SEBP7471
September 2014

RUTHZIL TRATOR COMERCIAL DE PEÇAS LTDA 11 97083-6812 ROLANDO

Parts Manual

320D2 & 320D2 L Excavators

KBS1-Up (Machine)
PBB1-Up (Machine)
D7A1-Up (Engine)

Powered By C7.1 Engine

Product and Dealer Information

Note: For product identification plate locations, see the section “Product Identification Information” in the Operation and Maintenance Manual.

Delivery Date: _____

Product Information

Model: _____

Product Identification Number: _____

Engine Serial Number: _____

Transmission Serial Number: _____

Generator Serial Number: _____

Attachment Serial Numbers: _____

Attachment Information: _____

Customer Equipment Number: _____

Dealer Equipment Number: _____

Dealer Information

Name: _____ Branch: _____

Address: _____

_____

_____

	Dealer Contact	Phone Number	Hours
Sales:	_____	_____	_____
Parts:	_____	_____	_____
Service:	_____	_____	_____

MEMORANDA

TABLE OF CONTENTS

NAME	PAGE
GENERAL INFORMATION	**A5**
REPAIR ALTERNATIVES	**A8**
SUPPLEMENTAL COOLANT ADDITIVES	A9
MAINTENANCE PARTS	**A10**
INDEX	**A13**
MACHINE ARRANGEMENT	**1**
CHASSIS AR	1
DISTRIBUTION AR	2
GENERAL AR	14
OPTION AR-CAB	14
OPTION AR-HYDRAULIC	16
OPTION AR-REGIONAL	17
ENGINE ARRANGEMENT	**18**
CONVERSION AR-ENGINE	18
ENGINE AR-COMPLETE	18
ENGINE AR-PRIMARY	19
INSTALLATION AR-ENGINE	20
BASIC ENGINE	**21**
CAMSHAFT GP	21
CONTACTOR GP-ALARM	22
COVER GP-VALVE MECHANISM	23
CRANKSHAFT GP	25
CYLINDER BLOCK AS	26
CYLINDER BLOCK GP	27
CYLINDER HEAD GP	28
DRAIN GP-ENGINE OIL	30
DRIVE GP-FAN	31
FLYWHEEL GP	33
HOUSING GP-FLYWHEEL	34
HOUSING GP-FRONT	35
JET GP-PISTON COOLING	37
LIFTING GP-ENGINE	38
MOUNTING GP-ENGINE	39
PAN GP-OIL	41
PISTON & ROD GP	43
PLUG GP-CYLINDER HEAD	45
PULLEY GP-CRANKSHAFT	46
PULLEY GP-ENGINE	47
ROCKER ARM GP	48
VALVE MECHANISM GP	50
LUBRICATION SYSTEM	**51**
FILLER GP-ENGINE OIL	51
FILTER & MTG GP-ENGINE OIL	52
FILTER GP-ENGINE OIL	54
FUMES DISPOSAL GP	55
LINES GP-ENGINE OIL DRAIN	56
PUMP GP-ENGINE OIL	57

NAME	PAGE
COOLING SYSTEM	58
CONNECTION GP-HEATER	58
COOLER GP-ENGINE OIL	59
FAN AR-SUCTION	62
FAN GP-SUCTION	63
LINES GP-COOLING	64
PUMP GP-WATER	65
RADIATOR & HYD OIL COOLER GP	66
AIR INLET AND EXHAUST SYSTEM	**71**
AIR CLEANER GP	71
LINES GP-AIR	73
MANIFOLD GP-INLET	74
MUFFLER & MOUNTING GP	75
PRECLEANER GP	77
TURBOCHARGER GP	78
FUEL SYSTEM	**79**
CONTROL GP-GOVERNOR	79
LINES GP-FUEL	81
LINES GP-FUEL FILTER	84
LINES GP-FUEL INJECTION	85
PUMP & MOTOR GP-REFUELING	86
PUMP AR-FUEL TRANSFER	87
PUMP AS-FUEL INJECTION	88
PUMP GP-FUEL INJECTION	89
PUMP GP-FUEL PRM & PRIM FILTER	90
PUMP GP-REFUELING	91
TANK & MTG GP-FUEL	93
TANK AR-FUEL	95
TANK GP-FUEL	96
VALVE GP-REFUELING	100
ELECTRICAL AND STARTING SYSTEM	101
ALARM GP	101
ALARM GP-TRAVEL	102
ALTERNATOR GP-CHARGING	103
BATTERY & WIRING GP	104
BLOCK GP-JUNCTION	110
CAMERA & MOUNTING GP	111
CAMERA GP	112
CONTROL & MTG GP-COMMUNICATION	113
CONTROL & MTG GP-ELECTRONIC	117
CONTROL AR-COMMUNICATION	118
CONTROL GP-COMMUNICATION	118
CONTROL GP-UNPROGRAMMED	119
ELECTRONICS GP-COMMUNICATION	120
ELECTRONICS GP-MACHINE	120
FASTENER GP-WIRING HARNESS	121
HARNESS AS-CHASSIS	127
HARNESS AS-CONTROL	127
HARNESS AS-SOLENOID	128

TABLE OF CONTENTS

NAME	PAGE
HEATER GP-JACKET WATER	129
INSTALLATION AR-COMMUNICATION	131
LAMP GP-FLOOD	132
LIGHTING GP-FLOOD	136
PANEL & MTG GP-CIRCUIT BREAKER	152
PANEL GP-CIRCUIT BREAKER	153
PANEL GP-SWITCH	155
RADIO GP-COMMUNICATION	159
SENSOR GP-LIQUID LEVEL	160
SENSOR GP-PRESSURE	161
SENSOR GP-SPEED	162
SENSOR GP-TEMP & PRESS	163
SENSOR GP-TEMPERATURE	164
STARTING AID GP	165
STARTING MOTOR GP-ELECTRIC	166
SWITCH GP-DISCONNECT	167
SWITCH GP-LIMIT	168
SWITCH GP-MAGNETIC	169
SWITCH GP-PUSH BUTTON	170
SWITCH GP-ROTARY	172
SWITCH GP-START	173
SWITCH GP-TOGGLE	174
SWITCH GP-WIPER	176
WIRING GP-AUXILIARY CONTROL	177
WIRING GP-CAB	179
WIRING GP-CHASSIS	196
WIRING GP-COMBINED FLOW	206
WIRING GP-COMMUNICATION	208
WIRING GP-CONSOLE	212
WIRING GP-CONVERTER	217
WIRING GP-ENGINE	219
WIRING GP-FINE SWING	221
WIRING GP-HYDRAULIC CONTROL	222
WIRING GP-MEDIUM PRESSURE	224
WIRING GP-PLATFORM	225
WIRING GP-QUICK COUPLER	228
WIRING GP-REFUELING PUMP	229
POWER TRAIN	**231**
DRIVE GP-FINAL	231
GEAR GP-RING	235
GEAR GP-TRANSFER	238
POWER TRAIN AR	238
SPROCKET GP	239
FRAME AND BODY	**240**
BOX & MTG GP-STORAGE	240
BOX GP-STORAGE	241
BUMPER GP	243
COUNTERWEIGHT & MOUNTING GP	244
COUNTERWEIGHT AR	249
COUNTERWEIGHT GP	250
COVER AS-SOUND SUPPRESSION	255
DOOR AS-ACCESS	258
DOOR GP-ACCESS	259
FENDER & COVER GP	261
FRAME AS-UPPER	262
FRAME GP-UPPER	263
GEAR & BEARING GP-SWING	267
GUARD GP-BOTTOM	270
GUARD GP-SWIVEL	272
HANDRAIL GP	274
HOOD & GUARD GP	275
HOOD GP	279
HOOD GP-ENGINE	280
SHEET AS-SOUND SUPPRESSION	287
STEP GP	297
SUPPORT AS-ENCLOSURE	298
SUPPORT AS-SOUND SUPPRESSION	299
UNDERCARRIAGE	**301**
FRAME AR-UNDERCARRIAGE	301
FRAME AS-UNDERCARRIAGE	302
GUARD GP-TRACK GUIDE	304
GUARD GP-TRAVEL MOTOR	310
IDLER GP-FRONT	312
LINK AS-TRACK	316
ROLLER AR-TRACK & CARRIER	318
ROLLER GP-TRACK CARRIER	321
ROLLER GP-TRACK-SINGLE FLANGE	322
TRACK ADJUSTER & RECOIL GP	324
TRACK AR	328
TRACK GP	328
HYDRAULIC SYSTEM	**332**
ACCUMULATOR GP-HYDRAULIC	332
BLOCK GP-HYDRAULIC	340
CONTROL AR-AUXILIARY	341
CONTROL AR-COUPLER	343
COUPLING GP-FLEXIBLE	344
COUPLING GP-PUMP	345
CYLINDER & LINES GP-BOOM	346
CYLINDER & LINES GP-BUCKET	347
CYLINDER & LINES GP-STICK	348
CYLINDER & SEAL GP-BOOM	350
CYLINDER & SEAL GP-BUCKET	354
CYLINDER & SEAL GP-STICK	367
CYLINDER AR-HYDRAULIC	379
CYLINDER GP-BUCKET	380
CYLINDER GP-COUPLER	382
CYLINDER GP-HYDRAULIC	386
DRIVE GP-AUXILIARY PUMP	388
DRIVE GP-PUMP	389
DRIVE GP-SWING	390
FASTENER GP-SWING & FINAL DR	395
FILTER & VALVE GP-PILOT	397

TABLE OF CONTENTS

NAME	PAGE
FILTER GP-OIL	398
FITTING GP-HYDRAULIC	404
GAUGE GP-SIGHT	405
HEAD GP-PUMP	406
HOSE GP-HYDRAULIC	413
HYDRAULIC AR	422
LINES GP-AUXILIARY HYDRAULIC	423
LINES GP-BOOM	441
LINES GP-BOOM CYLINDER	448
LINES GP-BUCKET CYLINDER	457
LINES GP-CONTROL	465
LINES GP-COUPLER	467
LINES GP-FRONT	475
LINES GP-HYDRAULIC OIL COOLER	497
LINES GP-PILOT	498
LINES GP-PUMP	544
LINES GP-QUICK COUPLER	547
LINES GP-RETURN	549
LINES GP-STICK	552
LINES GP-STICK CYLINDER	554
LINES GP-TRAVEL MOTOR	560
MANIFOLD GP-CONTROL	566
MOTOR & MTG GP-SWING	569
MOTOR & MTG GP-TRAVEL	571
MOTOR GP-SWING	572
MOTOR GP-TRAVEL	578
MOUNTING GP-MAIN CONTROL VALVE	582
PLUG GP-CONTROL VALVE	583
PUMP & MTG GP-AUXILIARY	584
PUMP & MTG GP-MAIN HYDRAULIC	585
PUMP GP-GEAR	586
PUMP GP-MAIN HYDRAULIC	588
SCREEN GP-HYDRAULIC	592
SWIVEL GP	593
TANK & FILTER GP-HYDRAULIC	595
TANK & MTG GP-HYDRAULIC	597
VALVE & LINES GP-HEAVY LIFT	598
VALVE & MTG GP-CONTROL	599
VALVE AR-ALT PATTERN CONTROL	600
VALVE AR-CHECK & RELIEF	600
VALVE AR-SWING	600
VALVE AS-MANUAL	601
VALVE GP-CHECK	602
VALVE GP-CHECK & RELIEF	604
VALVE GP-CONTROL	606
VALVE GP-LOAD CONTROL	634
VALVE GP-MAIN CONTROL	641
VALVE GP-MANUAL	643
VALVE GP-PILOT	644
VALVE GP-PRESSURE REDUCING	651
VALVE GP-PRIORITY	653
VALVE GP-RELIEF	654
VALVE GP-SELECTOR	667
VALVE GP-SHUTTLE	669
VALVE GP-SOLENOID	674
VALVE GP-SOLENOID & MANIFOLD	683
VALVE GP-SOLENOID & RELIEF	684
VALVE GP-SWING CUSHION	687
VALVE GP-TRAVEL COUNTERBALANCE	691
IMPLEMENTS	**693**
BOOM AR	693
BOOM AR-1 PIECE LONG	693
BOOM GP	695
LINES GP-GREASE	707
LINKAGE AR-BUCKET	715
LINKAGE AR-FRONT	716
LINKAGE GP-BUCKET	717
LOCK GP-TRANSPORT	726
PIN GP	727
STICK & BEARING AS	728
STICK AR-HOE	732
STICK GP-HOE	734
WORK TOOLS	**745**
ADJUSTER GP-BUCKET	745
BUCKET & ADJUSTER GP	746
BUCKET AS-GENERAL PURPOSE	753
BUCKET AS-HEAVY DUTY	758
BUCKET GP-HEAVY DUTY SPADE	764
CONTROL AR-QUICK COUPLER	765
COUPLER AR-QUICK	765
COUPLER GP-QUICK	767
OPERATOR STATION	**772**
AIR CONDITIONER & MOUNTING GP	772
AIR CONDITIONER AR	774
AIR CONDITIONER GP	775
ARMREST GP	777
BRACKET GP-MOUNTING	779
CAB GP	780
CAMERA & MIRROR AR	818
COIL GP-EVAPORATOR	819
COMPRESSOR GP-REFRIGERANT	823
CONDENSER & MTG GP-REFRIGERANT	825
CONDENSER GP-REFRIGERANT	828
CONSOLE GP-OPERATOR	829
CONTROL & MOUNTING GP	835
CONTROL & MTG GP-JOYSTICK	836
CONTROL & MTG GP-PEDAL	838
CONTROL GP-HANDLE	839
CONTROL GP-HEAT & AIR COND	844
CONTROL GP-HYDRAULIC PEDAL	845
CONTROL GP-JOYSTICK	849
CONTROL GP-PEDAL	853

TABLE OF CONTENTS

NAME	PAGE
CONTROL GP-PILOT OPERATED HYD	854
COVER GP-CAB	855
COVER GP-STORAGE	856
DOOR & MTG GP-CAB	857
DOOR GP-CAB	859
DUCT GP-CAB AIR	863
FLOOR MAT	864
FLOOR MAT GP	870
GUARD AR-OVERHEAD	871
GUARD GP-FRONT WINDOW	872
GUARD GP-OVERHEAD	876
HATCH GP-ROOF	878
HEADREST AS-SEAT	881
HORN GP-ELECTRIC	882
INSTALLATION AR	885
LATCH GP-WINDOW	886
LEVER GP-CAB DOOR	887
LINES GP-AIR CONDITIONER	888
LITERATURE GP	894
MIRROR GP-DOWN VIEW	895
MIRROR GP-REAR VIEW	896
MONITOR & MTG GP-OPERATOR	901
MONITOR GP-OPERATOR	902
MOUNTING GP-ANTENNA	903
MOUNTING GP-PLATFORM	908
OPERATOR AR	910
PEDAL AR-AUXILIARY	910
PLATFORM GP-OPERATOR	911
RADIO GP	912
SCREEN GP-SUN	913
SEAT & MOUNTING GP	914
SEAT BELT GP	917
SEAT GP	920
SEAT GP-SUSPENSION	925
SUPPORT GP-SEAT	928
SUSPENSION GP-SEAT	929
VISOR GP-CAB	936
VISOR GP-PROTECTION	937
WASHER GP-WINDOW	938
WINDOW GP-CAB	940
WINDOW GP-DOOR	959
WIPER & WASHER GP-WINDOW	963
WIPER AR-WINDOW	965
WIPER GP-WINDOW	966
SERVICE EQUIPMENT AND SUPPLIES	968
FILM GP	968
PLATE & FILM GP	989
PLATE GP-INFORMATION	1001
PART NUMBER INDEX	**B1**

1. MACHINE IDENTIFICATION

Cat machines are identified by Product Identification Numbers (PIN). Some components included in a machine may be identified by Serial Numbers (S/N). Typical components that will be serialized include engines, transmissions, bulldozers, and rippers. The machine and engine are further identified by arrangement numbers and in some cases modification numbers. These numbers are shown on the product identification plate(s) and on the master plate in the operator's compartment.

Cat dealers need all of these numbers to determine accurate parts identification.

Effective First Quarter 2001 the Cat Product Identification Number (PIN) changed from 8 to 17 characters. In an effort to provide uniform equipment identification, Caterpillar and other construction equipment manufacturers are moving to comply with the latest version of the product identification numbering standard. Non-road machine PINs are defined by ISO 10261. The new PIN format will apply to all Cat machines and generator sets. The PIN plates and frame marking will display the 17 character PIN. The new format will look like the following:

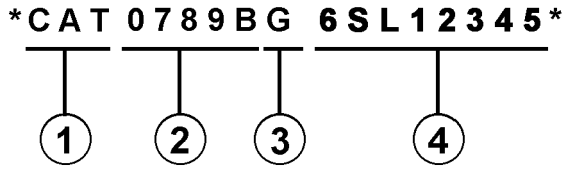

Where:

1. Caterpillar's World Manufacturing Code (characters 1-3)

2. Machine Descriptor (characters 4-8)

3. Check Character (character 9)

4. Machine Indicator Section (MIS) or Product Sequence Number (characters 10-17). These were previously referred to as the Serial Number.

Machines and generator sets produced before First Quarter 2001 will maintain their 8 character PIN format.

Components such as engines, transmissions, axles, etc. and work tools will continue to use an 8 character Serial Number (S/N).

2. ORDERING PARTS

⚠ WARNING

When replacement parts are required for this product Caterpillar recommends using Caterpillar replacement parts or parts with equivalent specifications including, but not limited to, physical dimensions, type, strength and material.

Failure to heed this warning can lead to premature failures, product damage, personal injury or death.

Quality Cat replacement parts are available from Cat dealers throughout the world. Their parts inventories are up to date and include all parts normally required to protect your investment in Cat machines. Dealers may offer repair kits or remanufactured parts to allow selection of the most effective repair alternative for a particular situation. When ordering parts, your order should specify the quantity, part number, part name, and the serial number/product identification number of the machine for which the parts are needed.

3. PARTS MANUAL ORGANIZATION

Product information in this manual is presented as "information elements" that represent all of the components for the specific model. Engine Arrangement and Seat Group are examples of information elements. The information elements are organized alphabetically by part name and secondarily by part number within each major section of the manual.

4. TABLE OF CONTENTS

A table of contents (TOC) is found at the beginning of the manual. The TOC lists each section of the manual with a complete list of all information elements organized as they appear in the manual. Page numbers are provided for quick reference to detailed parts identification illustrations and serviceable consist lists.

5. MAINTENANCE PARTS INDEX

The Maintenance Parts Index, located near the beginning of the manual, references most frequently used maintenance part numbers, providing description, quantity, usage and page number. This information is organized alphabetically by part description.

6. INDEX

The index located near the front of the manual is an alphabetical listing of all information elements included in the manual. Page numbers are provided for quick reference to detailed parts identification illustrations and serviceable consist lists.

7. PART NUMBER INDEX

A numerical index listing all part numbers and the corresponding page number(s) appears at the back of the manual.

8. CAPTIONS

Captions located at the beginning of each information element identify the part number and part name along with additional descriptive information. PIN and S/N information found in each caption should be used to select correct information for a specific machine. Field replacement options, identification of optional attachment components, and where used ("part of") information is also provided.

The first line of a caption is shown in larger type font to indicate the beginning of an information element. Captions for additional pages that may be required to illustrate an information element will be shown in standard type font and will include the term *(contd.)* .

9. NON-SERVICED PARTS

In some instances it is necessary to display non-serviced parts that are a link to a lower level serviceable consist lists. These non-serviced part numbers are shown in *italic* type indicating that they are not available.

10. PARTS LIST REFERENCE NUMBERS

Numbers shown in the Ref No column correspond to numbers used in the associated graphic(s). An alphabetic suffix may be added to a reference number to identify lower level consist items. Numbers shown in the Graphic Ref column refer to the graphic number identifier displayed in the lower left corner of each illustration. The Graphic Ref number may be used in combination with the item Ref No to determine the correct part number. There may be intentional omission of a Ref No in a consist list as information is updated to reflect the latest serviceable part numbers.

11. INDENTED PART NAMES

When a part name is indented in a parts list, it is part of (included in) the group or assembly under which it is indented.

12. ILLUSTRATION REFERENCE LETTERS

When necessary, illustrations contain reference letters (A, B, C etc.) that are intended to track lines and harnesses from one point to another. They are also used to show where to reconnect illustrations that have been separated.

13. ABBREVIATIONS AND SYMBOLS

O.D. – Outside Diameter
I.D. – Inside Diameter
A – Not Part Of This Group
B – Use As Required
C – Change From Previous Type
D – Order By The Meter
E – Order By The Centimeter
F – Not Shown
G – Order By The Inch
I – Refer To Hydraulic Information System
M – Metric Part
R – Remfg Part May Be Available
Y – Separate Illustration
Z – Not Serviced Separately

14. DESCRIPTION OF TYPE CHANGES

Type - A type is defined as any configuration change that requires an additional Information Element for an Arrangement, Group, or Assembly. If serial number breaks for types are not available, a type # (Type 1, Type 2, etc.) will be displayed in the caption. These "type" changes are identified with a "C" note (change from previous type) in the Parts List. Only the "types" that apply to this Parts Manual will be included. Additional types may exist causing "C" notes to appear on an Information Element when no other types are shown.

15.<END>

This symbol indicates the end of an information element.

NOTE:

Continuing improvement and advancement of product design may cause changes to your machine which may not be included in this publication. Whenever a question arises regarding your Cat product or this publication, please consult your Cat dealer for the latest available information.

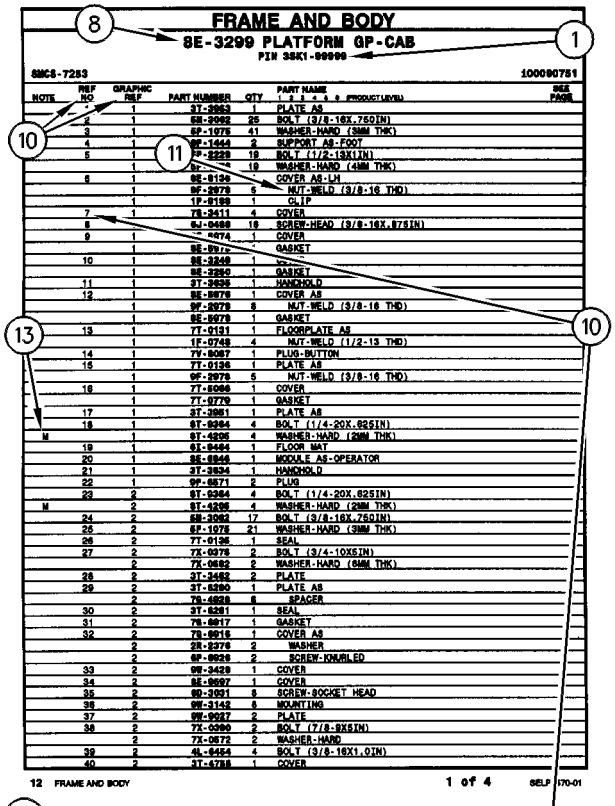

FRAME AND BODY

8E-3299 PLATFORM GP-CAB

PIN 38K1-99999

8MS-7253 100090751

NOTE	REF NO	GRAPHIC REF	PART NUMBER	QTY	PART NAME (1 2 3 4 5 6 PRODUCT LEVEL)	SEE PAGE
	1	1	3T-3963	1	PLATE AS	
	2	1	5H-3962	25	BOLT (3/8-16X.750IN)	
	3	1	6P-1075	41	WASHER-HARD (3MM THK)	
	4	1	9F-1444	2	SUPPORT AS-FOOT	
	5	1	5P-2229	19	BOLT (1/2-13X1IN)	
		1	9J-[illegible]	19	WASHER-HARD (4MM THK)	
	6	1	9E-8134	1	COVER AS-LH	
		1	9F-2979	6	NUT-WELD (3/8-16 THD)	
		1	1F-9189	1	CLIP	
	7	1	7S-2411	4	COVER	
	8	1	5J-0468	19	SCREW-HEAD (3/8-16X.87SIN)	
	9	1	[illegible]074	1	COVER	
		1	9E-8[illegible]	1	GASKET	
	10	1	9E-3248	1	[illegible]	
		1	9E-3250	1	GASKET	
	11	1	3T-3930	1	HANDHOLD	
	12	1	9E-8078	1	COVER AS	
		1	9F-2979	6	NUT-WELD (3/8-16 THD)	
		1	9E-8079	1	GASKET	
	13	1	7T-0131	1	FLOORPLATE AS	
		1	1F-0748	4	NUT-WELD (1/2-13 THD)	
	14	1	7V-8067	1	PLUG-BUTTON	
	15	1	7T-0136	1	PLATE AS	
		1	9F-2978	5	NUT-WELD (3/8-16 THD)	
	16	1	7T-5066	1	COVER	
		1	7T-0779	1	GASKET	
	17	1	3T-3951	1	PLATE AS	
	18	1	9T-9364	4	BOLT (1/4-20X.62SIN)	
M		1	9T-4236	4	WASHER-HARD (2MM THK)	
	19	1	6I-9464	1	FLOOR MAT	
	20	1	9E-8946	1	MODULE AS-OPERATOR	
	21	1	3T-3934	1	HANDHOLD	
	22	1	9P-8571	2	PLUG	
	23	2	9T-9364	4	BOLT (1/4-20X.62SIN)	
M		2	9T-4236	4	WASHER-HARD (2MM THK)	
	24	2	5H-3962	17	BOLT (3/8-16X.750IN)	
	25	2	6P-1078	21	WASHER-HARD (9MM THK)	
	26	2	7T-0136	1	SEAL	
	27	2	7X-0378	2	BOLT (3/4-10X5IN)	
		2	7X-0682	2	WASHER-HARD (6MM THK)	
	28	2	3T-3482	2	PLATE	
	29	2	3T-5290	1	PLATE AS	
		2	7S-4828	6	SPACER	
	30	2	3T-5281	1	SEAL	
	31	2	7S-8017	1	GASKET	
	32	2	7S-8016	1	COVER AS	
		2	2R-2376	2	WASHER	
		2	6P-8626	2	SCREW-KNURLED	
	33	2	9W-3429	1	COVER	
	34	2	8E-9697	1	COVER	
	35	2	9D-3091	8	SCREW-SOCKET HEAD	
	36	2	9W-3142	8	MOUNTING	
	37	2	9W-9527	2	PLATE	
	38	2	7X-0390	2	BOLT (7/8-9X6IN)	
		2	7X-0672	2	WASHER-HARD	
	39	2	4L-6454	4	BOLT (3/8-16X1.0IN)	
	40	2	3T-4788	1	COVER	

12 FRAME AND BODY 1 of 4 SELP4570-01

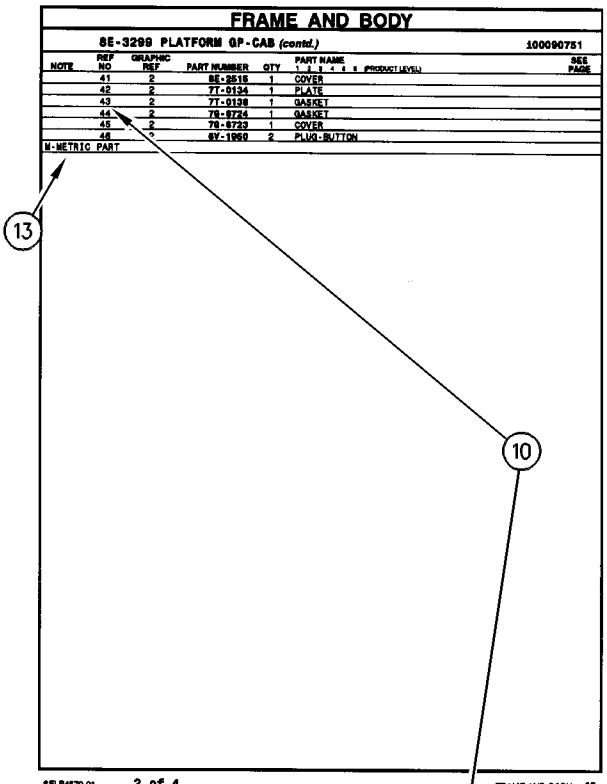

FRAME AND BODY

8E-3299 PLATFORM GP-CAB (contd.) 100090751

NOTE	REF NO	GRAPHIC REF	PART NUMBER	QTY	PART NAME (1 2 3 4 5 6 PRODUCT LEVEL)	SEE PAGE
	41	2	6E-2515	1	COVER	
	42	2	7T-0134	1	PLATE	
	43	2	7T-0128	1	GASKET	
	44	2	7S-8724	1	GASKET	
	45	2	7S-8723	1	COVER	
	46	2	6V-1960	2	PLUG-BUTTON	

M-METRIC PART

SELP4570-01 2 of 4 FRAME AND BODY 13

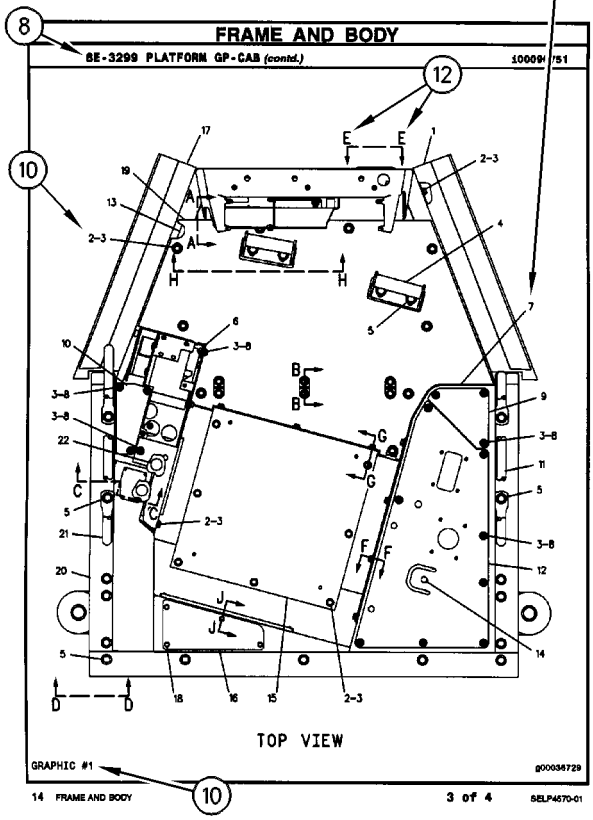

FRAME AND BODY

8E-3299 PLATFORM GP-CAB (contd.) 100090751

14 FRAME AND BODY 3 of 4 SELP4570-01

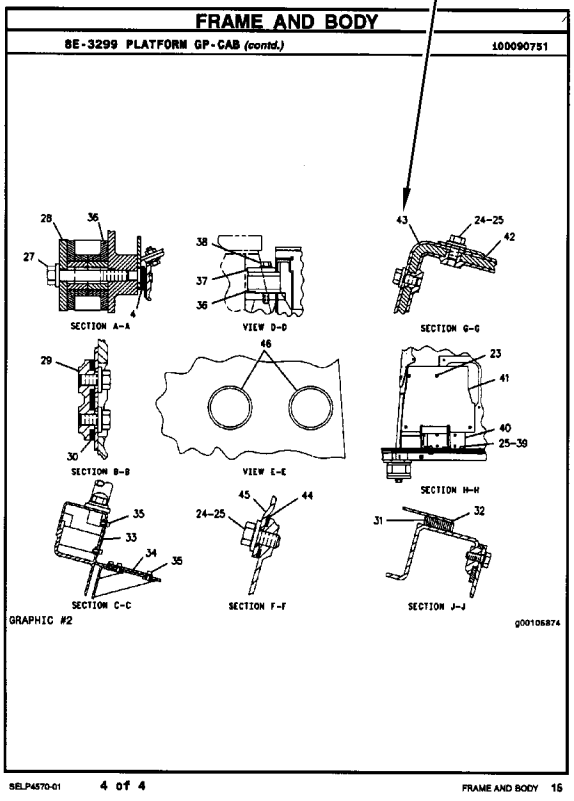

FRAME AND BODY

8E-3299 PLATFORM GP-CAB (contd.) 100090751

SELP4570-01 4 of 4 FRAME AND BODY 15

REMANUFACTURED COMPONENTS

As an option when making repairs consider Cat Remanufactured Components. Components that are available through the Cat Remanufactured Program are identified three ways in the parts book:

- with the letter R in the note field of the parts list
- with an R* at the beginning of the first line of the caption
- with an *R at the end of the first line of the caption

Typical components included in the Remanufacturing Program include:

ALTERNATORS
CONNECTING RODS
CRANKSHAFTS - UNDERSIZE
CRANKSHAFTS - UPGRADE TO NEW
CYLINDER HEADS
ELECTRONIC CONTROL MODULES (ECM)
ELECTRONIC SENSORS
FUEL INJECTORS
FUEL NOZZLES
FUEL PUMPS
GOVERNORS
OIL PUMPS
PISTONS
SHORT BLOCKS
STARTERS
TURBOCHARGERS - COMPLETE
TURBOCHARGER CARTRIDGES
WATER PUMPS

Cat Remanufactured engines for many engine arrangements are also available.

SUPPLEMENTAL COOLANT ADDITIVES

CUSTOMER BENEFITS:

Protects against cavitation, foam, erosion, corrosion, and scale buildup in cooling systems.

- Provides measured coolant conditioner.

DESCRIPTION:

Additives deplete from the coolant with normal operation. For this reason, Supplemental Coolant Additives (SCA) must be added to all heavy duty coolants at regular intervals. In addition, when not using a fully formulated, pre-charged antifreeze, like Cat DEAC, an initial charge of SCA must be added to the cooling system. The amount of SCA added to the system is dependent on the capacity of the system.

The SCA for initial fill is provided as a liquid. SCA's for maintenance intervals are available in liquid form and as a spin-on element. (No Spin-on available for 3600 Family of Engines)

NOTE:

The amount of SCA added at initial fill is not the same as the amount added at maintenance intervals.

The coolant additive elements can be used with any ethylene or propylene glycol type antifreeze which meets ASTM D4985 or ASTM D5345 Specifications.

NOTE:

For use with standard heavy duty coolant only, not for use with Extended Life Coolant.

PARTS NEEDED:

Cooling System Capacity		Liquid SCA at Initial Fill	Liquid SCA at Maintenance*	Spin-on SCA Maintenance Element*
Liters	Gallons			
22-30	(6-8)	3P-2044 (1)	6V-3542 (1)	111-2370 (1)
30-38	(8-10)	3P-2044 (1) 6V-3542 (1)	111-2372 (1)	111-2369 (1)
38-49	(10-13)	3P-2044 (1) 8T-1589 (1)	111-2372 (1)	111-2369 (1)
49-64	(13-17)	3P-2044 (2)	8T-1589 (1)	9N-3368 (1)
64-83	(17-22)	3P-2044 (2) 8T-1589 (1)	111-2372 (1) 6V-3542 (1)	111-2371 (1)
83-114	(22-30)	3P-2044 (3) 8T-1589 (1)	3P-2044 (1)	9N-3718 (1)
114-163	(30-43)	3P-2044 (5)	3P-2044 (1) 6V-3542 (1)	111-2371 (2)
163-242	(43-64)	3P-2044 (8)	3P-2044 (2)	9N-3718 (2)

** Normal maintenance period is 250 hrs. See your Operation and Maintenance Manual for complete coolant maintenance instructions.*

( ) Indicates quantity required.

MAINTENANCE PARTS

DESCRIPTION	PART NUMBER	QTY	WHERE USED	PAGE
AIR INLET AND EXHAUST SYSTEM				
FILTER ELEMENT AS-AIR (PRIMARY)	457-8206	1	AIR CLEANER GP	71
FILTER ELEMENT AS-AIR (SECONDARY)	447-0761	1	AIR CLEANER GP	71
BASIC ENGINE				
BELT-SERPENTINE	357-2637	1	PULLEY GP-ENGINE	47
CAP AS (ENGINE OIL FILLER)	369-3869	1	COVER GP-VALVE MECHANISM	23
SEAL-VALVE COVER	256-7704	1	COVER GP-VALVE MECHANISM	23
COOLING SYSTEM				
CAP AS (COOLANT RECOVERY)	171-3369	1	RADIATOR & HYD OIL COOLER GP	66
CAP-RADIATOR	416-0965	1	RADIATOR & HYD OIL COOLER GP	68
GASKET	225-7944	2	COOLER GP-ENGINE OIL	61
GASKET-WATER REGULATOR	281-8744	1	PUMP GP-WATER	65
HOSE-RADIATOR (LOWER)	423-4409	1	RADIATOR & HYD OIL COOLER GP	66
HOSE-RADIATOR (UPPER)	394-2235	1	RADIATOR & HYD OIL COOLER GP	66
PLUG-DRAIN (RADIATOR)	355-0468	1	RADIATOR & HYD OIL COOLER GP	68
REGULATOR AS-WATER TEMPERATURE (INCLUDES CONNECTOR) (WATER TEMPERATURE)	417-7782	1	PUMP GP-WATER	65
ELECTRICAL AND STARTING SYSTEM				
BATTERY GP (12-VOLT, 750-CCA)	3T-5760	2	BATTERY & WIRING GP	107
BATTERY GP (12-VOLT, MAINTENANCE FREE)	263-9574	4	BATTERY & WIRING GP	104
CAP AS-FILLER (BATTERY)	123-1373	6	BATTERY & WIRING GP	104
		6	BATTERY & WIRING GP	107
CIRCUIT BREAKER AS (120-AMPERE) (ALTERNATOR)	216-4970	1	PANEL GP-CIRCUIT BREAKER	153
CIRCUIT BREAKER AS (60-AMPERE) (GLOW PLUG)	171-2208	1	PANEL GP-CIRCUIT BREAKER	153
CIRCUIT BREAKER AS (80-AMPERE) (MAIN)	171-2210	1	PANEL GP-CIRCUIT BREAKER	153
FUSE (10-AMPERE)	113-8490	20	WIRING GP-CAB	187
FUSE (15-AMPERE)	113-8491	1	WIRING GP-CAB	185
		6	WIRING GP-CAB	187
FUSE (20-AMPERE)	113-8492	2	WIRING GP-CAB	187
FUSE (25-AMPERE)	113-8493	2	WIRING GP-CAB	187
FUSE (30-AMPERE)	124-3548	2	WIRING GP-CAB	187
FUSE (5-AMPERE)	141-2759	8	WIRING GP-CAB	187
GLOW PLUG (24-VOLT)	226-8770	6	STARTING AID GP	165
KEY (BATTERY DISCONNECT)	8H-5306	1	SWITCH GP-DISCONNECT	167
LAMP AS (24-VOLT, 3-WATT)	170-9324	1	PANEL GP-SWITCH	155
		1	PANEL GP-SWITCH	157
LAMP-HALOGEN (24-VOLT, 70-WATT)	351-9918	1	LAMP GP-FLOOD	132

DESCRIPTION	PART NUMBER	QTY	WHERE USED	PAGE
	9X-3463	1	LAMP GP-FLOOD	133
		1	LAMP GP-FLOOD	134
		1	LAMP GP-FLOOD	135
		1	LIGHTING GP-FLOOD	137
FUEL SYSTEM				
CAP AS-FUEL (LOCKABLE, VENTED)	349-7059	1	TANK GP-FUEL	96
		1	TANK GP-FUEL	98
DRAIN AS (FUEL FILTER)	222-6617	1	PUMP GP-FUEL PRM & PRIM FILTER	90
FILTER AS-WATER SEP & FUEL (ULTRA HIGH EFFICIENCY)	382-0664	1	LINES GP-FUEL	81
FILTER ELEMENT-WTR SEP & FUEL	1R-1804	1	PUMP GP-FUEL PRM & PRIM FILTER	90
STRAINER (REFUELING)	451-6724	1	VALVE GP-REFUELING	100
STRAINER AS-FUEL (FLOAT GAUGE)	303-9933	1	TANK GP-FUEL	96
		1	TANK GP-FUEL	98
HYDRAULIC SYSTEM				
BREATHER (HYDRAULIC TANK)	227-0590	1	TANK & FILTER GP-HYDRAULIC	595
BREATHER (SWING DRIVE)	4H-6112	1	DRIVE GP-SWING	392
		1	DRIVE GP-SWING	393
BREATHER AS (SWING DRIVE)	227-6221	1	DRIVE GP-SWING	392
		1	DRIVE GP-SWING	393
FILTER ELEMENT AS-OIL (ADVANCED EFFICIENCY) (HYDRAULIC RETURN)	179-9806	1	FILTER GP-OIL	400
FILTER ELEMENT AS-OIL (HYDRAULIC)	216-6676	1	FILTER GP-OIL	402
FILTER-OIL (ADVANCED EFFICIENCY) (HYDRAULIC, CASE DRAIN)	093-7521	1	FILTER GP-OIL	403
FILTER-OIL (ADVANCED EFFICIENCY) (HYDRAULIC, PILOT)	5I-8670	1	FILTER & VALVE GP-PILOT	397
PLUG-DRAIN (HYDRAULIC OIL)	9J-7031	1	TANK & FILTER GP-HYDRAULIC	595
SCREEN AS (HYDRAULIC TANK)	209-6000	1	SCREEN GP-HYDRAULIC	592
LUBRICATION SYSTEM				
FILTER ELEMENT-ENGINE OIL	322-3155	1	FILTER GP-ENGINE OIL	54
MACHINE ARRANGEMENT				
SEAT BELT GP (RETRACTABLE)	305-0467	1	OPTION AR-CAB	14
		1	OPTION AR-CAB	15
		1	OPTION AR-CAB	16
OPERATOR STATION				
BLADE AS-WIPER (275-MM) (LOWER)	4I-5021	1	WIPER & WASHER GP-WINDOW	963
BLADE AS-WIPER (600-MM)	161-3670	1	WIPER GP-WINDOW	966
CAP AS (WINDOW WASHER)	178-5431	1	WASHER GP-WINDOW	938
DRYER-REFRIGERANT (RECEIVER)	176-1902	1	LINES GP-AIR CONDITIONER	888
		1	LINES GP-AIR CONDITIONER	891

MAINTENANCE PARTS

DESCRIPTION	PART NUMBER	QTY	WHERE USED	PAGE
FILTER ELEMENT-CAB AIR	245-7823	1	AIR CONDITIONER GP	775
	293-1184	1	DUCT GP-CAB AIR	863
LAMP (24-VOLT, 10-WATT)	201-4417	1	CAB GP	780
		1	CAB GP	787
LAMP AS-DOME	176-1986	1	CAB GP	780
		1	CAB GP	787
SEAT BELT GP (RETRACTABLE, 51-MM (2-IN))	258-4095	1	SEAT & MOUNTING GP	916
	327-6541	1	SEAT BELT GP	919
SEAT BELT GP (RETRACTABLE, 76-MM (3-IN))	327-6540	1	SEAT BELT GP	918

INDEX

NAME PAGE

A

ACCUMULATOR GP-HYDRAULIC–CHARGED . . . 332 333 334 335 336 337 338
ACCUMULATOR GP-HYDRAULIC–UNCHARGED . . . 339
ADJUSTER GP-BUCKET–B-FAMILY . . . 745
AIR CLEANER GP . . . 71 72
AIR CONDITIONER & MOUNTING GP . . . 772
AIR CONDITIONER AR . . . 774
AIR CONDITIONER AR–CHASSIS . . . 774
AIR CONDITIONER GP . . . 775
ALARM GP-TRAVEL–BACKUP . . . 102
ALARM GP–FAULT . . . 101
ALTERNATOR GP-CHARGING . . . 103
ARM GP-WINDOW WIPER . . . 966
ARMREST GP–LH . . . 778
ARMREST GP–RH . . . 777

B

BATTERY & WIRING GP . . . 107
BATTERY & WIRING GP–COLD WEATHER . . . 104
BATTERY GP (12-VOLT, 750-CCA) . . . 107
BATTERY GP (12-VOLT, MAINTENANCE FREE) . . . 104
BELT-SERPENTINE . . . 47
BLADE AS-WIPER (275-MM) (LOWER) . . . 963
BLADE AS-WIPER (600-MM) . . . 966
BLOCK GP-HYDRAULIC . . . 340
BLOCK GP-JUNCTION . . . 110
BOOM AR-1 PIECE LONG–AUXILAIRY, GRADE CONTROL . . . 694
BOOM AR-1 PIECE LONG–AUXILIARY . . . 693
BOOM AR-1 PIECE LONG–AUXILIARY, HEAVY-DUTY . . . 694
BOOM AR-1 PIECE LONG–HEAVY-DUTY . . . 693
BOOM AR–1-PIECE SHORT, AUXILIARY . . . 693
BOOM GP . . . 695 697 699 701 703 705
BOX & MTG GP-STORAGE . . . 240
BOX GP-STORAGE . . . 241
BRACKET GP-MOUNTING–MIRROR . . . 779
BREATHER (HYDRAULIC TANK) . . . 595
BREATHER (SWING DRIVE) . . . 392 393
BREATHER AS (SWING DRIVE) . . . 392 393

NAME PAGE

BUCKET & ADJUSTER GP–B-FAMILY . . . 747 750 751
BUCKET & ADJUSTER GP–B-FAMILY, GENERAL PURPOSE . . . 751
BUCKET & ADJUSTER GP–B-FAMILY, HEAVY-DUTY . . . 747 752
BUCKET & ADJUSTER GP–GENERAL PURPOSE, B-FAMILY . . . 746 750
BUCKET & ADJUSTER GP–HEAVY-DUTY SPADE, B-FAMILY . . . 750
BUCKET & ADJUSTER GP–HEAVY-DUTY, B-FAMILY . . . 748 749
BUCKET AS-GENERAL PURPOSE–B-FAMILY . . . 753 754 755 756 757
BUCKET AS-HEAVY DUTY–B-FAMILY . . . 758 759 760 761 762 763
BUCKET GP-HEAVY DUTY SPADE–B-FAMILY . . . 764
BUMPER GP . . . 243

C

CAB GP . . . 783 785 794 796 798 800 806 808 812 816
CAB GP–EXTERIOR . . . 780 787
CAB GP–INTERIOR . . . 791 801 803 810 814
CAMERA & MIRROR AR . . . 818
CAMERA & MOUNTING GP–WORK AREA VISUAL SYSTEM, REAR . . . 111
CAMERA GP–WORK AREA VISUAL SYSTEM, REAR . . . 112
CAMSHAFT GP . . . 21
CAP AS (COOLANT RECOVERY) . . . 66
CAP AS (ENGINE OIL FILLER) . . . 23
CAP AS (WINDOW WASHER) . . . 938

INDEX

NAME	PAGE
CAP AS-FILLER (BATTERY)	104, 107
CAP AS-FUEL (LOCKABLE, VENTED)	96, 98
CAP-RADIATOR	68
CHASSIS AR	1
CIRCUIT BREAKER AS (120-AMPERE) (ALTERNATOR)	153
CIRCUIT BREAKER AS (60-AMPERE) (GLOW PLUG)	153
CIRCUIT BREAKER AS (80-AMPERE) (MAIN)	153
COIL GP-EVAPORATOR	819, 821
COMPRESSOR GP-REFRIGERANT	823, 824
CONDENSER & MTG GP-REFRIGERANT	825, 827
CONDENSER GP-REFRIGERANT	828
CONNECTING ROD GP	43, 44
CONNECTION GP-HEATER	58
CONSOLE GP-OPERATOR	831
CONSOLE GP-OPERATOR–LH	833
CONSOLE GP-OPERATOR–RH	829
CONTACTOR GP-ALARM	22
CONTROL & MOUNTING GP–FOOT SWITCH, ON/OFF, LH	835
CONTROL & MTG GP-COMMUNICATION–PRODUCT LINK 121SR	113
CONTROL & MTG GP-COMMUNICATION–PRODUCT LINK 321SR	115
CONTROL & MTG GP-COMMUNICATION–PRODUCT LINK CELLULAR	116
CONTROL & MTG GP-ELECTRONIC	117
CONTROL & MTG GP-JOYSTICK	837
CONTROL & MTG GP-JOYSTICK–2-BUTTON, SLIDE, TRIGGER SW	836
CONTROL & MTG GP-PEDAL–LH	838
CONTROL AR-AUXILIARY–FOOT SWITCH, ON/OFF, LH	341
CONTROL AR-AUXILIARY–HAMMER FILTER	343
CONTROL AR-AUXILIARY–JOYSTICK, 2-BN, SLIDE, TRIG SW	341
CONTROL AR-AUXILIARY–MEDIUM PRESSURE	342
CONTROL AR-AUXILIARY–SYSTEM 18	342
CONTROL AR-AUXILIARY–SYSTEM 2, COMBINED FUNCTION	341
CONTROL AR-AUXILIARY–SYSTEM 3, 1-WAY, 2-PUMP	342
CONTROL AR-COMMUNICATION–PRODUCT LINK CELLULAR	118
CONTROL AR-COUPLER	343
CONTROL AR-QUICK COUPLER–PIN GRABBER	765
CONTROL GP-COMMUNICATION–PRODUCT LINK CELLULAR	118
CONTROL GP-GOVERNOR	79
CONTROL GP-HANDLE (LH)	843
CONTROL GP-HANDLE (RH)	842
CONTROL GP-HANDLE–JOYSTICK, LH	839, 843
CONTROL GP-HANDLE–JOYSTICK, RH	841, 842
CONTROL GP-HEAT & AIR COND–AIR INLET	844
CONTROL GP-HYDRAULIC PEDAL	845, 846, 847
CONTROL GP-JOYSTICK–LH	850, 852
CONTROL GP-JOYSTICK–RH	849, 851
CONTROL GP-PEDAL–ELECTRIC	853
CONTROL GP-PILOT OPERATED HYD–TRAVEL	854
CONTROL GP-UNPROGRAMMED	120
CONTROL GP-UNPROGRAMMED–PRODUCT LINK 522	119
CONVERSION AR-ENGINE	18
COOLER GP-ENGINE OIL	59, 61
CORE AS-HEATER	775
CORE AS-OIL COOLER (HYDRAULIC)	68
CORE AS-RADIATOR	68
COUNTERWEIGHT & MOUNTING GP	244, 245, 246, 247, 248
COUNTERWEIGHT AR	249
COUNTERWEIGHT AR–GRADE CONTROL	249
COUNTERWEIGHT GP	250, 251, 252, 253, 254
COUPLER AR-QUICK–B-LINKAGE	765, 766
COUPLER AR-QUICK–B1-FAMILY	765
COUPLER GP-QUICK–B-LINKAGE	768, 770
COUPLER GP-QUICK–B1-LINKAGE	767
COUPLING GP-FLEXIBLE	344
COUPLING GP-PUMP	345
COVER AS-SOUND SUPPRESSION–FUEL, HYDRAULIC TANKS	255, 256, 257
COVER GP-CAB–REAR	855
COVER GP-STORAGE	856
COVER GP-VALVE MECHANISM–CRANKCASE	24
COVER GP-VALVE MECHANISM–CYLINDER HEAD	23
CRANKSHAFT GP	25
CYLINDER & LINES GP-BOOM–LH	346
CYLINDER & LINES GP-BOOM–RH	346
CYLINDER & LINES GP-BUCKET	347, 348

INDEX

NAME PAGE

CYLINDER & LINES GP-STICK. 348 349
CYLINDER & SEAL GP-BOOM 350 352
CYLINDER & SEAL GP-BUCKET 354 356 358 360 362 363 365
CYLINDER & SEAL GP-STICK 367 370 372 374 376 377
CYLINDER AR-HYDRAULIC–COLD WEATHER, B1-FAMILY 379
CYLINDER BLOCK AS. 26
CYLINDER BLOCK GP 27
CYLINDER GP-BUCKET 380
CYLINDER GP-COUPLER 382 383 385
CYLINDER GP-HYDRAULIC 386
CYLINDER HEAD GP. 28 29

D

DISTRIBUTION AR 2 3 4 5 6 7 8 9 10 11 12 13
DOOR & MTG GP-CAB. 857 858
DOOR AS-ACCESS–AIR CLEANER, BATTERY 258
DOOR GP-ACCESS–PUMP COMPARTMENT . . . 259
DOOR GP-ACCESS–RADIATOR 260
DOOR GP-CAB 859 861
DRAIN AS (FUEL FILTER) 90
DRAIN GP-ENGINE OIL. 30
DRIVE GP-AUXILIARY PUMP 388
DRIVE GP-FAN 31
DRIVE GP-FINAL–WITH MOTOR 232
DRIVE GP-FINAL–WITH MOTOR, SPROCKET 231
DRIVE GP-FINAL–WITHOUT MOTOR 233
DRIVE GP-PUMP. 389
DRIVE GP-SWING–WITH MOTOR 392 393 394
DRIVE GP-SWING–WITHOUT MOTOR 390
DRYER-REFRIGERANT (RECEIVER). 888 891
DUCT GP-CAB AIR. 863

E

ELECTRONICS GP-COMMUNICATION 120
ELECTRONICS GP-MACHINE 120
ENGINE AR-COMPLETE 18
ENGINE AR-PRIMARY 19

F

FAN AR-SUCTION. 62
FAN GP-SUCTION–DIRECT DRIVE 63
FASTENER GP-SWING & FINAL DR 395
FASTENER GP-WIRING HARNESS 126
FASTENER GP-WIRING HARNESS–FOOT SWITCH 124
FASTENER GP-WIRING HARNESS–HEAVY LIFT 122
FASTENER GP-WIRING HARNESS–JOYSTICK 125
FASTENER GP-WIRING HARNESS–PEDAL CONTROL 123
FASTENER GP-WIRING HARNESS–STRAIGHT TRAVEL 121
FENDER & COVER GP. 261
FILLER GP-ENGINE OIL 51
FILM GP. 983
FILM GP–ALT PATTERN CONTROL, WARNING 976
FILM GP–BRAZIL. 987
FILM GP–COUNTERWEIGHT 988
FILM GP–FUEL TRANSFER PUMP 980
FILM GP–HAMMER CONTROL, FOOT SWITCH 975
FILM GP–LONG REACH 981
FILM GP–MASS EXCAVATOR. 986
FILM GP–OPERATOR CONTROLS, NOTICE . . . 968 970 971 974
FILM GP–PRODUCT LINK RADIO, INTL 985
FILM GP–PRODUCT LINK RADIO, U.S. 984
FILM GP–QUICK COUPLER. 978 979
FILM GP–TOOL CONTROL. 972 973
FILM GP–WORK AREA VISUAL SYSTEM, REAR. 982
FILM-IDENTIFICATION (CAT) 990
FILM-IDENTIFICATION (OIL FILL, READ OMM). 23
FILM-INFORMATION (BELT ROUTING). 990

INDEX

NAME PAGE

FILM-INFORMATION (HYDO ADVANCED 10)... 995
FILM-INFORMATION (PRODUCT LINK, READ OMM)... 113 984
FILM-INSTRUCTION (COUPLER OPERATION)... 768
FILM-INSTRUCTION (ENGINE SHUTOFF)... 990
FILM-INSTRUCTION (FUEL, READ OMM)... 995
FILM-INSTRUCTION (HYDRAULIC OIL CHECK)... 990
FILM-INSTRUCTION (HYDRAULIC OIL RETURN FILTER)... 400
FILM-INSTRUCTION (NO STEP)... 990
FILM-INSTRUCTION (OPERATOR CONTROLS, READ OMM)... 910
FILM-INSTRUCTION (REFUELING PUMP)... 91
FILM-WARNING (ACCUMULATOR PRESSURE)... 990
FILM-WARNING (CRUSH HAZARD, READ OMM, INTL)... 995
FILM-WARNING (CRUSH HAZARD, STAY BACK)... 768
FILM-WARNING (DO NOT SPRAY, READ OMM)... 989
FILM-WARNING (HIGH PRESSURE CYLINDER)... 337
FILM-WARNING (PRODUCT LINK RADIO, INTL)... 113 985
FILM-WARNING (PRODUCT LINK RADIO, U. S.)... 113 984
FILM-WARNING (READ OMM)... 768 770
FILM-WARNING (SEAT BELT, INTERNATIONAL)... 995
FILM-WARNING (UNIVERSAL, READ OMM)... 995
FILTER & MTG GP-ENGINE OIL... 52
FILTER & VALVE GP-PILOT–HYDRAULIC OIL... 397
FILTER AS-WATER SEP & FUEL (ULTRA HIGH EFFICIENCY)... 81
FILTER ELEMENT AS-AIR (PRIMARY)... 71
FILTER ELEMENT AS-AIR (SECONDARY)... 71
FILTER ELEMENT AS-OIL (ADVANCED EFFICIENCY) (HYDRAULIC RETURN)... 400
FILTER ELEMENT AS-OIL (HYDRAULIC)... 402
FILTER ELEMENT-CAB AIR... 775 863
FILTER ELEMENT-ENGINE OIL... 54
FILTER ELEMENT-WTR SEP & FUEL... 90
FILTER GP-CAB AIR... 863
FILTER GP-ENGINE OIL... 54
FILTER GP-ENGINE OIL (ENGINE)... 52
FILTER GP-OIL–HYDRAULIC... 402
FILTER GP-OIL–HYDRAULIC RETURN... 398 400
FILTER GP-OIL–HYDRAULIC, CASE DRAIN... 403
FILTER-OIL (ADVANCED EFFICIENCY) (HYDRAULIC, CASE DRAIN)... 403
FILTER-OIL (ADVANCED EFFICIENCY) (HYDRAULIC, PILOT)... 397
FINAL DRIVE GP... 231 232 233
FITTING GP-HYDRAULIC... 404
FLOOR MAT... 2 3 17 864 865 866 867 868 869
FLOOR MAT GP–GRADE CONTROL... 870
FLYWHEEL GP... 33
FRAME AR-UNDERCARRIAGE... 301
FRAME AR-UNDERCARRIAGE–LONG... 301
FRAME AS-UNDERCARRIAGE... 303
FRAME AS-UNDERCARRIAGE–LONG... 302
FRAME AS-UPPER... 262
FRAME GP-UPPER... 263 265
FUMES DISPOSAL GP... 55
FUSE (10-AMPERE)... 187
FUSE (15-AMPERE)... 185 187
FUSE (20-AMPERE)... 187
FUSE (25-AMPERE)... 187
FUSE (30-AMPERE)... 187
FUSE (5-AMPERE)... 187

G

GASKET... 61
GASKET-WATER REGULATOR... 65
GAUGE GP-OIL LEVEL (DIPSTICK)... 41
GAUGE GP-SIGHT–HYDRAULIC OIL LEVEL... 405
GAUGE-OIL LEVEL (SWING DRIVE)... 392 393
GEAR & BEARING GP-SWING... 267 268
GEAR GP-RING... 235 236 237
GEAR GP-TRANSFER... 238
GENERAL AR... 14
GLOW PLUG (24-VOLT)... 165
GUARD AR-OVERHEAD–FALLING OBJECTS GUARD SYSTEM... 871
GUARD GP-BOTTOM... 270
GUARD GP-BOTTOM–HEAVY-DUTY... 271
GUARD GP-FRONT WINDOW... 874
GUARD GP-FRONT WINDOW–FULL... 872
GUARD GP-OVERHEAD... 876
GUARD GP-SWIVEL... 272 273
GUARD GP-TRACK GUIDE–CENTER... 304

INDEX

NAME PAGE

GUARD GP-TRACK GUIDE–FULL LENGTH 306 308
GUARD GP-TRACK GUIDE–REAR..... 305 307
GUARD GP-TRACK GUIDE–SEGMENTED..... 309
GUARD GP-TRAVEL MOTOR 311
GUARD GP-TRAVEL MOTOR–HEAVY-DUTY ... 310

H

HANDRAIL GP 274
HARNESS AS-AUXILIARY..... 82 177
HARNESS AS-CAB 185 187 194
HARNESS AS-CHASSIS 127 196 198 200 206 222 884
HARNESS AS-CHASSIS (HORN) 883
HARNESS AS-CONSOLE 155 212 215
HARNESS AS-CONTROL 127
HARNESS AS-CONTROL (PRODUCT LINK).... 208 210
HARNESS AS-HEATER & AIR COND 775
HARNESS AS-HEATER & AIR COND (LOW SIDE)..... 772
HARNESS AS-LIGHTING (BOOM, LH) 138
HARNESS AS-LIGHTING (BOOM, RH)..... 140
HARNESS AS-LIGHTING (CAB FLOODLIGHT)..... 145 147
HARNESS AS-LIGHTING (CAB FLOODLIGHTS, FRONT)..... 137
HARNESS AS-LIGHTING (CAB LIGHT) 148 150
HARNESS AS-LIGHTING (SHORT BOOM, LH)..... 143
HARNESS AS-LIGHTING (SHORT BOOM, RH)..... 141
HARNESS AS-OPERATOR CONTROLS..... 835
HARNESS AS-PANEL..... 157
HARNESS AS-PLATFORM 225
HARNESS AS-PUMP (REFUELING)..... 229
HARNESS AS-QUICK COUPLER 183
HARNESS AS-SOLENOID..... 128 221
HARNESS AS-SOLENOID (1-WAY, 2-WAY FLOW)..... 179
HARNESS AS-SOLENOID (QUICK COUPLER)..... 228
HARNESS AS-SWITCH 170 171
HARNESS AS-SWITCH (SECONDARY SHUTDOWN)..... 225
HARNESS AS-WIRING..... 183 229
HARNESS AS-WIRING (QUICK COUPLER SWITCH)..... 174
HATCH GP-ROOF 878 879 880
HEAD GP-MOTOR..... 574 576
HEAD GP-PUMP–DRIVE 406
HEAD GP-PUMP–DRIVEN..... 409
HEADREST AS-SEAT–CLOTH 881
HEATER GP-JACKET WATER..... 129 130
HOOD & GUARD GP..... 275
HOOD GP-ENGINE 280 283 284 286
HOOD GP-ENGINE–GRADE CONTROL 282
HOOD GP–GRADE CONTROL 279
HORN GP-ELECTRIC..... 882 883 884 885
HOSE GP-HYDRAULIC 413 415 416 417 419 420 421
HOSE GP-HYDRAULIC–CONTROL VALVE, STICK 414
HOSE GP-HYDRAULIC–FRONT..... 418
HOSE-RADIATOR (LOWER)..... 66
HOSE-RADIATOR (UPPER) 66
HOUSING GP-FLYWHEEL..... 34
HOUSING GP-FRONT 35
HYDRAULIC AR..... 422

I

IDLER GP-FRONT..... 312 315
IDLER GP-FRONT–LH 314
IDLER GP-FRONT–RH..... 313
INDICATOR AS (HYDRAULIC RETURN FILTER)..... 398
INDICATOR AS (SEAT ADJUSTMENT)..... 931
INDICATOR-FUEL FILTER CHANGE 81
INSTALLATION AR 885
INSTALLATION AR-COMMUNICATION–PRODUCT LINK 321SR..... 131
INSTALLATION AR-ENGINE..... 20
INSTALLATION AR–GRADE CONTROL 885

INDEX

NAME PAGE

J

JET GP-PISTON COOLING 37

K

KEY (BATTERY DISCONNECT) 167

L

LAMP (24-VOLT, 10-WATT) 780
787
LAMP AS (24-VOLT, 3-WATT). 155
157
LAMP AS-DOME 780
787
LAMP GP-FLOOD 132
133
134
135
LAMP GP-FLOOD (24-VOLT). 137
LAMP-HALOGEN (24-VOLT, 70-WATT). 132
133
134
135
137
LATCH GP-WINDOW 886
LEVER GP-CAB DOOR. 887
LIFTING GP-ENGINE 38
LIGHTING GP-FLOOD–BOOM, LH 138
LIGHTING GP-FLOOD–BOOM, RH. 140
LIGHTING GP-FLOOD–CAB 145
147
148
150
LIGHTING GP-FLOOD–CAB GUARD 137
LIGHTING GP-FLOOD–CHASSIS. 136
LIGHTING GP-FLOOD–SHORT BOOM, LH 143
LIGHTING GP-FLOOD–SHORT BOOM, RH. 141
LINES GP-AIR CONDITIONER. 888
891
LINES GP-AIR–AIR CLEANER TO TURBOCHARGER 73
LINES GP-AUXILIARY HYDRAULIC–BOOM, HIGH PRESSURE 425
LINES GP-AUXILIARY HYDRAULIC–BOOM, MEDIUM PRESSURE 427
LINES GP-AUXILIARY HYDRAULIC–MASS BOOM, HIGH PRESSURE 429
LINES GP-AUXILIARY HYDRAULIC–MEDIUM PRESSURE 439
LINES GP-AUXILIARY HYDRAULIC–STICK, HIGH PRESSURE 423
432
LINES GP-AUXILIARY HYDRAULIC–STICK, MEDIUM PRESSURE 434
436
438

NAME PAGE

LINES GP-BOOM. 441
444
446
LINES GP-BOOM CYLINDER. 448
LINES GP-BOOM CYLINDER–BOOM LOWERING CONTROL 454
LINES GP-BOOM CYLINDER–LH 450
452
LINES GP-BOOM CYLINDER–RH. 451
453
LINES GP-BOOM–STICK LOAD CONTROL. 442
LINES GP-BUCKET CYLINDER. 457
458
459
460
461
463
464
LINES GP-BUCKET CYLINDER–SUPER LONG REACH 462
LINES GP-CONTROL 465
LINES GP-COOLING. 64
LINES GP-COUPLER 470
471
LINES GP-COUPLER–B-LINKAGE. 473
474
LINES GP-COUPLER–B1-FAMILY LINKAGE 472
LINES GP-COUPLER–MASS BOOM 468
LINES GP-COUPLER–REACH BOOM 467
LINES GP-ENGINE OIL DRAIN. 56
LINES GP-FRONT 475
479
LINES GP-FRONT–COMBINED FUNCTION 480
LINES GP-FRONT–FILTER, HAMMER. 495
LINES GP-FRONT–MEDIUM PRESSURE 477
LINES GP-FRONT–SYSTEM 18, COMBINED FUNCTION. 487
LINES GP-FRONT–SYSTEM 3, 1-WAY, 2-PUMP 484
LINES GP-FRONT–UNIVERSAL QUICK COUPLER 491
LINES GP-FUEL. 81
LINES GP-FUEL FILTER. 84
LINES GP-FUEL INJECTION 85
LINES GP-GREASE–BOOM 707
710
712
LINES GP-GREASE–STICK. 709
713
LINES GP-HYDRAULIC OIL COOLER. 497
LINES GP-PILOT 504
LINES GP-PILOT–4-WAY PATTERN 541
LINES GP-PILOT–BOOM LOWERING CONTROL VALVE. 515
LINES GP-PILOT–FILTER, PILOT PUMP 525
LINES GP-PILOT–HEAVY LIFT 502
LINES GP-PILOT–JOYSTICK, PEDALS 498
LINES GP-PILOT–MAIN CONTROL VALVE 517
519
LINES GP-PILOT–MEDIUM PRESSURE 537
LINES GP-PILOT–OIL PRESSURE 539

INDEX

NAME PAGE

LINES GP-PILOT–STICK LOWERING CONTROL VALVE. 512
LINES GP-PILOT–SYSTEM 18. 534
LINES GP-PILOT–SYSTEM 2, COMBINED FUNCTION. 506
527
LINES GP-PILOT–SYSTEM 3 PRIME, 1-WAY, 2-PUMP 531
LINES GP-PILOT–THIRD PEDAL 510
LINES GP-PILOT–THIRD PEDAL, PILOT VALVE. 508
LINES GP-PUMP 545
LINES GP-PUMP–SUPPLY, MAIN PUMP 544
LINES GP-QUICK COUPLER. 547
LINES GP-RETURN–BOOM LOWERING CONTROL 551
LINES GP-RETURN–HYDRAULIC TANK. 549
LINES GP-STICK. 552
553
LINES GP-STICK CYLINDER. 554
555
556
557
LINES GP-STICK CYLINDER–STICK LOWERING CONTROL 558
LINES GP-TRAVEL MOTOR. 560
LINES GP-TRAVEL MOTOR–LONG UNDERCARRIAGE. 563
LINK AS-TRACK. 316
317
LINKAGE AR-BUCKET–B1-FAMILY. 716
LINKAGE AR-BUCKET–B1-FAMILY, WITH LIFTING EYE 715
716
LINKAGE AR-BUCKET–B1-FAMILY, WITHOUT LIFTING EYE 715
LINKAGE AR-BUCKET–CB2-FAMILY 715
LINKAGE AR-FRONT–LONG REACH. 716
LINKAGE GP-BUCKET. 717
LINKAGE GP-BUCKET–B1-FAMILY. 723
725
LINKAGE GP-BUCKET–B1-FAMILY, QUICK COUPLER 722
LINKAGE GP-BUCKET–B1-FAMILY, WITH LIFTING EYE 721
LINKAGE GP-BUCKET–B1-FAMILY, WITHOUT LIFTING EYE 724
LINKAGE GP-BUCKET–CB2-FAMILY 719
LITERATURE GP. 1
894
LOCK GP-TRANSPORT. 726

M

MANIFOLD GP-CONTROL–PILOT OIL SUPPLY 566
567
568
MANIFOLD GP-INLET. 74
MIRROR GP-DOWN VIEW–FUEL TANK, RH . . . 895
MIRROR GP-REAR VIEW. 896
897
898
899
900
MIRROR GP-SIDE VIEW (FUEL TANK) 895
MIRROR GP-SIDE VIEW (SIDE, RH) 895
MONITOR & MTG GP-OPERATOR 901
MONITOR GP-OPERATOR. 902
MOTOR & MTG GP-SWING. 569
570
MOTOR & MTG GP-TRAVEL. 571
MOTOR AS-WINDOW WIPER 966
MOTOR GP-SWING 572
573
574
576
MOTOR GP-TRAVEL 578
MOUNTING GP-ANTENNA–GRADE CONTROL 903
MOUNTING GP-ANTENNA–PRODUCT LINK. . . . 905
906
MOUNTING GP-ENGINE 39
40
MOUNTING GP-MAIN CONTROL VALVE. 582
MOUNTING GP-PLATFORM. 908
MUFFLER & MOUNTING GP. 75

O

OPERATOR AR 910
OPTION AR-CAB 14
15
16
OPTION AR-HYDRAULIC. 16
17
OPTION AR-REGIONAL. 17

P

PADLOCK GP. 93
94
PAN GP-OIL 41
42
PANEL & MTG GP-CIRCUIT BREAKER. 152
PANEL GP-CIRCUIT BREAKER 153
PANEL GP-SWITCH–CONSOLE 157
PANEL GP-SWITCH–ENGINE SPEED, START. 155
PEDAL AR-AUXILIARY–HIGH PRESSURE, LH. 910
PEDAL AR-AUXILIARY–THIRD PEDAL, STRAIGHT TRAVEL 910
PIN GP–COUPLER 727
PISTON & ROD GP 43
44
PLATE & FILM GP 990
995
PLATE & FILM GP–CHINA. 1000

INDEX

NAME PAGE

PLATE & FILM GP–ENGINE 989
PLATE GP-INFORMATION 1001
PLATE-WARNING (HIGH PRESSURE CYLINDER) 324 325
PLATFORM GP-OPERATOR. 911
PLUG GP-CONTROL VALVE 583
PLUG GP-CYLINDER HEAD 45
PLUG-DRAIN (HYDRAULIC OIL). 595
PLUG-DRAIN (RADIATOR) 68
POWER TRAIN AR. 238
PRECLEANER GP. 77
PULLEY GP-CRANKSHAFT 46
PULLEY GP-ENGINE 47
PUMP & MOTOR GP-REFUELING. 86
PUMP & MTG GP-AUXILIARY. 584
PUMP & MTG GP-MAIN HYDRAULIC. 585
PUMP AR-FUEL TRANSFER 87
PUMP AS-FUEL INJECTION 88
PUMP GP-ENGINE OIL 57
PUMP GP-FUEL INJECTION 89
PUMP GP-FUEL PRM & PRIM FILTER 90
PUMP GP-GEAR 586
PUMP GP-GEAR–AUXILIARY HYDRAULIC 587
PUMP GP-MAIN HYDRAULIC 588
PUMP GP-REFUELING 91
PUMP GP-WATER. 65

R

RADIATOR & HYD OIL COOLER GP. 66 68
RADIO GP-COMMUNICATION–PRODUCT LINK 121SR 159
RADIO GP–AM/FM. 912
REGULATOR AS-WATER TEMPERATURE (INCLUDES CONNECTOR) (WATER TEMPERATURE) 65
RELAY (24-VOLT) (1-WAY/2-WAY SOLENOID) 179
RELAY (24-VOLT) (BOOM FLOODLIGHT) 187
RELAY (24-VOLT) (CAB LIGHT). 187
RELAY (24-VOLT) (CHASSIS LIGHT) 187
RELAY (24-VOLT) (ELECTRIC LIFT PUMP) 187
RELAY (24-VOLT) (ETHER START). 187
RELAY (24-VOLT) (HORN). 187
RELAY (24-VOLT) (NEUTRAL START) 187
RELAY (24-VOLT) (QUICK COUPLER LOCK ON) 183
RELAY (24-VOLT) (QUICK COUPLER LOCK PRIORITY) 183
RELAY (24-VOLT) (QUICK COUPLER LOCK). . . 183
RELAY (24-VOLT) (REFUELING PUMP, START) 229
RELAY (24-VOLT) (REFUELING PUMP, STOP) 229
RELAY (BLOWER). 844
RELAY (COMPRESSOR CLUTCH). 844
RELAY AS (WIPER) 966
ROCKER ARM GP 48 49
ROCKER ARM GP (LH) 768
ROCKER ARM GP (RH) 768
ROLLER AR-TRACK & CARRIER. 318 319 320
ROLLER GP-TRACK CARRIER. 321
ROLLER GP-TRACK-SINGLE FLANGE. 322 323

S

SCREEN AS (HYDRAULIC TANK) 592
SCREEN GP-HYDRAULIC–TANK 592
SCREEN GP-SUN 913
SEAL-VALVE COVER. 23
SEAT & MOUNTING GP. 916
SEAT & MOUNTING GP–HIGH BACK, TILT. . . . 914
SEAT & MOUNTING GP–HIGH BACK, WITH HEATER 915
SEAT BELT GP (RETRACTABLE, 51-MM (2-IN)). 916 919
SEAT BELT GP (RETRACTABLE, 76-MM (3-IN)). 918
SEAT BELT GP (RETRACTABLE) 14 15 16
SEAT BELT GP–RETRACTABLE 917 918 919
SEAT GP-SUSPENSION–HIGH BACK, TILT 925 927
SEAT GP-SUSPENSION–HIGH BACK, WITH HEATER 926
SEAT GP–DELUXE, CLOTH. 922 924
SEAT GP–HIGH BACK, TILT. 920
SEAT GP–HIGH BACK, WITH HEATER. 921
SENDER AS-FUEL LEVEL 96 98
SENSOR AS-PRESSURE (DRIVE PUMP) 525
SENSOR AS-PRESSURE (DRIVEN PUMP). 525
SENSOR AS-TEMPERATURE (AIR). 844
SENSOR AS-TEMPERATURE (AMBIENT AIR TEMP). 775
SENSOR AS-TEMPERATURE (COOLANT) 775
SENSOR GP-LIQUID LEVEL 160
SENSOR GP-LIQUID LEVEL (WATER IN FUEL) 81
SENSOR GP-PRESSURE 161
SENSOR GP-PRESSURE (ATMOSPHERIC AIR) 81
SENSOR GP-PRESSURE (FUEL). 81 161 163
SENSOR GP-SPEED 162
SENSOR GP-TEMP & PRESS 163
SENSOR GP-TEMPERATURE 164

INDEX

NAME	PAGE
SENSOR GP-TEMPERATURE (HYDRAULIC OIL)	595
SENSOR-TEMPERATURE (AMBIENT AIR)	772
SENSOR-TEMPERATURE (ENGINE COOLANT)	163
SHEET AS-SOUND SUPPRESSION	287
	288
	289
	290
	291
	292
	293
	294
	295
	296
SOFTWARE GP-COMMUNICATION (PRODUCT LINK 121SR)	159
SOFTWARE GP-COMMUNICATION (PRODUCT LINK 522)	118
SOFTWARE GP-ELECTRONIC	119
SOFTWARE GP-MACHINE	120
SOFTWARE GP-MONITOR	902
SOFTWARE GP-MONITOR (VIMS MAIN, PROGRAM)	120
SPRING AS-GAS (ENGINE HOOD)	275
SPRING AS-GAS (FRONT WINDOW GUARD)	872
	874
SPRING AS-GAS (HATCH)	878
	880
SPROCKET GP	239
STARTING AID GP	165
STARTING MOTOR GP-ELECTRIC	166
STEP GP	297
STICK & BEARING AS	728
	729
	730
	731
STICK AR-HOE–HEAVY-DUTY, REACH	732
STICK AR-HOE–MASS	732
STICK AR-HOE–REACH	732
	733
STICK GP-HOE	736
	743
STICK GP-HOE–REACH	734
	737
	738
	740
	742
STRAINER (REFUELING)	100
STRAINER AS-FUEL (FLOAT GAUGE)	96
	98
SUN VISOR	936
SUPPORT AS-ENCLOSURE	298
SUPPORT AS-SOUND SUPPRESSION	299
	300
SUPPORT GP-SEAT	928
SUSPENSION GP-SEAT (AIR)	926
SUSPENSION GP-SEAT–AIR	930
SUSPENSION GP-SEAT–MECHANICAL	929
	931
	934
SWITCH (WINDOW LOWER LIMIT)	940
	953
SWITCH AS (HYDRAULIC FILTER BYPASS)	402
SWITCH AS-FOOT PEDAL (WORK TOOL)	835
SWITCH AS-LIMIT (HYDRAULIC LOCKOUT)	168
SWITCH AS-LIQUID LEVEL	42
SWITCH AS-LIQUID LEVEL (FUEL TANK SHUTOFF)	91
SWITCH AS-MAGNETIC (24-VOLT) (MAIN RELAY)	187
SWITCH AS-MAGNETIC (24-VOLT) (REFUELING PUMP RELAY)	229
SWITCH AS-PRESSURE (ACTION INPUT, WORK TOOL)	504
SWITCH AS-PRESSURE (CONTROL VALVE, PILOT CONTROL)	527
SWITCH AS-PRESSURE (IMPLEMENT, SWING)	498
SWITCH AS-PRESSURE (PILOT, BOOM UP)	506
SWITCH AS-PRESSURE (REFRIGERANT)	888
SWITCH AS-PRESSURE (THIRD PEDAL, STRAIGHT TRAVEL)	508
SWITCH AS-PRESSURE (TRAVEL, LH)	498
SWITCH AS-PRESSURE (TRAVEL, RH)	498
SWITCH AS-PUSH BUTTON (HORN)	839
SWITCH AS-PUSH BUTTON (MANUAL LOW IDLE)	841
SWITCH AS-PUSH BUTTON (REFUELING PUMP, START)	170
SWITCH AS-ROCKER (FINE SWING)	187
	195
SWITCH AS-ROCKER (HEATED SEAT)	915
SWITCH AS-ROCKER (WASHER, LOWER)	176
SWITCH AS-ROCKER (WIPER, LOWER)	176
SWITCH AS-ROLLER (WIPER, LOWER)	963
SWITCH AS-TOGGLE (QUICK COUPLER LOCK)	174
SWITCH AS-TOGGLE (QUICK COUPLER)	183
SWITCH AS-TOGGLE (SECONDARY SHUTDOWN)	226
SWITCH GP-DISCONNECT–BATTERY	167
SWITCH GP-LIMIT–HYDRAULIC LOCKOUT	168
SWITCH GP-MAGNETIC–GLOW PLUG	169
SWITCH GP-PEDAL	835
SWITCH GP-PUSH BUTTON (REFUELING PUMP, START)	170
SWITCH GP-PUSH BUTTON (REFUELING PUMP, STOP)	171
SWITCH GP-PUSH BUTTON–REFUELING PUMP, START	170
SWITCH GP-PUSH BUTTON–REFUELING PUMP, STOP	171
SWITCH GP-ROTARY (THROTTLE POSITION)	155
SWITCH GP-ROTARY–THROTTLE POSITION	172
SWITCH GP-START (ENGINE, KEY)	155
SWITCH GP-START–ENGINE, KEY	173

INDEX

NAME PAGE

SWITCH GP-TOGGLE–QUICK COUPLER LOCK. 174 175
SWITCH GP-WIPER–LOWER 176
SWITCH-PRESSURE (AIR CLEANER). 72
SWITCH-PUSH BUTTON (REFUELING PUMP, STOP) 171
SWITCH-TEMPERATURE. 89
SWIVEL GP. 593

T

TANK & FILTER GP-HYDRAULIC. 595
TANK & MTG GP-FUEL 93 94
TANK & MTG GP-HYDRAULIC 597
TANK AR-FUEL 95
TANK GP-FUEL 96 98
TRACK ADJUSTER & RECOIL GP 326 327
TRACK ADJUSTER & RECOIL GP–LH. 325
TRACK ADJUSTER & RECOIL GP–RH 324
TRACK AR–2-REQUIRED 328
TRACK GP–2-REQUIRED 328 329 330 331
TURBOCHARGER GP 78

V

VALVE & LINES GP-HEAVY LIFT 598
VALVE & MTG GP-CONTROL–AUXILIARY 599
VALVE AR-ALT PATTERN CONTROL–4-WAY. 600
VALVE AR-CHECK & RELIEF–BOOM LOWERING CONTROL VALVE 600
VALVE AR-CHECK & RELIEF–STICK LOWER CONT, REACH BOOM. 600
VALVE AR-SWING–WITHOUT FINE SWING 600
VALVE AS-MANUAL 601
VALVE AS-RELIEF (MAIN) 619
VALVE GP-CHECK 602
VALVE GP-CHECK (HYD CYLINDER, QUICK COUPLER). 382
VALVE GP-CHECK (PILOT OPERATED) 385
VALVE GP-CHECK & RELIEF–STICK LOWERING CONTROL VALVE 604
VALVE GP-CONTROL 626 633
VALVE GP-CONTROL–AUXILIARY 609
VALVE GP-CONTROL–BOOM, STICK, BUCKET 611
VALVE GP-CONTROL–HEAVY LIFT. 620
VALVE GP-CONTROL–MEDIUM PRESSURE . . . 619
VALVE GP-CONTROL–QUICK COUPLER 607
VALVE GP-CONTROL–STK, BM, BKT, WKTL, TRVL RH 631

NAME PAGE

VALVE GP-CONTROL–WITHOUT COVERS, HOUSINGS 606 614 615 617
VALVE GP-FLUID SAMPLING (HYDRAULIC OIL) 595
VALVE GP-LOAD CONTROL–BOOM CYLINDER 634
VALVE GP-LOAD CONTROL–BOOM DRIFT RED, LINE RELIEF. 639
VALVE GP-LOAD CONTROL–STICK DRIFT RED, LINE RELIEF. 637
VALVE GP-MAIN CONTROL 641
VALVE GP-MAIN CONTROL–HEAVY LIFT. 642
VALVE GP-MANUAL–AUXILIARY, SHUTOFF . . . 643
VALVE GP-PILOT 644
VALVE GP-PILOT RELIEF (HYDRAULIC FILTER). 397
VALVE GP-PILOT–JOYSTICK. 645
VALVE GP-PILOT–JOYSTICK, LH. 648
VALVE GP-PILOT–JOYSTICK, RH 647
VALVE GP-PILOT–TRAVEL, SHUTTLE 649
VALVE GP-PRESSURE REDUCING 651
VALVE GP-PRESSURE REDUCING (QUICK COUPLER). 607
VALVE GP-PRIORITY–SWING 653
VALVE GP-REFUELING. 100
VALVE GP-REFUELING (FOOT) 91
VALVE GP-RELIEF 654 657 658 662 663 664 666
VALVE GP-RELIEF (160-BAR (2321-PSI)) 619
VALVE GP-RELIEF (230-BAR (3336-PSI)) 619
VALVE GP-RELIEF (80-BAR (1160-PSI)) 619
VALVE GP-RELIEF (LINE) 609 611 631
VALVE GP-RELIEF (LINE) (STICK 1) 626
VALVE GP-RELIEF (LINE) (STICK) 620
VALVE GP-RELIEF–LINE. 659 665
VALVE GP-RELIEF–NEGATIVE FLOW CONTROL 655 656
VALVE GP-RELIEF–PILOT OPERATED 660
VALVE GP-SELECTOR–ALT PATTERN CONTROL, 4-WAY. 667
VALVE GP-SHUTTLE 669 670 671 672 673

INDEX

NAME	PAGE
VALVE GP-SOLENOID	674 675 676 677 678 679 680 681 682
VALVE GP-SOLENOID (24-VOLT) (FUEL SHUTOFF)	88
VALVE GP-SOLENOID (24-VOLT) (QUICK COUPLER)	683
VALVE GP-SOLENOID (AUXILIARY, COMBINED FUNCTION)	527
VALVE GP-SOLENOID (AUXILIARY)	676
VALVE GP-SOLENOID (HYDRAULIC LOCKOUT)	567 568
VALVE GP-SOLENOID (NEGATIVE FLOW CONTROL)	527 531 534
VALVE GP-SOLENOID (PRESSURE REDUCING)	406 537 678
VALVE GP-SOLENOID (QUICK COUPLER)	491 607
VALVE GP-SOLENOID (STRAIGHT TRAVEL)	620 626
VALVE GP-SOLENOID (SWING BRAKE RELEASE)	567 568
VALVE GP-SOLENOID (TRAVEL SPEED)	567 568
VALVE GP-SOLENOID (WORK TOOL, 4-FUNCTION)	534
VALVE GP-SOLENOID & MANIFOLD	683
VALVE GP-SOLENOID & MANIFOLD (QUICK COUPLER)	547
VALVE GP-SOLENOID & RELIEF	684 685 686
VALVE GP-SOLENOID & RELIEF (1-WAY, 2-WAY FLOW)	487
VALVE GP-SOLENOID–NEGATIVE FLOW CONTROL	682
VALVE GP-SWING CUSHION	687 688
VALVE GP-SWING CUSHION–FINE SWING	689
VALVE GP-TRAVEL COUNTERBALANCE	691
VALVE MECHANISM GP	50
VISOR GP-CAB–SUN	936
VISOR GP-PROTECTION–RAIN	937

W

NAME	PAGE
WASHER GP-WINDOW	938
WASHER GP-WINDOW–LOWER	939
WINDOW GP-CAB–FRONT, LOWER	943 946 951
WINDOW GP-CAB–FRONT, UPPER	940 944 948 953 956 958
WINDOW GP-CAB–SIDE, REAR	949 950
WINDOW GP-DOOR	959 961
WIPER & WASHER GP-WINDOW–FRONT, LOWER	963
WIPER AR-WINDOW–LOWER	965
WIPER GP-WINDOW–FRONT, UPPER	966
WIRING GP-AUXILIARY CONTROL–SYSTEM 18, COMBINED FUNCTION	177
WIRING GP-CAB	179 187
WIRING GP-CAB–CAMERA	194
WIRING GP-CAB–COUPLER	183 193
WIRING GP-CAB–FINE SWING	195
WIRING GP-CAB–GRADE CONTROL	185
WIRING GP-CHASSIS	200
WIRING GP-CHASSIS–GRADE CONTROL	198
WIRING GP-CHASSIS–REAR VIEW, CAMERA	197
WIRING GP-CHASSIS–UNIVERSAL QUICK COUPLER	196
WIRING GP-COMBINED FLOW	206
WIRING GP-COMMUNICATION–PRODUCT LINK 321SR	210
WIRING GP-COMMUNICATION–PRODUCT LINK 522	208
WIRING GP-CONSOLE	214
WIRING GP-CONSOLE–LH	212
WIRING GP-CONSOLE–RH	215
WIRING GP-CONVERTER–12-VOLT, 10-AMPERE	217
WIRING GP-ENGINE–JUMP START	219
WIRING GP-FINE SWING	221
WIRING GP-HYDRAULIC CONTROL–RETURN FILTER	222
WIRING GP-MEDIUM PRESSURE	224
WIRING GP-PLATFORM	225
WIRING GP-QUICK COUPLER	228
WIRING GP-REFUELING PUMP	229

MEMORANDA

MACHINE ARRANGEMENT

454-5588 CHASSIS AR

S/N: KBS1-UP

PART OF 454-5584 GENERAL AR

SMCS-7000 **i05851929**

NOTE	PART NUMBER	QTY	PART NAME 1 2 3 4 5 6 (PRODUCT LEVEL)	SEE PAGE
Y	*399-3647*	1	BATTERY & WIRING GP	107
Y	*444-6735*	1	BOX & MTG GP-STORAGE	240
Y	*388-6844*	1	CONTROL GP-GOVERNOR	79
Y	*379-7391*	1	COUNTERWEIGHT & MOUNTING GP	244
Y	*445-6262*	1	FENDER & COVER GP	261
Y	*374-4017*	1	GUARD GP-BOTTOM	270
Y	*142-3835*	1	HANDRAIL GP	274
Y	*455-4062*	1	HOOD & GUARD GP	275
Y	*267-8071*	1	HORN GP-ELECTRIC	882
Y	*4I-5409*	1	LIGHTING GP-FLOOD (CHASSIS)	136
Y	*372-9387*	1	LINES GP-AIR CONDITIONER	888
Y	*394-7468*	1	LINES GP-FUEL	81
Y	*7Y-0059*	1	LITERATURE GP	894
Y	*142-3836*	1	MIRROR GP-REAR VIEW	896
Y	*245-7811*	1	MOUNTING GP-PLATFORM	908
Y	*422-0645*	1	OPERATOR AR	910
Y	*394-7464*	1	PLATE & FILM GP	990
Y	*417-0270*	1	TANK & MTG GP-FUEL	93
Y	*453-1169*	1	WIRING GP-CHASSIS	200
Y	*259-5052*	1	WIRING GP-FINE SWING	221

Y - SEPARATE ILLUSTRATION

<END>

454-5589 CHASSIS AR

S/N: PBB1-UP

PART OF 454-5585 GENERAL AR

SMCS-7000 **i05857702**

NOTE	PART NUMBER	QTY	PART NAME 1 2 3 4 5 6 (PRODUCT LEVEL)	SEE PAGE
Y	*399-3647*	1	BATTERY & WIRING GP	107
Y	*444-6735*	1	BOX & MTG GP-STORAGE	240
Y	*388-6844*	1	CONTROL GP-GOVERNOR	79
Y	*379-7391*	1	COUNTERWEIGHT & MOUNTING GP	244
Y	*445-6262*	1	FENDER & COVER GP	261
Y	*374-4017*	1	GUARD GP-BOTTOM	270
Y	*142-3835*	1	HANDRAIL GP	274
Y	*455-4062*	1	HOOD & GUARD GP	275
Y	*267-8071*	1	HORN GP-ELECTRIC	882
Y	*4I-5409*	1	LIGHTING GP-FLOOD (CHASSIS)	136
Y	*372-9387*	1	LINES GP-AIR CONDITIONER	888
Y	*394-7468*	1	LINES GP-FUEL	81
Y	*7Y-0059*	1	LITERATURE GP	894
Y	*142-3836*	1	MIRROR GP-REAR VIEW	896
Y	*245-7811*	1	MOUNTING GP-PLATFORM	908
Y	*422-0645*	1	OPERATOR AR	910
Y	*394-7465*	1	PLATE & FILM GP	995
Y	*417-0270*	1	TANK & MTG GP-FUEL	93
Y	*453-1169*	1	WIRING GP-CHASSIS	200
Y	*259-5052*	1	WIRING GP-FINE SWING	221

Y - SEPARATE ILLUSTRATION

<END>

MACHINE ARRANGEMENT

456-0817 DISTRIBUTION AR

S/N: PBB1-UP

AN ATTACHMENT

SMCS-7000 **i05861501**

NOTE	PART NUMBER	QTY	PART NAME 1 2 3 4 5 6 (PRODUCT LEVEL)	SEE PAGE
Y	*455-0464*	1	PRECLEANER GP	77
Y	*415-8447*	1	BOOM AR-1 PIECE LONG (AUXILIARY, HEAVY-DUTY)	694
Y	*383-5449*	1	CONTROL AR-COMMUNICATION	118
Y	*394-4810*	1	FRAME GP-UPPER	263
Y	*134-8875*	1	GUARD GP-SWIVEL	273
Y	*259-5047*	1	LIGHTING GP-FLOOD (BOOM, RH)	140
Y	*441-6375*	1	LIGHTING GP-FLOOD (CAB)	148
Y	*242-6475*	1	LINES GP-AUXILIARY HYDRAULIC (BOOM, HIGH PRESSURE)	425
Y	*242-6487*	1	LINES GP-AUXILIARY HYDRAULIC (STICK, HIGH PRESSURE)	432
Y	*416-1009*	1	LINKAGE AR-BUCKET (B1-FAMILY, WITH LIFTING EYE)	715
Y	*456-0892*	1	OPTION AR-CAB	16
Y	*381-6119*	1	OPTION AR-HYDRAULIC	17
Y	*417-9101*	1	PLATE & FILM GP	1000
Y	*314-3728*	1	STICK AR-HOE (HEAVY-DUTY, REACH)	732
Y	*445-2220*	1	TANK AR-FUEL	95
Y	*194-1910*	2	TRACK GP	328
Y	*247-7457*	1	VALVE AR-SWING (WITHOUT FINE SWING)	600
Y	*229-9070*	1	WASHER GP-WINDOW	938

Y - SEPARATE ILLUSTRATION

<END>

456-0818 DISTRIBUTION AR

S/N: PBB1-UP

AN ATTACHMENT

SMCS-7000 **i05895713**

NOTE	PART NUMBER	QTY	PART NAME 1 2 3 4 5 6 (PRODUCT LEVEL)	SEE PAGE
Y	*377-8080*	1	BATTERY & WIRING GP	104
Y	*415-8447*	1	BOOM AR-1 PIECE LONG (AUXILIARY, HEAVY-DUTY)	694
Y	*422-8440*	1	COUNTERWEIGHT AR	249
Y	*420-5793*	1	FILM GP (BRAZIL)	987
Y	*394-4810*	1	FRAME GP-UPPER	263
Y	*383-5427*	1	INSTALLATION AR-COMMUNICATION (PRODUCT LINK 321SR)	131
Y	*416-1009*	1	LINKAGE AR-BUCKET (B1-FAMILY, WITH LIFTING EYE)	715
Y	*397-4688*	1	OPTION AR-REGIONAL	17
Y	*314-3728*	1	STICK AR-HOE (HEAVY-DUTY, REACH)	732
Y	*194-1911*	2	TRACK GP	329
Y	*240-3881*	1	VALVE & LINES GP-HEAVY LIFT	598
Y	*229-9070*	1	WASHER GP-WINDOW	938
	240-5071	1	FLOOR MAT	

Y - SEPARATE ILLUSTRATION

<END>

MACHINE ARRANGEMENT

456-0819 DISTRIBUTION AR

S/N: KBS1-UP

AN ATTACHMENT

SMCS-7000 **i05895714**

NOTE	PART NUMBER	QTY	PART NAME 1 2 3 4 5 6 (PRODUCT LEVEL)	SEE PAGE
Y	*377-8080*	1	BATTERY & WIRING GP	104
Y	*415-8447*	1	BOOM AR-1 PIECE LONG (AUXILIARY, HEAVY-DUTY)	694
Y	*422-8440*	1	COUNTERWEIGHT AR	249
Y	*420-5793*	1	FILM GP (BRAZIL)	987
Y	*394-4810*	1	FRAME GP-UPPER	263
Y	*383-5427*	1	INSTALLATION AR-COMMUNICATION (PRODUCT LINK 321SR)	131
Y	*416-1009*	1	LINKAGE AR-BUCKET (B1-FAMILY, WITH LIFTING EYE)	715
Y	*397-4688*	1	OPTION AR-REGIONAL	17
Y	*290-1837*	1	STICK AR-HOE (REACH, HEAVY-DUTY, AUXILIARY)	732
Y	*194-1920*	2	TRACK GP	330
Y	*240-3881*	1	VALVE & LINES GP-HEAVY LIFT	598
Y	*229-9070*	1	WASHER GP-WINDOW	938
	240-5071	1	FLOOR MAT	

Y - SEPARATE ILLUSTRATION

<END>

456-0820 DISTRIBUTION AR

S/N: PBB1-UP

AN ATTACHMENT

SMCS-7000 **i05861513**

NOTE	PART NUMBER	QTY	PART NAME 1 2 3 4 5 6 (PRODUCT LEVEL)	SEE PAGE
Y	*377-8080*	1	BATTERY & WIRING GP	104
Y	*415-8447*	1	BOOM AR-1 PIECE LONG (AUXILIARY, HEAVY-DUTY)	694
Y	*394-4810*	1	FRAME GP-UPPER	263
Y	*383-5427*	1	INSTALLATION AR-COMMUNICATION (PRODUCT LINK 321SR)	131
Y	*366-9343*	1	LIGHTING GP-FLOOD (CAB)	147
Y	*416-1009*	1	LINKAGE AR-BUCKET (B1-FAMILY, WITH LIFTING EYE)	715
Y	*456-0836*	1	OPTION AR-CAB	14
Y	*314-3868*	1	OPTION AR-HYDRAULIC	17
Y	*397-4688*	1	OPTION AR-REGIONAL	17
Y	*314-3728*	1	STICK AR-HOE (HEAVY-DUTY, REACH)	732
Y	*194-1911*	2	TRACK GP	329
Y	*240-3881*	1	VALVE & LINES GP-HEAVY LIFT	598
Y	*229-9070*	1	WASHER GP-WINDOW	938

Y - SEPARATE ILLUSTRATION

<END>

MACHINE ARRANGEMENT

456-0821 DISTRIBUTION AR

S/N: KBS1-UP

AN ATTACHMENT

SMCS-7000 **i05860001**

NOTE	PART NUMBER	QTY	PART NAME 1 2 3 4 5 6 (PRODUCT LEVEL)	SEE PAGE
Y	*377-8080*	1	BATTERY & WIRING GP	104
Y	*415-8447*	1	BOOM AR-1 PIECE LONG (AUXILIARY, HEAVY-DUTY)	694
Y	*394-4810*	1	FRAME GP-UPPER	263
Y	*383-5427*	1	INSTALLATION AR-COMMUNICATION (PRODUCT LINK 321SR)	131
Y	*366-9343*	1	LIGHTING GP-FLOOD (CAB)	147
Y	*416-1009*	1	LINKAGE AR-BUCKET (B1-FAMILY, WITH LIFTING EYE)	715
Y	*456-0836*	1	OPTION AR-CAB	14
Y	*314-3868*	1	OPTION AR-HYDRAULIC	17
Y	*397-4688*	1	OPTION AR-REGIONAL	17
Y	*290-1837*	1	STICK AR-HOE (REACH, HEAVY-DUTY, AUXILIARY)	732
Y	*194-1920*	2	TRACK GP	330
Y	*240-3881*	1	VALVE & LINES GP-HEAVY LIFT	598
Y	*229-9070*	1	WASHER GP-WINDOW	938

Y - SEPARATE ILLUSTRATION

<END>

456-0823 DISTRIBUTION AR

S/N: KBS1-UP

AN ATTACHMENT

SMCS-7000 **i05860067**

NOTE	PART NUMBER	QTY	PART NAME 1 2 3 4 5 6 (PRODUCT LEVEL)	SEE PAGE
Y	*415-8447*	1	BOOM AR-1 PIECE LONG (AUXILIARY, HEAVY-DUTY)	694
Y	*296-6288*	1	DRIVE GP-SWING	394
Y	*394-4810*	1	FRAME GP-UPPER	263
Y	*383-5427*	1	INSTALLATION AR-COMMUNICATION (PRODUCT LINK 321SR)	131
Y	*441-6375*	1	LIGHTING GP-FLOOD (CAB)	148
Y	*416-1009*	1	LINKAGE AR-BUCKET (B1-FAMILY, WITH LIFTING EYE)	715
Y	*456-0892*	1	OPTION AR-CAB	16
Y	*314-3868*	1	OPTION AR-HYDRAULIC	17
Y	*314-3728*	1	STICK AR-HOE (HEAVY-DUTY, REACH)	732
Y	*314-3797*	2	TRACK AR (2-REQUIRED)	328
Y	*247-7457*	1	VALVE AR-SWING (WITHOUT FINE SWING)	600
Y	*229-9070*	1	WASHER GP-WINDOW	938

Y - SEPARATE ILLUSTRATION

<END>

MACHINE ARRANGEMENT

456-0824 DISTRIBUTION AR

S/N: KBS1-UP

AN ATTACHMENT

SMCS-7000 **i05860268**

NOTE	PART NUMBER	QTY	PART NAME 1 2 3 4 5 6 (PRODUCT LEVEL)	SEE PAGE
Y	*359-2434*	1	BOOM AR-1 PIECE LONG (HEAVY-DUTY)	693
Y	*296-6288*	1	DRIVE GP-SWING	394
Y	*394-4810*	1	FRAME GP-UPPER	263
Y	*383-5427*	1	INSTALLATION AR-COMMUNICATION (PRODUCT LINK 321SR)	131
Y	*441-6375*	1	LIGHTING GP-FLOOD (CAB)	148
Y	*359-2435*	1	LINKAGE AR-BUCKET (B1-FAMILY, WITH LIFTING EYE)	715
Y	*456-0892*	1	OPTION AR-CAB	16
Y	*314-3868*	1	OPTION AR-HYDRAULIC	17
Y	*314-3728*	1	STICK AR-HOE (HEAVY-DUTY, REACH)	732
Y	*314-3797*	2	TRACK AR (2-REQUIRED)	328
Y	*247-7457*	1	VALVE AR-SWING (WITHOUT FINE SWING)	600
Y	*229-9070*	1	WASHER GP-WINDOW	938

Y - SEPARATE ILLUSTRATION

<END>

456-0825 DISTRIBUTION AR

S/N: PBB1-UP

AN ATTACHMENT

SMCS-7000 **i05861593**

NOTE	PART NUMBER	QTY	PART NAME 1 2 3 4 5 6 (PRODUCT LEVEL)	SEE PAGE
Y	*455-0464*	1	PRECLEANER GP	77
Y	*377-8080*	1	BATTERY & WIRING GP	104
Y	*415-8447*	1	BOOM AR-1 PIECE LONG (AUXILIARY, HEAVY-DUTY)	694
Y	*383-5449*	1	CONTROL AR-COMMUNICATION	118
Y	*418-5499*	1	CYLINDER AR-HYDRAULIC	379
Y	*394-4810*	1	FRAME GP-UPPER	263
Y	*134-8875*	1	GUARD GP-SWIVEL	273
Y	*259-5047*	1	LIGHTING GP-FLOOD (BOOM, RH)	140
Y	*366-9342*	1	LIGHTING GP-FLOOD (CAB)	145
Y	*416-1008*	1	LINKAGE AR-BUCKET (B1-FAMILY)	715
Y	*456-0836*	1	OPTION AR-CAB	14
Y	*314-3868*	1	OPTION AR-HYDRAULIC	17
Y	*229-1784*	1	PUMP AR-FUEL TRANSFER	87
Y	*314-3728*	1	STICK AR-HOE (HEAVY-DUTY, REACH)	732
Y	*445-2220*	1	TANK AR-FUEL	95
Y	*314-3798*	2	TRACK AR	328
Y	*247-7457*	1	VALVE AR-SWING (WITHOUT FINE SWING)	600
Y	*229-9070*	1	WASHER GP-WINDOW	938

Y - SEPARATE ILLUSTRATION

<END>

MACHINE ARRANGEMENT

456-0826 DISTRIBUTION AR

S/N: PBB1-UP

AN ATTACHMENT

SMCS-7000 **i05861601**

NOTE	PART NUMBER	QTY	PART NAME 1 2 3 4 5 6 (PRODUCT LEVEL)	SEE PAGE
Y	*455-0464*	1	PRECLEANER GP	77
Y	*377-8080*	1	BATTERY & WIRING GP	104
Y	*415-8447*	1	BOOM AR-1 PIECE LONG (AUXILIARY, HEAVY-DUTY)	694
Y	*383-5449*	1	CONTROL AR-COMMUNICATION	118
Y	*418-5499*	1	CYLINDER AR-HYDRAULIC	379
Y	*394-4810*	1	FRAME GP-UPPER	263
Y	*134-8875*	1	GUARD GP-SWIVEL	273
Y	*259-5047*	1	LIGHTING GP-FLOOD (BOOM, RH)	140
Y	*366-9342*	1	LIGHTING GP-FLOOD (CAB)	145
Y	*242-6475*	1	LINES GP-AUXILIARY HYDRAULIC (BOOM, HIGH PRESSURE)	425
Y	*242-6487*	1	LINES GP-AUXILIARY HYDRAULIC (STICK, HIGH PRESSURE)	432
Y	*416-1008*	1	LINKAGE AR-BUCKET (B1-FAMILY)	715
Y	*456-0836*	1	OPTION AR-CAB	14
Y	*381-6119*	1	OPTION AR-HYDRAULIC	17
Y	*229-1784*	1	PUMP AR-FUEL TRANSFER	87
Y	*314-3728*	1	STICK AR-HOE (HEAVY-DUTY, REACH)	732
Y	*445-2220*	1	TANK AR-FUEL	95
Y	*194-1910*	2	TRACK GP	328
Y	*247-7457*	1	VALVE AR-SWING (WITHOUT FINE SWING)	600
Y	*229-9070*	1	WASHER GP-WINDOW	938

Y - SEPARATE ILLUSTRATION

<END>

456-0827 DISTRIBUTION AR

S/N: PBB1-UP

AN ATTACHMENT

SMCS-7000 **i05861597**

NOTE	PART NUMBER	QTY	PART NAME 1 2 3 4 5 6 (PRODUCT LEVEL)	SEE PAGE
Y	*455-0464*	1	PRECLEANER GP	77
Y	*377-8080*	1	BATTERY & WIRING GP	104
Y	*383-5449*	1	CONTROL AR-COMMUNICATION	118
Y	*394-4810*	1	FRAME GP-UPPER	263
Y	*134-8875*	1	GUARD GP-SWIVEL	273
Y	*456-0836*	1	OPTION AR-CAB	14
Y	*381-6119*	1	OPTION AR-HYDRAULIC	17
Y	*445-2220*	1	TANK AR-FUEL	95
Y	*194-1910*	2	TRACK GP	328
Y	*247-7457*	1	VALVE AR-SWING (WITHOUT FINE SWING)	600
Y	*229-9070*	1	WASHER GP-WINDOW	938

Y - SEPARATE ILLUSTRATION

<END>

MACHINE ARRANGEMENT

456-0828 DISTRIBUTION AR

S/N: PBB1-UP

AN ATTACHMENT

SMCS-7000 **i05861616**

NOTE	PART NUMBER	QTY	PART NAME 1 2 3 4 5 6 (PRODUCT LEVEL)	SEE PAGE
Y	*455-0464*	1	PRECLEANER GP	77
Y	*377-8080*	1	BATTERY & WIRING GP	104
Y	*383-5449*	1	CONTROL AR-COMMUNICATION	118
Y	*394-4810*	1	FRAME GP-UPPER	263
Y	*134-8875*	1	GUARD GP-SWIVEL	273
Y	*456-0836*	1	OPTION AR-CAB	14
Y	*381-6119*	1	OPTION AR-HYDRAULIC	17
Y	*445-2220*	1	TANK AR-FUEL	95
Y	*194-1910*	2	TRACK GP	328
Y	*247-7457*	1	VALVE AR-SWING (WITHOUT FINE SWING)	600
Y	*229-9070*	1	WASHER GP-WINDOW	938

Y - SEPARATE ILLUSTRATION

<END>

456-0829 DISTRIBUTION AR

S/N: PBB1-UP

AN ATTACHMENT

SMCS-7000 **i05861583**

NOTE	PART NUMBER	QTY	PART NAME 1 2 3 4 5 6 (PRODUCT LEVEL)	SEE PAGE
Y	*455-0464*	1	PRECLEANER GP	77
Y	*377-8080*	1	BATTERY & WIRING GP	104
Y	*383-5449*	1	CONTROL AR-COMMUNICATION	118
Y	*394-4810*	1	FRAME GP-UPPER	263
Y	*134-8875*	1	GUARD GP-SWIVEL	273
Y	*456-0836*	1	OPTION AR-CAB	14
Y	*314-3868*	1	OPTION AR-HYDRAULIC	17
Y	*445-2220*	1	TANK AR-FUEL	95
Y	*314-3798*	2	TRACK AR	328
Y	*247-7457*	1	VALVE AR-SWING (WITHOUT FINE SWING)	600
Y	*229-9070*	1	WASHER GP-WINDOW	938

Y - SEPARATE ILLUSTRATION

<END>

MACHINE ARRANGEMENT

456-0830 DISTRIBUTION AR

S/N: PBB1-UP

AN ATTACHMENT

SMCS-7000 **i05861585**

NOTE	PART NUMBER	QTY	PART NAME 1 2 3 4 5 6 (PRODUCT LEVEL)	SEE PAGE
Y	*455-0464*	1	PRECLEANER GP	77
Y	*377-8080*	1	BATTERY & WIRING GP	104
Y	*383-5449*	1	CONTROL AR-COMMUNICATION	118
Y	*394-4810*	1	FRAME GP-UPPER	263
Y	*134-8875*	1	GUARD GP-SWIVEL	273
Y	*456-0836*	1	OPTION AR-CAB	14
Y	*314-3868*	1	OPTION AR-HYDRAULIC	17
Y	*445-2220*	1	TANK AR-FUEL	95
Y	*314-3798*	2	TRACK AR	328
Y	*247-7457*	1	VALVE AR-SWING (WITHOUT FINE SWING)	600
Y	*229-9070*	1	WASHER GP-WINDOW	938

Y - SEPARATE ILLUSTRATION

<END>

456-0918 DISTRIBUTION AR

S/N: PBB1-UP

AN ATTACHMENT

SMCS-7000 **i05861588**

NOTE	PART NUMBER	QTY	PART NAME 1 2 3 4 5 6 (PRODUCT LEVEL)	SEE PAGE
Y	*455-0464*	1	PRECLEANER GP	77
Y	*377-8080*	1	BATTERY & WIRING GP	104
Y	*383-5449*	1	CONTROL AR-COMMUNICATION	118
Y	*394-4810*	1	FRAME GP-UPPER	263
Y	*134-8875*	1	GUARD GP-SWIVEL	273
Y	*456-0838*	1	OPTION AR-CAB	15
Y	*381-6119*	1	OPTION AR-HYDRAULIC	17
Y	*417-9101*	1	PLATE & FILM GP	1000
Y	*445-2220*	1	TANK AR-FUEL	95
Y	*194-1910*	2	TRACK GP	328
Y	*247-7457*	1	VALVE AR-SWING (WITHOUT FINE SWING)	600
Y	*229-9070*	1	WASHER GP-WINDOW	938

Y - SEPARATE ILLUSTRATION

<END>

MACHINE ARRANGEMENT

456-0919 DISTRIBUTION AR

S/N: PBB1-UP

AN ATTACHMENT

SMCS-7000 **i05861592**

NOTE	PART NUMBER	QTY	PART NAME 1 2 3 4 5 6 (PRODUCT LEVEL)	SEE PAGE
Y	*455-0464*	1	PRECLEANER GP	77
Y	*377-8080*	1	BATTERY & WIRING GP	104
Y	*383-5449*	1	CONTROL AR-COMMUNICATION	118
Y	*394-4810*	1	FRAME GP-UPPER	263
Y	*134-8875*	1	GUARD GP-SWIVEL	273
Y	*456-0838*	1	OPTION AR-CAB	15
Y	*381-6119*	1	OPTION AR-HYDRAULIC	17
Y	*417-9101*	1	PLATE & FILM GP	1000
Y	*445-2220*	1	TANK AR-FUEL	95
Y	*194-1910*	2	TRACK GP	328
Y	*247-7457*	1	VALVE AR-SWING (WITHOUT FINE SWING)	600
Y	*229-9070*	1	WASHER GP-WINDOW	938

Y - SEPARATE ILLUSTRATION

<END>

456-0920 DISTRIBUTION AR

S/N: PBB1-UP

AN ATTACHMENT

SMCS-7000 **i05861594**

NOTE	PART NUMBER	QTY	PART NAME 1 2 3 4 5 6 (PRODUCT LEVEL)	SEE PAGE
Y	*455-0464*	1	PRECLEANER GP	77
Y	*377-8080*	1	BATTERY & WIRING GP	104
Y	*383-5449*	1	CONTROL AR-COMMUNICATION	118
Y	*394-4810*	1	FRAME GP-UPPER	263
Y	*134-8875*	1	GUARD GP-SWIVEL	273
Y	*456-0838*	1	OPTION AR-CAB	15
Y	*314-3868*	1	OPTION AR-HYDRAULIC	17
Y	*417-9101*	1	PLATE & FILM GP	1000
Y	*445-2220*	1	TANK AR-FUEL	95
Y	*314-3798*	2	TRACK AR	328
Y	*247-7457*	1	VALVE AR-SWING (WITHOUT FINE SWING)	600
Y	*229-9070*	1	WASHER GP-WINDOW	938

Y - SEPARATE ILLUSTRATION

<END>

MACHINE ARRANGEMENT

456-0921 DISTRIBUTION AR

S/N: PBB1-UP

AN ATTACHMENT

SMCS-7000 **i05861598**

NOTE	PART NUMBER	QTY	PART NAME 1 2 3 4 5 6 (PRODUCT LEVEL)	SEE PAGE
Y	*455-0464*	1	PRECLEANER GP	77
Y	*377-8080*	1	BATTERY & WIRING GP	104
Y	*383-5449*	1	CONTROL AR-COMMUNICATION	118
Y	*394-4810*	1	FRAME GP-UPPER	263
Y	*134-8875*	1	GUARD GP-SWIVEL	273
Y	*456-0838*	1	OPTION AR-CAB	15
Y	*314-3868*	1	OPTION AR-HYDRAULIC	17
Y	*417-9101*	1	PLATE & FILM GP	1000
Y	*445-2220*	1	TANK AR-FUEL	95
Y	*314-3798*	2	TRACK AR	328
Y	*247-7457*	1	VALVE AR-SWING (WITHOUT FINE SWING)	600
Y	*229-9070*	1	WASHER GP-WINDOW	938

Y - SEPARATE ILLUSTRATION

<END>

456-0922 DISTRIBUTION AR

S/N: PBB1-UP

AN ATTACHMENT

SMCS-7000 **i05861603**

NOTE	PART NUMBER	QTY	PART NAME 1 2 3 4 5 6 (PRODUCT LEVEL)	SEE PAGE
Y	*455-0464*	1	PRECLEANER GP	77
Y	*377-8080*	1	BATTERY & WIRING GP	104
Y	*415-8447*	1	BOOM AR-1 PIECE LONG (AUXILIARY, HEAVY-DUTY)	694
Y	*383-5449*	1	CONTROL AR-COMMUNICATION	118
Y	*418-5499*	1	CYLINDER AR-HYDRAULIC	379
Y	*394-4810*	1	FRAME GP-UPPER	263
Y	*134-8875*	1	GUARD GP-SWIVEL	273
Y	*259-5047*	1	LIGHTING GP-FLOOD (BOOM, RH)	140
Y	*454-8704*	1	LIGHTING GP-FLOOD	150
Y	*416-1008*	1	LINKAGE AR-BUCKET (B1-FAMILY)	715
Y	*456-0838*	1	OPTION AR-CAB	15
Y	*314-3868*	1	OPTION AR-HYDRAULIC	17
Y	*417-9101*	1	PLATE & FILM GP	1000
Y	*229-1784*	1	PUMP AR-FUEL TRANSFER	87
Y	*314-3728*	1	STICK AR-HOE (HEAVY-DUTY, REACH)	732
Y	*445-2220*	1	TANK AR-FUEL	95
Y	*314-3798*	2	TRACK AR	328
Y	*247-7457*	1	VALVE AR-SWING (WITHOUT FINE SWING)	600
Y	*229-9070*	1	WASHER GP-WINDOW	938

Y - SEPARATE ILLUSTRATION

<END>

MACHINE ARRANGEMENT

456-0923 DISTRIBUTION AR

S/N: PBB1-UP

AN ATTACHMENT

SMCS-7000 **i05861604**

NOTE	PART NUMBER	QTY	PART NAME 1 2 3 4 5 6 (PRODUCT LEVEL)	SEE PAGE
Y	*455-0464*	1	PRECLEANER GP	77
Y	*377-8080*	1	BATTERY & WIRING GP	104
Y	*415-8447*	1	BOOM AR-1 PIECE LONG (AUXILIARY, HEAVY-DUTY)	694
Y	*383-5449*	1	CONTROL AR-COMMUNICATION	118
Y	*418-5499*	1	CYLINDER AR-HYDRAULIC	379
Y	*394-4810*	1	FRAME GP-UPPER	263
Y	*134-8875*	1	GUARD GP-SWIVEL	273
Y	*259-5047*	1	LIGHTING GP-FLOOD (BOOM, RH)	140
Y	*454-8704*	1	LIGHTING GP-FLOOD	150
Y	*242-6475*	1	LINES GP-AUXILIARY HYDRAULIC (BOOM, HIGH PRESSURE)	425
Y	*242-6487*	1	LINES GP-AUXILIARY HYDRAULIC (STICK, HIGH PRESSURE)	432
Y	*416-1008*	1	LINKAGE AR-BUCKET (B1-FAMILY)	715
Y	*456-0838*	1	OPTION AR-CAB	15
Y	*381-6119*	1	OPTION AR-HYDRAULIC	17
Y	*417-9101*	1	PLATE & FILM GP	1000
Y	*229-1784*	1	PUMP AR-FUEL TRANSFER	87
Y	*314-3728*	1	STICK AR-HOE (HEAVY-DUTY, REACH)	732
Y	*445-2220*	1	TANK AR-FUEL	95
Y	*194-1910*	2	TRACK GP	328
Y	*247-7457*	1	VALVE AR-SWING (WITHOUT FINE SWING)	600
Y	*229-9070*	1	WASHER GP-WINDOW	938

Y - SEPARATE ILLUSTRATION

<END>

456-0932 DISTRIBUTION AR

S/N: KBS1-UP

AN ATTACHMENT

SMCS-7000 **i05861304**

NOTE	PART NUMBER	QTY	PART NAME 1 2 3 4 5 6 (PRODUCT LEVEL)	SEE PAGE
Y	*359-2434*	1	BOOM AR-1 PIECE LONG (HEAVY-DUTY)	693
Y	*296-6288*	1	DRIVE GP-SWING	394
Y	*394-4810*	1	FRAME GP-UPPER	263
Y	*441-6375*	1	LIGHTING GP-FLOOD (CAB)	148
Y	*359-2435*	1	LINKAGE AR-BUCKET (B1-FAMILY, WITH LIFTING EYE)	715
Y	*456-0892*	1	OPTION AR-CAB	16
Y	*314-3868*	1	OPTION AR-HYDRAULIC	17
Y	*314-3728*	1	STICK AR-HOE (HEAVY-DUTY, REACH)	732
Y	*247-7457*	1	VALVE AR-SWING (WITHOUT FINE SWING)	600
Y	*229-9070*	1	WASHER GP-WINDOW	938

Y - SEPARATE ILLUSTRATION

<END>

MACHINE ARRANGEMENT

456-0933 DISTRIBUTION AR

S/N: KBS1-UP

AN ATTACHMENT

SMCS-7000 **i05861303**

NOTE	PART NUMBER	QTY	PART NAME 1 2 3 4 5 6 (PRODUCT LEVEL)	SEE PAGE
Y	*415-8447*	1	BOOM AR-1 PIECE LONG (AUXILIARY, HEAVY-DUTY)	694
Y	*296-6288*	1	DRIVE GP-SWING	394
Y	*394-4810*	1	FRAME GP-UPPER	263
Y	*441-6375*	1	LIGHTING GP-FLOOD (CAB)	148
Y	*416-1009*	1	LINKAGE AR-BUCKET (B1-FAMILY, WITH LIFTING EYE)	715
Y	*456-0892*	1	OPTION AR-CAB	16
Y	*314-3868*	1	OPTION AR-HYDRAULIC	17
Y	*314-3728*	1	STICK AR-HOE (HEAVY-DUTY, REACH)	732
Y	*247-7457*	1	VALVE AR-SWING (WITHOUT FINE SWING)	600
Y	*229-9070*	1	WASHER GP-WINDOW	938

Y - SEPARATE ILLUSTRATION

<END>

456-0942 DISTRIBUTION AR

S/N: KBS1-UP

AN ATTACHMENT

SMCS-7000 **i05861284**

NOTE	PART NUMBER	QTY	PART NAME 1 2 3 4 5 6 (PRODUCT LEVEL)	SEE PAGE
Y	*359-2434*	1	BOOM AR-1 PIECE LONG (HEAVY-DUTY)	693
Y	*296-6288*	1	DRIVE GP-SWING	394
Y	*394-4810*	1	FRAME GP-UPPER	263
Y	*441-6375*	1	LIGHTING GP-FLOOD (CAB)	148
Y	*359-2435*	1	LINKAGE AR-BUCKET (B1-FAMILY, WITH LIFTING EYE)	715
Y	*456-0892*	1	OPTION AR-CAB	16
Y	*314-3868*	1	OPTION AR-HYDRAULIC	17
Y	*314-3728*	1	STICK AR-HOE (HEAVY-DUTY, REACH)	732
Y	*247-7457*	1	VALVE AR-SWING (WITHOUT FINE SWING)	600
Y	*229-9070*	1	WASHER GP-WINDOW	938

Y - SEPARATE ILLUSTRATION

<END>

456-0943 DISTRIBUTION AR

S/N: KBS1-UP

AN ATTACHMENT

SMCS-7000 **i05861285**

NOTE	PART NUMBER	QTY	PART NAME 1 2 3 4 5 6 (PRODUCT LEVEL)	SEE PAGE
Y	*415-8447*	1	BOOM AR-1 PIECE LONG (AUXILIARY, HEAVY-DUTY)	694
Y	*296-6288*	1	DRIVE GP-SWING	394
Y	*394-4810*	1	FRAME GP-UPPER	263
Y	*441-6375*	1	LIGHTING GP-FLOOD (CAB)	148
Y	*416-1009*	1	LINKAGE AR-BUCKET (B1-FAMILY, WITH LIFTING EYE)	715
Y	*456-0892*	1	OPTION AR-CAB	16
Y	*314-3868*	1	OPTION AR-HYDRAULIC	17
Y	*314-3728*	1	STICK AR-HOE (HEAVY-DUTY, REACH)	732
Y	*247-7457*	1	VALVE AR-SWING (WITHOUT FINE SWING)	600
Y	*229-9070*	1	WASHER GP-WINDOW	938

Y - SEPARATE ILLUSTRATION

<END>

MACHINE ARRANGEMENT

456-1026 DISTRIBUTION AR

S/N: PBB1-UP

AN ATTACHMENT

SMCS-7000 **i05861587**

NOTE	PART NUMBER	QTY	PART NAME 1 2 3 4 5 6 (PRODUCT LEVEL)	SEE PAGE
Y	*377-8080*	1	BATTERY & WIRING GP	104
Y	*415-8447*	1	BOOM AR-1 PIECE LONG (AUXILIARY, HEAVY-DUTY)	694
Y	*394-4810*	1	FRAME GP-UPPER	263
Y	*383-5427*	1	INSTALLATION AR-COMMUNICATION (PRODUCT LINK 321SR)	131
Y	*441-6375*	1	LIGHTING GP-FLOOD (CAB)	148
Y	*416-1009*	1	LINKAGE AR-BUCKET (B1-FAMILY, WITH LIFTING EYE)	715
Y	*456-0838*	1	OPTION AR-CAB	15
Y	*314-3868*	1	OPTION AR-HYDRAULIC	17
Y	*397-4688*	1	OPTION AR-REGIONAL	17
Y	*314-3728*	1	STICK AR-HOE (HEAVY-DUTY, REACH)	732
Y	*194-1911*	2	TRACK GP	329
Y	*240-3881*	1	VALVE & LINES GP-HEAVY LIFT	598

Y - SEPARATE ILLUSTRATION

<END>

456-1027 DISTRIBUTION AR

S/N: KBS1-UP

AN ATTACHMENT

SMCS-7000 **i05861287**

NOTE	PART NUMBER	QTY	PART NAME 1 2 3 4 5 6 (PRODUCT LEVEL)	SEE PAGE
Y	*377-8080*	1	BATTERY & WIRING GP	104
Y	*415-8447*	1	BOOM AR-1 PIECE LONG (AUXILIARY, HEAVY-DUTY)	694
Y	*394-4810*	1	FRAME GP-UPPER	263
Y	*383-5427*	1	INSTALLATION AR-COMMUNICATION (PRODUCT LINK 321SR)	131
Y	*441-6375*	1	LIGHTING GP-FLOOD (CAB)	148
Y	*416-1009*	1	LINKAGE AR-BUCKET (B1-FAMILY, WITH LIFTING EYE)	715
Y	*456-0838*	1	OPTION AR-CAB	15
Y	*314-3868*	1	OPTION AR-HYDRAULIC	17
Y	*397-4688*	1	OPTION AR-REGIONAL	17
Y	*290-1837*	1	STICK AR-HOE (REACH, HEAVY-DUTY, AUXILIARY)	732
Y	*194-1920*	2	TRACK GP	330
Y	*240-3881*	1	VALVE & LINES GP-HEAVY LIFT	598

Y - SEPARATE ILLUSTRATION

<END>

MACHINE ARRANGEMENT

454-5584 GENERAL AR

S/N: KBS1-UP

SMCS-7000 **i05850570**

NOTE	PART NUMBER	QTY	PART NAME 1 2 3 4 5 6 (PRODUCT LEVEL)	SEE PAGE
Y	*454-5588*	1	CHASSIS AR	1
Y	*436-1868*	1	ELECTRONICS GP-MACHINE	120
Y	*394-7469*	1	ENGINE AR-COMPLETE	18
Y	*247-7454*	1	FRAME AR-UNDERCARRIAGE	301
Y	*456-0404*	1	HYDRAULIC AR	422
Y	*455-4086*	1	INSTALLATION AR-ENGINE	20
Y	*267-6767*	1	POWER TRAIN AR	238

Y - SEPARATE ILLUSTRATION

<END>

454-5585 GENERAL AR

S/N: PBB1-UP

SMCS-7000 **i05857719**

NOTE	PART NUMBER	QTY	PART NAME 1 2 3 4 5 6 (PRODUCT LEVEL)	SEE PAGE
Y	*454-5589*	1	CHASSIS AR	1
Y	*436-1868*	1	ELECTRONICS GP-MACHINE	120
Y	*394-7469*	1	ENGINE AR-COMPLETE	18
Y	*240-3822*	1	FRAME AR-UNDERCARRIAGE (LONG)	301
Y	*456-0405*	1	HYDRAULIC AR	422
Y	*455-4086*	1	INSTALLATION AR-ENGINE	20
Y	*267-6767*	1	POWER TRAIN AR	238

Y - SEPARATE ILLUSTRATION

<END>

456-0836 OPTION AR-CAB

S/N: PBB1-UP; KBS1-UP

PART OF 456-0820, 456-0821, 456-0825, 456-0826, 456-0827, 456-0828, 456-0829, 456-0830 DISTRIBUTION AR

AN ATTACHMENT

SMCS-7000 **i05860031**

NOTE	PART NUMBER	QTY	PART NAME 1 2 3 4 5 6 (PRODUCT LEVEL)	SEE PAGE
Y	*418-9897*	1	AIR CONDITIONER AR	774
Y	*399-0056*	1	CAB GP	796
Y	*398-7007*	1	PANEL GP-SWITCH	157
Y	*327-6501*	1	SEAT & MOUNTING GP (HIGH BACK, TILT)	914
Y	*305-0467*	1	SEAT BELT GP (RETRACTABLE)	919
Y	*161-3751*	1	VISOR GP-CAB (SUN)	936
Y	*229-9070*	1	WASHER GP-WINDOW	938
Y	*350-8250*	1	WIRING GP-CONVERTER (12-VOLT, 10-AMPERE)	217

Y - SEPARATE ILLUSTRATION

<END>

MACHINE ARRANGEMENT

456-0837 OPTION AR-CAB

S/N: PBB1-UP; KBS1-UP

AN ATTACHMENT

SMCS-7000 **i05860265**

NOTE	PART NUMBER	QTY	PART NAME 1 2 3 4 5 6 (PRODUCT LEVEL)	SEE PAGE
Y	*418-9897*	1	AIR CONDITIONER AR	774
Y	*399-0055*	1	CAB GP	794
Y	*398-7007*	1	PANEL GP-SWITCH	157
Y	*251-0538*	1	RADIO GP (AM/FM)	912
Y	*245-7881*	1	SCREEN GP-SUN	913
Y	*327-6503*	1	SEAT & MOUNTING GP (HIGH BACK, WITH HEATER)	915
Y	*305-0466*	1	SEAT BELT GP (RETRACTABLE, 76-MM (3-IN))	918
Y	*229-9086*	1	WIPER AR-WINDOW (LOWER)	965
Y	*350-8250*	1	WIRING GP-CONVERTER (12-VOLT, 10-AMPERE)	217

Y - SEPARATE ILLUSTRATION

<END>

456-0838 OPTION AR-CAB

S/N: PBB1-UP; KBS1-UP

PART OF 456-0918, 456-0919, 456-0920, 456-0921, 456-0922, 456-0923, 456-1026, 456-1027 DISTRIBUTION AR

AN ATTACHMENT

SMCS-7000 **i05860381**

NOTE	PART NUMBER	QTY	PART NAME 1 2 3 4 5 6 (PRODUCT LEVEL)	SEE PAGE
Y	*418-9897*	1	AIR CONDITIONER AR	774
Y	*416-9606*	1	CAB GP	806
Y	*398-7007*	1	PANEL GP-SWITCH	157
Y	*327-6501*	1	SEAT & MOUNTING GP (HIGH BACK, TILT)	914
Y	*305-0467*	1	SEAT BELT GP (RETRACTABLE)	919
Y	*161-3751*	1	VISOR GP-CAB (SUN)	936
Y	*229-9070*	1	WASHER GP-WINDOW	938
Y	*350-8250*	1	WIRING GP-CONVERTER (12-VOLT, 10-AMPERE)	217

Y - SEPARATE ILLUSTRATION

<END>

456-0839 OPTION AR-CAB

S/N: PBB1-UP; KBS1-UP

AN ATTACHMENT

SMCS-7000 **i05860387**

NOTE	PART NUMBER	QTY	PART NAME 1 2 3 4 5 6 (PRODUCT LEVEL)	SEE PAGE
Y	*418-9897*	1	AIR CONDITIONER AR	774
Y	*424-5480*	1	CAB GP	816
Y	*398-7007*	1	PANEL GP-SWITCH	157
Y	*251-0538*	1	RADIO GP (AM/FM)	912
Y	*245-7881*	1	SCREEN GP-SUN	913
Y	*327-6503*	1	SEAT & MOUNTING GP (HIGH BACK, WITH HEATER)	915
Y	*305-0466*	1	SEAT BELT GP (RETRACTABLE, 76-MM (3-IN))	918
Y	*229-9086*	1	WIPER AR-WINDOW (LOWER)	965
Y	*350-8250*	1	WIRING GP-CONVERTER (12-VOLT, 10-AMPERE)	217

Y - SEPARATE ILLUSTRATION

<END>

MACHINE ARRANGEMENT

456-0842 OPTION AR-CAB

S/N: KBS1-UP

AN ATTACHMENT

SMCS-7000 **i05860395**

NOTE	PART NUMBER	QTY	PART NAME 1 2 3 4 5 6 (PRODUCT LEVEL)	SEE PAGE
Y	*418-9897*	1	AIR CONDITIONER AR	774
Y	*388-0026*	1	CAB GP	783
Y	*251-0542*	1	PANEL GP-SWITCH (ENGINE SPEED, START)	155
Y	*380-7183*	1	SEAT & MOUNTING GP (HIGH BACK, TILT)	916
Y	*161-3751*	1	VISOR GP-CAB (SUN)	936
Y	*229-9070*	1	WASHER GP-WINDOW	938
Y	*350-8250*	1	WIRING GP-CONVERTER (12-VOLT, 10-AMPERE)	217

Y - SEPARATE ILLUSTRATION

<END>

456-0892 OPTION AR-CAB

S/N: PBB1-UP; KBS1-UP

PART OF 456-0817, 456-0823, 456-0824, 456-0932, 456-0933, 456-0942, 456-0943 DISTRIBUTION AR

AN ATTACHMENT

SMCS-7000 **i05860106**

NOTE	PART NUMBER	QTY	PART NAME 1 2 3 4 5 6 (PRODUCT LEVEL)	SEE PAGE
Y	*418-9897*	1	AIR CONDITIONER AR	774
Y	*416-9606*	1	CAB GP	806
Y	*398-7007*	1	PANEL GP-SWITCH	157
Y	*327-6501*	1	SEAT & MOUNTING GP (HIGH BACK, TILT)	914
Y	*305-0467*	1	SEAT BELT GP (RETRACTABLE)	919
Y	*161-3751*	1	VISOR GP-CAB (SUN)	936
Y	*229-9070*	1	WASHER GP-WINDOW	938
Y	*350-8250*	1	WIRING GP-CONVERTER (12-VOLT, 10-AMPERE)	217

Y - SEPARATE ILLUSTRATION

<END>

253-2866 OPTION AR-HYDRAULIC

S/N: PBB1-UP

AN ATTACHMENT

SMCS-7000 **i05196478**

NOTE	PART NUMBER	QTY	PART NAME 1 2 3 4 5 6 (PRODUCT LEVEL)	SEE PAGE
Y	*268-7122*	1	LINES GP-AUXILIARY HYDRAULIC (MEDIUM PRESSURE)	438
Y	*288-7603*	1	LINES GP-AUXILIARY HYDRAULIC (MEDIUM PRESSURE)	439

Y - SEPARATE ILLUSTRATION

<END>

MACHINE ARRANGEMENT

314-3868 OPTION AR-HYDRAULIC

S/N: PBB1-UP; KBS1-UP

PART OF 456-0820, 456-0821, 456-0823, 456-0824, 456-0825, 456-0829, 456-0830, 456-0920, 456-0921, 456-0922, 456-0932, 456-0933, 456-0942, 456-0943, 456-1026, 456-1027 DISTRIBUTION AR

AN ATTACHMENT

SMCS-7000 **i05407601**

NOTE	PART NUMBER	QTY	PART NAME 1 2 3 4 5 6 (PRODUCT LEVEL)	SEE PAGE
Y	*310-0078*	1	CONTROL & MTG GP-JOYSTICK	837
	240-5071	1	FLOOR MAT	

Y - SEPARATE ILLUSTRATION

<END>

381-6119 OPTION AR-HYDRAULIC

S/N: PBB1-UP

PART OF 456-0817, 456-0826, 456-0827, 456-0828, 456-0918, 456-0919, 456-0923 DISTRIBUTION AR

AN ATTACHMENT

SMCS-7000 **i05801209**

NOTE	PART NUMBER	QTY	PART NAME 1 2 3 4 5 6 (PRODUCT LEVEL)	SEE PAGE
Y	*310-0078*	1	CONTROL & MTG GP-JOYSTICK	837
Y	*349-2211*	1	CONTROL AR-AUXILIARY (SYSTEM 3, 1-WAY, 2-PUMP)	342
	240-5073	1	FLOOR MAT	

Y - SEPARATE ILLUSTRATION

<END>

397-4688 OPTION AR-REGIONAL

S/N: PBB1-UP; KBS1-UP

PART OF 456-0818, 456-0819, 456-0820, 456-0821, 456-1026, 456-1027 DISTRIBUTION AR

AN ATTACHMENT

SMCS-7000 **i04941397**

NOTE	PART NUMBER	QTY	PART NAME 1 2 3 4 5 6 (PRODUCT LEVEL)	SEE PAGE
Y	*231-1771*	1	ALARM GP-TRAVEL (BACKUP)	102

Y - SEPARATE ILLUSTRATION

<END>

ENGINE ARRANGEMENT

425-0779 CONVERSION AR-ENGINE

S/N: D7A1-UP

PART OF 417-3389 ENGINE AR-PRIMARY

SMCS-1000 **i05523210**

NOTE	PART NUMBER	QTY	PART NAME 1 2 3 4 5 6 (PRODUCT LEVEL)	SEE PAGE
Y	*348-3285*	1	CRANKSHAFT GP	25
Y	*348-3283*	1	CYLINDER BLOCK GP	27
Y	*348-3503*	1	JET GP-PISTON COOLING	37
Y	*348-3300*	1	PISTON & ROD GP	44

Y - SEPARATE ILLUSTRATION

<END>

394-7469 ENGINE AR-COMPLETE

S/N: PBB1-UP; KBS1-UP

PART OF 454-5584, 454-5585 GENERAL AR

SMCS-1000 **i05213133**

NOTE	PART NUMBER	QTY	PART NAME 1 2 3 4 5 6 (PRODUCT LEVEL)	SEE PAGE
Y	*417-3389*	1	ENGINE AR-PRIMARY	19
Y	*431-9792*	1	FAN AR-SUCTION	62
Y	*394-7470*	1	MUFFLER & MOUNTING GP	75

Y - SEPARATE ILLUSTRATION

<END>

417-3389 ENGINE AR-PRIMARY

S/N: D7A1-UP
112 BRAKE KW (150 BHP) AT 1800 RPM
PART OF 394-7469 ENGINE AR-COMPLETE

SMCS-1000 **i05662624**

NOTE	PART NUMBER	QTY	PART NAME 1 2 3 4 5 6 (PRODUCT LEVEL)	SEE PAGE
Y	*396-6983*	1	ALTERNATOR GP-CHARGING	103
Y	*426-1498*	1	COVER GP-VALVE MECHANISM	24
Y	*343-0701*	1	CAMSHAFT GP	21
Y	*417-7185*	1	CONTACTOR GP-ALARM	22
Y	*371-2553*	1	COOLER GP-ENGINE OIL	61
Y	*348-3285*	1	CRANKSHAFT GP	25
Y	*348-3283*	1	CYLINDER BLOCK GP	27
Y	*391-3193*	1	CYLINDER HEAD GP	28
Y	*394-7014*	1	DRAIN GP-ENGINE OIL	30
Y	*396-6979*	1	DRIVE GP-FAN	31
Y	*417-5871*	1	FILLER GP-ENGINE OIL	51
Y	*371-2539*	1	FLYWHEEL GP	33
Y	*346-0495*	1	HOUSING GP-FRONT	35
Y	*396-6954*	1	HOUSING GP-FLYWHEEL	34
Y	*348-3503*	1	JET GP-PISTON COOLING	37
Y	*415-4600*	1	LIFTING GP-ENGINE	38
Y	*396-6969*	1	LINES GP-FUEL FILTER	84
Y	*346-0773*	1	MANIFOLD GP-INLET	74
Y	*375-5008*	1	MOUNTING GP-ENGINE	40
Y	*397-1501*	1	PAN GP-OIL	41
Y	*346-2911*	1	CONNECTION GP-HEATER	58
Y	*348-3296*	1	PISTON & ROD GP	43
Y	*346-1967*	1	PLATE & FILM GP	989
Y	*346-1841*	1	PLUG GP-CYLINDER HEAD	45
Y	*417-7187*	1	PULLEY GP-CRANKSHAFT	46
Y	*346-0737*	1	PUMP GP-ENGINE OIL	57
Y	*396-4502*	1	PUMP GP-FUEL INJECTION	89
Y	*346-0411*	1	PUMP GP-WATER	65
Y	*391-3197*	1	ROCKER ARM GP	48
Y	*393-0879*	1	STARTING AID GP	165
Y	*385-8000*	1	STARTING MOTOR GP-ELECTRIC	166
Y	*396-6322*	1	TURBOCHARGER GP	78
	376-6464	1	PLATE GP	
			AVAILABLE REPLACEMENT PART(S):	
Y	**425-0779**	1	CONVERSION AR-ENGINE	18
Y	**425-3316**	1	CYLINDER HEAD GP	29

Y - SEPARATE ILLUSTRATION

<END>

ENGINE ARRANGEMENT

455-4086 INSTALLATION AR-ENGINE

S/N: PBB1-UP; KBS1-UP

PART OF 454-5584, 454-5585 GENERAL AR

SMCS-1000 **i05857436**

NOTE	PART NUMBER	QTY	PART NAME 1 2 3 4 5 6 (PRODUCT LEVEL)	SEE PAGE
Y	*450-5325*	1	AIR CLEANER GP	72
Y	*379-4415*	1	COMPRESSOR GP-REFRIGERANT	824
Y	*363-9644*	1	CONDENSER & MTG GP-REFRIGERANT	827
Y	*368-7675*	1	FILTER & MTG GP-ENGINE OIL	52
Y	*394-7474*	1	FUMES DISPOSAL GP	55
Y	*455-3378*	1	LINES GP-AIR	73
Y	*394-2220*	1	LINES GP-COOLING	64
Y	*374-6004*	1	LINES GP-ENGINE OIL DRAIN	56
Y	*351-3886*	1	MOUNTING GP-ENGINE	39
Y	*394-2224*	1	RADIATOR & HYD OIL COOLER GP	66
Y	*416-4969*	1	SENSOR GP-TEMP & PRESS	163

Y - SEPARATE ILLUSTRATION

<END>

343-0701 CAMSHAFT GP

S/N: D7A1-UP

PART OF 417-3389 ENGINE AR-PRIMARY

SMCS-1210 **i05155910**

NOTE	REF NO	GRAPHIC REF	PART NUMBER	QTY	PART NAME 1 2 3 4 5 6 (PRODUCT LEVEL)	SEE PAGE
	1	1	**138-2053**	12	TAPPET	
	2	1	**350-0637**	1	CAMSHAFT GP	
		1	**067-6135**	1	KEY-WOODRUFF	
	3	1	**067-6095**	12	ROD	

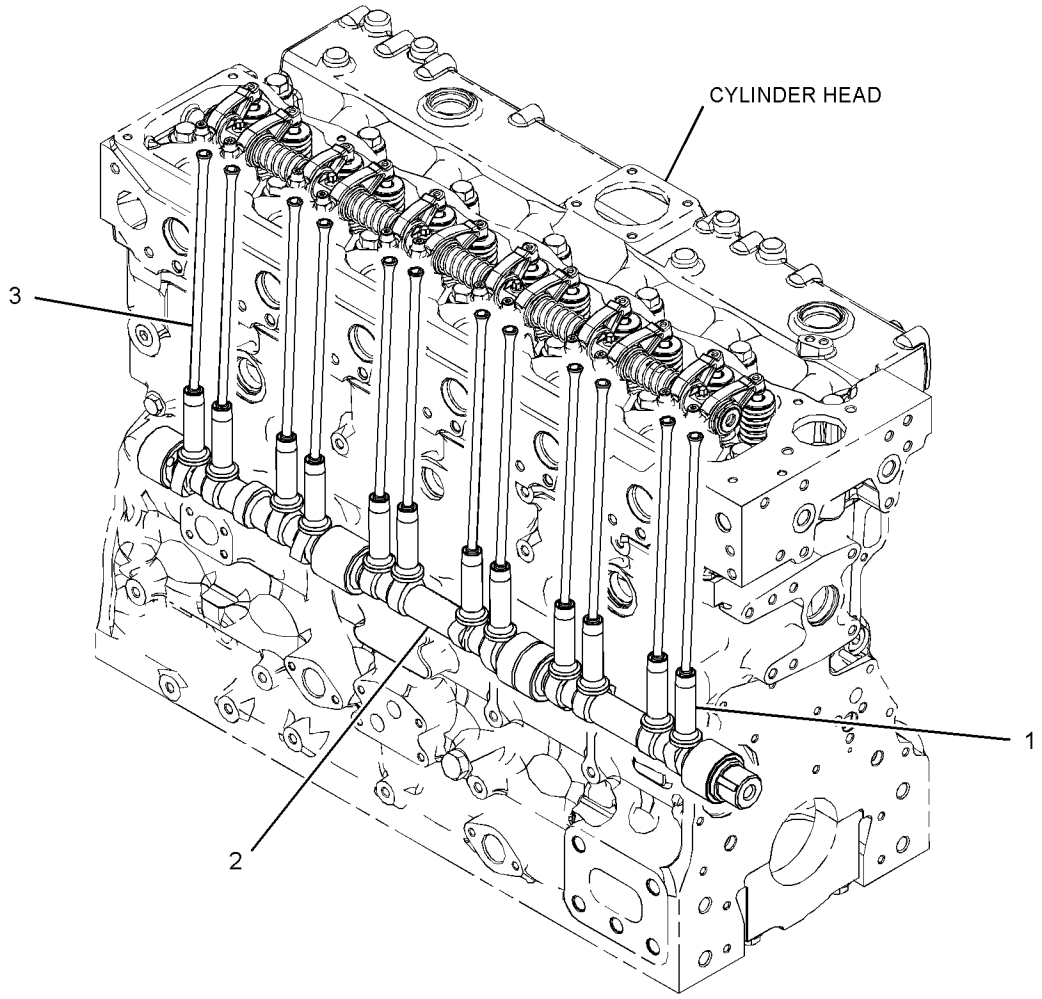

GRAPHIC #1 **<END>** g03320144

417-7185 CONTACTOR GP-ALARM

S/N: D7A1-UP

PART OF 417-3389 ENGINE AR-PRIMARY

SMCS-0663 **i05156010**

NOTE	REF NO	GRAPHIC REF	PART NUMBER	QTY	PART NAME 1 2 3 4 5 6 (PRODUCT LEVEL)	SEE PAGE
	1	1	**199-9267**	1	SEAL-O-RING	
	2	1	**232-3861**	1	PLUG (BLANKING)	

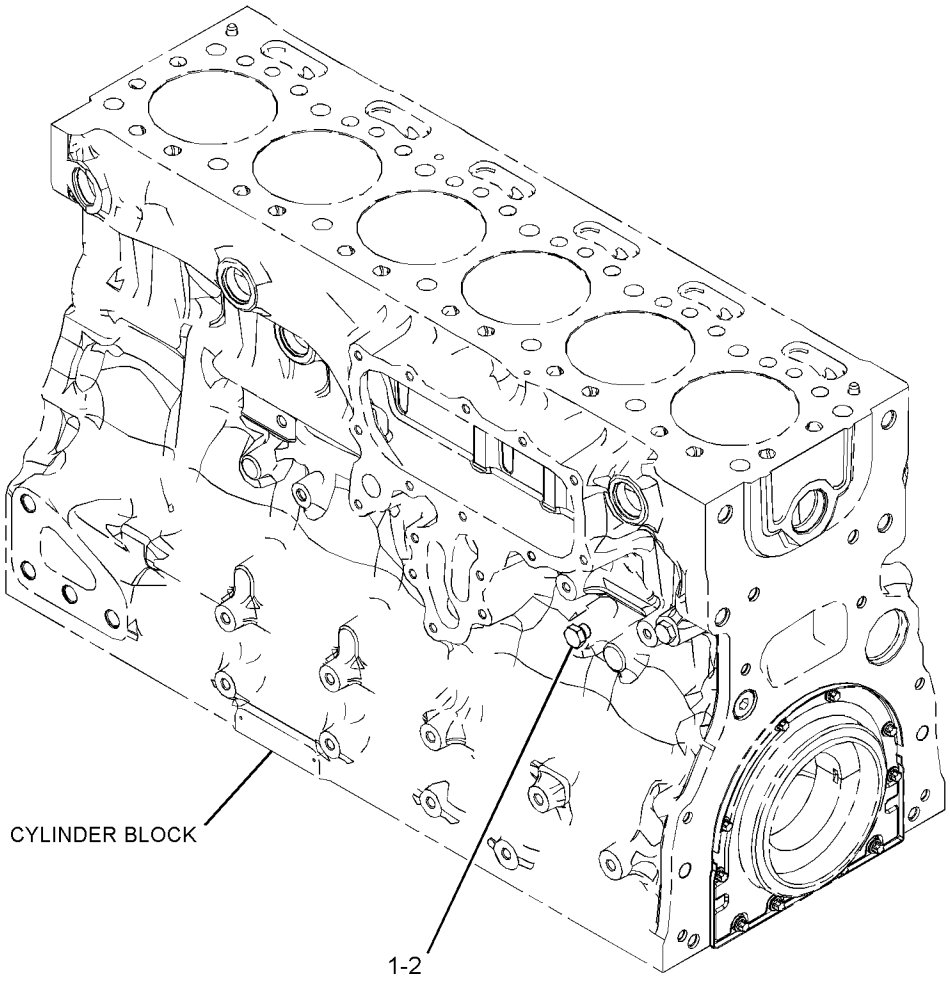

GRAPHIC #1 **<END>** g03317252

335-6883 COVER GP-VALVE MECHANISM—CYLINDER HEAD

S/N: D7A1-UP

PART OF 426-1498 COVER GP-VALVE MECHANISM

SMCS-1107 **i05905944**

NOTE	REF NO	GRAPHIC REF	PART NUMBER	QTY	PART NAME 1 2 3 4 5 6 (PRODUCT LEVEL)	SEE PAGE
	1	1	**256-7704**	1	SEAL-VALVE COVER	
	2	1	**326-7289**	1	SEAL-O-RING	
	3	1	**369-3869**	1	CAP AS (ENGINE OIL FILLER)	
	3A	1	**357-0147**	1	FILM-IDENTIFICATION (OIL FILL, READ OMM)	

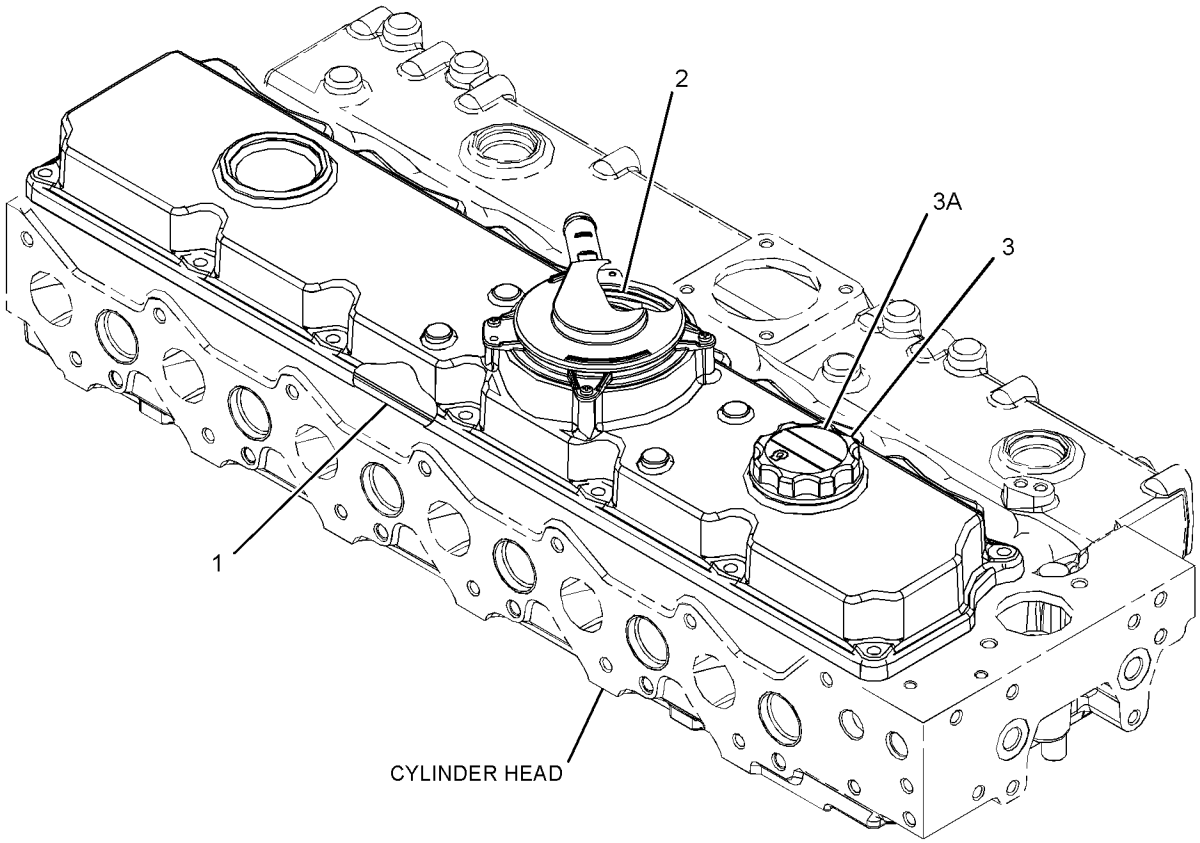

GRAPHIC #1 **<END>** g03320242

426-1498 COVER GP-VALVE MECHANISM–CRANKCASE

S/N: D7A1-UP

PART OF 417-3389 ENGINE AR-PRIMARY

SMCS-1107 **i05372628**

NOTE	REF NO	GRAPHIC REF	PART NUMBER	QTY	PART NAME 1 2 3 4 5 6 (PRODUCT LEVEL)	SEE PAGE
Y	1	1	**335-6883**	1	COVER GP-VALVE MECHANISM	23
M	2	1	**6I-0254**	14	BOLT (M8X1.25X30-MM)	

M - METRIC PART
Y - SEPARATE ILLUSTRATION

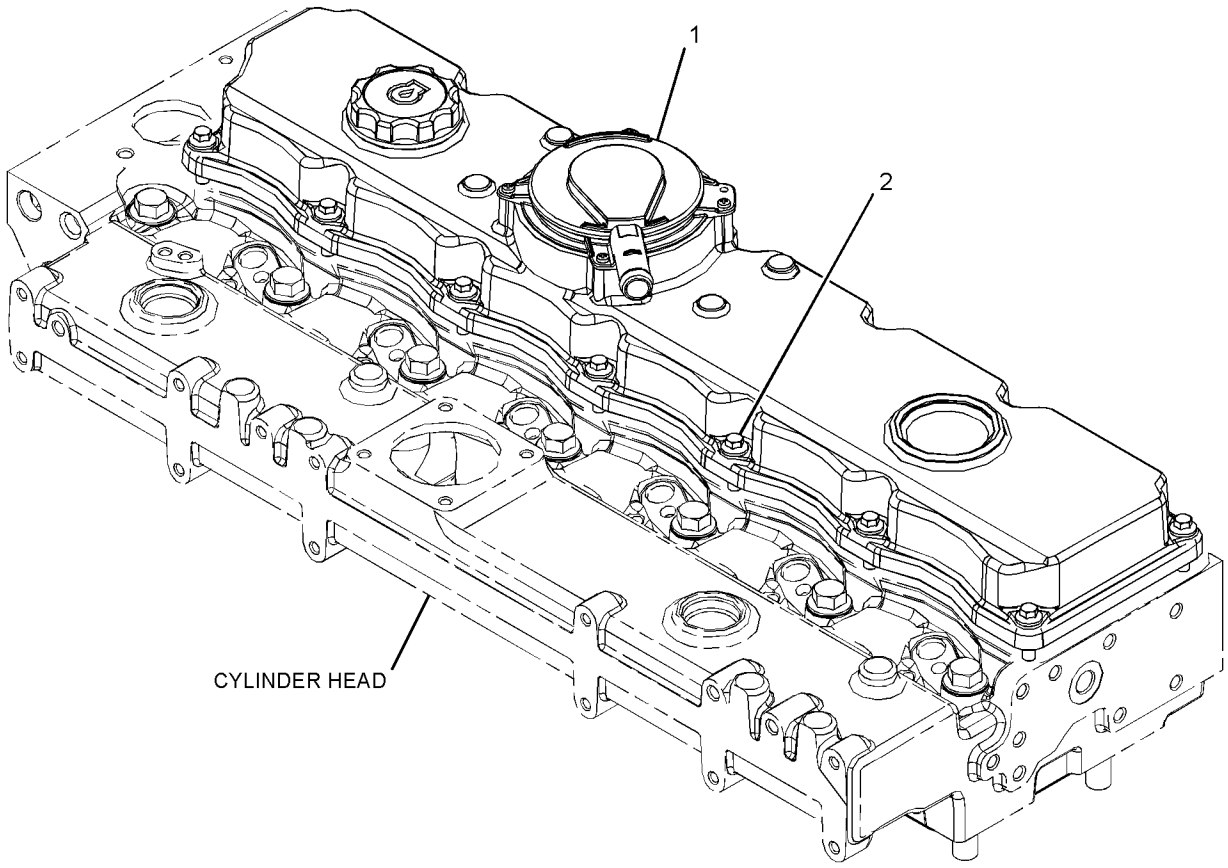

GRAPHIC #1 **<END>** g03403678

348-3285 CRANKSHAFT GP

S/N: D7A1-UP

PART OF 425-0779 CONVERSION AR-ENGINE, 417-3389 ENGINE AR-PRIMARY

SMCS-1202 **i05166785**

NOTE	REF NO	GRAPHIC REF	PART NUMBER	QTY	PART NAME 1 2 3 4 5 6 (PRODUCT LEVEL)	SEE PAGE
L	1	1	*317-5485*	7	BEARING (CRANKSHAFT)	
L	2	1	*317-5486*	7	BEARING (CRANKSHAFT)	
J	3	1	**363-0559**	2	WASHER-THRUST	
	4	1	**376-4074**	1	CRANKSHAFT	
	5	1	**067-6135**	1	KEY-WOODRUFF	
	6	1	**276-7391**	1	GEAR (34-TEETH)	
					AVAILABLE REPAIR KIT(S):	
L			**360-1978**	1	KIT-BEARING (CRANKSHAFT)	
J			**364-5145**	1	KIT-WASHER (CRANKSHAFT)	

J - KIT MARKED J SERVICES PARTS MARKED J
L - KIT MARKED L SERVICES PARTS MARKED L

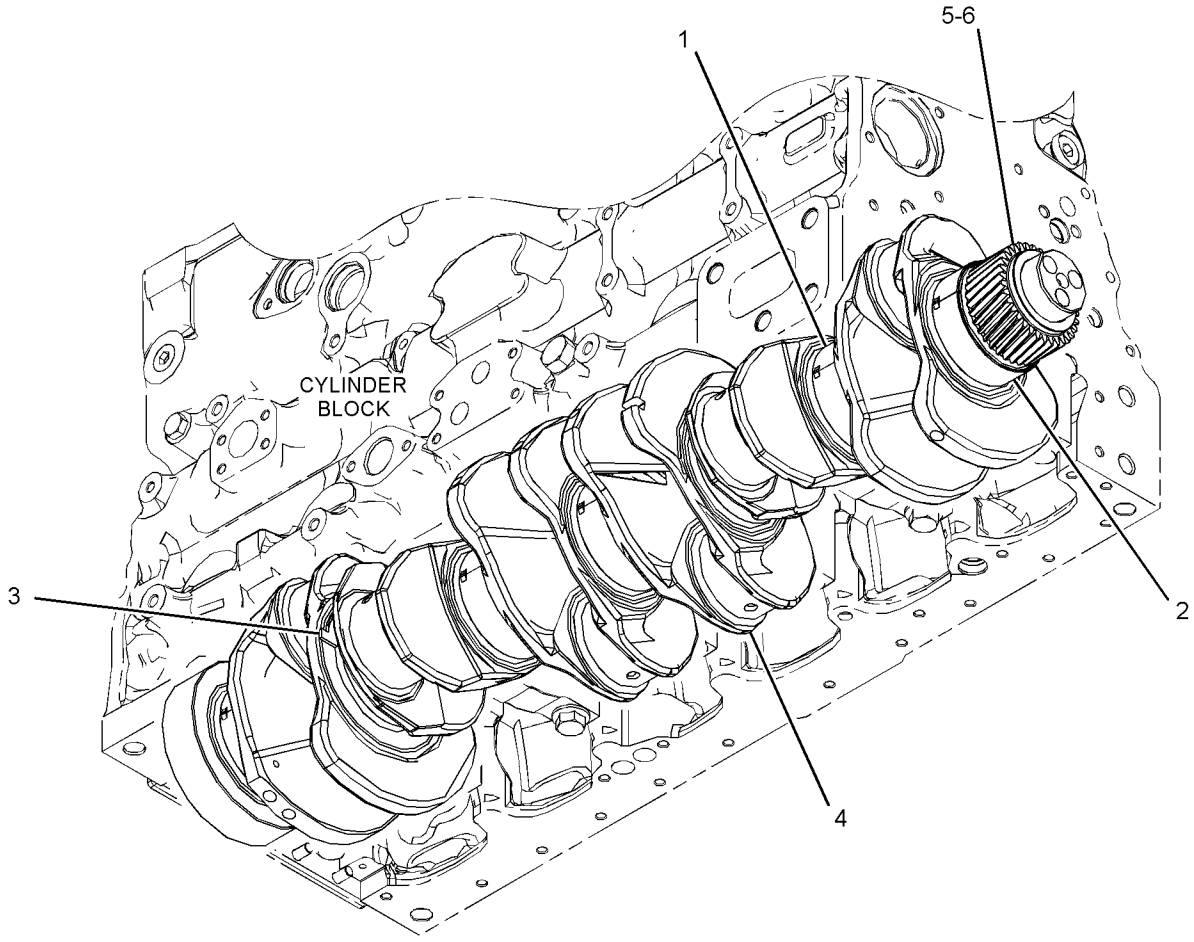

GRAPHIC #1 **<END>** g03320275

331-1682 CYLINDER BLOCK AS

S/N: D7A1-UP

PART OF 348-3283 CYLINDER BLOCK GP

SMCS-1201 **i05791013**

NOTE	REF NO	GRAPHIC REF	PART NUMBER	QTY	PART NAME 1 2 3 4 5 6 (PRODUCT LEVEL)	SEE PAGE
	1	1	**067-6043**	7	PLUG-SIDE	
	2	1	**185-0884**	2	DOWEL	
	3	1	**225-8858**	2	PLUG	
	4	1	**232-7597**	2	PLUG	
	5	1	**232-7599**	2	PLUG	
	6	1	**276-5602**	2	PLUG-CORE	
	7	1	**232-7596**	1	PLUG	
	8	1	**067-6823**	1	PLUG	
	9	1	**276-5600**	14	BOLT-SPECIAL (BEARING CAP)	
	10	1	**370-6545**	1	BUSHING-CAMSHAFT	

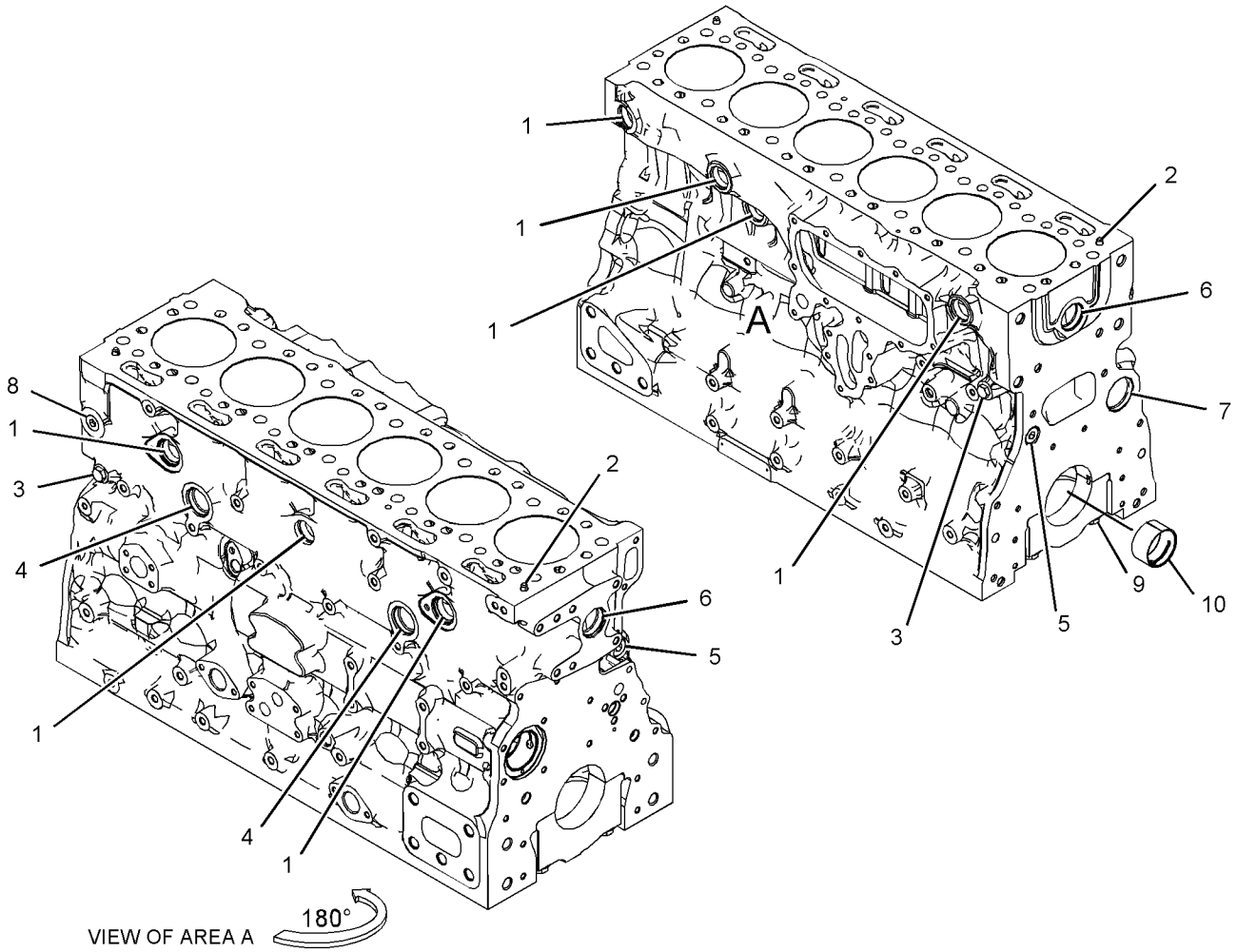

VIEW OF AREA A

GRAPHIC #1 **<END>** g03684180

348-3283 CYLINDER BLOCK GP

S/N: D7A1-UP

PART OF 425-0779 CONVERSION AR-ENGINE, 417-3389 ENGINE AR-PRIMARY

SMCS-1201 **i05155990**

NOTE	REF NO	GRAPHIC REF	PART NUMBER	QTY	PART NAME 1 2 3 4 5 6 (PRODUCT LEVEL)	SEE PAGE
M	1	1	**209-9219**	10	BOLT (M8X1.25X16-MM)	
	2	1	**232-1322**	1	PLUG	
	3	1	**276-5603**	1	SEAL-O-RING	
Y	4	1	*331-1682*	1	CYLINDER BLOCK AS	26
	5	1	**232-7449**	1	HOUSING AS	

M - METRIC PART
Y - SEPARATE ILLUSTRATION

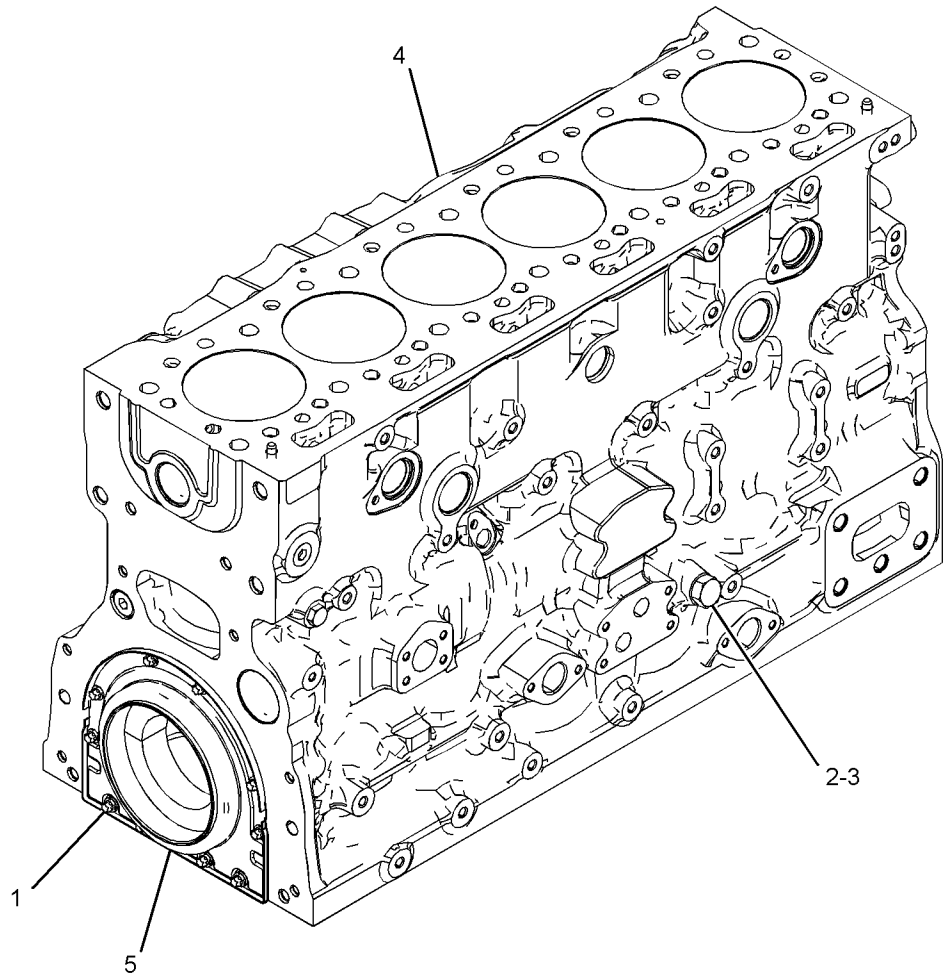

GRAPHIC #1 **<END>** g03318997

391-3193 CYLINDER HEAD GP

S/N: D7A1-UP

PART OF 425-3316 CYLINDER HEAD GP, 417-3389 ENGINE AR-PRIMARY

SMCS-1100 **i05787068**

NOTE	REF NO	GRAPHIC REF	PART NUMBER	QTY	PART NAME 1 2 3 4 5 6 (PRODUCT LEVEL)	SEE PAGE
	1	1	**335-7055**	14	BOLT	
	2	1	**359-6616**	1	GASKET	
	3	1	**450-9263**	1	CYLINDER HEAD GP	
		1	**067-6006**	6	PLUG	
		1	**335-6264**	12	GUIDE-VALVE	
		1	**343-4295**	8	PLUG	

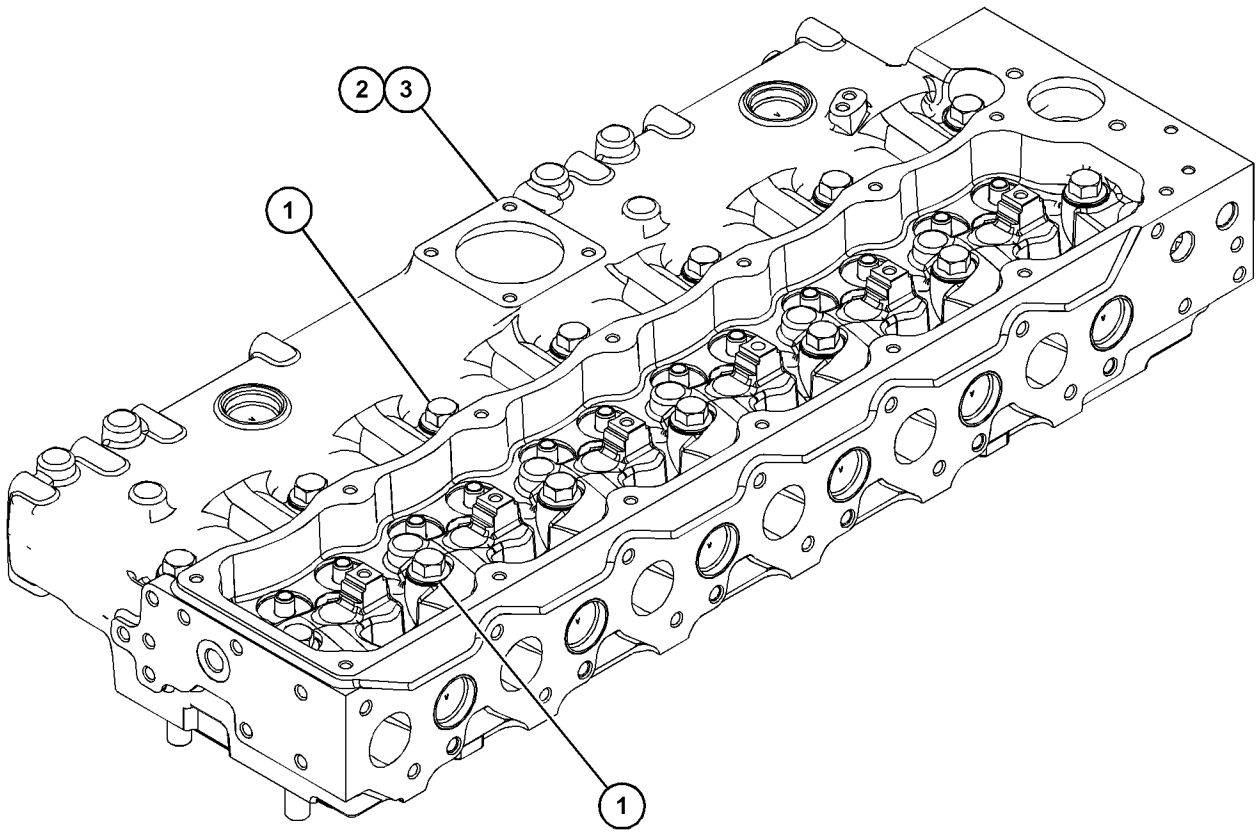

GRAPHIC #1 **<END>** g03672616

425-3316 CYLINDER HEAD GP

S/N: D7A1-UP

PART OF 417-3389 ENGINE AR-PRIMARY

SMCS-1100 **i05723661**

NOTE	PART NUMBER	QTY	PART NAME 1 2 3 4 5 6 (PRODUCT LEVEL)	SEE PAGE
Y	*391-3193*	1	CYLINDER HEAD GP	28
Y	*438-3180*	1	ROCKER ARM GP	49

Y - SEPARATE ILLUSTRATION

<END>

394-7014 DRAIN GP-ENGINE OIL

S/N: D7A1-UP

PART OF 417-3389 ENGINE AR-PRIMARY

SMCS-1302 **i05156019**

NOTE	REF NO	GRAPHIC REF	PART NUMBER	QTY	PART NAME 1 2 3 4 5 6 (PRODUCT LEVEL)	SEE PAGE
	1	1	**3K-0360**	1	SEAL-O-RING	
	2	1	**6V-7238**	1	VALVE-SHUTOFF	

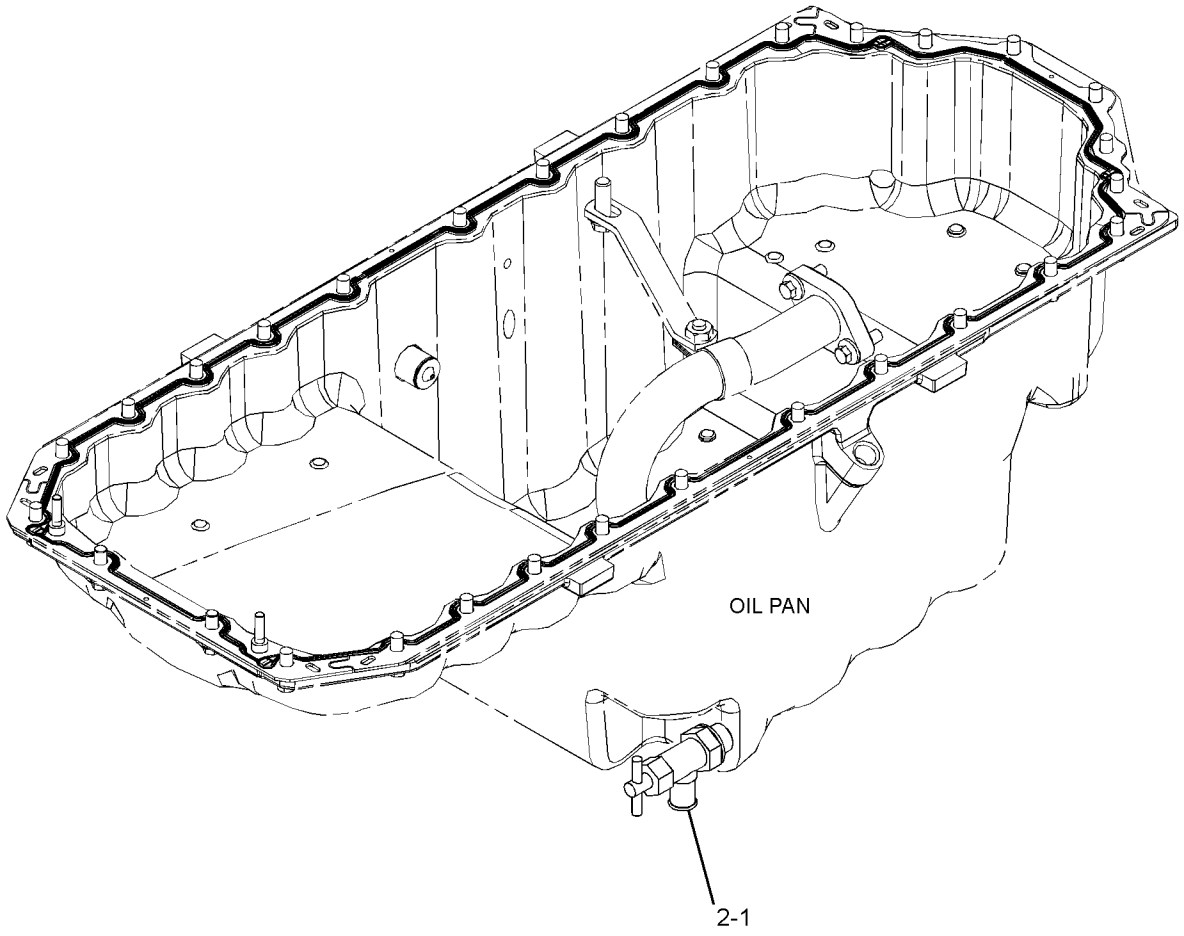

GRAPHIC #1 **<END>** g03317520

396-6979 DRIVE GP-FAN

S/N: D7A1-UP

PART OF 417-3389 ENGINE AR-PRIMARY

SMCS-1359 **i05156015**

NOTE	REF NO	GRAPHIC REF	PART NUMBER	QTY	PART NAME 1 2 3 4 5 6 (PRODUCT LEVEL)	SEE PAGE
M	1	1	**6I-0593**	10	BOLT (M10X1.5X30-MM)	
	2	1	**321-9994**	1	DRIVE AS-FAN	
	2A	1	**176-0773**	1	CLIP	
	3	1	**348-5434**	1	IDLER AS	
	4	1	**379-2023**	1	BRACKET	
	5	1	**388-1869**	1	BRACKET AS	
	5A	1	**339-8780**	1	DOWEL	
	5B	1	**379-2022**	1	BRACKET	
M	6	1	**6I-0654**	3	BOLT (M10X1.5X25-MM)	
	7	1	**273-9292**	2	BOLT	
	8	1	**277-6078**	1	BRACKET	

M - METRIC PART

396-6979 **DRIVE GP-FAN (*contd.*)** **i05156015**

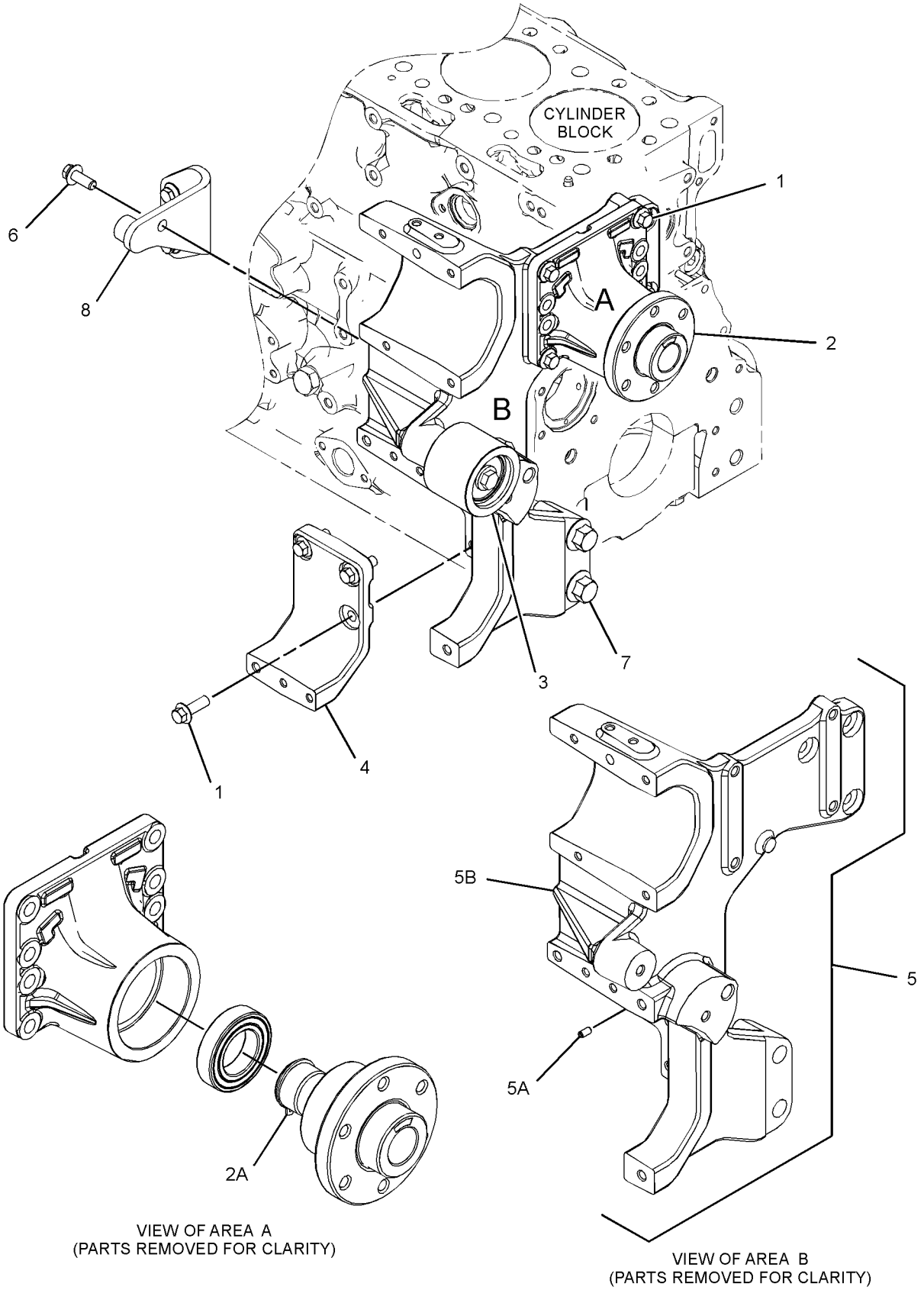

GRAPHIC #1 **<END>** g03319707

371-2539 FLYWHEEL GP

S/N: D7A1-UP

PART OF 417-3389 ENGINE AR-PRIMARY

SMCS-1156 **i05147993**

NOTE	REF NO	GRAPHIC REF	PART NUMBER	QTY	PART NAME 1 2 3 4 5 6 (PRODUCT LEVEL)	SEE PAGE
	1	1	**145-4911**	12	WASHER	
	2	1	**378-4739**	1	FLYWHEEL AS	
		1	**277-0588**	1	GEAR-STARTING MOTOR RING (134-TEETH)	
	3	1	**0S-1603**	12	BOLT (1/2-20X1.5-IN)	

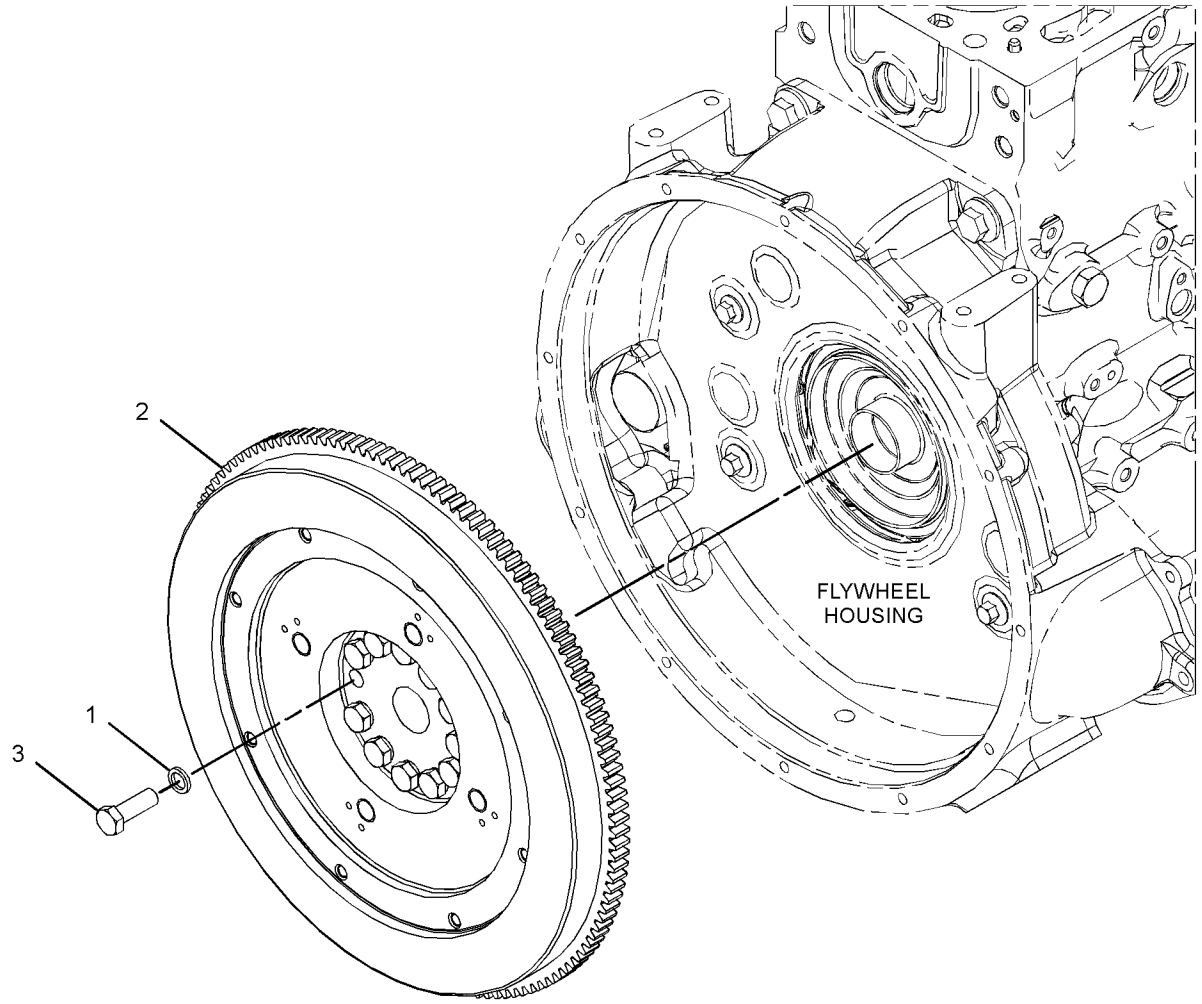

GRAPHIC #1 **<END>** g02629056

396-6954 HOUSING GP-FLYWHEEL

S/N: D7A1-UP

PART OF 417-3389 ENGINE AR-PRIMARY

SMCS-1157 **i05156017**

NOTE	REF NO	GRAPHIC REF	PART NUMBER	QTY	PART NAME 1 2 3 4 5 6 (PRODUCT LEVEL)	SEE PAGE
	1	1	**6I-0917**	2	BOLT (M6X1X25-MM)	
	2	1	**277-0121**	1	PLUG	
	3	1	**283-4662**	2	BOLT-FLANGE HEAD	
	4	1	**287-8597**	2	DOWEL	
	5	1	**288-6974**	4	BOLT	
	6	1	**335-2092**	1	COVER-FLYWHEEL	
	7	1	**393-4006**	1	GASKET	
	8	1	**394-5874**	1	HOUSING-FLYWHEEL	
	9	1	**288-6975**	2	BOLT (M16X2X40-MM)	

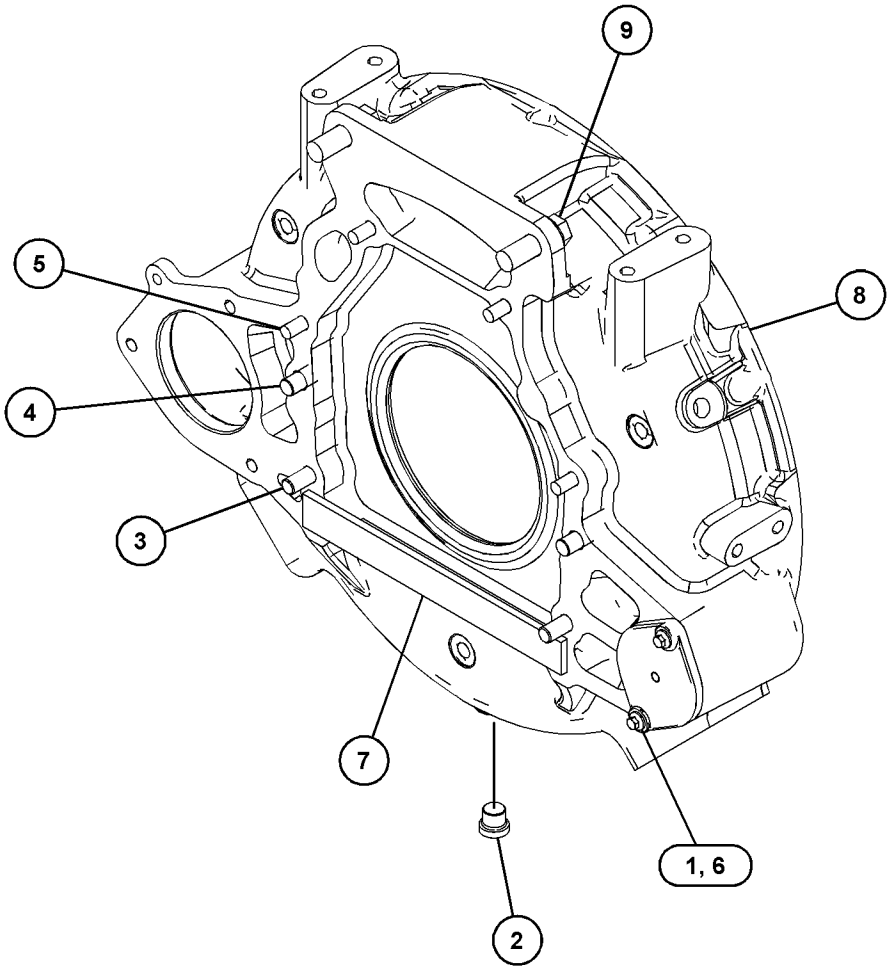

GRAPHIC #1 **<END>** g03319350

346-0495 HOUSING GP-FRONT

S/N: D7A1-UP

PART OF 417-3389 ENGINE AR-PRIMARY

SMCS-1151, 1162, 1206

i05906026

NOTE	REF NO	GRAPHIC REF	PART NUMBER	QTY	PART NAME 1 2 3 4 5 6 (PRODUCT LEVEL)	SEE PAGE
M	1	1	**6I-0217**	6	BOLT (M8X1.25X20-MM)	
M	2	1	**6I-0645**	4	BOLT (M8X1.25X25-MM)	
M	3	1	**6I-0650**	3	BOLT (M10X1.5X65-MM)	
	4	1	**7C-4616**	1	BOLT (M12X1.75X45-MM)	
	5	1	**067-6179**	1	DOWEL	
M	6	1	**100-3751**	5	BOLT (M8X1.25X65-MM)	
M	7	1	**101-3895**	2	BOLT (M8X1.25X35-MM)	
M	8	1	**124-3815**	10	BOLT (M8X1.25X16-MM)	
	9	1	**133-1011**	1	WASHER	
	10	1	**216-8634**	1	GEAR-CAMSHAFT (68-TEETH)	
	11	1	**277-3012**	1	GASKET-COVER	
	12	1	**277-3013**	1	SEAL	
	13	1	**277-4223**	1	PLUG	
	14	1	**294-0286**	1	KIT-COVER	
	15	1	**346-0408**	1	PLATE	
	16	1	**232-3657**	1	COVER AS-FRONT	
	16A	1	**225-8287**	1	GASKET	
	17	1	**232-3666**	1	WASHER-THRUST	
	18	1	**324-0444**	1	HUB-IDLER GEAR	
	19	1	**346-0407**	1	GEAR-IDLER	

M - METRIC PART

346-0495 **HOUSING GP-FRONT (*contd.*)** **i05906026**

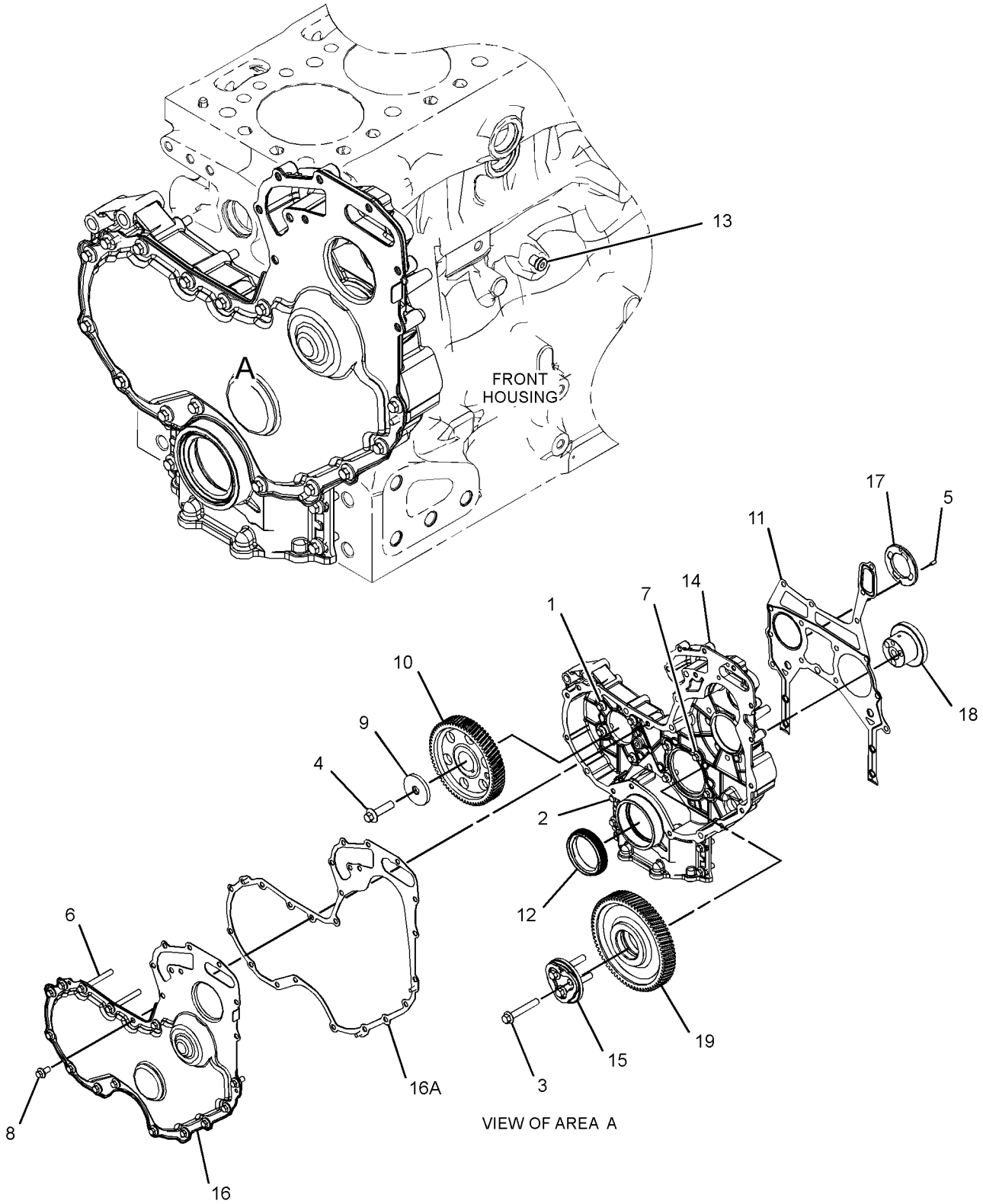

GRAPHIC #1 **<END>** g03316774

348-3503 JET GP-PISTON COOLING

S/N: D7A1-UP

PART OF 425-0779 CONVERSION AR-ENGINE, 417-3389 ENGINE AR-PRIMARY

SMCS-1331 **i05155995**

NOTE	REF NO	GRAPHIC REF	PART NUMBER	QTY	PART NAME 1 2 3 4 5 6 (PRODUCT LEVEL)	SEE PAGE
M	1	1	**100-4841**	6	BOLT (M6X1X10-MM)	
	2	1	**329-3796**	6	TUBE AS-OIL JET	

M - METRIC PART

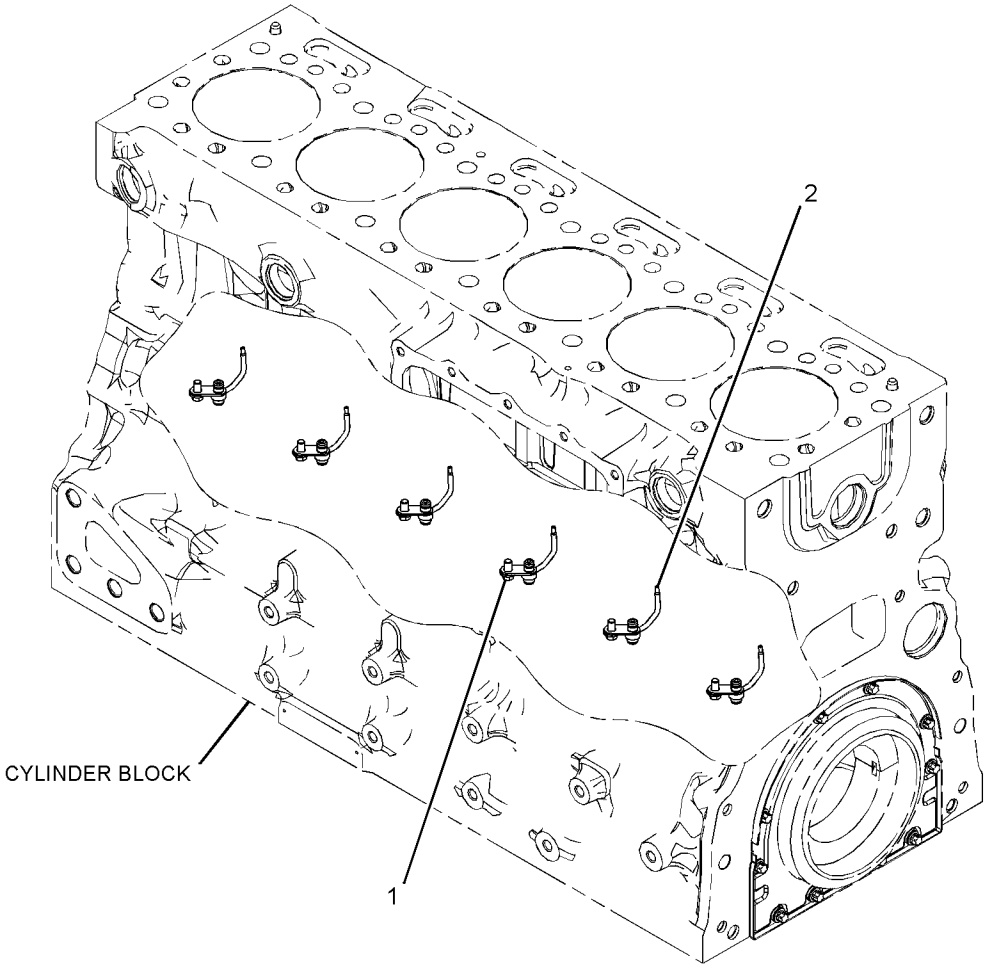

GRAPHIC #1 **<END>** g03316934

415-4600 LIFTING GP-ENGINE

S/N: D7A1-UP

PART OF 417-3389 ENGINE AR-PRIMARY

SMCS-1122 **i05156012**

NOTE	REF NO	GRAPHIC REF	PART NUMBER	QTY	PART NAME 1 2 3 4 5 6 (PRODUCT LEVEL)	SEE PAGE
	1	1	**123-2899**	4	BOLT (M10X1.5X40-MM)	
M	2	1	**6I-0654**	2	BOLT (M10X1.5X25-MM)	
	3	1	**279-9651**	1	PLATE-LIFTING	
	4	1	**304-5062**	1	BRACKET	
	5	1	**304-5063**	1	BRACKET	

M - METRIC PART

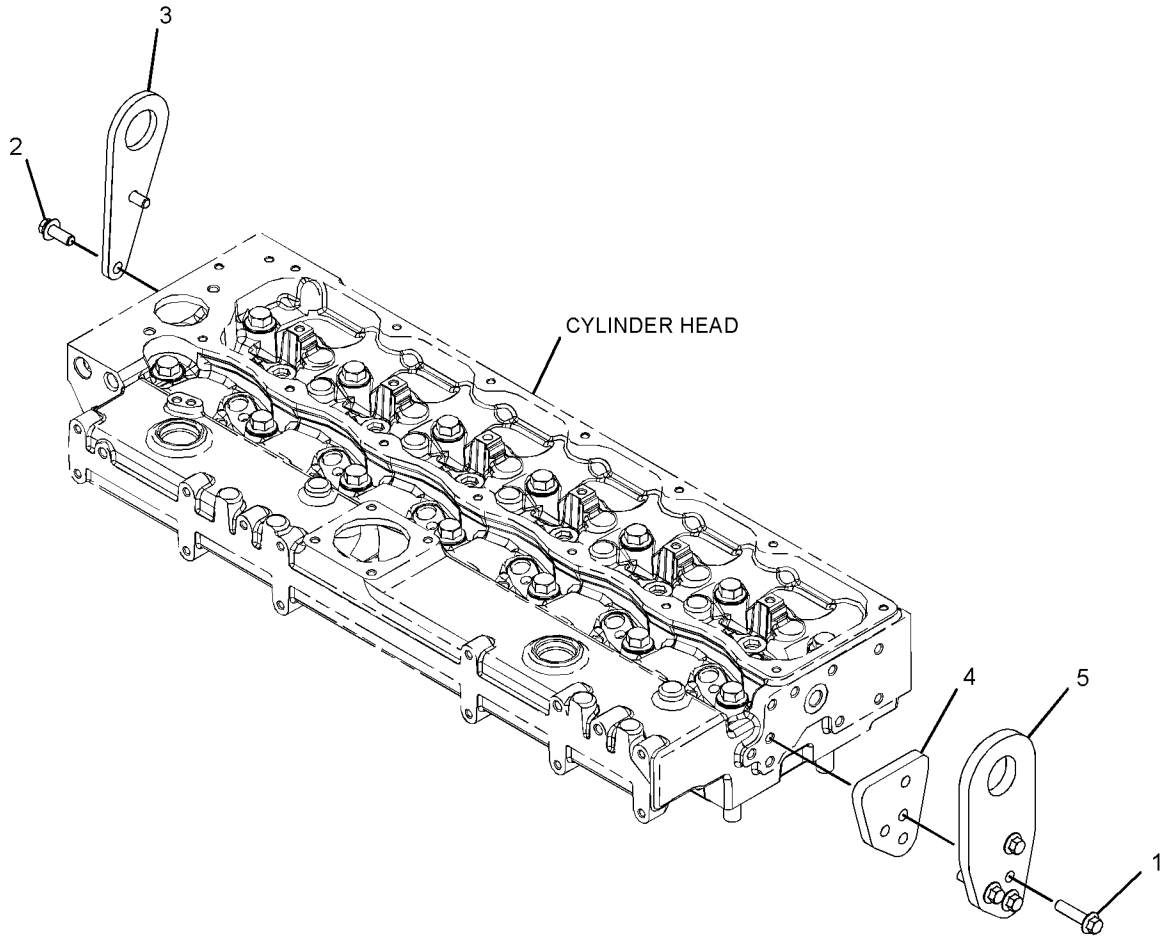

GRAPHIC #1 **<END>** g03317260

351-3886 MOUNTING GP-ENGINE

S/N: PBB1-UP; KBS1-UP

PART OF 455-4086 INSTALLATION AR-ENGINE

SMCS-1152 **i05775955**

NOTE	REF NO	GRAPHIC REF	PART NUMBER	QTY	PART NAME 1 2 3 4 5 6 (PRODUCT LEVEL)	SEE PAGE
	1	1	**118-9930**	4	SUPPORT AS	
M		1	**8T-4131**	1	NUT (M20X2.5-THD)	
	2	1	**324-4488**	4	MOUNT-RUBBER	
	3	1	**324-4489**	4	MOUNT-RUBBER	
	4	1	**390-2252**	2	BRACKET	
	5	1	**109-9329**	4	WASHER (21.5X120X8-MM THK)	
	6	1	**451-2176**	8	WASHER-HARD (22X35X3.5-MM THK)	
	7	1	**451-2182**	8	WASHER-HARD (13.5X25.5X3-MM THK)	
M	8	1	**453-3450**	8	BOLT (M12X1.75X60-MM)	
M	9	1	**447-1715**	4	BOLT (M20X2.5X120-MM)	

M - METRIC PART

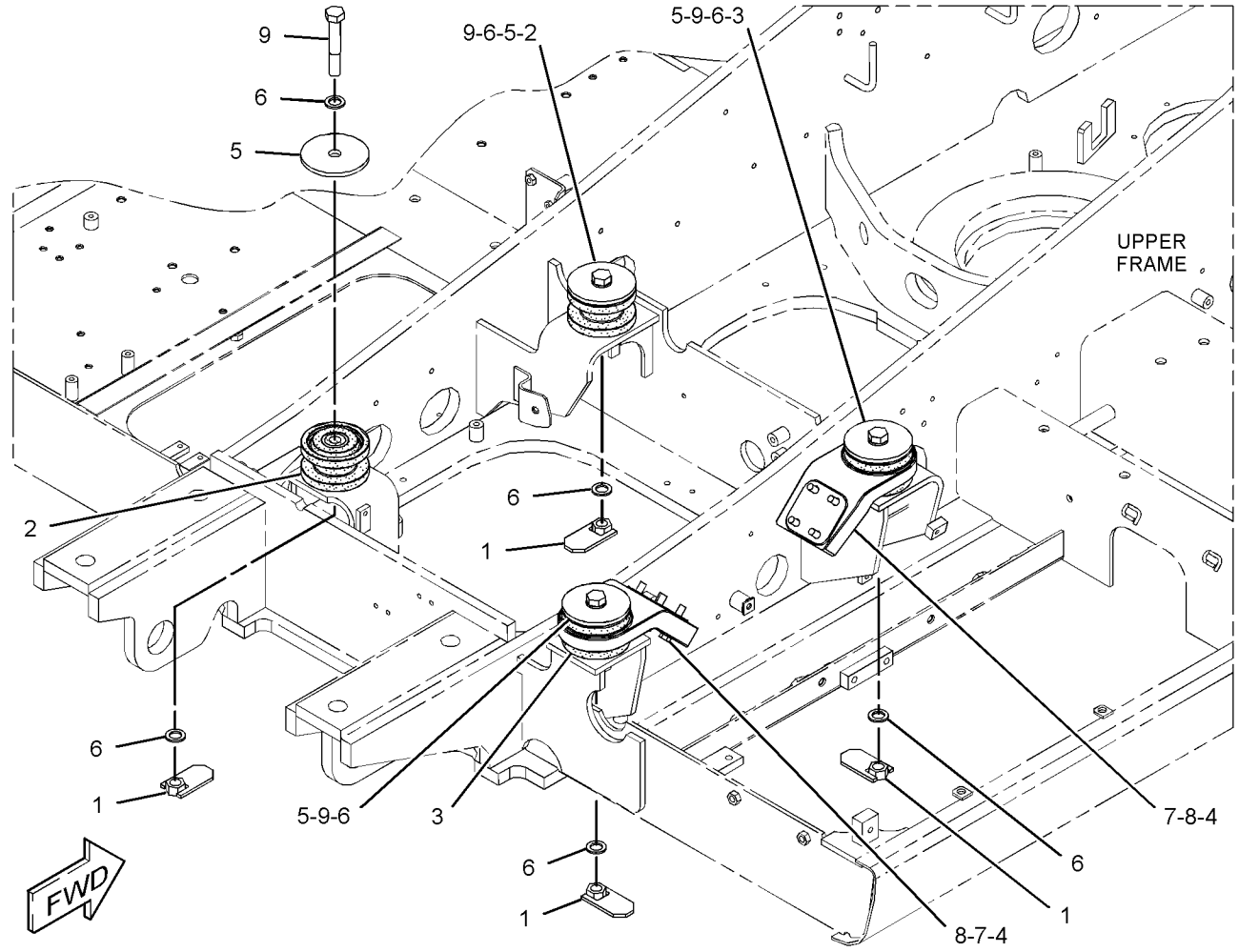

GRAPHIC #1 **<END>** g03103136

375-5008 MOUNTING GP-ENGINE

S/N: D7A1-UP

PART OF 417-3389 ENGINE AR-PRIMARY

SMCS-1152 **i05156033**

NOTE	REF NO	GRAPHIC REF	PART NUMBER	QTY	PART NAME 1 2 3 4 5 6 (PRODUCT LEVEL)	SEE PAGE
	1	1	**283-8301**	3	BOLT	
	2	1	**376-0601**	1	BRACKET	
	3	1	**376-2384**	1	BRACKET	
	4	1	**283-8302**	6	BOLT	

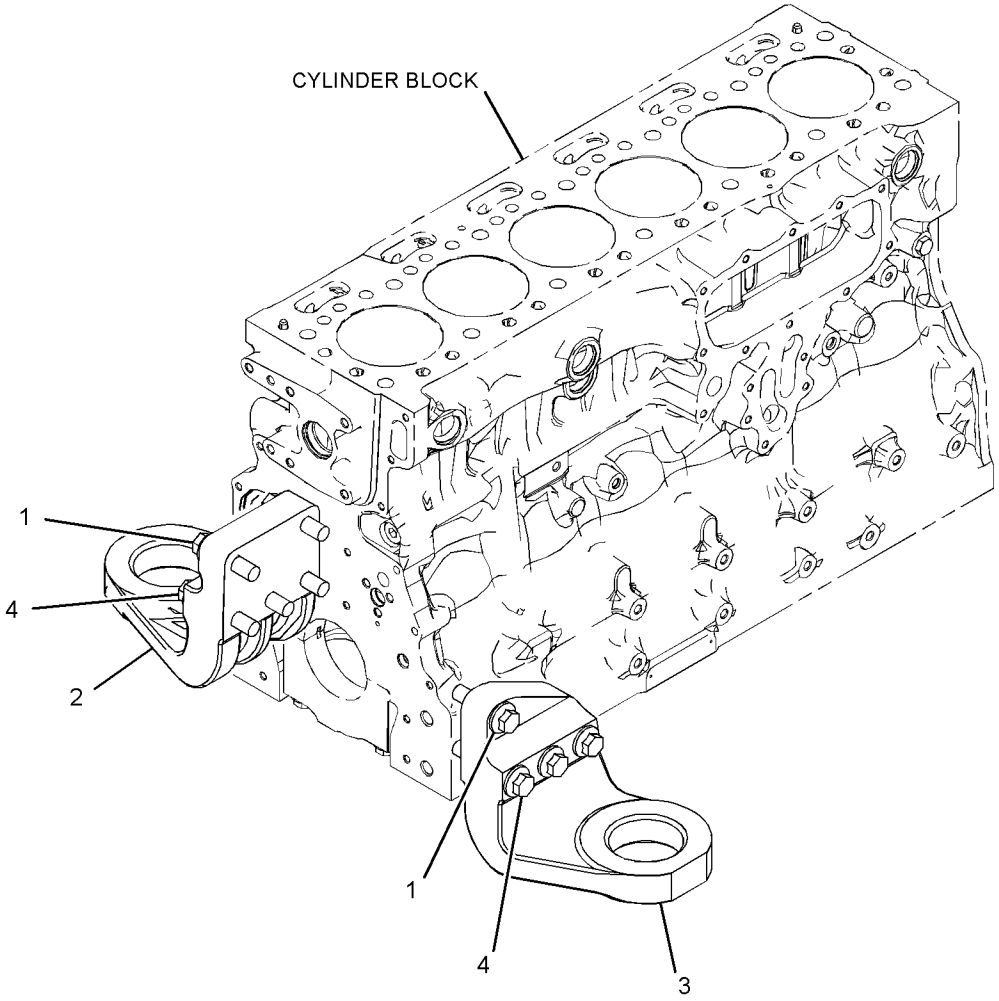

GRAPHIC #1 **<END>** g03317740

397-1501 PAN GP-OIL

S/N: D7A1-UP

PART OF 417-3389 ENGINE AR-PRIMARY

SMCS-1302 **i05905945**

NOTE	REF NO	GRAPHIC REF	PART NUMBER	QTY	PART NAME 1 2 3 4 5 6 (PRODUCT LEVEL)	SEE PAGE
M	1	1	**6I-0217**	29	BOLT (M8X1.25X20-MM)	
M	2	1	**6I-0260**	2	BOLT (M8X1.25X25-MM)	
M	3	1	**6I-0363**	2	BOLT (M6X1X20-MM)	
M	4	1	**6I-0572**	2	BOLT (M8X1.25X20-MM)	
M	5	1	**124-3815**	1	BOLT (M8X1.25X16-MM)	
	6	1	**230-8094**	1	BRIDGE	
	7	1	**275-9897**	1	BRACKET	
	8	1	**280-1384**	1	TUBE AS-OIL SUCTION	
	9	1	**351-4749**	1	GASKET-OIL PAN	
	10	1	**354-8322**	1	PLUG	
	11	1	**378-8587**	1	GAUGE GP-OIL LEVEL (DIPSTICK)	
Y	12	1	**453-6156**	1	PAN GP-OIL	42
	13	1	**396-2395**	1	BRACKET AS	
M	14	1	**6I-0654**	1	BOLT (M10X1.5X25-MM)	
M	15	1	**6I-4200**	2	BOLT (M10X1.5X16-MM)	
	16	1	**6I-4681**	1	GASKET	

M - METRIC PART
Y - SEPARATE ILLUSTRATION

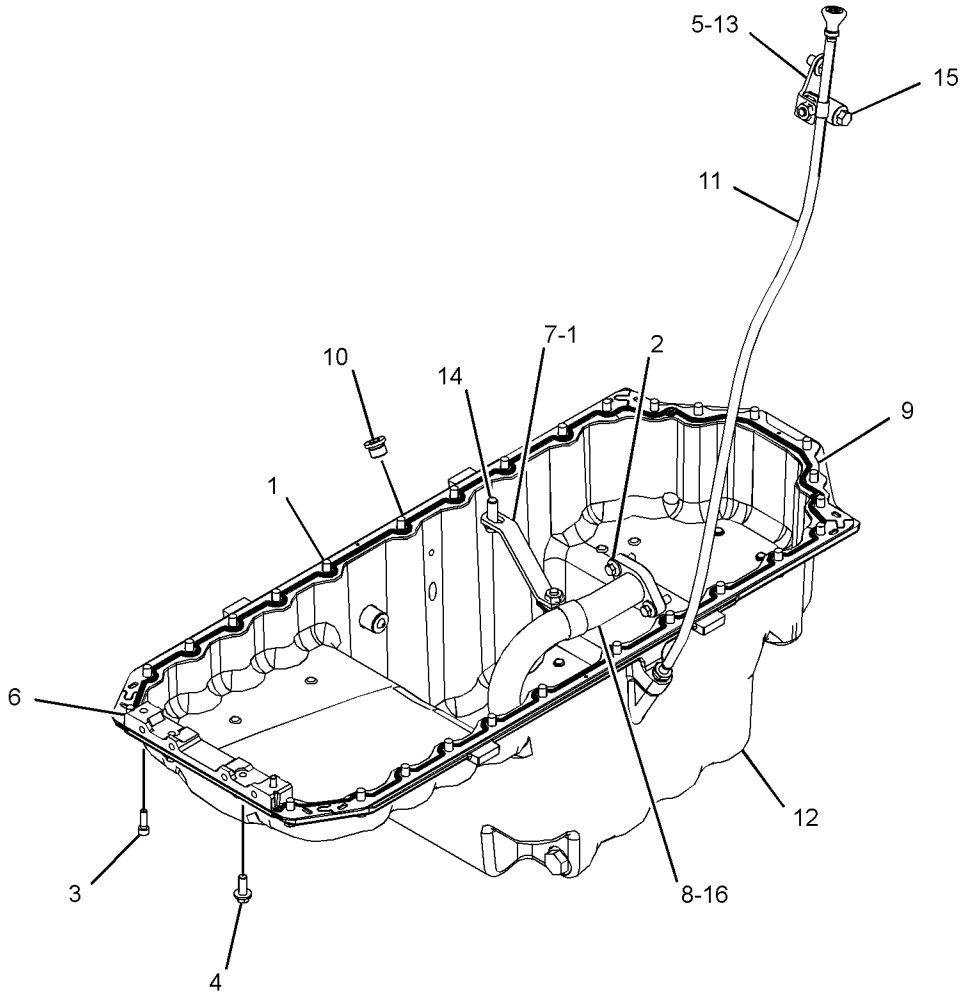

GRAPHIC #1 **<END>** g03319226

453-6156 PAN GP-OIL

S/N: D7A1-UP

PART OF 397-1501 PAN GP-OIL

SMCS-1302 **i05635212**

NOTE	REF NO	GRAPHIC REF	PART NUMBER	QTY	PART NAME 1 2 3 4 5 6 (PRODUCT LEVEL)	SEE PAGE
	1	1	**213-0677**	1	SWITCH AS-LIQUID LEVEL	
		1	**102-8802**	1	KIT-RECEPTACLE (2-PIN)	
					(INCLUDES RECEPTACLE AS AND WEDGE)	
		1	**9X-3401**	2	PIN-CONNECTOR (16-GA TO 18-GA)	
		1	**126-1767**	2	PIN-CONNECTOR (14-GA TO 16-GA)	
	2	1	**9S-4185**	2	PLUG-O-RING	
	3	1	**189-9377**	1	SEAL-O-RING	
	4	1	**316-9351**	1	MOUNTING-CABLE TIE	
	5	1	**8L-2786**	2	SEAL-O-RING	

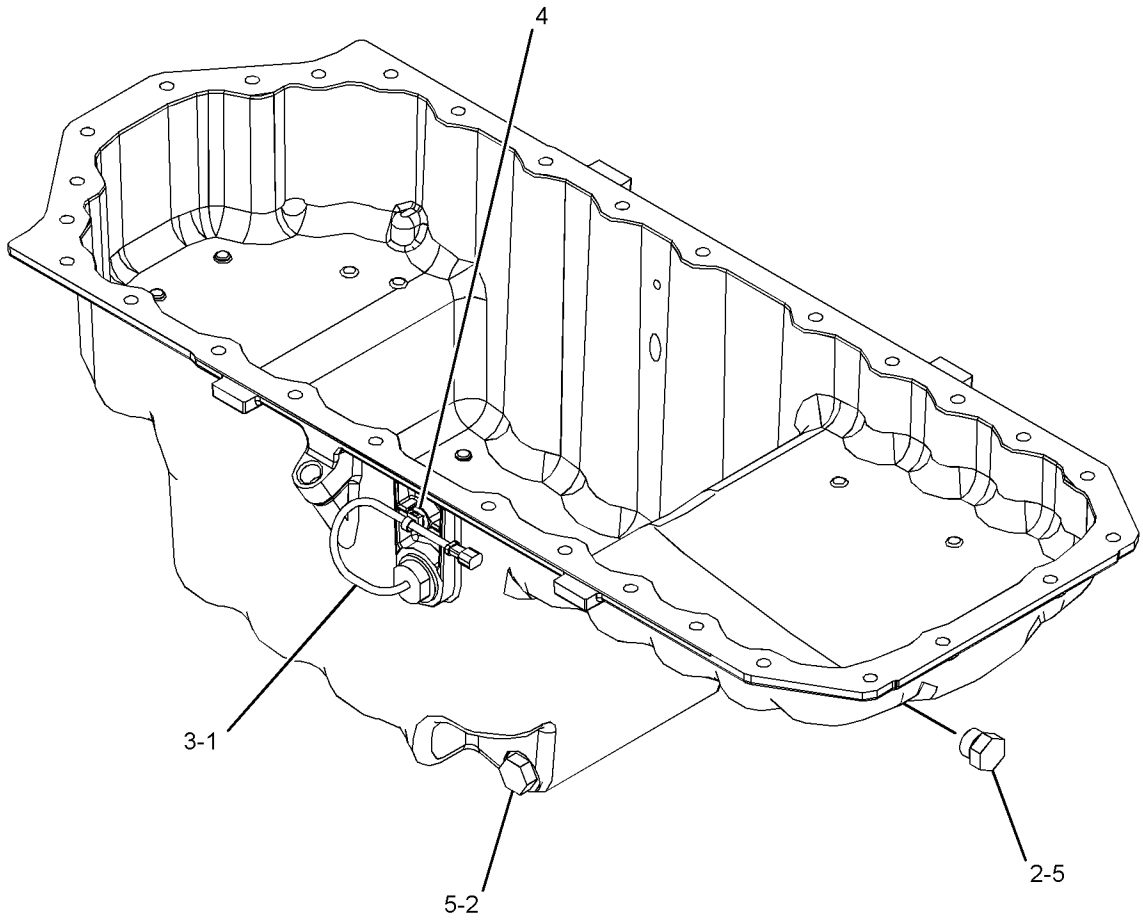

GRAPHIC #1 **<END>** g03583219

348-3296 PISTON & ROD GP

S/N: D7A1-UP

PART OF 417-3389 ENGINE AR-PRIMARY

SMCS-1225 **i05155996**

NOTE	REF NO	GRAPHIC REF	PART NUMBER	QTY	PART NAME 1 2 3 4 5 6 (PRODUCT LEVEL)	SEE PAGE
	1	1	**331-0290**	6	CONNECTING ROD GP	
		1	**276-7478**	1	BUSHING	
		1	**323-9312**	2	BOLT (M10X1X50-MM)	
	2	1	**370-7998**	6	PISTON GP	
L	3	1	*317-5482*	6	BEARING	
L	4	1	*317-5483*	6	BEARING	
N	5	1	**124-3536**	12	RING-RETAINING	
					AVAILABLE REPAIR KIT(S):	
L			**360-1564**	1	KIT-BEARING (PISTON)	
					(KIT INCLUDES BEARINGS)	
			389-7188	1	KIT-RING	
					(KIT INCLUDES RINGS-PISTON)	
N			**415-4315**	1	KIT-PISTON	
					(KIT INCLUDES RINGS-PISTON, RING-RETAINING, PIN, AND PISTON)	

L - KIT MARKED L SERVICES PARTS MARKED L
N - KIT MARKED N SERVICES PARTS MARKED N

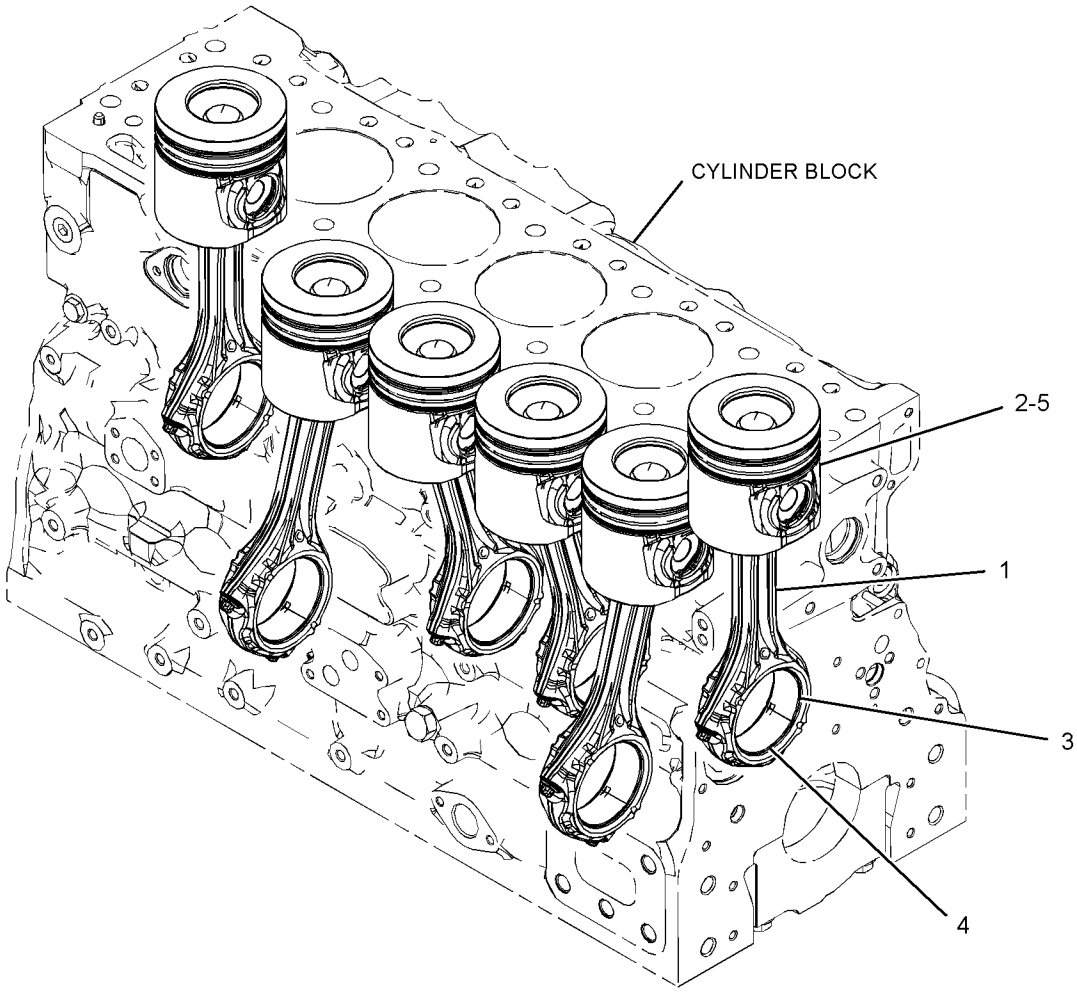

GRAPHIC #1 **<END>** g03320328

348-3300 PISTON & ROD GP

S/N: D7A1-UP

PART OF 425-0779 CONVERSION AR-ENGINE

SMCS-1225 **i05523720**

NOTE	REF NO	GRAPHIC REF	PART NUMBER	QTY	PART NAME 1 2 3 4 5 6 (PRODUCT LEVEL)	SEE PAGE
	1	1	**331-0290**	6	CONNECTING ROD GP	
		1	**276-7478**	1	BUSHING	
		1	**323-9312**	2	BOLT (M10X1X50-MM)	
	2	1	**366-0149**	6	PISTON GP	
L	3	1	*317-5482*	6	BEARING	
L	4	1	*317-5483*	6	BEARING	
N	5	1	**124-3536**	12	RING-RETAINING	
					AVAILABLE REPAIR KIT(S):	
L			**360-1564**	1	KIT-BEARING (PISTON)	
					(KIT INCLUDES BEARINGS)	
			389-7188	1	KIT-RING	
					(KIT INCLUDES RINGS-PISTON)	
N			**389-5891**	1	KIT-PISTON	
					(KIT INCLUDES RINGS-PISTON, RING-RETAINING, PIN, AND PISTON)	

L - KIT MARKED L SERVICES PARTS MARKED L
N - KIT MARKED N SERVICES PARTS MARKED N

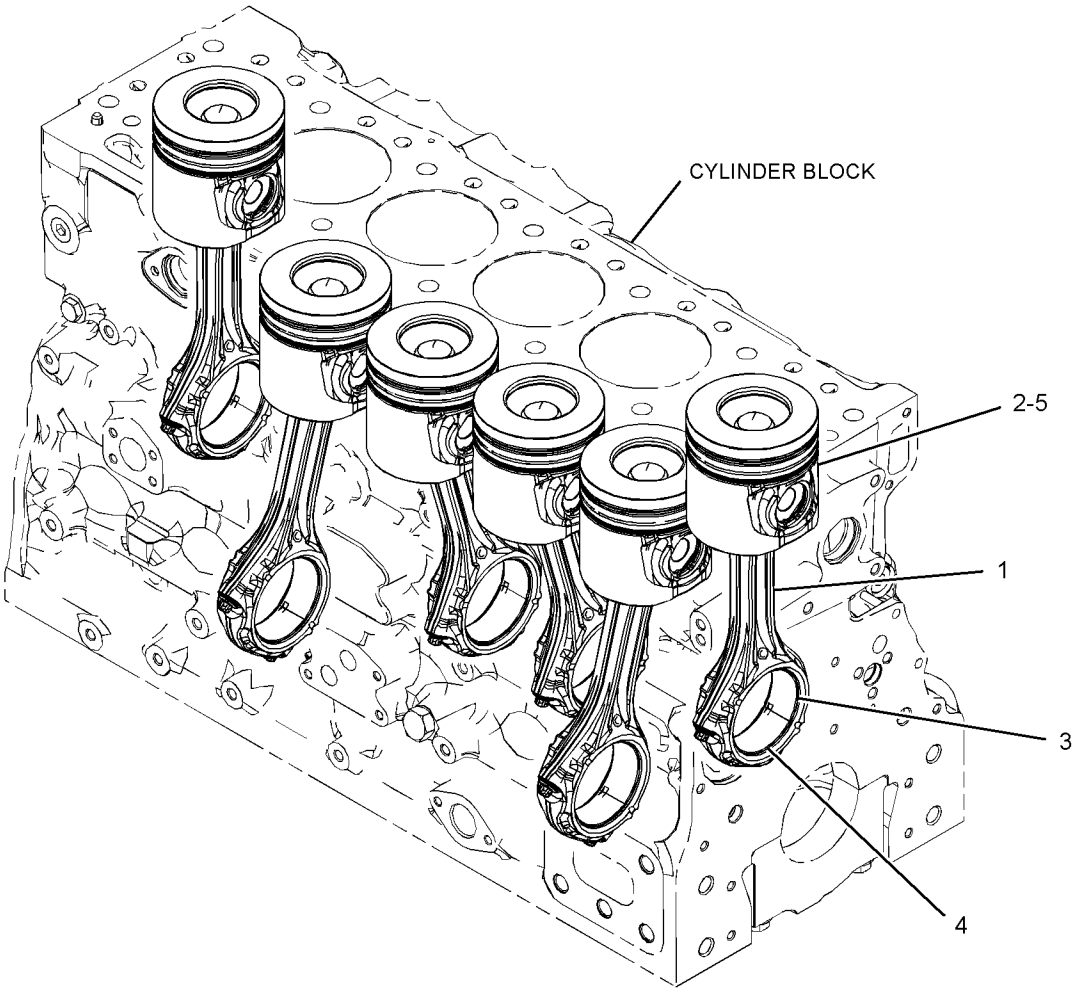

GRAPHIC #1 **<END>** g03320328

346-1841 PLUG GP-CYLINDER HEAD

S/N: D7A1-UP

PART OF 417-3389 ENGINE AR-PRIMARY

SMCS-1100 **i05662713**

NOTE	REF NO	GRAPHIC REF	PART NUMBER	QTY	PART NAME 1 2 3 4 5 6 (PRODUCT LEVEL)	SEE PAGE
	1	1	**199-9751**	1	SEAL-O-RING	
	2	1	**232-1322**	1	PLUG	

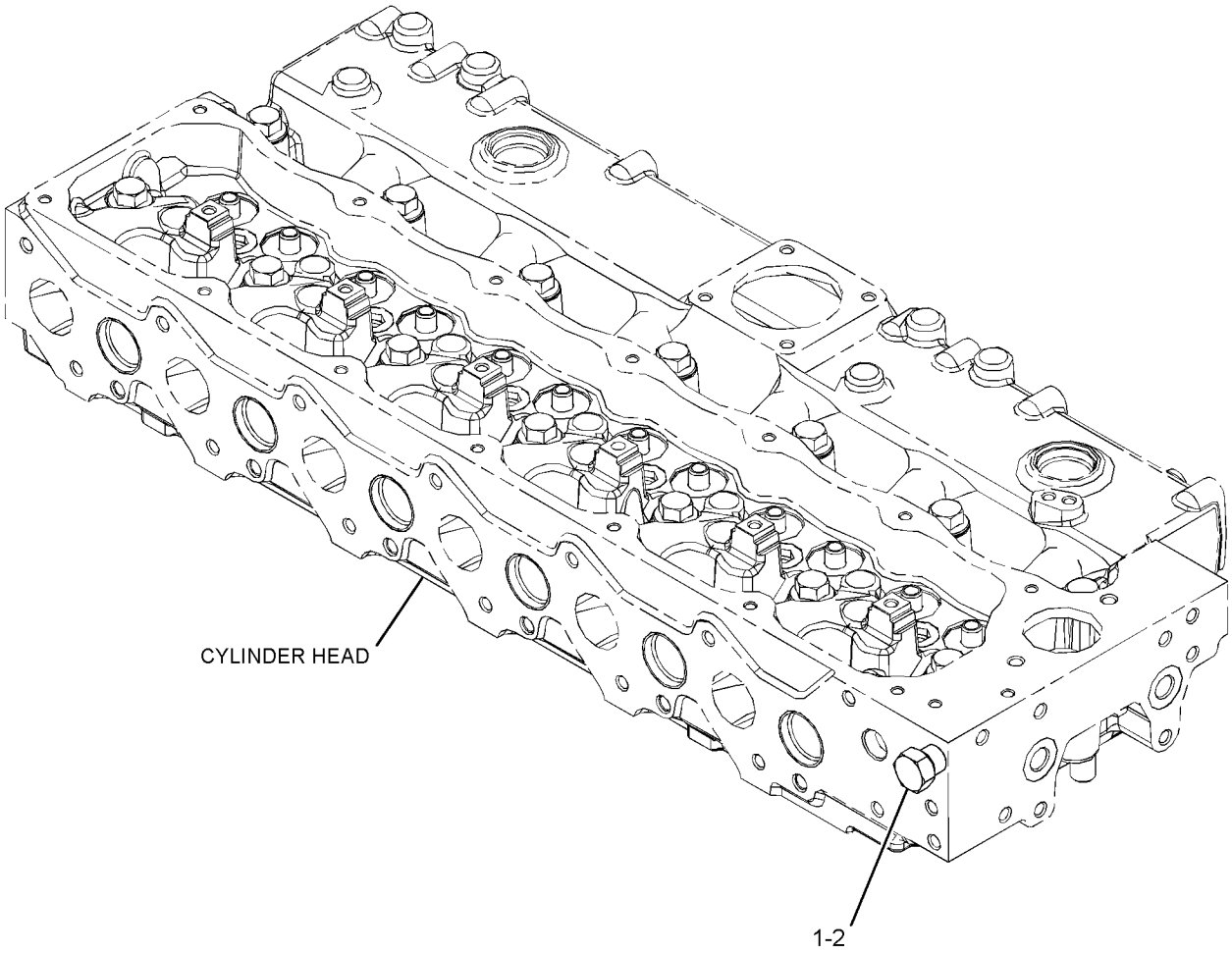

GRAPHIC #1 **<END>** g03316905

417-7187 PULLEY GP-CRANKSHAFT

S/N: D7A1-UP

PART OF 417-3389 ENGINE AR-PRIMARY

SMCS-1205 **i05156009**

NOTE	REF NO	GRAPHIC REF	PART NUMBER	QTY	PART NAME 1 2 3 4 5 6 (PRODUCT LEVEL)	SEE PAGE
	1	1	**274-1935**	6	BOLT (M12X1.75X30-MM)	
	2	1	**342-6510**	3	BOLT-TORX (M14X1.5X70-MM)	
	3	1	**344-7700**	1	ADAPTER	
	4	1	**345-2568**	1	PULLEY (12-GROOVE)	
	5	1	**351-1724**	1	DAMPER	

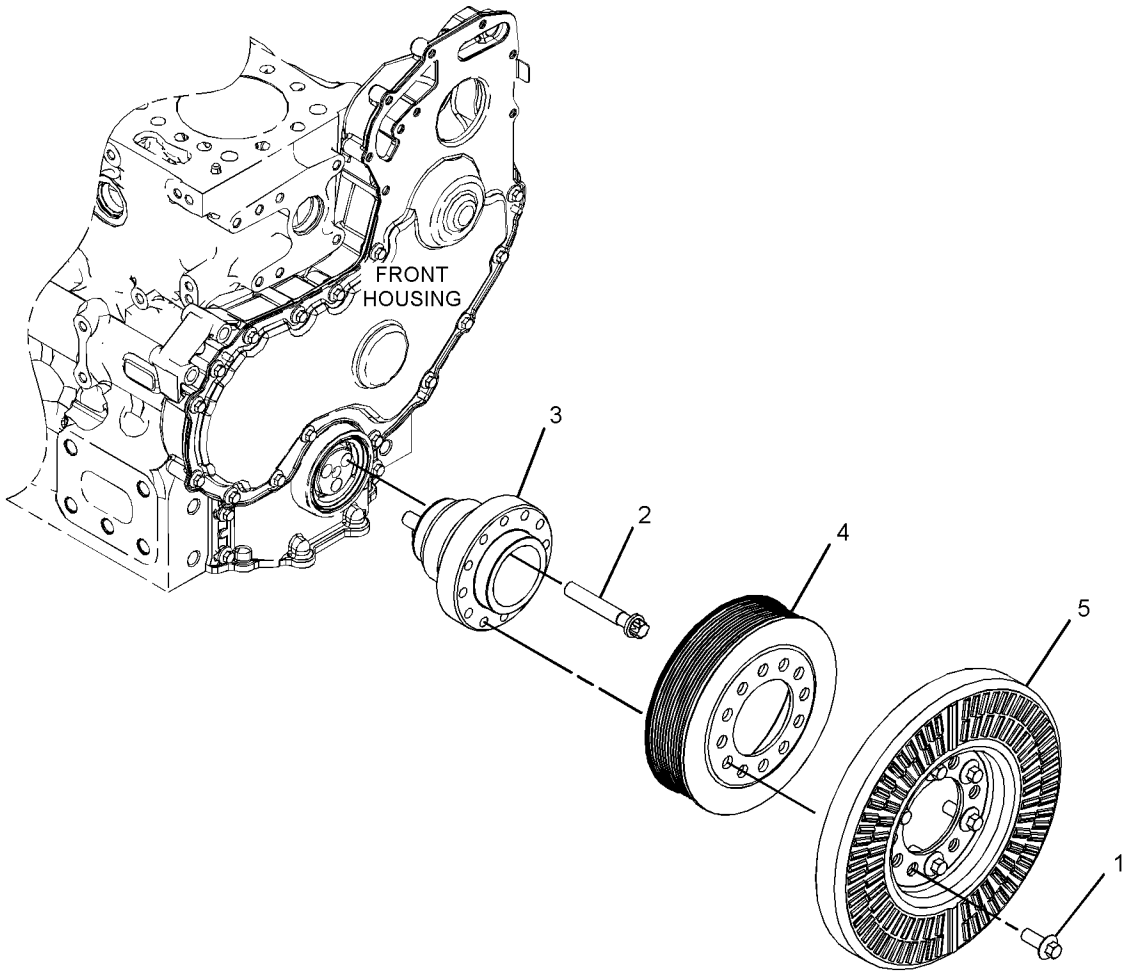

GRAPHIC #1 **<END>** g03317087

324-4551 PULLEY GP-ENGINE

S/N: PBB1-UP; KBS1-UP

PART OF 431-9792 FAN AR-SUCTION

SMCS-1205, 1207, 1359, 1384, 1425 **i04891066**

NOTE	REF NO	GRAPHIC REF	PART NUMBER	QTY	PART NAME 1 2 3 4 5 6 (PRODUCT LEVEL)	SEE PAGE
	1	1	**329-5255**	1	PULLEY (FAN DRIVE)	
	2	1	**357-2637**	1	BELT-SERPENTINE	

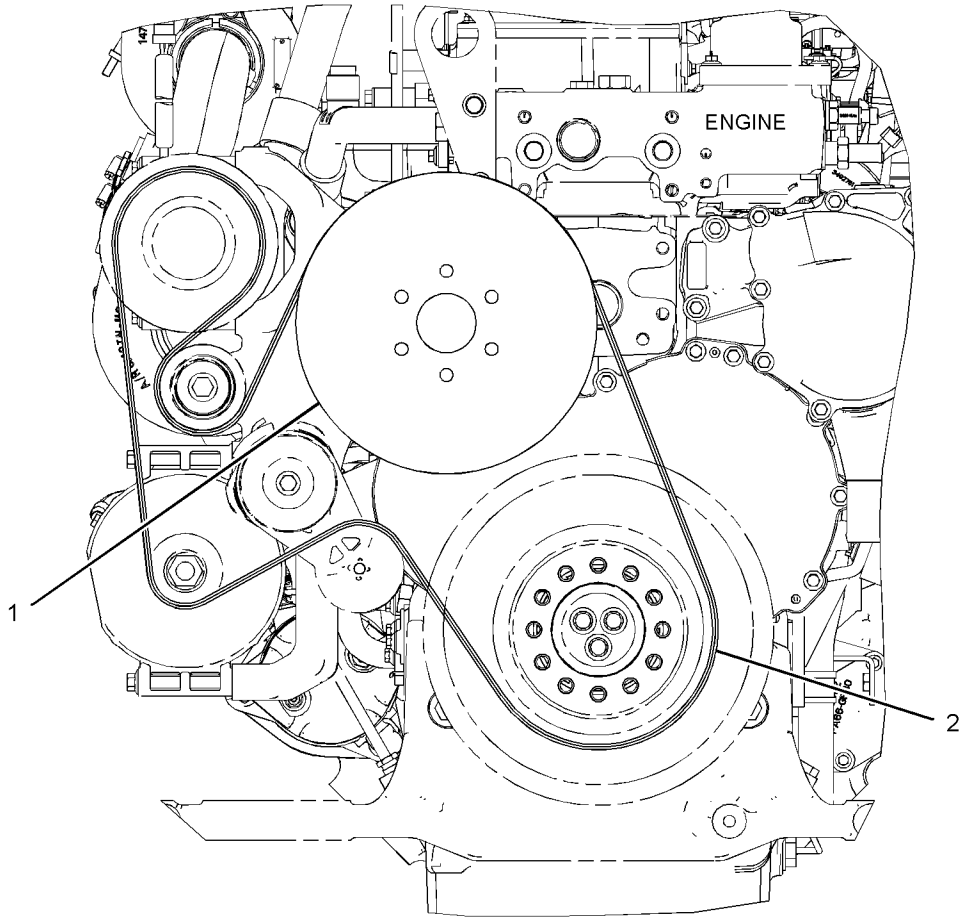

LEFT SIDE VIEW

GRAPHIC #1 **<END>** g02454838

391-3197 ROCKER ARM GP

S/N: D7A1-UP

PART OF 417-3389 ENGINE AR-PRIMARY

SMCS-1123 **i05832934**

NOTE	REF NO	GRAPHIC REF	PART NUMBER	QTY	PART NAME 1 2 3 4 5 6 (PRODUCT LEVEL)	SEE PAGE
	1	1	**252-6438**	6	SEAL-INLET VALVE	
	2	1	**254-3954**	6	SEAL	
	3	1	**315-3393**	24	COLLET	
	4	1	**315-3394**	6	VALVE-EXHAUST	
Y	5	1	**335-5602**	1	VALVE MECHANISM GP	50
	6	1	**436-0520**	12	SPRING-VALVE	
	7	1	**335-5607**	12	RETAINER-SPRING	
	8	1	**381-6235**	6	VALVE-INLET	

Y - SEPARATE ILLUSTRATION

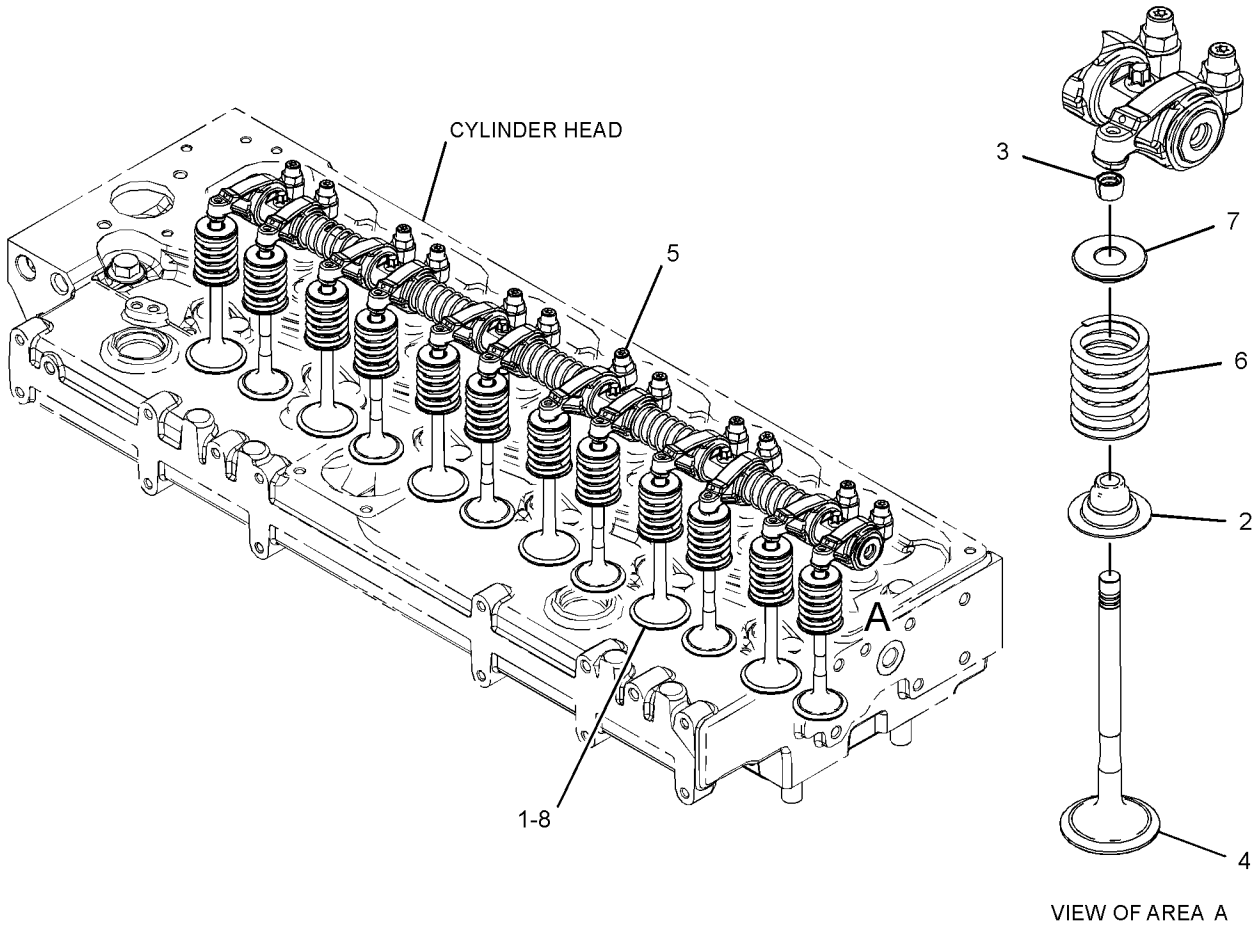

GRAPHIC #1 **<END>** g03317583

438-3180 ROCKER ARM GP

S/N: D7A1-UP

PART OF 425-3316 CYLINDER HEAD GP

SMCS-1123 **i05833758**

NOTE	REF NO	GRAPHIC REF	PART NUMBER	QTY	PART NAME 1 2 3 4 5 6 (PRODUCT LEVEL)	SEE PAGE
	1	1	**436-0520**	12	SPRING-VALVE	
	2	1	**335-5607**	12	RETAINER-SPRING	
	3	1	**381-6235**	6	VALVE-INLET	
	4	1	**252-6438**	6	SEAL-INLET VALVE	
	5	1	**254-3954**	6	SEAL	
	6	1	**315-3393**	24	COLLET	
	7	1	**315-3394**	6	VALVE-EXHAUST	

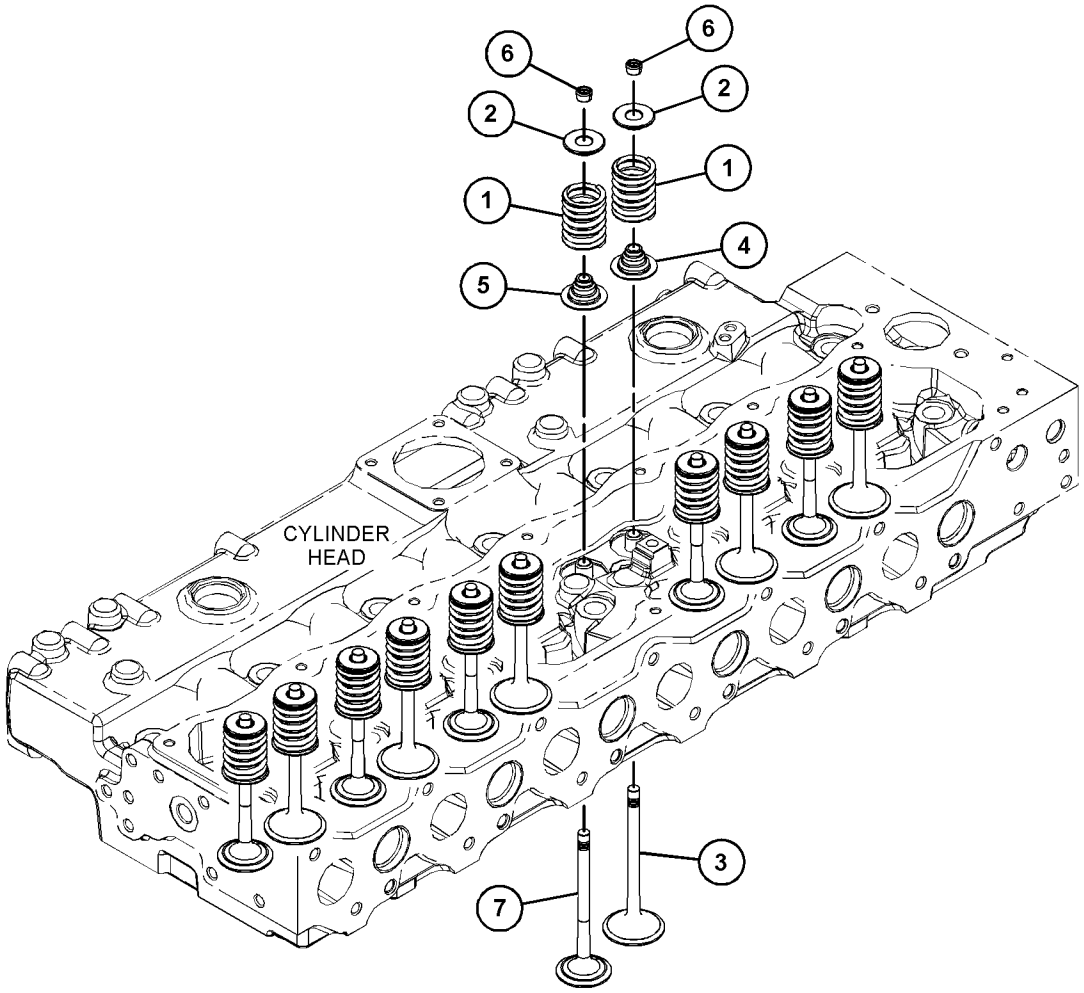

GRAPHIC #1 **<END>** g03646317

335-5602 VALVE MECHANISM GP

S/N: D7A1-UP

PART OF 391-3197 ROCKER ARM GP

SMCS-1209 **i05907410**

NOTE	REF NO	GRAPHIC REF	PART NUMBER	QTY	PART NAME 1 2 3 4 5 6 (PRODUCT LEVEL)	SEE PAGE
	1	1	**335-5604**	1	SHAFT AS-ROCKER ARM	
		1	**276-9200**	2	PLUG-SHAFT END	
		1	**335-5605**	1	SHAFT-ROCKER ARM	
	2	1	**225-5961**	2	WASHER (26.7X34.32X0.38-MM THK)	
M	3	1	**8T-9535**	1	BOLT-SOCKET HEAD (M8X1.25X60-MM)	
	4	1	**225-5962**	5	BOLT (M8X1.25X30-MM)	
	5	1	**225-5959**	2	CLIP	
	6	1	**225-5638**	5	SPRING	
	7	1	**225-5625**	6	LEVER AS	
					(EACH INCLUDES)	
		1	**5B-9079**	1	NUT-JAM (3/8-24-THD)	
		1	**185-1546**	1	SCREW	
	8	1	**225-5640**	6	LEVER AS	
					(EACH INCLUDES)	
		1	**5B-9079**	1	NUT-JAM (3/8-24-THD)	
		1	**185-1546**	1	SCREW	

M - METRIC PART

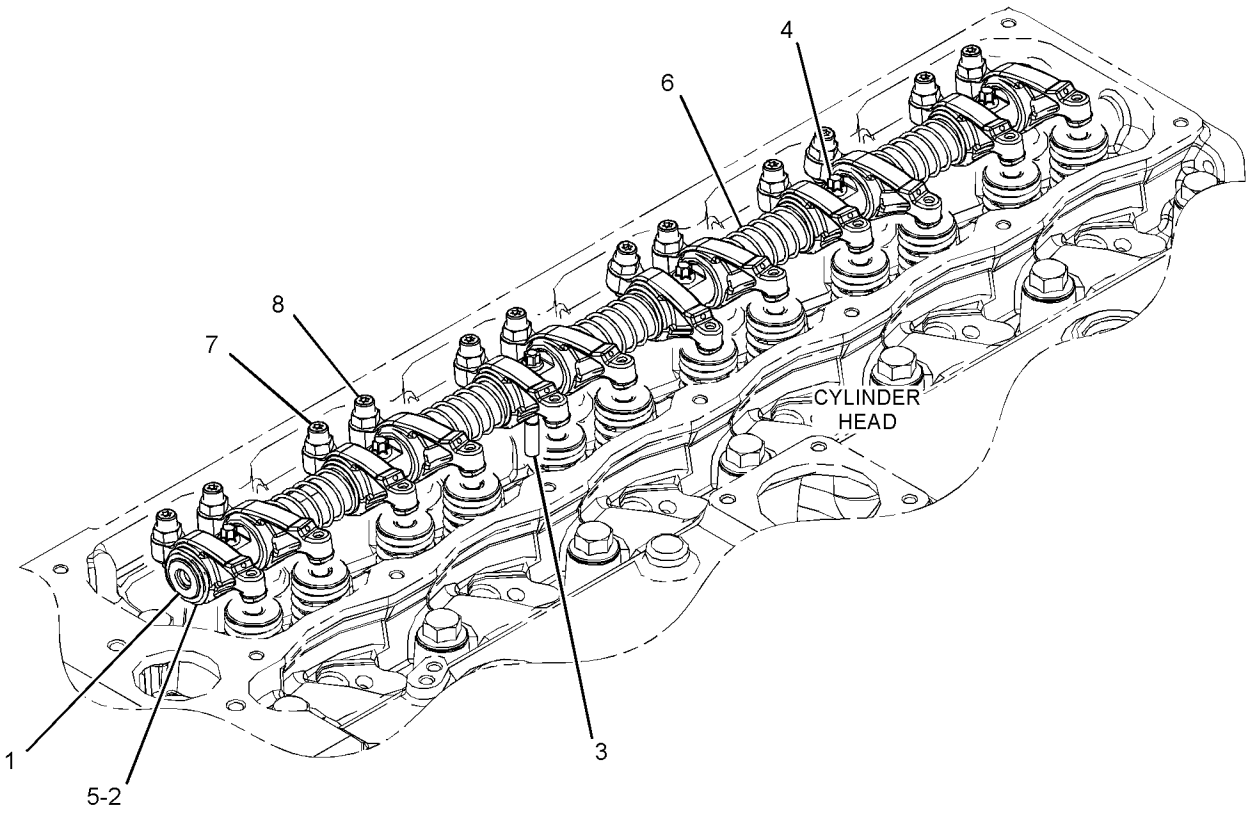

GRAPHIC #1 **<END>** g03319968

417-5871 FILLER GP-ENGINE OIL

S/N: D7A1-UP

PART OF 417-3389 ENGINE AR-PRIMARY

SMCS-1316 **i05156011**

NOTE	REF NO	GRAPHIC REF	PART NUMBER	QTY	PART NAME 1 2 3 4 5 6 (PRODUCT LEVEL)	SEE PAGE
M	1	1	**6I-0217**	2	BOLT (M8X1.25X20-MM)	
	2	1	**225-6522**	1	PLUG-CUP	
	3	1	**225-6524**	1	PLUG-CUP	
	4	1	**277-1974**	1	PLATE AS	
	4A	1	**277-1975**	1	SEAL-O-RING	

M - METRIC PART

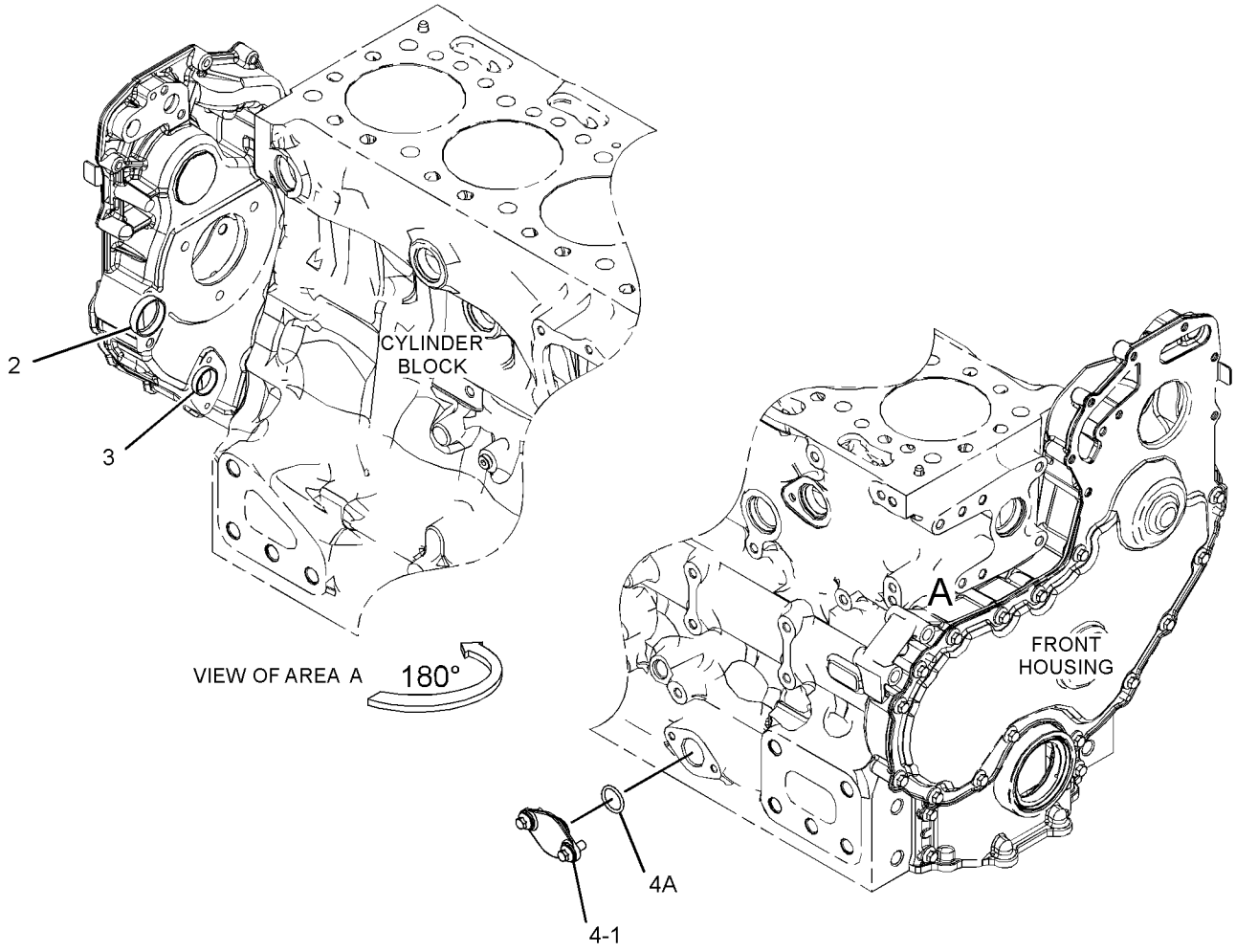

GRAPHIC #1 **<END>** g03316695

368-7675 FILTER & MTG GP-ENGINE OIL

S/N: PBB1-UP; KBS1-UP

PART OF 455-4086 INSTALLATION AR-ENGINE

SMCS-1306, 1308 **i05792371**

NOTE	REF NO	GRAPHIC REF	PART NUMBER	QTY	PART NAME 1 2 3 4 5 6 (PRODUCT LEVEL)	SEE PAGE
Y	1	1	**322-3154**	1	FILTER GP-ENGINE OIL (ENGINE)	54
	2	1	*329-5534*	1	CONNECTOR AS	
		1	**8C-5723**	1	CONNECTOR	
		1	**228-7093**	1	SEAL-O-RING	
		1	**238-5084**	1	SEAL-O-RING	
	3	1	**346-3229**	1	BASE AS-FILTER	
		1	**232-7599**	1	PLUG	
I	4	1	**379-4463**	1	HOSE AS	
I	5	1	**379-4464**	1	HOSE AS	
	6	1	**379-4465**	1	PLATE AS	
	7	1	**203-2287**	1	CLIP	
	8	1	*309-5130*	1	PLUG AS	
		1	**9S-4182**	1	PLUG	
		1	**214-7566**	1	SEAL-O-RING	
	9	1	*309-5137*	1	CONNECTOR AS	
		1	**6V-8635**	1	CONNECTOR	
		1	**228-7093**	1	SEAL-O-RING	
		1	**238-5084**	1	SEAL-O-RING	
	10	1	*319-6212*	1	CONNECTOR AS	
		1	**6V-8714**	1	CONNECTOR	
		1	**228-7093**	1	SEAL-O-RING	
		1	**238-5082**	1	SEAL-O-RING	
	11	1	*319-6220*	1	ELBOW AS	
		1	**6V-9008**	1	ELBOW	
		1	**228-7093**	1	SEAL-O-RING	
		1	**238-5084**	1	SEAL-O-RING	
	12	1	*321-8649*	1	VALVE AS-FLUID SAMPLING (ENGINE OIL)	
		1	**8C-3446**	1	VALVE-SAMPLING (ENGINE OIL)	
		1	**214-7566**	1	SEAL-O-RING	
	13	1	*326-0319*	1	PLUG AS	
		1	**9S-4188**	1	PLUG	
		1	**238-5083**	1	SEAL-O-RING	
	14	1	**8C-3445**	1	CAP-DUST	
M	15	1	**8T-4192**	3	BOLT (M12X1.75X25-MM)	
	16	1	**8T-4223**	3	WASHER-HARD (13.5X25.5X3-MM THK)	
	17	1	**8T-4224**	4	WASHER-HARD (8.8X16X2-MM THK)	
M	18	1	**8T-7547**	4	BOLT (M8X1.25X30-MM)	
E	19	1	**7Y-5074**		GUARD-HOSE (49-CM)	

E - ORDER BY THE CENTIMETER
I - REFER TO HYDRAULIC INFORMATION SYSTEM
M - METRIC PART
Y - SEPARATE ILLUSTRATION

368-7675 **FILTER & MTG GP-ENGINE OIL (*contd.*)** **i05792371**

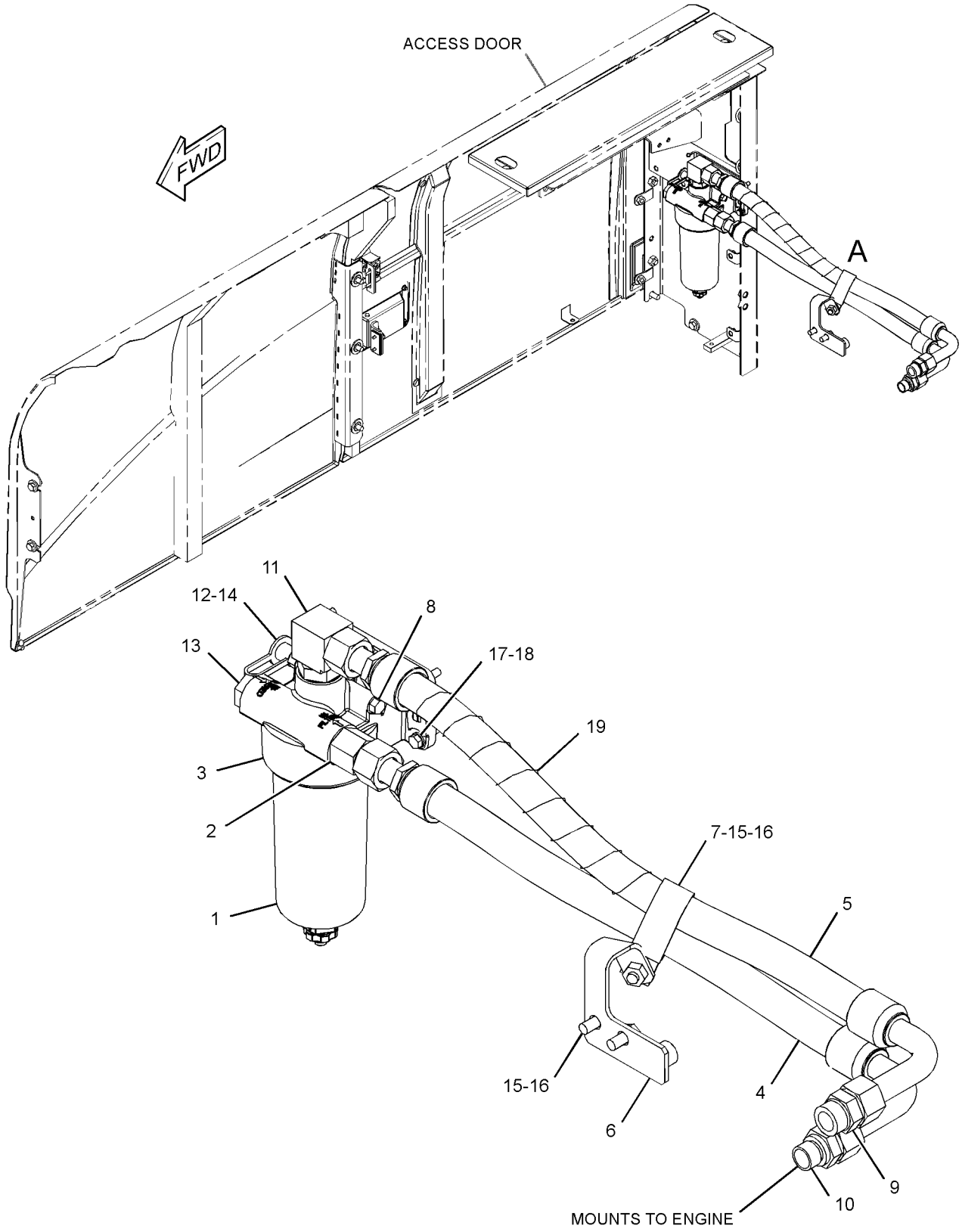

VIEW OF AREA A

GRAPHIC #1 **<END>** g03304439

322-3154 FILTER GP-ENGINE OIL

S/N: PBB1-UP; KBS1-UP

PART OF 368-7675 FILTER & MTG GP-ENGINE OIL

SMCS-1308 **i05792413**

NOTE	REF NO	GRAPHIC REF	PART NUMBER	QTY	PART NAME 1 2 3 4 5 6 (PRODUCT LEVEL)	SEE PAGE
	1	1	**322-3155**	1	FILTER ELEMENT-ENGINE OIL	
	2	1	**354-5833**	1	KIT-DRAIN	

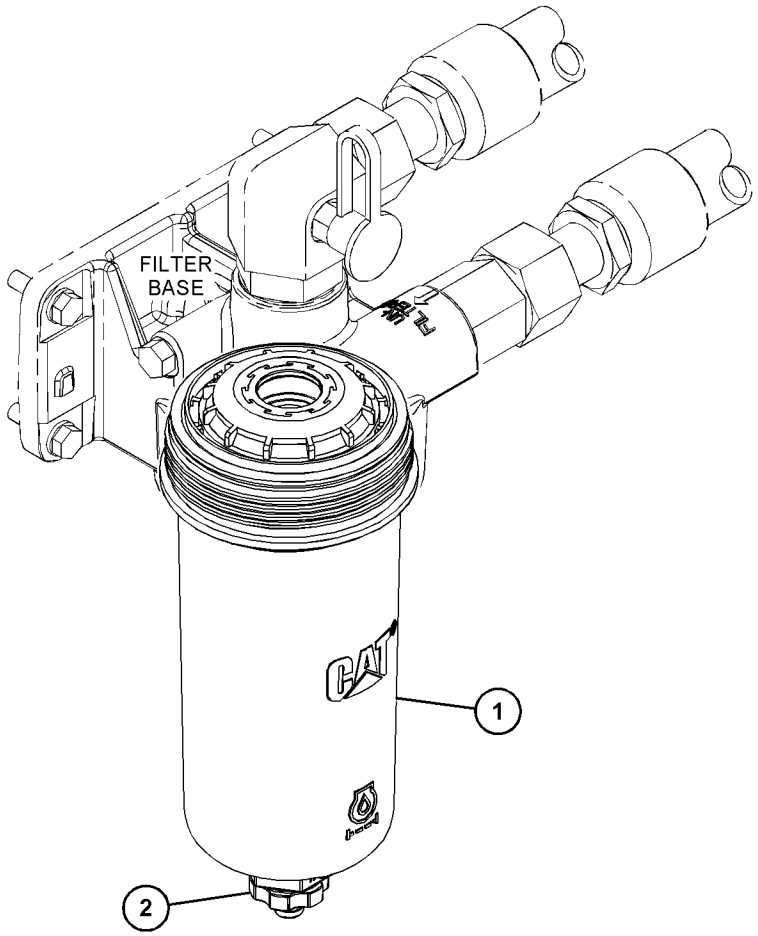

GRAPHIC #1 **<END>** g03449839

394-7474 FUMES DISPOSAL GP

S/N: PBB1-UP; KBS1-UP

PART OF 455-4086 INSTALLATION AR-ENGINE

SMCS-1317 **i05227096**

NOTE	REF NO	GRAPHIC REF	PART NUMBER	QTY	PART NAME 1 2 3 4 5 6 (PRODUCT LEVEL)	SEE PAGE
M	1	1	**8T-6870**	1	BOLT (M8X1.25X70-MM)	
	2	1	**394-7970**	1	HOSE-FUMES DISPOSAL	
	3	1	**395-1699**	1	PLATE	
	4	1	**067-3045**	1	CLIP	
	5	1	**206-1345**	1	STRAP-CABLE	
	6	1	**5V-9155**	1	CLAMP-HOSE	
	7	1	**8T-4121**	2	WASHER-HARD (11X21X2.5-MM THK)	
M	8	1	**8T-4137**	2	BOLT (M10X1.5X20-MM)	
	9	1	**8T-4224**	1	WASHER-HARD (8.8X16X2-MM THK)	

M - METRIC PART

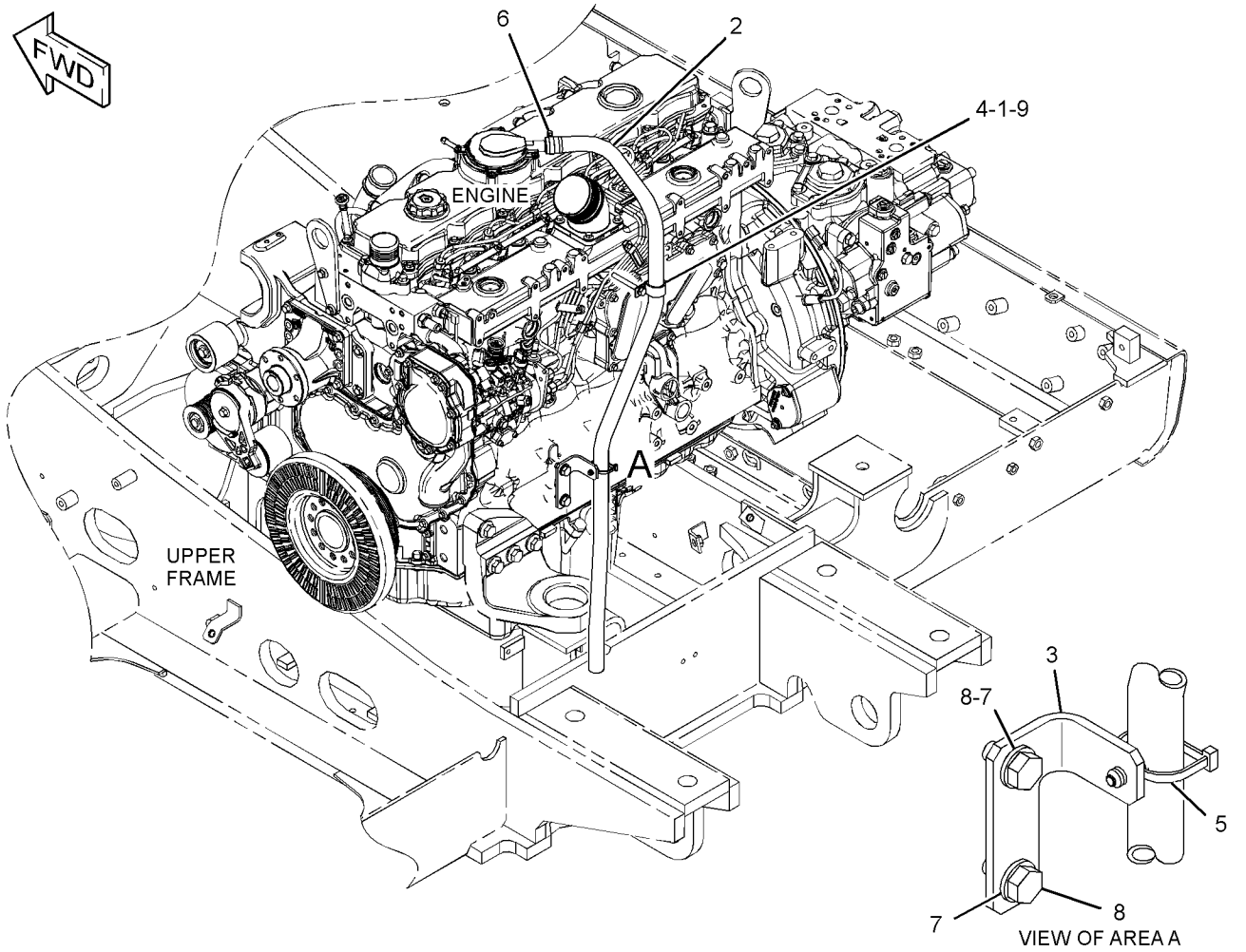

GRAPHIC #1 **<END>** g03358502

374-6004 LINES GP-ENGINE OIL DRAIN

S/N: PBB1-UP; KBS1-UP

PART OF 455-4086 INSTALLATION AR-ENGINE

SMCS-1307 **i05114429**

NOTE	REF NO	GRAPHIC REF	PART NUMBER	QTY	PART NAME 1 2 3 4 5 6 (PRODUCT LEVEL)	SEE PAGE
	1	1	**095-1388**	1	CLAMP-HOSE	
E	2	1	**5P-0743**		HOSE (23-CM)	

E - ORDER BY THE CENTIMETER

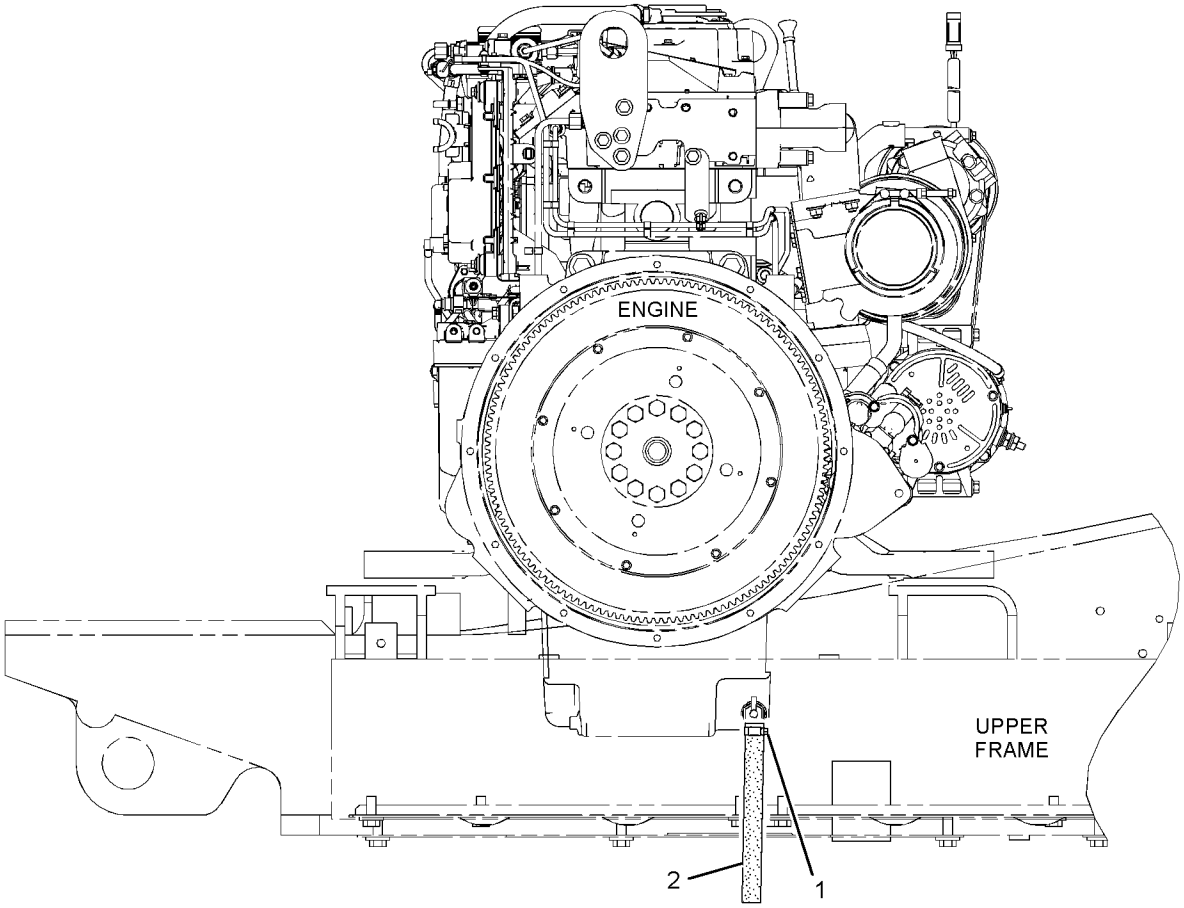

RIGHT SIDE VIEW

GRAPHIC #1

<END>

g02724625

346-0737 PUMP GP-ENGINE OIL

S/N: D7A1-UP

PART OF 417-3389 ENGINE AR-PRIMARY

SMCS-1304, 1315

i05147972

NOTE	REF NO	GRAPHIC REF	PART NUMBER	QTY	PART NAME 1 2 3 4 5 6 (PRODUCT LEVEL)	SEE PAGE
	1	1	**373-8014**	1	PUMP-OIL	
M	2	1	**6I-1090**	4	BOLT (M8X1.25X40-MM)	

M - METRIC PART

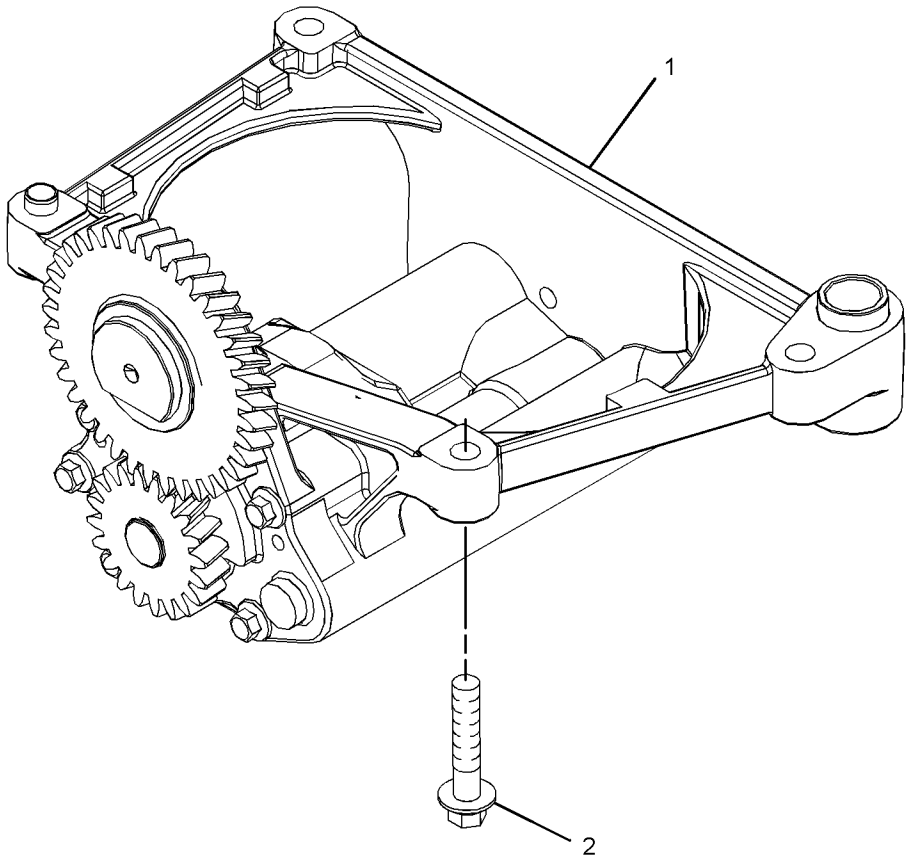

GRAPHIC #1 **<END>** g02815299

346-2911 CONNECTION GP-HEATER

S/N: D7A1-UP

FOR USE WITH OPTIONAL CUSTOMER CONNECTION FOR CAB HEATER

PART OF 417-3389 ENGINE AR-PRIMARY

SMCS-1380, 1383 **i05303169**

NOTE	REF NO	GRAPHIC REF	PART NUMBER	QTY	PART NAME 1 2 3 4 5 6 (PRODUCT LEVEL)	SEE PAGE
	1	1	**067-6823**	1	PLUG	
	2	1	**9X-3959**	1	ELBOW	
	3	1	**7W-4669**	1	ADAPTER	

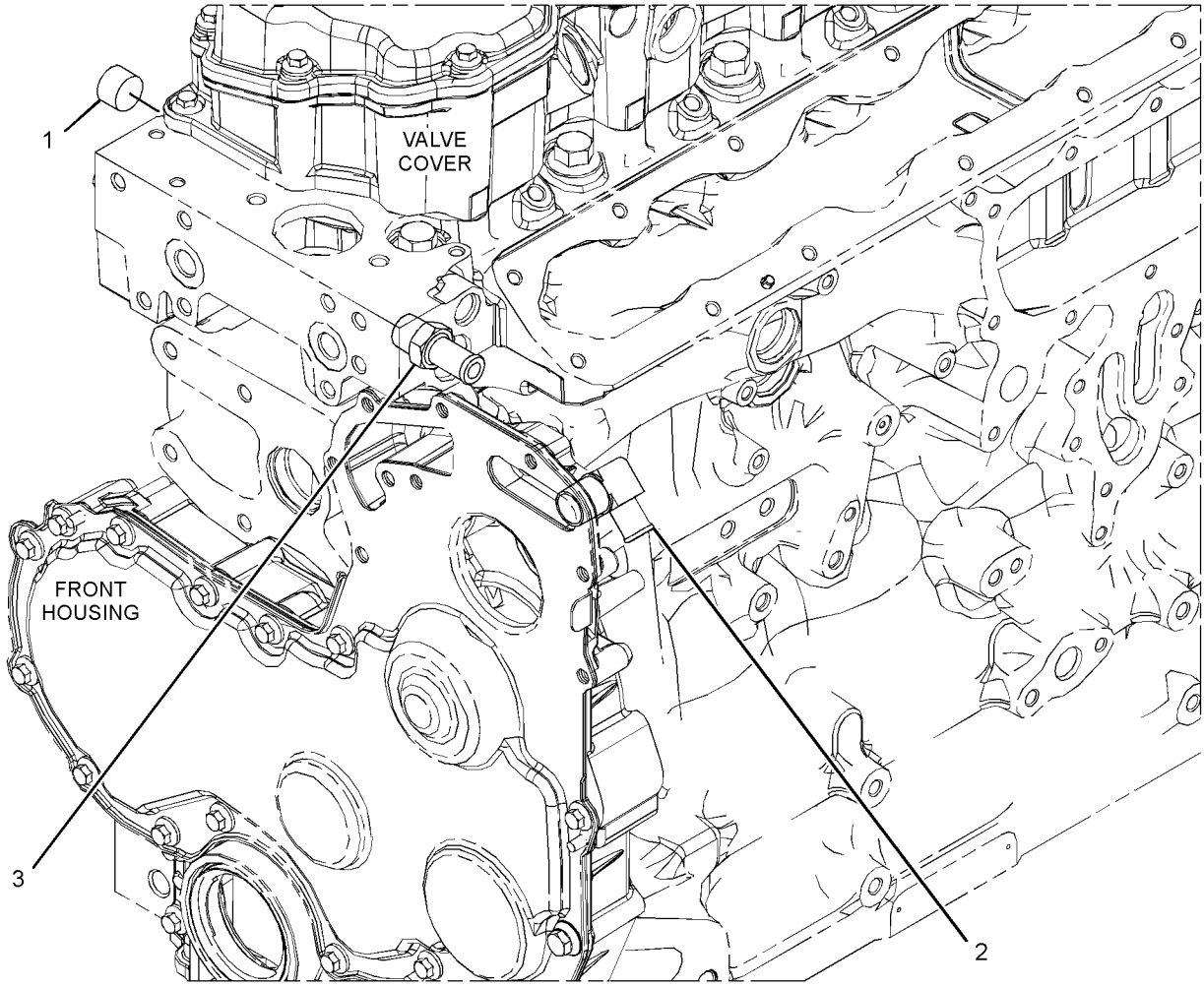

GRAPHIC #1 **<END>** g03105759

326-7401 COOLER GP-ENGINE OIL

S/N: D7A1-UP

PART OF 371-2553 COOLER GP-ENGINE OIL

SMCS-1378 **i04526701**

NOTE	REF NO	GRAPHIC REF	PART NUMBER	QTY	PART NAME 1 2 3 4 5 6 (PRODUCT LEVEL)	SEE PAGE
M	1	1	**6I-0260**	1	BOLT (M8X1.25X25-MM)	
	2	1	**6I-4793**	6	BOLT (M8X1.25X50-MM)	
	3	1	**277-2500**	1	GASKET	
	4	1	**281-7039**	1	COOLER-OIL (ENGINE)	
	5	1	**281-7040**	1	GASKET	

M - METRIC PART

326-7401 **COOLER GP-ENGINE OIL (*contd.*)** **i04526701**

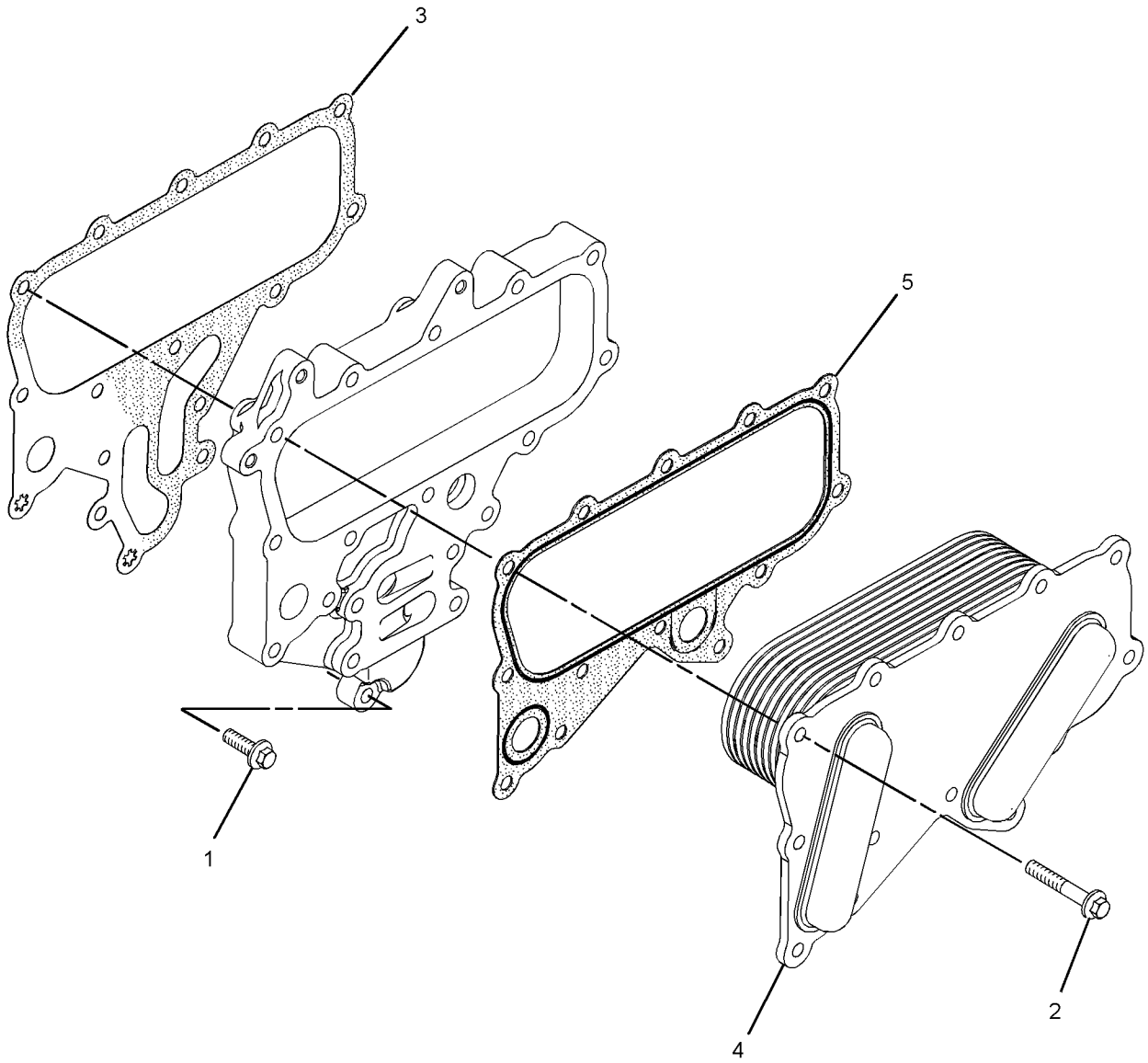

GRAPHIC #1 **<END>** g01508024

371-2553 COOLER GP-ENGINE OIL

S/N: D7A1-UP

PART OF 417-3389 ENGINE AR-PRIMARY

SMCS-1378 **i05207716**

NOTE	REF NO	GRAPHIC REF	PART NUMBER	QTY	PART NAME 1 2 3 4 5 6 (PRODUCT LEVEL)	SEE PAGE
	1	1	**225-7944**	2	GASKET	
	2	1	**232-3751**	1	PLATE	
	3	1	**277-2537**	1	PLATE	
	4	1	**277-2538**	1	GASKET	
Y	5	1	**326-7401**	1	COOLER GP-ENGINE OIL	59
	6	1	**340-4212**	1	ADAPTER	
M	9	1	**6I-0455**	4	BOLT (M8X1.25X55-MM)	
M	10	1	**6I-0217**	6	BOLT (M8X1.25X20-MM)	
	11	1	**6I-4793**	7	BOLT (M8X1.25X50-MM)	

M - METRIC PART
Y - SEPARATE ILLUSTRATION

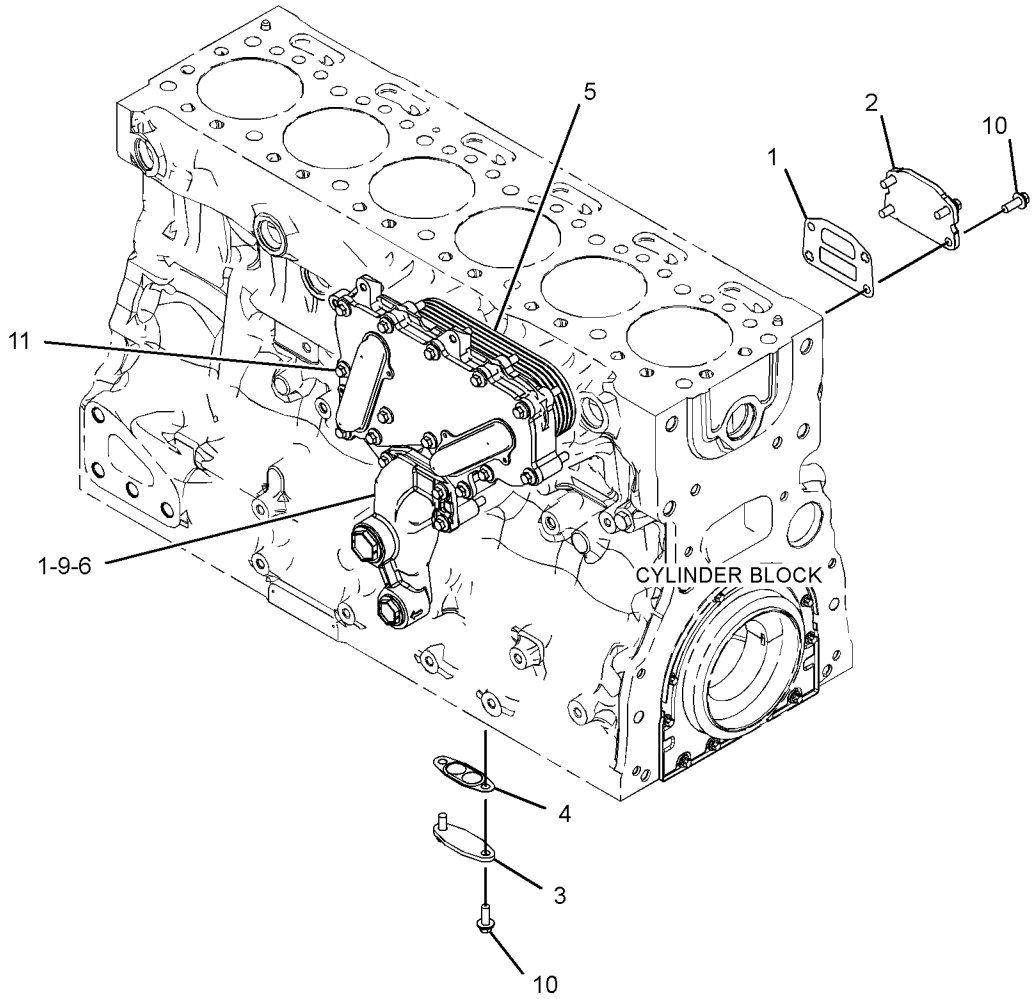

GRAPHIC #1 **<END>** g03360460

431-9792 FAN AR-SUCTION

S/N: PBB1-UP; KBS1-UP

PART OF 394-7469 ENGINE AR-COMPLETE

SMCS-1356 **i05213269**

NOTE	PART NUMBER	QTY	PART NAME 1 2 3 4 5 6 (PRODUCT LEVEL)	SEE PAGE
Y	*416-0664*	1	FAN GP-SUCTION	63
Y	*324-4551*	1	PULLEY GP-ENGINE	47

Y - SEPARATE ILLUSTRATION

<END>

416-0664 FAN GP-SUCTION—DIRECT DRIVE

S/N: PBB1-UP; KBS1-UP

PART OF 431-9792 FAN AR-SUCTION

SMCS-1356 **i05903757**

NOTE	REF NO	GRAPHIC REF	PART NUMBER	QTY	PART NAME 1 2 3 4 5 6 (PRODUCT LEVEL)	SEE PAGE
	1	1	**350-7492**	1	FAN AS-SUCTION (9-BLADE)	
	2	1	**369-2258**	1	SPACER-FAN	
	3	1	**453-3454**	6	WASHER-HARD (11X21X2.5-MM THK)	
M	4	1	**453-3441**	6	BOLT (M10X1.5X50-MM)	
M	5	1	**453-3432**	6	BOLT (M8X1.25X20-MM)	
	6	1	**453-3451**	6	WASHER-HARD (8.8X16X2-MM THK)	

M - METRIC PART

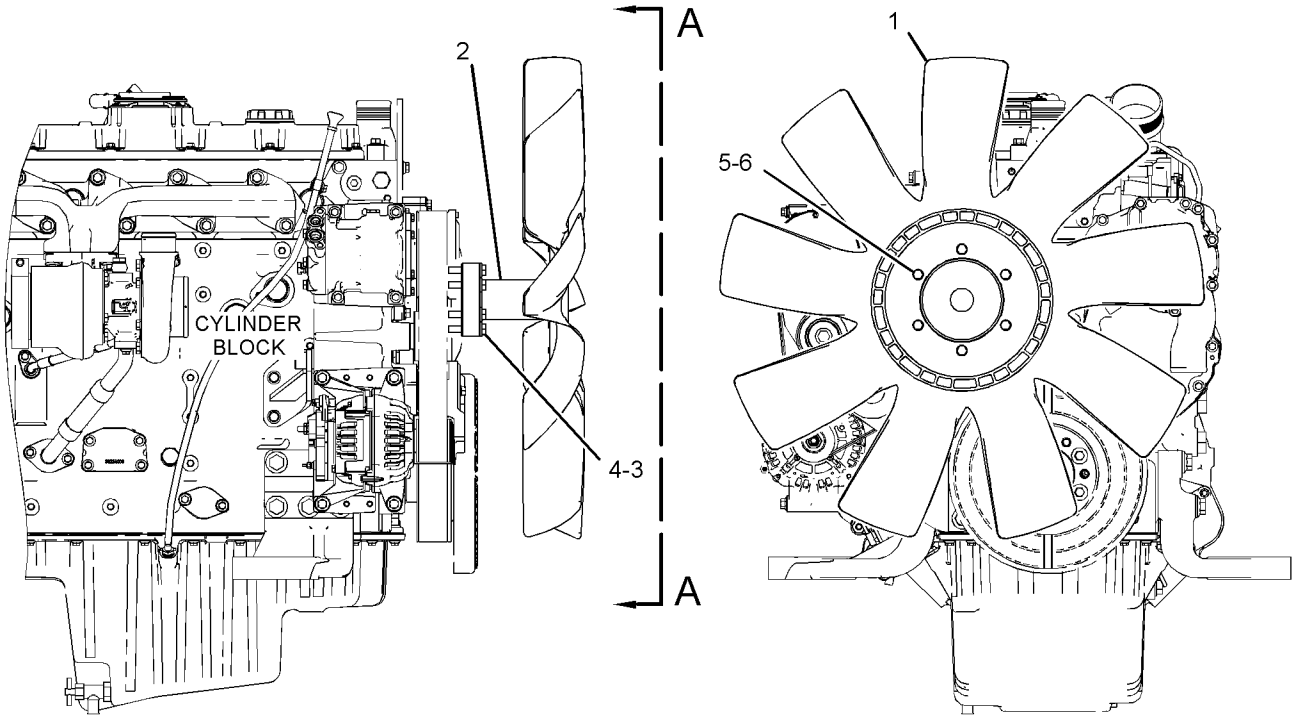

VIEW A-A

GRAPHIC #1 **<END>** g03342961

394-2220 LINES GP-COOLING

S/N: PBB1-UP; KBS1-UP

PART OF 455-4086 INSTALLATION AR-ENGINE

SMCS-1380, 5057 **i05333454**

NOTE	REF NO	GRAPHIC REF	PART NUMBER	QTY	PART NAME 1 2 3 4 5 6 (PRODUCT LEVEL)	SEE PAGE
	1	1	**369-2259**	1	HOSE	
	2	1	**369-2263**	1	HOSE	
	3	1	**369-2264**	1	HOSE	
	4	1	**369-2265**	1	PIPE AS	
		1	**7T-1099**	1	LINK	
M		1	**8T-3490**	2	NUT-WELD (M10X1.5-THD)	
	5	1	**394-2229**	1	HOSE	
	6	1	**415-8537**	1	PIPE AS	
	7	1	**144-0367**	8	CLAMP-HOSE	
	8	1	**5M-6213**	1	PLUG-PIPE	
	9	1	**5P-4116**	8	WASHER-HARD (8.8X20.5X2-MM THK)	
M	10	1	**8T-4200**	8	BOLT (M8X1.25X16-MM)	
	11	1	**8T-4985**	1	CLAMP-HOSE	
	12	1	**8T-6703**	1	CLAMP-HOSE	

M - METRIC PART

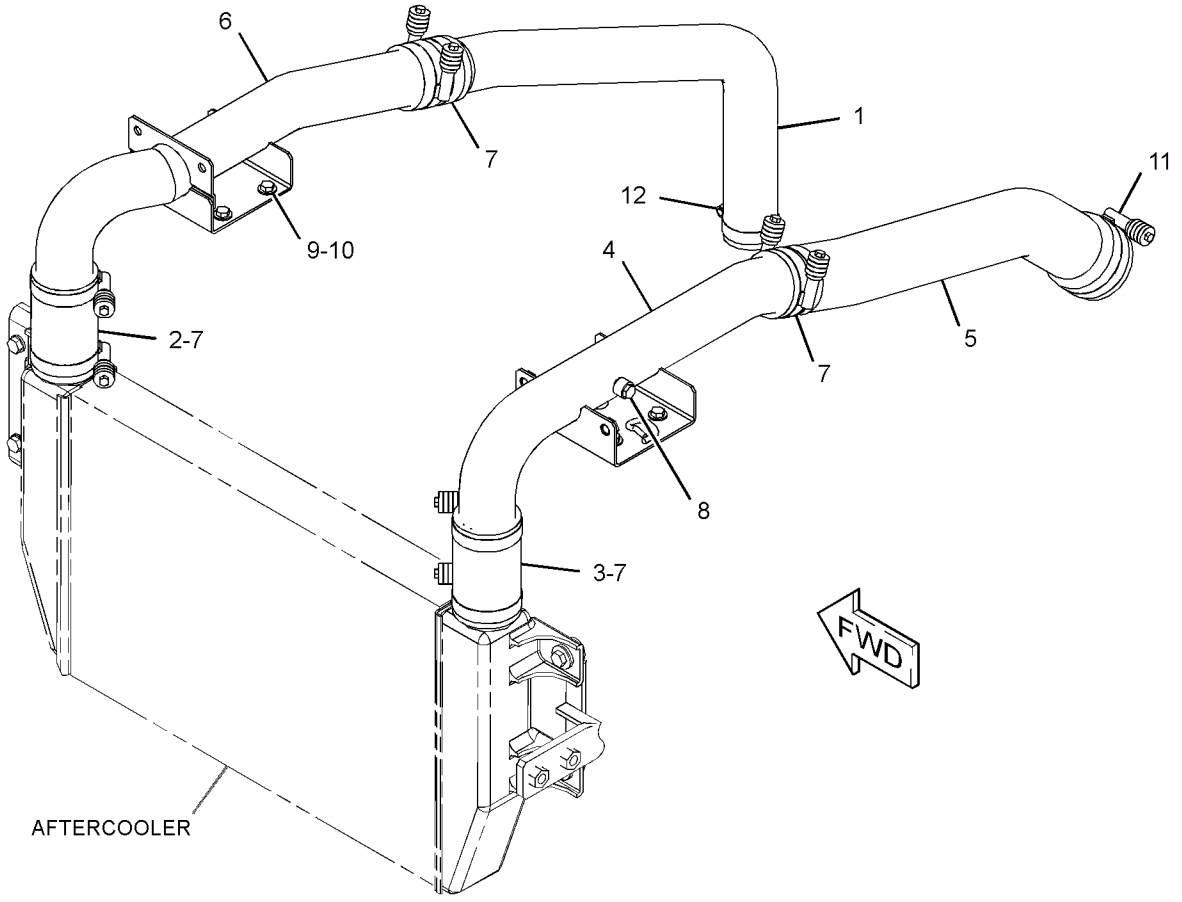

GRAPHIC #1 **<END>** g03306736

346-0411 PUMP GP-WATER

S/N: D7A1-UP

PART OF 417-3389 ENGINE AR-PRIMARY

SMCS-1361 **i05245725**

NOTE	REF NO	GRAPHIC REF	PART NUMBER	QTY	PART NAME 1 2 3 4 5 6 (PRODUCT LEVEL)	SEE PAGE
	1	1	**113-8129**	2	BOLT (M8X1.25X75-MM)	
	2	1	**123-2899**	2	BOLT (M10X1.5X40-MM)	
	4	1	**277-2925**	1	CONNECTION AS	
		1	**225-7738**	1	SEAL-O-RING	
		1	**277-2923**	1	GASKET	
	5	1	**281-8744**	1	GASKET-WATER REGULATOR	
	6	1	**354-4754**	1	KIT-WATER PUMP	
					(KIT INCLUDES GASKET & PUMP GP)	
	7	1	**417-7782**	1	REGULATOR AS-WATER TEMPERATURE (INCLUDES CONNECTOR) (WATER TEMPERATURE)	
M	8	1	**6I-0217**	2	BOLT (M8X1.25X20-MM)	
M	9	1	**6I-0254**	2	BOLT (M8X1.25X30-MM)	
	10	1	**6I-0839**	5	BOLT (M8X1.25X70-MM)	
	11	1	**225-8019**	1	GASKET	

M - METRIC PART

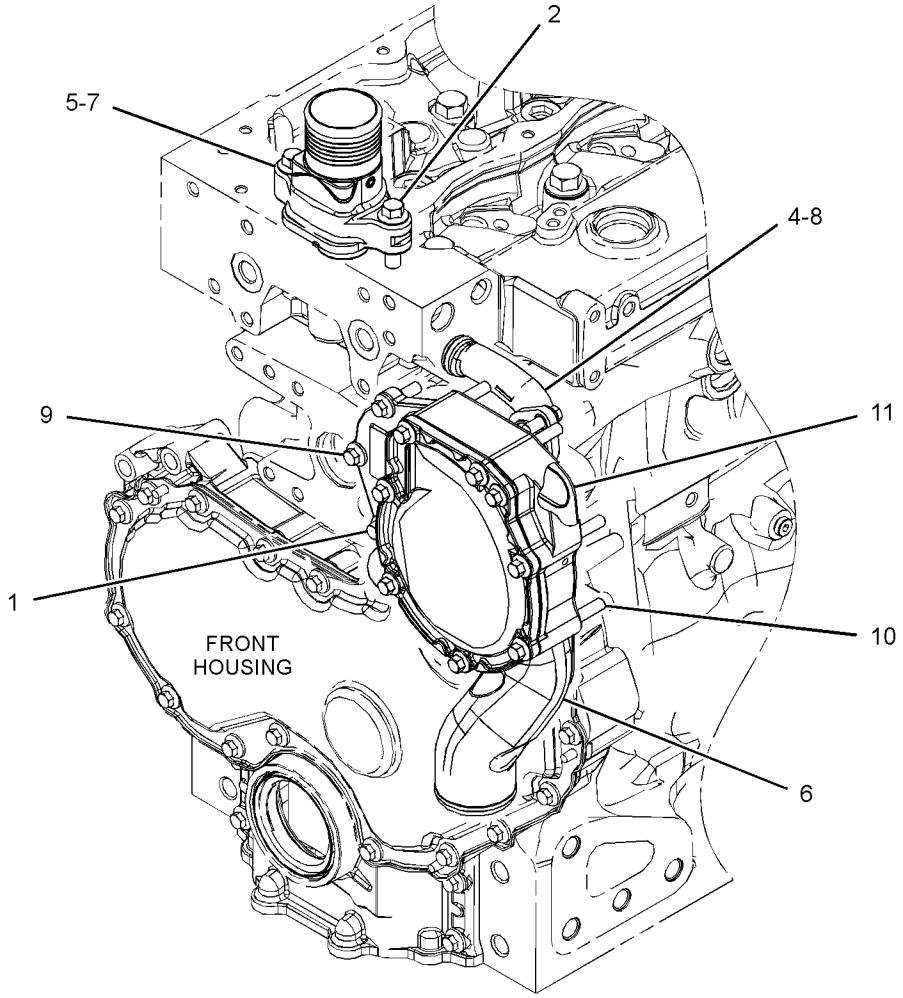

GRAPHIC #1 **<END>** g03357993

394-2224 RADIATOR & HYD OIL COOLER GP

S/N: PBB1-UP; KBS1-UP

PART OF 455-4086 INSTALLATION AR-ENGINE

SMCS-1351 **i05857484**

NOTE	REF NO	GRAPHIC REF	PART NUMBER	QTY	PART NAME 1 2 3 4 5 6 (PRODUCT LEVEL)	SEE PAGE
	1	1	**096-4035**	1	CLIP	
	2	1	**171-9077**	1	BAND	
	3	1	**305-7664**	1	BRACKET AS	
	4	1	**245-9191**	1	PLATE AS	
	5	1	**096-5819**	1	TANK AS-COOLANT (RECOVERY)	
		1	**171-3369**	1	CAP AS (COOLANT RECOVERY)	
	7	1	**417-9090**	1	GUARD AS	
	8	1	**423-4409**	1	HOSE-RADIATOR (LOWER)	
CY	13	1	**433-5163**	1	RADIATOR & HYD OIL COOLER GP	68
	14	1	**394-2235**	1	HOSE-RADIATOR (UPPER)	
	15	1	**399-7534**	1	LINER	
	17	1	**178-6450**	4	SPACER (17X35X30-MM THK)	
	18	1	**3P-9847**	1	CLIP	
	19	1	**3S-2093**	5	STRAP-CABLE	
	23	1	**7I-2673**	1	STRAP-CABLE	
M	24	1	**8T-4191**	4	BOLT (M10X1.5X16-MM)	
M	26	1	**453-2838**	4	BOLT (M16X2X70-MM)	
	27	1	**7X-7729**	6	WASHER (11X25X3-MM THK)	
	28	1	**8T-4121**	5	WASHER-HARD (11X21X2.5-MM THK)	
M	29	1	**8T-4136**	2	BOLT (M10X1.5X25-MM)	
M	30	1	**8T-4137**	5	BOLT (M10X1.5X20-MM)	
M	31	1	**8T-4139**	2	BOLT (M12X1.75X30-MM)	
M	32	1	**8T-4200**	2	BOLT (M8X1.25X16-MM)	
	33	1	**8T-4223**	2	WASHER-HARD (13.5X25.5X3-MM THK)	
	34	1	**8T-4224**	2	WASHER-HARD (8.8X16X2-MM THK)	
	35	1	**8T-6703**	4	CLAMP-HOSE	
E	37	1	**7Y-1976**		HOSE-WATER (38-CM)	
D	38	1	**5P-9909**		SEAL (0.2-M)	
D	39	1	**5P-5649**		SEAL-BULK (0.9-M)	

C - CHANGE FROM PREVIOUS TYPE
D - ORDER BY THE METER
E - ORDER BY THE CENTIMETER
M - METRIC PART
Y - SEPARATE ILLUSTRATION

394-2224 **RADIATOR & HYD OIL COOLER GP (*contd.*)** **i05857484**

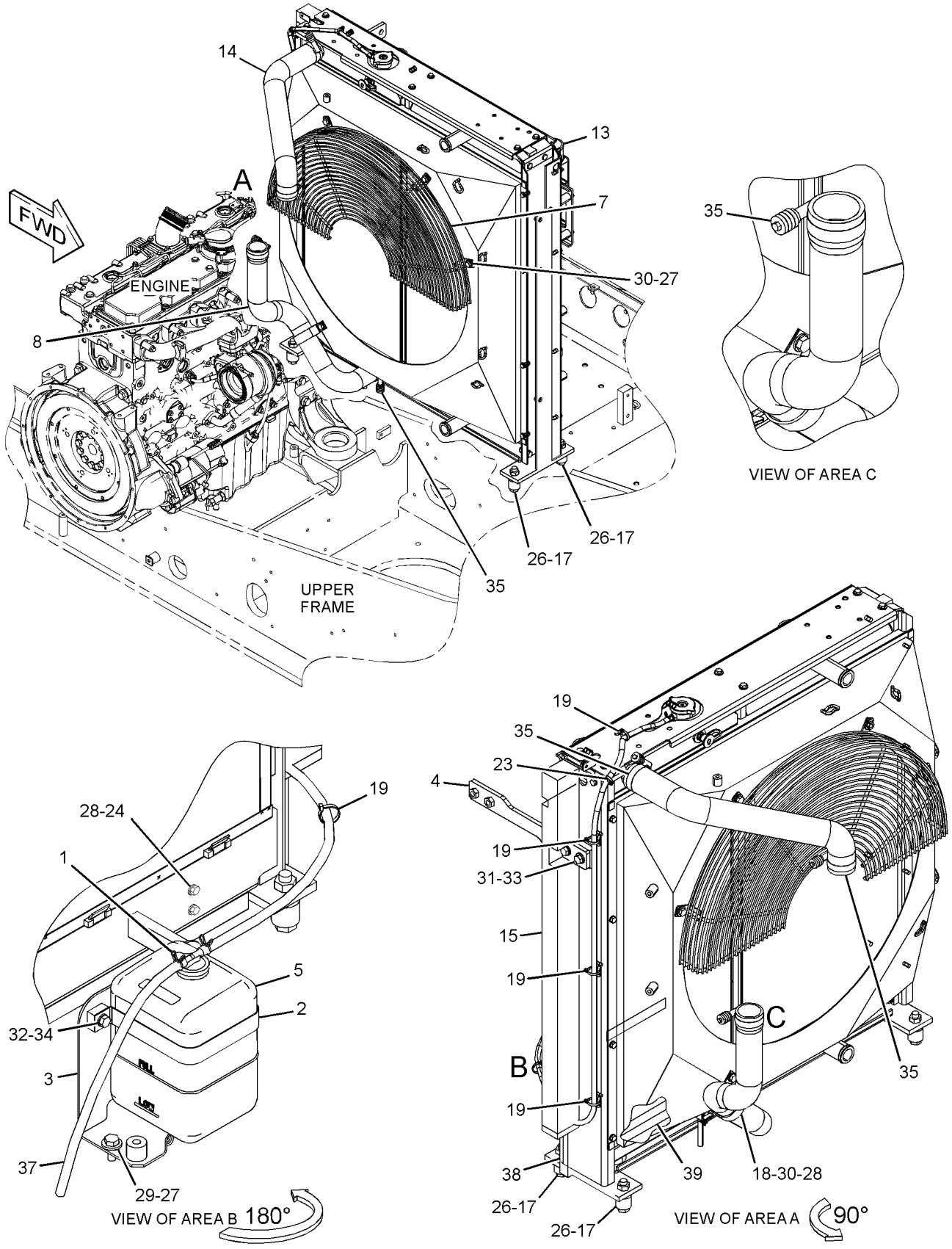

GRAPHIC #1

<END>

g03342936

433-5163 RADIATOR & HYD OIL COOLER GP

S/N: PBB1-UP; KBS1-UP

PART OF 394-2224 RADIATOR & HYD OIL COOLER GP

SMCS-1351 **i05909472**

NOTE	REF NO	GRAPHIC REF	PART NUMBER	QTY	PART NAME 1 2 3 4 5 6 (PRODUCT LEVEL)	SEE PAGE
	1	1	**377-5000**	2	SEAL	
	2	1	**377-5001**	4	SEAL	
	3	2	**377-5002**	1	SEAL	
	4	1	**377-5003**	2	SEAL	
	5	2	**5D-8159**	4	PIN AS	
	6	1	**096-4035**	3	CLIP	
	7	1	**312-8338**	1	CORE AS-OIL COOLER (HYDRAULIC)	
	8	1	**313-3762**	2	CUSHION-RUBBER	
	9	2	**313-3763**	1	SCREEN AS (RADIATOR)	
	10	2	**313-3764**	1	SCREEN AS (OIL COOLER)	
	11	2	**313-3766**	2	SLEEVE	
	12	2	**313-3769**	2	CUSHION-RUBBER	
	13	2	**314-6506**	2	CUSHION-RUBBER	
	14	2	**314-6509**	2	WASHER	
	15	2	**314-6510**	2	PIN	
	16	1	**336-4591**	1	BRACKET AS	
M		1	**5C-7261**	4	NUT (M8X1.25-THD)	
	17	1,2	**352-7775**	2	SEAL	
	18	2	**374-5000**	1	PLATE AS	
	19	2	**375-2985**	1	PLATE AS	
	20	2	**377-5004**	1	SEAL	
	21	2	**377-5005**	2	SEAL	
	22	1	**377-5006**	2	SEAL	
	23	2	**378-6177**	1	FRAME AS	
	24	2	**378-6179**	1	AFTERCOOLER AS	
	25	1	**378-6180**	1	SHROUD AS	
	26	1	**391-1497**	1	CORE AS-RADIATOR	
		1	**332-4192**	2	SEAL-O-RING	
		1	**355-0468**	1	PLUG-DRAIN (RADIATOR)	
	27	1	**391-1498**	1	PLATE AS	
	28	1	**416-0965**	1	CAP-RADIATOR	
	29	1	**433-5158**	1	SEAL-AIR	
	30	2	**433-5159**	1	SEAL-AIR	
	31	1	**154-9023**	1	VALVE-SAMPLING	
	32	1	**157-0670**	1	CAP-DUST	
	33	1	**5P-4116**	6	WASHER-HARD (8.8X20.5X2-MM THK)	
	34	1	**6V-9027**	1	SEAL-O-RING	
	35	2	**7X-7729**	2	WASHER (11X25X3-MM THK)	
	36	2	**8T-4121**	14	WASHER-HARD (11X21X2.5-MM THK)	
M	37	2	**8T-4136**	10	BOLT (M10X1.5X25-MM)	
M	38	2	**8T-4137**	4	BOLT (M10X1.5X20-MM)	
M	39	2	**8T-4185**	2	BOLT (M10X1.5X50-MM)	
M	40	1	**8T-4189**	16	BOLT (M8X1.25X20-MM)	
M	41	2	**8T-4195**	4	BOLT (M10X1.5X30-MM)	
	42	1	**8T-4224**	10	WASHER-HARD (8.8X16X2-MM THK)	
E	43	2	**7Y-1976**		HOSE-WATER (190-CM)	
E	43A	1	**7Y-1976**		HOSE-WATER (8-CM)	

E - ORDER BY THE CENTIMETER
M - METRIC PART

433-5163 **RADIATOR & HYD OIL COOLER GP (*contd.*)** **i05909472**

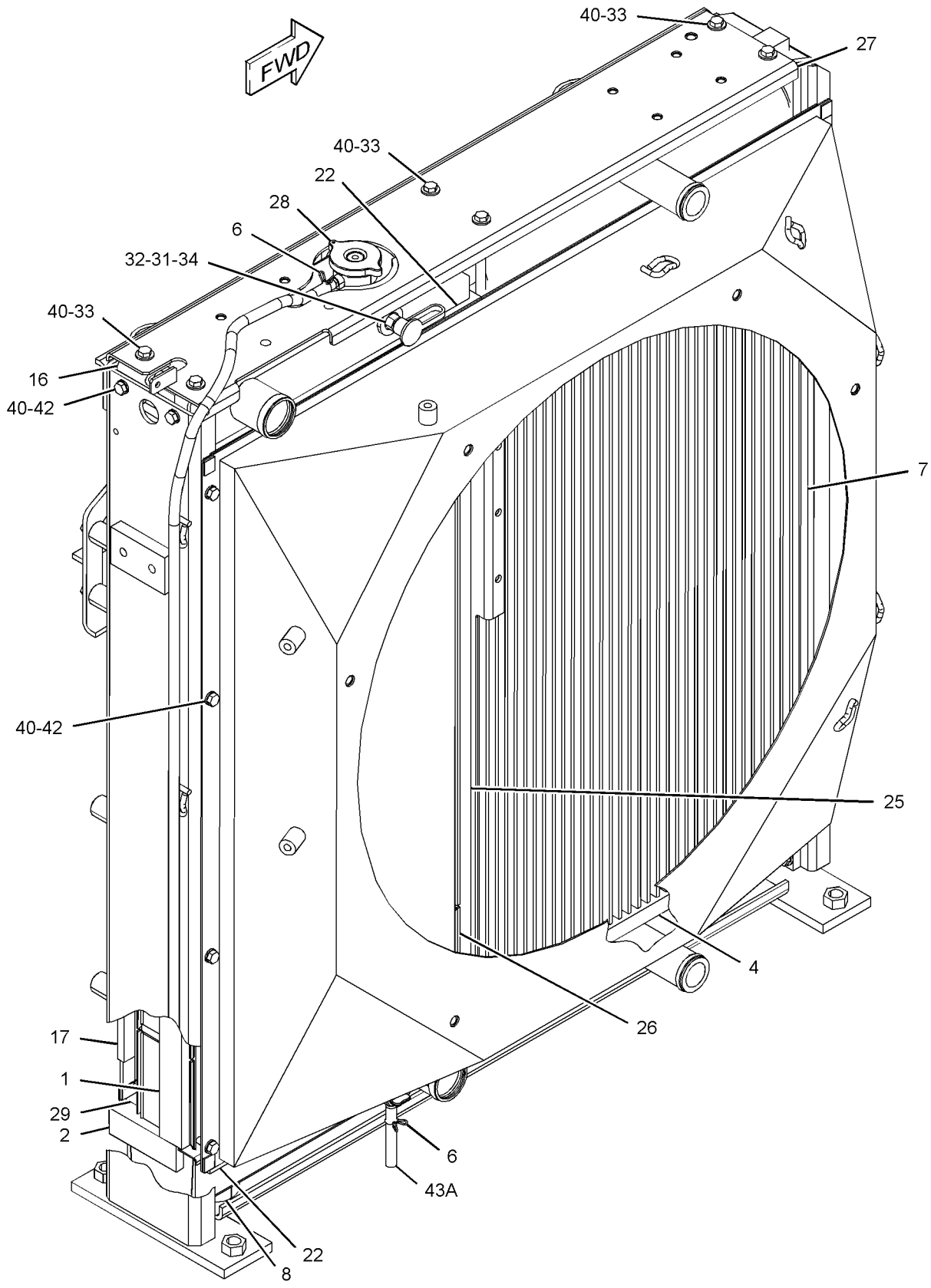

GRAPHIC #1 g03454981

433-5163 **RADIATOR & HYD OIL COOLER GP (*contd.*)** **i05909472**

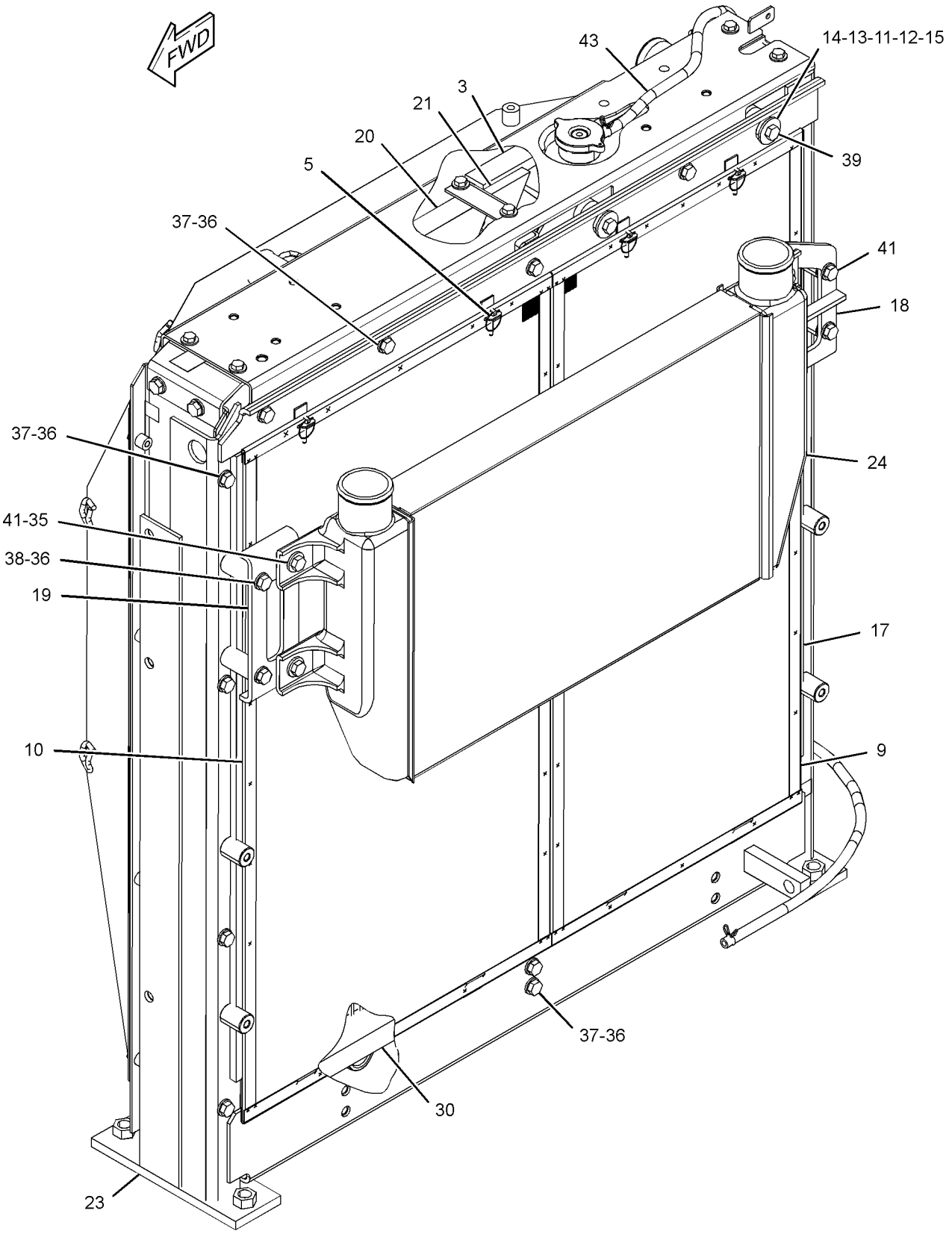

GRAPHIC #2 **<END>** g03455457

447-0758 AIR CLEANER GP

S/N: PBB1-UP; KBS1-UP

PART OF 450-5325 AIR CLEANER GP

SMCS-1051, 1054 **i05885605**

NOTE	REF NO	GRAPHIC REF	PART NUMBER	QTY	PART NAME 1 2 3 4 5 6 (PRODUCT LEVEL)	SEE PAGE
	1	1	**353-4847**	1	VALVE-DUST	
	2	1	**447-0761**	1	FILTER ELEMENT AS-AIR (SECONDARY)	
	3	1	**447-0762**	1	COVER AS	
	4	1	**457-8206**	1	FILTER ELEMENT AS-AIR (PRIMARY)	

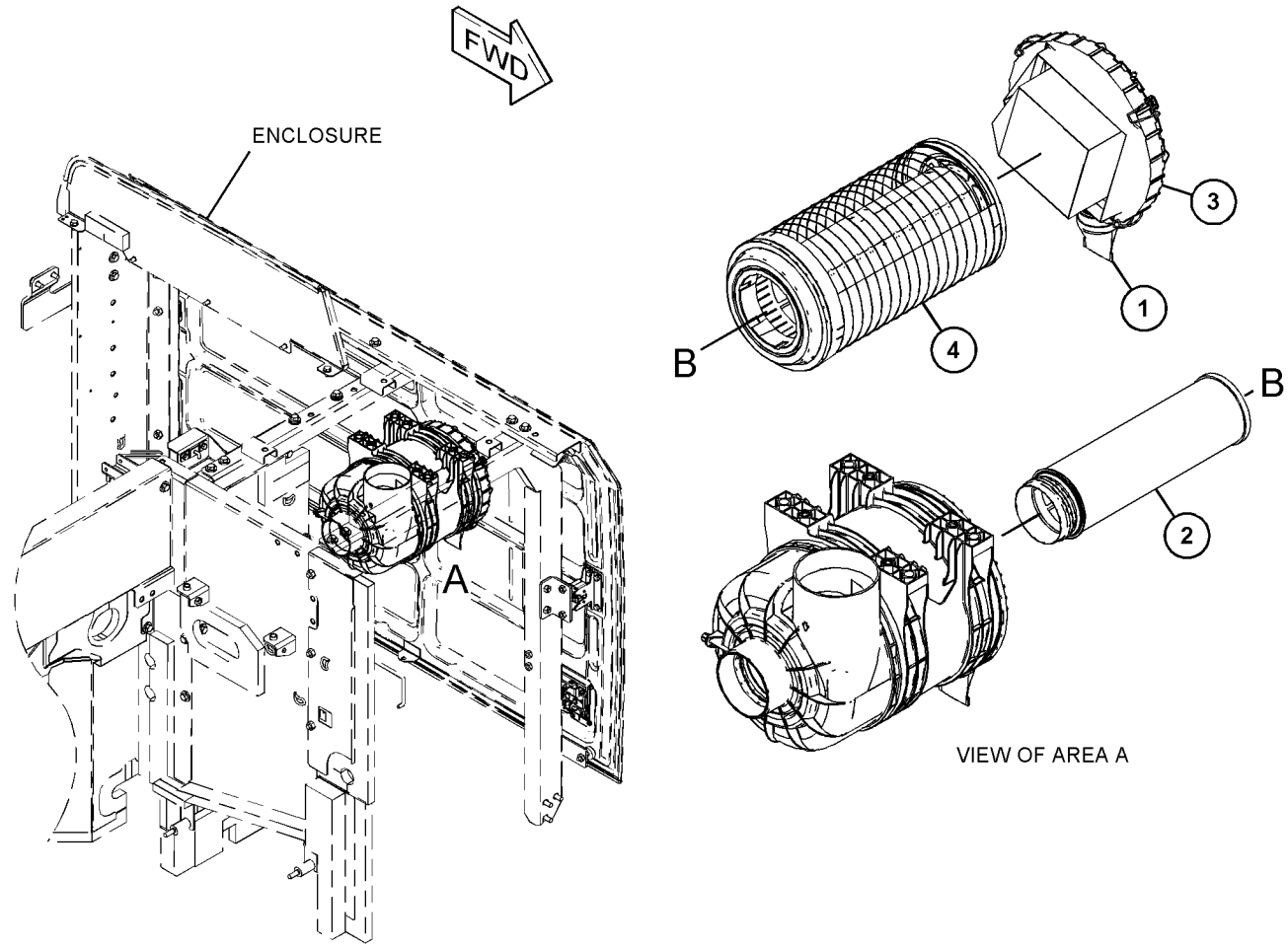

GRAPHIC #1 **<END>** g03721007

450-5325 AIR CLEANER GP

S/N: PBB1-UP; KBS1-UP

PART OF 455-4086 INSTALLATION AR-ENGINE

SMCS-1051, 1054

i05909475

NOTE	REF NO	GRAPHIC REF	PART NUMBER	QTY	PART NAME 1 2 3 4 5 6 (PRODUCT LEVEL)	SEE PAGE
	1	1	**5L-8091**	1	CAP GP-AIR CLEANER	
	2	1	**276-4836**	1	SWITCH-PRESSURE (AIR CLEANER)	
Y	3	1	**447-0758**	1	AIR CLEANER GP	71
	4	1	**452-4201**	1	PIPE AS	
	5	1	**8T-4121**	8	WASHER-HARD (11X21X2.5-MM THK)	
M	6	1	**8T-4137**	4	BOLT (M10X1.5X20-MM)	
M	7	1	**8T-4186**	4	BOLT (M10X1.5X40-MM)	

M - METRIC PART
Y - SEPARATE ILLUSTRATION

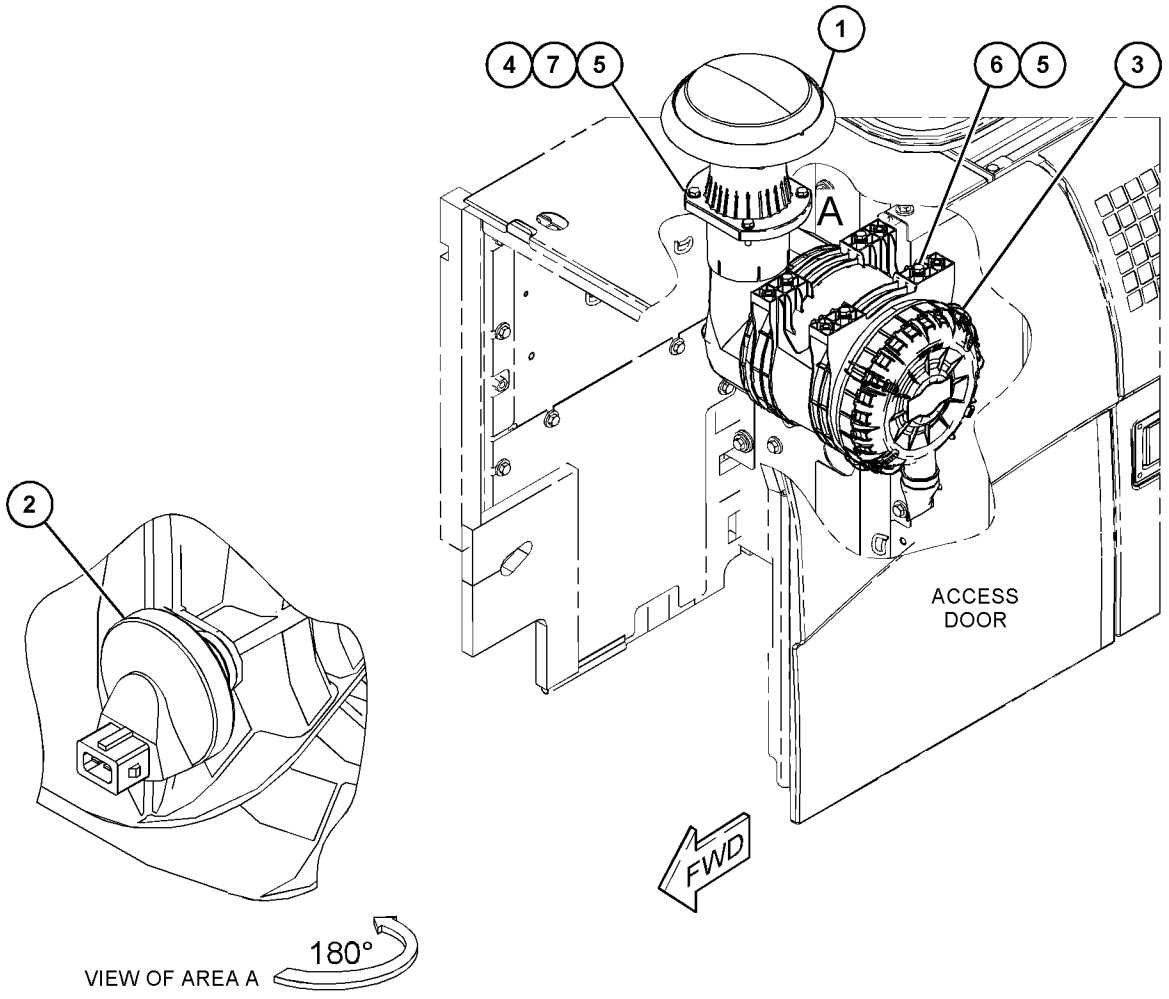

GRAPHIC #1

<END>

g03687089

455-3378 LINES GP-AIR—AIR CLEANER TO TURBOCHARGER

S/N: PBB1-UP; KBS1-UP

PART OF 455-4086 INSTALLATION AR-ENGINE

SMCS-1071 **i05857498**

NOTE	REF NO	GRAPHIC REF	PART NUMBER	QTY	PART NAME 1 2 3 4 5 6 (PRODUCT LEVEL)	SEE PAGE
	1	1	**394-7689**	1	HOSE-AIR	
	2	1	**453-0110**	1	HOSE-AIR	
	3	1	**8T-4986**	1	CLAMP-HOSE	
	4	1	**9X-2201**	3	CLAMP-HOSE	

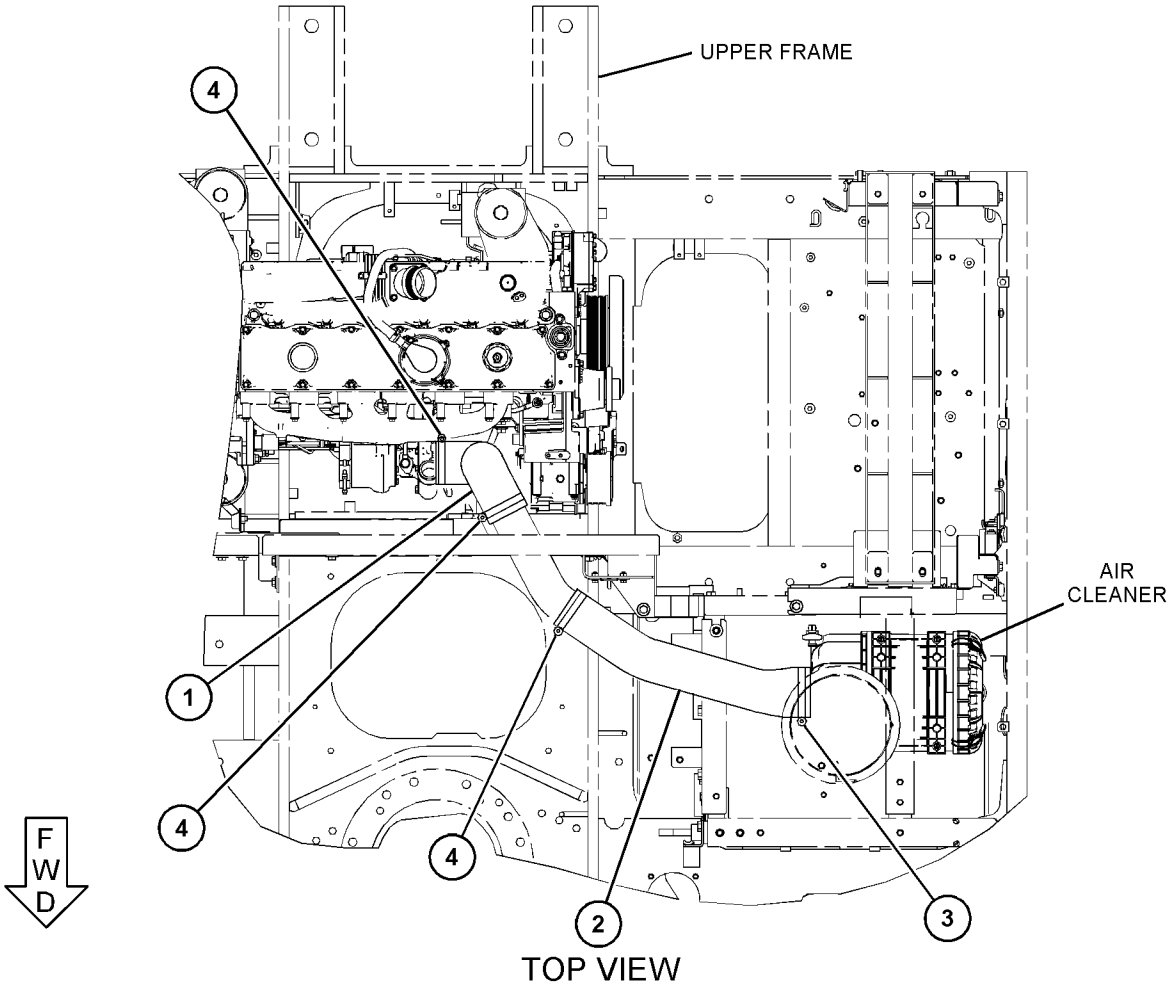

TOP VIEW

GRAPHIC #1 **<END>** g03687087

AIR INLET AND EXHAUST SYSTEM

346-0773 MANIFOLD GP-INLET

S/N: D7A1-UP

PART OF 417-3389 ENGINE AR-PRIMARY

SMCS-1058, 1090 **i05155992**

NOTE	REF NO	GRAPHIC REF	PART NUMBER	QTY	PART NAME 1 2 3 4 5 6 (PRODUCT LEVEL)	SEE PAGE
	1	1	**277-4374**	1	ELBOW AS-AIR INLET	
		1	**238-8288**	1	GASKET-INLET	
M	2	1	**6I-0645**	4	BOLT (M8X1.25X25-MM)	

M - METRIC PART

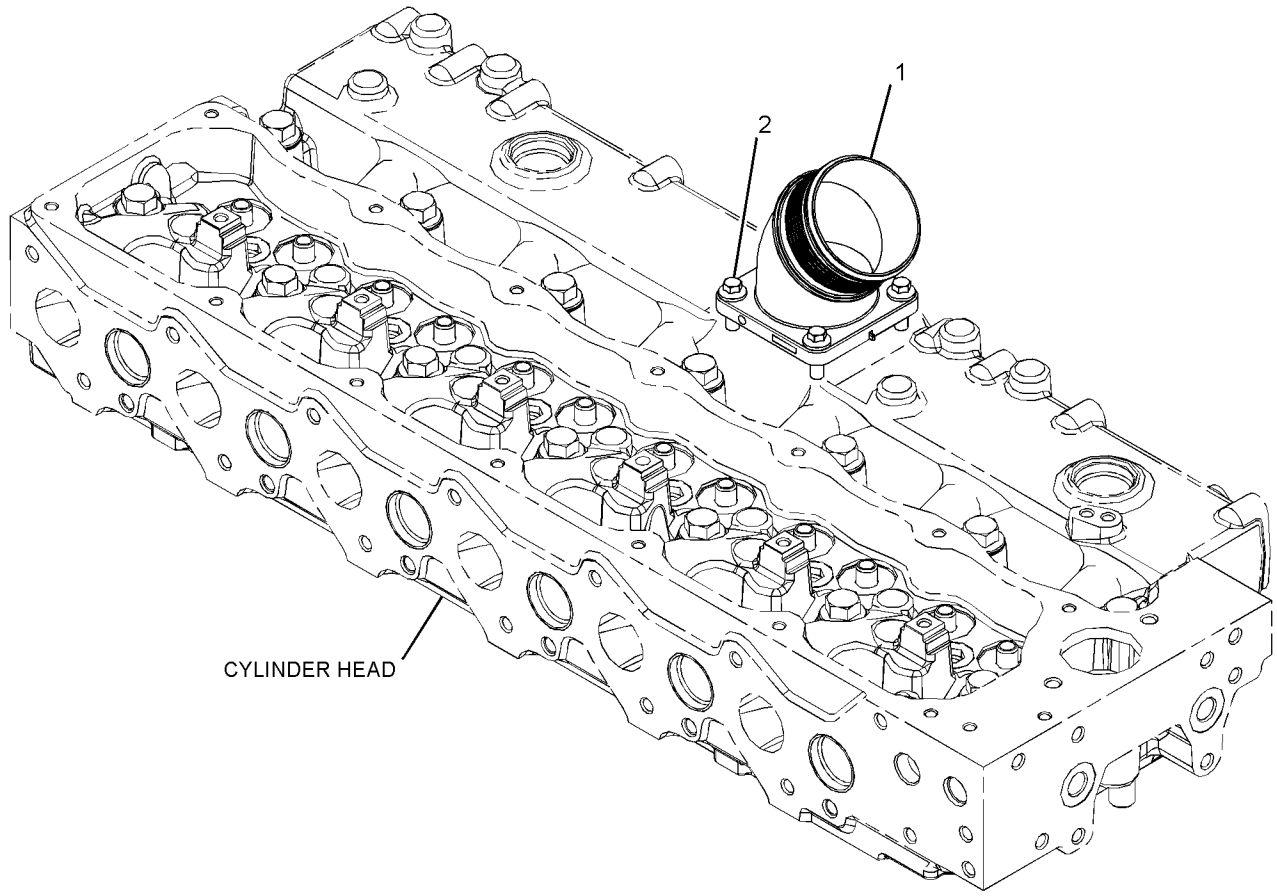

GRAPHIC #1 **<END>** g03316898

394-7470 MUFFLER & MOUNTING GP

S/N: PBB1-UP; KBS1-UP

PART OF 394-7469 ENGINE AR-COMPLETE

SMCS-1062 **i05100731**

NOTE	REF NO	GRAPHIC REF	PART NUMBER	QTY	PART NAME 1 2 3 4 5 6 (PRODUCT LEVEL)	SEE PAGE
	1	1	**241-9264**	1	CLAMP-MUFFLER	
	2	1	**291-5216**	2	STRAP	
	3	1	**374-5981**	1	PIPE AS-EXHAUST	
		1	**374-6025**	1	PIPE	
	4	1	**374-6038**	2	U-BOLT	
	5	1	**374-6040**	1	MUFFLER AS	
	6	1	**379-4430**	1	PIPE-TAIL	
	7	1	**416-2386**	1	SHEET	
	8	1	**419-7580**	1	SUPPORT AS	
M	9	1	**135-8574**	4	BOLT AS	
	10	1	**388-7014**	1	CLAMP-BENT BOLT	
	11	1	**8T-4121**	2	WASHER-HARD (11X21X2.5-MM THK)	
M	12	1	**8T-4133**	8	NUT (M10X1.5-THD)	
M	13	1	**8T-4136**	2	BOLT (M10X1.5X25-MM)	

M - METRIC PART

394-7470 **MUFFLER & MOUNTING GP (*contd.*)** **i05100731**

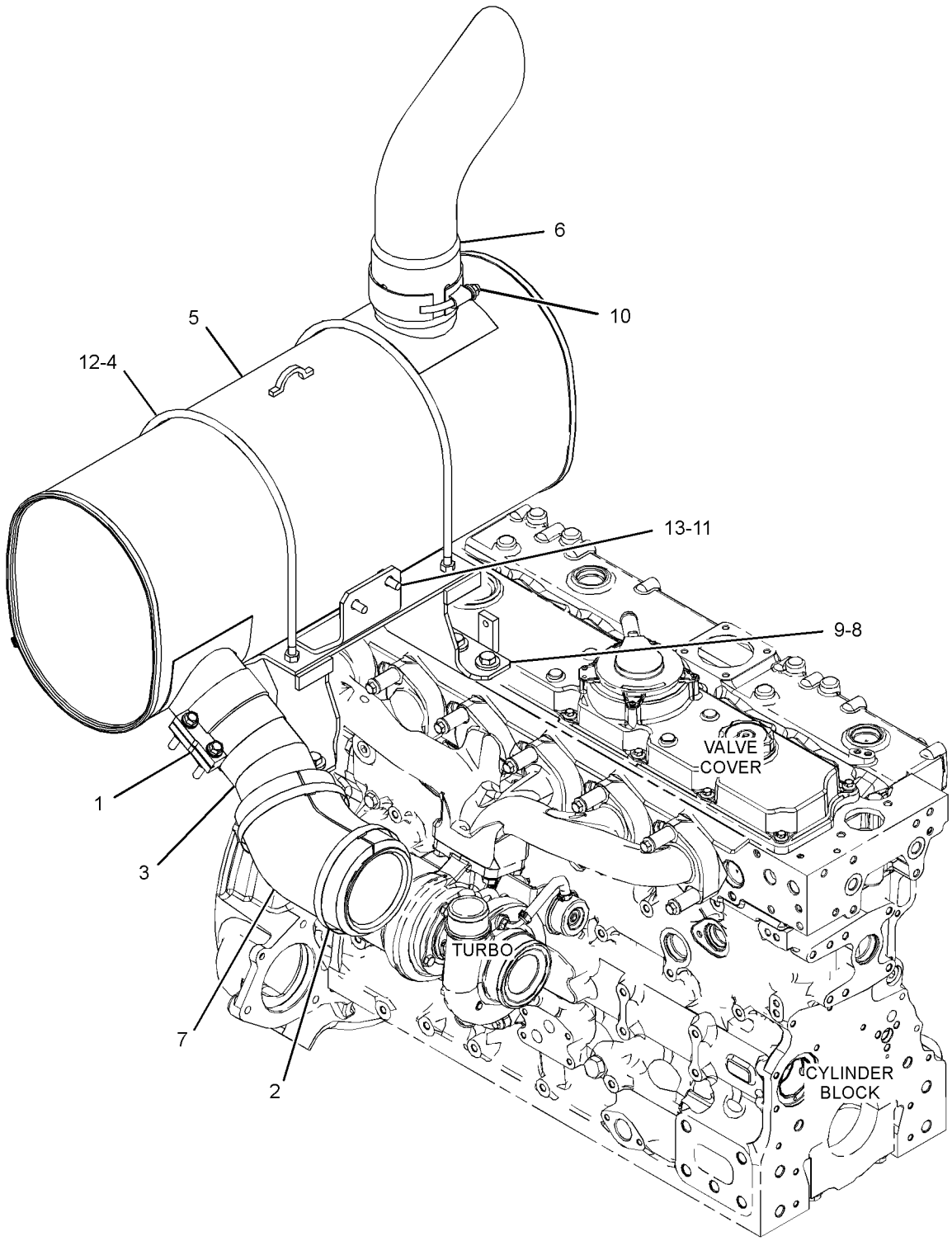

GRAPHIC #1 **<END>** g03320170

455-0464 PRECLEANER GP

S/N: PBB1-UP

PART OF 456-0817, 456-0825, 456-0826, 456-0827, 456-0828, 456-0829, 456-0830, 456-0918, 456-0919, 456-0920, 456-0921, 456-0922, 456-0923 DISTRIBUTION AR AN ATTACHMENT

SMCS-1055 **i05861504**

NOTE	REF NO	GRAPHIC REF	PART NUMBER	QTY	PART NAME 1 2 3 4 5 6 (PRODUCT LEVEL)	SEE PAGE
	1	1	**343-5645**	1	PRECLEANER AS	
		1	**222-2277**	1	CLAMP	

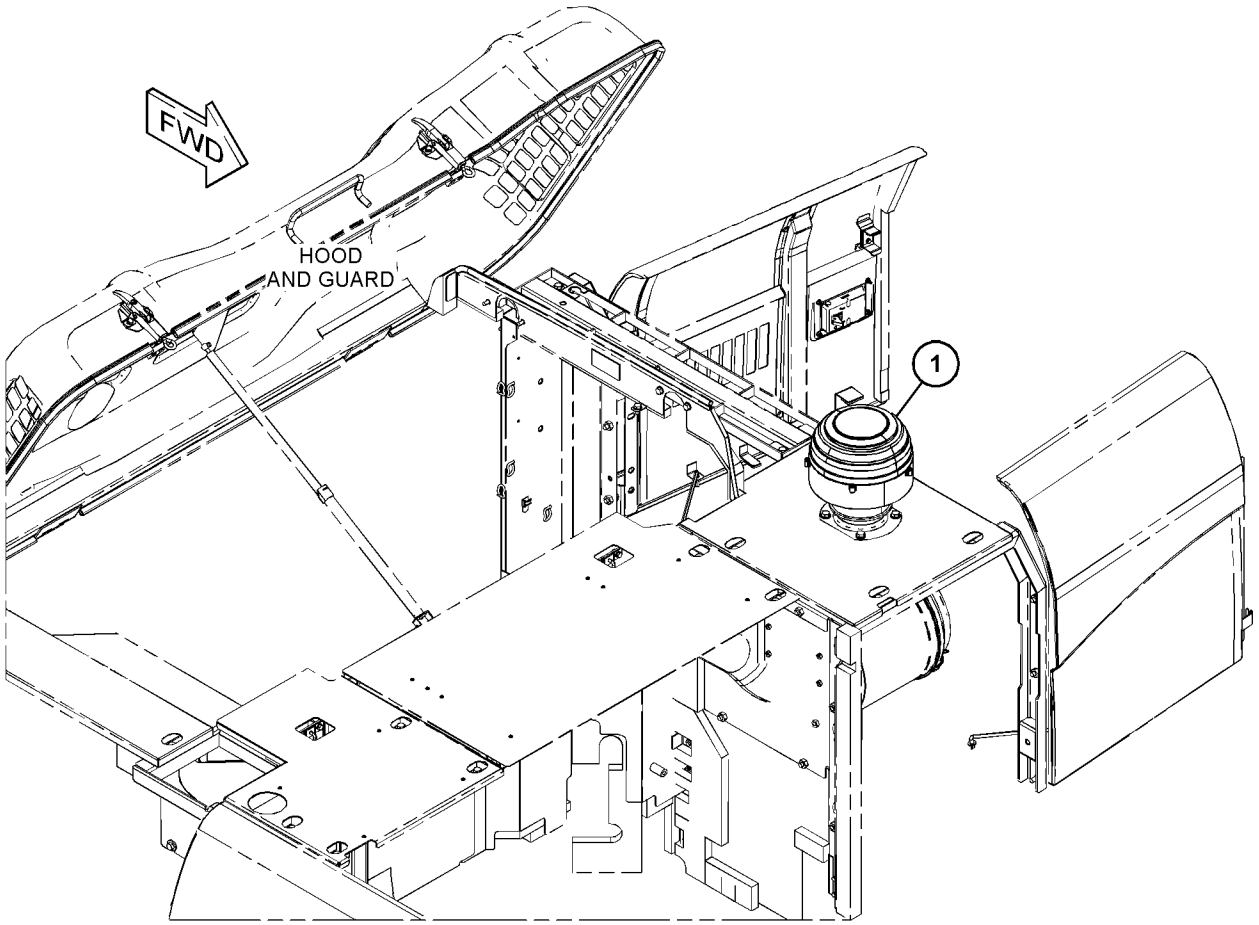

GRAPHIC #1 **<END>** g03686996

396-6322 TURBOCHARGER GP

S/N: D7A1-UP

PART OF 417-3389 ENGINE AR-PRIMARY

SMCS-1052, 1053

i05905616

NOTE	REF NO	GRAPHIC REF	PART NUMBER	QTY	PART NAME 1 2 3 4 5 6 (PRODUCT LEVEL)	SEE PAGE
M	1	1	**6I-0217**	5	BOLT (M8X1.25X20-MM)	
	2	1	**238-8292**	12	BOLT-FLANGE HEAD	
	3	1	**437-4170**	1	GASKET	
	4	1	**278-0017**	1	GASKET	
	5	1	**279-9361**	2	GASKET-EXHAUST	
	6	1	**286-7851**	12	SPACER	
	7	1	**384-2286**	1	MANIFOLD	
	8	1	**365-4584**	1	TUBE AS	
	9	1	**456-5182**	1	LINE AS	
	9A	1	**3P-0647**	2	SEAL-O-RING	
	9B	1	**277-9940**	1	SEAL-O-RING	
	10	1	**431-4572**	1	TURBOCHARGER	
	11	1	**277-9463**	1	CLAMP	
	12	1	**361-7519**	4	ROD-THREADED	
	13	1	**6I-0563**	4	NUT (M10X1.5-THD)	
	14	1	**451-0548**	1	BOLT	

M - METRIC PART

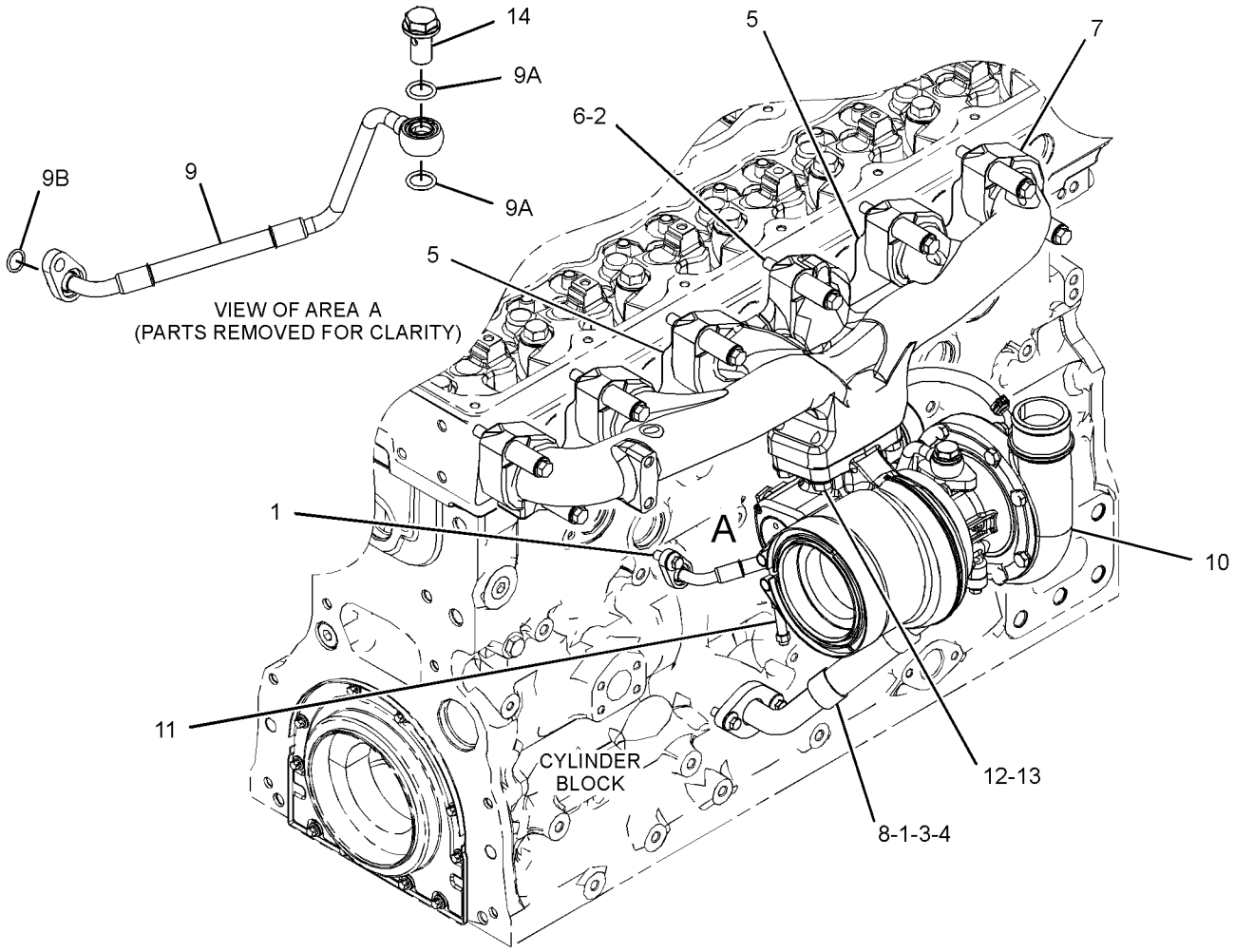

GRAPHIC #1

<END>

g03695435

388-6844 CONTROL GP-GOVERNOR

S/N: PBB1-UP; KBS1-UP

PART OF 454-5588, 454-5589 CHASSIS AR

SMCS-1265, 1276 **i05433800**

NOTE	REF NO	GRAPHIC REF	PART NUMBER	QTY	PART NAME 1 2 3 4 5 6 (PRODUCT LEVEL)	SEE PAGE
	1	1	**386-3439**	1	MOTOR AS-GOVERNOR	
		1	**8T-8737**	1	PLUG-SEAL	
		1	**9X-3401**	7	PIN-CONNECTOR (16-GA TO 18-GA)	
					—OR—	
		1	**126-1767**	7	PIN-CONNECTOR (14-GA TO 16-GA)	
		1	**157-3184**	1	JOINT	
		1	**243-4509**	1	RECEPTACLE AS-CONNECTOR (8-PIN)	
	2	1	**396-3531**	1	BRACKET AS	
		1	**121-1029**	1	CLIP	
	3	1	**396-3533**	1	BRACKET AS	
M		1	**8T-3612**	1	NUT-WELD (M8X1.25-THD)	
	4	1	**396-3538**	1	BRACKET AS	
M		1	**8T-3612**	1	NUT-WELD (M8X1.25-THD)	
	5	1	**432-8507**	1	BRACKET AS	
	5A	1	**7I-4949**	1	TUBE	
	5B	1	**415-7773**	1	BRACKET-SUPPORT	
	6	1	**415-7775**	1	BRACKET AS-LEVER	
M	7	1	**5C-2890**	1	NUT (M6X1-THD)	
	8	1	**6V-3265**	4	CLIP	
M	9	1	**7X-2537**	2	BOLT (M8X1.25X35-MM)	
M	10	1	**7X-2619**	2	BOLT (M6X1X10-MM)	
	11	1	**8T-4121**	7	WASHER-HARD (11X21X2.5-MM THK)	
M	12	1	**8T-4136**	2	BOLT (M10X1.5X25-MM)	
M	13	1	**8T-4137**	4	BOLT (M10X1.5X20-MM)	
M	14	1	**8T-4200**	5	BOLT (M8X1.25X16-MM)	
	15	1	**8T-4224**	7	WASHER-HARD (8.8X16X2-MM THK)	
	16	1	**9X-8256**	3	WASHER (6.6X12X2-MM THK)	

M - METRIC PART

388-6844 **CONTROL GP-GOVERNOR (*contd.*)** **i05433800**

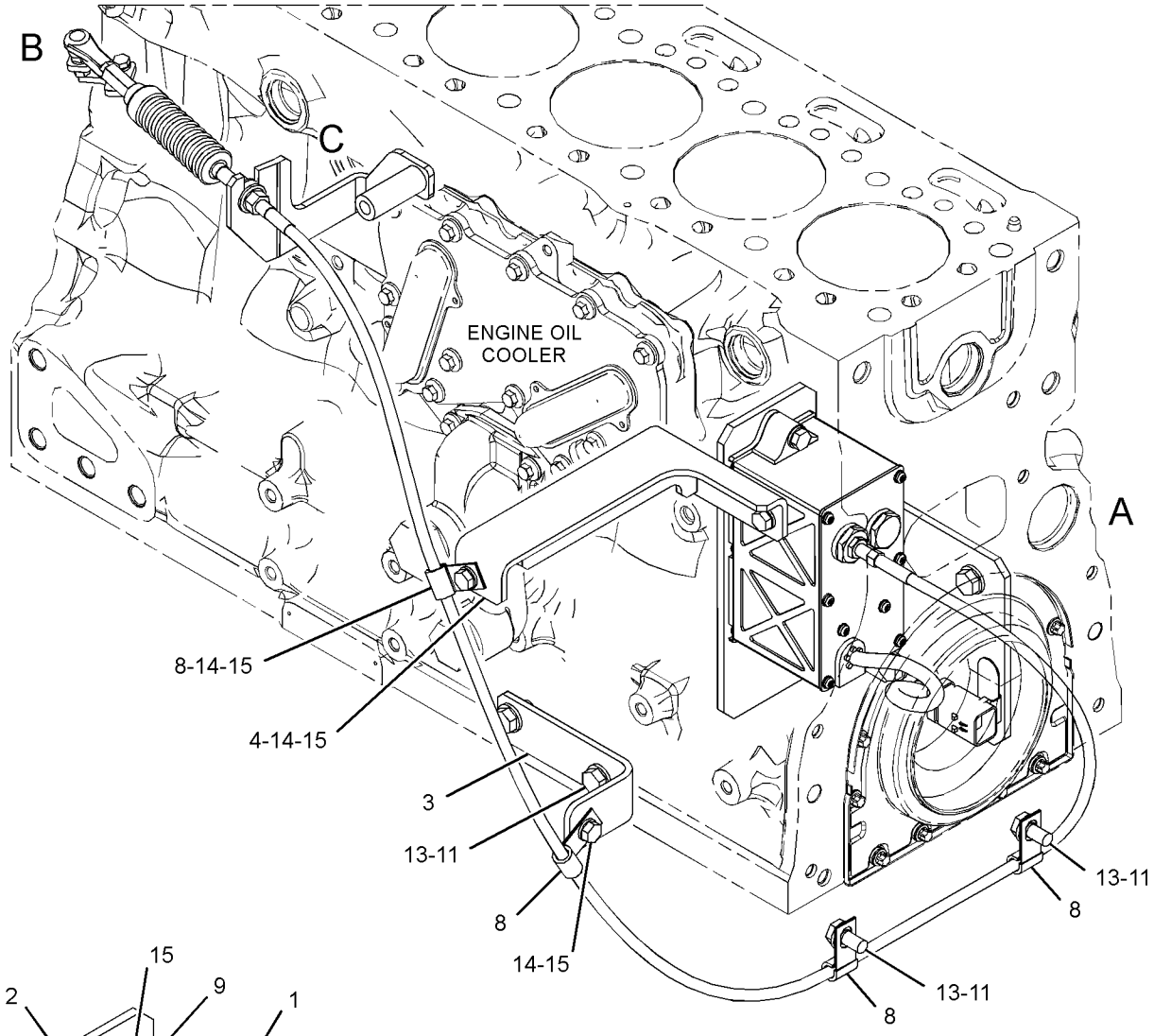

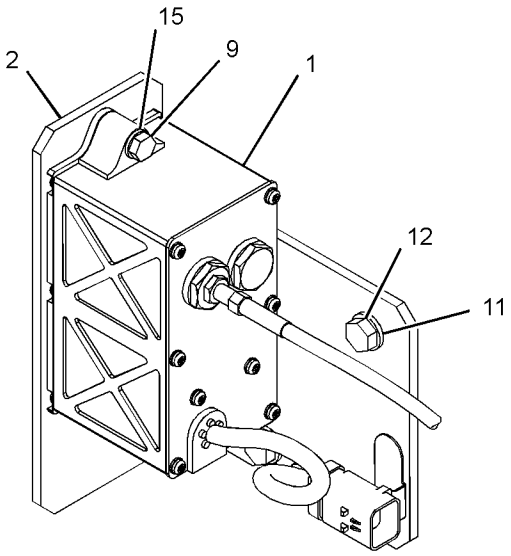

VIEW OF AREA A

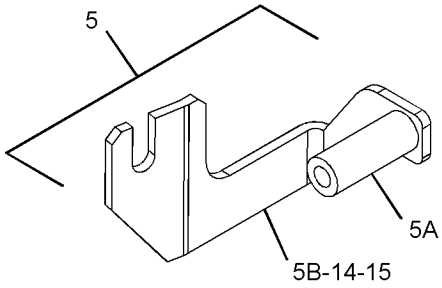

VIEW OF AREA C

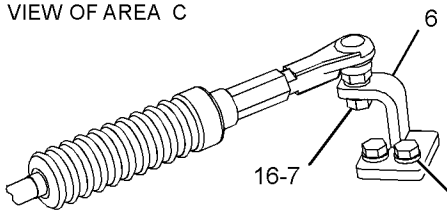

VIEW OF AREA B 90°

GRAPHIC #1 **<END>** g03392676

394-7468 LINES GP-FUEL

S/N: PBB1-UP; KBS1-UP

PART OF 454-5588, 454-5589 CHASSIS AR

SMCS-1274 **i05884989**

NOTE	REF NO	GRAPHIC REF	PART NUMBER	QTY	PART NAME 1 2 3 4 5 6 (PRODUCT LEVEL)	SEE PAGE
	1	1	**4I-0379**	2	VALVE-MANUAL (FUEL)	
	2	1	**116-0118**	2	CLIP	
	3	1	**9X-9896**	6	MOUNT (ISOLATION)	
	4	1	**093-2065**	3	GROMMET	
	5	1	*150-3030*	1	ELBOW AS	
		1	**3J-1907**	1	SEAL-O-RING	
		1	**7X-1448**	1	ELBOW	
	6	1	*165-7951*	1	CONNECTOR AS	
		1	**3J-1907**	1	SEAL-O-RING	
		1	**157-1669**	1	CONNECTOR	
	7	1	**176-4746**	1	GROMMET	
	8	1	*217-8185*	1	ELBOW AS	
		1	**3K-0360**	1	SEAL-O-RING	
		1	**9X-3982**	1	ELBOW	
	9	1	*225-0311*	1	TEE AS	
		1	**3K-0360**	1	SEAL-O-RING	
		1	**168-3332**	1	TEE-ADAPTER	
	10	1	**281-5987**	1	ELBOW	
	11	1	**305-6873**	1	SENSOR GP-PRESSURE (FUEL)	
	12	1	**320-3063**	1	SENSOR GP-PRESSURE (ATMOSPHERIC AIR)	
	13	1	**342-8584**	3	CONNECTOR	
	14	1	**343-3917**	3	CONNECTION	
	15	1	**343-7352**	1	CONNECTOR-FUEL	
	16	1	**351-4318**	12	CLIP	
	17	1	**354-6246**	3	CONNECTOR	
	18	1	**355-0632**	1	CONNECTOR-SPECIAL	
CY	19	1	**423-6434**	1	SENSOR GP-LIQUID LEVEL (WATER IN FUEL)	160
	20	1	**381-9061**	1	BASE AS-FUEL FILTER	
	21	1	**381-9064**	1	INDICATOR-FUEL FILTER CHANGE	
	22	1	**382-0664**	1	FILTER AS-WATER SEP & FUEL (ULTRA HIGH EFFICIENCY)	
Y	23	1	*299-9265*	1	PUMP GP-FUEL PRM & PRIM FILTER	90
	24	1	**387-2637**	2	ADAPTER-TEE	
	25	1	**394-7686**	1	HOSE	
	26	1	**420-2083**	1	PLATE AS	
	27	1	**420-2087**	1	HOSE	
	28	1	**420-2089**	1	HOSE	
	29	1	**420-2092**	1	HOSE	
	30	1	**432-6280**	1	HOSE	
	31	1	**420-2096**	1	HOSE	
	32	1	**432-6281**	1	HOSE	
	33	1	**432-6282**	1	HOSE	
	34	1	**420-5299**	4	CLIP	
	35	1	*148-8411*	3	PLUG AS	
					(EACH INCLUDES)	
		1	**3K-0360**	1	SEAL-O-RING	
		1	**9S-4185**	1	PLUG-O-RING	
	36	1	*155-3624*	1	PLUG AS	
		1	**3J-7354**	1	SEAL-O-RING	
		1	**9S-4182**	1	PLUG	
	37	1	*169-7397*	1	ADAPTER AS	
		1	**3K-0360**	1	SEAL-O-RING	
		1	**3P-1932**	1	ADAPTER	
	38	1	**204-1673**	1	STRAP-CABLE	
	39	1	*260-9144*	1	CONNECTOR AS	
		1	**3K-0360**	1	SEAL-O-RING	
		1	**168-8806**	1	CONNECTOR	
	40	1	**337-6501**	2	FITTING	
	41	1	**344-5360**	7	CLIP	

394-7468 **LINES GP-FUEL (*contd.*)** **i05884989**

NOTE	REF NO	GRAPHIC REF	PART NUMBER	QTY	PART NAME 1 2 3 4 5 6 (PRODUCT LEVEL)	SEE PAGE
	42	1	**347-4416**	2	ADAPTER	
	43	1	**351-4089**	4	GROMMET	
	44	1	**351-4321**	4	CLIP	
	45	1	**3J-7354**	1	SEAL-O-RING	
	46	1	**3S-2093**	1	STRAP-CABLE	
	47	1	**5V-9155**	4	CLAMP-HOSE	
	48	1	**6S-8620**	15	CLAMP-HOSE	
	49	1	**6V-9028**	5	SEAL-O-RING	
	50	1	**8C-5608**	3	SPACER (6.5X9.5X25.4-MM THK)	
	51	1	**8T-1889**	4	CLIP (SLOT)	
	52	1	**8T-1890**	4	CLIP (TAB)	
	53	1	**8T-4121**	29	WASHER-HARD (11X21X2.5-MM THK)	
M	54	1	**8T-4136**	2	BOLT (M10X1.5X25-MM)	
M	55	1	**8T-4137**	22	BOLT (M10X1.5X20-MM)	
M	56	1	**8T-4138**	3	BOLT (M6X1X20-MM)	
C	57	1	**132-5789**	1	CLIP	
M	58	1	**8T-4196**	4	BOLT (M10X1.5X35-MM)	
M	59	1	**105-3486**	3	BOLT-SOCKET HEAD (M6X1X50-MM)	
	60	1	**9X-6165**	6	WASHER (6.5X22X2.5-MM THK)	
	61	1	**9X-8256**	3	WASHER (6.6X12X2-MM THK)	
D	62	1	**5P-1442**		HOSE (29-CM)	
D	62A	1	**5P-1442**		HOSE (61-CM)	
M	63	1	**8T-4191**	1	BOLT (M10X1.5X16-MM)	
	64	1	**300-5183**	1	RESISTOR AS (24-VOLT)	
	65	1	**8T-4224**	4	WASHER-HARD (8.8X16X2-MM THK)	
M	66	1	**8T-4908**	4	BOLT (M8X1.25X25-MM)	
	67	1	**445-5175**	1	PLATE AS	
	68	1	**445-5177**	1	HARNESS AS-AUXILIARY	
		1	**102-8802**	1	KIT-RECEPTACLE (2-PIN)	
					(INCLUDES RECEPTACLE AS AND WEDGE)	
		1	**3S-2093**	1	STRAP-CABLE	
		1	**8T-8137**	1	SEAL-FACE	
		1	**9W-0852**	2	PIN-CONNECTOR (14-GA TO 16-GA)	
		1	**9W-0844**	2	SOCKET-CONNECTOR (14-GA TO 16-GA)	
		1	**155-2260**	1	KIT-CONNECTING PLUG (3-PIN)	
					(INCLUDES WEDGE, PLUG AS & INTERFACE SEAL)	
	69	1	**7K-1181**	1	STRAP-CABLE	

C - CHANGE FROM PREVIOUS TYPE
D - ORDER BY THE METER
M - METRIC PART
Y - SEPARATE ILLUSTRATION

394-7468 **LINES GP-FUEL (*contd.*)** **i05884989**

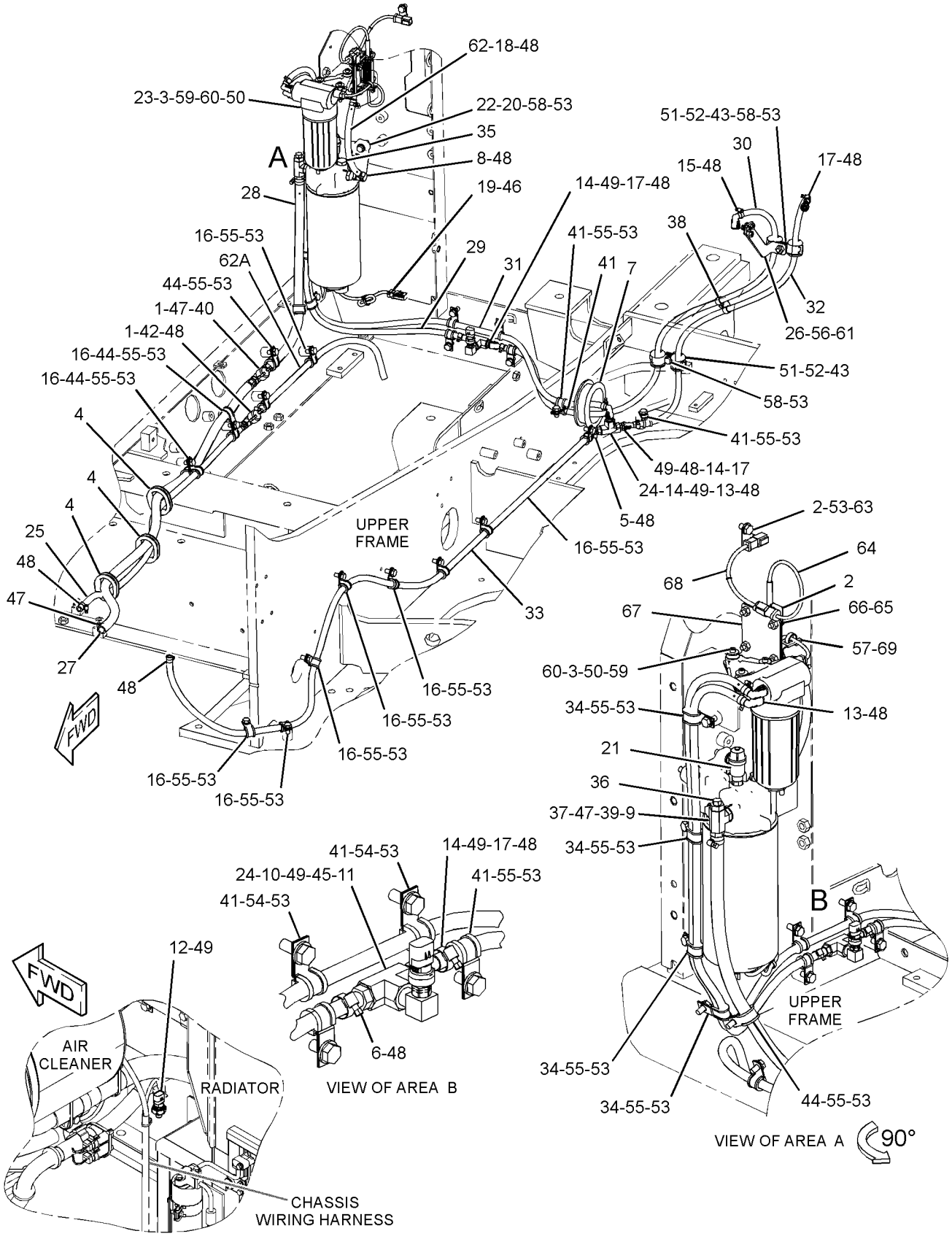

GRAPHIC #1 **<END>** g03457876

396-6969 LINES GP-FUEL FILTER

S/N: D7A1-UP

PART OF 417-3389 ENGINE AR-PRIMARY

SMCS-1261 **i05156016**

NOTE	REF NO	GRAPHIC REF	PART NUMBER	QTY	PART NAME 1 2 3 4 5 6 (PRODUCT LEVEL)	SEE PAGE
	1	1	**100-4458**	4	BOLT (M8X1.25X14-MM)	
	2	1	**111-8222**	1	BOLT (M8X16-MM)	
	3	1	**231-4457**	1	GASKET	
	4	1	**246-4383**	1	PLATE	
	5	1	**398-3877**	1	LINE AS-FUEL	
	6	1	**232-3126**	1	CLIP	
	7	1	**240-5571**	1	BRACKET	

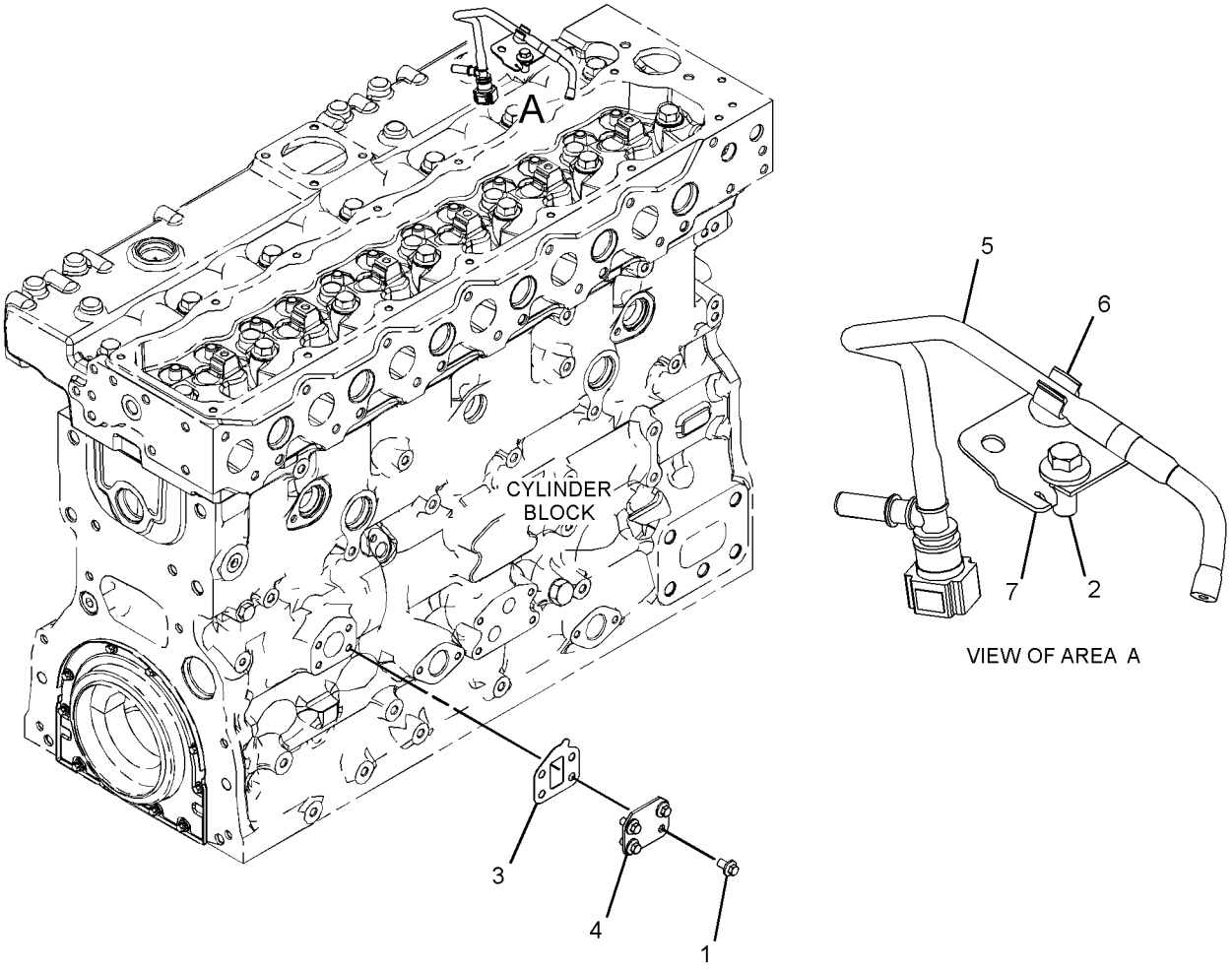

GRAPHIC #1 **<END>** g03319107

364-2901 LINES GP-FUEL INJECTION

S/N: D7A1-UP

PART OF 396-4502 PUMP GP-FUEL INJECTION

SMCS-1252, 1254

i05792295

NOTE	REF NO	GRAPHIC REF	PART NUMBER	QTY	PART NAME 1 2 3 4 5 6 (PRODUCT LEVEL)	SEE PAGE
	1	1	**124-3708**	3	CLIP	
	2	1	**124-3709**	1	CLIP	
	3	1	**162-9994**	2	CLIP	
	4	1	**364-2862**	1	LINE AS-FUEL	
	5	1	**364-2863**	1	LINE AS-FUEL	
	6	1	**364-2864**	1	LINE AS-FUEL	
	7	1	**364-2866**	1	LINE AS-FUEL	
	8	1	**364-2879**	1	LINE AS-FUEL	
	9	1	**364-2882**	1	LINE AS-FUEL	

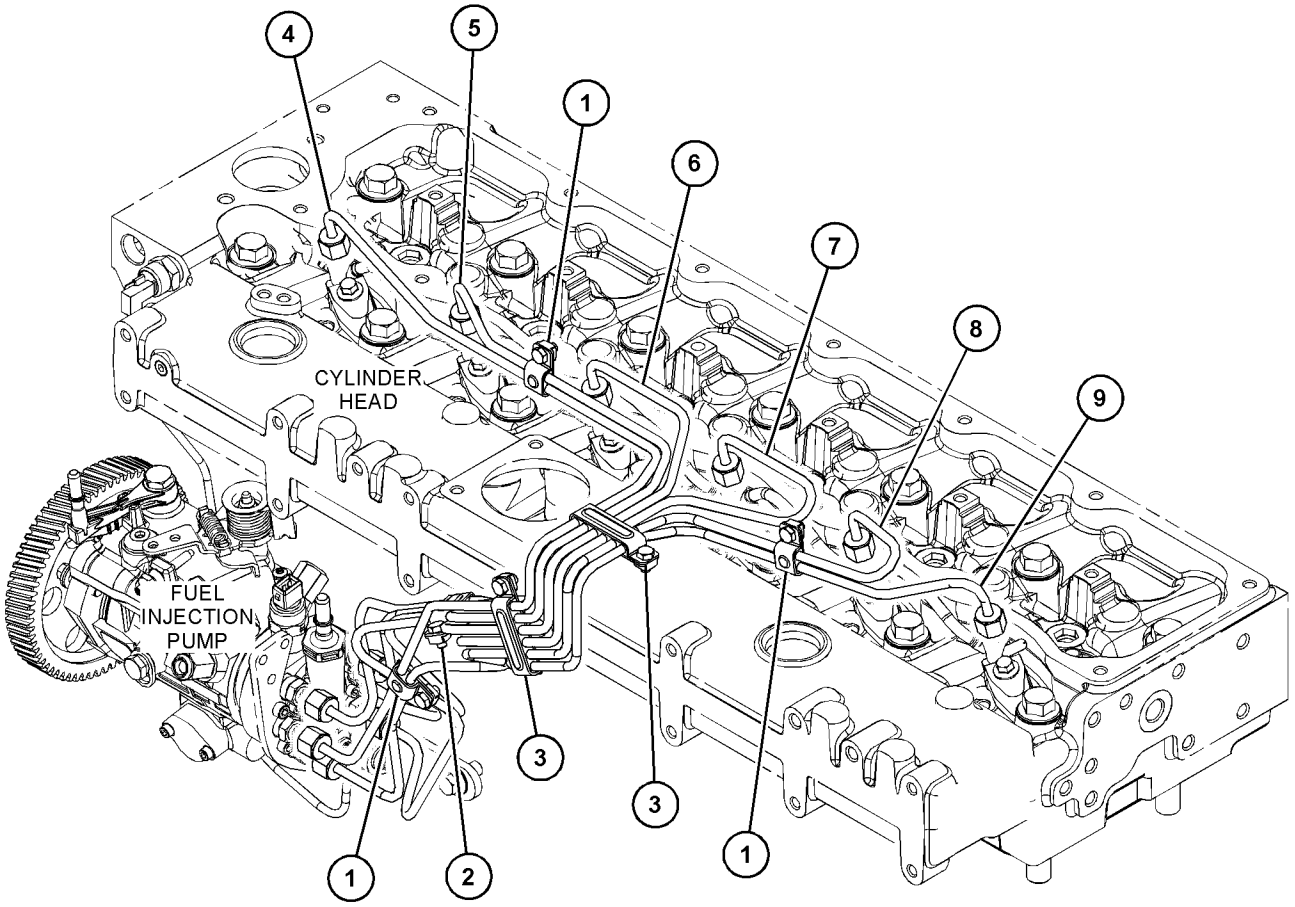

GRAPHIC #1

<END>

g03679178

229-1859 PUMP & MOTOR GP-REFUELING

S/N: PBB1-UP; KBS1-UP
PART OF 229-1785 PUMP GP-REFUELING
AN ATTACHMENT

SMCS-1295 **i05731056**

NOTE	REF NO	GRAPHIC REF	PART NUMBER	QTY	PART NAME 1 2 3 4 5 6 (PRODUCT LEVEL)	SEE PAGE
	1	1	**121-1038**	1	HOUSING-RECEPTACLE	
	2	1	**116-0128**	1	SEAL	
	3	1	**121-1039**	2	TERMINAL (MALE)	
					AVAILABLE REPAIR KIT(S):	
			450-1781	1	KIT-PUMP (HOSE)	
					(INCLUDES HOSE-TAIL & WASHER)	
			450-1782	1	KIT-PUMP (VANE)	
					(INCLUDES VANES)	
			450-1783	1	KIT-PUMP (ROTOR)	
					(INCLUDES ROTOR,KEY,COVER & SEAL)	

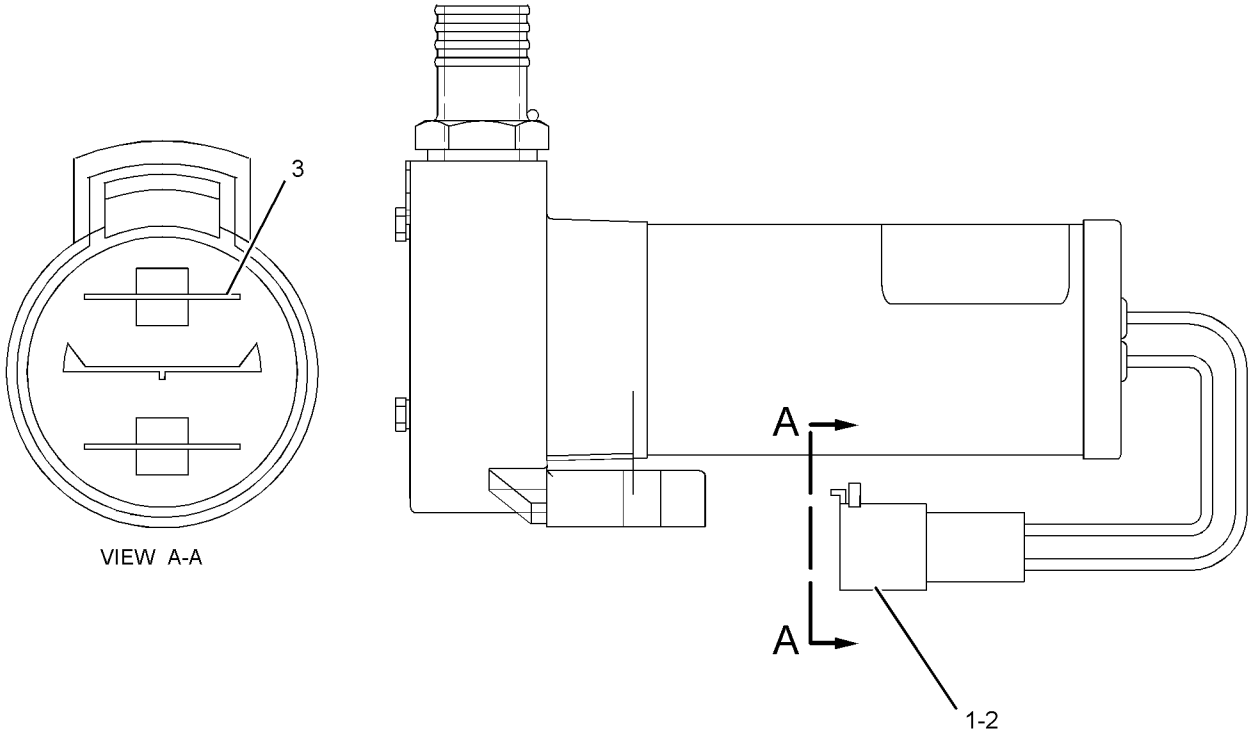

GRAPHIC #1 **<END>** g01104176

229-1784 PUMP AR-FUEL TRANSFER

S/N: PBB1-UP; KBS1-UP

PART OF 456-0825, 456-0826, 456-0922, 456-0923 DISTRIBUTION AR

AN ATTACHMENT

SMCS-1256 **i05193259**

NOTE	PART NUMBER	QTY	PART NAME 1 2 3 4 5 6 (PRODUCT LEVEL)	SEE PAGE
Y	*298-4258*	1	FILM GP (FUEL TRANSFER PUMP)	980
Y	*229-1785*	1	PUMP GP-REFUELING	91
Y	*238-1570*	1	WIRING GP-REFUELING PUMP	229

Y - SEPARATE ILLUSTRATION

<END>

398-1498 PUMP AS-FUEL INJECTION

S/N: D7A1-UP

PART OF 396-4502 PUMP GP-FUEL INJECTION

SMCS-1251 **i05527051**

NOTE	REF NO	GRAPHIC REF	PART NUMBER	QTY	PART NAME 1 2 3 4 5 6 (PRODUCT LEVEL)	SEE PAGE
M	1	1	**111-3422**	1	NUT (M14X1.5-THD)	
	2	1	**111-3423**	1	WASHER	
	3	1	**147-2645**	1	VALVE GP-SOLENOID (24-VOLT) (FUEL SHUTOFF)	
	4	1	**152-3968**	1	SEAL-O-RING	

M - METRIC PART

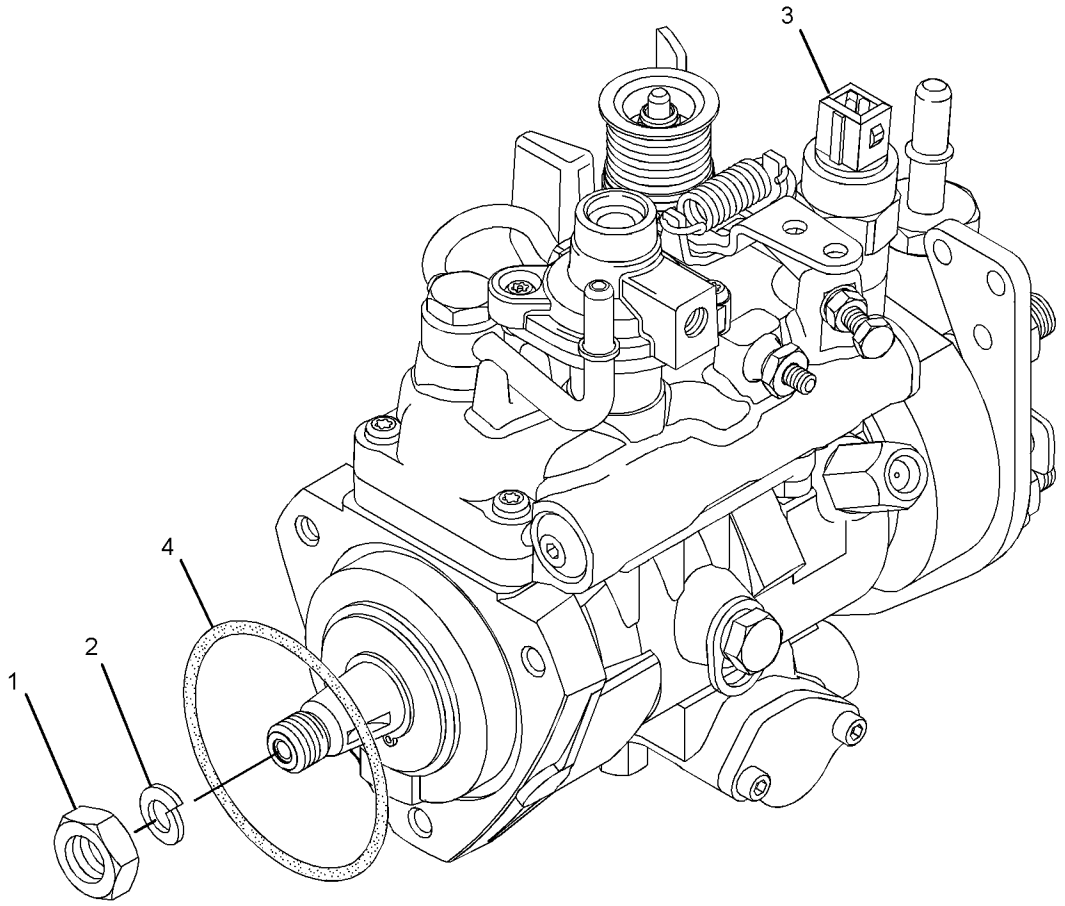

GRAPHIC #1 **<END>** g01312380

396-4502 PUMP GP-FUEL INJECTION

S/N: D7A1-UP
24-VOLT
PART OF 417-3389 ENGINE AR-PRIMARY

SMCS-1251, 1290 **i05792284**

NOTE	REF NO	GRAPHIC REF	PART NUMBER	QTY	PART NAME 1 2 3 4 5 6 (PRODUCT LEVEL)	SEE PAGE
M	1	1	**6I-0260**	4	BOLT (M8X1.25X25-MM)	
M	2	1	**100-4830**	1	BOLT (M10X1.5X20-MM)	
	3	1	**169-5326**	1	SWITCH-TEMPERATURE	
	4	1	**230-8989**	1	GEAR-FUEL PUMP (68-TEETH)	
	5	1	**232-1794**	5	HOSE	
	6	1	**336-4757**	1	BRACKET	
Y	7	1	**364-2901**	1	LINES GP-FUEL INJECTION	85
	8	1	**396-8257**	1	CAP	
Y	9	1	**398-1498**	1	PUMP AS-FUEL INJECTION	88
	10	1	**398-1507**	6	INJECTOR GP-FUEL	
M	11	1	**6I-0291**	1	NUT (M8X1.25-THD)	
	12	1	**292-3462**	1	PLUG-PIPE	
	13	1	**232-1793**	1	CABLE	
	14	1	**232-3149**	3	WASHER (8.35X16.85X1.55-MM THK)	
	15	1	**232-3274**	6	BOLT (M8X1.25X48.1-MM)	
	16	1	**238-8671**	6	CLAMP-INJECTOR	

M - METRIC PART
Y - SEPARATE ILLUSTRATION

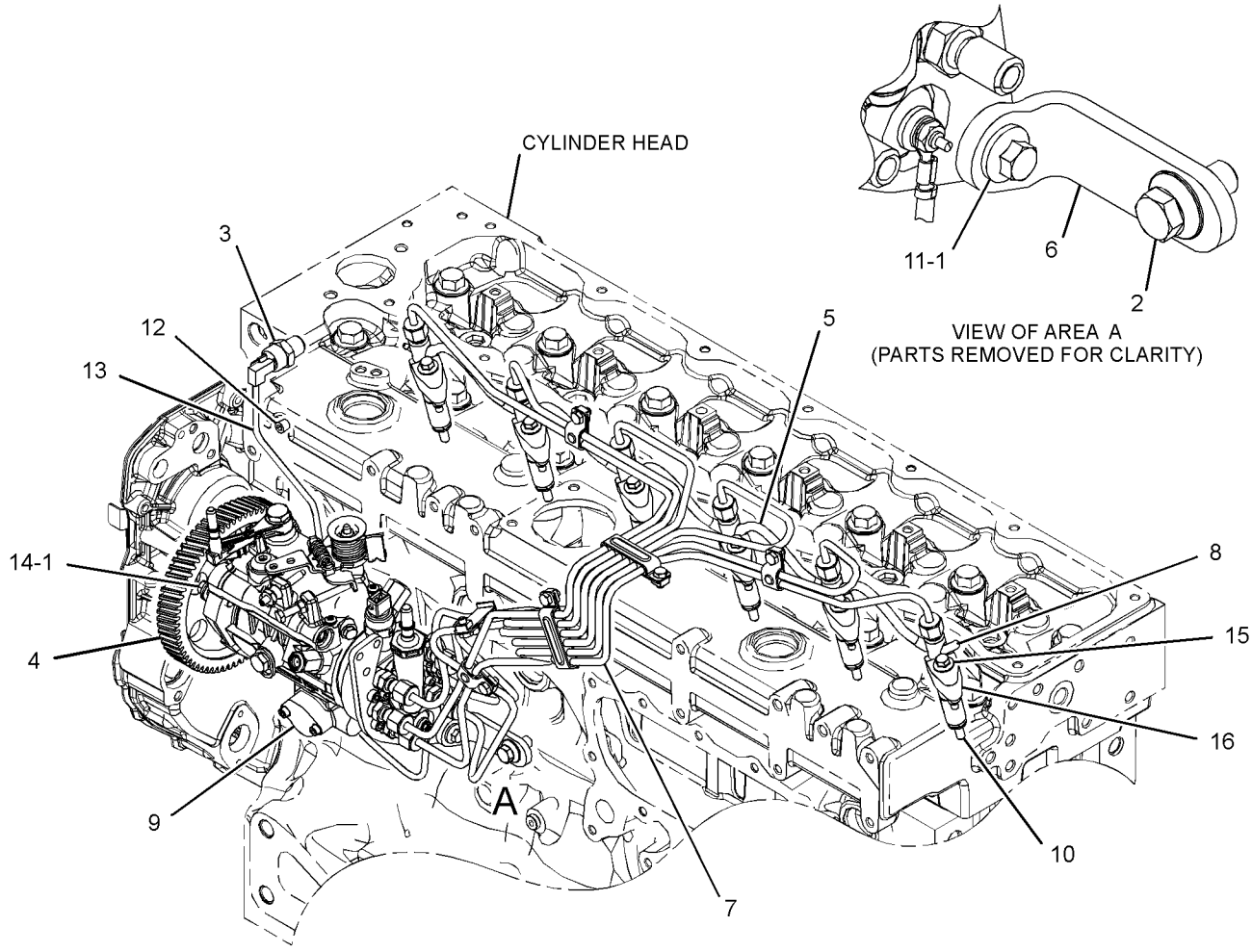

GRAPHIC #1 **<END>** g03317777

299-9265 PUMP GP-FUEL PRM & PRIM FILTER

S/N: PBB1-UP; KBS1-UP

PART OF 394-7468 LINES GP-FUEL

SMCS-1258 **i05783154**

NOTE	REF NO	GRAPHIC REF	PART NUMBER	QTY	PART NAME 1 2 3 4 5 6 (PRODUCT LEVEL)	SEE PAGE
	1	1	**207-2757**	1	SEAL (FUEL FILTER)	
	2	1	**221-2014**	1	BOWL AS	
	2A	1	**222-6617**	1	DRAIN AS (FUEL FILTER)	
	3	1	**1R-1804**	1	FILTER ELEMENT-WTR SEP & FUEL	
	4	1	*302-8411*	1	BASE GP-FUEL FILTER	
		1	**207-2755**	1	SEAL-O-RING	

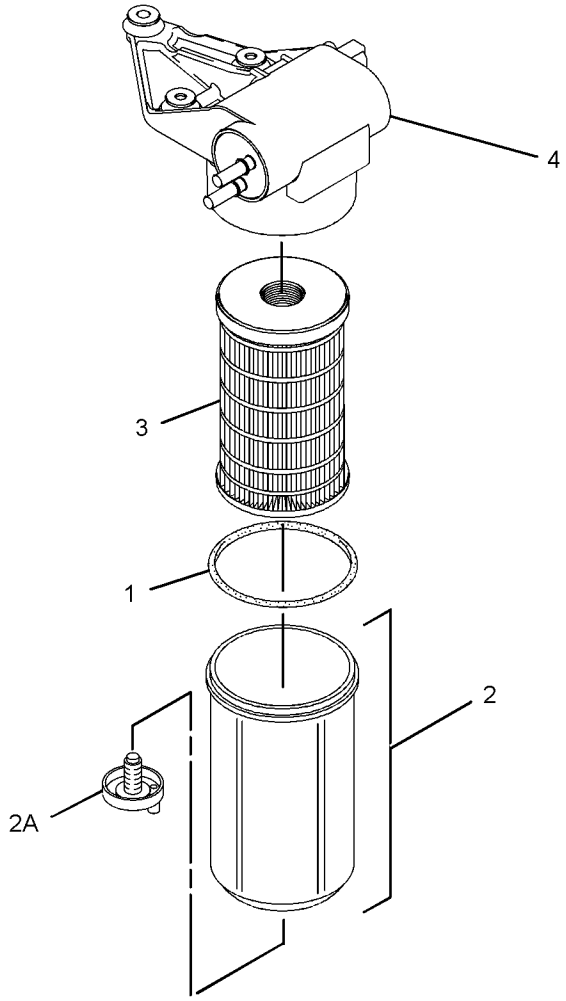

GRAPHIC #1 **<END>** g03667128

229-1785 PUMP GP-REFUELING

S/N: PBB1-UP; KBS1-UP
PART OF 229-1784 PUMP AR-FUEL TRANSFER
AN ATTACHMENT

SMCS-1295 **i05694733**

NOTE	REF NO	GRAPHIC REF	PART NUMBER	QTY	PART NAME 1 2 3 4 5 6 (PRODUCT LEVEL)	SEE PAGE
C	1	1	**312-2645**	1	SWITCH AS-LIQUID LEVEL (FUEL TANK SHUTOFF)	
		1	**2S-4078**	1	SEAL-O-RING	
		1	**8T-8729**	2	PIN-CONNECTOR (16-GA TO 18-GA)	
		1	**243-4505**	1	RECEPTACLE AS-CONNECTOR (2-PIN)	
	2	1	**7K-1181**	1	STRAP-CABLE	
	3	1	**9M-7958**	4	CLAMP-HOSE	
	4	1	**444-7841**	1	FILM-INSTRUCTION (REFUELING PUMP)	
C	5	1	**324-5761**	1	COVER AS	
M	6	1	**135-8572**	2	BOLT AS	
M	7	1	**135-8573**	4	BOLT AS	
Y	8	1	**229-1859**	1	PUMP & MOTOR GP-REFUELING	86
Y	9	1	**442-3947**	1	VALVE GP-REFUELING (FOOT)	100
	10	1	**229-1861**	1	CONNECTOR-HOSE	
	11	1	**438-2674**	1	SUPPORT AS	
M	12	1	**8T-4194**	2	BOLT (M12X1.75X50-MM)	
	13	1	**8T-4223**	4	WASHER-HARD (13.5X25.5X3-MM THK)	
M	14	1	**8T-4244**	2	NUT (M12X1.75-THD)	
E	15	1	**366-6495**		HOSE (430-CM)	
E	15A	1	**366-6495**		HOSE (38-CM)	

C - CHANGE FROM PREVIOUS TYPE
E - ORDER BY THE CENTIMETER
M - METRIC PART
Y - SEPARATE ILLUSTRATION

229-1785 **PUMP GP-REFUELING (*contd.*)** **i05694733**

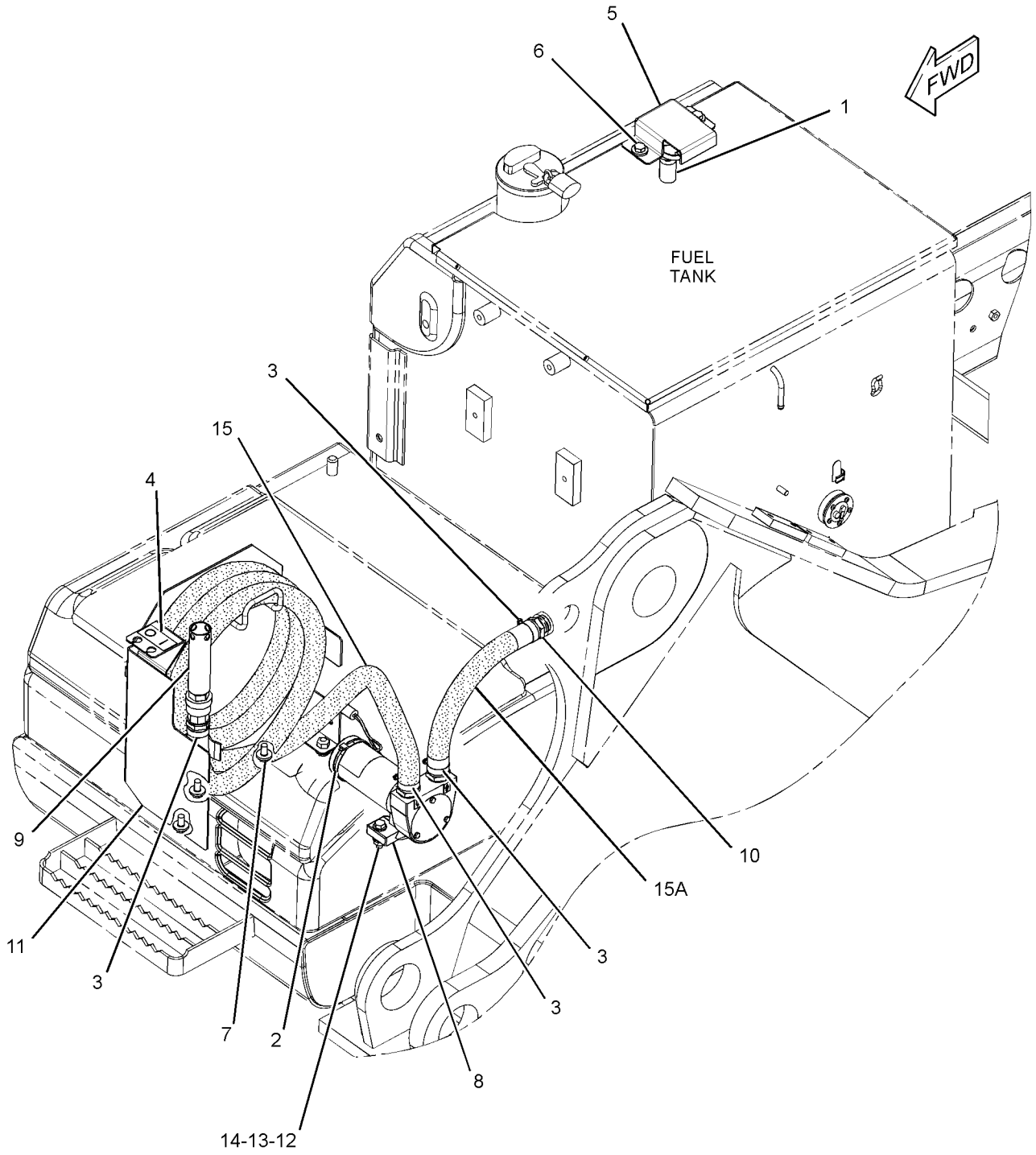

GRAPHIC #1 **<END>** g01582453

417-0270 TANK & MTG GP-FUEL

S/N: PBB1-UP; KBS1-UP

PART OF 454-5588, 454-5589 CHASSIS AR

SMCS-1273 **i05852357**

NOTE	REF NO	GRAPHIC REF	PART NUMBER	QTY	PART NAME 1 2 3 4 5 6 (PRODUCT LEVEL)	SEE PAGE
	1	1	**246-2641**	1	PADLOCK GP	
		1	**5P-8500**	1	KEY	
	2	1	**085-9310**	4	SPACER (16.6X32X26-MM THK)	
CY	3	1	**438-2505**	1	TANK GP-FUEL	96
M	4	1	**447-1707**	4	BOLT (M16X2X60-MM)	

C - CHANGE FROM PREVIOUS TYPE
M - METRIC PART
Y - SEPARATE ILLUSTRATION

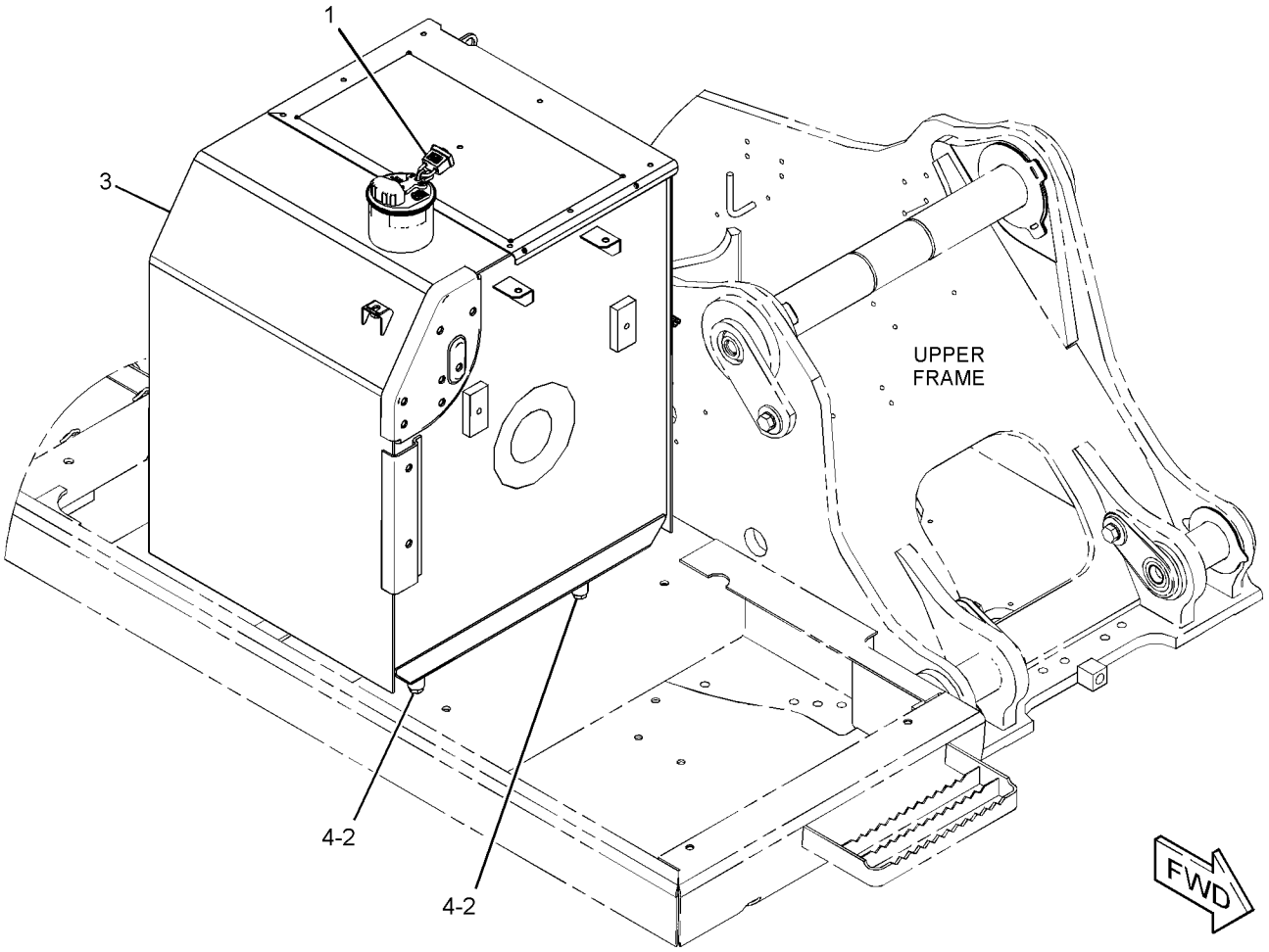

GRAPHIC #1 **<END>** g03700416

445-2221 TANK & MTG GP-FUEL

S/N: PBB1-UP; KBS1-UP
PART OF 445-2220 TANK AR-FUEL
AN ATTACHMENT

SMCS-1273 **i05801211**

NOTE	REF NO	GRAPHIC REF	PART NUMBER	QTY	PART NAME 1 2 3 4 5 6 (PRODUCT LEVEL)	SEE PAGE
	1	1	**246-2641**	1	PADLOCK GP	
		1	**5P-8500**	1	KEY	
	2	1	**085-9310**	4	SPACER (16.6X32X26-MM THK)	
Y	3	1	**438-2506**	1	TANK GP-FUEL	98
M	4	1	**135-8579**	3	BOLT AS	
M	5	1	**447-1707**	4	BOLT (M16X2X60-MM)	

M - METRIC PART
Y - SEPARATE ILLUSTRATION

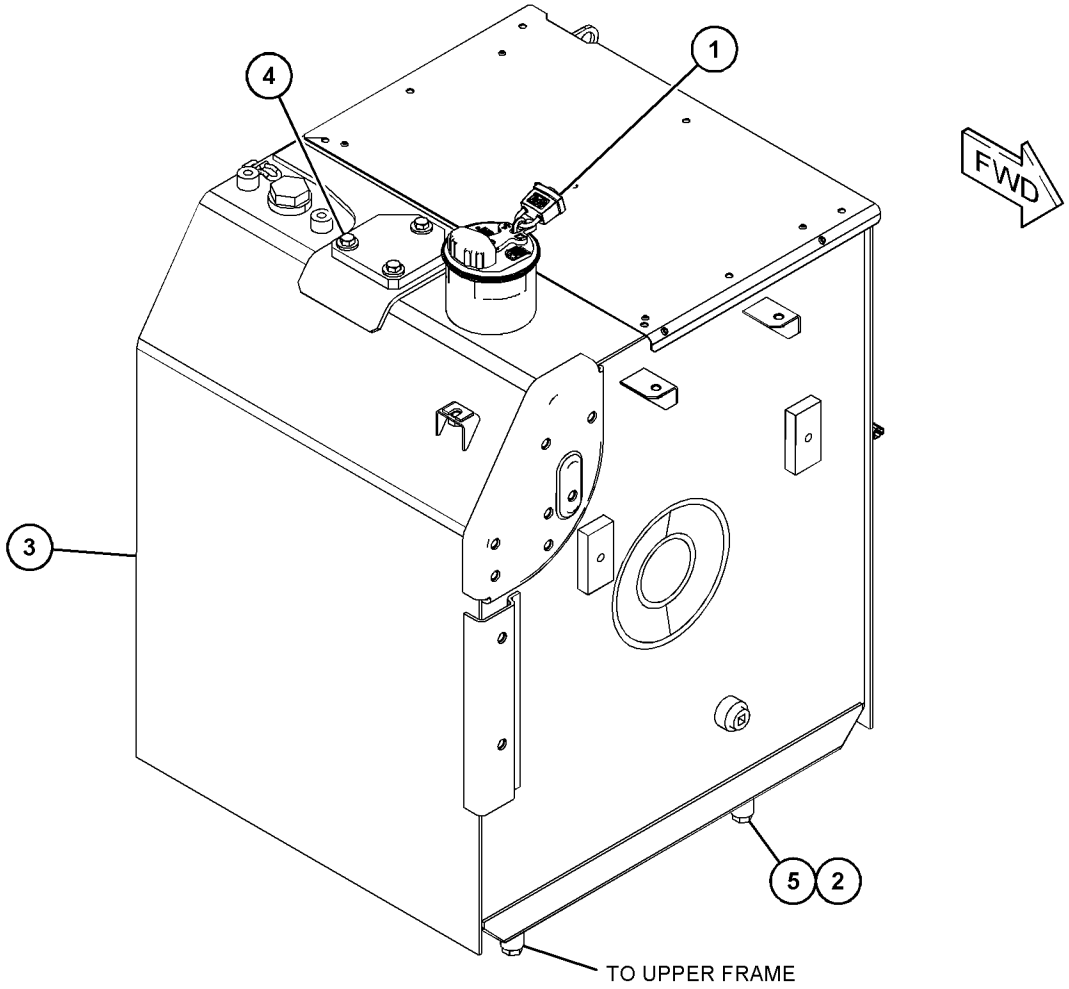

GRAPHIC #1 **<END>** g03429207

445-2220 TANK AR-FUEL

S/N: PBB1-UP; KBS1-UP

PART OF 456-0817, 456-0825, 456-0826, 456-0827, 456-0828, 456-0829, 456-0830, 456-0918, 456-0919, 456-0920, 456-0921, 456-0922, 456-0923 DISTRIBUTION AR AN ATTACHMENT

SMCS-1273 **i05801210**

NOTE	PART NUMBER	QTY	PART NAME 1 2 3 4 5 6 (PRODUCT LEVEL)	SEE PAGE
Y	*399-2560*	1	COVER AS-SOUND SUPPRESSION (FUEL, HYDRAULIC TANKS)	257
Y	*445-2221*	1	TANK & MTG GP-FUEL	94

Y - SEPARATE ILLUSTRATION

<END>

438-2505 TANK GP-FUEL

S/N: PBB1-UP; KBS1-UP
390-L (103-US GAL)
PART OF 417-0270 TANK & MTG GP-FUEL

SMCS-1273 **i05909474**

NOTE	REF NO	GRAPHIC REF	PART NUMBER	QTY	PART NAME 1 2 3 4 5 6 (PRODUCT LEVEL)	SEE PAGE
J	1	1	**303-9933**	1	STRAINER AS-FUEL (FLOAT GAUGE)	
	2	1	**341-1842**	1	SENDER AS-FUEL LEVEL	
		1	**8T-8729**	2	PIN-CONNECTOR (16-GA TO 18-GA)	
		1	**102-8802**	1	KIT-RECEPTACLE (2-PIN)	
					(INCLUDES RECEPTACLE AS AND WEDGE)	
H	3	1	**349-7059**	1	CAP AS-FUEL (LOCKABLE, VENTED)	
		1	**9X-8600**	1	SEAL-O-RING	
	4	1	**359-8335**	1	PACKING	
	5	1	*385-5773*	1	CONNECTOR AS	
		1	**5P-1046**	1	CONNECTOR	
		1	**214-7568**	1	SEAL-O-RING	
	6	1	**8T-0328**	5	WASHER-HARD (5.5X10X1-MM THK)	
M	7	1	**095-0736**	5	SCREW-MACHINE (M5X0.8X10-MM)	
	8	1	**214-7568**	1	SEAL-O-RING	
	9	1	*353-5109*	1	ELBOW AS	
		1	**5P-4906**	1	ELBOW	
		1	**238-5080**	1	SEAL-O-RING	
	10	1	**5P-4924**	1	ELBOW	
					AVAILABLE REPAIR KIT(S):	
J			**303-9937**	1	KIT-GAUGE (FUEL STRAINER)	
					(INCLUDES STOPPER & GAUGE)	
H			**350-7735**	1	KIT-CAP FILTER (FUEL TANK)	
					(INCLUDES BREATHER BODY, BREATHER GASKET, MOUNTING SCREWS & NYLON WASHERS)	

H - KIT MARKED H SERVICES PART(S) MARKED H
J - KIT MARKED J SERVICES PART(S) MARKED J
M - METRIC PART

438-2505 **TANK GP-FUEL (*contd.*)** **i05909474**

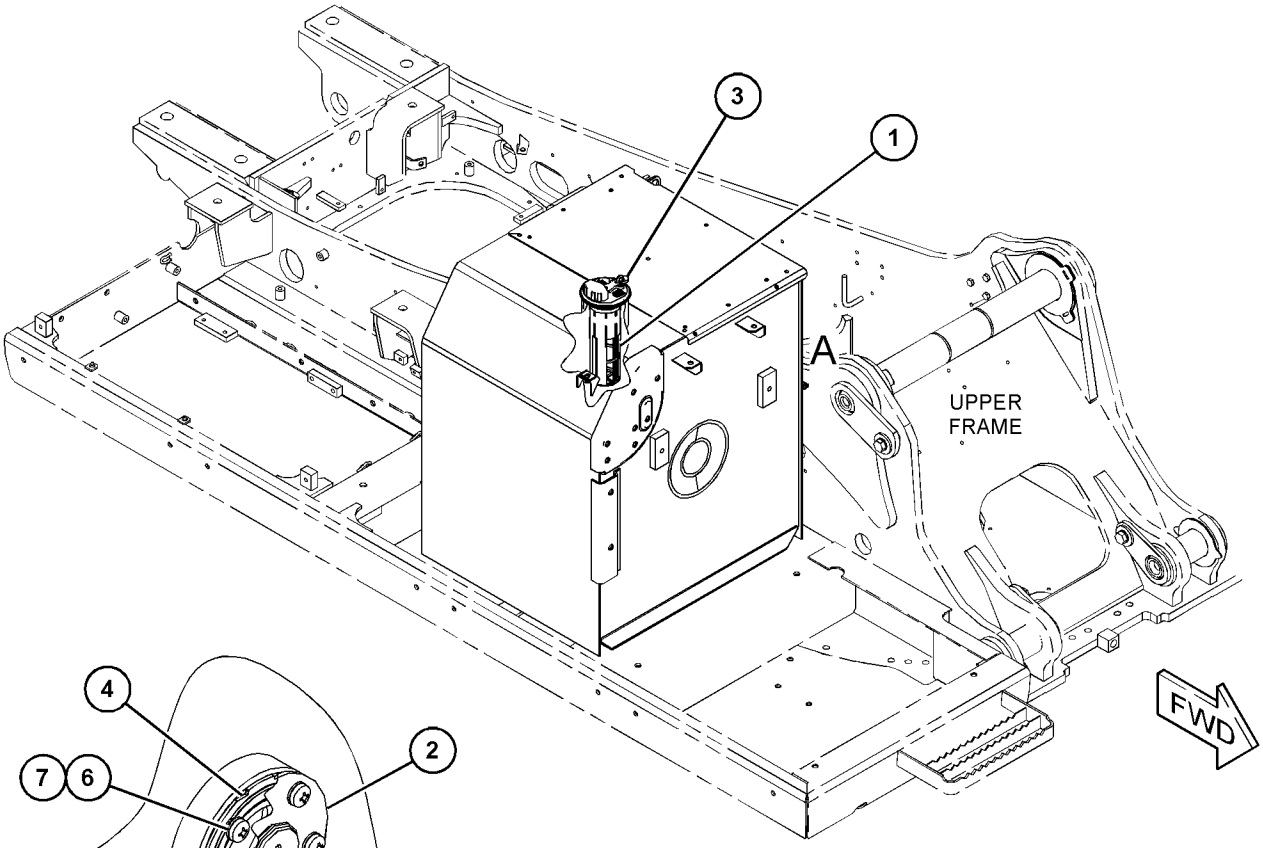

VIEW OF AREA A 90°

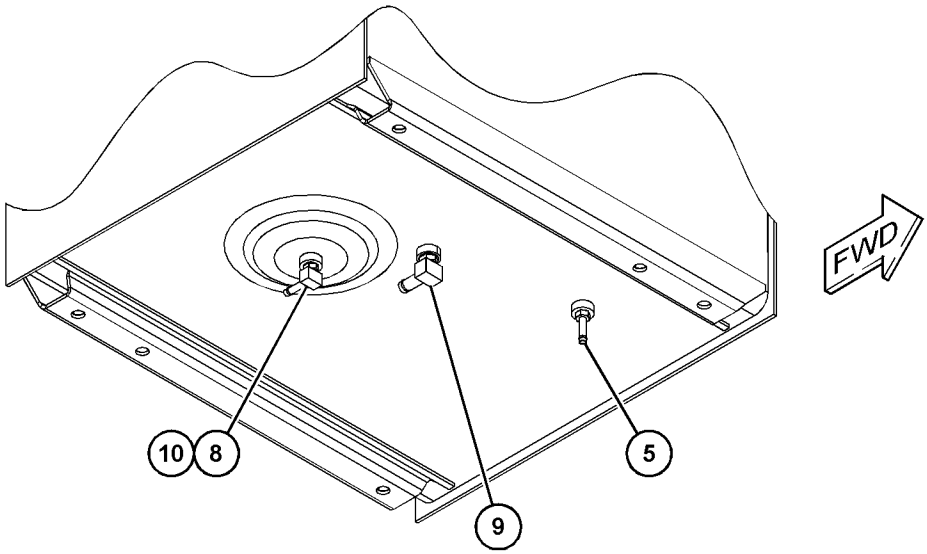

GRAPHIC #1 **<END>** g03498676

438-2506 TANK GP-FUEL

S/N: PBB1-UP; KBS1-UP
390-L (103-US GAL)
PART OF 445-2221 TANK & MTG GP-FUEL
AN ATTACHMENT

SMCS-1273 **i05801212**

NOTE	REF NO	GRAPHIC REF	PART NUMBER	QTY	PART NAME 1 2 3 4 5 6 (PRODUCT LEVEL)	SEE PAGE
J	1	1	**303-9933**	1	STRAINER AS-FUEL (FLOAT GAUGE)	
	2	1	**341-1842**	1	SENDER AS-FUEL LEVEL	
		1	**9X-3401**	2	PIN-CONNECTOR (16-GA TO 18-GA)	
		1	**102-8802**	1	KIT-RECEPTACLE (2-PIN)	
					(INCLUDES RECEPTACLE AS AND WEDGE)	
L	3	1	**349-7059**	1	CAP AS-FUEL (LOCKABLE, VENTED)	
		1	**9X-8600**	1	SEAL-O-RING	
	4	1	**359-8335**	1	PACKING	
	6	1	*385-5773*	1	CONNECTOR AS	
		1	**5P-1046**	1	CONNECTOR	
		1	**214-7568**	1	SEAL-O-RING	
M	7	1	**095-0736**	5	SCREW-MACHINE (M5X0.8X10-MM)	
	8	1	**214-7568**	1	SEAL-O-RING	
	9	1	*326-0316*	1	PLUG AS	
		1	**9S-6130**	1	PLUG	
		1	**228-7096**	1	SEAL-O-RING	
	10	1	*353-5109*	1	ELBOW AS	
		1	**5P-4906**	1	ELBOW	
		1	**238-5080**	1	SEAL-O-RING	
	11	1	**3B-0551**	1	PLUG-PIPE	
	12	1	**5P-4924**	1	ELBOW	
	13	1	**8T-0328**	5	WASHER-HARD (5.5X10X1-MM THK)	
					AVAILABLE REPAIR KIT(S):	
J			**303-9937**	1	KIT-GAUGE (FUEL STRAINER)	
					(INCLUDES STOPPER & GAUGE)	
L			**350-7735**	1	KIT-CAP FILTER (FUEL TANK)	
					(INCLUDES BREATHER BODY, BREATHER GASKET, MOUNTING SCREWS & NYLON WASHERS)	

J - KIT MARKED J SERVICES PART(S) MARKED J
L - KIT MARKED L SERVICES PART(S) MARKED L
M - METRIC PART

438-2506 **TANK GP-FUEL (*contd.*)** **i05801212**

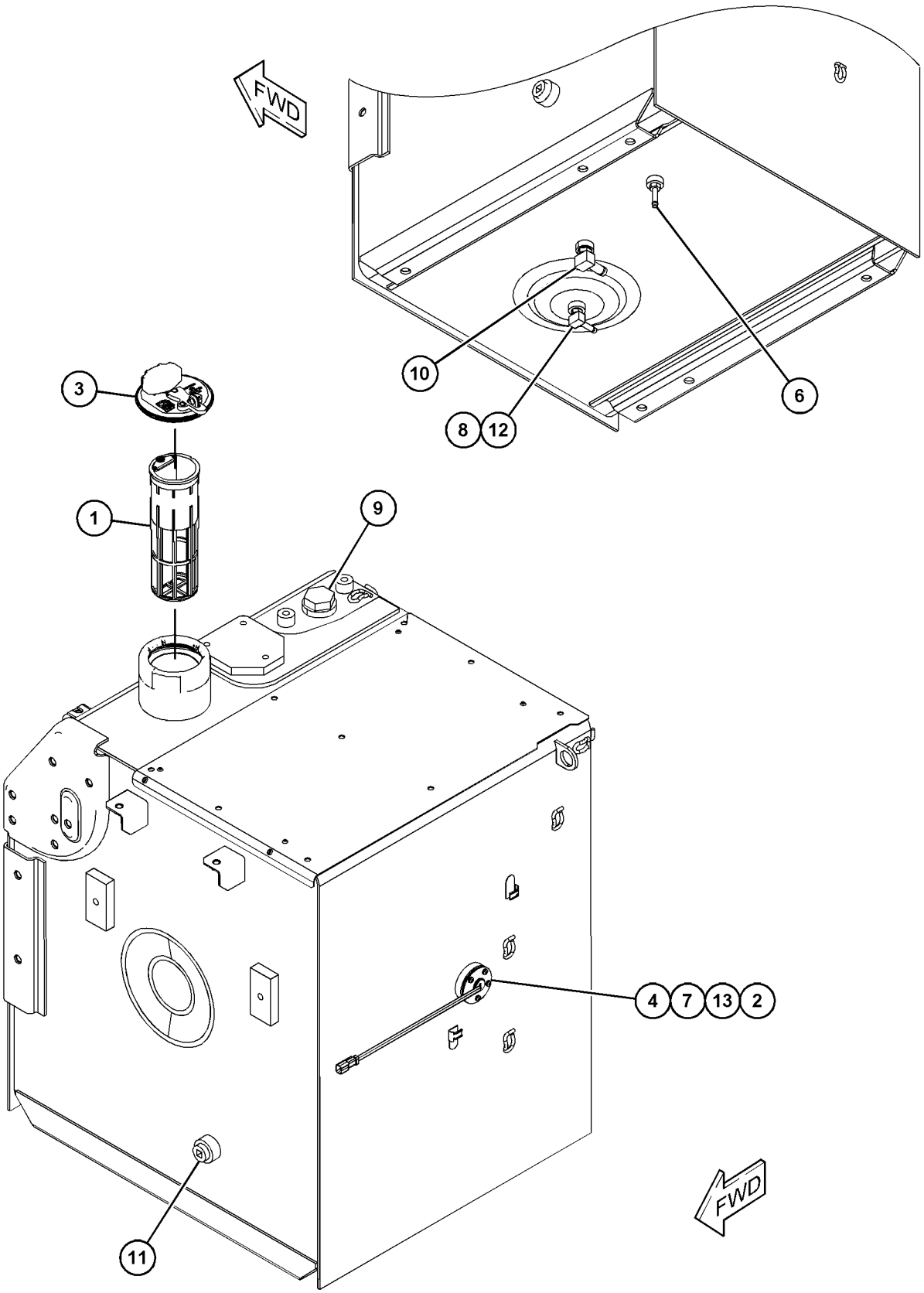

GRAPHIC #1 **<END>** g03429727

442-3947 VALVE GP-REFUELING

S/N: PBB1-UP; KBS1-UP
PART OF 229-1785 PUMP GP-REFUELING
AN ATTACHMENT

SMCS-1256 **i05743539**

NOTE	REF NO	GRAPHIC REF	PART NUMBER	QTY	PART NAME 1 2 3 4 5 6 (PRODUCT LEVEL)	SEE PAGE
	1	1	**451-6724**	1	STRAINER (REFUELING)	
	2	1	**451-6726**	1	SPRING	
	3	1	**451-6728**	1	SPRING	
	4	1	**450-7126**	1	KIT-VALVE	
					(INCLUDES CAP & SEAL)	
					PARTS SHOWN IN GRAPHIC(S) WITHOUT A REFERENCE NUMBER ARE NOT SERVICED SEPARATELY	

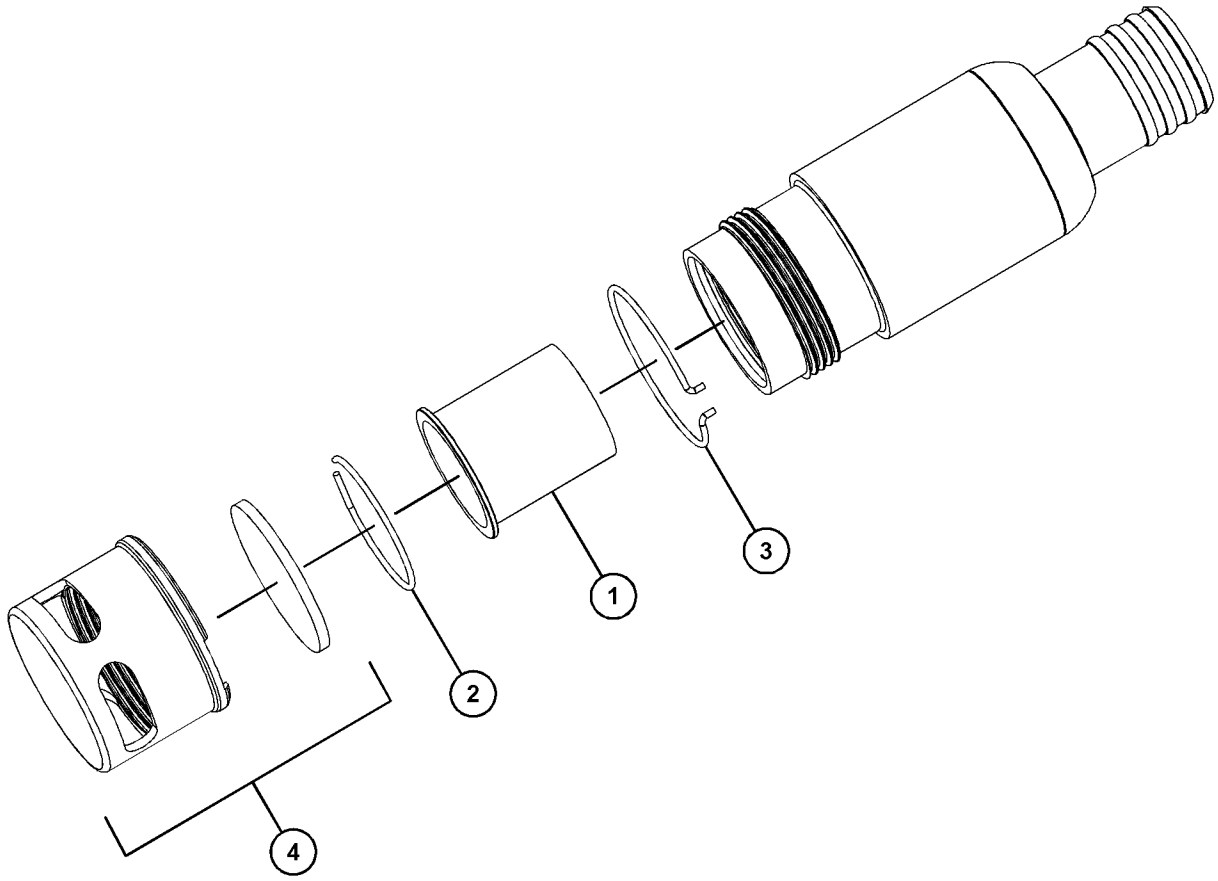

GRAPHIC #1 **<END>** g03612901

132-1829 ALARM GP–FAULT

S/N: PBB1-UP; KBS1-UP
24-VOLT
PART OF 398-7003 WIRING GP-CAB

SMCS-7400, 7402, 7407

i05270543

NOTE	REF NO	GRAPHIC REF	PART NUMBER	QTY	PART NAME 1 2 3 4 5 6 (PRODUCT LEVEL)	SEE PAGE
	1	1	**102-8802**	1	KIT-RECEPTACLE (2-PIN)	
					(INCLUDES RECEPTACLE AS & WEDGE)	
	2	1	**186-3735**	2	PIN-CONNECTOR (16-GA TO 18-GA)	

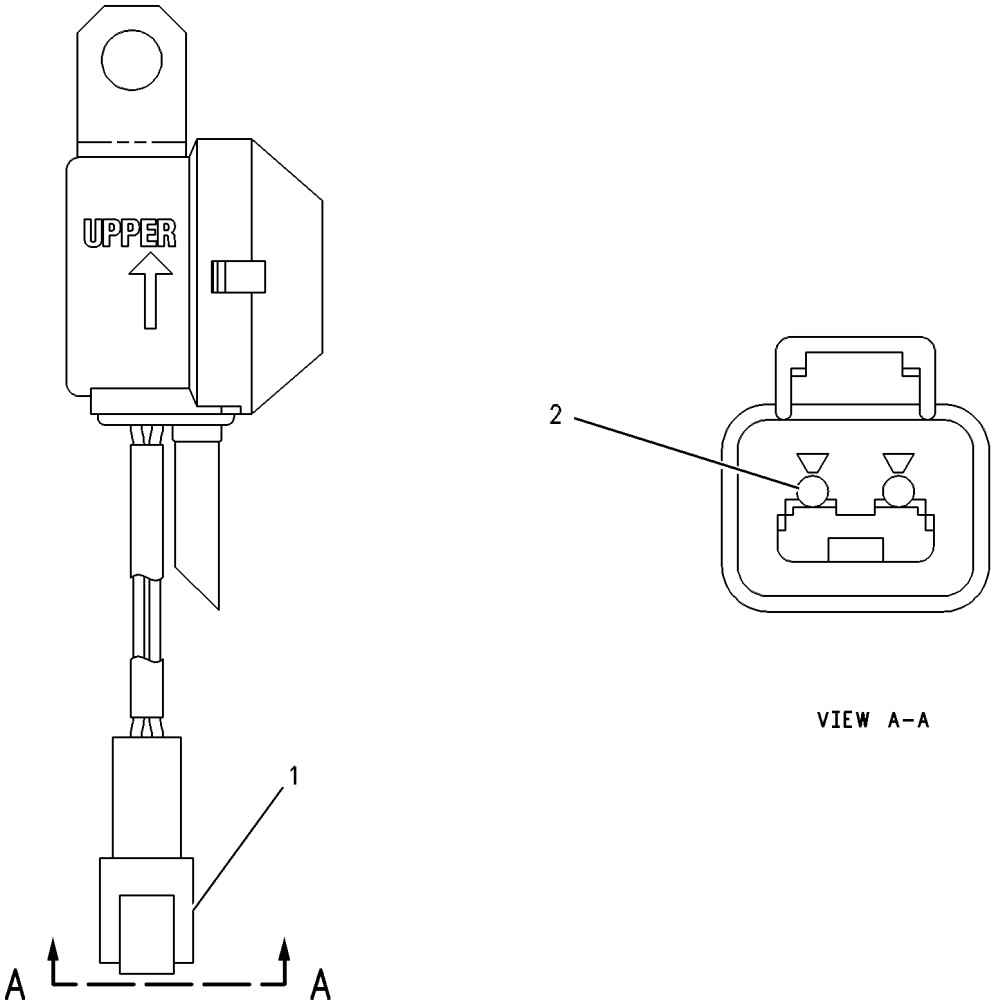

GRAPHIC #1

<END>

g00272185

231-1771 ALARM GP-TRAVEL–BACKUP

S/N: PBB1-UP; KBS1-UP
PART OF 397-4688 OPTION AR-REGIONAL
AN ATTACHMENT

SMCS-7429 **i05238915**

NOTE	REF NO	GRAPHIC REF	PART NUMBER	QTY	PART NAME 1 2 3 4 5 6 (PRODUCT LEVEL)	SEE PAGE
	1	1	**213-9100**	1	ALARM AS	
		1	**102-8802**	1	KIT-RECEPTACLE (2-PIN)	
					(INCLUDES RECEPTACLE AS & WEDGE)	
		1	**8T-8729**	2	PIN-CONNECTOR (16-GA TO 18-GA)	
E	1A	1	**9X-1813**		SLEEVE (29-CM)	
M	2	1	**8T-4189**	2	BOLT (M8X1.25X20-MM)	
	3	1	**5P-4116**	2	WASHER-HARD (8.8X20.5X2-MM THK)	

E - ORDER BY THE CENTIMETER
M - METRIC PART

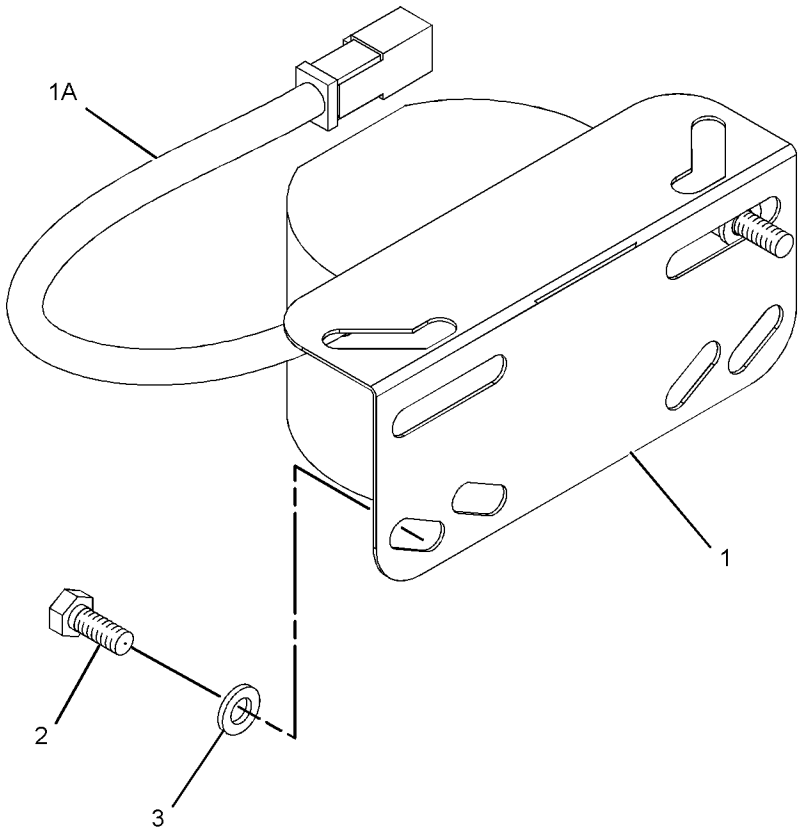

GRAPHIC #1 **<END>** g01682735

396-6983 ALTERNATOR GP-CHARGING

S/N: D7A1-UP

PART OF 417-3389 ENGINE AR-PRIMARY

SMCS-1405 **i05156029**

NOTE	REF NO	GRAPHIC REF	PART NUMBER	QTY	PART NAME 1 2 3 4 5 6 (PRODUCT LEVEL)	SEE PAGE
	1	1	**329-5254**	1	PULLEY (12-GROOVE)	
	2	1	**344-1722**	1	TENSIONER-BELT	
R	3	1	**344-5081**	1	ALTERNATOR GP-CHARGING	
	4	1	**100-4463**	1	BOLT (M10X1.5X80-MM)	
	5	1	**164-7468**	4	BOLT (M10X1.5X95-MM)	

R - REMFG PART MAY BE AVAILABLE

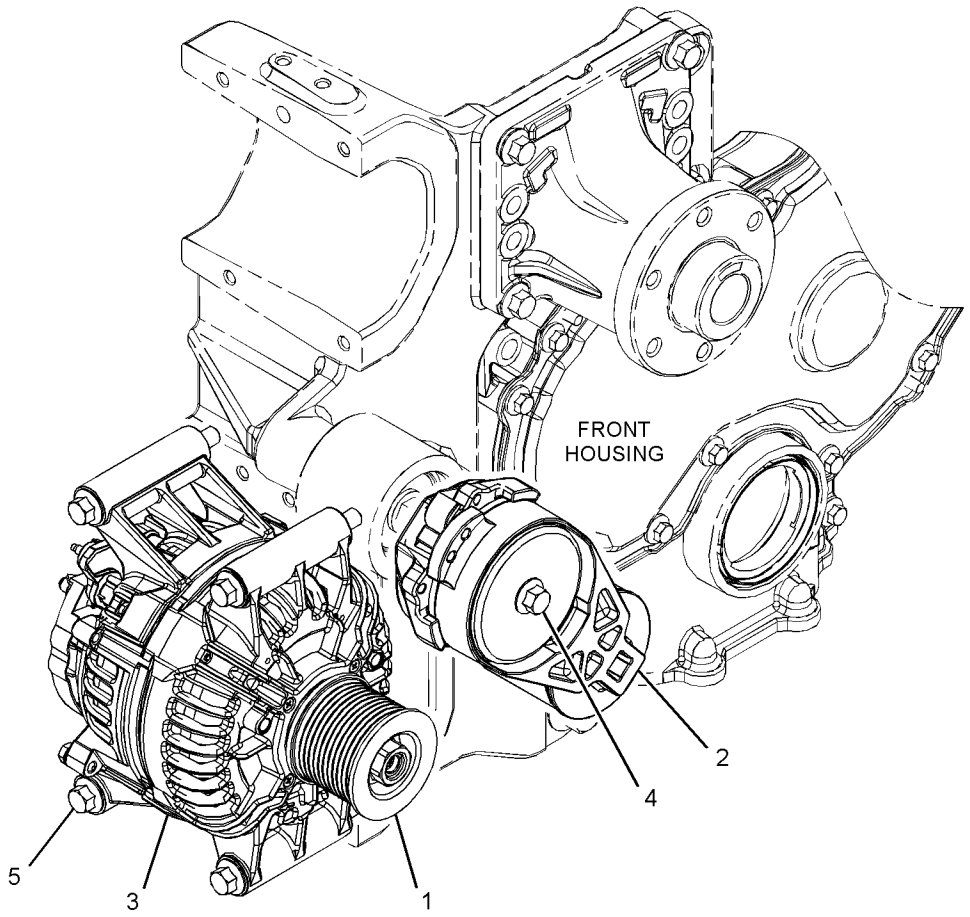

GRAPHIC #1 **<END>** g03317329

377-8080 BATTERY & WIRING GP—COLD WEATHER

S/N: PBB1-UP; KBS1-UP

PART OF 456-0818, 456-0819, 456-0820, 456-0821, 456-0825, 456-0826, 456-0827, 456-0828, 456-0829, 456-0830, 456-0918, 456-0919, 456-0920, 456-0921, 456-0922, 456-0923, 456-1026, 456-1027 DISTRIBUTION AR

AN ATTACHMENT

SMCS-1401, 1402, 1408 **i05320715**

NOTE	REF NO	GRAPHIC REF	PART NUMBER	QTY	PART NAME 1 2 3 4 5 6 (PRODUCT LEVEL)	SEE PAGE
	1	2	**5I-8270**	1	COVER-BATTERY	
	2	2	**6W-6005**	1	HOLD-DOWN-BATTERY	
	3	2	**170-6929**	1	CABLE AS (JUMPER)	
E		2	**5P-0761**		CABLE (00-GA, RED) (31-CM)	
		2	**9G-0002**	1	COVER AS-TERMINAL (RED)	
		2	**8L-8413**	1	STRAP-CABLE	
		2	**9G-0005**	1	COVER AS-TERMINAL (BLACK)	
		2	**8L-8413**	1	STRAP-CABLE	
		2	**8C-5918**	1	TERMINAL AS (NEGATIVE)	
		2	**8T-9756**	1	TERMINAL AS (POSITIVE)	
					(EACH TERMINAL AS INCLUDES)	
		2	**1M-6119**	1	BOLT (5/16-18X1.375-IN)	
		2	**1M-6120**	1	NUT (5/16-18-THD)	
	4	2	**177-2215**	1	STRAP-DUAL CLAMP	
	5	2	**238-2501**	1	KNOB	
	6	2	**238-2528**	1	ROD	
	7	2	**259-5225**	1	SUPPORT AS	
	8	2	**259-5229**	1	CABLE AS (DISCONNECT)	
		2	**1S-7252**	1	TERMINAL-CABLE (00-GA, 3/8-IN SCREW)	
E		2	**5P-0747**		CABLE (00-GA, BLACK) (89-CM)	
		2	**9G-0003**	1	COVER AS-TERMINAL (BLACK)	
		2	**8L-8413**	1	STRAP-CABLE	
		2	**8T-9757**	1	TERMINAL AS-BATTERY (NEGATIVE)	
		2	**1M-6119**	1	BOLT (5/16-18X1.375-IN)	
		2	**1M-6120**	1	NUT (5/16-18-THD)	
	9	2	**263-9574**	4	BATTERY GP (12-VOLT, MAINTENANCE FREE)	
					(EACH INCLUDES)	
		2	**123-1373**	6	CAP AS-FILLER (BATTERY)	
	10	1	**388-6788**	1	CABLE AS (STARTER)	
E		1	**159-8049**		CABLE (00-GA, RED) (194-CM)	
		1	**9G-0004**	1	COVER AS-TERMINAL (RED)	
		1	**8L-8413**	1	STRAP-CABLE	
		1	**8C-5917**	1	TERMINAL AS-BATTERY (POSITIVE)	
		1	**1M-6119**	1	BOLT (5/16-18X1.375-IN)	
		1	**1M-6120**	1	NUT (5/16-18-THD)	
		1	**1S-7252**	1	TERMINAL-CABLE (00-GA, 3/8-IN SCREW)	
Y	11	2	**379-7489**	1	SHEET AS-SOUND SUPPRESSION	289
	12	2	**4K-8864**	2	CLIP	
M	13	2	**5C-7261**	1	NUT (M8X1.25-THD)	
	14	2	**6K-8178**	2	CLIP	
	15	2	**8T-4121**	1	WASHER-HARD (11X21X2.5-MM THK)	
M	16	2	**8T-4133**	1	NUT (M10X1.5-THD)	
M	17	2	**8T-4191**	1	BOLT (M10X1.5X16-MM)	
M	18	2	**8T-4192**	4	BOLT (M12X1.75X25-MM)	
	19	2	**8T-4223**	4	WASHER-HARD (13.5X25.5X3-MM THK)	
	20	2	**8T-4226**	1	WASHER-PLATED (10.5X45X3-MM THK)	

E - ORDER BY THE CENTIMETER
M - METRIC PART
Y - SEPARATE ILLUSTRATION

377-8080 **BATTERY & WIRING GP (*contd.*)** **i05320715**

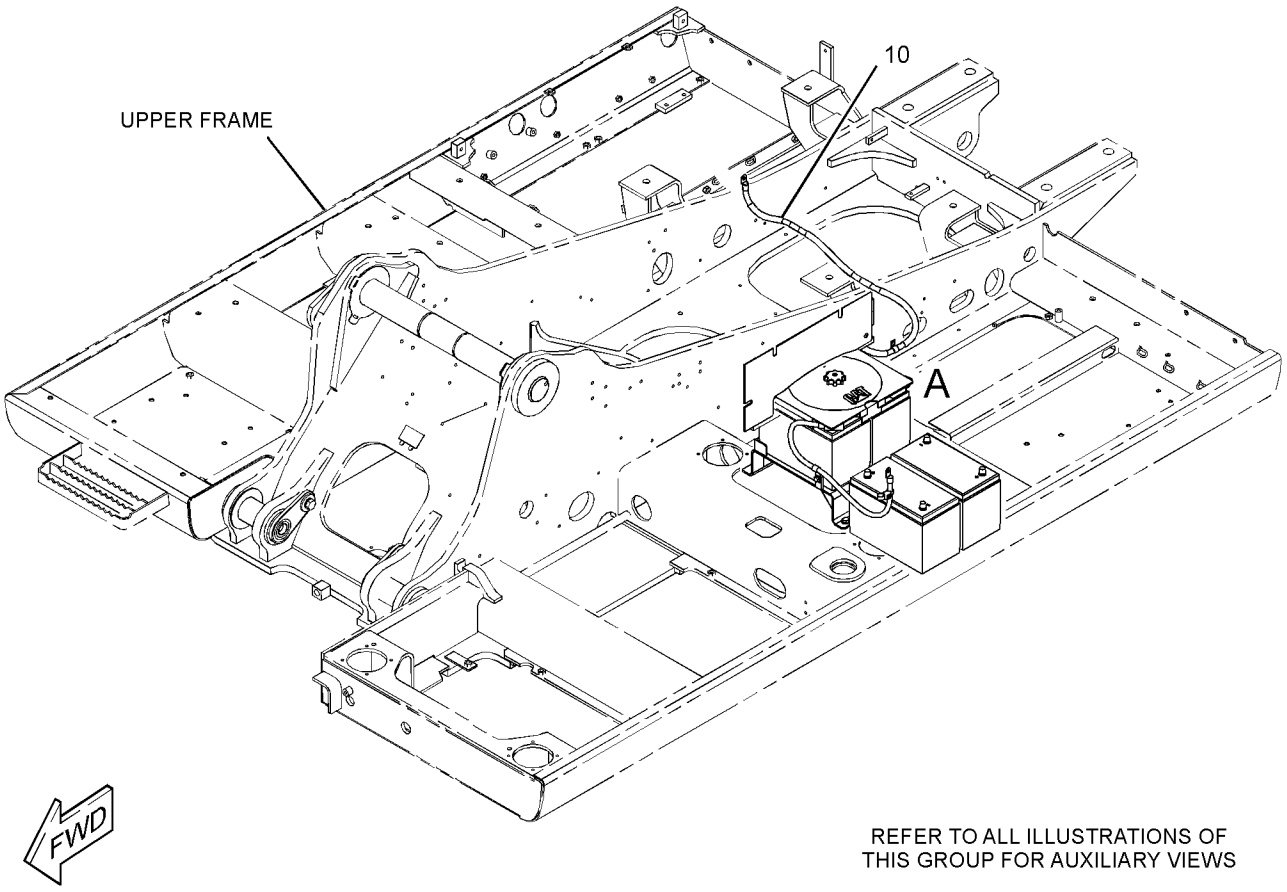

REFER TO ALL ILLUSTRATIONS OF
THIS GROUP FOR AUXILIARY VIEWS

GRAPHIC #1

g03358487

377-8080 **BATTERY & WIRING GP (*contd.*)** **i05320715**

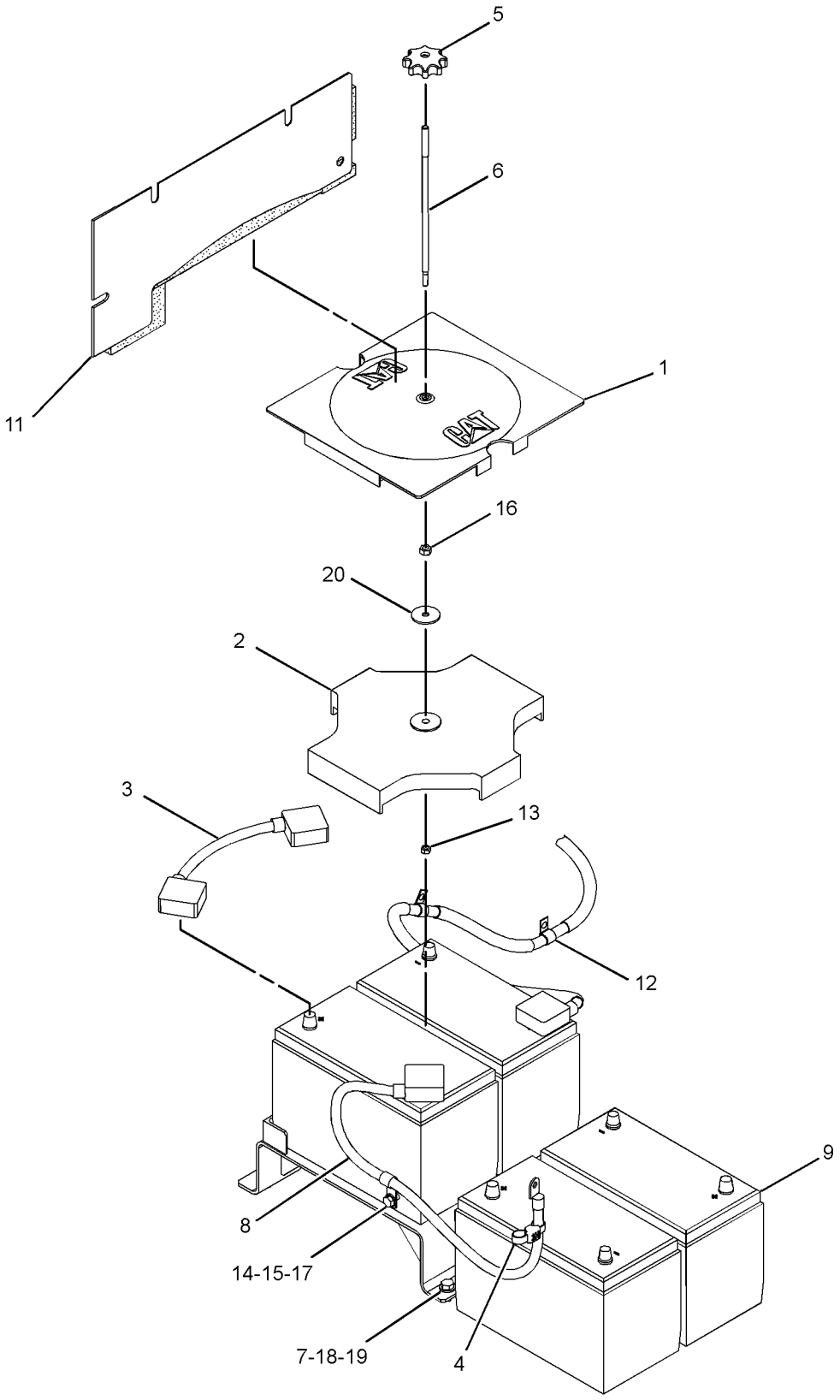

VIEW OF AREA A

GRAPHIC #2 **<END>** g02746318

399-3647 BATTERY & WIRING GP

S/N: PBB1-UP; KBS1-UP

PART OF 454-5588, 454-5589 CHASSIS AR

SMCS-1401, 1402, 1408 **i05851957**

NOTE	REF NO	GRAPHIC REF	PART NUMBER	QTY	PART NAME 1 2 3 4 5 6 (PRODUCT LEVEL)	SEE PAGE
	1	1	**3T-5760**	2	BATTERY GP (12-VOLT, 750-CCA)	
					(EACH INCLUDES)	
		1	**123-1373**	6	CAP AS-FILLER (BATTERY)	
	2	1	**5I-8270**	1	COVER-BATTERY	
	3	1	**6W-6005**	1	HOLD-DOWN-BATTERY	
	4	1	**132-1805**	1	STRAP AS-GROUND	
	5	1	**134-3355**	2	STRAP AS	
	6	1	**170-6929**	1	CABLE AS	
E		1	**159-8049**		CABLE (00-GA, RED) (31-CM)	
		1	**9G-0002**	1	COVER AS-TERMINAL (RED)	
		1	**9G-0005**	1	COVER AS-TERMINAL (BLACK)	
					(EACH COVER AS INCLUDES)	
		1	**8L-8413**	1	STRAP-CABLE (WHITE)	
		1	**8C-5918**	1	TERMINAL AS (NEGATIVE)	
		1	**8T-9756**	1	TERMINAL AS (POSITIVE)	
					(EACH TERMINAL AS INCLUDES)	
		1	**1M-6119**	1	BOLT (5/16-18X1.375-IN)	
		1	**1M-6120**	1	NUT (5/16-18-THD)	
	7	1	**231-1827**	1	CABLE AS	
		1	**1S-7252**	1	TERMINAL-CABLE (00-GA, 3/8-IN SCREW)	
E		1	**159-8050**		CABLE (00-GA, BLACK) (23-CM)	
		1	**9G-0003**	1	COVER AS-TERMINAL (BLACK) (BATTERY NEGATIVE)	
		1	**8L-8413**	1	STRAP-CABLE (WHITE)	
		1	**9G-8909**	1	COVER-TERMINAL (BLACK) (JUNCTION BLOCK)	
		1	**8T-9757**	1	TERMINAL AS-BATTERY (NEGATIVE)	
		1	**1M-6119**	1	BOLT (5/16-18X1.375-IN)	
		1	**1M-6120**	1	NUT (5/16-18-THD)	
	8	1	**238-2501**	1	KNOB	
	9	1	**238-2528**	1	ROD	
C	11	1	**439-4128**	1	BRACKET AS	
	12	1	**388-6760**	1	CABLE AS	
		1	**1S-7252**	1	TERMINAL-CABLE (00-GA, 3/8-IN SCREW)	
D		1	**6V-2722**		TUBE-HEAT SHRINK (25.4-MM DIA) (0.1-M)	
		1	**8N-0869**	1	COVER-TERMINAL (RED) (STARTING MOTOR)	
		1	**9G-0004**	1	COVER AS-TERMINAL (RED) (BATTERY POSITIVE)	
		1	**8L-8413**	1	STRAP-CABLE (WHITE)	
		1	**8C-5917**	1	TERMINAL AS-BATTERY (POSITIVE)	
		1	**1M-6119**	1	BOLT (5/16-18X1.375-IN)	
		1	**1M-6120**	1	NUT (5/16-18-THD)	
E		1	**159-8049**		CABLE (00-GA, RED) (239-CM)	
	13	1	**091-9035**	1	SPACER (11X25X20-MM THK)	
	14	1	**2G-8767**	3	WASHER (10.5X60X3-MM THK)	
	15	1	**4K-8864**	1	CLIP	
M	16	1	**5C-7261**	1	NUT (M8X1.25-THD)	
	17	1	**6G-2256**	2	CLAMP	
	18	1	**6G-2263**	2	SPACER (10.5X19X28.5-MM THK)	
	19	1	**6K-8178**	3	CLIP	
CM	20	1	**8T-4186**	2	BOLT (M10X1.5X40-MM)	
	21	1	**8T-4121**	11	WASHER-HARD (11X21X2.5-MM THK)	
M	22	1	**8T-4133**	1	NUT (M10X1.5-THD)	
CM	23	1	**8T-4136**	3	BOLT (M10X1.5X25-MM)	
M	24	1	**8T-4137**	4	BOLT (M10X1.5X20-MM)	
CM	25	1	**8T-4185**	1	BOLT (M10X1.5X50-MM)	
M	26	1	**8T-4182**	1	BOLT (M10X1.5X45-MM)	
	27	1	**8T-4226**	1	WASHER-PLATED (10.5X45X3-MM THK)	
M	28	1	**8T-6466**	1	BOLT (M10X1.5X60-MM)	

399-3647 **BATTERY & WIRING GP (*contd.*)** **i05851957**

NOTE	REF NO	GRAPHIC REF	PART NUMBER	QTY	PART NAME 1 2 3 4 5 6 (PRODUCT LEVEL)	SEE PAGE
C - CHANGE FROM PREVIOUS TYPE						
D - ORDER BY THE METER						
E - ORDER BY THE CENTIMETER						
M - METRIC PART						

399-3647 **BATTERY & WIRING GP (*contd.*)** **i05851957**

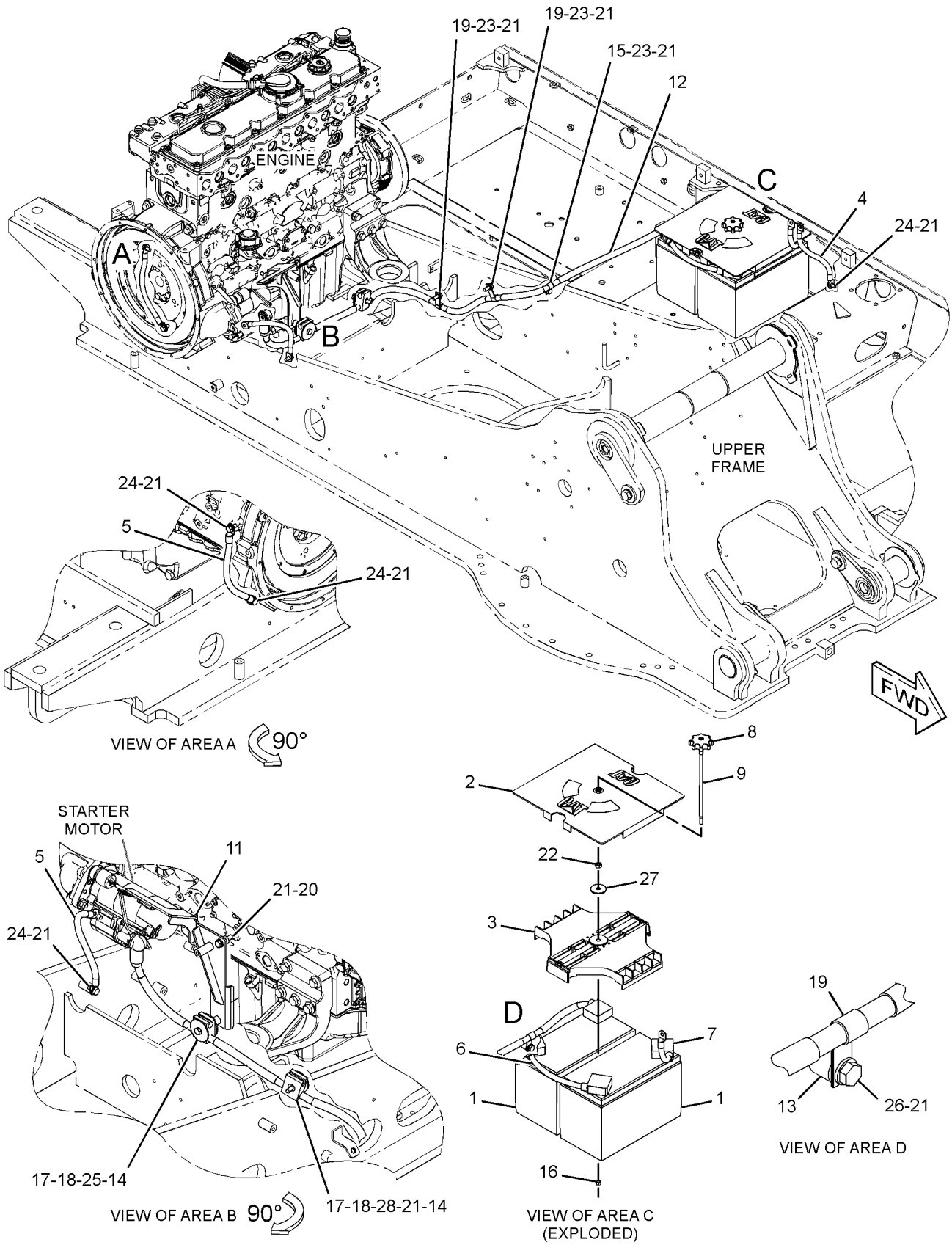

GRAPHIC #1 **<END>** g03479936

9W-0742 BLOCK GP-JUNCTION

S/N: PBB1-UP; KBS1-UP
PART OF 369-0249 WIRING GP-ENGINE
AN ATTACHMENT

SMCS-7426 **i05738090**

NOTE	REF NO	GRAPHIC REF	PART NUMBER	QTY	PART NAME 1 2 3 4 5 6 (PRODUCT LEVEL)	SEE PAGE
	1	1	**435-2848**	1	COVER-TERMINAL	
	2	1	**7F-0560**	6	WASHER (0.516X0.938X0.101-IN THK)	
	3	1	**8T-3518**	6	NUT-FULL (1/2-13-THD)	
	4	1	**8C-6358**	1	BLOCK AS-JUNCTION (BATTERY)	

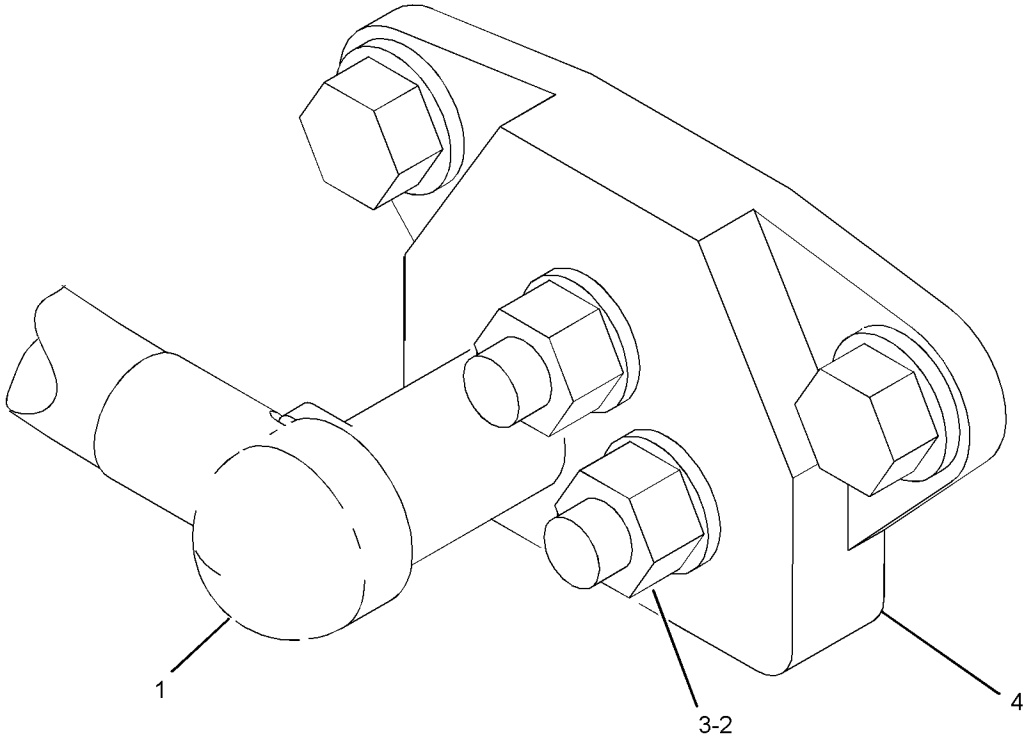

GRAPHIC #1 **<END>** g03490479

459-0359 CAMERA & MOUNTING GP—WORK AREA VISUAL SYSTEM, REAR

S/N: PBB1-UP; KBS1-UP
PART OF 456-0917 CAMERA & MIRROR AR
AN ATTACHMENT

SMCS-7348 **i05849309**

NOTE	REF NO	GRAPHIC REF	PART NUMBER	QTY	PART NAME 1 2 3 4 5 6 (PRODUCT LEVEL)	SEE PAGE
	1	1	**459-0360**	1	COVER	
Y	2	1	*460-6371*	1	CAMERA GP	112
	3	1	**8T-4121**	4	WASHER-HARD (11X21X2.5-MM THK)	
M	4	1	**8T-4137**	4	BOLT (M10X1.5X20-MM)	
	5	1	**9X-2038**	1	WASHER (7X19X2-MM THK)	
M	6	1	**9X-2043**	1	SCREW-TRUSS HEAD (M6X1X14-MM)	

M - METRIC PART
Y - SEPARATE ILLUSTRATION

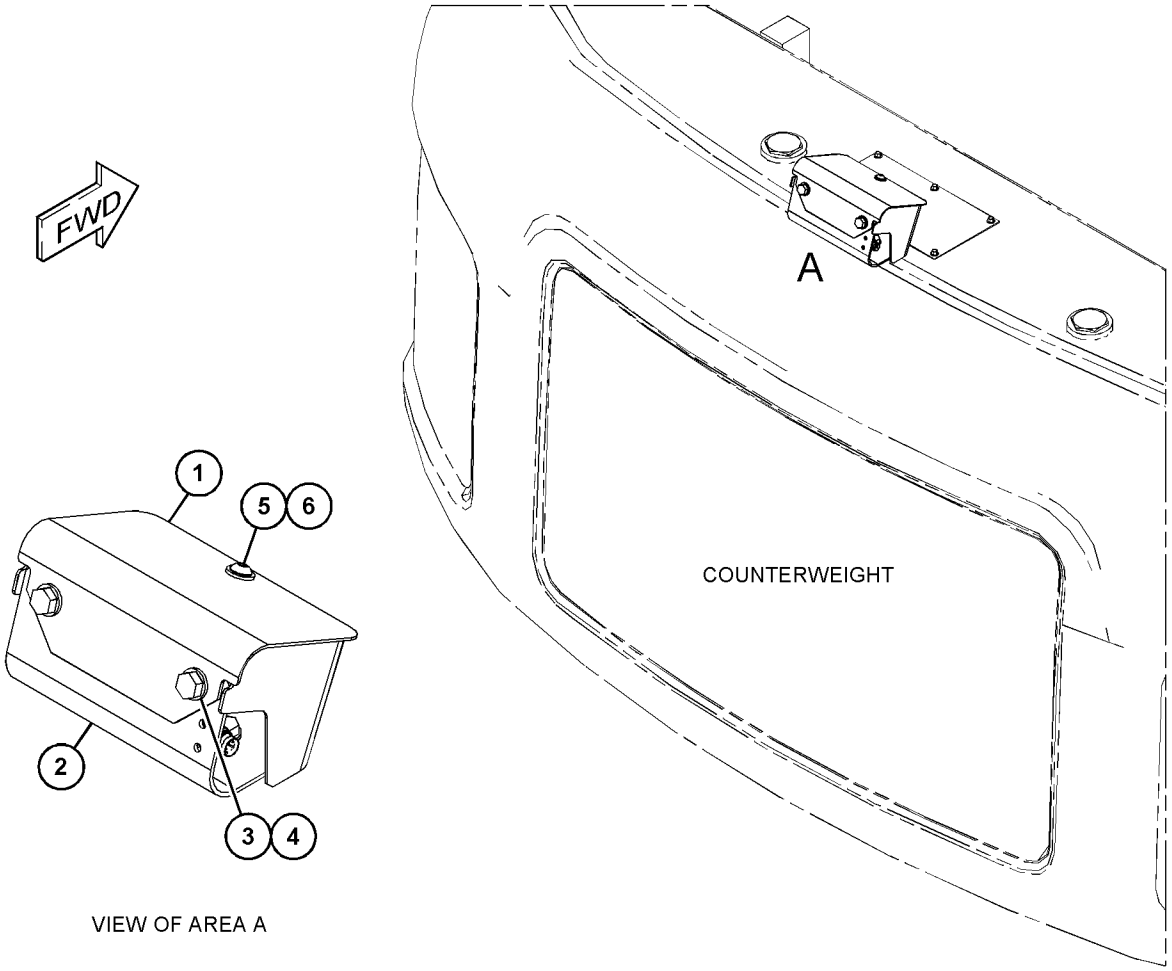

VIEW OF AREA A

GRAPHIC #1 **<END>** g03705925

460-6371 CAMERA GP—WORK AREA VISUAL SYSTEM, REAR

S/N: PBB1-UP; KBS1-UP
PART OF 459-0359 CAMERA & MOUNTING GP
AN ATTACHMENT

SMCS-7348 **i05849311**

NOTE	REF NO	GRAPHIC REF	PART NUMBER	QTY	PART NAME 1 2 3 4 5 6 (PRODUCT LEVEL)	SEE PAGE
	1	1	**7K-1181**	1	STRAP-CABLE	
	2	1	**386-3453**	1	CAMERA	
	3	1	**460-2006**	1	BRACKET AS	
M	4	1	**150-6256**	4	BOLT-SOCKET HEAD (M3X0.5X12-MM)	

M - METRIC PART

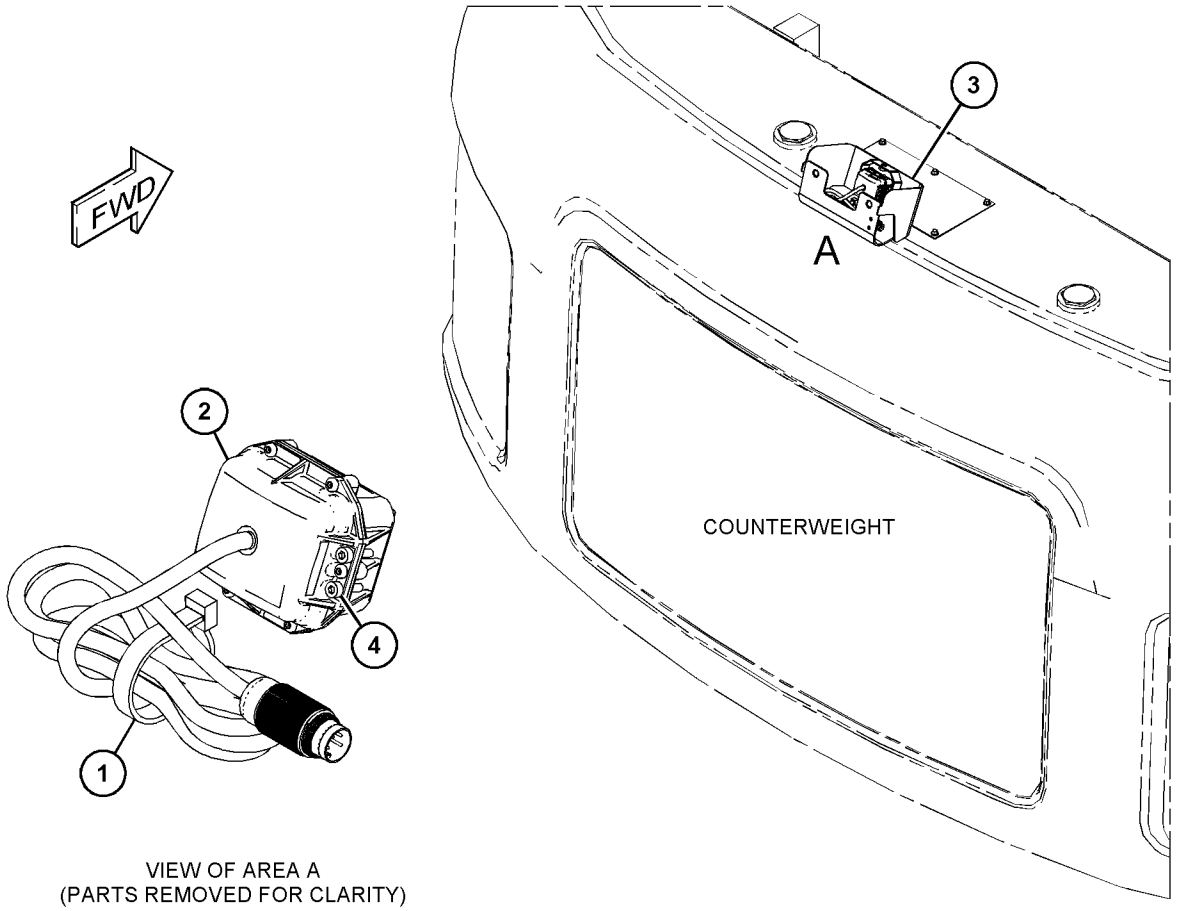

VIEW OF AREA A
(PARTS REMOVED FOR CLARITY)

GRAPHIC #1 **<END>** g03705947

309-5881 CONTROL & MTG GP-COMMUNICATION—PRODUCT LINK

121SR

S/N: PBB1-UP; KBS1-UP

PART OF 383-5427 INSTALLATION AR-COMMUNICATION

AN ATTACHMENT

SMCS-7606 **i03413771**

NOTE	REF NO	GRAPHIC REF	PART NUMBER	QTY	PART NAME 1 2 3 4 5 6 (PRODUCT LEVEL)	SEE PAGE
	1	1	**3S-2093**	1	STRAP-CABLE	
	2	1	**7K-1181**	3	STRAP-CABLE	
Y	3	1	**263-9088**	1	RADIO GP-COMMUNICATION (PRODUCT LINK 121SR)	159
	4	1	**111-4836**	1	CLIP	
	5	1	**8T-4121**	1	WASHER-HARD (11X21X2.5-MM THK)	
M	6	1	**8T-4137**	1	BOLT (M10X1.5X20-MM)	
M	7	1	**8T-4138**	4	BOLT (M6X1X20-MM)	
	8	1	**9X-8256**	4	WASHER (6.6X12X2-MM THK)	
	9	1	**230-1340**	1	FILM-WARNING (PRODUCT LINK RADIO, U.S.)	
					—OR—	
		1	**230-1341**	1	FILM-WARNING (PRODUCT LINK RADIO, INTL)	
	10	1	**307-0047**	1	FILM-INFORMATION (PRODUCT LINK, READ OMM)	

M - METRIC PART
Y - SEPARATE ILLUSTRATION

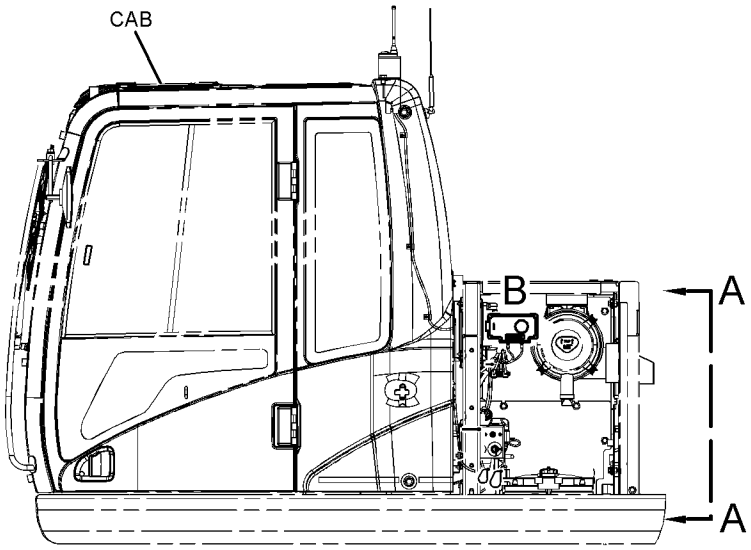

LEFT SIDE VIEW

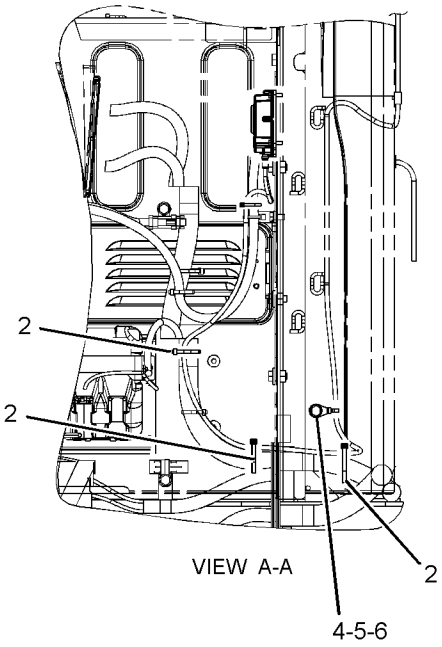

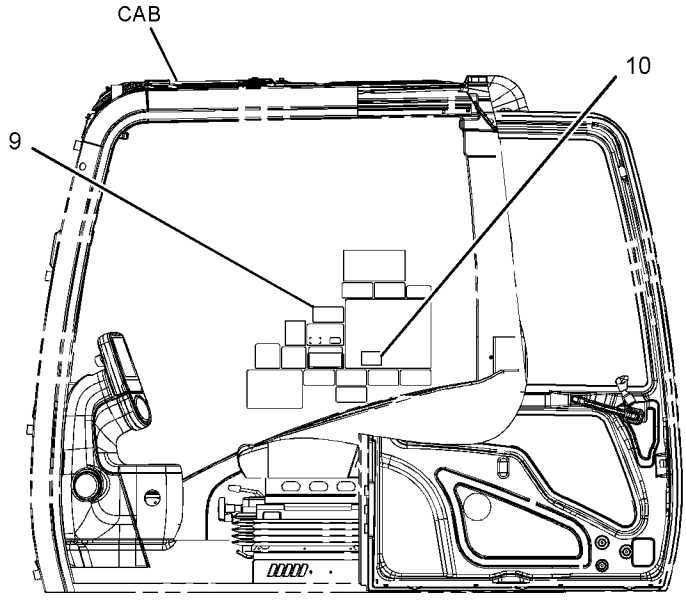

LEFT SIDE VIEW

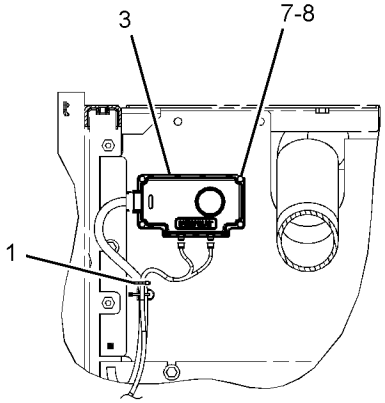

VIEW OF AREA B

GRAPHIC #1 **<END>** g01778333

418-1084 CONTROL & MTG GP-COMMUNICATION–PRODUCT LINK

321SR

S/N: PBB1-UP; KBS1-UP

PART OF 383-5427 INSTALLATION AR-COMMUNICATION

AN ATTACHMENT

SMCS-7606 **i05619264**

NOTE	REF NO	GRAPHIC REF	PART NUMBER	QTY	PART NAME 1 2 3 4 5 6 (PRODUCT LEVEL)	SEE PAGE
	1	1	**8C-5608**	4	SPACER (6.5X9.5X25.4-MM THK)	
	2	1	**9X-9896**	8	MOUNT (ISOLATION)	
Y	3	1	*428-7937*	1	ELECTRONICS GP-COMMUNICATION (PRODUCT LINK, VIMS)	120
M	4	1	**8C-8451**	4	BOLT (M6X1X40-MM)	
	5	1	**9X-6165**	4	WASHER (6.5X22X2.5-MM THK)	

M - METRIC PART
Y - SEPARATE ILLUSTRATION

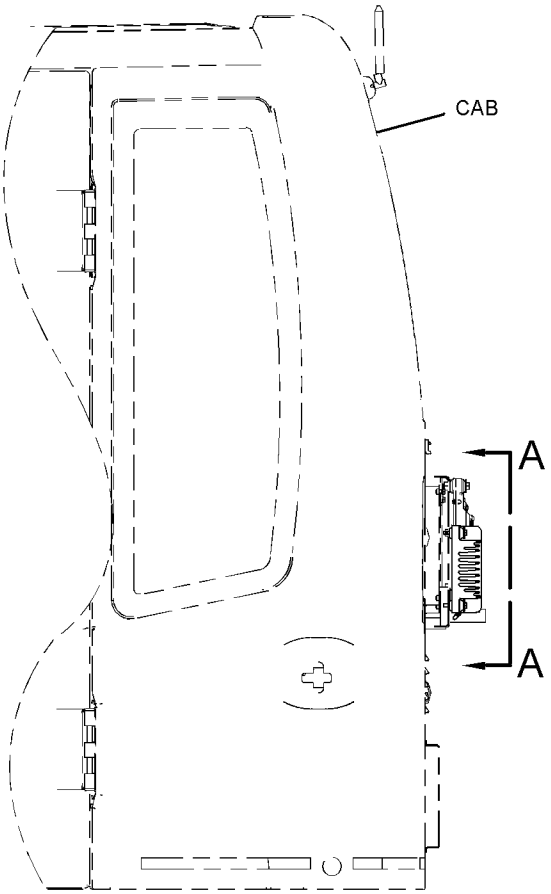

LEFT SIDE VIEW

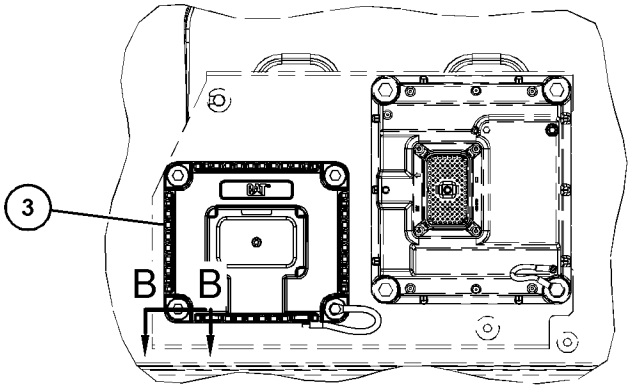

VIEW A-A

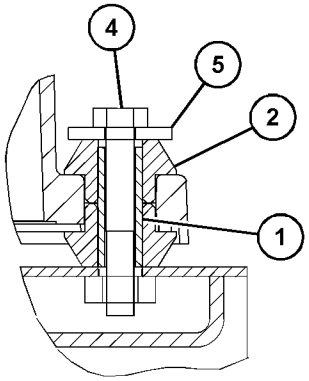

SECTION B-B

GRAPHIC #1 **<END>** g03444237

426-4906 CONTROL & MTG GP-COMMUNICATION–PRODUCT LINK CELLULAR

S/N: PBB1-UP; KBS1-UP
PART OF 383-5449 CONTROL AR-COMMUNICATION
AN ATTACHMENT

SMCS-7606 **i05622110**

NOTE	REF NO	GRAPHIC REF	PART NUMBER	QTY	PART NAME 1 2 3 4 5 6 (PRODUCT LEVEL)	SEE PAGE
	1	1	**9X-9896**	8	MOUNT (ISOLATION)	
Y	2	1	*376-6478*	1	CONTROL GP-COMMUNICATION (PRODUCT LINK CELLULAR)	118
	3	1	**8C-5608**	4	SPACER (6.5X9.5X25.4-MM THK)	
M	4	1	**8C-8451**	4	BOLT (M6X1X40-MM)	
	5	1	**9X-6165**	4	WASHER (6.5X22X2.5-MM THK)	

M - METRIC PART
Y - SEPARATE ILLUSTRATION

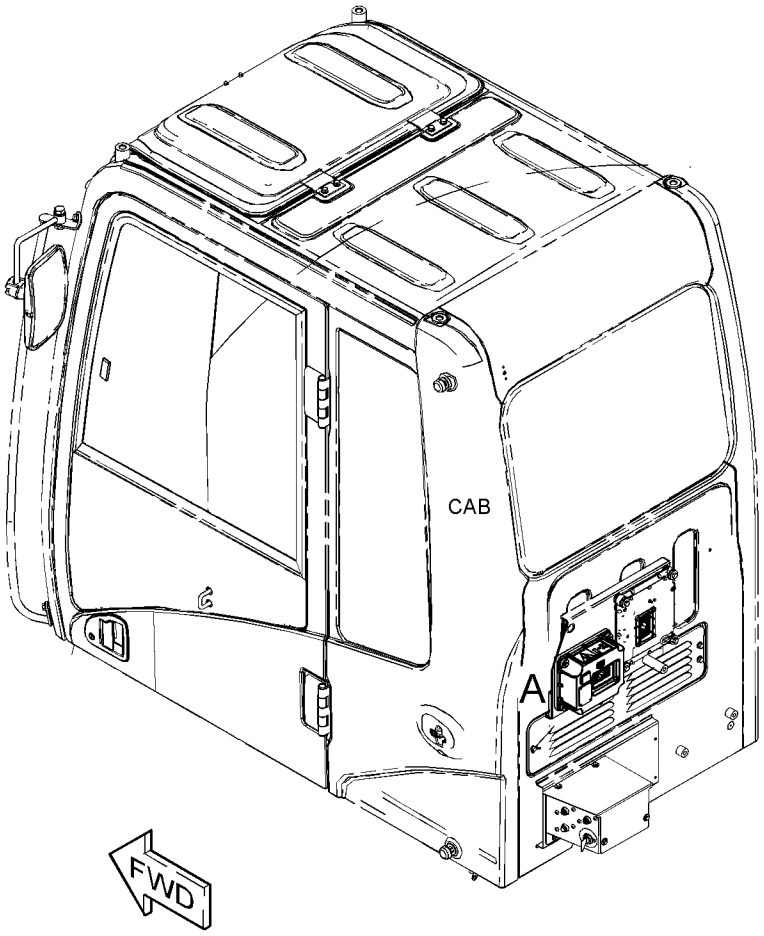

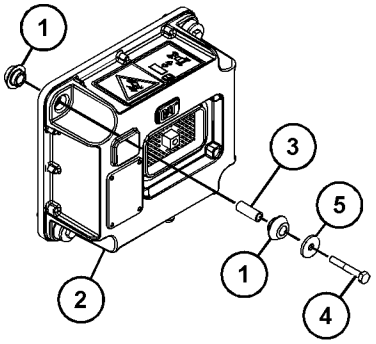

VIEW OF AREA A

GRAPHIC #1 **<END>** g03572312

399-2618 CONTROL & MTG GP-ELECTRONIC

S/N: PBB1-UP; KBS1-UP

PART OF 422-0645 OPERATOR AR

SMCS-1901, 3168, 7490, 7610 **i05474770**

NOTE	REF NO	GRAPHIC REF	PART NUMBER	QTY	PART NAME 1 2 3 4 5 6 (PRODUCT LEVEL)	SEE PAGE
	1	1	**155-0576**	8	MOUNT-ISOLATION	
	2	1	**386-3444**	1	CONTROL GP-UNPROGRAMMED	
	3	1	**399-5308**	1	BRACKET AS	
	4	1	**6I-1418**	4	SPACER (8.2X12.7X28.7-MM THK)	
M	5	1	**7X-0818**	4	BOLT (M8X1.25X45-MM)	
	6	1	**8T-4224**	1	WASHER-HARD (8.8X16X2-MM THK)	
M	7	1	**8T-4970**	4	BOLT (M6X1X14-MM)	
	8	1	**9N-0869**	8	WASHER-HARD (8.8X25.5X2-MM THK)	
	9	1	**9X-8256**	4	WASHER (6.6X12X2-MM THK)	

M - METRIC PART

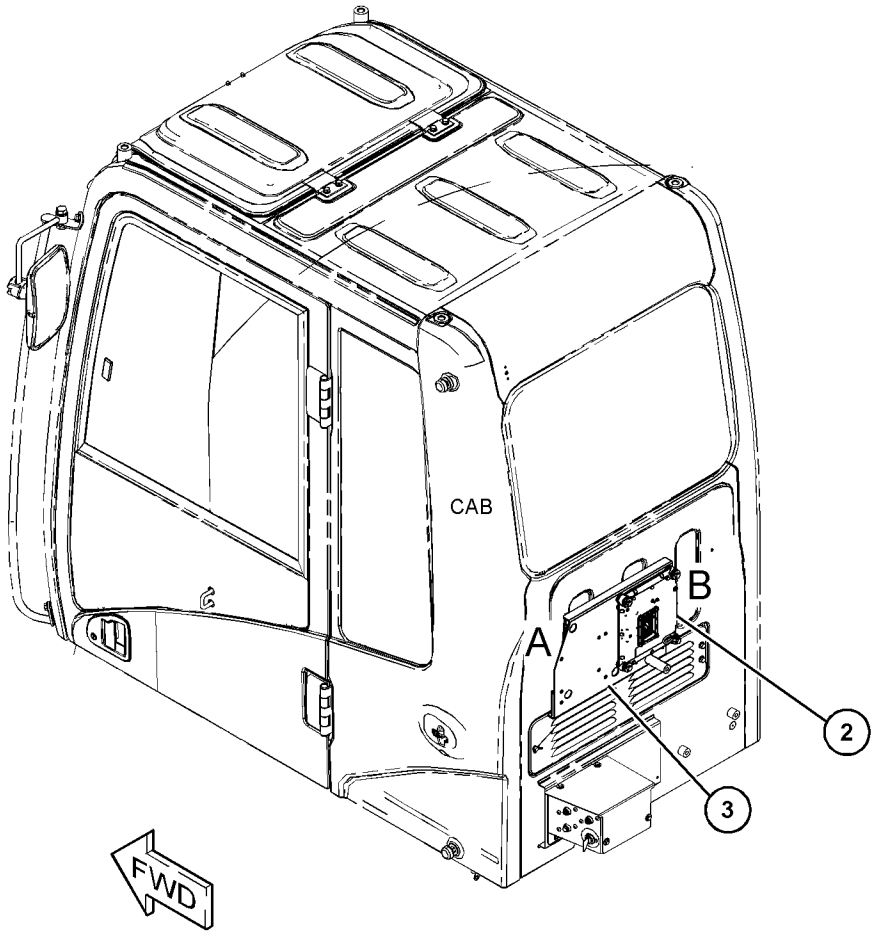

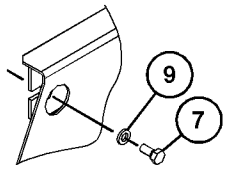

VIEW OF AREA A

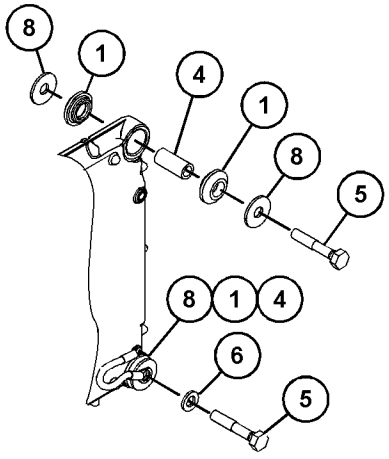

VIEW OF AREA B

GRAPHIC #1 **<END>** g03457163

383-5449 CONTROL AR-COMMUNICATION—PRODUCT LINK CELLULAR

S/N: PBB1-UP; KBS1-UP

PART OF 456-0817, 456-0825, 456-0826, 456-0827, 456-0828, 456-0829, 456-0830, 456-0918, 456-0919, 456-0920, 456-0921, 456-0922, 456-0923 DISTRIBUTION AR

AN ATTACHMENT

SMCS-1400, 7600

i05858869

NOTE	PART NUMBER	QTY	PART NAME 1 2 3 4 5 6 (PRODUCT LEVEL)	SEE PAGE
Y	*426-4906*	1	CONTROL & MTG GP-COMMUNICATION (PRODUCT LINK CELLULAR)	116
Y	*366-8770*	1	FILM GP (PRODUCT LINK RADIO, U.S.)	984
			—OR—	
Y	*366-8771*	1	FILM GP (PRODUCT LINK RADIO, INTL)	985
Y	*399-4217*	1	MOUNTING GP-ANTENNA (PRODUCT LINK)	906
Y	*399-1110*	1	WIRING GP-COMMUNICATION (PRODUCT LINK 522)	208

Y - SEPARATE ILLUSTRATION

<END>

376-6478 CONTROL GP-COMMUNICATION—PRODUCT LINK CELLULAR

S/N: PBB1-UP; KBS1-UP

PART OF 426-4906 CONTROL & MTG GP-COMMUNICATION

AN ATTACHMENT

SMCS-7606, 7610, 7620

i05588355

NOTE	PART NUMBER	QTY	PART NAME 1 2 3 4 5 6 (PRODUCT LEVEL)	SEE PAGE
Y	**351-8490**	1	CONTROL GP-UNPROGRAMMED (PRODUCT LINK 522)	119
	442-6441	1	SOFTWARE GP-COMMUNICATION (PRODUCT LINK 522)	

Y - SEPARATE ILLUSTRATION

<END>

351-8490 CONTROL GP-UNPROGRAMMED–PRODUCT LINK 522

S/N: PBB1-UP; KBS1-UP
PART OF 376-6478 CONTROL GP-COMMUNICATION
AN ATTACHMENT

SMCS-7610 **i04679611**

NOTE	REF NO	GRAPHIC REF	PART NUMBER	QTY	PART NAME 1 2 3 4 5 6 (PRODUCT LEVEL)	SEE PAGE
	1	1	**346-7763**	1	COVER AS	
	2	1	**351-8488**	1	CARD-MEMORY (SUBSCRIBER IDENTITY MODULE)	
	3	1	**7X-6315**	1	STRAP AS-GROUND	
	4	1	**342-9022**	4	SCREW-PAN HEAD (M2.5X0.45-THD)	
	5	1	**342-9290**	1	SCREW-PAN HEAD (M4X0.7-THD)	
	6	1	**134-4126**	1	WASHER (4.52X8.28X0.76-MM THK)	
F		1	**376-7248**	1	SOFTWARE GP-ELECTRONIC	

F - NOT SHOWN

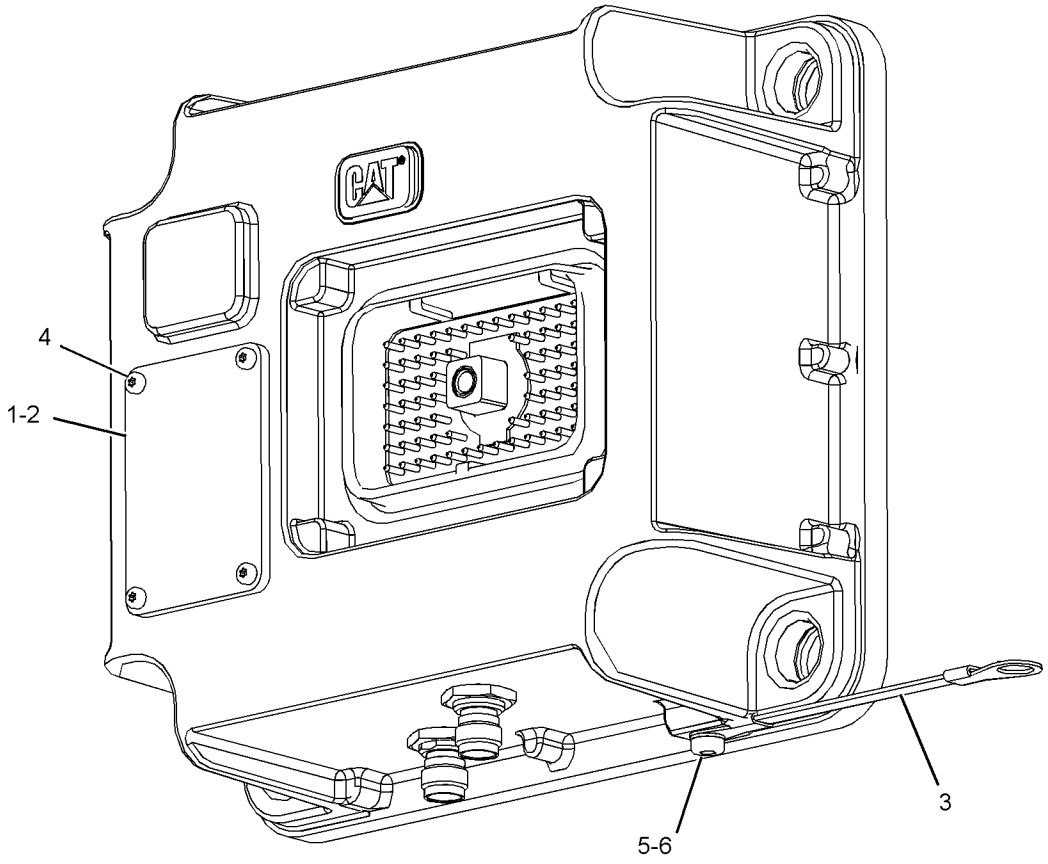

GRAPHIC #1 **<END>** g02330133

428-7937 ELECTRONICS GP-COMMUNICATION

S/N: PBB1-UP; KBS1-UP
PART OF 418-1084 CONTROL & MTG GP-COMMUNICATION
AN ATTACHMENT

SMCS-7606, 7610, 7620

i05619270

NOTE	PART NUMBER	QTY	PART NAME 1 2 3 4 5 6 (PRODUCT LEVEL)	SEE PAGE
	285-1142	1	CONTROL GP-UNPROGRAMMED	
	7X-6315	1	STRAP AS-GROUND	
	101-0852	1	SCREW-PAN HEAD (8-32X0.375-IN)	
	134-4126	1	WASHER (4.52X8.28X0.76-MM THK)	
	439-7520	1	SOFTWARE GP-MONITOR (VIMS MAIN, PROGRAM)	

<END>

436-1868 ELECTRONICS GP-MACHINE

S/N: PBB1-UP; KBS1-UP
PART OF 454-5584, 454-5585 GENERAL AR

SMCS-7610, 7620

i05851798

NOTE	PART NUMBER	QTY	PART NAME 1 2 3 4 5 6 (PRODUCT LEVEL)	SEE PAGE
	436-1869	1	SOFTWARE GP-MACHINE	

<END>

251-0526 FASTENER GP-WIRING HARNESS–STRAIGHT TRAVEL

S/N: PBB1-UP; KBS1-UP
PART OF 259-7178 PEDAL AR-AUXILIARY
AN ATTACHMENT

SMCS-1408, 7553

i02344768

NOTE	REF NO	GRAPHIC REF	PART NUMBER	QTY	PART NAME 1 2 3 4 5 6 (PRODUCT LEVEL)	SEE PAGE
	1	1	**3S-2093**	1	STRAP-CABLE	
	2	1	**116-0118**	1	CLIP	
M	3	1	**7X-2621**	1	BOLT (M10X1.5X12-MM)	
	4	1	**8T-4121**	1	WASHER-HARD (11X21X2.5-MM THK)	

M - METRIC PART

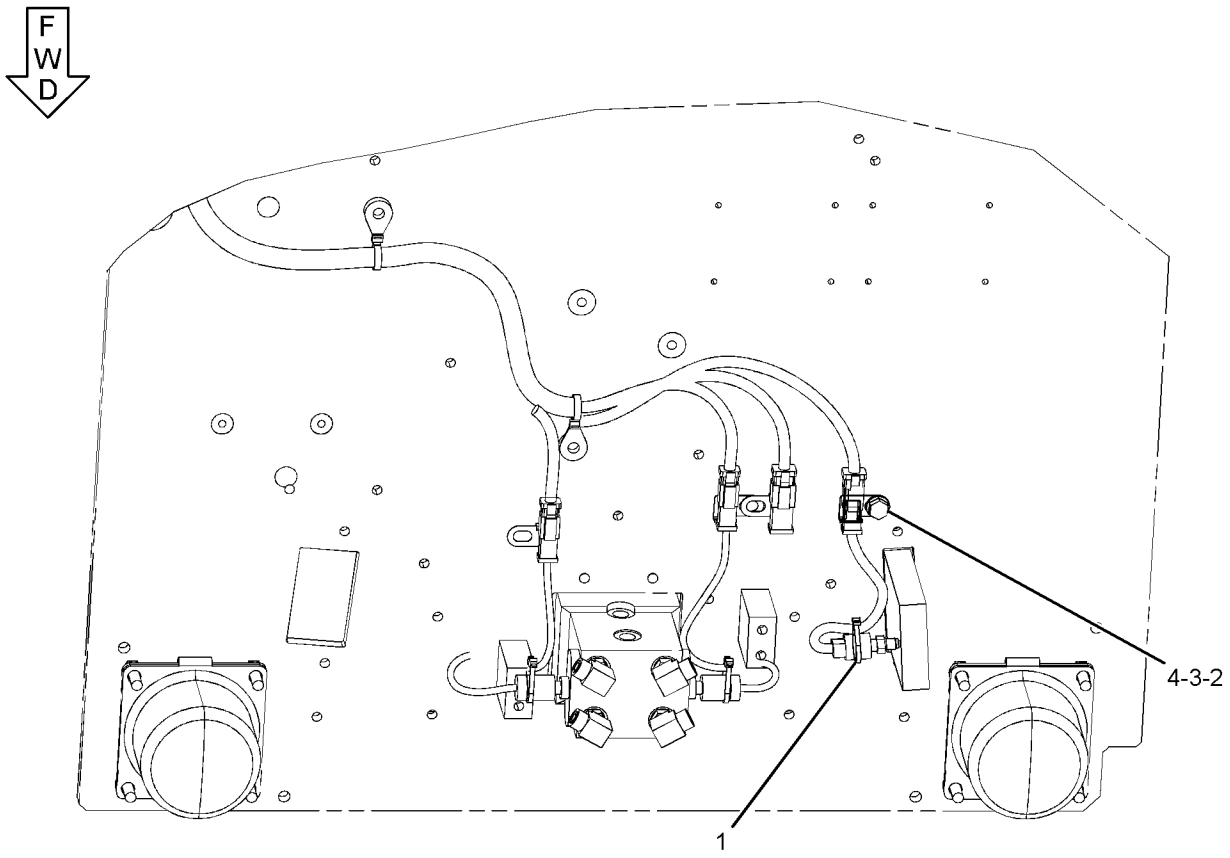

BOTTOM VIEW

GRAPHIC #1 **<END>** g01190326

259-5237 FASTENER GP-WIRING HARNESS–HEAVY LIFT

S/N: PBB1-UP; KBS1-UP
PART OF 240-3881 VALVE & LINES GP-HEAVY LIFT
AN ATTACHMENT

SMCS-1408, 7553

i05245068

NOTE	REF NO	GRAPHIC REF	PART NUMBER	QTY	PART NAME 1 2 3 4 5 6 (PRODUCT LEVEL)	SEE PAGE
	1	1	**7I-2673**	1	STRAP-CABLE	

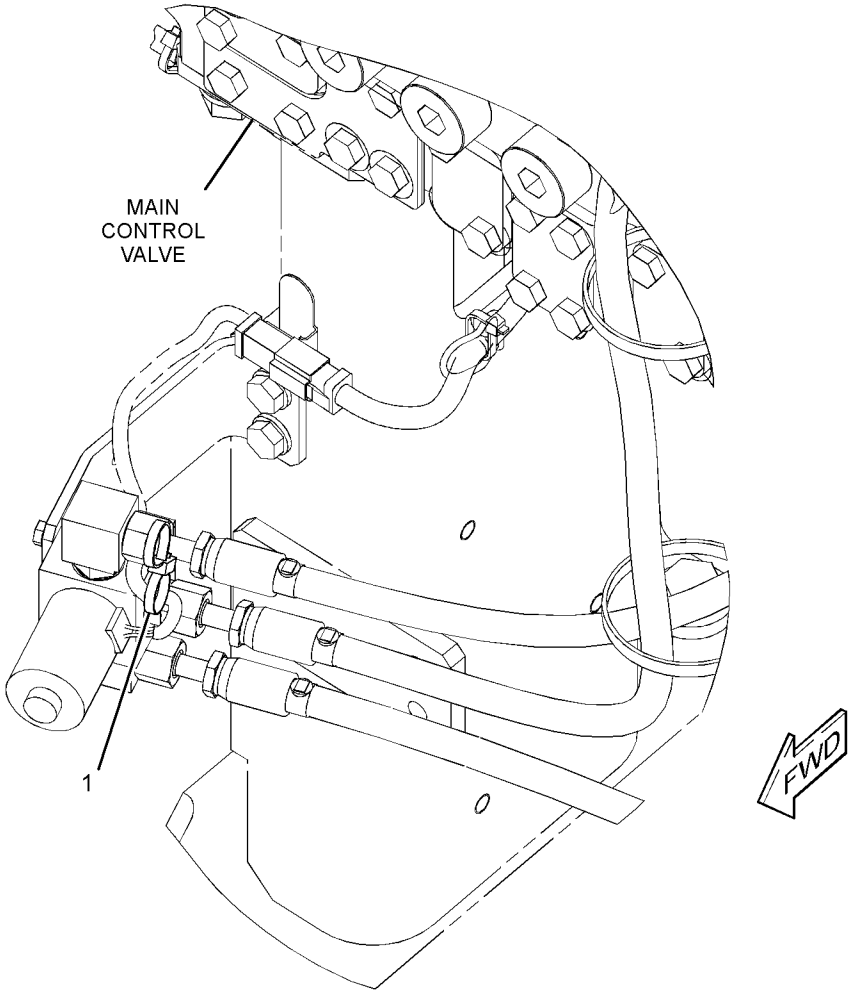

GRAPHIC #1

<END>

g02155914

259-5293 FASTENER GP-WIRING HARNESS—PEDAL CONTROL

S/N: PBB1-UP; KBS1-UP
PART OF 255-5845 PEDAL AR-AUXILIARY
AN ATTACHMENT

SMCS-1408, 7553

i02527277

NOTE	REF NO	GRAPHIC REF	PART NUMBER	QTY	PART NAME 1 2 3 4 5 6 (PRODUCT LEVEL)	SEE PAGE
	1	1	**116-0118**	1	CLIP	
M	2	1	**7X-2621**	1	BOLT (M10X1.5X12-MM)	
	3	1	**8T-4121**	1	WASHER-HARD (11X21X2.5-MM THK)	

M - METRIC PART

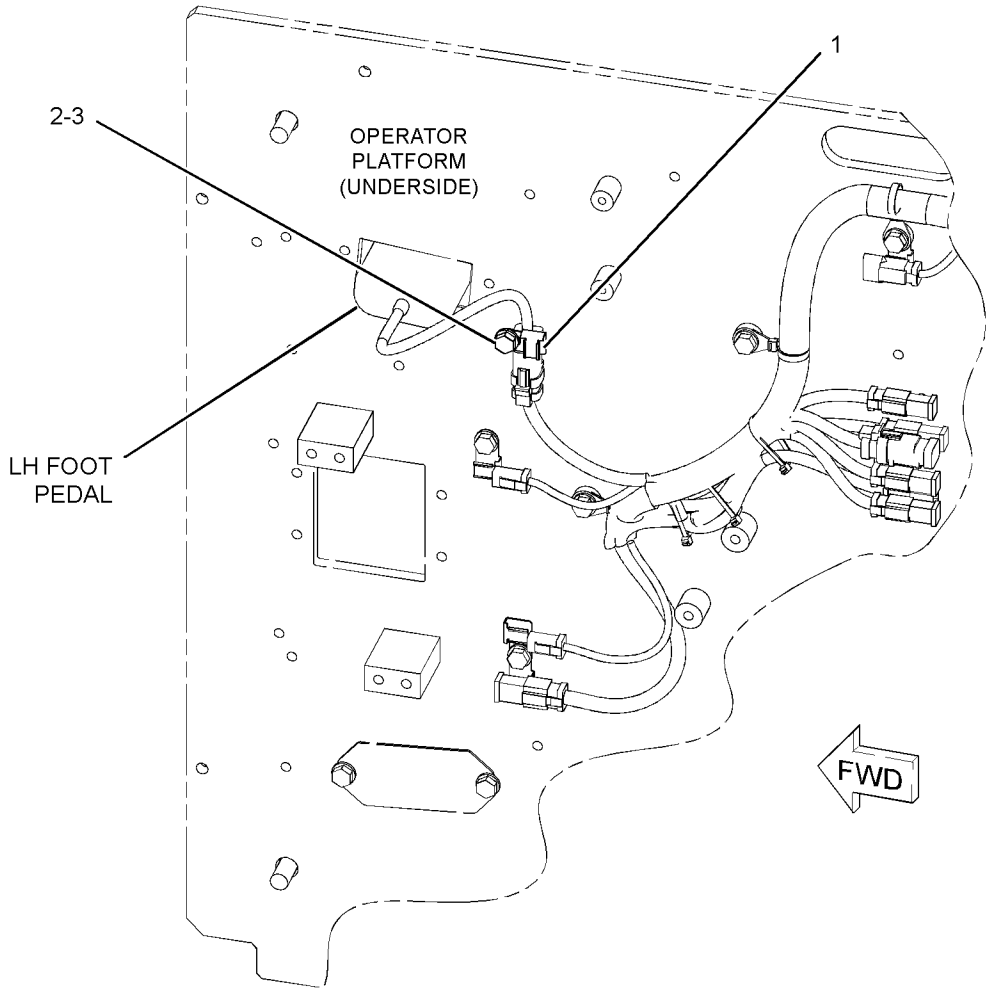

GRAPHIC #1

<END>

g01264273

259-5294 FASTENER GP-WIRING HARNESS—FOOT SWITCH

S/N: PBB1-UP; KBS1-UP
PART OF 270-6106 CONTROL AR-AUXILIARY
AN ATTACHMENT

SMCS-1408, 7553

i03670700

NOTE	REF NO	GRAPHIC REF	PART NUMBER	QTY	PART NAME 1 2 3 4 5 6 (PRODUCT LEVEL)	SEE PAGE
	1	1	**116-0118**	1	CLIP	
M	2	1	**7X-2621**	1	BOLT (M10X1.5X12-MM)	
	3	1	**8T-4121**	1	WASHER-HARD (11X21X2.5-MM THK)	

M - METRIC PART

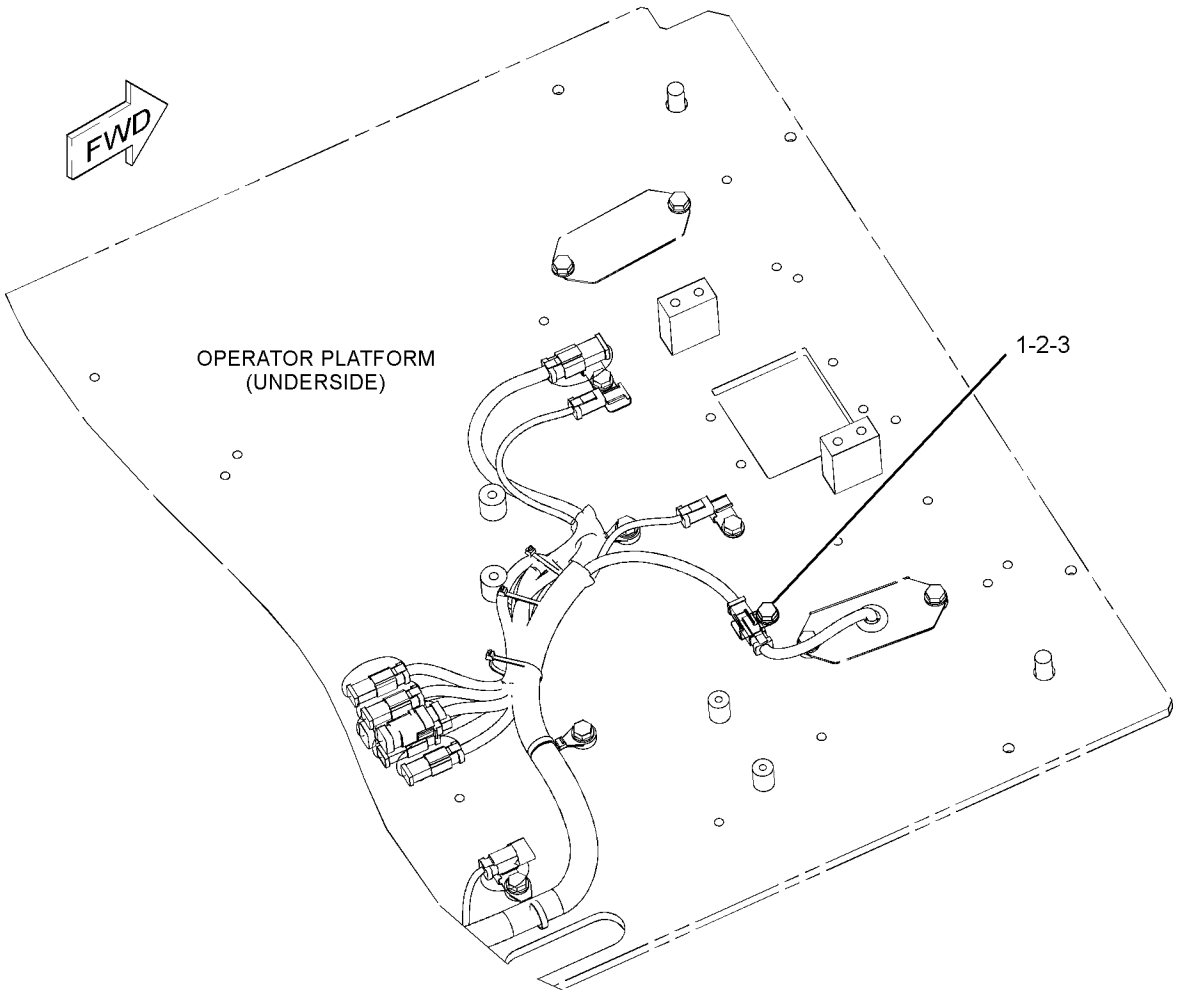

GRAPHIC #1

<END>

g01970833

259-5295 FASTENER GP-WIRING HARNESS—JOYSTICK

S/N: PBB1-UP
PART OF 270-5687 CONTROL AR-AUXILIARY
AN ATTACHMENT

SMCS-1408, 7553

i04007681

NOTE	REF NO	GRAPHIC REF	PART NUMBER	QTY	PART NAME 1 2 3 4 5 6 (PRODUCT LEVEL)	SEE PAGE
	1	1	**3S-2093**	2	STRAP - CABLE	

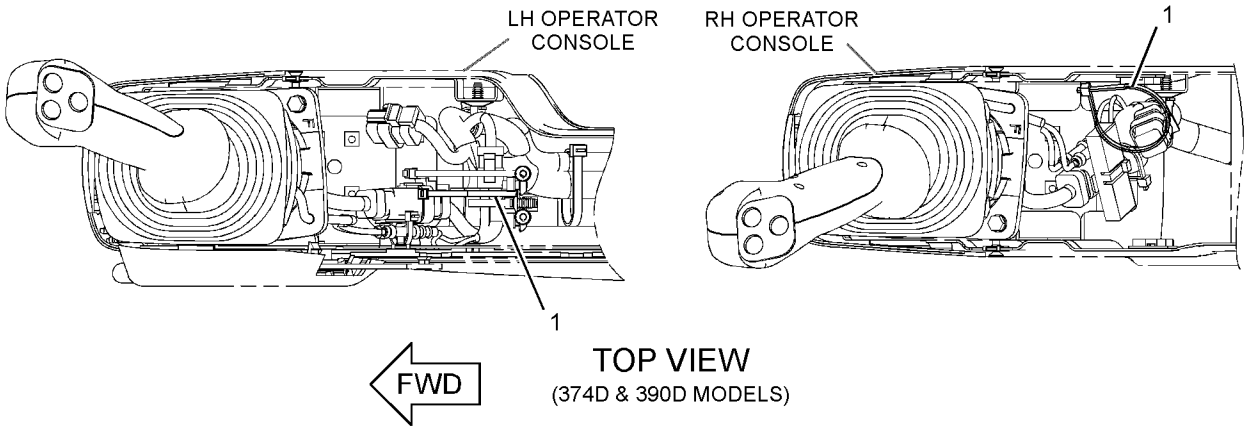

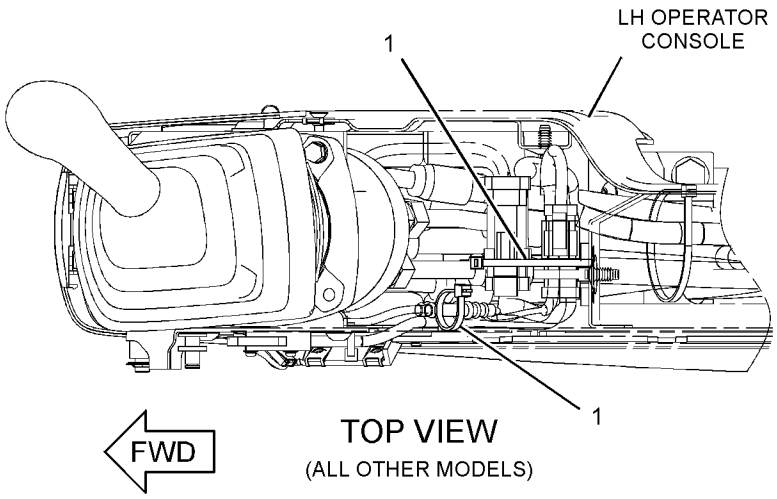

GRAPHIC #1

<END>

g02181157

418-0749 FASTENER GP-WIRING HARNESS

S/N: PBB1-UP; KBS1-UP
PART OF 349-2211 CONTROL AR-AUXILIARY
AN ATTACHMENT

SMCS-1408, 7553

i05229190

NOTE	REF NO	GRAPHIC REF	PART NUMBER	QTY	PART NAME 1 2 3 4 5 6 (PRODUCT LEVEL)	SEE PAGE
	1	1	**116-0118**	1	CLIP	
	2	1	**3S-2093**	1	STRAP-CABLE	
M	3	1	**7X-2621**	1	BOLT (M10X1.5X12-MM)	
	4	1	**8T-4121**	1	WASHER-HARD (11X21X2.5-MM THK)	

M - METRIC PART

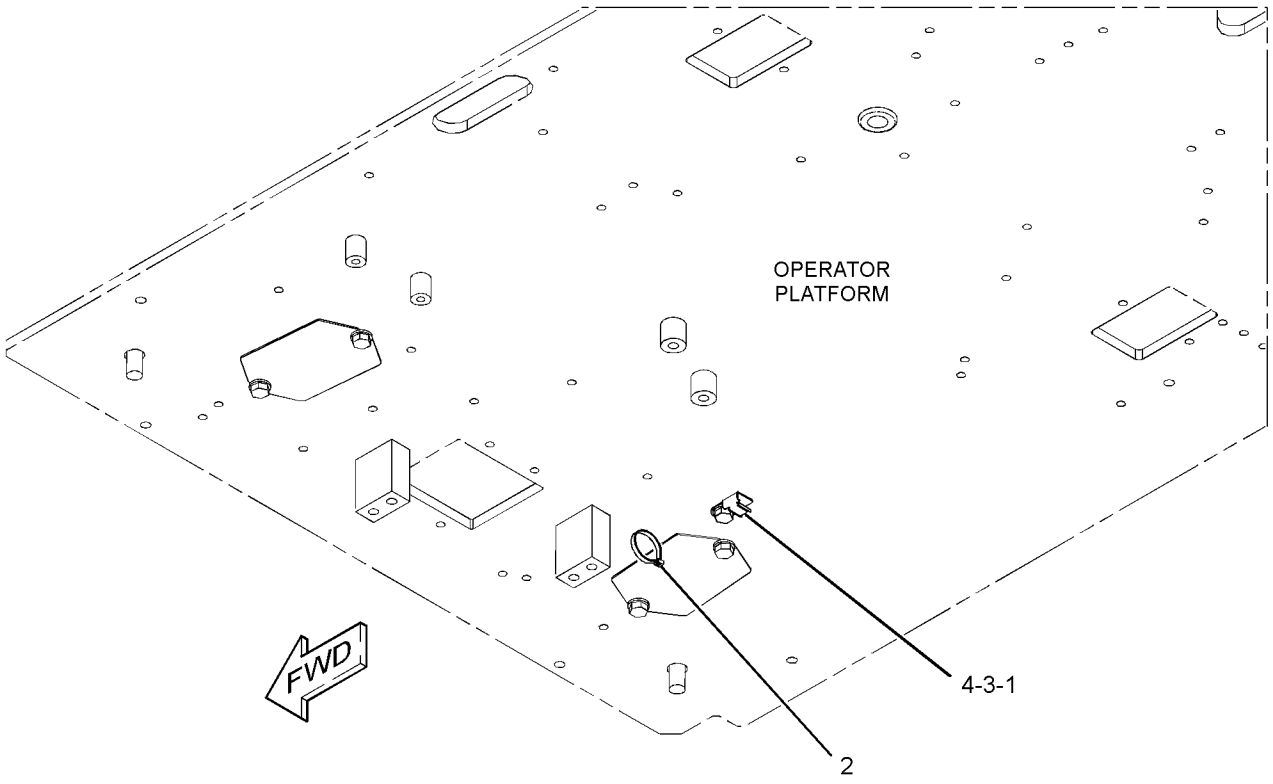

GRAPHIC #1

<END>

g03348776

419-6413 HARNESS AS-CHASSIS

S/N: PBB1-UP; KBS1-UP
PART OF 369-0244 WIRING GP-CHASSIS
AN ATTACHMENT

SMCS-1408 **i05858632**

NOTE	PART NUMBER	QTY	PART NAME 1 2 3 4 5 6 (PRODUCT LEVEL)	SEE PAGE
	155-2270	3	KIT-CONNECTING PLUG (2-PIN)	
			(EACH INCLUDES PLUG AS, WEDGE & INTERFACE SEAL)	
	102-8802	1	KIT-RECEPTACLE (2-PIN)	
			(INCLUDES RECEPTACLE AS AND WEDGE)	
	8T-8729	4	PIN-CONNECTOR (16-GA TO 18-GA)	
	9W-0852	2	PIN-CONNECTOR (14-GA TO 16-GA)	
	243-4507	1	RECEPTACLE AS-CONNECTOR (4-PIN)	
	8T-8730	4	SOCKET-CONNECTOR (16-GA TO 18-GA)	
	9W-0844	2	SOCKET-CONNECTOR (14-GA TO 16-GA)	
	3S-2093	1	STRAP-CABLE	
	2L-8069	1	TERMINAL-RING (2-GA TO 10-GA, 3/8-IN SCREW)	
E	**125-7874**		TUBE-HEAT SHRINK (5.72-MM DIA) (5-CM)	

E - ORDER BY THE CENTIMETER

<END>

275-6841 HARNESS AS-CONTROL

S/N: PBB1-UP; KBS1-UP
PART OF 399-3648 WIRING GP-CHASSIS
AN ATTACHMENT

SMCS-1408 **i05162713**

NOTE	PART NUMBER	QTY	PART NAME 1 2 3 4 5 6 (PRODUCT LEVEL)	SEE PAGE
	239-7356	1	PLUG AS-CONNECTOR (12-PIN)	
	264-7034	1	SEAL-CONNECTOR	
	230-4009	1	PLUG AS-CONNECTOR (12-PIN)	
	264-7034	1	SEAL-CONNECTOR	
	243-4510	1	RECEPTACLE AS-CONNECTOR (12-PIN)	
	9X-3401	8	PIN-CONNECTOR (16-GA TO 18-GA)	
	8T-8737	16	PLUG-SEAL	
	9X-3402	12	SOCKET-CONNECTOR (16-GA TO 18-GA)	
E	**125-7874**		TUBE-HEAT SHRINK (5.72-MM DIA) (20-CM)	

E - ORDER BY THE CENTIMETER

<END>

275-6842 HARNESS AS-CONTROL

S/N: PBB1-UP; KBS1-UP
PART OF 399-3648 WIRING GP-CHASSIS
AN ATTACHMENT

SMCS-1408 **i05162712**

NOTE	PART NUMBER	QTY	PART NAME 1 2 3 4 5 6 (PRODUCT LEVEL)	SEE PAGE
	167-8987	1	PLUG AS-CONNECTOR (8-PIN)	
	243-4510	1	RECEPTACLE AS-CONNECTOR (12-PIN)	
	9X-3401	6	PIN-CONNECTOR (16-GA TO 18-GA)	
	8T-8737	6	PLUG-SEAL	

<END>

369-0286 HARNESS AS-SOLENOID

S/N: PBB1-UP; KBS1-UP
PART OF 369-0243 WIRING GP-MEDIUM PRESSURE
AN ATTACHMENT

SMCS-1408, 1467

i05858579

NOTE	PART NUMBER	QTY	PART NAME 1 2 3 4 5 6 (PRODUCT LEVEL)	SEE PAGE
	155-2270	2	KIT-CONNECTING PLUG (2-PIN)	
			(EACH INCLUDES PLUG AS, WEDGE & INTERFACE SEAL)	
	8T-8729	3	PIN-CONNECTOR (16-GA TO 18-GA)	
	8T-8737	3	PLUG-SEAL	
	243-4508	1	RECEPTACLE AS-CONNECTOR (6-PIN)	
	8T-8730	4	SOCKET-CONNECTOR (16-GA TO 18-GA)	
	3S-2093	1	STRAP-CABLE	
E	**125-7874**		TUBE-HEAT SHRINK (5.72-MM DIA) (5-CM)	

E - ORDER BY THE CENTIMETER

<END>

265-7724 HEATER GP-JACKET WATER

S/N: PBB1-UP; KBS1-UP

AN ATTACHMENT

SMCS-1383 **i05767942**

NOTE	REF NO	GRAPHIC REF	PART NUMBER	QTY	PART NAME 1 2 3 4 5 6 (PRODUCT LEVEL)	SEE PAGE
	1	1	**6N-1604**	1	CAP AS-DUST	
	2	1	**7K-1181**	1	STRAP-CABLE	
	3	1	**260-1555**	1	ELEMENT AS-JACKET WATER HEATER (120-VOLT, 1000-WATT)	
		1	**4D-9986**	1	SEAL-O-RING	
	4	1	**260-1566**	1	CORD AS-HEATER	
M	5	1	**8T-4200**	1	BOLT (M8X1.25X16-MM)	
	6	1	**8T-4224**	1	WASHER-HARD (8.8X16X2-MM THK)	

M - METRIC PART

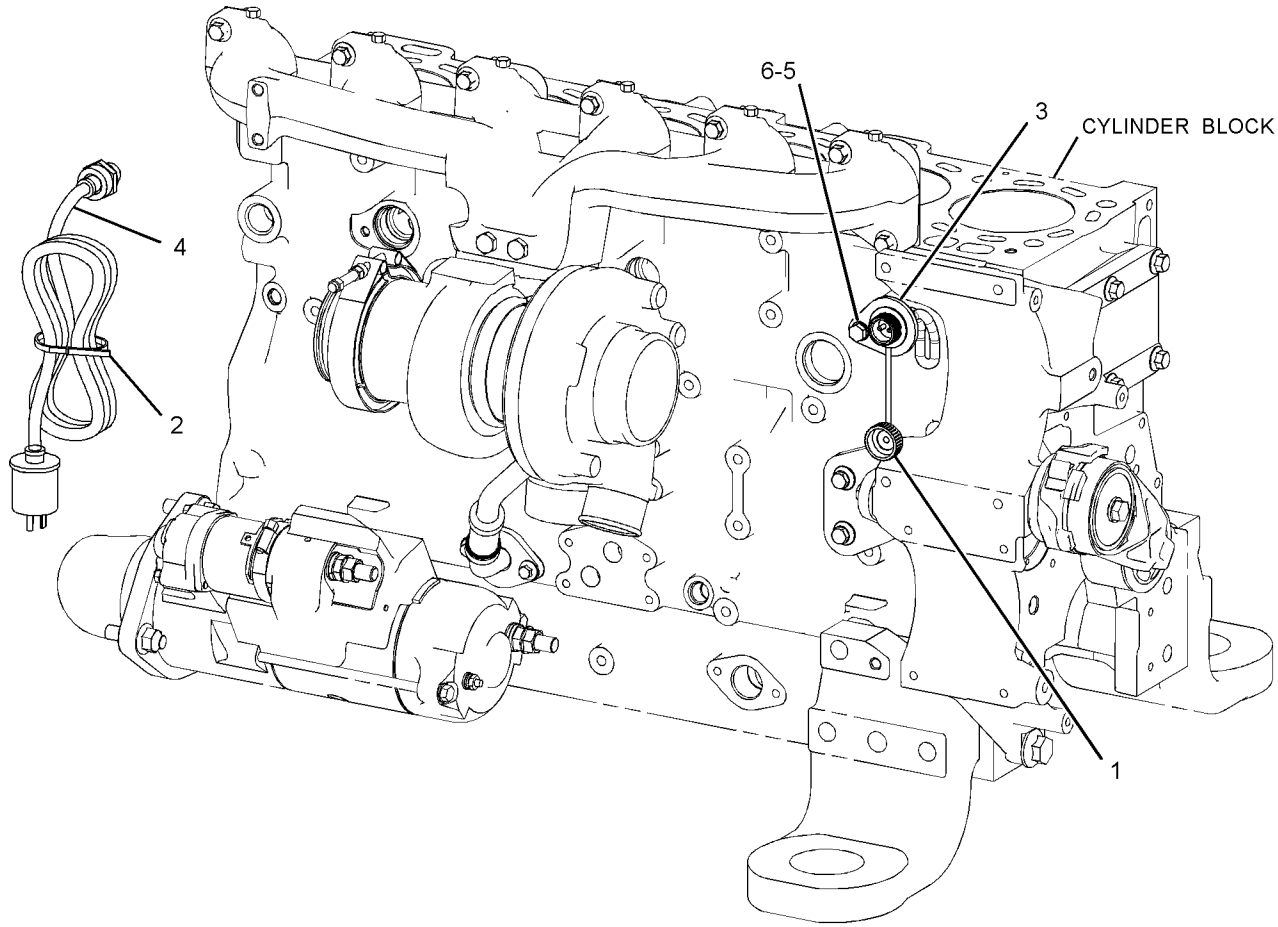

GRAPHIC #1 **<END>** g01343350

267-0339 HEATER GP-JACKET WATER

S/N: PBB1-UP; KBS1-UP

AN ATTACHMENT

SMCS-1383 **i05767952**

NOTE	REF NO	GRAPHIC REF	PART NUMBER	QTY	PART NAME 1 2 3 4 5 6 (PRODUCT LEVEL)	SEE PAGE
	1	1	**6N-1604**	1	CAP AS-DUST	
	2	1	**7K-1181**	1	STRAP-CABLE	
	3	1	**260-1556**	1	ELEMENT AS-JACKET WATER HEATER (240-VOLT, 1000-WATT)	
		1	**4D-9986**	1	SEAL-O-RING	
	4	1	**260-1569**	1	CORD AS-HEATER	
M	5	1	**8T-4200**	1	BOLT (M8X1.25X16-MM)	
	6	1	**8T-4224**	1	WASHER-HARD (8.8X16X2-MM THK)	

M - METRIC PART

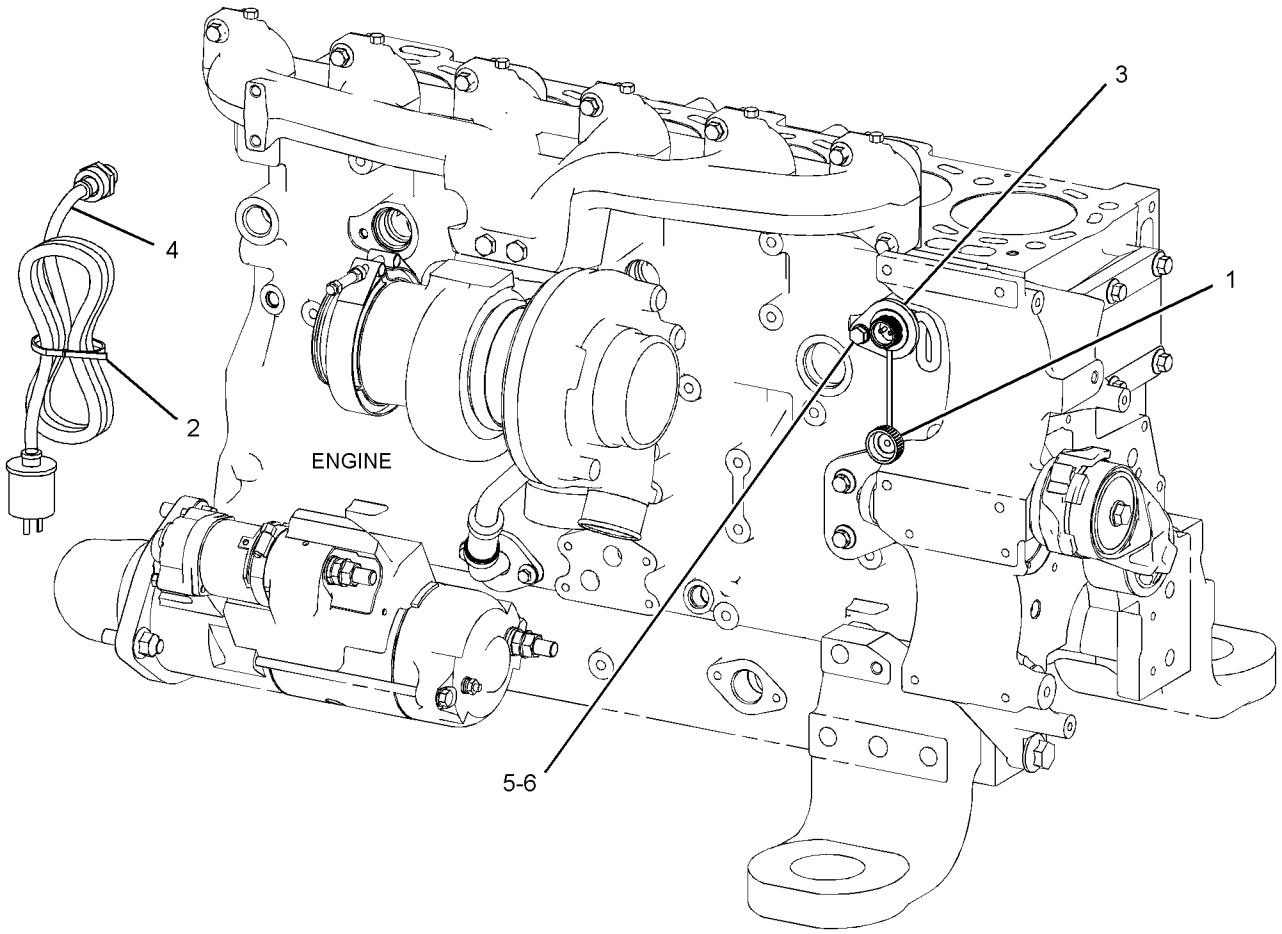

GRAPHIC #1 **<END>** g01426588

383-5427 INSTALLATION AR-COMMUNICATION–PRODUCT LINK 321SR

S/N: PBB1-UP; KBS1-UP

PART OF 456-0818, 456-0819, 456-0820, 456-0821, 456-0823, 456-0824, 456-1026, 456-1027 DISTRIBUTION AR

AN ATTACHMENT

SMCS-7606 **i05858861**

NOTE	PART NUMBER	QTY	PART NAME 1 2 3 4 5 6 (PRODUCT LEVEL)	SEE PAGE
Y	*309-5881*	1	CONTROL & MTG GP-COMMUNICATION (PRODUCT LINK 121SR)	113
Y	*418-1084*	1	CONTROL & MTG GP-COMMUNICATION (PRODUCT LINK 321SR)	115
Y	*309-5771*	1	MOUNTING GP-ANTENNA (PRODUCT LINK)	905
Y	*417-9821*	1	WIRING GP-COMMUNICATION (PRODUCT LINK 321SR)	210

Y - SEPARATE ILLUSTRATION

<END>

153-2521 LAMP GP-FLOOD

S/N: PBB1-UP; KBS1-UP
24-VOLT
PART OF 259-5043, 259-5047, 259-5048, 267-7627 LIGHTING GP-FLOOD
AN ATTACHMENT

SMCS-1434 **i05856219**

NOTE	REF NO	GRAPHIC REF	PART NUMBER	QTY	PART NAME 1 2 3 4 5 6 (PRODUCT LEVEL)	SEE PAGE
M	1	1	**6V-5210**	2	SCREW-MACHINE (M4X0.7X10-MM)	
	2	1	**3B-4501**	2	LOCKWASHER	
	3	1	**351-9918**	1	LAMP-HALOGEN (24-VOLT, 70-WATT)	
	4	1	**8T-4223**	1	WASHER-HARD (13.5X25.5X3-MM THK)	
M	5	1	**8T-4244**	1	NUT (M12X1.75-THD)	
M	6	1	**174-7791**	1	SCREW-TAPPING	
	7	1	**9B-0453**	1	LOCKWASHER	
	8	1	**170-6993**	1	COVER	
M	9	1	**180-3861**	4	SCREW-TAPPING	
	10	1	**170-9417**	1	LENS AS	
	11	1	**170-9418**	1	BAND	

M - METRIC PART

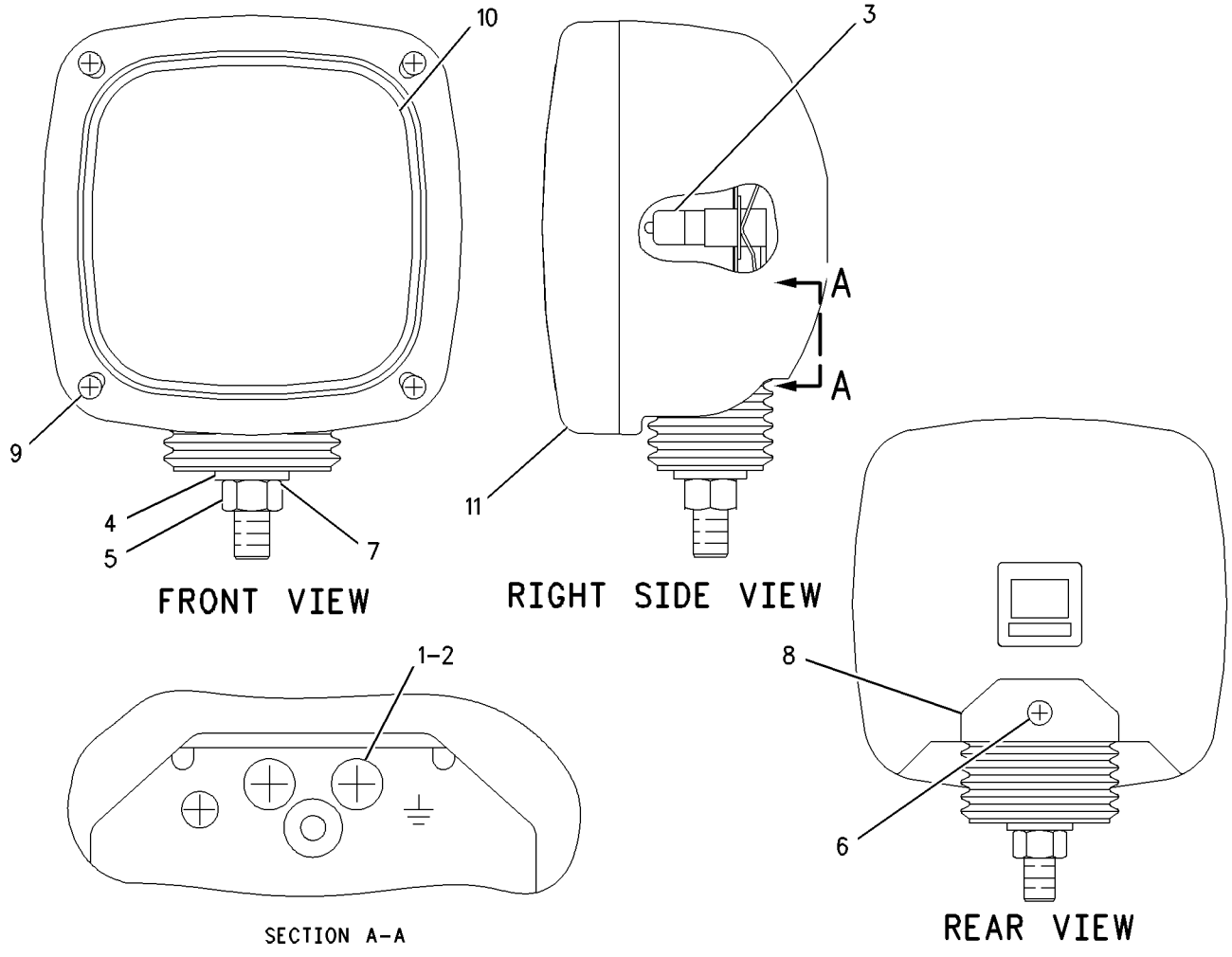

GRAPHIC #1 **<END>** g00645948

153-2523 LAMP GP-FLOOD

S/N: PBB1-UP; KBS1-UP
24-VOLT
PART OF 4I-5409 LIGHTING GP-FLOOD

SMCS-1434 **i05785818**

NOTE	REF NO	GRAPHIC REF	PART NUMBER	QTY	PART NAME 1 2 3 4 5 6 (PRODUCT LEVEL)	SEE PAGE
M	1	1	**6V-5210**	2	SCREW-MACHINE (M4X0.7X10-MM)	
	2	1	**3B-4501**	2	LOCKWASHER	
	3	1	**9X-3463**	1	LAMP-HALOGEN (24-VOLT, 70-WATT)	
	4	1	**8T-4223**	1	WASHER-HARD (13.5X25.5X3-MM THK)	
M	5	1	**8T-4244**	1	NUT (M12X1.75-THD)	
M	6	1	**174-7791**	1	SCREW-TAPPING	
	7	1	**5C-2889**	1	LOCKWASHER	
	8	1	**170-6993**	1	COVER	
M	9	1	**180-3861**	4	SCREW-TAPPING	
	10	1	**170-9417**	1	LENS AS	
	11	1	**170-9418**	1	BAND	

M - METRIC PART

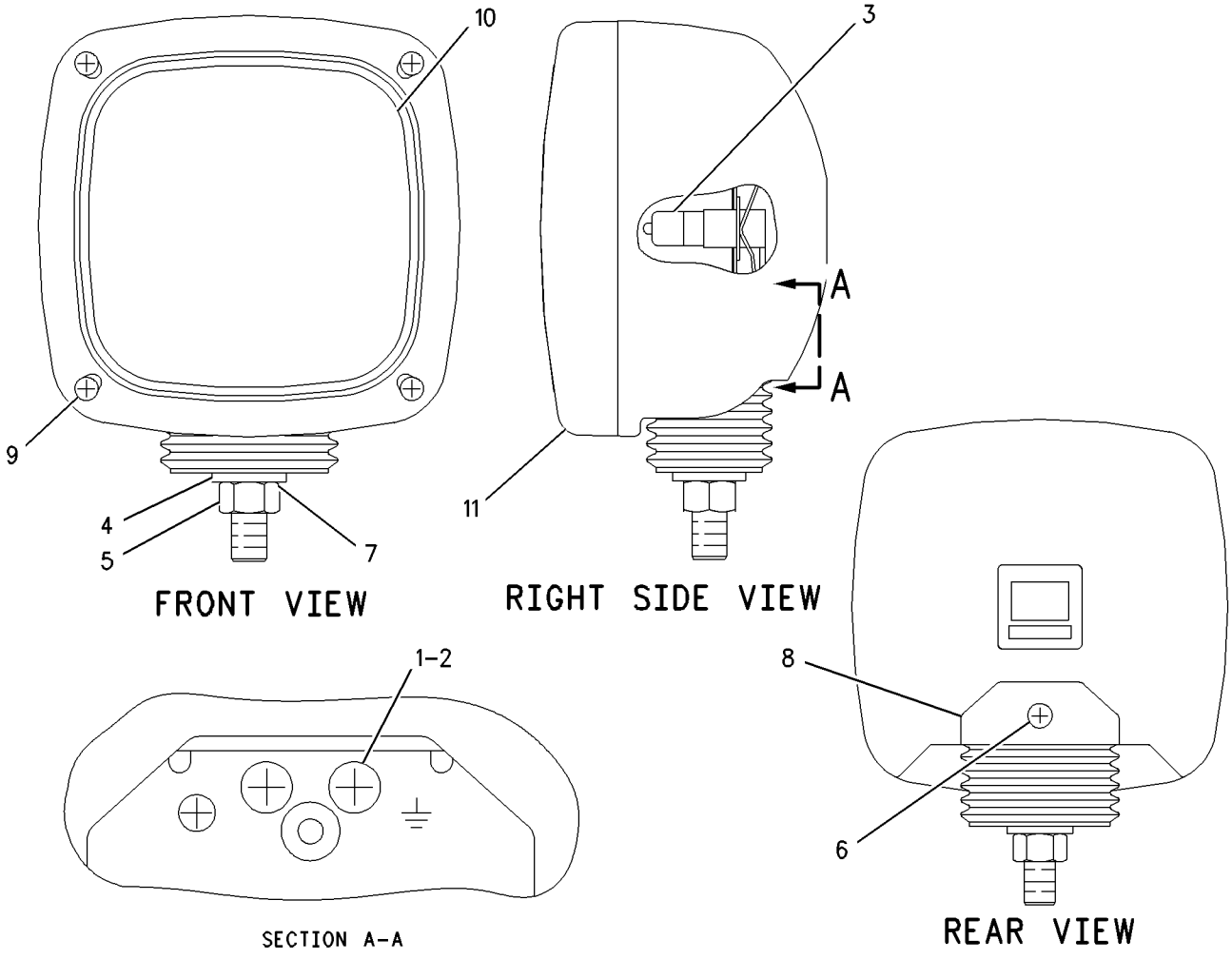

GRAPHIC #1 **<END>** g00645948

167-3441 LAMP GP-FLOOD

S/N: PBB1-UP; KBS1-UP
24-VOLT
PART OF 366-9342, 366-9343 LIGHTING GP-FLOOD
AN ATTACHMENT

SMCS-1434 **i01823005**

NOTE	REF NO	GRAPHIC REF	PART NUMBER	QTY	PART NAME 1 2 3 4 5 6 (PRODUCT LEVEL)	SEE PAGE
	1	1	**9X-3463**	1	LAMP-HALOGEN (24-VOLT, 70-WATT)	

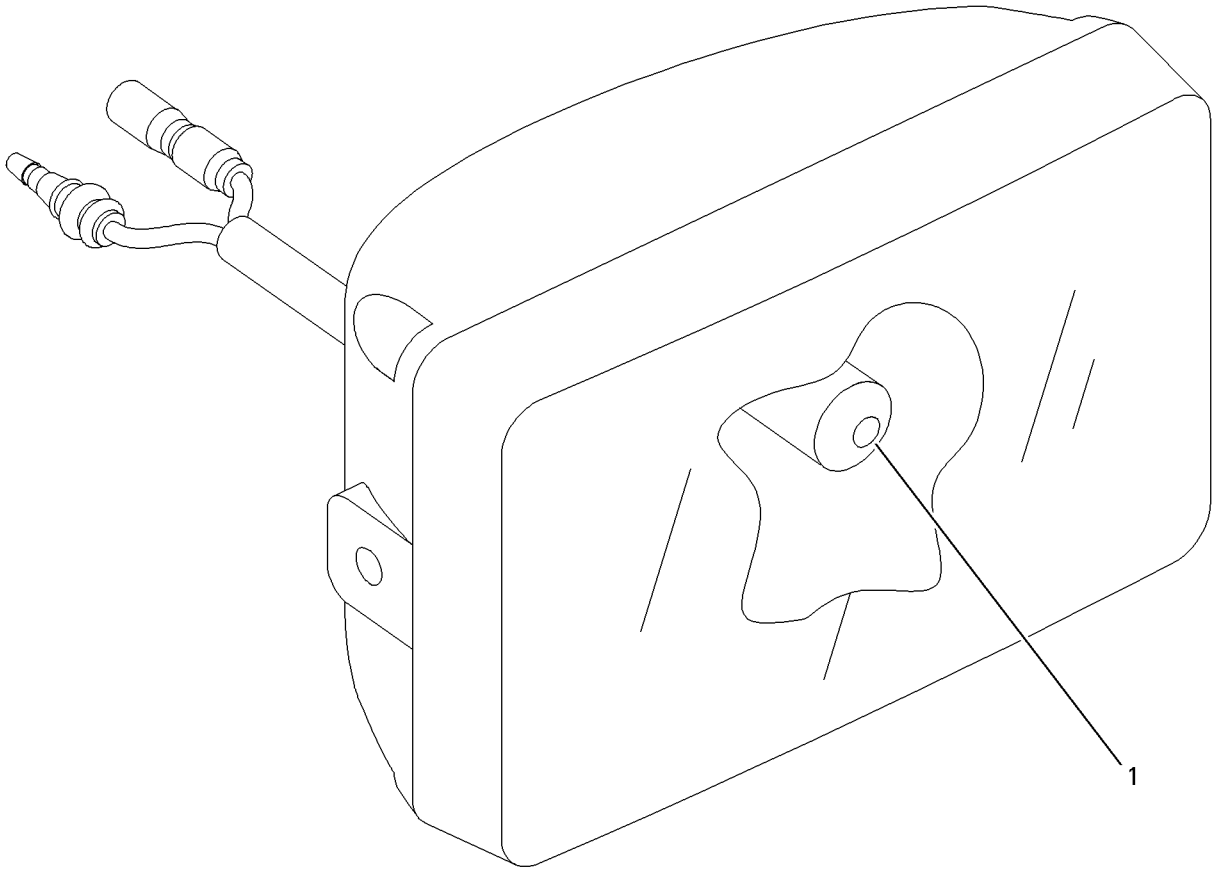

GRAPHIC #1 **<END>** g00692317

325-4471 LAMP GP-FLOOD

S/N: PBB1-UP; KBS1-UP
24-VOLT
PART OF 441-6375, 454-8704 LIGHTING GP-FLOOD
AN ATTACHMENT

SMCS-1434 **i04136249**

NOTE	REF NO	GRAPHIC REF	PART NUMBER	QTY	PART NAME 1 2 3 4 5 6 (PRODUCT LEVEL)	SEE PAGE
	1	1	**175-4291**	1	BRACKET AS	
	2	1	**9X-4244**	2	SCREW-SPECIAL (M4X1.79X25-MM)	
	3	1	**9X-3463**	1	LAMP-HALOGEN (24-VOLT, 70-WATT)	
	4	1	**8T-4224**	1	WASHER-HARD (8.8X16X2-MM THK)	
M	5	1	**8T-7547**	1	BOLT (M8X1.25X30-MM)	
M	6	1	**5C-7261**	1	NUT (M8X1.25-THD)	

M - METRIC PART

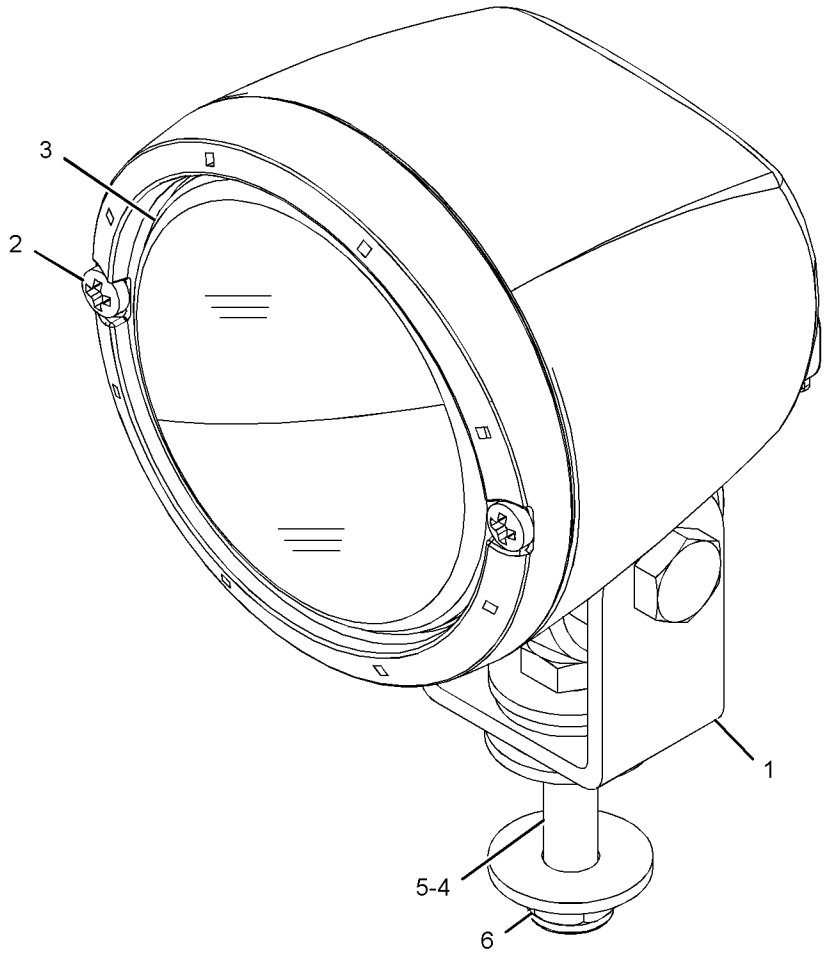

GRAPHIC #1 **<END>** g02097194

4I-5409 LIGHTING GP-FLOOD—CHASSIS

S/N: PBB1-UP; KBS1-UP

PART OF 454-5588, 454-5589 CHASSIS AR

SMCS-1434 **i05441302**

NOTE	REF NO	GRAPHIC REF	PART NUMBER	QTY	PART NAME 1 2 3 4 5 6 (PRODUCT LEVEL)	SEE PAGE
Y	1	1	**153-2523**	1	LAMP GP-FLOOD (24-VOLT)	133

Y - SEPARATE ILLUSTRATION

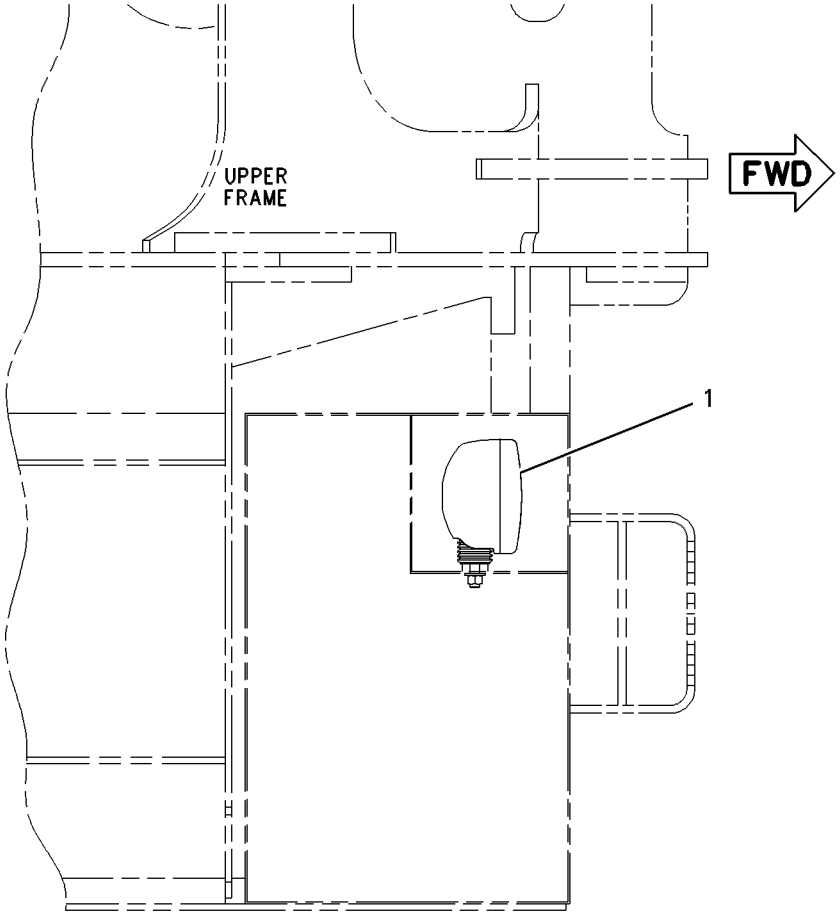

TOP VIEW

GRAPHIC #1 **<END>** g00588573

170-9294 LIGHTING GP-FLOOD–CAB GUARD

S/N: PBB1-UP; KBS1-UP

AN ATTACHMENT

SMCS-1434 **i05134329**

NOTE	REF NO	GRAPHIC REF	PART NUMBER	QTY	PART NAME 1 2 3 4 5 6 (PRODUCT LEVEL)	SEE PAGE
	1	1	**183-1035**	2	LAMP GP-FLOOD (24-VOLT)	
					(EACH INCLUDES)	
		1	**9X-3463**	1	LAMP-HALOGEN (24-VOLT, 70-WATT)	
	2	1	**163-6795**	2	STRAP-CABLE	
M	3	1	**8T-4133**	2	NUT (M10X1.5-THD)	
	4	1	**8T-4121**	4	WASHER-HARD (11X21X2.5-MM THK)	
M	5	1	**8T-4137**	2	BOLT (M10X1.5X20-MM)	
	6	1	**170-9295**	2	HARNESS AS-LIGHTING (CAB FLOODLIGHTS, FRONT)	
					(EACH INCLUDES)	
		1	**7Y-3962**	2	TERMINAL-BULLET (MALE)	
		1	**7Y-3964**	2	TUBE (CONNECTOR TERMINAL)	
		1	**7Y-3963**	2	TERMINAL-BULLET (FEMALE)	
		1	**7Y-3965**	2	TUBE (RECEPTACLE TERMINAL)	

M - METRIC PART

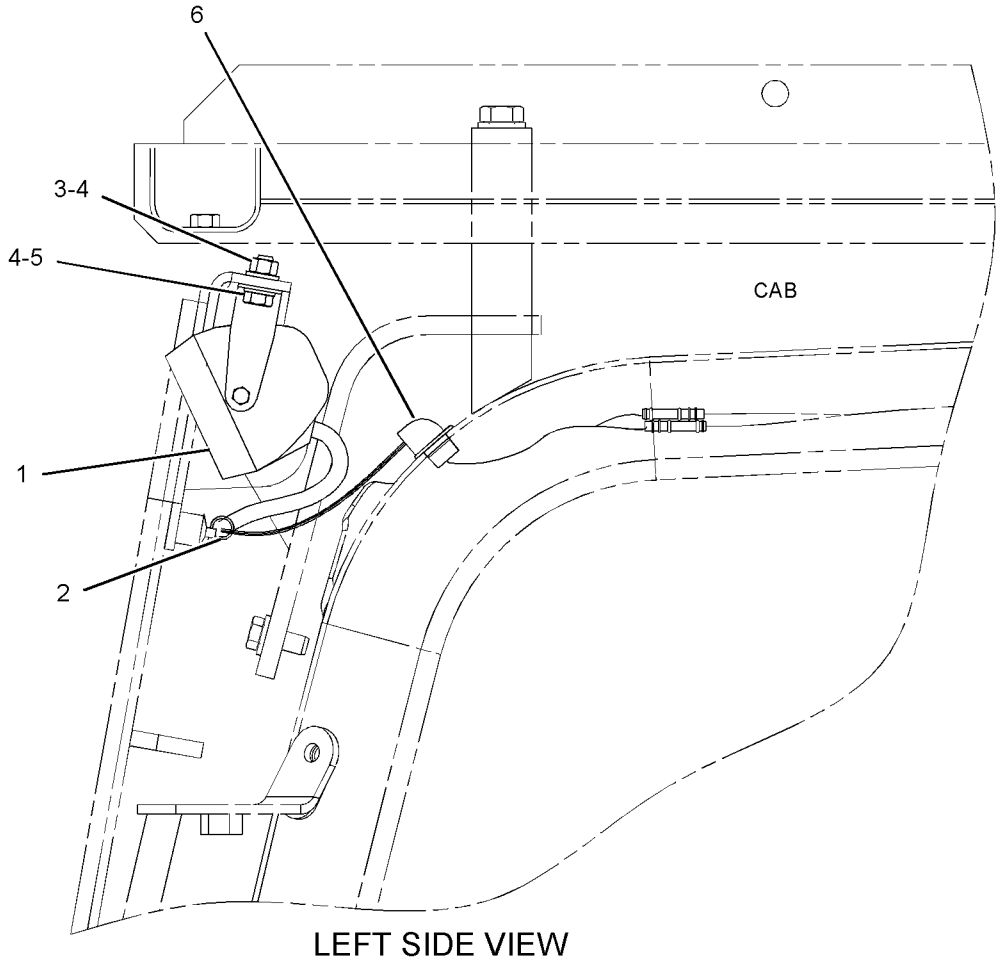

LEFT SIDE VIEW

GRAPHIC #1 **<END>** g01134805

259-5043 LIGHTING GP-FLOOD—BOOM, LH

S/N: PBB1-UP; KBS1-UP

PART OF 359-2434, 415-1399, 415-8447, 416-0961 BOOM AR-1 PIECE LONG, 420-0298 LINKAGE AR-FRONT AN ATTACHMENT

SMCS-1434 **i05574153**

NOTE	REF NO	GRAPHIC REF	PART NUMBER	QTY	PART NAME 1 2 3 4 5 6 (PRODUCT LEVEL)	SEE PAGE
	1	1	**7I-2673**	1	STRAP-CABLE	
	2	1	**111-4836**	4	CLIP	
	3	1	**116-0118**	1	CLIP	
Y	4	1	**153-2521**	1	LAMP GP-FLOOD (24-VOLT)	132
	5	1	**259-5326**	1	HARNESS AS-LIGHTING (BOOM, LH)	
		1	**243-4505**	1	RECEPTACLE AS-CONNECTOR (2-PIN)	
	6	1	**111-4837**	1	CLIP	
	7	1	**134-3284**	1	BRACKET	
	8	1	**5P-9297**	2	CLIP	
	9	1	**8T-4121**	5	WASHER-HARD (11X21X2.5-MM THK)	
M	10	1	**8T-4133**	5	NUT (M10X1.5-THD)	
M	11	1	**7X-2552**	1	BOLT (M16X2X30-MM)	
	12	1	**9X-8257**	1	WASHER (17.5X30X3.5-MM THK)	

M - METRIC PART
Y - SEPARATE ILLUSTRATION

259-5043 **LIGHTING GP-FLOOD (*contd.*)** **i05574153**

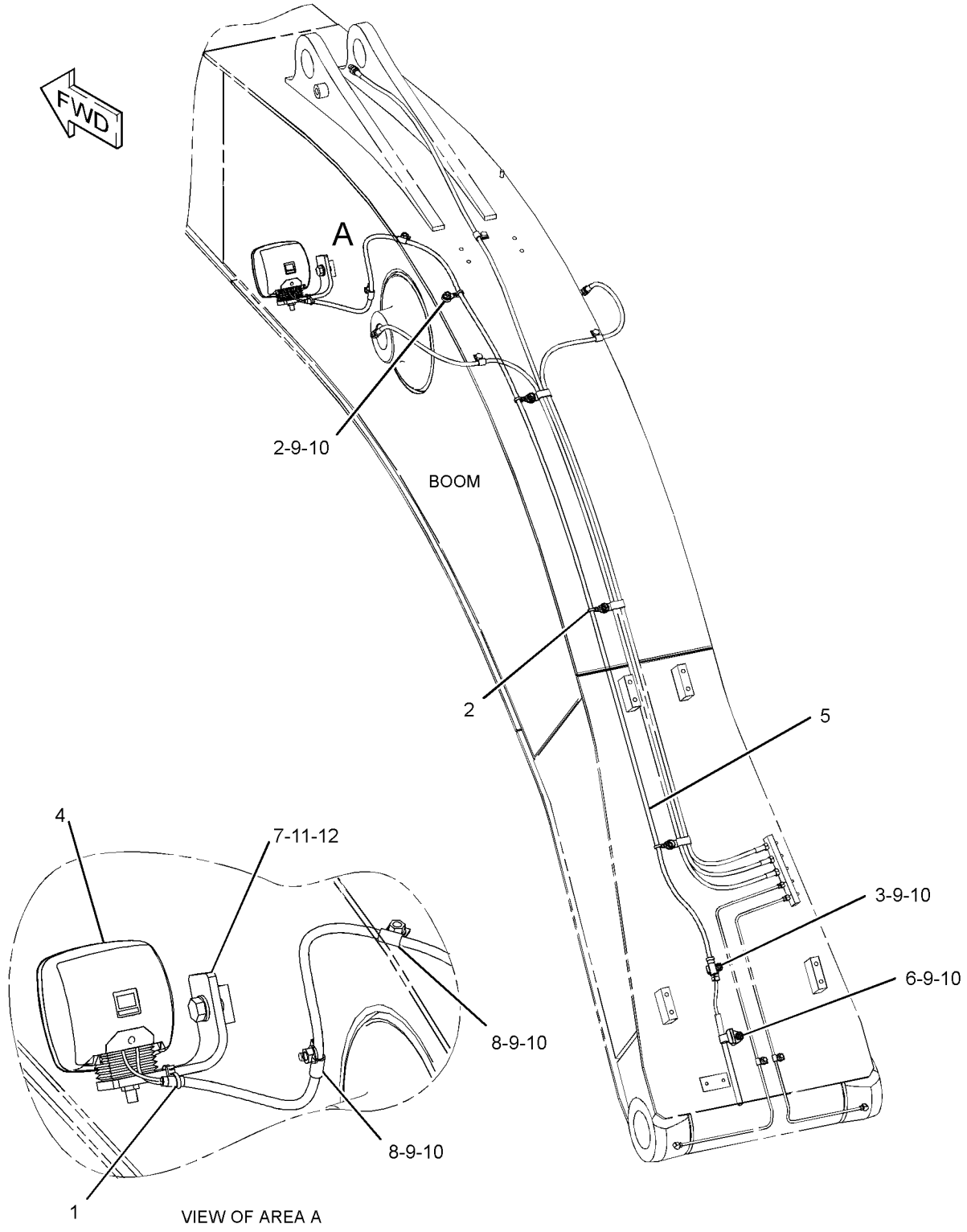

GRAPHIC #1 **<END>** g01226436

259-5047 LIGHTING GP-FLOOD—BOOM, RH

S/N: PBB1-UP; KBS1-UP
FOR USE WITH 259-5043—PAGE: 138
PART OF 456-0817, 456-0825, 456-0826, 456-0922, 456-0923 DISTRIBUTION AR
AN ATTACHMENT

SMCS-1434 **i05344356**

NOTE	REF NO	GRAPHIC REF	PART NUMBER	QTY	PART NAME 1 2 3 4 5 6 (PRODUCT LEVEL)	SEE PAGE
	1	1	**7I-2673**	2	STRAP-CABLE	
	2	1	**111-4836**	2	CLIP	
Y	3	1	**153-2521**	1	LAMP GP-FLOOD (24-VOLT)	132
	4	1	**259-5327**	1	HARNESS AS-LIGHTING (BOOM, RH)	
		1	**2L-8075**	4	TERMINAL-RING (14-GA TO 16-GA, NO. 8 SCREW)	
	5	1	**134-3284**	1	BRACKET	
	6	1	**7N-3718**	2	CLIP	
	7	1	**8T-4121**	2	WASHER-HARD (11X21X2.5-MM THK)	
M	8	1	**8T-4133**	2	NUT (M10X1.5-THD)	
M	9	1	**7X-2552**	1	BOLT (M16X2X30-MM)	
	10	1	**9X-8257**	1	WASHER (17.5X30X3.5-MM THK)	

M - METRIC PART
Y - SEPARATE ILLUSTRATION

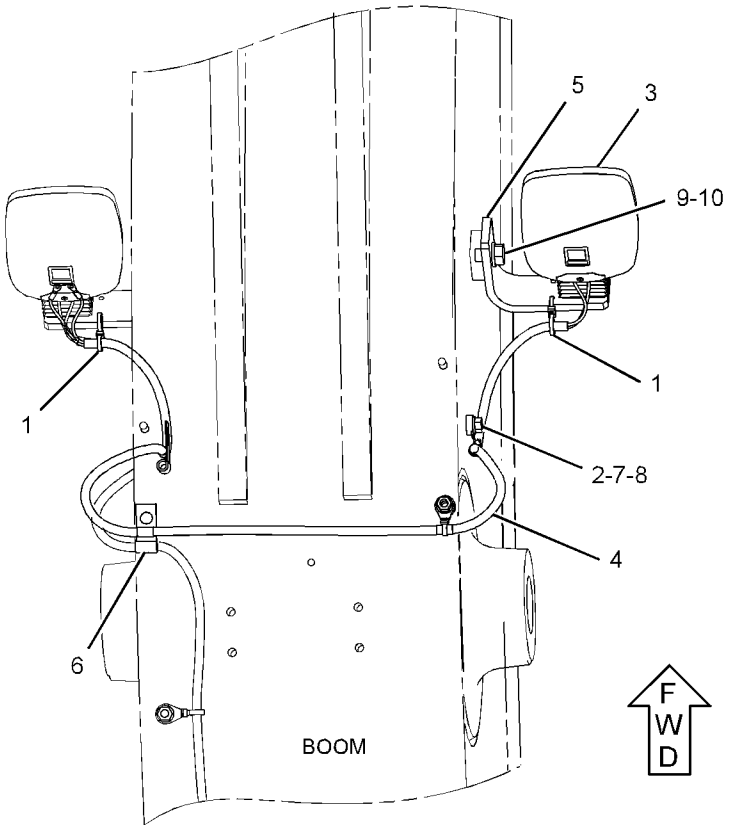

TOP VIEW

GRAPHIC #1 **<END>** g01223146

259-5048 LIGHTING GP-FLOOD—SHORT BOOM, RH

S/N: PBB1-UP; KBS1-UP
FOR USE WITH 267-7627—PAGE: 143
AN ATTACHMENT

SMCS-1434 **i05294250**

NOTE	REF NO	GRAPHIC REF	PART NUMBER	QTY	PART NAME 1 2 3 4 5 6 (PRODUCT LEVEL)	SEE PAGE
	1	1	**3S-2093**	1	STRAP-CABLE	
	2	1	**7I-2673**	1	STRAP-CABLE	
Y	3	1	**153-2521**	1	LAMP GP-FLOOD (24-VOLT)	132
	4	1	**267-7626**	1	HARNESS AS-LIGHTING (SHORT BOOM, RH)	
		1	**2L-8075**	4	TERMINAL-RING (14-GA TO 16-GA, NO. 8 SCREW)	
	5	1	**111-4836**	1	CLIP	
	6	1	**134-3284**	1	BRACKET	
	7	1	**5P-9297**	1	CLIP	
	8	1	**7N-3718**	2	CLIP	
	9	1	**8T-4121**	4	WASHER-HARD (11X21X2.5-MM THK)	
M	10	1	**8T-4133**	4	NUT (M10X1.5-THD)	
M	11	1	**7X-2552**	1	BOLT (M16X2X30-MM)	
	12	1	**9X-8257**	1	WASHER (17.5X30X3.5-MM THK)	

M - METRIC PART
Y - SEPARATE ILLUSTRATION

259-5048 **LIGHTING GP-FLOOD (*contd.*)** **i05294250**

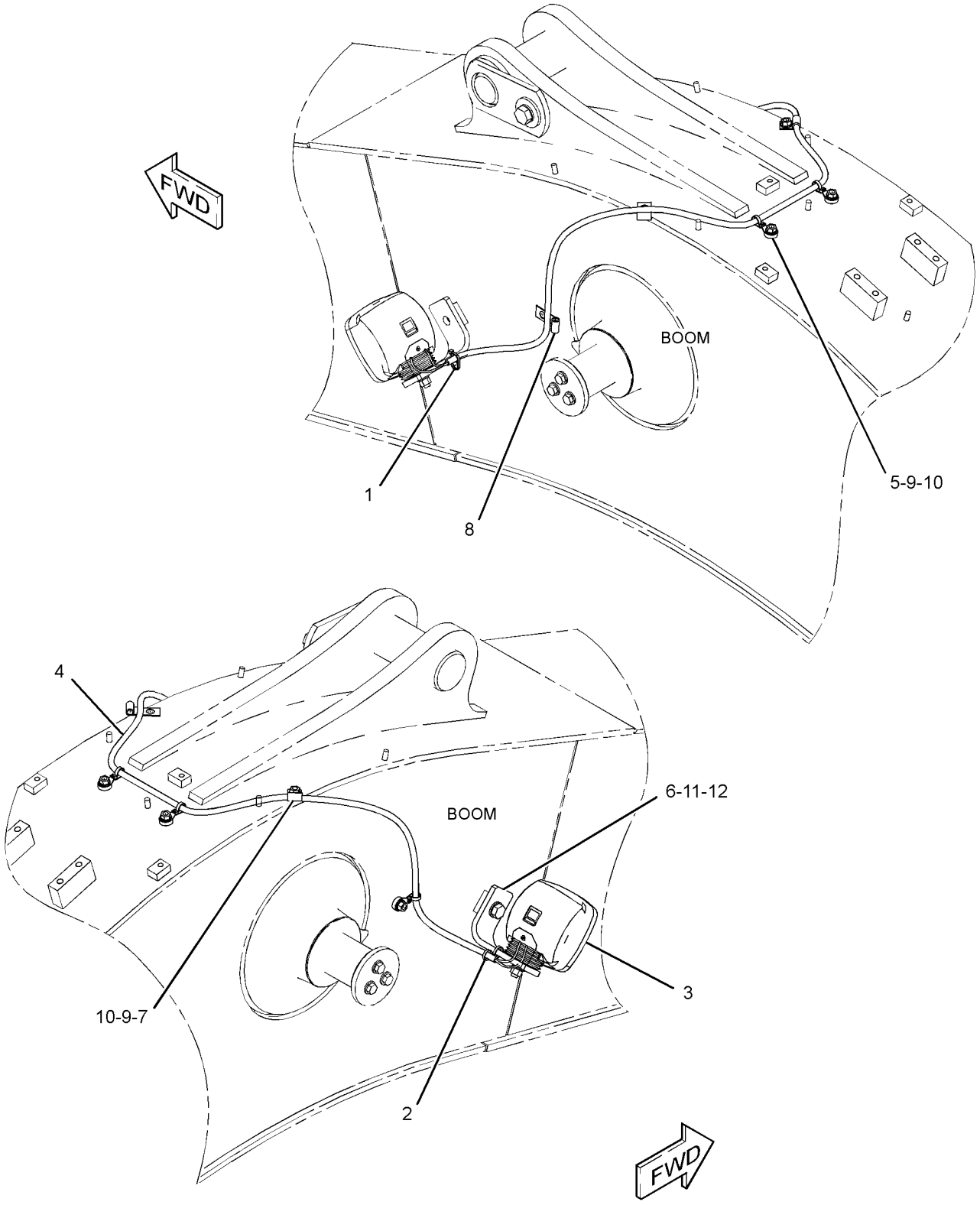

GRAPHIC #1 **<END>** g01230046

267-7627 LIGHTING GP-FLOOD—SHORT BOOM, LH

S/N: PBB1-UP; KBS1-UP
PART OF 415-1396 BOOM AR
AN ATTACHMENT

SMCS-1434 **i05291910**

NOTE	REF NO	GRAPHIC REF	PART NUMBER	QTY	PART NAME 1 2 3 4 5 6 (PRODUCT LEVEL)	SEE PAGE
	1	1	**7I-2673**	1	STRAP-CABLE	
	2	1	**111-4836**	4	CLIP	
	3	1	**116-0118**	1	CLIP	
Y	4	1	**153-2521**	1	LAMP GP-FLOOD (24-VOLT)	132
	5	1	**267-7628**	1	HARNESS AS-LIGHTING (SHORT BOOM, LH)	
		1	**9W-0852**	2	PIN-CONNECTOR (14-GA TO 16-GA)	
		1	**2L-8075**	2	TERMINAL-RING (14-GA TO 16-GA, NO. 8 SCREW)	
		1	**243-4505**	1	RECEPTACLE AS-CONNECTOR (2-PIN)	
	6	1	**111-4837**	1	CLIP	
	7	1	**134-3284**	1	BRACKET	
	8	1	**5P-9297**	2	CLIP	
	9	1	**8T-4121**	5	WASHER-HARD (11X21X2.5-MM THK)	
M	10	1	**8T-4133**	5	NUT (M10X1.5-THD)	
M	11	1	**7X-2552**	1	BOLT (M16X2X30-MM)	
	12	1	**9X-8257**	1	WASHER (17.5X30X3.5-MM THK)	

M - METRIC PART
Y - SEPARATE ILLUSTRATION

267-7627 **LIGHTING GP-FLOOD (*contd.*)** **i05291910**

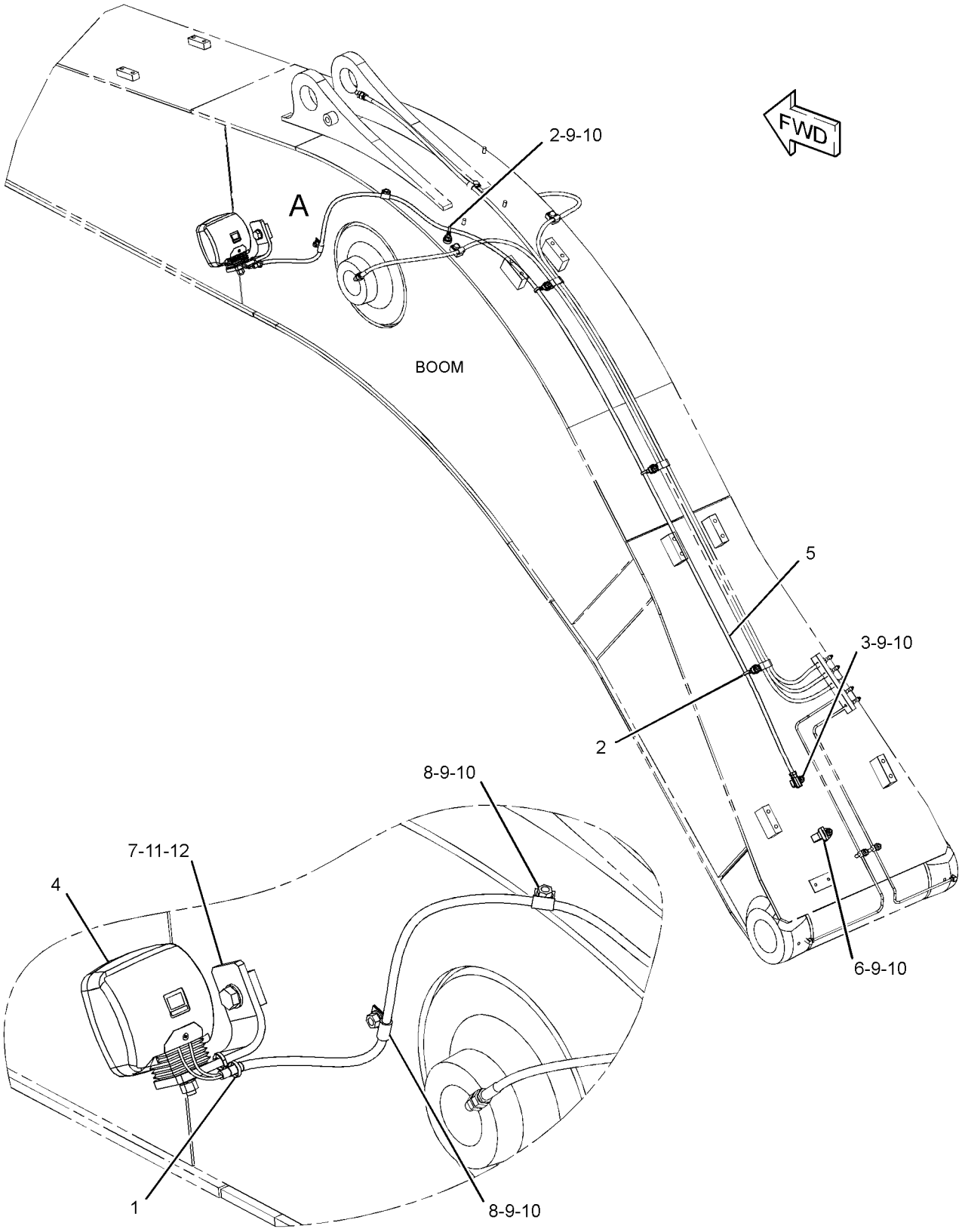

VIEW OF AREA A

GRAPHIC #1 **<END>** g01229074

366-9342 LIGHTING GP-FLOOD–CAB

S/N: PBB1-UP
PART OF 456-0825, 456-0826 DISTRIBUTION AR
AN ATTACHMENT

SMCS-1434 **i05194844**

NOTE	REF NO	GRAPHIC REF	PART NUMBER	QTY	PART NAME 1 2 3 4 5 6 (PRODUCT LEVEL)	SEE PAGE
	1	1	**3S-2093**	1	STRAP-CABLE	
	2	1	**163-6704**	1	TIMER AS (TIME DELAY LIGHTING)	
		1	**8T-8729**	5	PIN-CONNECTOR (16-GA TO 18-GA)	
		1	**102-8802**	1	KIT-RECEPTACLE (2-PIN)	
		1	**102-8803**	1	KIT-RECEPTACLE (3-PIN)	
					(EACH KIT INCLUDES RECEPTACLE AS & WEDGE)	
	3	1	**163-6795**	2	STRAP-CABLE	
Y	4	1	**167-3441**	2	LAMP GP-FLOOD (24-VOLT)	134
	5	1	**167-3456**	2	HARNESS AS-LIGHTING (CAB FLOODLIGHT)	
					(EACH INCLUDES)	
		1	**7Y-3962**	2	TERMINAL-BULLET (MALE)	
		1	**7Y-3964**	2	TUBE (CONNECTOR TERMINAL)	
		1	**7Y-3963**	2	TERMINAL-BULLET (FEMALE)	
		1	**7Y-3965**	2	TUBE (RECEPTACLE TERMINAL)	
	6	1	**238-2326**	1	PLATE AS	
	7	1	**366-9344**	1	BRACKET-LIGHT (CAB, LH)	
	8	1	**366-9345**	1	BRACKET-LIGHT (CAB, RH)	
M	9	1	**8T-4200**	2	BOLT (M8X1.25X16-MM)	
	10	1	**8T-4224**	2	WASHER-HARD (8.8X16X2-MM THK)	
M	11	1	**8T-4970**	4	BOLT (M6X1X14-MM)	
M	12	1	**9X-2042**	2	SCREW-TRUSS HEAD (M6X1X12-MM)	
M	13	1	**9X-2043**	2	SCREW-TRUSS HEAD (M6X1X14-MM)	
	14	1	**9X-8256**	4	WASHER (6.6X12X2-MM THK)	

M - METRIC PART
Y - SEPARATE ILLUSTRATION

366-9342 **LIGHTING GP-FLOOD (*contd.*)** **i05194844**

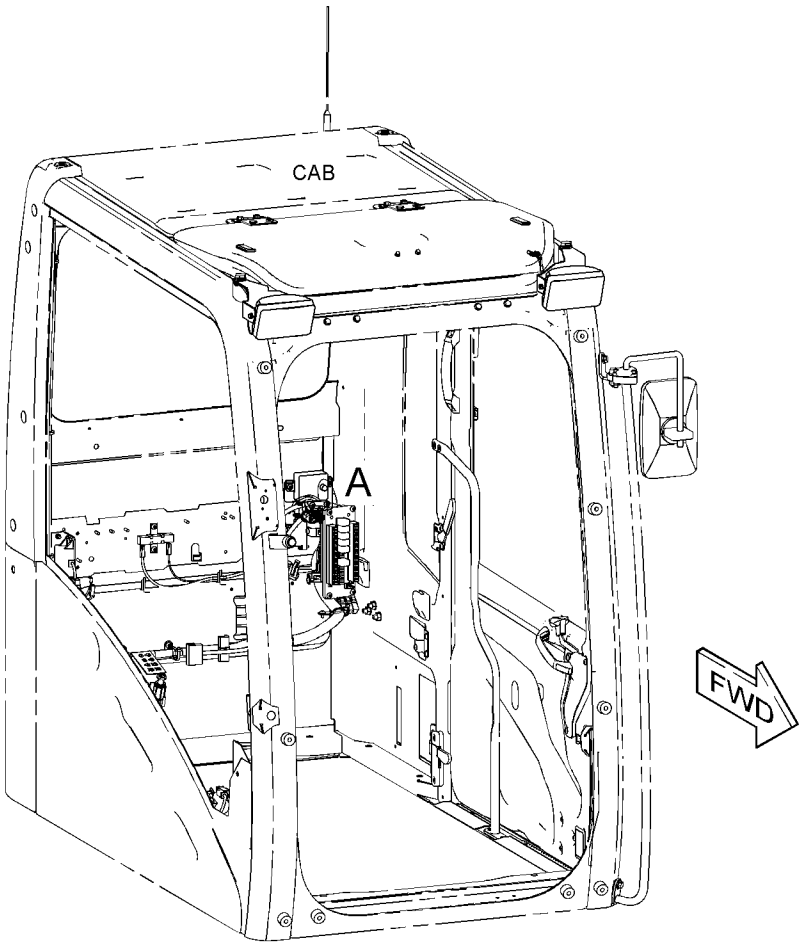

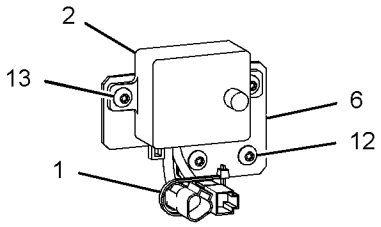

VIEW OF AREA A

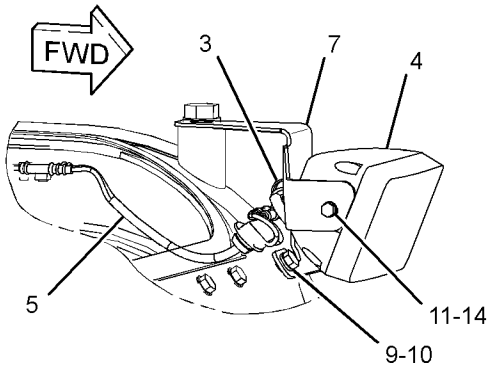

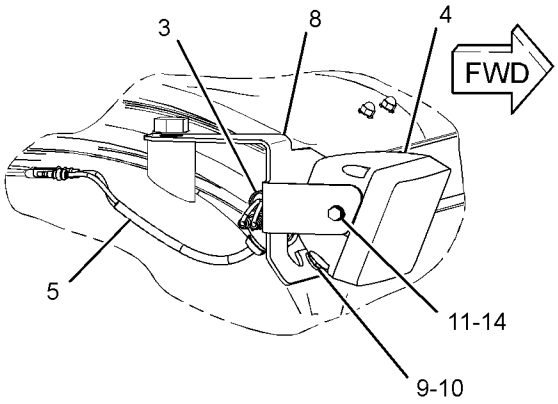

GRAPHIC #1 **<END>** g02798222

366-9343 LIGHTING GP-FLOOD–CAB

S/N: PBB1-UP; KBS1-UP
PART OF 456-0820, 456-0821 DISTRIBUTION AR
AN ATTACHMENT

SMCS-1434 **i05193585**

NOTE	REF NO	GRAPHIC REF	PART NUMBER	QTY	PART NAME 1 2 3 4 5 6 (PRODUCT LEVEL)	SEE PAGE
	1	1	**163-6795**	2	STRAP-CABLE	
Y	2	1	**167-3441**	2	LAMP GP-FLOOD (24-VOLT)	134
	3	1	**167-3456**	2	HARNESS AS-LIGHTING (CAB FLOODLIGHT)	
					(EACH INCLUDES)	
		1	**7Y-3962**	2	TERMINAL-BULLET (MALE)	
		1	**7Y-3964**	2	TUBE (CONNECTOR TERMINAL)	
		1	**7Y-3963**	2	TERMINAL-BULLET (FEMALE)	
		1	**7Y-3965**	2	TUBE (RECEPTACLE TERMINAL)	
	4	1	**366-9344**	1	BRACKET-LIGHT (CAB, LH)	
	5	1	**366-9345**	1	BRACKET-LIGHT (CAB, RH)	
M	6	1	**8T-4200**	2	BOLT (M8X1.25X16-MM)	
	7	1	**8T-4224**	2	WASHER-HARD (8.8X16X2-MM THK)	
M	8	1	**8T-4970**	4	BOLT (M6X1X14-MM)	
	9	1	**9X-8256**	4	WASHER (6.6X12X2-MM THK)	

M - METRIC PART
Y - SEPARATE ILLUSTRATION

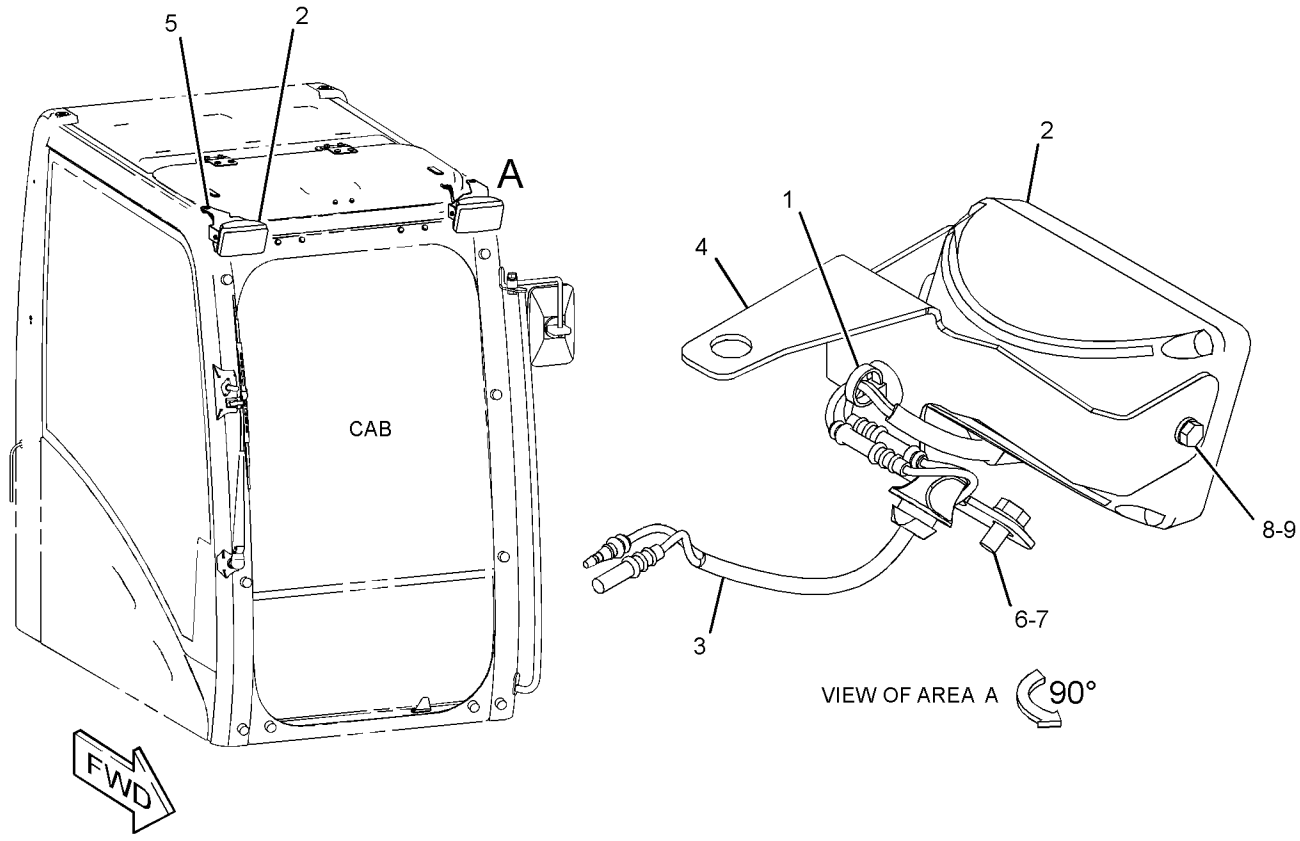

GRAPHIC #1 **<END>** g02768898

441-6375 LIGHTING GP-FLOOD—CAB

S/N: PBB1-UP; KBS1-UP

PART OF 456-0817, 456-0823, 456-0824, 456-0932, 456-0933, 456-0942, 456-0943, 456-1026, 456-1027 DISTRIBUTION AR

AN ATTACHMENT

SMCS-1434 **i05860066**

NOTE	REF NO	GRAPHIC REF	PART NUMBER	QTY	PART NAME 1 2 3 4 5 6 (PRODUCT LEVEL)	SEE PAGE
Y	1	1	**325-4471**	1	LAMP GP-FLOOD (24-VOLT, 35-WATT) (CAB FRONT, LH)	135
Y	1A	1	**325-4471**	1	LAMP GP-FLOOD (24-VOLT, 35-WATT) (CAB FRONT, RH)	135
	2	1	**441-6376**	2	HARNESS AS-LIGHTING (CAB LIGHT)	
					(EACH INCLUDES)	
		1	*7Y-3966*	1	TERMINAL AS	
		1	**7Y-3962**	1	TERMINAL-BULLET (MALE)	
		1	**7Y-3964**	1	TUBE (CONNECTOR TERMINAL)	
		1	*7Y-3967*	1	TERMINAL AS	
		1	**7Y-3963**	1	TERMINAL-BULLET (FEMALE)	
		1	**7Y-3965**	1	TUBE (RECEPTACLE TERMINAL)	
		1	**9X-3402**	2	SOCKET-CONNECTOR (16-GA TO 18-GA)	
					—OR—	
		1	**126-1768**	2	SOCKET-CONNECTOR (14-GA TO 16-GA)	
		1	**155-2270**	1	KIT-CONNECTING PLUG (2-PIN)	
					(INCLUDES PLUG AS, WEDGE & INTERFACE SEAL)	
	3	1	**441-6377**	1	BRACKET-LIGHT	
	4	1	**441-6379**	1	BRACKET-LIGHT	
	5	1	**163-6795**	2	STRAP-CABLE	
M	6	1	**8T-4200**	2	BOLT (M8X1.25X16-MM)	
	7	1	**8T-4224**	2	WASHER-HARD (8.8X16X2-MM THK)	

M - METRIC PART
Y - SEPARATE ILLUSTRATION

441-6375 **LIGHTING GP-FLOOD (*contd.*)** **i05860066**

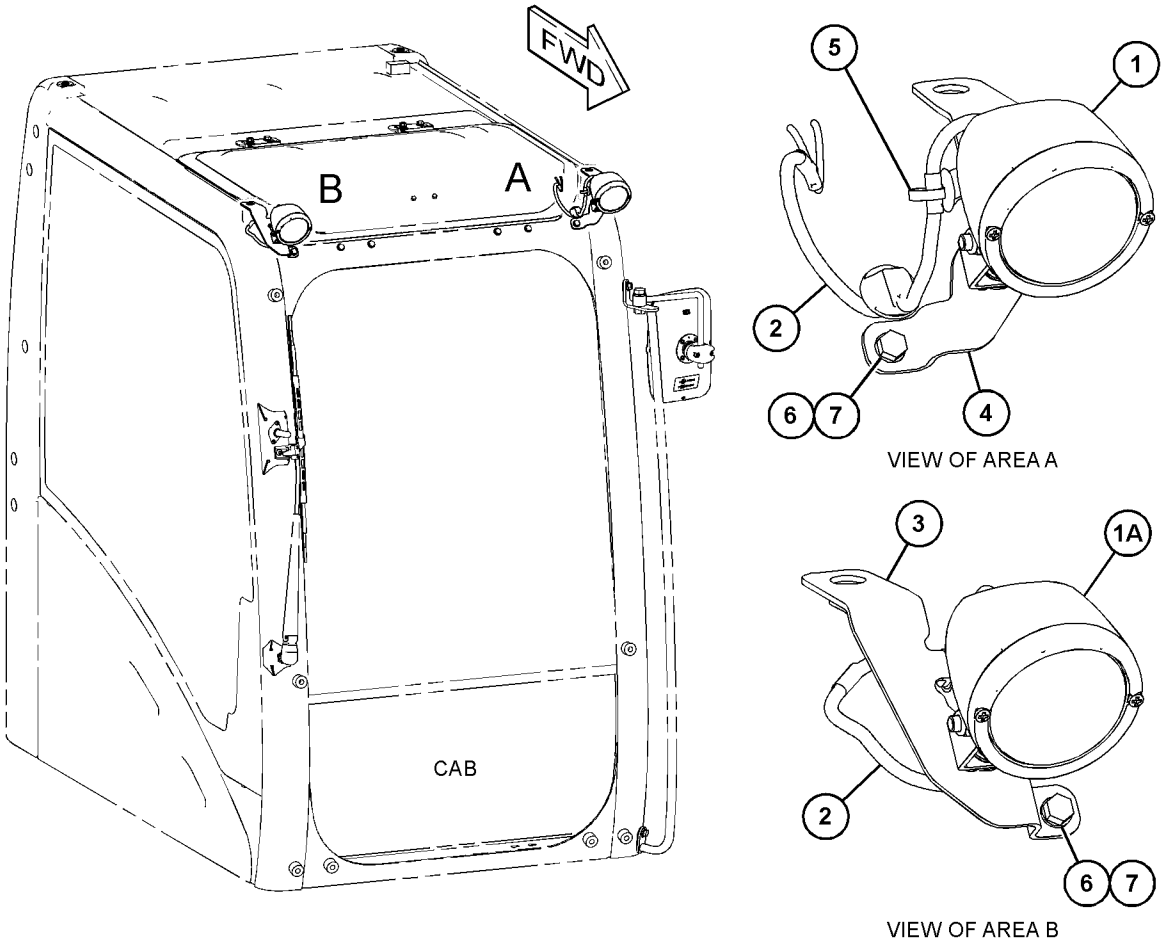

GRAPHIC #1 **<END>** g03668733

454-8704 LIGHTING GP-FLOOD—CAB

S/N: PBB1-UP

PART OF 456-0922, 456-0923 DISTRIBUTION AR

AN ATTACHMENT

SMCS-1434 **i05861571**

NOTE	REF NO	GRAPHIC REF	PART NUMBER	QTY	PART NAME 1 2 3 4 5 6 (PRODUCT LEVEL)	SEE PAGE
	1	1	**3S-2093**	1	STRAP-CABLE	
	2	1	**163-6704**	1	TIMER AS (TIME DELAY LIGHTING)	
		1	**8T-8729**	5	PIN-CONNECTOR (16-GA TO 18-GA)	
		1	**102-8802**	1	KIT-RECEPTACLE (2-PIN)	
		1	**102-8803**	1	KIT-RECEPTACLE (3-PIN)	
					(EACH RECEPTACLE KIT INCLUDES RECEPTACLE AS & WEDGE)	
	3	1	**238-2326**	1	PLATE AS	
M		1	**6V-9632**	2	NUT-WELD (M6X1-THD)	
Y	4	1	**325-4471**	1	LAMP GP-FLOOD (24-VOLT, 35-WATT) (CAB FRONT, LH)	135
Y	4A	1	**325-4471**	1	LAMP GP-FLOOD (24-VOLT, 35-WATT) (CAB FRONT, RH)	135
	5	1	**441-6376**	2	HARNESS AS-LIGHTING (CAB LIGHT)	
					(EACH INCLUDES)	
		1	**7Y-3962**	1	TERMINAL-BULLET (MALE)	
		1	**7Y-3964**	1	TUBE (CONNECTOR TERMINAL)	
		1	**7Y-3963**	1	TERMINAL-BULLET (FEMALE)	
		1	**7Y-3965**	1	TUBE (RECEPTACLE TERMINAL)	
		1	**9X-3402**	2	SOCKET-CONNECTOR (16-GA TO 18-GA)	
					—OR—	
		1	**126-1768**	2	SOCKET-CONNECTOR (14-GA TO 16-GA)	
		1	**155-2270**	1	KIT-CONNECTING PLUG (2-PIN)	
					(INCLUDES PLUG AS,WEDGE & INTERFACE SEAL)	
	6	1	**441-6377**	1	BRACKET-LIGHT (CAB FRONT, RH)	
	7	1	**441-6379**	1	BRACKET-LIGHT (CAB FRONT, LH)	
	8	1	**163-6795**	2	STRAP-CABLE	
M	9	1	**8T-4200**	2	BOLT (M8X1.25X16-MM)	
	10	1	**8T-4224**	2	WASHER-HARD (8.8X16X2-MM THK)	
M	11	1	**9X-2042**	2	SCREW-TRUSS HEAD (M6X1X12-MM)	
M	12	1	**9X-2043**	2	SCREW-TRUSS HEAD (M6X1X14-MM)	

M - METRIC PART
Y - SEPARATE ILLUSTRATION

454-8704 **LIGHTING GP-FLOOD (*contd.*)** **i05861571**

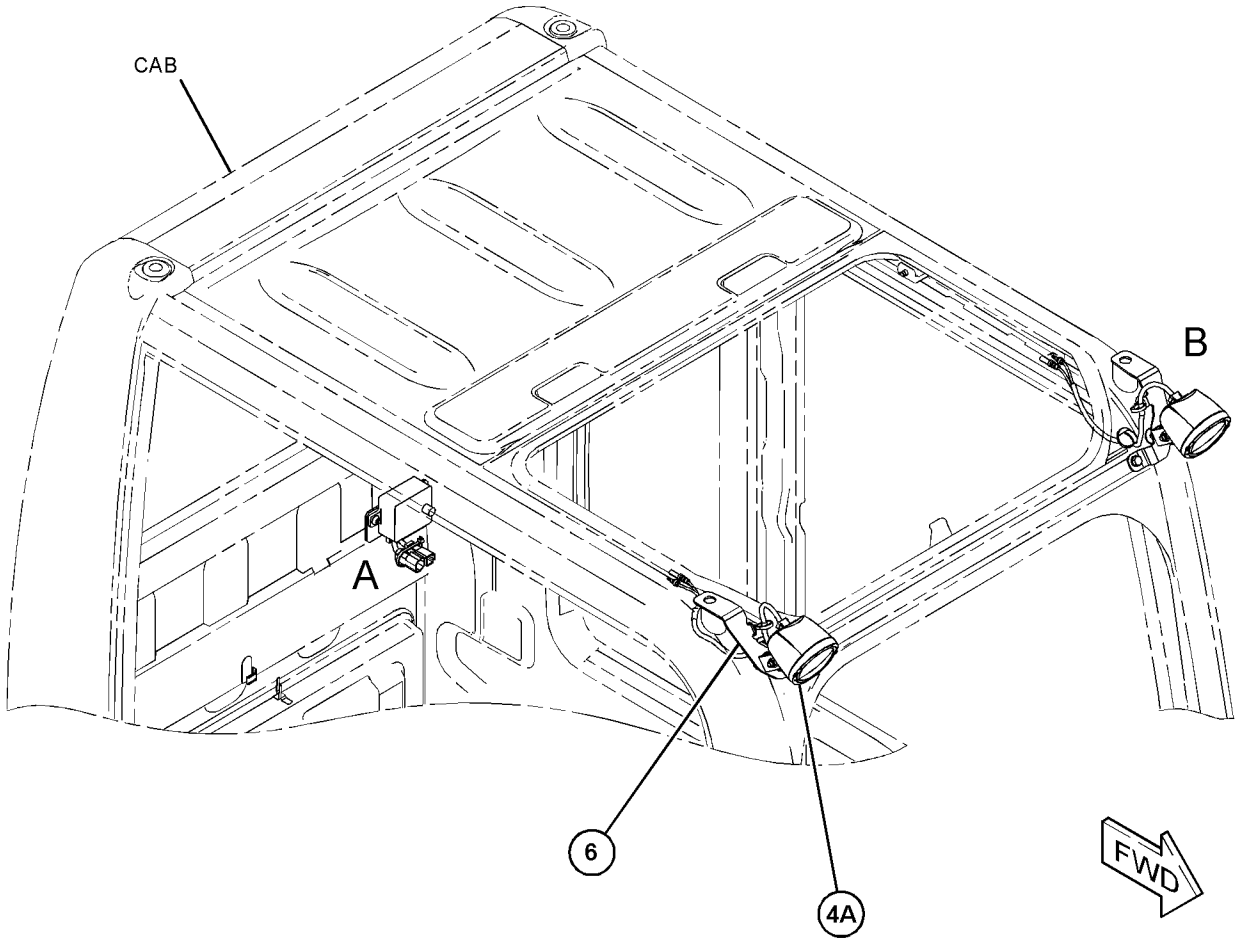

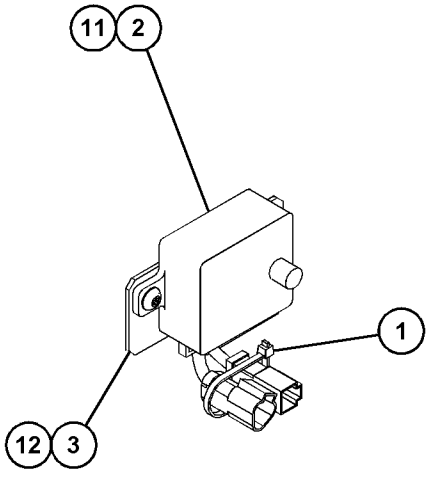

VIEW OF AREA A

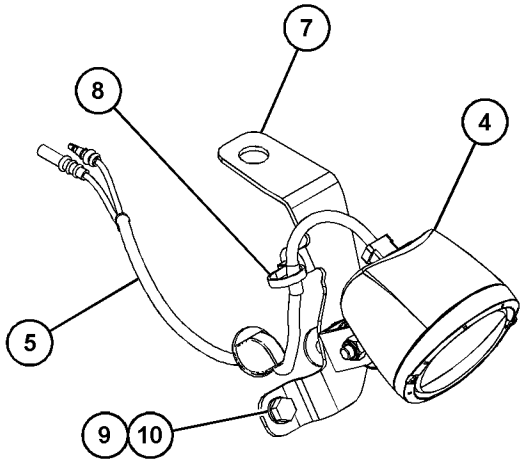

VIEW OF AREA B

GRAPHIC #1 **<END>** g03704991

399-2648 PANEL & MTG GP-CIRCUIT BREAKER

S/N: PBB1-UP; KBS1-UP

PART OF 422-0645 OPERATOR AR

SMCS-1417, 1420 **i05857181**

NOTE	REF NO	GRAPHIC REF	PART NUMBER	QTY	PART NAME 1 2 3 4 5 6 (PRODUCT LEVEL)	SEE PAGE
Y	1	1	*399-2649*	1	PANEL GP-CIRCUIT BREAKER	153
	2	1	**8T-4121**	4	WASHER-HARD (11X21X2.5-MM THK)	
M	3	1	**8T-4137**	4	BOLT (M10X1.5X20-MM)	

M - METRIC PART
Y - SEPARATE ILLUSTRATION

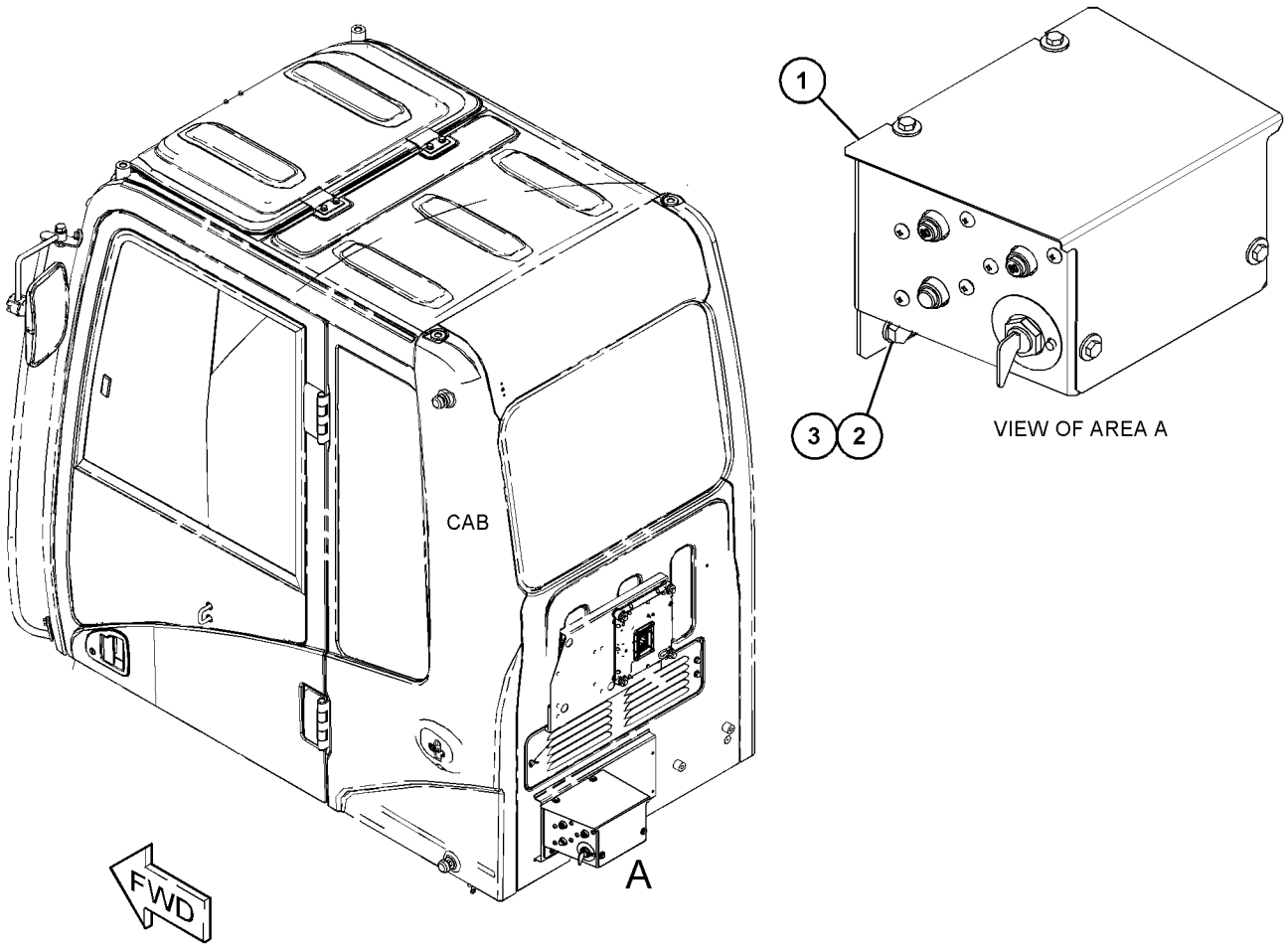

GRAPHIC #1 **<END>** g03456718

399-2649 PANEL GP-CIRCUIT BREAKER

S/N: PBB1-UP; KBS1-UP

PART OF 399-2648 PANEL & MTG GP-CIRCUIT BREAKER

SMCS-1417 **i05857184**

NOTE	REF NO	GRAPHIC REF	PART NUMBER	QTY	PART NAME 1 2 3 4 5 6 (PRODUCT LEVEL)	SEE PAGE
	1	1	**3E-8320**	1	PLATE-INSTRUCTION (BATTERY)	
Y	2	1	**7N-0719**	1	SWITCH GP-DISCONNECT (BATTERY)	167
	3	1	**121-1023**	1	BLOCK-TERMINAL	
	4	1	**171-2208**	1	CIRCUIT BREAKER AS (60-AMPERE) (GLOW PLUG)	
	5	1	**171-2210**	1	CIRCUIT BREAKER AS (80-AMPERE) (MAIN)	
	6	1	**216-4970**	1	CIRCUIT BREAKER AS (120-AMPERE) (ALTERNATOR)	
					(EACH CIRCUIT BREAKER AS INCLUDES)	
		1	**4E-5724**	2	WASHER (7X12X1-MM THK)	
		1	**8T-0122**	2	NUT-FULL (1/4-28-THD)	
		1	**1H-3244**	2	LOCKWASHER	
	7	1	**238-1506**	1	COVER	
	8	1	**238-2279**	1	BAR-BUS	
	9	1	**238-2280**	1	WIRE AS	
		1	**2L-8050**	2	TERMINAL-RING (6-GA, 1/4-IN SCREW)	
					—OR—	
		1	**2L-8058**	2	TERMINAL-RING (8-GA, 1/4-IN SCREW)	
E		1	**119-3662**	4	TUBE-HEAT SHRINK (10.85-MM DIA) (4-CM)	
Y	10	1	**241-8368**	1	SWITCH GP-MAGNETIC (24-VOLT) (GLOW PLUG RELAY)	169
	11	1	**251-0303**	1	CABLE AS	
	12	1	**251-0304**	1	CABLE AS	
					(EACH CABLE AS INCLUDES)	
		1	**9G-4343**	2	TERMINAL-RING (4-GA, 1/4-IN SCREW)	
E		1	**125-7876**		TUBE-HEAT SHRINK (17.78-MM DIA) (4-CM)	
	13	1	**377-8041**	1	BRACKET AS	
	14	1	**377-8043**	1	WIRE AS	
	15	1	**377-8044**	1	WIRE AS	
					(EACH WIRE AS INCLUDES)	
		1	**2L-8058**	1	TERMINAL-RING (8-GA, 1/4-IN SCREW)	
					—OR—	
		1	**5P-3455**	1	TERMINAL-RING (8-GA, 5/16-IN SCREW)	
E		1	**119-3662**		TUBE-HEAT SHRINK (10.85-MM DIA) (4-CM)	
M	16	1	**5C-9553**	7	BOLT (M6X1X16-MM)	
	17	1	**5P-4115**	4	WASHER-HARD (7.2X19X2-MM THK)	
	18	1	**6V-5645**	6	SCREW-MACHINE (10-32X0.87-IN)	
	19	1	**8T-0328**	6	WASHER-HARD (5.5X10X1-MM THK)	
M	20	1	**8T-4171**	2	BOLT (M6X1X12-MM)	
M	21	1	**8T-4970**	4	BOLT (M6X1X14-MM)	
	22	1	**9X-8256**	9	WASHER (6.6X12X2-MM THK)	

E - ORDER BY THE CENTIMETER
M - METRIC PART
Y - SEPARATE ILLUSTRATION

399-2649 **PANEL GP-CIRCUIT BREAKER (*contd.*)** **i05857184**

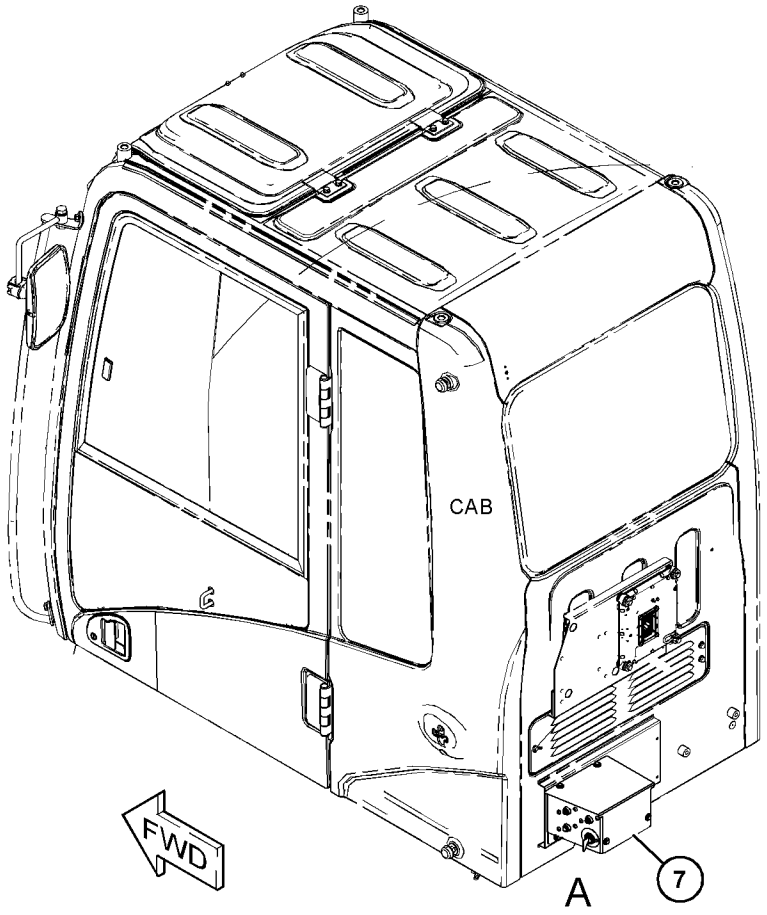

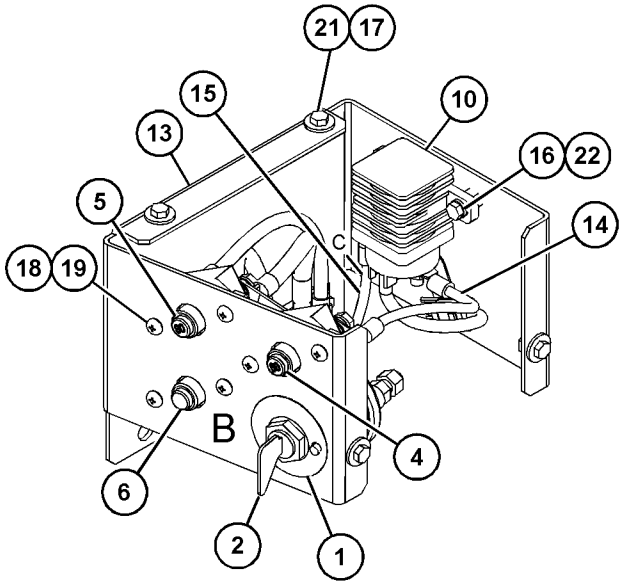

VIEW OF AREA A
(COVER REMOVED FOR CLARITY)

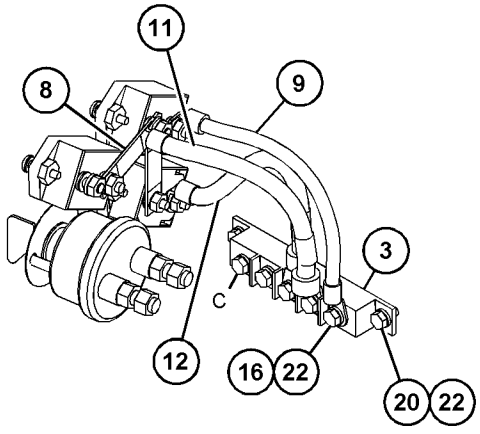

VIEW OF AREA B
(PARTS REMOVED FOR CLARITY) 90°

GRAPHIC #1 **<END>** g03458316

251-0542 PANEL GP-SWITCH—ENGINE SPEED, START

S/N: KBS1-UP
PART OF 456-0842 OPTION AR-CAB
AN ATTACHMENT

SMCS-1408, 1429, 7332, 7451 **i05238926**

NOTE	REF NO	GRAPHIC REF	PART NUMBER	QTY	PART NAME 1 2 3 4 5 6 (PRODUCT LEVEL)	SEE PAGE
	1	1	**3S-2093**	4	STRAP-CABLE	
CY	2	1	**255-2751**	1	SWITCH GP-START (ENGINE, KEY)	173
Y	3	1	**319-4420**	1	SWITCH GP-ROTARY (THROTTLE POSITION)	172
	4	1	**170-9324**	1	LAMP AS (24-VOLT, 3-WATT)	
	5	1	**185-9208**	1	KNOB AS (THROTTLE POSITION)	
	6	1	**234-1156**	1	COVER	
	7	1	**234-1158**	1	COVER	
	8	1	**267-7976**	1	PANEL	
	9	1	**328-0021**	1	HARNESS AS-CONSOLE	
		1	**3S-2093**	3	STRAP-CABLE	
		1	**102-8802**	1	KIT-RECEPTACLE (2-PIN)	
					(INCLUDES RECEPTACLE AS & WEDGE)	
		1	**7Y-3951**	2	TERMINAL-BLADE (14-GA)	
		1	**7Y-3952**	1	PLUG-CONNECTOR (2-PIN)	
		1	**7Y-3962**	1	TERMINAL-BULLET (MALE)	
		1	**7Y-3964**	1	TUBE (CONNECTOR TERMINAL)	
		1	**7Y-3963**	1	TERMINAL-BULLET (FEMALE)	
		1	**7Y-3965**	1	TUBE (RECEPTACLE TERMINAL)	
		1	**8T-8737**	3	PLUG-SEAL	
		1	**121-1168**	1	CONNECTOR-RECEPTACLE	
		1	**121-1173**	14	TERMINAL (MALE)	
		1	**9X-3402**	7	SOCKET-CONNECTOR (16-GA TO 18-GA)	
		1	**2L-8075**	4	TERMINAL-RING (14-GA TO 16-GA, NO. 8 SCREW)	
		1	**153-2540**	10	TERMINAL (FEMALE)	
		1	**153-2541**	1	PLUG-CONNECTOR (10-PIN)	
		1	**155-2270**	1	KIT-CONNECTING PLUG (2-PIN)	
					(INCLUDES PLUG AS, WEDGE & INTERFACE SEAL)	
		1	**230-5010**	1	PLUG AS-CONNECTOR (6-PIN)	
		1	**264-7032**	1	SEAL-CONNECTOR	
		1	**238-2366**	7	TERMINAL (MALE)	
	10	1	**096-6166**	4	WASHER-HARD (4.5X9X1-MM THK)	
	11	1	**119-5026**	4	SCREW-PAN HEAD (10-16X0.63-IN)	
M	12	1	**6V-9491**	4	SCREW-MACHINE (M4X0.7X20-MM)	

C - CHANGE FROM PREVIOUS TYPE
M - METRIC PART
Y - SEPARATE ILLUSTRATION

251-0542 **PANEL GP-SWITCH (*contd.*)** **i05238926**

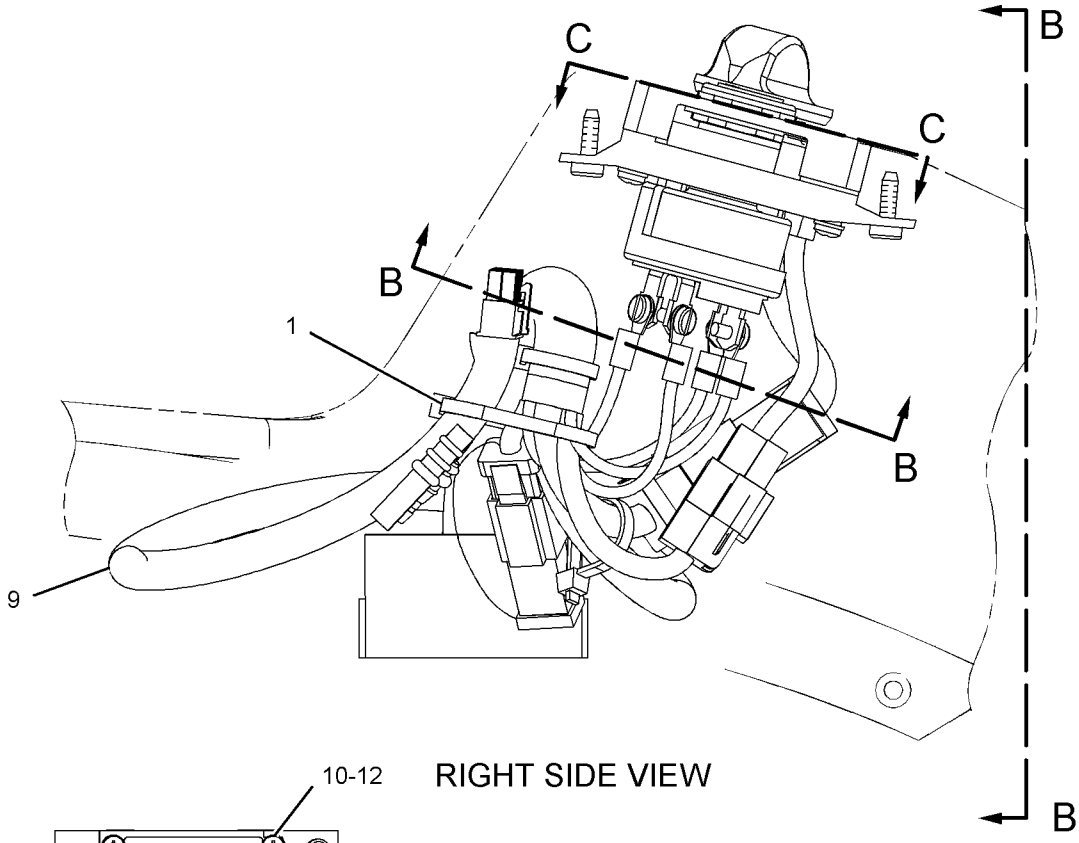

RIGHT SIDE VIEW

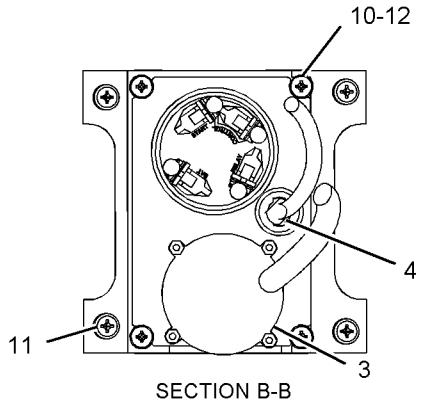

SECTION B-B

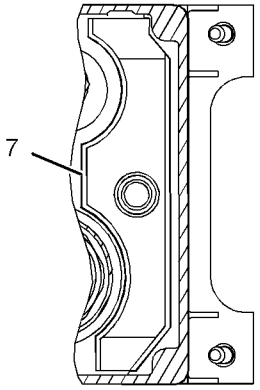

VIEW C-C

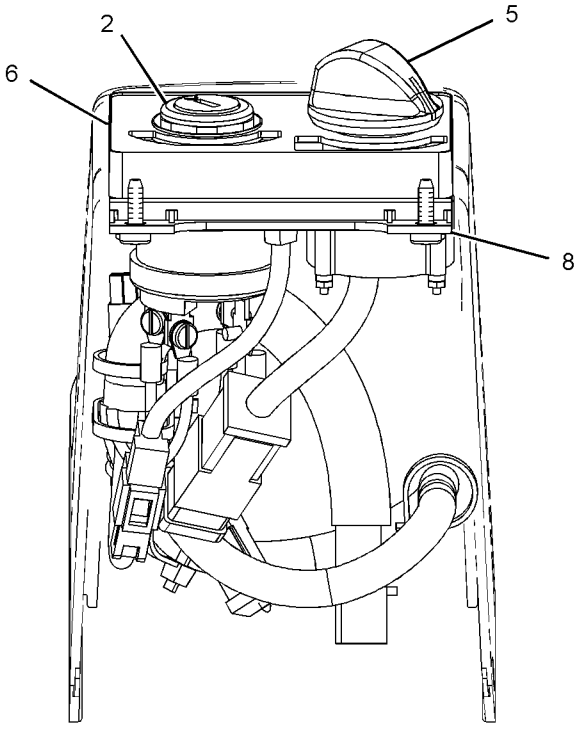

VIEW B-B

GRAPHIC #1 **<END>** g01112022

398-7007 PANEL GP-SWITCH—CONSOLE

S/N: PBB1-UP; KBS1-UP

PART OF 456-0836, 456-0837, 456-0838, 456-0839, 456-0892 OPTION AR-CAB AN ATTACHMENT

SMCS-1408, 1429, 7332, 7451 **i05495979**

NOTE	REF NO	GRAPHIC REF	PART NUMBER	QTY	PART NAME 1 2 3 4 5 6 (PRODUCT LEVEL)	SEE PAGE
	1	1	**3S-2093**	4	STRAP-CABLE	
	2	1	**170-9324**	1	LAMP AS (24-VOLT, 3-WATT)	
	3	1	**234-1158**	1	COVER	
Y	4	1	**255-2751**	1	SWITCH GP-START (ENGINE, KEY)	173
	5	1	**267-7976**	1	PANEL	
	6	1	**398-7013**	1	HARNESS AS-PANEL	
		1	**102-8802**	1	KIT-RECEPTACLE (2-PIN)	
					(INCLUDES RECEPTACLE AS AND WEDGE)	
		1	**3S-2093**	3	STRAP-CABLE	
		1	**7Y-3951**	2	TERMINAL-BLADE (14-GA)	
		1	**7Y-3952**	1	PLUG-CONNECTOR (2-PIN)	
		1	*7Y-3966*	1	TERMINAL AS	
		1	**7Y-3962**	1	TERMINAL-BULLET (MALE)	
		1	**7Y-3964**	1	TUBE (CONNECTOR TERMINAL)	
		1	*7Y-3967*	1	TERMINAL AS	
		1	**7Y-3963**	1	TERMINAL-BULLET (FEMALE)	
		1	**7Y-3965**	1	TUBE (RECEPTACLE TERMINAL)	
		1	**8T-8737**	2	PLUG-SEAL	
		1	**121-1168**	1	CONNECTOR-RECEPTACLE	
		1	**121-1173**	14	TERMINAL (MALE)	
		1	**9X-3402**	2	SOCKET-CONNECTOR (16-GA TO 18-GA)	
		1	**2L-8075**	4	TERMINAL-RING (14-GA TO 16-GA, NO. 8 SCREW)	
		1	**153-2540**	10	TERMINAL (FEMALE)	
		1	**153-2541**	1	PLUG-CONNECTOR (10-PIN)	
		1	**155-2270**	1	KIT-CONNECTING PLUG (2-PIN)	
					(INCLUDES PLUG AS, WEDGE & INTERFACE SEAL)	
		1	**238-2366**	2	TERMINAL (MALE)	
	7	1	**398-8931**	1	COVER	
	8	1	**096-6166**	4	WASHER-HARD (4.5X9X1-MM THK)	
	9	1	**119-5026**	4	SCREW-PAN HEAD (10-16X0.63-IN)	
M	10	1	**6V-9491**	4	SCREW-MACHINE (M4X0.7X20-MM)	

M - METRIC PART
Y - SEPARATE ILLUSTRATION

398-7007 **PANEL GP-SWITCH (*contd.*)** **i05495979**

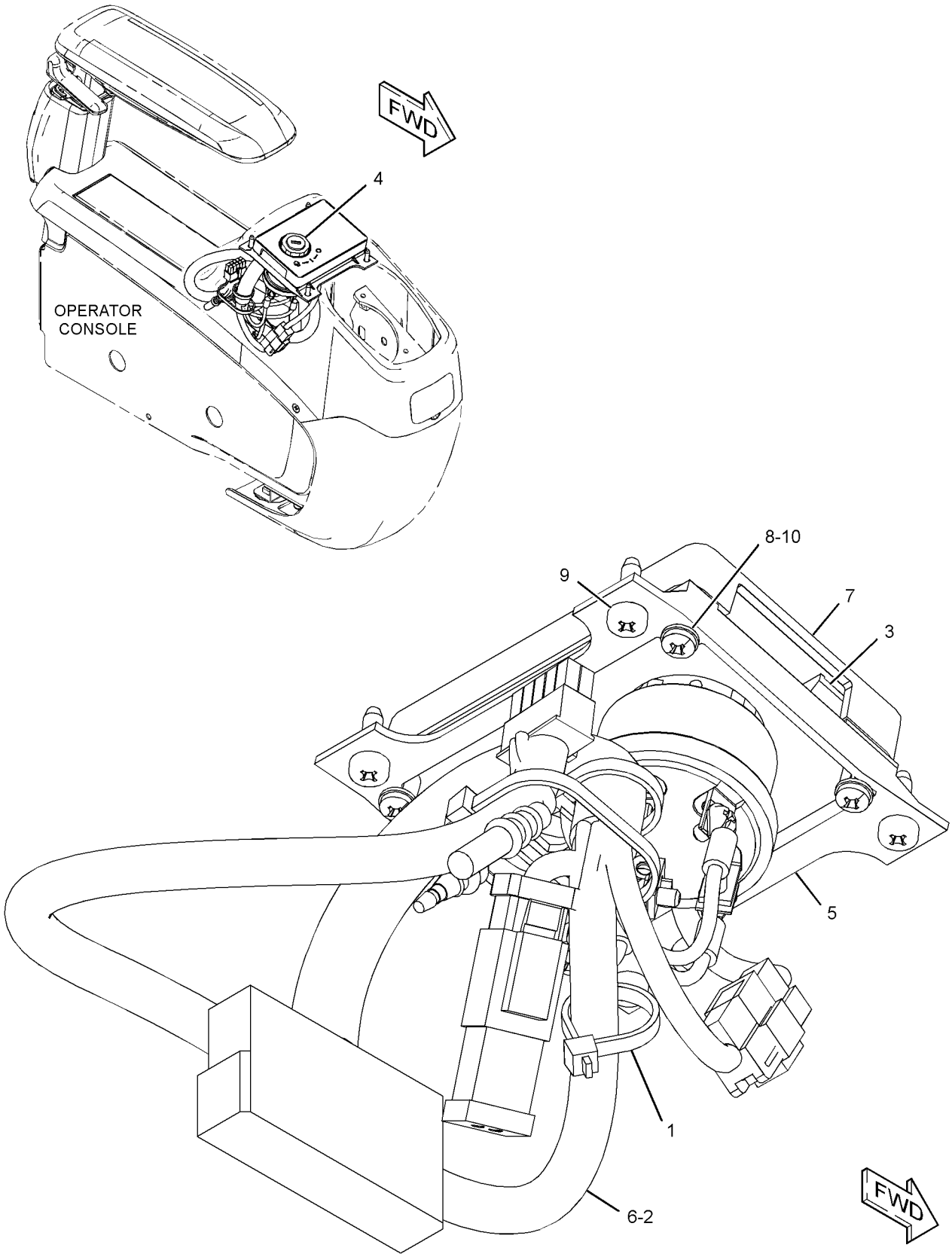

GRAPHIC #1 **<END>** g03445597

263-9088 RADIO GP-COMMUNICATION—PRODUCT LINK 121SR

S/N: PBB1-UP; KBS1-UP
FIELD REPLACEMENT ORDER 336-3545—PAGE: 159
PART OF 309-5881 CONTROL & MTG GP-COMMUNICATION
AN ATTACHMENT

SMCS-733T **i03756382**

NOTE	PART NUMBER	QTY	PART NAME 1 2 3 4 5 6 (PRODUCT LEVEL)	SEE PAGE
	336-3566	1	SOFTWARE GP-COMMUNICATION (PRODUCT LINK 121SR)	

<END>

336-3545 RADIO GP-COMMUNICATION—PRODUCT LINK 121SR

S/N: PBB1-UP; KBS1-UP
FIELD REPLACEMENT FOR 263-9088—PAGE: 159

SMCS-733T **i05317640**

NOTE	PART NUMBER	QTY	PART NAME 1 2 3 4 5 6 (PRODUCT LEVEL)	SEE PAGE
	434-1356	1	SOFTWARE GP-COMMUNICATION (PRODUCT LINK 121SR)	

<END>

423-6434 SENSOR GP-LIQUID LEVEL

S/N: PBB1-UP; KBS1-UP

PART OF 394-7468 LINES GP-FUEL

SMCS-7422 **i05559663**

NOTE	REF NO	GRAPHIC REF	PART NUMBER	QTY	PART NAME 1 2 3 4 5 6 (PRODUCT LEVEL)	SEE PAGE
	1	1	**214-7568**	1	SEAL-O-RING	
	2	1	**281-8805**	1	RECEPTACLE AS-CONNECTOR	
	3	1	**9X-3401**	3	PIN-CONNECTOR (16-GA TO 18-GA)	

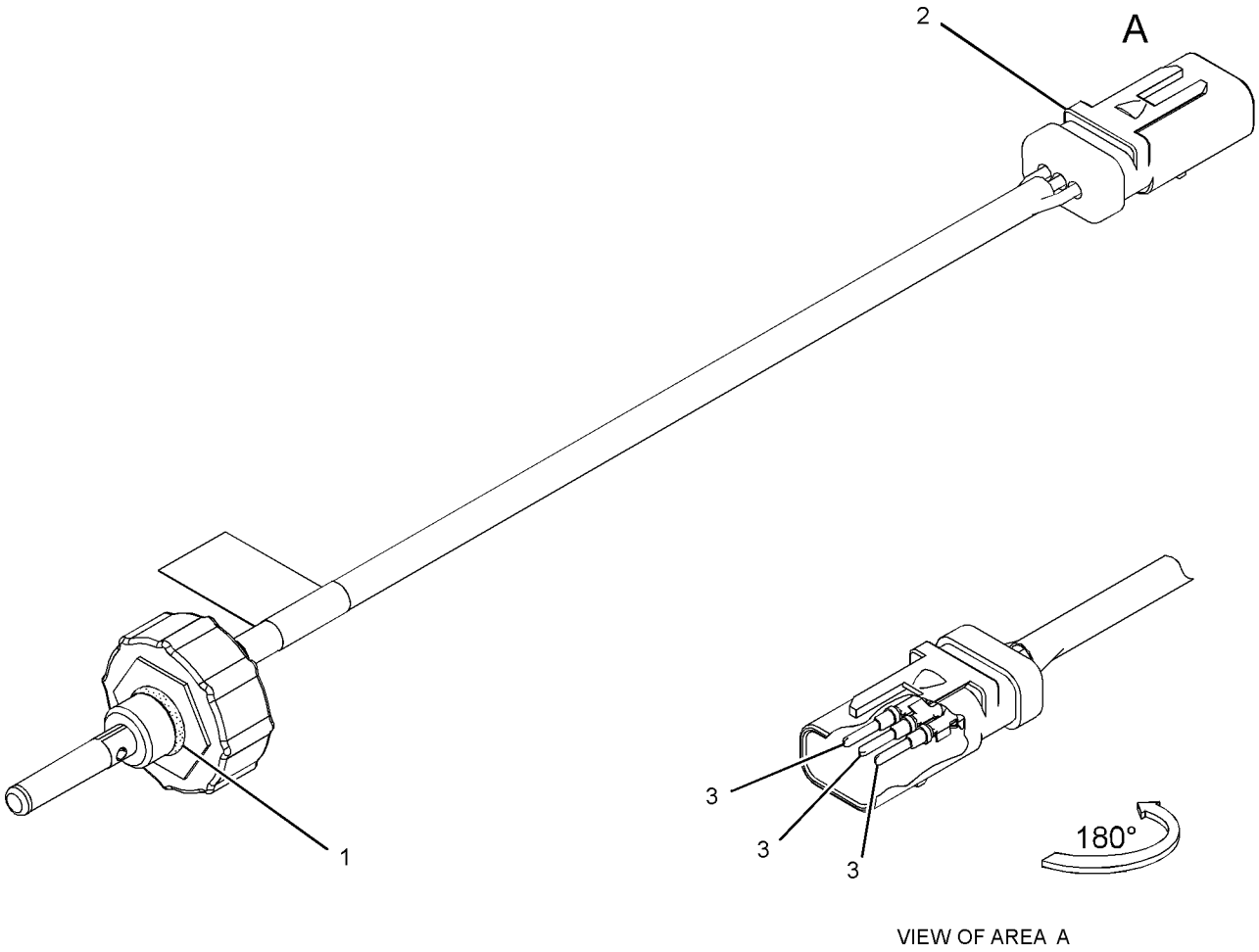

VIEW OF AREA A

GRAPHIC #1 **<END>** g02423836

325-8634 SENSOR GP-PRESSURE

S/N: PBB1-UP; KBS1-UP

PART OF 416-4969 SENSOR GP-TEMP & PRESS

SMCS-1439, 1916, 1917, 1923, 1924 **i04407511**

NOTE	REF NO	GRAPHIC REF	PART NUMBER	QTY	PART NAME 1 2 3 4 5 6 (PRODUCT LEVEL)	SEE PAGE
	1	1	**320-3060**	1	SENSOR GP-PRESSURE (FUEL)	
	2	1	**228-7100**	1	SEAL-O-RING	

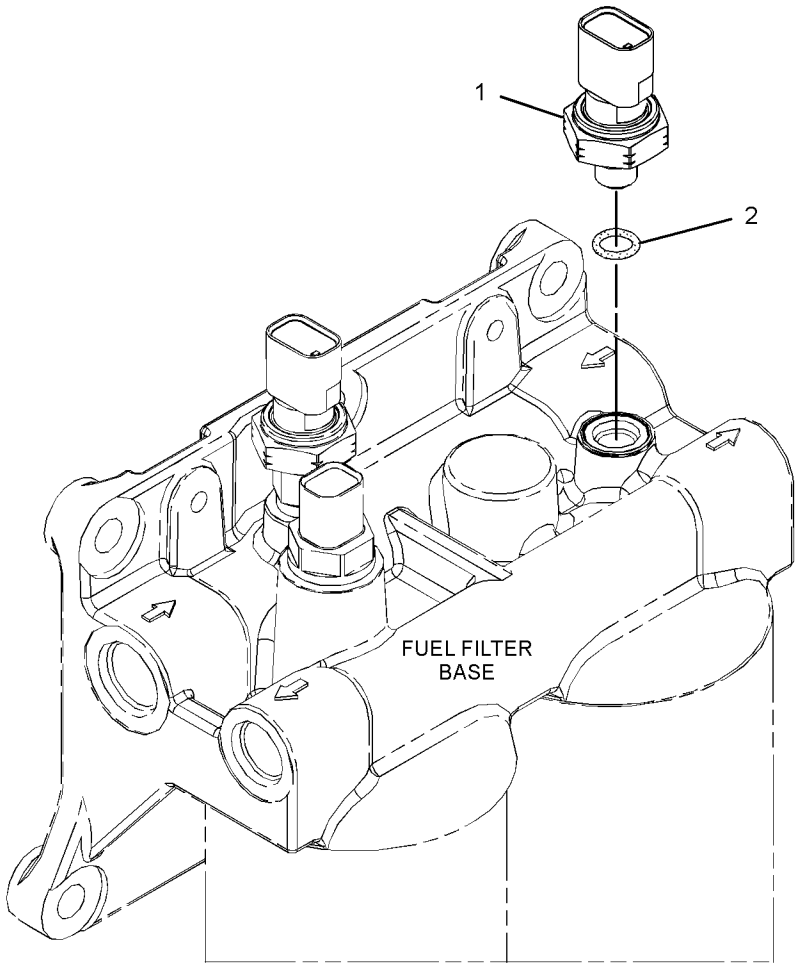

GRAPHIC #1 **<END>** g02080674

318-1181 SENSOR GP-SPEED

S/N: PBB1-UP; KBS1-UP

PART OF 453-1169 WIRING GP-CHASSIS

SMCS-1907, 1912, 4803, 7493 **i05338138**

NOTE	REF NO	GRAPHIC REF	PART NUMBER	QTY	PART NAME 1 2 3 4 5 6 (PRODUCT LEVEL)	SEE PAGE
	1	1	**171-5349**	1	STRAP-MARKER	
	2	1	**102-8802**	1	KIT-RECEPTACLE (2-PIN)	
					(INCLUDES RECEPTACLE AS & WEDGE)	
	3	1	**9X-3401**	2	PIN-CONNECTOR (16-GA TO 18-GA)	
					–OR–	
		1	**126-1767**	2	PIN-CONNECTOR (14-GA TO 16-GA)	
E	4	1	**9X-1386**		SLEEVE (14-CM)	

E - ORDER BY THE CENTIMETER

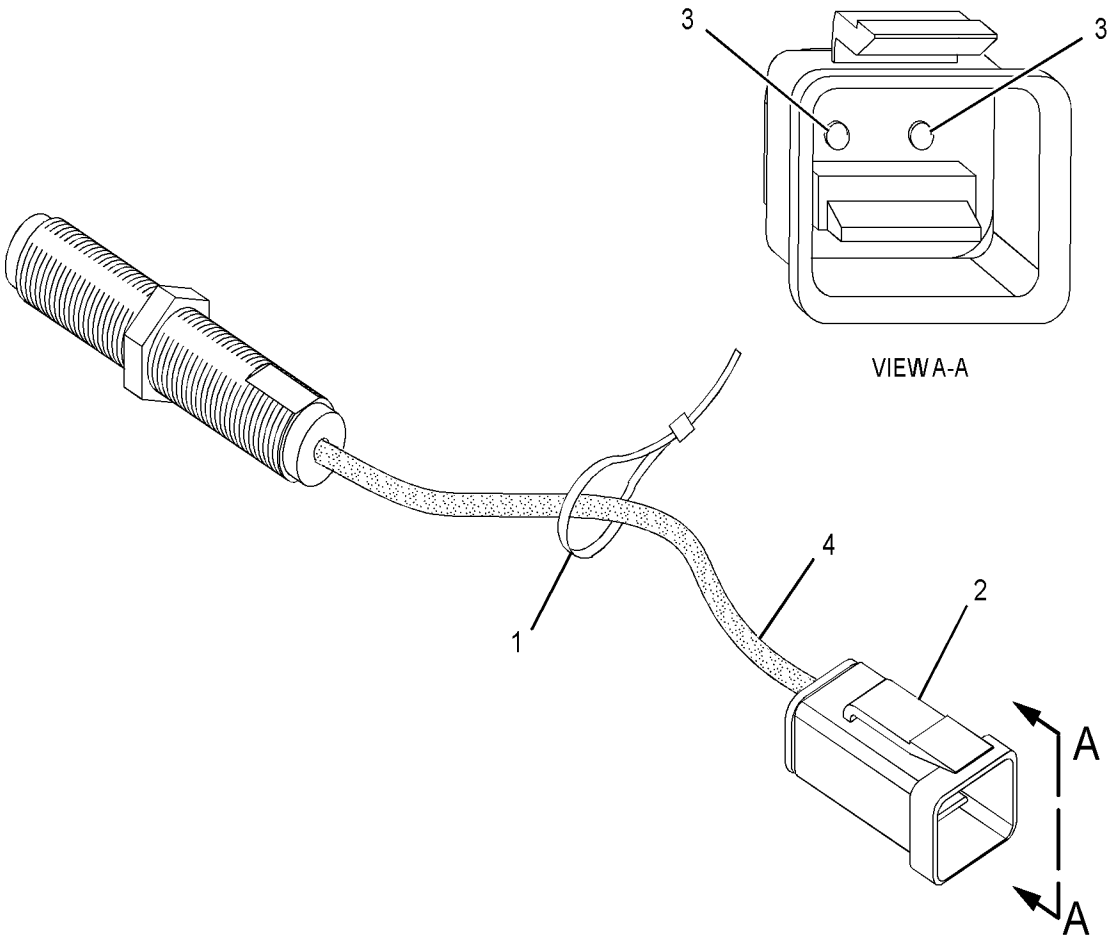

GRAPHIC #1 **<END>** g03381476

416-4969 SENSOR GP-TEMP & PRESS

S/N: PBB1-UP; KBS1-UP

PART OF 455-4086 INSTALLATION AR-ENGINE

SMCS-1408, 1435, 1439, 1906, 1924, 7400 **i05857494**

NOTE	REF NO	GRAPHIC REF	PART NUMBER	QTY	PART NAME 1 2 3 4 5 6 (PRODUCT LEVEL)	SEE PAGE
	1	1	**256-6454**	1	SENSOR-TEMPERATURE (ENGINE COOLANT)	
Y	2	1	*325-8634*	1	SENSOR GP-PRESSURE (FUEL)	161
	3	1	**199-9751**	1	SEAL-O-RING	

Y - SEPARATE ILLUSTRATION

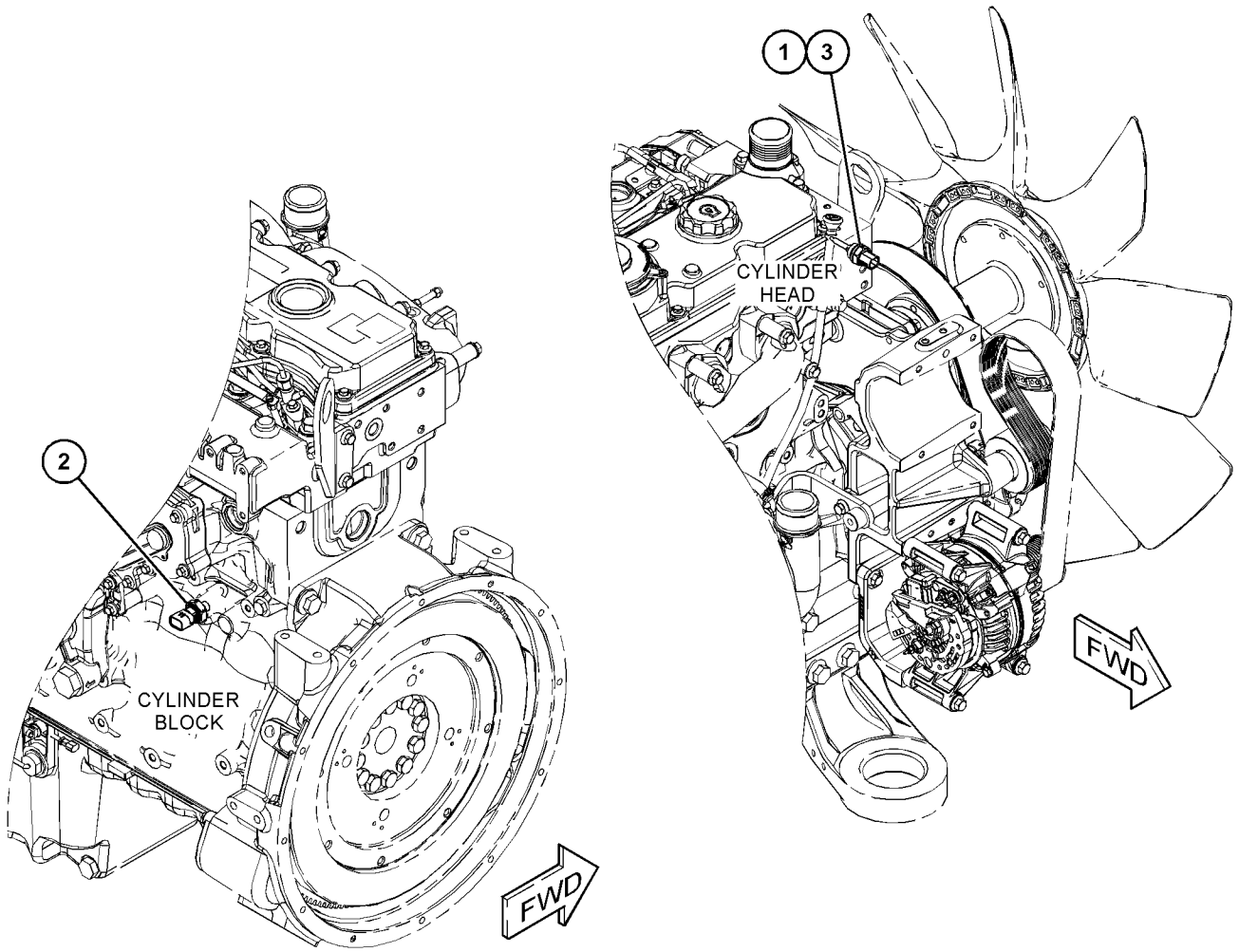

GRAPHIC #1 **<END>** g03687216

102-2240 SENSOR GP-TEMPERATURE

S/N: PBB1-UP; KBS1-UP

PART OF 455-4364 TANK & FILTER GP-HYDRAULIC

SMCS-1906, 1921, 1922, 1928, 1929, 3290, 7344 **i01807499**

NOTE	REF NO	GRAPHIC REF	PART NUMBER	QTY	PART NAME 1 2 3 4 5 6 (PRODUCT LEVEL)	SEE PAGE
E	2	1	**9X-1813**		SLEEVE (31CM)	
	3	1	**102-8803**	1	KIT-RECEPTACLE (3-PIN)	
					(INCLUDES RECEPTACLE AS AND WEDGE)	
	4	1	**186-3735**	3	PIN-CONNECTOR (16-GA TO 18-GA)	
	5	1	**3E-3371**	1	WEDGE-RECEPTACLE LOCK (3-PIN)	

E - ORDER BY THE CENTIMETER

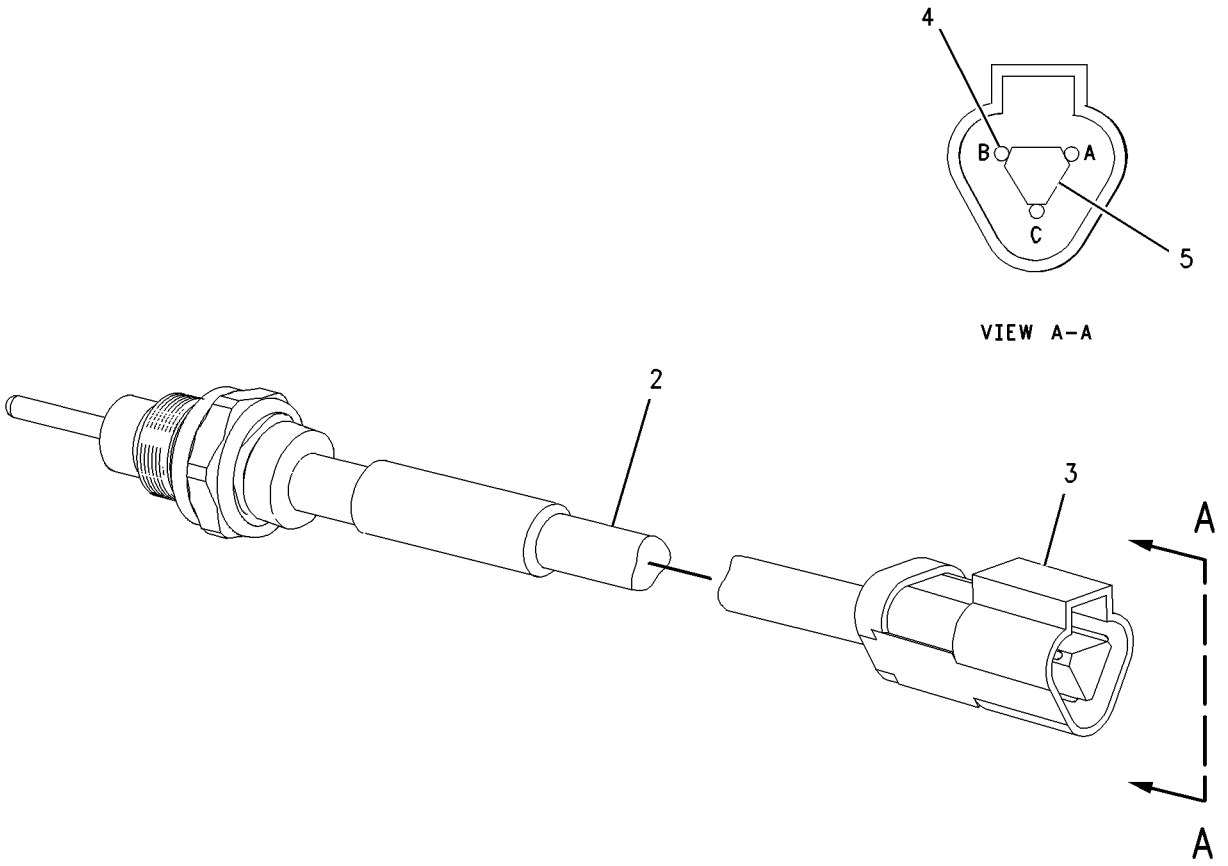

GRAPHIC #1 **<END>** g00790465

393-0879 STARTING AID GP

S/N: D7A1-UP

PART OF 417-3389 ENGINE AR-PRIMARY

SMCS-1090 **i05832955**

NOTE	REF NO	GRAPHIC REF	PART NUMBER	QTY	PART NAME 1 2 3 4 5 6 (PRODUCT LEVEL)	SEE PAGE
	1	1	**226-8770**	6	GLOW PLUG (24-VOLT)	

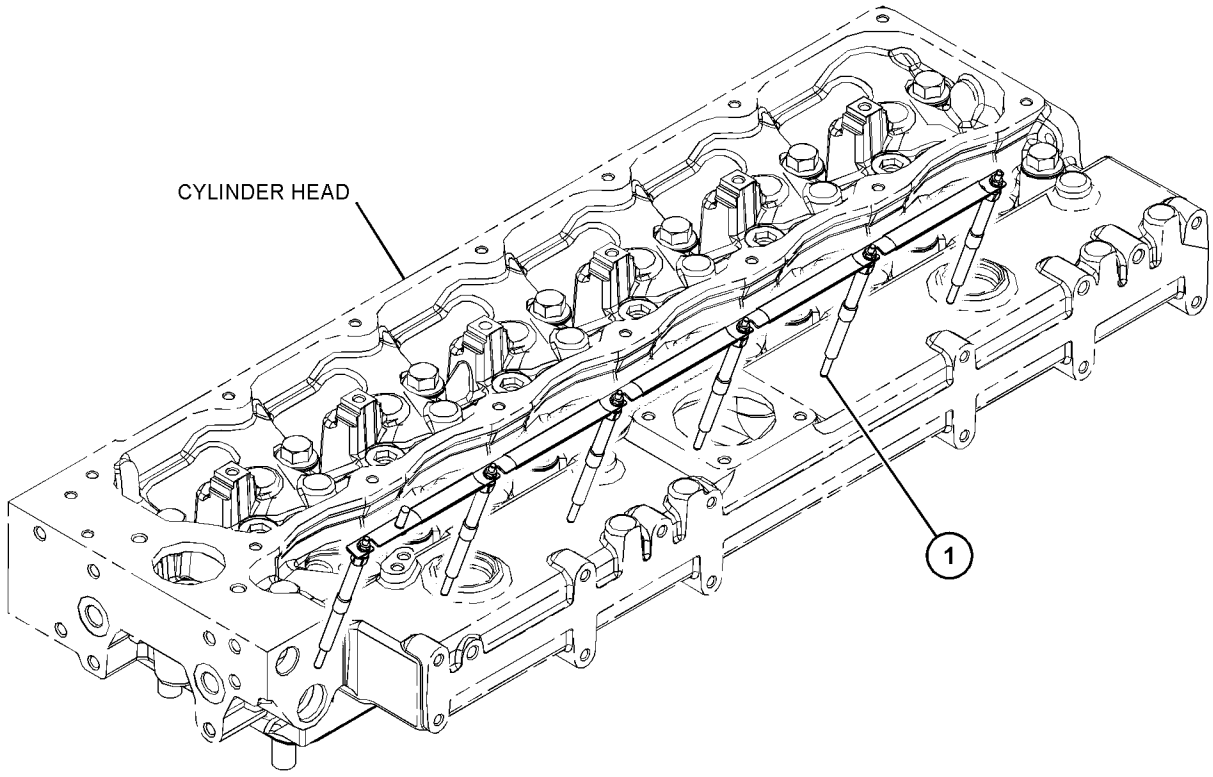

GRAPHIC #1 **<END>** g03692216

385-8000 STARTING MOTOR GP-ELECTRIC

S/N: D7A1-UP

PART OF 417-3389 ENGINE AR-PRIMARY

SMCS-1453 **i05243577**

NOTE	REF NO	GRAPHIC REF	PART NUMBER	QTY	PART NAME 1 2 3 4 5 6 (PRODUCT LEVEL)	SEE PAGE
	1	1	**354-5671**	1	STARTING MOTOR GP-ELECTRIC	
	1A	1	**230-4012**	1	RECEPTACLE AS-CONNECTOR (2-PIN)	
	2	1	**183-1343**	3	STUD	
M	3	1	**6I-0233**	3	NUT (M12X1.75-THD)	

M - METRIC PART

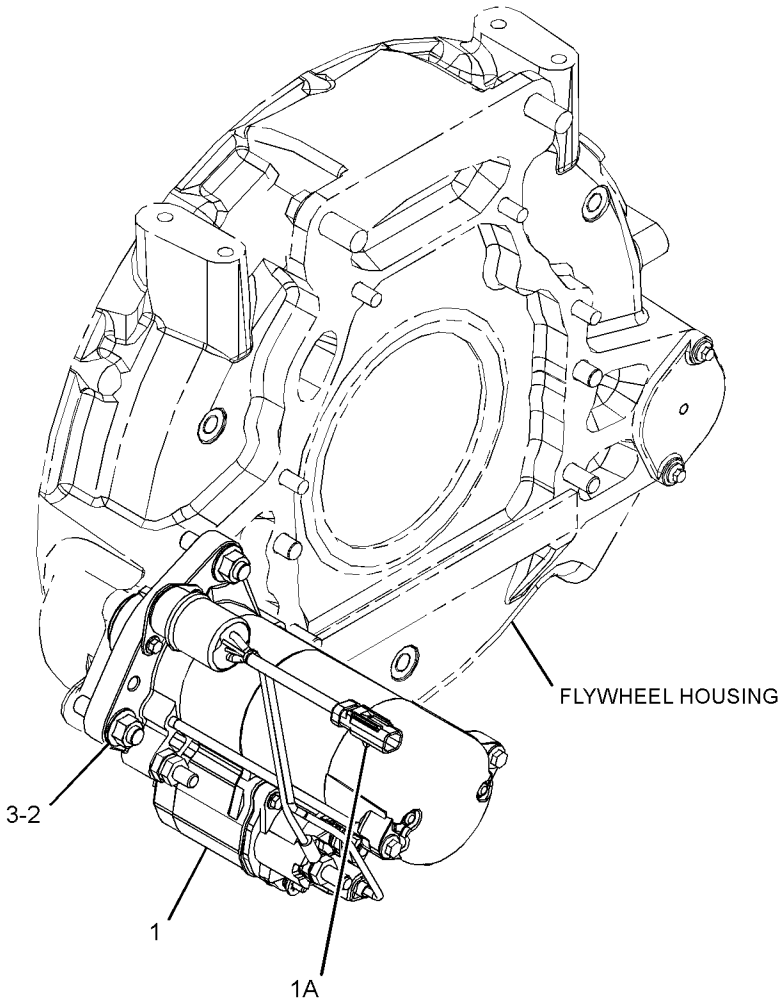

GRAPHIC #1 **<END>** g03317666

7N-0719 SWITCH GP-DISCONNECT–BATTERY

S/N: PBB1-UP; KBS1-UP

PART OF 399-2649 PANEL GP-CIRCUIT BREAKER

SMCS-1411 **i05227609**

NOTE	REF NO	GRAPHIC REF	PART NUMBER	QTY	PART NAME 1 2 3 4 5 6 (PRODUCT LEVEL)	SEE PAGE
	1	1	**2H-3922**	1	LOCKWASHER	
	2	1	**8H-5303**	1	NUT (3/4-16-THD)	
	3	1	**9F-5644**	2	LOCKWASHER	
	4	1	**6F-7045**	2	NUT-FULL (3/8-24-THD)	
	5	1	**8H-5306**	1	KEY (BATTERY DISCONNECT)	

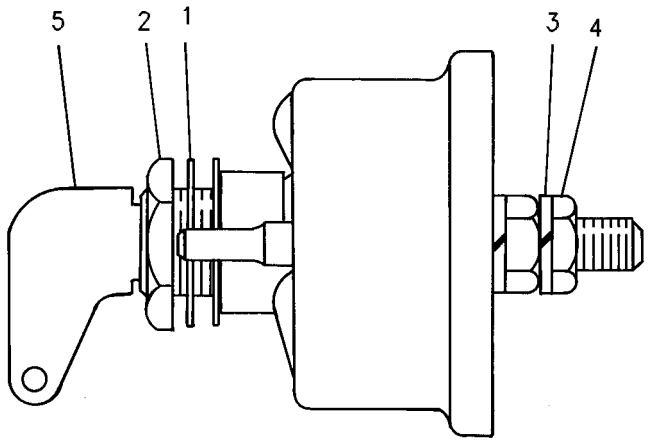

GRAPHIC #1 **<END>** g00580531

234-6613 SWITCH GP-LIMIT—HYDRAULIC LOCKOUT

S/N: PBB1-UP; KBS1-UP

PART OF 421-1434 CONSOLE GP-OPERATOR

SMCS-1435 **i04026174**

NOTE	REF NO	GRAPHIC REF	PART NUMBER	QTY	PART NAME 1 2 3 4 5 6 (PRODUCT LEVEL)	SEE PAGE
	1	1	**3S-2093**	1	STRAP-CABLE	
	2	1	**4I-3038**	2	WASHER (3.3X8X0.5-MM THK)	
	3	1	**111-4799**	1	SWITCH AS-LIMIT (HYDRAULIC LOCKOUT)	
		1	**102-8803**	1	KIT-RECEPTACLE (3-PIN)	
					(INCLUDES RECEPTACLE AS & WEDGE)	
		1	**186-3735**		PIN-CONNECTOR (16-GA TO 18-GA)	
D		1	**5P-5998**		TUBE (0.3-M)	
M	4	1	**185-8286**	2	SCREW-MACHINE (M4X0.7X8-MM)	
	5	1	**234-6615**	1	KNOB	
	6	1	**087-4683**	2	LOCKWASHER	
M	7	1	**120-9027**	2	SCREW-PAN HEAD (M3X0.5X16-MM)	

D - ORDER BY THE METER
M - METRIC PART

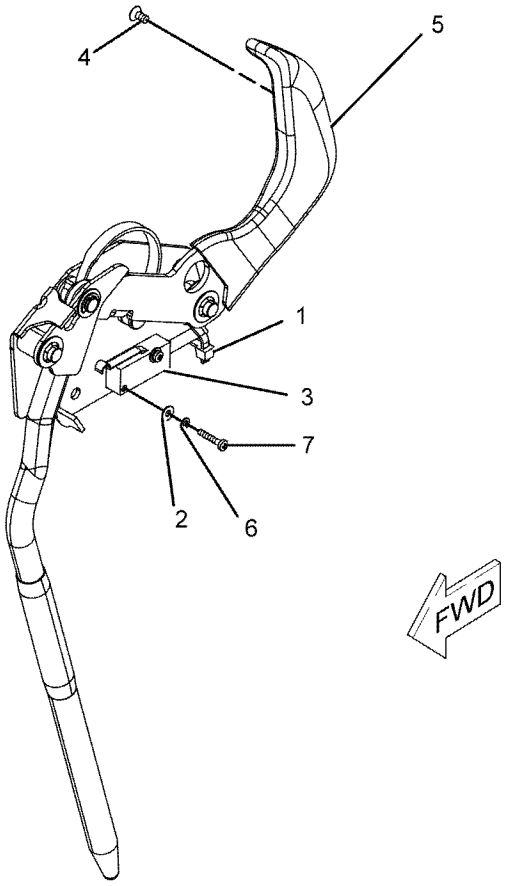

GRAPHIC #1 **<END>** g01096293

241-8368 SWITCH GP-MAGNETIC–GLOW PLUG

S/N: PBB1-UP; KBS1-UP
24-VOLT
PART OF 399-2649 PANEL GP-CIRCUIT BREAKER

SMCS-7499 **i05456652**

NOTE	REF NO	GRAPHIC REF	PART NUMBER	QTY	PART NAME 1 2 3 4 5 6 (PRODUCT LEVEL)	SEE PAGE
	1	1	**155-2270**	1	KIT-CONNECTING PLUG (2-PIN)	
					(INCLUDES PLUG AS, WEDGE & INTERFACE SEAL)	
	2	1	**4F-2294**	2	NUT-JAM (5/16-24-THD)	
	3	1	**8T-8730**	2	SOCKET-CONNECTOR (16-GA TO 18-GA)	

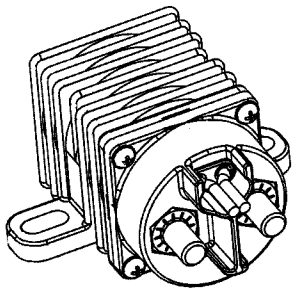

ISOMETRIC VIEW

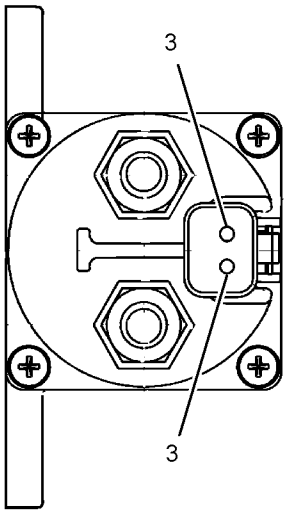

VIEW A-A

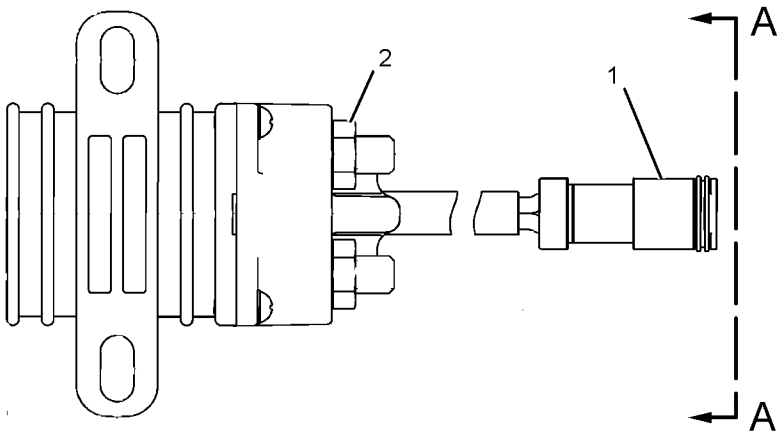

GRAPHIC #1 **<END>** g01077362

238-1594 SWITCH GP-PUSH BUTTON—REFUELING PUMP, START

S/N: PBB1-UP; KBS1-UP
PART OF 238-1570 WIRING GP-REFUELING PUMP
AN ATTACHMENT

SMCS-1435, 7332

i05494638

NOTE	REF NO	GRAPHIC REF	PART NUMBER	QTY	PART NAME 1 2 3 4 5 6 (PRODUCT LEVEL)	SEE PAGE
	1	1	**6T-9442**	1	SWITCH GP-PUSH BUTTON (REFUELING PUMP, START)	
		1	**1S-0812**	2	SCREW-TAPPING	
		1	**3K-0835**	1	NUT (5/8-24-THD)	
		1	**6F-0253**	1	LOCKWASHER	
		1	**8T-8748**	1	ADAPTER-MOUNT	
		1	**9W-0625**	1	SWITCH AS-PUSH BUTTON (REFUELING PUMP, START)	
	2	1	**238-1595**	1	HARNESS AS-SWITCH	
E	3	1	**125-7875**		TUBE-HEAT SHRINK (7.44-MM DIA) (6-CM)	

E - ORDER BY THE CENTIMETER

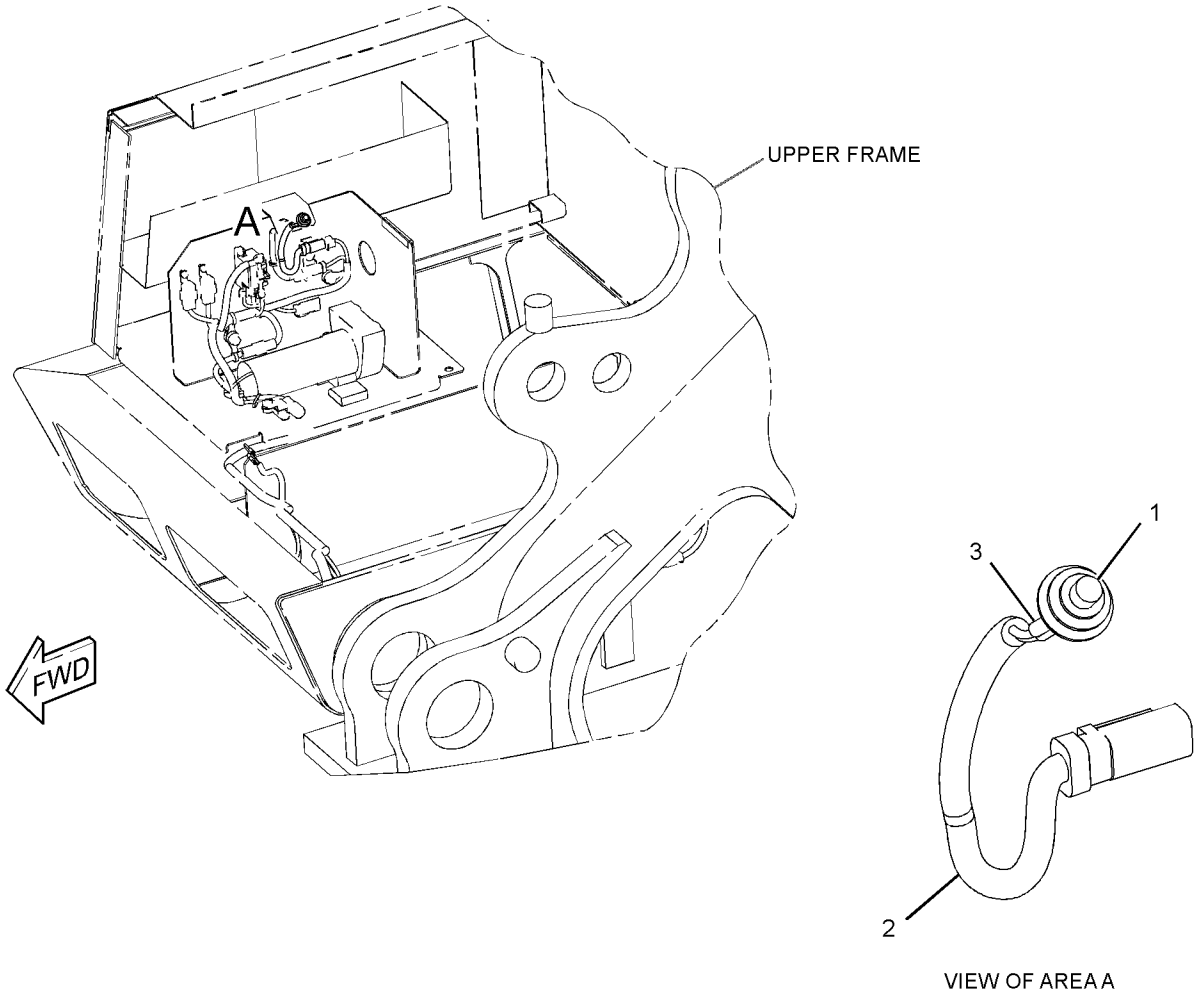

VIEW OF AREA A

GRAPHIC #1

<END>

g01560235

238-1596 SWITCH GP-PUSH BUTTON—REFUELING PUMP, STOP

S/N: PBB1-UP; KBS1-UP
PART OF 238-1570 WIRING GP-REFUELING PUMP
AN ATTACHMENT

SMCS-1435, 7332

i04129914

NOTE	REF NO	GRAPHIC REF	PART NUMBER	QTY	PART NAME 1 2 3 4 5 6 (PRODUCT LEVEL)	SEE PAGE
	1	1	*9X-4184*	1	SWITCH GP-PUSH BUTTON (REFUELING PUMP, STOP)	
		1	**1S-0812**	2	SCREW-TAPPING	
		1	**3E-7389**	1	SWITCH-PUSH BUTTON (REFUELING PUMP, STOP)	
		1	**3K-0835**	1	NUT (5/8-24-THD)	
		1	**6F-0253**	1	LOCKWASHER	
		1	**8T-8748**	1	ADAPTER-MOUNT	
	2	1	**238-1597**	1	HARNESS AS-SWITCH	
E	3	1	**125-7875**		TUBE-HEAT SHRINK (7.44-MM DIA) (6-CM)	

E - ORDER BY THE CENTIMETER

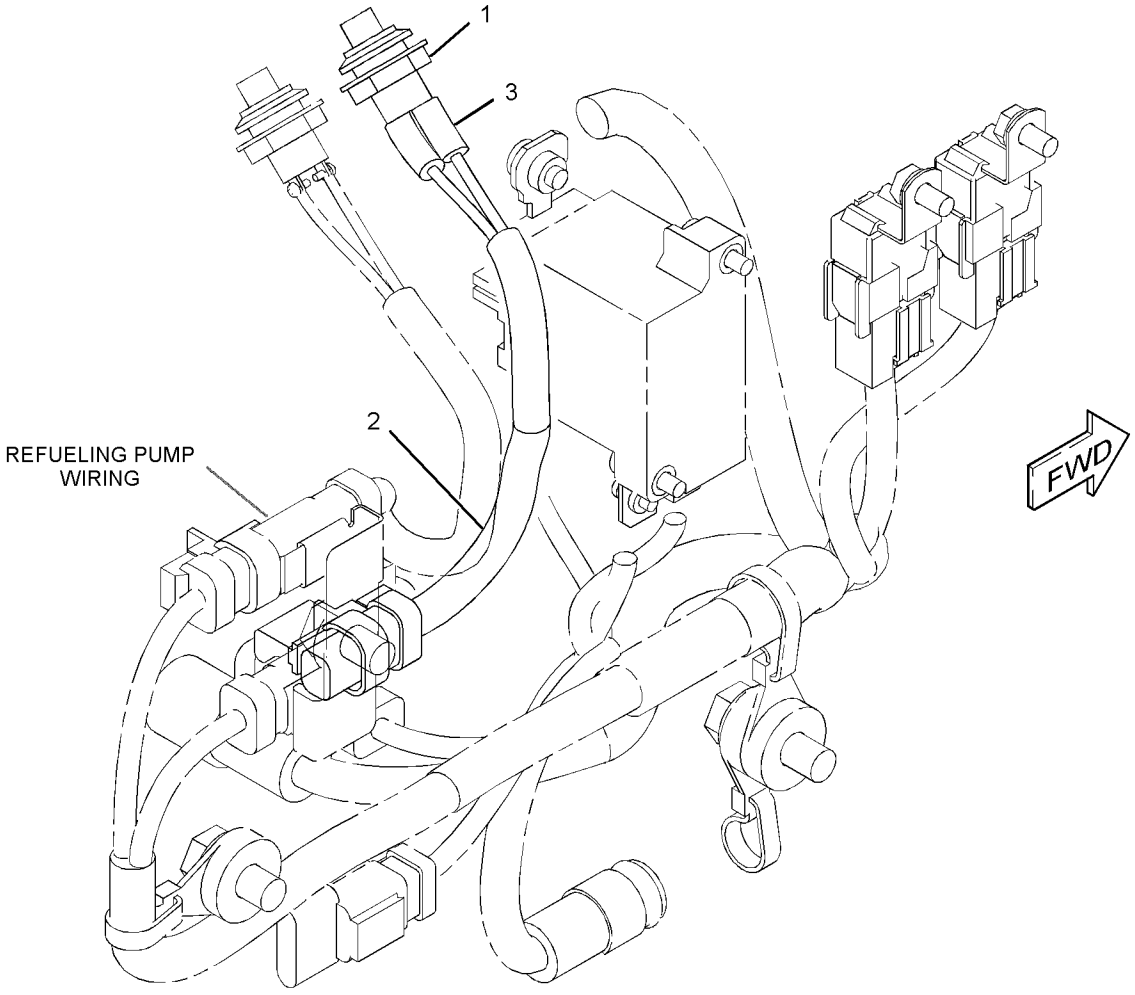

GRAPHIC #1

<END>

g01560319

319-4420 SWITCH GP-ROTARY–THROTTLE POSITION

S/N: KBS1-UP
PART OF 251-0542 PANEL GP-SWITCH
AN ATTACHMENT

SMCS-7332 **i03105700**

NOTE	REF NO	GRAPHIC REF	PART NUMBER	QTY	PART NAME 1 2 3 4 5 6 (PRODUCT LEVEL)	SEE PAGE
	1	1	**243-4508**	1	RECEPTACLE AS-CONNECTOR (6-PIN)	
	2	1	**9X-3401**	5	PIN-CONNECTOR (16-GA TO 18-GA)	
					–OR–	
		1	**126-1767**	5	PIN-CONNECTOR (14-GA TO 16-GA)	
	3	1	**8T-8737**	1	PLUG-SEAL	
M	4	1	**7Y-5458**	1	NUT (M12X1-THD)	
	5	1	**7Y-5464**	1	WASHER (12.2X15.4X0.5-MM THK)	
	6	1	**106-0210**	1	SEAL	

M - METRIC PART

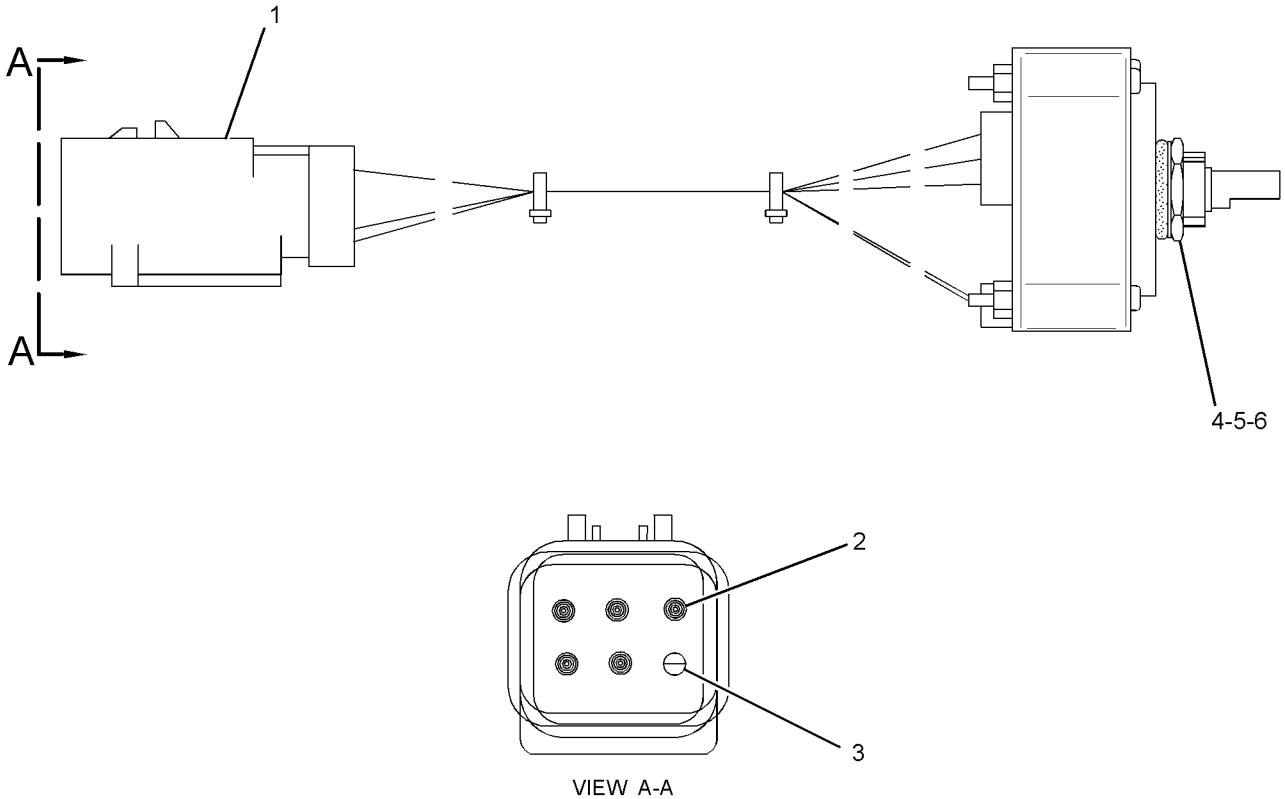

VIEW A-A

GRAPHIC #1 **<END>** g01588034

255-2751 SWITCH GP-START–ENGINE, KEY

S/N: PBB1-UP; KBS1-UP
PART OF 251-0542, 398-7007 PANEL GP-SWITCH
AN ATTACHMENT

SMCS-1416 **i05408935**

NOTE	REF NO	GRAPHIC REF	PART NUMBER	QTY	PART NAME 1 2 3 4 5 6 (PRODUCT LEVEL)	SEE PAGE
	1	1	**6V-8362**	4	SCREW-MACHINE (8-32X0.31-IN)	
	2	1	**9B-7233**	4	LOCKWASHER	
	3	1	**7T-6799**	1	NUT-MOUNTING (1-32-THD)	
AF			**5P-8500**	1	KEY	

A - NOT PART OF THIS GROUP
F - NOT SHOWN

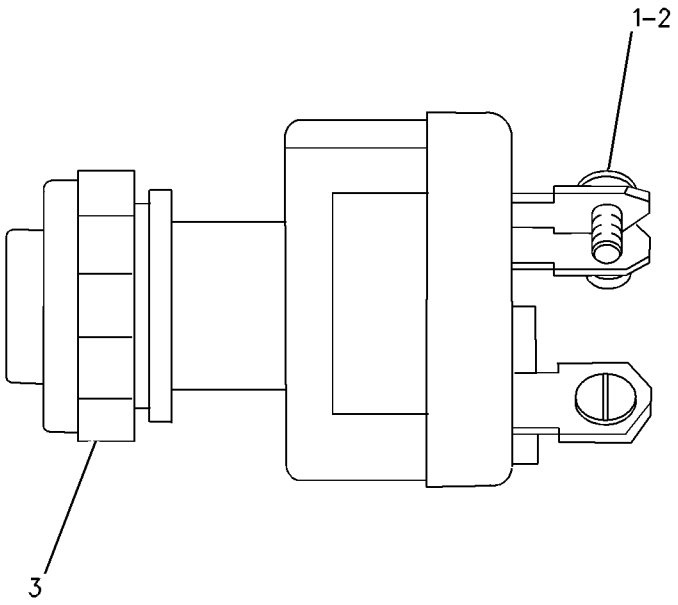

GRAPHIC #1 **<END>** g00699802

238-2478 SWITCH GP-TOGGLE—QUICK COUPLER LOCK

S/N: PBB1-UP; KBS1-UP

PART OF 238-2485 SWITCH GP-TOGGLE, 417-9812 WIRING GP-CAB

AN ATTACHMENT

SMCS-7332 **i03750212**

NOTE	REF NO	GRAPHIC REF	PART NUMBER	QTY	PART NAME 1 2 3 4 5 6 (PRODUCT LEVEL)	SEE PAGE
	1	1	**7N-2353**	1	SWITCH AS-TOGGLE (QUICK COUPLER LOCK)	
	2	1	**238-2479**	1	HARNESS AS-WIRING (QUICK COUPLER SWITCH)	
		1	**7Y-3950**	2	TERMINAL-BLADE (14-GA TO 20-GA)	
		1	**7Y-3953**	1	CONNECTOR-RECEPTACLE	
		1	**3S-2093**	1	STRAP-CABLE	

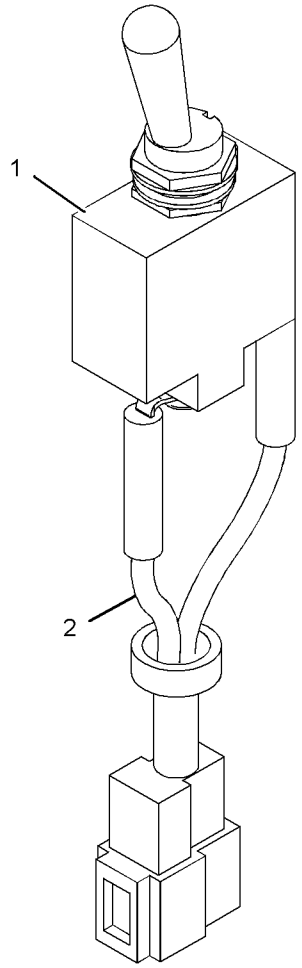

GRAPHIC #1 **<END>** g01125914

238-2485 SWITCH GP-TOGGLE—QUICK COUPLER LOCK

S/N: PBB1-UP; KBS1-UP
PART OF 349-2220 CONTROL AR-QUICK COUPLER
AN ATTACHMENT

SMCS-7332 **i03750252**

NOTE	REF NO	GRAPHIC REF	PART NUMBER	QTY	PART NAME 1 2 3 4 5 6 (PRODUCT LEVEL)	SEE PAGE
Y	1	1	*238-2478*	1	SWITCH GP-TOGGLE (QUICK COUPLER LOCK)	174
	2	1	**259-4884**	1	BRACKET AS	
	3	1	**259-7180**	1	COVER	
M	4	1	**9X-2042**	3	SCREW-TRUSS HEAD (M6X1X12-MM)	

M - METRIC PART
Y - SEPARATE ILLUSTRATION

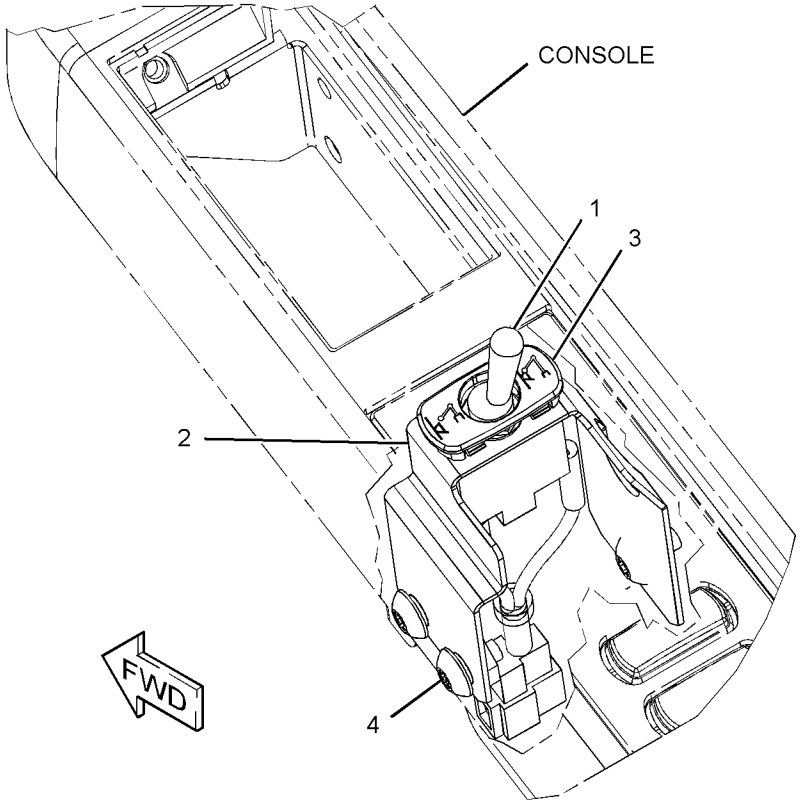

GRAPHIC #1 **<END>** g01259744

238-2208 SWITCH GP-WIPER–LOWER

S/N: PBB1-UP; KBS1-UP
PART OF 229-9086 WIPER AR-WINDOW
AN ATTACHMENT

SMCS-7305 **i05408948**

NOTE	REF NO	GRAPHIC REF	PART NUMBER	QTY	PART NAME 1 2 3 4 5 6 (PRODUCT LEVEL)	SEE PAGE
	1	1	**238-2209**	1	SWITCH AS-ROCKER (WIPER, LOWER)	
		1	**167-3542**	1	RECEPTACLE-CONNECTOR (5-PIN)	
		1	**167-3543**	5	TERMINAL (MALE)	
	2	1	**238-2210**	1	SWITCH AS-ROCKER (WASHER, LOWER)	
		1	**167-3542**	1	RECEPTACLE-CONNECTOR (5-PIN)	
		1	**167-3543**	4	TERMINAL (MALE)	

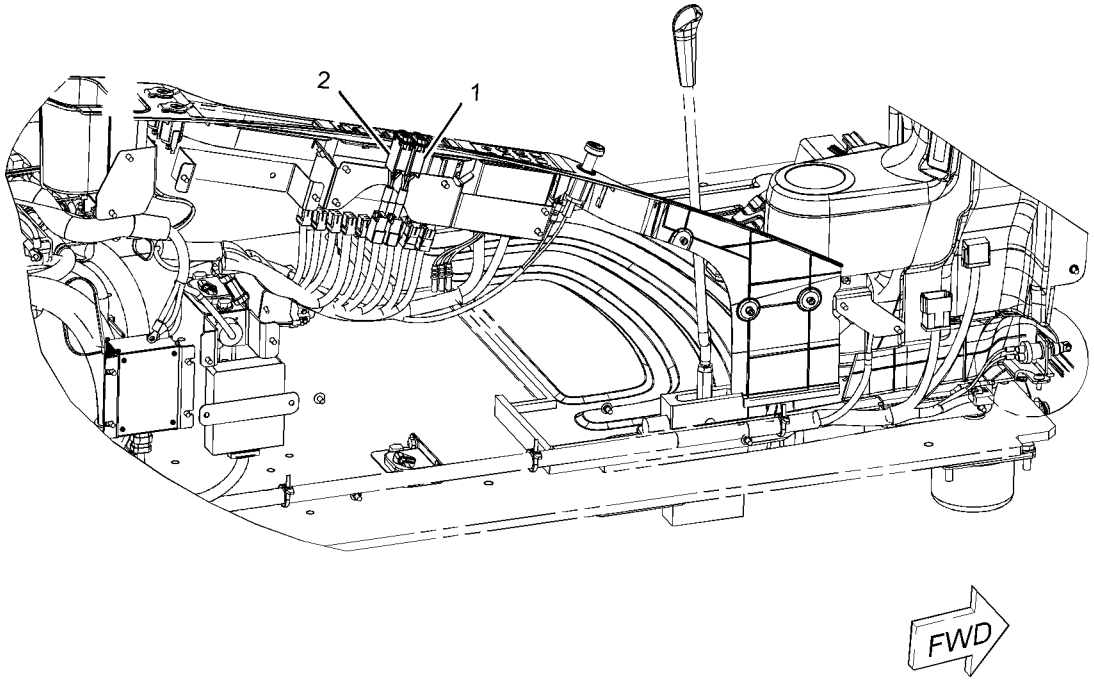

GRAPHIC #1 **<END>** g03039414

369-0242 WIRING GP-AUXILIARY CONTROL–SYSTEM 18, COMBINED FUNCTION

S/N: PBB1-UP; KBS1-UP
PART OF 349-2290 CONTROL AR-AUXILIARY
AN ATTACHMENT

SMCS-1408 **i05640257**

NOTE	REF NO	GRAPHIC REF	PART NUMBER	QTY	PART NAME 1 2 3 4 5 6 (PRODUCT LEVEL)	SEE PAGE
	1	1	**3S-2093**	16	STRAP-CABLE	
	2	1	**7K-1181**	7	STRAP-CABLE	
	3	1	**111-4836**	1	CLIP	
	4	1	**377-8092**	1	HARNESS AS-AUXILIARY	
		1	**8T-8729**	8	PIN-CONNECTOR (16-GA TO 18-GA)	
		1	**155-2270**	4	KIT-CONNECTING PLUG (2-PIN)	
					(EACH KIT INCLUDES PLUG AS, WEDGE & INTERFACE SEAL)	
		1	**8T-8730**	12	SOCKET-CONNECTOR (16-GA TO 18-GA)	
		1	**230-4011**	2	PLUG AS-CONNECTOR (2-PIN)	
					(EACH INCLUDES)	
		1	**455-0704**	1	SEAL-CONNECTOR	
		1	**8T-8737**	12	PLUG-SEAL	
		1	**243-4509**	1	RECEPTACLE AS-CONNECTOR (8-PIN)	
		1	**243-4510**	1	RECEPTACLE AS-CONNECTOR (12-PIN)	
E		1	**125-7874**		TUBE-HEAT SHRINK (5.72-MM DIA) (10-CM)	
E		1	**125-7875**		TUBE-HEAT SHRINK (7.44-MM DIA) (5-CM)	
	5	1	**132-5789**	3	CLIP	
	6	1	**8T-4121**	3	WASHER-HARD (11X21X2.5-MM THK)	
M	7	1	**8T-4191**	3	BOLT (M10X1.5X16-MM)	

E - ORDER BY THE CENTIMETER
M - METRIC PART

369-0242 **WIRING GP-AUXILIARY CONTROL (*contd.*)** **i05640257**

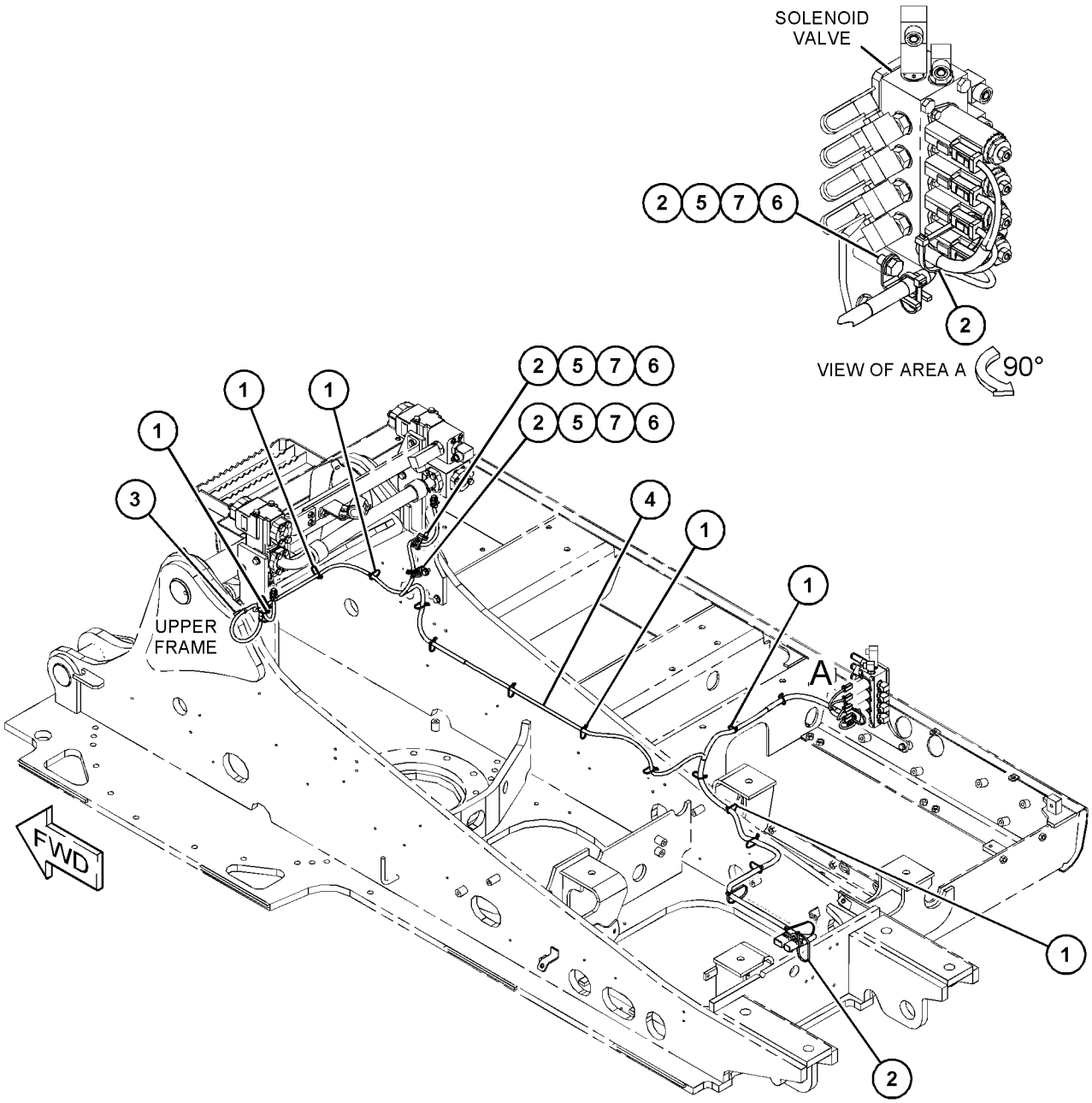

GRAPHIC #1 **<END>** g03714922

251-0529 WIRING GP-CAB

S/N: PBB1-UP; KBS1-UP
PART OF 349-2209 CONTROL AR-AUXILIARY
AN ATTACHMENT

SMCS-1408, 7301

i05408952

NOTE	REF NO	GRAPHIC REF	PART NUMBER	QTY	PART NAME 1 2 3 4 5 6 (PRODUCT LEVEL)	SEE PAGE
	1	1,3	**3S-2093**	4	STRAP-CABLE	
	2	1,2	**7K-1181**	8	STRAP-CABLE	
	3	3	**116-0118**	2	CLIP	
	4	1	**149-5050**	1	RELAY (24-VOLT) (1-WAY/2-WAY SOLENOID)	
	5	1	**251-0598**	1	HARNESS AS-SOLENOID (1-WAY, 2-WAY FLOW)	
		1	**3S-2093**	6	STRAP-CABLE	
		1	**8T-8737**	1	PLUG-SEAL	
		1	**243-4508**	1	RECEPTACLE AS-CONNECTOR (6-PIN)	
M	6	1	**5C-2890**	1	NUT (M6X1-THD)	
M	7	3	**7X-2621**	2	BOLT (M10X1.5X12-MM)	
	8	3	**8T-4121**	2	WASHER-HARD (11X21X2.5-MM THK)	
	9	1	**9X-8256**	1	WASHER (6.6X12X2-MM THK)	

M - METRIC PART

251-0529 **WIRING GP-CAB (*contd.*)** **i05408952**

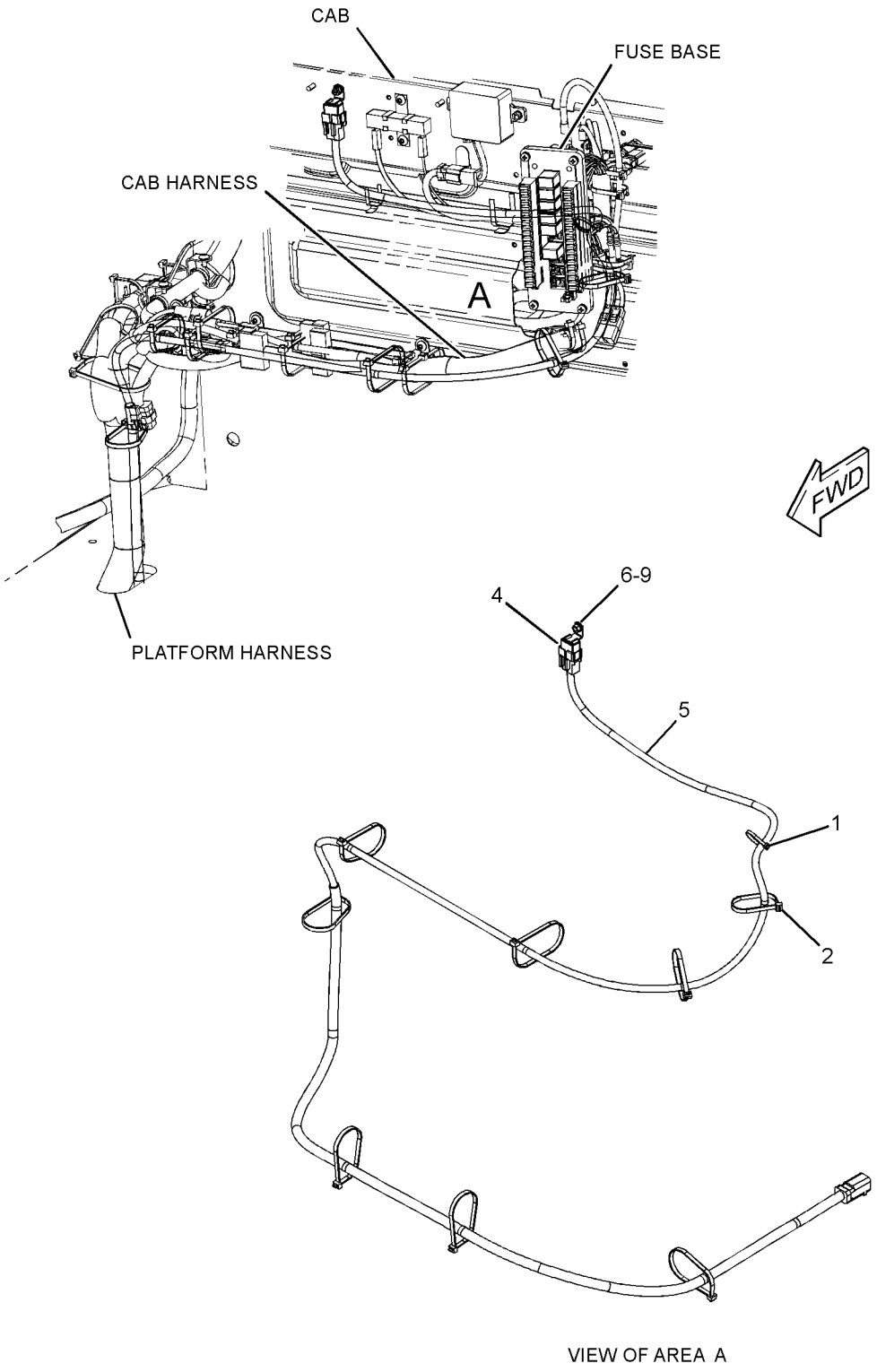

GRAPHIC #1 g02756436

251-0529 **WIRING GP-CAB (*contd.*)** **i05408952**

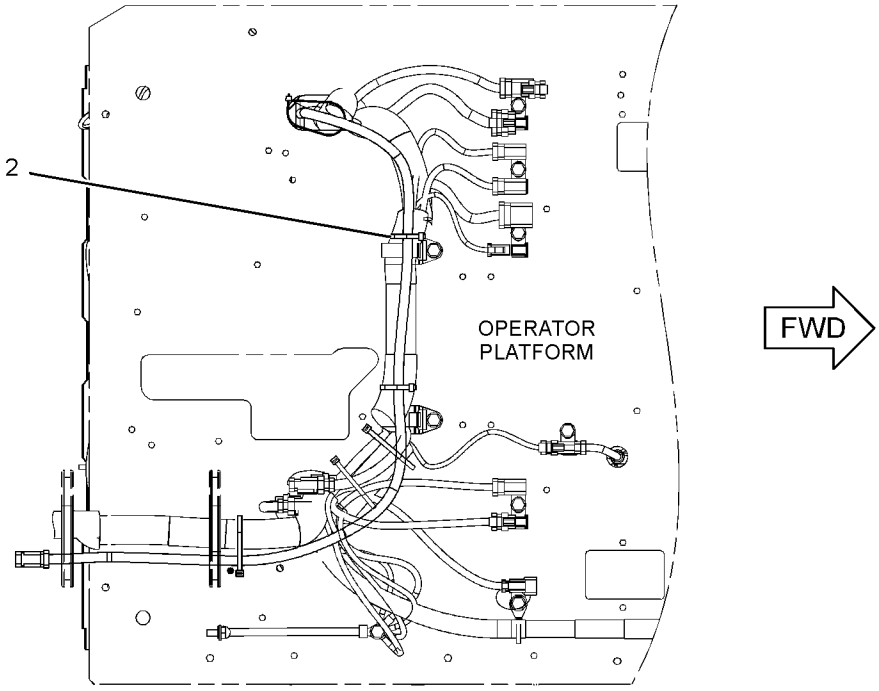

BOTTOM VIEW
(FOR CONFIG. 2,11)

GRAPHIC #2 g02756378

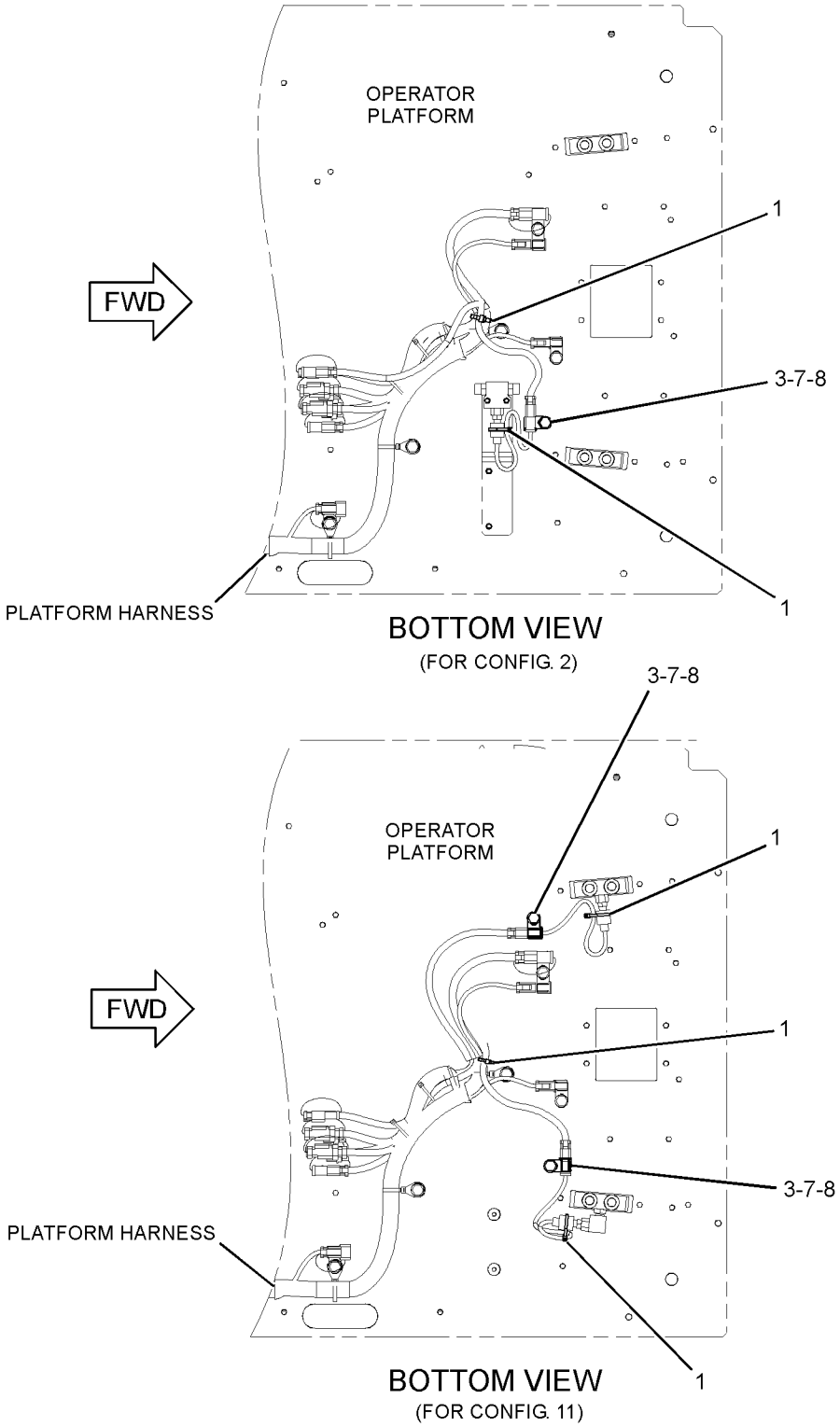

GRAPHIC #3 **<END>** g02756438

267-7642 WIRING GP-CAB—COUPLER

S/N: PBB1-UP; KBS1-UP
PART OF 349-2218 CONTROL AR-COUPLER
AN ATTACHMENT

SMCS-1408, 7301

i04097910

NOTE	REF NO	GRAPHIC REF	PART NUMBER	QTY	PART NAME 1 2 3 4 5 6 (PRODUCT LEVEL)	SEE PAGE
	1	1	**7K-1181**	13	STRAP-CABLE	
	2	1	**149-5050**	1	RELAY (24-VOLT) (QUICK COUPLER LOCK PRIORITY)	
	2A	1	**149-5050**	1	RELAY (24-VOLT) (QUICK COUPLER LOCK ON)	
	2B	1	**149-5050**	2	RELAY (24-VOLT) (QUICK COUPLER LOCK)	
	3	1	**259-4884**	1	BRACKET AS	
	4	1	**259-7220**	1	COVER	
	5	1	**267-7644**	1	HARNESS AS-QUICK COUPLER	
		1	**102-7965**	3	TERMINAL (FEMALE)	
E		1	**125-7874**		TUBE-HEAT SHRINK (5.72-MM DIA) (10-CM)	
E		1	**125-7875**		TUBE-HEAT SHRINK (7.44-MM DIA) (15-CM)	
		1	**149-5070**	9	TERMINAL-BLADE (16-GA TO 20-GA)	
		1	**163-6803**	1	PLUG-CONNECTOR (5-PIN)	
		1	**230-5008**	1	PLUG AS-CONNECTOR (4-PIN)	
		1	**7Y-3950**	2	TERMINAL-BLADE (14-GA TO 20-GA)	
		1	**7Y-3953**	1	CONNECTOR-RECEPTACLE	
		1	**149-5069**	7	TERMINAL-BLADE (14-GA TO 20-GA)	
		1	**3S-2093**	15	STRAP-CABLE	
		1	**230-5008**	1	PLUG AS-CONNECTOR (4-PIN)	
	6	1	*267-7671*	1	SWITCH GP-TOGGLE (QUICK COUPLER)	
		1	**105-5175**	1	SWITCH AS-TOGGLE (QUICK COUPLER)	
		1	**3L-8187**	6	LOCKWASHER	
		1	**6T-3631**	2	NUT-HEX (15/32-32-THD)	
		1	**6T-3632**	1	LOCKWASHER	
		1	**6T-3633**	1	RING-LOCKING	
		1	**6V-8374**	6	SCREW-MACHINE (6-32X0.25-IN)	
		1	**267-7672**	1	HARNESS AS-WIRING	
		1	**3S-2093**	1	STRAP-CABLE	
		1	**121-1173**	3	TERMINAL (MALE)	
		1	**167-3542**	1	RECEPTACLE-CONNECTOR (5-PIN)	
	7	1	**267-7676**	1	BRACKET AS	
M	8	1	**9X-2042**	7	SCREW-TRUSS HEAD (M6X1X12-MM)	

E - ORDER BY THE CENTIMETER
M - METRIC PART

267-7642 **WIRING GP-CAB (*contd.*)** **i04097910**

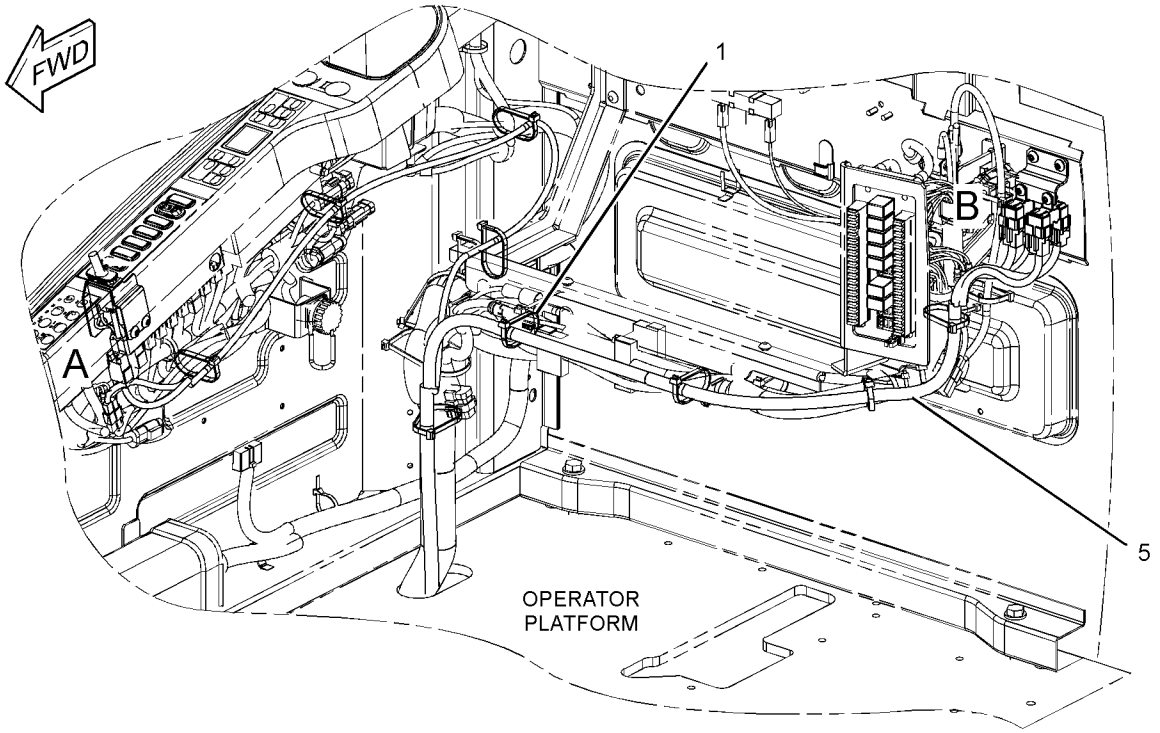

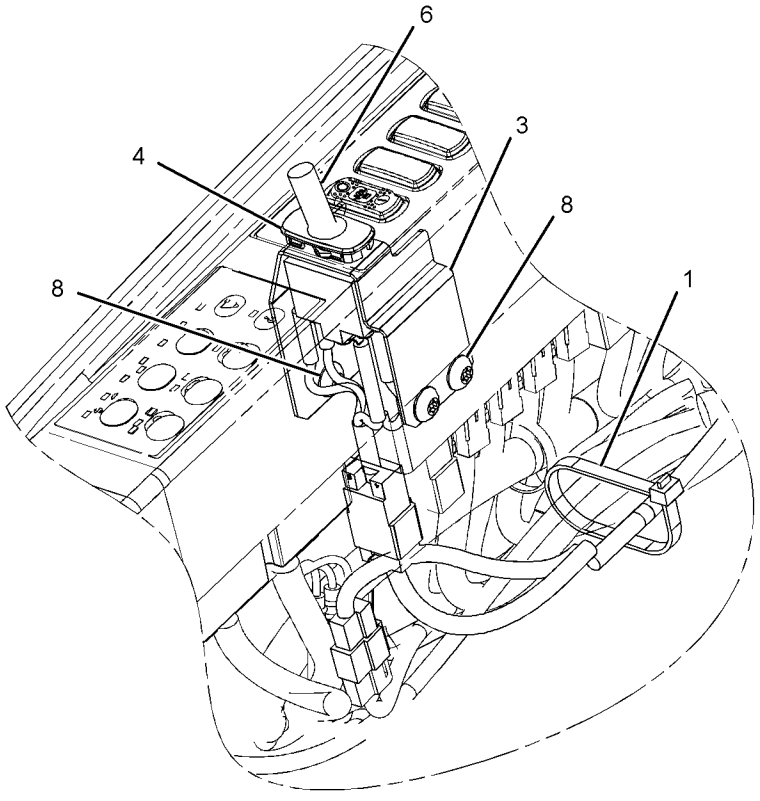

VIEW OF AREA A

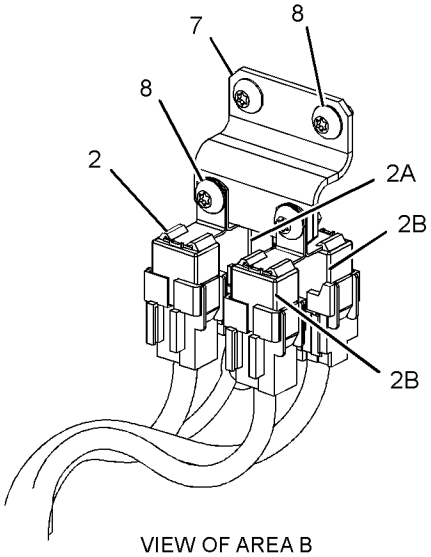

VIEW OF AREA B

GRAPHIC #1 **<END>** g02304153

306-8349 WIRING GP-CAB—GRADE CONTROL

S/N: PBB1-UP; KBS1-UP
PART OF 396-2389, 456-1032 INSTALLATION AR
AN ATTACHMENT

SMCS-1408, 7301

i04894427

NOTE	REF NO	GRAPHIC REF	PART NUMBER	QTY	PART NAME 1 2 3 4 5 6 (PRODUCT LEVEL)	SEE PAGE
	1	1	**7K-1181**	7	STRAP-CABLE	
	2	1	**113-8491**	1	FUSE (15-AMPERE)	
	3	1	**306-8350**	1	HARNESS AS-CAB	
		1	**3S-2093**	2	STRAP-CABLE	
		1	**8T-8737**	36	PLUG-SEAL	
		1	**9W-0852**	5	PIN-CONNECTOR (14-GA TO 16-GA)	
E		1	**125-7874**		TUBE-HEAT SHRINK (5.72-MM DIA) (20-CM)	
E		1	**125-7875**		TUBE-HEAT SHRINK (7.44-MM DIA) (15-CM)	
		1	**9X-3402**	6	SOCKET-CONNECTOR (16-GA TO 18-GA)	
					—OR—	
		1	**126-1768**	6	SOCKET-CONNECTOR (14-GA TO 16-GA)	
		1	**134-2540**	1	RECEPTACLE AS-CONNECTOR (3-PIN)	
		1	**9X-3401**	32	PIN-CONNECTOR (16-GA TO 18-GA)	
					—OR—	
		1	**126-1767**	32	PIN-CONNECTOR (14-GA TO 16-GA)	
		1	**155-2260**	1	KIT-CONNECTING PLUG (3-PIN)	
					(INCLUDES RECPTACLE AS, WEDGE & INTERFACE SEAL)	
		1	**155-2267**	1	PLUG AS-CONNECTOR (3-PIN)	
		1	**170-6891**	2	TERMINAL-BLADE (16-GA TO 18-GA)	
		1	**230-4009**	1	PLUG AS-CONNECTOR (12-PIN)	
		1	**264-7034**	1	SEAL-CONNECTOR	
		1	**230-5008**	1	PLUG AS-CONNECTOR (4-PIN)	
		1	**264-7031**	1	SEAL-CONNECTOR	
		1	**239-7356**	1	PLUG AS-CONNECTOR (12-PIN)	
		1	**264-7034**	1	SEAL-CONNECTOR	
		1	**243-4507**	1	RECEPTACLE AS-CONNECTOR (4-PIN)	
		1	**243-4509**	1	RECEPTACLE AS-CONNECTOR (8-PIN)	
		1	**243-4510**	2	RECEPTACLE AS-CONNECTOR (12-PIN)	
		1	**272-5000**	1	RECEPTACLE AS-CONNECTOR (12-PIN)	

E - ORDER BY THE CENTIMETER

306-8349 **WIRING GP-CAB (*contd.*)** **i04894427**

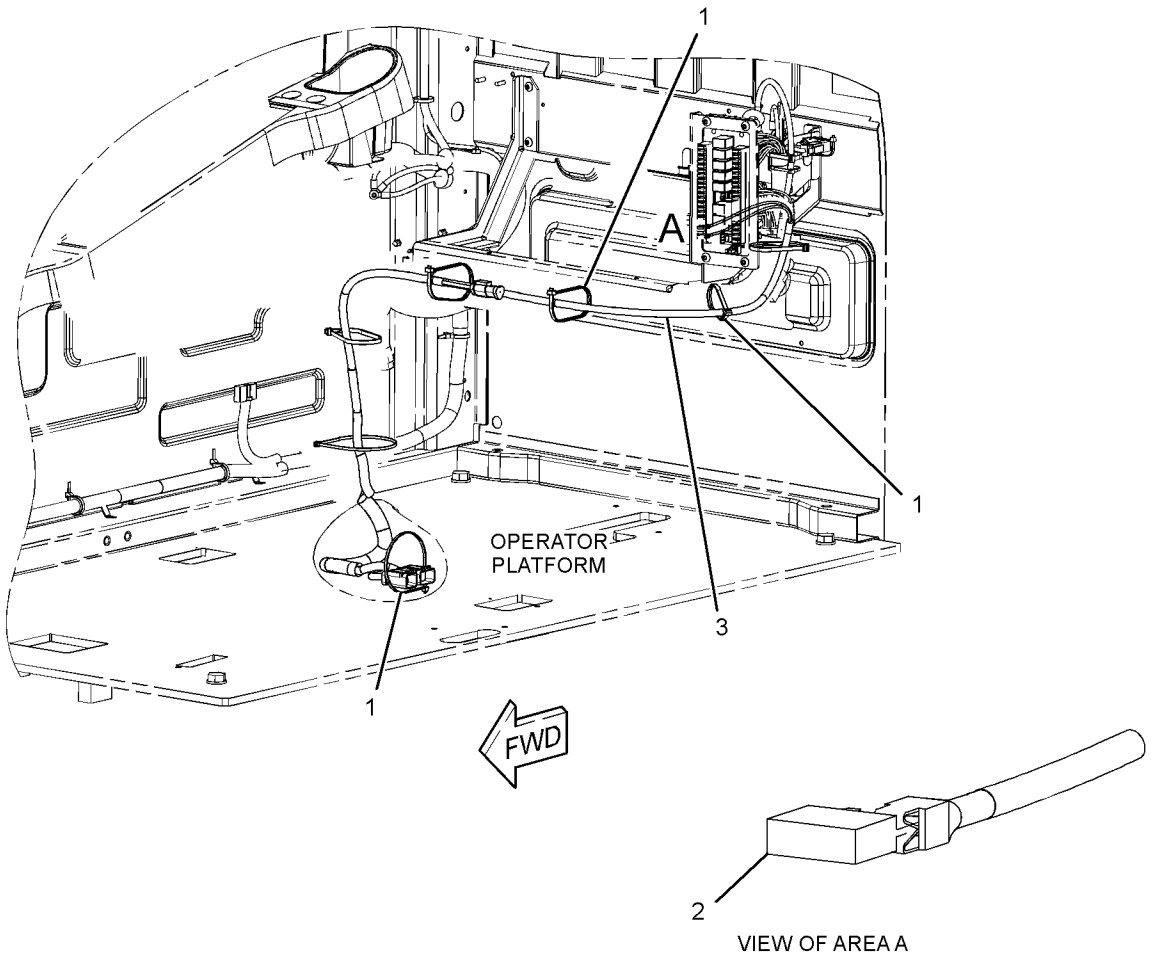

GRAPHIC #1 **<END>** g01398198

398-7003 WIRING GP-CAB

S/N: PBB1-UP; KBS1-UP

PART OF 422-0645 OPERATOR AR

SMCS-1408, 7301 **i05757875**

NOTE	REF NO	GRAPHIC REF	PART NUMBER	QTY	PART NAME 1 2 3 4 5 6 (PRODUCT LEVEL)	SEE PAGE
	1	2,3	**7K-1181**	7	STRAP-CABLE	
	2	2	**7Y-5505**	2	SPEAKER AS	
		2	**7Y-3951**	2	TERMINAL-BLADE (14-GA)	
		2	**7Y-3954**	1	CONNECTOR-PLUG (3-PIN)	
J	3	2	**9W-0335**	1	LIGHTER AS-CIGAR (24-VOLT)	
M	4	2	**099-7127**	8	SCREW-MACHINE (M4X0.7X12-MM)	
	5	3	**113-8490**	20	FUSE (10-AMPERE)	
	6	3	**113-8491**	6	FUSE (15-AMPERE)	
	7	3	**113-8492**	2	FUSE (20-AMPERE)	
	8	3	**113-8493**	2	FUSE (25-AMPERE)	
	9	2	**116-0210**	4	BRACKET AS	
	10	3	**124-3548**	2	FUSE (30-AMPERE)	
Y	11	2	**132-1829**	1	ALARM GP (24-VOLT) (FAULT)	101
	12	3	**141-2759**	8	FUSE (5-AMPERE)	
	13	3	**161-3128**	1	RELAY (24-VOLT) (BOOM FLOODLIGHT)	
	13A	3	**161-3128**	1	RELAY (24-VOLT) (CHASSIS LIGHT)	
	13B	3	**161-3128**	1	RELAY (24-VOLT) (CAB LIGHT)	
	13C	3	**161-3128**	1	RELAY (24-VOLT) (HORN)	
	13D	3	**161-3128**	1	RELAY (24-VOLT) (NEUTRAL START)	
	13E	3	**161-3128**	1	RELAY (24-VOLT) (ETHER START)	
	13F	3	**161-3128**	1	RELAY (24-VOLT) (ELECTRIC LIFT PUMP)	
	14	2	**163-6795**	15	STRAP-CABLE	
	15	2	**167-3593**	1	STRAP	
	16	3	**170-6888**	1	PULLER-FUSE	
	17	3	**213-0772**	1	SWITCH AS-MAGNETIC (24-VOLT) (MAIN RELAY)	
	18	2	**234-1097**	1	BRACKET	
	19	2	**238-2212**	1	SWITCH AS-ROCKER (FINE SWING)	
		2	**167-3542**	1	RECEPTACLE-CONNECTOR (5-PIN)	
		2	**167-3543**	5	TERMINAL (MALE)	
H	20	2	**238-2318**	1	LIGHTER AS-CIGAR (24-VOLT)	
	21	3	**238-2390**	1	CABLE AS (RED)	
	22	3	**238-2391**	1	CABLE AS (PURPLE)	
					(EACH CABLE AS INCLUDES)	
		3	**9G-4343**	2	TERMINAL-RING (4-GA, 1/4-IN SCREW)	
E		3	**125-7876**		TUBE-HEAT SHRINK (17.78-MM DIA) (4-CM)	
	23	2	**245-7760**	8	INSULATION	
	24	2	**251-0637**	1	INSULATION	
	25	1	**259-4883**	1	ANTENNA AS	
		1	**259-5081**	1	ROD	
		1	**259-5082**	1	CABLE AS	
	26	2	**327-7538**	1	PANEL AS-SWITCH	
		2	**356-7732**	1	KNOB (SWITCH PANEL)	
	27	2	**366-4622**	1	KIT-SERVICE METER	
					(INCLUDES FILM & METER GP)	
	28	2	**421-1960**	1	HARNESS AS-CAB	
		2	**102-8803**	2	KIT-RECEPTACLE (3-PIN)	
					(INCLUDES RECEPTACLE AS AND WEDGE)	
		2	**8T-8730**	5	SOCKET-CONNECTOR (16-GA TO 18-GA)	
		2	**3S-2093**	109	STRAP-CABLE	
		2	**7Y-3950**	4	TERMINAL-BLADE (14-GA TO 20-GA)	
		2	**7Y-3951**	11	TERMINAL-BLADE (14-GA)	
		2	**7Y-3952**	3	PLUG-CONNECTOR (2-PIN)	
		2	**7Y-3955**	2	CONNECTOR-RECEPTACLE	
		2	**7Y-3958**	1	CONNECTOR-PLUG (6-PIN)	
		2	*7Y-3966*	2	TERMINAL AS	
					(EACH INCLUDES)	
		2	**7Y-3962**	1	TERMINAL-BULLET (MALE)	

398-7003 **WIRING GP-CAB (*contd.*)** **i05757875**

NOTE	REF NO	GRAPHIC REF	PART NUMBER	QTY	PART NAME 1 2 3 4 5 6 (PRODUCT LEVEL)	SEE PAGE
		2	**7Y-3964**	1	TUBE (CONNECTOR TERMINAL)	
		2	*7Y-3967*	8	TERMINAL AS	
					(EACH INCLUDES)	
		2	**7Y-3963**	1	TERMINAL-BULLET (FEMALE)	
		2	**7Y-3965**	1	TUBE (RECEPTACLE TERMINAL)	
		2	**8C-6354**	1	CAP-RECEPTACLE (ET CONNECTOR)	
		2	**8T-8737**	8	PLUG-SEAL	
		2	**5P-6271**	1	CONNECTOR AS	
		2	**9W-1951**	1	RECEPTACLE-CONNECTOR (9-PIN)	
		2	**102-7964**	2	PLUG-CONNECTOR (16-PIN)	
		2	**102-7965**	82	TERMINAL (FEMALE)	
		2	**9W-0844**	2	SOCKET-CONNECTOR (14-GA TO 16-GA)	
		2	**111-4816**	1	PLUG-CONNECTOR (13-PIN)	
		2	**116-0255**	1	TERMINAL-BLADE (10-GA TO 20-GA)	
E		2	**119-3662**		TUBE-HEAT SHRINK (10.85-MM DIA) (26-CM)	
		2	**121-1022**	1	DIODE	
		2	**121-1168**	1	CONNECTOR-RECEPTACLE	
		2	**121-1173**	17	TERMINAL (MALE)	
		2	**125-4784**	1	PLUG-CONNECTOR (12-PIN)	
		2	**125-4785**	36	TERMINAL (FEMALE)	
		2	**125-4840**	1	WEDGE-PLUG LOCK (13-PIN)	
		2	**125-4841**	2	WEDGE-PLUG LOCK (21-PIN)	
E		2	**125-7874**		TUBE-HEAT SHRINK (5.72-MM DIA) (35-CM)	
E		2	**125-7875**		TUBE-HEAT SHRINK (7.44-MM DIA) (55-CM)	
		2	**9X-3402**	6	SOCKET-CONNECTOR (16-GA TO 18-GA)	
					—OR—	
		2	**126-1768**	6	SOCKET-CONNECTOR (14-GA TO 16-GA)	
		2	**2L-8065**	3	TERMINAL-RING (10-GA TO 12-GA, NO. 8 SCREW)	
		2	**2L-8066**	2	TERMINAL-RING (10-GA TO 12-GA, NO. 10 SCREW)	
		2	**2L-8067**	6	TERMINAL-RING (10-GA TO 12-GA, 1/4-IN SCREW)	
		2	**2L-8075**	3	TERMINAL-RING (14-GA TO 16-GA, NO. 8 SCREW)	
		2	**2L-8076**	2	TERMINAL-RING (14-GA TO 16-GA, NO. 10 SCREW)	
		2	**128-8950**	1	CONNECTOR-RECEPTACLE	
		2	**5P-2321**	1	TERMINAL-FORK (14-GA TO 16-GA, NO. 6 SCREW)	
		2	**176-9299**	2	KIT-RECEPTACLE (3-PIN)	
					(INCLUDES RECEPTACLE AS & WEDGES)	
		2	**134-3296**	1	HOUSING-PLUG	
		2	**134-3297**	1	SEAL	
		2	**138-5184**	1	PLUG-CONNECTOR (20-PIN)	
		2	**9X-3401**	12	PIN-CONNECTOR (16-GA TO 18-GA)	
					—OR—	
		2	**126-1767**	12	PIN-CONNECTOR (14-GA TO 16-GA)	
		2	**149-5069**	8	TERMINAL-BLADE (14-GA TO 20-GA)	
		2	**149-5070**	16	TERMINAL-BLADE (16-GA TO 20-GA)	
		2	**149-5071**	8	TERMINAL-BLADE (12-GA TO 14-GA)	
		2	**153-2602**	3	RECEPTACLE-CONNECTOR (1-PIN)	
		2	**153-2631**	3	TERMINAL (FEMALE)	
		2	**155-2270**	1	KIT-CONNECTING PLUG (2-PIN)	
					(INCLUDES PLUG AS, WEDGE & INTERFACE SEAL)	
		2	**163-6803**	8	PLUG-CONNECTOR (5-PIN)	
		2	**167-3487**	8	WEDGE-PLUG LOCK (5-PIN)	
		2	**167-3630**	1	CONNECTOR-PLUG	
		2	**167-3631**	2	TERMINAL (FEMALE)	
		2	**170-6890**	6	TERMINAL-BLADE (14-GA)	
		2	**170-6891**	25	TERMINAL-BLADE (16-GA TO 18-GA)	
		2	**174-3016**	2	PLUG AS-CONNECTOR (3-PIN)	
		2	**230-4009**	1	PLUG AS-CONNECTOR (12-PIN)	
		2	**264-7034**	1	SEAL-CONNECTOR	
		2	**230-4011**	1	PLUG AS-CONNECTOR (2-PIN)	
		2	**264-7029**	1	SEAL-CONNECTOR	

398-7003 **WIRING GP-CAB (*contd.*)** **i05757875**

NOTE	REF NO	GRAPHIC REF	PART NUMBER	QTY	PART NAME 1 2 3 4 5 6 (PRODUCT LEVEL)	SEE PAGE
		2	**238-2319**	1	BASE AS (FUSE, RELAY PANEL)	
		2	**9X-8256**	2	WASHER (6.6X12X2-MM THK)	
M		2	**095-0742**	2	SCREW-MACHINE (M6X1X16-MM)	
		2	**170-9394**	40	TERMINAL	
		2	**238-2363**	6	TERMINAL (FEMALE)	
		2	**238-2366**	13	TERMINAL (MALE)	
		2	**243-4505**	1	RECEPTACLE AS-CONNECTOR (2-PIN)	
		2	**342-2972**	1	CAP-CONNECTOR (2-PIN)	
		2	**349-5084**	3	TERMINAL-BLADE	
		2	**349-5085**	3	RECEPTACLE AS-CONNECTOR	
M	29	2	**095-0723**	3	SCREW-SPECIAL	
	30	2	**096-5962**	3	WASHER-HARD (3.4X7X0.8-MM THK)	
	31	1,2	**096-6166**	6	WASHER-HARD (4.5X9X1-MM THK)	
	32	2,3	**132-5789**	6	CLIP	
	33	2	**3S-2093**	1	STRAP-CABLE	
	34	3	**4P-7581**	1	CLIP	
M	35	2	**5C-2890**	3	NUT (M6X1-THD)	
M	36	2	**6V-5210**	12	SCREW-MACHINE (M4X0.7X10-MM)	
M	37	1	**6V-9672**	2	SCREW-MACHINE (M4X0.7X16-MM)	
	38	2,3	**8T-0328**	3	WASHER-HARD (5.5X10X1-MM THK)	
M	39	3	**8T-4127**	2	SCREW-MACHINE (M5X0.8X20-MM)	
M	40	2	**8T-6693**	1	SCREW-MACHINE (M5X0.8X16-MM)	
M	41	2,3	**9X-2042**	8	SCREW-TRUSS HEAD (M6X1X12-MM)	
M	42	3	**9X-2044**	5	SCREW-TRUSS HEAD (M6X1X16-MM)	
	43	2	**9X-8256**	3	WASHER (6.6X12X2-MM THK)	
E	44	2	**101-2846**		GUARD (28-CM)	

E - ORDER BY THE CENTIMETER
H - FOR AKASHI PLANT
J - FOR OTHER THAN AKASHI PLANT
M - METRIC PART
Y - SEPARATE ILLUSTRATION

398-7003 **WIRING GP-CAB (*contd.*)** **i05757875**

REFER TO ALL ILLUSTRATIONS OF
THIS GROUP FOR AUXILIARY VIEWS

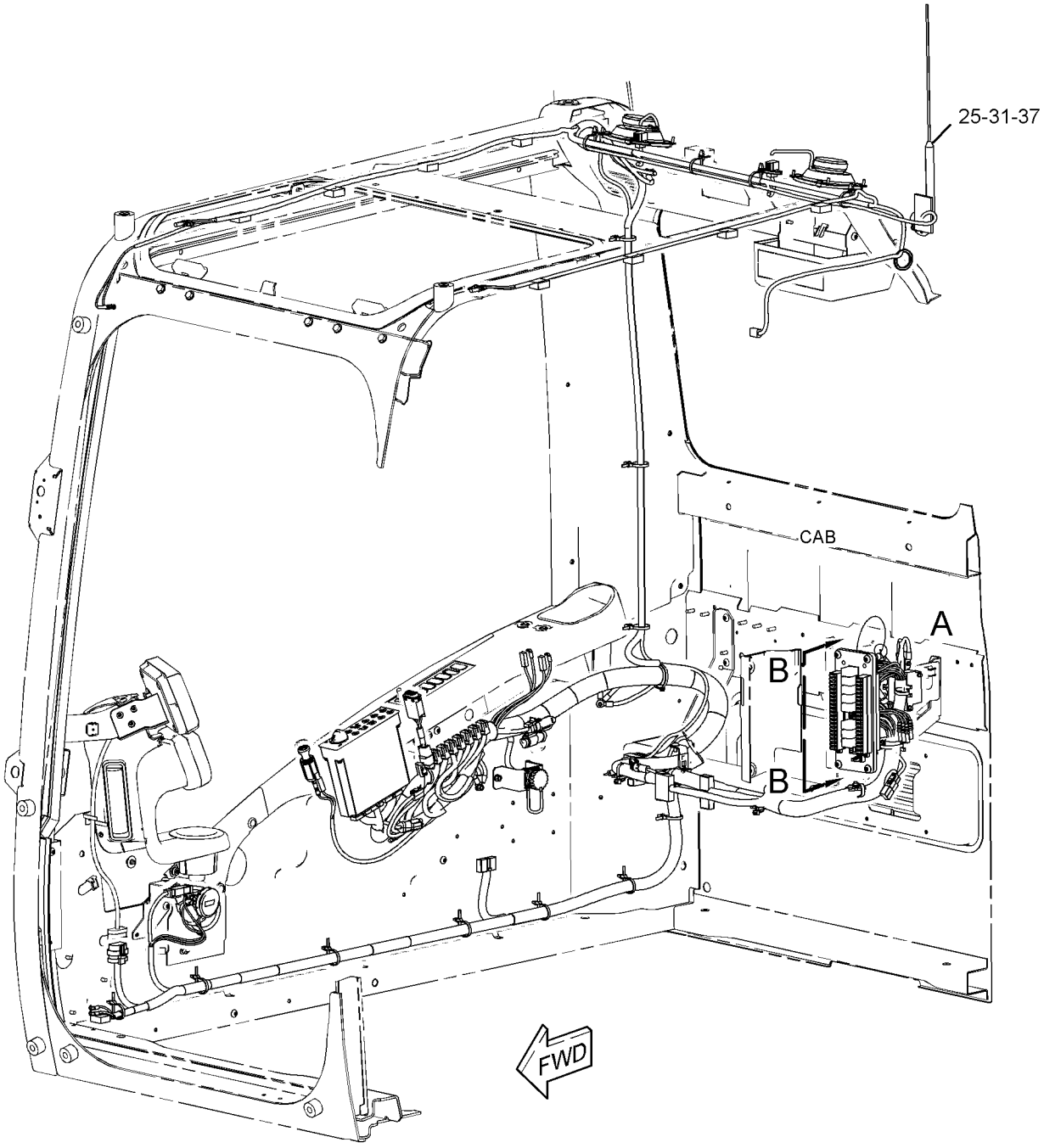

GRAPHIC #1 g03483257

398-7003 **WIRING GP-CAB (*contd.*)** **i05757875**

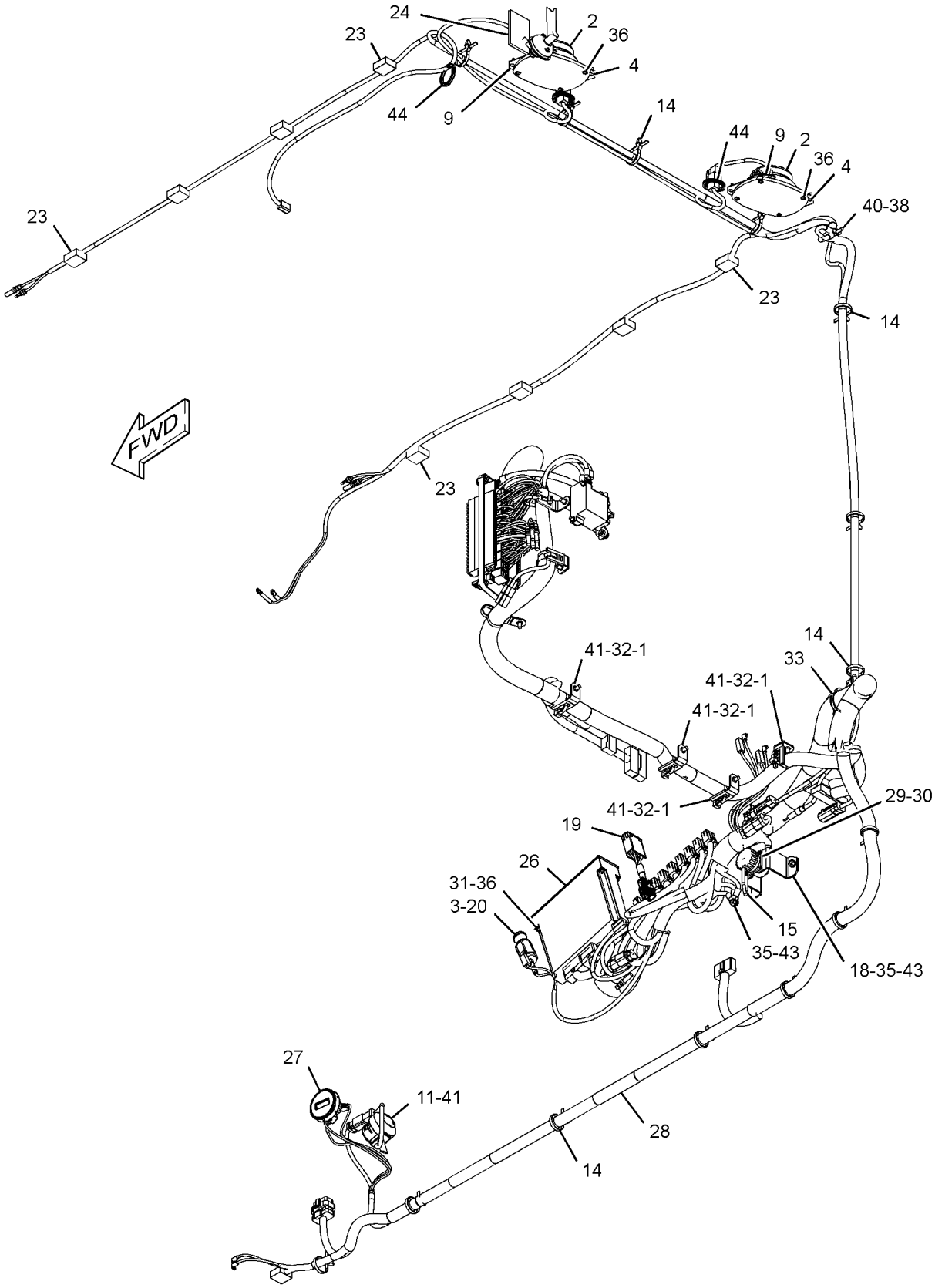

GRAPHIC #2 g03483258

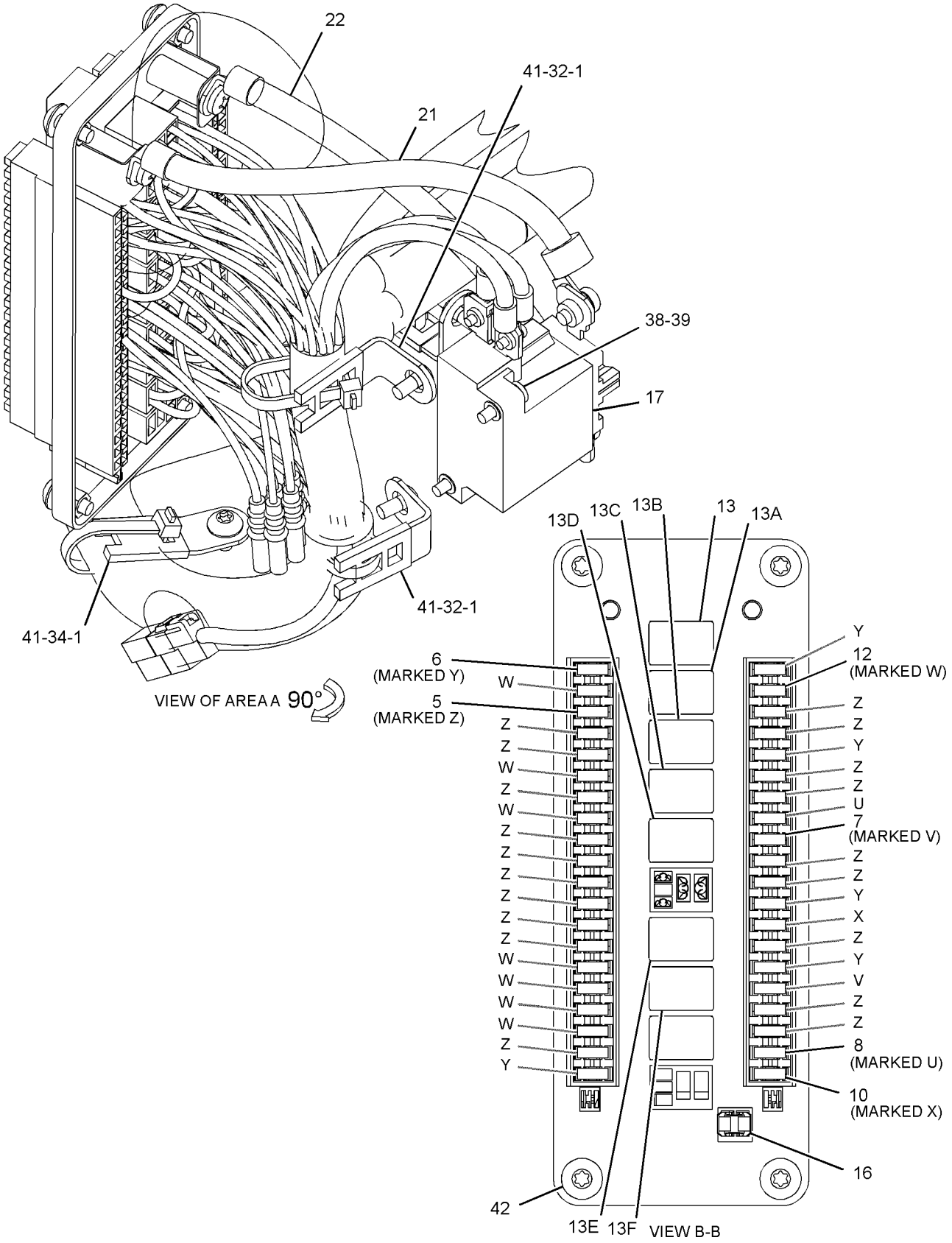

GRAPHIC #3 **<END>** g03483259

417-9812 WIRING GP-CAB–COUPLER

S/N: PBB1-UP; KBS1-UP
PART OF 456-0934 CONTROL AR-QUICK COUPLER
AN ATTACHMENT

SMCS-1408, 7301

i05781040

NOTE	REF NO	GRAPHIC REF	PART NUMBER	QTY	PART NAME 1 2 3 4 5 6 (PRODUCT LEVEL)	SEE PAGE
Y	1	1	*238-2478*	1	SWITCH GP-TOGGLE (QUICK COUPLER)	174
	2	1	**420-7262**	1	BRACKET AS	
	3	1	**259-7180**	1	COVER	
M	4	1	**9X-2042**	3	SCREW-TRUSS HEAD (M6X1X12-MM)	

M - METRIC PART
Y - SEPARATE ILLUSTRATION

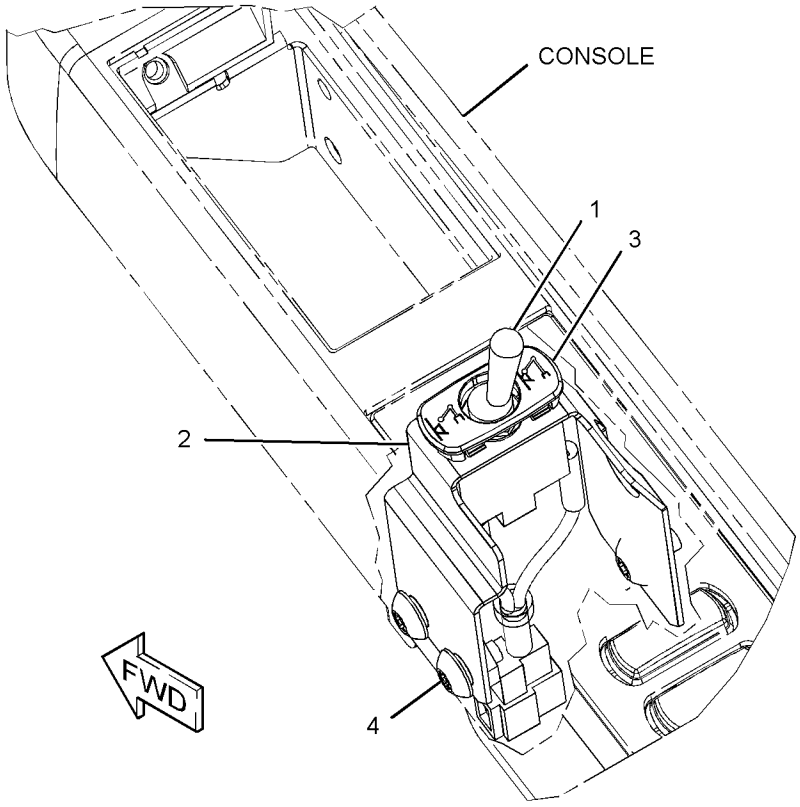

GRAPHIC #1

<END>

g01259744

430-5530 WIRING GP-CAB–CAMERA

S/N: PBB1-UP; KBS1-UP
PART OF 456-0917 CAMERA & MIRROR AR
AN ATTACHMENT

SMCS-1408, 7301 **i05508869**

NOTE	REF NO	GRAPHIC REF	PART NUMBER	QTY	PART NAME 1 2 3 4 5 6 (PRODUCT LEVEL)	SEE PAGE
	1	1	**426-4006**	1	HARNESS AS-CAB	
		1	**8T-8730**	2	SOCKET-CONNECTOR (16-GA TO 18-GA)	
		1	**3S-2093**	10	STRAP-CABLE	
		1	*7Y-3966*	1	TERMINAL AS	
		1	**7Y-3962**	1	TERMINAL-BULLET (MALE)	
		1	**7Y-3964**	1	TUBE (CONNECTOR TERMINAL)	
		1	**8T-8737**	4	PLUG-SEAL	
		1	**2L-8077**	1	TERMINAL-RING (14-GA TO 16-GA, 1/4-IN SCREW)	
		1	**230-5010**	1	PLUG AS-CONNECTOR (6-PIN)	
		1	**264-7032**	1	SEAL-CONNECTOR	
	2	1	**3S-2093**	18	STRAP-CABLE	
	3	1	**7K-1181**	12	STRAP-CABLE	

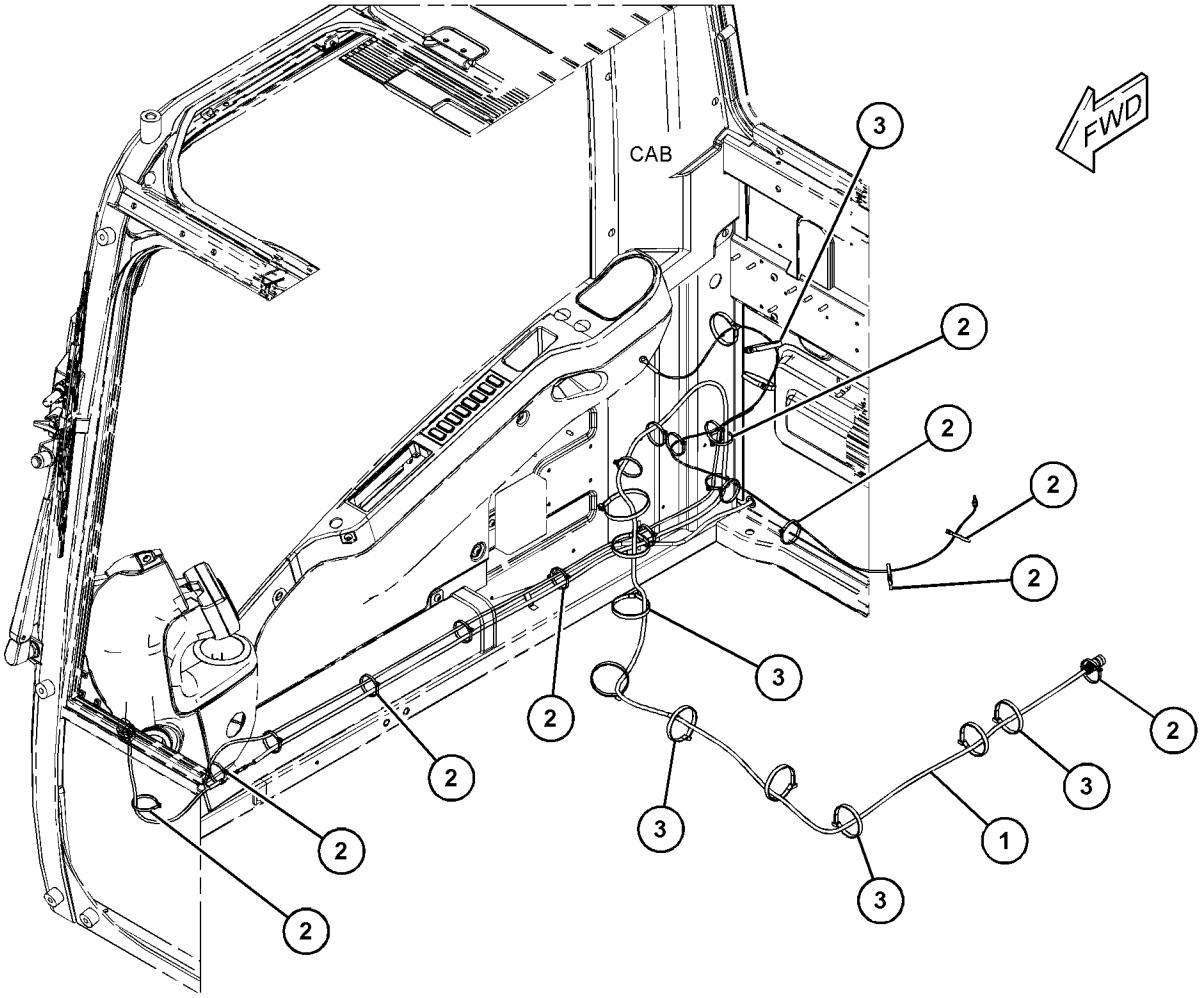

GRAPHIC #1 **<END>** g03521538

448-1392 WIRING GP-CAB–FINE SWING

S/N: PBB1-UP; KBS1-UP

PART OF 422-0645 OPERATOR AR

SMCS-1408, 7301 **i05780021**

NOTE	REF NO	GRAPHIC REF	PART NUMBER	QTY	PART NAME 1 2 3 4 5 6 (PRODUCT LEVEL)	SEE PAGE
	1	1	**238-2212**	1	SWITCH AS-ROCKER (FINE SWING)	
		1	**167-3542**	1	RECEPTACLE-CONNECTOR (5-PIN)	
		1	**167-3543**	5	TERMINAL (MALE)	

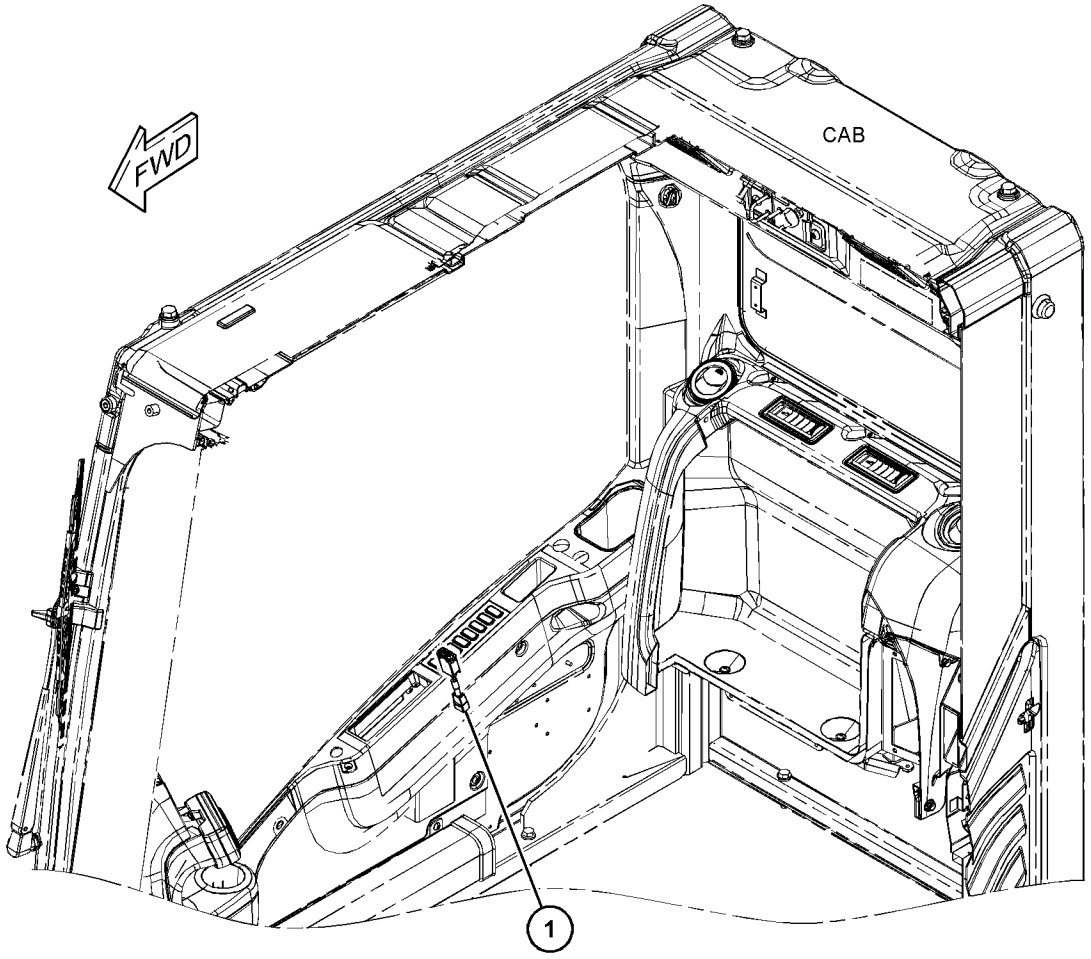

GRAPHIC #1 **<END>** g03674428

369-0244 WIRING GP-CHASSIS—UNIVERSAL QUICK COUPLER

S/N: PBB1-UP; KBS1-UP
PART OF 349-2218 CONTROL AR-COUPLER
AN ATTACHMENT

SMCS-1408 **i05858630**

NOTE	REF NO	GRAPHIC REF	PART NUMBER	QTY	PART NAME 1 2 3 4 5 6 (PRODUCT LEVEL)	SEE PAGE
	1	1	**3S-2093**	13	STRAP-CABLE	
	2	1	**7I-2673**	2	STRAP-CABLE	
	3	1	**7K-1181**	14	STRAP-CABLE	
	4	1	**116-0118**	1	CLIP	
Y	5	1	**419-6413**	1	HARNESS AS-CHASSIS	127
	6	1	**132-5789**	2	CLIP	
	7	1	**4P-7581**	1	CLIP	
	8	1	**5P-4116**	3	WASHER-HARD (8.8X20.5X2-MM THK)	
M	9	1	**8T-4189**	3	BOLT (M8X1.25X20-MM)	

M - METRIC PART
Y - SEPARATE ILLUSTRATION

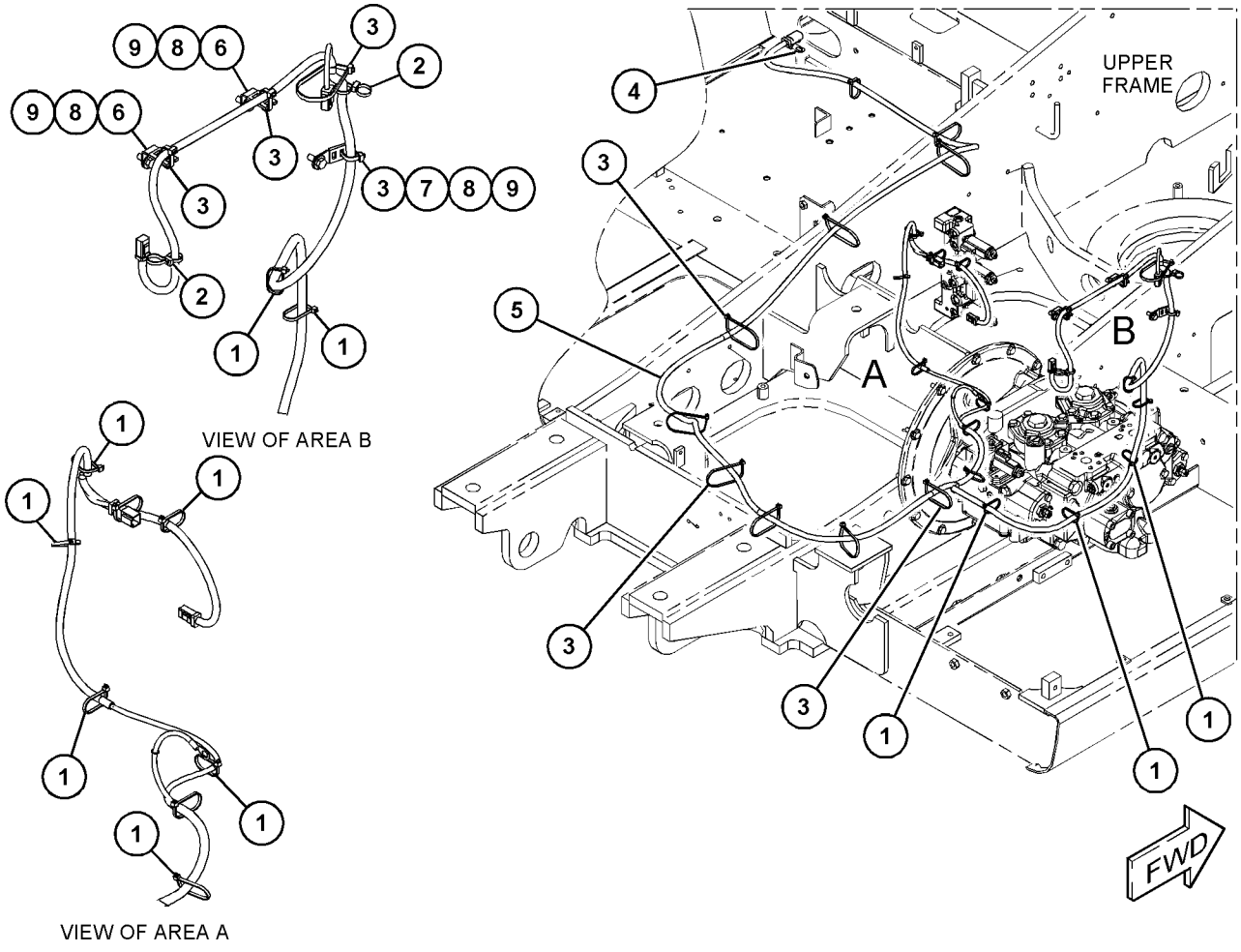

GRAPHIC #1 **<END>** g03475245

396-8145 WIRING GP-CHASSIS–REAR VIEW, CAMERA

S/N: PBB1-UP; KBS1-UP
PART OF 456-0917 CAMERA & MIRROR AR
AN ATTACHMENT

SMCS-1408 **i05272624**

NOTE	REF NO	GRAPHIC REF	PART NUMBER	QTY	PART NAME 1 2 3 4 5 6 (PRODUCT LEVEL)	SEE PAGE
	1	1	**268-8643**	1	CABLE AS	
	2	1	**132-5789**	6	CLIP	
	3	1	**3S-2093**	11	STRAP-CABLE	
	4	1	**3V-4791**	1	GROMMET	
	5	1	**4P-7428**	1	CLIP	
	6	1	**4P-7581**	2	CLIP	
	7	1	**7K-1181**	14	STRAP-CABLE	
	8	1	**8T-4121**	7	WASHER-HARD (11X21X2.5-MM THK)	
M	9	1	**8T-4137**	2	BOLT (M10X1.5X20-MM)	
M	10	1	**8T-4179**	1	BOLT (M12X1.75X20-MM)	
M	11	1	**8T-4191**	5	BOLT (M10X1.5X16-MM)	
	12	1	**8T-4223**	1	WASHER-HARD (13.5X25.5X3-MM THK)	

M - METRIC PART

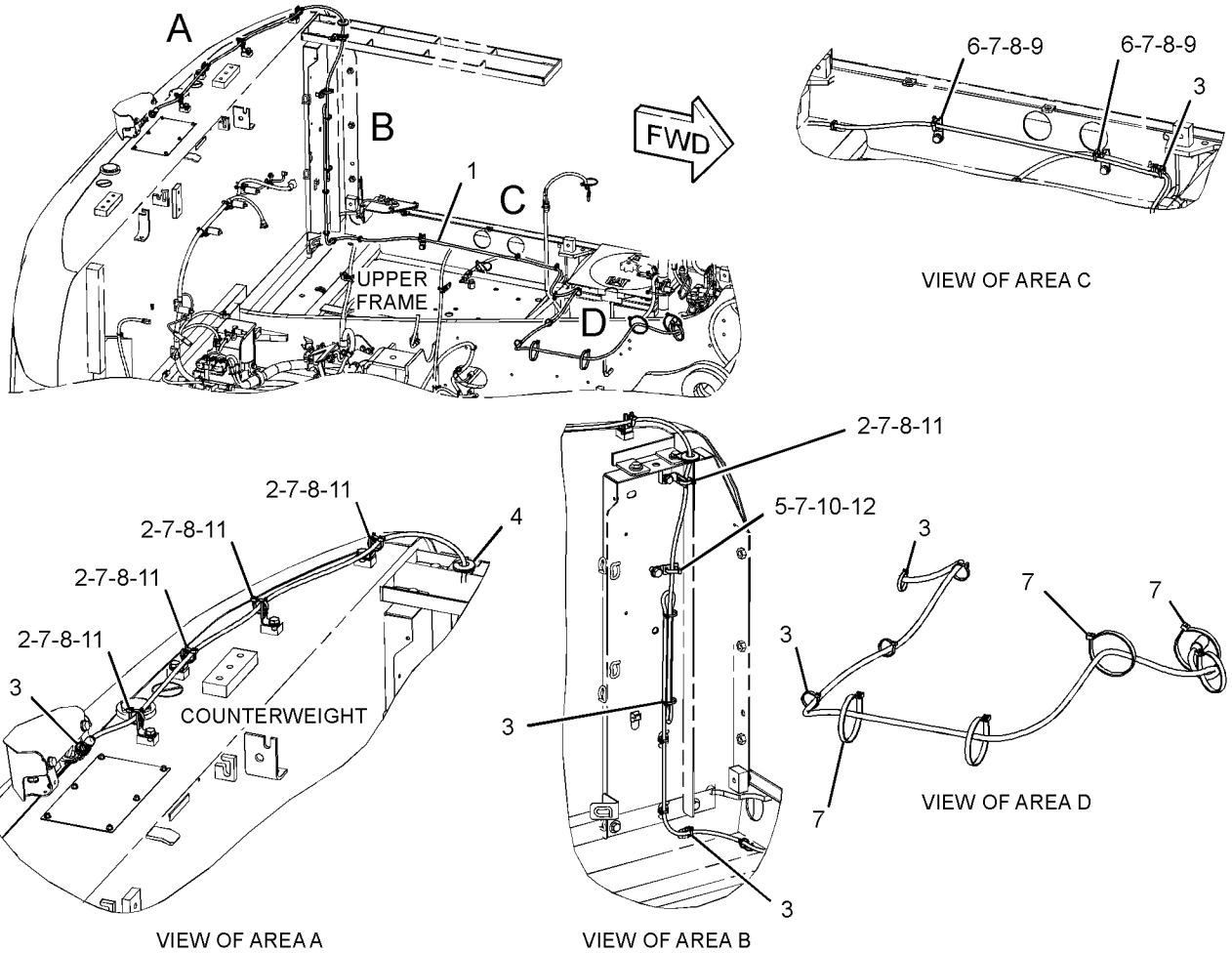

GRAPHIC #1 **<END>** g03358493

399-3648 WIRING GP-CHASSIS–GRADE CONTROL

S/N: PBB1-UP; KBS1-UP
PART OF 396-2389, 456-1032 INSTALLATION AR
AN ATTACHMENT

SMCS-1408 **i05162637**

NOTE	REF NO	GRAPHIC REF	PART NUMBER	QTY	PART NAME 1 2 3 4 5 6 (PRODUCT LEVEL)	SEE PAGE
	1	1	**3S-2093**	8	STRAP-CABLE	
	2	1	**4I-7889**	1	SPACER (11X25X45-MM THK)	
	3	1	**7K-1181**	43	STRAP-CABLE	
	4	1	**111-4836**	1	CLIP	
	5	1	**177-7707**	2	BOSS	
Y	6	1	**275-6841**	1	HARNESS AS-CONTROL (BODY TILT SENSOR, GPS RECEIVER)	127
Y	7	1	**275-6842**	1	HARNESS AS-CONTROL (DISPLAY, GPS RADIO)	127
	8	1	**279-7609**	1	BRACKET AS	
		1	**7T-1099**	1	LINK	
	9	1	**416-0762**	1	HARNESS AS-CHASSIS	
		1	**3R-9965**	1	PLUG AS-CONNECTOR (8-PIN)	
		1	**3S-2093**	1	STRAP-CABLE	
		1	**6D-5257**	1	PLUG AS-CONNECTOR (8-PIN)	
		1	**8L-8413**	3	STRAP-CABLE (WHITE)	
		1	**8T-8737**	18	PLUG-SEAL	
		1	**104-6871**	2	CAP-DUST	
		1	**9W-0844**	3	SOCKET-CONNECTOR (14-GA TO 16-GA)	
E		1	**119-3662**		TUBE-HEAT SHRINK (10.85-MM DIA) (7-CM)	
E		1	**125-7874**		TUBE-HEAT SHRINK (5.72-MM DIA) (40-CM)	
E		1	**125-7875**		TUBE-HEAT SHRINK (7.44-MM DIA) (50-CM)	
		1	**9X-3402**	32	SOCKET-CONNECTOR (16-GA TO 18-GA)	
		1	**2L-8069**	1	TERMINAL-RING (2-GA TO 10-GA, 3/8-IN SCREW)	
		1	**134-2540**	2	RECEPTACLE AS-CONNECTOR (3-PIN)	
		1	**9X-3401**	21	PIN-CONNECTOR (16-GA TO 18-GA)	
		1	**174-0503**	2	KIT-CONNECTING PLUG (3-PIN)	
		1	**155-2260**	2	KIT-CONNECTING PLUG (3-PIN)	
					(EACH KIT INCLUDES PLUG AS,WEDGE & INTERFACE SEAL)	
		1	**230-4009**	3	PLUG AS-CONNECTOR (12-PIN)	
					(EACH INCLUDES)	
		1	**264-7034**	1	SEAL-CONNECTOR	
		1	**231-2295**	1	PLUG AS-CONNECTOR (8-PIN)	
		1	**264-7033**	1	SEAL-CONNECTOR	
		1	**243-4510**	1	RECEPTACLE AS-CONNECTOR (12-PIN)	
		1	**243-5362**	1	CAP-DUST	
		1	**253-2695**	1	PLUG AS-CONNECTOR	
		1	**272-5000**	1	RECEPTACLE AS-CONNECTOR (12-PIN)	
	10	1	**132-5789**	2	CLIP	
	11	1	**2S-1647**	1	GROMMET	
	12	1	**4P-7428**	1	CLIP	
	13	1	**8T-4121**	2	WASHER-HARD (11X21X2.5-MM THK)	
M	14	1	**8T-4191**	1	BOLT (M10X1.5X16-MM)	
	15	1	**8T-4223**	2	WASHER-HARD (13.5X25.5X3-MM THK)	
M	16	1	**8T-4648**	2	BOLT (M12X1.75X70-MM)	
M	17	1	**8T-6466**	1	BOLT (M10X1.5X60-MM)	

E - ORDER BY THE CENTIMETER
M - METRIC PART
Y - SEPARATE ILLUSTRATION

399-3648 **WIRING GP-CHASSIS (*contd.*)** **i05162637**

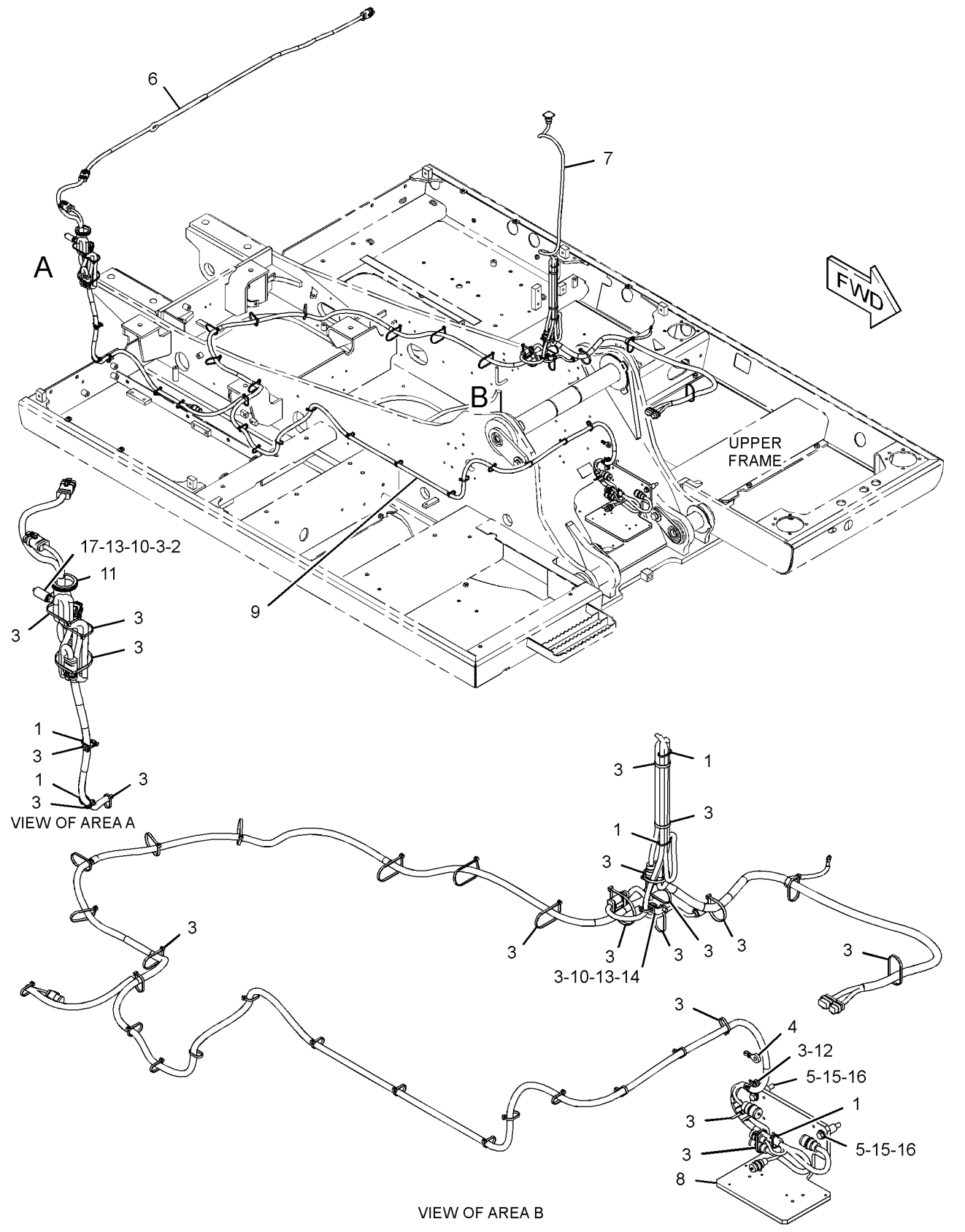

GRAPHIC #1

<END>

g03317592

453-1169 WIRING GP-CHASSIS

S/N: PBB1-UP; KBS1-UP

PART OF 454-5588, 454-5589 CHASSIS AR

SMCS-1408 **i05857420**

NOTE	REF NO	GRAPHIC REF	PART NUMBER	QTY	PART NAME 1 2 3 4 5 6 (PRODUCT LEVEL)	SEE PAGE
	1	1,2,3	**3S-2093**	36	STRAP-CABLE	
	2	1,2,3	**4I-7889**	6	SPACER (11X25X45-MM THK)	
	3	1,3	**7I-2673**	3	STRAP-CABLE	
	4	1,2,3	**7K-1181**	21	STRAP-CABLE	
	5	1	**7Y-5456**	2	GROMMET	
	6	2	**087-4587**	1	GROMMET	
	7	1	**091-9035**	1	SPACER (11X25X20-MM THK)	
	8	3	**111-4836**	9	CLIP	
	9	1,2,3	**111-4837**	13	CLIP	
	10	1,2	**111-4838**	13	CLIP	
	11	1,2	**111-4839**	13	STRAP	
	12	2,3	**116-0118**	9	CLIP	
	13	2	**204-1611**	1	STRAP (DUAL)	
	14	1	**251-0467**	1	BRACKET AS	
	15	1	**259-5317**	1	BRACKET AS	
	16	1	**291-7593**	1	BRACKET AS	
	17	2	**306-8401**	1	GROMMET	
Y	18	3	**318-1181**	1	SENSOR GP-SPEED (MAGNETIC)	162
	19	3	**366-9331**	1	BRACKET AS-PUMP	
	20	1	**377-8051**	1	BRACKET AS (ENGINE)	
	21	1	**399-0797**	1	BRACKET AS (ENGINE)	
	22	1	**415-3687**	1	STRAP AS-GROUND	
		1	**030-1712**	1	TERMINAL-RING (2-GA, 1/4-IN SCREW)	
		1	**311-6184**	1	TERMINAL-RING (2-GA, 3/8-IN SCREW)	
	23	3	**453-1195**	1	HARNESS AS-CHASSIS	
		3	**102-8802**	4	KIT-RECEPTACLE (2-PIN)	
		3	**102-8803**	2	KIT-RECEPTACLE (3-PIN)	
		3	**176-9299**	2	KIT-RECEPTACLE (3-PIN)	
					(EACH RECEPTACLE KIT INCLUDES RECEPTACLE AS & WEDGE)	
		3	**8T-8729**	15	PIN-CONNECTOR (16-GA TO 18-GA)	
		3	**8T-8730**	55	SOCKET-CONNECTOR (16-GA TO 18-GA)	
		3	**3S-2093**	16	STRAP-CABLE	
		3	**6T-5598**	1	TERMINAL-RING (1-GA TO 2-GA, 5/16-IN SCREW)	
		3	**5P-4571**	4	TERMINAL-BLADE (14-GA TO 16-GA)	
		3	**8T-8737**	64	PLUG-SEAL	
		3	**8T-8799**	1	BOOT (RED)	
		3	**8T-8827**	1	BOOT (RED)	
		3	**100-3320**	1	PLUG AS-CONNECTOR (2-PIN)	
		3	**126-5011**	1	SEAL-CONNECTOR	
E		3	**103-2529**		HOSE (80-CM)	
		3	**9W-0852**	13	PIN-CONNECTOR (14-GA TO 16-GA)	
		3	**9W-0844**	10	SOCKET-CONNECTOR (14-GA TO 16-GA)	
		3	**111-1567**	2	SOCKET-TERMINAL	
		3	**115-1184**	2	TERMINAL-RING (2-GA, 1/4-IN SCREW)	
		3	**116-0126**	1	HOUSING-PLUG	
		3	**116-0128**	2	SEAL	
		3	**116-0255**	2	TERMINAL-BLADE (10-GA TO 20-GA)	
E		3	**119-3662**		TUBE-HEAT SHRINK (10.85-MM DIA) (26-CM)	
		3	**121-1038**	1	HOUSING-RECEPTACLE	
		3	**121-1039**	1	TERMINAL (MALE)	
E		3	**125-7874**		TUBE-HEAT SHRINK (5.72-MM DIA) (70-CM)	
E		3	**125-7875**		TUBE-HEAT SHRINK (7.44-MM DIA) (35-CM)	
E		3	**125-7876**		TUBE-HEAT SHRINK (17.78-MM DIA) (12-CM)	
		3	**9X-3402**	76	SOCKET-CONNECTOR (16-GA TO 18-GA)	
					–OR–	
		3	**126-1768**	76	SOCKET-CONNECTOR (14-GA TO 16-GA)	

453-1169 **WIRING GP-CHASSIS (*contd.*)** **i05857420**

NOTE	REF NO	GRAPHIC REF	PART NUMBER	QTY	PART NAME 1 2 3 4 5 6 (PRODUCT LEVEL)	SEE PAGE
		3	**2L-8050**	2	TERMINAL-RING (6-GA, 1/4-IN SCREW)	
					—OR—	
		3	**2L-8058**	2	TERMINAL-RING (8-GA, 1/4-IN SCREW)	
		3	**2L-8069**	9	TERMINAL-RING (2-GA TO 10-GA, 3/8-IN SCREW)	
		3	**2L-8075**	2	TERMINAL-RING (14-GA TO 16-GA, NO. 8 SCREW)	
		3	**2L-8076**	1	TERMINAL-RING (14-GA TO 16-GA, NO. 10 SCREW)	
		3	**2L-8078**	1	TERMINAL-RING (14-GA TO 16-GA, 5/16-IN SCREW)	
		3	**134-3297**	1	SEAL	
		3	**9X-3401**	34	PIN-CONNECTOR (16-GA TO 18-GA)	
					—OR—	
		3	**126-1767**	34	PIN-CONNECTOR (14-GA TO 16-GA)	
		3	**155-2270**	14	KIT-CONNECTING PLUG (2-PIN)	
		3	**155-2260**	1	KIT-CONNECTING PLUG (3-PIN)	
					(EACH PLUG KIT INCLUDES PLUG AS,WEDGE & INTERFACE SEAL)	
		3	**160-7689**	1	PLUG AS-CONNECTOR (70-PIN)	
		3	**159-9322**	1	SEAL-O-RING	
		3	**163-6637**	1	RECEPTACLE AS-CONNECTOR (54-PIN, BLACK)	
		3	**163-6773**	2	PLUG-SEAL	
		3	**174-3016**	2	PLUG AS-CONNECTOR (3-PIN)	
		3	**176-1477**	1	PLUG AS (2-PIN)	
		3	**176-1521**	2	TERMINAL	
		3	**185-1861**	2	SEAL-WIRE	
		3	**197-4385**	1	DIODE	
		3	**230-4009**	1	PLUG AS-CONNECTOR (12-PIN)	
		3	**455-0709**	1	SEAL-CONNECTOR	
		3	**230-4011**	10	PLUG AS-CONNECTOR (2-PIN)	
					(EACH INCLUDES)	
		3	**455-0704**	1	SEAL-CONNECTOR	
		3	**230-4013**	2	PLUG AS-CONNECTOR (3-PIN)	
					(EACH INCLUDES)	
		3	**455-0705**	1	SEAL-CONNECTOR	
		3	**230-5010**	2	PLUG AS-CONNECTOR (6-PIN)	
					(EACH INCLUDES)	
		3	**455-0707**	1	SEAL-CONNECTOR	
		3	**231-2295**	2	PLUG AS-CONNECTOR (8-PIN)	
					(EACH INCLUDES)	
		3	**455-0708**	1	SEAL-CONNECTOR	
		3	**231-4475**	1	TERMINAL-RING	
		3	**243-4505**	4	RECEPTACLE AS-CONNECTOR (2-PIN)	
		3	**243-4510**	1	RECEPTACLE AS-CONNECTOR (12-PIN)	
		3	**281-8803**	3	PLUG AS-CONNECTOR (3-PIN)	
					(EACH INCLUDES)	
		3	**455-0705**	1	SEAL-CONNECTOR	
		3	**281-8804**	1	PLUG AS-CONNECTOR (3-PIN)	
		3	**455-0705**	1	SEAL-CONNECTOR	
		3	**342-2972**	2	CAP-CONNECTOR (2-PIN)	
		3	**342-2974**	2	CAP-CONNECTOR (6-PIN)	
		3	**342-2975**	1	CAP-CONNECTOR (8-PIN)	
		3	**342-2976**	1	CAP-CONNECTOR (12-PIN)	
		3	**349-5084**	1	TERMINAL-BLADE	
		3	**349-5085**	1	RECEPTACLE AS-CONNECTOR	
M	24	2	**099-6418**	1	NUT (M6X1-THD)	
	25	1,2,3	**132-5789**	6	CLIP	
	26	2	**204-1673**	1	STRAP-CABLE	
	27	2	**347-4734**	1	CLIP	
	28	3	**4P-7428**	1	CLIP	
	29	1,2,3	**4P-7581**	4	CLIP	
M	30	1	**5C-7261**	1	NUT (M8X1.25-THD)	
M	31	1	**5C-7883**	4	BOLT-SOCKET HEAD (M6X1X16-MM)	

453-1169 **WIRING GP-CHASSIS (*contd.*)** **i05857420**

NOTE	REF NO	GRAPHIC REF	PART NUMBER	QTY	PART NAME 1 2 3 4 5 6 (PRODUCT LEVEL)	SEE PAGE
	32	3	**5I-3878**	1	GROMMET	
	33	3	**5P-4116**	4	WASHER-HARD (8.8X20.5X2-MM THK)	
	34	1	**6G-2263**	2	SPACER (10.5X19X28.5-MM THK)	
M	35	2	**7X-2621**	1	BOLT (M10X1.5X12-MM)	
	36	2	**7Y-8165**	1	GROMMET	
	37	3	**7Y-8167**	1	GROMMET	
	38	1	**8M-2770**	1	CLIP	
	39	1,2,3	**8T-4121**	60	WASHER-HARD (11X21X2.5-MM THK)	
M	40	1,2,3	**8T-4136**	14	BOLT (M10X1.5X25-MM)	
M	41	1,2,3	**8T-4137**	27	BOLT (M10X1.5X20-MM)	
M	42	1	**8T-4182**	1	BOLT (M10X1.5X45-MM)	
M	43	1	**8T-4185**	2	BOLT (M10X1.5X50-MM)	
M	44	1	**8T-4189**	2	BOLT (M8X1.25X20-MM)	
M	45	1,2,3	**8T-4191**	6	BOLT (M10X1.5X16-MM)	
M	46	1,2,3	**8T-4195**	5	BOLT (M10X1.5X30-MM)	
M	47	1	**8T-4196**	1	BOLT (M10X1.5X35-MM)	
M	48	3	**8T-4199**	1	BOLT (M8X1.25X12-MM)	
	49	1	**8T-4224**	2	WASHER-HARD (8.8X16X2-MM THK)	
M	50	3	**8T-5005**	2	BOLT (M10X1.5X70-MM)	
M	51	1	**8T-6466**	1	BOLT (M10X1.5X60-MM)	
M	52	3	**8T-6869**	3	BOLT (M8X1.25X60-MM)	
	53	1	**9X-8256**	4	WASHER (6.6X12X2-MM THK)	

E - ORDER BY THE CENTIMETER
M - METRIC PART
Y - SEPARATE ILLUSTRATION

453-1169 **WIRING GP-CHASSIS (*contd.*)** **i05857420**

REFER TO ALL ILLUSTRATIONS OF
THIS GROUP FOR AUXILIARY VIEWS

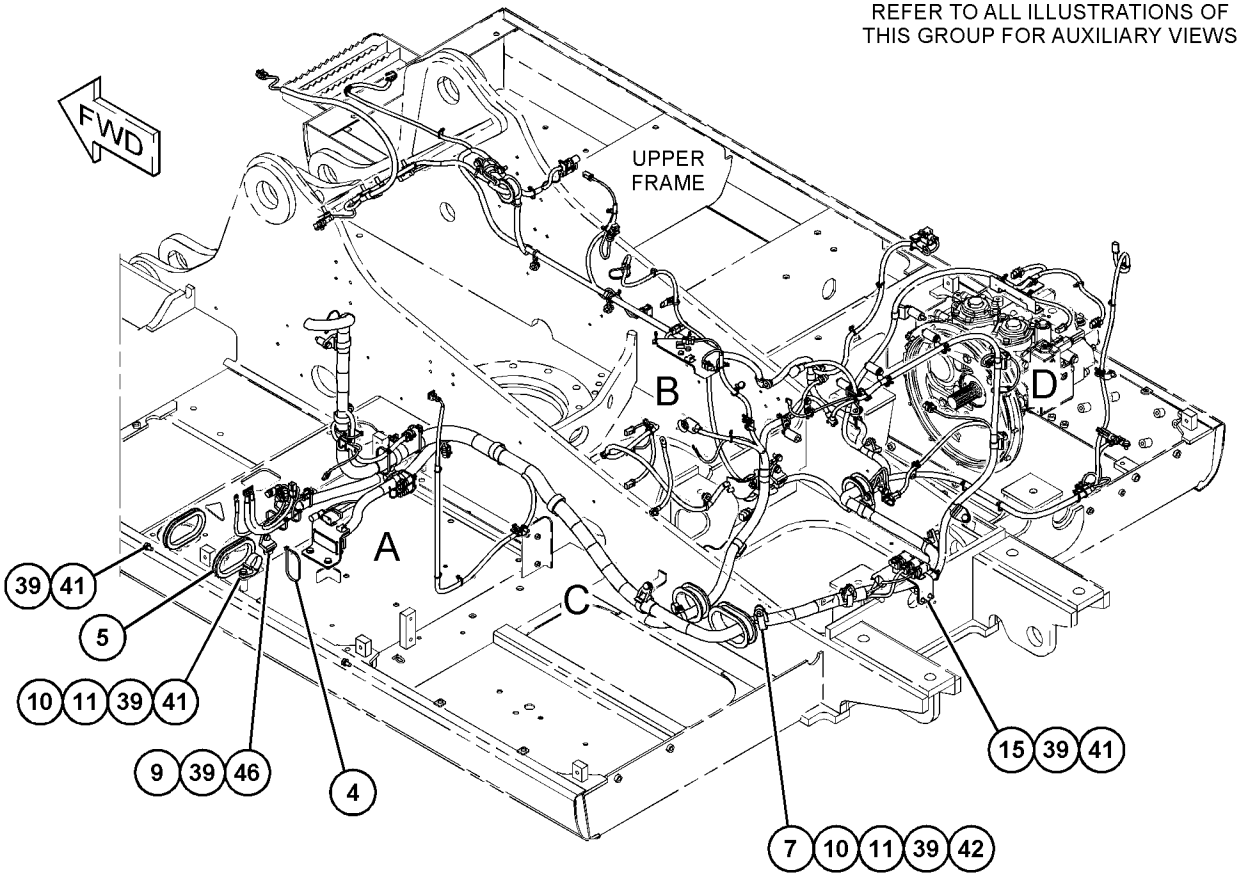

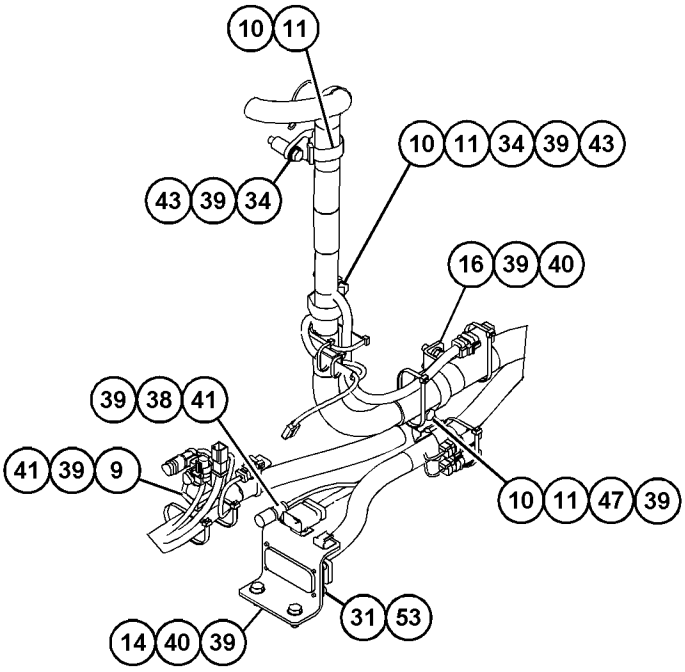

VIEW OF AREA A

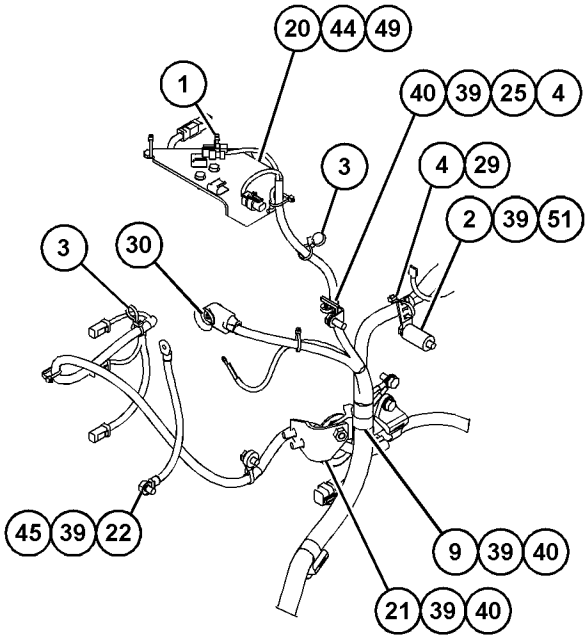

VIEW OF AREA B

GRAPHIC #1 g03692856

453-1169 **WIRING GP-CHASSIS (*contd.*)** **i05857420**

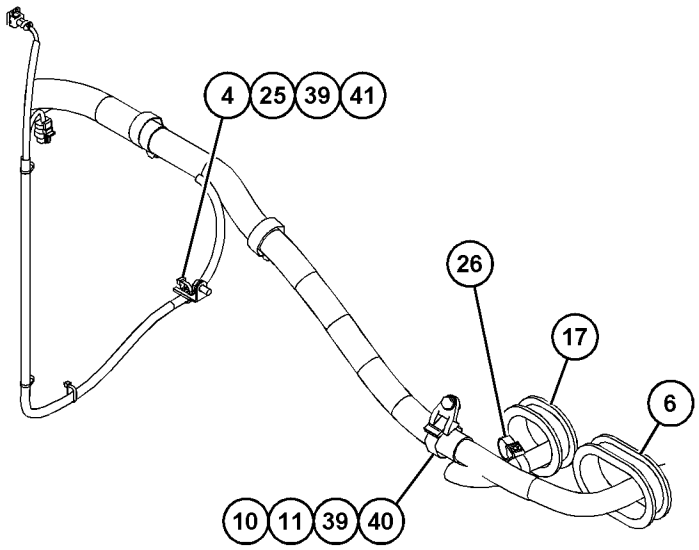

VIEW OF AREA C

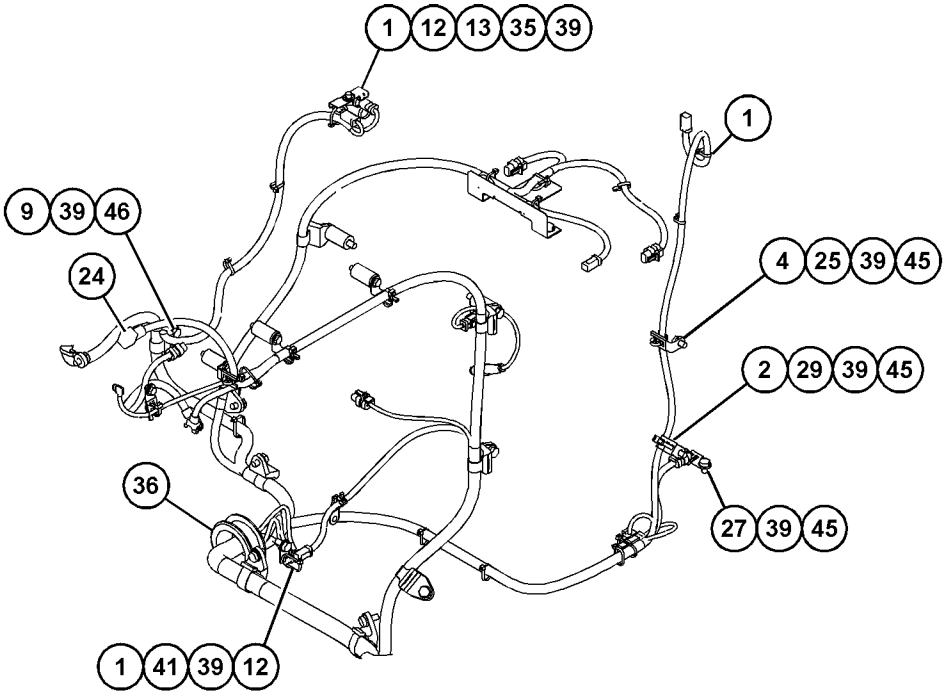

VIEW OF AREA D

GRAPHIC #2 g03694733

453-1169 **WIRING GP-CHASSIS (*contd.*)** **i05857420**

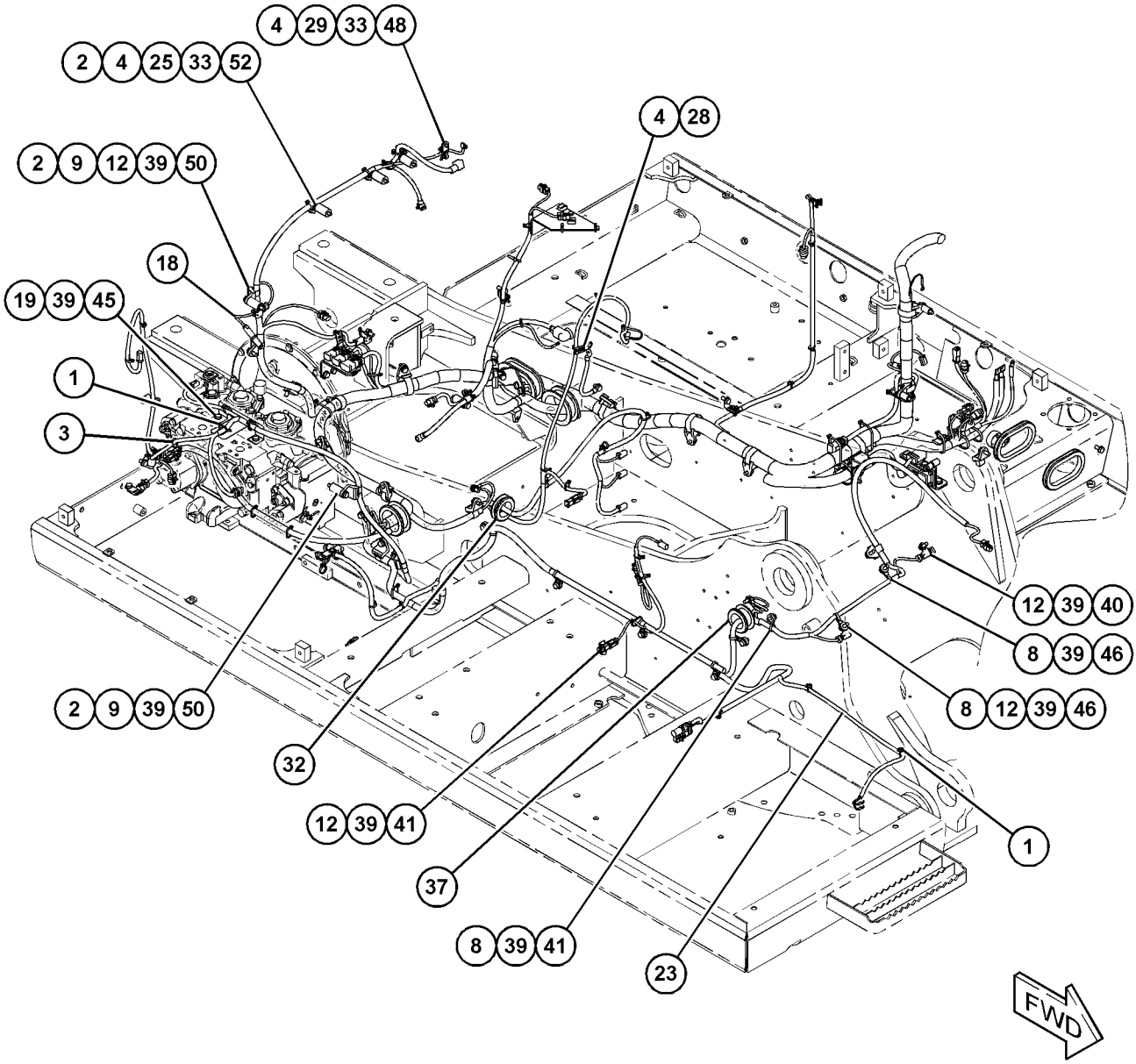

GRAPHIC #3 **<END>** g03692857

369-0239 WIRING GP-COMBINED FLOW

S/N: PBB1-UP; KBS1-UP
PART OF 349-2209 CONTROL AR-AUXILIARY
AN ATTACHMENT

SMCS-1408 **i05151789**

NOTE	REF NO	GRAPHIC REF	PART NUMBER	QTY	PART NAME 1 2 3 4 5 6 (PRODUCT LEVEL)	SEE PAGE
	1	1	**3S-2093**	22	STRAP-CABLE	
	2	1	**7K-1181**	13	STRAP-CABLE	
	3	1	**111-4836**	2	CLIP	
	4	1	**116-0118**	1	CLIP	
	5	1	**204-1611**	4	STRAP (DUAL)	
	6	1	**419-6414**	1	HARNESS AS-CHASSIS	
		1	**8T-8729**	2	PIN-CONNECTOR (16-GA TO 18-GA)	
		1	**8T-8730**	14	SOCKET-CONNECTOR (16-GA TO 18-GA)	
		1	**3S-2093**	2	STRAP-CABLE	
		1	**8T-8737**	9	PLUG-SEAL	
		1	**9W-0852**	1	PIN-CONNECTOR (14-GA TO 16-GA)	
		1	**9W-0844**	1	SOCKET-CONNECTOR (14-GA TO 16-GA)	
E		1	**125-7874**		TUBE-HEAT SHRINK (5.72-MM DIA) (20-CM)	
		1	**9X-3402**	2	SOCKET-CONNECTOR (16-GA TO 18-GA)	
					—OR—	
		1	**126-1768**	2	SOCKET-CONNECTOR (14-GA TO 16-GA)	
		1	**2L-8079**	3	TERMINAL-RING (14-GA TO 16-GA, 3/8-IN SCREW)	
		1	**9X-3401**	1	PIN-CONNECTOR (16-GA TO 18-GA)	
					—OR—	
		1	**126-1767**	1	PIN-CONNECTOR (14-GA TO 16-GA)	
		1	**155-2270**	6	KIT-CONNECTING PLUG (2-PIN)	
					(EACH INCLUDES PLUG AS, WEDGE & INTERFACE SEAL)	
		1	**230-5010**	1	PLUG AS-CONNECTOR (6-PIN)	
		1	**264-7032**	1	SEAL-CONNECTOR	
		1	**243-4510**	1	RECEPTACLE AS-CONNECTOR (12-PIN)	
	7	1	**132-5789**	1	CLIP	
	8	1	**4P-7581**	1	CLIP	
	9	1	**8T-4121**	3	WASHER-HARD (11X21X2.5-MM THK)	
M	10	1	**8T-4137**	1	BOLT (M10X1.5X20-MM)	
M	11	1	**8T-4191**	2	BOLT (M10X1.5X16-MM)	
M	12	1	**8T-4195**	1	BOLT (M10X1.5X30-MM)	

E - ORDER BY THE CENTIMETER
M - METRIC PART

369-0239 **WIRING GP-COMBINED FLOW (*contd.*)** **i05151789**

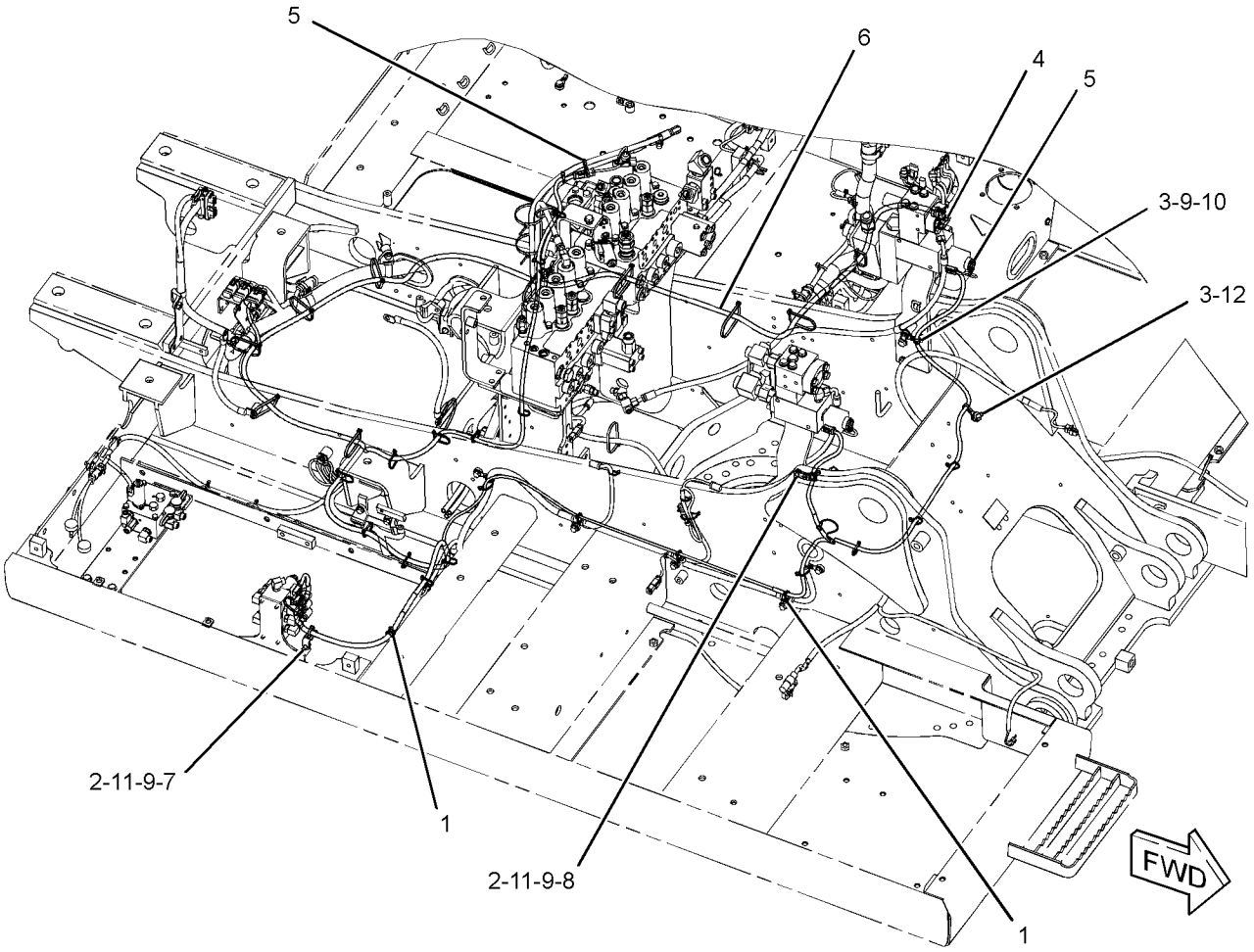

GRAPHIC #1 **<END>** g02735878

399-1110 WIRING GP-COMMUNICATION—PRODUCT LINK 522

S/N: PBB1-UP; KBS1-UP
PART OF 383-5449 CONTROL AR-COMMUNICATION
AN ATTACHMENT

SMCS-1408 **i05858871**

NOTE	REF NO	GRAPHIC REF	PART NUMBER	QTY	PART NAME 1 2 3 4 5 6 (PRODUCT LEVEL)	SEE PAGE
	1	1	**7K-1181**	5	STRAP-CABLE	
	2	1	**116-0118**	1	CLIP	
	3	1	**421-1894**	1	HARNESS AS-CONTROL (PRODUCT LINK)	
		1	**126-1774**	1	COVER-CONNECTOR	
		1	**155-2260**	1	KIT-CONNECTING PLUG (3-PIN)	
					(INCLUDES PLUG AS, WEDGE & INTERFACE SEAL)	
		1	**102-8803**	1	KIT-RECEPTACLE (3-PIN)	
					(INCLUDES RECEPTAVLE AS & WEDGE)	
		1	**8T-8729**	1	PIN-CONNECTOR (16-GA TO 18-GA)	
		1	**9W-0852**	1	PIN-CONNECTOR (14-GA TO 16-GA)	
		1	**9X-3401**	6	PIN-CONNECTOR (16-GA TO 18-GA)	
					—OR—	
		1	**126-1767**	6	PIN-CONNECTOR (14-GA TO 16-GA)	
		1	**160-7690**	1	PLUG AS-CONNECTOR (70-PIN)	
		1	**159-9322**	1	SEAL-O-RING	
		1	**8T-8737**	64	PLUG-SEAL	
		1	**243-4508**	1	RECEPTACLE AS-CONNECTOR (6-PIN)	
		1	**9X-3402**	10	SOCKET-CONNECTOR (16-GA TO 18-GA)	
		1	**3S-2093**	3	STRAP-CABLE	
		1	**2L-8077**	1	TERMINAL-RING (14-GA TO 16-GA, 1/4-IN SCREW)	
E		1	**125-7874**		TUBE-HEAT SHRINK (5.72-MM DIA) (15-CM)	
M	4	1	**7X-2621**	1	BOLT (M10X1.5X12-MM)	
	5	1	**8T-4121**	1	WASHER-HARD (11X21X2.5-MM THK)	

E - ORDER BY THE CENTIMETER
M - METRIC PART

399-1110 **WIRING GP-COMMUNICATION (*contd.*)** **i05858871**

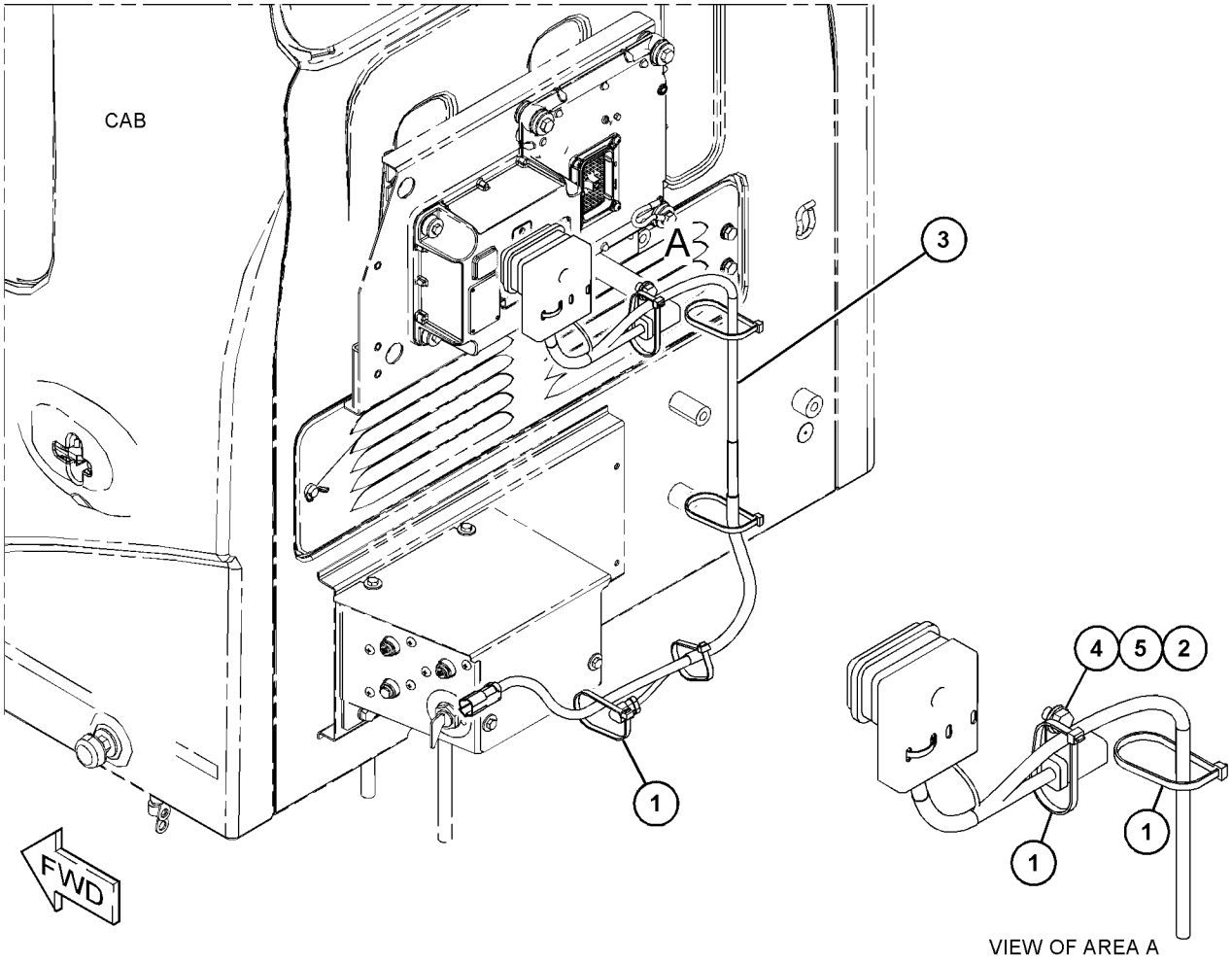

GRAPHIC #1 **<END>** g03459266

417-9821 WIRING GP-COMMUNICATION—PRODUCT LINK 321SR

S/N: PBB1-UP; KBS1-UP

PART OF 383-5427 INSTALLATION AR-COMMUNICATION

AN ATTACHMENT

SMCS-1408 **i05858864**

NOTE	REF NO	GRAPHIC REF	PART NUMBER	QTY	PART NAME 1 2 3 4 5 6 (PRODUCT LEVEL)	SEE PAGE
	1	1	**116-0118**	1	CLIP	
	2	1	**421-2864**	1	HARNESS AS-CONTROL (PRODUCT LINK)	
		1	**102-8803**	1	KIT-RECEPTACLE (3-PIN)	
		1	**176-9299**	1	KIT-RECEPTACLE (3-PIN)	
					(EACH RECEPTACLE KIT INCLUDES RECEPTACLE AS & WEDGE)	
		1	**8T-8729**	1	PIN-CONNECTOR (16-GA TO 18-GA)	
		1	**3S-2093**	3	STRAP-CABLE	
		1	**8T-8737**	62	PLUG-SEAL	
		1	**9W-0852**	1	PIN-CONNECTOR (14-GA TO 16-GA)	
E		1	**125-7874**		TUBE-HEAT SHRINK (5.72-MM DIA) (20-CM)	
E		1	**125-7875**		TUBE-HEAT SHRINK (7.44-MM DIA) (10-CM)	
		1	**9X-3402**	24	SOCKET-CONNECTOR (16-GA TO 18-GA)	
					—OR—	
		1	**126-1768**	24	SOCKET-CONNECTOR (14-GA TO 16-GA)	
		1	**126-1774**	1	COVER-CONNECTOR	
		1	**2L-8077**	1	TERMINAL-RING (14-GA TO 16-GA, 1/4-IN SCREW)	
		1	**9X-3401**	6	PIN-CONNECTOR (16-GA TO 18-GA)	
					—OR—	
		1	**126-1767**	6	PIN-CONNECTOR (14-GA TO 16-GA)	
		1	**155-2258**	1	WEDGE-PLUG LOCK (12-PIN)	
		1	**155-2255**	1	KIT-CONNECTING PLUG (12-PIN)	
		1	**174-0503**	1	KIT-CONNECTING PLUG (3-PIN)	
		1	**155-2260**	1	KIT-CONNECTING PLUG (3-PIN)	
					(EACH PLUG KIT INCLUDES PLUG AS,WEDGE & INTERFACE SEAL)	
		1	*160-7690*	1	PLUG AS-CONNECTOR (70-PIN)	
		1	**159-9322**	1	SEAL-O-RING	
		1	**243-4508**	1	RECEPTACLE AS-CONNECTOR (6-PIN)	
	3	1	**132-5789**	1	CLIP	
	4	1	**7K-1181**	7	STRAP-CABLE	
	5	1	**8T-4121**	2	WASHER-HARD (11X21X2.5-MM THK)	
M	6	1	**8T-4137**	1	BOLT (M10X1.5X20-MM)	
M	7	1	**8T-4191**	1	BOLT (M10X1.5X16-MM)	

E - ORDER BY THE CENTIMETER
M - METRIC PART

417-9821 **WIRING GP-COMMUNICATION (*contd.*)** **i05858864**

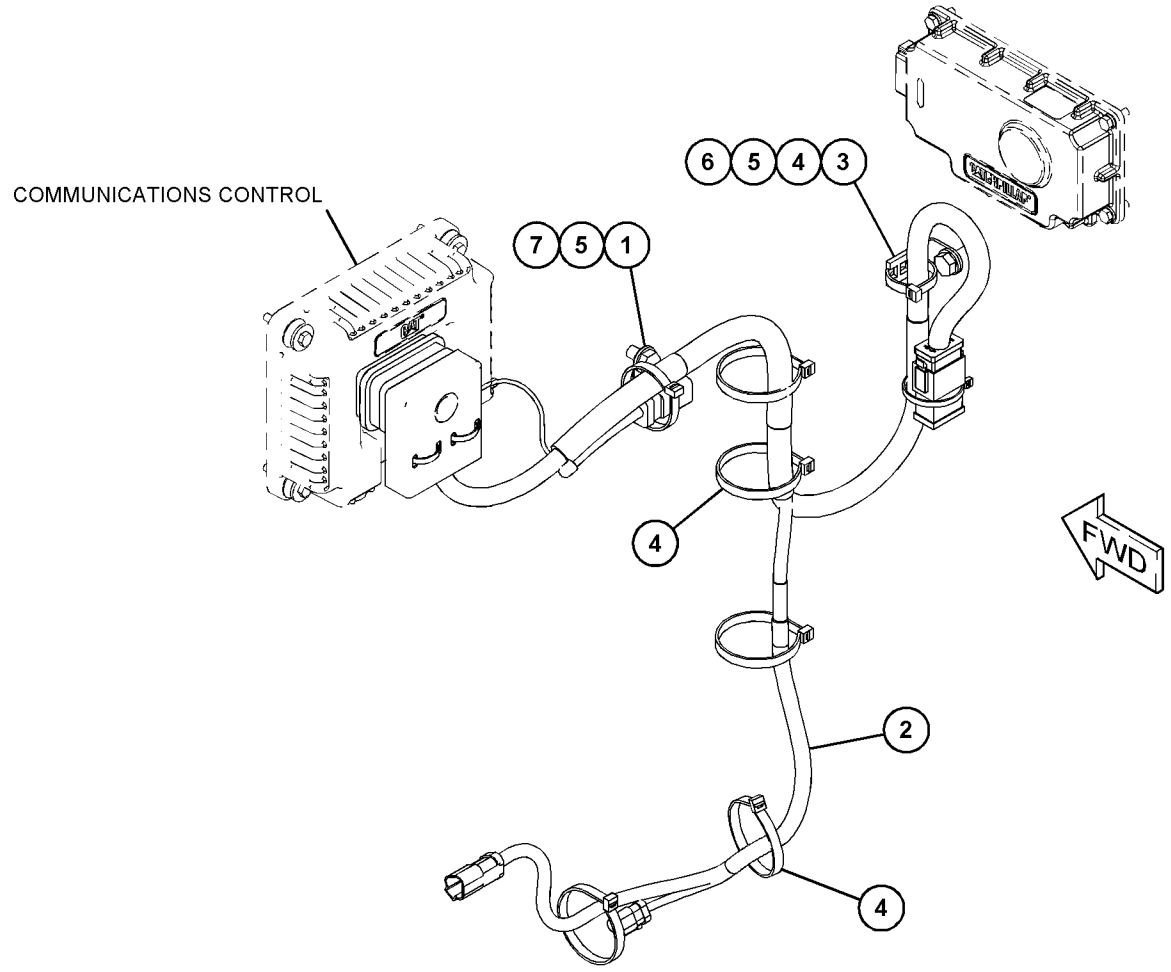

GRAPHIC #1 **<END>** g03445696

231-1836 WIRING GP-CONSOLE—LH

S/N: PBB1-UP; KBS1-UP

PART OF 398-7005 WIRING GP-CONSOLE

SMCS-1408 **i04913377**

NOTE	REF NO	GRAPHIC REF	PART NUMBER	QTY	PART NAME 1 2 3 4 5 6 (PRODUCT LEVEL)	SEE PAGE
	1	1	**3S-2093**	2	STRAP-CABLE	
	2	1	**7K-1181**	1	STRAP-CABLE	
	3	1	**163-6795**	2	STRAP-CABLE	
	4	1	**251-0580**	1	HARNESS AS-CONSOLE	
		1	**8T-8729**	4	PIN-CONNECTOR (16-GA TO 18-GA)	
		1	**8T-8730**	3	SOCKET-CONNECTOR (16-GA TO 18-GA)	
		1	**3S-2093**	9	STRAP-CABLE	
D		1	**5P-5995**		TUBE (0.3-M)	
		1	**7Y-3963**	2	TERMINAL-BULLET (FEMALE)	
		1	**7Y-3965**	2	TUBE (RECEPTACLE TERMINAL)	
		1	**8T-8737**	9	PLUG-SEAL	
		1	**9W-0852**	2	PIN-CONNECTOR (14-GA TO 16-GA)	
		1	**9W-0844**	2	SOCKET-CONNECTOR (14-GA TO 16-GA)	
E		1	**125-7874**		TUBE-HEAT SHRINK (5.72-MM DIA) (5-CM)	
E		1	**125-7875**		TUBE-HEAT SHRINK (7.44-MM DIA) (5-CM)	
		1	**9X-3402**	11	SOCKET-CONNECTOR (16-GA TO 18-GA)	
					—OR—	
		1	**126-1768**	11	SOCKET-CONNECTOR (14-GA TO 16-GA)	
		1	**155-2260**	1	KIT-CONNECTING PLUG (3-PIN)	
					(INCLUDES PLUG AS, WEDGE & INTERFACE SEAL)	
		1	**230-4011**	1	PLUG AS-CONNECTOR (2-PIN)	
		1	**264-7029**	1	SEAL-CONNECTOR	
		1	**230-5010**	1	PLUG AS-CONNECTOR (6-PIN)	
		1	**264-7032**	1	SEAL-CONNECTOR	
		1	**239-7352**	1	PLUG AS-CONNECTOR (6-PIN)	
		1	**264-7032**	1	SEAL-CONNECTOR	
		1	**243-4505**	1	RECEPTACLE AS-CONNECTOR (2-PIN)	
		1	**243-4508**	1	RECEPTACLE AS-CONNECTOR (6-PIN)	
		1	**247-2693**	1	RECEPTACLE AS-CONNECTOR (6-PIN)	

D - ORDER BY THE METER
E - ORDER BY THE CENTIMETER

231-1836 **WIRING GP-CONSOLE (*contd.*)** **i04913377**

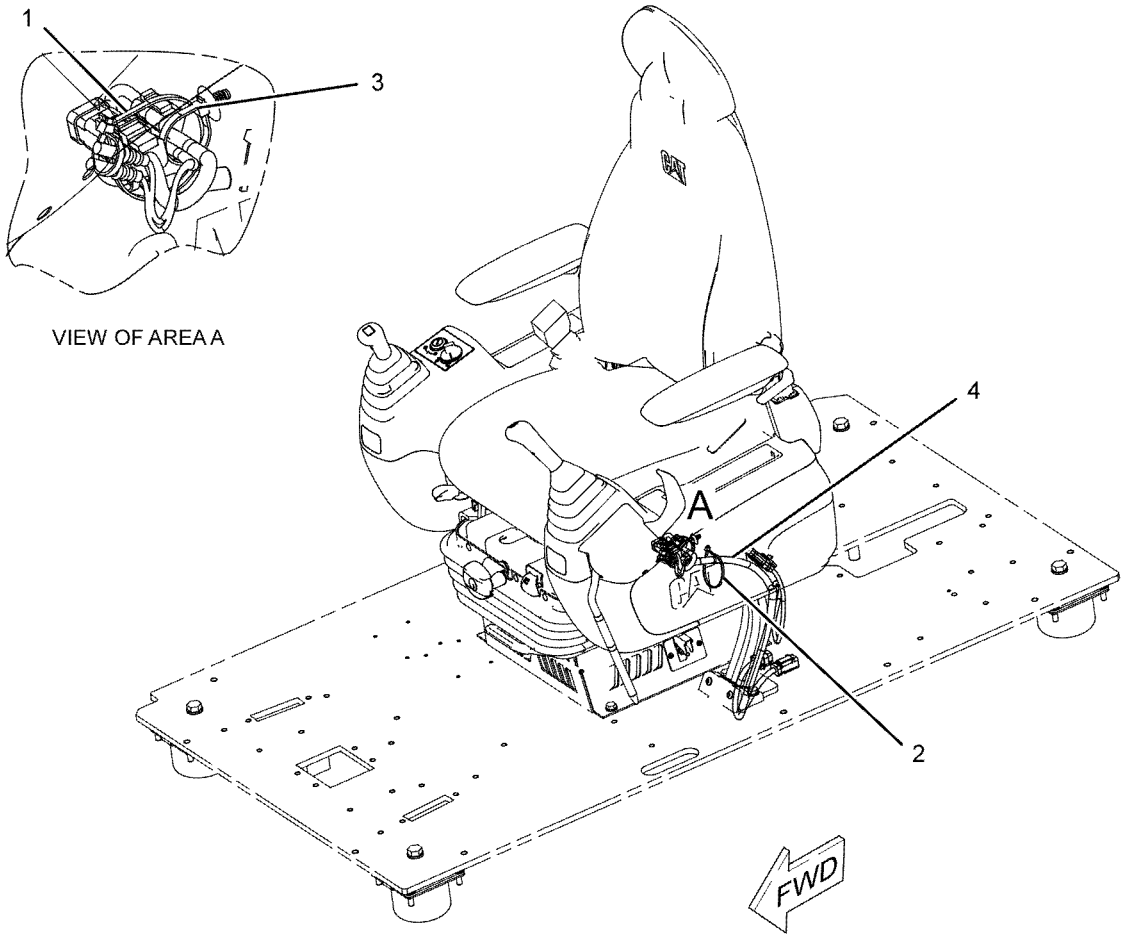

GRAPHIC #1 **<END>** g01150799

398-7005 WIRING GP-CONSOLE

S/N: PBB1-UP; KBS1-UP

PART OF 422-0645 OPERATOR AR

SMCS-1408 **i05474681**

NOTE	PART NUMBER	QTY	PART NAME 1 2 3 4 5 6 (PRODUCT LEVEL)	SEE PAGE
Y	*231-1836*	1	WIRING GP-CONSOLE (LH)	212
Y	*398-7006*	1	WIRING GP-CONSOLE (RH)	215

Y - SEPARATE ILLUSTRATION

<END>

398-7006 WIRING GP-CONSOLE–RH

S/N: PBB1-UP; KBS1-UP

PART OF 398-7005 WIRING GP-CONSOLE

SMCS-1408 **i05474711**

NOTE	REF NO	GRAPHIC REF	PART NUMBER	QTY	PART NAME 1 2 3 4 5 6 (PRODUCT LEVEL)	SEE PAGE
	1	1	**3S-2093**	4	STRAP-CABLE	
	2	1	**7K-1181**	2	STRAP-CABLE	
	3	1	**163-6795**	1	STRAP-CABLE	
	4	1	**398-7012**	1	HARNESS AS-CONSOLE	
		1	**102-8806**	1	KIT-RECEPTACLE (8-PIN)	
					(INCLUDES RECEPTACLE AS AND WEDGE)	
		1	**8T-8730**	9	SOCKET-CONNECTOR (16-GA TO 18-GA)	
		1	**3S-2093**	10	STRAP-CABLE	
		1	*7Y-3967*	2	TERMINAL AS	
		1	**7Y-3963**	1	TERMINAL-BULLET (FEMALE)	
		1	**7Y-3965**	1	TUBE (RECEPTACLE TERMINAL)	
		1	**8T-8737**	17	PLUG-SEAL	
		1	**102-7964**	1	PLUG-CONNECTOR (16-PIN)	
		1	**102-7965**	14	TERMINAL (FEMALE)	
		1	**9W-0844**	8	SOCKET-CONNECTOR (14-GA TO 16-GA)	
		1	**125-4841**	1	WEDGE-PLUG LOCK (21-PIN)	
E		1	**125-7875**		TUBE-HEAT SHRINK (7.44-MM DIA) (15-CM)	
		1	**9X-3402**	20	SOCKET-CONNECTOR (16-GA TO 18-GA)	
					–OR–	
		1	**126-1768**	20	SOCKET-CONNECTOR (14-GA TO 16-GA)	
		1	**155-2265**	1	KIT-CONNECTING PLUG (8-PIN)	
					(INCLUDES PLUG AS, WEDGE & INTERFACE SEAL)	
		1	**230-4009**	1	PLUG AS-CONNECTOR (12-PIN)	
		1	**264-7034**	1	SEAL-CONNECTOR	
		1	**230-4011**	1	PLUG AS-CONNECTOR (2-PIN)	
		1	**264-7029**	1	SEAL-CONNECTOR	
		1	**230-5008**	1	PLUG AS-CONNECTOR (4-PIN)	
		1	**264-7031**	1	SEAL-CONNECTOR	
		1	**230-5010**	1	PLUG AS-CONNECTOR (6-PIN)	
		1	**264-7032**	1	SEAL-CONNECTOR	
		1	**231-2295**	1	PLUG AS-CONNECTOR (8-PIN)	
		1	**264-7033**	1	SEAL-CONNECTOR	
		1	**238-2363**	2	TERMINAL (FEMALE)	
		1	**239-7352**	1	PLUG AS-CONNECTOR (6-PIN)	
		1	**264-7032**	1	SEAL-CONNECTOR	
		1	**342-2972**	1	CAP-CONNECTOR (2-PIN)	
		1	**342-2974**	1	CAP-CONNECTOR (6-PIN)	
E	5	1	**3E-9375**		CONDUIT (10-CM)	

E - ORDER BY THE CENTIMETER

398-7006 **WIRING GP-CONSOLE (*contd.*)** **i05474711**

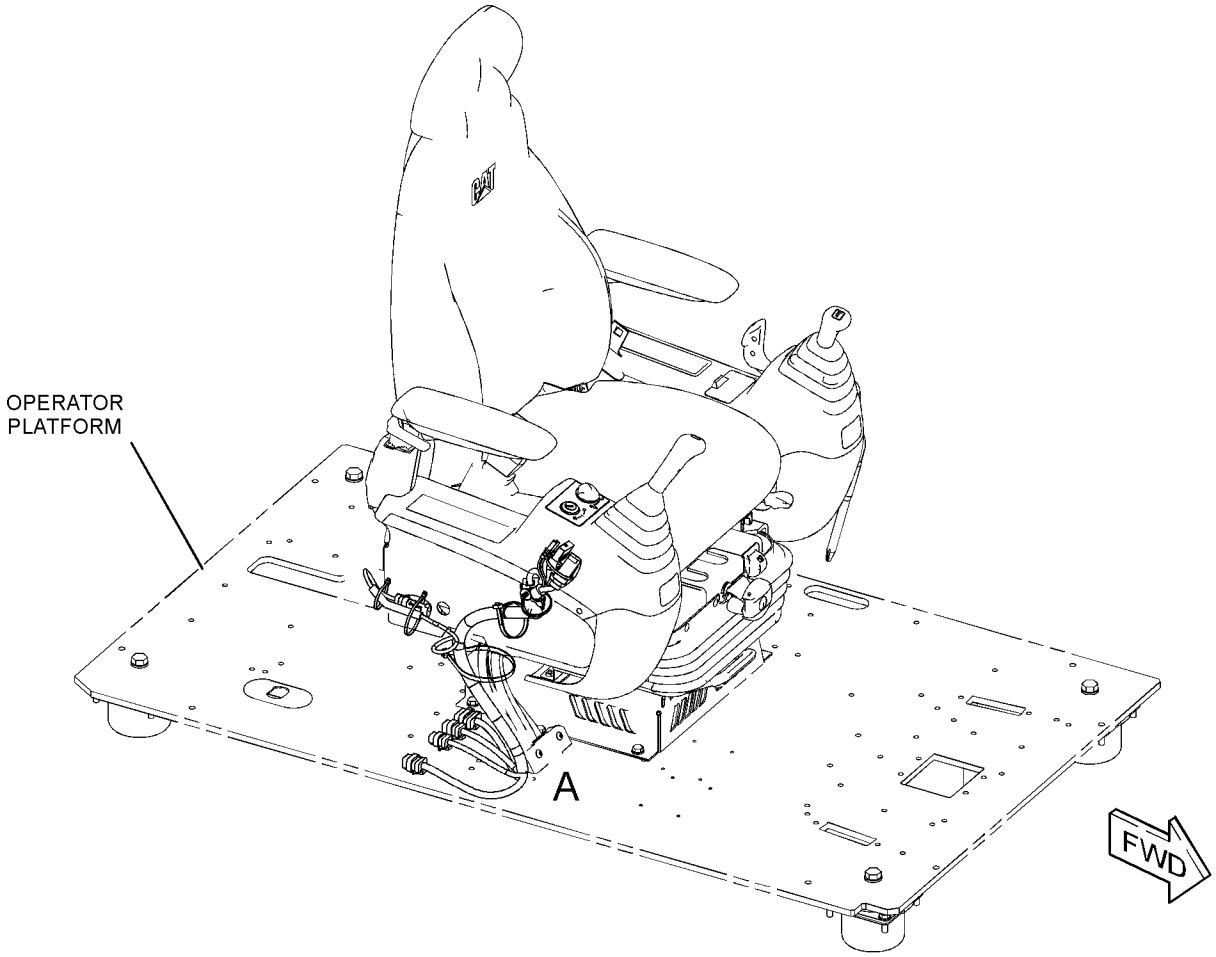

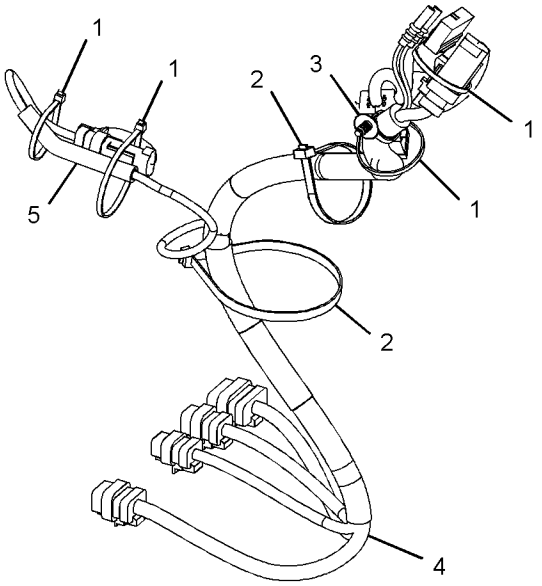

VIEW OF AREA A

GRAPHIC #1

<END>

g03481411

350-8250 WIRING GP-CONVERTER–12-VOLT, 10-AMPERE

S/N: PBB1-UP; KBS1-UP

PART OF 456-0836, 456-0837, 456-0838, 456-0839, 456-0842, 456-0892 OPTION AR-CAB AN ATTACHMENT

SMCS-1421 **i05238944**

NOTE	REF NO	GRAPHIC REF	PART NUMBER	QTY	PART NAME 1 2 3 4 5 6 (PRODUCT LEVEL)	SEE PAGE
	1	1	**251-0483**	1	BRACKET	
	2	1	**324-5770**	1	CONVERTER-POWER (24-VOLT TO 12-VOLT)	
	3	1	**324-5771**	2	SOCKET-AUXILIARY POWER (12-VOLT)	
	4	1	**8T-4121**	2	WASHER-HARD (11X21X2.5-MM THK)	
M	5	1	**8T-4136**	2	BOLT (M10X1.5X25-MM)	
M	6	1	**8T-4171**	4	BOLT (M6X1X12-MM)	
	7	1	**9X-8256**	4	WASHER (6.6X12X2-MM THK)	

M - METRIC PART

350-8250 **WIRING GP-CONVERTER (*contd.*)** **i05238944**

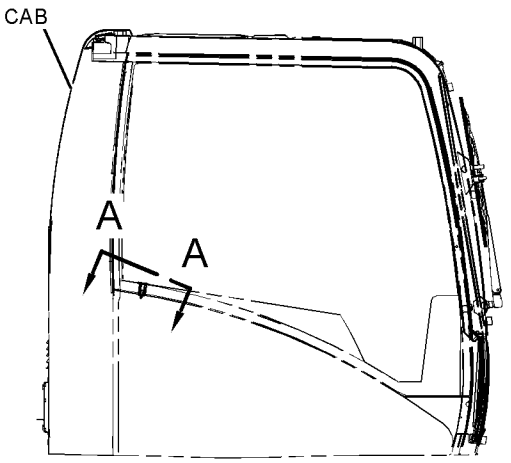

RIGHT SIDE VIEW

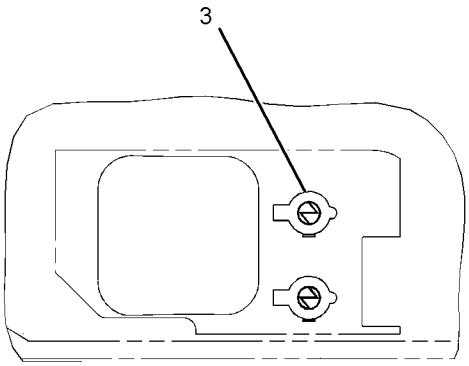

VIEW A-A

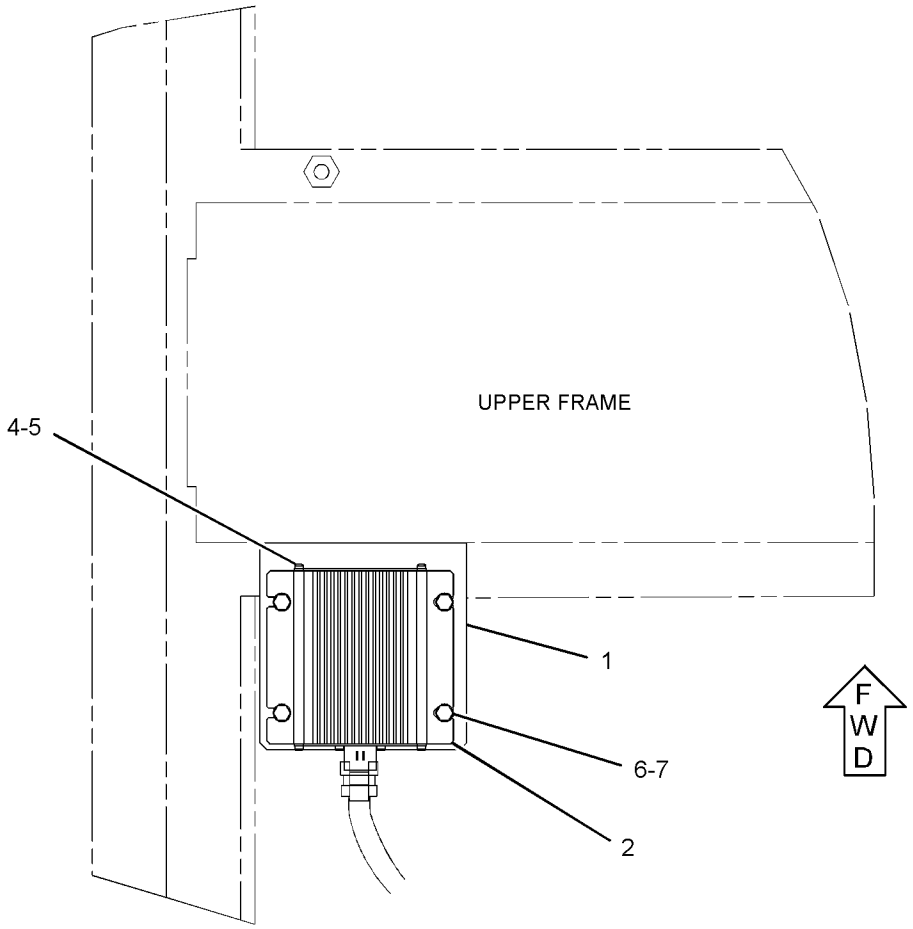

TOP VIEW

GRAPHIC #1 **<END>** g02143732

369-0249 WIRING GP-ENGINE–JUMP START

S/N: PBB1-UP; KBS1-UP

AN ATTACHMENT

SMCS-1408 **i05194831**

NOTE	REF NO	GRAPHIC REF	PART NUMBER	QTY	PART NAME 1 2 3 4 5 6 (PRODUCT LEVEL)	SEE PAGE
	1	1	**2G-1830**	1	RECEPTACLE AS (AUXILIARY START)	
		1	**1S-7251**	2	TERMINAL-CABLE (00-GA, 1/2-IN SCREW)	
E		1	**159-8050**		CABLE (00-GA, BLACK) (49-CM)	
E		1	**159-8049**		CABLE (00-GA, RED) (56-CM)	
D		1	**6V-2722**		TUBE-HEAT SHRINK (25.4-MM DIA) (0.1-M)	
	2	1	**8S-2634**	1	COVER AS	
Y	3	1	**9W-0742**	1	BLOCK GP-JUNCTION (BATTERY)	110
	4	1	**251-0452**	1	BRACKET	
	5	1	**259-5097**	1	CABLE AS	
		1	**1S-7251**	1	TERMINAL-CABLE (00-GA, 1/2-IN SCREW)	
E		1	**159-8049**		CABLE (00-GA, RED) (30-CM)	
		1	**9G-0004**	1	COVER AS-TERMINAL (RED) (BATTERY POSITIVE)	
		1	**8L-8413**	1	STRAP-CABLE	
		1	**8C-5917**	1	TERMINAL AS-BATTERY (POSITIVE)	
		1	**1M-6119**	1	BOLT (5/16-18X1.375-IN)	
		1	**1M-6120**	1	NUT (5/16-18-THD)	
		1	**301-0091**	1	COVER-TERMINAL (RED) (JUNCTION BLOCK)	
	6	1	**301-0091**	1	COVER-TERMINAL (RED)	
	7	1	**388-6867**	1	CABLE AS	
		1	**1S-7251**	1	TERMINAL-CABLE (00-GA, 1/2-IN SCREW)	
		1	**1S-7252**	1	TERMINAL-CABLE (00-GA, 3/8-IN SCREW)	
		1	**8N-0869**	1	COVER-TERMINAL (RED) (STARTING MOTOR)	
E		1	**159-8049**		CABLE (00-GA, RED) (207-CM)	
		1	**301-0091**	1	COVER-TERMINAL (RED) (JUNCTION BLOCK)	
	8	1	**4I-7889**	1	SPACER (11X25X45-MM THK)	
	9	1	**4K-8864**	1	CLIP	
M	10	1	**5C-9553**	4	BOLT (M6X1X16-MM)	
	11	1	**5P-4115**	4	WASHER-HARD (7.2X19X2-MM THK)	
	12	1	**8T-4121**	5	WASHER-HARD (11X21X2.5-MM THK)	
M	13	1	**8T-4136**	2	BOLT (M10X1.5X25-MM)	
M	14	1	**8T-4137**	2	BOLT (M10X1.5X20-MM)	
M	15	1	**8T-5005**	1	BOLT (M10X1.5X70-MM)	

D - ORDER BY THE METER
E - ORDER BY THE CENTIMETER
M - METRIC PART
Y - SEPARATE ILLUSTRATION

369-0249 **WIRING GP-ENGINE (*contd.*)** **i05194831**

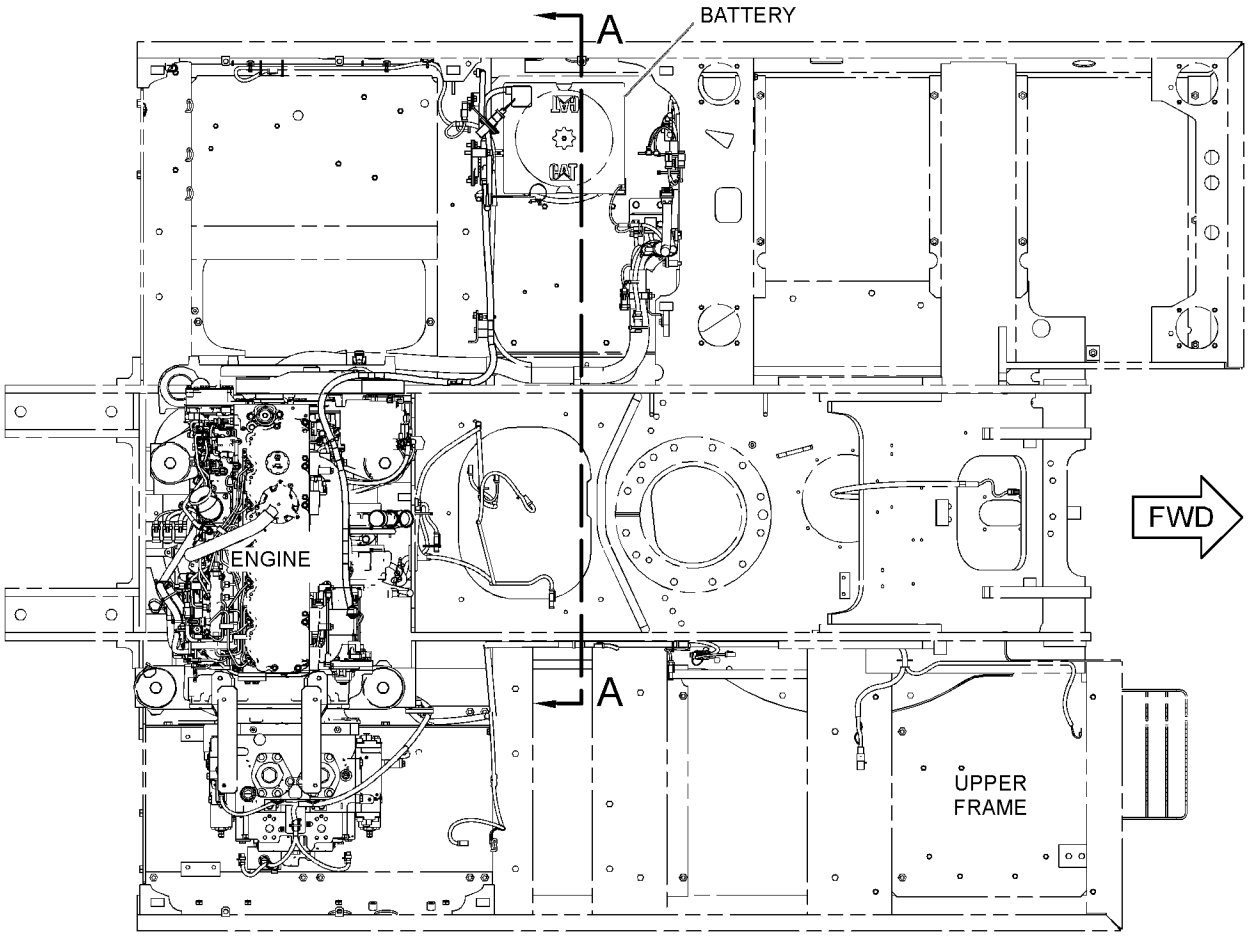

TOP VIEW

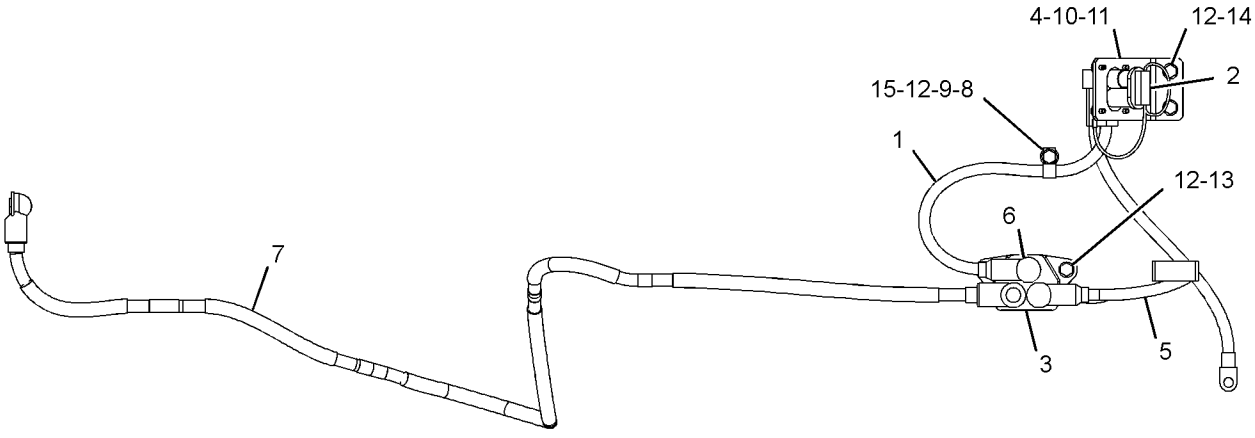

VIEW A-A

GRAPHIC #1 **<END>** g03313758

259-5052 WIRING GP-FINE SWING

S/N: PBB1-UP; KBS1-UP

PART OF 454-5588, 454-5589 CHASSIS AR

SMCS-1408 **i04915059**

NOTE	REF NO	GRAPHIC REF	PART NUMBER	QTY	PART NAME 1 2 3 4 5 6 (PRODUCT LEVEL)	SEE PAGE
	1	1	**111-4836**	1	CLIP	
	2	1	**111-4837**	3	CLIP	
	3	1	**238-2171**	1	BRACKET AS	
	4	1	**259-5129**	1	HARNESS AS-SOLENOID	
		1	**8T-8730**	2	SOCKET-CONNECTOR (16-GA TO 18-GA)	
		1	**3S-2093**	1	STRAP-CABLE	
E		1	**103-2529**		HOSE (100-CM)	
		1	**9W-0844**	2	SOCKET-CONNECTOR (14-GA TO 16-GA)	
		1	**155-2270**	1	KIT-CONNECTING PLUG (2-PIN)	
					(INCLUDES PLUG AS, WEDGE & INTERFACE SEAL)	
		1	**230-4011**	1	PLUG AS-CONNECTOR (2-PIN)	
		1	**264-7029**	1	SEAL-CONNECTOR	
	5	1	**8T-4121**	4	WASHER-HARD (11X21X2.5-MM THK)	
M	6	1	**8T-4136**	1	BOLT (M10X1.5X25-MM)	
M	7	1	**8T-4137**	3	BOLT (M10X1.5X20-MM)	

E - ORDER BY THE CENTIMETER
M - METRIC PART

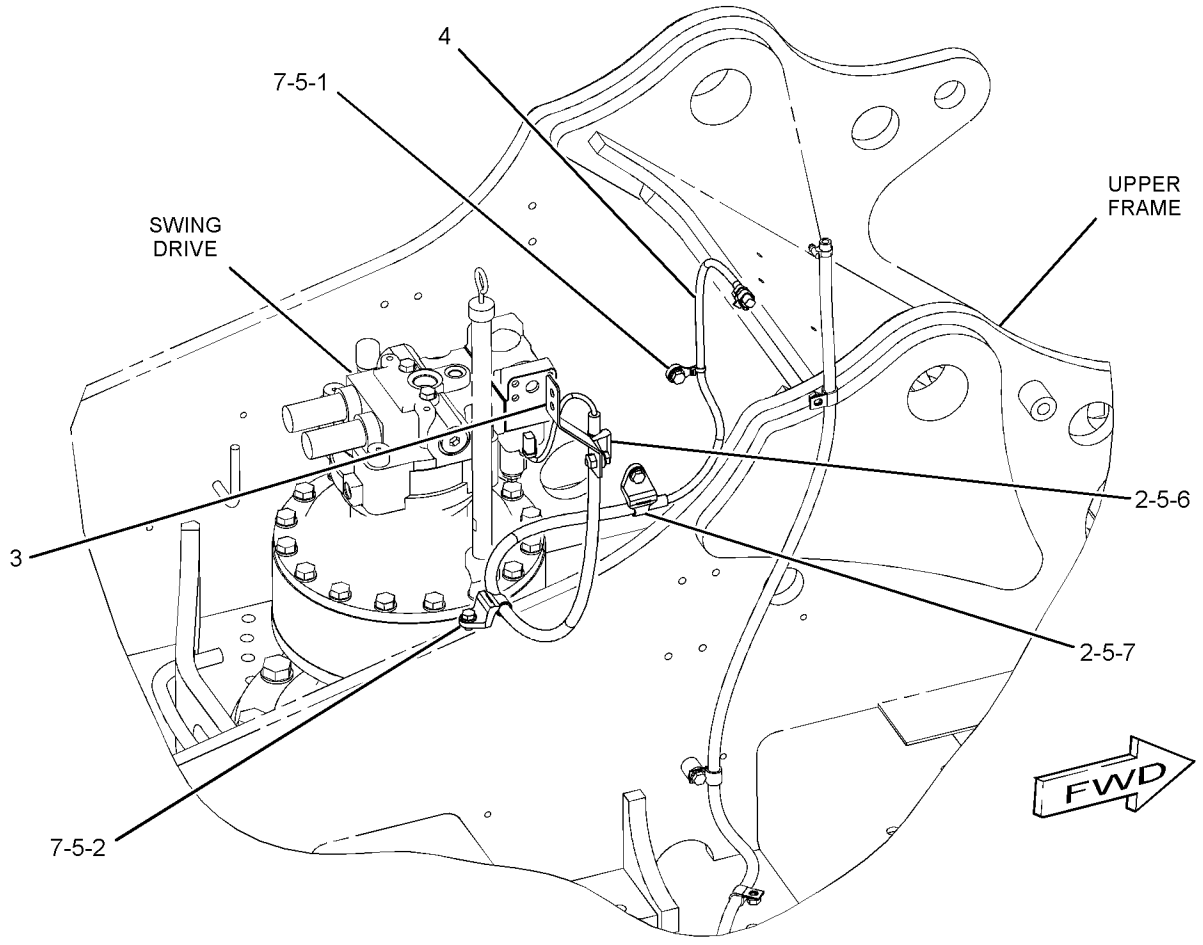

GRAPHIC #1 **<END>** g01228716

369-0246 WIRING GP-HYDRAULIC CONTROL–RETURN FILTER

S/N: PBB1-UP

PART OF 369-4371 CONTROL AR-AUXILIARY

AN ATTACHMENT

SMCS-1408 **i05325343**

NOTE	REF NO	GRAPHIC REF	PART NUMBER	QTY	PART NAME 1 2 3 4 5 6 (PRODUCT LEVEL)	SEE PAGE
	1	1	**3S-2093**	3	STRAP-CABLE	
	2	1	**4I-7889**	1	SPACER (11X25X45-MM THK)	
	3	1	**116-0118**	1	CLIP	
	4	1	**421-3867**	1	HARNESS AS-CHASSIS	
		1	**8T-8737**	1	PLUG-SEAL	
		1	**9X-3402**	2	SOCKET-CONNECTOR (16-GA TO 18-GA)	
		1	**2L-8079**	1	TERMINAL-RING (14-GA TO 16-GA, 3/8-IN SCREW)	
E		1	**125-7874**		TUBE-HEAT SHRINK (5.72-MM DIA) (3-CM)	
		1	**9X-3401**	1	PIN-CONNECTOR (16-GA TO 18-GA)	
		1	**155-2270**	1	KIT-CONNECTING PLUG (2-PIN)	
					(INCLUDES PLUG AS AND WEDGE)	
		1	**243-4505**	1	RECEPTACLE AS-CONNECTOR (2-PIN)	
	5	1	**132-5789**	2	CLIP	
	6	1	**8T-4121**	1	WASHER-HARD (11X21X2.5-MM THK)	
M	7	1	**8T-4191**	1	BOLT (M10X1.5X16-MM)	
M	8	1	**8T-5005**	1	BOLT (M10X1.5X70-MM)	
	9	1	**7K-1181**	13	STRAP-CABLE	

E - ORDER BY THE CENTIMETER
M - METRIC PART

369-0246 **WIRING GP-HYDRAULIC CONTROL (*contd.*)** **i05325343**

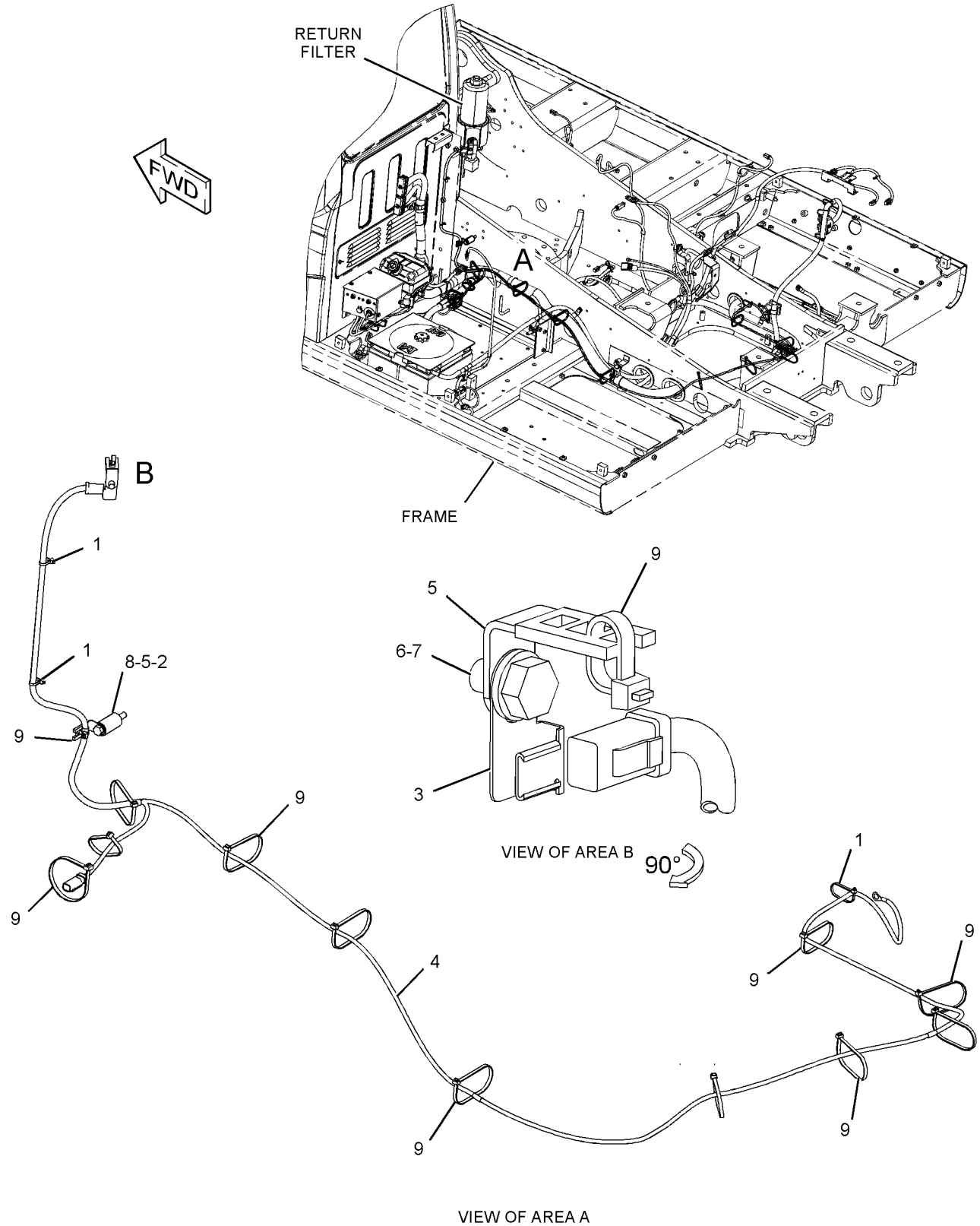

GRAPHIC #1 **<END>** g03384512

369-0243 WIRING GP-MEDIUM PRESSURE

S/N: PBB1-UP; KBS1-UP
PART OF 349-2216 CONTROL AR-AUXILIARY
AN ATTACHMENT

SMCS-1408 **i05858577**

NOTE	REF NO	GRAPHIC REF	PART NUMBER	QTY	PART NAME 1 2 3 4 5 6 (PRODUCT LEVEL)	SEE PAGE
	1	1	**3S-2093**	5	STRAP-CABLE	
	2	1	**7K-1181**	5	STRAP-CABLE	
Y	3	1	**369-0286**	1	HARNESS AS-SOLENOID	128
	4	1	**132-5789**	1	CLIP	

Y - SEPARATE ILLUSTRATION

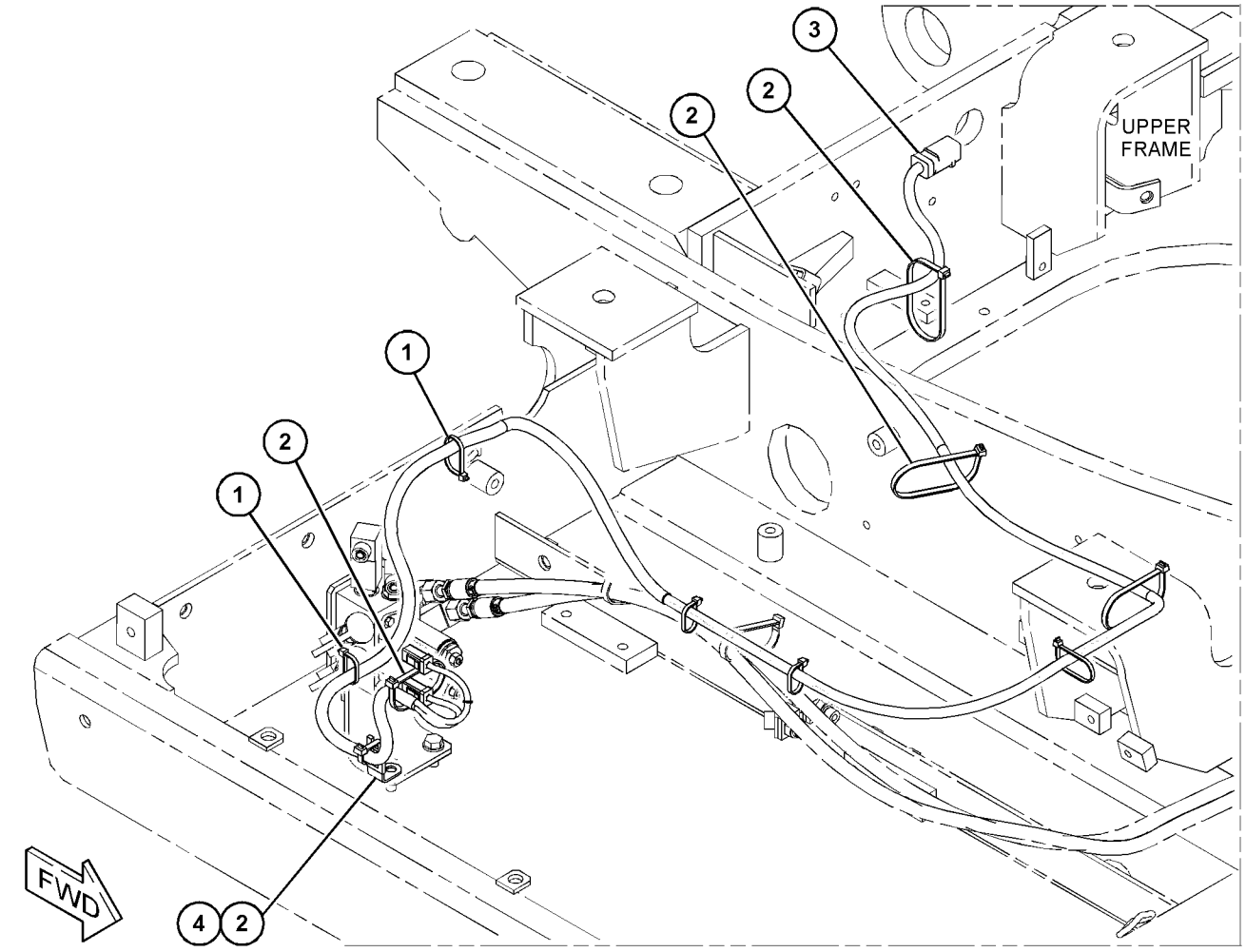

GRAPHIC #1 **<END>** g03474616

398-7004 WIRING GP-PLATFORM

S/N: PBB1-UP; KBS1-UP

PART OF 422-0645 OPERATOR AR

SMCS-1408 **i05852325**

NOTE	REF NO	GRAPHIC REF	PART NUMBER	QTY	PART NAME 1 2 3 4 5 6 (PRODUCT LEVEL)	SEE PAGE
	1	1	**3E-5169**	1	GUARD-SWITCH	
	2	1	**3S-2093**	6	STRAP-CABLE	
	3	1	**7G-1060**	1	STRAP AS-GROUND	
	4	1	**7K-1181**	15	STRAP-CABLE	
	5	1	**111-4836**	4	CLIP	
	6	1	**111-4838**	2	CLIP	
	7	1	**111-4839**	2	STRAP	
	8	1	**116-0118**	11	CLIP	
	9	1	**234-1122**	1	COVER	
	10	1	**251-0299**	1	HARNESS AS-SWITCH (SECONDARY SHUTDOWN)	
		1	**2L-8074**	2	TERMINAL-RING (14-GA TO 16-GA, NO. 6 SCREW)	
		1	**9X-3401**	2	PIN-CONNECTOR (16-GA TO 18-GA)	
					—OR—	
		1	**126-1767**	2	PIN-CONNECTOR (14-GA TO 16-GA)	
		1	**243-4505**	1	RECEPTACLE AS-CONNECTOR (2-PIN)	
	11	1	**441-7659**	1	HARNESS AS-PLATFORM	
		1	**102-8802**	5	KIT-RECEPTACLE (2-PIN)	
		1	**102-8804**	1	KIT-RECEPTACLE (4-PIN)	
					(EACH RECEPTACLE KIT INCLUDES RECEPTACLE AS & WEDGE)	
		1	**8T-8729**	7	PIN-CONNECTOR (16-GA TO 18-GA)	
		1	**8T-8730**	20	SOCKET-CONNECTOR (16-GA TO 18-GA)	
		1	**3S-2093**	21	STRAP-CABLE	
		1	**8T-8737**	34	PLUG-SEAL	
		1	**102-7964**	1	PLUG-CONNECTOR (16-PIN)	
		1	**102-7965**	14	TERMINAL (FEMALE)	
		1	**9W-0852**	7	PIN-CONNECTOR (14-GA TO 16-GA)	
		1	**9W-0844**	33	SOCKET-CONNECTOR (14-GA TO 16-GA)	
		1	**116-0255**	1	TERMINAL-BLADE (10-GA TO 20-GA)	
E		1	**119-3662**		TUBE-HEAT SHRINK (10.85-MM DIA) (7-CM)	
		1	**121-1039**	1	TERMINAL (MALE)	
		1	**121-1168**	2	CONNECTOR-RECEPTACLE	
		1	**121-1173**	35	TERMINAL (MALE)	
		1	**125-4766**	1	PLUG-CONNECTOR (17-PIN)	
		1	**125-4841**	1	WEDGE-PLUG LOCK (21-PIN)	
E		1	**125-7874**		TUBE-HEAT SHRINK (5.72-MM DIA) (25-CM)	
E		1	**125-7875**		TUBE-HEAT SHRINK (7.44-MM DIA) (35-CM)	
		1	**9X-3402**	56	SOCKET-CONNECTOR (16-GA TO 18-GA)	
					—OR—	
		1	**126-1768**	56	SOCKET-CONNECTOR (14-GA TO 16-GA)	
		1	**2L-8050**	2	TERMINAL-RING (6-GA, 1/4-IN SCREW)	
					—OR—	
		1	**2L-8058**	2	TERMINAL-RING (8-GA, 1/4-IN SCREW)	
		1	**2L-8052**	2	TERMINAL-RING (6-GA, 3/8-IN SCREW)	
					—OR—	
		1	**2L-8060**	2	TERMINAL-RING (8-GA, 3/8-IN SCREW)	
		1	**2L-8069**	2	TERMINAL-RING (2-GA TO 10-GA, 3/8-IN SCREW)	
		1	**134-3296**	1	HOUSING-PLUG	
		1	**134-3297**	2	SEAL	
		1	**9X-3401**	15	PIN-CONNECTOR (16-GA TO 18-GA)	
					—OR—	
		1	**126-1767**	15	PIN-CONNECTOR (14-GA TO 16-GA)	
		1	**153-2620**	1	PLUG AS-CONNECTOR (54-PIN, BLACK)	
		1	**163-6759**	1	SEAL	
		1	**155-2270**	8	KIT-CONNECTING PLUG (2-PIN)	
		1	**155-2271**	1	KIT-CONNECTING PLUG (4-PIN)	
					(EACH PLUG KIT INCLUDES PLUG AS,WEDGE & INTERFACE SEAL)	

398-7004 **WIRING GP-PLATFORM (*contd.*)** **i05852325**

NOTE	REF NO	GRAPHIC REF	PART NUMBER	QTY	PART NAME 1 2 3 4 5 6 (PRODUCT LEVEL)	SEE PAGE
		1	**230-4009**	2	PLUG AS-CONNECTOR (12-PIN)	
					(EACH INCLUDES)	
		1	**264-7034**	1	SEAL-CONNECTOR	
		1	**230-4011**	3	PLUG AS-CONNECTOR (2-PIN)	
					(EACH INCLUDES)	
		1	**264-7029**	1	SEAL-CONNECTOR	
		1	**230-5010**	2	PLUG AS-CONNECTOR (6-PIN)	
					(EACH INCLUDES)	
		1	**264-7032**	1	SEAL-CONNECTOR	
		1	**238-2363**	13	TERMINAL (FEMALE)	
		1	**238-2366**	6	TERMINAL (MALE)	
		1	**239-7352**	1	PLUG AS-CONNECTOR (6-PIN)	
		1	**264-7032**	1	SEAL-CONNECTOR	
		1	**243-4507**	1	RECEPTACLE AS-CONNECTOR (4-PIN)	
		1	**243-4508**	2	RECEPTACLE AS-CONNECTOR (6-PIN)	
		1	**243-4509**	1	RECEPTACLE AS-CONNECTOR (8-PIN)	
		1	**243-4510**	1	RECEPTACLE AS-CONNECTOR (12-PIN)	
		1	**342-2972**	1	CAP-CONNECTOR (2-PIN)	
		1	**342-2974**	2	CAP-CONNECTOR (6-PIN)	
	12	1	**096-6166**	2	WASHER-HARD (4.5X9X1-MM THK)	
	13	1	**4D-1836**	1	SWITCH AS-TOGGLE (SECONDARY SHUTDOWN)	
M	14	1	**7X-2621**	7	BOLT (M10X1.5X12-MM)	
M	15	1	**8T-0337**	2	SCREW-MACHINE (M4X0.7X12-MM)	
	16	1	**8T-4121**	14	WASHER-HARD (11X21X2.5-MM THK)	
M	17	1	**8T-4137**	7	BOLT (M10X1.5X20-MM)	

E - ORDER BY THE CENTIMETER
M - METRIC PART

398-7004 **WIRING GP-PLATFORM (*contd.*)** **i05852325**

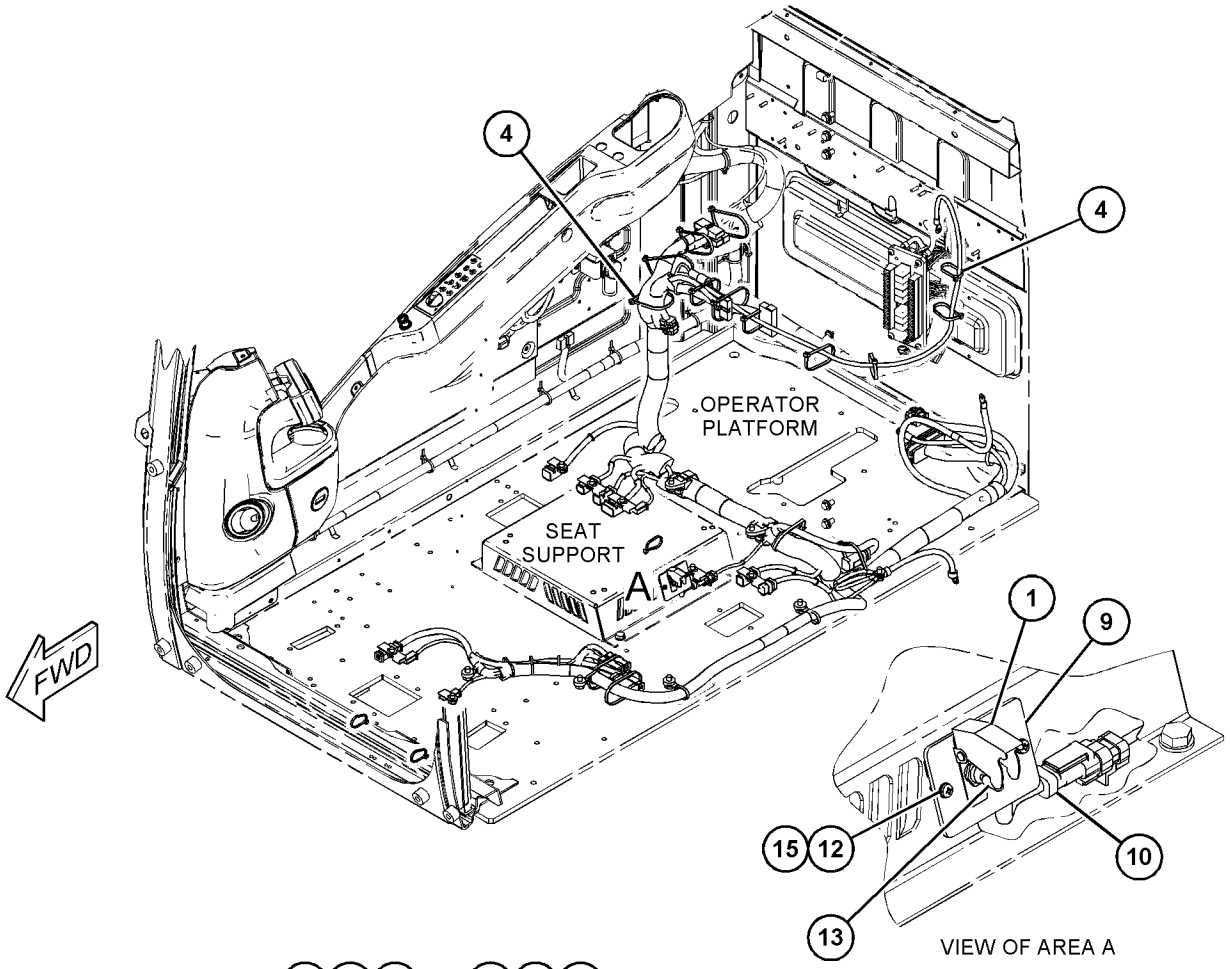

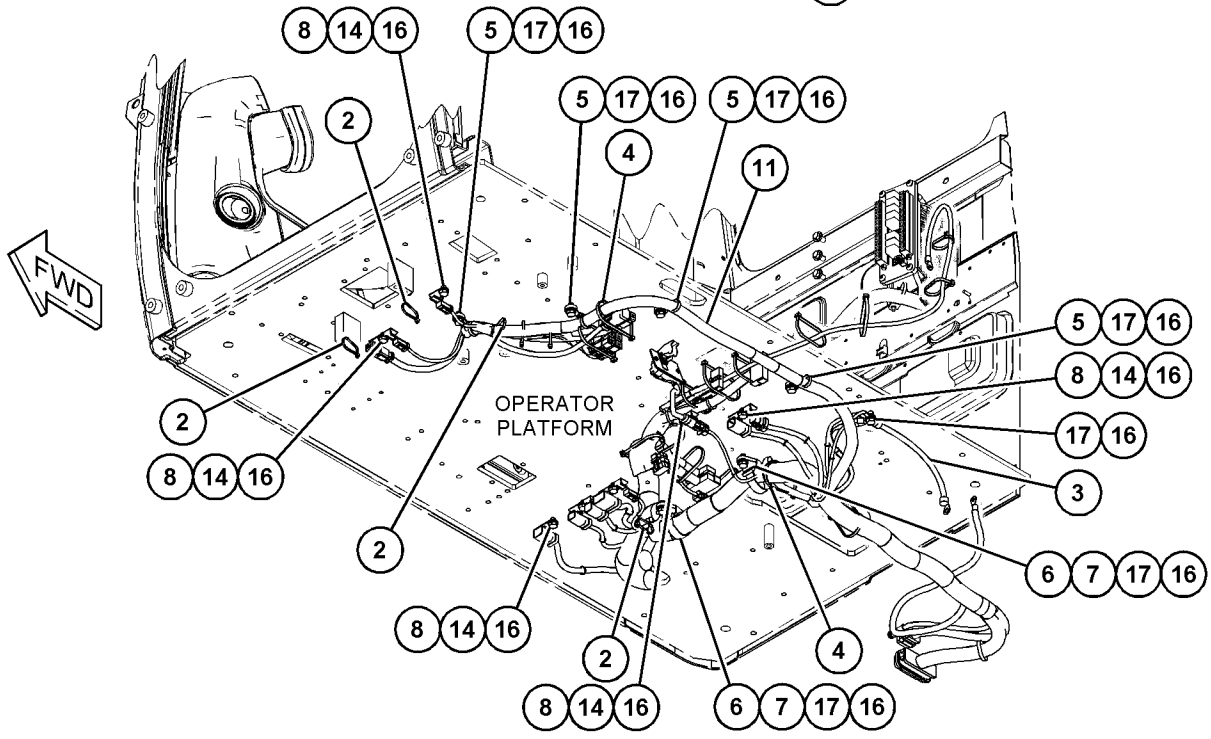

GRAPHIC #1

<END>

g03713857

369-0245 WIRING GP-QUICK COUPLER

S/N: PBB1-UP; KBS1-UP

PART OF 349-2220, 456-0934 CONTROL AR-QUICK COUPLER

AN ATTACHMENT

SMCS-1408, 6129

i05138650

NOTE	REF NO	GRAPHIC REF	PART NUMBER	QTY	PART NAME 1 2 3 4 5 6 (PRODUCT LEVEL)	SEE PAGE
	1	1	**3S-2093**	9	STRAP-CABLE	
	2	1	**7K-1181**	9	STRAP-CABLE	
	3	1	**419-6412**	1	HARNESS AS-SOLENOID (QUICK COUPLER)	
		1	**8T-8730**	1	SOCKET-CONNECTOR (16-GA TO 18-GA)	
		1	**8T-8737**	1	PLUG-SEAL	
		1	**9W-0852**	1	PIN-CONNECTOR (14-GA TO 16-GA)	
		1	**9W-0844**	1	SOCKET-CONNECTOR (14-GA TO 16-GA)	
		1	**2L-8079**	1	TERMINAL-RING (14-GA TO 16-GA, 3/8-IN SCREW)	
		1	**230-4011**	1	PLUG AS-CONNECTOR (2-PIN)	
		1	**264-7029**	1	SEAL-CONNECTOR	
		1	**243-4505**	1	RECEPTACLE AS-CONNECTOR (2-PIN)	

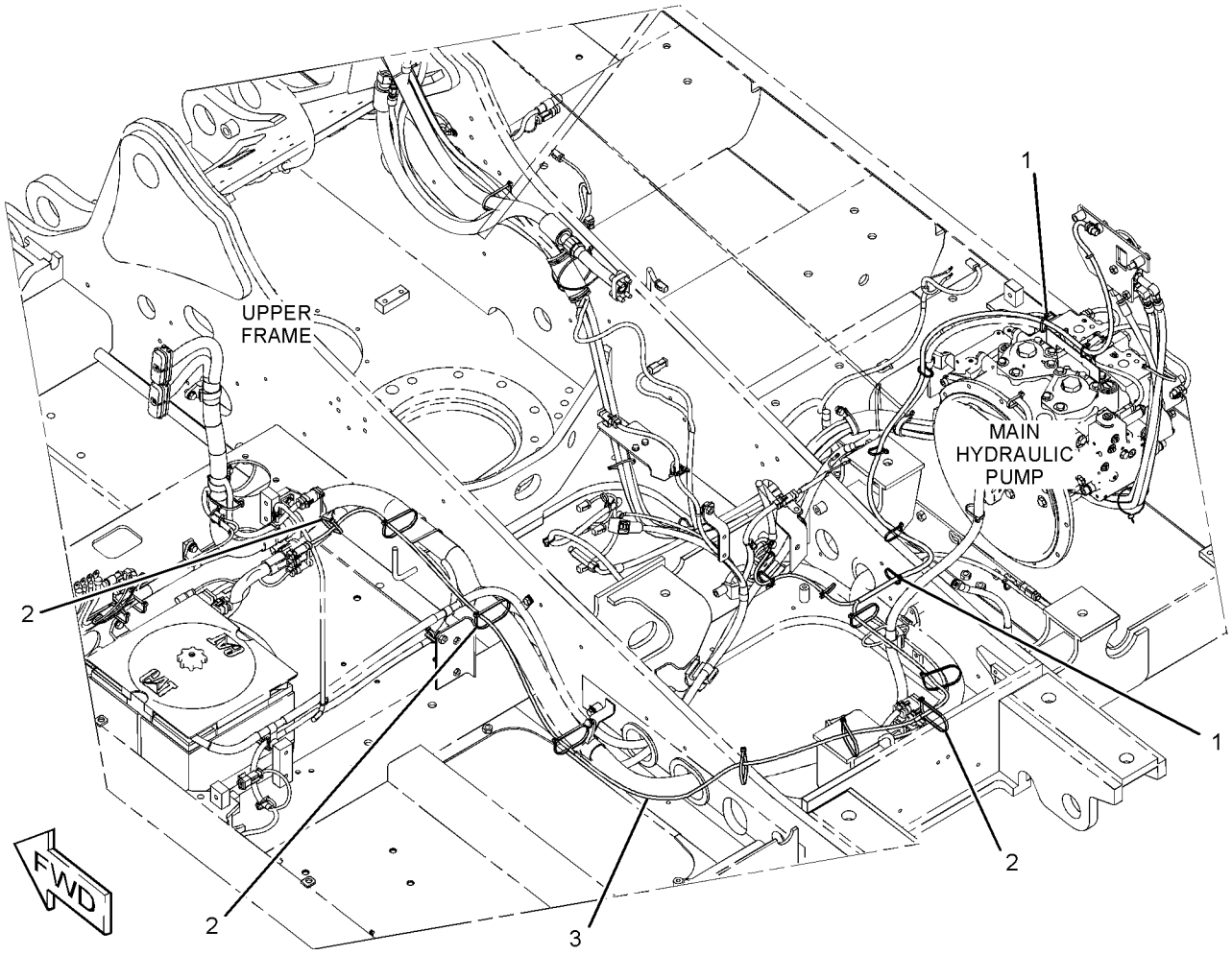

GRAPHIC #1

<END>

g03314978

238-1570 WIRING GP-REFUELING PUMP

S/N: PBB1-UP; KBS1-UP
PART OF 229-1784 PUMP AR-FUEL TRANSFER
AN ATTACHMENT

SMCS-1408 **i04472054**

NOTE	REF NO	GRAPHIC REF	PART NUMBER	QTY	PART NAME 1 2 3 4 5 6 (PRODUCT LEVEL)	SEE PAGE
	1	1	**3S-2093**	16	STRAP-CABLE	
	2	1	**9X-3495**	1	CLIP AS	
	3	1	**149-5050**	1	RELAY (24-VOLT) (REFUELING PUMP, STOP)	
	3A	1	**149-5050**	1	RELAY (24-VOLT) (REFUELING PUMP, START)	
	4	1	**213-0772**	1	SWITCH AS-MAGNETIC (24-VOLT) (REFUELING PUMP RELAY)	
	5	1	**238-1579**	1	HARNESS AS-PUMP (REFUELING)	
		1	**8T-8729**	2	PIN-CONNECTOR (16-GA TO 18-GA)	
		1	**8T-8730**	5	SOCKET-CONNECTOR (16-GA TO 18-GA)	
		1	**3S-2093**	3	STRAP-CABLE	
		1	**8T-8737**	1	PLUG-SEAL	
		1	**116-0126**	1	HOUSING-PLUG	
		1	**116-0128**	2	SEAL	
		1	**116-0255**	2	TERMINAL-BLADE (10-GA TO 20-GA)	
E		1	**119-3662**		TUBE-HEAT SHRINK (10.85-MM DIA) (7-CM)	
		1	**121-1038**	1	HOUSING-RECEPTACLE	
		1	**121-1039**	2	TERMINAL (MALE)	
E		1	**125-7875**		TUBE-HEAT SHRINK (7.44-MM DIA) (10-CM)	
		1	**2L-8065**	1	TERMINAL-RING (10-GA TO 12-GA, NO. 8 SCREW)	
		1	**2L-8067**	2	TERMINAL-RING (10-GA TO 12-GA, 1/4-IN SCREW)	
		1	**2L-8075**	1	TERMINAL-RING (14-GA TO 16-GA, NO. 8 SCREW)	
		1	**2L-8077**	1	TERMINAL-RING (14-GA TO 16-GA, 1/4-IN SCREW)	
		1	**149-5051**	2	CONNECTOR-RECEPTACLE	
		1	**149-5069**	4	TERMINAL-BLADE (14-GA TO 20-GA)	
		1	**149-5070**	4	TERMINAL-BLADE (16-GA TO 20-GA)	
		1	**155-2270**	1	KIT-CONNECTING PLUG (2-PIN)	
					(INCLUDES PLUG AS, WEDGE & INTERFACE SEAL)	
		1	**197-4385**	1	DIODE	
		1	**230-4011**	2	PLUG AS-CONNECTOR (2-PIN)	
					(EACH INCLUDES)	
		1	**264-7029**	1	SEAL-CONNECTOR	
		1	**243-4505**	1	RECEPTACLE AS-CONNECTOR (2-PIN)	
C	6	1	**319-1335**	1	HARNESS AS-WIRING	
		1	**8T-8730**	3	SOCKET-CONNECTOR (16-GA TO 18-GA)	
		1	**8T-8737**	1	PLUG-SEAL	
		1	**2L-8079**	1	TERMINAL-RING (14-GA TO 16-GA, 3/8-IN SCREW)	
		1	**230-4011**	2	PLUG AS-CONNECTOR (2-PIN)	
					(EACH INCLUDES)	
		1	**264-7029**	1	SEAL-CONNECTOR	
Y	7	1	**238-1594**	1	SWITCH GP-PUSH BUTTON (REFUELING PUMP, START)	170
Y	8	1	**238-1596**	1	SWITCH GP-PUSH BUTTON (REFUELING PUMP, STOP)	171
M	9	1	**096-2591**	2	SCREW-MACHINE (M5X0.8X35-MM)	
M	10	1	**7X-2619**	2	BOLT (M6X1X10-MM)	
C	11	1	**8T-0328**	2	WASHER-HARD (5.5X10X1-MM THK)	
M	12	1	**8T-4199**	1	BOLT (M8X1.25X12-MM)	
	13	1	**8T-4224**	1	WASHER-HARD (8.8X16X2-MM THK)	
	14	1	**9X-8256**	2	WASHER (6.6X12X2-MM THK)	
	15	1	**275-6993**	1	COVER	
C	16	1	**7K-1181**	11	STRAP-CABLE	

C - CHANGE FROM PREVIOUS TYPE
E - ORDER BY THE CENTIMETER
M - METRIC PART
Y - SEPARATE ILLUSTRATION

238-1570 **WIRING GP-REFUELING PUMP (*contd.*)** **i04472054**

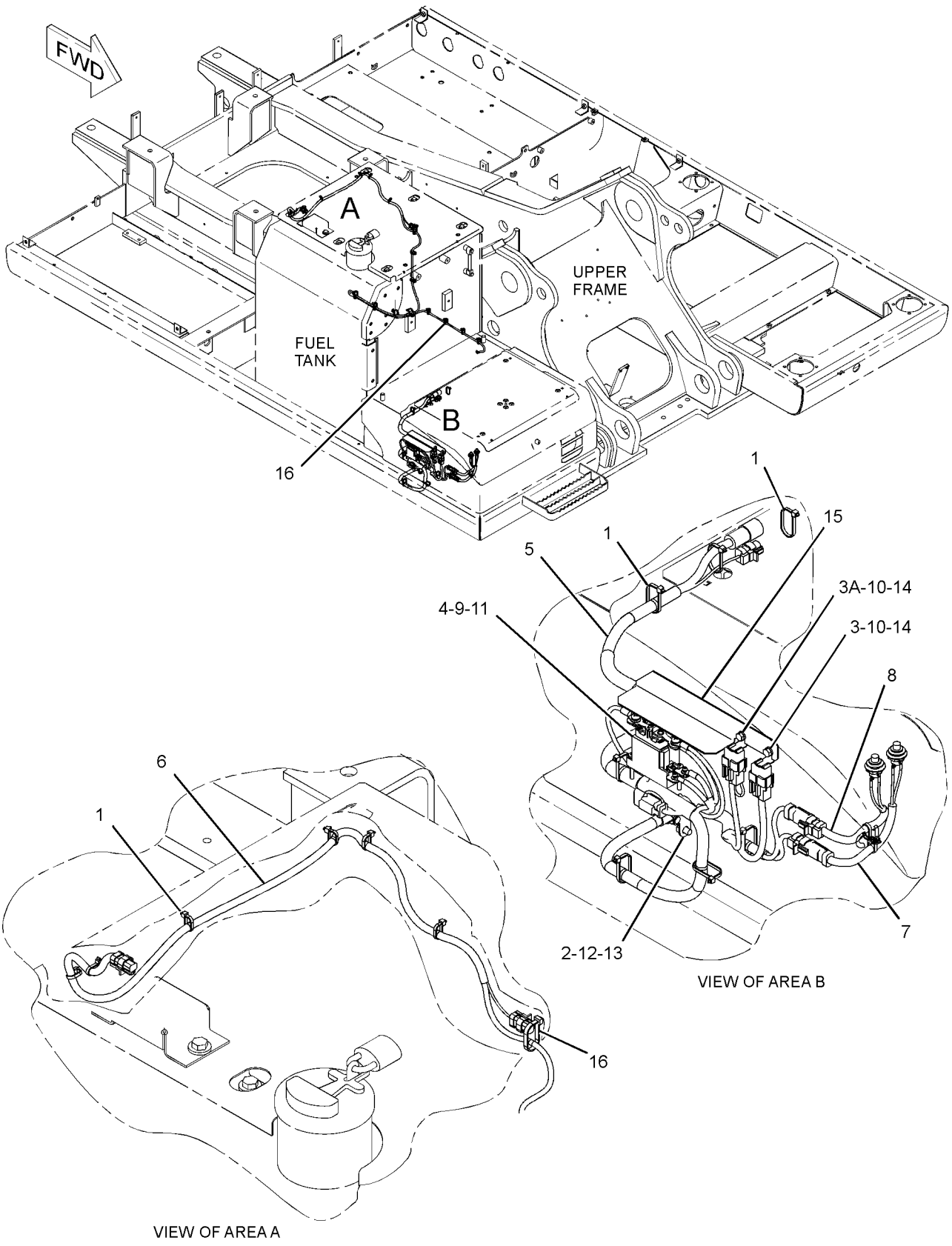

GRAPHIC #1 **<END>** g01620056

353-0545 DRIVE GP-FINAL—WITH MOTOR, SPROCKET

S/N: PBB1-UP; KBS1-UP

PART OF 267-6767 POWER TRAIN AR

SMCS-4050 **i04707969**

NOTE	REF NO	GRAPHIC REF	PART NUMBER	QTY	PART NAME 1 2 3 4 5 6 (PRODUCT LEVEL)	SEE PAGE
Y	1	1	*145-3042*	1	SPROCKET GP	239
Y	2	1	*353-0609*	1	DRIVE GP-FINAL (WITH MOTOR)	232

Y - SEPARATE ILLUSTRATION

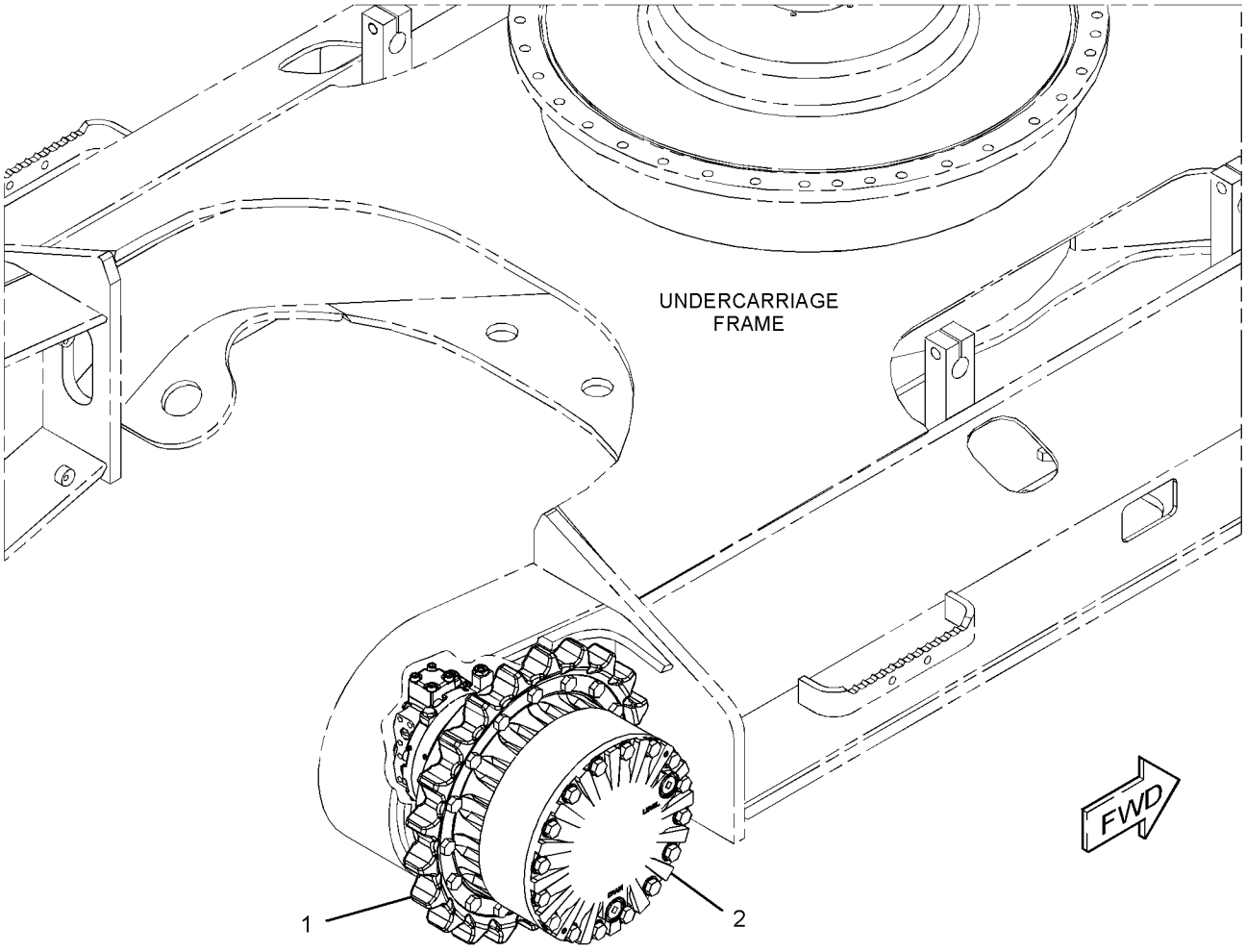

GRAPHIC #1 **<END>** g02813096

353-0609 DRIVE GP-FINAL—WITH MOTOR

S/N: PBB1-UP; KBS1-UP

PART OF 353-0545 DRIVE GP-FINAL

SMCS-4050 **i04422616**

NOTE	REF NO	GRAPHIC REF	PART NUMBER	QTY	PART NAME 1 2 3 4 5 6 (PRODUCT LEVEL)	SEE PAGE
Y	1	1	*334-9986*	1	MOTOR & MTG GP-TRAVEL	571
Y	2	1	**353-0611**	1	DRIVE GP-FINAL (WITHOUT MOTOR)	233

Y - SEPARATE ILLUSTRATION

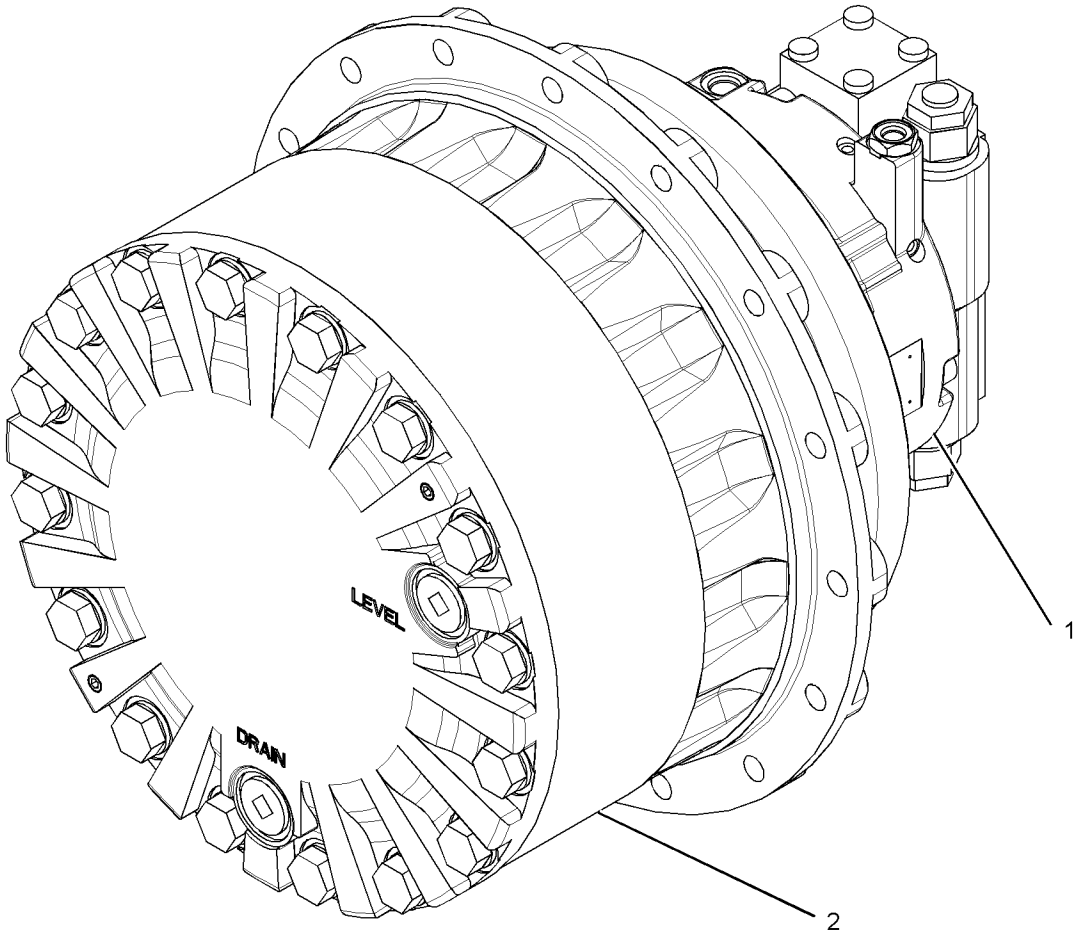

GRAPHIC #1 **<END>** g01522287

353-0611 DRIVE GP-FINAL—WITHOUT MOTOR

S/N: PBB1-UP; KBS1-UP

PART OF 353-0609 DRIVE GP-FINAL

SMCS-4050 **i05750602**

NOTE	REF NO	GRAPHIC REF	PART NUMBER	QTY	PART NAME 1 2 3 4 5 6 (PRODUCT LEVEL)	SEE PAGE
	1	1	**6I-6583**	1	GEAR-SUN (13-TEETH)	
	2	1	**6I-6585**	3	GEAR-PLANETARY (44-TEETH)	
	3	1	**7Y-0223**	3	SHAFT-PLANETARY	
	4	1	**7Y-0225**	3	SHAFT-PLANETARY	
	5	1	**7Y-1426**	1	COVER	
	6	1	**7Y-1430**	1	GEAR-SUN (17-TEETH)	
	7	1	**7Y-1431**	3	GEAR-PLANETARY (30-TEETH)	
	8	1	**7Y-1432**	1	CARRIER	
	9	1	**7Y-1433**	1	CARRIER	
	10	1	**7Y-1558**	1	SPACER (90X119.6X7.5-MM THK)	
	11	1	**094-0580**	1	PLATE (10-MM THK)	
	12	1	**094-0611**	6	WASHER (47.3X76X1-MM THK)	
M	13	1	**094-1528**	6	WASHER (53X84X1-MM THK)	
	14	1	**095-0891**	6	PIN-SPRING	
B	15	1	**096-1773**	1	SHIM (0.15-MM THK)	
B			**096-1774**	1	SHIM (0.3-MM THK)	
B			**096-1775**	1	SHIM (0.4-MM THK)	
B			**096-1776**	1	SHIM (0.5-MM THK)	
B			**096-1777**	1	SHIM (0.6-MM THK)	
B			**096-1778**	1	SHIM (0.7-MM THK)	
B			**096-1779**	1	SHIM (0.8-MM THK)	
B			**096-1780**	1	SHIM (1-MM THK)	
B			**096-1781**	1	SHIM (1.6-MM THK)	
	24	1	**114-1539**	6	PIN-DOWEL	
	25	1	**148-4715**	1	GEAR-COUPLING (55-TEETH)	
	26	1	**174-4874**	1	SEAL GP-DUO-CONE	
	27	1	**191-3235**	1	HOUSING	
	28	1	**227-6034**	14	BOLT-FLANGE HEAD (M16X2X60-MM)	
	29	1	**296-6220**	2	BALL BEARING	
	30	1	**296-6268**	3	BEARING AS-ROLLER	
	31	1	**296-6269**	6	BEARING-ROLLER	
Y	32	1	**296-6300**	1	GEAR GP-TRANSFER	238
	33	1	**353-0612**	1	HOUSING-MOTOR	
M	34	1	**095-1270**	2	SETSCREW-SOCKET (M12X1.75X30-MM)	
	35	1	**3E-2338**	2	PLUG-PIPE	
	36	1	**6D-0692**	1	SEAL-O-RING	
	37	1	**7M-8485**	2	SEAL-O-RING	
	38	1	**453-4137**	16	BOLT (M20X2.5X180-MM)	
	39	1	**7Y-1434**	1	SPACER (40X69.5X6-MM THK)	
	40	1	**451-2176**	16	WASHER-HARD (22X35X3.5-MM THK)	
BF			**1U-8846**		SEALANT-GASKET	

B - USE AS REQUIRED
F - NOT SHOWN
M - METRIC PART
Y - SEPARATE ILLUSTRATION

353-0611 **DRIVE GP-FINAL (*contd.*)** **i05750602**

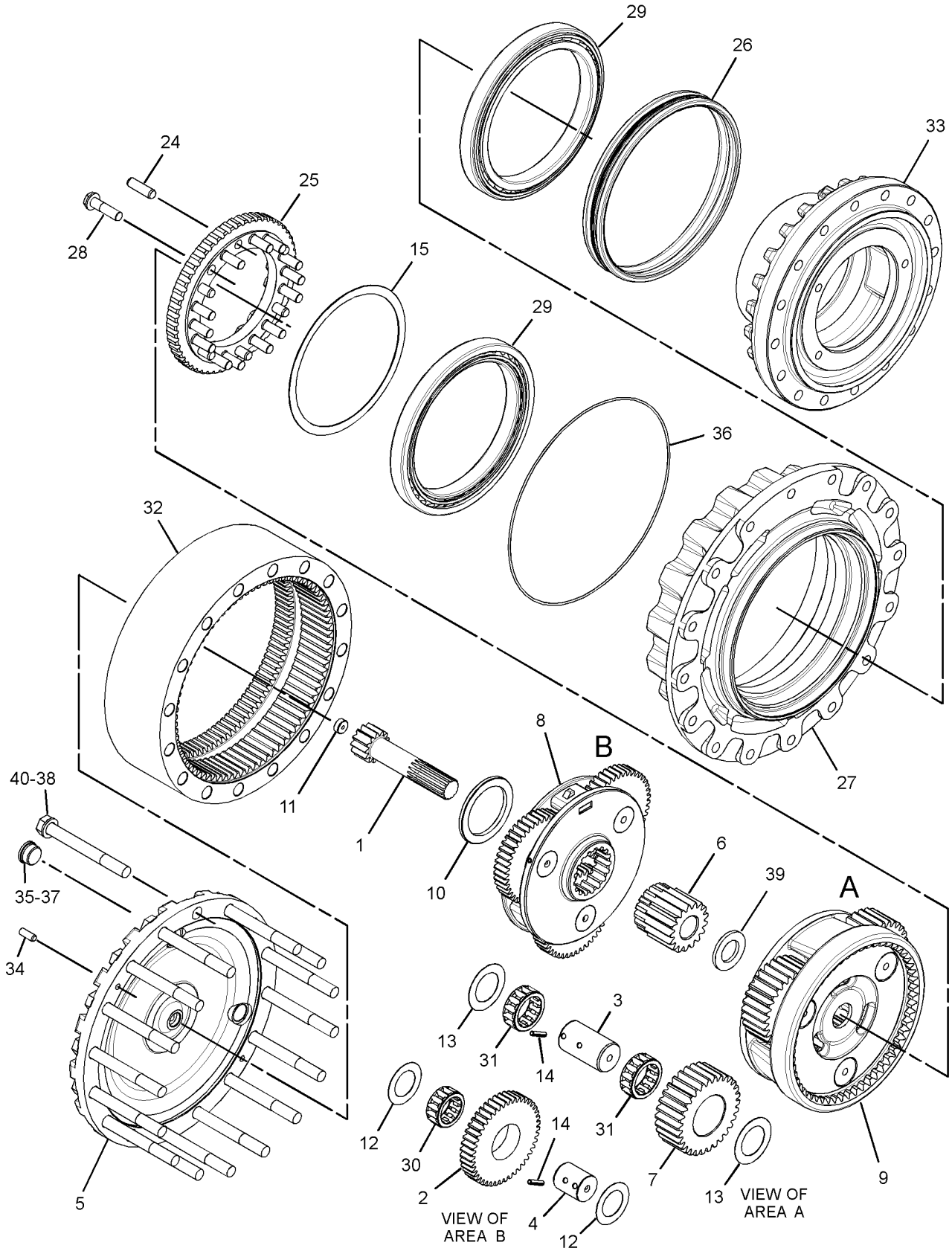

GRAPHIC #1

<END>

g03372343

267-6783 GEAR GP-RING

S/N: PBB1-UP; KBS1-UP

PART OF 296-6300 GEAR GP-TRANSFER

SMCS- **i05349523**

NOTE	REF NO	GRAPHIC REF	PART NUMBER	QTY	PART NAME 1 2 3 4 5 6 (PRODUCT LEVEL)	SEE PAGE
					(NO SERVICED PARTS)	

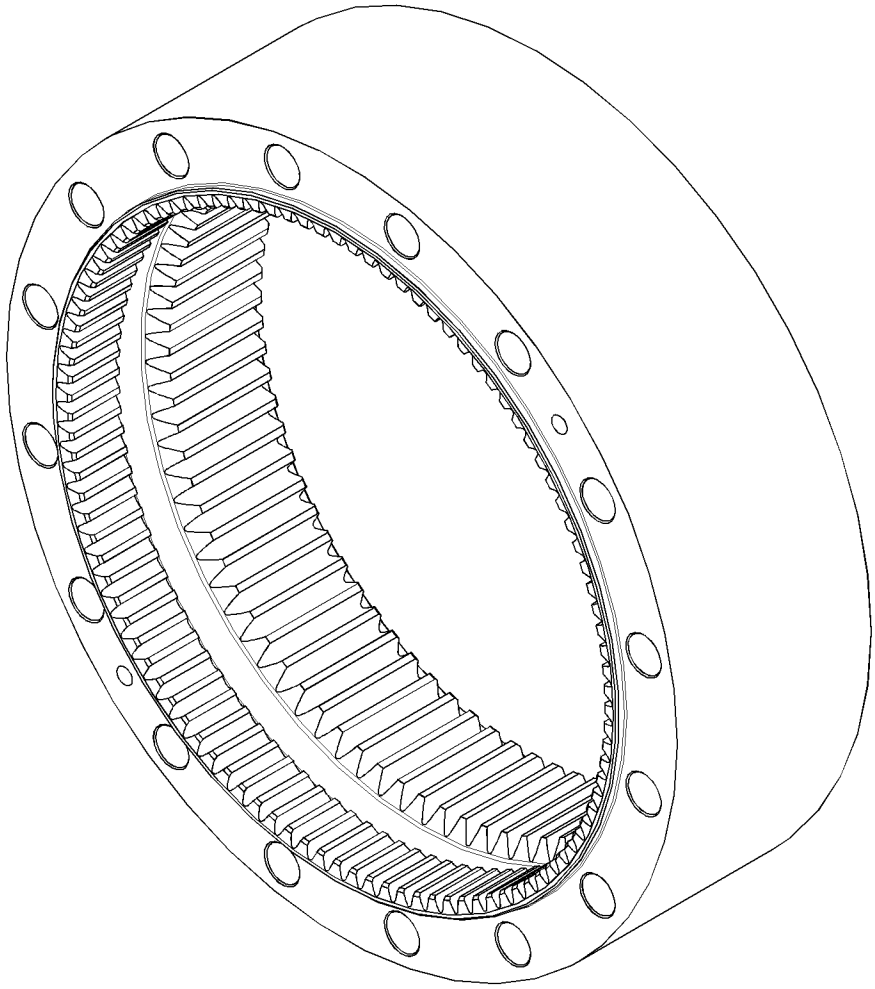

GRAPHIC #1 **<END>** g02114513

296-6301 GEAR GP-RING

S/N: PBB1-UP; KBS1-UP

PART OF 296-6300 GEAR GP-TRANSFER

SMCS- **i03343731**

NOTE	REF NO	GRAPHIC REF	PART NUMBER	QTY	PART NAME 1 2 3 4 5 6 (PRODUCT LEVEL)	SEE PAGE
	1	1	**148-4705**	1	GEAR-RING (104-TEETH)	
	2	1	**148-4708**	1	GEAR-RING (79-TEETH)	

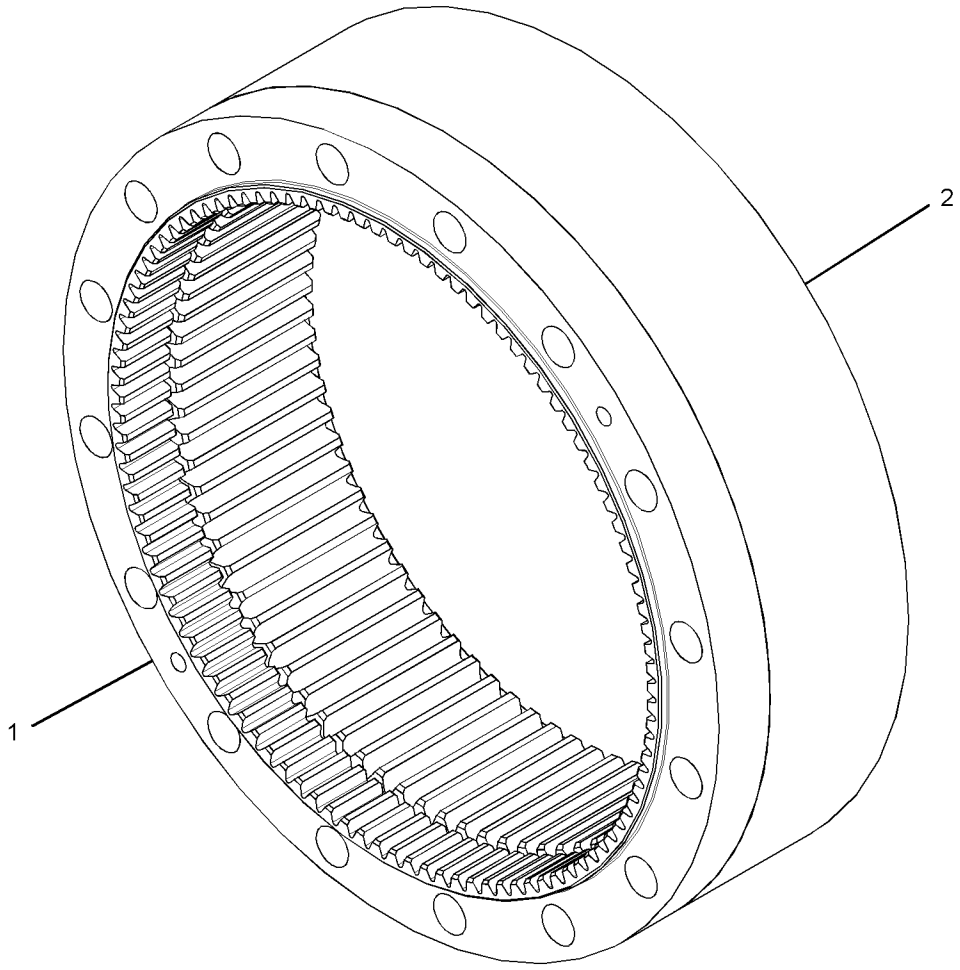

GRAPHIC #1 **<END>** g01731180

296-6302 GEAR GP-RING

S/N: PBB1-UP; KBS1-UP

PART OF 296-6300 GEAR GP-TRANSFER

SMCS- **i03343745**

NOTE	REF NO	GRAPHIC REF	PART NUMBER	QTY	PART NAME 1 2 3 4 5 6 (PRODUCT LEVEL)	SEE PAGE
	1	1	**102-6455**	1	GEAR-RING (104-TEETH)	
	2	1	**102-6457**	1	GEAR-RING (79-TEETH)	

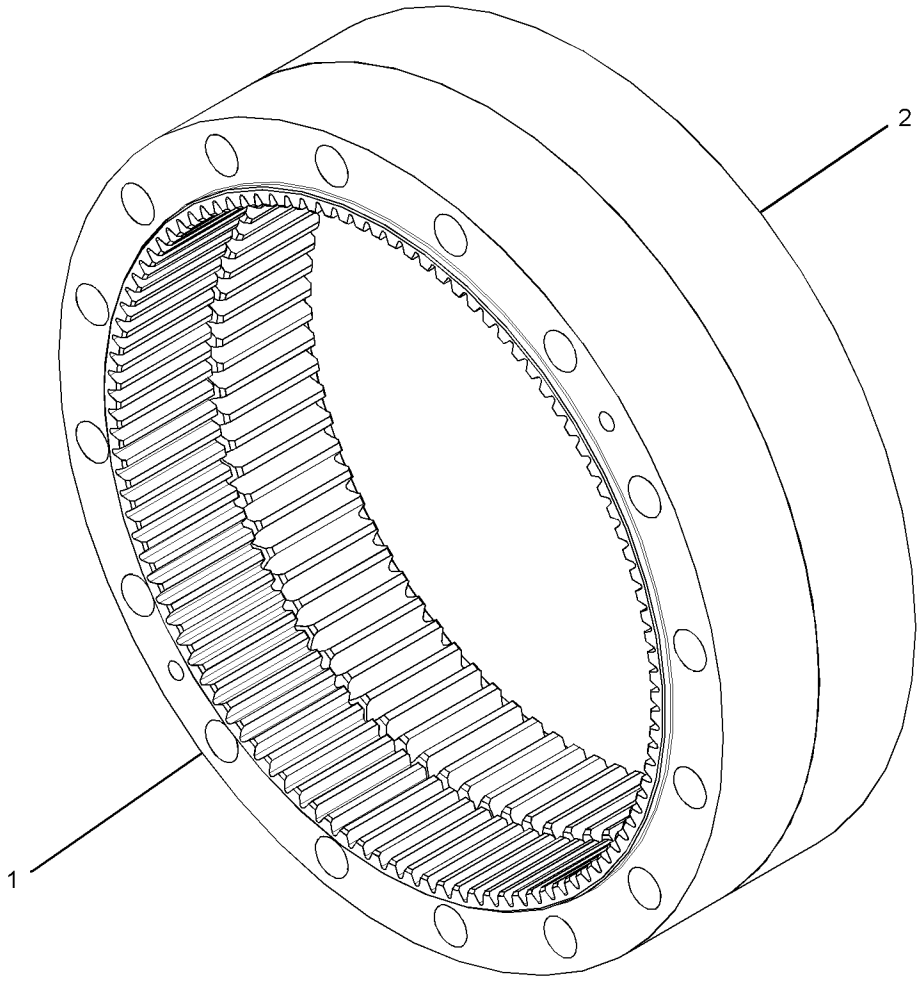

GRAPHIC #1 **<END>** g01731178

296-6300 GEAR GP-TRANSFER

S/N: PBB1-UP; KBS1-UP

PART OF 353-0611 DRIVE GP-FINAL

SMCS-1164, 3159 **i03343727**

NOTE	PART NUMBER	QTY	PART NAME 1 2 3 4 5 6 (PRODUCT LEVEL)	SEE PAGE
Y	*267-6783*	1	GEAR GP-RING	235
			—OR—	
Y	*296-6301*	1	GEAR GP-RING	236
			—OR—	
Y	*296-6302*	1	GEAR GP-RING	237

Y - SEPARATE ILLUSTRATION

<END>

267-6767 POWER TRAIN AR

S/N: PBB1-UP; KBS1-UP

PART OF 454-5584, 454-5585 GENERAL AR

SMCS-3000, 4000 **i05440743**

NOTE	PART NUMBER	QTY	PART NAME 1 2 3 4 5 6 (PRODUCT LEVEL)	SEE PAGE
Y	*148-4679*	1	DRIVE GP-SWING (WITH MOTOR)	392
Y	*227-6166*	1	FASTENER GP-SWING & FINAL DR	395
Y	*353-0545*	2	DRIVE GP-FINAL (WITH MOTOR, SPROCKET)	231

Y - SEPARATE ILLUSTRATION

<END>

145-3042 SPROCKET GP

S/N: PBB1-UP; KBS1-UP
NON-SEGMENTED
PART OF 353-0545 DRIVE GP-FINAL

SMCS-4164 **i05656846**

NOTE	REF NO	GRAPHIC REF	PART NUMBER	QTY	PART NAME 1 2 3 4 5 6 (PRODUCT LEVEL)	SEE PAGE
	1	1	**8E-9805**	1	SPROCKET-TRACK (21-TEETH)	
M	2	1	**447-1717**	16	BOLT (M20X2.5X45-MM)	

M - METRIC PART

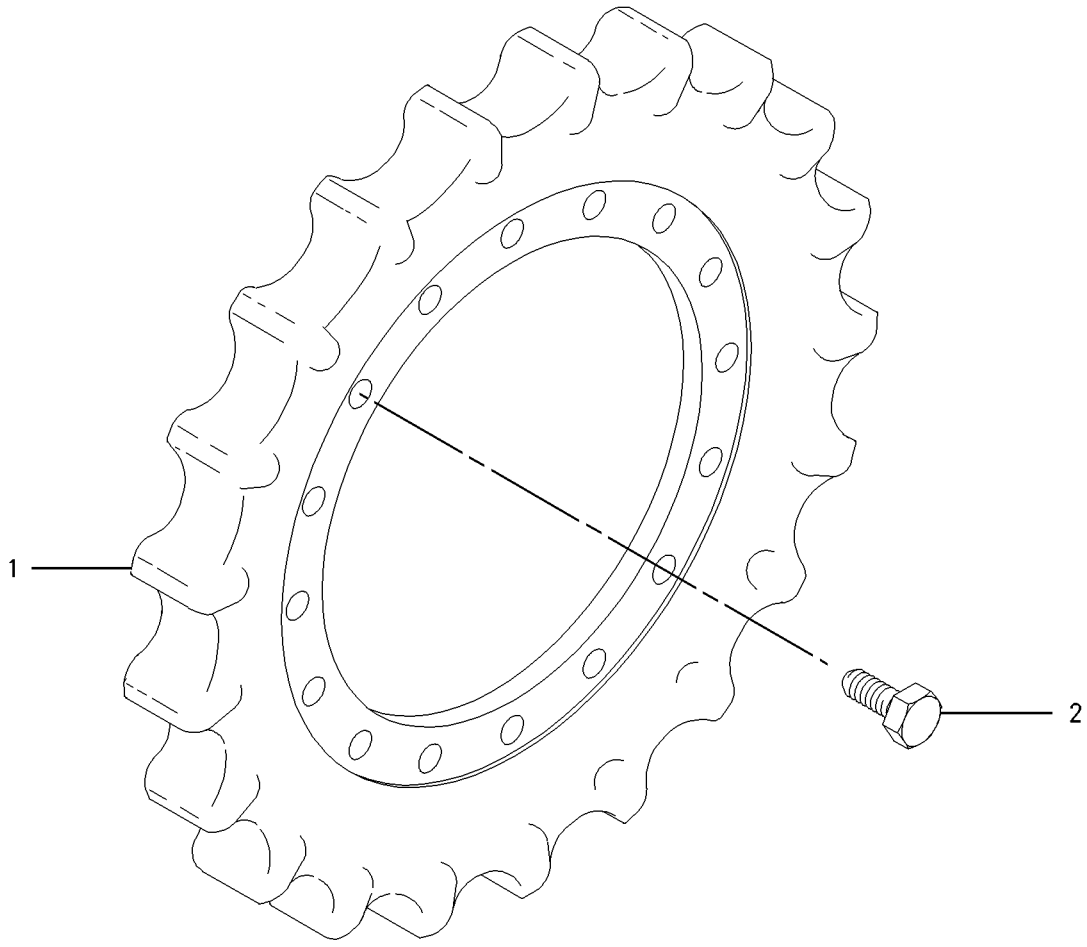

GRAPHIC #1 **<END>** g00935714

444-6735 BOX & MTG GP-STORAGE

S/N: PBB1-UP; KBS1-UP

PART OF 454-5588, 454-5589 CHASSIS AR

SMCS-7268 **i05426741**

NOTE	REF NO	GRAPHIC REF	PART NUMBER	QTY	PART NAME 1 2 3 4 5 6 (PRODUCT LEVEL)	SEE PAGE
Y	1	1	**444-6736**	1	BOX GP-STORAGE	241
M	2	1	**135-8577**	4	BOLT AS	

M - METRIC PART
Y - SEPARATE ILLUSTRATION

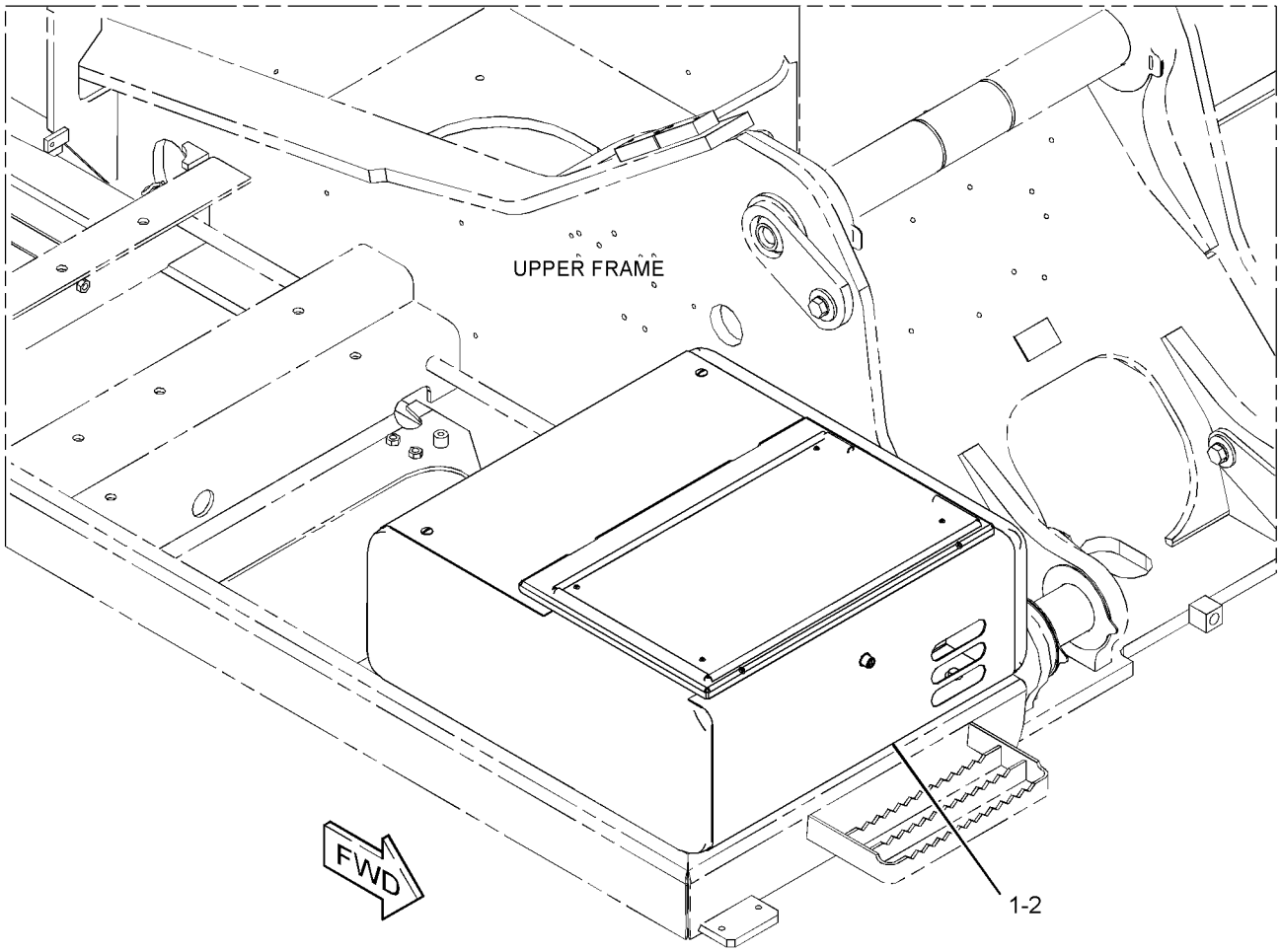

GRAPHIC #1 **<END>** g03320137

444-6736 BOX GP-STORAGE

S/N: PBB1-UP; KBS1-UP

PART OF 444-6735 BOX & MTG GP-STORAGE

SMCS-7268 **i05907423**

NOTE	REF NO	GRAPHIC REF	PART NUMBER	QTY	PART NAME 1 2 3 4 5 6 (PRODUCT LEVEL)	SEE PAGE
B	1	1	**6I-5976**	6	SHIM (1-MM THK)	
	2	1	**170-2755**	1	HOOK AS	
B	3	1	**184-8850**	2	SHIM (0.5-MM THK)	
	4	1	**449-4094**	2	MOUNT	
L	5	1	**320-5737**	1	LOCK AS	
	6	1	**394-8010**	1	COVER AS	
	6A	1	**3D-9143**	2	HINGE-BUTT	
	7	1	**439-3322**	1	SUPPORT AS	
	8	1	*444-6737*	1	BOX AS-STORAGE	
J		1	**348-5409**		SEAL (19-DM)	
	9	1	**095-0843**	1	PIN-COTTER	
	10	1	**096-3780**	1	PIN-CLEVIS	
M	11	1	**105-3487**	4	BOLT-SOCKET HEAD (M6X1X20-MM)	
	12	1	**170-2983**	1	SEAL	
	13	1	**170-9360**	1	GROMMET	
	14	1	**293-1501**	4	NUT (M10X1.5-THD)	
	15	1	**4B-4278**	4	WASHER (10.2X20.5X1.6-MM THK)	
M	16	1	**5C-9553**	2	BOLT (M6X1X16-MM)	
	17	1	**5P-4116**	1	WASHER-HARD (8.8X20.5X2-MM THK)	
	18	1	**8T-4223**	4	WASHER-HARD (13.5X25.5X3-MM THK)	
	19	1	**9X-8256**	6	WASHER (6.6X12X2-MM THK)	

B - USE AS REQUIRED
J - ORDER BY THE DECIMETER
L - REQUIRES CORPORATE KEY
M - METRIC PART

444-6736 **BOX GP-STORAGE (*contd.*)** **i05907423**

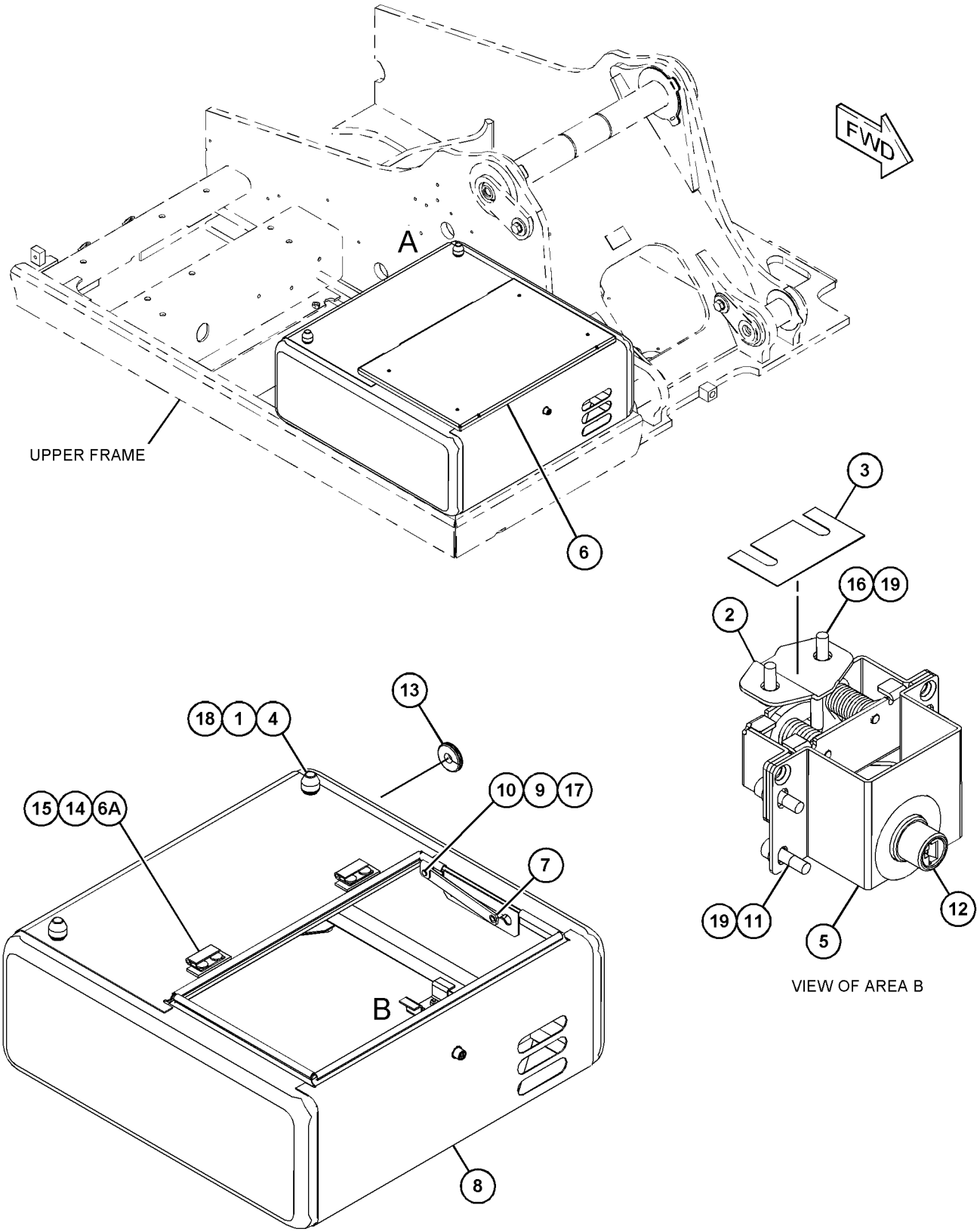

VIEW OF AREA B

VIEW OF AREA A
(COVER REMOVED FOR CLARITY)

GRAPHIC #1 **<END>** g03428049

394-5780 BUMPER GP

S/N: PBB1-UP; KBS1-UP

AN ATTACHMENT

SMCS-7156 **i05162622**

NOTE	REF NO	GRAPHIC REF	PART NUMBER	QTY	PART NAME 1 2 3 4 5 6 (PRODUCT LEVEL)	SEE PAGE
	1	1	**180-7521**	2	BUMPER AS	
	2	1	**180-7525**	1	BUMPER AS	
	3	1	**180-7529**	1	BUMPER AS	
	4	1	**180-7533**	1	BUMPER AS	
	5	1	**218-5199**	1	BUMPER AS	
	6	1	**228-5463**	1	BUMPER AS	
	7	1	**8T-4223**	14	WASHER-HARD (13.5X25.5X3-MM THK)	
M	8	1	**8T-4244**	14	NUT (M12X1.75-THD)	

M - METRIC PART

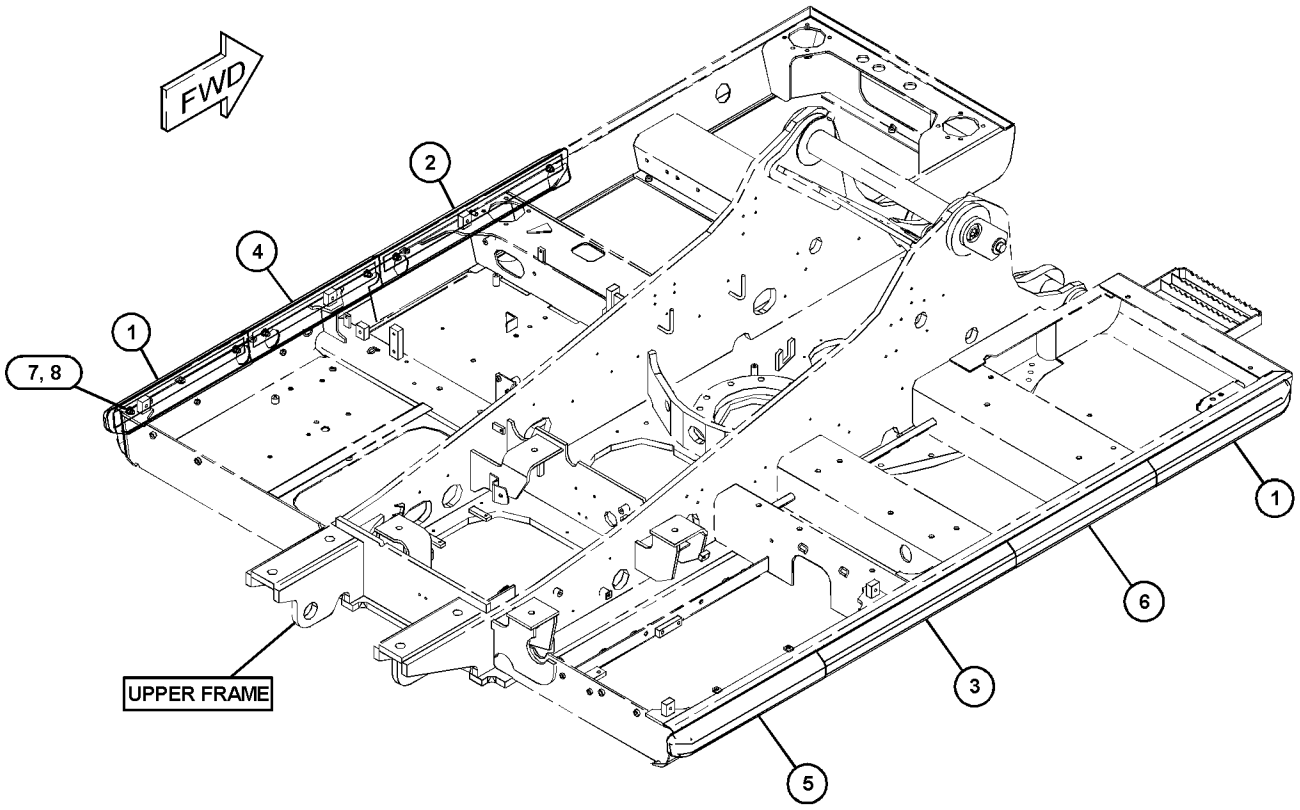

GRAPHIC #1 **<END>** g03317924

379-7391 COUNTERWEIGHT & MOUNTING GP

S/N: PBB1-UP; KBS1-UP

PART OF 454-5588, 454-5589 CHASSIS AR

SMCS-7056 **i05832710**

NOTE	REF NO	GRAPHIC REF	PART NUMBER	QTY	PART NAME 1 2 3 4 5 6 (PRODUCT LEVEL)	SEE PAGE
M	1	1	**447-1733**	4	BOLT (M30X3.5X120-MM)	
	2	1	**136-0139**	2	CAP	
	3	1	**244-8194**	4	SPACER (32X65X30-MM THK)	
Y	4	1	*379-7392*	1	COUNTERWEIGHT GP	250

M - METRIC PART
Y - SEPARATE ILLUSTRATION

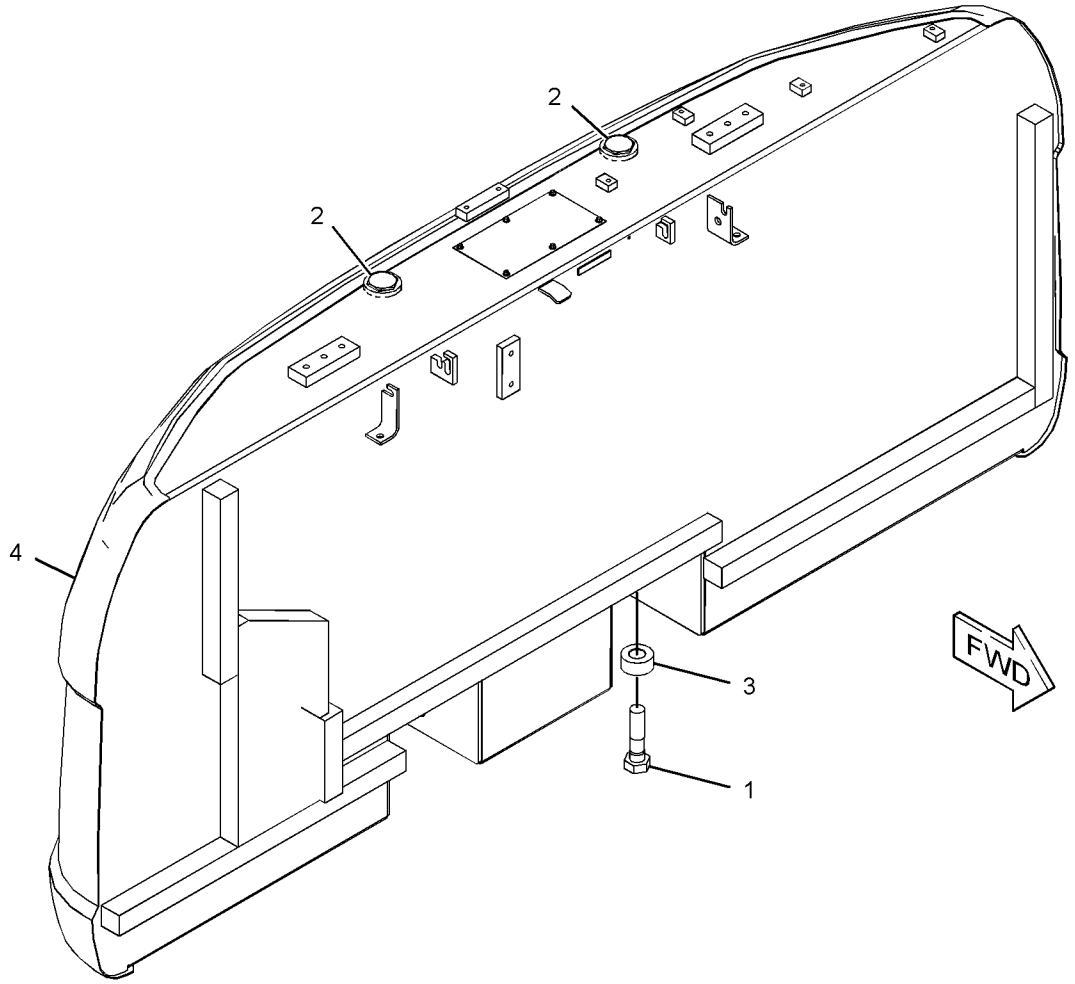

GRAPHIC #1 **<END>** g03695539

379-7398 COUNTERWEIGHT & MOUNTING GP

S/N: PBB1-UP
PART OF 420-0298 LINKAGE AR-FRONT
AN ATTACHMENT

SMCS-7056 **i05732899**

NOTE	REF NO	GRAPHIC REF	PART NUMBER	QTY	PART NAME 1 2 3 4 5 6 (PRODUCT LEVEL)	SEE PAGE
Y	1	1	*379-7399*	1	COUNTERWEIGHT GP	251
	2	1	**244-8194**	4	SPACER (32X65X30-MM THK)	
M	3	1	**447-1733**	4	BOLT (M30X3.5X120-MM)	
	4	1	**087-3533**	2	CAP	

M - METRIC PART
Y - SEPARATE ILLUSTRATION

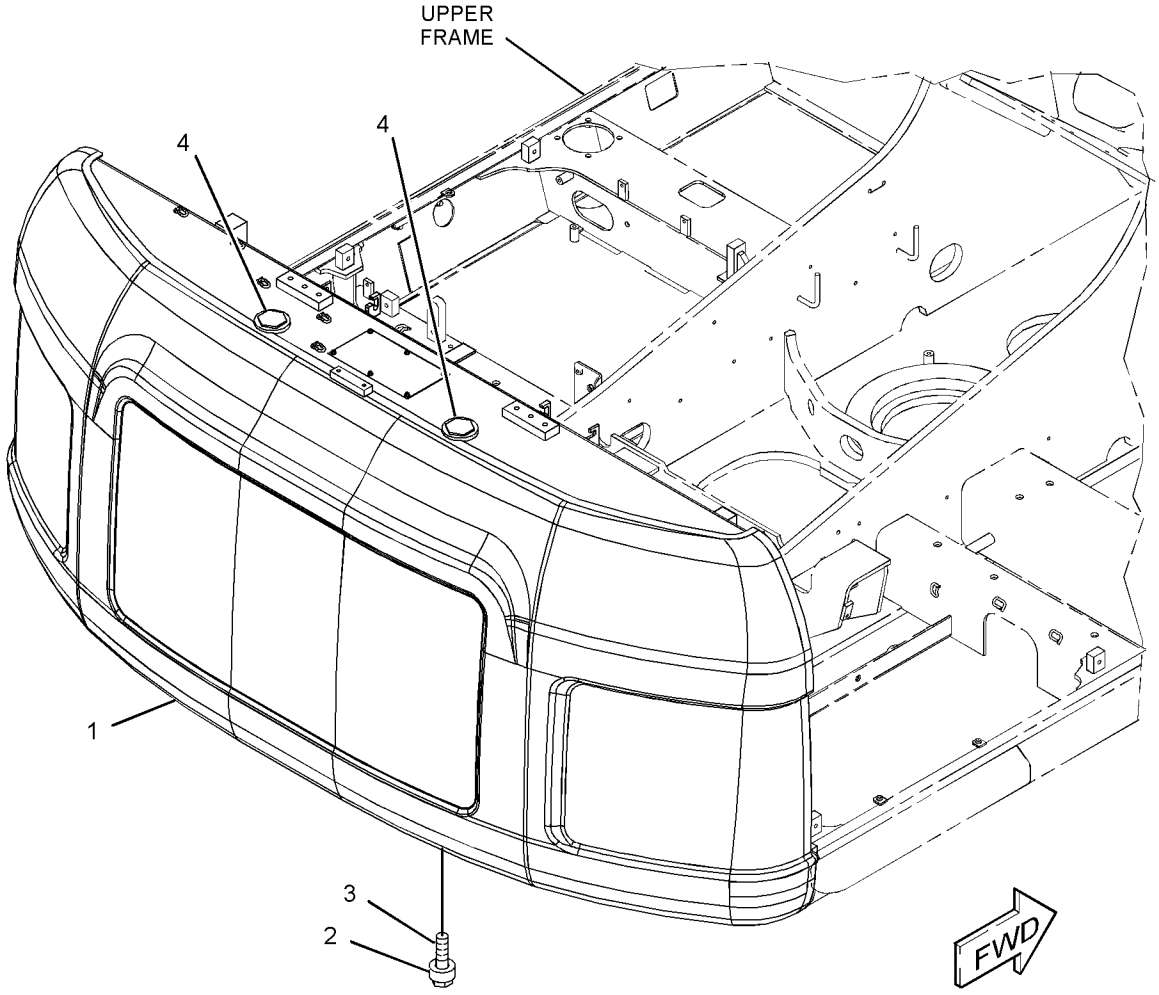

GRAPHIC #1 **<END>** g03589485

399-6306 COUNTERWEIGHT & MOUNTING GP

S/N: PBB1-UP; KBS1-UP

AN ATTACHMENT

SMCS-7056 **i05859453**

NOTE	REF NO	GRAPHIC REF	PART NUMBER	QTY	PART NAME 1 2 3 4 5 6 (PRODUCT LEVEL)	SEE PAGE
	1	1	**244-8194**	4	SPACER (32X65X30-MM THK)	
Y	2	1	*417-0252*	1	COUNTERWEIGHT GP	252
M	3	1	**447-1733**	4	BOLT (M30X3.5X120-MM)	
M	4	1	**447-1730**	8	BOLT (M16X2X25-MM)	
	5	1	**136-0139**	2	CAP	

M - METRIC PART
Y - SEPARATE ILLUSTRATION

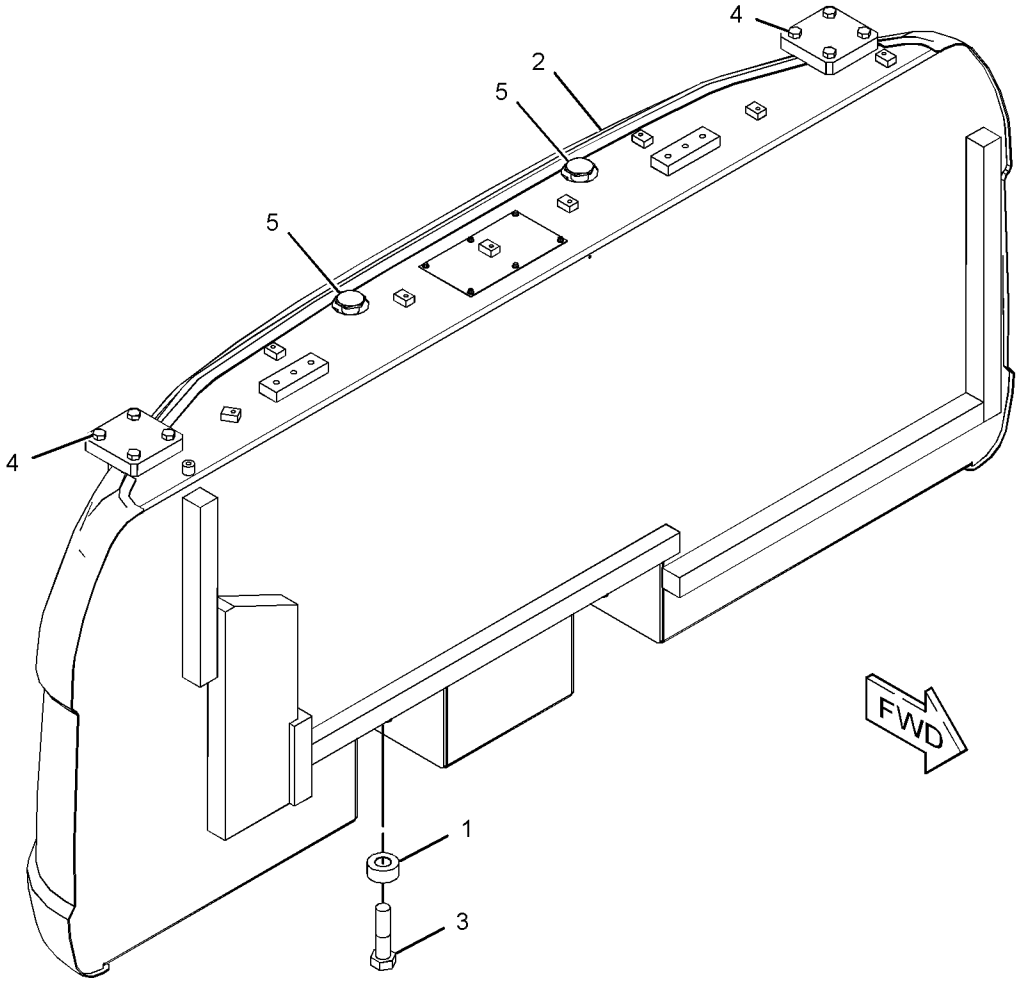

GRAPHIC #1 **<END>** g03633336

423-2370 COUNTERWEIGHT & MOUNTING GP

S/N: PBB1-UP; KBS1-UP
PART OF 422-8440 COUNTERWEIGHT AR
AN ATTACHMENT

SMCS-7056 **i05859523**

NOTE	REF NO	GRAPHIC REF	PART NUMBER	QTY	PART NAME 1 2 3 4 5 6 (PRODUCT LEVEL)	SEE PAGE
M	1	1	**447-1733**	4	BOLT (M30X3.5X120-MM)	
	2	1	**136-0139**	2	CAP	
	3	1	**244-8194**	4	SPACER (32X65X30-MM THK)	
Y	4	1	*423-5178*	1	COUNTERWEIGHT GP	253

M - METRIC PART
Y - SEPARATE ILLUSTRATION

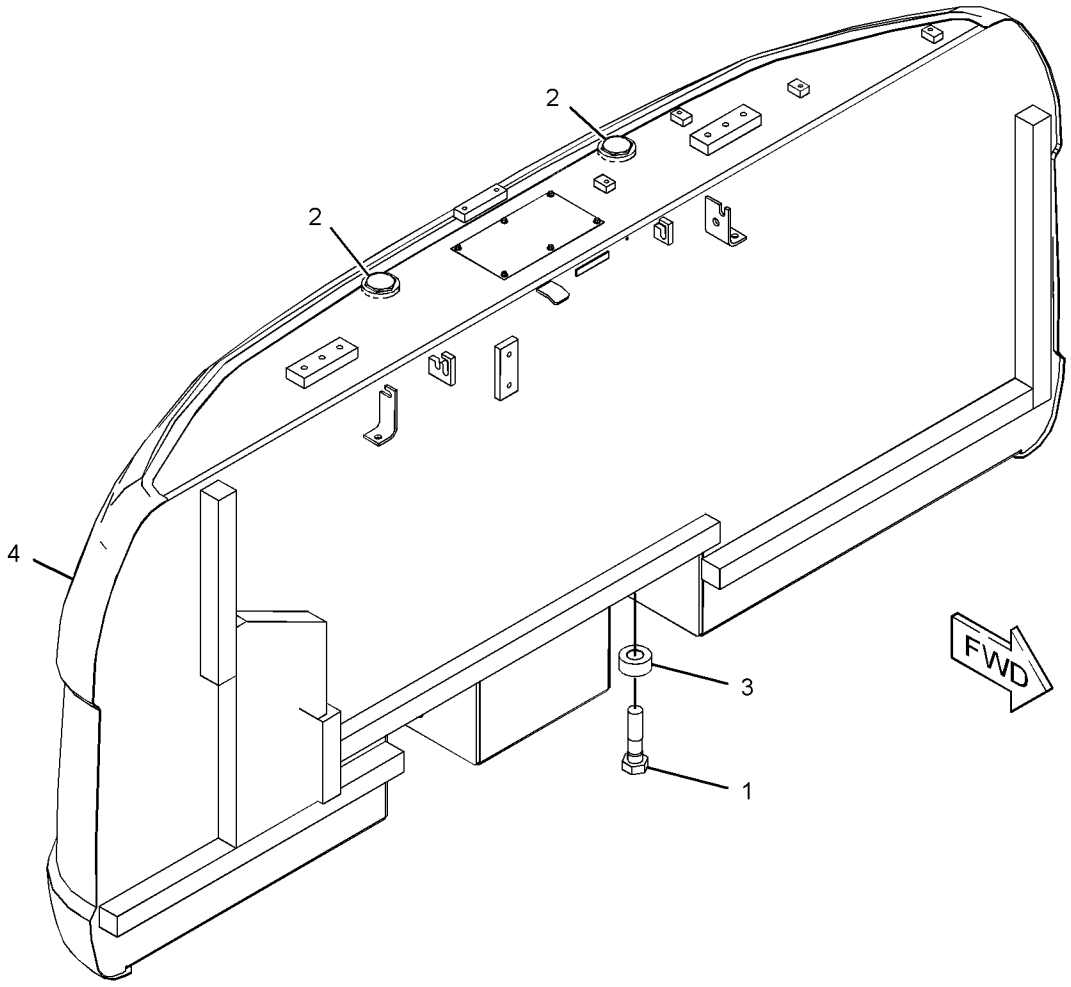

GRAPHIC #1 **<END>** g03703823

423-2371 COUNTERWEIGHT & MOUNTING GP

S/N: PBB1-UP; KBS1-UP
PART OF 422-8441 COUNTERWEIGHT AR
AN ATTACHMENT

SMCS-7056 **i05859606**

NOTE	REF NO	GRAPHIC REF	PART NUMBER	QTY	PART NAME 1 2 3 4 5 6 (PRODUCT LEVEL)	SEE PAGE
	1	1	**244-8194**	4	SPACER (32X65X30-MM THK)	
Y	2	1	*423-5180*	1	COUNTERWEIGHT GP	254
M	3	1	**447-1733**	4	BOLT (M30X3.5X120-MM)	
M	4	1	**8T-4190**	8	BOLT (M16X2X25-MM)	
	5	1	**136-0139**	2	CAP	

M - METRIC PART
Y - SEPARATE ILLUSTRATION

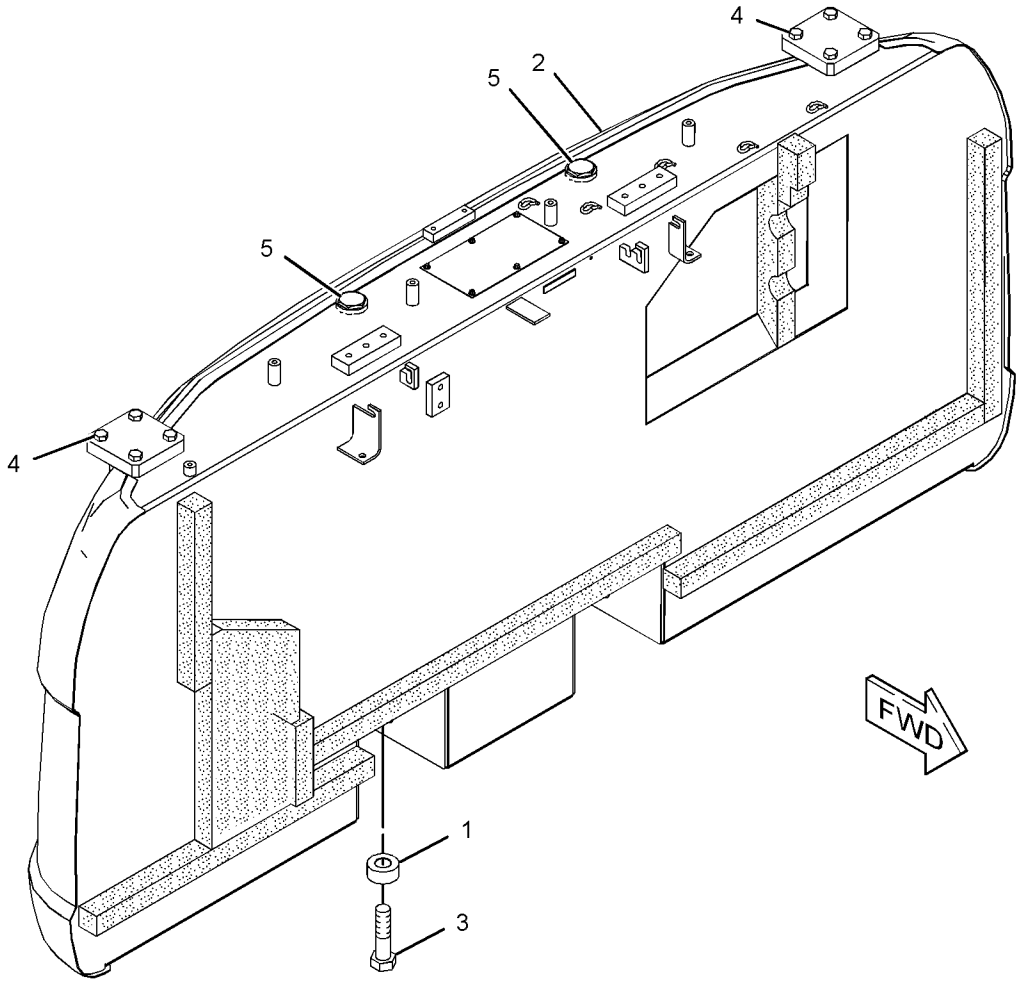

GRAPHIC #1 **<END>** g03703822

422-8440 COUNTERWEIGHT AR

S/N: PBB1-UP; KBS1-UP
PART OF 456-0818, 456-0819 DISTRIBUTION AR
AN ATTACHMENT

SMCS-7056 **i05120404**

NOTE	PART NUMBER	QTY	PART NAME 1 2 3 4 5 6 (PRODUCT LEVEL)	SEE PAGE
Y	*423-2370*	1	COUNTERWEIGHT & MOUNTING GP	247
Y	*422-8442*	1	FILM GP	988

Y - SEPARATE ILLUSTRATION

<END>

422-8441 COUNTERWEIGHT AR—GRADE CONTROL

S/N: PBB1-UP; KBS1-UP
AN ATTACHMENT

SMCS-7056 **i05120405**

NOTE	PART NUMBER	QTY	PART NAME 1 2 3 4 5 6 (PRODUCT LEVEL)	SEE PAGE
Y	*423-2371*	1	COUNTERWEIGHT & MOUNTING GP	248
Y	*422-8442*	1	FILM GP	988

Y - SEPARATE ILLUSTRATION

<END>

379-7392 COUNTERWEIGHT GP

S/N: PBB1-UP; KBS1-UP
3699-KG (8154.9-LB)
PART OF 379-7391 COUNTERWEIGHT & MOUNTING GP

SMCS-7056 **i05321842**

NOTE	REF NO	GRAPHIC REF	PART NUMBER	QTY	PART NAME 1 2 3 4 5 6 (PRODUCT LEVEL)	SEE PAGE
	1	1	**7I-0717**	1	LINER	
	2	1	**116-1665**	1	LINER	
	3	1	**165-3102**	1	LINER	
	4	1	**165-3103**	1	LINER	
	5	1	**428-7524**	1	LINER	
	6	1	**273-7677**	1	LINER	
	7	1	**390-7446**	1	COUNTERWEIGHT AS	
	7A	1	**165-3120**	1	SHEET	
M	7B	1	**192-3039**	6	SCREW-HEX FLANGE (6.3X1.8X19-MM)	

M - METRIC PART

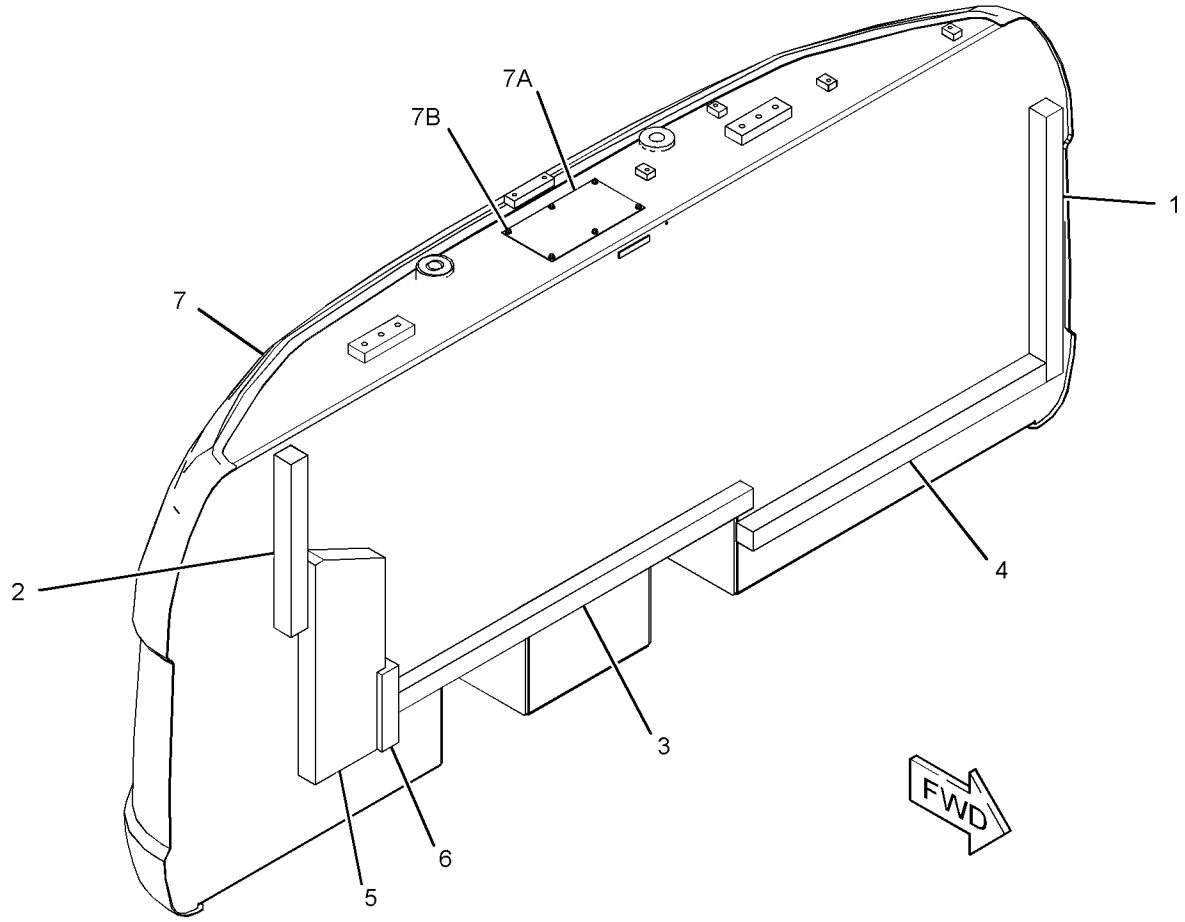

GRAPHIC #1 **<END>** g03373921

379-7399 COUNTERWEIGHT GP

S/N: PBB1-UP
4689-KG (10337-LB)
PART OF 379-7398 COUNTERWEIGHT & MOUNTING GP
AN ATTACHMENT

SMCS-7056 **i05219181**

NOTE	REF NO	GRAPHIC REF	PART NUMBER	QTY	PART NAME 1 2 3 4 5 6 (PRODUCT LEVEL)	SEE PAGE
	1	1	**7I-0717**	1	LINER	
	2	1	**116-1665**	1	LINER	
	3	1	**165-3102**	1	LINER	
	4	1	**165-3103**	1	LINER	
	5	1	**262-2406**	1	LINER	
	6	1	**273-7677**	1	LINER	
	7	1	**390-7449**	1	COUNTERWEIGHT AS	
	7A	1	**165-3120**	1	SHEET	
M	7B	1	**192-3039**	6	SCREW-HEX FLANGE (6.3X1.8X19-MM)	

M - METRIC PART

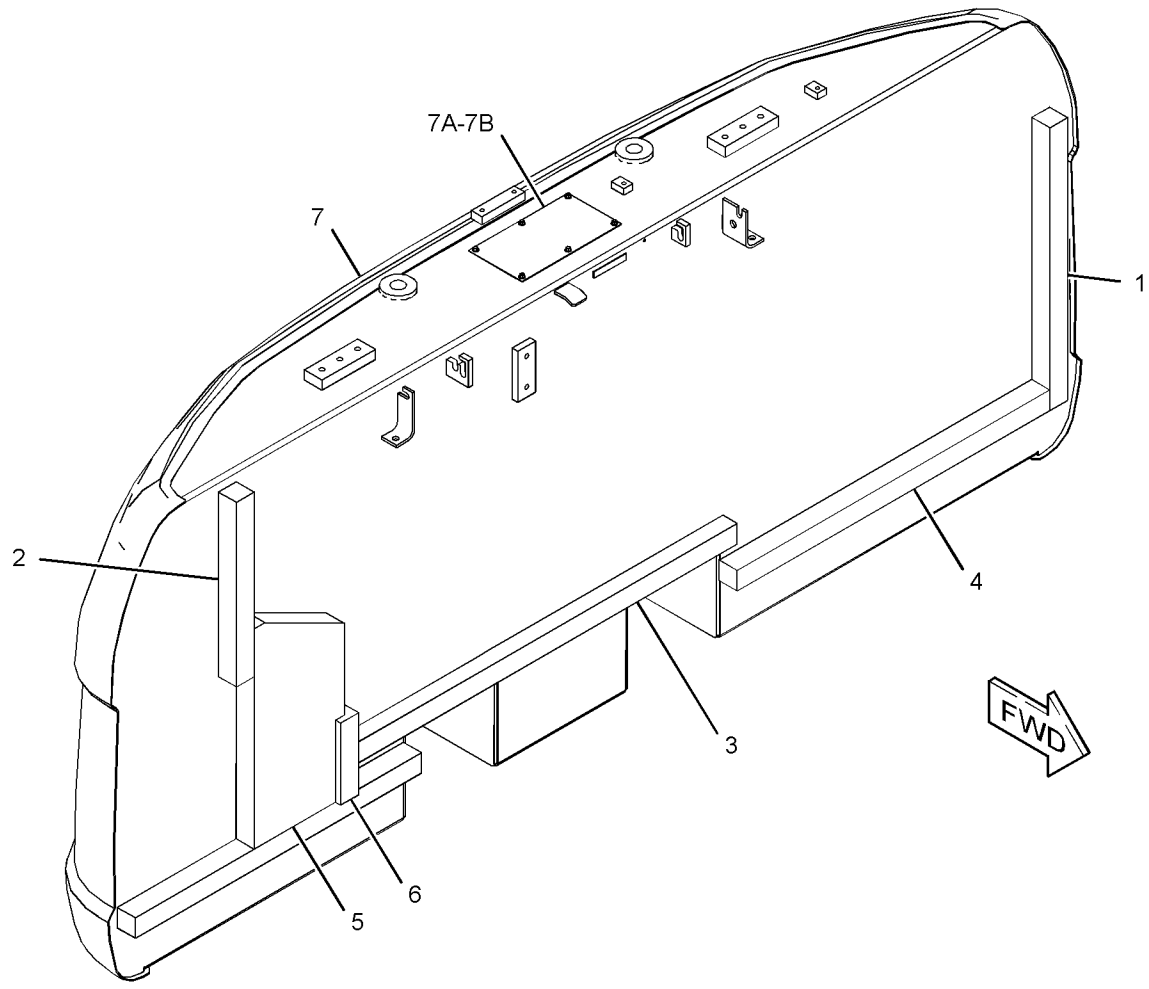

GRAPHIC #1 **<END>** g03356108

417-0252 COUNTERWEIGHT GP

S/N: PBB1-UP; KBS1-UP
3701-KG (8159.3-LBS)
PART OF 399-6306 COUNTERWEIGHT & MOUNTING GP
AN ATTACHMENT

SMCS-7056 **i05262450**

NOTE	REF NO	GRAPHIC REF	PART NUMBER	QTY	PART NAME 1 2 3 4 5 6 (PRODUCT LEVEL)	SEE PAGE
	1	1	**7I-0717**	1	LINER	
	2	1	**116-1665**	1	LINER	
	3	1	**165-3102**	1	LINER	
	4	1	**165-3103**	1	LINER	
	5	1	**428-7524**	1	LINER	
	6	1	**273-7677**	1	LINER	
	7	1	**417-0253**	1	COUNTERWEIGHT AS	
	7A	1	**165-3120**	1	SHEET	
M	7B	1	**192-3039**	6	SCREW-HEX FLANGE (6.3X1.8X19-MM)	

M - METRIC PART

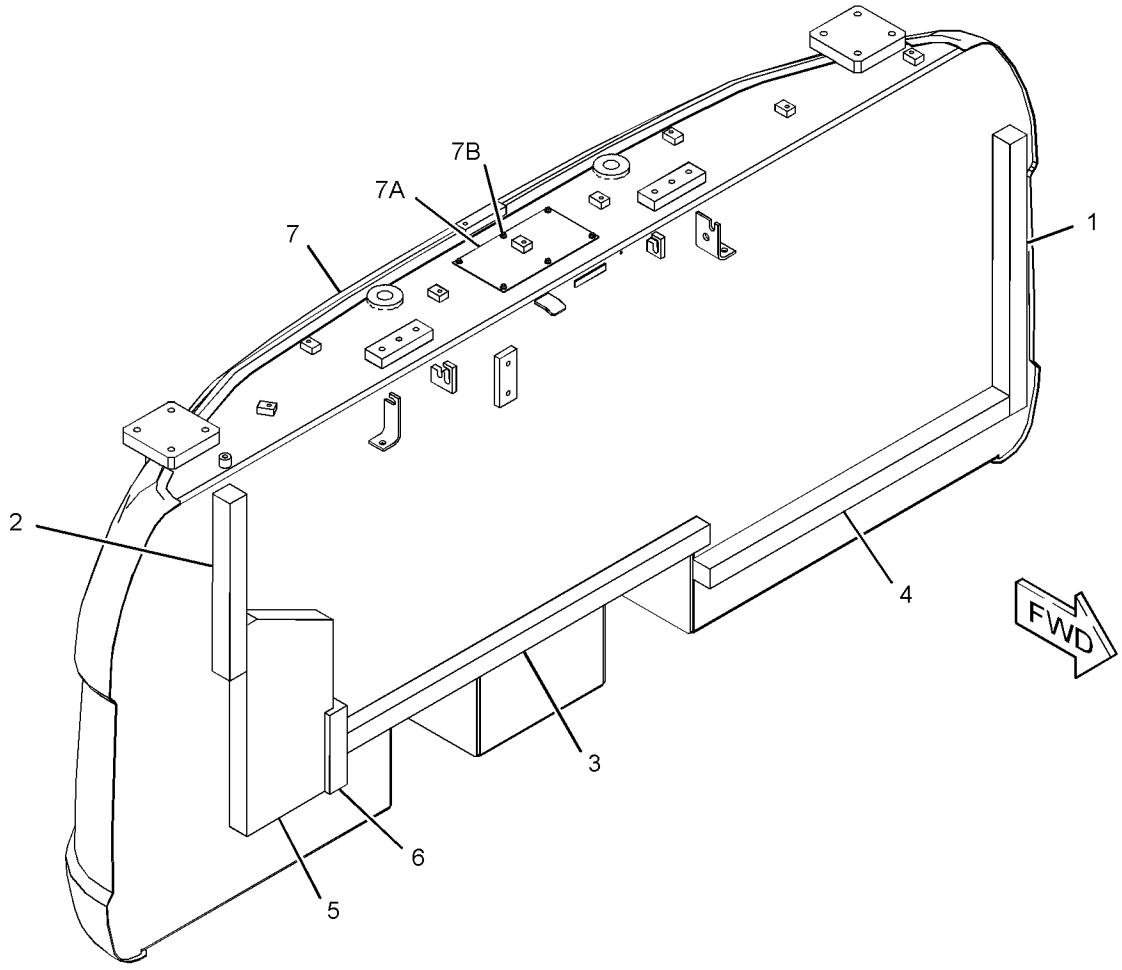

GRAPHIC #1 **<END>** g03319815

423-5178 COUNTERWEIGHT GP

S/N: PBB1-UP; KBS1-UP
3701-KG (8159.3-LB)
PART OF 423-2370 COUNTERWEIGHT & MOUNTING GP
AN ATTACHMENT

SMCS-7056 **i05291949**

NOTE	REF NO	GRAPHIC REF	PART NUMBER	QTY	PART NAME 1 2 3 4 5 6 (PRODUCT LEVEL)	SEE PAGE
	1	1	**7I-0717**	1	LINER	
	2	1	**116-1665**	1	LINER	
	3	1	**165-3102**	1	LINER	
	4	1	**165-3103**	1	LINER	
	5	1	**273-7677**	1	LINER	
	6	1	**423-5179**	1	COUNTERWEIGHT AS	
	6A	1	**165-3120**	1	SHEET	
M	6B	1	**192-3039**	6	SCREW-HEX FLANGE (6.3X1.8X19-MM)	
	7	1	**428-7524**	1	LINER	

M - METRIC PART

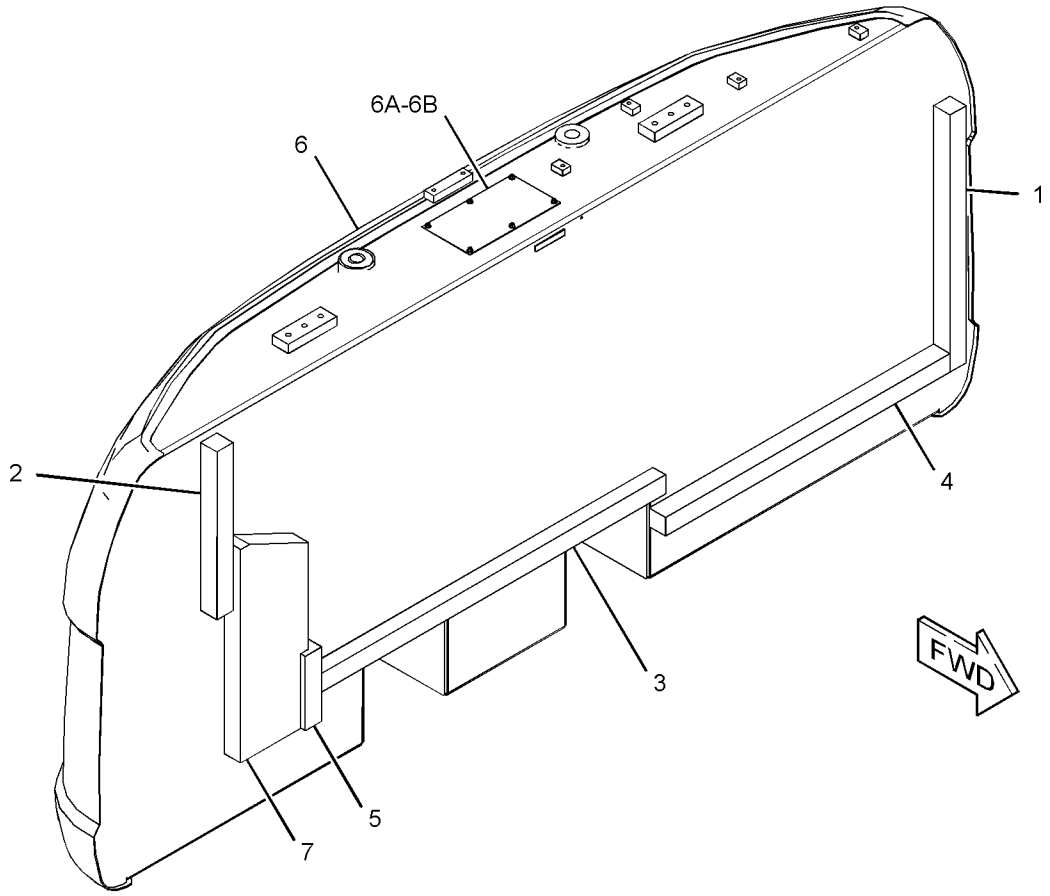

GRAPHIC #1 **<END>** g03350351

423-5180 COUNTERWEIGHT GP

S/N: PBB1-UP; KBS1-UP
3701-KG (8159.3-LB)
PART OF 423-2371 COUNTERWEIGHT & MOUNTING GP
AN ATTACHMENT

SMCS-7056 **i05291950**

NOTE	REF NO	GRAPHIC REF	PART NUMBER	QTY	PART NAME 1 2 3 4 5 6 (PRODUCT LEVEL)	SEE PAGE
	1	1	**7I-0717**	1	LINER	
	2	1	**116-1665**	1	LINER	
	3	1	**165-3102**	1	LINER	
	4	1	**165-3103**	1	LINER	
	5	1	**273-7677**	1	LINER	
	6	1	**423-5181**	1	COUNTERWEIGHT AS	
	6A	1	**165-3120**	1	SHEET	
M	6B	1	**192-3039**	6	SCREW-HEX FLANGE (6.3X1.8X19-MM)	
	7	1	**428-7524**	1	LINER	

M - METRIC PART

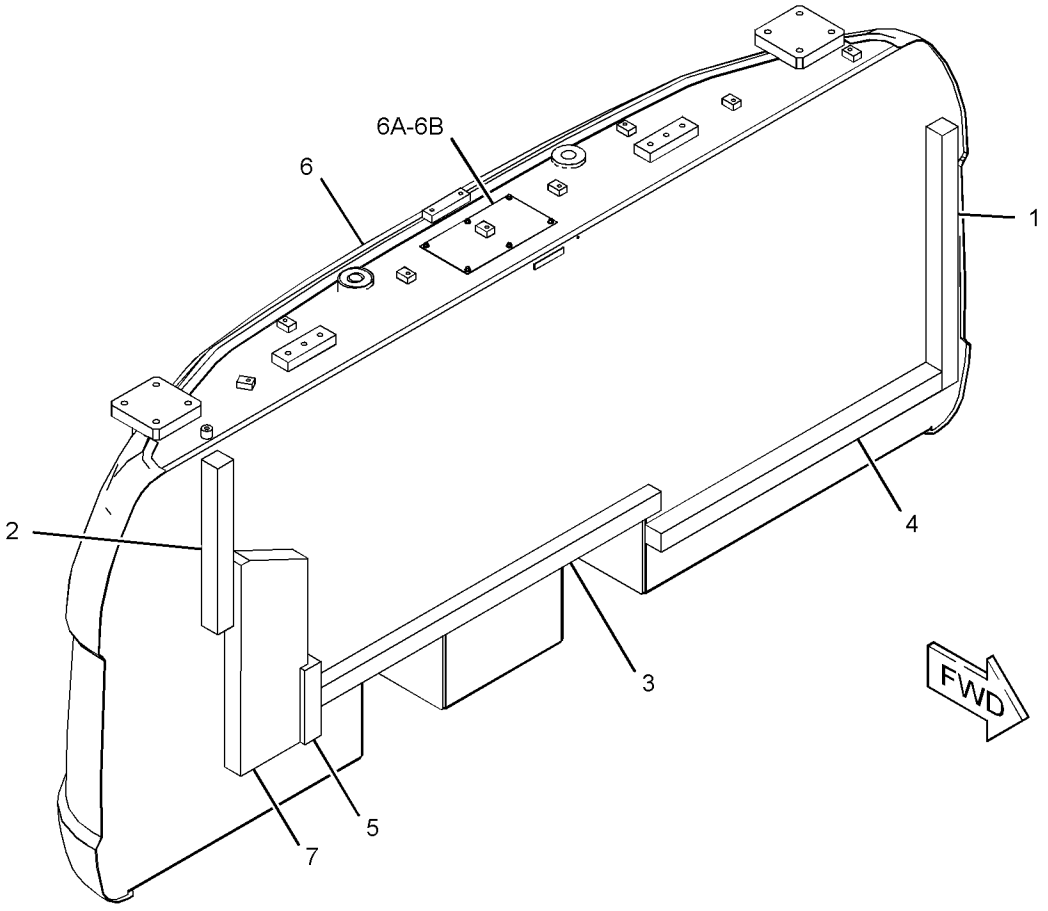

GRAPHIC #1 **<END>** g03350361

396-9388 COVER AS-SOUND SUPPRESSION–FUEL, HYDRAULIC TANKS

S/N: PBB1-UP; KBS1-UP

PART OF 455-4062 HOOD & GUARD GP

SMCS-7253, 7263, 7276, 795C

i05103172

NOTE	REF NO	GRAPHIC REF	PART NUMBER	QTY	PART NAME 1 2 3 4 5 6 (PRODUCT LEVEL)	SEE PAGE
	1	1	**170-3015**	1	BUMPER	
	2	1	**177-5739**	1	LINER	
	3	1	**240-2978**	2	LINER	
	4	1	**240-2979**	1	LINER	

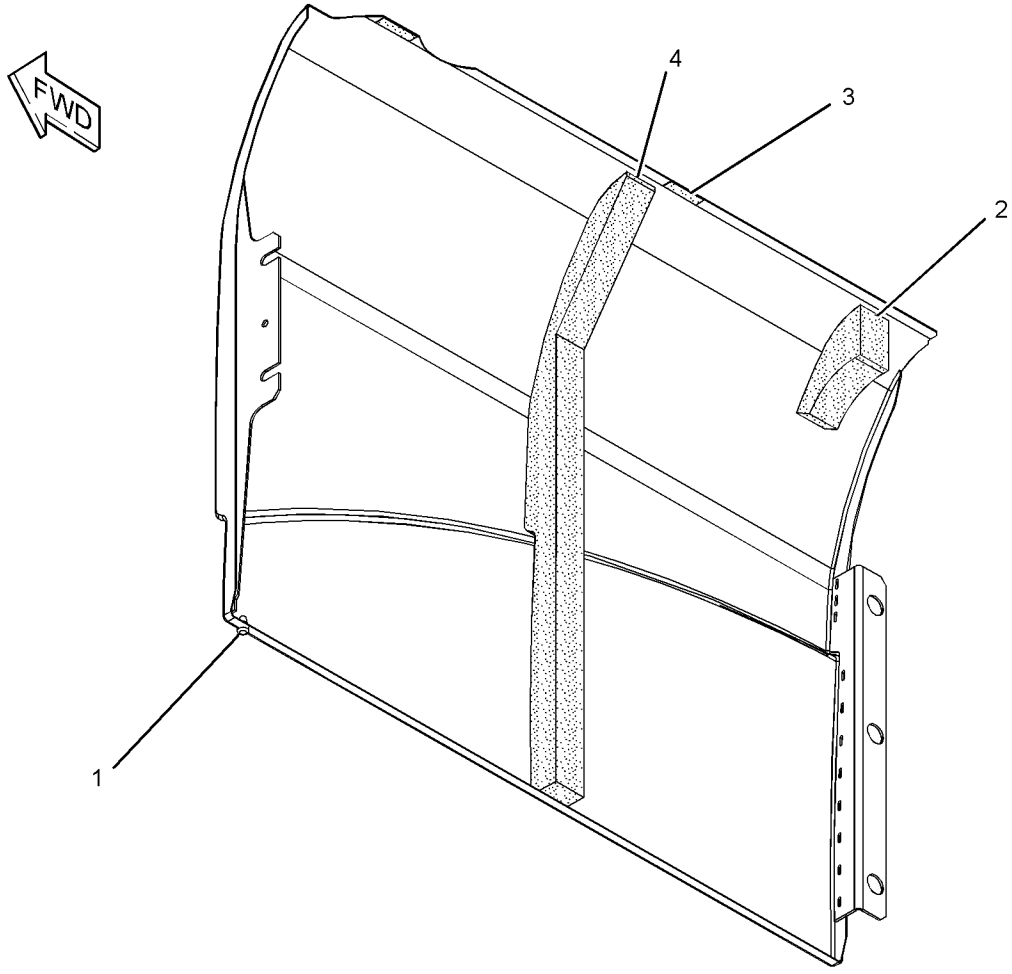

GRAPHIC #1

<END>

g01342289

399-0819 COVER AS-SOUND SUPPRESSION—FUEL, HYDRAULIC TANKS

S/N: PBB1-UP; KBS1-UP
PART OF 399-2560 COVER AS-SOUND SUPPRESSION
AN ATTACHMENT

SMCS-7253, 7263, 7276, 795C **i05126837**

NOTE	REF NO	GRAPHIC REF	PART NUMBER	QTY	PART NAME 1 2 3 4 5 6 (PRODUCT LEVEL)	SEE PAGE
	1	1	**170-3015**	1	BUMPER	
	2	1	**177-5739**	1	LINER	
	3	1	**240-2978**	3	LINER	
	4	1	**240-2979**	1	LINER	

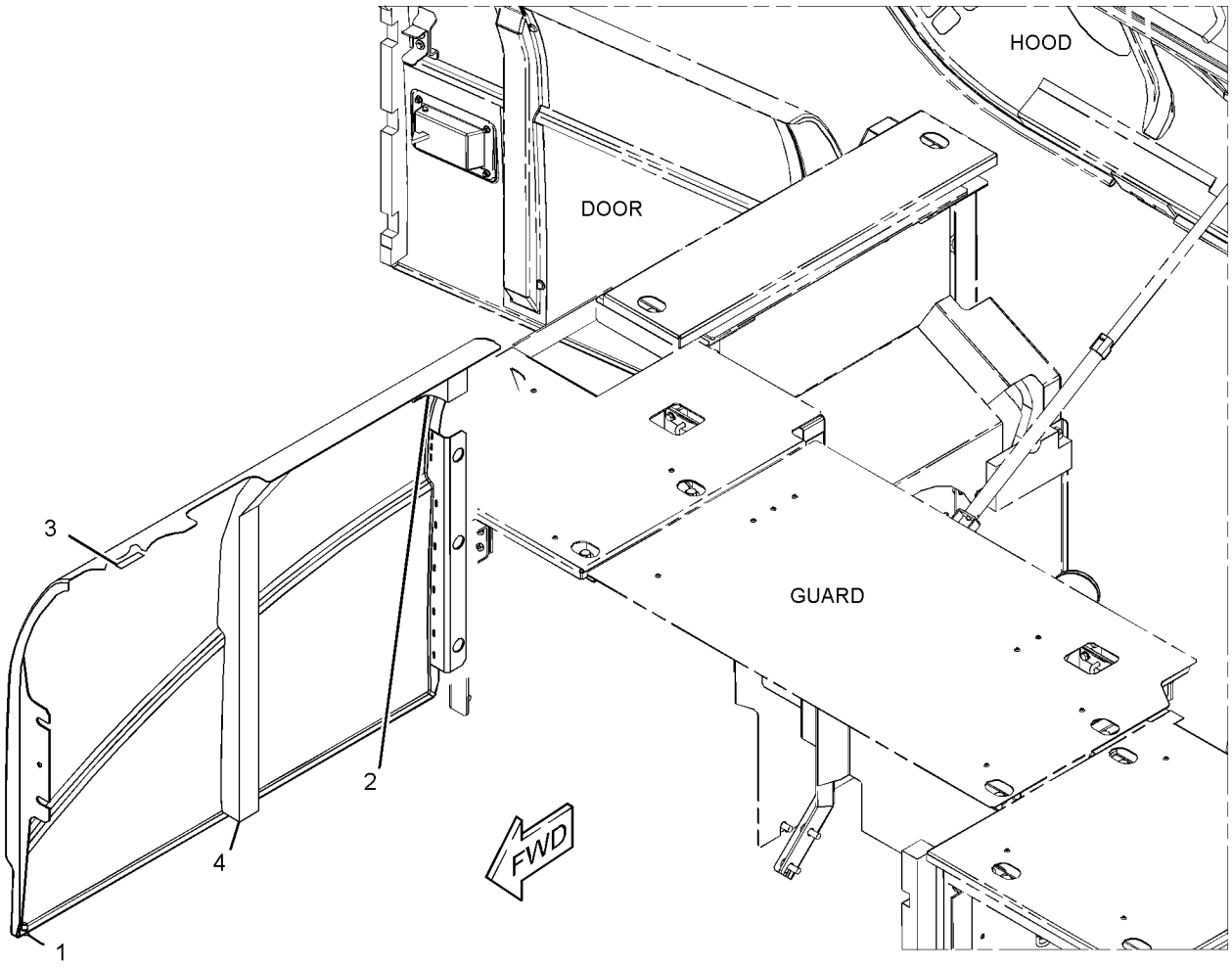

GRAPHIC #1 **<END>** g03362270

399-2560 COVER AS-SOUND SUPPRESSION—FUEL, HYDRAULIC TANKS

S/N: PBB1-UP; KBS1-UP
PART OF 445-2220 TANK AR-FUEL
AN ATTACHMENT

SMCS-7253, 7263, 7276, 795C

i05126767

NOTE	REF NO	GRAPHIC REF	PART NUMBER	QTY	PART NAME 1 2 3 4 5 6 (PRODUCT LEVEL)	SEE PAGE
Y	1	1	**399-0819**	1	COVER AS-SOUND SUPPRESSION	256

Y - SEPARATE ILLUSTRATION

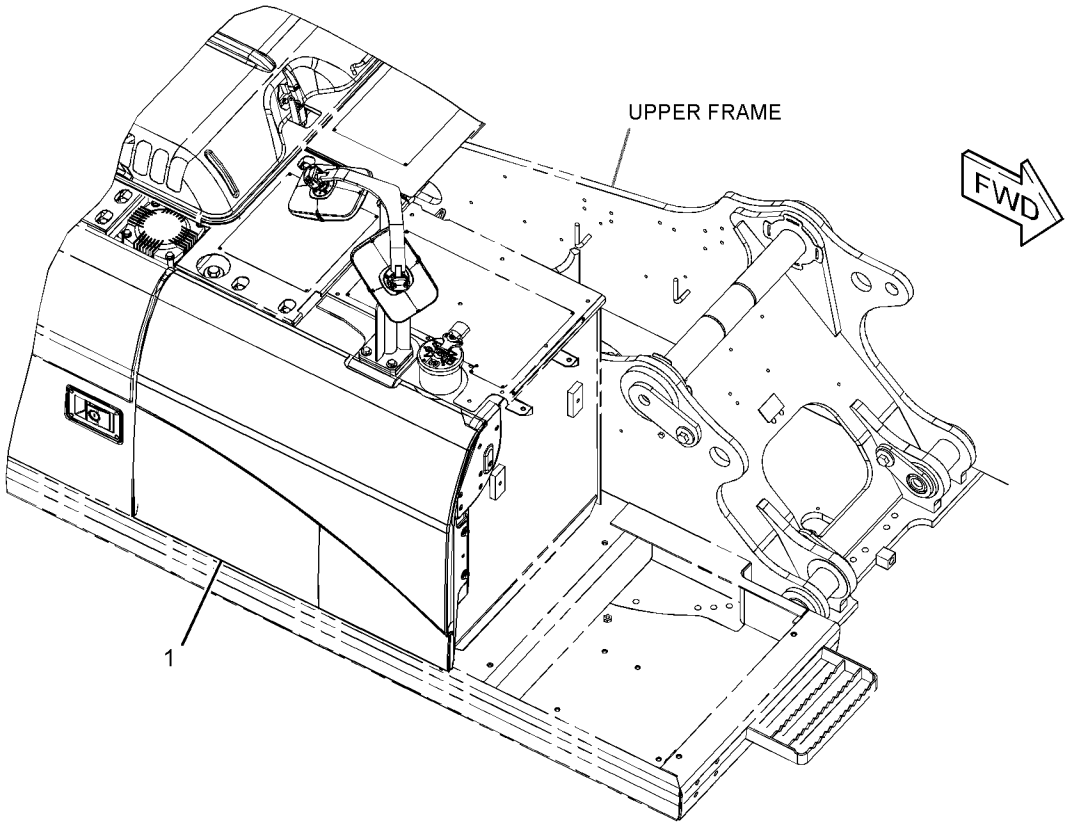

GRAPHIC #1

<END>

g03361513

422-5388 DOOR AS-ACCESS—AIR CLEANER, BATTERY

S/N: PBB1-UP; KBS1-UP

PART OF 455-4062 HOOD & GUARD GP

SMCS-7273 **i05108872**

NOTE	REF NO	GRAPHIC REF	PART NUMBER	QTY	PART NAME 1 2 3 4 5 6 (PRODUCT LEVEL)	SEE PAGE
	1	1	**208-4289**	1	CUSHION	
	2	1	**250-5054**	1	LINER	
	3	1	**165-2976**	2	HINGE	

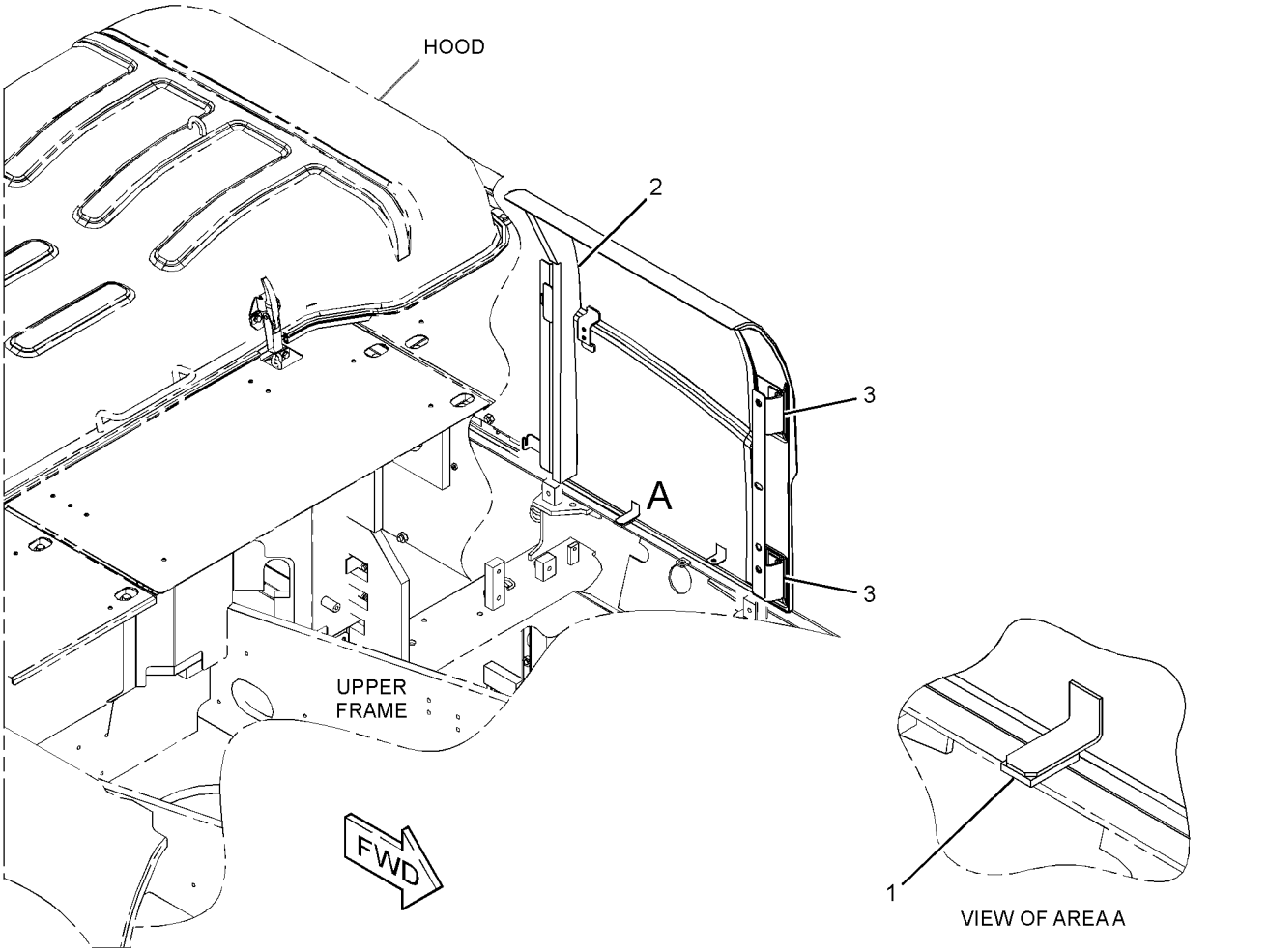

GRAPHIC #1 **<END>** g03309139

425-6092 DOOR GP-ACCESS–PUMP COMPARTMENT

S/N: PBB1-UP; KBS1-UP

PART OF 455-4062 HOOD & GUARD GP

SMCS-7273 **i05229332**

NOTE	REF NO	GRAPHIC REF	PART NUMBER	QTY	PART NAME 1 2 3 4 5 6 (PRODUCT LEVEL)	SEE PAGE
	1	1	**184-8862**	1	COVER	
	2	1	**244-7927**	1	INSULATION	
	3	1	**248-8961**	1	LINER	
	4	1	**358-0921**	1	LATCH AS	
J		1	**385-3458**	1	LOCK AS	
	5	1	**165-2976**	2	HINGE	
M	6	1	**099-6418**	4	NUT (M6X1-THD)	

J - REQUIRES CORPORATE KEY
M - METRIC PART

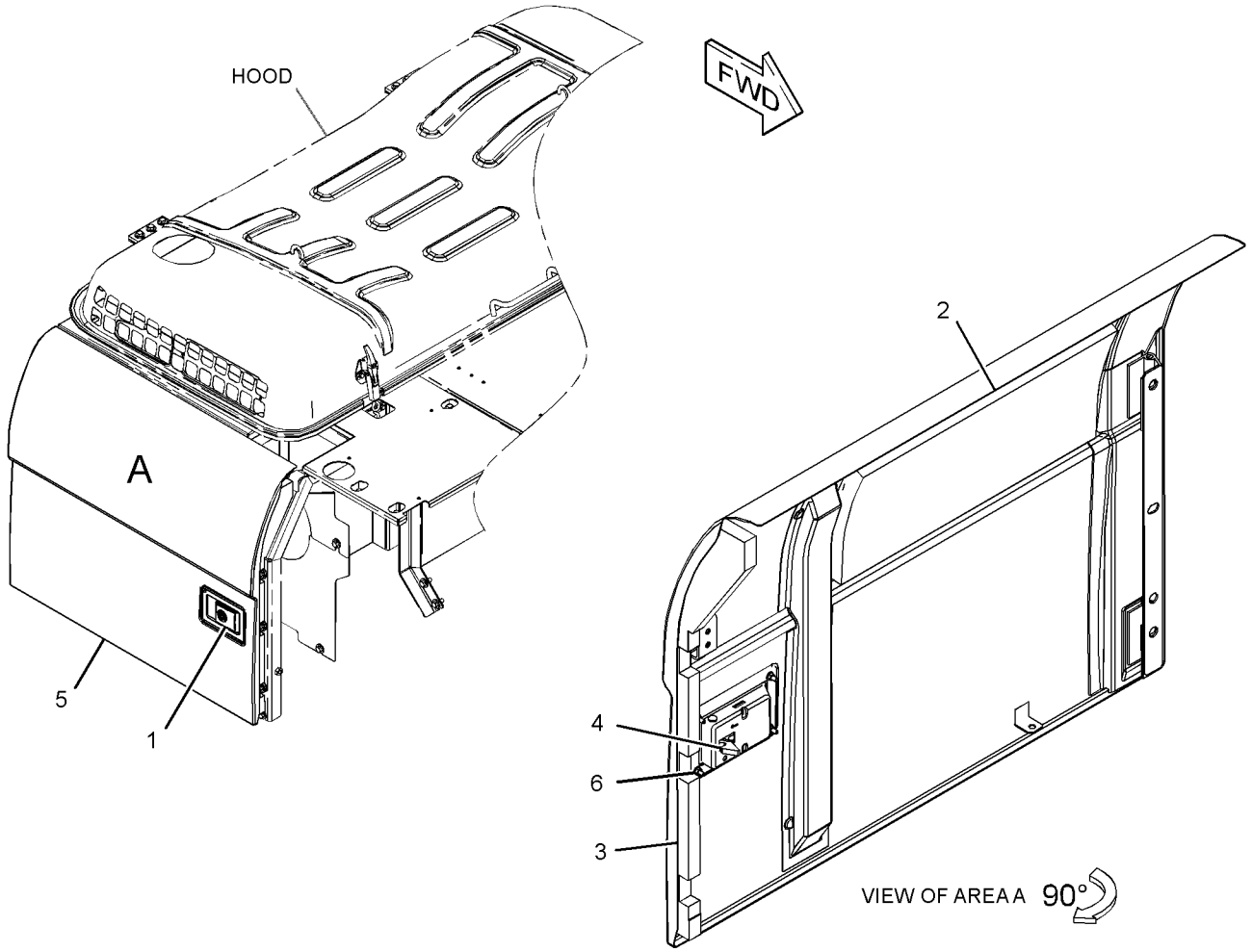

GRAPHIC #1

<END>

g03353282

438-2507 DOOR GP-ACCESS–RADIATOR

S/N: PBB1-UP; KBS1-UP

PART OF 455-4062 HOOD & GUARD GP, 464-1226 HOOD GP-ENGINE

ALSO AN ATTACHMENT

SMCS-7273 **i05606714**

NOTE	REF NO	GRAPHIC REF	PART NUMBER	QTY	PART NAME 1 2 3 4 5 6 (PRODUCT LEVEL)	SEE PAGE
	1	1	**122-4101**	1	RUBBER	
	2	1	**208-4289**	1	CUSHION	
	3	1	**307-7656**	1	LINER	
J	4	1	**358-0921**	1	LATCH AS	
		1	**385-3458**	1	LOCK AS	
	5	1	*438-2508*	1	DOOR AS-ACCESS	
	5A	1	**165-2976**	2	HINGE	
M	6	1	**099-6418**	4	NUT (M6X1-THD)	

J - REQUIRES CORPORATE KEY
M - METRIC PART

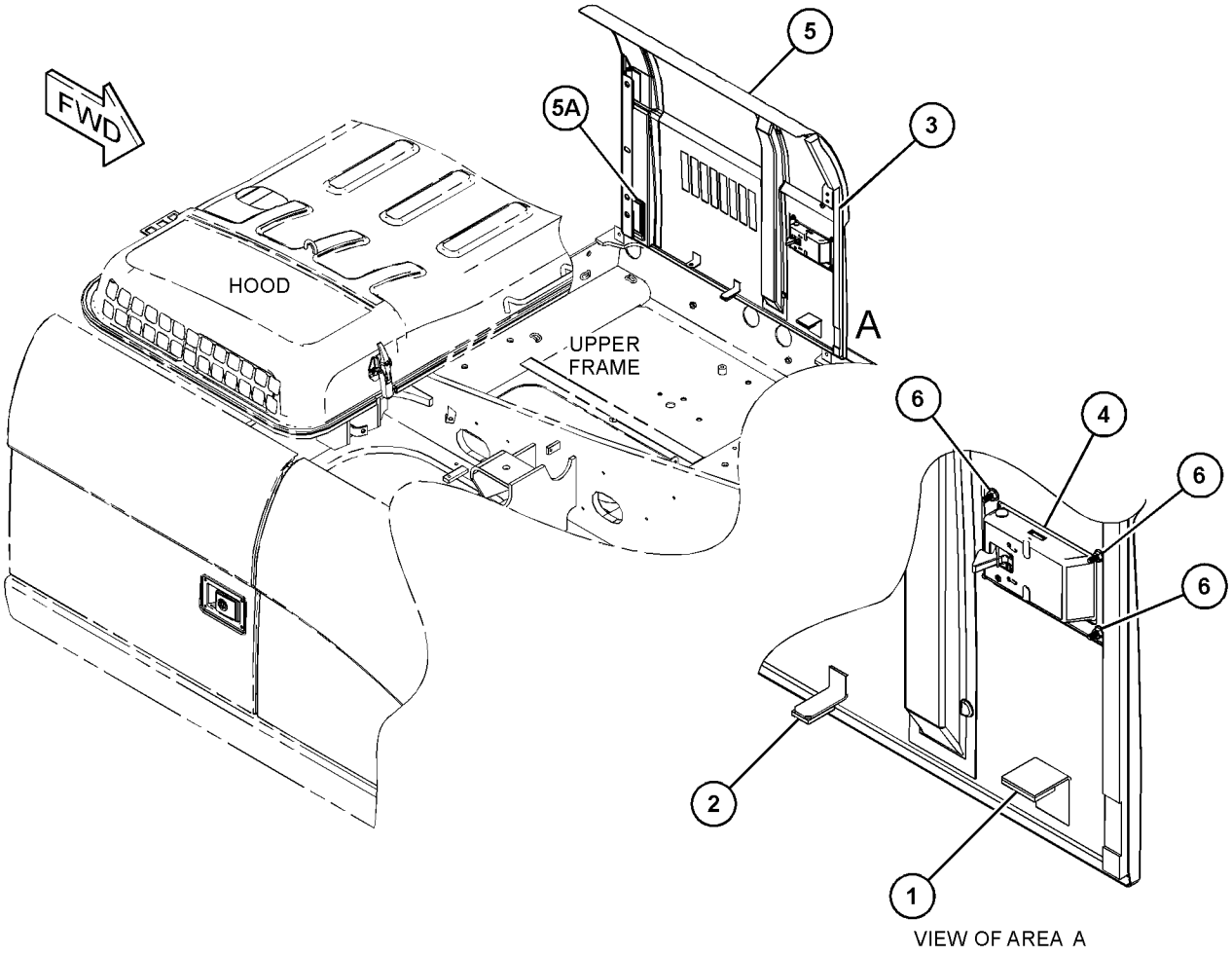

VIEW OF AREA A

GRAPHIC #1 **<END>** g03707115

445-6262 FENDER & COVER GP

S/N: PBB1-UP; KBS1-UP

PART OF 454-5588, 454-5589 CHASSIS AR

SMCS-7252 **i05754209**

NOTE	REF NO	GRAPHIC REF	PART NUMBER	QTY	PART NAME 1 2 3 4 5 6 (PRODUCT LEVEL)	SEE PAGE
M	1	1	**135-8573**	2	BOLT AS	
	2	1	**236-3702**	2	SPACER (15X35X11-MM THK)	
	3	1	**236-3703**	2	WASHER (25X35X4-MM THK)	
	4	1	**259-3543**	1	STEP AS	
	5	1	**445-6263**	1	COVER AS	
		1	**6C-3679**	8	RIVET-POP	
		1	**278-3818**	1	LINER	
	6	1	**5P-1075**	2	WASHER-HARD (10.2X22.5X3-MM THK)	
M	7	1	**8T-4195**	2	BOLT (M10X1.5X30-MM)	

M - METRIC PART

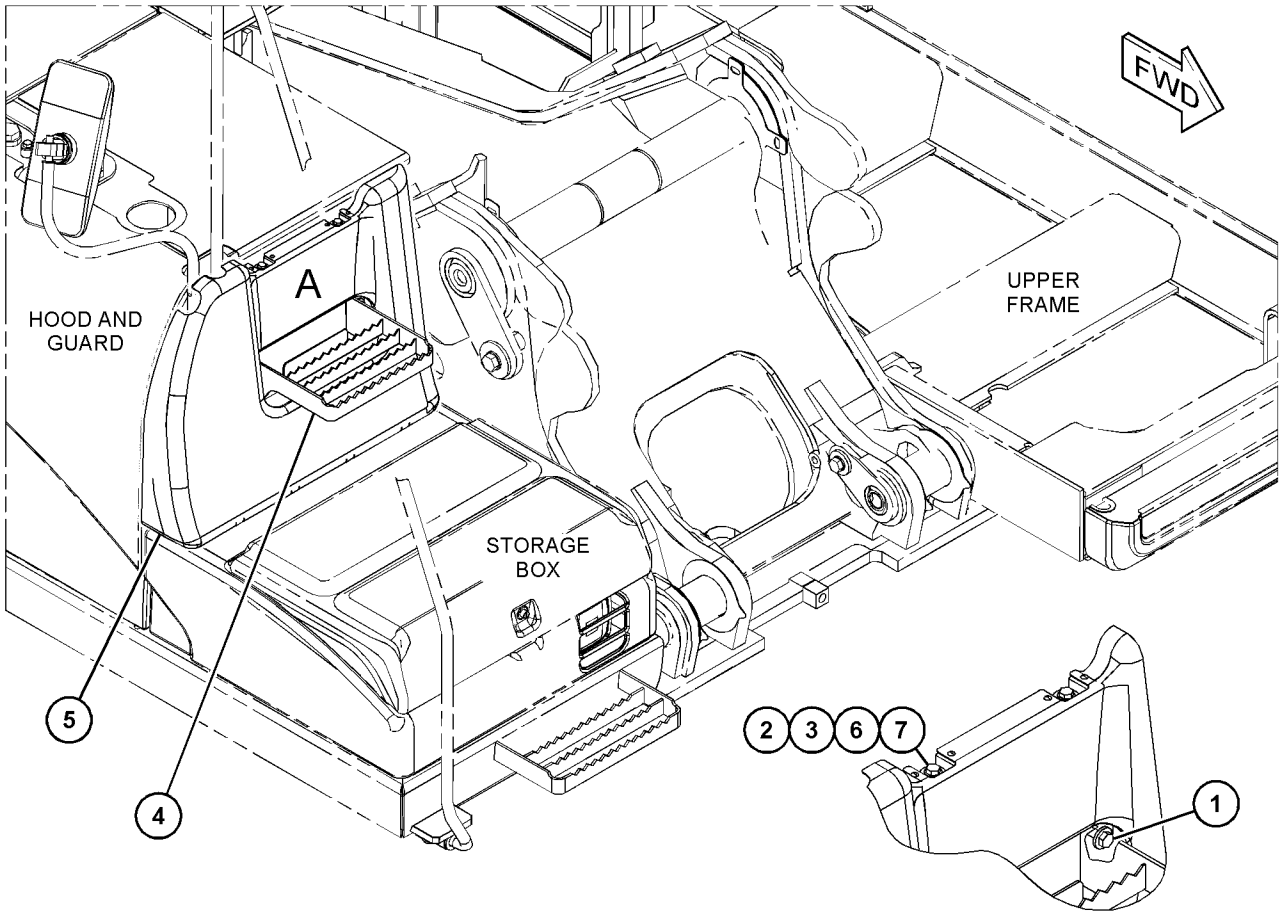

VIEW OF AREA A

GRAPHIC #1 **<END>** g03474746

394-4812 FRAME AS-UPPER

S/N: PBB1-UP; KBS1-UP
PART OF 394-4810 FRAME GP-UPPER
AN ATTACHMENT

SMCS-7051 **i05297183**

NOTE	REF NO	GRAPHIC REF	PART NUMBER	QTY	PART NAME 1 2 3 4 5 6 (PRODUCT LEVEL)	SEE PAGE
	1	1	**7Y-0633**	1	BOSS	
	2	1	**163-3729**	1	STEP AS	
					THE FOLLOWING REPAIR PARTS ARE AVAILABLE FOR REPAIR OF DAMAGED SKIRTS	
F			**178-0852**	1	PLATE-SKIRT (1100-MM)	
F			**184-5724**	1	PLATE-SKIRT (2000-MM)	

F - NOT SHOWN

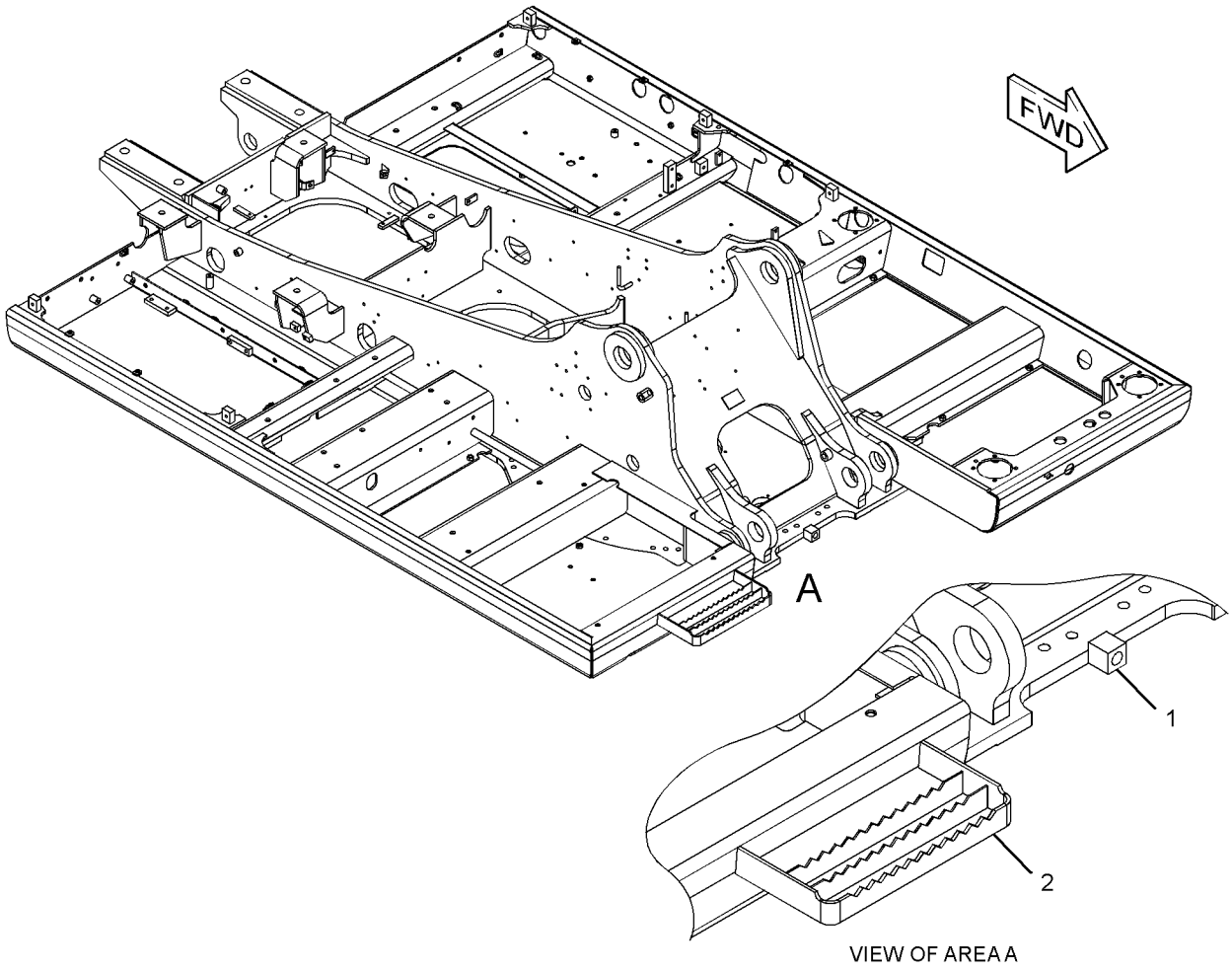

VIEW OF AREA A

GRAPHIC #1 **<END>** g03303730

394-4810 FRAME GP-UPPER

S/N: PBB1-UP; KBS1-UP

PART OF 456-0817, 456-0818, 456-0819, 456-0820, 456-0821, 456-0823, 456-0824, 456-0825, 456-0826, 456-0827, 456-0828, 456-0829, 456-0830, 456-0918, 456-0919, 456-0920, 456-0921, 456-0922, 456-0923, 456-0932, 456-0933, 456-0942, 456-0943, 456-1026, 456-1027 DISTRIBUTION AR

AN ATTACHMENT

SMCS-7051 **i05767959**

NOTE	REF NO	GRAPHIC REF	PART NUMBER	QTY	PART NAME 1 2 3 4 5 6 (PRODUCT LEVEL)	SEE PAGE
B	1	1	**093-0083**	4	SHIM (1-MM THK)	
B	2	1	**093-0115**	2	SHIM (2-MM THK)	
	3	1	**093-0349**	3	WASHER (22X60X6-MM THK)	
	4	1	**093-0363**	2	SPACER (83X120X12-MM THK)	
B	5	1	**133-2425**	2	SHIM (0.5-MM THK)	
	6	1	**4I-4812**	2	PIN AS	
	7	1	**212-2838**	2	SHIM (2-MM THK)	
J	8	1	**245-7900**	1	CAP	
J	9	1	**245-7901**	1	CAP	
B	10	1	**308-8775**	1	SHIM (0.5-MM THK)	
B	11	1	**308-8776**	2	SHIM (1-MM THK)	
B	12	1	**308-8777**	1	SHIM (2-MM THK)	
	13	1	**315-0800**	1	PIN AS	
Y	14	1	**394-4812**	1	FRAME AS-UPPER	262
	15	1	**451-2176**	3	WASHER-HARD (22X35X3.5-MM THK)	
M	16	1	**453-2844**	3	BOLT (M20X2.5X30-MM)	

B - USE AS REQUIRED
J - USE ON MACHINE WITHOUT LOWER WIPER
M - METRIC PART
Y - SEPARATE ILLUSTRATION

394-4810 **FRAME GP-UPPER (*contd.*)** **i05767959**

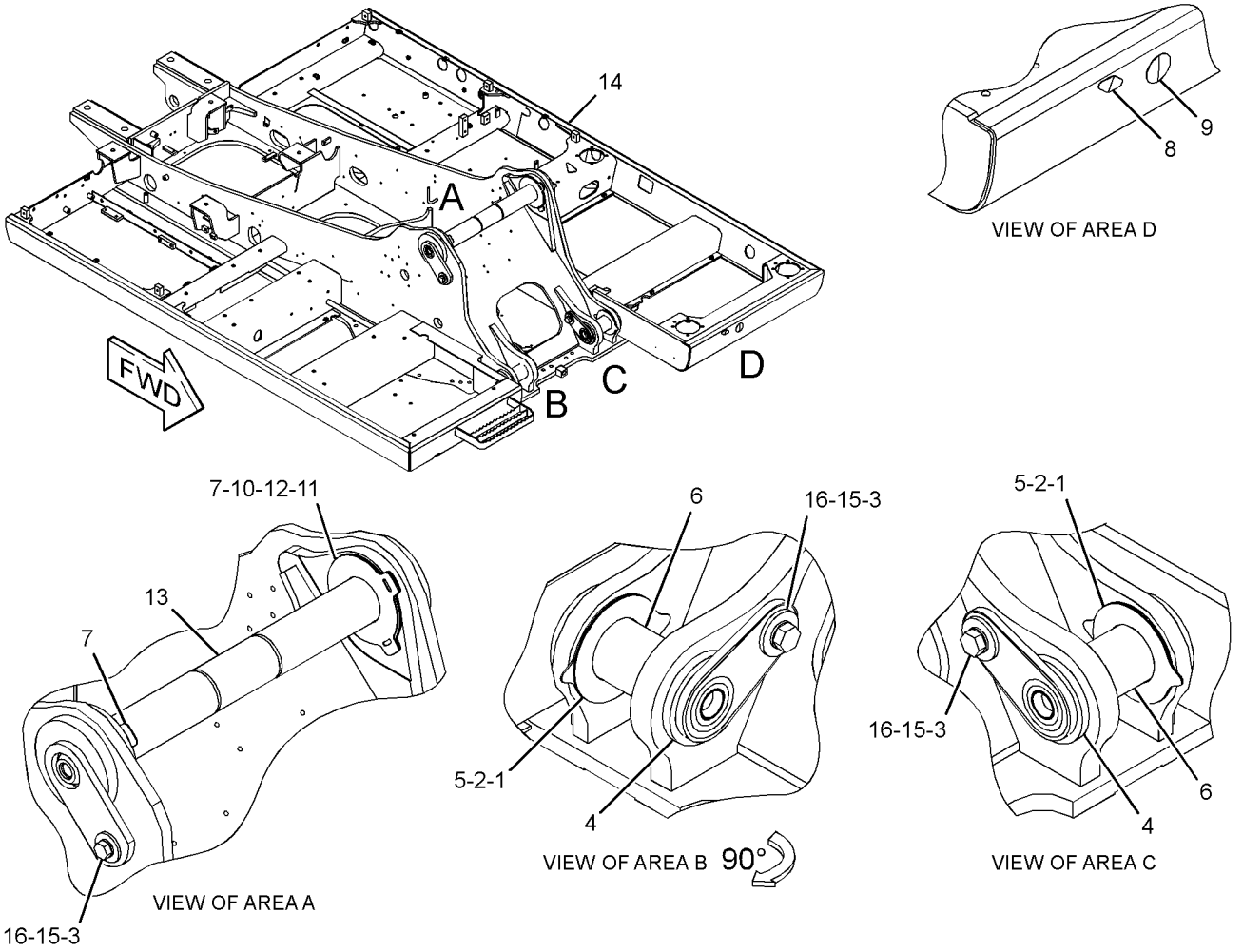

GRAPHIC #1

<END>

g03302897

394-5886 FRAME GP-UPPER

S/N: PBB1-UP; KBS1-UP
CANNOT BE USED WITH 394-4810—PAGE: 263
AN ATTACHMENT

SMCS-7051 **i05858903**

NOTE	REF NO	GRAPHIC REF	PART NUMBER	QTY	PART NAME 1 2 3 4 5 6 (PRODUCT LEVEL)	SEE PAGE
B	1	1	**093-0083**	4	SHIM (1-MM THK)	
B	2	1	**093-0115**	2	SHIM (2-MM THK)	
	3	1	**093-0349**	3	WASHER (22X60X6-MM THK)	
	4	1	**093-0363**	2	SPACER (83X120X12-MM THK)	
B	5	1	**133-2425**	2	SHIM (0.5-MM THK)	
	6	1	**4I-4812**	2	PIN AS	
C	7	1	**177-6315**	15	PLUG	
	8	1	**212-2838**	2	SHIM (2-MM THK)	
J	9	1	**245-7900**	1	CAP	
J	10	1	**245-7901**	1	CAP	
B	11	1	**308-8775**	1	SHIM (0.5-MM THK)	
B		1	**308-8776**	2	SHIM (1-MM THK)	
B		1	**308-8777**	1	SHIM (2-MM THK)	
	12	1	**315-0800**	1	PIN AS	
	13	1	*394-5887*	1	FRAME AS-UPPER	
	13A	1	**7Y-0633**	1	BOSS	
	13B	1	**163-3729**	1	STEP AS	
	15	1	**8T-4123**	3	WASHER (3.62X5.75X0.375-MM THK)	
M	17	1	**8T-4780**	3	BOLT (M20X2.5X30-MM)	
					THE FOLLOWING REPAIR PARTS ARE AVAILABLE FOR REPAIR OF DAMAGED SHIRTS	
F			**178-0852**	1	PLATE-SKIRT (1100-MM)	
F			**184-5724**	1	PLATE-SKIRT (2000-MM)	

B - USE AS REQUIRED
C - CHANGE FROM PREVIOUS TYPE
F - NOT SHOWN
J - FOR AKASHI USE ONLY MACHINE WITHOUT LOWER WIPER
M - METRIC PART

394-5886 **FRAME GP-UPPER (*contd.*)** **i05858903**

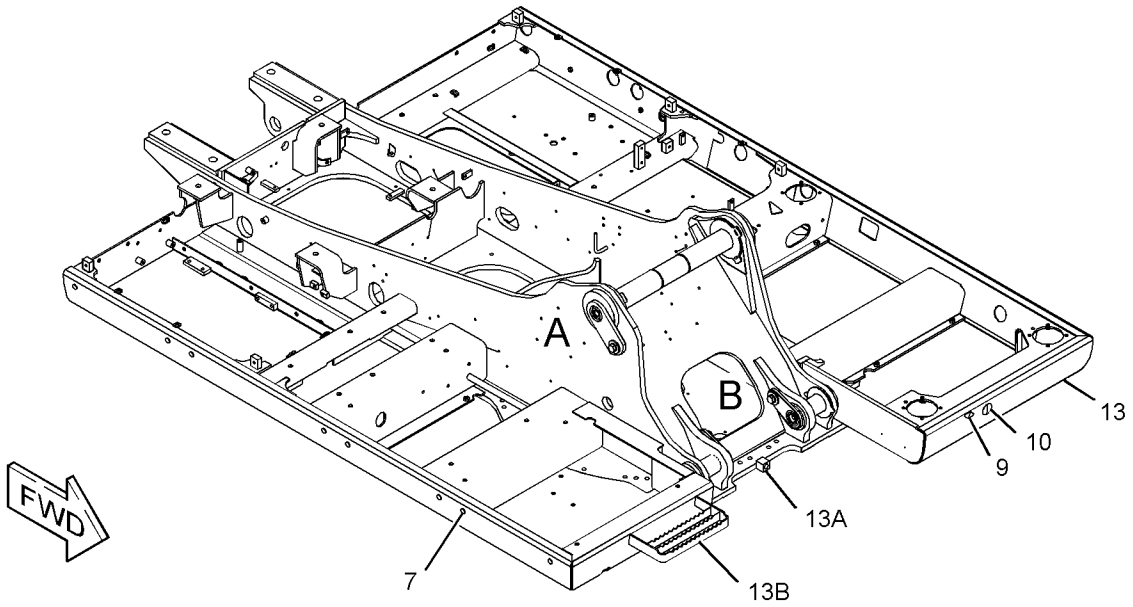

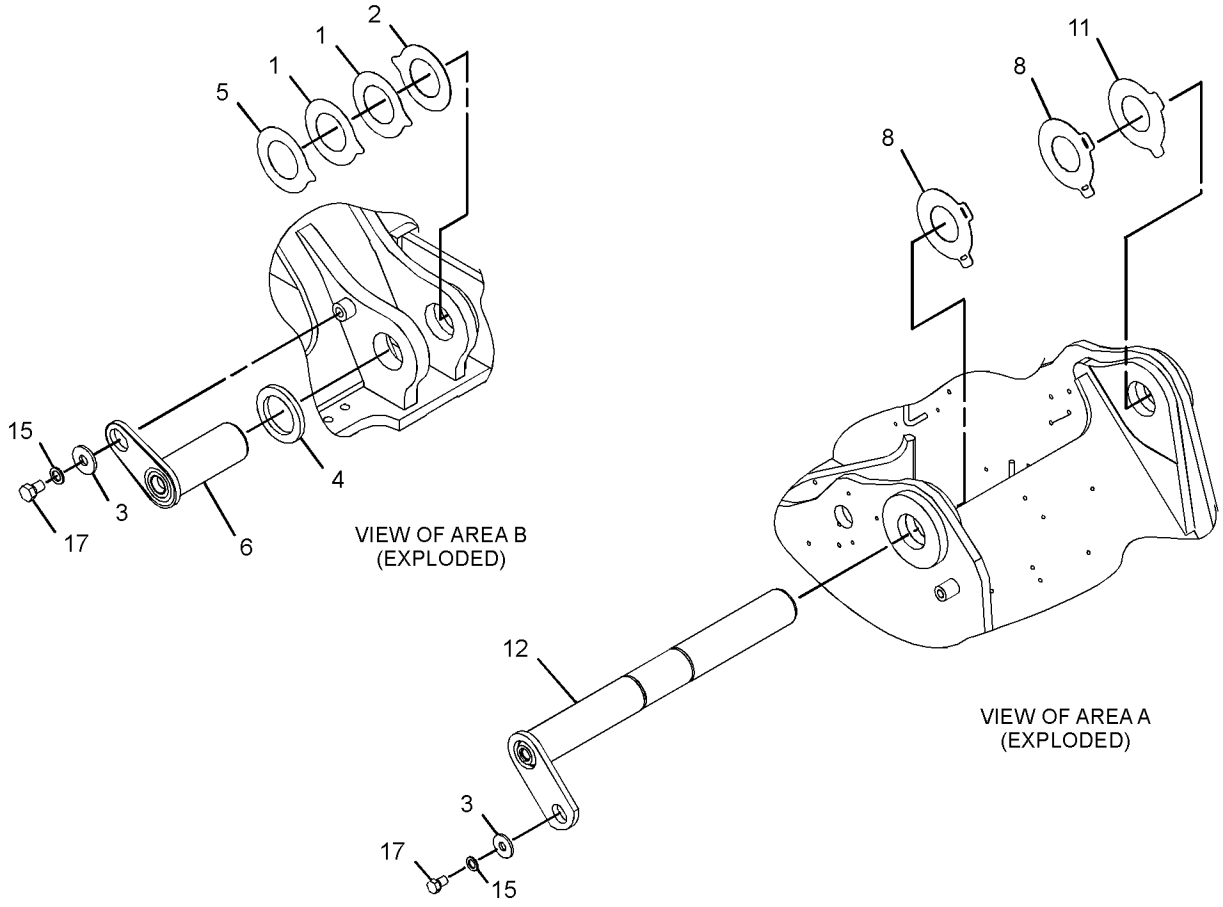

GRAPHIC #1 **<END>** g03712644

227-6081 GEAR & BEARING GP-SWING

S/N: PBB1-UP; KBS1-UP

PART OF 227-6147 GEAR & BEARING GP-SWING

SMCS-7063 **i05326598**

NOTE	REF NO	GRAPHIC REF	PART NUMBER	QTY	PART NAME 1 2 3 4 5 6 (PRODUCT LEVEL)	SEE PAGE
	1	1	**3B-8489**	1	FITTING-GREASE	
	2	1	**227-6071**	1	SEAL-DUST	
E	3	1	**148-4685**		SEAL (368-CM)	

E - ORDER BY THE CENTIMETER

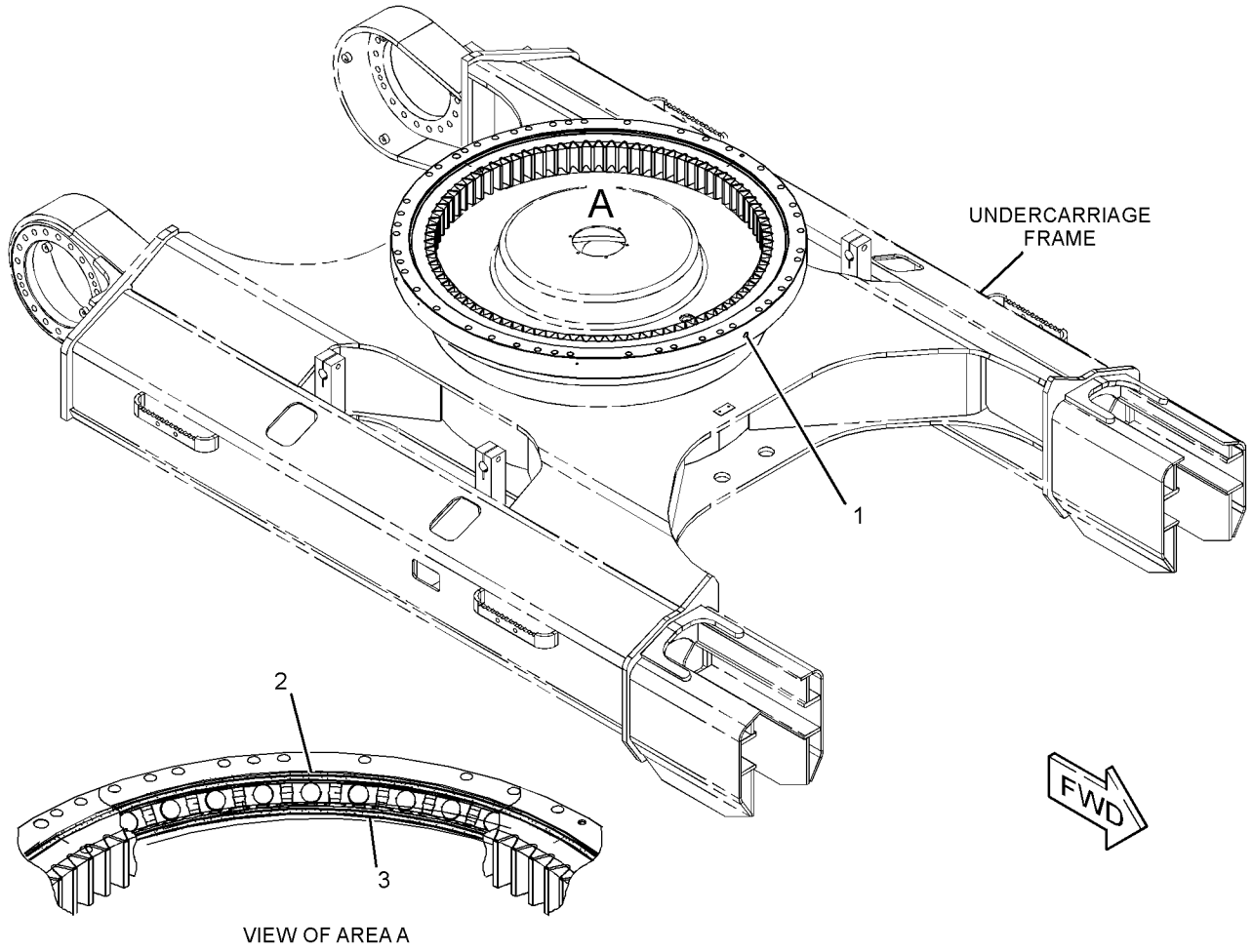

VIEW OF AREA A

GRAPHIC #1 **<END>** g01671618

227-6147 GEAR & BEARING GP-SWING

S/N: PBB1-UP; KBS1-UP

PART OF 240-3822, 247-7454 FRAME AR-UNDERCARRIAGE

SMCS-7063 **i02507535**

NOTE	REF NO	GRAPHIC REF	PART NUMBER	QTY	PART NAME 1 2 3 4 5 6 (PRODUCT LEVEL)	SEE PAGE
	1	1	**5K-9243**	2	ELBOW-FLARED	
	2	1	**7Y-1647**	1	GASKET	
	3	1	**7Y-1650**	1	CLAMP-HOSE	
	4	1	**7Y-1863**	40	SPACER (20.5X38X34-MM THK)	
	5	1	**148-4689**	1	TUBE AS	
	6	1	**171-9464**	37	SPACER (20.6X38X6-MM THK)	
Y	7	1	**227-6081**	1	GEAR & BEARING GP-SWING (118-BEARING)	267
	8	1	**227-6105**	1	BOOT	
	9	1	**227-6106**	1	RETAINER	
	10	1	**096-4902**	1	DOWEL	
	11	1	**148-4703**	1	COVER	
	12	1	**148-4704**	1	GASKET	
	13	1	**3B-8489**	1	FITTING-GREASE	
	14	1	**4N-9170**	2	CLIP	
	15	1	**7Y-1648**	1	STRIP	
M	16	1	**8T-0360**	40	BOLT (M20X2.5X90-MM)	
M	17	1	**8T-0362**	37	BOLT (M20X2.5X110-MM)	
	18	1	**8T-4121**	14	WASHER-HARD (11X21X2.5-MM THK)	
M	19	1	**8T-4137**	2	BOLT (M10X1.5X20-MM)	
M	20	1	**8T-4136**	12	BOLT (M10X1.5X25-MM)	
M	21	1	**8T-4199**	2	BOLT (M8X1.25X12-MM)	
B	22	1	**1U-8846**		SEALANT-GASKET	

B - USE AS REQUIRED
M - METRIC PART
Y - SEPARATE ILLUSTRATION

227-6147 **GEAR & BEARING GP-SWING (*contd.*)** **i02507535**

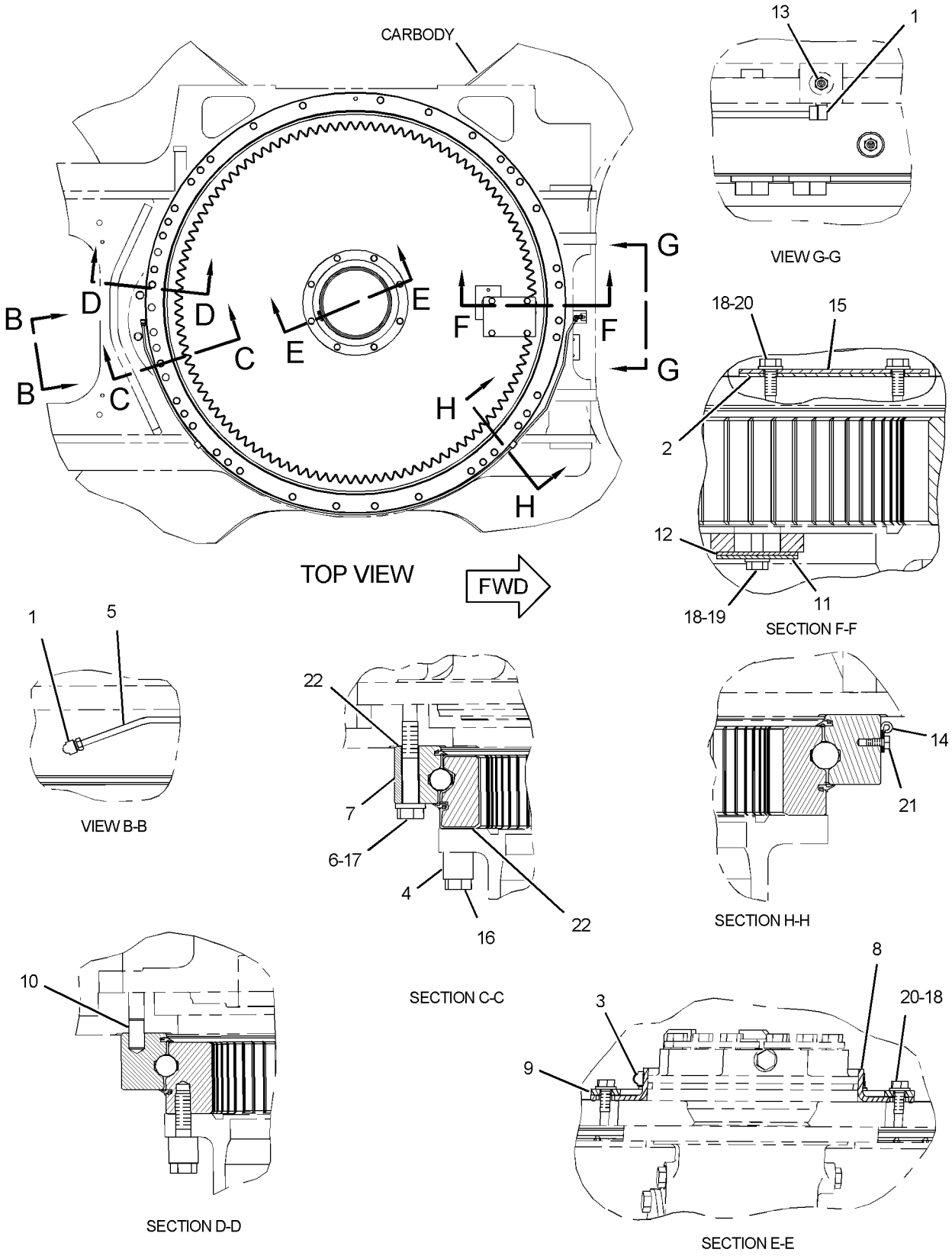

GRAPHIC #1 **<END>** g01276722

374-4017 GUARD GP-BOTTOM

S/N: PBB1-UP; KBS1-UP

PART OF 454-5588, 454-5589 CHASSIS AR

SMCS-7153 **i05119223**

NOTE	REF NO	GRAPHIC REF	PART NUMBER	QTY	PART NAME 1 2 3 4 5 6 (PRODUCT LEVEL)	SEE PAGE
M	1	1	**135-8576**	36	BOLT AS-LOCKING	
	2	1	**165-2823**	1	SHEET	
	3	1	**248-8992**	1	SHEET	
	4	1	**421-3762**	1	SHEET	
	5	1	**248-8994**	1	SHEET	
					–OR–	
J		1	**342-0932**	1	SHEET AS	
	6	1	**248-8995**	1	SHEET	
	7	1	**377-6715**	2	SHEET	
	8	1	**374-4161**	1	SHEET AS	
	9	1	**289-6603**	1	SHEET	
J	10	1	**342-0965**	1	PLATE AS	
JM	11	1	**8C-8992**	2	BOLT-LOCKING (M12X1.75X30-MM)	
J	12	1	**5P-1076**	2	WASHER-HARD (13.5X30X4-MM THK)	

J - OPTIONAL DESIGN FOR COLD WEATHER APPLICATIONS
M - METRIC PART

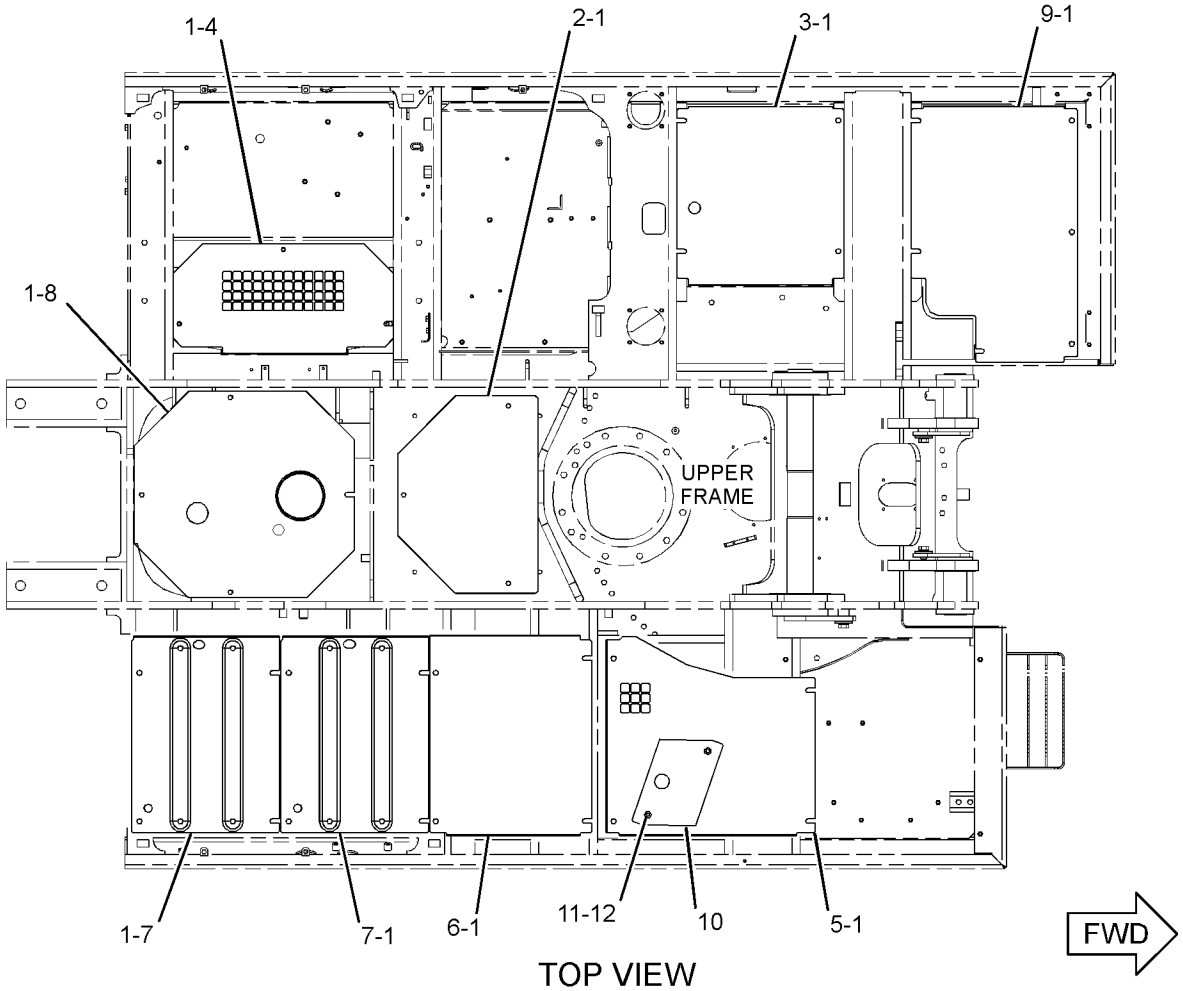

TOP VIEW

GRAPHIC #1 **<END>** g03305997

374-4019 GUARD GP-BOTTOM–HEAVY-DUTY

S/N: PBB1-UP; KBS1-UP

AN ATTACHMENT

SMCS-7153 **i05229304**

NOTE	REF NO	GRAPHIC REF	PART NUMBER	QTY	PART NAME 1 2 3 4 5 6 (PRODUCT LEVEL)	SEE PAGE
M	1	1	**135-8576**	2	BOLT AS-LOCKING	
	2	1	**355-8007**	1	SHEET AS	
	3	1	**355-8008**	1	SHEET AS	
	4	1	**423-5186**	1	SHEET AS	
	5	1	**355-8010**	1	PLATE AS	
	6	1	**355-8013**	1	SHEET AS	
	7	1	**355-8014**	1	SHEET AS	
	8	1	**377-6679**	1	SHEET AS	
	9	1	**377-6681**	1	SHEET AS	
	10	1	**377-6716**	2	SHEET AS	

M - METRIC PART

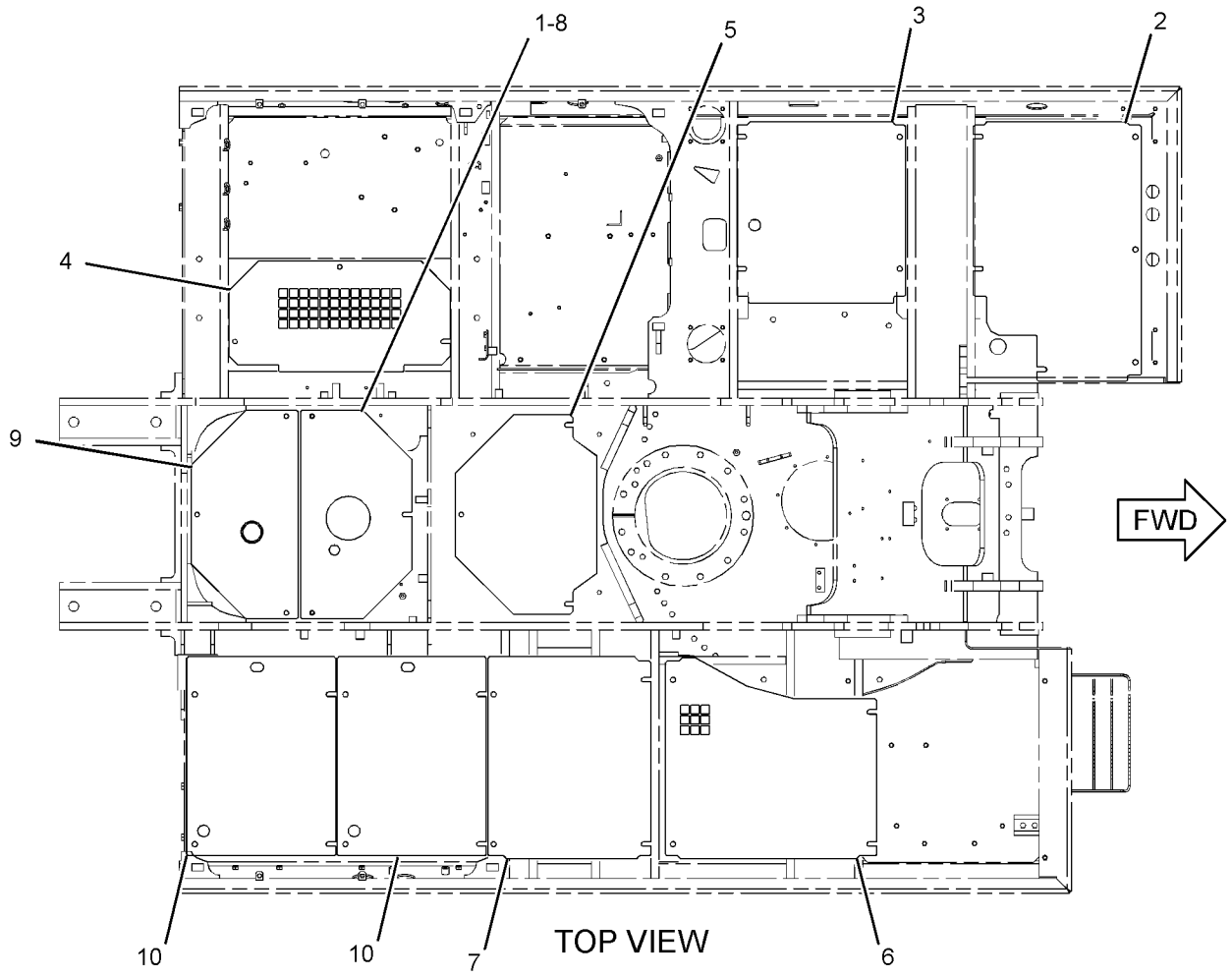

GRAPHIC #1 **<END>** g03358584

134-8850 GUARD GP-SWIVEL

S/N: PBB1-UP; KBS1-UP

AN ATTACHMENT

SMCS-7183 **i05755044**

NOTE	REF NO	GRAPHIC REF	PART NUMBER	QTY	PART NAME 1 2 3 4 5 6 (PRODUCT LEVEL)	SEE PAGE
	1	1	**134-8851**	1	PLATE AS	
	2	1	**130-4276**	4	PLATE	
M	3	1	**447-1707**	8	BOLT (M16X2X60-MM)	
	4	1	**453-2865**	8	WASHER-HARD (17.5X38X6-MM THK)	

M - METRIC PART

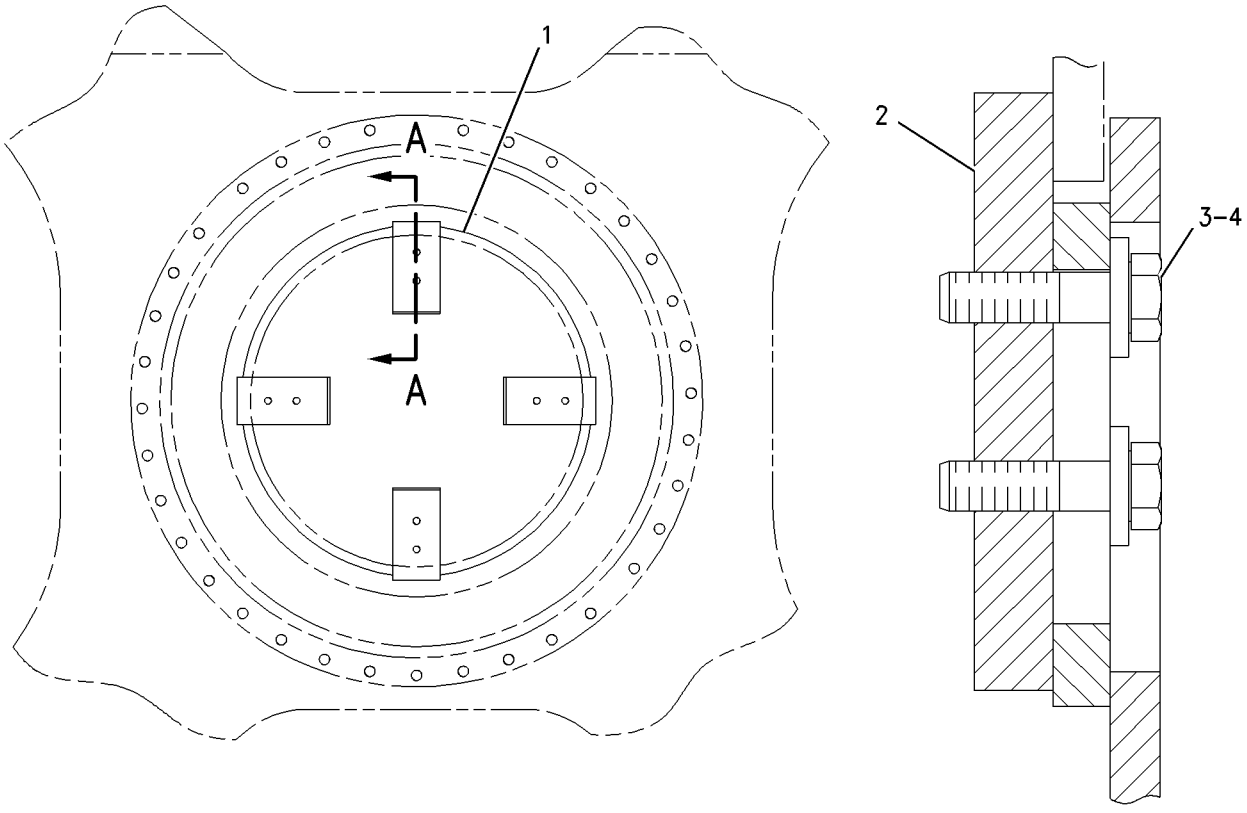

SECTION A-A

GRAPHIC #1 **<END>** g00690093

134-8875 GUARD GP-SWIVEL

S/N: PBB1-UP; KBS1-UP

PART OF 456-0817, 456-0825, 456-0826, 456-0827, 456-0828, 456-0829, 456-0830, 456-0918, 456-0919, 456-0920, 456-0921, 456-0922, 456-0923 DISTRIBUTION AR AN ATTACHMENT

SMCS-7183 **i05214798**

NOTE	REF NO	GRAPHIC REF	PART NUMBER	QTY	PART NAME 1 2 3 4 5 6 (PRODUCT LEVEL)	SEE PAGE
	1	1	**134-8876**	1	PLATE AS	
	2	1	**134-8878**	1	PLATE AS	
M	3	1	**8C-8992**	5	BOLT-LOCKING (M12X1.75X30-MM)	
	4	1	**5P-1076**	5	WASHER-HARD (13.5X30X4-MM THK)	

M - METRIC PART

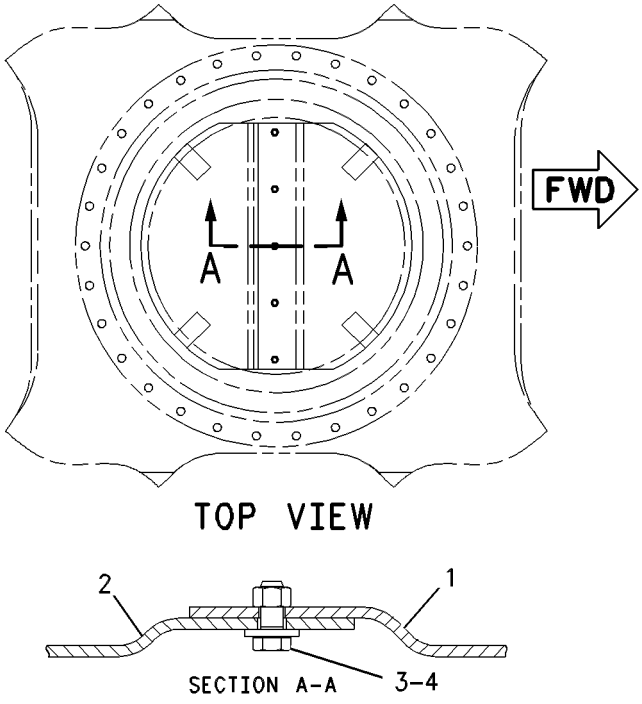

GRAPHIC #1 **<END>** g00390432

142-3835 HANDRAIL GP

S/N: PBB1-UP; KBS1-UP

PART OF 454-5588, 454-5589 CHASSIS AR

SMCS-7256 **i02781758**

NOTE	REF NO	GRAPHIC REF	PART NUMBER	QTY	PART NAME 1 2 3 4 5 6 (PRODUCT LEVEL)	SEE PAGE
	1	1	**8T-4223**	2	WASHER-HARD (13.5X25.5X3-MM THK)	
M	2	1	**8T-4192**	2	BOLT (M12X1.75X25-MM)	
	3	1	**177-5880**	2	SLEEVE	
	4	1	**177-5879**	1	CLAMP	
	5	1	**177-5877**	1	HANDHOLD AS	
M	6	1	**135-8578**	3	BOLT AS	

M - METRIC PART

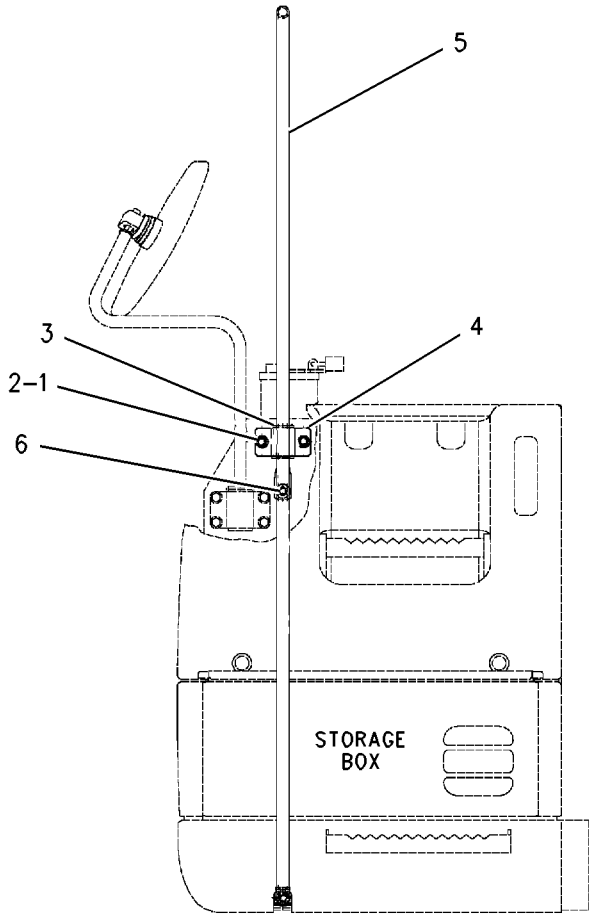

FRONT VIEW

GRAPHIC #1 **<END>** g00678707

455-4062 HOOD & GUARD GP

S/N: PBB1-UP; KBS1-UP

PART OF 454-5588, 454-5589 CHASSIS AR

SMCS-7251, 7276 **i05858067**

NOTE	REF NO	GRAPHIC REF	PART NUMBER	QTY	PART NAME 1 2 3 4 5 6 (PRODUCT LEVEL)	SEE PAGE
	1	2	**4I-0118**	2	HOOK AS	
	2	2	**4I-0232**	2	STRIKER	
	3	1	**4I-8019**	3	SUPPORT	
	4	2	**6I-6033**	3	STOP	
	5	2	**7Y-2853**	8	SPACER (13X38X5-MM THK)	
B	6	2	**087-3908**	4	SHIM (1-MM THK)	
B	7	2	**087-3909**	4	SHIM (2-MM THK)	
	8	2	**122-3979**	1	BAND	
	9	2	**122-3980**	1	ROD	
	10	1	**122-4120**	3	ROD	
	11	1,2	**170-3016**	15	SPACER (19X32X2-MM THK)	
	12	2	**190-6880**	3	SUPPORT AS	
	13	2	**244-8228**	1	SUPPORT AS	
	14	2	**451-4099**	1	SUPPORT AS	
	15	2	**244-8255**	1	SUPPORT AS	
	16	1	**262-2363**	1	SHEET AS-SOUND SUPPRESSION	
		1	**262-2365**	1	LINER	
	17	2	**289-6698**	1	SUPPORT AS	
	18	2	**455-4063**	1	SUPPORT AS	
Y	19	2	**377-6667**	1	SHEET AS-SOUND SUPPRESSION	287
Y	20	2	**451-4100**	1	SUPPORT AS-ENCLOSURE	298
Y	21	2	**377-6708**	1	SHEET AS-SOUND SUPPRESSION	288
	22	1	**377-6786**	1	COVER AS	
Y	23	1	**379-7425**	1	SUPPORT AS-SOUND SUPPRESSION	299
	24	1	**451-4098**	1	COVER AS	
	25	1	**379-7518**	1	SUPPORT AS	
		1	**7T-1099**	8	LINK	
M		1	**8T-3597**	7	NUT-WELD (M12X1.75-THD)	
		1	**087-5841**	1	PLATE	
		1	**121-1029**	1	CLIP	
Y	26	1	**425-6092**	1	DOOR GP-ACCESS (PUMP COMPARTMENT)	259
	27	1	**391-4751**	1	COVER AS	
	28	1	**391-4752**	1	COVER AS	
Y	29	2	**391-9646**	1	SHEET AS-SOUND SUPPRESSION	290
	30	2	**391-9651**	1	SHEET AS-SOUND SUPPRESSION	
	31	2	**391-9655**	1	SUPPORT AS	
	32	2	**392-1262**	1	SPRING AS-GAS (ENGINE HOOD)	
	33	1	**392-2667**	1	SUPPORT AS	
	34	2	**396-3542**	1	SUPPORT AS	
	35	1	**396-3545**	1	COVER AS	
		1	**190-7081**	2	SHEET	
		1	**396-3547**	1	COVER AS	
Y	36	2	**431-0101**	1	SHEET AS-SOUND SUPPRESSION	294
	37	1	**431-0102**	1	SUPPORT AS	
M		1	**6V-9632**	3	NUT-WELD (M6X1-THD)	
		1	**7T-1099**	3	LINK	
M		1	**8T-3490**	7	NUT-WELD (M10X1.5-THD)	
M		1	**8T-3597**	8	NUT-WELD (M12X1.75-THD)	
M		1	**8T-3612**	4	NUT-WELD (M8X1.25-THD)	
M		1	**9R-2060**	1	BOSS (M10X1.5X21-MM)	
	38	2	**396-3569**	1	SHEET AS	
Y	39	2	**428-5842**	1	SHEET AS-SOUND SUPPRESSION	293
Y	40	2	**396-8523**	1	SHEET AS-SOUND SUPPRESSION	291
Y	41	1	**396-9388**	1	COVER AS-SOUND SUPPRESSION	255
Y	42	2	**397-9009**	1	SUPPORT AS-SOUND SUPPRESSION	300
	43	2	**431-0103**	1	SHEET AS	
		1	**7T-1099**	3	LINK	
M		1	**8T-3597**	2	NUT-WELD (M12X1.75-THD)	
Y	44	2	**451-5170**	1	SHEET AS-SOUND SUPPRESSION	295

455-4062 **HOOD & GUARD GP (*contd.*)** **i05858067**

NOTE	REF NO	GRAPHIC REF	PART NUMBER	QTY	PART NAME 1 2 3 4 5 6 (PRODUCT LEVEL)	SEE PAGE
Y	45	1	**422-5388**	1	DOOR AS-ACCESS (AIR CLEANER, BATTERY)	258
Y	46	1	**423-5183**	1	HOOD GP-ENGINE	283
Y	47	1	**438-2507**	1	DOOR GP-ACCESS	260
M	48	2	**105-3487**	6	BOLT-SOCKET HEAD (M6X1X20-MM)	
	49	1	**114-6285**	2	BAR	
M	50	1,2	**135-8573**	67	BOLT AS	
M	51	1,2	**135-8575**	34	BOLT AS	
M	52	1	**135-8577**	4	BOLT AS	
M	53	1	**135-8578**	6	BOLT AS	
	54	1	**3B-4618**	3	PIN-COTTER	
M	55	2	**5C-7261**	1	NUT (M8X1.25-THD)	
M	56	1,2	**5C-9553**	8	BOLT (M6X1X16-MM)	
	57	2	**5P-0372**	1	LOCK PIN	
	58	2	**5P-4115**	10	WASHER-HARD (7.2X19X2-MM THK)	
	59	2	**7F-3708**	1	PIN	
	60	2	**7Y-2854**	8	SPACER (24X38X3-MM THK)	
	61	1,2	**8T-4121**	12	WASHER-HARD (11X21X2.5-MM THK)	
M	62	1,2	**8T-4137**	7	BOLT (M10X1.5X20-MM)	
M	63	2	**8T-4138**	10	BOLT (M6X1X20-MM)	
M	64	2	**8T-4189**	4	BOLT (M8X1.25X20-MM)	
	65	2	**8T-4224**	5	WASHER-HARD (8.8X16X2-MM THK)	
	66	1,2	**9X-8256**	14	WASHER (6.6X12X2-MM THK)	

B - USE AS REQUIRED
M - METRIC PART
Y - SEPARATE ILLUSTRATION

455-4062 **HOOD & GUARD GP (*contd.*)** **i05858067**

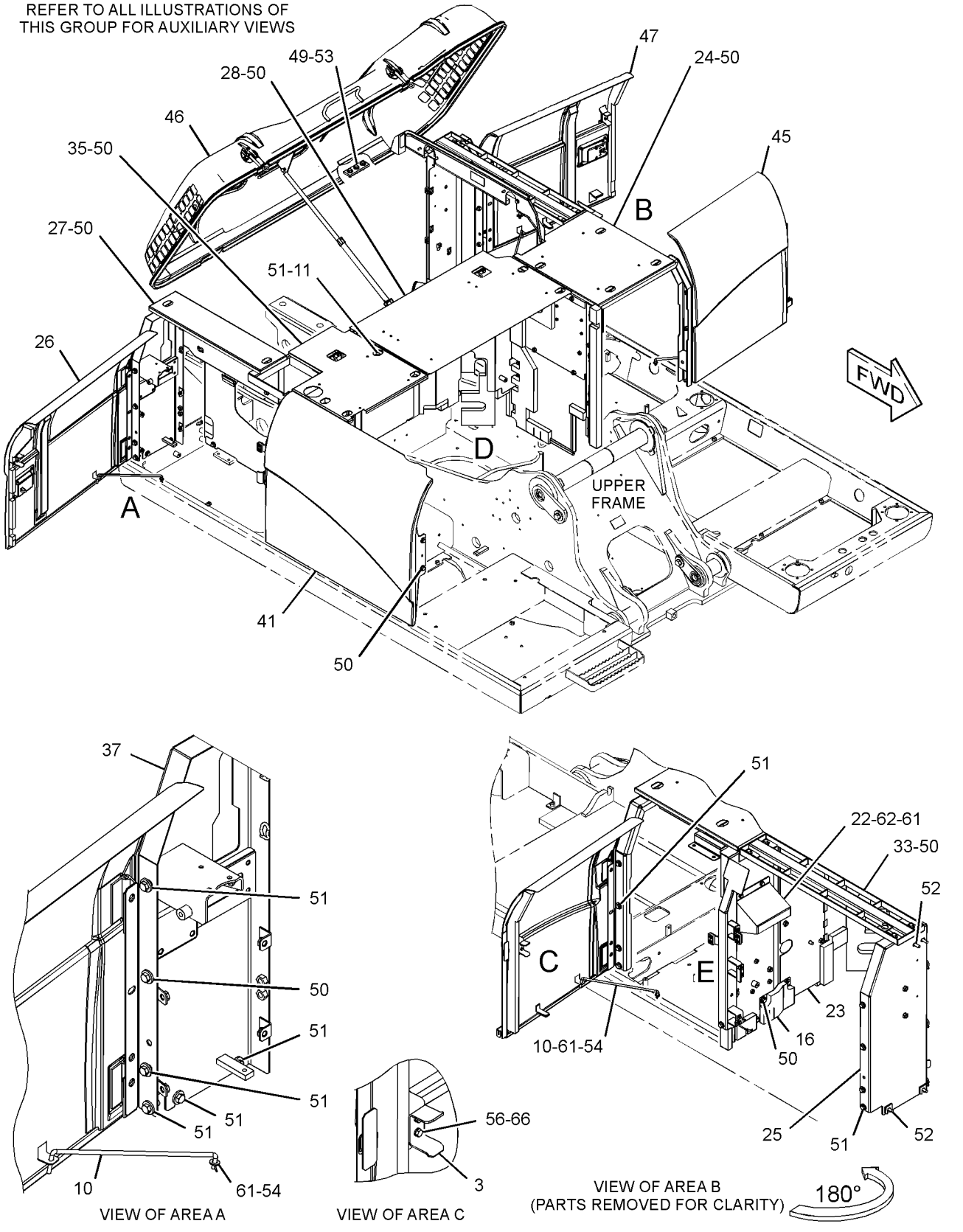

GRAPHIC #1

g03321099

455-4062 **HOOD & GUARD GP (*contd.*)** **i05858067**

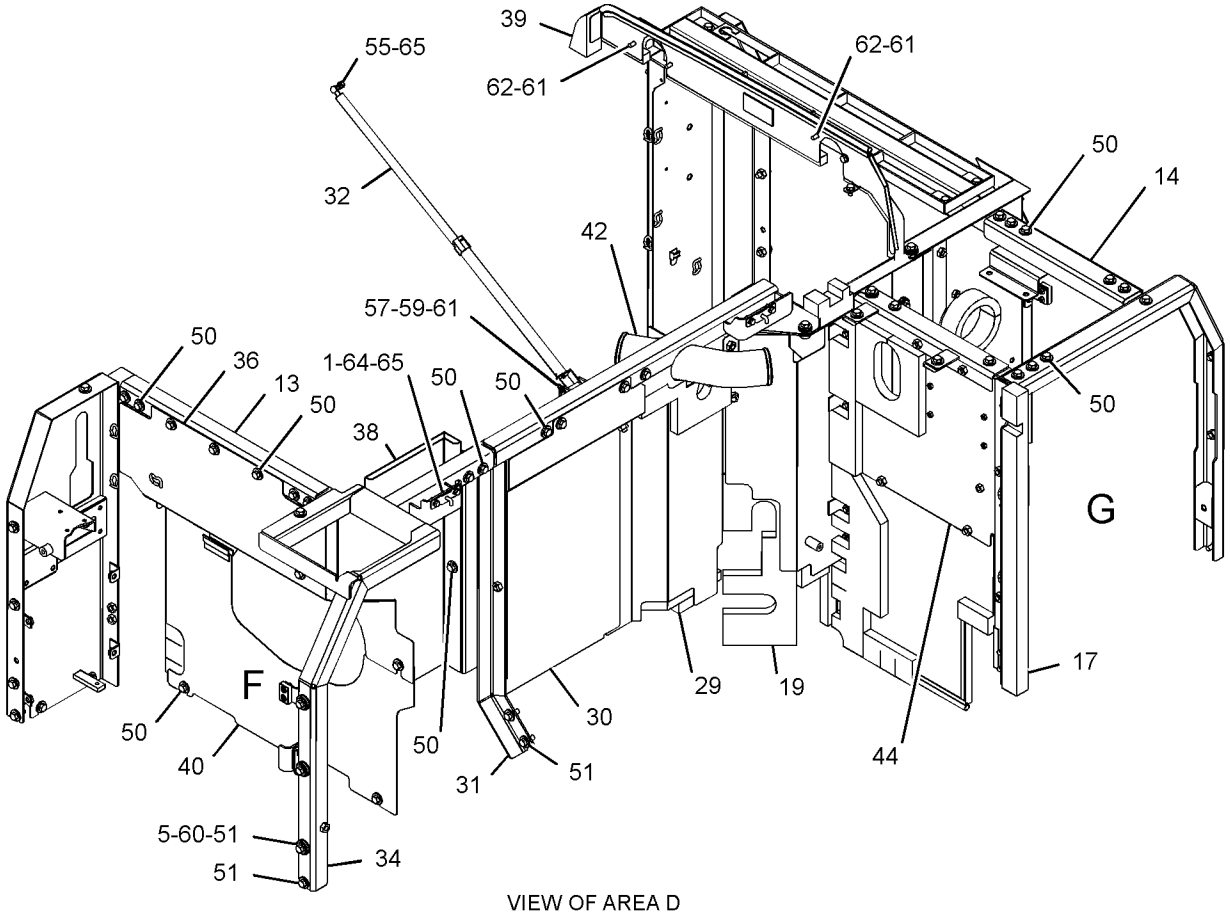

VIEW OF AREA D
(PARTS REMOVED FOR CLARITY)

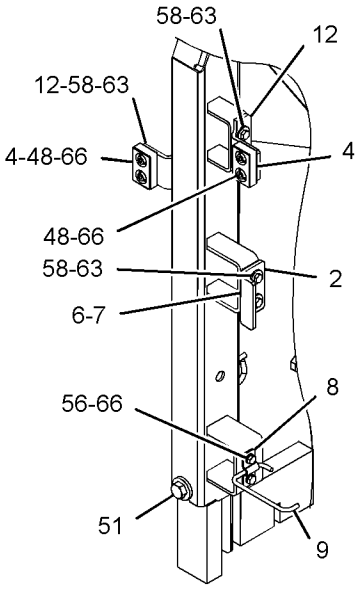

VIEW OF AREA E

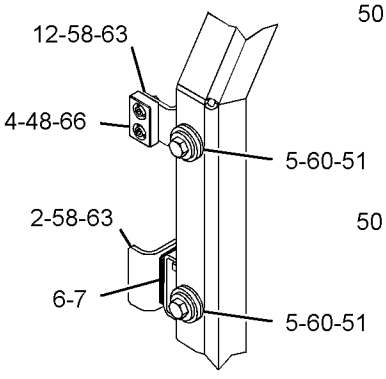

VIEW OF AREA F

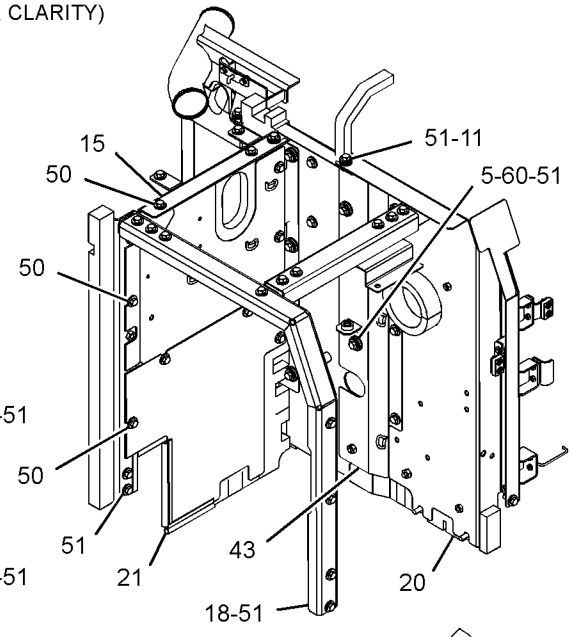

VIEW OF AREA G 90°

GRAPHIC #2 **<END>** g03321100

464-1227 HOOD GP–GRADE CONTROL

S/N: PBB1-UP; KBS1-UP
PART OF 456-1032 INSTALLATION AR
AN ATTACHMENT

SMCS-7251 **i05861294**

NOTE	REF NO	GRAPHIC REF	PART NUMBER	QTY	PART NAME 1 2 3 4 5 6 (PRODUCT LEVEL)	SEE PAGE
Y	1	1	**430-5643**	1	HOOD GP-ENGINE	284
	2	1	**464-1275**	1	SUPPORT AS	
	3	1	**399-6315**	1	COVER AS	

Y - SEPARATE ILLUSTRATION

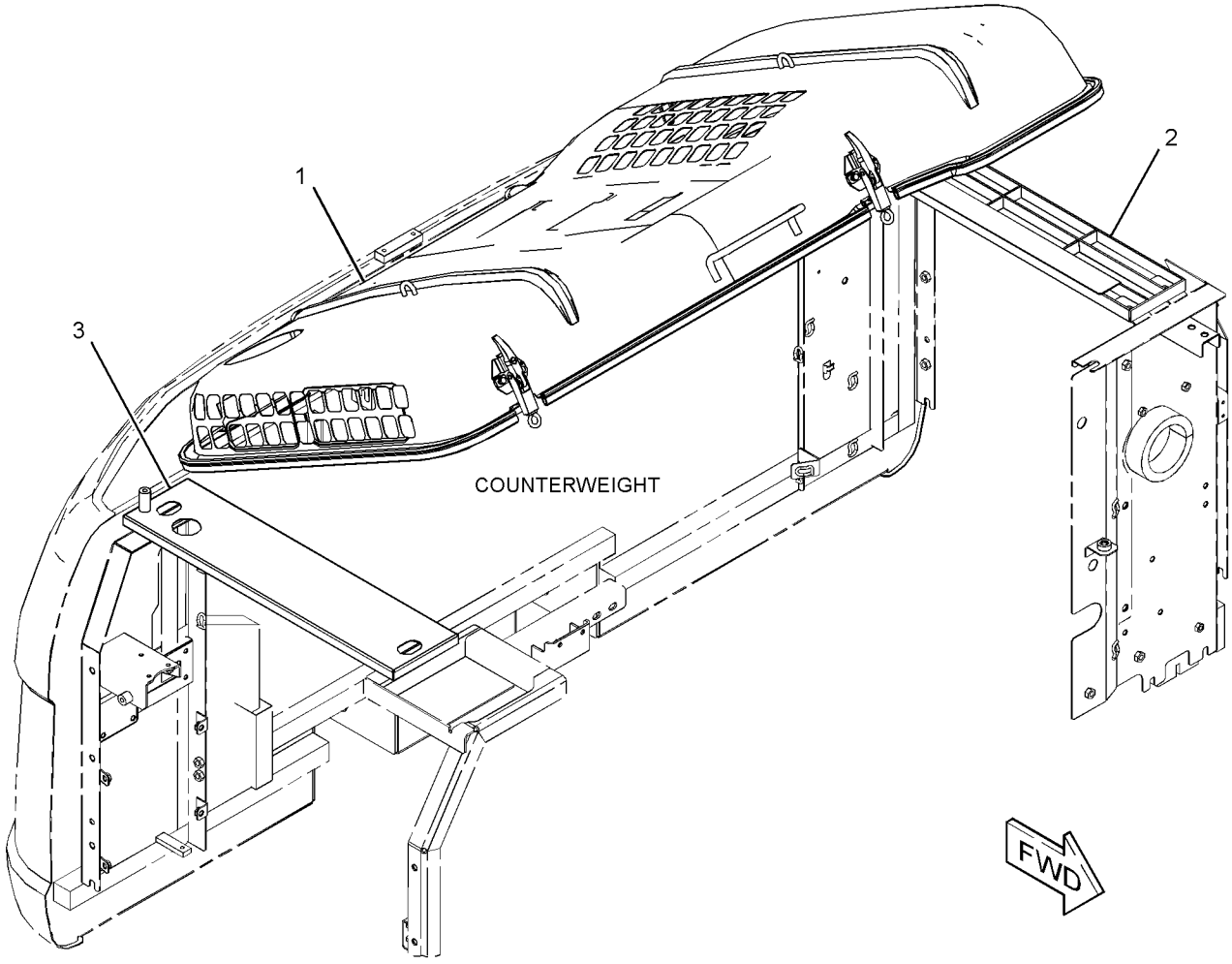

GRAPHIC #1 **<END>** g03317616

396-7683 HOOD GP-ENGINE

S/N: PBB1-UP; KBS1-UP
PART OF 399-6309 HOOD GP-ENGINE
AN ATTACHMENT

SMCS-7251 **i05203971**

NOTE	REF NO	GRAPHIC REF	PART NUMBER	QTY	PART NAME 1 2 3 4 5 6 (PRODUCT LEVEL)	SEE PAGE
	1	1	**096-4129**	2	CUSHION	
J	2	1	**375-8749**	1	LATCH AS	
	3	1	**375-8750**	1	LATCH AS	
	4	1	**396-7706**	1	LINER	
	5	1	*397-9013*	1	HOOD AS-ENGINE	
	5A	1	**114-6289**	2	HINGE	
	5B	1	**268-0720**	1	HANDLE	
M		1	**8T-3612**	4	NUT-WELD (M8X1.25-THD)	
M		1	**8T-8874**	4	NUT-WELD (M5X0.8-THD)	
	6	1	**8T-0328**	4	WASHER-HARD (5.5X10X1-MM THK)	
M	7	1	**8T-4189**	4	BOLT (M8X1.25X20-MM)	
	8	1	**8T-4224**	4	WASHER-HARD (8.8X16X2-MM THK)	
M	9	1	**8T-6693**	4	SCREW-MACHINE (M5X0.8X16-MM)	
D	10	1	**101-9848**		SEAL (1.5-M)	
D	10A	1	**101-9848**		SEAL (2.1-M)	
D	10B	1	**101-9848**		SEAL (1.1-M)	
D	10C	1	**101-9848**		SEAL (1-M)	

D - ORDER BY THE METER
J - REQUIRES CORPORATE KEY
M - METRIC PART

396-7683 **HOOD GP-ENGINE (*contd.*)** **i05203971**

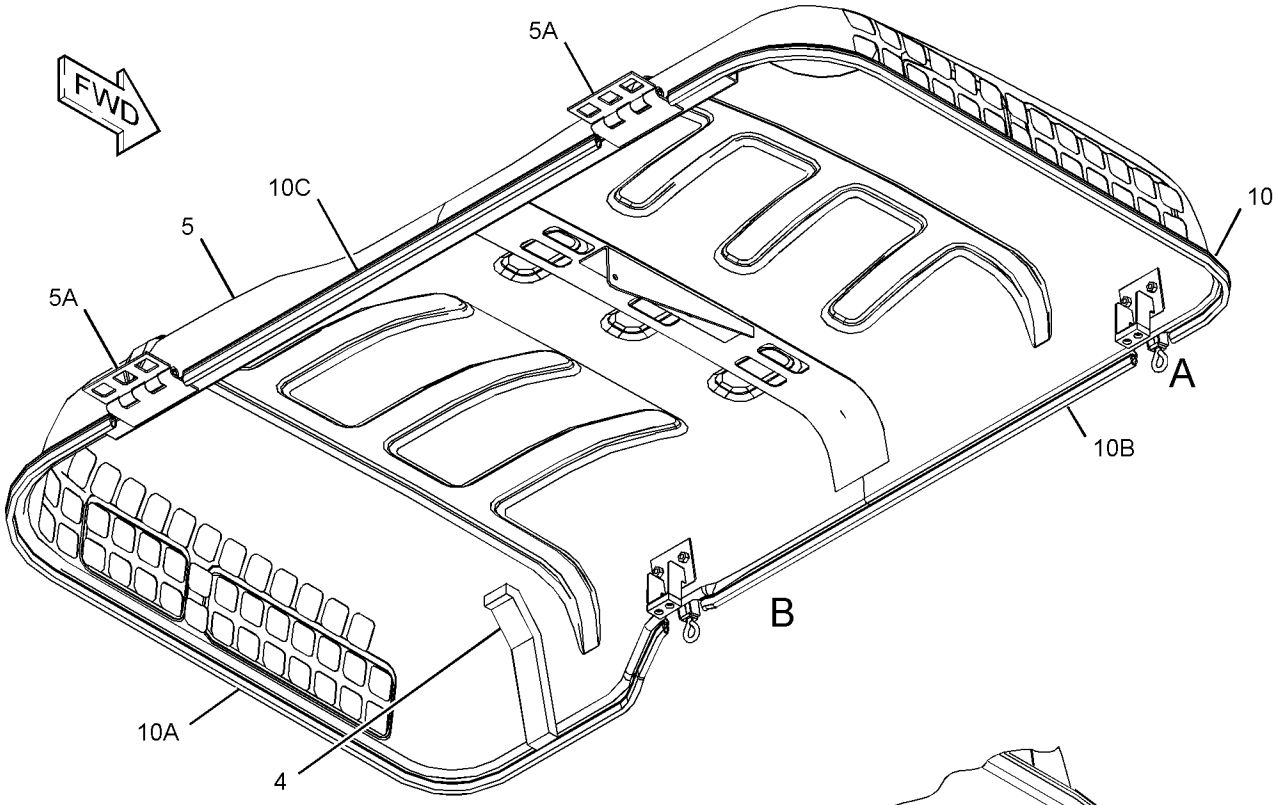

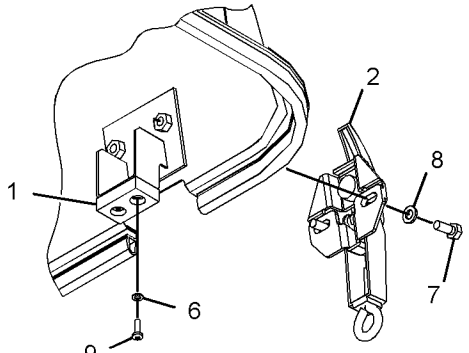

VIEW OF AREA A
(EXPLODED)

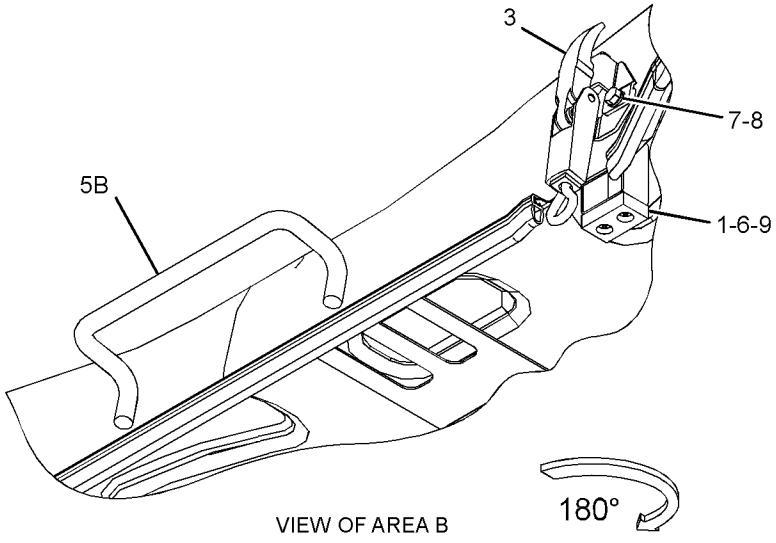

VIEW OF AREA B

GRAPHIC #1 **<END>** g03333940

399-6309 HOOD GP-ENGINE—GRADE CONTROL

S/N: PBB1-UP; KBS1-UP
PART OF 396-2389 INSTALLATION AR
AN ATTACHMENT

SMCS-7251 **i05162638**

NOTE	REF NO	GRAPHIC REF	PART NUMBER	QTY	PART NAME 1 2 3 4 5 6 (PRODUCT LEVEL)	SEE PAGE
Y	1	1	**396-7683**	1	HOOD GP-ENGINE	280
	2	1	**397-9014**	1	SUPPORT AS	
	3	1	**399-6315**	1	COVER AS	

Y - SEPARATE ILLUSTRATION

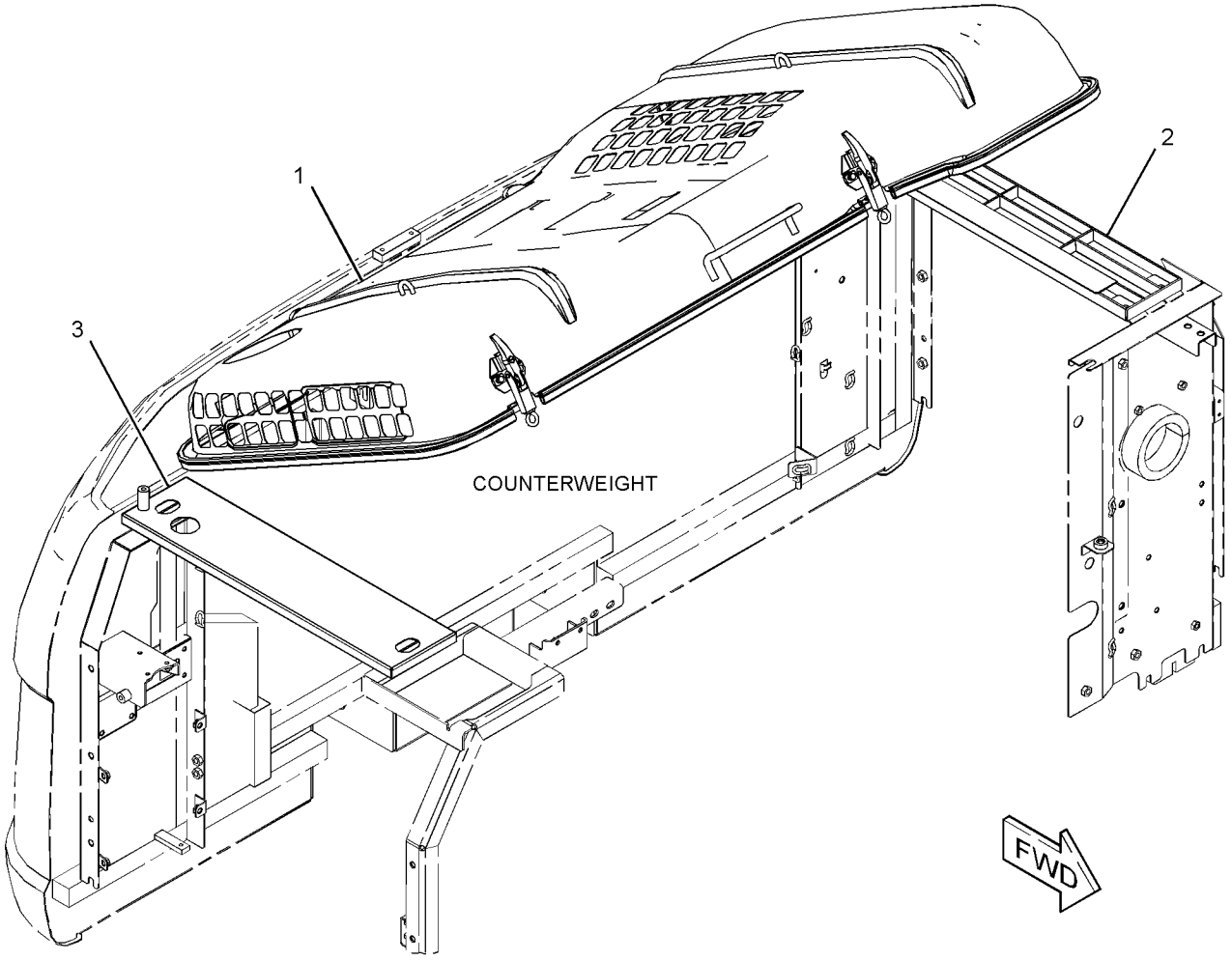

GRAPHIC #1 **<END>** g03317616

423-5183 HOOD GP-ENGINE

S/N: PBB1-UP; KBS1-UP
PART OF 455-4062 HOOD & GUARD GP, 464-1226 HOOD GP-ENGINE
ALSO AN ATTACHMENT

SMCS-7251 **i05108849**

NOTE	REF NO	GRAPHIC REF	PART NUMBER	QTY	PART NAME 1 2 3 4 5 6 (PRODUCT LEVEL)	SEE PAGE
	1	1	**096-4129**	2	CUSHION	
J	2	1	**375-8749**	1	LATCH AS	
	3	1	**375-8750**	1	LATCH AS	
	4	1	**396-7706**	1	LINER	
	5	1	**423-5184**	1	HOOD AS-ENGINE	
	5A	1	**114-6289**	2	HINGE	
	5B	1	**268-0720**	1	HANDLE	
M		1	**8T-3612**	4	NUT-WELD (M8X1.25-THD)	
M		1	**8T-8874**	4	NUT-WELD (M5X0.8-THD)	
	6	1	**8T-0328**	4	WASHER-HARD (5.5X10X1-MM THK)	
M	7	1	**8T-4189**	4	BOLT (M8X1.25X20-MM)	
	8	1	**8T-4224**	4	WASHER-HARD (8.8X16X2-MM THK)	
M	9	1	**8T-6693**	4	SCREW-MACHINE (M5X0.8X16-MM)	
D	10	1	**101-9848**		SEAL (22-M)	
D	10A	1	**101-9848**		SEAL (10.1-M)	
D	10B	1	**101-9848**		SEAL (17.1-M)	
D	10C	1	**101-9848**		SEAL (9.7-M)	

D - ORDER BY THE METER
J - REQUIRES CORPORATE KEY
M - METRIC PART

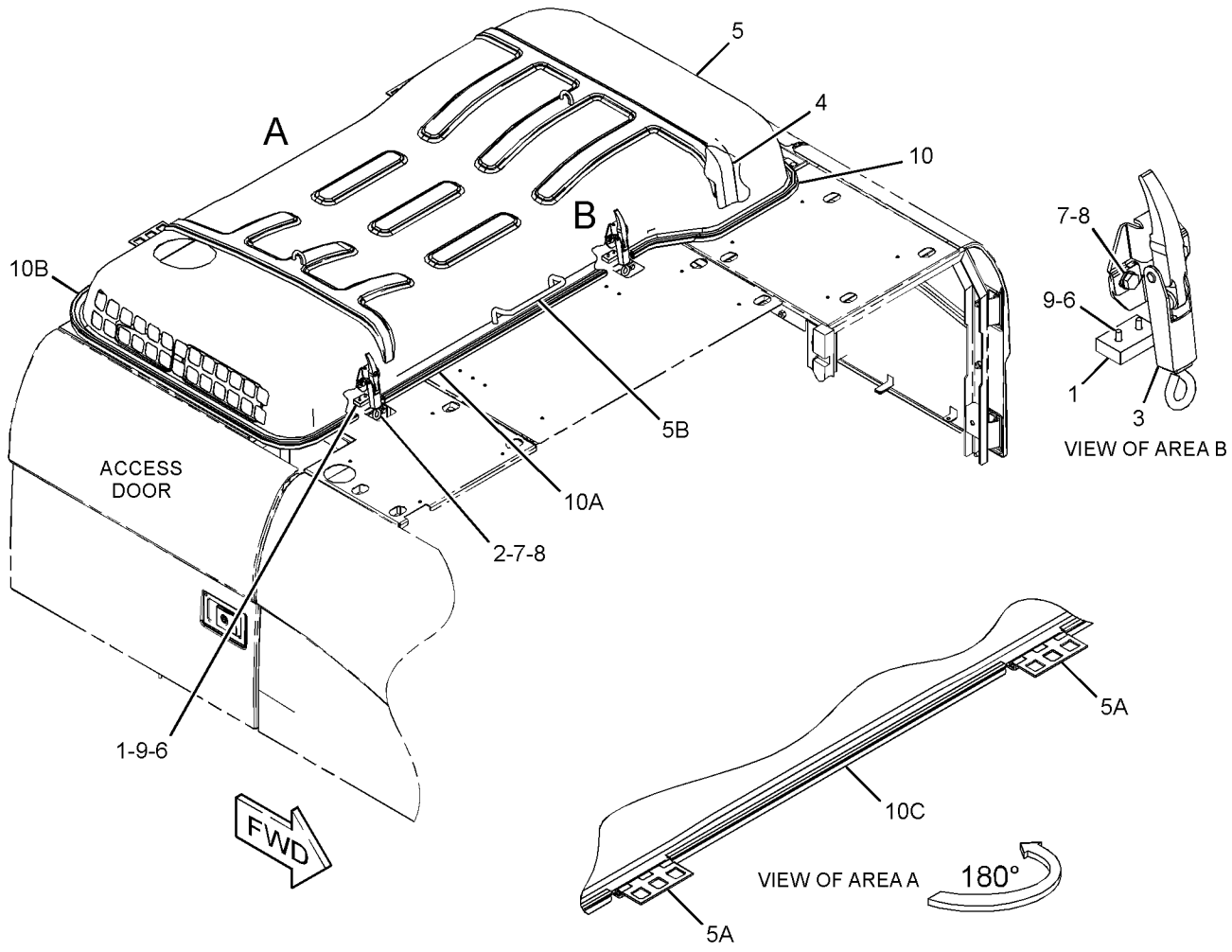

GRAPHIC #1 **<END>** g03309878

430-5643 HOOD GP-ENGINE

S/N: PBB1-UP; KBS1-UP
PART OF 464-1227 HOOD GP
AN ATTACHMENT

SMCS-7251 **i05861291**

NOTE	REF NO	GRAPHIC REF	PART NUMBER	QTY	PART NAME 1 2 3 4 5 6 (PRODUCT LEVEL)	SEE PAGE
	1	1	**096-4129**	2	CUSHION	
J	2	1	**375-8749**	1	LATCH AS	
	3	1	**375-8750**	1	LATCH AS	
	4	1	**396-7706**	1	LINER	
	5	1	*430-5645*	1	HOOD AS-ENGINE	
	5A	1	**114-6289**	2	HINGE	
	5B	1	**268-0720**	1	HANDLE	
M		1	**8T-3612**	4	NUT-WELD (M8X1.25-THD)	
M		1	**8T-8874**	4	NUT-WELD (M5X0.8-THD)	
	6	1	**8T-0328**	4	WASHER-HARD (5.5X10X1-MM THK)	
M	7	1	**8T-4189**	4	BOLT (M8X1.25X20-MM)	
	8	1	**8T-4224**	4	WASHER-HARD (8.8X16X2-MM THK)	
M	9	1	**8T-6693**	4	SCREW-MACHINE (M5X0.8X16-MM)	
D	10	1	**101-9848**		SEAL (2.02-M)	
D	10A	1	**101-9848**		SEAL (1.01-M)	
D	10B	1	**101-9848**		SEAL (1.41-M)	
D	10C	1	**101-9848**		SEAL (0.97-M)	

D - ORDER BY THE METER
J - REQUIRES CORPORATE KEY
M - METRIC PART

430-5643 **HOOD GP-ENGINE (*contd.*)** **i05861291**

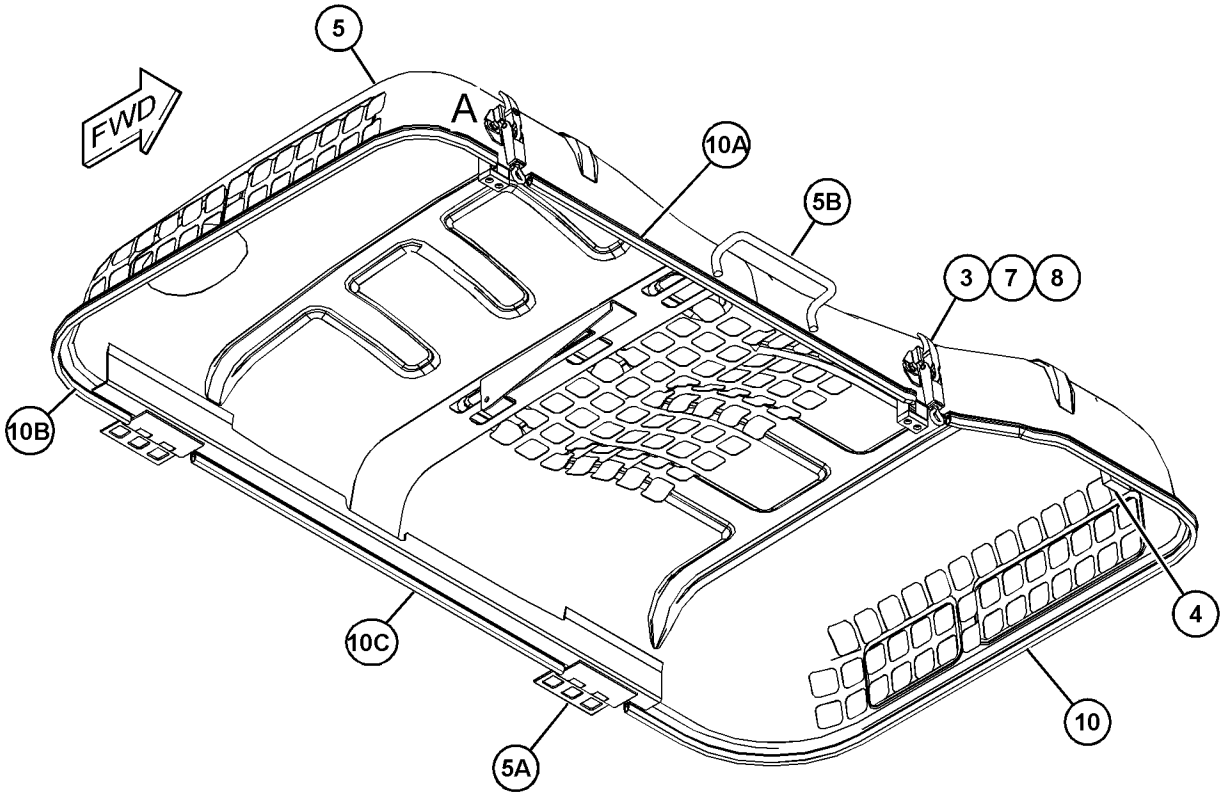

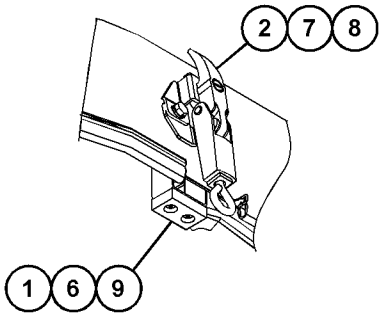

VIEW OF AREA A

GRAPHIC #1 **<END>** g03462780

464-1226 HOOD GP-ENGINE

S/N: PBB1-UP; KBS1-UP

AN ATTACHMENT

SMCS-7251 **i05861296**

NOTE	REF NO	GRAPHIC REF	PART NUMBER	QTY	PART NAME 1 2 3 4 5 6 (PRODUCT LEVEL)	SEE PAGE
Y	1	1	**423-5183**	1	HOOD GP-ENGINE	283
Y	2	1	**438-2507**	1	DOOR GP-ACCESS	260

Y - SEPARATE ILLUSTRATION

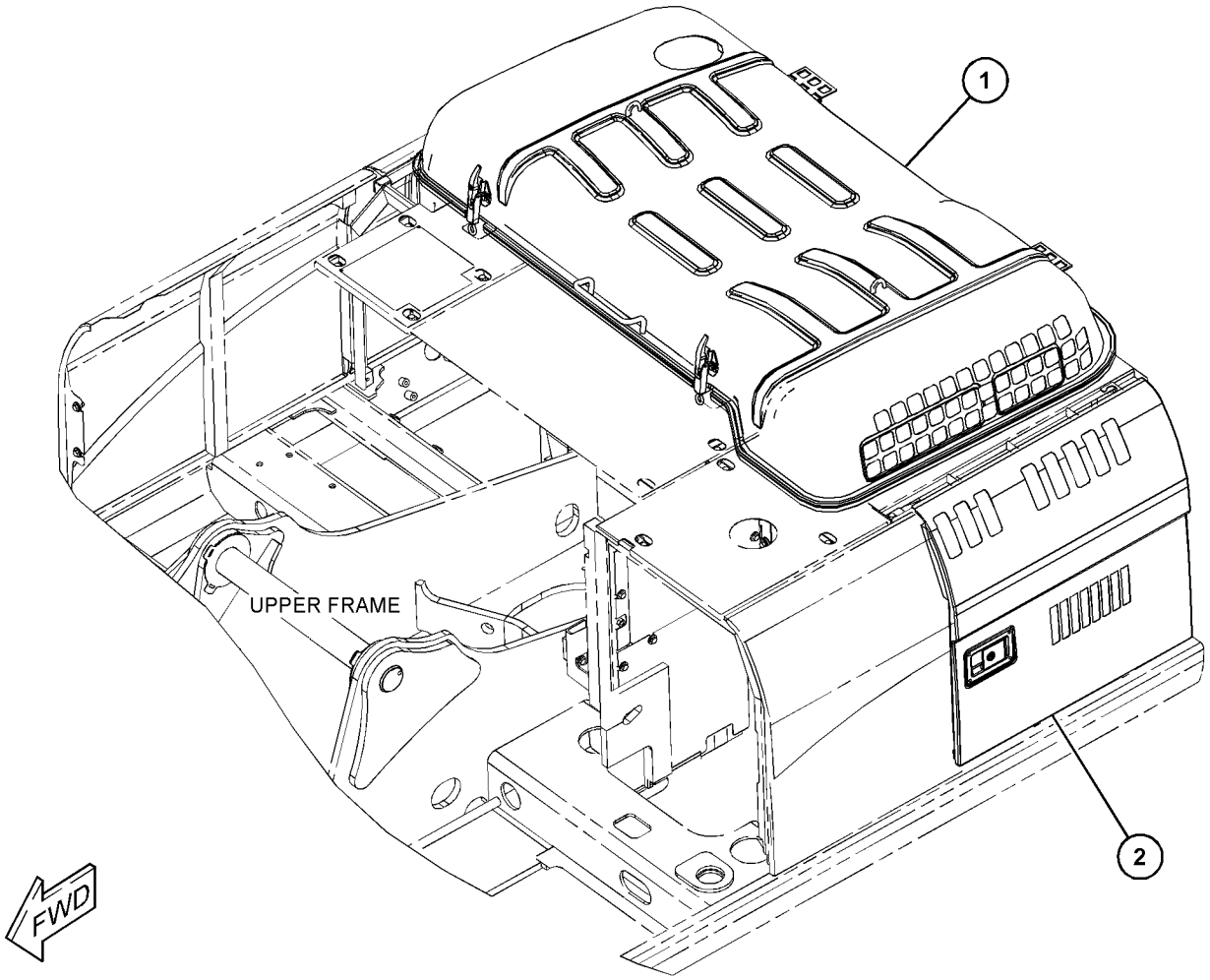

GRAPHIC #1 **<END>** g03704863

377-6667 SHEET AS-SOUND SUPPRESSION

S/N: PBB1-UP; KBS1-UP

PART OF 455-4062 HOOD & GUARD GP

SMCS-1801, 7076, 7251, 7267 **i05103015**

NOTE	REF NO	GRAPHIC REF	PART NUMBER	QTY	PART NAME 1 2 3 4 5 6 (PRODUCT LEVEL)	SEE PAGE
	1	1	**289-6700**	1	LINER	
	2	1	**377-6743**	1	LINER	

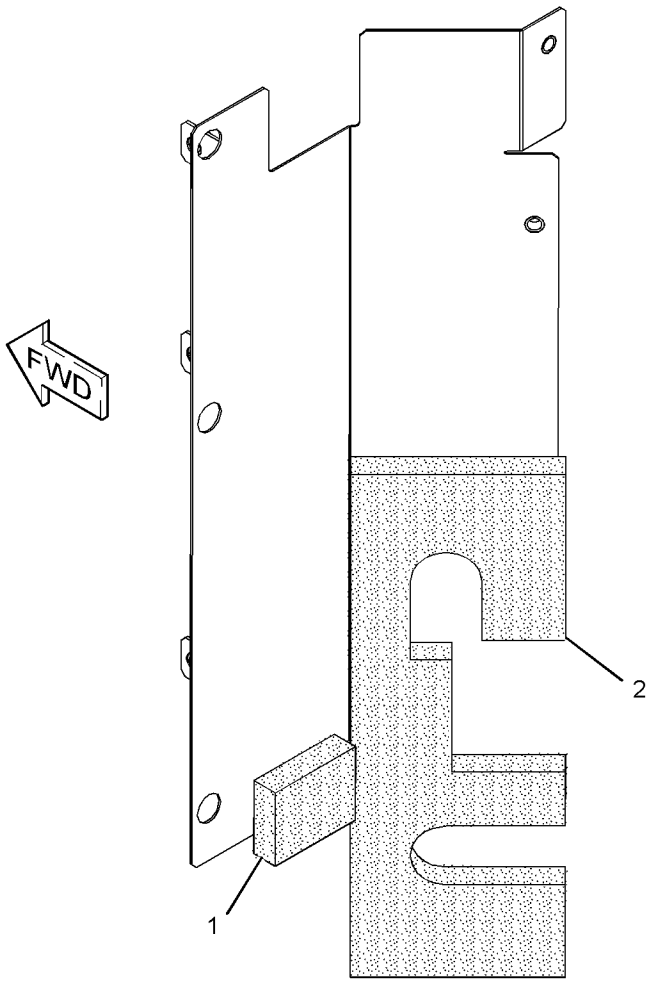

GRAPHIC #1 **<END>** g02732916

377-6708 SHEET AS-SOUND SUPPRESSION

S/N: PBB1-UP; KBS1-UP

PART OF 455-4062 HOOD & GUARD GP

SMCS-1801, 7076, 7251, 7267 **i05103150**

NOTE	REF NO	GRAPHIC REF	PART NUMBER	QTY	PART NAME 1 2 3 4 5 6 (PRODUCT LEVEL)	SEE PAGE
D	1	1	**5P-8309**		SEAL (0.2-M)	
D	1A	1	**5P-8309**		SEAL (0.3-M)	
	2	1	**377-6749**	1	LINER	
	3	1	**244-8284**	1	LINER	
	4	1	**262-2347**	1	LINER	

D - ORDER BY THE METER

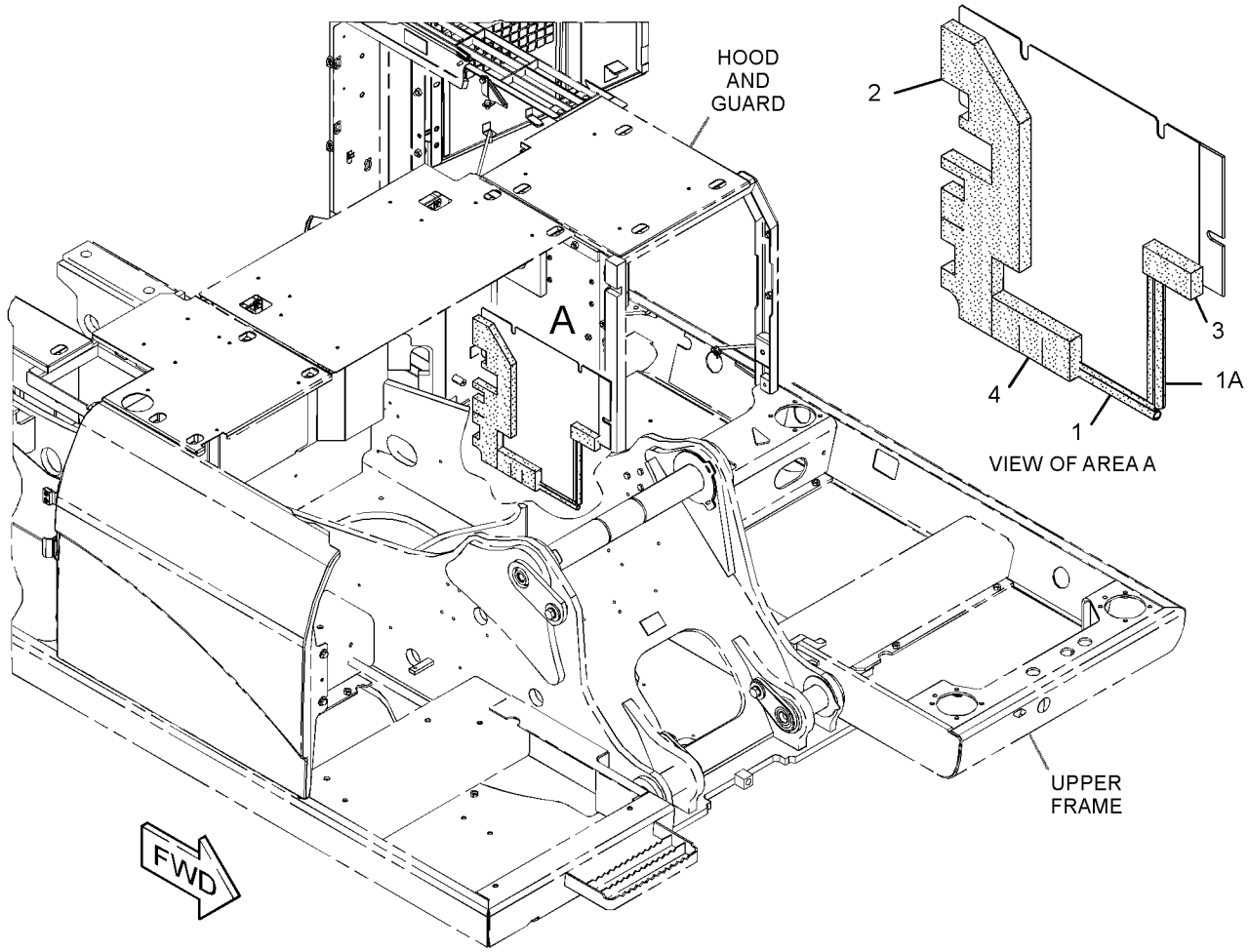

GRAPHIC #1 **<END>** g02732422

379-7489 SHEET AS-SOUND SUPPRESSION

S/N: PBB1-UP; KBS1-UP
PART OF 377-8080 BATTERY & WIRING GP
AN ATTACHMENT

SMCS-1801, 7076, 7251, 7267 **i05137434**

NOTE	REF NO	GRAPHIC REF	PART NUMBER	QTY	PART NAME 1 2 3 4 5 6 (PRODUCT LEVEL)	SEE PAGE
	1	1	**379-7490**	1	LINER	
	2	1	**262-2333**	1	LINER	
	3	1	**262-2335**	1	LINER	

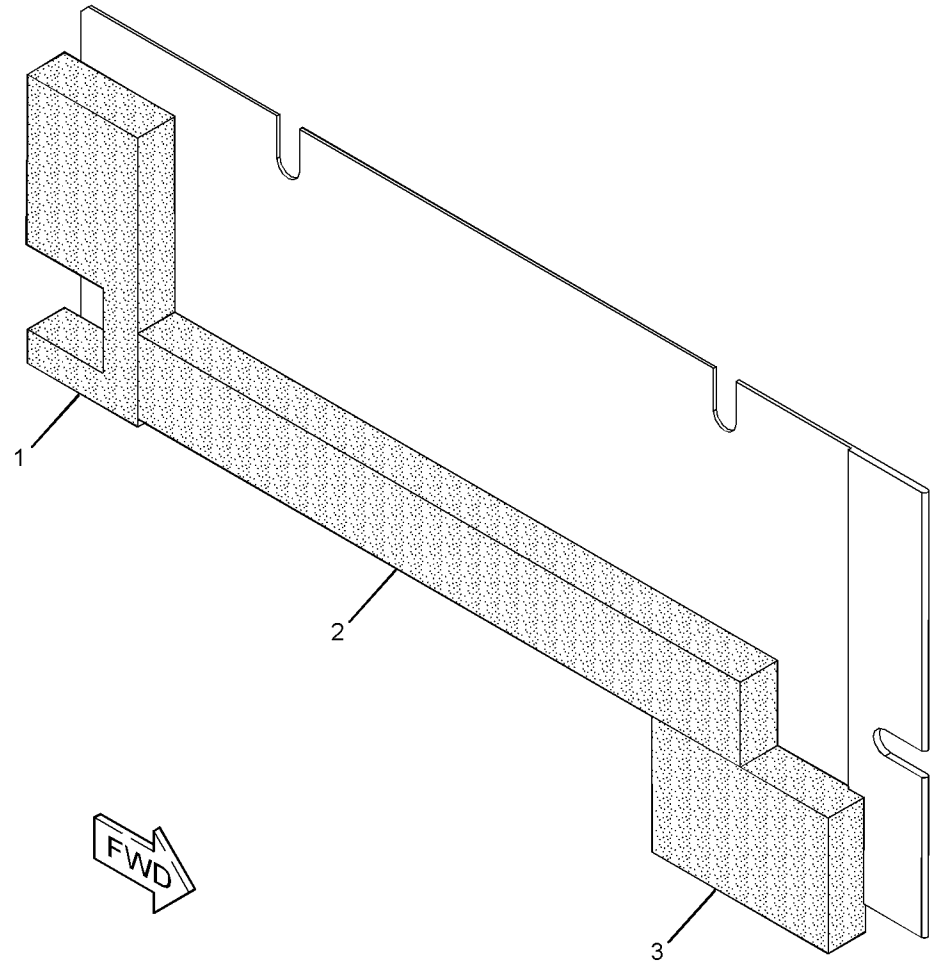

GRAPHIC #1 **<END>** g02743256

391-9646 SHEET AS-SOUND SUPPRESSION

S/N: PBB1-UP; KBS1-UP

PART OF 455-4062 HOOD & GUARD GP

SMCS-1801, 7076, 7251, 7267 **i05349541**

NOTE	REF NO	GRAPHIC REF	PART NUMBER	QTY	PART NAME 1 2 3 4 5 6 (PRODUCT LEVEL)	SEE PAGE
	1	1	**377-6746**	1	LINER	
	2	1	**377-6727**	1	LINER	
	3	1	**394-7410**	1	LINER	

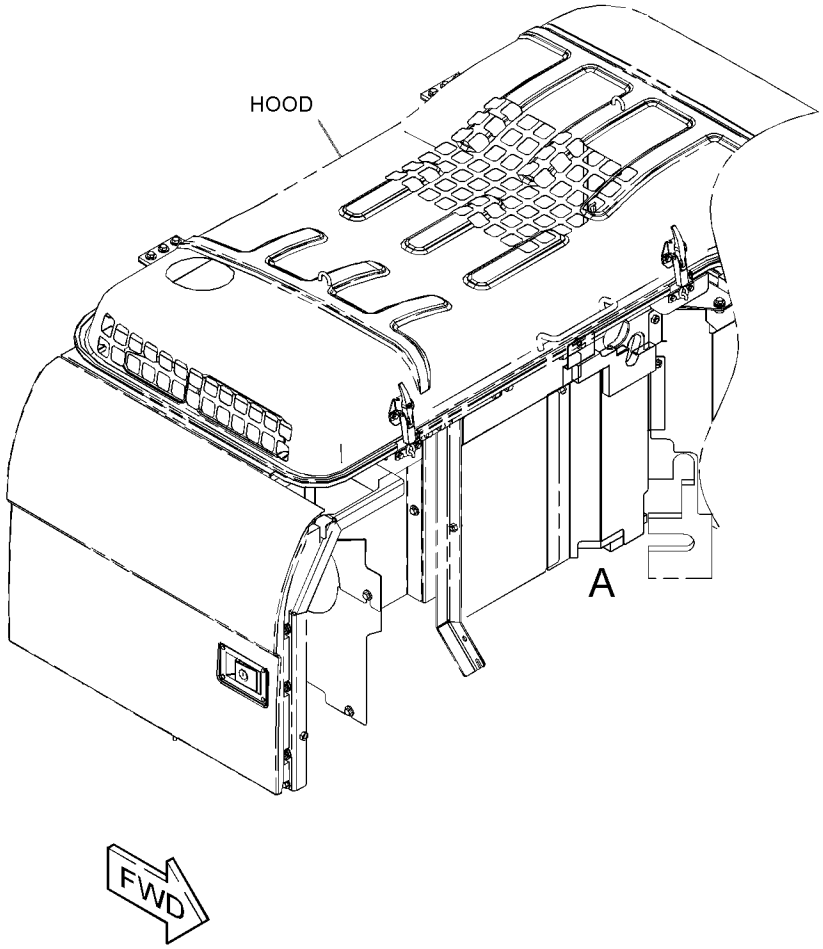

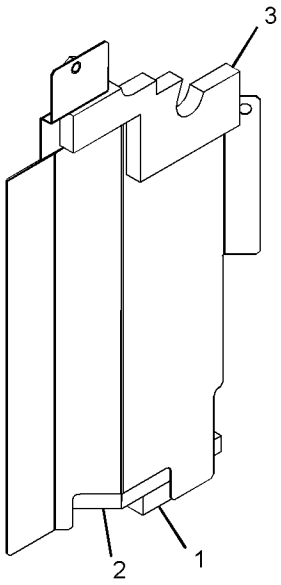

VIEW OF AREA A

GRAPHIC #1 **<END>** g03388626

396-8523 SHEET AS-SOUND SUPPRESSION

S/N: PBB1-UP; KBS1-UP

PART OF 455-4062 HOOD & GUARD GP

SMCS-1801, 7076, 7251, 7267 **i05280810**

NOTE	REF NO	GRAPHIC REF	PART NUMBER	QTY	PART NAME 1 2 3 4 5 6 (PRODUCT LEVEL)	SEE PAGE
	1	1	**391-9642**	1	LINER	
	2	1	*396-8524*	1	SHEET AS	
M		1	**8T-3597**	2	NUT-WELD (M12X1.75-THD)	
	3	1	**399-6263**	1	LINER	

M - METRIC PART

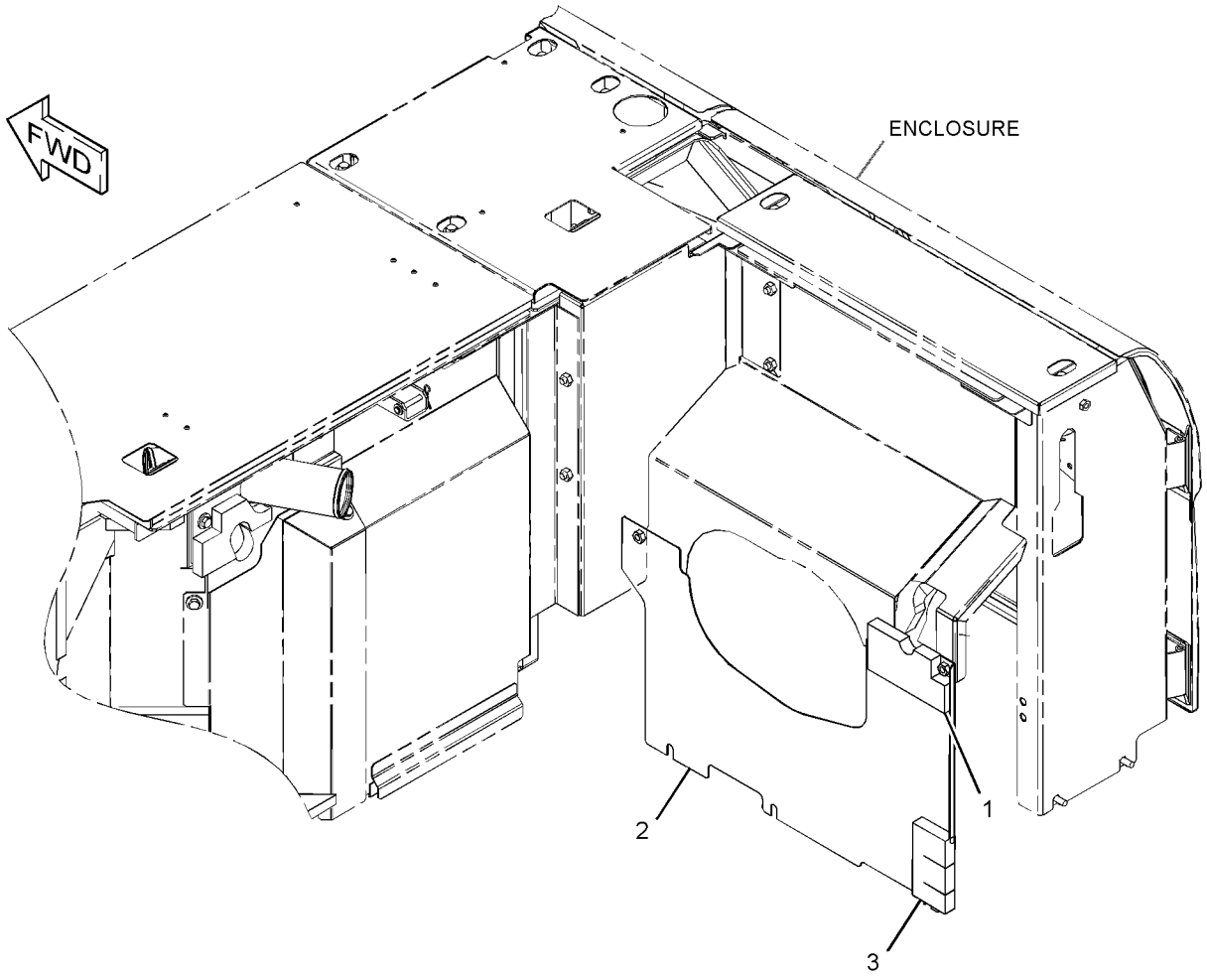

GRAPHIC #1 **<END>** g03358538

399-6308 SHEET AS-SOUND SUPPRESSION

S/N: PBB1-UP; KBS1-UP
PART OF 397-1472 DRIVE GP-PUMP
AN ATTACHMENT

SMCS-1801, 7076, 7251, 7267 **i05858911**

NOTE	REF NO	GRAPHIC REF	PART NUMBER	QTY	PART NAME 1 2 3 4 5 6 (PRODUCT LEVEL)	SEE PAGE
	1	1	**417-1198**	1	LINER	
	2	1	**399-6263**	1	LINER	
	3	1	**417-1197**	1	LINER	

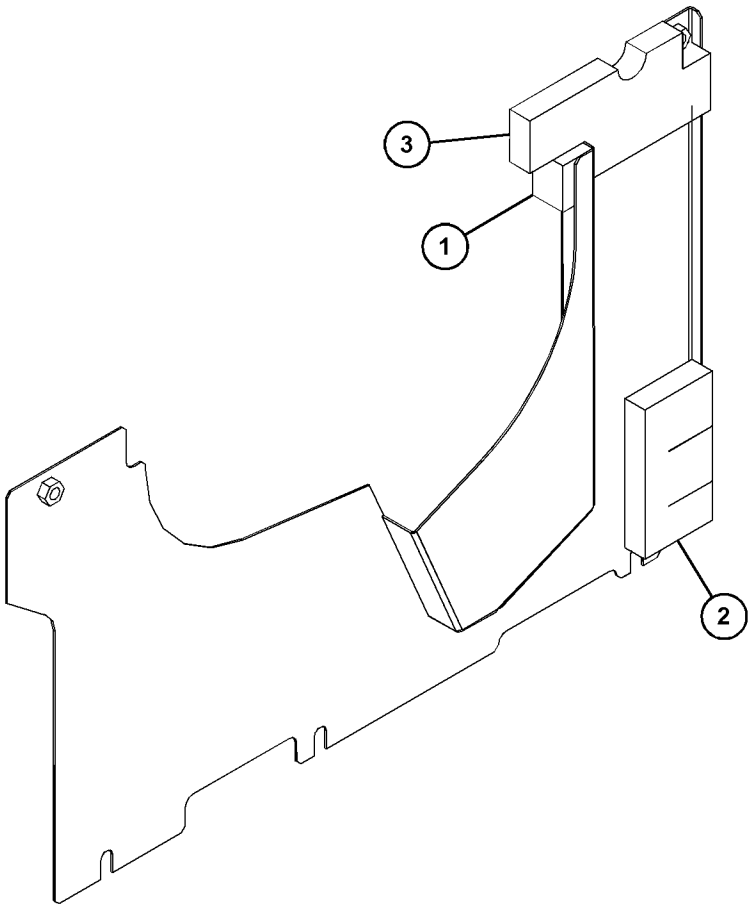

GRAPHIC #1 **<END>** g03718410

428-5842 SHEET AS-SOUND SUPPRESSION

S/N: PBB1-UP; KBS1-UP

PART OF 455-4062 HOOD & GUARD GP

SMCS-1801, 7076, 7251, 7267 **i05298534**

NOTE	REF NO	GRAPHIC REF	PART NUMBER	QTY	PART NAME 1 2 3 4 5 6 (PRODUCT LEVEL)	SEE PAGE
	1	1	**377-6760**	1	SHEET-RUBBER	
	2	1	**377-6782**	1	LINER	
	3	1	*428-5843*	1	SUPPORT AS	
M		1	**8T-3490**	2	NUT-WELD (M10X1.5-THD)	
	4	1	**396-7695**	1	LINER	
	5	1	**396-7696**	1	LINER	
	6	1	**396-7697**	1	LINER	
	7	1	**396-7698**	1	LINER	
J	8	1	**348-5409**		SEAL (10-DM)	

J - ORDER BY THE DECIMETER
M - METRIC PART

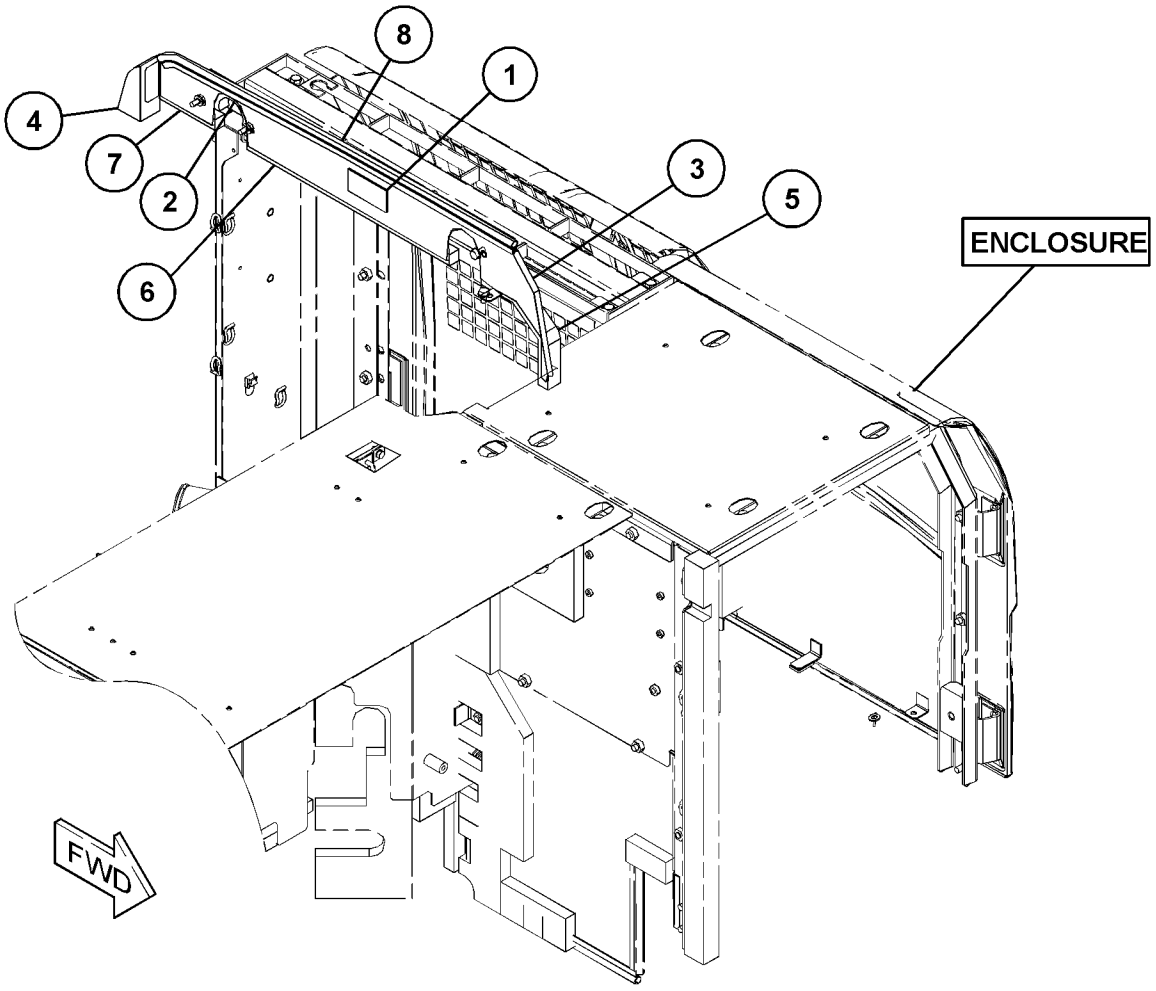

GRAPHIC #1 **<END>** g03301096

431-0101 SHEET AS-SOUND SUPPRESSION

S/N: PBB1-UP; KBS1-UP

PART OF 455-4062 HOOD & GUARD GP

SMCS-1801, 7076, 7251, 7267 **i05323052**

NOTE	REF NO	GRAPHIC REF	PART NUMBER	QTY	PART NAME 1 2 3 4 5 6 (PRODUCT LEVEL)	SEE PAGE
	1	1	**387-5174**	1	LINER	
	2	1	**391-9636**	1	LINER	

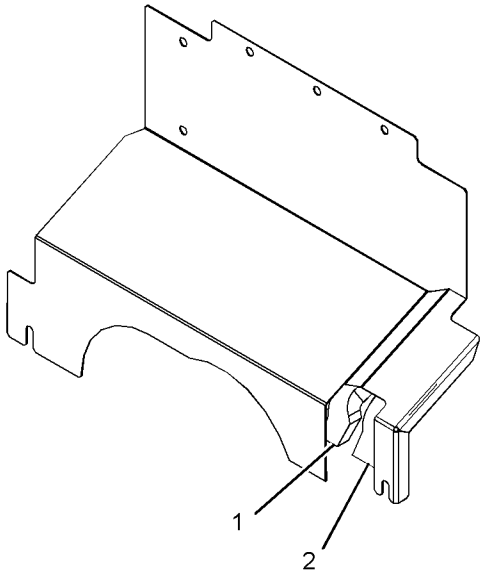

VIEW OF AREA A

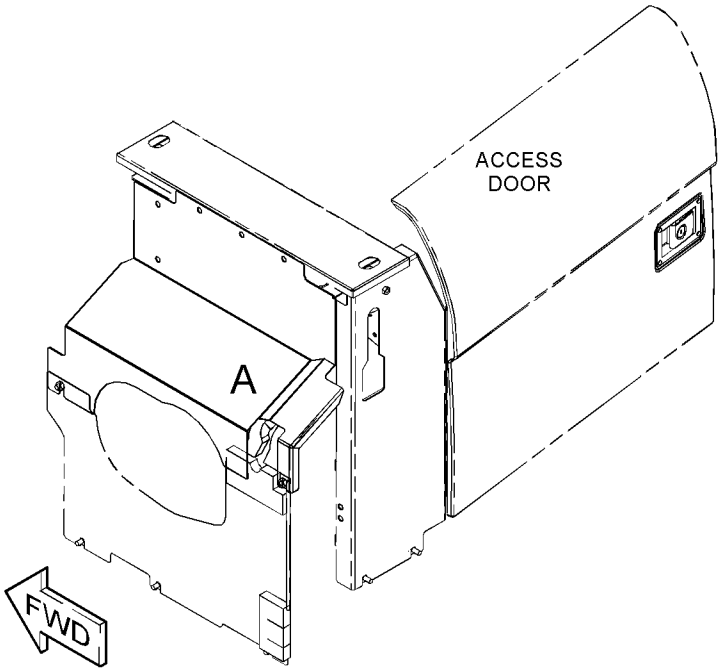

GRAPHIC #1

<END>

g03354224

451-5170 SHEET AS-SOUND SUPPRESSION

S/N: PBB1-UP; KBS1-UP

PART OF 455-4062 HOOD & GUARD GP

SMCS-1801, 7076, 7251, 7267 **i05858080**

NOTE	REF NO	GRAPHIC REF	PART NUMBER	QTY	PART NAME 1 2 3 4 5 6 (PRODUCT LEVEL)	SEE PAGE
	1	1	**262-2313**	1	LINER	
	2	1	**453-1121**	1	LINER	

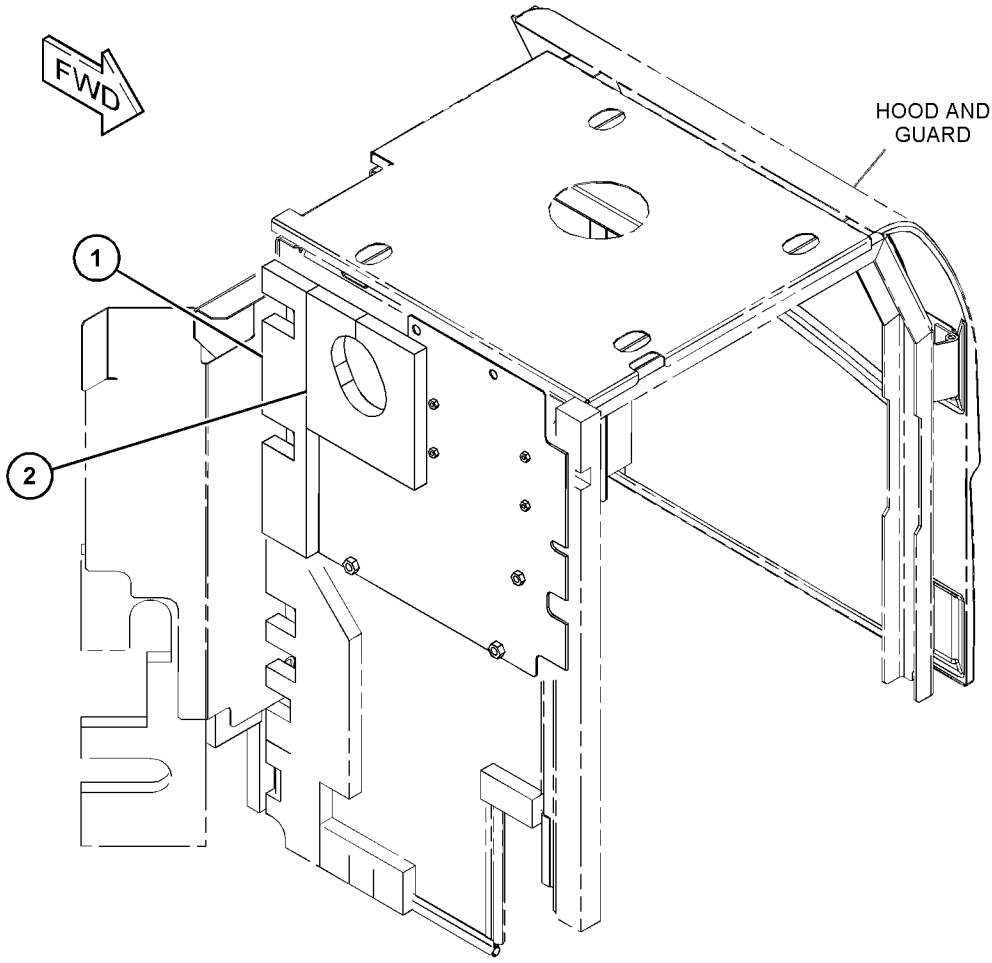

GRAPHIC #1 **<END>** g03687346

455-4068 SHEET AS-SOUND SUPPRESSION

S/N: PBB1-UP
PART OF 376-6332 LINES GP-FRONT
AN ATTACHMENT

SMCS-1801, 7076, 7251, 7267

i05861399

NOTE	REF NO	GRAPHIC REF	PART NUMBER	QTY	PART NAME 1 2 3 4 5 6 (PRODUCT LEVEL)	SEE PAGE
	1	1	**262-2313**	1	LINER	
	2	1	**278-3837**	1	LINER	

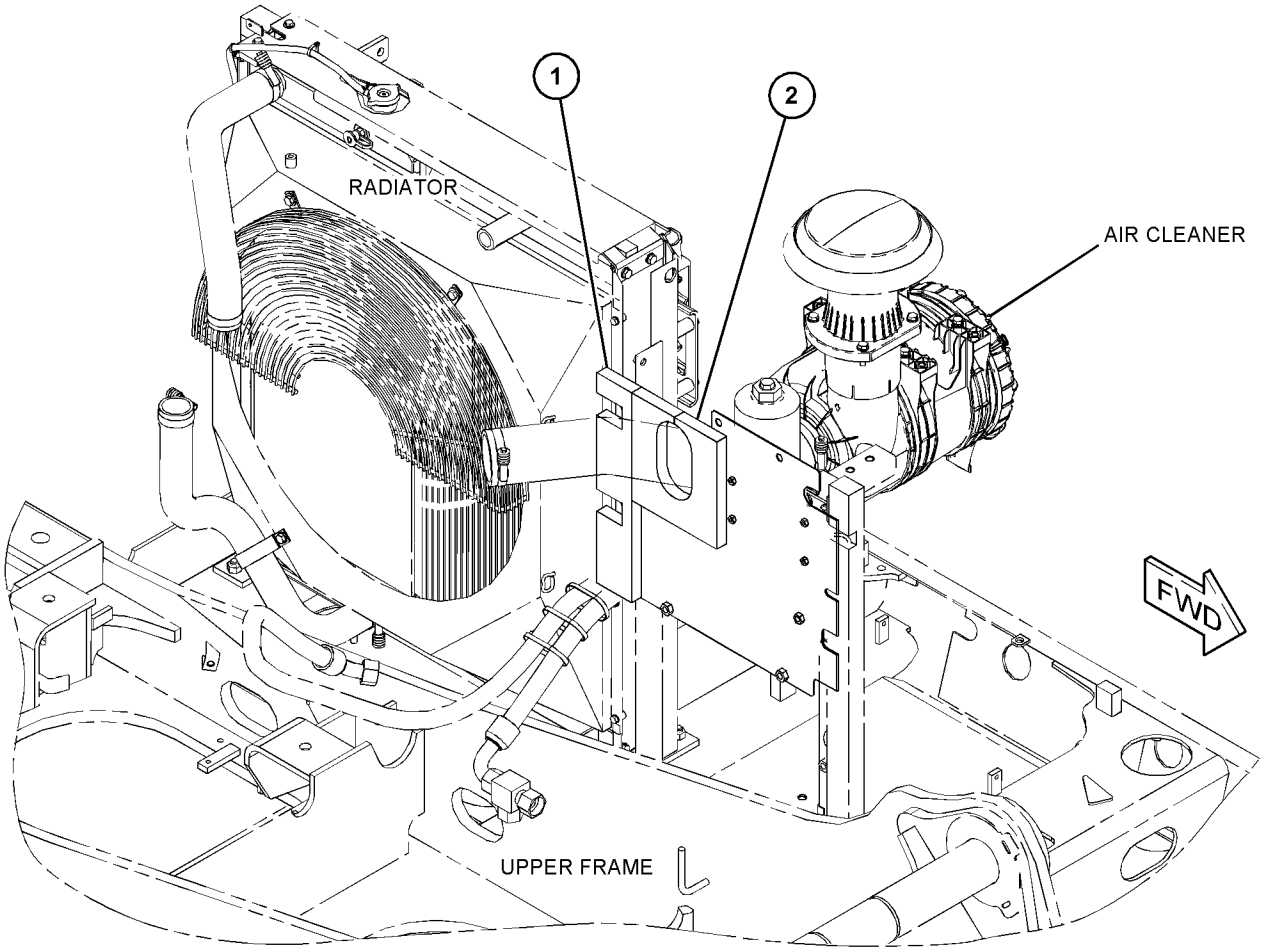

GRAPHIC #1

<END>

g03704801

235-7764 STEP GP

S/N: PBB1-UP; KBS1-UP
FOR USE WITH TRACK SHOES UP TO 800-MM (32-IN) WIDE
PART OF 314-3797, 314-3798 TRACK AR
AN ATTACHMENT

SMCS-7254 **i05850571**

NOTE	REF NO	GRAPHIC REF	PART NUMBER	QTY	PART NAME 1 2 3 4 5 6 (PRODUCT LEVEL)	SEE PAGE
	1	1	**359-5808**	2	STEP	
M	2	1	**447-1709**	4	BOLT (M16X2X45-MM)	
	3	1	**451-2175**	4	WASHER-HARD (17.5X30X3.5-MM THK)	

M - METRIC PART

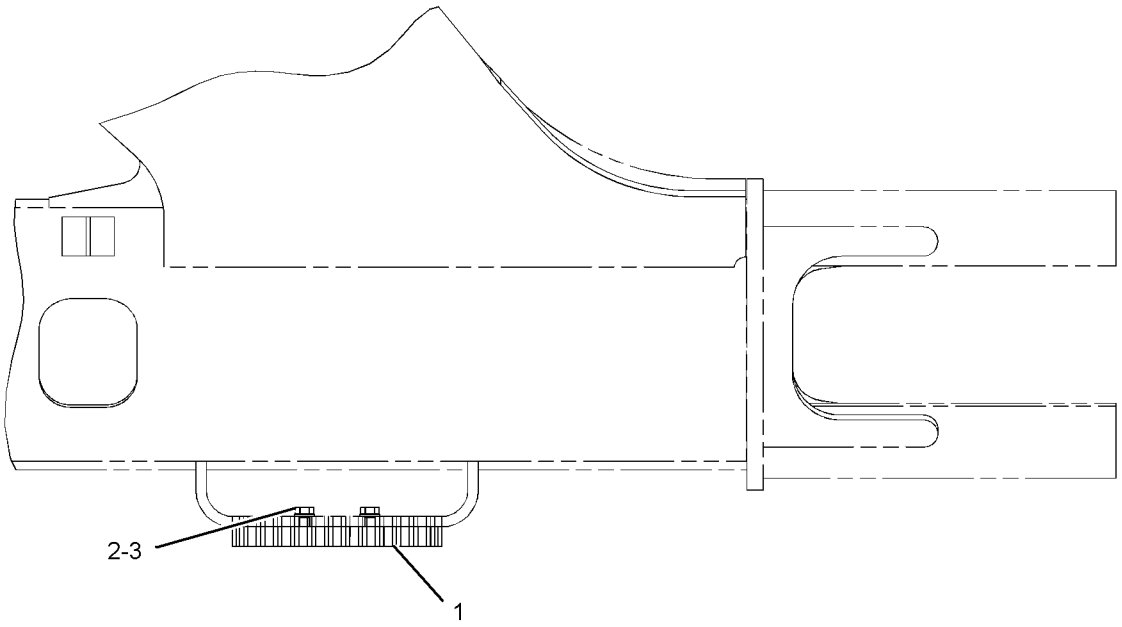

TOP VIEW

GRAPHIC #1 **<END>** g01150668

451-4100 SUPPORT AS-ENCLOSURE

S/N: PBB1-UP; KBS1-UP

PART OF 455-4062 HOOD & GUARD GP

SMCS-0635, 1801, 7076, 7251, 7263, 7267, 7272, 7276 **i05858077**

NOTE	REF NO	GRAPHIC REF	PART NUMBER	QTY	PART NAME 1 2 3 4 5 6 (PRODUCT LEVEL)	SEE PAGE
	1	1	**244-8277**	1	LINER	
	2	1	**244-8278**	1	LINER	

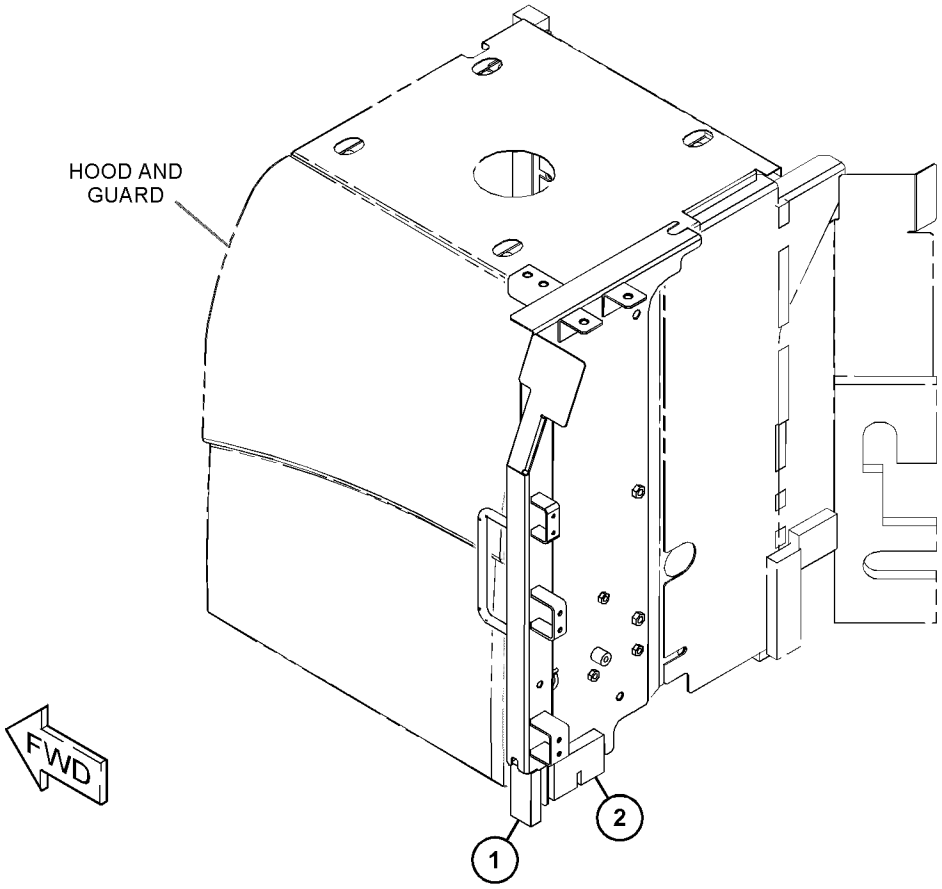

GRAPHIC #1 **<END>** g03687359

379-7425 SUPPORT AS-SOUND SUPPRESSION

S/N: PBB1-UP; KBS1-UP

PART OF 455-4062 HOOD & GUARD GP

SMCS-7276 **i05108889**

NOTE	REF NO	GRAPHIC REF	PART NUMBER	QTY	PART NAME 1 2 3 4 5 6 (PRODUCT LEVEL)	SEE PAGE
	1	1	*379-7426*	1	SUPPORT AS	
M		1	**8T-3597**	5	NUT-WELD (M12X1.75-THD)	
M		1	**9R-5271**	1	BOSS (M10X1.5X25-MM)	
	2	1	**248-8943**	1	LINER	
	3	1	**379-7509**	1	LINER	

M - METRIC PART

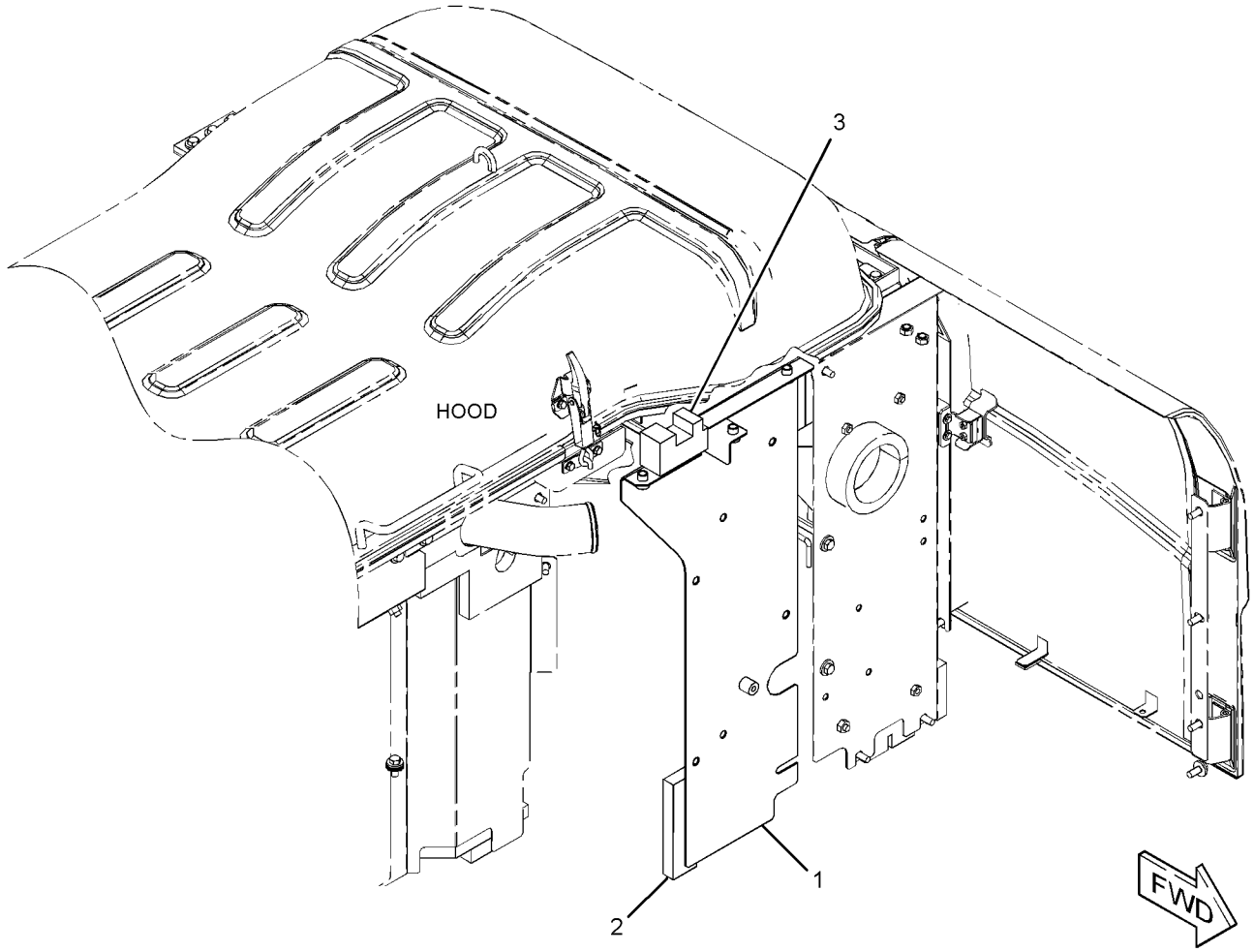

GRAPHIC #1 **<END>** g03310396

397-9009 SUPPORT AS-SOUND SUPPRESSION

S/N: PBB1-UP; KBS1-UP

PART OF 455-4062 HOOD & GUARD GP

SMCS-7276 **i05108897**

NOTE	REF NO	GRAPHIC REF	PART NUMBER	QTY	PART NAME 1 2 3 4 5 6 (PRODUCT LEVEL)	SEE PAGE
	1	1	**377-6767**	1	LINER	
	2	1	**377-6809**	1	LINER	
	3	1	*397-9010*	1	SUPPORT AS	
M		1	**8T-3597**	2	NUT-WELD (M12X1.75-THD)	
M		1	**8T-3612**	2	NUT-WELD (M8X1.25-THD)	

M - METRIC PART

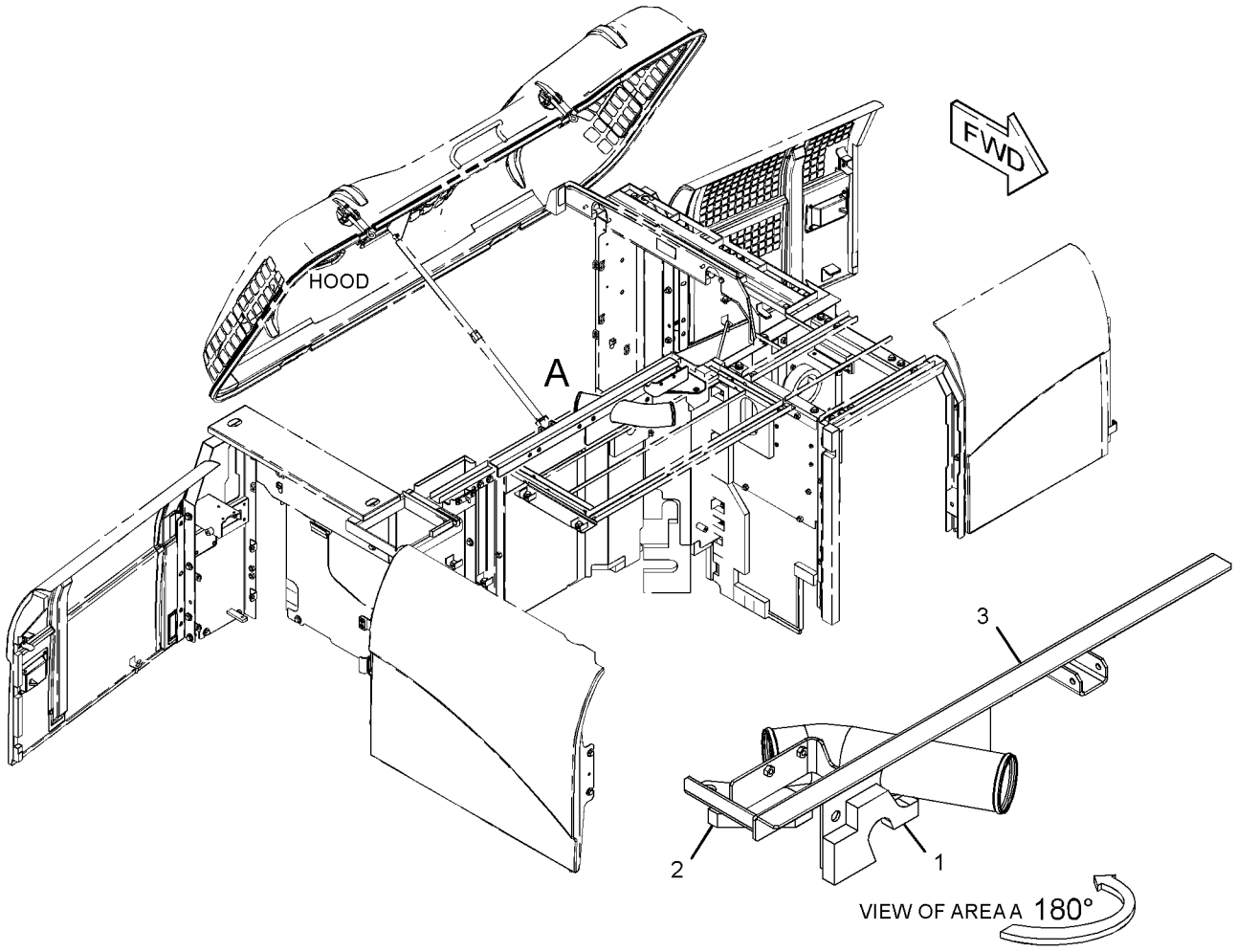

GRAPHIC #1 **<END>** g03303860

240-3822 FRAME AR-UNDERCARRIAGE—LONG

S/N: PBB1-UP

PART OF 454-5585 GENERAL AR

SMCS-4151 **i04787401**

NOTE	PART NUMBER	QTY	PART NAME 1 2 3 4 5 6 (PRODUCT LEVEL)	SEE PAGE
Y	**236-8341**	1	FRAME AS-UNDERCARRIAGE	302
Y	*227-6147*	1	GEAR & BEARING GP-SWING	268
Y	*087-5908*	2	GUARD GP-TRACK GUIDE (CENTER)	304
Y	*346-7204*	1	GUARD GP-TRAVEL MOTOR	311
Y	*239-4341*	1	IDLER GP-FRONT	312
Y	*7Y-1608*	1	ROLLER AR-TRACK & CARRIER	319

Y - SEPARATE ILLUSTRATION

<END>

247-7454 FRAME AR-UNDERCARRIAGE

S/N: KBS1-UP

PART OF 454-5584 GENERAL AR

SMCS-4151 **i05401203**

NOTE	PART NUMBER	QTY	PART NAME 1 2 3 4 5 6 (PRODUCT LEVEL)	SEE PAGE
Y	**254-3022**	1	FRAME AS-UNDERCARRIAGE	303
Y	*227-6147*	1	GEAR & BEARING GP-SWING	268
Y	*087-5908*	2	GUARD GP-TRACK GUIDE (CENTER)	304
Y	*346-7204*	1	GUARD GP-TRAVEL MOTOR	311
Y	*239-4341*	1	IDLER GP-FRONT	312
Y	*7Y-1607*	1	ROLLER AR-TRACK & CARRIER	318

Y - SEPARATE ILLUSTRATION

<END>

236-8341 FRAME AS-UNDERCARRIAGE–LONG

S/N: PBB1-UP

PART OF 240-3822 FRAME AR-UNDERCARRIAGE

SMCS-4150, 7062 **i05252389**

NOTE	REF NO	GRAPHIC REF	PART NUMBER	QTY	PART NAME 1 2 3 4 5 6 (PRODUCT LEVEL)	SEE PAGE
	1	1	*236-8357*	1	FRAME AS-TRACK ROLLER (RH)	
	1A	1	**117-5540**	2	BRACKET	
	1B	1	**235-7520**	2	STEP	
	2	1	*236-8358*	1	FRAME AS-TRACK ROLLER (LH)	
	2A	1	**117-5540**	2	BRACKET	
	2B	1	**235-7520**	2	STEP	

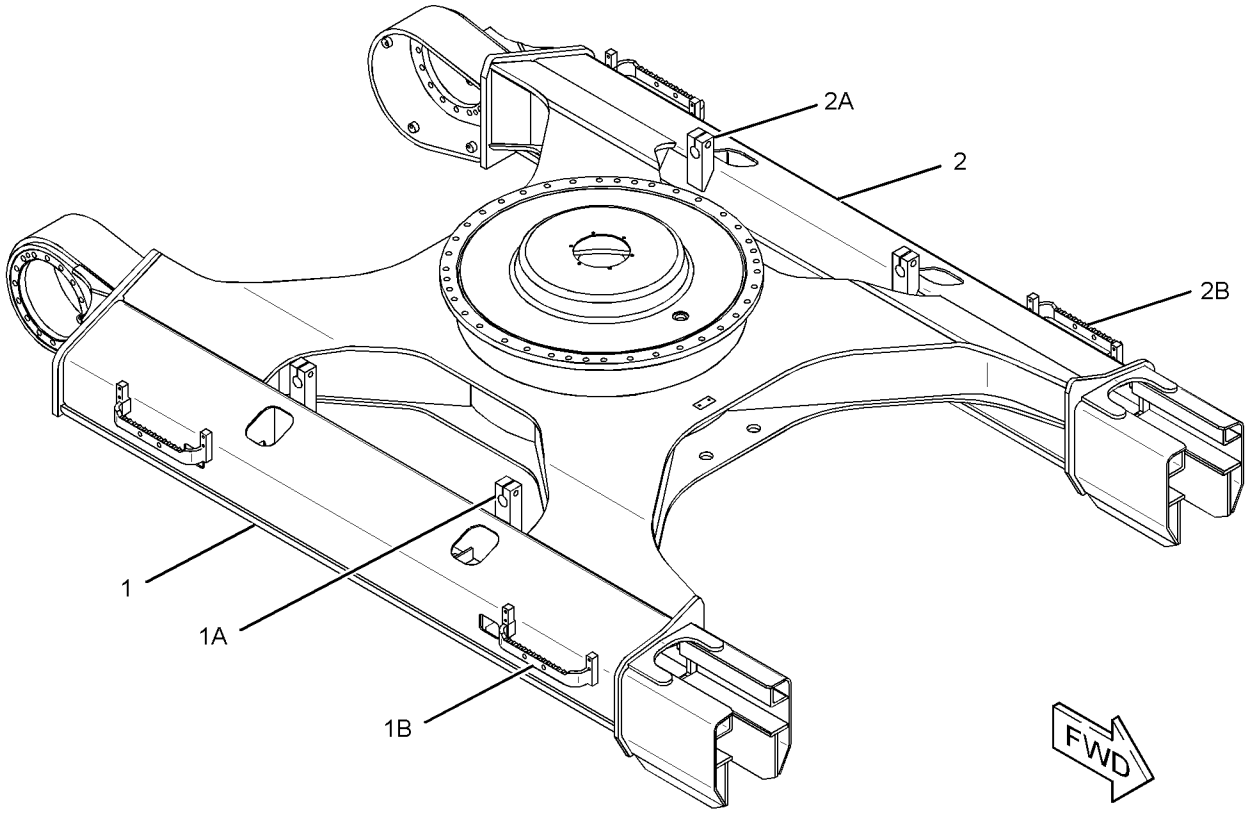

GRAPHIC #1 **<END>** g02177715

254-3022 FRAME AS-UNDERCARRIAGE

S/N: KBS1-UP

PART OF 247-7454 FRAME AR-UNDERCARRIAGE

SMCS-4150, 7062 **i05761513**

NOTE	REF NO	GRAPHIC REF	PART NUMBER	QTY	PART NAME 1 2 3 4 5 6 (PRODUCT LEVEL)	SEE PAGE
	1	1	*254-3023*	1	FRAME AS-TRACK ROLLER (RH)	
	1A	1	**117-5540**	2	BRACKET	
	1B	1	**235-7520**	2	STEP	
	2	1	*254-3024*	1	FRAME AS-TRACK ROLLER (LH)	
	2A	1	**117-5540**	2	BRACKET	
	2B	1	**235-7520**	2	STEP	
	3	1	**236-8360**	1	COVER AS	

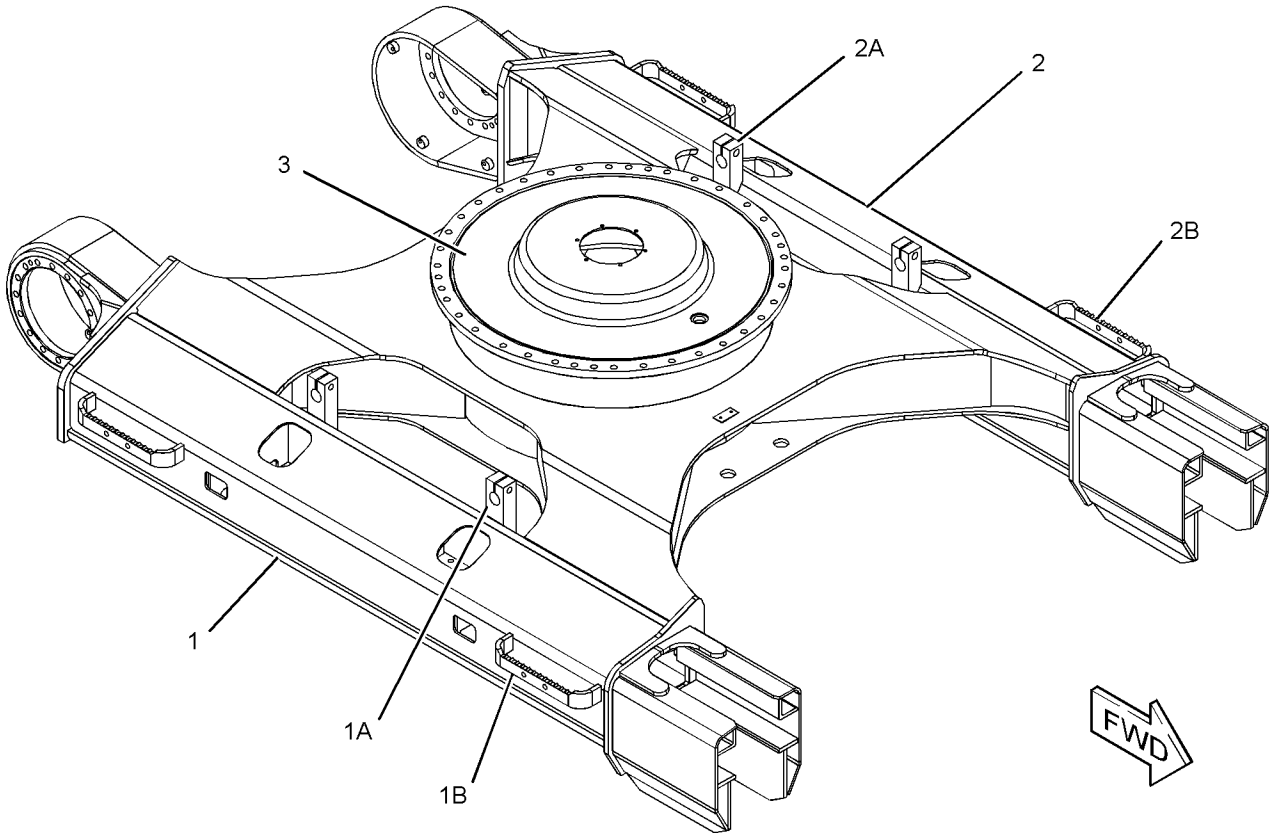

GRAPHIC #1 **<END>** g03656242

087-5908 GUARD GP-TRACK GUIDE–CENTER

S/N: PBB1-UP; KBS1-UP

PART OF 240-3822, 247-7454 FRAME AR-UNDERCARRIAGE

SMCS-4177 **i05811036**

NOTE	REF NO	GRAPHIC REF	PART NUMBER	QTY	PART NAME 1 2 3 4 5 6 (PRODUCT LEVEL)	SEE PAGE
	1	1	**240-2988**	1	GUARD AS-TRACK GUIDE	
M	2	1	**453-2845**	4	BOLT (M20X2.5X40-MM)	
	3	1	**451-2176**	4	WASHER-HARD (22X35X3.5-MM THK)	

M - METRIC PART

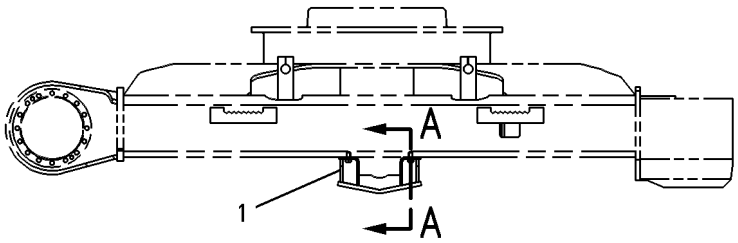

RIGHT SIDE VIEW

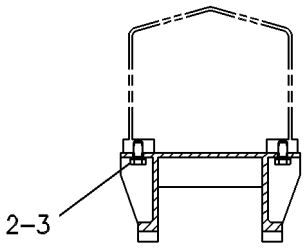

SECTION A–A

GRAPHIC #1 **<END>** g00257014

120-7164 GUARD GP-TRACK GUIDE–REAR

S/N: KBS1-UP

AN ATTACHMENT

SMCS-4177 **i05768799**

NOTE	REF NO	GRAPHIC REF	PART NUMBER	QTY	PART NAME 1 2 3 4 5 6 (PRODUCT LEVEL)	SEE PAGE
	1	1	**219-8468**	2	GUARD AS-TRACK GUIDE	
M	2	1	**453-2845**	12	BOLT (M20X2.5X40-MM)	
	3	1	**451-2176**	12	WASHER-HARD (22X35X3.5-MM THK)	

M - METRIC PART

QUANTITIES SHOWN ARE THOSE REQUIRED FOR BOTH LH AND RH SIDES

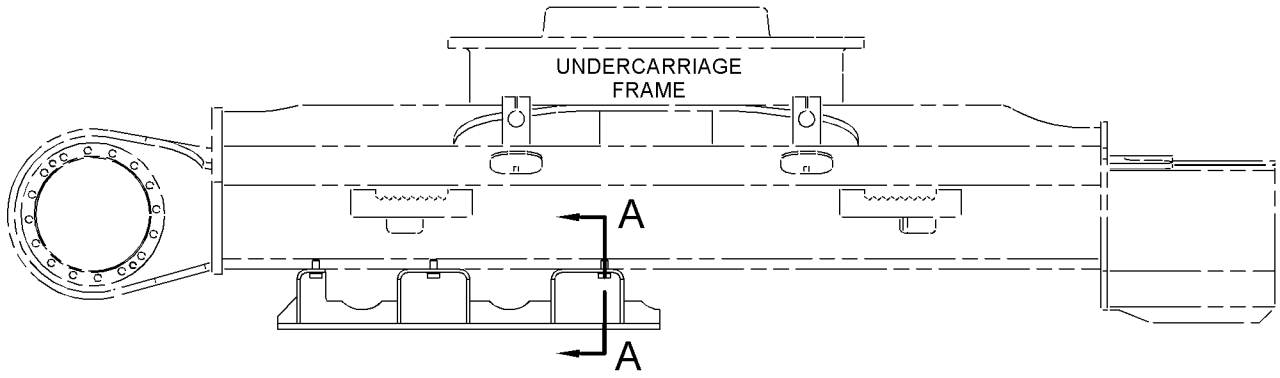

RIGHT SIDE VIEW

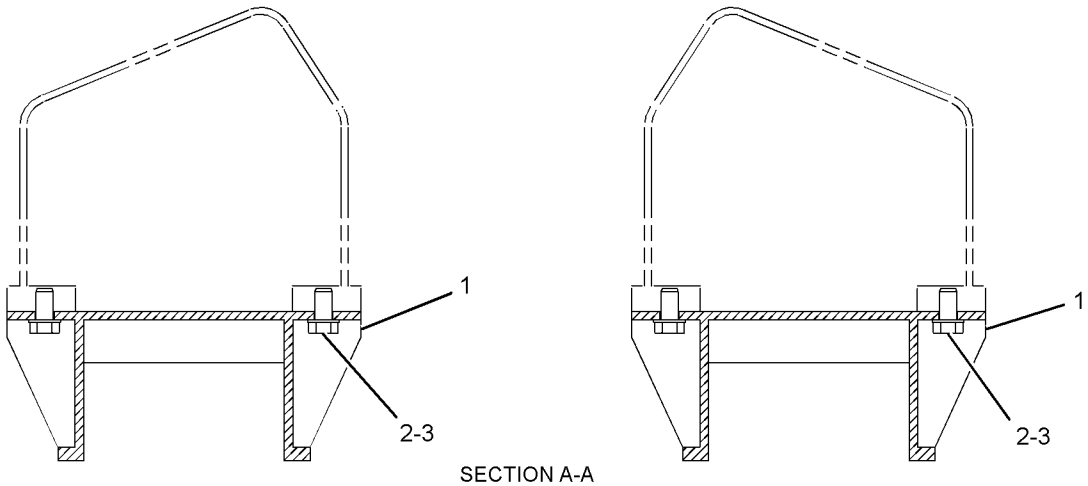

SECTION A-A

GRAPHIC #1

<END>

g01577033

120-7165 GUARD GP-TRACK GUIDE–FULL LENGTH

S/N: KBS1-UP

FOR USE WITH 120-7164–PAGE: 305

AN ATTACHMENT

SMCS-4177 **i05845464**

NOTE	REF NO	GRAPHIC REF	PART NUMBER	QTY	PART NAME 1 2 3 4 5 6 (PRODUCT LEVEL)	SEE PAGE
	1	1	**219-8468**	4	GUARD AS-TRACK GUIDE	
M	2	1	**453-2845**	24	BOLT (M20X2.5X40-MM)	
	3	1	**451-2176**	24	WASHER-HARD (22X35X3.5-MM THK)	

M - METRIC PART

QUANTITIES SHOWN ARE THOSE REQUIRED FOR BOTH LH AND RH SIDES

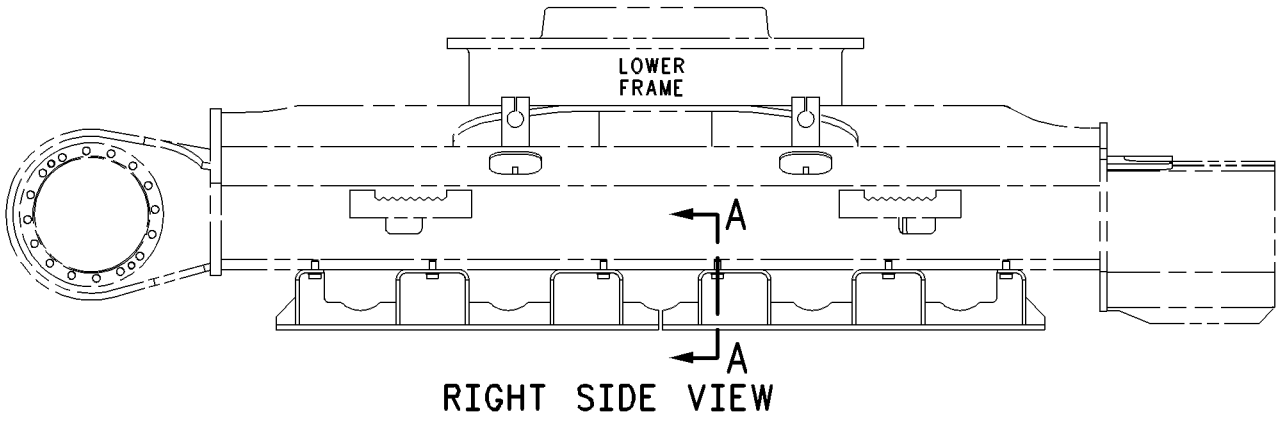

RIGHT SIDE VIEW

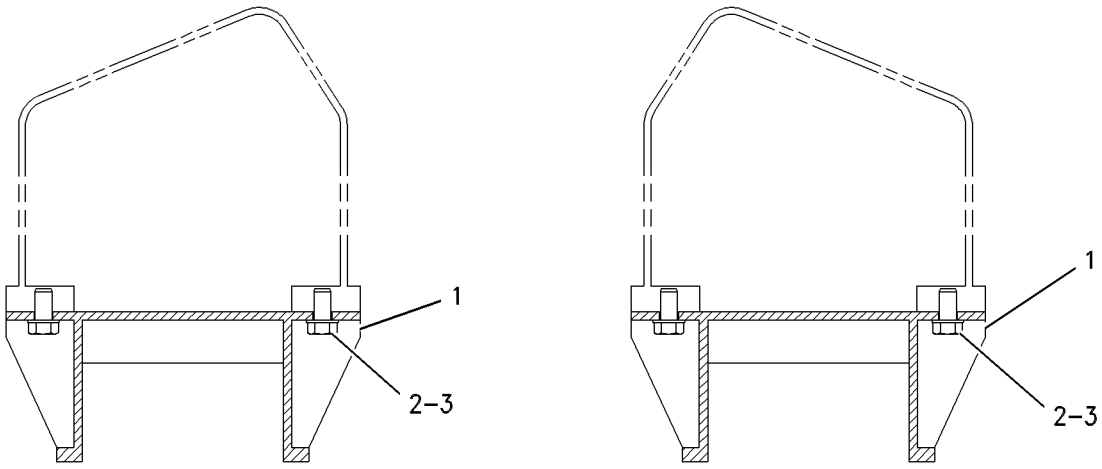

SECTION A-A

GRAPHIC #1 **<END>** g00470469

120-7167 GUARD GP-TRACK GUIDE–REAR

S/N: PBB1-UP

AN ATTACHMENT

SMCS-4177 **i05797234**

NOTE	REF NO	GRAPHIC REF	PART NUMBER	QTY	PART NAME 1 2 3 4 5 6 (PRODUCT LEVEL)	SEE PAGE
	1	1	**219-8469**	2	GUARD AS-TRACK GUIDE	
M	2	1	**453-2845**	16	BOLT (M20X2.5X40-MM)	
	3	1	**451-2176**	16	WASHER-HARD (22X35X3.5-MM THK)	

M - METRIC PART

QUANTITIES SHOWN ARE THOSE REQUIRED FOR BOTH LH AND RH SIDES

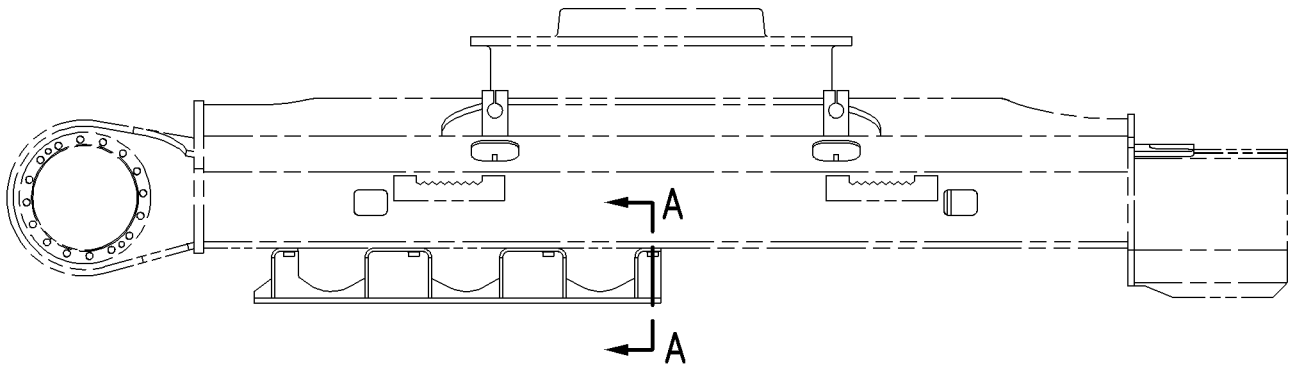

RIGHT SIDE VIEW

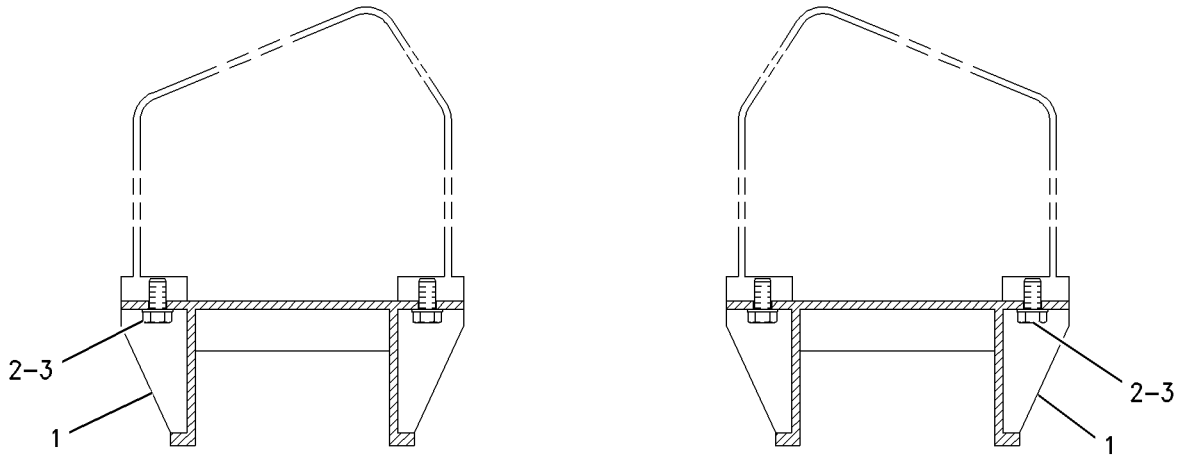

SECTION A-A

GRAPHIC #1 **<END>** g00761430

120-7168 GUARD GP-TRACK GUIDE–FULL LENGTH

S/N: PBB1-UP

AN ATTACHMENT

SMCS-4177 **i05797235**

NOTE	REF NO	GRAPHIC REF	PART NUMBER	QTY	PART NAME 1 2 3 4 5 6 (PRODUCT LEVEL)	SEE PAGE
	1	1	**219-8469**	4	GUARD AS-TRACK GUIDE	
M	2	1	**453-2845**	32	BOLT (M20X2.5X40-MM)	
	3	1	**451-2176**	32	WASHER-HARD (22X35X3.5-MM THK)	

M - METRIC PART

QUANTITIES SHOWN ARE THOSE REQUIRED FOR BOTH LH AND RH SIDES

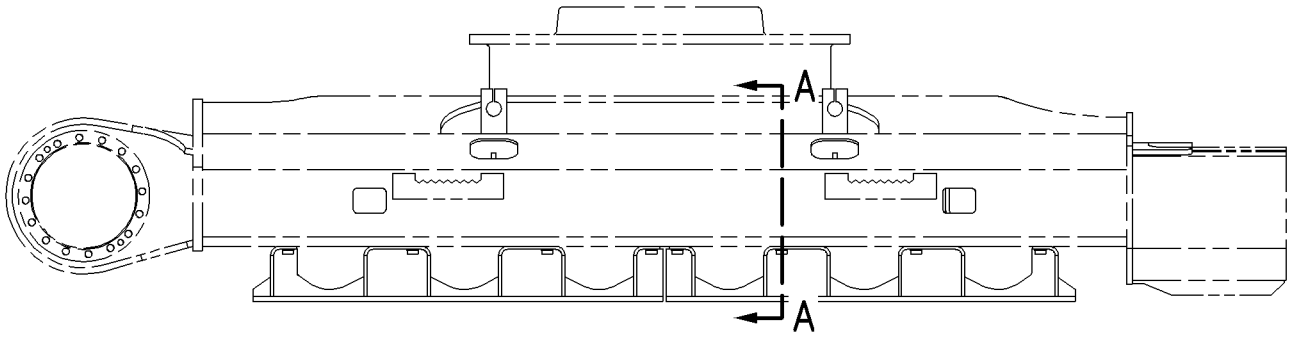

RIGHT SIDE VIEW

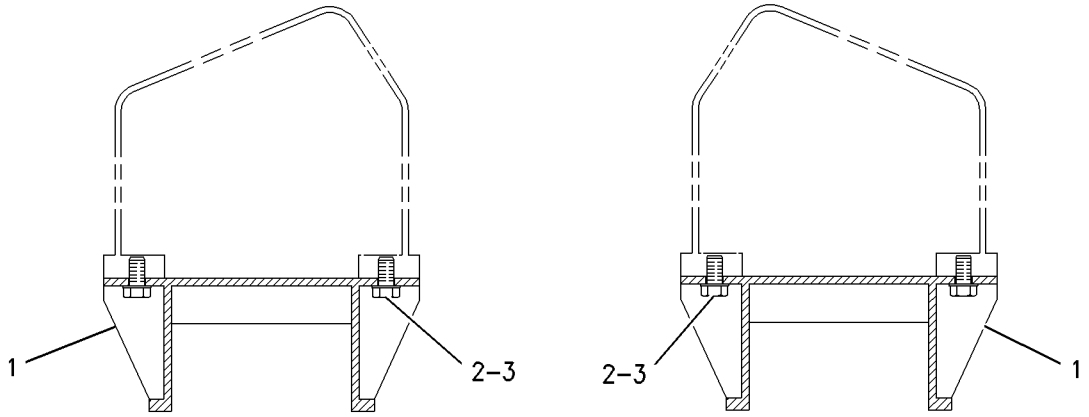

SECTION A-A

GRAPHIC #1 **<END>** g00736329

352-9554 GUARD GP-TRACK GUIDE–SEGMENTED

S/N: PBB1-UP

AN ATTACHMENT

SMCS-4177 **i05732889**

NOTE	REF NO	GRAPHIC REF	PART NUMBER	QTY	PART NAME 1 2 3 4 5 6 (PRODUCT LEVEL)	SEE PAGE
	1	1	**240-2988**	4	GUARD AS-TRACK GUIDE	
	2	1	**451-2176**	16	WASHER-HARD (22X35X3.5-MM THK)	
M	3	1	**453-2845**	16	BOLT (M20X2.5X40-MM)	

M - METRIC PART

QUANTITIES SHOWN ARE THOSE REQUIRED FOR BOTH LH AND RH SIDES

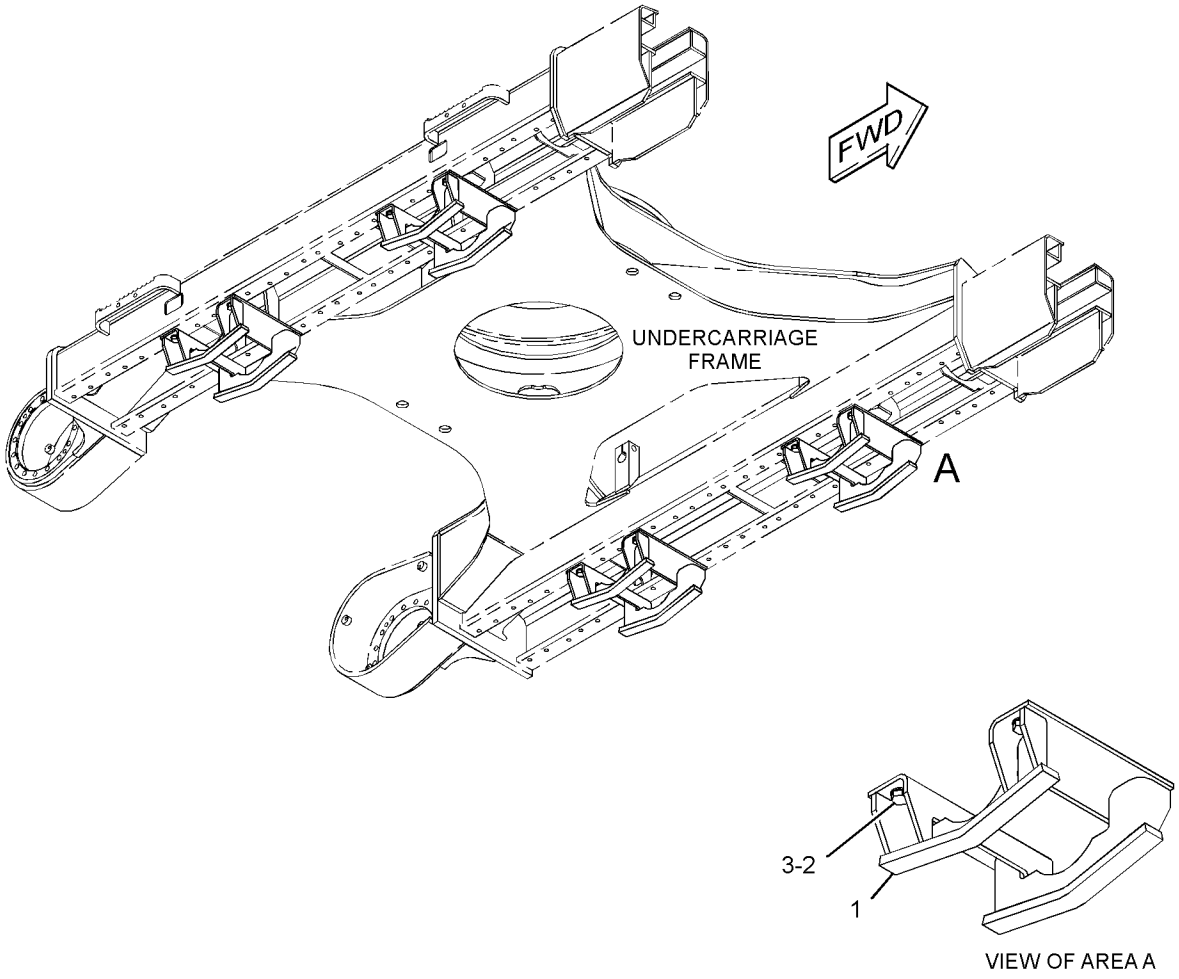

GRAPHIC #1 **<END>** g03382896

166-1478 GUARD GP-TRAVEL MOTOR–HEAVY-DUTY

S/N: PBB1-UP; KBS1-UP

AN ATTACHMENT

SMCS-7163 **i05736352**

NOTE	REF NO	GRAPHIC REF	PART NUMBER	QTY	PART NAME 1 2 3 4 5 6 (PRODUCT LEVEL)	SEE PAGE
	1	1	**453-8030**	8	BOLT AS	
C	2	1	**346-7233**	1	COVER AS (LH)	
C	3	1	**346-7232**	1	COVER AS (RH)	

C - CHANGE FROM PREVIOUS TYPE

QUANTITIES SHOWN ARE THOSE REQUIRED FOR BOTH LH AND RH SIDES

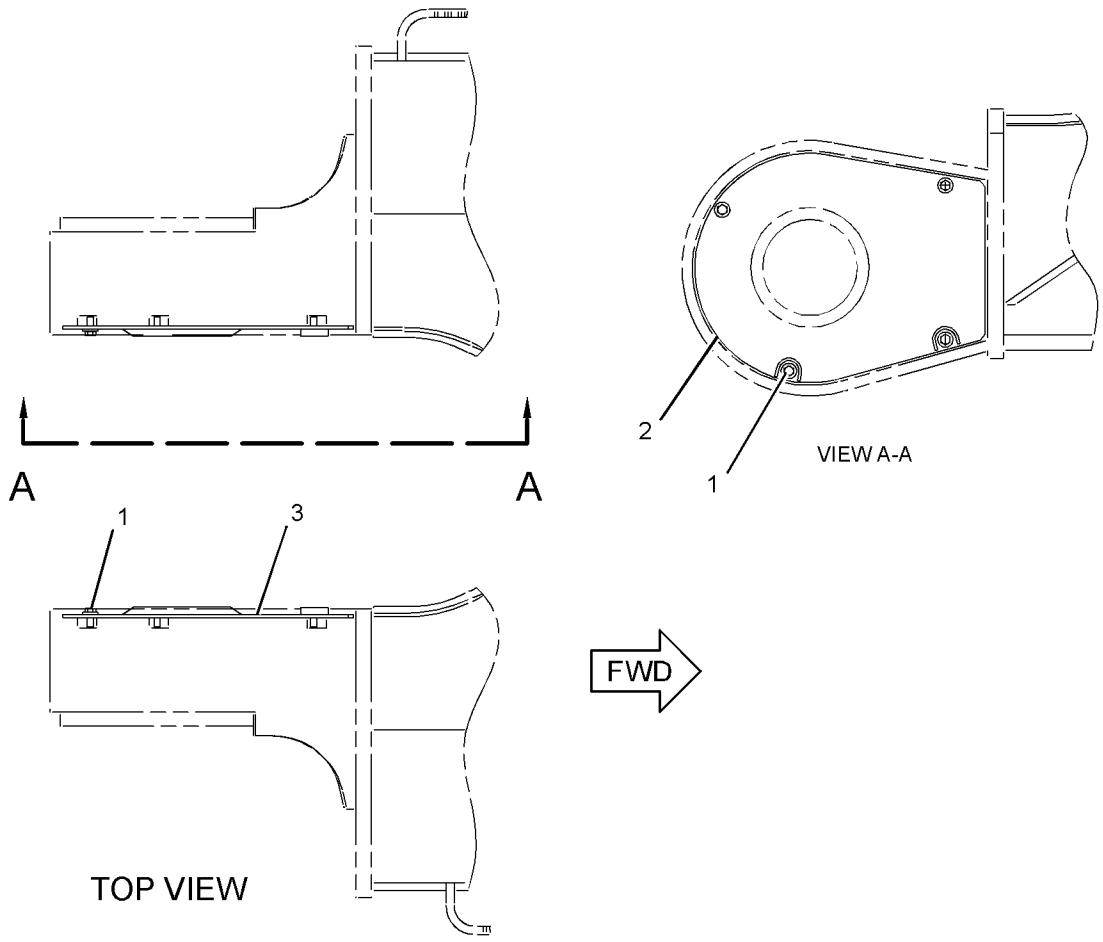

GRAPHIC #1 **<END>** g02626400

346-7204 GUARD GP-TRAVEL MOTOR

S/N: PBB1-UP; KBS1-UP

PART OF 240-3822, 247-7454 FRAME AR-UNDERCARRIAGE

SMCS-7163 **i05750513**

NOTE	REF NO	GRAPHIC REF	PART NUMBER	QTY	PART NAME 1 2 3 4 5 6 (PRODUCT LEVEL)	SEE PAGE
	1	1	**453-8030**	8	BOLT AS	
	2	1	**346-7236**	1	COVER (RH)	
	3	1	**346-7237**	1	COVER (LH)	

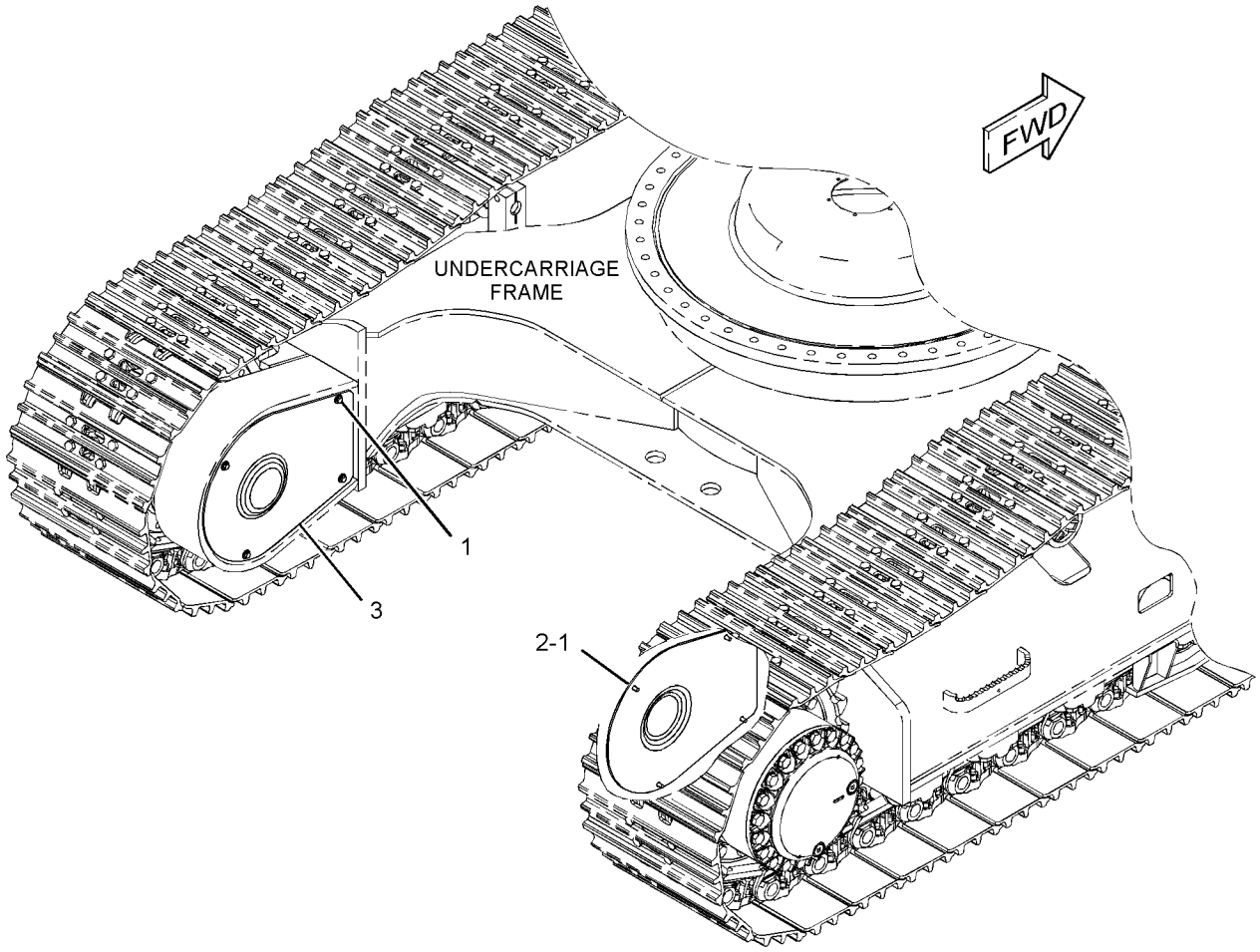

GRAPHIC #1 **<END>** g02723002

239-4341 IDLER GP-FRONT

S/N: PBB1-UP; KBS1-UP

PART OF 240-3822, 247-7454 FRAME AR-UNDERCARRIAGE

SMCS-4159 **i05277495**

NOTE	REF NO	GRAPHIC REF	PART NUMBER	QTY	PART NAME 1 2 3 4 5 6 (PRODUCT LEVEL)	SEE PAGE
Y	1	1	*239-4385*	1	IDLER GP-FRONT (RH)	313
Y	2	1	*239-4386*	1	IDLER GP-FRONT (LH)	314

Y - SEPARATE ILLUSTRATION

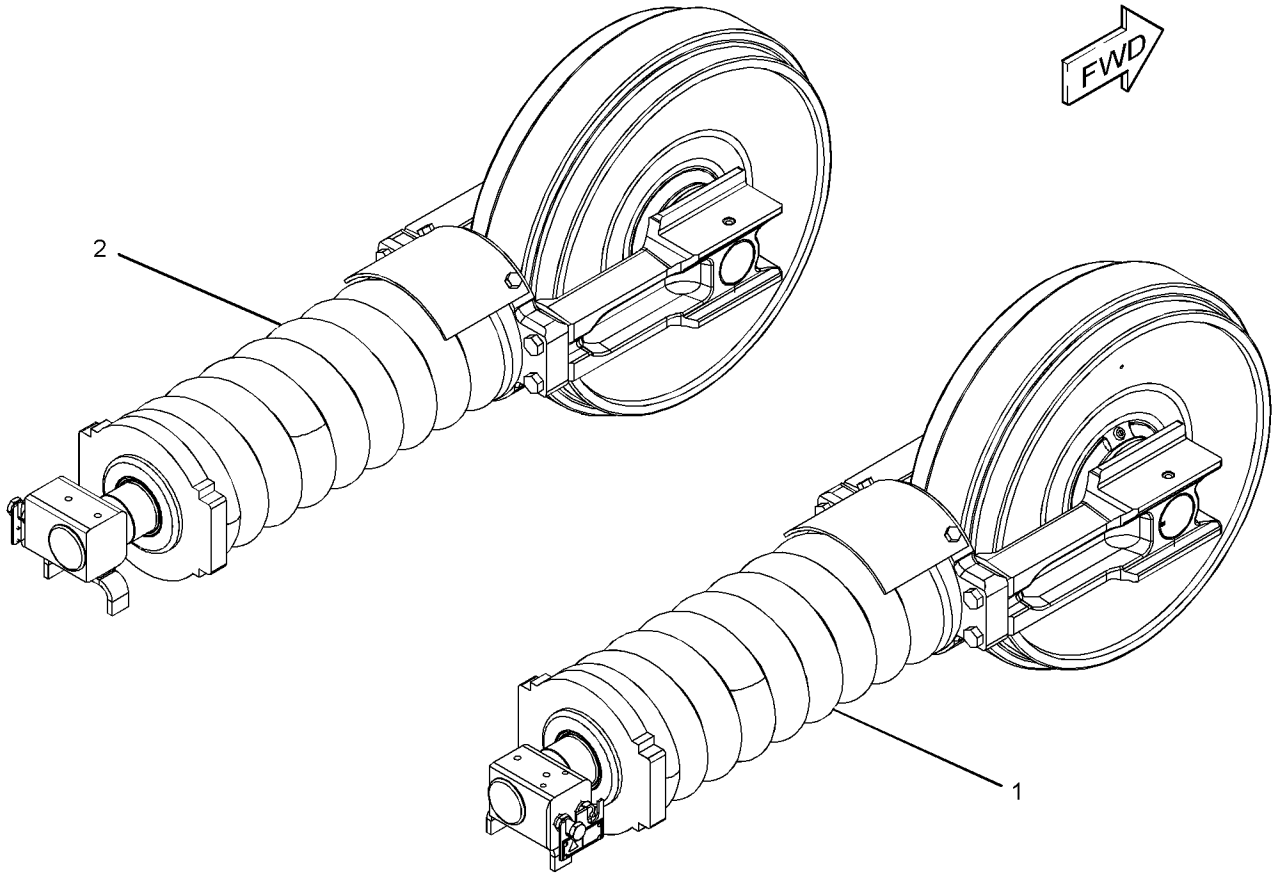

GRAPHIC #1 **<END>** g01217090

239-4385 IDLER GP-FRONT–RH

S/N: PBB1-UP; KBS1-UP

PART OF 239-4341 IDLER GP-FRONT

SMCS-4159 **i05830373**

NOTE	REF NO	GRAPHIC REF	PART NUMBER	QTY	PART NAME 1 2 3 4 5 6 (PRODUCT LEVEL)	SEE PAGE
Y	1	1	*239-4387*	1	TRACK ADJUSTER & RECOIL GP (RH)	324
Y	2	1	**248-7143**	1	IDLER GP-FRONT	315
M	3	1	**447-1707**	4	BOLT (M16X2X60-MM)	

M - METRIC PART
Y - SEPARATE ILLUSTRATION

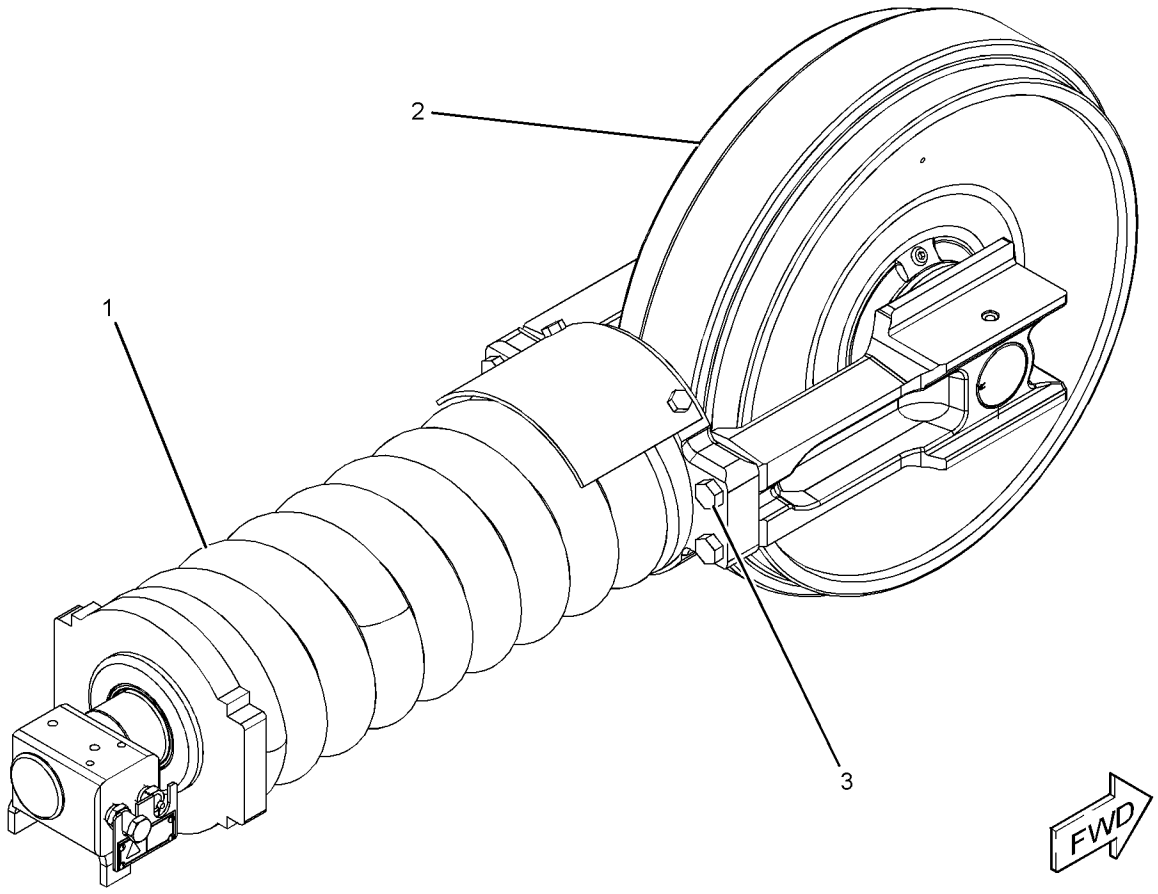

GRAPHIC #1 **<END>** g01217100

239-4386 IDLER GP-FRONT–LH

S/N: PBB1-UP; KBS1-UP

PART OF 239-4341 IDLER GP-FRONT

SMCS-4159 **i05830414**

NOTE	REF NO	GRAPHIC REF	PART NUMBER	QTY	PART NAME 1 2 3 4 5 6 (PRODUCT LEVEL)	SEE PAGE
Y	1	1	*239-4388*	1	TRACK ADJUSTER & RECOIL GP (LH)	325
Y	2	1	**248-7143**	1	IDLER GP-FRONT	315
M	3	1	**447-1707**	4	BOLT (M16X2X60-MM)	

M - METRIC PART
Y - SEPARATE ILLUSTRATION

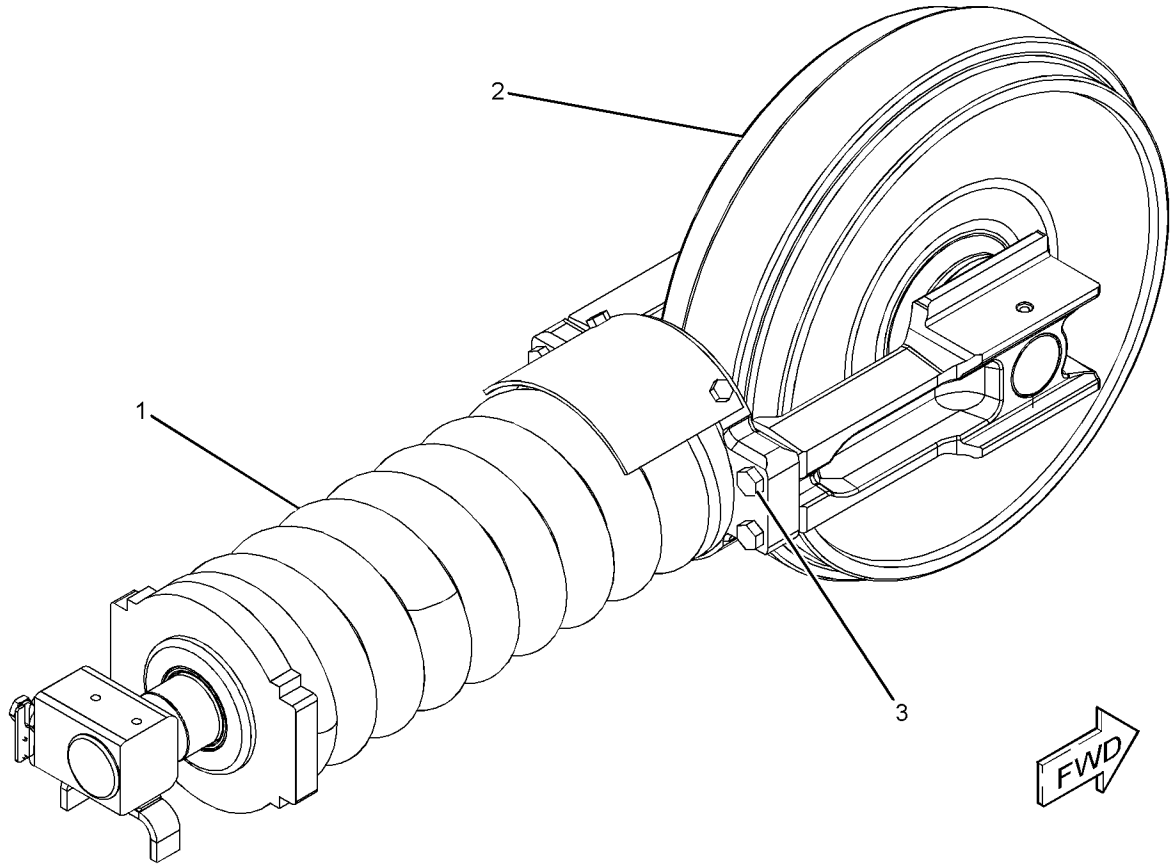

GRAPHIC #1 **<END>** g01217105

248-7143 IDLER GP-FRONT

S/N: PBB1-UP; KBS1-UP

PART OF 239-4385, 239-4386 IDLER GP-FRONT

SMCS-4159 **i02408880**

NOTE	REF NO	GRAPHIC REF	PART NUMBER	QTY	PART NAME 1 2 3 4 5 6 (PRODUCT LEVEL)	SEE PAGE
	1	1	**9W-2201**	2	SEAL GP-DUO-CONE	
					(EACH INCLUDES)	
		1	**096-4255**	2	RING	
	2	1	**239-4362**	2	BEARING (FRONT IDLER)	
	3	1	**246-5425**	1	SHAFT	
	4	1	**262-4781**	1	IDLER & BEARING AS	
		1	**8E-4359**	2	BEARING	
	5	1	**6V-7658**	2	SEAL-O-RING	
	6	1	**7H-3171**	1	PLUG-PIPE	
	7	1	**9W-9455**	2	PIN	

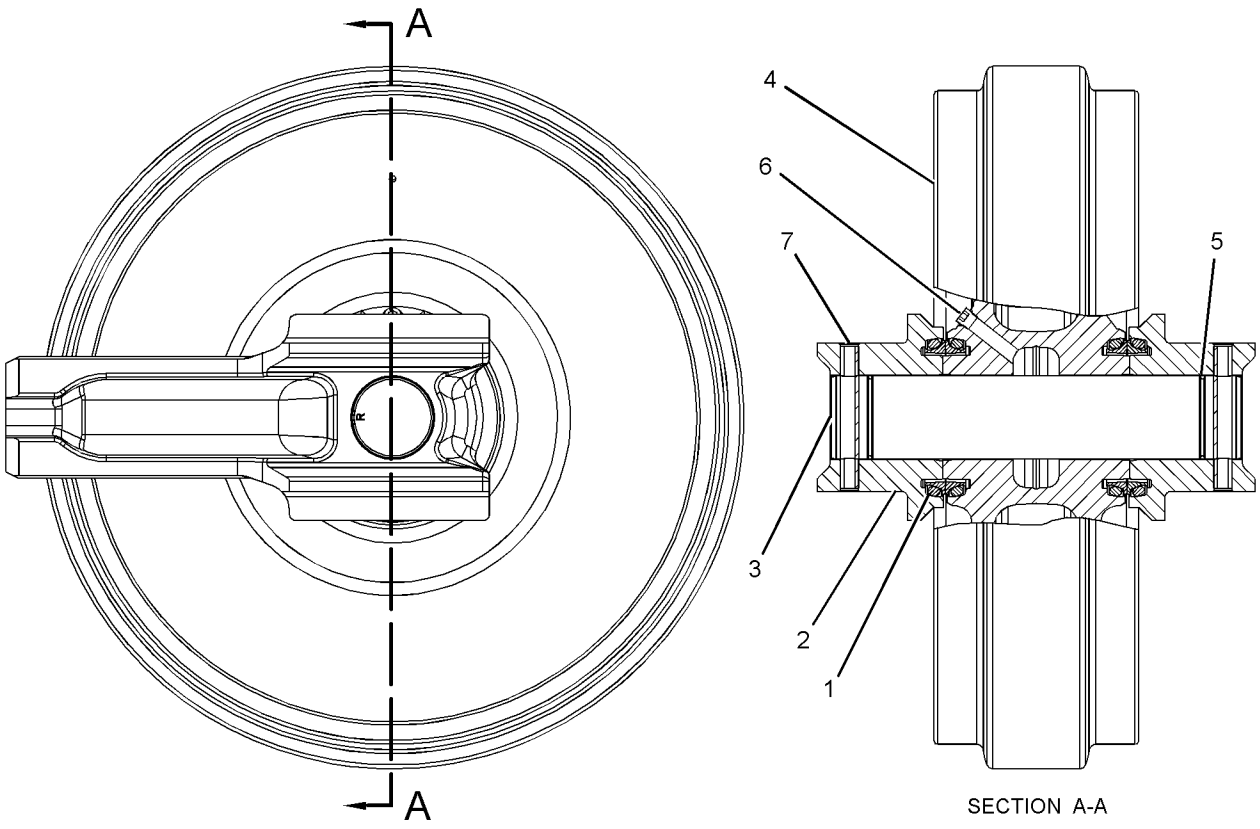

SECTION A-A

GRAPHIC #1 **<END>** g01206925

194-1608 LINK AS-TRACK

S/N: PBB1-UP
GREASE LUBRICATED TRACK
PART OF 194-1910, 194-1911, 194-1914, 332-8908 TRACK GP
AN ATTACHMENT

SMCS-4169, 4171 **i01450800**

NOTE	REF NO	GRAPHIC REF	PART NUMBER	QTY	PART NAME 1 2 3 4 5 6 (PRODUCT LEVEL)	SEE PAGE
	1	1	**9W-3138**	48	LINK-TRACK (LH)	
	2	1	**095-0863**	1	PIN-COTTER	
	3	1	**8E-8586**	1	LINK-MASTER (LH)	
	4	1	**190-3524**	1	BUSHING-TRACK MASTER	
	5	1	**8E-8585**	1	LINK-MASTER (RH)	
	6	1	**188-3064**	1	PIN-TRACK MASTER	
	7	1	**9W-3137**	48	LINK-TRACK (RH)	
	8	1	**6Y-8186**	48	PIN-TRACK	
	10	1	**158-4380**	96	SEAL-TRACK	
	11	1	**190-3523**	48	BUSHING-TRACK	
	12	1	**158-4381**	2	SEAL-TRACK MASTER	

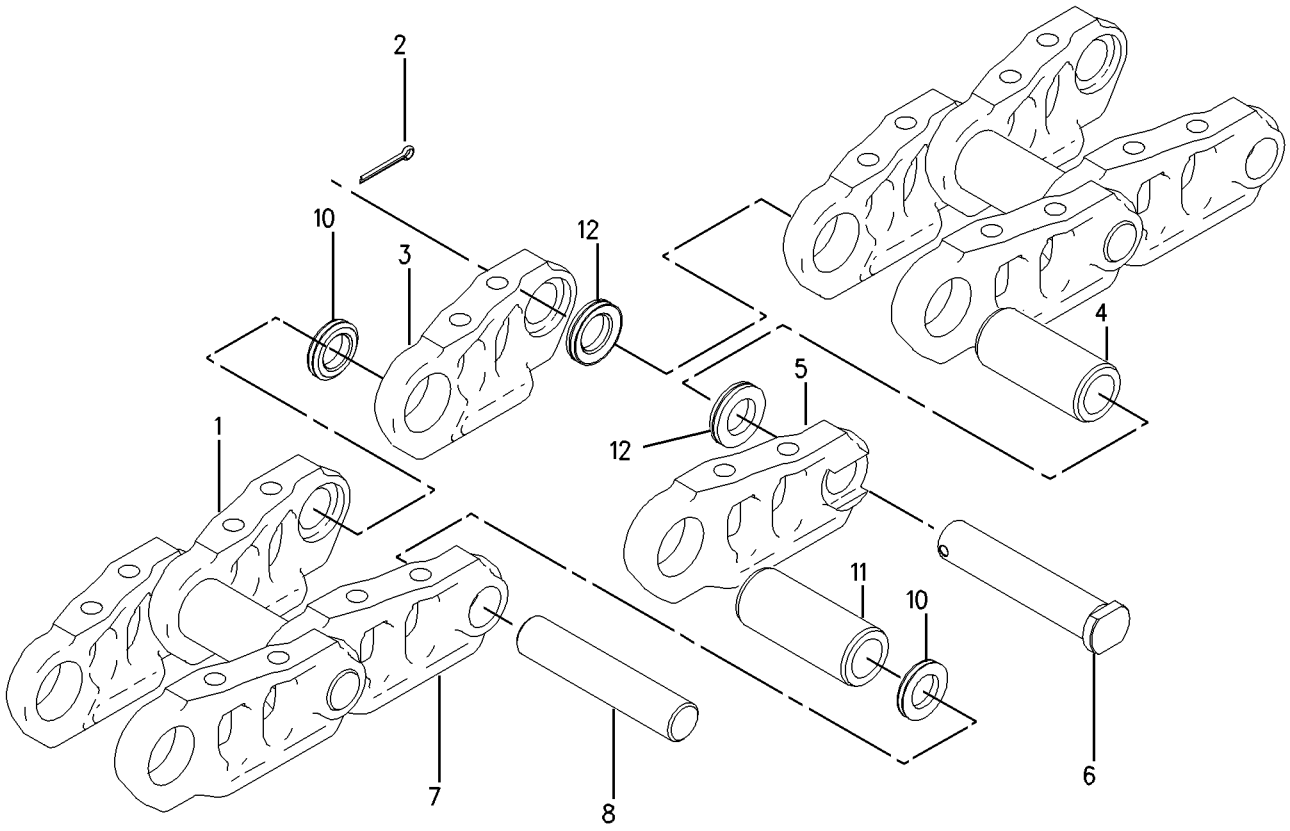

GRAPHIC #1 **<END>** g00668766

194-1609 LINK AS-TRACK

S/N: KBS1-UP
GREASE LUBRICATED TRACK
PART OF 194-1917, 194-1920, 277-7148, 332-8915 TRACK GP
AN ATTACHMENT

SMCS-4169, 4171 **i01471018**

NOTE	REF NO	GRAPHIC REF	PART NUMBER	QTY	PART NAME 1 2 3 4 5 6 (PRODUCT LEVEL)	SEE PAGE
	1	1	**9W-3138**	44	LINK-TRACK (LH)	
	2	1	**095-0863**	1	PIN-COTTER	
	3	1	**8E-8586**	1	LINK-MASTER (LH)	
	4	1	**190-3524**	1	BUSHING-TRACK MASTER	
	5	1	**8E-8585**	1	LINK-MASTER (RH)	
	6	1	**188-3064**	1	PIN-TRACK MASTER	
	7	1	**9W-3137**	44	LINK-TRACK (RH)	
	8	1	**6Y-8186**	44	PIN-TRACK	
	10	1	**158-4380**	88	SEAL-TRACK	
	11	1	**190-3523**	44	BUSHING-TRACK	
	12	1	**158-4381**	2	SEAL-TRACK MASTER	

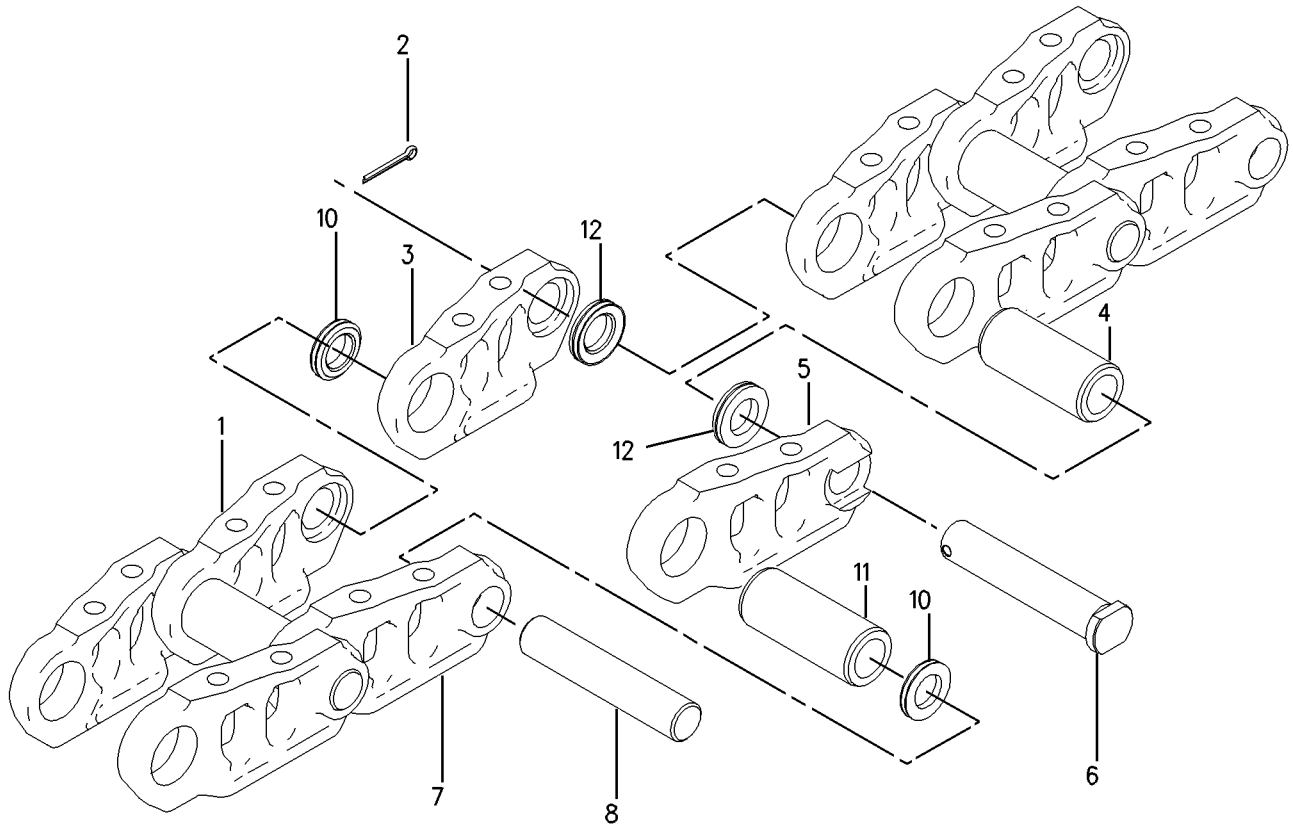

GRAPHIC #1 **<END>** g00668766

7Y-1607 ROLLER AR-TRACK & CARRIER

S/N: KBS1-UP

PART OF 247-7454 FRAME AR-UNDERCARRIAGE

SMCS-4154, 4180 **i01721628**

NOTE	REF NO	GRAPHIC REF	PART NUMBER	QTY	PART NAME 1 2 3 4 5 6 (PRODUCT LEVEL)	SEE PAGE
M	1	1	**8T-5878**	4	BOLT (M24X3X80-MM)	
Y	2	1	**8E-5600**	4	ROLLER GP-TRACK CARRIER	321
YR	3	1	**163-4143**	14	ROLLER GP-TRACK-SINGLE FLANGE	322
M	4	1	**7X-2565**	56	BOLT (M20X2.5X100-MM)	
	5	1	**8T-4123**	56	WASHER (3.62X5.75X0.375-MM THK)	

M - METRIC PART
R - REMFG PART MAY BE AVAILABLE
Y - SEPARATE ILLUSTRATION
QUANTITIES SHOWN ARE THOSE REQUIRED FOR BOTH LH AND RH SIDES

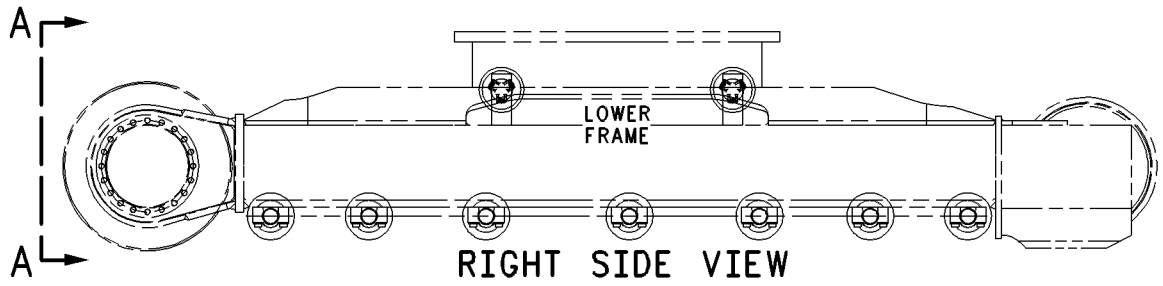

RIGHT SIDE VIEW

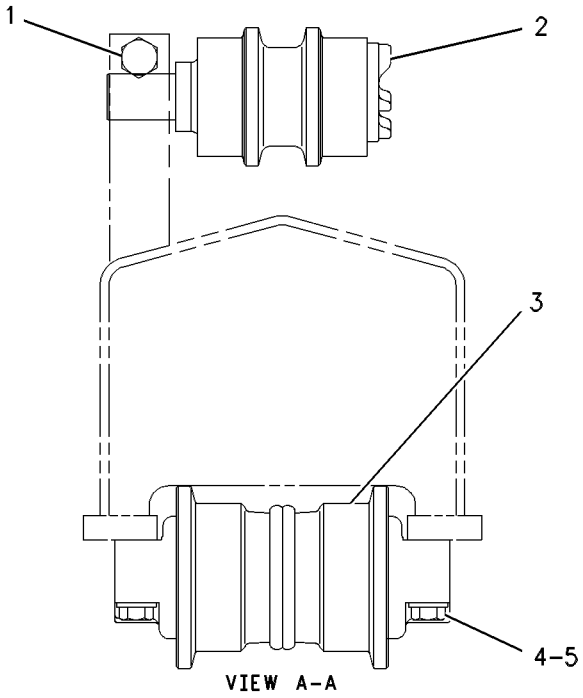

VIEW A-A

GRAPHIC #1 **<END>** g00387795

7Y-1608 ROLLER AR-TRACK & CARRIER

S/N: PBB1-UP

PART OF 240-3822 FRAME AR-UNDERCARRIAGE

SMCS-4154, 4180 **i02836335**

NOTE	REF NO	GRAPHIC REF	PART NUMBER	QTY	PART NAME 1 2 3 4 5 6 (PRODUCT LEVEL)	SEE PAGE
M	1	1	**8T-5878**	4	BOLT (M24X3X80-MM)	
Y	2	1	**8E-5600**	4	ROLLER GP-TRACK CARRIER	321
YR	3	1	**163-4143**	16	ROLLER GP-TRACK-SINGLE FLANGE	322
M	4	1	**7X-2565**	64	BOLT (M20X2.5X100-MM)	
	5	1	**8T-4123**	64	WASHER (3.62X5.75X0.375-MM THK)	

M - METRIC PART
R - REMFG PART MAY BE AVAILABLE
Y - SEPARATE ILLUSTRATION
QUANTITIES SHOWN ARE THOSE REQUIRED FOR BOTH LH AND RH SIDES

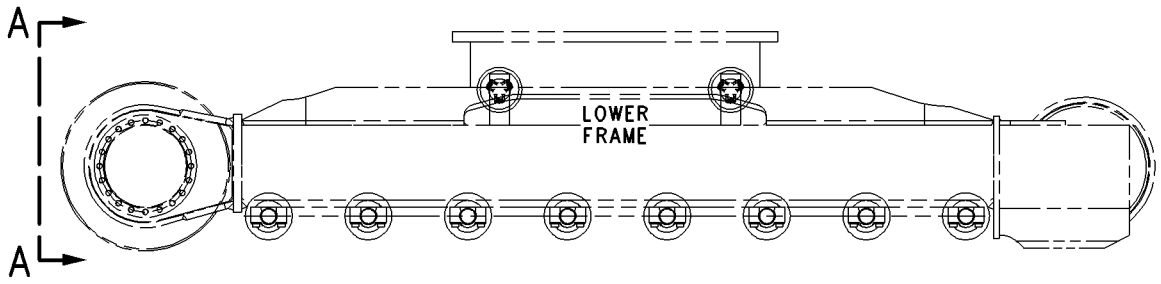

RIGHT SIDE VIEW

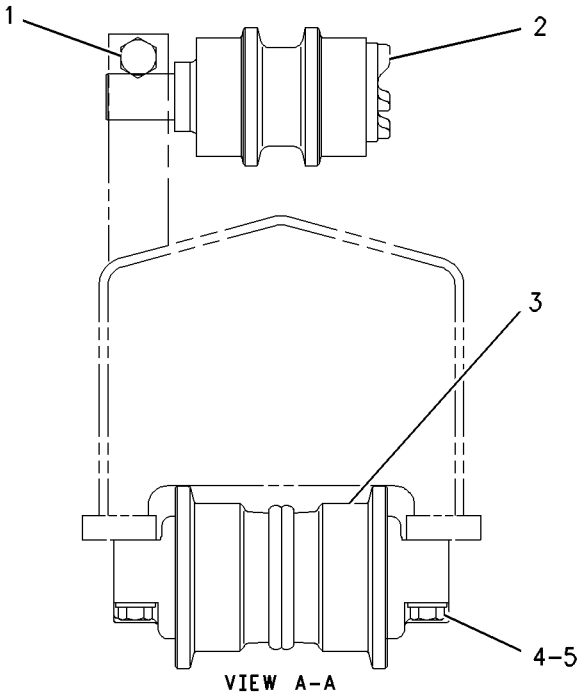

VIEW A-A

GRAPHIC #1 **<END>** g00680258

297-9132 ROLLER AR-TRACK & CARRIER

S/N: PBB1-UP

AN ATTACHMENT

SMCS-4154, 4180 **i05800024**

NOTE	REF NO	GRAPHIC REF	PART NUMBER	QTY	PART NAME 1 2 3 4 5 6 (PRODUCT LEVEL)	SEE PAGE
Y	1	1	**8E-5600**	4	ROLLER GP-TRACK CARRIER	321
Y	2	1	**206-1265**	16	ROLLER GP-TRACK-SINGLE FLANGE	323
M	3	1	**447-1731**	64	BOLT (M20X2.5X100-MM)	
	4	1	**451-2176**	64	WASHER-HARD (22X35X3.5-MM THK)	
M	5	1	**447-1725**	4	BOLT (M24X3X80-MM)	

M - METRIC PART
Y - SEPARATE ILLUSTRATION
QUANTITIES SHOWN ARE THOSE REQUIRED FOR BOTH LH AND RH SIDES

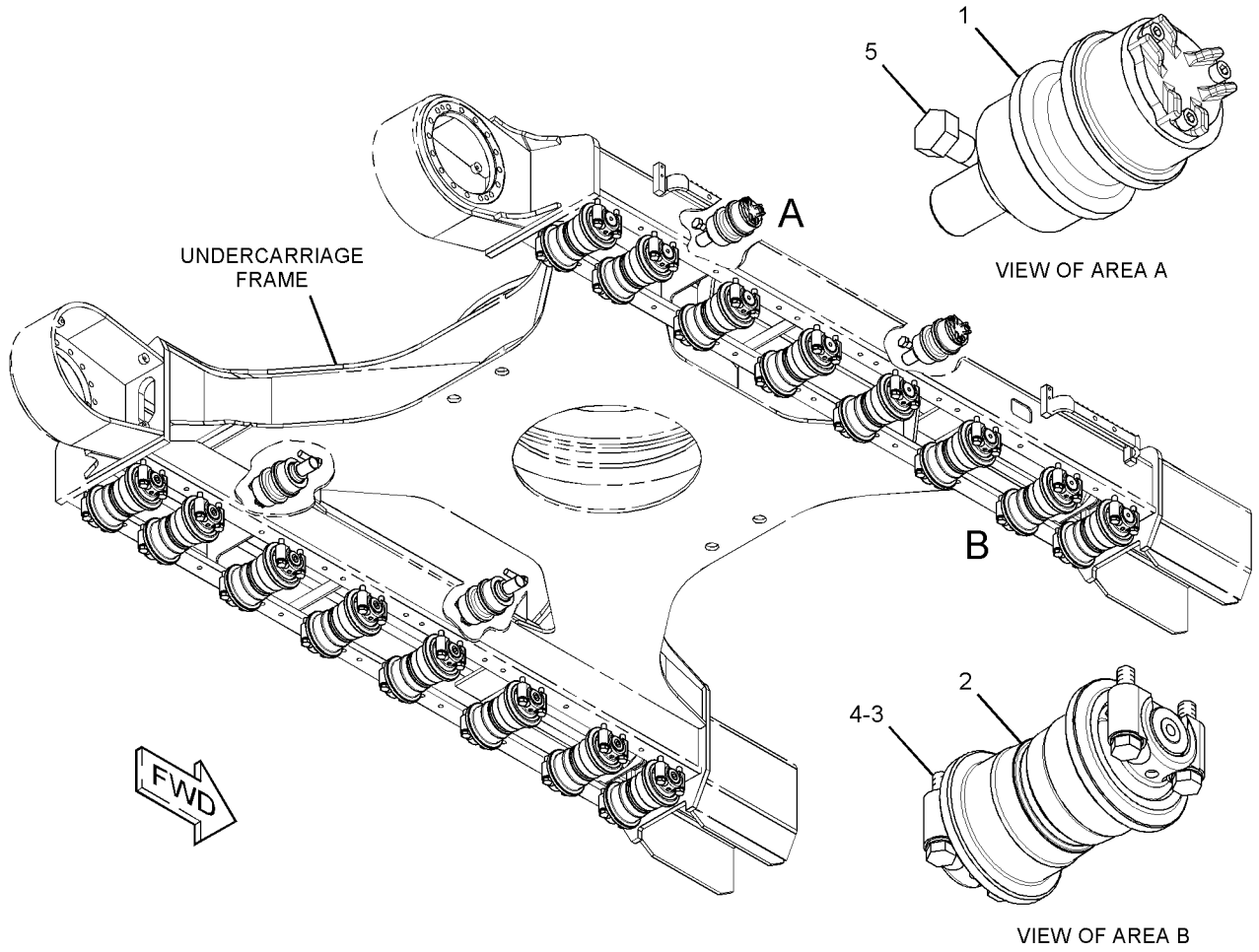

GRAPHIC #1 **<END>** g01360424

8E-5600 ROLLER GP-TRACK CARRIER

S/N: PBB1-UP; KBS1-UP

PART OF 297-9132, 7Y-1607, 7Y-1608 ROLLER AR-TRACK & CARRIER

ALSO AN ATTACHMENT

SMCS-4154 **i04566032**

NOTE	REF NO	GRAPHIC REF	PART NUMBER	QTY	PART NAME 1 2 3 4 5 6 (PRODUCT LEVEL)	SEE PAGE
	1	1	**8E-5601**	1	SHAFT AS-TRACK ROLLER	
		1	**8E-5604**	1	COLLAR-ROLLER END	
	2	1	**8E-5608**	1	SEAL GP-DUO-CONE	
		1	**096-4279**	2	RING-TORIC	
	3	1	**8E-5602**	1	ROLLER & BEARING AS	
	3A	1	**8E-6792**	1	BEARING-TRACK ROLLER	
	3B	1	**8E-6793**	1	BEARING-TRACK ROLLER	
	4	1	**8E-5606**	1	RETAINER	
	5	1	**6V-7661**	1	SEAL-O-RING	
M	6	1	**8T-1159**	5	BOLT-SOCKET HEAD (M10X1.5X25-MM)	
	7	1	**8E-5605**	1	COVER-CARRIER ROLLER	
	8	1	**7H-3171**	1	PLUG-PIPE	

M - METRIC PART

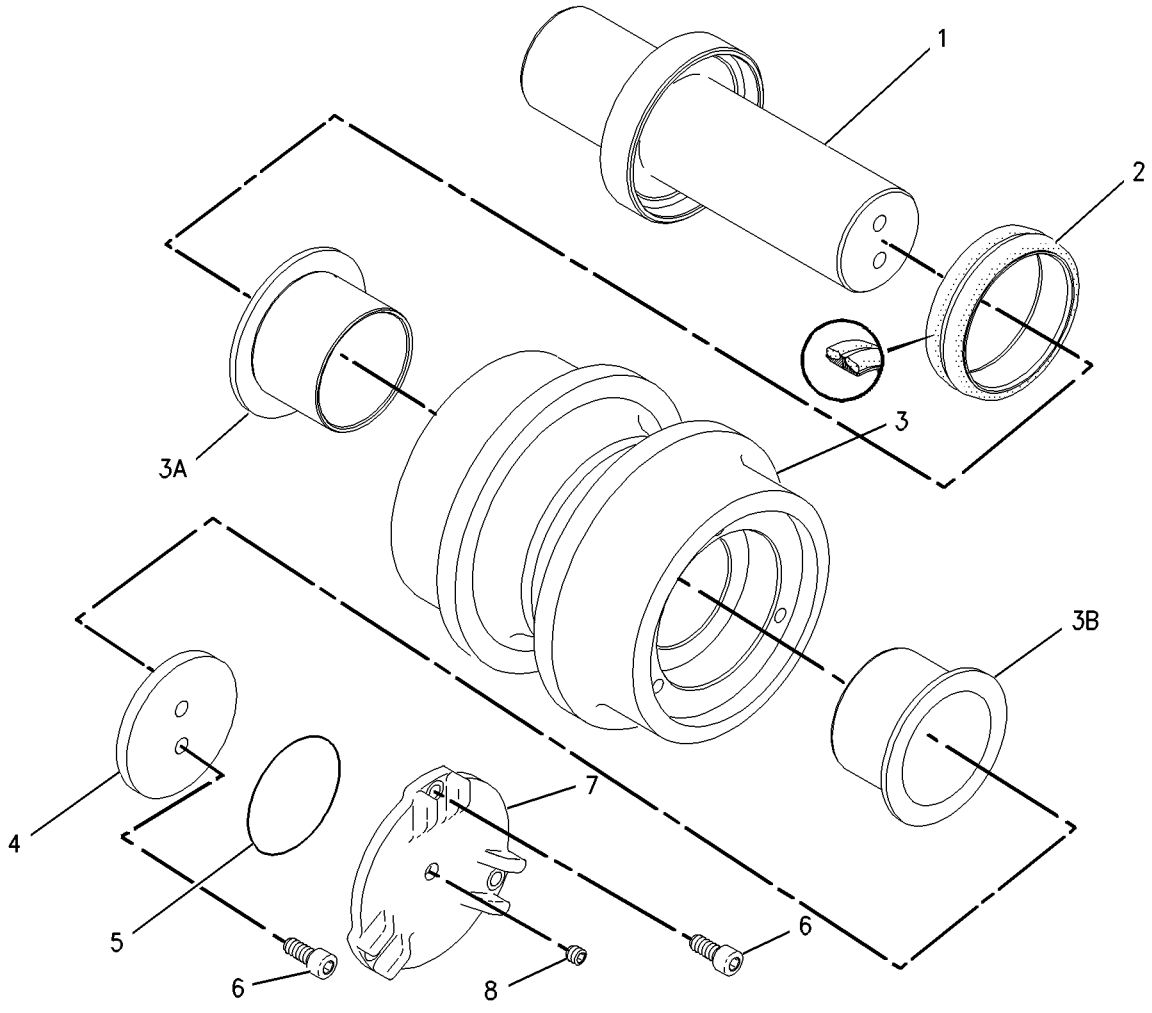

GRAPHIC #1 **<END>** g00715793

163-4143 ROLLER GP-TRACK-SINGLE FLANGE*R

S/N: PBB1-UP; KBS1-UP

PART OF 7Y-1607, 7Y-1608 ROLLER AR-TRACK & CARRIER

SMCS-4180 **i03982483**

NOTE	REF NO	GRAPHIC REF	PART NUMBER	QTY	PART NAME 1 2 3 4 5 6 (PRODUCT LEVEL)	SEE PAGE
	1	1	**8E-5031**	2	RING-RETAINING	
	2	1	**7F-8268**	2	SEAL-O-RING	
	3	1	**5G-2247**	1	STOPPER-RUBBER	
	4	1	**6Y-0473**	1	PLUG-CLEAR	
	5	1	**8E-5032**	1	ROLLER & BEARING AS	
		1	**8E-5599**	2	BEARING-TRACK ROLLER	
	6	1	**8E-5035**	1	SHAFT-TRACK ROLLER	
	7	1	**8E-5037**	2	COLLAR-TRACK ROLLER	
	8	1	**9W-2142**	2	SEAL GP-DUO-CONE	
					(EACH INCLUDES)	
		1	**096-4295**	2	RING-SEALING	
	9	1	**3E-3217**	1	DOWEL	

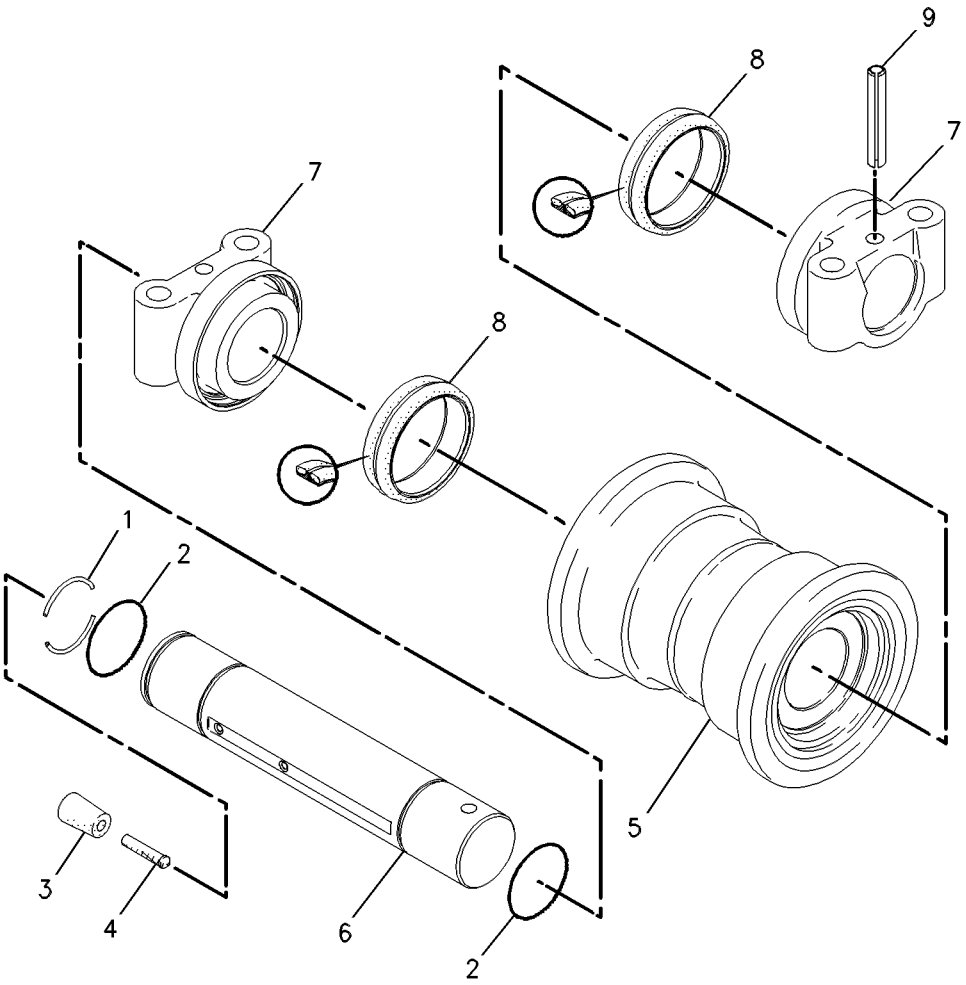

GRAPHIC #1 **<END>** g00593567

206-1265 ROLLER GP-TRACK-SINGLE FLANGE

S/N: PBB1-UP

PART OF 297-9132 ROLLER AR-TRACK & CARRIER

AN ATTACHMENT

SMCS-4180 **i02166514**

NOTE	REF NO	GRAPHIC REF	PART NUMBER	QTY	PART NAME 1 2 3 4 5 6 (PRODUCT LEVEL)	SEE PAGE
	1	1	**209-3313**	1	ROLLER & BEARING AS (SINGLE FLANGE)	
	1A	1	**8E-5599**	2	BEARING-TRACK ROLLER	
	2	1	**7F-8268**	2	SEAL-O-RING	
	3	1	**3E-3217**	2	DOWEL	
	4	1	**8E-5037**	2	COLLAR-TRACK ROLLER	
	5	1	**9W-2146**	1	PLUG	
	6	1	**206-9211**	2	SEAL GP-DUO-CONE	
					(EACH INCLUDES)	
	6A	1	**162-2168**	2	RING-TORIC	
	7	1	**209-3312**	1	SHAFT-TRACK ROLLER	

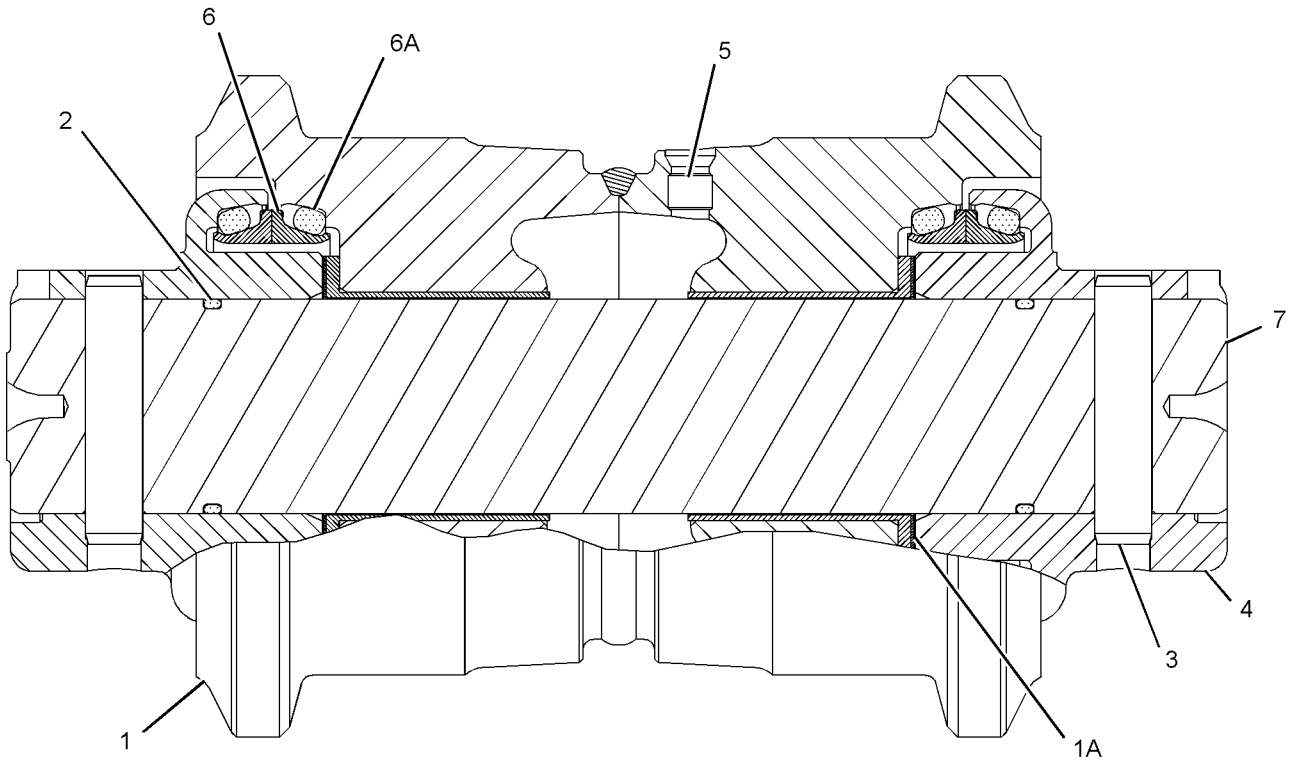

GRAPHIC #1 **<END>** g01099908

239-4387 TRACK ADJUSTER & RECOIL GP–RH

S/N: PBB1-UP; KBS1-UP

PART OF 239-4385 IDLER GP-FRONT

SMCS-4157, 4158 **i02417210**

NOTE	REF NO	GRAPHIC REF	PART NUMBER	QTY	PART NAME 1 2 3 4 5 6 (PRODUCT LEVEL)	SEE PAGE
	1	1	**7Y-1746**	1	PLATE	
	2	1	**168-6761**	1	PLATE AS	
		1	**4B-4158**	4	SCREW-DRIVE (NO 4X0.25-IN)	
		1	**253-1346**	1	PLATE-WARNING (HIGH PRESSURE CYLINDER)	
Y	3	1	*239-4389*	1	TRACK ADJUSTER & RECOIL GP	326
M	4	1	**8T-4137**	2	BOLT (M10X1.5X20-MM)	

M - METRIC PART
Y - SEPARATE ILLUSTRATION

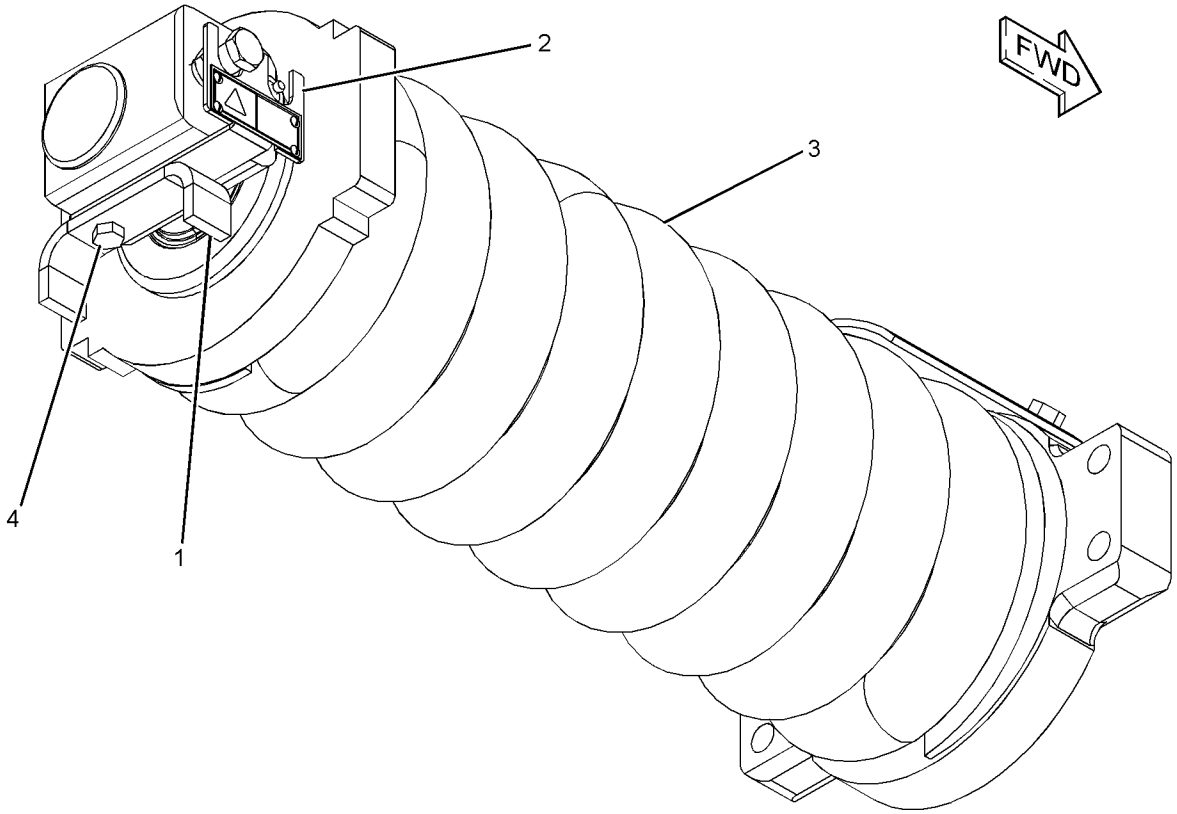

GRAPHIC #1 **<END>** g01217204

239-4388 TRACK ADJUSTER & RECOIL GP–LH

S/N: PBB1-UP; KBS1-UP

PART OF 239-4386 IDLER GP-FRONT

SMCS-4157, 4158 **i02417233**

NOTE	REF NO	GRAPHIC REF	PART NUMBER	QTY	PART NAME 1 2 3 4 5 6 (PRODUCT LEVEL)	SEE PAGE
	1	1	**7Y-1746**	1	PLATE	
	2	1	**168-6761**	1	PLATE AS	
		1	**4B-4158**	4	SCREW-DRIVE (NO 4X0.25-IN)	
		1	**253-1346**	1	PLATE-WARNING (HIGH PRESSURE CYLINDER)	
Y	3	1	*239-4389*	1	TRACK ADJUSTER & RECOIL GP	326
M	4	1	**8T-4137**	2	BOLT (M10X1.5X20-MM)	

M - METRIC PART
Y - SEPARATE ILLUSTRATION

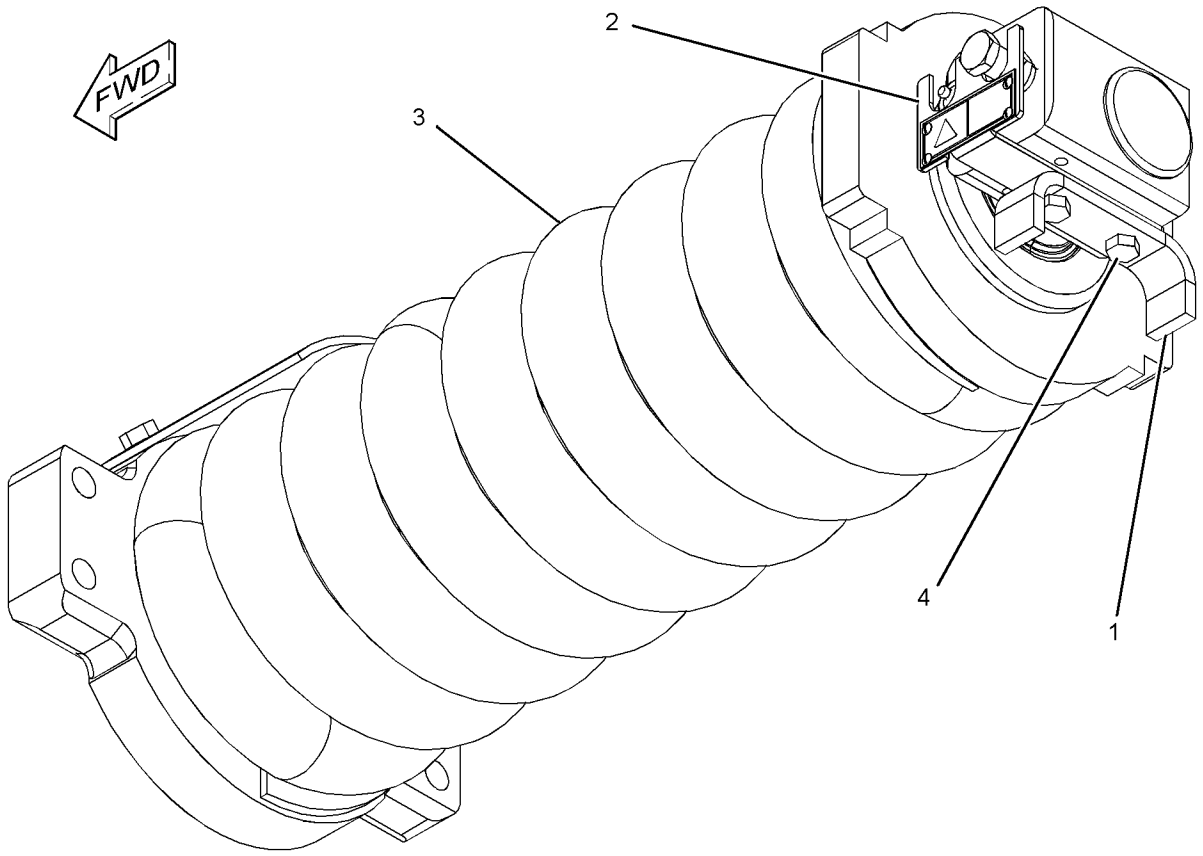

GRAPHIC #1 **<END>** g01217224

239-4389 TRACK ADJUSTER & RECOIL GP

S/N: PBB1-UP; KBS1-UP

PART OF 239-4387, 239-4388 TRACK ADJUSTER & RECOIL GP

SMCS-4157, 4158 **i04941433**

NOTE	REF NO	GRAPHIC REF	PART NUMBER	QTY	PART NAME 1 2 3 4 5 6 (PRODUCT LEVEL)	SEE PAGE
	1	1	**7Y-1781**	1	COVER	
	2	1	**145-3035**	1	PLATE	
	3	1	**340-8237**	1	SPRING	
	4	1	**239-4378**	1	SUPPORT	
	5	1	**239-4382**	1	NUT (M48X5-THD)	
	6	1	**239-4383**	1	STRIP	
	7	1	**239-4384**	1	SPACER (49X95X72-MM THK)	
Y	8	1	**239-4390**	1	TRACK ADJUSTER & RECOIL GP	327
	9	1	**239-4393**	1	WASHER (50X78X8-MM THK)	
M	10	1	**7X-2536**	2	BOLT (M8X1.25X14-MM)	
M	11	1	**8T-4179**	2	BOLT (M12X1.75X20-MM)	

M - METRIC PART
Y - SEPARATE ILLUSTRATION

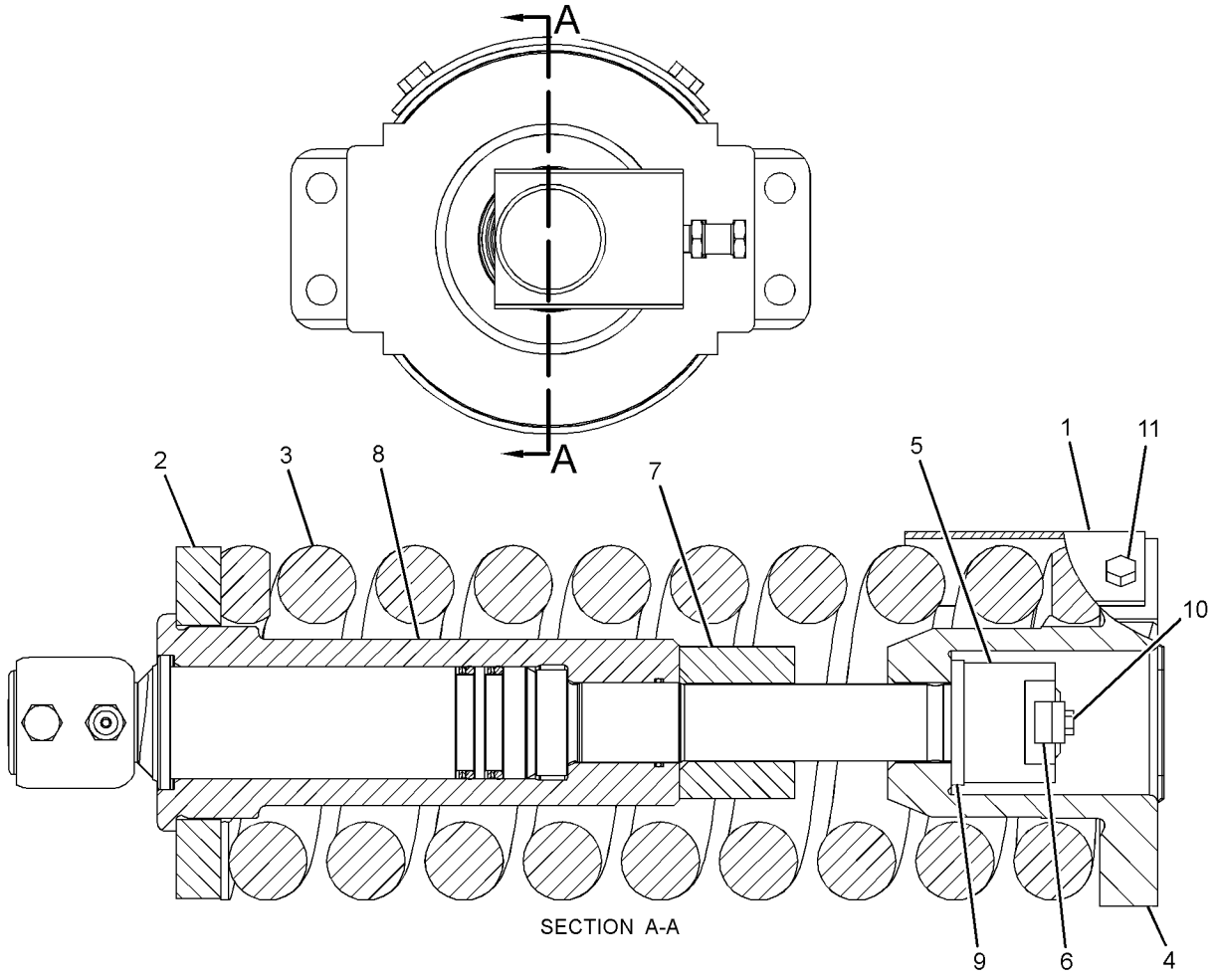

SECTION A-A

GRAPHIC #1 **<END>** g01217233

239-4390 TRACK ADJUSTER & RECOIL GP

S/N: PBB1-UP; KBS1-UP

PART OF 239-4389 TRACK ADJUSTER & RECOIL GP

SMCS-4157, 4158 **i04634509**

NOTE	REF NO	GRAPHIC REF	PART NUMBER	QTY	PART NAME 1 2 3 4 5 6 (PRODUCT LEVEL)	SEE PAGE
	1	1	**2S-5926**	1	VALVE-RELIEF	
	2	1	**7Y-0682**	2	RING	
	3	1	**093-1436**	1	SEAL-LIP TYPE	
	4	1	**093-1512**	2	RING	
	5	1	**357-7540**	1	VALVE-FILL	
	6	1	**145-3031**	1	PISTON AS	
	7	1	**239-4391**	1	ROD	
	8	1	**239-4392**	1	CYLINDER	
	9	1	**239-4394**	1	RING-BACKUP	
	10	1	**248-7174**	2	SEAL-O-RING	
	11	1	**095-1704**	1	SEAL-O-RING	

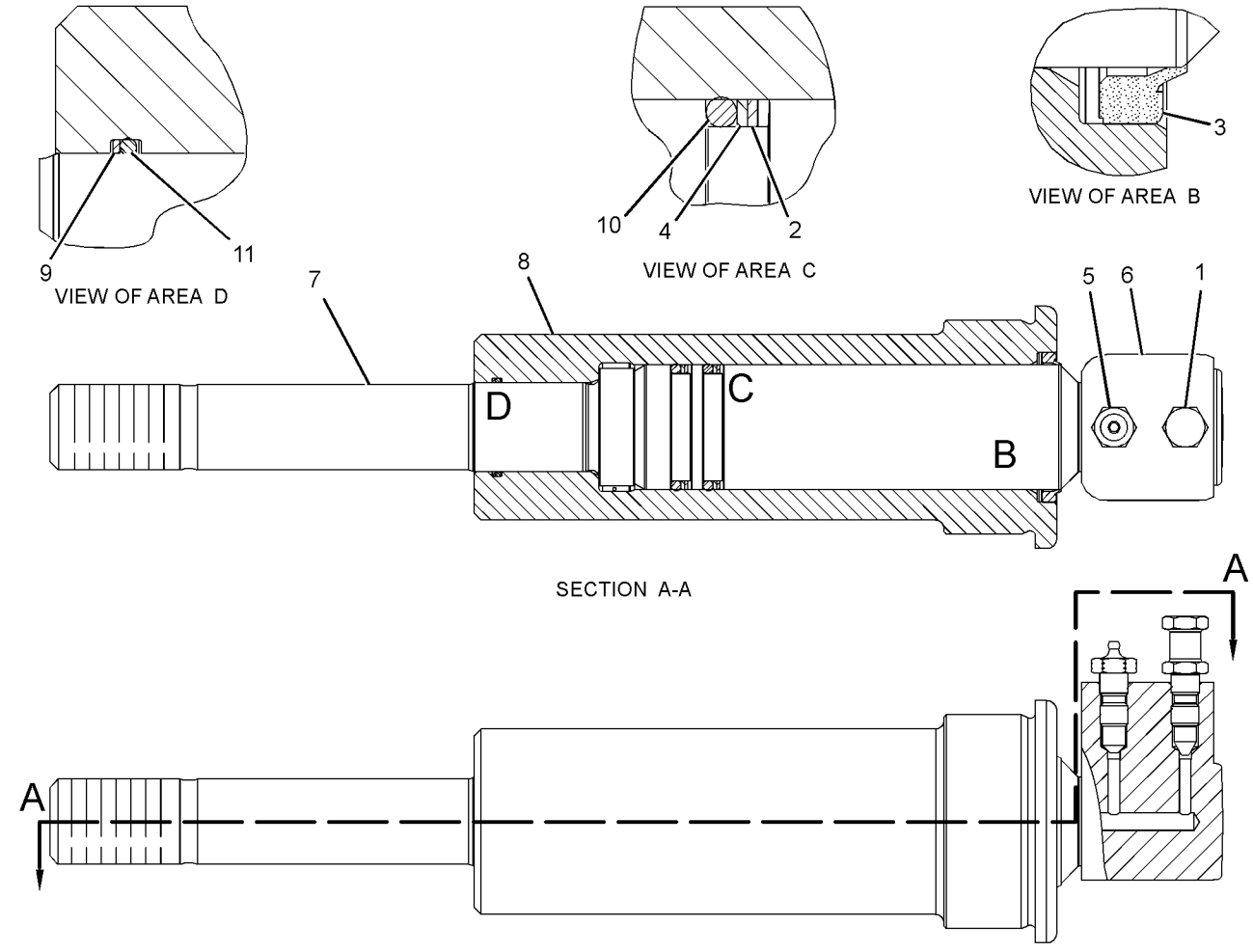

GRAPHIC #1 **<END>** g02512796

314-3797 TRACK AR–2-REQUIRED

S/N: KBS1-UP
790-MM (31.1-IN) TRIPLE GROUSER SHOE. WITH STEP
PART OF 456-0823, 456-0824 DISTRIBUTION AR
AN ATTACHMENT

SMCS-4170 **i03140152**

NOTE	PART NUMBER	QTY	PART NAME 1 2 3 4 5 6 (PRODUCT LEVEL)	SEE PAGE
Y	*235-7764*	1	STEP GP	297
Y	*332-8915*	1	TRACK GP	331

Y - SEPARATE ILLUSTRATION

<END>

314-3798 TRACK AR–2-REQUIRED

S/N: PBB1-UP
790-MM (31.1-IN) TRIPLE GROUSER SHOE. WITH STEP
PART OF 456-0825, 456-0829, 456-0830, 456-0920, 456-0921, 456-0922 DISTRIBUTION AR
AN ATTACHMENT

SMCS-4170 **i03142164**

NOTE	PART NUMBER	QTY	PART NAME 1 2 3 4 5 6 (PRODUCT LEVEL)	SEE PAGE
Y	*235-7764*	1	STEP GP	297
Y	*332-8908*	1	TRACK GP	330

Y - SEPARATE ILLUSTRATION

<END>

194-1910 TRACK GP–2-REQUIRED

S/N: PBB1-UP
600-MM (23.6-IN) TRIPLE GROUSER SHOE. GREASE LUBRICATED TRACK
PART OF 456-0817, 456-0826, 456-0827, 456-0828, 456-0918, 456-0919, 456-0923 DISTRIBUTION AR
AN ATTACHMENT

SMCS-4170 **i03933493**

NOTE	PART NUMBER	QTY	PART NAME 1 2 3 4 5 6 (PRODUCT LEVEL)	SEE PAGE
Y	**194-1608**	1	LINK AS-TRACK	316
M	**9W-3619**	196	BOLT-TRACK (M20X1.5X55-MM)	
M	**9W-3361**	196	NUT-TRACK (M20X1.5-THD)	
	126-5062	49	SHOE-TRACK	

M - METRIC PART
Y - SEPARATE ILLUSTRATION

<END>

194-1911 TRACK GP—2-REQUIRED

S/N: PBB1-UP
700-MM (27.6-IN) TRIPLE GROUSER SHOE. GREASE LUBRICATED TRACK
PART OF 456-0818, 456-0820, 456-1026 DISTRIBUTION AR
AN ATTACHMENT

SMCS-4170 **i05345099**

NOTE	PART NUMBER	QTY	PART NAME 1 2 3 4 5 6 (PRODUCT LEVEL)	SEE PAGE
Y	**194-1608**	1	LINK AS-TRACK	316
M	**9W-3619**	196	BOLT-TRACK (M20X1.5X55-MM)	
M	**9W-3361**	196	NUT-TRACK (M20X1.5-THD)	
	6I-9454	49	SHOE-TRACK	

M - METRIC PART
Y - SEPARATE ILLUSTRATION

<END>

194-1914 TRACK GP—2-REQUIRED

S/N: PBB1-UP
600-MM (23.6-IN) DOUBLE GROUSER SHOE. GREASE LUBRICATED TRACK
AN ATTACHMENT

SMCS-4170 **i03969735**

NOTE	PART NUMBER	QTY	PART NAME 1 2 3 4 5 6 (PRODUCT LEVEL)	SEE PAGE
Y	**194-1608**	1	LINK AS-TRACK	316
M	**6Y-0846**	196	BOLT-TRACK (M20X1.5X63-MM)	
M	**9W-3361**	196	NUT-TRACK (M20X1.5-THD)	
	106-0615	49	SHOE-TRACK	

M - METRIC PART
Y - SEPARATE ILLUSTRATION

<END>

194-1917 TRACK GP—2-REQUIRED

S/N: KBS1-UP
700-MM (27.6-IN) TRIPLE GROUSER SHOE. GREASE LUBRICATED TRACK
AN ATTACHMENT

SMCS-4170 **i03969747**

NOTE	PART NUMBER	QTY	PART NAME 1 2 3 4 5 6 (PRODUCT LEVEL)	SEE PAGE
Y	**194-1609**	1	LINK AS-TRACK	317
M	**9W-3619**	180	BOLT-TRACK (M20X1.5X55-MM)	
M	**9W-3361**	180	NUT-TRACK (M20X1.5-THD)	
	6I-9454	45	SHOE-TRACK	

M - METRIC PART
Y - SEPARATE ILLUSTRATION

<END>

194-1920 TRACK GP–2-REQUIRED

S/N: KBS1-UP
600-MM (23.6-IN) TRIPLE GROUSER SHOE. GREASE LUBRICATED TRACK
PART OF 456-0819, 456-0821, 456-1027 DISTRIBUTION AR
AN ATTACHMENT

SMCS-4170 **i03969738**

NOTE	PART NUMBER	QTY	PART NAME 1 2 3 4 5 6 (PRODUCT LEVEL)	SEE PAGE
Y	**194-1609**	1	LINK AS-TRACK	317
M	**9W-3619**	180	BOLT-TRACK (M20X1.5X55-MM)	
M	**9W-3361**	180	NUT-TRACK (M20X1.5-THD)	
	126-5062	45	SHOE-TRACK	

M - METRIC PART
Y - SEPARATE ILLUSTRATION

<END>

277-7148 TRACK GP–2-REQUIRED

S/N: KBS1-UP
600-MM (23.6-IN). DOUBLE GROUSER SHOE. GREASE LUBRICATED TRACK
AN ATTACHMENT

SMCS-4170 **i04385505**

NOTE	PART NUMBER	QTY	PART NAME 1 2 3 4 5 6 (PRODUCT LEVEL)	SEE PAGE
Y	**194-1609**	1	LINK AS-TRACK	317
M	**6Y-0846**	180	BOLT-TRACK (M20X1.5X63-MM)	
M	**9W-3361**	180	NUT-TRACK (M20X1.5-THD)	
	106-0615	45	SHOE-TRACK	

M - METRIC PART
Y - SEPARATE ILLUSTRATION

<END>

332-8908 TRACK GP–2-REQUIRED

S/N: PBB1-UP
790-MM (31.1-IN) TRIPLE GROUSER SHOE. GREASE LUBRICATED TRACK
PART OF 314-3798 TRACK AR
AN ATTACHMENT

SMCS-4170 **i03970310**

NOTE	PART NUMBER	QTY	PART NAME 1 2 3 4 5 6 (PRODUCT LEVEL)	SEE PAGE
Y	**194-1608**	1	LINK AS-TRACK	316
M	**9W-3619**	196	BOLT-TRACK (M20X1.5X55-MM)	
M	**9W-3361**	196	NUT-TRACK (M20X1.5-THD)	
	332-8903	49	SHOE-TRACK	

M - METRIC PART
Y - SEPARATE ILLUSTRATION

<END>

332-8915 TRACK GP–2-REQUIRED

S/N: KBS1-UP
790-MM (31.1-IN) TRIPLE GROUSER SHOE. GREASE LUBRICATED TRACK
PART OF 314-3797 TRACK AR
AN ATTACHMENT

SMCS-4170 **i03970311**

NOTE	PART NUMBER	QTY	PART NAME 1 2 3 4 5 6 (PRODUCT LEVEL)	SEE PAGE
Y	**194-1609**	1	LINK AS-TRACK	317
M	**9W-3619**	180	BOLT-TRACK (M20X1.5X55-MM)	
M	**9W-3361**	180	NUT-TRACK (M20X1.5-THD)	
	332-8903	45	SHOE-TRACK	

M - METRIC PART
Y - SEPARATE ILLUSTRATION

<END>

4I-1536 ACCUMULATOR GP-HYDRAULIC—CHARGED

S/N: PBB1-UP; KBS1-UP

PART OF 087-4456 ACCUMULATOR GP-HYDRAULIC

SMCS-5077 **i03413820**

NOTE	REF NO	GRAPHIC REF	PART NUMBER	QTY	PART NAME 1 2 3 4 5 6 (PRODUCT LEVEL)	SEE PAGE
	1	1	**4I-5862**	1	CAP	
	2	1	**4I-1539**	1	CORE	

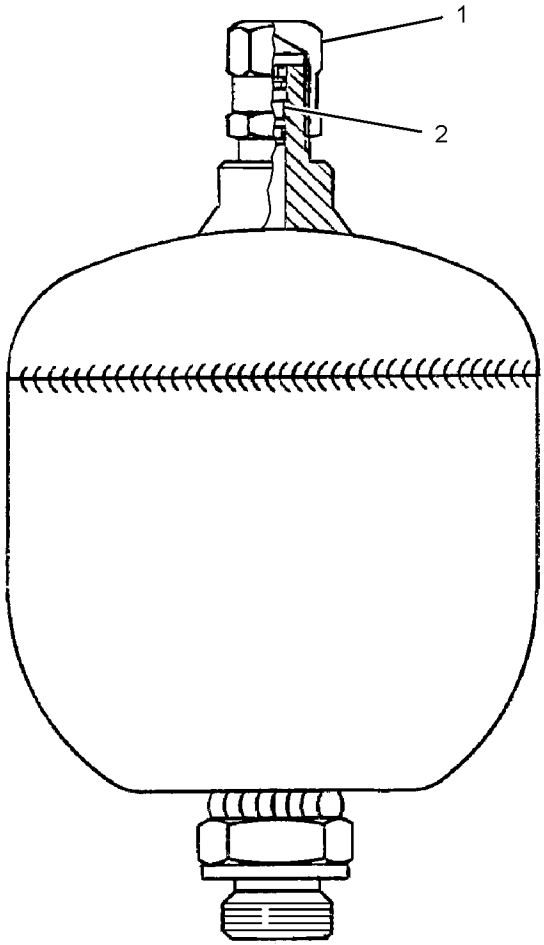

GRAPHIC #1 **<END>** g01769613

5I-8416 ACCUMULATOR GP-HYDRAULIC–CHARGED

S/N: PBB1-UP; KBS1-UP

PART OF 087-4456 ACCUMULATOR GP-HYDRAULIC

SMCS-5077 **i01548084**

NOTE	REF NO	GRAPHIC REF	PART NUMBER	QTY	PART NAME 1 2 3 4 5 6 (PRODUCT LEVEL)	SEE PAGE
	1	1	**4I-8267**	1	CAP	
Y	2	1	*087-4454*	1	ACCUMULATOR GP-HYDRAULIC (CHARGED)	335

Y - SEPARATE ILLUSTRATION

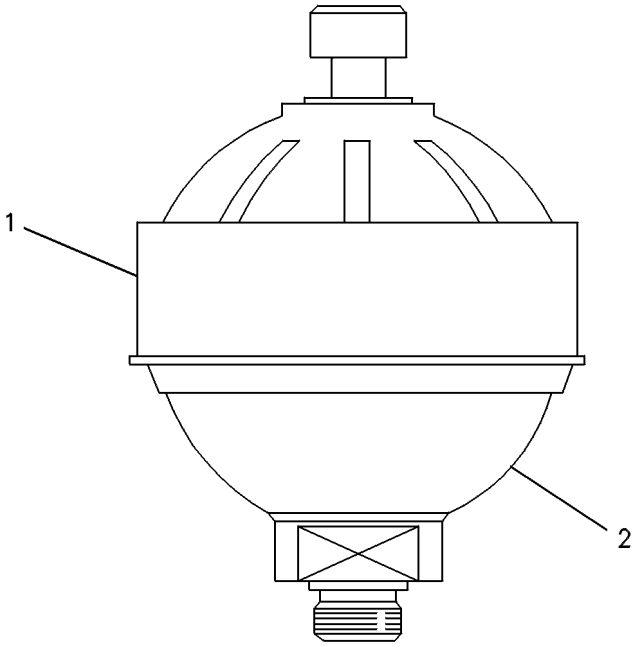

GRAPHIC #1 **<END>** g00237219

7Y-4444 ACCUMULATOR GP-HYDRAULIC—CHARGED

S/N: PBB1-UP; KBS1-UP
JAPANESE MARKET
PART OF 087-4456 ACCUMULATOR GP-HYDRAULIC

SMCS-5077 **i04452672**

NOTE	REF NO	GRAPHIC REF	PART NUMBER	QTY	PART NAME 1 2 3 4 5 6 (PRODUCT LEVEL)	SEE PAGE
					(NO SERVICED PARTS)	

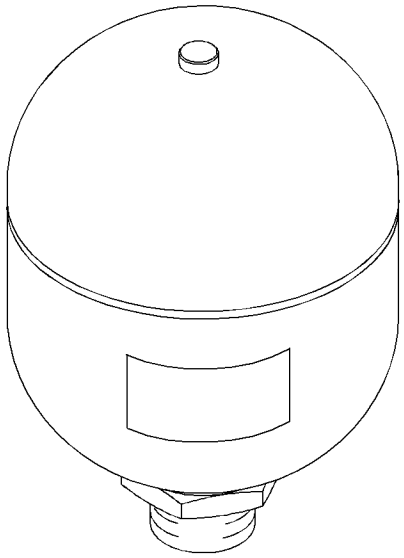

GRAPHIC #1 **<END>** g02639816

087-4454 ACCUMULATOR GP-HYDRAULIC—CHARGED

S/N: PBB1-UP; KBS1-UP

PART OF 5I-8416 ACCUMULATOR GP-HYDRAULIC

SMCS-5077 **i04099483**

NOTE	REF NO	GRAPHIC REF	PART NUMBER	QTY	PART NAME 1 2 3 4 5 6 (PRODUCT LEVEL)	SEE PAGE
	1	1	**087-4577**	1	SEAL	
	2	1	**087-4576**	1	CAP	
	3	1	**087-4575**	1	CORE	

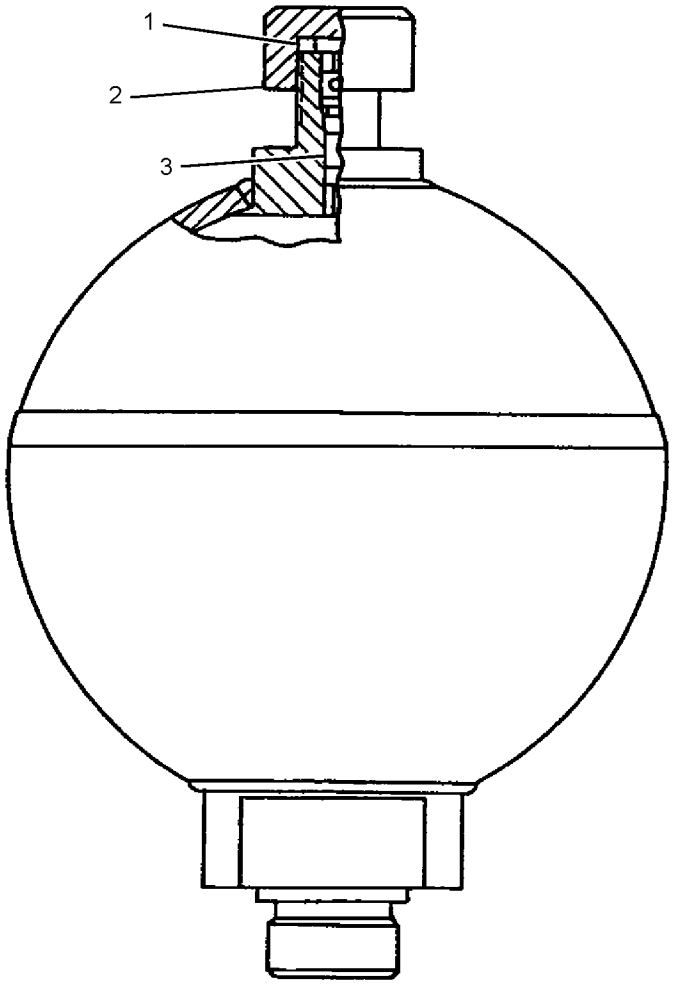

GRAPHIC #1 **<END>** g02304393

087-4456 ACCUMULATOR GP-HYDRAULIC—CHARGED

S/N: PBB1-UP; KBS1-UP
FIELD REPLACEMENT ORDER 227-8807—PAGE: 339
PART OF 164-6981 ACCUMULATOR GP-HYDRAULIC

SMCS-5077 **i04453269**

NOTE	PART NUMBER	QTY	PART NAME 1 2 3 4 5 6 (PRODUCT LEVEL)	SEE PAGE
Y	*7Y-4444*	1	ACCUMULATOR GP-HYDRAULIC (CHARGED) (JAPANESE MARKET ONLY)	334
			—OR—	
Y	*4I-1536*	1	ACCUMULATOR GP-HYDRAULIC (CHARGED)	332
			—OR—	
Y	*5I-8416*	1	ACCUMULATOR GP-HYDRAULIC (CHARGED)	333
			—OR—	
Y	*145-5106*	1	ACCUMULATOR GP-HYDRAULIC (CHARGED)	337

Y - SEPARATE ILLUSTRATION

<END>

145-5106 ACCUMULATOR GP-HYDRAULIC–CHARGED

S/N: PBB1-UP; KBS1-UP
FIELD REPLACEMENT ORDER 227-8807–PAGE: 339
PART OF 087-4456 ACCUMULATOR GP-HYDRAULIC

SMCS-5077 **i02464714**

NOTE	REF NO	GRAPHIC REF	PART NUMBER	QTY	PART NAME 1 2 3 4 5 6 (PRODUCT LEVEL)	SEE PAGE
	1	1	**159-4700**	1	FILM-WARNING (HIGH PRESSURE CYLINDER)	

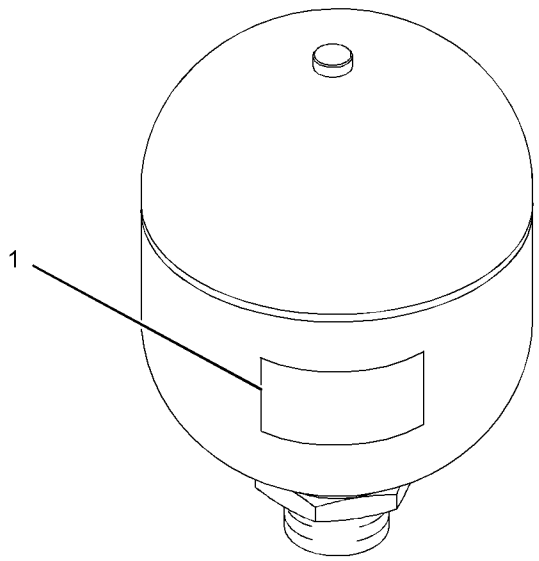

GRAPHIC #1 **<END>** g01229518

164-6981 ACCUMULATOR GP-HYDRAULIC—CHARGED

S/N: PBB1-UP; KBS1-UP

PART OF 376-6310 LINES GP-PILOT

SMCS-5077 **i01284579**

NOTE	PART NUMBER	QTY	PART NAME 1 2 3 4 5 6 (PRODUCT LEVEL)	SEE PAGE
Y	**087-4456**	1	ACCUMULATOR GP-HYDRAULIC (CHARGED)	336
	3K-0360	1	SEAL-O-RING	

Y - SEPARATE ILLUSTRATION

<END>

227-8807 ACCUMULATOR GP-HYDRAULIC—UNCHARGED

S/N: PBB1-UP; KBS1-UP

FIELD REPLACEMENT FOR 087-4456—PAGE: 336: FOR 145-5106—PAGE: 337

SMCS-5077 **i02847478**

NOTE	REF NO	GRAPHIC REF	PART NUMBER	QTY	PART NAME 1 2 3 4 5 6 (PRODUCT LEVEL)	SEE PAGE
					(NO SERVICED PARTS)	

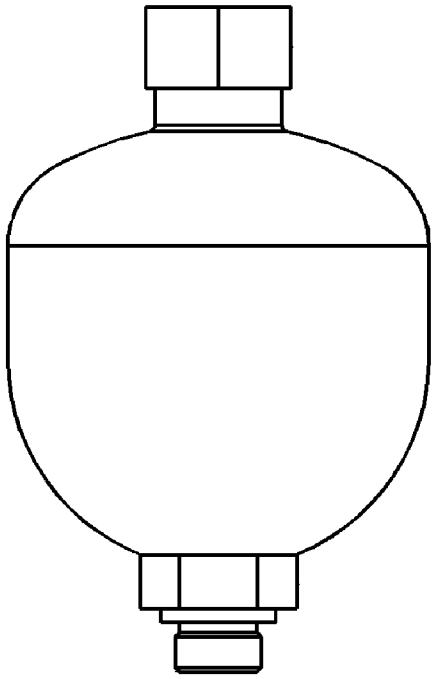

GRAPHIC #1 **<END>** g01423820

173-3503 BLOCK GP-HYDRAULIC

S/N: PBB1-UP; KBS1-UP

PART OF 188-4140 FILTER GP-OIL

SMCS-5264 **i05342086**

NOTE	REF NO	GRAPHIC REF	PART NUMBER	QTY	PART NAME 1 2 3 4 5 6 (PRODUCT LEVEL)	SEE PAGE
	1	1	**204-2763**	1	BLOCK	
	2	1	**5L-4758**	1	SEAL-O-RING	
	3	1	**177-2619**	2	PACKING	
	4	1	**173-3505**	1	PLATE-SLIDE	
	5	1	**137-3631**	1	PACKING	
M	6	1	**137-3626**	1	BOLT-SPECIAL	
	7	1	**173-3506**	1	PLUG AS	
	8	1	**3J-1907**	1	SEAL-O-RING	
	9	1	**7Y-5272**	2	PIN-SPRING	
	10	1	**137-3628**	1	SHIM (0.1-MM THK)	

M - METRIC PART

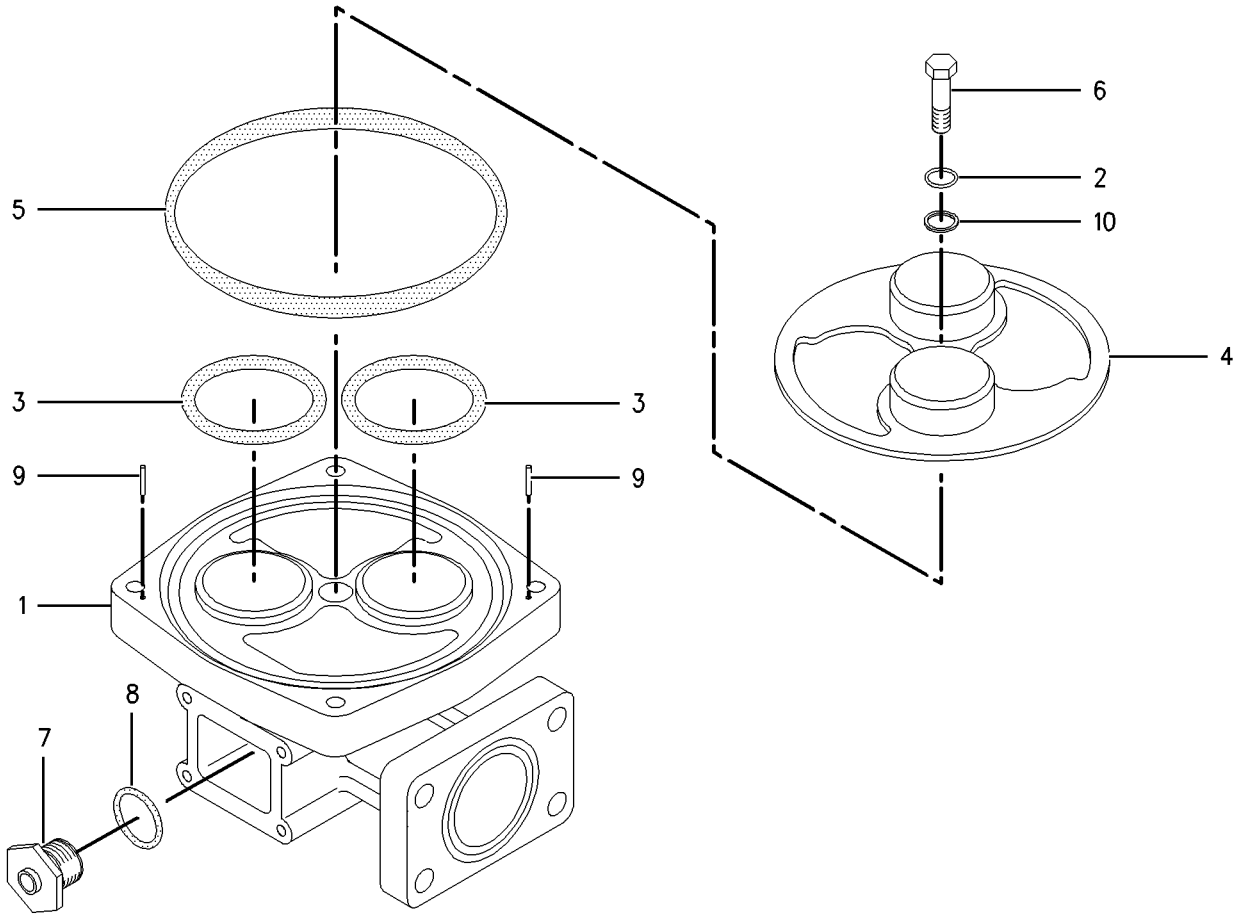

GRAPHIC #1 **<END>** g00671074

270-5687 CONTROL AR-AUXILIARY—JOYSTICK, 2-BN, SLIDE, TRIG SW

S/N: PBB1-UP

AN ATTACHMENT

SMCS-5051 **i02426150**

NOTE	PART NUMBER	QTY	PART NAME 1 2 3 4 5 6 (PRODUCT LEVEL)	SEE PAGE
Y	*270-5689*	1	CONTROL & MTG GP-JOYSTICK (2-BUTTON, SLIDE, TRIGGER SW)	836
Y	*259-5295*	1	FASTENER GP-WIRING HARNESS (JOYSTICK)	125
Y	*247-7410*	1	FILM GP (OPERATOR CONTROLS, NOTICE)	968

Y - SEPARATE ILLUSTRATION

<END>

270-6106 CONTROL AR-AUXILIARY—FOOT SWITCH, ON/OFF, LH

S/N: PBB1-UP; KBS1-UP

AN ATTACHMENT

SMCS-5051 **i03669814**

NOTE	PART NUMBER	QTY	PART NAME 1 2 3 4 5 6 (PRODUCT LEVEL)	SEE PAGE
Y	*270-6107*	1	CONTROL & MOUNTING GP (FOOT SWITCH, ON/OFF, LH)	835
Y	*259-5294*	1	FASTENER GP-WIRING HARNESS (FLOOR, SWITCH)	124
Y	*247-7465*	1	FILM GP (HAMMER CONTROL, FLOOR SWITCH)	975

Y - SEPARATE ILLUSTRATION

<END>

349-2209 CONTROL AR-AUXILIARY—SYSTEM 2, COMBINED FUNCTION

S/N: PBB1-UP; KBS1-UP

AN ATTACHMENT

SMCS-5051 **i05257352**

NOTE	PART NUMBER	QTY	PART NAME 1 2 3 4 5 6 (PRODUCT LEVEL)	SEE PAGE
Y	*239-8695*	1	CONTROL GP-HYDRAULIC PEDAL	846
JY	*247-7416*	1	FILM GP (OPERATOR CONTROLS, NOTICE)	970
			—OR—	
LY	*247-7424*	1	FILM GP (OPERATOR CONTROLS, NOTICE)	974
Y	*376-6317*	1	LINES GP-FRONT (COMBINED FUNCTION) (SYSTEM 2, COMBINED FUNCTION)	480
Y	*255-1802*	1	LINES GP-PILOT (SYSTEM 2, COMBINED FUNCTION)	506
Y	*376-6316*	1	LINES GP-PILOT (SYSTEM 2, COMBINED FUNCTION)	527
Y	*255-5713*	1	VALVE & MTG GP-CONTROL (AUXILIARY)	599
Y	*251-0529*	1	WIRING GP-CAB	179
Y	*369-0239*	1	WIRING GP-COMBINED FLOW (SYSTEM 2, COMBINED FUNCTION)	206

J - (JAPANESE MARKET)
L - (OUTSIDE JAPAN MARKET)
Y - SEPARATE ILLUSTRATION

<END>

349-2211 CONTROL AR-AUXILIARY—SYSTEM 3, 1-WAY, 2-PUMP

S/N: PBB1-UP; KBS1-UP
PART OF 381-6119 OPTION AR-HYDRAULIC
AN ATTACHMENT

SMCS-5051 **i05229169**

NOTE	PART NUMBER	QTY	PART NAME 1 2 3 4 5 6 (PRODUCT LEVEL)	SEE PAGE
Y	*239-8693*	1	CONTROL GP-HYDRAULIC PEDAL (RH) (WORK TOOL)	845
Y	*418-0749*	1	FASTENER GP-WIRING HARNESS	126
Y	*247-7420*	1	FILM GP (OPERATOR CONTROLS, NOTICE)	972
Y	*247-7423*	1	FILM GP (OPERATOR CONTROLS, NOTICE)	973
Y	*376-6319*	1	LINES GP-FRONT (SYSTEM 3, 1-WAY, 2-PUMP) (SYSTEM 3, 1-WAY, 2-PUMP)	484
Y	*255-1800*	1	LINES GP-PILOT	504
Y	*376-6318*	1	LINES GP-PILOT (SYSTEM 3 PRIME, 1-WAY, 2-PUMP)	531
Y	*255-5713*	1	VALVE & MTG GP-CONTROL (AUXILIARY)	599

Y - SEPARATE ILLUSTRATION

<END>

349-2216 CONTROL AR-AUXILIARY—MEDIUM PRESSURE

S/N: PBB1-UP; KBS1-UP
AN ATTACHMENT

SMCS-5051 **i05858574**

NOTE	PART NUMBER	QTY	PART NAME 1 2 3 4 5 6 (PRODUCT LEVEL)	SEE PAGE
Y	*260-8015*	1	LINES GP-FRONT (MEDIUM PRESSURE)	477
Y	*376-6327*	1	LINES GP-PILOT (MEDIUM PRESSURE)	537
Y	*376-6326*	1	LINES GP-PUMP	545
Y	*200-3365*	1	PUMP & MTG GP-AUXILIARY	584
Y	*369-0243*	1	WIRING GP-MEDIUM PRESSURE	224

Y - SEPARATE ILLUSTRATION

<END>

349-2290 CONTROL AR-AUXILIARY—SYSTEM 18

S/N: PBB1-UP; KBS1-UP
FOR USE WITH 270-5687—PAGE: 341, 255-5845—PAGE: 910, 270-6106—PAGE: 341, 376-6336—PAGE: 539, 240-5071—PAGE: 864, 245-7796—PAGE: 867, 293-1168—PAGE: 868
CANNOT BE USED WITH 369-4371—PAGE: 343
AN ATTACHMENT

SMCS-5051 **i05640252**

NOTE	PART NUMBER	QTY	PART NAME 1 2 3 4 5 6 (PRODUCT LEVEL)	SEE PAGE
Y	*376-6325*	1	LINES GP-FRONT (SYSTEM 18, COMBINED FUNCTION)	487
Y	*376-6324*	1	LINES GP-PILOT (SYSTEM 18)	534
Y	*255-5713*	1	VALVE & MTG GP-CONTROL (AUXILIARY)	599
Y	*369-0242*	1	WIRING GP-AUXILIARY CONTROL (SYSTEM 18, COMBINED FUNCTION)	177

Y - SEPARATE ILLUSTRATION

<END>

369-4371 CONTROL AR-AUXILIARY–HAMMER FILTER

S/N: PBB1-UP
AN ATTACHMENT

SMCS-5051 **i05325342**

NOTE	PART NUMBER	QTY	PART NAME 1 2 3 4 5 6 (PRODUCT LEVEL)	SEE PAGE
Y	*376-6332*	1	LINES GP-FRONT (FILTER, HAMMER)	495
Y	*369-0246*	1	WIRING GP-HYDRAULIC CONTROL (RETURN FILTER)	222
Y - SEPARATE ILLUSTRATION				

<END>

349-2218 CONTROL AR-COUPLER

S/N: PBB1-UP; KBS1-UP
FOR USE WITH 376-6336–PAGE: 539
AN ATTACHMENT

SMCS-6129 **i05858621**

NOTE	PART NUMBER	QTY	PART NAME 1 2 3 4 5 6 (PRODUCT LEVEL)	SEE PAGE
Y	*268-6816*	1	FILM GP (QUICK COUPLER)	978
Y	*376-6329*	1	LINES GP-FRONT (UNIVERSAL QUICK COUPLER)	491
Y	*267-7642*	1	WIRING GP-CAB (COUPLER)	183
Y	*369-0244*	1	WIRING GP-CHASSIS	196
Y - SEPARATE ILLUSTRATION				

<END>

374-6001 COUPLING GP-FLEXIBLE

S/N: PBB1-UP; KBS1-UP

PART OF 374-6000 COUPLING GP-PUMP

SMCS-3252 **i05180871**

NOTE	REF NO	GRAPHIC REF	PART NUMBER	QTY	PART NAME 1 2 3 4 5 6 (PRODUCT LEVEL)	SEE PAGE
	1	1	**7Y-0463**	1	ELEMENT-COUPLING (FLEXIBLE RUBBER)	
M	2	1	**7Y-0466**	2	SETSCREW-SOCKET (M16X2X22-MM)	
M	3	1	**7Y-0467**	4	BOLT-SOCKET HEAD (M18X2.5X55-MM)	
	4	1	**374-6053**	1	HUB	
	5	1	**305-4951**	4	INSERT-COUPLING	
	6	1	**305-4952**	4	INSERT-COUPLING	
	7	1	**7Y-0468**	8	PIN-SPRING	

M - METRIC PART

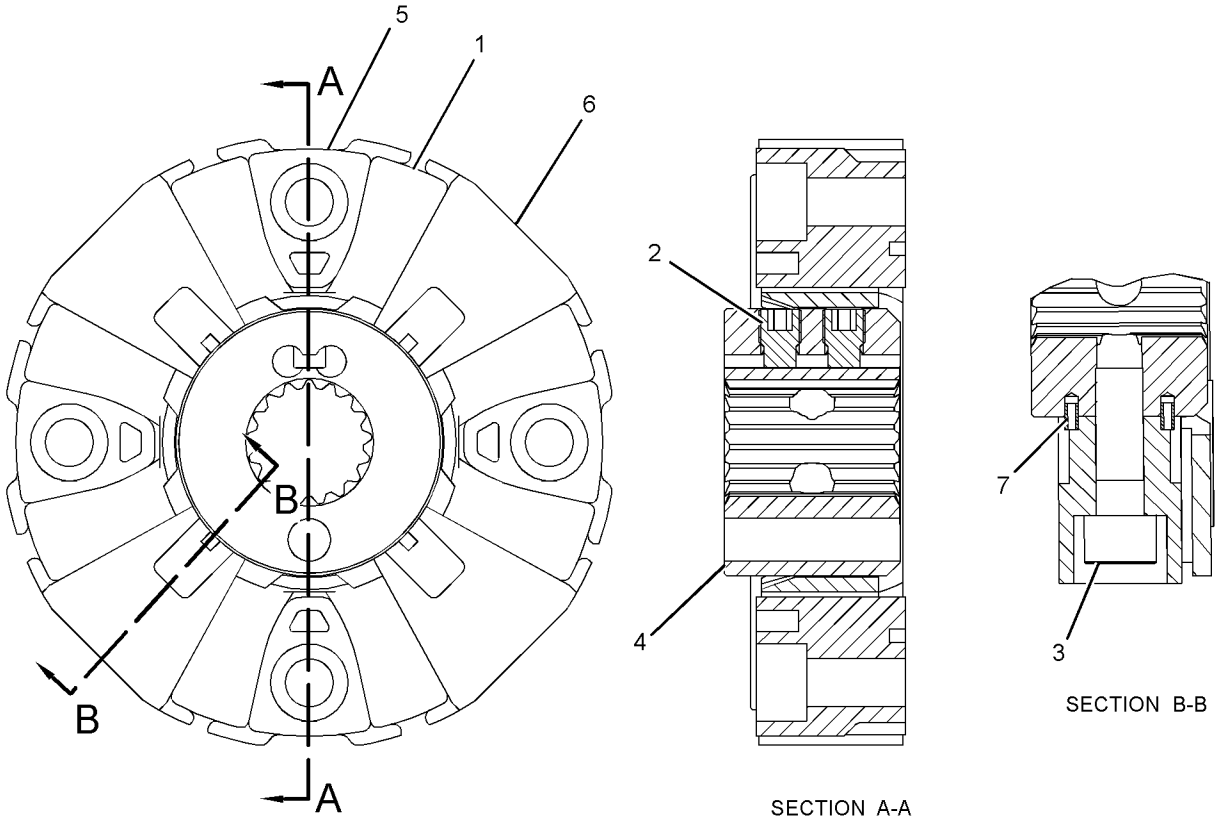

GRAPHIC #1 **<END>** g02725382

374-6000 COUPLING GP-PUMP

S/N: PBB1-UP; KBS1-UP

PART OF 396-1865 PUMP & MTG GP-MAIN HYDRAULIC

SMCS-5062 **i05104412**

NOTE	REF NO	GRAPHIC REF	PART NUMBER	QTY	PART NAME 1 2 3 4 5 6 (PRODUCT LEVEL)	SEE PAGE
Y	1	1	**374-6001**	1	COUPLING GP-FLEXIBLE	344
M	2	1	**287-0047**	4	BOLT-SOCKET HEAD (M18X2.5X60-MM)	
	3	1	**7Y-0468**	4	PIN-SPRING	

M - METRIC PART
Y - SEPARATE ILLUSTRATION

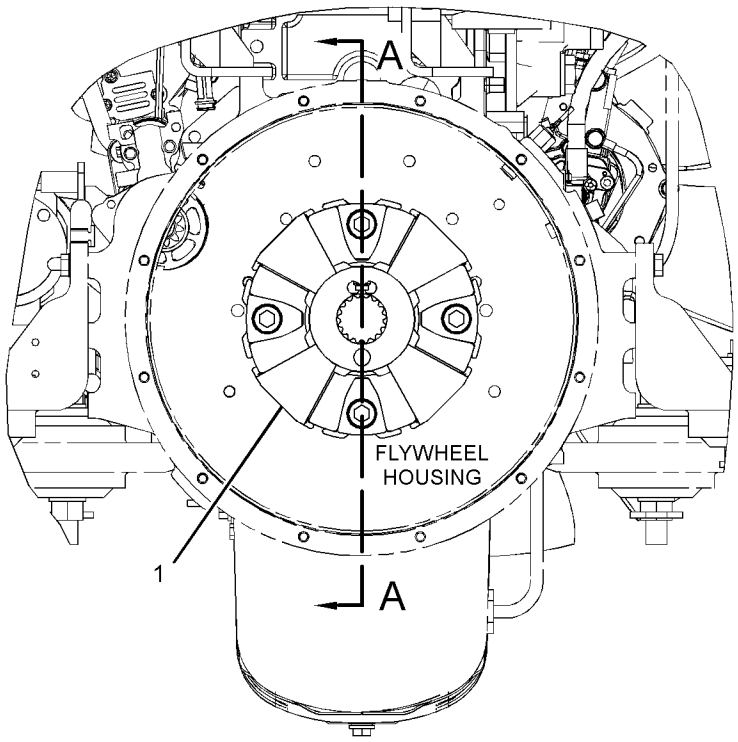

RIGHT SIDE VIEW

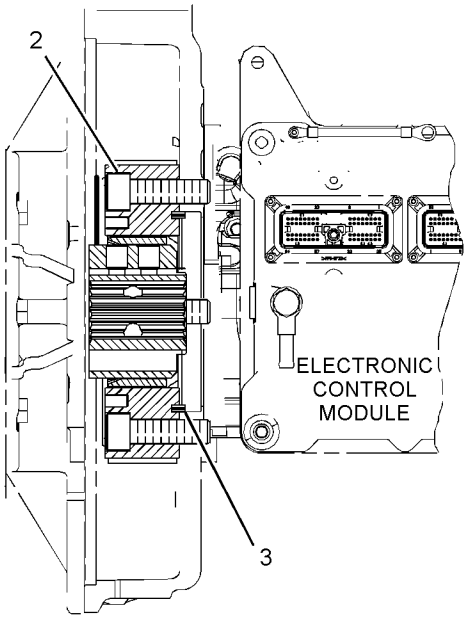

SECTION A-A

GRAPHIC #1 **<END>** g02725277

341-2788 CYLINDER & LINES GP-BOOM–LH

S/N: PBB1-UP; KBS1-UP
PART OF 415-1396 BOOM AR, 359-2434, 415-1399, 415-8447, 416-0961 BOOM AR-1 PIECE LONG, 420-0298 LINKAGE AR-FRONT AN ATTACHMENT

SMCS-5456, 7562 **i04408497**

NOTE	PART NUMBER	QTY	PART NAME 1 2 3 4 5 6 (PRODUCT LEVEL)	SEE PAGE
Y	**341-2790**	1	CYLINDER & SEAL GP-BOOM	350
Y	*242-6732*	1	LINES GP-BOOM CYLINDER (LH)	450

Y - SEPARATE ILLUSTRATION

<END>

341-2789 CYLINDER & LINES GP-BOOM–RH

S/N: PBB1-UP; KBS1-UP
PART OF 415-1396 BOOM AR, 359-2434, 415-1399, 415-8447, 416-0961 BOOM AR-1 PIECE LONG, 420-0298 LINKAGE AR-FRONT AN ATTACHMENT

SMCS-5456, 7562 **i04408495**

NOTE	PART NUMBER	QTY	PART NAME 1 2 3 4 5 6 (PRODUCT LEVEL)	SEE PAGE
Y	**341-2790**	1	CYLINDER & SEAL GP-BOOM	350
Y	*242-6737*	1	LINES GP-BOOM CYLINDER (RH)	451

Y - SEPARATE ILLUSTRATION

<END>

418-5502 CYLINDER & LINES GP-BOOM–LH

S/N: PBB1-UP
PART OF 418-5499 CYLINDER AR-HYDRAULIC AN ATTACHMENT

SMCS-5456, 7562 **i05133349**

NOTE	PART NUMBER	QTY	PART NAME 1 2 3 4 5 6 (PRODUCT LEVEL)	SEE PAGE
Y	**418-5511**	1	CYLINDER & SEAL GP-BOOM	352
Y	*266-8022*	1	LINES GP-BOOM CYLINDER (LH)	452

Y - SEPARATE ILLUSTRATION

<END>

418-5510 CYLINDER & LINES GP-BOOM–RH

S/N: PBB1-UP
PART OF 418-5499 CYLINDER AR-HYDRAULIC AN ATTACHMENT

SMCS-5456, 7562 **i05133490**

NOTE	PART NUMBER	QTY	PART NAME 1 2 3 4 5 6 (PRODUCT LEVEL)	SEE PAGE
Y	**418-5511**	1	CYLINDER & SEAL GP-BOOM	352
Y	*266-8023*	1	LINES GP-BOOM CYLINDER (RH)	453

Y - SEPARATE ILLUSTRATION

<END>

341-2181 CYLINDER & LINES GP-BUCKET

S/N: PBB1-UP; KBS1-UP
PART OF 416-1005 LINKAGE AR-BUCKET
AN ATTACHMENT

SMCS-5457 **i05203216**

NOTE	PART NUMBER	QTY	PART NAME 1 2 3 4 5 6 (PRODUCT LEVEL)	SEE PAGE
Y	**341-2182**	1	CYLINDER & SEAL GP-BUCKET	356
Y	*225-4592*	1	LINES GP-BUCKET CYLINDER	458

Y - SEPARATE ILLUSTRATION

<END>

341-2813 CYLINDER & LINES GP-BUCKET

S/N: PBB1-UP; KBS1-UP
PART OF 416-1008, 416-1009, 416-1011, 417-9771 LINKAGE AR-BUCKET
AN ATTACHMENT

SMCS-5457 **i05226064**

NOTE	PART NUMBER	QTY	PART NAME 1 2 3 4 5 6 (PRODUCT LEVEL)	SEE PAGE
Y	**341-2814**	1	CYLINDER & SEAL GP-BUCKET	358
Y	*369-9677*	1	LINES GP-BUCKET CYLINDER	461

Y - SEPARATE ILLUSTRATION

<END>

349-4133 CYLINDER & LINES GP-BUCKET

S/N: PBB1-UP; KBS1-UP
PART OF 262-3494 COUPLER AR-QUICK
AN ATTACHMENT

SMCS-5457 **i05083889**

NOTE	PART NUMBER	QTY	PART NAME 1 2 3 4 5 6 (PRODUCT LEVEL)	SEE PAGE
Y	**349-4134**	1	CYLINDER & SEAL GP-BUCKET	360
Y	*369-9677*	1	LINES GP-BUCKET CYLINDER	461

Y - SEPARATE ILLUSTRATION

<END>

364-0938 CYLINDER & LINES GP-BUCKET

S/N: KBS1-UP
PART OF 359-2435 LINKAGE AR-BUCKET
AN ATTACHMENT

SMCS-5457 **i04758476**

NOTE	PART NUMBER	QTY	PART NAME 1 2 3 4 5 6 (PRODUCT LEVEL)	SEE PAGE
Y	*364-0939*	1	CYLINDER & SEAL GP-BUCKET	362
Y	*248-9926*	1	LINES GP-BUCKET CYLINDER	459

Y - SEPARATE ILLUSTRATION

<END>

418-8772 CYLINDER & LINES GP-BUCKET

S/N: PBB1-UP
PART OF 418-5499 CYLINDER AR-HYDRAULIC
AN ATTACHMENT

SMCS-5457 **i05133473**

NOTE	PART NUMBER	QTY	PART NAME 1 2 3 4 5 6 (PRODUCT LEVEL)	SEE PAGE
Y	**418-8777**	1	CYLINDER & SEAL GP-BUCKET	365
Y	*266-8025*	1	LINES GP-BUCKET CYLINDER	460

Y - SEPARATE ILLUSTRATION

<END>

418-9085 CYLINDER & LINES GP-BUCKET

S/N: PBB1-UP
PART OF 420-0298 LINKAGE AR-FRONT
AN ATTACHMENT

SMCS-5457 **i05193647**

NOTE	PART NUMBER	QTY	PART NAME 1 2 3 4 5 6 (PRODUCT LEVEL)	SEE PAGE
Y	**385-2834**	1	CYLINDER & SEAL GP-BUCKET	363
Y	**418-9086**	1	LINES GP-BUCKET CYLINDER (SUPER LONG REACH)	462

Y - SEPARATE ILLUSTRATION

<END>

268-7256 CYLINDER & LINES GP-STICK

S/N: PBB1-UP
PART OF 420-0298 LINKAGE AR-FRONT
AN ATTACHMENT

SMCS-5458 **i05154134**

NOTE	PART NUMBER	QTY	PART NAME 1 2 3 4 5 6 (PRODUCT LEVEL)	SEE PAGE
Y	**341-2177**	1	CYLINDER & SEAL GP-STICK	367
Y	*369-9673*	1	LINES GP-STICK CYLINDER	557

Y - SEPARATE ILLUSTRATION

<END>

341-2801 CYLINDER & LINES GP-STICK

S/N: PBB1-UP; KBS1-UP
PART OF 415-1399, 416-0961 BOOM AR-1 PIECE LONG
AN ATTACHMENT

SMCS-5458 **i04408609**

NOTE	PART NUMBER	QTY	PART NAME 1 2 3 4 5 6 (PRODUCT LEVEL)	SEE PAGE
Y	**341-2802**	1	CYLINDER & SEAL GP-STICK	370
Y	*242-6735*	1	LINES GP-STICK CYLINDER	554

Y - SEPARATE ILLUSTRATION

<END>

341-2806 CYLINDER & LINES GP-STICK

S/N: PBB1-UP; KBS1-UP
PART OF 415-8447 BOOM AR-1 PIECE LONG
AN ATTACHMENT

SMCS-5458 **i05192660**

NOTE	PART NUMBER	QTY	PART NAME 1 2 3 4 5 6 (PRODUCT LEVEL)	SEE PAGE
Y	**341-2807**	1	CYLINDER & SEAL GP-STICK	372
Y	*242-6735*	1	LINES GP-STICK CYLINDER	554

Y - SEPARATE ILLUSTRATION

<END>

341-2808 CYLINDER & LINES GP-STICK

S/N: PBB1-UP; KBS1-UP
PART OF 415-1396 BOOM AR
AN ATTACHMENT

SMCS-5458 **i05192661**

NOTE	PART NUMBER	QTY	PART NAME 1 2 3 4 5 6 (PRODUCT LEVEL)	SEE PAGE
Y	**341-2809**	1	CYLINDER & SEAL GP-STICK	374
Y	*242-6735*	1	LINES GP-STICK CYLINDER	554

Y - SEPARATE ILLUSTRATION

<END>

364-0935 CYLINDER & LINES GP-STICK

S/N: KBS1-UP
PART OF 359-2434 BOOM AR-1 PIECE LONG
AN ATTACHMENT

SMCS-5458 **i04709179**

NOTE	PART NUMBER	QTY	PART NAME 1 2 3 4 5 6 (PRODUCT LEVEL)	SEE PAGE
Y	*364-0936*	1	CYLINDER & SEAL GP-STICK	376
Y	*248-9925*	1	LINES GP-STICK CYLINDER	555

Y - SEPARATE ILLUSTRATION

<END>

418-5512 CYLINDER & LINES GP-STICK

S/N: PBB1-UP
PART OF 418-5499 CYLINDER AR-HYDRAULIC
AN ATTACHMENT

SMCS-5458 **i05133471**

NOTE	PART NUMBER	QTY	PART NAME 1 2 3 4 5 6 (PRODUCT LEVEL)	SEE PAGE
Y	**418-5513**	1	CYLINDER & SEAL GP-STICK	377
Y	*266-8024*	1	LINES GP-STICK CYLINDER	556

Y - SEPARATE ILLUSTRATION

<END>

341-2790 CYLINDER & SEAL GP-BOOM

S/N: PBB1-UP; KBS1-UP
120-MM (4.7-IN) BORE X 1260-MM (49.6-IN) STROKE
PART OF 341-2788, 341-2789 CYLINDER & LINES GP-BOOM
AN ATTACHMENT

SMCS-5456 **i05858723**

NOTE	REF NO	GRAPHIC REF	PART NUMBER	QTY	PART NAME 1 2 3 4 5 6 (PRODUCT LEVEL)	SEE PAGE
	1	1	**352-1096**	1	CYLINDER AS-BOOM	
	1A	1	**357-5717**	1	BUSHING	
	2	1	**352-1102**	1	ROD AS	
	2A	1	**240-2913**	1	BUSHING	
	3	1	**177-2611**	1	HEAD	
J	4	1	**095-1717**	1	SEAL-O-RING	
J	5	1	**096-3964**	1	RING-BACKUP	
	6	1	**094-0747**	1	RING-RETAINING	
	7	1	**096-4402**	1	BUSHING	
J	8	1	**350-0952**	1	SEAL-BUFFER	
J	9	1	**350-0957**	1	SEAL-U-CUP	
J	10	1	**096-1568**	1	RING-BACKUP	
J	11	1	**121-1611**	1	SEAL-LIP TYPE	
J	12	1	**126-1935**	1	RING-SEAL	
	13	1	**4I-8864**	1	STOP	
	14	1	**247-8864**	1	PISTON	
J	15	1	**086-0255**	2	RING	
J	16	1	**247-8865**	2	RING	
J	17	1	**096-7803**	1	SEAL AS	
J	18	1	**4I-3615**	2	RING-BACKUP	
	19	1	**3D-2891**	1	BALL	
M	20	1	**096-3216**	1	SETSCREW-SOCKET (M12X1.75X12-MM)	
M	21	1	**8T-1447**	12	BOLT-SOCKET HEAD (M16X2X70-MM)	
	22	1	**166-1494**	4	SEAL-LIP TYPE	
	23	1	**3B-8489**	1	FITTING-GREASE (1/8-27 PTF)	
					AVAILABLE REPAIR KIT(S):	
J			**350-0962**	1	KIT-SEAL (BOOM CYLINDER)	

J - KIT MARKED J SERVICES PART(S) MARKED J
M - METRIC PART

341-2790 **CYLINDER & SEAL GP-BOOM (*contd.*)** **i05858723**

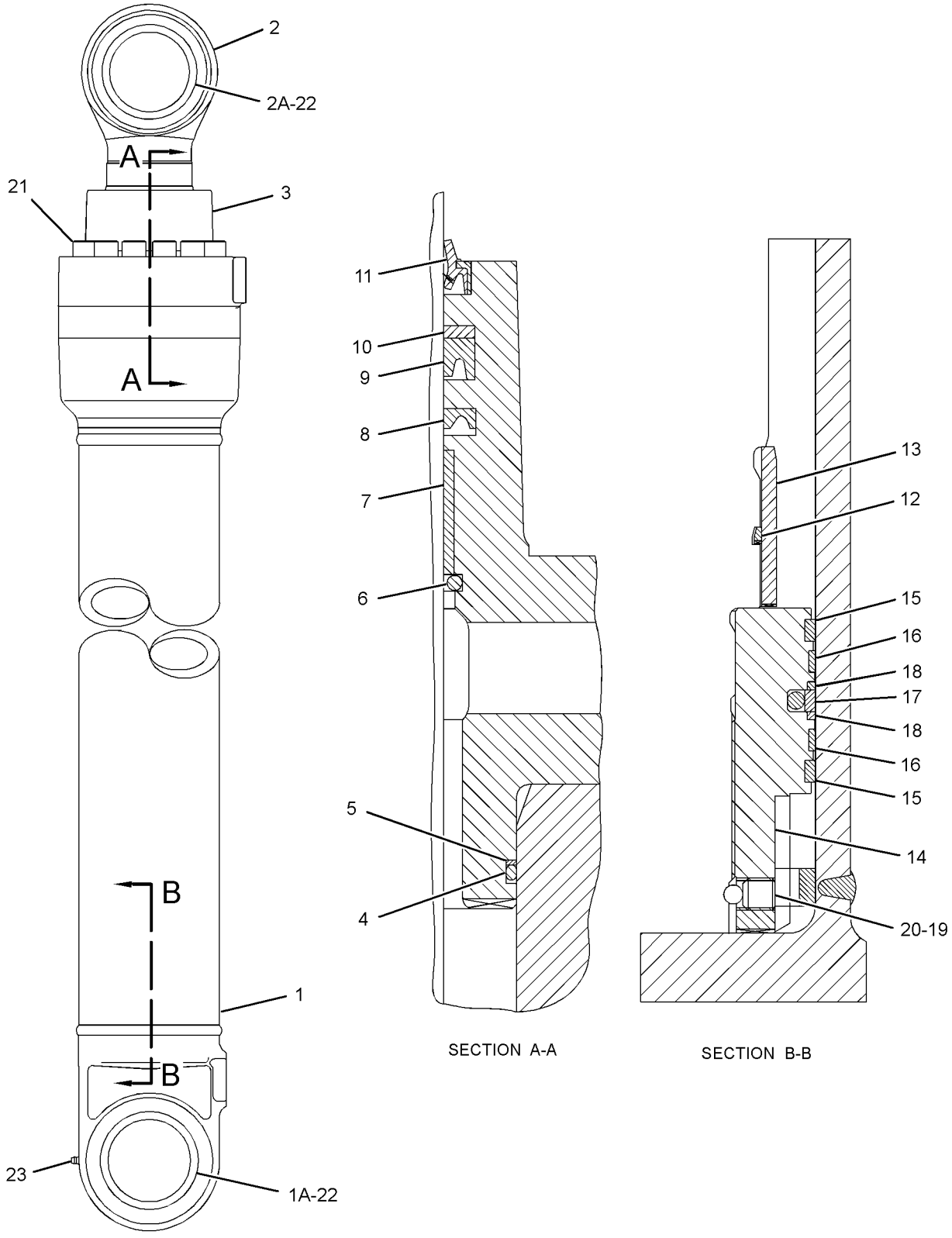

GRAPHIC #1 **<END>** g02657368

418-5511 CYLINDER & SEAL GP-BOOM

S/N: PBB1-UP
120-MM (4.7-IN) BORE X 1260-MM (49.6-IN) STROKE
PART OF 418-5502, 418-5510 CYLINDER & LINES GP-BOOM
AN ATTACHMENT

SMCS-5456 **i05162420**

NOTE	REF NO	GRAPHIC REF	PART NUMBER	QTY	PART NAME 1 2 3 4 5 6 (PRODUCT LEVEL)	SEE PAGE
	1	1	**352-1096**	1	CYLINDER AS-BOOM	
	1A	1	**357-5717**	1	BUSHING	
	2	1	**352-1102**	1	ROD AS	
	2A	1	**240-2913**	1	BUSHING	
	3	1	**185-0334**	1	HEAD	
J	4	1	**095-1717**	1	SEAL-O-RING	
J	5	1	**096-3964**	1	RING-BACKUP	
	6	1	**094-0747**	1	RING-RETAINING	
	7	1	**096-4402**	1	BUSHING	
J	8	1	**204-3622**	1	SEAL-BUFFER	
J	9	1	**096-1567**	1	SEAL-U-CUP	
J	10	1	**096-1568**	1	RING-BACKUP	
J	11	1	**121-1611**	1	SEAL-LIP TYPE	
J	12	1	**126-1935**	1	RING-SEAL	
	13	1	**4I-8864**	1	STOP	
	14	1	**247-8864**	1	PISTON	
J	15	1	**086-0255**	2	RING	
J	16	1	**247-8865**	2	RING	
J	17	1	**096-7803**	1	SEAL AS	
J	18	1	**4I-3615**	2	RING-BACKUP	
	19	1	**3D-2891**	1	BALL	
M	20	1	**096-3216**	1	SETSCREW-SOCKET (M12X1.75X12-MM)	
M	21	1	**8T-1447**	12	BOLT-SOCKET HEAD (M16X2X70-MM)	
	22	1	**166-1494**	4	SEAL-LIP TYPE	
	23	1	**3B-8489**	1	FITTING-GREASE	
					AVAILABLE REPAIR KIT(S):	
J			**266-8011**	1	KIT-SEAL (BOOM CYLINDER)	

J - KIT MARKED J SERVICES PART(S) MARKED J
M - METRIC PART

418-5511 **CYLINDER & SEAL GP-BOOM (*contd.*)** **i05162420**

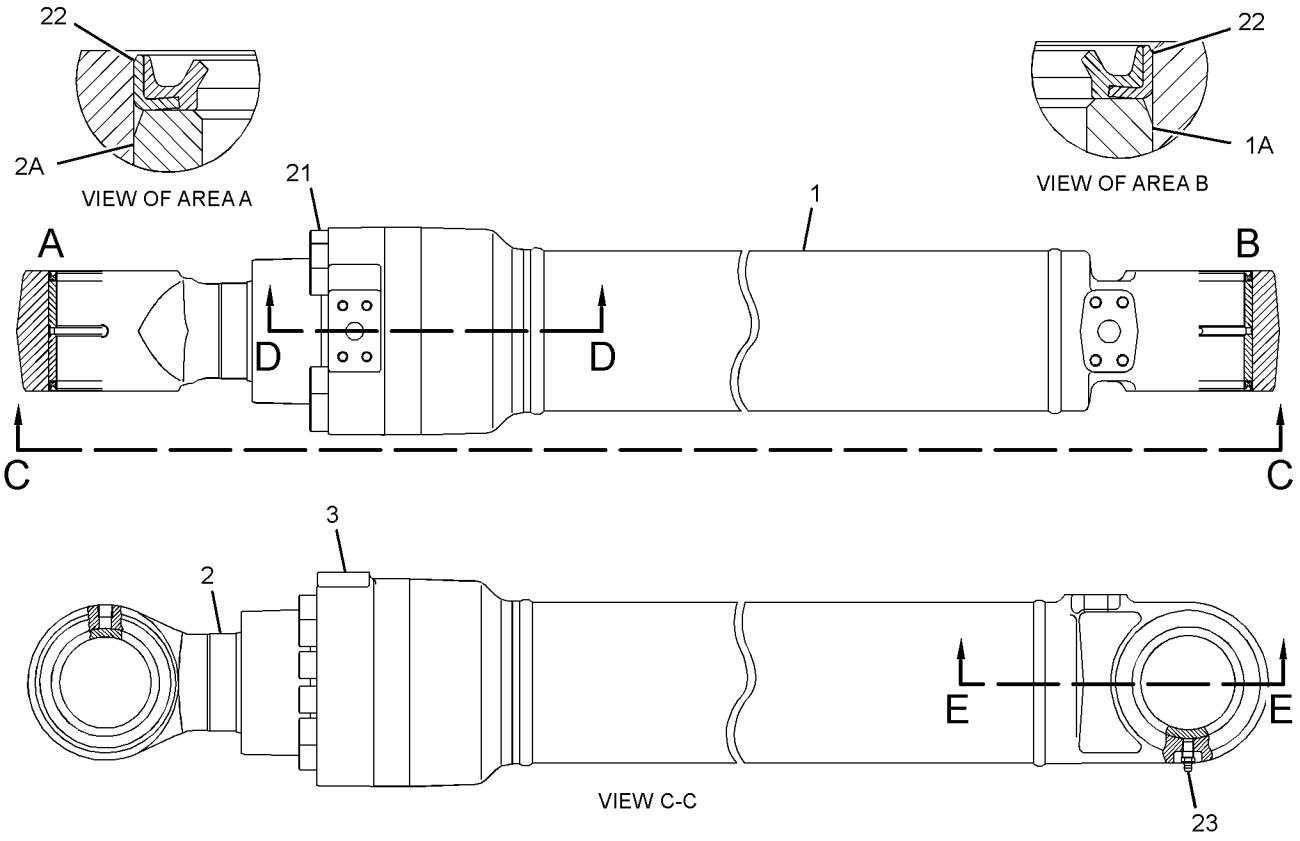

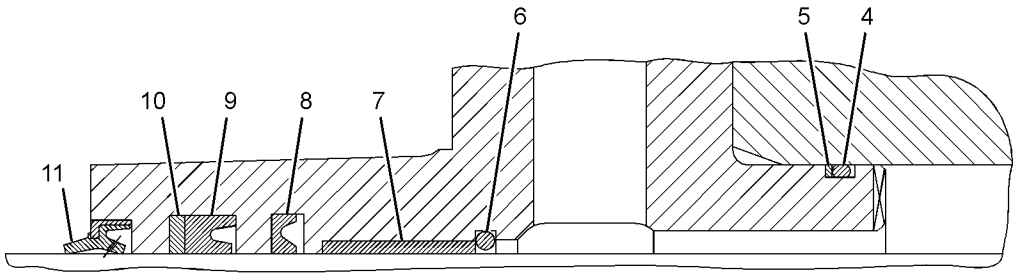

SECTION D-D

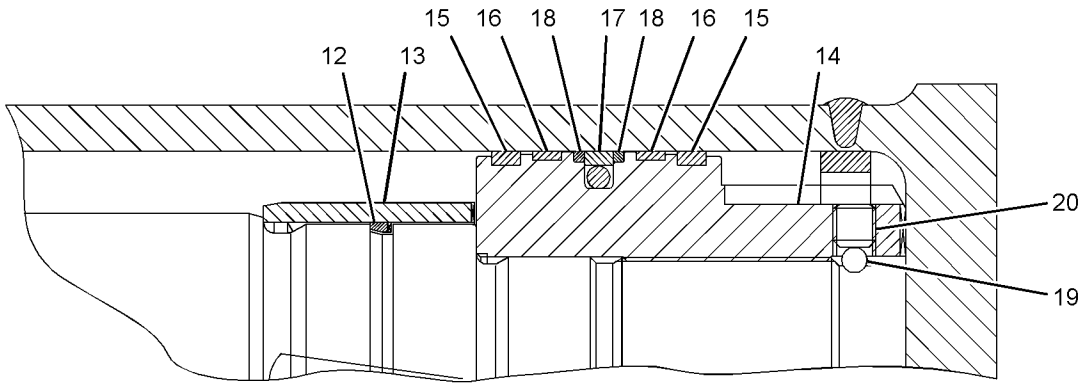

SECTION E-E

GRAPHIC #1 **<END>** g03317634

340-8949 CYLINDER & SEAL GP-BUCKET

S/N: PBB1-UP; KBS1-UP
130-MM (5.1-IN) BORE X 1156-MM (45.5-IN) STROKE
FIELD REPLACEMENT FOR 349-4134—PAGE: 360

SMCS-5457 **i05880354**

NOTE	REF NO	GRAPHIC REF	PART NUMBER	QTY	PART NAME 1 2 3 4 5 6 (PRODUCT LEVEL)	SEE PAGE
J	1	1	**126-1885**	1	SEAL-LIP TYPE	
J	2	1	**105-2578**	1	RING-BACKUP	
J	3	1	**350-0958**	1	SEAL-U-CUP	
J	4	1	**350-0953**	1	SEAL-BUFFER	
	5	1	**105-2575**	1	BUSHING	
	6	1	**093-1571**	1	RING-RETAINING	
	7	1	**185-0194**	1	HEAD	
M	8	1	**4I-3628**	12	BOLT-SOCKET HEAD (M18X2.5X80-MM)	
J	9	1	**095-1719**	1	SEAL-O-RING	
J	10	1	**105-2579**	1	RING-BACKUP	
	11	1	**350-9342**	1	ROD AS	
	11A	1	**240-2914**	1	BUSHING	
	12	1	**350-9337**	1	CYLINDER AS	
	12A	1	**284-7313**	1	BUSHING	
J	13	1	**086-1345**	1	SEAL AS	
J	14	1	**105-2583**	2	RING-BACKUP	
J	15	1	**247-9006**	2	RING	
J	16	1	**086-1346**	2	RING	
	17	1	**259-0675**	1	PISTON	
M	18	1	**160-8759**	1	SETSCREW-SOCKET	
	19	1	**3D-2891**	1	BALL	
	20	1	**166-1494**	2	SEAL-LIP TYPE	
	21	1	**235-7679**	2	SEAL-LIP TYPE	
	22	1	**3B-8489**	2	FITTING-GREASE (1/8-27 PTF)	
					AVAILABLE REPAIR KIT(S):	
J			**350-0972**	1	KIT-SEAL (BUCKET CYLINDER)	

J - KIT MARKED J SERVICES PART(S) MARKED J
M - METRIC PART

340-8949 **CYLINDER & SEAL GP-BUCKET (*contd.*)** **i05880354**

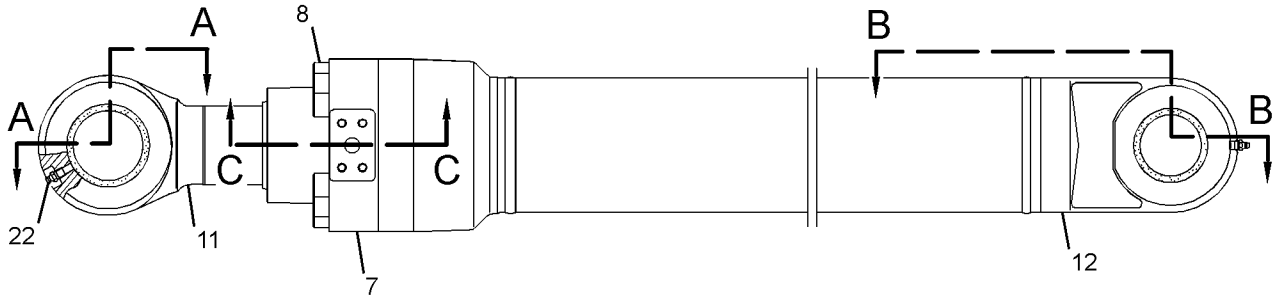

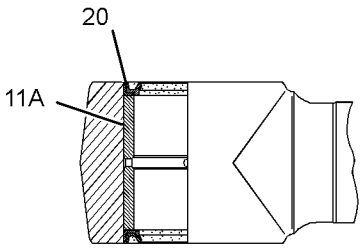

SECTION A-A

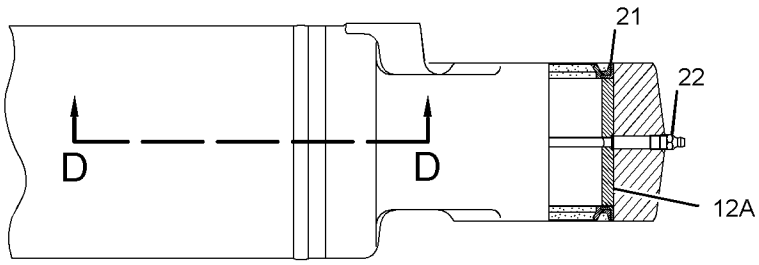

SECTION B-B

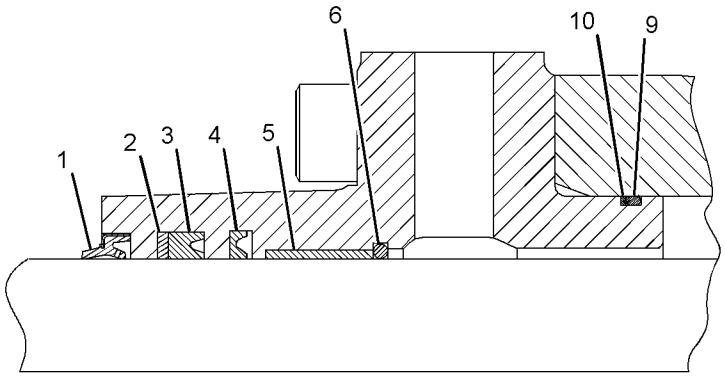

SECTION C-C

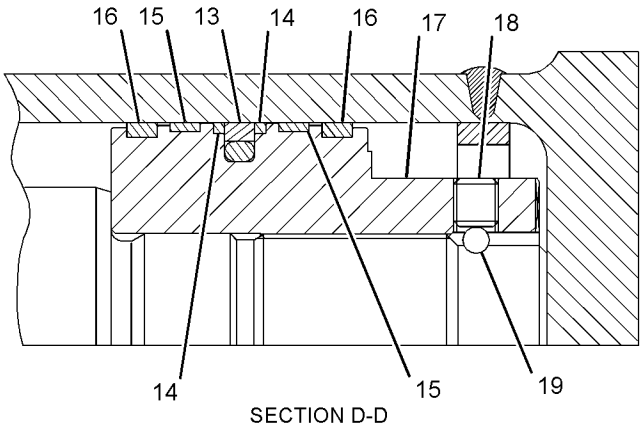

SECTION D-D

GRAPHIC #1 **<END>** g02474496

341-2182 CYLINDER & SEAL GP-BUCKET

S/N: PBB1-UP; KBS1-UP
135-MM (5.4-IN) BORE X 1156-MM (45.5-IN) STROKE
PART OF 341-2181 CYLINDER & LINES GP-BUCKET
AN ATTACHMENT

SMCS-5457 **i04265309**

NOTE	REF NO	GRAPHIC REF	PART NUMBER	QTY	PART NAME 1 2 3 4 5 6 (PRODUCT LEVEL)	SEE PAGE
J	1	1	**150-5828**	1	SEAL-LIP TYPE	
J	2	1	**150-5827**	1	RING-BACKUP	
J	3	1	**350-0959**	1	SEAL-U-CUP	
J	4	1	**350-0954**	1	SEAL-BUFFER	
	5	1	**096-4430**	1	BUSHING	
	6	1	**7Y-4631**	1	RING-RETAINING	
	7	1	**234-4580**	1	HEAD	
M	8	1	**4I-3628**	12	BOLT-SOCKET HEAD (M18X2.5X80-MM)	
J	9	1	**095-1720**	1	SEAL-O-RING	
J	10	1	**234-4581**	1	RING-BACKUP	
	11	1	**234-4589**	1	ROD AS	
	11A	1	**228-5615**	1	BUSHING	
	12	1	**360-0074**	1	CYLINDER AS	
	12A	1	**284-7313**	1	BUSHING	
J	13	1	**234-4583**	1	SEAL AS	
J	14	1	**234-4584**	2	RING-BACKUP	
J	15	1	**234-4585**	2	RING	
J	16	1	**234-4586**	2	RING	
	17	1	**234-4582**	1	PISTON	
M	18	1	**096-6210**	1	SETSCREW-SOCKET (M14X2X14-MM)	
	19	1	**4B-9880**	1	BALL	
	20	1	**166-1495**	2	SEAL-LIP TYPE	
	21	1	**235-7679**	2	SEAL-LIP TYPE	
	22	1	**3B-8489**	2	FITTING-GREASE	
					AVAILABLE REPAIR KIT(S):	
J			**350-0976**	1	KIT-SEAL (BUCKET CYLINDER)	

J - KIT MARKED J SERVICES PART(S) MARKED J
M - METRIC PART

341-2182 **CYLINDER & SEAL GP-BUCKET (*contd.*)** **i04265309**

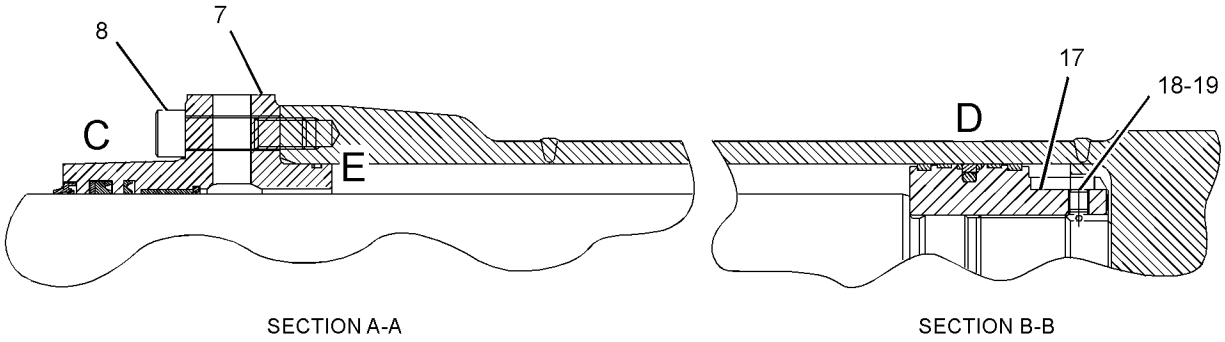

SECTION A-A

SECTION B-B

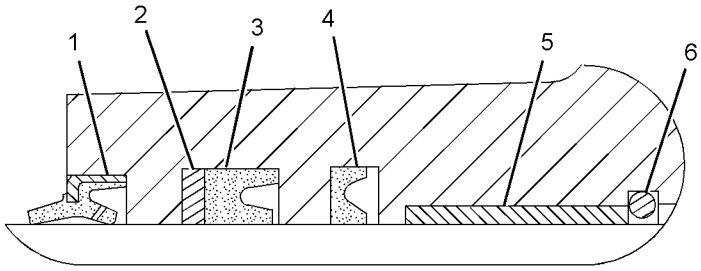

VIEW OF AREA C

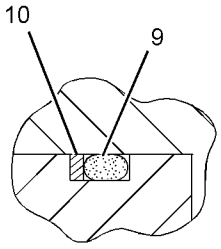

VIEW OF AREA E

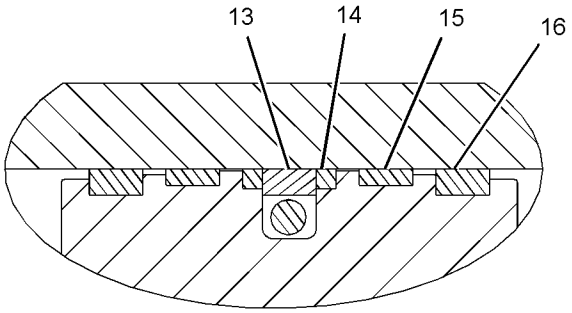

VIEW OF AREA D

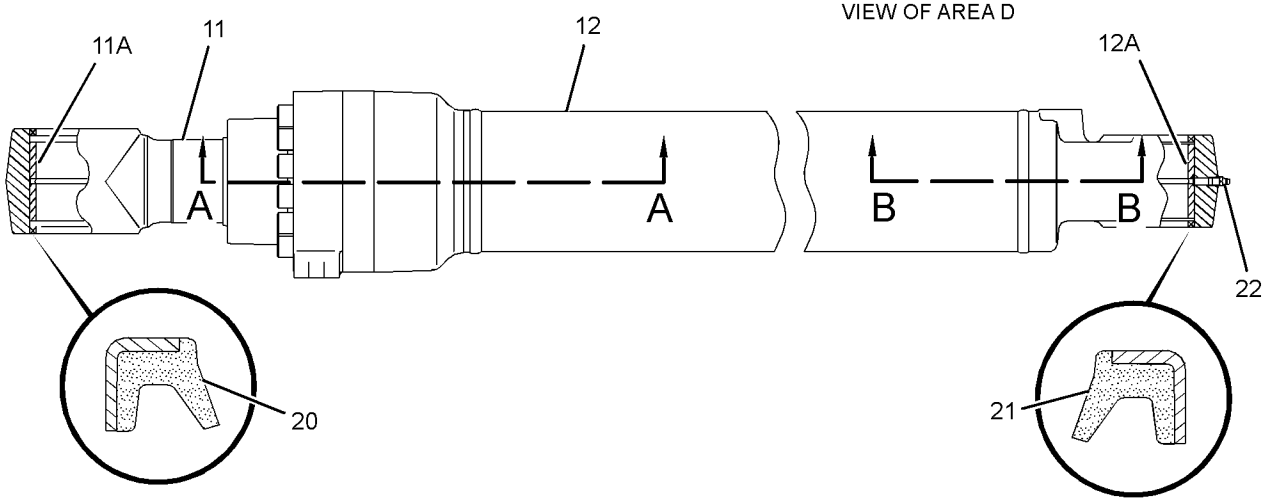

GRAPHIC #1 **<END>** g01191305

341-2814 CYLINDER & SEAL GP-BUCKET

S/N: PBB1-UP; KBS1-UP
120-MM (4.7-IN) BORE X 1104-MM (43.5-IN) STROKE
PART OF 341-2813 CYLINDER & LINES GP-BUCKET
AN ATTACHMENT

SMCS-5457 **i04409791**

NOTE	REF NO	GRAPHIC REF	PART NUMBER	QTY	PART NAME 1 2 3 4 5 6 (PRODUCT LEVEL)	SEE PAGE
	1	1	**352-1100**	1	CYLINDER AS-HYDRAULIC	
	1A	1	**357-5712**	1	BUSHING	
	2	1	**352-1106**	1	ROD AS-HYDRAULIC CYLINDER	
	2A	1	**241-7382**	1	BUSHING	
	3	1	**177-2611**	1	HEAD	
J	4	1	**095-1717**	1	SEAL-O-RING	
J	5	1	**096-3964**	1	RING-BACKUP	
	6	1	**096-4402**	1	BUSHING	
	7	1	**094-0747**	1	RING-RETAINING	
J	8	1	**350-0952**	1	SEAL-BUFFER	
J	9	1	**350-0957**	1	SEAL-U-CUP	
J	10	1	**096-1568**	1	RING-BACKUP	
J	11	1	**121-1611**	1	SEAL-LIP TYPE	
	12	1	**247-8885**	1	PISTON	
J	13	1	**086-0255**	2	RING	
J	14	1	**247-8865**	2	RING	
J	15	1	**096-7803**	1	SEAL AS	
J	16	1	**4I-3615**	2	RING-BACKUP	
M	17	1	**096-3216**	1	SETSCREW-SOCKET (M12X1.75X12-MM)	
	18	1	**3D-2891**	1	BALL	
M	19	1	**8T-1447**	12	BOLT-SOCKET HEAD (M16X2X70-MM)	
	20	1	**166-1494**	2	SEAL-LIP TYPE	
	21	1	**235-7679**	2	SEAL-LIP TYPE	
	22	1	**3B-8489**	2	FITTING-GREASE	
					AVAILABLE REPAIR KIT(S):	
J			**350-0967**	1	KIT-SEAL (BUCKET CYLINDER)	

J - KIT MARKED J SERVICES PART(S) MARKED J
M - METRIC PART

341-2814 **CYLINDER & SEAL GP-BUCKET (*contd.*)** **i04409791**

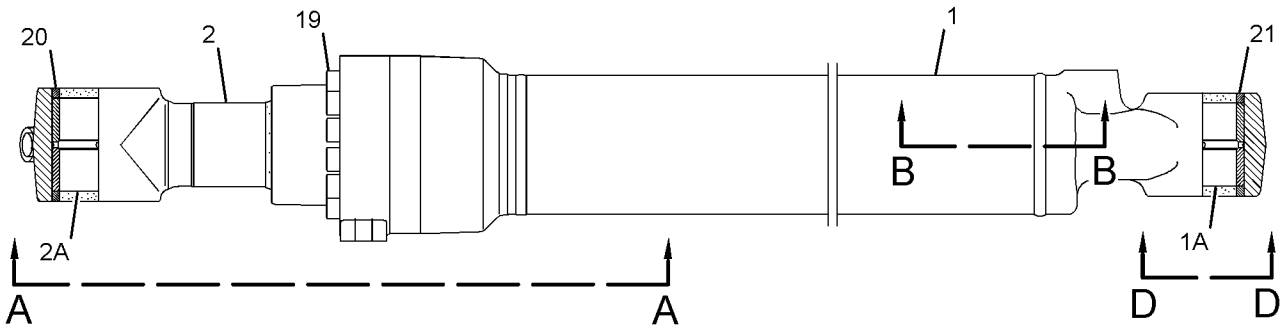

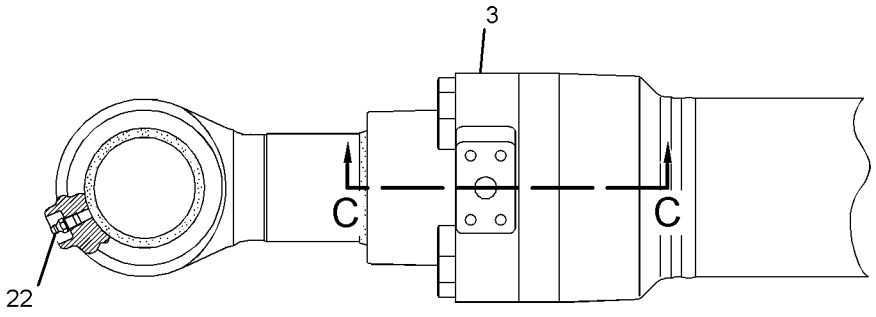

VIEW A-A

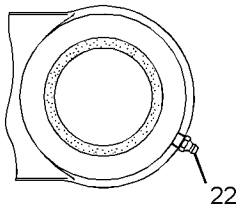

VIEW D-D

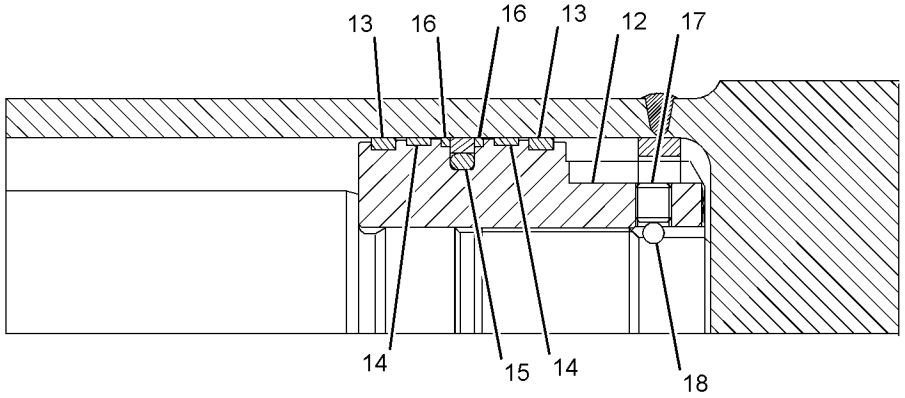

SECTION B-B

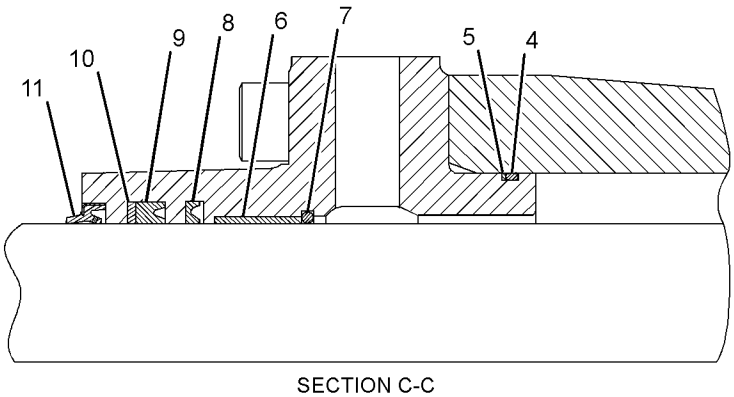

SECTION C-C

GRAPHIC #1 **<END>** g02644601

349-4134 CYLINDER & SEAL GP-BUCKET

S/N: PBB1-UP; KBS1-UP
120-MM (4.7-IN) BORE X 1104-MM (43.5-IN) STROKE
FIELD REPLACEMENT ORDER 340-8949—PAGE: 354
PART OF 349-4133 CYLINDER & LINES GP-BUCKET
AN ATTACHMENT

SMCS-5457 **i05876449**

NOTE	REF NO	GRAPHIC REF	PART NUMBER	QTY	PART NAME 1 2 3 4 5 6 (PRODUCT LEVEL)	SEE PAGE
J	1	1	**121-1611**	1	SEAL-LIP TYPE	
J	2	1	**096-1568**	1	RING-BACKUP	
J	3	1	**350-0957**	1	SEAL-U-CUP	
J	4	1	**350-0952**	1	SEAL-BUFFER	
	5	1	**096-4402**	1	BUSHING	
	6	1	**094-0747**	1	RING-RETAINING	
	7	1	**177-2611**	1	HEAD	
M	8	1	**8T-1447**	12	BOLT-SOCKET HEAD (M16X2X70-MM)	
J	9	1	**095-1717**	1	SEAL-O-RING	
J	10	1	**096-3964**	1	RING-BACKUP	
	11	1	**247-8886**	1	CYLINDER AS	
	11A	1	**235-7769**	1	BUSHING	
	12	1	**247-8887**	1	ROD AS	
	12A	1	**241-7382**	1	BUSHING	
J	13	1	**4I-3615**	2	RING-BACKUP	
J	14	1	**096-7803**	1	SEAL AS	
J	15	1	**247-8865**	2	RING	
J	16	1	**086-0255**	2	RING	
	17	1	**247-8885**	1	PISTON	
M	18	1	**096-3216**	1	SETSCREW-SOCKET (M12X1.75X12-MM)	
	19	1	**3D-2891**	1	BALL	
	20	1	**166-1494**	2	SEAL-LIP TYPE	
	21	1	**235-7679**	2	SEAL-LIP TYPE	
	22	1	**3B-8489**	2	FITTING-GREASE (1/8-27 PTF)	
					AVAILABLE REPAIR KIT(S):	
J			**350-0967**	1	KIT-SEAL (BUCKET CYLINDER)	

J - KIT MARKED J SERVICES PART(S) MARKED J
M - METRIC PART

349-4134 **CYLINDER & SEAL GP-BUCKET (*contd.*)** **i05876449**

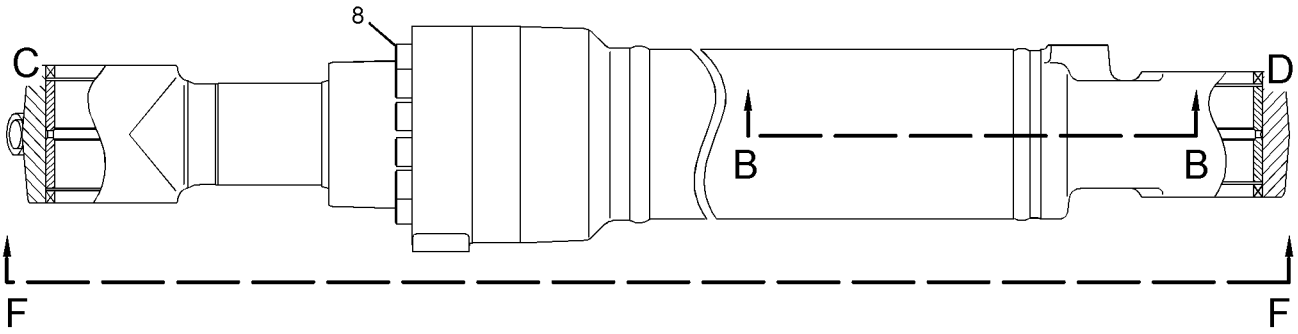

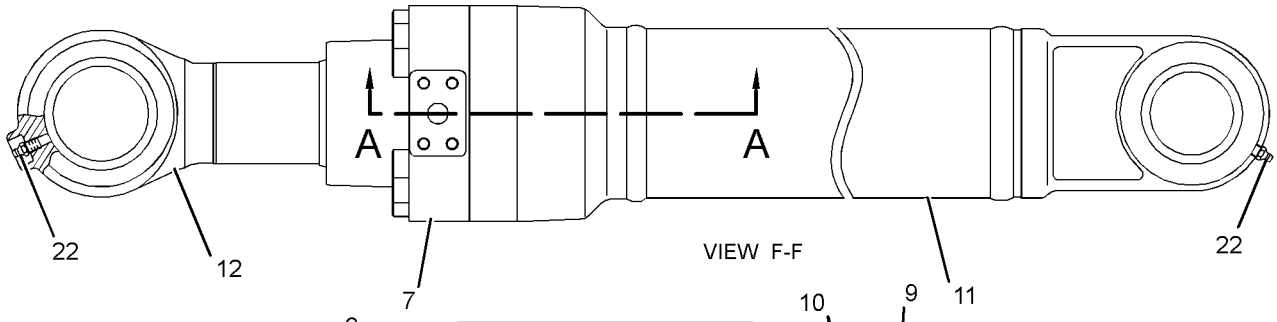

VIEW F-F

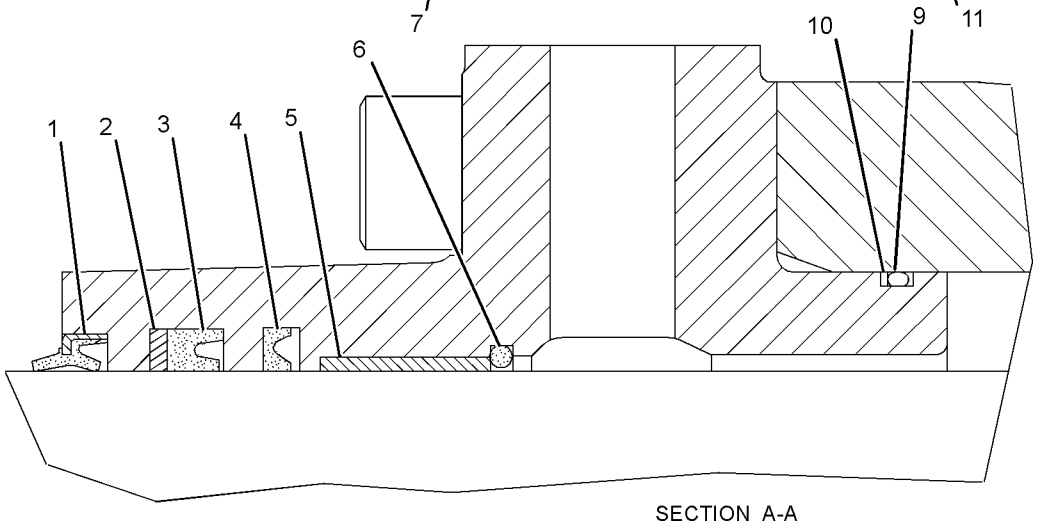

SECTION A-A

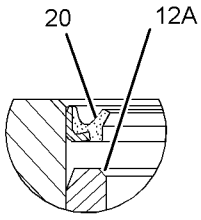

VIEW OF AREA C

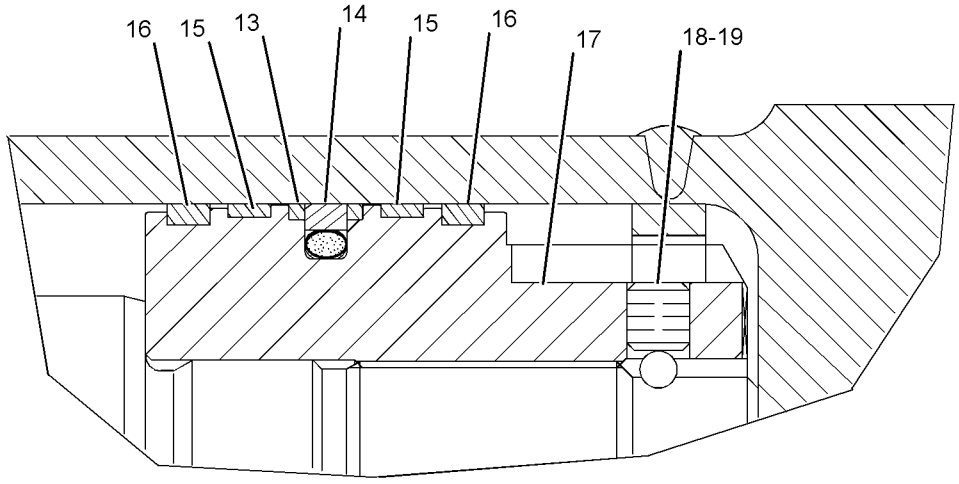

SECTION B-B

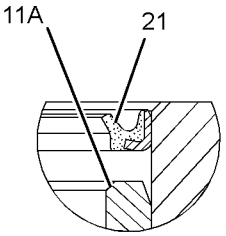

VIEW OF AREA D

GRAPHIC #1 **<END>** g01215279

364-0939 CYLINDER & SEAL GP-BUCKET

S/N: KBS1-UP

PART OF 364-0938 CYLINDER & LINES GP-BUCKET

AN ATTACHMENT

SMCS-5457 **i04758481**

NOTE	REF NO	GRAPHIC REF	PART NUMBER	QTY	PART NAME 1 2 3 4 5 6 (PRODUCT LEVEL)	SEE PAGE
	1	1	**3B-8489**	2	FITTING-GREASE	
	2	1	**166-1494**	2	SEAL-LIP TYPE	
Y	3	1	**364-0940**	1	CYLINDER GP-BUCKET	380
	4	1	**235-7679**	2	SEAL-LIP TYPE	

Y - SEPARATE ILLUSTRATION

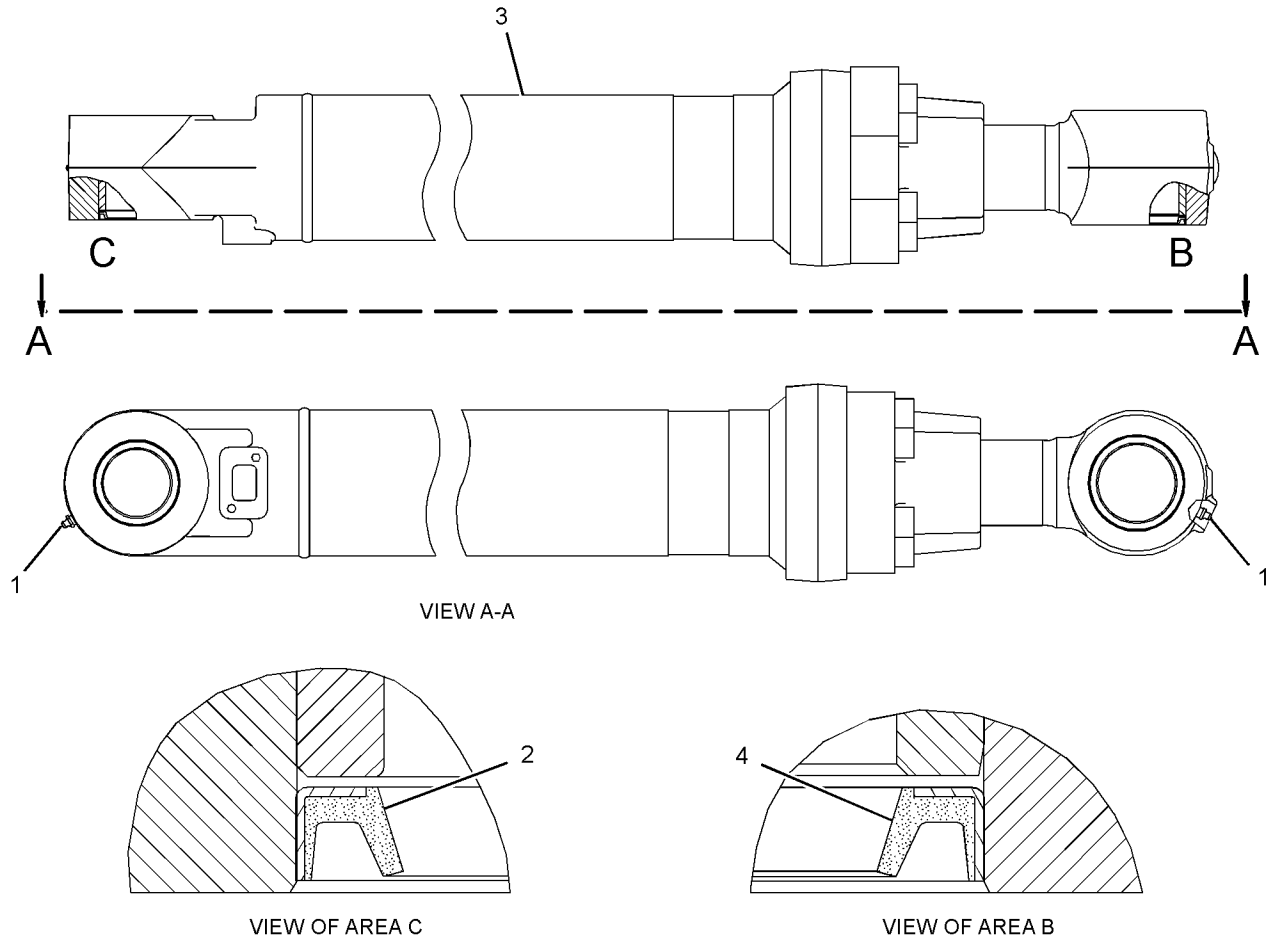

GRAPHIC #1 **<END>** g01216997

385-2834 CYLINDER & SEAL GP-BUCKET

S/N: PBB1-UP
100-MM (3.9-IN) BORE X 939-MM (36.9-IN) STROKE
PART OF 418-9085 CYLINDER & LINES GP-BUCKET
AN ATTACHMENT

SMCS-5457 **i05297835**

NOTE	REF NO	GRAPHIC REF	PART NUMBER	QTY	PART NAME 1 2 3 4 5 6 (PRODUCT LEVEL)	SEE PAGE
	1	1	**390-4219**	1	CYLINDER AS	
	1A	1	**229-1095**	1	BUSHING	
	2	1	**390-4220**	1	ROD AS	
	2A	1	**248-7857**	1	BUSHING	
	3	1	**390-4221**	1	HEAD	
	4	1	**390-4158**	1	BUSHING	
	5	1	**390-4157**	1	RING-RETAINING	
	6	1	**390-4159**	1	RING-SNAP	
	7	1	**390-4225**	1	PISTON	
	8	1	**390-4226**	1	SETSCREW-SOCKET (M10X1.5X10-MM)	
	9	1	**385-2890**	1	BALL	
M	10	1	**3E-6910**	15	BOLT-SOCKET HEAD (M12X1.75X70-MM)	
	11	1	**166-1492**	2	SEAL-LIP TYPE	
	12	1	**235-7679**	2	SEAL-LIP TYPE	
	13	1	**3B-8489**	2	FITTING-GREASE	
J	14	1	**416-1295**	1	SEAL-WIPER	
J	15	1	**416-1296**	1	SEAL-U-CUP	
J	16	1	**416-1298**	1	SEAL-BUFFER	
J	17	1	**416-1297**	1	RING-BACKUP	
J	18	1	**416-1299**	1	SEAL-O-RING	
J	19	1	**416-1300**	1	RING-BACKUP	
J	20	1	**416-1302**	1	SEAL AS-PISTON	
J	21	1	**416-1301**	2	RING-WEAR	
J	22	1	**416-1303**	2	RING-WEAR	
					AVAILABLE REPAIR KIT(S):	
J			**390-4227**	1	KIT-SEAL (BUCKET CYLINDER)	

J - KIT MARKED J SERVICES PART(S) MARKED J
M - METRIC PART

385-2834 **CYLINDER & SEAL GP-BUCKET (*contd.*)** **i05297835**

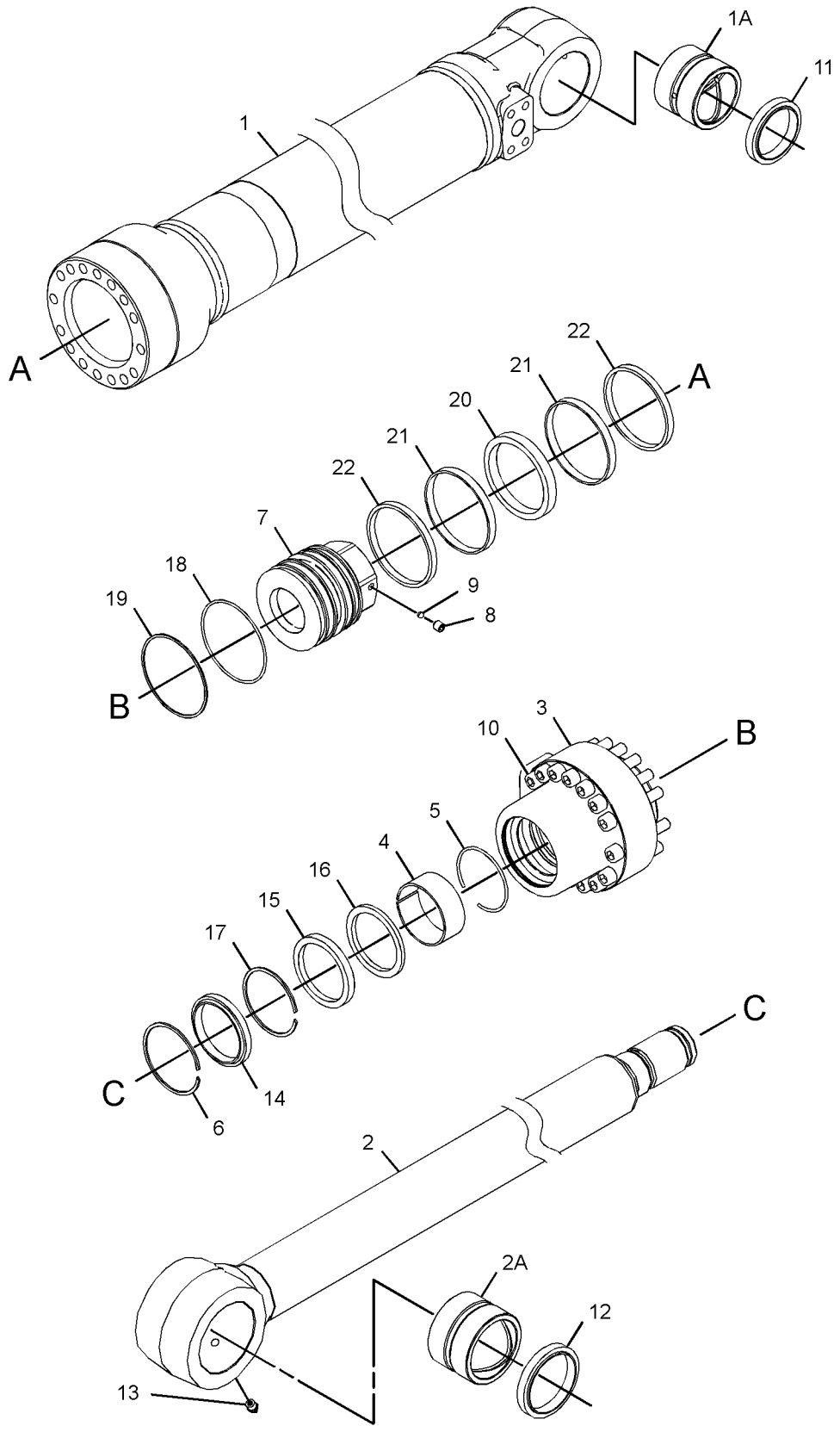

GRAPHIC #1 **<END>** g03319746

418-8777 CYLINDER & SEAL GP-BUCKET

S/N: PBB1-UP
120-MM (4.7-IN) BORE X 1104-MM (43.5-IN) STROKE
PART OF 418-8772 CYLINDER & LINES GP-BUCKET
AN ATTACHMENT

SMCS-5457 **i05162399**

NOTE	REF NO	GRAPHIC REF	PART NUMBER	QTY	PART NAME 1 2 3 4 5 6 (PRODUCT LEVEL)	SEE PAGE
	1	1	**352-1100**	1	CYLINDER AS-HYDRAULIC	
	1A	1	**357-5712**	1	BUSHING	
	2	1	**352-1106**	1	ROD AS-HYDRAULIC CYLINDER	
	2A	1	**241-7382**	1	BUSHING	
J	3	1	**177-2611**	1	HEAD	
J	4	1	**095-1717**	1	SEAL-O-RING	
J	5	1	**096-3964**	1	RING-BACKUP	
	6	1	**096-4402**	1	BUSHING	
	7	1	**094-0747**	1	RING-RETAINING	
J	8	1	**204-3622**	1	SEAL-BUFFER	
	9	1	**096-1567**	1	SEAL-U-CUP	
J	10	1	**096-1568**	1	RING-BACKUP	
	11	1	**121-1611**	1	SEAL-LIP TYPE	
	12	1	**247-8885**	1	PISTON	
J	13	1	**086-0255**	2	RING	
J	14	1	**247-8865**	2	RING	
J	15	1	**096-7803**	1	SEAL AS	
J	16	1	**4I-3615**	2	RING-BACKUP	
M	17	1	**096-3216**	1	SETSCREW-SOCKET (M12X1.75X12-MM)	
	18	1	**3D-2891**	1	BALL	
M	19	1	**8T-1447**	12	BOLT-SOCKET HEAD (M16X2X70-MM)	
	20	1	**166-1494**	2	SEAL-LIP TYPE	
	21	1	**235-7679**	2	SEAL-LIP TYPE	
	22	1	**3B-8489**	2	FITTING-GREASE	
					AVAILABLE REPAIR KIT(S):	
J			**266-8057**	1	KIT-SEAL (BUCKET CYLINDER)	

J - KIT MARKED J SERVICES PARTS MARKED J
M - METRIC PART

418-8777 **CYLINDER & SEAL GP-BUCKET (*contd.*)** **i05162399**

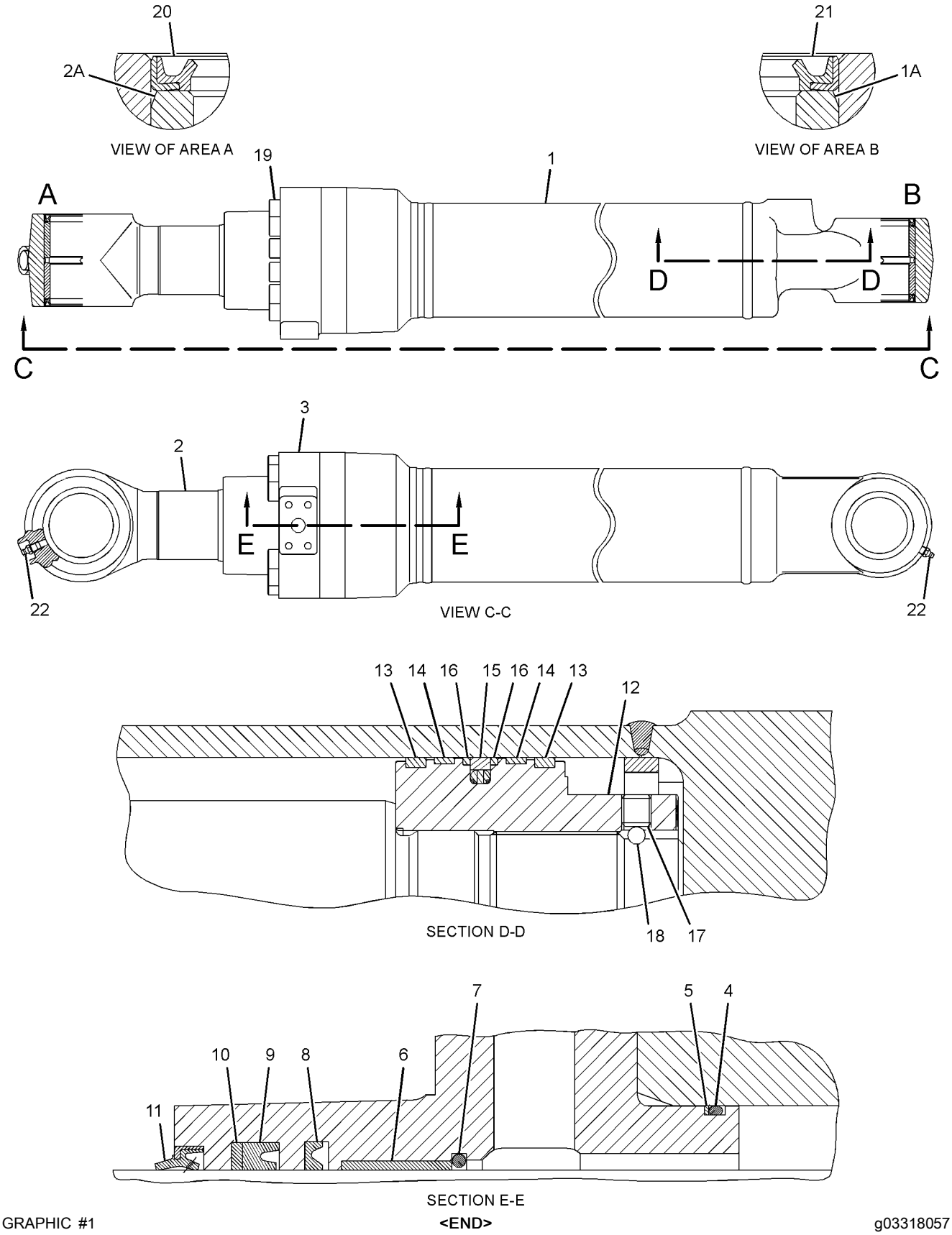

GRAPHIC #1

<END>

g03318057

341-2177 CYLINDER & SEAL GP-STICK

S/N: PBB1-UP
150-MM (6-IN) BORE X 1646-MM (64.8-IN) STROKE
PART OF 268-7256 CYLINDER & LINES GP-STICK
AN ATTACHMENT

SMCS-5458 **i05349594**

NOTE	REF NO	GRAPHIC REF	PART NUMBER	QTY	PART NAME 1 2 3 4 5 6 (PRODUCT LEVEL)	SEE PAGE
J	1	2	**133-6909**	1	SEAL-LIP TYPE	
J	2	2	**194-8355**	1	RING-BACKUP	
J	3	2	**350-0961**	1	SEAL-U-CUP	
J	4	2	**350-0956**	1	SEAL-BUFFER	
	5	2	**099-5572**	1	BUSHING	
	6	2	**099-5573**	1	RING-RETAINING	
	7	2	**194-8353**	1	HEAD	
M	8	1	**9X-2404**	12	BOLT-SOCKET HEAD (M20X2.5X90-MM)	
J	9	2	**095-1723**	1	SEAL-O-RING	
J	10	2	**114-0706**	1	RING-BACKUP	
	11	2	**350-9344**	1	ROD AS	
	11A	1	**290-9180**	1	BUSHING	
	12	1	**350-9339**	1	CYLINDER AS-STICK	
	12A	1	**290-9180**	1	BUSHING	
	13	2	**121-1548**	1	STOP	
J	14	2	**231-6805**	1	RING-SEAL	
J	15	2	**114-0711**	2	RING-BACKUP	
J	16	2	**114-0710**	1	SEAL AS	
J	17	2	**234-4574**	2	RING	
J	18	2	**114-0713**	2	RING	
	19	2	**234-4573**	1	PISTON	
M	20	2	**096-6210**	1	SETSCREW-SOCKET (M14X2X14-MM)	
	21	2	**4B-9880**	1	BALL	
	22	2	**085-8605**	1	RING-RETAINING	
J	23	2	**194-8359**	1	RING-SEAL	
	24	2	**121-1549**	1	STOP	
	25	2	**085-8604**	2	RING-RETAINING	
	26	1	**166-1494**	4	SEAL-LIP TYPE	
	27	1	**3B-8489**	1	FITTING-GREASE	
					AVAILABLE REPAIR KIT(S):	
J			**350-0975**	1	KIT-SEAL (STICK CYLINDER)	

J - KIT MARKED J SERVICES PART(S) MARKED J
M - METRIC PART

341-2177 **CYLINDER & SEAL GP-STICK (*contd.*)** **i05349594**

REFER TO ALL ILLUSTRATIONS OF
THIS GROUP FOR AUXILIARY VIEWS

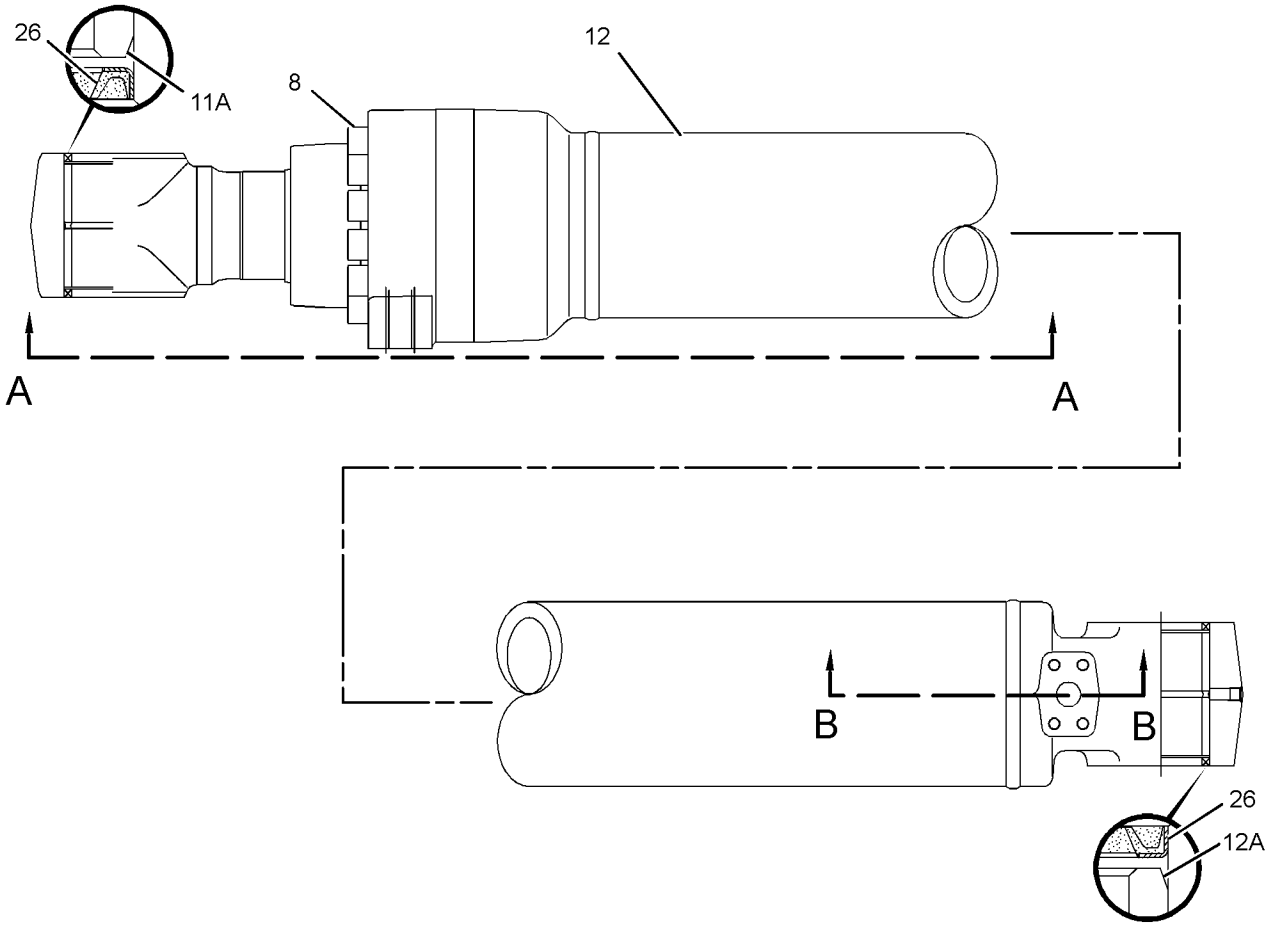

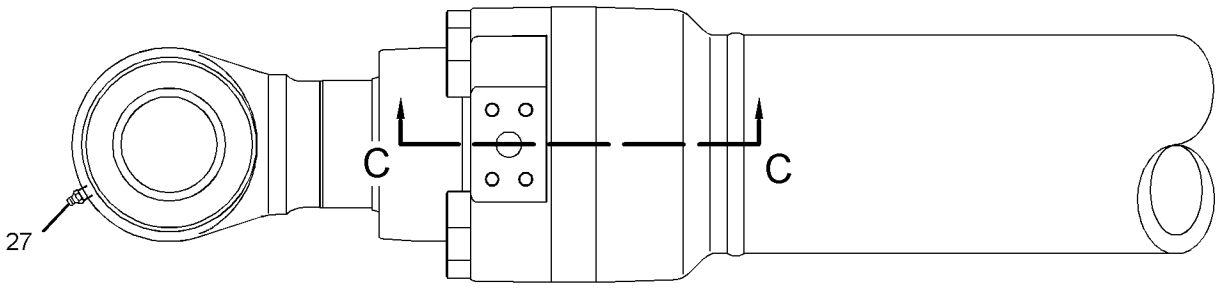

VIEW A-A

GRAPHIC #1 g03341032

341-2177 **CYLINDER & SEAL GP-STICK (*contd.*)** **i05349594**

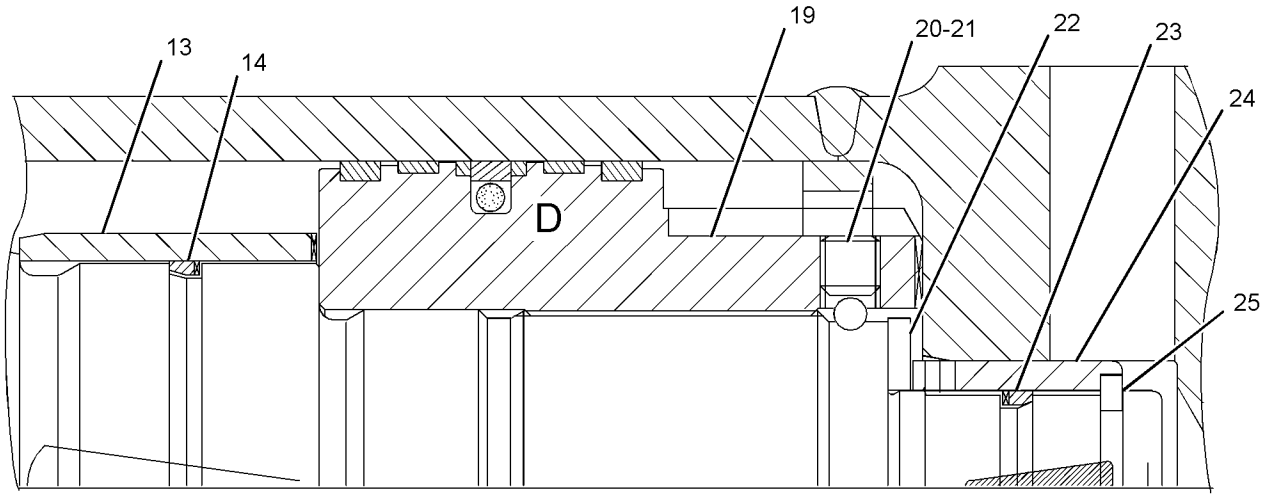

SECTION B-B

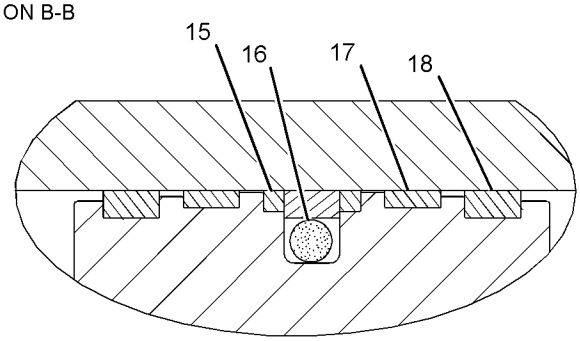

VIEW OF AREA D

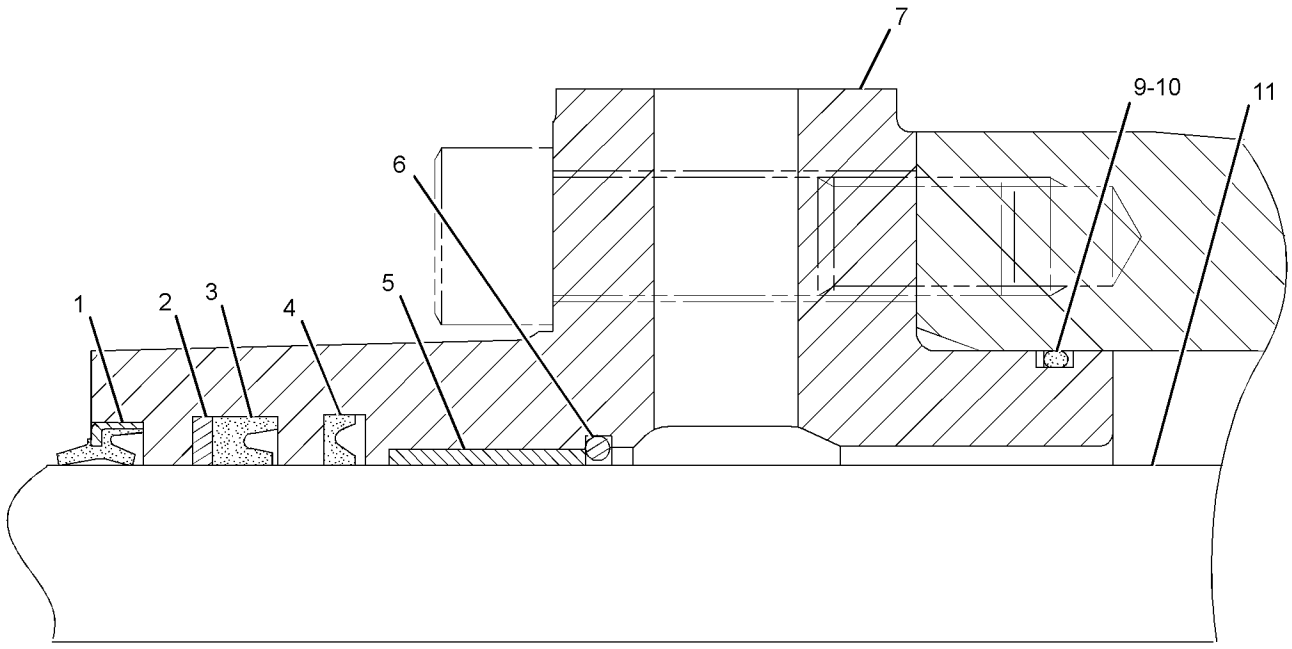

SECTION C-C

GRAPHIC #2 **<END>** g03388990

341-2802 CYLINDER & SEAL GP-STICK

S/N: PBB1-UP; KBS1-UP
140-MM (5.5-IN) BORE X 1504-MM (59.2-IN) STROKE
PART OF 341-2801 CYLINDER & LINES GP-STICK
AN ATTACHMENT

SMCS-5458 **i05310723**

NOTE	REF NO	GRAPHIC REF	PART NUMBER	QTY	PART NAME 1 2 3 4 5 6 (PRODUCT LEVEL)	SEE PAGE
	1	1	**352-1098**	1	CYLINDER AS-STICK	
	1A	1	**357-5711**	2	BUSHING	
	2	1	**352-1104**	1	ROD AS	
	2A	1	**240-2914**	2	BUSHING	
	3	1	**188-4181**	1	HEAD	
J	4	1	**095-1721**	1	SEAL-O-RING	
J	5	1	**4I-3627**	1	RING-BACKUP	
	6	1	**096-5625**	1	BUSHING	
	7	1	**094-1931**	1	RING-RETAINING	
J	8	1	**350-0955**	1	SEAL-BUFFER	
J	9	1	**350-0960**	1	SEAL-U-CUP	
J	10	1	**121-1372**	1	RING-BACKUP	
J	11	1	**133-6904**	1	SEAL-LIP TYPE	
J	12	1	**126-1876**	1	RING-SEAL	
	13	1	**378-1556**	1	STOP	
	14	1	**247-8873**	1	PISTON	
J	15	1	**096-1571**	2	RING	
J	16	1	**247-8874**	2	RING	
J	17	1	**096-1570**	1	SEAL AS	
J	18	1	**4I-3631**	2	RING-BACKUP	
	19	1	**4B-9880**	1	BALL	
M	20	1	**096-6210**	1	SETSCREW-SOCKET (M14X2X14-MM)	
	21	1	**085-8605**	1	RING-RETAINING	
J	22	1	**194-8359**	1	RING-SEAL	
	23	1	**085-8604**	2	RING-RETAINING	
	24	1	**121-1549**	1	STOP	
M	25	1	**4I-3628**	12	BOLT-SOCKET HEAD (M18X2.5X80-MM)	
	26	1	**166-1494**	4	SEAL-LIP TYPE	
	27	1	**3B-8489**	1	FITTING-GREASE	
					AVAILABLE REPAIR KIT(S):	
J			**350-0970**	1	KIT-SEAL (STICK CYLINDER)	

J - KIT MARKED J SERVICES PART(S) MARKED J
M - METRIC PART

341-2802 **CYLINDER & SEAL GP-STICK (*contd.*)** **i05310723**

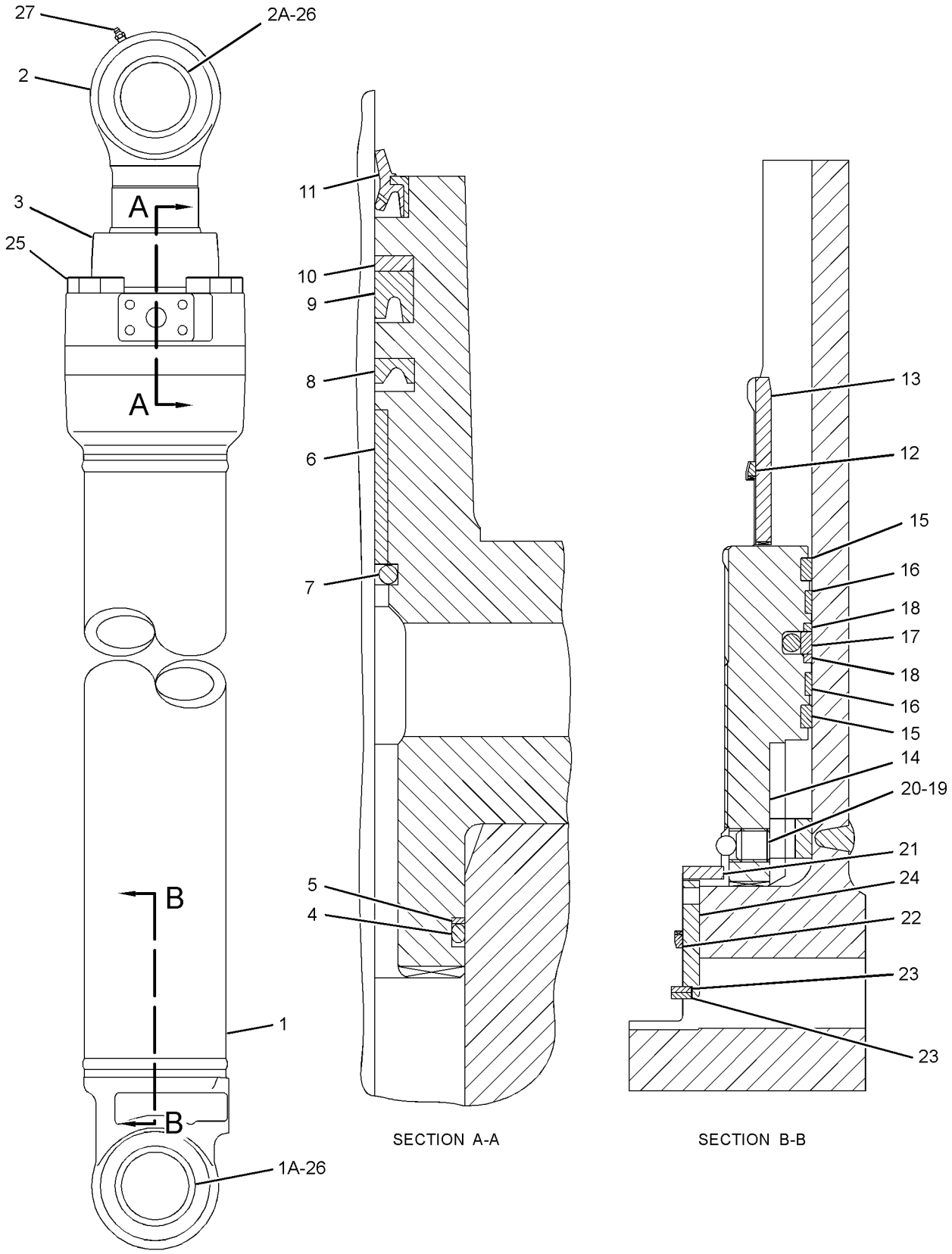

GRAPHIC #1 **<END>** g02657601

341-2807 CYLINDER & SEAL GP-STICK

S/N: PBB1-UP; KBS1-UP
140-MM (5.5-IN) BORE X 1504-MM (59.2-IN) STROKE
PART OF 341-2806 CYLINDER & LINES GP-STICK
AN ATTACHMENT

SMCS-5458 **i05270541**

NOTE	REF NO	GRAPHIC REF	PART NUMBER	QTY	PART NAME 1 2 3 4 5 6 (PRODUCT LEVEL)	SEE PAGE
	1	1	**352-1098**	1	CYLINDER AS-STICK	
	1A	1	**357-5711**	2	BUSHING	
	2	1	**352-1104**	1	ROD AS	
	2A	1	**240-2914**	1	BUSHING	
	3	1	**188-4181**	1	HEAD	
J	4	1	**095-1721**	1	SEAL-O-RING	
J	5	1	**4I-3627**	1	RING-BACKUP	
	6	1	**096-5625**	1	BUSHING	
	7	1	**094-1931**	1	RING-RETAINING	
J	8	1	**350-0955**	1	SEAL-BUFFER	
J	9	1	**350-0960**	1	SEAL-U-CUP	
J	10	1	**121-1372**	1	RING-BACKUP	
J	11	1	**133-6904**	1	SEAL-LIP TYPE	
J	12	1	**214-4501**	1	RING-SEAL	
	13	1	**378-1556**	1	STOP	
	14	1	**247-8873**	1	PISTON	
J	15	1	**096-1571**	2	RING	
J	16	1	**247-8874**	2	RING	
J	17	1	**096-1570**	1	SEAL AS	
J	18	1	**4I-3631**	2	RING-BACKUP	
	19	1	**4B-9880**	1	BALL	
M	20	1	**096-6210**	1	SETSCREW-SOCKET (M14X2X14-MM)	
	21	1	**085-8605**	1	RING-RETAINING	
J	22	1	**194-8359**	1	RING-SEAL	
	23	1	**085-8604**	2	RING-RETAINING	
	24	1	**121-1549**	1	STOP	
M	25	1	**4I-3628**	12	BOLT-SOCKET HEAD (M18X2.5X80-MM)	
	26	1	**166-1494**	4	SEAL-LIP TYPE	
	27	1	**3B-8489**	1	FITTING-GREASE	
					AVAILABLE REPAIR KIT(S):	
J			**350-0971**	1	KIT-SEAL (STICK CYLINDER)	

J - KIT MARKED J SERVICES PART(S) MARKED J
M - METRIC PART

341-2807 **CYLINDER & SEAL GP-STICK (*contd.*)** **i05270541**

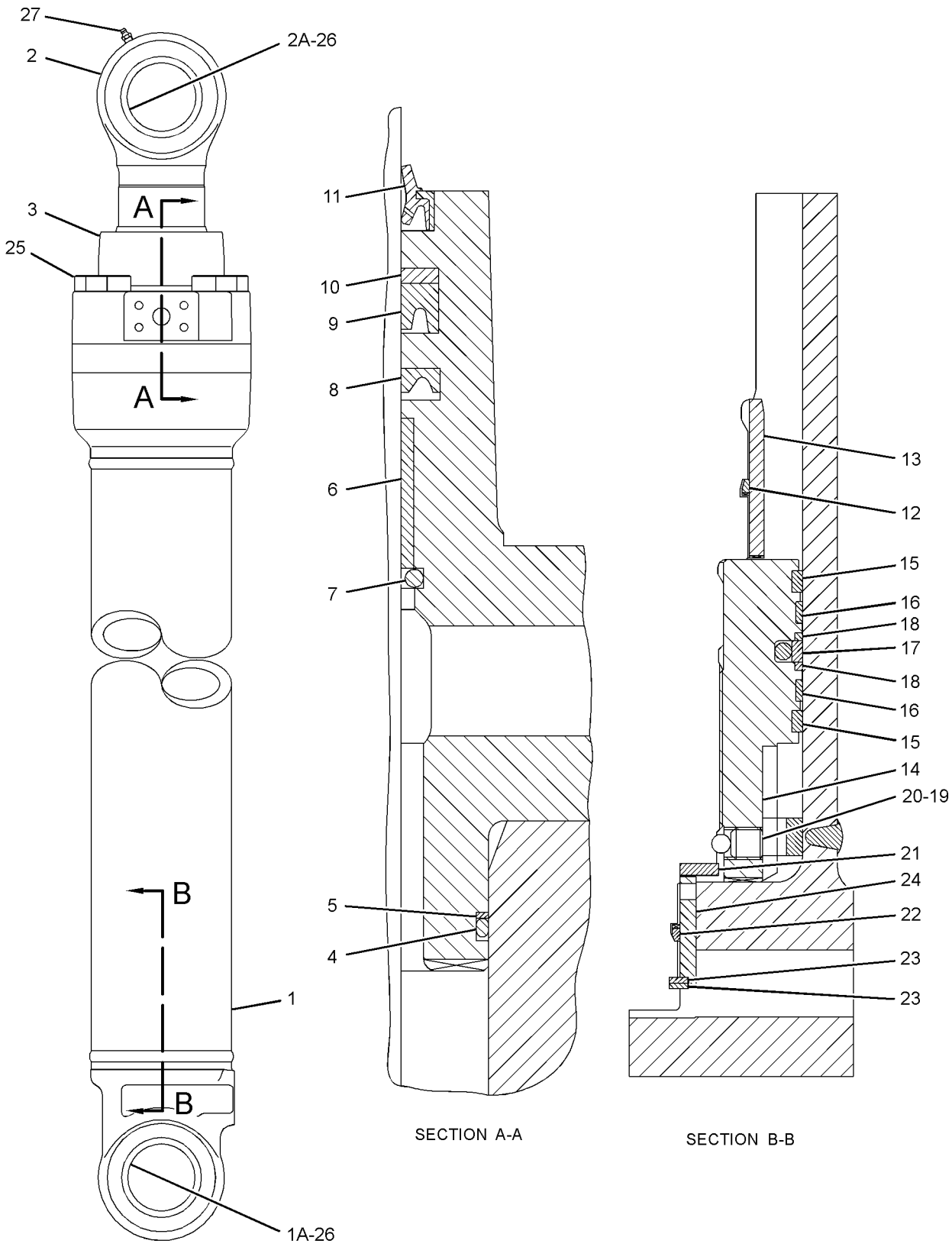

GRAPHIC #1 **<END>** g02657766

341-2809 CYLINDER & SEAL GP-STICK

S/N: PBB1-UP; KBS1-UP
140-MM (5.5-IN) BORE X 1518-MM (59.8-IN) STROKE
PART OF 341-2808 CYLINDER & LINES GP-STICK
AN ATTACHMENT

SMCS-5458 **i05262448**

NOTE	REF NO	GRAPHIC REF	PART NUMBER	QTY	PART NAME 1 2 3 4 5 6 (PRODUCT LEVEL)	SEE PAGE
	1	1	**352-1099**	1	CYLINDER AS-STICK	
	1A	1	**357-5711**	2	BUSHING	
	2	1	**352-1105**	1	ROD AS	
	2A	1	**240-2914**	1	BUSHING	
	3	1	**188-4181**	1	HEAD	
J	4	1	**095-1721**	1	SEAL-O-RING	
J	5	1	**4I-3627**	1	RING-BACKUP	
	6	1	**096-5625**	1	BUSHING	
	7	1	**094-1931**	1	RING-RETAINING	
J	8	1	**350-0955**	1	SEAL-BUFFER	
J	9	1	**350-0960**	1	SEAL-U-CUP	
J	10	1	**121-1372**	1	RING-BACKUP	
J	11	1	**133-6904**	1	SEAL-LIP TYPE	
J	12	1	**126-1876**	1	RING-SEAL	
	13	1	**378-1556**	1	STOP	
	14	1	**247-8873**	1	PISTON	
J	15	1	**096-1571**	2	RING	
J	16	1	**247-8874**	2	RING	
J	17	1	**096-1570**	1	SEAL AS	
J	18	1	**4I-3631**	2	RING-BACKUP	
	19	1	**4B-9880**	1	BALL	
M	20	1	**096-6210**	1	SETSCREW-SOCKET (M14X2X14-MM)	
	21	1	**085-8605**	1	RING-RETAINING	
J	22	1	**194-8359**	1	RING-SEAL	
	23	1	**085-8604**	2	RING-RETAINING	
	24	1	**121-1549**	1	STOP	
M	25	1	**4I-3628**	12	BOLT-SOCKET HEAD (M18X2.5X80-MM)	
	26	1	**166-1494**	4	SEAL-LIP TYPE	
	27	1	**3B-8489**	1	FITTING-GREASE	
					AVAILABLE REPAIR KIT(S):	
J			**350-0970**	1	KIT-SEAL (STICK CYLINDER)	

J - KIT MARKED J SERVICES PART(S) MARKED J
M - METRIC PART

341-2809 **CYLINDER & SEAL GP-STICK (*contd.*)** **i05262448**

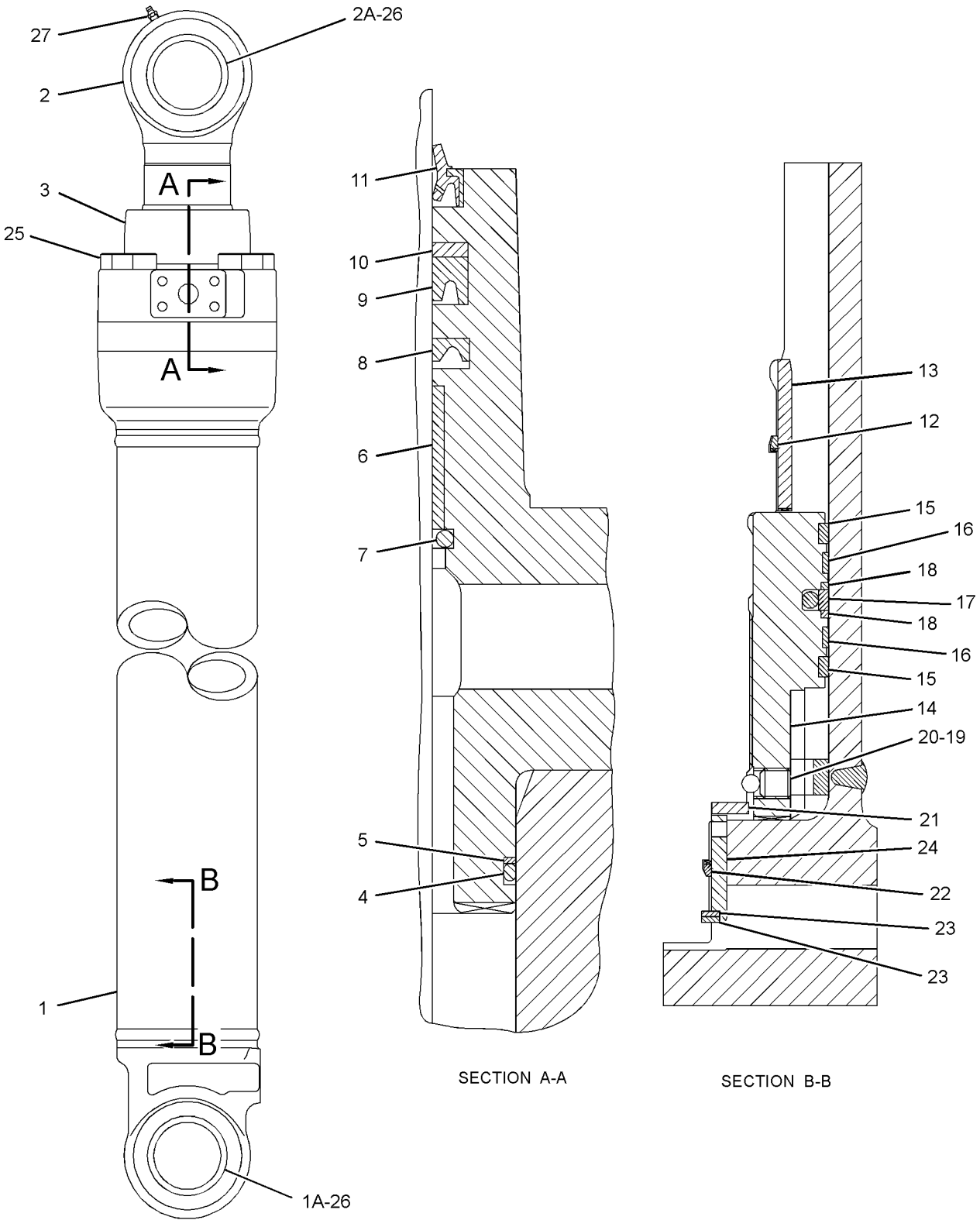

GRAPHIC #1 **<END>** g02658038

364-0936 CYLINDER & SEAL GP-STICK

S/N: KBS1-UP

PART OF 364-0935 CYLINDER & LINES GP-STICK

AN ATTACHMENT

SMCS-5458 **i04887446**

NOTE	PART NUMBER	QTY	PART NAME 1 2 3 4 5 6 (PRODUCT LEVEL)	SEE PAGE
Y	**364-0937**	1	CYLINDER GP-HYDRAULIC	386
	3B-8489	1	FITTING-GREASE	
	166-1494	4	SEAL-LIP TYPE	

Y - SEPARATE ILLUSTRATION

<END>

418-5513 CYLINDER & SEAL GP-STICK

S/N: PBB1-UP
140-MM (5.5-IN) BORE X 1504-MM (59.2-IN) STROKE
PART OF 418-5512 CYLINDER & LINES GP-STICK
AN ATTACHMENT

SMCS-5458 **i05190579**

NOTE	REF NO	GRAPHIC REF	PART NUMBER	QTY	PART NAME 1 2 3 4 5 6 (PRODUCT LEVEL)	SEE PAGE
	1	1	**352-1098**	1	CYLINDER AS-STICK	
	1A	1	**357-5711**	2	BUSHING	
	2	1	**352-1104**	1	ROD AS	
	2A	1	**240-2914**	1	BUSHING	
	3	1	**188-4181**	1	HEAD	
J	4	1	**266-7968**	1	SEAL-O-RING	
J	5	1	**4I-3627**	1	RING-BACKUP	
	6	1	**096-5625**	1	BUSHING	
	7	1	**094-1931**	1	RING-RETAINING	
J	8	1	**204-3623**	1	SEAL-BUFFER	
J	9	1	**121-1371**	1	SEAL-U-CUP	
J	10	1	**121-1372**	1	RING-BACKUP	
J	11	1	**133-6904**	1	SEAL-LIP TYPE	
J	12	1	**126-1876**	1	RING-SEAL	
	13	1	**378-1556**	1	STOP	
	14	1	**247-8873**	1	PISTON	
J	15	1	**096-1571**	2	RING	
J	16	1	**247-8874**	2	RING	
J	17	1	**096-1570**	1	SEAL AS	
J	18	1	**4I-3631**	2	RING-BACKUP	
	19	1	**4B-9880**	1	BALL	
M	20	1	**096-6210**	1	SETSCREW-SOCKET (M14X2X14-MM)	
	21	1	**085-8605**	1	RING-RETAINING	
J	22	1	**194-8359**	1	RING-SEAL	
	23	1	**085-8604**	2	RING-RETAINING	
	24	1	**121-1549**	1	STOP	
M	25	1	**4I-3628**	12	BOLT-SOCKET HEAD (M18X2.5X80-MM)	
	26	1	**166-1494**	4	SEAL-LIP TYPE	
	27	1	**3B-8489**	1	FITTING-GREASE	
					AVAILABLE REPAIR KIT(S):	
J			**266-8012**	1	KIT-SEAL	

J - KIT MARKED J SERVICES PARTS MARKED J
M - METRIC PART

418-5513 **CYLINDER & SEAL GP-STICK (*contd.*)** **i05190579**

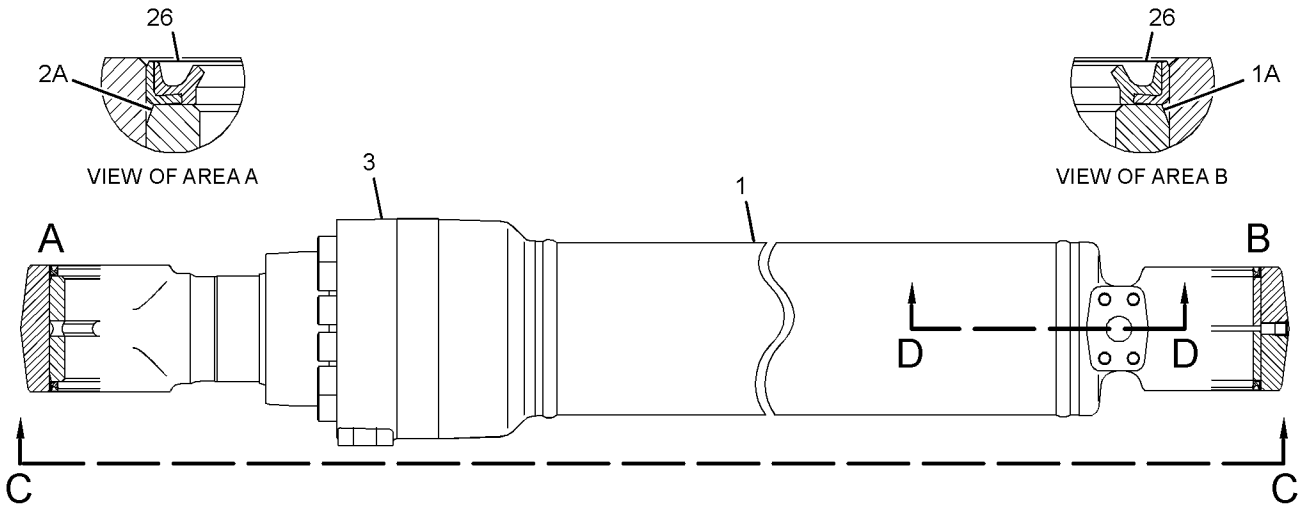

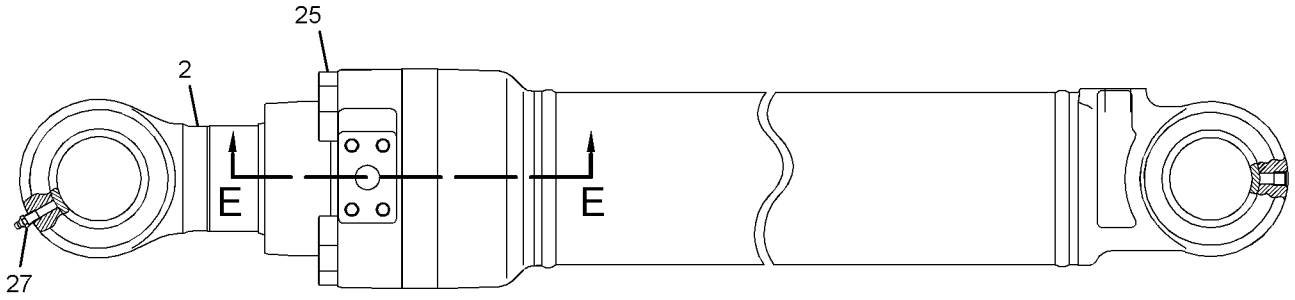

VIEW C-C

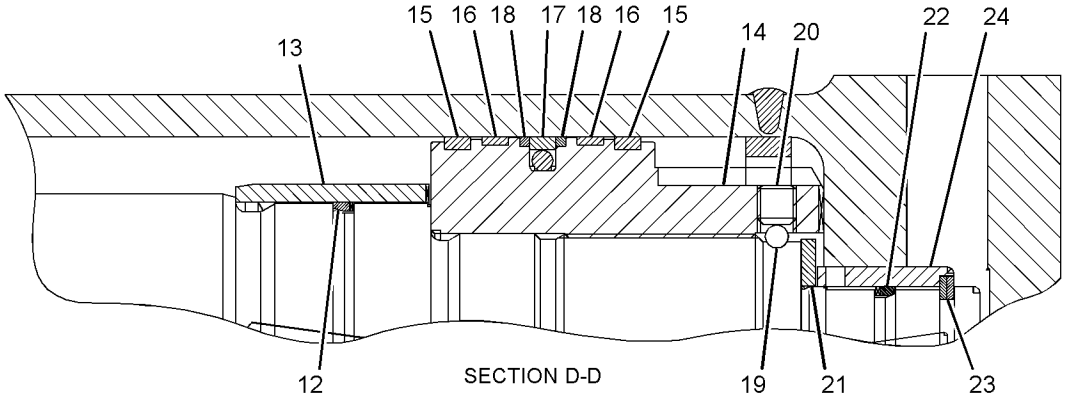

SECTION D-D

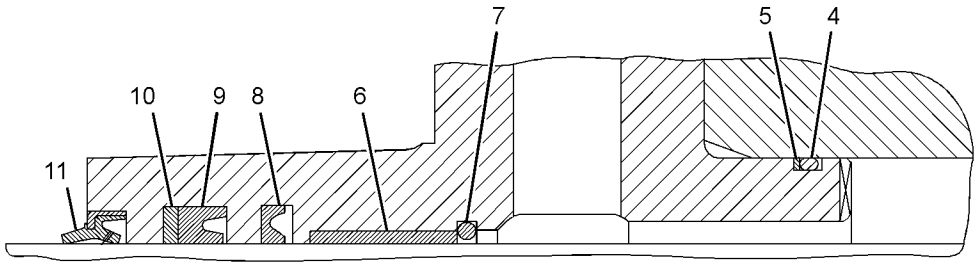

SECTION E-E

GRAPHIC #1 **<END>** g03317986

418-5499 CYLINDER AR-HYDRAULIC—COLD WEATHER, B1-FAMILY

S/N: PBB1-UP

PART OF 456-0825, 456-0826, 456-0922, 456-0923 DISTRIBUTION AR

AN ATTACHMENT

SMCS-5104, 5456, 5458

i05914475

NOTE	PART NUMBER	QTY	PART NAME 1 2 3 4 5 6 (PRODUCT LEVEL)	SEE PAGE
Y	*418-5502*	1	CYLINDER & LINES GP-BOOM (LH)	346
Y	*418-5510*	1	CYLINDER & LINES GP-BOOM (RH)	346
Y	*418-8772*	1	CYLINDER & LINES GP-BUCKET	348
Y	*418-5512*	1	CYLINDER & LINES GP-STICK	349

Y - SEPARATE ILLUSTRATION

<END>

364-0940 CYLINDER GP-BUCKET

S/N: KBS1-UP
120-MM (4.7-IN) BORE X 1104-MM (43.5-IN) STROKE
PART OF 364-0939 CYLINDER & SEAL GP-BUCKET
AN ATTACHMENT

SMCS-5457 **i05154071**

NOTE	REF NO	GRAPHIC REF	PART NUMBER	QTY	PART NAME 1 2 3 4 5 6 (PRODUCT LEVEL)	SEE PAGE
J	1	1	**7Y-5116**	1	RING	
	2	1	**7Y-5119**	1	RING-RETAINING	
J	3	1	**9X-3592**	1	SEAL AS	
M	4	1	**147-5835**	1	LOCKNUT-SPECIAL	
	5	1	**126-2043**	1	HEAD	
	6	1	**158-9062**	1	PISTON	
J	7	1	**364-0952**	1	SEAL-LIP TYPE	
J	8	1	**179-9674**	1	RING	
	9	1	**247-8751**	1	ROD AS	
	9A	1	**241-7382**	1	BUSHING	
	10	1	**289-7949**	1	CYLINDER AS	
	10A	1	**235-7769**	1	BUSHING	
J	11	1	**355-5818**	1	SEAL-BUFFER	
J	12	1	**087-5510**	1	RING	
J	13	1	**095-1717**	1	SEAL-O-RING	
	14	1	**114-0756**	1	BUSHING	
J	15	1	**158-9063**	2	RING	
J	16	1	**355-5820**	1	SEAL-U-CUP	
M	17	1	**7Y-5216**	8	BOLT-SOCKET HEAD (M20X2.5X80-MM)	
					AVAILABLE REPAIR KIT(S):	
J			**397-9294**	1	KIT-SEAL (BUCKET CYLINDER)	

J - KIT MARKED J SERVICES PART(S) MARKED J
M - METRIC PART

364-0940 **CYLINDER GP-BUCKET (*contd.*)** **i05154071**

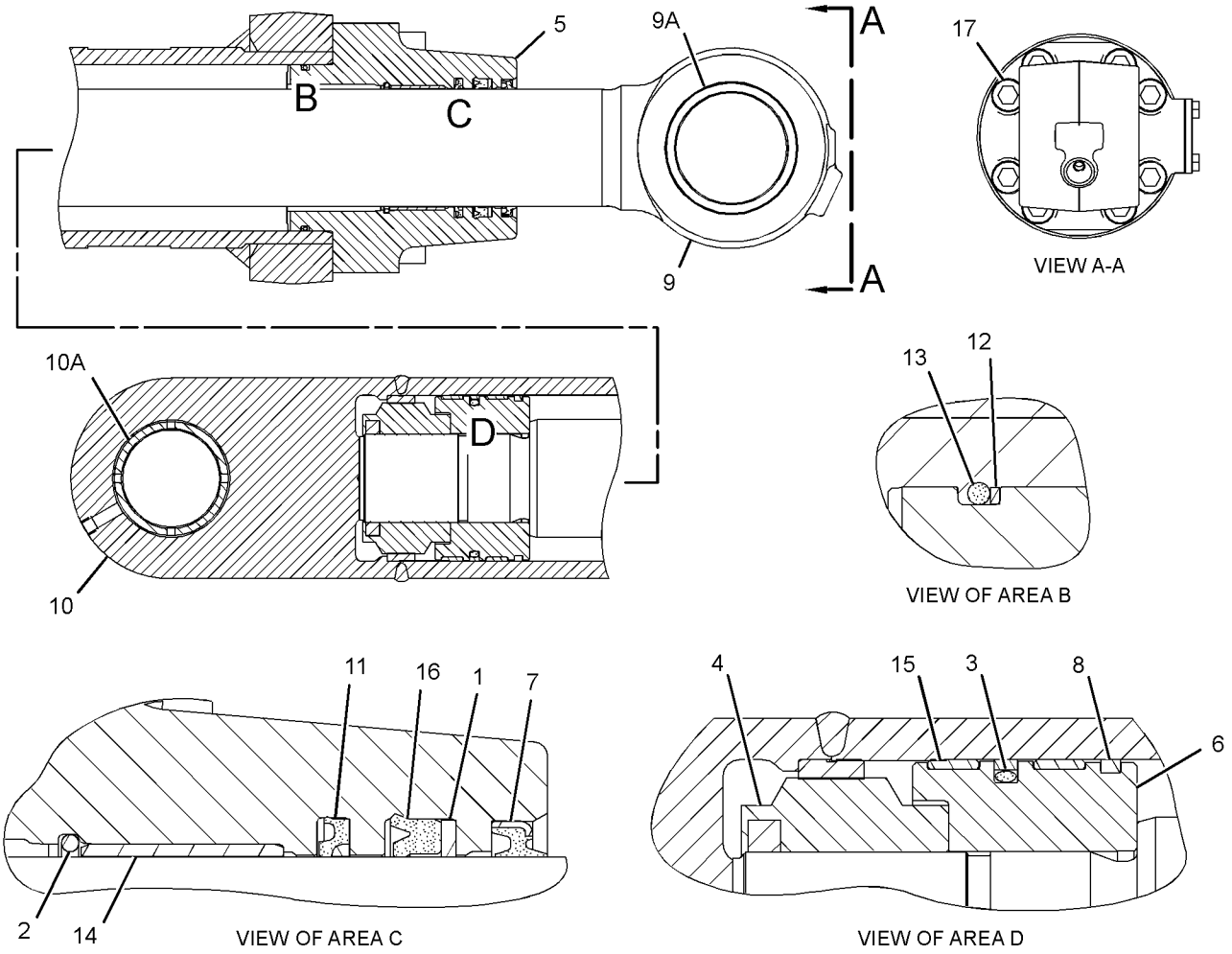

GRAPHIC #1

<END>

g01215278

172-8402 CYLINDER GP-COUPLER

S/N: PBB1-UP; KBS1-UP
70-MM (2.8-IN) BORE X 145-MM (5.7-IN) STROKE
PART OF 235-0723 COUPLER GP-QUICK
AN ATTACHMENT

SMCS-5133 **i02846928**

NOTE	REF NO	GRAPHIC REF	PART NUMBER	QTY	PART NAME 1 2 3 4 5 6 (PRODUCT LEVEL)	SEE PAGE
	1	1	**172-8406**	1	VALVE GP-CHECK (HYD CYLINDER, QUICK COUPLER)	
	1A	1	**2U-5338**	1	SEAL-O-RING	
	1B	1	**107-7640**	1	SEAL-O-RING	
	1C	1	**9W-3340**	1	SEAL-O-RING	
	2	1	**091-5928**	2	FITTING-GREASE	
					AVAILABLE REPAIR KIT(S):	
			172-8487	1	KIT-SEAL (HYD CYLINDER, QUICK COUPLER)	

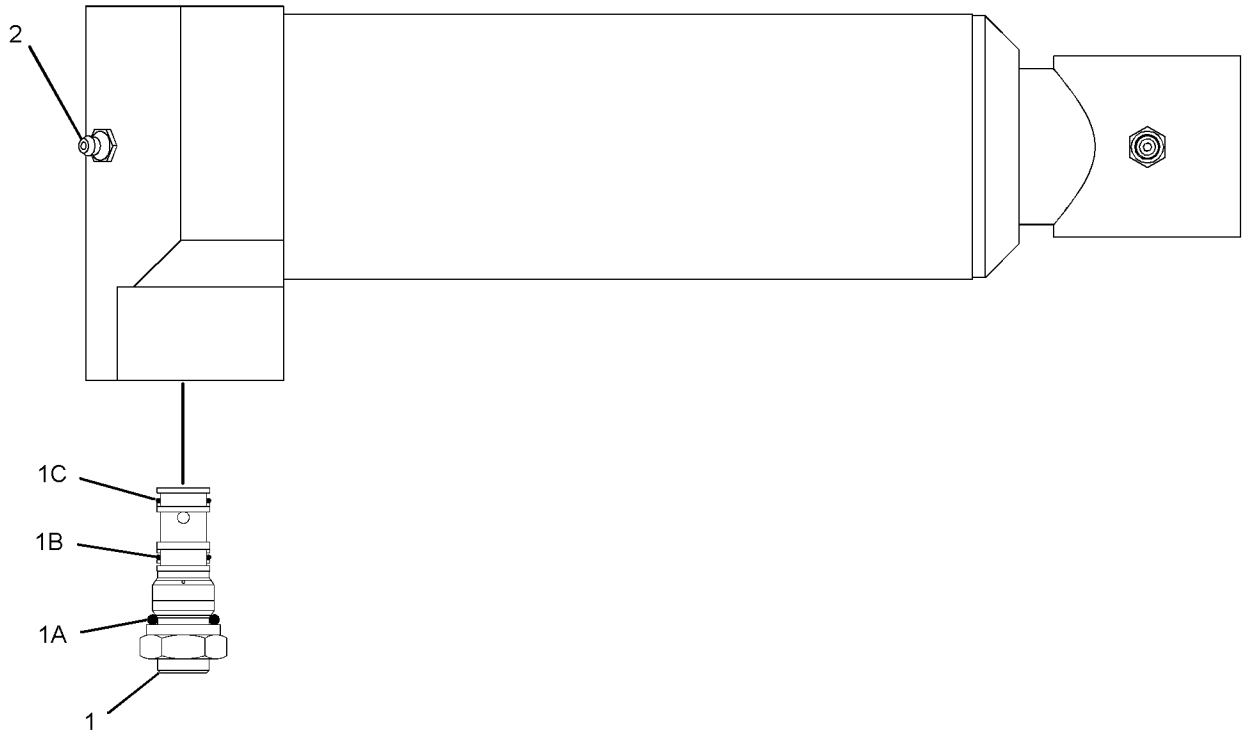

GRAPHIC #1 **<END>** g01373621

294-8011 CYLINDER GP-COUPLER

S/N: PBB1-UP; KBS1-UP
88.9-MM (3.5-IN) BORE X 165.1-MM (6.5-IN) STROKE
PART OF 292-4151 COUPLER GP-QUICK
AN ATTACHMENT

SMCS-5133 **i05281391**

NOTE	REF NO	GRAPHIC REF	PART NUMBER	QTY	PART NAME 1 2 3 4 5 6 (PRODUCT LEVEL)	SEE PAGE
	1	1	**3B-8489**	1	FITTING-GREASE (1/8-27 PTF)	
	2	1	**9F-2167**	1	SCREW-PURGE (3/8-24X1.164-IN)	
J	3	1	**339-3730**	1	VALVE-COUNTERBALANCE	
	4	1	**346-5591**	1	BEARING	
	5	1	**346-5592**	2	BUSHING	
	6	1	**346-5593**	1	PISTON	
	7	1	**346-5594**	1	HEAD	
	8	1	**346-5595**	1	ROD AS	
	9	1	**346-5596**	1	TUBE AS	
	10	1	**3F-7147**	12	BOLT (1/2-13X1.5-IN)	
	11	1	**4B-9808**	3	SETSCREW (1/4-20X0.5-IN)	
	12	1	**9S-8002**	4	PLUG-O-RING	
	13	1	**9S-8004**	1	PLUG-O-RING	
					AVAILABLE REPAIR KIT(S):	
			346-0643	1	KIT-SEAL (COUPLER CYLINDER)	
					(INCLUDES WIPER, DOUBLE LIP SEAL, WEAR-RING, O-RING, BACK-UP RING, PISTON RING SET, & CAST IRON PISTON RING)	
J			**161-1980**	1	KIT-SERVICE (COUNTERBALANCE VALVE)	

J - KIT MARKED J SERVICES PART MARKED J

294-8011 **CYLINDER GP-COUPLER (*contd.*)** **i05281391**

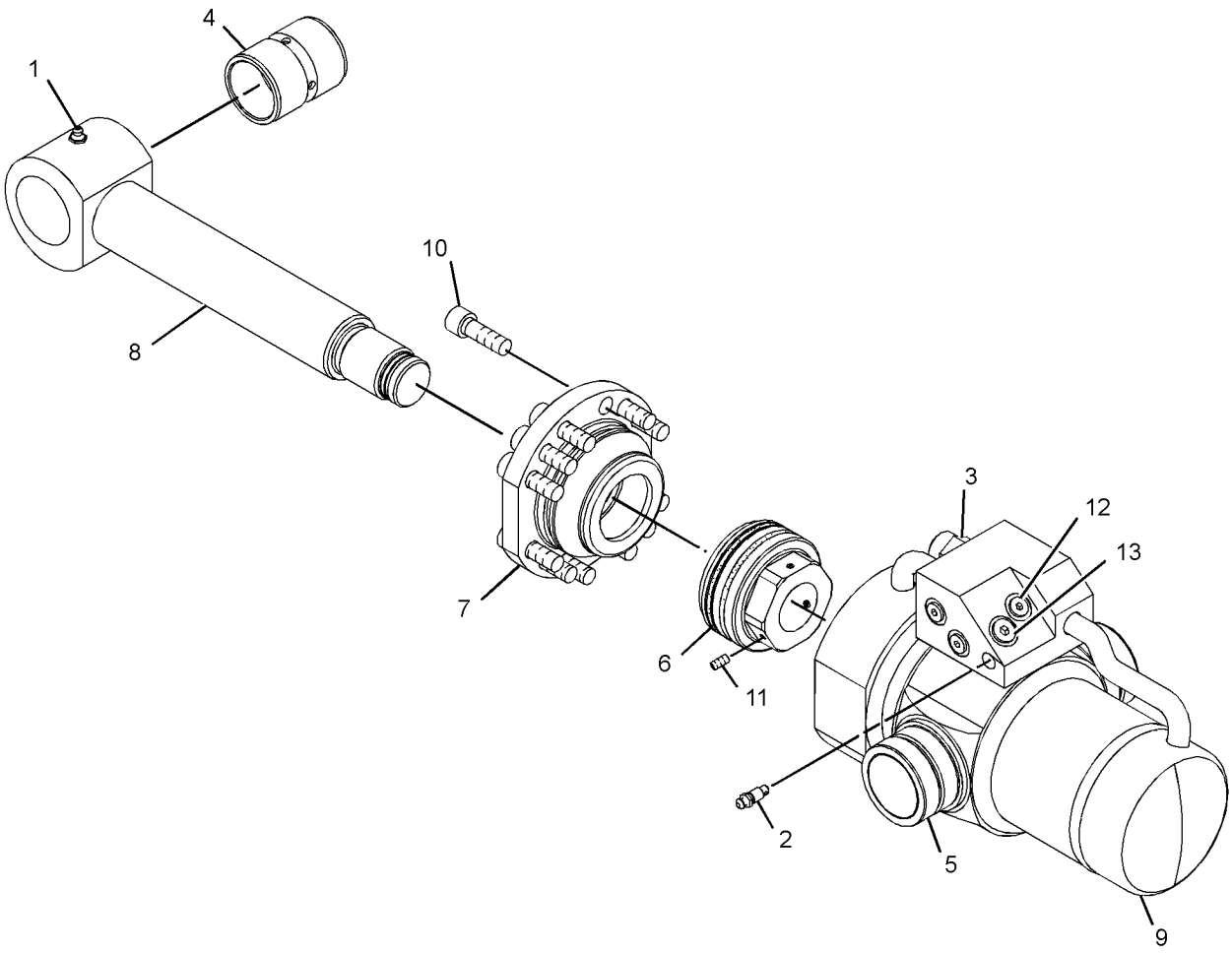

GRAPHIC #1 **<END>** g01993024

390-9505 CYLINDER GP-COUPLER

S/N: PBB1-UP; KBS1-UP
63.5-MM (2.5-IN) BORE X 116.8-MM (4.6-IN) STROKE
PART OF 388-0067 COUPLER GP-QUICK
AN ATTACHMENT

SMCS-5133 **i05859647**

NOTE	REF NO	GRAPHIC REF	PART NUMBER	QTY	PART NAME 1 2 3 4 5 6 (PRODUCT LEVEL)	SEE PAGE
J	1	1	**237-0947**	1	VALVE GP-CHECK (PILOT OPERATED)	
	2	1	**3J-1907**	1	SEAL-O-RING	
	3	1	**3J-7354**	1	SEAL-O-RING	
	4	1	**9S-8002**	1	PLUG-O-RING	
	5	1	**9S-8004**	1	PLUG-O-RING	
	6	1	**9F-2167**	1	SCREW-PURGE (3/8-24X1.164-IN)	
					AVAILABLE REPAIR KIT(S):	
J			**213-8433**	1	KIT-SEAL (CHECK VALVE)	
			453-6523	1	KIT-PACKING (COUPLER CYLINDER)	
					(INCLUDES O-RINGS,SEALS & POLYPAK)	

J - KIT MARKED J SERVICES PART(S)MARKED J

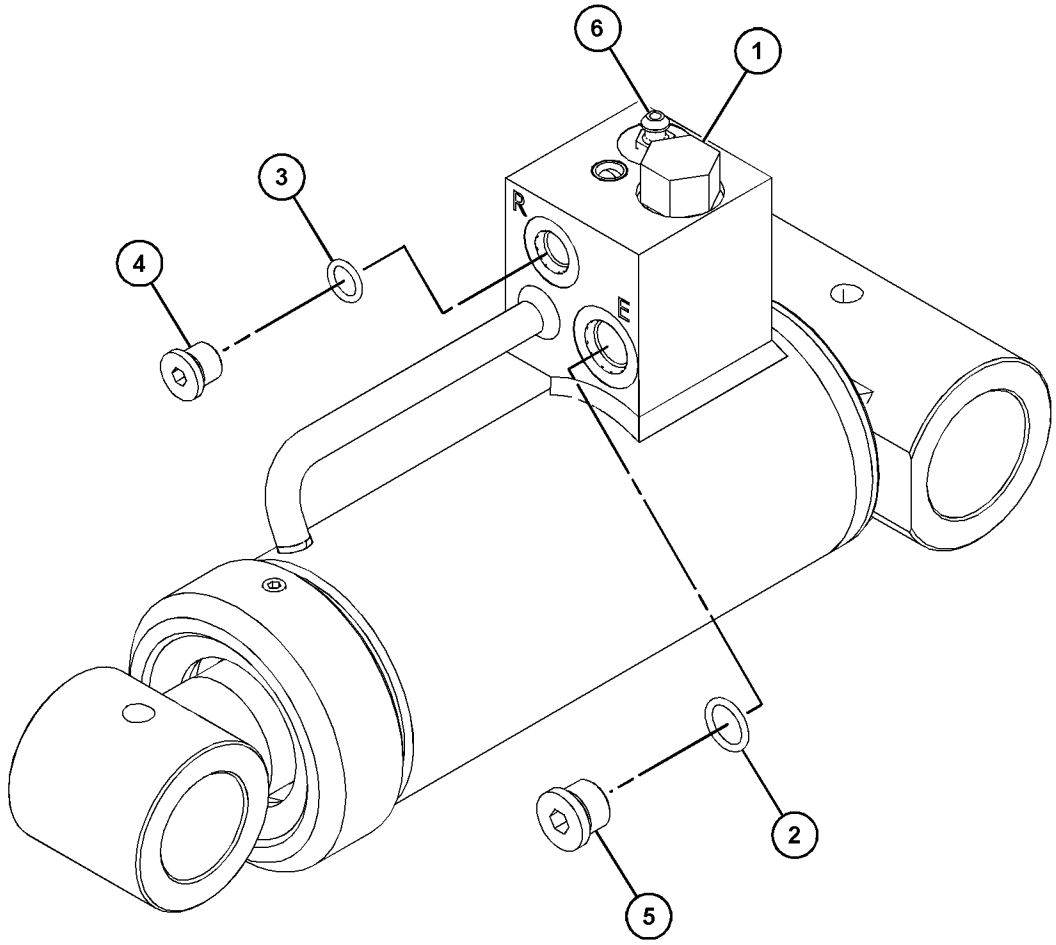

GRAPHIC #1 **<END>** g03711887

364-0937 CYLINDER GP-HYDRAULIC

S/N: KBS1-UP
140-MM (5.5-IN) BORE X 1504-MM (59.2-IN) STROKE
PART OF 364-0936 CYLINDER & SEAL GP-STICK
AN ATTACHMENT

SMCS-4303, 5102, 5105, 5116, 5138, 5149, 5362, 5576, 5816, 7201, 7562

i05403735

NOTE	REF NO	GRAPHIC REF	PART NUMBER	QTY	PART NAME 1 2 3 4 5 6 (PRODUCT LEVEL)	SEE PAGE
	1	1	**087-5434**	1	HEAD	
M	2	1	**123-2060**	1	LOCKNUT (M80X2-THD)	
	3	1	**158-9064**	1	PISTON	
J	4	1	**158-9065**	2	RING	
J	5	1	**179-9667**	1	RING	
J	6	1	**377-6019**	1	SEAL-U-CUP	
	7	1	**289-7934**	1	CYLINDER AS	
	7A	1	**241-7381**	1	BUSHING	
	8	1	**289-7937**	1	ROD AS	
	8A	1	**241-7381**	1	BUSHING	
J	9	1	**247-8791**	1	RING-SEAL	
J	10	1	**377-6022**	1	SEAL-BUFFER	
	11	1	**087-5431**	1	STOP	
J	12	1	**087-5436**	1	RING-BACKUP	
	13	1	**093-1572**	1	RING-RETAINING	
	14	1	**095-0929**	2	RING-RETAINING	
J	15	1	**095-1632**	1	SEAL-O-RING	
J	16	1	**096-2665**	1	RING-BACKUP	
	17	1	**103-8378**	1	RING-RETAINING	
	18	1	**103-8379**	1	RING	
	19	1	**103-8380**	1	STOP	
	20	1	**114-0757**	1	BUSHING	
J	21	1	**364-0955**	1	SEAL-LIP TYPE	
M	22	1	**7Y-5215**	8	BOLT-SOCKET HEAD (M24X3X90-MM)	
J	23	1	**9X-3598**	1	SEAL AS	
					AVAILABLE REPAIR KIT(S):	
J			**398-1900**	1	KIT-SEAL (HYDRAULIC CYLINDER)	

J - KIT MARKED J SERVICES PART(S) MARKED J
M - METRIC PART

364-0937 **CYLINDER GP-HYDRAULIC (*contd.*)** **i05403735**

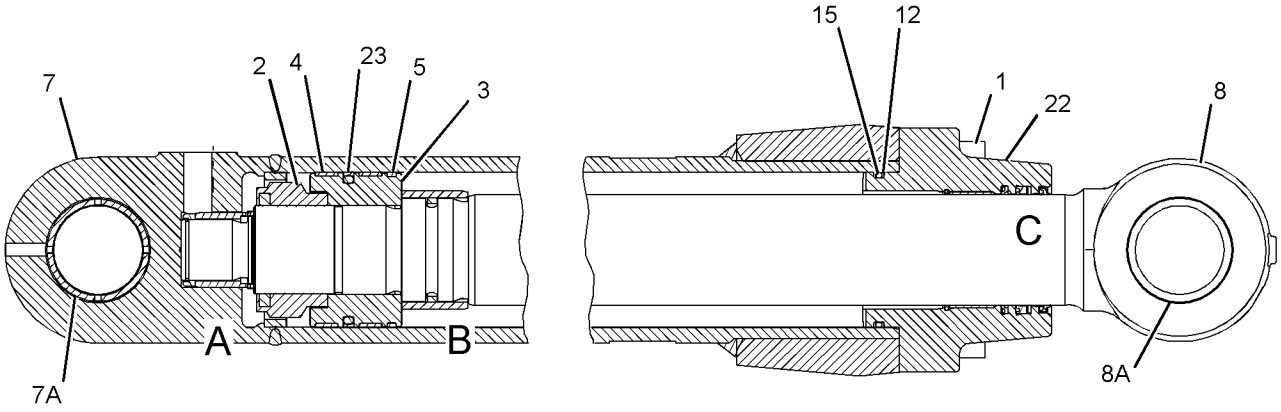

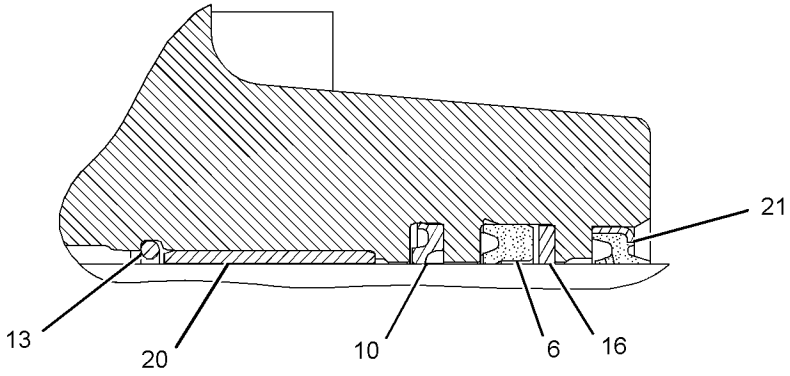

VIEW OF AREA C

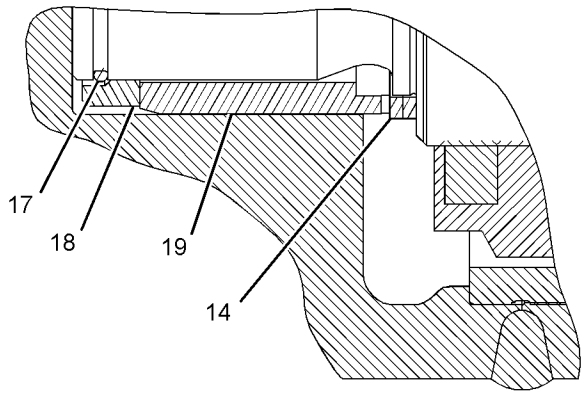

VIEW OF AREA A

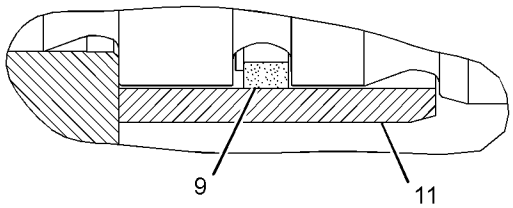

VIEW OF AREA B

GRAPHIC #1 **<END>** g01222986

191-5537 DRIVE GP-AUXILIARY PUMP

S/N: PBB1-UP; KBS1-UP
PART OF 397-1472 DRIVE GP-PUMP
AN ATTACHMENT

SMCS-3108 **i04746316**

NOTE	REF NO	GRAPHIC REF	PART NUMBER	QTY	PART NAME 1 2 3 4 5 6 (PRODUCT LEVEL)	SEE PAGE
M	1	1	**101-7402**	8	BOLT-SOCKET HEAD (M12X1.75X30-MM)	
M	2	1	**8T-4189**	2	BOLT (M8X1.25X20-MM)	
M	3	1	**8T-4192**	2	BOLT (M12X1.75X25-MM)	
	4	1	**191-5601**	2	BEARING	
	5	1	**096-0121**	1	SEAL-O-RING	
	6	1	**191-5541**	1	COVER	
	7	1	**8T-5049**	1	SEAL-O-RING	
	8	1	**177-2585**	1	COVER	
	9	1	**173-3436**	1	COVER	
	10	1	**095-1680**	1	SEAL-O-RING	
	11	1	**9S-4191**	1	PLUG	
	12	1	**3J-1907**	1	SEAL-O-RING	
	13	1	**099-2096**	2	BALL BEARING	
	14	1	**173-3406**	1	SHAFT	
	15	1	**191-5540**	1	GEAR (39-TEETH)	
	16	1	**191-5539**	1	SHAFT	
	17	1	**129-7857**	1	GASKET	
	18	1	**094-1875**	2	DOWEL	

M - METRIC PART

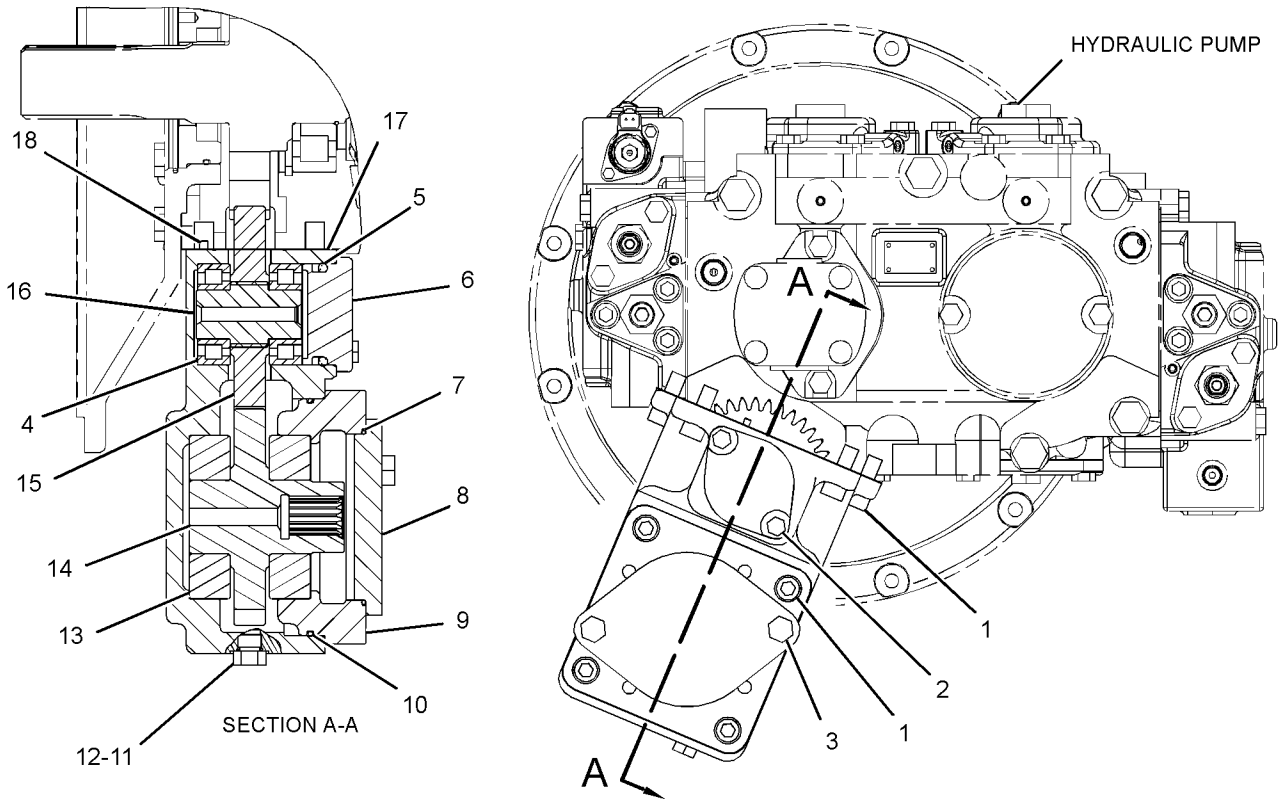

GRAPHIC #1 **<END>** g01948587

397-1472 DRIVE GP-PUMP

S/N: PBB1-UP; KBS1-UP

AN ATTACHMENT

SMCS-3108 **i05858904**

NOTE	PART NUMBER	QTY	PART NAME 1 2 3 4 5 6 (PRODUCT LEVEL)	SEE PAGE
Y	**191-5537**	1	DRIVE GP-AUXILIARY PUMP	388
Y	**399-6308**	1	SHEET AS-SOUND SUPPRESSION	292

Y - SEPARATE ILLUSTRATION

<END>

148-4644 DRIVE GP-SWING—WITHOUT MOTOR

S/N: PBB1-UP; KBS1-UP

PART OF 148-4679, 296-6272 DRIVE GP-SWING

ALSO AN ATTACHMENT

SMCS-5459 **i05718919**

NOTE	REF NO	GRAPHIC REF	PART NUMBER	QTY	PART NAME 1 2 3 4 5 6 (PRODUCT LEVEL)	SEE PAGE
	1	1	**094-0584**	6	WASHER (40.3X72X1-MM THK)	
	2	1	**094-1509**	3	SHAFT-PLANETARY	
	3	1	**148-4733**	3	GEAR-PLANETARY (26-TEETH)	
	4	1	**114-1581**	1	SPACER (57.5X74X6-MM THK)	
	5	1	**148-4732**	1	GEAR-SUN (20-TEETH)	
	6	1	**093-1729**	2	RING-RETAINING	
	7	1	**148-4632**	1	GEAR-SUN (23-TEETH)	
	8	1	**191-2578**	1	CARRIER-PLANETARY	
	9	1	**7Y-1434**	1	SPACER (40X69.5X6-MM THK)	
	10	1	**148-4637**	1	CARRIER-PLANETARY	
	11	1	**148-4640**	1	RING-RETAINING	
	12	1	**148-4643**	1	BEARING	
	13	1	**095-1022**	1	BEARING-ROLLER	
	14	1	**148-4642**	1	SEAL-O-RING	
	15	1	**227-6228**	1	CAGE	
M	16	1	**453-3447**	6	BOLT (M12X1.75X40-MM)	
	17	1	**451-2182**	6	WASHER-HARD (13.5X25.5X3-MM THK)	
	18	1	**199-4561**	2	SEAL-LIP TYPE	
	19	1	**148-4636**	1	SHAFT-PINION	
	20	1	**148-4638**	1	HOUSING	
	21	1	**3K-0360**	1	SEAL-O-RING	
	22	1	**6V-7238**	1	VALVE-SHUTOFF (SWING DRIVE)	
	23	1	**148-4634**	3	SHAFT-PLANETARY	
	24	1	**095-0891**	3	PIN-SPRING	
	25	1	**148-4635**	1	GEAR-RING (73-TEETH)	
	26	1	**148-4633**	3	GEAR-PLANETARY (25-TEETH)	
	27	1	**7Y-0252**	6	BEARING AS-ROLLER	
	28	1	**094-0611**	6	WASHER (47.3X76X1-MM THK)	
	29	1	**095-0886**	3	PIN-SPRING	
	30	1	**094-1516**	3	BEARING-ROLLER	
	31	1	**171-9383**	1	SPACER	
BF			**1U-8846**		SEALANT-GASKET	

B - USE AS REQUIRED
F - NOT SHOWN
M - METRIC PART

148-4644 **DRIVE GP-SWING (*contd.*)** **i05718919**

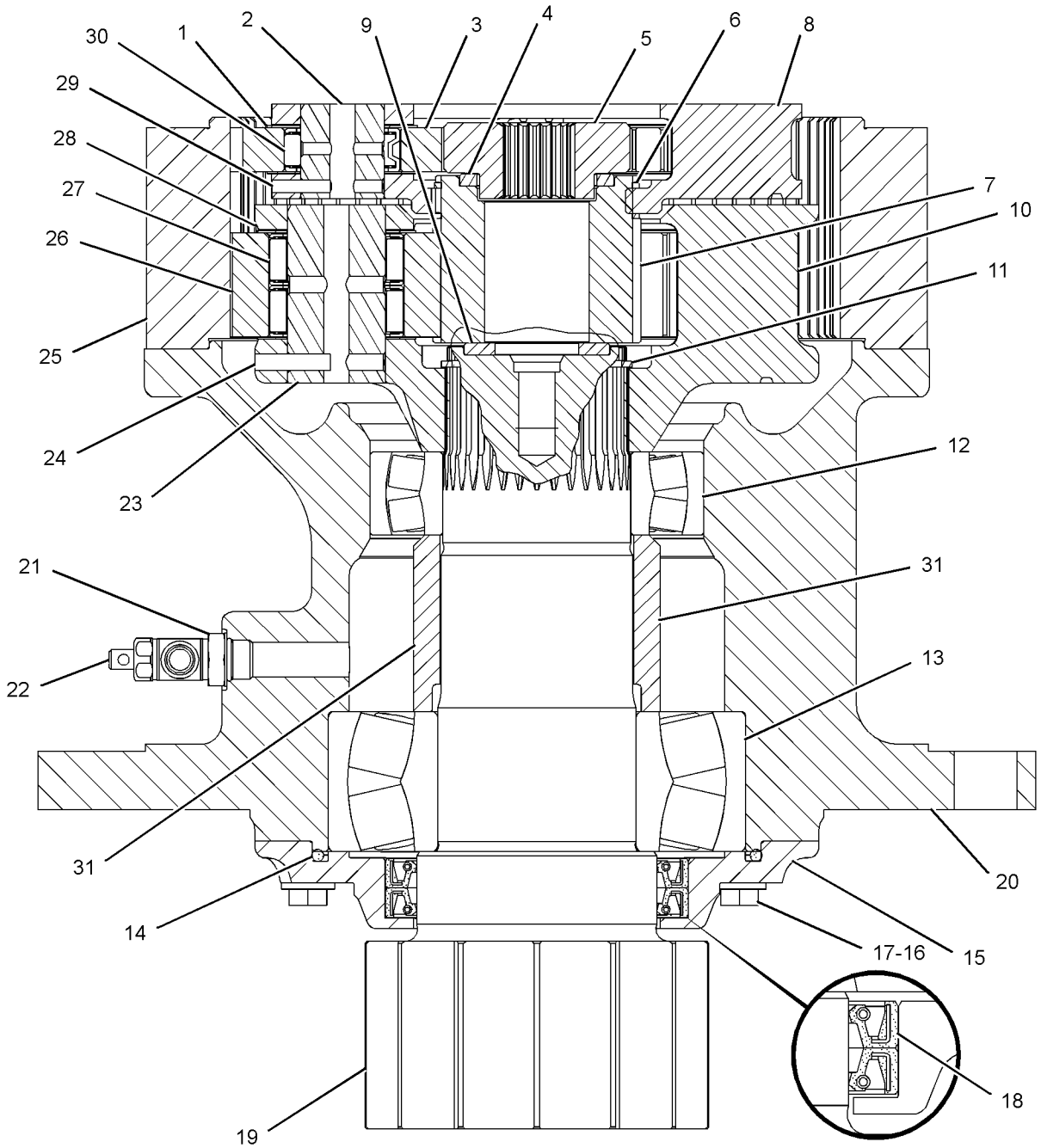

GRAPHIC #1 **<END>** g03647723

148-4679 DRIVE GP-SWING—WITH MOTOR

S/N: PBB1-UP; KBS1-UP

PART OF 267-6767 POWER TRAIN AR

SMCS-5459 **i05325334**

NOTE	REF NO	GRAPHIC REF	PART NUMBER	QTY	PART NAME 1 2 3 4 5 6 (PRODUCT LEVEL)	SEE PAGE
Y	1	1	**148-4644**	1	DRIVE GP-SWING (WITHOUT MOTOR)	390
	2	1	**114-1398**	1	GAUGE-OIL LEVEL (SWING DRIVE)	
	3	1	**114-1399**	1	PIPE-GAUGE	
Y	4	1	*158-8985*	1	MOTOR & MTG GP-SWING	569
	5	1	**227-6221**	1	BREATHER AS (SWING DRIVE)	
	5A	1	**4H-6112**	1	BREATHER (SWING DRIVE)	
	5B	1	**227-6215**	1	BOSS (1/4-18-THD)	
	5C	1	**267-6785**	1	PIPE	
BF		1	**1U-8846**		SEALANT-GASKET	

B - USE AS REQUIRED
F - NOT SHOWN
Y - SEPARATE ILLUSTRATION

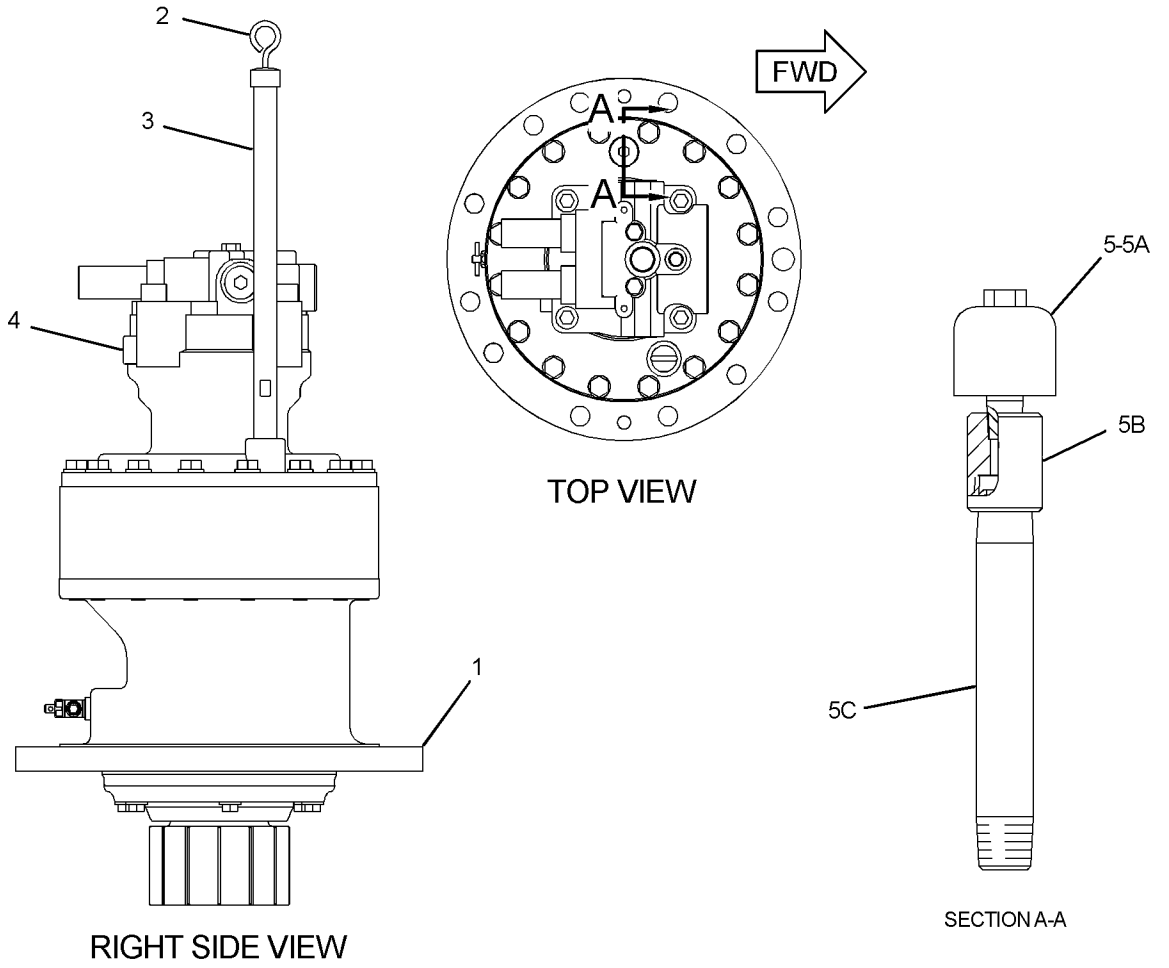

GRAPHIC #1 **<END>** g03374339

296-6272 DRIVE GP-SWING—WITH MOTOR

S/N: PBB1-UP; KBS1-UP
PART OF 296-6288 DRIVE GP-SWING
AN ATTACHMENT

SMCS-5459 **i03874814**

NOTE	REF NO	GRAPHIC REF	PART NUMBER	QTY	PART NAME 1 2 3 4 5 6 (PRODUCT LEVEL)	SEE PAGE
	1	1	**114-1398**	1	GAUGE-OIL LEVEL (SWING DRIVE)	
	2	1	**114-1399**	1	PIPE-GAUGE	
Y	3	1	**148-4644**	1	DRIVE GP-SWING (WITHOUT MOTOR)	390
	4	1	**227-6221**	1	BREATHER AS (SWING DRIVE)	
		1	**4H-6112**	1	BREATHER (SWING DRIVE)	
		1	**227-6215**	1	BOSS (1/4-18-THD)	
		1	**267-6785**	1	PIPE	
Y	5	1	*315-4370*	1	MOTOR & MTG GP-SWING	570
B	6	1	**1U-8846**		SEALANT-GASKET	

B - USE AS REQUIRED
Y - SEPARATE ILLUSTRATION

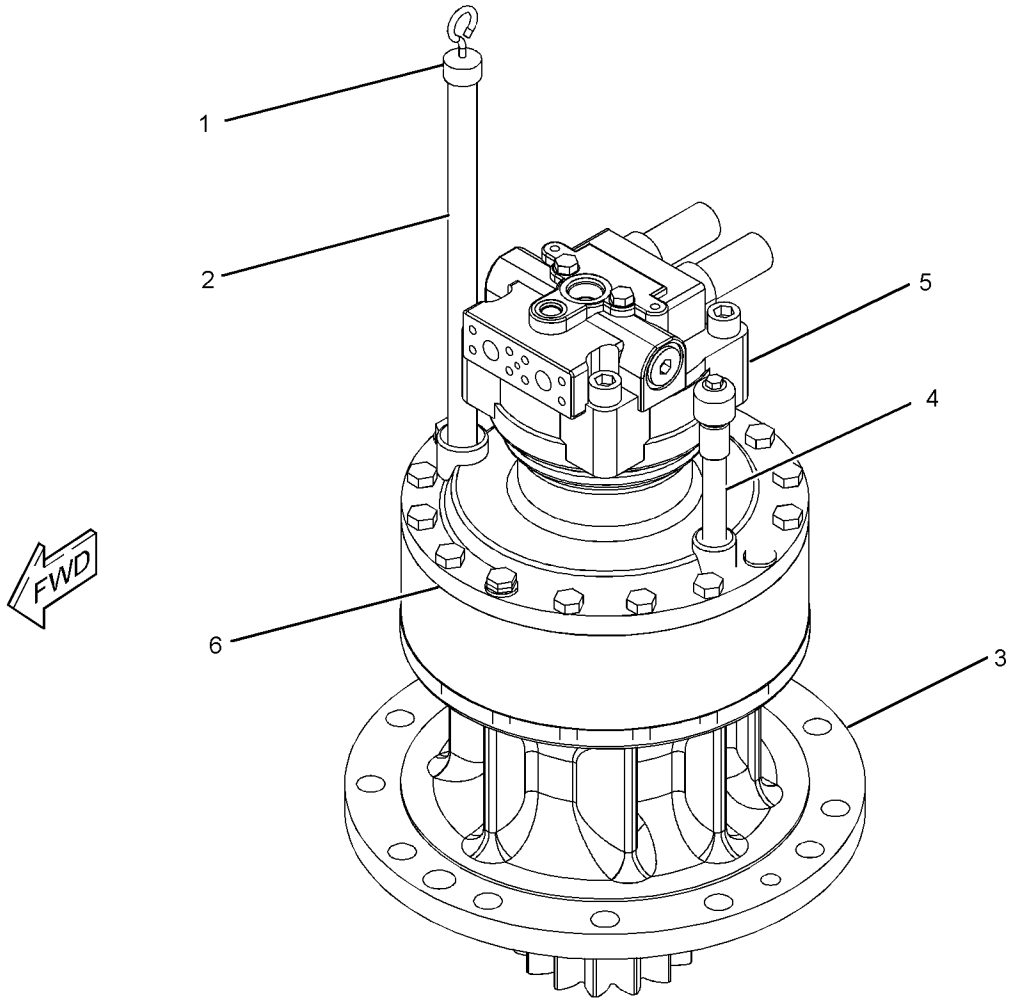

GRAPHIC #1 **<END>** g01524600

296-6288 DRIVE GP-SWING—WITH MOTOR

S/N: PBB1-UP; KBS1-UP

PART OF 456-0823, 456-0824, 456-0932, 456-0933, 456-0942, 456-0943 DISTRIBUTION AR AN ATTACHMENT

SMCS-5459 **i03874762**

NOTE	PART NUMBER	QTY	PART NAME 1 2 3 4 5 6 (PRODUCT LEVEL)	SEE PAGE
Y	*296-6272*	1	DRIVE GP-SWING (WITH MOTOR)	393

Y - SEPARATE ILLUSTRATION

<END>

227-6166 FASTENER GP-SWING & FINAL DR

S/N: PBB1-UP; KBS1-UP

PART OF 267-6767 POWER TRAIN AR

SMCS-4050, 5459

i05623217

NOTE	REF NO	GRAPHIC REF	PART NUMBER	QTY	PART NAME 1 2 3 4 5 6 (PRODUCT LEVEL)	SEE PAGE
	1	1	**2Y-5503**	2	CORK	
	2	1	**5D-1026**	1	CLAMP-BAND	
	3	1	**096-4755**	1	PIN	
M	4	1	**447-1719**	32	BOLT (M20X2.5X60-MM)	
M	5	1	**447-1726**	12	BOLT (M24X3X70-MM)	
	6	1	**451-2176**	32	WASHER-HARD (22X35X3.5-MM THK)	
	7	1	**451-2177**	12	WASHER-HARD (26X44X4-MM THK)	
E	8	1	**5P-0767**		HOSE (90-CM)	

E - ORDER BY THE CENTIMETER
M - METRIC PART

227-6166 **FASTENER GP-SWING & FINAL DR (*contd.*)** **i05623217**

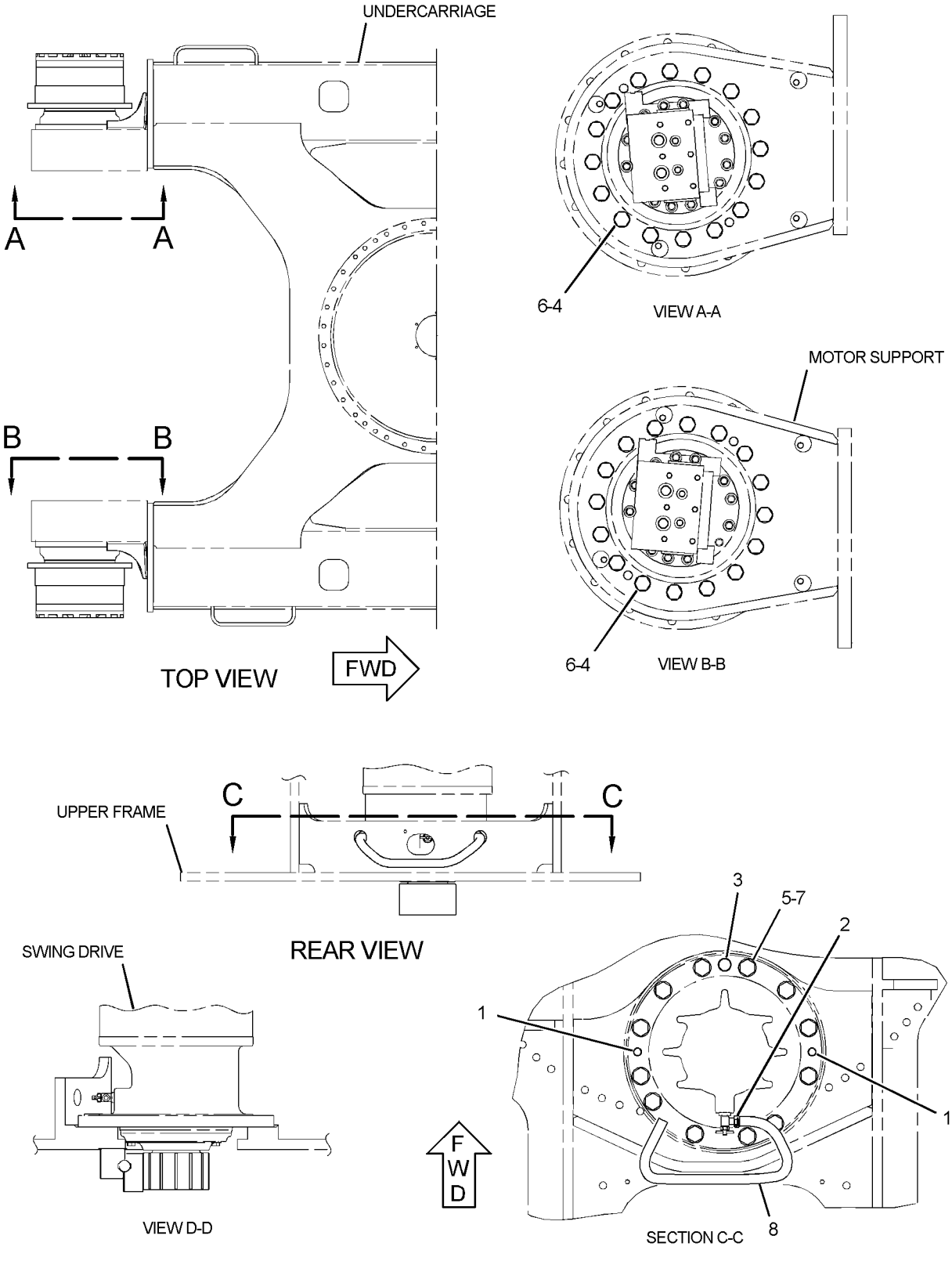

GRAPHIC #1 **<END>** g03571579

158-8987 FILTER & VALVE GP-PILOT–HYDRAULIC OIL

S/N: PBB1-UP; KBS1-UP

PART OF 455-4364 TANK & FILTER GP-HYDRAULIC

SMCS-5072, 5092 **i05673879**

NOTE	REF NO	GRAPHIC REF	PART NUMBER	QTY	PART NAME 1 2 3 4 5 6 (PRODUCT LEVEL)	SEE PAGE
	1	1	**5I-8670**	1	FILTER-OIL (ADVANCED EFFICIENCY) (HYDRAULIC, PILOT)	
	2	1	**215-4909**	1	VALVE GP-PILOT RELIEF (HYDRAULIC FILTER)	
	2A	1	**095-1584**	1	SEAL-O-RING	
	2B	1	**095-1590**	1	SEAL-O-RING	
	2C	1	**095-1596**	1	SEAL-O-RING	

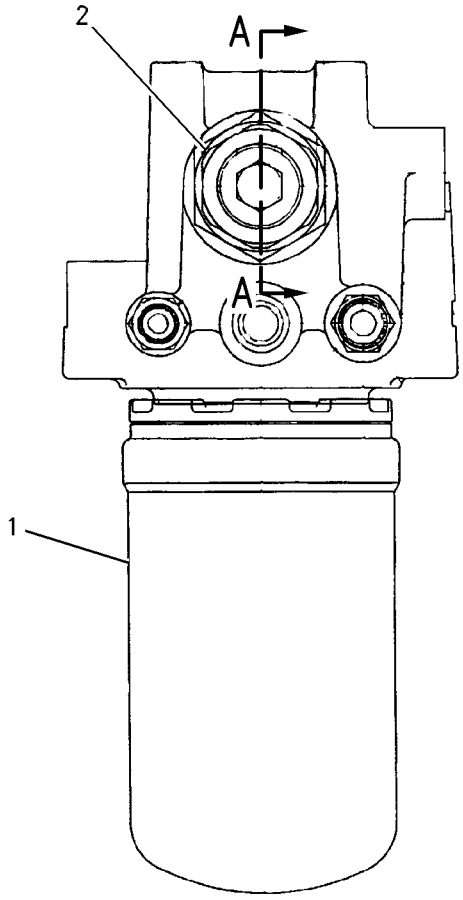

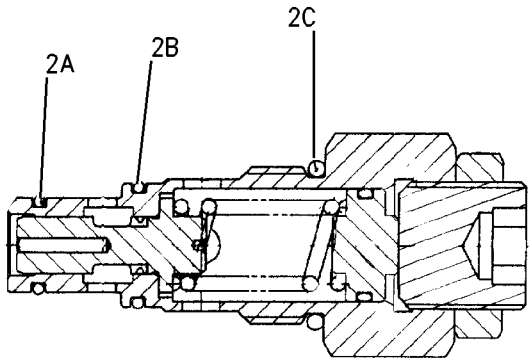

SECTION A–A

GRAPHIC #1 **<END>** g00842119

188-4140 FILTER GP-OIL—HYDRAULIC RETURN

S/N: PBB1-UP; KBS1-UP

PART OF 455-4364 TANK & FILTER GP-HYDRAULIC

SMCS-3004, 4295, 431F, 5068, 5091, 5092 **i04889376**

NOTE	REF NO	GRAPHIC REF	PART NUMBER	QTY	PART NAME 1 2 3 4 5 6 (PRODUCT LEVEL)	SEE PAGE
Y	1	1	**173-3503**	1	BLOCK GP-HYDRAULIC	340
	2	1	**129-8034**	1	VALVE AS-BYPASS	
	3	1	**123-2003**	2	SEAL-O-RING	
	4	1	**173-3507**	1	HOUSING AS	
M	5	1	**8T-4194**	8	BOLT (M12X1.75X50-MM)	
	6	1	**8T-4223**	8	WASHER-HARD (13.5X25.5X3-MM THK)	
Y	7	1	**188-4142**	1	FILTER GP-OIL (HYDRAULIC RETURN)	400
	8	1	**173-3510**	1	COVER	
	9	1	**173-3518**	1	INDICATOR AS (HYDRAULIC RETURN FILTER)	
	10	1	**159-7784**	1	SEAL-O-RING	
M	11	1	**6V-4298**	4	BOLT (M5X0.8X16-MM)	
	12	1	**8T-0328**	4	WASHER-HARD (5.5X10X1-MM THK)	
M	13	1	**8T-6693**	4	SCREW-MACHINE (M5X0.8X16-MM)	

M - METRIC PART
Y - SEPARATE ILLUSTRATION

188-4140 **FILTER GP-OIL (*contd.*)** **i04889376**

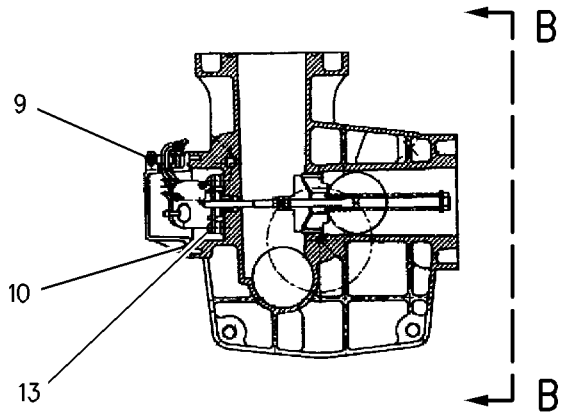

SECTION A-A

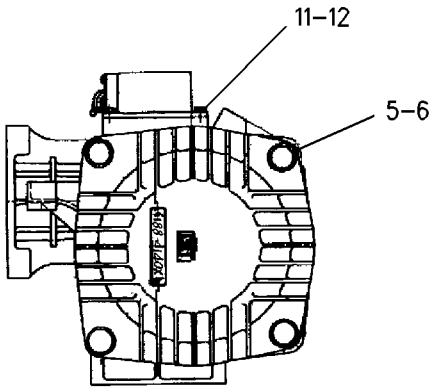

VIEW B-B

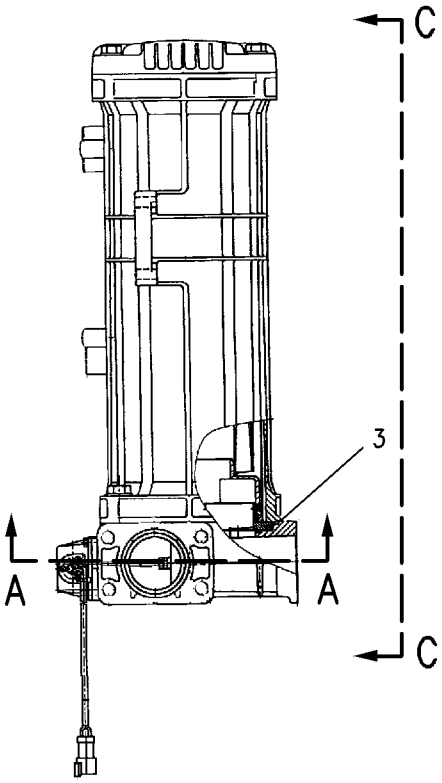

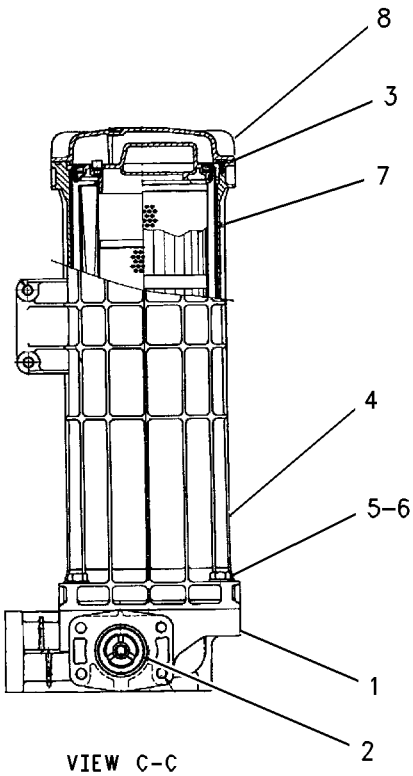

VIEW C-C

GRAPHIC #1 **<END>** g00792787

188-4142 FILTER GP-OIL—HYDRAULIC RETURN

S/N: PBB1-UP; KBS1-UP

PART OF 188-4140 FILTER GP-OIL

SMCS-3004, 4295, 431F, 5068, 5091, 5092 **i05673878**

NOTE	REF NO	GRAPHIC REF	PART NUMBER	QTY	PART NAME 1 2 3 4 5 6 (PRODUCT LEVEL)	SEE PAGE
	1	1	**204-2762**	1	PLATE	
JM	2	1	**173-3529**	6	BOLT (M6X1X15-MM)	
J	3	1	**3T-7528**	6	SEAL-O-RING	
	4	1	**173-3513**	1	BASE	
J	5	1	**3E-4297**	2	SEAL-O-RING	
M	6	1	**137-3626**	1	BOLT-SPECIAL	
	7	1	**188-4143**	1	FILM-INSTRUCTION (HYDRAULIC OIL RETURN FILTER)	
	8	1	**179-9806**	1	FILTER ELEMENT AS-OIL (ADVANCED EFFICIENCY) (HYDRAULIC RETURN)	
J	9	1	**137-3623**	4	SEAL-O-RING	
J	10	1	**6V-7658**	2	SEAL-O-RING	
J	11	1	**177-2553**	1	SEAL-O-RING	
J	12	1	**095-1681**	1	SEAL-O-RING	
	13	1	**173-3515**	1	RING-RETAINING	
	14	1	**173-3516**	1	HANDLE	
J	15	1	**4J-7533**	1	SEAL-O-RING	
J	16	1	**9S-4180**	1	PLUG	
JM	17	1	**137-3624**	8	SCREW (M3X0.5X5-MM)	
J	18	1	**137-3625**	2	PAD	
	19	1	**173-3517**	1	PLATE	
J	20	1	**137-3628**	1	SHIM (0.1-MM THK)	
					AVAILABLE REPAIR KIT(S):	
J			**201-9299**	1	KIT-SERVICE (HYDRAULIC RETURN FILTER)	

J - KIT MARKED J SERVICES PARTS MARKED J
M - METRIC PART

188-4142 **FILTER GP-OIL (*contd.*)** **i05673878**

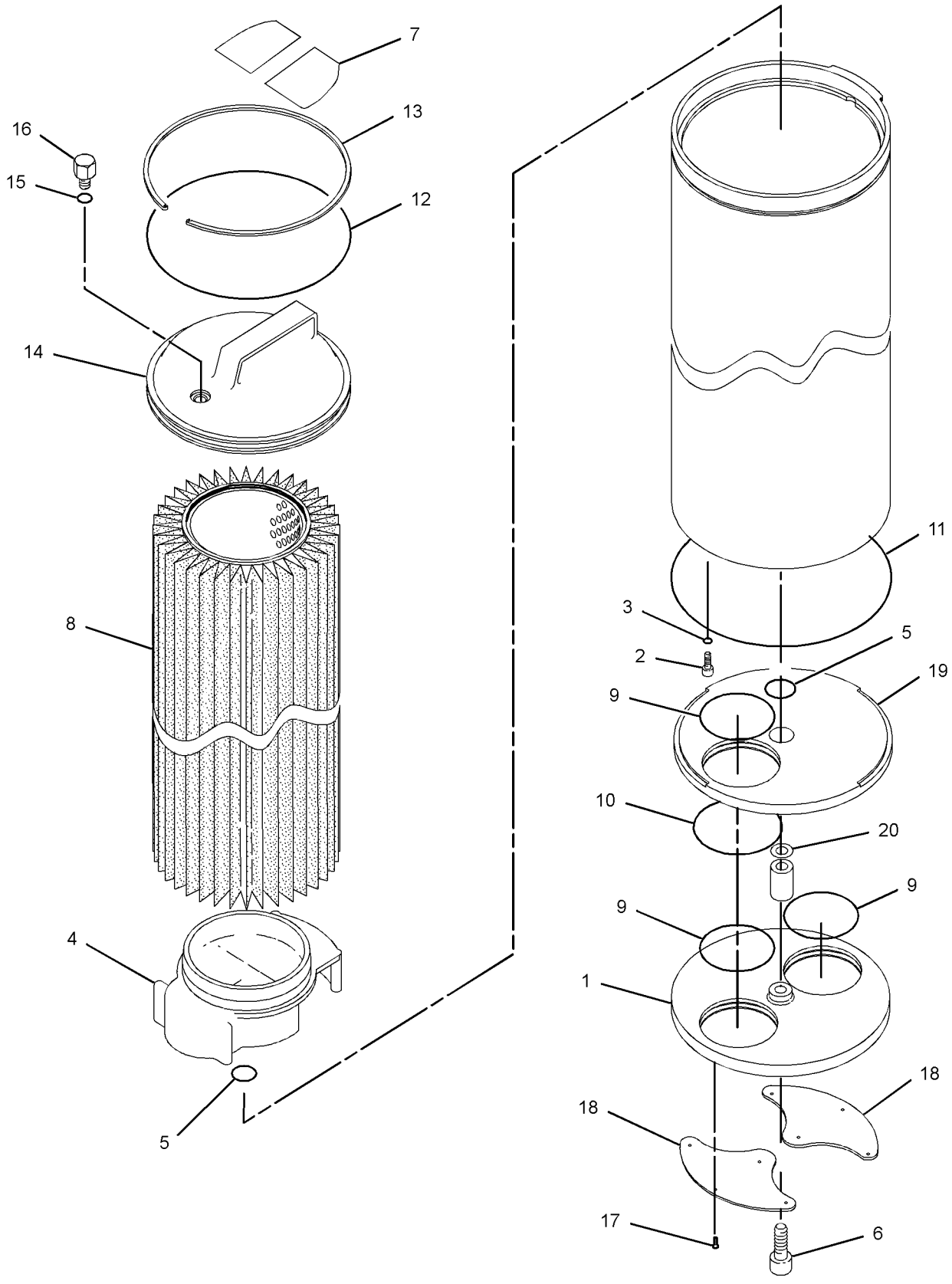

GRAPHIC #1 **<END>** g01830153

224-1687 FILTER GP-OIL–HYDRAULIC

S/N: PBB1-UP
PART OF 376-6332 LINES GP-FRONT
AN ATTACHMENT

SMCS-3004, 4295, 431F, 5068, 5091, 5092 **i03298027**

NOTE	REF NO	GRAPHIC REF	PART NUMBER	QTY	PART NAME 1 2 3 4 5 6 (PRODUCT LEVEL)	SEE PAGE
	1	1	**224-1685**	1	SWITCH AS (HYDRAULIC FILTER BYPASS)	
	2	1	**096-6073**	1	PLUG	
	3	1	**095-1582**	1	SEAL-O-RING	
	4	1	**216-6678**	1	CASE	
	5	1	**216-6676**	1	FILTER ELEMENT AS-OIL (HYDRAULIC)	
	6	1	**216-6677**	1	HEAD AS	
	7	1	**095-1717**	1	SEAL-O-RING	

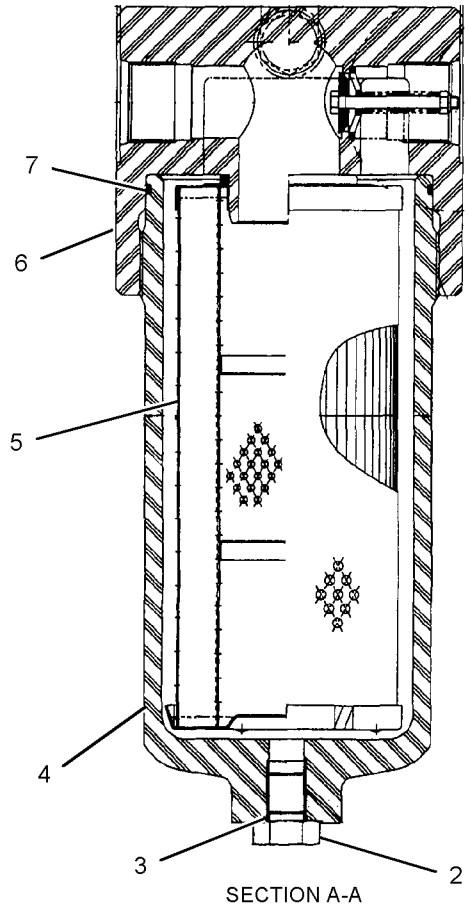

SECTION A-A

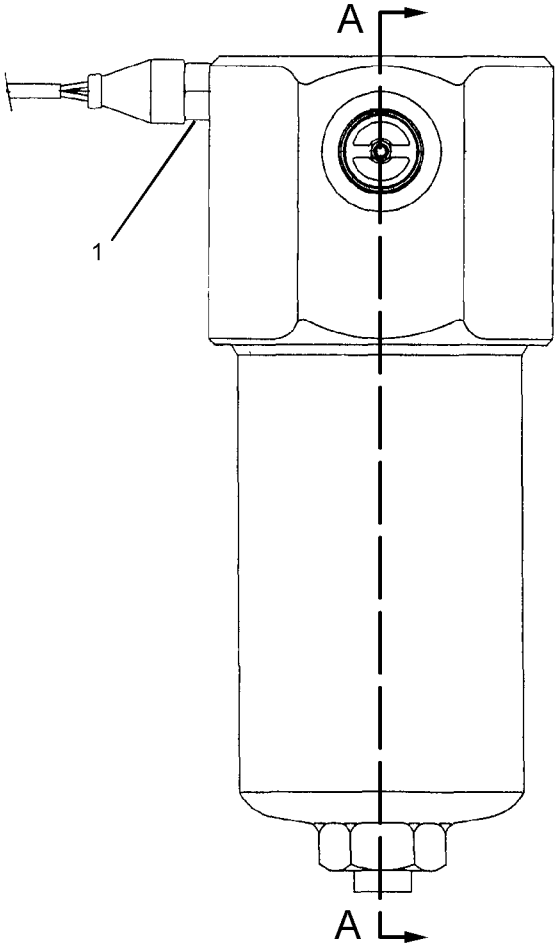

GRAPHIC #1

<END>

g01029603

289-8194 FILTER GP-OIL—HYDRAULIC, CASE DRAIN

S/N: PBB1-UP; KBS1-UP

PART OF 455-4364 TANK & FILTER GP-HYDRAULIC

SMCS-3004, 4295, 431F, 5068, 5091, 5092

i05673875

NOTE	REF NO	GRAPHIC REF	PART NUMBER	QTY	PART NAME 1 2 3 4 5 6 (PRODUCT LEVEL)	SEE PAGE
	1	1	**093-7521**	1	FILTER-OIL (ADVANCED EFFICIENCY) (HYDRAULIC, CASE DRAIN)	
	2	1	**289-8195**	1	HEAD AS-FILTER	

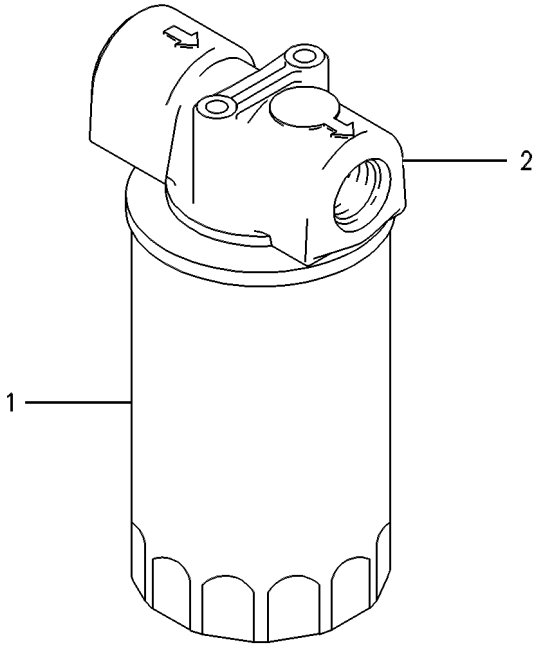

GRAPHIC #1

<END>

g00258224

214-4511 FITTING GP-HYDRAULIC

S/N: PBB1-UP; KBS1-UP

PART OF 239-1714 LINES GP-FRONT

SMCS-5057, 7553 **i05190572**

NOTE	REF NO	GRAPHIC REF	PART NUMBER	QTY	PART NAME 1 2 3 4 5 6 (PRODUCT LEVEL)	SEE PAGE
	1	1	*214-4400*	1	FLANGE AS	
	1A	1	**5K-9090**	1	SEAL-O-RING	
					-OR-	
	2	1	*214-4518*	1	FLANGE AS	
	2A	1	**5K-9090**	1	SEAL-O-RING	
	2B	1	**6V-8635**	1	CONNECTOR	
	2C	1	**7M-8485**	1	SEAL-O-RING	

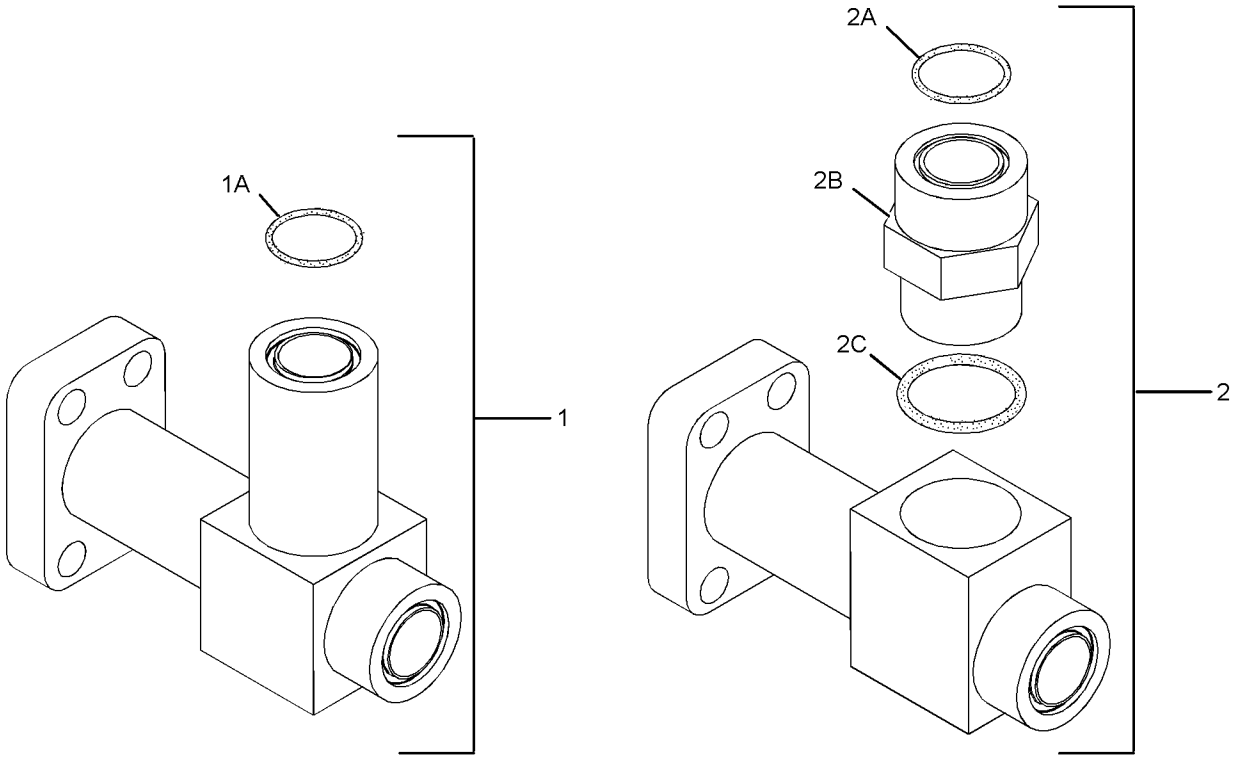

OPTIONAL DESIGN

GRAPHIC #1 **<END>** g02154439

347-6081 GAUGE GP-SIGHT—HYDRAULIC OIL LEVEL

S/N: PBB1-UP; KBS1-UP

PART OF 455-4364 TANK & FILTER GP-HYDRAULIC

SMCS-7479 **i04177752**

NOTE	REF NO	GRAPHIC REF	PART NUMBER	QTY	PART NAME 1 2 3 4 5 6 (PRODUCT LEVEL)	SEE PAGE
	1	1	**347-6082**	2	BLOCK	
M	2	1	**236-3259**	2	BOLT-SPECIAL	
	3	1	**236-3257**	1	PIPE	
	4	1	**6F-6672**	4	SEAL-O-RING	
	5	1	**6F-4855**	4	SEAL-O-RING	

M - METRIC PART

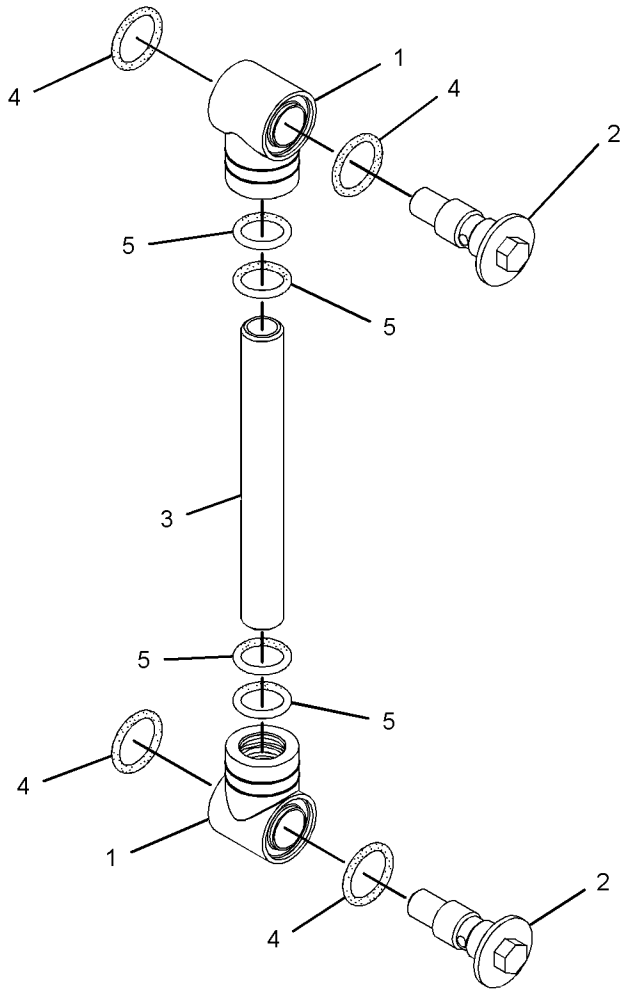

GRAPHIC #1 **<END>** g02270933

256-0093 HEAD GP-PUMP–DRIVE

S/N: PBB1-UP; KBS1-UP

PART OF 397-3680 PUMP GP-MAIN HYDRAULIC

SMCS-3222, 5070, 5086 **i05345839**

NOTE	REF NO	GRAPHIC REF	PART NUMBER	QTY	PART NAME 1 2 3 4 5 6 (PRODUCT LEVEL)	SEE PAGE
B	1	1	**099-3669**	2	SHIM (1-MM THK)	
B		1	**099-3670**	2	SHIM (1.95-MM THK)	
B		1	**099-6109**	2	SHIM (1.05-MM THK)	
B		1	**099-6110**	2	SHIM (1.1-MM THK)	
B		1	**099-6111**	2	SHIM (1.15-MM THK)	
B		1	**099-6112**	2	SHIM (1.2-MM THK)	
B		1	**099-6113**	2	SHIM (1.25-MM THK)	
B		1	**099-6115**	2	SHIM (1.3-MM THK)	
B		1	**099-6117**	2	SHIM (1.35-MM THK)	
B		1	**099-6118**	2	SHIM (1.4-MM THK)	
B		1	**099-6119**	2	SHIM (1.45-MM THK)	
B		1	**099-6120**	2	SHIM (1.5-MM THK)	
B		1	**099-6121**	2	SHIM (1.55-MM THK)	
B		1	**099-6122**	2	SHIM (1.6-MM THK)	
B		1	**099-6123**	2	SHIM (1.65-MM THK)	
B		1	**099-6124**	2	SHIM (1.7-MM THK)	
B		1	**099-6125**	2	SHIM (1.75-MM THK)	
B		1	**099-6126**	2	SHIM (1.8-MM THK)	
B		1	**099-6127**	2	SHIM (1.85-MM THK)	
B		1	**099-6128**	2	SHIM (1.9-MM THK)	
	2	1	**9S-4191**	1	PLUG	
	3	1	**8T-4223**	6	WASHER-HARD (13.5X25.5X3-MM THK)	
M	4	1	**8T-4196**	2	BOLT (M10X1.5X35-MM)	
M	5	1	**8T-4136**	2	BOLT (M10X1.5X25-MM)	
M	6	1	**8T-4133**	1	NUT (M10X1.5-THD)	
M	7	1	**7I-2272**	2	BOLT (M5X0.8X12-MM)	
Y	8	1	**111-9916**	1	VALVE GP-SOLENOID (PRESSURE REDUCING)	674
	9	1	**391-0668**	1	COVER	
	10	1	**200-3244**	1	SPRING	
	11	1	**200-3245**	1	SPRING	
	12	1	**200-3246**	1	SPRING	
	13	1	**215-9961**	1	STOPPER	
	14	1	**215-9962**	1	STOPPER	
M	15	1	**225-4607**	2	SETSCREW (M20X2.5X45-MM)	
	16	1	**234-4452**	1	COVER	
	17	1	**234-4453**	1	COVER	
	18	1	**273-8316**	1	SEAL-O-RING	
	19	1	**273-8317**	1	SEAL-O-RING	
	20	1	**273-8318**	1	SEAL-O-RING	
	21	1	**273-8319**	1	SEAL-O-RING	
	22	1	**285-4470**	1	SEAL-O-RING	
	23	1	**391-0665**	1	BODY AS (DRIVE)	
C	24	1	**301-6874**	1	RETAINER	
C	25	1	**301-8294**	1	ADJUSTER	
	26	1	**094-1875**	1	DOWEL	
	27	1	**094-1881**	1	PLATE-SLIDE	
	28	1	**094-1882**	10	PLUG	
	29	1	**095-1788**	1	RING-BACKUP	
M	30	1	**8T-4131**	1	NUT (M20X2.5-THD)	
M	31	1	**6V-8200**	6	BOLT-SOCKET HEAD (M12X1.75X35-MM)	
	32	1	**099-3671**	1	SPRING	
	33	1	**3J-1907**	2	SEAL-O-RING	
	34	1	**3D-2891**	1	BALL	
M	35	1	**200-3255**	1	NUT (M20X1.5-THD)	
	36	1	**191-5707**	1	SPOOL AS	
	37	1	**190-7674**	1	SEAL-O-RING	
	38	1	**190-7673**	1	SEAL-O-RING	

256-0093 **HEAD GP-PUMP (*contd.*)** **i05345839**

NOTE	REF NO	GRAPHIC REF	PART NUMBER	QTY	PART NAME 1 2 3 4 5 6 (PRODUCT LEVEL)	SEE PAGE
	39	1	**189-9763**	3	SEAL-O-RING	
	40	1	**185-0201**	1	PIN AS	
		1	**129-7978**	1	DOWEL	
	41	1	**185-0169**	1	GUIDE	
	42	1	**173-3413**	1	COVER	
	43	1	**173-3397**	1	LEVER	
	44	1	**173-3384**	1	PISTON	
	45	1	**150-5797**	1	PIN	
	46	1	**153-8623**	1	RING-BACKUP	

B - USE AS REQUIRED
C - CHANGE FROM PREVIOUS TYPE
M - METRIC PART
Y - SEPARATE ILLUSTRATION

256-0093 **HEAD GP-PUMP (*contd.*)** **i05345839**

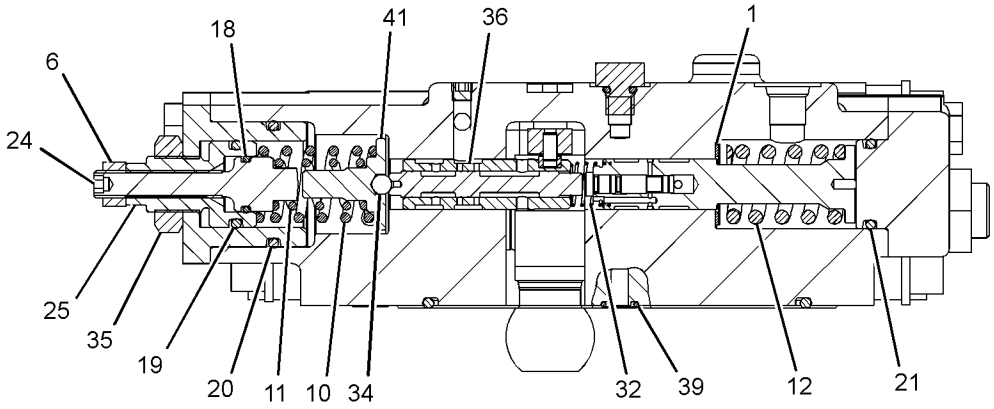

SECTION A-A

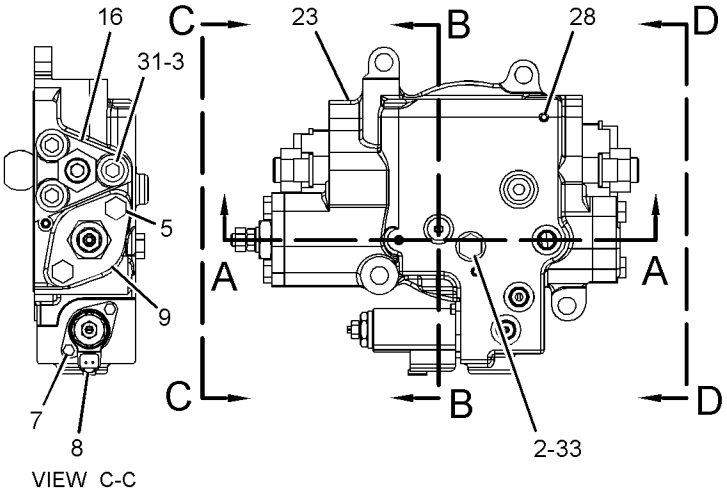

VIEW C-C

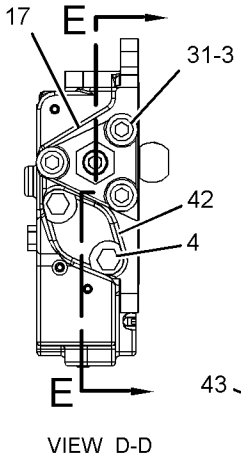

VIEW D-D

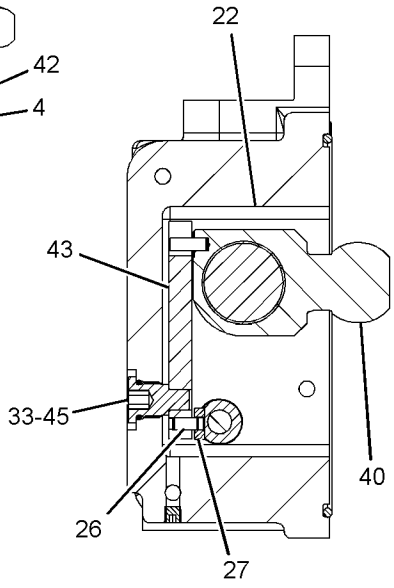

SECTION B-B

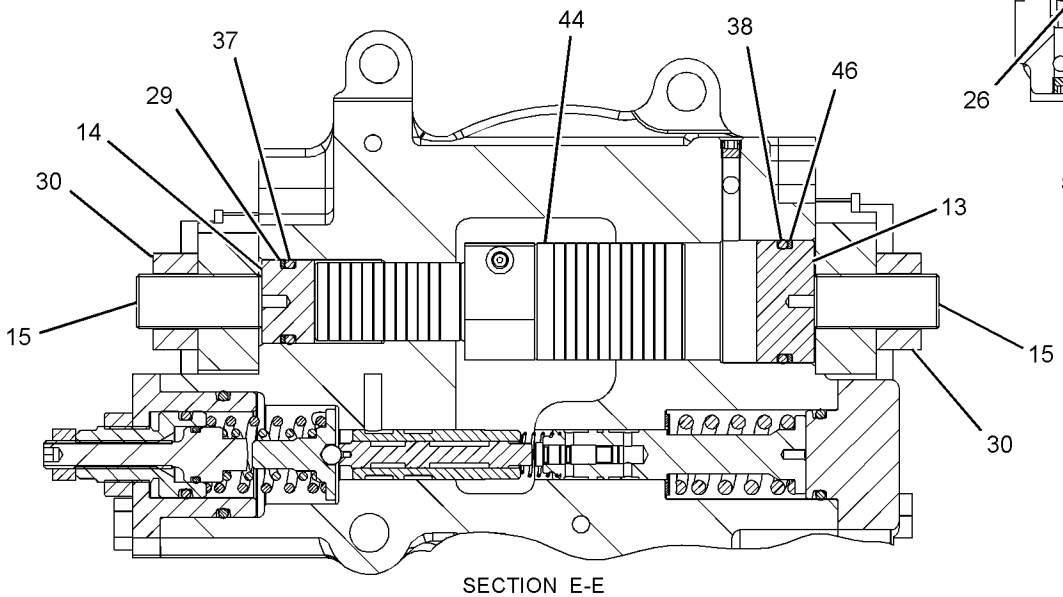

SECTION E-E

GRAPHIC #1 **<END>** g01392644

256-0096 HEAD GP-PUMP–DRIVEN

S/N: PBB1-UP; KBS1-UP

PART OF 397-3680 PUMP GP-MAIN HYDRAULIC

SMCS-3222, 5070, 5086

i04794852

NOTE	REF NO	GRAPHIC REF	PART NUMBER	QTY	PART NAME 1 2 3 4 5 6 (PRODUCT LEVEL)	SEE PAGE
B	1	2	**099-3669**	2	SHIM (1-MM THK)	
B		2	**099-3670**	2	SHIM (1.95-MM THK)	
B		2	**099-6109**	2	SHIM (1.05-MM THK)	
B		2	**099-6110**	2	SHIM (1.1-MM THK)	
B		2	**099-6111**	2	SHIM (1.15-MM THK)	
B		2	**099-6112**	2	SHIM (1.2-MM THK)	
B		2	**099-6113**	2	SHIM (1.25-MM THK)	
B		2	**099-6115**	2	SHIM (1.3-MM THK)	
B		2	**099-6117**	2	SHIM (1.35-MM THK)	
B		2	**099-6118**	2	SHIM (1.4-MM THK)	
B		2	**099-6119**	2	SHIM (1.45-MM THK)	
B		2	**099-6120**	2	SHIM (1.5-MM THK)	
B		2	**099-6121**	2	SHIM (1.55-MM THK)	
B		2	**099-6122**	2	SHIM (1.6-MM THK)	
B		2	**099-6123**	2	SHIM (1.65-MM THK)	
B		2	**099-6124**	2	SHIM (1.7-MM THK)	
B		2	**099-6125**	2	SHIM (1.75-MM THK)	
B		2	**099-6126**	2	SHIM (1.8-MM THK)	
B		2	**099-6127**	2	SHIM (1.85-MM THK)	
B		2	**099-6128**	2	SHIM (1.9-MM THK)	
	2	1,2	**8T-4223**	6	WASHER-HARD (13.5X25.5X3-MM THK)	
M	3	1	**8T-4196**	2	BOLT (M10X1.5X35-MM)	
M	4	2	**8T-4136**	2	BOLT (M10X1.5X25-MM)	
M	5	2	**8T-4133**	1	NUT (M10X1.5-THD)	
M	6	1,2	**6V-8200**	6	BOLT-SOCKET HEAD (M12X1.75X35-MM)	
	7	2	**3J-1907**	1	SEAL-O-RING	
	8	2	**391-0668**	1	COVER	
	9	2	**200-3244**	1	SPRING	
	10	2	**200-3245**	1	SPRING	
	11	2	**200-3246**	1	SPRING	
	12	1	**215-9961**	1	STOPPER	
	13	1	**215-9962**	1	STOPPER	
M	14	1	**225-4607**	2	SETSCREW (M20X2.5X45-MM)	
	15	2	**234-4452**	1	COVER	
	16	1	**234-4453**	1	COVER	
	17	2	**273-8316**	1	SEAL-O-RING	
	18	2	**273-8317**	1	SEAL-O-RING	
	19	2	**273-8318**	1	SEAL-O-RING	
	20	2	**273-8319**	1	SEAL-O-RING	
	21	2	**285-4470**	1	SEAL-O-RING	
	22	1	**391-0666**	1	BODY AS (DRIVEN)	
C	23	2	**301-6874**	1	RETAINER	
C	24	2	**301-8294**	1	ADJUSTER	
	25	2	**094-1875**	1	DOWEL	
	26	2	**094-1881**	1	PLATE-SLIDE	
	27	1	**094-1882**	9	PLUG	
	28	1	**095-1788**	1	RING-BACKUP	
M	29	1	**8T-4131**	2	NUT (M20X2.5-THD)	
	30	2	**3D-2891**	1	BALL	
	31	2	**099-3671**	1	SPRING	
M	32	2	**200-3255**	1	NUT (M20X1.5-THD)	
	33	2	**191-5707**	1	SPOOL AS	
	34	1	**190-7674**	1	SEAL-O-RING	
	35	1	**190-7673**	1	SEAL-O-RING	
	36	2	**189-9763**	3	SEAL-O-RING	
	37	2	**185-0201**	1	PIN AS	
		2	**129-7978**	1	DOWEL	

256-0096 **HEAD GP-PUMP (*contd.*)** **i04794852**

NOTE	REF NO	GRAPHIC REF	PART NUMBER	QTY	PART NAME 1 2 3 4 5 6 (PRODUCT LEVEL)	SEE PAGE
	38	2	**185-0169**	1	GUIDE	
	39	1	**173-3413**	1	COVER	
	40	2	**173-3397**	1	LEVER	
	41	1	**173-3384**	1	PISTON	
	42	1	**153-8623**	1	RING-BACKUP	
	43	2	**150-5797**	1	PIN	

B - USE AS REQUIRED
C - CHANGE FROM PREVIOUS TYPE
M - METRIC PART

256-0096 **HEAD GP-PUMP (*contd.*)** **i04794852**

REFER TO ALL ILLUSTRATIONS OF
THIS GROUP FOR AUXILIARY VIEWS

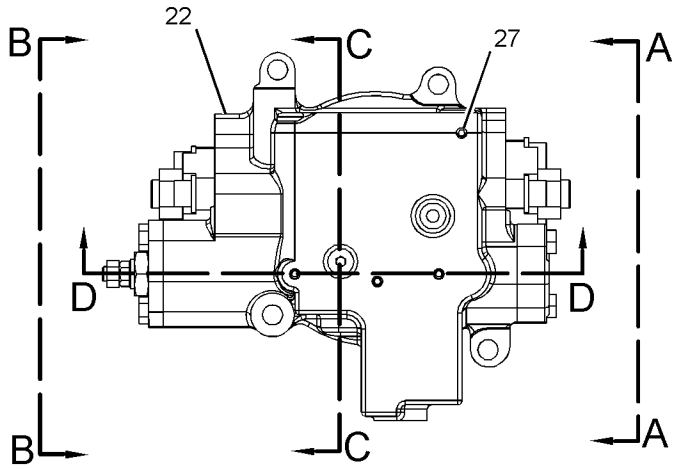

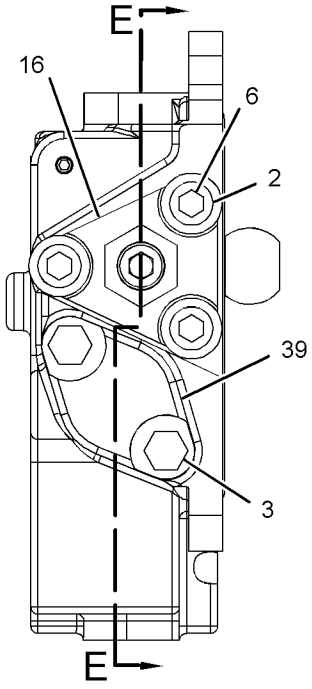

VIEW A-A

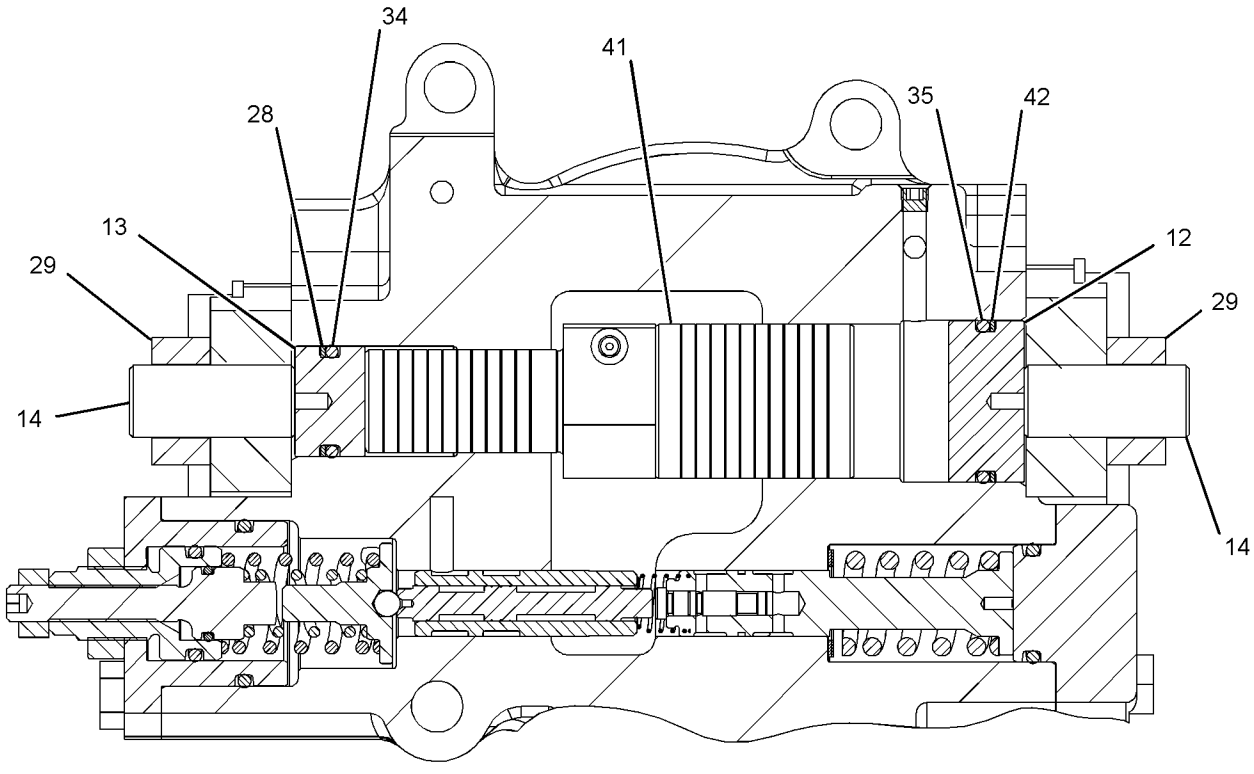

SECTION E-E

GRAPHIC #1 g01393331

256-0096 **HEAD GP-PUMP (*contd.*)** **i04794852**

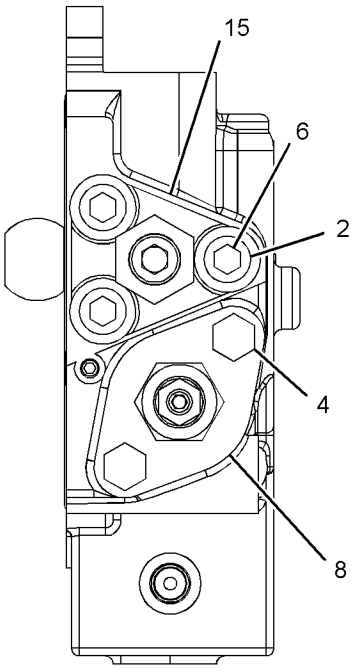

VIEW B-B

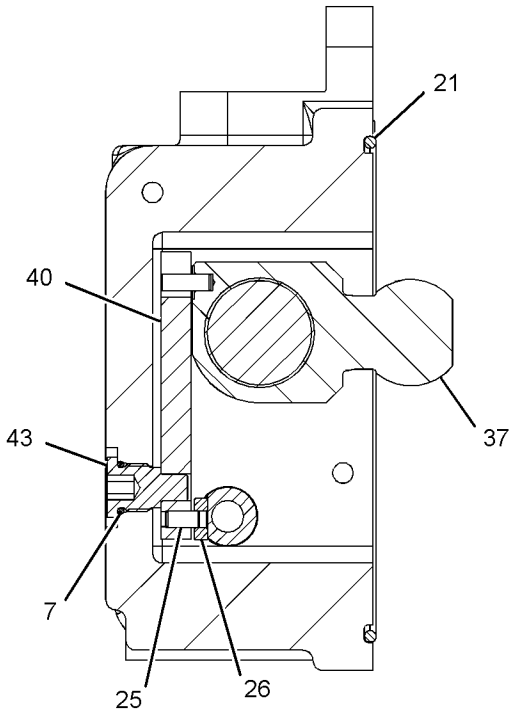

SECTION C-C

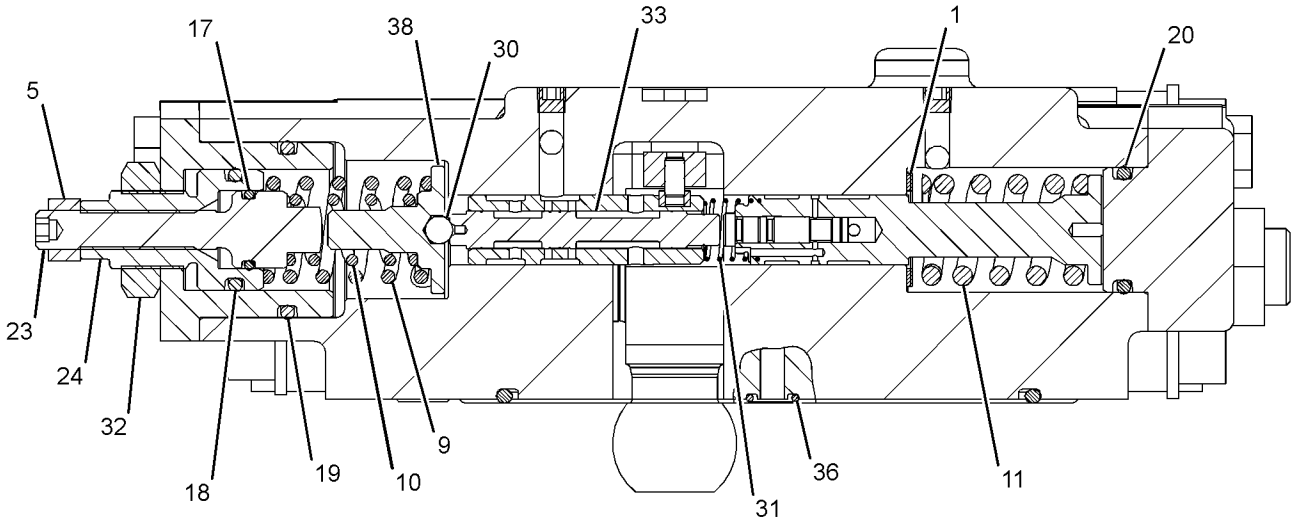

SECTION D-D

GRAPHIC #2 **<END>** g01393359

194-0174 HOSE GP-HYDRAULIC

S/N: PBB1-UP; KBS1-UP

PART OF 239-1714 LINES GP-FRONT

SMCS-5057 **i03732280**

NOTE	PART NUMBER	QTY	PART NAME 1 2 3 4 5 6 (PRODUCT LEVEL)	SEE PAGE
Y	*194-0176*	1	HOSE GP-HYDRAULIC	414
			-OR-	
	168-9760	1	HOSE AS (CONTROL VALVE, STICK)	

Y - SEPARATE ILLUSTRATION

<END>

194-0176 HOSE GP-HYDRAULIC—CONTROL VALVE, STICK

S/N: PBB1-UP; KBS1-UP

PART OF 194-0174 HOSE GP-HYDRAULIC

SMCS-5057 **i02014465**

NOTE	REF NO	GRAPHIC REF	PART NUMBER	QTY	PART NAME 1 2 3 4 5 6 (PRODUCT LEVEL)	SEE PAGE
	1	1	**142-7765**	1	TUBE AS	
	2	1	**5K-9090**	1	SEAL-O-RING	
I	3	1	**165-3165**	1	HOSE AS	

I - REFER TO HYDRAULIC INFORMATION SYSTEM

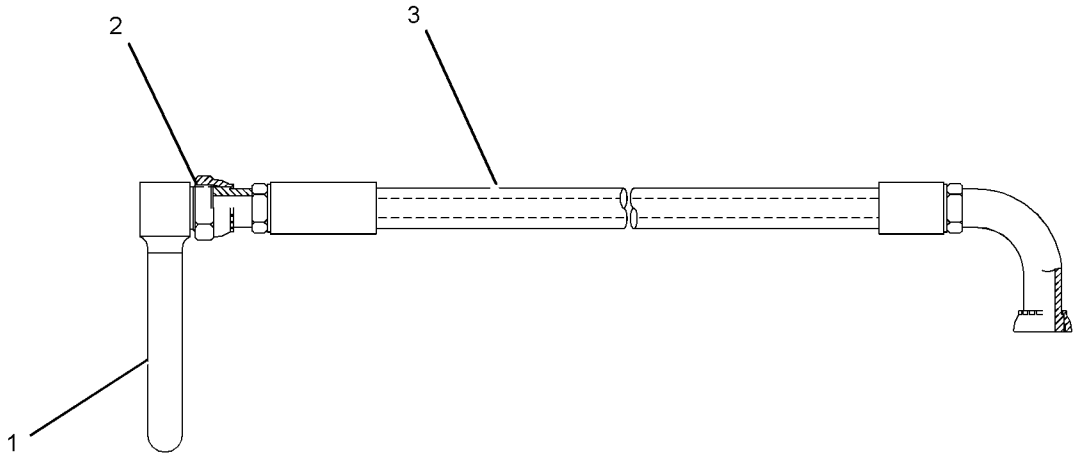

GRAPHIC #1 **<END>** g01041998

194-0180 HOSE GP-HYDRAULIC

S/N: PBB1-UP; KBS1-UP

PART OF 239-1714 LINES GP-FRONT

SMCS-5057 **i05345952**

NOTE	PART NUMBER	QTY	PART NAME 1 2 3 4 5 6 (PRODUCT LEVEL)	SEE PAGE
Y	*194-0181*	1	HOSE GP-HYDRAULIC	416
			—OR—	
Y	*194-0182*	1	HOSE GP-HYDRAULIC	417

Y - SEPARATE ILLUSTRATION

<END>

194-0181 HOSE GP-HYDRAULIC

S/N: PBB1-UP; KBS1-UP

PART OF 194-0180 HOSE GP-HYDRAULIC

SMCS-5057 **i02611124**

NOTE	REF NO	GRAPHIC REF	PART NUMBER	QTY	PART NAME 1 2 3 4 5 6 (PRODUCT LEVEL)	SEE PAGE
	1	1	**168-9762**	1	HOSE AS	
	2	1	**8C-3206**	2	FLANGE-HALF	
	3	1	**4J-0520**	1	SEAL-O-RING	



GRAPHIC #1 **<END>** g01049500

194-0182 HOSE GP-HYDRAULIC

S/N: PBB1-UP; KBS1-UP

PART OF 194-0180 HOSE GP-HYDRAULIC

SMCS-5057 **i01610617**

NOTE	REF NO	GRAPHIC REF	PART NUMBER	QTY	PART NAME 1 2 3 4 5 6 (PRODUCT LEVEL)	SEE PAGE
I	1	1	**165-3173**	1	HOSE AS	
	2	1	**168-9523**	1	TUBE AS	
	3	1	**113-6479**	1	FLANGE-SPECIAL	
	4	1	**5K-9090**	2	SEAL-O-RING	
	5	1	**1P-3703**	1	SEAL-RECTANGULAR	

I - REFER TO HYDRAULIC INFORMATION SYSTEM

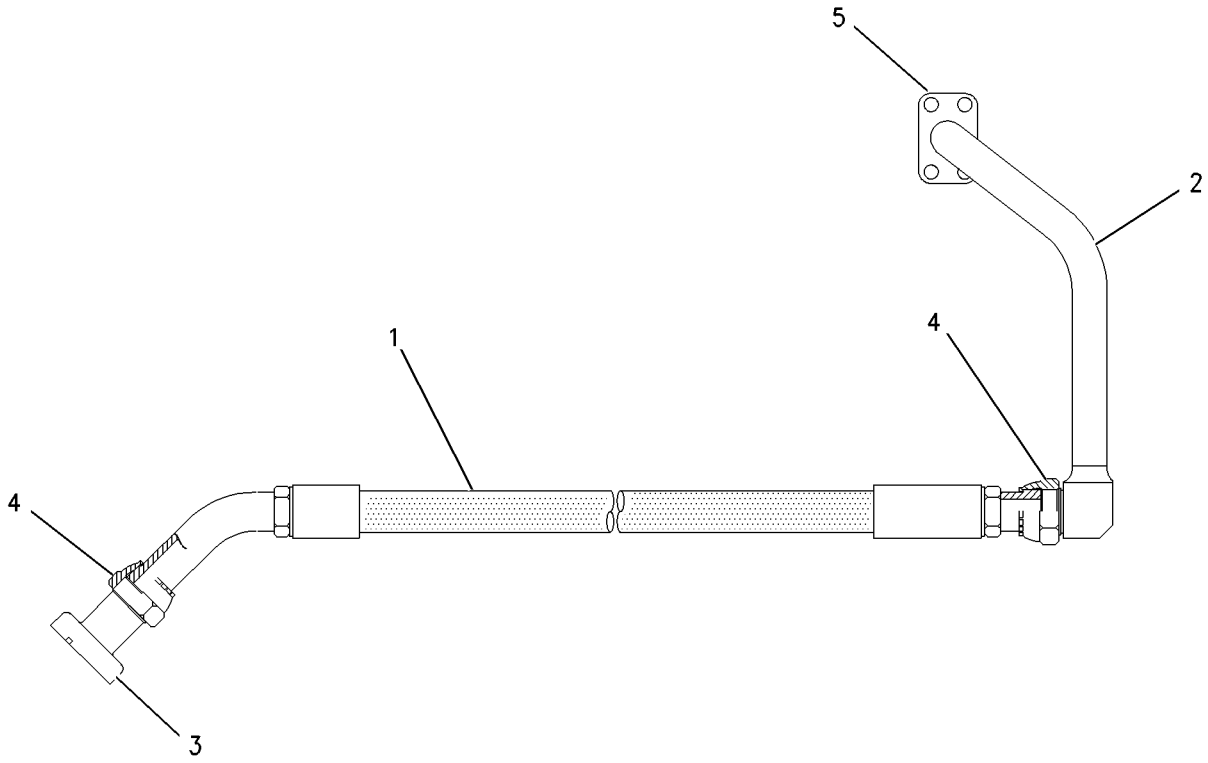

GRAPHIC #1 **<END>** g00834662

236-3212 HOSE GP-HYDRAULIC—FRONT

S/N: PBB1-UP; KBS1-UP

PART OF 239-1714 LINES GP-FRONT

SMCS-5057 **i03414640**

NOTE	PART NUMBER	QTY	PART NAME 1 2 3 4 5 6 (PRODUCT LEVEL)	SEE PAGE
Y	*236-3214*	1	HOSE GP-HYDRAULIC (FRONT)	418
			—OR—	
	207-6666	1	HOSE AS	
BE	**7Y-5074**		GUARD-HOSE	

B - USE AS REQUIRED
E - ORDER BY THE CENTIMETER
Y - SEPARATE ILLUSTRATION

<END>

236-3213 HOSE GP-HYDRAULIC—FRONT

S/N: PBB1-UP; KBS1-UP

PART OF 239-1714 LINES GP-FRONT

SMCS-5057 **i03414641**

NOTE	PART NUMBER	QTY	PART NAME 1 2 3 4 5 6 (PRODUCT LEVEL)	SEE PAGE
Y	*236-3215*	1	HOSE GP-HYDRAULIC (FRONT)	418
			—OR—	
	207-6667	1	HOSE AS	
BE	**7Y-5074**		GUARD-HOSE	

B - USE AS REQUIRED
E - ORDER BY THE CENTIMETER
Y - SEPARATE ILLUSTRATION

<END>

236-3214 HOSE GP-HYDRAULIC—FRONT

S/N: PBB1-UP; KBS1-UP

PART OF 236-3212 HOSE GP-HYDRAULIC

SMCS-5057 **i02424334**

NOTE	PART NUMBER	QTY	PART NAME 1 2 3 4 5 6 (PRODUCT LEVEL)	SEE PAGE
I	**187-5954**	1	HOSE AS	
	6V-9746	1	SEAL-O-RING	
	7Y-3721	1	TUBE AS	

I - REFER TO HYDRAULIC INFORMATION SYSTEM

<END>

236-3215 HOSE GP-HYDRAULIC—FRONT

S/N: PBB1-UP; KBS1-UP

PART OF 236-3213 HOSE GP-HYDRAULIC

SMCS-5057 **i02424336**

NOTE	PART NUMBER	QTY	PART NAME 1 2 3 4 5 6 (PRODUCT LEVEL)	SEE PAGE
I	**187-5954**	1	HOSE AS	
	6V-9746	1	SEAL-O-RING	
	137-0856	1	TUBE AS	

I - REFER TO HYDRAULIC INFORMATION SYSTEM

<END>

260-7910 HOSE GP-HYDRAULIC

S/N: PBB1-UP; KBS1-UP

PART OF 239-1714 LINES GP-FRONT

SMCS-5057 **i05334626**

NOTE	PART NUMBER	QTY	PART NAME 1 2 3 4 5 6 (PRODUCT LEVEL)	SEE PAGE
Y	*260-7911*	1	HOSE GP-HYDRAULIC	420
			—OR—	
Y	*260-7913*	1	HOSE GP-HYDRAULIC	421

Y - SEPARATE ILLUSTRATION

<END>

260-7911 HOSE GP-HYDRAULIC

S/N: PBB1-UP; KBS1-UP

PART OF 260-7910 HOSE GP-HYDRAULIC

SMCS-5057 **i02580159**

NOTE	REF NO	GRAPHIC REF	PART NUMBER	QTY	PART NAME 1 2 3 4 5 6 (PRODUCT LEVEL)	SEE PAGE
	1	1	**260-7912**	1	HOSE AS	
	2	1	**8C-3206**	2	FLANGE-HALF	
	3	1	**4J-0520**	1	SEAL-O-RING	

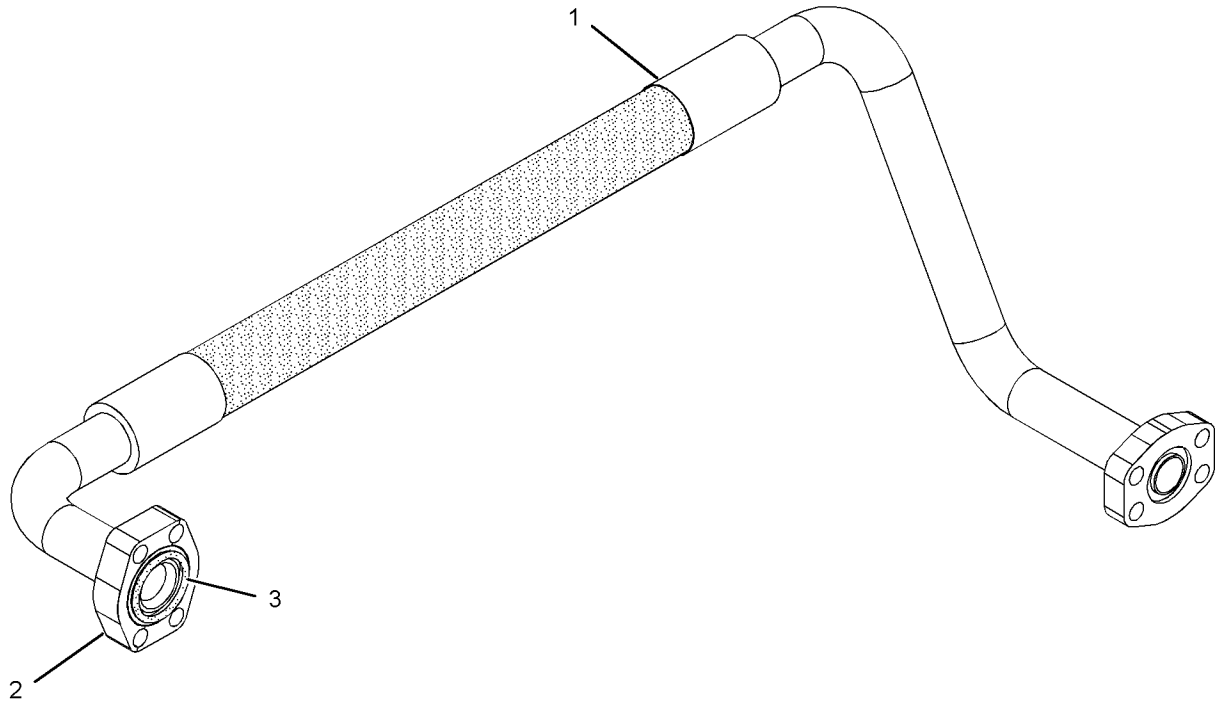

GRAPHIC #1 **<END>** g01277264

260-7913 HOSE GP-HYDRAULIC

S/N: PBB1-UP; KBS1-UP

PART OF 260-7910 HOSE GP-HYDRAULIC

SMCS-5057 **i02425626**

NOTE	REF NO	GRAPHIC REF	PART NUMBER	QTY	PART NAME 1 2 3 4 5 6 (PRODUCT LEVEL)	SEE PAGE
	1	1	**142-7764**	1	TUBE AS	
I	2	1	**260-7914**	1	HOSE AS	
	3	1	**1P-3703**	1	SEAL-RECTANGULAR	
	4	1	**5K-9090**	2	SEAL-O-RING	
	5	1	**7Y-3731**	1	FLANGE	

I - REFER TO HYDRAULIC INFORMATION SYSTEM

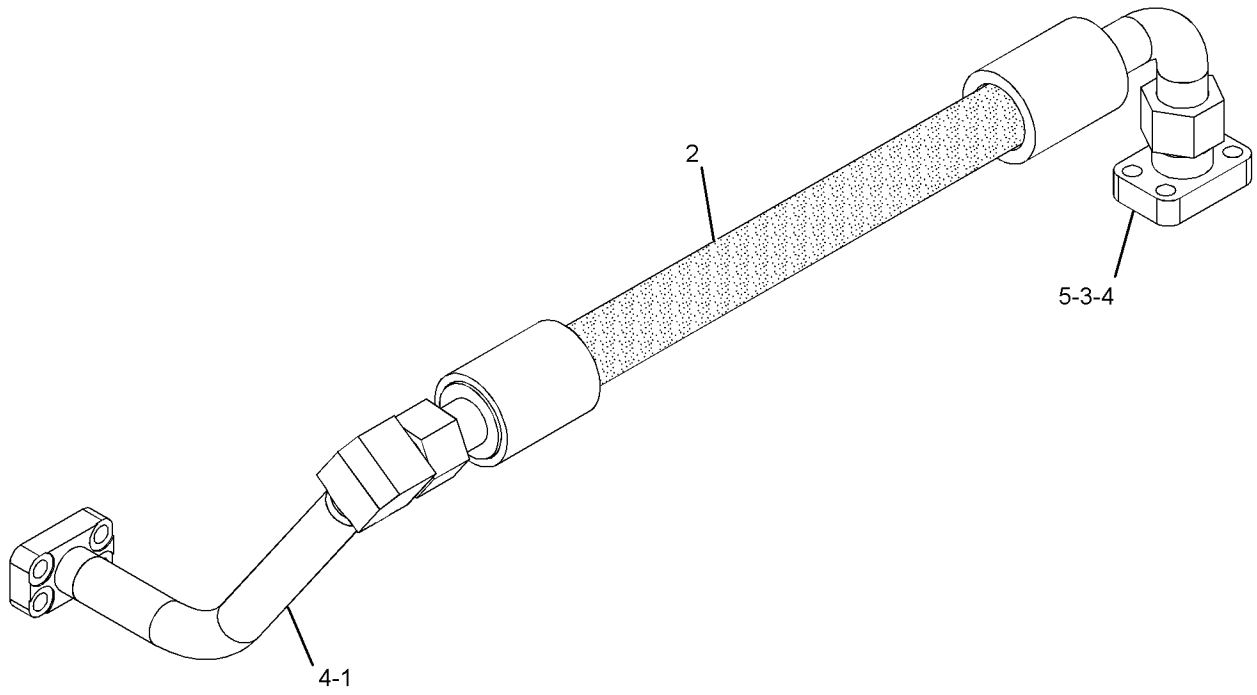

GRAPHIC #1 **<END>** g01277324

456-0404 HYDRAULIC AR

S/N: KBS1-UP

PART OF 454-5584 GENERAL AR

SMCS-5050 **i05857500**

NOTE	PART NUMBER	QTY	PART NAME 1 2 3 4 5 6 (PRODUCT LEVEL)	SEE PAGE
Y	*239-1699*	1	LINES GP-BOOM CYLINDER	448
Y	*376-6308*	1	LINES GP-CONTROL	465
Y	*239-1714*	1	LINES GP-FRONT	475
Y	*376-6321*	1	LINES GP-HYDRAULIC OIL COOLER	497
Y	*248-9825*	1	LINES GP-PILOT (JOYSTICK, PEDALS)	498
Y	*376-6309*	1	LINES GP-PILOT (MAIN CONTROL VALVE)	517
Y	*376-6310*	1	LINES GP-PILOT (MAIN CONTROL VALVE)	519
Y	*376-6311*	1	LINES GP-PILOT (FILTER, PILOT PUMP)	525
Y	*376-6313*	1	LINES GP-PUMP (SUPPLY, MAIN PUMP)	544
Y	*239-1716*	1	LINES GP-TRAVEL MOTOR	560
Y	*260-7868*	1	MOUNTING GP-MAIN CONTROL VALVE	582
Y	*396-1865*	1	PUMP & MTG GP-MAIN HYDRAULIC	585
Y	*455-4363*	1	TANK & MTG GP-HYDRAULIC	597
Y	**259-7464**	1	VALVE GP-MAIN CONTROL	641

Y - SEPARATE ILLUSTRATION

<END>

456-0405 HYDRAULIC AR

S/N: PBB1-UP

PART OF 454-5585 GENERAL AR

SMCS-5050 **i05857710**

NOTE	PART NUMBER	QTY	PART NAME 1 2 3 4 5 6 (PRODUCT LEVEL)	SEE PAGE
Y	*239-1699*	1	LINES GP-BOOM CYLINDER	448
Y	*376-6308*	1	LINES GP-CONTROL	465
Y	*239-1714*	1	LINES GP-FRONT	475
Y	*376-6321*	1	LINES GP-HYDRAULIC OIL COOLER	497
Y	*248-9825*	1	LINES GP-PILOT (JOYSTICK, PEDALS)	498
Y	*376-6309*	1	LINES GP-PILOT (MAIN CONTROL VALVE)	517
Y	*376-6310*	1	LINES GP-PILOT (MAIN CONTROL VALVE)	519
Y	*376-6311*	1	LINES GP-PILOT (FILTER, PILOT PUMP)	525
Y	*376-6313*	1	LINES GP-PUMP (SUPPLY, MAIN PUMP)	544
Y	*239-1717*	1	LINES GP-TRAVEL MOTOR (LONG UNDERCARRIAGE)	563
Y	*260-7868*	1	MOUNTING GP-MAIN CONTROL VALVE	582
Y	*396-1865*	1	PUMP & MTG GP-MAIN HYDRAULIC	585
Y	*455-4363*	1	TANK & MTG GP-HYDRAULIC	597
Y	**259-7464**	1	VALVE GP-MAIN CONTROL	641

Y - SEPARATE ILLUSTRATION

<END>

237-3184 LINES GP-AUXILIARY HYDRAULIC—STICK, HIGH PRESSURE

S/N: PBB1-UP; KBS1-UP
2.4-M TO 2.5-M (7.9-FT TO 8.2-FT) STICK
AN ATTACHMENT

SMCS-5057 **i05272333**

NOTE	REF NO	GRAPHIC REF	PART NUMBER	QTY	PART NAME 1 2 3 4 5 6 (PRODUCT LEVEL)	SEE PAGE
	1	1	**127-6780**	1	TUBE AS	
	2	1	**142-6582**	1	TUBE AS	
	3	1	**173-7916**	4	CLAMP-HALF	
I	4	1	**253-6694**	1	HOSE AS	
I	5	1	**253-6697**	1	HOSE AS	
CY	6	1	**389-2407**	2	VALVE GP-MANUAL (AUXILIARY, SHUTOFF)	643
	7	1	**1P-3703**	3	SEAL-RECTANGULAR	
	8	1	**1P-3704**	3	SEAL-RECTANGULAR	
	9	1	**1P-5767**	4	FLANGE-HALF	
	10	1	**6V-0400**	4	FLANGE-HALF	
	11	1	**7Y-4538**	4	CLAMP-HALF	
	12	1	**8T-4121**	4	WASHER-HARD (11X21X2.5-MM THK)	
M	13	1	**8T-4139**	12	BOLT (M12X1.75X30-MM)	
M	15	1	**8T-4184**	8	BOLT (M12X1.75X45-MM)	
M	16	1	**8T-4194**	8	BOLT (M12X1.75X50-MM)	
	17	1	**8T-4223**	24	WASHER-HARD (13.5X25.5X3-MM THK)	
M	18	1	**8T-4956**	4	BOLT (M12X1.75X35-MM)	
M	19	1	**8T-6685**	4	BOLT (M10X1.5X110-MM)	

C - CHANGE FROM PREVIOUS TYPE
I - REFER TO HYDRAULIC INFORMATION SYSTEM
M - METRIC PART
Y - SEPARATE ILLUSTRATION

237-3184 **LINES GP-AUXILIARY HYDRAULIC (*contd.*)** **i05272333**

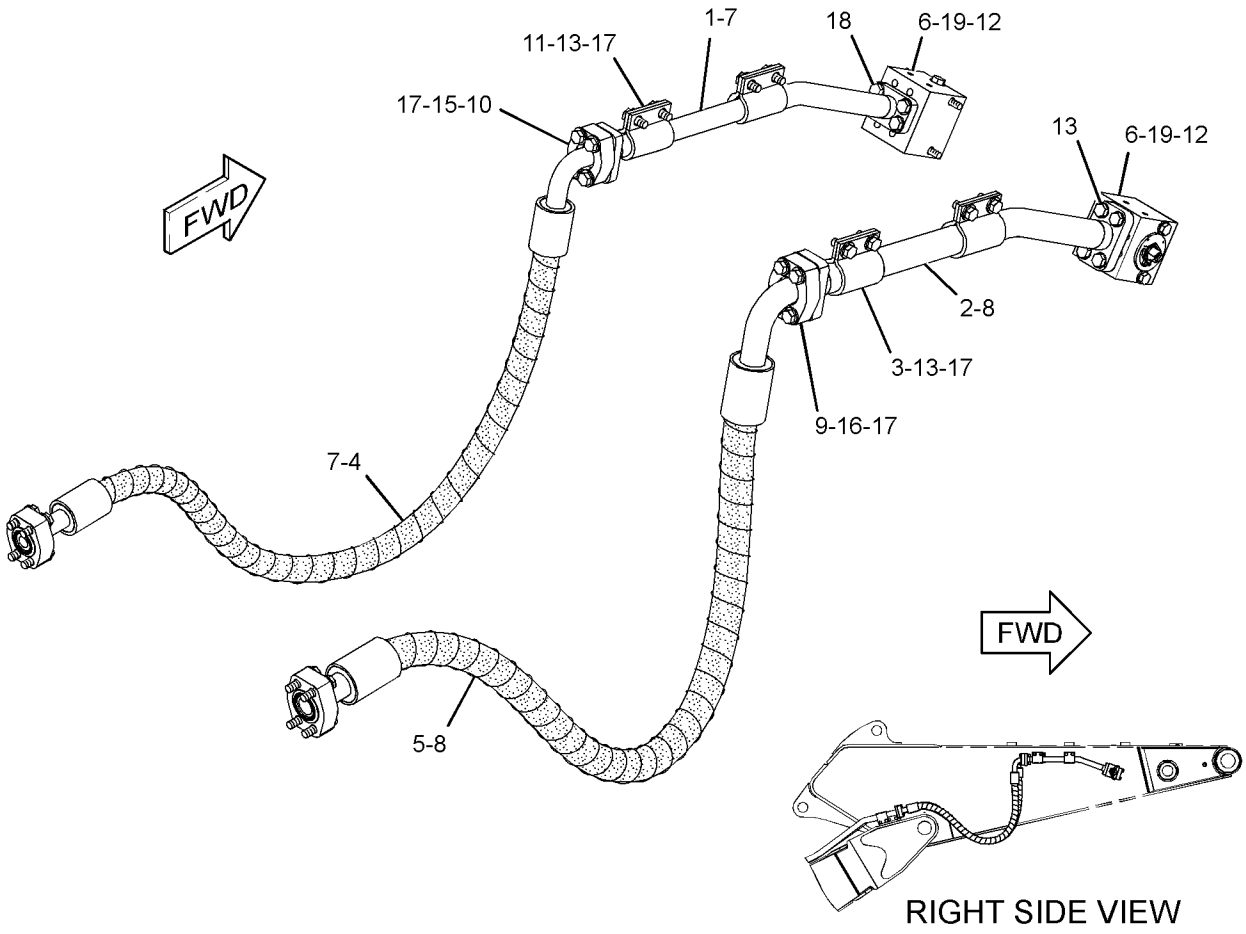

GRAPHIC #1 **<END>** g03358490

242-6475 LINES GP-AUXILIARY HYDRAULIC–BOOM, HIGH PRESSURE

S/N: PBB1-UP; KBS1-UP
PART OF 456-0817, 456-0826, 456-0923 DISTRIBUTION AR
AN ATTACHMENT

SMCS-5057 **i05799223**

NOTE	REF NO	GRAPHIC REF	PART NUMBER	QTY	PART NAME 1 2 3 4 5 6 (PRODUCT LEVEL)	SEE PAGE
	1	1	**124-1107**	1	GROMMET	
	2	1	**129-5874**	1	GROMMET	
	3	1	**138-5708**	2	CLIP-HALF	
	4	1	**153-8798**	2	PLATE	
	5	1	**173-7916**	6	CLAMP-HALF	
	6	1	**173-7995**	1	PLATE	
	7	1	**193-6606**	2	PLATE	
	8	1	**202-7127**	1	PLATE	
	9	1	**202-7128**	2	PLATE	
I	10	1	**216-6589**	1	HOSE AS	
J	11	1	**306-1611**	1	TUBE GP	
L	11A	1	**306-1614**	1	TUBE AS	
L	11B	1	**306-1615**	1	TUBE AS	
L	11C	1	**1P-3705**	1	SEAL-RECTANGULAR	
LM	11D	1	**8T-4183**	4	BOLT (M12X1.75X40-MM)	
J	12	1	**247-9030**	1	TUBE GP	
L	12A	1	**247-9033**	1	TUBE AS	
L	12B	1	**247-9034**	1	TUBE AS	
L	12C	1	**1P-3703**	1	SEAL-RECTANGULAR	
LM	12D	1	**8T-4139**	4	BOLT (M12X1.75X30-MM)	
	13	1	**277-0786**	1	SUPPORT AS	
I	14	1	**288-7502**	1	HOSE AS	
	15	1	**124-1108**	2	CLIP	
	16	1	**1P-3703**	2	SEAL-RECTANGULAR	
	17	1	**1P-3704**	2	SEAL-RECTANGULAR	
	18	1	**1P-5767**	4	FLANGE-HALF	
	19	1	**6V-0400**	4	FLANGE-HALF	
M	20	1	**7X-2549**	4	BOLT (M12X1.75X100-MM)	
M	21	1	**453-1259**	2	BOLT (M16X2X40-MM)	
	22	1	**7Y-4538**	6	CLAMP-HALF	
M	23	1	**8T-4139**	10	BOLT (M12X1.75X30-MM)	
M	24	1	**8T-4184**	14	BOLT (M12X1.75X45-MM)	
M	25	1	**8T-4194**	10	BOLT (M12X1.75X50-MM)	
	26	1	**8T-4223**	42	WASHER-HARD (13.5X25.5X3-MM THK)	
M	27	1	**8T-4648**	4	BOLT (M12X1.75X70-MM)	
	28	1	**451-2175**	2	WASHER-HARD (17.5X30X3.5-MM THK)	

I - REFER TO HYDRAULIC INFORMATION SYSTEM
J - TUBE MAY BE 1-PIECE OR 2-PIECE DESIGN (2-PIECE SHOWN)
L - PARTS REQUIRED ONLY WITH 2-PIECE TUBE DESIGN
M - METRIC PART

242-6475 **LINES GP-AUXILIARY HYDRAULIC (*contd.*)** **i05799223**

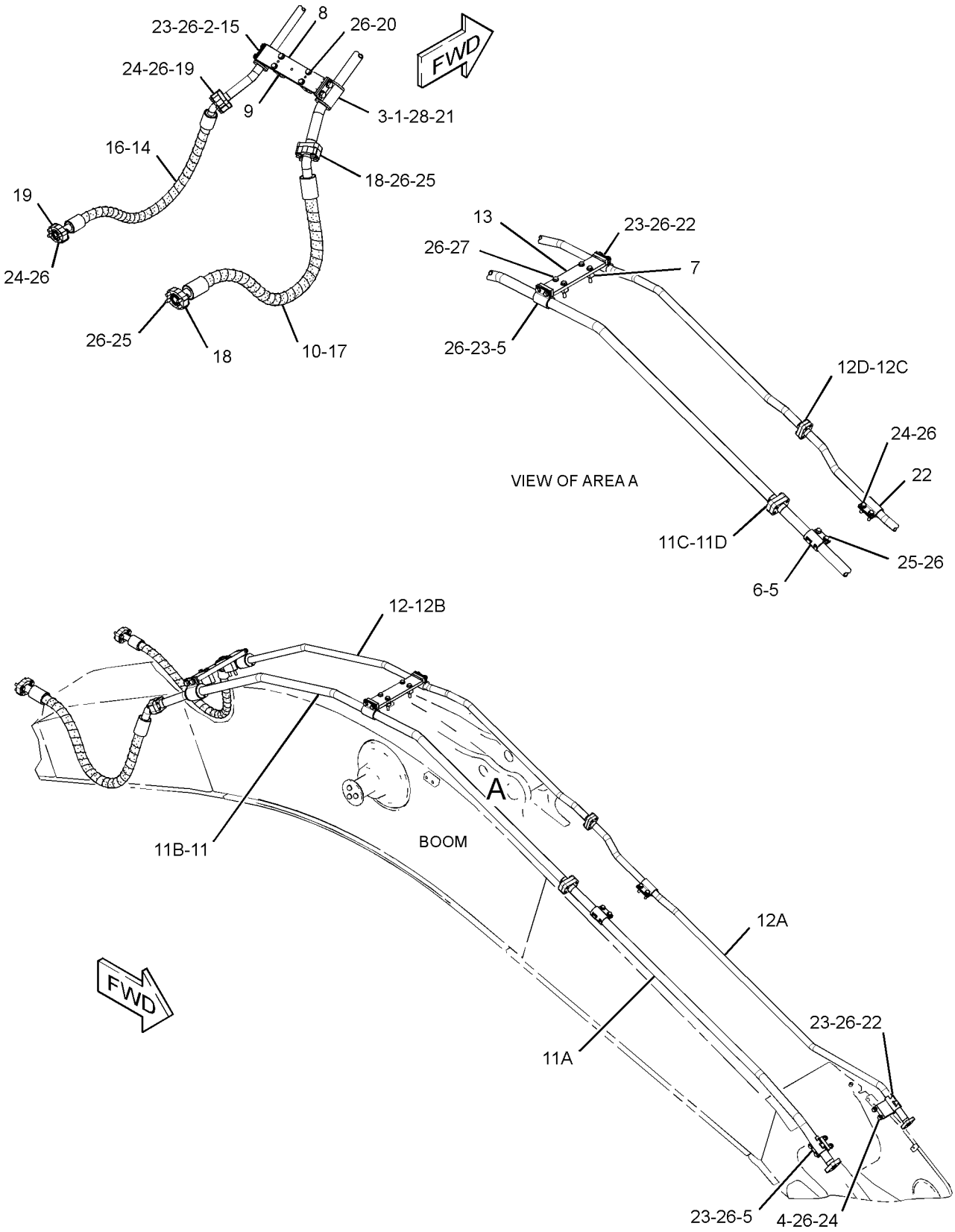

GRAPHIC #1 **<END>** g01426849

242-6476 LINES GP-AUXILIARY HYDRAULIC–BOOM, MEDIUM PRESSURE

S/N: PBB1-UP; KBS1-UP

AN ATTACHMENT

SMCS-5057 **i05214812**

NOTE	REF NO	GRAPHIC REF	PART NUMBER	QTY	PART NAME 1 2 3 4 5 6 (PRODUCT LEVEL)	SEE PAGE
	1	1	**153-8867**	2	CLIP	
	2	1	**173-7895**	4	CLIP	
	3	1	**179-5260**	4	CLIP	
	4	1	**202-3915**	1	PLATE	
	5	1	**247-9129**	1	TUBE AS	
J	6	1	**247-9132**	1	TUBE GP	
L	6A	1	**247-9135**	1	TUBE AS	
L	6B	1	**247-9138**	1	TUBE AS	
L	6C	1	**7J-9108**	1	SEAL-O-RING	
	7	1	**247-9141**	1	TUBE AS	
J	8	1	**247-9144**	1	TUBE GP	
L	8A	1	**247-9147**	1	TUBE AS	
L	8B	1	**268-6787**	1	TUBE AS	
L	8C	1	**7J-9108**	1	SEAL-O-RING	
	9	1	**247-9298**	1	CLIP AS	
C	10	1	**294-3796**	1	PLATE	
C	11	1	**294-3797**	1	PLATE	
	12	1	**268-6790**	1	CLIP AS	
	13	1	**093-1291**	2	CLAMP	
	14	1	**6V-8398**	4	SEAL-O-RING	
	15	1	**7J-9108**	2	SEAL-O-RING	
M	16	1	**7X-2549**	2	BOLT (M12X1.75X100-MM)	
	17	1	**7Y-4868**	2	CLIP	
	18	1	**8T-4121**	2	WASHER-HARD (11X21X2.5-MM THK)	
M	19	1	**8T-4194**	4	BOLT (M12X1.75X50-MM)	
M	20	1	**8T-4139**	12	BOLT (M12X1.75X30-MM)	
M	21	1	**8T-4184**	4	BOLT (M12X1.75X45-MM)	
M	22	1	**8T-4185**	2	BOLT (M10X1.5X50-MM)	
	23	1	**8T-4223**	22	WASHER-HARD (13.5X25.5X3-MM THK)	
M	24	1	**8T-4244**	12	NUT (M12X1.75-THD)	
C	25	1	**294-3795**	2	CLIP AS	
C	26	1	**294-3794**	2	CLIP AS	

C - CHANGE FROM PREVIOUS TYPE
J - TUBE MAY BE 1-PIECE OR 2-PIECE DESIGN (2-PIECE SHOWN)
L - PARTS REQUIRED ONLY WITH 2-PIECE TUBE DESIGN
M - METRIC PART

242-6476 **LINES GP-AUXILIARY HYDRAULIC (*contd.*)** **i05214812**

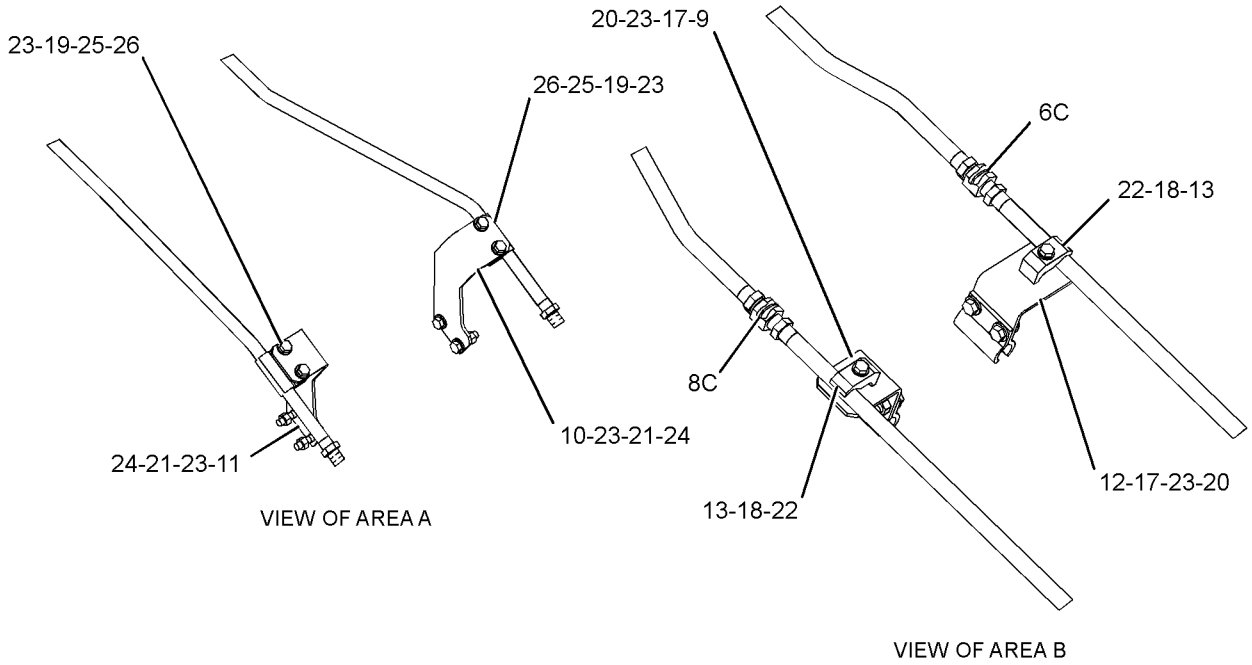

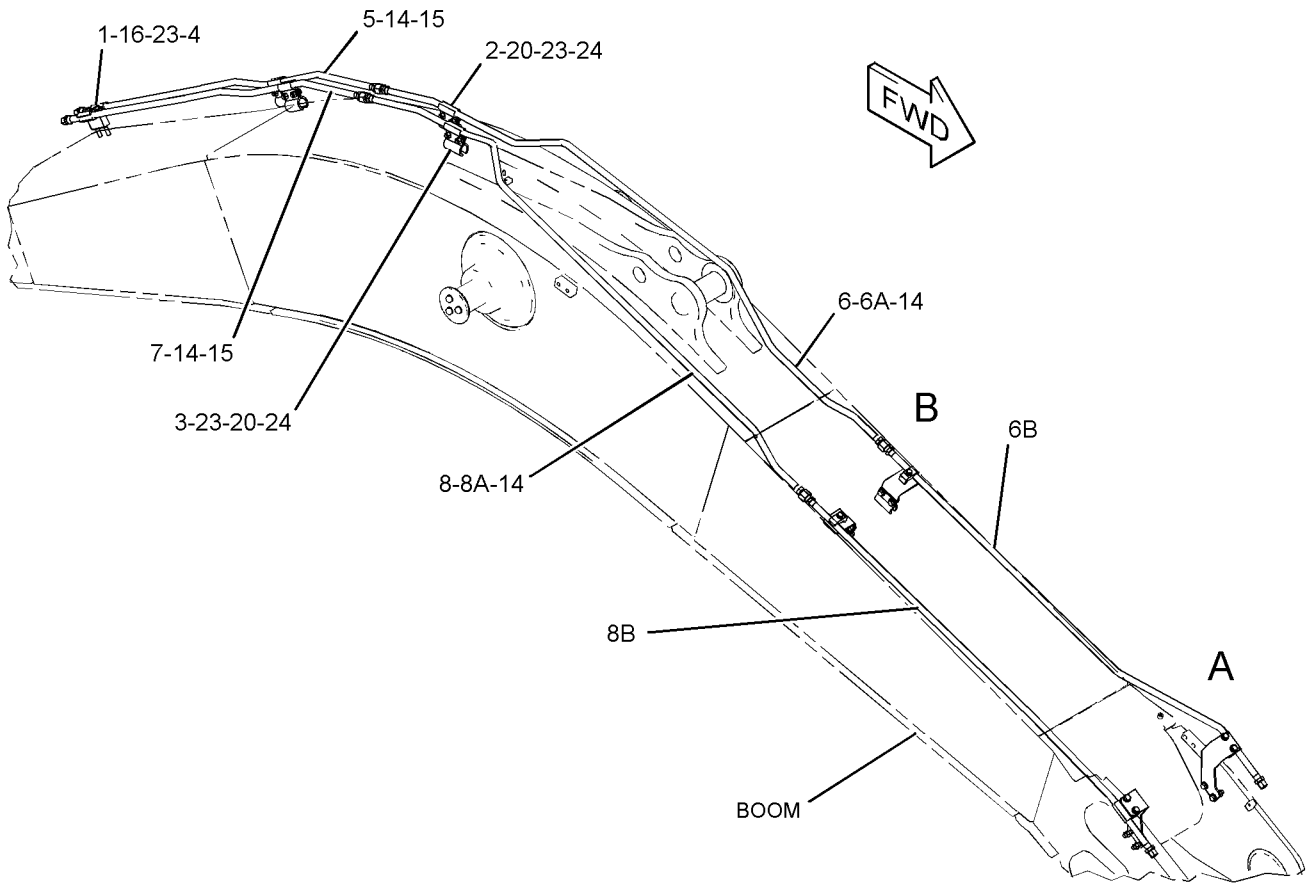

GRAPHIC #1 **<END>** g01282055

242-6479 LINES GP-AUXILIARY HYDRAULIC—MASS BOOM, HIGH PRESSURE

S/N: PBB1-UP; KBS1-UP
AN ATTACHMENT

SMCS-5057 **i05799230**

NOTE	REF NO	GRAPHIC REF	PART NUMBER	QTY	PART NAME 1 2 3 4 5 6 (PRODUCT LEVEL)	SEE PAGE
	1	2	**124-1107**	1	GROMMET	
	2	2	**129-5874**	1	GROMMET	
	3	2	**138-5708**	2	CLIP-HALF	
	4	2	**153-8798**	2	PLATE	
	5	2	**173-7916**	6	CLAMP-HALF	
	6	2	**173-7995**	1	PLATE	
	7	2	**193-6606**	2	PLATE	
	8	2	**202-7127**	1	PLATE	
	9	2	**202-7128**	2	PLATE	
I	10	1	**216-6589**	1	HOSE AS	
J	11	1	**226-3065**	1	TUBE GP	
L		1	**1P-3705**	1	SEAL-RECTANGULAR	
L	11A	1	**179-5005**	1	TUBE AS	
L	11B	1	**179-5006**	1	TUBE AS	
LM	11C	1	**8T-4183**	4	BOLT (M12X1.75X40-MM)	
I	12	1	**288-7502**	1	HOSE AS	
J	13	1	**268-6966**	1	TUBE GP	
L		1	**1P-3703**	1	SEAL-RECTANGULAR	
L	13A	1	**268-6969**	1	TUBE AS	
L	13B	1	**268-6970**	1	TUBE AS	
LM	13C	1	**8T-4139**	4	BOLT (M12X1.75X30-MM)	
	14	2	**277-0786**	1	SUPPORT AS	
	15	2	**124-1108**	2	CLIP	
	16	1	**1P-3703**	2	SEAL-RECTANGULAR	
	17	1	**1P-3704**	2	SEAL-RECTANGULAR	
	18	1	**1P-5767**	4	FLANGE-HALF	
	19	1	**6V-0400**	4	FLANGE-HALF	
M	20	2	**7X-2549**	4	BOLT (M12X1.75X100-MM)	
M	21	2	**453-1259**	2	BOLT (M16X2X40-MM)	
	22	2	**7Y-4538**	6	CLAMP-HALF	
M	23	2	**8T-4139**	10	BOLT (M12X1.75X30-MM)	
M	24	1,2	**8T-4184**	14	BOLT (M12X1.75X45-MM)	
M	25	1,2	**8T-4194**	10	BOLT (M12X1.75X50-MM)	
	26	1,2	**8T-4223**	42	WASHER-HARD (13.5X25.5X3-MM THK)	
M	27	2	**8T-4648**	4	BOLT (M12X1.75X70-MM)	
	28	2	**451-2175**	2	WASHER-HARD (17.5X30X3.5-MM THK)	

I - REFER TO HYDRAULIC INFORMATION SYSTEM
J - TUBE MAY BE 1-PIECE OR 2-PIECE DESIGN (2-PIECE SHOWN)
L - PARTS REQUIRED ONLY WITH 2-PIECE TUBE DESIGN
M - METRIC PART

242-6479 **LINES GP-AUXILIARY HYDRAULIC (*contd.*)** **i05799230**

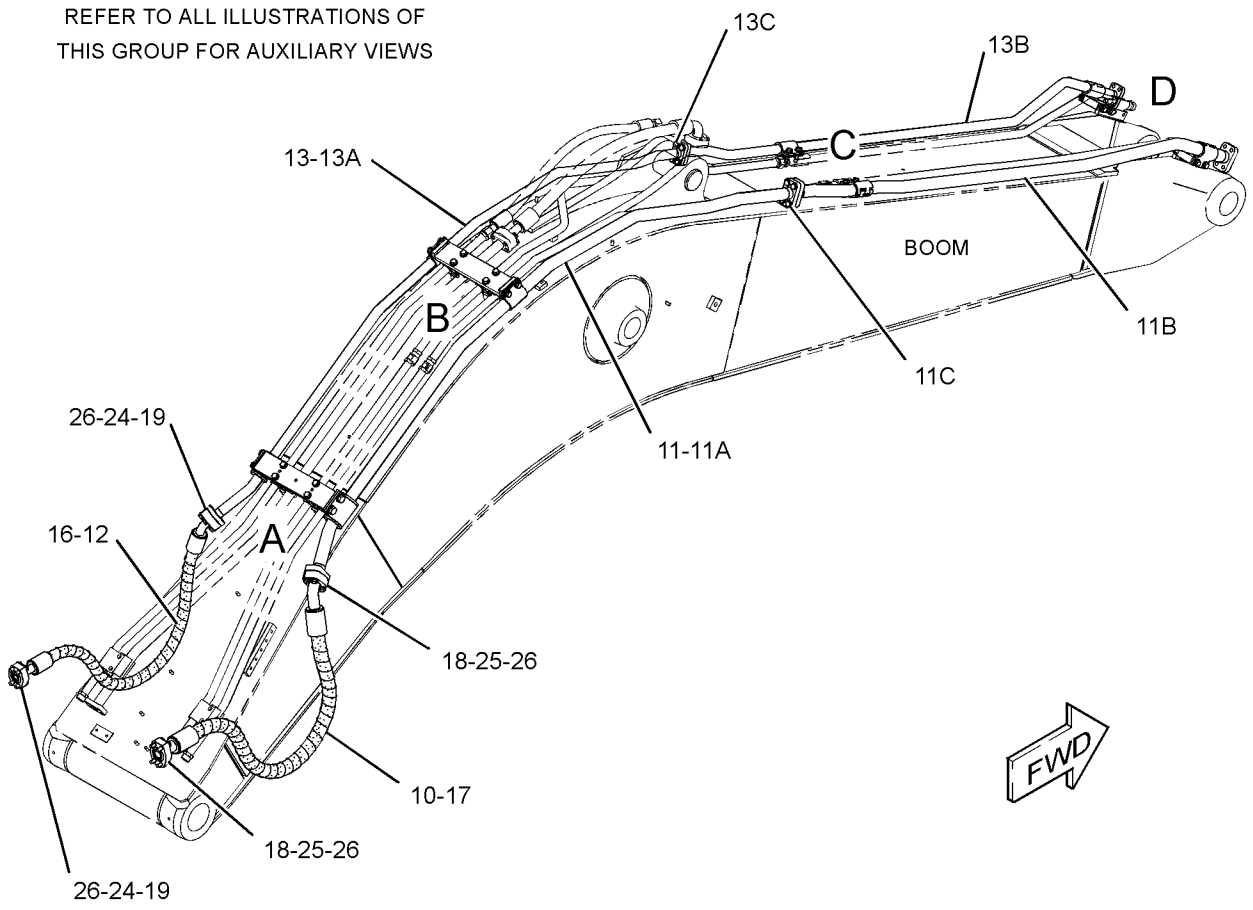

GRAPHIC #1 g01229180

242-6479 **LINES GP-AUXILIARY HYDRAULIC (*contd.*)** **i05799230**

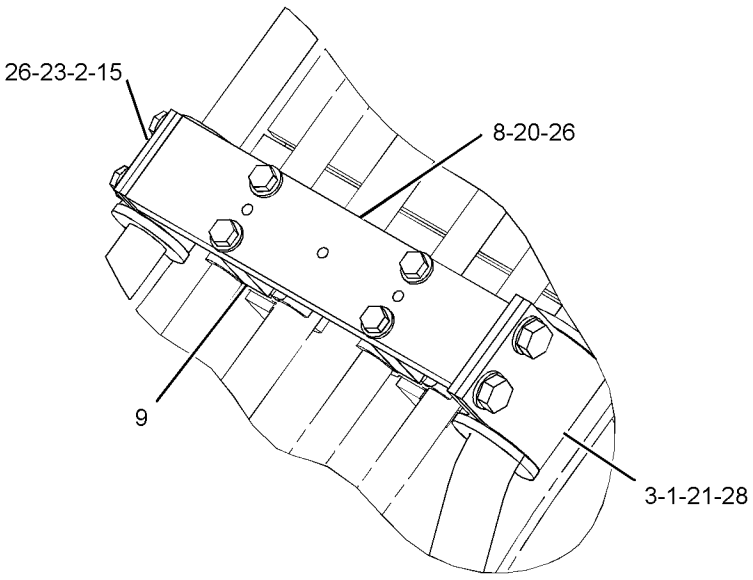

VIEW OF AREA A

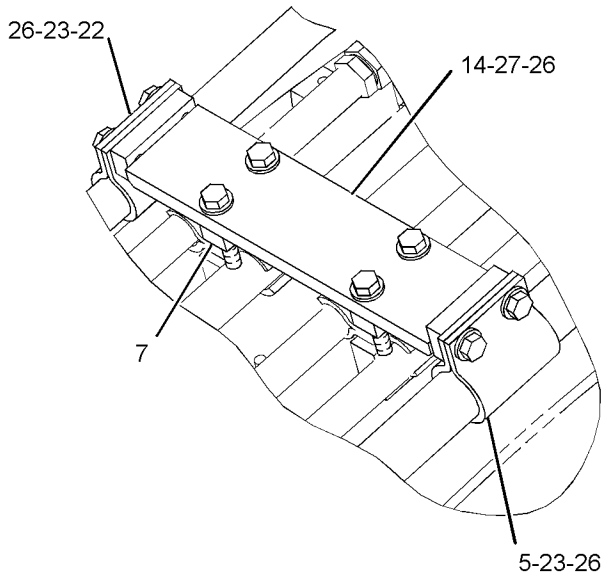

VIEW OF AREA B

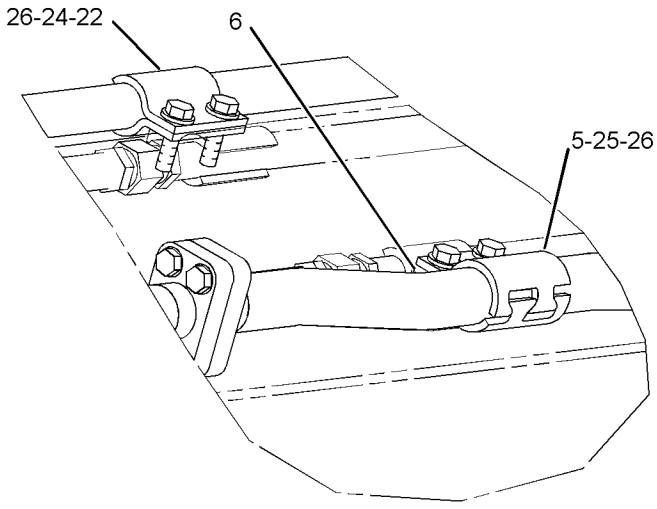

VIEW OF AREA C

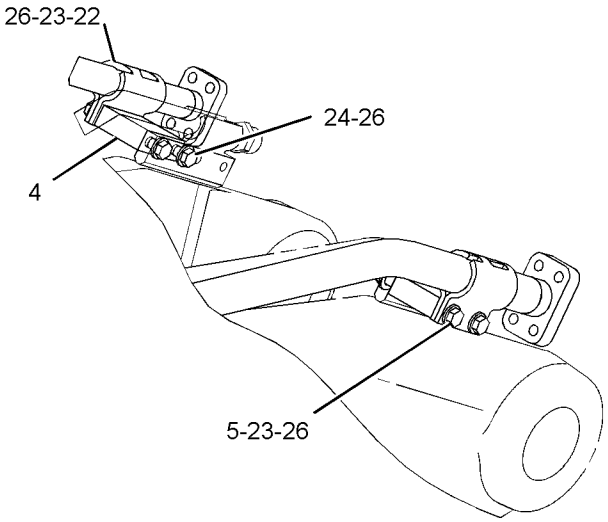

VIEW OF AREA D

GRAPHIC #2 **<END>** g01229181

242-6487 LINES GP-AUXILIARY HYDRAULIC—STICK, HIGH PRESSURE

S/N: PBB1-UP; KBS1-UP
FOR USE WITH 2.92-M (9.6-FT) STICK
PART OF 456-0817, 456-0826, 456-0923 DISTRIBUTION AR
AN ATTACHMENT

SMCS-5057 **i05254564**

NOTE	REF NO	GRAPHIC REF	PART NUMBER	QTY	PART NAME 1 2 3 4 5 6 (PRODUCT LEVEL)	SEE PAGE
I	1	1	**5I-8510**	1	HOSE AS	
	2	1	**173-7916**	4	CLAMP-HALF	
I	3	1	**253-6445**	1	HOSE AS	
	4	1	**253-6453**	1	TUBE AS	
	5	1	**253-6454**	1	TUBE AS	
CY	6	1	**389-2407**	2	VALVE GP-MANUAL (AUXILIARY, SHUTOFF)	643
	7	1	**1P-3703**	3	SEAL-RECTANGULAR	
	8	1	**1P-3704**	3	SEAL-RECTANGULAR	
	9	1	**1P-5767**	4	FLANGE-HALF	
	10	1	**6V-0400**	4	FLANGE-HALF	
	11	1	**7Y-4538**	4	CLAMP-HALF	
	12	1	**8T-4121**	4	WASHER-HARD (11X21X2.5-MM THK)	
M	13	1	**8T-4139**	12	BOLT (M12X1.75X30-MM)	
M	15	1	**8T-4184**	8	BOLT (M12X1.75X45-MM)	
M	16	1	**8T-4194**	8	BOLT (M12X1.75X50-MM)	
	17	1	**8T-4223**	24	WASHER-HARD (13.5X25.5X3-MM THK)	
M	18	1	**8T-4956**	4	BOLT (M12X1.75X35-MM)	
M	19	1	**8T-6685**	4	BOLT (M10X1.5X110-MM)	
J	20	1	**135-4063**	2	FLANGE	
J	21	1	**1P-3704**	2	SEAL-RECTANGULAR	
JM	22	1	**8T-4956**	8	BOLT (M12X1.75X35-MM)	

C - CHANGE FROM PREVIOUS TYPE
I - REFER TO HYDRAULIC INFORMATION SYSTEM
J - FOR JAPANESE MARKET ONLY
M - METRIC PART
Y - SEPARATE ILLUSTRATION

242-6487 **LINES GP-AUXILIARY HYDRAULIC (*contd.*)** **i05254564**

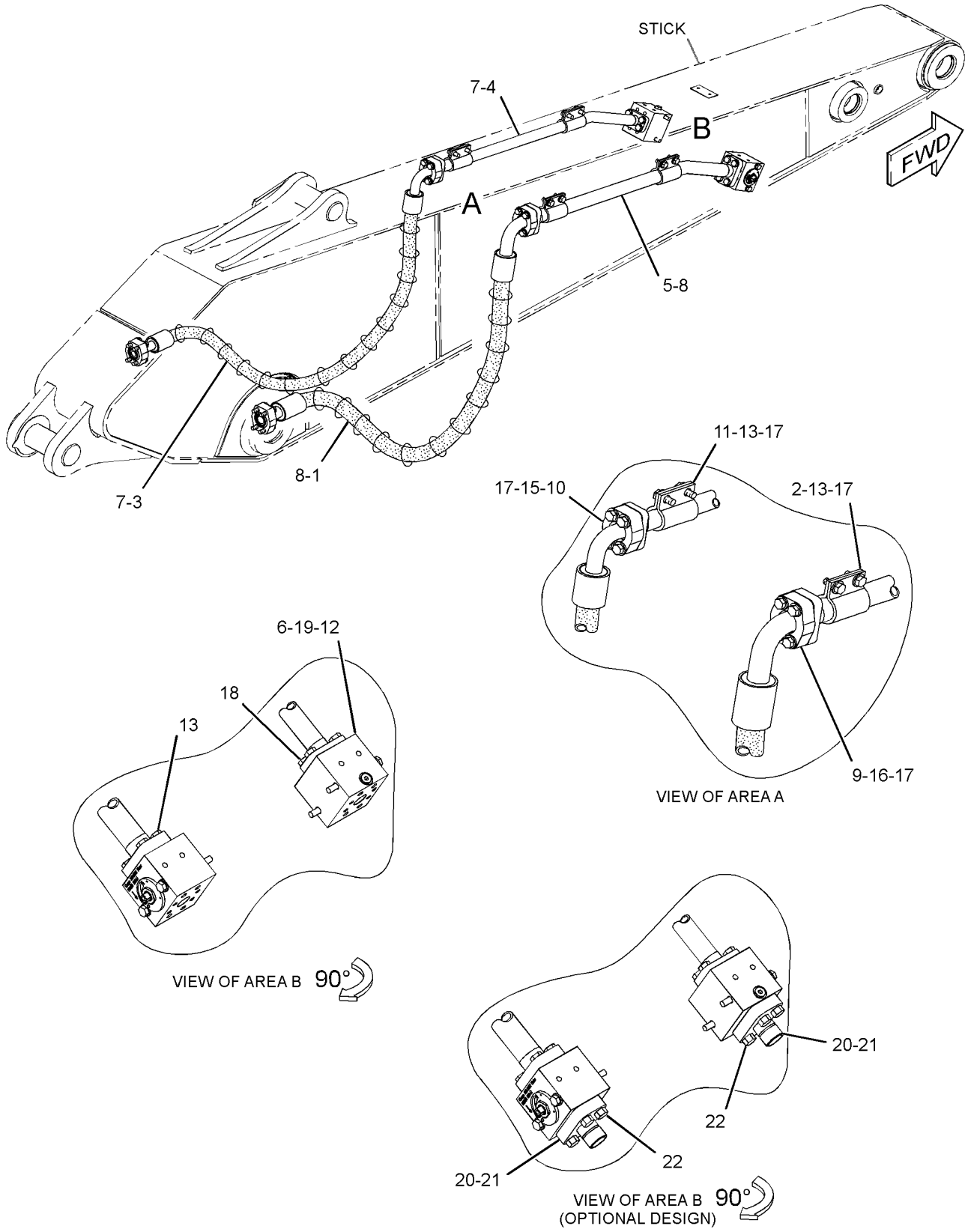

GRAPHIC #1 **<END>** g03347105

242-6488 LINES GP-AUXILIARY HYDRAULIC—STICK, MEDIUM PRESSURE

S/N: PBB1-UP; KBS1-UP
FOR USE WITH 2.92-M (9.6-FT) STICK
AN ATTACHMENT

SMCS-5057 **i05214850**

NOTE	REF NO	GRAPHIC REF	PART NUMBER	QTY	PART NAME 1 2 3 4 5 6 (PRODUCT LEVEL)	SEE PAGE
	1	1	**6C-6760**	2	MANIFOLD	
	2	1	**149-1738**	8	CLIP	
I	3	1	**177-8572**	2	HOSE AS	
	4	1	**187-9977**	2	PLATE	
	5	1	**187-9978**	2	SUPPORT AS	
	6	1	**187-9981**	2	SUPPORT AS	
	7	1	*250-1440*	2	ADAPTER AS	
					(EACH INCLUDES)	
		1	**3K-0360**	1	SEAL-O-RING	
		1	**7X-3164**	1	ADAPTER-SWIVEL	
	8	1	**253-6455**	2	TUBE AS	
	9	1	**6V-8398**	4	SEAL-O-RING	
	10	1	**8T-4121**	4	WASHER-HARD (11X21X2.5-MM THK)	
M	11	1	**8T-4136**	4	BOLT (M10X1.5X25-MM)	
M	12	1	**8T-4139**	16	BOLT (M12X1.75X30-MM)	
M	13	1	**8T-4185**	4	BOLT (M10X1.5X50-MM)	
	14	1	**8T-4223**	16	WASHER-HARD (13.5X25.5X3-MM THK)	
JM	15	1	**7X-2543**	4	BOLT (M10X1.5X120-MM)	
JM	16	1	**8T-4183**	8	BOLT (M12X1.75X40-MM)	

I - REFER TO HYDRAULIC INFORMATION SYSTEM
J - USED ONLY WITH HIGH PRESSURE AUXILIARY HYDRAULIC LINES
M - METRIC PART

242-6488 **LINES GP-AUXILIARY HYDRAULIC (*contd.*)** **i05214850**

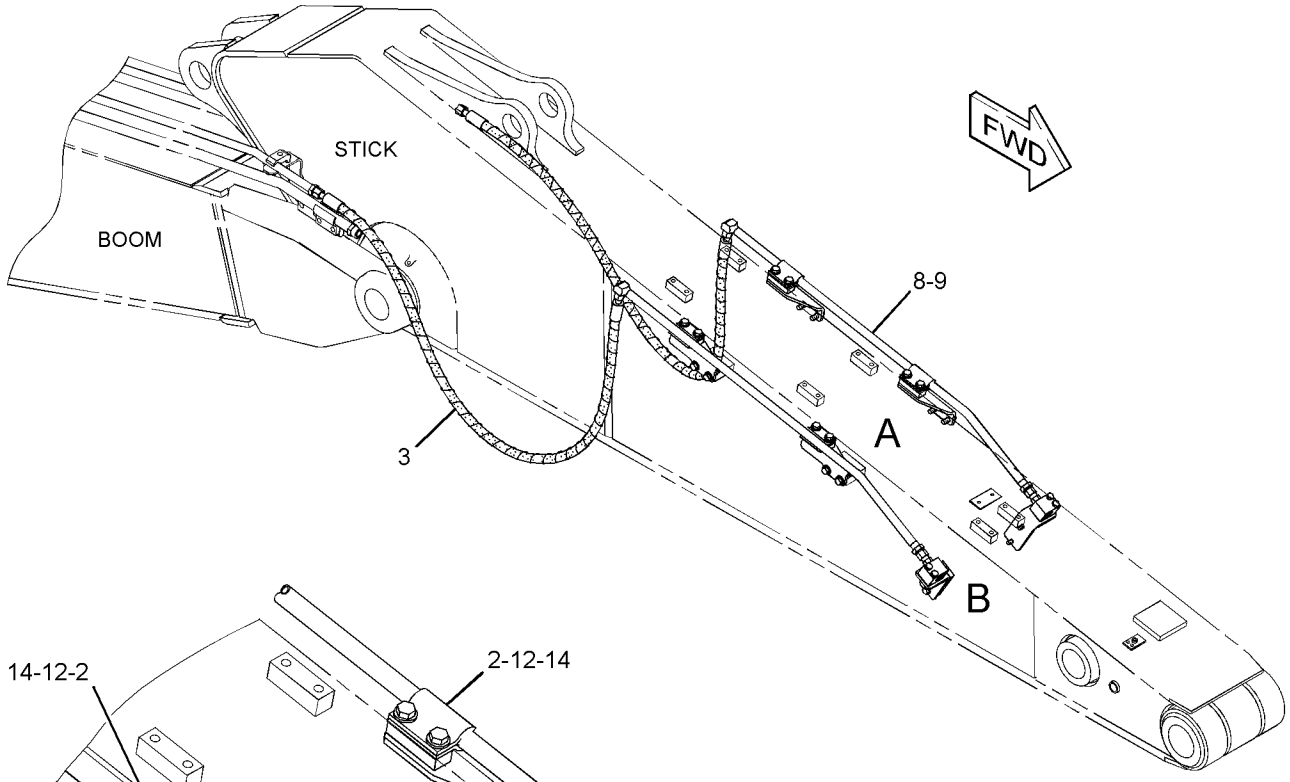

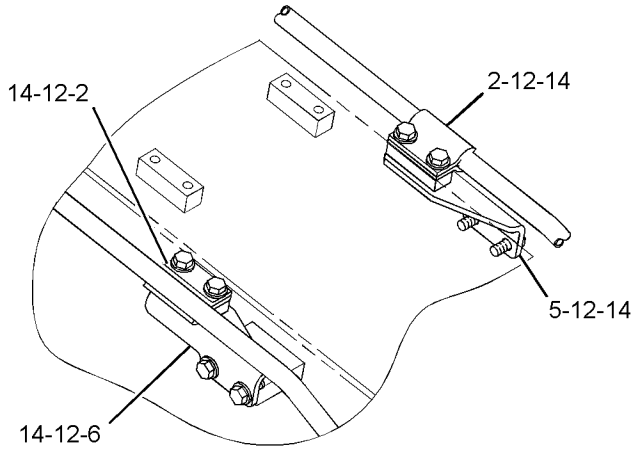

VIEW OF AREA A

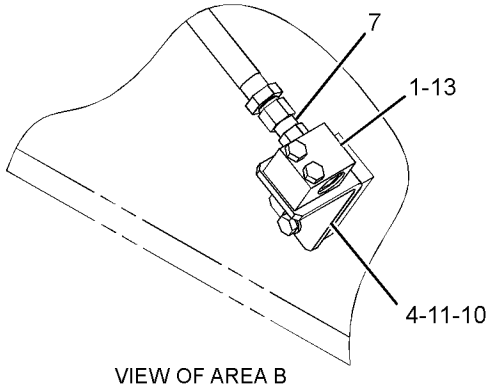

VIEW OF AREA B

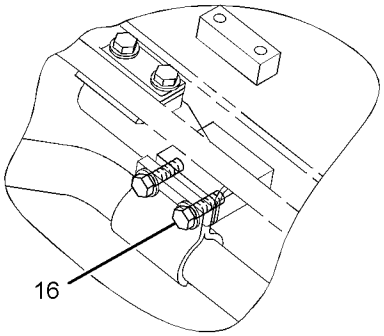

VIEW OF AREA A
(OPTIONAL DESIGN,
WHEN USED WITH HIGH FLOW LINES)

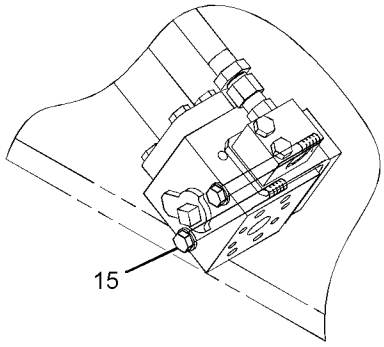

VIEW OF AREA B
(OPTIONAL DESIGN,
WHEN USED WITH HIGH FLOW LINES)

GRAPHIC #1 **<END>** g01519736

242-6492 LINES GP-AUXILIARY HYDRAULIC—STICK, MEDIUM PRESSURE

S/N: PBB1-UP; KBS1-UP
FOR USE WITH 2.4 TO 2.5-M (7.9 TO 8.2-FT) STICK
AN ATTACHMENT

SMCS-5057 **i05222320**

NOTE	REF NO	GRAPHIC REF	PART NUMBER	QTY	PART NAME 1 2 3 4 5 6 (PRODUCT LEVEL)	SEE PAGE
	1	1	**6C-6760**	2	MANIFOLD	
	2	1	**149-1738**	4	CLIP	
	3	1	**187-9977**	2	PLATE	
	4	1	**187-9978**	1	SUPPORT AS	
	5	1	**187-9981**	1	SUPPORT AS	
I	6	1	**216-6485**	2	HOSE AS	
	7	1	*250-1440*	2	ADAPTER AS	
					(EACH INCLUDES)	
		1	**3K-0360**	1	SEAL-O-RING	
		1	**7X-3164**	1	ADAPTER-SWIVEL	
	8	1	**253-6685**	2	TUBE AS	
	9	1	**6V-8398**	4	SEAL-O-RING	
	10	1	**8T-4121**	4	WASHER-HARD (11X21X2.5-MM THK)	
M	11	1	**8T-4136**	4	BOLT (M10X1.5X25-MM)	
M	12	1	**8T-4139**	8	BOLT (M12X1.75X30-MM)	
	13	1	**8T-4223**	8	WASHER-HARD (13.5X25.5X3-MM THK)	
M	14	1	**8T-4185**	4	BOLT (M10X1.5X50-MM)	
J	15	1	**197-2362**	2	PLATE	
JM	16	1	**7X-2543**	4	BOLT (M10X1.5X120-MM)	
JM	17	1	**8T-4183**	8	BOLT (M12X1.75X40-MM)	

I - REFER TO HYDRAULIC INFORMATION SYSTEM
J - USED ONLY WITH HIGH PRESSURE AUXILIARY HYDRAULIC LINES
M - METRIC PART

242-6492 **LINES GP-AUXILIARY HYDRAULIC (*contd.*)** **i05222320**

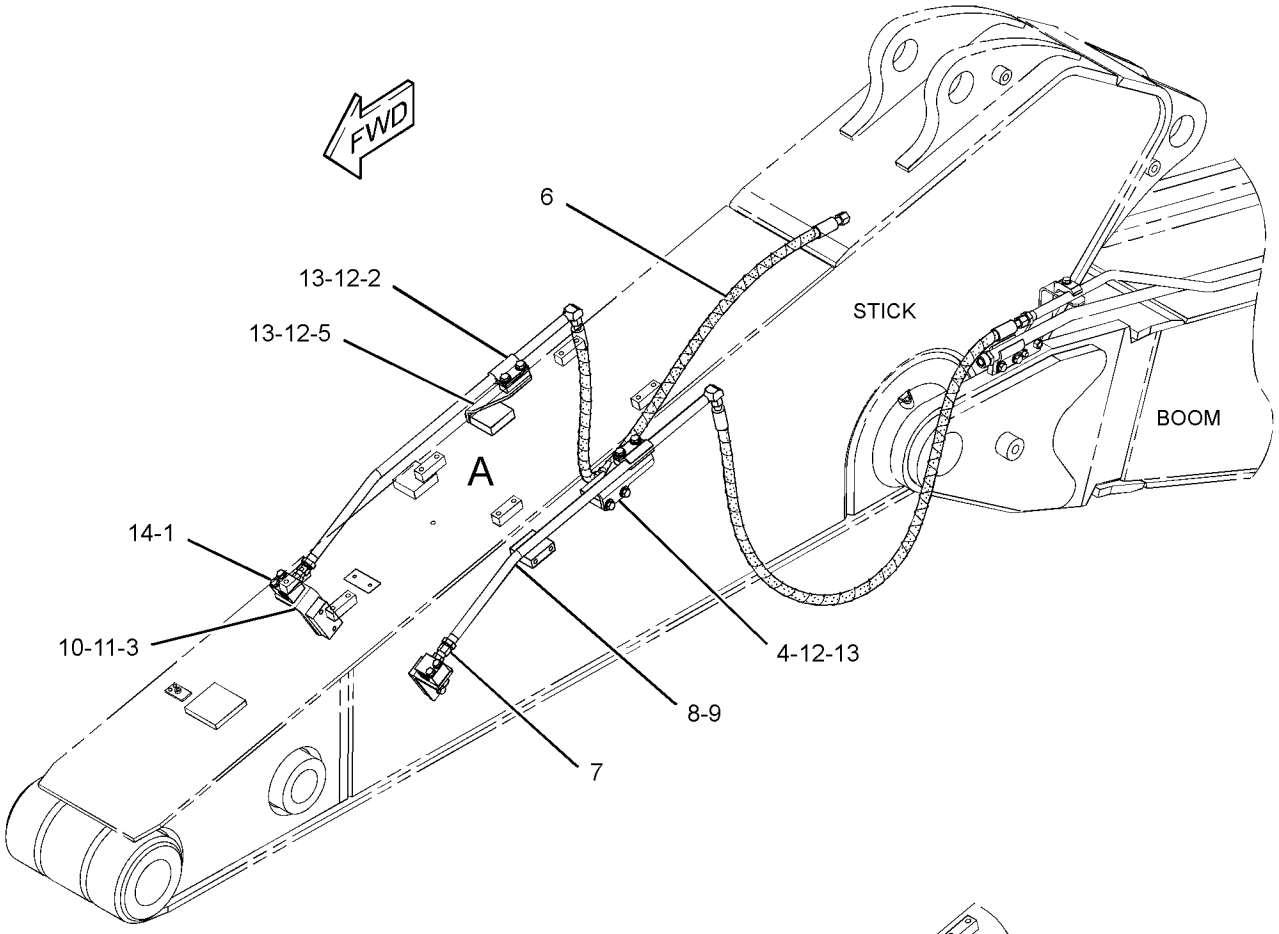

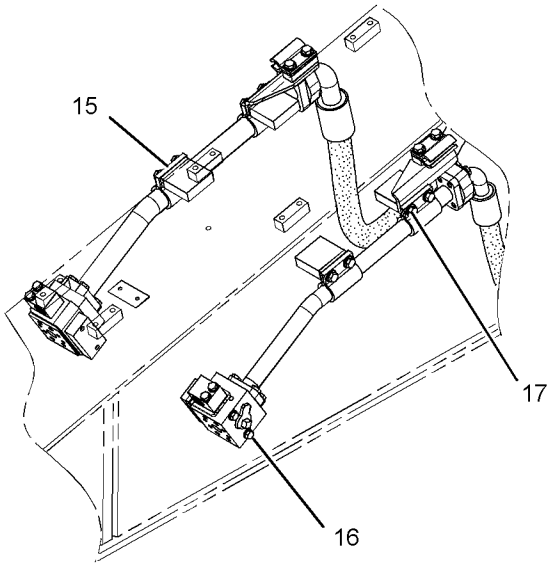

VIEW OF AREA A
(OPTIONAL DESIGN)
(WHEN USED WITH HIGH PRESSURE LINES)

GRAPHIC #1 **<END>** g02177901

268-7122 LINES GP-AUXILIARY HYDRAULIC—STICK, MEDIUM PRESSURE

S/N: PBB1-UP
PART OF 253-2866 OPTION AR-HYDRAULIC
AN ATTACHMENT

SMCS-5057 **i05521677**

NOTE	REF NO	GRAPHIC REF	PART NUMBER	QTY	PART NAME 1 2 3 4 5 6 (PRODUCT LEVEL)	SEE PAGE
	1	1	**268-7129**	2	TUBE AS	
	2	1	**268-7130**	1	TUBE AS	
	3	1	**268-7131**	1	TUBE AS	
I	4	1	**216-6485**	2	HOSE AS	
I	5	1	**111-6511**	2	HOSE AS	
	6	1	*148-8342*	2	CONNECTOR AS	
					(EACH INCLUDES)	
		1	**3K-0360**	1	SEAL-O-RING	
		1	**6V-8632**	1	CONNECTOR	
		1	**7J-9108**	1	SEAL-O-RING	
Y	7	1	**173-8093**	2	VALVE AS-MANUAL (AUXILIARY HYDRAULIC)	601
	8	1	**6V-8398**	6	SEAL-O-RING	
	9	1	**173-7895**	16	CLIP	
	10	1	**149-1738**	4	CLIP	
M	11	1	**8T-4139**	20	BOLT (M12X1.75X30-MM)	
	12	1	**8T-4223**	20	WASHER-HARD (13.5X25.5X3-MM THK)	
M	13	1	**6V-8337**	4	BOLT-SOCKET HEAD (M8X1.25X35-MM)	

I - REFER TO HYDRAULIC INFORMATION SYSTEM
M - METRIC PART
Y - SEPARATE ILLUSTRATION

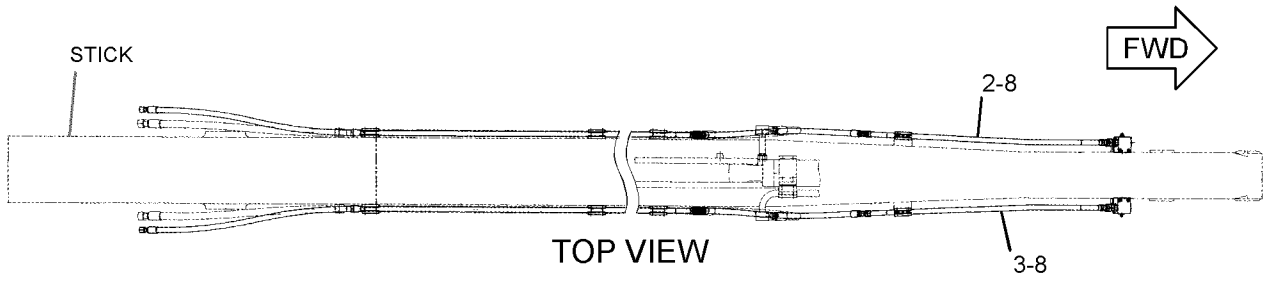

TOP VIEW

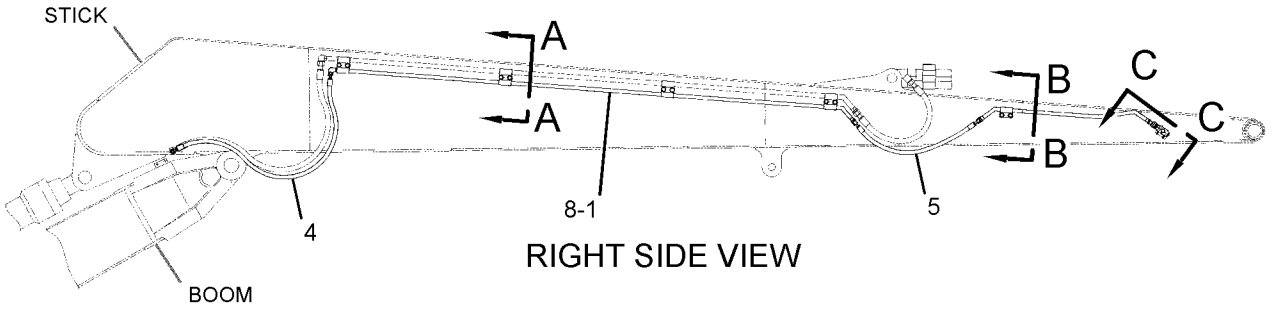

RIGHT SIDE VIEW

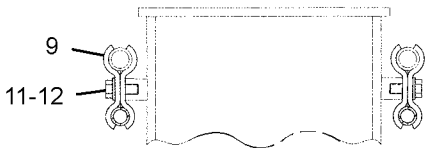

SECTION A-A

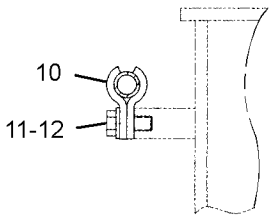

SECTION B-B

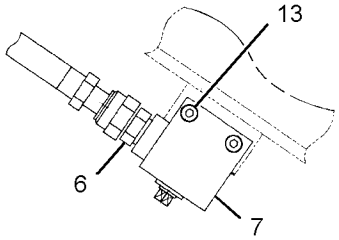

VIEW C-C

GRAPHIC #1 **<END>** g02022584

288-7603 LINES GP-AUXILIARY HYDRAULIC—MEDIUM PRESSURE

S/N: PBB1-UP

PART OF 253-2866 OPTION AR-HYDRAULIC

AN ATTACHMENT

SMCS-5057 **i03742841**

NOTE	REF NO	GRAPHIC REF	PART NUMBER	QTY	PART NAME 1 2 3 4 5 6 (PRODUCT LEVEL)	SEE PAGE
	1	1	**288-7604**	1	TUBE AS	
	2	1	**268-7124**	1	TUBE AS	
	3	1	**288-7605**	1	TUBE AS	
	4	1	**288-7606**	1	TUBE AS	
	5	1	**268-7127**	1	TUBE AS	
	6	1	**288-7607**	1	TUBE AS	
	7	1	**153-8867**	2	CLIP	
	8	1	**149-1738**	28	CLIP	
	9	1	**173-7895**	4	CLIP	
	10	1	**3V-9744**	12	SPACER	
	11	1	**202-3915**	3	PLATE	
M	12	1	**8T-4139**	4	BOLT (M12X1.75X30-MM)	
M	13	1	**8T-4648**	24	BOLT (M12X1.75X70-MM)	
M	14	1	**8T-4176**	6	BOLT (M12X1.75X90-MM)	
	15	1	**8T-4223**	34	WASHER-HARD (13.5X25.5X3-MM THK)	
	16	1	**6V-8398**	4	SEAL-O-RING	
	17	1	**7J-9108**	4	SEAL-O-RING	

M - METRIC PART

288-7603 **LINES GP-AUXILIARY HYDRAULIC (*contd.*)** **i03742841**

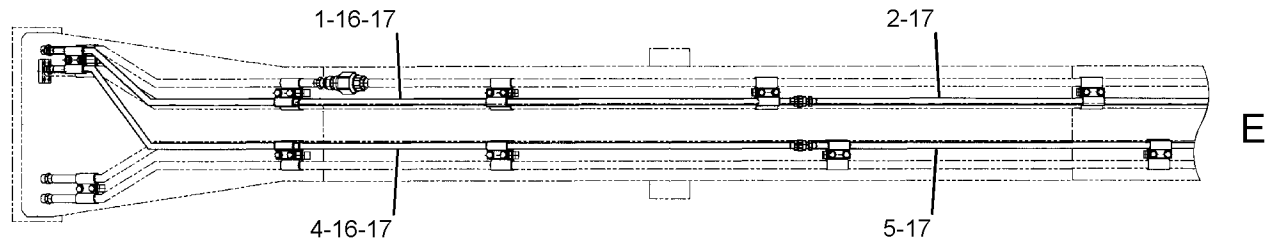

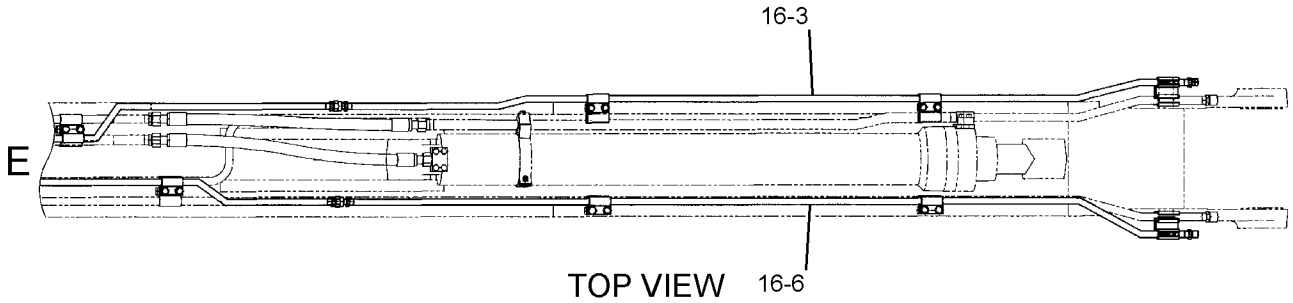

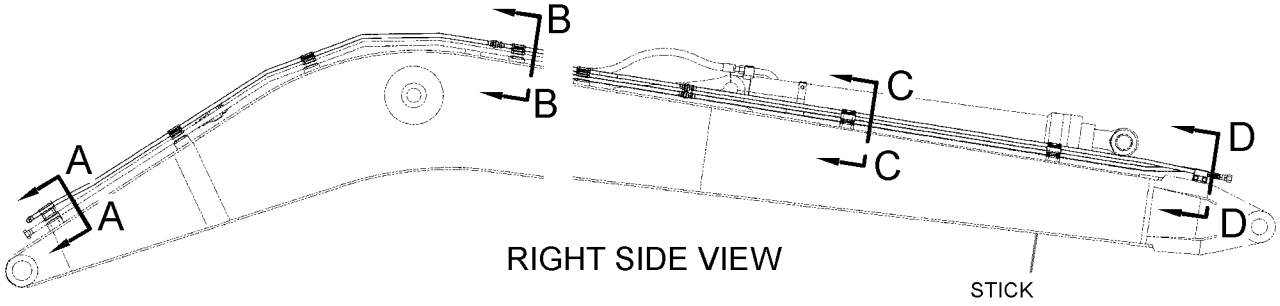

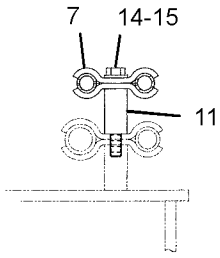

SECTION A-A

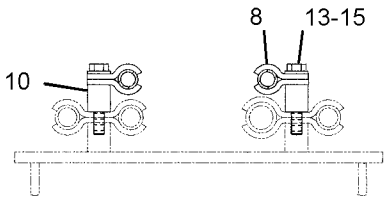

SECTION B-B

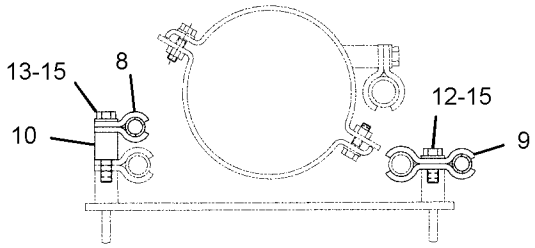

SECTION C-C

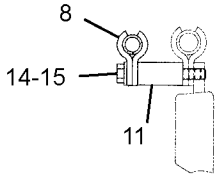

SECTION D-D

GRAPHIC #1 **<END>** g02022783

239-1732 LINES GP-BOOM

S/N: PBB1-UP; KBS1-UP
PART OF 415-1396 BOOM AR
AN ATTACHMENT

SMCS-5057 **i02956555**

NOTE	REF NO	GRAPHIC REF	PART NUMBER	QTY	PART NAME 1 2 3 4 5 6 (PRODUCT LEVEL)	SEE PAGE
	1	1	**4I-1674**	6	CLIP	
	2	1	**4I-1676**	6	CLIP	
	3	1	**7Y-4868**	8	CLIP	
I	4	1	**151-1846**	1	HOSE AS	
	5	1	**307-5035**	1	TUBE AS	
	6	1	**184-9253**	2	TUBE AS	
	7	1	**184-9254**	1	TUBE AS	
	8	1	**320-0198**	1	TUBE AS	
	9	1	**184-9256**	1	TUBE AS	
	10	1	**184-9257**	1	TUBE AS	
	11	1	**260-8320**	1	TUBE AS	
I	12	1	**260-8321**	1	HOSE AS	
	13	1	**1P-3703**	2	SEAL-RECTANGULAR	
	14	1	**6V-0400**	4	FLANGE-HALF	
	15	1	**6V-9746**	11	SEAL-O-RING	
M	16	1	**8T-4139**	20	BOLT (M12X1.75X30-MM)	
M	17	1	**8T-4184**	8	BOLT (M12X1.75X45-MM)	
	18	1	**8T-4223**	28	WASHER-HARD (13.5X25.5X3-MM THK)	

I - REFER TO HYDRAULIC INFORMATION SYSTEM
M - METRIC PART

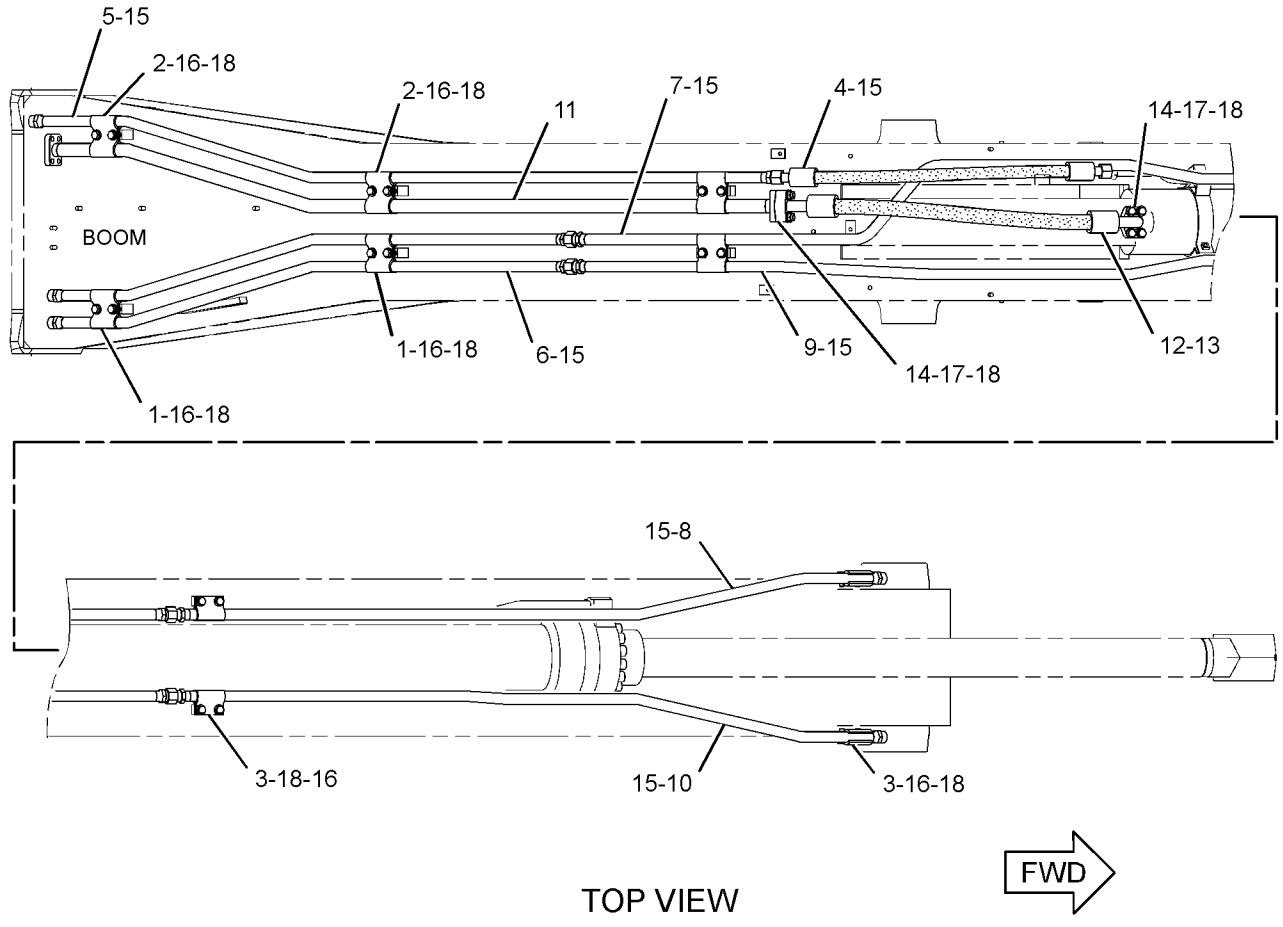

TOP VIEW

GRAPHIC #1 **<END>** g01473969

242-6505 LINES GP-BOOM–STICK LOAD CONTROL

S/N: PBB1-UP; KBS1-UP

PART OF 419-5123 VALVE AR-CHECK & RELIEF

AN ATTACHMENT

SMCS-5057 **i02997299**

NOTE	REF NO	GRAPHIC REF	PART NUMBER	QTY	PART NAME 1 2 3 4 5 6 (PRODUCT LEVEL)	SEE PAGE
I	1	1	**5I-4393**	1	HOSE AS	
	2	1	**5Q-4213**	6	CLIP	
	3	1	**7K-1181**	5	STRAP-CABLE	
	4	1	**202-3915**	1	PLATE	
I	5	1	**268-6850**	2	HOSE AS	
	6	1	**288-7410**	1	TUBE AS	
C	7	1	**282-5567**	1	PLATE	
	8	1	*149-5452*	2	UNION AS (STRAIGHT)	
					(EACH INCLUDES)	
		1	**6V-8397**	2	SEAL-O-RING	
		1	**6V-8994**	1	UNION (STRAIGHT)	
	9	1	**5Q-4212**	2	CLIP	
	10	1	**6V-8398**	2	SEAL-O-RING	
	11	1	**6V-9168**	2	NUT (11/16-16-THD)	
M	12	1	**7X-2549**	2	BOLT (M12X1.75X100-MM)	
M	13	1	**8T-4139**	6	BOLT (M12X1.75X30-MM)	
	14	1	**8T-4223**	8	WASHER-HARD (13.5X25.5X3-MM THK)	
M	15	1	**8T-4244**	6	NUT (M12X1.75-THD)	
CJ	16	1	**179-5030**	6	CLIP	
CJM	17	1	**8T-7930**	2	BOLT (M12X1.75X160-MM)	

C - CHANGE FROM PREVIOUS TYPE
I - REFER TO HYDRAULIC INFORMATION SYSTEM
J - USED WITH AUXILIARY HYDRAULIC LINES GROUP (MEDIUM PRESSURE)
M - METRIC PART

242-6505 **LINES GP-BOOM (*contd.*)** **i02997299**

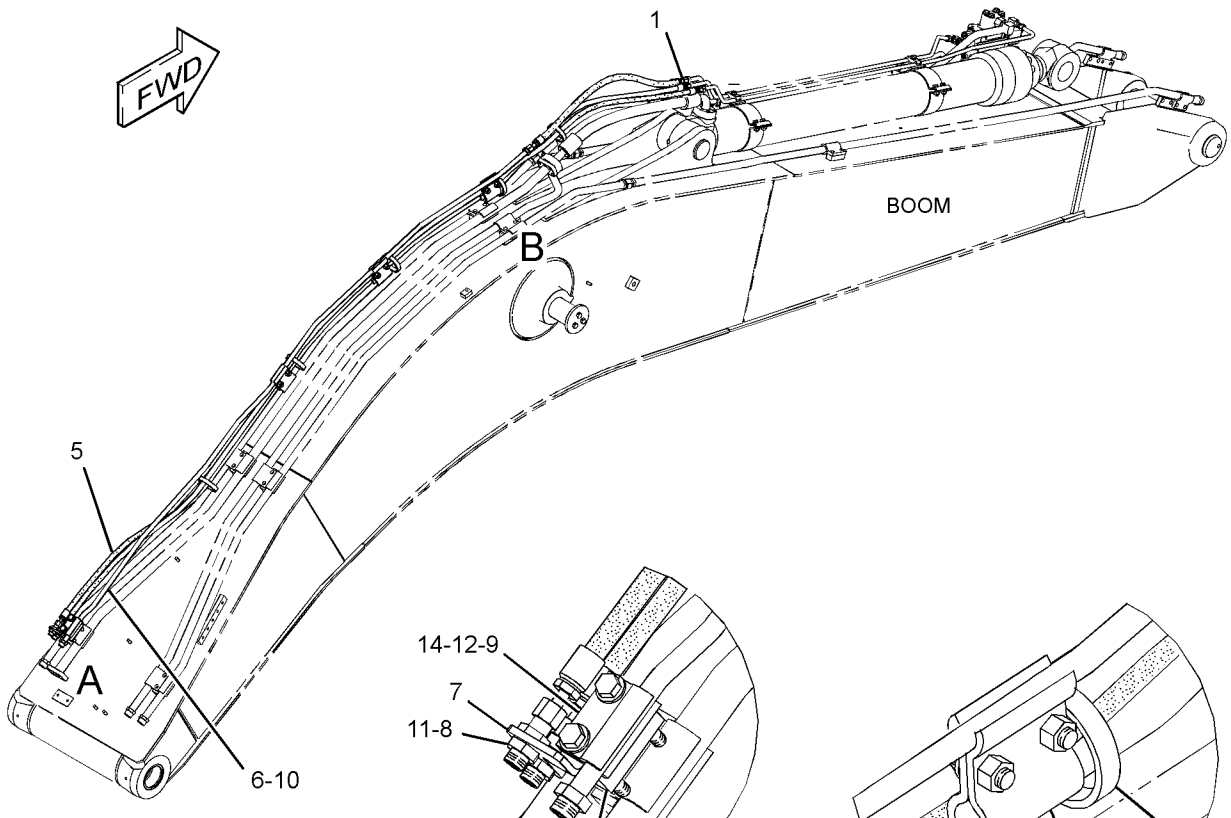

VIEW OF AREA A

VIEW OF AREA B

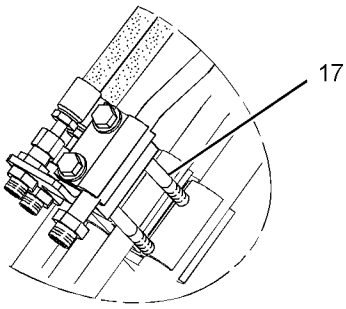

VIEW OF AREA A
(WITH AUXILIARY MEDIUM PRESSURE LINES)

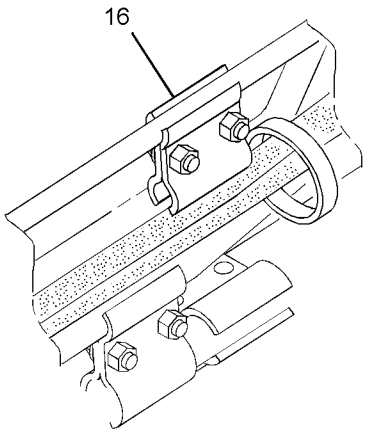

VIEW OF AREA B
(WITH AUXILIARY MEDIUM PRESSURE LINES)

GRAPHIC #1 **<END>** g01487213

260-8010 LINES GP-BOOM

S/N: PBB1-UP; KBS1-UP

PART OF 359-2434, 415-1399, 415-8447, 416-0961 BOOM AR-1 PIECE LONG

AN ATTACHMENT

SMCS-5057 **i02776641**

NOTE	REF NO	GRAPHIC REF	PART NUMBER	QTY	PART NAME 1 2 3 4 5 6 (PRODUCT LEVEL)	SEE PAGE
	1	1	**4I-1674**	6	CLIP	
	2	1	**4I-1676**	6	CLIP	
	3	1	**7Y-4868**	8	CLIP	
	4	1	**307-5034**	1	TUBE AS	
	5	1	**202-3855**	1	TUBE AS	
	6	1	**202-3856**	1	TUBE AS	
	7	1	**202-3857**	1	TUBE AS	
	8	1	**202-3858**	1	TUBE AS	
I	9	1	**202-6996**	1	HOSE AS	
	10	1	**260-8315**	1	TUBE AS	
I	11	1	**260-8316**	1	HOSE AS	
	12	1	**1P-3703**	2	SEAL-RECTANGULAR	
	13	1	**6V-0400**	4	FLANGE-HALF	
	14	1	**6V-9746**	9	SEAL-O-RING	
M	15	1	**8T-4139**	20	BOLT (M12X1.75X30-MM)	
M	16	1	**8T-4184**	8	BOLT (M12X1.75X45-MM)	
	17	1	**8T-4223**	28	WASHER-HARD (13.5X25.5X3-MM THK)	

I - REFER TO HYDRAULIC INFORMATION SYSTEM
M - METRIC PART

260-8010 **LINES GP-BOOM (*contd.*)** **i02776641**

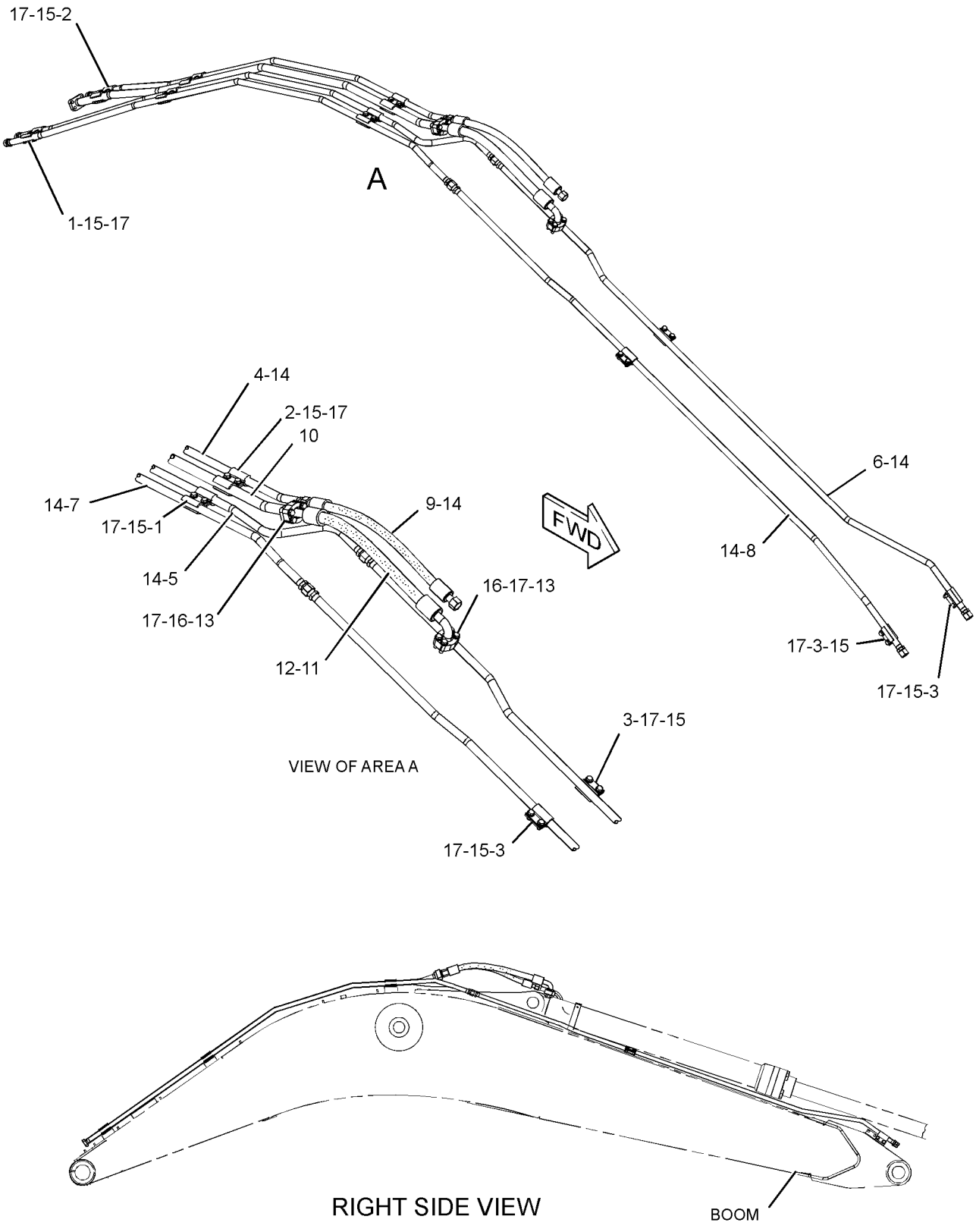

GRAPHIC #1 **<END>** g01366545

268-7046 LINES GP-BOOM

S/N: PBB1-UP

PART OF 420-0298 LINKAGE AR-FRONT

AN ATTACHMENT

SMCS-5057 **i04028618**

NOTE	REF NO	GRAPHIC REF	PART NUMBER	QTY	PART NAME 1 2 3 4 5 6 (PRODUCT LEVEL)	SEE PAGE
	1	1	**4I-1676**	12	CLIP	
	2	1	**4I-8789**	1	VALVE-CHECK	
	3	1	**6I-6721**	1	ELBOW	
I	4	1	**359-8784**	1	HOSE AS	
	5	1	**268-7047**	1	TUBE AS	
	6	1	**268-7048**	1	TUBE AS	
	7	1	**268-7049**	1	TUBE AS	
	8	1	**268-7238**	2	TUBE AS	
	9	1	**268-7239**	1	TUBE AS	
	10	1	**268-7240**	1	TUBE AS	
	11	1	*148-8335*	1	CONNECTOR AS	
		1	**5K-9090**	1	SEAL-O-RING	
		1	**6V-8635**	1	CONNECTOR	
		1	**7M-8485**	1	SEAL-O-RING	
	12	1	**1P-3704**	1	SEAL-RECTANGULAR	
	13	1	**4I-1674**	12	CLIP	
	14	1	**5K-9090**	4	SEAL-O-RING	
	15	1	**6V-9746**	7	SEAL-O-RING	
	16	1	**7M-8485**	1	SEAL-O-RING	
	17	1	**7Y-4868**	12	CLIP	
M	18	1	**8T-4139**	36	BOLT (M12X1.75X30-MM)	
	19	1	**8T-4223**	36	WASHER-HARD (13.5X25.5X3-MM THK)	
M	20	1	**8T-4648**	4	BOLT (M12X1.75X70-MM)	
I	21	1	**359-8787**	1	HOSE AS	

I - REFER TO HYDRAULIC INFORMATION SYSTEM
M - METRIC PART

268-7046 **LINES GP-BOOM (*contd.*)** **i04028618**

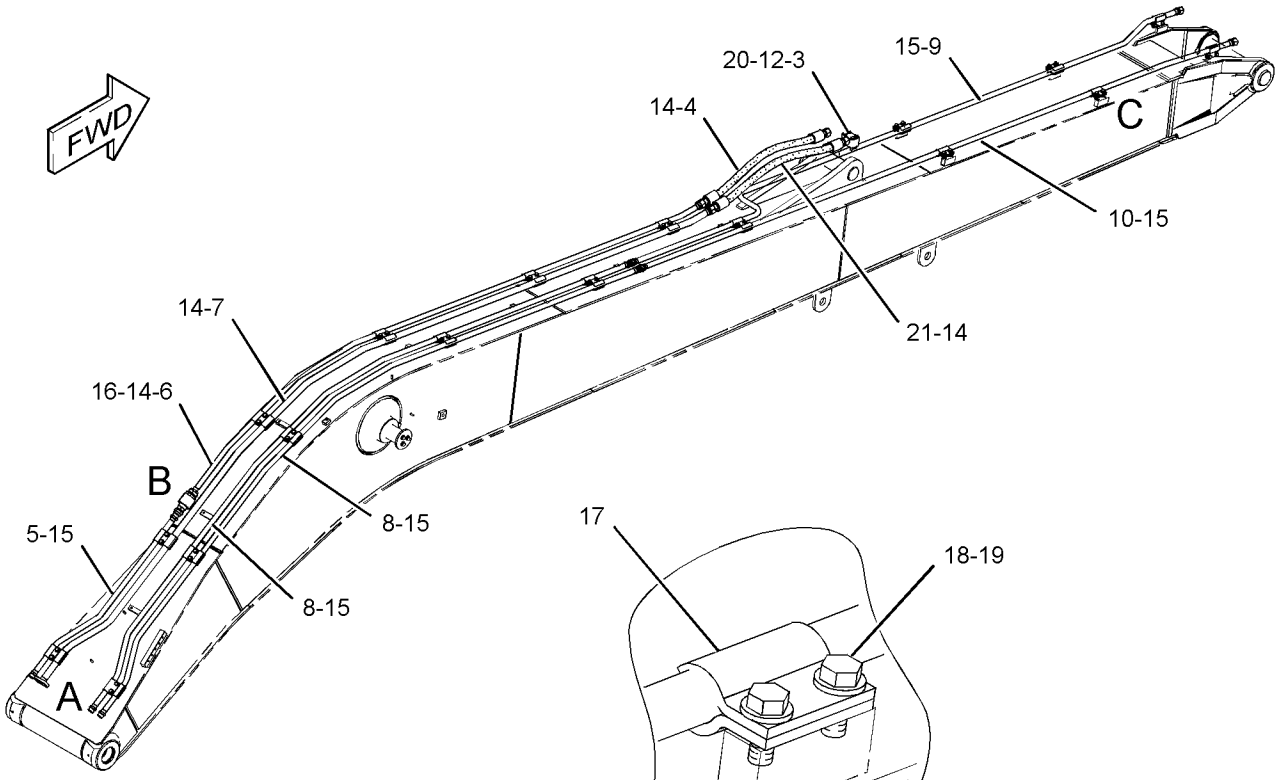

VIEW OF AREA C

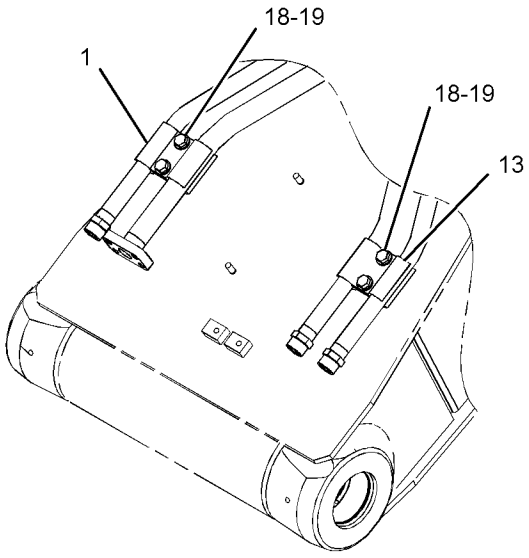

VIEW OF AREA A

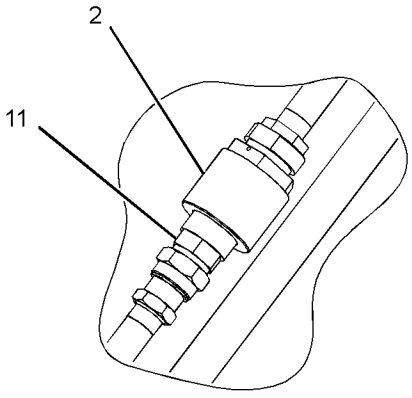

VIEW OF AREA B

GRAPHIC #1 **<END>** g02362579

239-1699 LINES GP-BOOM CYLINDER

S/N: PBB1-UP; KBS1-UP

PART OF 456-0404, 456-0405 HYDRAULIC AR

SMCS-5057, 5456 **i04798227**

NOTE	REF NO	GRAPHIC REF	PART NUMBER	QTY	PART NAME 1 2 3 4 5 6 (PRODUCT LEVEL)	SEE PAGE
	1	1	**9F-2167**	1	SCREW-PURGE (3/8-24X1.164-IN)	
M	2	1	**101-7398**	4	BOLT-SOCKET HEAD (M10X1.5X40-MM)	
I	3	1	**108-7354**	1	HOSE AS	
I	4	1	**124-1047**	4	HOSE AS	
	5	1	**124-1062**	1	SUPPORT AS	
	6	1	**133-5828**	1	SUPPORT AS	
	7	1	**142-7768**	1	TUBE AS	
	8	1	**142-7769**	1	TUBE AS	
CY	9	1	**322-8716**	1	VALVE GP-SWING CUSHION (FINE SWING)	689
	10	1	*164-5552*	1	CONNECTOR AS	
		1	**3D-2824**	1	SEAL-O-RING	
		1	**4I-7745**	1	CONNECTOR	
		1	**6V-8398**	1	SEAL-O-RING	
	11	1	**234-4492**	1	SUPPORT	
	12	1	*307-4918*	1	CONNECTOR AS	
		1	**5K-9090**	1	SEAL-O-RING	
		1	**7M-8485**	1	SEAL-O-RING	
		1	**307-4919**	1	CONNECTOR	
M	13	1	**101-7404**	4	BOLT-SOCKET HEAD (M10X1.5X30-MM)	
	14	1	**108-7550**	1	CLIP	
	15	1	*148-8336*	1	CONNECTOR AS	
		1	**3J-1907**	1	SEAL-O-RING	
		1	**6V-8397**	1	SEAL-O-RING	
		1	**6V-8636**	1	CONNECTOR	
	16	1	*148-8353*	1	ELBOW AS	
		1	**3J-1907**	1	SEAL-O-RING	
		1	**6V-8397**	1	SEAL-O-RING	
		1	**6V-9001**	1	ELBOW	
	17	1	*148-8364*	1	ELBOW AS	
		1	**3K-0360**	1	SEAL-O-RING	
		1	**6V-8398**	1	SEAL-O-RING	
		1	**6V-8625**	1	ELBOW	
	18	1	*148-8367*	1	ELBOW AS	
		1	**6V-8397**	1	SEAL-O-RING	
		1	**6V-9850**	1	ELBOW	
	19	1	*148-8444*	1	TEE AS-SWIVEL	
		1	**6V-8398**	2	SEAL-O-RING	
		1	**6V-9837**	1	TEE-SWIVEL	
	20	1	**1P-3703**	2	SEAL-RECTANGULAR	
	21	1	**4I-1674**	2	CLIP	
	22	1	**5P-1076**	2	WASHER-HARD (13.5X30X4-MM THK)	
	23	1	**6V-9746**	4	SEAL-O-RING	
	24	1	**8T-4121**	8	WASHER-HARD (11X21X2.5-MM THK)	
M	25	1	**8T-4139**	2	BOLT (M12X1.75X30-MM)	
M	26	1	**8T-4178**	6	BOLT (M10X1.5X90-MM)	
M	27	1	**8T-4182**	8	BOLT (M10X1.5X45-MM)	
M	28	1	**8T-4192**	2	BOLT (M12X1.75X25-MM)	
	29	1	**8T-4223**	6	WASHER-HARD (13.5X25.5X3-MM THK)	
M	30	1	**8T-4648**	2	BOLT (M12X1.75X70-MM)	
M	31	1	**8T-4910**	2	BOLT (M12X1.75X60-MM)	
	32	1	**8T-9403**	4	FLANGE-HALF	
	33	1	**6H-3615**	1	PLUG-PROTECTION	

C - CHANGE FROM PREVIOUS TYPE
I - REFER TO HYDRAULIC INFORMATION SYSTEM
M - METRIC PART
Y - SEPARATE ILLUSTRATION

239-1699 **LINES GP-BOOM CYLINDER (*contd.*)** **i04798227**

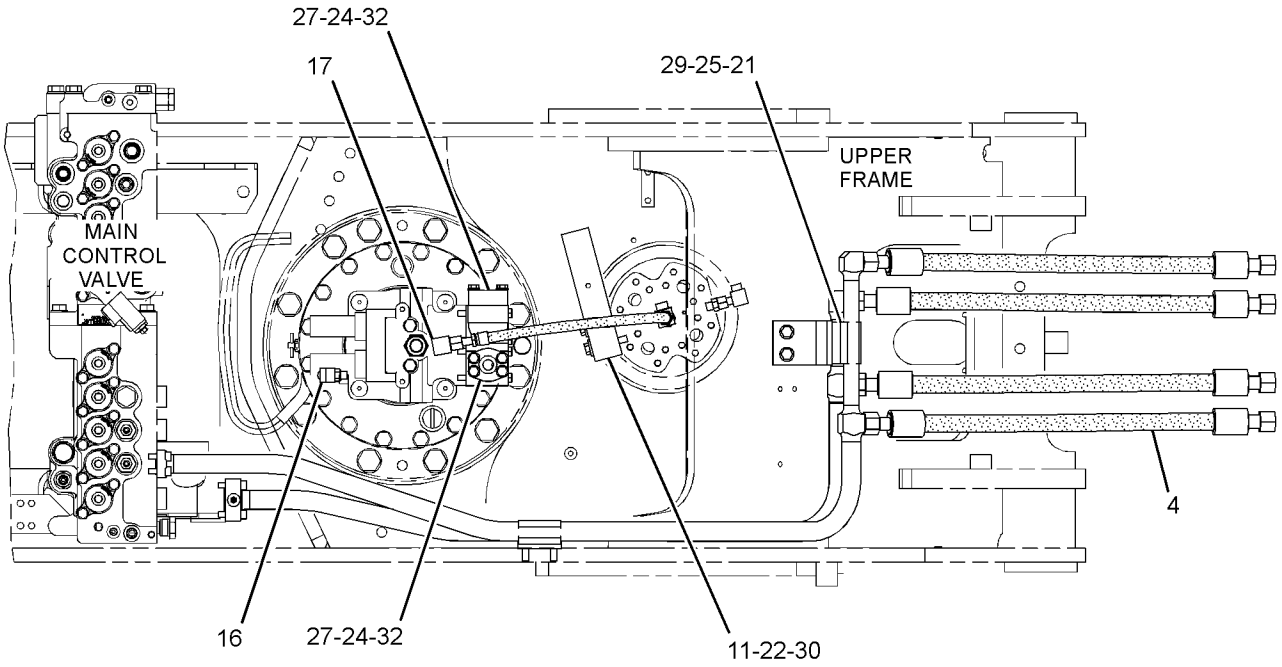

TOP VIEW

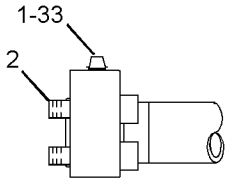

VIEW OF AREA A

FWD

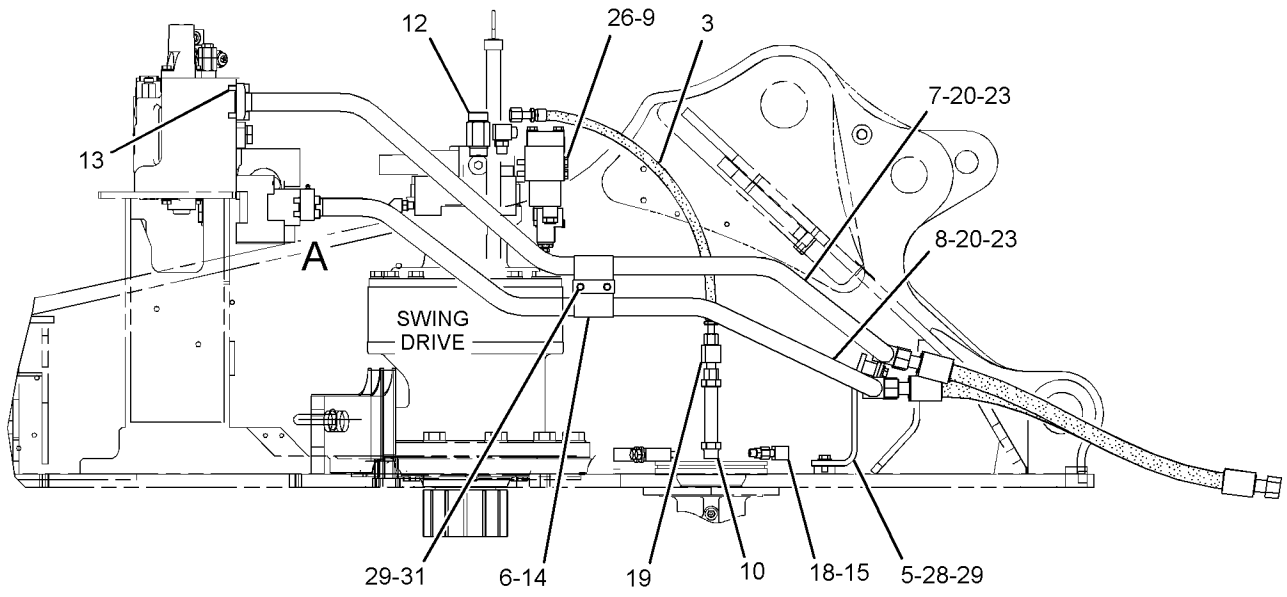

RIGHT SIDE VIEW

GRAPHIC #1 **<END>** g02917961

242-6732 LINES GP-BOOM CYLINDER—LH

S/N: PBB1-UP; KBS1-UP

PART OF 341-2788 CYLINDER & LINES GP-BOOM

AN ATTACHMENT

SMCS-5057, 5456

i04388581

NOTE	REF NO	GRAPHIC REF	PART NUMBER	QTY	PART NAME 1 2 3 4 5 6 (PRODUCT LEVEL)	SEE PAGE
	1	1	**247-8869**	1	TUBE AS	
	2	1	**222-0126**	1	TUBE AS	
	3	1	**095-1597**	2	SEAL-O-RING	
M	4	1	**9X-6032**	8	BOLT-SOCKET HEAD (M10X1.5X30-MM)	
	5	1	**137-3709**	1	SUPPORT AS	
	6	1	**4I-3621**	1	SUPPORT	
M	7	1	**8T-4196**	2	BOLT (M10X1.5X35-MM)	
	8	1	**8T-4896**	2	WASHER-HARD (10.2X18.5X2.5-MM THK)	
M	9	1	**8T-3653**	1	BOLT (M14X2X80-MM)	
	10	1	**3B-4509**	1	LOCKWASHER	
	11	1	**094-1920**	2	CLAMP	

M - METRIC PART

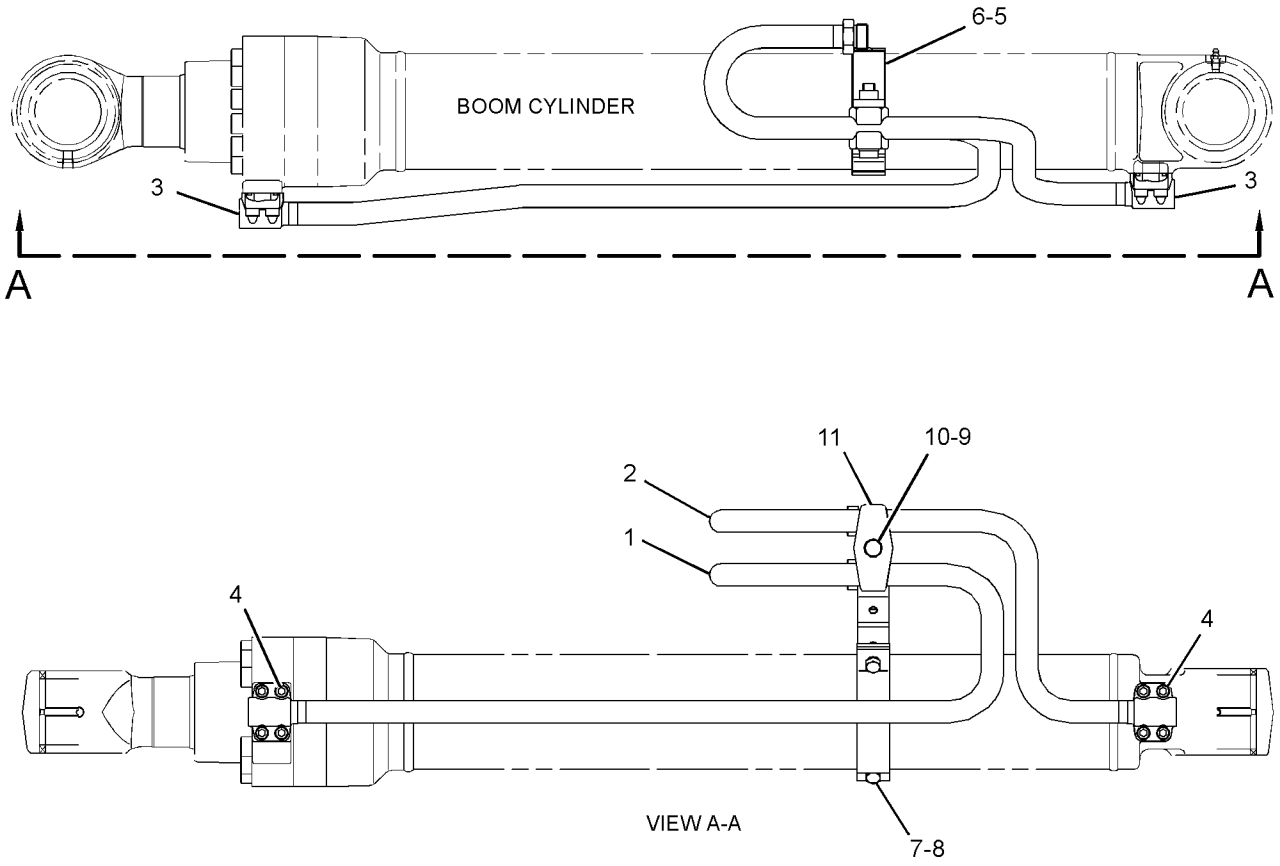

GRAPHIC #1

<END>

g02566498

242-6737 LINES GP-BOOM CYLINDER–RH

S/N: PBB1-UP; KBS1-UP
PART OF 341-2789 CYLINDER & LINES GP-BOOM
AN ATTACHMENT

SMCS-5057, 5456 **i04388585**

NOTE	REF NO	GRAPHIC REF	PART NUMBER	QTY	PART NAME 1 2 3 4 5 6 (PRODUCT LEVEL)	SEE PAGE
	1	1	**247-8870**	1	TUBE AS	
	2	1	**222-0124**	1	TUBE AS	
	3	1	**095-1597**	2	SEAL-O-RING	
M	4	1	**9X-6032**	8	BOLT-SOCKET HEAD (M10X1.5X30-MM)	
	5	1	**137-3709**	1	SUPPORT AS	
	6	1	**4I-3621**	1	SUPPORT	
M	7	1	**8T-4196**	2	BOLT (M10X1.5X35-MM)	
	8	1	**8T-4896**	2	WASHER-HARD (10.2X18.5X2.5-MM THK)	
M	9	1	**8T-3653**	1	BOLT (M14X2X80-MM)	
	10	1	**3B-4509**	1	LOCKWASHER	
	11	1	**094-1920**	2	CLAMP	

M - METRIC PART

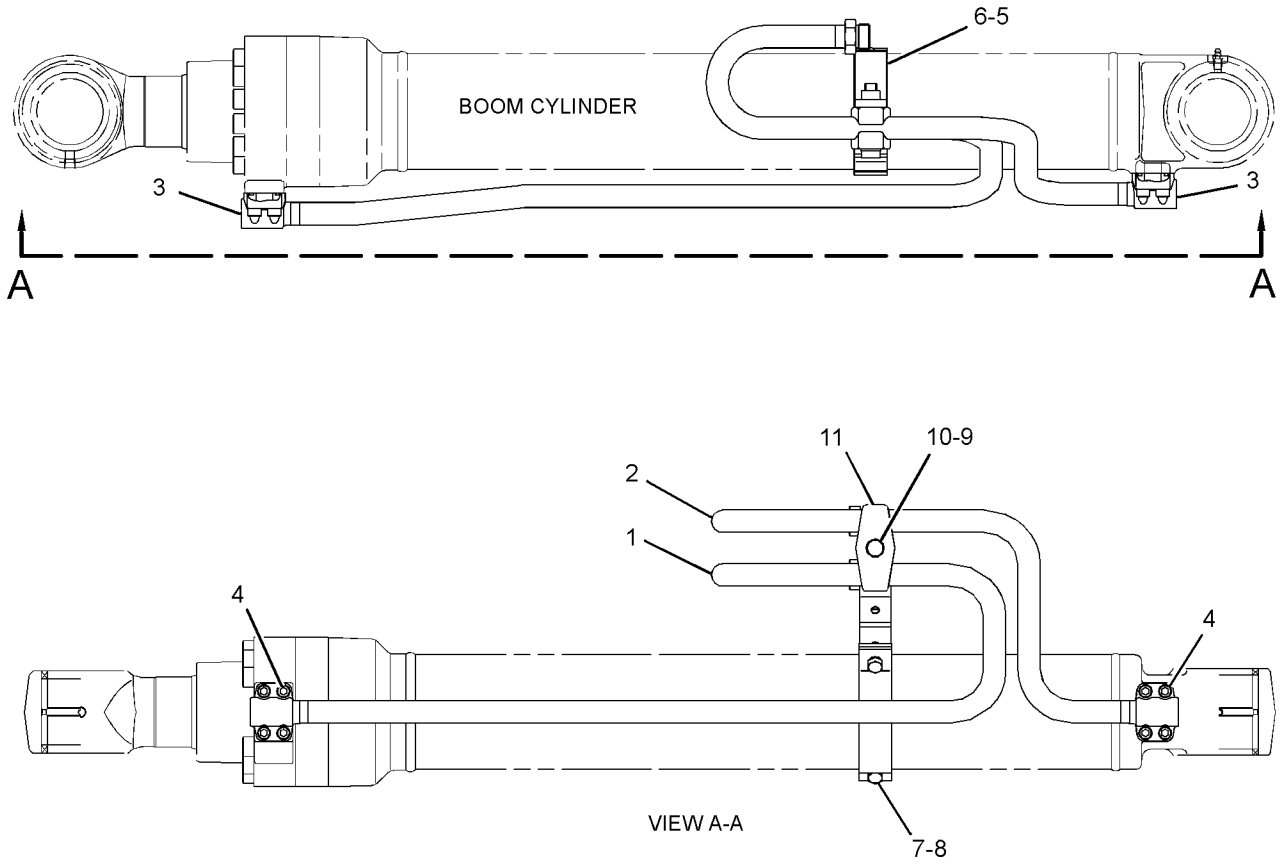

GRAPHIC #1 **<END>** g02566498

266-8022 LINES GP-BOOM CYLINDER—LH

S/N: PBB1-UP

PART OF 418-5502 CYLINDER & LINES GP-BOOM

AN ATTACHMENT

SMCS-5057, 5456

i03996696

NOTE	REF NO	GRAPHIC REF	PART NUMBER	QTY	PART NAME 1 2 3 4 5 6 (PRODUCT LEVEL)	SEE PAGE
	1	1	**247-8869**	1	TUBE AS	
	2	1	**222-0126**	1	TUBE AS	
	3	1	**266-7964**	2	SEAL-O-RING	
M	4	1	**9X-6032**	8	BOLT-SOCKET HEAD (M10X1.5X30-MM)	
	5	1	**137-3709**	1	SUPPORT AS	
	6	1	**4I-3621**	1	SUPPORT	
M	7	1	**8T-4196**	2	BOLT (M10X1.5X35-MM)	
	8	1	**8T-4896**	2	WASHER-HARD (10.2X18.5X2.5-MM THK)	
M	9	1	**8T-3653**	1	BOLT (M14X2X80-MM)	
	10	1	**3B-4509**	1	LOCKWASHER	
	11	1	**094-1920**	2	CLAMP	

M - METRIC PART

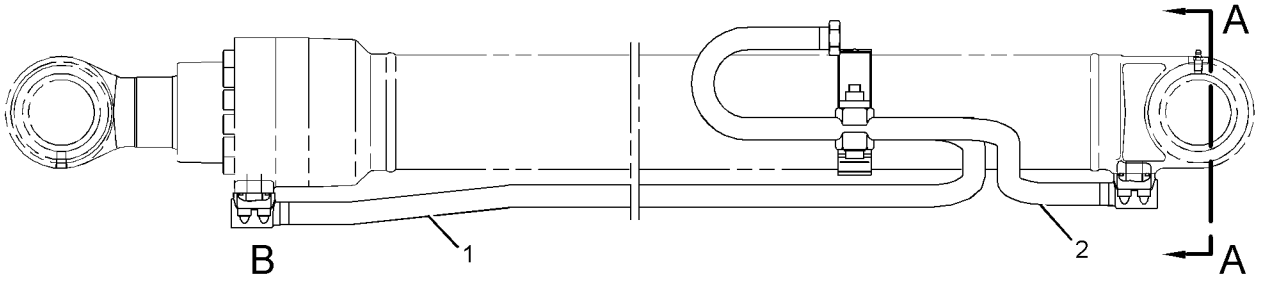

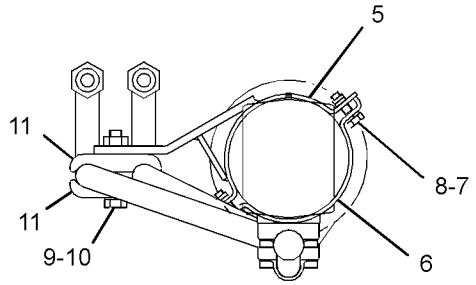

VIEW A-A

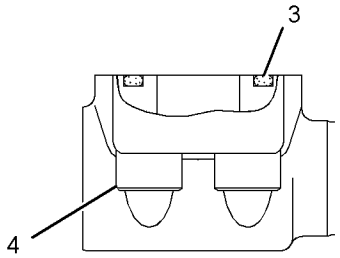

VIEW OF AREA B

GRAPHIC #1

<END>

g02178358

266-8023 LINES GP-BOOM CYLINDER–RH

S/N: PBB1-UP

PART OF 418-5510 CYLINDER & LINES GP-BOOM

AN ATTACHMENT

SMCS-5057, 5456 **i02422984**

NOTE	REF NO	GRAPHIC REF	PART NUMBER	QTY	PART NAME 1 2 3 4 5 6 (PRODUCT LEVEL)	SEE PAGE
	1	1	**266-7964**	2	SEAL-O-RING	
M	2	1	**9X-6032**	8	BOLT-SOCKET HEAD (M10X1.5X30-MM)	
	3	1	**222-0124**	1	TUBE AS	
	4	1	**247-8870**	1	TUBE AS	
	5	1	**094-1920**	2	CLAMP	
M	6	1	**8T-3653**	1	BOLT (M14X2X80-MM)	
	7	1	**3B-4509**	1	LOCKWASHER	
M	8	1	**8T-4196**	2	BOLT (M10X1.5X35-MM)	
	9	1	**8T-4896**	2	WASHER-HARD (10.2X18.5X2.5-MM THK)	
	10	1	**4I-3621**	1	SUPPORT	
	11	1	**137-3709**	1	SUPPORT AS	

M - METRIC PART

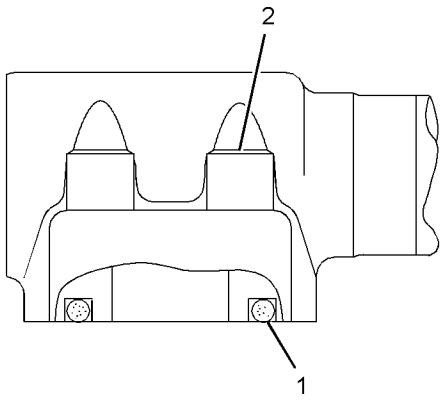

VIEW OF AREA B

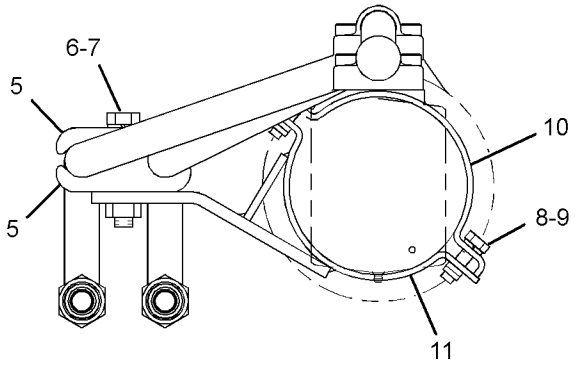

VIEW A-A

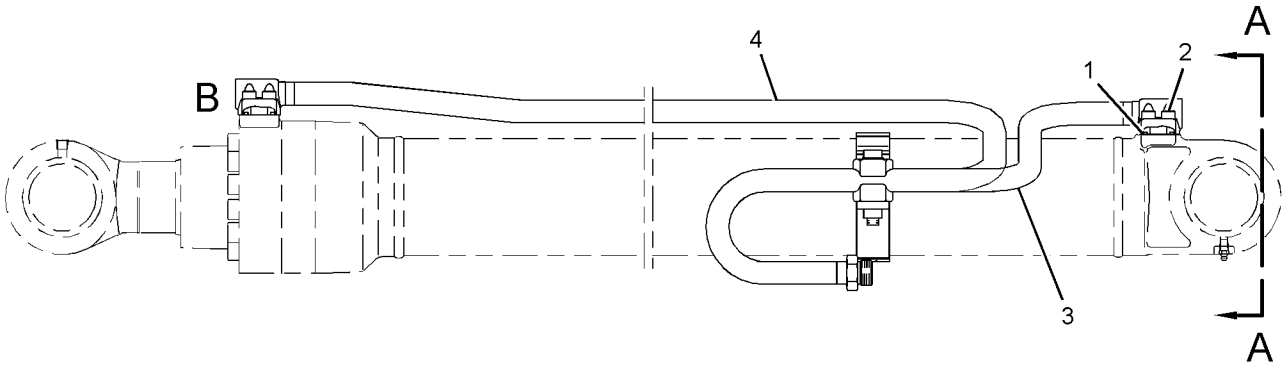

GRAPHIC #1 **<END>** g01226991

286-6495 LINES GP-BOOM CYLINDER—BOOM LOWERING CONTROL

S/N: PBB1-UP; KBS1-UP

PART OF 270-5974 VALVE AR-CHECK & RELIEF

AN ATTACHMENT

SMCS-5057, 5456

i03567863

NOTE	REF NO	GRAPHIC REF	PART NUMBER	QTY	PART NAME 1 2 3 4 5 6 (PRODUCT LEVEL)	SEE PAGE
	1	1	**4I-1674**	4	CLIP	
	2	1	**7K-1181**	12	STRAP-CABLE	
	3	1	**119-2804**	2	SUPPORT AS	
	4	1	**149-1738**	4	CLIP	
Y	5	1	**225-4785**	2	VALVE GP-LOAD CONTROL (BOOM CYLINDER)	634
	6	1	**266-1110**	1	TUBE AS	
	7	1	**266-1111**	1	TUBE AS	
	8	1	**266-1114**	1	TUBE AS	
	9	1	**266-1115**	1	TUBE AS	
	10	1	**266-1116**	2	SUPPORT AS	
I	11	1	**266-1147**	1	HOSE AS	
I	12	1	**320-0013**	2	HOSE AS	
					(EACH INCLUDES)	
E		1	**7I-7439**		GUARD-HOSE (171-CM)	
	13	1	**278-6587**	1	BLOCK	
I	14	1	**278-6593**	2	HOSE AS	
	15	1	**278-6875**	1	SUPPORT AS	
	16	1	**278-6877**	1	SUPPORT AS	
I	17	1	**286-6731**	2	HOSE AS	
					(EACH INCLUDES)	
E		1	**7I-7439**		GUARD-HOSE (161-CM)	
	18	1	**286-6720**	1	TUBE AS	
	19	1	**286-6721**	1	TUBE AS	
	20	1	*148-8326*	2	CONNECTOR AS	
					(EACH INCLUDES)	
		1	**3J-7354**	1	SEAL-O-RING	
		1	**6V-8397**	1	SEAL-O-RING	
		1	**6V-9872**	1	CONNECTOR	
	21	1	*148-8336*	4	CONNECTOR AS	
					(EACH INCLUDES)	
		1	**3J-1907**	1	SEAL-O-RING	
		1	**6V-8397**	1	SEAL-O-RING	
		1	**6V-8636**	1	CONNECTOR	
	22	1	*148-8341*	2	CONNECTOR AS	
					(EACH INCLUDES)	
		1	**3D-2824**	1	SEAL-O-RING	
		1	**6V-8713**	1	CONNECTOR	
		1	**7J-9108**	1	SEAL-O-RING	
	23	1	*148-8371*	1	ELBOW AS	
		1	**6V-8397**	1	SEAL-O-RING	
		1	**8C-8988**	1	ELBOW	
	24	1	*148-8378*	2	ELBOW AS	
					(EACH INCLUDES)	
		1	**3J-1907**	1	SEAL-O-RING	
		1	**6V-8397**	1	SEAL-O-RING	
		1	**6V-8724**	1	ELBOW	
	25	1	*148-8390*	1	ELBOW AS	
		1	**2M-9780**	1	SEAL-O-RING	
		1	**6V-8626**	1	ELBOW	
		1	**7J-9108**	1	SEAL-O-RING	
	26	1	*148-8407*	2	PLUG AS	
					(EACH INCLUDES)	
		1	**3J-1907**	1	SEAL-O-RING	
		1	**9S-4191**	1	PLUG	
	27	1	*148-8411*	2	PLUG AS	
					(EACH INCLUDES)	
		1	**3K-0360**	1	SEAL-O-RING	
		1	**9S-4185**	1	PLUG-O-RING	

286-6495 **LINES GP-BOOM CYLINDER (*contd.*)** **i03567863**

NOTE	REF NO	GRAPHIC REF	PART NUMBER	QTY	PART NAME 1 2 3 4 5 6 (PRODUCT LEVEL)	SEE PAGE
	28	1	*148-8435*	2	TEE AS	
					(EACH INCLUDES)	
		1	**3J-1907**	1	SEAL-O-RING	
		1	**6V-8397**	2	SEAL-O-RING	
		1	**6V-8781**	1	TEE	
	29	1	*164-5578*	1	TEE AS	
		1	**3D-2824**	1	SEAL-O-RING	
		1	**6V-9175**	1	TEE (FACE SEAL)	
		1	**6V-9746**	1	SEAL-O-RING	
		1	**7J-9108**	1	SEAL-O-RING	
	30	1	**1P-3703**	6	SEAL-RECTANGULAR	
	31	1	**4I-9521**	2	BAND-MARKER (RED, L1)	
	32	1	**4I-9522**	2	BAND-MARKER (YELLOW, L2)	
	33	1	**4I-9525**	2	BAND-MARKER (ORANGE, R1)	
	34	1	**4I-9526**	2	BAND-MARKER (WHITE, R2)	
	35	1	**6V-9746**	4	SEAL-O-RING	
	36	1	**7J-9108**	2	SEAL-O-RING	
M	37	1	**280-2747**	8	BOLT-SOCKET HEAD (M10X1.5X60-MM)	
	38	1	**8T-4121**	18	WASHER-HARD (11X21X2.5-MM THK)	
M	39	1	**8T-4136**	2	BOLT (M10X1.5X25-MM)	
M	40	1	**8T-4185**	8	BOLT (M10X1.5X50-MM)	
M	41	1	**8T-4192**	2	BOLT (M12X1.75X25-MM)	
M	42	1	**8T-4196**	8	BOLT (M10X1.5X35-MM)	
	43	1	**8T-4223**	12	WASHER-HARD (13.5X25.5X3-MM THK)	
M	44	1	**8T-4956**	10	BOLT (M12X1.75X35-MM)	
M	45	1	**8T-6466**	8	BOLT (M10X1.5X60-MM)	
	46	1	**307-5121**	1	GUARD	

E - ORDER BY THE CENTIMETER
I - REFER TO HYDRAULIC INFORMATION SYSTEM
M - METRIC PART
Y - SEPARATE ILLUSTRATION

286-6495 **LINES GP-BOOM CYLINDER (*contd.*)** **i03567863**

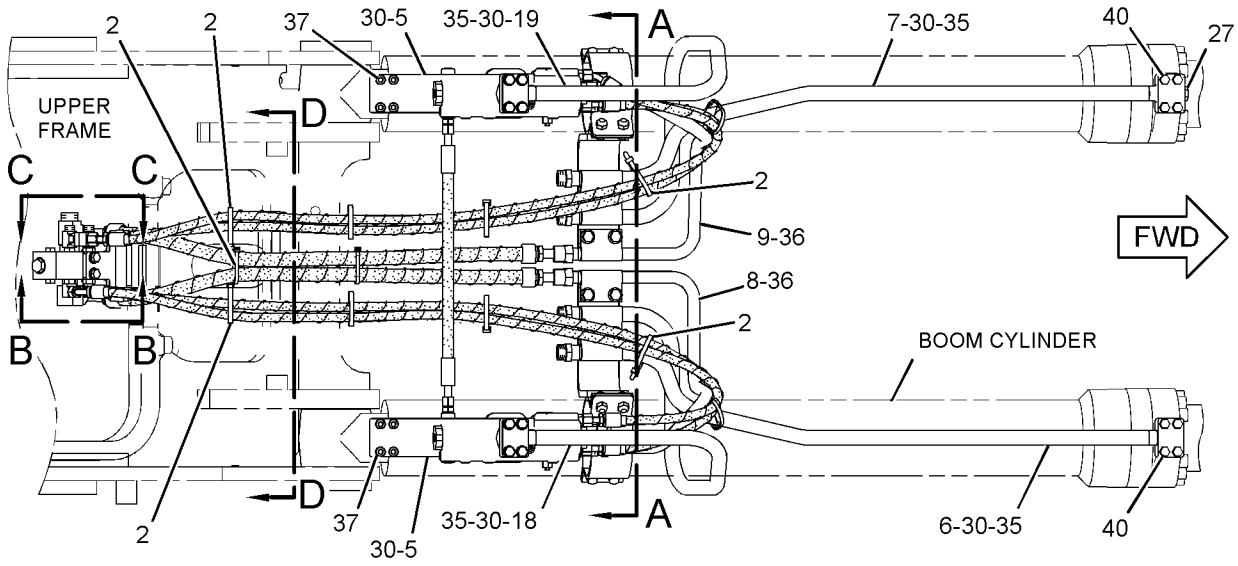

TOP VIEW

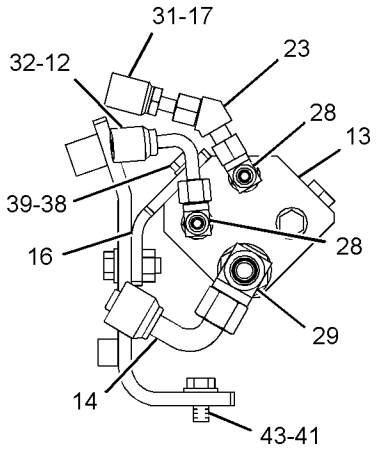

VIEW C-C

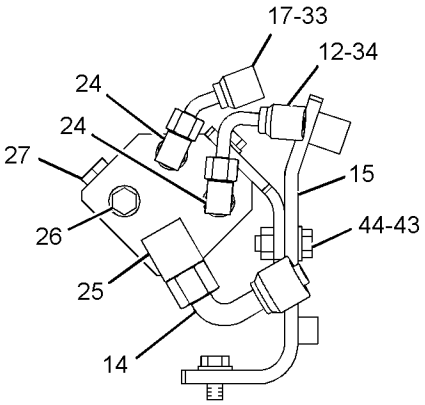

VIEW B-B

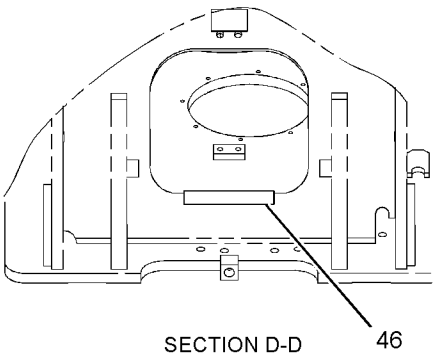

SECTION D-D

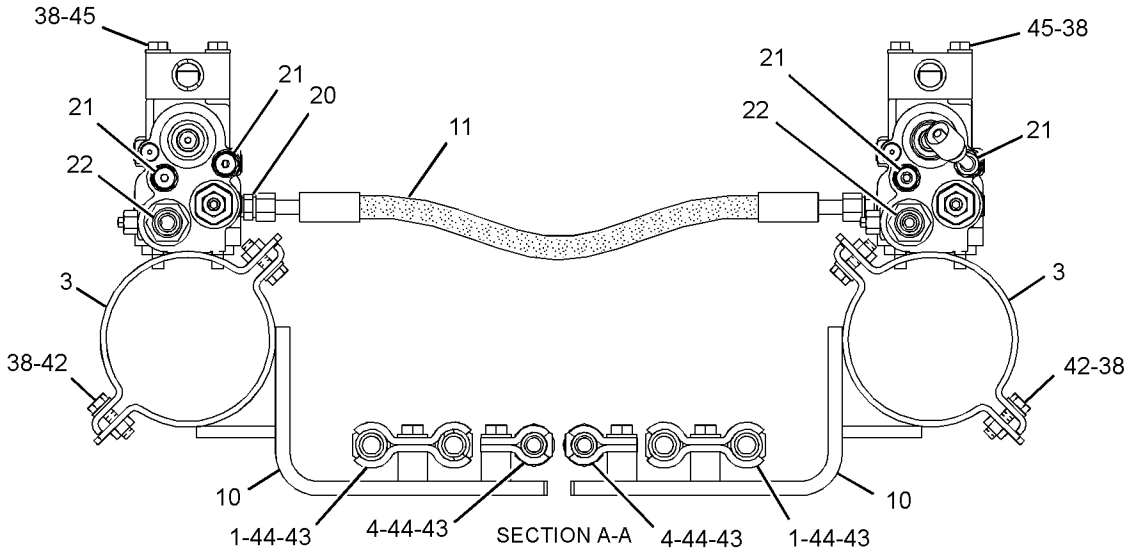

SECTION A-A

GRAPHIC #1 **<END>** g01624660

127-6624 LINES GP-BUCKET CYLINDER

S/N: PBB1-UP
FOR USE WITH 6.28-M (20.6-FT) STICK
PART OF 420-0298 LINKAGE AR-FRONT
AN ATTACHMENT

SMCS-5457 **i05035909**

NOTE	REF NO	GRAPHIC REF	PART NUMBER	QTY	PART NAME 1 2 3 4 5 6 (PRODUCT LEVEL)	SEE PAGE
	1	1	**5I-7233**	2	TUBE AS	
I	2	1	**4I-5556**	2	HOSE AS	
I	3	1	**7Y-7904**	2	HOSE AS	
	4	1	**7Y-4868**	16	CLIP	
	5	1	**6V-9746**	8	SEAL-O-RING	
M	6	1	**8T-4139**	16	BOLT (M12X1.75X30-MM)	
	7	1	**8T-4223**	16	WASHER-HARD (13.5X25.5X3-MM THK)	

I - REFER TO HYDRAULIC INFORMATION SYSTEM
M - METRIC PART

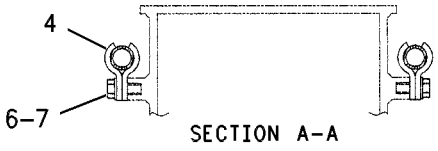

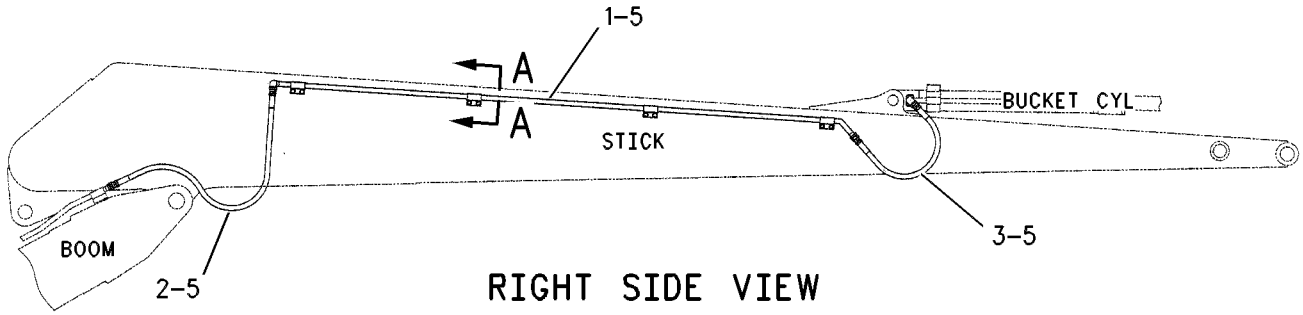

RIGHT SIDE VIEW

GRAPHIC #1 **<END>** g00420221

225-4592 LINES GP-BUCKET CYLINDER

S/N: PBB1-UP; KBS1-UP

PART OF 341-2181 CYLINDER & LINES GP-BUCKET

AN ATTACHMENT

SMCS-5457 **i02348511**

NOTE	REF NO	GRAPHIC REF	PART NUMBER	QTY	PART NAME 1 2 3 4 5 6 (PRODUCT LEVEL)	SEE PAGE
	1	1	**8T-4223**	1	WASHER-HARD (13.5X25.5X3-MM THK)	
M	2	1	**8T-4910**	1	BOLT (M12X1.75X60-MM)	
	3	1	**096-4480**	1	CLAMP	
	4	1	**8T-4896**	2	WASHER-HARD (10.2X18.5X2.5-MM THK)	
M	5	1	**8T-4196**	2	BOLT (M10X1.5X35-MM)	
	6	1	**234-4592**	1	SUPPORT	
	7	1	**234-4591**	1	SUPPORT AS	
	8	1	**095-1597**	1	SEAL-O-RING	
M	9	1	**9X-6032**	4	BOLT-SOCKET HEAD (M10X1.5X30-MM)	
	10	1	**259-0647**	1	TUBE AS	

M - METRIC PART

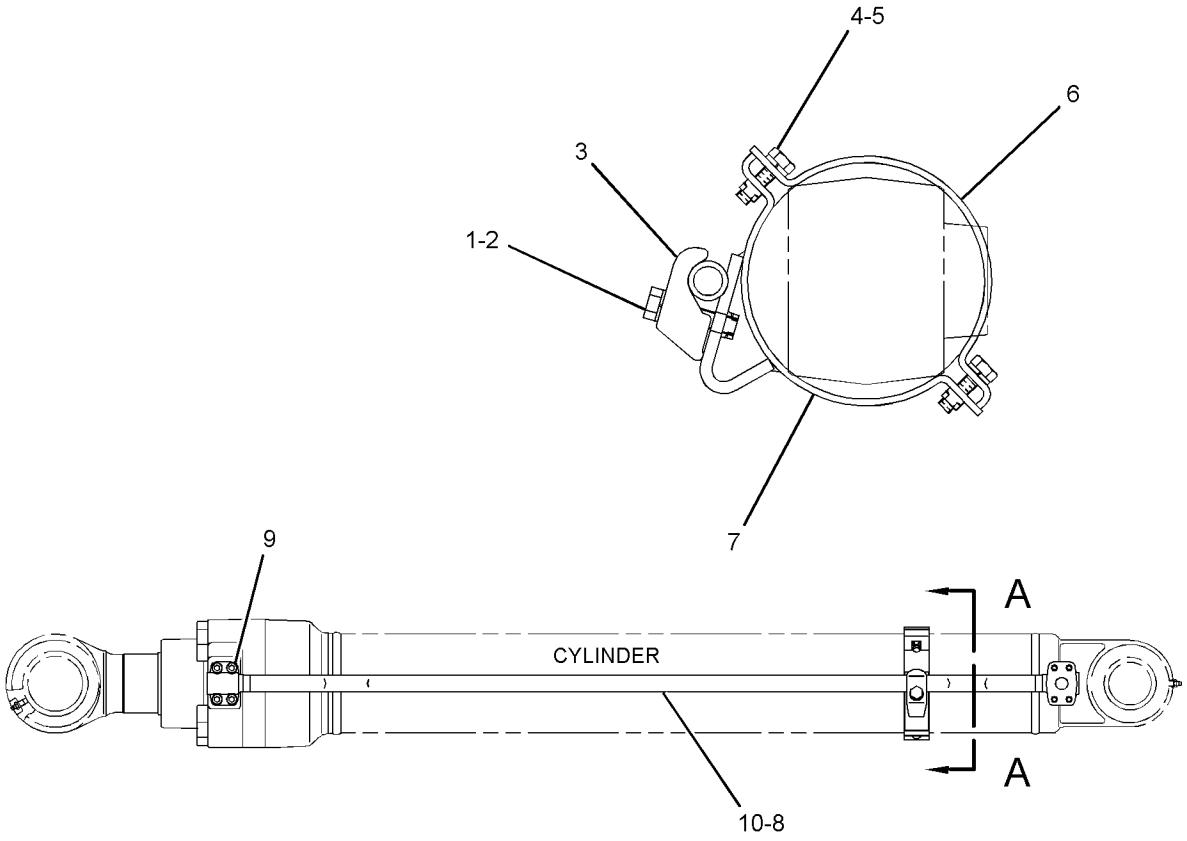

GRAPHIC #1 **<END>** g01188200

248-9926 LINES GP-BUCKET CYLINDER

S/N: KBS1-UP

PART OF 364-0938 CYLINDER & LINES GP-BUCKET

AN ATTACHMENT

SMCS-5457 **i02946705**

NOTE	REF NO	GRAPHIC REF	PART NUMBER	QTY	PART NAME 1 2 3 4 5 6 (PRODUCT LEVEL)	SEE PAGE
	1	1	**119-2321**	1	SUPPORT AS	
	2	1	**119-2323**	1	SUPPORT AS	
	3	1	**255-1592**	1	TUBE AS	
	4	1	**1P-3703**	1	SEAL-RECTANGULAR	
	5	1	**7Y-4868**	2	CLIP	
	6	1	**8T-4121**	4	WASHER-HARD (11X21X2.5-MM THK)	
M	7	1	**8T-4139**	2	BOLT (M12X1.75X30-MM)	
M	8	1	**8T-4185**	4	BOLT (M10X1.5X50-MM)	
M	9	1	**8T-4196**	4	BOLT (M10X1.5X35-MM)	
	10	1	**8T-4223**	2	WASHER-HARD (13.5X25.5X3-MM THK)	

M - METRIC PART

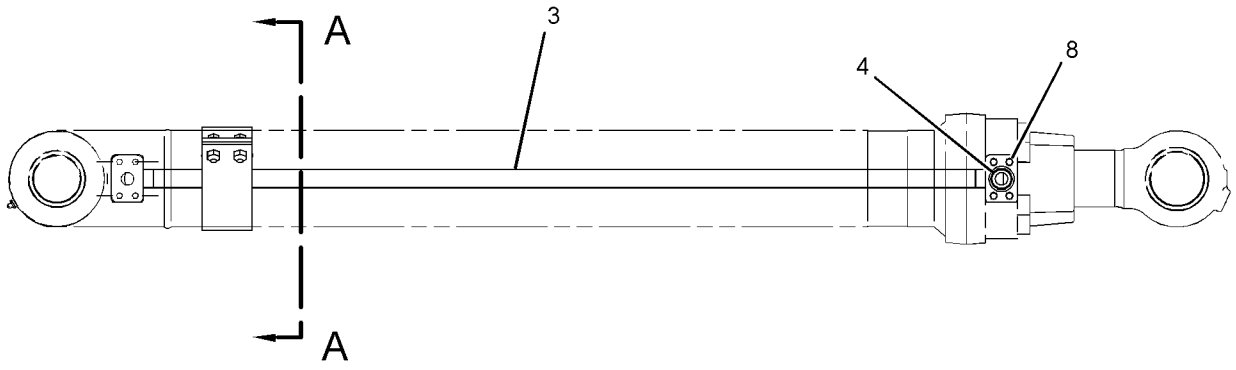

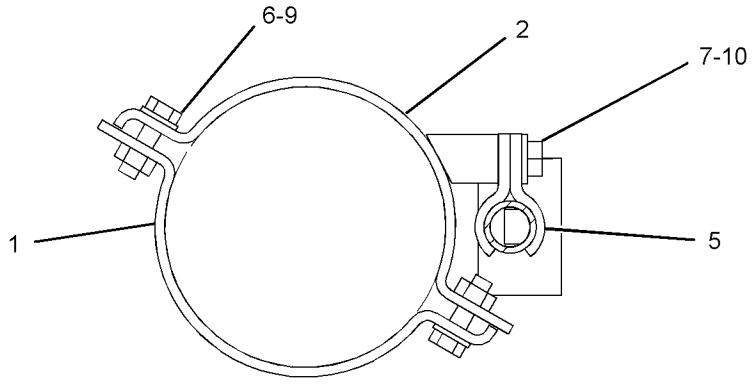

SECTION A-A

GRAPHIC #1 **<END>** g01215596

266-8025 LINES GP-BUCKET CYLINDER

S/N: PBB1-UP

PART OF 418-8772 CYLINDER & LINES GP-BUCKET

AN ATTACHMENT

SMCS-5457 **i05640304**

NOTE	REF NO	GRAPHIC REF	PART NUMBER	QTY	PART NAME 1 2 3 4 5 6 (PRODUCT LEVEL)	SEE PAGE
M	1	1	**9X-6032**	4	BOLT-SOCKET HEAD (M10X1.5X30-MM)	
	2	1	**266-7964**	1	SEAL-O-RING	
	3	1	**274-2547**	1	TUBE AS	
	4	1	**096-4412**	1	SUPPORT	
M	5	1	**8T-4196**	2	BOLT (M10X1.5X35-MM)	
	6	1	**8T-4896**	2	WASHER-HARD (10.2X18.5X2.5-MM THK)	
	7	1	**369-9678**	1	SUPPORT AS	
	8	1	**096-4480**	1	CLAMP	
M	9	1	**8T-4910**	1	BOLT (M12X1.75X60-MM)	
	10	1	**8T-4223**	1	WASHER-HARD (13.5X25.5X3-MM THK)	

M - METRIC PART

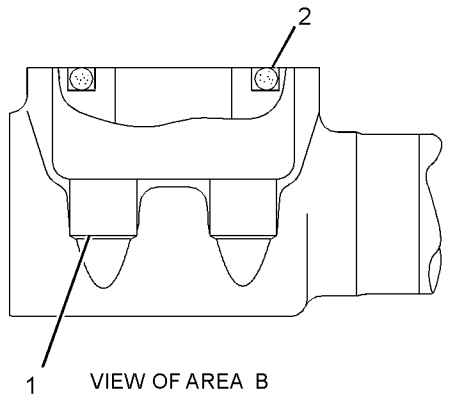

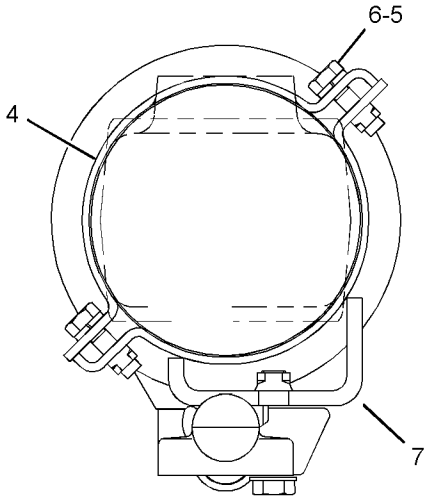

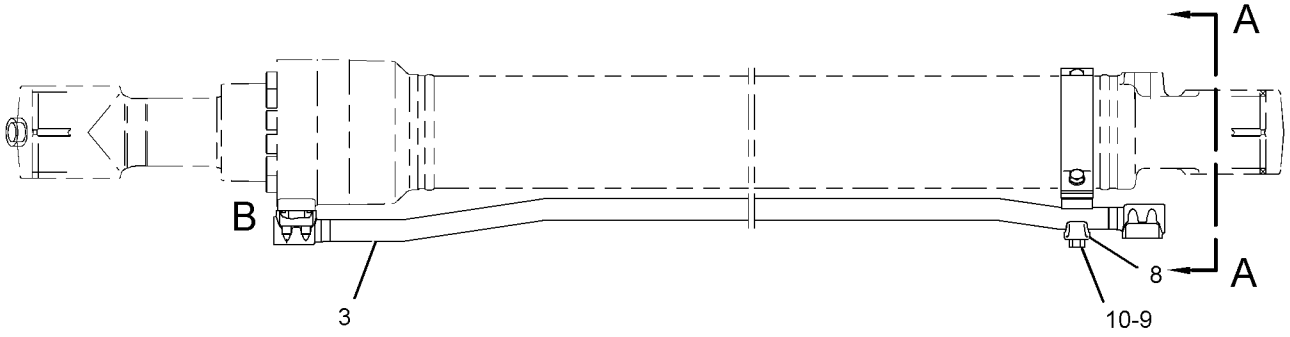

GRAPHIC #1 **<END>** g03714928

369-9677 LINES GP-BUCKET CYLINDER

S/N: PBB1-UP; KBS1-UP

PART OF 341-2813, 349-4133 CYLINDER & LINES GP-BUCKET

AN ATTACHMENT

SMCS-5457 **i05221831**

NOTE	REF NO	GRAPHIC REF	PART NUMBER	QTY	PART NAME 1 2 3 4 5 6 (PRODUCT LEVEL)	SEE PAGE
M	1	1	**9X-6032**	4	BOLT-SOCKET HEAD (M10X1.5X30-MM)	
	2	1	**095-1597**	1	SEAL-O-RING	
	3	1	**274-2547**	1	TUBE AS	
	4	1	**096-4412**	1	SUPPORT	
M	5	1	**8T-4196**	2	BOLT (M10X1.5X35-MM)	
	6	1	**8T-4896**	2	WASHER-HARD (10.2X18.5X2.5-MM THK)	
	7	1	**369-9678**	1	SUPPORT AS	
	8	1	**096-4480**	1	CLAMP	
M	9	1	**8T-4910**	1	BOLT (M12X1.75X60-MM)	
	10	1	**8T-4223**	1	WASHER-HARD (13.5X25.5X3-MM THK)	

M - METRIC PART

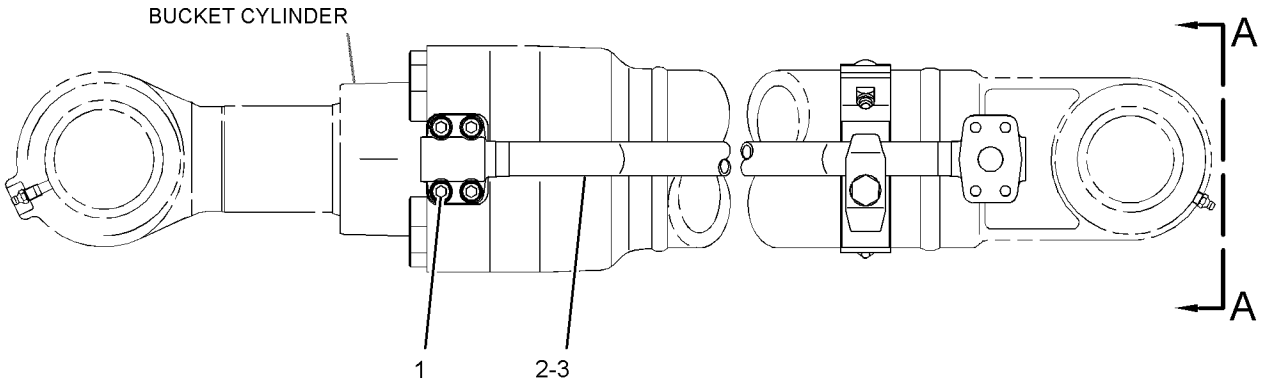

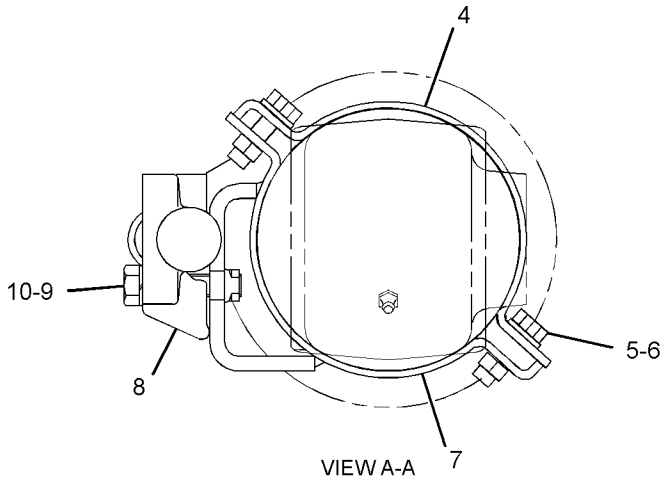

GRAPHIC #1 **<END>** g03338811

418-9086 LINES GP-BUCKET CYLINDER—SUPER LONG REACH

S/N: PBB1-UP

PART OF 418-9085 CYLINDER & LINES GP-BUCKET

AN ATTACHMENT

SMCS-5457 **i05393387**

NOTE	REF NO	GRAPHIC REF	PART NUMBER	QTY	PART NAME 1 2 3 4 5 6 (PRODUCT LEVEL)	SEE PAGE
M	1	1	**8T-0271**	4	BOLT-SOCKET HEAD (M10X1.5X35-MM)	
	2	1	**6V-0357**	2	SEAL-O-RING	
	3	1	**422-9111**	1	TUBE AS	
	4	1	**424-8398**	2	NUT-WELD (M10X1.5-THD)	
M	5	1	**6V-5842**	2	BOLT (M10X1.5X40-MM)	
	6	1	**7X-0796**	3	LOCKWASHER	
	7	1	**422-9113**	1	SUPPORT AS	
	8	1	**385-2967**	1	CLAMP	
M	9	1	**6V-4249**	1	BOLT (M10X1.5X50-MM)	
	10	1	**422-9112**	1	TUBE AS	
M	11	1	**101-7404**	4	BOLT-SOCKET HEAD (M10X1.5X30-MM)	
	12	1	**6V-9832**	2	CAP AS	

M - METRIC PART

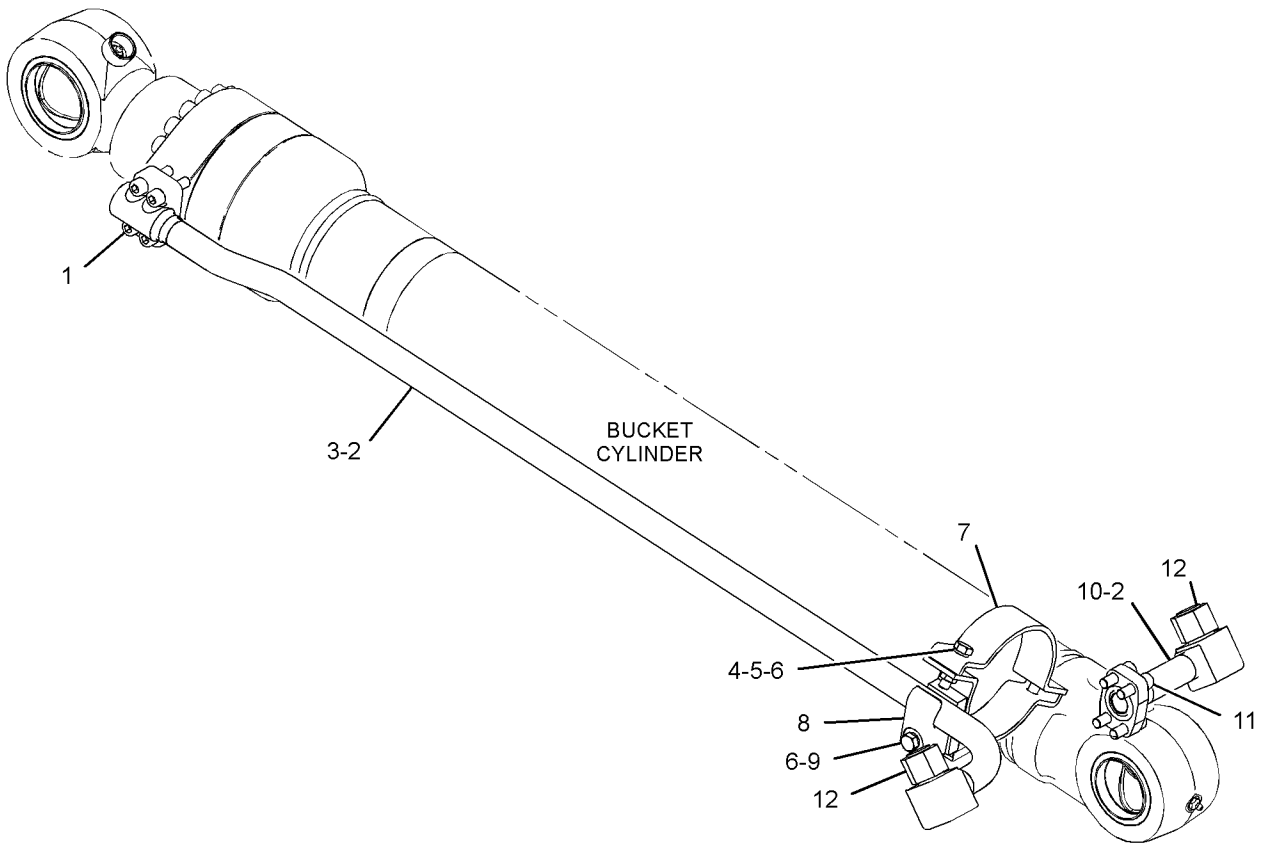

GRAPHIC #1 **<END>** g03329030

431-0455 LINES GP-BUCKET CYLINDER

S/N: PBB1-UP; KBS1-UP
FOR USE WITH 2.9-M (9.5-FT) STICK
PART OF 314-3728, 314-3730, 416-1002 STICK AR-HOE
AN ATTACHMENT

SMCS-5457 **i05270537**

NOTE	REF NO	GRAPHIC REF	PART NUMBER	QTY	PART NAME 1 2 3 4 5 6 (PRODUCT LEVEL)	SEE PAGE
I	1	1	**4I-8785**	1	HOSE AS	
I	2	1	**5I-4216**	1	HOSE AS	
	3	1	**289-5690**	1	FLANGE-SPECIAL	
	4	1	**1P-3702**	1	SEAL-RECTANGULAR	
	5	1	**1P-3703**	2	SEAL-RECTANGULAR	
	6	1	**6V-0400**	2	FLANGE-HALF	
M	7	1	**7X-2549**	4	BOLT (M12X1.75X100-MM)	
	8	1	**8T-4121**	4	WASHER-HARD (11X21X2.5-MM THK)	
M	9	1	**8T-4182**	4	BOLT (M10X1.5X45-MM)	
	10	1	**8T-4223**	4	WASHER-HARD (13.5X25.5X3-MM THK)	
	11	1	**8T-9403**	2	FLANGE-HALF	

I - REFER TO HYDRAULIC INFORMATION SYSTEM
M - METRIC PART

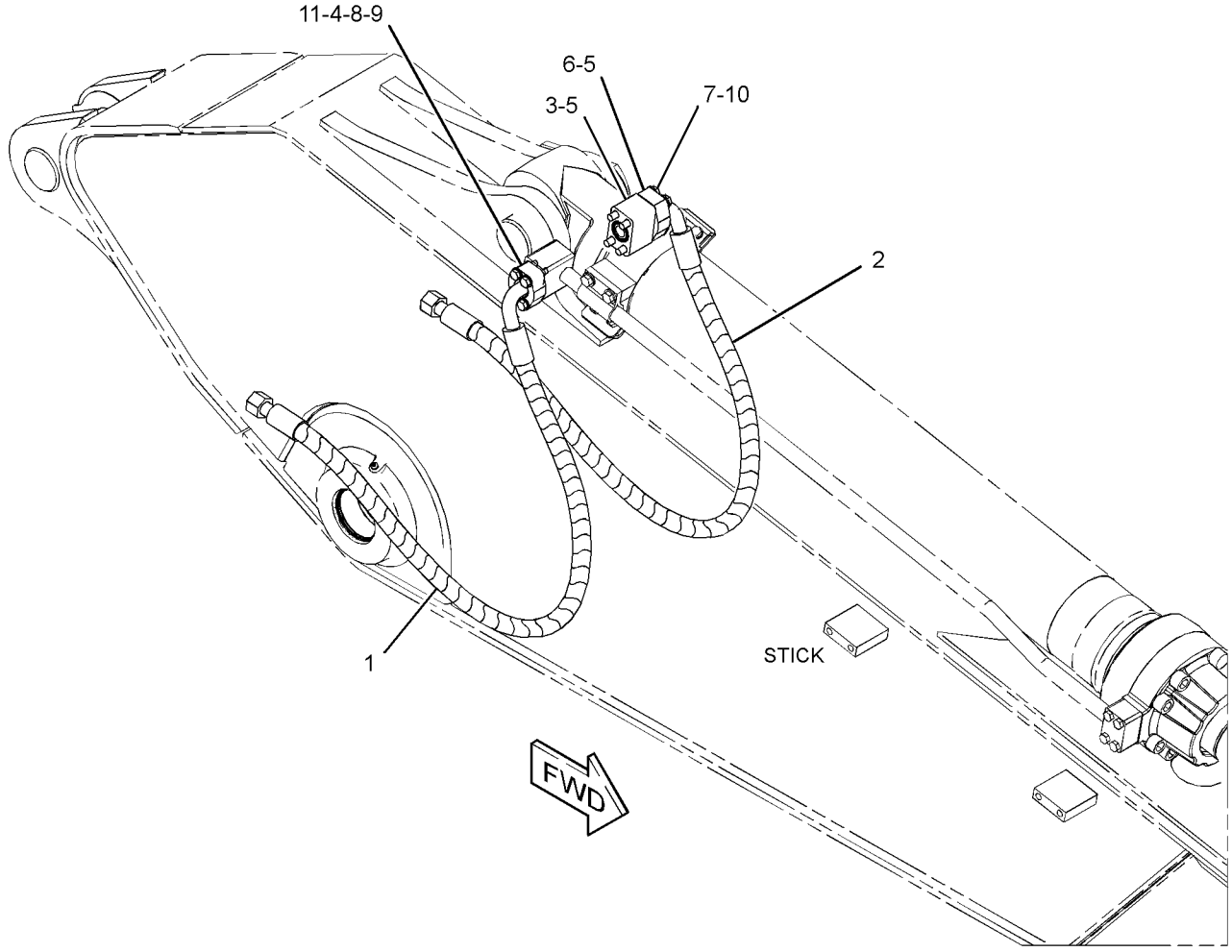

GRAPHIC #1 **<END>** g03322800

431-1642 LINES GP-BUCKET CYLINDER

S/N: PBB1-UP; KBS1-UP
FOR USE WITH 2.5-M (8.2-FT) STICK
PART OF 290-1837 STICK AR-HOE
AN ATTACHMENT

SMCS-5457 **i05181023**

NOTE	REF NO	GRAPHIC REF	PART NUMBER	QTY	PART NAME 1 2 3 4 5 6 (PRODUCT LEVEL)	SEE PAGE
I	1	1	**187-6058**	1	HOSE AS	
	2	1	**289-5690**	1	FLANGE-SPECIAL	
I	3	1	**431-1802**	1	HOSE AS	
	4	1	**1P-3702**	1	SEAL-RECTANGULAR	
	5	1	**1P-3703**	2	SEAL-RECTANGULAR	
	6	1	**6V-0400**	2	FLANGE-HALF	
M	7	1	**7X-2549**	4	BOLT (M12X1.75X100-MM)	
	8	1	**8T-4121**	4	WASHER-HARD (11X21X2.5-MM THK)	
M	9	1	**8T-4182**	4	BOLT (M10X1.5X45-MM)	
	10	1	**8T-4223**	4	WASHER-HARD (13.5X25.5X3-MM THK)	
	11	1	**8T-9403**	2	FLANGE-HALF	

I - REFER TO HYDRAULIC INFORMATION SYSTEM
M - METRIC PART

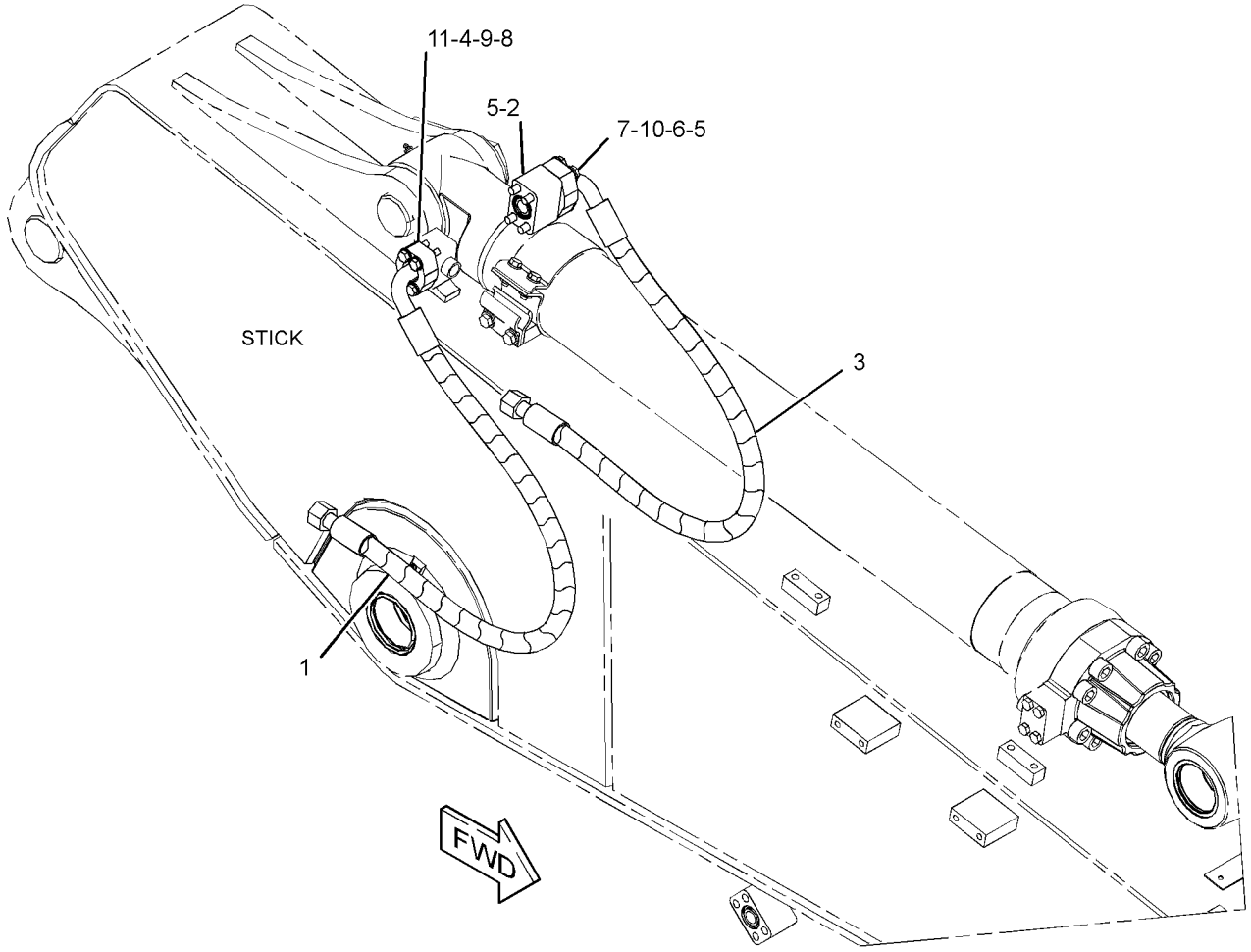

GRAPHIC #1 **<END>** g03322929

376-6308 LINES GP-CONTROL

S/N: PBB1-UP; KBS1-UP

PART OF 456-0404, 456-0405 HYDRAULIC AR

SMCS-5057 **i05857514**

NOTE	REF NO	GRAPHIC REF	PART NUMBER	QTY	PART NAME 1 2 3 4 5 6 (PRODUCT LEVEL)	SEE PAGE
	1	1	**144-0367**	2	CLAMP-HOSE	
	2	1	**173-4816**	1	SUPPORT AS	
	3	1	**196-0807**	1	PLATE	
	4	1	**199-7394**	1	PIPE AS	
I	5	1	**199-7403**	1	HOSE AS	
	6	1	**227-0581**	1	HOSE	
	7	1	**266-1045**	1	TUBE AS	
	8	1	**319-9888**	1	SUPPORT AS	
	9	1	**369-8420**	1	VALVE GP-CHECK	
		1	**2S-4078**	1	SEAL-O-RING	
		1	**9S-6130**	1	PLUG	
		1	**095-1547**	2	SEAL-O-RING	
		1	**190-7826**	2	PLUG	
I	10	1	**459-2094**	1	HOSE AS	
I	11	1	**459-2098**	1	HOSE AS	
M	12	1	**8T-4956**	7	BOLT (M12X1.75X35-MM)	
M	13	1	**096-4883**	2	LOCKNUT (M10X1.5-THD)	
M	14	1	**101-7402**	4	BOLT-SOCKET HEAD (M12X1.75X30-MM)	
	15	1	*148-8354*	1	ELBOW AS	
		1	**3K-0360**	1	SEAL-O-RING	
		1	**6V-8398**	1	SEAL-O-RING	
		1	**6V-9002**	1	ELBOW	
	16	1	*148-8357*	1	ELBOW AS	
		1	**5K-9090**	1	SEAL-O-RING	
		1	**6V-9008**	1	ELBOW	
		1	**7M-8485**	1	SEAL-O-RING	
	17	1	**1P-3703**	4	SEAL-RECTANGULAR	
	18	1	**4J-0524**	3	SEAL-O-RING	
	19	1	**4J-0527**	1	SEAL-O-RING	
	20	1	**5P-7468**	1	CLIP (SLOT)	
	21	1	**5P-7469**	1	CLIP (TAB)	
J	22	1	**5P-8444**	1	GROMMET (37-MM ID)	
					—OR—	
J			**8T-7087**	1	GROMMET (34-MM ID)	
	23	1	**6V-0400**	4	FLANGE-HALF	
	24	1	**7G-5984**	1	CLIP (TAB)	
	25	1	**7G-5985**	1	CLIP (SLOT)	
	26	1	**7G-5986**	1	GROMMET	
M	27	1	**7X-2544**	4	BOLT (M10X1.5X104-MM)	
	28	1	**7X-7729**	2	WASHER (11X25X3-MM THK)	
M	29	1	**7Y-5247**	1	U-BOLT	
	30	1	**8T-4121**	8	WASHER-HARD (11X21X2.5-MM THK)	
M	31	1	**8T-4136**	2	BOLT (M10X1.5X25-MM)	
M	32	1	**8T-4139**	4	BOLT (M12X1.75X30-MM)	
M	33	1	**8T-4186**	2	BOLT (M10X1.5X40-MM)	
M	34	1	**8T-4194**	8	BOLT (M12X1.75X50-MM)	
	35	1	**8T-4223**	13	WASHER-HARD (13.5X25.5X3-MM THK)	
	36	1	**383-9204**	1	PIPE AS	

I - REFER TO HYDRAULIC INFORMATION SYSTEM
J - SELECT CORRECT GROMMET SIZE TO MATCH HOSE O.D.
M - METRIC PART

376-6308 **LINES GP-CONTROL (*contd.*)** **i05857514**

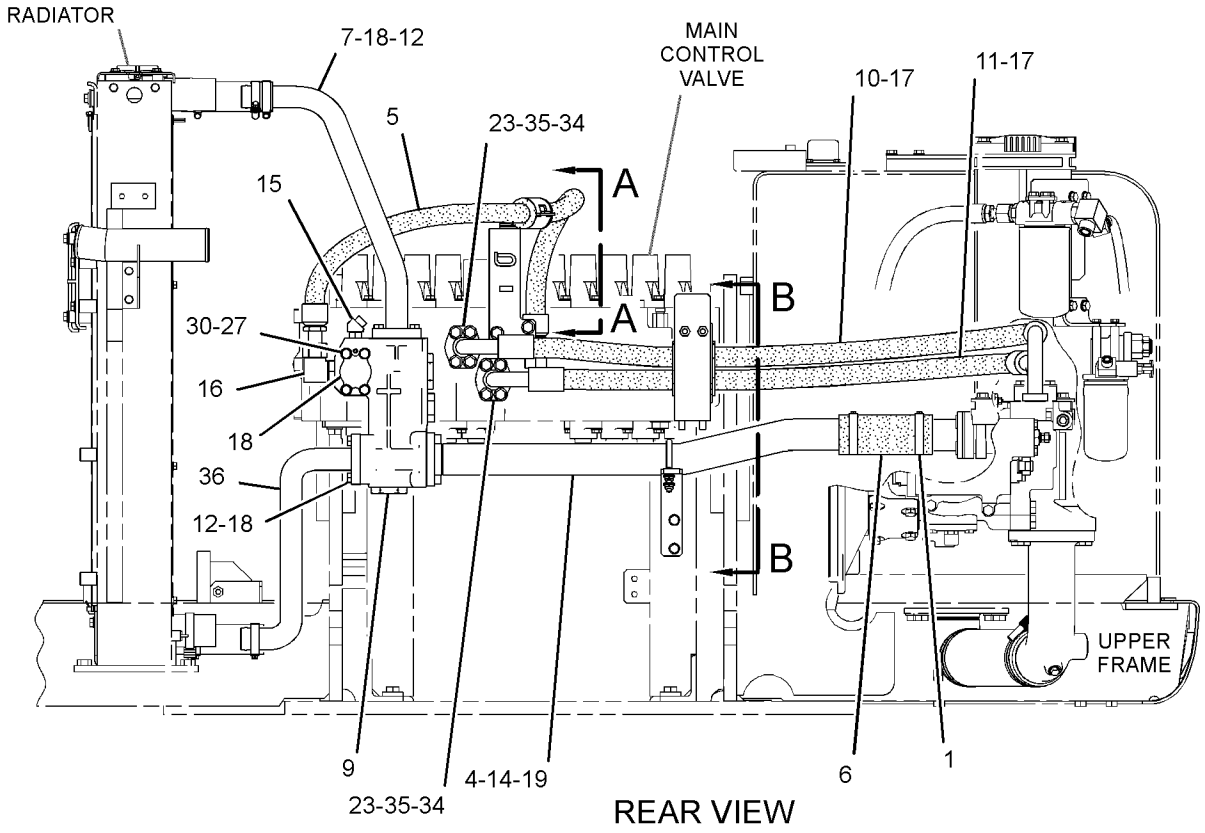

REAR VIEW

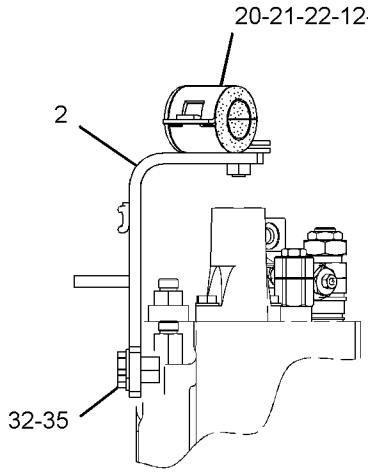

VIEW A-A

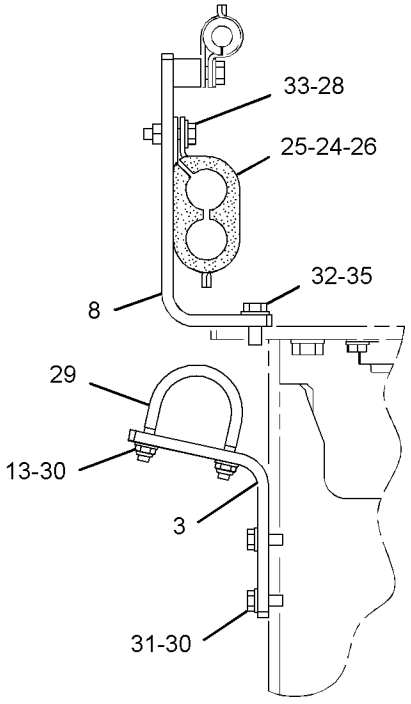

SECTION B-B

GRAPHIC #1 **<END>** g02732396

242-6478 LINES GP-COUPLER—REACH BOOM

S/N: PBB1-UP; KBS1-UP

AN ATTACHMENT

SMCS-5057, 5133 **i05214815**

NOTE	REF NO	GRAPHIC REF	PART NUMBER	QTY	PART NAME 1 2 3 4 5 6 (PRODUCT LEVEL)	SEE PAGE
	1	1	**5Q-4213**	14	CLIP	
	2	1	**3V-9744**	1	SPACER	
	3	1	**247-9164**	1	TUBE AS	
	4	1	**356-8174**	1	TUBE AS	
	5	1	**247-9173**	1	TUBE AS	
	6	1	**247-9177**	1	TUBE AS	
	7	1	**356-8177**	1	TUBE AS	
	8	1	**247-9294**	2	SUPPORT AS	
	9	1	**262-3589**	1	TUBE AS	
	10	1	**135-3980**	2	CLIP	
	11	1	**5Q-4212**	4	CLIP	
	12	1	**6V-8398**	8	SEAL-O-RING	
M	13	1	**8T-4139**	18	BOLT (M12X1.75X30-MM)	
M	14	1	**8T-4184**	4	BOLT (M12X1.75X45-MM)	
	15	1	**8T-4223**	24	WASHER-HARD (13.5X25.5X3-MM THK)	
M	16	1	**8T-4244**	18	NUT (M12X1.75-THD)	
M	17	1	**8T-6868**	2	BOLT (M12X1.75X80-MM)	

M - METRIC PART

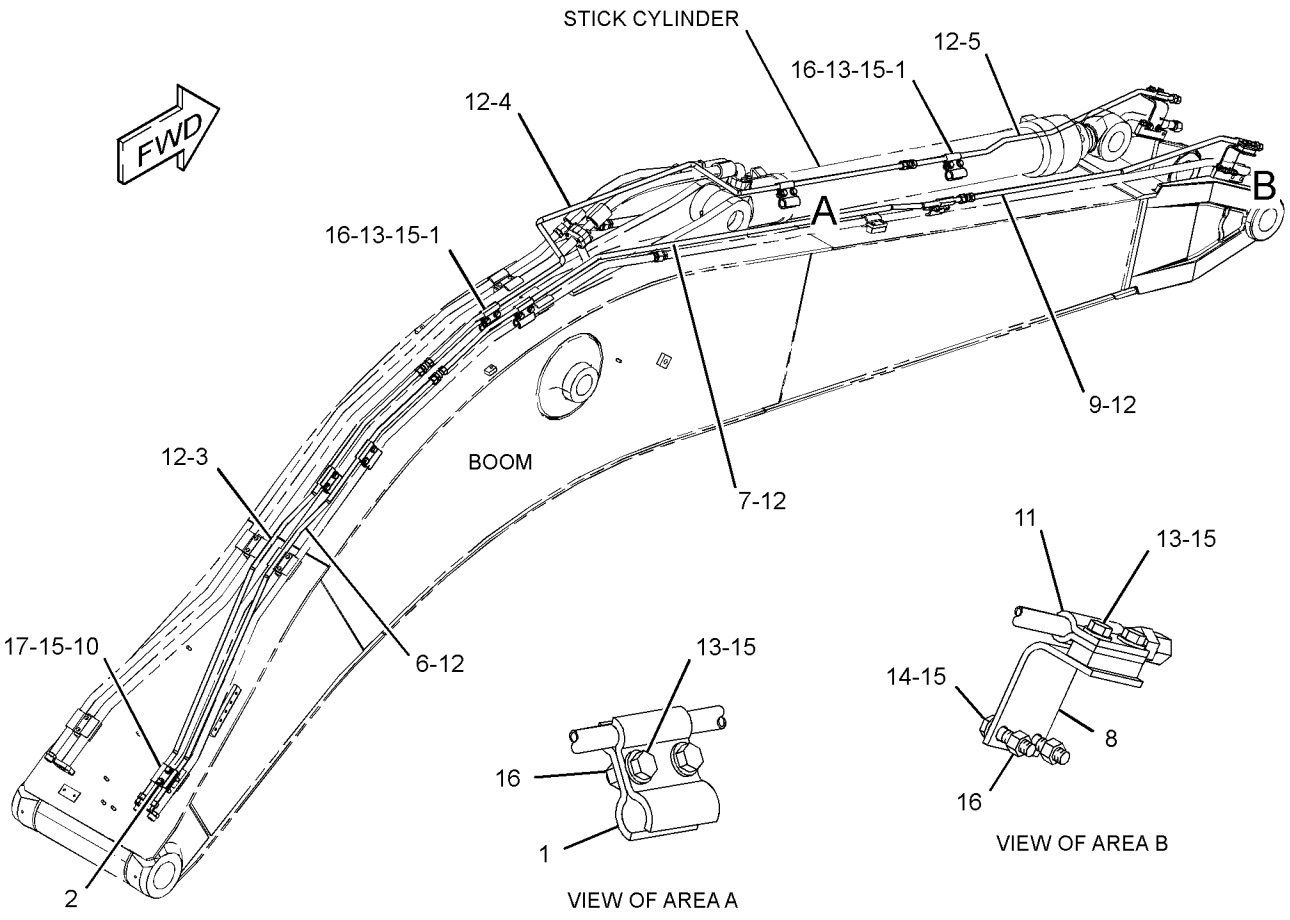

GRAPHIC #1 **<END>** g01952765

242-6482 LINES GP-COUPLER—MASS BOOM

S/N: PBB1-UP; KBS1-UP

AN ATTACHMENT

SMCS-5057, 5133 **i05214816**

NOTE	REF NO	GRAPHIC REF	PART NUMBER	QTY	PART NAME 1 2 3 4 5 6 (PRODUCT LEVEL)	SEE PAGE
	1	1	**5Q-4213**	14	CLIP	
	2	1	**3V-9744**	1	SPACER	
	3	1	**247-9294**	2	SUPPORT AS	
	4	1	**268-6971**	1	TUBE AS	
	5	1	**268-6974**	1	TUBE AS	
	6	1	**268-6977**	1	TUBE AS	
	7	1	**268-6980**	1	TUBE AS	
	8	1	**268-6983**	1	TUBE AS	
	9	1	**268-6986**	1	TUBE AS	
	10	1	**135-3980**	2	CLIP	
	11	1	**5Q-4212**	4	CLIP	
	12	1	**6V-8398**	8	SEAL-O-RING	
M	13	1	**8T-4139**	18	BOLT (M12X1.75X30-MM)	
M	14	1	**8T-4184**	4	BOLT (M12X1.75X45-MM)	
	15	1	**8T-4223**	24	WASHER-HARD (13.5X25.5X3-MM THK)	
M	16	1	**8T-4244**	18	NUT (M12X1.75-THD)	
M	17	1	**8T-6868**	2	BOLT (M12X1.75X80-MM)	

M - METRIC PART

242-6482 **LINES GP-COUPLER (*contd.*)** **i05214816**

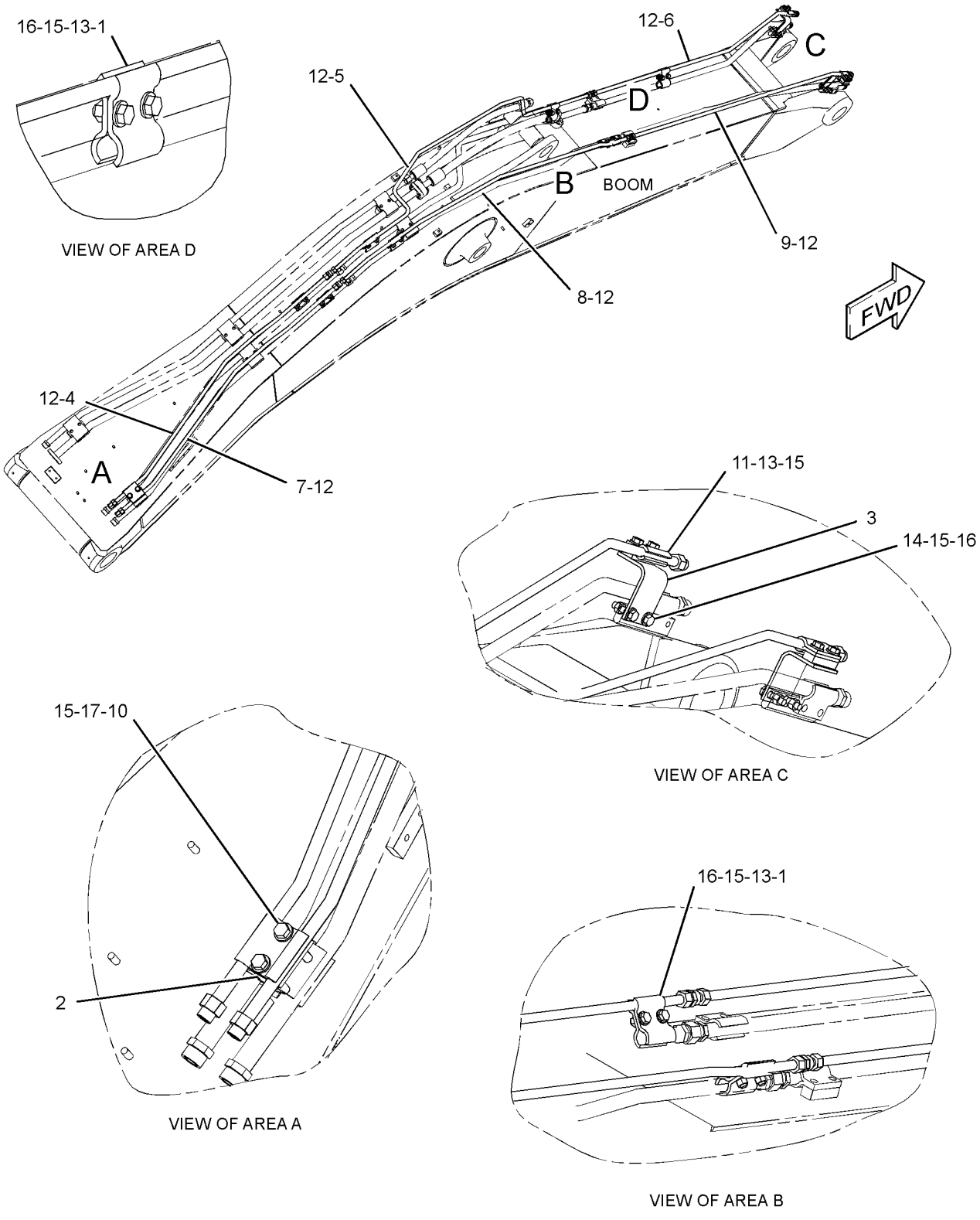

GRAPHIC #1 **<END>** g01230965

242-6490 LINES GP-COUPLER

S/N: PBB1-UP; KBS1-UP
FOR USE WITH 2.9-M (9.5-FT) STICK
AN ATTACHMENT

SMCS-5057, 5133 **i02421143**

NOTE	REF NO	GRAPHIC REF	PART NUMBER	QTY	PART NAME 1 2 3 4 5 6 (PRODUCT LEVEL)	SEE PAGE
	1	1	**9X-6582**	1	NUT (13/16-16-THD)	
	2	1	**253-6548**	1	TUBE AS	
	3	1	**253-6551**	1	TUBE AS	
I	4	1	**262-3390**	2	HOSE AS	
	5	1	*148-8415*	1	REDUCER AS	
		1	**6V-8397**	1	SEAL-O-RING	
		1	**6V-8936**	1	REDUCER	
	6	1	*148-8419*	1	REDUCER AS	
		1	**4J-5477**	1	SEAL-O-RING	
		1	**6V-8935**	1	REDUCER-O-RING	
	7	1	**5Q-4212**	12	CLIP	
	8	1	**6V-8398**	4	SEAL-O-RING	
	9	1	**8T-4223**	12	WASHER-HARD (13.5X25.5X3-MM THK)	
M	10	1	**8T-4956**	12	BOLT (M12X1.75X35-MM)	

I - REFER TO HYDRAULIC INFORMATION SYSTEM
M - METRIC PART

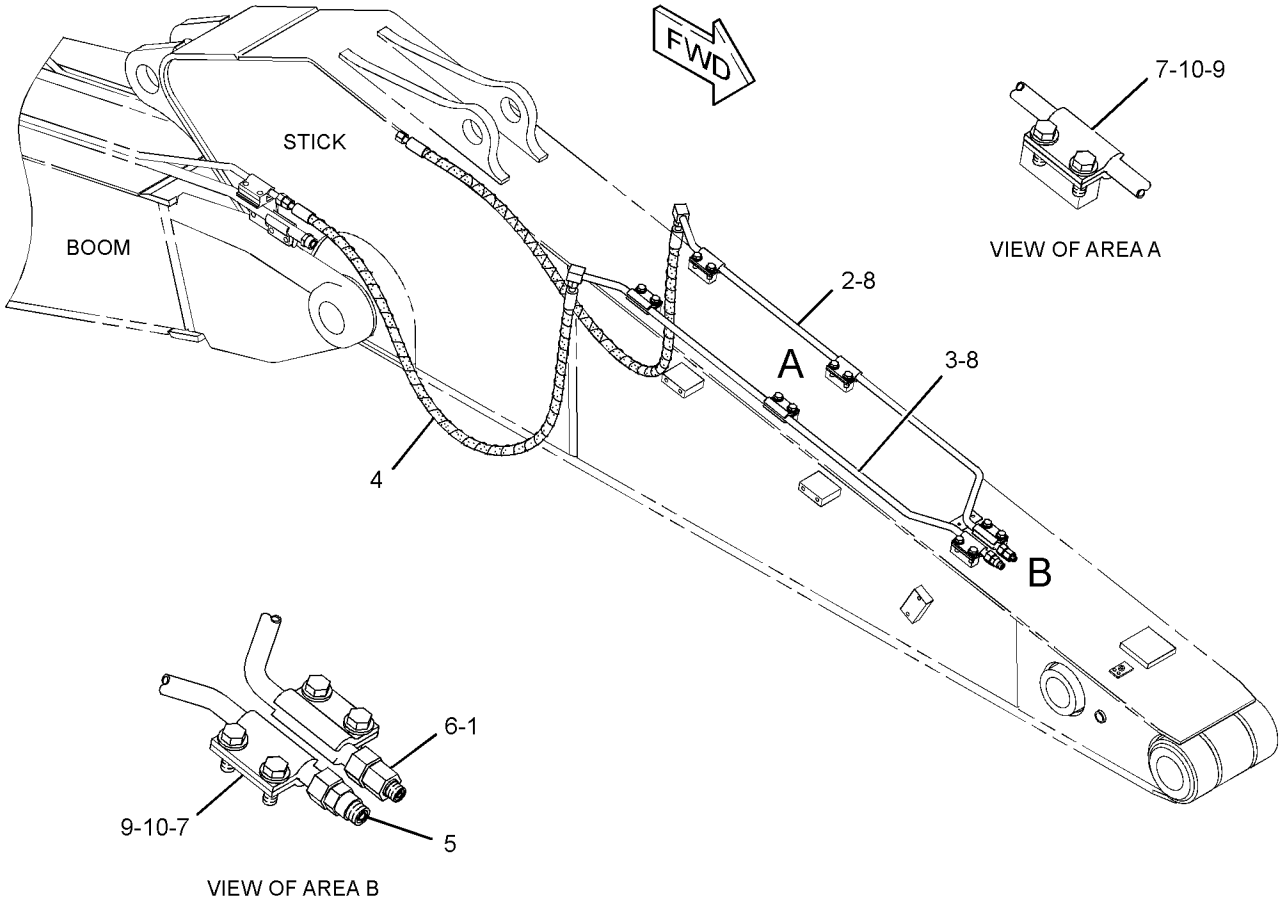

GRAPHIC #1 **<END>** g01217350

242-6494 LINES GP-COUPLER

S/N: PBB1-UP; KBS1-UP
FOR USE WITH 2.4 TO 2.5-M (7.9 TO 8.2-FT) STICK
AN ATTACHMENT

SMCS-5057, 5133

i05222321

NOTE	REF NO	GRAPHIC REF	PART NUMBER	QTY	PART NAME 1 2 3 4 5 6 (PRODUCT LEVEL)	SEE PAGE
	1	1	**9X-6582**	1	NUT (13/16-16-THD)	
I	2	1	**210-9966**	2	HOSE AS	
	3	1	**253-6688**	1	TUBE AS	
	4	1	**253-6691**	1	TUBE AS	
	5	1	*148-8415*	1	REDUCER AS	
		1	**6V-8397**	1	SEAL-O-RING	
		1	**6V-8936**	1	REDUCER	
	6	1	*148-8419*	1	REDUCER AS	
		1	**4J-5477**	1	SEAL-O-RING	
		1	**6V-8935**	1	REDUCER-O-RING	
	7	1	**5Q-4212**	12	CLIP	
	8	1	**6V-8398**	4	SEAL-O-RING	
	9	1	**8T-4223**	12	WASHER-HARD (13.5X25.5X3-MM THK)	
M	10	1	**8T-4956**	12	BOLT (M12X1.75X35-MM)	

I - REFER TO HYDRAULIC INFORMATION SYSTEM
M - METRIC PART

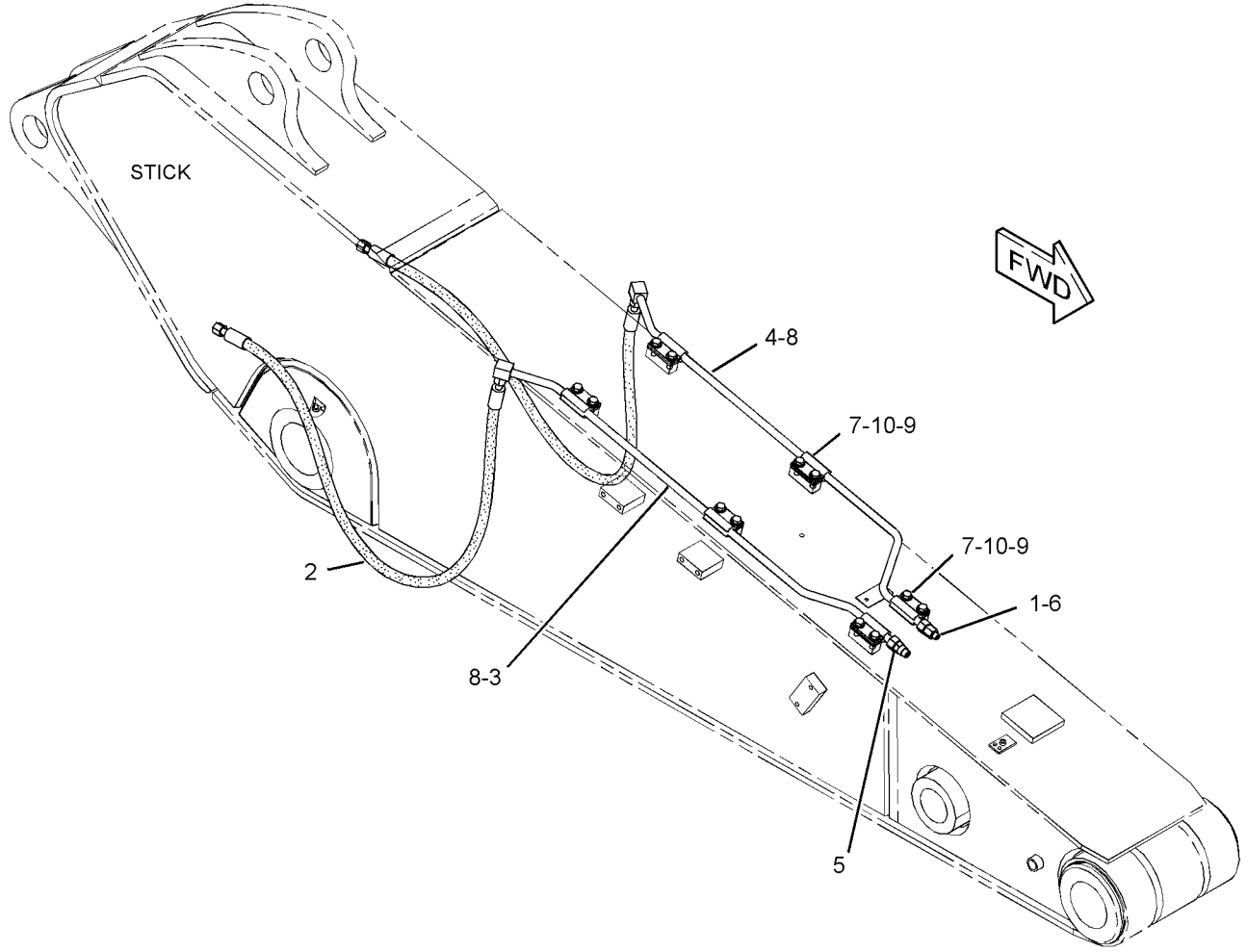

GRAPHIC #1

<END>

g01236506

262-3496 LINES GP-COUPLER—B1-FAMILY LINKAGE

S/N: PBB1-UP; KBS1-UP
PART OF 262-3494 COUPLER AR-QUICK
AN ATTACHMENT

SMCS-5057, 5133 **i03100023**

NOTE	REF NO	GRAPHIC REF	PART NUMBER	QTY	PART NAME 1 2 3 4 5 6 (PRODUCT LEVEL)	SEE PAGE
	1	1	**8C-6561**	1	BOLT (5/16-18X1.375-IN)	
	2	1	**6W-2464**	2	CLAMP	
Y	3	1	*235-0723*	1	COUPLER GP-QUICK	767
CI	4	1	**316-4084**	1	HOSE AS	
CI	5	1	**316-4085**	1	HOSE AS	
	6	1	**3V-0046**	1	PLATE	
	7	1	**3J-1907**	1	SEAL-O-RING	
	8	1	**3J-7354**	1	SEAL-O-RING	
C	9	1	**7K-1181**	1	STRAP-CABLE	

C - CHANGE FROM PREVIOUS TYPE
I - REFER TO HYDRAULIC INFORMATION SYSTEM
Y - SEPARATE ILLUSTRATION

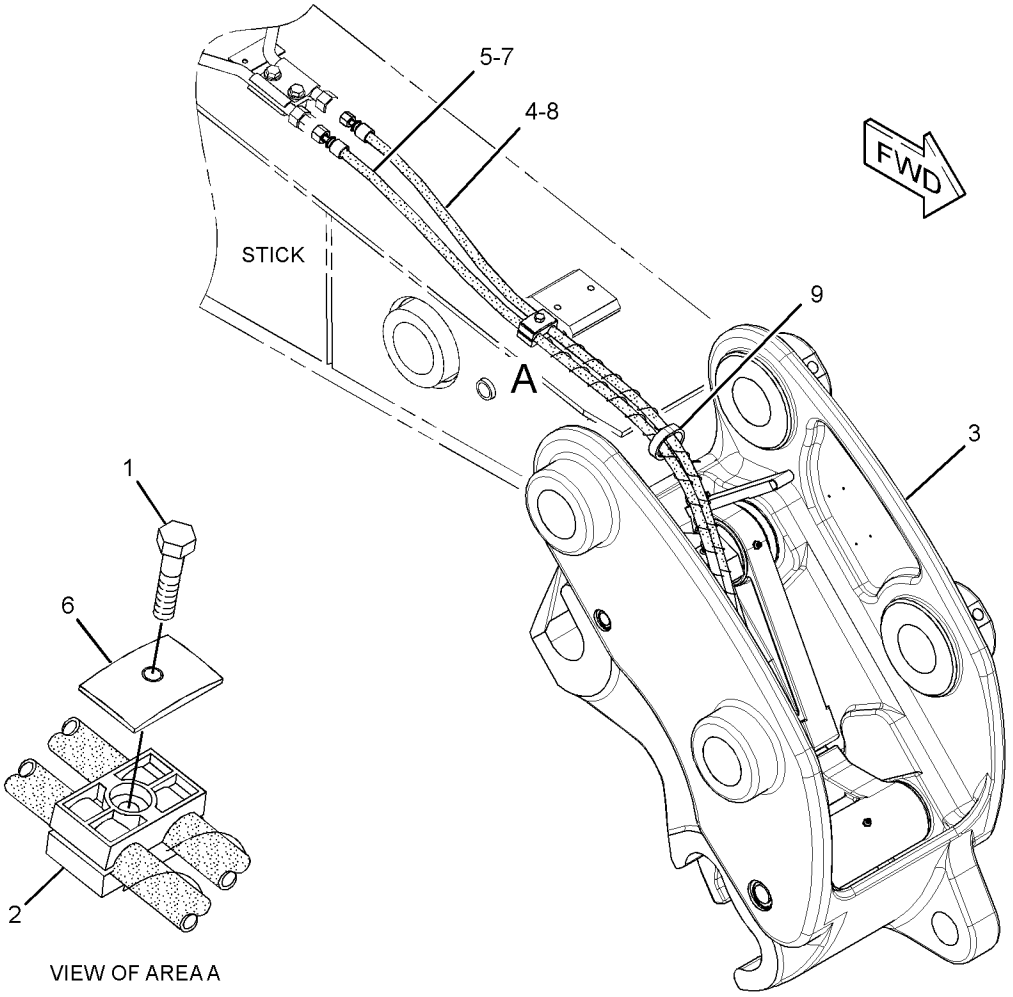

VIEW OF AREA A

GRAPHIC #1 **<END>** g01624752

345-3156 LINES GP-COUPLER—B-LINKAGE

S/N: PBB1-UP; KBS1-UP
FOR USE WITH 292-4151—PAGE: 768
PART OF 351-8602 COUPLER AR-QUICK
AN ATTACHMENT

SMCS-5057, 5133 **i03997822**

NOTE	REF NO	GRAPHIC REF	PART NUMBER	QTY	PART NAME 1 2 3 4 5 6 (PRODUCT LEVEL)	SEE PAGE
	1	1	**7K-1181**	5	STRAP-CABLE	
	2	1	**345-4467**	1	BRACKET AS	
I	3	1	**346-3046**	1	HOSE AS	
I	4	1	**346-3047**	1	HOSE AS	
I	5	1	**359-2912**	1	HOSE AS	
I	6	1	**359-2913**	1	HOSE AS	
	7	1	*148-8384*	1	ELBOW AS	
		1	**4J-5477**	2	SEAL-O-RING	
		1	**6V-8979**	1	ELBOW	
	8	1	**2P-1279**	1	LOCKNUT (9/16-18-THD)	
	9	1	**6V-8397**	2	SEAL-O-RING	
	10	1	**6V-8980**	1	ELBOW	
	11	1	**6V-9168**	1	NUT (11/16-16-THD)	
	12	1	**8T-4121**	2	WASHER-HARD (11X21X2.5-MM THK)	
M	13	1	**8T-4137**	2	BOLT (M10X1.5X20-MM)	

I - REFER TO HYDRAULIC INFORMATION SYSTEM
M - METRIC PART

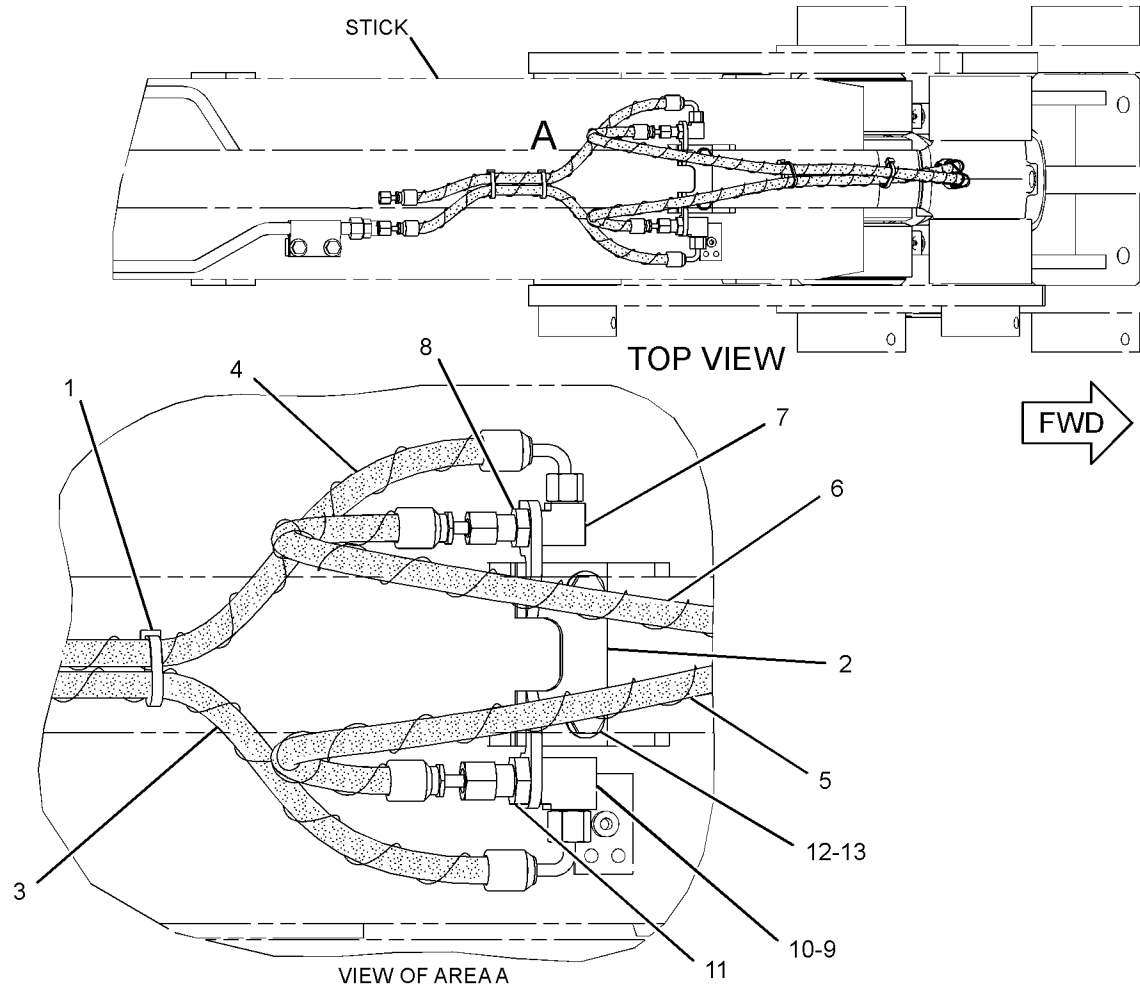

GRAPHIC #1 **<END>** g01977810

449-1136 LINES GP-COUPLER—B-LINKAGE

S/N: PBB1-UP; KBS1-UP
FOR USE WITH 388-0067—PAGE: 770
PART OF 455-3910 COUPLER AR-QUICK
AN ATTACHMENT

SMCS-5057, 5133 **i05859708**

NOTE	REF NO	GRAPHIC REF	PART NUMBER	QTY	PART NAME 1 2 3 4 5 6 (PRODUCT LEVEL)	SEE PAGE
	1	1	**345-4467**	1	BRACKET AS	
I	2	1	**346-3046**	1	HOSE AS	
I	3	1	**346-3047**	1	HOSE AS	
I	4	1	**448-4180**	1	HOSE AS	
I	5	1	**448-4181**	1	HOSE AS	
	6	1	*148-8384*	1	ELBOW AS	
		1	**4J-5477**	2	SEAL-O-RING	
		1	**6V-8979**	1	ELBOW	
	7	1	**2P-1279**	1	LOCKNUT (9/16-18-THD)	
	8	1	**6V-8397**	2	SEAL-O-RING	
	9	1	**6V-8980**	1	ELBOW	
	10	1	**6V-9168**	1	NUT (11/16-16-THD)	
	11	1	**7K-1181**	5	STRAP-CABLE	
	12	1	**8T-4121**	2	WASHER-HARD (11X21X2.5-MM THK)	
M	13	1	**8T-4137**	2	BOLT (M10X1.5X20-MM)	

I - REFER TO HYDRAULIC INFORMATION SYSTEM
M - METRIC PART

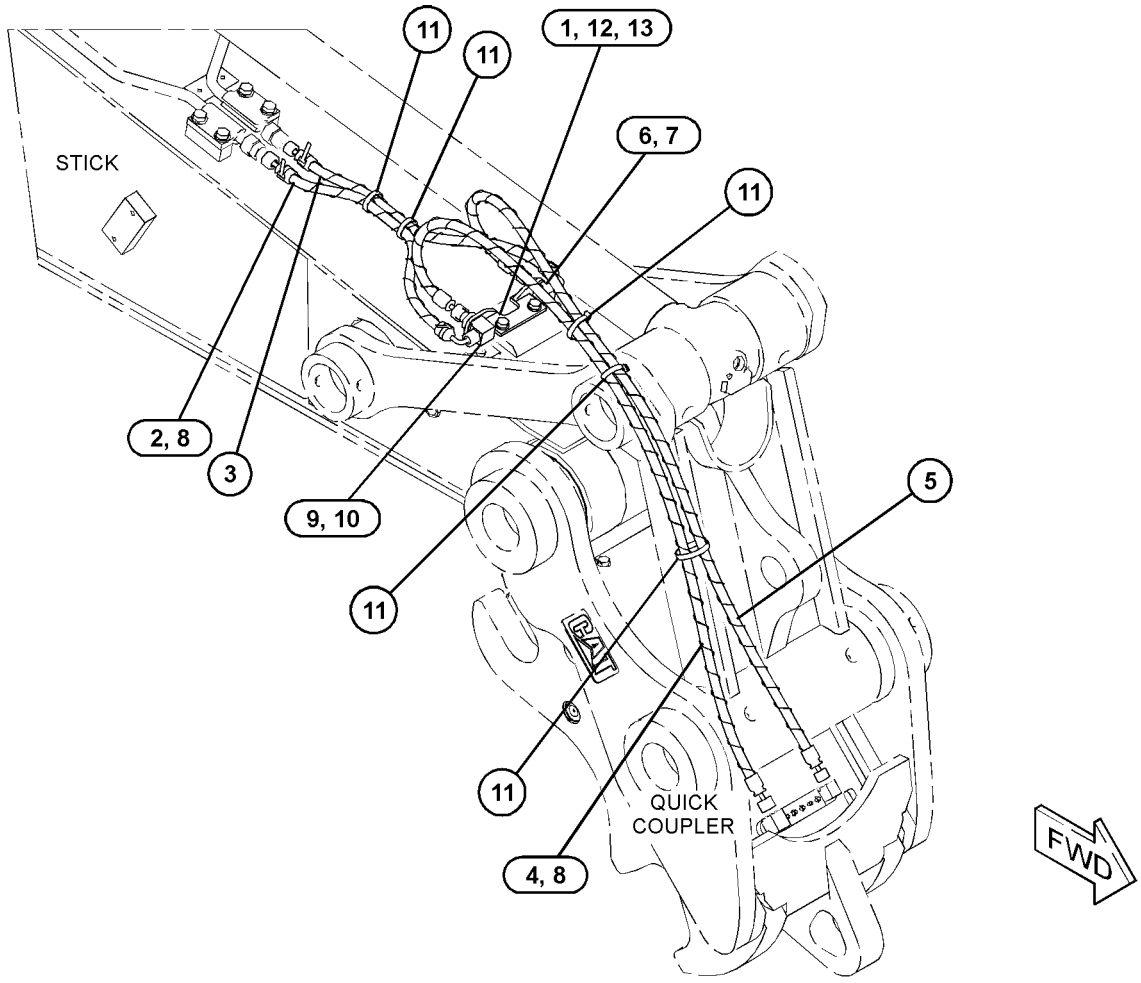

GRAPHIC #1 **<END>** g03708907

239-1714 LINES GP-FRONT

S/N: PBB1-UP; KBS1-UP

PART OF 456-0404, 456-0405 HYDRAULIC AR

SMCS-5057 **i05346403**

NOTE	REF NO	GRAPHIC REF	PART NUMBER	QTY	PART NAME 1 2 3 4 5 6 (PRODUCT LEVEL)	SEE PAGE
	1	1	**7Y-3730**	2	FLANGE-SPECIAL	
M	2	1	**101-7403**	2	BOLT-SOCKET HEAD (M10X1.5X80-MM)	
M	3	1	**105-3477**	8	BOLT-SOCKET HEAD (M10X1.5X45-MM)	
M	4	1	**105-3483**	2	BOLT-SOCKET HEAD (M10X1.5X70-MM)	
	5	1	**113-6479**	2	FLANGE-SPECIAL	
I	6	1	**165-3185**	1	HOSE AS	
I	7	1	**165-3190**	1	HOSE AS	
I	8	1	**337-1182**	1	HOSE AS	
Y	9	1	**194-0174**	1	HOSE GP-HYDRAULIC	413
Y	10	1	**194-0180**	1	HOSE GP-HYDRAULIC	415
Y	11	1	**214-4511**	1	FITTING GP-HYDRAULIC (4-BOLT FLANGE)	404
Y	12	1	**236-3212**	1	HOSE GP-HYDRAULIC (FRONT)	418
Y	13	1	**236-3213**	1	HOSE GP-HYDRAULIC (FRONT)	418
I	14	1	**289-5672**	1	HOSE AS	
Y	15	1	**255-5680**	1	VALVE GP-LOAD CONTROL (STICK DRIFT RED, LINE RELIEF)	637
Y	16	1	**255-5683**	1	VALVE GP-LOAD CONTROL (BOOM DRIFT RED, LINE RELIEF)	639
Y	17	1	**260-7910**	1	HOSE GP-HYDRAULIC	419
I	18	1	**260-7988**	1	HOSE AS	
I	19	1	**260-7992**	1	HOSE AS	
I	20	1	**260-7996**	1	HOSE AS	
I	21	1	**260-8000**	1	HOSE AS	
M	22	1	**101-7397**	4	BOLT-SOCKET HEAD (M12X1.75X50-MM)	
M	23	1	**101-7404**	42	BOLT-SOCKET HEAD (M10X1.5X30-MM)	
M	24	1	**199-1286**	6	BOLT-SOCKET HEAD (M10X1.5X150-MM)	
	25	1	**1P-3702**	4	SEAL-RECTANGULAR	
	26	1	**1P-3703**	9	SEAL-RECTANGULAR	
	27	1	**4J-5267**	10	SEAL-O-RING	
	28	1	**4J-5268**	1	SEAL-O-RING	
	29	1	**5K-9090**	5	SEAL-O-RING	
	30	1	**6V-0400**	4	FLANGE-HALF	
	31	1	**8T-4121**	8	WASHER-HARD (11X21X2.5-MM THK)	
M	32	1	**8T-4194**	4	BOLT (M12X1.75X50-MM)	
	33	1	**8T-4223**	8	WASHER-HARD (13.5X25.5X3-MM THK)	
	34	1	**8T-9403**	4	FLANGE-HALF	

I - REFER TO HYDRAULIC INFORMATION SYSTEM
M - METRIC PART
Y - SEPARATE ILLUSTRATION

239-1714 **LINES GP-FRONT (*contd.*)** **i05346403**

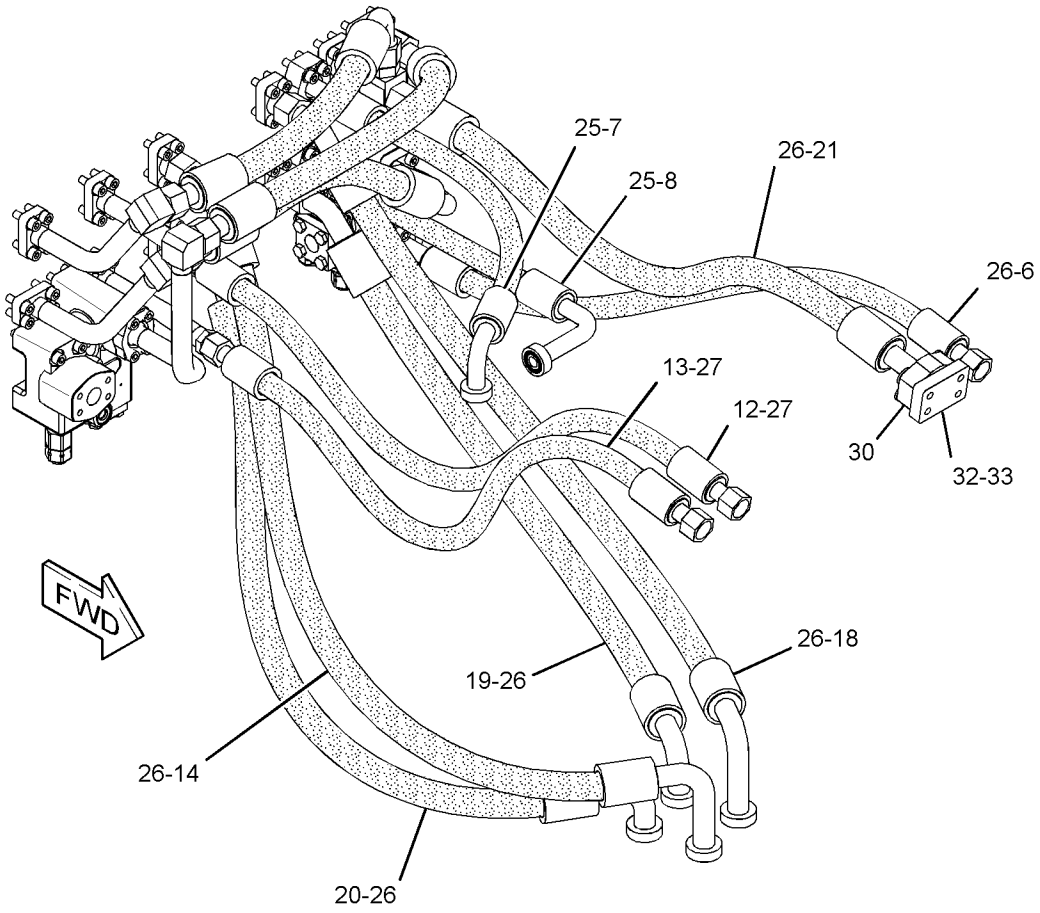

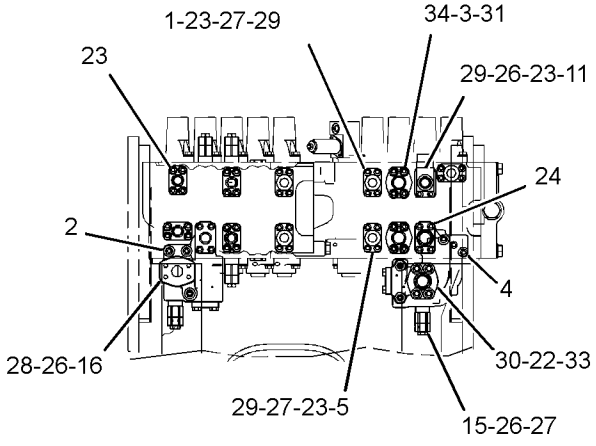

VIEW A-A
(HOSES REMOVED)

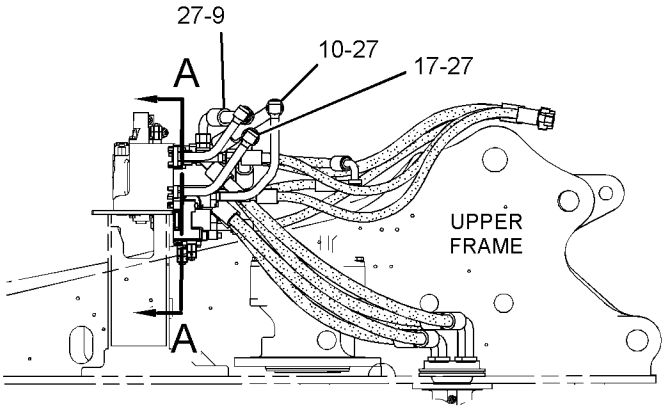

RIGHT SIDE VIEW

GRAPHIC #1 **<END>** g01806235

260-8015 LINES GP-FRONT—MEDIUM PRESSURE

S/N: PBB1-UP; KBS1-UP
PART OF 349-2216 CONTROL AR-AUXILIARY
AN ATTACHMENT

SMCS-5057 **i02867545**

NOTE	REF NO	GRAPHIC REF	PART NUMBER	QTY	PART NAME 1 2 3 4 5 6 (PRODUCT LEVEL)	SEE PAGE
	1	1	**6V-0852**	1	CAP-DUST	
I	2	1	**187-5589**	2	HOSE AS	
CY	3	1	**285-1531**	1	VALVE GP-CONTROL (MEDIUM PRESSURE)	619
	4	1	**266-0908**	1	SUPPORT	
	5	1	*270-0012*	1	ELBOW AS	
		1	**2M-9780**	1	SEAL-O-RING	
		1	**6V-8398**	1	SEAL-O-RING	
		1	**270-0013**	1	ELBOW	
	6	1	*270-0014*	1	ELBOW AS	
		1	**2M-9780**	1	SEAL-O-RING	
		1	**6V-8398**	1	SEAL-O-RING	
		1	**270-0015**	1	ELBOW	
	7	1	*164-5567*	1	COUPLER AS-QUICK DISCONNECT (MALE)	
		1	**3J-1907**	1	SEAL-O-RING	
		1	**6V-3965**	1	FITTING (QUICK DISCONNECT)	
	8	1	*168-1969*	1	ADAPTER AS	
		1	**1J-9671**	1	SEAL-O-RING	
		1	**5P-1318**	1	ADAPTER	
	9	1	**6V-5782**	4	BOLT (5/16-18X1.125-IN)	
	10	1	**8T-4223**	4	WASHER-HARD (13.5X25.5X3-MM THK)	
	11	1	**8T-4224**	4	WASHER-HARD (8.8X16X2-MM THK)	
M	12	1	**8T-4956**	4	BOLT (M12X1.75X35-MM)	

C - CHANGE FROM PREVIOUS TYPE
I - REFER TO HYDRAULIC INFORMATION SYSTEM
M - METRIC PART
Y - SEPARATE ILLUSTRATION

260-8015 **LINES GP-FRONT (*contd.*)** **i02867545**

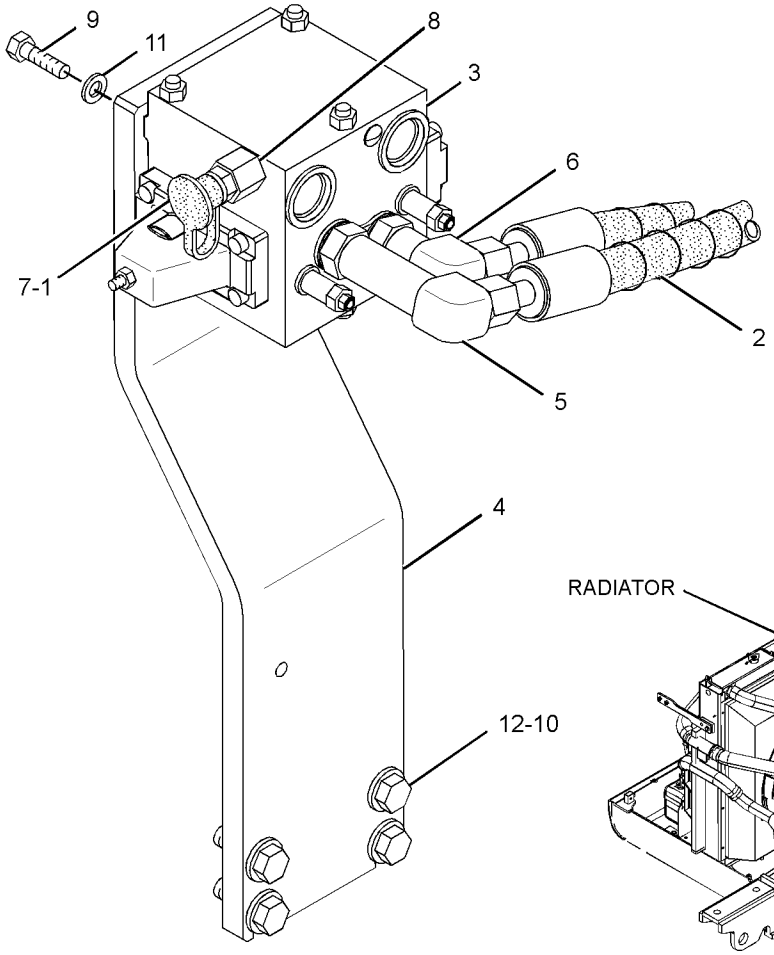

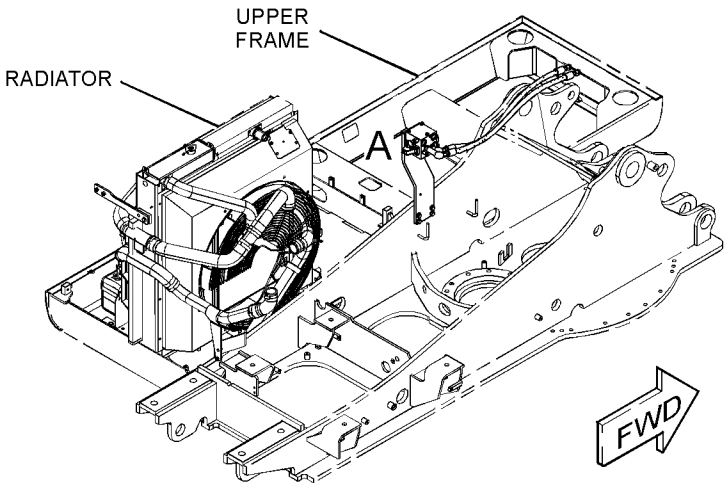

GRAPHIC #1 **<END>** g01286113

268-7074 LINES GP-FRONT

S/N: PBB1-UP
PART OF 420-0298 LINKAGE AR-FRONT
AN ATTACHMENT

SMCS-5057 **i05278517**

NOTE	REF NO	GRAPHIC REF	PART NUMBER	QTY	PART NAME 1 2 3 4 5 6 (PRODUCT LEVEL)	SEE PAGE
	1	1	**4I-8789**	1	VALVE-CHECK	
	2	1	**9F-2167**	1	SCREW-PURGE (3/8-24X1.164-IN)	
M	3	1	**101-7398**	4	BOLT-SOCKET HEAD (M10X1.5X40-MM)	
	4	1	**268-7183**	1	PLATE AS	
	5	1	**268-7185**	1	TUBE AS	
	6	1	**268-7186**	1	TUBE AS	
	7	1	*148-8335*	1	CONNECTOR AS	
		1	**5K-9090**	1	SEAL-O-RING	
		1	**6V-8635**	1	CONNECTOR	
		1	**7M-8485**	1	SEAL-O-RING	
	8	1	**1P-3703**	1	SEAL-RECTANGULAR	
	9	1	**6V-9746**	2	SEAL-O-RING	
	10	1	**7M-8485**	1	SEAL-O-RING	
	11	1	**7Y-3732**	4	CLIP	
	12	1	**8T-4223**	4	WASHER-HARD (13.5X25.5X3-MM THK)	
M	13	1	**8T-4910**	2	BOLT (M12X1.75X60-MM)	
M	14	1	**8T-4956**	2	BOLT (M12X1.75X35-MM)	
	15	1	**6H-3615**	1	PLUG-PROTECTION	

M - METRIC PART

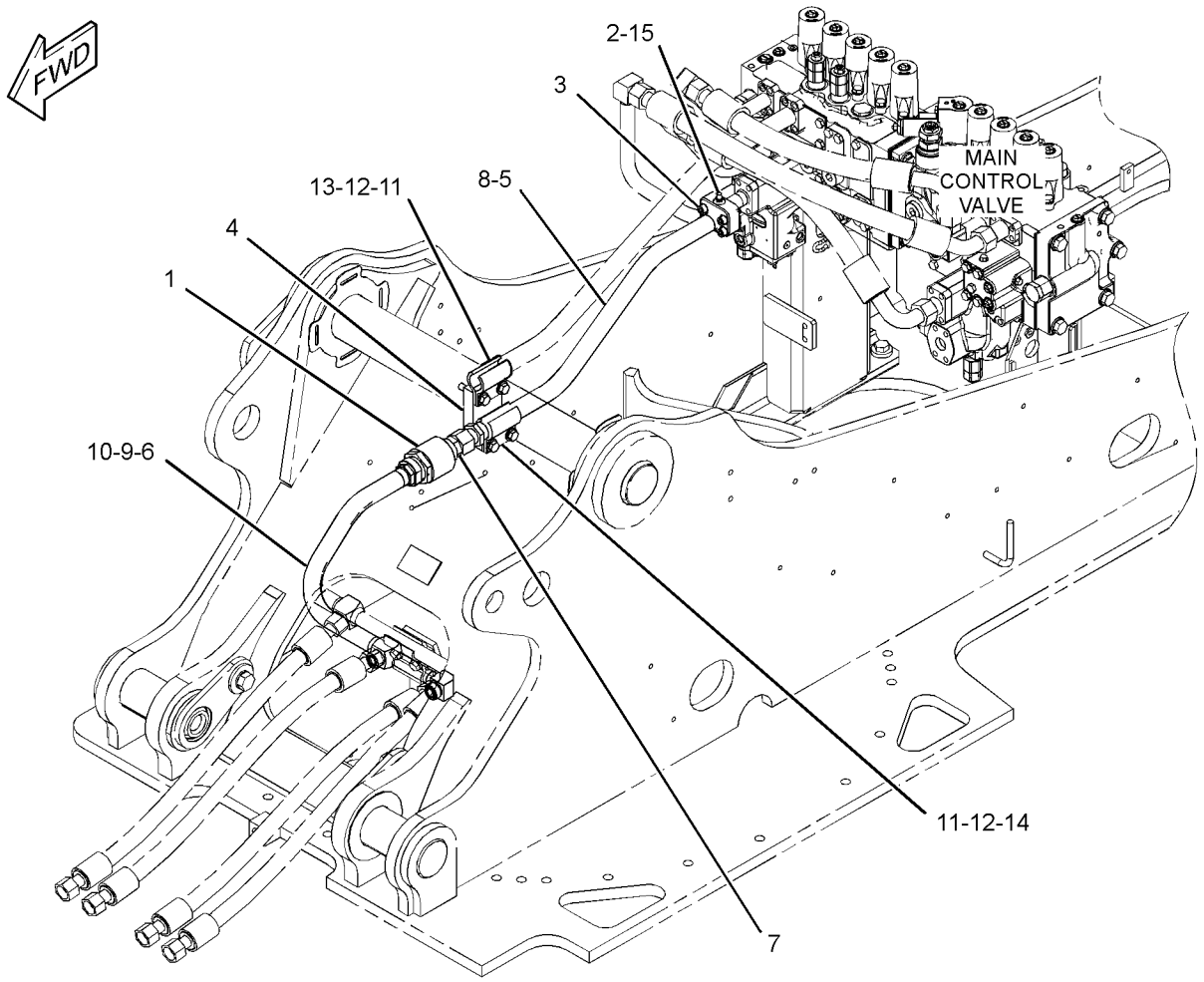

GRAPHIC #1 **<END>** g03361605

376-6317 LINES GP-FRONT—COMBINED FUNCTION

S/N: PBB1-UP; KBS1-UP
PART OF 349-2209 CONTROL AR-AUXILIARY
AN ATTACHMENT

SMCS-5057 **i05190604**

NOTE	REF NO	GRAPHIC REF	PART NUMBER	QTY	PART NAME 1 2 3 4 5 6 (PRODUCT LEVEL)	SEE PAGE
	1	2	**7Y-3729**	1	FLANGE-SPECIAL	
	2	2	**7Y-3731**	1	FLANGE	
I	3	2	**102-1248**	1	HOSE AS	
	4	1	**173-4664**	1	FLANGE	
	5	1	*177-1061*	1	ELBOW AS	
		1	**5K-9090**	1	SEAL-O-RING	
		1	**142-0038**	1	ELBOW	
Y	6	2	**177-2653**	1	VALVE GP-RELIEF (LINE)	659
	7	2	**207-6222**	1	BLOCK	
	8	2	**218-1139**	1	BLOCK	
	9	1	**260-7872**	1	SUPPORT AS	
	10	2	**260-8043**	1	BLOCK	
	11	2	**266-0912**	1	BRACKET	
	12	2	**266-0913**	1	SUPPORT AS	
	13	2	**266-1278**	1	BLOCK	
	14	2	**266-1279**	2	FLANGE	
I	15	1	**266-1303**	1	HOSE AS	
	16	2	**275-1439**	1	BLOCK	
	17	2	**275-1440**	1	BLOCK	
	18	2	**296-7067**	1	SUPPORT AS	
	19	2	**296-7069**	1	SUPPORT AS	
Y	20	2	**297-0370**	2	VALVE GP-CHECK	602
I	21	1	**314-8205**	1	HOSE AS	
I	22	1	**317-4712**	1	HOSE AS	
	23	1	**325-8865**	1	SUPPORT AS	
	24	1	**337-1424**	1	SUPPORT AS	
M		1	**8T-3490**	2	NUT-WELD (M10X1.5-THD)	
M		1	**8T-3597**	1	NUT-WELD (M12X1.75-THD)	
I	25	1	**337-1426**	1	HOSE AS	
JI	26	1	**377-3291**	1	HOSE AS	
	27	2	**099-8232**	2	SEAL-O-RING	
M	28	2	**101-7397**	4	BOLT-SOCKET HEAD (M12X1.75X50-MM)	
M	29	2	**101-7401**	8	BOLT-SOCKET HEAD (M10X1.5X20-MM)	
M	30	1	**101-7402**	4	BOLT-SOCKET HEAD (M12X1.75X30-MM)	
M	31	2	**101-7404**	8	BOLT-SOCKET HEAD (M10X1.5X30-MM)	
M	32	2	**105-3477**	4	BOLT-SOCKET HEAD (M10X1.5X45-MM)	
M	33	2	**108-4282**	4	BOLT-SOCKET HEAD (M10X1.5X100-MM)	
	34	1	*148-8323*	1	CONNECTOR AS	
		1	**2S-4078**	1	SEAL-O-RING	
		1	**5K-9090**	1	SEAL-O-RING	
		1	**6V-9875**	1	CONNECTOR	
	35	2	*148-8330*	1	CONNECTOR AS	
		2	**5K-9090**	1	SEAL-O-RING	
		2	**7M-8485**	1	SEAL-O-RING	
		2	**8T-0198**	1	CONNECTOR	
	36	2	*148-8339*	1	CONNECTOR AS	
		2	**6V-8716**	1	CONNECTOR (STRAIGHT)	
		2	**6V-9746**	1	SEAL-O-RING	
		2	**7M-8485**	1	SEAL-O-RING	
	37	1	*148-8347*	1	ELBOW AS	
		1	**3D-2824**	1	SEAL-O-RING	
		1	**6V-9007**	1	ELBOW	
		1	**6V-9746**	1	SEAL-O-RING	
	38	2	*148-8355*	1	ELBOW AS	
		2	**5K-9090**	1	SEAL-O-RING	
		2	**6V-9005**	1	ELBOW	
		2	**7M-8485**	1	SEAL-O-RING	
	39	1	*148-8411*	1	PLUG AS	

376-6317 **LINES GP-FRONT (*contd.*)** **i05190604**

NOTE	REF NO	GRAPHIC REF	PART NUMBER	QTY	PART NAME 1 2 3 4 5 6 (PRODUCT LEVEL)	SEE PAGE
		1	**3K-0360**	1	SEAL-O-RING	
		1	**9S-4185**	1	PLUG-O-RING	
	40	2	*148-8429*	1	TEE AS	
		2	**5K-9090**	2	SEAL-O-RING	
		2	**6V-9840**	1	TEE-SWIVEL	
	41	2	*148-8449*	1	TEE AS-SWIVEL	
		2	**6V-9746**	2	SEAL-O-RING	
		2	**6V-9839**	1	TEE-SWIVEL	
	42	1	*153-6237*	1	ELBOW AS	
		1	**3D-2824**	1	SEAL-O-RING	
		1	**6V-9004**	1	ELBOW	
		1	**6V-9746**	1	SEAL-O-RING	
	43	2	*164-4180*	1	PLUG AS	
		2	**7M-8485**	1	SEAL-O-RING	
		2	**9S-4181**	1	PLUG-O-RING	
	44	2	*164-5606*	1	CONNECTOR AS	
		2	**3D-2824**	1	SEAL-O-RING	
		2	**6V-9746**	1	SEAL-O-RING	
		2	**8T-0078**	1	CONNECTOR	
	45	2	**1P-3702**	6	SEAL-RECTANGULAR	
	46	1,2	**1P-3703**	4	SEAL-RECTANGULAR	
M	47	2	**280-2747**	4	BOLT-SOCKET HEAD (M10X1.5X60-MM)	
	48	1,2	**5K-9090**	2	SEAL-O-RING	
	49	1	**5P-7466**	1	CLIP (SLOT)	
	50	1	**5P-7467**	1	CLIP (TAB)	
	51	1	**5P-7468**	2	CLIP (SLOT)	
	52	1	**5P-7469**	2	CLIP (TAB)	
	53	1	**5P-8112**	1	GROMMET	
	54	1	**5P-8444**	2	GROMMET	
					—OR—	
			8T-7087	2	GROMMET	
	55	2	**6V-9746**	1	SEAL-O-RING	
	56	1,2	**8T-4121**	10	WASHER-HARD (11X21X2.5-MM THK)	
M	57	1,2	**8T-4136**	6	BOLT (M10X1.5X25-MM)	
M	58	2	**8T-4176**	4	BOLT (M12X1.75X90-MM)	
M	59	2	**8T-4183**	8	BOLT (M12X1.75X40-MM)	
M	60	1	**8T-4195**	2	BOLT (M10X1.5X30-MM)	
M	61	2	**8T-4196**	2	BOLT (M10X1.5X35-MM)	
	62	1,2	**8T-4223**	27	WASHER-HARD (13.5X25.5X3-MM THK)	
M	63	1,2	**8T-4956**	7	BOLT (M12X1.75X35-MM)	
M	64	2	**8T-5092**	8	BOLT (M12X1.75X150-MM)	

I - REFER TO HYDRAULIC INFORMATION SYSTEM
J - NOT REQUIRED WHEN USED WITH LINES GP-FRONT (HAMMER RETURN)
M - METRIC PART
Y - SEPARATE ILLUSTRATION

376-6317 **LINES GP-FRONT (*contd.*)** **i05190604**

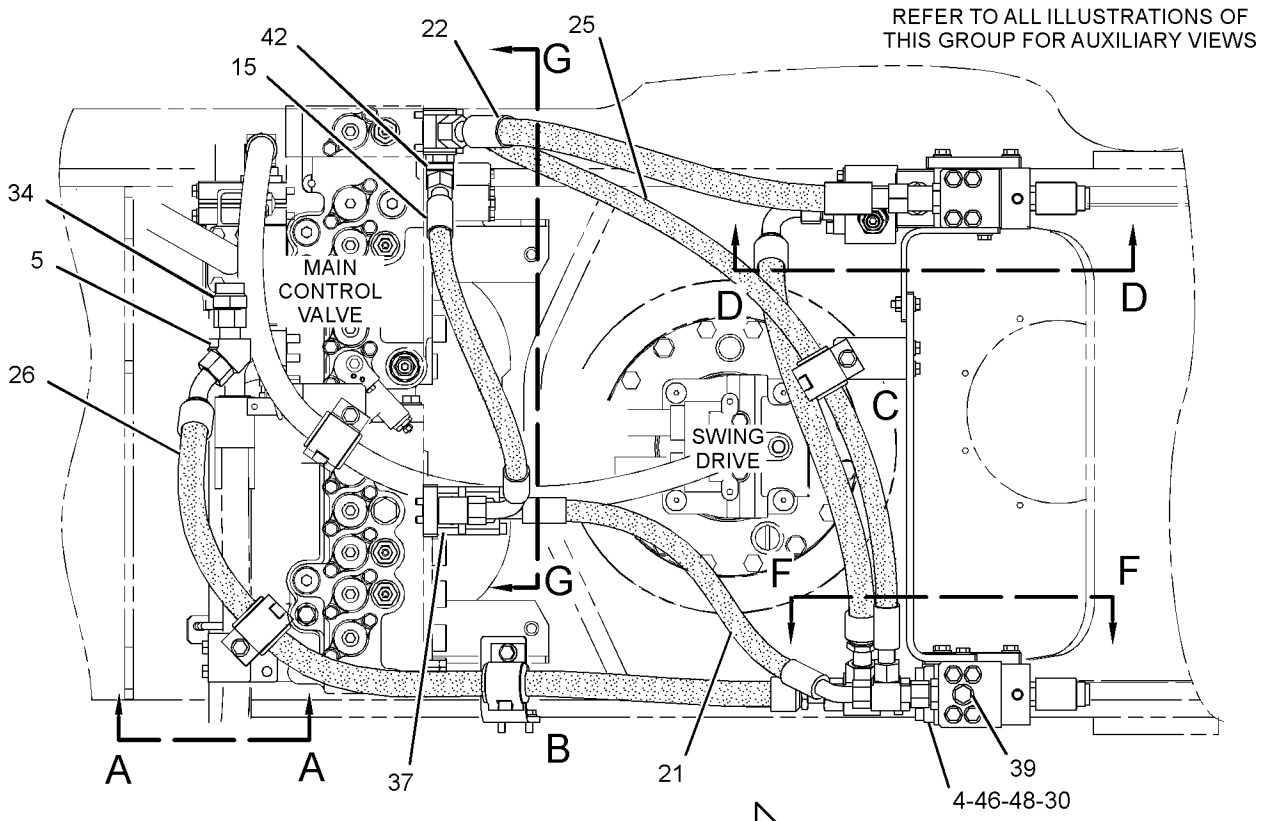

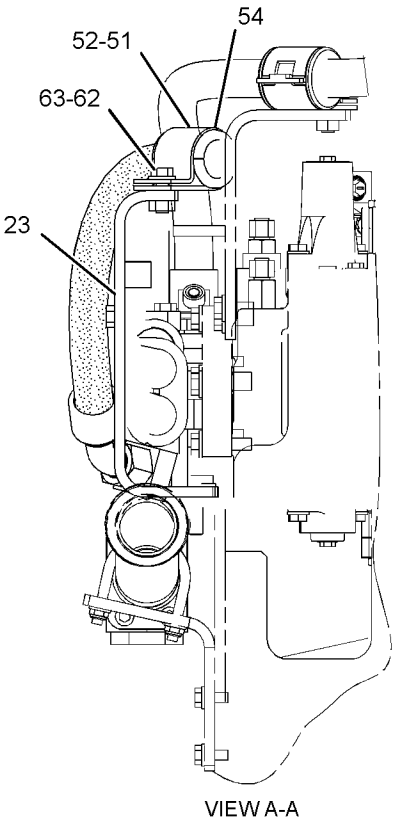

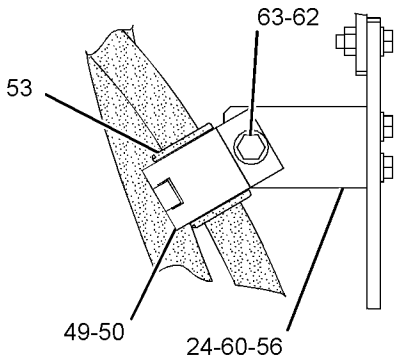

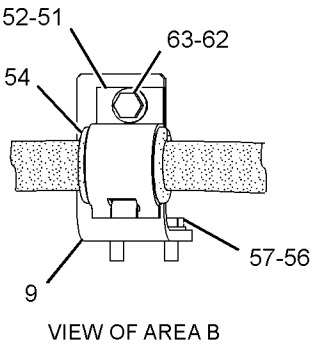

GRAPHIC #1 g02743236

376-6317 **LINES GP-FRONT (*contd.*)** **i05190604**

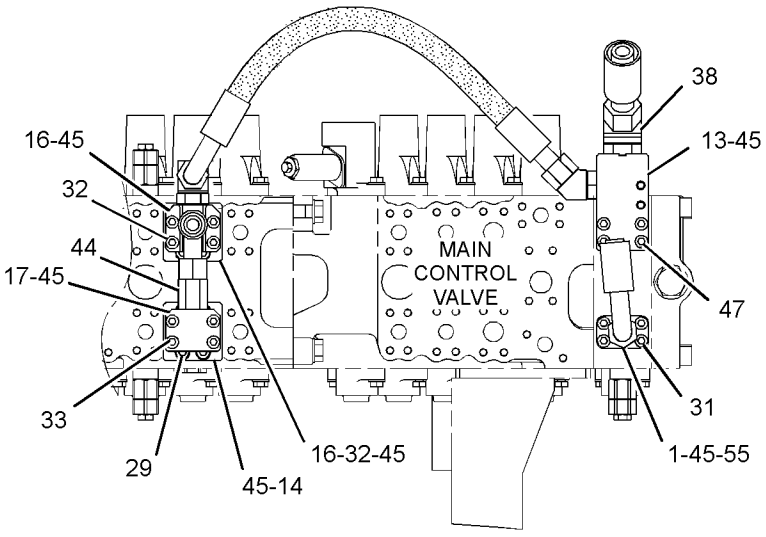

SECTION G-G

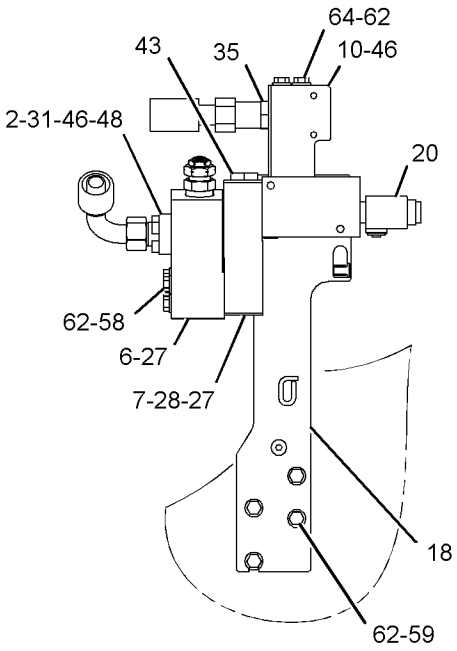

SECTION D-D

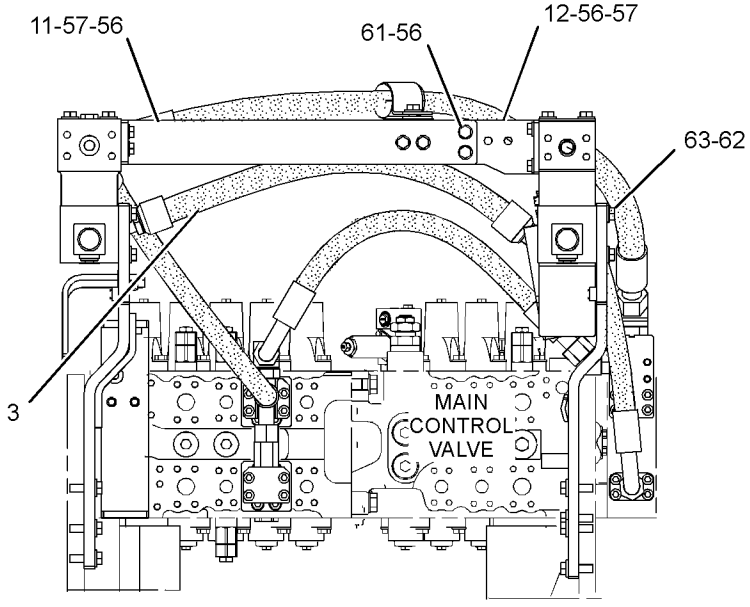

FRONT VIEW

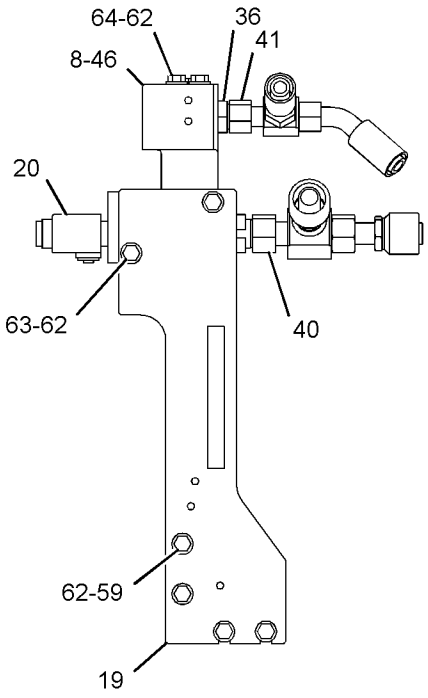

SECTION F-F

GRAPHIC #2 **<END>** g02743237

376-6319 LINES GP-FRONT—SYSTEM 3, 1-WAY, 2-PUMP

S/N: PBB1-UP; KBS1-UP
PART OF 349-2211 CONTROL AR-AUXILIARY
AN ATTACHMENT

SMCS-5057 **i05346531**

NOTE	REF NO	GRAPHIC REF	PART NUMBER	QTY	PART NAME 1 2 3 4 5 6 (PRODUCT LEVEL)	SEE PAGE
	1	2	**7Y-3731**	1	FLANGE	
I	2	1	**102-1248**	1	HOSE AS	
	3	1	**173-4664**	1	FLANGE	
	4	1	*177-1061*	1	ELBOW AS	
		1	**5K-9090**	1	SEAL-O-RING	
		1	**142-0038**	1	ELBOW	
Y	5	2	**177-2653**	1	VALVE GP-RELIEF (LINE)	659
	6	2	**207-6222**	1	BLOCK	
	7	1,2	**212-5148**	2	BLOCK	
	8	2	**218-1139**	1	BLOCK	
	9	1	**260-7872**	1	SUPPORT AS	
	10	2	**260-8043**	1	BLOCK	
	11	1	**266-0912**	1	BRACKET	
	12	1	**266-0913**	1	SUPPORT AS	
	13	2	**266-1278**	1	BLOCK	
	14	2	**266-1279**	1	FLANGE	
I	15	2	**266-1303**	1	HOSE AS	
	16	2	**275-1439**	1	BLOCK	
	17	2	**296-7067**	1	SUPPORT AS	
	18	2	**296-7069**	1	SUPPORT AS	
I	19	1	**317-4712**	1	HOSE AS	
	20	1	**325-8865**	1	SUPPORT AS	
JI	21	1	**377-3291**	1	HOSE AS	
	22	2	**099-8232**	2	SEAL-O-RING	
M	23	2	**101-7397**	4	BOLT-SOCKET HEAD (M12X1.75X50-MM)	
M	24	2	**101-7401**	4	BOLT-SOCKET HEAD (M10X1.5X20-MM)	
M	25	1	**101-7402**	4	BOLT-SOCKET HEAD (M12X1.75X30-MM)	
M	26	2	**101-7404**	4	BOLT-SOCKET HEAD (M10X1.5X30-MM)	
M	27	2	**105-3477**	4	BOLT-SOCKET HEAD (M10X1.5X45-MM)	
	28	1	*148-8323*	1	CONNECTOR AS	
		1	**2S-4078**	1	SEAL-O-RING	
		1	**5K-9090**	1	SEAL-O-RING	
		1	**6V-9875**	1	CONNECTOR	
	29	2	*148-8330*	1	CONNECTOR AS	
		2	**5K-9090**	1	SEAL-O-RING	
		2	**7M-8485**	1	SEAL-O-RING	
		2	**8T-0198**	1	CONNECTOR	
	30	1	*148-8347*	1	ELBOW AS	
		1	**3D-2824**	1	SEAL-O-RING	
		1	**6V-9007**	1	ELBOW	
		1	**6V-9746**	1	SEAL-O-RING	
	31	2	*148-8355*	1	ELBOW AS	
		2	**5K-9090**	1	SEAL-O-RING	
		2	**6V-9005**	1	ELBOW	
		2	**7M-8485**	1	SEAL-O-RING	
	32	1	*148-8411*	1	PLUG AS	
		1	**3K-0360**	1	SEAL-O-RING	
		1	**9S-4185**	1	PLUG-O-RING	
	33	2	*148-8429*	1	TEE AS	
		2	**5K-9090**	2	SEAL-O-RING	
		2	**6V-9840**	1	TEE-SWIVEL	
	34	2	*153-6237*	1	ELBOW AS	
		2	**3D-2824**	1	SEAL-O-RING	
		2	**6V-9004**	1	ELBOW	
		2	**6V-9746**	1	SEAL-O-RING	
	35	2	*164-4180*	2	PLUG AS	
					(EACH INCLUDES)	
		2	**7M-8485**	1	SEAL-O-RING	

376-6319 **LINES GP-FRONT (*contd.*)** **i05346531**

NOTE	REF NO	GRAPHIC REF	PART NUMBER	QTY	PART NAME 1 2 3 4 5 6 (PRODUCT LEVEL)	SEE PAGE
		2	**9S-4181**	1	PLUG-O-RING	
	36	2	**1P-3702**	3	SEAL-RECTANGULAR	
	37	1,2	**1P-3703**	4	SEAL-RECTANGULAR	
M	38	2	**280-2747**	4	BOLT-SOCKET HEAD (M10X1.5X60-MM)	
	39	1,2	**5K-9090**	2	SEAL-O-RING	
	40	1	**5P-7468**	2	CLIP (SLOT)	
	41	1	**5P-7469**	2	CLIP (TAB)	
L	42	1	**5P-8444**	2	GROMMET (37-MM ID)	
					–OR–	
L		1	**8T-7087**	2	GROMMET (34-MM ID)	
	43	1	**8T-4121**	8	WASHER-HARD (11X21X2.5-MM THK)	
M	44	1	**8T-4136**	6	BOLT (M10X1.5X25-MM)	
M	45	2	**8T-4176**	4	BOLT (M12X1.75X90-MM)	
M	46	2	**8T-4183**	8	BOLT (M12X1.75X40-MM)	
M	47	1	**8T-4196**	2	BOLT (M10X1.5X35-MM)	
	48	1,2	**8T-4223**	26	WASHER-HARD (13.5X25.5X3-MM THK)	
M	49	1,2	**8T-4956**	6	BOLT (M12X1.75X35-MM)	
M	50	2	**8T-5092**	8	BOLT (M12X1.75X150-MM)	

I - REFER TO HYDRAULIC INFORMATION SYSTEM
J - NOT REQUIRED WHEN USED WITH LINES GP-FRONT (HAMMER RETURN)
L - SELECT CORRECT GROMMET SIZE TO MATCH HOSE O.D.
M - METRIC PART
Y - SEPARATE ILLUSTRATION

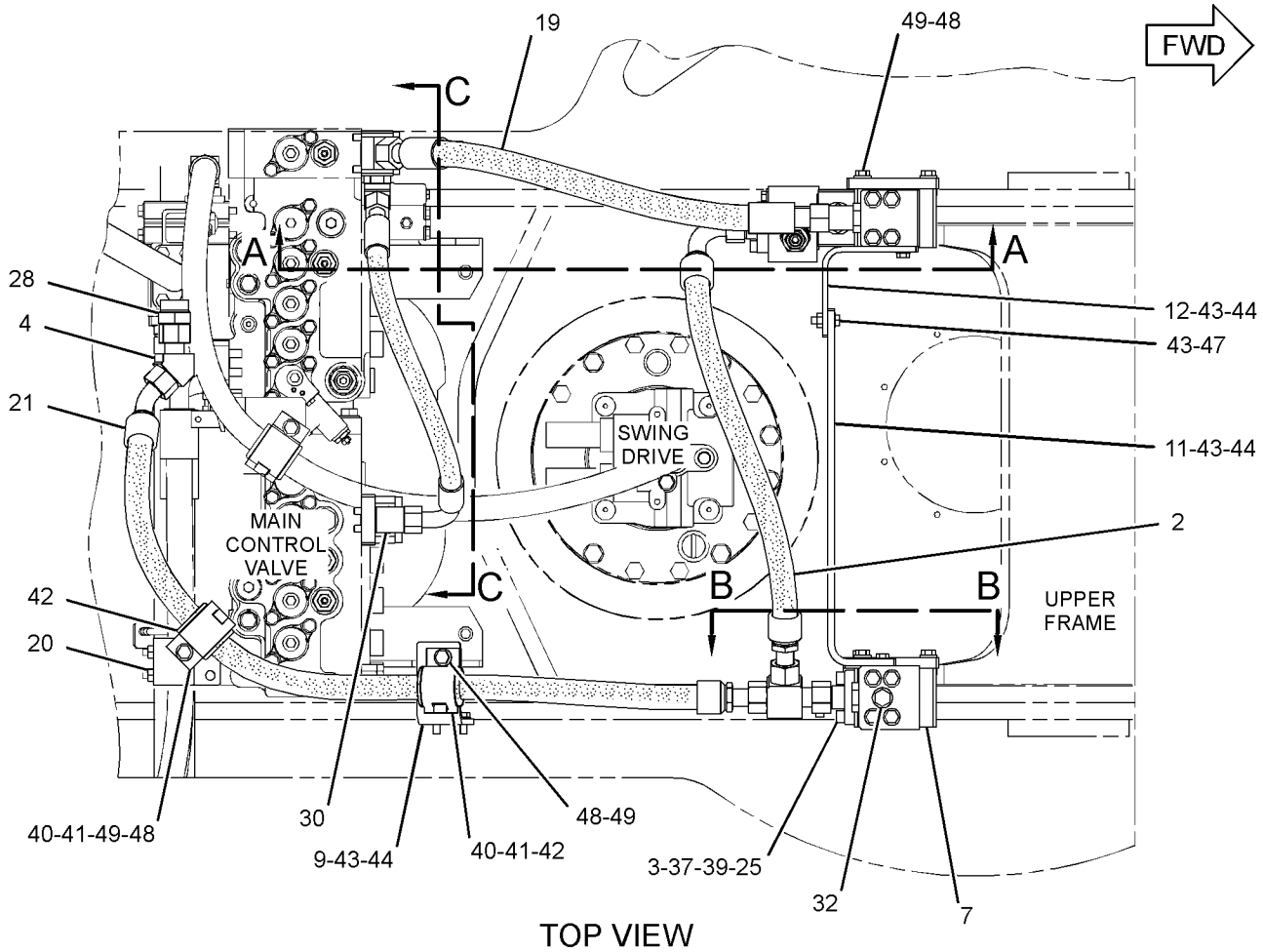

TOP VIEW

GRAPHIC #1 g02742858

376-6319 **LINES GP-FRONT (*contd.*)** **i05346531**

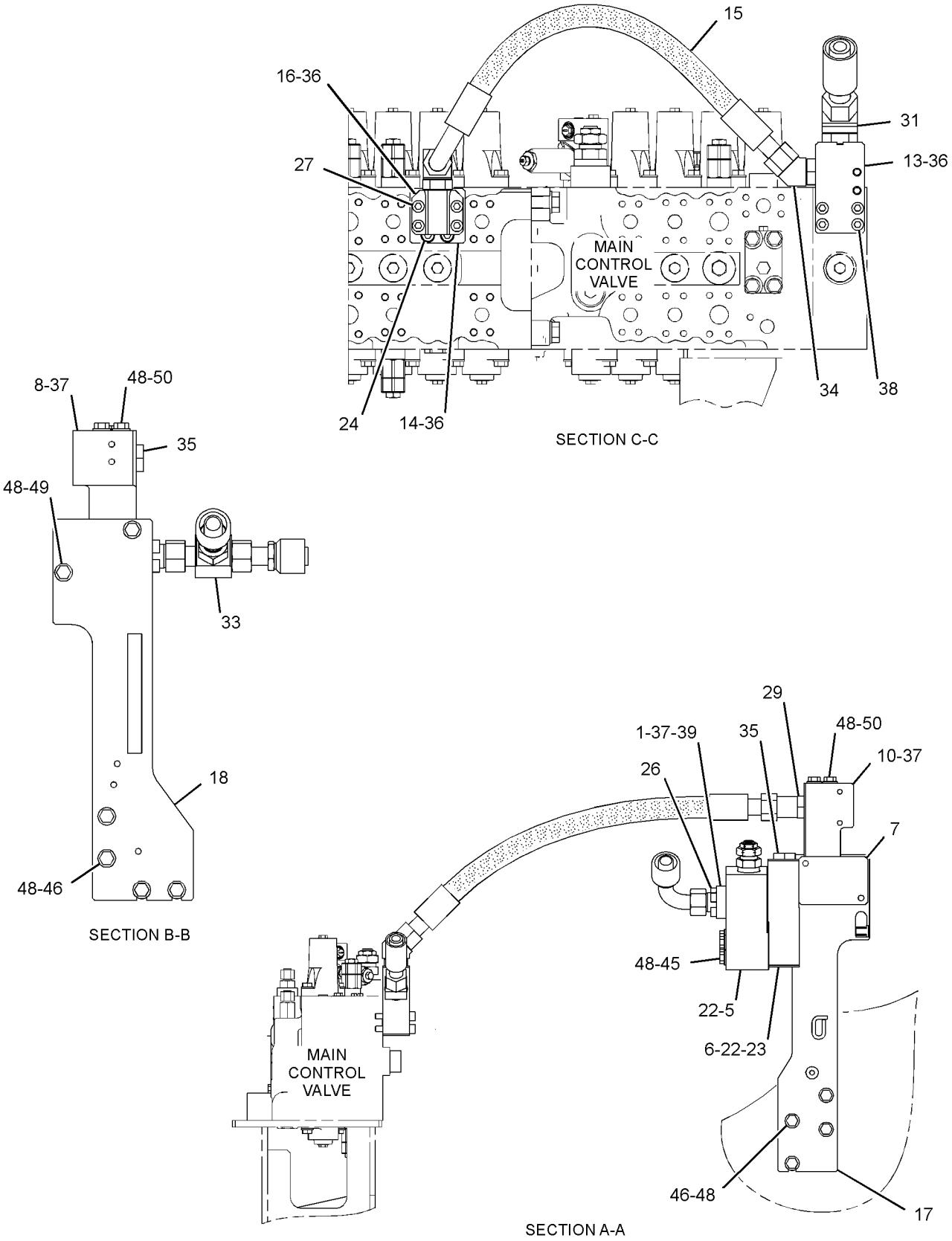

GRAPHIC #2 **<END>** g02743080

376-6325 LINES GP-FRONT—SYSTEM 18, COMBINED FUNCTION

S/N: PBB1-UP; KBS1-UP
PART OF 349-2290 CONTROL AR-AUXILIARY
AN ATTACHMENT

SMCS-5057 **i05640282**

NOTE	REF NO	GRAPHIC REF	PART NUMBER	QTY	PART NAME 1 2 3 4 5 6 (PRODUCT LEVEL)	SEE PAGE
	1	2	**7Y-3729**	1	FLANGE-SPECIAL	
M	2	2	**105-3477**	4	BOLT-SOCKET HEAD (M10X1.5X45-MM)	
	3	1	**260-7872**	1	SUPPORT AS	
	4	1	*260-9172*	1	ELBOW AS	
		1	**6V-9746**	1	SEAL-O-RING	
		1	**7M-8485**	1	SEAL-O-RING	
		1	**202-1713**	1	ELBOW	
	5	2	**266-1278**	1	BLOCK	
	6	2	**266-1279**	2	FLANGE	
I	7	2	**266-1303**	1	HOSE AS	
	8	2	**275-1439**	1	BLOCK	
	9	2	**275-1440**	1	BLOCK	
	10	1	**296-7024**	1	BLOCK	
Y	11	1	**297-0265**	1	VALVE GP-SOLENOID & RELIEF (1-WAY, 2-WAY FLOW)	684
Y	12	1	**323-7942**	1	VALVE GP-SOLENOID & RELIEF (1-WAY, 2-WAY FLOW)	685
	13	1	**325-8865**	1	SUPPORT AS	
	14	1	**330-2470**	1	BLOCK	
I	15	2	**337-1141**	1	HOSE AS	
I	16	1	**337-1142**	1	HOSE AS	
	17	1	**337-1145**	1	SUPPORT AS	
	18	1	**337-1148**	1	SUPPORT AS	
	19	1	**337-1424**	1	SUPPORT AS	
I	20	1	**337-1435**	1	HOSE AS	
	21	1	**354-3701**	1	SUPPORT AS	
	22	1	**354-3703**	1	BRACKET	
I	23	1	**354-3704**	1	HOSE AS	
I	24	1	**381-5822**	1	HOSE AS	
M	26	2	**101-7401**	8	BOLT-SOCKET HEAD (M10X1.5X20-MM)	
M	27	1	**101-7402**	4	BOLT-SOCKET HEAD (M12X1.75X30-MM)	
M	28	2	**101-7404**	4	BOLT-SOCKET HEAD (M10X1.5X30-MM)	
M	29	1	**108-1782**	4	BOLT-SOCKET HEAD (M12X1.75X90-MM)	
M	30	1,2	**108-4282**	8	BOLT-SOCKET HEAD (M10X1.5X100-MM)	
	31	2	*148-8347*	1	ELBOW AS	
		2	**3D-2824**	1	SEAL-O-RING	
		2	**6V-9007**	1	ELBOW	
		2	**6V-9746**	1	SEAL-O-RING	
	32	2	*148-8355*	1	ELBOW AS	
		2	**5K-9090**	1	SEAL-O-RING	
		2	**6V-9005**	1	ELBOW	
		2	**7M-8485**	1	SEAL-O-RING	
	33	1	*148-8360*	1	ELBOW AS	
		1	**6V-9182**	1	ELBOW	
		1	**6V-9746**	1	SEAL-O-RING	
		1	**7M-8485**	1	SEAL-O-RING	
	34	1	*148-8411*	3	PLUG AS	
					(EACH INCLUDES)	
		1	**3K-0360**	1	SEAL-O-RING	
		1	**9S-4185**	1	PLUG-O-RING	
	35	2	*153-6237*	1	ELBOW AS	
		2	**3D-2824**	1	SEAL-O-RING	
		2	**6V-9004**	1	ELBOW	
		2	**6V-9746**	1	SEAL-O-RING	
	36	2	*164-5606*	1	CONNECTOR AS	
		2	**3D-2824**	1	SEAL-O-RING	
		2	**6V-9746**	1	SEAL-O-RING	
		2	**8T-0078**	1	CONNECTOR	
	37	2	**1P-3702**	6	SEAL-RECTANGULAR	
	38	1	**1P-3703**	1	SEAL-RECTANGULAR	

376-6325 **LINES GP-FRONT (*contd.*)** **i05640282**

NOTE	REF NO	GRAPHIC REF	PART NUMBER	QTY	PART NAME 1 2 3 4 5 6 (PRODUCT LEVEL)	SEE PAGE
	39	1	**1P-3704**	1	SEAL-RECTANGULAR	
	40	1	**1P-4578**	8	FLANGE-HALF	
M	41	2	**280-2747**	4	BOLT-SOCKET HEAD (M10X1.5X60-MM)	
	42	1	**4J-0522**	5	SEAL-O-RING	
	43	1	**4J-0527**	1	SEAL-O-RING	
	44	1	**5P-7466**	1	CLIP (SLOT)	
	45	1	**5P-7467**	1	CLIP (TAB)	
	46	1	**5P-7470**	2	CLIP (SLOT)	
	47	1	**5P-7471**	2	CLIP (TAB)	
	48	1	**5P-8112**	1	GROMMET	
	49	1	**5P-8182**	2	GROMMET	
	50	1	**6V-0400**	2	FLANGE-HALF	
	51	2	**6V-9746**	1	SEAL-O-RING	
M	52	1	**7X-2621**	4	BOLT (M10X1.5X12-MM)	
	53	1	**8T-4121**	28	WASHER-HARD (11X21X2.5-MM THK)	
M	54	1	**8T-4136**	4	BOLT (M10X1.5X25-MM)	
M	55	1	**8T-4139**	4	BOLT (M12X1.75X30-MM)	
M	56	1	**8T-4183**	8	BOLT (M12X1.75X40-MM)	
M	57	1	**8T-4192**	2	BOLT (M12X1.75X25-MM)	
M	58	1	**8T-4194**	4	BOLT (M12X1.75X50-MM)	
M	59	1	**8T-4195**	2	BOLT (M10X1.5X30-MM)	
M	60	1	**8T-4196**	18	BOLT (M10X1.5X35-MM)	
	61	1	**8T-4223**	21	WASHER-HARD (13.5X25.5X3-MM THK)	
M	62	1	**8T-4956**	3	BOLT (M12X1.75X35-MM)	

I - REFER TO HYDRAULIC INFORMATION SYSTEM
M - METRIC PART
Y - SEPARATE ILLUSTRATION

376-6325 **LINES GP-FRONT (*contd.*)** **i05640282**

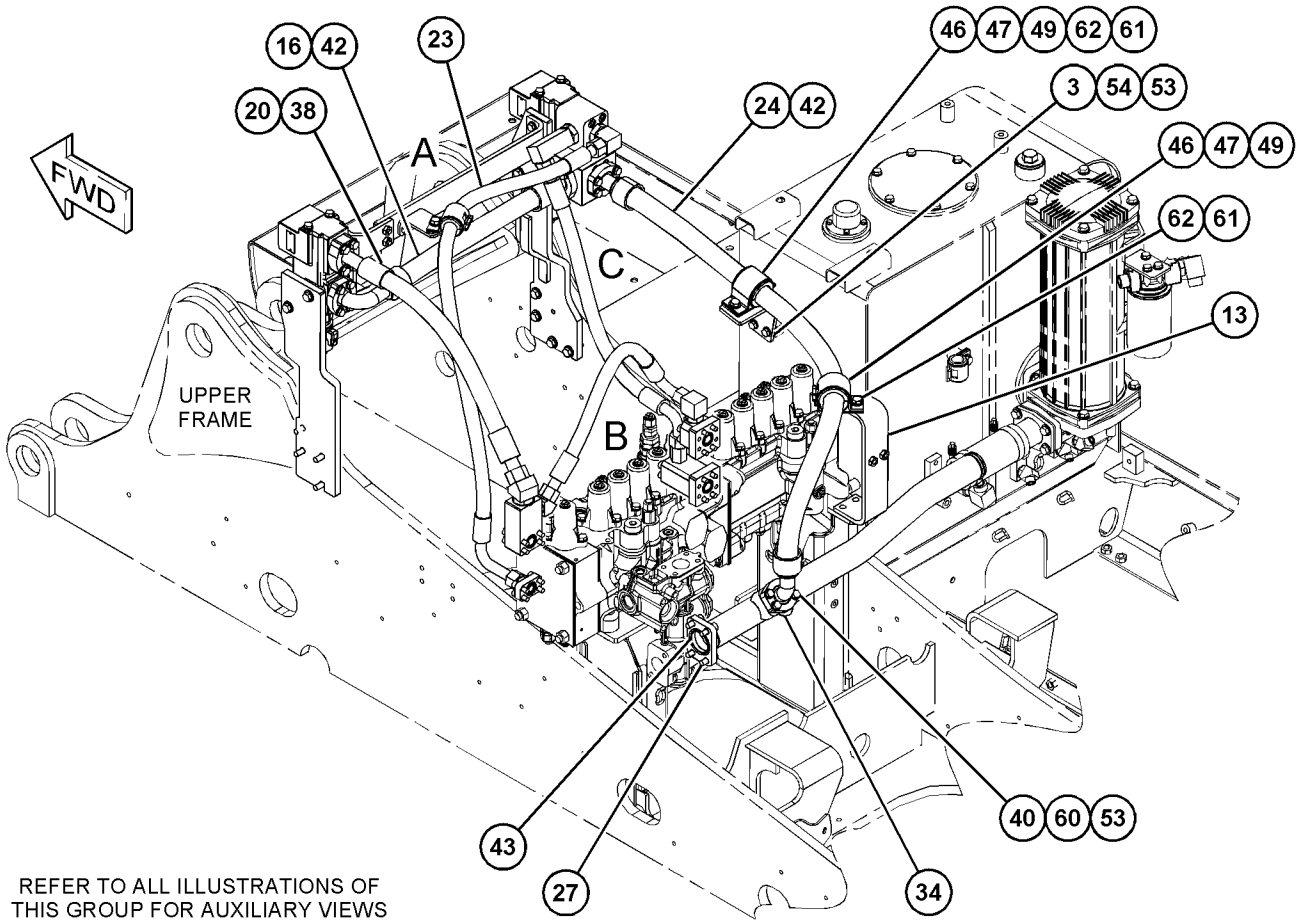

REFER TO ALL ILLUSTRATIONS OF THIS GROUP FOR AUXILIARY VIEWS

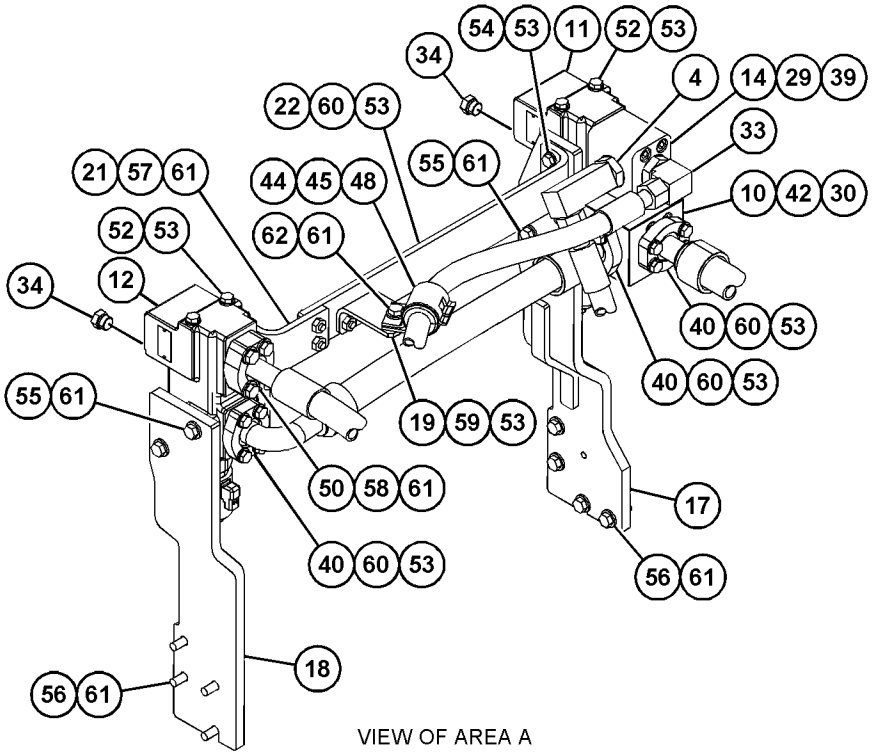

VIEW OF AREA A

GRAPHIC #1 g03470819

376-6325 **LINES GP-FRONT (*contd.*)** **i05640282**

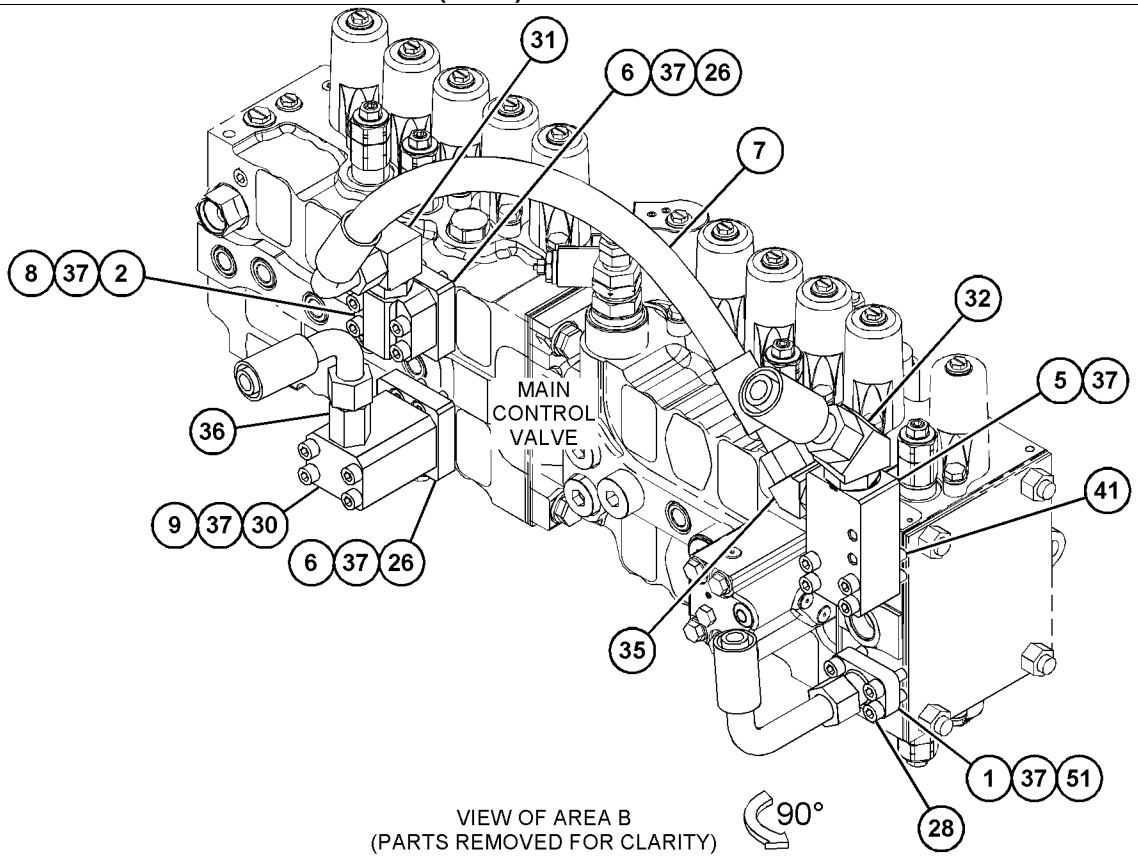

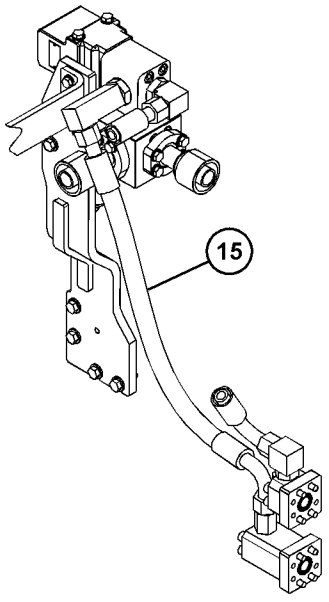

VIEW OF AREA C

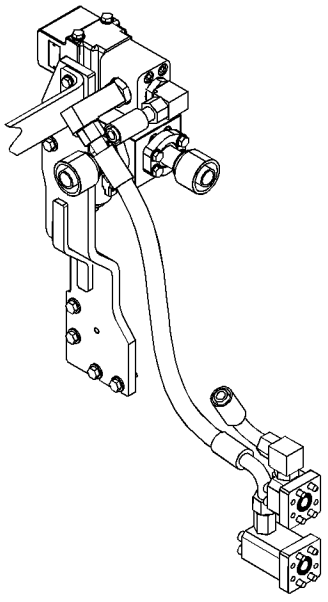

VIEW OF AREA C
(FOR USE WITH MEDIUM CIRCUIT)

GRAPHIC #2 **<END>** g03470820

376-6329 LINES GP-FRONT—UNIVERSAL QUICK COUPLER

S/N: PBB1-UP; KBS1-UP
PART OF 349-2218 CONTROL AR-COUPLER
AN ATTACHMENT

SMCS-5057 **i05858633**

NOTE	REF NO	GRAPHIC REF	PART NUMBER	QTY	PART NAME 1 2 3 4 5 6 (PRODUCT LEVEL)	SEE PAGE
	1	1,2	**4I-9521**	6	BAND-MARKER (RED, L1)	
	2	1,2	**4I-9522**	8	BAND-MARKER (YELLOW, L2)	
	3	2	**4I-9526**	6	BAND-MARKER (WHITE, R2)	
	4	2	**4I-9527**	2	BAND-MARKER (GREEN, R3)	
I	5	2	**7Y-8484**	1	HOSE AS	
I	6	2	**087-5761**	1	HOSE AS	
I	7	2	**104-8950**	1	HOSE AS	
	8	2	**123-4750**	1	VALVE AS-CHECK (MAIN PUMP)	
	9	2	**124-1035**	1	FITTING-ORFS	
Y	10	2	**164-6980**	1	VALVE GP-SHUTTLE (STICK LOWERING CONTROL VALVE)	672
	11	2	**203-3470**	1	CONNECTOR	
	12	2	**213-3745**	2	ELBOW	
Y	13	2	**254-3080**	1	VALVE GP-CONTROL (QUICK COUPLER)	607
Y	14	2	**258-6749**	1	VALVE GP-SOLENOID (QUICK COUPLER)	677
	15	1	**266-0982**	1	GUARD	
I	16	2	**266-1133**	1	HOSE AS	
	17	2	*267-4051*	1	CONNECTOR AS	
		2	**3J-1907**	1	SEAL-O-RING	
		2	**4J-5477**	1	SEAL-O-RING	
		2	**156-8845**	1	CONNECTOR	
I	18	2	**275-1538**	1	HOSE AS	
	19	2	**282-7615**	1	HOSE AS	
	20	1	**285-2423**	1	TUBE AS	
I	21	2	**285-2428**	1	HOSE AS	
I	22	2	**289-5336**	1	HOSE AS	
	23	2	**302-2852**	1	SUPPORT AS	
I	24	2	**313-8623**	1	HOSE AS	
I	25	1	**377-3336**	2	HOSE AS	
	26	2	**415-8976**	1	SUPPORT AS	
M	27	1	**101-7402**	4	BOLT-SOCKET HEAD (M12X1.75X30-MM)	
	28	2	*148-8321*	1	CONNECTOR AS	
		2	**3J-1907**	1	SEAL-O-RING	
		2	**6V-8397**	1	SEAL-O-RING	
		2	**8C-0564**	1	CONNECTOR	
	29	2	*148-8325*	1	CONNECTOR AS	
		2	**3J-1907**	1	SEAL-O-RING	
		2	**4J-5477**	1	SEAL-O-RING	
		2	**6V-8641**	1	CONNECTOR	
	30	2	*148-8336*	3	CONNECTOR AS	
					(EACH INCLUDES)	
		2	**3J-1907**	1	SEAL-O-RING	
		2	**6V-8397**	1	SEAL-O-RING	
		2	**6V-8636**	1	CONNECTOR	
	31	2	*148-8351*	1	ELBOW AS	
		2	**4J-5477**	1	SEAL-O-RING	
		2	**6V-9849**	1	ELBOW	
	32	2	*148-8358*	1	ELBOW AS	
		2	**2M-9780**	1	SEAL-O-RING	
		2	**6V-8398**	1	SEAL-O-RING	
		2	**6V-8624**	1	ELBOW	
	33	2	*148-8363*	1	ELBOW AS	
		2	**3K-0360**	1	SEAL-O-RING	
		2	**6V-8397**	1	SEAL-O-RING	
		2	**6V-9876**	1	ELBOW	
	34	2	*148-8367*	1	ELBOW AS	
		2	**6V-8397**	1	SEAL-O-RING	
		2	**6V-9850**	1	ELBOW	
	35	2	*148-8368*	1	ELBOW AS	

376-6329 **LINES GP-FRONT (*contd.*)** **i05858633**

NOTE	REF NO	GRAPHIC REF	PART NUMBER	QTY	PART NAME 1 2 3 4 5 6 (PRODUCT LEVEL)	SEE PAGE
		2	**3J-1907**	1	SEAL-O-RING	
		2	**4J-5477**	1	SEAL-O-RING	
		2	**6V-8627**	1	ELBOW	
	36	2	*148-8378*	7	ELBOW AS	
					(EACH INCLUDES)	
		2	**3J-1907**	1	SEAL-O-RING	
		2	**6V-8397**	1	SEAL-O-RING	
		2	**6V-8724**	1	ELBOW	
	37	1	*148-8419*	2	REDUCER AS	
					(EACH INCLUDES)	
		1	**4J-5477**	1	SEAL-O-RING	
		1	**6V-8935**	1	REDUCER-O-RING	
	38	2	*148-8439*	1	TEE AS	
		2	**3J-1907**	1	SEAL-O-RING	
		2	**6V-8397**	2	SEAL-O-RING	
		2	**6V-8774**	1	TEE	
	39	2	*148-8443*	1	TEE AS	
		2	**3J-1907**	1	SEAL-O-RING	
		2	**6V-8397**	1	SEAL-O-RING	
		2	**7X-2459**	1	TEE-O-RING	
	40	2	*150-3036*	2	ELBOW AS	
					(EACH INCLUDES)	
		2	**3J-1907**	1	SEAL-O-RING	
		2	**6V-8397**	1	SEAL-O-RING	
		2	**8T-1905**	1	ELBOW	
	41	2	*162-0177*	1	PLUG AS	
		2	**3J-1907**	1	SEAL-O-RING	
		2	**9S-8004**	1	PLUG-O-RING	
	42	2	*164-5546*	1	TEE AS	
		2	**3E-7410**	1	TEE-O-RING	
		2	**3J-1907**	1	SEAL-O-RING	
	43	2	*164-5567*	3	COUPLER AS-QUICK DISCONNECT (MALE)	
					(EACH INCLUDES)	
		2	**6V-3965**	1	FITTING (QUICK DISCONNECT)	
		2	**214-7568**	1	SEAL-O-RING	
	44	2	*164-6874*	1	FITTING AS-ELBOW (QUICK DISCONNECT, MALE)	
		2	**3J-1907**	1	SEAL-O-RING	
		2	**085-7356**	1	FITTING	
	45	2	*164-9640*	1	CONNECTOR AS	
		2	**3J-1907**	1	SEAL-O-RING	
		2	**4J-5477**	1	SEAL-O-RING	
		2	**145-2237**	1	CONNECTOR	
	46	2	*164-9869*	1	CONNECTOR AS	
		2	**3J-1907**	1	SEAL-O-RING	
		2	**6V-8397**	1	SEAL-O-RING	
		2	**9X-2297**	1	CONNECTOR	
	47	2	*168-1968*	1	TEE AS	
		2	**3J-1907**	1	SEAL-O-RING	
		2	**6V-8397**	1	SEAL-O-RING	
		2	**126-6872**	1	TEE	
	48	2	**3J-1907**	1	SEAL-O-RING	
	49	1	**4J-0527**	1	SEAL-O-RING	
	50	2	**5K-8451**	1	CLIP	
	51	2	**6V-0852**	3	CAP-DUST	
	52	1,2	**7K-1181**	15	STRAP-CABLE	
	53	2	**8T-4121**	5	WASHER-HARD (11X21X2.5-MM THK)	
M	54	2	**8T-4136**	3	BOLT (M10X1.5X25-MM)	
M	55	2	**8T-4137**	2	BOLT (M10X1.5X20-MM)	
M	56	2	**8T-4192**	2	BOLT (M12X1.75X25-MM)	
	57	2	**8T-4223**	5	WASHER-HARD (13.5X25.5X3-MM THK)	
M	58	2	**8T-4910**	3	BOLT (M12X1.75X60-MM)	
	59	1	**9X-6582**	2	NUT (13/16-16-THD)	

376-6329 **LINES GP-FRONT (*contd.*)** **i05858633**

NOTE	REF NO	GRAPHIC REF	PART NUMBER	QTY	PART NAME 1 2 3 4 5 6 (PRODUCT LEVEL)	SEE PAGE

I - REFER TO HYDRAULIC INFORMATION SYSTEM
M - METRIC PART
Y - SEPARATE ILLUSTRATION

REFER TO ALL ILLUSTRATIONS OF
THIS GROUP FOR AUXILIARY VIEWS

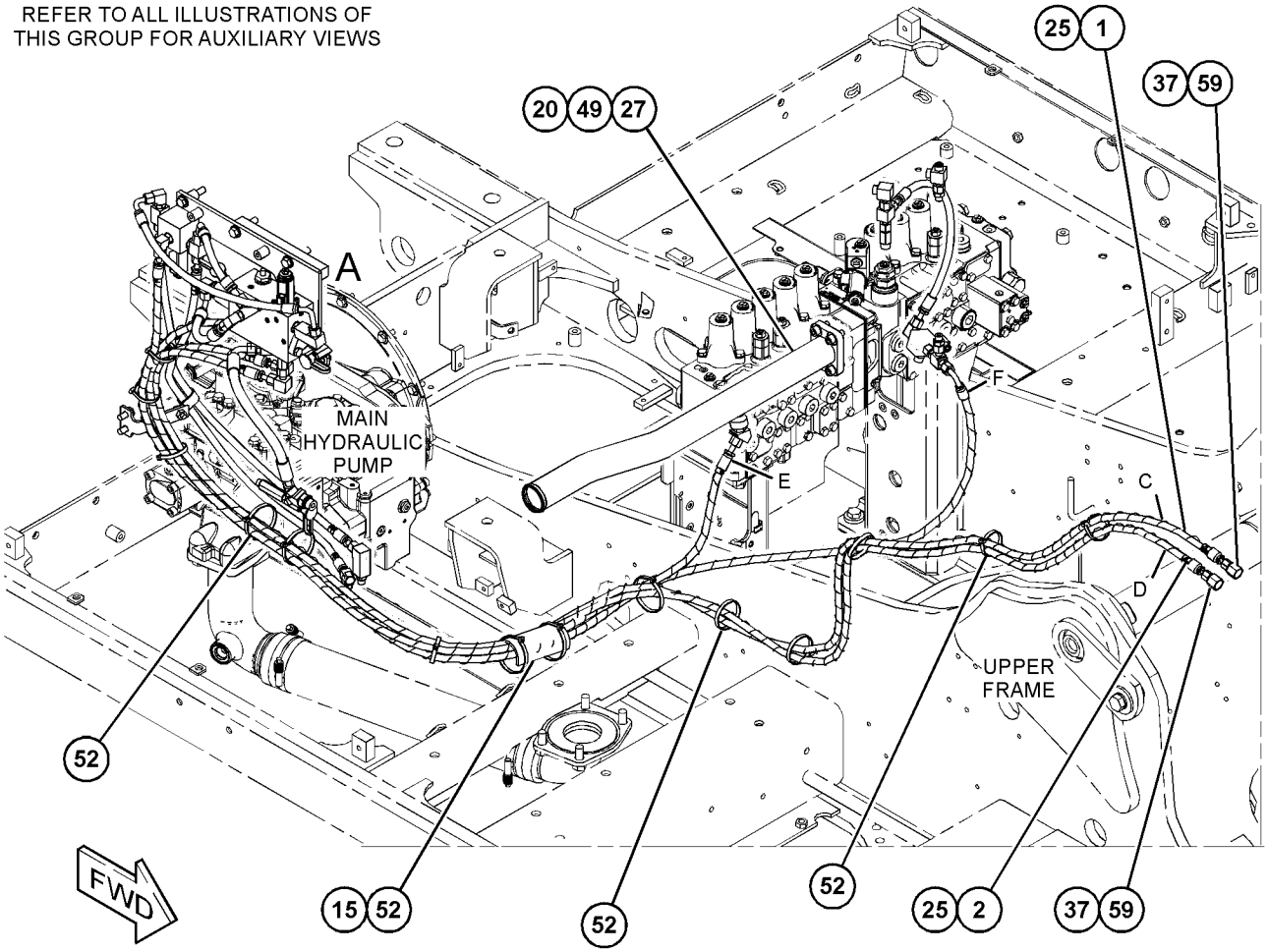

GRAPHIC #1 g03476205

376-6329 **LINES GP-FRONT (*contd.*)** **i05858633**

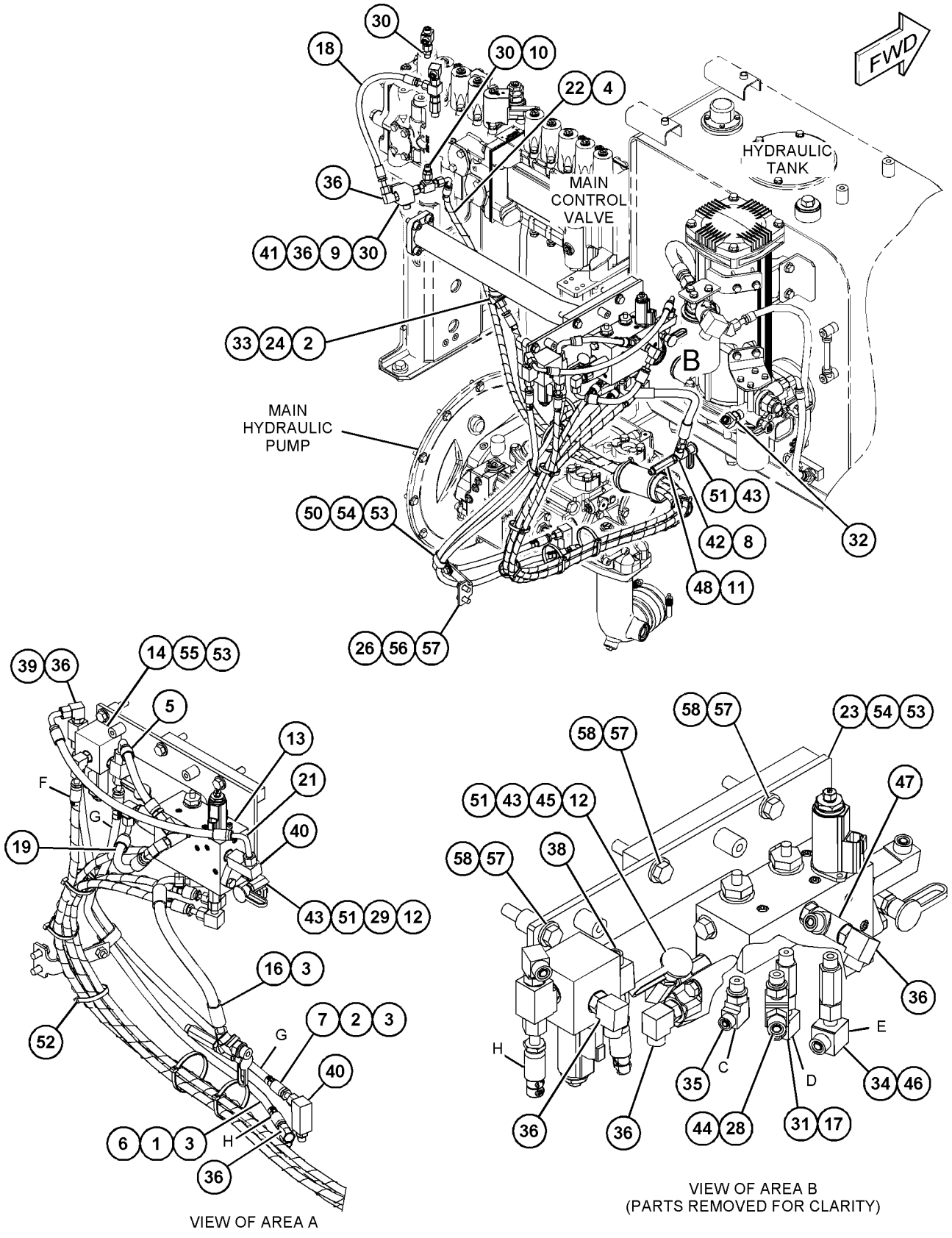

GRAPHIC #2 **<END>** g03476206

376-6332 LINES GP-FRONT–FILTER, HAMMER

S/N: PBB1-UP
PART OF 369-4371 CONTROL AR-AUXILIARY
AN ATTACHMENT

SMCS-5057 **i05861396**

NOTE	REF NO	GRAPHIC REF	PART NUMBER	QTY	PART NAME 1 2 3 4 5 6 (PRODUCT LEVEL)	SEE PAGE
	1	1	**7K-1181**	3	STRAP-CABLE	
	2	1	*177-1061*	1	ELBOW AS	
		1	**5K-9090**	1	SEAL-O-RING	
		1	**142-0038**	1	ELBOW	
Y	3	1	**224-1687**	1	FILTER GP-OIL (HYDRAULIC)	402
	4	1	**266-1258**	1	SUPPORT AS	
I	5	1	**282-7135**	1	HOSE AS	
	6	1	**313-7878**	1	SUPPORT AS	
		1	**129-3400**	1	GUARD	
		1	**244-8198**	1	LINER	
	7	1	**314-8124**	1	SUPPORT AS	
CY	8	1	**455-4068**	1	SHEET AS-SOUND SUPPRESSION	296
I	9	1	**377-3343**	1	HOSE AS	
	10	1	*148-8335*	1	CONNECTOR AS	
		1	**5K-9090**	1	SEAL-O-RING	
		1	**6V-8635**	1	CONNECTOR	
		1	**7M-8485**	1	SEAL-O-RING	
	11	1	*148-8352*	1	ELBOW AS	
		1	**5K-9090**	1	SEAL-O-RING	
		1	**6V-9854**	1	ELBOW	
	12	1	*148-8357*	1	ELBOW AS	
		1	**5K-9090**	1	SEAL-O-RING	
		1	**6V-9008**	1	ELBOW	
		1	**7M-8485**	1	SEAL-O-RING	
	13	1	*148-8429*	1	TEE AS	
		1	**5K-9090**	2	SEAL-O-RING	
		1	**6V-9840**	1	TEE-SWIVEL	
	14	1	**6V-9833**	1	CAP AS	
M	15	1	**8T-4139**	6	BOLT (M12X1.75X30-MM)	
M	16	1	**8T-4192**	3	BOLT (M12X1.75X25-MM)	
	17	1	**8T-4223**	9	WASHER-HARD (13.5X25.5X3-MM THK)	

C - CHANGE FROM PREVIOUS TYPE
I - REFER TO HYDRAULIC INFORMATION SYSTEM
M - METRIC PART
Y - SEPARATE ILLUSTRATION

376-6332 **LINES GP-FRONT (*contd.*)** **i05861396**

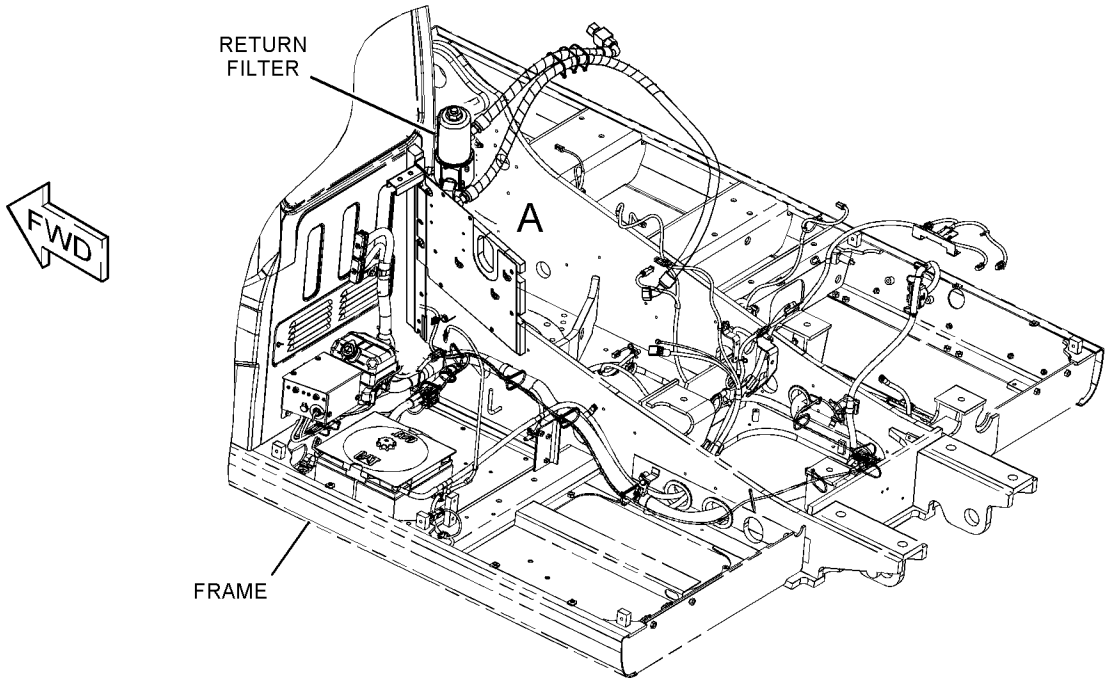

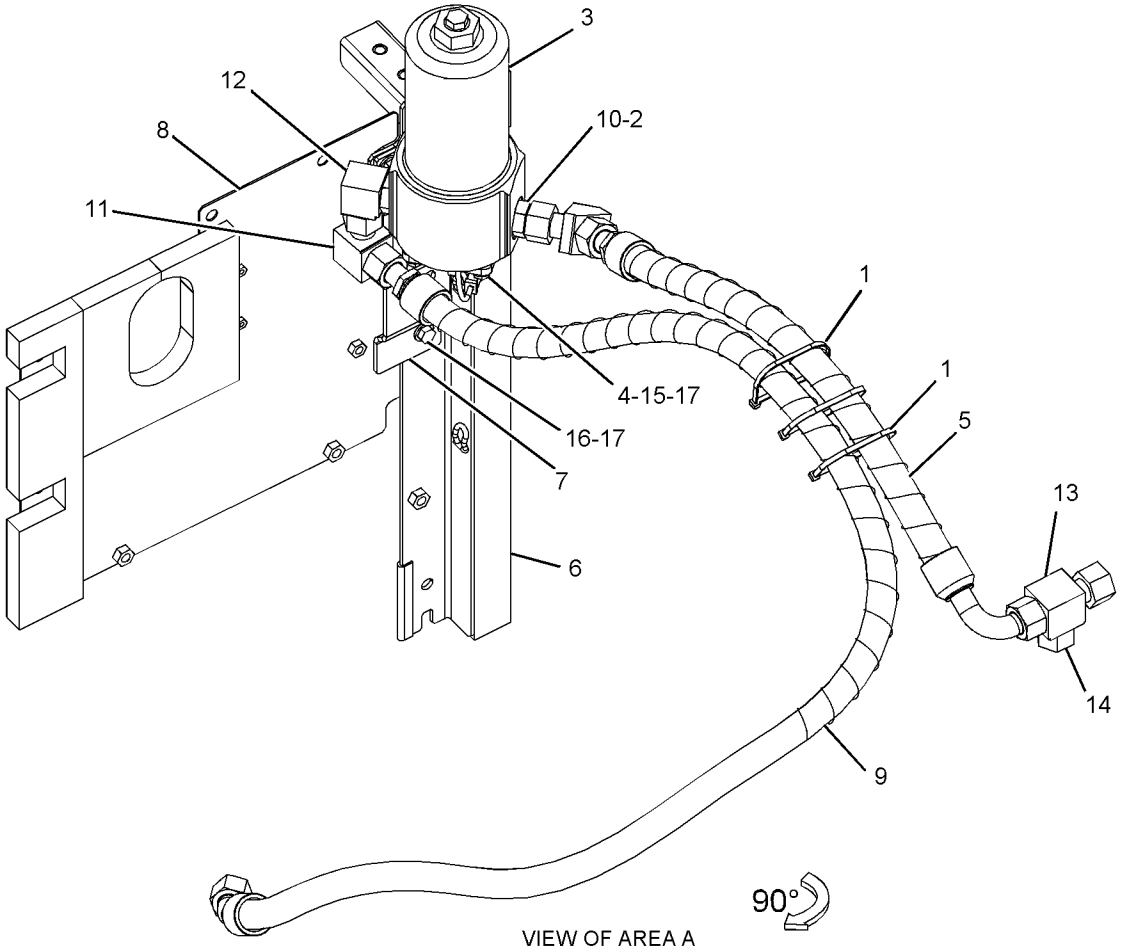

VIEW OF AREA A

GRAPHIC #1 **<END>** g03387358

376-6321 LINES GP-HYDRAULIC OIL COOLER

S/N: PBB1-UP; KBS1-UP

PART OF 456-0404, 456-0405 HYDRAULIC AR

SMCS-1374 **i05099069**

NOTE	REF NO	GRAPHIC REF	PART NUMBER	QTY	PART NAME 1 2 3 4 5 6 (PRODUCT LEVEL)	SEE PAGE
	1	1	**227-0265**	2	HOSE	
	2	1	**8T-6703**	5	CLAMP - HOSE	

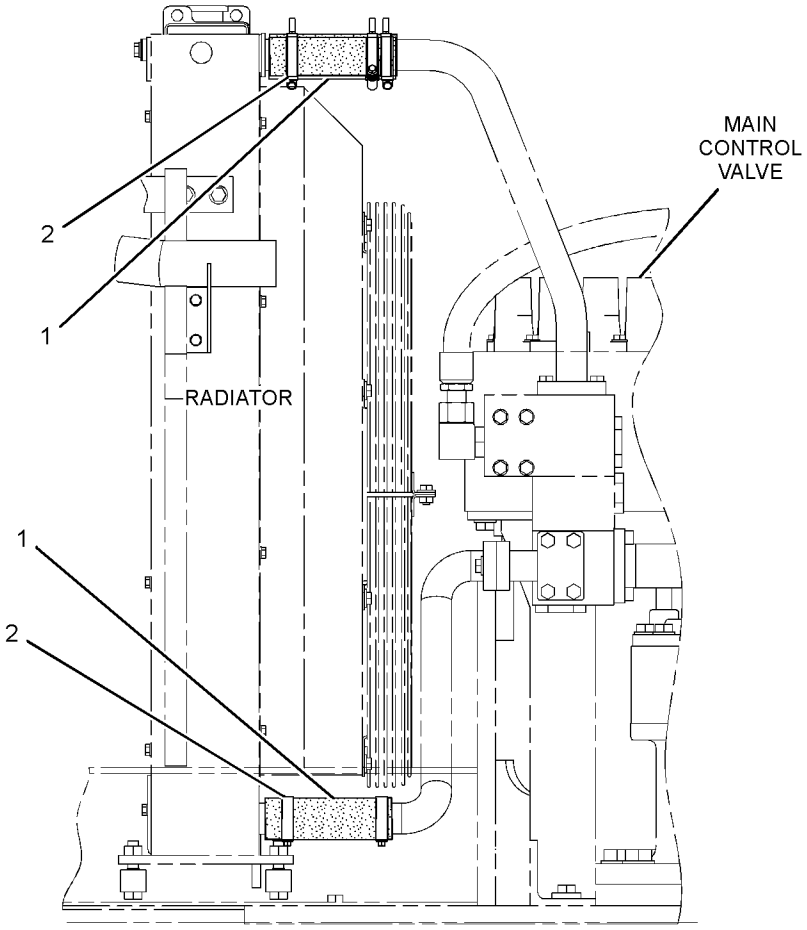

REAR VIEW

GRAPHIC #1

<END>

g01276111

248-9825 LINES GP-PILOT—JOYSTICK, PEDALS

S/N: PBB1-UP; KBS1-UP

PART OF 456-0404, 456-0405 HYDRAULIC AR

SMCS-5057, 5059 **i05283030**

NOTE	REF NO	GRAPHIC REF	PART NUMBER	QTY	PART NAME 1 2 3 4 5 6 (PRODUCT LEVEL)	SEE PAGE
	1	2	**4I-9521**	2	BAND-MARKER (RED, L1)	
	2	2	**4I-9522**	2	BAND-MARKER (YELLOW, L2)	
	3	2	**4I-9523**	2	BAND-MARKER (BLUE, L3)	
	4	2	**4I-9524**	2	BAND-MARKER (BROWN, L4)	
	5	2	**4I-9525**	2	BAND-MARKER (ORANGE, R1)	
	6	2	**4I-9526**	2	BAND-MARKER (WHITE, R2)	
	7	2	**4I-9527**	2	BAND-MARKER (GREEN, R3)	
	8	2	**4I-9528**	2	BAND-MARKER (PURPLE, R4)	
	9	1,2	**7K-1181**	5	STRAP-CABLE	
I	10	1	**087-4402**	2	HOSE AS	
	11	2	**133-5813**	4	BAND-MARKER (GRAY, P)	
	12	1	**309-5769**	1	SWITCH AS-PRESSURE (IMPLEMENT, SWING)	
	12A	1	**309-5769**	1	SWITCH AS-PRESSURE (TRAVEL, LH)	
	12B	2	**309-5769**	1	SWITCH AS-PRESSURE (TRAVEL, RH)	
					(EACH SWITCH AS INCLUDES)	
		2	**102-8802**	1	KIT-RECEPTACLE (2-PIN)	
					(INCLUDES RECEPTACLE AS & WEDGE)	
		2	**9X-3401**	2	PIN-CONNECTOR (16-GA TO 18-GA)	
					—OR—	
		2	**126-1767**	2	PIN-CONNECTOR (14-GA TO 16-GA)	
	13	2	**168-9759**	1	BLOCK	
C	14	1	**392-2185**	3	SUPPORT	
C	15	2	**387-3699**	1	BRACKET	
Y	16	2	**185-0462**	1	VALVE GP-SHUTTLE	673
	17	1	**323-7770**	2	ADAPTER	
	18	2	**236-2844**	3	HOSE AS	
	19	2	**236-2843**	4	HOSE AS	
	20	2	**245-5079**	1	HOSE AS	
	21	2	**255-1665**	1	HOSE AS	
	22	2	**255-1666**	1	HOSE AS	
Y	23	1	**369-8502**	1	VALVE GP-PILOT (TRAVEL, SHUTTLE)	649
	24	1,2	*148-8336*	23	CONNECTOR AS	
					(EACH INCLUDES)	
		1,2	**3J-1907**	1	SEAL-O-RING	
		1,2	**6V-8397**	1	SEAL-O-RING	
		1,2	**6V-8636**	1	CONNECTOR	
	25	2	*148-8353*	8	ELBOW AS	
					(EACH INCLUDES)	
		2	**3J-1907**	1	SEAL-O-RING	
		2	**6V-8397**	1	SEAL-O-RING	
		2	**6V-9001**	1	ELBOW	
	26	2	*148-8354*	2	ELBOW AS	
					(EACH INCLUDES)	
		2	**3K-0360**	1	SEAL-O-RING	
		2	**6V-8398**	1	SEAL-O-RING	
		2	**6V-9002**	1	ELBOW	
	27	1,2	*148-8378*	6	ELBOW AS	
					(EACH INCLUDES)	
		1,2	**3J-1907**	1	SEAL-O-RING	
		1,2	**6V-8397**	1	SEAL-O-RING	
		1,2	**6V-8724**	1	ELBOW	
	28	2	*148-8407*	4	PLUG AS	
					(EACH INCLUDES)	
		2	**3J-1907**	1	SEAL-O-RING	
		2	**9S-4191**	1	PLUG	
	29	1	*164-5628*	3	CONNECTOR AS	
					(EACH INCLUDES)	

248-9825 **LINES GP-PILOT (*contd.*)** **i05283030**

NOTE	REF NO	GRAPHIC REF	PART NUMBER	QTY	PART NAME 1 2 3 4 5 6 (PRODUCT LEVEL)	SEE PAGE
		1	**3J-1907**	1	SEAL-O-RING	
		1	**6V-8397**	1	SEAL-O-RING	
		1	**107-6631**	1	CONNECTOR-FILTER	
	30	1,2	**8T-4121**	18	WASHER-HARD (11X21X2.5-MM THK)	
	31	1	**3J-7354**	2	SEAL-O-RING	
CM	32	1,2	**8T-4137**	7	BOLT (M10X1.5X20-MM)	
M	33	2	**8T-4198**	2	BOLT (M10X1.5X100-MM)	
	34	2	**289-5657**	1	HOSE AS	
	35	2	**4P-7581**	1	CLIP	
CM	36	1,2	**8T-4191**	10	BOLT (M10X1.5X16-MM)	
	41	2	**236-2848**	1	HOSE AS	

C - CHANGE FROM PREVIOUS TYPE
I - REFER TO HYDRAULIC INFORMATION SYSTEM
M - METRIC PART
Y - SEPARATE ILLUSTRATION

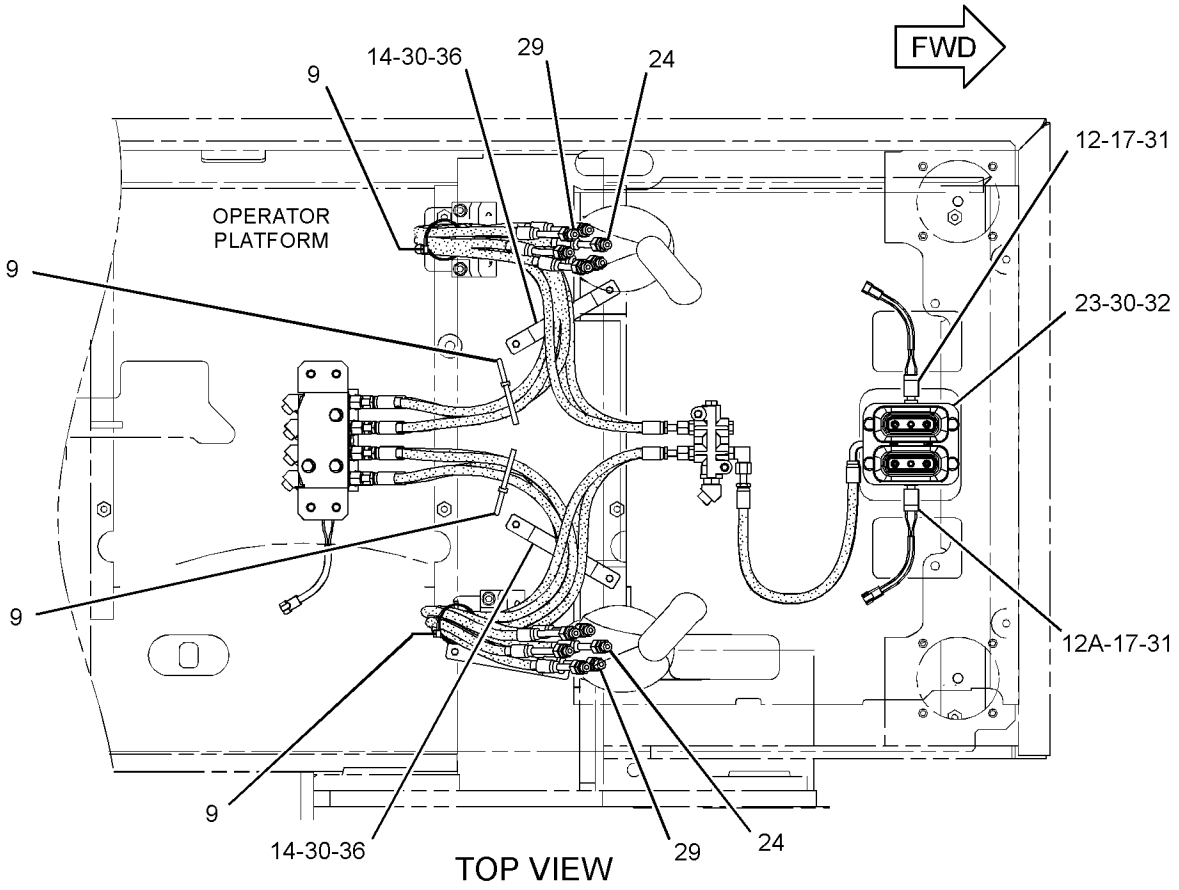

TOP VIEW

REFER TO ALL ILLUSTRATIONS OF
THIS GROUP FOR AUXILIARY VIEWS

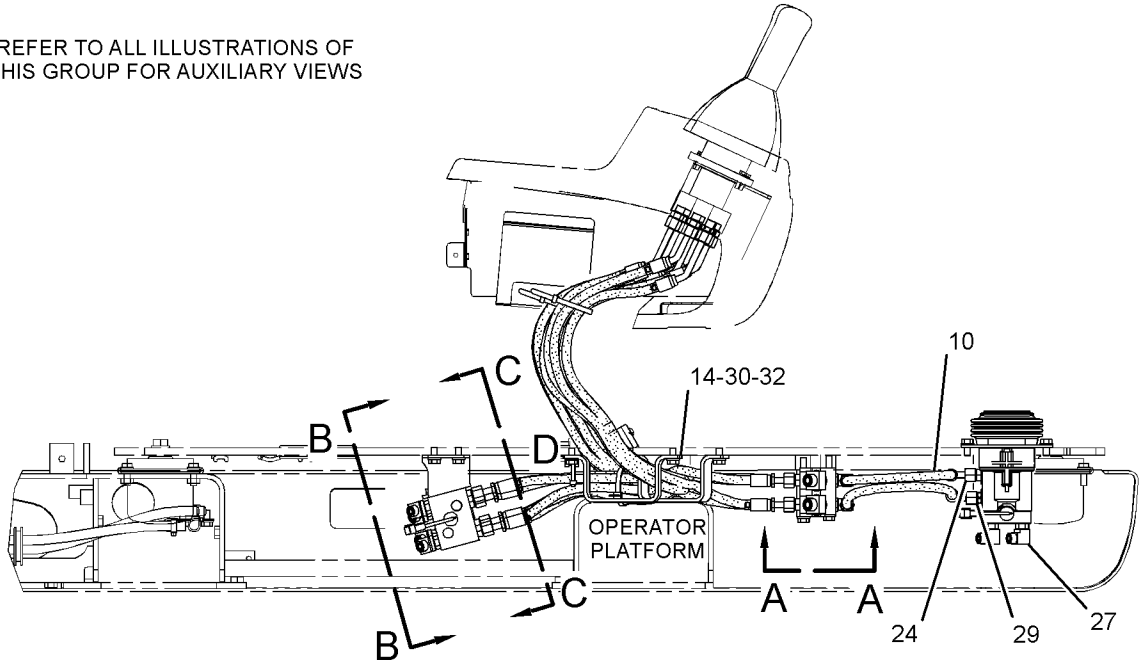

RIGHT SIDE VIEW

GRAPHIC #1 g03357364

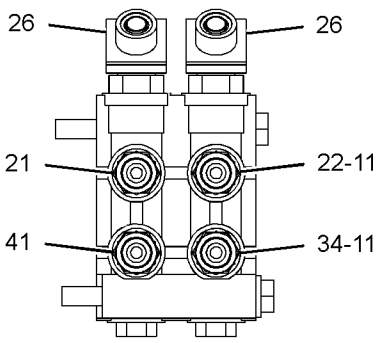

VIEWE-E

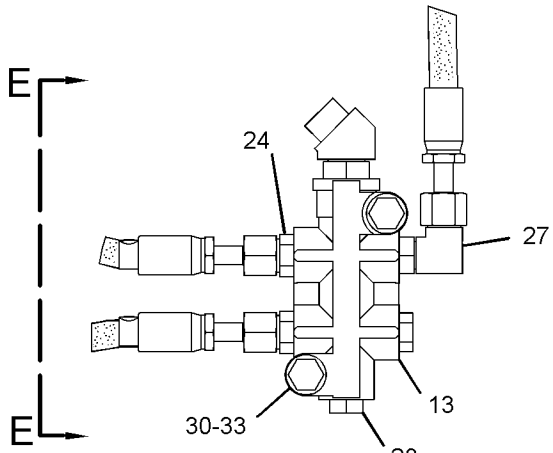

VIEW A-A

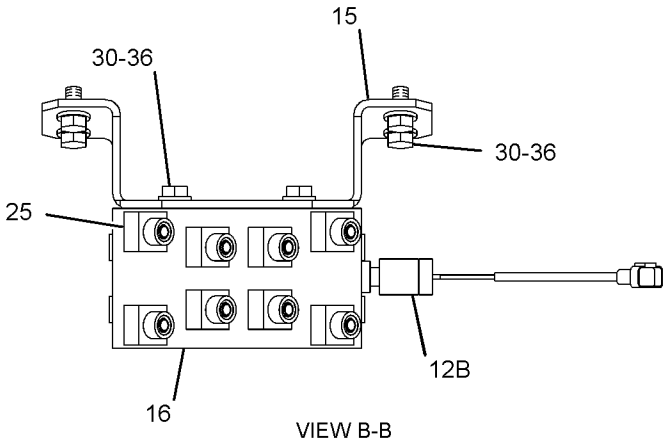

VIEW B-B

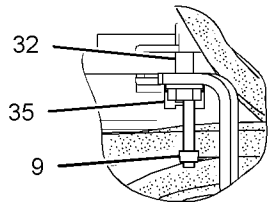

VIEW OF AREA D

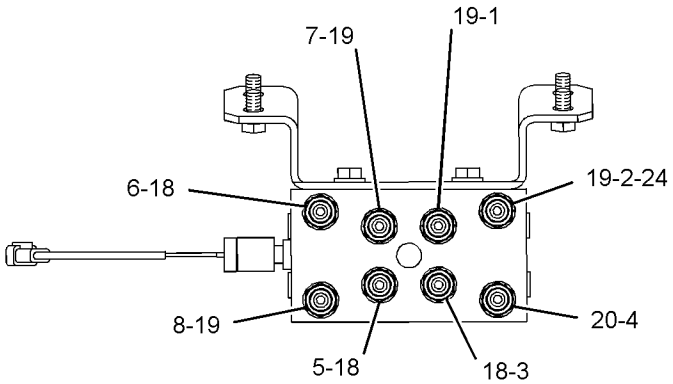

SECTION C-C

GRAPHIC #2 **<END>** g03357363

255-1659 LINES GP-PILOT–HEAVY LIFT

S/N: PBB1-UP; KBS1-UP

PART OF 240-3881 VALVE & LINES GP-HEAVY LIFT

AN ATTACHMENT

SMCS-5057, 5059 **i04108391**

NOTE	REF NO	GRAPHIC REF	PART NUMBER	QTY	PART NAME 1 2 3 4 5 6 (PRODUCT LEVEL)	SEE PAGE
I	1	1	**087-4402**	1	HOSE AS	
I	2	1	**087-5772**	1	HOSE AS	
	3	1	**4I-9522**	2	BAND-MARKER (YELLOW, L2)	
	4	1	**4I-9523**	2	BAND-MARKER (BLUE, L3)	
	5	1	**4I-9524**	2	BAND-MARKER (BROWN, L4)	
	6	1	**7K-1181**	2	STRAP-CABLE	
I	7	1	**087-5766**	1	HOSE AS	
CY	8	1	**352-7176**	1	VALVE GP-SOLENOID (HEAVY LIFT)	681
	9	1	**269-9919**	1	PLATE	
	10	1	*148-8336*	2	CONNECTOR AS	
					(EACH INCLUDES)	
		1	**3J-1907**	1	SEAL-O-RING	
		1	**6V-8397**	1	SEAL-O-RING	
		1	**6V-8636**	1	CONNECTOR	
	11	1	*148-8338*	1	CONNECTOR AS	
		1	**3J-1907**	1	SEAL-O-RING	
		1	**6V-8397**	1	SEAL-O-RING	
		1	**8T-0075**	1	CONNECTOR	
	13	1	*148-8378*	2	ELBOW AS	
					(EACH INCLUDES)	
		1	**3J-1907**	1	SEAL-O-RING	
		1	**6V-8397**	1	SEAL-O-RING	
		1	**6V-8724**	1	ELBOW	
	14	1	*148-8435*	1	TEE AS	
		1	**3J-1907**	1	SEAL-O-RING	
		1	**6V-8397**	2	SEAL-O-RING	
		1	**6V-8781**	1	TEE	
	15	1	**8T-4121**	2	WASHER-HARD (11X21X2.5-MM THK)	
M	16	1	**8T-4136**	2	BOLT (M10X1.5X25-MM)	
M	17	1	**8T-4970**	2	BOLT (M6X1X14-MM)	
	18	1	**9X-8256**	2	WASHER (6.6X12X2-MM THK)	

C - CHANGE FROM PREVIOUS TYPE
I - REFER TO HYDRAULIC INFORMATION SYSTEM
M - METRIC PART
Y - SEPARATE ILLUSTRATION

255-1659 **LINES GP-PILOT (*contd.*)** **i04108391**

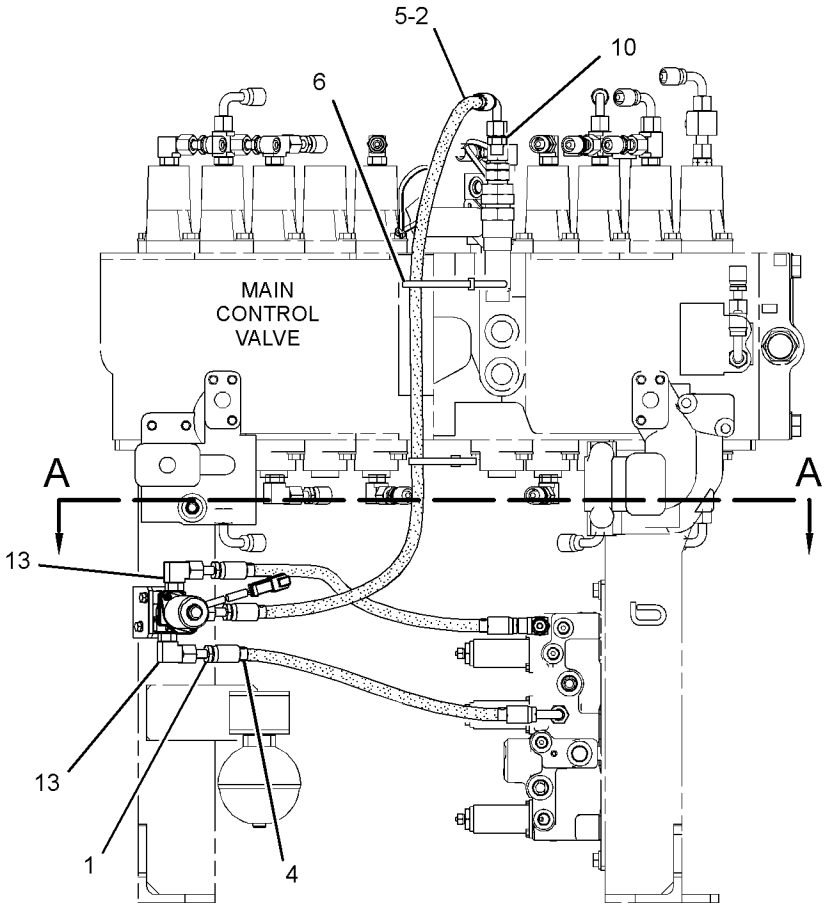

FRONT VIEW

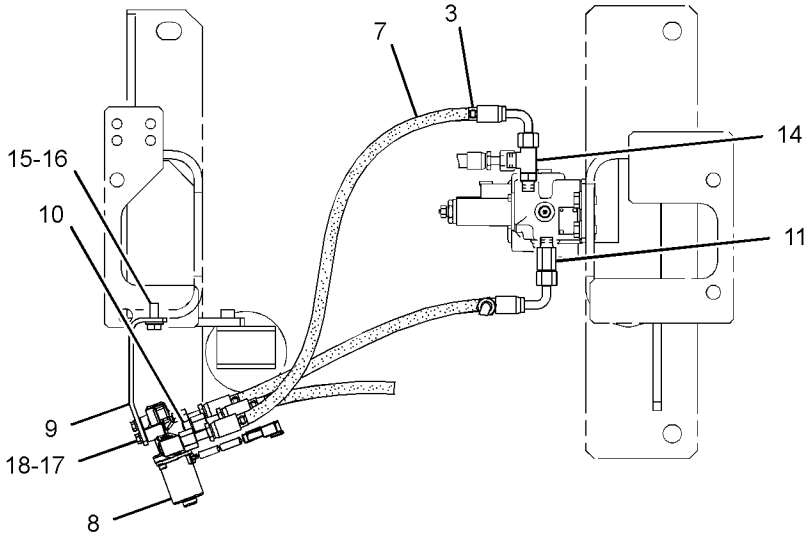

SECTION A-A

GRAPHIC #1 **<END>** g02317301

255-1800 LINES GP-PILOT

S/N: PBB1-UP; KBS1-UP
PART OF 349-2211 CONTROL AR-AUXILIARY
AN ATTACHMENT

SMCS-5057, 5059 **i05409464**

NOTE	REF NO	GRAPHIC REF	PART NUMBER	QTY	PART NAME 1 2 3 4 5 6 (PRODUCT LEVEL)	SEE PAGE
I	1	1	**4I-1704**	1	HOSE AS	
I	2	1	**087-4402**	1	HOSE AS	
	3	1	*164-5629*	1	FITTING AS	
		1	**3J-1907**	1	SEAL-O-RING	
		1	**108-7516**	1	FITTING	
	4	1	**309-5769**	1	SWITCH AS-PRESSURE (ACTION INPUT, WORK TOOL)	
		1	**102-8802**	1	KIT-RECEPTACLE (2-PIN)	
					(INCLUDES RECEPTACLE AS & WEDGE)	
		1	**9X-3401**	2	PIN-CONNECTOR (16-GA TO 18-GA)	
					—OR—	
		1	**126-1767**	2	PIN-CONNECTOR (14-GA TO 16-GA)	
	5	1	*148-8336*	1	CONNECTOR AS	
		1	**3J-1907**	1	SEAL-O-RING	
		1	**6V-8397**	1	SEAL-O-RING	
		1	**6V-8636**	1	CONNECTOR	
	6	1	*148-8353*	2	ELBOW AS	
					(EACH INCLUDES)	
		1	**3J-1907**	1	SEAL-O-RING	
		1	**6V-8397**	1	SEAL-O-RING	
		1	**6V-9001**	1	ELBOW	
	7	1	*148-8378*	1	ELBOW AS	
		1	**3J-1907**	1	SEAL-O-RING	
		1	**6V-8397**	1	SEAL-O-RING	
		1	**6V-8724**	1	ELBOW	
	8	1	*148-8407*	1	PLUG AS	
		1	**3J-1907**	1	SEAL-O-RING	
		1	**9S-4191**	1	PLUG	
	9	1	*164-5628*	1	CONNECTOR AS	
		1	**3J-1907**	1	SEAL-O-RING	
		1	**6V-8397**	1	SEAL-O-RING	
		1	**107-6631**	1	CONNECTOR-FILTER	

I - REFER TO HYDRAULIC INFORMATION SYSTEM

255-1800 **LINES GP-PILOT (*contd.*)** **i05409464**

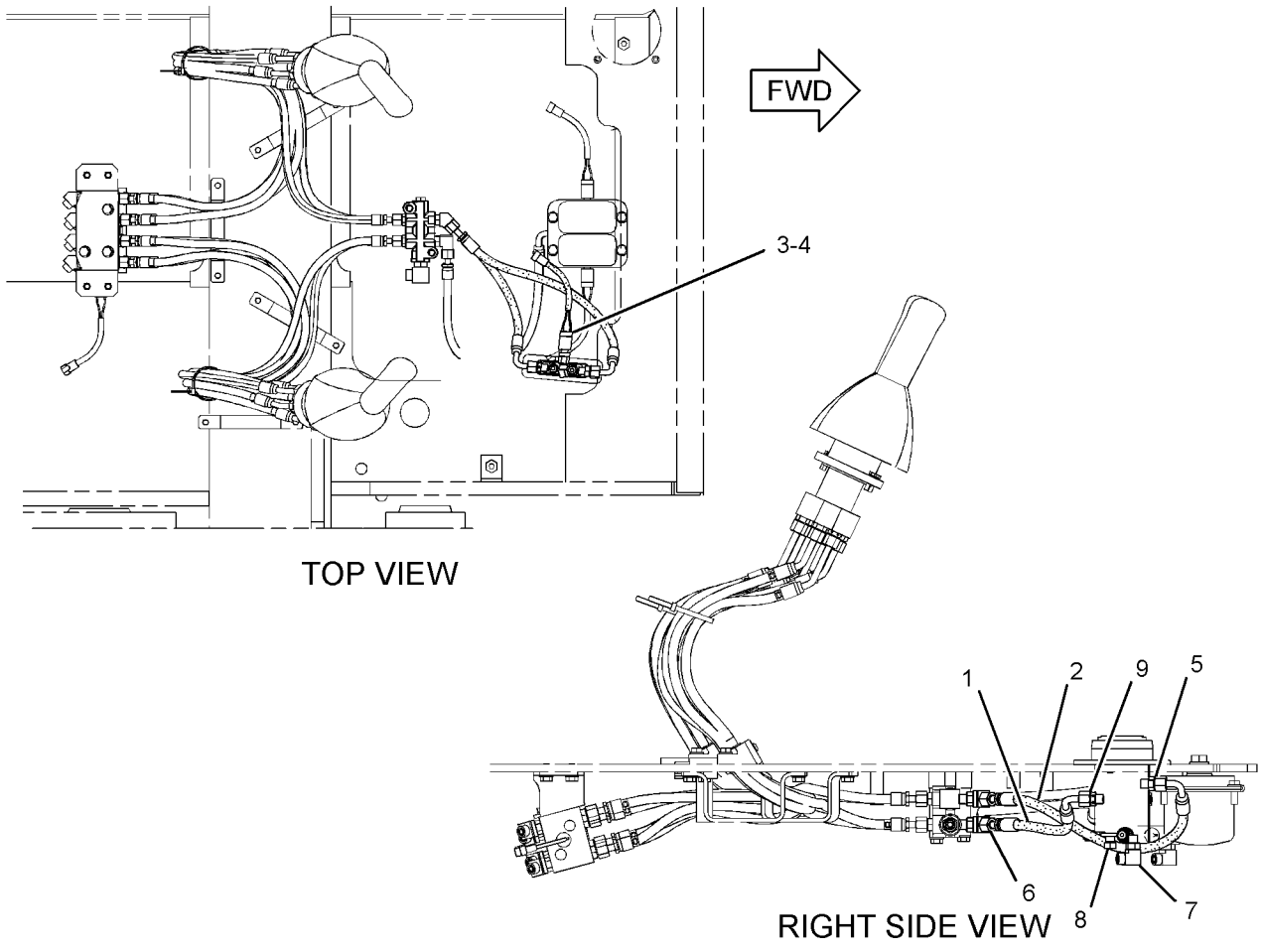

GRAPHIC #1 **<END>** g01389248

255-1802 LINES GP-PILOT—SYSTEM 2, COMBINED FUNCTION

S/N: PBB1-UP; KBS1-UP
PART OF 349-2209 CONTROL AR-AUXILIARY
AN ATTACHMENT

SMCS-5057, 5059 **i04789181**

NOTE	REF NO	GRAPHIC REF	PART NUMBER	QTY	PART NAME 1 2 3 4 5 6 (PRODUCT LEVEL)	SEE PAGE
I	1	1	**4I-1025**	1	HOSE AS	
I	2	1	**4I-1704**	1	HOSE AS	
I	3	1	**5I-4396**	1	HOSE AS	
I	4	1	**087-4402**	2	HOSE AS	
	5	1	**383-9558**	1	HOSE AS	
CY	6	1	**164-6979**	1	VALVE GP-SHUTTLE	671
	7	1	*164-5629*	1	FITTING AS	
		1	**3J-1907**	1	SEAL-O-RING	
		1	**108-7516**	1	FITTING	
	8	1	**309-5769**	1	SWITCH AS-PRESSURE (PILOT, BOOM UP)	
		1	**102-8802**	1	KIT-RECEPTACLE (2-PIN)	
					(INCLUDES RECEPTACLE AS & WEDGE)	
		1	**9X-3401**	2	PIN-CONNECTOR (16-GA TO 18-GA)	
					—OR—	
		1	**126-1767**	2	PIN-CONNECTOR (14-GA TO 16-GA)	
	9	1	*148-8336*	2	CONNECTOR AS	
					(EACH INCLUDES)	
		1	**3J-1907**	1	SEAL-O-RING	
		1	**6V-8397**	1	SEAL-O-RING	
		1	**6V-8636**	1	CONNECTOR	
	10	1	*148-8353*	3	ELBOW AS	
					(EACH INCLUDES)	
		1	**3J-1907**	1	SEAL-O-RING	
		1	**6V-8397**	1	SEAL-O-RING	
		1	**6V-9001**	1	ELBOW	
	11	1	*148-8378*	5	ELBOW AS	
					(EACH INCLUDES)	
		1	**3J-1907**	1	SEAL-O-RING	
		1	**6V-8397**	1	SEAL-O-RING	
		1	**6V-8724**	1	ELBOW	
	12	1	*148-8407*	2	PLUG AS	
					(EACH INCLUDES)	
		1	**3J-1907**	1	SEAL-O-RING	
		1	**9S-4191**	1	PLUG	
	13	1	*164-5628*	2	CONNECTOR AS	
					(EACH INCLUDES)	
		1	**3J-1907**	1	SEAL-O-RING	
		1	**6V-8397**	1	SEAL-O-RING	
		1	**107-6631**	1	CONNECTOR-FILTER	
	14	1	**179-7578**	1	SUPPORT AS	
	15	1	**8T-4224**	4	WASHER-HARD (8.8X16X2-MM THK)	
M	16	1	**7X-0818**	2	BOLT (M8X1.25X45-MM)	
M	17	1	**8T-4189**	2	BOLT (M8X1.25X20-MM)	

C - CHANGE FROM PREVIOUS TYPE
I - REFER TO HYDRAULIC INFORMATION SYSTEM
M - METRIC PART
Y - SEPARATE ILLUSTRATION

255-1802 **LINES GP-PILOT (*contd.*)** **i04789181**

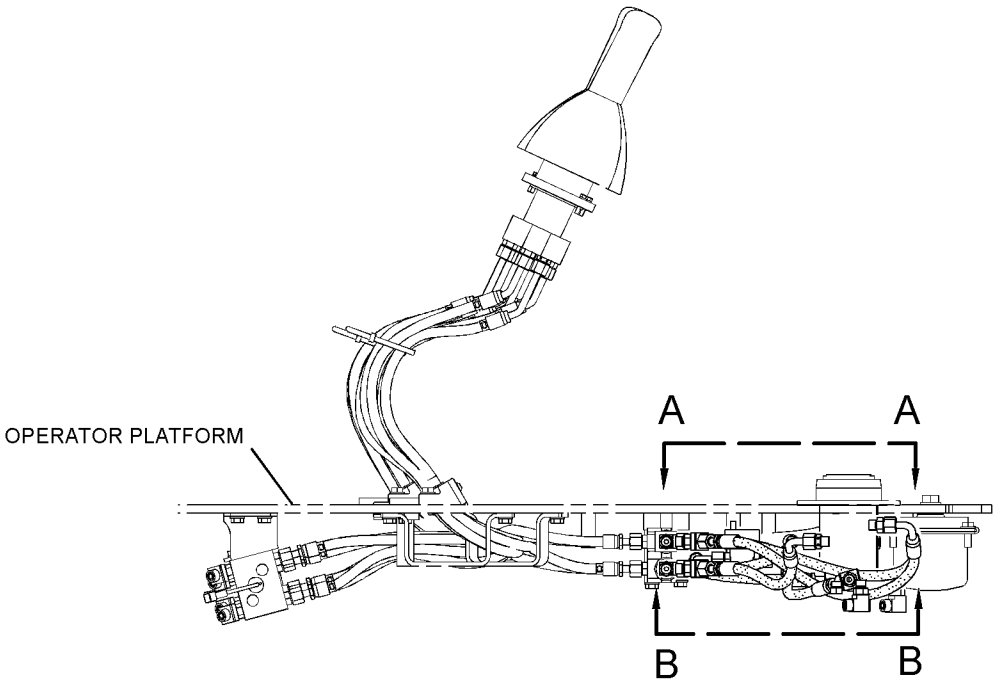

RIGHT SIDE VIEW

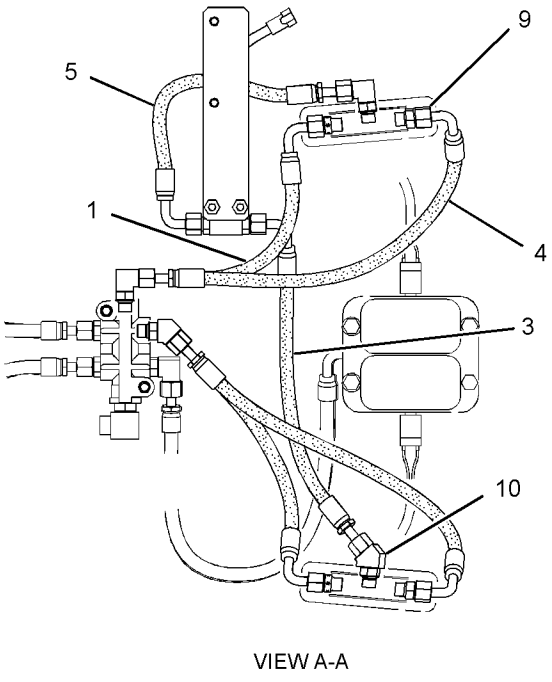

VIEW A-A

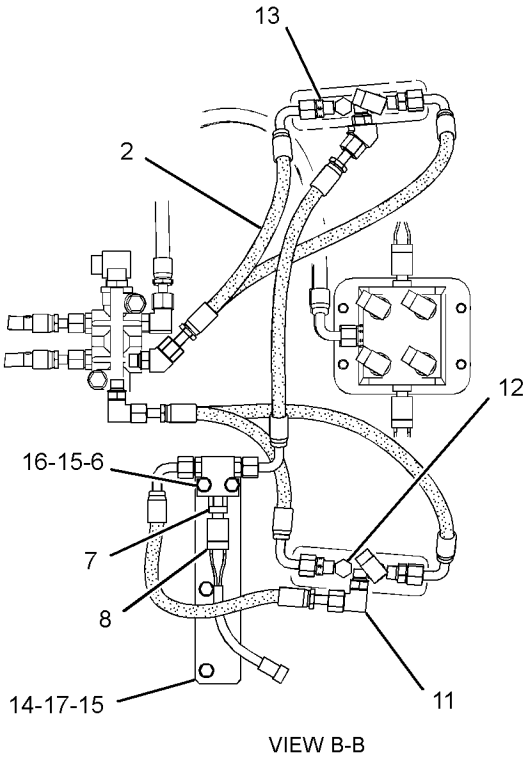

VIEW B-B

GRAPHIC #1 **<END>** g02900097

255-1843 LINES GP-PILOT—THIRD PEDAL, PILOT VALVE

S/N: PBB1-UP; KBS1-UP
PART OF 259-7178 PEDAL AR-AUXILIARY
AN ATTACHMENT

SMCS-5057, 5059 **i02981562**

NOTE	REF NO	GRAPHIC REF	PART NUMBER	QTY	PART NAME 1 2 3 4 5 6 (PRODUCT LEVEL)	SEE PAGE
I	1	1	**4I-1704**	1	HOSE AS	
I	2	1	**087-4402**	1	HOSE AS	
I	3	1	**087-5762**	1	HOSE AS	
I	4	1	**087-5765**	2	HOSE AS	
I	5	1	**087-5766**	1	HOSE AS	
	6	1	*164-5629*	1	FITTING AS	
		1	**3J-1907**	1	SEAL-O-RING	
		1	**108-7516**	1	FITTING	
I	7	1	**179-7456**	2	HOSE AS	
Y	8	1	**112-0083**	1	VALVE GP-SHUTTLE	669
	9	1	*148-8336*	3	CONNECTOR AS	
					(EACH INCLUDES)	
		1	**3J-1907**	1	SEAL-O-RING	
		1	**6V-8397**	1	SEAL-O-RING	
		1	**6V-8636**	1	CONNECTOR	
	10	1	*148-8353*	6	ELBOW AS	
					(EACH INCLUDES)	
		1	**3J-1907**	1	SEAL-O-RING	
		1	**6V-8397**	1	SEAL-O-RING	
		1	**6V-9001**	1	ELBOW	
	11	1	*148-8378*	4	ELBOW AS	
					(EACH INCLUDES)	
		1	**3J-1907**	1	SEAL-O-RING	
		1	**6V-8397**	1	SEAL-O-RING	
		1	**6V-8724**	1	ELBOW	
	12	1	*150-3036*	1	ELBOW AS	
		1	**3J-1907**	1	SEAL-O-RING	
		1	**6V-8397**	1	SEAL-O-RING	
		1	**8T-1905**	1	ELBOW	
	13	1	*150-4044*	1	CONNECTOR AS	
		1	**3J-1907**	1	SEAL-O-RING	
		1	**6V-8397**	1	SEAL-O-RING	
		1	**8T-1779**	1	CONNECTOR	
	14	1	*164-5628*	1	CONNECTOR AS	
		1	**3J-1907**	1	SEAL-O-RING	
		1	**6V-8397**	1	SEAL-O-RING	
		1	**107-6631**	1	CONNECTOR-FILTER	
	15	1	**309-5769**	1	SWITCH AS-PRESSURE (THIRD PEDAL, STRAIGHT TRAVEL)	
		1	**9X-3401**	2	PIN-CONNECTOR (16-GA TO 18-GA)	
					—OR—	
		1	**126-1767**	2	PIN-CONNECTOR (14-GA TO 16-GA)	
		1	**102-8802**	1	KIT-RECEPTACLE (2-PIN)	
					(INCLUDES RECEPTACLE AS & WEDGE)	
C	16	1	**4I-7889**	2	SPACER (11X25X45-MM THK)	
CM	17	1	**8T-4178**	2	BOLT (M10X1.5X90-MM)	

C - CHANGE FROM PREVIOUS TYPE
I - REFER TO HYDRAULIC INFORMATION SYSTEM
M - METRIC PART
Y - SEPARATE ILLUSTRATION

255-1843 **LINES GP-PILOT (*contd.*)** **i02981562**

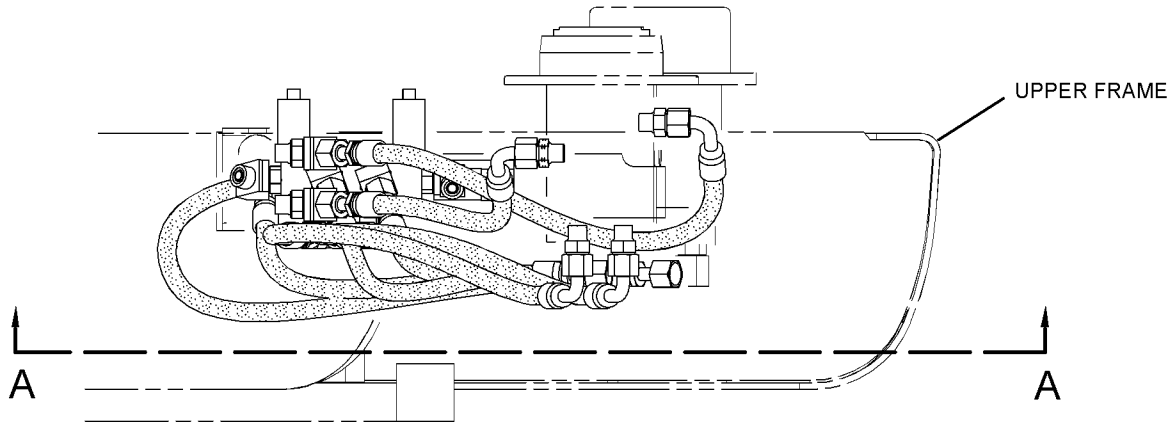

RIGHT SIDE VIEW

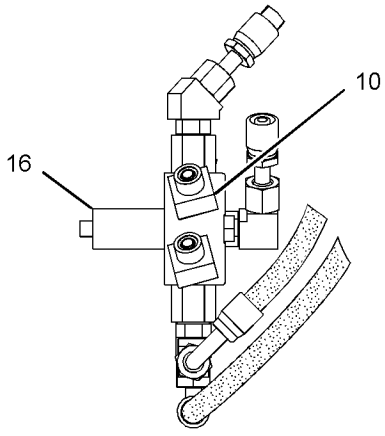

VIEW B-B

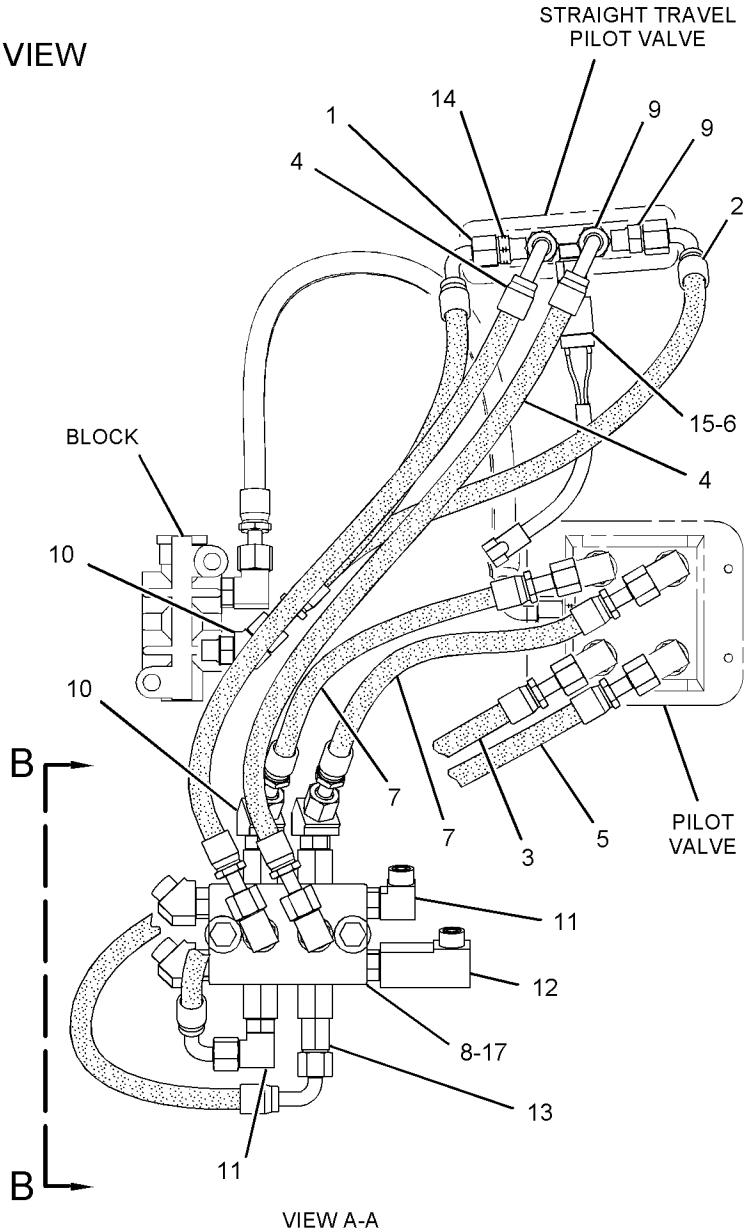

VIEW A-A

GRAPHIC #1 **<END>** g01338160

260-7965 LINES GP-PILOT—THIRD PEDAL

S/N: PBB1-UP; KBS1-UP

PART OF 259-7178 PEDAL AR-AUXILIARY

AN ATTACHMENT

SMCS-5057, 5059 **i05190597**

NOTE	REF NO	GRAPHIC REF	PART NUMBER	QTY	PART NAME 1 2 3 4 5 6 (PRODUCT LEVEL)	SEE PAGE
	1	1	**4I-9521**	4	BAND-MARKER (RED, L1)	
	2	1	**4I-9522**	4	BAND-MARKER (YELLOW, L2)	
	3	1	**4I-9525**	4	BAND-MARKER (ORANGE, R1)	
	4	1	**4I-9526**	4	BAND-MARKER (WHITE, R2)	
	5	1	**7K-1181**	7	STRAP-CABLE	
I	6	1	**087-6583**	2	HOSE AS	
I	7	1	**221-4883**	2	HOSE AS	

I - REFER TO HYDRAULIC INFORMATION SYSTEM

260-7965 **LINES GP-PILOT (*contd.*)** **i05190597**

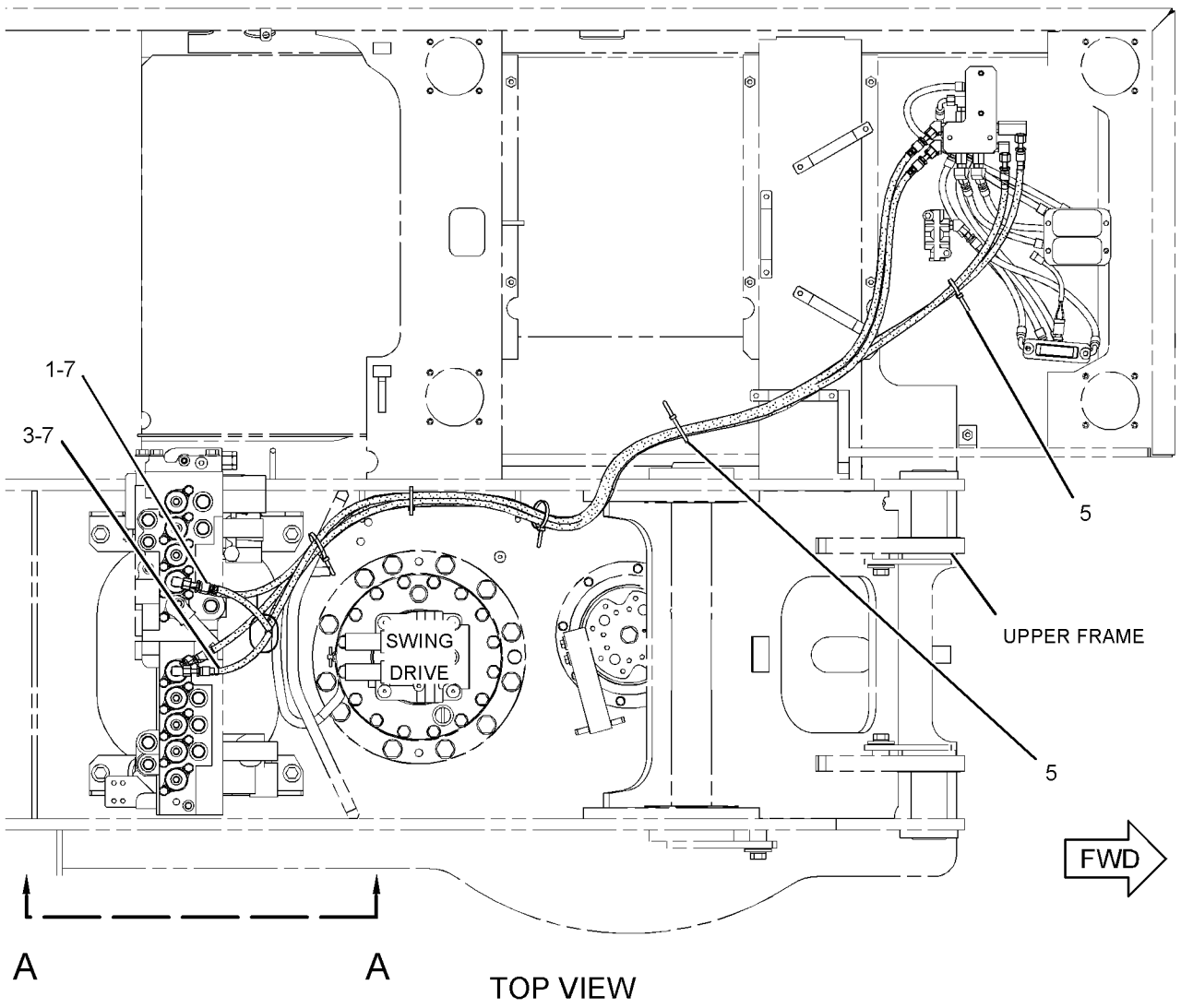

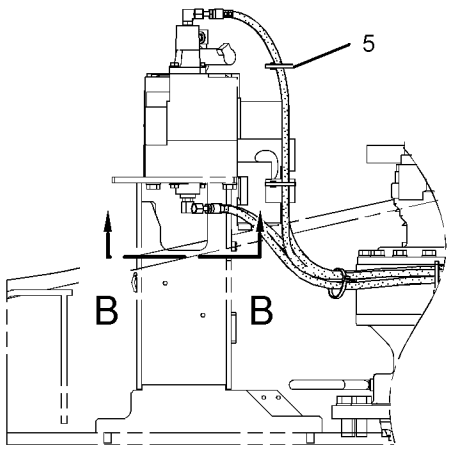

VIEW A-A

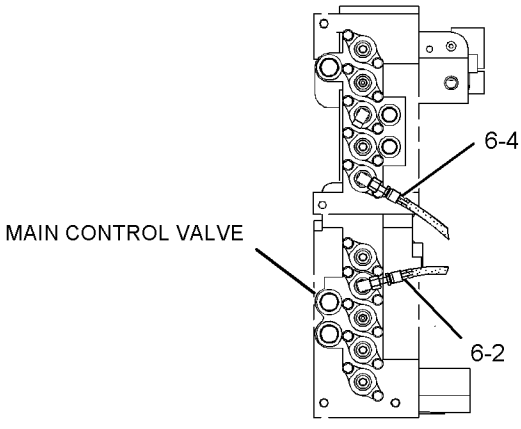

VIEW B-B

GRAPHIC #1 **<END>** g01230229

260-7970 LINES GP-PILOT–STICK LOWERING CONTROL VALVE

S/N: PBB1-UP; KBS1-UP

PART OF 419-5123 VALVE AR-CHECK & RELIEF

AN ATTACHMENT

SMCS-5057, 5059 **i05270535**

NOTE	REF NO	GRAPHIC REF	PART NUMBER	QTY	PART NAME 1 2 3 4 5 6 (PRODUCT LEVEL)	SEE PAGE
	1	2	**7K-1181**	7	STRAP-CABLE	
	2	1	**201-9379**	1	BLOCK	
I	3	2	**275-1712**	1	HOSE AS	
	4	2	**275-1713**	1	HOSE AS	
	5	2	**282-7079**	1	HOSE AS	
C	6	2	*148-8336*	1	CONNECTOR AS	
		2	**3J-1907**	1	SEAL-O-RING	
		2	**6V-8397**	1	SEAL-O-RING	
		2	**6V-8636**	1	CONNECTOR	
	7	1	*148-8364*	1	ELBOW AS	
		1	**3K-0360**	1	SEAL-O-RING	
		1	**6V-8398**	1	SEAL-O-RING	
		1	**6V-8625**	1	ELBOW	
	8	2	*148-8433*	1	TEE AS	
		2	**6V-8397**	2	SEAL-O-RING	
		2	**6V-9836**	1	TEE-SWIVEL	
	9	2	*148-8434*	1	TEE AS	
		2	**6V-8397**	2	SEAL-O-RING	
		2	**6V-9843**	1	TEE	
	10	2	**136-0207**	6	STRAP-CABLE	
	11	2	**133-5813**	2	BAND-MARKER (GRAY, P)	
	12	2	**4I-9523**	4	BAND-MARKER (BLUE, L3)	
BC	13	2	**6V-9829**	1	CAP AS	

B - USE AS REQUIRED
C - CHANGE FROM PREVIOUS TYPE
I - REFER TO HYDRAULIC INFORMATION SYSTEM

260-7970 **LINES GP-PILOT (*contd.*)** **i05270535**

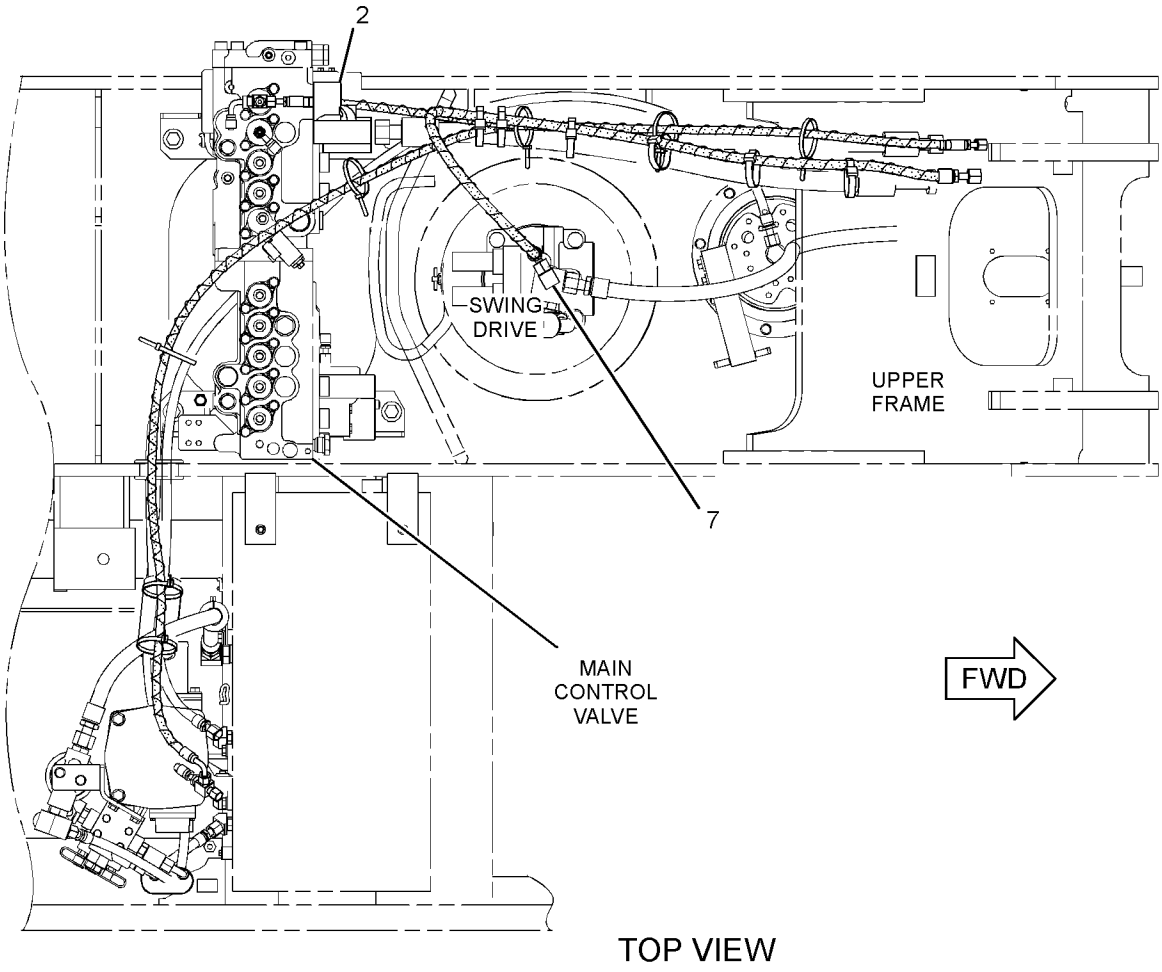

TOP VIEW

GRAPHIC #1 g01444080

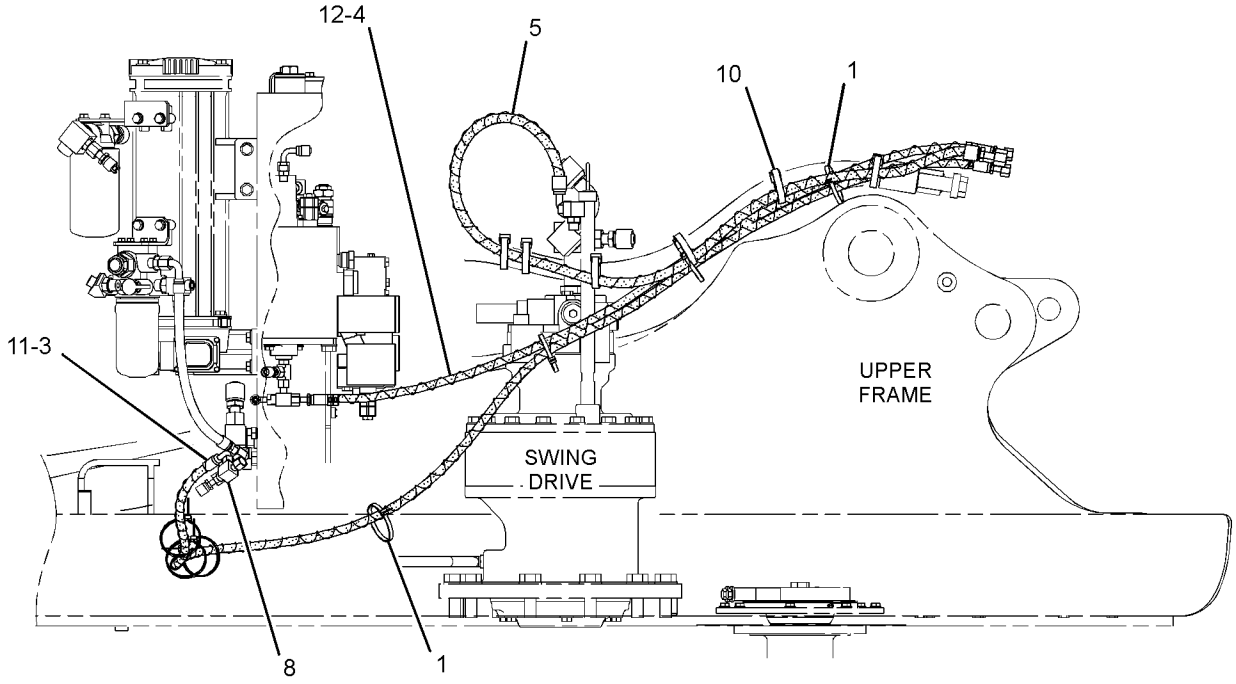

RIGHT SIDE VIEW

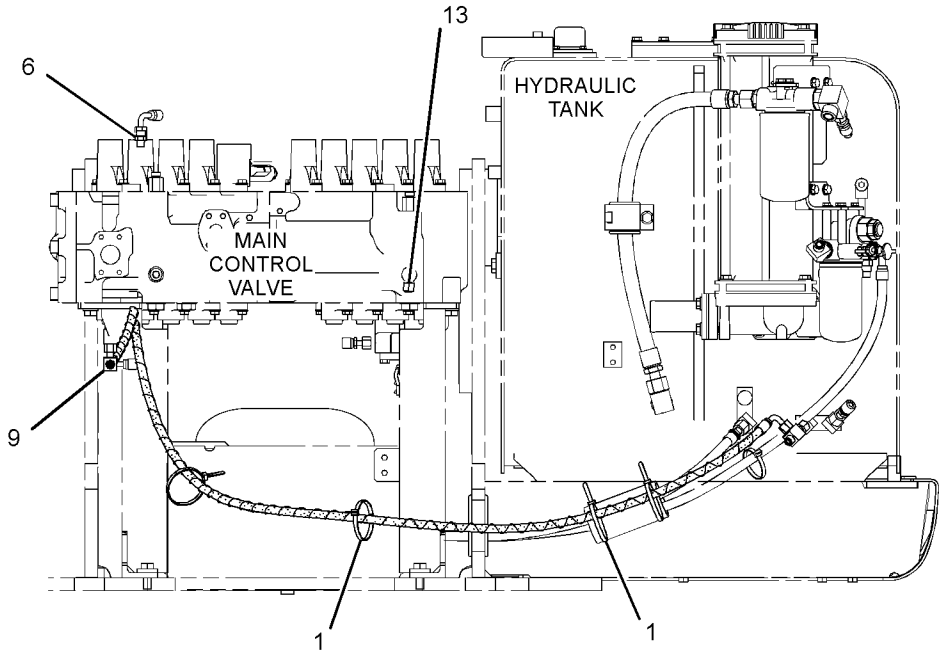

REAR VIEW

GRAPHIC #2 **<END>** g01444081

282-7162 LINES GP-PILOT—BOOM LOWERING CONTROL VALVE

S/N: PBB1-UP; KBS1-UP
PART OF 270-5974 VALVE AR-CHECK & RELIEF
AN ATTACHMENT

SMCS-5057, 5059 **i02996074**

NOTE	REF NO	GRAPHIC REF	PART NUMBER	QTY	PART NAME 1 2 3 4 5 6 (PRODUCT LEVEL)	SEE PAGE
I	1	1	**4I-0800**	1	HOSE AS	
I	2	1	**5I-8825**	1	HOSE AS	
CI	3	1	**302-9635**	1	HOSE AS	
	4	1	**7K-1181**	12	STRAP-CABLE	
	5	1	**133-5813**	2	BAND-MARKER (GRAY, P)	
CI	6	1	**187-5669**	1	HOSE AS	
	7	1	*148-8363*	1	ELBOW AS	
		1	**3K-0360**	1	SEAL-O-RING	
		1	**6V-8397**	1	SEAL-O-RING	
		1	**6V-9876**	1	ELBOW	
	8	1	*148-8433*	1	TEE AS	
		1	**6V-8397**	2	SEAL-O-RING	
		1	**6V-9836**	1	TEE-SWIVEL	

C - CHANGE FROM PREVIOUS TYPE
I - REFER TO HYDRAULIC INFORMATION SYSTEM

282-7162 **LINES GP-PILOT (*contd.*)** **i02996074**

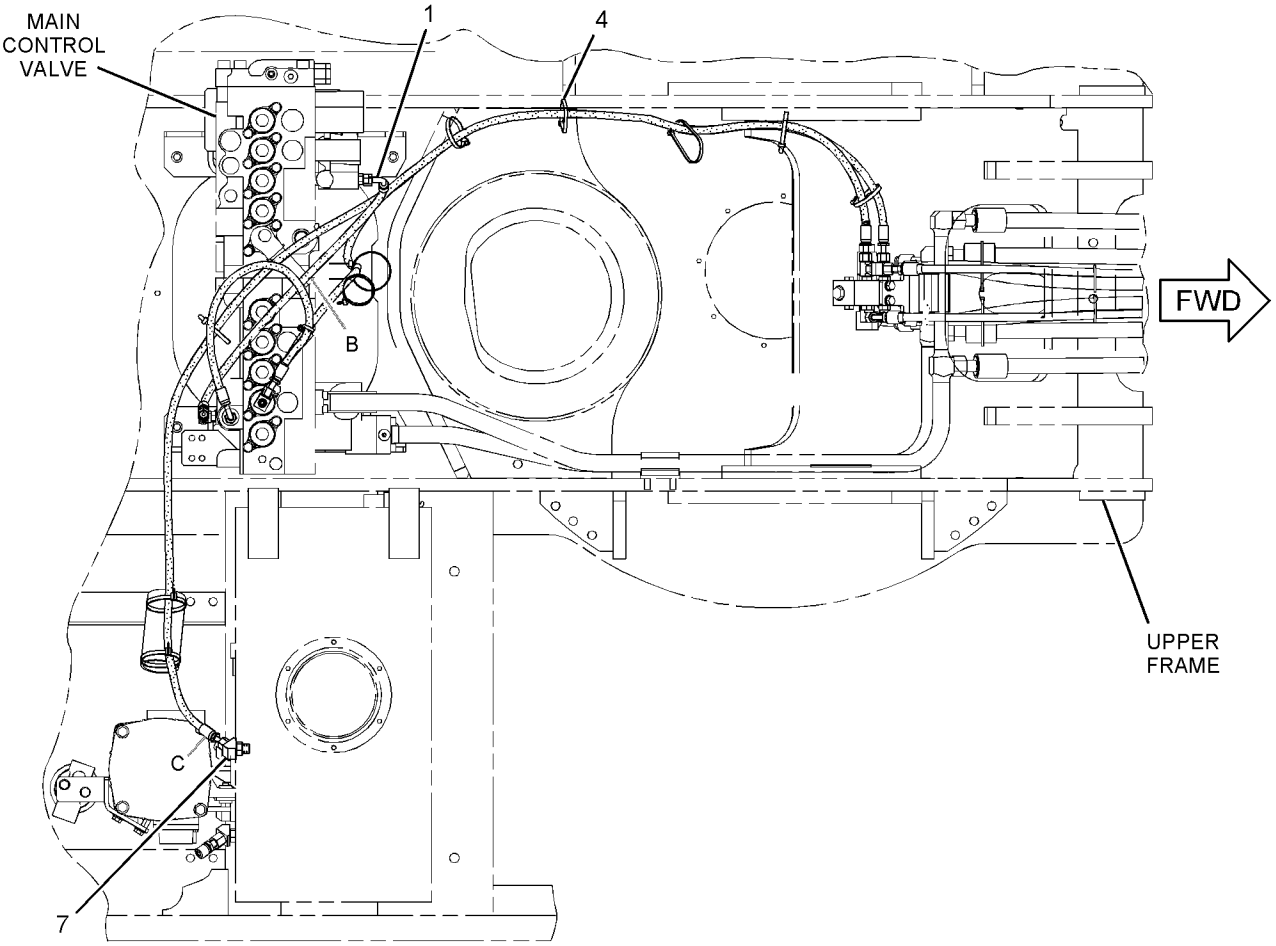

TOP VIEW

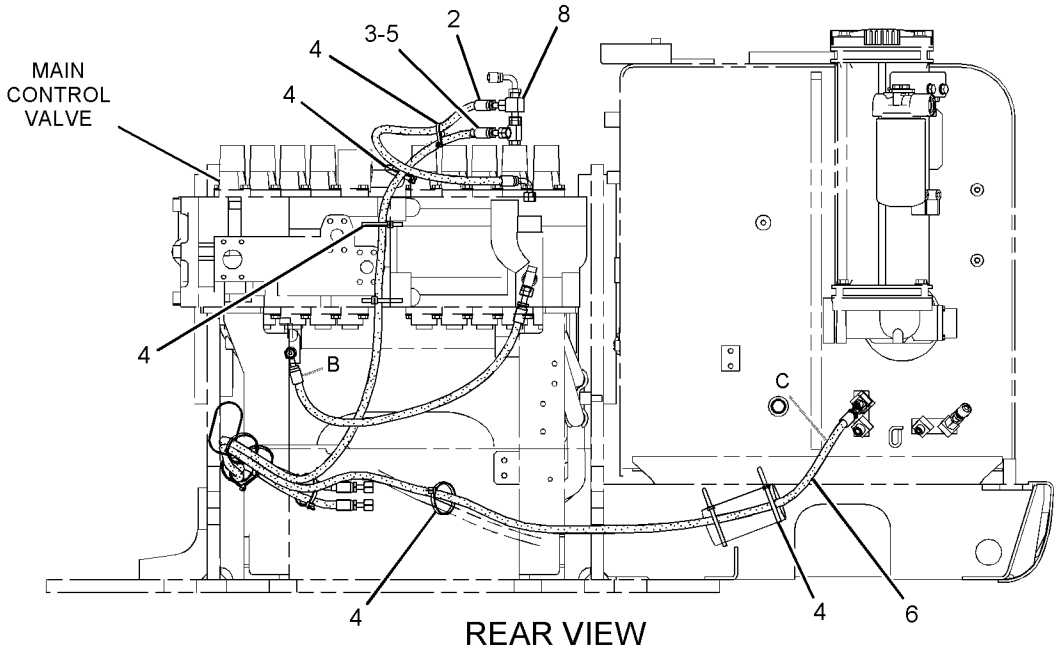

REAR VIEW

GRAPHIC #1 **<END>** g01589554

376-6309 LINES GP-PILOT—MAIN CONTROL VALVE

S/N: PBB1-UP; KBS1-UP

PART OF 456-0404, 456-0405 HYDRAULIC AR

SMCS-5057, 5059 **i05098633**

NOTE	REF NO	GRAPHIC REF	PART NUMBER	QTY	PART NAME 1 2 3 4 5 6 (PRODUCT LEVEL)	SEE PAGE
I	1	1	**4I-1631**	1	HOSE AS	
I	2	1	**4I-3981**	1	HOSE AS	
I	3	1	**4I-3994**	1	HOSE AS	
I	4	1	**4I-6054**	1	HOSE AS	
	5	1	**4I-9521**	6	BAND-MARKER (RED, L1)	
	6	1	**4I-9522**	6	BAND-MARKER (YELLOW, L2)	
	7	1	**4I-9523**	2	BAND-MARKER (BLUE, L3)	
	8	1	**4I-9524**	2	BAND-MARKER (BROWN, L4)	
	9	1	**4I-9525**	6	BAND-MARKER (ORANGE, R1)	
	10	1	**4I-9526**	6	BAND-MARKER (WHITE, R2)	
	11	1	**4I-9527**	2	BAND-MARKER (GREEN, R3)	
	12	1	**4I-9528**	2	BAND-MARKER (PURPLE, R4)	
I	13	1	**5I-8853**	1	HOSE AS	
	14	1	**7K-1181**	13	STRAP-CABLE	
I	15	1	**7Y-4193**	2	HOSE AS	
I	16	1	**7Y-4390**	1	HOSE AS	
I	17	1	**087-5303**	2	HOSE AS	
	18	1	**176-4708**	1	GROMMET	
I	19	1	**221-4883**	2	HOSE AS	
	20	1	**115-8645**	3	GUARD	
	21	1	*148-8378*	6	ELBOW AS	
					(EACH INCLUDES)	
		1	**3J-1907**	1	SEAL-O-RING	
		1	**6V-8397**	1	SEAL-O-RING	
		1	**6V-8724**	1	ELBOW	
	22	1	*148-8435*	6	TEE AS	
					(EACH INCLUDES)	
		1	**3J-1907**	1	SEAL-O-RING	
		1	**6V-8397**	2	SEAL-O-RING	
		1	**6V-8781**	1	TEE	
	23	1	**202-4004**	1	GROMMET	
	24	1	**337-1205**	2	GROMMET	
J	25	1	**337-1205**	1	GROMMET	

I - REFER TO HYDRAULIC INFORMATION SYSTEM
J - USED ONLY ON MODELS EQUIPPED WITH ROPS CAB

376-6309 **LINES GP-PILOT (*contd.*)** **i05098633**

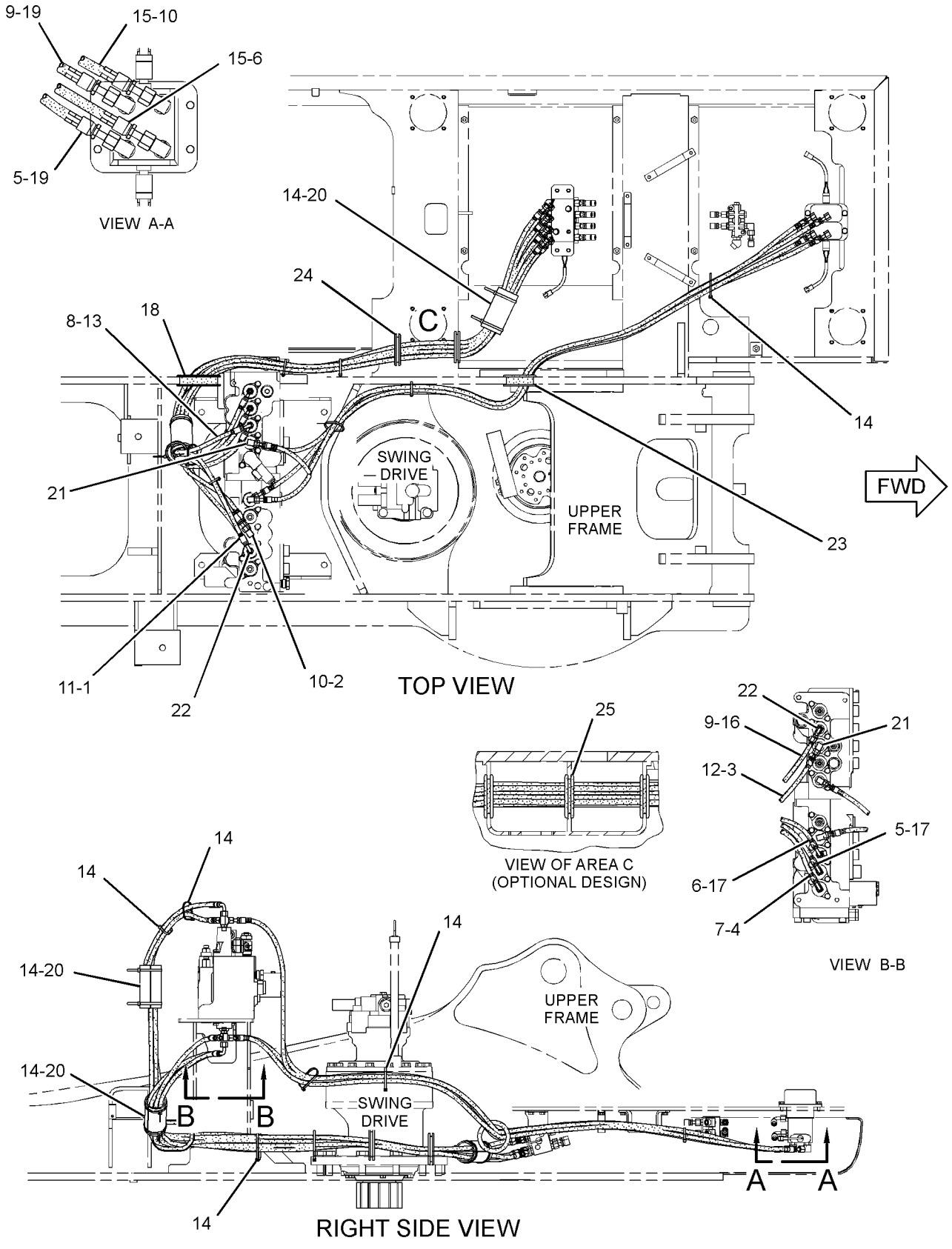

GRAPHIC #1 **<END>** g02728339

376-6310 LINES GP-PILOT—MAIN CONTROL VALVE

S/N: PBB1-UP; KBS1-UP

PART OF 456-0404, 456-0405 HYDRAULIC AR

SMCS-5057, 5059 **i05881784**

NOTE	REF NO	GRAPHIC REF	PART NUMBER	QTY	PART NAME 1 2 3 4 5 6 (PRODUCT LEVEL)	SEE PAGE
I	1	1	**4I-0818**	1	HOSE AS	
I	2	2	**4I-0836**	1	HOSE AS	
I	3	3	**4I-1037**	1	HOSE AS	
I	4	2	**4I-1739**	1	HOSE AS	
I	5	2	**4I-1780**	1	HOSE AS	
I	6	2	**4I-5906**	1	HOSE AS	
I	7	3	**4I-5933**	1	HOSE AS	
	8	2	**4I-9521**	2	BAND-MARKER (RED, L1)	
	9	1,2	**4I-9522**	6	BAND-MARKER (YELLOW, L2)	
	10	1,2	**4I-9523**	4	BAND-MARKER (BLUE, L3)	
	11	1,2	**4I-9524**	6	BAND-MARKER (BROWN, L4)	
	12	3	**4I-9525**	2	BAND-MARKER (ORANGE, R1)	
	13	2	**4I-9527**	4	BAND-MARKER (GREEN, R3)	
	14	3	**4I-9528**	4	BAND-MARKER (PURPLE, R4)	
I	15	1	**5I-4076**	1	HOSE AS	
I	16	3	**5I-4396**	1	HOSE AS	
I	17	2	**5I-8708**	1	HOSE AS	
	18	1,2,3	**7K-1181**	15	STRAP-CABLE	
I	19	3	**7Y-8487**	1	HOSE AS	
I	20	2	**087-4411**	1	HOSE AS	
I	21	1,2	**087-4531**	2	HOSE AS	
I	22	3	**4I-5795**	1	HOSE AS	
I	23	2	**087-5760**	1	HOSE AS	
I	24	2	**087-5762**	1	HOSE AS	
I	25	2	**087-5772**	1	HOSE AS	
I	26	3	**087-5774**	1	HOSE AS	
I	27	2	**104-8838**	1	HOSE AS	
I	28	2	**110-5496**	1	HOSE AS	
I	29	1,3	**143-4254**	2	HOSE AS	
	30	1,2	*150-4044*	3	CONNECTOR AS	
					(EACH INCLUDES)	
		1,2	**3J-1907**	1	SEAL-O-RING	
		1,2	**6V-8397**	1	SEAL-O-RING	
		1,2	**8T-1779**	1	CONNECTOR	
	31	3	*164-5639*	1	ELBOW AS	
		3	**3K-0360**	1	SEAL-O-RING	
		3	**6V-8398**	1	SEAL-O-RING	
		3	**124-0988**	1	ELBOW-FILTER	
Y	32	3	**164-6979**	1	VALVE GP-SHUTTLE	671
Y	33	2	*164-6981*	1	ACCUMULATOR GP-HYDRAULIC (CHARGED)	338
I	34	1	**164-8977**	1	HOSE AS	
I	35	2,3	**164-8983**	2	HOSE AS	
	36	3	**176-4463**	1	PLATE	
	37	2	**176-4469**	1	BLOCK	
I	38	3	**176-4755**	1	HOSE AS	
I	39	1	**187-7070**	2	HOSE AS	
I	40	3	**199-1965**	1	HOSE AS	
	41	3	**202-4004**	1	GROMMET	
	42	1	**204-2281**	2	STRAP-CABLE	
Y	43	3	**215-5037**	1	MANIFOLD GP-CONTROL (PILOT OIL SUPPLY)	566
	44	3	**275-1442**	1	CLIP (TAB)	
			275-1443	1	CLIP (SLOT)	
J			**275-1444**	1	GROMMET (19-MM ID)	
					—OR—	
			275-1442	1	CLIP (TAB)	
			275-1443	1	CLIP (SLOT)	
J			**333-4609**	1	GROMMET (21-MM ID)	
I	47	2	**275-1503**	1	HOSE AS	

376-6310 **LINES GP-PILOT (*contd.*)** **i05881784**

NOTE	REF NO	GRAPHIC REF	PART NUMBER	QTY	PART NAME 1 2 3 4 5 6 (PRODUCT LEVEL)	SEE PAGE
	48	3	*285-1399*	1	CONNECTOR AS	
		3	**3J-1907**	1	SEAL-O-RING	
		3	**6V-8397**	1	SEAL-O-RING	
		3	**285-1465**	1	CONNECTOR	
Y	49	2	**310-0210**	1	VALVE GP-PRESSURE REDUCING (BOOM, SWING PRIORITY)	651
I	50	2	**314-8128**	1	HOSE AS	
I	51	2	**330-2568**	1	HOSE AS	
	52	3	*351-0286*	1	CONNECTOR AS	
		3	**3J-1907**	1	SEAL-O-RING	
		3	**6V-8397**	1	SEAL-O-RING	
		3	**259-7733**	1	CONNECTOR	
I	53	2	**376-6342**	1	HOSE AS	
M	54	3	**099-3649**	2	BOLT (M8X1.25X40-MM)	
M	55	2	**105-3484**	2	BOLT-SOCKET HEAD (M10X1.5X25-MM)	
	56	1,2,3	*148-8336*	7	CONNECTOR AS	
					(EACH INCLUDES)	
		1,2,3	**3J-1907**	1	SEAL-O-RING	
		1,2,3	**6V-8397**	1	SEAL-O-RING	
		1,2,3	**6V-8636**	1	CONNECTOR	
	57	2,3	*148-8340*	4	CONNECTOR AS	
					(EACH INCLUDES)	
		2,3	**3K-0360**	1	SEAL-O-RING	
		2,3	**6V-8398**	1	SEAL-O-RING	
		2,3	**6V-8639**	1	CONNECTOR	
	58	2,3	*148-8353*	5	ELBOW AS	
					(EACH INCLUDES)	
		2,3	**3J-1907**	1	SEAL-O-RING	
		2,3	**6V-8397**	1	SEAL-O-RING	
		2,3	**6V-9001**	1	ELBOW	
	59	2	*148-8354*	1	ELBOW AS	
		2	**3K-0360**	1	SEAL-O-RING	
		2	**6V-8398**	1	SEAL-O-RING	
		2	**6V-9002**	1	ELBOW	
	60	3	*148-8364*	1	ELBOW AS	
		3	**3K-0360**	1	SEAL-O-RING	
		3	**6V-8398**	1	SEAL-O-RING	
		3	**6V-8625**	1	ELBOW	
	61	2,3	*148-8367*	2	ELBOW AS	
					(EACH INCLUDES)	
		2,3	**6V-8397**	1	SEAL-O-RING	
		2,3	**6V-9850**	1	ELBOW	
	62	1,2,3	*148-8378*	8	ELBOW AS	
					(EACH INCLUDES)	
		1,2,3	**3J-1907**	1	SEAL-O-RING	
		1,2,3	**6V-8397**	1	SEAL-O-RING	
		1,2,3	**6V-8724**	1	ELBOW	
	63	2,3	*148-8407*	6	PLUG AS	
					(EACH INCLUDES)	
		2,3	**3J-1907**	1	SEAL-O-RING	
		2,3	**9S-4191**	1	PLUG	
	64	2,3	*148-8433*	2	TEE AS	
					(EACH INCLUDES)	
		2,3	**6V-8397**	2	SEAL-O-RING	
		2,3	**6V-9836**	1	TEE-SWIVEL	
	65	2,3	*148-8435*	4	TEE AS	
					(EACH INCLUDES)	
		2,3	**3J-1907**	1	SEAL-O-RING	
		2,3	**6V-8397**	2	SEAL-O-RING	
		2,3	**6V-8781**	1	TEE	
	66	3	*148-8439*	2	TEE AS	

376-6310 **LINES GP-PILOT (*contd.*)** **i05881784**

NOTE	REF NO	GRAPHIC REF	PART NUMBER	QTY	PART NAME 1 2 3 4 5 6 (PRODUCT LEVEL)	SEE PAGE
					(EACH INCLUDES)	
		3	**3J-1907**	1	SEAL-O-RING	
		3	**6V-8397**	2	SEAL-O-RING	
		3	**6V-8774**	1	TEE	
	67	2	**4K-8864**	1	CLIP	
	68	1	**5P-7462**	2	CLIP (SLOT) (USE WITH 30-MM OD GROMMET)	
			5P-7463	2	CLIP (TAB) (USE WITH 30-MM OD GROMMET)	
J			**6V-0683**	2	GROMMET (19-MM ID) (30-MM OD)	
					—OR—	
			5P-7464	2	CLIP (SLOT) (USE WITH 37-MM OD GROMMET)	
			5P-7465	2	CLIP (TAB) (USE WITH 37-MM OD GROMMET)	
J			**6V-1249**	2	GROMMET (22-MM ID) (37-MM OD)	
	71	2,3	**6V-8397**	2	SEAL-O-RING	
	72	2,3	**8T-4121**	8	WASHER-HARD (11X21X2.5-MM THK)	
M	73	2	**8T-4136**	1	BOLT (M10X1.5X25-MM)	
M	74	3	**8T-4137**	5	BOLT (M10X1.5X20-MM)	
M	75	1	**8T-4139**	1	BOLT (M12X1.75X30-MM)	
M	76	2	**8T-4172**	2	BOLT (M10X1.5X80-MM)	
M	77	3	**8T-4192**	3	BOLT (M12X1.75X25-MM)	
	78	1,3	**8T-4223**	4	WASHER-HARD (13.5X25.5X3-MM THK)	
	79	3	*148-8434*	1	TEE AS	
		3	**6V-9843**	1	TEE	
		3	**6V-8397**	2	SEAL-O-RING	

I - REFER TO HYDRAULIC INFORMATION SYSTEM
J - SELECT CORRECT GROMMET SIZE TO MATCH HOSE OD
M - METRIC PART
Y - SEPARATE ILLUSTRATION

376-6310 **LINES GP-PILOT (*contd.*)** **i05881784**

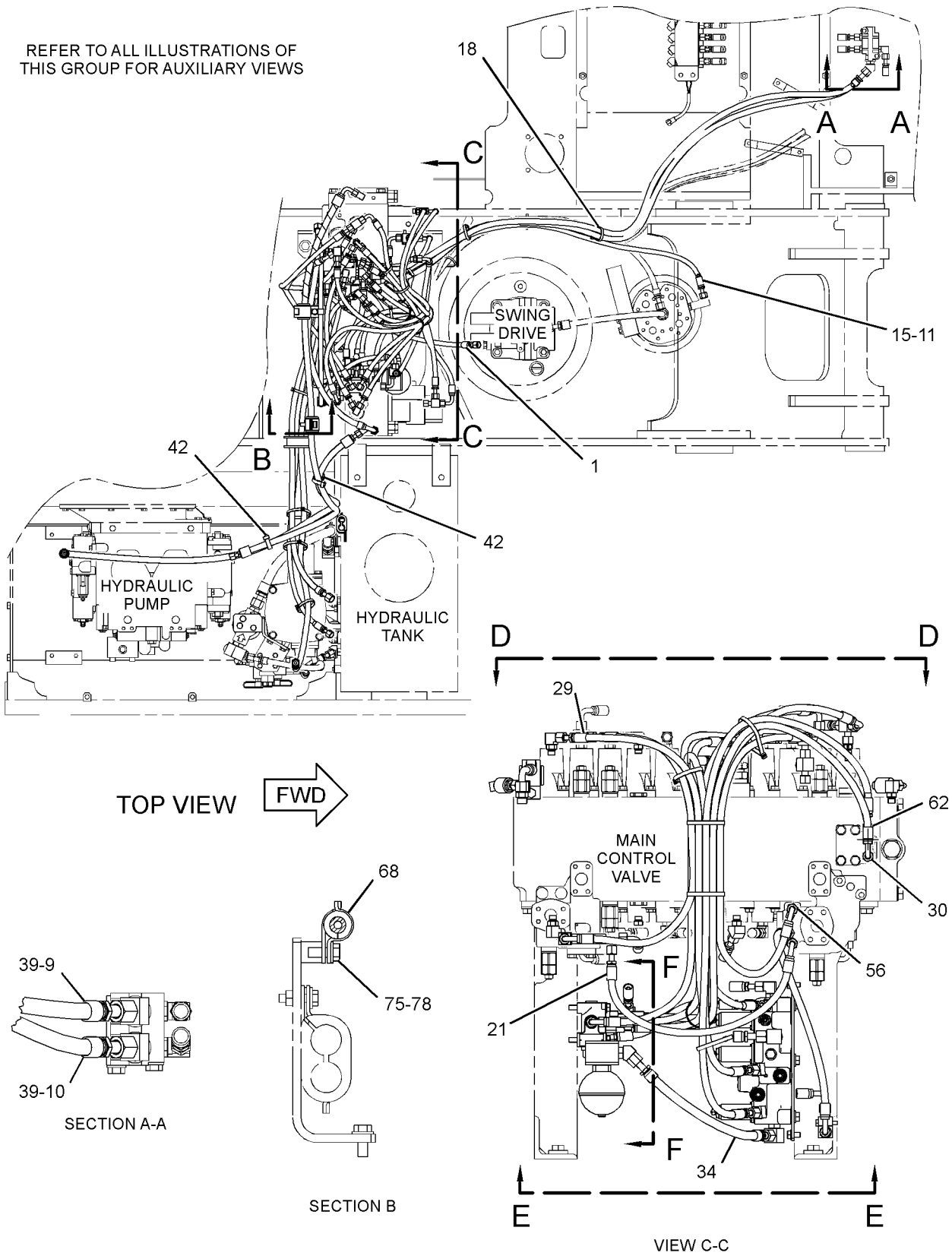

GRAPHIC #1 g03711686

376-6310 **LINES GP-PILOT (*contd.*)** **i05881784**

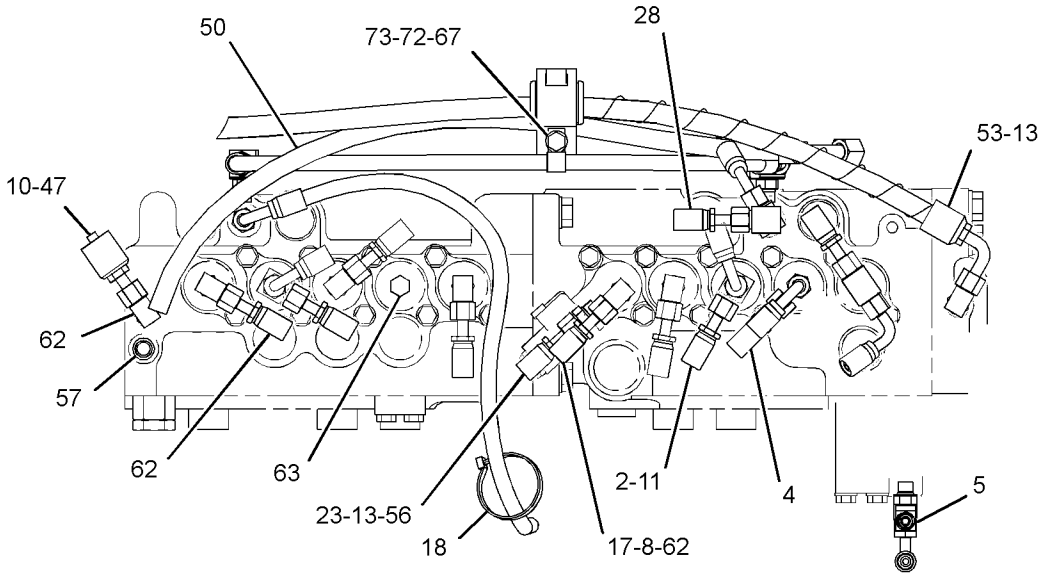

VIEW D-D

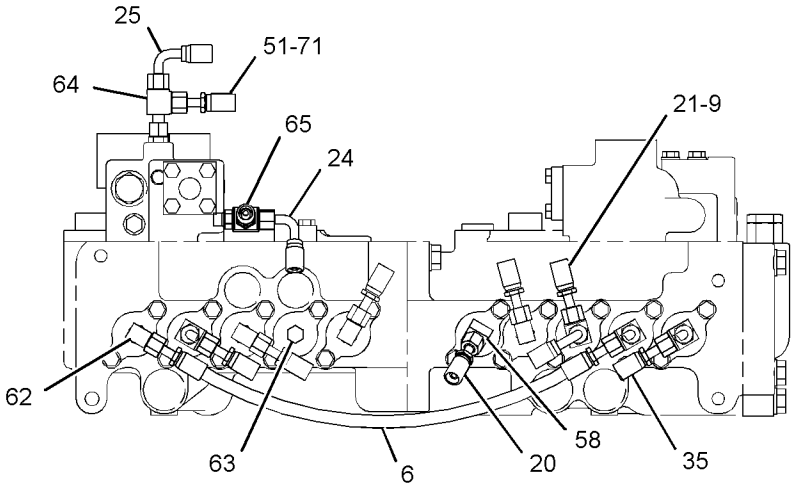

VIEW E-E

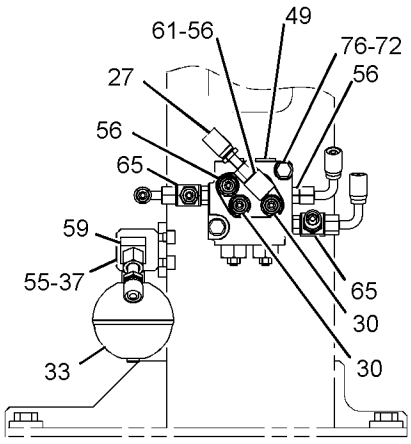

SECTION F-F

REFER TO ALL ILLUSTRATIONS OF
THIS GROUP FOR AUXILIARY VIEWS

GRAPHIC #2 g03711690

376-6310 **LINES GP-PILOT (*contd.*)** **i05881784**

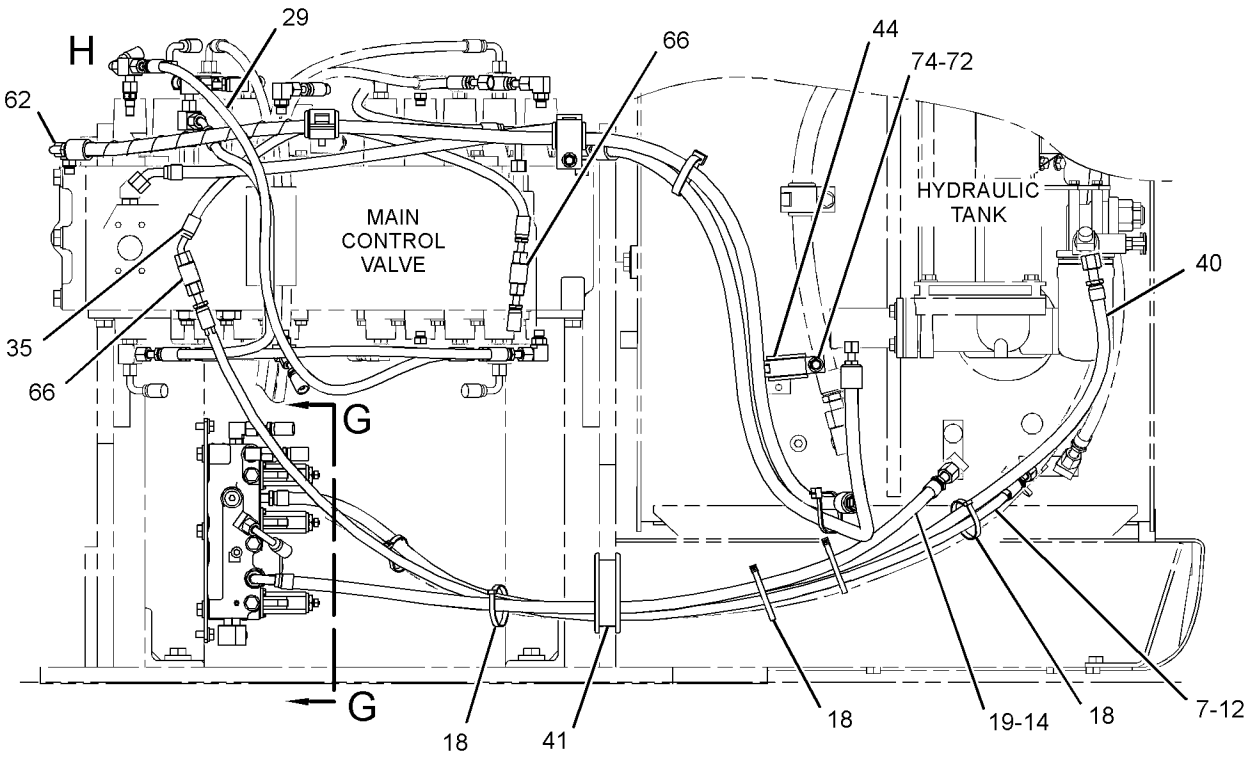

REAR VIEW

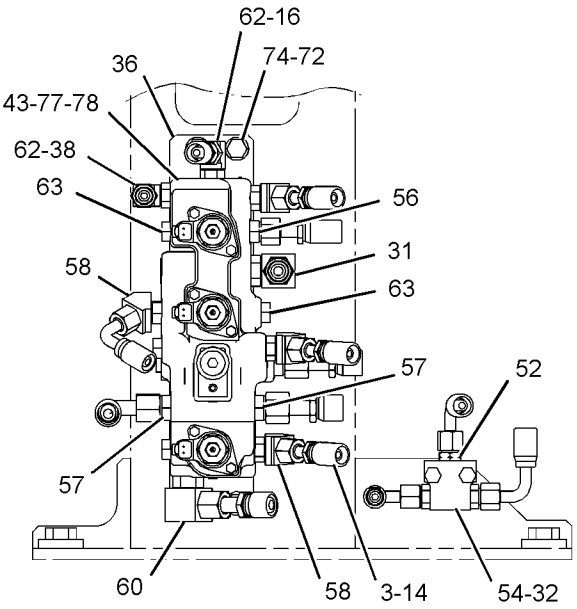

SECTION G-G

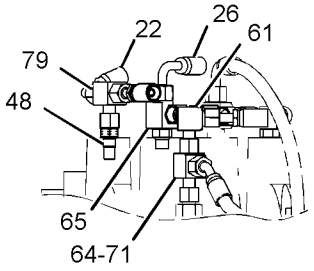

VIEW OF AREA H

GRAPHIC #3 **<END>** g03711693

376-6311 LINES GP-PILOT—FILTER, PILOT PUMP

S/N: PBB1-UP; KBS1-UP

PART OF 456-0404, 456-0405 HYDRAULIC AR

SMCS-5057, 5059 **i05350546**

NOTE	REF NO	GRAPHIC REF	PART NUMBER	QTY	PART NAME 1 2 3 4 5 6 (PRODUCT LEVEL)	SEE PAGE
I	1	1	**5I-3121**	1	HOSE AS	
	2	1	**6V-0852**	5	CAP-DUST	
	3	1	**7K-1181**	3	STRAP-CABLE	
I	4	1	**087-5768**	1	HOSE AS	
I	5	1	**178-5955**	1	HOSE AS	
I	6	1	**307-5120**	1	HOSE AS	
I	7	1	**366-1059**	1	HOSE AS	
	8	1	**434-3436**	1	SENSOR AS-PRESSURE (DRIVE PUMP)	
	8A	1	**434-3436**	1	SENSOR AS-PRESSURE (DRIVEN PUMP)	
					(EACH SENSOR AS INCLUDES)	
		1	**3K-0360**	1	SEAL-O-RING	
	9	1	*148-8336*	2	CONNECTOR AS	
					(EACH INCLUDES)	
		1	**3J-1907**	1	SEAL-O-RING	
		1	**6V-8397**	1	SEAL-O-RING	
		1	**6V-8636**	1	CONNECTOR	
	10	1	*148-8347*	2	ELBOW AS	
					(EACH INCLUDES)	
		1	**3D-2824**	1	SEAL-O-RING	
		1	**6V-9007**	1	ELBOW	
		1	**6V-9746**	1	SEAL-O-RING	
	11	1	*148-8354*	1	ELBOW AS	
		1	**3K-0360**	1	SEAL-O-RING	
		1	**6V-8398**	1	SEAL-O-RING	
		1	**6V-9002**	1	ELBOW	
	12	1	*148-8378*	2	ELBOW AS	
					(EACH INCLUDES)	
		1	**3J-1907**	1	SEAL-O-RING	
		1	**6V-8397**	1	SEAL-O-RING	
		1	**6V-8724**	1	ELBOW	
	13	1	*150-3036*	1	ELBOW AS	
		1	**3J-1907**	1	SEAL-O-RING	
		1	**6V-8397**	1	SEAL-O-RING	
		1	**8T-1905**	1	ELBOW	
	14	1	*153-6237*	1	ELBOW AS	
		1	**3D-2824**	1	SEAL-O-RING	
		1	**6V-9004**	1	ELBOW	
		1	**6V-9746**	1	SEAL-O-RING	
	15	1	*164-5567*	5	COUPLER AS-QUICK DISCONNECT (MALE)	
					(EACH INCLUDES)	
		1	**6V-3965**	1	FITTING (QUICK DISCONNECT)	
		1	**214-7568**	1	SEAL-O-RING	

I - REFER TO HYDRAULIC INFORMATION SYSTEM

376-6311 **LINES GP-PILOT (*contd.*)** **i05350546**

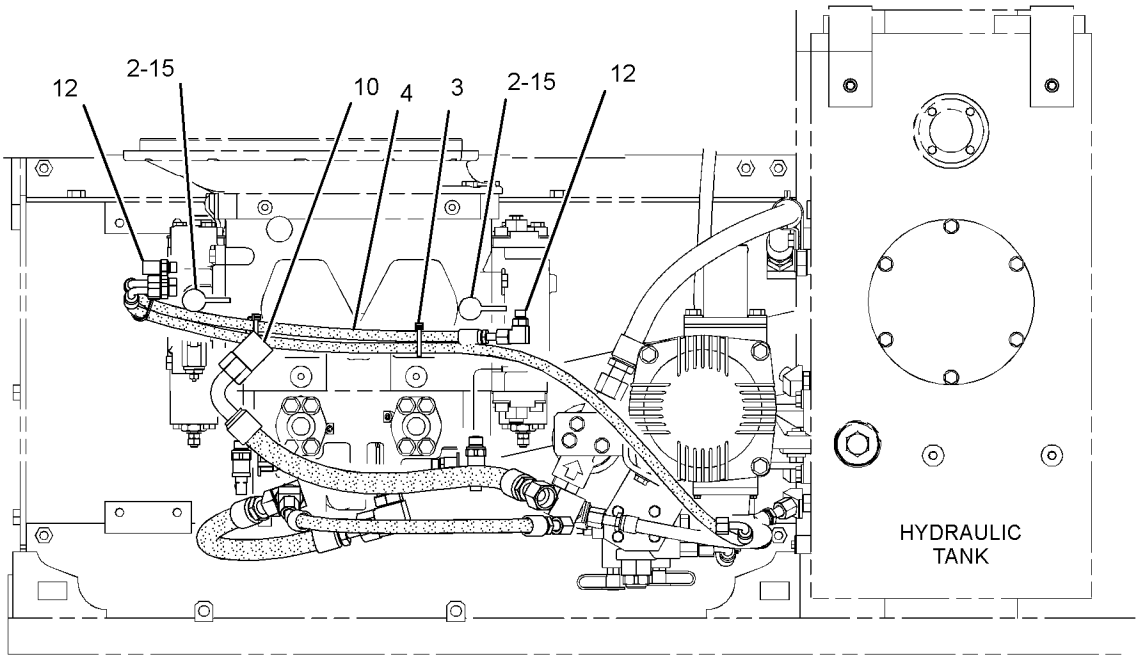

TOP VIEW FWD

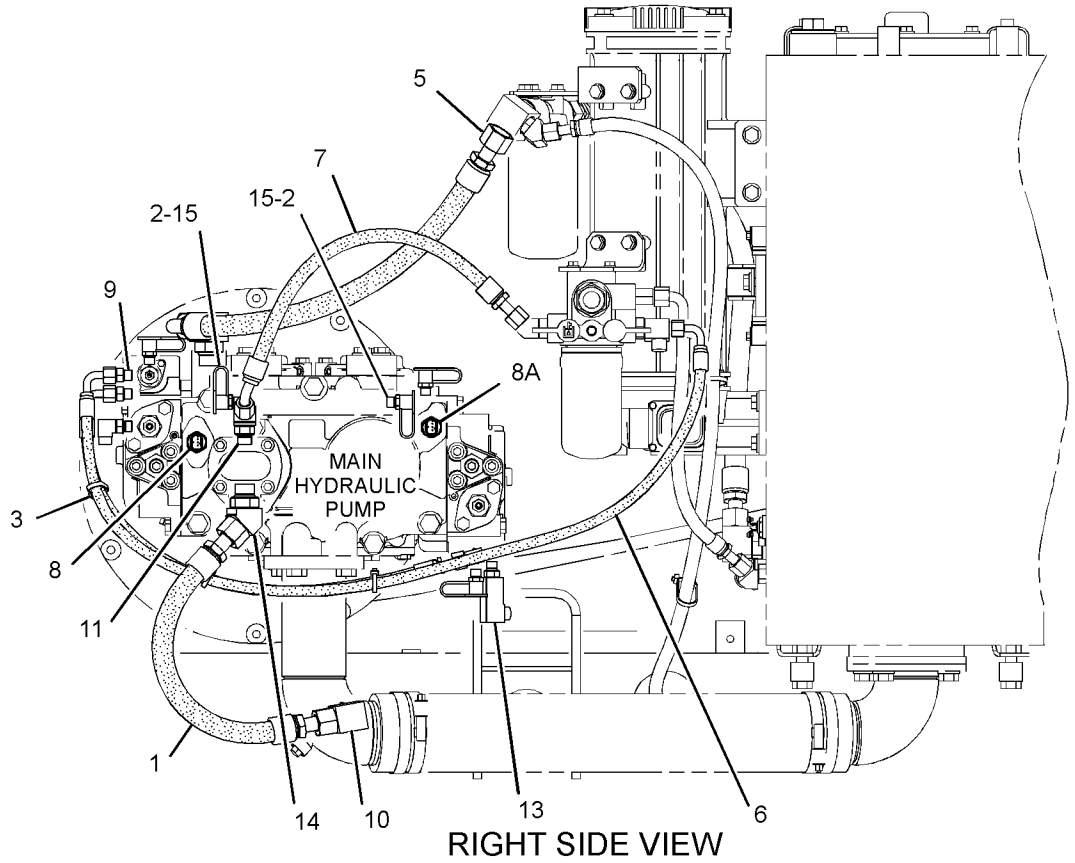

RIGHT SIDE VIEW

GRAPHIC #1 **<END>** g02732420

376-6316 LINES GP-PILOT—SYSTEM 2, COMBINED FUNCTION

S/N: PBB1-UP; KBS1-UP
PART OF 349-2209 CONTROL AR-AUXILIARY
AN ATTACHMENT

SMCS-5057, 5059 **i05385638**

NOTE	REF NO	GRAPHIC REF	PART NUMBER	QTY	PART NAME 1 2 3 4 5 6 (PRODUCT LEVEL)	SEE PAGE
I	1	1	**4I-1878**	1	HOSE AS	
	2	1	**4I-3941**	1	FITTING AS	
I	3	1	**4I-3988**	1	HOSE AS	
	4	1	**4I-9521**	2	BAND-MARKER (RED, L1)	
	5	1	**4I-9522**	2	BAND-MARKER (YELLOW, L2)	
	6	1,2	**4I-9523**	8	BAND-MARKER (BLUE, L3)	
	7	1	**4I-9524**	2	BAND-MARKER (BROWN, L4)	
	8	1	**4I-9525**	2	BAND-MARKER (ORANGE, R1)	
	9	1,2	**4I-9527**	8	BAND-MARKER (GREEN, R3)	
	10	1,2	**7K-1181**	19	STRAP-CABLE	
I	11	1	**7Y-4199**	1	HOSE AS	
I	12	1	**087-5764**	1	HOSE AS	
I	13	2	**087-5772**	1	HOSE AS	
I	14	1	**108-7313**	2	HOSE AS	
I	15	1	**111-0988**	1	HOSE AS	
	16	1	**118-9902**	1	SPACER (12X20X43-MM THK)	
	17	2	**124-1008**	1	GUARD	
Y	18	2	**165-9549**	1	VALVE GP-SOLENOID (AUXILIARY, COMBINED FUNCTION)	676
I	19	1	**179-7616**	1	HOSE AS	
	20	1,2	**204-2281**	2	STRAP-CABLE	
I	21	1	**212-5419**	1	HOSE AS	
I	22	1	**212-5423**	1	HOSE AS	
	23	2	**266-1108**	1	SUPPORT AS	
I	24	2	**272-4180**	1	HOSE AS	
I	25	2	**296-7229**	1	HOSE AS	
	26	1	**309-5769**	1	SWITCH AS-PRESSURE (CONTROL VALVE, PILOT CONTROL)	
		1	**102-8802**	1	KIT-RECEPTACLE (2-PIN)	
		1	**151-9272**	1	KIT-RECEPTACLE (2-PIN)	
					(EACH KIT INCLUDES RECEPTACLE AS & WEDGE)	
		1	**9X-3401**	1	PIN-CONNECTOR (16-GA TO 18-GA)	
					—OR—	
		1	**126-1767**	1	PIN-CONNECTOR (14-GA TO 16-GA)	
I	27	1	**330-2384**	1	HOSE AS	
	28	2	*363-6132*	1	CONNECTOR AS	
		2	**3J-1907**	1	SEAL-O-RING	
		2	**6V-8397**	1	SEAL-O-RING	
		2	**116-3412**	1	CONNECTOR-FILTER	
	29	2	*363-6133*	2	ADAPTER AS	
					(EACH INCLUDES)	
		2	**3J-1907**	1	SEAL-O-RING	
		2	**6V-8397**	1	SEAL-O-RING	
		2	**354-3863**	1	ADAPTER-FILTER	
I	30	1	**377-3294**	1	HOSE AS	
	31	2	**377-3449**	1	SUPPORT AS	
CY	32	2	**398-2282**	1	VALVE GP-SOLENOID (NEGATIVE FLOW CONTROL)	682
	33	1	*148-8336*	2	CONNECTOR AS	
					(EACH INCLUDES)	
		1	**3J-1907**	1	SEAL-O-RING	
		1	**6V-8397**	1	SEAL-O-RING	
		1	**6V-8636**	1	CONNECTOR	
	34	1	*148-8338*	1	CONNECTOR AS	
		1	**3J-1907**	1	SEAL-O-RING	
		1	**6V-8397**	1	SEAL-O-RING	
		1	**8T-0075**	1	CONNECTOR	
	35	1	*148-8353*	1	ELBOW AS	

376-6316 **LINES GP-PILOT (*contd.*)** **i05385638**

NOTE	REF NO	GRAPHIC REF	PART NUMBER	QTY	PART NAME 1 2 3 4 5 6 (PRODUCT LEVEL)	SEE PAGE
		1	**3J-1907**	1	SEAL-O-RING	
		1	**6V-8397**	1	SEAL-O-RING	
		1	**6V-9001**	1	ELBOW	
	36	1,2	*148-8378*	15	ELBOW AS	
					(EACH INCLUDES)	
		1,2	**3J-1907**	1	SEAL-O-RING	
		1,2	**6V-8397**	1	SEAL-O-RING	
		1,2	**6V-8724**	1	ELBOW	
	37	1	*148-8433*	3	TEE AS	
					(EACH INCLUDES)	
		1	**6V-8397**	2	SEAL-O-RING	
		1	**6V-9836**	1	TEE-SWIVEL	
	38	1	*148-8443*	1	TEE AS	
		1	**3J-1907**	1	SEAL-O-RING	
		1	**6V-8397**	1	SEAL-O-RING	
		1	**7X-2459**	1	TEE-O-RING	
	39	2	*150-3036*	1	ELBOW AS	
		2	**3J-1907**	1	SEAL-O-RING	
		2	**6V-8397**	1	SEAL-O-RING	
		2	**8T-1905**	1	ELBOW	
	40	2	*150-4027*	2	TEE AS	
					(EACH INCLUDES)	
		2	**3E-2310**	1	TEE	
		2	**3J-1907**	1	SEAL-O-RING	
		2	**6V-8397**	1	SEAL-O-RING	
	41	2	*164-5567*	2	COUPLER AS-QUICK DISCONNECT (MALE)	
					(EACH INCLUDES)	
		2	**6V-3965**	1	FITTING (QUICK DISCONNECT)	
		2	**214-7568**	1	SEAL-O-RING	
	42	1	**6D-3479**	2	CLIP	
	43	2	**6V-0852**	2	CAP-DUST	
B	44	1	**6V-9829**	1	CAP AS	
	45	1,2	**8T-4121**	4	WASHER-HARD (11X21X2.5-MM THK)	
M	46	2	**8T-4136**	2	BOLT (M10X1.5X25-MM)	
M	47	2	**8T-4177**	4	BOLT (M8X1.25X90-MM)	
M	48	1	**8T-4191**	1	BOLT (M10X1.5X16-MM)	
M	49	2	**8T-4192**	4	BOLT (M12X1.75X25-MM)	
	50	2	**8T-4223**	4	WASHER-HARD (13.5X25.5X3-MM THK)	
	51	2	**8T-4224**	4	WASHER-HARD (8.8X16X2-MM THK)	
M	52	1	**8T-6466**	1	BOLT (M10X1.5X60-MM)	
M	53	2	**8T-6870**	4	BOLT (M8X1.25X70-MM)	

B - USE AS REQUIRED
C - CHANGE FROM PREVIOUS TYPE
I - REFER TO HYDRAULIC INFORMATION SYSTEM
M - METRIC PART
Y - SEPARATE ILLUSTRATION

376-6316 **LINES GP-PILOT (*contd.*)** **i05385638**

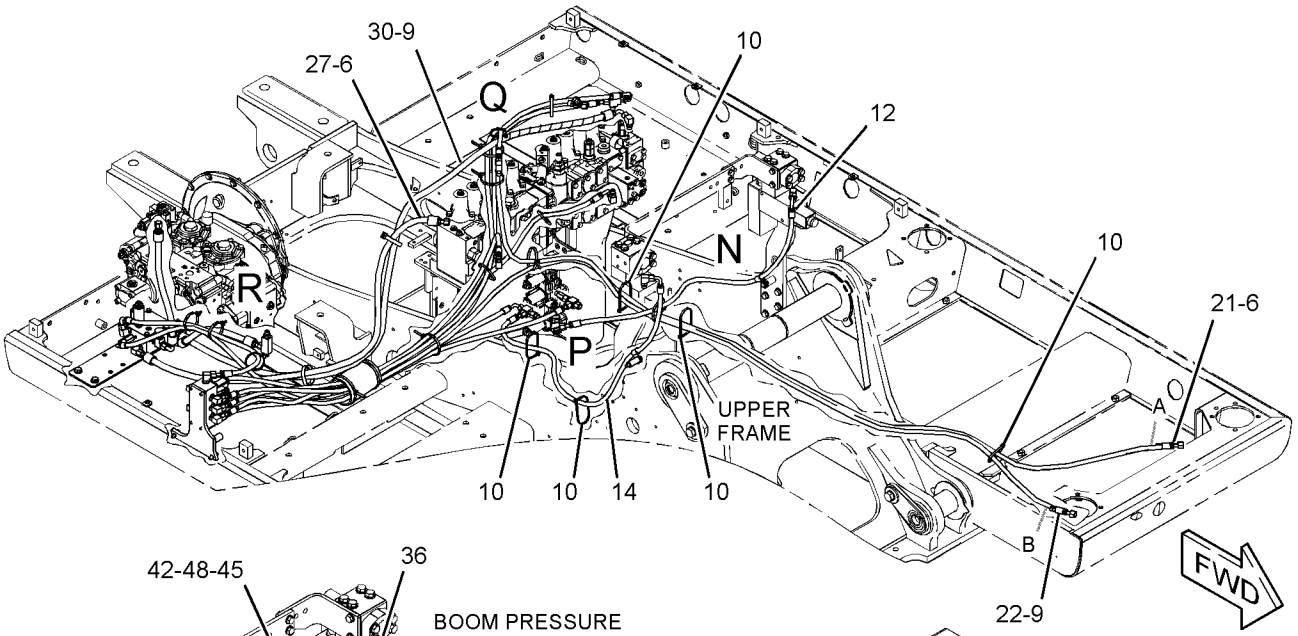

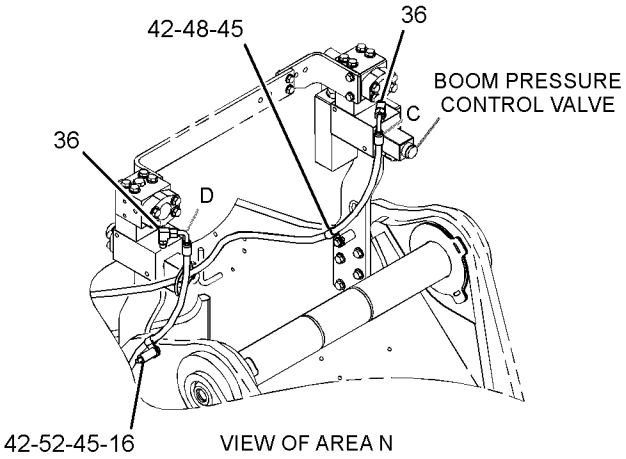

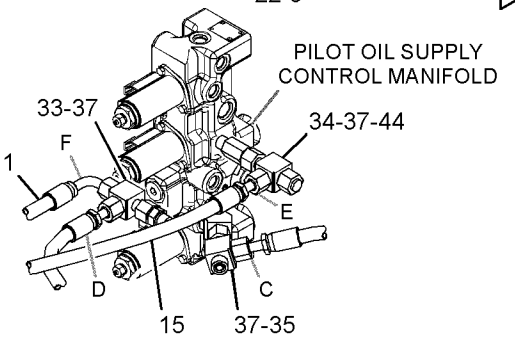

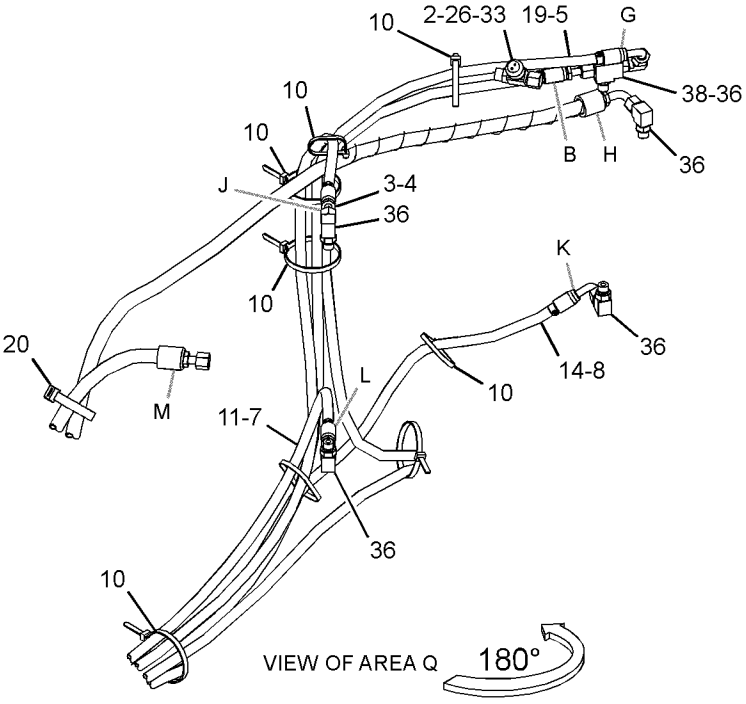

REFER TO ALL ILLUSTRATIONS OF THIS GROUP FOR AUXILIARY VIEWS

GRAPHIC #1

g03349040

376-6316 **LINES GP-PILOT (*contd.*)** **i05385638**

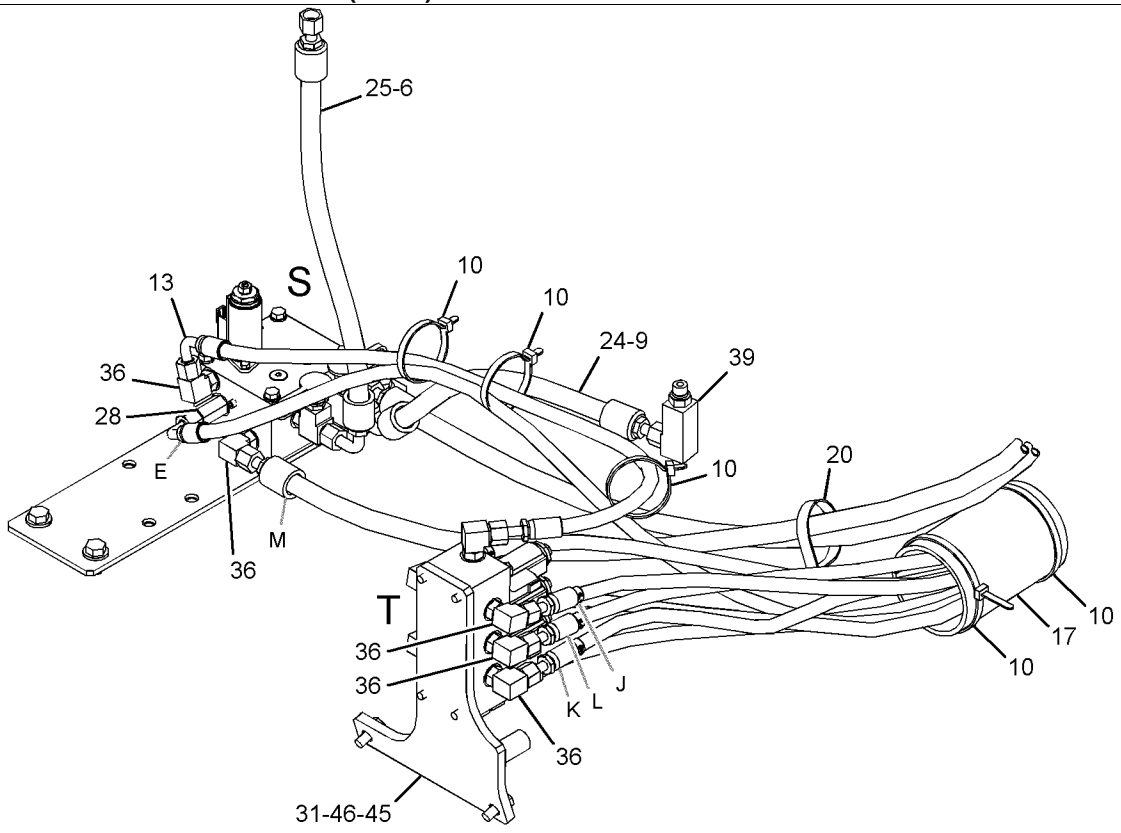

VIEW OF AREA R

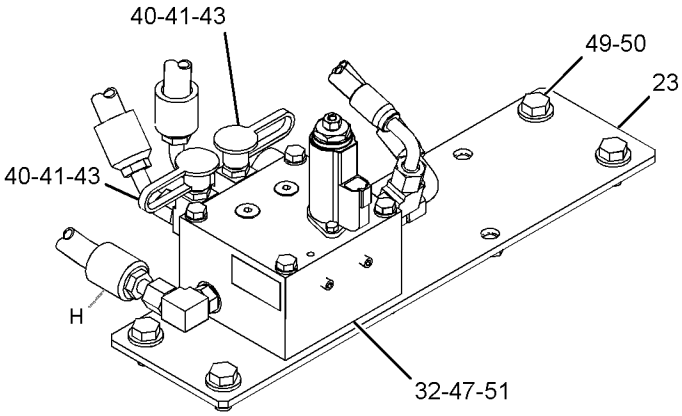

VIEW OF AREA S 180°

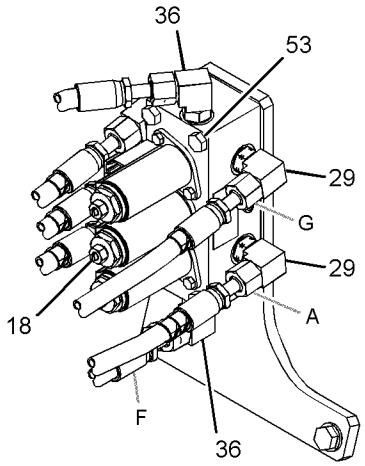

VIEW OF AREA T 180°

GRAPHIC #2 **<END>** g03349041

376-6318 LINES GP-PILOT–SYSTEM 3 PRIME, 1-WAY, 2-PUMP

S/N: PBB1-UP; KBS1-UP
PART OF 349-2211 CONTROL AR-AUXILIARY
AN ATTACHMENT

SMCS-5057, 5059 **i05151369**

NOTE	REF NO	GRAPHIC REF	PART NUMBER	QTY	PART NAME 1 2 3 4 5 6 (PRODUCT LEVEL)	SEE PAGE
I	1	1	**4I-1671**	1	HOSE AS	
	2	1	**4I-9523**	4	BAND-MARKER (BLUE, L3)	
	3	1	**4I-9524**	2	BAND-MARKER (BROWN, L4)	
	4	1	**4I-9525**	2	BAND-MARKER (ORANGE, R1)	
	5	1	**4I-9527**	8	BAND-MARKER (GREEN, R3)	
I	6	1	**5I-4396**	1	HOSE AS	
	7	1	**6V-0852**	2	CAP-DUST	
	8	1	**7K-1181**	13	STRAP-CABLE	
I	9	1	**087-5766**	1	HOSE AS	
I	10	1	**108-7375**	1	HOSE AS	
I	11	1	**111-0988**	1	HOSE AS	
	12	1	**124-1008**	1	GUARD	
	13	1	*148-8443*	1	TEE AS	
		1	**3J-1907**	1	SEAL-O-RING	
		1	**6V-8397**	1	SEAL-O-RING	
		1	**7X-2459**	1	TEE-O-RING	
Y	14	1	**398-2282**	1	VALVE GP-SOLENOID (NEGATIVE FLOW CONTROL)	682
	15	1	**204-2281**	2	STRAP-CABLE	
	16	1	**266-1108**	1	SUPPORT AS	
I	17	1	**268-6850**	1	HOSE AS	
I	18	1	**272-4180**	1	HOSE AS	
I	19	1	**296-7229**	1	HOSE AS	
I	20	1	**330-2384**	1	HOSE AS	
	21	1	*363-6132*	1	CONNECTOR AS	
		1	**3J-1907**	1	SEAL-O-RING	
		1	**6V-8397**	1	SEAL-O-RING	
		1	**116-3412**	1	CONNECTOR-FILTER	
I	22	1	**377-3294**	1	HOSE AS	
	23	1	*148-8338*	2	CONNECTOR AS	
					(EACH INCLUDES)	
		1	**3J-1907**	1	SEAL-O-RING	
		1	**6V-8397**	1	SEAL-O-RING	
		1	**8T-0075**	1	CONNECTOR	
	24	1	*148-8378*	9	ELBOW AS	
					(EACH INCLUDES)	
		1	**3J-1907**	1	SEAL-O-RING	
		1	**6V-8397**	1	SEAL-O-RING	
		1	**6V-8724**	1	ELBOW	
	25	1	*148-8433*	2	TEE AS	
					(EACH INCLUDES)	
		1	**6V-8397**	2	SEAL-O-RING	
		1	**6V-9836**	1	TEE-SWIVEL	
	26	1	*150-3036*	1	ELBOW AS	
		1	**3J-1907**	1	SEAL-O-RING	
		1	**6V-8397**	1	SEAL-O-RING	
		1	**8T-1905**	1	ELBOW	
	27	1	*150-4027*	2	TEE AS	
					(EACH INCLUDES)	
		1	**3E-2310**	1	TEE	
		1	**3J-1907**	1	SEAL-O-RING	
		1	**6V-8397**	1	SEAL-O-RING	
	28	1	*164-5567*	2	COUPLER AS-QUICK DISCONNECT (MALE)	
					(EACH INCLUDES)	
		1	**6V-3965**	1	FITTING (QUICK DISCONNECT)	
		1	**214-7568**	1	SEAL-O-RING	
B	29	1	**6V-9829**	1	CAP AS	
M	30	1	**8T-4177**	4	BOLT (M8X1.25X90-MM)	
M	31	1	**8T-4192**	4	BOLT (M12X1.75X25-MM)	

376-6318 **LINES GP-PILOT (*contd.*)** **i05151369**

NOTE	REF NO	GRAPHIC REF	PART NUMBER	QTY	PART NAME 1 2 3 4 5 6 (PRODUCT LEVEL)	SEE PAGE
	32	1	**8T-4223**	4	WASHER-HARD (13.5X25.5X3-MM THK)	
	33	1	**8T-4224**	4	WASHER-HARD (8.8X16X2-MM THK)	

B - USE AS REQUIRED
I - REFER TO HYDRAULIC INFORMATION SYSTEM
M - METRIC PART
Y - SEPARATE ILLUSTRATION

376-6318 **LINES GP-PILOT (*contd.*)** **i05151369**

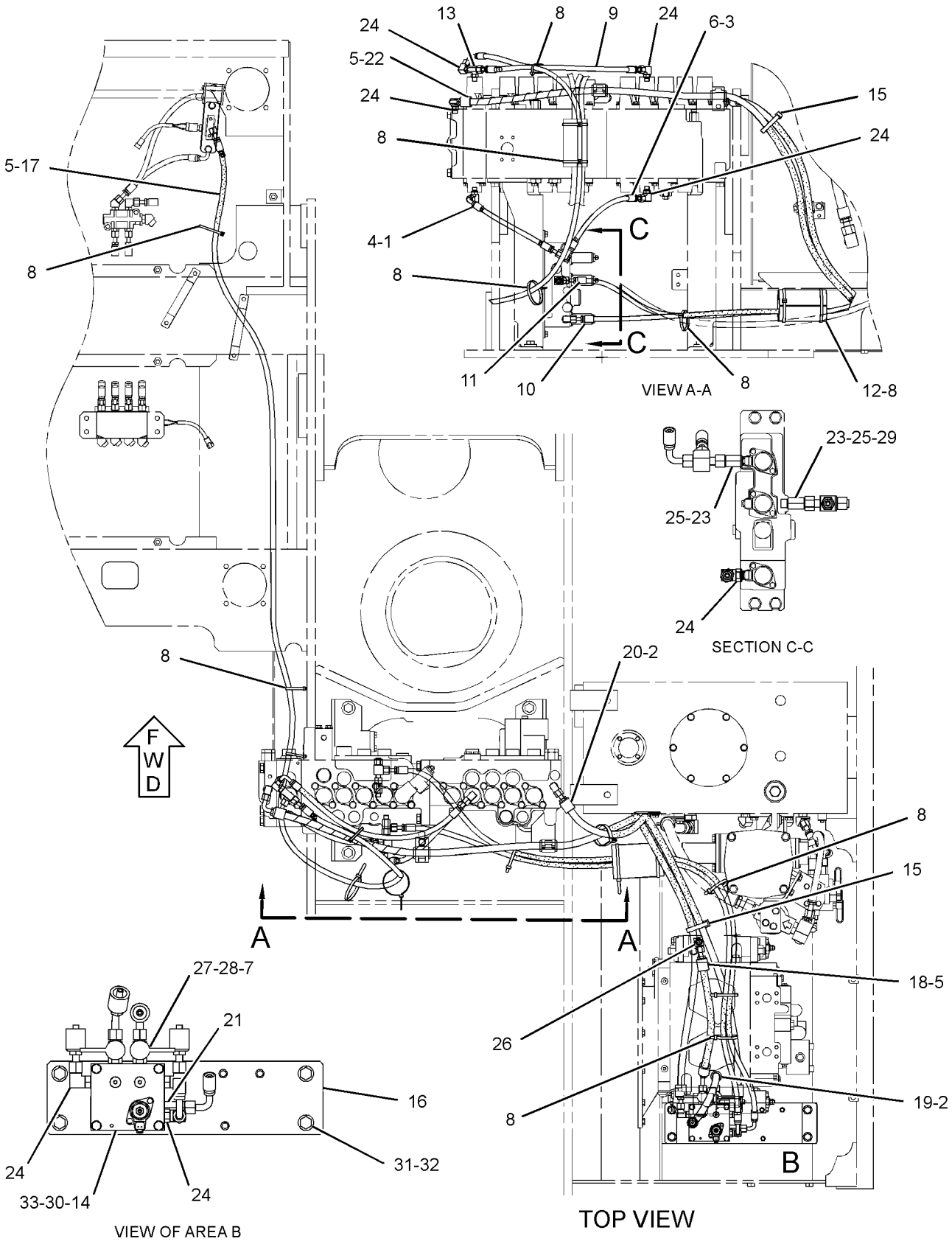

GRAPHIC #1 **<END>** g03311057

376-6324 LINES GP-PILOT–SYSTEM 18

S/N: PBB1-UP; KBS1-UP
PART OF 349-2290 CONTROL AR-AUXILIARY
AN ATTACHMENT

SMCS-5057, 5059 **i05640279**

NOTE	REF NO	GRAPHIC REF	PART NUMBER	QTY	PART NAME 1 2 3 4 5 6 (PRODUCT LEVEL)	SEE PAGE
I	1	1	**4I-3988**	1	HOSE AS	
I	2	1	**4I-6054**	1	HOSE AS	
	3	1	**4I-9521**	2	BAND-MARKER (RED, L1)	
	4	1	**4I-9522**	2	BAND-MARKER (YELLOW, L2)	
	5	1,2	**4I-9523**	4	BAND-MARKER (BLUE, L3)	
	6	1	**4I-9524**	2	BAND-MARKER (BROWN, L4)	
	7	1	**4I-9525**	2	BAND-MARKER (ORANGE, R1)	
	8	2	**4I-9526**	6	BAND-MARKER (WHITE, R2)	
	9	1,2	**4I-9527**	10	BAND-MARKER (GREEN, R3)	
I	10	2	**5I-4396**	1	HOSE AS	
I	11	1	**7Y-4199**	1	HOSE AS	
I	12	2	**7Y-4366**	2	HOSE AS	
I	13	2	**087-4411**	1	HOSE AS	
I	14	1	**108-7313**	1	HOSE AS	
	15	1,2	**204-2281**	3	STRAP-CABLE	
Y	16	2	**259-7429**	1	VALVE GP-SOLENOID (WORK TOOL, 4-FUNCTION)	678
I	17	2	**272-4180**	1	HOSE AS	
I	18	2	**296-7229**	1	HOSE AS	
I	19	1	**330-2384**	1	HOSE AS	
	20	2	*363-6132*	1	CONNECTOR AS	
		2	**3J-1907**	1	SEAL-O-RING	
		2	**6V-8397**	1	SEAL-O-RING	
		2	**116-3412**	1	CONNECTOR-FILTER	
	21	2	*363-6134*	1	ADAPTER AS	
		2	**3J-1907**	1	SEAL-O-RING	
		2	**6V-8397**	1	SEAL-O-RING	
		2	**354-3864**	1	ADAPTER-FILTER	
I	22	1	**377-3294**	1	HOSE AS	
	23	2	**379-4666**	1	SUPPORT AS	
Y	24	2	**398-2282**	1	VALVE GP-SOLENOID (NEGATIVE FLOW CONTROL)	682
	25	2	*148-8336*	3	CONNECTOR AS	
					(EACH INCLUDES)	
		2	**3J-1907**	1	SEAL-O-RING	
		2	**6V-8397**	1	SEAL-O-RING	
		2	**6V-8636**	1	CONNECTOR	
	26	2	*148-8353*	2	ELBOW AS	
					(EACH INCLUDES)	
		2	**3J-1907**	1	SEAL-O-RING	
		2	**6V-8397**	1	SEAL-O-RING	
		2	**6V-9001**	1	ELBOW	
	27	2	*148-8378*	12	ELBOW AS	
					(EACH INCLUDES)	
		2	**3J-1907**	1	SEAL-O-RING	
		2	**6V-8397**	1	SEAL-O-RING	
		2	**6V-8724**	1	ELBOW	
	28	2	*150-3036*	1	ELBOW AS	
		2	**3J-1907**	1	SEAL-O-RING	
		2	**6V-8397**	1	SEAL-O-RING	
		2	**8T-1905**	1	ELBOW	
	29	2	*150-4027*	2	TEE AS	
					(EACH INCLUDES)	
		2	**3E-2310**	1	TEE	
		2	**3J-1907**	1	SEAL-O-RING	
		2	**6V-8397**	1	SEAL-O-RING	
	30	2	*164-5567*	6	COUPLER AS-QUICK DISCONNECT (MALE)	
					(EACH INCLUDES)	
		2	**6V-3965**	1	FITTING (QUICK DISCONNECT)	

376-6324 **LINES GP-PILOT (*contd.*)** **i05640279**

NOTE	REF NO	GRAPHIC REF	PART NUMBER	QTY	PART NAME 1 2 3 4 5 6 (PRODUCT LEVEL)	SEE PAGE
		2	**214-7568**	1	SEAL-O-RING	
	31	2	*164-6874*	4	FITTING AS-ELBOW (QUICK DISCONNECT, MALE)	
					(EACH INCLUDES)	
		2	**3J-1907**	1	SEAL-O-RING	
		2	**085-7356**	1	FITTING	
	32	2	**6V-0852**	6	CAP-DUST	
	33	2	**7K-1181**	9	STRAP-CABLE	
	34	2	**8T-4121**	2	WASHER-HARD (11X21X2.5-MM THK)	
M	35	2	**8T-4136**	2	BOLT (M10X1.5X25-MM)	
M	36	2	**8T-4177**	4	BOLT (M8X1.25X90-MM)	
	37	2	**8T-4224**	4	WASHER-HARD (8.8X16X2-MM THK)	
M	38	2	**8T-6870**	4	BOLT (M8X1.25X70-MM)	

I - REFER TO HYDRAULIC INFORMATION SYSTEM
M - METRIC PART
Y - SEPARATE ILLUSTRATION

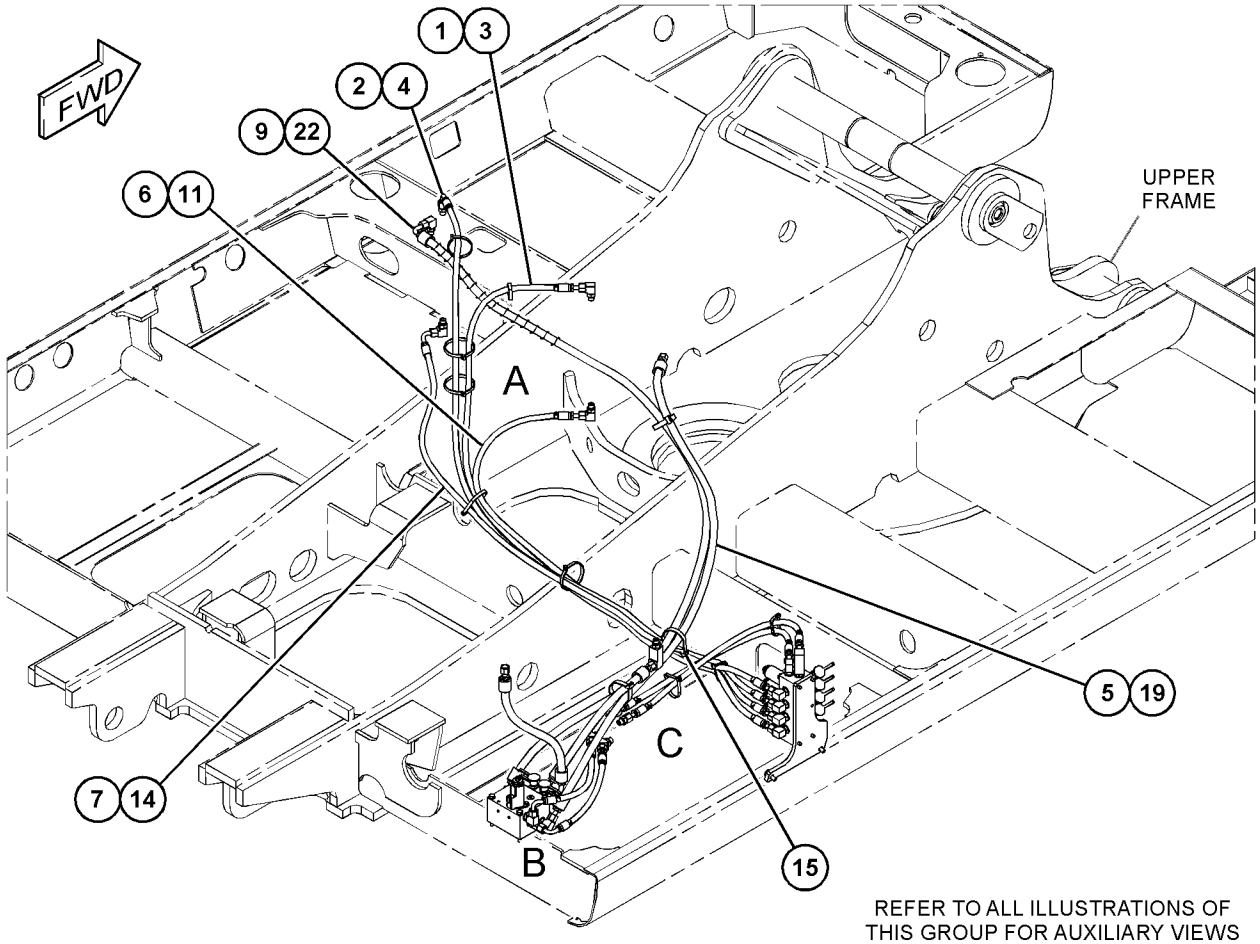

REFER TO ALL ILLUSTRATIONS OF THIS GROUP FOR AUXILIARY VIEWS

GRAPHIC #1 g03713000

376-6324 **LINES GP-PILOT (*contd.*)** **i05640279**

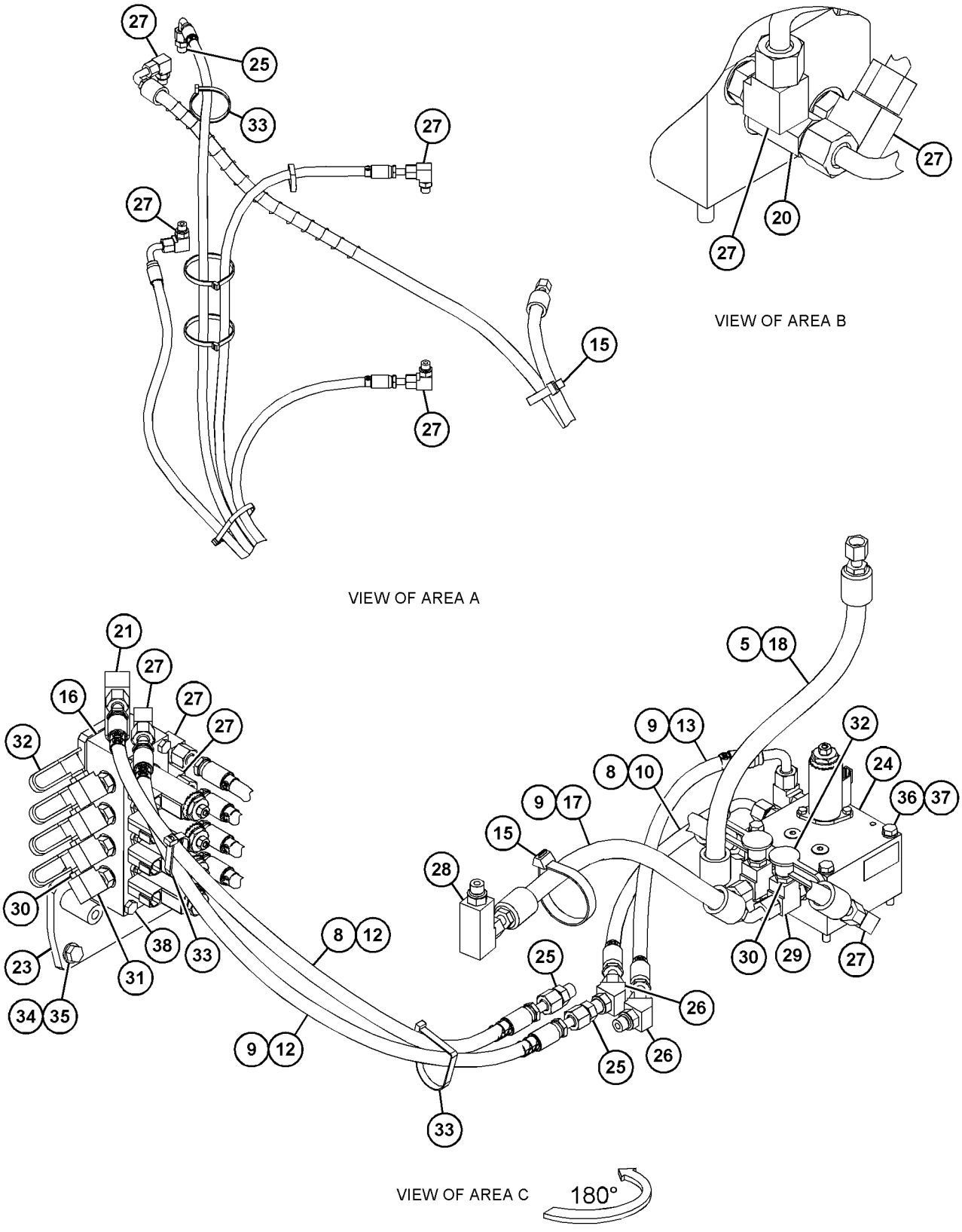

GRAPHIC #2 **<END>** g03713001

376-6327 LINES GP-PILOT—MEDIUM PRESSURE

S/N: PBB1-UP; KBS1-UP
PART OF 349-2216 CONTROL AR-AUXILIARY
AN ATTACHMENT

SMCS-5057, 5059 **i05858605**

NOTE	REF NO	GRAPHIC REF	PART NUMBER	QTY	PART NAME 1 2 3 4 5 6 (PRODUCT LEVEL)	SEE PAGE
	1	1	**4I-9523**	2	BAND-MARKER (BLUE, L3)	
	2	1	**4I-9526**	2	BAND-MARKER (WHITE, R2)	
I	3	1	**087-4402**	1	HOSE AS	
I	4	1	**087-4411**	1	HOSE AS	
	5	1	**255-2068**	1	SUPPORT AS	
Y	6	1	**259-7430**	1	VALVE GP-SOLENOID (PRESSURE REDUCING)	679
	7	1	*363-6134*	1	ADAPTER AS	
		1	**3J-1907**	1	SEAL-O-RING	
		1	**6V-8397**	1	SEAL-O-RING	
		1	**354-3864**	1	ADAPTER-FILTER	
I	8	1	**376-6335**	2	HOSE AS	
	9	1	*148-8336*	1	CONNECTOR AS	
		1	**3J-1907**	1	SEAL-O-RING	
		1	**6V-8397**	1	SEAL-O-RING	
		1	**6V-8636**	1	CONNECTOR	
	10	1	*148-8338*	1	CONNECTOR AS	
		1	**3J-1907**	1	SEAL-O-RING	
		1	**6V-8397**	1	SEAL-O-RING	
		1	**8T-0075**	1	CONNECTOR	
	11	1	*148-8353*	2	ELBOW AS	
					(EACH INCLUDES)	
		1	**3J-1907**	1	SEAL-O-RING	
		1	**6V-8397**	1	SEAL-O-RING	
		1	**6V-9001**	1	ELBOW	
	12	1	*148-8378*	2	ELBOW AS	
					(EACH INCLUDES)	
		1	**3J-1907**	1	SEAL-O-RING	
		1	**6V-8397**	1	SEAL-O-RING	
		1	**6V-8724**	1	ELBOW	
	13	1	*150-3036*	1	ELBOW AS	
		1	**3J-1907**	1	SEAL-O-RING	
		1	**6V-8397**	1	SEAL-O-RING	
		1	**8T-1905**	1	ELBOW	
	14	1	*164-5567*	2	COUPLER AS-QUICK DISCONNECT (MALE)	
					(EACH INCLUDES)	
		1	**6V-3965**	1	FITTING (QUICK DISCONNECT)	
		1	**214-7568**	1	SEAL-O-RING	
	15	1	*164-6874*	2	FITTING AS-ELBOW (QUICK DISCONNECT, MALE)	
					(EACH INCLUDES)	
		1	**3J-1907**	1	SEAL-O-RING	
		1	**085-7356**	1	FITTING	
	16	1	**5K-8451**	1	CLIP	
	17	1	**6V-0852**	2	CAP-DUST	
	18	1	**7K-1181**	3	STRAP-CABLE	
	19	1	**8T-4121**	3	WASHER-HARD (11X21X2.5-MM THK)	
M	20	1	**8T-4136**	2	BOLT (M10X1.5X25-MM)	
M	21	1	**8T-4137**	1	BOLT (M10X1.5X20-MM)	
M	22	1	**8T-6870**	2	BOLT (M8X1.25X70-MM)	

I - REFER TO HYDRAULIC INFORMATION SYSTEM
M - METRIC PART
Y - SEPARATE ILLUSTRATION

376-6327 **LINES GP-PILOT (*contd.*)** **i05858605**

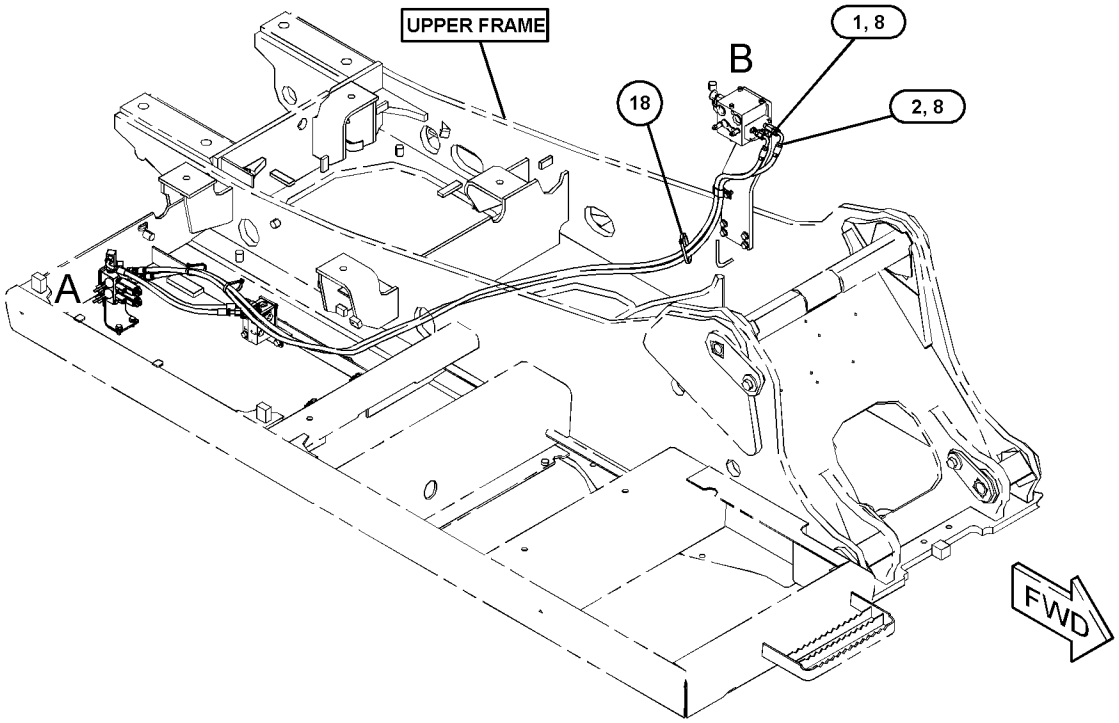

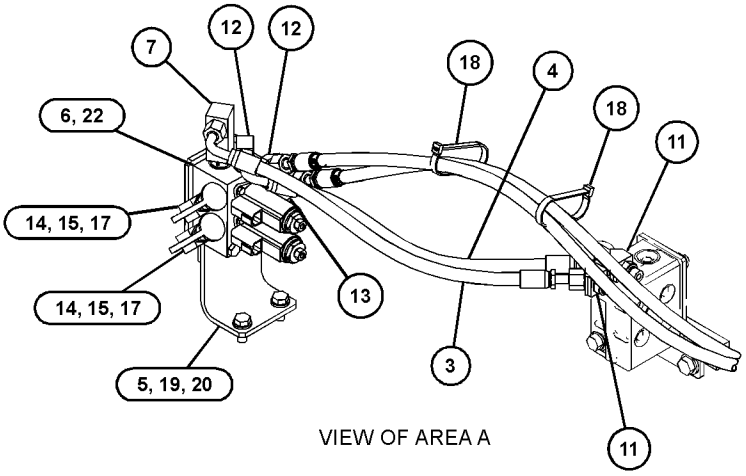

VIEW OF AREA A

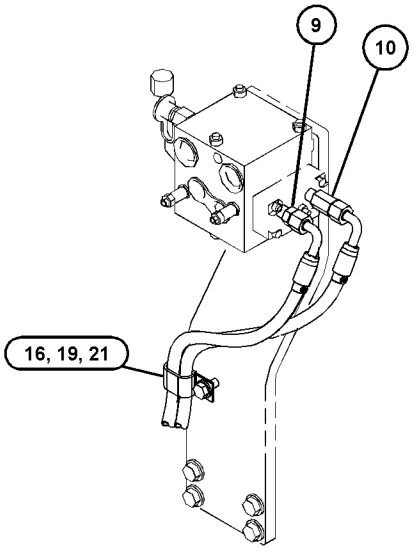

VIEW OF AREA B

GRAPHIC #1 **<END>** g03476262

376-6336 LINES GP-PILOT—OIL PRESSURE

S/N: PBB1-UP; KBS1-UP

AN ATTACHMENT

SMCS-5057, 5059 **i05194835**

NOTE	REF NO	GRAPHIC REF	PART NUMBER	QTY	PART NAME 1 2 3 4 5 6 (PRODUCT LEVEL)	SEE PAGE
I	1	1	**4I-0836**	1	HOSE AS	
	2	1	**4I-9526**	2	BAND-MARKER (WHITE, R2)	
	3	1	**4I-9527**	2	BAND-MARKER (GREEN, R3)	
I	4	1	**5I-4076**	1	HOSE AS	
	5	1	**7K-1181**	4	STRAP-CABLE	
	6	1	**124-1008**	1	GUARD	
	7	1	**168-9759**	1	BLOCK	
	8	1	**266-1108**	1	SUPPORT AS	
	9	1	**377-3289**	1	SUPPORT AS	
	10	1	*148-8336*	3	CONNECTOR AS	
					(EACH INCLUDES)	
		1	**3J-1907**	1	SEAL-O-RING	
		1	**6V-8397**	1	SEAL-O-RING	
		1	**6V-8636**	1	CONNECTOR	
	11	1	*148-8338*	1	CONNECTOR AS	
		1	**3J-1907**	1	SEAL-O-RING	
		1	**6V-8397**	1	SEAL-O-RING	
		1	**8T-0075**	1	CONNECTOR	
	12	1	*148-8411*	2	PLUG AS	
					(EACH INCLUDES)	
		1	**3K-0360**	1	SEAL-O-RING	
		1	**9S-4185**	1	PLUG-O-RING	
	13	1	*148-8433*	2	TEE AS	
					(EACH INCLUDES)	
		1	**6V-8397**	2	SEAL-O-RING	
		1	**6V-9836**	1	TEE-SWIVEL	
	14	1	**8T-4121**	2	WASHER-HARD (11X21X2.5-MM THK)	
M	15	1	**8T-4184**	2	BOLT (M12X1.75X45-MM)	
M	16	1	**8T-4192**	4	BOLT (M12X1.75X25-MM)	
M	17	1	**8T-4198**	2	BOLT (M10X1.5X100-MM)	
	18	1	**8T-4223**	6	WASHER-HARD (13.5X25.5X3-MM THK)	
B	19	1	*148-8407*	8	PLUG AS	
					(EACH INCLUDES)	
		1	**3J-1907**	1	SEAL-O-RING	
		1	**9S-4191**	1	PLUG	
B	20	1	**6V-9829**	2	CAP AS	

B - USE AS REQUIRED
I - REFER TO HYDRAULIC INFORMATION SYSTEM
M - METRIC PART

376-6336 **LINES GP-PILOT (*contd.*)** **i05194835**

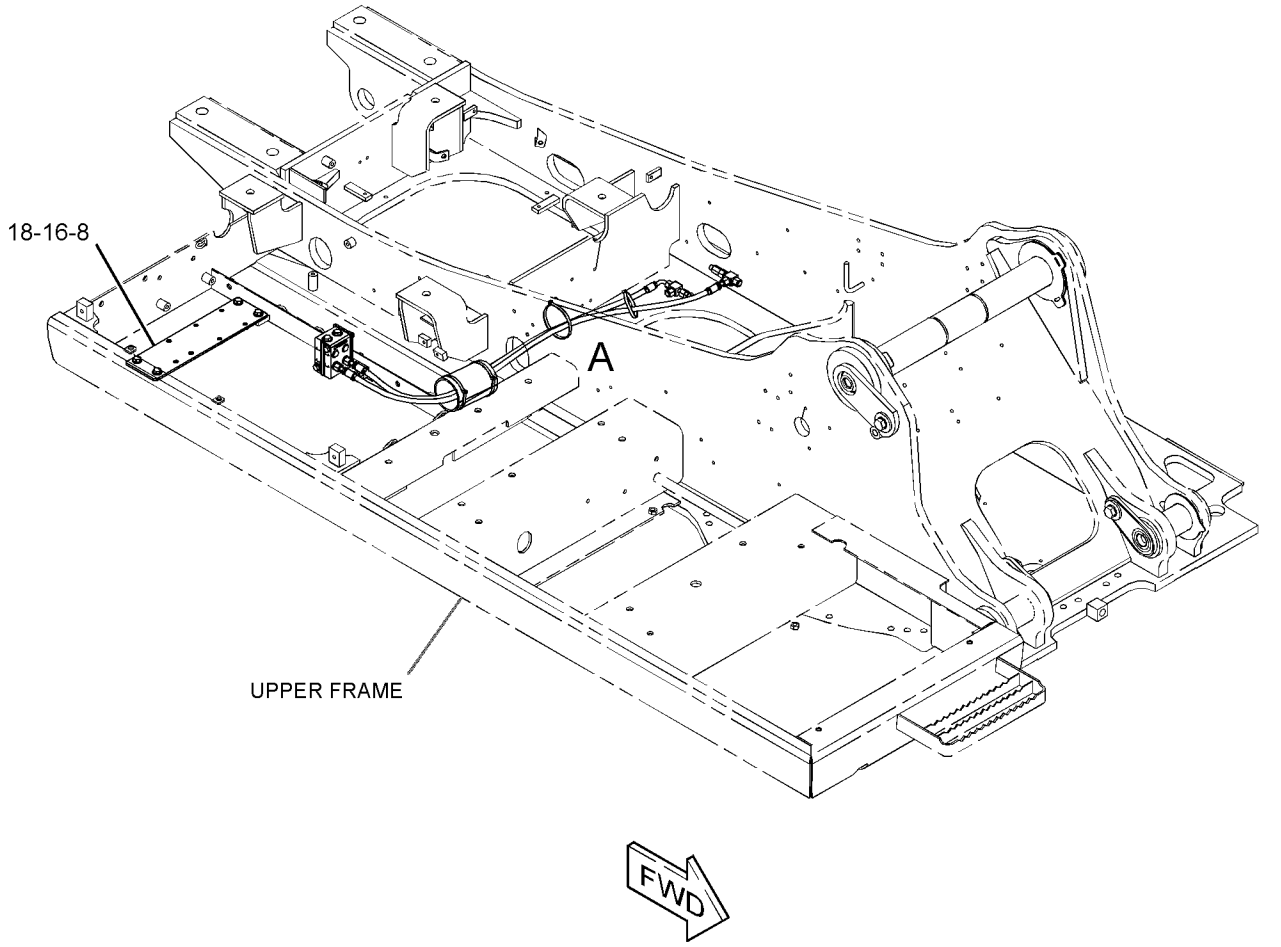

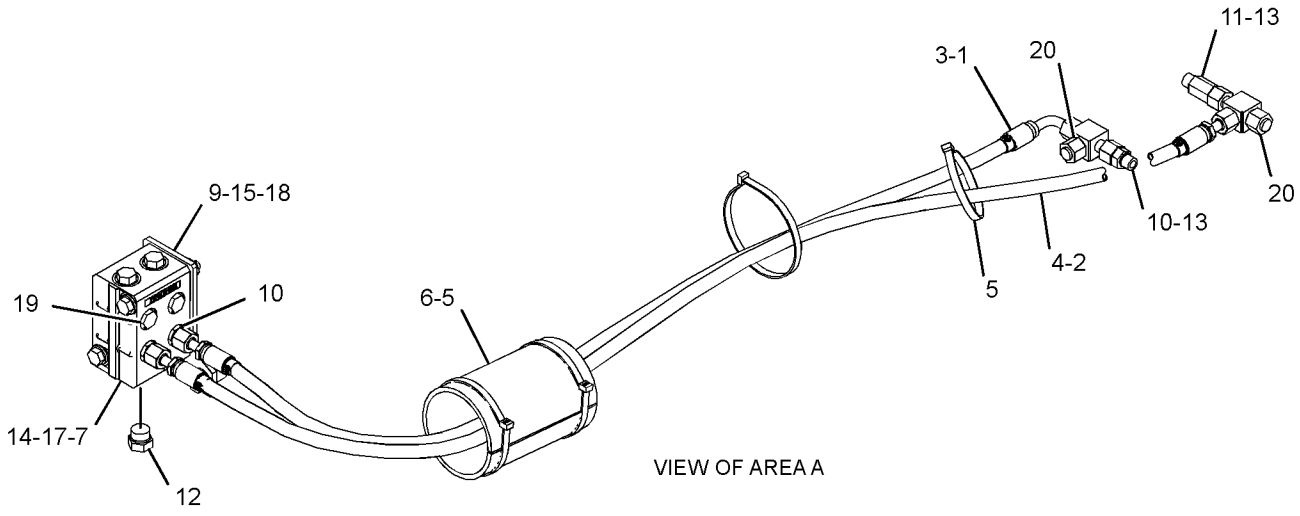

GRAPHIC #1 **<END>** g03311445

376-6340 LINES GP-PILOT–4-WAY PATTERN

S/N: PBB1-UP; KBS1-UP

PART OF 349-2224 VALVE AR-ALT PATTERN CONTROL AN ATTACHMENT

SMCS-5057, 5059 **i05138400**

NOTE	REF NO	GRAPHIC REF	PART NUMBER	QTY	PART NAME 1 2 3 4 5 6 (PRODUCT LEVEL)	SEE PAGE
I	1	2	**4I-3988**	1	HOSE AS	
I	2	1	**4I-3991**	1	HOSE AS	
	3	1,2	**4I-9521**	4	BAND-MARKER (RED, L1)	
	4	1,2	**4I-9522**	4	BAND-MARKER (YELLOW, L2)	
	5	1,2	**4I-9523**	4	BAND-MARKER (BLUE, L3)	
	6	1,2	**4I-9524**	4	BAND-MARKER (BROWN, L4)	
	7	1,2	**4I-9525**	4	BAND-MARKER (ORANGE, R1)	
	8	1,2	**4I-9526**	4	BAND-MARKER (WHITE, R2)	
	9	1,2	**4I-9527**	4	BAND-MARKER (GREEN, R3)	
	10	1,2	**4I-9528**	4	BAND-MARKER (PURPLE, R4)	
	11	1,2	**7K-1181**	11	STRAP-CABLE	
I	12	2	**7Y-8478**	1	HOSE AS	
I	13	2	**087-5780**	1	HOSE AS	
I	14	1	**104-8774**	3	HOSE AS	
I	15	1	**104-8783**	3	HOSE AS	
	16	2	**104-8903**	1	GUARD	
I	17	1	**108-7360**	1	HOSE AS	
I	18	2	**108-7375**	3	HOSE AS	
I	19	2	**111-6752**	1	HOSE AS	
	20	1	**136-0207**	1	STRAP-CABLE	
Y	21	2	**165-9470**	1	VALVE GP-SELECTOR (ALT PATTERN CONTROL, 4-WAY)	667
	22	1	**176-4366**	1	SUPPORT	
	23	2	**176-4684**	1	SUPPORT	
I	24	2	**184-9156**	1	HOSE AS	
	25	1,2	**255-1781**	2	SUPPORT	
	26	1,2	**115-8645**	2	GUARD	
	27	1	**129-3400**	1	GUARD	
	28	2	*148-8336*	2	CONNECTOR AS	
					(EACH INCLUDES)	
		2	**3J-1907**	1	SEAL-O-RING	
		2	**6V-8397**	1	SEAL-O-RING	
		2	**6V-8636**	1	CONNECTOR	
	29	2	*148-8353*	5	ELBOW AS	
					(EACH INCLUDES)	
		2	**3J-1907**	1	SEAL-O-RING	
		2	**6V-8397**	1	SEAL-O-RING	
		2	**6V-9001**	1	ELBOW	
	30	2	*148-8378*	9	ELBOW AS	
					(EACH INCLUDES)	
		2	**3J-1907**	1	SEAL-O-RING	
		2	**6V-8397**	1	SEAL-O-RING	
		2	**6V-8724**	1	ELBOW	
	31	2	**8T-4121**	4	WASHER-HARD (11X21X2.5-MM THK)	
M	32	2	**8T-4191**	4	BOLT (M10X1.5X16-MM)	
M	33	2	**8T-4192**	4	BOLT (M12X1.75X25-MM)	
	34	2	**8T-4223**	4	WASHER-HARD (13.5X25.5X3-MM THK)	
	35	1,2	**8T-4224**	6	WASHER-HARD (8.8X16X2-MM THK)	
M	36	1,2	**8T-4908**	6	BOLT (M8X1.25X25-MM)	

I - REFER TO HYDRAULIC INFORMATION SYSTEM
M - METRIC PART
Y - SEPARATE ILLUSTRATION

376-6340 **LINES GP-PILOT (*contd.*)** **i05138400**

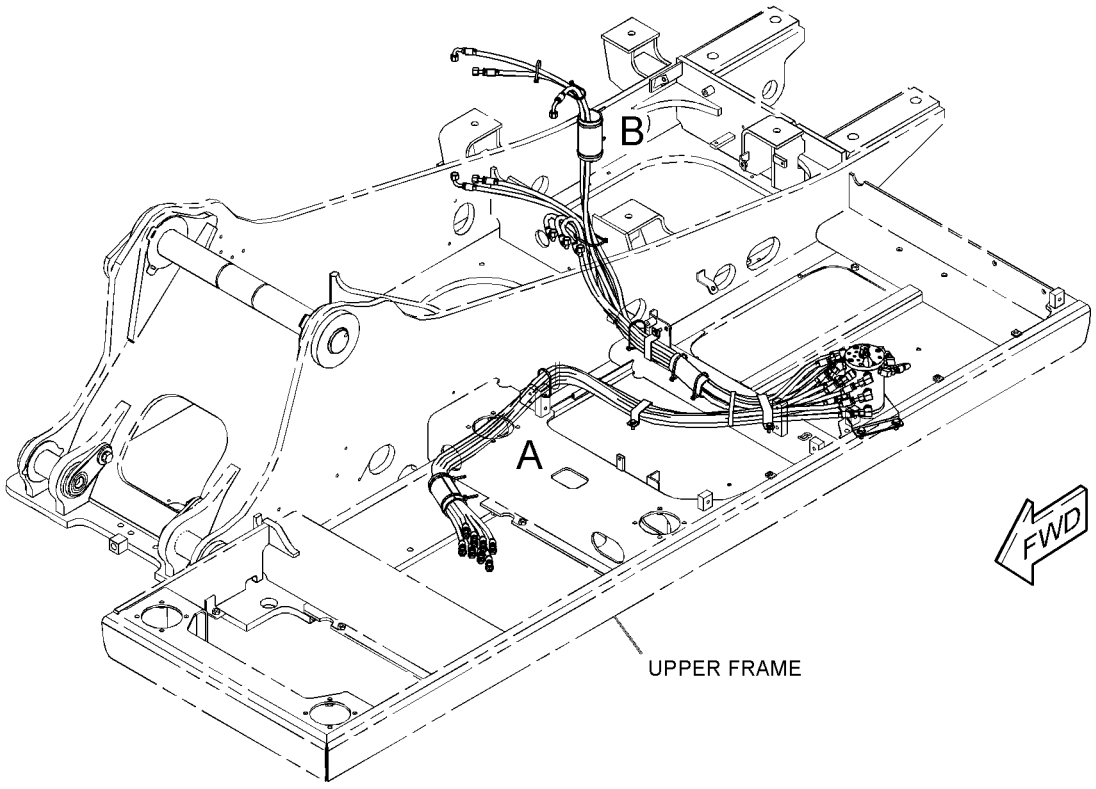

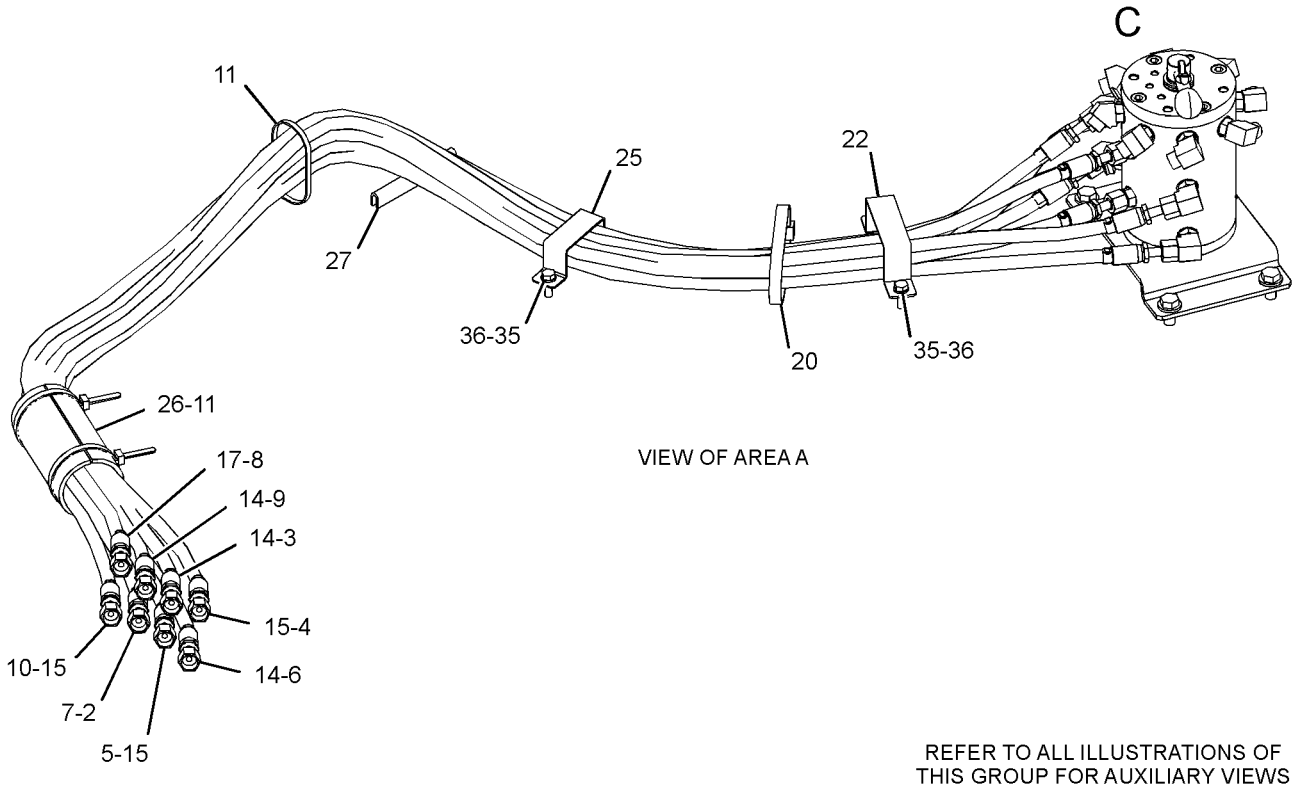

REFER TO ALL ILLUSTRATIONS OF THIS GROUP FOR AUXILIARY VIEWS

GRAPHIC #1

g03312336

376-6340 **LINES GP-PILOT (*contd.*)** **i05138400**

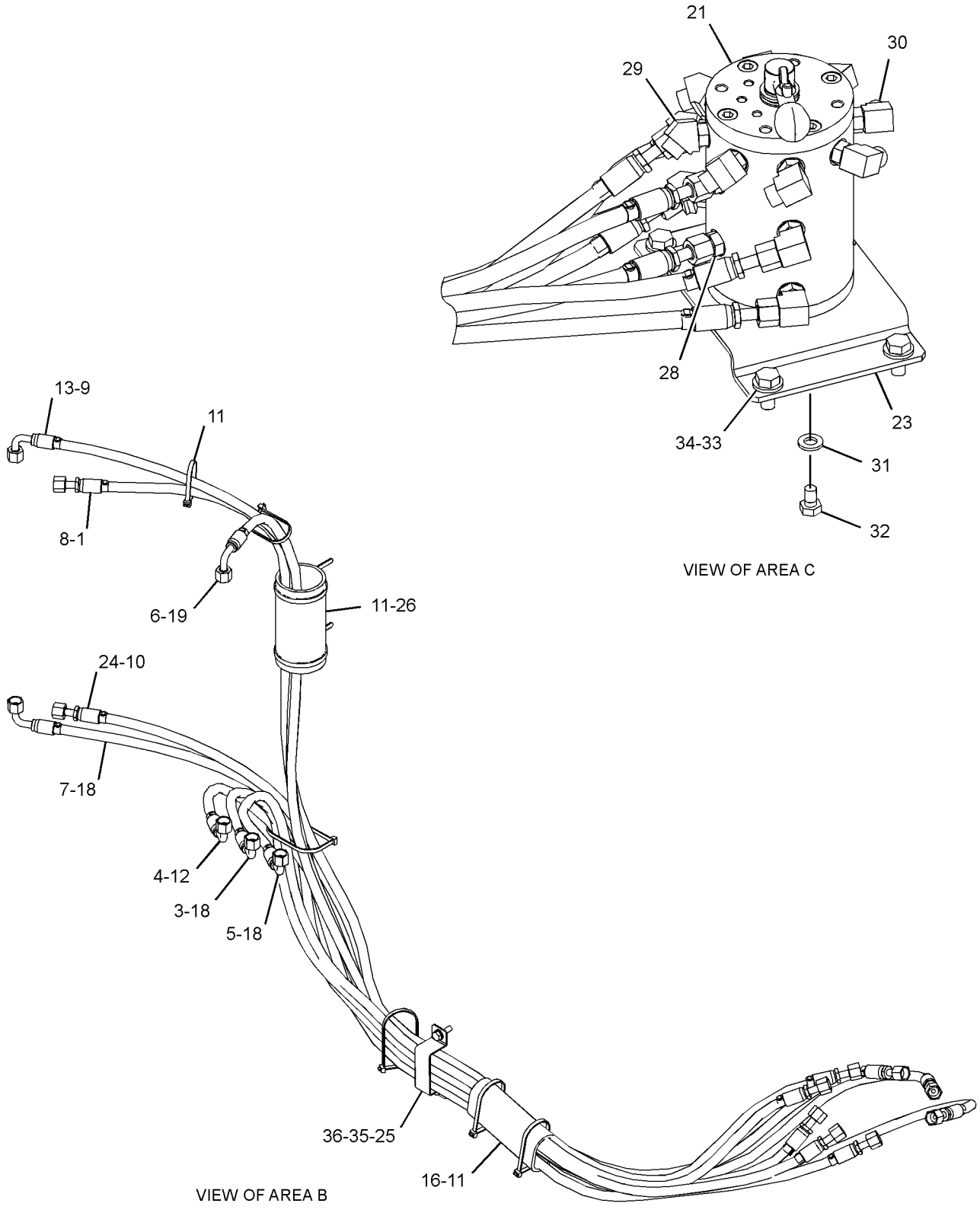

GRAPHIC #2 **<END>** g03312337

376-6313 LINES GP-PUMP–SUPPLY, MAIN PUMP

S/N: PBB1-UP; KBS1-UP

PART OF 456-0404, 456-0405 HYDRAULIC AR

SMCS-5057 **i05857529**

NOTE	REF NO	GRAPHIC REF	PART NUMBER	QTY	PART NAME 1 2 3 4 5 6 (PRODUCT LEVEL)	SEE PAGE
	1	1	**451-2175**	8	WASHER-HARD (17.5X30X3.5-MM THK)	
	2	1	**347-2081**	1	HOSE	
	3	1	**9X-2201**	4	CLAMP-HOSE	
	4	1	**399-7623**	1	PIPE	
	5	1	**399-7626**	1	PIPE	
	6	1	*155-3624*	1	PLUG AS	
		1	**3J-7354**	1	SEAL-O-RING	
		1	**9S-4182**	1	PLUG	
	7	1	**5H-8624**	1	SEAL-O-RING	
	8	1	**6D-9157**	1	SEAL-O-RING	
	9	1	**6V-0400**	4	FLANGE-HALF	
M	10	1	**453-1259**	4	BOLT (M16X2X40-MM)	
M	11	1	**8T-4194**	8	BOLT (M12X1.75X50-MM)	
	12	1	**8T-4223**	8	WASHER-HARD (13.5X25.5X3-MM THK)	
M	13	1	**447-1709**	4	BOLT (M16X2X45-MM)	

M - METRIC PART

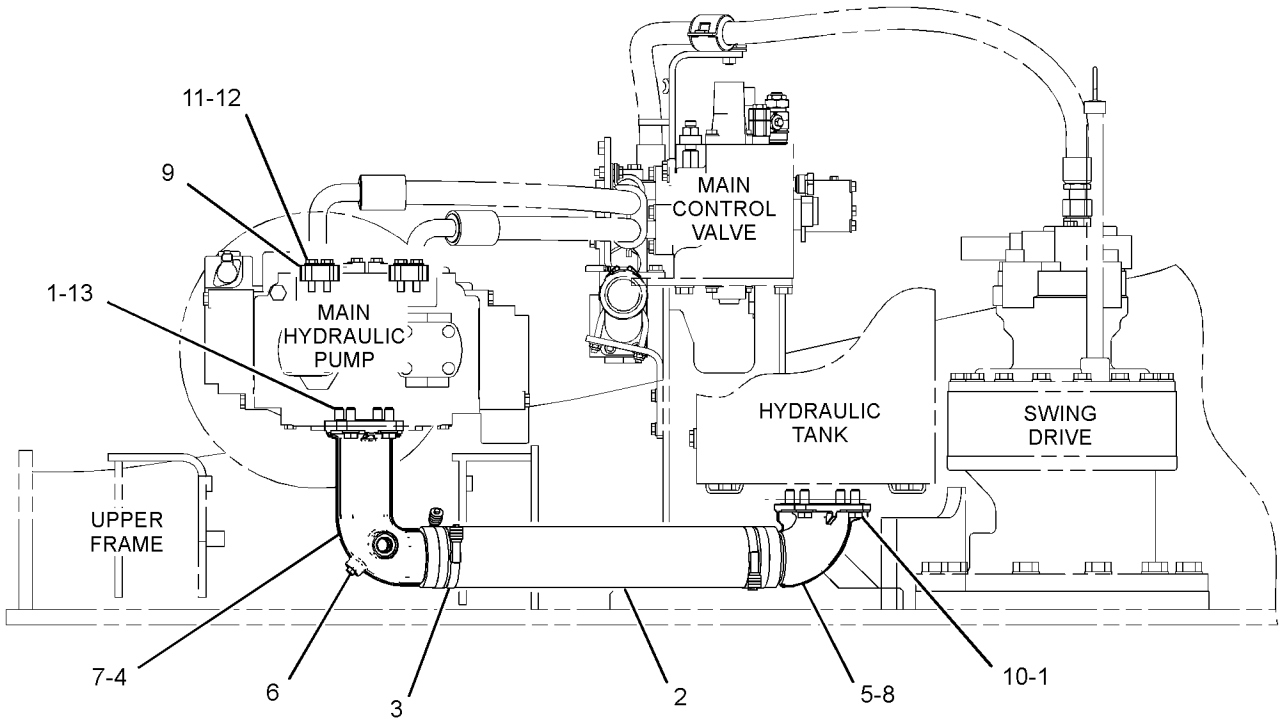

RIGHT SIDE VIEW

GRAPHIC #1 **<END>** g03711866

376-6326 LINES GP-PUMP

S/N: PBB1-UP; KBS1-UP
PART OF 349-2216 CONTROL AR-AUXILIARY
AN ATTACHMENT

SMCS-5057 **i05858603**

NOTE	REF NO	GRAPHIC REF	PART NUMBER	QTY	PART NAME 1 2 3 4 5 6 (PRODUCT LEVEL)	SEE PAGE
	1	1	**6V-0852**	1	CAP-DUST	
	2	1	**9X-2201**	4	CLAMP-HOSE	
	3	1	*106-8715*	1	ELBOW AS	
		1	**3D-2824**	1	SEAL-O-RING	
		1	**6V-9746**	1	SEAL-O-RING	
		1	**8C-8400**	1	ELBOW	
	4	1	*180-9286*	1	TEE AS	
		1	**3D-2824**	1	SEAL-O-RING	
		1	**3E-2345**	1	TEE-O-RING	
		1	**6V-9746**	1	SEAL-O-RING	
	5	1	**199-2045**	1	SPACER (13X25X85-MM THK)	
	6	1	**266-0955**	1	FLANGE	
	7	1	**282-7055**	1	TUBE AS	
I	8	1	**289-5681**	1	HOSE AS	
	9	1	**377-3314**	1	PIPE AS	
	10	1	**377-3318**	1	HOSE	
I	11	1	**377-3319**	1	HOSE AS	
I	12	1	**377-3322**	1	HOSE AS	
M	13	1	**105-3478**	4	BOLT-SOCKET HEAD (M10X1.5X35-MM)	
	14	1	**105-7781**	1	SPACER (13.5X25X40-MM THK)	
	15	1	*150-4049*	1	ELBOW AS	
		1	**6V-9746**	1	SEAL-O-RING	
		1	**7M-8485**	1	SEAL-O-RING	
		1	**8T-4149**	1	ELBOW	
	16	1	*164-5567*	1	COUPLER AS-QUICK DISCONNECT (MALE)	
		1	**6V-3965**	1	FITTING (QUICK DISCONNECT)	
		1	**214-7568**	1	SEAL-O-RING	
	17	1	*164-5606*	1	CONNECTOR AS	
		1	**3D-2824**	1	SEAL-O-RING	
		1	**6V-9746**	1	SEAL-O-RING	
		1	**8T-0078**	1	CONNECTOR	
	18	1	*171-6723*	2	ELBOW AS (EACH INCLUDES)	
		1	**6V-9746**	1	SEAL-O-RING	
		1	**8T-8899**	1	ELBOW	
	19	1	**1P-3703**	1	SEAL-RECTANGULAR	
	20	1	**1P-4578**	2	FLANGE-HALF	
	21	1	**1P-4579**	2	FLANGE-HALF	
	22	1	**4J-0522**	1	SEAL-O-RING	
	23	1	**4J-0524**	2	SEAL-O-RING	
	24	1	**5P-7468**	3	CLIP (SLOT)	
	25	1	**5P-7469**	3	CLIP (TAB)	
	26	1	**6V-1874**	3	GROMMET	
M	27	1	**7X-2550**	1	BOLT (M12X1.75X110-MM)	
	28	1	**8T-4121**	4	WASHER-HARD (11X21X2.5-MM THK)	
M	29	1	**8T-4183**	4	BOLT (M12X1.75X40-MM)	
M	30	1	**8T-4192**	1	BOLT (M12X1.75X25-MM)	
M	31	1	**8T-4196**	4	BOLT (M10X1.5X35-MM)	
	32	1	**8T-4223**	6	WASHER-HARD (13.5X25.5X3-MM THK)	
M	33	1	**8T-4648**	1	BOLT (M12X1.75X70-MM)	
M	34	1	**8T-4956**	4	BOLT (M12X1.75X35-MM)	
M	35	1	**447-1709**	4	BOLT (M16X2X45-MM)	
	36	1	**8T-7971**	1	WASHER-HARD (13.5X25.5X5-MM THK)	
	37	1	**9M-3786**	1	SEAL-O-RING	
	38	1	**451-2175**	4	WASHER-HARD (17.5X30X3.5-MM THK)	

I - REFER TO HYDRAULIC INFORMATION SYSTEM
M - METRIC PART

376-6326 **LINES GP-PUMP (*contd.*)** **i05858603**

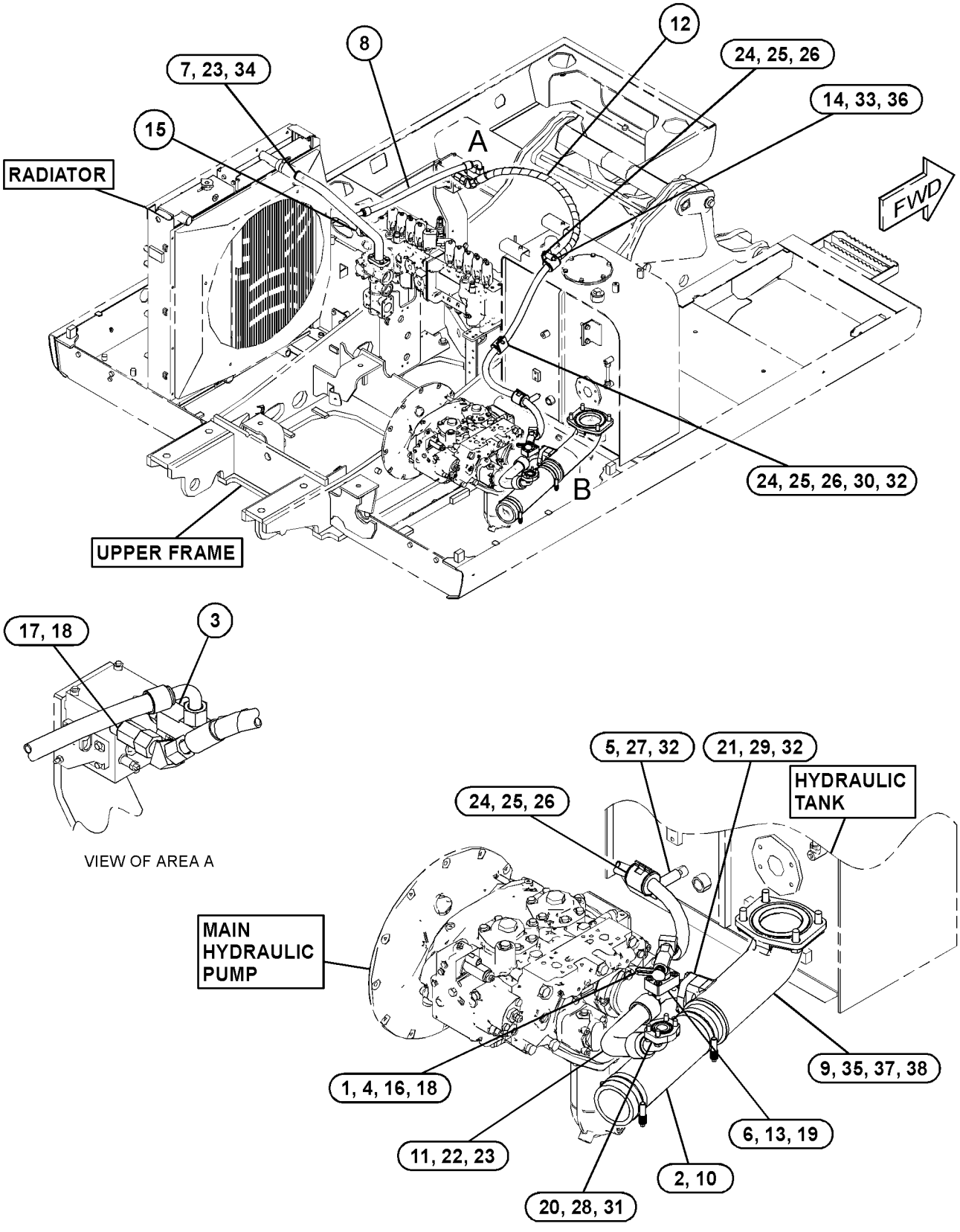

GRAPHIC #1 **<END>** g03476059

376-6331 LINES GP-QUICK COUPLER

S/N: PBB1-UP; KBS1-UP
PART OF 349-2220, 456-0934 CONTROL AR-QUICK COUPLER
AN ATTACHMENT

SMCS-5057, 6129 **i05138855**

NOTE	REF NO	GRAPHIC REF	PART NUMBER	QTY	PART NAME 1 2 3 4 5 6 (PRODUCT LEVEL)	SEE PAGE
	1	1	**3S-2093**	1	STRAP-CABLE	
	2	1	**4I-9521**	6	BAND-MARKER (RED, L1)	
	3	1	**4I-9522**	4	BAND-MARKER (YELLOW, L2)	
	4	1	**4I-9526**	2	BAND-MARKER (WHITE, R2)	
	5	1	**7K-1181**	14	STRAP-CABLE	
	6	1	**7Y-3721**	1	TUBE AS	
	7	1	**9X-6582**	2	NUT (13/16-16-THD)	
	8	1	*148-8430*	1	TEE AS	
		1	**6V-9746**	1	SEAL-O-RING	
		1	**7X-0873**	1	TEE	
	9	1	*164-6874*	1	FITTING AS-ELBOW (QUICK DISCONNECT, MALE)	
		1	**3J-1907**	1	SEAL-O-RING	
		1	**085-7356**	1	FITTING	
I	10	1	**184-9216**	1	HOSE AS	
	11	1	**236-3200**	1	SUPPORT AS	
	12	1	*285-2663*	1	FITTING AS (QUICK DISCONNECT, MALE)	
		1	**3J-1907**	1	SEAL-O-RING	
		1	**285-2664**	1	FITTING	
Y	13	1	**328-2035**	1	VALVE GP-SOLENOID & MANIFOLD (QUICK COUPLER)	683
	14	1	**337-2709**	1	GROMMET	
I	15	1	**377-3336**	3	HOSE AS	
I	16	1	**377-3445**	1	HOSE AS	
M	17	1	**101-7404**	4	BOLT-SOCKET HEAD (M10X1.5X30-MM)	
	18	1	*104-4980*	1	ELBOW AS	
		1	**3J-1907**	1	SEAL-O-RING	
		1	**4J-5477**	1	SEAL-O-RING	
		1	**153-6267**	1	ELBOW	
	19	1	*148-8353*	1	ELBOW AS	
		1	**3J-1907**	1	SEAL-O-RING	
		1	**6V-8397**	1	SEAL-O-RING	
		1	**6V-9001**	1	ELBOW	
	20	1	*148-8368*	2	ELBOW AS	
					(EACH INCLUDES)	
		1	**3J-1907**	1	SEAL-O-RING	
		1	**4J-5477**	1	SEAL-O-RING	
		1	**6V-8627**	1	ELBOW	
	21	1	*148-8419*	2	REDUCER AS	
					(EACH INCLUDES)	
		1	**4J-5477**	1	SEAL-O-RING	
		1	**6V-8935**	1	REDUCER-O-RING	
	22	1	*150-3033*	1	ELBOW AS	
		1	**3J-1907**	1	SEAL-O-RING	
		1	**4J-5477**	1	SEAL-O-RING	
		1	**8T-0164**	1	ELBOW	
	23	1	*153-6249*	1	CONNECTOR AS	
		1	**3J-1907**	1	SEAL-O-RING	
		1	**6V-8397**	1	SEAL-O-RING	
		1	**8T-8887**	1	CONNECTOR	
	24	1	**4J-5267**	1	SEAL-O-RING	
	25	1	**6V-9746**	1	SEAL-O-RING	
	26	1	**8T-4121**	2	WASHER-HARD (11X21X2.5-MM THK)	
M	27	1	**8T-4185**	2	BOLT (M10X1.5X50-MM)	
M	28	1	**8T-4194**	2	BOLT (M12X1.75X50-MM)	
	29	1	**8T-4223**	2	WASHER-HARD (13.5X25.5X3-MM THK)	

I - REFER TO HYDRAULIC INFORMATION SYSTEM
M - METRIC PART
Y - SEPARATE ILLUSTRATION

376-6331 **LINES GP-QUICK COUPLER (*contd.*)** **i05138855**

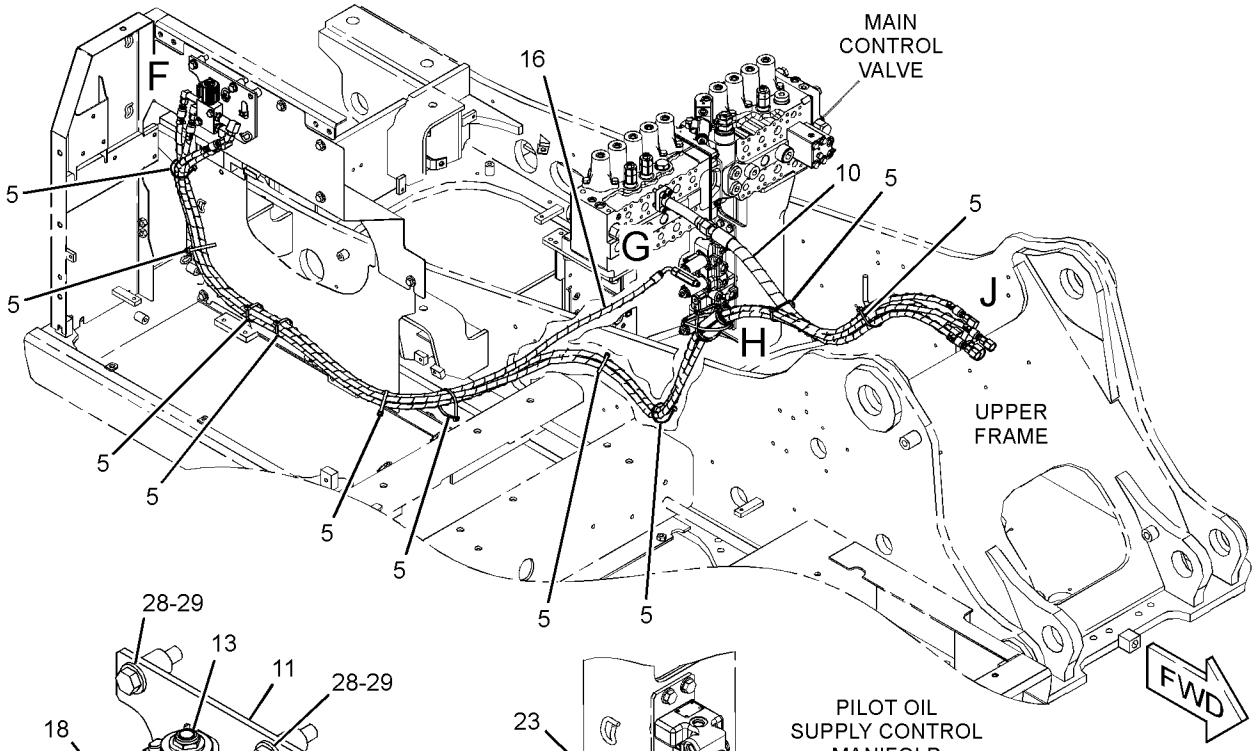

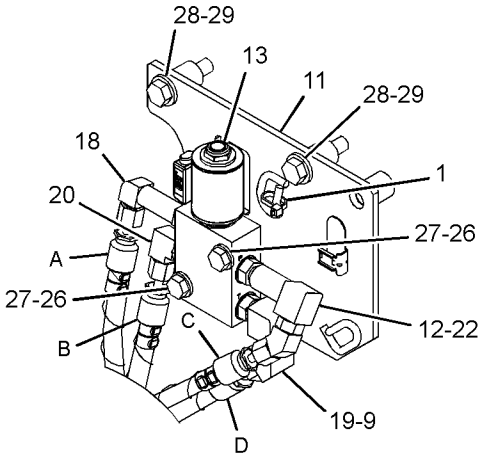

VIEW OF AREA F

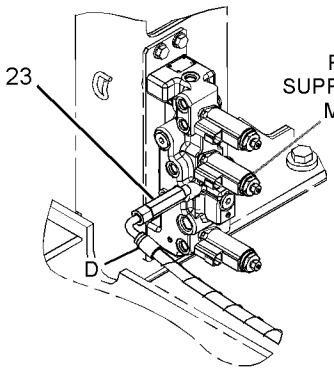

VIEW OF AREA G 90°

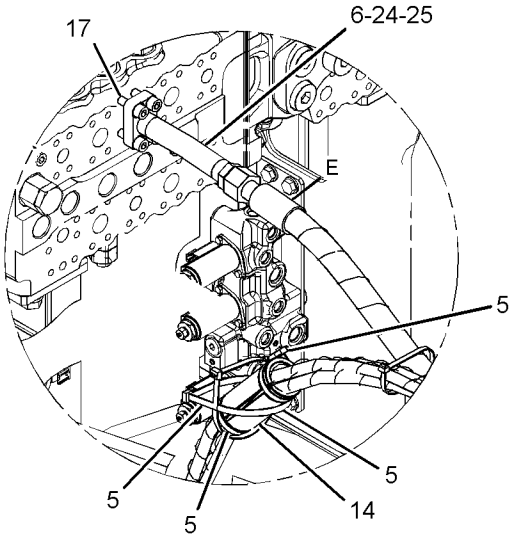

VIEW OF AREA H

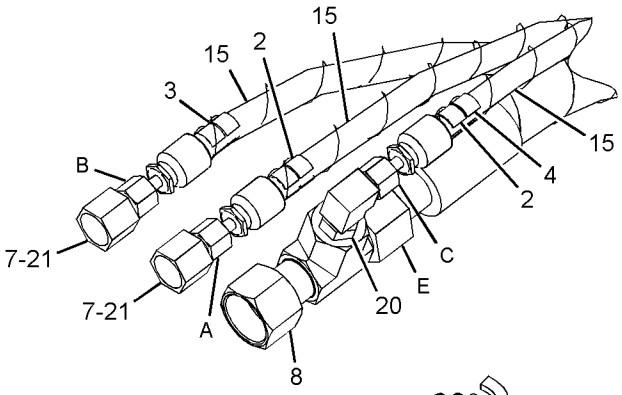

VIEW OF AREA J 90°

GRAPHIC #1 **<END>** g03313299

248-9853 LINES GP-RETURN—HYDRAULIC TANK

S/N: PBB1-UP; KBS1-UP

PART OF 455-4363 TANK & MTG GP-HYDRAULIC

SMCS-5057 **i04021676**

NOTE	REF NO	GRAPHIC REF	PART NUMBER	QTY	PART NAME 1 2 3 4 5 6 (PRODUCT LEVEL)	SEE PAGE
	1	1	**4I-9527**	2	BAND-MARKER (GREEN, R3)	
	2	1	**7K-1181**	2	STRAP-CABLE	
	3	1	*268-1621*	1	FITTING AS	
		1	**3D-2824**	1	SEAL-O-RING	
		1	**6V-9746**	1	SEAL-O-RING	
		1	**124-1212**	1	FITTING	
	4	1	**165-3260**	1	PIPE AS	
I	5	1	**176-4770**	1	HOSE AS	
C	6	1	*307-5097*	1	TEE AS	
		1	**2M-9780**	1	SEAL-O-RING	
		1	**6V-8397**	1	SEAL-O-RING	
		1	**6V-8398**	1	SEAL-O-RING	
		1	**307-5098**	1	TEE-ORP TO ORFS	
I	7	1	**275-1361**	1	HOSE AS	
I	8	1	**292-7153**	1	HOSE AS	
	9	1	*148-8327*	1	CONNECTOR AS	
		1	**3D-2824**	1	SEAL-O-RING	
		1	**6V-8637**	1	CONNECTOR	
		1	**6V-9746**	1	SEAL-O-RING	
C	10	1	*164-5608*	1	CONNECTOR AS	
		1	**3K-0360**	1	SEAL-O-RING	
		1	**6V-8398**	1	SEAL-O-RING	
		1	**8T-1687**	1	CONNECTOR	
	11	1	*148-8347*	1	ELBOW AS	
		1	**3D-2824**	1	SEAL-O-RING	
		1	**6V-9007**	1	ELBOW	
		1	**6V-9746**	1	SEAL-O-RING	
	12	1	*148-8354*	3	ELBOW AS	
					(EACH INCLUDES)	
		1	**3K-0360**	1	SEAL-O-RING	
		1	**6V-8398**	1	SEAL-O-RING	
		1	**6V-9002**	1	ELBOW	
	13	1	*148-8358*	1	ELBOW AS	
		1	**2M-9780**	1	SEAL-O-RING	
		1	**6V-8398**	1	SEAL-O-RING	
		1	**6V-8624**	1	ELBOW	
	14	1	*148-8363*	1	ELBOW AS	
		1	**3K-0360**	1	SEAL-O-RING	
		1	**6V-8397**	1	SEAL-O-RING	
		1	**6V-9876**	1	ELBOW	
	15	1	*148-8411*	1	PLUG AS	
		1	**3K-0360**	1	SEAL-O-RING	
		1	**9S-4185**	1	PLUG-O-RING	
	17	1	**5P-7464**	1	CLIP (SLOT)	
	18	1	**5P-7465**	1	CLIP (TAB)	
	19	1	**6J-2680**	1	SEAL-O-RING	
	21	1	**8T-2920**	1	GROMMET (27-MM ID)	
M	22	1	**8T-4139**	1	BOLT (M12X1.75X30-MM)	
	23	1	**8T-4223**	5	WASHER-HARD (13.5X25.5X3-MM THK)	
M	24	1	**8T-4956**	4	BOLT (M12X1.75X35-MM)	

C - CHANGE FROM PREVIOUS TYPE
I - REFER TO HYDRAULIC INFORMATION SYSTEM
M - METRIC PART

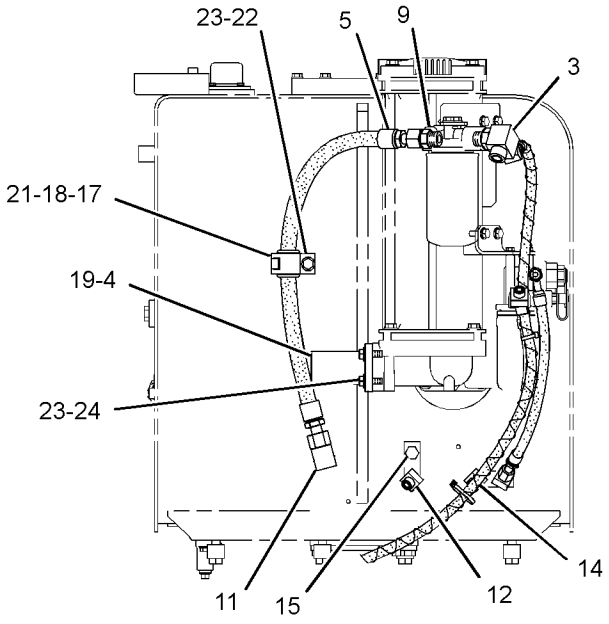

REAR VIEW

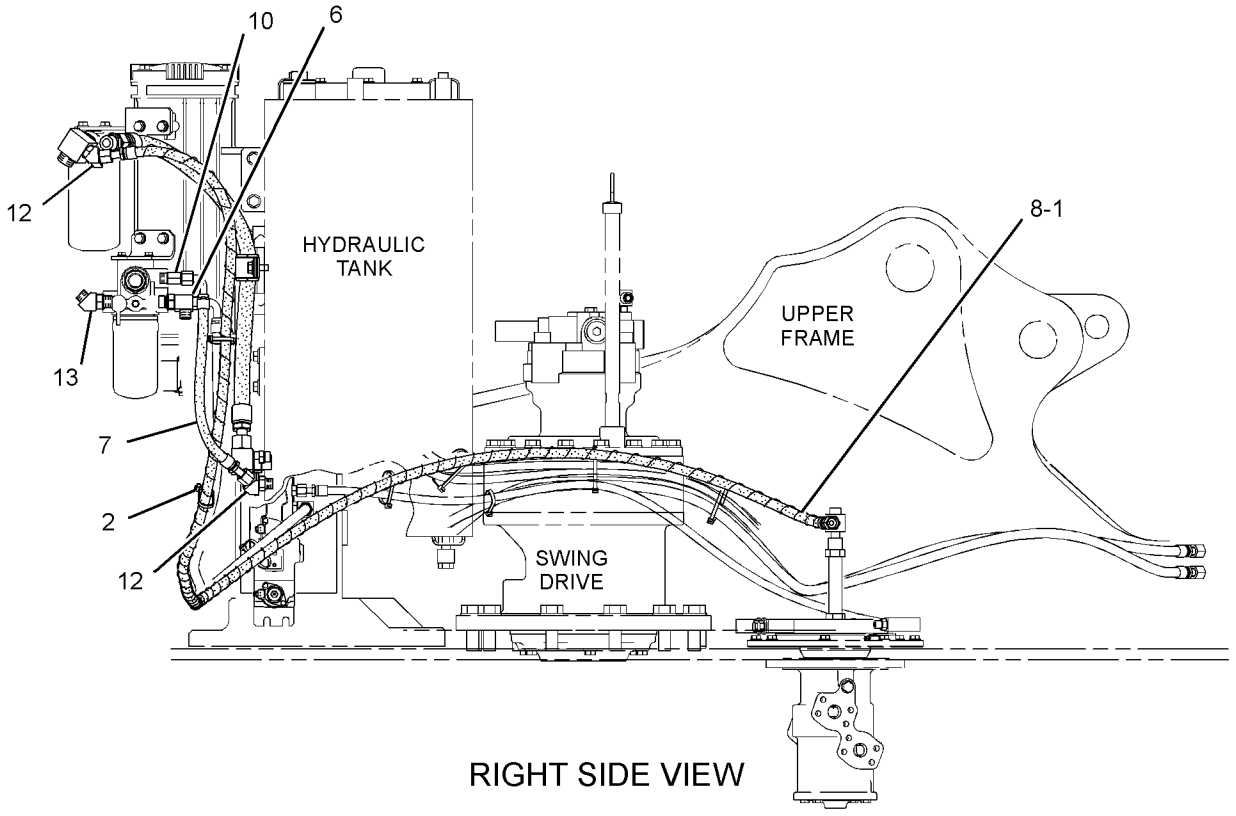

RIGHT SIDE VIEW

GRAPHIC #1 **<END>** g02140028

282-7161 LINES GP-RETURN—BOOM LOWERING CONTROL

S/N: PBB1-UP; KBS1-UP
PART OF 270-5974 VALVE AR-CHECK & RELIEF
AN ATTACHMENT

SMCS-5057 **i03086981**

NOTE	REF NO	GRAPHIC REF	PART NUMBER	QTY	PART NAME 1 2 3 4 5 6 (PRODUCT LEVEL)	SEE PAGE
	1	1	**7K-1181**	1	STRAP-CABLE	
I	2	1	**107-1567**	1	HOSE AS	
CI	3	1	**319-9845**	1	HOSE AS	
	4	1	**201-9378**	1	BLOCK	
	5	1	**307-4920**	1	FITTING	
	6	1	*148-8357*	1	ELBOW AS	
		1	**5K-9090**	1	SEAL-O-RING	
		1	**6V-9008**	1	ELBOW	
		1	**7M-8485**	1	SEAL-O-RING	
	7	1	*148-8411*	1	PLUG AS	
		1	**3K-0360**	1	SEAL-O-RING	
		1	**9S-4185**	1	PLUG-O-RING	
	8	1	**1P-3703**	1	SEAL-RECTANGULAR	
	9	1	**4J-5268**	1	SEAL-O-RING	
	10	1	*148-8327*	1	CONNECTOR AS	
		1	**3D-2824**	1	SEAL-O-RING	
		1	**6V-8637**	1	CONNECTOR	
		1	**6V-9746**	1	SEAL-O-RING	

C - CHANGE FROM PREVIOUS TYPE
I - REFER TO HYDRAULIC INFORMATION SYSTEM

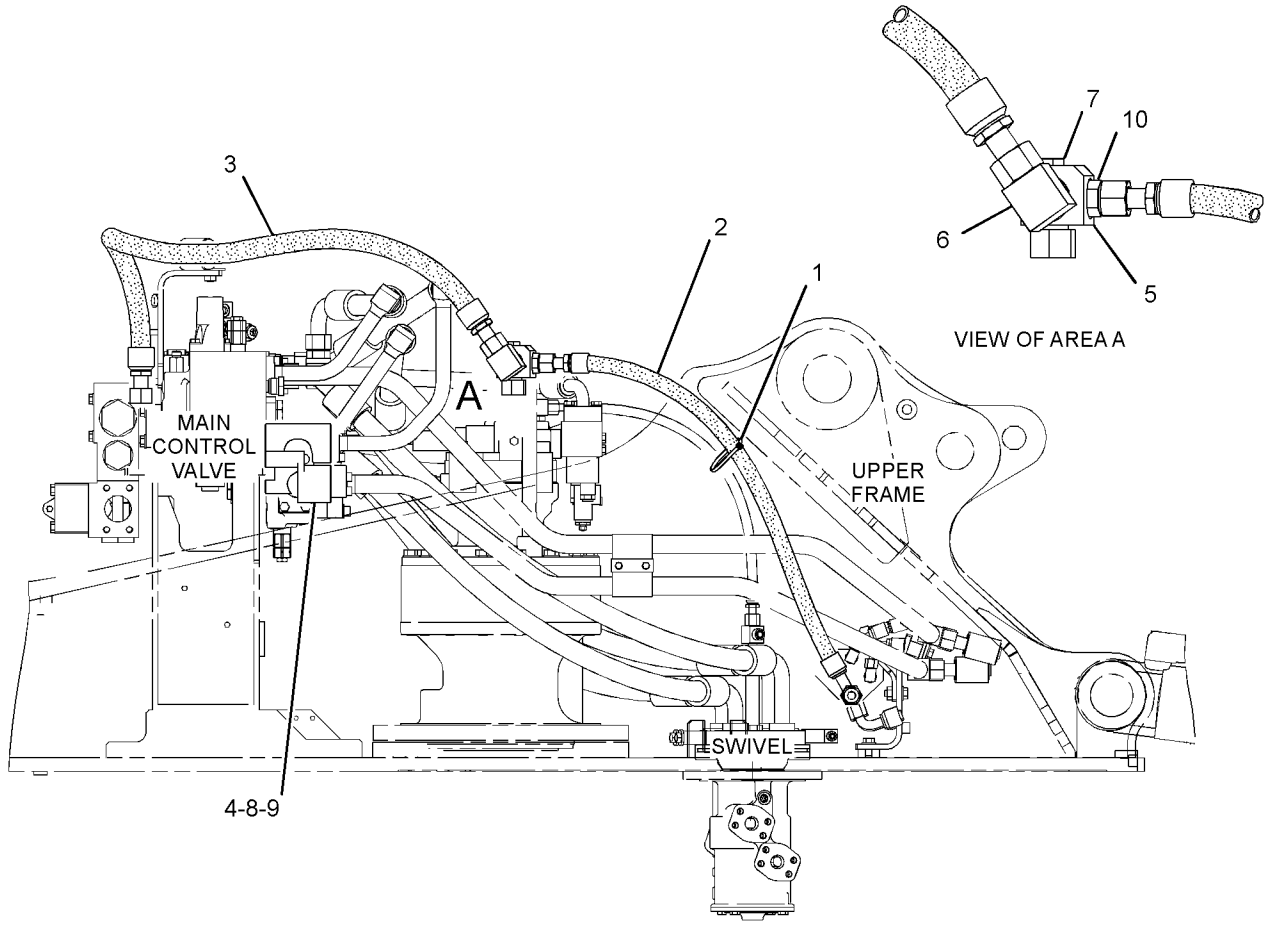

RIGHT SIDE VIEW

GRAPHIC #1 **<END>** g01623628

248-9633 LINES GP-STICK

S/N: PBB1-UP; KBS1-UP
FOR USE WITH 2.4-M (7.9-FT) STICK
PART OF 290-1788 STICK AR-HOE
AN ATTACHMENT

SMCS-5057, 5458 **i05346015**

NOTE	REF NO	GRAPHIC REF	PART NUMBER	QTY	PART NAME 1 2 3 4 5 6 (PRODUCT LEVEL)	SEE PAGE
	1	1	**5I-4174**	1	BLOCK	
I	2	1	**187-6058**	2	HOSE AS	
	3	1	**1P-3702**	2	SEAL-RECTANGULAR	
	4	1	**1P-3703**	1	SEAL-RECTANGULAR	
	5	1	**8T-4121**	8	WASHER-HARD (11X21X2.5-MM THK)	
M	6	1	**8T-4182**	4	BOLT (M10X1.5X45-MM)	
M	7	1	**8T-4198**	4	BOLT (M10X1.5X100-MM)	
	8	1	**8T-9403**	4	FLANGE-HALF	

I - REFER TO HYDRAULIC INFORMATION SYSTEM
M - METRIC PART

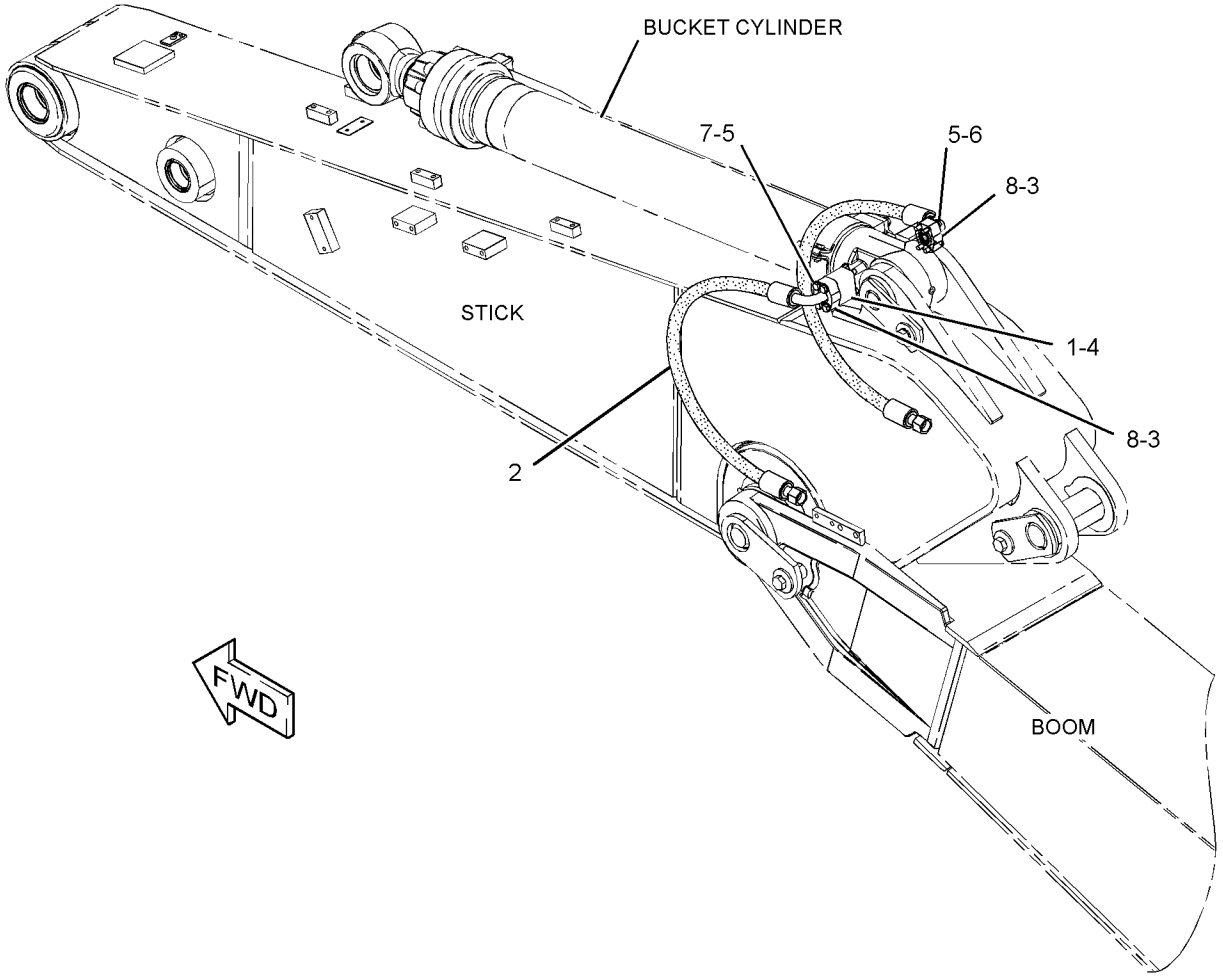

GRAPHIC #1 **<END>** g01227745

431-1641 LINES GP-STICK

S/N: PBB1-UP; KBS1-UP
FOR USE WITH 3.9-M (12.8-FT) STICK
PART OF 298-4127 STICK AR-HOE
AN ATTACHMENT

SMCS-5057, 5458 **i05270536**

NOTE	REF NO	GRAPHIC REF	PART NUMBER	QTY	PART NAME 1 2 3 4 5 6 (PRODUCT LEVEL)	SEE PAGE
	1	1	**102-1120**	1	ELBOW AS	
I	2	1	**102-1279**	2	HOSE AS	
	3	1	**102-1291**	1	ELBOW AS	
I	4	1	**187-6696**	1	HOSE AS	
	5	1	**289-5690**	1	FLANGE-SPECIAL	
I	6	1	**431-1805**	1	HOSE AS	
	7	1	**1P-3702**	1	SEAL-RECTANGULAR	
	8	1	**1P-3703**	2	SEAL-RECTANGULAR	
	9	1	**6V-0400**	2	FLANGE-HALF	
	10	1	**6V-9746**	4	SEAL-O-RING	
M	11	1	**7X-2549**	4	BOLT (M12X1.75X100-MM)	
	12	1	**8T-4121**	4	WASHER-HARD (11X21X2.5-MM THK)	
M	13	1	**8T-4179**	8	BOLT (M12X1.75X20-MM)	
M	14	1	**8T-4182**	4	BOLT (M10X1.5X45-MM)	
	15	1	**8T-4223**	12	WASHER-HARD (13.5X25.5X3-MM THK)	
	16	1	**8T-9403**	2	FLANGE-HALF	

I - REFER TO HYDRAULIC INFORMATION SYSTEM
M - METRIC PART

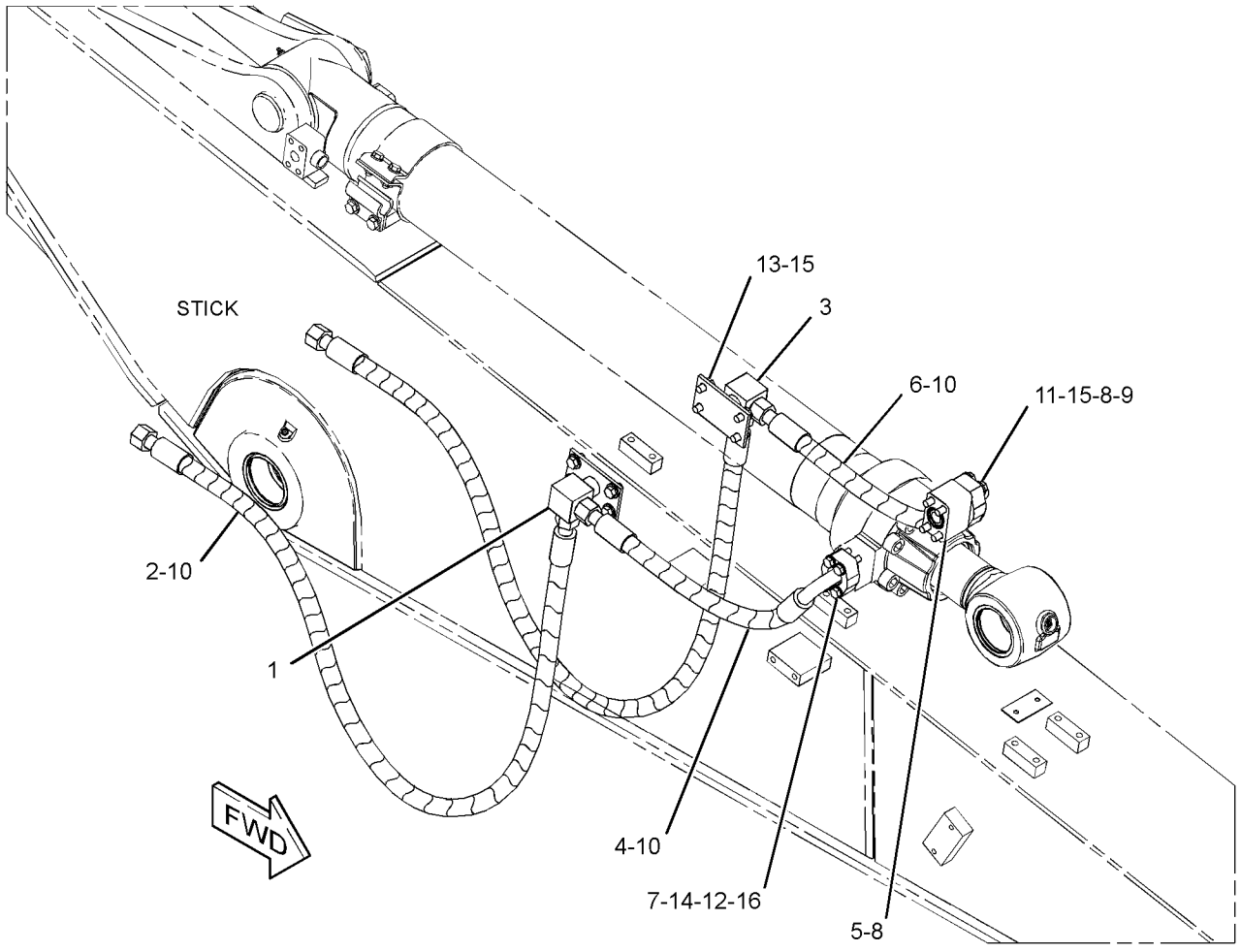

GRAPHIC #1 **<END>** g03322881

242-6735 LINES GP-STICK CYLINDER

S/N: PBB1-UP; KBS1-UP

PART OF 341-2801, 341-2806, 341-2808 CYLINDER & LINES GP-STICK

AN ATTACHMENT

SMCS-5458 **i02420908**

NOTE	REF NO	GRAPHIC REF	PART NUMBER	QTY	PART NAME 1 2 3 4 5 6 (PRODUCT LEVEL)	SEE PAGE
M	1	1	**6V-8200**	4	BOLT-SOCKET HEAD (M12X1.75X35-MM)	
	2	1	**095-1600**	1	SEAL-O-RING	
	3	1	**247-8883**	1	TUBE AS	
M	4	1	**8T-4196**	2	BOLT (M10X1.5X35-MM)	
	5	1	**8T-4896**	2	WASHER-HARD (10.2X18.5X2.5-MM THK)	
	6	1	**124-1020**	1	SUPPORT	
	7	1	**124-1019**	1	SUPPORT AS	
	8	1	**096-4480**	1	CLAMP	
M	9	1	**8T-4910**	1	BOLT (M12X1.75X60-MM)	
	10	1	**8T-4223**	1	WASHER-HARD (13.5X25.5X3-MM THK)	

M - METRIC PART

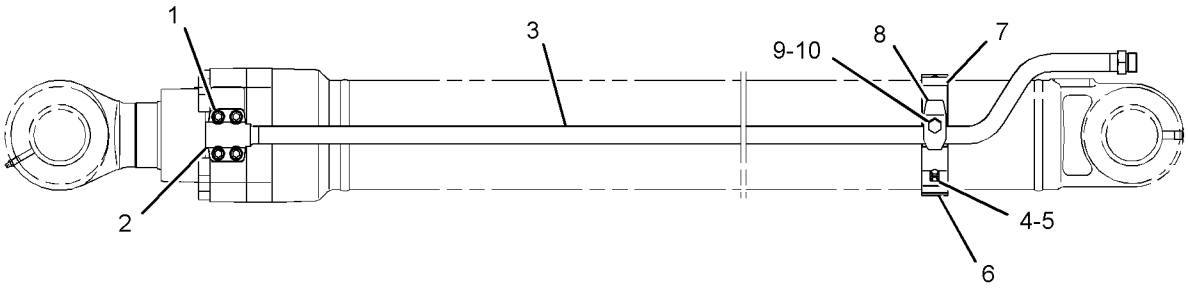

GRAPHIC #1 **<END>** g01220097

248-9925 LINES GP-STICK CYLINDER

S/N: KBS1-UP

PART OF 364-0935 CYLINDER & LINES GP-STICK

AN ATTACHMENT

SMCS-5458 **i02946670**

NOTE	REF NO	GRAPHIC REF	PART NUMBER	QTY	PART NAME 1 2 3 4 5 6 (PRODUCT LEVEL)	SEE PAGE
	1	1	**7Y-4868**	2	CLIP	
	2	1	**119-2324**	1	SUPPORT AS	
	3	1	**119-2325**	1	SUPPORT AS	
	4	1	**179-7467**	1	TUBE AS	
	5	1	**1P-3704**	1	SEAL-RECTANGULAR	
	6	1	**6V-9746**	1	SEAL-O-RING	
	7	1	**8T-4121**	4	WASHER-HARD (11X21X2.5-MM THK)	
M	8	1	**8T-4139**	2	BOLT (M12X1.75X30-MM)	
M	9	1	**8T-4196**	4	BOLT (M10X1.5X35-MM)	
	10	1	**8T-4223**	6	WASHER-HARD (13.5X25.5X3-MM THK)	
M	11	1	**8T-4648**	4	BOLT (M12X1.75X70-MM)	

M - METRIC PART

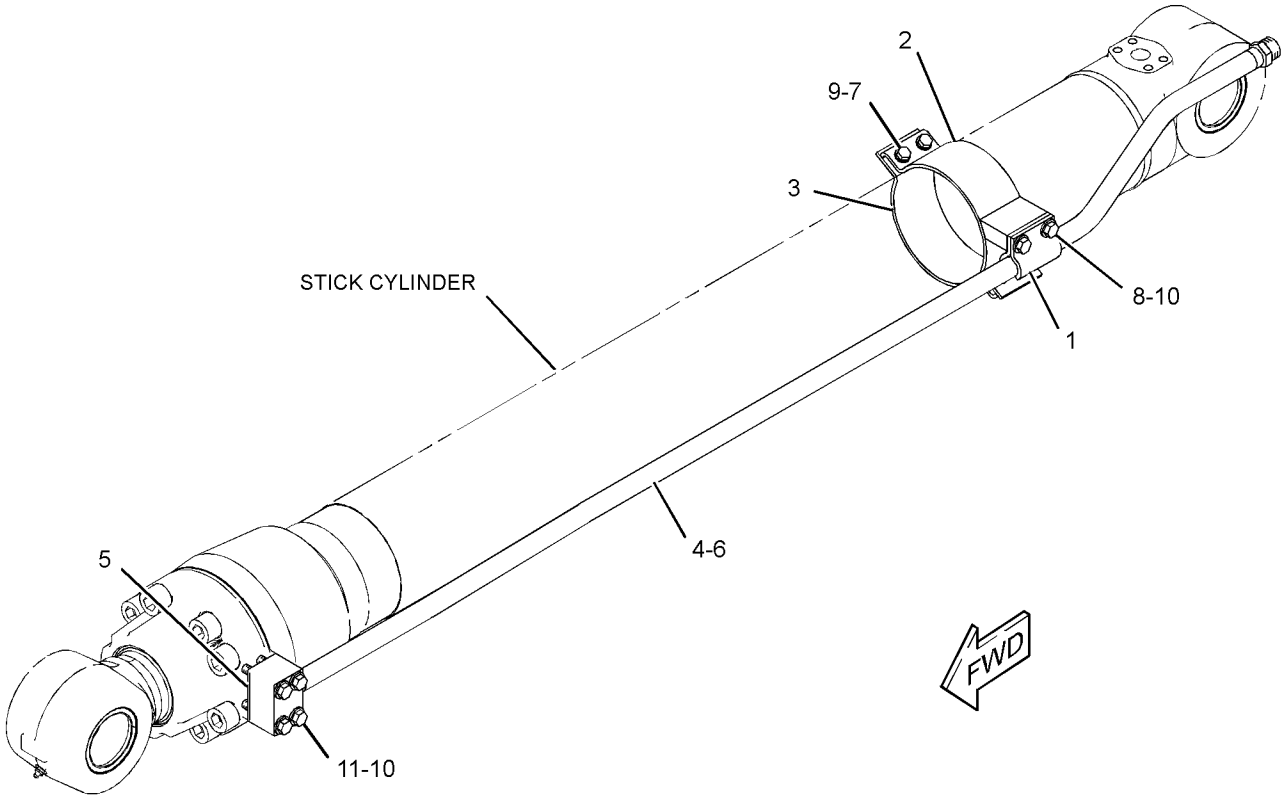

GRAPHIC #1 **<END>** g01222817

266-8024 LINES GP-STICK CYLINDER

S/N: PBB1-UP

PART OF 418-5512 CYLINDER & LINES GP-STICK

AN ATTACHMENT

SMCS-5458 **i02423003**

NOTE	REF NO	GRAPHIC REF	PART NUMBER	QTY	PART NAME 1 2 3 4 5 6 (PRODUCT LEVEL)	SEE PAGE
M	1	1	**6V-8200**	4	BOLT-SOCKET HEAD (M12X1.75X35-MM)	
	2	1	**266-7965**	1	SEAL-O-RING	
	3	1	**247-8883**	1	TUBE AS	
M	4	1	**8T-4196**	2	BOLT (M10X1.5X35-MM)	
	5	1	**8T-4896**	2	WASHER-HARD (10.2X18.5X2.5-MM THK)	
	6	1	**124-1020**	1	SUPPORT	
	7	1	**124-1019**	1	SUPPORT AS	
	8	1	**096-4480**	1	CLAMP	
M	9	1	**8T-4910**	1	BOLT (M12X1.75X60-MM)	
	10	1	**8T-4223**	1	WASHER-HARD (13.5X25.5X3-MM THK)	

M - METRIC PART

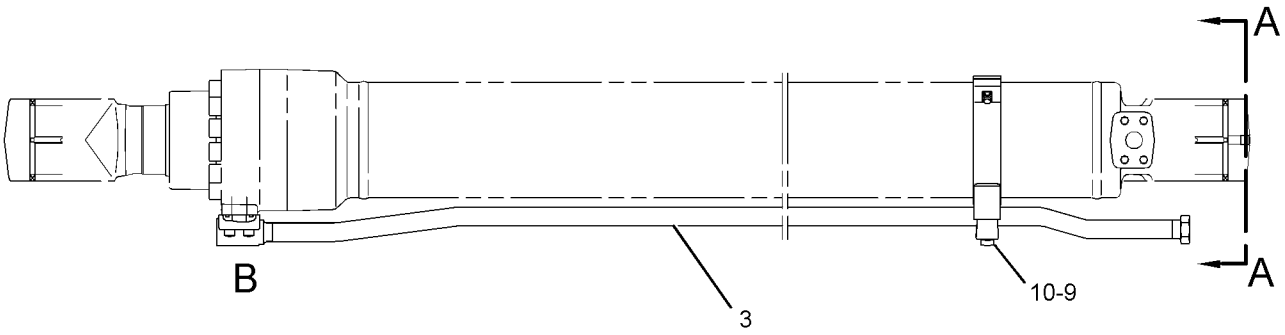

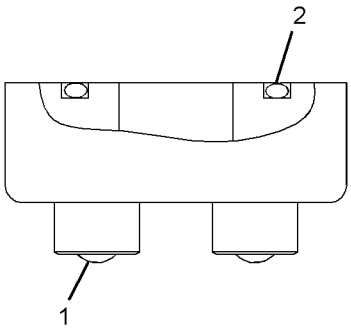

VIEW OF AREA B

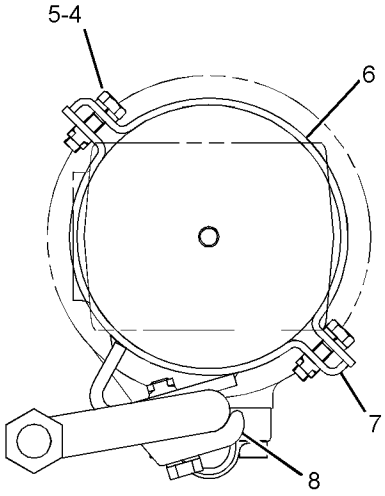

VIEW A-A

GRAPHIC #1 **<END>** g01226983

369-9673 LINES GP-STICK CYLINDER

S/N: PBB1-UP

PART OF 268-7256 CYLINDER & LINES GP-STICK

AN ATTACHMENT

SMCS-5458 **i05154191**

NOTE	REF NO	GRAPHIC REF	PART NUMBER	QTY	PART NAME 1 2 3 4 5 6 (PRODUCT LEVEL)	SEE PAGE
	1	1	**096-4447**	1	CLAMP	
	2	1	**099-6025**	1	SUPPORT	
	3	1	**369-9620**	1	SUPPORT AS	
	4	1	**227-6884**	1	TUBE AS	
	5	1	**095-1600**	1	SEAL-O-RING	
M	6	1	**6V-8200**	4	BOLT-SOCKET HEAD (M12X1.75X35-MM)	
M	7	1	**8T-4196**	2	BOLT (M10X1.5X35-MM)	
	8	1	**8T-4223**	1	WASHER-HARD (13.5X25.5X3-MM THK)	
	9	1	**8T-4896**	2	WASHER-HARD (10.2X18.5X2.5-MM THK)	
M	10	1	**172-9966**	1	BOLT (M12X1.75X65-MM)	

M - METRIC PART

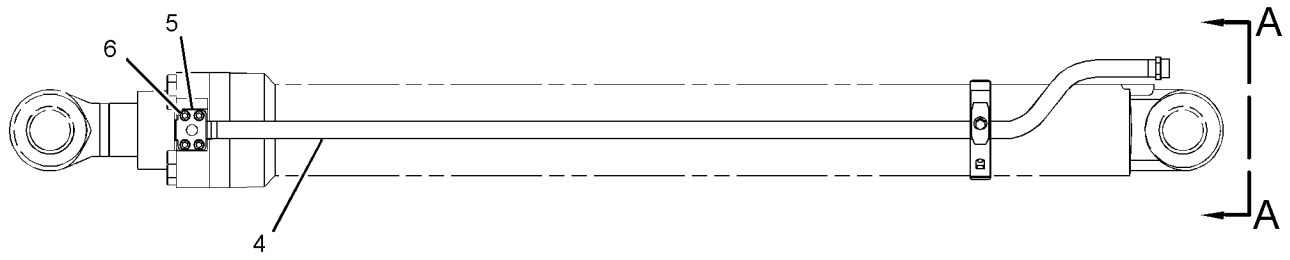

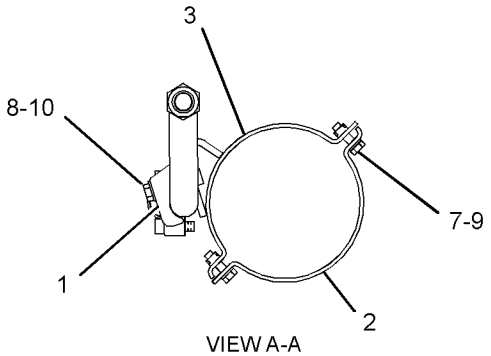

VIEW A-A

GRAPHIC #1 **<END>** g01228951

419-5136 LINES GP-STICK CYLINDER—STICK LOWERING CONTROL

S/N: PBB1-UP; KBS1-UP
PART OF 419-5123 VALVE AR-CHECK & RELIEF
AN ATTACHMENT

SMCS-5458 **i05155659**

NOTE	REF NO	GRAPHIC REF	PART NUMBER	QTY	PART NAME 1 2 3 4 5 6 (PRODUCT LEVEL)	SEE PAGE
	1	1	**5Q-4213**	4	CLIP	
	2	1	**093-1294**	2	CLAMP	
	3	1	**247-9073**	1	TUBE AS	
	4	1	**247-9074**	1	TUBE AS	
	5	1	**247-9076**	1	TUBE AS	
	6	1	**247-9078**	1	TUBE AS	
Y	7	1	**352-7243**	1	VALVE GP-CHECK & RELIEF (STICK LOWERING CONTROL VALVE)	604
	8	1	**420-1013**	2	SUPPORT AS	
	9	1	**420-1015**	2	SUPPORT AS	
M	10	1	**108-1782**	4	BOLT-SOCKET HEAD (M12X1.75X90-MM)	
	11	1	*148-8328*	1	CONNECTOR AS	
		1	**3D-2824**	1	SEAL-O-RING	
		1	**6V-8398**	1	SEAL-O-RING	
		1	**6V-8633**	1	CONNECTOR	
	12	1	*148-8368*	2	ELBOW AS	
					(EACH INCLUDES)	
		1	**3J-1907**	1	SEAL-O-RING	
		1	**4J-5477**	1	SEAL-O-RING	
		1	**6V-8627**	1	ELBOW	
	13	1	**1P-3703**	1	SEAL-RECTANGULAR	
	14	1	**1P-3704**	1	SEAL-RECTANGULAR	
	15	1	**6V-8397**	2	SEAL-O-RING	
	16	1	**6V-8398**	1	SEAL-O-RING	
	17	1	**6V-9746**	1	SEAL-O-RING	
	18	1	**8T-4121**	10	WASHER-HARD (11X21X2.5-MM THK)	
M	19	1	**8T-4139**	4	BOLT (M12X1.75X30-MM)	
M	20	1	**8T-4186**	2	BOLT (M10X1.5X40-MM)	
M	21	1	**8T-4196**	8	BOLT (M10X1.5X35-MM)	
	22	1	**8T-4223**	8	WASHER-HARD (13.5X25.5X3-MM THK)	
M	23	1	**8T-4648**	4	BOLT (M12X1.75X70-MM)	

M - METRIC PART
Y - SEPARATE ILLUSTRATION

419-5136 **LINES GP-STICK CYLINDER (*contd.*)** **i05155659**

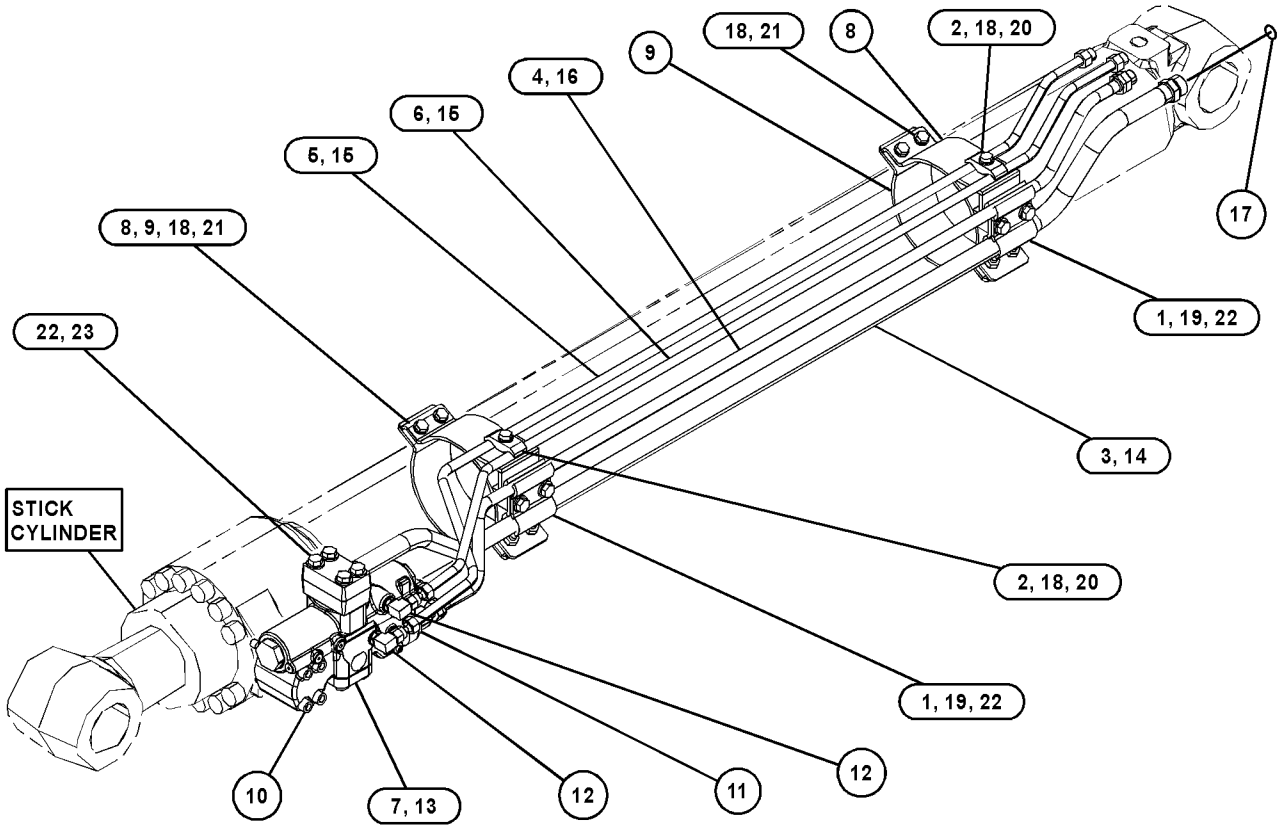

GRAPHIC #1 **<END>** g03315557

239-1716 LINES GP-TRAVEL MOTOR

S/N: KBS1-UP

PART OF 456-0404 HYDRAULIC AR

SMCS-5057, 5058 **i04679932**

NOTE	REF NO	GRAPHIC REF	PART NUMBER	QTY	PART NAME 1 2 3 4 5 6 (PRODUCT LEVEL)	SEE PAGE
	1	2	**7K-1181**	4	STRAP-CABLE	
	2	2	**108-7118**	4	GROMMET	
I	3	2	**111-6752**	2	HOSE AS	
Y	4	2	**234-4440**	1	SWIVEL GP	593
I	5	2	**245-5427**	4	HOSE AS	
CI	6	2	**4I-3573**	2	HOSE AS	
	7	2	*148-8364*	2	ELBOW AS	
					(EACH INCLUDES)	
		2	**3K-0360**	1	SEAL-O-RING	
		2	**6V-8398**	1	SEAL-O-RING	
		2	**6V-8625**	1	ELBOW	
	9	2	*148-8378*	2	ELBOW AS	
					(EACH INCLUDES)	
		2	**3J-1907**	1	SEAL-O-RING	
		2	**6V-8397**	1	SEAL-O-RING	
		2	**6V-8724**	1	ELBOW	
C	10	2	*164-6872*	1	TEE AS	
		2	**2M-9780**	1	SEAL-O-RING	
		2	**6V-8398**	2	SEAL-O-RING	
		2	**115-8634**	1	TEE-O-RING	
	11	2	*150-4044*	2	CONNECTOR AS	
					(EACH INCLUDES)	
		2	**3J-1907**	1	SEAL-O-RING	
		2	**6V-8397**	1	SEAL-O-RING	
		2	**8T-1779**	1	CONNECTOR	
	12	2	**1P-3703**	8	SEAL-RECTANGULAR	
	13	2	**6V-0400**	24	FLANGE-HALF	
	14	2	**8T-4121**	6	WASHER-HARD (11X21X2.5-MM THK)	
M	15	2	**8T-4136**	6	BOLT (M10X1.5X25-MM)	
M	16	2	**8T-4184**	48	BOLT (M12X1.75X45-MM)	
	17	2	**8T-4223**	48	WASHER-HARD (13.5X25.5X3-MM THK)	
B	18	2	**1U-8846**		SEALANT-GASKET	

B - USE AS REQUIRED
C - CHANGE FROM PREVIOUS TYPE
I - REFER TO HYDRAULIC INFORMATION SYSTEM
M - METRIC PART
Y - SEPARATE ILLUSTRATION

239-1716 **LINES GP-TRAVEL MOTOR (*contd.*)** **i04679932**

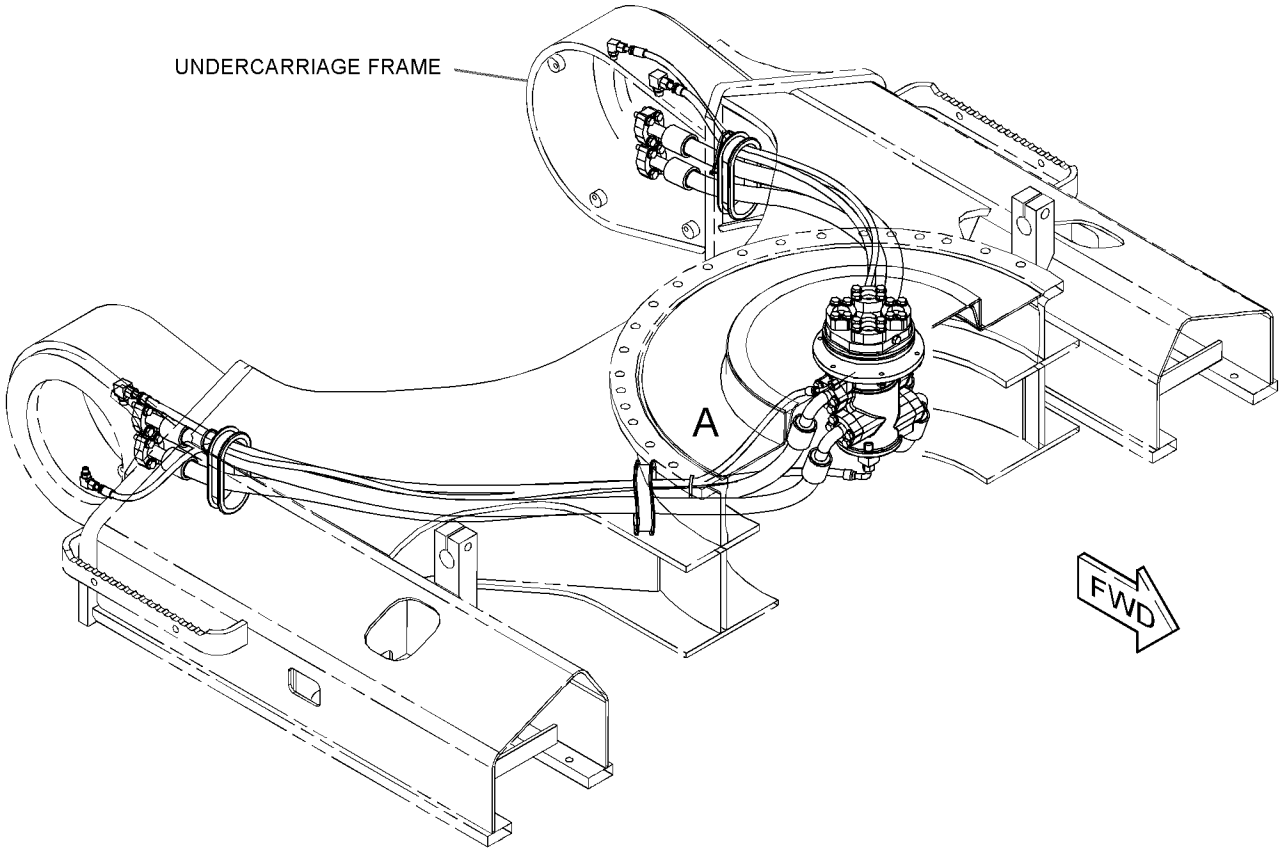

REFER TO ALL ILLUSTRATIONS OF
THIS GROUP FOR AUXILIARY VIEWS

GRAPHIC #1 g02728073

239-1716 **LINES GP-TRAVEL MOTOR (*contd.*)** **i04679932**

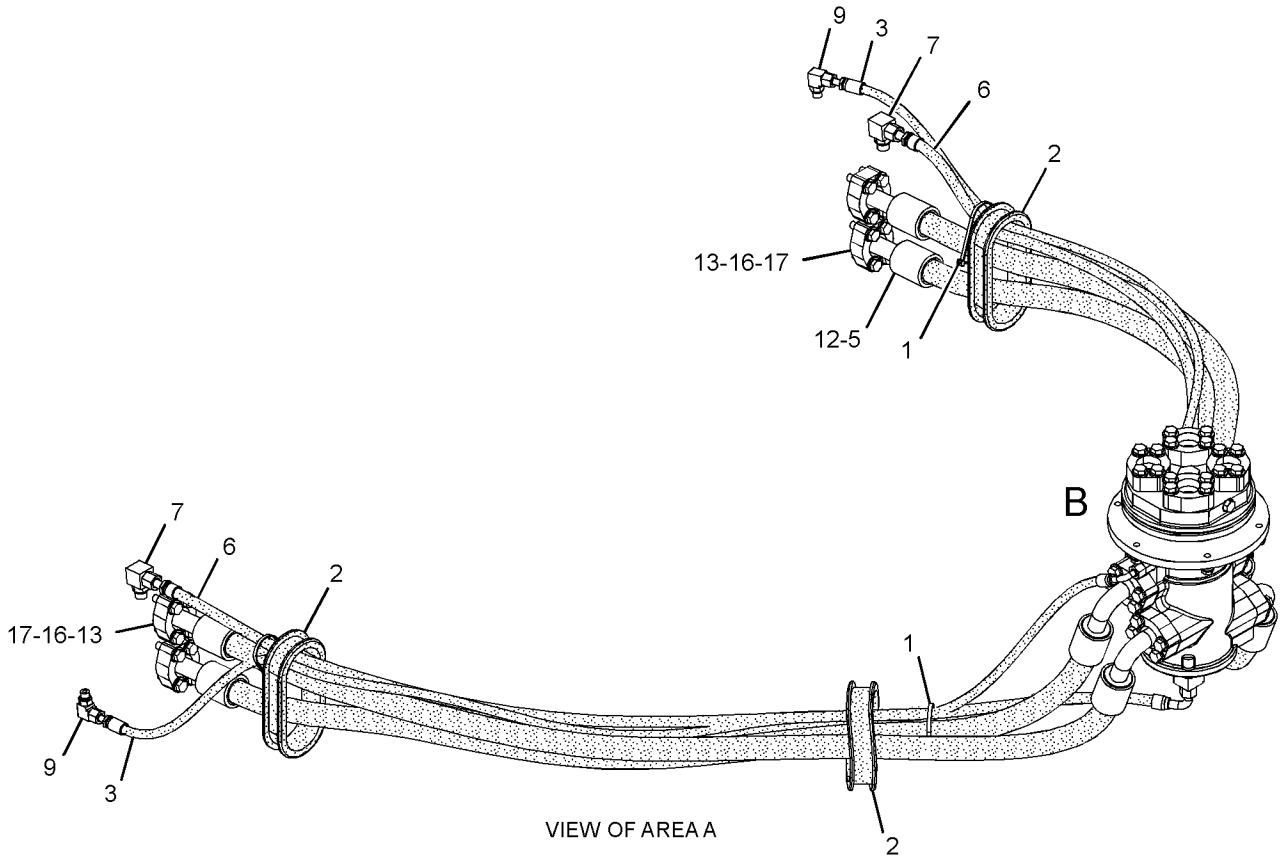

VIEW OF AREA A

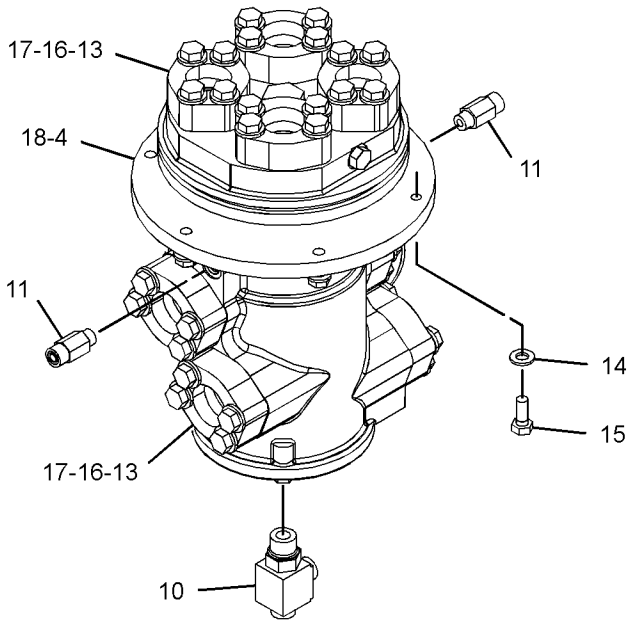

VIEW OF AREA B

GRAPHIC #2 **<END>** g02728075

239-1717 LINES GP-TRAVEL MOTOR—LONG UNDERCARRIAGE

S/N: PBB1-UP

PART OF 456-0405 HYDRAULIC AR

SMCS-5057, 5058 **i04682149**

NOTE	REF NO	GRAPHIC REF	PART NUMBER	QTY	PART NAME 1 2 3 4 5 6 (PRODUCT LEVEL)	SEE PAGE
	1	1	**7K-1181**	4	STRAP-CABLE	
I	2	2	**7Y-4390**	2	HOSE AS	
	3	1	**108-7118**	4	GROMMET	
CI	4	2	**124-1266**	2	HOSE AS	
Y	5	2	**234-4440**	1	SWIVEL GP	593
I	6	1	**245-5416**	4	HOSE AS	
	7	2	*148-8364*	2	ELBOW AS	
					(EACH INCLUDES)	
		2	**3K-0360**	1	SEAL-O-RING	
		2	**6V-8398**	1	SEAL-O-RING	
		2	**6V-8625**	1	ELBOW	
C	8	2	*164-6872*	1	TEE AS	
		2	**2M-9780**	1	SEAL-O-RING	
		2	**6V-8398**	1	SEAL-O-RING	
		2	**115-8634**	1	TEE-O-RING	
	9	2	*148-8378*	2	ELBOW AS	
					(EACH INCLUDES)	
		2	**3J-1907**	1	SEAL-O-RING	
		2	**6V-8397**	1	SEAL-O-RING	
		2	**6V-8724**	1	ELBOW	
	11	2	*150-4044*	2	CONNECTOR AS	
					(EACH INCLUDES)	
		2	**3J-1907**	1	SEAL-O-RING	
		2	**6V-8397**	1	SEAL-O-RING	
		2	**8T-1779**	1	CONNECTOR	
	12	1	**1P-3703**	8	SEAL-RECTANGULAR	
	13	2	**6V-0400**	24	FLANGE-HALF	
	14	2	**8T-4121**	6	WASHER-HARD (11X21X2.5-MM THK)	
M	15	2	**8T-4136**	6	BOLT (M10X1.5X25-MM)	
M	16	2	**8T-4184**	48	BOLT (M12X1.75X45-MM)	
	17	2	**8T-4223**	48	WASHER-HARD (13.5X25.5X3-MM THK)	
	18	2	**1U-8846**	1	SEALANT-GASKET	

C - CHANGE FROM PREVIOUS TYPE
I - REFER TO HYDRAULIC INFORMATION SYSTEM
M - METRIC PART
Y - SEPARATE ILLUSTRATION

239-1717 **LINES GP-TRAVEL MOTOR (*contd.*)** **i04682149**

REFER TO ALL ILLUSTRATIONS OF
THIS GROUP FOR AUXILIARY VIEWS

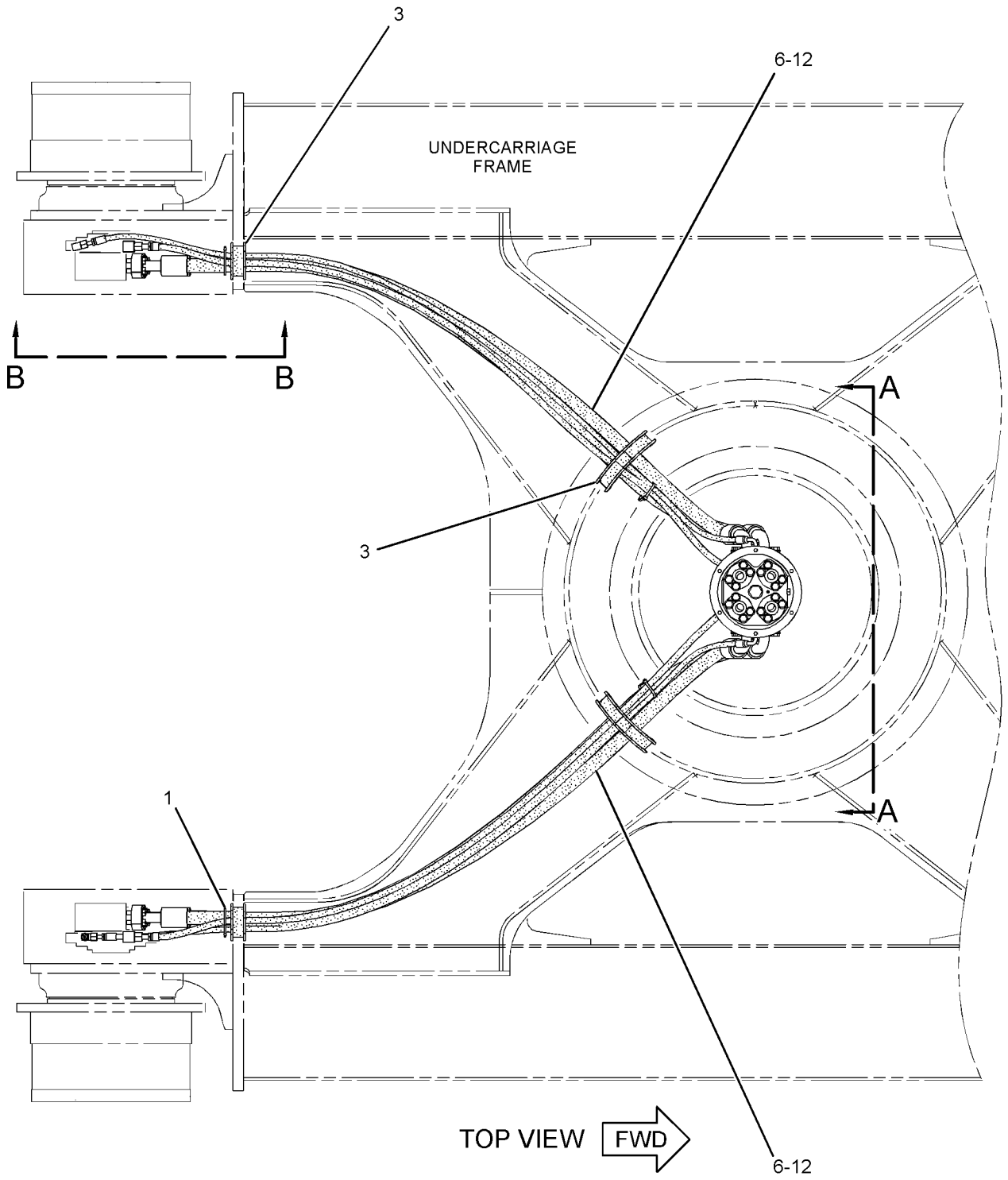

GRAPHIC #1 g02734650

239-1717 **LINES GP-TRAVEL MOTOR (*contd.*)** **i04682149**

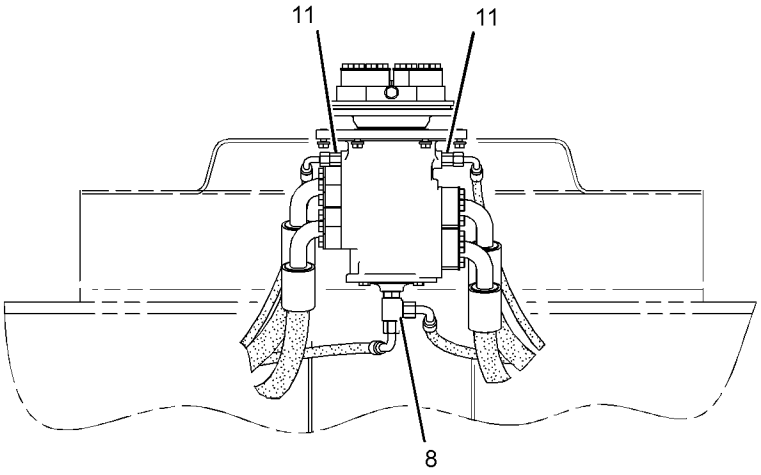

VIEW A-A

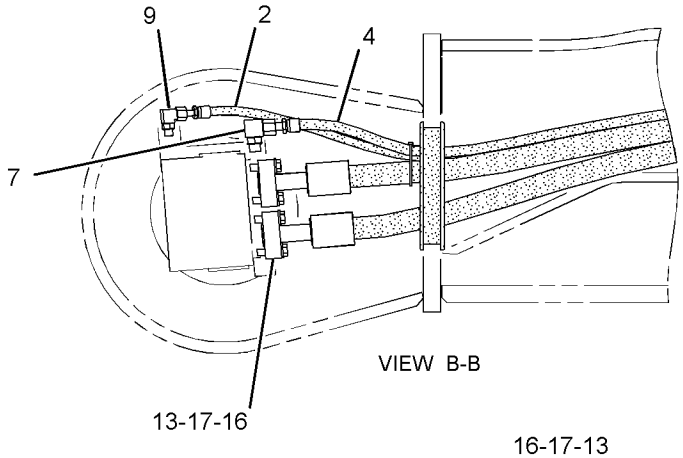

VIEW B-B

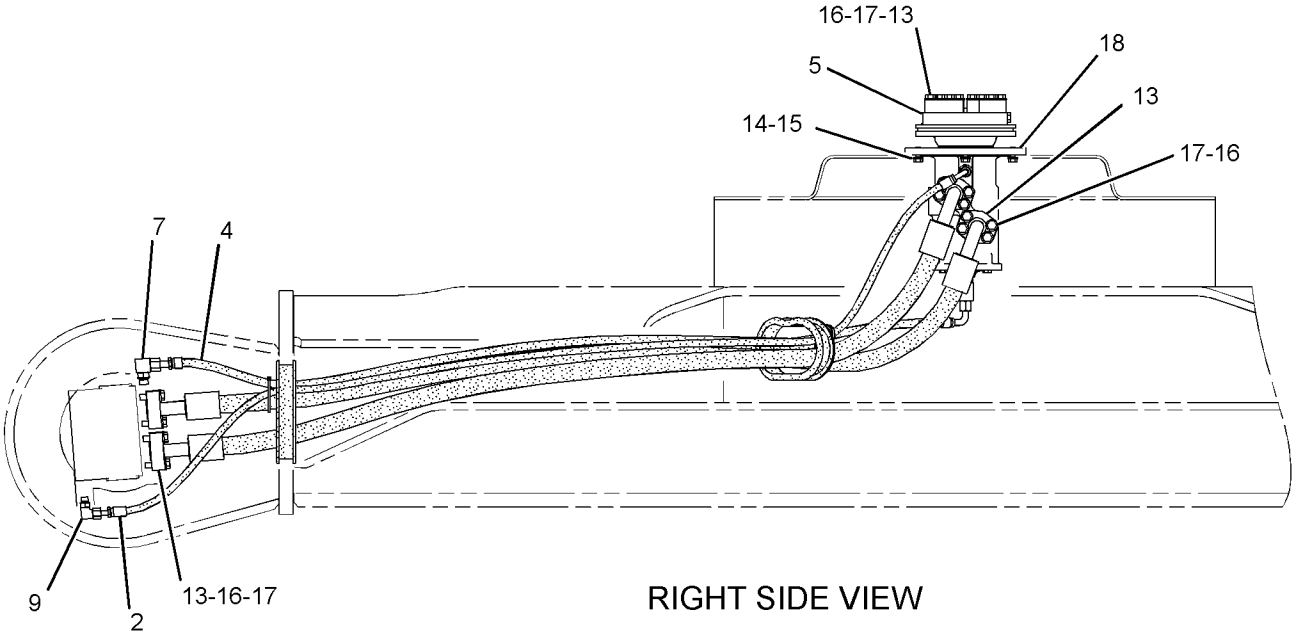

RIGHT SIDE VIEW

GRAPHIC #2 **<END>** g02734651

215-5037 MANIFOLD GP-CONTROL–PILOT OIL SUPPLY

S/N: PBB1-UP; KBS1-UP

PART OF 376-6310 LINES GP-PILOT

SMCS-5264 **i02092079**

NOTE	PART NUMBER	QTY	PART NAME 1 2 3 4 5 6 (PRODUCT LEVEL)	SEE PAGE
Y	*239-8998*	1	MANIFOLD GP-CONTROL (PILOT OIL SUPPLY) (STEEL BODY)	568
			-OR-	
Y	*239-8697*	1	MANIFOLD GP-CONTROL (PILOT OIL SUPPLY) (ALUMINUM BODY)	567

Y - SEPARATE ILLUSTRATION

<END>

239-8697 MANIFOLD GP-CONTROL—PILOT OIL SUPPLY

S/N: PBB1-UP; KBS1-UP
ALUMINUM BODY
PART OF 215-5037 MANIFOLD GP-CONTROL

SMCS-5264 **i04132916**

NOTE	REF NO	GRAPHIC REF	PART NUMBER	QTY	PART NAME 1 2 3 4 5 6 (PRODUCT LEVEL)	SEE PAGE
Y	1	1	**121-1491**	1	VALVE GP-SOLENOID (SWING BRAKE RELEASE)	675
Y	1A	1	**121-1491**	1	VALVE GP-SOLENOID (HYDRAULIC LOCKOUT)	675
Y	1B	1	**121-1491**	1	VALVE GP-SOLENOID (TRAVEL SPEED)	675
	4	1	**197-0196**	1	VALVE-CHECK	
	5	1	**197-0199**	1	SPRING	
	6	1	**197-0273**	1	SPRING	
	7	1	**9S-8005**	4	PLUG-O-RING	
	8	1	**3J-1907**	1	SEAL-O-RING	
	9	1	**3K-0360**	4	SEAL-O-RING	
M	11	1	**7I-2272**	6	BOLT (M5X0.8X12-MM)	
	12	1	*225-4818*	6	PLUG AS	
					(EACH INCLUDES)	
		1	**4J-7533**	1	SEAL-O-RING	
		1	**225-4804**	1	PLUG	
	13	1	**9S-8004**	1	PLUG-O-RING	

M - METRIC PART
Y - SEPARATE ILLUSTRATION

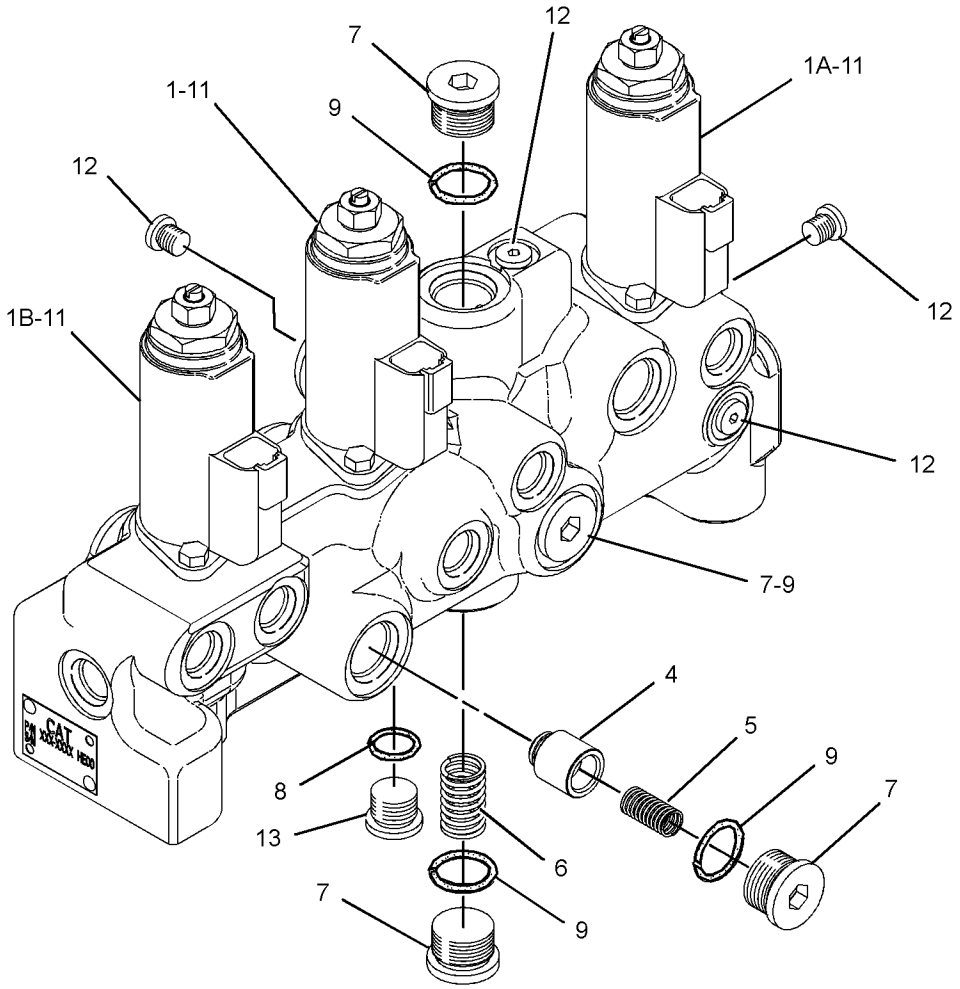

GRAPHIC #1 **<END>** g02345260

239-8998 MANIFOLD GP-CONTROL—PILOT OIL SUPPLY

S/N: PBB1-UP; KBS1-UP
STEEL BODY
PART OF 215-5037 MANIFOLD GP-CONTROL

SMCS-5264 **i04922918**

NOTE	REF NO	GRAPHIC REF	PART NUMBER	QTY	PART NAME 1 2 3 4 5 6 (PRODUCT LEVEL)	SEE PAGE
Y	1	1	**121-1491**	1	VALVE GP-SOLENOID (SWING BRAKE RELEASE)	675
Y	1A	1	**121-1491**	1	VALVE GP-SOLENOID (HYDRAULIC LOCKOUT)	675
Y	1B	1	**121-1491**	1	VALVE GP-SOLENOID (TRAVEL SPEED)	675
	2	1	**7M-7410**	2	PLUG-PIPE	
	3	1	**8T-6759**	6	PLUG-PIPE	
	4	1	**197-0196**	1	VALVE-CHECK	
	5	1	**9S-8005**	3	PLUG-O-RING	
	6	1	**197-0199**	1	SPRING	
	7	1	**197-0273**	1	SPRING	
	8	1	**3K-0360**	3	SEAL-O-RING	
M	9	1	**7I-2272**	6	BOLT (M5X0.8X12-MM)	

M - METRIC PART
Y - SEPARATE ILLUSTRATION

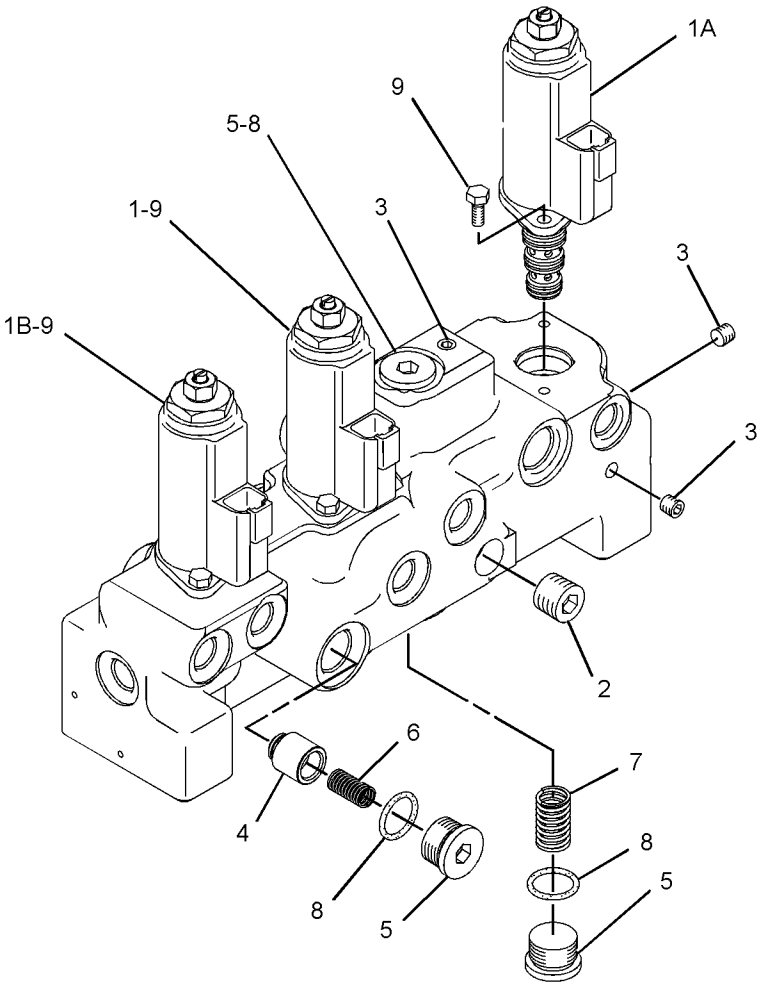

GRAPHIC #1 **<END>** g03089517

158-8985 MOTOR & MTG GP-SWING

S/N: PBB1-UP; KBS1-UP

PART OF 148-4679 DRIVE GP-SWING

SMCS-5058 **i05706590**

NOTE	REF NO	GRAPHIC REF	PART NUMBER	QTY	PART NAME 1 2 3 4 5 6 (PRODUCT LEVEL)	SEE PAGE
CYR	1	1	**334-9968**	1	MOTOR GP-SWING	572
	2	1	**6V-5200**	1	RING-RETAINING	
M	3	1	**453-2841**	16	BOLT (M16X2X150-MM)	
	4	1	**451-2175**	16	WASHER-HARD (17.5X30X3.5-MM THK)	
	5	1	**352-7063**	2	CAP	

C - CHANGE FROM PREVIOUS TYPE
M - METRIC PART
R - REMFG PART MAY BE AVAILABLE
Y - SEPARATE ILLUSTRATION

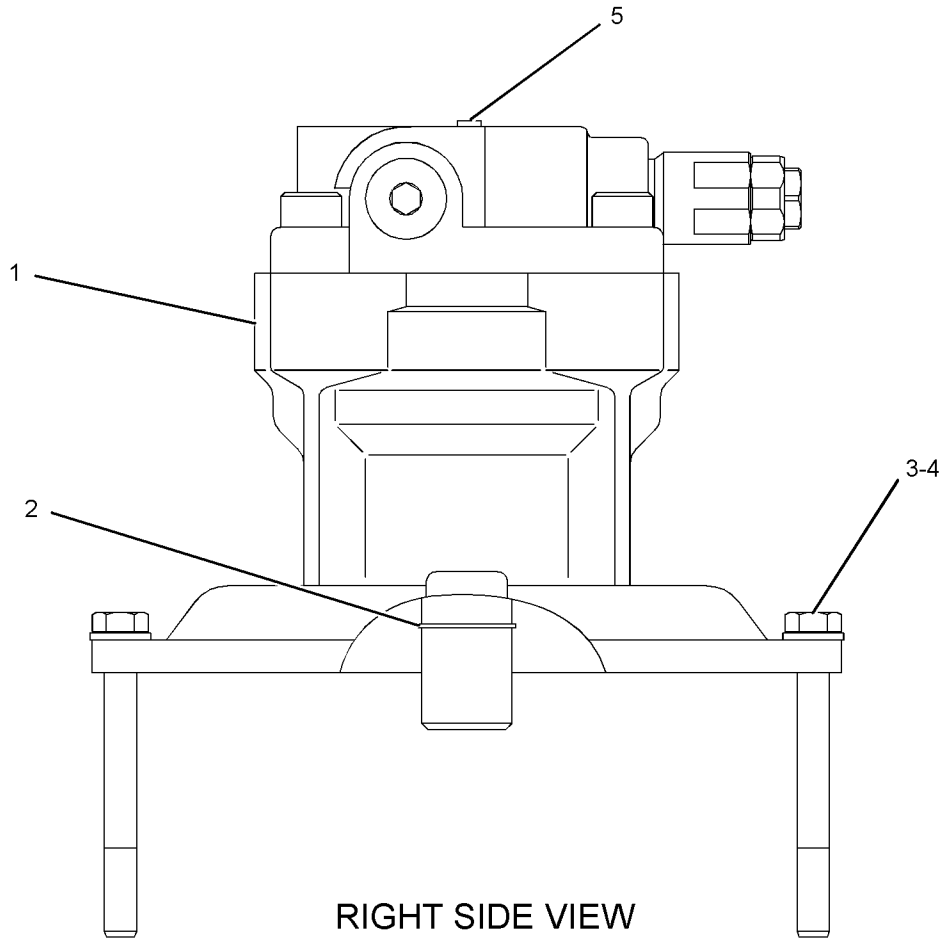

RIGHT SIDE VIEW

GRAPHIC #1 **<END>** g02521782

315-4370 MOTOR & MTG GP-SWING

S/N: PBB1-UP; KBS1-UP
PART OF 296-6272 DRIVE GP-SWING
AN ATTACHMENT

SMCS-5058 **i05858203**

NOTE	REF NO	GRAPHIC REF	PART NUMBER	QTY	PART NAME 1 2 3 4 5 6 (PRODUCT LEVEL)	SEE PAGE
CY	1	1	**334-9969**	1	MOTOR GP-SWING	573
	2	1	**6V-5200**	1	RING-RETAINING	
M	3	1	**453-2841**	16	BOLT (M16X2X150-MM)	
	4	1	**451-2175**	16	WASHER-HARD (17.5X30X3.5-MM THK)	
	5	1	**352-7063**	2	CAP	

C - CHANGE FROM PREVIOUS TYPE
M - METRIC PART
Y - SEPARATE ILLUSTRATION

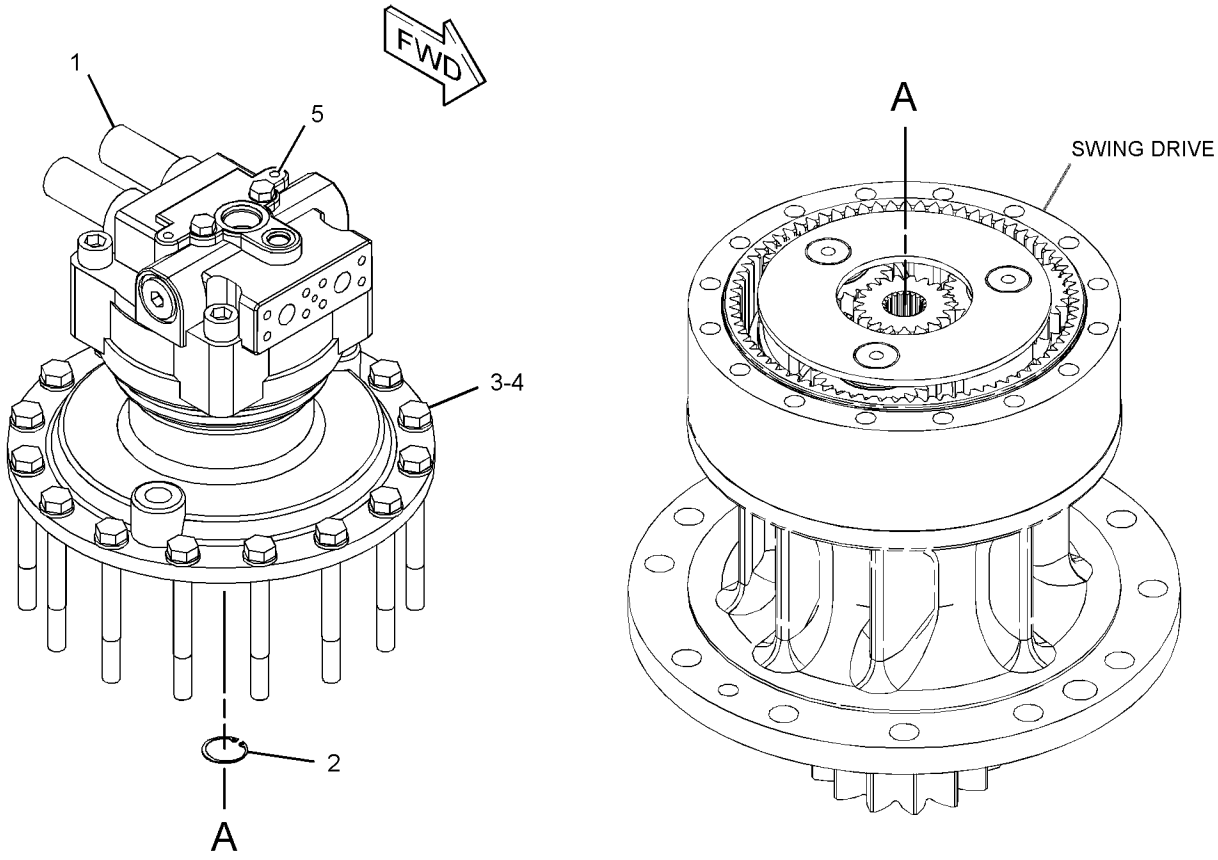

GRAPHIC #1 **<END>** g02917457

334-9986 MOTOR & MTG GP-TRAVEL

S/N: PBB1-UP; KBS1-UP

PART OF 353-0609 DRIVE GP-FINAL

SMCS-4351 **i04938931**

NOTE	REF NO	GRAPHIC REF	PART NUMBER	QTY	PART NAME 1 2 3 4 5 6 (PRODUCT LEVEL)	SEE PAGE
YR	1	1	**209-5992**	1	MOTOR GP-TRAVEL	578
Y	2	1	**322-8714**	1	VALVE GP-TRAVEL COUNTERBALANCE	691
M	3	1	**095-0707**	3	BOLT (M16X2X120-MM)	
	4	1	**095-1685**	1	SEAL-O-RING	
M	5	1	**8C-8729**	6	BOLT-SOCKET HEAD (M12X1.75X80-MM)	

M - METRIC PART
R - REMFG PART MAY BE AVAILABLE
Y - SEPARATE ILLUSTRATION

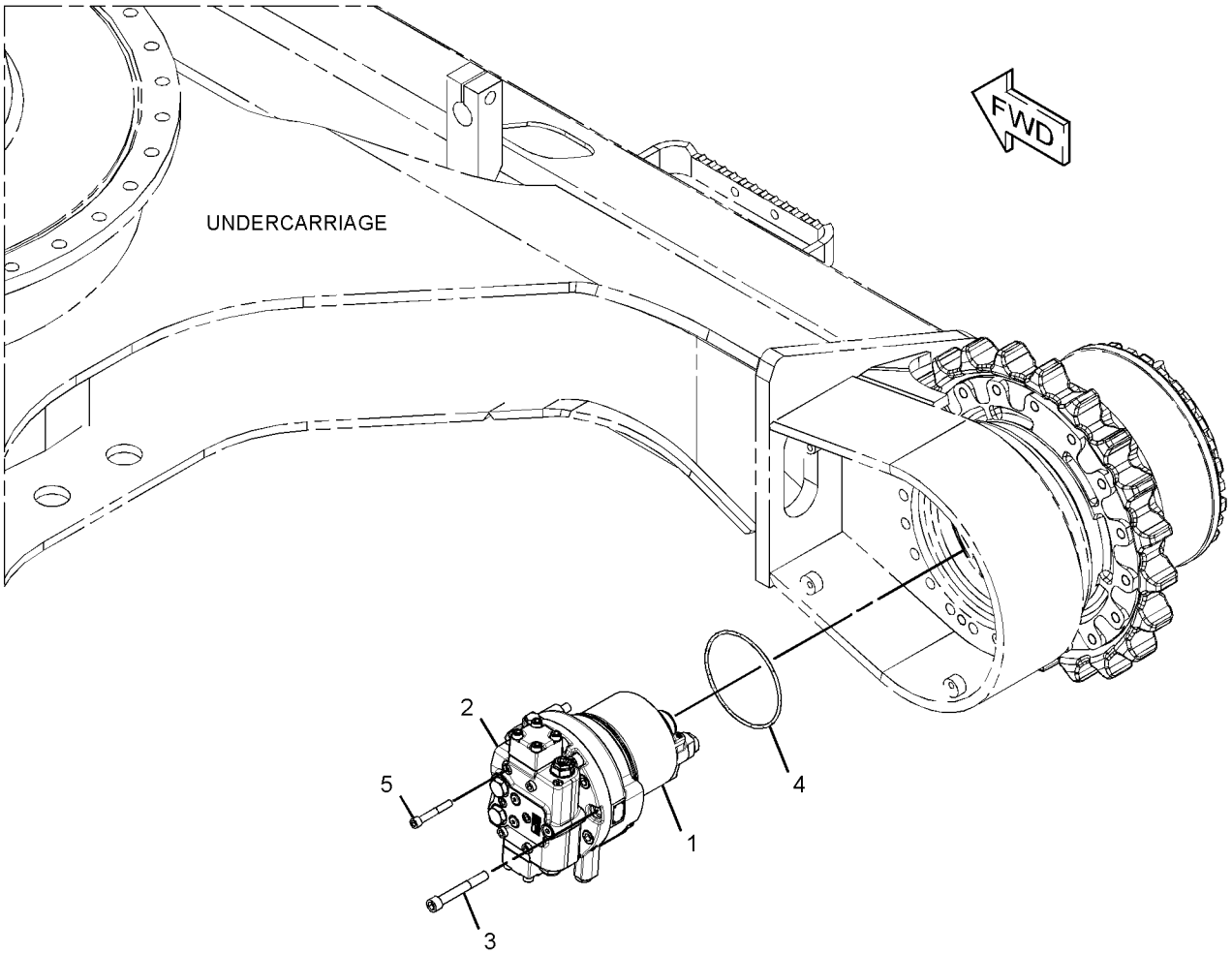

GRAPHIC #1 **<END>** g02466056

334-9968 MOTOR GP-SWING

S/N: PBB1-UP; KBS1-UP

PART OF 158-8985 MOTOR & MTG GP-SWING

SMCS-5058 **i03429422**

NOTE	REF NO	GRAPHIC REF	PART NUMBER	QTY	PART NAME 1 2 3 4 5 6 (PRODUCT LEVEL)	SEE PAGE
Y	1	1	**173-3452**	2	VALVE GP-RELIEF (SWING MOTOR)	657
Y	2	1	**334-9976**	1	MOTOR GP-SWING	574

Y - SEPARATE ILLUSTRATION

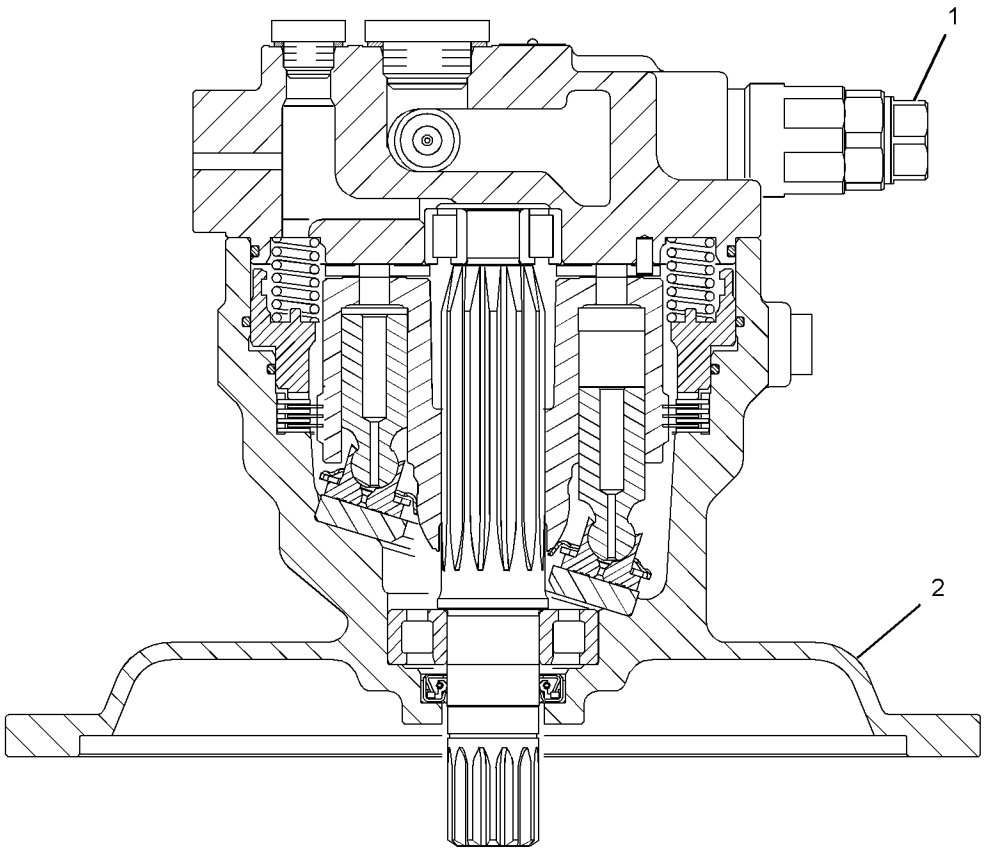

GRAPHIC #1 **<END>** g01793555

334-9969 MOTOR GP-SWING

S/N: PBB1-UP; KBS1-UP
PART OF 315-4370 MOTOR & MTG GP-SWING
AN ATTACHMENT

SMCS-5058 **i05190601**

NOTE	REF NO	GRAPHIC REF	PART NUMBER	QTY	PART NAME 1 2 3 4 5 6 (PRODUCT LEVEL)	SEE PAGE
Y	1	1	**173-3452**	2	VALVE GP-RELIEF (SWING MOTOR)	657
Y	2	1	**334-9977**	1	MOTOR GP-SWING	576

Y - SEPARATE ILLUSTRATION

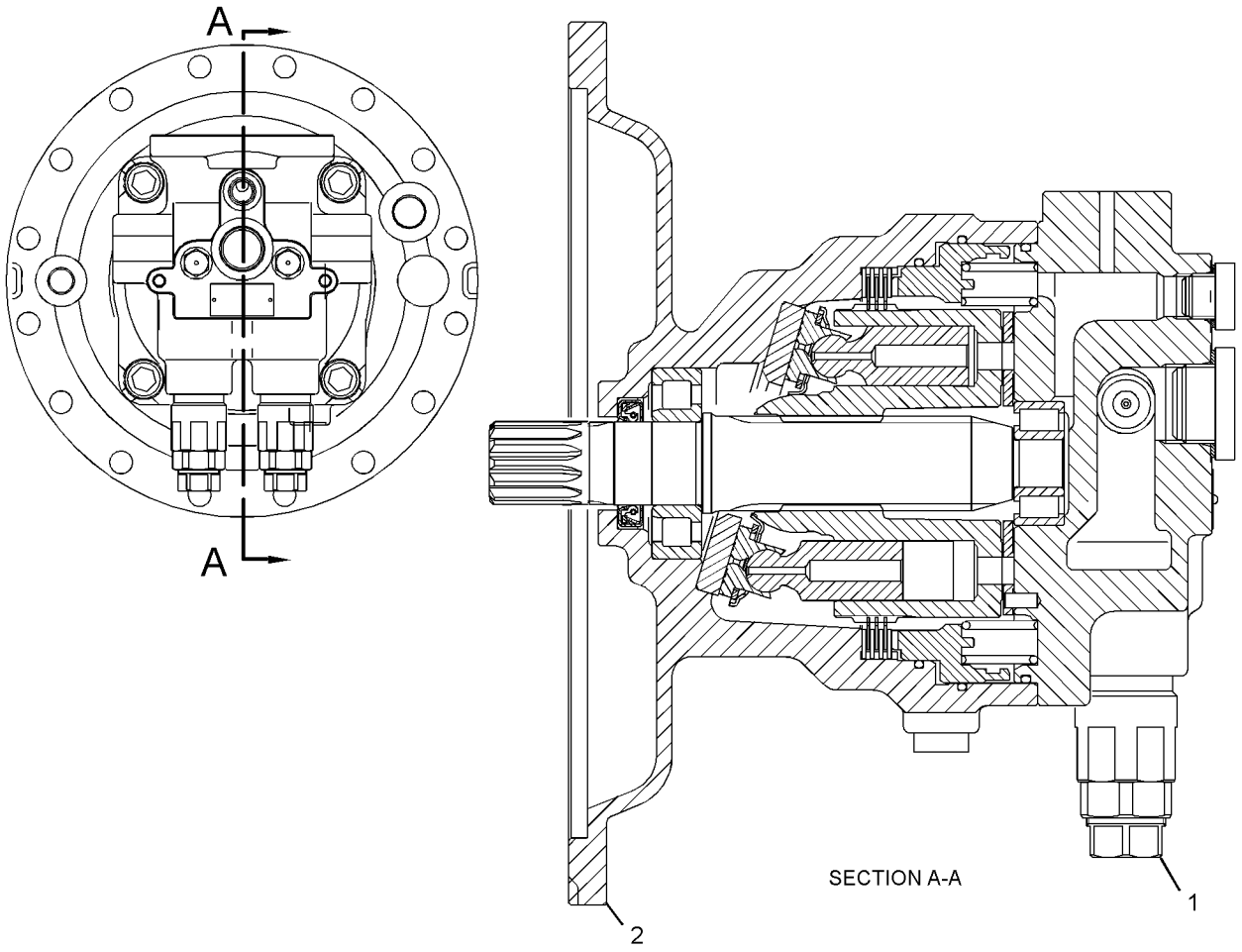

GRAPHIC #1 **<END>** g02140577

334-9976 MOTOR GP-SWING*R

S/N: PBB1-UP; KBS1-UP

PART OF 334-9968 MOTOR GP-SWING

SMCS-5058 **i05360440**

NOTE	REF NO	GRAPHIC REF	PART NUMBER	QTY	PART NAME 1 2 3 4 5 6 (PRODUCT LEVEL)	SEE PAGE
	1	1	**122-5318**	1	BEARING	
	2	1	**173-3444**	1	PLATE	
	3	1	**334-9981**	1	PISTON AS-PUMP	
	4	1	**173-3443**	1	PLATE	
	5	1	**173-3441**	1	BARREL	
J	6	1	**5I-8426**	1	SEAL-O-RING	
J	7	1	**5I-8417**	1	SEAL-O-RING	
	8	1	**177-2584**	1	PISTON-BRAKE	
J	9	1	**5I-8623**	1	SEAL-O-RING	
	10	1	**126-2055**	20	SPRING	
	11	1	**173-3439**	1	HEAD GP-MOTOR	
		1	**095-0882**	2	PIN-SPRING	
	12	1	**173-3445**	1	PLATE-VALVE	
	13	1	**110-5525**	2	PLUG	
J	14	1	**3J-1907**	2	SEAL-O-RING	
	15	1	**5I-8625**	1	BEARING	
	16	1	**173-3451**	4	PLATE-SEPARATOR	
	17	1	**173-3450**	3	PLATE-FRICTION	
	18	1	**173-3442**	1	SPRING	
	19	1	**191-5543**	1	BODY	
	20	1	**173-3440**	1	SHAFT	
	21	1	**173-3447**	1	SEAL-OIL	
	22	1	**094-1900**	2	PLUG	
	23	1	**095-1595**	2	SEAL-O-RING	
	24	1	**7Y-4268**	2	SPRING	
	25	1	**7Y-4267**	2	VALVE	
M	26	1	**7Y-5221**	4	BOLT-SOCKET HEAD (M20X2.5X45-MM)	
					AVAILABLE REPAIR KIT(S):	
J			**173-3454**	1	KIT-SEAL (SWING MOTOR)	

J - KIT MARKED J SERVICES PART(S) MARKED J
M - METRIC PART

334-9976 **MOTOR GP-SWING (*contd.*)** **i05360440**

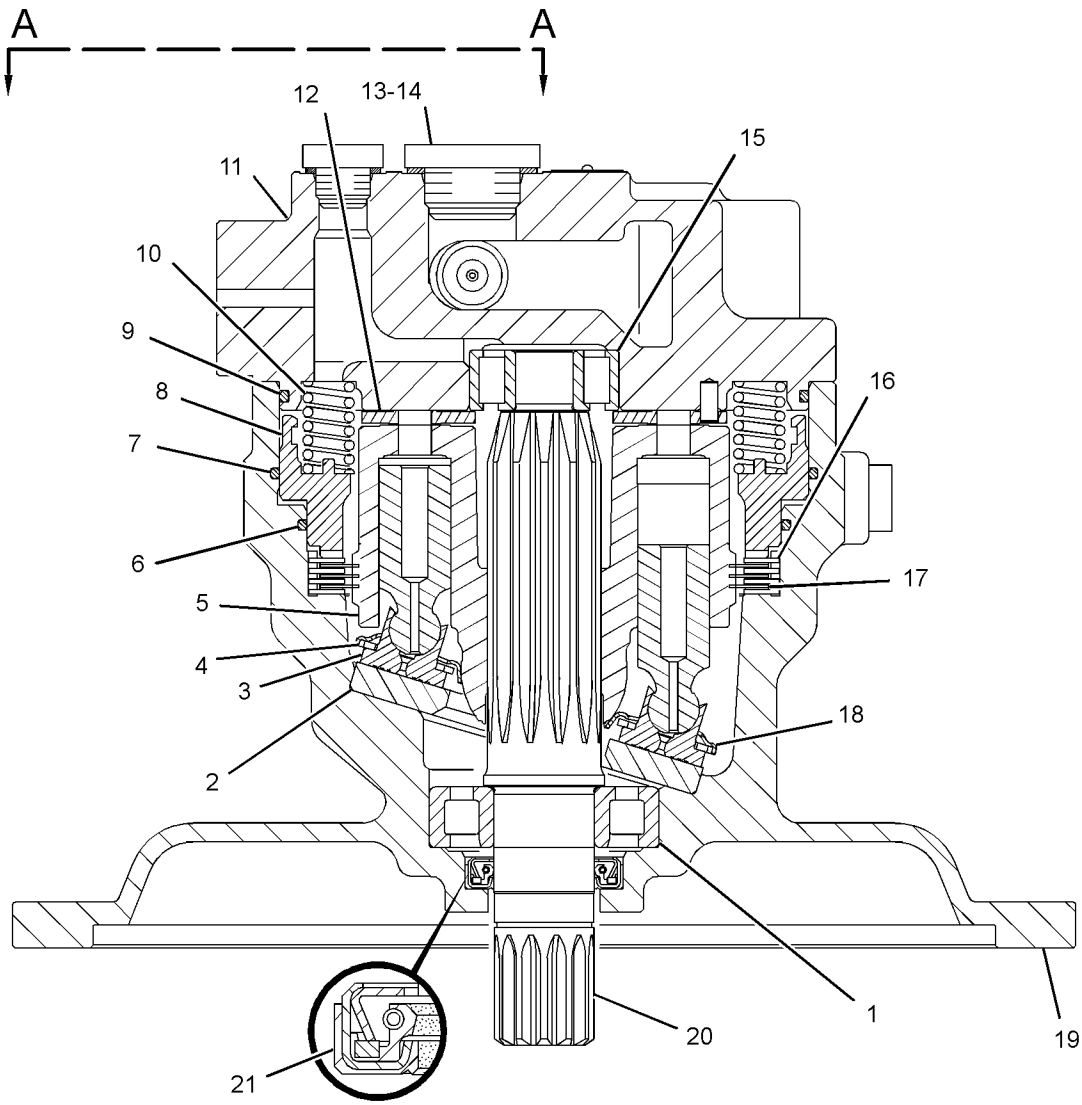

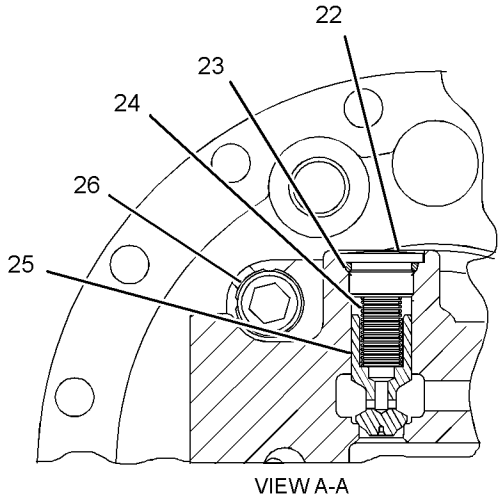

VIEW A-A

GRAPHIC #1 **<END>** g01793353

334-9977 MOTOR GP-SWING

S/N: PBB1-UP; KBS1-UP
PART OF 334-9969 MOTOR GP-SWING
AN ATTACHMENT

SMCS-5058 **i05403770**

NOTE	REF NO	GRAPHIC REF	PART NUMBER	QTY	PART NAME 1 2 3 4 5 6 (PRODUCT LEVEL)	SEE PAGE
	1	1	**122-5318**	1	BEARING	
	2	1	**173-3444**	1	PLATE	
	3	1	**334-9981**	1	PISTON AS-PUMP	
	4	1	**173-3443**	1	PLATE	
	5	1	**173-3441**	1	BARREL	
J	6	1	**5I-8426**	1	SEAL-O-RING	
J	7	1	**5I-8417**	1	SEAL-O-RING	
	8	1	**177-2584**	1	PISTON-BRAKE	
J	9	1	**5I-8623**	1	SEAL-O-RING	
	10	1	**126-2055**	16	SPRING	
	11	1	**173-3439**	1	HEAD GP-MOTOR	
		1	**095-0882**	2	PIN-SPRING	
	12	1	**173-3445**	1	PLATE-VALVE	
	13	1	**110-5525**	2	PLUG	
J	14	1	**3J-1907**	2	SEAL-O-RING	
	15	1	**5I-8625**	1	BEARING	
	16	1	**173-3451**	4	PLATE-SEPARATOR	
	17	1	**173-3450**	3	PLATE-FRICTION	
	18	1	**173-3442**	1	SPRING	
	19	1	**191-5543**	1	BODY	
	20	1	**173-3440**	1	SHAFT	
J	21	1	**173-3447**	1	SEAL-OIL	
	22	1	**094-1900**	2	PLUG	
J	23	1	**095-1595**	2	SEAL-O-RING	
	24	1	**7Y-4268**	2	SPRING	
	25	1	**7Y-4267**	2	VALVE	
M	26	1	**7Y-5221**	4	BOLT-SOCKET HEAD (M20X2.5X45-MM)	
					AVAILABLE REPAIR KIT(S):	
J			**173-3454**	1	KIT-SEAL (SWING MOTOR)	

J - KIT MARKED J SERVICES PART(S) MARKED J
M - METRIC PART

334-9977 **MOTOR GP-SWING (*contd.*)** **i05403770**

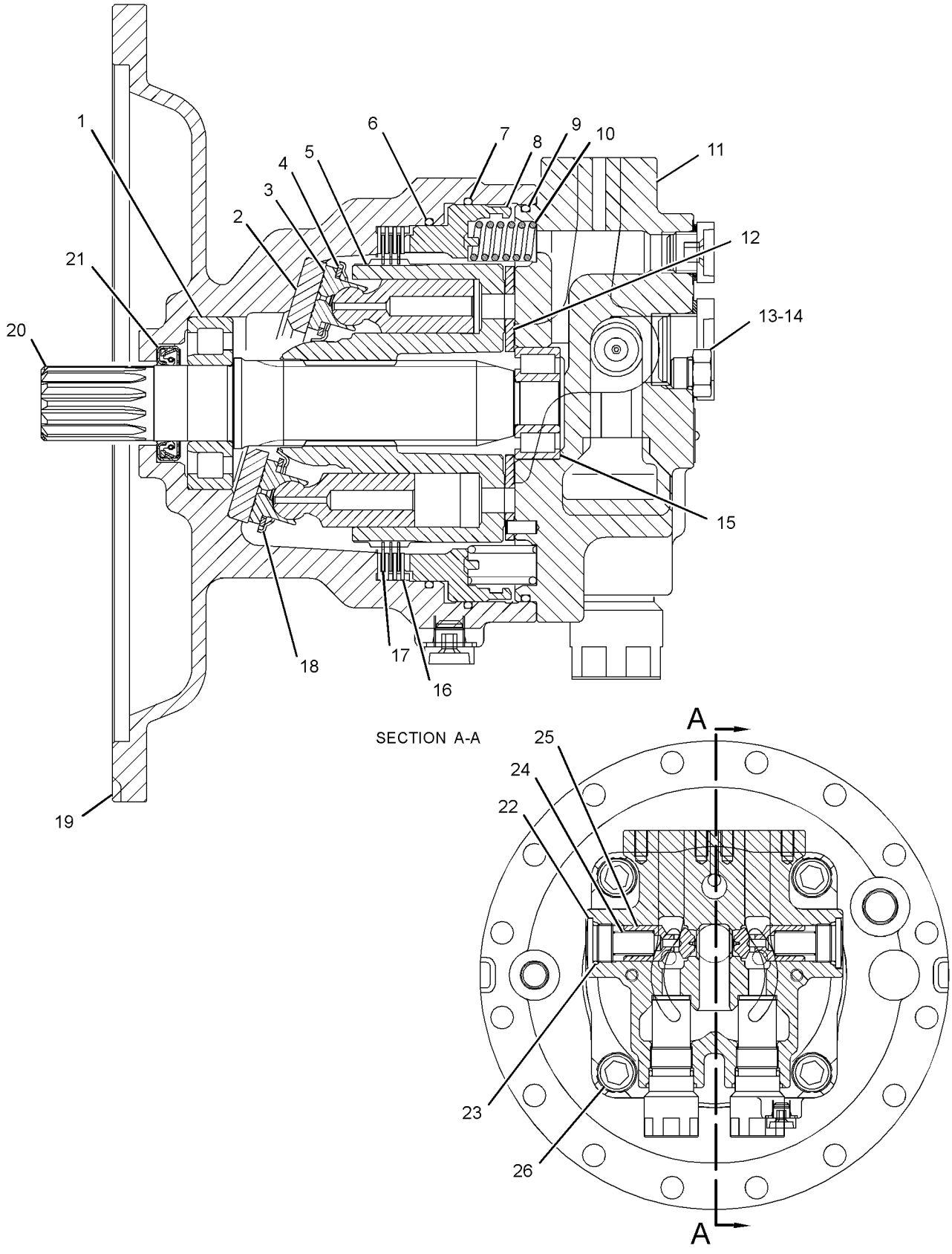

GRAPHIC #1 **<END>** g02140555

209-5992 MOTOR GP-TRAVEL*R

S/N: PBB1-UP; KBS1-UP

PART OF 334-9986 MOTOR & MTG GP-TRAVEL

SMCS-4351, 5058 **i04554138**

NOTE	REF NO	GRAPHIC REF	PART NUMBER	QTY	PART NAME 1 2 3 4 5 6 (PRODUCT LEVEL)	SEE PAGE
	1	1	**7Y-4202**	1	HEAD	
	2	2	**7Y-4212**	1	BEARING	
	3	2	**7Y-4213**	1	PISTON-BRAKE	
	4	1	**7Y-4215**	1	SPACER	
	5	2	**7Y-4216**	1	SPOOL	
	6	2	**7Y-4224**	2	ORIFICE	
	7	2	**087-4742**	1	VALVE	
	8	1	**087-4743**	2	STOP	
	9	2	**087-4786**	1	ADAPTER	
	10	2	**094-1399**	1	RING-RETAINING	
L	11	2	**094-1882**	1	PLUG	
	12	1	**095-7378**	1	WASHER SET	
	13	2	**095-7380**	1	SPRING	
	14	2	**095-7382**	1	RETAINER	
	15	2	**096-1519**	1	SEAT	
B	16	1	**096-1521**	1	SHIM (1-MM THK)	
B	17	1	**096-1522**	1	SHIM (2-MM THK)	
	18	2	**096-1523**	1	GUIDE-PISTON	
B	19	1	**096-3785**	1	SHIM (1.2-MM THK)	
B	20	1	**096-3786**	1	SHIM (1.4-MM THK)	
B	21	1	**096-3787**	1	SHIM (1.6-MM THK)	
B	22	1	**096-3788**	1	SHIM (1.8-MM THK)	
	23	2	**096-3978**	1	SPRING	
	24	1	**096-4003**	1	SET-BEARING	
J	25	2	**096-4376**	1	SEAL-LIP TYPE	
	26	2	**096-5915**	2	RETAINER	
	27	2	**107-6954**	4	PLATE-FRICTION	
	28	2	**107-6955**	5	PLATE-SEPARATOR	
	29	1	**107-6969**	1	BODY	
	30	1	**118-4057**	9	SPRING	
	31	1	**122-5114**	1	GUIDE-BALL	
	32	2	**123-2008**	2	KEY	
	33	1	**133-6777**	1	BARREL AS	
	34	1	**147-5860**	1	PISTON AS	
	35	1	**209-5894**	1	SHAFT	
	36	1	**209-5909**	1	PLATE-CAM	
C	38	1	**346-1340**	2	PISTON	
	39	1	**094-1875**	1	DOWEL	
	40	2	**094-1882**	10	PLUG	
J	41	2	**095-1572**	2	SEAL-O-RING	
J	42	2	**095-1575**	3	SEAL-O-RING	
J	43	2	**095-1585**	1	SEAL-O-RING	
J	44	1	**095-1586**	2	SEAL-O-RING	
	46	2	**095-1700**	2	SEAL-O-RING	
J	47	2	**095-7383**	1	SEAL-O-RING	
J	48	2	**095-7384**	1	SEAL-O-RING	
J	49	2	**095-7386**	1	RING-BACKUP	
J	50	2	**095-7387**	1	RING	
J	52	2	**096-4377**	2	SEAL-O-RING	
J	53	2	**096-4378**	1	RING-BACKUP	
	54	2	**096-5916**	2	SEAT	
J	55	2	**096-5919**	2	RING-BACKUP	
	56	2	**121-1558**	2	PIN	
	57	2	**2D-6642**	2	BALL	
J	58	2	**2M-9780**	1	SEAL-O-RING	
J	59	1	**3K-0360**	1	SEAL-O-RING	
J	60	1	**7Y-4217**	2	RING-BACKUP	
M	61	1	**8T-4944**	10	BOLT-SOCKET HEAD (M16X2X40-MM)	
	62	1	**9S-4185**	1	PLUG-O-RING	

209-5992 **MOTOR GP-TRAVEL (*contd.*)** **i04554138**

NOTE	REF NO	GRAPHIC REF	PART NUMBER	QTY	PART NAME 1 2 3 4 5 6 (PRODUCT LEVEL)	SEE PAGE
					AVAILABLE REPAIR KIT(S):	
J			**7Y-4222**	1	KIT-SEAL (TRAVEL MOTOR)	

B - USE AS REQUIRED
C - CHANGE FROM PREVIOUS TYPE
J - KIT MARKED J SERVICES PARTS MARKED J
L - NOT REQUIRED FOR OPTIONAL BODY DESIGN
M - METRIC PART

209-5992 **MOTOR GP-TRAVEL (*contd.*)** **i04554138**

REFER TO ALL ILLUSTRATIONS OF
THIS GROUP FOR AUXILIARY VIEWS

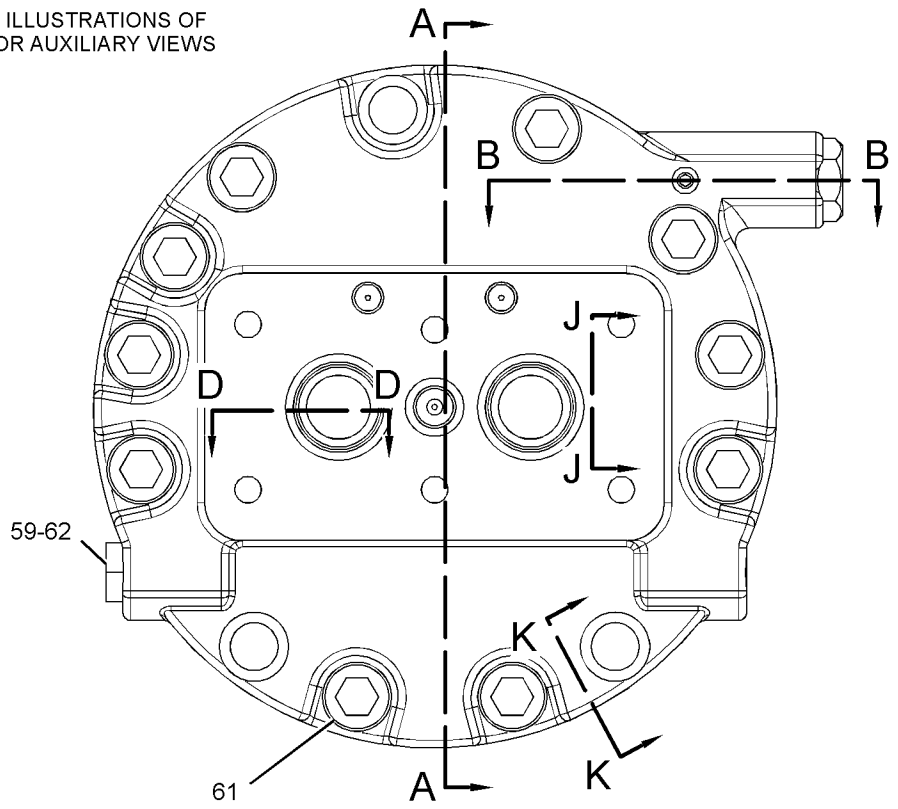

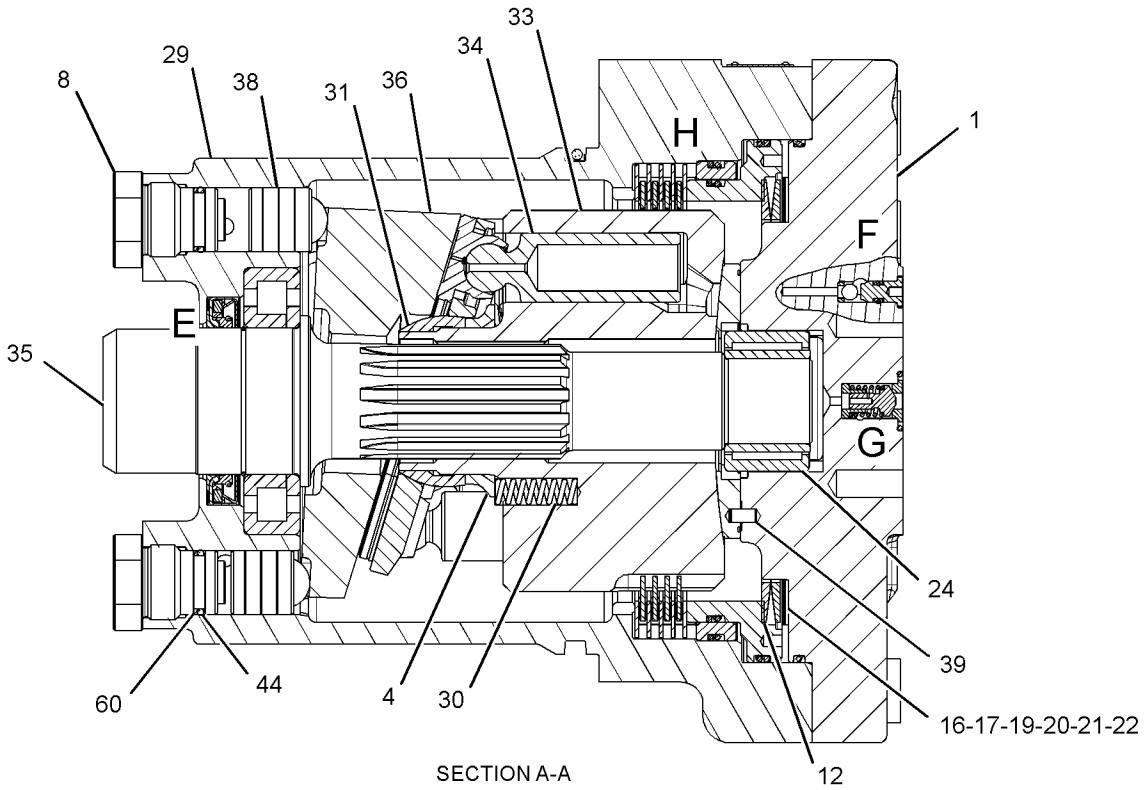

SECTION A-A

GRAPHIC #1

g02354280

209-5992 **MOTOR GP-TRAVEL (*contd.*)** **i04554138**

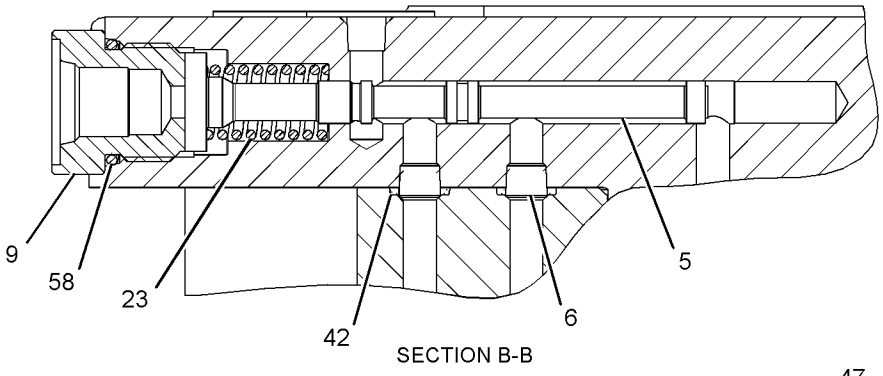

SECTION B-B

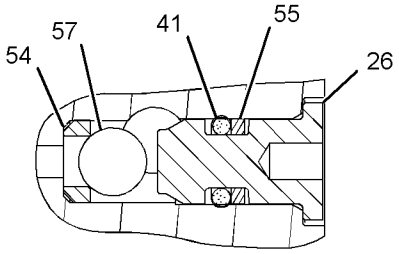

VIEW OF AREA F

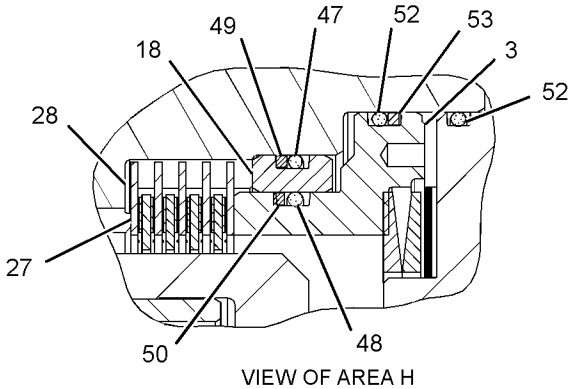

VIEW OF AREA H

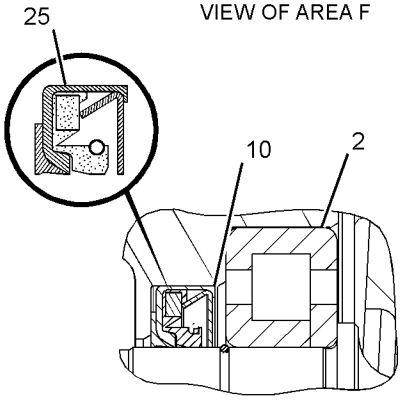

VIEW OF AREA E

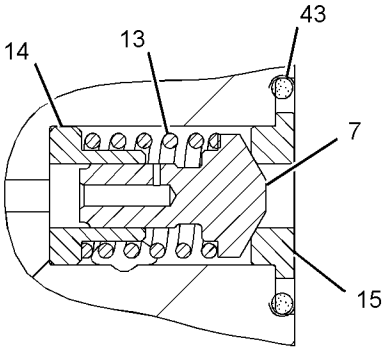

VIEW OF AREA G

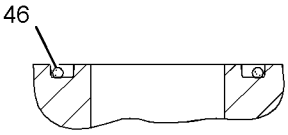

SECTION D-D

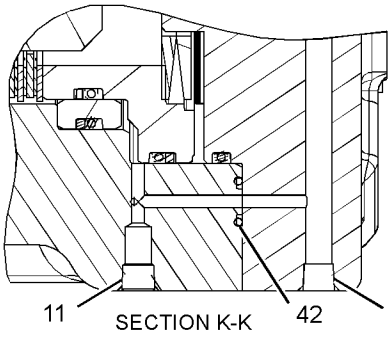

SECTION K-K

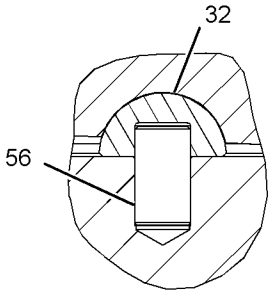

SECTION J-J

GRAPHIC #2 **<END>** g01196115

260-7868 MOUNTING GP-MAIN CONTROL VALVE

S/N: PBB1-UP; KBS1-UP

PART OF 456-0404, 456-0405 HYDRAULIC AR

SMCS-5051 **i05686876**

NOTE	REF NO	GRAPHIC REF	PART NUMBER	QTY	PART NAME 1 2 3 4 5 6 (PRODUCT LEVEL)	SEE PAGE
	1	1	**260-7904**	1	SUPPORT AS	
	2	1	**260-7906**	1	SUPPORT AS	
M	3	1	**453-2835**	8	BOLT (M16X2X40-MM)	
	4	1	**451-2175**	4	WASHER-HARD (17.5X30X3.5-MM THK)	
	5	1	**196-0711**	4	WASHER (17X40X8-MM THK)	

M - METRIC PART

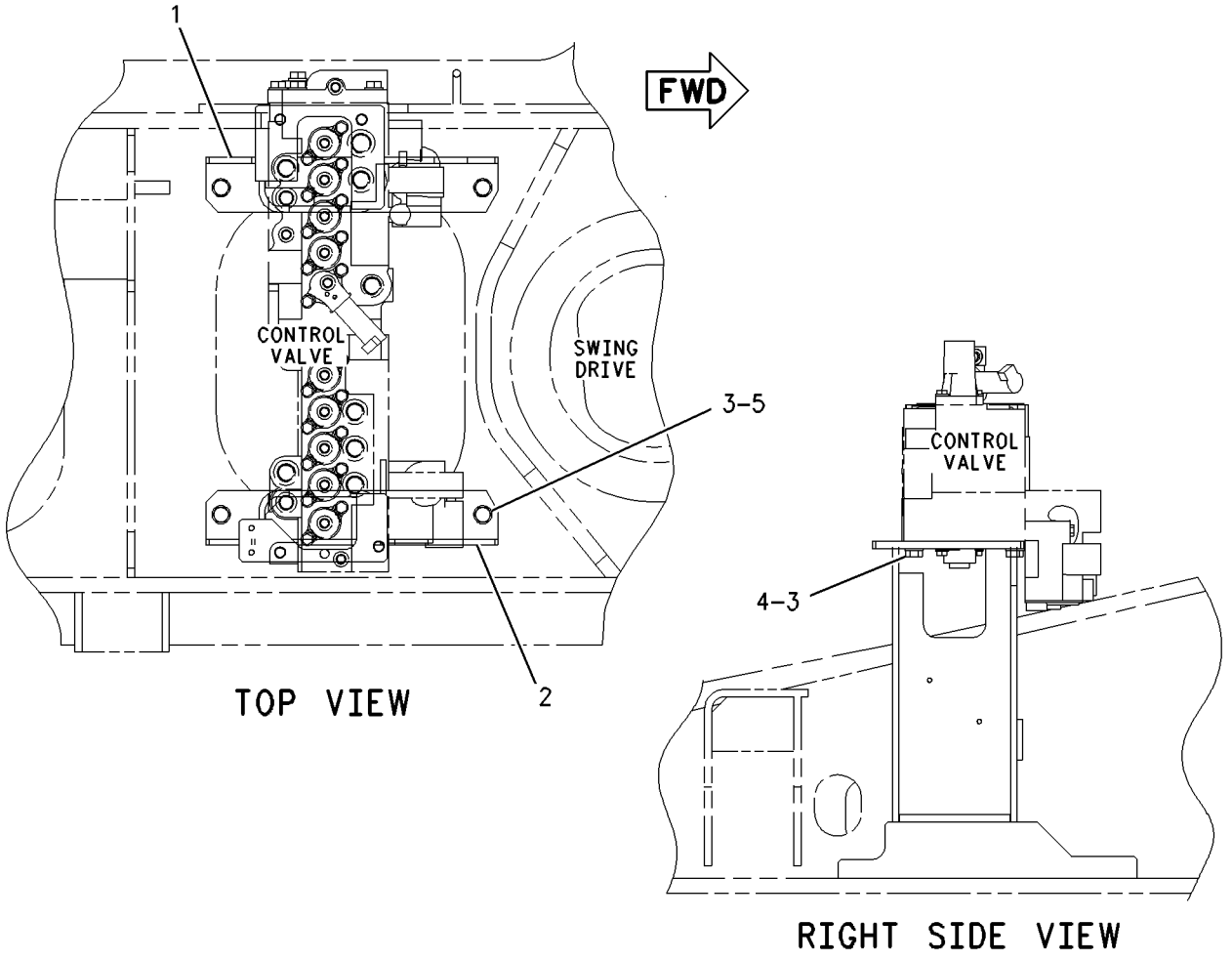

GRAPHIC #1 **<END>** g00676425

310-0404 PLUG GP-CONTROL VALVE

S/N: PBB1-UP; KBS1-UP
PART OF 259-7465, 435-1484 VALVE GP-CONTROL
ALSO AN ATTACHMENT

SMCS-5051 **i03941430**

NOTE	REF NO	GRAPHIC REF	PART NUMBER	QTY	PART NAME 1 2 3 4 5 6 (PRODUCT LEVEL)	SEE PAGE
	1	1	**310-0405**	1	PLUG	
	2	1	**3D-2824**	1	SEAL-O-RING	
	3	1	**6M-5062**	1	SEAL-O-RING	
	4	1	**9J-0705**	1	RING-BACKUP	

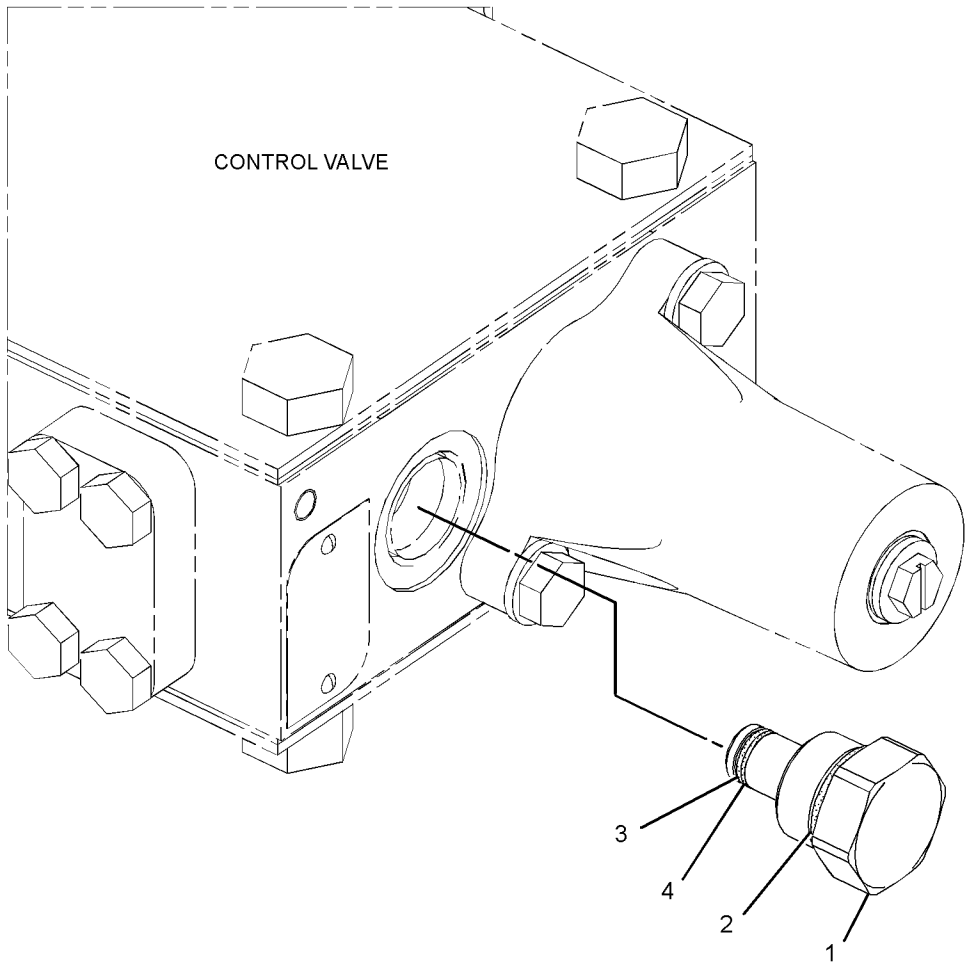

GRAPHIC #1 **<END>** g02377560

200-3365 PUMP & MTG GP-AUXILIARY

S/N: PBB1-UP; KBS1-UP
PART OF 349-2216 CONTROL AR-AUXILIARY
AN ATTACHMENT

SMCS-5070, 5073 **i03946110**

NOTE	REF NO	GRAPHIC REF	PART NUMBER	QTY	PART NAME 1 2 3 4 5 6 (PRODUCT LEVEL)	SEE PAGE
	1	1	**342-1861**	1	SPACER	
	2	1	**200-3327**	1	COUPLING	
CY	3	1	**349-4087**	1	PUMP GP-GEAR (AUXILIARY HYDRAULIC)	587
M	4	1	**105-3478**	2	BOLT-SOCKET HEAD (M10X1.5X35-MM)	
	5	1	**273-8315**	2	SEAL-O-RING	
CM	6	1	**8T-4195**	2	BOLT (M10X1.5X30-MM)	
C	7	1	**8T-4121**	2	WASHER-HARD (11X21X2.5-MM THK)	

C - CHANGE FROM PREVIOUS TYPE
M - METRIC PART
Y - SEPARATE ILLUSTRATION

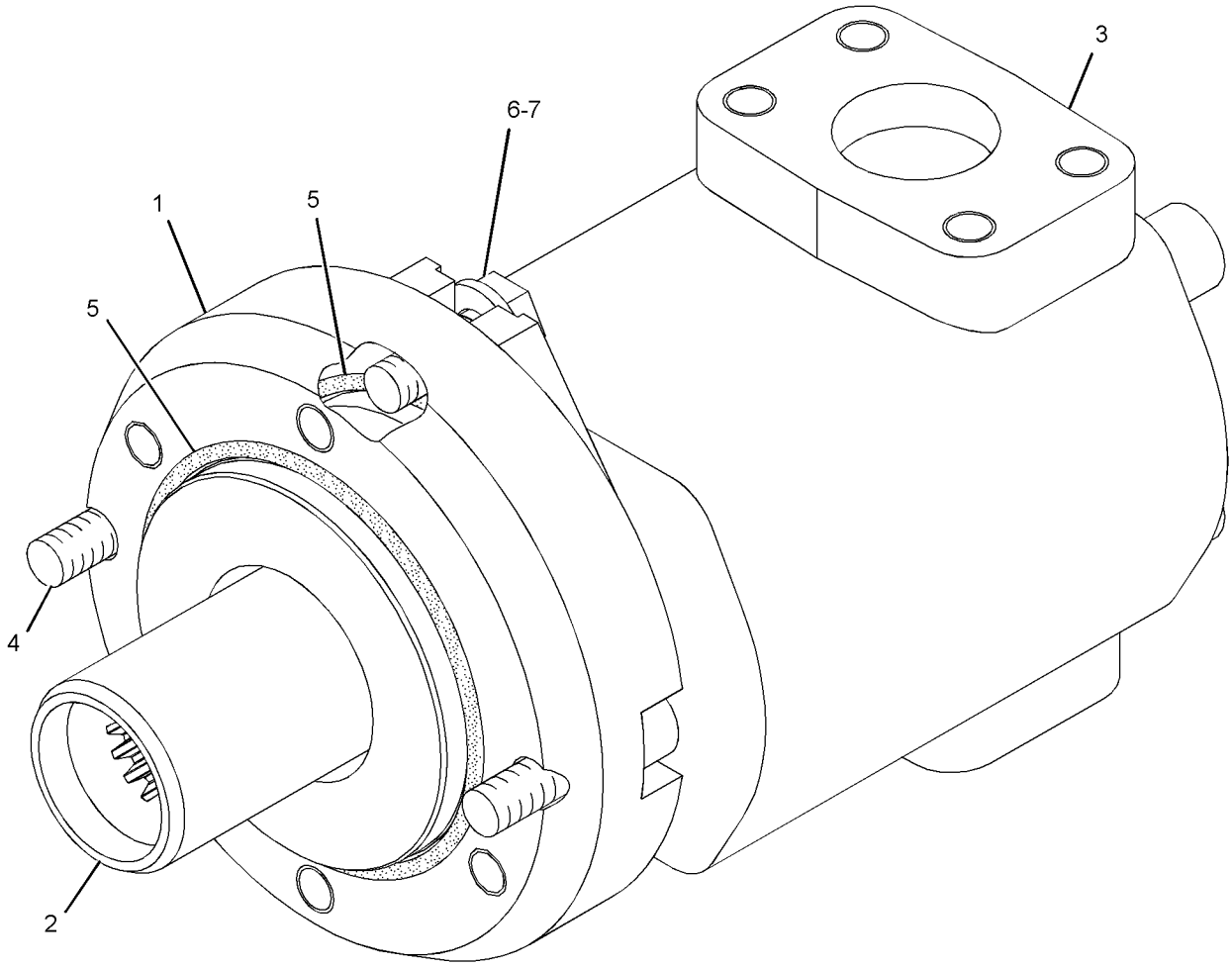

GRAPHIC #1 **<END>** g02159671

396-1865 PUMP & MTG GP-MAIN HYDRAULIC

S/N: PBB1-UP; KBS1-UP

PART OF 456-0404, 456-0405 HYDRAULIC AR

SMCS-5070 **i05099189**

NOTE	REF NO	GRAPHIC REF	PART NUMBER	QTY	PART NAME 1 2 3 4 5 6 (PRODUCT LEVEL)	SEE PAGE
Y	1	1	*374-6000*	1	COUPLING GP-PUMP	345
Y	2	1	**397-3680**	1	PUMP GP-MAIN HYDRAULIC	588
	3	1	**7X-7729**	12	WASHER (11X25X3-MM THK)	
M	4	1	**8T-4195**	12	BOLT (M10X1.5X30-MM)	

M - METRIC PART
Y - SEPARATE ILLUSTRATION

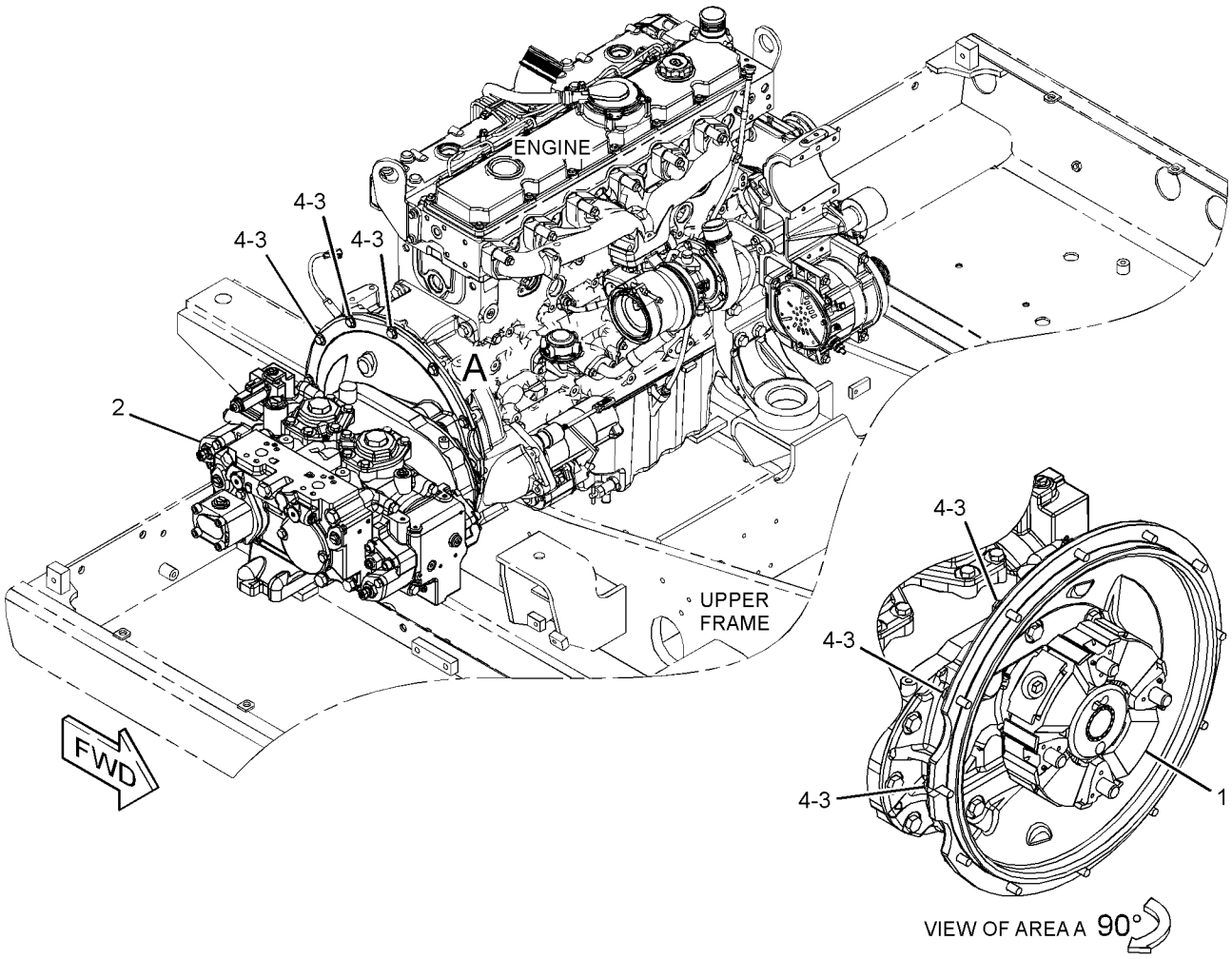

GRAPHIC #1 **<END>** g03303476

341-2860 PUMP GP-GEAR

S/N: PBB1-UP; KBS1-UP

PART OF 397-3680 PUMP GP-MAIN HYDRAULIC

SMCS-5073 **i04468549**

NOTE	REF NO	GRAPHIC REF	PART NUMBER	QTY	PART NAME 1 2 3 4 5 6 (PRODUCT LEVEL)	SEE PAGE
					AVAILABLE REPAIR KIT(S):	
			327-8740	1	KIT-SEAL (GEAR PUMP)	
					(KIT INCLUDES GASKETS, LIP TYPE SEAL, SEAL & RETAINING RING)	

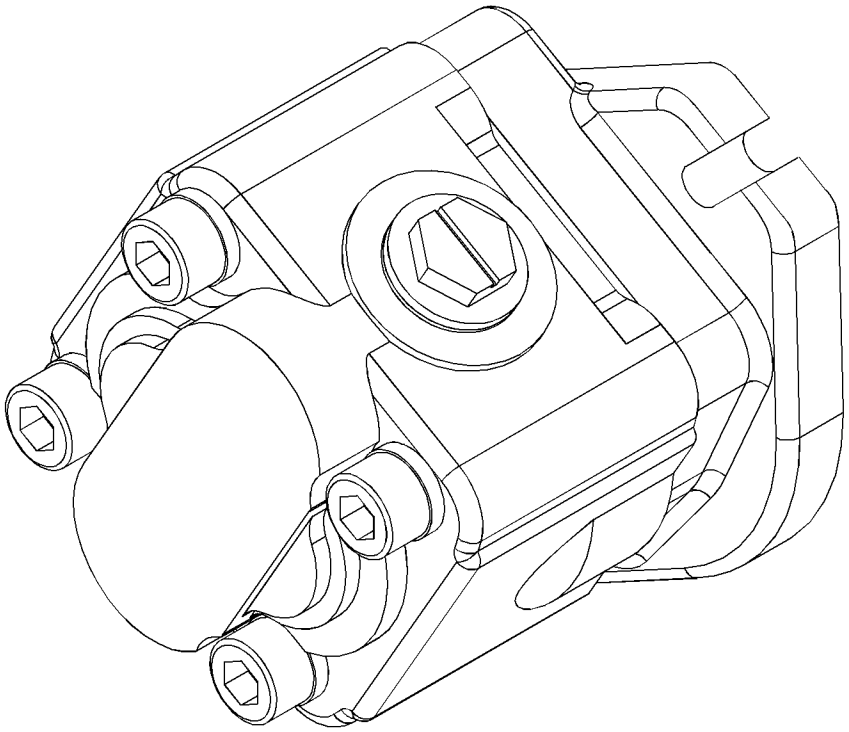

GRAPHIC #1 **<END>** g02484156

349-4087 PUMP GP-GEAR–AUXILIARY HYDRAULIC

S/N: PBB1-UP; KBS1-UP
PART OF 200-3365 PUMP & MTG GP-AUXILIARY
AN ATTACHMENT

SMCS-5073 **i04706329**

NOTE	REF NO	GRAPHIC REF	PART NUMBER	QTY	PART NAME 1 2 3 4 5 6 (PRODUCT LEVEL)	SEE PAGE
J	1	1	**3G-5083**	1	SEAL-LIP TYPE	
J	2	1	**9T-0836**	1	RING-RETAINING	
					AVAILABLE REPAIR KIT(S):	
J			**204-2800**	1	KIT-SEAL (GEAR PUMP)	
					(ALSO INCLUDES STRIPS & GASKETS)	

J - KIT MARKED J SERVICES PART(S) MARKED J

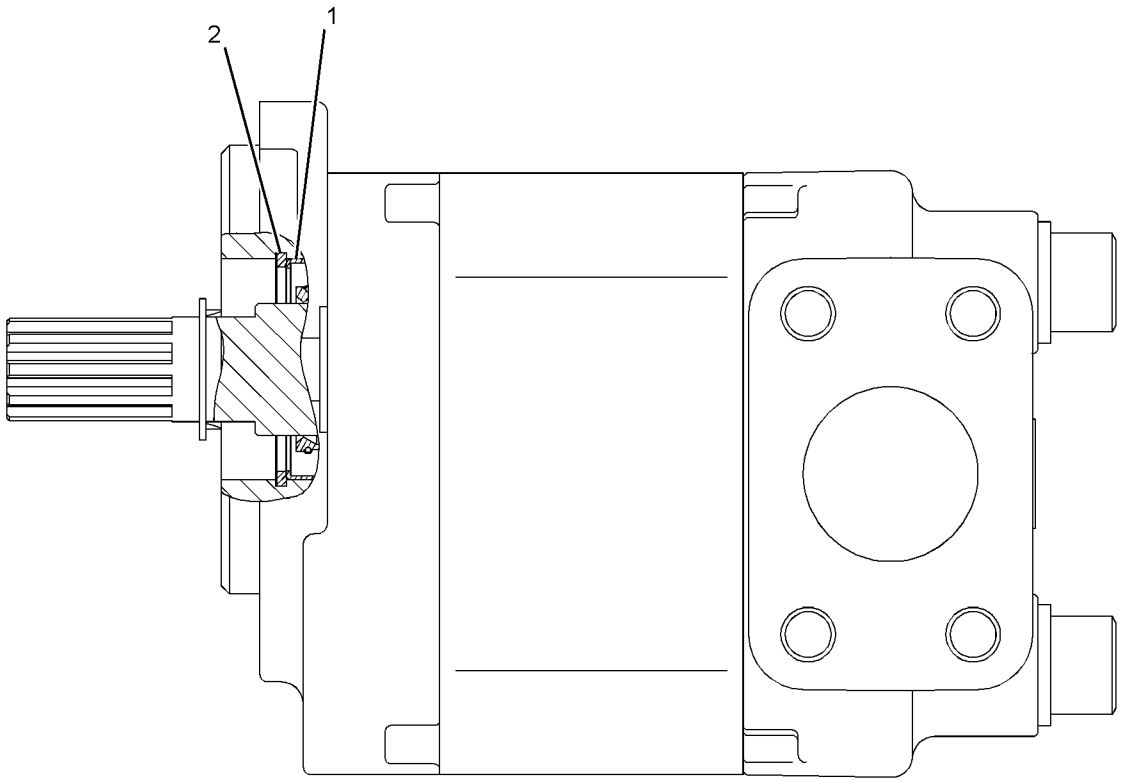

GRAPHIC #1 **<END>** g02711925

397-3680 PUMP GP-MAIN HYDRAULIC

S/N: PBB1-UP; KBS1-UP

PART OF 396-1865 PUMP & MTG GP-MAIN HYDRAULIC

SMCS-5070 **i05099229**

NOTE	REF NO	GRAPHIC REF	PART NUMBER	QTY	PART NAME 1 2 3 4 5 6 (PRODUCT LEVEL)	SEE PAGE
	1	2	**4I-1022**	2	ORIFICE	
	2	2	**7Y-4215**	2	SPACER	
	3	2	**096-3983**	1	RING-RETAINING	
	4	2	**118-4057**	18	SPRING	
	5	2	**129-7853**	2	PLATE-CREEP	
	6	2	**129-7855**	1	GASKET	
	7	1	**129-7857**	1	GASKET	
	8	2	**129-7859**	2	SET-BEARING	
	9	1	**129-7863**	1	COVER	
	10	2	**129-7921**	2	RING-RETAINING	
	11	2	**129-7927**	2	BEARING	
	12	1	**129-7979**	4	DOWEL	
	13	1	**150-5782**	2	COVER	
	14	2	**173-3427**	2	GUIDE-BALL	
	15	2	**173-3496**	1	BARREL AS	
	16	2	**173-3498**	1	BARREL AS	
	17	1	**177-2470**	1	COVER	
	18	1	**177-2471**	1	COVER	
	19	2	**190-4896**	2	PLUG	
	20	2	**192-0573**	4	PIN-DOWEL	
	21	1	**200-3333**	1	HEAD-PUMP	
	22	2	**200-3334**	1	COVER	
	23	2	**247-8920**	2	ORIFICE	
Y	24	1	**256-0093**	1	HEAD GP-PUMP (DRIVE)	406
Y	25	1	**256-0096**	1	HEAD GP-PUMP (DRIVEN)	409
	26	2	**273-8314**	1	SEAL-O-RING	
	27	2	**273-8315**	2	SEAL-O-RING	
	28	2	**341-2831**	1	SHAFT-DRIVE	
	29	2	**341-2834**	1	SHAFT-DRIVEN	
	30	2	**341-2839**	2	GEAR (50-TEETH)	
	31	2	**341-2840**	1	CASE	
	32	1	**341-2841**	1	FLANGE	
	33	1	**341-2842**	1	BODY	
Y	34	2	**341-2860**	1	PUMP GP-GEAR	586
	35	2	**341-2862**	1	SEAL-LIP TYPE	
	36	2	**373-9516**	2	SWASHPLATE AS	
					(EACH INCLUDES)	
		2	**094-1875**	1	DOWEL	
		2	**173-3428**	1	BUSHING	
		2	**242-6803**	2	PIN-DOWEL	
	37	2	**373-9518**	4	BEARING	
	38	2	**392-6626**	2	PISTON AS	
	40	2	**094-1875**	6	DOWEL	
	41	1,2	**094-1882**	16	PLUG	
	42	2	**095-0929**	2	RING-RETAINING	
	43	2	**095-0946**	2	RING-RETAINING	
	45	2	**096-3944**	1	SEAL-O-RING	
	46	1,2	**189-9763**	8	SEAL-O-RING	
	47	2	**193-1736**	4	SEAL-O-RING	
	48	1	**3K-0360**	2	SEAL-O-RING	
	49	2	**7M-8485**	2	SEAL-O-RING	
M	50	1	**7X-2557**	1	BOLT (M16X2X140-MM)	
	51	2	**8J-4645**	2	PLUG (STRAIGHT THREAD O-RING)	
M	52	1,2	**8T-4136**	20	BOLT (M10X1.5X25-MM)	
M	53	1	**8T-4139**	10	BOLT (M12X1.75X30-MM)	
M	54	1	**8T-4140**	4	BOLT (M16X2X60-MM)	
M	55	1	**8T-4175**	2	BOLT (M16X2X90-MM)	
M	56	1	**8T-4176**	2	BOLT (M12X1.75X90-MM)	
M	57	2	**8T-4192**	10	BOLT (M12X1.75X25-MM)	

397-3680 **PUMP GP-MAIN HYDRAULIC (*contd.*)** **i05099229**

NOTE	REF NO	GRAPHIC REF	PART NUMBER	QTY	PART NAME 1 2 3 4 5 6 (PRODUCT LEVEL)	SEE PAGE
M	58	2	**8T-4196**	2	BOLT (M10X1.5X35-MM)	
	59	1	**9S-4185**	2	PLUG-O-RING	

M - METRIC PART
Y - SEPARATE ILLUSTRATION

397-3680 **PUMP GP-MAIN HYDRAULIC (*contd.*)** **i05099229**

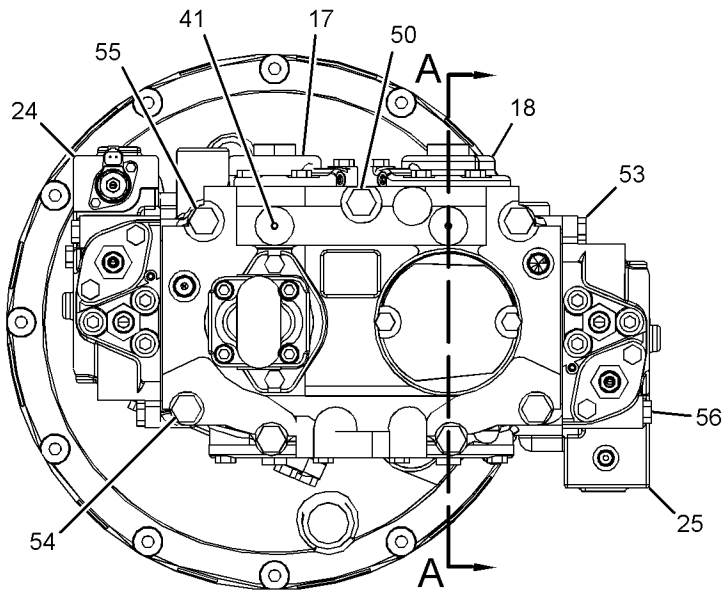

RIGHT SIDE VIEW

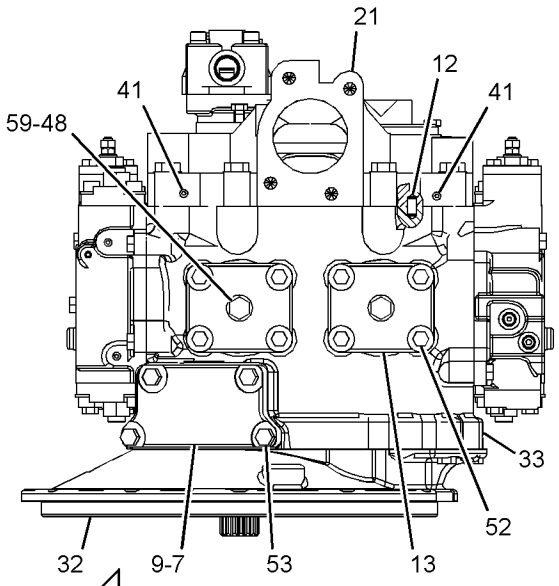

FWD TOP VIEW

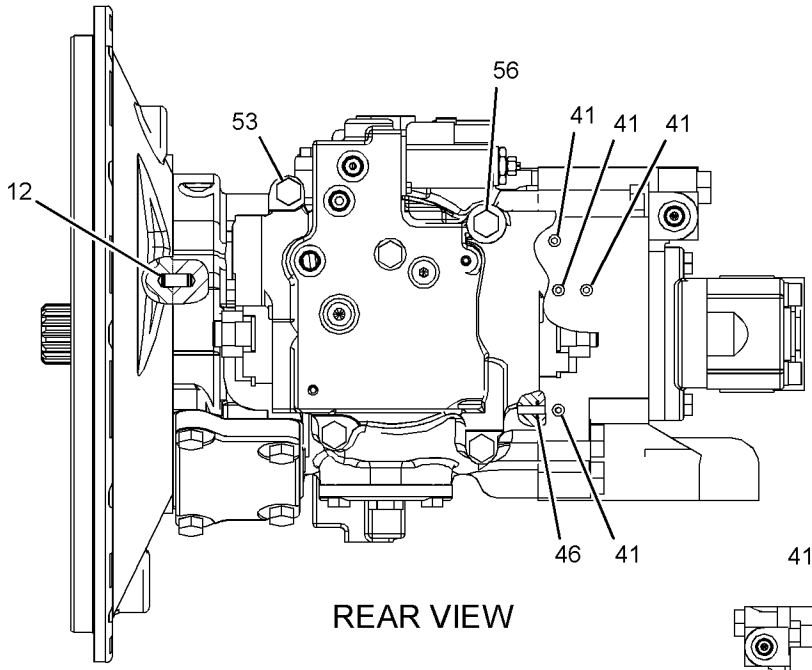

REAR VIEW

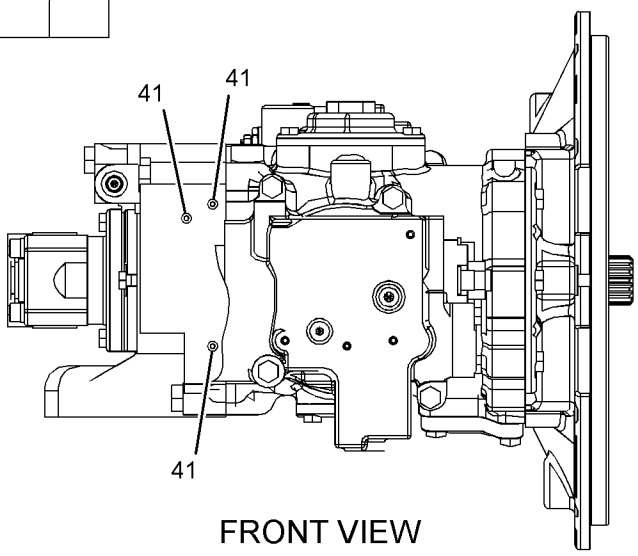

FRONT VIEW

GRAPHIC #1 g03306243

397-3680 **PUMP GP-MAIN HYDRAULIC (*contd.*)** **i05099229**

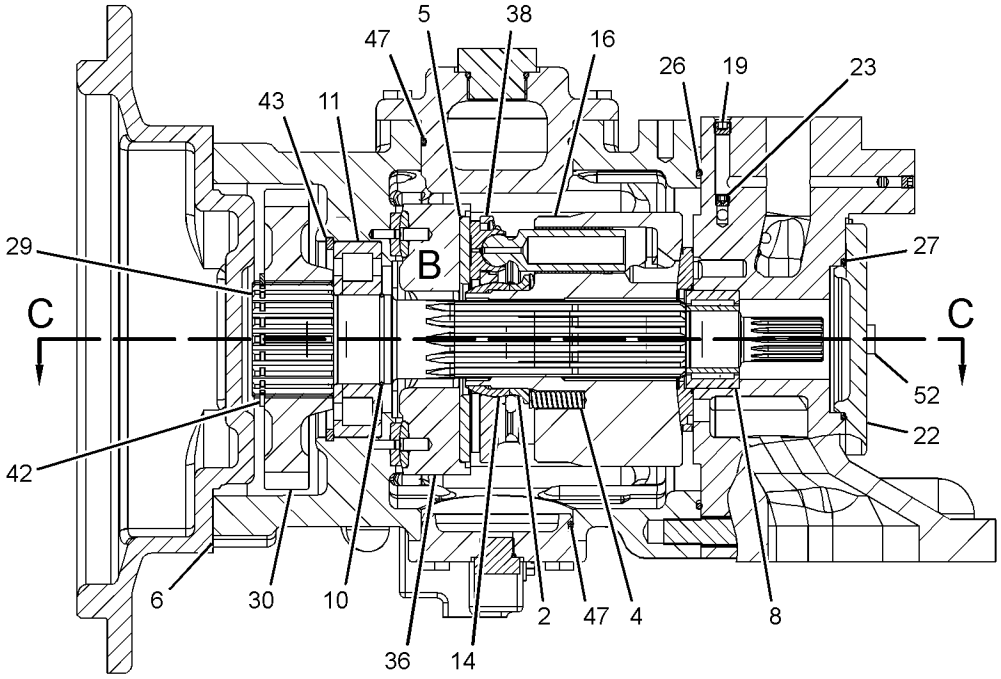

SECTION A-A

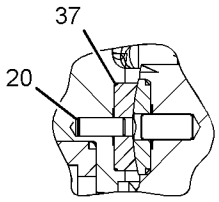

VIEW OF AREA B

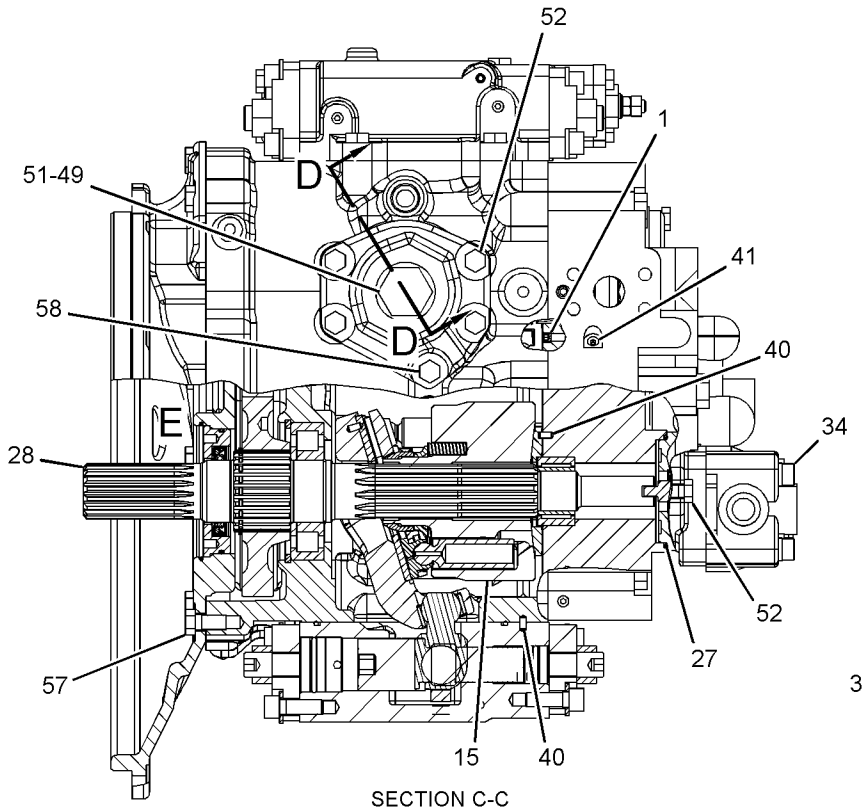

SECTION C-C

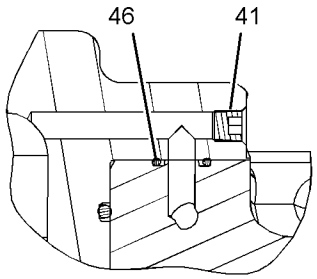

SECTION D-D

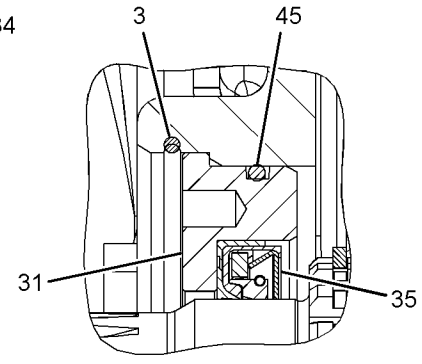

VIEW OF AREA E

GRAPHIC #2 **<END>** g03306256

387-3783 SCREEN GP-HYDRAULIC–TANK

S/N: PBB1-UP; KBS1-UP

PART OF 455-4364 TANK & FILTER GP-HYDRAULIC

SMCS-5068 **i05843948**

NOTE	REF NO	GRAPHIC REF	PART NUMBER	QTY	PART NAME 1 2 3 4 5 6 (PRODUCT LEVEL)	SEE PAGE
	1	1	**129-7784**	1	ROD	
	2	1	**209-6000**	1	SCREEN AS (HYDRAULIC TANK)	
	3	1	**259-0918**	1	GUIDE	
	4	1	**095-6639**	1	SPRING	
	5	1	**5H-5672**	1	SEAL-O-RING	
M	6	1	**8T-4133**	2	NUT (M10X1.5-THD)	

M - METRIC PART

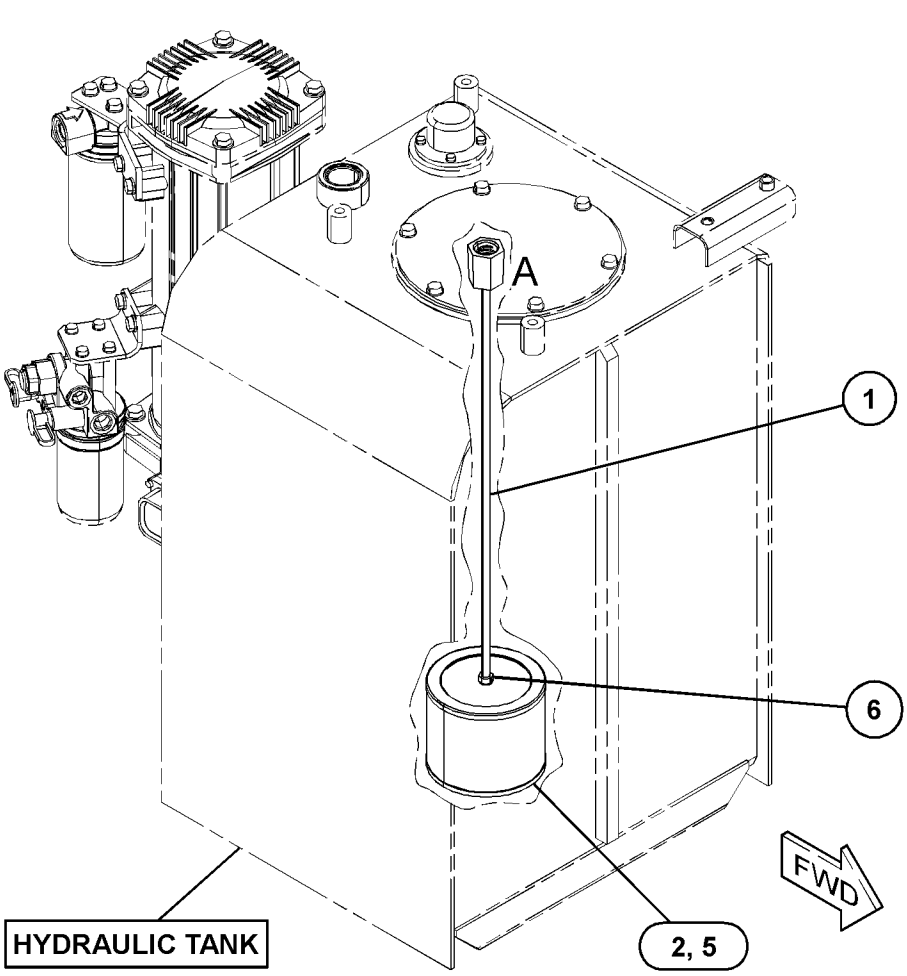

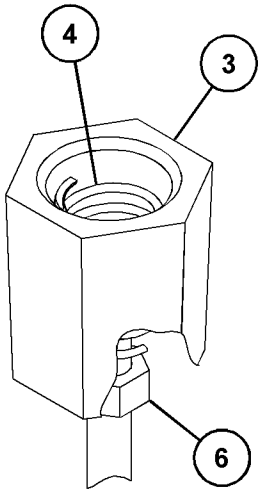

VIEW OF AREA A

GRAPHIC #1 **<END>** g03271036

234-4440 SWIVEL GP

S/N: PBB1-UP; KBS1-UP

PART OF 239-1716, 239-1717 LINES GP-TRAVEL MOTOR

SMCS-5060 **i02738907**

NOTE	REF NO	GRAPHIC REF	PART NUMBER	QTY	PART NAME 1 2 3 4 5 6 (PRODUCT LEVEL)	SEE PAGE
	1	1	**7I-7131**	1	RETAINER	
	2	1	**7Y-4817**	1	COVER	
	3	1	**159-7782**	5	SEAL	
	4	1	**225-4548**	1	HOUSING	
	5	1	**225-4549**	1	ROTOR	
	6	1	**095-1625**	3	SEAL-O-RING	
	7	1	**095-1716**	1	SEAL-O-RING	
	8	1	**8T-4121**	2	WASHER-HARD (11X21X2.5-MM THK)	
M	9	1	**8T-4136**	6	BOLT (M10X1.5X25-MM)	
	10	1	**8T-6759**	1	PLUG-PIPE	

M - METRIC PART

234-4440 **SWIVEL GP (*contd.*)** **i02738907**

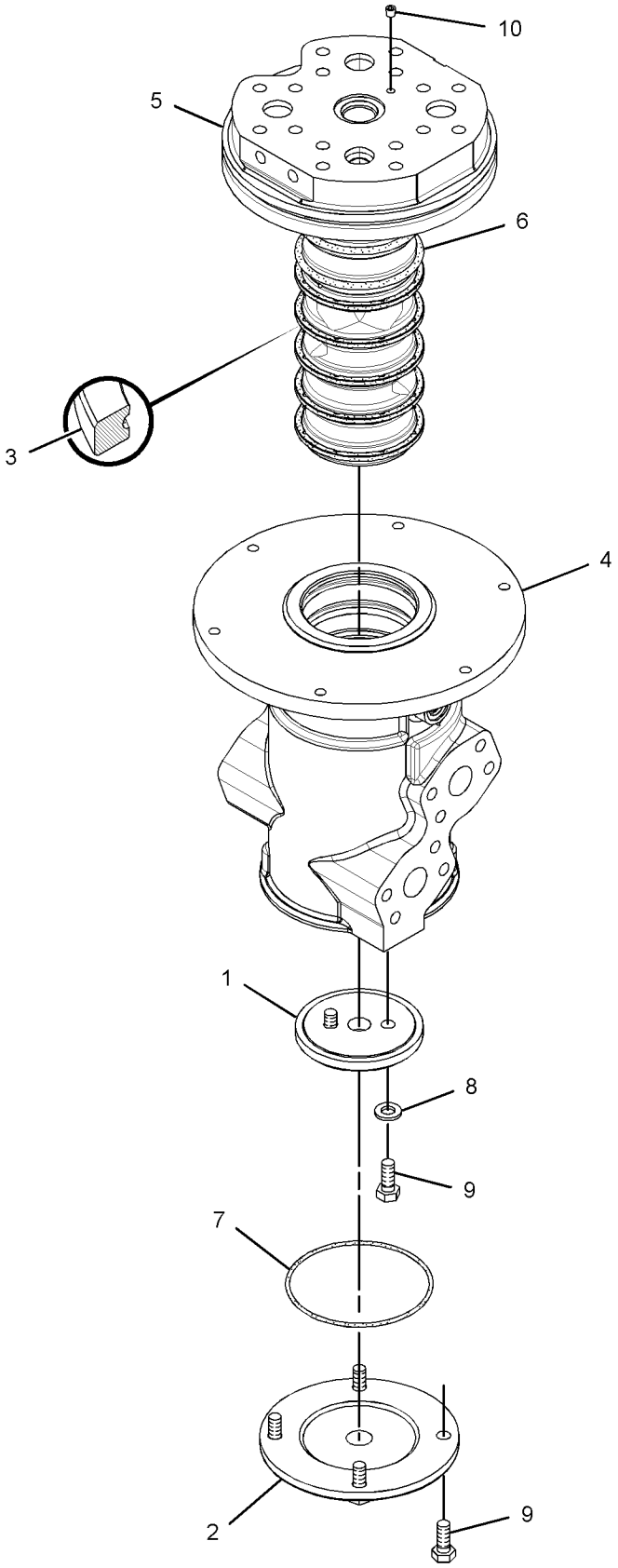

GRAPHIC #1

<END>

g01373464

455-4364 TANK & FILTER GP-HYDRAULIC

S/N: PBB1-UP; KBS1-UP
210-L (55.5-US GAL)
PART OF 455-4363 TANK & MTG GP-HYDRAULIC

SMCS-5056, 5068 **i05910674**

NOTE	REF NO	GRAPHIC REF	PART NUMBER	QTY	PART NAME 1 2 3 4 5 6 (PRODUCT LEVEL)	SEE PAGE
	1	1	**1U-2827**	1	GUIDE-VALVE	
	2	1	**6D-9157**	1	SEAL-O-RING	
	3	1	**6J-2680**	1	SEAL-O-RING	
	4	1	**6V-0852**	1	CAP-DUST	
	5	1	**8J-8782**	1	BODY-DRAIN VALVE	
	6	1	**8J-8783**	1	VALVE-DRAIN	
	7	1	**9J-7031**	1	PLUG-DRAIN (HYDRAULIC OIL)	
	8	1	**095-1608**	1	SEAL-O-RING	
Y	9	1	**158-8987**	1	FILTER & VALVE GP-PILOT (HYDRAULIC OIL)	397
	10	1	**165-3256**	1	PIPE AS	
	11	1	**207-6403**	1	PLUG	
	12	1	**227-0590**	1	BREATHER (HYDRAULIC TANK)	
	13	1	**275-1362**	1	BRACKET	
Y	14	1	**289-8194**	1	FILTER GP-OIL (HYDRAULIC, CASE DRAIN)	403
	15	1	**292-7297**	1	SUPPORT AS	
Y	16	1	**102-2240**	1	SENSOR GP-TEMPERATURE (HYDRAULIC OIL)	164
Y	17	1	**347-6081**	1	GAUGE GP-SIGHT (HYDRAULIC OIL LEVEL)	405
Y	18	1	*387-3783*	1	SCREEN GP-HYDRAULIC (TANK)	592
	19	1	**395-0021**	1	COVER AS	
	21	1	**207-6404**	1	WASHER (49.5X60.5X1.5-MM THK)	
	22	1	**095-1730**	1	SEAL-O-RING	
	23	1	*164-5567*	1	COUPLER AS-QUICK DISCONNECT (MALE)	
		1	**214-7568**	1	SEAL-O-RING	
		1	**6V-3965**	1	FITTING (QUICK DISCONNECT)	
	24	1	*164-5590*	1	VALVE GP-FLUID SAMPLING (HYDRAULIC OIL)	
		1	**3J-7354**	1	SEAL-O-RING	
		1	**8C-3446**	1	VALVE-SAMPLING (HYDRAULIC OIL)	
Y	25	1	*188-4140*	1	FILTER GP-OIL (HYDRAULIC RETURN)	398
	26	1	**3K-0360**	1	SEAL-O-RING	
	27	1	**4J-0527**	1	SEAL-O-RING	
M	28	1	**5C-9553**	4	BOLT (M6X1X16-MM)	
	29	1	**5M-2057**	1	SEAL-O-RING	
	31	1	**7B-3039**	1	SPRING	
	32	1	**8C-3451**	1	CAP-DUST	
M	33	1	**8T-0267**	2	BOLT-SOCKET HEAD (M6X1X12-MM)	
	34	1	**8T-3298**	1	SEAL-RECTANGULAR	
	35	1	**8T-4121**	15	WASHER-HARD (11X21X2.5-MM THK)	
M	36	1	**8T-4136**	9	BOLT (M10X1.5X25-MM)	
M	37	1	**8T-4183**	6	BOLT (M12X1.75X40-MM)	
M	38	1	**8T-4195**	4	BOLT (M10X1.5X30-MM)	
M	39	1	**8T-4196**	2	BOLT (M10X1.5X35-MM)	
	40	1	**8T-4223**	4	WASHER-HARD (13.5X25.5X3-MM THK)	
	41	1	**8T-4224**	4	WASHER-HARD (8.8X16X2-MM THK)	
M	42	1	**8T-4908**	4	BOLT (M8X1.25X25-MM)	
	43	1	**8T-7971**	2	WASHER-HARD (13.5X25.5X5-MM THK)	
	44	1	**9X-8256**	4	WASHER (6.6X12X2-MM THK)	

M - METRIC PART
Y - SEPARATE ILLUSTRATION

455-4364 **TANK & FILTER GP-HYDRAULIC (*contd.*)** **i05910674**

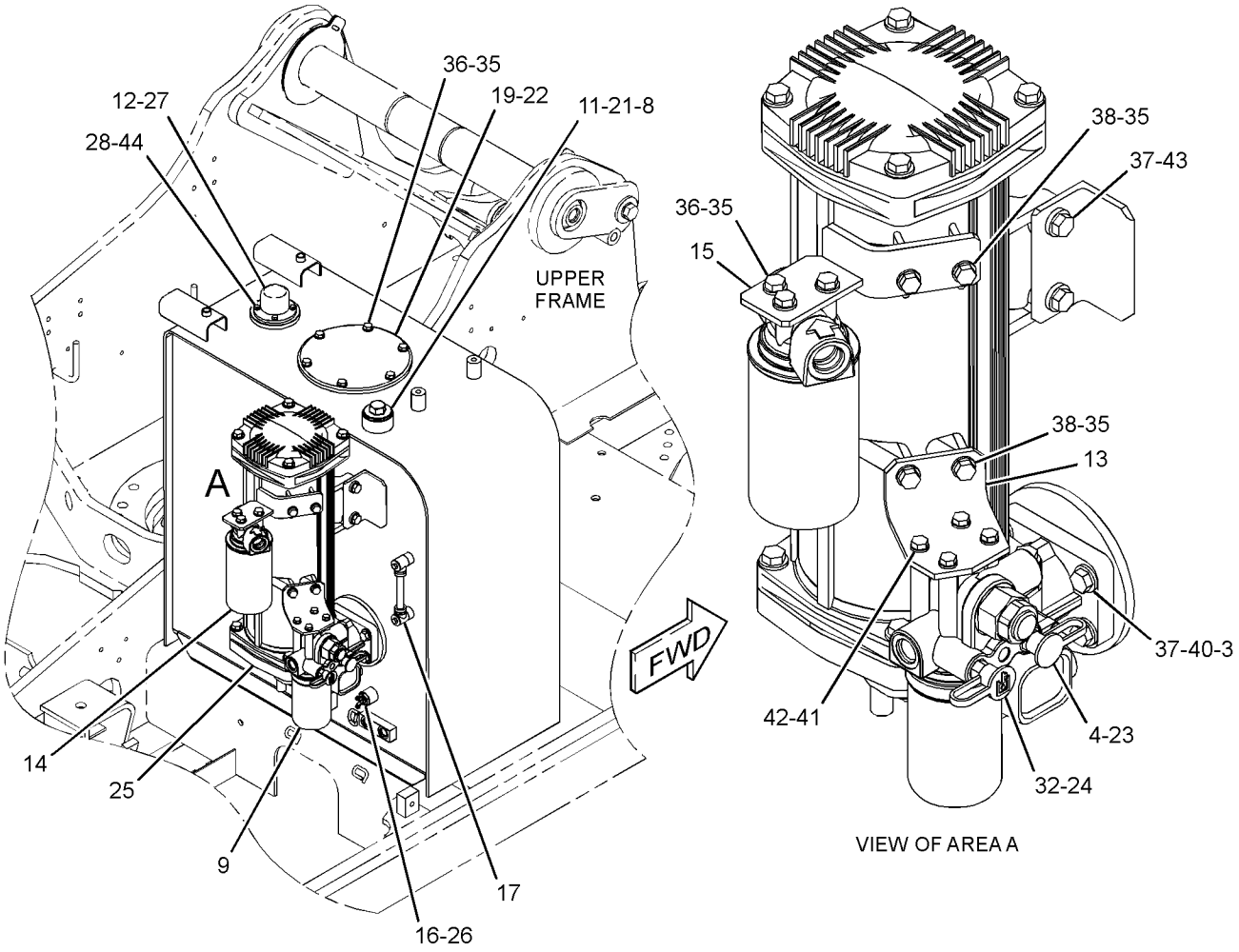

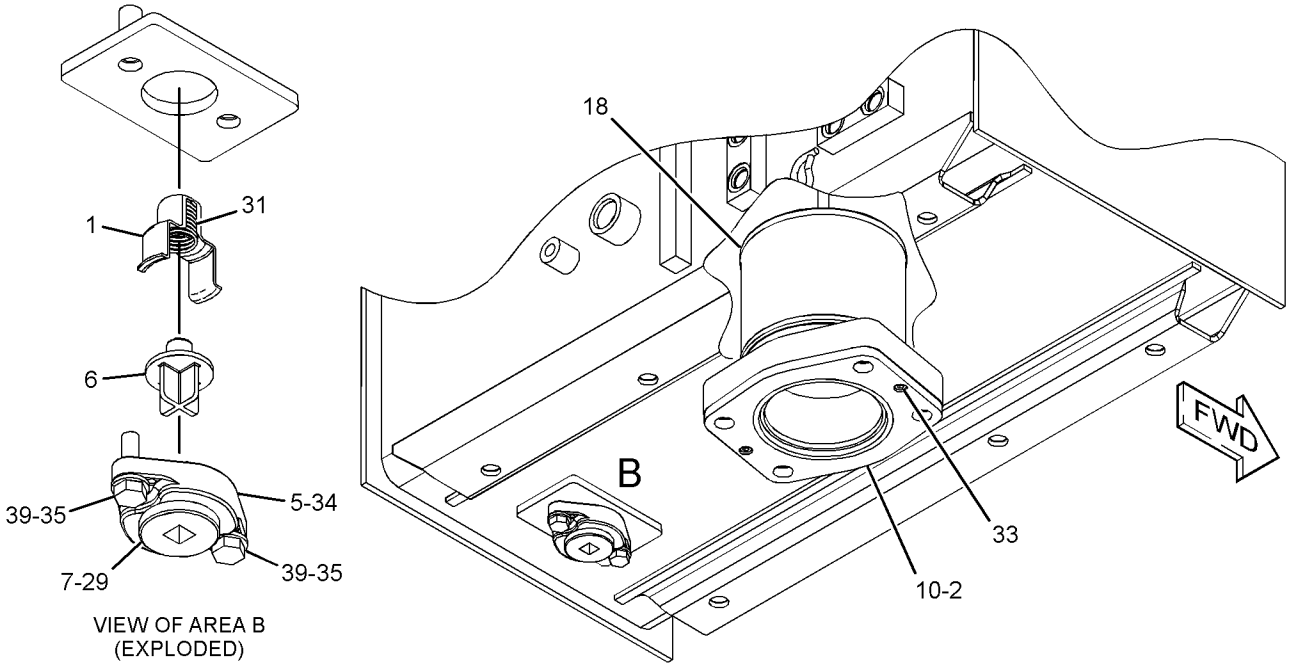

GRAPHIC #1 **<END>** g03687100

455-4363 TANK & MTG GP-HYDRAULIC

S/N: PBB1-UP; KBS1-UP

PART OF 456-0404, 456-0405 HYDRAULIC AR

SMCS-5056 **i05857527**

NOTE	REF NO	GRAPHIC REF	PART NUMBER	QTY	PART NAME 1 2 3 4 5 6 (PRODUCT LEVEL)	SEE PAGE
	1	1	**085-9310**	6	SPACER (16.6X32X26-MM THK)	
Y	2	1	*248-9853*	1	LINES GP-RETURN	549
Y	3	1	**455-4364**	1	TANK & FILTER GP-HYDRAULIC	595
M	4	1	**447-1707**	6	BOLT (M16X2X60-MM)	

M - METRIC PART
Y - SEPARATE ILLUSTRATION

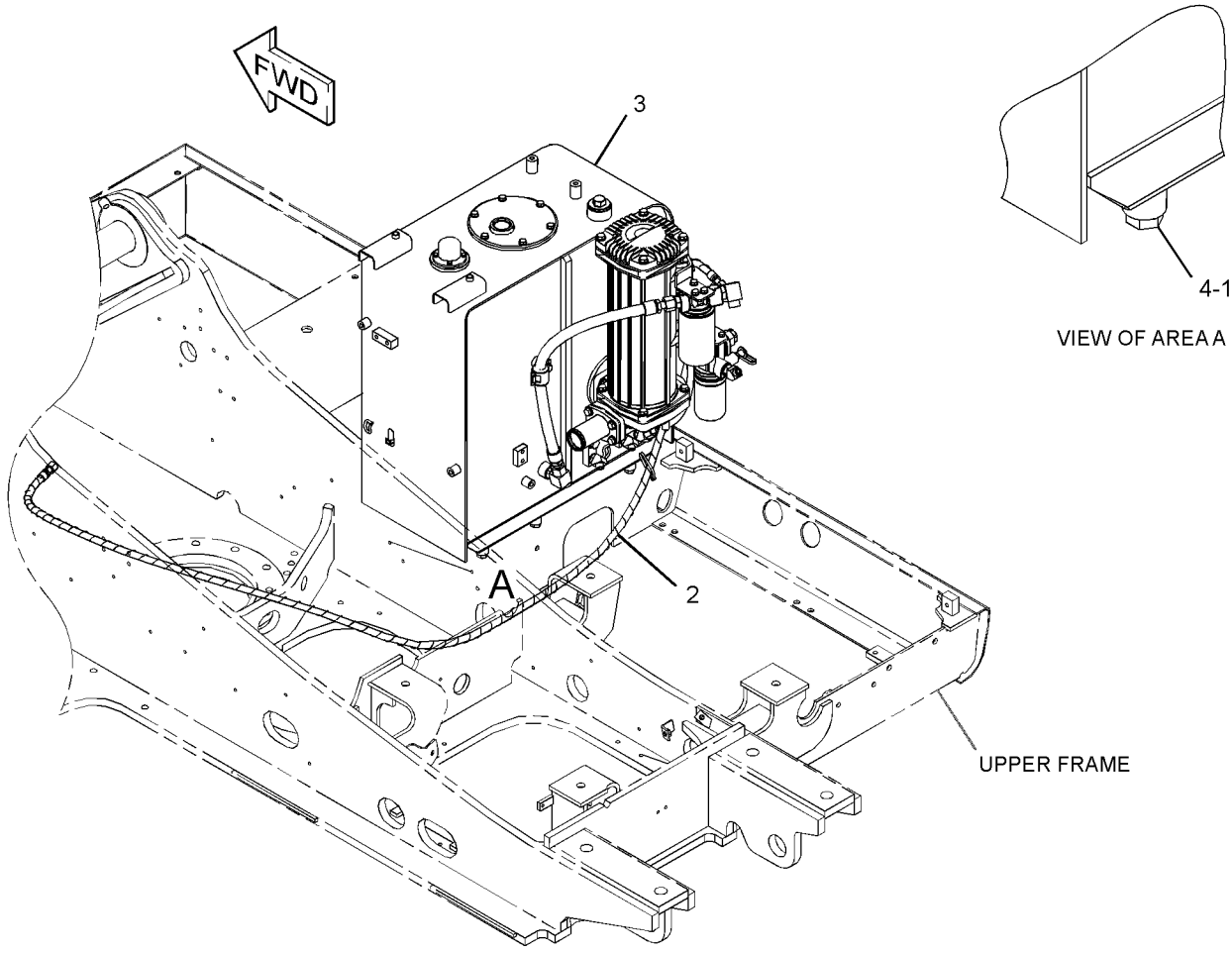

GRAPHIC #1 **<END>** g03303259

240-3881 VALVE & LINES GP-HEAVY LIFT

S/N: PBB1-UP; KBS1-UP

PART OF 456-0818, 456-0819, 456-0820, 456-0821, 456-1026, 456-1027 DISTRIBUTION AR AN ATTACHMENT

SMCS-5059, 5479

i05458412

NOTE	PART NUMBER	QTY	PART NAME 1 2 3 4 5 6 (PRODUCT LEVEL)	SEE PAGE
Y	*259-5237*	1	FASTENER GP-WIRING HARNESS (HEAVY LIFT)	122
Y	*255-1659*	1	LINES GP-PILOT (HEAVY LIFT)	502
Y	**435-1482**	1	VALVE GP-MAIN CONTROL (HEAVY LIFT)	642

Y - SEPARATE ILLUSTRATION

<END>

255-5713 VALVE & MTG GP-CONTROL–AUXILIARY

S/N: PBB1-UP; KBS1-UP
PART OF 349-2209, 349-2211, 349-2290 CONTROL AR-AUXILIARY
AN ATTACHMENT

SMCS-5051 **i05781378**

NOTE	REF NO	GRAPHIC REF	PART NUMBER	QTY	PART NAME 1 2 3 4 5 6 (PRODUCT LEVEL)	SEE PAGE
Y	1	1	**259-7378**	1	VALVE GP-CONTROL (AUXILIARY)	609
M	2	1	**447-1706**	5	BOLT (M16X2X130-MM)	
	3	1	**4J-8998**	2	SEAL-O-RING	
	4	1	**1P-3702**	2	SEAL-RECTANGULAR	

M - METRIC PART
Y - SEPARATE ILLUSTRATION

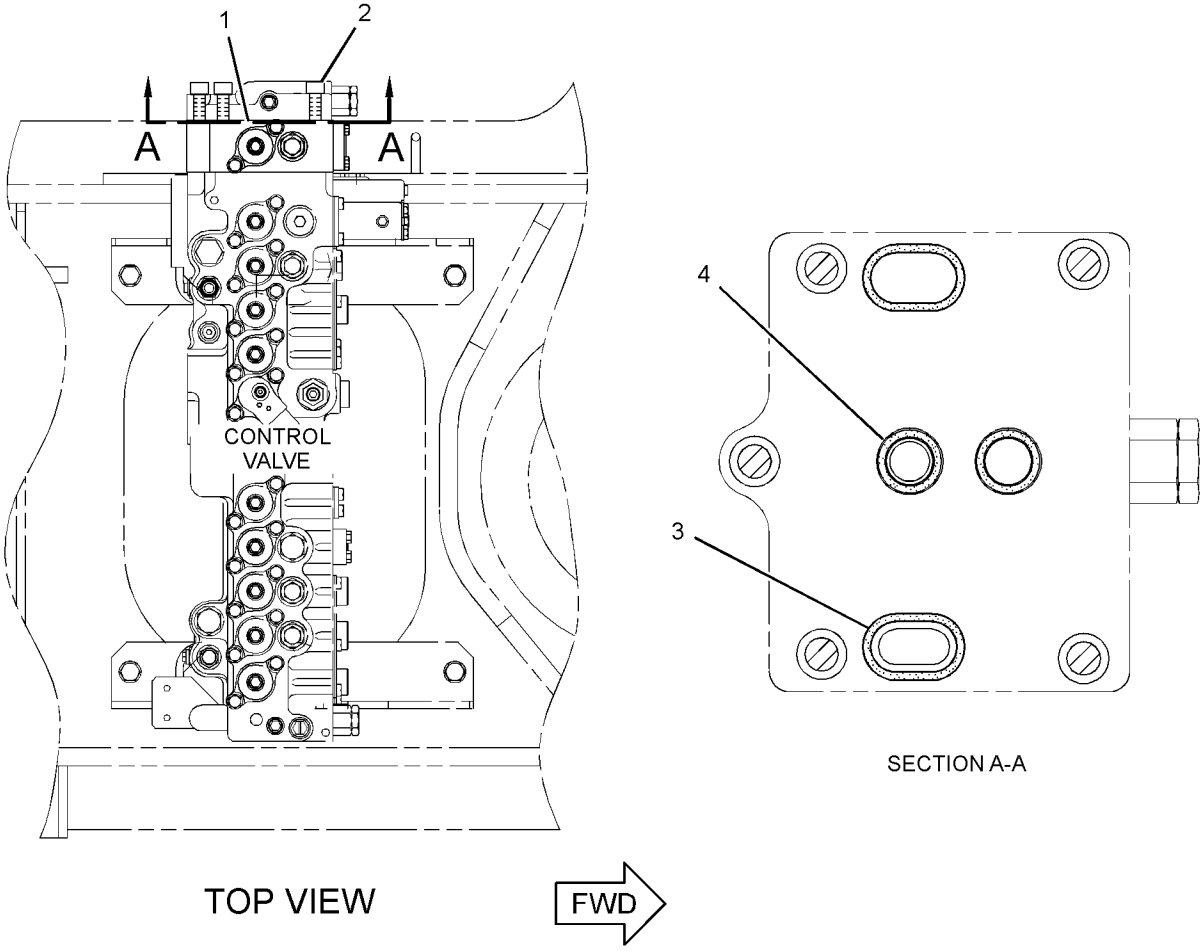

GRAPHIC #1 **<END>** g01214142

349-2224 VALVE AR-ALT PATTERN CONTROL–4-WAY

S/N: PBB1-UP; KBS1-UP

AN ATTACHMENT

SMCS-5065 **i05138369**

NOTE	PART NUMBER	QTY	PART NAME 1 2 3 4 5 6 (PRODUCT LEVEL)	SEE PAGE
Y	*247-7492*	1	FILM GP (ALT PATTERN CONTROL, WARNING)	976
Y	*376-6340*	1	LINES GP-PILOT (4-WAY PATTERN)	541

Y - SEPARATE ILLUSTRATION

<END>

270-5974 VALVE AR-CHECK & RELIEF–BOOM LOWERING CONTROL VALVE

S/N: PBB1-UP; KBS1-UP

AN ATTACHMENT

SMCS-5117, 5453 **i05196473**

NOTE	PART NUMBER	QTY	PART NAME 1 2 3 4 5 6 (PRODUCT LEVEL)	SEE PAGE
Y	*286-6495*	1	LINES GP-BOOM CYLINDER	454
Y	*282-7162*	1	LINES GP-PILOT	515
Y	*282-7161*	1	LINES GP-RETURN	551

Y - SEPARATE ILLUSTRATION

<END>

419-5123 VALVE AR-CHECK & RELIEF–STICK LOWER CONT, REACH BOOM

S/N: PBB1-UP; KBS1-UP

AN ATTACHMENT

SMCS-5117, 5453 **i05120353**

NOTE	PART NUMBER	QTY	PART NAME 1 2 3 4 5 6 (PRODUCT LEVEL)	SEE PAGE
Y	*242-6505*	1	LINES GP-BOOM (STICK LOAD CONTROL)	442
Y	*260-7970*	1	LINES GP-PILOT (LOAD CONTROL, STICK CYLINDER)	512
Y	*419-5136*	1	LINES GP-STICK CYLINDER (STICK LOWERING CONTROL)	558

Y - SEPARATE ILLUSTRATION

<END>

247-7457 VALVE AR-SWING–WITHOUT FINE SWING

S/N: PBB1-UP; KBS1-UP

PART OF 456-0817, 456-0823, 456-0824, 456-0825, 456-0826, 456-0827, 456-0828, 456-0829, 456-0830, 456-0918, 456-0919, 456-0920, 456-0921, 456-0922, 456-0923, 456-0932, 456-0933, 456-0942, 456-0943 DISTRIBUTION AR

AN ATTACHMENT

SMCS-5480 **i05222332**

NOTE	PART NUMBER	QTY	PART NAME 1 2 3 4 5 6 (PRODUCT LEVEL)	SEE PAGE
Y	*259-0680*	1	VALVE GP-SWING CUSHION	688

Y - SEPARATE ILLUSTRATION

<END>

173-8093 VALVE AS-MANUAL

S/N: PBB1-UP

PART OF 268-7122 LINES GP-AUXILIARY HYDRAULIC

AN ATTACHMENT

SMCS-1329 **i03296001**

NOTE	REF NO	GRAPHIC REF	PART NUMBER	QTY	PART NAME 1 2 3 4 5 6 (PRODUCT LEVEL)	SEE PAGE
	1	1	**134-7113**	1	HANDLE	
M	2	1	**134-7114**	1	BOLT-SPECIAL	
	3	1	**134-7115**	1	PLATE	
	4	1	**195-0090**	1	PLATE-DETENT	
	5	1	**327-4930**	1	SEAL-O-RING	

M - METRIC PART

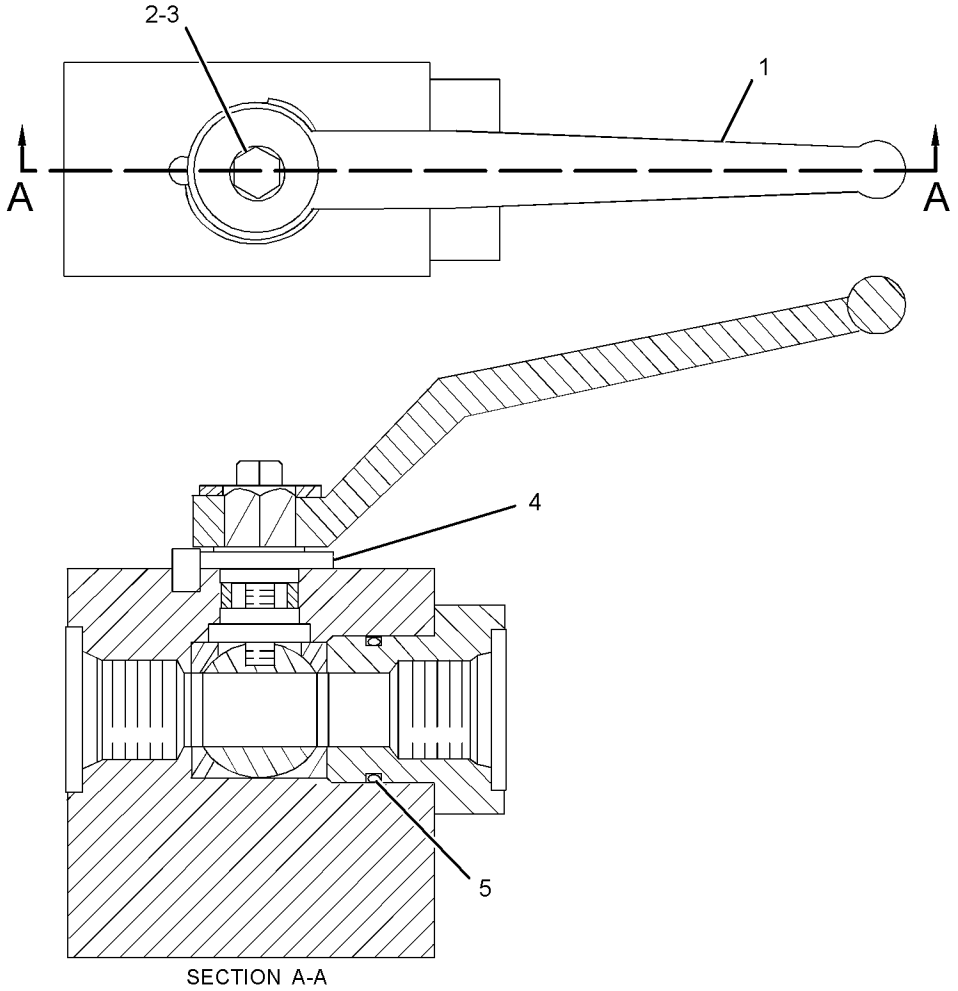

SECTION A-A

GRAPHIC #1 **<END>** g01696634

297-0370 VALVE GP-CHECK

S/N: PBB1-UP; KBS1-UP
PART OF 376-6317 LINES GP-FRONT
AN ATTACHMENT

SMCS-5067 **i02757868**

NOTE	REF NO	GRAPHIC REF	PART NUMBER	QTY	PART NAME 1 2 3 4 5 6 (PRODUCT LEVEL)	SEE PAGE
	1	1	**095-1585**	1	SEAL-O-RING	
	2	1	**225-4804**	3	PLUG	
	3	1	**4J-7533**	3	SEAL-O-RING	
	4	1	**095-1602**	1	SEAL-O-RING	
	5	1	**232-4113**	1	RING	
	6	1	**095-1601**	1	SEAL-O-RING	
	7	1	**8T-3008**	1	RING-BACKUP	
	8	1	**095-1700**	1	SEAL-O-RING	
	9	1	**7M-8485**	1	SEAL-O-RING	
	10	1	**095-1657**	1	SEAL-O-RING	
	11	1	**232-4114**	2	RING	

297-0370 **VALVE GP-CHECK (*contd.*)** **i02757868**

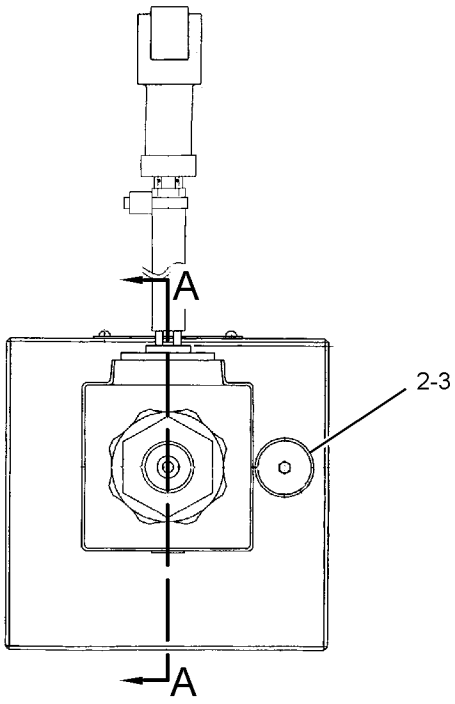

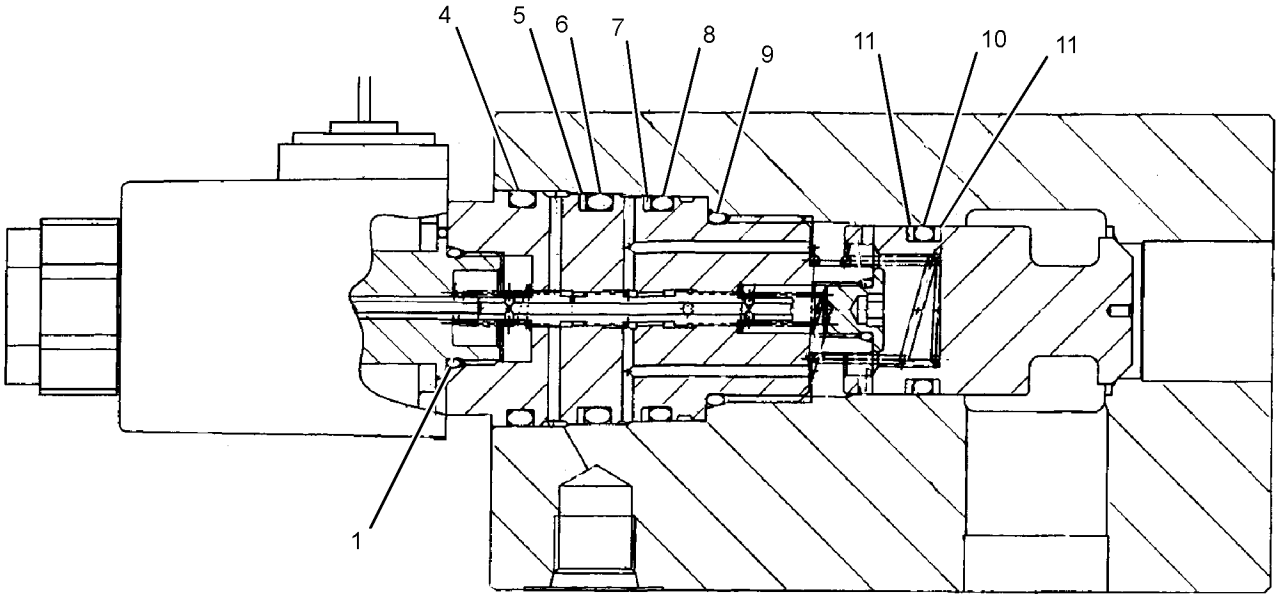

SECTION A-A

GRAPHIC #1 **<END>** g01382946

352-7243 VALVE GP-CHECK & RELIEF–STICK LOWERING CONTROL VALVE

S/N: PBB1-UP; KBS1-UP
PART OF 419-5136 LINES GP-STICK CYLINDER
AN ATTACHMENT

SMCS-5117, 5453 **i04358769**

NOTE	REF NO	GRAPHIC REF	PART NUMBER	QTY	PART NAME 1 2 3 4 5 6 (PRODUCT LEVEL)	SEE PAGE
	1	1	**2S-2596**	1	SPRING	
	3	1	**8J-6815**	1	PLUG-ORIFICE	
	4	1	**9T-1614**	1	VALVE	
	5	1	**165-9513**	1	SEAT	
	6	1	**165-9514**	1	PLUG	
	7	1	**352-7190**	1	VALVE	
	8	1	**225-4789**	1	VALVE	
	9	1	**225-4790**	1	SPRING	
	10	1	**225-4791**	1	GUIDE	
	11	1	**225-4792**	1	PLUG	
	12	1	**225-4793**	1	VALVE AS	
	13	1	**225-4796**	1	PISTON	
	14	1	**225-4797**	1	VALVE AS	
	15	1	**259-7788**	1	GUIDE AS	
	15A	1	**4T-0987**	1	BUSHING	
	16	1	**225-4803**	1	COVER	
	17	1	*225-4818*	6	PLUG AS	
					(EACH INCLUDES)	
		1	**4J-7533**	1	SEAL-O-RING	
		1	**225-4804**	1	PLUG	
	18	1	*225-4820*	2	PLUG AS	
					(EACH INCLUDES)	
		1	**3J-7354**	1	SEAL-O-RING	
		1	**225-4821**	1	PLUG	
B	19	1	**225-4830**	1	SHIM (1-MM THK)	
B		1	**225-4831**	2	SHIM (0.5-MM THK)	
B		1	**225-4832**	2	SHIM (0.2-MM THK)	
B		1	**225-4833**	1	SHIM (0.1-MM THK)	
Y	25	1	**352-7123**	1	VALVE GP-RELIEF (LINE)	665
	26	1	**095-1594**	2	SEAL-O-RING	
	27	1	**095-1789**	2	RING	
	28	1	**122-7797**	2	RING	
	29	1	**2D-6642**	1	BALL	
	30	1	**3H-0442**	1	SEAL-O-RING	
	31	1	**3J-1907**	2	SEAL-O-RING	
	32	1	**6V-5326**	2	SEAL-O-RING	
M	33	1	**5C-2874**	1	NUT (M5X0.8-THD)	
M	34	1	**8T-4139**	4	BOLT (M12X1.75X30-MM)	
	35	1	**8T-6759**	1	PLUG-PIPE	

PARTS SHOWN IN GRAPHIC(S) WITHOUT A REFERENCE NUMBER ARE NOT SERVICED SEPARATELY

B - USE AS REQUIRED
M - METRIC PART
Y - SEPARATE ILLUSTRATION

352-7243 **VALVE GP-CHECK & RELIEF (*contd.*)** **i04358769**

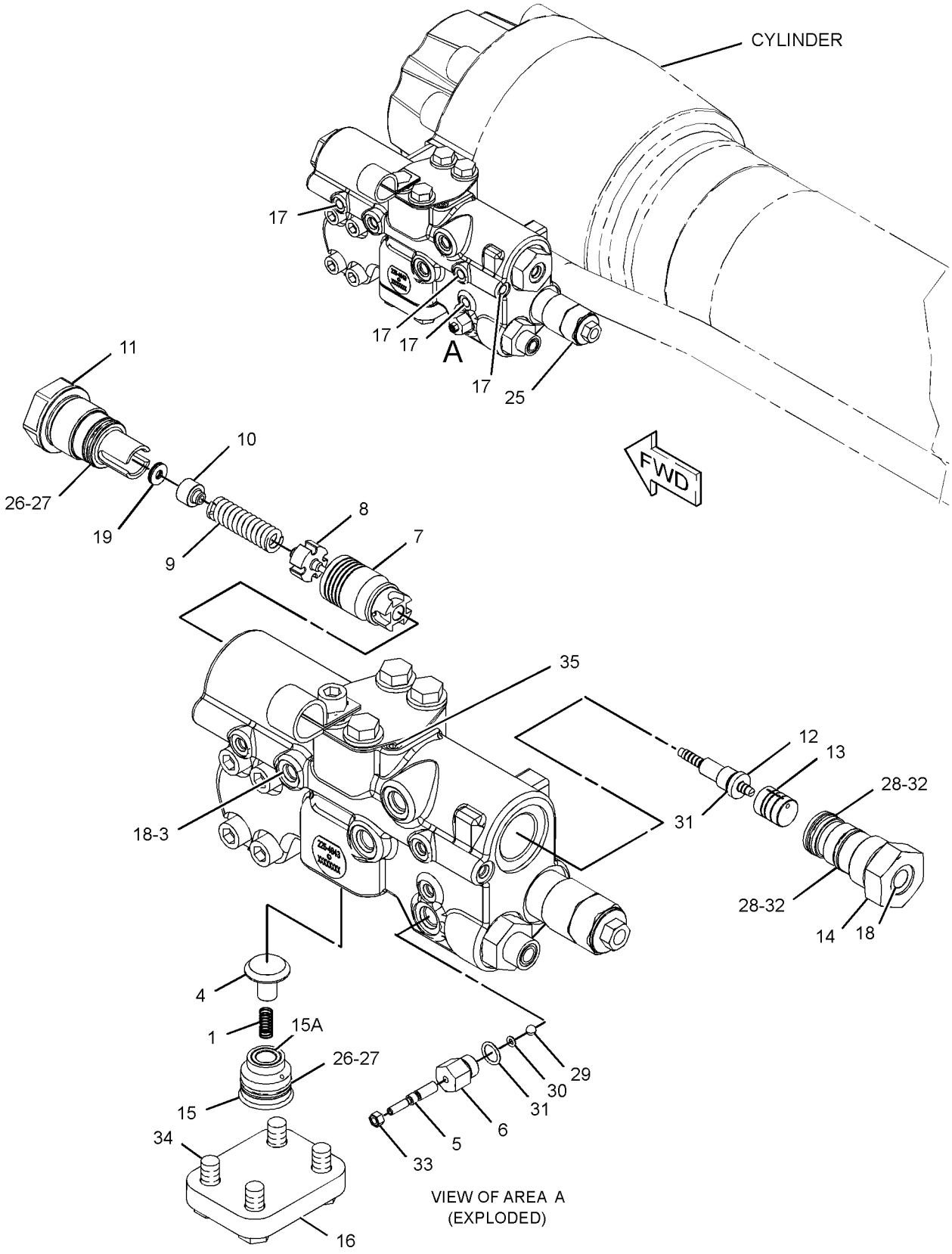

GRAPHIC #1 **<END>** g02470996

244-8400 VALVE GP-CONTROL—WITHOUT COVERS, HOUSINGS

S/N: PBB1-UP; KBS1-UP
PART OF 259-7378 VALVE GP-CONTROL
AN ATTACHMENT

SMCS-5051 **i04398906**

NOTE	REF NO	GRAPHIC REF	PART NUMBER	QTY	PART NAME 1 2 3 4 5 6 (PRODUCT LEVEL)	SEE PAGE
	1	1	**352-7057**	1	SPRING-RETURN	
M	2	1	**153-5276**	1	BOLT-SPECIAL	
	3	1	**6E-2271**	2	RETAINER	

M - METRIC PART

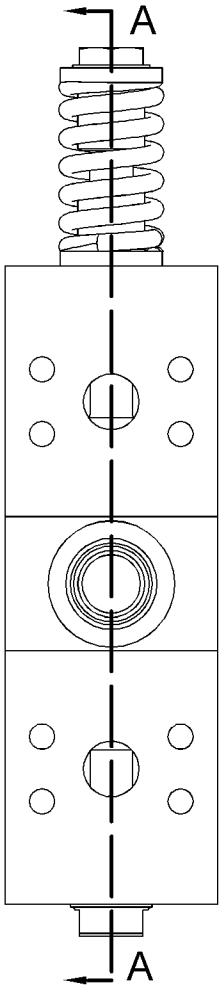

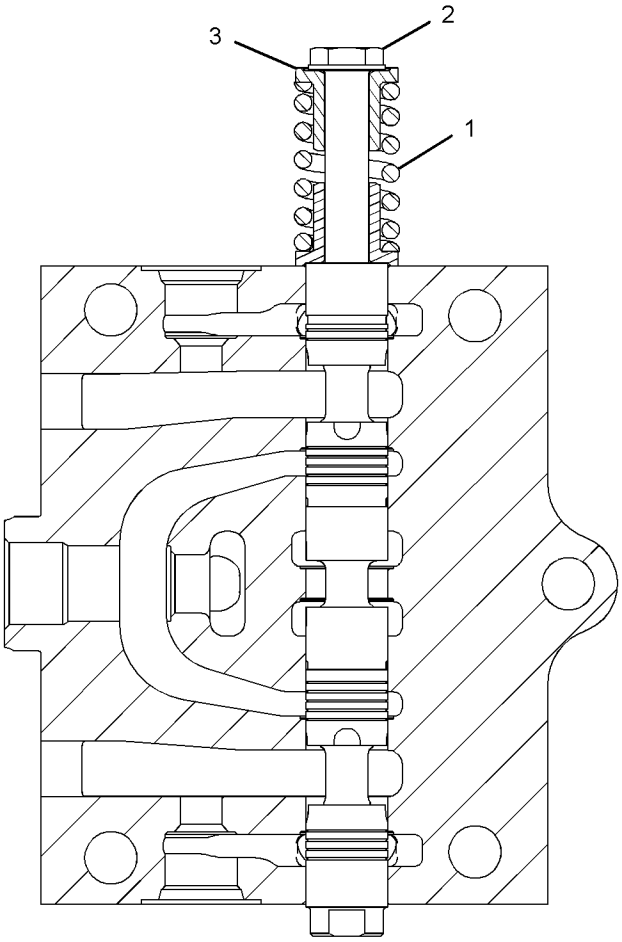

SECTION A-A

GRAPHIC #1 **<END>** g01950575

254-3080 VALVE GP-CONTROL—QUICK COUPLER

S/N: PBB1-UP; KBS1-UP
PART OF 376-6329 LINES GP-FRONT
AN ATTACHMENT

SMCS-5051 **i05589921**

NOTE	REF NO	GRAPHIC REF	PART NUMBER	QTY	PART NAME 1 2 3 4 5 6 (PRODUCT LEVEL)	SEE PAGE
	1	1	**287-2352**	1	RETAINER-SPRING	
	2	1	**6E-5438**	1	SPRING	
	3	1	**6E-5439**	1	SPRING	
Y	4	1	**121-1491**	1	VALVE GP-SOLENOID (QUICK COUPLER)	675
J	5	1	**247-7587**	2	VALVE GP-PRESSURE REDUCING (QUICK COUPLER)	
Z	6	1		1	BODY-VALVE	
Z	7	1		1	STEM	
	8	1	*148-8407*	2	PLUG AS	
					(EACH INCLUDES)	
		1	**3J-1907**	1	SEAL-O-RING	
		1	**9S-4191**	1	PLUG	
	9	1	**4J-5267**	1	SEAL-O-RING	
	10	1	**6E-2313**	1	COVER	
	11	1	**6E-5431**	5	SHIM (0.5-MM THK)	
	12	1	**6E-5434**	1	HOUSING-PILOT	
M	13	1	**7I-2272**	2	BOLT (M5X0.8X12-MM)	
	14	1	**8F-0212**	1	SEAL-O-RING	
M	15	1	**8T-4195**	2	BOLT (M10X1.5X30-MM)	
	16	1	**8T-4224**	2	WASHER-HARD (8.8X16X2-MM THK)	
	17	1	**8T-6759**	12	PLUG-PIPE	
M	18	1	**8T-6870**	2	BOLT (M8X1.25X70-MM)	
					AVAILABLE REPAIR KIT(S):	
J			**172-4432**	1	KIT-SEAL (QUICK COUPLER VALVE)	

J - KIT MARKED J SERVICES PART(S) MARKED J
M - METRIC PART
Y - SEPARATE ILLUSTRATION
Z - NOT SERVICED SEPARATELY

254-3080 **VALVE GP-CONTROL (*contd.*)** **i05589921**

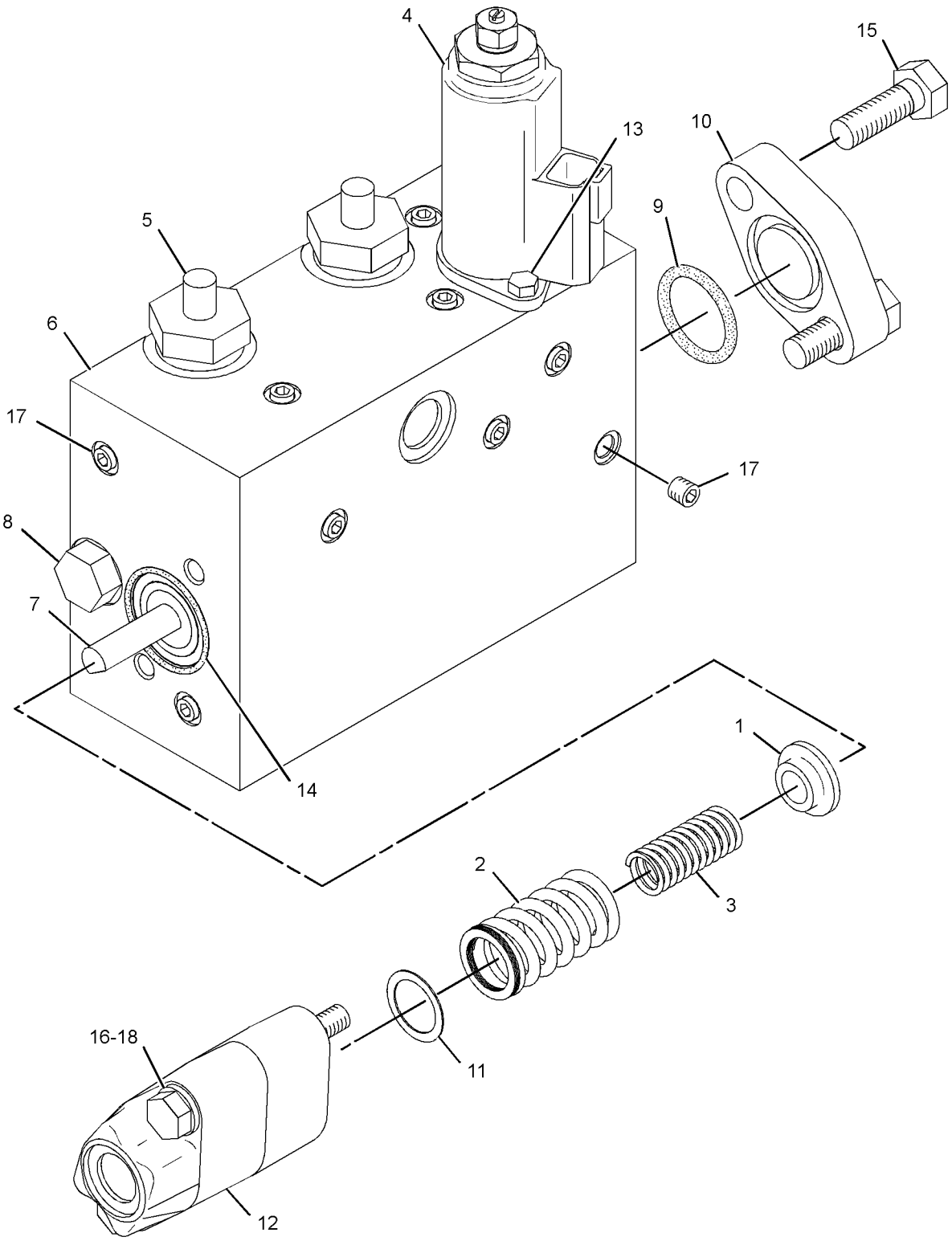

GRAPHIC #1 **<END>** g01245214

259-7378 VALVE GP-CONTROL—AUXILIARY

S/N: PBB1-UP; KBS1-UP
PART OF 255-5713 VALVE & MTG GP-CONTROL
AN ATTACHMENT

SMCS-5051 **i04088789**

NOTE	REF NO	GRAPHIC REF	PART NUMBER	QTY	PART NAME 1 2 3 4 5 6 (PRODUCT LEVEL)	SEE PAGE
M	1	1	**8T-4195**	12	BOLT (M10X1.5X30-MM)	
	2	1	**4J-8998**	2	SEAL-O-RING	
	3	1	**6E-5731**	1	VALVE (LOAD CHECK)	
	4	1	**7I-1248**	1	SPRING	
	5	1	**171-0150**	2	COVER	
	6	1	**236-6419**	1	PLUG	
Y	7	1	*244-8400*	1	VALVE GP-CONTROL (WITHOUT COVERS, HOUSINGS)	606
CY	8	1	**352-7122**	2	VALVE GP-RELIEF (LINE)	664
	9	1	**8T-4121**	4	WASHER-HARD (11X21X2.5-MM THK)	
	10	1	**095-1590**	1	SEAL-O-RING	
	11	1	**095-1787**	1	RING-BACKUP	
	12	1	**158-8159**	1	HOUSING	
	13	1	**1P-3702**	4	SEAL-RECTANGULAR	
	14	1	**6E-2274**	1	COVER	
	15	1	**6V-5597**	2	SEAL-O-RING	

C - CHANGE FROM PREVIOUS TYPE
M - METRIC PART
Y - SEPARATE ILLUSTRATION

259-7378 **VALVE GP-CONTROL (*contd.*)** **i04088789**

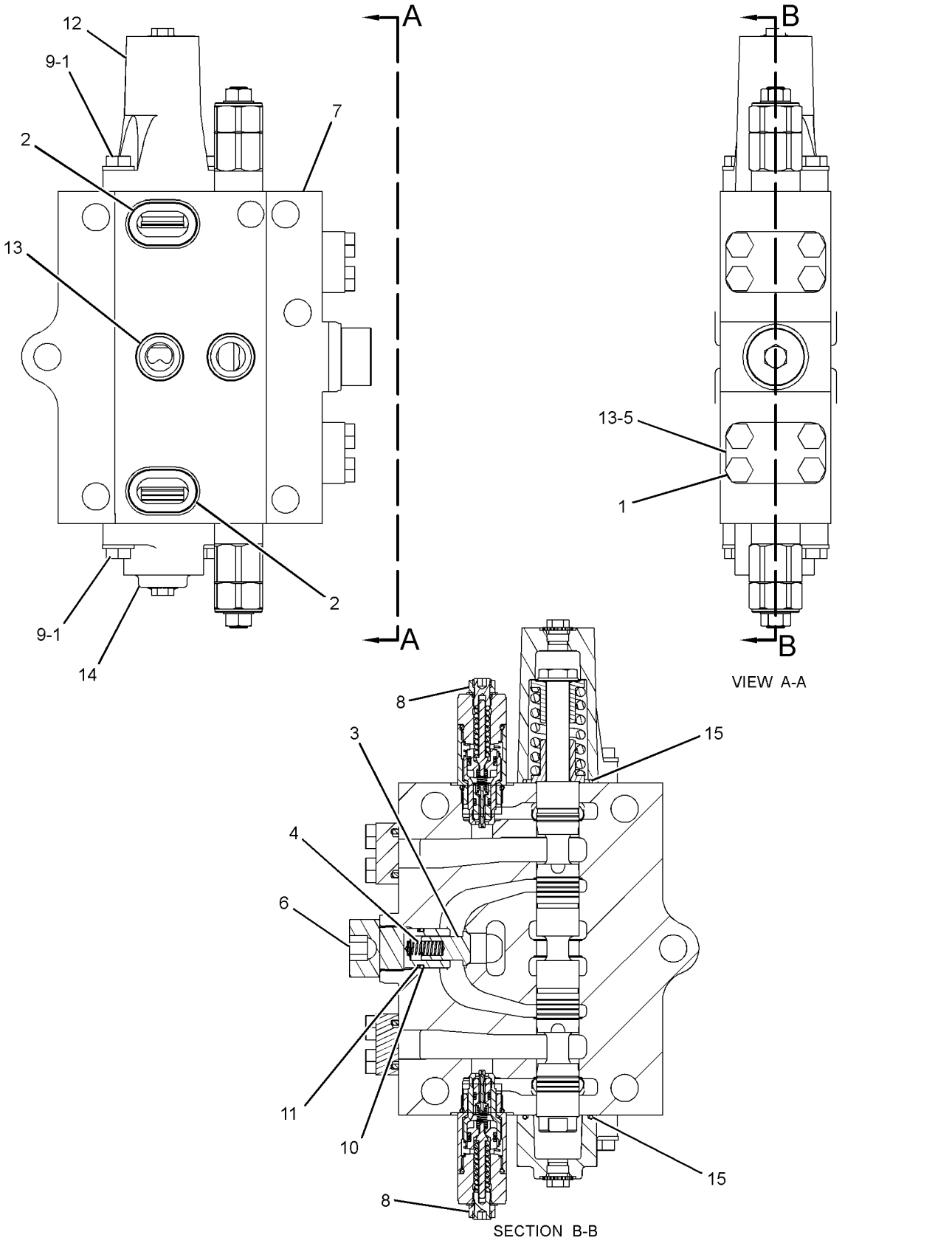

GRAPHIC #1 **<END>** g01219416

259-7465 VALVE GP-CONTROL—BOOM, STICK, BUCKET

S/N: PBB1-UP; KBS1-UP

PART OF 259-7464 VALVE GP-MAIN CONTROL

SMCS-5051 **i05278124**

NOTE	REF NO	GRAPHIC REF	PART NUMBER	QTY	PART NAME 1 2 3 4 5 6 (PRODUCT LEVEL)	SEE PAGE
	1	1	**6E-2274**	5	COVER	
	2	1,2	**6E-5731**	4	VALVE (LOAD CHECK)	
	3	1,2	**7I-1248**	5	SPRING	
	4	2	**153-5286**	1	VALVE (LOAD CHECK)	
	5	1	**153-5288**	1	SPRING	
	6	1	**153-5289**	1	GUIDE	
	7	1	**153-5290**	1	PLUG	
	8	1	**153-5291**	1	CONNECTOR	
	9	1	**153-5292**	1	VALVE-CHECK	
	10	1	**153-5293**	1	SPRING	
	11	1	**158-8159**	5	HOUSING	
	12	1,2	**236-6419**	5	PLUG	
	13	1	**236-6421**	1	PLUG	
Y	14	2	**352-7122**	3	VALVE GP-RELIEF (LINE)	664
Y	15	1	**259-7631**	1	VALVE GP-CONTROL (WITHOUT COVERS, HOUSINGS)	614
	16	1,2	**095-1590**	5	SEAL-O-RING	
	17	1,2	**095-1787**	5	RING-BACKUP	
Y	18	1	**109-5152**	1	VALVE GP-RELIEF (NEGATIVE FLOW CONTROL)	655
	19	1	**111-9959**	2	PLUG-PIPE	
	20	1	**2M-9780**	1	SEAL-O-RING	
	21	1	**4I-6397**	1	RING-BACKUP	
	22	2	**4J-0520**	2	SEAL-O-RING	
CY	23	2	*310-0404*	2	PLUG GP-CONTROL VALVE	583
	24	1	**6V-3922**	1	SEAL-O-RING	
	25	2	**6V-5597**	10	SEAL-O-RING	
	26	1	**7M-8485**	1	SEAL-O-RING	
	27	2	**7Y-8099**	2	COVER	
	28	1	**8T-4121**	20	WASHER-HARD (11X21X2.5-MM THK)	
M	29	1,2	**8T-4195**	28	BOLT (M10X1.5X30-MM)	

C - CHANGE FROM PREVIOUS TYPE
M - METRIC PART
Y - SEPARATE ILLUSTRATION

259-7465 **VALVE GP-CONTROL (*contd.*)** **i05278124**

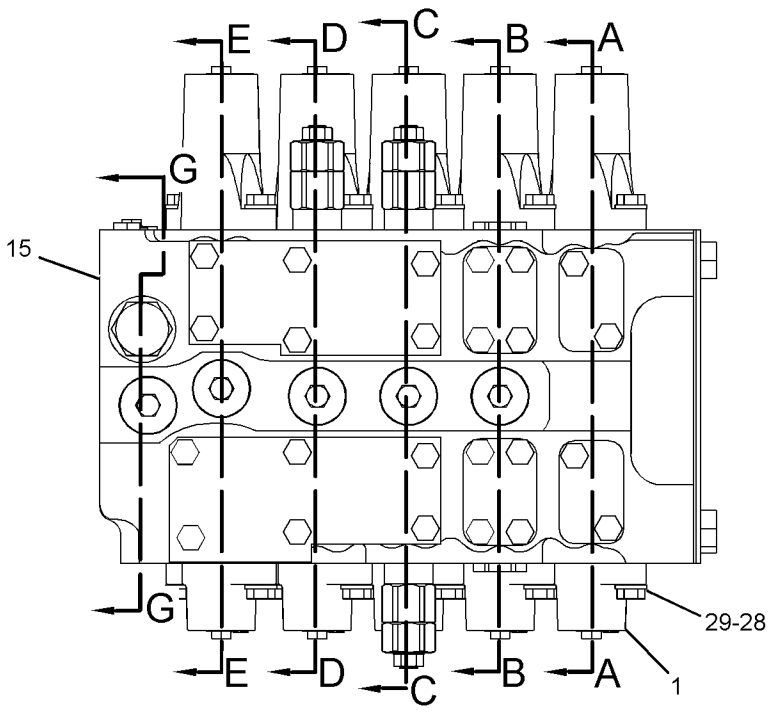

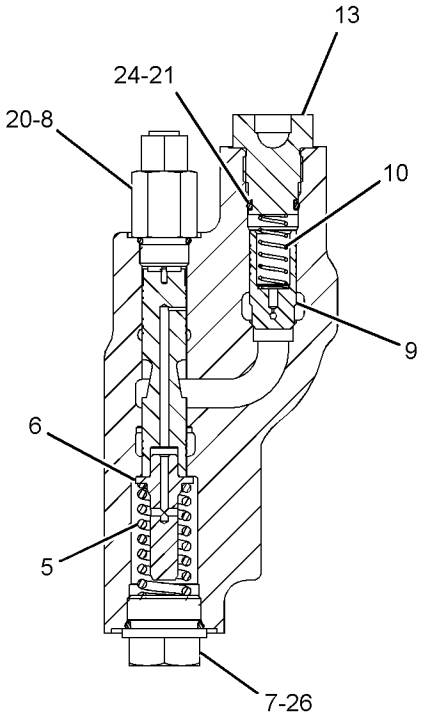

SECTION F-F

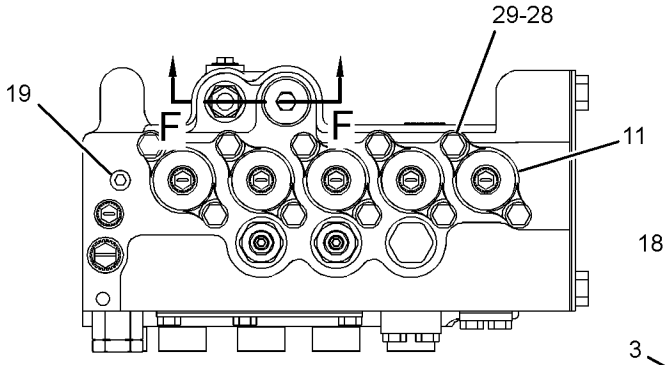

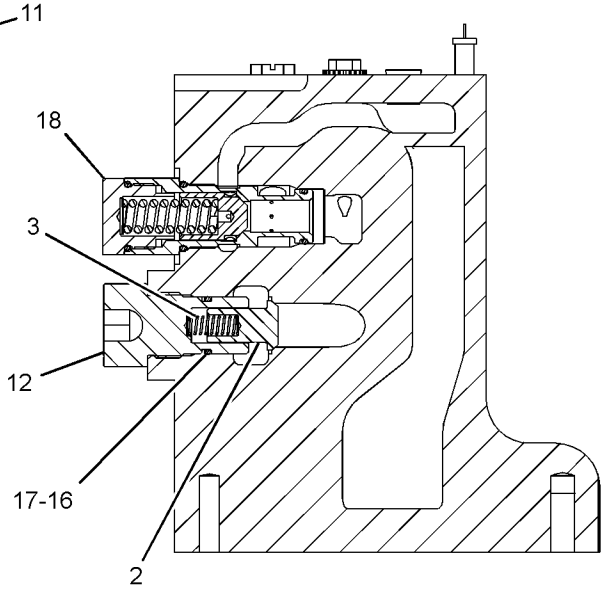

SECTION G-G

REFER TO ALL ILLUSTRATIONS OF
THIS GROUP FOR AUXILIARY VIEWS

GRAPHIC #1 g01226704

259-7465 **VALVE GP-CONTROL (*contd.*)** **i05278124**

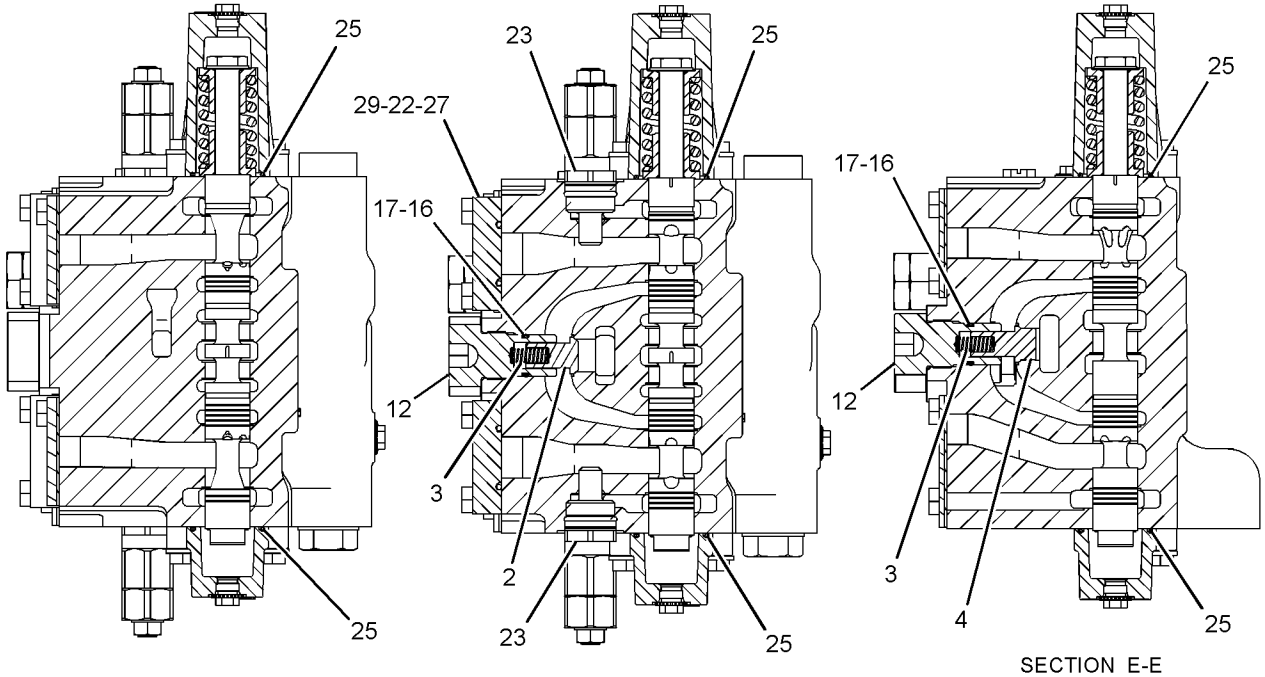

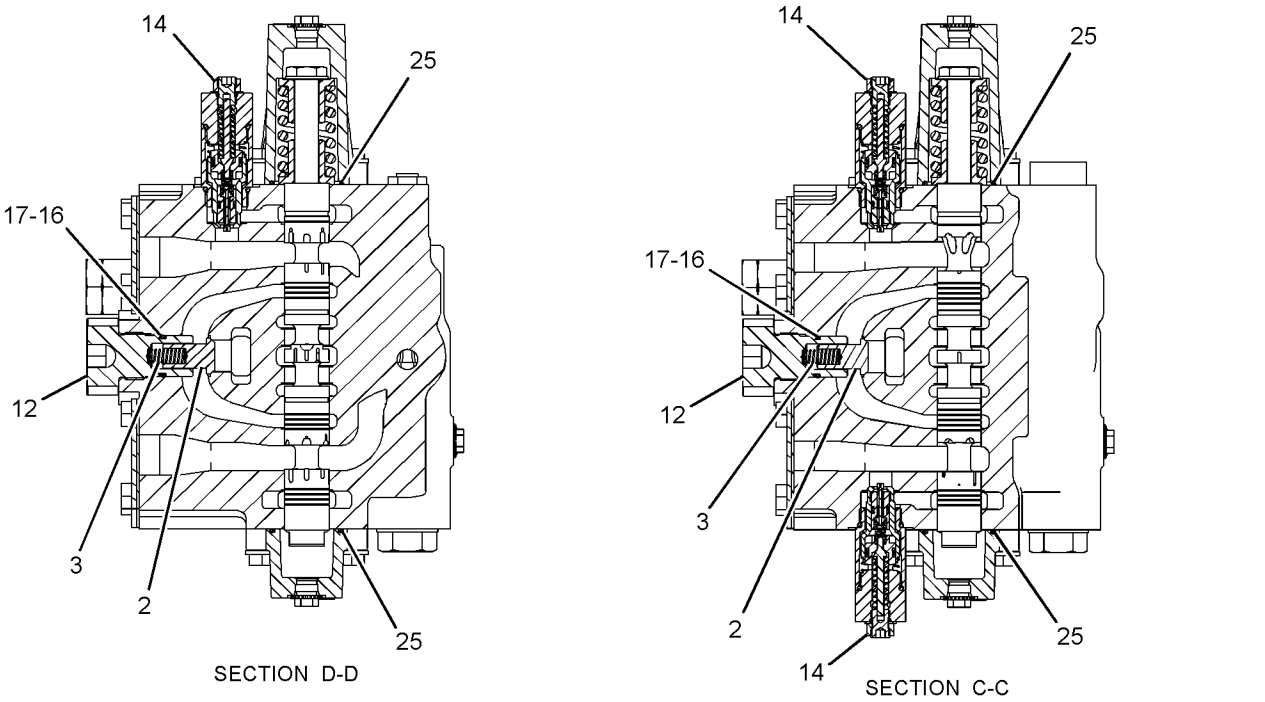

GRAPHIC #2 **<END>** g01226719

259-7631 VALVE GP-CONTROL—WITHOUT COVERS, HOUSINGS

S/N: PBB1-UP; KBS1-UP

PART OF 259-7465 VALVE GP-CONTROL

SMCS-5051 **i04397308**

NOTE	REF NO	GRAPHIC REF	PART NUMBER	QTY	PART NAME 1 2 3 4 5 6 (PRODUCT LEVEL)	SEE PAGE
	1	1	**6E-2271**	10	RETAINER	
	2	1	**352-7057**	3	SPRING-RETURN	
	3	1	**352-7058**	1	SPRING-RETURN	
	4	1	**352-7059**	1	SPRING-RETURN	
M	5	1	**153-5276**	5	BOLT-SPECIAL	

M - METRIC PART

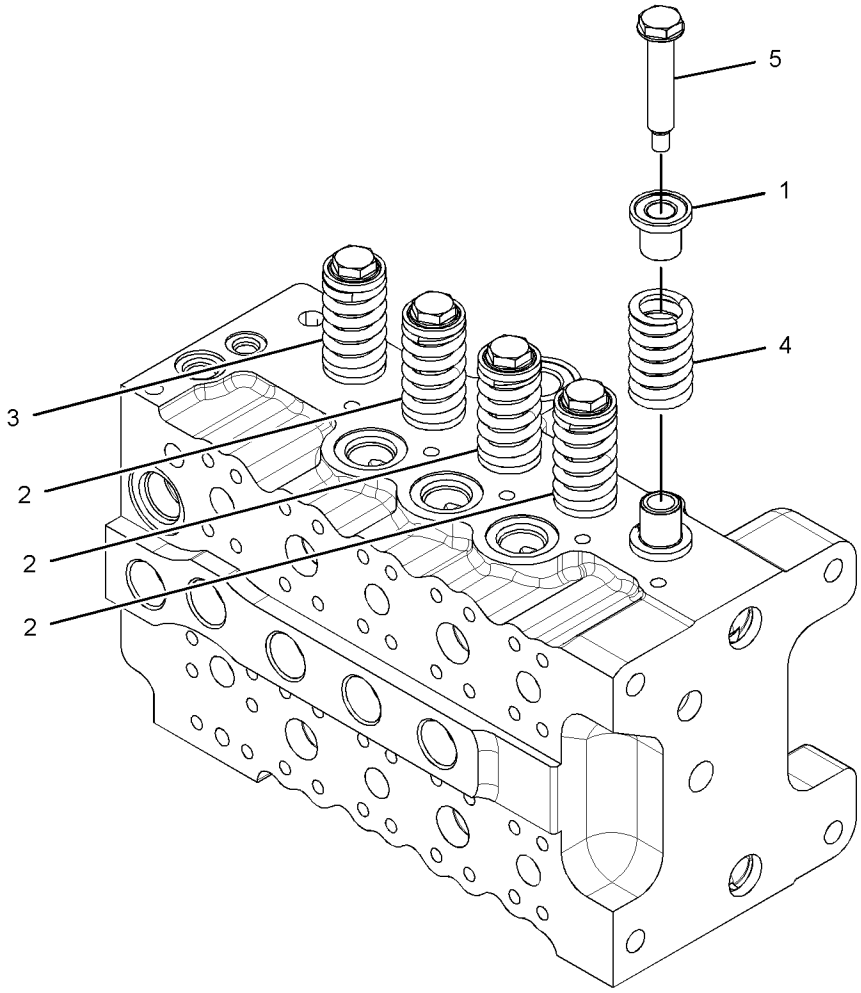

GRAPHIC #1 **<END>** g02736956

259-7632 VALVE GP-CONTROL—WITHOUT COVERS, HOUSINGS

S/N: PBB1-UP; KBS1-UP

PART OF 352-7138 VALVE GP-CONTROL

SMCS-5051 **i04397263**

NOTE	REF NO	GRAPHIC REF	PART NUMBER	QTY	PART NAME 1 2 3 4 5 6 (PRODUCT LEVEL)	SEE PAGE
	1	1	**2S-2596**	1	SPRING	
	2	1	**6E-2163**	1	VALVE-CHECK (STRAIGHT TRAVEL)	
	3	1	**6E-2271**	8	RETAINER	
	4	1	**352-7057**	2	SPRING-RETURN	
	5	1	**352-7058**	1	SPRING-RETURN	
	6	1	**352-7059**	1	SPRING-RETURN	
M	7	1	**153-5276**	4	BOLT-SPECIAL	
	8	1	**3K-0360**	1	SEAL-O-RING	

M - METRIC PART

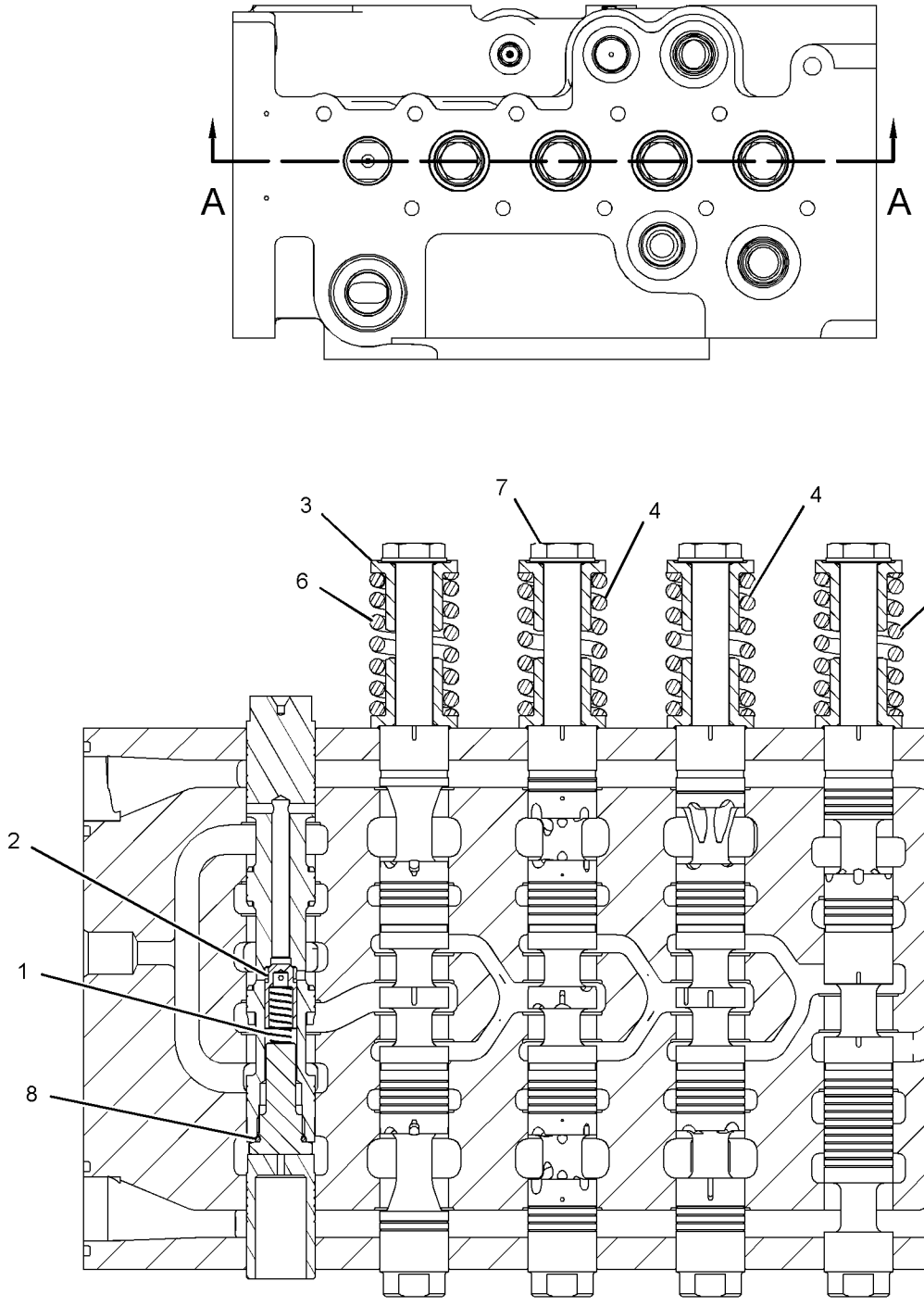

SECTION A-A

GRAPHIC #1 **<END>** g02689837

285-1340 VALVE GP-CONTROL—WITHOUT COVERS, HOUSINGS

S/N: PBB1-UP; KBS1-UP
PART OF 352-7132 VALVE GP-CONTROL
AN ATTACHMENT

SMCS-5051 **i04397279**

NOTE	REF NO	GRAPHIC REF	PART NUMBER	QTY	PART NAME 1 2 3 4 5 6 (PRODUCT LEVEL)	SEE PAGE
	1	1	**2S-2596**	1	SPRING	
	2	1	**6E-2163**	1	VALVE-CHECK	
	3	1	**6E-2271**	8	RETAINER	
	4	1	**352-7057**	2	SPRING-RETURN	
	5	1	**352-7058**	1	SPRING-RETURN	
	6	1	**352-7059**	1	SPRING-RETURN	
M	7	1	**153-5276**	4	BOLT-SPECIAL	
	8	1	**3K-0360**	1	SEAL-O-RING	

M - METRIC PART

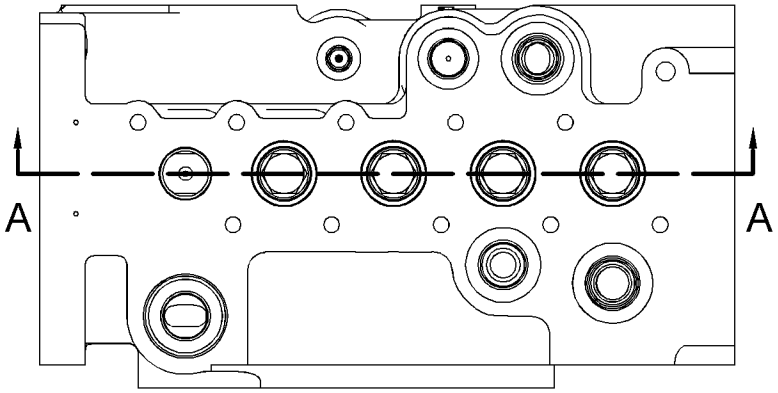

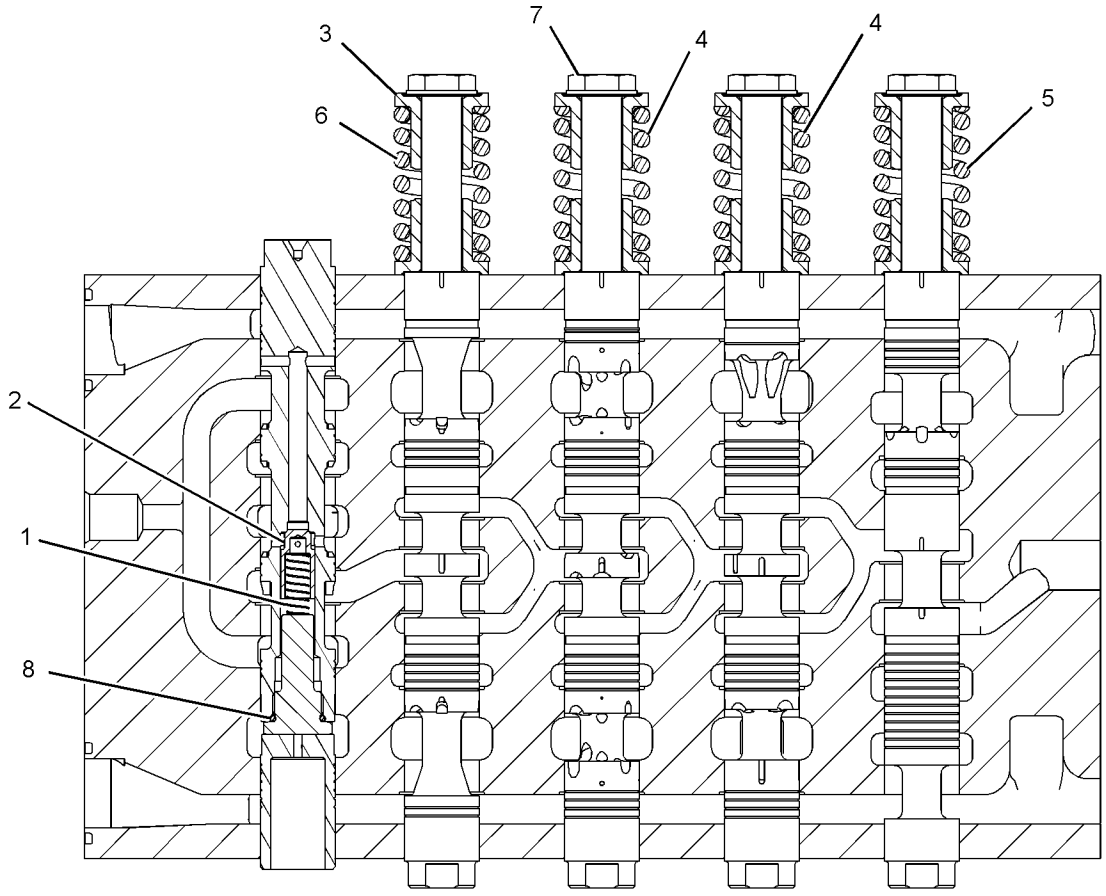

SECTION A-A

GRAPHIC #1 **<END>** g02690996

285-1531 VALVE GP-CONTROL–MEDIUM PRESSURE

S/N: PBB1-UP; KBS1-UP
PART OF 260-8015 LINES GP-FRONT
AN ATTACHMENT

SMCS-5051 **i03932149**

NOTE	REF NO	GRAPHIC REF	PART NUMBER	QTY	PART NAME 1 2 3 4 5 6 (PRODUCT LEVEL)	SEE PAGE
	1	1	**170-0848**	1	MANIFOLD AS (OUTLET)	
	2	1	**261-2445**	1	VALVE AS-RELIEF (MAIN)	
	3	1	**261-2452**	1	MOUNTING GP-VALVE	
	4	1	**285-1777**	2	VALVE GP-RELIEF (230-BAR (3336-PSI))	
					–OR–	
A			**260-3003**	2	VALVE GP-RELIEF (160-BAR (2321-PSI))	
					(OPTIONAL SERVICE REPLACEMENT)	
					–OR–	
A			**309-9941**	2	VALVE GP-RELIEF (80-BAR (1160-PSI))	
					(OPTIONAL SERVICE REPLACEMENT)	

A - NOT PART OF THIS GROUP

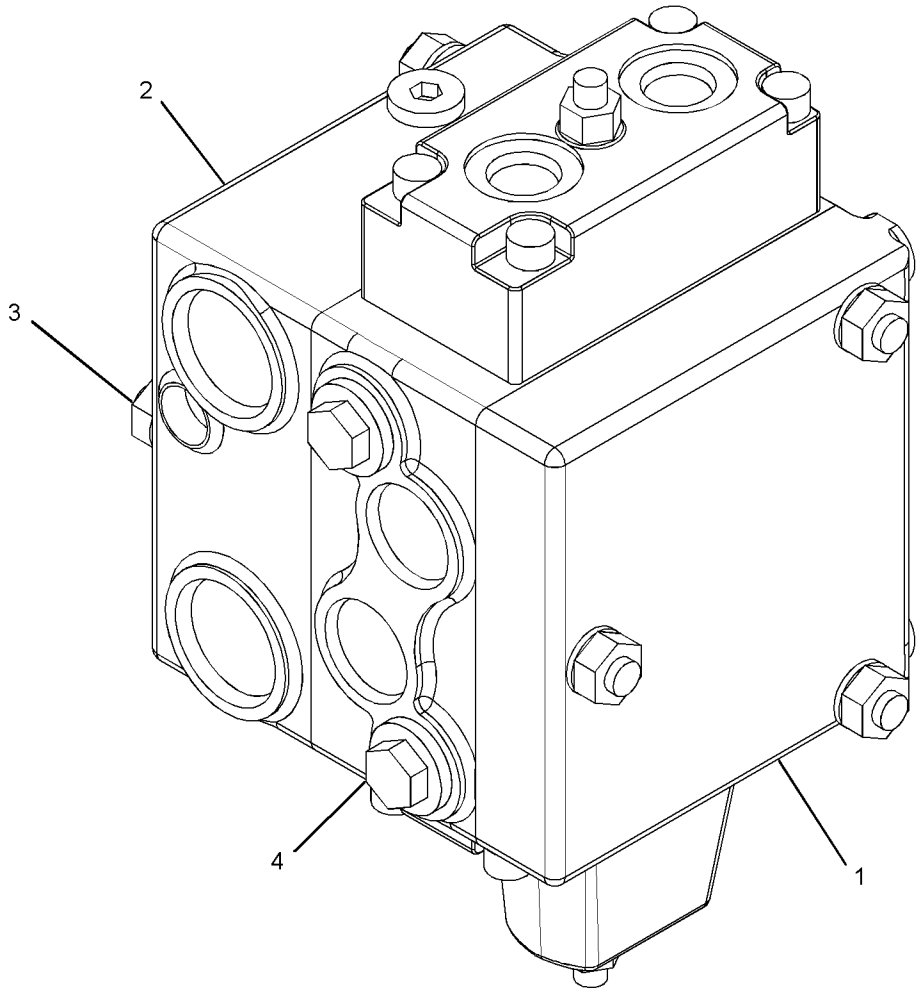

GRAPHIC #1 **<END>** g02126495

352-7132 VALVE GP-CONTROL—HEAVY LIFT

S/N: PBB1-UP; KBS1-UP

PART OF 435-1482 VALVE GP-MAIN CONTROL

AN ATTACHMENT

SMCS-5051 **i04056070**

NOTE	REF NO	GRAPHIC REF	PART NUMBER	QTY	PART NAME 1 2 3 4 5 6 (PRODUCT LEVEL)	SEE PAGE
	1	1	**4I-3569**	1	RING-BACKUP	
	2	3,4	**4T-3148**	3	SPRING	
	3	1	**6E-2274**	5	COVER	
	4	1	**6E-3653**	1	PLUG	
	5	4	**6E-5169**	1	SPRING	
	6	3,4	**6E-5643**	3	VALVE (LOAD CHECK) (BOOM)	
	7	2	**6E-5731**	1	VALVE (LOAD CHECK) (SWING)	
	8	2	**7I-1248**	1	SPRING	
	9	4	**103-8177**	1	ADAPTER	
Y	10	2	**121-1491**	1	VALVE GP-SOLENOID (STRAIGHT TRAVEL)	675
	11	2	**153-5288**	1	SPRING	
	12	2	**153-5289**	1	GUIDE	
	13	2	**153-5290**	2	PLUG	
	14	2	**153-5291**	1	CONNECTOR	
	15	2	**153-5292**	1	VALVE-CHECK (LOAD)	
	16	2	**153-5293**	1	SPRING	
	17	3	**153-5298**	1	SLEEVE	
	18	3	**153-5299**	1	VALVE (LOAD CHECK)	
	19	3	**153-5306**	1	SPRING	
	20	4	**153-5309**	1	SLEEVE	
	21	2	**153-5311**	1	SPRING	
	22	2	**158-8150**	1	VALVE GP-UNLOADING (STICK CYLINDER)	
	23	2	**158-8159**	4	HOUSING	
	24	2	**158-8206**	1	HOUSING	
	25	4	**158-8207**	1	STOPPER	
	26	4	**201-9263**	2	PLUG	
	27	2,3	*225-4818*	3	PLUG AS	
					(EACH INCLUDES)	
		2,3	**4J-7533**	1	SEAL-O-RING	
		2,3	**225-4804**	1	PLUG	
	28	2	**236-6419**	1	PLUG	
	29	2	**236-6421**	1	PLUG	
	30	3	**250-2446**	1	PLUG	
	31	4	**250-2447**	1	PLUG	
	32	3	**255-5594**	1	SEAL-O-RING	
	33	3	**264-9961**	1	PLUG	
Y	34	1	*285-1340*	1	VALVE GP-CONTROL (WITHOUT COVERS, HOUSINGS)	617
	35	3	**323-7897**	1	COVER	
Y	36	3	**323-7898**	1	VALVE GP-PRIORITY	653
Y	37	4	**352-7113**	1	VALVE GP-RELIEF (PILOT OPERATED)	660
Y	38	3	**352-7122**	1	VALVE GP-RELIEF (LINE) (STICK)	664
	39	2	**095-1575**	1	SEAL-O-RING	
	40	2,3,4	**095-1590**	3	SEAL-O-RING	
	41	4	**095-1603**	1	SEAL-O-RING	
	42	2	**095-1778**	1	RING-BACKUP	
	43	2,3,4	**095-1787**	3	RING-BACKUP	
	44	1	**111-9959**	1	PLUG-PIPE	
	45	2	**123-2485**	1	PLUG	
	46	2	**2M-9780**	1	SEAL-O-RING	
	47	2	**3J-1907**	1	SEAL-O-RING	
	48	2,4	**4I-6397**	3	RING-BACKUP	
	49	3	**4J-5309**	1	SEAL-O-RING	
	50	3	**4T-5074**	1	RING-BACKUP	
	51	2,4	**6V-3922**	3	SEAL-O-RING	
	52	4	**6V-5393**	1	SEAL-O-RING	
	53	3	**6V-5556**	1	SEAL-O-RING	
	54	2,3,4	**6V-5597**	9	SEAL-O-RING	

352-7132 **VALVE GP-CONTROL (*contd.*)** **i04056070**

NOTE	REF NO	GRAPHIC REF	PART NUMBER	QTY	PART NAME 1 2 3 4 5 6 (PRODUCT LEVEL)	SEE PAGE
M	55	2	**7I-2272**	2	BOLT (M5X0.8X12-MM)	
	56	2	**7M-8485**	2	SEAL-O-RING	
M	57	3	**7X-2621**	1	BOLT (M10X1.5X12-MM)	
	58	1	**7Y-5219**	1	SEAL-O-RING	
	59	1,2,3	**8T-4121**	24	WASHER-HARD (11X21X2.5-MM THK)	
M	60	1,2	**8T-4195**	20	BOLT (M10X1.5X30-MM)	
M	61	3	**8T-6685**	4	BOLT (M10X1.5X110-MM)	
	62	2	**8T-6759**	2	PLUG-PIPE	

M - METRIC PART
Y - SEPARATE ILLUSTRATION

352-7132 **VALVE GP-CONTROL (*contd.*)** **i04056070**

REFER TO ALL ILLUSTRATIONS OF THIS GROUP FOR AUXILIARY VIEWS

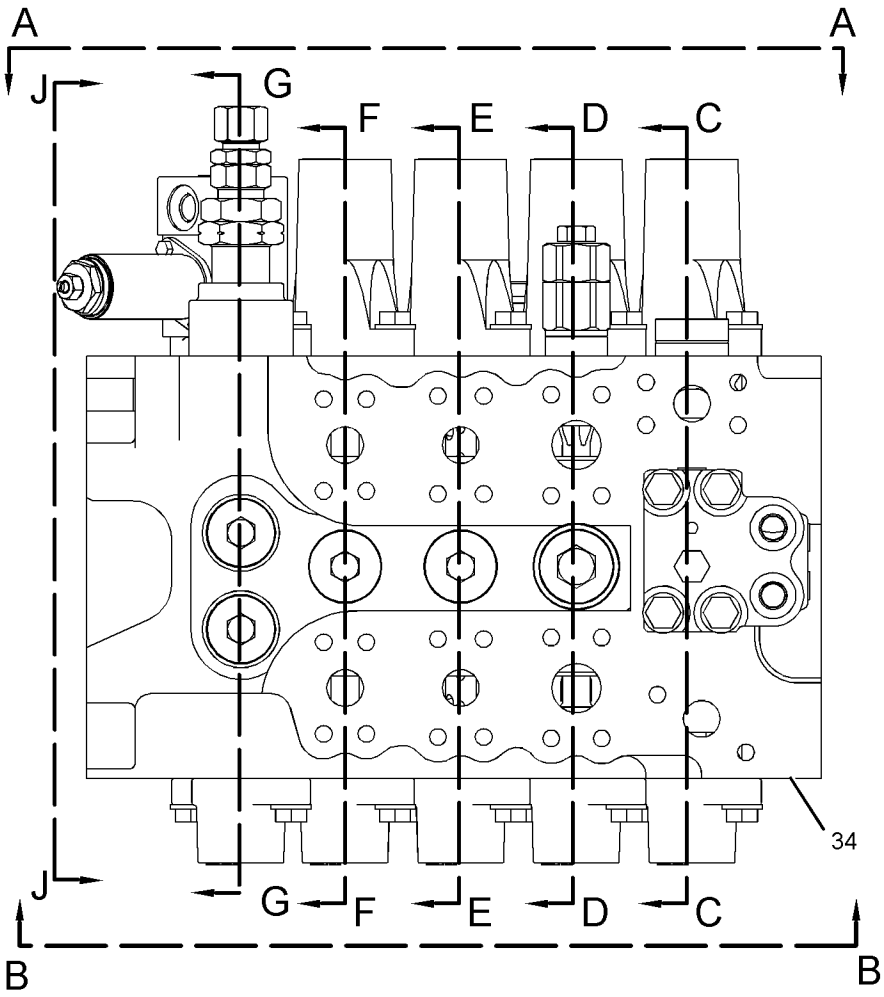

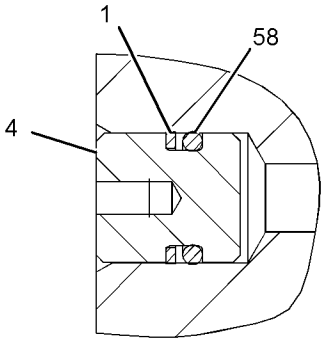

SECTION H-H

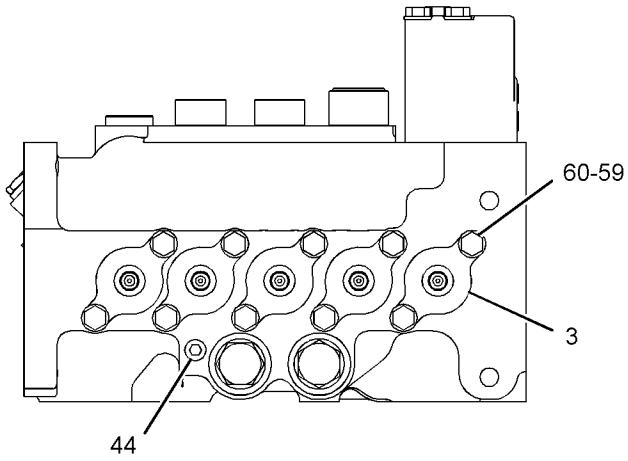

VIEW B-B

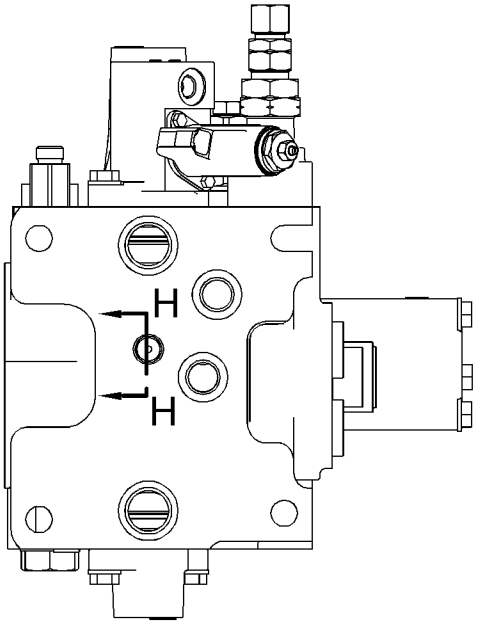

VIEW J-J

GRAPHIC #1 g02324075

352-7132 **VALVE GP-CONTROL (*contd.*)** **i04056070**

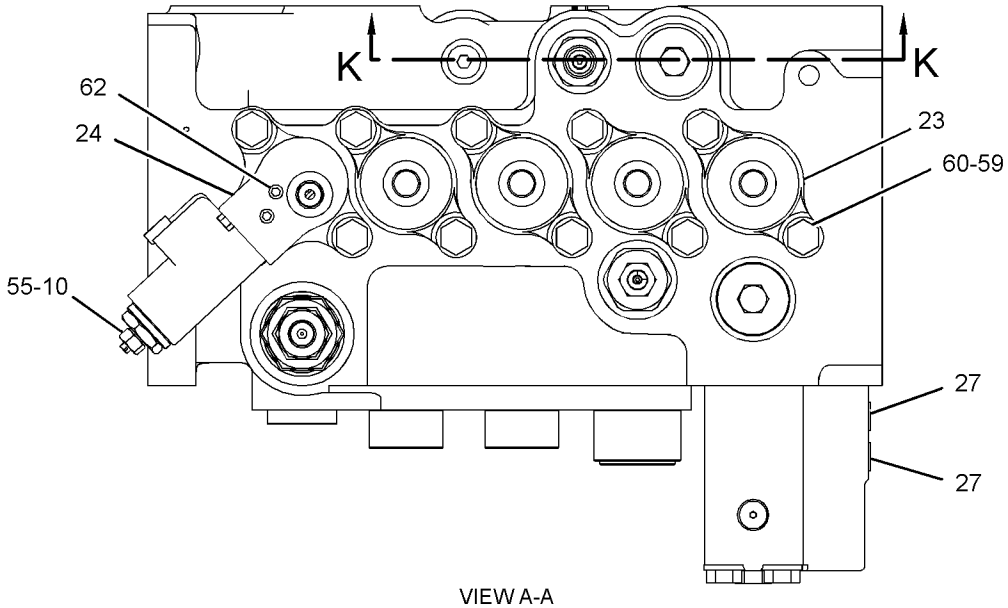

VIEW A-A

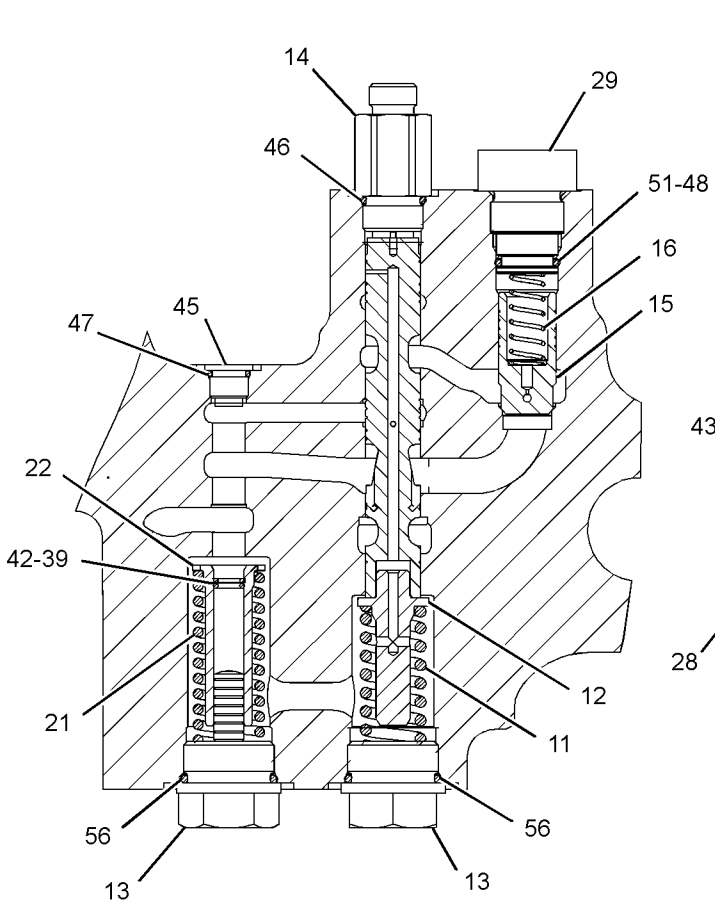

SECTION K-K

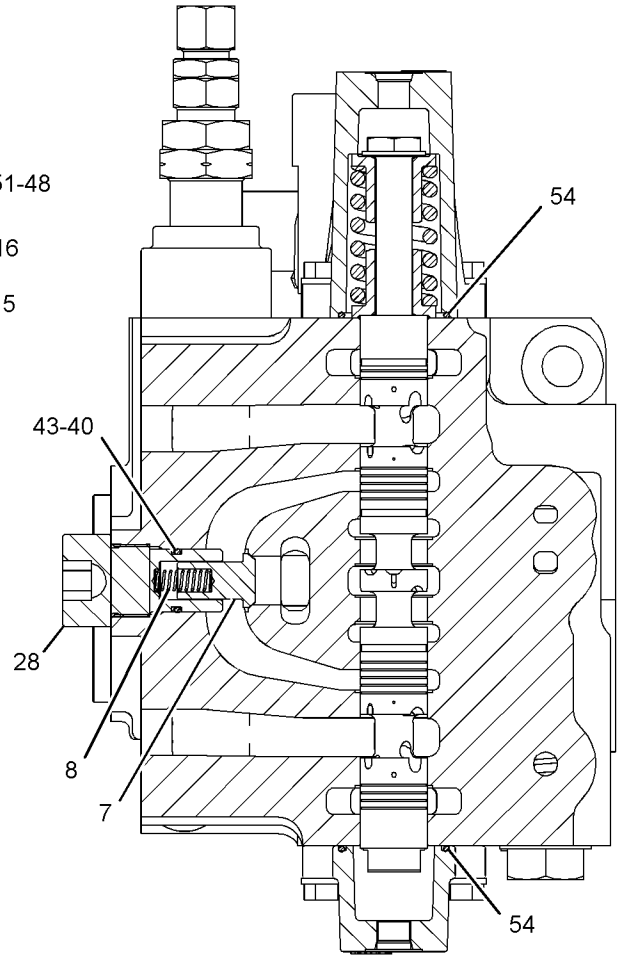

SECTION E-E

GRAPHIC #2

g02324076

352-7132 **VALVE GP-CONTROL (*contd.*)** **i04056070**

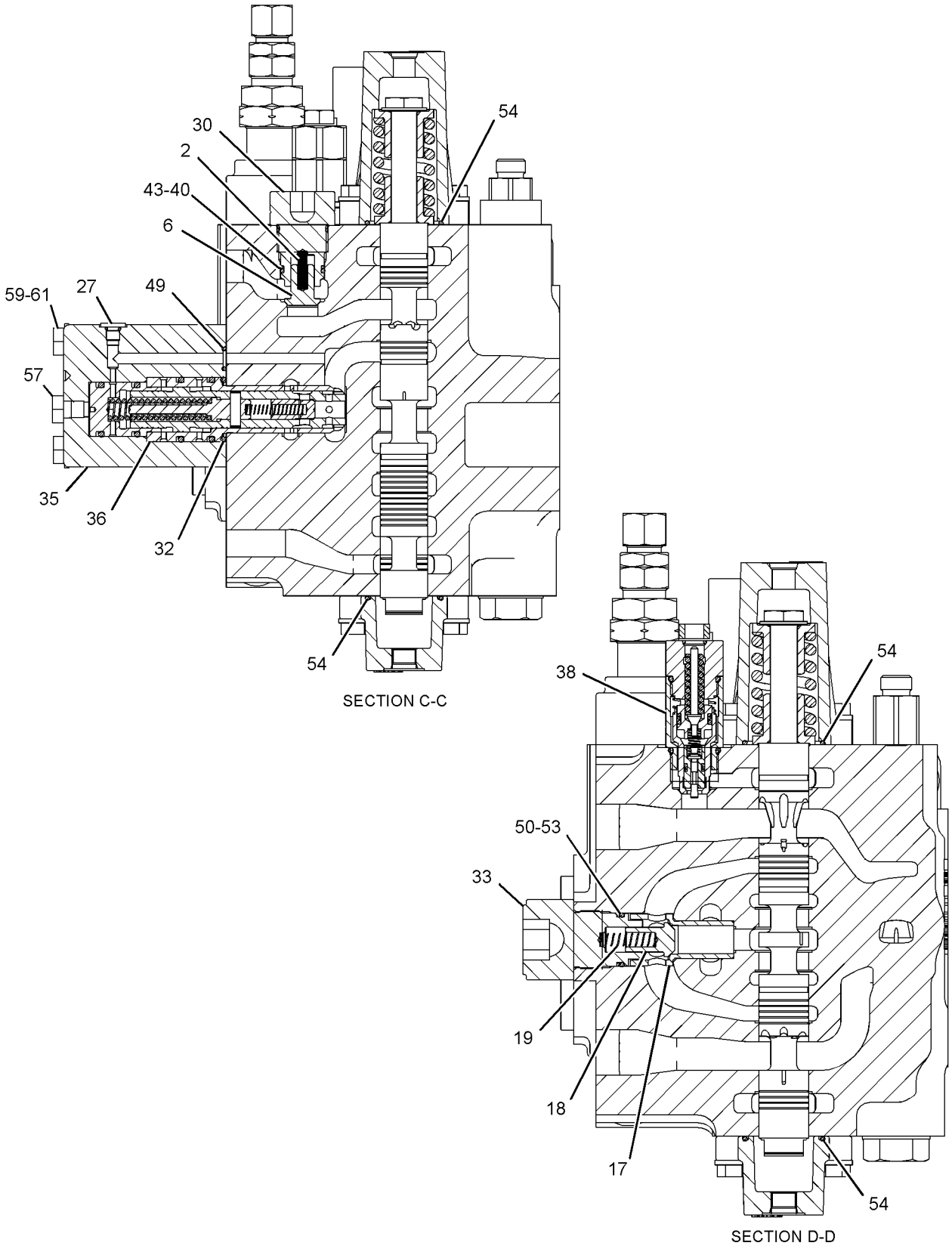

GRAPHIC #3 g02324077

352-7132 **VALVE GP-CONTROL (*contd.*)** **i04056070**

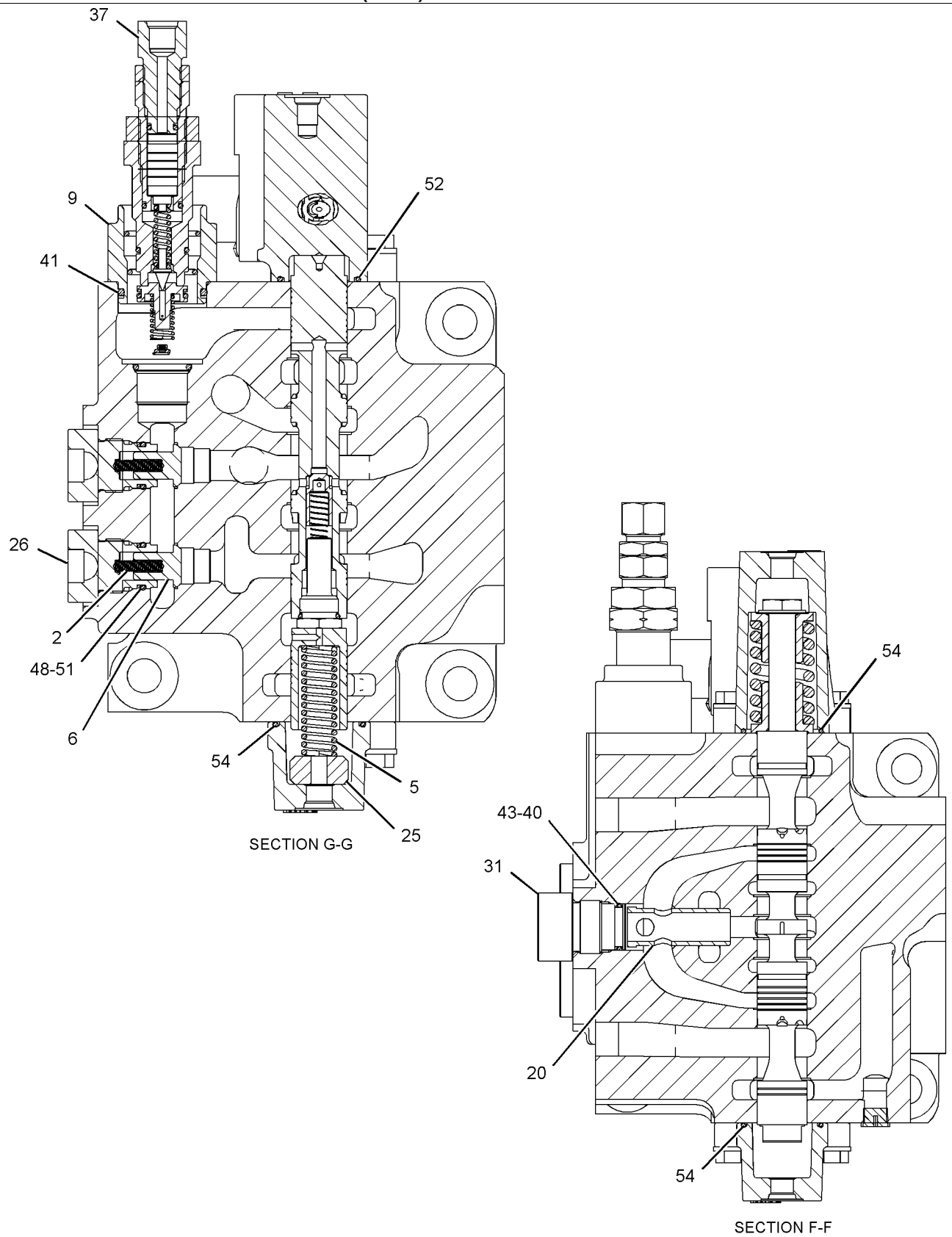

GRAPHIC #4 **<END>** g02324078

352-7138 VALVE GP-CONTROL

S/N: PBB1-UP; KBS1-UP

PART OF 259-7464 VALVE GP-MAIN CONTROL

SMCS-5051 **i05294147**

NOTE	REF NO	GRAPHIC REF	PART NUMBER	QTY	PART NAME 1 2 3 4 5 6 (PRODUCT LEVEL)	SEE PAGE
	1	2,3	**4T-3148**	3	SPRING	
	2	1	**6E-2274**	5	COVER	
	3	3	**6E-5169**	1	SPRING	
	4	2,3	**6E-5643**	3	VALVE (LOAD CHECK) (BOOM 2, STRAIGHT TRAVEL)	
	5	2	**7I-1248**	1	SPRING	
Y	6	1	**121-1491**	1	VALVE GP-SOLENOID (STRAIGHT TRAVEL)	675
	7	3	**153-5288**	1	SPRING	
	8	3	**153-5289**	1	GUIDE	
	9	3	**153-5290**	2	PLUG	
	10	3	**153-5291**	1	CONNECTOR	
	11	3	**153-5292**	1	VALVE-CHECK (BOOM 2)	
	12	3	**153-5293**	1	SPRING	
Y	13	2	**323-7898**	1	VALVE GP-PRIORITY (BOOM 2)	653
	14	2	**153-5298**	1	SLEEVE	
	15	2	**153-5299**	1	VALVE (STICK 1)	
	16	2	**153-5306**	1	SPRING	
	17	3	**153-5309**	1	SLEEVE	
	18	3	**153-5311**	1	SPRING	
	19	3	**158-8150**	1	VALVE GP-UNLOADING (SWING)	
	20	1	**158-8159**	4	HOUSING	
	21	1	**158-8206**	1	HOUSING	
	22	3	**158-8207**	1	STOPPER	
	23	2	**323-7897**	1	COVER	
	24	3	**201-9263**	2	PLUG	
	25	1,2	*225-4818*	3	PLUG AS	
					(EACH INCLUDES)	
		1,2	**4J-7533**	1	SEAL-O-RING	
		1,2	**225-4804**	1	PLUG	
	26	2	**236-6419**	1	PLUG	
	27	3	**236-6421**	1	PLUG	
	28	2	**250-2446**	1	PLUG	
	29	3	**250-2447**	1	PLUG	
Y	30	3	**352-7116**	1	VALVE GP-RELIEF (PILOT OPERATED) (STRAIGHT TRAVEL)	662
Y	31	2	**352-7122**	1	VALVE GP-RELIEF (LINE) (STICK 1)	664
Y	32	1	**259-7632**	1	VALVE GP-CONTROL	615
	33	2	**264-9961**	1	PLUG	
	34	3	**095-1575**	1	SEAL-O-RING	
	35	2,3	**095-1590**	3	SEAL-O-RING	
	36	3	**095-1603**	1	SEAL-O-RING	
	37	3	**095-1778**	1	RING-BACKUP	
	38	2,3	**095-1787**	3	RING-BACKUP	
	39	2	**255-5594**	1	SEAL-O-RING	
	40	3	**103-8177**	1	ADAPTER	
	41	3	**123-2485**	1	PLUG	
	42	3	**2M-9780**	1	SEAL-O-RING	
	43	3	**3J-1907**	1	SEAL-O-RING	
	44	1	**4I-3569**	1	RING-BACKUP	
	45	3	**4I-6397**	3	RING-BACKUP	
	46	2	**4J-5309**	1	SEAL-O-RING	
	47	2	**4T-5074**	1	RING-BACKUP	
	48	1	**6E-3653**	1	PLUG	
	49	2	**6E-5731**	1	VALVE (LOAD CHECK) (SWING)	
	50	3	**6V-3922**	3	SEAL-O-RING	
	51	3	**6V-5393**	1	SEAL-O-RING	
	52	2	**6V-5556**	1	SEAL-O-RING	
	53	2,3	**6V-5597**	9	SEAL-O-RING	
M	54	1	**7I-2272**	2	BOLT (M5X0.8X12-MM)	

352-7138 **VALVE GP-CONTROL (*contd.*)** **i05294147**

NOTE	REF NO	GRAPHIC REF	PART NUMBER	QTY	PART NAME 1 2 3 4 5 6 (PRODUCT LEVEL)	SEE PAGE
	55	3	**7M-8485**	2	SEAL-O-RING	
M	56	2	**7X-2621**	1	BOLT (M10X1.5X12-MM)	
	57	1	**7Y-5219**	1	SEAL-O-RING	
	58	1,2	**8T-4121**	24	WASHER-HARD (11X21X2.5-MM THK)	
M	59	1	**8T-4195**	20	BOLT (M10X1.5X30-MM)	
M	60	2	**8T-6685**	4	BOLT (M10X1.5X110-MM)	
	61	1	**8T-6759**	2	PLUG-PIPE	
	62	3	**111-9959**	1	PLUG-PIPE	

M - METRIC PART
Y - SEPARATE ILLUSTRATION

352-7138 **VALVE GP-CONTROL (*contd.*)** **i05294147**

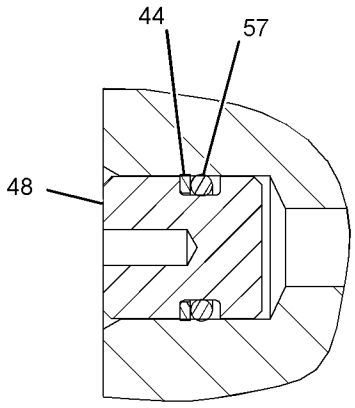

SECTION J-J

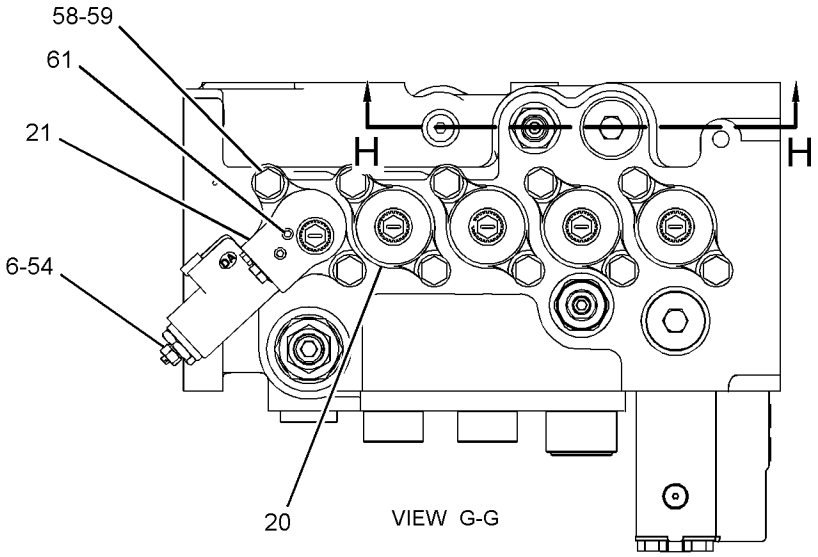

VIEW G-G

REFER TO ALL ILLUSTRATIONS OF THIS GROUP FOR AUXILIARY VIEWS

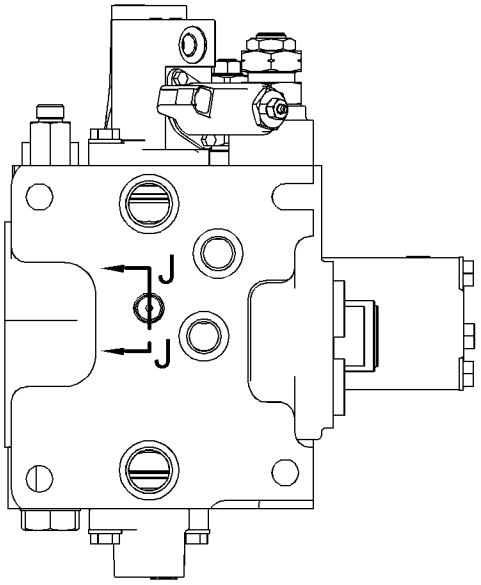

VIEW A-A

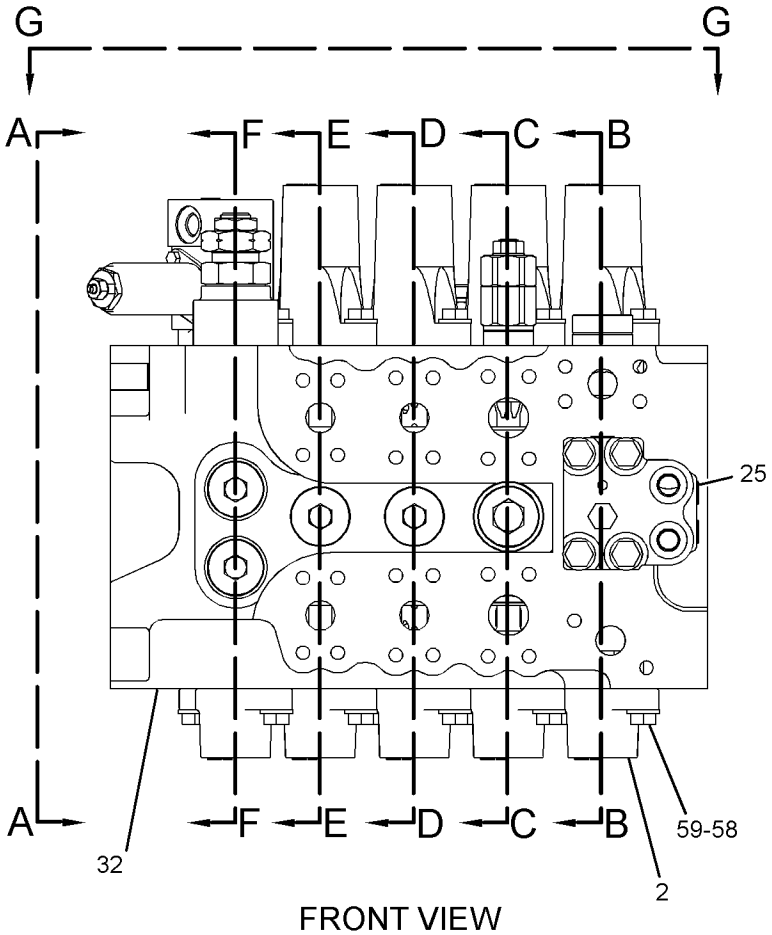

FRONT VIEW

GRAPHIC #1 g02482439

352-7138 **VALVE GP-CONTROL (*contd.*)** **i05294147**

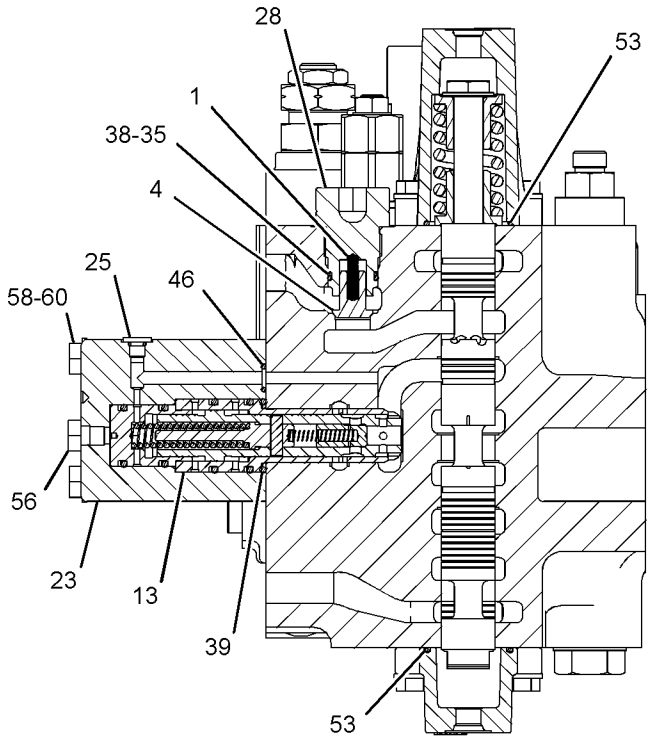

SECTION B-B

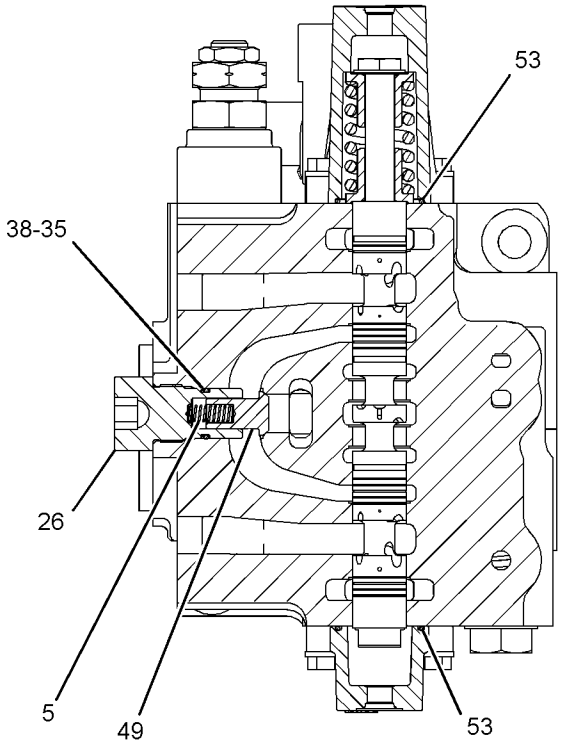

SECTION D-D

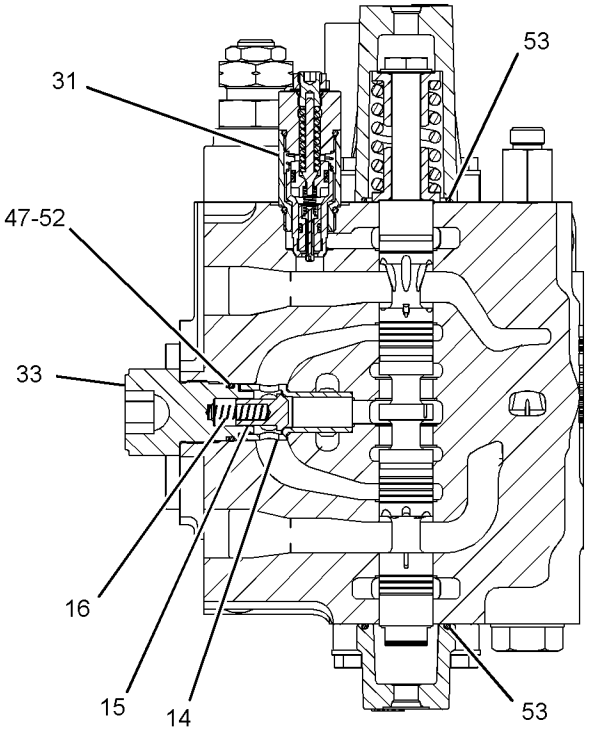

SECTION C-C

GRAPHIC #2 g02482442

352-7138 **VALVE GP-CONTROL (*contd.*)** **i05294147**

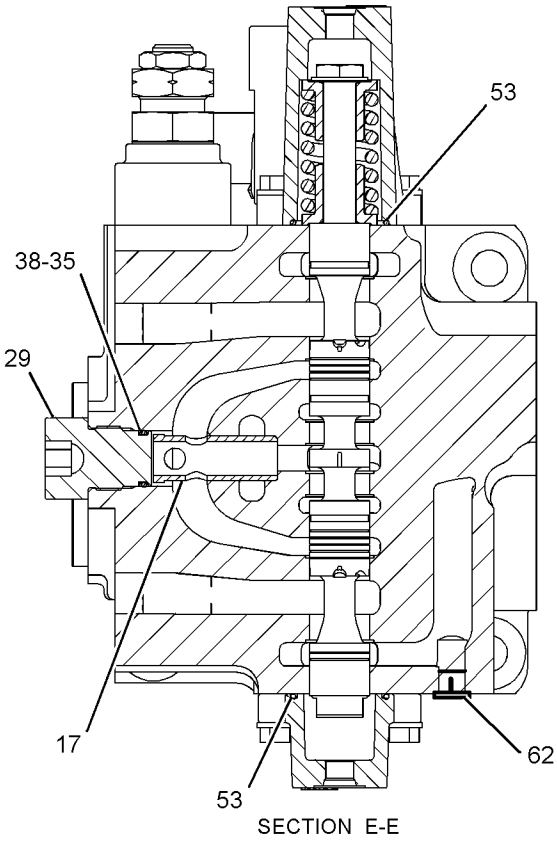

SECTION E-E

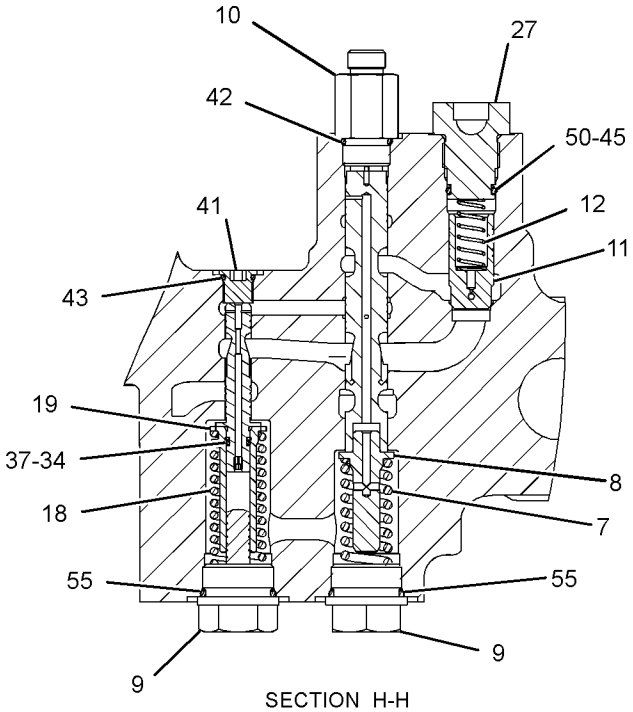

SECTION H-H

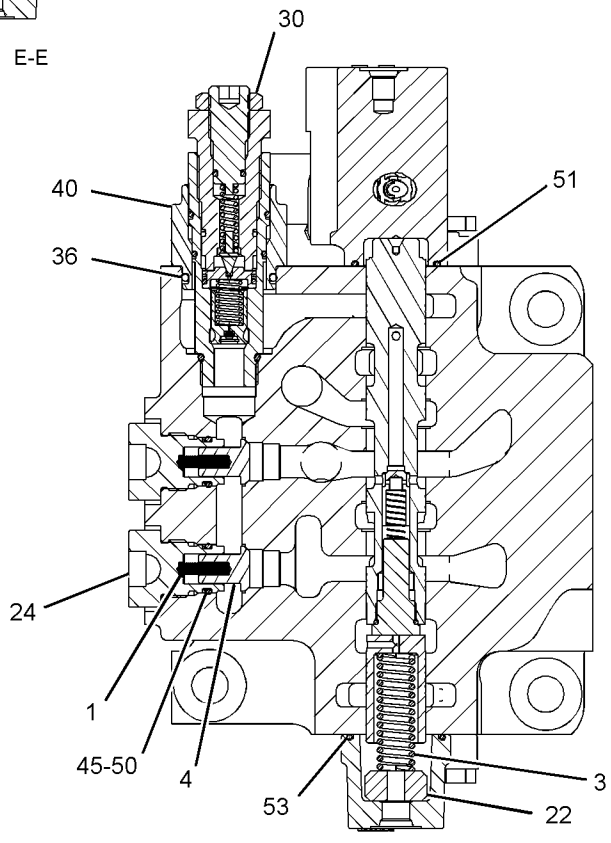

SECTION F-F

GRAPHIC #3 **<END>** g02696758

435-1484 VALVE GP-CONTROL—STK, BM, BKT, WKTL, TRVL RH

S/N: PBB1-UP; KBS1-UP
PART OF 435-1482 VALVE GP-MAIN CONTROL
AN ATTACHMENT

SMCS-5051 **i05458709**

NOTE	REF NO	GRAPHIC REF	PART NUMBER	QTY	PART NAME 1 2 3 4 5 6 (PRODUCT LEVEL)	SEE PAGE
	1	1	**6E-2274**	5	COVER	
	2	1	**6E-5731**	4	VALVE (LOAD CHECK)	
	3	1	**7I-1248**	5	SPRING	
	4	1	**7Y-8099**	2	COVER	
	5	1	**153-5286**	1	VALVE (LOAD CHECK)	
	6	1	**153-5288**	1	SPRING	
	7	1	**153-5289**	1	GUIDE	
	8	1	**153-5290**	1	PLUG	
	9	1	**153-5291**	1	CONNECTOR	
	10	1	**153-5292**	1	VALVE-CHECK	
	11	1	**153-5293**	1	SPRING	
	12	1	**158-8159**	5	HOUSING	
	13	1	**236-6419**	5	PLUG	
	14	1	**236-6421**	1	PLUG	
Y	15	1	*310-0404*	2	PLUG GP-CONTROL VALVE	583
					(EACH INCLUDES)	
		1	**3D-2824**	1	SEAL-O-RING	
		1	**6M-5062**	1	SEAL-O-RING	
		1	**9J-0705**	1	RING-BACKUP	
		1	**310-0405**	1	PLUG	
Y	16	1	**352-7122**	3	VALVE GP-RELIEF (LINE)	664
Y	17	1	*435-1485*	1	VALVE GP-CONTROL	633
	18	1	**095-1590**	5	SEAL-O-RING	
	19	1	**095-1787**	5	RING-BACKUP	
Y	20	1	**109-5152**	1	VALVE GP-RELIEF (NEGATIVE FLOW CONTROL)	655
	21	1	**111-9959**	2	PLUG-PIPE	
	22	1	**2M-9780**	1	SEAL-O-RING	
	23	1	**4I-6397**	1	RING-BACKUP	
	24	1	**4J-0520**	2	SEAL-O-RING	
	25	1	**6V-3922**	1	SEAL-O-RING	
	26	1	**6V-5597**	10	SEAL-O-RING	
	27	1	**7M-8485**	1	SEAL-O-RING	
	28	1	**8T-4121**	20	WASHER-HARD (11X21X2.5-MM THK)	
M	29	1	**8T-4195**	28	BOLT (M10X1.5X30-MM)	

M - METRIC PART
Y - SEPARATE ILLUSTRATION

435-1484 **VALVE GP-CONTROL (*contd.*)** **i05458709**

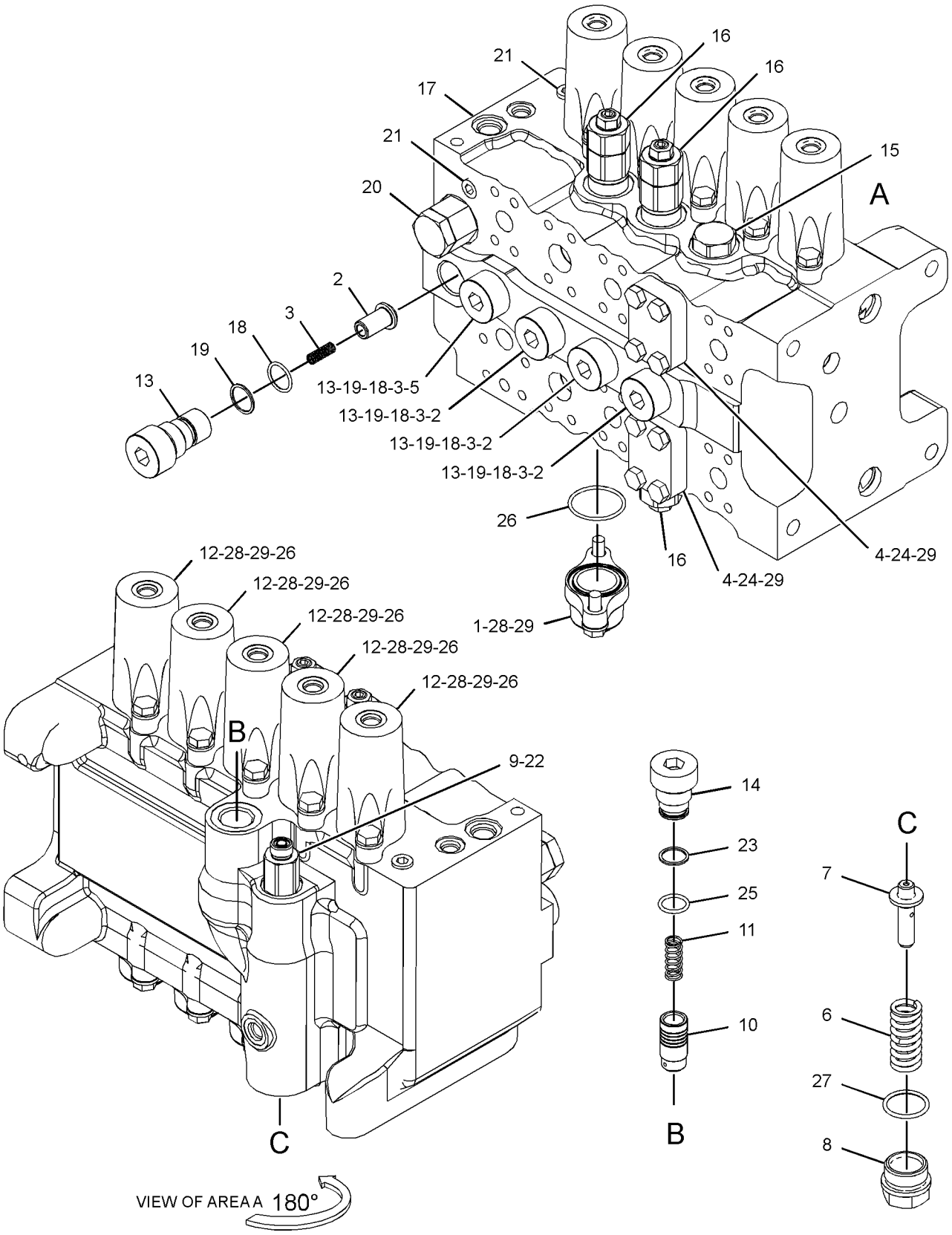

GRAPHIC #1 **<END>** g03450537

435-1485 VALVE GP-CONTROL

S/N: PBB1-UP; KBS1-UP
PART OF 435-1484 VALVE GP-CONTROL
AN ATTACHMENT

SMCS-5051 **i05458805**

NOTE	REF NO	GRAPHIC REF	PART NUMBER	QTY	PART NAME 1 2 3 4 5 6 (PRODUCT LEVEL)	SEE PAGE
	1	1	**6E-2271**	10	RETAINER	
	2	1	**352-7059**	1	SPRING-RETURN	
	3	1	**352-7058**	1	SPRING-RETURN	
M	4	1	**153-5276**	5	BOLT-SPECIAL	
	5	1	**352-7057**	3	SPRING-RETURN	

M - METRIC PART

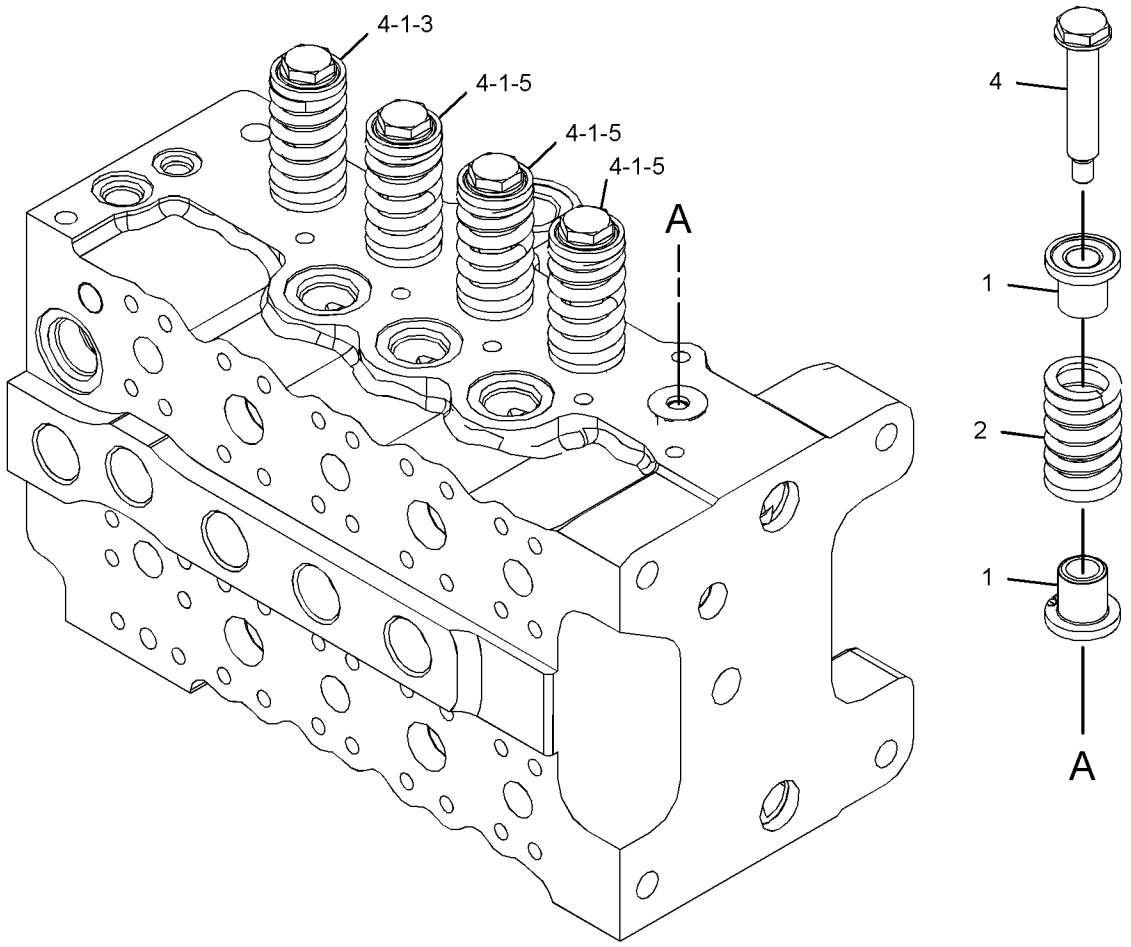

GRAPHIC #1 **<END>** g03448962

225-4785 VALVE GP-LOAD CONTROL–BOOM CYLINDER

S/N: PBB1-UP; KBS1-UP
PART OF 286-6495 LINES GP-BOOM CYLINDER
AN ATTACHMENT

SMCS-5067, 5117, 5147, 5811 **i04089350**

NOTE	REF NO	GRAPHIC REF	PART NUMBER	QTY	PART NAME 1 2 3 4 5 6 (PRODUCT LEVEL)	SEE PAGE
	1	2	**2S-2596**	1	SPRING	
	3	1,2	**8J-6815**	3	PLUG-ORIFICE	
	4	2	**9T-1614**	1	VALVE	
	5	2	**165-9513**	1	SEAT	
	6	2	**165-9514**	1	PLUG	
	8	2	**225-4787**	1	VALVE	
	9	2	**225-4789**	1	VALVE	
	10	2	**225-4790**	1	SPRING	
	11	2	**225-4791**	1	GUIDE	
	12	2	**225-4792**	1	PLUG	
	13	2	**225-4793**	1	VALVE AS	
	14	2	**225-4796**	1	PISTON	
	15	2	**225-4797**	1	VALVE AS	
	16	2	**259-7788**	1	GUIDE AS	
		2	**4T-0987**	1	BUSHING	
	17	1	**225-4803**	1	COVER	
	18	1	**8T-6759**	1	PLUG-PIPE	
	19	1,2	*225-4818*	7	PLUG AS	
					(EACH INCLUDES)	
		1,2	**4J-7533**	1	SEAL-O-RING	
		1,2	**225-4804**	1	PLUG	
	20	1,2	*225-4820*	4	PLUG AS	
					(EACH INCLUDES)	
		1,2	**3J-7354**	1	SEAL-O-RING	
		1,2	**225-4821**	1	PLUG	
B	21	2	**225-4830**	1	SHIM (1-MM THK)	
B	22	2	**225-4831**	2	SHIM (0.5-MM THK)	
B	23	2	**225-4832**	2	SHIM (0.2-MM THK)	
B	24	2	**225-4833**	1	SHIM (0.1-MM THK)	
CY	25	1	**352-7123**	1	VALVE GP-RELIEF (LINE)	665
	26	2	**095-1594**	2	SEAL-O-RING	
	27	2	**095-1789**	2	RING	
	28	2	**122-7797**	2	RING	
	29	2	**2D-6642**	1	BALL	
	30	2	**3H-0442**	1	SEAL-O-RING	
	31	2	**3J-1907**	2	SEAL-O-RING	
	32	2	**6V-5326**	2	SEAL-O-RING	
CM	33	2	**5C-2874**	1	NUT (M5X0.8-THD)	
M	34	1	**8T-4139**	4	BOLT (M12X1.75X30-MM)	

B - USE AS REQUIRED
C - CHANGE FROM PREVIOUS TYPE
M - METRIC PART
Y - SEPARATE ILLUSTRATION

225-4785 **VALVE GP-LOAD CONTROL (*contd.*)** **i04089350**

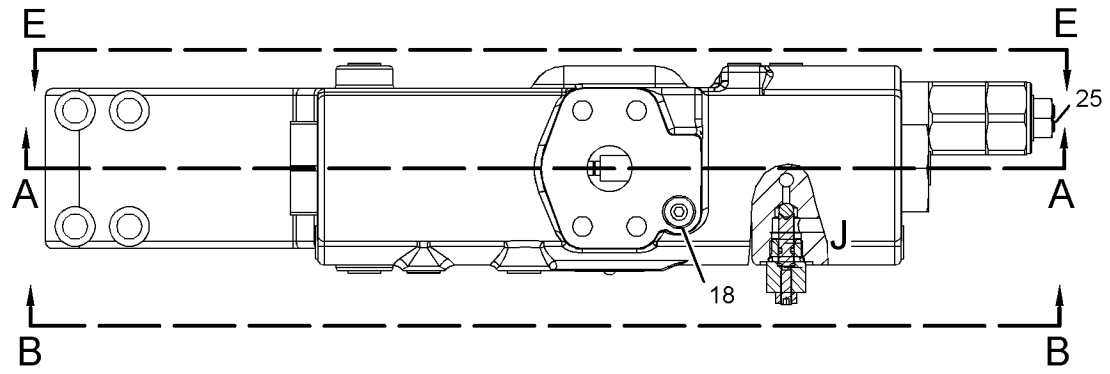

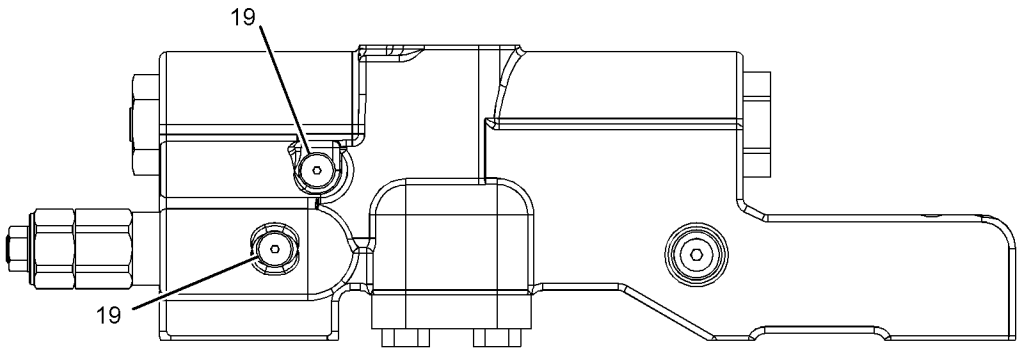

VIEW E-E

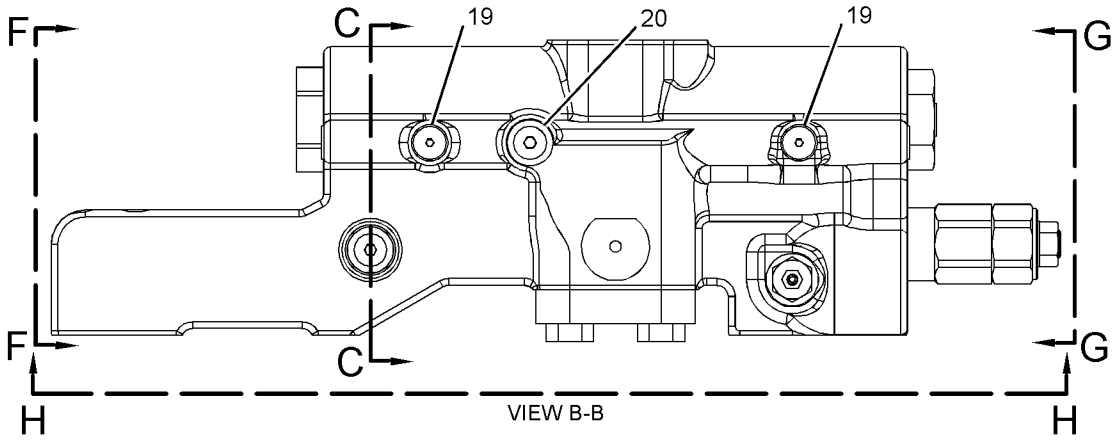

VIEW B-B

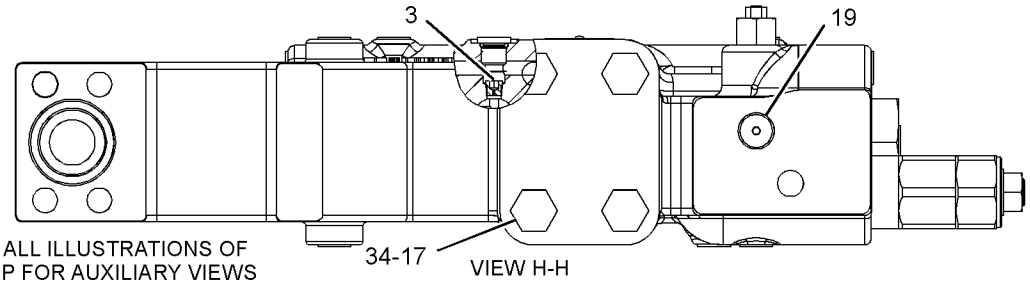

VIEW H-H

REFER TO ALL ILLUSTRATIONS OF THIS GROUP FOR AUXILIARY VIEWS

GRAPHIC #1

g02320885

225-4785 **VALVE GP-LOAD CONTROL (*contd.*)** **i04089350**

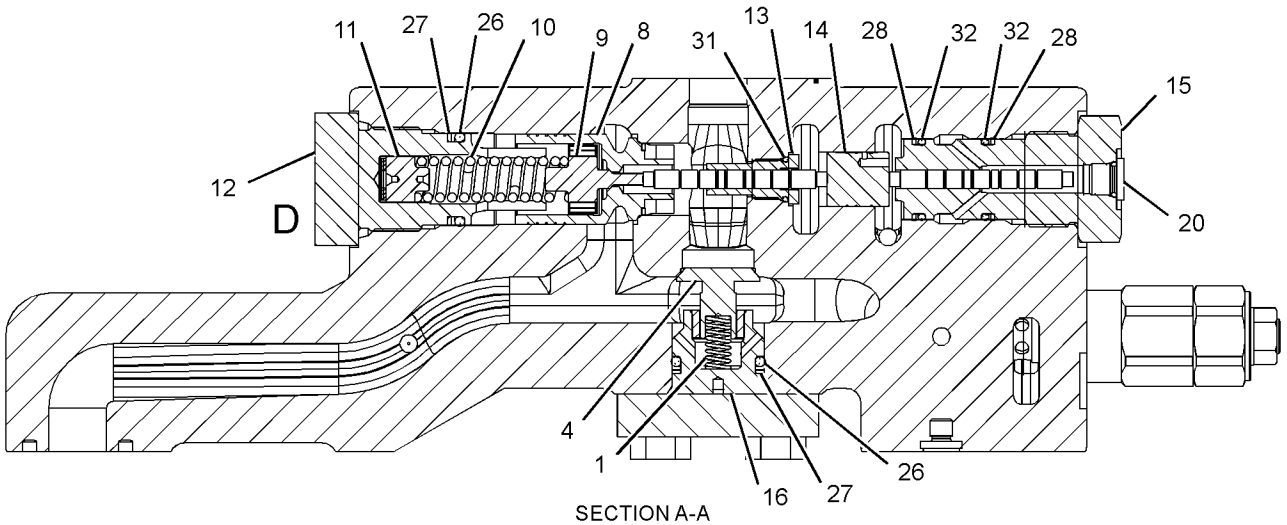

SECTION A-A

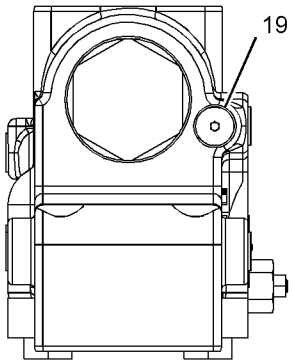

VIEW F-F

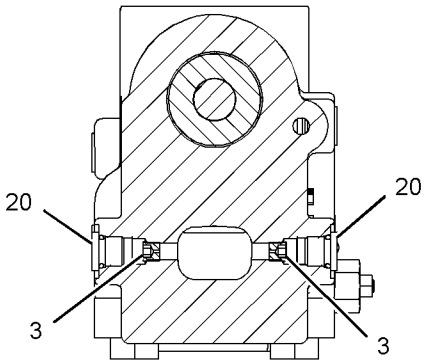

SECTION C-C

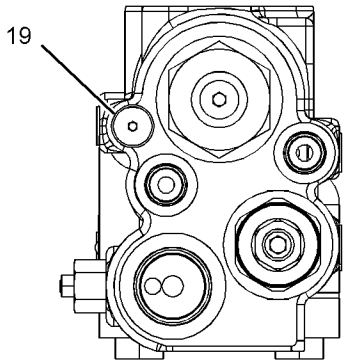

VIEW G-G

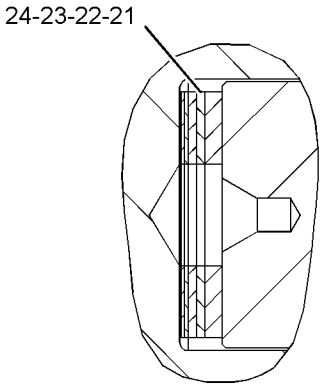

VIEW OF AREA D

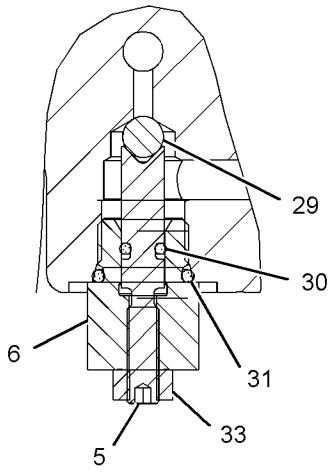

VIEW OF AREA J

GRAPHIC #2 **<END>** g01243563

255-5680 VALVE GP-LOAD CONTROL—STICK DRIFT RED, LINE RELIEF

S/N: PBB1-UP; KBS1-UP

PART OF 239-1714 LINES GP-FRONT

SMCS-5067, 5117, 5147, 5811 **i05409898**

NOTE	REF NO	GRAPHIC REF	PART NUMBER	QTY	PART NAME 1 2 3 4 5 6 (PRODUCT LEVEL)	SEE PAGE
M	1	1	**8T-4136**	4	BOLT (M10X1.5X25-MM)	
	2	1	**4I-8965**	1	GUIDE	
	3	1	**5I-8511**	1	SPRING	
	4	1	**087-5166**	1	SPRING	
	5	1	**118-4044**	1	COVER	
	7	1	**147-4184**	1	PLUG	
	8	1	*225-4818*	2	PLUG AS	
					(EACH INCLUDES)	
		1	**4J-7533**	1	SEAL-O-RING	
		1	**225-4804**	1	PLUG	
CY	9	1	**352-7123**	1	VALVE GP-RELIEF (LINE) (STICK CYLINDER)	665
	11	1	**095-1594**	1	SEAL-O-RING	
	12	1	**095-1789**	1	RING	
	13	1	*148-8395*	1	PLUG AS	
		1	**3K-0360**	1	SEAL-O-RING	
		1	**9S-8005**	1	PLUG-O-RING	
	14	1	*162-0177*	1	PLUG AS	
		1	**3J-1907**	1	SEAL-O-RING	
		1	**9S-8004**	1	PLUG-O-RING	

C - CHANGE FROM PREVIOUS TYPE
M - METRIC PART
Y - SEPARATE ILLUSTRATION

255-5680 **VALVE GP-LOAD CONTROL (*contd.*)** **i05409898**

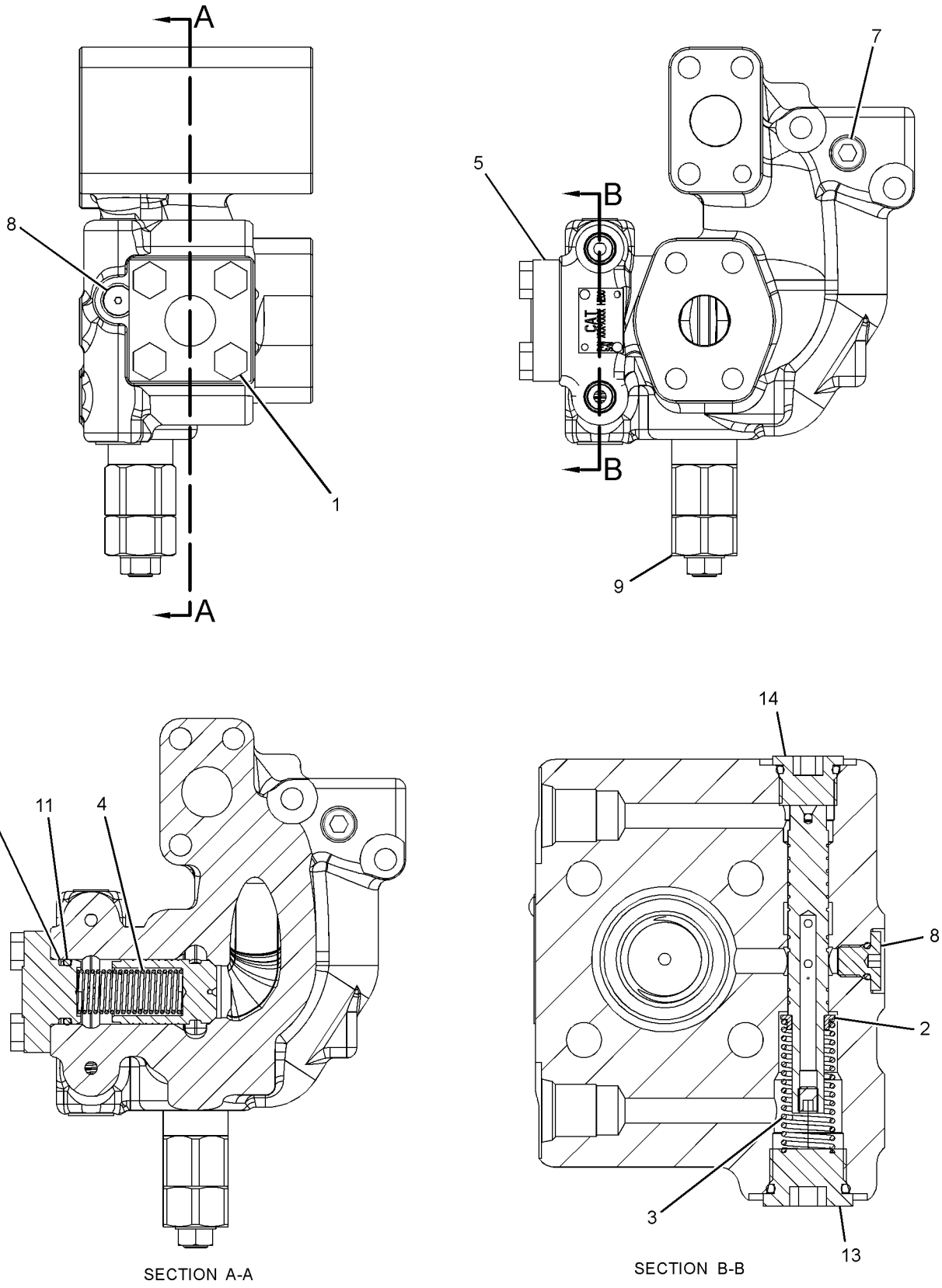

SECTION A-A

SECTION B-B

GRAPHIC #1 **<END>** g03358384

255-5683 VALVE GP-LOAD CONTROL—BOOM DRIFT RED, LINE RELIEF

S/N: PBB1-UP; KBS1-UP

PART OF 239-1714 LINES GP-FRONT

SMCS-5067, 5117, 5147, 5811 **i05282299**

NOTE	REF NO	GRAPHIC REF	PART NUMBER	QTY	PART NAME 1 2 3 4 5 6 (PRODUCT LEVEL)	SEE PAGE
M	1	1	**8T-4136**	4	BOLT (M10X1.5X25-MM)	
	2	1	**4I-8965**	1	GUIDE	
	3	1	**5I-8511**	1	SPRING	
	4	1	**087-5166**	1	SPRING	
	5	1	**118-4044**	1	COVER	
	7	1	*225-4818*	2	PLUG AS	
					(EACH INCLUDES)	
		1	**225-4804**	1	PLUG	
	7A	1	**4J-7533**	1	SEAL-O-RING	
CY	8	1	**352-7123**	1	VALVE GP-RELIEF (LINE) (BOOM CYLINDER)	665
	10	1	**095-1594**	1	SEAL-O-RING	
	11	1	**095-1789**	1	RING	
	12	1	*148-8395*	1	PLUG AS	
		1	**9S-8005**	1	PLUG-O-RING	
	12A	1	**3K-0360**	1	SEAL-O-RING	
	13	1	*148-8407*	1	PLUG AS	
		1	**9S-4191**	1	PLUG	
	13A	1	**3J-1907**	1	SEAL-O-RING	
	14	1	**190-7865**	1	CONNECTOR	
	15	1	**3J-1907**	1	SEAL-O-RING	
	16	1	**6V-8397**	1	SEAL-O-RING	

C - CHANGE FROM PREVIOUS TYPE
M - METRIC PART
Y - SEPARATE ILLUSTRATION

255-5683 **VALVE GP-LOAD CONTROL (*contd.*)** **i05282299**

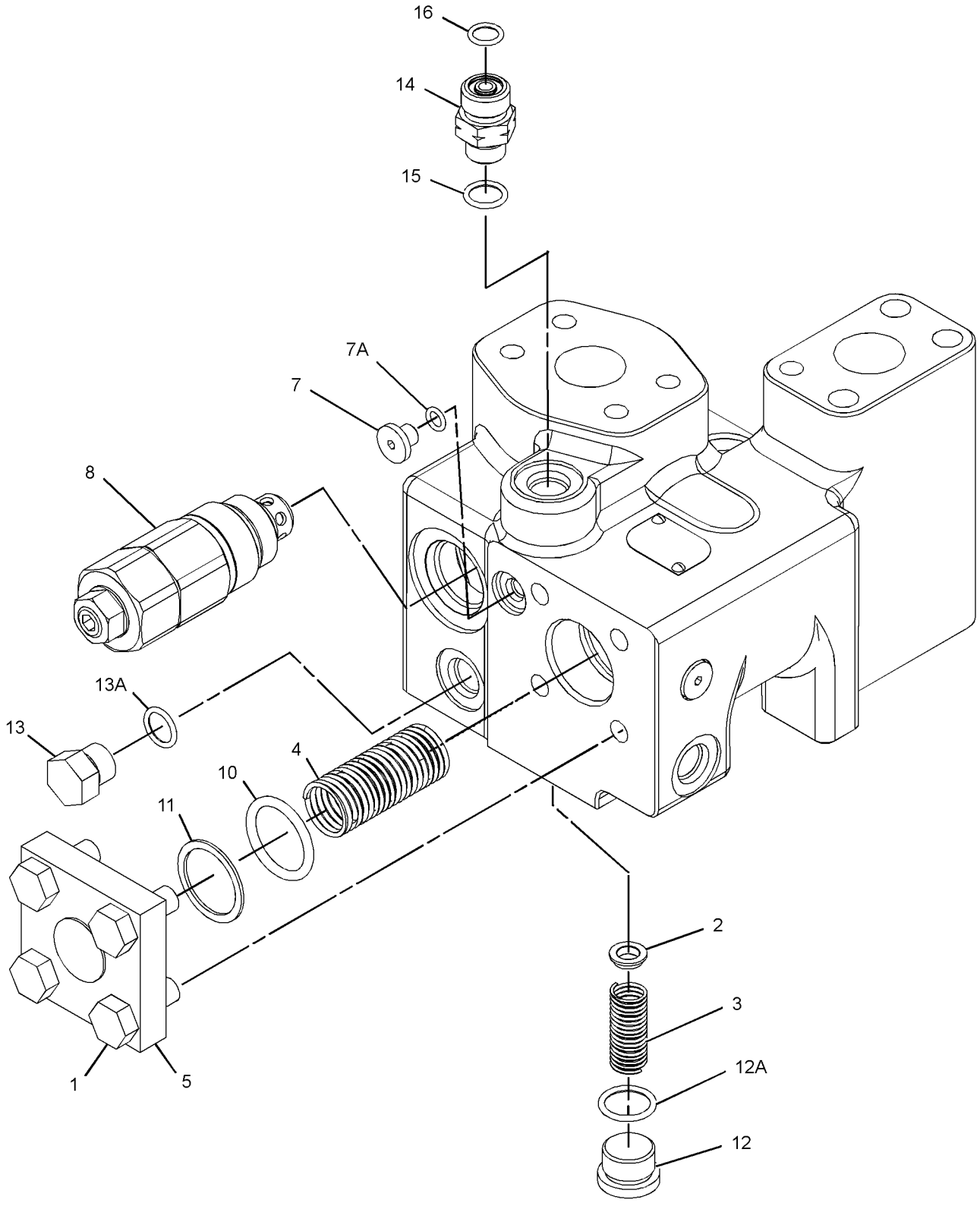

GRAPHIC #1 **<END>** g03358446

259-7464 VALVE GP-MAIN CONTROL

S/N: PBB1-UP; KBS1-UP

PART OF 456-0404, 456-0405 HYDRAULIC AR

SMCS-5051 **i05343297**

NOTE	REF NO	GRAPHIC REF	PART NUMBER	QTY	PART NAME 1 2 3 4 5 6 (PRODUCT LEVEL)	SEE PAGE
Y	1	1	**153-5313**	1	VALVE GP-RELIEF (NEGATIVE FLOW CONTROL)	656
Y	2	1	**259-7465**	1	VALVE GP-CONTROL (BOOM, STICK, BUCKET) (RH)	611
CY	3	1	**352-7138**	1	VALVE GP-CONTROL (BOOM, STICK, SWING, TRAVEL) (LH)	626
	4	1	**1P-3702**	2	SEAL-RECTANGULAR	
	5	1	**4J-0519**	2	SEAL-O-RING	
M	6	1	**8T-4140**	5	BOLT (M16X2X60-MM)	
M	7	1	**8T-4193**	4	BOLT (M16X2X50-MM)	
	8	1	**9X-8257**	9	WASHER (17.5X30X3.5-MM THK)	

C - CHANGE FROM PREVIOUS TYPE
M - METRIC PART
Y - SEPARATE ILLUSTRATION

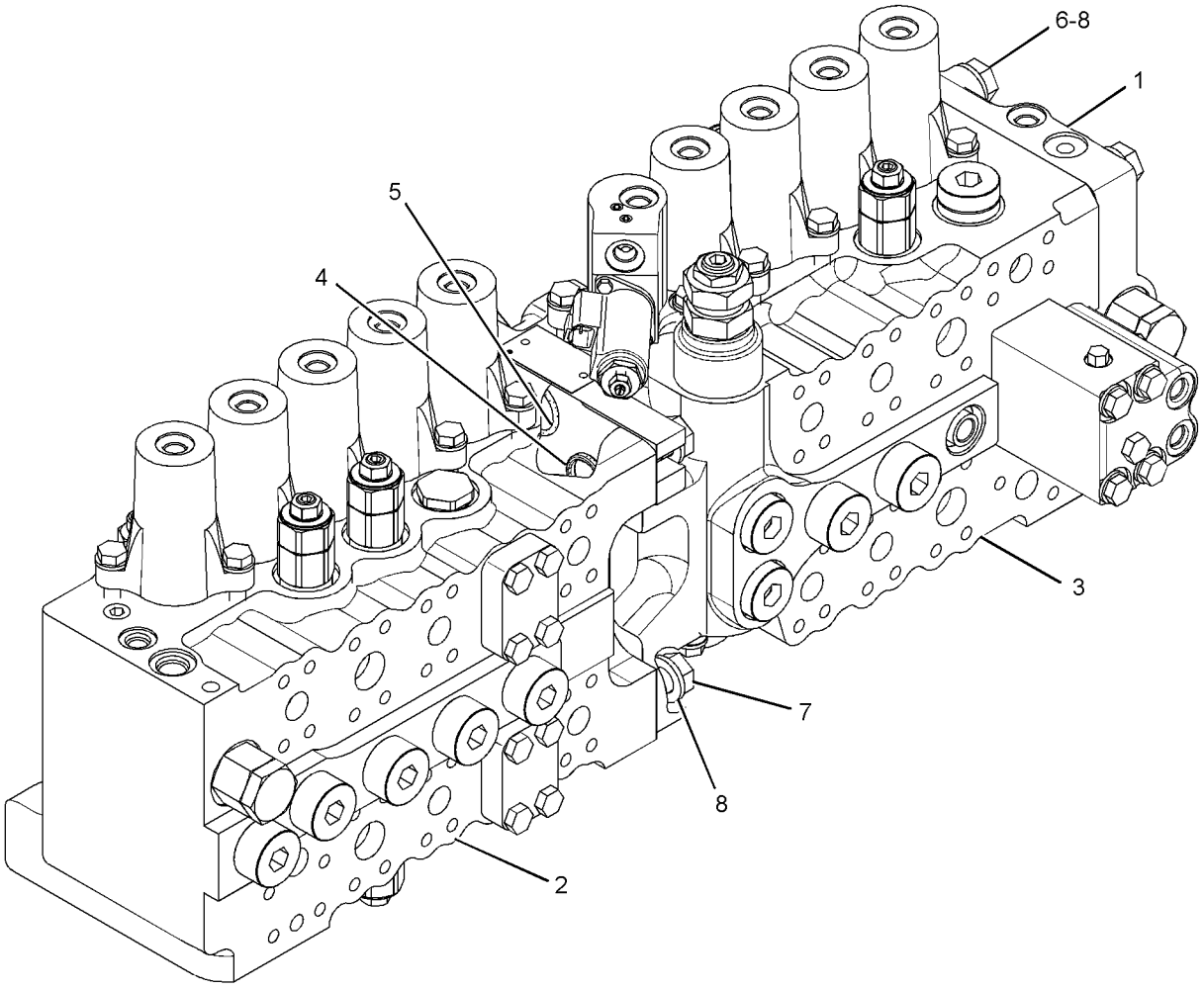

GRAPHIC #1 **<END>** g01190229

435-1482 VALVE GP-MAIN CONTROL—HEAVY LIFT

S/N: PBB1-UP; KBS1-UP

PART OF 240-3881 VALVE & LINES GP-HEAVY LIFT

AN ATTACHMENT

SMCS-5051 **i05767966**

NOTE	REF NO	GRAPHIC REF	PART NUMBER	QTY	PART NAME 1 2 3 4 5 6 (PRODUCT LEVEL)	SEE PAGE
Y	1	1	*153-5313*	1	VALVE GP-RELIEF (NEGATIVE FLOW CONTROL)	656
Y	2	1	**352-7132**	1	VALVE GP-CONTROL (TRAVEL, SWING, STICK, BOOM)	620
	3	1	**451-2175**	9	WASHER-HARD (17.5X30X3.5-MM THK)	
Y	4	1	*435-1484*	1	VALVE GP-CONTROL (STK, BM, BKT, WKTL, TRVL RH)	631
	5	1	**1P-3702**	2	SEAL-RECTANGULAR	
M	6	1	**447-1711**	4	BOLT (M16X2X50-MM)	
	7	1	**4J-0519**	2	SEAL-O-RING	
M	8	1	**447-1707**	5	BOLT (M16X2X60-MM)	

M - METRIC PART
Y - SEPARATE ILLUSTRATION

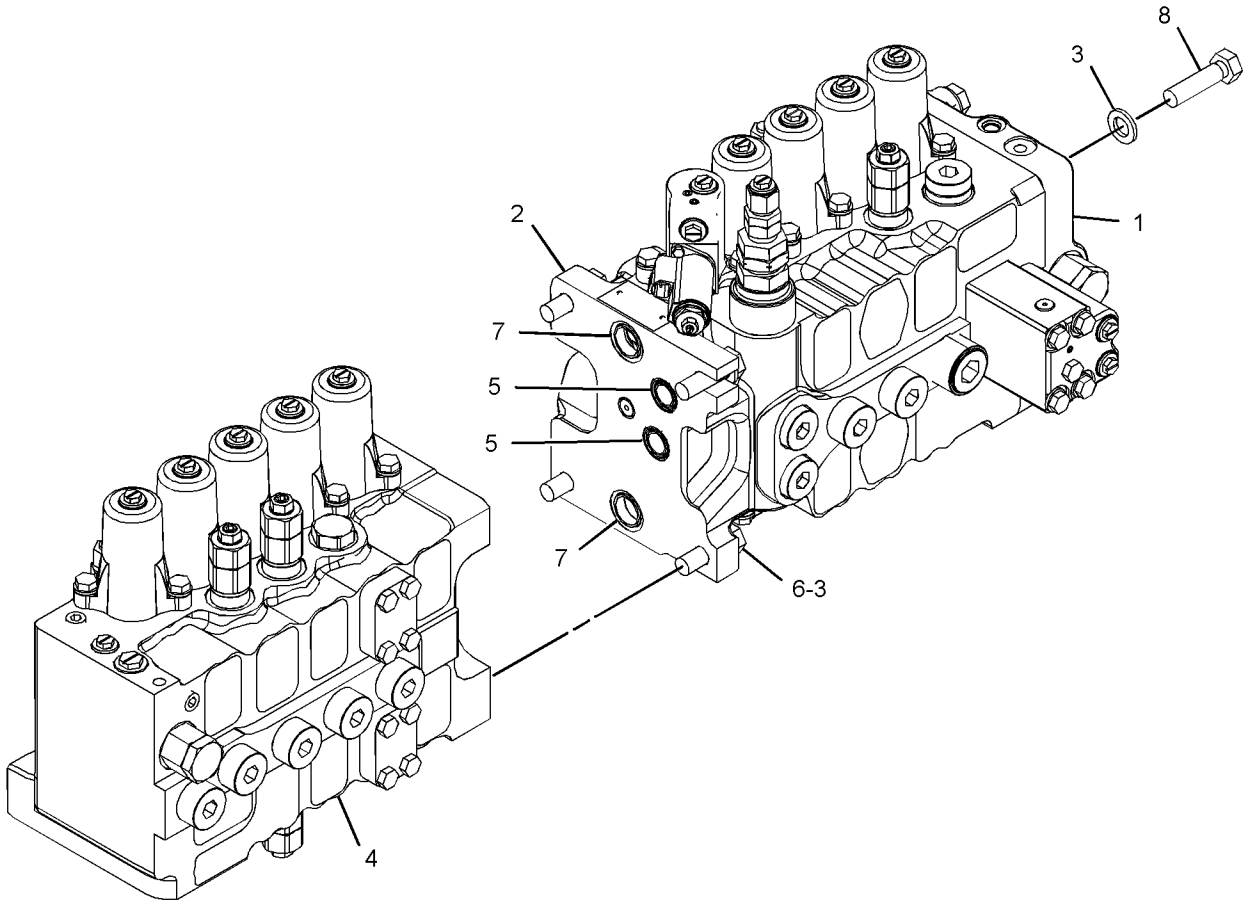

GRAPHIC #1 **<END>** g03448878

389-2407 VALVE GP-MANUAL–AUXILIARY, SHUTOFF

S/N: PBB1-UP; KBS1-UP

PART OF 237-3184, 242-6487 LINES GP-AUXILIARY HYDRAULIC

AN ATTACHMENT

SMCS-1329, 5001, 5130 **i04811315**

NOTE	REF NO	GRAPHIC REF	PART NUMBER	QTY	PART NAME 1 2 3 4 5 6 (PRODUCT LEVEL)	SEE PAGE
	1	1	**302-9466**	1	HANDLE	
	2	1	**3J-1907**	1	SEAL-O-RING	
	3	1	**9S-8004**	1	PLUG-O-RING	

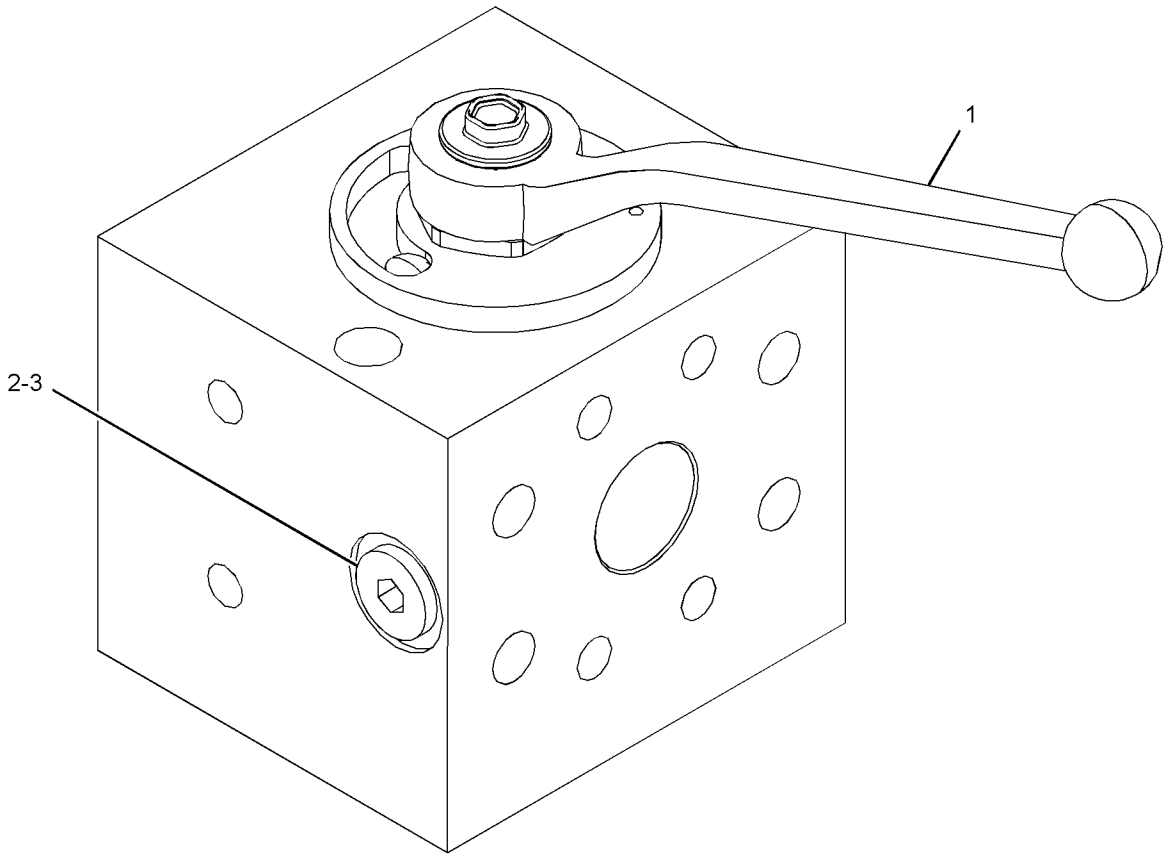

GRAPHIC #1 **<END>** g02933216

206-3336 VALVE GP-PILOT

S/N: PBB1-UP; KBS1-UP

PART OF 239-8693, 239-8695, 259-7179 CONTROL GP-HYDRAULIC PEDAL

AN ATTACHMENT

SMCS-5059 **i05495908**

NOTE	REF NO	GRAPHIC REF	PART NUMBER	QTY	PART NAME 1 2 3 4 5 6 (PRODUCT LEVEL)	SEE PAGE
	1	1	**107-6479**	1	PLUG	
	2	1	**438-4965**	2	SPRING (STANDARD)	
					—OR—	
		1	**190-7819**	2	SPRING (OPTIONAL)	
					(REDUCES OPERATING FORCE BY 40%)	
	3	1	**335-0136**	1	BELLOWS	
	4	1	**335-0138**	2	PACKING	
	5	1	**095-1575**	1	SEAL-O-RING	
	6	1	**095-1578**	2	SEAL-O-RING	
	7	1	**095-1579**	1	SEAL-O-RING	
	8	1	**095-1584**	1	SEAL-O-RING	
	9	1	**6V-8399**	2	SEAL-O-RING	
	10	1	**9M-5590**	1	BALL	

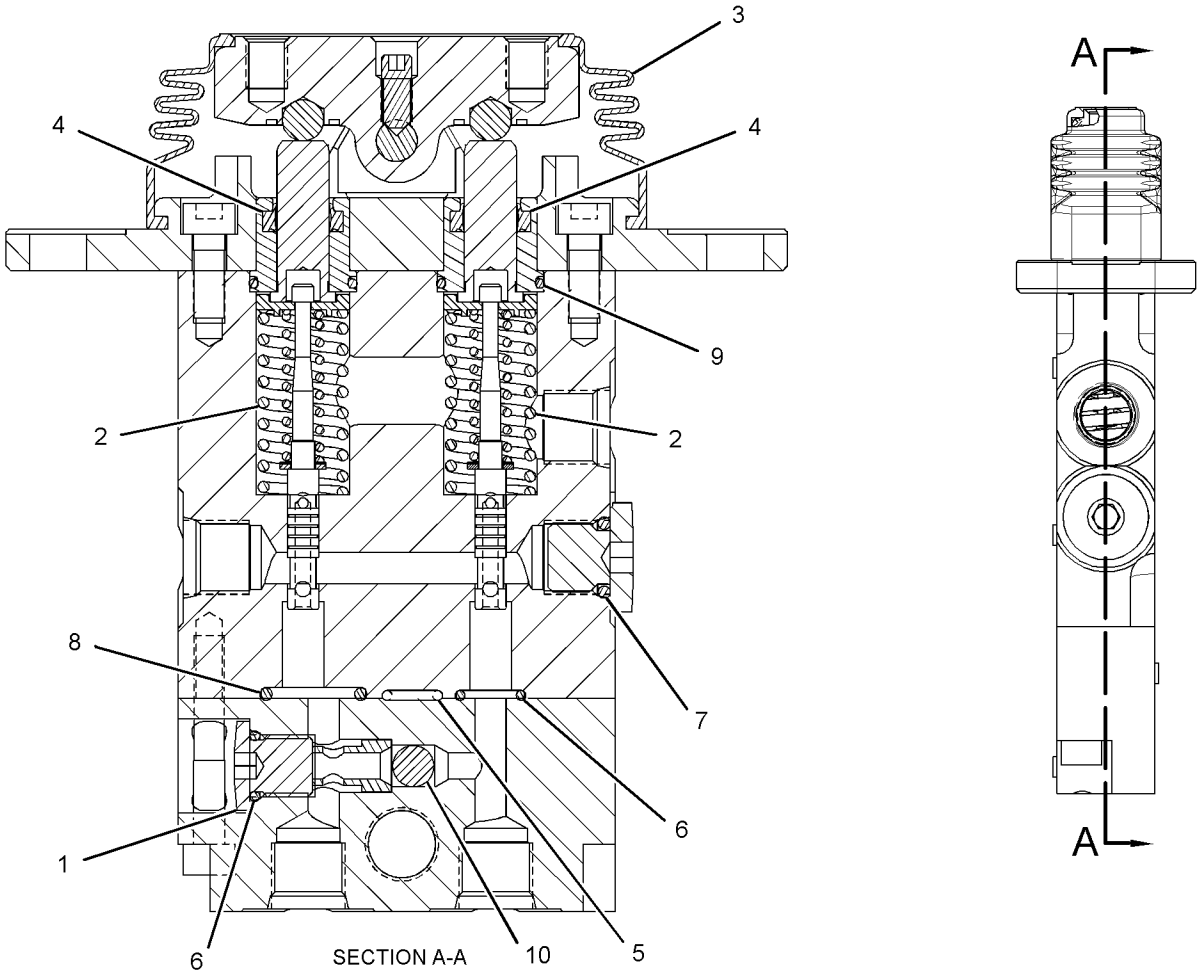

GRAPHIC #1 **<END>** g03371302

297-0529 VALVE GP-PILOT–JOYSTICK

S/N: PBB1-UP; KBS1-UP

PART OF 297-0532, 297-0533 CONTROL GP-JOYSTICK

AN ATTACHMENT

SMCS-5059 **i03017531**

NOTE	REF NO	GRAPHIC REF	PART NUMBER	QTY	PART NAME 1 2 3 4 5 6 (PRODUCT LEVEL)	SEE PAGE
	1	1	**270-5953**	4	SPRING	
	2	1	**095-1586**	4	SEAL-O-RING	
	3	1	**4I-6365**	1	JOINT	
	4	1	**094-0876**	4	SEAL	
	5	1	**096-1628**	4	PLUG	
B	6	1	**099-6137**	4	WASHER (6.1X9X0.2-MM THK)	
	7	1	**118-4086**	4	ROD	
	8	1	**118-4087**	4	SPRING	
M	9	1	**131-5915**	1	NUT-SPECIAL	
	10	1	**165-9431**	1	PLATE	
	11	1	**165-9435**	2	SEAT	
	12	1	**165-9436**	2	SEAT	
	13	1	**165-9438**	1	PLATE	
	14	1	**165-9442**	2	SPRING	
	15	1	**165-9443**	2	SEAT-SPRING	
	16	1	**165-9444**	2	SEAT-SPRING	
	17	1	**165-9460**	2	SPRING	
	18	1	**171-0087**	1	BELLOWS	
					PARTS SHOWN IN GRAPHIC(S) WITHOUT A REFERENCE NUMBER ARE NOT SERVICED SEPARATELY	

B - USE AS REQUIRED
M - METRIC PART

297-0529 **VALVE GP-PILOT (*contd.*)** **i03017531**

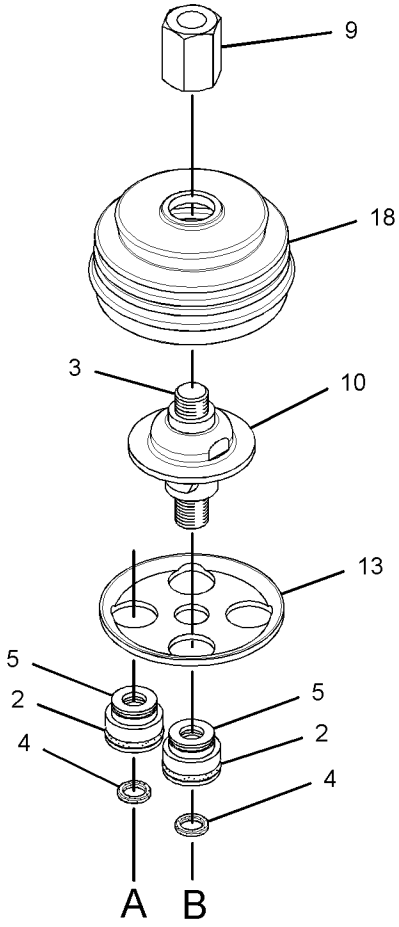

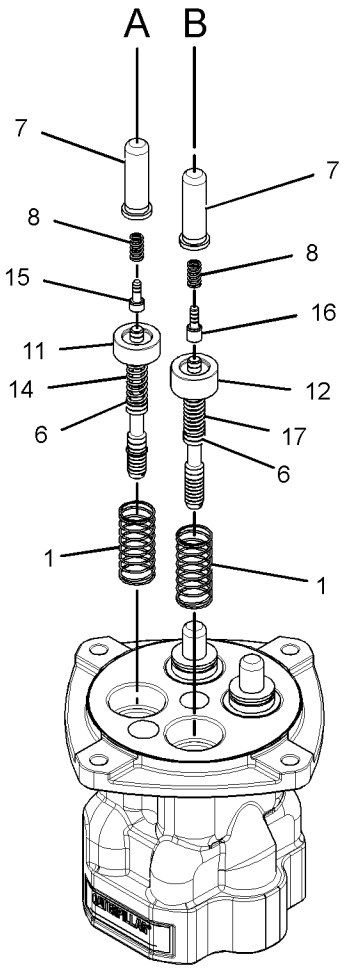

GRAPHIC #1 **<END>** g01528724

297-0530 VALVE GP-PILOT–JOYSTICK, RH

S/N: PBB1-UP
PART OF 297-0538 CONTROL GP-JOYSTICK
AN ATTACHMENT

SMCS-5059 **i02961332**

NOTE	REF NO	GRAPHIC REF	PART NUMBER	QTY	PART NAME 1 2 3 4 5 6 (PRODUCT LEVEL)	SEE PAGE
	1	1	**4I-6365**	1	JOINT	
	2	1	**094-0876**	4	SEAL	
	3	1	**095-1586**	4	SEAL-O-RING	
	4	1	**096-1628**	4	PLUG	
B	5	1	**099-6137**	4	WASHER (6.1X9X0.2-MM THK)	
	6	1	**118-4086**	4	ROD	
	7	1	**118-4087**	4	SPRING	
M	8	1	**131-5915**	1	NUT-SPECIAL	
	9	1	**165-9431**	1	PLATE	
	10	1	**165-9435**	2	SEAT	
	11	1	**165-9436**	2	SEAT	
	12	1	**165-9438**	1	PLATE	
	13	1	**165-9442**	2	SPRING	
	14	1	**165-9443**	2	SEAT-SPRING	
	15	1	**165-9444**	2	SEAT-SPRING	
	16	1	**165-9460**	1	SPRING	
	17	1	**171-0087**	1	BELLOWS	
	18	1	**190-7750**	4	SPRING	
	19	1	**225-4815**	1	SPRING	

B - USE AS REQUIRED
M - METRIC PART

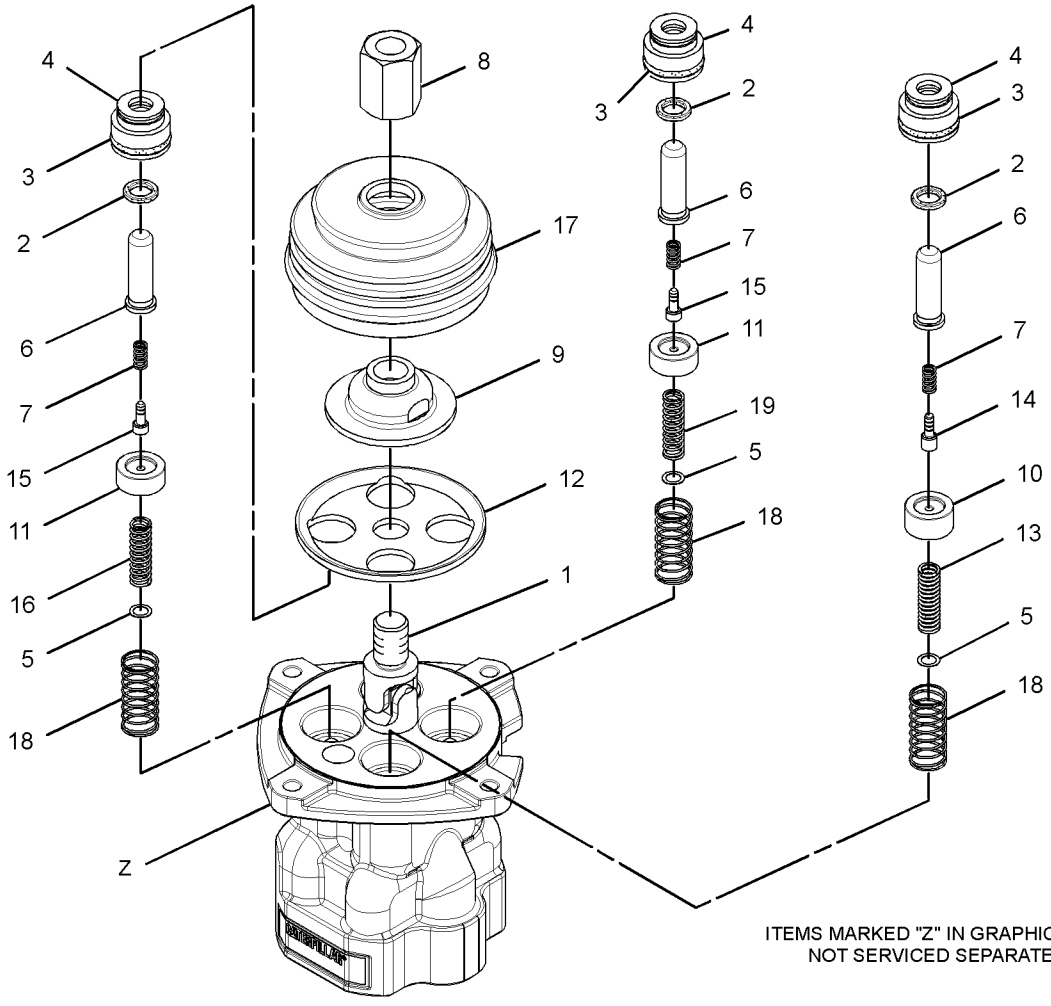

ITEMS MARKED "Z" IN GRAPHICS ARE NOT SERVICED SEPARATELY

GRAPHIC #1 **<END>** g01515022

297-0531 VALVE GP-PILOT–JOYSTICK, LH

S/N: PBB1-UP
PART OF 297-0539 CONTROL GP-JOYSTICK
AN ATTACHMENT

SMCS-5059 **i02961333**

NOTE	REF NO	GRAPHIC REF	PART NUMBER	QTY	PART NAME 1 2 3 4 5 6 (PRODUCT LEVEL)	SEE PAGE
	1	1	**4I-6365**	1	JOINT	
	2	1	**094-0876**	4	SEAL	
	3	1	**095-1586**	4	SEAL-O-RING	
	4	1	**096-1628**	4	PLUG	
B	5	1	**099-6137**	4	WASHER (6.1X9X0.2-MM THK)	
	6	1	**118-4086**	4	ROD	
	7	1	**118-4087**	4	SPRING	
M	8	1	**131-5915**	1	NUT-SPECIAL	
	9	1	**165-9431**	1	PLATE	
	10	1	**165-9435**	2	SEAT	
	11	1	**165-9436**	2	SEAT	
	12	1	**165-9438**	1	PLATE	
	13	1	**165-9442**	2	SPRING	
	14	1	**165-9443**	2	SEAT-SPRING	
	15	1	**165-9444**	2	SEAT-SPRING	
	16	1	**165-9460**	1	SPRING	
	17	1	**171-0087**	1	BELLOWS	
	18	1	**190-7750**	4	SPRING	
	19	1	**225-4815**	1	SPRING	

B - USE AS REQUIRED
M - METRIC PART

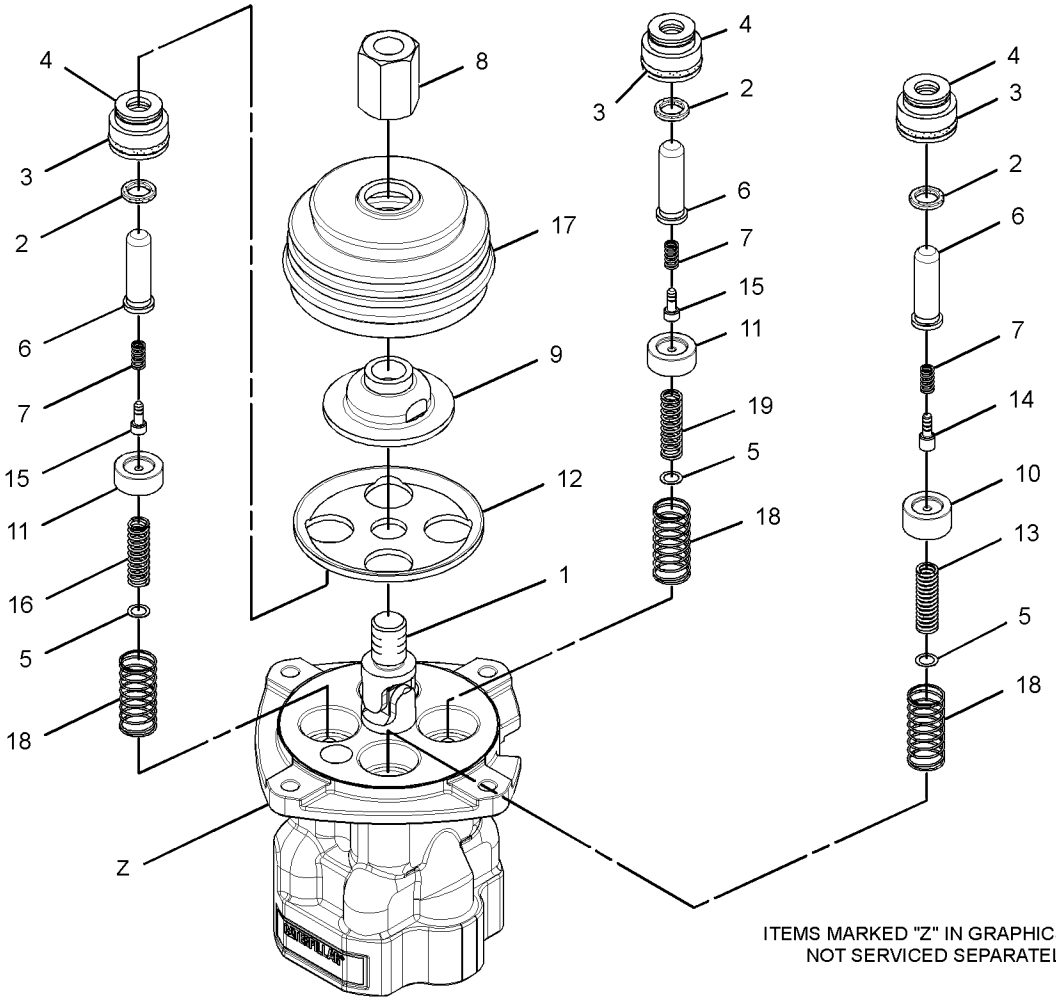

ITEMS MARKED "Z" IN GRAPHICS ARE NOT SERVICED SEPARATELY

GRAPHIC #1 **<END>** g01515022

369-8502 VALVE GP-PILOT–TRAVEL, SHUTTLE

S/N: PBB1-UP; KBS1-UP

PART OF 248-9825 LINES GP-PILOT

SMCS-5059 **i04888490**

NOTE	REF NO	GRAPHIC REF	PART NUMBER	QTY	PART NAME 1 2 3 4 5 6 (PRODUCT LEVEL)	SEE PAGE
	1	1	**087-5708**	2	PEDAL	
	2	1	**099-6137**	4	WASHER (6.1X9X0.2-MM THK)	
	3	1	**099-6141**	4	WASHER (6.1X11X1.5-MM THK)	
	4	1	**099-6144**	4	BUSHING-TERMINAL	
	5	1	**099-6145**	2	CAMSHAFT	
	6	1	**119-5388**	4	CAP	
	7	1	**119-5389**	4	PACKING	
	8	1	**119-5391**	4	SEAT	
	9	1	**126-1865**	4	SPRING	
	10	1	**126-1866**	4	SPRING	
	11	1	**131-5818**	4	SPRING	
	12	1	**153-5223**	12	BALL	
	13	1	**165-9552**	4	PUSHROD	
	14	1	**165-9554**	4	PLUG	
	15	1	**270-5949**	4	PISTON	
	16	1	**270-5950**	4	SPRING	
	17	1	**310-0419**	4	SEAT	
	18	1	**310-0420**	4	SEAL-O-RING	
	19	1	**369-8507**	2	PLUG-O-RING	
	20	1	**369-8508**	2	SEAT	
	21	1	**369-8509**	2	COVER	
	22	1	**369-8510**	1	COVER	
	23	1	**369-8568**	2	BOLT-SOCKET HEAD (M10X1.5X65-MM)	
	24	1	**369-8569**	2	BELLOWS	
M	25	1	**087-4710**	4	SETSCREW (M10X21-MM)	
M	26	1	**095-1260**	2	SETSCREW-SOCKET (M6X1X6-MM)	
	27	1	**095-1575**	4	SEAL-O-RING	
	28	1	**3Y-9267**	2	BALL	
M	29	1	**6V-8202**	2	BOLT-SOCKET HEAD (M8X1.25X16-MM)	
	30	1	**6V-8400**	4	SEAL-O-RING	
M	31	1	**8C-6965**	2	BOLT-SOCKET HEAD (M6X1X45-MM)	
M	32	1	**8T-4133**	4	NUT (M10X1.5-THD)	
	33	1	**8T-6759**	1	PLUG-PIPE	

M - METRIC PART

369-8502 **VALVE GP-PILOT (*contd.*)** **i04888490**

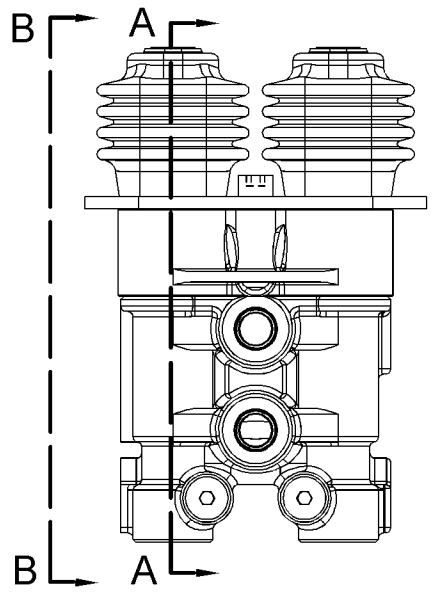

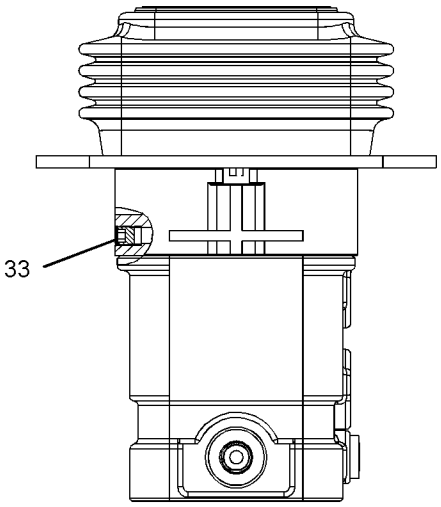

VIEW B-B

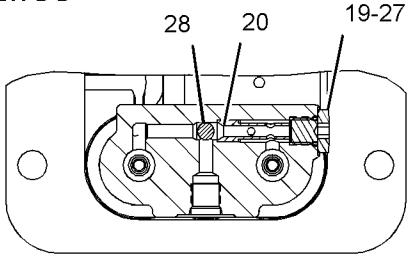

SECTION D-D

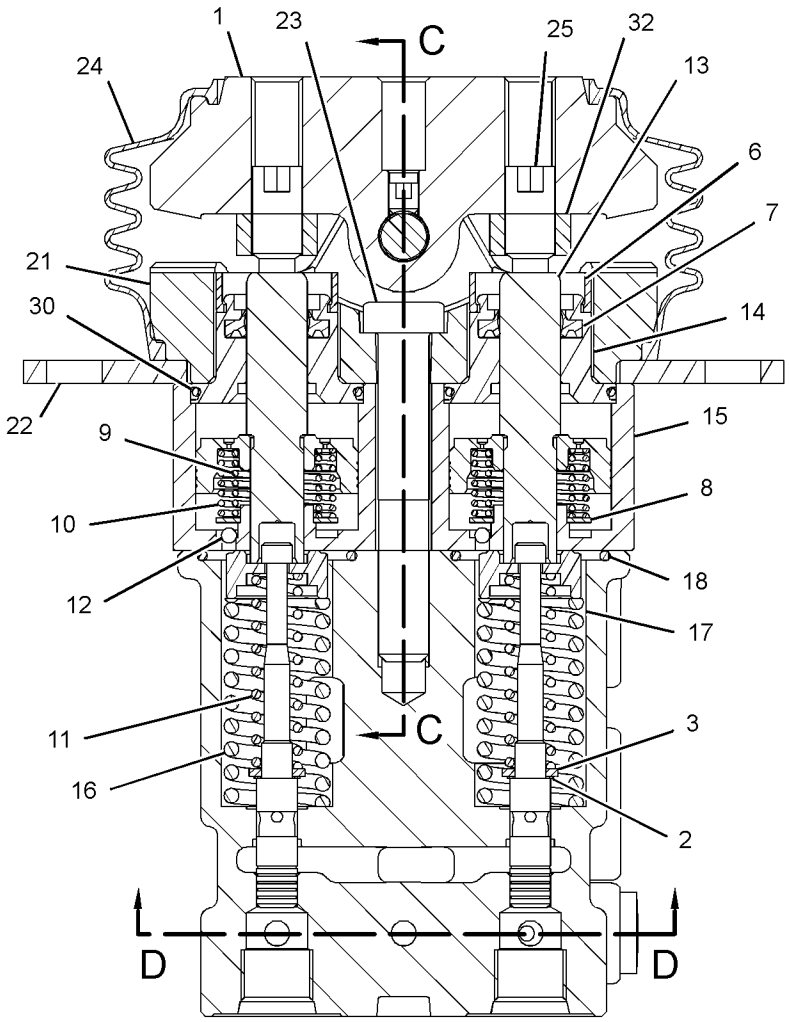

SECTION A-A

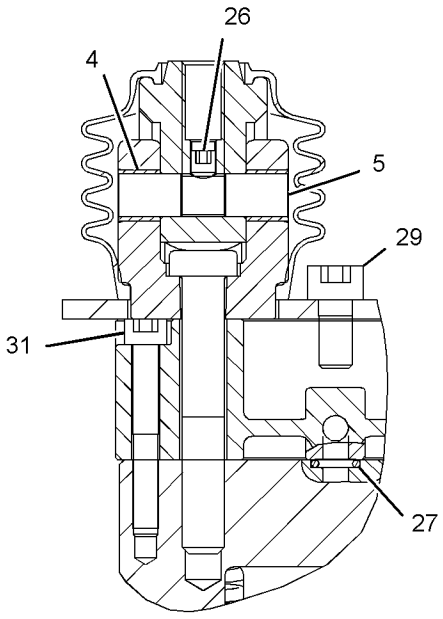

SECTION C-C

GRAPHIC #1 **<END>** g02835743

310-0210 VALVE GP-PRESSURE REDUCING

S/N: PBB1-UP; KBS1-UP

PART OF 376-6310 LINES GP-PILOT

SMCS-5117 **i03018448**

NOTE	REF NO	GRAPHIC REF	PART NUMBER	QTY	PART NAME 1 2 3 4 5 6 (PRODUCT LEVEL)	SEE PAGE
	1	1	**111-9998**	2	PLUG	
	2	1	**171-0123**	2	PLUG	
M	3	1	**171-0124**	2	SETSCREW (M8X1.25X18-MM)	
	4	1	**171-0126**	2	SEAT-SPRING	
	5	1	**171-0127**	2	SEAT-SPRING	
	6	1	**171-0128**	2	SPRING	
	7	1	**185-0423**	2	STOP	
	8	1	**095-1580**	2	SEAL-O-RING	
	9	1	**095-1582**	2	SEAL-O-RING	
	10	1	**095-1590**	2	SEAL-O-RING	
M	11	1	**5C-7261**	2	NUT (M8X1.25-THD)	

M - METRIC PART

310-0210 **VALVE GP-PRESSURE REDUCING (*contd.*)** **i03018448**

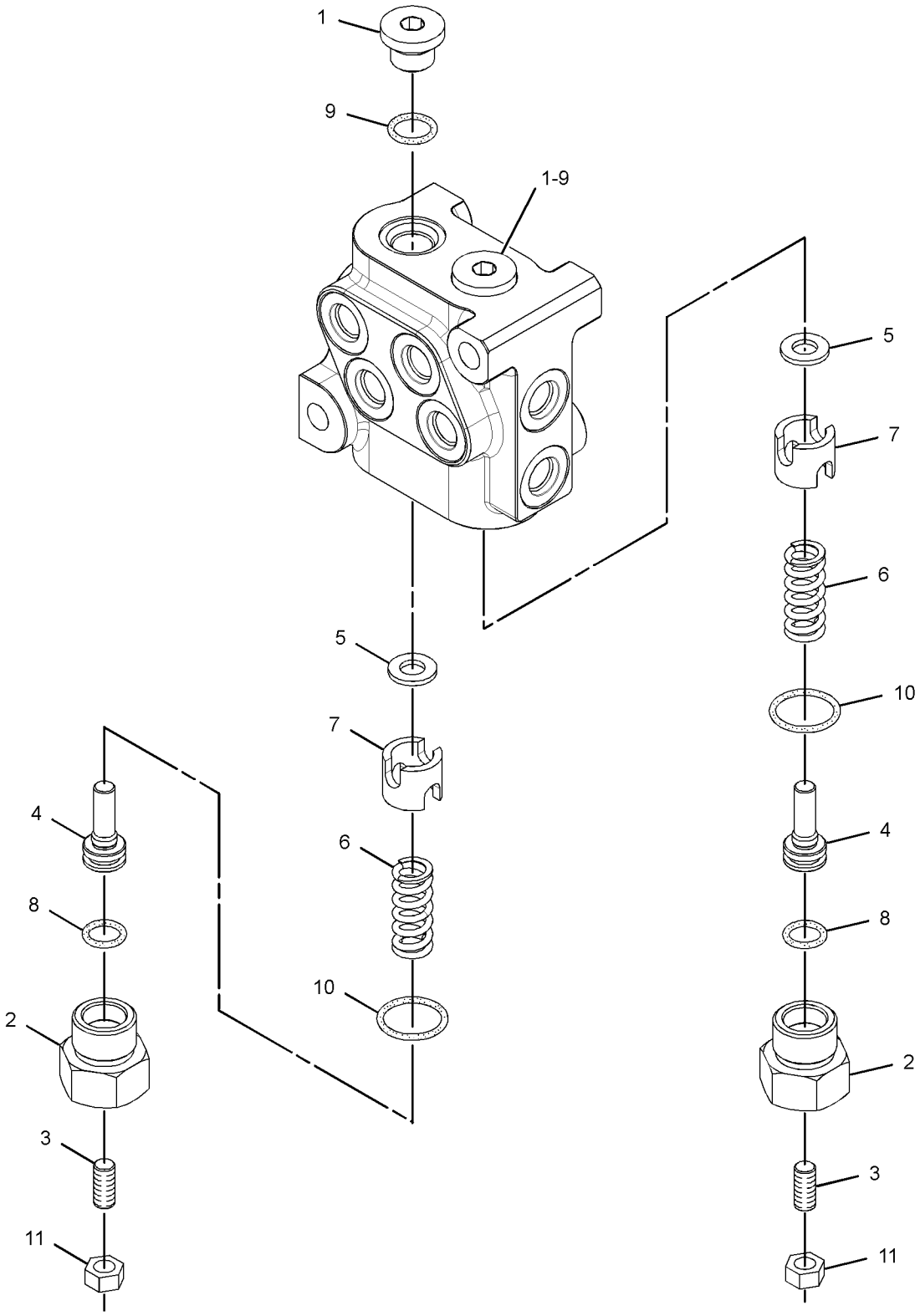

GRAPHIC #1 **<END>** g01506435

323-7898 VALVE GP-PRIORITY–SWING

S/N: PBB1-UP; KBS1-UP
PART OF 352-7132, 352-7138 VALVE GP-CONTROL
ALSO AN ATTACHMENT

SMCS-506P **i03900919**

NOTE	REF NO	GRAPHIC REF	PART NUMBER	QTY	PART NAME 1 2 3 4 5 6 (PRODUCT LEVEL)	SEE PAGE
	1	1	**140-0674**	1	VALVE	
	2	1	**158-8186**	1	SPRING	
	3	1	**255-5594**	2	SEAL-O-RING	
	4	1	**297-0483**	2	SEAL-O-RING	
	5	1	**140-0677**	1	PIN	
					PARTS SHOWN IN GRAPHIC(S) WITHOUT A REFERENCE NUMBER ARE NOT SERVICED SEPARATELY	

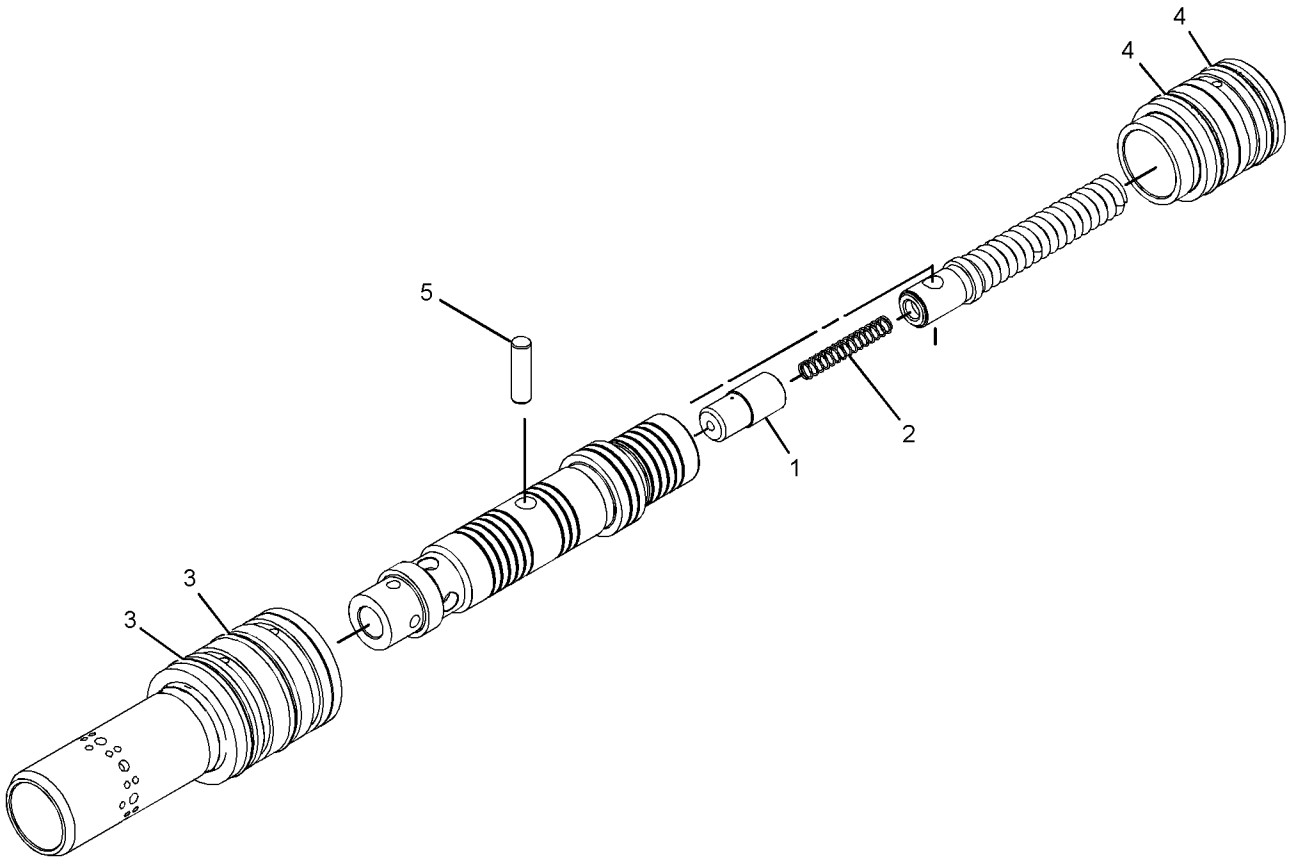

GRAPHIC #1 **<END>** g02144637

109-2667 VALVE GP-RELIEF

S/N: PBB1-UP; KBS1-UP
PART OF 153-5313 VALVE GP-RELIEF
ALSO AN ATTACHMENT

SMCS-5069, 5117

i01259345

NOTE	REF NO	GRAPHIC REF	PART NUMBER	QTY	PART NAME 1 2 3 4 5 6 (PRODUCT LEVEL)	SEE PAGE
	1	1	**5I-4111**	1	PLUG	
	2	1	**109-2665**	1	BODY-VALVE	
	3	1	**107-6370**	1	SPRING	
	4	1	**107-6371**	1	VALVE	
	5	1	**4K-1388**	2	SEAL-O-RING	
B	6	1	**4J-7385**	1	SHIM (0.048-IN THK)	
B	7	1	**4J-7386**	5	SHIM (0.01-IN THK)	
	8	1	**5P-3108**	1	SEAL-O-RING	

B - USE AS REQUIRED

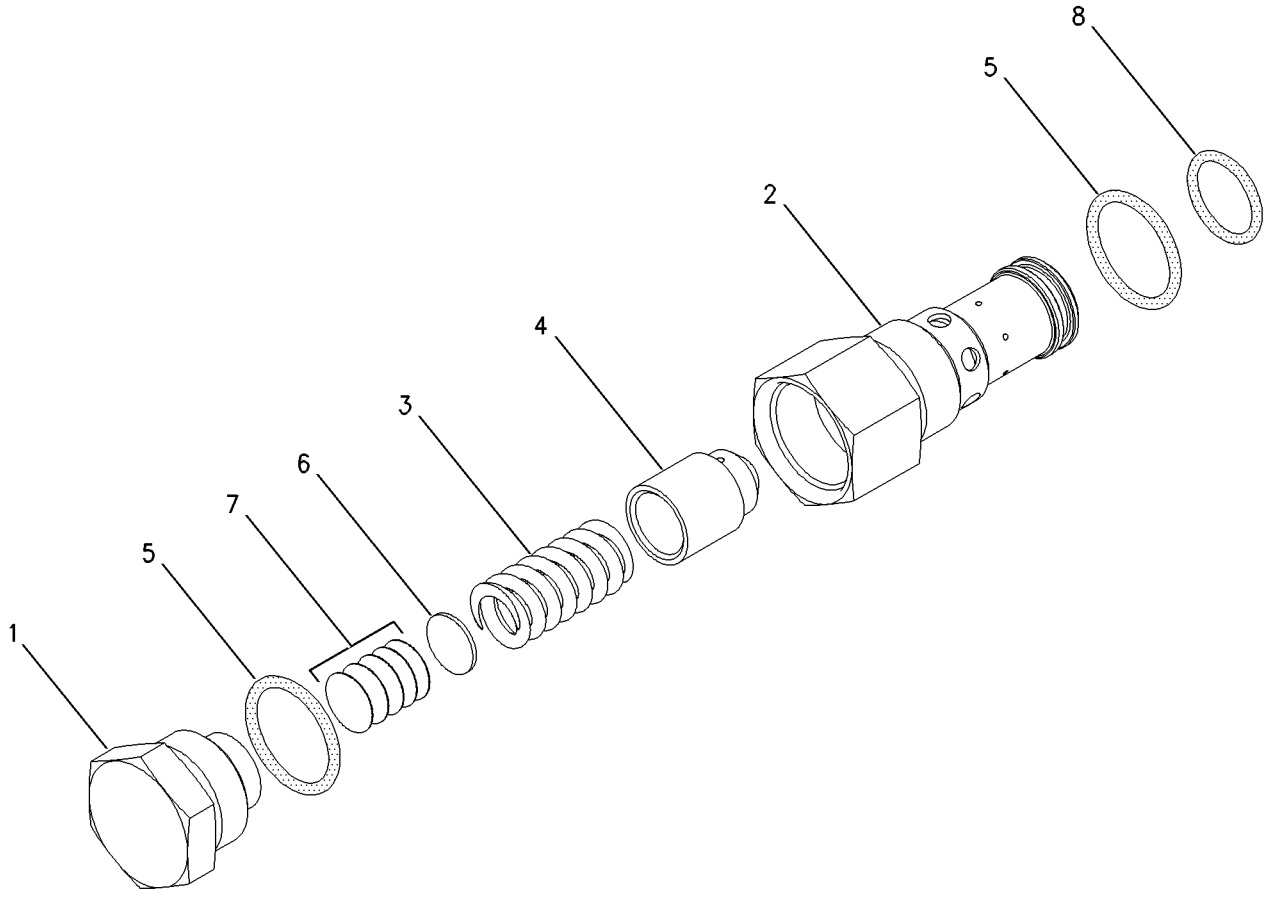

GRAPHIC #1

<END>

g00672680

109-5152 VALVE GP-RELIEF—NEGATIVE FLOW CONTROL

S/N: PBB1-UP; KBS1-UP

PART OF 259-7465, 435-1484 VALVE GP-CONTROL

ALSO AN ATTACHMENT

SMCS-5069, 5117

i01271453

NOTE	REF NO	GRAPHIC REF	PART NUMBER	QTY	PART NAME 1 2 3 4 5 6 (PRODUCT LEVEL)	SEE PAGE
	1	1	**5I-4111**	1	PLUG	
	2	1	*109-5153*	1	BODY-VALVE	
	3	1	**107-6370**	1	SPRING	
	4	1	**107-6371**	1	VALVE	
	5	1	**4K-1388**	2	SEAL-O-RING	
B	6	1	**4J-7385**	1	SHIM (0.048-IN THK)	
B	7	1	**4J-7386**	1	SHIM (0.01-IN THK)	
	8	1	**5P-3108**	1	SEAL-O-RING	

B - USE AS REQUIRED

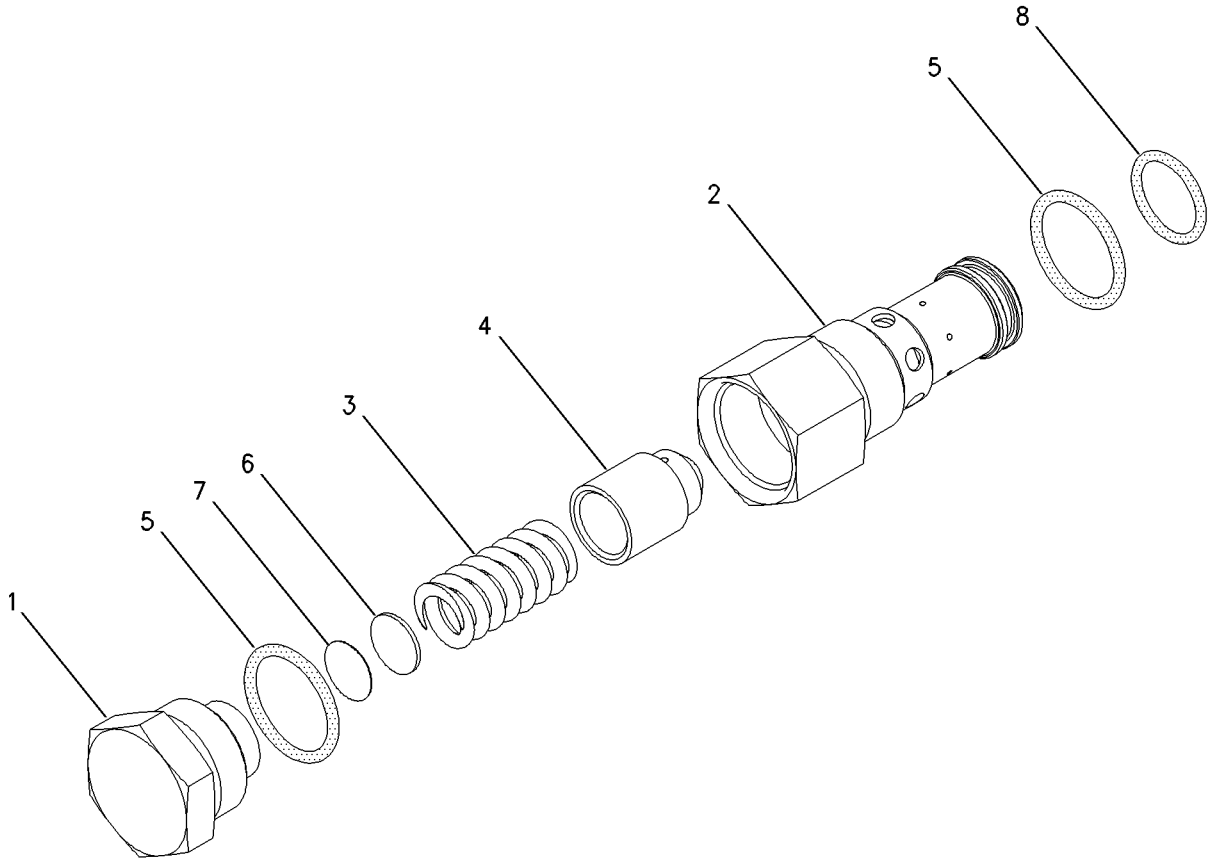

GRAPHIC #1

<END>

g00680634

153-5313 VALVE GP-RELIEF–NEGATIVE FLOW CONTROL

S/N: PBB1-UP; KBS1-UP
PART OF 259-7464, 435-1482 VALVE GP-MAIN CONTROL
ALSO AN ATTACHMENT

SMCS-5069, 5117 **i01548212**

NOTE	REF NO	GRAPHIC REF	PART NUMBER	QTY	PART NAME 1 2 3 4 5 6 (PRODUCT LEVEL)	SEE PAGE
	1	1	*153-5239*	1	COVER	
Y	2	1	**109-2667**	1	VALVE GP-RELIEF	654
	3	1	**1P-3702**	2	SEAL-RECTANGULAR	
	4	1	**4J-8998**	2	SEAL-O-RING	

Y - SEPARATE ILLUSTRATION

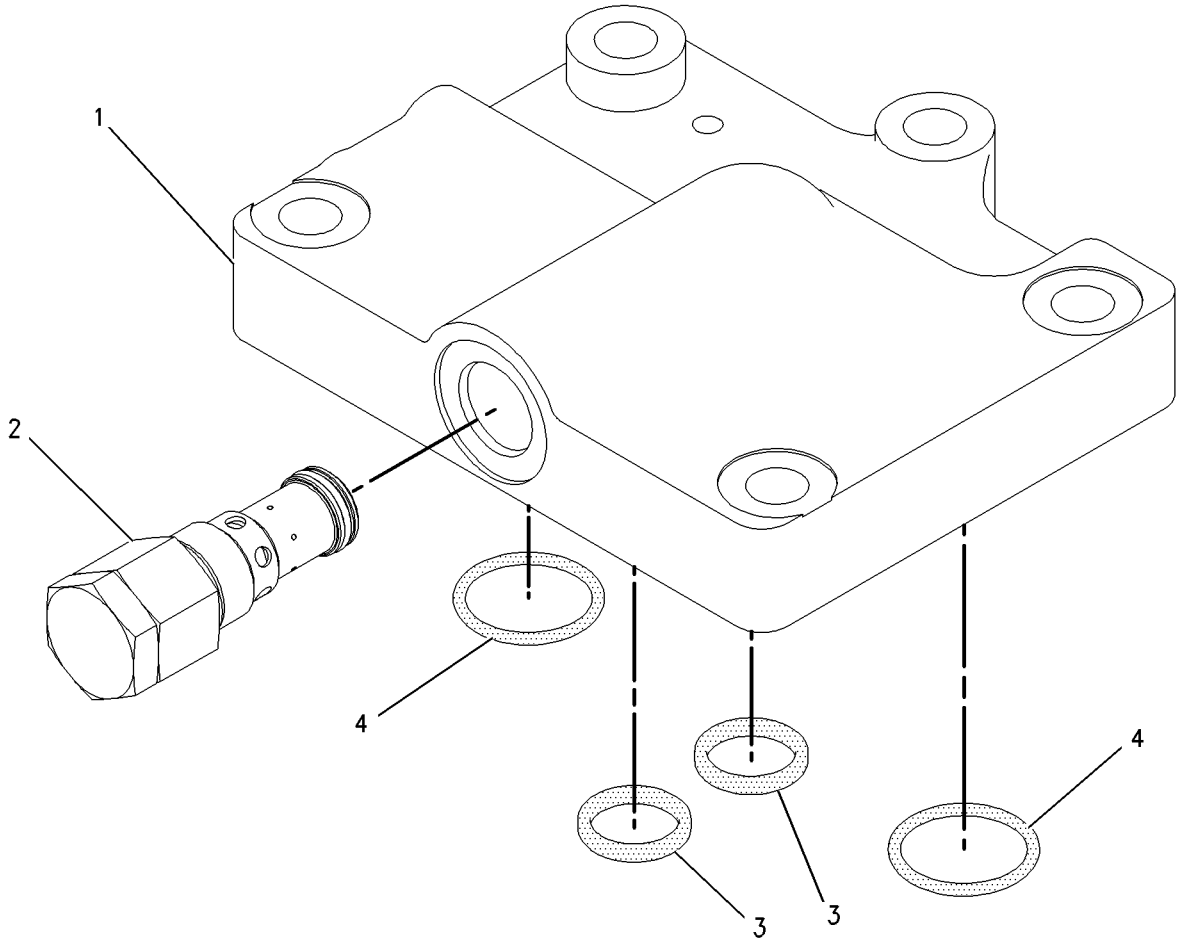

GRAPHIC #1 **<END>** g00743238

173-3452 VALVE GP-RELIEF

S/N: PBB1-UP; KBS1-UP
PART OF 334-9968, 334-9969 MOTOR GP-SWING
ALSO AN ATTACHMENT

SMCS-5069, 5117

i01255353

NOTE	REF NO	GRAPHIC REF	PART NUMBER	QTY	PART NAME 1 2 3 4 5 6 (PRODUCT LEVEL)	SEE PAGE
	1	1	**168-0765**	1	RING-BACKUP	
	2	1	**7J-9933**	1	SEAL-O-RING	
	3	1	**7I-0966**	1	RING-BACKUP	
	4	1	**6V-5556**	1	SEAL-O-RING	
	5	1	**095-1698**	1	SEAL-O-RING	

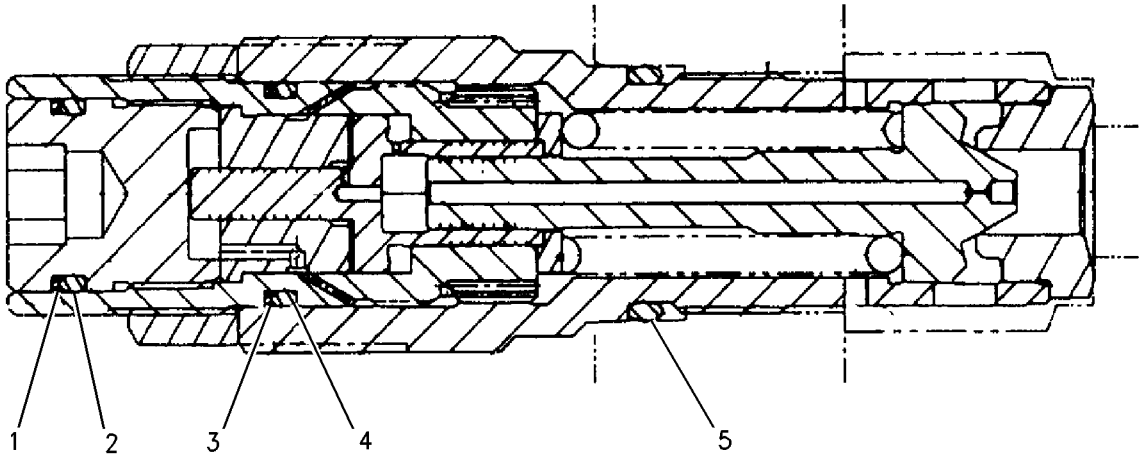

GRAPHIC #1

<END>

g00671043

173-3536 VALVE GP-RELIEF

S/N: PBB1-UP; KBS1-UP
PART OF 158-9085, 322-8716 VALVE GP-SWING CUSHION
ALSO AN ATTACHMENT

SMCS-5069, 5117 **i01251972**

NOTE	REF NO	GRAPHIC REF	PART NUMBER	QTY	PART NAME 1 2 3 4 5 6 (PRODUCT LEVEL)	SEE PAGE
	1	1	**095-1785**	1	RING-BACKUP	
	2	1	**095-1586**	1	SEAL-O-RING	

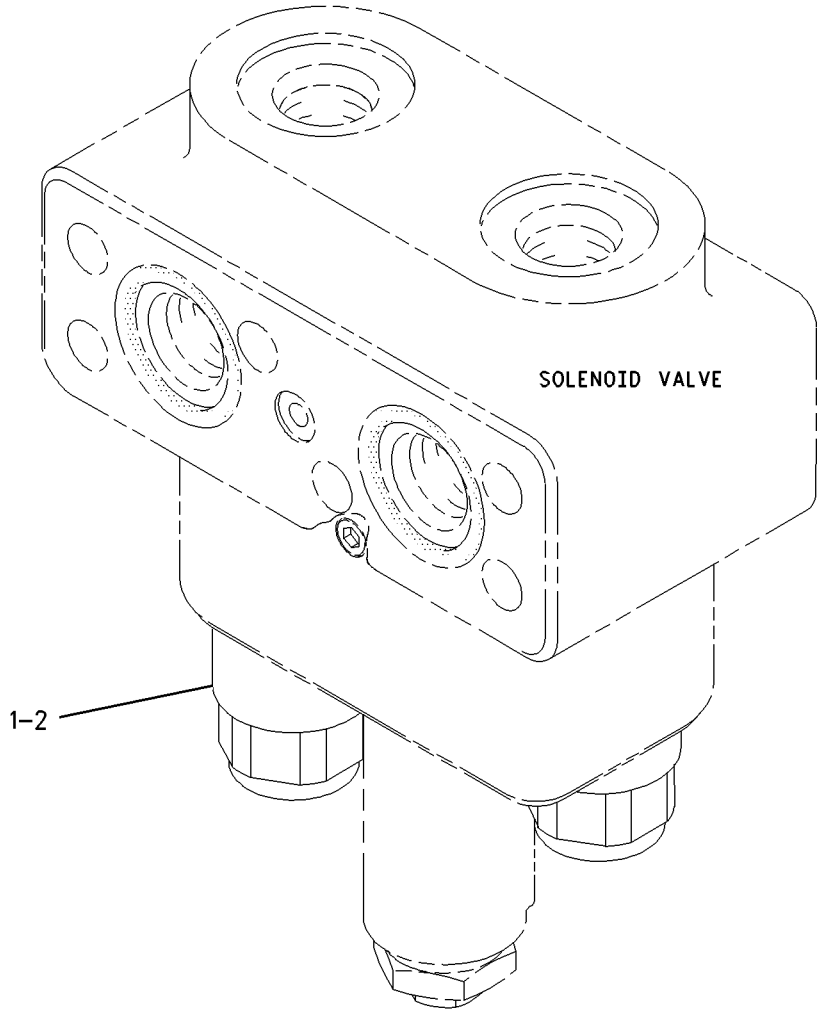

GRAPHIC #1 **<END>** g00672771

177-2653 VALVE GP-RELIEF–LINE

S/N: PBB1-UP; KBS1-UP
PART OF 376-6317, 376-6319 LINES GP-FRONT
AN ATTACHMENT

SMCS-5069, 5117 **i04132379**

NOTE	REF NO	GRAPHIC REF	PART NUMBER	QTY	PART NAME 1 2 3 4 5 6 (PRODUCT LEVEL)	SEE PAGE
CY	1	1	**352-7117**	1	VALVE GP-RELIEF (PILOT OPERATED)	663

C - CHANGE FROM PREVIOUS TYPE
Y - SEPARATE ILLUSTRATION

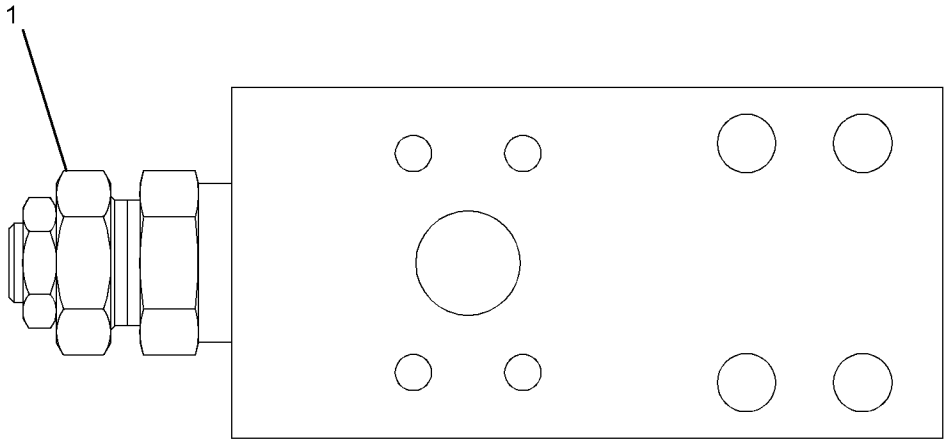

GRAPHIC #1 **<END>** g02320914

352-7113 VALVE GP-RELIEF–PILOT OPERATED

S/N: PBB1-UP; KBS1-UP
PART OF 352-7132 VALVE GP-CONTROL
AN ATTACHMENT

SMCS-5069, 5117 **i04054489**

NOTE	REF NO	GRAPHIC REF	PART NUMBER	QTY	PART NAME 1 2 3 4 5 6 (PRODUCT LEVEL)	SEE PAGE
	1	1	**4I-3510**	1	SPRING	
	2	1	**4I-7714**	1	NUT (3/4-16-THD)	
	3	1	**6I-6795**	1	SPRING	
	4	1	**095-1786**	1	RING-BACKUP	
	5	1	**107-6540**	1	COLLAR	
	6	1	**107-6541**	1	RING-RETAINING	
	7	1	**119-5398**	1	SCREEN-FILTER	
	8	1	**171-0037**	1	VALVE	
	9	1	**259-7848**	1	SLEEVE	
	10	1	**259-7849**	1	PISTON	
	11	1	**259-7850**	1	SLEEVE	
	12	1	**259-7851**	1	ADJUSTER	
M	13	1	**287-2499**	1	NUT (M24X2-THD)	
	14	1	**352-6864**	1	SEAT-VALVE	
	16	1	**095-1579**	1	SEAL-O-RING	
	17	1	**095-1584**	1	SEAL-O-RING	
	18	1	**095-1587**	1	SEAL-O-RING	
	19	1	**095-1590**	1	SEAL-O-RING	
	20	1	**3D-2824**	1	SEAL-O-RING	
	21	1	**6V-8218**	1	SEAL-O-RING	
	22	1	**6V-8978**	1	SEAL-O-RING	

M - METRIC PART

352-7113 **VALVE GP-RELIEF (*contd.*)** **i04054489**

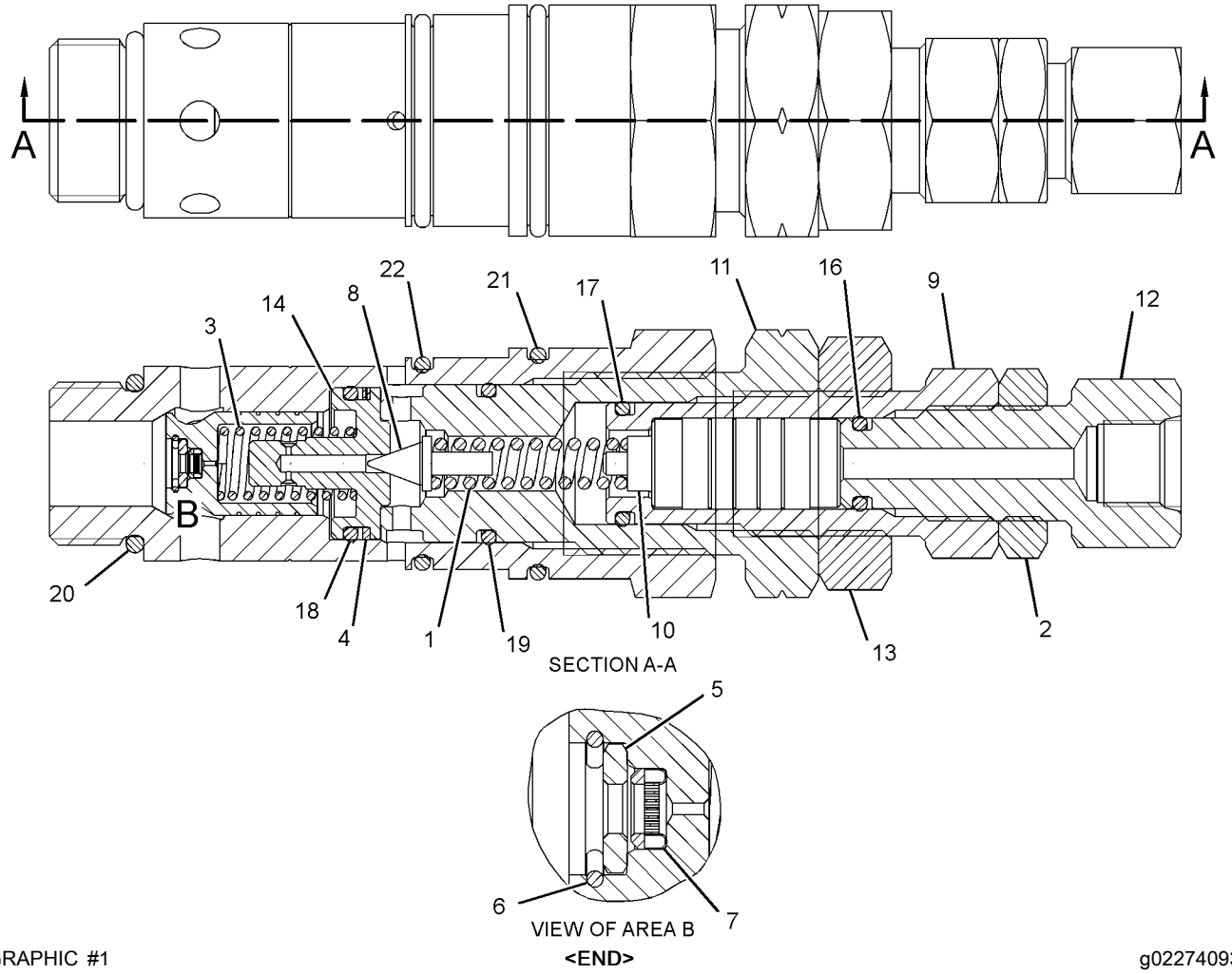

GRAPHIC #1

<END>

g02274093

352-7116 VALVE GP-RELIEF

S/N: PBB1-UP; KBS1-UP

PART OF 352-7138 VALVE GP-CONTROL

SMCS-5069, 5117 **i04132914**

NOTE	REF NO	GRAPHIC REF	PART NUMBER	QTY	PART NAME 1 2 3 4 5 6 (PRODUCT LEVEL)	SEE PAGE
	1	1	**4I-3510**	1	SPRING	
	2	1	**4I-7714**	1	NUT (3/4-16-THD)	
	3	1	**6I-6795**	1	SPRING	
	4	1	**095-1786**	1	RING-BACKUP	
	5	1	**107-6540**	1	COLLAR	
	6	1	**107-6541**	1	RING-RETAINING	
	7	1	**119-5398**	1	SCREEN-FILTER (RELIEF VALVE)	
	8	1	**171-0035**	1	HOLDER	
	9	1	**171-0036**	1	ADJUSTER	
	10	1	**171-0037**	1	VALVE	
	11	1	**352-6864**	1	SEAT-VALVE	
	12	1	**6V-8978**	1	SEAL-O-RING	
	13	1	**095-1579**	1	SEAL-O-RING	
	14	1	**095-1587**	1	SEAL-O-RING	
	15	1	**095-1590**	1	SEAL-O-RING	
	16	1	**3D-2824**	1	SEAL-O-RING	
	17	1	**6V-8218**	1	SEAL-O-RING	

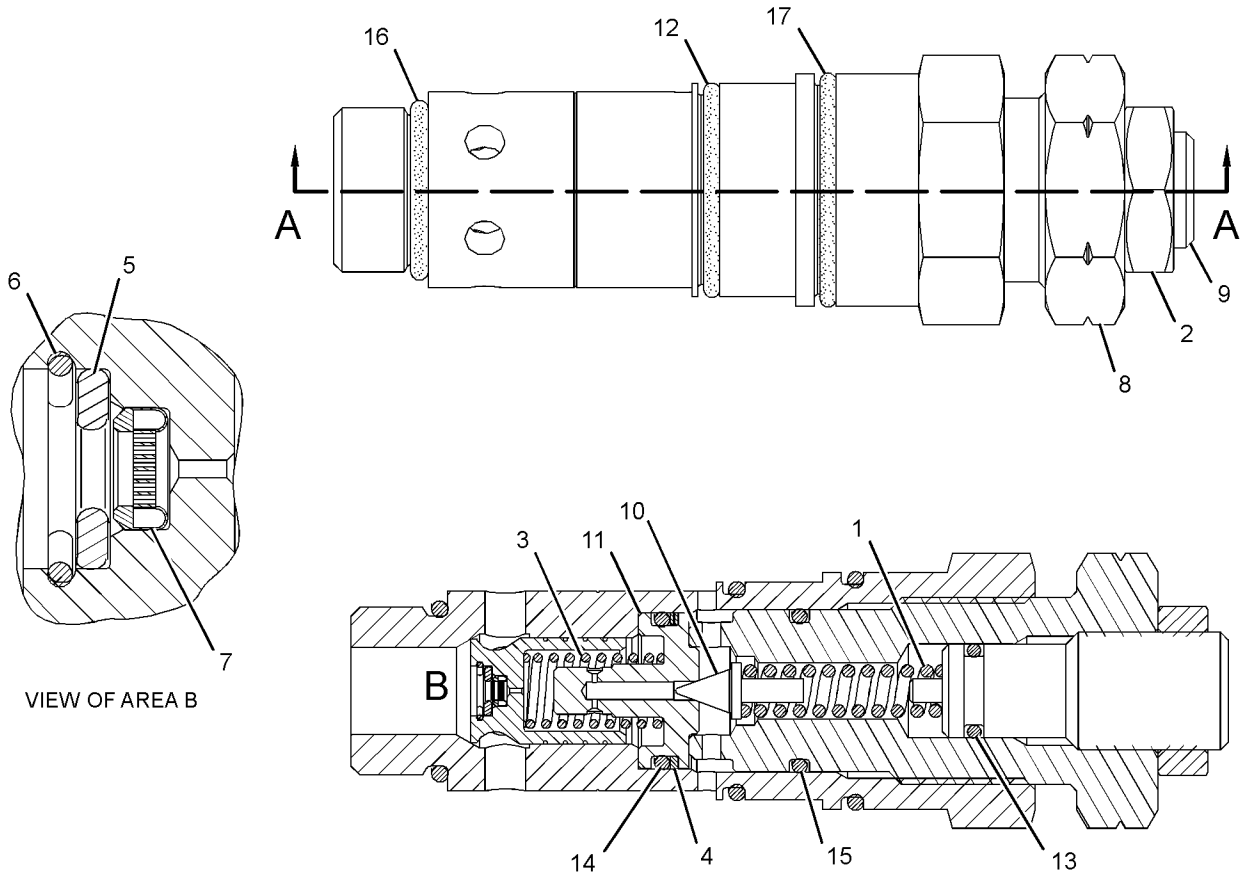

VIEW OF AREA B

SECTION A-A

GRAPHIC #1 **<END>** g02283174

352-7117 VALVE GP-RELIEF

S/N: PBB1-UP; KBS1-UP
PART OF 177-2653 VALVE GP-RELIEF
AN ATTACHMENT

SMCS-5069, 5117 **i04132738**

NOTE	REF NO	GRAPHIC REF	PART NUMBER	QTY	PART NAME 1 2 3 4 5 6 (PRODUCT LEVEL)	SEE PAGE
	1	1	**4I-3510**	1	SPRING	
	2	1	**6I-6795**	1	SPRING	
	3	1	**095-1786**	1	RING-BACKUP	
	4	1	**352-6864**	1	SEAT-VALVE	
	5	1	**171-0035**	1	HOLDER	
	6	1	**171-0036**	1	ADJUSTER	
	7	1	**171-0037**	1	VALVE	
	8	1	**222-0085**	1	NUT (3/4-16-THD)	
	9	1	**6V-8978**	1	SEAL-O-RING	
	10	1	**095-1579**	1	SEAL-O-RING	
	11	1	**095-1587**	1	SEAL-O-RING	
	12	1	**095-1590**	1	SEAL-O-RING	
	13	1	**3D-2824**	1	SEAL-O-RING	
	14	1	**6V-8218**	1	SEAL-O-RING	

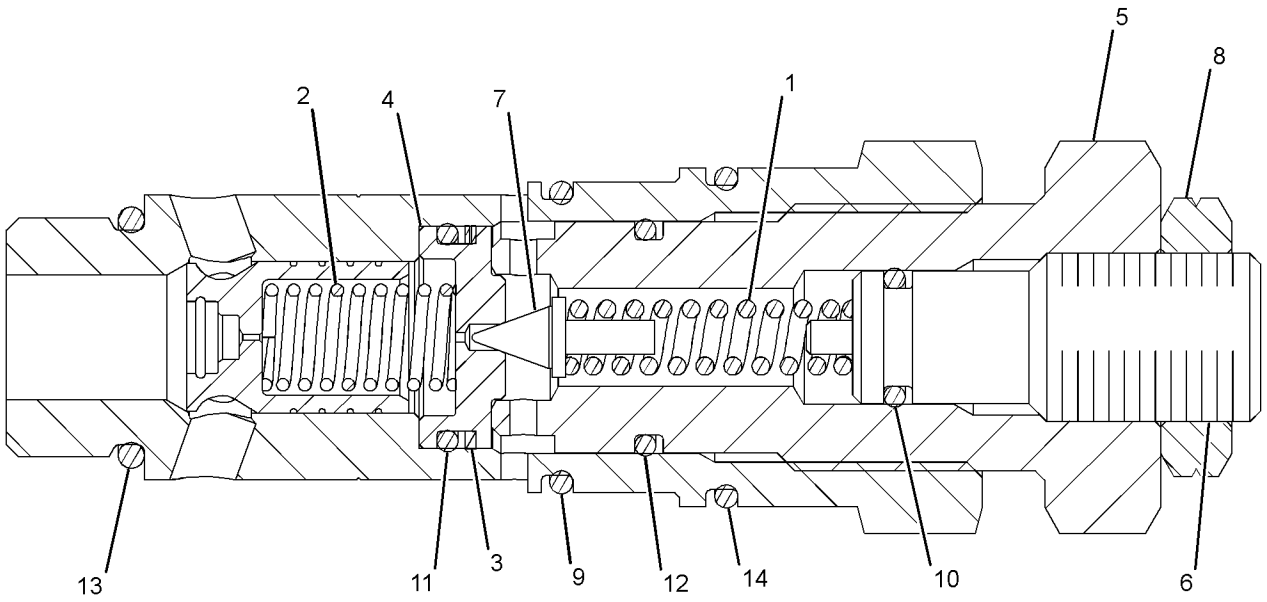

GRAPHIC #1 **<END>** g01513501

352-7122 VALVE GP-RELIEF

S/N: PBB1-UP; KBS1-UP

PART OF 259-7378, 259-7465, 352-7132, 352-7138, 435-1484 VALVE GP-CONTROL

ALSO AN ATTACHMENT

SMCS-5069, 5117

i05452797

NOTE	REF NO	GRAPHIC REF	PART NUMBER	QTY	PART NAME 1 2 3 4 5 6 (PRODUCT LEVEL)	SEE PAGE
	1	1	**095-1578**	1	SEAL-O-RING	
	2	1	**103-8252**	2	RING	
	3	1	**103-8253**	2	RING	
	4	1	**103-8254**	1	SEAL-O-RING	
	5	1	**103-8255**	1	SEAL-O-RING	
	6	1	**3D-2824**	2	SEAL-O-RING	

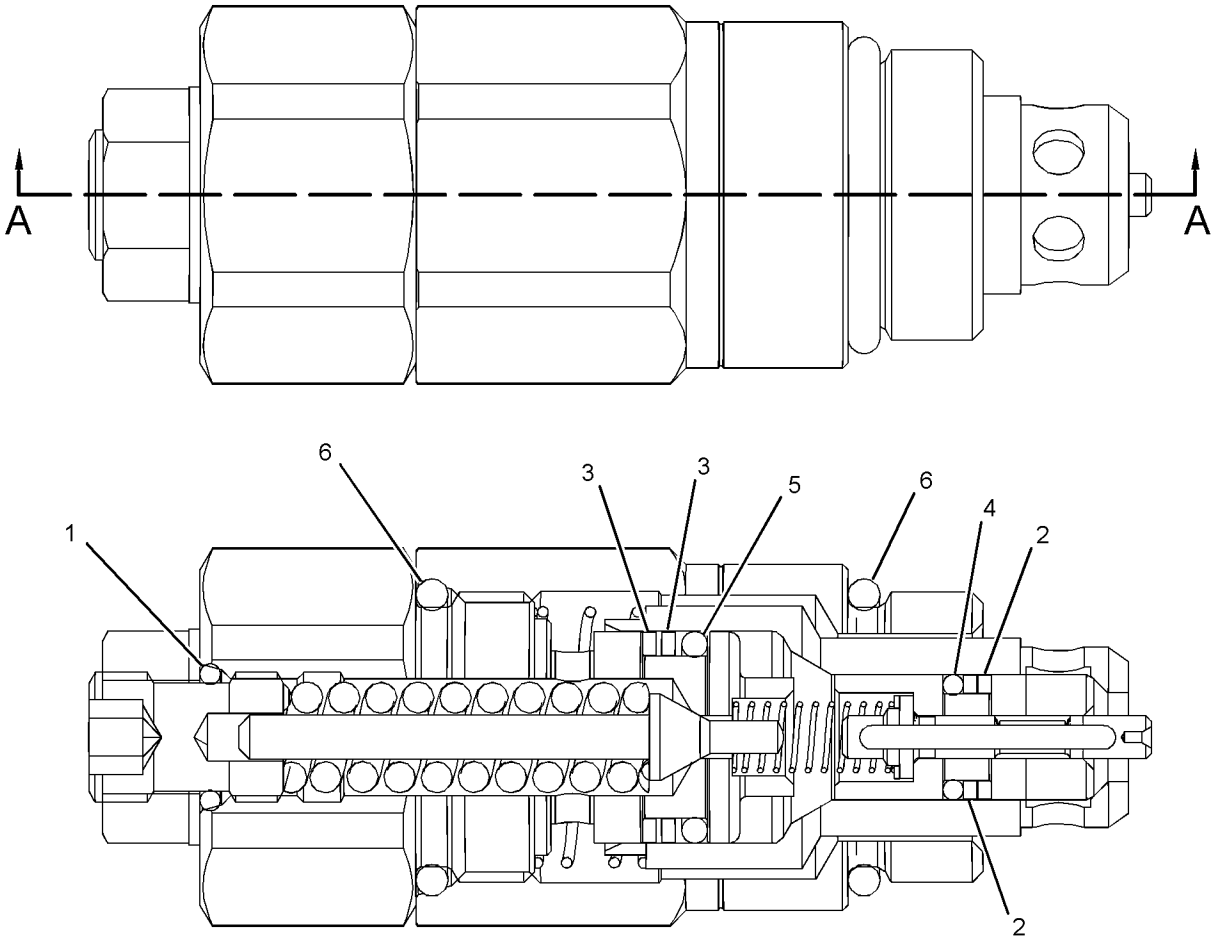

SECTION A-A

GRAPHIC #1

<END>

g02270493

352-7123 VALVE GP-RELIEF–LINE

S/N: PBB1-UP; KBS1-UP

PART OF 352-7243 VALVE GP-CHECK & RELIEF, 225-4785, 255-5680, 255-5683 VALVE GP-LOAD CONTROL

ALSO AN ATTACHMENT

SMCS-5069, 5117

i04089492

NOTE	REF NO	GRAPHIC REF	PART NUMBER	QTY	PART NAME 1 2 3 4 5 6 (PRODUCT LEVEL)	SEE PAGE
	1	1	**095-1578**	1	SEAL-O-RING	
	2	1	**103-8252**	2	RING	
	3	1	**103-8253**	2	RING	
	4	1	**103-8254**	1	SEAL-O-RING	
	5	1	**103-8255**	1	SEAL-O-RING	
	6	1	**3D-2824**	2	SEAL-O-RING	
					PARTS SHOWN IN GRAPHIC(S) WITHOUT A REFERENCE NUMBER ARE NOT SERVICED SEPARATELY	

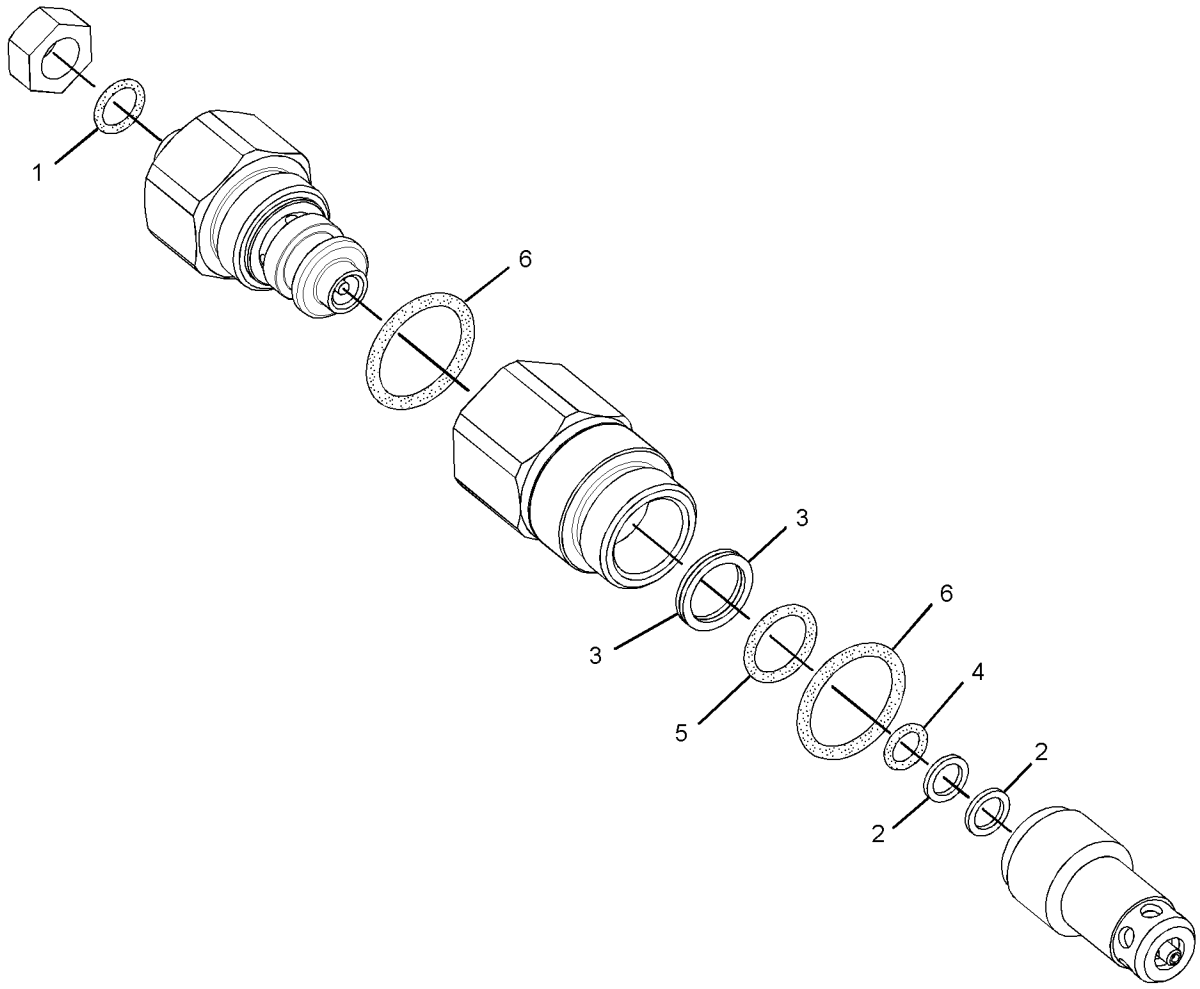

GRAPHIC #1

<END>

g02217774

360-4588 VALVE GP-RELIEF

S/N: PBB1-UP; KBS1-UP

PART OF 322-8714 VALVE GP-TRAVEL COUNTERBALANCE

SMCS-5069, 5117 **i04033053**

NOTE	REF NO	GRAPHIC REF	PART NUMBER	QTY	PART NAME 1 2 3 4 5 6 (PRODUCT LEVEL)	SEE PAGE
	1	1	**095-1583**	1	SEAL-O-RING	
	2	1	**095-1590**	1	SEAL-O-RING	
	3	1	**7E-4846**	1	SEAL-O-RING	
	4	1	**099-8232**	1	SEAL-O-RING	
	5	1	**364-1975**	1	RING-BACKUP	
	6	1	**364-1976**	2	RING-BACKUP	
	7	1	**364-1977**	2	RING-BACKUP	
	8	1	**364-1978**	1	RING-BACKUP	

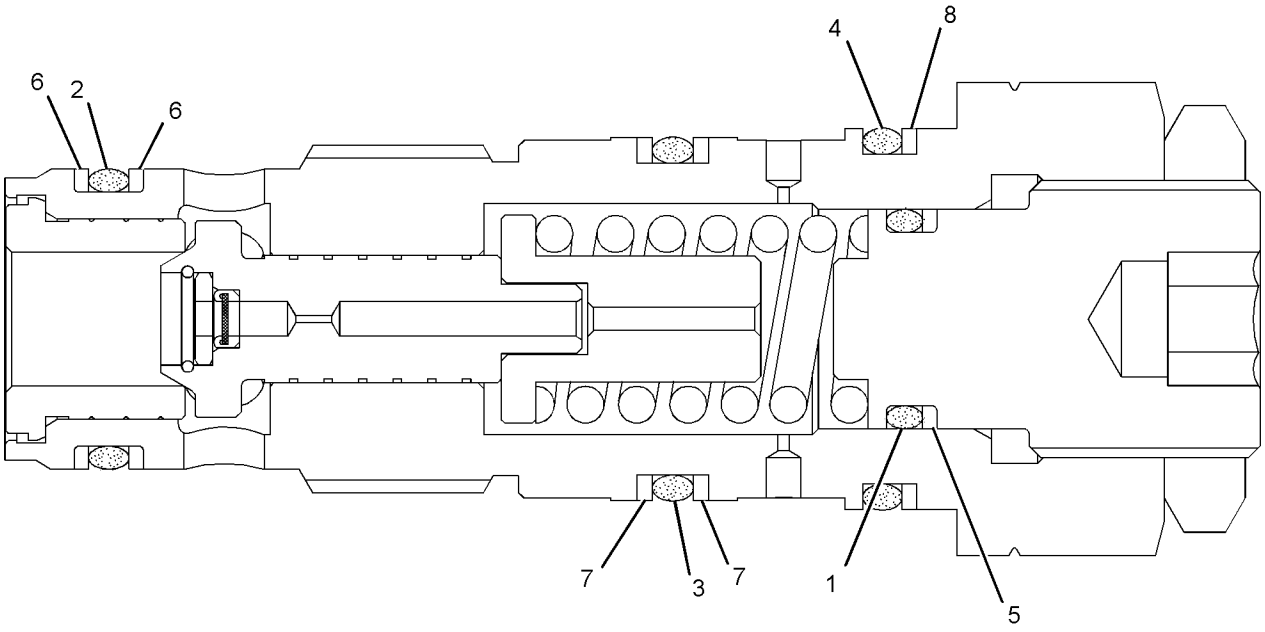

GRAPHIC #1 **<END>** g02267093

165-9470 VALVE GP-SELECTOR—ALT PATTERN CONTROL, 4-WAY

S/N: PBB1-UP; KBS1-UP
PART OF 376-6340 LINES GP-PILOT
AN ATTACHMENT

SMCS-5065 **i01298655**

NOTE	REF NO	GRAPHIC REF	PART NUMBER	QTY	PART NAME 1 2 3 4 5 6 (PRODUCT LEVEL)	SEE PAGE
M	1	1	**6V-8202**	6	BOLT-SOCKET HEAD (M8X1.25X16-MM)	
	2	1	**085-7083**	1	PIN-SPRING	
	3	1	**085-7084**	1	BOLT (M8X1.25X35-MM)	
	4	1	**085-7080**	1	LEVER	
	5	1	**085-7079**	1	GRIP	
M	6	1	**6V-3938**	4	BOLT (M10X1.5X20-MM)	
	7	1	**171-0185**	1	COVER	
	8	1	**085-7081**	4	NEEDLE	
	9	1	**171-0184**	1	SPRING	
M	10	1	**8T-9533**	1	SETSCREW (M12X1.75-THD)	
	11	1	**006-6803**	1	BALL	
	12	1	**171-0183**	1	COVER	
	13	1	**095-1710**	2	SEAL-O-RING	
	14	1	**6I-6923**	1	SEAL	
	15	1	**095-1590**	1	SEAL-O-RING	
	16	1	**095-0965**	7	PLUG	
	17	1	**1F-0425**	1	BALL	
	18	1	**126-9993**	2	SCREW-DRIVE	

M - METRIC PART

165-9470 **VALVE GP-SELECTOR (*contd.*)** **i01298655**

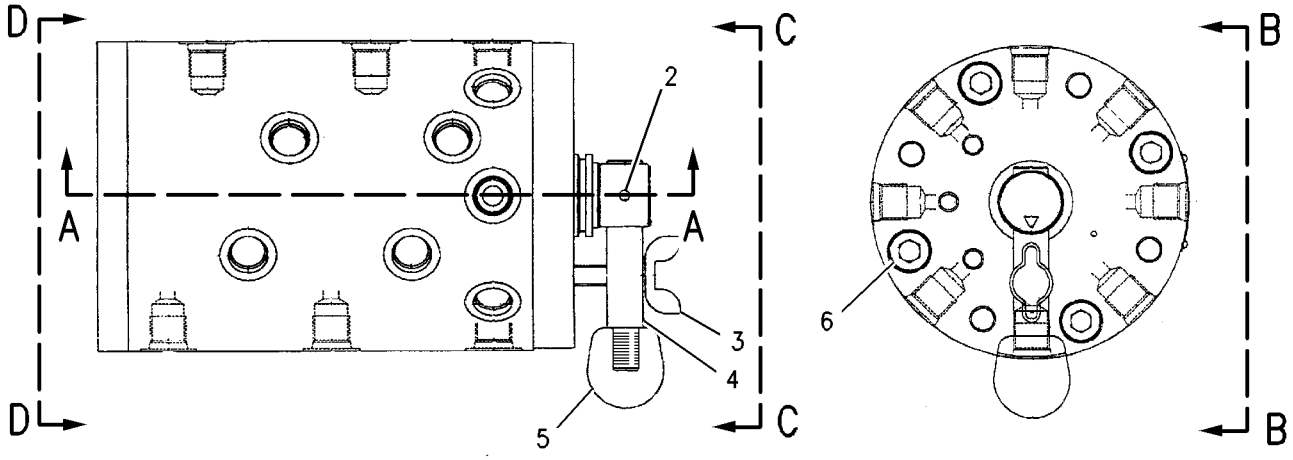

VIEW C-C

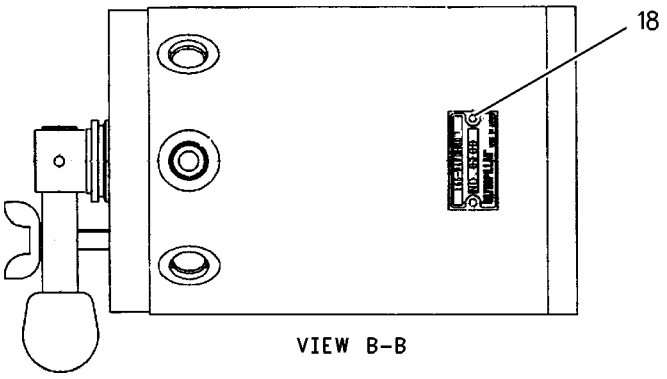

VIEW B-B

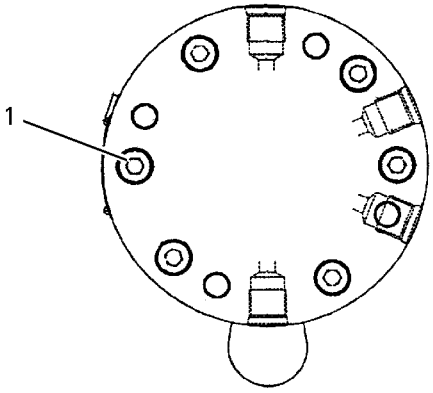

VIEW D-D

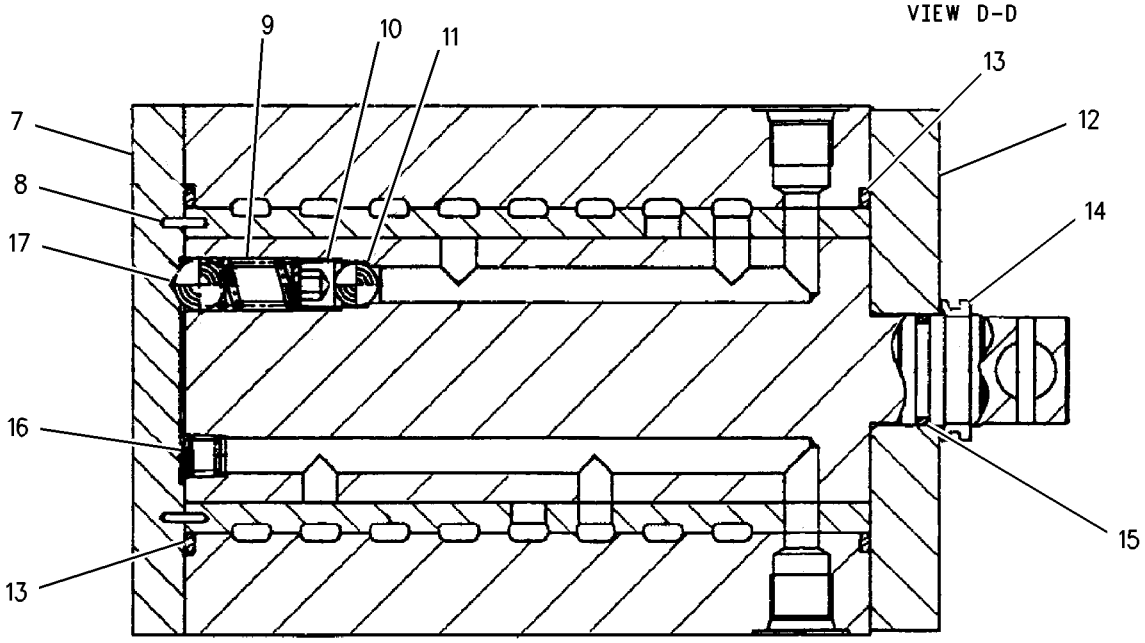

SECTION A-A

GRAPHIC #1 **<END>** g00690417

112-0083 VALVE GP-SHUTTLE

S/N: PBB1-UP; KBS1-UP
PART OF 255-1843 LINES GP-PILOT
AN ATTACHMENT

SMCS-5079 **i05303403**

NOTE	REF NO	GRAPHIC REF	PART NUMBER	QTY	PART NAME 1 2 3 4 5 6 (PRODUCT LEVEL)	SEE PAGE
	1	1	**2D-6642**	4	BALL	
	2	1	**112-0085**	4	PLUG	
	3	1	**3J-1907**	4	SEAL-O-RING	

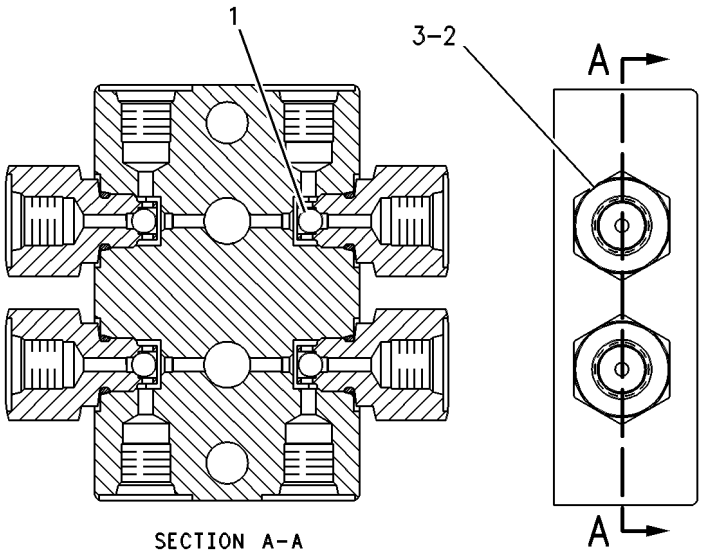

GRAPHIC #1 **<END>** g00258739

123-2549 VALVE GP-SHUTTLE

S/N: PBB1-UP; KBS1-UP
PART OF 164-6980 VALVE GP-SHUTTLE
AN ATTACHMENT

SMCS-5079 **i02210148**

NOTE	REF NO	GRAPHIC REF	PART NUMBER	QTY	PART NAME 1 2 3 4 5 6 (PRODUCT LEVEL)	SEE PAGE
	1	1	**123-2511**	1	TEE	
	2	1	**4B-9783**	1	BALL	
	3	1	**123-2552**	2	CONNECTOR	
	4	1	**3J-1907**	2	SEAL-O-RING	

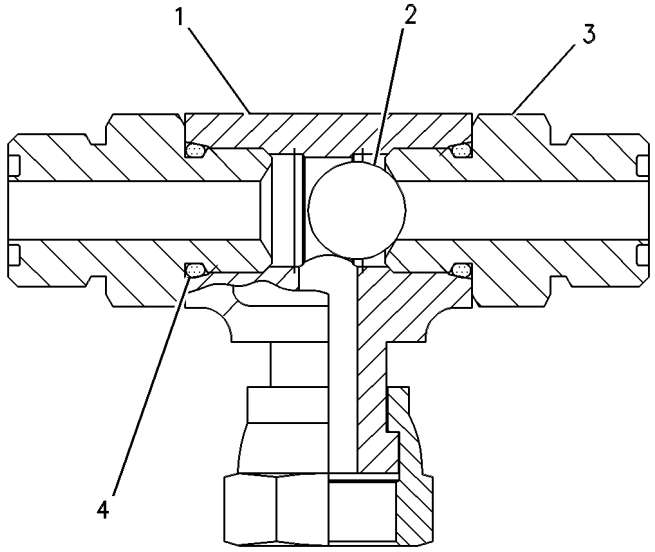

GRAPHIC #1 **<END>** g00274258

164-6979 VALVE GP-SHUTTLE

S/N: PBB1-UP; KBS1-UP
PART OF 255-1802, 376-6310 LINES GP-PILOT
ALSO AN ATTACHMENT

SMCS-5079 **i05432604**

NOTE	REF NO	GRAPHIC REF	PART NUMBER	QTY	PART NAME 1 2 3 4 5 6 (PRODUCT LEVEL)	SEE PAGE
	1	1	*175-4430*	2	CONNECTOR AS	
					(EACH INCLUDES)	
		1	**3J-1907**	1	SEAL-O-RING	
		1	**6V-8397**	1	SEAL-O-RING	
		1	**123-2552**	1	CONNECTOR	
	2	1	**352-6815**	1	BODY-VALVE	
	3	1	**4B-9783**	1	BALL	

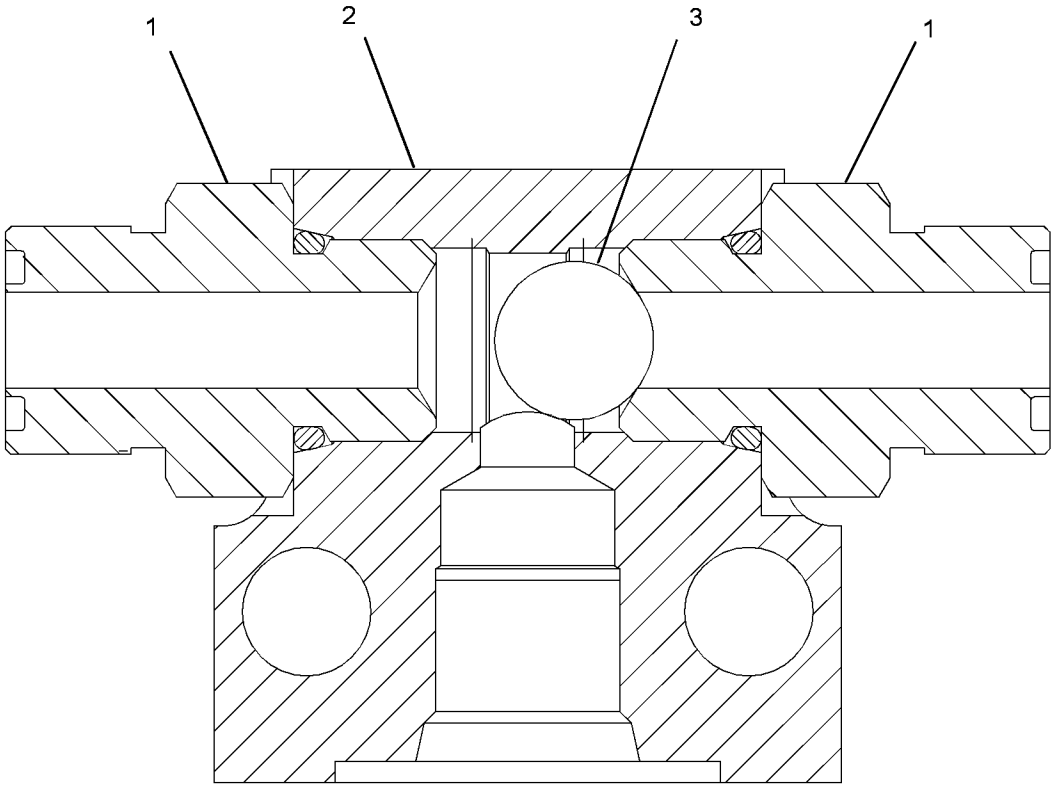

GRAPHIC #1 **<END>** g02203693

164-6980 VALVE GP-SHUTTLE

S/N: PBB1-UP; KBS1-UP
PART OF 376-6329 LINES GP-FRONT
AN ATTACHMENT

SMCS-5079 **i03677000**

NOTE	PART NUMBER	QTY	PART NAME 1 2 3 4 5 6 (PRODUCT LEVEL)	SEE PAGE
Y	**123-2549**	1	VALVE GP-SHUTTLE	670
	6V-8397	2	SEAL-O-RING	

Y - SEPARATE ILLUSTRATION

<END>

185-0462 VALVE GP-SHUTTLE

S/N: PBB1-UP; KBS1-UP

PART OF 248-9825 LINES GP-PILOT

SMCS-5079 **i01612080**

NOTE	REF NO	GRAPHIC REF	PART NUMBER	QTY	PART NAME 1 2 3 4 5 6 (PRODUCT LEVEL)	SEE PAGE
	1	1	**7I-8084**	4	PLUG	
	2	1	**185-0463**	1	SEAT	
	3	1	**4B-9880**	7	BALL	
	4	1	**165-9464**	6	SEAT	
	5	1	**095-1578**	7	SEAL-O-RING	
	6	1	**107-6479**	7	PLUG	

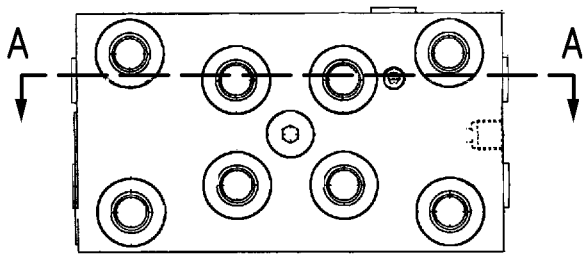

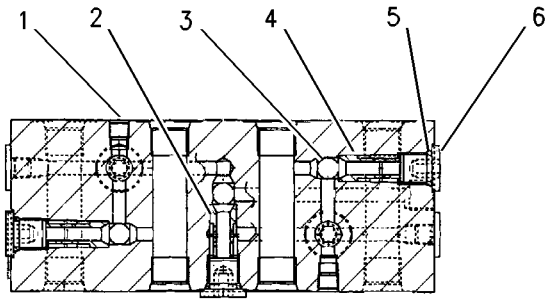

SECTION A-A

GRAPHIC #1 **<END>** g00699270

111-9916 VALVE GP-SOLENOID

S/N: PBB1-UP; KBS1-UP

PART OF 256-0093 HEAD GP-PUMP, 259-7429, 259-7430, 398-2282 VALVE GP-SOLENOID

ALSO AN ATTACHMENT

SMCS-5479 **i05606718**

NOTE	REF NO	GRAPHIC REF	PART NUMBER	QTY	PART NAME 1 2 3 4 5 6 (PRODUCT LEVEL)	SEE PAGE
	1	1	**095-1750**	1	SEAL-O-RING	
	2	1	**6V-8398**	1	SEAL-O-RING	
	3	1	**095-1751**	1	SEAL-O-RING	
	4	1	**095-1586**	1	SEAL-O-RING	
M	5	1	**114-0623**	1	NUT AS (M6X1-THD)	

M - METRIC PART

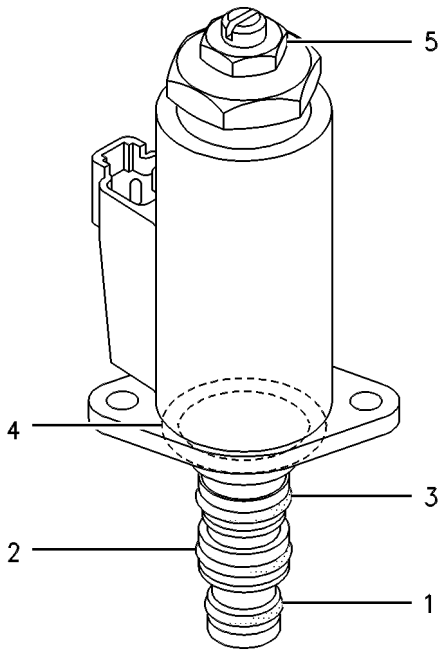

GRAPHIC #1 **<END>** g00258219

121-1491 VALVE GP-SOLENOID

S/N: PBB1-UP; KBS1-UP

PART OF 239-8697, 239-8998 MANIFOLD GP-CONTROL, 254-3080, 352-7132, 352-7138 VALVE GP-CONTROL, 165-9549, 258-6749 VALVE GP-SOLENOID

ALSO AN ATTACHMENT

SMCS-5479 **i05607143**

NOTE	REF NO	GRAPHIC REF	PART NUMBER	QTY	PART NAME 1 2 3 4 5 6 (PRODUCT LEVEL)	SEE PAGE
	1	1	**095-1750**	1	SEAL-O-RING	
	2	1	**6V-8398**	1	SEAL-O-RING	
	3	1	**095-1751**	1	SEAL-O-RING	
	4	1	**095-1586**	1	SEAL-O-RING	
M	5	1	**114-0623**	1	NUT AS (M6X1-THD)	

M - METRIC PART

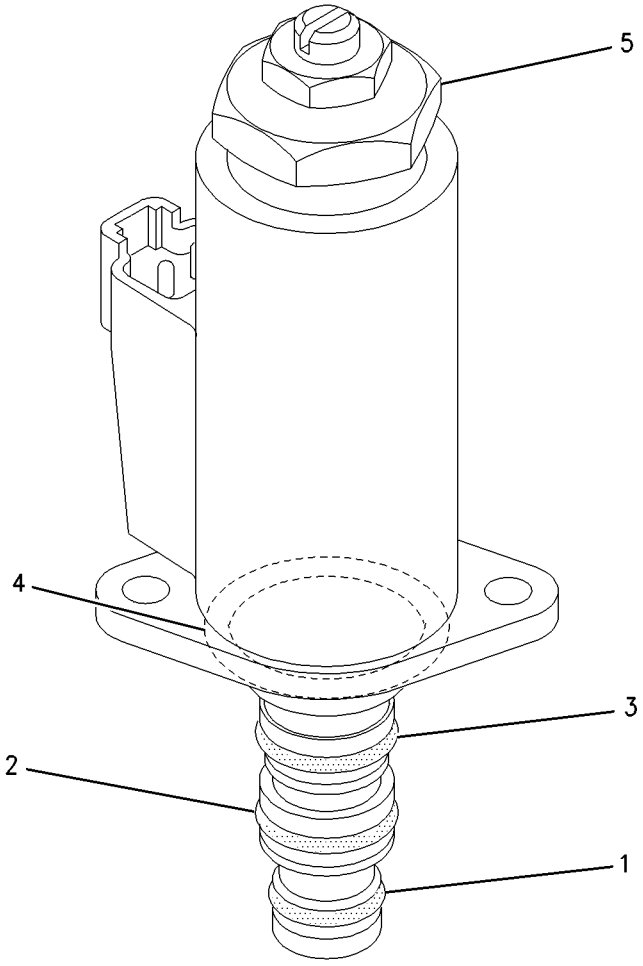

GRAPHIC #1 **<END>** g00928680

165-9549 VALVE GP-SOLENOID

S/N: PBB1-UP; KBS1-UP
PART OF 376-6316 LINES GP-PILOT
AN ATTACHMENT

SMCS-5479 **i04778644**

NOTE	REF NO	GRAPHIC REF	PART NUMBER	QTY	PART NAME 1 2 3 4 5 6 (PRODUCT LEVEL)	SEE PAGE
	1	1	**7I-8084**	4	PLUG	
Y	2	1	**121-1491**	3	VALVE GP-SOLENOID (AUXILIARY)	675
M	3	1	**7I-2272**	6	BOLT (M5X0.8X12-MM)	

M - METRIC PART
Y - SEPARATE ILLUSTRATION

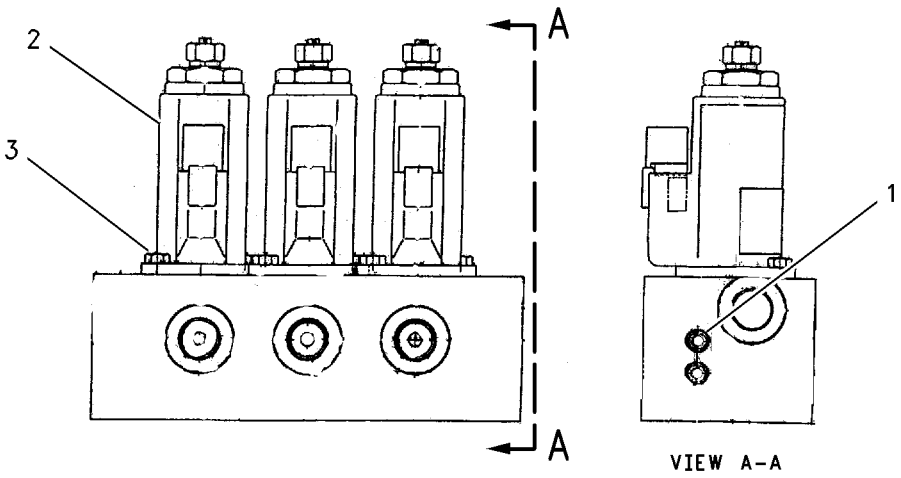

GRAPHIC #1 **<END>** g00754979

258-6749 VALVE GP-SOLENOID

S/N: PBB1-UP; KBS1-UP
PART OF 376-6329 LINES GP-FRONT
AN ATTACHMENT

SMCS-5479 **i05603250**

NOTE	REF NO	GRAPHIC REF	PART NUMBER	QTY	PART NAME 1 2 3 4 5 6 (PRODUCT LEVEL)	SEE PAGE
Y	1	1	**121-1491**	1	VALVE GP-SOLENOID	675
Z	2	1		1	BODY-VALVE	
M	3	1	**7I-2272**	2	BOLT (M5X0.8X12-MM)	

M - METRIC PART
Y - SEPARATE ILLUSTRATION
Z - NOT SERVICED SEPARATELY

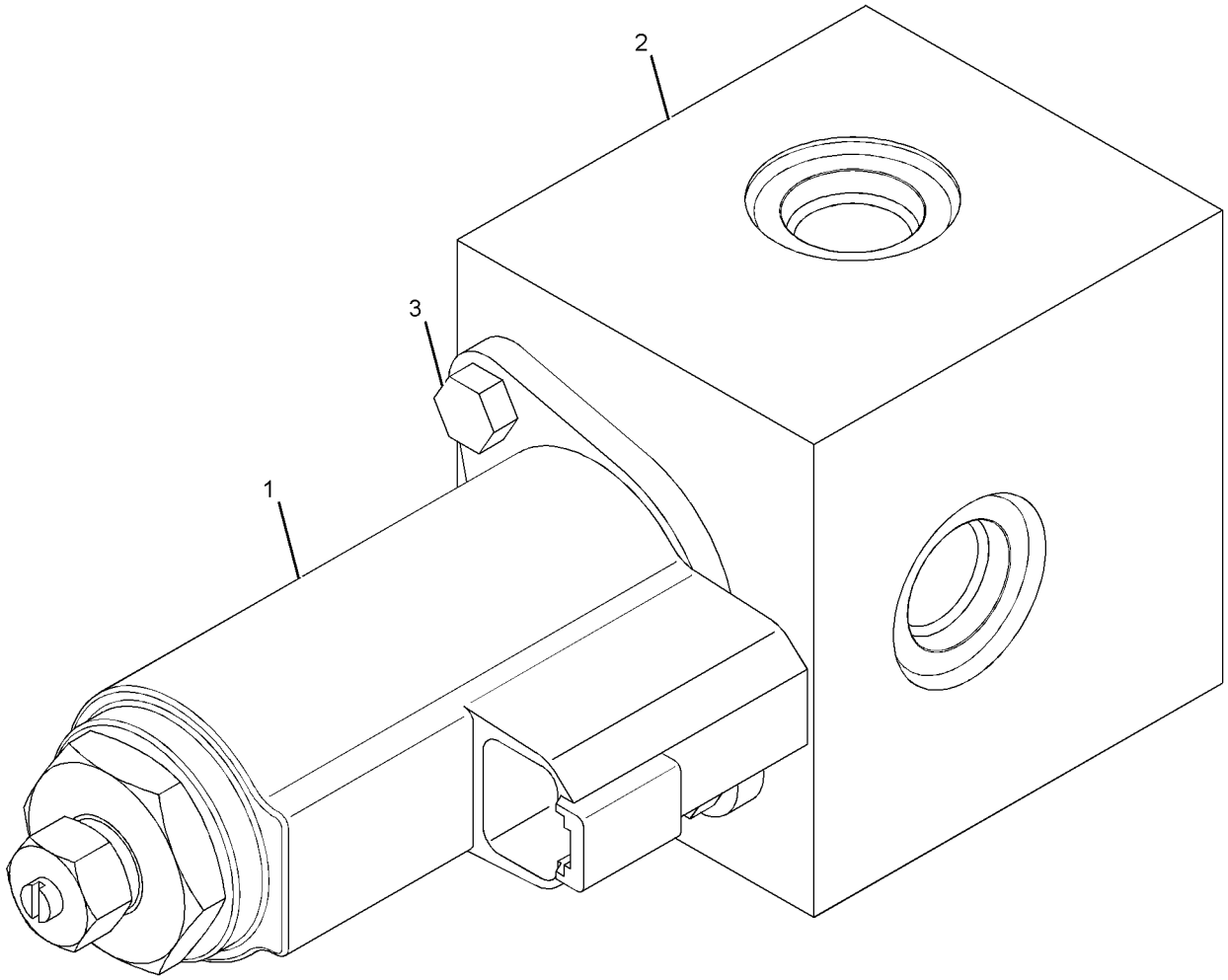

GRAPHIC #1 **<END>** g01137453

259-7429 VALVE GP-SOLENOID

S/N: PBB1-UP; KBS1-UP
PART OF 376-6324 LINES GP-PILOT
AN ATTACHMENT

SMCS-5479 **i05669530**

NOTE	REF NO	GRAPHIC REF	PART NUMBER	QTY	PART NAME 1 2 3 4 5 6 (PRODUCT LEVEL)	SEE PAGE
M	1	1	**7I-2272**	8	BOLT (M5X0.8X12-MM)	
Y	2	1	**111-9916**	4	VALVE GP-SOLENOID (PRESSURE REDUCING)	674

M - METRIC PART
Y - SEPARATE ILLUSTRATION

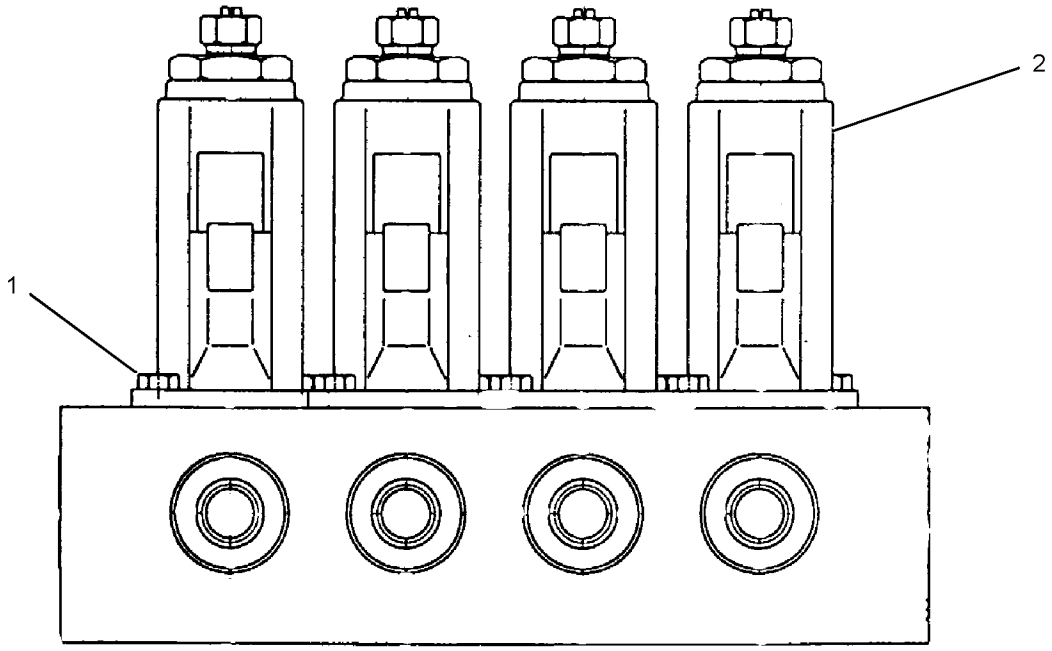

GRAPHIC #1 **<END>** g01014124

259-7430 VALVE GP-SOLENOID

S/N: PBB1-UP; KBS1-UP
PART OF 376-6327 LINES GP-PILOT
AN ATTACHMENT

SMCS-5479 **i04523596**

NOTE	REF NO	GRAPHIC REF	PART NUMBER	QTY	PART NAME 1 2 3 4 5 6 (PRODUCT LEVEL)	SEE PAGE
CM	1	1	**7I-2272**	4	BOLT (M5X0.8X12-MM)	
Y	2	1	**111-9916**	2	VALVE GP-SOLENOID	674

C - CHANGE FROM PREVIOUS TYPE
M - METRIC PART
Y - SEPARATE ILLUSTRATION

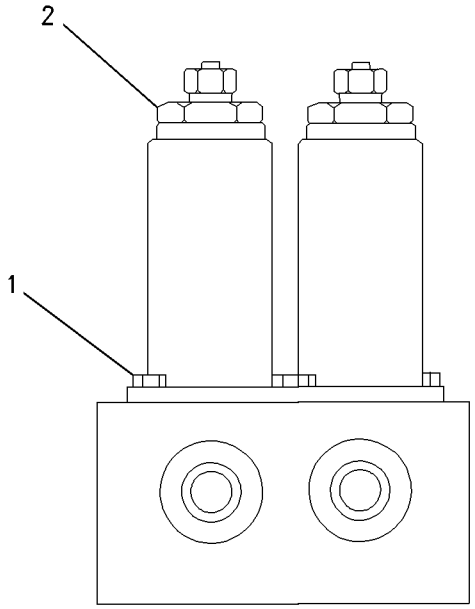

GRAPHIC #1 **<END>** g00785417

315-4412 VALVE GP-SOLENOID

S/N: PBB1-UP; KBS1-UP

PART OF 322-8716 VALVE GP-SWING CUSHION

SMCS-5479 **i02954227**

NOTE	REF NO	GRAPHIC REF	PART NUMBER	QTY	PART NAME 1 2 3 4 5 6 (PRODUCT LEVEL)	SEE PAGE
	1	1	**126-6514**	1	SEAL-O-RING	
	2	1	**126-6515**	1	SEAL-O-RING	
	3	1	**126-6516**	1	SEAL-O-RING	
	4	1	**095-1586**	1	SEAL-O-RING	

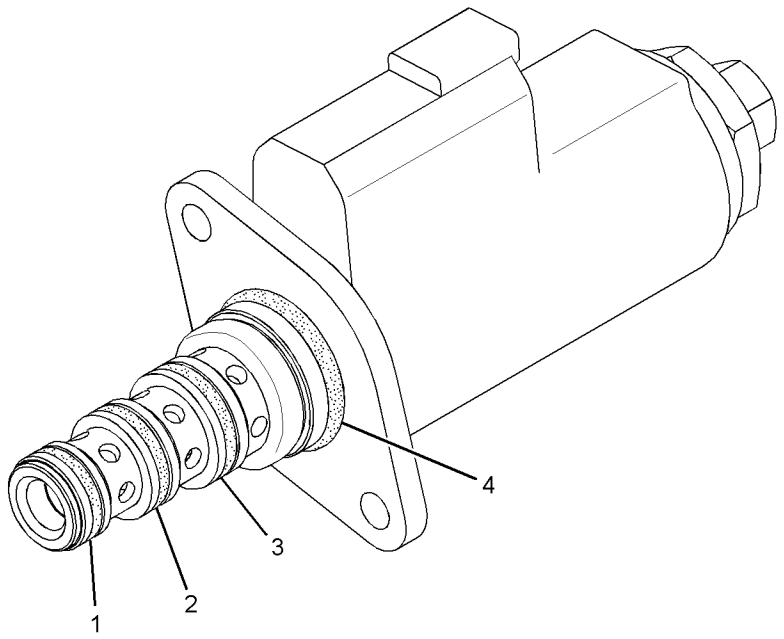

GRAPHIC #1 **<END>** g01456627

352-7176 VALVE GP-SOLENOID

S/N: PBB1-UP; KBS1-UP
PART OF 255-1659 LINES GP-PILOT
AN ATTACHMENT

SMCS-5479 **i04108974**

NOTE	REF NO	GRAPHIC REF	PART NUMBER	QTY	PART NAME 1 2 3 4 5 6 (PRODUCT LEVEL)	SEE PAGE
	1	1	**102-8802**	1	KIT-RECEPTACLE (2-PIN)	
					(INCLUDES RECEPTACLE AS & WEDGE)	
	2	1	**8T-8729**	2	PIN-CONNECTOR (16-GA TO 18-GA)	
	3	1	**095-1519**	1	SEAL-O-RING	
	4	1	**095-1579**	1	SEAL-O-RING	
					PARTS SHOWN IN GRAPHIC(S) WITHOUT A REFERENCE NUMBER ARE NOT SERVICED SEPARATELY	

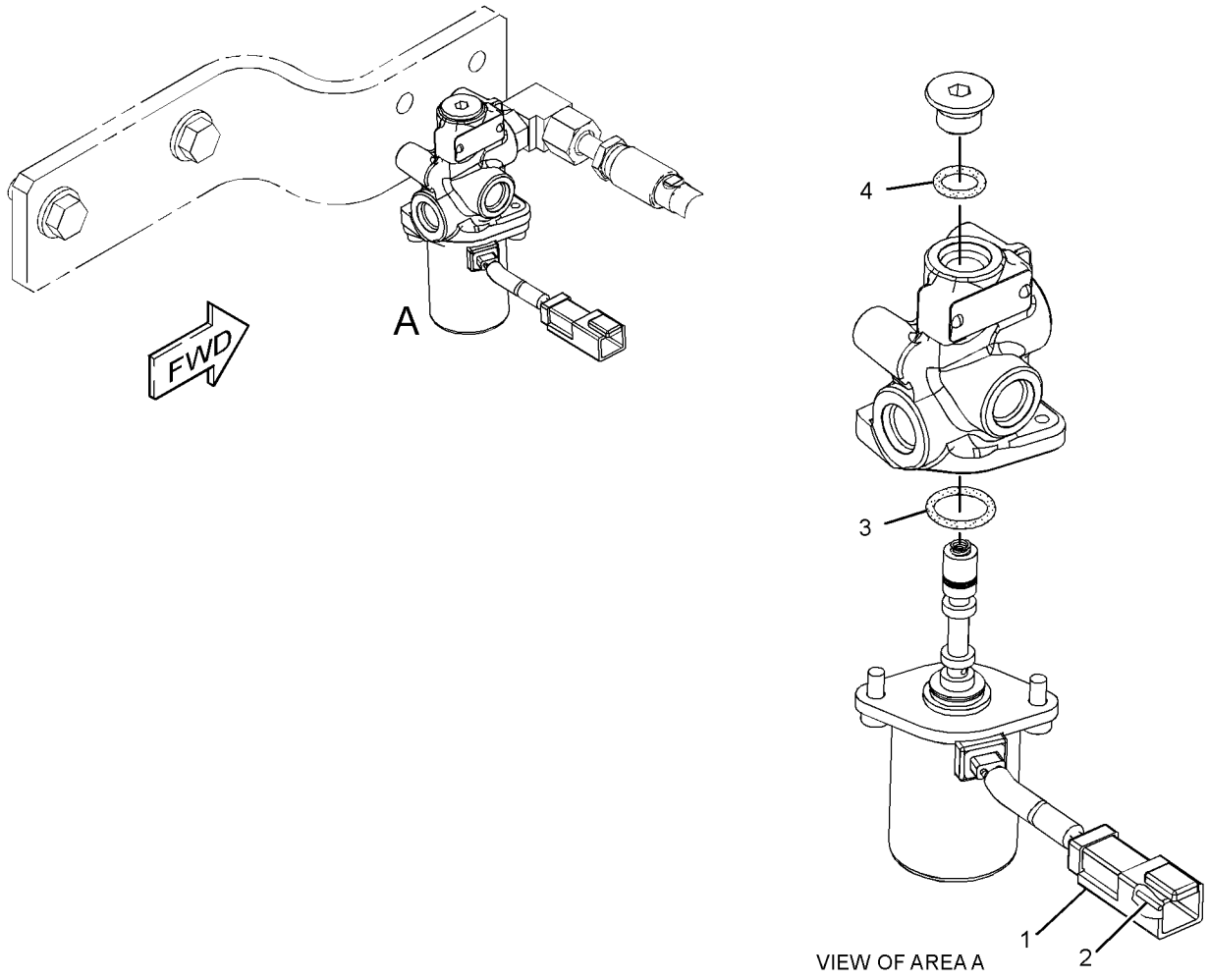

VIEW OF AREA A

GRAPHIC #1 **<END>** g02317033

398-2282 VALVE GP-SOLENOID—NEGATIVE FLOW CONTROL

S/N: PBB1-UP; KBS1-UP

PART OF 376-6316, 376-6318, 376-6324 LINES GP-PILOT

AN ATTACHMENT

SMCS-5479 **i05409516**

NOTE	REF NO	GRAPHIC REF	PART NUMBER	QTY	PART NAME 1 2 3 4 5 6 (PRODUCT LEVEL)	SEE PAGE
	1	1	**7I-8084**	3	PLUG	
	2	1	**107-6479**	2	PLUG	
Y	3	1	**111-9916**	1	VALVE GP-SOLENOID	674
	4	1	**185-0463**	2	SEAT	
	5	1	**095-1578**	2	SEAL-O-RING	
M	6	1	**7I-2272**	2	BOLT (M5X0.8X12-MM)	
	7	1	**9M-5590**	2	BALL	

M - METRIC PART
Y - SEPARATE ILLUSTRATION

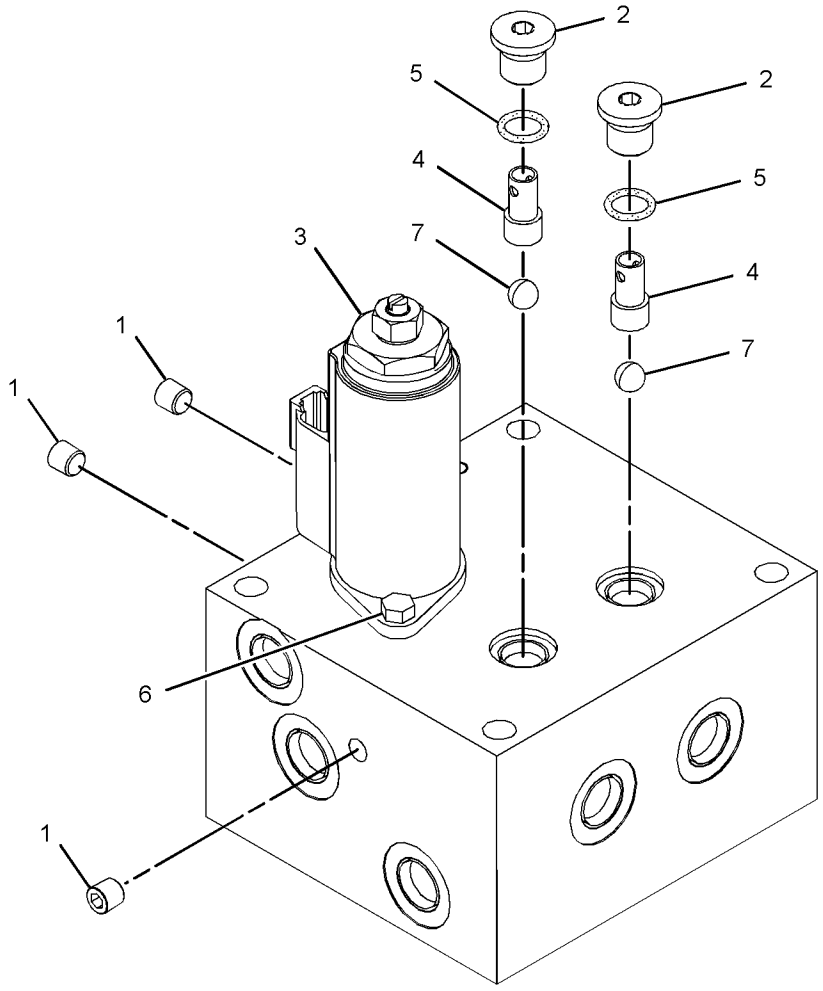

GRAPHIC #1 **<END>** g03149637

328-2035 VALVE GP-SOLENOID & MANIFOLD

S/N: PBB1-UP; KBS1-UP
24-VOLT
PART OF 376-6331 LINES GP-QUICK COUPLER
AN ATTACHMENT

SMCS-5264, 5479 **i05617590**

NOTE	REF NO	GRAPHIC REF	PART NUMBER	QTY	PART NAME 1 2 3 4 5 6 (PRODUCT LEVEL)	SEE PAGE
J	1	1	**368-8651**	1	VALVE GP-SOLENOID (24-VOLT) (QUICK COUPLER)	
		1	**260-3883**	1	COIL AS-SOLENOID (24-VOLT)	
		1	**1S-9593**	2	STRAP-CABLE	
		1	**186-3735**	2	PIN-CONNECTOR (16-GA TO 18-GA)	
		1	**230-4012**	1	RECEPTACLE AS-CONNECTOR (2-PIN)	
	1A	1	**156-5970**	1	NUT (1/2-20-THD)	
					AVAILABLE REPAIR KIT(S):	
J			**268-8209**	1	KIT-SEAL (QUICK COUPLER SOLENOID)	
					(INCLUDES 4 O-RING SEALS & 3 RINGS)	

J - KIT MARKED J SERVICES PART(S) MARKED J

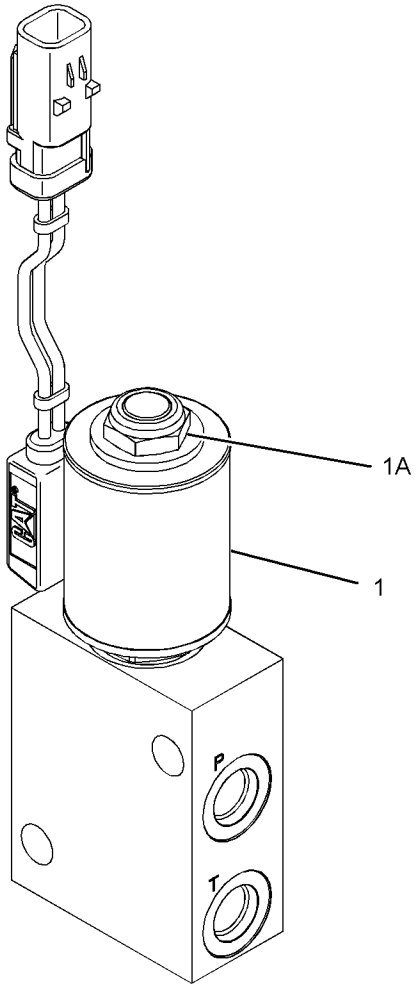

GRAPHIC #1 **<END>** g02452258

297-0265 VALVE GP-SOLENOID & RELIEF

S/N: PBB1-UP; KBS1-UP
PART OF 376-6325 LINES GP-FRONT
AN ATTACHMENT

SMCS-5571 **i03745154**

NOTE	REF NO	GRAPHIC REF	PART NUMBER	QTY	PART NAME 1 2 3 4 5 6 (PRODUCT LEVEL)	SEE PAGE
Y	1	1	**335-0084**	1	VALVE GP-SOLENOID & RELIEF	686

Y - SEPARATE ILLUSTRATION

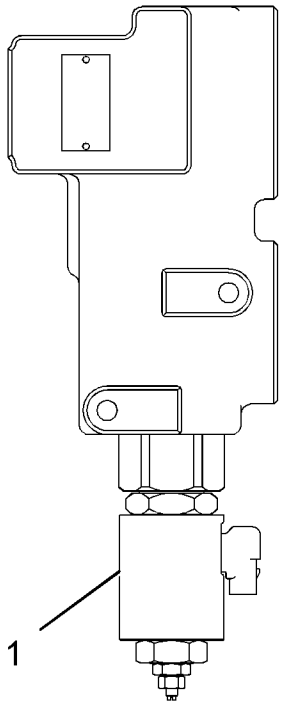

GRAPHIC #1 **<END>** g02022925

323-7942 VALVE GP-SOLENOID & RELIEF

S/N: PBB1-UP; KBS1-UP
PART OF 376-6325 LINES GP-FRONT
AN ATTACHMENT

SMCS-5571 **i03778504**

NOTE	REF NO	GRAPHIC REF	PART NUMBER	QTY	PART NAME 1 2 3 4 5 6 (PRODUCT LEVEL)	SEE PAGE
Y	1	1	**335-0084**	1	VALVE GP-SOLENOID & RELIEF	686

Y - SEPARATE ILLUSTRATION

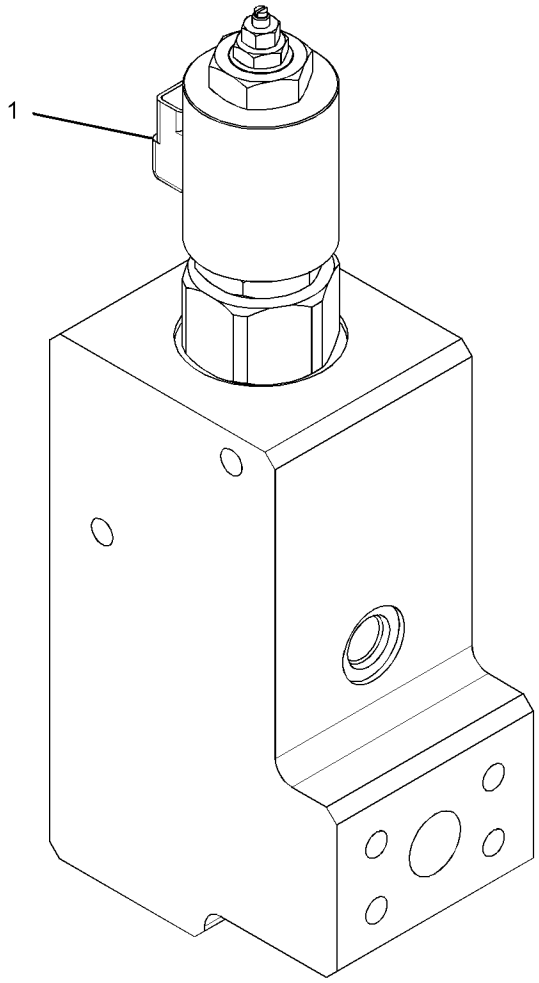

GRAPHIC #1 **<END>** g02039394

335-0084 VALVE GP-SOLENOID & RELIEF

S/N: PBB1-UP; KBS1-UP

PART OF 297-0265, 323-7942 VALVE GP-SOLENOID & RELIEF

AN ATTACHMENT

SMCS-5571 **i03745157**

NOTE	REF NO	GRAPHIC REF	PART NUMBER	QTY	PART NAME 1 2 3 4 5 6 (PRODUCT LEVEL)	SEE PAGE
	1	1	**095-1597**	1	SEAL-O-RING	
	2	1	**095-1604**	1	SEAL-O-RING	
	3	1	**095-1791**	1	RING-BACKUP	

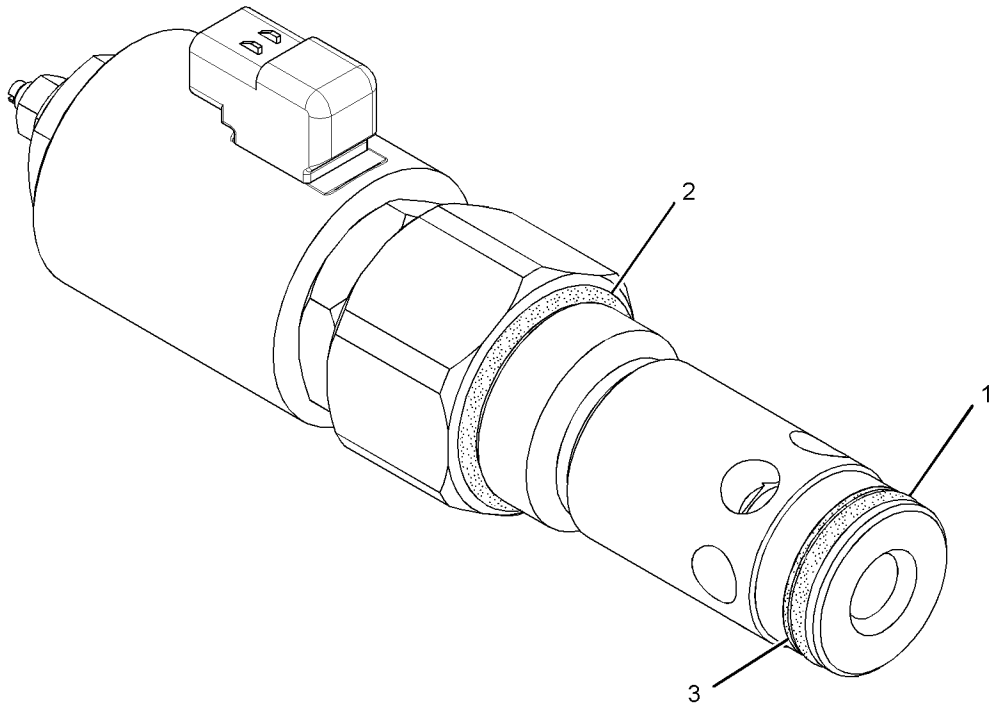

GRAPHIC #1 **<END>** g02022940

158-9085 VALVE GP-SWING CUSHION

S/N: PBB1-UP; KBS1-UP
PART OF 259-0680 VALVE GP-SWING CUSHION
AN ATTACHMENT

SMCS-5480 **i05460691**

NOTE	REF NO	GRAPHIC REF	PART NUMBER	QTY	PART NAME 1 2 3 4 5 6 (PRODUCT LEVEL)	SEE PAGE
	1	1	**8T-6759**	4	PLUG-PIPE	
	2	1	**095-1576**	1	SEAL-O-RING	
Y	3	1	**173-3536**	2	VALVE GP-RELIEF (CUSHION CROSSOVER)	658
	4	1	**095-1698**	2	SEAL-O-RING	

Y - SEPARATE ILLUSTRATION

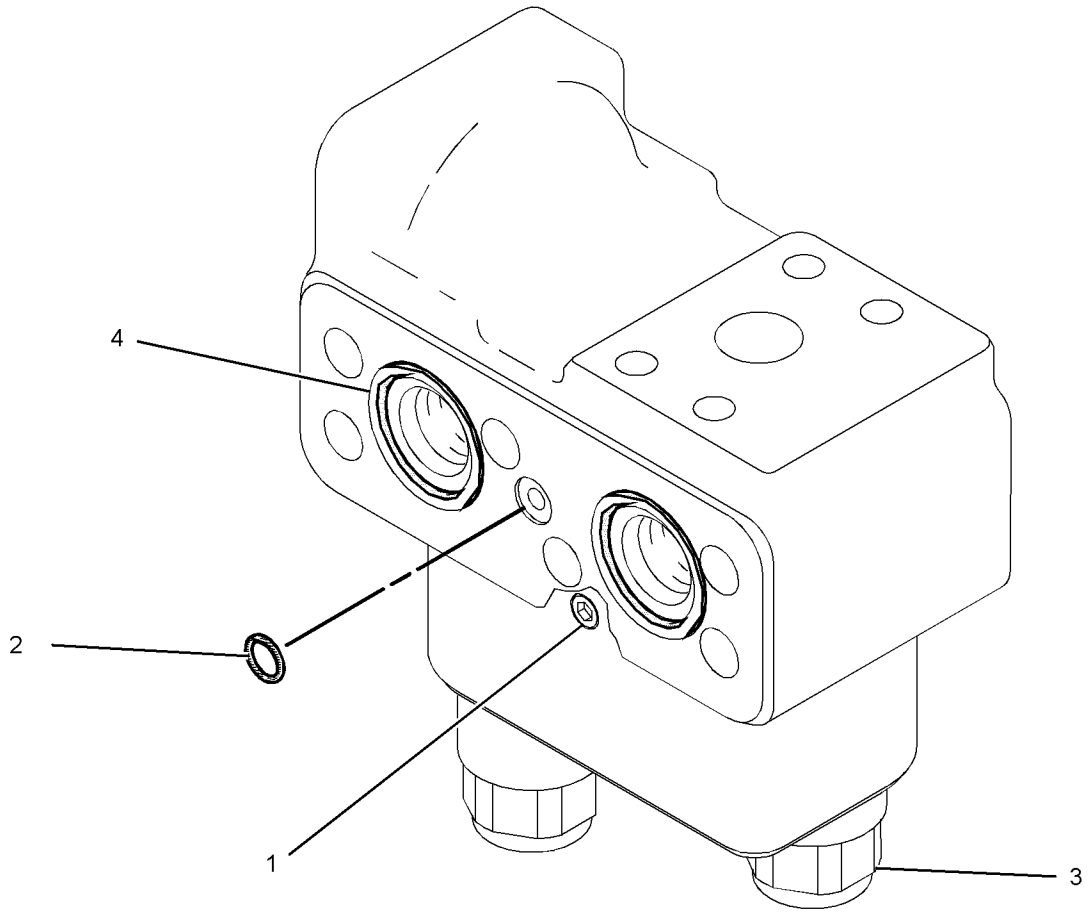

GRAPHIC #1 **<END>** g03087461

259-0680 VALVE GP-SWING CUSHION

S/N: PBB1-UP; KBS1-UP
PART OF 247-7457 VALVE AR-SWING
AN ATTACHMENT

SMCS-5480 **i02407559**

NOTE	REF NO	GRAPHIC REF	PART NUMBER	QTY	PART NAME 1 2 3 4 5 6 (PRODUCT LEVEL)	SEE PAGE
Y	1	1	**158-9085**	1	VALVE GP-SWING CUSHION	687

Y - SEPARATE ILLUSTRATION

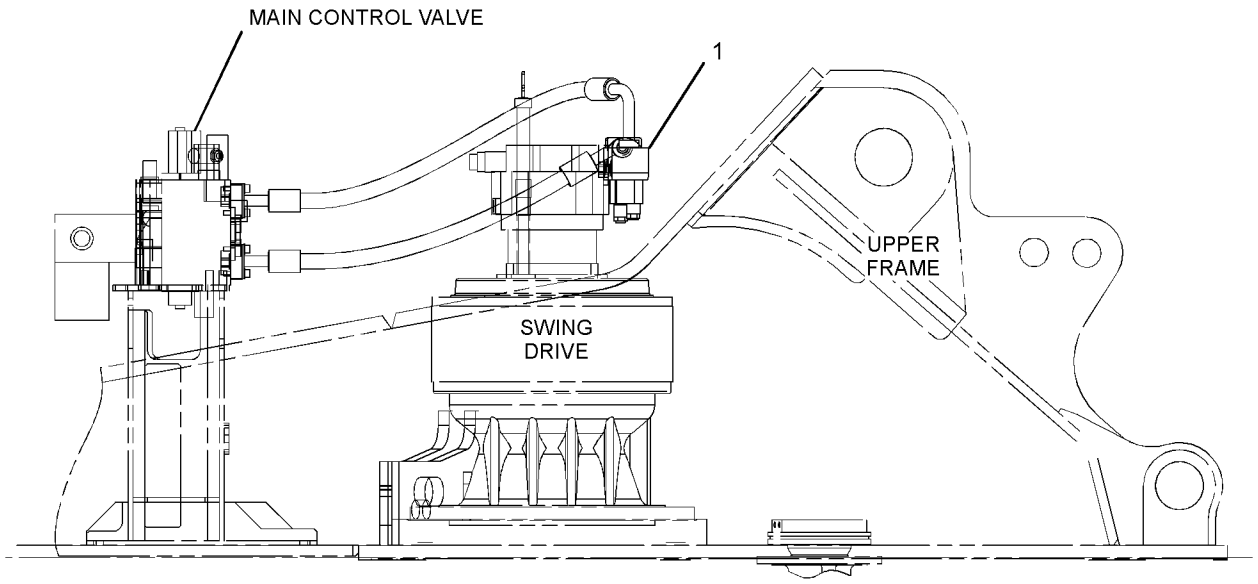

RIGHT SIDE VIEW

GRAPHIC #1 **<END>** g01212011

322-8716 VALVE GP-SWING CUSHION–FINE SWING

S/N: PBB1-UP; KBS1-UP

PART OF 239-1699 LINES GP-BOOM CYLINDER

SMCS-5480 **i03300041**

NOTE	REF NO	GRAPHIC REF	PART NUMBER	QTY	PART NAME 1 2 3 4 5 6 (PRODUCT LEVEL)	SEE PAGE
Y	1	1	**315-4412**	1	VALVE GP-SOLENOID	680
Y	2	1	**173-3536**	2	VALVE GP-RELIEF	658
	3	1	**095-1698**	2	SEAL-O-RING	
M	4	1	**8T-0288**	2	BOLT (M5X0.8X12-MM)	
	5	1	**133-6788**	2	ORIFICE	
	6	1	**8T-6759**	6	PLUG-PIPE	
	7	1	**095-1576**	1	SEAL-O-RING	

M - METRIC PART
Y - SEPARATE ILLUSTRATION

322-8716 **VALVE GP-SWING CUSHION (*contd.*)** **i03300041**

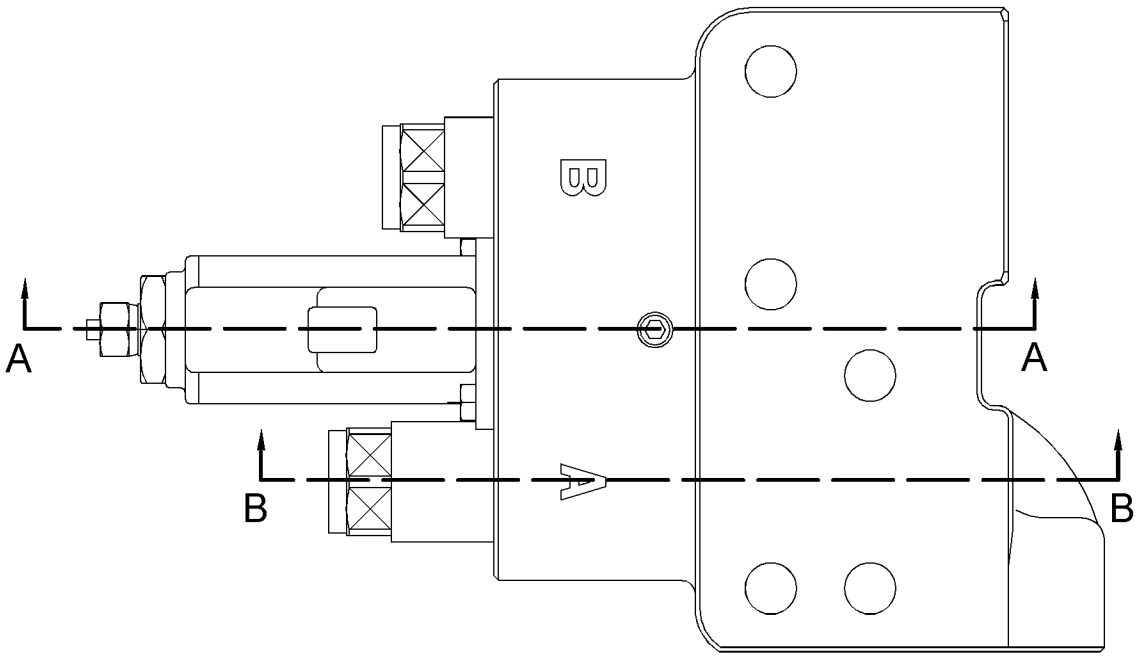

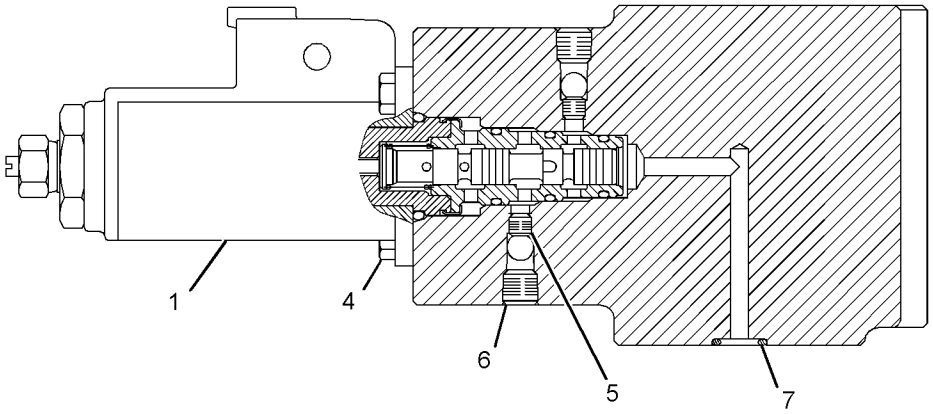

SECTION A-A

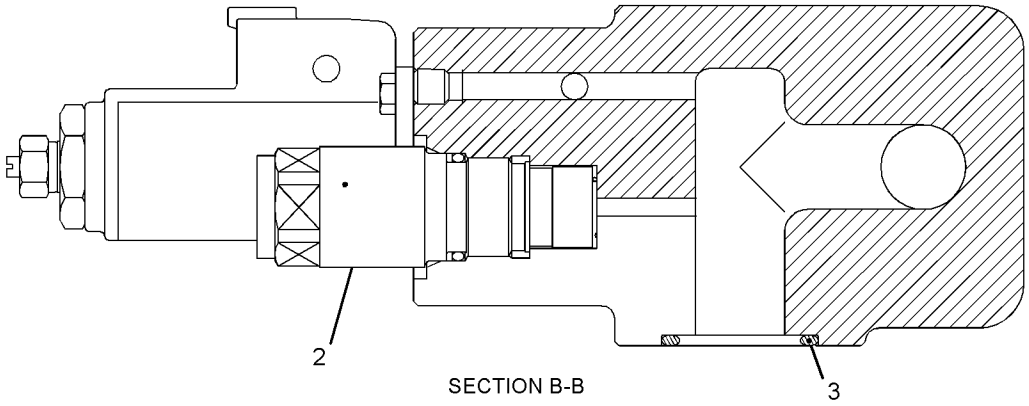

SECTION B-B

GRAPHIC #1 **<END>** g01572033

322-8714 VALVE GP-TRAVEL COUNTERBALANCE

S/N: PBB1-UP; KBS1-UP

PART OF 334-9986 MOTOR & MTG GP-TRAVEL

SMCS-5811 **i04033047**

NOTE	REF NO	GRAPHIC REF	PART NUMBER	QTY	PART NAME 1 2 3 4 5 6 (PRODUCT LEVEL)	SEE PAGE
	1	2	**096-2902**	2	ORIFICE	
	2	2	**102-0818**	2	PLUG	
	3	2	**334-9940**	2	COVER	
	4	2	**360-4583**	2	SPRING	
	5	2	**360-4584**	2	GUIDE	
	6	2	**360-4585**	2	PLUG	
	7	2	**360-4586**	2	VALVE	
	8	2	**360-4587**	2	SPRING	
	9	2	**225-4821**	2	PLUG	
	10	2	**096-4514**	2	PLUG	
M	11	2	**8T-7811**	8	BOLT-SOCKET HEAD (M12X1.75X50-MM)	
	12	2	**095-1582**	2	SEAL-O-RING	
	13	2	**095-1587**	2	SEAL-O-RING	
	14	2	**5P-2568**	2	SEAL-O-RING	
	15	2	**3J-7354**	2	SEAL-O-RING	
	16	2	**3J-1907**	2	SEAL-O-RING	
Y	17	2	**360-4588**	2	VALVE GP-RELIEF	666

M - METRIC PART
Y - SEPARATE ILLUSTRATION

REFER TO ALL ILLUSTRATIONS OF THIS GROUP FOR AUXILIARY VIEWS

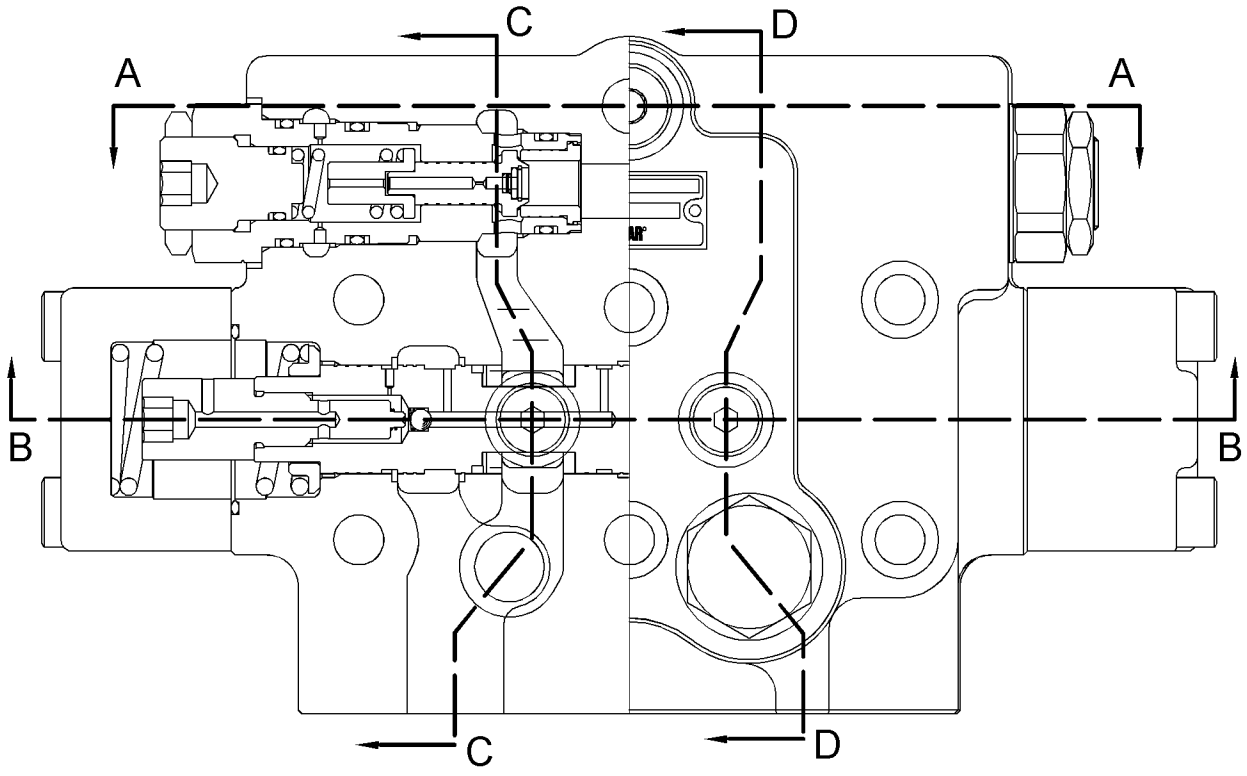

GRAPHIC #1 g02262520

322-8714 **VALVE GP-TRAVEL COUNTERBALANCE (*contd.*)** **i04033047**

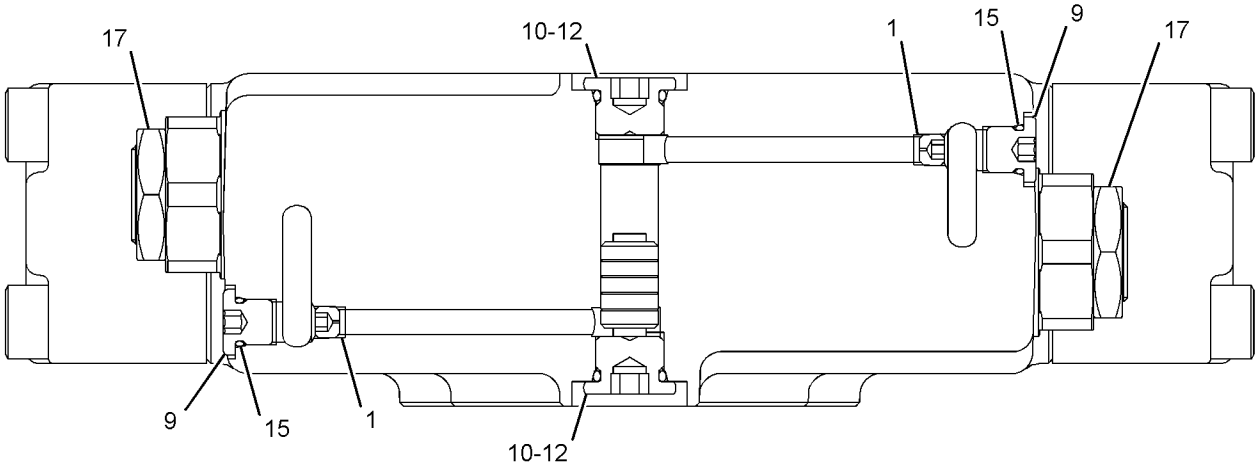

SECTION A-A

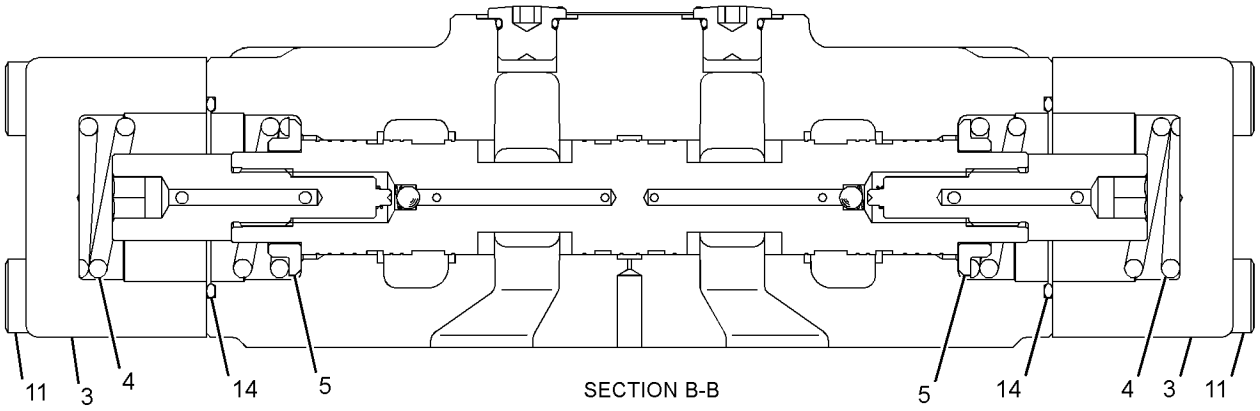

SECTION B-B

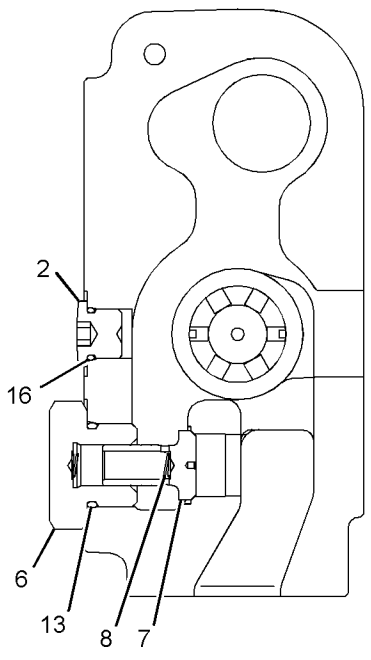

SECTION C-C

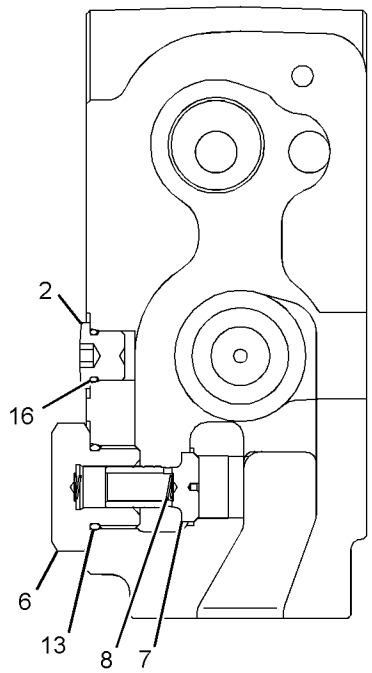

SECTION D-D

GRAPHIC #2 **<END>** g02262521

415-1396 BOOM AR—1-PIECE SHORT, AUXILIARY

S/N: PBB1-UP; KBS1-UP
5.2-M (17.1-FT)
AN ATTACHMENT

SMCS-6000 **i05629796**

NOTE	PART NUMBER	QTY	PART NAME 1 2 3 4 5 6 (PRODUCT LEVEL)	SEE PAGE
Y	*290-9198*	1	BOOM GP (SHORT REACH)	701
Y	*341-2788*	1	CYLINDER & LINES GP-BOOM (LH)	346
Y	*341-2789*	1	CYLINDER & LINES GP-BOOM (RH)	346
Y	*341-2808*	1	CYLINDER & LINES GP-STICK	349
Y	*267-7627*	1	LIGHTING GP-FLOOD (SHORT BOOM, LH)	143
Y	*239-1732*	1	LINES GP-BOOM (1-PIECE SHORT)	441
Y	*172-2939*	1	LINES GP-GREASE (BOOM)	710

Y - SEPARATE ILLUSTRATION

<END>

359-2434 BOOM AR-1 PIECE LONG—HEAVY-DUTY

S/N: KBS1-UP
PART OF 456-0824, 456-0932, 456-0942 DISTRIBUTION AR
AN ATTACHMENT

SMCS-6501 **i05331870**

NOTE	PART NUMBER	QTY	PART NAME 1 2 3 4 5 6 (PRODUCT LEVEL)	SEE PAGE
Y	*241-7287*	1	BOOM GP (LONG REACH)	695
Y	*341-2788*	1	CYLINDER & LINES GP-BOOM (LH)	346
Y	*341-2789*	1	CYLINDER & LINES GP-BOOM (RH)	346
Y	*364-0935*	1	CYLINDER & LINES GP-STICK	349
Y	*259-5043*	1	LIGHTING GP-FLOOD (BOOM, LH)	138
Y	*260-8010*	1	LINES GP-BOOM (1-PIECE LONG)	444
Y	*241-7286*	1	LINES GP-GREASE (BOOM)	712

Y - SEPARATE ILLUSTRATION

<END>

415-1399 BOOM AR-1 PIECE LONG—AUXILIARY

S/N: PBB1-UP; KBS1-UP
5.7-M (18.7-FT)
AN ATTACHMENT

SMCS-6501 **i05194067**

NOTE	PART NUMBER	QTY	PART NAME 1 2 3 4 5 6 (PRODUCT LEVEL)	SEE PAGE
Y	*290-9192*	1	BOOM GP (REACH)	697
Y	*341-2788*	1	CYLINDER & LINES GP-BOOM (LH)	346
Y	*341-2789*	1	CYLINDER & LINES GP-BOOM (RH)	346
Y	*341-2801*	1	CYLINDER & LINES GP-STICK	348
Y	*259-5043*	1	LIGHTING GP-FLOOD (BOOM, LH)	138
Y	*260-8010*	1	LINES GP-BOOM (1-PIECE LONG)	444
Y	*241-7286*	1	LINES GP-GREASE (BOOM)	712

Y - SEPARATE ILLUSTRATION

<END>

415-8447 BOOM AR-1 PIECE LONG—AUXILIARY, HEAVY-DUTY

S/N: PBB1-UP; KBS1-UP

PART OF 456-0817, 456-0818, 456-0819, 456-0820, 456-0821, 456-0823, 456-0825, 456-0826, 456-0922, 456-0923, 456-0933, 456-0943, 456-1026, 456-1027 DISTRIBUTION AR AN ATTACHMENT

SMCS-6501 **i04897234**

NOTE	PART NUMBER	QTY	PART NAME 1 2 3 4 5 6 (PRODUCT LEVEL)	SEE PAGE
Y	*290-9195*	1	BOOM GP	699
Y	*341-2788*	1	CYLINDER & LINES GP-BOOM (LH)	346
Y	*341-2789*	1	CYLINDER & LINES GP-BOOM (RH)	346
Y	*341-2806*	1	CYLINDER & LINES GP-STICK	349
Y	*259-5043*	1	LIGHTING GP-FLOOD (BOOM, LH)	138
Y	*260-8010*	1	LINES GP-BOOM (1-PIECE LONG)	444
Y	*241-7286*	1	LINES GP-GREASE (BOOM)	712

Y - SEPARATE ILLUSTRATION

<END>

416-0961 BOOM AR-1 PIECE LONG—AUXILAIRY, GRADE CONTROL

S/N: PBB1-UP; KBS1-UP

5.7-M (18.7-FT)

AN ATTACHMENT

SMCS-6501 **i04896442**

NOTE	PART NUMBER	QTY	PART NAME 1 2 3 4 5 6 (PRODUCT LEVEL)	SEE PAGE
Y	*294-1480*	1	BOOM GP (LONG REACH)	703
Y	*341-2788*	1	CYLINDER & LINES GP-BOOM (LH)	346
Y	*341-2789*	1	CYLINDER & LINES GP-BOOM (RH)	346
Y	*341-2801*	1	CYLINDER & LINES GP-STICK	348
Y	*259-5043*	1	LIGHTING GP-FLOOD (BOOM, LH)	138
Y	*260-8010*	1	LINES GP-BOOM (1-PIECE LONG)	444
Y	*241-7286*	1	LINES GP-GREASE (BOOM)	712

Y - SEPARATE ILLUSTRATION

<END>

241-7287 BOOM GP

S/N: KBS1-UP
5.7-M (18.7-FT)
PART OF 359-2434 BOOM AR-1 PIECE LONG
AN ATTACHMENT

SMCS-6301, 6302, 6460, 6501, 6516, 6521, 6535, 6536 **i05784681**

NOTE	REF NO	GRAPHIC REF	PART NUMBER	QTY	PART NAME 1 2 3 4 5 6 (PRODUCT LEVEL)	SEE PAGE
	1	1	**4I-3308**	2	PLATE	
	2	1	**4I-3309**	2	SPACER (82X110X3-MM THK)	
B	3	1	**093-0084**	2	SHIM (1-MM THK)	
B	4	1	**093-0116**	2	SHIM (2-MM THK)	
	5	1	**093-0349**	2	WASHER (22X60X6-MM THK)	
	6	1	**093-0363**	1	SPACER (83X120X12-MM THK)	
B	7	1	**113-2127**	1	SHIM (0.5-MM THK)	
	8	1	**166-1486**	2	SHIM (2-MM THK)	
	9	1	**176-2278**	1	PIN	
	10	1	**241-7288**	1	BOOM & BEARING AS	
	10A	1	**244-4277**	2	BUSHING	
	10B	1	**166-1433**	1	BOSS AS	
	11	1	**264-1702**	1	PIN AS	
	12	1	**166-1487**	2	SHIM (2-MM THK)	
	13	1	**166-1495**	2	SEAL-LIP TYPE	
	14	1	**4I-4809**	1	PIN AS	
	15	1	**451-2176**	2	WASHER-HARD (22X35X3.5-MM THK)	
	16	1	**8T-4223**	6	WASHER-HARD (13.5X25.5X3-MM THK)	
M	17	1	**453-2844**	2	BOLT (M20X2.5X30-MM)	
M	18	1	**8T-4956**	6	BOLT (M12X1.75X35-MM)	

B - USE AS REQUIRED
M - METRIC PART

241-7287 **BOOM GP (*contd.*)** **i05784681**

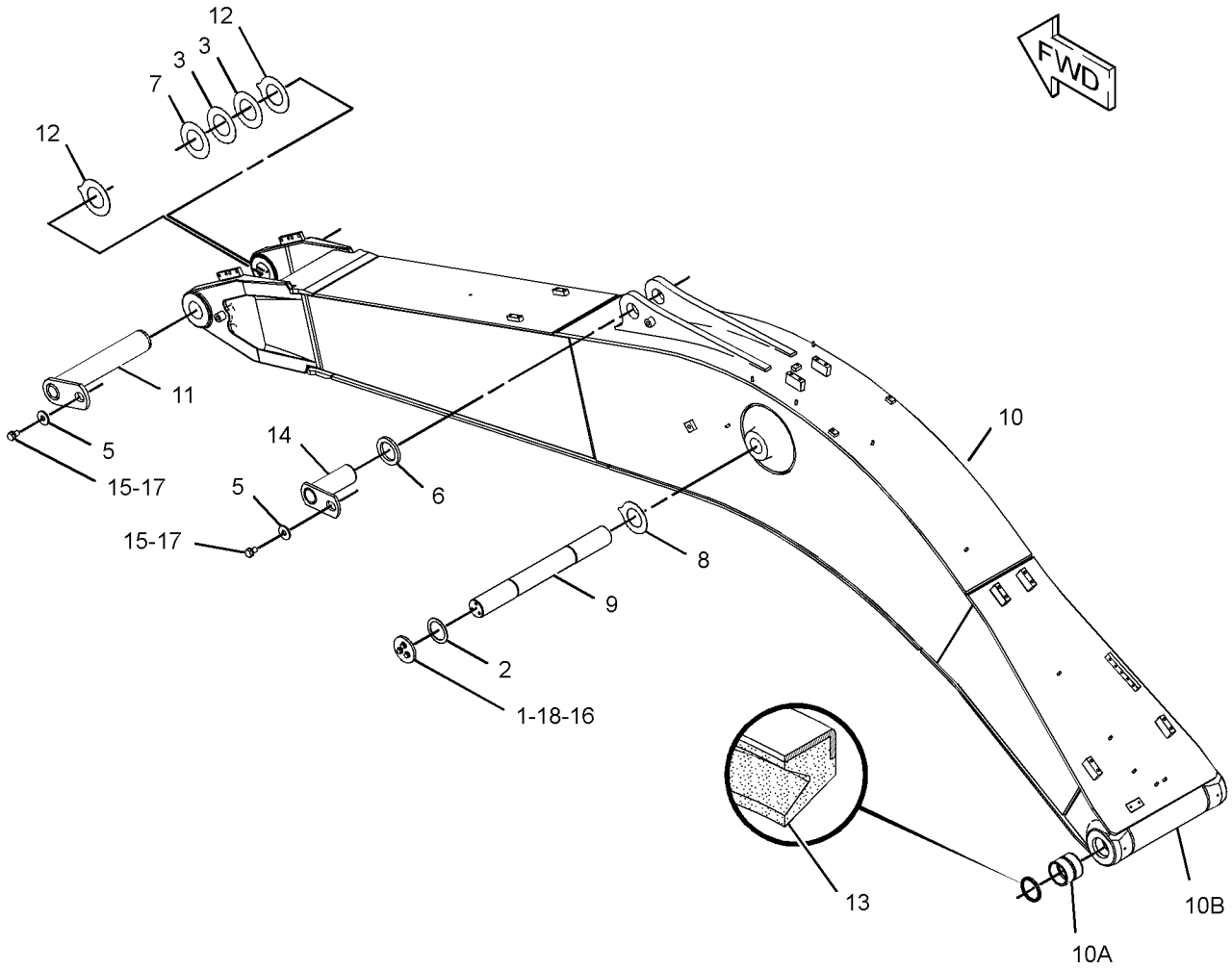

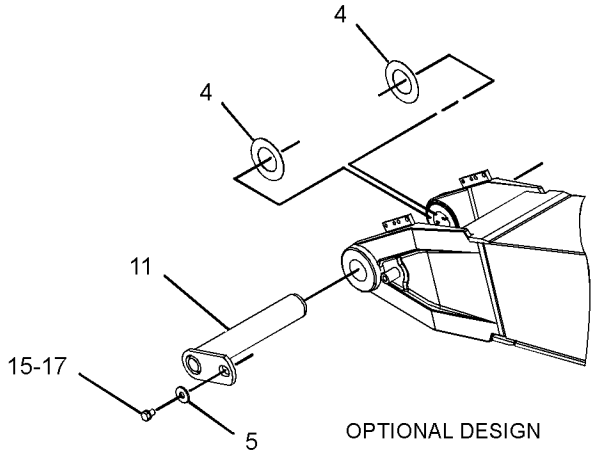

OPTIONAL DESIGN

GRAPHIC #1 **<END>** g02052313

290-9192 BOOM GP

S/N: PBB1-UP; KBS1-UP
5.7-M (18.7-FT)
PART OF 415-1399 BOOM AR-1 PIECE LONG
AN ATTACHMENT

SMCS-6301, 6302, 6460, 6501, 6516, 6521, 6535, 6536 **i05859452**

NOTE	REF NO	GRAPHIC REF	PART NUMBER	QTY	PART NAME 1 2 3 4 5 6 (PRODUCT LEVEL)	SEE PAGE
	1	1	**4I-3308**	2	PLATE	
	2	1	**4I-3309**	2	SPACER (82X110X3-MM THK)	
B	3	1	**093-0084**	2	SHIM (1-MM THK)	
J	4	1	**093-0116**	2	SHIM (2-MM THK)	
	5	1	**093-0349**	2	WASHER (22X60X6-MM THK)	
	6	1	**093-0363**	1	SPACER (83X120X12-MM THK)	
B	7	1	**113-2127**	1	SHIM (0.5-MM THK)	
	8	1	**166-1486**	2	SHIM (2-MM THK)	
	9	1	**176-2278**	1	PIN	
	10	1	**290-9193**	1	BOOM & BEARING AS	
	10A	1	**244-4277**	2	BUSHING	
	11	1	**264-1702**	1	PIN AS	
	12	1	**166-1487**	2	SHIM (2-MM THK)	
	13	1	**166-1495**	2	SEAL-LIP TYPE	
	14	1	**4I-4809**	1	PIN AS	
	15	1	**451-2176**	2	WASHER-HARD (22X35X3.5-MM THK)	
	16	1	**8T-4223**	6	WASHER-HARD (13.5X25.5X3-MM THK)	
M	17	1	**453-2844**	2	BOLT (M20X2.5X30-MM)	
M	18	1	**8T-4956**	6	BOLT (M12X1.75X35-MM)	

B - USE AS REQUIRED
J - USED ONLY ON OPTIONAL DESIGN BOOM END
M - METRIC PART

290-9192 **BOOM GP (*contd.*)** **i05859452**

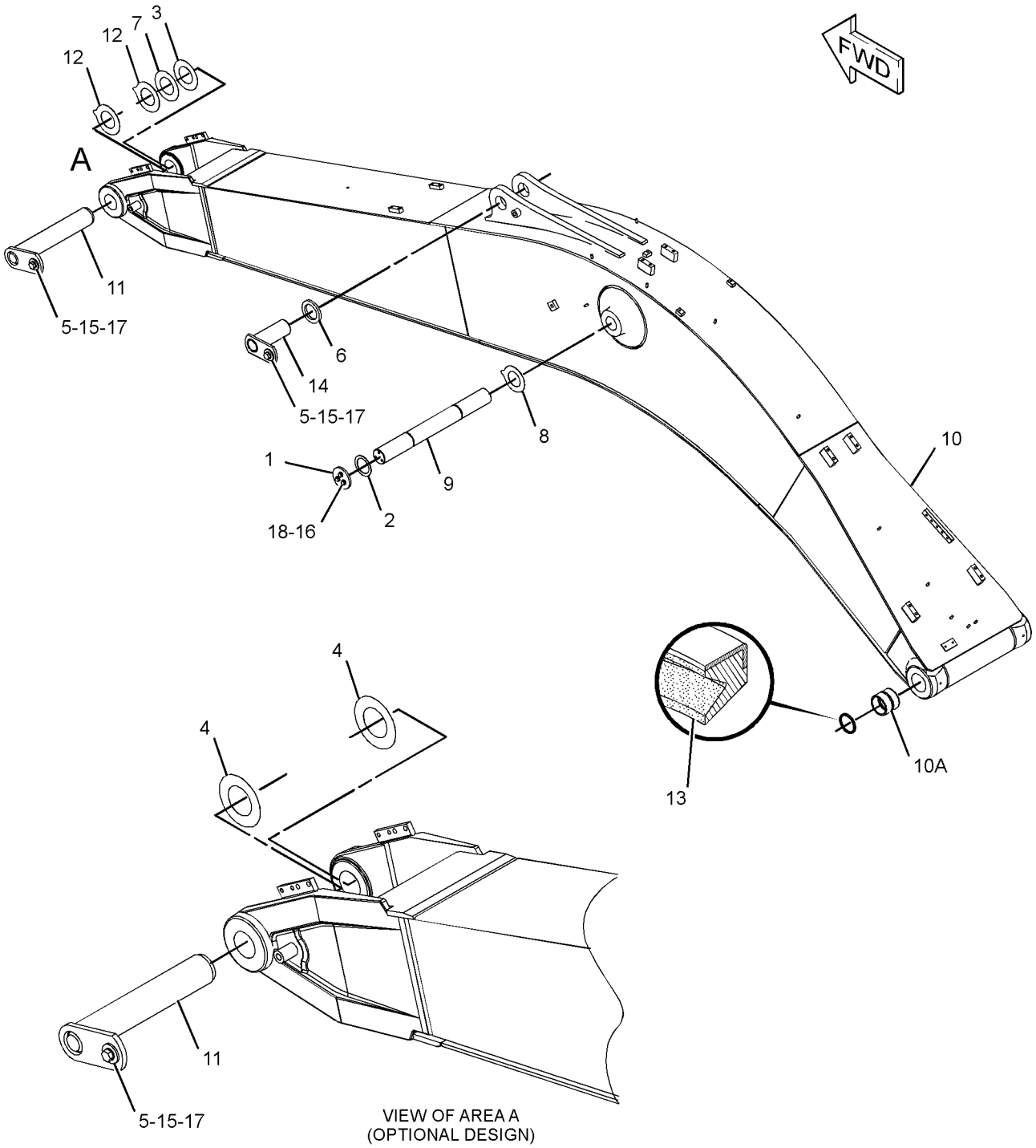

GRAPHIC #1 **<END>** g01331168

290-9195 BOOM GP

S/N: PBB1-UP; KBS1-UP
5.7-M (18.7-FT)
PART OF 415-8447 BOOM AR-1 PIECE LONG
AN ATTACHMENT

SMCS-6301, 6302, 6460, 6501, 6516, 6521, 6535, 6536 **i05859481**

NOTE	REF NO	GRAPHIC REF	PART NUMBER	QTY	PART NAME 1 2 3 4 5 6 (PRODUCT LEVEL)	SEE PAGE
	1	1	**4I-3308**	2	PLATE	
	2	1	**4I-3309**	2	SPACER (82X110X3-MM THK)	
B	3	1	**093-0084**	2	SHIM (1-MM THK)	
B	4	1	**093-0116**	2	SHIM (2-MM THK)	
	5	1	**093-0349**	2	WASHER (22X60X6-MM THK)	
	6	1	**093-0363**	1	SPACER (83X120X12-MM THK)	
B	7	1	**113-2127**	1	SHIM (0.5-MM THK)	
	8	1	**166-1486**	2	SHIM (2-MM THK)	
	9	1	**176-2278**	1	PIN	
	10	1	**264-1702**	1	PIN AS	
	11	1	**290-9196**	1	BOOM & BEARING AS	
	11A	1	**244-4277**	2	BUSHING	
	12	1	**166-1487**	2	SHIM (2-MM THK)	
	13	1	**166-1495**	2	SEAL-LIP TYPE	
	14	1	**4I-4809**	1	PIN AS	
	15	1	**451-2176**	2	WASHER-HARD (22X35X3.5-MM THK)	
	16	1	**8T-4223**	6	WASHER-HARD (13.5X25.5X3-MM THK)	
M	17	1	**453-2844**	2	BOLT (M20X2.5X30-MM)	
M	18	1	**8T-4956**	6	BOLT (M12X1.75X35-MM)	

B - USE AS REQUIRED
M - METRIC PART

290-9195 **BOOM GP (*contd.*)** **i05859481**

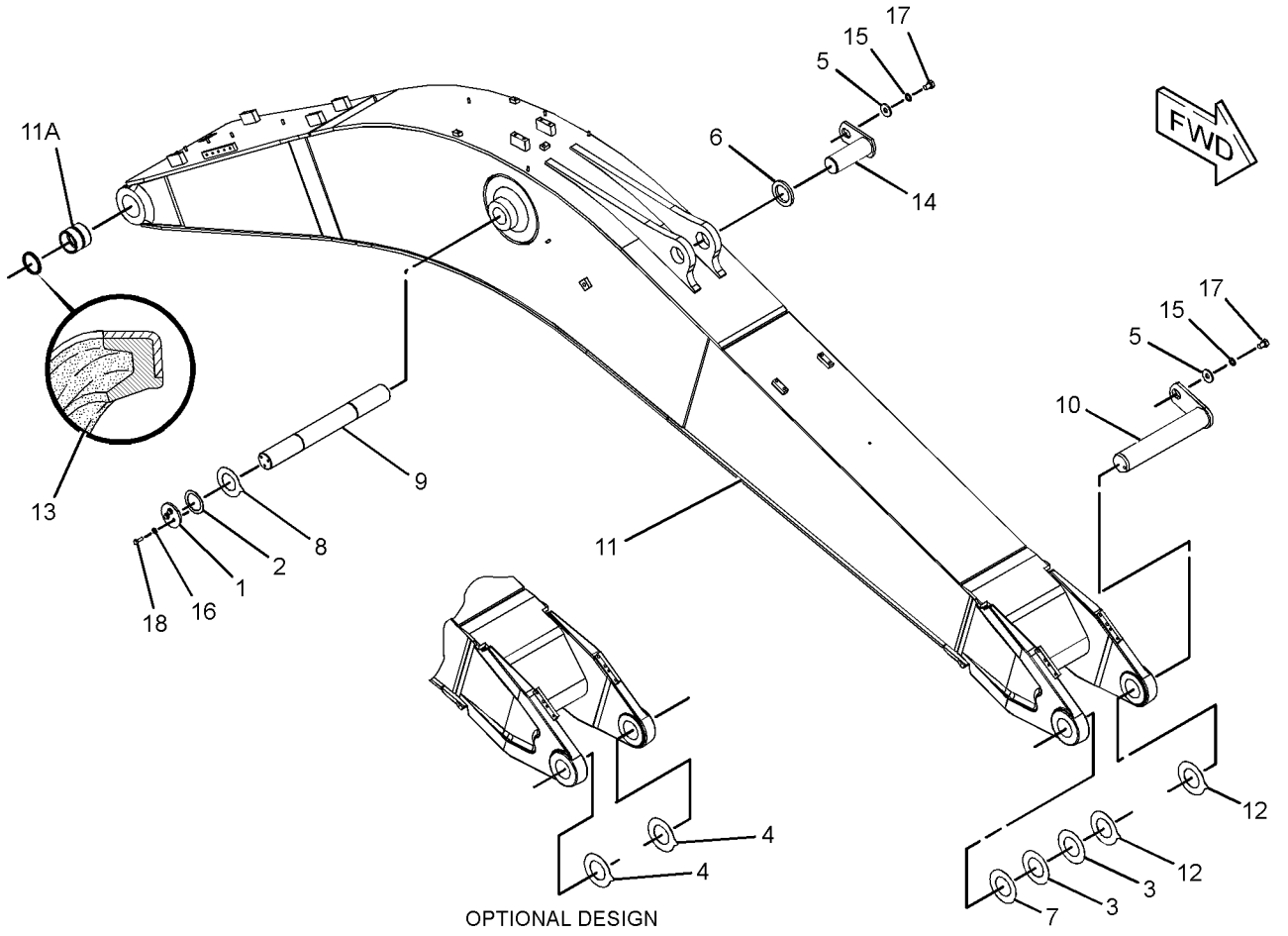

GRAPHIC #1 **<END>** g01473774

290-9198 BOOM GP

S/N: PBB1-UP; KBS1-UP
5.2-M (17.1-FT)
PART OF 415-1396 BOOM AR
AN ATTACHMENT

SMCS-6301, 6302, 6460, 6501, 6516, 6521, 6535, 6536 **i05755708**

NOTE	REF NO	GRAPHIC REF	PART NUMBER	QTY	PART NAME 1 2 3 4 5 6 (PRODUCT LEVEL)	SEE PAGE
	1	1	**4I-3308**	2	PLATE	
	2	1	**4I-3309**	2	SPACER (82X110X3-MM THK)	
B	3	1	**093-0084**	2	SHIM (1-MM THK)	
B	4	1	**093-0116**	2	SHIM (2-MM THK)	
	5	1	**093-0349**	2	WASHER (22X60X6-MM THK)	
	6	1	**093-0363**	1	SPACER (83X120X12-MM THK)	
B	7	1	**113-2127**	1	SHIM (0.5-MM THK)	
	8	1	**166-1486**	2	SHIM (2-MM THK)	
	9	1	**166-1495**	2	SEAL-LIP TYPE	
	10	1	**176-2278**	1	PIN	
	11	1	**264-1702**	1	PIN AS	
	12	1	**290-9199**	1	BOOM & BEARING AS	
	12A	1	**244-4277**	2	BUSHING	
	13	1	**166-1487**	2	SHIM (2-MM THK)	
	14	1	**4I-4809**	1	PIN AS	
	15	1	**451-2176**	2	WASHER-HARD (22X35X3.5-MM THK)	
	16	1	**8T-4223**	6	WASHER-HARD (13.5X25.5X3-MM THK)	
M	17	1	**453-2844**	2	BOLT (M20X2.5X30-MM)	
M	18	1	**8T-4956**	6	BOLT (M12X1.75X35-MM)	

B - USE AS REQUIRED
M - METRIC PART

290-9198 **BOOM GP** (*contd.*) **i05755708**

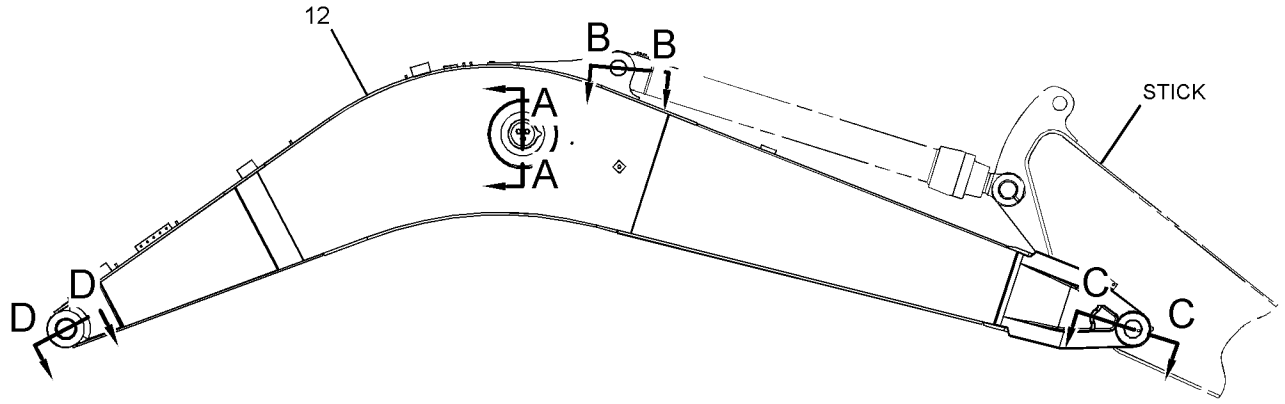

RIGHT SIDE VIEW

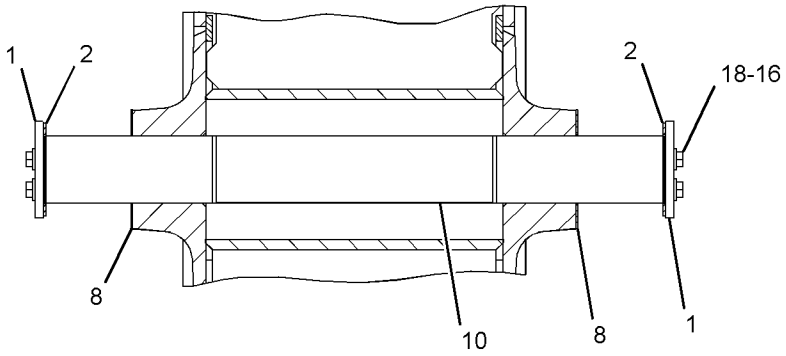

SECTION A-A

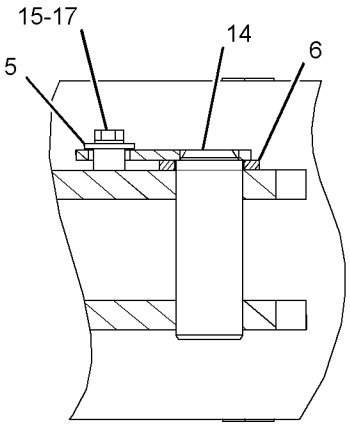

SECTION B-B

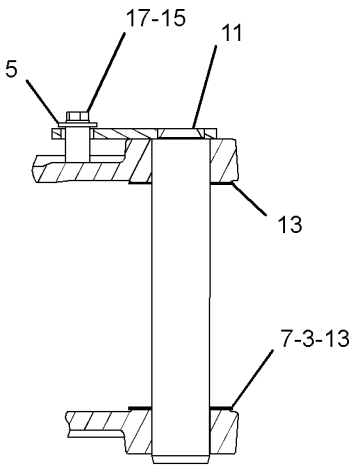

SECTION C-C

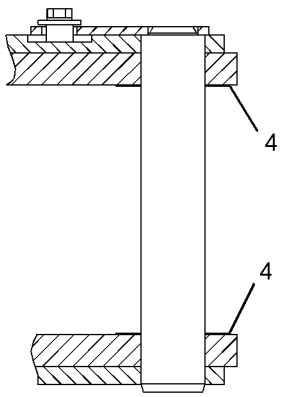

SECTION C-C
(OPTIONAL DESIGN)

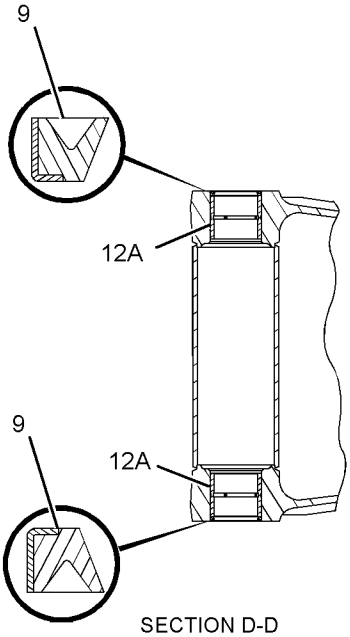

SECTION D-D

GRAPHIC #1 **<END>** g01343417

294-1480 BOOM GP

S/N: PBB1-UP; KBS1-UP
5.7-M (18.7-FT)
PART OF 416-0961 BOOM AR-1 PIECE LONG
AN ATTACHMENT

SMCS-6301, 6302, 6460, 6501, 6516, 6521, 6535, 6536 **i05797980**

NOTE	REF NO	GRAPHIC REF	PART NUMBER	QTY	PART NAME 1 2 3 4 5 6 (PRODUCT LEVEL)	SEE PAGE
	1	1	**4I-3308**	2	PLATE	
	2	1	**4I-3309**	2	SPACER (82X110X3-MM THK)	
B	3	1	**093-0084**	2	SHIM (1-MM THK)	
	4	1	**093-0116**	2	SHIM (2-MM THK)	
	5	1	**093-0349**	2	WASHER (22X60X6-MM THK)	
	6	1	**093-0363**	1	SPACER (83X120X12-MM THK)	
B	7	1	**113-2127**	1	SHIM (0.5-MM THK)	
	8	1	**166-1486**	2	SHIM (2-MM THK)	
	9	1	**166-1495**	2	SEAL-LIP TYPE	
	10	1	**176-2278**	1	PIN	
	11	1	**264-1702**	1	PIN AS	
	12	1	**294-1481**	1	BOOM & BEARING AS	
	12A	1	**244-4277**	2	BUSHING	
	13	1	**166-1487**	2	SHIM (2-MM THK)	
	14	1	**4I-4809**	1	PIN AS	
	15	1	**451-2176**	2	WASHER-HARD (22X35X3.5-MM THK)	
	16	1	**8T-4223**	6	WASHER-HARD (13.5X25.5X3-MM THK)	
M	17	1	**453-2844**	2	BOLT (M20X2.5X30-MM)	
M	18	1	**8T-4956**	6	BOLT (M12X1.75X35-MM)	

B - USE AS REQUIRED
M - METRIC PART

294-1480 **BOOM GP** (*contd.*) **i05797980**

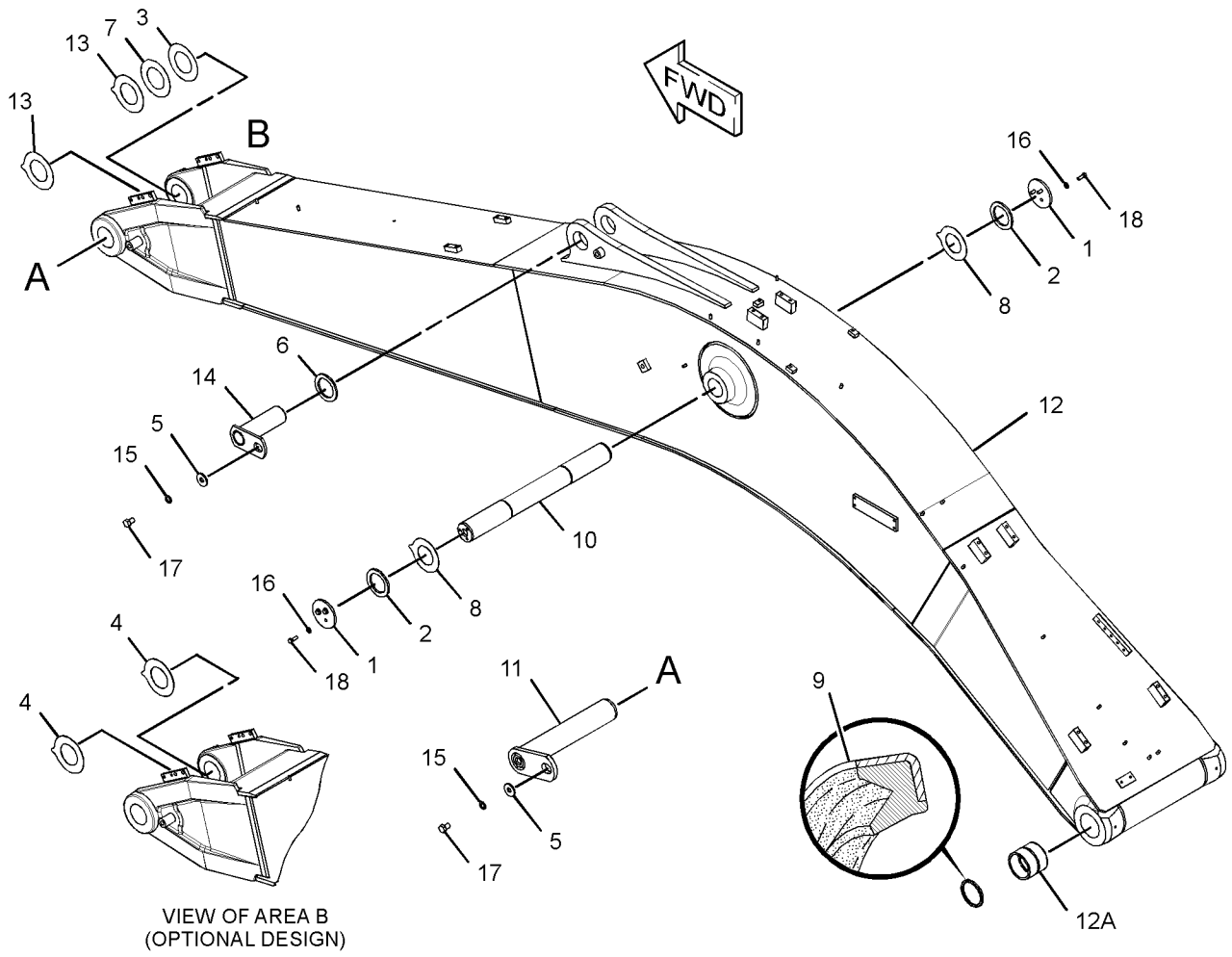

GRAPHIC #1 **<END>** g01409891

418-5104 BOOM GP

S/N: PBB1-UP
8.85-M (29-FT)
PART OF 420-0298 LINKAGE AR-FRONT
AN ATTACHMENT

SMCS-6301, 6302, 6460, 6501, 6516, 6521, 6535, 6536 **i05793805**

NOTE	REF NO	GRAPHIC REF	PART NUMBER	QTY	PART NAME 1 2 3 4 5 6 (PRODUCT LEVEL)	SEE PAGE
	1	1	**4I-3308**	2	PLATE	
	2	1	**4I-3309**	2	SPACER (82X110X3-MM THK)	
	3	1	**4I-4618**	1	PIN AS	
B	4	1	**093-0084**	2	SHIM (1-MM THK)	
	5	1	**093-0349**	2	WASHER (22X60X6-MM THK)	
	6	1	**093-0363**	1	SPACER (83X120X12-MM THK)	
B	7	1	**113-2127**	1	SHIM (0.5-MM THK)	
	8	1	**166-1486**	2	SHIM (2-MM THK)	
	9	1	**176-2278**	1	PIN	
	10	1	**250-2402**	1	PIN AS	
	11	1	**418-5105**	1	BOOM & BEARING AS	
	11A	1	**244-4277**	2	BUSHING	
	12	1	**166-1487**	2	SHIM (2-MM THK)	
	13	1	**166-1495**	2	SEAL-LIP TYPE	
	14	1	**451-2176**	2	WASHER-HARD (22X35X3.5-MM THK)	
	15	1	**8T-4223**	6	WASHER-HARD (13.5X25.5X3-MM THK)	
M	16	1	**453-2844**	2	BOLT (M20X2.5X30-MM)	
M	17	1	**8T-4956**	6	BOLT (M12X1.75X35-MM)	

B - USE AS REQUIRED
M - METRIC PART

418-5104 **BOOM GP (*contd.*)** **i05793805**

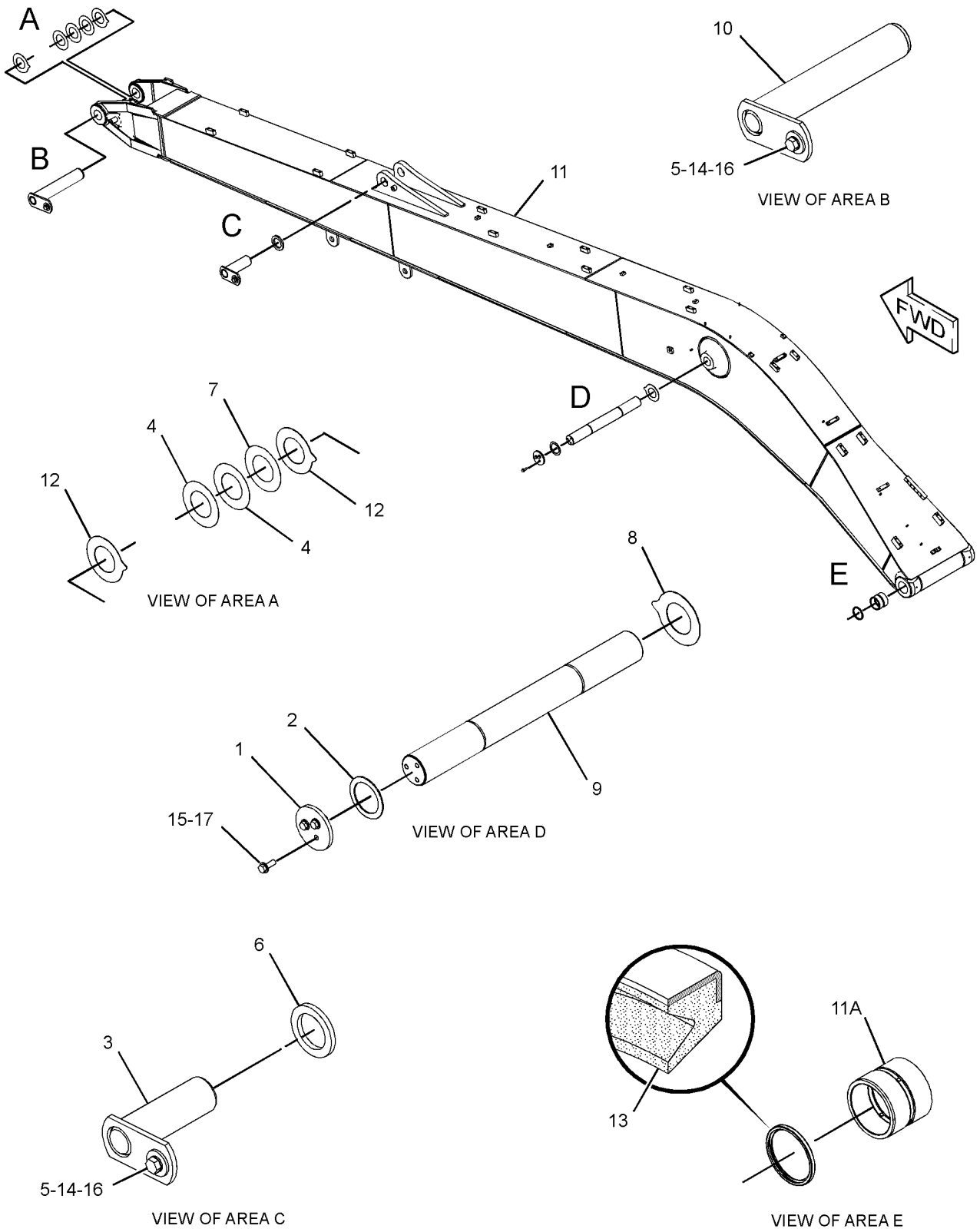

GRAPHIC #1 **<END>** g01231265

5I-7235 LINES GP-GREASE–BOOM

S/N: PBB1-UP

PART OF 420-0298 LINKAGE AR-FRONT

AN ATTACHMENT

SMCS-7510 **i05411389**

NOTE	REF NO	GRAPHIC REF	PART NUMBER	QTY	PART NAME 1 2 3 4 5 6 (PRODUCT LEVEL)	SEE PAGE
	1	1	**3B-8489**	5	FITTING-GREASE	
	2	1	**4I-4543**	1	TUBE AS	
	3	1	**4I-4544**	1	TUBE AS	
I	4	1	**4I-6608**	1	HOSE AS	
I	5	1	**4I-6610**	1	HOSE AS	
					(EACH HOSE AS INCLUDES)	
		1	**105-6431**	1	CONNECTOR	
	6	1	**5K-9243**	2	ELBOW-FLARED	
	7	1	**087-5840**	3	PLATE	
	8	1	**342-1962**	1	HOSE AS	
		1	**105-6431**	1	CONNECTOR	
	9	1	**033-8248**	6	CLIP	
	10	1	**6L-3616**	2	CONNECTOR	
	11	1	**8M-2772**	2	CLIP	
	12	1	**8T-4121**	14	WASHER-HARD (11X21X2.5-MM THK)	
M	13	1	**8T-4133**	2	NUT (M10X1.5-THD)	
M	14	1	**8T-4191**	12	BOLT (M10X1.5X16-MM)	

I - REFER TO HYDRAULIC INFORMATION SYSTEM
M - METRIC PART

5I-7235 **LINES GP-GREASE (*contd.*)** **i05411389**

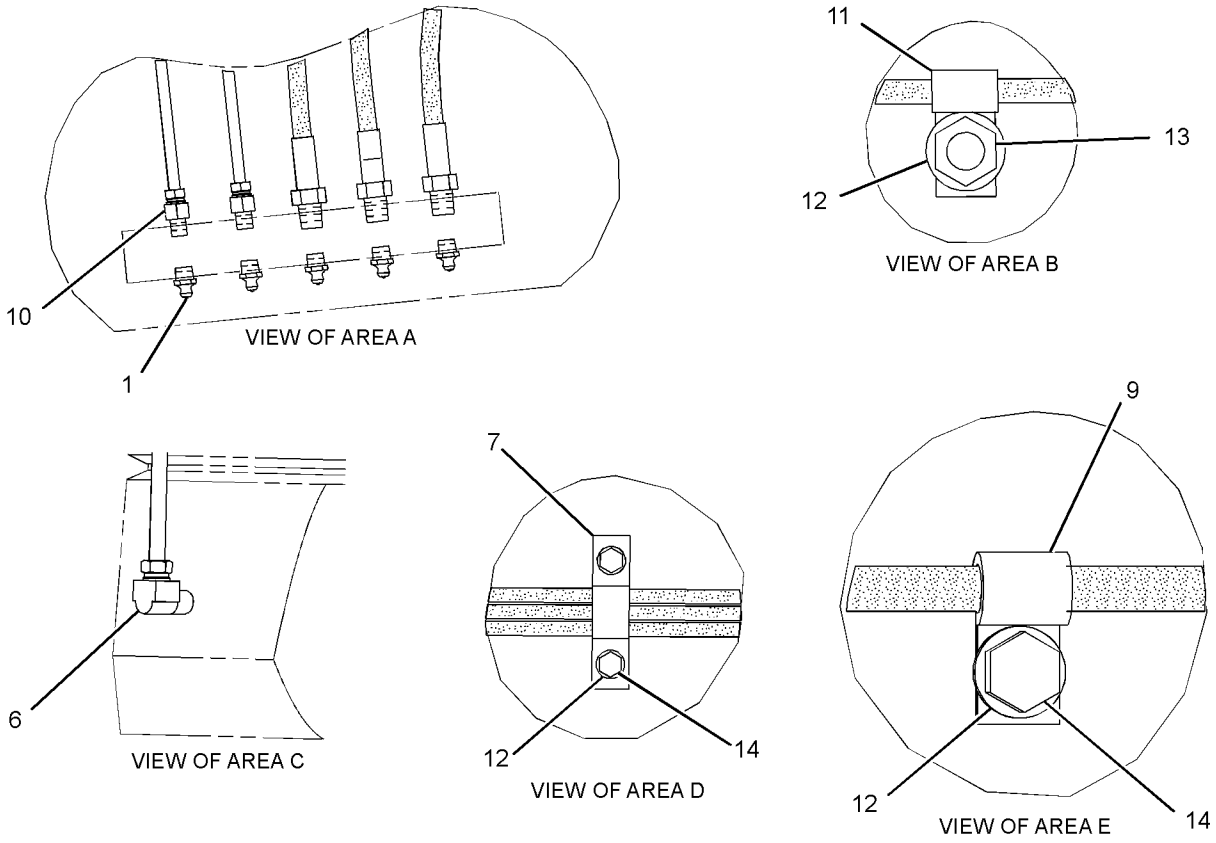

GRAPHIC #1 **<END>** g01937312

127-6625 LINES GP-GREASE–STICK

S/N: PBB1-UP
PART OF 420-0298 LINKAGE AR-FRONT
AN ATTACHMENT

SMCS-7510 **i05425107**

NOTE	REF NO	GRAPHIC REF	PART NUMBER	QTY	PART NAME 1 2 3 4 5 6 (PRODUCT LEVEL)	SEE PAGE
	1	1	**5I-7238**	2	TUBE AS	
	2	1	**5I-7239**	1	TUBE AS	
	3	1	**132-1531**	1	TUBE AS	
I	4	1	**087-5966**	2	HOSE AS	
					(EACH INCLUDES)	
		1	**105-6431**	1	CONNECTOR	
M	5	1	**8T-4191**	10	BOLT (M10X1.5X16-MM)	
	6	1	**8T-4121**	10	WASHER-HARD (11X21X2.5-MM THK)	
	7	1	**8M-2772**	10	CLIP	
	8	1	**3B-8489**	3	FITTING-GREASE	
	9	1	**6L-3616**	3	CONNECTOR	
	10	1	**5K-9242**	2	UNION-FLARED	
	11	1	**5H-8936**	1	ADAPTER	
	12	1	**5K-9243**	1	ELBOW-FLARED	
	13	1	**6V-3342**	1	ELBOW-PIPE	

I - REFER TO HYDRAULIC INFORMATION SYSTEM
M - METRIC PART

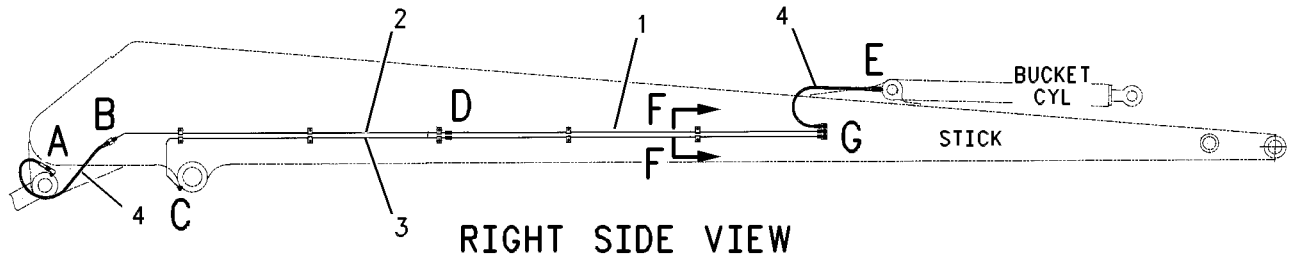

RIGHT SIDE VIEW

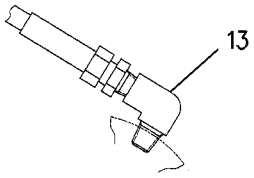

VIEW OF AREA A

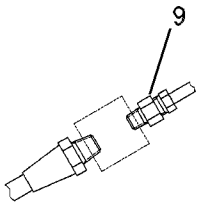

VIEW OF AREA B

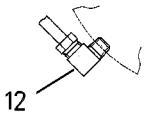

VIEW OF AREA C

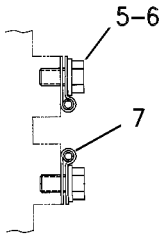

SECTION F-F

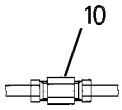

VIEW OF AREA D

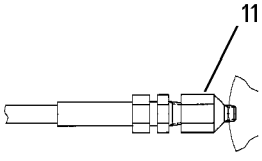

VIEW OF AREA E

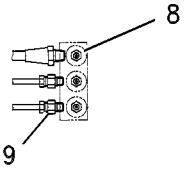

VIEW OF AREA G

GRAPHIC #1 **<END>** g00420078

172-2939 LINES GP-GREASE–BOOM

S/N: PBB1-UP; KBS1-UP
PART OF 415-1396 BOOM AR
AN ATTACHMENT

SMCS-7510 **i05411790**

NOTE	REF NO	GRAPHIC REF	PART NUMBER	QTY	PART NAME 1 2 3 4 5 6 (PRODUCT LEVEL)	SEE PAGE
	1	1	**8M-2772**	2	CLIP	
M	2	1	**8T-4133**	5	NUT (M10X1.5-THD)	
	3	1	**8T-4121**	8	WASHER-HARD (11X21X2.5-MM THK)	
	4	1	**166-1579**	3	CLIP	
	5	1	**033-8248**	3	CLIP	
M	6	1	**8T-4191**	3	BOLT (M10X1.5X16-MM)	
	7	1	**166-3152**	1	HOSE AS	
I	8	1	**115-2678**	1	HOSE AS	
					(EACH HOSE AS INCLUDES)	
		1	**105-6431**	1	CONNECTOR	
	9	1	**3B-8489**	5	FITTING-GREASE	
	10	1	**6L-3616**	2	CONNECTOR	
	11	1	**5K-9243**	2	ELBOW-FLARED	
	12	1	**4I-4544**	1	TUBE AS	
	13	1	**4I-4543**	1	TUBE AS	
I	14	1	**115-2677**	1	HOSE AS	
		1	**105-6431**	1	CONNECTOR	

I - REFER TO HYDRAULIC INFORMATION SYSTEM
M - METRIC PART

172-2939 **LINES GP-GREASE (*contd.*)** **i05411790**

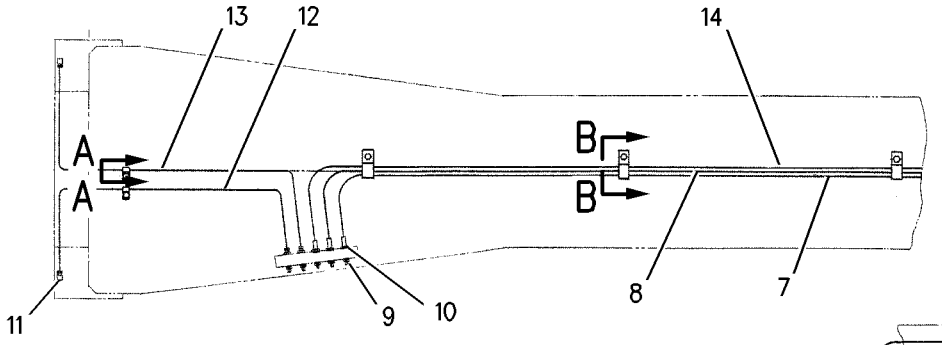

VIEW D-D

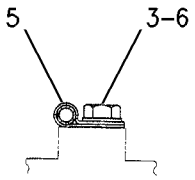

SECTION C-C

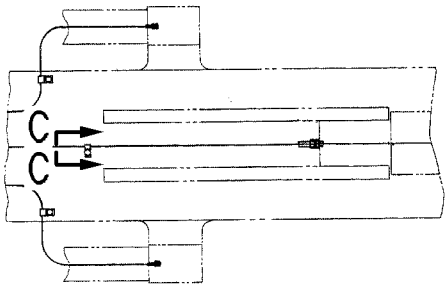

VIEW E-E

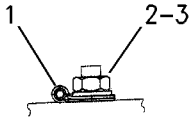

SECTION A-A

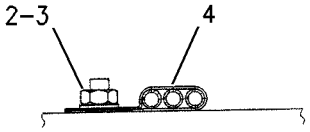

SECTION B-B

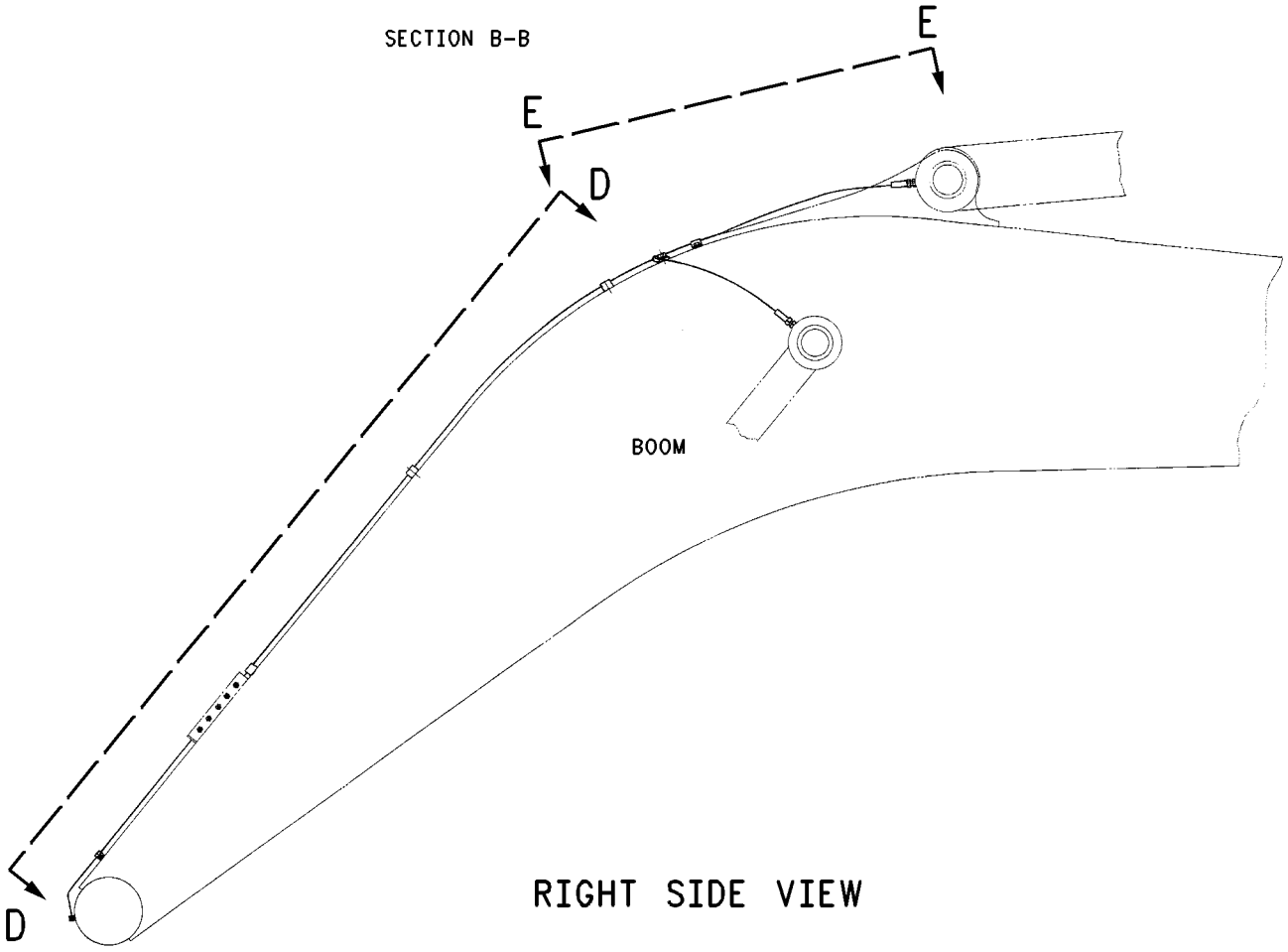

RIGHT SIDE VIEW

GRAPHIC #1 **<END>** g00675837

241-7286 LINES GP-GREASE–BOOM

S/N: PBB1-UP; KBS1-UP

PART OF 359-2434, 415-1399, 415-8447, 416-0961 BOOM AR-1 PIECE LONG

AN ATTACHMENT

SMCS-7510 **i05411713**

NOTE	REF NO	GRAPHIC REF	PART NUMBER	QTY	PART NAME 1 2 3 4 5 6 (PRODUCT LEVEL)	SEE PAGE
	1	1	**8M-2772**	2	CLIP	
M	2	1	**8T-4133**	5	NUT (M10X1.5-THD)	
	3	1	**8T-4121**	8	WASHER-HARD (11X21X2.5-MM THK)	
	4	1	**166-1579**	3	CLIP	
	5	1	**033-8248**	3	CLIP	
M	6	1	**8T-4191**	3	BOLT (M10X1.5X16-MM)	
	8	1	**134-9137**	1	HOSE AS	
		1	**105-6431**	1	CONNECTOR	
	9	1	**3B-8489**	5	FITTING-GREASE	
	10	1	**6L-3616**	2	CONNECTOR	
	11	1	**5K-9243**	2	ELBOW-FLARED	
	12	1	**4I-4544**	1	TUBE AS	
	13	1	**4I-4543**	1	TUBE AS	
	14	1	**216-6682**	2	HOSE AS	
					(EACH INCLUDES)	
		1	**105-6431**	1	CONNECTOR	

M - METRIC PART

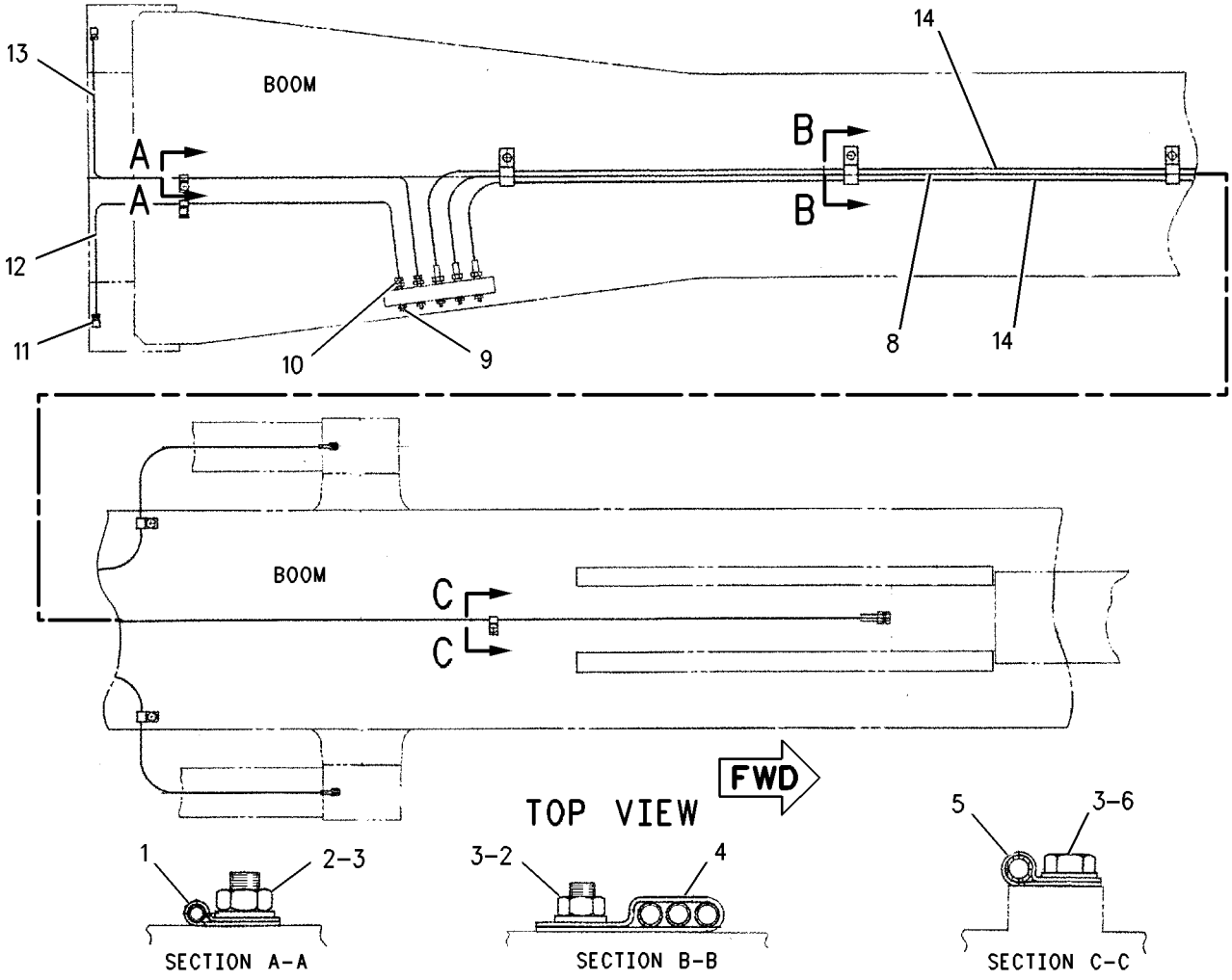

GRAPHIC #1 **<END>** g00781541

267-0138 LINES GP-GREASE–STICK

S/N: PBB1-UP; KBS1-UP
PART OF 298-4127 STICK AR-HOE
AN ATTACHMENT

SMCS-7510 **i05425579**

NOTE	REF NO	GRAPHIC REF	PART NUMBER	QTY	PART NAME 1 2 3 4 5 6 (PRODUCT LEVEL)	SEE PAGE
	1	1	**3B-8489**	3	FITTING-GREASE	
	2	1	**5K-9242**	3	UNION-FLARED	
	3	1	**6I-5134**	1	TUBE AS	
	4	1	**6I-5135**	1	TUBE AS	
	5	1	**6I-5136**	1	TUBE AS	
	6	1	**6V-3342**	1	ELBOW-PIPE	
I	7	1	**7Y-2670**	1	HOSE AS	
		1	**105-6431**	1	CONNECTOR	
	8	1	**087-5838**	2	PLATE	
	9	1	**267-0139**	1	TUBE AS	
	10	1	**267-0140**	1	TUBE AS	
	11	1	**267-0141**	1	TUBE AS	
	12	1	**5K-2298**	1	CLIP	
	13	1	**6L-3616**	6	CONNECTOR	
	14	1	**8M-2772**	3	CLIP	
	15	1	**8T-4121**	8	WASHER-HARD (11X21X2.5-MM THK)	
M	16	1	**8T-4133**	8	NUT (M10X1.5-THD)	

I - REFER TO HYDRAULIC INFORMATION SYSTEM
M - METRIC PART

267-0138 **LINES GP-GREASE (*contd.*)** **i05425579**

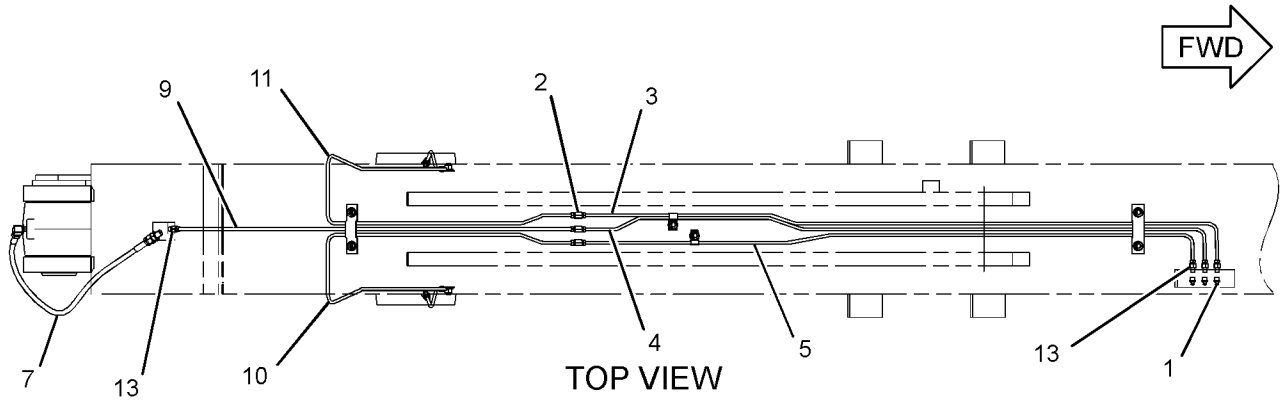

TOP VIEW

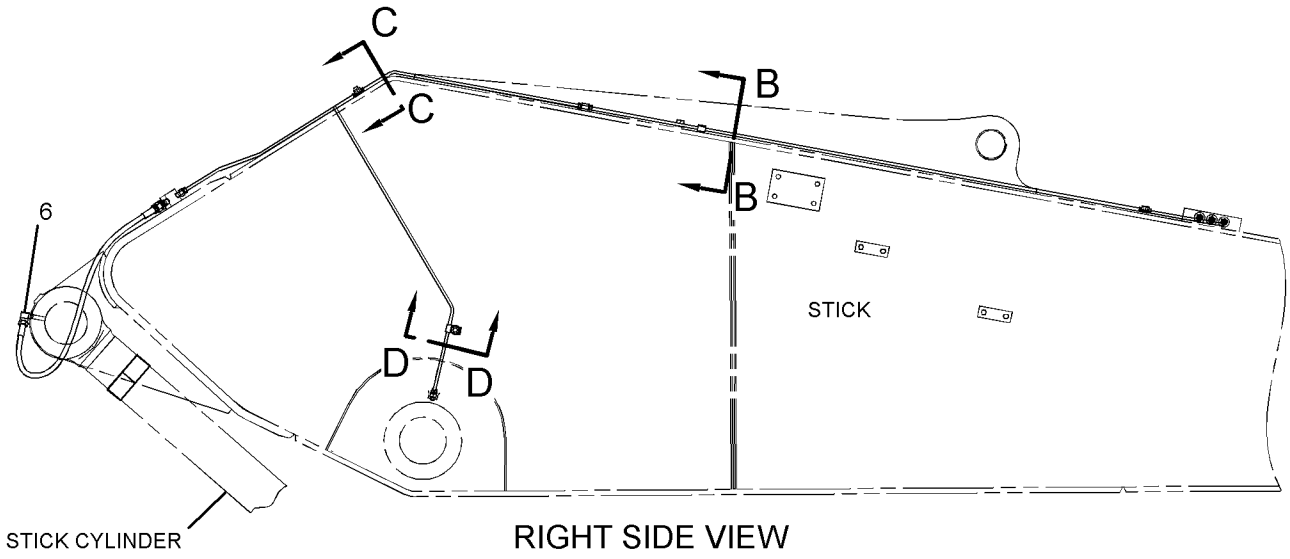

RIGHT SIDE VIEW

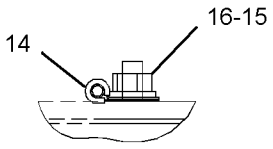

SECTION D-D

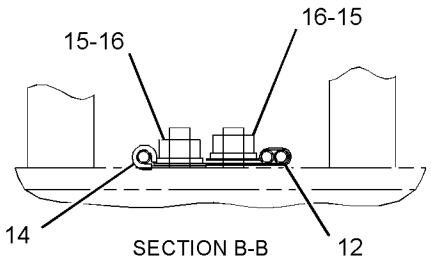

SECTION B-B

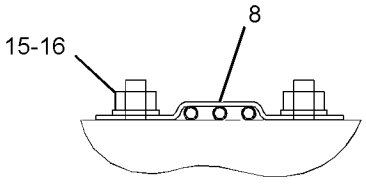

SECTION C-C

GRAPHIC #1 **<END>** g01229386

359-2435 LINKAGE AR-BUCKET—B1-FAMILY, WITH LIFTING EYE

S/N: KBS1-UP
PART OF 456-0824, 456-0932, 456-0942 DISTRIBUTION AR
AN ATTACHMENT

SMCS-6513 **i04758470**

NOTE	PART NUMBER	QTY	PART NAME 1 2 3 4 5 6 (PRODUCT LEVEL)	SEE PAGE
Y	*364-0938*	1	CYLINDER & LINES GP-BUCKET	347
Y	*260-2288*	1	LINKAGE GP-BUCKET (B1-FAMILY, WITH LIFTING EYE)	721

Y - SEPARATE ILLUSTRATION

<END>

416-1005 LINKAGE AR-BUCKET—CB2-FAMILY

S/N: PBB1-UP; KBS1-UP
WITH LIFTING EYE
AN ATTACHMENT

SMCS-6513 **i05194032**

NOTE	PART NUMBER	QTY	PART NAME 1 2 3 4 5 6 (PRODUCT LEVEL)	SEE PAGE
Y	*341-2181*	1	CYLINDER & LINES GP-BUCKET	347
Y	*251-2597*	1	LINKAGE GP-BUCKET (CB2-FAMILY)	719

Y - SEPARATE ILLUSTRATION

<END>

416-1008 LINKAGE AR-BUCKET—B1-FAMILY, WITHOUT LIFTING EYE

S/N: PBB1-UP; KBS1-UP
PART OF 456-0825, 456-0826, 456-0922, 456-0923 DISTRIBUTION AR
AN ATTACHMENT

SMCS-6513 **i05278111**

NOTE	PART NUMBER	QTY	PART NAME 1 2 3 4 5 6 (PRODUCT LEVEL)	SEE PAGE
Y	*341-2813*	1	CYLINDER & LINES GP-BUCKET	347
Y	*332-5077*	1	LINKAGE GP-BUCKET (B1-FAMILY)	724

Y - SEPARATE ILLUSTRATION

<END>

416-1009 LINKAGE AR-BUCKET—B1-FAMILY, WITH LIFTING EYE

S/N: PBB1-UP; KBS1-UP
PART OF 456-0817, 456-0818, 456-0819, 456-0820, 456-0821, 456-0823, 456-0933, 456-0943, 456-1026, 456-1027 DISTRIBUTION AR
AN ATTACHMENT

SMCS-6513 **i05197789**

NOTE	PART NUMBER	QTY	PART NAME 1 2 3 4 5 6 (PRODUCT LEVEL)	SEE PAGE
Y	*341-2813*	1	CYLINDER & LINES GP-BUCKET	347
Y	*260-2288*	1	LINKAGE GP-BUCKET (B1-FAMILY, WITH LIFTING EYE)	721

Y - SEPARATE ILLUSTRATION

<END>

416-1011 LINKAGE AR-BUCKET—B1-FAMILY, WITH LIFTING EYE

S/N: PBB1-UP; KBS1-UP
GRADE CONTROL
AN ATTACHMENT

SMCS-6513 **i05196469**

NOTE	PART NUMBER	QTY	PART NAME 1 2 3 4 5 6 (PRODUCT LEVEL)	SEE PAGE
Y	*341-2813*	1	CYLINDER & LINES GP-BUCKET	347
Y	*282-4539*	1	LINKAGE GP-BUCKET (B1-FAMILY)	723

Y - SEPARATE ILLUSTRATION

<END>

417-9771 LINKAGE AR-BUCKET—B1-FAMILY

S/N: PBB1-UP
WITHOUT LIFT EYE
AN ATTACHMENT

SMCS-6513 **i05120432**

NOTE	PART NUMBER	QTY	PART NAME 1 2 3 4 5 6 (PRODUCT LEVEL)	SEE PAGE
Y	*341-2813*	1	CYLINDER & LINES GP-BUCKET	347
Y	*383-2514*	1	LINKAGE GP-BUCKET (B1-FAMILY)	725

Y - SEPARATE ILLUSTRATION

<END>

420-0298 LINKAGE AR-FRONT—LONG REACH

S/N: PBB1-UP
AN ATTACHMENT

SMCS-6107 **i05219067**

NOTE	PART NUMBER	QTY	PART NAME 1 2 3 4 5 6 (PRODUCT LEVEL)	SEE PAGE
Y	*418-5104*	1	BOOM GP	705
Y	*379-7398*	1	COUNTERWEIGHT & MOUNTING GP	245
Y	*341-2788*	1	CYLINDER & LINES GP-BOOM (LH)	346
Y	*341-2789*	1	CYLINDER & LINES GP-BOOM (RH)	346
Y	*418-9085*	1	CYLINDER & LINES GP-BUCKET	348
Y	*268-7256*	1	CYLINDER & LINES GP-STICK	348
Y	*302-9210*	1	FILM GP (LONG REACH)	981
Y	*259-5043*	1	LIGHTING GP-FLOOD (BOOM, LH)	138
Y	*268-7046*	1	LINES GP-BOOM	446
Y	*127-6624*	1	LINES GP-BUCKET CYLINDER	457
Y	*268-7074*	1	LINES GP-FRONT	479
Y	*5I-7235*	1	LINES GP-GREASE (BOOM)	707
Y	*127-6625*	1	LINES GP-GREASE (STICK)	709
Y	*248-7831*	1	LINKAGE GP-BUCKET	717
Y	*116-9115*	1	LOCK GP-TRANSPORT	726
Y	*418-5108*	1	STICK GP-HOE	743

Y - SEPARATE ILLUSTRATION

<END>

248-7831 LINKAGE GP-BUCKET

S/N: PBB1-UP

PART OF 420-0298 LINKAGE AR-FRONT

AN ATTACHMENT

SMCS-6513 **i05717630**

NOTE	REF NO	GRAPHIC REF	PART NUMBER	QTY	PART NAME 1 2 3 4 5 6 (PRODUCT LEVEL)	SEE PAGE
	1	1	**248-7822**	1	LINK	
	2	1	**248-7820**	1	PIN	
	3	1	**248-7832**	1	LINK & BEARING AS	
	3A	1	**248-7835**	2	BUSHING	
	3B	1	**229-1092**	2	BUSHING	
	4	1	**3B-8489**	5	FITTING-GREASE	
M	5	1	**096-4876**	6	NUT (M14X2-THD)	
M	6	1	**099-0707**	1	BOLT (M14X2X115-MM)	
	7	1	**248-7823**	1	LINK AS	
M	8	1	**099-0724**	2	BOLT (M14X2X145-MM)	
	9	1	**086-0523**	2	PIN	
	10	1	**367-8465**	4	SEAL-O-RING	
	11	1	**235-7679**	4	SEAL-LIP TYPE	
	12	1	**248-7836**	2	SEAL-LIP TYPE	
	13	1	**166-1482**	2	SHIM (2-MM THK)	
	14	1	**7I-6843**	1	PIN	
M	15	1	**236-6365**	1	BOLT (M16X2X150-MM)	
M	16	1	**451-2183**	2	NUT (M16X2-THD)	

M - METRIC PART

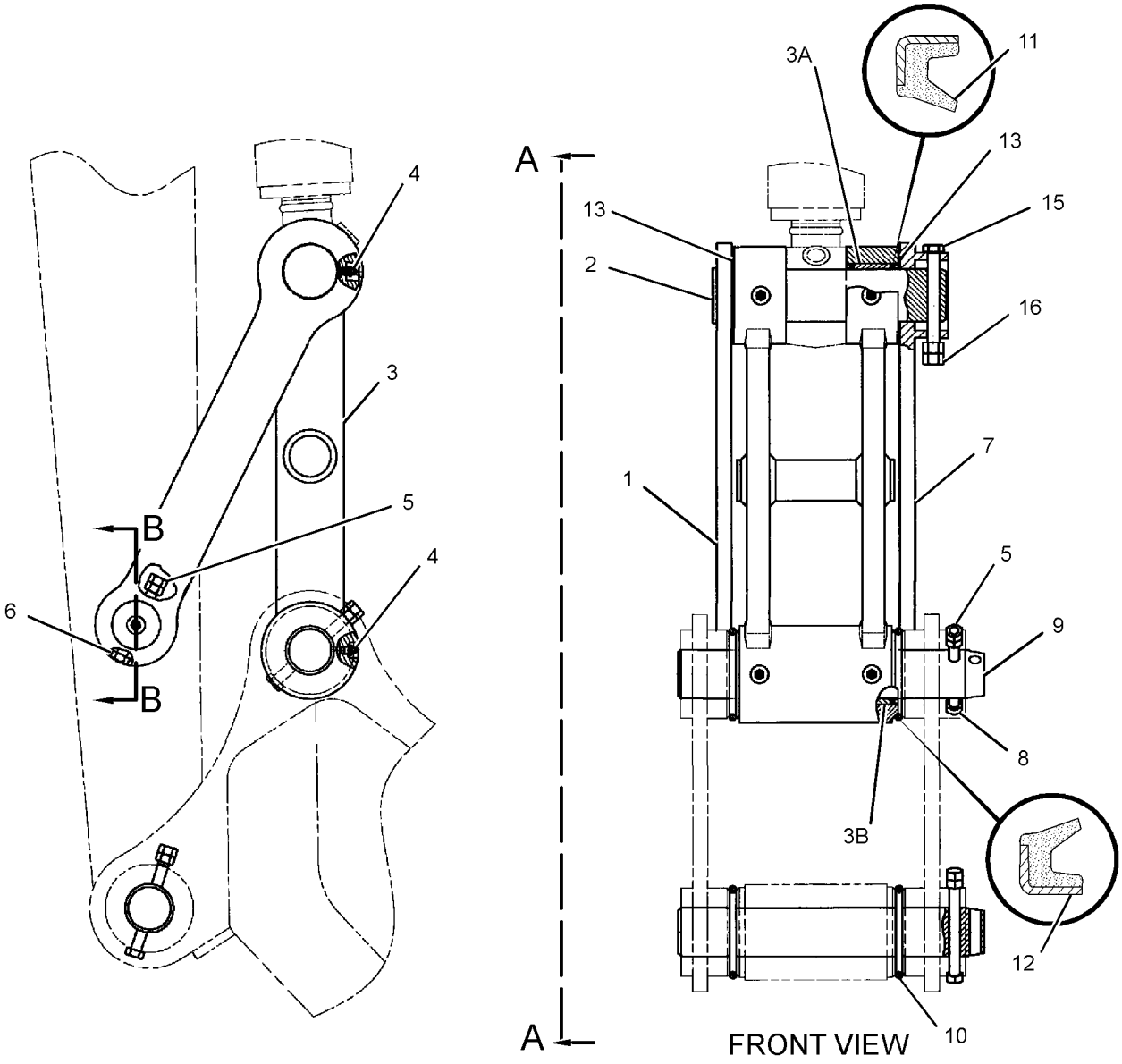

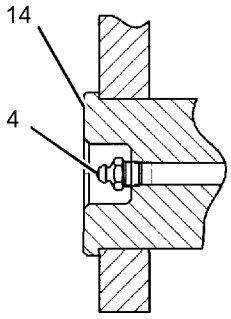

SECTION B-B

GRAPHIC #1 **<END>** g01209947

251-2597 LINKAGE GP-BUCKET—CB2-FAMILY

S/N: PBB1-UP; KBS1-UP
PART OF 416-1005 LINKAGE AR-BUCKET
AN ATTACHMENT

SMCS-6513 **i05749935**

NOTE	REF NO	GRAPHIC REF	PART NUMBER	QTY	PART NAME 1 2 3 4 5 6 (PRODUCT LEVEL)	SEE PAGE
	1	1	**3B-8489**	5	FITTING-GREASE	
M	2	1	**451-2184**	4	NUT (M20X2.5-THD)	
	3	1	**093-0349**	2	WASHER (22X60X6-MM THK)	
	4	1	**186-5662**	1	PIN	
	5	1	**234-3927**	1	LINK AS	
	6	1	**234-3928**	1	LINK	
	7	1	**234-3930**	1	PIN	
	8	1	**234-3931**	2	PIN AS	
	9	1	**254-2996**	1	LINK & BEARING AS	
	9A	1	**228-5615**	4	BUSHING	
	10	1	**367-8468**	4	SEAL-O-RING	
	11	1	**166-1487**	2	SHIM (2-MM THK)	
	12	1	**166-1495**	6	SEAL-LIP TYPE	
M	13	1	**186-5649**	1	BOLT (M20X2.5X160-MM)	
M	14	1	**189-3925**	1	BOLT (M20X2.5X170-MM)	
	15	1	**451-2176**	2	WASHER-HARD (22X35X3.5-MM THK)	
M	16	1	**453-2845**	2	BOLT (M20X2.5X40-MM)	

M - METRIC PART

251-2597 **LINKAGE GP-BUCKET (*contd.*)** **i05749935**

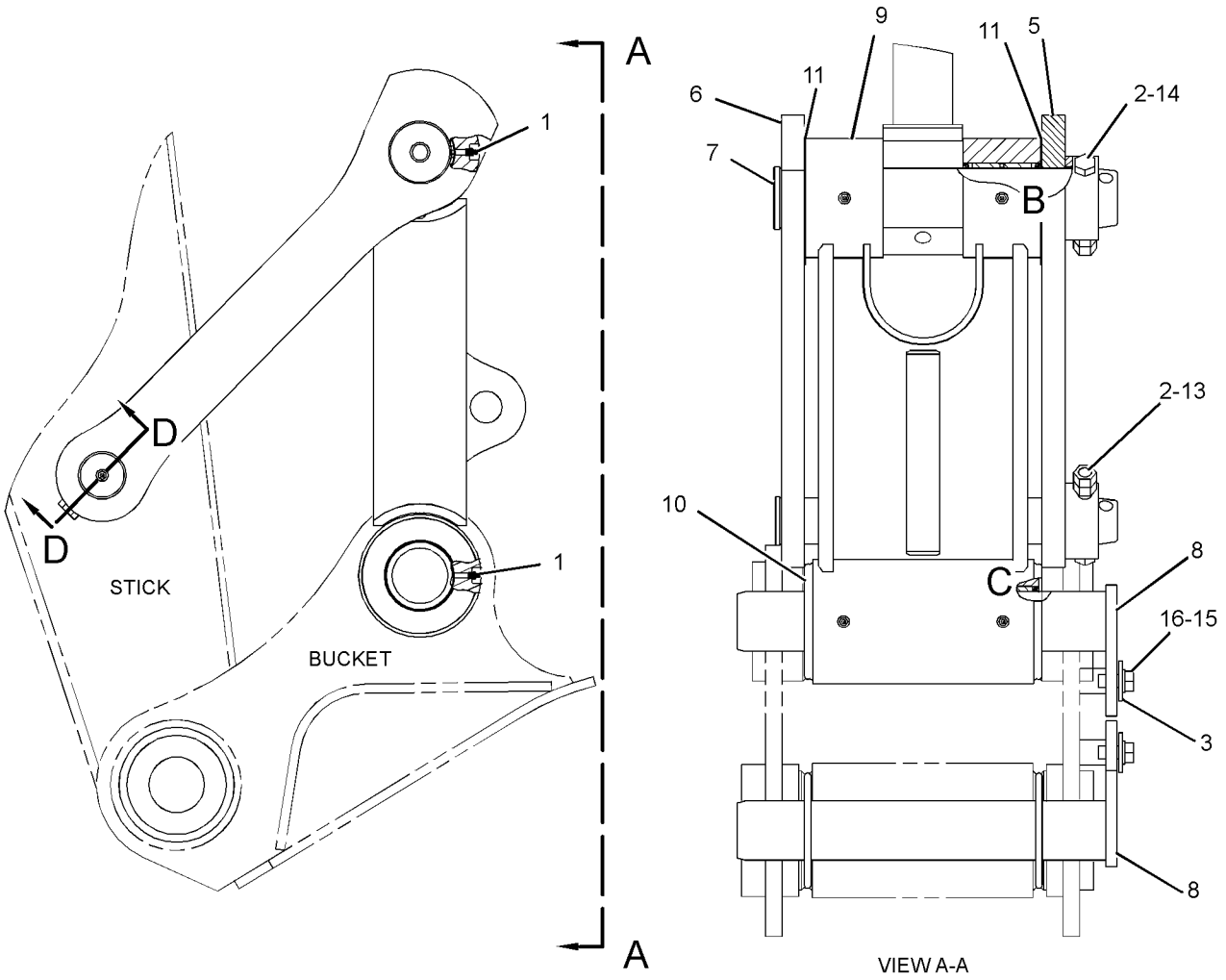

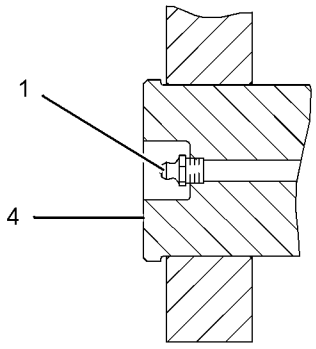

SECTION D-D

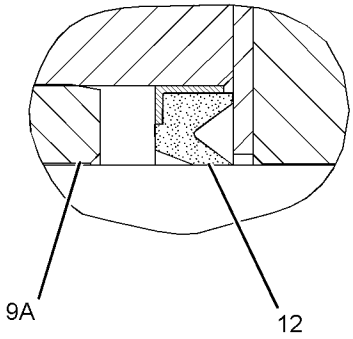

VIEW OF AREA B

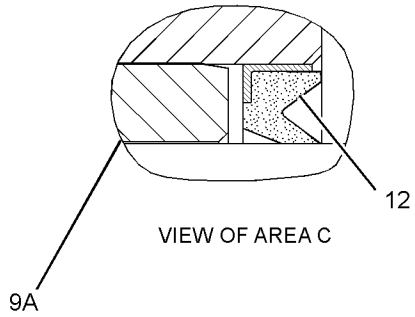

VIEW OF AREA C

GRAPHIC #1 **<END>** g03124839

260-2288 LINKAGE GP-BUCKET—B1-FAMILY, WITH LIFTING EYE

S/N: PBB1-UP; KBS1-UP

PART OF 359-2435, 416-1009 LINKAGE AR-BUCKET

AN ATTACHMENT

SMCS-6513 **i05656832**

NOTE	REF NO	GRAPHIC REF	PART NUMBER	QTY	PART NAME 1 2 3 4 5 6 (PRODUCT LEVEL)	SEE PAGE
	1	1	**3B-8489**	5	FITTING-GREASE	
	2	1	**087-5805**	2	PIN	
	3	1	**166-1486**	2	SHIM (2-MM THK)	
	4	1	**244-4254**	1	LINK AS	
	5	1	**244-4255**	1	LINK	
	6	1	**254-3052**	1	PIN	
	7	1	**254-3053**	1	PIN	
	8	1	**260-2289**	1	LINK & BEARING AS	
	8A	1	**244-4360**	2	BUSHING	
	8B	1	**240-2912**	2	BUSHING	
	9	1	**367-8467**	4	SEAL-O-RING	
	10	1	**166-1494**	6	SEAL-LIP TYPE	
M	11	1	**236-6365**	2	BOLT (M16X2X150-MM)	
M	12	1	**188-2315**	2	BOLT (M16X2X195-MM)	
M	13	1	**451-2183**	8	NUT (M16X2-THD)	

M - METRIC PART

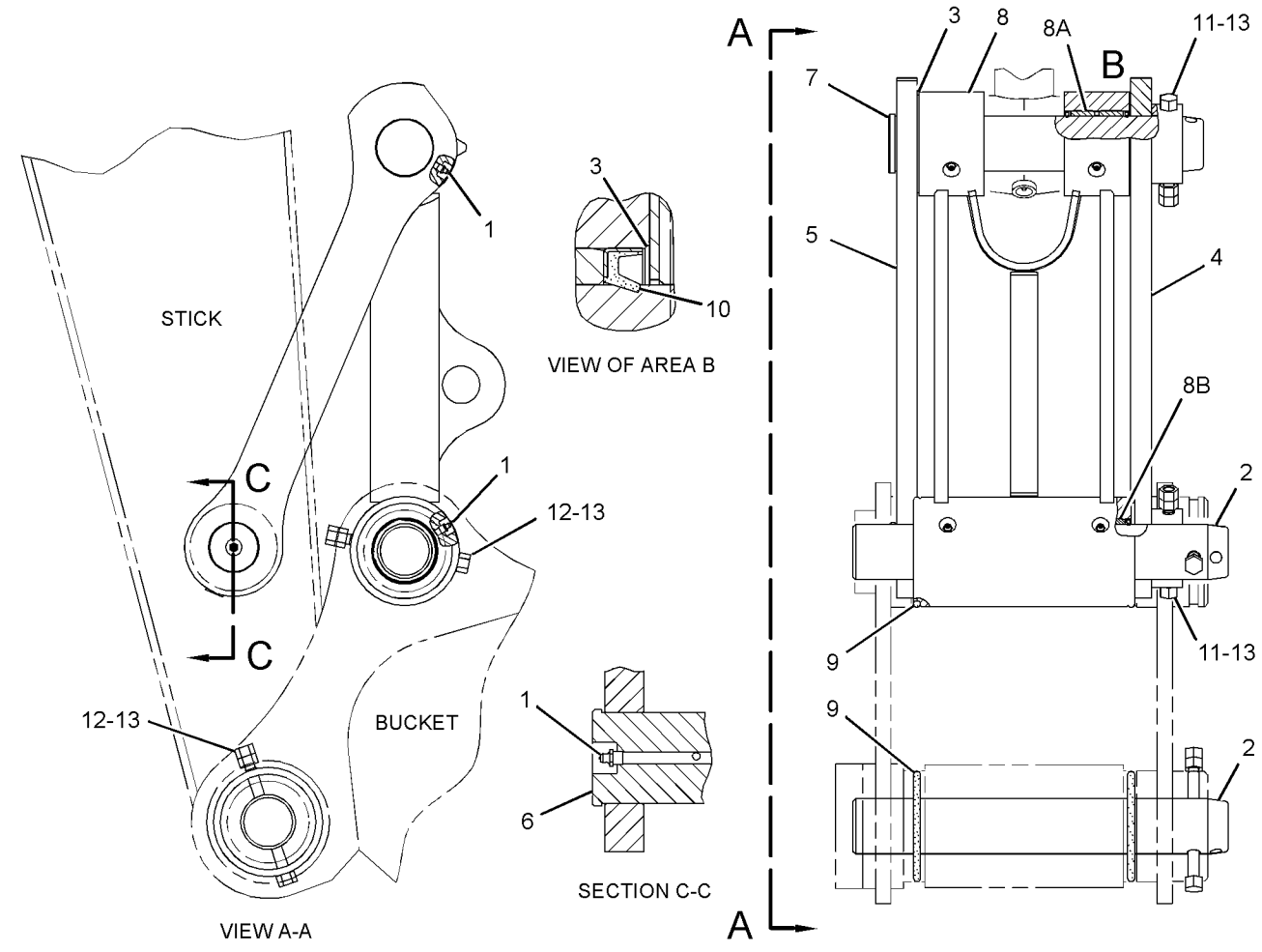

GRAPHIC #1

<END>

g03414224

262-3497 LINKAGE GP-BUCKET—B1-FAMILY, QUICK COUPLER

S/N: PBB1-UP; KBS1-UP
PART OF 262-3494 COUPLER AR-QUICK
AN ATTACHMENT

SMCS-6513 **i05738432**

NOTE	REF NO	GRAPHIC REF	PART NUMBER	QTY	PART NAME 1 2 3 4 5 6 (PRODUCT LEVEL)	SEE PAGE
M	1	1	**236-6365**	2	BOLT (M16X2X150-MM)	
M	2	1	**236-6366**	2	BOLT (M16X2X195-MM)	
	3	1	**3B-8489**	5	FITTING-GREASE	
	4	1	**244-4255**	1	LINK	
	5	1	**244-4254**	1	LINK AS	
	6	1	**260-2289**	1	LINK & BEARING AS	
	6A	1	**244-4360**	2	BUSHING	
	6B	1	**240-2912**	2	BUSHING	
M	7	1	**451-2183**	8	NUT (M16X2-THD)	
	8	1	**087-5805**	2	PIN	
	9	1	**254-3052**	1	PIN	
	10	1	**254-3053**	1	PIN	
	11	1	**166-1494**	6	SEAL-LIP TYPE	
	12	1	**166-1486**	2	SHIM (2-MM THK)	
	13	1	**367-8467**	4	SEAL-O-RING	

M - METRIC PART

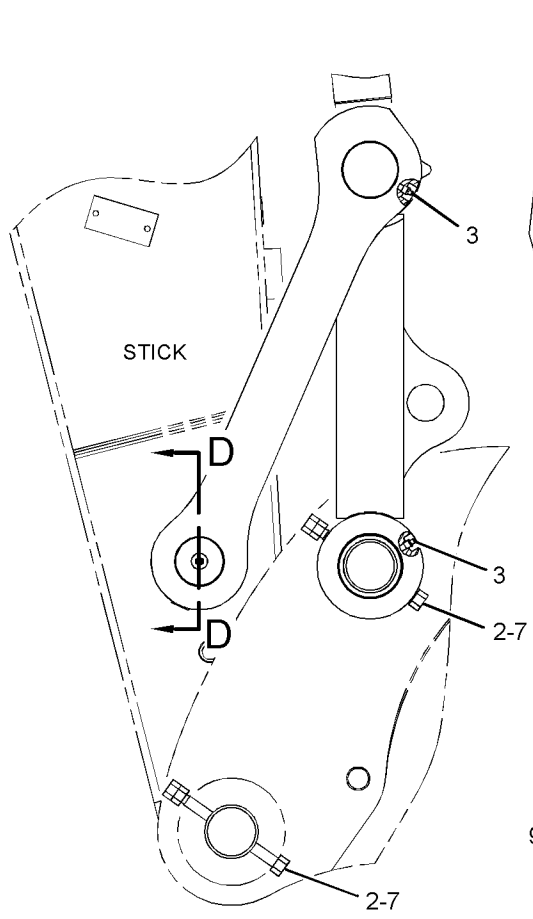

RIGHT SIDE VIEW

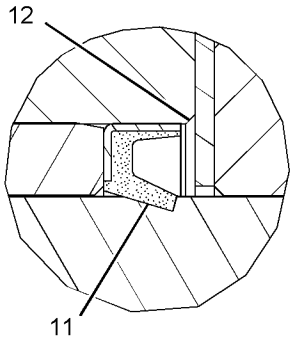

VIEW OF AREA B

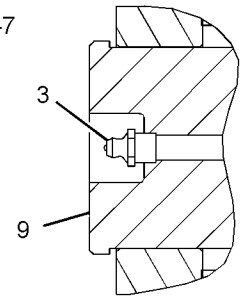

SECTION D-D

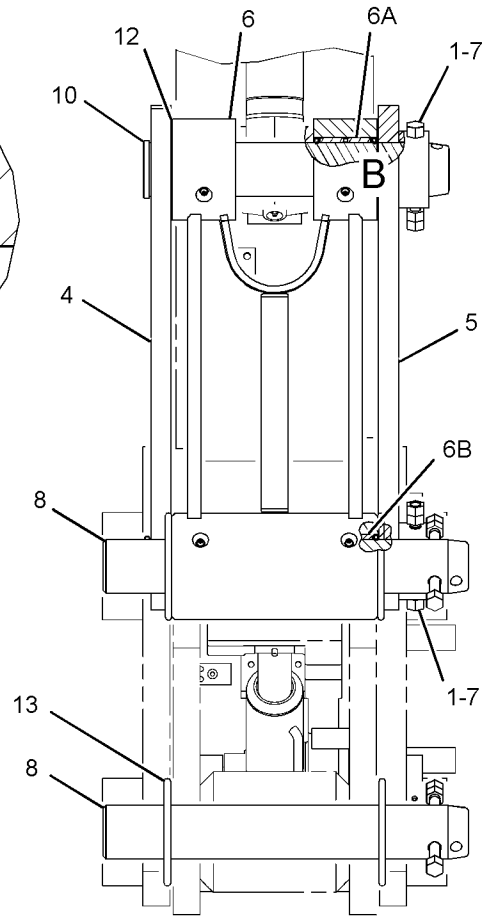

FRONT VIEW

GRAPHIC #1

<END>

g01313822

282-4539 LINKAGE GP-BUCKET–B1-FAMILY

S/N: PBB1-UP; KBS1-UP
GRADE CONTROL
PART OF 416-1011 LINKAGE AR-BUCKET
AN ATTACHMENT

SMCS-6513 **i05725413**

NOTE	REF NO	GRAPHIC REF	PART NUMBER	QTY	PART NAME 1 2 3 4 5 6 (PRODUCT LEVEL)	SEE PAGE
	1	1	**3B-8489**	5	FITTING-GREASE	
	2	1	**087-5805**	2	PIN	
	3	1	**166-1486**	2	SHIM (2-MM THK)	
	4	1	**244-4255**	1	LINK	
	5	1	**254-3052**	1	PIN	
	6	1	**254-3053**	1	PIN	
	7	1	**260-2289**	1	LINK & BEARING AS	
	7A	1	**244-4360**	2	BUSHING	
	7B	1	**240-2912**	2	BUSHING	
	8	1	**282-4540**	1	LINK AS	
	9	1	**367-8467**	4	SEAL-O-RING	
	10	1	**166-1494**	6	SEAL-LIP TYPE	
M	11	1	**236-6365**	2	BOLT (M16X2X150-MM)	
M	12	1	**236-6366**	2	BOLT (M16X2X195-MM)	
M	13	1	**451-2183**	8	NUT (M16X2-THD)	

M - METRIC PART

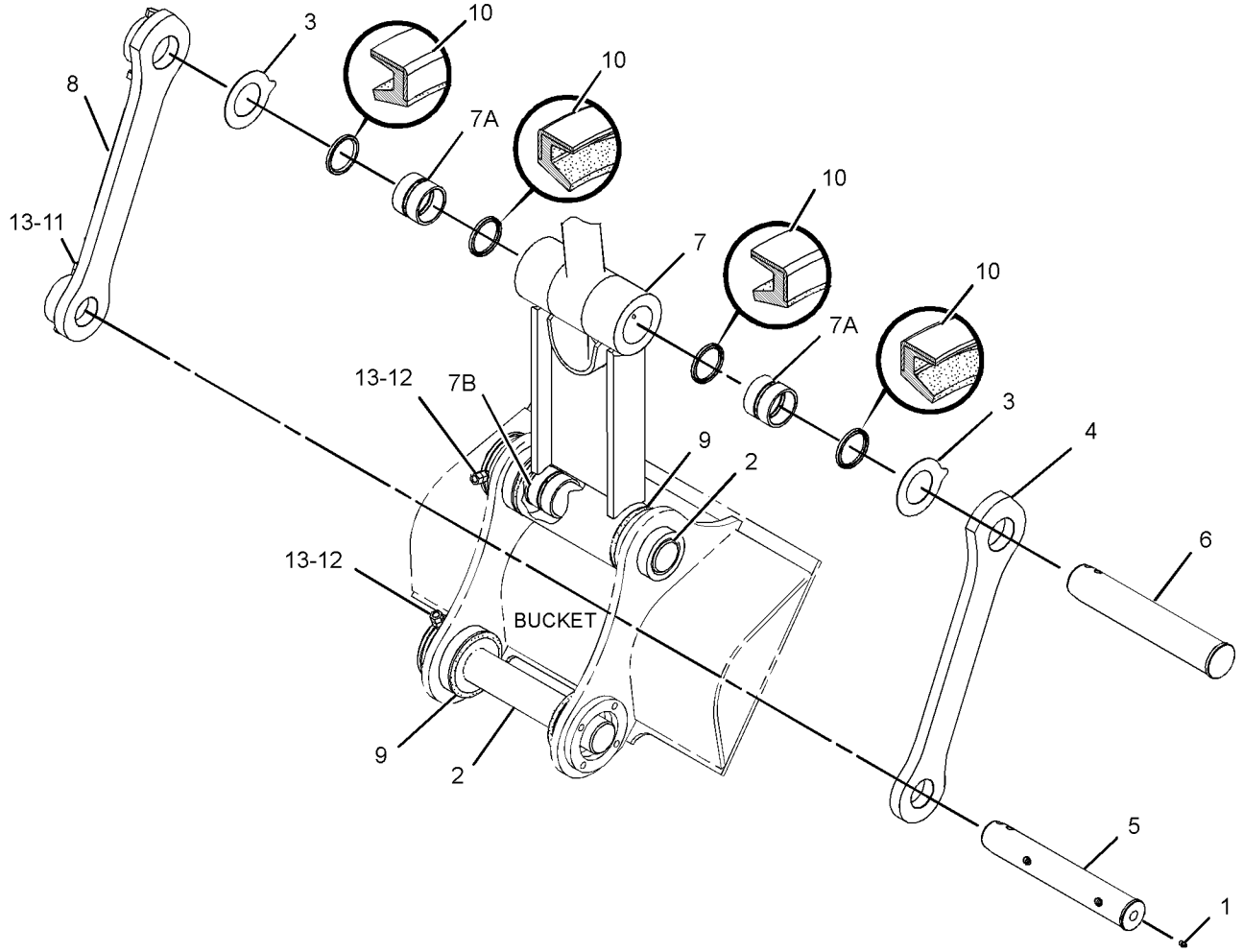

GRAPHIC #1 **<END>** g01296259

332-5077 LINKAGE GP-BUCKET—B1-FAMILY, WITHOUT LIFTING EYE

S/N: PBB1-UP; KBS1-UP
PART OF 416-1008 LINKAGE AR-BUCKET
AN ATTACHMENT

SMCS-6513 **i05859482**

NOTE	REF NO	GRAPHIC REF	PART NUMBER	QTY	PART NAME 1 2 3 4 5 6 (PRODUCT LEVEL)	SEE PAGE
	1	1	**3B-8489**	5	FITTING-GREASE (1/8-27 PTF)	
	2	1	**087-5805**	2	PIN	
	3	1	**166-1486**	2	SHIM (2-MM THK)	
	4	1	**241-7325**	1	LINK & BEARING AS	
	4A	1	**240-2912**	2	BUSHING	
	4B	1	**244-4360**	2	BUSHING	
	5	1	**244-4254**	1	LINK AS	
	6	1	**244-4255**	1	LINK	
	7	1	**254-3052**	1	PIN	
	8	1	**254-3053**	1	PIN	
	9	1	**367-8467**	4	SEAL-O-RING	
	10	1	**166-1494**	6	SEAL-LIP TYPE	
M	11	1	**236-6365**	2	BOLT (M16X2X150-MM)	
M	12	1	**236-6366**	2	BOLT (M16X2X195-MM)	
M	13	1	**451-2183**	8	NUT (M16X2-THD)	

M - METRIC PART

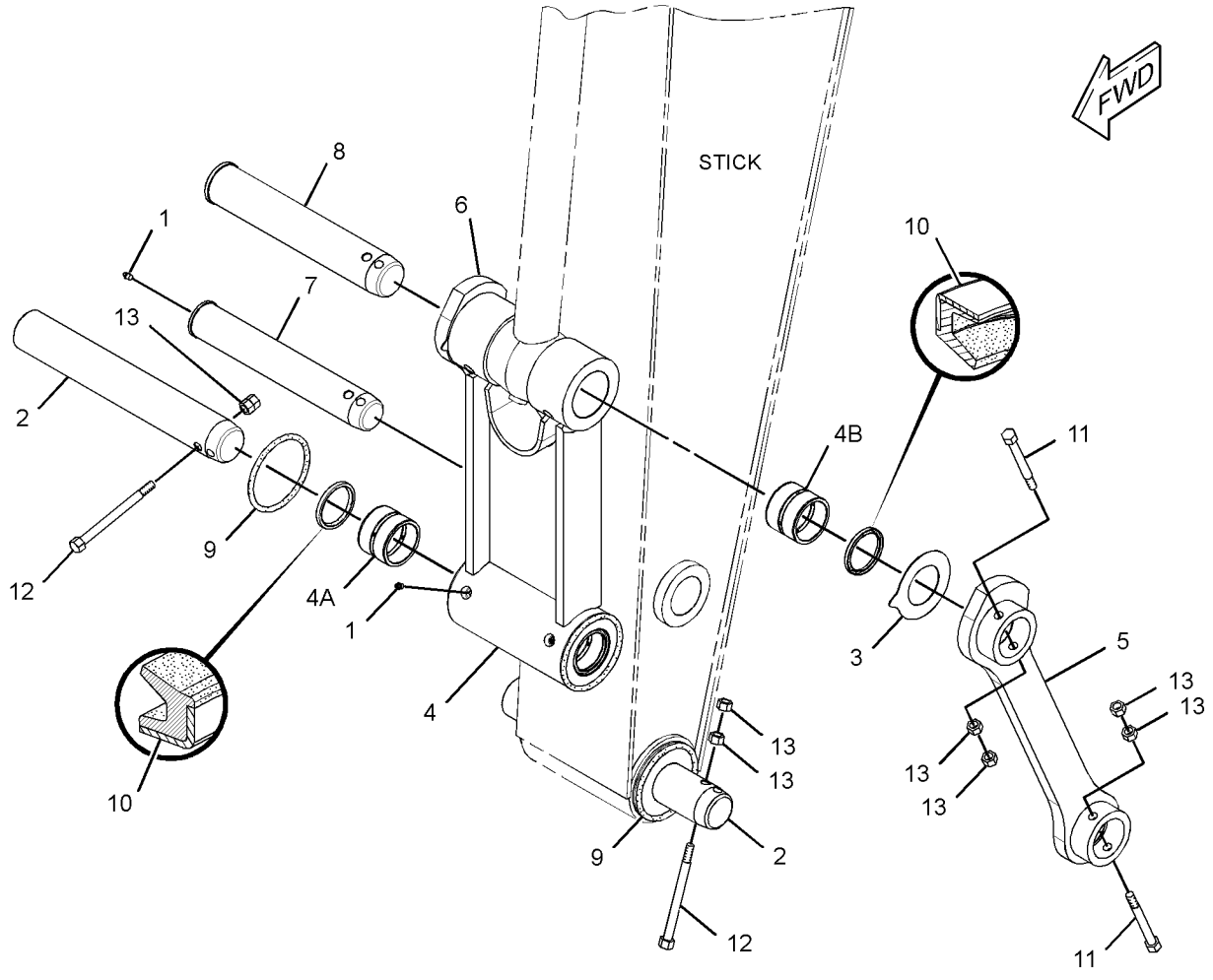

GRAPHIC #1 **<END>** g01742814

383-2514 LINKAGE GP-BUCKET–B1-FAMILY

S/N: PBB1-UP
PART OF 417-9771 LINKAGE AR-BUCKET
AN ATTACHMENT

SMCS-6513 **i05861466**

NOTE	REF NO	GRAPHIC REF	PART NUMBER	QTY	PART NAME 1 2 3 4 5 6 (PRODUCT LEVEL)	SEE PAGE
	1	1	**3B-8489**	5	FITTING-GREASE (1/8-27 PTF)	
	2	1	**087-5805**	2	PIN	
	3	1	**166-1486**	2	SHIM (2-MM THK)	
	4	1	**244-4254**	1	LINK AS	
	5	1	**244-4255**	1	LINK	
	6	1	**254-3052**	1	PIN	
	7	1	**254-3053**	1	PIN	
	8	1	**241-7319**	1	LINK & BEARING AS	
	8A	1	**244-4360**	2	BUSHING	
	8B	1	**240-2912**	2	BUSHING	
	9	1	**367-8467**	4	SEAL-O-RING	
	10	1	**166-1494**	6	SEAL-LIP TYPE	
M	11	1	**236-6365**	2	BOLT (M16X2X150-MM)	
M	12	1	**236-6366**	2	BOLT (M16X2X195-MM)	
M	13	1	**451-2183**	8	NUT (M16X2-THD)	

M - METRIC PART

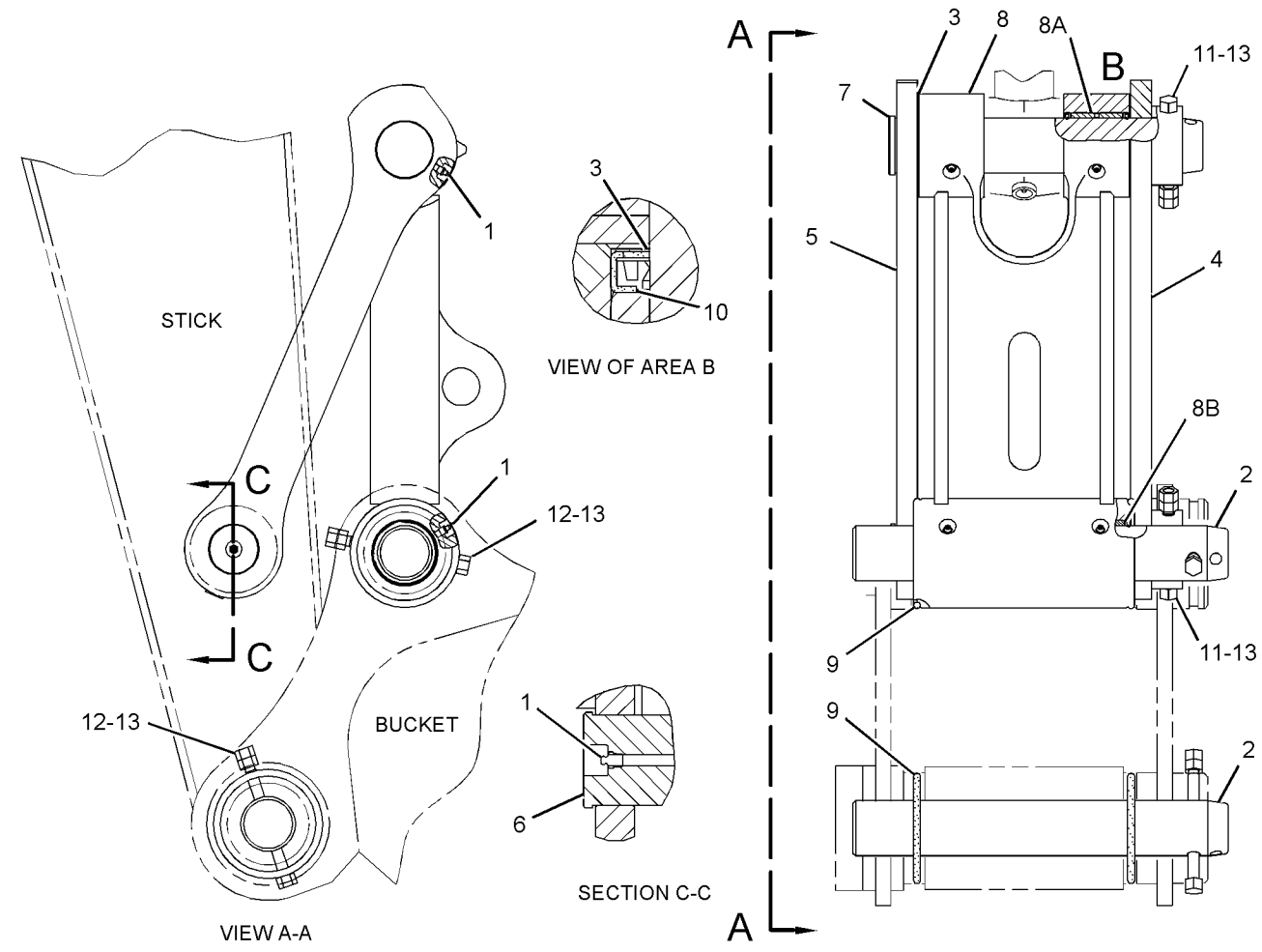

GRAPHIC #1 **<END>** g02933226

116-9115 LOCK GP-TRANSPORT

S/N: PBB1-UP

PART OF 420-0298 LINKAGE AR-FRONT

AN ATTACHMENT

SMCS-7505 **i04852489**

NOTE	REF NO	GRAPHIC REF	PART NUMBER	QTY	PART NAME 1 2 3 4 5 6 (PRODUCT LEVEL)	SEE PAGE
	1	1	**7Y-6649**	2	PIN	
	2	1	**7Y-6641**	1	ROD AS	
M	3	1	**8T-6466**	2	BOLT (M10X1.5X60-MM)	
M	4	1	**8T-4133**	4	NUT (M10X1.5-THD)	

M - METRIC PART

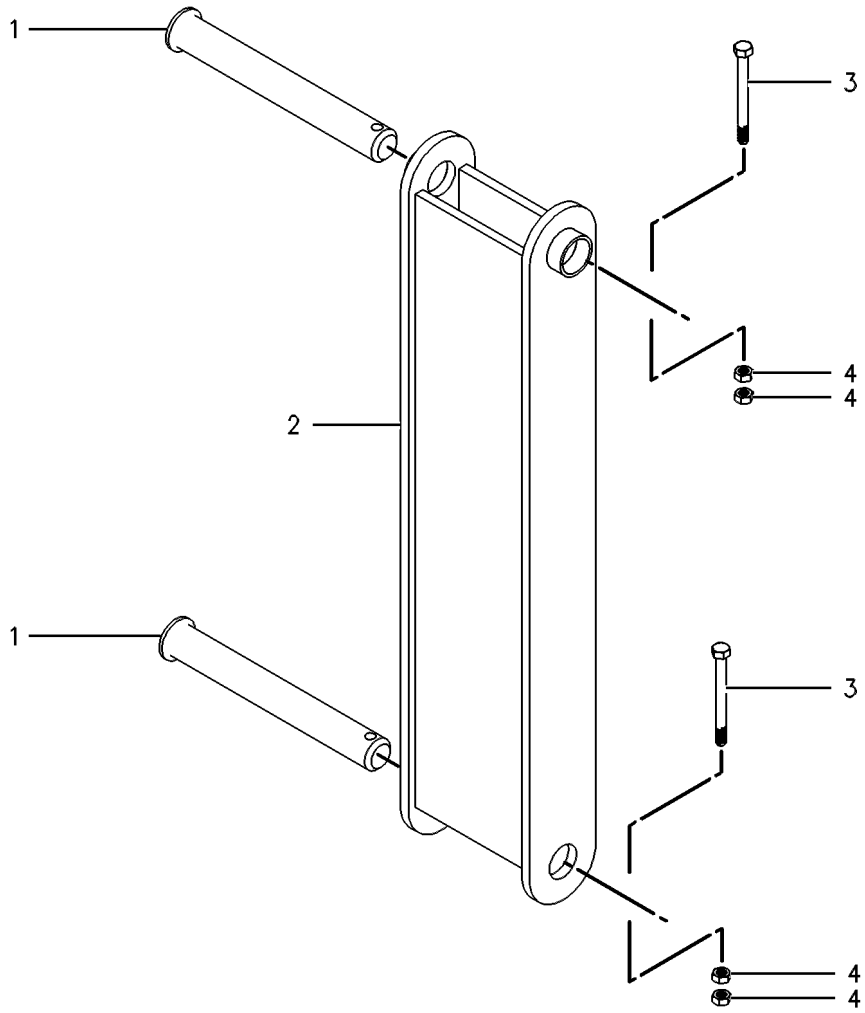

GRAPHIC #1 **<END>** g00287071

177-8628 PIN GP–COUPLER

S/N: PBB1-UP; KBS1-UP
PART OF 262-3494, 455-3909 COUPLER AR-QUICK
AN ATTACHMENT

SMCS-6108, 6501, 6502 **i05649020**

NOTE	REF NO	GRAPHIC REF	PART NUMBER	QTY	PART NAME 1 2 3 4 5 6 (PRODUCT LEVEL)	SEE PAGE
	1	1	**087-5805**	2	PIN	
M	2	1	**451-2183**	4	NUT (M16X2-THD)	
M	3	1	**236-6366**	2	BOLT (M16X2X195-MM)	

M - METRIC PART

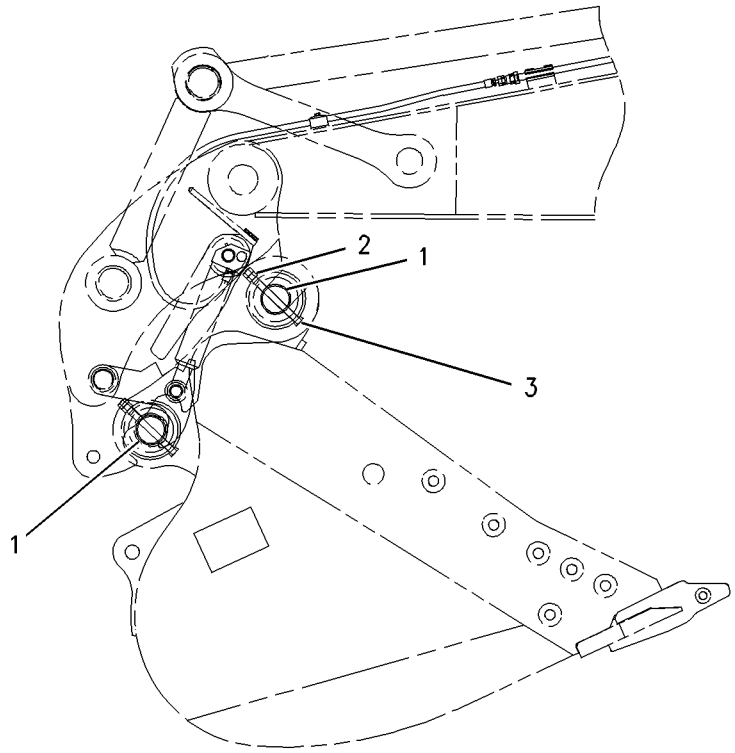

LEFT SIDE VIEW

GRAPHIC #1 **<END>** g00808848

241-7301 STICK & BEARING AS

S/N: PBB1-UP; KBS1-UP
PART OF 399-5224 STICK & BEARING AS
AN ATTACHMENT

SMCS-6502 **i05338431**

NOTE	REF NO	GRAPHIC REF	PART NUMBER	QTY	PART NAME 1 2 3 4 5 6 (PRODUCT LEVEL)	SEE PAGE
	1	1	**229-1096**	2	BUSHING	
	2	1	**240-2913**	2	BUSHING	
	3	1	**244-4277**	2	BUSHING	

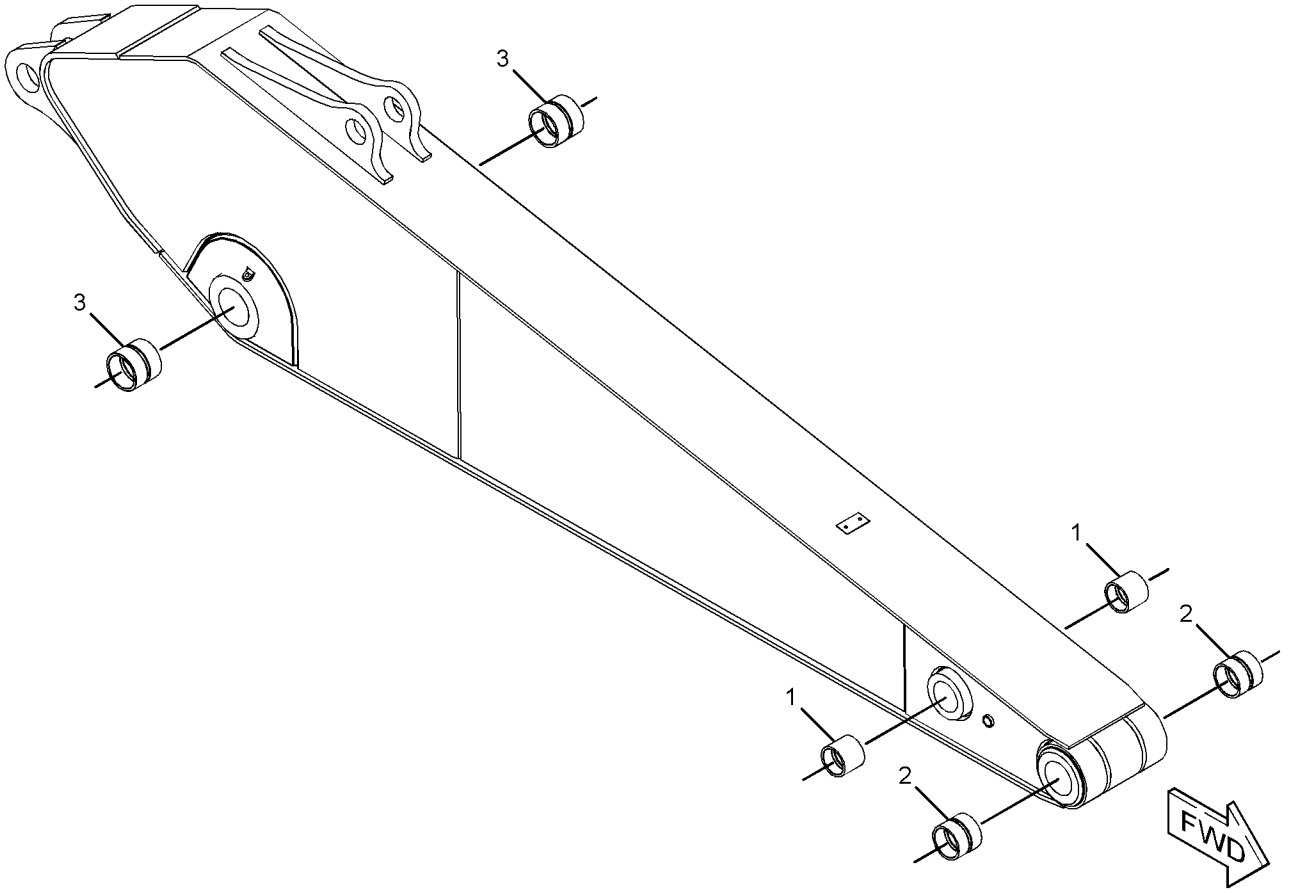

GRAPHIC #1 **<END>** g03381519

399-5224 STICK & BEARING AS

S/N: PBB1-UP; KBS1-UP
PART OF 399-5223 STICK GP-HOE
AN ATTACHMENT

SMCS-6502 **i05079431**

NOTE	PART NUMBER	QTY	PART NAME 1 2 3 4 5 6 (PRODUCT LEVEL)	SEE PAGE
Y	*241-7301*	1	STICK & BEARING AS	728
			—OR—	
Y	*399-5225*	1	STICK & BEARING AS	730
			—OR—	
Y	*399-5413*	1	STICK & BEARING AS	731

Y - SEPARATE ILLUSTRATION

<END>

399-5225 STICK & BEARING AS

S/N: PBB1-UP; KBS1-UP
PART OF 399-5224 STICK & BEARING AS
AN ATTACHMENT

SMCS-6502 **i05079351**

NOTE	REF NO	GRAPHIC REF	PART NUMBER	QTY	PART NAME 1 2 3 4 5 6 (PRODUCT LEVEL)	SEE PAGE
	1	1	**228-5615**	2	BUSHING	
	2	1	**229-1096**	2	BUSHING	
	3	1	**240-2913**	2	BUSHING	

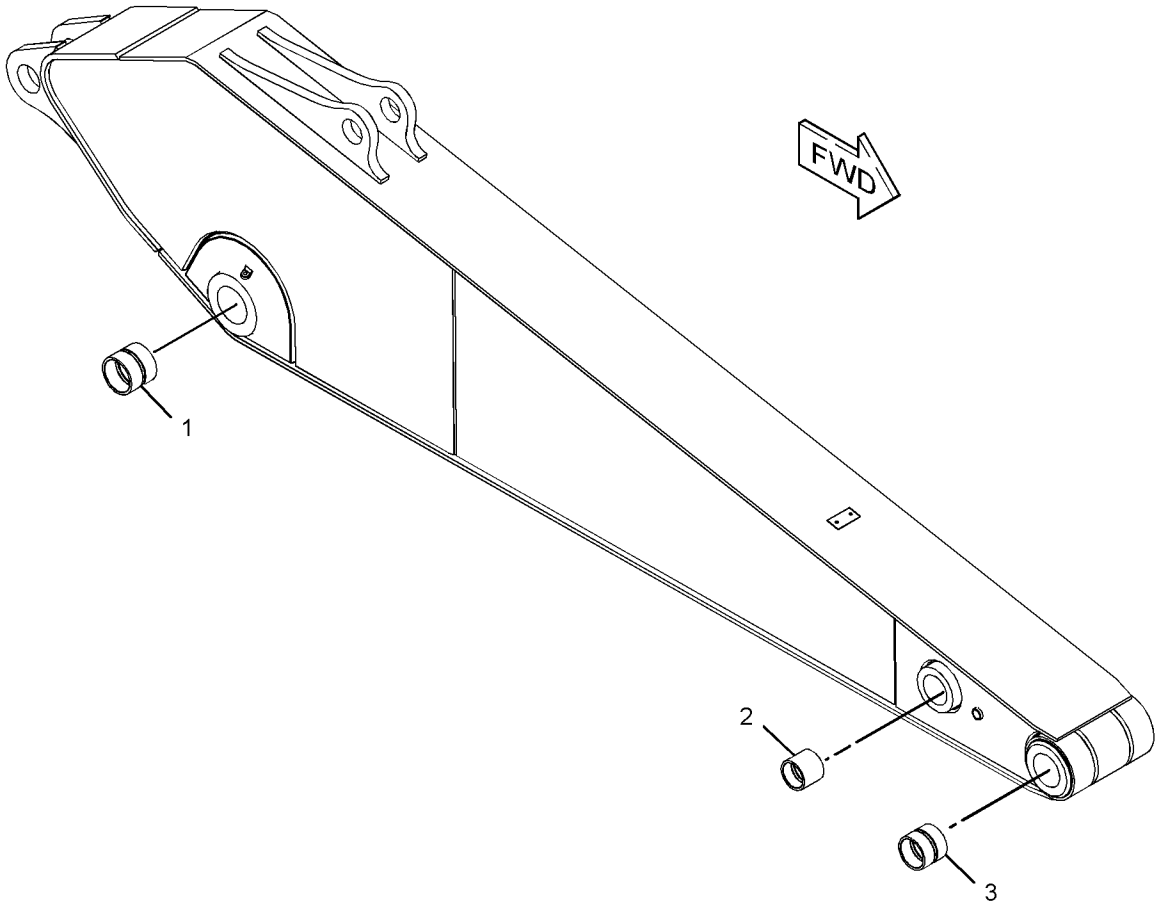

GRAPHIC #1 **<END>** g03347991

399-5413 STICK & BEARING AS

S/N: PBB1-UP; KBS1-UP
PART OF 399-5224 STICK & BEARING AS
AN ATTACHMENT

SMCS-6502 **i05079372**

NOTE	REF NO	GRAPHIC REF	PART NUMBER	QTY	PART NAME 1 2 3 4 5 6 (PRODUCT LEVEL)	SEE PAGE
	1	1	**229-1096**	2	BUSHING	
	2	1	**240-2913**	2	BUSHING	
	3	1	**357-5709**	2	BUSHING	

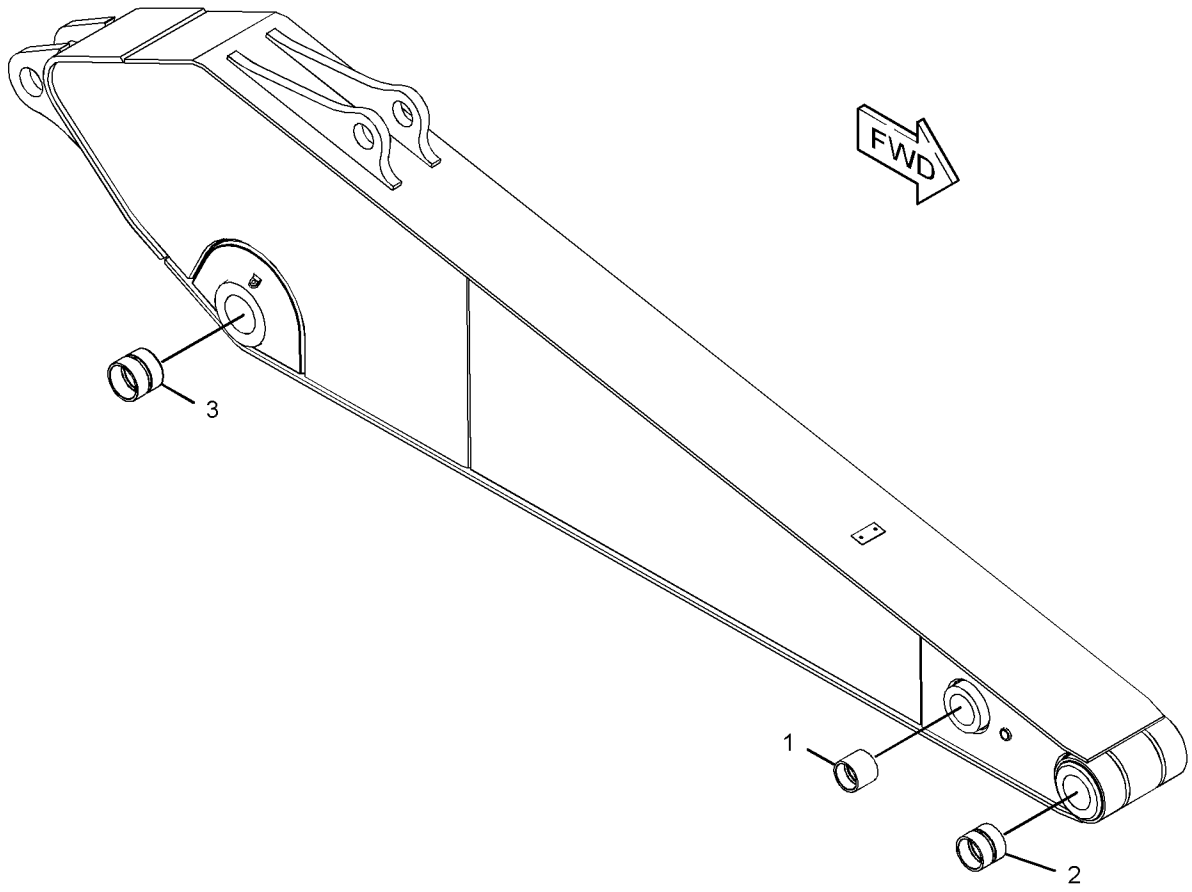

GRAPHIC #1 **<END>** g03348015

290-1788 STICK AR-HOE—MASS

S/N: PBB1-UP; KBS1-UP
2.4-M (7.9-FT). CB2-FAMILY
AN ATTACHMENT

SMCS-6502 **i05738732**

NOTE	PART NUMBER	QTY	PART NAME 1 2 3 4 5 6 (PRODUCT LEVEL)	SEE PAGE
Y	*267-0138*	1	LINES GP-GREASE (STICK)	713
Y	*248-9633*	1	LINES GP-STICK	552
Y	*290-9222*	1	STICK GP-HOE	736

Y - SEPARATE ILLUSTRATION

<END>

290-1837 STICK AR-HOE—REACH

S/N: PBB1-UP; KBS1-UP
2.5-M (8.2-FT). B1-FAMILY, HEAVY-DUTY
PART OF 456-0819, 456-0821, 456-1027 DISTRIBUTION AR
AN ATTACHMENT

SMCS-6502 **i05231556**

NOTE	PART NUMBER	QTY	PART NAME 1 2 3 4 5 6 (PRODUCT LEVEL)	SEE PAGE
Y	*431-1642*	1	LINES GP-BUCKET CYLINDER	464
Y	*290-9216*	1	STICK GP-HOE (HEAVY-DUTY, REACH)	734

Y - SEPARATE ILLUSTRATION

<END>

298-4127 STICK AR-HOE—REACH

S/N: PBB1-UP; KBS1-UP
3.9-M (12.8-FT). B1-FAMILY, HEAVY-DUTY
AN ATTACHMENT

SMCS-6502 **i05196471**

NOTE	PART NUMBER	QTY	PART NAME 1 2 3 4 5 6 (PRODUCT LEVEL)	SEE PAGE
Y	*431-1641*	1	LINES GP-STICK	553
Y	*267-0138*	1	LINES GP-GREASE (STICK)	713
Y	*315-1040*	1	STICK GP-HOE (REACH)	737

Y - SEPARATE ILLUSTRATION

<END>

314-3728 STICK AR-HOE—HEAVY-DUTY, REACH

S/N: PBB1-UP; KBS1-UP
2.9-M (9.5-FT)
PART OF 456-0817, 456-0818, 456-0820, 456-0823, 456-0824, 456-0825, 456-0826, 456-0922, 456-0923, 456-0932, 456-0933, 456-0942, 456-0943, 456-1026 DISTRIBUTION AR
AN ATTACHMENT

SMCS-6502 **i05196466**

NOTE	PART NUMBER	QTY	PART NAME 1 2 3 4 5 6 (PRODUCT LEVEL)	SEE PAGE
Y	*431-0455*	1	LINES GP-BUCKET CYLINDER	463
Y	*324-0967*	1	STICK GP-HOE (REACH)	738

Y - SEPARATE ILLUSTRATION

<END>

314-3730 STICK AR-HOE—REACH

S/N: PBB1-UP; KBS1-UP
2.9-M (9.5-FT). ACCUGRADE READY. B1-FAMILY, HEAVY-DUTY
AN ATTACHMENT

SMCS-6502 **i05196465**

NOTE	PART NUMBER	QTY	PART NAME 1 2 3 4 5 6 (PRODUCT LEVEL)	SEE PAGE
Y	*431-0455*	1	LINES GP-BUCKET CYLINDER	463
Y	*324-0981*	1	STICK GP-HOE (GRADE CONTROL)	740
Y - SEPARATE ILLUSTRATION				

<END>

416-1002 STICK AR-HOE—REACH

S/N: PBB1-UP; KBS1-UP
2.9-M (9.5-FT). B1-FAMILY, WITHOUT AUXILIARY
AN ATTACHMENT

SMCS-6502 **i05197790**

NOTE	PART NUMBER	QTY	PART NAME 1 2 3 4 5 6 (PRODUCT LEVEL)	SEE PAGE
Y	*431-0455*	1	LINES GP-BUCKET CYLINDER	463
Y	*399-5223*	1	STICK GP-HOE (REACH)	742
Y - SEPARATE ILLUSTRATION				

<END>

290-9216 STICK GP-HOE–REACH

S/N: PBB1-UP; KBS1-UP
2.5-M (8.2-FT). B1-FAMILY, HEAVY-DUTY
PART OF 290-1837 STICK AR-HOE
AN ATTACHMENT

SMCS-6502 **i05738437**

NOTE	REF NO	GRAPHIC REF	PART NUMBER	QTY	PART NAME 1 2 3 4 5 6 (PRODUCT LEVEL)	SEE PAGE
	1	1	**3B-8489**	3	FITTING-GREASE	
	2	1	**4I-4811**	1	PIN AS	
	3	1	**093-0349**	2	WASHER (22X60X6-MM THK)	
	4	1	**093-0363**	1	SPACER (83X120X12-MM THK)	
	5	1	**118-5982**	1	SPACER (73X105X14-MM THK)	
	6	1	**166-1486**	2	SHIM (2-MM THK)	
	7	1	**235-7679**	2	SEAL-LIP TYPE	
C	8	1	**441-1020**	1	STICK & BEARING AS	
	8A	1	**229-1096**	2	BUSHING	
	8B	1	**240-2913**	2	BUSHING	
	8C	1	**244-4277**	2	BUSHING (1000 SERVICE HOURS)	
					–OR–	
		1	**228-5615**	2	BUSHING (500 SERVICE HOURS)	
					–OR–	
		1	**357-5709**	2	BUSHING (500 SERVICE HOURS)	
	9	1	**166-1494**	2	SEAL-LIP TYPE	
	10	1	**166-1495**	2	SEAL-LIP TYPE	
	11	1	**4I-4809**	1	PIN AS	
	12	1	**451-2176**	2	WASHER-HARD (22X35X3.5-MM THK)	
M	13	1	**453-2844**	2	BOLT (M20X2.5X30-MM)	

C - CHANGE FROM PREVIOUS TYPE
M - METRIC PART

290-9216 **STICK GP-HOE (*contd.*)** **i05738437**

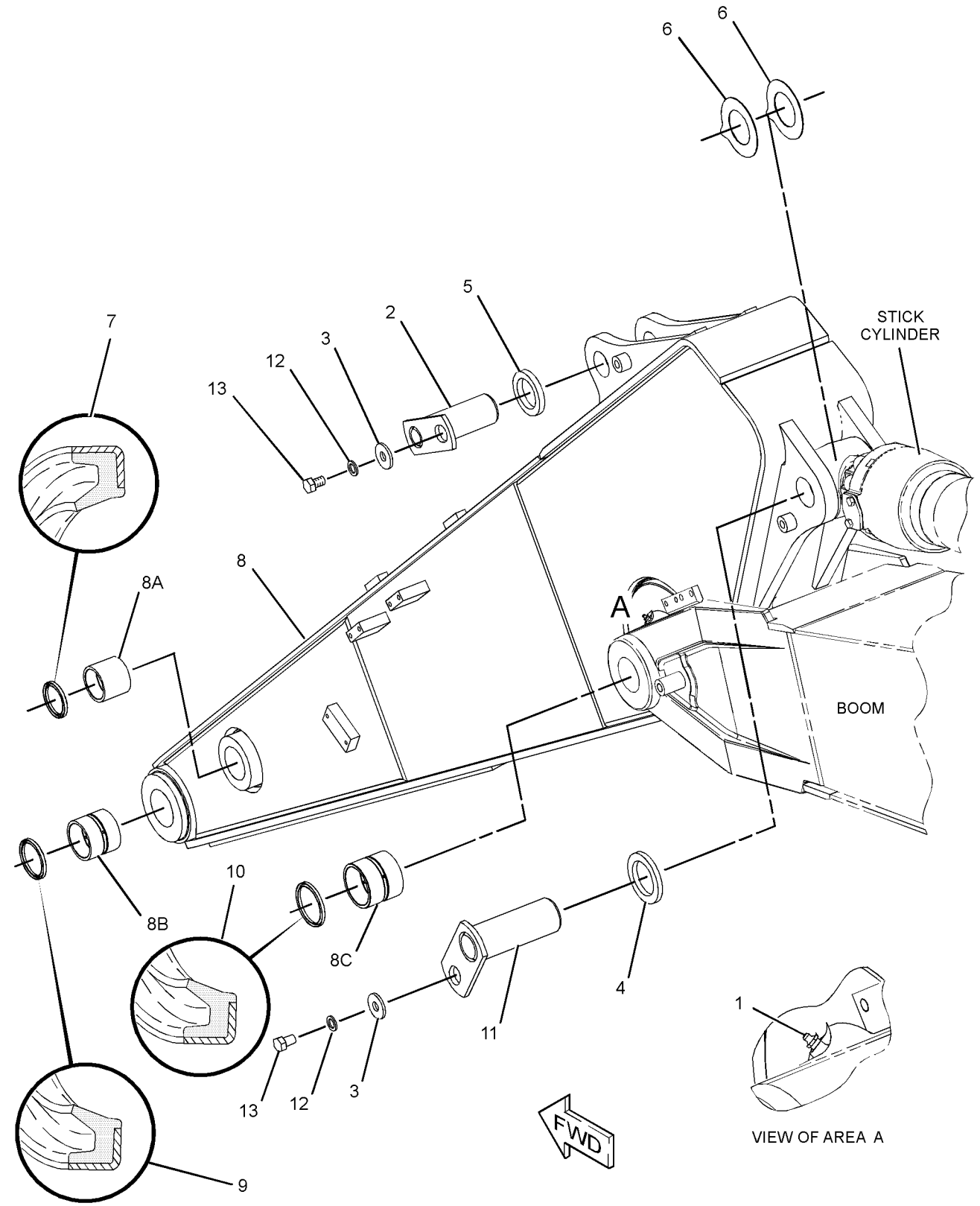

GRAPHIC #1

<END>

g01231476

290-9222 STICK GP-HOE

S/N: PBB1-UP; KBS1-UP
2.4-M (7.9-FT)
PART OF 290-1788 STICK AR-HOE
AN ATTACHMENT

SMCS-6502 **i05346771**

NOTE	REF NO	GRAPHIC REF	PART NUMBER	QTY	PART NAME 1 2 3 4 5 6 (PRODUCT LEVEL)	SEE PAGE
	1	1	**3B-8489**	3	FITTING-GREASE	
	2	1	**4I-4811**	1	PIN AS	
	3	1	**093-0349**	2	WASHER (22X60X6-MM THK)	
	4	1	**093-0363**	1	SPACER (83X120X12-MM THK)	
	5	1	**118-5982**	1	SPACER (73X105X14-MM THK)	
	6	1	**166-1486**	2	SHIM (2-MM THK)	
	7	1	**166-1495**	4	SEAL-LIP TYPE	
	8	1	**235-7679**	2	SEAL-LIP TYPE	
	9	1	**290-9223**	1	STICK & BEARING AS	
	9A	1	**228-5614**	2	BUSHING	
	9B	1	**228-5615**	2	BUSHING	
	9C	1	**244-4277**	2	BUSHING	
	10	1	**4I-4809**	1	PIN AS	
	11	1	**8T-4123**	2	WASHER (3.62X5.75X0.375-MM THK)	
M	12	1	**8T-4780**	2	BOLT (M20X2.5X30-MM)	

M - METRIC PART

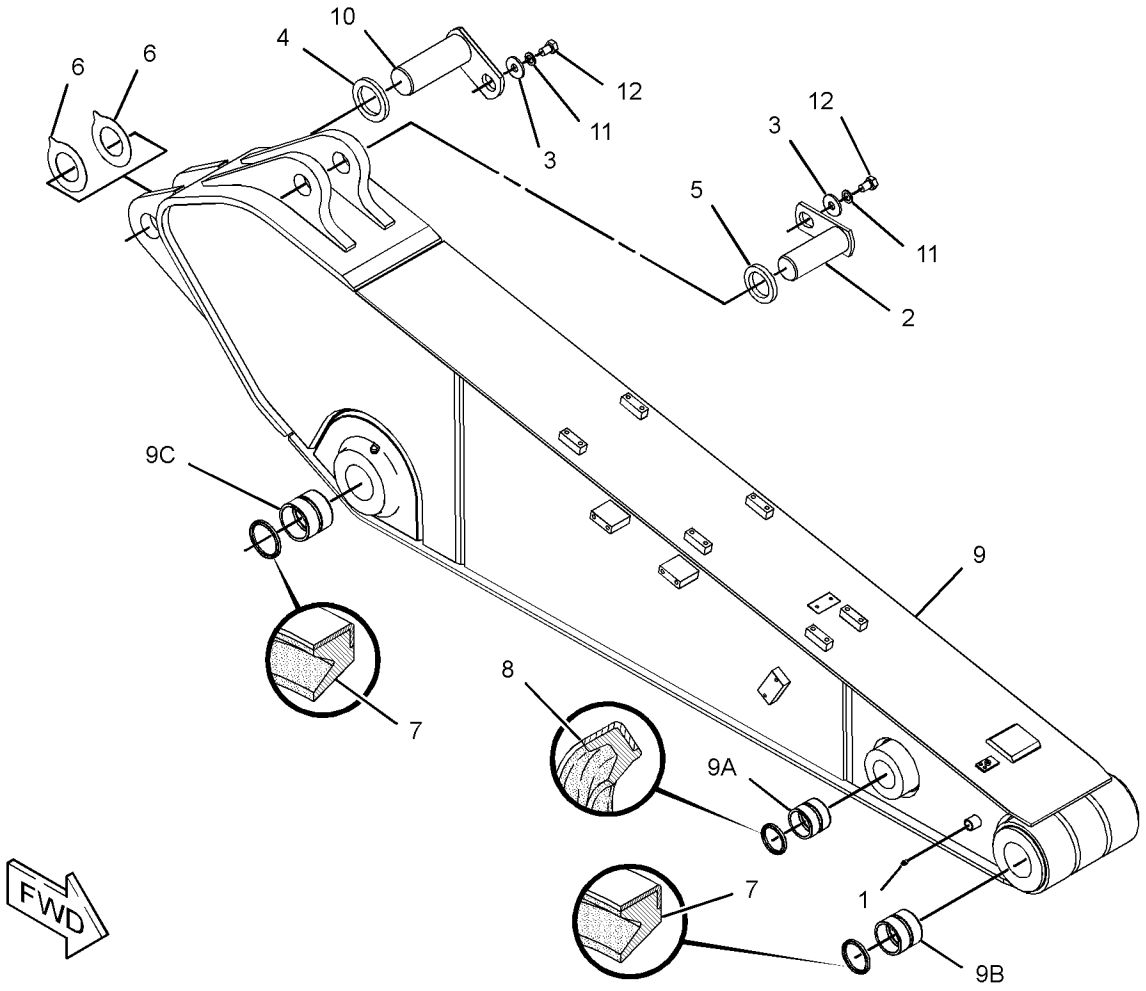

GRAPHIC #1 **<END>** g01475336

315-1040 STICK GP-HOE—REACH

S/N: PBB1-UP; KBS1-UP
3.9-M (12.8-FT). B1-FAMILY, HEAVY-DUTY
PART OF 298-4127 STICK AR-HOE
AN ATTACHMENT

SMCS-6502 **i05858192**

NOTE	REF NO	GRAPHIC REF	PART NUMBER	QTY	PART NAME 1 2 3 4 5 6 (PRODUCT LEVEL)	SEE PAGE
	1	1	**3B-8489**	1	FITTING-GREASE (1/8-27 PTF)	
	2	1	**4I-4811**	1	PIN AS	
	3	1	**093-0349**	2	WASHER (22X60X6-MM THK)	
	4	1	**093-0363**	1	SPACER (83X120X12-MM THK)	
	5	1	**118-5982**	1	SPACER (73X105X14-MM THK)	
	6	1	**166-1486**	2	SHIM (2-MM THK)	
	7	1	**166-1495**	2	SEAL-LIP TYPE	
	8	1	**235-7679**	2	SEAL-LIP TYPE	
	9	1	**315-1041**	1	STICK & BEARING AS	
	9A	1	**228-5615**	2	BUSHING	
	9B	1	**229-1096**	2	BUSHING	
	9C	1	**240-2913**	2	BUSHING	
	10	1	**166-1494**	2	SEAL-LIP TYPE	
	11	1	**4I-4809**	1	PIN AS	
	12	1	**451-2176**	2	WASHER-HARD (22X35X3.5-MM THK)	
M	13	1	**453-2844**	2	BOLT (M20X2.5X30-MM)	

M - METRIC PART

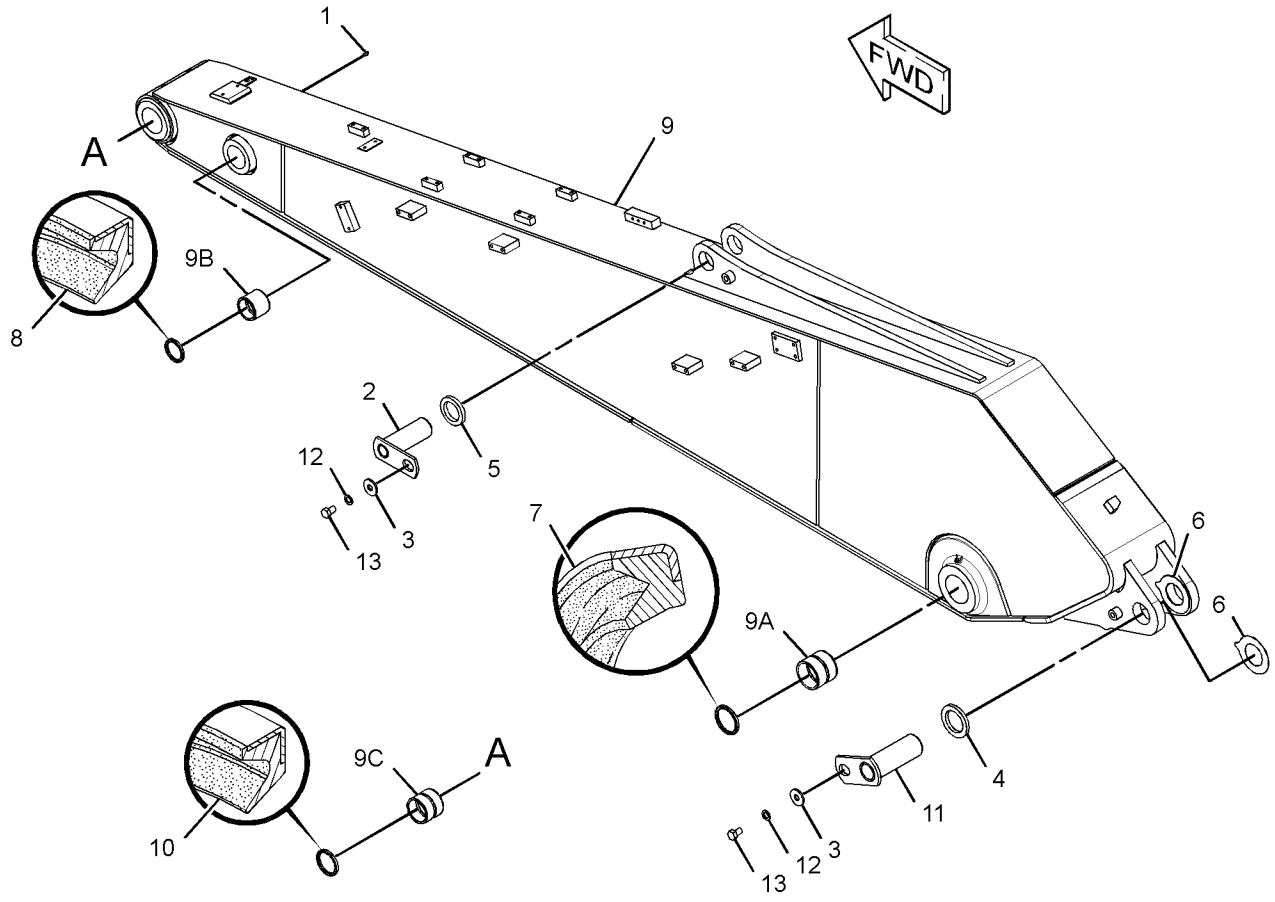

GRAPHIC #1 **<END>** g01618512

324-0967 STICK GP-HOE–REACH

S/N: PBB1-UP; KBS1-UP
2.9-M (9.5-FT). B1-FAMILY, HEAVY-DUTY
PART OF 314-3728 STICK AR-HOE
AN ATTACHMENT

SMCS-6502 **i05858199**

NOTE	REF NO	GRAPHIC REF	PART NUMBER	QTY	PART NAME 1 2 3 4 5 6 (PRODUCT LEVEL)	SEE PAGE
	1	1	**3B-8489**	3	FITTING-GREASE (1/8-27 PTF)	
	2	1	**4I-4809**	1	PIN AS	
	3	1	**4I-4811**	1	PIN AS	
	4	1	**093-0349**	2	WASHER (22X60X6-MM THK)	
	5	1	**093-0363**	1	SPACER (83X120X12-MM THK)	
	6	1	**118-5982**	1	SPACER (73X105X14-MM THK)	
	7	1	**166-1486**	2	SHIM (2-MM THK)	
	8	1	**166-1494**	2	SEAL-LIP TYPE	
	9	1	**166-1495**	2	SEAL-LIP TYPE	
	10	1	**235-7679**	2	SEAL-LIP TYPE	
C	11	1	**441-1014**	1	STICK & BEARING AS	
	11A	1	**229-1096**	2	BUSHING	
	11B	1	**240-2913**	2	BUSHING	
	11C	1	**244-4277**	2	BUSHING (1000 SERVICE HOURS)	
					–OR–	
		1	**228-5615**	2	BUSHING (500 SERVICE HOURS)	
					–OR–	
		1	**357-5709**	2	BUSHING (500 SERVICE HOURS)	
	12	1	**451-2176**	2	WASHER-HARD (22X35X3.5-MM THK)	
M	13	1	**453-2844**	2	BOLT (M20X2.5X30-MM)	

C - CHANGE FROM PREVIOUS TYPE
M - METRIC PART

324-0967 **STICK GP-HOE (*contd.*)** **i05858199**

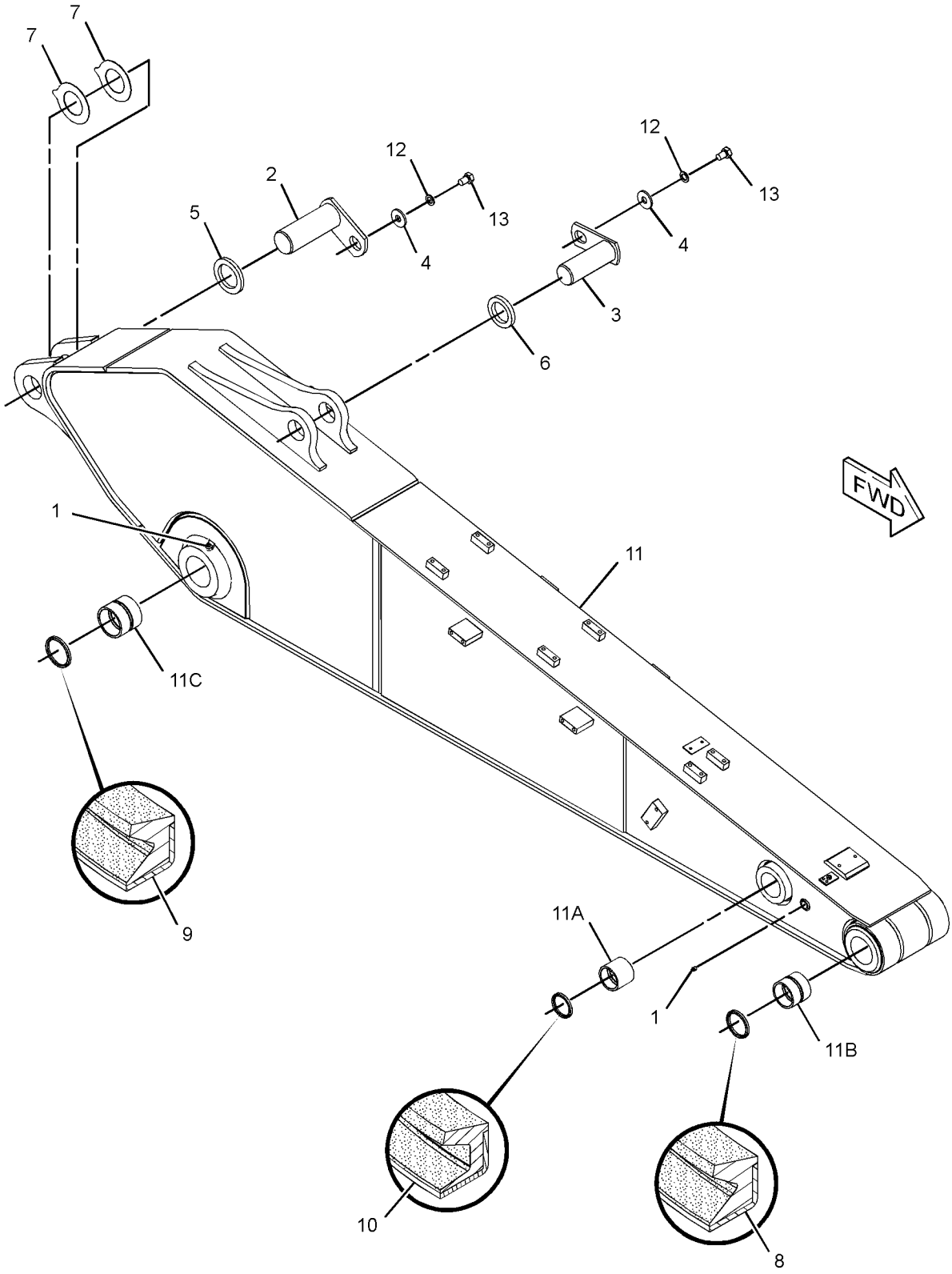

GRAPHIC #1 **<END>** g01473971

324-0981 STICK GP-HOE–REACH

S/N: PBB1-UP; KBS1-UP
2.9-M (9.5-FT). GRADE CONTROL. B1-FAMILY, HEAVY-DUTY
PART OF 314-3730 STICK AR-HOE
AN ATTACHMENT

SMCS-6502 **i05767911**

NOTE	REF NO	GRAPHIC REF	PART NUMBER	QTY	PART NAME 1 2 3 4 5 6 (PRODUCT LEVEL)	SEE PAGE
	1	1	**3B-8489**	3	FITTING-GREASE	
	2	1	**4I-4809**	1	PIN AS	
	3	1	**4I-4811**	1	PIN AS	
	4	1	**093-0349**	2	WASHER (22X60X6-MM THK)	
	5	1	**093-0363**	1	SPACER (83X120X12-MM THK)	
	6	1	**118-5982**	1	SPACER (73X105X14-MM THK)	
	7	1	**166-1486**	2	SHIM (2-MM THK)	
	8	1	**166-1494**	2	SEAL-LIP TYPE	
	9	1	**166-1495**	2	SEAL-LIP TYPE	
	10	1	**235-7679**	2	SEAL-LIP TYPE	
C	11	1	**443-9824**	1	STICK & BEARING AS	
	11A	1	**229-1096**	2	BUSHING	
	11B	1	**240-2913**	2	BUSHING	
	11C	1	**244-4277**	2	BUSHING (1000 SERVICE HOURS)	
					–OR–	
		1	**228-5615**	2	BUSHING (500 SERVICE HOURS)	
					–OR–	
		1	**357-5709**	2	BUSHING (500 SERVICE HOURS)	
	12	1	**451-2176**	2	WASHER-HARD (22X35X3.5-MM THK)	
M	13	1	**453-2844**	2	BOLT (M20X2.5X30-MM)	

C - CHANGE FROM PREVIOUS TYPE
M - METRIC PART

324-0981 **STICK GP-HOE (*contd.*)** **i05767911**

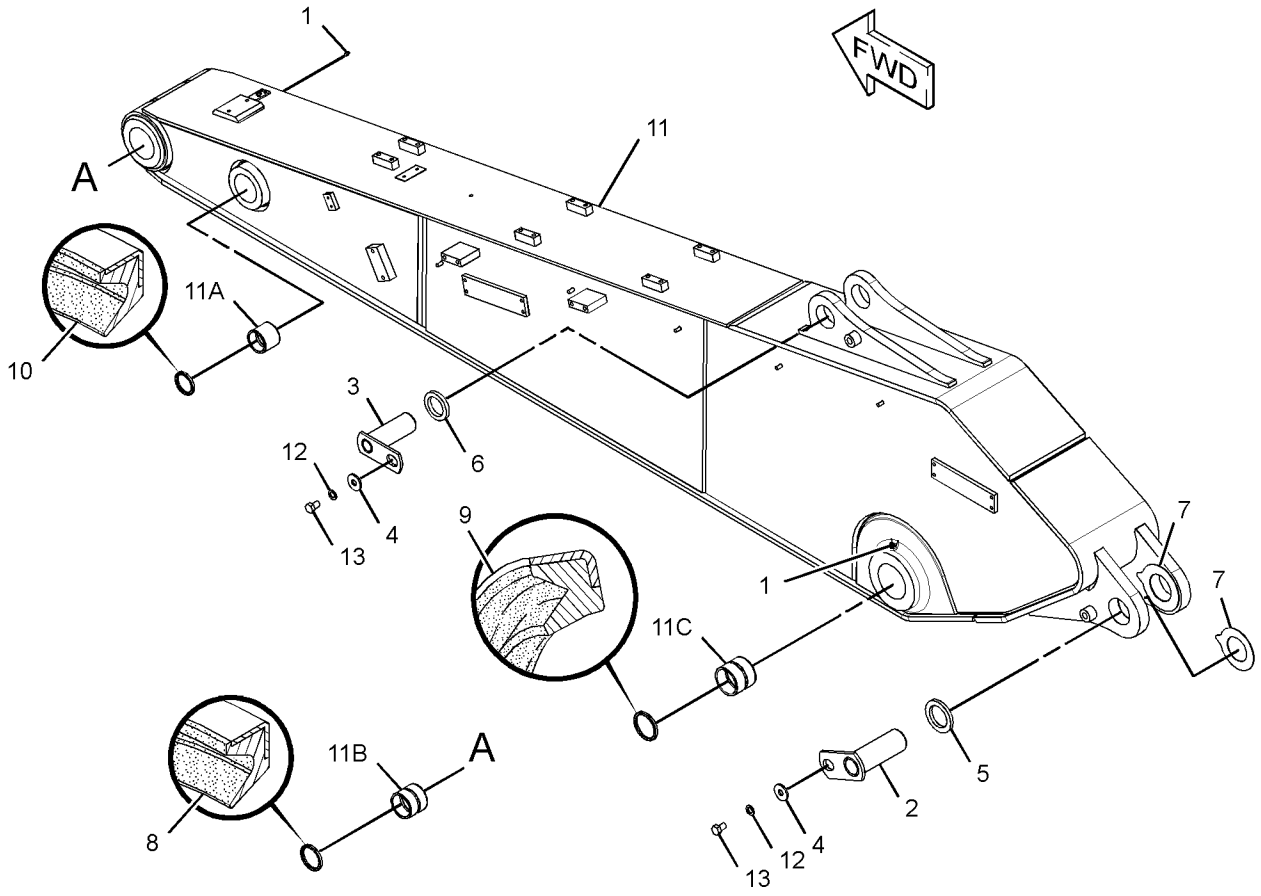

GRAPHIC #1 **<END>** g01624046

399-5223 STICK GP-HOE–REACH

S/N: PBB1-UP; KBS1-UP
2.9-M (9.5-FT). B1-FAMILY, WITHOUT LIFTING EYE
PART OF 416-1002 STICK AR-HOE
AN ATTACHMENT

SMCS-6502 **i05771904**

NOTE	REF NO	GRAPHIC REF	PART NUMBER	QTY	PART NAME 1 2 3 4 5 6 (PRODUCT LEVEL)	SEE PAGE
	1	1	**4I-4809**	1	PIN AS	
	2	1	**4I-4811**	1	PIN AS	
	3	1	**093-0349**	2	WASHER (22X60X6-MM THK)	
	4	1	**093-0363**	1	SPACER (83X120X12-MM THK)	
	5	1	**118-5982**	1	SPACER (73X105X14-MM THK)	
	6	1	**166-1486**	2	SHIM (2-MM THK)	
	7	1	**235-7679**	2	SEAL-LIP TYPE	
Y	8	1	**399-5224**	1	STICK & BEARING AS	729
	9	1	**166-1494**	2	SEAL-LIP TYPE	
	10	1	**166-1495**	2	SEAL-LIP TYPE	
	11	1	**3B-8489**	3	FITTING-GREASE	
	12	1	**451-2176**	2	WASHER-HARD (22X35X3.5-MM THK)	
M	13	1	**453-2844**	2	BOLT (M20X2.5X30-MM)	

M - METRIC PART
Y - SEPARATE ILLUSTRATION

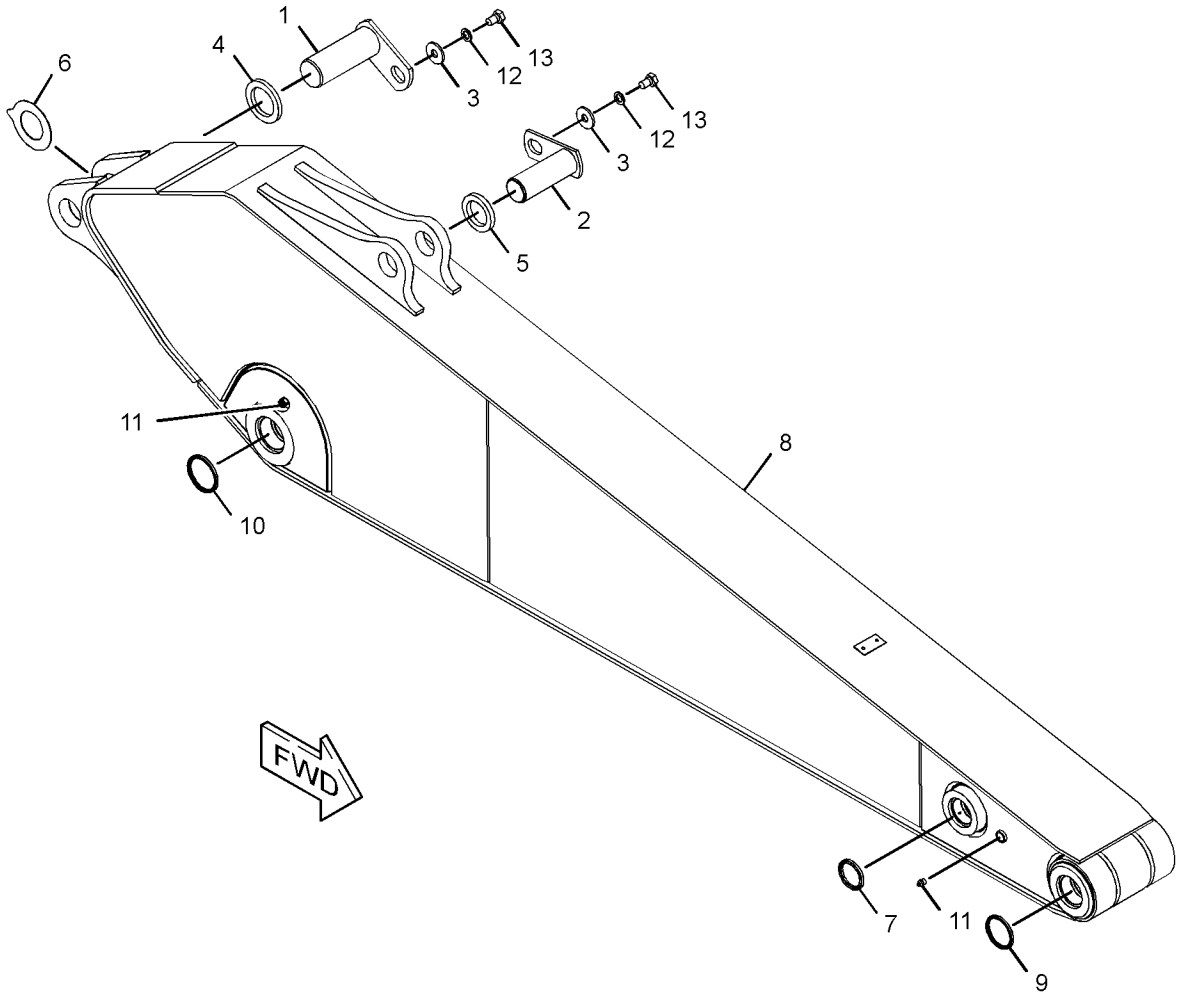

GRAPHIC #1 **<END>** g03338057

418-5108 STICK GP-HOE

S/N: PBB1-UP
6.3-M (20.6-FT)
PART OF 420-0298 LINKAGE AR-FRONT
AN ATTACHMENT

SMCS-6502 **i05860770**

NOTE	REF NO	GRAPHIC REF	PART NUMBER	QTY	PART NAME 1 2 3 4 5 6 (PRODUCT LEVEL)	SEE PAGE
	1	1	**093-0363**	1	SPACER (83X120X12-MM THK)	
	2	1	**4I-4618**	1	PIN AS	
M	3	1	**453-2844**	1	BOLT (M20X2.5X30-MM)	
	4	1	**093-0349**	1	WASHER (22X60X6-MM THK)	
	5	1	**451-2176**	1	WASHER-HARD (22X35X3.5-MM THK)	
	6	1	**166-1486**	2	SHIM (2-MM THK)	
	7	1	**418-5109**	1	STICK & BEARING AS	
	7A	1	**244-4277**	2	BUSHING (1000 SERVICE HOURS)	
					—OR—	
		1	**228-5615**	2	BUSHING (500 SERVICE HOURS)	
					—OR—	
		1	**357-5709**	2	BUSHING (500 SERVICE HOURS)	
	7B	1	**229-1095**	2	BUSHING	
	7C	1	**229-1091**	2	BUSHING	
M	8	1	**8T-4179**	1	BOLT (M12X1.75X20-MM)	
	9	1	**086-0297**	1	WASHER (13X50X6-MM THK)	
	10	1	**8T-4223**	1	WASHER-HARD (13.5X25.5X3-MM THK)	
	11	1	**127-3913**	1	PIN AS	
	12	1	**093-0357**	1	WASHER (63X100X9-MM THK)	
	13	1	**3B-8489**	1	FITTING-GREASE (1/8-27 PTF)	
	14	1	**166-1495**	2	SEAL-LIP TYPE	
	15	1	**096-0131**	2	SEAL-LIP TYPE	
	16	1	**093-1433**	2	SEAL-LIP TYPE	

M - METRIC PART

418-5108 **STICK GP-HOE** (*contd.*) **i05860770**

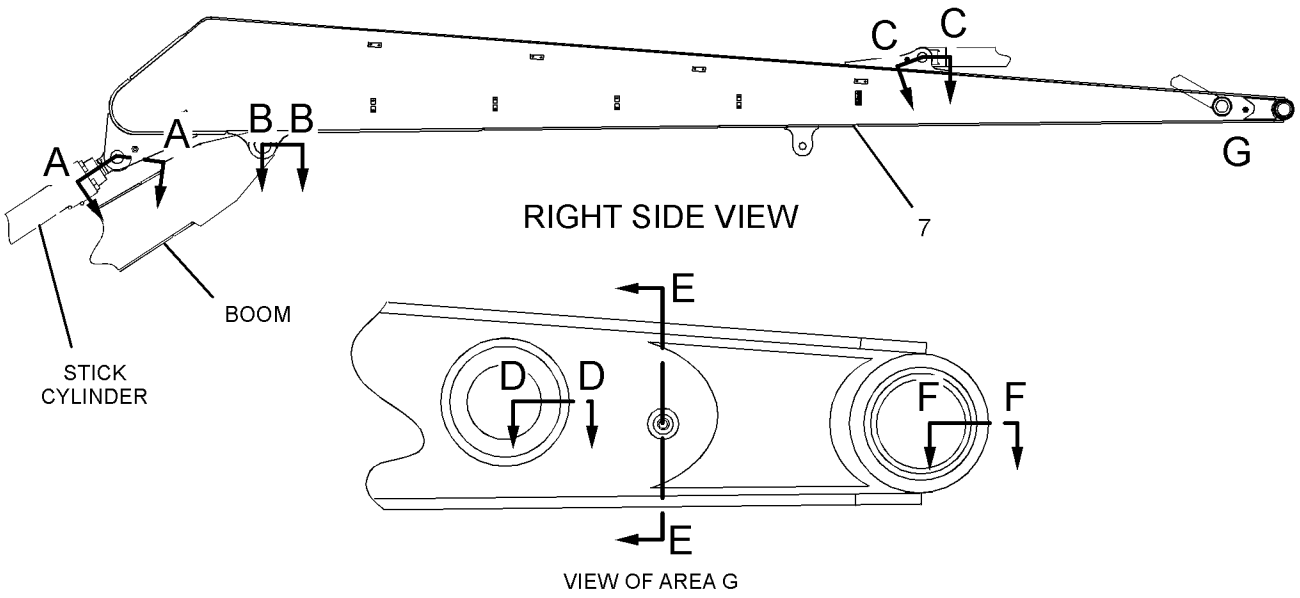

VIEW OF AREA G

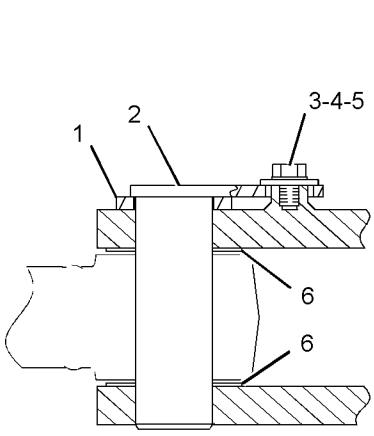

SECTION A-A

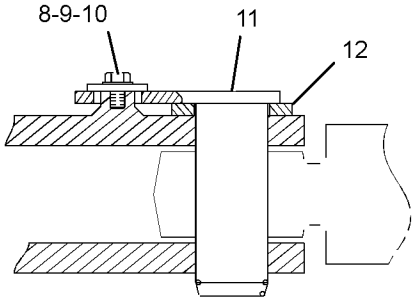

SECTION C-C

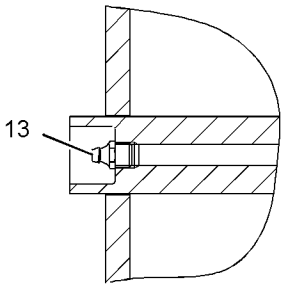

SECTION E-E

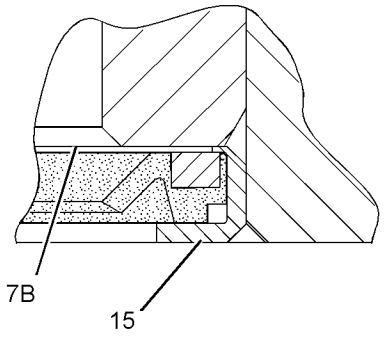

SECTION D-D

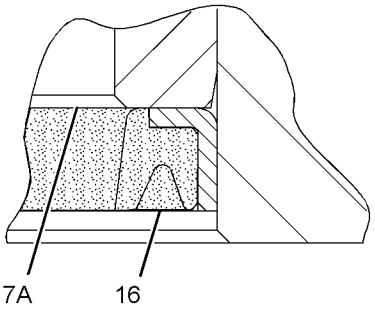

SECTION B-B

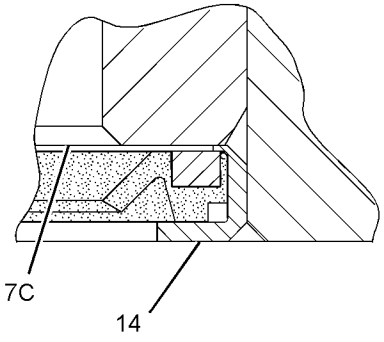

SECTION F-F

GRAPHIC #1 **<END>** g02126018

7Y-2219 ADJUSTER GP-BUCKET–B-FAMILY

S/N: PBB1-UP; KBS1-UP

PART OF 347-6708, 347-6730, 347-6739, 347-6743, 347-6744, 347-6849, 347-6852, 347-6853, 377-5419, 418-5243, 420-3353, 420-3356 BUCKET & ADJUSTER GP AN ATTACHMENT

SMCS-6513, 6700 **i04707429**

NOTE	REF NO	GRAPHIC REF	PART NUMBER	QTY	PART NAME 1 2 3 4 5 6 (PRODUCT LEVEL)	SEE PAGE
B	1	1	**086-0322**	6	SHIM (1-MM THK)	
B	2	1	**086-0321**	4	SHIM (0.5-MM THK)	
	3	1	**193-5014**	1	PIN	
	4	1	**134-8948**	1	PLATE	
M	5	1	**8T-4193**	4	BOLT (M16X2X50-MM)	
	6	1	**9X-8257**	4	WASHER (17.5X30X3.5-MM THK)	
	7	1	**193-5015**	1	FLANGE	

B - USE AS REQUIRED
M - METRIC PART

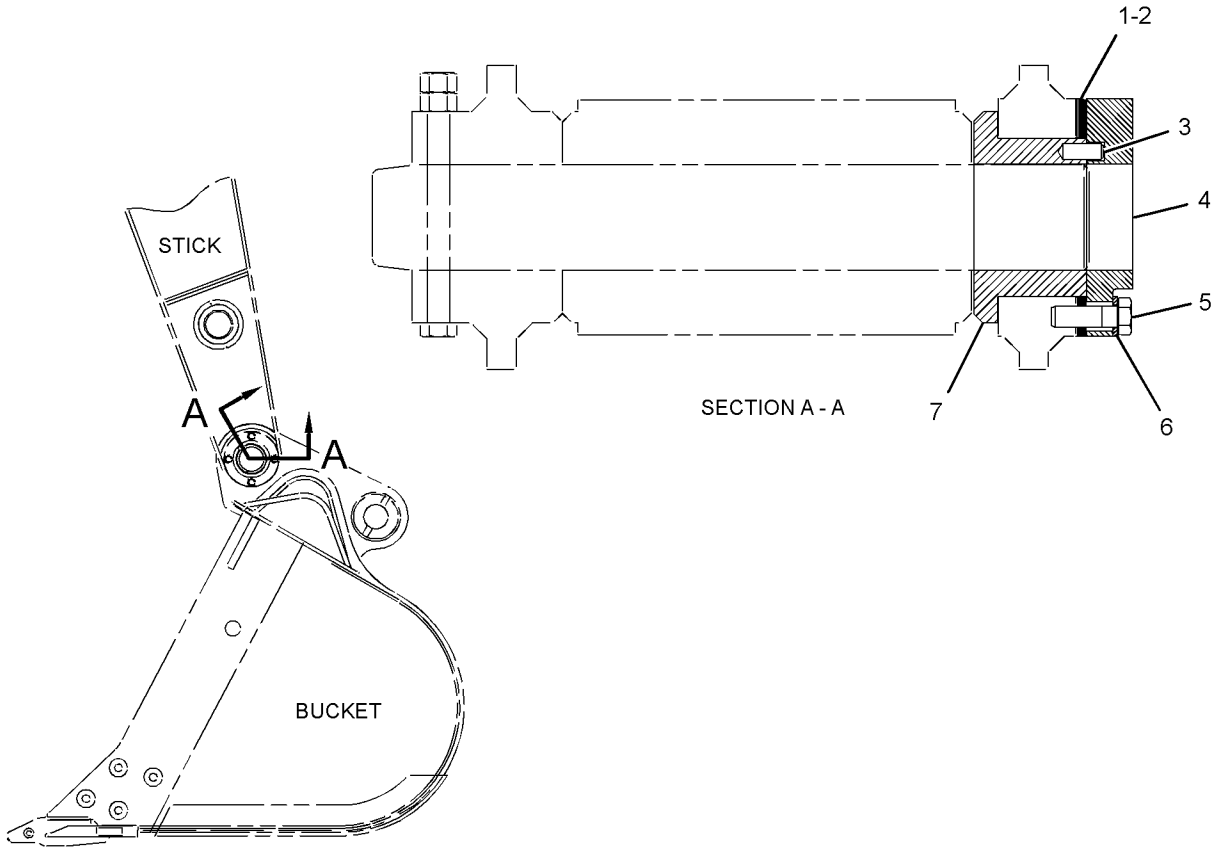

RIGHT SIDE VIEW

GRAPHIC #1 **<END>** g02812617

347-6708 BUCKET & ADJUSTER GP—GENERAL PURPOSE, B-FAMILY

S/N: PBB1-UP; KBS1-UP

1200-MM (48-IN) WIDE X 1.19-CU M (1.55-CU YD) CAPACITY. K-80 ADAPTERS, QTY OF 5

AN ATTACHMENT

SMCS-6503, 6513 **i04538032**

NOTE	REF NO	GRAPHIC REF	PART NUMBER	QTY	PART NAME 1 2 3 4 5 6 (PRODUCT LEVEL)	SEE PAGE
Y	1	1	**7Y-2219**	1	ADJUSTER GP-BUCKET (B-FAMILY)	745
	2	1	**312-5694**	1	SETSCREW (1/4-20X0.25-IN)	
Y	3	1	*347-6714*	1	BUCKET AS-GENERAL PURPOSE	753
	4	1	**2C-9259**	2	PLATE-IDENTIFICATION (CAT)	

Y - SEPARATE ILLUSTRATION

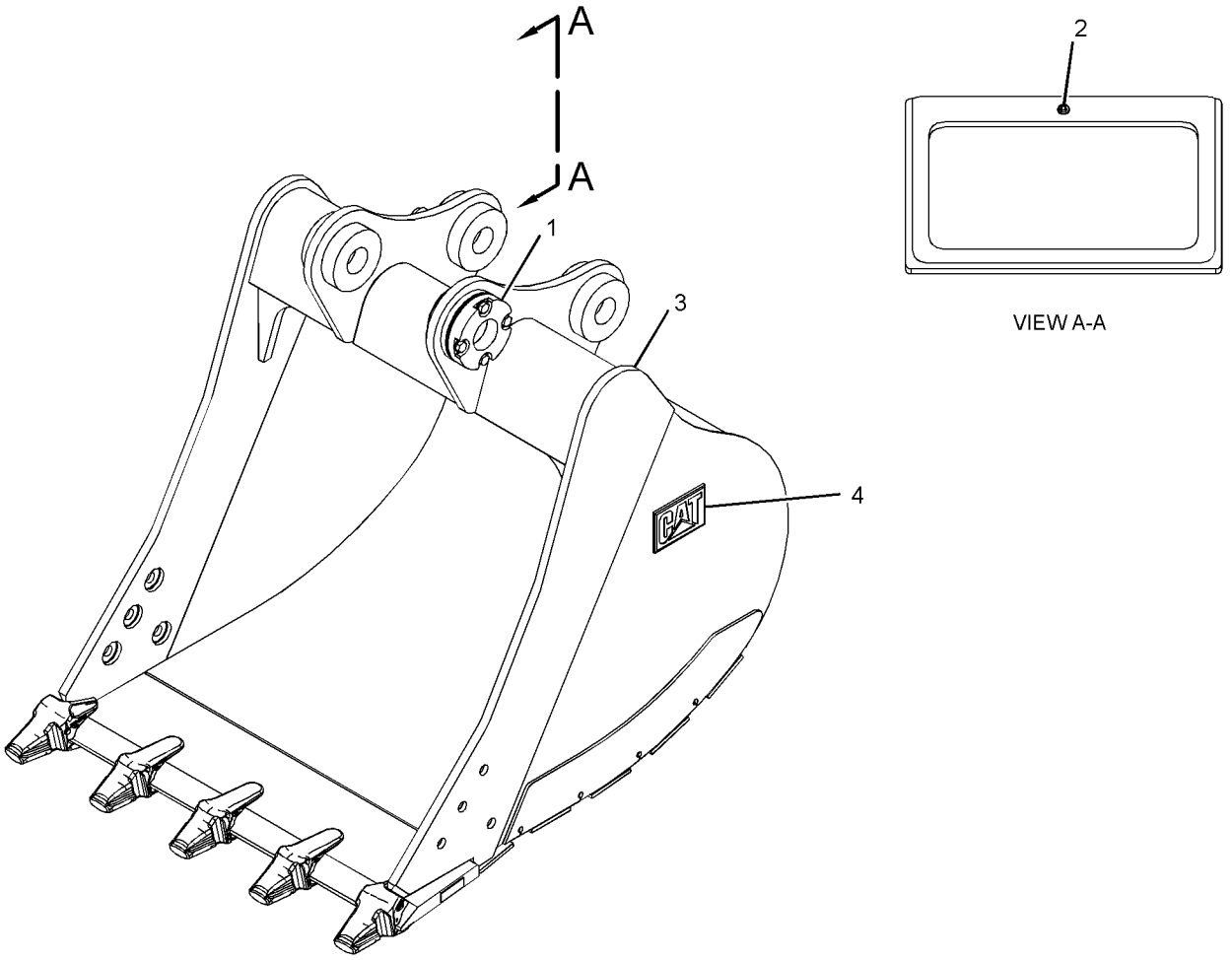

GRAPHIC #1 **<END>** g02721877

347-6730 BUCKET & ADJUSTER GP—B-FAMILY

S/N: PBB1-UP; KBS1-UP

1050-MM (42-IN) WIDE X 1.0-CU M (1.31-CU YD) CAPACITY. K-90 ADAPTERS, QTY OF 5

AN ATTACHMENT

SMCS-6503, 6513 **i05192770**

NOTE	PART NUMBER	QTY	PART NAME 1 2 3 4 5 6 (PRODUCT LEVEL)	SEE PAGE
Y	**7Y-2219**	1	ADJUSTER GP-BUCKET (B-FAMILY)	745
Y	*347-6736*	1	BUCKET AS-HEAVY DUTY (B-FAMILY) (B-FAMILY)	758
	2C-9259	2	PLATE-IDENTIFICATION (CAT)	
			(ON LH & RH SIDES OF BUCKET)	
	312-5694	1	SETSCREW (1/4-20X0.25-IN)	
			(USE TO MOUNT BUCKET INFORMATION PLATE)	

Y - SEPARATE ILLUSTRATION

<END>

347-6739 BUCKET & ADJUSTER GP—B-FAMILY, HEAVY-DUTY

S/N: PBB1-UP; KBS1-UP

1050-MM (43-IN) WIDE X 1.0-CU M (1.3-CU YD) CAPACITY. J-350 ADAPTERS, QTY OF 5

AN ATTACHMENT

SMCS-6503, 6513 **i05002990**

NOTE	PART NUMBER	QTY	PART NAME 1 2 3 4 5 6 (PRODUCT LEVEL)	SEE PAGE
Y	**7Y-2219**	1	ADJUSTER GP-BUCKET (B-FAMILY)	745
Y	*347-6741*	1	BUCKET AS-HEAVY DUTY	759
	2C-9259	1	PLATE-IDENTIFICATION (CAT)	
			(ON LH & RH SIDE OF BUCKET)	
	312-5694	1	SETSCREW (1/4-20X0.25-IN)	
			(USE TO MOUNT BUCKET INFORMATION PLATE)	

Y - SEPARATE ILLUSTRATION

<END>

347-6743 BUCKET & ADJUSTER GP—HEAVY-DUTY, B-FAMILY

S/N: PBB1-UP; KBS1-UP

1200-MM (48-IN) WIDE X 1.19-CU M (1.56-CU YD) CAPACITY. K-90 ADAPTERS, QTY OF 4

AN ATTACHMENT

SMCS-6503, 6513

i05192768

NOTE	REF NO	GRAPHIC REF	PART NUMBER	QTY	PART NAME 1 2 3 4 5 6 (PRODUCT LEVEL)	SEE PAGE
Y	1	1	**7Y-2219**	1	ADJUSTER GP-BUCKET (B-FAMILY)	745
	2	1	**312-5694**	1	SETSCREW (1/4-20X0.25-IN)	
Y	3	1	*347-6745*	1	BUCKET AS-HEAVY DUTY (B-FAMILY)	760
	4	1	**2C-9259**	2	PLATE-IDENTIFICATION (CAT)	

Y - SEPARATE ILLUSTRATION

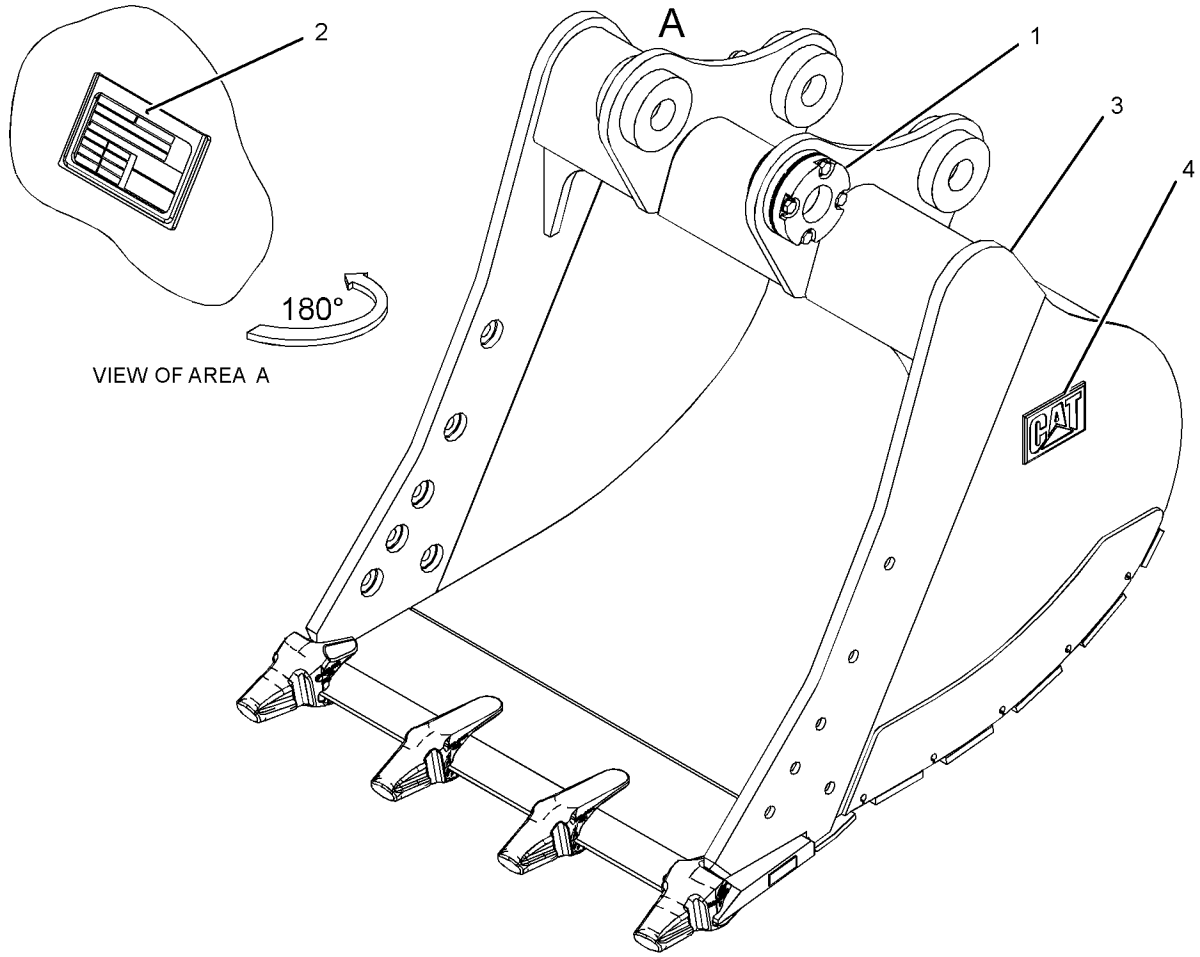

GRAPHIC #1

<END>

g02750636

347-6744 BUCKET & ADJUSTER GP—HEAVY-DUTY, B-FAMILY

S/N: PBB1-UP; KBS1-UP

1300-MM (52-IN) WIDE X 1.3-CU M (1.71-CU YD) CAPACITY. K-90 ADAPTERS, QTY OF 5

AN ATTACHMENT

SMCS-6503, 6513

i05192769

NOTE	REF NO	GRAPHIC REF	PART NUMBER	QTY	PART NAME 1 2 3 4 5 6 (PRODUCT LEVEL)	SEE PAGE
Y	1	1	**7Y-2219**	1	ADJUSTER GP-BUCKET (B-FAMILY)	745
	2	1	**312-5694**	1	SETSCREW (1/4-20X0.25-IN)	
Y	3	1	*347-6746*	1	BUCKET AS-HEAVY DUTY (B-FAMILY)	761
	4	1	**2C-9259**	2	PLATE-IDENTIFICATION (CAT)	

Y - SEPARATE ILLUSTRATION

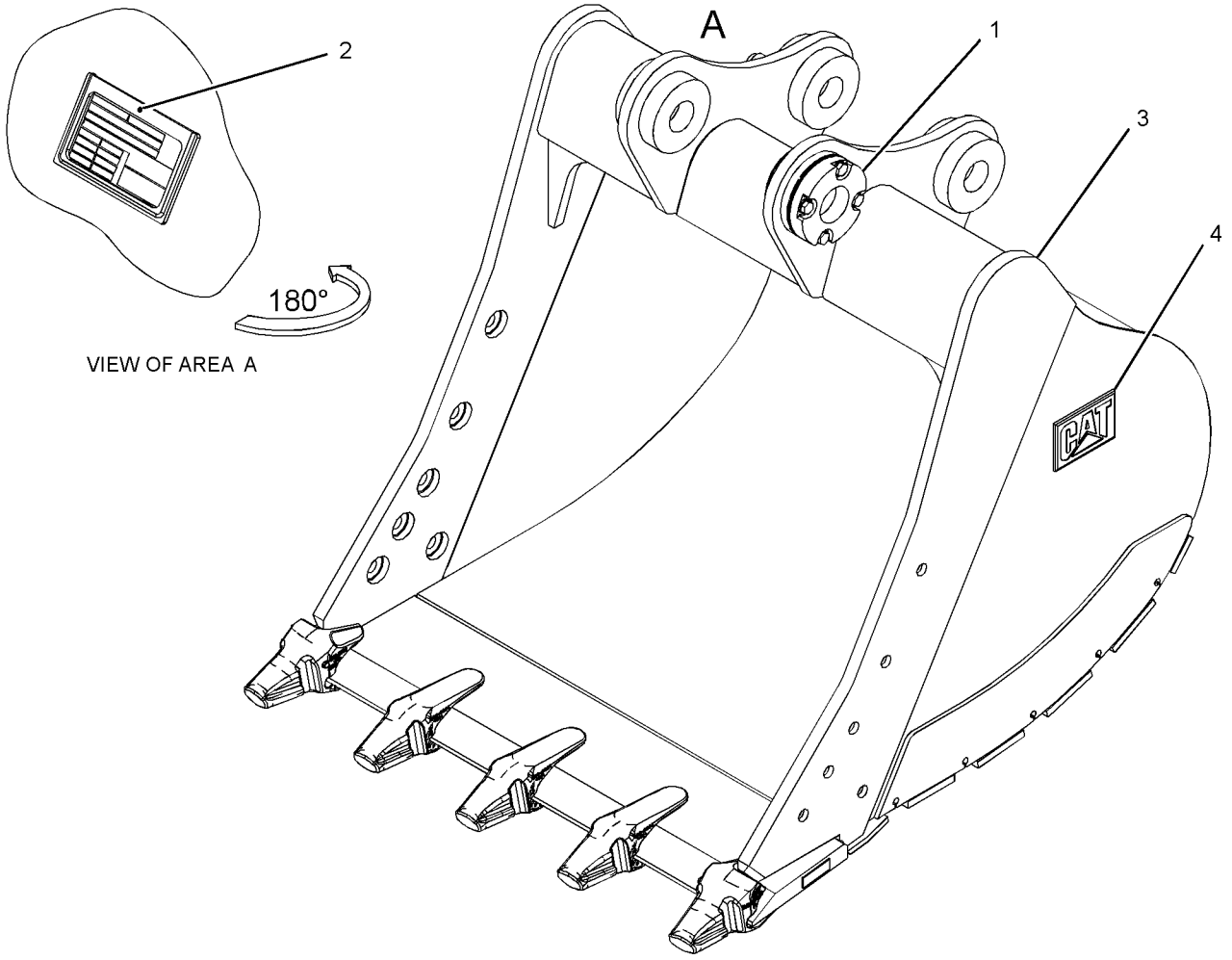

VIEW OF AREA A

GRAPHIC #1

<END>

g02753532

347-6849 BUCKET & ADJUSTER GP—GENERAL PURPOSE, B-FAMILY

S/N: PBB1-UP; KBS1-UP

1250-MM (50-IN) WIDE X 1.0-CU M (1.31-CU YD) CAPACITY. J-350 ADAPTERS, QTY OF 5

AN ATTACHMENT

SMCS-6503, 6513 **i04828533**

NOTE	PART NUMBER	QTY	PART NAME 1 2 3 4 5 6 (PRODUCT LEVEL)	SEE PAGE
Y	**7Y-2219**	1	ADJUSTER GP-BUCKET (B-FAMILY)	745
Y	*371-9082*	1	BUCKET AS-GENERAL PURPOSE (B-FAMILY)	754
	2C-9259	1	PLATE-IDENTIFICATION (CAT)	
			(ON LH SIDE OF BUCKET)	
	312-5694	1	SETSCREW (1/4-20X0.25-IN)	
			(USE TO MOUNT BUCKET INFORMATION PLATE)	
Y - SEPARATE ILLUSTRATION				

<END>

347-6852 BUCKET & ADJUSTER GP—B-FAMILY

S/N: PBB1-UP; KBS1-UP

1200-MM (48-IN) WIDE X 1.19-CU M (1.56-CU YD) CAPACITY. K-90 ADAPTERS, QTY OF 4

AN ATTACHMENT

SMCS-6503, 6513 **i05068889**

NOTE	PART NUMBER	QTY	PART NAME 1 2 3 4 5 6 (PRODUCT LEVEL)	SEE PAGE
Y	**7Y-2219**	1	ADJUSTER GP-BUCKET (B-FAMILY)	745
Y	*371-9085*	1	BUCKET AS-HEAVY DUTY (B-FAMILY)	762
	2C-9259	2	PLATE-IDENTIFICATION (CAT)	
			(ON LH & RH SIDES OF BUCKET)	
	312-5694	1	SETSCREW (1/4-20X0.25-IN)	
			(USE TO MOUNT BUCKET INFORMATION PLATE)	
Y - SEPARATE ILLUSTRATION				

<END>

347-6853 BUCKET & ADJUSTER GP—HEAVY-DUTY SPADE, B-FAMILY

S/N: PBB1-UP; KBS1-UP

1350-MM (54-IN) WIDE X 1.40-CU M (1.83-CU YD) CAPACITY. K-90 ADAPTERS, QTY OF 5

AN ATTACHMENT

SMCS-6503, 6513 **i05193517**

NOTE	PART NUMBER	QTY	PART NAME 1 2 3 4 5 6 (PRODUCT LEVEL)	SEE PAGE
Y	**7Y-2219**	1	ADJUSTER GP-BUCKET (B-FAMILY)	745
Y	*371-9086*	1	BUCKET AS-HEAVY DUTY SPADE (B-FAMILY)	764
	2C-9259	2	PLATE-IDENTIFICATION (CAT)	
			(ON LH & RH SIDES OF BUCKET)	
	312-5694	1	SETSCREW (1/4-20X0.25-IN)	
			(USE TO MOUNT BUCKET INFORMATION PLATE)	
Y - SEPARATE ILLUSTRATION				

<END>

377-5419 BUCKET & ADJUSTER GP—B-FAMILY

S/N: PBB1-UP; KBS1-UP
1150-MM (46-IN) WIDE X 0.90-CU M (1.18-CU YD) CAPACITY. J-350 ADAPTERS, QTY OF 5
AN ATTACHMENT

SMCS-6503, 6513 **i05162778**

NOTE	PART NUMBER	QTY	PART NAME 1 2 3 4 5 6 (PRODUCT LEVEL)	SEE PAGE
Y	**7Y-2219**	1	ADJUSTER GP-BUCKET (B-FAMILY)	745
Y	*390-5448*	1	BUCKET AS-GENERAL PURPOSE	755
	2C-9259	1	PLATE-IDENTIFICATION (CAT)	
			(ON LH SIDE OF BUCKET)	
	312-5694	1	SETSCREW (1/4-20X0.25-IN)	
			(USE TO MOUNT BUCKET INFORMATION PLATE)	
Y - SEPARATE ILLUSTRATION				

<END>

418-5243 BUCKET & ADJUSTER GP—B-FAMILY, GENERAL PURPOSE

S/N: PBB1-UP; KBS1-UP
1250-MM (50-IN) WIDE X 1.0-CU M (1.31-CU YD) CAPACITY. J-350 ADAPTERS, QTY OF 5
AN ATTACHMENT

SMCS-6503, 6513 **i05162439**

NOTE	PART NUMBER	QTY	PART NAME 1 2 3 4 5 6 (PRODUCT LEVEL)	SEE PAGE
Y	**7Y-2219**	1	ADJUSTER GP-BUCKET (B-FAMILY)	745
Y	*418-5244*	1	BUCKET AS-GENERAL PURPOSE (B-FAMILY)	756
	2C-9259	1	PLATE-IDENTIFICATION (CAT)	
			(ON LH SIDE OF BUCKET)	
	312-5694	1	SETSCREW (1/4-20X0.25-IN)	
			(USE TO MOUNT BUCKET INFORMATION PLATE)	
Y - SEPARATE ILLUSTRATION				

<END>

420-3353 BUCKET & ADJUSTER GP—B-FAMILY, GENERAL PURPOSE

S/N: PBB1-UP; KBS1-UP
1150-MM (46-IN) WIDE X 0.90-CU M (1.18-CU YD) CAPACITY. J-350 ADAPTERS, QTY OF 5
AN ATTACHMENT

SMCS-6503, 6513 **i05320609**

NOTE	PART NUMBER	QTY	PART NAME 1 2 3 4 5 6 (PRODUCT LEVEL)	SEE PAGE
Y	**7Y-2219**	1	ADJUSTER GP-BUCKET (B-FAMILY)	745
Y	*420-3351*	1	BUCKET AS-GENERAL PURPOSE (B-FAMILY)	757
	2C-9259	1	PLATE-IDENTIFICATION (CAT)	
			(ON LH SIDE OF BUCKET)	
	312-5694	1	SETSCREW (1/4-20X0.25-IN)	
			(USE TO MOUNT BUCKET INFORMATION PLATE)	
Y - SEPARATE ILLUSTRATION				

<END>

420-3356 BUCKET & ADJUSTER GP—B-FAMILY, HEAVY-DUTY

S/N: PBB1-UP; KBS1-UP

1050-MM (43-IN) WIDE X 1.00-CU M (1.31-CU YD) CAPACITY. J-350 ADAPTERS, QTY OF 5

AN ATTACHMENT

SMCS-6503, 6513

i05130791

NOTE	PART NUMBER	QTY	PART NAME 1 2 3 4 5 6 (PRODUCT LEVEL)	SEE PAGE
Y	**7Y-2219**	1	ADJUSTER GP-BUCKET (B-FAMILY)	745
Y	*420-3366*	1	BUCKET AS-HEAVY DUTY (B-FAMILY)	763
	2C-9259	2	PLATE-IDENTIFICATION (CAT)	
			(ON LH & RH SIDES OF BUCKET)	
	312-5694	1	SETSCREW (1/4-20X0.25-IN)	
			(USE TO MOUNT BUCKET INFORMATION PLATE)	

Y - SEPARATE ILLUSTRATION

<END>

347-6714 BUCKET AS-GENERAL PURPOSE–B-FAMILY

S/N: PBB1-UP; KBS1-UP
1200-MM (48-IN) WIDE X 1.19-CU M (1.55-CU YD) CAPACITY. K-80 ADAPTERS, QTY OF 5
PART OF 347-6708 BUCKET & ADJUSTER GP
AN ATTACHMENT

SMCS-6101 **i05769149**

NOTE	REF NO	GRAPHIC REF	PART NUMBER	QTY	PART NAME 1 2 3 4 5 6 (PRODUCT LEVEL)	SEE PAGE
	1	1	**347-7468**	1	EDGE AS	
	1A	1	**8P-9770**	1	PLATE	
	1B	1	**220-9084**	3	ADAPTER-TIP (K-80, 2-STRAP, CENTER)	
	1C	1	**232-2085**	1	ADAPTER-TIP (K-80, 2-STRAP, RH)	
	1D	1	**232-2086**	1	ADAPTER-TIP (K-80, 2-STRAP, LH)	
	2	1	**347-7507**	1	PLATE (LH)	
	3	1	**347-7508**	1	PLATE (RH)	
	4	1	**347-7510**	2	PLATE-WEAR	
	5	1	**347-7517**	1	PLATE AS-HINGE	
	6	1	**348-3196**	1	PLATE-WEAR	
	7	1	**348-3201**	4	PLATE-WEAR	

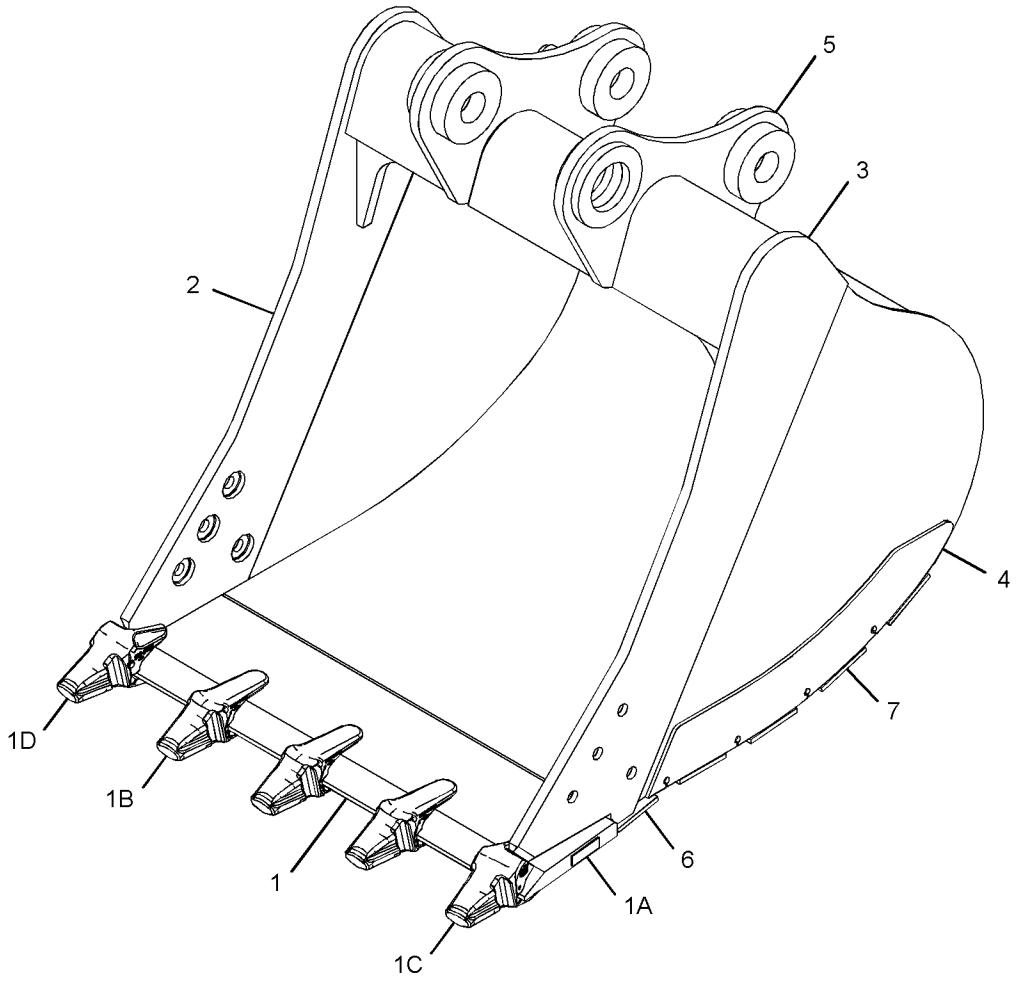

GRAPHIC #1 **<END>** g02721767

371-9082 BUCKET AS-GENERAL PURPOSE—B-FAMILY

S/N: PBB1-UP; KBS1-UP

1250-MM (50-IN) WIDE X 1.0-CU M (1.31-CU YD) CAPACITY. J-350 ADAPTERS, QTY OF 5

PART OF 347-6849 BUCKET & ADJUSTER GP

AN ATTACHMENT

SMCS-6101 **i05335123**

NOTE	REF NO	GRAPHIC REF	PART NUMBER	QTY	PART NAME 1 2 3 4 5 6 (PRODUCT LEVEL)	SEE PAGE
	1	1	**378-0320**	1	EDGE AS	
	1A	1	**6I-6354**	3	ADAPTER-TIP (J-350, 2-STRAP, CENTER)	
	1B	1	**6I-6355**	1	ADAPTER-TIP (J-350, 2-STRAP, RH)	
	1C	1	**6I-6356**	1	ADAPTER-TIP (J-350, 2-STRAP, LH)	
	1D	1	**8P-9770**	1	PLATE	
	2	1	**347-7480**	1	PLATE-WEAR	
	3	1	**347-7483**	4	PLATE-WEAR	
	4	1	**371-9130**	1	PLATE AS-HINGE	
	5	1	**378-0319**	2	PLATE-WEAR	

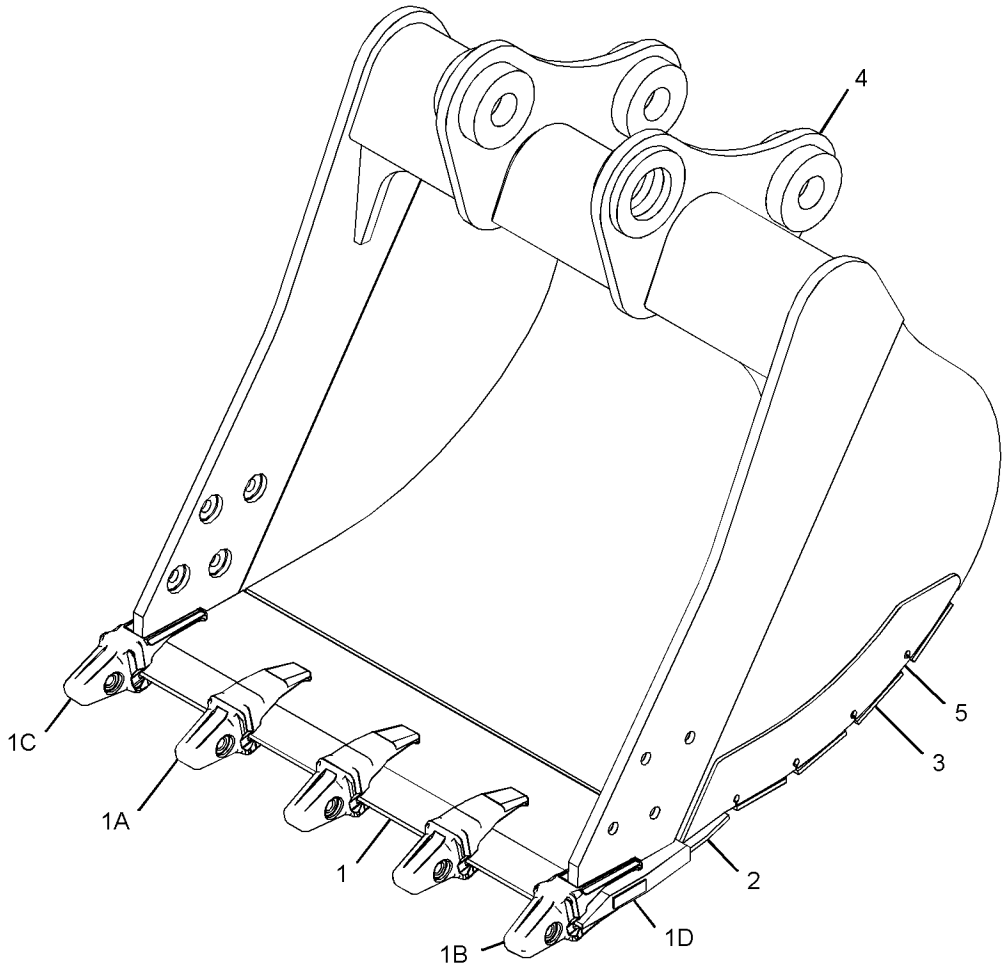

GRAPHIC #1 **<END>** g02979096

390-5448 BUCKET AS-GENERAL PURPOSE–B-FAMILY

S/N: PBB1-UP; KBS1-UP
1150-M (46-IN) WIDE X 0.90-CU M (1.18-CU YD) CAPACITY. J-350 ADAPTERS, QTY OF 5
PART OF 377-5419 BUCKET & ADJUSTER GP
AN ATTACHMENT

SMCS-6101 **i05377900**

NOTE	REF NO	GRAPHIC REF	PART NUMBER	QTY	PART NAME 1 2 3 4 5 6 (PRODUCT LEVEL)	SEE PAGE
	1	1	**390-6802**	1	PLATE AS-HINGE	
	2	1	**347-7479**	1	PLATE-WEAR	
	3	1	**347-7482**	4	PLATE-WEAR	
	4	1	**378-0319**	2	PLATE-WEAR	
	5	1	**390-5451**	1	EDGE AS	
	5A	1	**6I-6354**	3	ADAPTER-TIP (J-350, 2-STRAP, CENTER)	
	5B	1	**6I-6355**	1	ADAPTER-TIP (J-350, 2-STRAP, RH)	
	5C	1	**6I-6356**	1	ADAPTER-TIP (J-350, 2-STRAP, LH)	
	5D	1	**8P-9770**	1	PLATE	

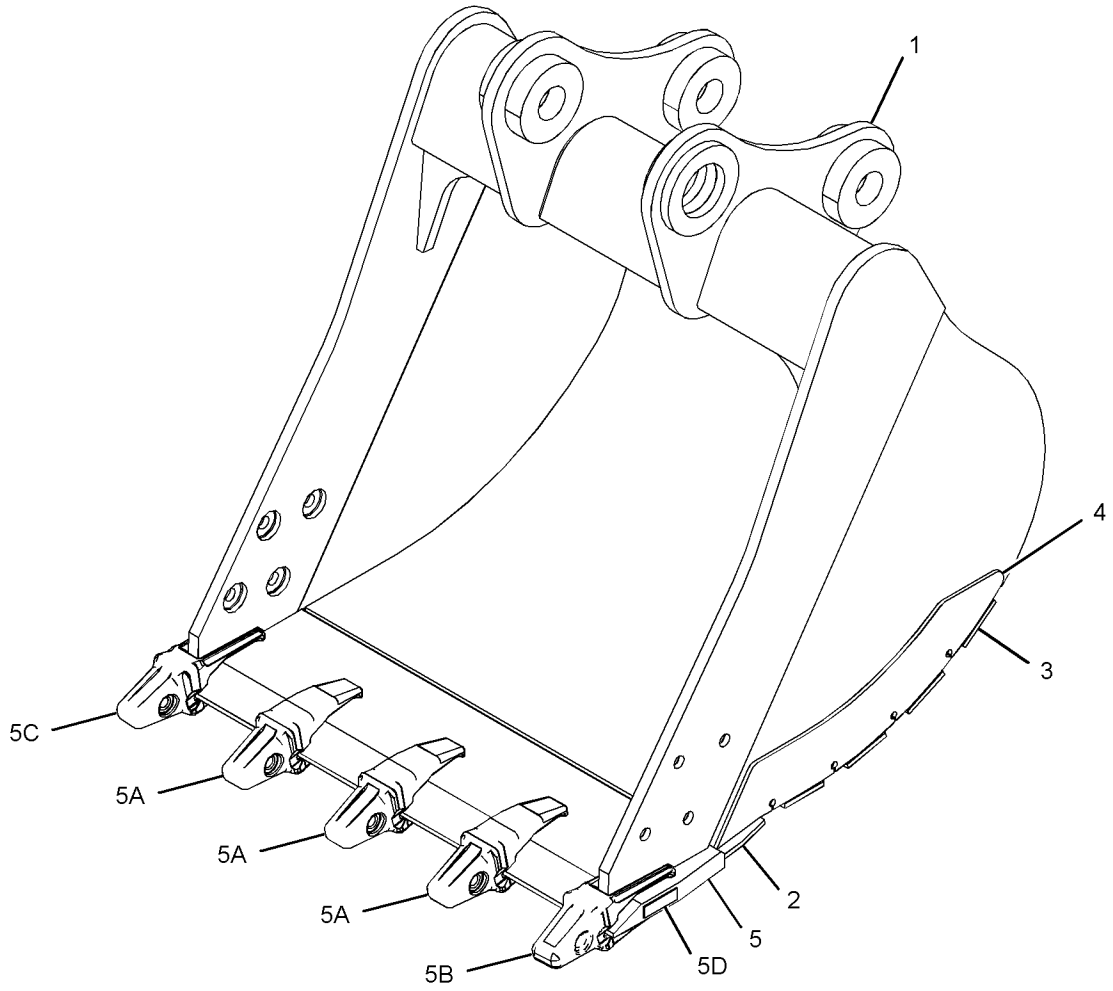

GRAPHIC #1 **<END>** g03404554

418-5244 BUCKET AS-GENERAL PURPOSE—B-FAMILY

S/N: PBB1-UP; KBS1-UP

1250-MM (50-IN) WIDE X 1.0-CU M (1.31-CU YD) CAPACITY. J-350 ADAPTERS, QTY OF 5

PART OF 418-5243 BUCKET & ADJUSTER GP

AN ATTACHMENT

SMCS-6101 **i05190633**

NOTE	REF NO	GRAPHIC REF	PART NUMBER	QTY	PART NAME 1 2 3 4 5 6 (PRODUCT LEVEL)	SEE PAGE
	1	1	**378-0320**	1	EDGE AS	
	1A	1	**8P-9770**	1	PLATE	
	1B	1	**6I-6354**	3	ADAPTER-TIP (J-350, 2-STRAP, CENTER)	
	1C	1	**6I-6355**	1	ADAPTER-TIP (J-350, 2-STRAP, RH)	
	1D	1	**6I-6356**	1	ADAPTER-TIP (J-350, 2-STRAP, LH)	
	2	1	**347-7480**	1	PLATE-WEAR	
	3	1	**347-7483**	4	PLATE-WEAR	
	4	1	**378-0319**	2	PLATE-WEAR	
	5	1	**371-9130**	1	PLATE AS-HINGE	

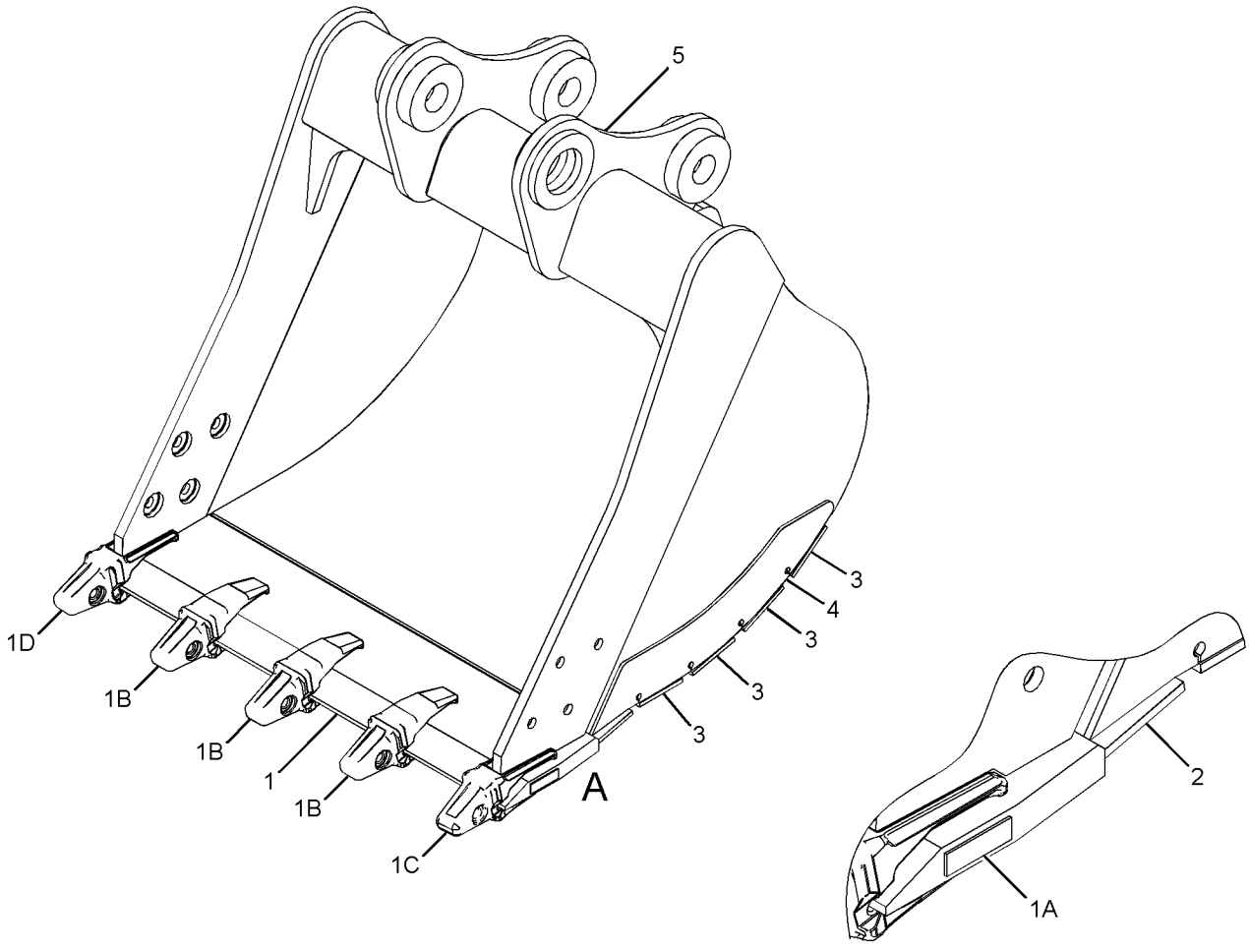

VIEW OF AREA A

GRAPHIC #1 **<END>** g03319341

420-3351 BUCKET AS-GENERAL PURPOSE–B-FAMILY

S/N: PBB1-UP; KBS1-UP

1150-MM (46-IN) WIDE X 0.90-CU M (1.18-CU YD) CAPACITY. J-350 ADAPTERS, QTY OF 5

PART OF 420-3353 BUCKET & ADJUSTER GP

AN ATTACHMENT

SMCS-6101 **i05190634**

NOTE	REF NO	GRAPHIC REF	PART NUMBER	QTY	PART NAME 1 2 3 4 5 6 (PRODUCT LEVEL)	SEE PAGE
	1	1	**390-6802**	1	PLATE AS-HINGE	
	2	1	**347-7479**	1	PLATE-WEAR	
	3	1	**347-7482**	4	PLATE-WEAR	
	4	1	**390-5451**	1	EDGE AS	
	4A	1	**8P-9770**	1	PLATE	
	4B	1	**6I-6354**	3	ADAPTER-TIP (J-350, 2-STRAP, CENTER)	
	4C	1	**6I-6355**	1	ADAPTER-TIP (J-350, 2-STRAP, RH)	
	4D	1	**6I-6356**	1	ADAPTER-TIP (J-350, 2-STRAP, LH)	
	5	1	**378-0319**	2	PLATE-WEAR	

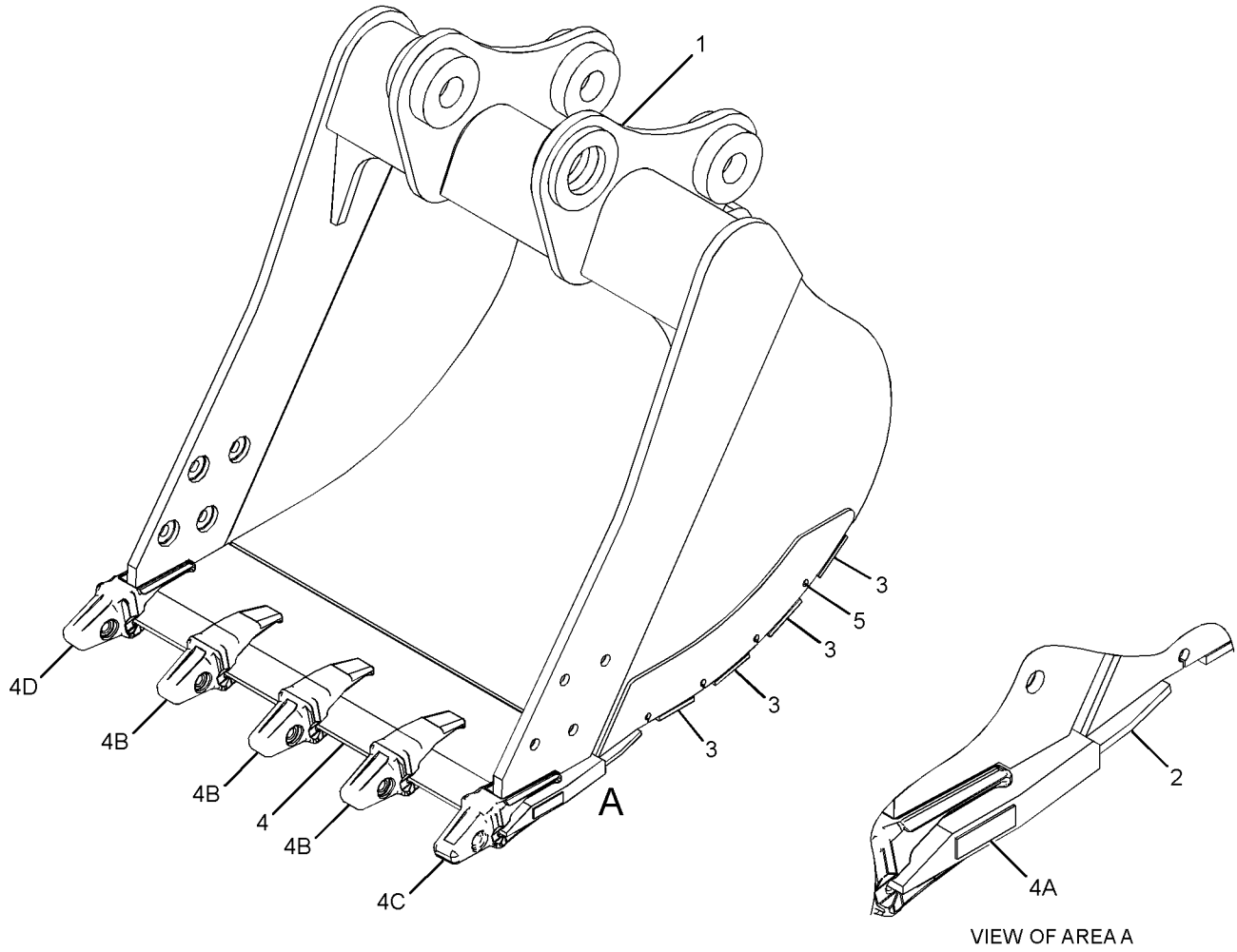

VIEW OF AREA A

GRAPHIC #1 **<END>** g03319347

347-6736 BUCKET AS-HEAVY DUTY–B-FAMILY

S/N: PBB1-UP; KBS1-UP
1050-MM (42-IN) WIDE X 1.0-CU M (1.31-CU YD) CAPACITY. K-90 ADAPTERS, QTY OF 5
PART OF 347-6730 BUCKET & ADJUSTER GP
AN ATTACHMENT

SMCS-6531 **i04753809**

NOTE	REF NO	GRAPHIC REF	PART NUMBER	QTY	PART NAME 1 2 3 4 5 6 (PRODUCT LEVEL)	SEE PAGE
	1	1	**279-4093**	1	EDGE AS	
	1A	1	**220-9094**	3	ADAPTER-TIP (K-90, 2-STRAP, CENTER)	
	1B	1	**232-2095**	1	ADAPTER-TIP (K-90, 2-STRAP, RH)	
	1C	1	**232-2096**	1	ADAPTER-TIP (K-90, 2-STRAP, LH)	
	1D	1	**8P-9770**	1	PLATE	
	2	1	**347-7516**	1	PLATE AS-HINGE	
	3	1	**347-7544**	1	PLATE-WEAR	
	4	1	**347-7551**	4	PLATE-WEAR	
	5	1	**347-7556**	1	PLATE-WEAR	
	6	1	**347-7571**	1	PLATE (LH)	
	7	1	**347-7572**	1	PLATE (RH)	
	8	1	**347-7574**	2	PLATE-WEAR	

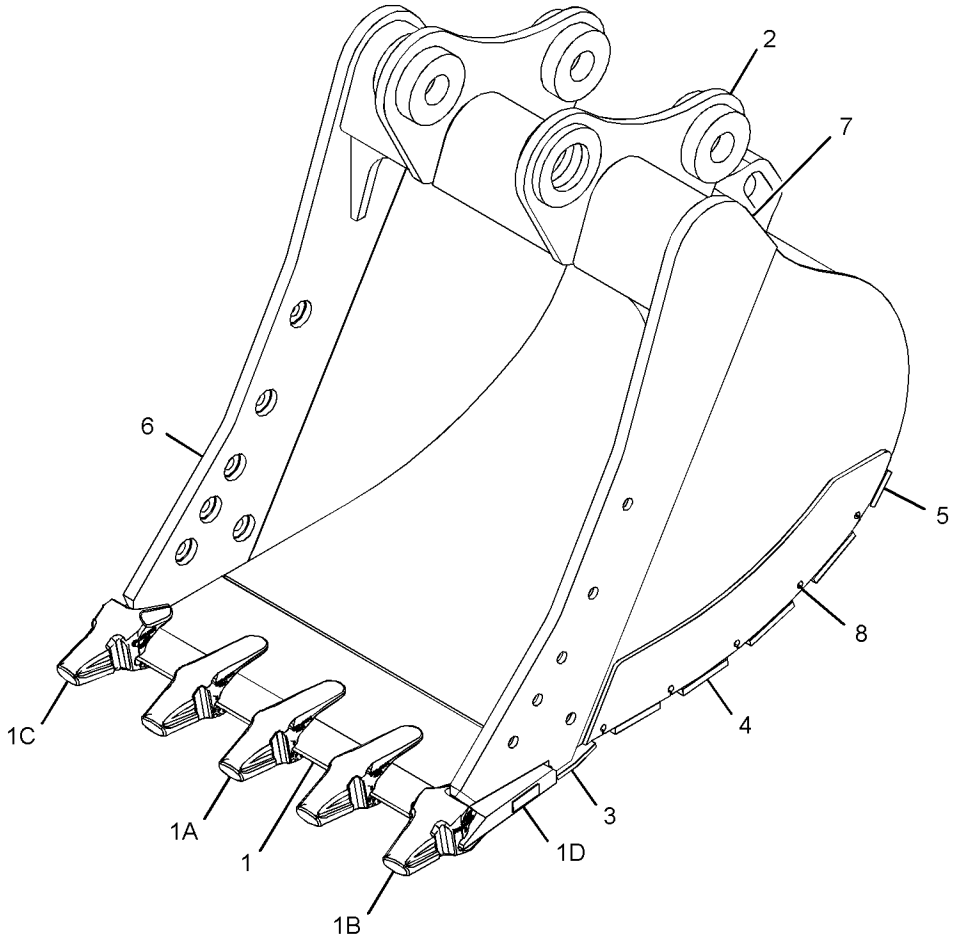

GRAPHIC #1 **<END>** g02910917

347-6741 BUCKET AS-HEAVY DUTY–B-FAMILY

S/N: PBB1-UP; KBS1-UP
1050-MM (43-IN) WIDE X 1.0-CU M (1.3-CU YD) CAPACITY. J-350 ADAPTERS, QTY OF 5
PART OF 347-6739 BUCKET & ADJUSTER GP
AN ATTACHMENT

SMCS-6531 **i05190629**

NOTE	REF NO	GRAPHIC REF	PART NUMBER	QTY	PART NAME 1 2 3 4 5 6 (PRODUCT LEVEL)	SEE PAGE
	1	1	**294-2955**	1	EDGE AS	
	1A	1	**6I-6354**	3	ADAPTER-TIP (J-350, 2-STRAP, CENTER)	
	1B	1	**6I-6355**	1	ADAPTER-TIP (J-350, 2-STRAP, RH)	
	1C	1	**6I-6356**	1	ADAPTER-TIP (J-350, 2-STRAP, LH)	
	1D	1	**8P-9770**	1	PLATE	
	2	1	**347-7544**	1	PLATE-WEAR	
	3	1	**347-7551**	4	PLATE-WEAR	
	4	1	**347-7556**	1	PLATE-WEAR	
	5	1	**347-7574**	2	PLATE-WEAR	
	6	1	**378-0361**	1	PLATE (LH)	
	7	1	**378-0362**	1	PLATE (RH)	
	8	1	**378-0363**	1	PLATE AS-HINGE	

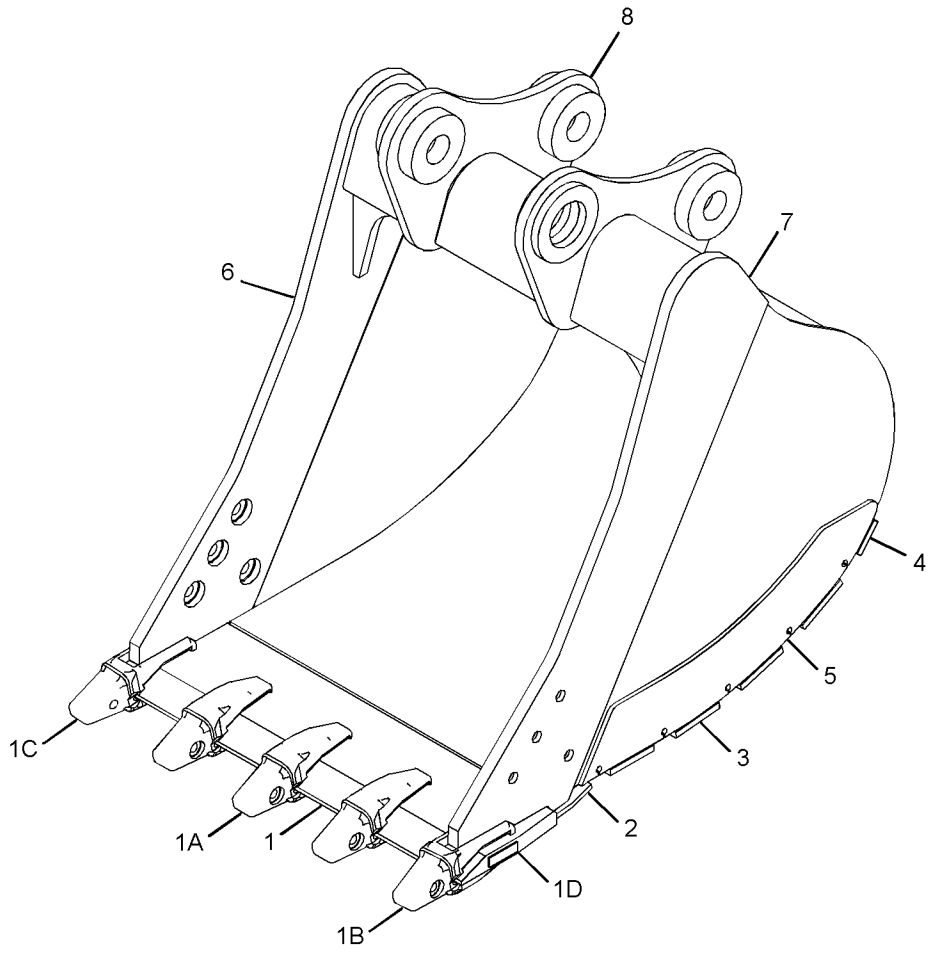

GRAPHIC #1 **<END>** g02739676

347-6745 BUCKET AS-HEAVY DUTY–B-FAMILY

S/N: PBB1-UP; KBS1-UP
1200-MM (48-IN) WIDE X 1.19-CU M (1.56-CU YD) CAPACITY. K-90 ADAPTERS, QTY OF 4
PART OF 347-6743 BUCKET & ADJUSTER GP
AN ATTACHMENT

SMCS-6531 **i04592475**

NOTE	REF NO	GRAPHIC REF	PART NUMBER	QTY	PART NAME 1 2 3 4 5 6 (PRODUCT LEVEL)	SEE PAGE
	1	1	**331-1924**	4	PLATE-WEAR	
	2	1	**331-1926**	1	PLATE-WEAR	
	3	1	**347-7517**	1	PLATE AS-HINGE	
	4	1	**347-7545**	1	PLATE-WEAR	
	5	1	**347-7571**	1	PLATE (LH)	
	6	1	**347-7572**	1	PLATE (RH)	
	7	1	**347-7574**	2	PLATE-WEAR	
	8	1	**348-3094**	1	EDGE AS	
	8A	1	**8P-9770**	1	PLATE	
	8B	1	**220-9094**	2	ADAPTER-TIP (K-90, 2-STRAP, CENTER)	
	8C	1	**232-2095**	1	ADAPTER-TIP (K-90, 2-STRAP, RH)	
	8D	1	**232-2096**	1	ADAPTER-TIP (K-90, 2-STRAP, LH)	

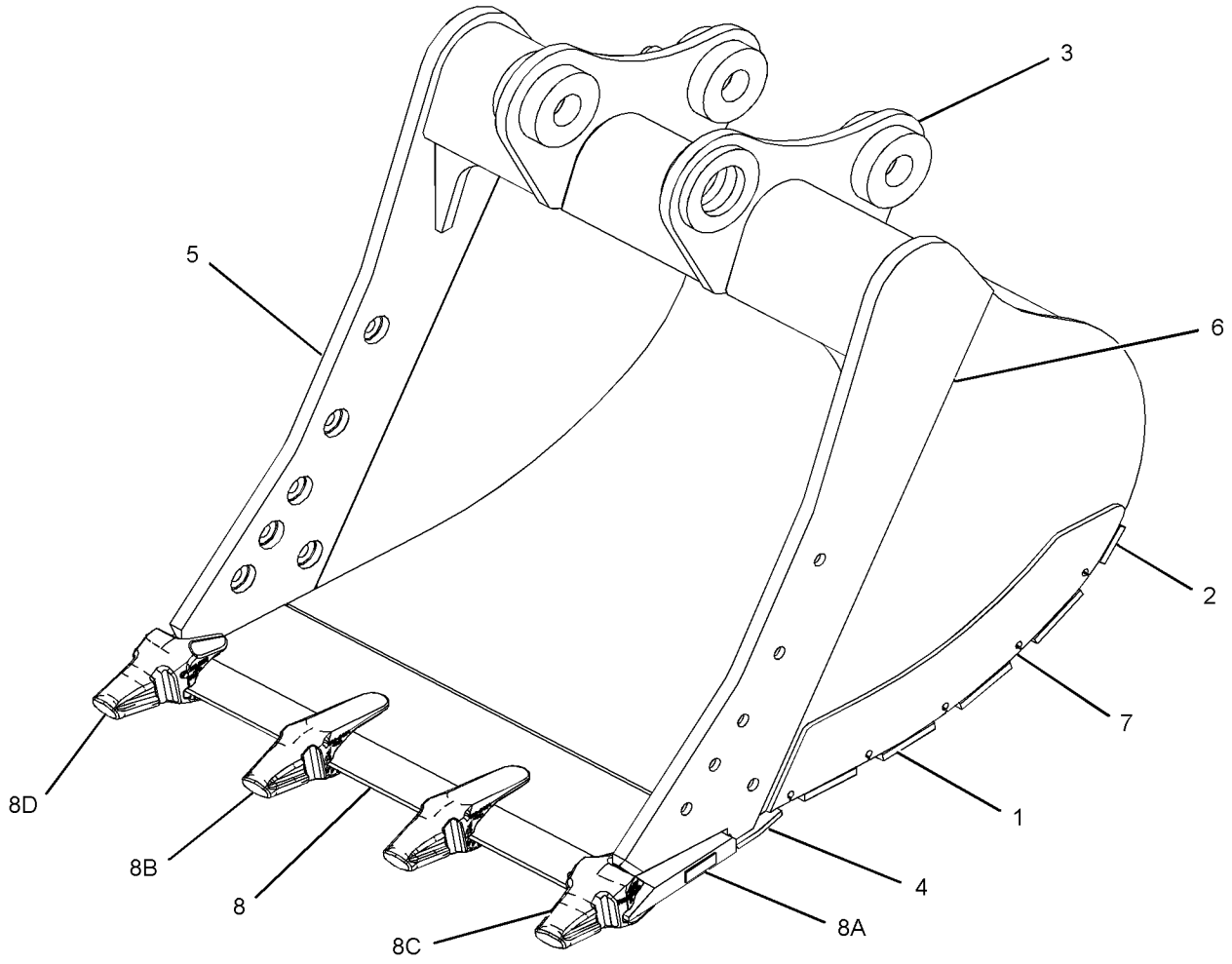

GRAPHIC #1 **<END>** g02750677

347-6746 BUCKET AS-HEAVY DUTY–B-FAMILY

S/N: PBB1-UP; KBS1-UP
1300-MM (52-IN) WIDE X 1.3-CU M (1.71-CU YD) CAPACITY. K-90 ADAPTERS, QTY OF 5
PART OF 347-6744 BUCKET & ADJUSTER GP
AN ATTACHMENT

SMCS-6531 **i04592476**

NOTE	REF NO	GRAPHIC REF	PART NUMBER	QTY	PART NAME 1 2 3 4 5 6 (PRODUCT LEVEL)	SEE PAGE
	1	1	**347-7518**	1	PLATE AS-HINGE	
	2	1	**347-7546**	1	PLATE-WEAR	
	3	1	**347-7552**	4	PLATE-WEAR	
	4	1	**347-7557**	1	PLATE-WEAR	
	5	1	**347-7571**	1	PLATE (LH)	
	6	1	**347-7572**	1	PLATE (RH)	
	7	1	**347-7574**	2	PLATE-WEAR	
	8	1	**348-3095**	1	EDGE AS	
	8A	1	**8P-9770**	1	PLATE	
	8B	1	**220-9094**	3	ADAPTER-TIP (K-90, 2-STRAP, CENTER)	
	8C	1	**232-2095**	1	ADAPTER-TIP (K-90, 2-STRAP, RH)	
	8D	1	**232-2096**	1	ADAPTER-TIP (K-90, 2-STRAP, LH)	

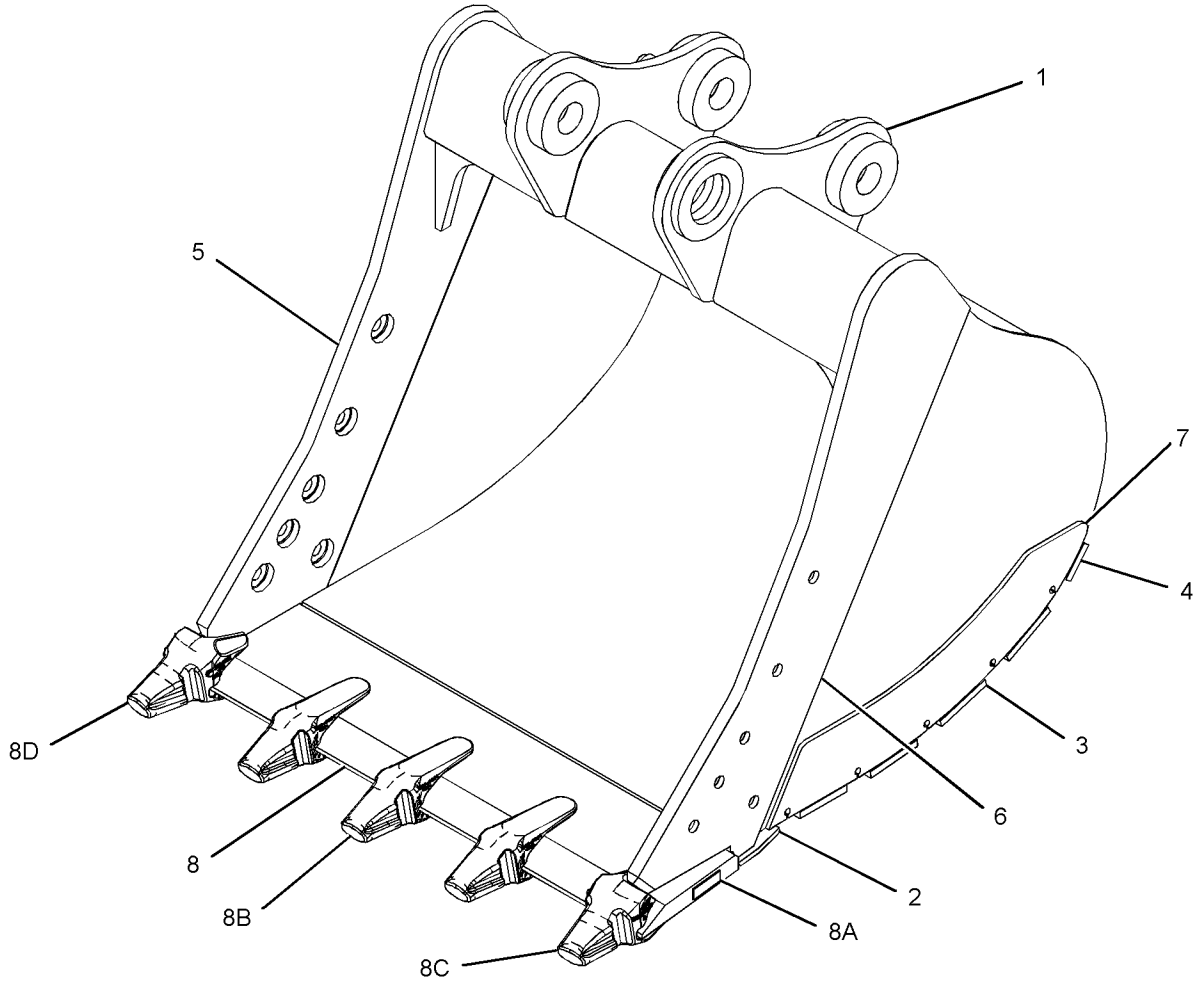

GRAPHIC #1 **<END>** g02753537

371-9085 BUCKET AS-HEAVY DUTY–B-FAMILY

S/N: PBB1-UP; KBS1-UP

1200-MM (48-IN) WIDE X 1.19-CU M (1.56-CU YD) CAPACITY. K-90 ADAPTERS, QTY OF 4

PART OF 347-6852 BUCKET & ADJUSTER GP

AN ATTACHMENT

SMCS-6531 **i05770164**

NOTE	REF NO	GRAPHIC REF	PART NUMBER	QTY	PART NAME 1 2 3 4 5 6 (PRODUCT LEVEL)	SEE PAGE
	1	1	**348-3184**	1	PLATE AS-HINGE	
	2	1	**331-1924**	4	PLATE-WEAR	
	3	1	**331-1926**	1	PLATE-WEAR	
	4	1	**347-7545**	1	PLATE-WEAR	
	5	1	**347-7574**	2	PLATE-WEAR	
	6	1	**347-7572**	1	PLATE (RH)	
	7	1	**347-7571**	1	PLATE (LH)	
	8	1	**348-3094**	1	EDGE AS	
	8A	1	**8P-9770**	1	PLATE	
	8B	1	**220-9094**	2	ADAPTER-TIP (K-90, 2-STRAP, CENTER)	
	8C	1	**232-2095**	1	ADAPTER-TIP (K-90, 2-STRAP, RH)	
	8D	1	**232-2096**	1	ADAPTER-TIP (K-90, 2-STRAP, LH)	

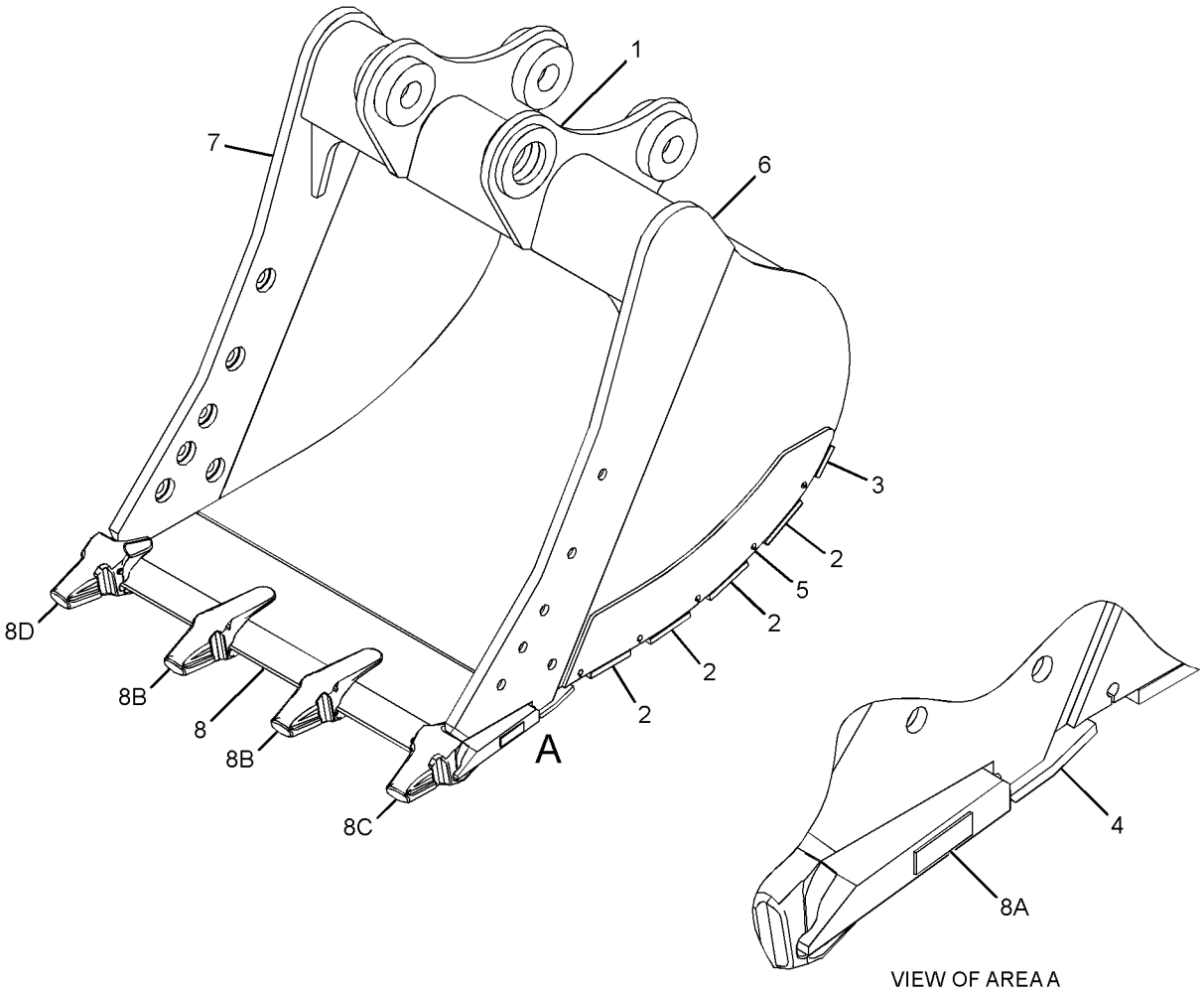

VIEW OF AREA A

GRAPHIC #1 **<END>** g03319300

420-3366 BUCKET AS-HEAVY DUTY–B-FAMILY

S/N: PBB1-UP; KBS1-UP
1050-MM (43-IN) WIDE X 1.00-CU M (1.31-CU YD) CAPACITY. J-350 ADAPTERS, QTY OF 5
PART OF 420-3356 BUCKET & ADJUSTER GP
AN ATTACHMENT

SMCS-6531 **i05190635**

NOTE	REF NO	GRAPHIC REF	PART NUMBER	QTY	PART NAME 1 2 3 4 5 6 (PRODUCT LEVEL)	SEE PAGE
	1	1	**378-0363**	1	PLATE AS-HINGE	
	2	1	**294-2955**	1	EDGE AS	
	2A	1	**8P-9770**	1	PLATE	
	2B	1	**6I-6354**	3	ADAPTER-TIP (J-350, 2-STRAP, CENTER)	
	2C	1	**6I-6355**	1	ADAPTER-TIP (J-350, 2-STRAP, RH)	
	2D	1	**6I-6356**	1	ADAPTER-TIP (J-350, 2-STRAP, LH)	
	3	1	**347-7544**	1	PLATE-WEAR	
	4	1	**347-7551**	4	PLATE-WEAR	
	5	1	**347-7556**	1	PLATE-WEAR	
	6	1	**378-0361**	1	PLATE (LH)	
	7	1	**378-0362**	1	PLATE (RH)	
	8	1	**347-7574**	2	PLATE-WEAR	

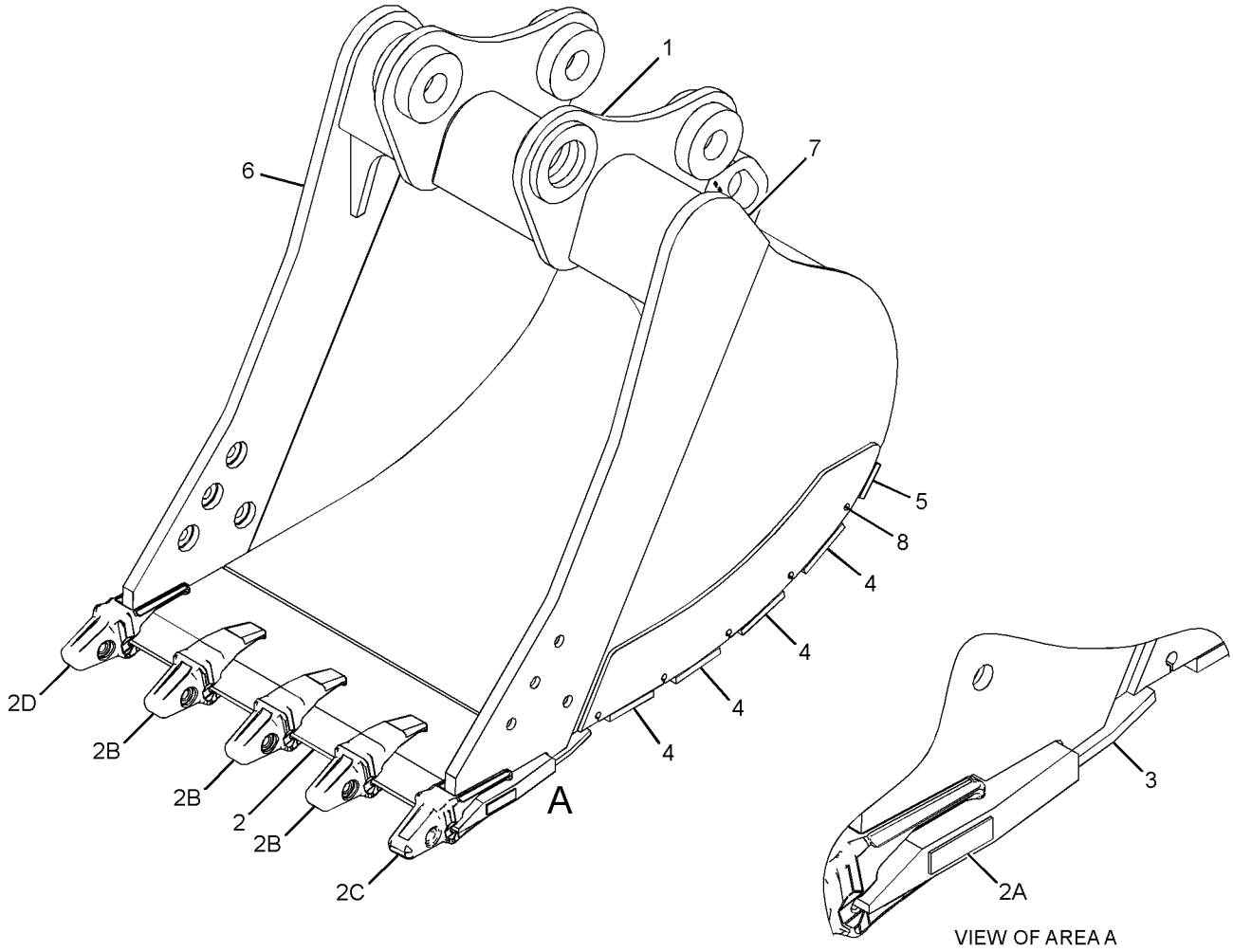

VIEW OF AREA A

GRAPHIC #1 **<END>** g03319360

371-9086 BUCKET GP-HEAVY DUTY SPADE—B-FAMILY

S/N: PBB1-UP; KBS1-UP

1350-MM (54-IN) WIDE X 1.40-CU M (1.83-CU YD) CAPACITY. K-90 ADAPTERS, QTY OF 5

PART OF 347-6853 BUCKET & ADJUSTER GP

AN ATTACHMENT

SMCS-6001 **i05164500**

NOTE	REF NO	GRAPHIC REF	PART NUMBER	QTY	PART NAME 1 2 3 4 5 6 (PRODUCT LEVEL)	SEE PAGE
	1	1	**348-3185**	1	PLATE AS-HINGE	
	2	1	**331-1925**	4	PLATE-WEAR	
	3	1	**331-1927**	1	PLATE-WEAR	
	4	1	**347-7547**	1	PLATE-WEAR	
	5	1	**347-7571**	1	PLATE (LH)	
	6	1	**347-7572**	1	PLATE (RH)	
	7	1	**347-7574**	2	PLATE-WEAR	
	8	1	**371-9146**	1	EDGE AS	
	8A	1	**220-9094**	3	ADAPTER-TIP (K-90, 2-STRAP, CENTER)	
	8B	1	**232-2095**	1	ADAPTER-TIP (K-90, 2-STRAP, RH)	
	8C	1	**232-2096**	1	ADAPTER-TIP (K-90, 2-STRAP, LH)	
	8D	1	**8P-9770**	1	PLATE	

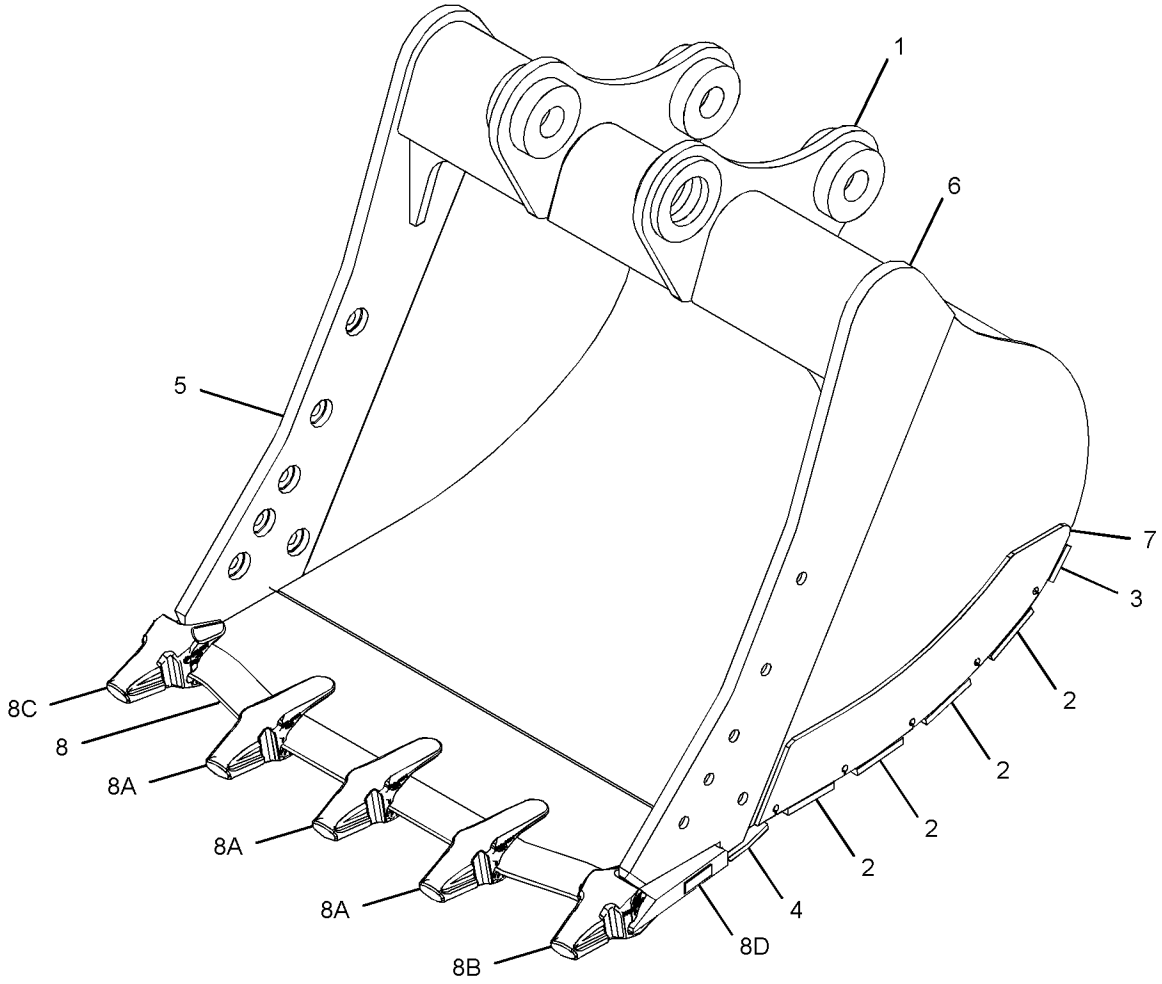

GRAPHIC #1 **<END>** g03317879

349-2220 CONTROL AR-QUICK COUPLER–PIN GRABBER

S/N: PBB1-UP; KBS1-UP

AN ATTACHMENT

SMCS-6129 **i05197738**

NOTE	PART NUMBER	QTY	PART NAME 1 2 3 4 5 6 (PRODUCT LEVEL)	SEE PAGE
Y	*282-5705*	1	FILM GP (QUICK COUPLER)	979
Y	*376-6331*	1	LINES GP-QUICK COUPLER	547
Y	*238-2485*	1	SWITCH GP-TOGGLE (QUICK COUPLER LOCK)	175
Y	*369-0245*	1	WIRING GP-QUICK COUPLER	228

Y - SEPARATE ILLUSTRATION

<END>

456-0934 CONTROL AR-QUICK COUPLER–PIN GRABBER

S/N: PBB1-UP; KBS1-UP

AN ATTACHMENT

SMCS-6129 **i05861274**

NOTE	PART NUMBER	QTY	PART NAME 1 2 3 4 5 6 (PRODUCT LEVEL)	SEE PAGE
Y	*282-5705*	1	FILM GP (QUICK COUPLER)	979
Y	*376-6331*	1	LINES GP-QUICK COUPLER	547
Y	*417-9812*	1	WIRING GP-CAB (COUPLER)	193
Y	*369-0245*	1	WIRING GP-QUICK COUPLER (CHASSIS)	228

Y - SEPARATE ILLUSTRATION

<END>

262-3494 COUPLER AR-QUICK–B1-FAMILY

S/N: PBB1-UP; KBS1-UP

AN ATTACHMENT

SMCS-1408, 5057, 6129 **i05196475**

NOTE	PART NUMBER	QTY	PART NAME 1 2 3 4 5 6 (PRODUCT LEVEL)	SEE PAGE
Y	*349-4133*	1	CYLINDER & LINES GP-BUCKET	347
Y	*262-3496*	1	LINES GP-COUPLER (B1-FAMILY LINKAGE)	472
Y	*262-3497*	1	LINKAGE GP-BUCKET (B1-FAMILY, QUICK COUPLER)	722
Y	*177-8628*	1	PIN GP (COUPLER)	727

Y - SEPARATE ILLUSTRATION

<END>

351-8602 COUPLER AR-QUICK–B-LINKAGE

S/N: PBB1-UP; KBS1-UP

AN ATTACHMENT

SMCS-1408, 5057, 6129 **i04671492**

NOTE	PART NUMBER	QTY	PART NAME 1 2 3 4 5 6 (PRODUCT LEVEL)	SEE PAGE
Y	*292-4151*	1	COUPLER GP-QUICK (B-LINKAGE)	768
Y	*345-3156*	1	LINES GP-COUPLER (B-LINKAGE)	473
J	**160-8290**	2	SHIM (1-MM THK)	

J - APPLY TO STICK/COUPLER INTERFACE
Y - SEPARATE ILLUSTRATION

<END>

455-3909 COUPLER AR-QUICK–B-LINKAGE

S/N: PBB1-UP; KBS1-UP

AN ATTACHMENT

SMCS-1408, 5057, 6129 **i05859617**

NOTE	PART NUMBER	QTY	PART NAME 1 2 3 4 5 6 (PRODUCT LEVEL)	SEE PAGE
Y	*455-3910*	1	COUPLER AR-QUICK	766
Y	*177-8628*	1	PIN GP (COUPLER)	727

Y - SEPARATE ILLUSTRATION

<END>

455-3910 COUPLER AR-QUICK–B-LINKAGE

S/N: PBB1-UP; KBS1-UP

PART OF 455-3909 COUPLER AR-QUICK

AN ATTACHMENT

SMCS-1408, 5057, 6129 **i05859623**

NOTE	PART NUMBER	QTY	PART NAME 1 2 3 4 5 6 (PRODUCT LEVEL)	SEE PAGE
Y	**388-0067**	1	COUPLER GP-QUICK	770
Y	*449-1136*	1	LINES GP-COUPLER	474
	160-8290	2	SHIM (1-MM THK)	

Y - SEPARATE ILLUSTRATION

<END>

235-0723 COUPLER GP-QUICK—B1-LINKAGE

S/N: PBB1-UP; KBS1-UP
PART OF 262-3496 LINES GP-COUPLER
AN ATTACHMENT

SMCS-1408, 5057, 6129 **i05226040**

NOTE	REF NO	GRAPHIC REF	PART NUMBER	QTY	PART NAME 1 2 3 4 5 6 (PRODUCT LEVEL)	SEE PAGE
Y	1	1	**172-8402**	1	CYLINDER GP-COUPLER	382
	2	1	**273-4161**	1	HOOK	
	3	1	**273-4162**	1	PIN	
	4	1	**273-4163**	1	PIN	
	5	1	**273-4160**	1	PIN	
	6	1	**091-5928**	4	FITTING-GREASE	
	7	1	**201-3665**	1	SPRING	
	8	1	**171-5956**	1	BEARING	
	9	1	**256-9806**	1	BAR	
	10	1	**273-4165**	1	BAR	
	11	1	**5P-7604**	2	RING-RETAINING	
	12	1	**256-9807**	4	CLIP	
	13	1	**273-4159**	1	PLATE-RETAINING	
M	14	1	**118-4140**	2	SCREW (M5X0.8X19-MM)	
					PARTS SHOWN IN GRAPHIC(S) WITHOUT A REFERENCE NUMBER ARE NOT SERVICED SEPARATELY	

M - METRIC PART
Y - SEPARATE ILLUSTRATION

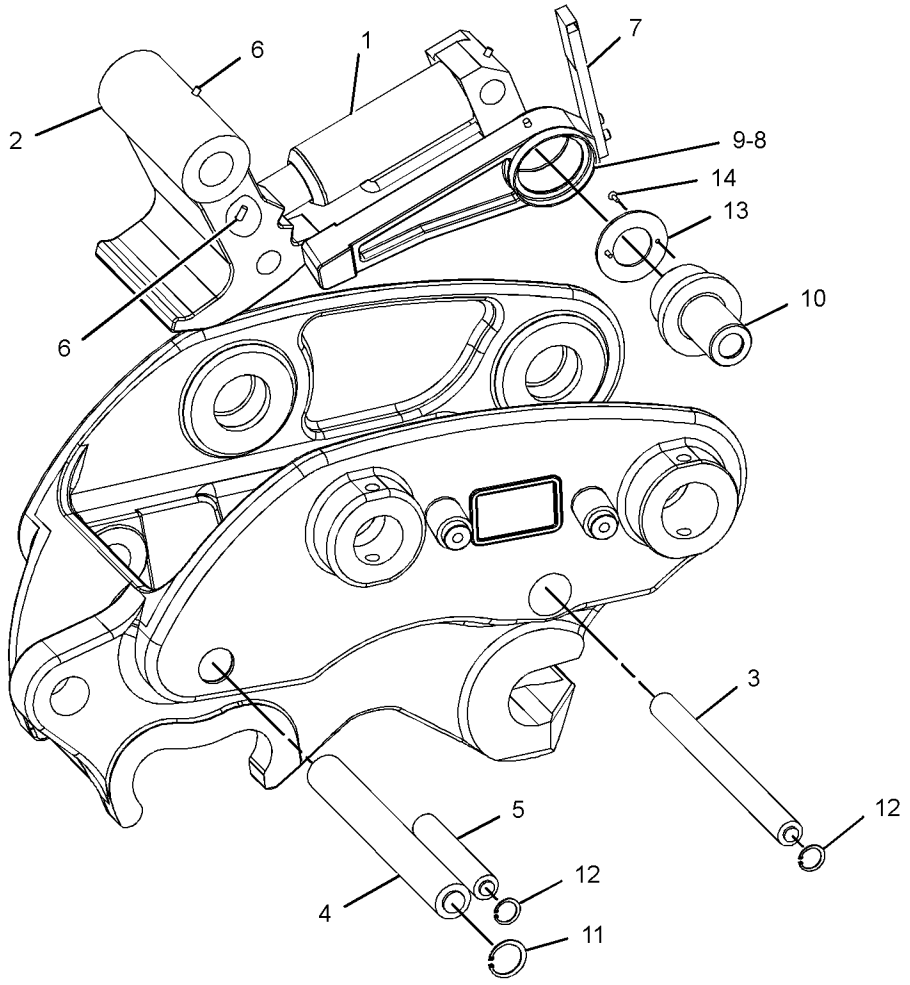

GRAPHIC #1 **<END>** g01845993

292-4151 COUPLER GP-QUICK—B-LINKAGE

S/N: PBB1-UP; KBS1-UP
PART OF 351-8602 COUPLER AR-QUICK
AN ATTACHMENT

SMCS-1408, 5057, 6129

i04536140

NOTE	REF NO	GRAPHIC REF	PART NUMBER	QTY	PART NAME 1 2 3 4 5 6 (PRODUCT LEVEL)	SEE PAGE
	1	1	**1S-4923**	2	WASHER (1.5X2X0.035-IN THK)	
	4	1	**159-8035**	1	FILM-WARNING (CRUSH HAZARD, STAY BACK)	
	5	1	**159-8036**	1	FILM-WARNING (READ OMM)	
C	6	1	**2K-1594**	1	PIN-SPRING (7.94X76.2-MM)	
	9	1	**293-5146**	2	PLATE	
Y	10	1	**294-8011**	1	CYLINDER GP-COUPLER	383
	11	1	**295-7964**	1	PIN	
C	12	1	**348-4330**	1	PIN	
	13	1	**302-5941**	1	HOOK AS (SECONDARY)	
	13A	1	**3B-8489**	2	FITTING-GREASE (1/8-27 PTF)	
	13B	1	**096-6837**	2	RING-RETAINING	
	13C	1	**133-1207**	2	WASHER (21.1X28.1X0.9-MM THK)	
	14	1	**302-5943**	1	HOOK AS (PRIMARY)	
	14A	1	**3B-8489**	2	FITTING-GREASE (1/8-27 PTF)	
	14B	1	**117-9436**	2	BUSHING	
	15	1	**302-6859**	1	ROCKER ARM GP (RH)	
	15A	1	**3B-8489**	2	FITTING-GREASE (1/8-27 PTF)	
	15B	1	**7K-9592**	1	BUSHING	
M	15C	1	**8T-0439**	2	BOLT-SOCKET HEAD (M16X2X30-MM)	
	16	1	**302-6860**	1	ROCKER ARM GP (LH)	
	16A	1	**3B-8489**	2	FITTING-GREASE (1/8-27 PTF)	
	16B	1	**7K-9592**	1	BUSHING	
M	16C	1	**8T-0439**	2	BOLT-SOCKET HEAD (M16X2X30-MM)	
	17	1	**349-6114**	1	PIN	
	18	1	**095-0924**	2	RING-RETAINING	
	19	1	**096-6837**	2	RING-RETAINING	
	20	1	**133-1207**	2	WASHER (21.1X28.1X0.9-MM THK)	
	21	1	**4D-1322**	2	RING-RETAINING	
	22	1	**268-4531**	1	FILM-INSTRUCTION (COUPLER OPERATION)	
C	23	1	**6V-5589**	2	RING-RETAINING	

C - CHANGE FROM PREVIOUS TYPE
M - METRIC PART
Y - SEPARATE ILLUSTRATION

292-4151 **COUPLER GP-QUICK (*contd.*)** **i04536140**

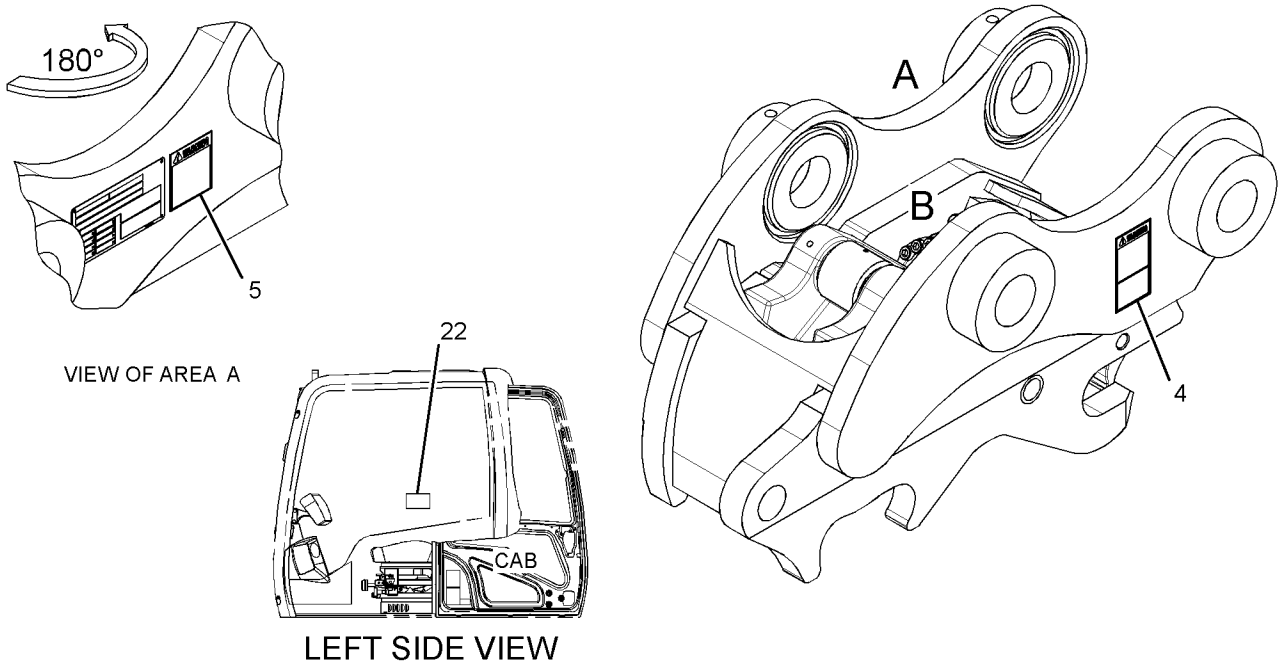

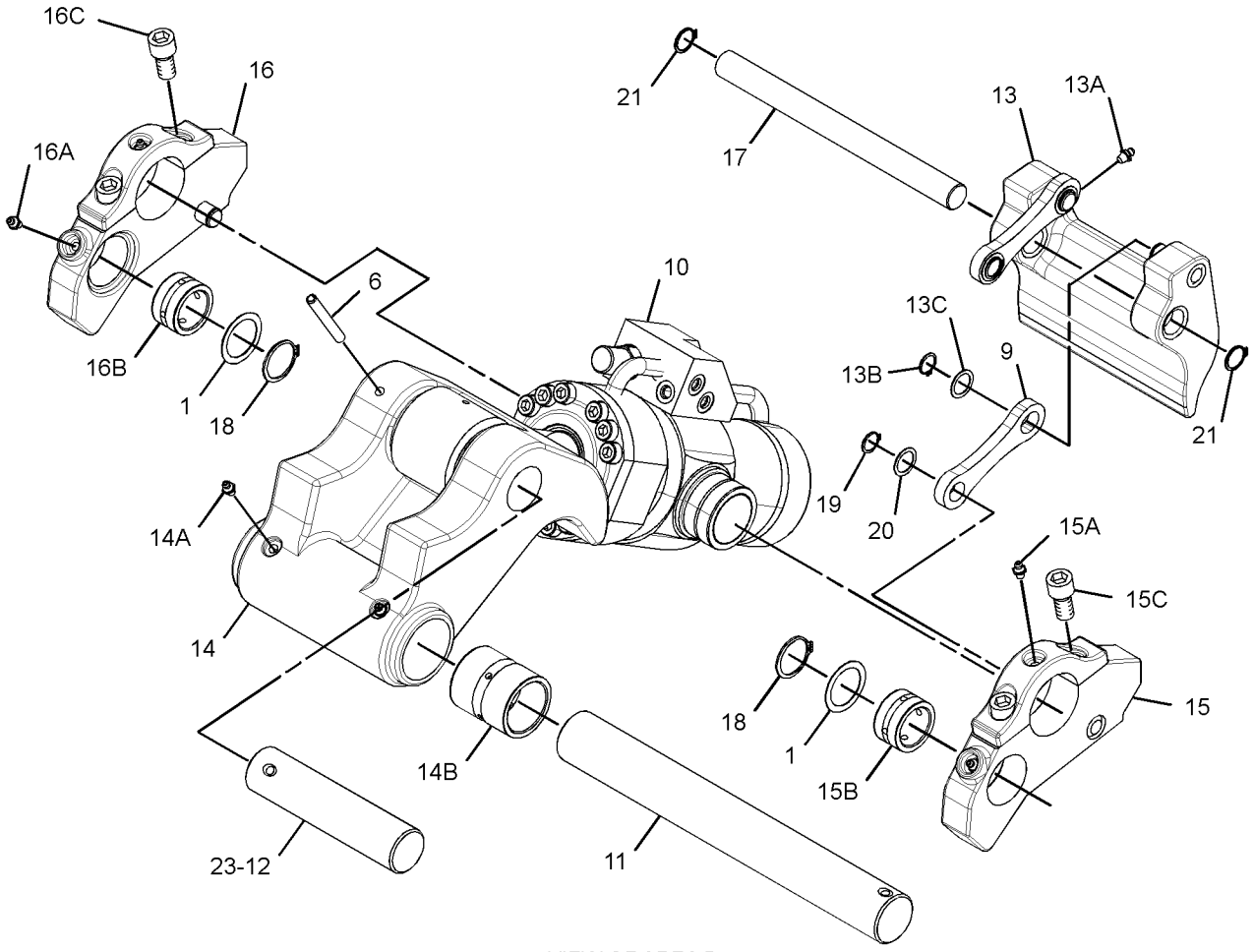

VIEW OF AREA B
(COUPLER REMOVED)

GRAPHIC #1 **<END>** g02183033

388-0067 COUPLER GP-QUICK–B-LINKAGE

S/N: PBB1-UP; KBS1-UP
PART OF 455-3910 COUPLER AR-QUICK
AN ATTACHMENT

SMCS-1408, 5057, 6129 **i05859666**

NOTE	REF NO	GRAPHIC REF	PART NUMBER	QTY	PART NAME 1 2 3 4 5 6 (PRODUCT LEVEL)	SEE PAGE
M	1	1	**8T-4137**	1	BOLT (M10X1.5X20-MM)	
	2	1	**159-8036**	1	FILM-WARNING (READ OMM)	
	3	1	**355-5804**	2	PLUG	
	4	1	**388-0084**	1	LATCH	
	5	1	**388-0085**	1	ROCKER ARM	
	6	1	**388-0086**	1	ROCKER ARM	
	7	1	**388-0088**	2	SPRING-SPACER	
	8	1	**388-0090**	2	SPRING-GUIDE	
	9	1	**388-0091**	1	PIN	
	10	1	**388-0099**	1	PIN	
I	11	1	**388-0105**	3	HOSE AS	
I	12	1	**388-0110**	1	HOSE AS	
	13	1	**388-6876**	1	PIN	
Y	14	1	**390-9505**	1	CYLINDER GP-COUPLER	385
I	15	1	**393-7499**	1	HOSE AS	
	16	1	**424-6681**	2	SPRING	
I	17	1	**440-5314**	1	HOSE AS	
I	18	1	**440-5315**	1	HOSE AS	
	19	1	**446-7944**	1	PIN	
	20	1	*458-3267*	1	COUPLER AS	
M	20A	1	**9R-2613**	1	BOSS-WELD (M10X1.5X25-MM)	
	20B	1	**193-5014**	12	PIN	
	21	1	**458-3274**	1	PLATE-COVER	
	22	1	**458-3275**	1	PLATE	
	23	1	**463-1603**	1	WEDGE	
	24	1	**096-0015**	4	RING-RETAINING	
	25	1	**2D-6398**	2	RING-RETAINING	
	26	1	**2P-1279**	2	LOCKNUT (9/16-18-THD)	
	27	1	**349-6114**	1	PIN	
	28	1	**3J-1907**	1	SEAL-O-RING	
	29	1	**3J-7354**	1	SEAL-O-RING	
	30	1	**4D-1322**	2	RING-RETAINING	
	31	1	**4D-7794**	2	CLIP	
	32	1	**4J-5477**	3	SEAL-O-RING	
	33	1	**4M-8973**	2	ELBOW	
	34	1	**5B-0935**	7	FITTING-GREASE	
	35	1	**5P-9436**	2	PLUG	
	36	1	**6J-7836**	2	RING-SNAP	
	37	1	**6V-8397**	3	SEAL-O-RING	
	38	1	**6V-8636**	1	CONNECTOR	
	39	1	**6V-8647**	1	CONNECTOR	
	40	1	**6V-8979**	1	ELBOW	
	41	1	**6V-8980**	1	ELBOW	
	42	1	**6V-9168**	2	NUT (11/16-16-THD)	
	43	1	**6V-9828**	1	CAP AS	
	44	1	**6V-9829**	1	CAP AS	
	45	1	**8T-4121**	7	WASHER-HARD (11X21X2.5-MM THK)	
M	46	1	**8T-4136**	5	BOLT (M10X1.5X25-MM)	

I - REFER TO HYDRAULIC INFORMATION SYSTEM
M - METRIC PART
Y - SEPARATE ILLUSTRATION

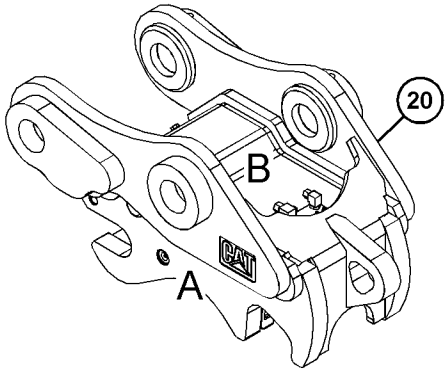

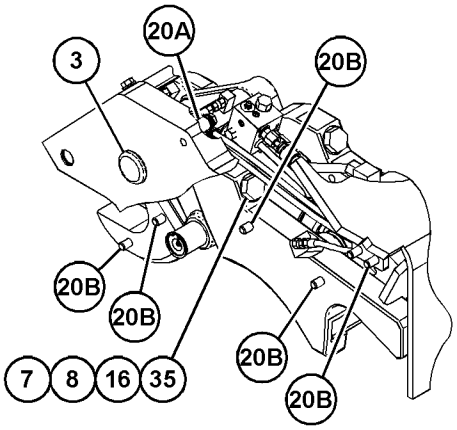

VIEW OF AREA A
(PARTS REMOVED FOR CLARITY)

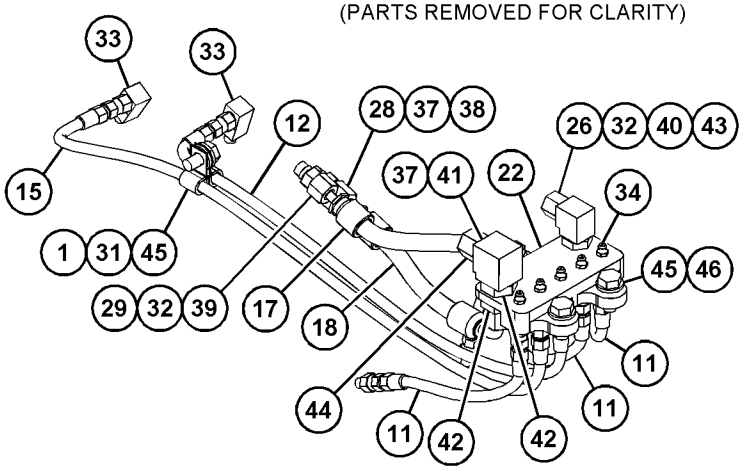

VIEW OF AREA C
(PARTS REMOVED FOR CLARITY)

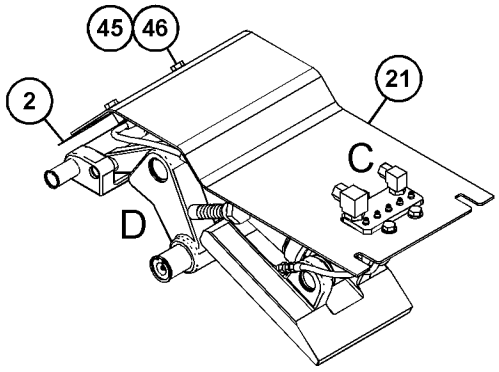

VIEW OF AREA B
(PARTS REMOVED FOR CLARITY)

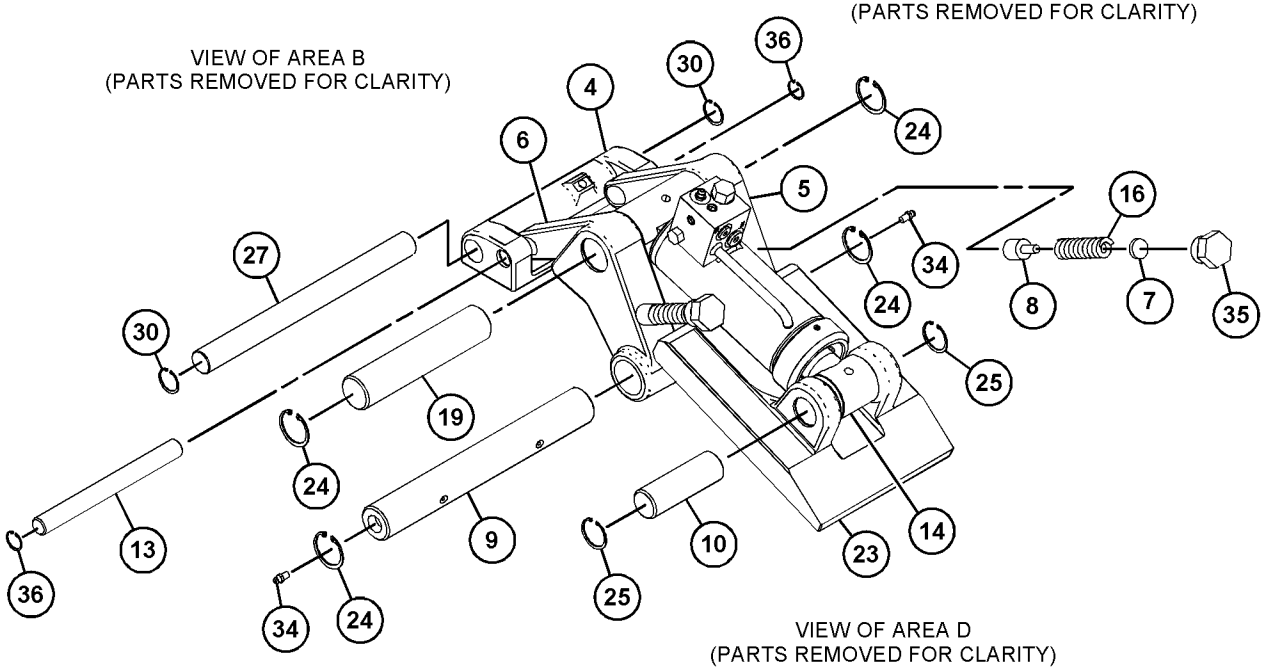

VIEW OF AREA D
(PARTS REMOVED FOR CLARITY)

GRAPHIC #1 **<END>** g03713705

416-1798 AIR CONDITIONER & MOUNTING GP

S/N: PBB1-UP; KBS1-UP
PART OF 418-9897 AIR CONDITIONER AR
AN ATTACHMENT

SMCS-7320 **i05333180**

NOTE	REF NO	GRAPHIC REF	PART NUMBER	QTY	PART NAME 1 2 3 4 5 6 (PRODUCT LEVEL)	SEE PAGE
	1	1	**111-4836**	3	CLIP	
	2	1	**235-8874**	1	SENSOR-TEMPERATURE (AMBIENT AIR)	
	3	1	**235-8875**	1	BRACKET	
	4	1	**235-9005**	1	HARNESS AS-HEATER & AIR COND (LOW SIDE)	
Y	5	1	**316-8916**	1	AIR CONDITIONER GP	775
	6	1	**396-6895**	1	PANEL AS-CONTROL	
	7	1	**416-1802**	1	HARNESS AS-HEATER & AIR COND (HIGH SIDE)	
	8	1	**119-5026**	4	SCREW-PAN HEAD (10-16X0.63-IN)	
	9	1	**3S-2093**	1	STRAP-CABLE	
	10	1	**4P-7581**	1	CLIP	
M	11	1	**5C-9553**	1	BOLT (M6X1X16-MM)	
	12	1	**7X-7729**	7	WASHER (11X25X3-MM THK)	
	13	1	**8T-4121**	3	WASHER-HARD (11X21X2.5-MM THK)	
M	14	1	**8T-4136**	7	BOLT (M10X1.5X25-MM)	
M	15	1	**8T-4137**	3	BOLT (M10X1.5X20-MM)	
	16	1	**9X-8256**	1	WASHER (6.6X12X2-MM THK)	

M - METRIC PART
Y - SEPARATE ILLUSTRATION

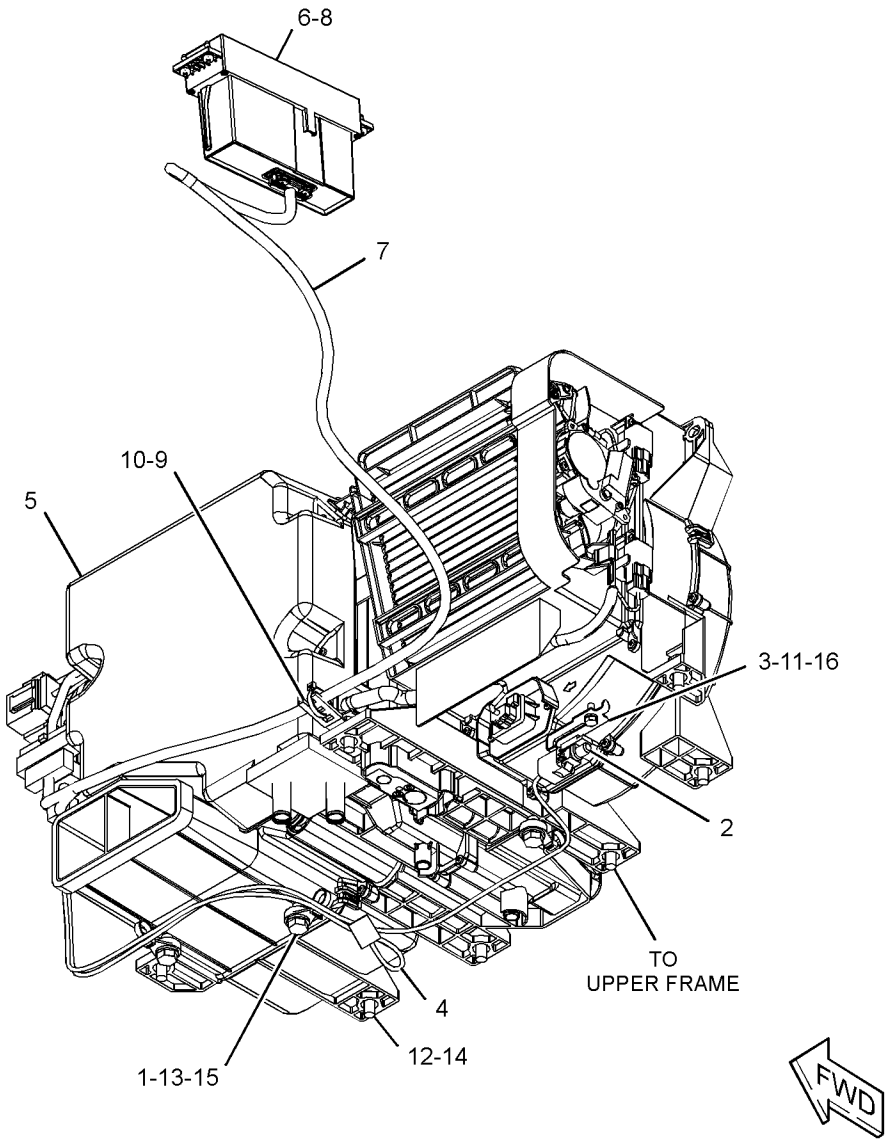

GRAPHIC #1 **<END>** g03312776

OPERATOR STATION

372-9414 AIR CONDITIONER AR–CHASSIS

S/N: PBB1-UP; KBS1-UP

AN ATTACHMENT

SMCS-7320 **i05194855**

NOTE	PART NUMBER	QTY	PART NAME 1 2 3 4 5 6 (PRODUCT LEVEL)	SEE PAGE
Y	*273-5167*	1	CONDENSER & MTG GP-REFRIGERANT	825
Y	*372-9388*	1	LINES GP-AIR CONDITIONER	891

Y - SEPARATE ILLUSTRATION

<END>

418-9897 AIR CONDITIONER AR

S/N: PBB1-UP; KBS1-UP

PART OF 456-0836, 456-0837, 456-0838, 456-0839, 456-0842, 456-0892 OPTION AR-CAB

AN ATTACHMENT

SMCS-7320 **i05335338**

NOTE	PART NUMBER	QTY	PART NAME 1 2 3 4 5 6 (PRODUCT LEVEL)	SEE PAGE
Y	*416-1798*	1	AIR CONDITIONER & MOUNTING GP	772
Y	*229-9082*	1	DUCT GP-CAB AIR	863
	185-8284	1	COVER	
	235-8950	2	CLIP	
			(LOCATED ON RH CAB CONSOLE SWITCH PANEL)	

Y - SEPARATE ILLUSTRATION

<END>

316-8916 AIR CONDITIONER GP

S/N: PBB1-UP; KBS1-UP

PART OF 416-1798 AIR CONDITIONER & MOUNTING GP

AN ATTACHMENT

SMCS-7320 **i03675524**

NOTE	REF NO	GRAPHIC REF	PART NUMBER	QTY	PART NAME 1 2 3 4 5 6 (PRODUCT LEVEL)	SEE PAGE
	1	1	**185-8300**	35	SCREW-TAPPING	
	2	1	**185-8302**	3	SCREW AS-TAPPING	
	3	1	**245-7817**	2	MOTOR AS	
	4	1	**245-7818**	3	CLIP	
	5	1	**245-7819**	2	CLIP	
	6	1	**245-7820**	1	COVER-FRONT	
	7	1	**245-7825**	1	INSULATOR	
	8	1	**245-7826**	1	INSULATOR	
	9	1	**245-7827**	1	INSULATOR	
	10	1	**245-7828**	1	INSULATOR	
	11	1	**245-7829**	1	PACKING	
	12	1	**245-7830**	1	CLIP	
	13	1	**245-7831**	1	SENSOR AS-TEMPERATURE (COOLANT)	
	14	1	**245-7832**	1	CONTROL AS	
	15	1	**245-7833**	1	CORE AS-HEATER	
	16	1	**245-7834**	1	DAMPER AS	
	17	1	**245-7835**	1	SENSOR AS-TEMPERATURE (AMBIENT AIR TEMP)	
Y	18	1	**245-7836**	1	COIL GP-EVAPORATOR	819
	19	1	**245-7838**	1	PACKING	
	20	1	**245-7839**	1	MOTOR AS (WITH FAN)	
Y	21	1	**245-7846**	1	CONTROL GP-HEAT & AIR COND (AIR INLET)	844
	22	1	**245-7847**	1	HARNESS AS-HEATER & AIR COND	
	23	1	**245-7856**	3	SCREW AS-TAPPING	
	24	1	**293-1137**	1	FILTER GP-AIR (AIR CONDITIONER)	
		1	**245-7823**	1	FILTER ELEMENT-CAB AIR	
		1	**245-7824**	1	PACKING	
	25	1	**316-8846**	1	PLATE	
	26	1	**316-8847**	2	ROD	
	27	1	**316-8849**	1	ROD	
	28	1	**316-8918**	1	PLATE	
	29	1	**316-8920**	1	ROD	
	30	1	**316-8921**	1	ROD	

Y - SEPARATE ILLUSTRATION

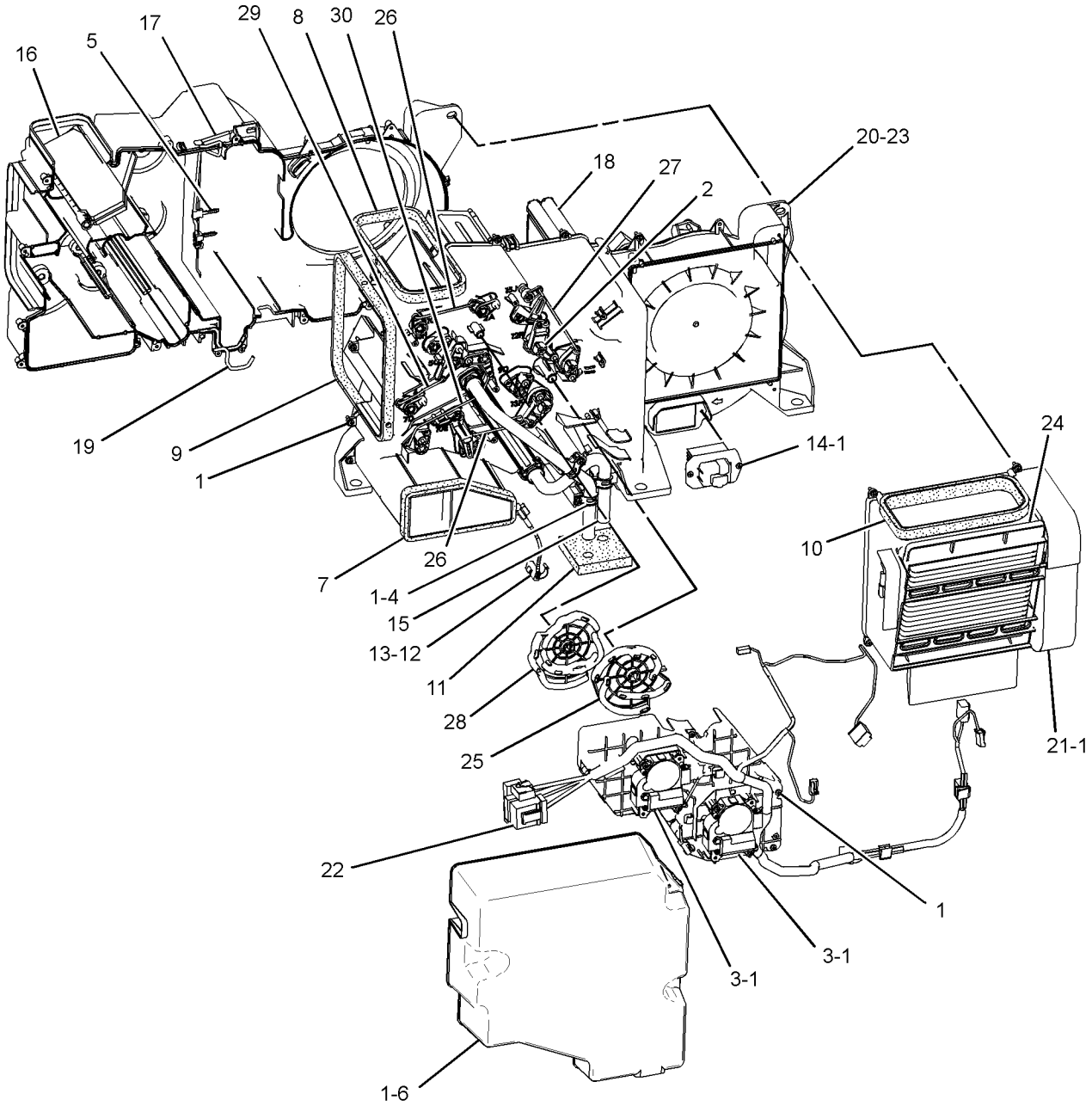

FRONT VIEW
(UPPER RIGHT)

GRAPHIC #1 **<END>** g01684274

259-7346 ARMREST GP–RH

S/N: PBB1-UP; KBS1-UP

PART OF 259-7348 CONSOLE GP-OPERATOR

SMCS-7307 **i05509640**

NOTE	REF NO	GRAPHIC REF	PART NUMBER	QTY	PART NAME 1 2 3 4 5 6 (PRODUCT LEVEL)	SEE PAGE
M	1	1	**171-7325**	3	SCREW-TAPPING (M5X0.8-THD)	
M	2	1	**185-8286**	2	SCREW-MACHINE (M4X0.7X8-MM)	
	3	1	**235-8951**	1	SUPPORT AS	
	4	1	**235-8996**	1	COVER	
	5	1	**235-8997**	1	KNOB	
	6	1	**259-7345**	1	CUSHION	

M - METRIC PART

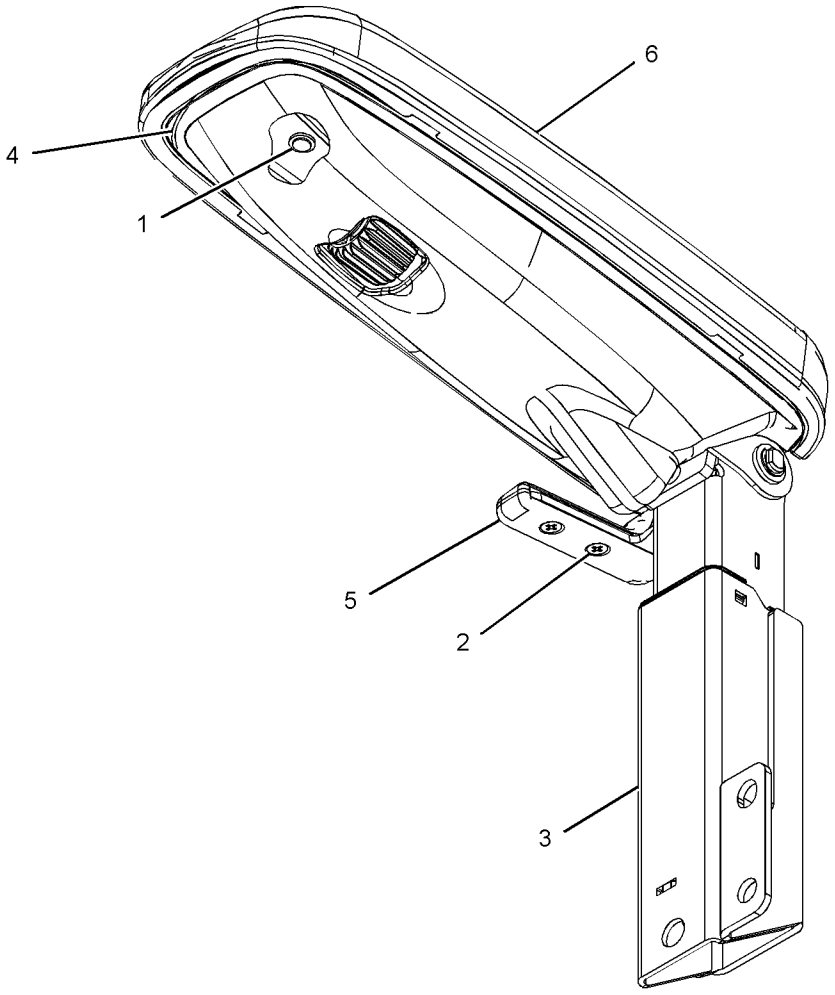

GRAPHIC #1 **<END>** g03482800

259-7347 ARMREST GP–LH

S/N: PBB1-UP; KBS1-UP

PART OF 421-1434 CONSOLE GP-OPERATOR

SMCS-7307 **i02488397**

NOTE	REF NO	GRAPHIC REF	PART NUMBER	QTY	PART NAME 1 2 3 4 5 6 (PRODUCT LEVEL)	SEE PAGE
M	1	1	**171-7325**	3	SCREW-TAPPING (M5X0.8-THD)	
M	2	1	**185-8286**	2	SCREW-MACHINE (M4X0.7X8-MM)	
	3	1	**235-8952**	1	SUPPORT AS	
	4	1	**235-8996**	1	COVER	
	5	1	**235-8998**	1	KNOB	
	6	1	**259-7345**	1	CUSHION	

M - METRIC PART

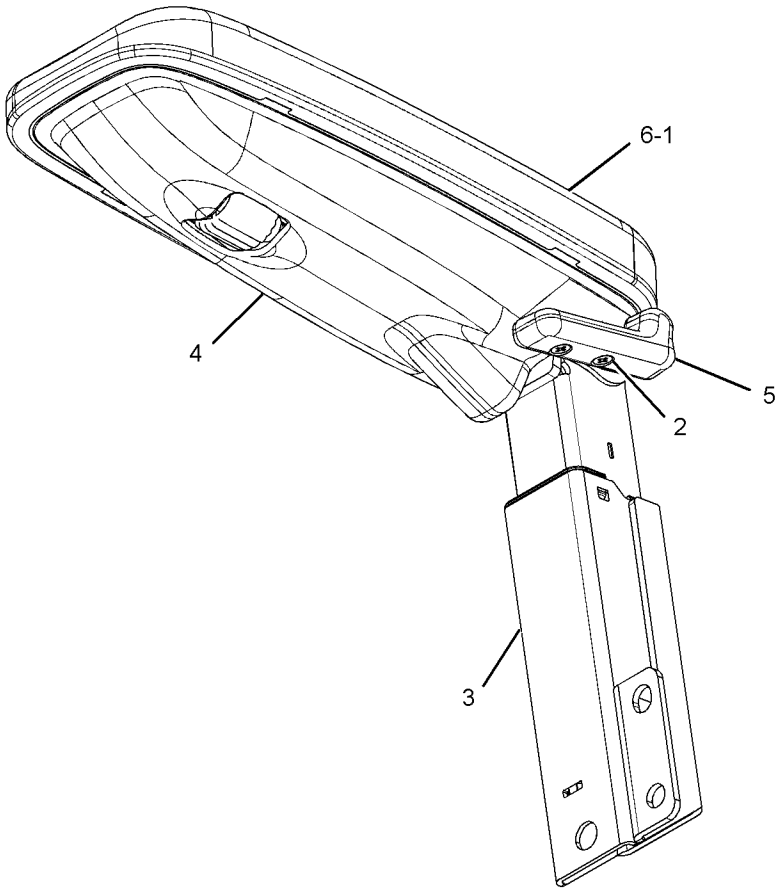

GRAPHIC #1 **<END>** g01210886

346-7375 BRACKET GP-MOUNTING-MIRROR

S/N: PBB1-UP; KBS1-UP
PART OF 346-8058 CAB GP
AN ATTACHMENT

SMCS-0635 **i03645723**

NOTE	REF NO	GRAPHIC REF	PART NUMBER	QTY	PART NAME 1 2 3 4 5 6 (PRODUCT LEVEL)	SEE PAGE
	1	1	**2U-2552**	5	LOCKWASHER	
M	2	1	**6V-5683**	3	BOLT (M6X1X16-MM)	
M	3	1	**9X-6153**	2	BOLT (M6X1X10-MM)	
					PARTS SHOWN IN GRAPHIC(S) WITHOUT A REFERENCE NUMBER ARE NOT SERVICED SEPARATELY	

M - METRIC PART

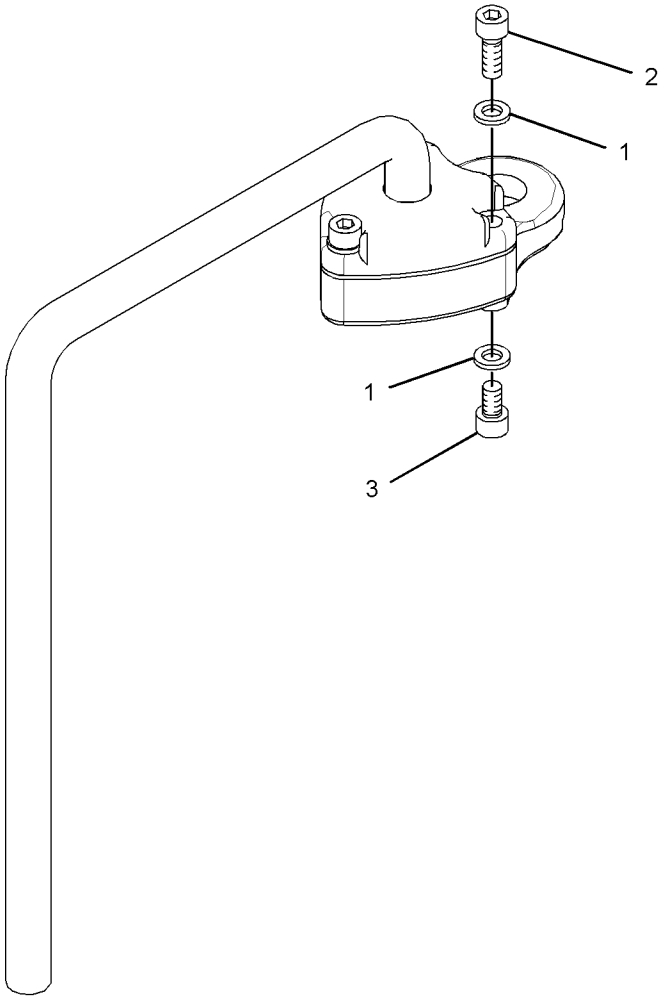

GRAPHIC #1 **<END>** g01962144

OPERATOR STATION

346-8058 CAB GP–EXTERIOR

S/N: PBB1-UP; KBS1-UP
PART OF 399-0057, 399-0058 CAB GP
AN ATTACHMENT

SMCS-7301, 7325 **i05280804**

NOTE	REF NO	GRAPHIC REF	PART NUMBER	QTY	PART NAME 1 2 3 4 5 6 (PRODUCT LEVEL)	SEE PAGE
	1	1	**139-7126**	1	HOLDER	
	2	1	**139-7127**	1	HOLDER	
	3	1	**156-6599**	1	STRIKER	
	4	1	**161-3685**	1	ROD	
	5	1	**161-3697**	1	GUARD	
	6	1	**164-0523**	1	LEVER AS	
	7	1	**164-0527**	1	ROD	
Y	8	1	*164-0528*	1	LEVER GP-CAB DOOR	887
	9	1	**167-7018**	1	COVER AS	
	10	1	**167-7042**	2	SEAL	
	11	1	**171-7426**	1	CABLE AS	
	12	1	*176-1939*	1	LEVER AS	
M		1	**9X-2044**	1	SCREW-TRUSS HEAD (M6X1X16-MM)	
		1	**176-1937**	1	BRACKET AS	
		1	**176-1938**	1	LEVER	
	13	1	**178-5570**	2	GROMMET	
	14	1	**185-8196**	1	GROMMET	
	15	1	**189-2704**	1	SEAL	
M	16	1	**189-2864**	2	SCREW-FLAT HEAD (M8X1.25X30-MM)	
	17	1	**4B-4278**	3	WASHER (10.2X20.5X1.6-MM THK)	
	18	1	**201-4530**	1	BRACKET AS	
	19	1	**205-6295**	1	LATCH AS	
	20	1	**416-4309**	1	SEAL	
	21	1	**235-8912**	1	HANDLE AS	
	22	1	**235-8933**	1	HANDLE AS	
M	23	1	**284-4426**	1	BOLT-WING (M8X1.25X15-MM)	
	24	1	**315-5313**	1	COVER	
Y	25	1	**327-6550**	1	MIRROR GP-REAR VIEW	897
Y	26	1	**346-7375**	1	BRACKET GP-MOUNTING (MIRROR)	779
	27	1	**9X-8257**	1	WASHER (17.5X30X3.5-MM THK)	
M	28	1	**099-0823**	3	SCREW-MACHINE (M6X1X6-MM)	
J	29	1	**099-3607**	2	WASHER-HARD (10.2X30X3.2-MM THK)	
M	30	1	**105-2169**	2	BOLT AS (M8X1.25X16-MM)	
M	31	1	**127-0580**	2	SCREW-FLAT HEAD (M8X1.25X20-MM)	
	32	1	**133-8016**	1	PACKING	
	33	1	**176-1986**	1	LAMP AS-DOME	
		1	**201-4417**	1	LAMP (24-VOLT, 10-WATT)	
	34	1	**1R-5998**	4	LOCKWASHER	
M	35	1	**3E-8020**	6	SCREW-TRUSS HEAD (M6X1X25-MM)	
M	36	1	**095-0755**	2	SCREW-MACHINE (M4X0.7X12-MM)	
	37	1	**4I-1205**	2	BUMPER	
	38	1	**4I-1206**	2	GUIDE	
	39	1	**4I-3063**	1	SPRING	
	40	1	**4I-3090**	4	SEAL	
M	41	1	**8T-4137**	2	BOLT (M10X1.5X20-MM)	
	42	1	**4I-3144**	2	WASHER-HARD (10.2X22X3.2-MM THK)	
	43	1	**4I-4270**	1	HOLDER-GLASS	
	44	1	**4I-4392**	3	CLIP	
	45	1	**5C-7793**	1	HOOK-COAT	
	46	1	**6V-7636**	4	PIN AS-SPRING	
L	47	1	**7X-0578**	2	WASHER-HARD (10.2X32X2.5-MM THK)	
M	48	1	**8T-4133**	5	NUT (M10X1.5-THD)	
M	49	1	**8T-4779**	1	BOLT (M16X2X35-MM)	
M	50	1	**9X-2041**	3	SCREW-TRUSS HEAD (M10X1.5X20-MM)	
M	51	1	**9X-2042**	5	SCREW-TRUSS HEAD (M6X1X12-MM)	
M	52	1	**9X-2044**	5	SCREW-TRUSS HEAD (M6X1X16-MM)	

346-8058 **CAB GP (*contd.*)** **i05280804**

NOTE	REF NO	GRAPHIC REF	PART NUMBER	QTY	PART NAME 1 2 3 4 5 6 (PRODUCT LEVEL)	SEE PAGE
M	53	1	**9X-2045**	2	SCREW-TRUSS HEAD (M6X1X20-MM)	
E	54	1	**6I-5470**		SEAL (140-CM)	

E - ORDER BY THE CENTIMETER
J - FOR AKASHI & SAGAMI PLANT
L - FOR PLANTS OTHER THAN AKASHI & SAGAMI
M - METRIC PART
Y - SEPARATE ILLUSTRATION

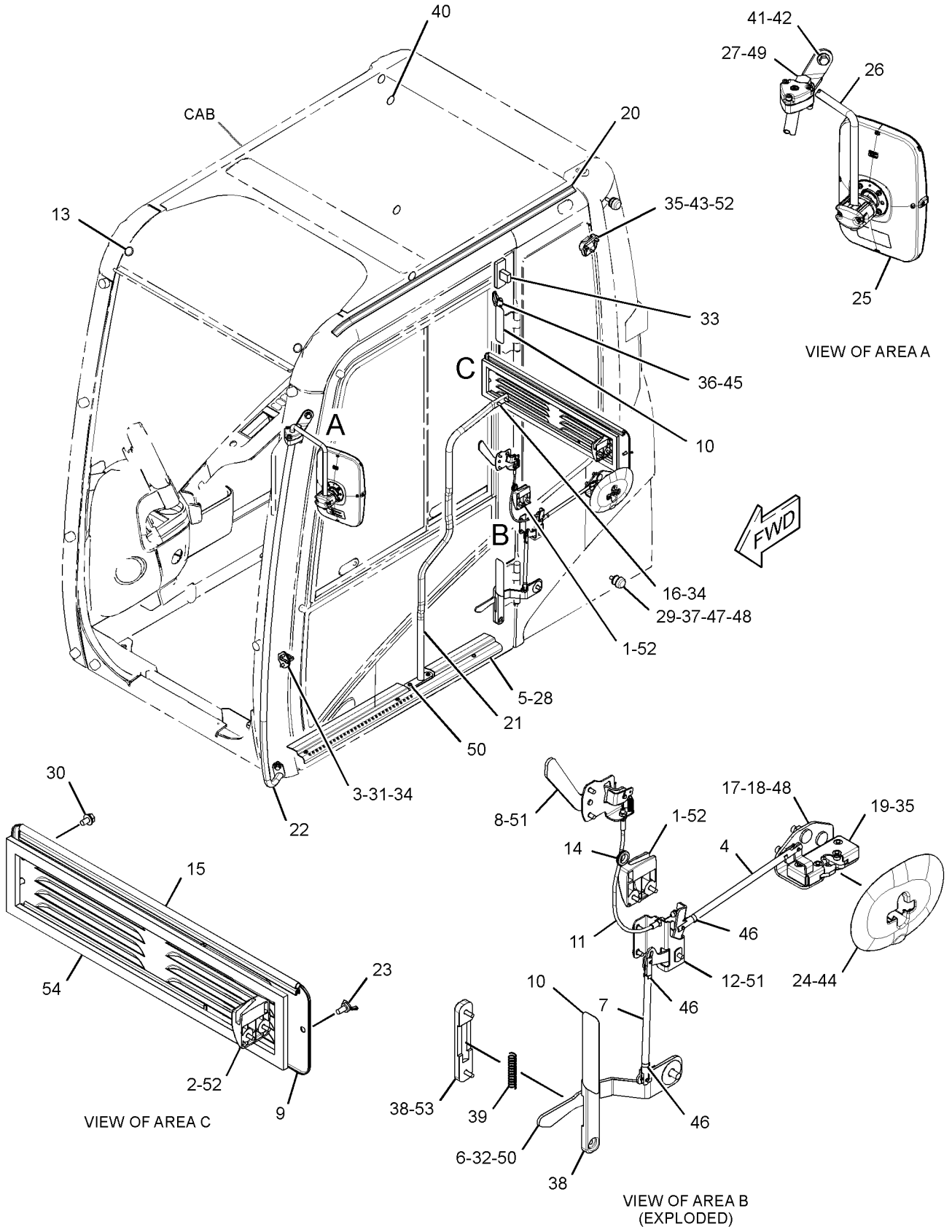

GRAPHIC #1 **<END>** g03334032

388-0026 CAB GP

S/N: KBS1-UP
PART OF 456-0842 OPTION AR-CAB
AN ATTACHMENT

SMCS-7301, 7325

i05214835

NOTE	REF NO	GRAPHIC REF	PART NUMBER	QTY	PART NAME 1 2 3 4 5 6 (PRODUCT LEVEL)	SEE PAGE
M	1	2	**128-2135**	5	SCREW-TRUSS HEAD (M6X1X13-MM)	
	2	2	**164-8474**	2	LOUVER AS-VENT	
Y	3	1	**388-0065**	1	CAB GP	785
Y	4	2	**234-6501**	1	COVER GP-CAB (REAR)	855
	5	2	**235-9001**	1	SUPPORT	
M	6	2	**8T-4179**	5	BOLT (M12X1.75X20-MM)	
M	7	1	**8T-4190**	4	BOLT (M16X2X25-MM)	
	8	2	**8T-4223**	13	WASHER-HARD (13.5X25.5X3-MM THK)	
M	9	2	**8T-4910**	6	BOLT (M12X1.75X60-MM)	
M	10	2	**8T-6868**	2	BOLT (M12X1.75X80-MM)	
	11	2	**8Y-6967**	2	LOUVER AS-VENT	
	12	1	**9X-8257**	6	WASHER (17.5X30X3.5-MM THK)	

M - METRIC PART
Y - SEPARATE ILLUSTRATION

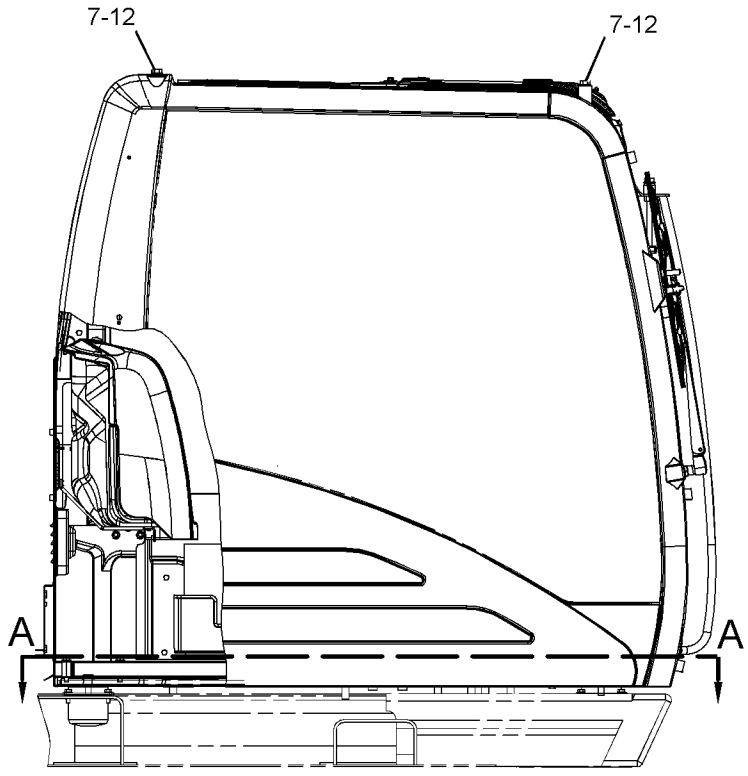

RIGHT SIDE VIEW

REFER TO ALL ILLUSTRATIONS OF THIS GROUP FOR AUXILIARY VIEWS

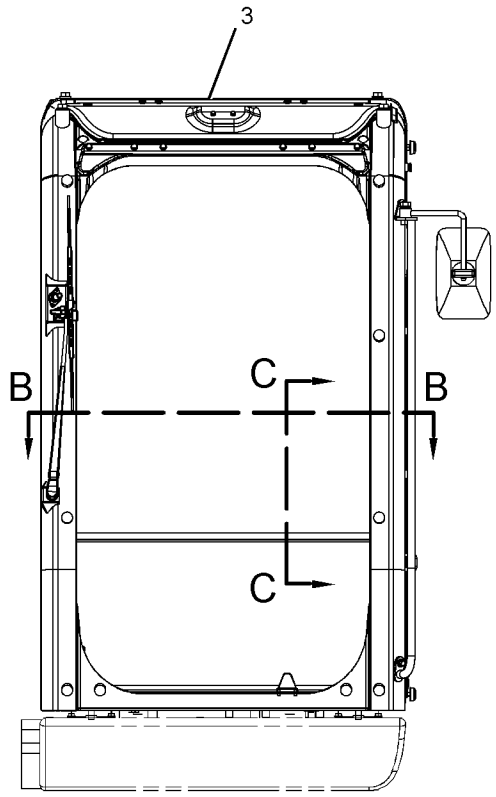

FRONT VIEW

GRAPHIC #1

g02773478

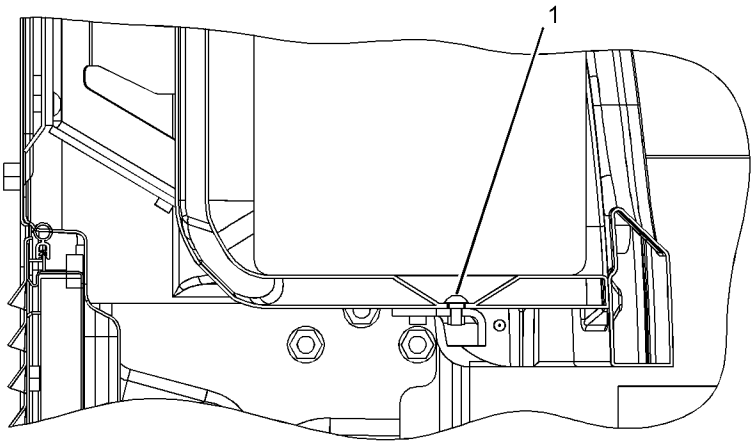

SECTION C-C

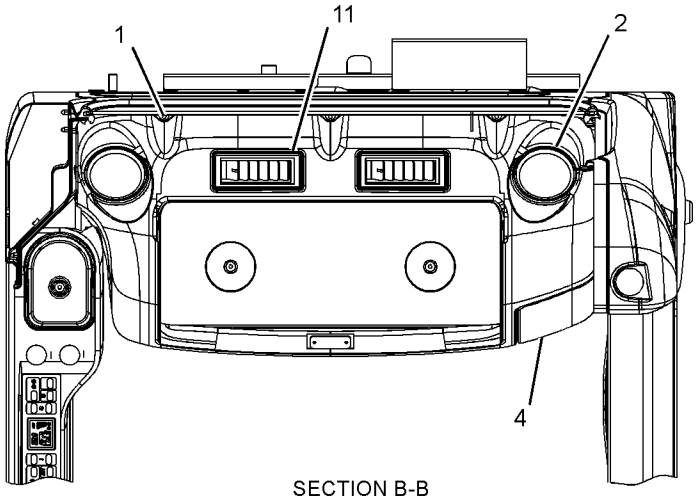

SECTION B-B

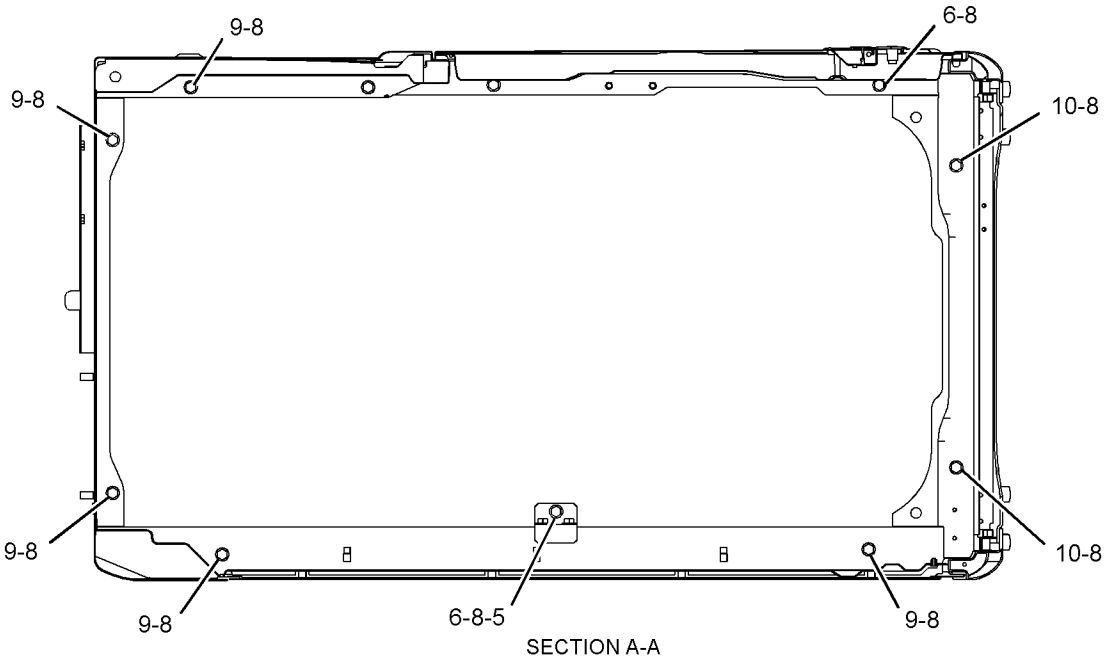

SECTION A-A

GRAPHIC #2 **<END>** g02773484

388-0065 CAB GP

S/N: KBS1-UP
PART OF 388-0026 CAB GP
AN ATTACHMENT

SMCS-7301, 7325 **i05636230**

NOTE	REF NO	GRAPHIC REF	PART NUMBER	QTY	PART NAME 1 2 3 4 5 6 (PRODUCT LEVEL)	SEE PAGE
C	1	1	*434-9157*	1	CAB AS	
Y	2	1	*388-9102*	1	CAB GP (EXTERIOR)	787
Y	3	1	*388-9104*	1	CAB GP (INTERIOR)	791
Y	4	1	*388-9107*	1	WINDOW GP-CAB (SIDE, REAR)	950
Y	5	1	*234-6594*	1	WIPER GP-WINDOW (FRONT, UPPER)	966
Y	6	1	*388-9105*	1	DOOR GP-CAB (INTERIOR)	861
Y	7	1	*388-9109*	1	WINDOW GP-CAB (FRONT, UPPER)	953
Y	8	1	*388-9108*	1	WINDOW GP-CAB (FRONT, LOWER)	951
Y	9	1	*259-7350*	1	HATCH GP-ROOF	880
CFY			**388-9116**	1	WINDOW GP-CAB (FRONT, UPPER)	956
CFY			**388-9117**	1	WINDOW GP-CAB (FRONT, UPPER)	958
FY			**316-6166**	1	DOOR & MTG GP-CAB	857

C - CHANGE FROM PREVIOUS TYPE
F - NOT SHOWN
Y - SEPARATE ILLUSTRATION

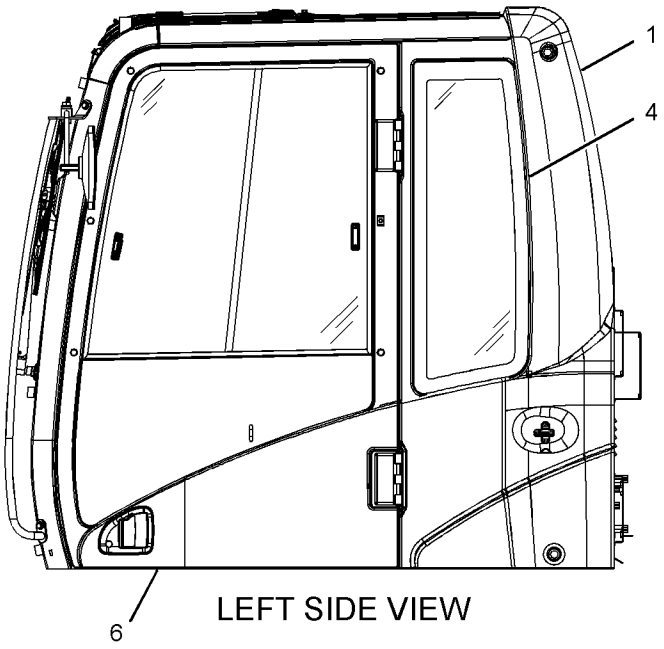

LEFT SIDE VIEW

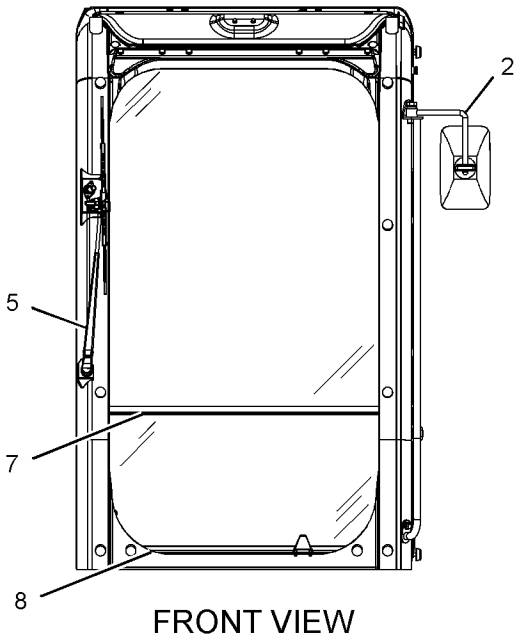

FRONT VIEW

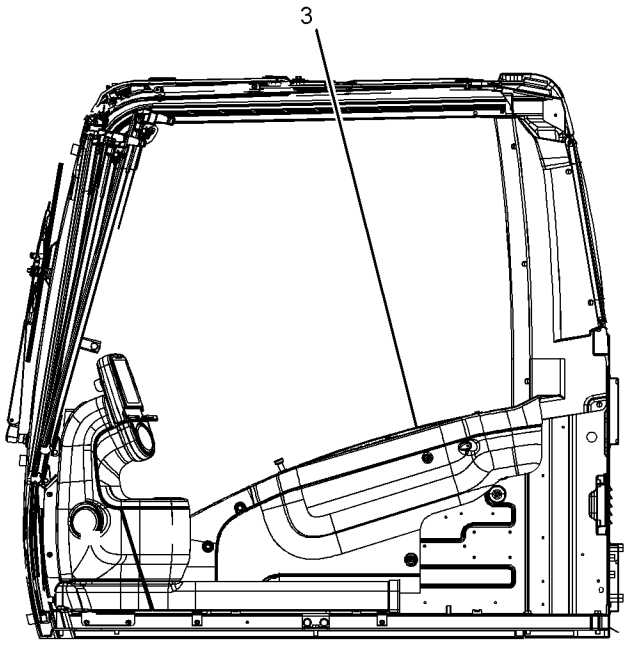

SECTION A-A

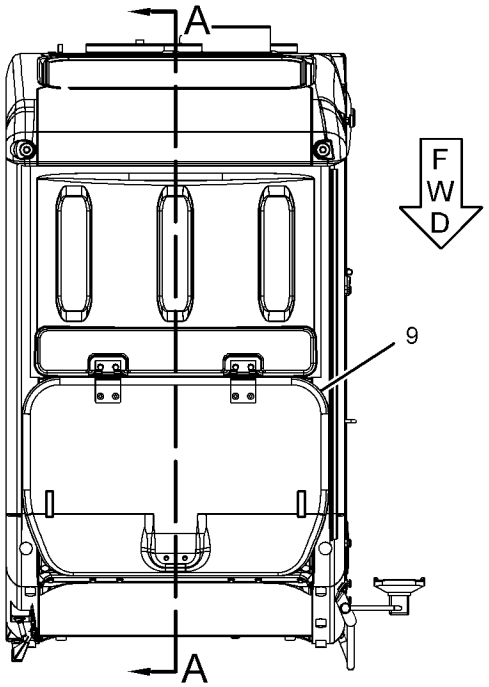

TOP VIEW

GRAPHIC #1 **<END>** g03691143

OPERATOR STATION

388-9102 CAB GP—EXTERIOR

S/N: PBB1-UP; KBS1-UP
PART OF 388-0065, 416-9607, 424-5477 CAB GP
AN ATTACHMENT

SMCS-7301, 7325 **i05362740**

NOTE	REF NO	GRAPHIC REF	PART NUMBER	QTY	PART NAME 1 2 3 4 5 6 (PRODUCT LEVEL)	SEE PAGE
	1	2	**4B-4278**	3	WASHER (10.2X20.5X1.6-MM THK)	
	2	3	**156-6599**	1	STRIKER	
	3	2	**161-3685**	1	ROD	
	4	1	**161-3697**	1	GUARD	
	5	2	**164-0527**	1	ROD	
Y	6	2	*164-0528*	1	LEVER GP-CAB DOOR	887
	7	3	**167-7018**	1	COVER AS	
	8	2	**167-7042**	2	SEAL	
	9	2	**171-7426**	1	CABLE AS	
	10	2	**176-1939**	1	LEVER AS	
	11	1,2	**178-5570**	2	GROMMET	
	12	2	**185-8196**	1	GROMMET	
	13	3	**189-2704**	1	SEAL	
M	14	3	**189-2864**	2	SCREW-FLAT HEAD (M8X1.25X30-MM)	
	15	2	**201-4530**	1	BRACKET AS	
	16	2	**205-6295**	1	LATCH AS	
	17	3	**235-8912**	1	HANDLE AS	
	18	3	**235-8933**	1	HANDLE AS	
M	19	3	**284-4426**	1	BOLT-WING (M8X1.25X15-MM)	
	20	2	**315-5313**	1	COVER	
Y	21	3	**327-6550**	1	MIRROR GP-REAR VIEW	897
	22	2	**416-4309**	1	SEAL	
	23	2	**434-9163**	1	LEVER AS	
M	24	1	**099-0823**	3	SCREW-MACHINE (M6X1X6-MM)	
M	25	3	**105-2169**	2	BOLT AS (M8X1.25X16-MM)	
M	26	3	**127-0580**	2	SCREW-FLAT HEAD (M8X1.25X20-MM)	
	27	2	**133-8016**	1	PACKING	
	28	3	**156-6618**	1	SUPPORT AS	
	29	2	**176-1986**	1	LAMP AS-DOME	
		2	**201-4417**	1	LAMP (24-VOLT, 10-WATT)	
	30	3	**1R-5998**	4	LOCKWASHER	
	31	3	**3B-4510**	1	LOCKWASHER	
M	32	2	**3E-8020**	6	SCREW-TRUSS HEAD (M6X1X25-MM)	
M	33	2	**095-0755**	2	SCREW-MACHINE (M4X0.7X12-MM)	
	34	1	**4I-1205**	2	BUMPER	
	35	2	**4I-1206**	2	GUIDE	
	36	2	**4I-3063**	1	SPRING	
	37	1,2	**4I-3090**	4	SEAL	
M	38	3	**8T-4137**	2	BOLT (M10X1.5X20-MM)	
	39	2	**4I-4392**	3	CLIP	
	40	2	**5C-7793**	1	HOOK-COAT	
	41	3	**5P-1075**	2	WASHER-HARD (10.2X22.5X3-MM THK)	
	42	2	**6V-7636**	4	PIN AS-SPRING	
	43	1	**7X-0578**	2	WASHER-HARD (10.2X32X2.5-MM THK)	
M	44	1,2	**8T-4133**	5	NUT (M10X1.5-THD)	
M	45	3	**8T-4193**	1	BOLT (M16X2X50-MM)	
M	46	2,3	**9X-2041**	3	SCREW-TRUSS HEAD (M10X1.5X20-MM)	
M	47	2	**9X-2042**	5	SCREW-TRUSS HEAD (M6X1X12-MM)	
M	48	2,3	**9X-2044**	5	SCREW-TRUSS HEAD (M6X1X16-MM)	
M	49	2	**9X-2045**	2	SCREW-TRUSS HEAD (M6X1X20-MM)	
	50	3	**9X-8257**	1	WASHER (17.5X30X3.5-MM THK)	
E	51	3	**6I-5470**		SEAL (150-CM)	

E - ORDER BY THE CENTIMETER
M - METRIC PART
Y - SEPARATE ILLUSTRATION

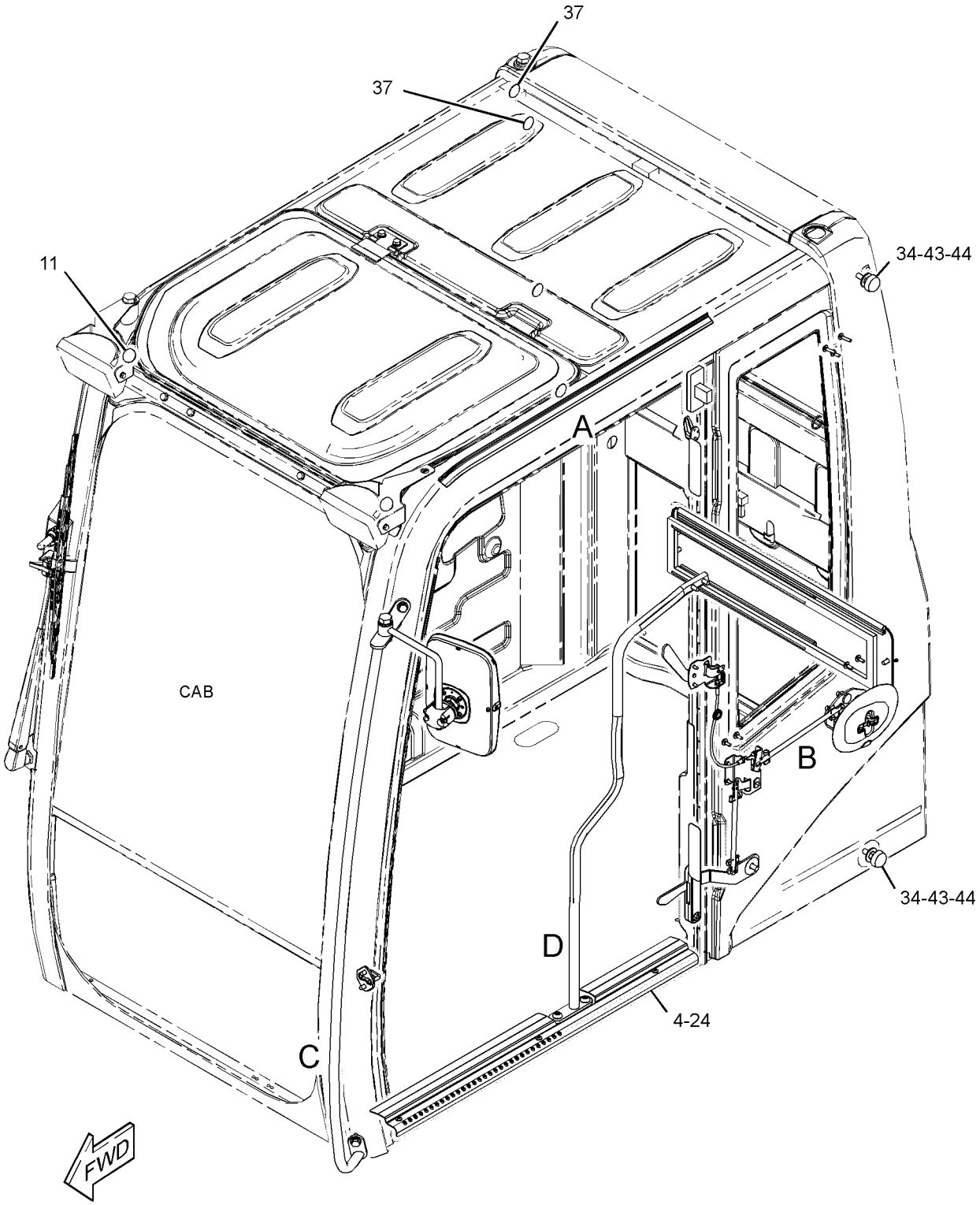

REFER TO ALL ILLUSTRATIONS OF
THIS GROUP FOR AUXILIARY VIEWS

GRAPHIC #1 g03407135

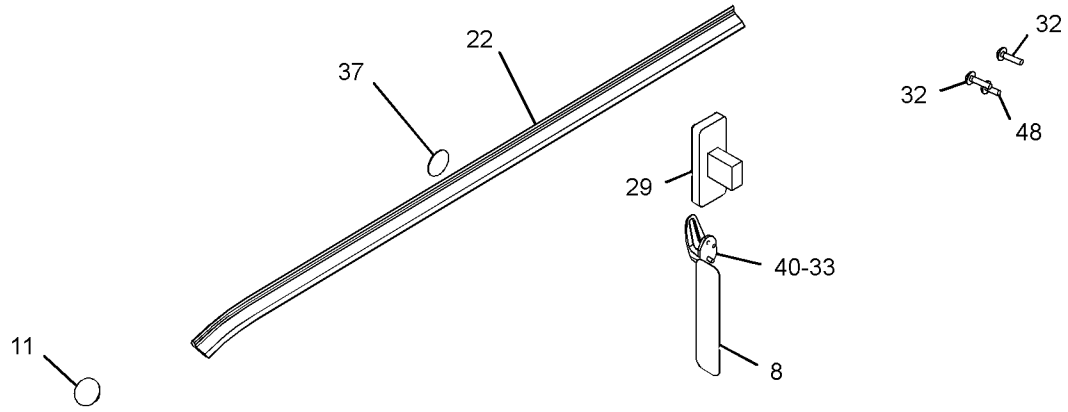

VIEW OF AREA A

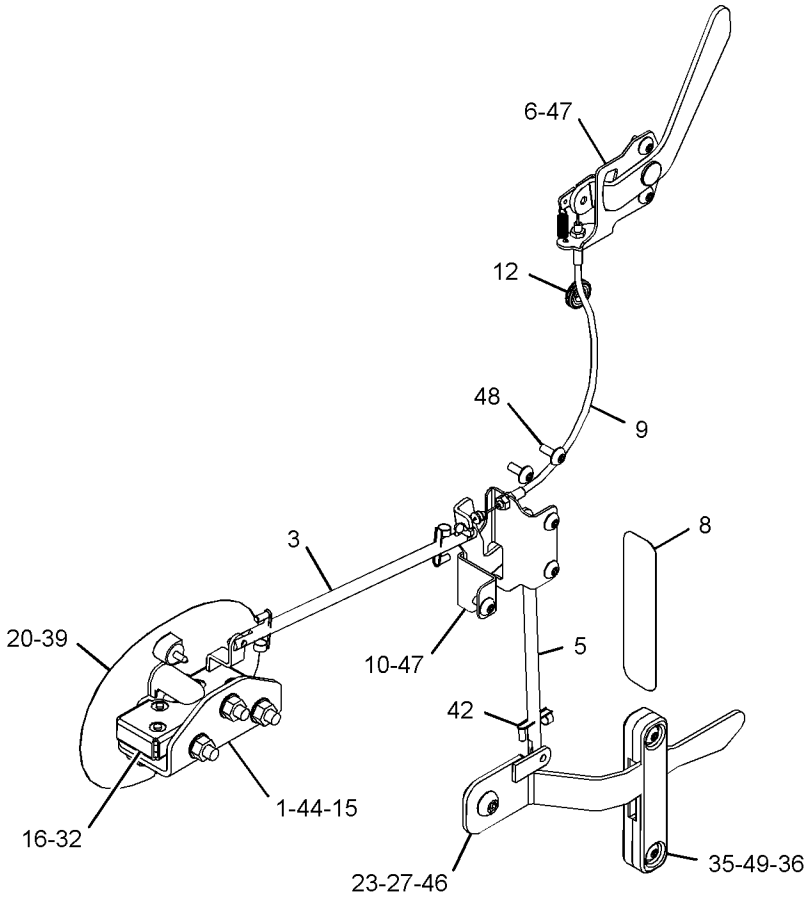

VIEW OF AREA B
(PARTS REMOVED FOR CLARITY) 180°

GRAPHIC #2 g03407137

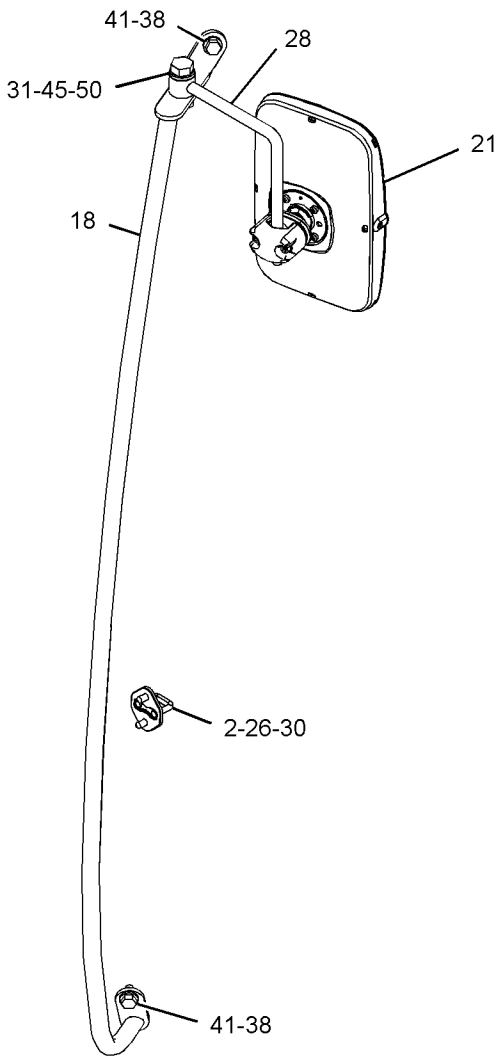

VIEW OF AREA C

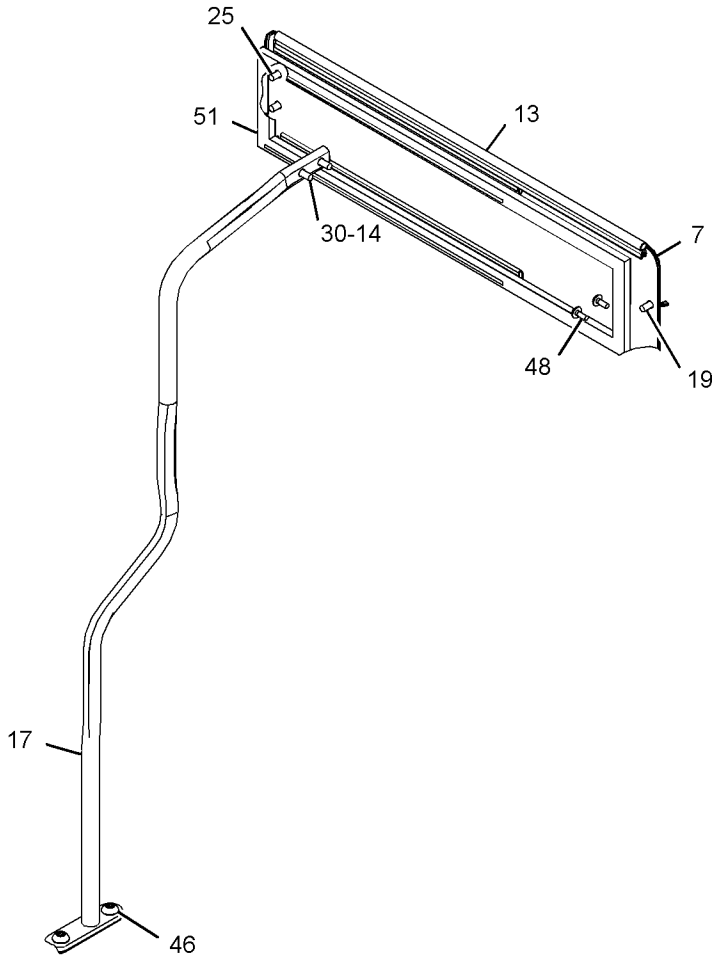

VIEW OF AREA D

GRAPHIC #3 **<END>** g03407138

388-9104 CAB GP–INTERIOR

S/N: KBS1-UP
PART OF 388-0065 CAB GP
AN ATTACHMENT

SMCS-7301, 7325 **i04956950**

NOTE	REF NO	GRAPHIC REF	PART NUMBER	QTY	PART NAME 1 2 3 4 5 6 (PRODUCT LEVEL)	SEE PAGE
	1	2	**8Y-6352**	1	LOUVER AS	
	2	2	**164-0646**	1	CUP	
	3	1	**164-0655**	1	PANEL-SWITCH	
	4	1,2	**164-8474**	2	LOUVER AS-VENT	
	5	2	**170-9724**	5	CLIP	
	6	1	**171-7420**	6	CLIP	
	7	1	**176-1972**	1	COVER	
	8	1	**185-8205**	7	CLIP	
	9	1	**189-2678**	3	SPACER	
	10	1	**189-2853**	1	COVER	
	11	1	**189-2854**	1	COVER	
	12	1	**234-6468**	1	COVER AS	
		1	**259-7353**	4	CLIP	
	13	2	**234-6470**	1	COVER-MONITOR	
	14	2	**234-6471**	1	COVER-DUCT	
	15	1	**234-6472**	1	COVER	
	16	1	**234-6473**	1	COVER-FRONT (UPPER, RH)	
	17	1	**234-6474**	1	COVER-CONSOLE (UPPER, RH)	
	18	1	**234-6476**	1	DUCT	
	19	1	**234-6477**	1	BRACKET AS	
	20	2	**234-6480**	1	BRACKET AS	
	21	2	**234-6483**	1	BRACKET AS	
	22	2	**234-6485**	1	BRACKET AS	
	23	1	**234-6490**	1	CUP	
	24	2	**234-6491**	1	COVER	
	25	2	**234-6497**	1	COVER	
	26	1	**234-6498**	3	RIVET	
	27	2	**234-6521**	1	COVER	
	28	2	**234-6579**	2	NUT-SPEED	
	29	1	**235-8923**	2	CAP	
	30	1	**235-8930**	1	LINER	
	31	1,2	**235-8950**	10	CLIP	
	32	2	**245-7790**	2	SCREW-TAPPING	
	33	1	**305-0330**	1	COVER (LOWER, RH)	
	34	2	**305-0333**	1	BRACKET	
	35	1	**388-9091**	1	COVER	
	36	2	**388-9094**	1	COVER	
	37	2	**388-9095**	1	COVER	
M	38	1	**128-2135**	13	SCREW-TRUSS HEAD (M6X1X13-MM)	
M	39	1	**128-2136**	1	SCREW-TRUSS HEAD (M6X1X16-MM)	
	40	1	**234-6469**	1	COVER	
M	41	1	**9X-2042**	17	SCREW-TRUSS HEAD (M6X1X12-MM)	

M - METRIC PART

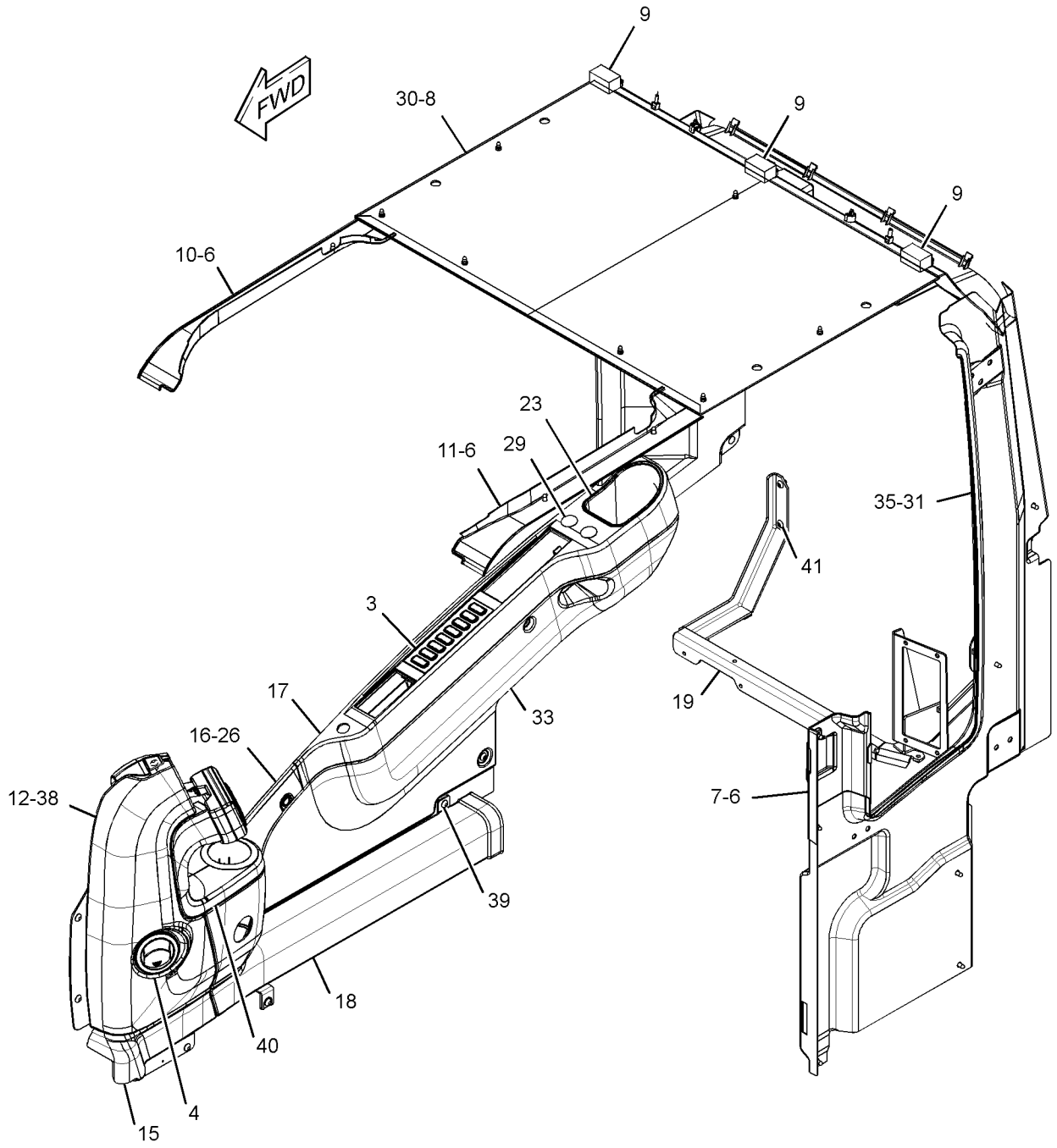

GRAPHIC #1 g02797327

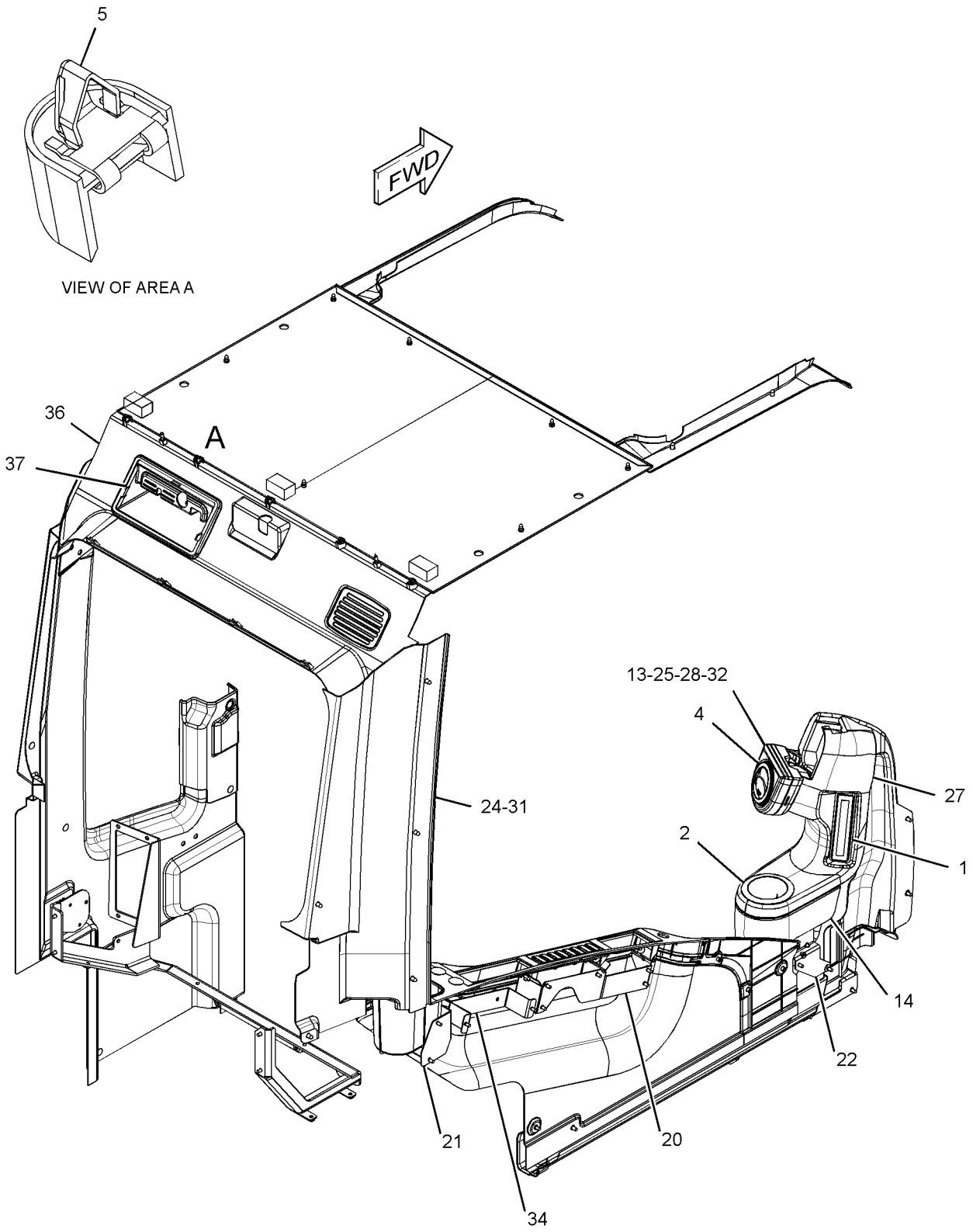

GRAPHIC #2 **<END>** g02797328

OPERATOR STATION

399-0055 CAB GP

S/N: PBB1-UP; KBS1-UP
PART OF 456-0837 OPTION AR-CAB
AN ATTACHMENT

SMCS-7301, 7325 **i05858915**

NOTE	REF NO	GRAPHIC REF	PART NUMBER	QTY	PART NAME 1 2 3 4 5 6 (PRODUCT LEVEL)	SEE PAGE
M	1	1	**128-2135**	5	SCREW-TRUSS HEAD (M6X1X13-MM)	
	2	1	**164-8474**	2	LOUVER AS-VENT	
Y	3	1	**399-0057**	1	CAB GP	798
Y	4	1	**234-6501**	1	COVER GP-CAB (REAR)	855
	5	1	**235-9001**	1	SUPPORT	
M	6	1	**8T-4179**	5	BOLT (M12X1.75X20-MM)	
M	7	1	**8T-4190**	4	BOLT (M16X2X25-MM)	
	8	1	**8T-4223**	13	WASHER-HARD (13.5X25.5X3-MM THK)	
M	9	1	**8T-4910**	6	BOLT (M12X1.75X60-MM)	
M	10	1	**8T-6868**	2	BOLT (M12X1.75X80-MM)	
	11	1	**8Y-6967**	2	LOUVER AS-VENT	
	12	1	**9X-8257**	6	WASHER (17.5X30X3.5-MM THK)	

M - METRIC PART
Y - SEPARATE ILLUSTRATION

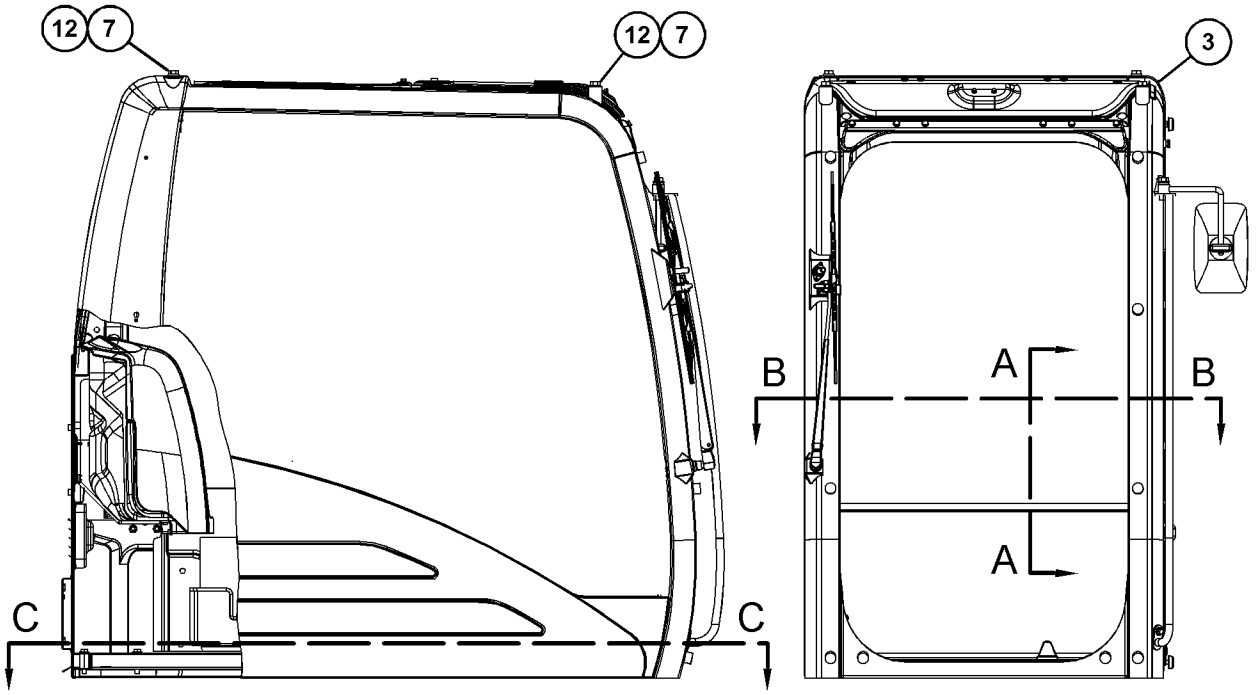

RIGHT SIDE VIEW

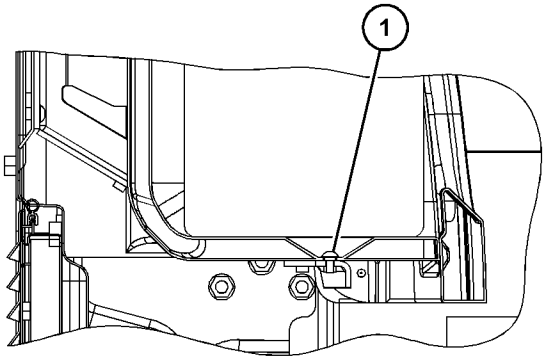

FRONT VIEW

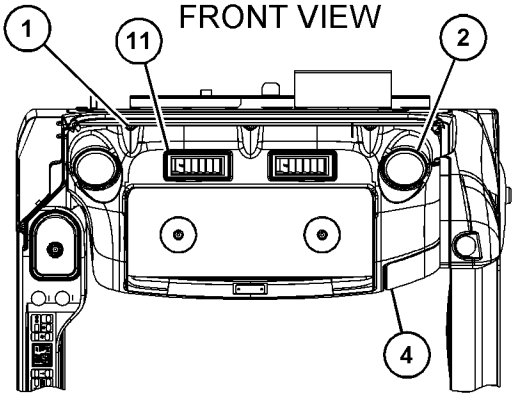

SECTION A-A

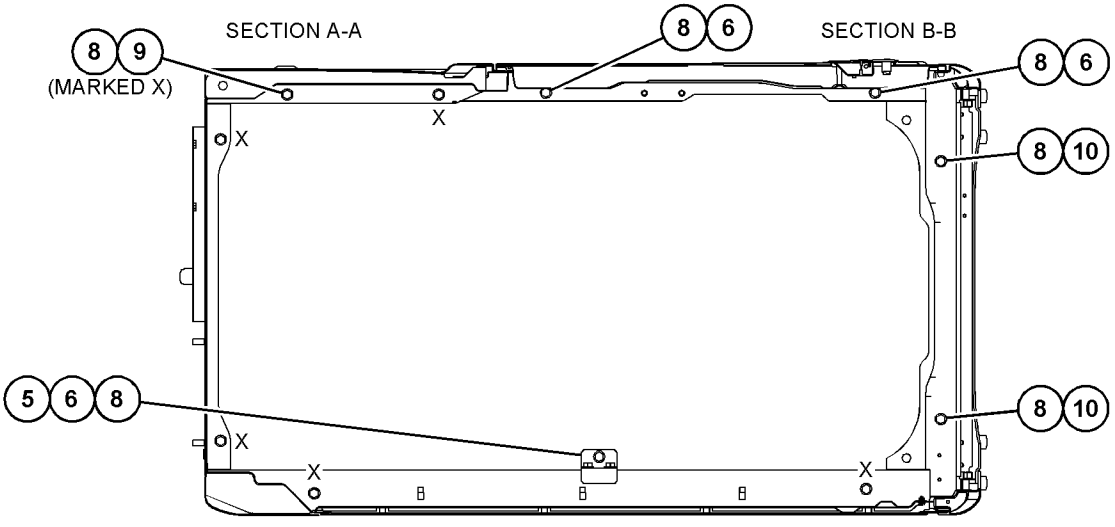

SECTION B-B

SECTION C-C

GRAPHIC #1 **<END>** g03671952

OPERATOR STATION

399-0056 CAB GP

S/N: PBB1-UP; KBS1-UP
PART OF 456-0836 OPTION AR-CAB
AN ATTACHMENT

SMCS-7301, 7325 **i05859354**

NOTE	REF NO	GRAPHIC REF	PART NUMBER	QTY	PART NAME 1 2 3 4 5 6 (PRODUCT LEVEL)	SEE PAGE
M	1	1	**128-2135**	5	SCREW-TRUSS HEAD (M6X1X13-MM)	
	2	1	**164-8474**	2	LOUVER AS-VENT	
Y	3	1	*399-0058*	1	CAB GP	800
Y	4	1	**234-6501**	1	COVER GP-CAB (REAR)	855
	5	1	**235-9001**	1	SUPPORT	
M	6	1	**8T-4179**	5	BOLT (M12X1.75X20-MM)	
M	7	1	**8T-4190**	4	BOLT (M16X2X25-MM)	
	8	1	**8T-4223**	13	WASHER-HARD (13.5X25.5X3-MM THK)	
M	9	1	**8T-4910**	6	BOLT (M12X1.75X60-MM)	
M	10	1	**8T-6868**	2	BOLT (M12X1.75X80-MM)	
	11	1	**8Y-6967**	2	LOUVER AS-VENT	
	12	1	**9X-8257**	6	WASHER (17.5X30X3.5-MM THK)	

M - METRIC PART
Y - SEPARATE ILLUSTRATION

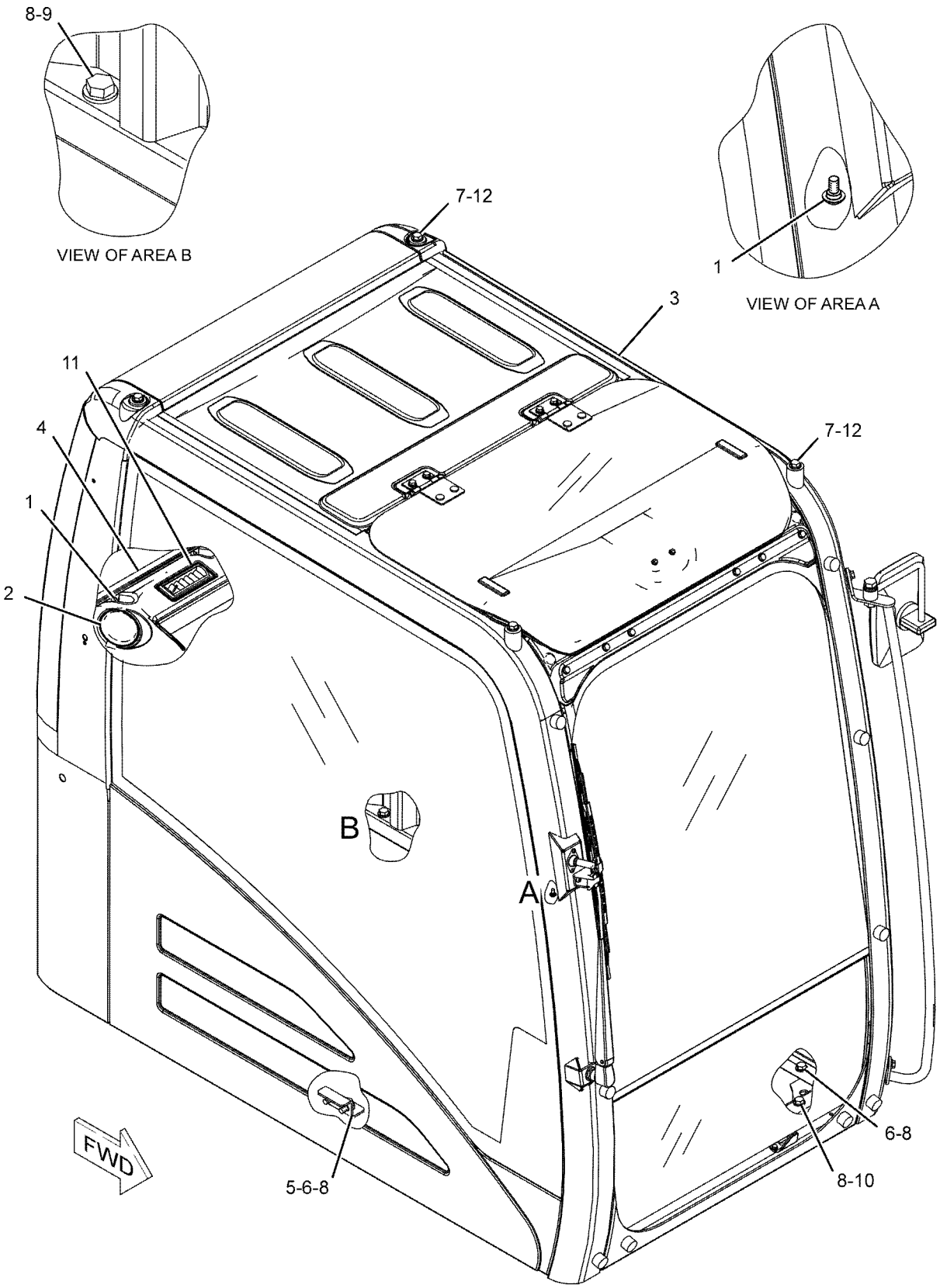

GRAPHIC #1 **<END>** g01119695

OPERATOR STATION

399-0057 CAB GP

S/N: PBB1-UP; KBS1-UP
PART OF 399-0055 CAB GP
AN ATTACHMENT

SMCS-7301, 7325 **i05858919**

NOTE	REF NO	GRAPHIC REF	PART NUMBER	QTY	PART NAME 1 2 3 4 5 6 (PRODUCT LEVEL)	SEE PAGE
	1	1	*235-8916*	1	CAB AS	
M	1A	1	**9X-2041**	6	SCREW-TRUSS HEAD (M10X1.5X20-MM)	
	1B	1	**151-6777**	2	HINGE	
M	1C	1	**185-8182**	6	BOLT (M10X1.5X20-MM)	
	1D	1	**185-8187**	6	WASHER (10.2X22X3.2-MM THK)	
Y	2	1	*346-8058*	1	CAB GP (EXTERIOR)	780
Y	3	1	*399-0059*	1	CAB GP (INTERIOR)	801
Y	4	1	*235-8909*	1	WINDOW GP-CAB (SIDE, REAR)	949
Y	5	1	*234-6594*	1	WIPER GP-WINDOW (FRONT, UPPER)	966
HY	6	1	**316-6166**	1	DOOR & MTG GP-CAB	857
JY	7	1	*139-7101*	1	WINDOW GP-CAB (FRONT, UPPER)	940
Y	8	1	*176-1958*	1	WINDOW GP-CAB (FRONT, LOWER)	946
Y	9	1	*139-7099*	1	HATCH GP-ROOF	878
FJY		1	**307-1818**	1	DOOR GP-CAB	859
FJY		1	**171-7503**	1	WINDOW GP-CAB (FRONT, UPPER)	944
FHY		1	**207-0144**	1	WINDOW GP-CAB (FRONT, UPPER)	948

F - NOT SHOWN
H - ITEM MARKED H AVAILABLE FOR SERVICE REAPIR OF DOOR GP MARKED H
J - ITEMS MARKED J AVAILABLE FOR SERVICE REPAIR OF WINDOW GP MARTKED J
M - METRIC PART
Y - SEPARATE ILLUSTRATION

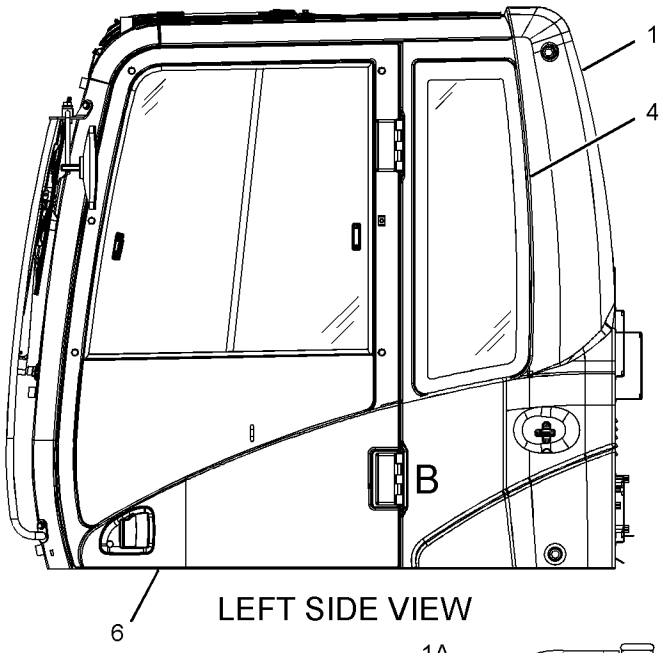

LEFT SIDE VIEW

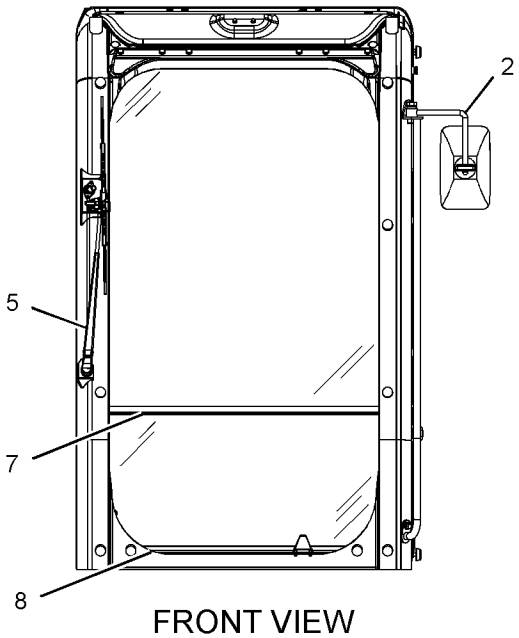

FRONT VIEW

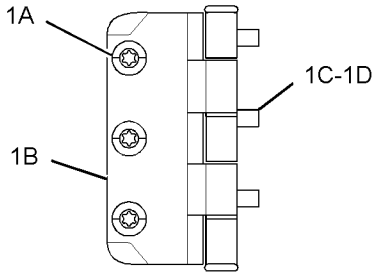

VIEW OF AREA B
(HINGE COVER REMOVED)

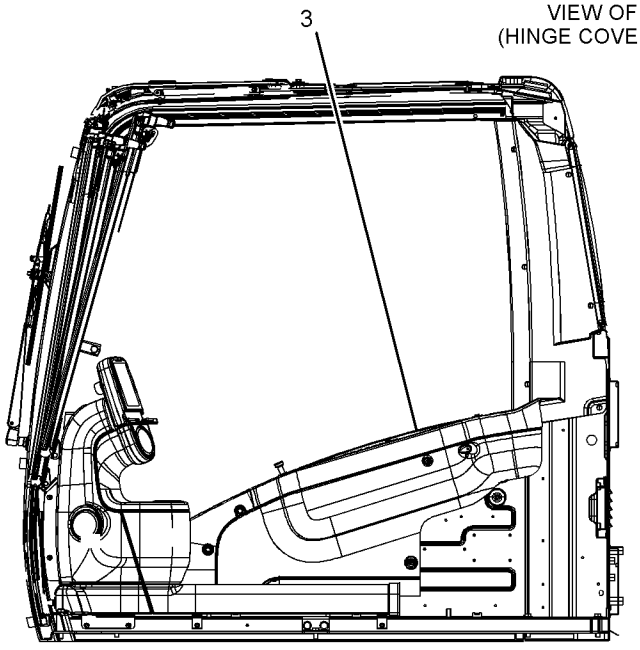

SECTION A-A

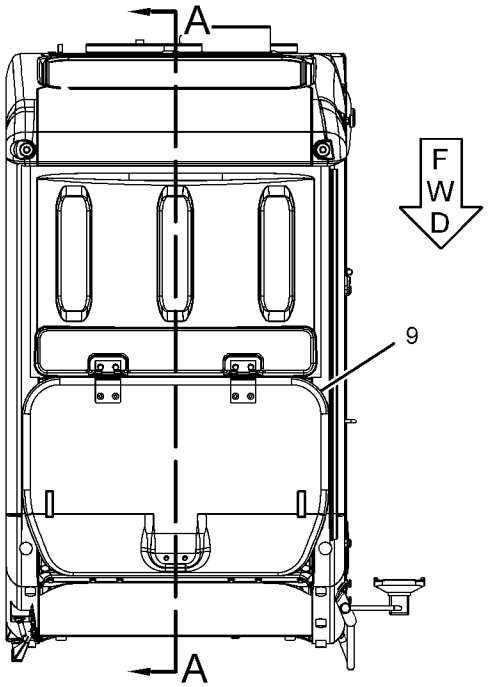

TOP VIEW

GRAPHIC #1 **<END>** g02793335

OPERATOR STATION

399-0058 CAB GP

S/N: PBB1-UP; KBS1-UP
PART OF 399-0056 CAB GP
AN ATTACHMENT

SMCS-7301, 7325 **i05859398**

NOTE	REF NO	GRAPHIC REF	PART NUMBER	QTY	PART NAME 1 2 3 4 5 6 (PRODUCT LEVEL)	SEE PAGE
	1	1	*234-6467*	1	CAB AS	
M	1A	1	**9X-2041**	6	SCREW-TRUSS HEAD (M10X1.5X20-MM)	
	1B	1	**436-1901**	2	HINGE	
M	1C	1	**185-8182**	6	BOLT (M10X1.5X20-MM)	
	1D	1	**185-8187**	6	WASHER (10.2X22X3.2-MM THK)	
Y	2	1	*346-8058*	1	CAB GP (EXTERIOR)	780
Y	3	1	*399-0060*	1	CAB GP	803
Y	4	1	*235-8909*	1	WINDOW GP-CAB (SIDE, REAR)	949
Y	5	1	*234-6594*	1	WIPER GP-WINDOW (FRONT, UPPER)	966
Y	6	1	**316-6166**	1	DOOR & MTG GP-CAB	857
JY	7	1	*139-7101*	1	WINDOW GP-CAB (FRONT, UPPER)	940
Y	8	1	*176-1958*	1	WINDOW GP-CAB (FRONT, LOWER)	946
Y	9	1	*259-7350*	1	HATCH GP-ROOF	880
FJY			**171-7503**	1	WINDOW GP-CAB (FRONT, UPPER)	944
FJY			**207-0144**	1	WINDOW GP-CAB (FRONT, UPPER)	948

F - NOT SHOWN
J - ITEMS MARKED J AVAILABLE FOR SERVICE REPAIR OF WINDOW GP MARKED J
M - METRIC PART
Y - SEPARATE ILLUSTRATION

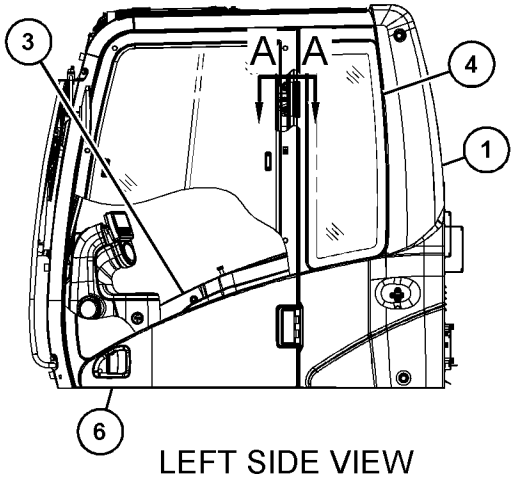

LEFT SIDE VIEW

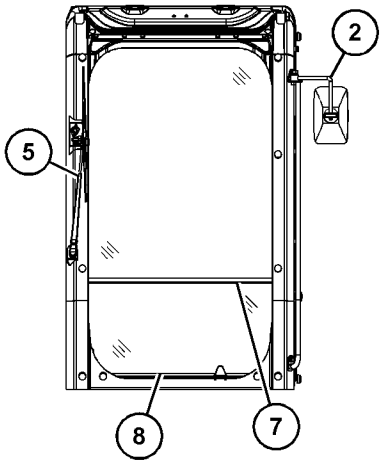

FRONT VIEW

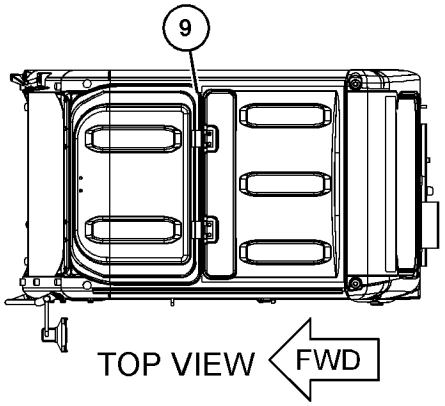

TOP VIEW

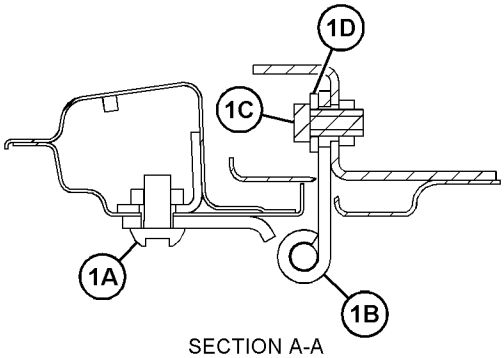

SECTION A-A

GRAPHIC #1 **<END>** g03708995

399-0059 CAB GP—INTERIOR

S/N: PBB1-UP; KBS1-UP
PART OF 399-0057 CAB GP
AN ATTACHMENT

SMCS-7301, 7325 **i05506191**

NOTE	REF NO	GRAPHIC REF	PART NUMBER	QTY	PART NAME 1 2 3 4 5 6 (PRODUCT LEVEL)	SEE PAGE
	1	1	**8Y-6352**	1	LOUVER AS	
	2	1	**156-6656**	1	RAIL	
	3	1	**156-6657**	1	RAIL	
	4	1	**164-0646**	1	CUP	
	5	1	**164-0655**	1	PANEL-SWITCH	
	6	1	**164-8474**	2	LOUVER AS-VENT	
	7	1	**170-9724**	5	CLIP	
	8	1	**171-7420**	6	CLIP	
	9	1	**176-1946**	1	PLATE	
	10	1	**176-1947**	1	PLATE	
	11	1	**176-1972**	1	COVER	
	12	1	**185-8214**	1	BRACKET AS	
	13	1	**189-2678**	3	SPACER	
	14	1	**234-6468**	1	COVER AS	
	15	1	**234-6469**	1	COVER	
	16	1	**234-6470**	1	COVER-MONITOR	
	17	1	**234-6471**	1	COVER-DUCT	
	18	1	**234-6472**	1	COVER	
	19	1	**234-6473**	1	COVER-FRONT (UPPER, RH)	
	20	1	**234-6476**	1	DUCT	
	21	1	**234-6477**	1	BRACKET AS	
	22	1	**234-6483**	1	BRACKET AS	
	23	1	**234-6485**	1	BRACKET AS	
	24	1	**234-6490**	1	CUP	
	25	1	**234-6491**	1	COVER	
	26	1	**234-6497**	1	COVER	
	27	1	**234-6498**	3	RIVET	
	28	1	**234-6547**	1	COVER	
	29	1	**234-6548**	1	COVER	
	30	1	**234-6549**	1	COVER	
	31	1	**234-6550**	1	COVER	
	32	1	**234-6579**	2	NUT-SPEED	
	33	1	**235-8922**	1	COVER	
	34	1	**235-8923**	2	CAP	
	35	1	**235-8928**	1	LINER	
	36	1	**235-8950**	12	CLIP	
	37	1	**245-7790**	2	SCREW-TAPPING	
	38	1	**305-0330**	1	COVER (LOWER, RH)	
	39	1	**383-5706**	1	VISOR	
	40	1	**383-5767**	1	COVER	
	41	1	**399-0061**	1	BRACKET AS	
	42	1	**399-0062**	1	COVER	
	43	1	**399-0065**	1	BRACKET	
M	44	1	**128-2135**	13	SCREW-TRUSS HEAD (M6X1X13-MM)	
M	45	1	**128-2136**	1	SCREW-TRUSS HEAD (M6X1X16-MM)	
	46	1	**185-8205**	5	CLIP	
	47	1	**189-2855**	1	COVER	
M	48	1	**9X-2042**	22	SCREW-TRUSS HEAD (M6X1X12-MM)	
M	49	1	**9X-2044**	6	SCREW-TRUSS HEAD (M6X1X16-MM)	

M - METRIC PART

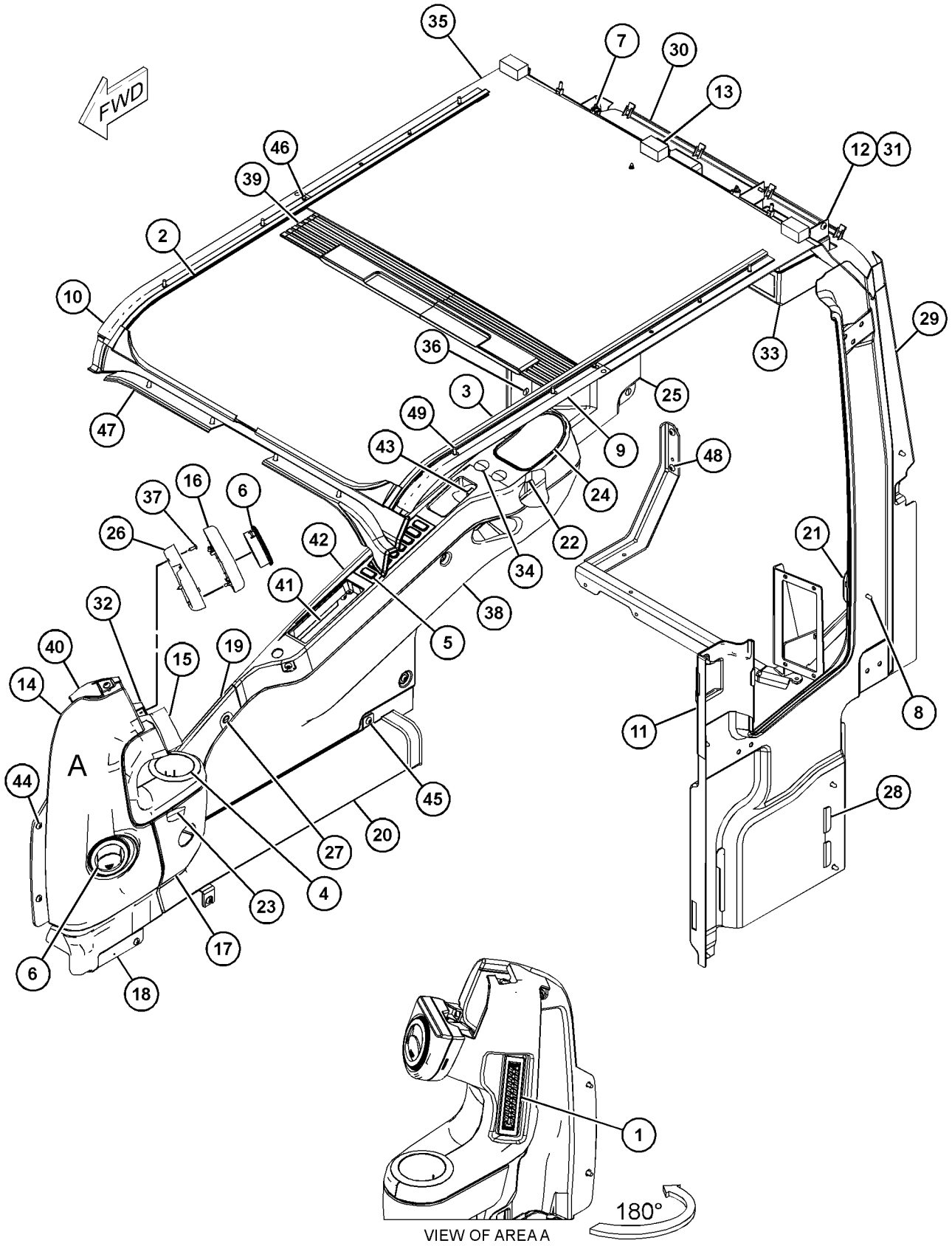

VIEW OF AREA A

GRAPHIC #1

<END>

g03515377

OPERATOR STATION

399-0060 CAB GP—INTERIOR

S/N: PBB1-UP; KBS1-UP
PART OF 399-0058 CAB GP
AN ATTACHMENT

SMCS-7301, 7325 **i05616509**

NOTE	REF NO	GRAPHIC REF	PART NUMBER	QTY	PART NAME 1 2 3 4 5 6 (PRODUCT LEVEL)	SEE PAGE
	1	1	**8Y-6352**	1	LOUVER AS	
	2	1	**164-0646**	1	CUP	
	3	1	**164-0655**	1	PANEL-SWITCH	
	4	1	**164-8474**	2	LOUVER AS-VENT	
	5	2	**170-9724**	5	CLIP	
	6	2	**171-7420**	10	CLIP	
	7	2	**176-1972**	1	COVER	
	8	2	**185-8214**	1	BRACKET AS	
	9	2	**189-2678**	3	SPACER	
	10	2	**189-2853**	1	COVER	
	11	2	**189-2854**	1	COVER	
	12	1	**234-6468**	1	COVER AS	
		1	**259-7353**	4	CLIP	
	13	1	**234-6469**	1	COVER	
	14	1	**234-6470**	1	COVER-MONITOR	
	15	1	**234-6471**	1	COVER-DUCT	
	16	1	**234-6472**	1	COVER	
	17	1	**234-6473**	1	COVER-FRONT (UPPER, RH)	
	18	1	**234-6476**	1	DUCT	
	19	2	**234-6477**	1	BRACKET AS	
	20	1	**234-6483**	1	BRACKET AS	
	21	1	**234-6485**	1	BRACKET AS	
	22	1	**234-6490**	1	CUP	
	23	2	**234-6491**	1	COVER	
	24	1	**234-6497**	1	COVER	
	25	1	**234-6498**	3	RIVET	
	26	2	**234-6547**	1	COVER	
	27	2	**234-6548**	1	COVER	
	28	2	**234-6549**	1	COVER	
	29	2	**234-6550**	1	COVER	
	30	1	**234-6579**	2	NUT-SPEED	
	31	2	**235-8922**	1	COVER	
	32	1	**235-8923**	2	CAP	
	33	2	**235-8930**	1	LINER	
	34	1,2	**235-8950**	12	CLIP	
	35	1	**245-7790**	2	SCREW-TAPPING	
	36	1	**305-0330**	1	COVER (LOWER, RH)	
	37	1	**383-5767**	1	COVER	
	38	1	**399-0061**	1	BRACKET AS	
	39	1	**399-0062**	1	COVER	
	40	1	**399-0065**	1	BRACKET	
M	41	1,2	**128-2135**	13	SCREW-TRUSS HEAD (M6X1X13-MM)	
M	42	1	**128-2136**	1	SCREW-TRUSS HEAD (M6X1X16-MM)	
	43	2	**185-8205**	7	CLIP	
	44	2	**189-2855**	1	COVER	
M	45	1,2	**9X-2042**	22	SCREW-TRUSS HEAD (M6X1X12-MM)	

M - METRIC PART

REFER TO ALL ILLUSTRATIONS OF THIS GROUP FOR AUXILIARY VIEWS

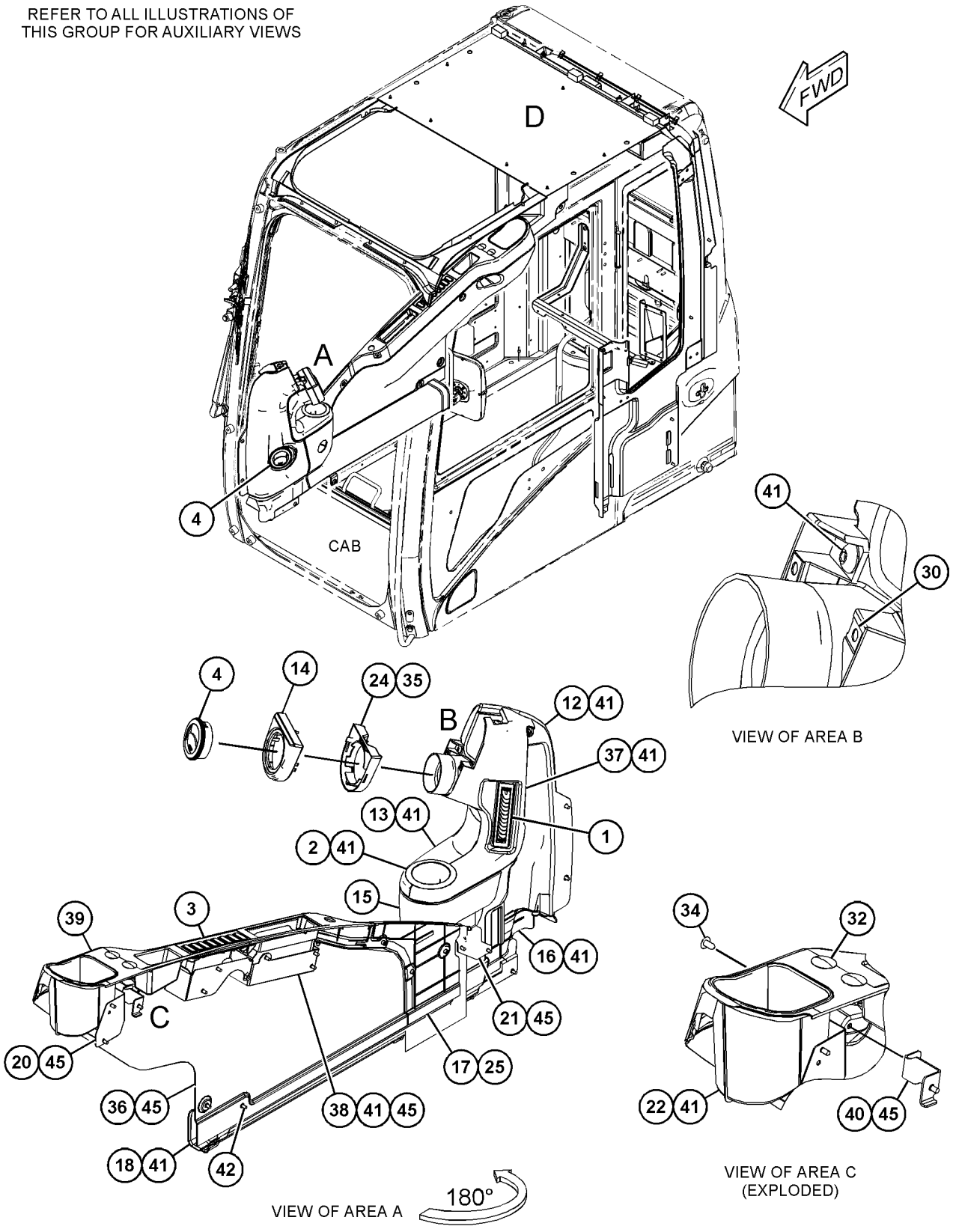

GRAPHIC #1 g03569345

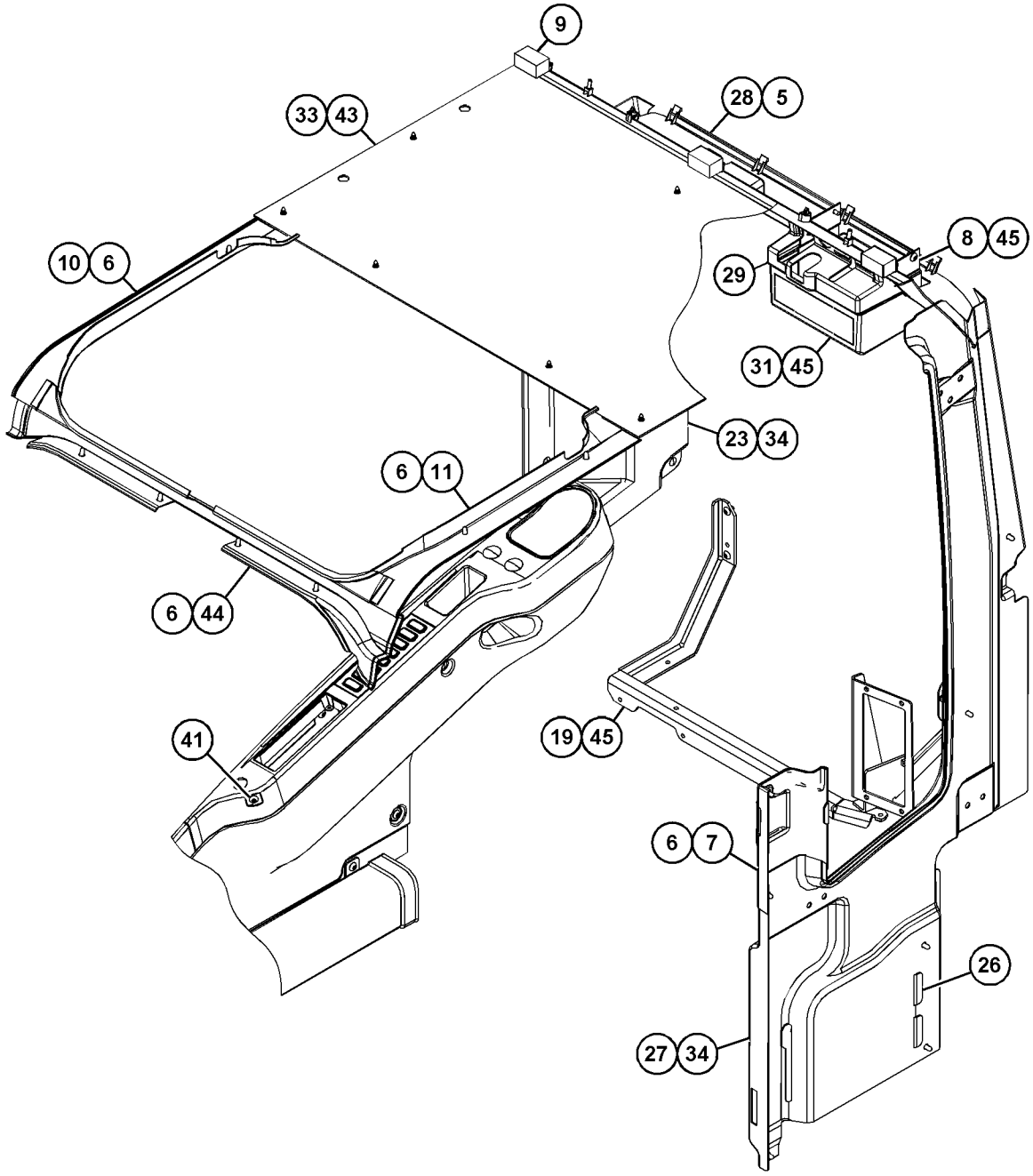

VIEW OF AREA D

GRAPHIC #2 **<END>** g03569346

OPERATOR STATION

416-9606 CAB GP

S/N: PBB1-UP; KBS1-UP
PART OF 456-0838, 456-0892 OPTION AR-CAB
AN ATTACHMENT

SMCS-7301, 7325 **i05859741**

NOTE	REF NO	GRAPHIC REF	PART NUMBER	QTY	PART NAME 1 2 3 4 5 6 (PRODUCT LEVEL)	SEE PAGE
M	1	1	**128-2135**	5	SCREW-TRUSS HEAD (M6X1X13-MM)	
	2	1	**164-8474**	2	LOUVER AS-VENT	
Y	3	1	*416-9607*	1	CAB GP	808
Y	4	1	**234-6501**	1	COVER GP-CAB (REAR)	855
	5	1	**235-9001**	1	SUPPORT	
M	6	1	**8T-4179**	5	BOLT (M12X1.75X20-MM)	
M	7	1	**8T-4190**	4	BOLT (M16X2X25-MM)	
	8	1	**8T-4223**	13	WASHER-HARD (13.5X25.5X3-MM THK)	
M	9	1	**8T-4910**	6	BOLT (M12X1.75X60-MM)	
M	10	1	**8T-6868**	2	BOLT (M12X1.75X80-MM)	
	11	1	**8Y-6967**	2	LOUVER AS-VENT	
	12	1	**9X-8257**	6	WASHER (17.5X30X3.5-MM THK)	

M - METRIC PART
Y - SEPARATE ILLUSTRATION

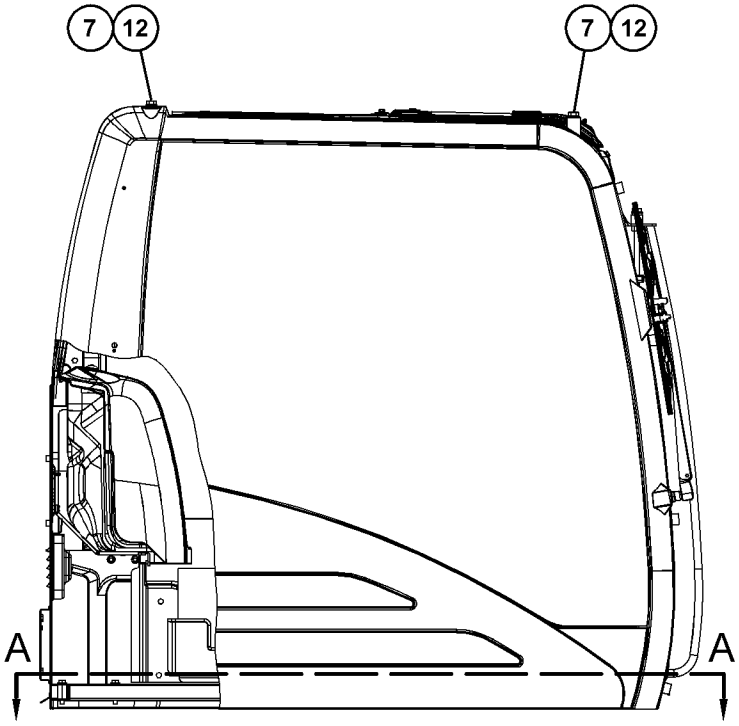

RIGHT SIDE VIEW

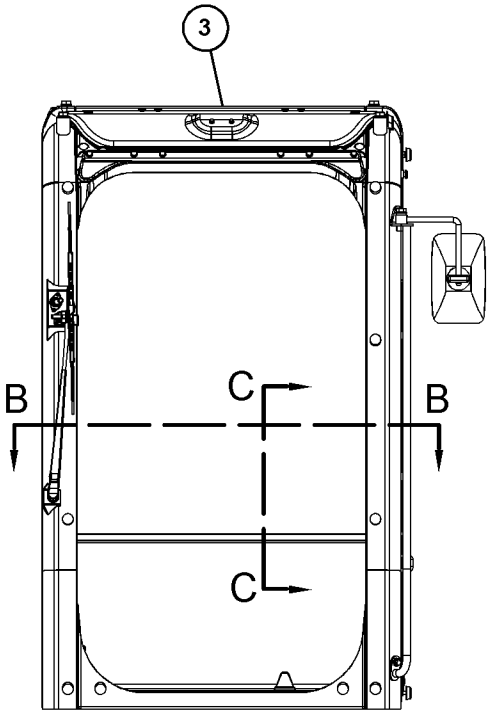

FRONT VIEW

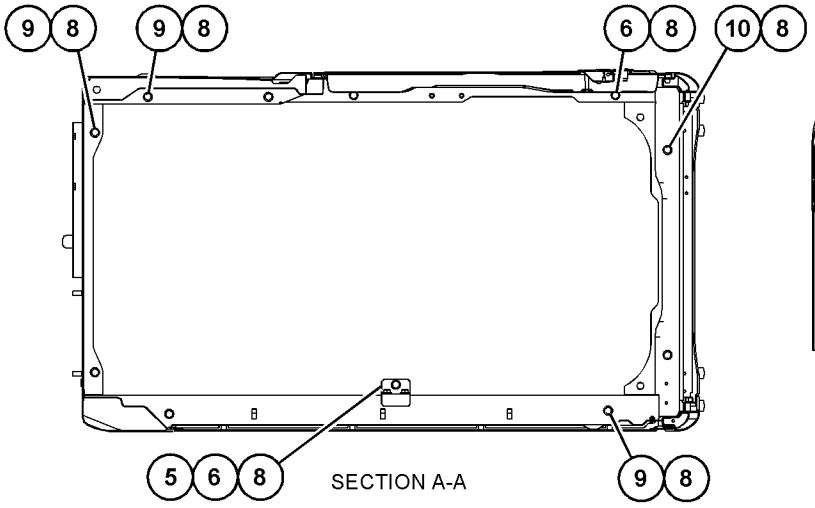

SECTION A-A

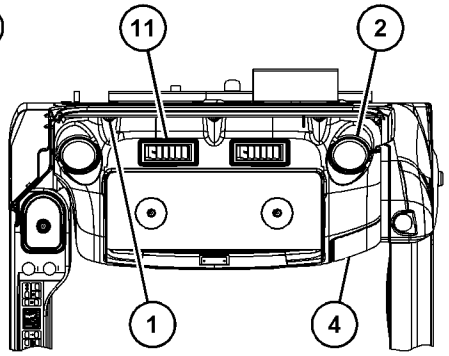

VIEW B-B

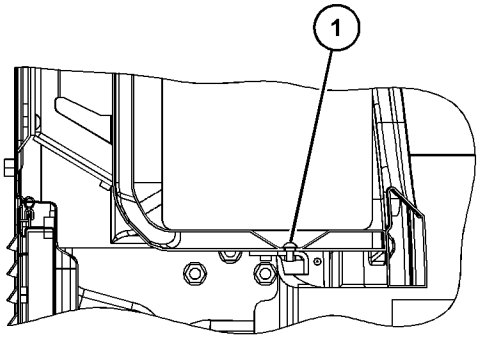

SECTION C-C

GRAPHIC #1 **<END>** g03431201

OPERATOR STATION

416-9607 CAB GP

S/N: PBB1-UP; KBS1-UP
PART OF 416-9606 CAB GP
AN ATTACHMENT

SMCS-7301, 7325 **i05859744**

NOTE	REF NO	GRAPHIC REF	PART NUMBER	QTY	PART NAME 1 2 3 4 5 6 (PRODUCT LEVEL)	SEE PAGE
	1	1	*235-8916*	1	CAB AS	
	1A	1	**436-1901**	2	HINGE	
M		1	**185-8182**	6	BOLT (M10X1.5X20-MM)	
		1	**5P-1075**	6	WASHER-HARD (10.2X22.5X3-MM THK)	
Y	2	1	*388-9102*	1	CAB GP (EXTERIOR)	787
Y	3	1	*416-9608*	1	CAB GP	810
Y	4	1	*388-9107*	1	WINDOW GP-CAB (SIDE, REAR)	950
Y	5	1	*234-6594*	1	WIPER GP-WINDOW (FRONT, UPPER)	966
HY	6	1	*388-9105*	1	DOOR GP-CAB (INTERIOR)	861
JY	7	1	*388-9109*	1	WINDOW GP-CAB (FRONT, UPPER)	953
Y	8	1	*388-9108*	1	WINDOW GP-CAB (FRONT, LOWER)	951
Y	9	1	*259-7350*	1	HATCH GP-ROOF	880
FHY			*388-9115*	1	DOOR & MTG GP-CAB	858
FJY			*388-9116*	1	WINDOW GP-CAB (UPPER)	956
FJY			*388-9117*	1	WINDOW GP-CAB (UPPER)	958

F - NOT SHOWN
H - ITEM MARKED H AVAILABLE FOR SERVICE REPAIR OF DOOR GP MARKED H
J - ITEMS MARKED J AVAILABLE FOR SERVICE REPAIR OF WINDOW GP MARKED J
M - METRIC PART
Y - SEPARATE ILLUSTRATION

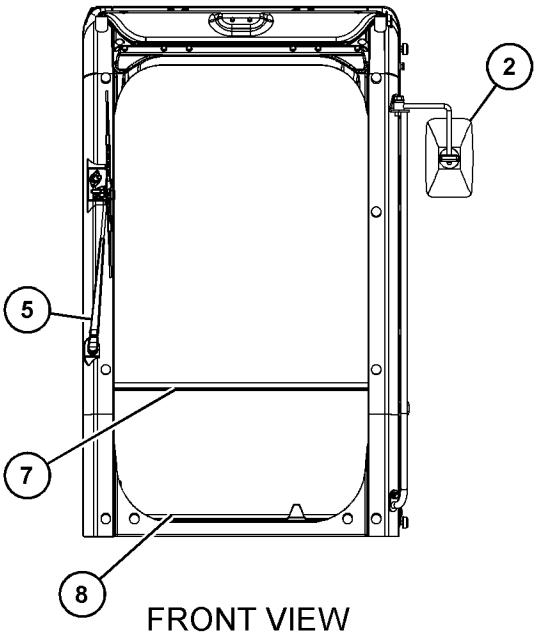

FRONT VIEW

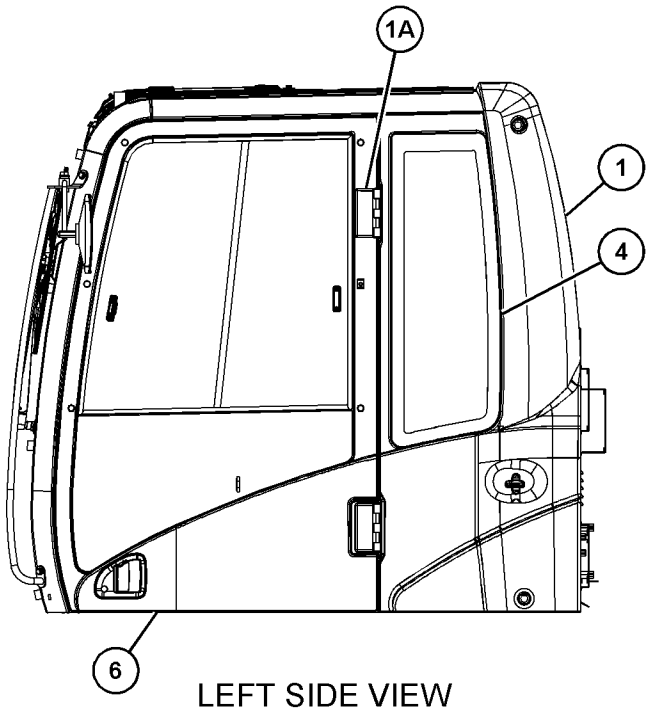

LEFT SIDE VIEW

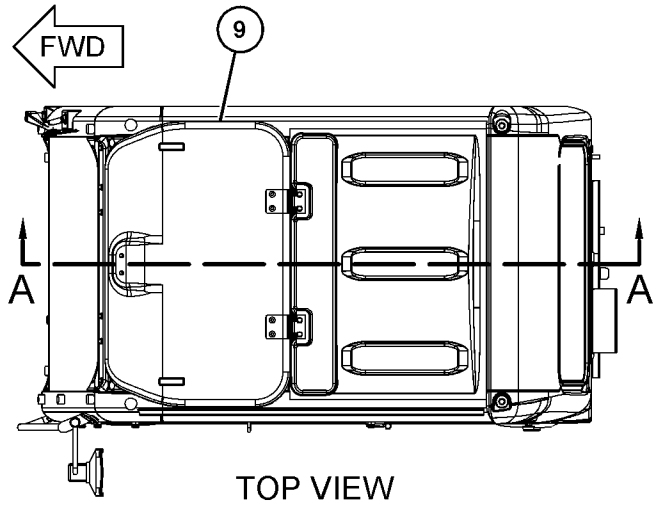

TOP VIEW

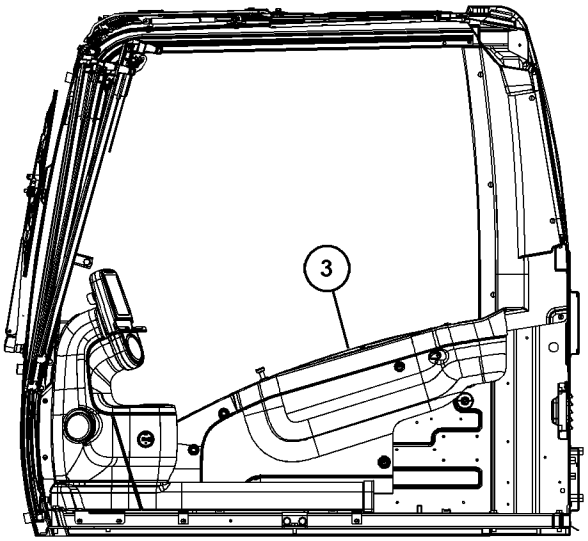

SECTION A-A

GRAPHIC #1 **<END>** g03431203

OPERATOR STATION

416-9608 CAB GP—INTERIOR

S/N: PBB1-UP; KBS1-UP
PART OF 416-9607 CAB GP
AN ATTACHMENT

SMCS-7301, 7325 **i05859746**

NOTE	REF NO	GRAPHIC REF	PART NUMBER	QTY	PART NAME 1 2 3 4 5 6 (PRODUCT LEVEL)	SEE PAGE
	1	1	**164-0646**	1	CUP	
	2	1	**164-0655**	1	PANEL-SWITCH	
	3	1	**170-9724**	5	CLIP	
	4	1	**171-7420**	6	CLIP	
	5	1	**176-1972**	1	COVER	
	6	1	**185-8205**	7	CLIP	
	7	1	**189-2678**	3	SPACER	
	8	1	**189-2853**	1	COVER	
	9	1	**189-2854**	1	COVER	
	10	1	**234-6468**	1	COVER AS	
		1	**259-7353**	4	CLIP	
	11	1	**234-6470**	1	COVER-MONITOR	
	12	1	**234-6471**	1	COVER-DUCT	
	13	1	**234-6472**	1	COVER	
	14	1	**234-6473**	1	COVER-FRONT (UPPER, RH)	
	15	1	**234-6476**	1	DUCT	
	16	1	**234-6477**	1	BRACKET AS	
	17	1	**234-6483**	1	BRACKET AS	
	18	1	**234-6485**	1	BRACKET AS	
	19	1	**234-6490**	1	CUP	
	20	1	**234-6491**	1	COVER	
	21	1	**234-6497**	1	COVER	
	22	1	**234-6498**	3	RIVET	
	23	1	**234-6579**	2	NUT-SPEED	
	24	1	**235-8923**	2	CAP	
	25	1	**235-8930**	1	LINER	
	26	1	**235-8950**	12	CLIP	
	27	1	**245-7790**	2	SCREW-TAPPING	
	28	1	**305-0330**	1	COVER (LOWER, RH)	
	29	1	**383-5767**	1	COVER	
	30	1	**388-9091**	1	COVER	
	31	1	**388-9094**	1	COVER	
	32	1	**388-9095**	1	COVER	
	33	1	**396-2351**	1	LOUVER AS	
	34	1	**396-2352**	2	LOUVER AS	
	35	1	**399-0061**	1	BRACKET AS	
	36	1	**399-0062**	1	COVER	
	37	1	**399-0065**	1	BRACKET	
M	38	1	**128-2135**	10	SCREW-TRUSS HEAD (M6X1X13-MM)	
M	39	1	**128-2136**	1	SCREW-TRUSS HEAD (M6X1X16-MM)	
	40	1	**234-6469**	1	COVER	
M	41	1	**9X-2042**	11	SCREW-TRUSS HEAD (M6X1X12-MM)	

M - METRIC PART

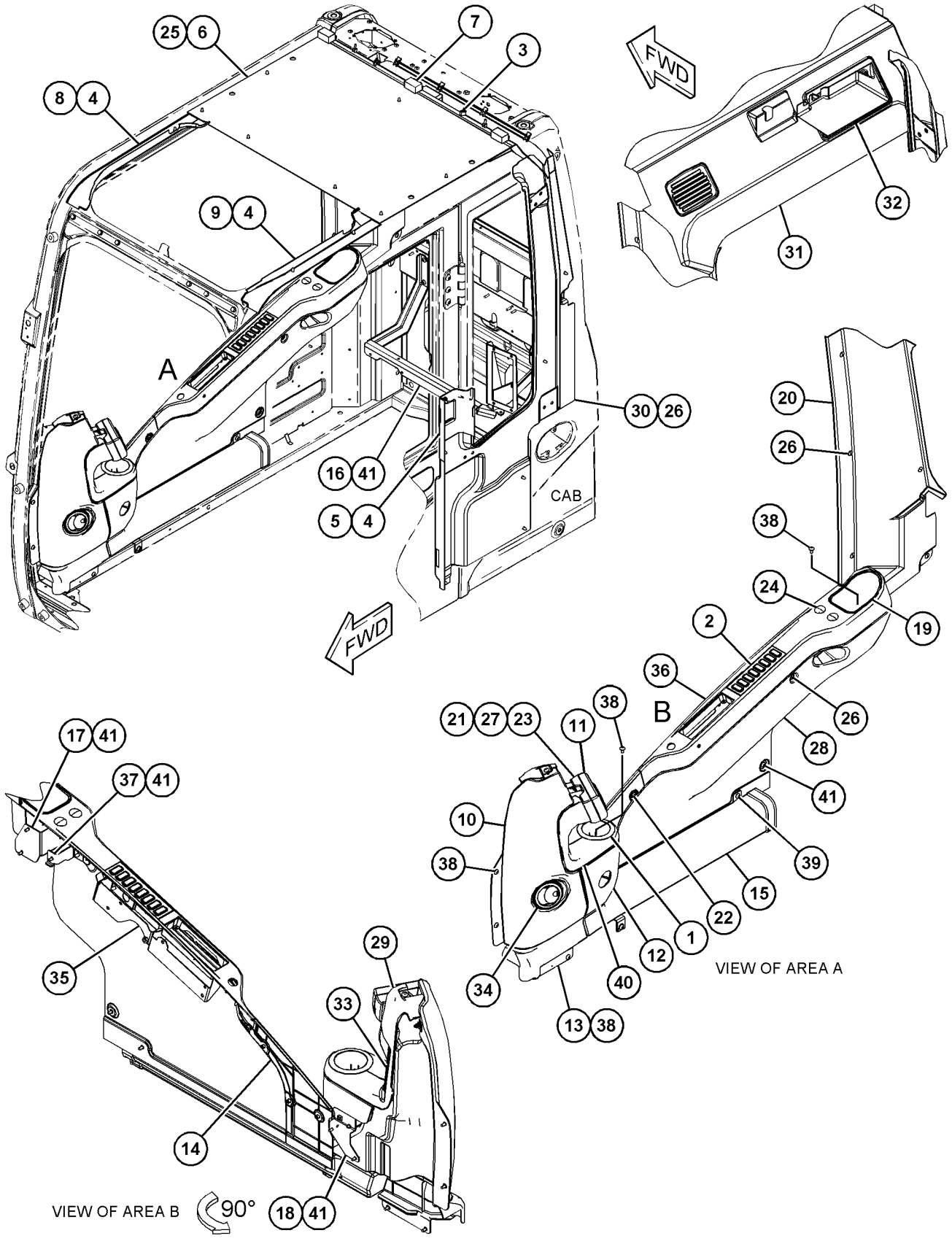

GRAPHIC #1 **<END>** g03431204

OPERATOR STATION

424-5477 CAB GP

S/N: PBB1-UP; KBS1-UP
PART OF 424-5480 CAB GP
AN ATTACHMENT

SMCS-7301, 7325 **i05860282**

NOTE	REF NO	GRAPHIC REF	PART NUMBER	QTY	PART NAME 1 2 3 4 5 6 (PRODUCT LEVEL)	SEE PAGE
	1	1	*235-8916*	1	CAB AS	
M	1A	1	**185-8182**	6	BOLT (M10X1.5X20-MM)	
	1B	1	**185-8187**	6	WASHER (10.2X22X3.2-MM THK)	
	1C	1	**436-1901**	2	HINGE	
M	1D	1	**9X-2041**	6	SCREW-TRUSS HEAD (M10X1.5X20-MM)	
Y	2	1	*388-9102*	1	CAB GP (EXTERIOR)	787
Y	3	1	*424-5478*	1	CAB GP (INTERIOR)	814
Y	4	1	*388-9107*	1	WINDOW GP-CAB (SIDE, REAR)	950
Y	5	1	*234-6594*	1	WIPER GP-WINDOW (FRONT, UPPER)	966
LY	6	1	*388-9105*	1	DOOR GP-CAB (INTERIOR)	861
CJY	7	1	*388-9109*	1	WINDOW GP-CAB (FRONT, UPPER)	953
Y	8	1	*388-9108*	1	WINDOW GP-CAB (FRONT, LOWER)	951
Y	9	1	*139-7099*	1	HATCH GP-ROOF	878
FLY			**388-9115**	1	DOOR & MTG GP-CAB	858
FJY			**388-9116**	1	WINDOW GP-CAB (FRONT, UPPER)	956
FJY			**388-9117**	1	WINDOW GP-CAB (FRONT, UPPER)	958

C - CHANGE FROM PREVIOUS TYPE
F - NOT SHOWN
J - ITEMS MARKED J AVAILABLE FOR SERVICE REPAIR OF WINDOW GP MARKED J
L - PART MARKED L AVAILABLE FOR FIELD REPLACEMENT OF DOOR GP MARKED L
M - METRIC PART
Y - SEPARATE ILLUSTRATION

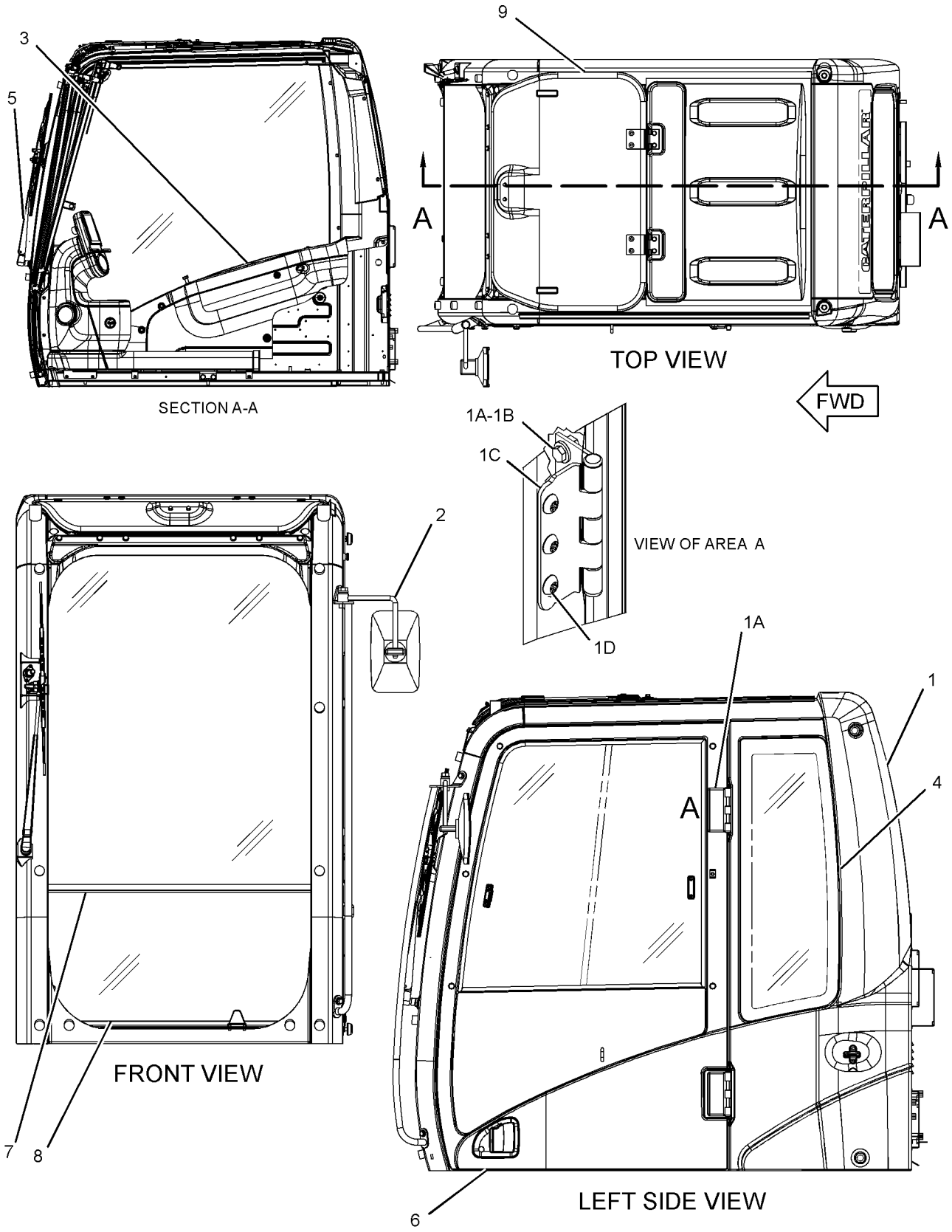

GRAPHIC #1 **<END>** g02546698

424-5478 CAB GP–INTERIOR

S/N: PBB1-UP; KBS1-UP
PART OF 424-5477 CAB GP
AN ATTACHMENT

SMCS-7301, 7325 **i05860294**

NOTE	REF NO	GRAPHIC REF	PART NUMBER	QTY	PART NAME 1 2 3 4 5 6 (PRODUCT LEVEL)	SEE PAGE
	1	1	**156-6656**	1	RAIL	
	2	1	**156-6657**	1	RAIL	
	3	1	**164-0646**	1	CUP	
	4	1	**164-0655**	1	PANEL-SWITCH	
	5	1	**170-9724**	5	CLIP	
	6	1	**171-7420**	2	CLIP	
	7	1	**176-1946**	1	PLATE	
	8	1	**176-1947**	1	PLATE	
	9	1	**176-1972**	1	COVER	
	10	1	**185-8205**	5	CLIP	
	11	1	**189-2678**	3	SPACER	
	12	1	**234-6468**	1	COVER AS	
		1	**259-7353**	4	CLIP	
	13	1	**234-6469**	1	COVER	
	14	1	**234-6470**	1	COVER-MONITOR	
	15	1	**234-6471**	1	COVER-DUCT	
	16	1	**234-6472**	1	COVER	
	17	1	**234-6473**	1	COVER-FRONT (UPPER, RH)	
	18	1	**234-6476**	1	DUCT	
	19	1	**234-6477**	1	BRACKET AS	
	20	1	**234-6483**	1	BRACKET AS	
	21	1	**234-6485**	1	BRACKET AS	
	22	1	**234-6490**	1	CUP	
	23	1	**234-6491**	1	COVER	
	24	1	**234-6497**	1	COVER	
	25	1	**234-6498**	3	RIVET	
	26	1	**234-6579**	2	NUT-SPEED	
	27	1	**235-8923**	2	CAP	
	28	1	**235-8926**	1	VISOR	
	29	1	**235-8928**	1	LINER	
	30	1	**235-8929**	2	HANDLE	
	31	1	**235-8950**	12	CLIP	
	32	1	**245-7790**	2	SCREW-TAPPING	
	33	1	**305-0330**	1	COVER (LOWER, RH)	
	34	1	**383-5767**	1	COVER	
	35	1	**388-9091**	1	COVER	
	36	1	**388-9094**	1	COVER	
	37	1	**388-9095**	1	COVER	
	38	1	**396-2351**	1	LOUVER AS	
	39	1	**396-2352**	2	LOUVER AS	
	40	1	**399-0061**	1	BRACKET AS	
	41	1	**399-0062**	1	COVER	
	42	1	**399-0065**	1	BRACKET	
M	43	1	**128-2135**	13	SCREW-TRUSS HEAD (M6X1X13-MM)	
M	44	1	**128-2136**	1	SCREW-TRUSS HEAD (M6X1X16-MM)	
M	45	1	**9X-2042**	16	SCREW-TRUSS HEAD (M6X1X12-MM)	
M	46	1	**9X-2044**	6	SCREW-TRUSS HEAD (M6X1X16-MM)	

M - METRIC PART

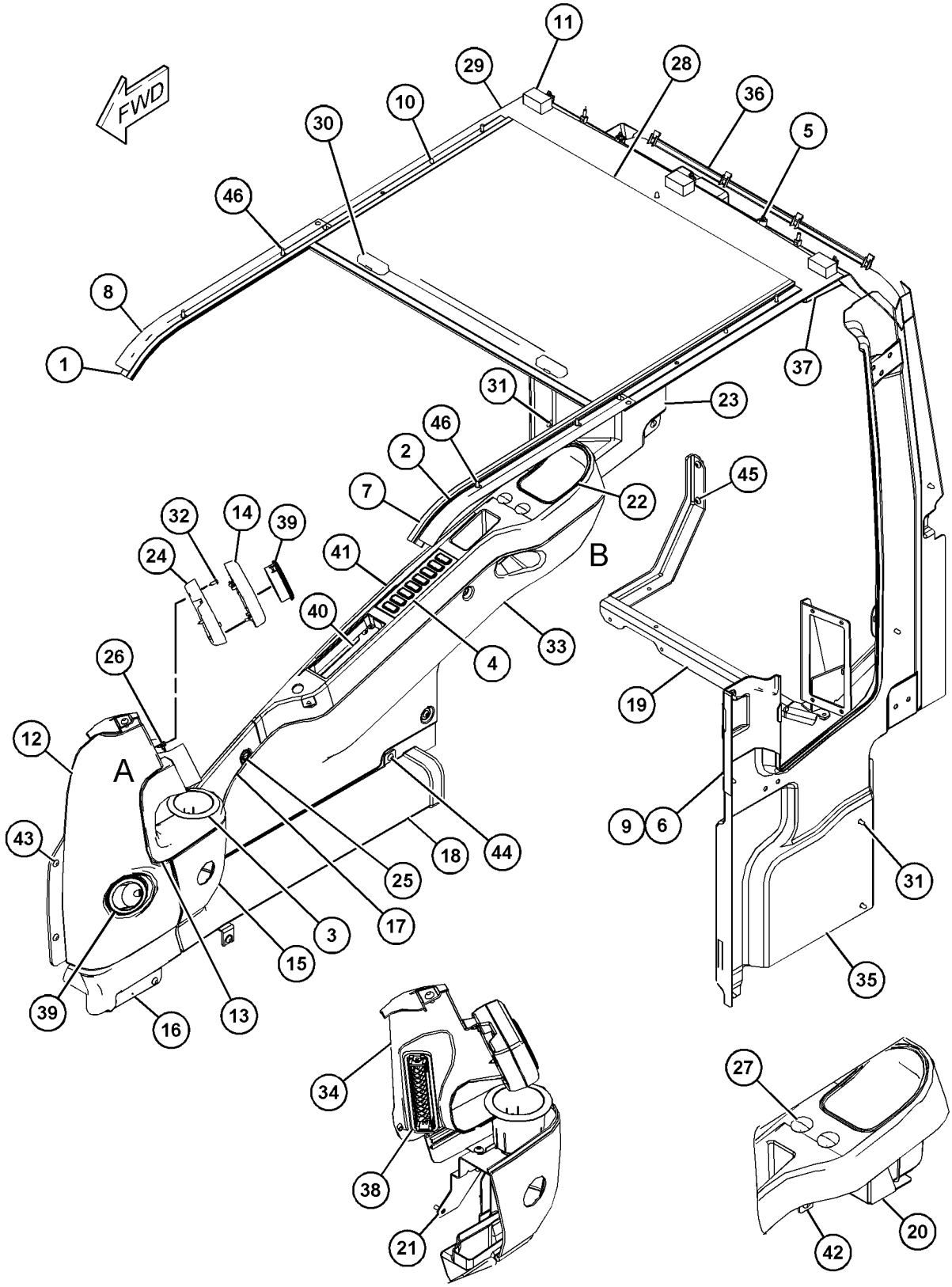

VIEW OF AREA A
(PARTS REMOVED FOR CLARITY)

VIEW OF AREA B
(PARTS REMOVED FOR CLARITY)

GRAPHIC #1

<END>

g03461836

OPERATOR STATION

424-5480 CAB GP

S/N: PBB1-UP; KBS1-UP
PART OF 456-0839 OPTION AR-CAB
AN ATTACHMENT

SMCS-7301, 7325 **i05860261**

NOTE	REF NO	GRAPHIC REF	PART NUMBER	QTY	PART NAME 1 2 3 4 5 6 (PRODUCT LEVEL)	SEE PAGE
M	1	1	**128-2135**	5	SCREW-TRUSS HEAD (M6X1X13-MM)	
	2	1	**164-8474**	2	LOUVER AS-VENT	
Y	3	1	**424-5477**	1	CAB GP	812
Y	4	1	**234-6501**	1	COVER GP-CAB (REAR)	855
	5	1	**235-9001**	1	SUPPORT	
M	6	1	**8T-4179**	5	BOLT (M12X1.75X20-MM)	
M	7	1	**8T-4190**	4	BOLT (M16X2X25-MM)	
	8	1	**8T-4223**	13	WASHER-HARD (13.5X25.5X3-MM THK)	
M	9	1	**8T-4910**	6	BOLT (M12X1.75X60-MM)	
M	10	1	**8T-6868**	2	BOLT (M12X1.75X80-MM)	
	11	1	**8Y-6967**	2	LOUVER AS-VENT	
	12	1	**9X-8257**	6	WASHER (17.5X30X3.5-MM THK)	

M - METRIC PART
Y - SEPARATE ILLUSTRATION

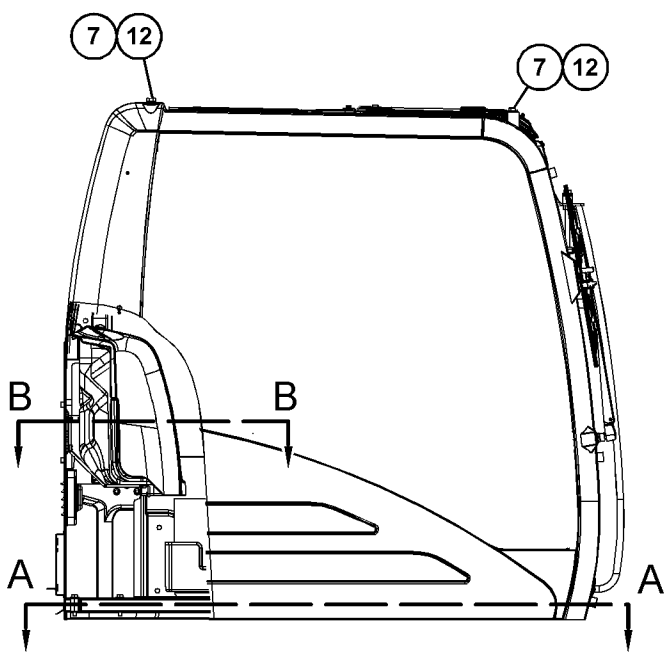

RIGHT SIDE VIEW

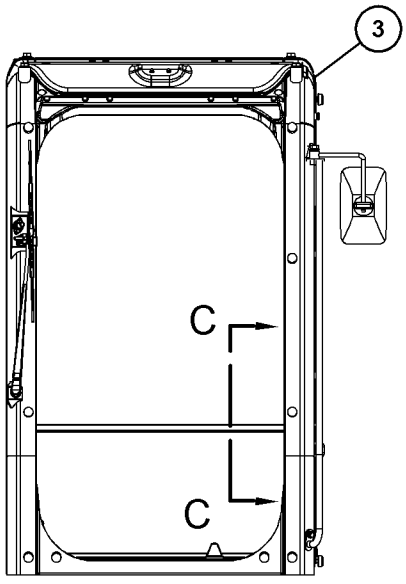

FRONT VIEW

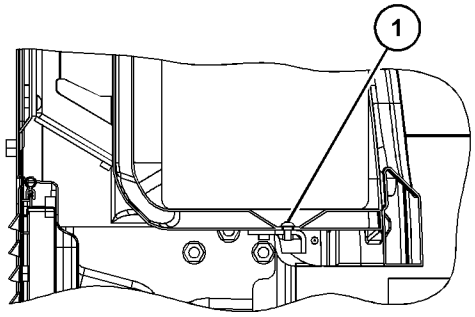

SECTION C-C

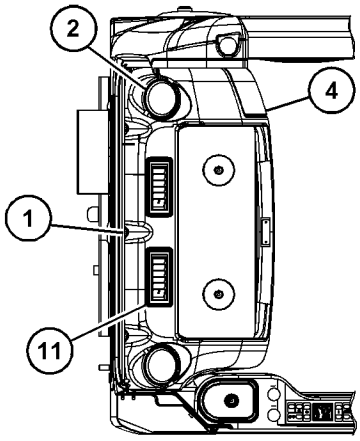

SECTION B-B

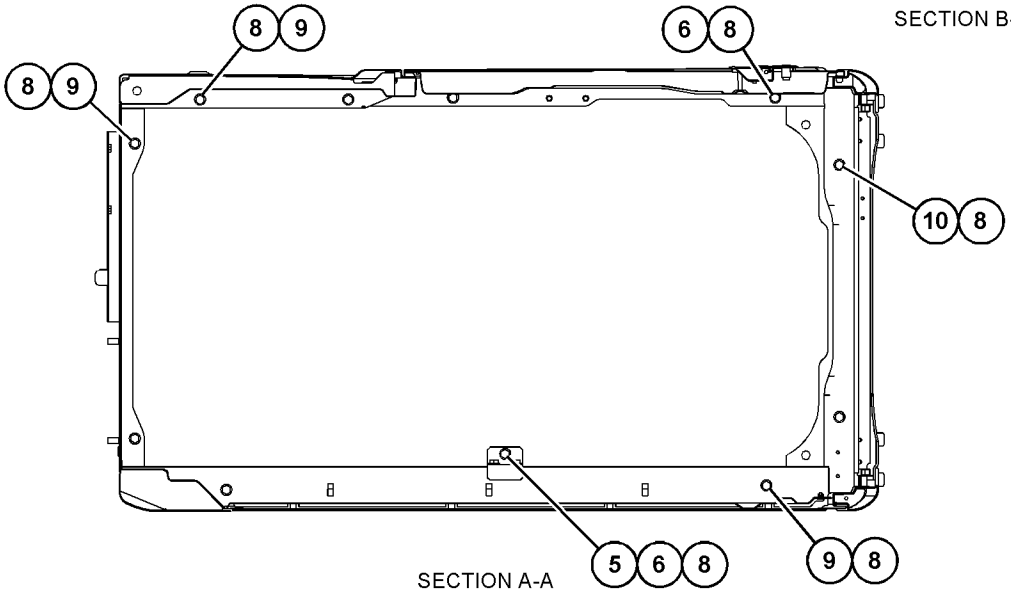

SECTION A-A

GRAPHIC #1 **<END>** g03460016

OPERATOR STATION

456-0917 CAMERA & MIRROR AR

S/N: PBB1-UP; KBS1-UP

AN ATTACHMENT

SMCS-7319, 7348 **i05861262**

NOTE	PART NUMBER	QTY	PART NAME 1 2 3 4 5 6 (PRODUCT LEVEL)	SEE PAGE
Y	*459-0359*	1	CAMERA & MOUNTING GP	111
Y	*303-2787*	1	FILM GP (WORK AREA VISUAL SYSTEM, REAR)	982
Y	*330-1162*	1	MIRROR GP-DOWN VIEW (FUEL TANK, RH)	895
Y	*430-5530*	1	WIRING GP-CAB	194
Y	*396-8145*	1	WIRING GP-CHASSIS (REAR VIEW, CAMERA)	197

Y - SEPARATE ILLUSTRATION

<END>

245-7836 COIL GP-EVAPORATOR

S/N: PBB1-UP; KBS1-UP
FIELD REPLACEMENT ORDER 353-2151–PAGE: 821
PART OF 316-8916 AIR CONDITIONER GP
AN ATTACHMENT

SMCS-7343 **i04842775**

NOTE	REF NO	GRAPHIC REF	PART NUMBER	QTY	PART NAME 1 2 3 4 5 6 (PRODUCT LEVEL)	SEE PAGE
	1	1	**245-7837**	1	VALVE AS-EXPANSION	
	2	1	**245-7905**	1	INSULATOR	
	3	1	**281-0791**	2	BOLT-SOCKET HEAD (M5X0.8X40-MM)	
	4	1	**121-7136**	1	SEAL-O-RING	
	5	1	**121-7137**	1	SEAL-O-RING	

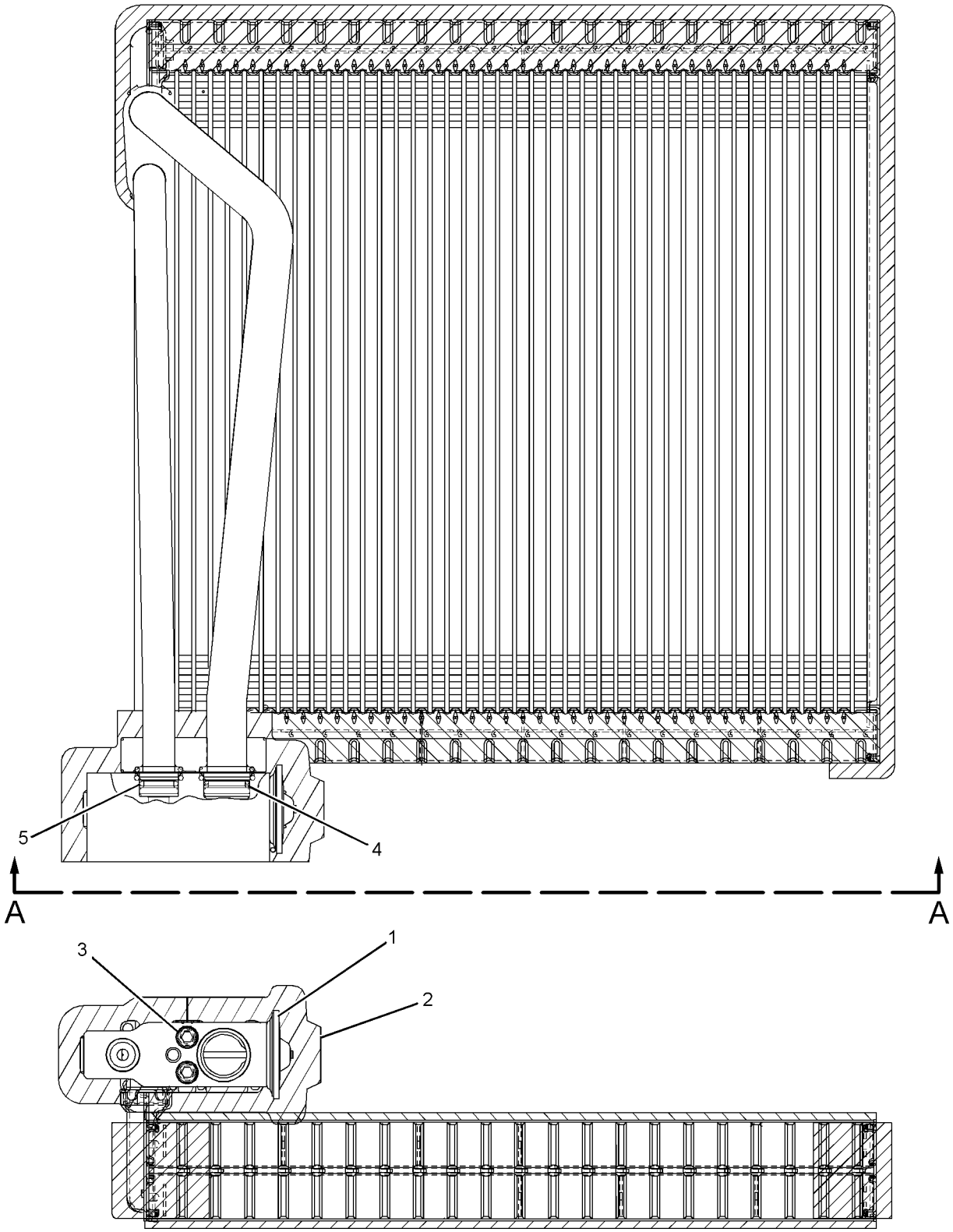

VIEW A-A

GRAPHIC #1 **<END>** g01134658

353-2151 COIL GP-EVAPORATOR

S/N: PBB1-UP; KBS1-UP

FIELD REPLACEMENT FOR 245-7836—PAGE: 819

SMCS-7343 **i05535846**

NOTE	REF NO	GRAPHIC REF	PART NUMBER	QTY	PART NAME 1 2 3 4 5 6 (PRODUCT LEVEL)	SEE PAGE
	1	1	**245-7837**	1	VALVE AS-EXPANSION	
	2	1	**245-7905**	1	INSULATOR	
	3	1	**281-0791**	2	BOLT-SOCKET HEAD (M5X0.8X40-MM)	
	4	1	**121-7136**	1	SEAL-O-RING	
	5	1	**121-7137**	1	SEAL-O-RING	

353-2151 **COIL GP-EVAPORATOR (*contd.*)** **i05535846**

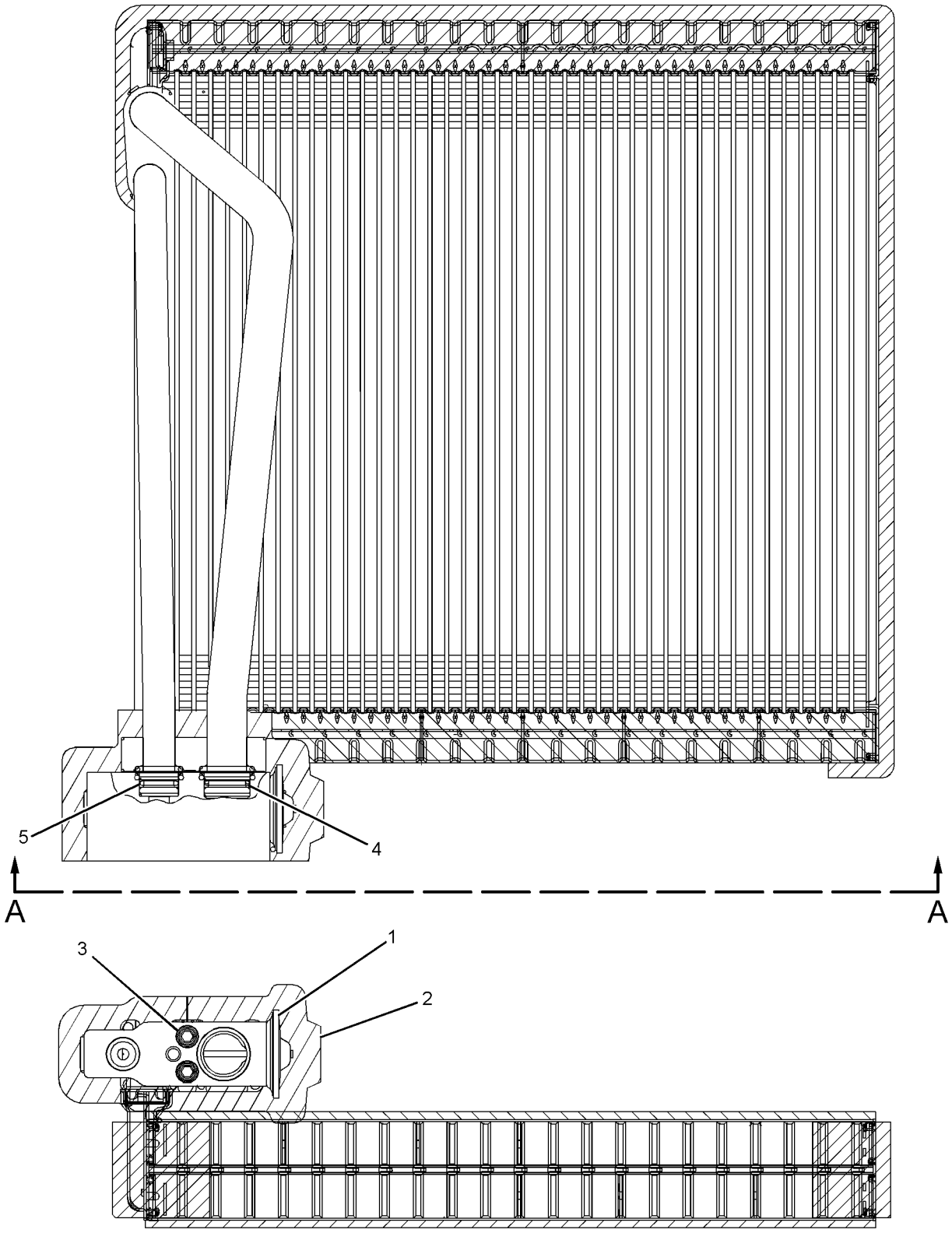

VIEW A-A

GRAPHIC #1 **<END>** g02150001

372-9295 COMPRESSOR GP-REFRIGERANT

S/N: PBB1-UP; KBS1-UP
24-VOLT
PART OF 379-4415 COMPRESSOR GP-REFRIGERANT

SMCS-1802 **i04415276**

NOTE	REF NO	GRAPHIC REF	PART NUMBER	QTY	PART NAME 1 2 3 4 5 6 (PRODUCT LEVEL)	SEE PAGE
	1	1	**9W-0852**	2	PIN-CONNECTOR (14-GA TO 16-GA)	
	2	1	**243-4505**	1	RECEPTACLE AS-CONNECTOR (2-PIN)	
	3	1	**327-6593**	1	SEAL-O-RING	
	4	1	**327-6594**	1	SEAL-O-RING	

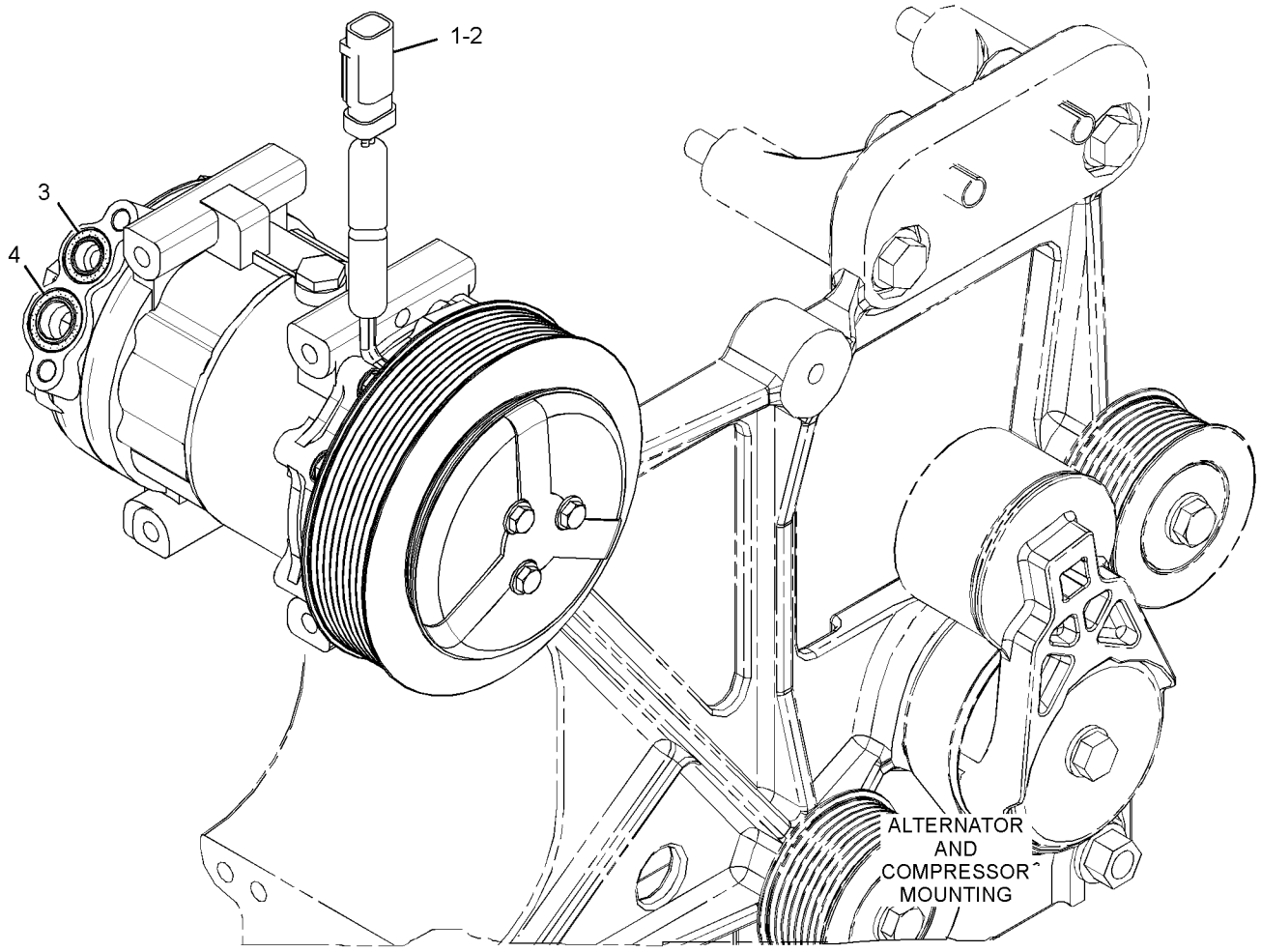

GRAPHIC #1 **<END>** g02149988

379-4415 COMPRESSOR GP-REFRIGERANT

S/N: PBB1-UP; KBS1-UP

PART OF 455-4086 INSTALLATION AR-ENGINE

SMCS-1802 **i05338529**

NOTE	REF NO	GRAPHIC REF	PART NUMBER	QTY	PART NAME 1 2 3 4 5 6 (PRODUCT LEVEL)	SEE PAGE
	1	1	**364-1614**	4	BOLT-FLANGE HEAD (M8X1.25X95-MM)	
Y	2	1	**372-9295**	1	COMPRESSOR GP-REFRIGERANT	823
	3	1	**383-5626**	1	BRACKET AS	

Y - SEPARATE ILLUSTRATION

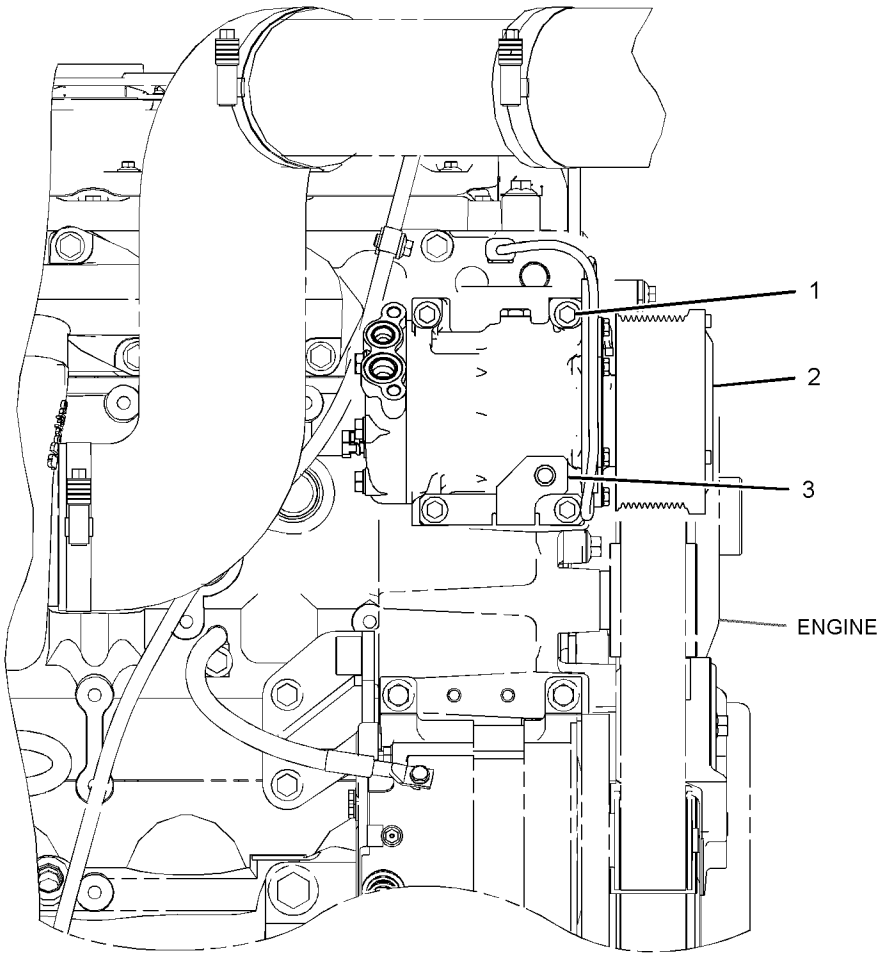

FRONT VIEW

GRAPHIC #1 **<END>** g03381542

273-5167 CONDENSER & MTG GP-REFRIGERANT

S/N: PBB1-UP; KBS1-UP
PART OF 372-9414 AIR CONDITIONER AR
AN ATTACHMENT

SMCS-1805 **i05291916**

NOTE	REF NO	GRAPHIC REF	PART NUMBER	QTY	PART NAME 1 2 3 4 5 6 (PRODUCT LEVEL)	SEE PAGE
	1	1	**7Y-8561**	1	BUMPER	
C	2	1	**357-4101**	1	HANDLE AS	
Y	3	1	**245-7749**	1	CONDENSER GP-REFRIGERANT	828
	4	1	**346-8012**	1	SUPPORT AS	
	5	1	**273-5399**	1	BRACKET AS	
C	6	1	**363-9545**	1	BRACKET AS	
C	7	1	**363-9548**	1	SUPPORT AS-CONDENSER	
	7A	1	**099-7857**	2	HINGE	
	8	1	**372-9551**	2	SUPPORT AS	
	9	1	**5P-4116**	4	WASHER-HARD (8.8X20.5X2-MM THK)	
M	10	1	**8T-4971**	4	BOLT (M6X1X30-MM)	
	11	1	**8T-4121**	8	WASHER-HARD (11X21X2.5-MM THK)	
M	12	1	**8T-4133**	1	NUT (M10X1.5-THD)	
M	13	1	**8T-4137**	7	BOLT (M10X1.5X20-MM)	
M	14	1	**8T-4179**	4	BOLT (M12X1.75X20-MM)	
M	15	1	**8T-4189**	4	BOLT (M8X1.25X20-MM)	
	16	1	**8T-4223**	4	WASHER-HARD (13.5X25.5X3-MM THK)	
	17	1	**117-8929**	4	WASHER (6.6X22X2-MM THK)	
C	18	1	**5P-8523**	1	GROMMET	
C	19	1	**363-9550**	1	PLATE AS	

C - CHANGE FROM PREVIOUS TYPE
M - METRIC PART
Y - SEPARATE ILLUSTRATION

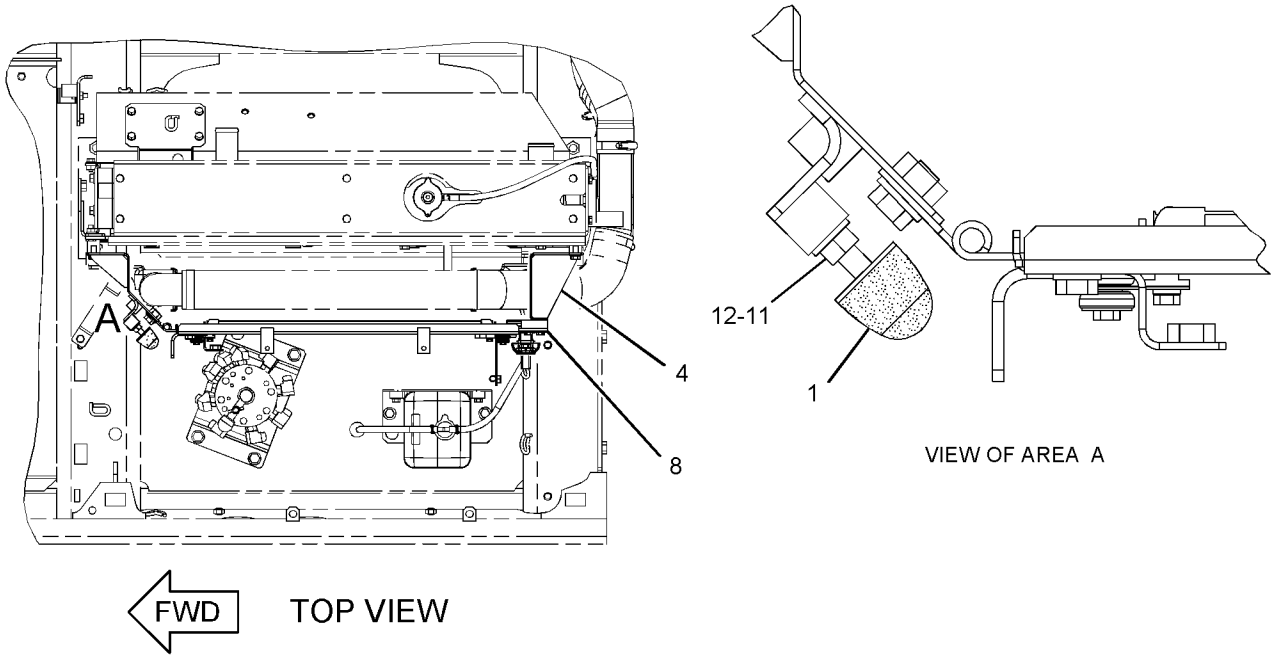

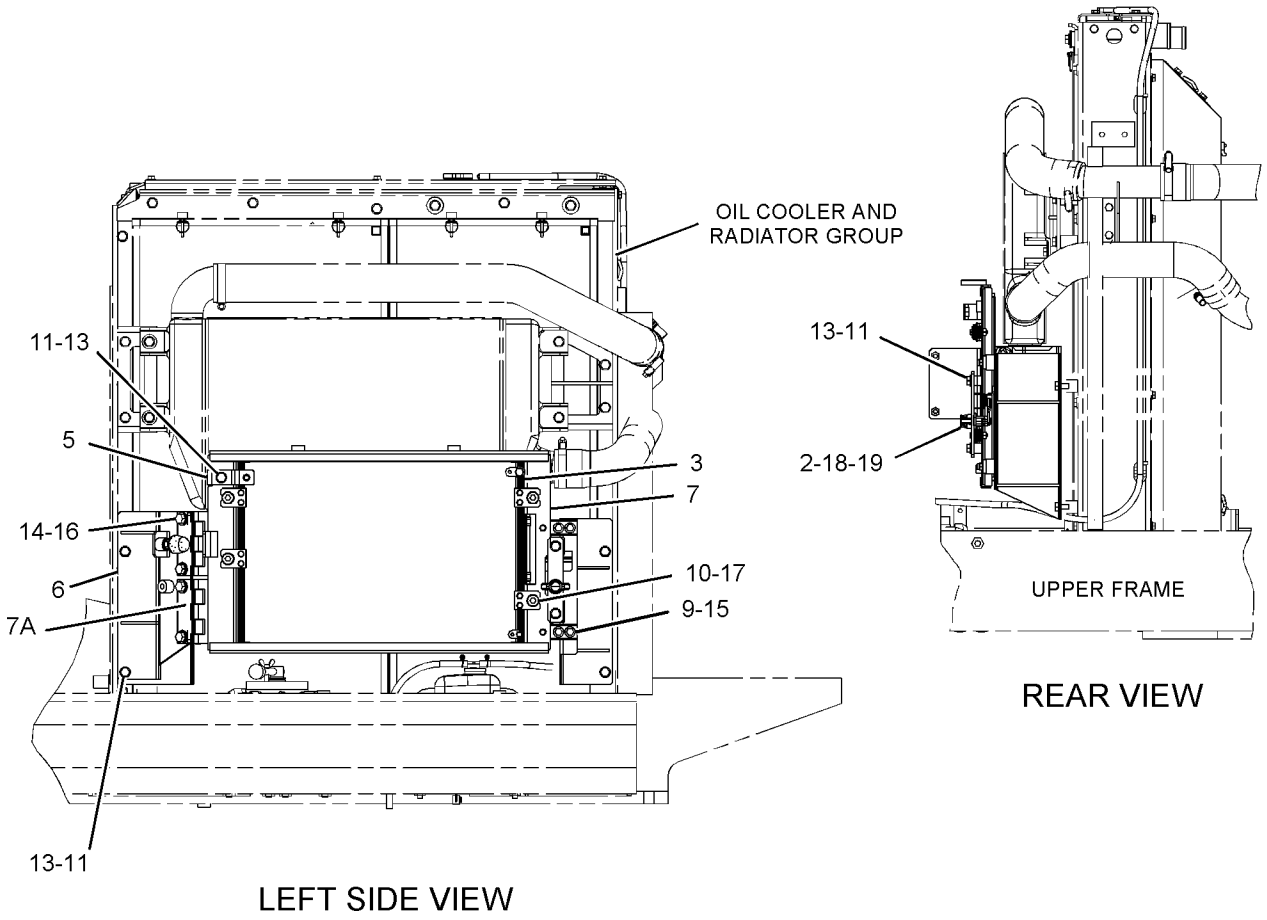

GRAPHIC #1 **<END>** g02725234

363-9644 CONDENSER & MTG GP-REFRIGERANT

S/N: PBB1-UP; KBS1-UP

PART OF 455-4086 INSTALLATION AR-ENGINE

SMCS-1805 **i05194849**

NOTE	REF NO	GRAPHIC REF	PART NUMBER	QTY	PART NAME 1 2 3 4 5 6 (PRODUCT LEVEL)	SEE PAGE
Y	1	1	**245-7749**	1	CONDENSER GP-REFRIGERANT	828
	2	1	**363-9645**	1	SUPPORT AS-CONDENSER	
M	3	1	**7X-2533**	4	BOLT (M6X1X35-MM)	
	4	1	**8T-4121**	4	WASHER-HARD (11X21X2.5-MM THK)	
M	5	1	**8T-4137**	4	BOLT (M10X1.5X20-MM)	
	6	1	**117-8929**	4	WASHER (6.6X22X2-MM THK)	

M - METRIC PART
Y - SEPARATE ILLUSTRATION

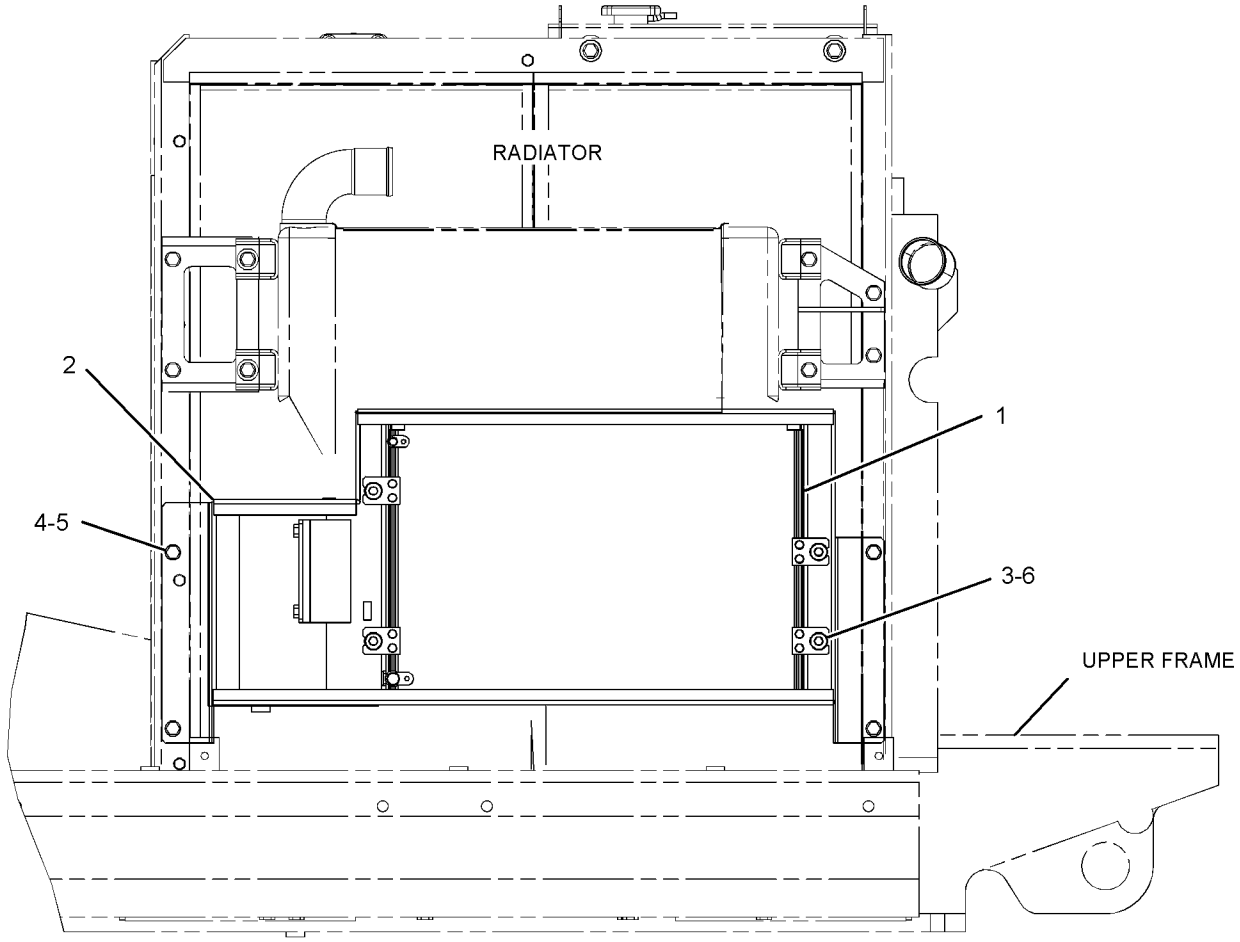

LEFT SIDE VIEW

GRAPHIC #1 **<END>** g02726048

245-7749 CONDENSER GP-REFRIGERANT

S/N: PBB1-UP; KBS1-UP

PART OF 273-5167, 363-9644 CONDENSER & MTG GP-REFRIGERANT

ALSO AN ATTACHMENT

SMCS-1805 **i02416857**

NOTE	REF NO	GRAPHIC REF	PART NUMBER	QTY	PART NAME 1 2 3 4 5 6 (PRODUCT LEVEL)	SEE PAGE
	1	1	**235-8880**	1	CONDENSER AS	
	2	1	**245-7750**	4	BUSHING-RUBBER	
	3	1	**245-7751**	4	BRACKET	
	4	1	**095-0827**	8	LOCKWASHER	
M	5	1	**8T-4171**	8	BOLT (M6X1X12-MM)	
	6	1	**9X-8256**	8	WASHER (6.6X12X2-MM THK)	

M - METRIC PART

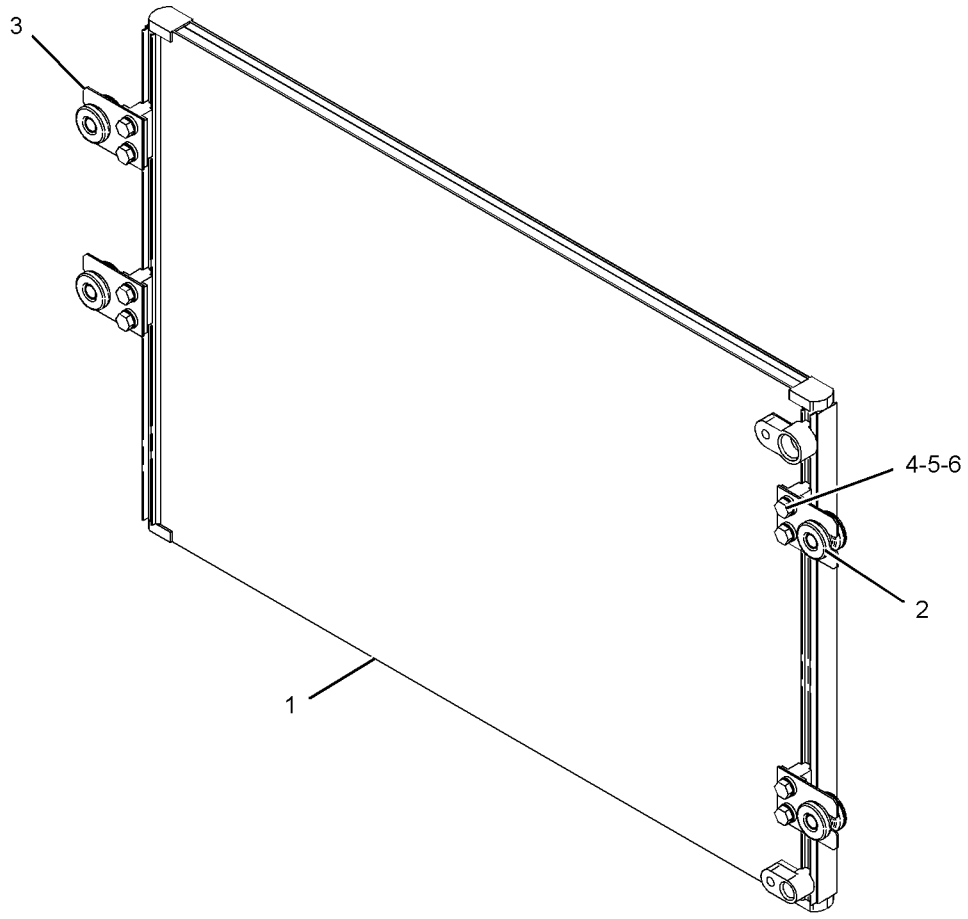

GRAPHIC #1 **<END>** g01086695

259-7348 CONSOLE GP-OPERATOR–RH

S/N: PBB1-UP; KBS1-UP

PART OF 421-1431 CONSOLE GP-OPERATOR

SMCS-5258 **i02488237**

NOTE	REF NO	GRAPHIC REF	PART NUMBER	QTY	PART NAME 1 2 3 4 5 6 (PRODUCT LEVEL)	SEE PAGE
M	1	1	**128-2135**	4	SCREW-TRUSS HEAD (M6X1X13-MM)	
	2	1	**185-8284**	1	COVER	
	3	1	**234-6579**	2	NUT-SPEED	
	4	1	**234-6580**	2	CAP	
	5	1	**234-6602**	1	COVER	
	6	1	**234-6604**	1	COVER	
	7	1	**234-6608**	1	COVER	
	8	1	**234-6609**	1	COVER	
	9	1	**234-6610**	1	COVER	
	10	1	**235-8914**	4	NUT-SPEED	
	11	1	**235-8966**	2	BASE-MOUNTING	
	12	1	**245-7790**	2	SCREW-TAPPING	
	13	1	**245-7926**	1	SUPPORT AS	
	14	1	**245-7948**	4	SCREW-TAPPING	
Y	15	1	**259-7346**	1	ARMREST GP (RH)	777
M	16	1	**9X-2041**	3	SCREW-TRUSS HEAD (M10X1.5X20-MM)	

M - METRIC PART
Y - SEPARATE ILLUSTRATION

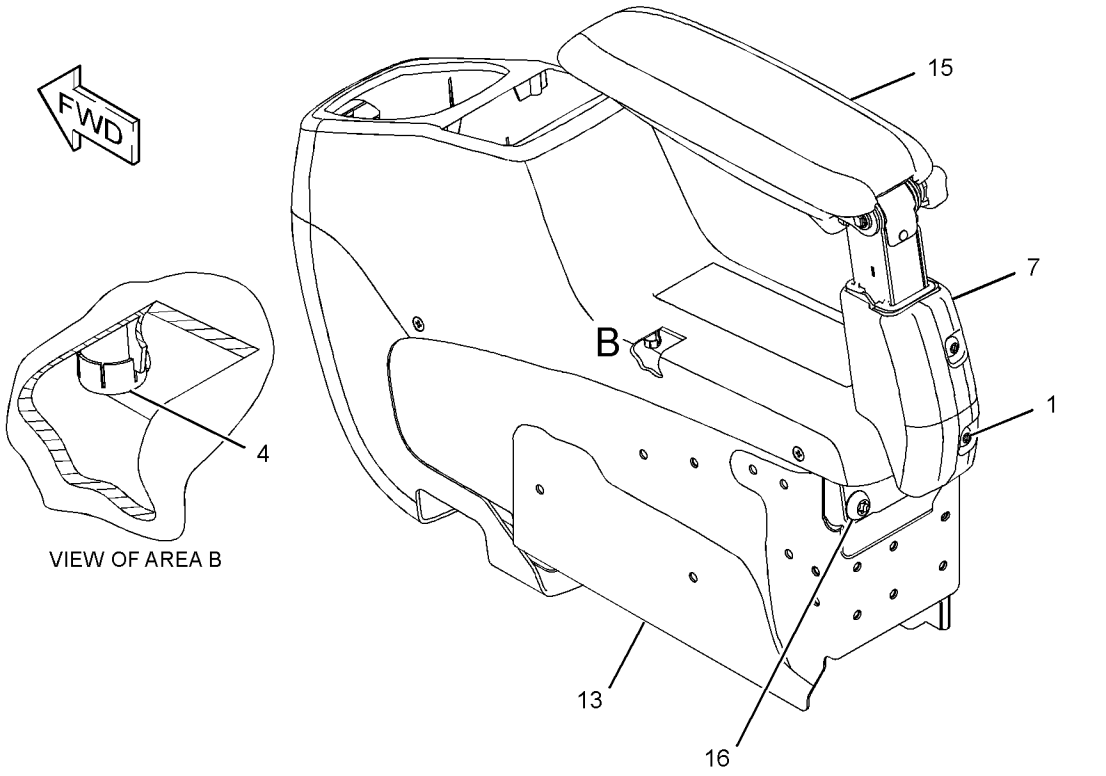

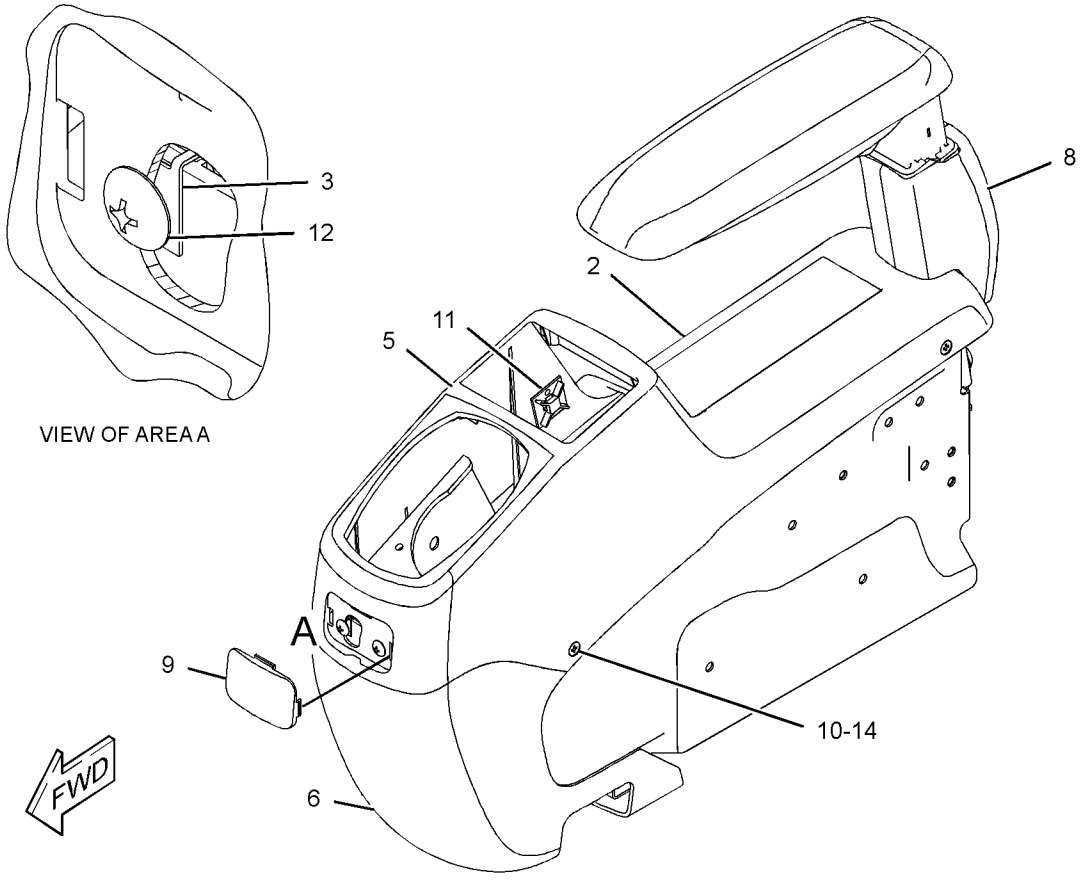

GRAPHIC #1 **<END>** g01217107

421-1431 CONSOLE GP-OPERATOR

S/N: PBB1-UP; KBS1-UP

PART OF 422-0645 OPERATOR AR

SMCS-5258 **i05409253**

NOTE	REF NO	GRAPHIC REF	PART NUMBER	QTY	PART NAME 1 2 3 4 5 6 (PRODUCT LEVEL)	SEE PAGE
	1	1	**176-1916**	2	GROMMET	
	2	1	**178-5422**	2	GROMMET	
	3	1	**178-5423**	2	GROMMET	
	4	1	**185-8161**	2	INSULATOR	
	5	1	**235-8893**	2	SUPPORT	
	6	1	**235-8894**	2	SUPPORT	
Y	7	1	*421-1434*	1	CONSOLE GP-OPERATOR (LH)	833
Y	8	1	*259-7348*	1	CONSOLE GP-OPERATOR (RH)	829
	9	1	**8T-4121**	4	WASHER-HARD (11X21X2.5-MM THK)	
M	10	1	**8T-4195**	4	BOLT (M10X1.5X30-MM)	
M	11	1	**9X-2046**	8	SCREW-TRUSS HEAD (M6X1X35-MM)	
M	12	1	**9X-2045**	12	SCREW-TRUSS HEAD (M6X1X20-MM)	
	13	1	**7K-1181**	4	STRAP-CABLE	
	14	1	**122-9617**	2	GUARD	

M - METRIC PART
Y - SEPARATE ILLUSTRATION

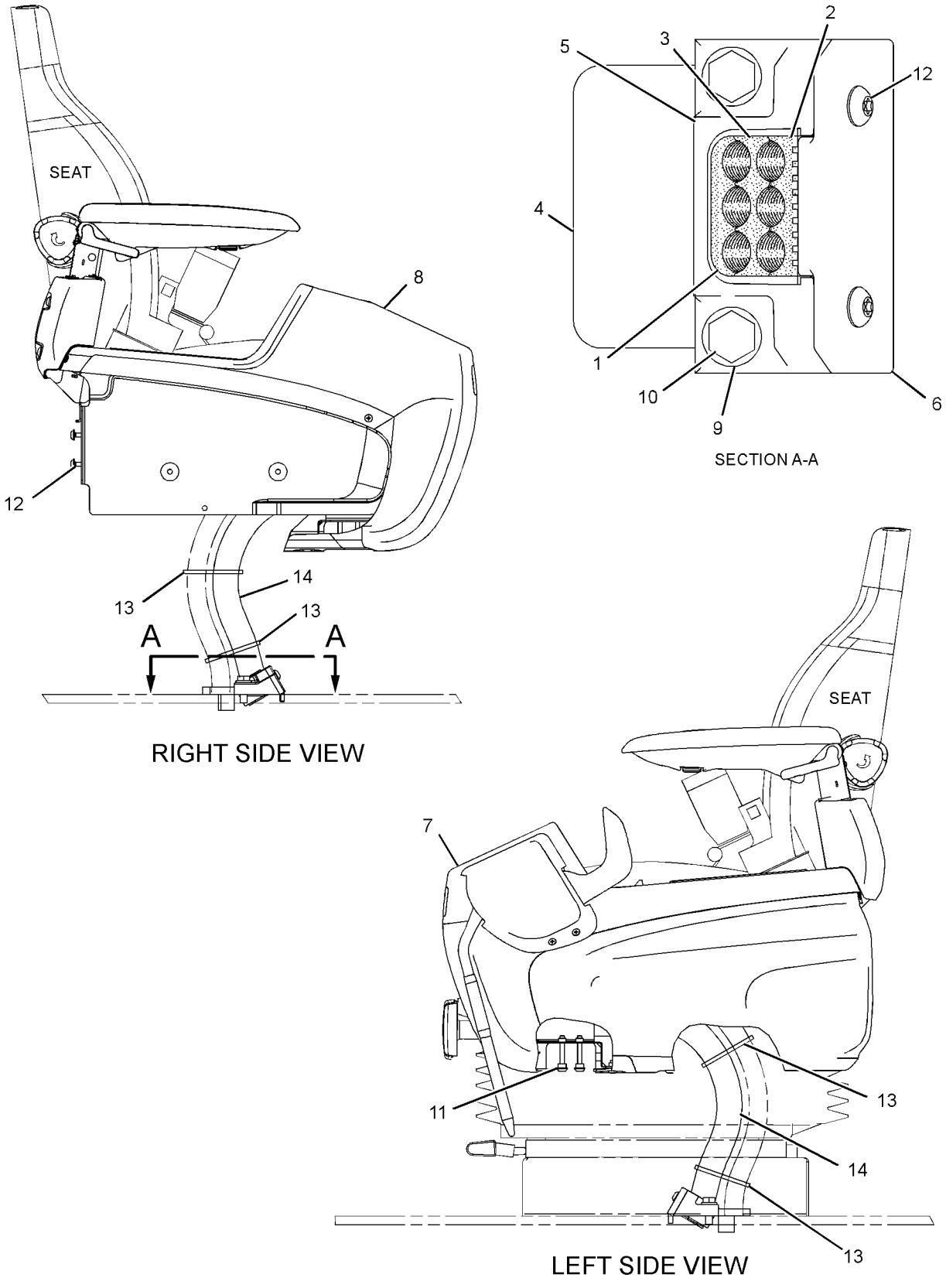

GRAPHIC #1 **<END>** g01844714

421-1434 CONSOLE GP-OPERATOR–LH

S/N: PBB1-UP; KBS1-UP

PART OF 421-1431 CONSOLE GP-OPERATOR

SMCS-5258 **i05356117**

NOTE	REF NO	GRAPHIC REF	PART NUMBER	QTY	PART NAME 1 2 3 4 5 6 (PRODUCT LEVEL)	SEE PAGE
M	1	1	**128-2135**	5	SCREW-TRUSS HEAD (M6X1X13-MM)	
M	2	1	**171-7325**	3	SCREW-TAPPING (M5X0.8-THD)	
	3	1	**234-6579**	6	NUT-SPEED	
	4	1	**234-6580**	4	CAP	
	5	1	**234-6603**	1	COVER	
	6	1	**234-6605**	1	COVER	
	7	1	**234-6608**	1	COVER	
	8	1	**234-6609**	1	COVER	
	9	1	**234-6610**	1	COVER	
	11	1	**234-6612**	1	COVER	
Y	12	1	**234-6613**	1	SWITCH GP-LIMIT (HYDRAULIC LOCKOUT)	168
	13	1	**234-6614**	1	COVER	
	14	1	**235-8914**	4	NUT-SPEED	
	15	1	**235-8965**	1	GUARD	
	16	1	**245-7790**	3	SCREW-TAPPING	
	17	1	**245-7925**	1	SUPPORT AS	
	18	1	**245-7948**	7	SCREW-TAPPING	
	19	1	**259-7202**	1	ASHTRAY	
Y	20	1	**259-7347**	1	ARMREST GP (LH)	778
M	21	1	**9X-2041**	3	SCREW-TRUSS HEAD (M10X1.5X20-MM)	
M	22	1	**9X-2042**	2	SCREW-TRUSS HEAD (M6X1X12-MM)	

M - METRIC PART
Y - SEPARATE ILLUSTRATION

421-1434 **CONSOLE GP-OPERATOR (*contd.*)** **i05356117**

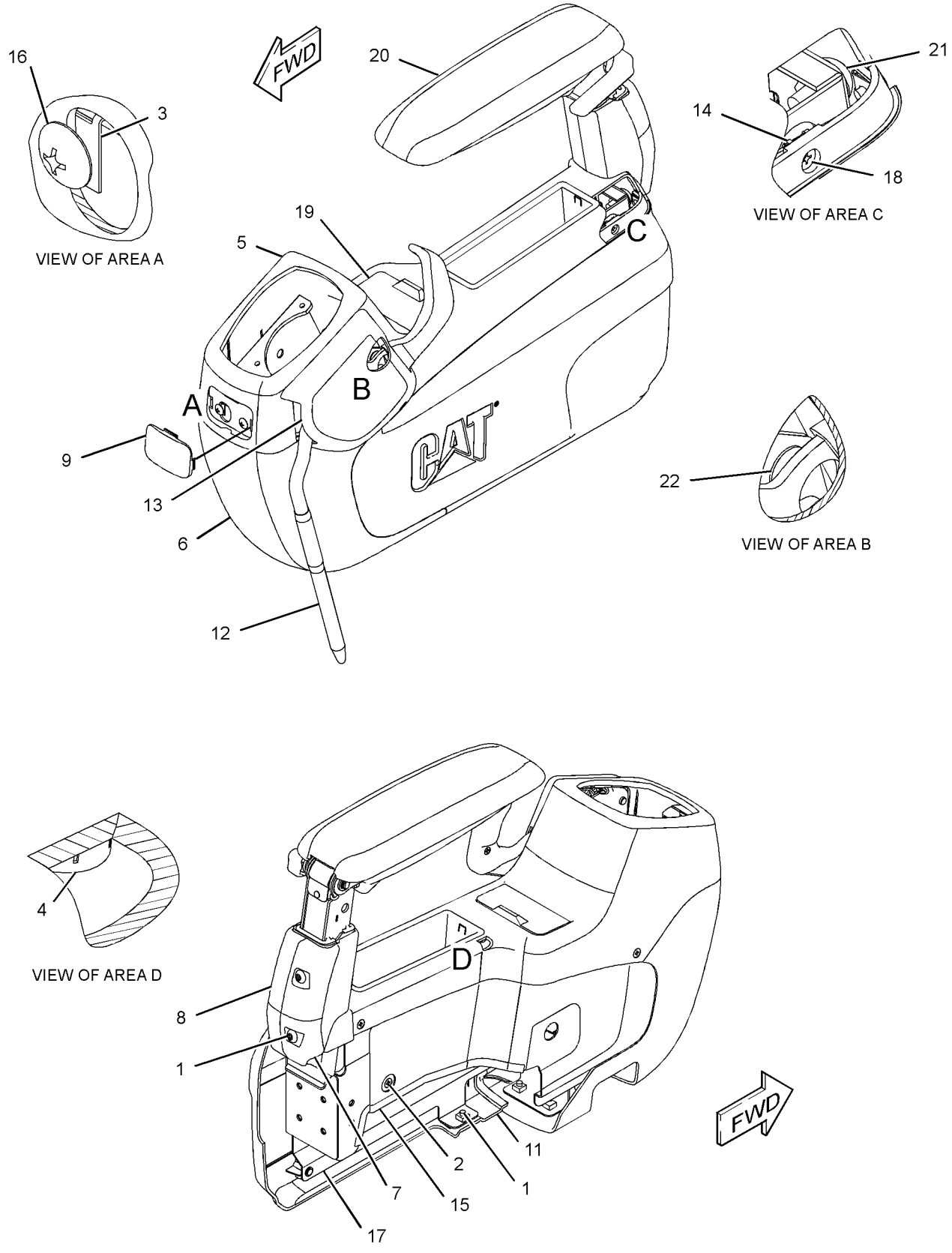

GRAPHIC #1 **<END>** g03401396

270-6107 CONTROL & MOUNTING GP–FOOT SWITCH, ON/OFF, LH

S/N: PBB1-UP; KBS1-UP
PART OF 270-6106 CONTROL AR-AUXILIARY
AN ATTACHMENT

SMCS-6700 **i04156284**

NOTE	REF NO	GRAPHIC REF	PART NUMBER	QTY	PART NAME 1 2 3 4 5 6 (PRODUCT LEVEL)	SEE PAGE
	1	1	**093-2069**	1	GROMMET	
	2	1	*205-1339*	1	SWITCH GP-PEDAL	
		1	**2Q-4703**	1	SWITCH AS-FOOT PEDAL (WORK TOOL)	
		1	**205-1340**	1	HARNESS AS-OPERATOR CONTROLS	
		1	**8T-8730**	2	SOCKET-CONNECTOR (16-GA TO 18-GA)	
		1	**2L-8075**	2	TERMINAL-RING (14-GA TO 16-GA, NO. 8 SCREW)	
		1	**155-2270**	1	KIT-CONNECTING PLUG (2-PIN) (INCLUDES PLUG AS, WEDGE & INTERFACE SEAL)	
	3	1	**285-1332**	1	SUPPORT AS	
	4	1	**285-1333**	1	SUPPORT AS	
	5	1	**285-1337**	1	PLATE-STOP	
	6	1	**6V-7646**	1	WASHER-HARD (7.2X25X2-MM THK)	
M	7	1	**8C-8580**	2	BOLT-SOCKET HEAD (M5X0.8X16-MM)	
M	8	1	**8T-0269**	2	BOLT-SOCKET HEAD (M6X1X20-MM)	
	9	1	**8T-4121**	4	WASHER-HARD (11X21X2.5-MM THK)	
M	10	1	**8T-4137**	4	BOLT (M10X1.5X20-MM)	
	11	1	**9X-8256**	1	WASHER (6.6X12X2-MM THK)	
	12	1	**7K-1181**	1	STRAP-CABLE	

M - METRIC PART

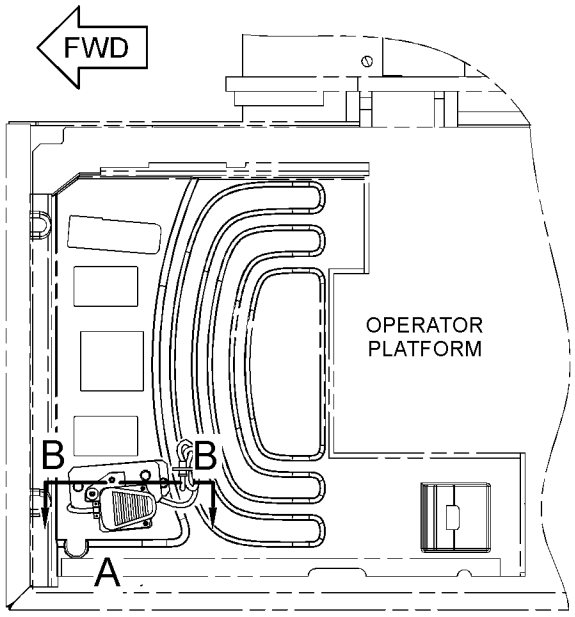

TOP VIEW

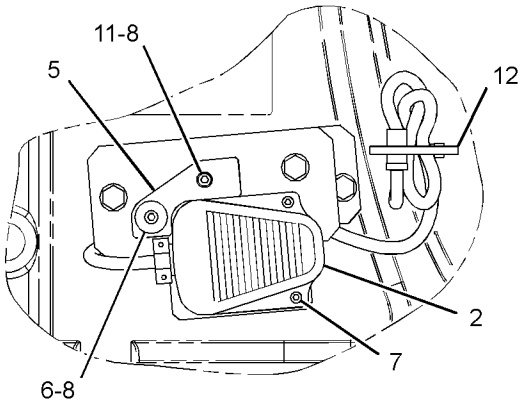

VIEW OF AREA A

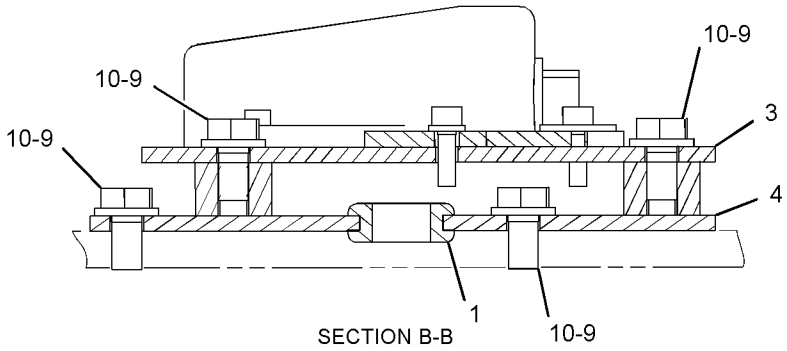

SECTION B-B

GRAPHIC #1 **<END>** g02387681

270-5689 CONTROL & MTG GP-JOYSTICK–2-BUTTON, SLIDE, TRIGGER SW

S/N: PBB1-UP

PART OF 270-5687 CONTROL AR-AUXILIARY AN ATTACHMENT

SMCS-5063, 5705 **i03087561**

NOTE	REF NO	GRAPHIC REF	PART NUMBER	QTY	PART NAME 1 2 3 4 5 6 (PRODUCT LEVEL)	SEE PAGE
CY	1	1	**297-0539**	1	CONTROL GP-JOYSTICK (LH)	852
CY	2	1	**297-0538**	1	CONTROL GP-JOYSTICK (RH)	851
M	3	1	**6V-7357**	6	BOLT (M6X1X25-MM)	
	4	1	**9X-8256**	6	WASHER (6.6X12X2-MM THK)	

C - CHANGE FROM PREVIOUS TYPE
M - METRIC PART
Y - SEPARATE ILLUSTRATION

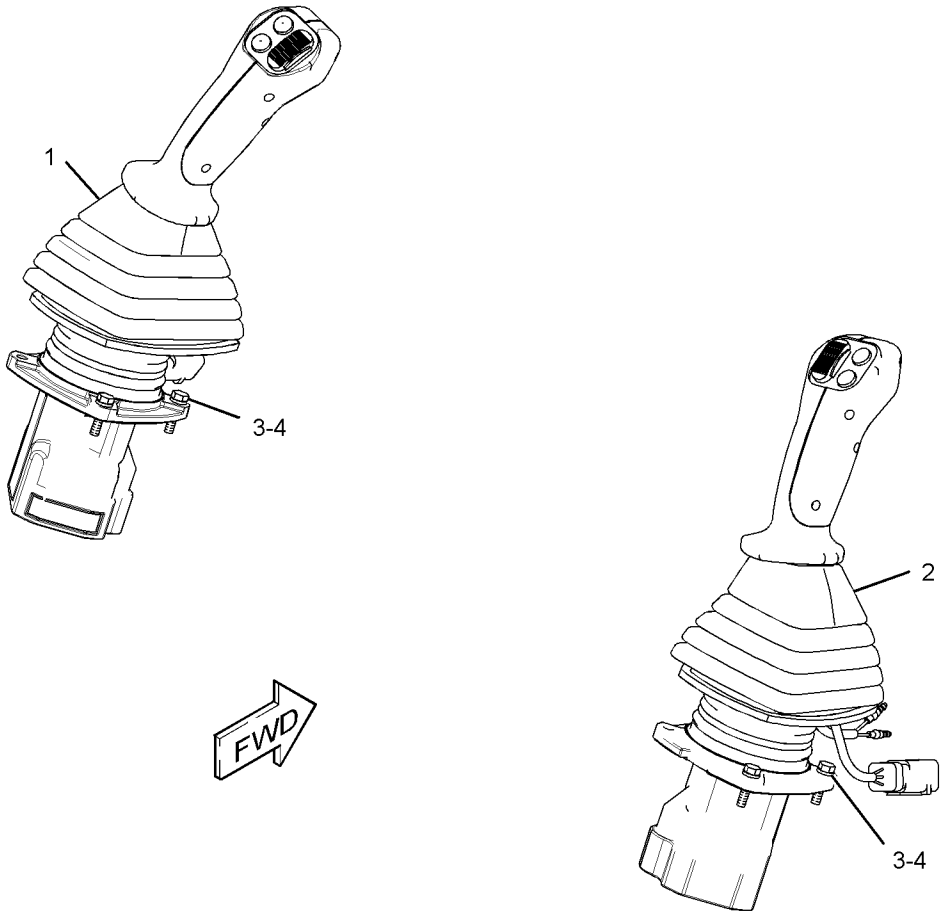

GRAPHIC #1 **<END>** g01619846

310-0078 CONTROL & MTG GP-JOYSTICK

S/N: PBB1-UP; KBS1-UP
PART OF 314-3868, 381-6119 OPTION AR-HYDRAULIC
AN ATTACHMENT

SMCS-5063, 5705 **i05238933**

NOTE	REF NO	GRAPHIC REF	PART NUMBER	QTY	PART NAME 1 2 3 4 5 6 (PRODUCT LEVEL)	SEE PAGE
Y	1	1	**297-0532**	1	CONTROL GP-JOYSTICK (RH)	849
Y	2	1	**297-0533**	1	CONTROL GP-JOYSTICK (LH)	850
M	3	1	**6V-7357**	6	BOLT (M6X1X25-MM)	
	4	1	**9X-8256**	6	WASHER (6.6X12X2-MM THK)	

M - METRIC PART
Y - SEPARATE ILLUSTRATION

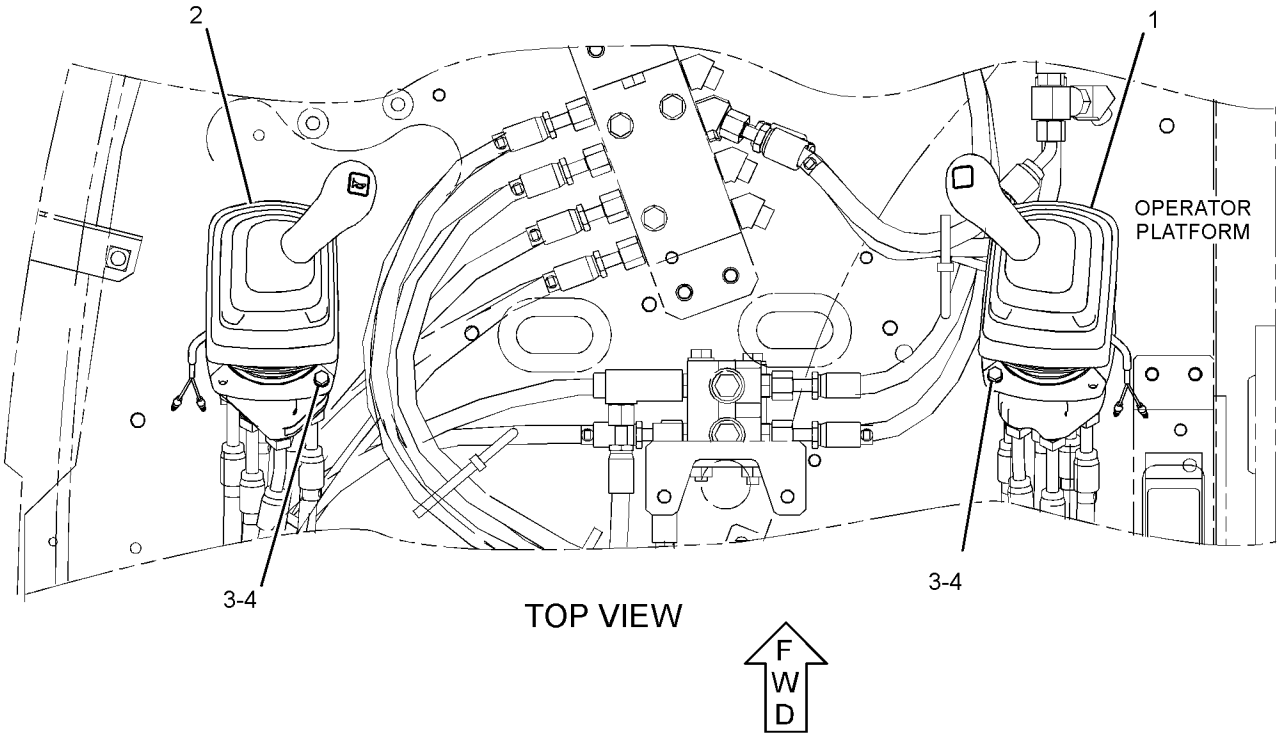

GRAPHIC #1 **<END>** g01442248

221-8884 CONTROL & MTG GP-PEDAL–LH

S/N: PBB1-UP; KBS1-UP
PART OF 255-5845 PEDAL AR-AUXILIARY
AN ATTACHMENT

SMCS-5462 **i04017543**

NOTE	REF NO	GRAPHIC REF	PART NUMBER	QTY	PART NAME 1 2 3 4 5 6 (PRODUCT LEVEL)	SEE PAGE
	1	1	**233-5260**	1	LANYARD	
	2	1	**121-1865**	1	PEDAL-RUBBER (LH)	
	3	1	**128-2173**	1	PIN	
	4	1	**153-8723**	1	PEDAL AS	
CY	5	1	**309-5808**	1	CONTROL GP-PEDAL (ELECTRIC)	853
	6	1	**227-7625**	1	SUPPORT AS	
M	7	1	**095-0735**	2	SCREW-MACHINE (M5X0.8X8-MM)	
M	8	1	**7X-2536**	2	BOLT (M8X1.25X14-MM)	
	9	1	**8T-0114**	1	PIN-SPRING	
	10	1	**8T-4121**	3	WASHER-HARD (11X21X2.5-MM THK)	
M	11	1	**8T-4136**	2	BOLT (M10X1.5X25-MM)	
M	12	1	**8T-4191**	1	BOLT (M10X1.5X16-MM)	
	13	1	**8T-4224**	2	WASHER-HARD (8.8X16X2-MM THK)	

C - CHANGE FROM PREVIOUS TYPE
M - METRIC PART
Y - SEPARATE ILLUSTRATION

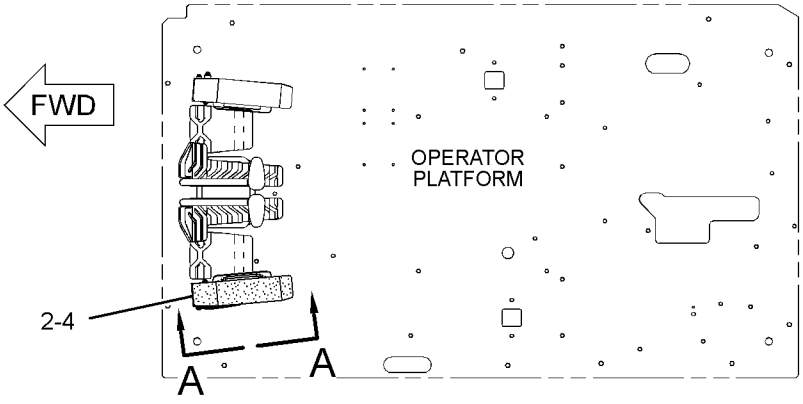

TOP VIEW

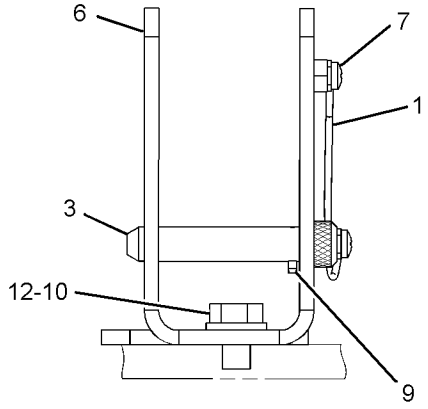

VIEW B-B

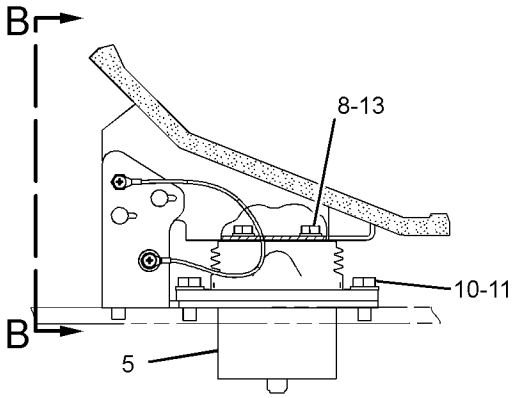

VIEW A-A

GRAPHIC #1 **<END>** g02155930

235-8969 CONTROL GP-HANDLE—JOYSTICK, LH

S/N: PBB1-UP; KBS1-UP

PART OF 297-0533 CONTROL GP-JOYSTICK

AN ATTACHMENT

SMCS-5705 **i04528508**

NOTE	REF NO	GRAPHIC REF	PART NUMBER	QTY	PART NAME 1 2 3 4 5 6 (PRODUCT LEVEL)	SEE PAGE
	1	1	**124-4010**	1	LEVER	
	2	1	**353-2149**	1	BOOT	
	3	1	**245-7842**	1	KNOB AS	
M		1	**6I-5298**	1	SCREW-TAPPING	
		1	**124-4009**	1	SHAFT	
		1	**222-0225**	1	SWITCH AS-PUSH BUTTON (HORN)	
M	4	1	**095-0735**	2	SCREW-MACHINE (M5X0.8X8-MM)	

M - METRIC PART

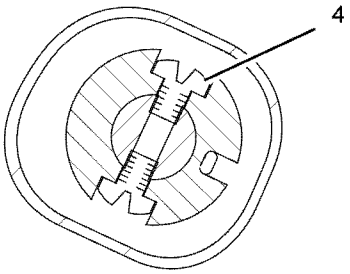

SECTION B-B

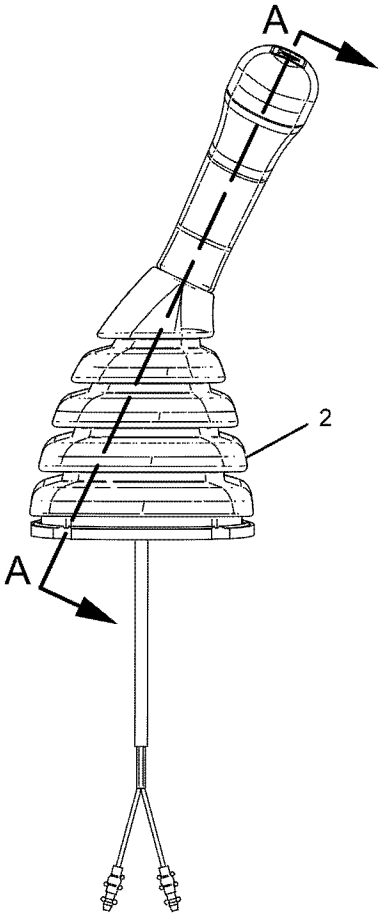

LEFT SIDE VIEW

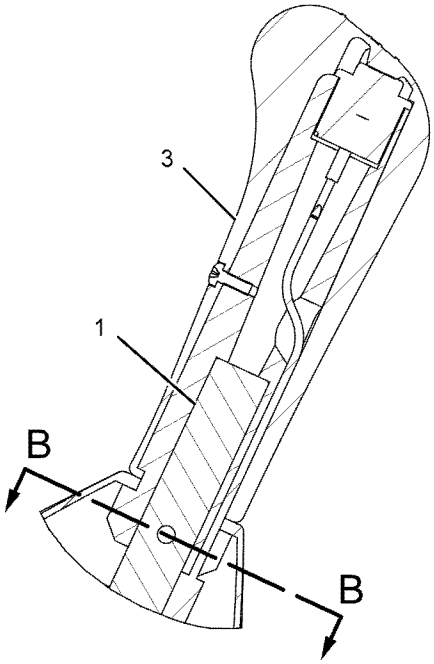

SECTION A-A

GRAPHIC #1 **<END>** g01082395

235-8970 CONTROL GP-HANDLE–JOYSTICK, RH

S/N: PBB1-UP; KBS1-UP
PART OF 297-0532 CONTROL GP-JOYSTICK
AN ATTACHMENT

SMCS-5705 **i04528520**

NOTE	REF NO	GRAPHIC REF	PART NUMBER	QTY	PART NAME 1 2 3 4 5 6 (PRODUCT LEVEL)	SEE PAGE
	1	1	**124-4010**	1	LEVER	
	2	1	**353-2150**	1	BOOT	
	3	1	**245-7844**	1	KNOB AS	
M		1	**6I-5298**	1	SCREW-TAPPING	
		1	**124-4009**	1	SHAFT	
		1	**222-0225**	1	SWITCH AS-PUSH BUTTON (MANUAL LOW IDLE)	
M	4	1	**095-0735**	2	SCREW-MACHINE (M5X0.8X8-MM)	

M - METRIC PART

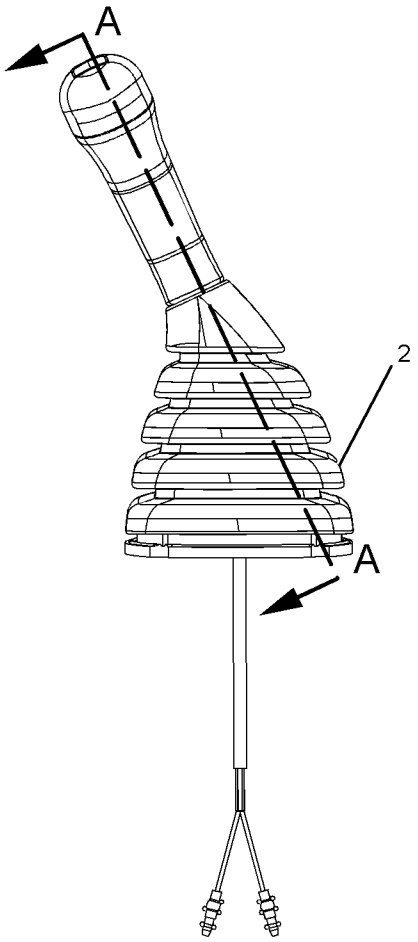

RIGHT SIDE VIEW

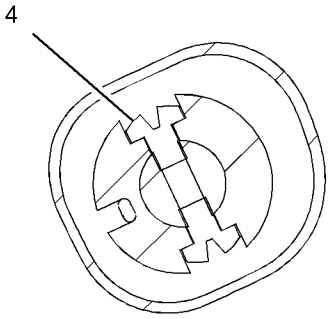

SECTION B-B

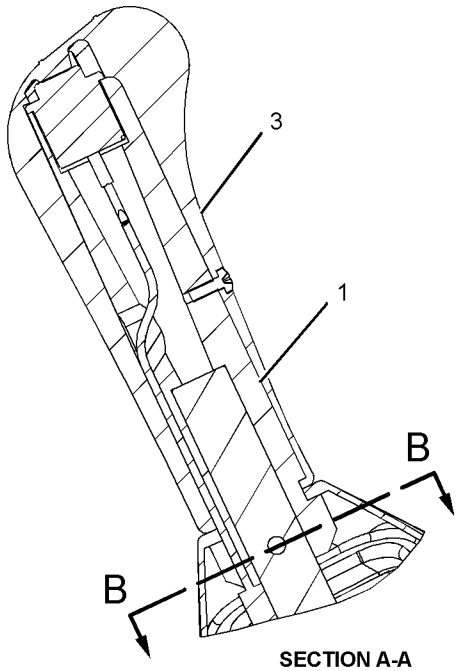

SECTION A-A

GRAPHIC #1 **<END>** g01082427

260-2109 CONTROL GP-HANDLE—JOYSTICK, RH

S/N: PBB1-UP
2-BUTTON, SLIDE, TRIGGER SW
PART OF 297-0538 CONTROL GP-JOYSTICK
AN ATTACHMENT

SMCS-5705 **i04902513**

NOTE	REF NO	GRAPHIC REF	PART NUMBER	QTY	PART NAME 1 2 3 4 5 6 (PRODUCT LEVEL)	SEE PAGE
M	1	1	**271-7843**	1	NUT (M14X2-THD)	
	2	1	**117-8683**	1	PIN-SPRING	
	3	1	**260-2111**	1	LEVER	
	4	1	**297-4589**	1	CONTROL GP-HANDLE (RH)	
		1	**247-2693**	1	RECEPTACLE AS-CONNECTOR (6-PIN)	
		1	**9X-3401**	6	PIN-CONNECTOR (16-GA TO 18-GA)	
					—OR—	
		1	**126-1767**	6	PIN-CONNECTOR (14-GA TO 16-GA)	
	5	1	**305-0332**	1	BOOT	

M - METRIC PART

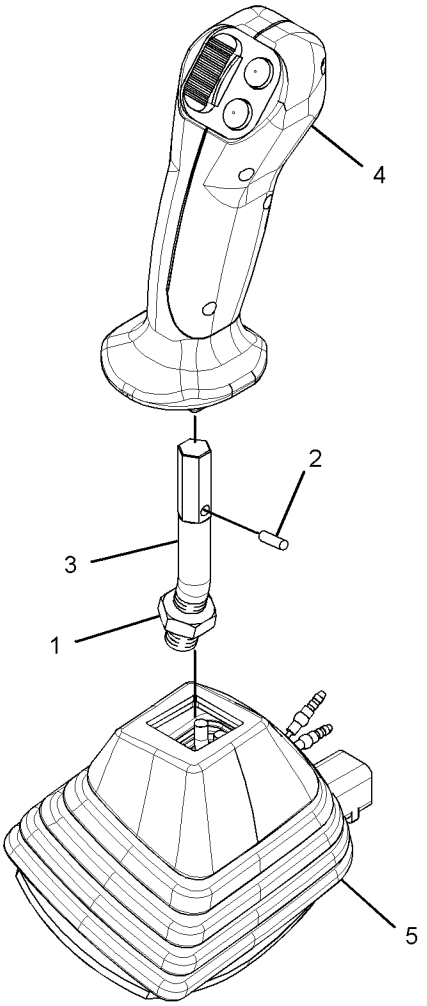

GRAPHIC #1

<END>

g03057357

260-2110 CONTROL GP-HANDLE—JOYSTICK, LH

S/N: PBB1-UP
2-BUTTON, SLIDE, TRIGGER SW
PART OF 297-0539 CONTROL GP-JOYSTICK
AN ATTACHMENT

SMCS-5705 **i03779169**

NOTE	REF NO	GRAPHIC REF	PART NUMBER	QTY	PART NAME 1 2 3 4 5 6 (PRODUCT LEVEL)	SEE PAGE
M	1	1	**271-7843**	1	NUT (M14X2-THD)	
	2	1	**117-8683**	1	PIN-SPRING	
	3	1	**260-2111**	1	LEVER	
C	4	1	**297-4590**	1	CONTROL GP-HANDLE (LH)	
		1	**9X-3401**	6	PIN-CONNECTOR (16-GA TO 18-GA)	
					-OR-	
		1	**126-1767**	6	PIN-CONNECTOR (14-GA TO 16-GA)	
		1	**247-2693**	1	RECEPTACLE AS-CONNECTOR (6-PIN)	
	5	1	**305-0331**	1	BOOT	

C - CHANGE FROM PREVIOUS TYPE
M - METRIC PART

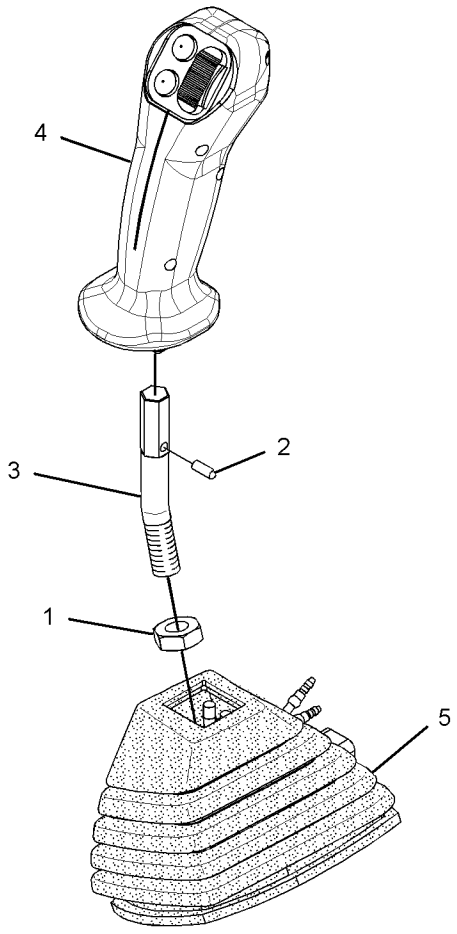

GRAPHIC #1 **<END>** g01428094

245-7846 CONTROL GP-HEAT & AIR COND–AIR INLET

S/N: PBB1-UP; KBS1-UP
PART OF 316-8916 AIR CONDITIONER GP
AN ATTACHMENT

SMCS-7309 **i05332895**

NOTE	REF NO	GRAPHIC REF	PART NUMBER	QTY	PART NAME 1 2 3 4 5 6 (PRODUCT LEVEL)	SEE PAGE
	1	1	**185-8300**	4	SCREW-TAPPING	
	2	1	**196-1666**	1	RELAY (COMPRESSOR CLUTCH)	
	2A	1	**196-1666**	1	RELAY (BLOWER)	
	3	1	**245-7813**	1	MOTOR AS	
	4	1	**245-7814**	1	BRACKET	
	5	1	**245-7815**	1	SENSOR AS-TEMPERATURE (AIR)	
	6	1	**245-7816**	1	DAMPER AS	

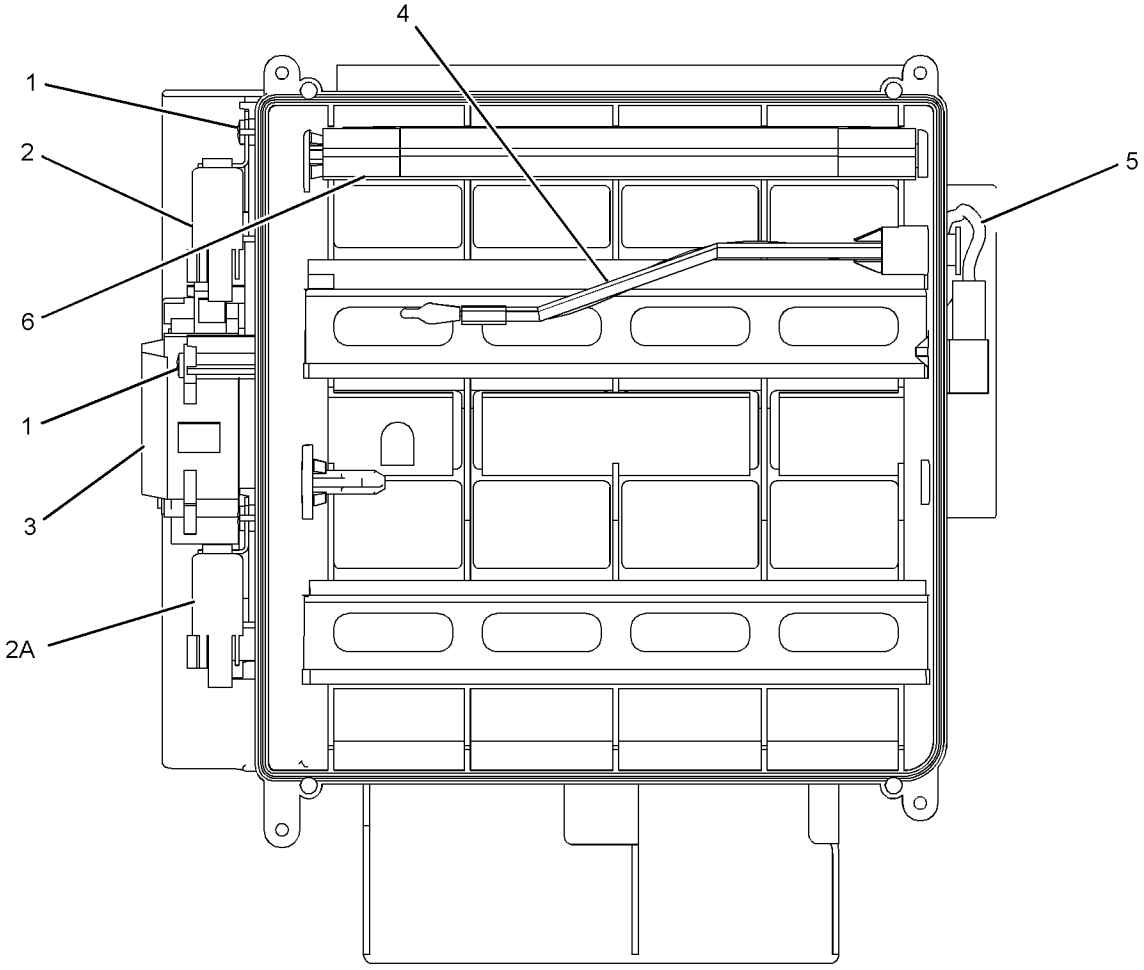

GRAPHIC #1 **<END>** g01245591

239-8693 CONTROL GP-HYDRAULIC PEDAL

S/N: PBB1-UP; KBS1-UP
PART OF 349-2211 CONTROL AR-AUXILIARY
AN ATTACHMENT

SMCS-5059, 5063 **i05346823**

NOTE	REF NO	GRAPHIC REF	PART NUMBER	QTY	PART NAME 1 2 3 4 5 6 (PRODUCT LEVEL)	SEE PAGE
	1	1	**233-5260**	1	LANYARD	
	2	1	**122-9611**	1	PEDAL-RUBBER (RH)	
	3	1	**357-3877**	1	PIN	
	4	1	**153-8762**	1	PEDAL AS	
	5	1	**153-8763**	1	SUPPORT AS	
Y	6	1	**206-3336**	1	VALVE GP-PILOT (WORK TOOL)	644
M	7	1	**095-0735**	2	SCREW-MACHINE (M5X0.8X8-MM)	
M	8	1	**7X-2536**	2	BOLT (M8X1.25X14-MM)	
	9	1	**8T-0114**	1	PIN-SPRING	
	10	1	**8T-4121**	3	WASHER-HARD (11X21X2.5-MM THK)	
M	11	1	**8T-4136**	2	BOLT (M10X1.5X25-MM)	
M	12	1	**8T-4137**	1	BOLT (M10X1.5X20-MM)	
	13	1	**8T-4224**	2	WASHER-HARD (8.8X16X2-MM THK)	

M - METRIC PART
Y - SEPARATE ILLUSTRATION

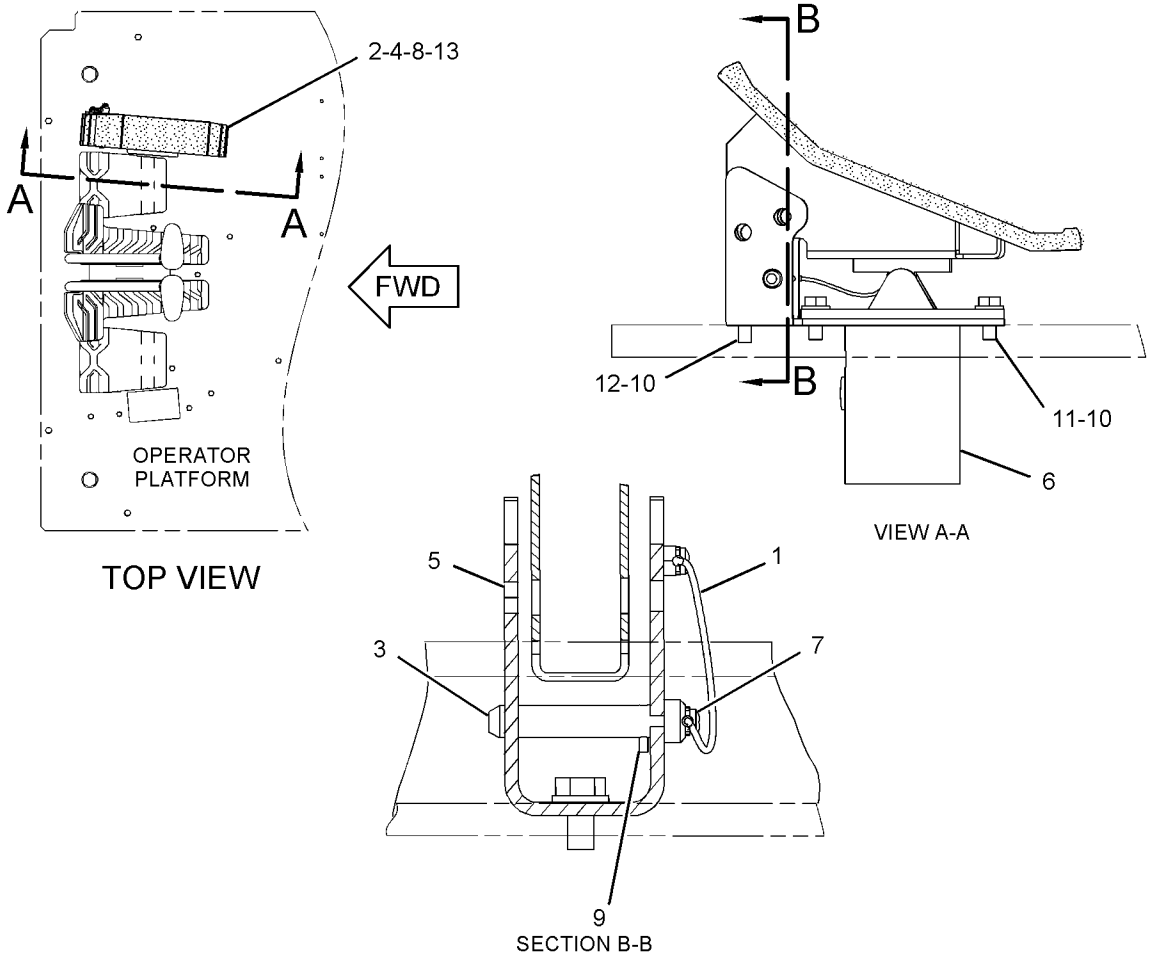

GRAPHIC #1

<END>

g02360561

239-8695 CONTROL GP-HYDRAULIC PEDAL

S/N: PBB1-UP; KBS1-UP
PART OF 349-2209 CONTROL AR-AUXILIARY
AN ATTACHMENT

SMCS-5059, 5063 **i04004185**

NOTE	REF NO	GRAPHIC REF	PART NUMBER	QTY	PART NAME 1 2 3 4 5 6 (PRODUCT LEVEL)	SEE PAGE
	1	1	**233-5260**	2	LANYARD	
	2	1	**121-1865**	1	PEDAL-RUBBER (LH)	
	3	1	**122-9611**	1	PEDAL-RUBBER (RH)	
	4	1	**357-3877**	2	PIN	
	5	1	**153-8753**	1	PEDAL AS	
	6	1	**153-8762**	1	PEDAL AS	
	7	1	**153-8763**	1	SUPPORT AS	
Y	8	1	**206-3336**	2	VALVE GP-PILOT	644
	9	1	**259-7877**	1	SUPPORT AS	
M	10	1	**095-0735**	4	SCREW-MACHINE (M5X0.8X8-MM)	
M	11	1	**7X-2536**	4	BOLT (M8X1.25X14-MM)	
	12	1	**8T-0114**	2	PIN-SPRING	
	13	1	**8T-4121**	6	WASHER-HARD (11X21X2.5-MM THK)	
M	14	1	**8T-4136**	4	BOLT (M10X1.5X25-MM)	
M	15	1	**8T-4137**	2	BOLT (M10X1.5X20-MM)	
	16	1	**8T-4224**	4	WASHER-HARD (8.8X16X2-MM THK)	

M - METRIC PART
Y - SEPARATE ILLUSTRATION

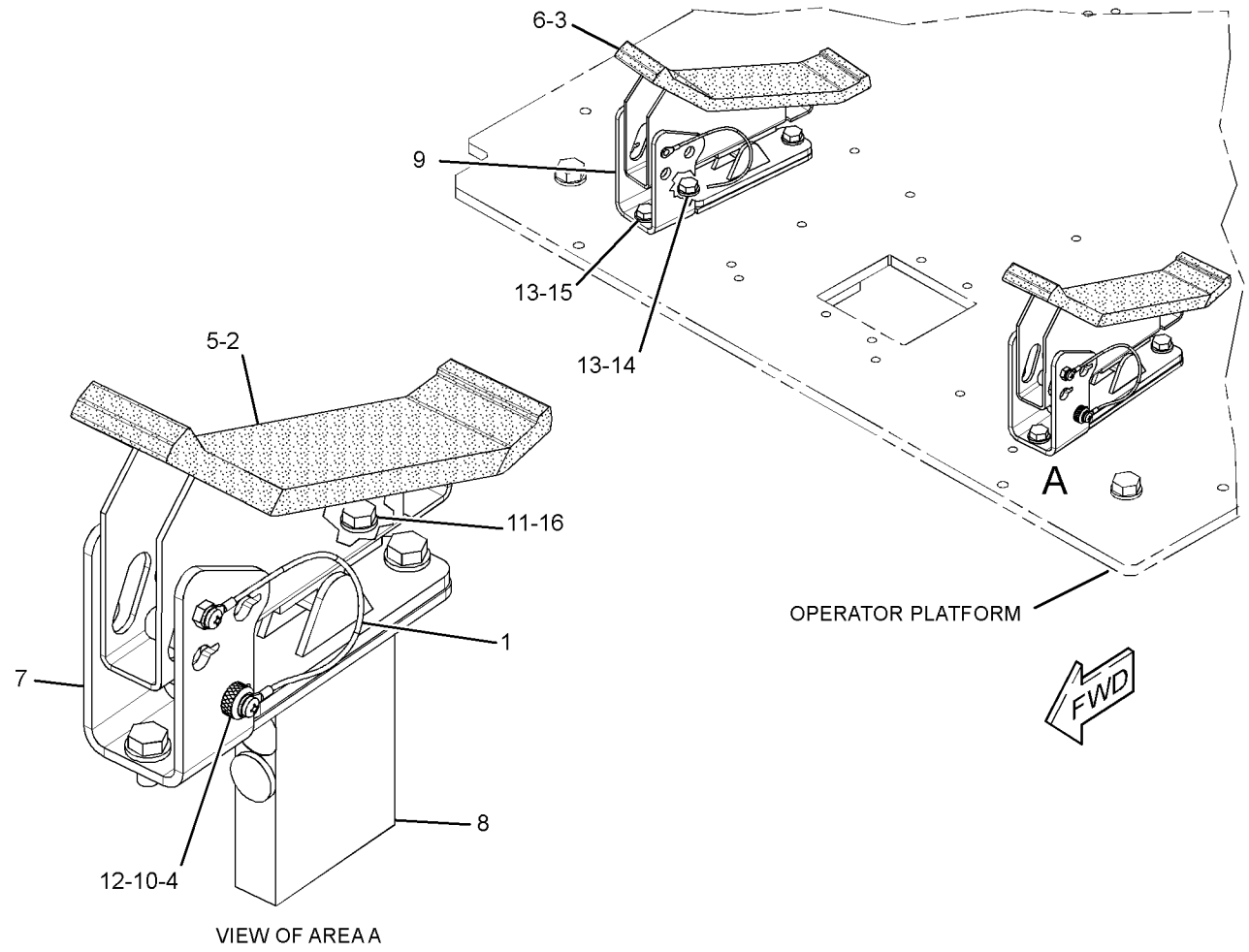

GRAPHIC #1 **<END>** g02183973

259-7179 CONTROL GP-HYDRAULIC PEDAL

S/N: PBB1-UP; KBS1-UP
PART OF 259-7178 PEDAL AR-AUXILIARY
AN ATTACHMENT

SMCS-5059, 5063

i04036157

NOTE	REF NO	GRAPHIC REF	PART NUMBER	QTY	PART NAME 1 2 3 4 5 6 (PRODUCT LEVEL)	SEE PAGE
	1	1	**233-5260**	1	LANYARD	
	2	1	**357-3877**	1	PIN	
	3	1	**135-2274**	1	PEDAL-RUBBER	
	4	1	**164-0614**	1	PEDAL AS	
	5	1	**164-0617**	1	SUPPORT AS	
Y	6	1	**206-3336**	1	VALVE GP-PILOT (THIRD PEDAL, STRAIGHT TRAVEL)	644
M	7	1	**095-0735**	2	SCREW-MACHINE (M5X0.8X8-MM)	
M	8	1	**7X-2536**	2	BOLT (M8X1.25X14-MM)	
	9	1	**8T-0114**	1	PIN-SPRING	
	10	1	**8T-4121**	3	WASHER-HARD (11X21X2.5-MM THK)	
M	11	1	**8T-4136**	2	BOLT (M10X1.5X25-MM)	
M	12	1	**8T-4191**	1	BOLT (M10X1.5X16-MM)	
	13	1	**8T-4224**	2	WASHER-HARD (8.8X16X2-MM THK)	

M - METRIC PART
Y - SEPARATE ILLUSTRATION

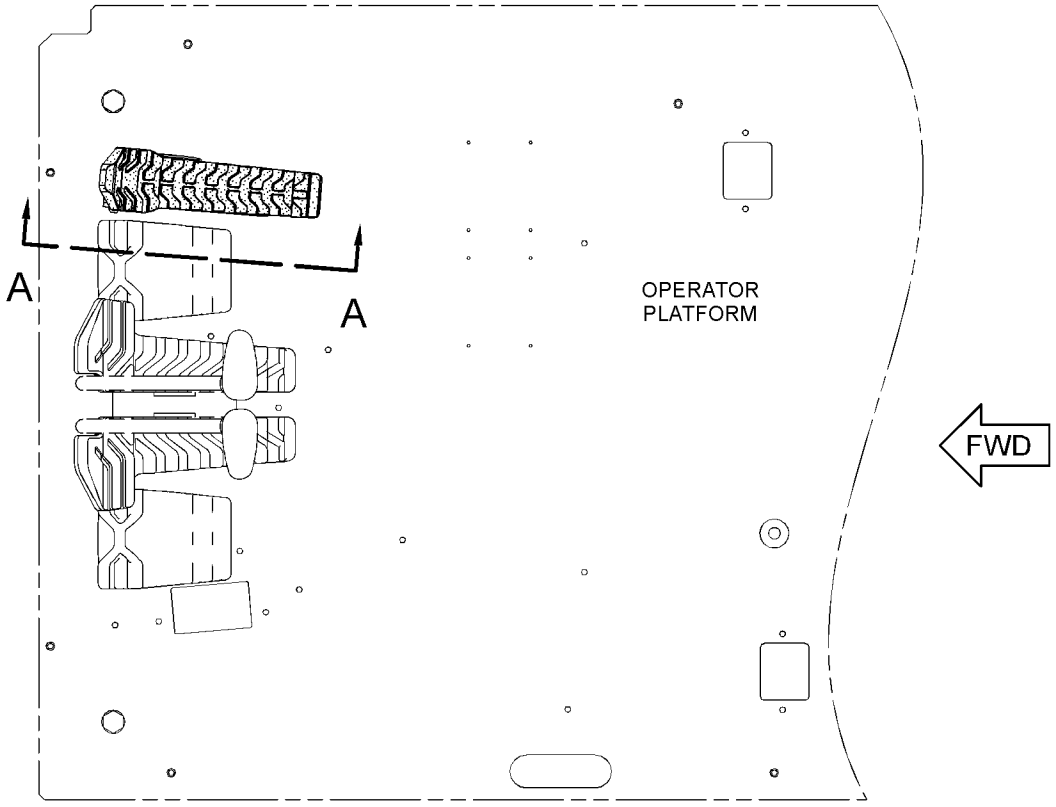

TOP VIEW

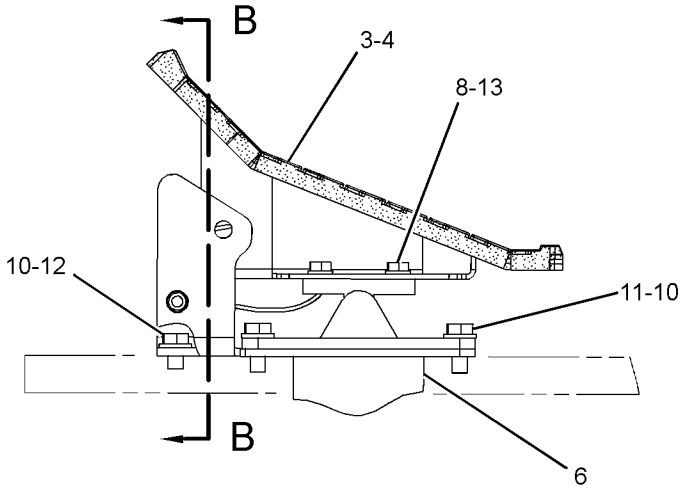

VIEW A-A

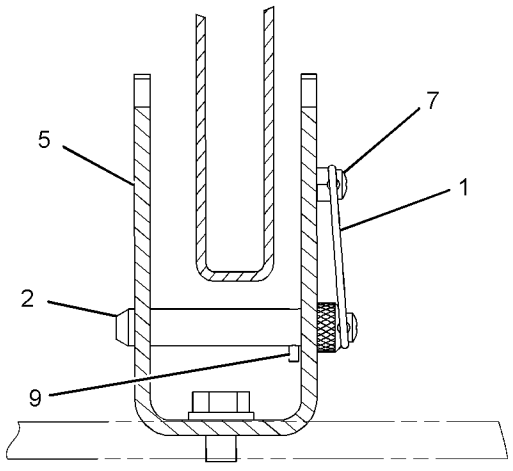

SECTION B-B

GRAPHIC #1 **<END>** g02361007

297-0532 CONTROL GP-JOYSTICK–RH

S/N: PBB1-UP; KBS1-UP
PART OF 310-0078 CONTROL & MTG GP-JOYSTICK
AN ATTACHMENT

SMCS-5705 **i04902988**

NOTE	REF NO	GRAPHIC REF	PART NUMBER	QTY	PART NAME 1 2 3 4 5 6 (PRODUCT LEVEL)	SEE PAGE
M	1	1	**271-7843**	1	NUT (M14X2-THD)	
Y	2	1	**235-8970**	1	CONTROL GP-HANDLE (JOYSTICK, RH)	841
Y	3	1	**297-0529**	1	VALVE GP-PILOT (JOYSTICK)	645
	4	1	**6K-0806**	1	STRAP-CABLE	

M - METRIC PART
Y - SEPARATE ILLUSTRATION

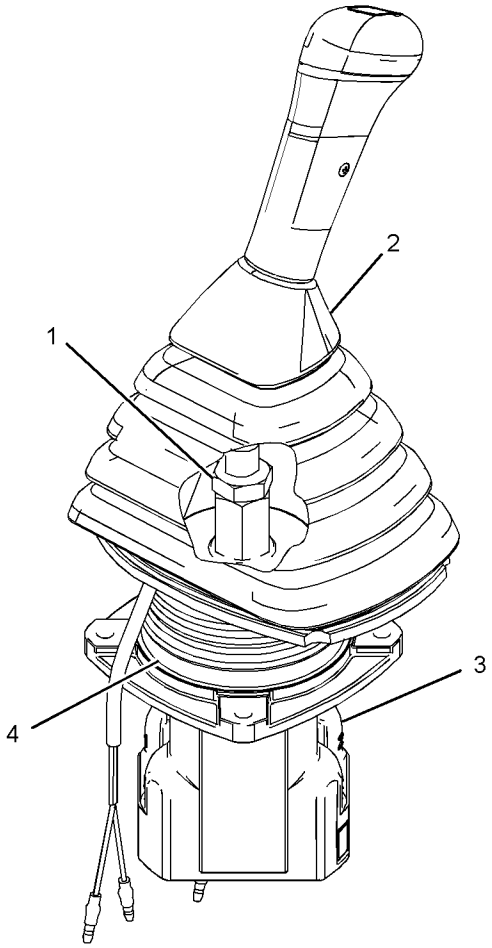

GRAPHIC #1 **<END>** g03057522

297-0533 CONTROL GP-JOYSTICK–LH

S/N: PBB1-UP; KBS1-UP
PART OF 310-0078 CONTROL & MTG GP-JOYSTICK
AN ATTACHMENT

SMCS-5705 **i04902992**

NOTE	REF NO	GRAPHIC REF	PART NUMBER	QTY	PART NAME 1 2 3 4 5 6 (PRODUCT LEVEL)	SEE PAGE
M	1	1	**271-7843**	1	NUT (M14X2-THD)	
Y	2	1	**235-8969**	1	CONTROL GP-HANDLE (JOYSTICK, LH)	839
Y	3	1	**297-0529**	1	VALVE GP-PILOT (JOYSTICK)	645
	4	1	**6K-0806**	1	STRAP-CABLE	

M - METRIC PART
Y - SEPARATE ILLUSTRATION

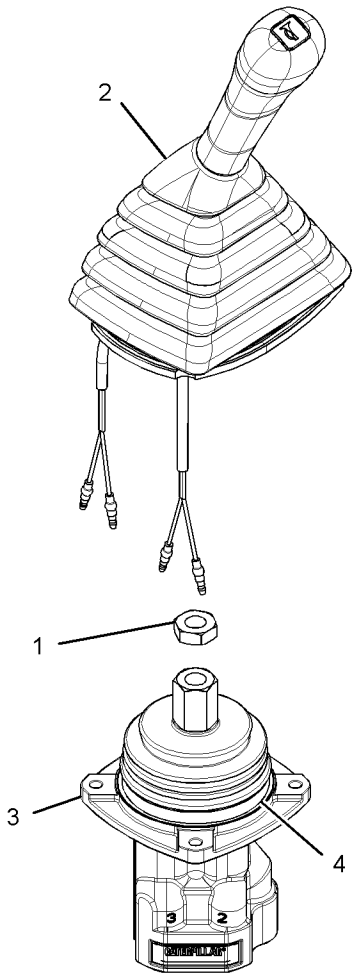

GRAPHIC #1 **<END>** g03057536

297-0538 CONTROL GP-JOYSTICK–RH

S/N: PBB1-UP
PART OF 270-5689 CONTROL & MTG GP-JOYSTICK
AN ATTACHMENT

SMCS-5705 **i04896562**

NOTE	REF NO	GRAPHIC REF	PART NUMBER	QTY	PART NAME 1 2 3 4 5 6 (PRODUCT LEVEL)	SEE PAGE
	1	1	**6K-0806**	1	STRAP-CABLE	
Y	2	1	**260-2109**	1	CONTROL GP-HANDLE (JOYSTICK, RH)	842
Y	3	1	**297-0530**	1	VALVE GP-PILOT (JOYSTICK, RH)	647

Y - SEPARATE ILLUSTRATION

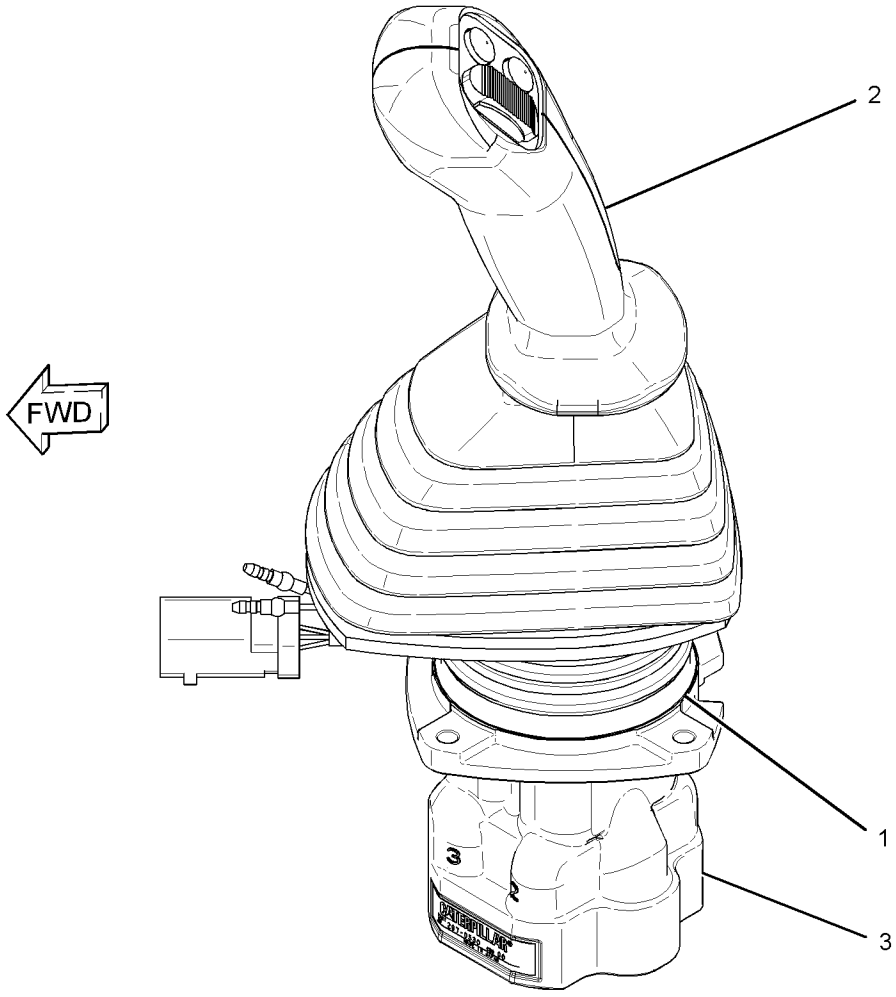

GRAPHIC #1 **<END>** g01620126

297-0539 CONTROL GP-JOYSTICK–LH

S/N: PBB1-UP

PART OF 270-5689 CONTROL & MTG GP-JOYSTICK

AN ATTACHMENT

SMCS-5705 **i04896550**

NOTE	REF NO	GRAPHIC REF	PART NUMBER	QTY	PART NAME 1 2 3 4 5 6 (PRODUCT LEVEL)	SEE PAGE
	1	1	**6K-0806**	1	STRAP-CABLE	
Y	2	1	**260-2110**	1	CONTROL GP-HANDLE (JOYSTICK, LH)	843
Y	3	1	**297-0531**	1	VALVE GP-PILOT (JOYSTICK, LH)	648

Y - SEPARATE ILLUSTRATION

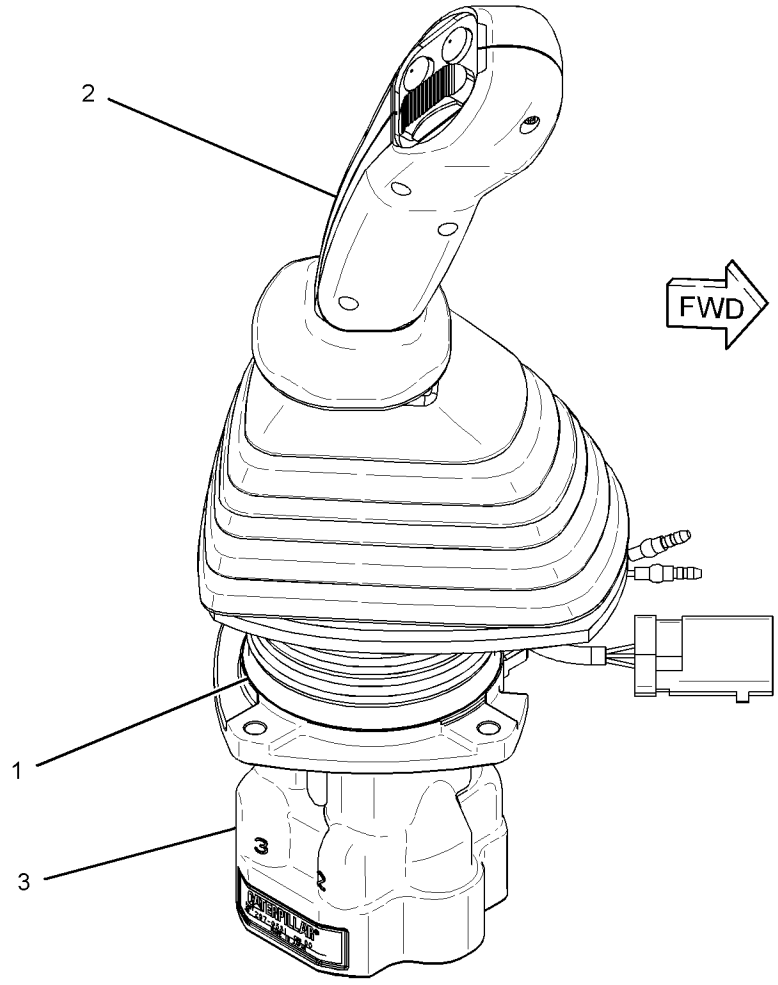

GRAPHIC #1 **<END>** g01620119

309-5808 CONTROL GP-PEDAL–ELECTRIC

S/N: PBB1-UP; KBS1-UP
PART OF 221-8884 CONTROL & MTG GP-PEDAL
AN ATTACHMENT

SMCS-1435, 5702

i02840265

NOTE	REF NO	GRAPHIC REF	PART NUMBER	QTY	PART NAME 1 2 3 4 5 6 (PRODUCT LEVEL)	SEE PAGE
	1	1	**8T-8737**	1	PLUG-SEAL	
	2	1	**9X-3401**	5	PIN-CONNECTOR (16-GA TO 18-GA)	
					–OR–	
		1	**126-1767**	5	PIN-CONNECTOR (14-GA TO 16-GA)	
	3	1	**247-2693**	1	RECEPTACLE AS-CONNECTOR (6-PIN)	
	4	1	**247-5112**	1	BOOT	

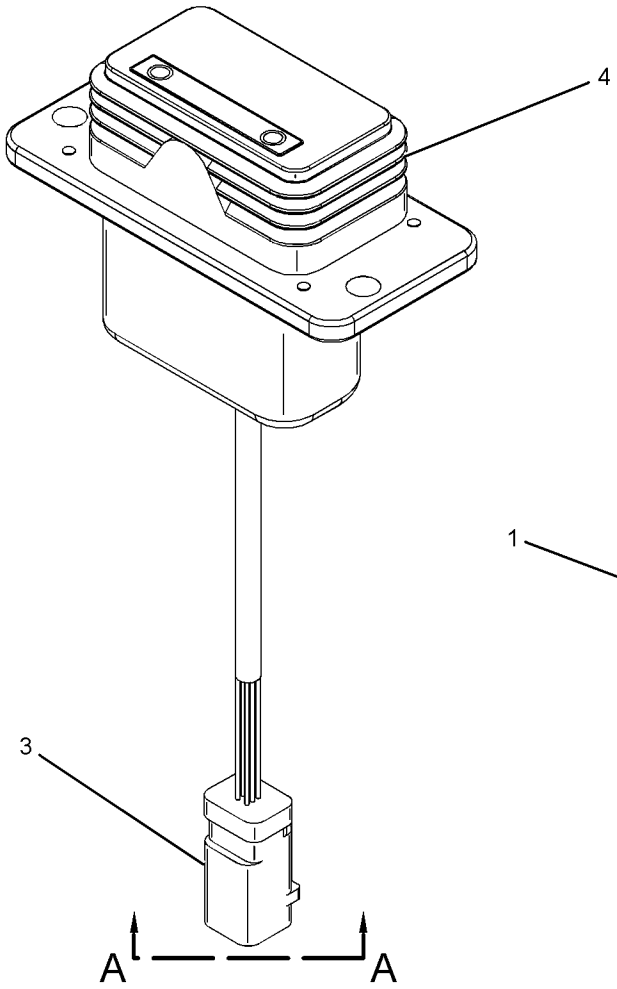

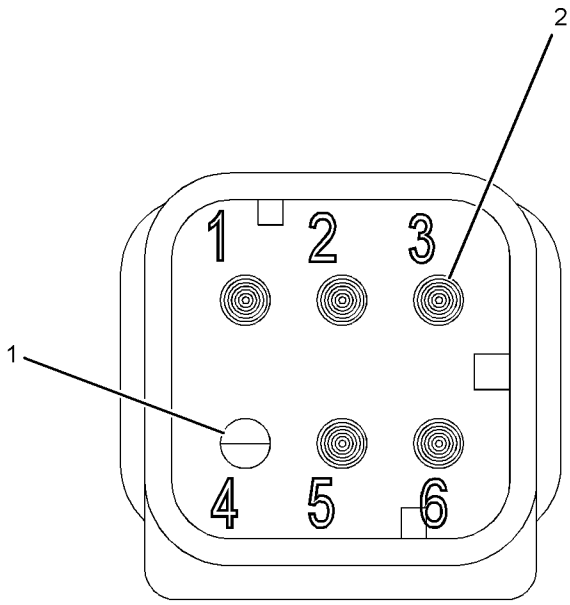

VIEW A-A

GRAPHIC #1

<END>

g01219365

170-9497 CONTROL GP-PILOT OPERATED HYD–TRAVEL

S/N: PBB1-UP; KBS1-UP

PART OF 422-0645 OPERATOR AR

SMCS-5059 **i03305845**

NOTE	REF NO	GRAPHIC REF	PART NUMBER	QTY	PART NAME 1 2 3 4 5 6 (PRODUCT LEVEL)	SEE PAGE
	1	1	**096-6166**	2	WASHER-HARD (4.5X9X1-MM THK)	
M	2	1	**095-0728**	2	SCREW-MACHINE (M4X0.7X12-MM)	
	3	1	**8T-4121**	12	WASHER-HARD (11X21X2.5-MM THK)	
M	4	1	**8T-4136**	4	BOLT (M10X1.5X25-MM)	
M	5	1	**8T-4191**	8	BOLT (M10X1.5X16-MM)	
	6	1	**142-5546**	2	KNOB	
	7	1	**117-6356**	2	STEP AS	
	8	1	**122-9610**	2	STEP	
	9	1	**170-9499**	1	LEVER AS (LH)	
	10	1	**170-9498**	1	LEVER AS (RH)	
	11	1	**122-9608**	1	PEDAL-RUBBER (RH)	
	12	1	**117-6350**	1	PEDAL AS (RH)	
	13	1	**122-9609**	1	PEDAL-RUBBER (LH)	
	14	1	**117-6349**	1	PEDAL AS (LH)	

M - METRIC PART

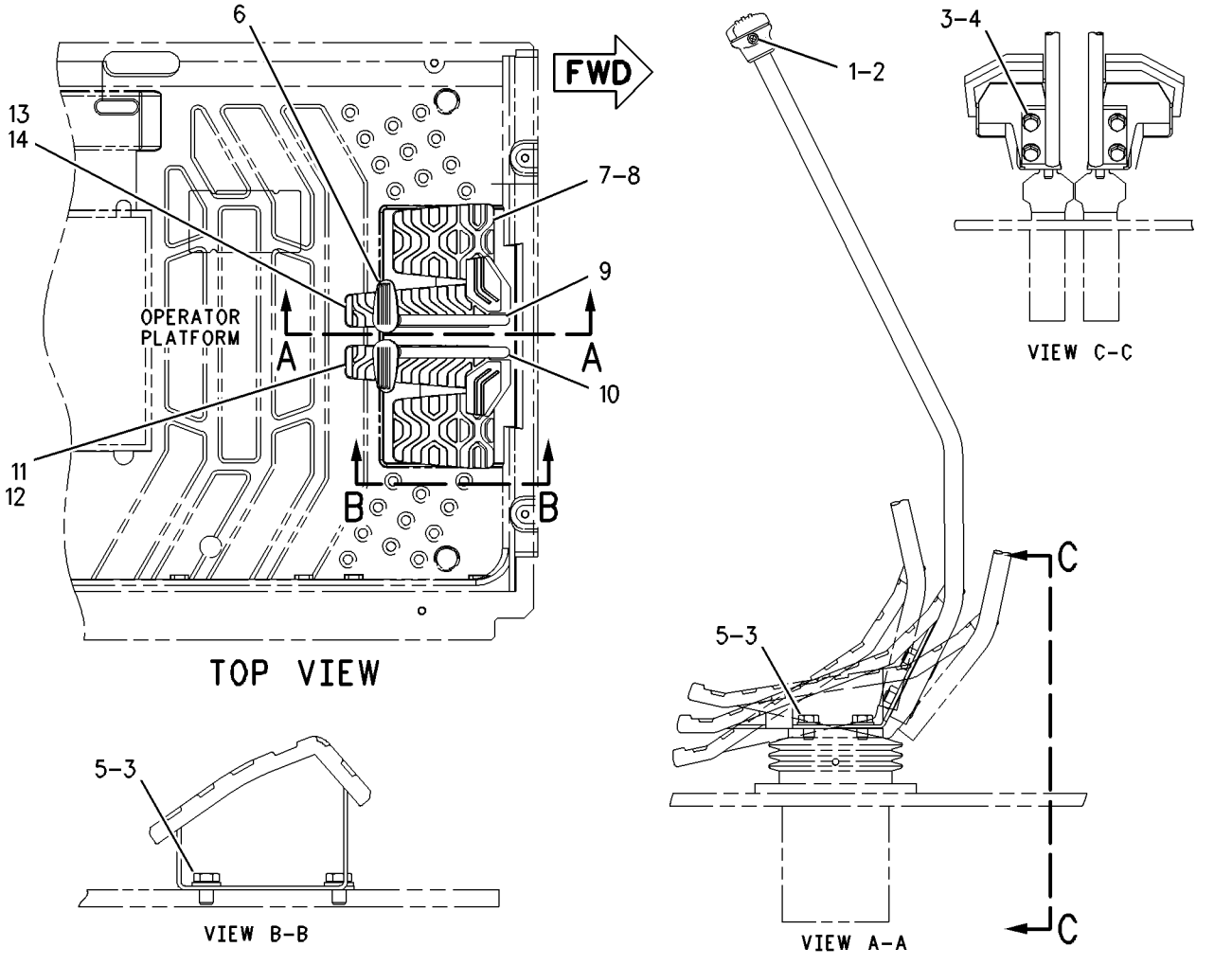

GRAPHIC #1 **<END>** g00672963

234-6501 COVER GP-CAB–REAR

S/N: PBB1-UP; KBS1-UP
PART OF 388-0026, 399-0055, 399-0056, 416-9606, 424-5480 CAB GP
AN ATTACHMENT

SMCS-7301, 7308

i05349686

NOTE	REF NO	GRAPHIC REF	PART NUMBER	QTY	PART NAME 1 2 3 4 5 6 (PRODUCT LEVEL)	SEE PAGE
	1	1	**234-6499**	1	COVER AS	
	2	1	**234-6502**	1	COVER-ACCESS (FUSE-REAR PANEL)	
	3	1	**234-6593**	2	FASTENER	
					USE WITH COVER WITH A 9-MM DIAMETER UPPER MOUNTING HOLE	
					–OR–	
		1	**245-7929**	2	CLIP	
					USE WITH COVER WITH A 7.6-MM DIAMETER UPPER MOUNTING HOLE	

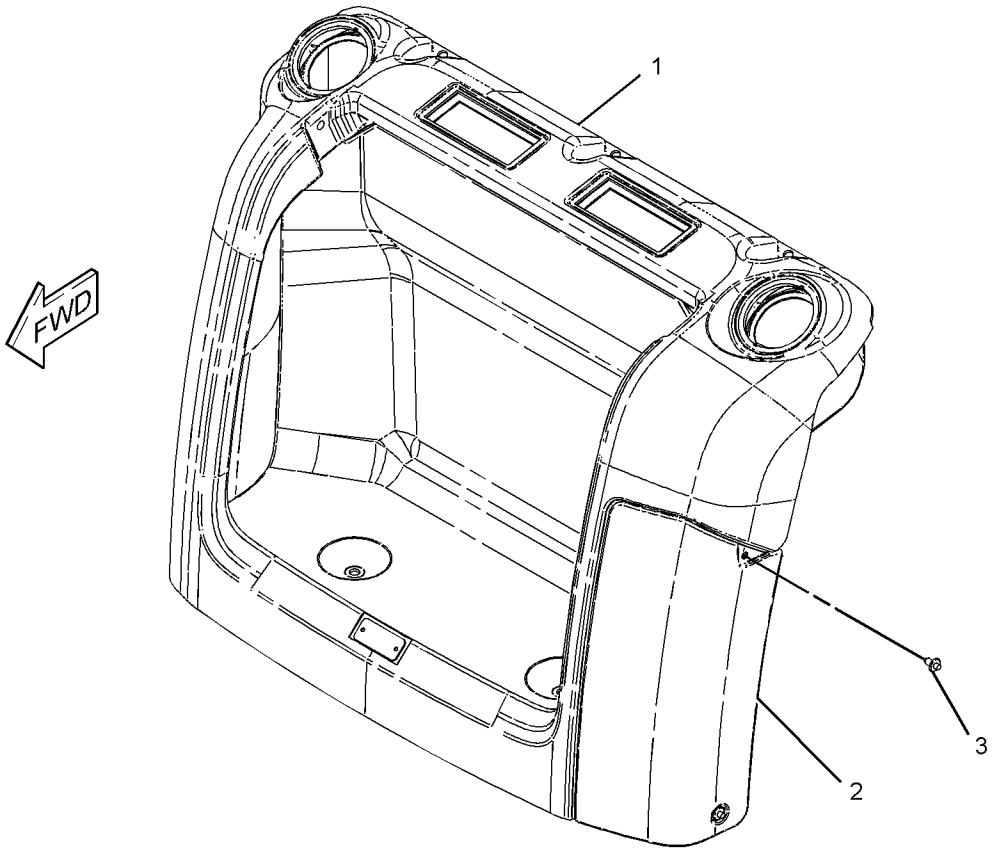

GRAPHIC #1

<END>

g03389225

234-6500 COVER GP-STORAGE

S/N: PBB1-UP; KBS1-UP
USED ON STORAGE COMPARTMENT INSIDE CAB
AN ATTACHMENT

SMCS-7268 **i05238918**

NOTE	REF NO	GRAPHIC REF	PART NUMBER	QTY	PART NAME 1 2 3 4 5 6 (PRODUCT LEVEL)	SEE PAGE
					(NO SERVICED PARTS)	

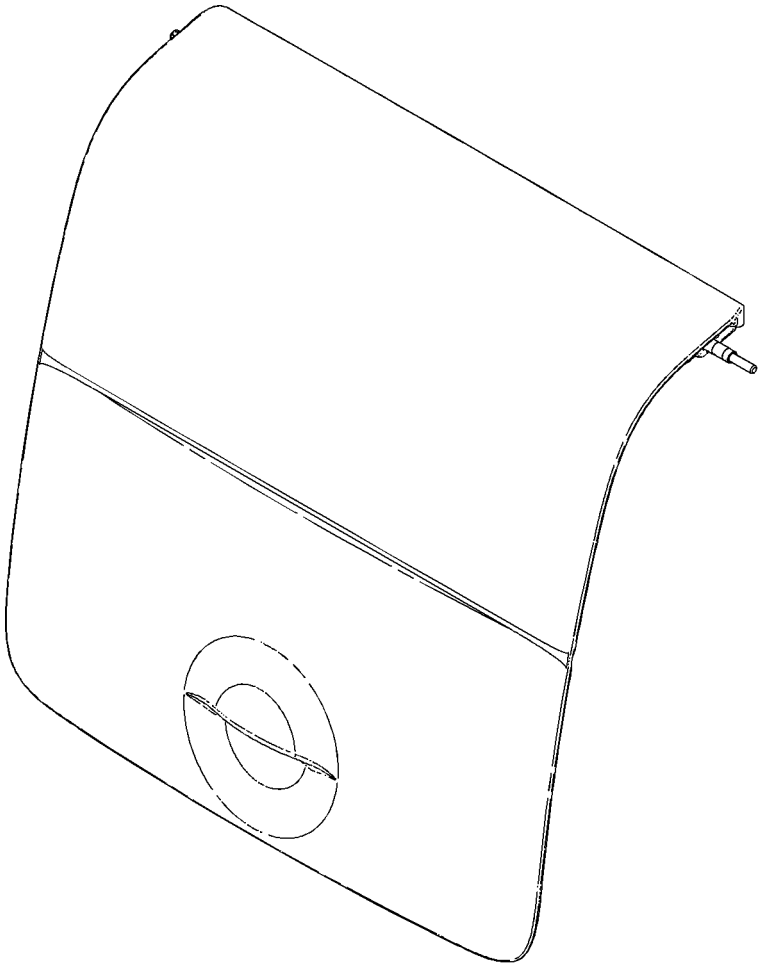

GRAPHIC #1 **<END>** g01092876

316-6166 DOOR & MTG GP-CAB

S/N: PBB1-UP; KBS1-UP
PART OF 388-0065, 399-0057, 399-0058 CAB GP
AN ATTACHMENT

SMCS-7308 **i04903015**

NOTE	REF NO	GRAPHIC REF	PART NUMBER	QTY	PART NAME 1 2 3 4 5 6 (PRODUCT LEVEL)	SEE PAGE
Y	1	1	**307-1818**	1	DOOR GP-CAB	859
	2	1	*151-6767*	1	DOOR AS	
	2A	1	**151-6777**	2	HINGE	
M		1	**9X-2041**	6	SCREW-TRUSS HEAD (M10X1.5X20-MM)	

M - METRIC PART
Y - SEPARATE ILLUSTRATION

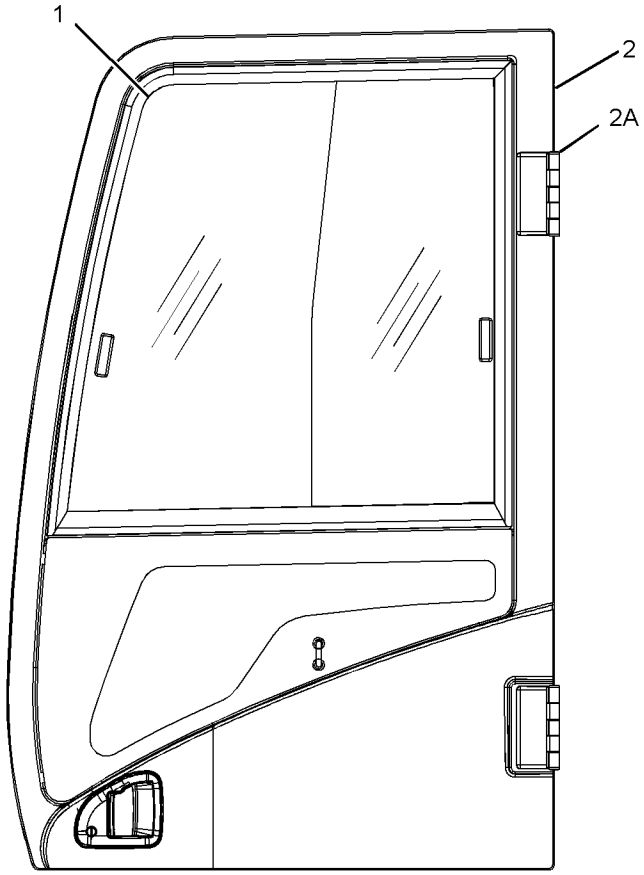

LEFT SIDE VIEW

GRAPHIC #1 **<END>** g03057538

388-9115 DOOR & MTG GP-CAB

S/N: PBB1-UP; KBS1-UP
PART OF 416-9607, 424-5477 CAB GP
AN ATTACHMENT

SMCS-7308 **i05397420**

NOTE	REF NO	GRAPHIC REF	PART NUMBER	QTY	PART NAME 1 2 3 4 5 6 (PRODUCT LEVEL)	SEE PAGE
Y	1	1	*307-1818*	1	DOOR GP-CAB	859
	2	1	*420-3151*	1	DOOR & MTG GP-CAB	
M	2A	1	**9X-2041**	6	SCREW-TRUSS HEAD (M10X1.5X20-MM)	
	2B	1	**425-7079**	1	PANEL AS-DOOR	
	2C	1	**436-1901**	2	HINGE	

M - METRIC PART
Y - SEPARATE ILLUSTRATION

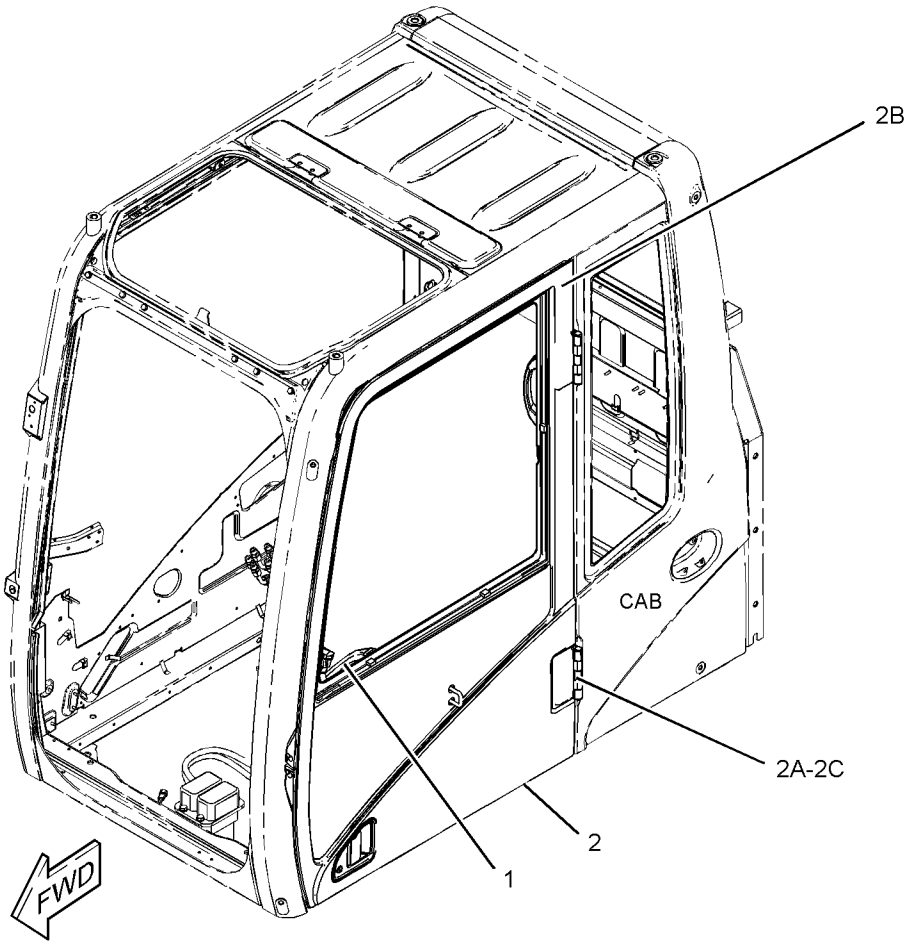

GRAPHIC #1 **<END>** g03411276

307-1818 DOOR GP-CAB

S/N: PBB1-UP; KBS1-UP

PART OF 399-0057 CAB GP, 316-6166, 388-9115 DOOR & MTG GP-CAB

AN ATTACHMENT

SMCS-7308 **i05343738**

NOTE	REF NO	GRAPHIC REF	PART NUMBER	QTY	PART NAME 1 2 3 4 5 6 (PRODUCT LEVEL)	SEE PAGE
	1	1	**151-6703**	1	HANDLE-PULL	
	2	1	**151-6704**	2	CAP	
Y	3	1	**151-6792**	1	WINDOW GP-DOOR	959
	4	1	**156-6471**	1	GLASS	
	5	1	**156-6598**	1	HOOK	
	6	1	**156-6600**	1	LOCK AS	
		1	**164-0514**	1	CLIP	
	6A	1	**164-0519**	1	CLIP	
	7	1	**156-6643**	2	COVER	
	8	1	**156-6645**	1	HANDLE AS	
		1	**201-4391**	1	CLIP	
	9	1	**161-3639**	1	HANDLE AS	
	10	1	**161-3650**	1	COVER AS	
	11	1	**161-3663**	1	SEAL AS	
		1	**151-9497**	45	CLIP	
	12	1	**161-3665**	1	SEAL	
	13	1	**164-0515**	1	JOINT	
	14	1	**167-7039**	1	GROMMET	
M	15	1	**185-8180**	3	SCREW (M6X1X16-MM)	
	16	1	**8T-4224**	2	WASHER-HARD (8.8X16X2-MM THK)	
	17	1	**259-7354**	1	COVER	
M	18	1	**096-2622**	2	SCREW-MACHINE (M4X0.7X8-MM)	
M	19	1	**096-3884**	2	NUT-SPRING (M8X1.25-THD)	
M	20	1	**101-8899**	2	SCREW AS (M6X1.0X16-MM)	
M	21	1	**101-8900**	2	SCREW AS (M6X1X20-MM)	
	22	1	**151-9461**	4	SPACER	
	23	1	**178-5573**	4	SPACER	
	24	1	**178-5574**	2	SPACER	
	25	1	**189-2690**	1	HANDLE	
	26	1	**4I-4286**	1	KNOB	
M	27	1	**9X-2042**	8	SCREW-TRUSS HEAD (M6X1X12-MM)	

M - METRIC PART
Y - SEPARATE ILLUSTRATION

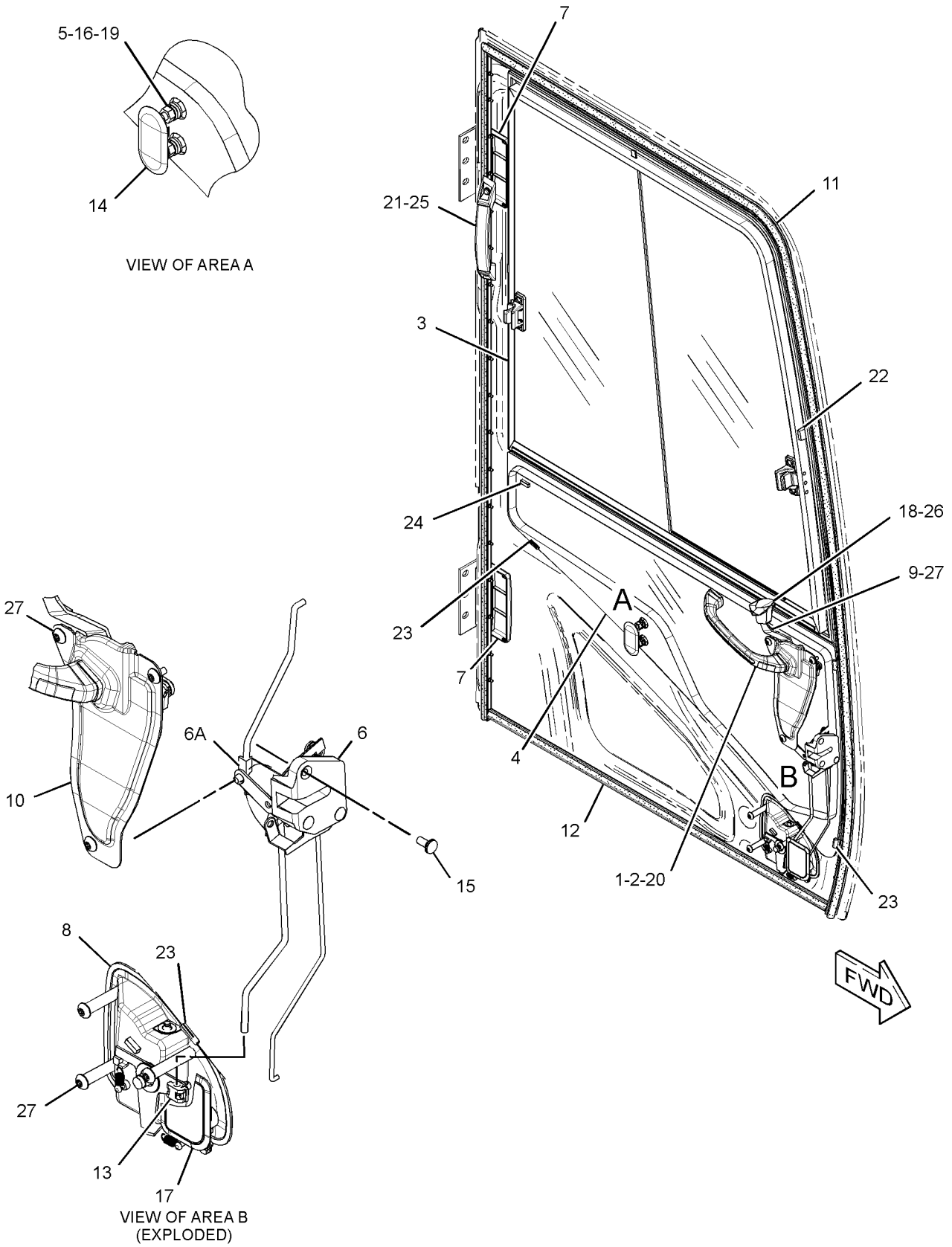

GRAPHIC #1 **<END>** g02178270

388-9105 DOOR GP-CAB

S/N: PBB1-UP; KBS1-UP
PART OF 388-0065, 416-9607, 424-5477 CAB GP
AN ATTACHMENT

SMCS-7308 **i05437231**

NOTE	REF NO	GRAPHIC REF	PART NUMBER	QTY	PART NAME 1 2 3 4 5 6 (PRODUCT LEVEL)	SEE PAGE
	1	1	**151-6703**	1	HANDLE-PULL	
	2	1	**151-6704**	2	CAP	
Y	3	1	**384-6533**	1	WINDOW GP-DOOR	961
	4	1	**383-6933**	1	GLASS	
	5	1	**156-6598**	1	HOOK	
	6	1	**398-7107**	1	LOCK AS	
	6A	1	**398-7105**	1	CLIP	
		1	**398-7105**	1	CLIP	
	7	1	**156-6643**	2	COVER	
	8	1	**398-7111**	1	HANDLE AS	
		1	**398-7106**	1	CLIP	
	9	1	**161-3639**	1	HANDLE AS	
	10	1	**161-3650**	1	COVER AS	
	11	1	**161-3663**	1	SEAL AS	
		1	**151-9497**	45	CLIP	
	12	1	**161-3665**	1	SEAL	
	13	1	**164-0515**	1	JOINT	
	14	1	**167-7039**	1	GROMMET	
M	15	1	**185-8180**	3	SCREW (M6X1X16-MM)	
	16	1	**8T-4224**	2	WASHER-HARD (8.8X16X2-MM THK)	
	17	1	**259-7354**	1	COVER	
M	18	1	**096-2622**	2	SCREW-MACHINE (M4X0.7X8-MM)	
M	19	1	**096-3884**	2	NUT-SPRING (M8X1.25-THD)	
M	20	1	**101-8899**	2	SCREW AS (M6X1.0X16-MM)	
M	21	1	**101-8900**	2	SCREW AS (M6X1X20-MM)	
	22	1	**151-9461**	4	SPACER	
	23	1	**178-5573**	4	SPACER	
	24	1	**178-5574**	3	SPACER	
	25	1	**189-2690**	1	HANDLE	
	26	1	**4I-4286**	1	KNOB (HANDLE)	
M	27	1	**9X-2042**	8	SCREW-TRUSS HEAD (M6X1X12-MM)	

M - METRIC PART
Y - SEPARATE ILLUSTRATION

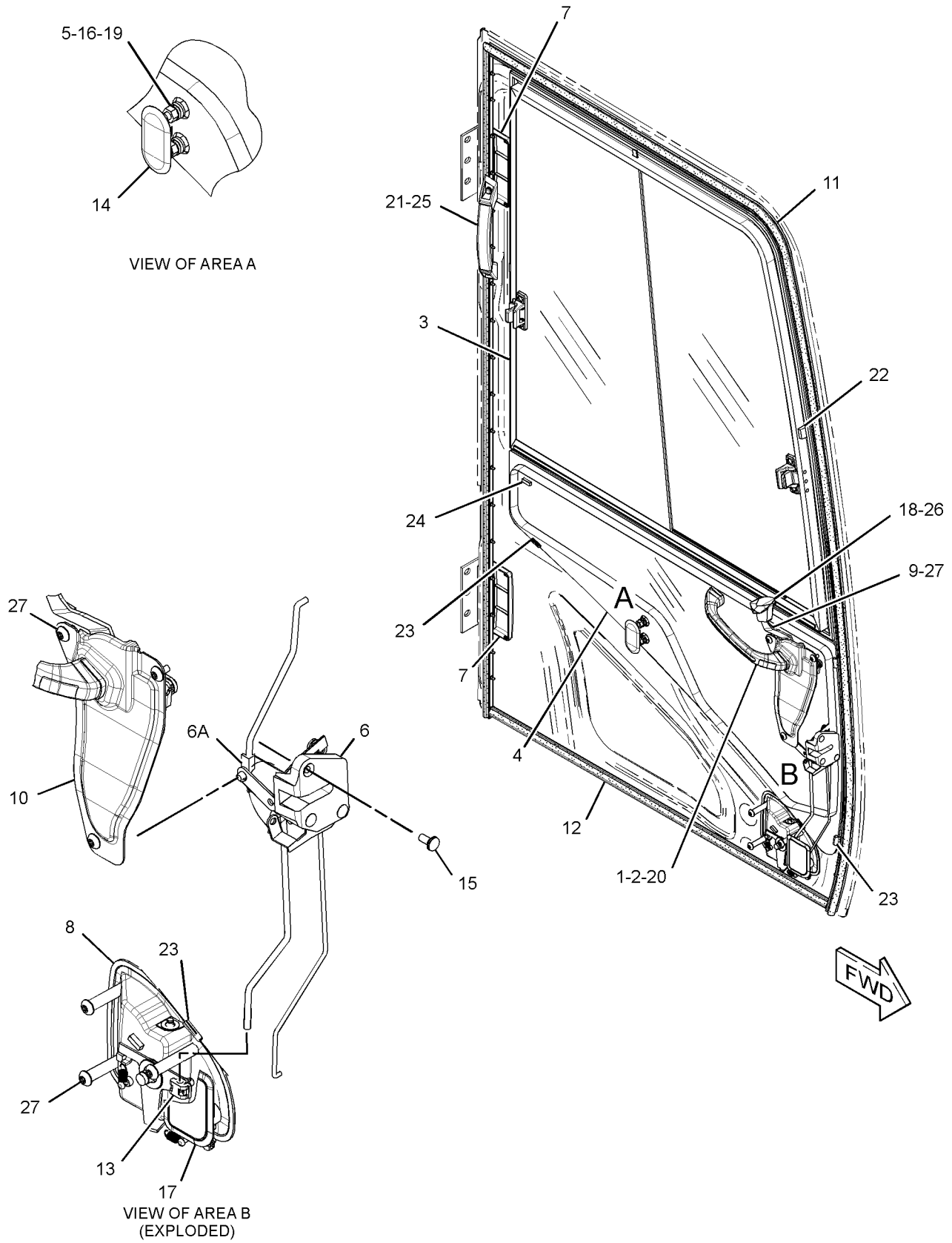

GRAPHIC #1 **<END>** g02178270

229-9082 DUCT GP-CAB AIR

S/N: PBB1-UP; KBS1-UP
PART OF 418-9897 AIR CONDITIONER AR
AN ATTACHMENT

SMCS-734D **i04564619**

NOTE	REF NO	GRAPHIC REF	PART NUMBER	QTY	PART NAME 1 2 3 4 5 6 (PRODUCT LEVEL)	SEE PAGE
	1	1	**293-1183**	1	FILTER GP-CAB AIR	
		1	**293-1184**	1	FILTER ELEMENT-CAB AIR	
	2	1	**235-8876**	1	DUCT AS (FRESH AIR, UPPER)	
		1	**245-7872**	1	INSULATOR	
	3	1	**235-8877**	1	DUCT AS (VENT, REAR)	
		1	**245-7792**	1	INSULATOR	
	4	1	**235-8878**	1	DUCT AS (VENT, FRONT)	
		1	**245-7793**	1	INSULATOR	
	5	1	**235-8879**	1	DUCT AS (FLOOR)	
		1	**245-7873**	1	INSULATOR	
	6	1	**240-5074**	1	DUCT AS (FRESH AIR, LOWER)	
		1	**245-7791**	1	INSULATOR	
M	7	1	**101-8899**	2	SCREW AS (M6X1.0X16-MM)	
	8	1	**176-1996**	5	CLIP	

M - METRIC PART

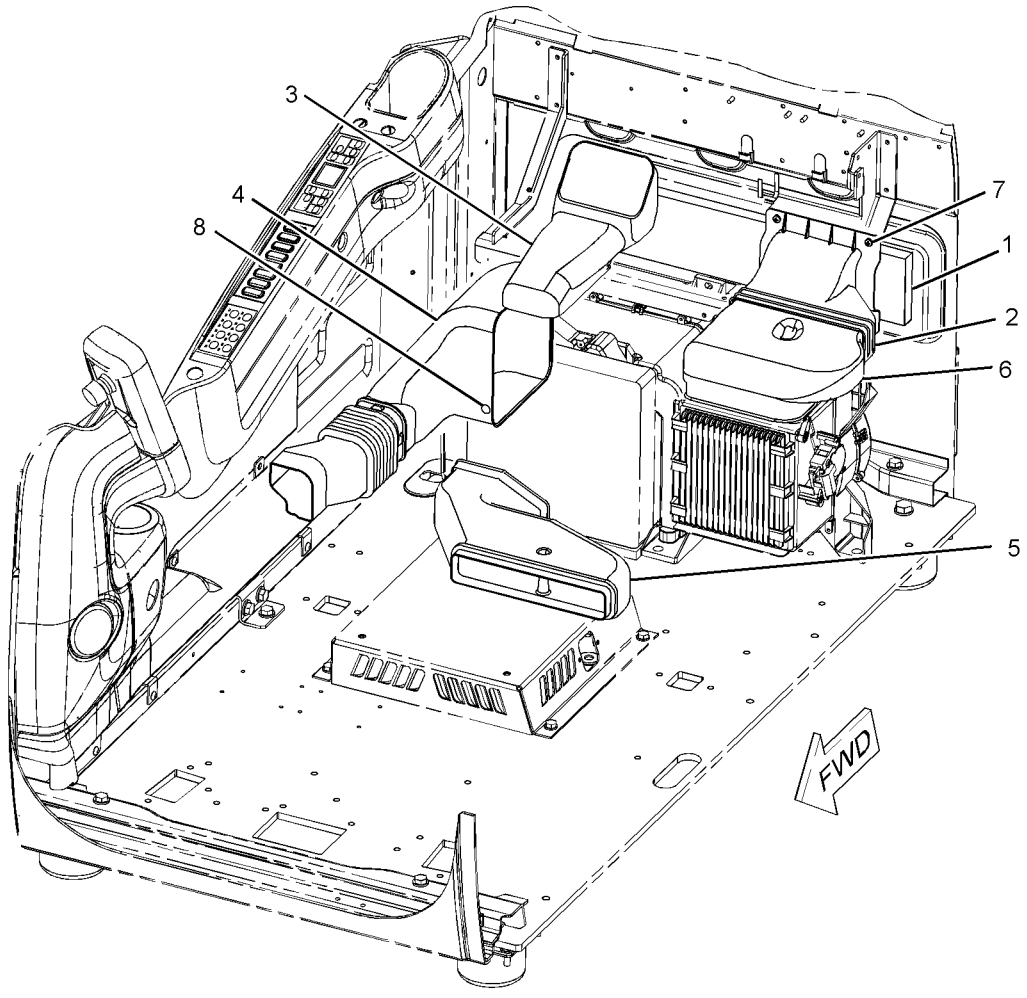

GRAPHIC #1 **<END>** g01126665

240-5071 FLOOR MAT

S/N: PBB1-UP; KBS1-UP

FIELD REPLACEMENT FOR 293-1168—PAGE: 868: FOR 240-5073—PAGE: 865: FOR 245-7796—PAGE: 867: FOR 305-0326—PAGE: 869: FOR 245-7794—PAGE: 866

AN ATTACHMENT

SMCS-726M **i05229552**

NOTE	REF NO	GRAPHIC REF	PART NUMBER	QTY	PART NAME 1 2 3 4 5 6 (PRODUCT LEVEL)	SEE PAGE
(NO SERVICED PARTS)						

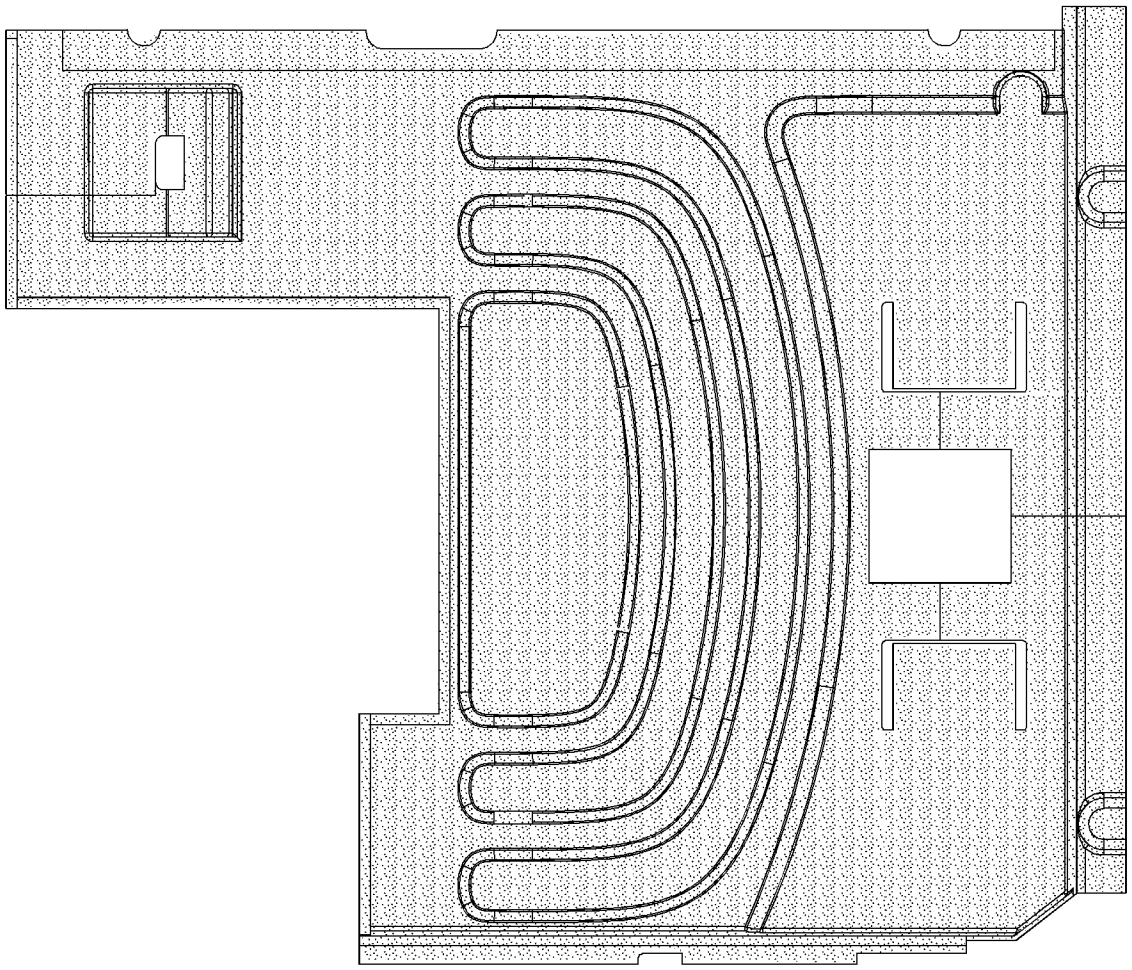

GRAPHIC #1 **<END>** g03057558

240-5073 FLOOR MAT

S/N: PBB1-UP; KBS1-UP
FIELD REPLACEMENT ORDER 240-5071–PAGE: 864
AN ATTACHMENT

SMCS-726M **i05214770**

NOTE	REF NO	GRAPHIC REF	PART NUMBER	QTY	PART NAME 1 2 3 4 5 6 (PRODUCT LEVEL)	SEE PAGE
					(NO SERVICED PARTS)	

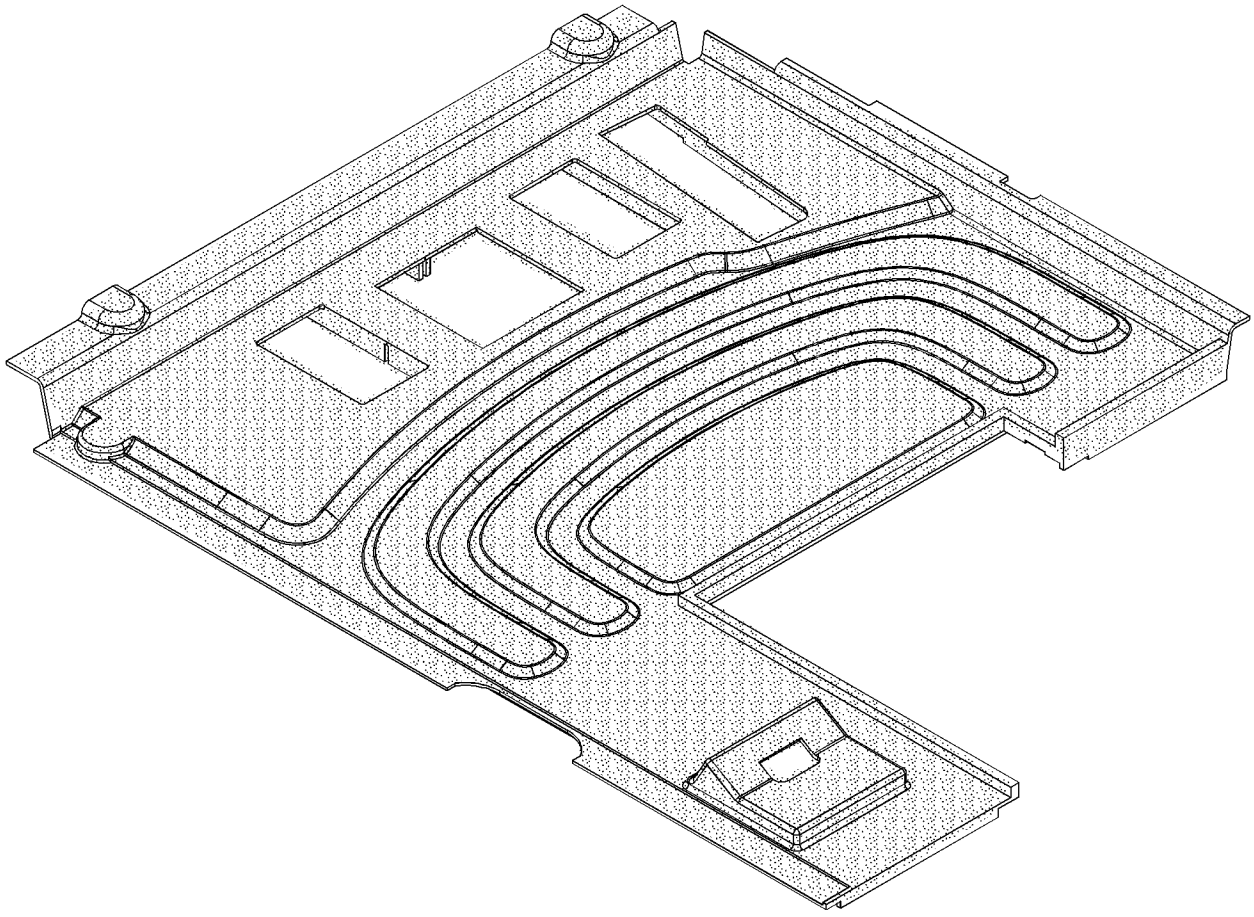

GRAPHIC #1 **<END>** g03060316

OPERATOR STATION

245-7794 FLOOR MAT

S/N: PBB1-UP; KBS1-UP
FIELD REPLACEMENT ORDER 240-5071—PAGE: 864
AN ATTACHMENT

SMCS-726M **i05222330**

NOTE	REF NO	GRAPHIC REF	PART NUMBER	QTY	PART NAME 1 2 3 4 5 6 (PRODUCT LEVEL)	SEE PAGE
					(NO SERVICED PARTS)	

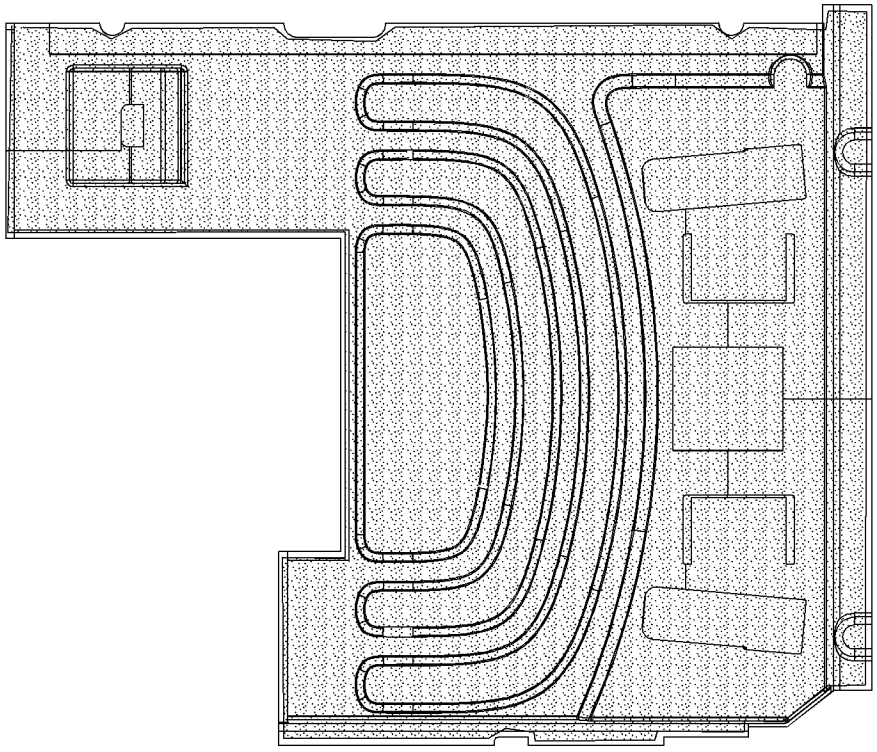

TOP VIEW

GRAPHIC #1 **<END>** g03057560

OPERATOR STATION

245-7796 FLOOR MAT

S/N: PBB1-UP; KBS1-UP
FIELD REPLACEMENT ORDER 240-5071—PAGE: 864
AN ATTACHMENT

SMCS-726M **i05222331**

NOTE	REF NO	GRAPHIC REF	PART NUMBER	QTY	PART NAME 1 2 3 4 5 6 (PRODUCT LEVEL)	SEE PAGE
					(NO SERVICED PARTS)	

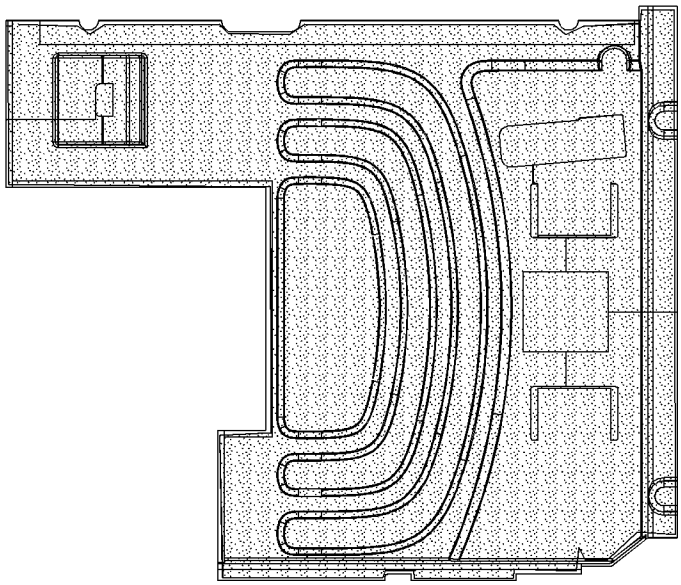

TOP VIEW

GRAPHIC #1 **<END>** g03057572

293-1168 FLOOR MAT

S/N: PBB1-UP; KBS1-UP
FIELD REPLACEMENT ORDER 240-5071—PAGE: 864
AN ATTACHMENT

SMCS-726M **i04903787**

NOTE	REF NO	GRAPHIC REF	PART NUMBER	QTY	PART NAME 1 2 3 4 5 6 (PRODUCT LEVEL)	SEE PAGE
(NO SERVICED PARTS)						

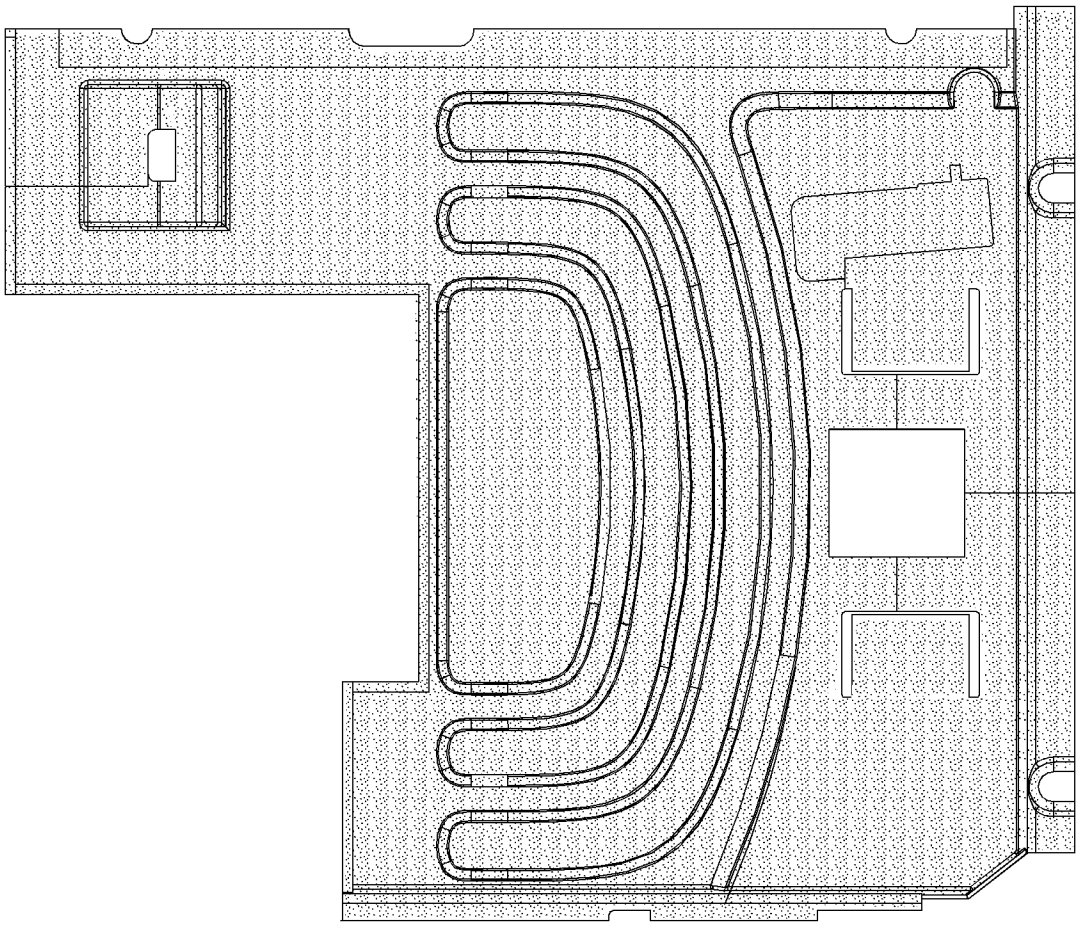

TOP VIEW

GRAPHIC #1 **<END>** g03058337

OPERATOR STATION

305-0326 FLOOR MAT

S/N: PBB1-UP; KBS1-UP
FIELD REPLACEMENT ORDER 240-5071–PAGE: 864
AN ATTACHMENT

SMCS-726M **i04903788**

NOTE	REF NO	GRAPHIC REF	PART NUMBER	QTY	PART NAME 1 2 3 4 5 6 (PRODUCT LEVEL)	SEE PAGE
					(NO SERVICED PARTS)	

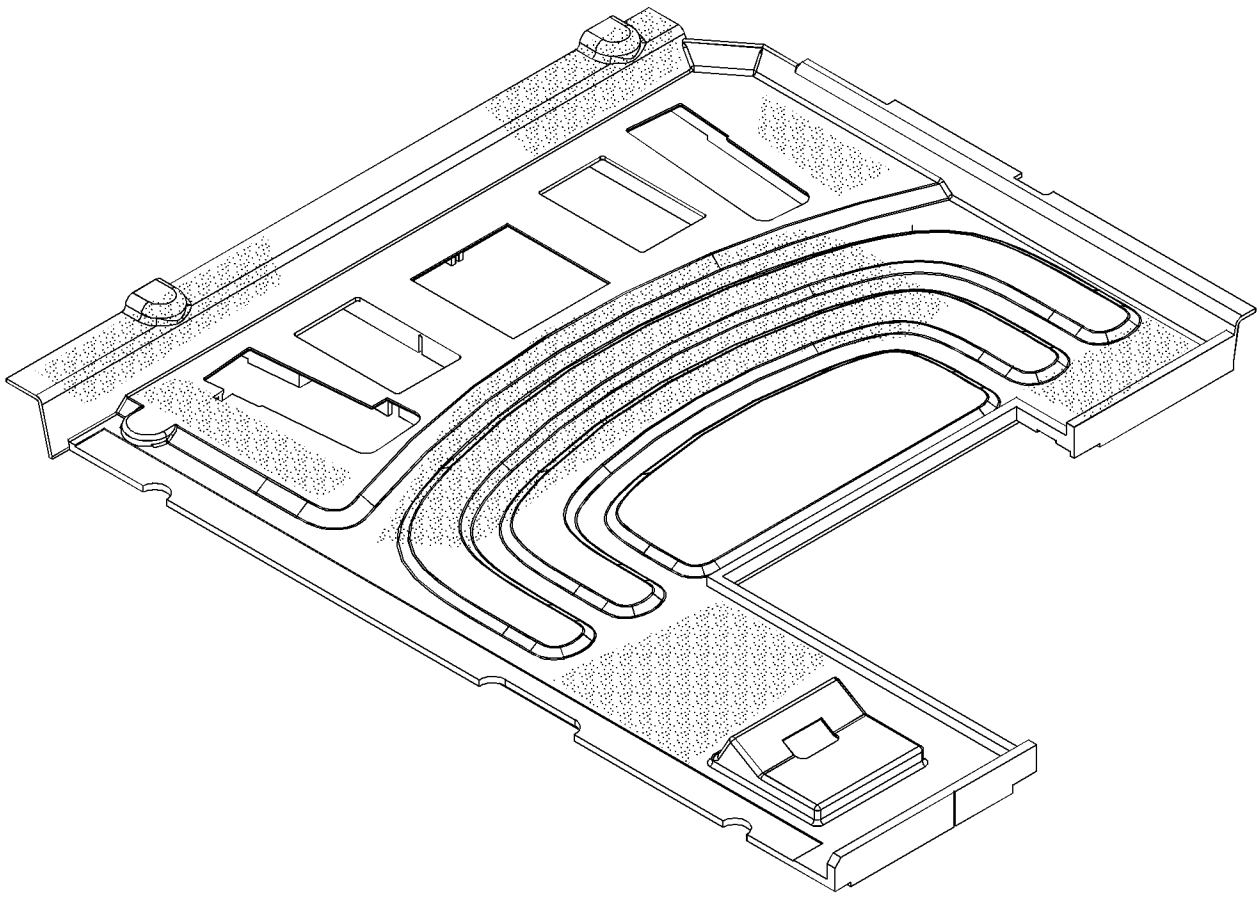

GRAPHIC #1 **<END>** g03058341

OPERATOR STATION

273-5358 FLOOR MAT GP–GRADE CONTROL

S/N: PBB1-UP; KBS1-UP

AN ATTACHMENT

SMCS-7265, 726M **i05407102**

NOTE	REF NO	GRAPHIC REF	PART NUMBER	QTY	PART NAME 1 2 3 4 5 6 (PRODUCT LEVEL)	SEE PAGE
	1	1	**273-5333**	1	FLOOR MAT	
	2	1	**273-5359**	1	PLATE-RUBBER	
	3	1	**273-5360**	1	PLATE-RUBBER	

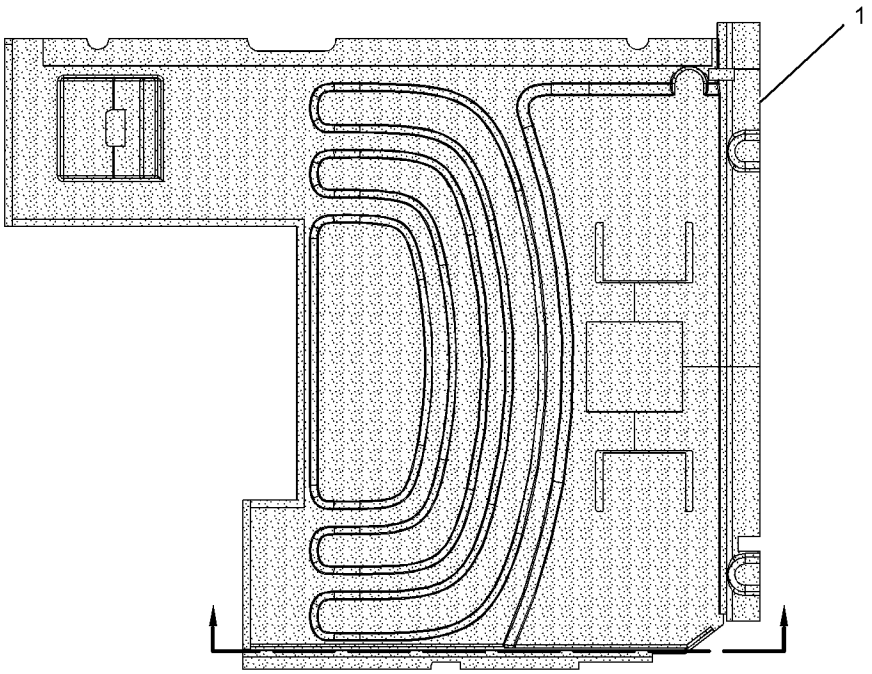

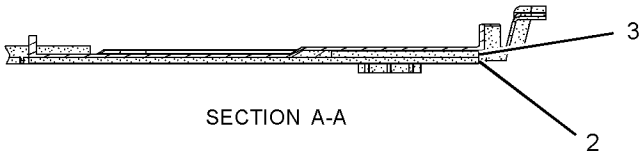

GRAPHIC #1 **<END>** g03058356

178-5549 GUARD AR-OVERHEAD—FALLING OBJECTS GUARD SYSTEM

S/N: PBB1-UP; KBS1-UP

CANNOT BE USED WITH VANDALISM GUARD, WINDOW GUARD AN ATTACHMENT

SMCS-7159 **i05135193**

NOTE	PART NUMBER	QTY	PART NAME 1 2 3 4 5 6 (PRODUCT LEVEL)	SEE PAGE
Y	*171-7485*	1	GUARD GP-FRONT WINDOW	874
Y	*164-0497*	1	GUARD GP-OVERHEAD	876

Y - SEPARATE ILLUSTRATION

<END>

164-0534 GUARD GP-FRONT WINDOW—FULL

S/N: PBB1-UP; KBS1-UP
CANNOT BE USED WITH 171-7485—PAGE: 874
AN ATTACHMENT

SMCS-7182, 7315 **i05729437**

NOTE	REF NO	GRAPHIC REF	PART NUMBER	QTY	PART NAME 1 2 3 4 5 6 (PRODUCT LEVEL)	SEE PAGE
	1	1	**5D-4822**	4	RING-RETAINING	
	2	1	**6C-8382**	2	SPRING-LATCH	
	3	1	**176-1928**	2	BRACKET AS	
	4	1	**196-1569**	1	SUPPORT AS	
	5	1	**196-1571**	1	SUPPORT AS	
	6	1	**196-1572**	2	LATCH AS	
	7	1	**201-4534**	2	BOLT (M16X2X26-MM)	
	8	1	**201-4535**	2	PIN	
	9	1	**207-0216**	2	SPRING AS-GAS (FRONT WINDOW GUARD)	
	10	1	**258-0330**	2	BRACKET AS	
C	11	1	**327-6601**	1	FRAME AS	
M	12	1	**096-4882**	2	LOCKNUT (M8X1.25-THD)	
	13	1	**4I-6602**	8	BOSS (M12X1.75X20-MM)	
M	14	1	**453-1259**	2	BOLT (M16X2X40-MM)	
M	15	1	**7Y-0623**	2	LOCKNUT (M16X2-THD)	
M	16	1	**8T-4139**	6	BOLT (M12X1.75X30-MM)	
M	17	1	**8T-4192**	2	BOLT (M12X1.75X25-MM)	
	18	1	**8T-4223**	4	WASHER-HARD (13.5X25.5X3-MM THK)	
	19	1	**8T-4224**	4	WASHER-HARD (8.8X16X2-MM THK)	
	20	1	**451-2175**	4	WASHER-HARD (17.5X30X3.5-MM THK)	
	21	1	**5P-1076**	4	WASHER-HARD (13.5X30X4-MM THK)	

C - CHANGE FROM PREVIOUS TYPE
M - METRIC PART

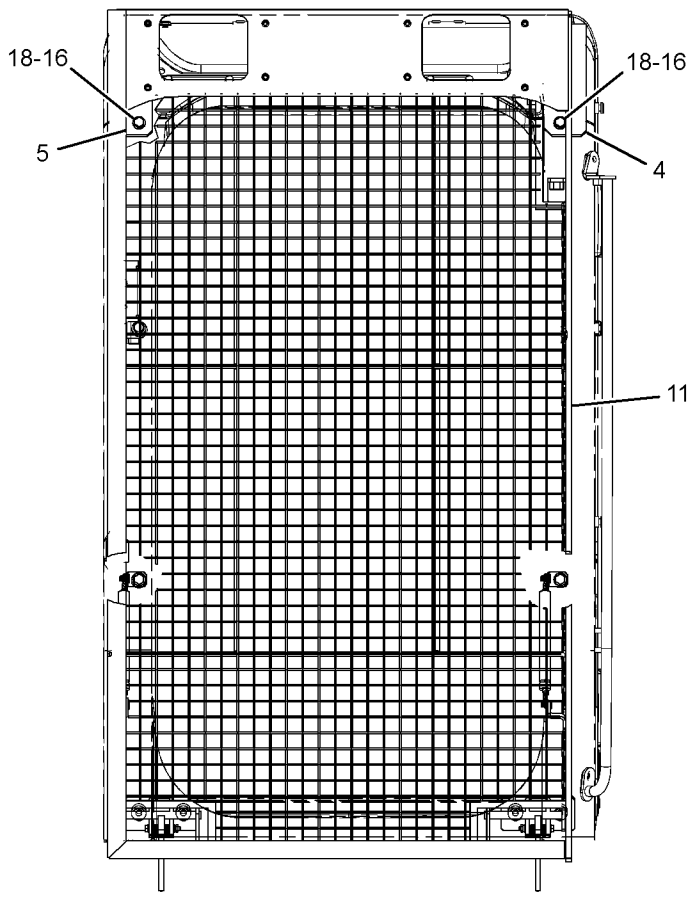

FRONT VIEW

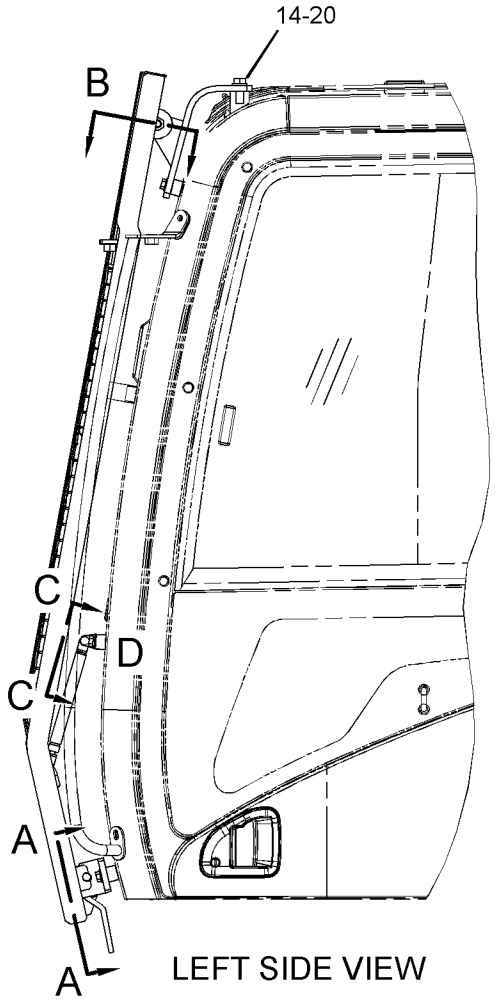

LEFT SIDE VIEW

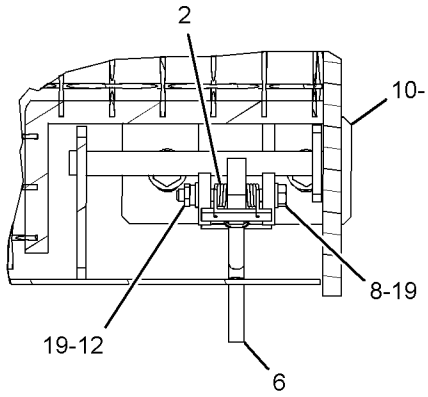

SECTION A-A

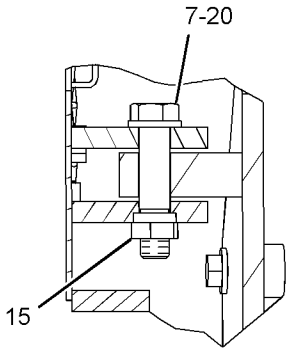

SECTION B

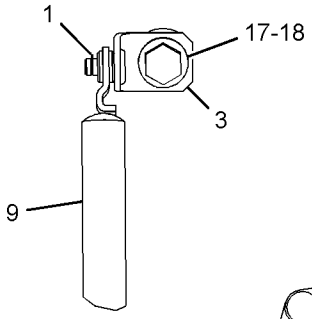

VIEW C-C

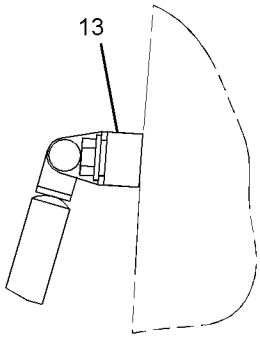

VIEW OF AREA D

GRAPHIC #1 **<END>** g03520378

171-7485 GUARD GP-FRONT WINDOW

S/N: PBB1-UP; KBS1-UP
CANNOT BE USED WITH 164-0534—PAGE: 872, 161-3750—PAGE: 937
PART OF 178-5549 GUARD AR-OVERHEAD
AN ATTACHMENT

SMCS-7182, 7315 **i05857748**

NOTE	REF NO	GRAPHIC REF	PART NUMBER	QTY	PART NAME 1 2 3 4 5 6 (PRODUCT LEVEL)	SEE PAGE
	1	1	**5D-4822**	4	RING-RETAINING	
	2	1	**6C-8382**	2	SPRING-LATCH	
	4	1	**316-8908**	1	GUARD AS-WINDOW	
	5	1	**176-1925**	2	SPRING AS-GAS (FRONT WINDOW GUARD)	
	6	1	**176-1928**	2	BRACKET AS	
	7	1	**196-1569**	1	SUPPORT AS	
	8	1	**196-1571**	1	SUPPORT AS	
	9	1	**196-1572**	2	LATCH AS	
	10	1	**258-0330**	2	BRACKET AS	
	11	1	**201-4534**	2	BOLT (M16X2X26-MM)	
M	12	1	**285-9066**	2	BOLT (M8X1.25X65-MM)	
M	13	1	**096-4882**	2	LOCKNUT (M8X1.25-THD)	
B	15	1	**4I-6602**	8	BOSS (M12X1.75X20-MM)	
M	16	1	**453-1259**	2	BOLT (M16X2X40-MM)	
M	17	1	**7Y-0623**	2	LOCKNUT (M16X2-THD)	
M	18	1	**8T-4139**	6	BOLT (M12X1.75X30-MM)	
M	19	1	**8T-4192**	2	BOLT (M12X1.75X25-MM)	
	20	1	**8T-4223**	4	WASHER-HARD (13.5X25.5X3-MM THK)	
	21	1	**8T-4224**	4	WASHER-HARD (8.8X16X2-MM THK)	
	22	1	**451-2175**	4	WASHER-HARD (17.5X30X3.5-MM THK)	
	23	1	**459-1731**	1	FILM-FRONT GUARD	
	25	1	**219-0305**	1	FILM-WARNING (NO WELD, NO DRILL, READ OMM)	
	26	1	**5P-1076**	4	WASHER-HARD (13.5X30X4-MM THK)	

B - USE AS REQUIRED
M - METRIC PART

171-7485 **GUARD GP-FRONT WINDOW (*contd.*)** **i05857748**

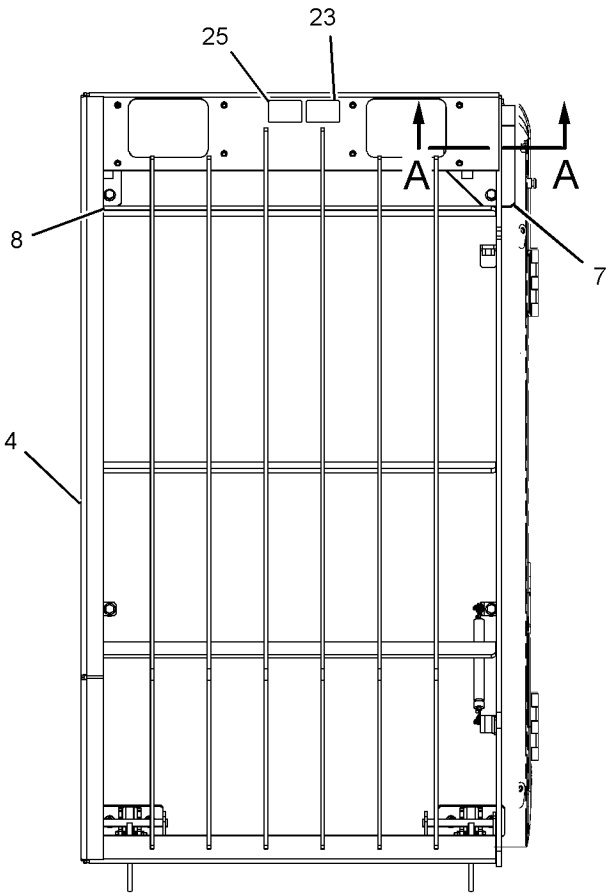

FRONT VIEW

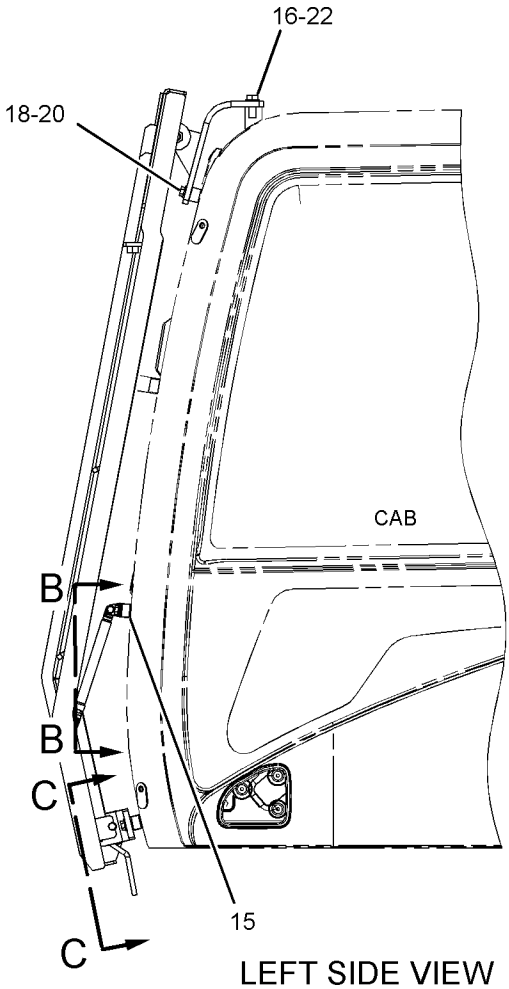

LEFT SIDE VIEW

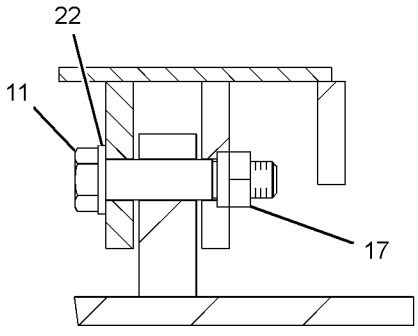

SECTION A-A

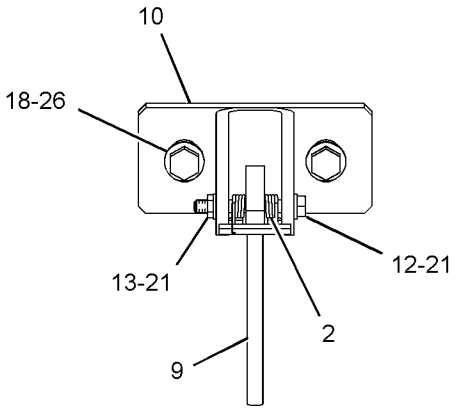

SECTION C-C

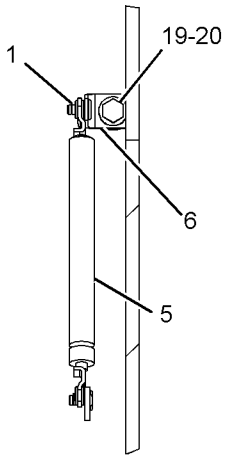

SECTION B-B

GRAPHIC #1

<END>

g03536137

OPERATOR STATION

164-0497 GUARD GP-OVERHEAD

S/N: PBB1-UP; KBS1-UP
PART OF 178-5549 GUARD AR-OVERHEAD
AN ATTACHMENT

SMCS-7159 **i05857747**

NOTE	REF NO	GRAPHIC REF	PART NUMBER	QTY	PART NAME 1 2 3 4 5 6 (PRODUCT LEVEL)	SEE PAGE
	1	1	**8V-1715**	2	SPACER (20.5X35X12-MM THK)	
	2	1	**372-9565**	1	GUARD AS	
M		1	**8T-4132**	2	NUT (M16X2-THD)	
	3	1	**219-0305**	1	FILM-WARNING (NO WELD, NO DRILL, READ OMM)	
C	4	1	**459-1732**	1	FILM-CERTIFICATION (TOP GUARD, READ OMM)	
	5	1	**451-2175**	4	WASHER-HARD (17.5X30X3.5-MM THK)	
B	6	1	**090-8865**	1	SPACER (17X40X3-MM THK)	
M	7	1	**453-2840**	2	BOLT (M16X2X140-MM)	
M	8	1	**447-1703**	2	BOLT (M16X2X120-MM)	

B - USE AS REQUIRED
C - CHANGE FROM PREVIOUS TYPE
M - METRIC PART

164-0497 **GUARD GP-OVERHEAD (*contd.*)** **i05857747**

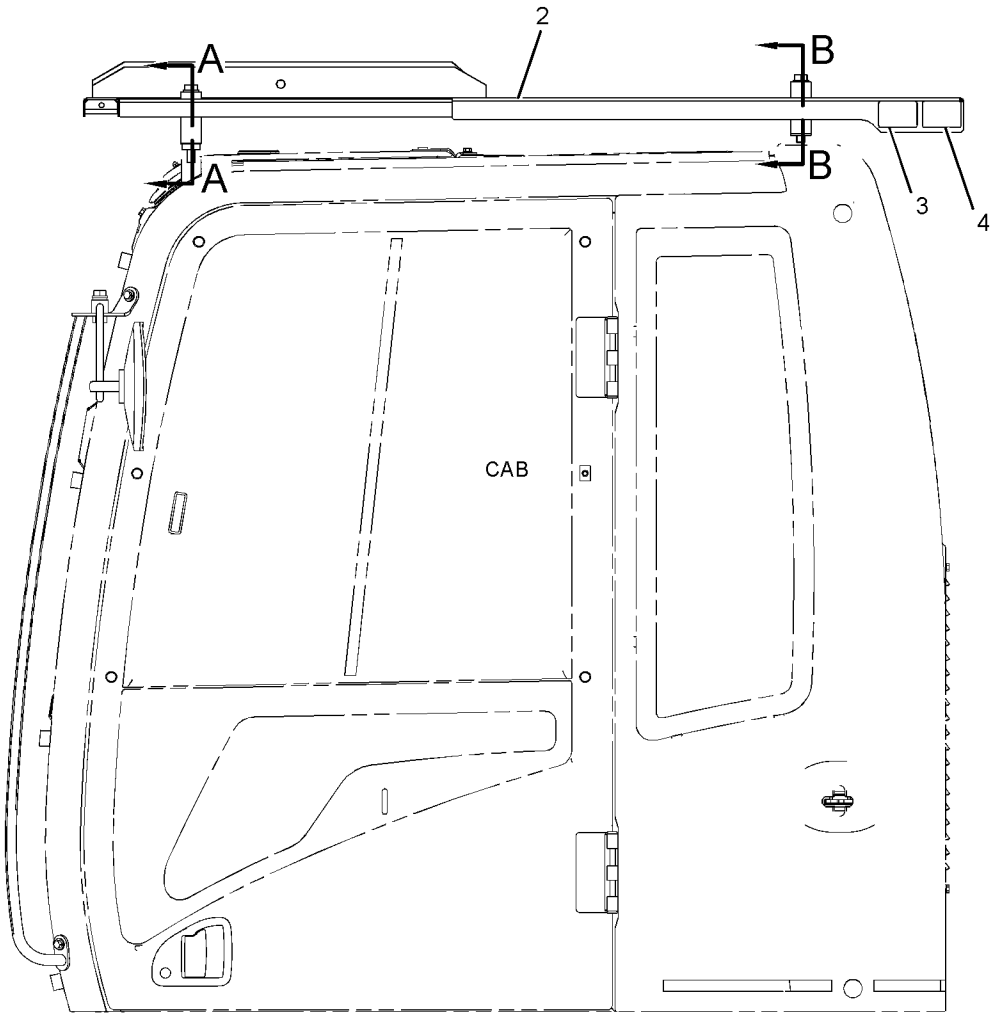

LEFT SIDE VIEW

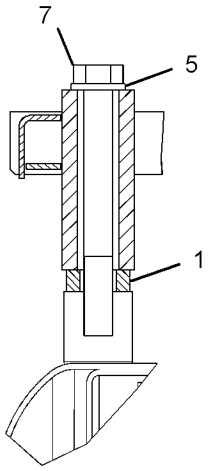

SECTION A-A

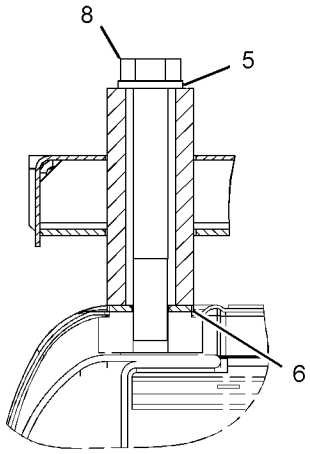

SECTION B-B

GRAPHIC #1 **<END>** g03400290

139-7099 HATCH GP-ROOF

S/N: PBB1-UP; KBS1-UP
PART OF 399-0057, 424-5477 CAB GP
AN ATTACHMENT

SMCS-7303 **i05589893**

NOTE	REF NO	GRAPHIC REF	PART NUMBER	QTY	PART NAME 1 2 3 4 5 6 (PRODUCT LEVEL)	SEE PAGE
	1	1	**5D-4822**	4	RING-RETAINING	
	2	1	**099-3506**	2	SPRING AS-GAS (HATCH)	
M	3	1	**105-2169**	4	BOLT AS (M8X1.25X16-MM)	
Y	4	1	**189-2849**	1	HATCH GP-ROOF	879
	5	1	**189-2847**	1	SEAL	

M - METRIC PART
Y - SEPARATE ILLUSTRATION

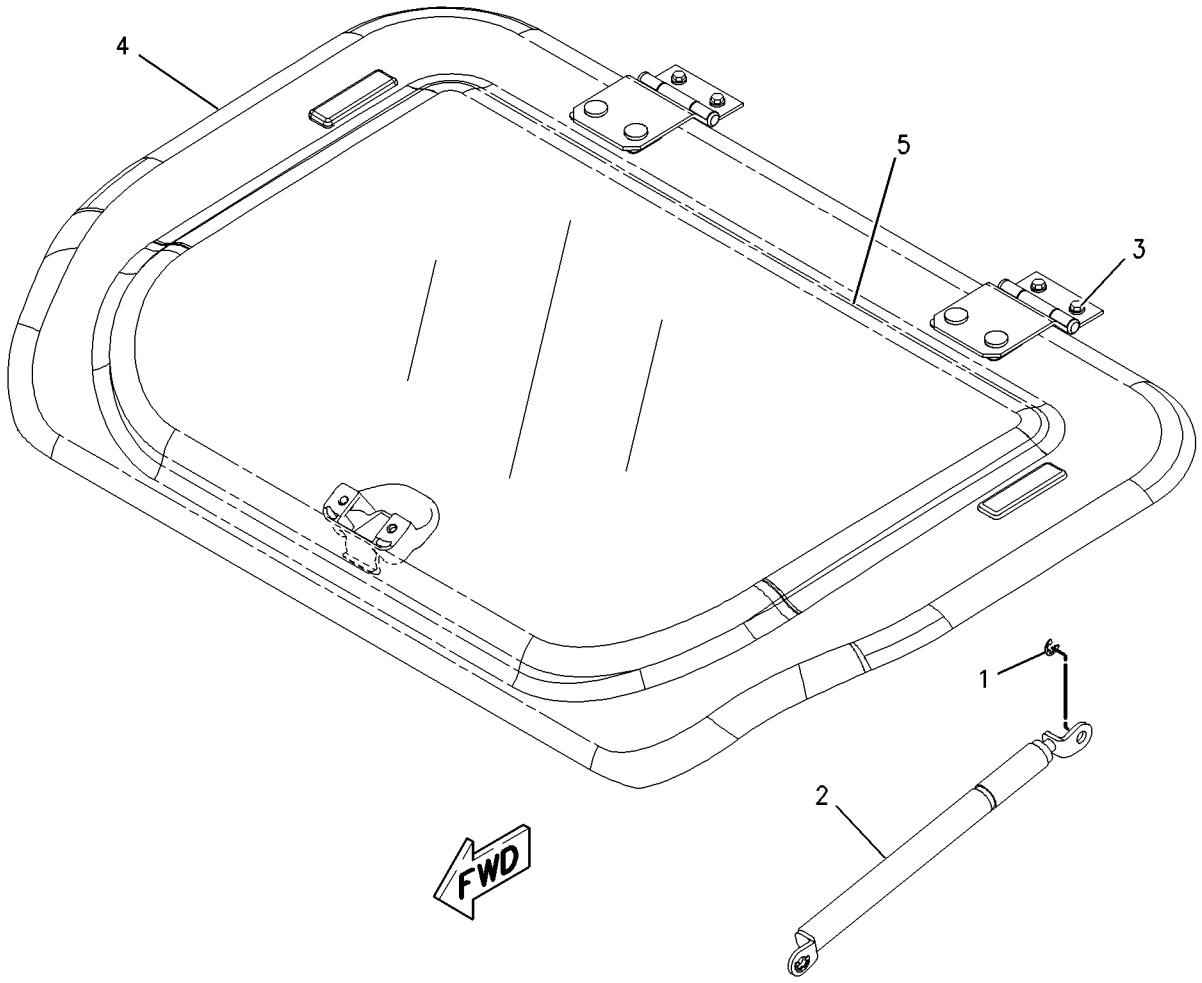

GRAPHIC #1 **<END>** g00737364

189-2849 HATCH GP-ROOF

S/N: PBB1-UP; KBS1-UP
PART OF 139-7099 HATCH GP-ROOF
AN ATTACHMENT

SMCS-7303 **i03523500**

NOTE	REF NO	GRAPHIC REF	PART NUMBER	QTY	PART NAME 1 2 3 4 5 6 (PRODUCT LEVEL)	SEE PAGE
	1	1	**161-3694**	1	CATCH	
	2	1	**189-2693**	1	BRACKET AS	
	3	1	**189-2694**	1	BRACKET AS	
	4	1	**189-2716**	2	HINGE AS	
	6	1	**085-6449**	2	PACKING	
M	7	1	**100-2881**	4	SCREW-TRUSS HEAD (M5X0.8X10-MM)	
	8	1	**171-7477**	2	NUT	
	9	1	**4I-1260**	2	PACKING	
	10	1	**4I-4361**	2	RETAINER	
M	11	1	**6I-5342**	4	NUT (M8X1.25-THD)	
M	12	1	**9X-2045**	2	SCREW-TRUSS HEAD (M6X1X20-MM)	

M - METRIC PART

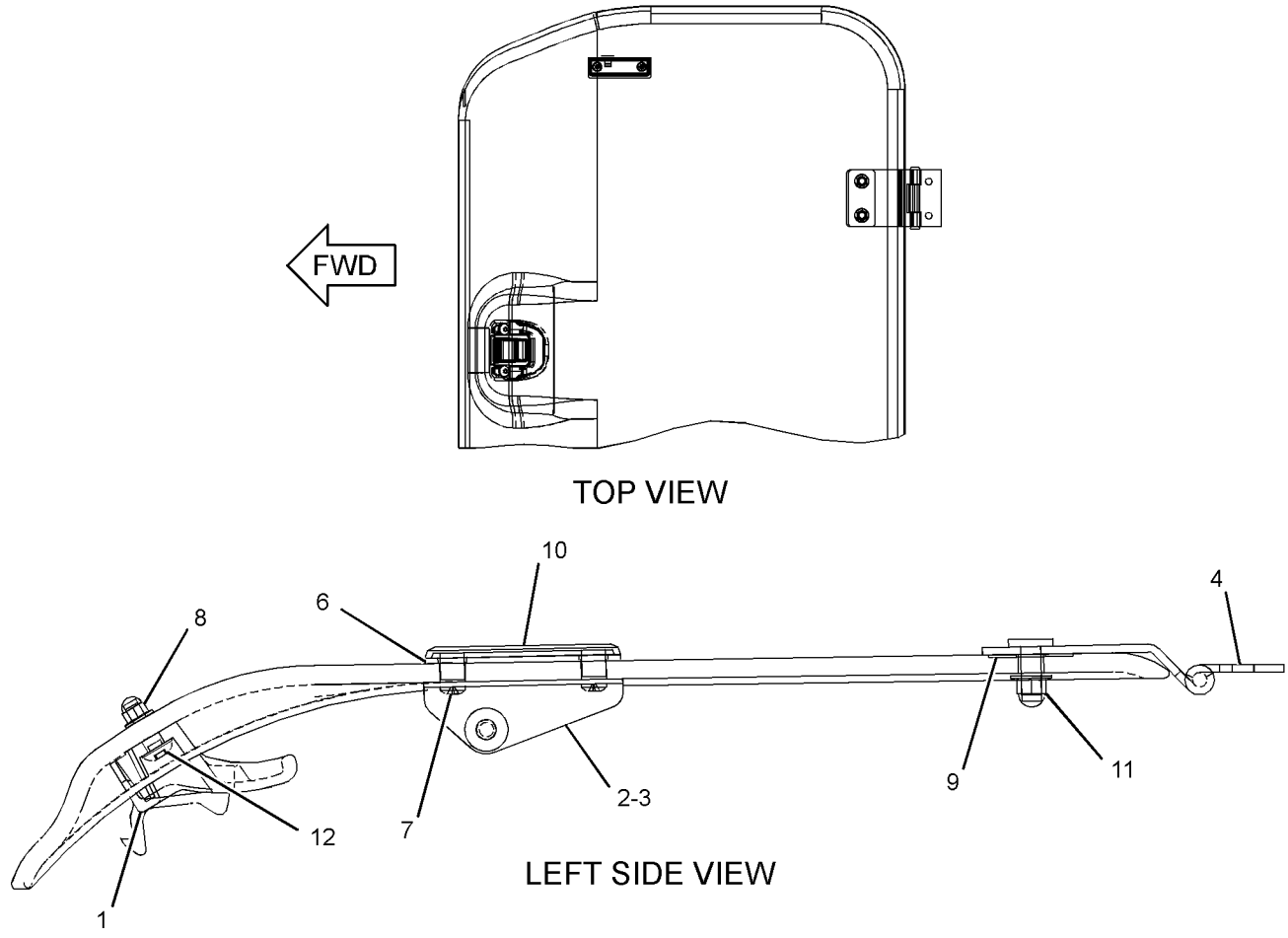

GRAPHIC #1 **<END>** g01852853

OPERATOR STATION

259-7350 HATCH GP-ROOF

S/N: PBB1-UP; KBS1-UP
PART OF 388-0065, 399-0058, 416-9607 CAB GP
AN ATTACHMENT

SMCS-7303 **i05404200**

NOTE	REF NO	GRAPHIC REF	PART NUMBER	QTY	PART NAME 1 2 3 4 5 6 (PRODUCT LEVEL)	SEE PAGE
	1	1	**259-7352**	1	CATCH	
	2	1	**189-2847**	1	SEAL	
	3	1	**259-7351**	1	HATCH AS	
	3A	1	**176-1949**	2	BRACKET AS	
	3B	1	**189-2717**	2	HINGE AS	
	4	1	**099-3506**	2	SPRING AS-GAS (HATCH)	
M	5	1	**105-2169**	4	BOLT AS (M8X1.25X16-MM)	
	6	1	**5D-4822**	4	RING-RETAINING	
M	7	1	**9X-2042**	2	SCREW-TRUSS HEAD (M6X1X12-MM)	

M - METRIC PART

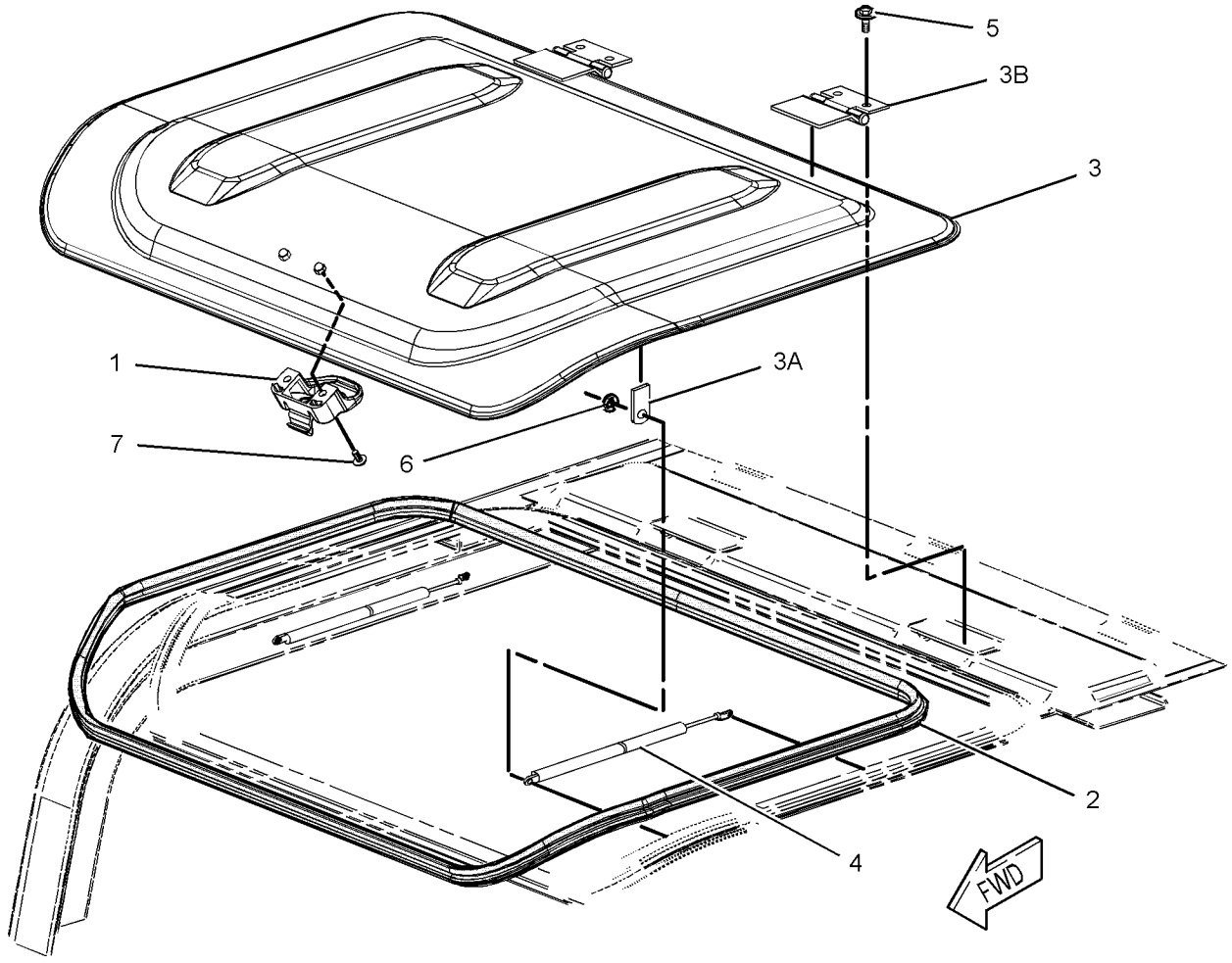

GRAPHIC #1 **<END>** g01242907

327-6515 HEADREST AS-SEAT–CLOTH

S/N: PBB1-UP; KBS1-UP

AN ATTACHMENT

SMCS-7312 **i03090223**

NOTE	REF NO	GRAPHIC REF	PART NUMBER	QTY	PART NAME 1 2 3 4 5 6 (PRODUCT LEVEL)	SEE PAGE
					(NO SERVICED PARTS)	

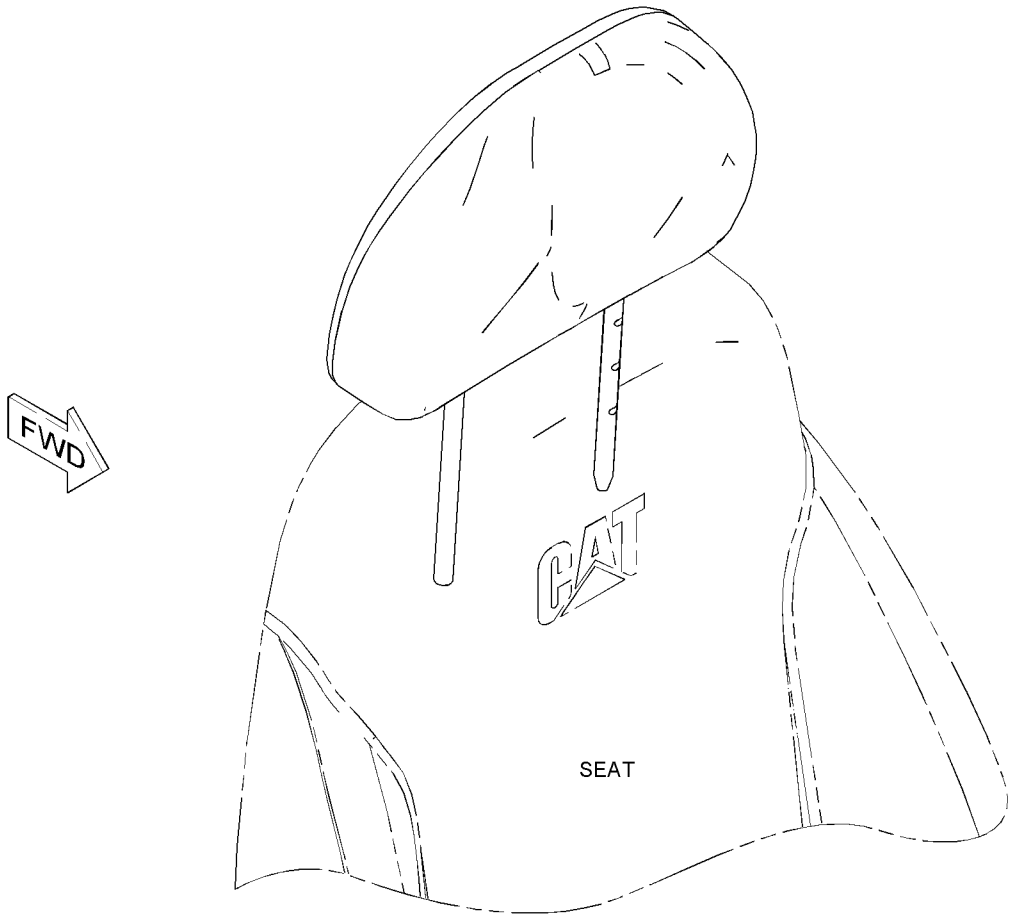

GRAPHIC #1 **<END>** g01126613

267-8071 HORN GP-ELECTRIC

S/N: PBB1-UP; KBS1-UP

PART OF 454-5588, 454-5589 CHASSIS AR

SMCS-7402 **i04942675**

NOTE	REF NO	GRAPHIC REF	PART NUMBER	QTY	PART NAME 1 2 3 4 5 6 (PRODUCT LEVEL)	SEE PAGE
CY	1	1	**381-7416**	1	HORN GP-ELECTRIC	885
	2	1	**8T-4121**	2	WASHER-HARD (11X21X2.5-MM THK)	
M	3	1	**8T-4195**	2	BOLT (M10X1.5X30-MM)	

C - CHANGE FROM PREVIOUS TYPE
M - METRIC PART
Y - SEPARATE ILLUSTRATION

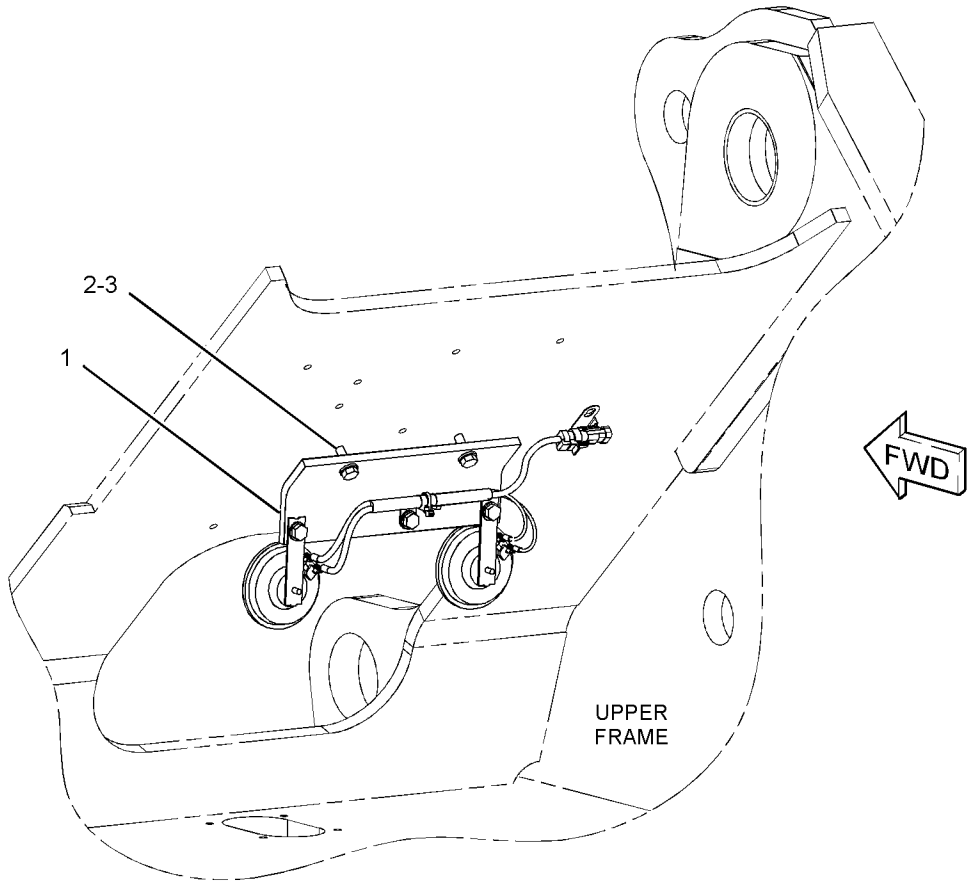

GRAPHIC #1 **<END>** g01289732

291-7559 HORN GP-ELECTRIC

S/N: PBB1-UP; KBS1-UP

PART OF 381-7416 HORN GP-ELECTRIC

SMCS-7402 **i05349701**

NOTE	REF NO	GRAPHIC REF	PART NUMBER	QTY	PART NAME 1 2 3 4 5 6 (PRODUCT LEVEL)	SEE PAGE
	1	1	**3S-2093**	1	STRAP-CABLE	
	2	1	**7Y-3919**	1	HORN AS (24-VOLT, LOW TONE)	
	3	1	**7Y-3920**	1	HORN AS (24-VOLT, HIGH TONE)	
					(EACH HORN AS INCLUDES)	
		1	**095-0826**	2	LOCKWASHER	
M		1	**095-7930**	2	SCREW-MACHINE (M4X0.7X6-MM)	
	4	1	**291-7560**	1	HARNESS AS-CHASSIS (HORN)	
		1	**3S-2093**	1	STRAP-CABLE	
		1	**230-4011**	1	PLUG AS-CONNECTOR (2-PIN)	
	5	1	**291-7561**	1	BRACKET	
	6	1	**132-5789**	1	CLIP	
	7	1	**8T-4121**	3	WASHER-HARD (11X21X2.5-MM THK)	
M	8	1	**8T-4191**	3	BOLT (M10X1.5X16-MM)	

M - METRIC PART

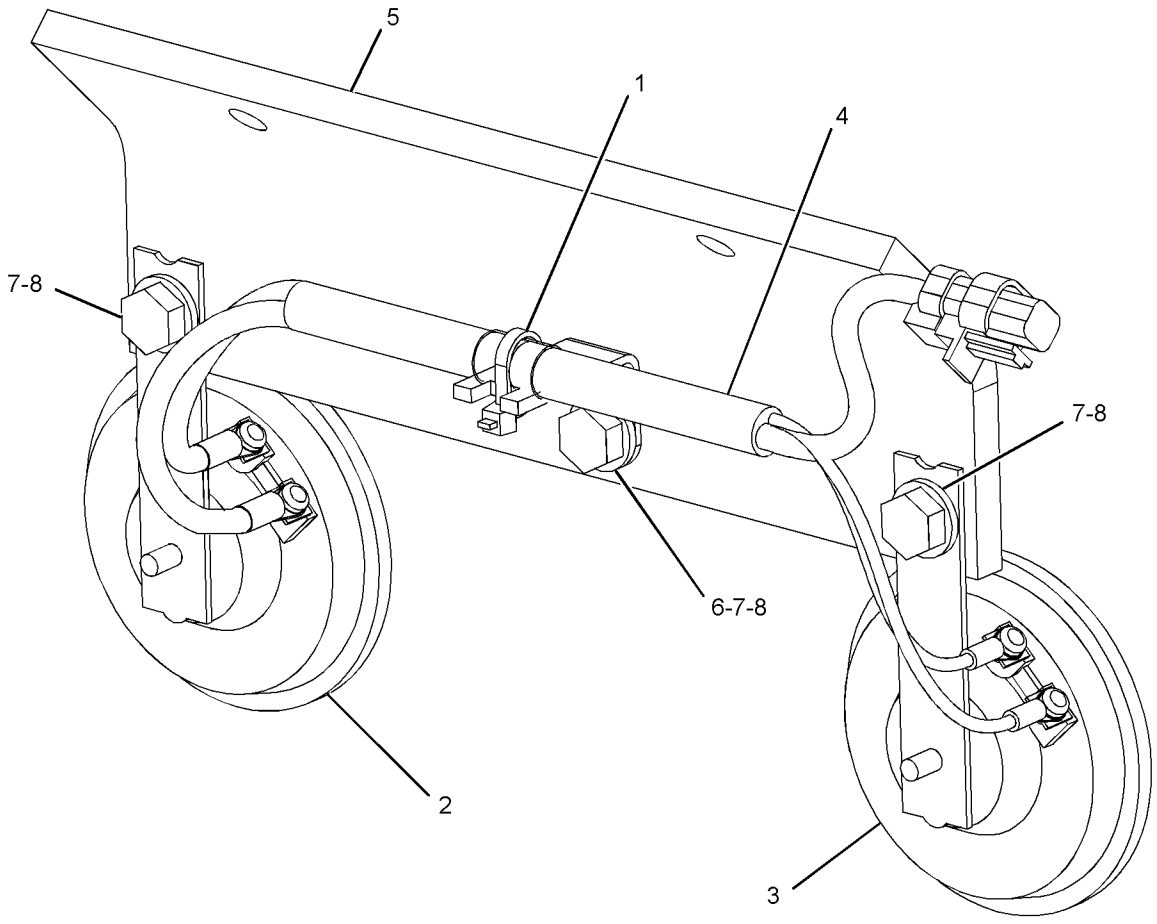

GRAPHIC #1 **<END>** g03389246

377-6536 HORN GP-ELECTRIC

S/N: PBB1-UP; KBS1-UP
24-VOLT
PART OF 381-7416 HORN GP-ELECTRIC

SMCS-7402 **i05335254**

NOTE	REF NO	GRAPHIC REF	PART NUMBER	QTY	PART NAME 1 2 3 4 5 6 (PRODUCT LEVEL)	SEE PAGE
	1	1	**3S-2093**	1	STRAP-CABLE	
	2	1	**7Y-3919**	1	HORN AS (24-VOLT, LOW TONE)	
	3	1	**7Y-3920**	1	HORN AS (24-VOLT, HIGH TONE)	
					(EACH HORN AS INCLUDES)	
		1	**1H-4393**	2	LOCKWASHER	
M		1	**095-7930**	2	SCREW-MACHINE (M4X0.7X6-MM)	
	4	1	**291-7560**	1	HARNESS AS-CHASSIS	
		1	**3S-2093**	1	STRAP-CABLE	
		1	**9W-0844**	2	SOCKET-CONNECTOR (14-GA TO 16-GA)	
		1	**2L-8065**	2	TERMINAL-RING (10-GA TO 12-GA, NO. 8 SCREW)	
		1	**2L-8075**	2	TERMINAL-RING (14-GA TO 16-GA, NO. 8 SCREW)	
		1	**230-4011**	1	PLUG AS-CONNECTOR (2-PIN)	
		1	**264-7029**	1	SEAL-CONNECTOR	
	5	1	**377-5887**	1	BRACKET AS	
	6	1	**8T-4121**	2	WASHER-HARD (11X21X2.5-MM THK)	
M	7	1	**8T-4137**	2	BOLT (M10X1.5X20-MM)	

M - METRIC PART

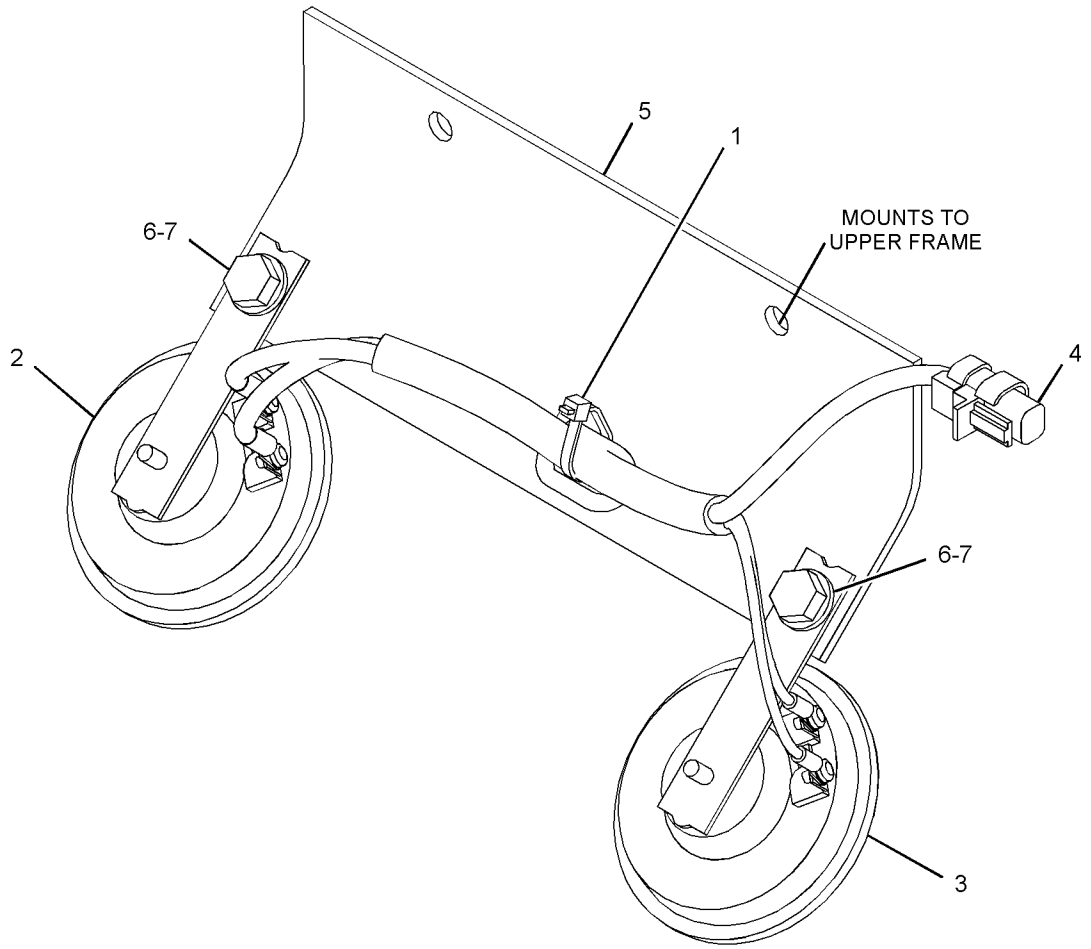

GRAPHIC #1 **<END>** g03097697

OPERATOR STATION

381-7416 HORN GP-ELECTRIC

S/N: PBB1-UP; KBS1-UP
PART OF 267-8071 HORN GP-ELECTRIC

SMCS-7402 **i04942680**

NOTE	PART NUMBER	QTY	PART NAME 1 2 3 4 5 6 (PRODUCT LEVEL)	SEE PAGE
Y	*291-7559*	1	HORN GP-ELECTRIC	883
			—OR—	
Y	*377-6536*	1	HORN GP-ELECTRIC	884

Y - SEPARATE ILLUSTRATION

<END>

396-2389 INSTALLATION AR

S/N: PBB1-UP; KBS1-UP
AN ATTACHMENT

SMCS-1405, 1802, 1805, 1808, 7174, 7304, 7319, 7320, 7348, 734D **i05162623**

NOTE	PART NUMBER	QTY	PART NAME 1 2 3 4 5 6 (PRODUCT LEVEL)	SEE PAGE
Y	*399-6309*	1	HOOD GP-ENGINE (GRADE CONTROL)	282
Y	*270-5603*	1	MOUNTING GP-ANTENNA (GRADE CONTROL)	903
Y	*306-8349*	1	WIRING GP-CAB (GRADE CONTROL)	185
Y	*399-3648*	1	WIRING GP-CHASSIS (GRADE CONTROL)	198

Y - SEPARATE ILLUSTRATION

<END>

456-1032 INSTALLATION AR—GRADE CONTROL

S/N: PBB1-UP; KBS1-UP
AN ATTACHMENT

SMCS-1405, 1802, 1805, 1808, 7174, 7304, 7319, 7320, 7348, 734D **i05861288**

NOTE	PART NUMBER	QTY	PART NAME 1 2 3 4 5 6 (PRODUCT LEVEL)	SEE PAGE
Y	*464-1227*	1	HOOD GP	279
Y	*270-5603*	1	MOUNTING GP-ANTENNA (GRADE CONTROL)	903
Y	*306-8349*	1	WIRING GP-CAB (GRADE CONTROL)	185
Y	*399-3648*	1	WIRING GP-CHASSIS (GRADE CONTROL)	198

Y - SEPARATE ILLUSTRATION

<END>

085-6444 LATCH GP-WINDOW

S/N: PBB1-UP; KBS1-UP
PART OF 151-6792 WINDOW GP-DOOR
AN ATTACHMENT

SMCS-7310 **i03654671**

NOTE	REF NO	GRAPHIC REF	PART NUMBER	QTY	PART NAME 1 2 3 4 5 6 (PRODUCT LEVEL)	SEE PAGE
	1	1	**085-6445**	1	LOCK	
	2	1	**085-6446**	1	LOCK	
	3	1	**085-6447**	1	RETAINER	
M	4	1	**085-6448**	2	SCREW-TAPPING	
	5	1	**085-6449**	1	PACKING	

M - METRIC PART

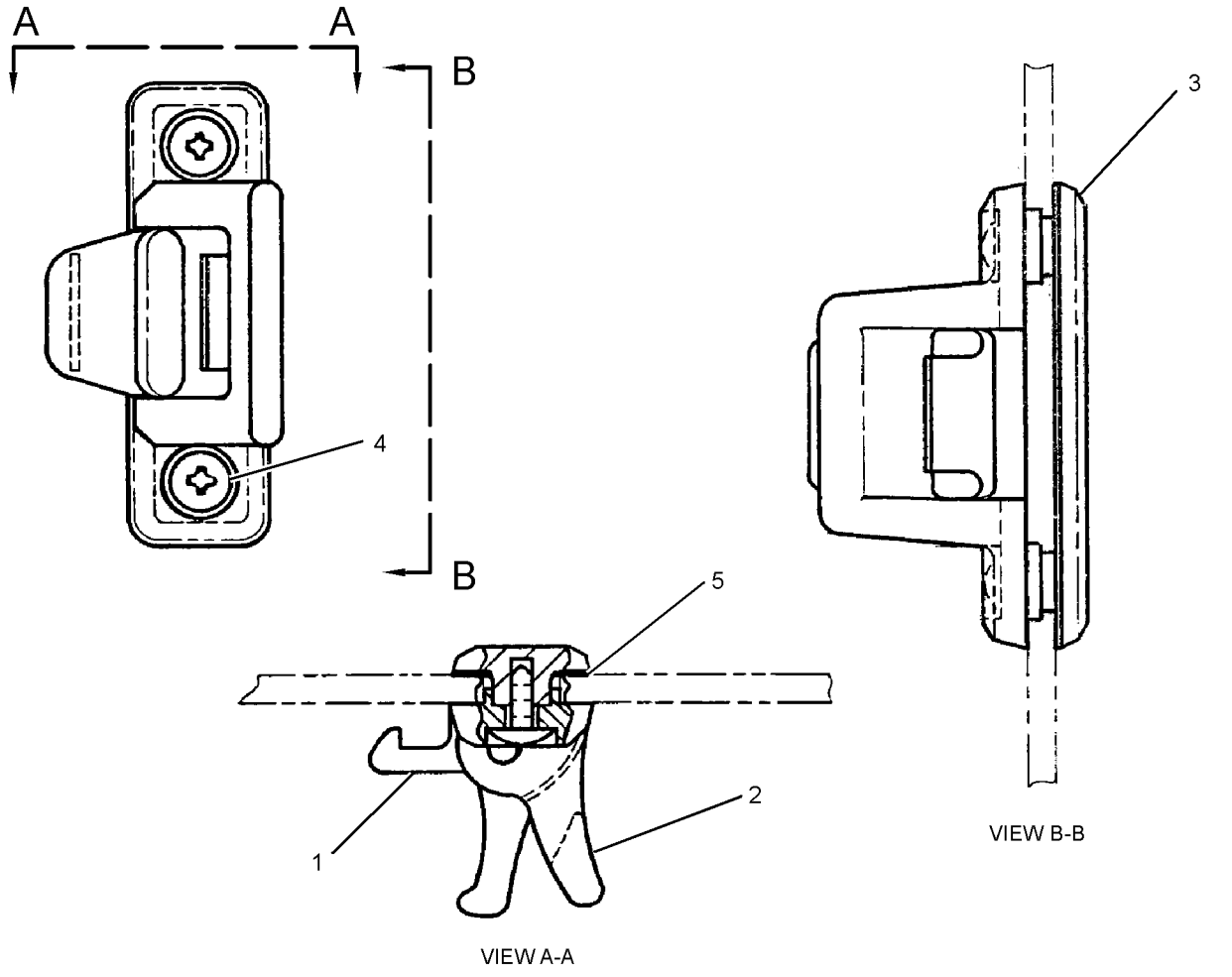

GRAPHIC #1 **<END>** g01164280

164-0528 LEVER GP-CAB DOOR

S/N: PBB1-UP; KBS1-UP
PART OF 346-8058, 388-9102 CAB GP
AN ATTACHMENT

SMCS-7308 **i02504626**

NOTE	REF NO	GRAPHIC REF	PART NUMBER	QTY	PART NAME 1 2 3 4 5 6 (PRODUCT LEVEL)	SEE PAGE
	1	1	**156-6642**	1	LEVER AS	
	2	1	**164-0664**	1	BRACKET	
	3	1	**176-1941**	1	PIN	
	4	1	**185-8280**	1	WASHER-WAVE (10.5X15X0.3-MM THK)	
	5	1	**185-8281**	1	SPRING	

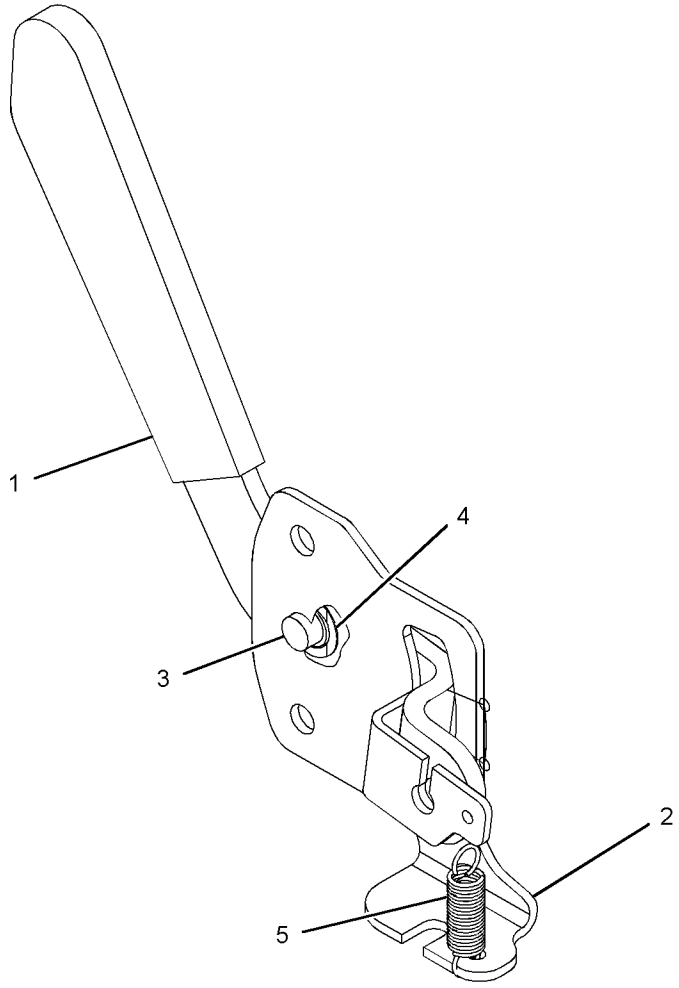

GRAPHIC #1 **<END>** g01217036

OPERATOR STATION

372-9387 LINES GP-AIR CONDITIONER

S/N: PBB1-UP; KBS1-UP

PART OF 454-5588, 454-5589 CHASSIS AR

SMCS-1808 **i05291945**

NOTE	REF NO	GRAPHIC REF	PART NUMBER	QTY	PART NAME 1 2 3 4 5 6 (PRODUCT LEVEL)	SEE PAGE
	1	1	**122-9605**	2	TUBE	
	2	1	**122-9657**	2	CLAMP	
	3	1	**130-0252**	2	HOSE-DRAIN	
	4	2	**176-1902**	1	DRYER-REFRIGERANT (RECEIVER)	
	5	2	**235-8891**	1	PLATE	
	6	1	**235-9014**	8	CLAMP-SPRING	
	7	1	**235-9015**	2	HOSE	
	8	2	**245-7756**	1	TUBE AS	
		2	**121-7138**	2	SEAL-O-RING	
	9	2	**245-7757**	1	HOSE AS	
		2	**121-7138**	2	SEAL-O-RING	
		2	**130-0270**	1	SWITCH AS-PRESSURE (REFRIGERANT)	
		2	**185-8293**	1	SEAL-O-RING	
	10	1	**305-0441**	2	BAND-MARKER (HS)	
	11	1	**305-0442**	2	BAND-MARKER (HR)	
	12	2	**372-9407**	1	HOSE AS-REFRIGERANT	
		2	**121-7137**	1	SEAL-O-RING	
		2	**245-7850**	1	CAP	
	13	2	**372-9409**	1	HOSE AS-REFRIGERANT	
		2	**121-7136**	1	SEAL-O-RING	
		2	**245-7851**	1	CAP	
	14	1	**383-5709**	1	BRACKET AS	
	15	2	**418-5090**	1	BRACKET AS	
	16	2	**100-4336**	3	CLIP	
	17	2	**121-7098**	1	BRACKET AS	
M		2	**8T-4138**	2	BOLT (M6X1X20-MM)	
		2	**9X-8256**	2	WASHER (6.6X12X2-MM THK)	
	18	1	**132-5789**	1	CLIP	
	19	1,2	**6D-1641**	13	CLIP	
	20	2	**6D-3479**	2	CLIP	
	22	2	**6V-3265**	1	CLIP	
M	23	2	**6V-7357**	3	BOLT (M6X1X25-MM)	
	24	2	**6W-7293**	1	GROMMET	
	25	1	**7K-1181**	1	STRAP-CABLE	
	26	2	**8M-2770**	1	CLIP	
	27	2	**8M-2773**	1	CLIP	
	28	1,2	**8T-4121**	20	WASHER-HARD (11X21X2.5-MM THK)	
M	29	2	**8T-4136**	1	BOLT (M10X1.5X25-MM)	
M	30	1,2	**8T-4137**	18	BOLT (M10X1.5X20-MM)	
M	31	1,2	**8T-4189**	3	BOLT (M8X1.25X20-MM)	
M	32	1	**8T-4191**	1	BOLT (M10X1.5X16-MM)	
M	33	2	**8T-4200**	2	BOLT (M8X1.25X16-MM)	
	34	1,2	**8T-4224**	7	WASHER-HARD (8.8X16X2-MM THK)	
M	35	2	**8T-4908**	2	BOLT (M8X1.25X25-MM)	
M	36	2	**8T-4971**	2	BOLT (M6X1X30-MM)	
	37	2	**9X-8256**	5	WASHER (6.6X12X2-MM THK)	
E	38	1	**5P-0767**		HOSE (370-CM)	
E	38A	1	**5P-0767**		HOSE (350-CM)	

E - ORDER BY THE CENTIMETER
M - METRIC PART

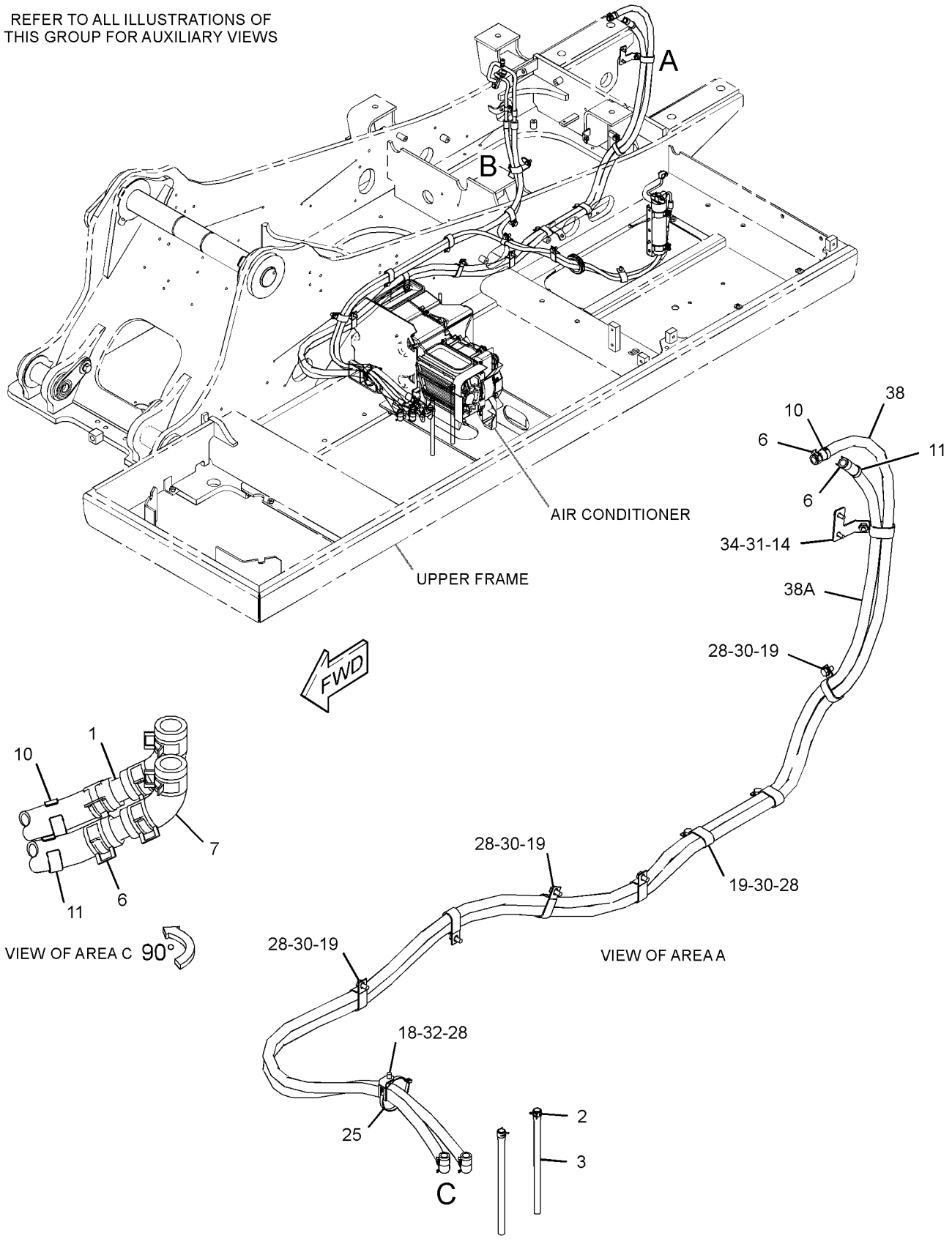

GRAPHIC #1 g03310877

372-9387 **LINES GP-AIR CONDITIONER (*contd.*)** **i05291945**

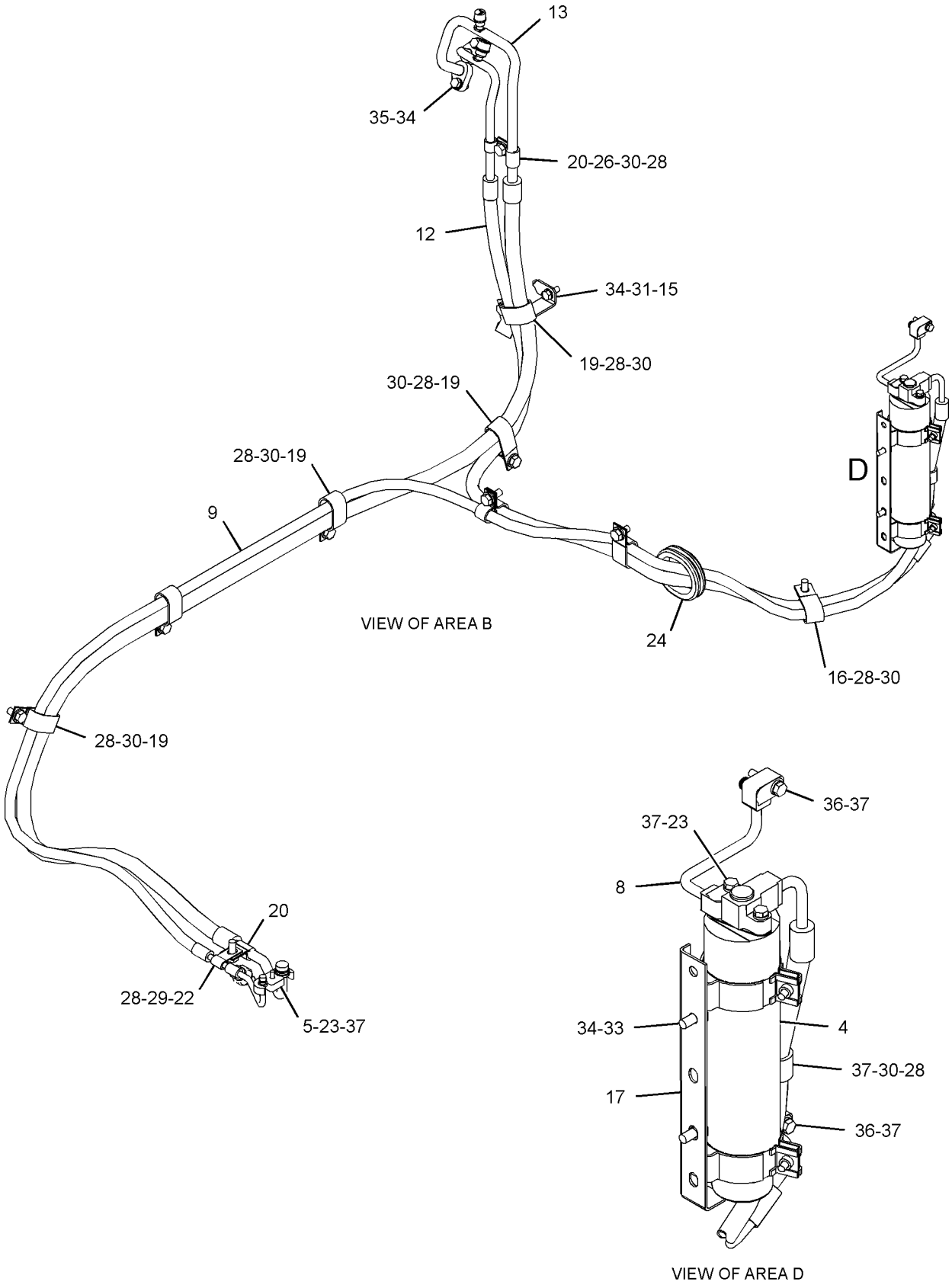

GRAPHIC #2 **<END>** g03361520

372-9388 LINES GP-AIR CONDITIONER

S/N: PBB1-UP; KBS1-UP
PART OF 372-9414 AIR CONDITIONER AR
AN ATTACHMENT

SMCS-1808 **i05296048**

NOTE	REF NO	GRAPHIC REF	PART NUMBER	QTY	PART NAME 1 2 3 4 5 6 (PRODUCT LEVEL)	SEE PAGE
	1	1	**122-9605**	2	TUBE	
	2	2	**122-9657**	2	CLAMP	
	3	2	**130-0252**	2	HOSE-DRAIN	
	4	2	**176-1902**	1	DRYER-REFRIGERANT (RECEIVER)	
	5	2	**235-8891**	1	PLATE	
	6	1	**235-9014**	8	CLAMP-SPRING	
	7	1	**235-9015**	2	HOSE	
	8	2	**284-4552**	1	TUBE AS	
	9	2	**293-1118**	1	TUBE AS	
	10	2	**293-1119**	1	TUBE AS	
	11	2	**293-1120**	1	HOSE AS	
	12	1	**305-0441**	2	BAND-MARKER (HS)	
	13	1	**305-0442**	2	BAND-MARKER (HR)	
	14	2	**372-9409**	1	HOSE AS-REFRIGERANT	
		2	**121-7136**	1	SEAL-O-RING	
		2	**245-7851**	1	CAP	
	15	2	**372-9410**	1	HOSE AS-REFRIGERANT	
		2	**121-7137**	1	SEAL-O-RING	
		2	**245-7850**	1	CAP	
	16	1,2	**383-5709**	1	BRACKET AS	
	17	2	**418-5090**	1	BRACKET AS	
M		2	**8T-3490**	1	NUT-WELD (M10X1.5-THD)	
	18	2	**100-4336**	3	CLIP	
	19	2	**121-7098**	1	BRACKET AS	
M		2	**8T-4138**	2	BOLT (M6X1X20-MM)	
		2	**9X-8256**	2	WASHER (6.6X12X2-MM THK)	
	20	2	**132-5789**	1	CLIP	
	21	2	**5K-3294**	3	CLIP	
	22	2	**5P-9085**	3	CLIP	
	23	1,2	**6D-1641**	13	CLIP	
	24	2	**6D-3479**	2	CLIP	
	26	2	**6V-3265**	1	CLIP	
M	27	2	**6V-7357**	3	BOLT (M6X1X25-MM)	
	28	2	**6W-7293**	1	GROMMET	
	29	2	**7K-1181**	1	STRAP-CABLE	
	30	2	**8M-2770**	1	CLIP	
	32	1,2	**8T-4121**	22	WASHER-HARD (11X21X2.5-MM THK)	
M	33	2	**8T-4136**	4	BOLT (M10X1.5X25-MM)	
M	34	1,2	**8T-4137**	17	BOLT (M10X1.5X20-MM)	
M	35	1,2	**8T-4189**	3	BOLT (M8X1.25X20-MM)	
M	36	2	**8T-4191**	1	BOLT (M10X1.5X16-MM)	
M	37	1,2	**8T-4200**	2	BOLT (M8X1.25X16-MM)	
	38	1,2	**8T-4224**	7	WASHER-HARD (8.8X16X2-MM THK)	
M	39	2	**8T-4908**	2	BOLT (M8X1.25X25-MM)	
M	40	2	**8T-4971**	2	BOLT (M6X1X30-MM)	
	41	2	**9X-8256**	5	WASHER (6.6X12X2-MM THK)	
E	42	1	**5P-0767**		HOSE (370-CM)	
E	42A	1	**5P-0767**		HOSE (350-CM)	

E - ORDER BY THE CENTIMETER
M - METRIC PART

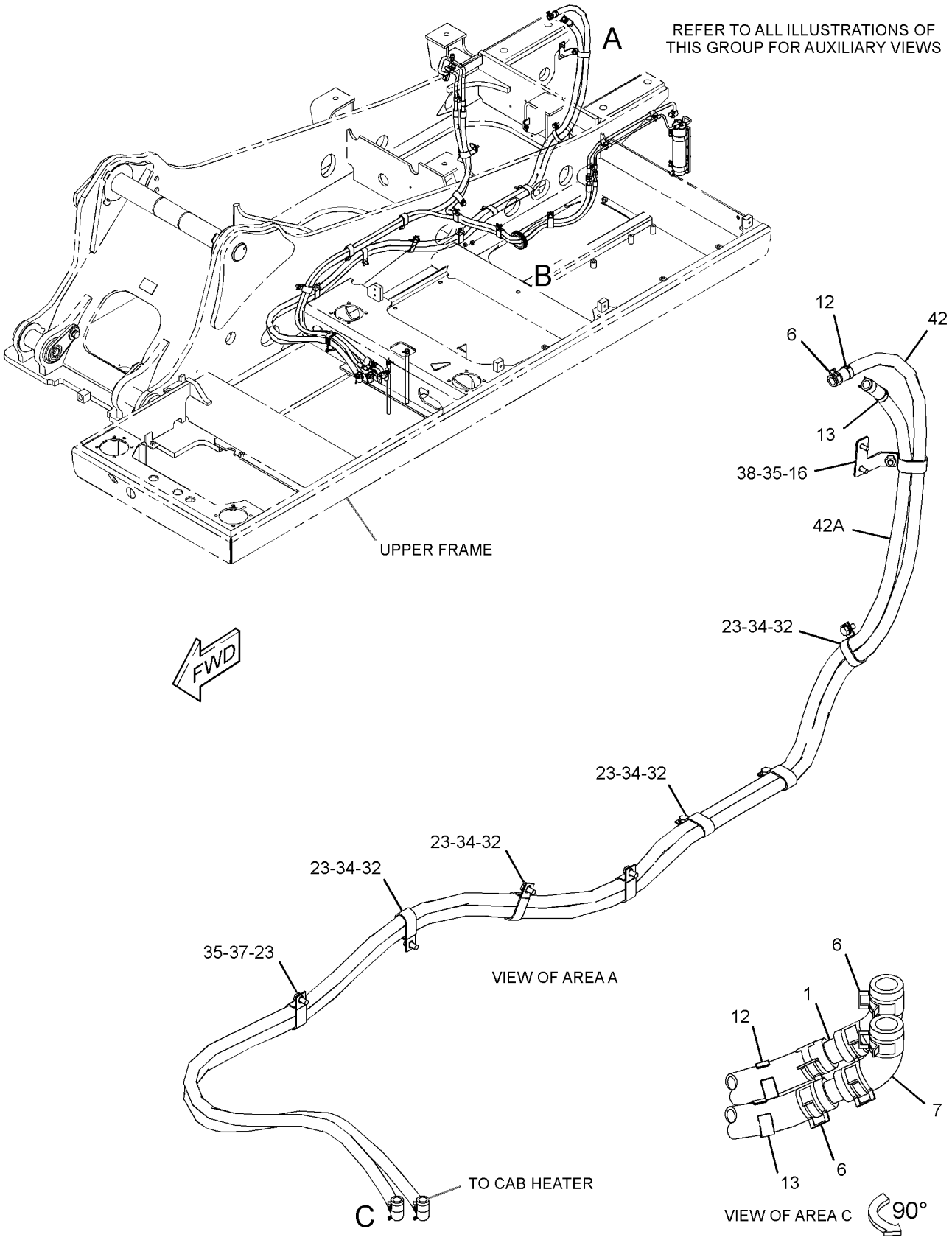

GRAPHIC #1

g03368295

372-9388 **LINES GP-AIR CONDITIONER (*contd.*)** **i05296048**

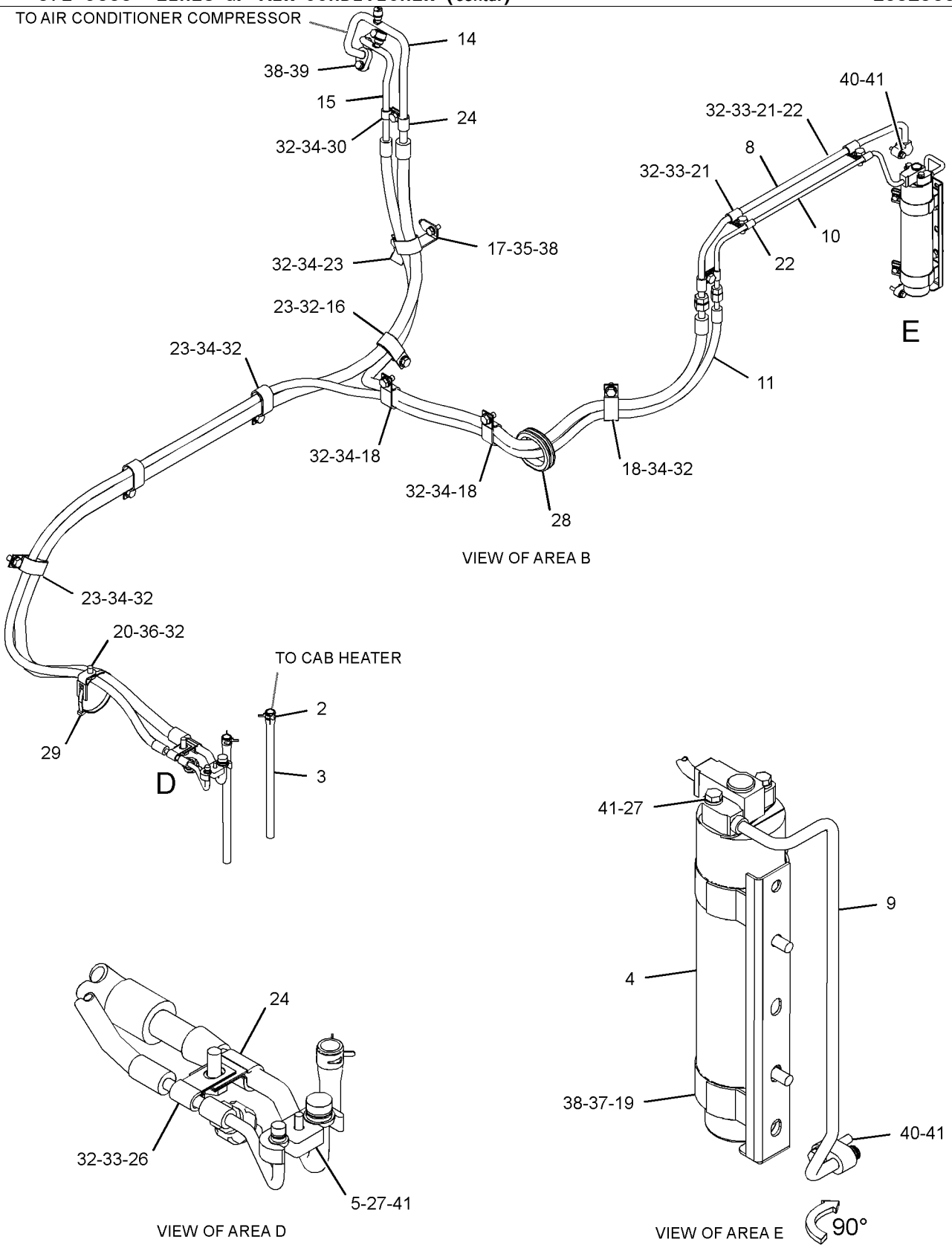

GRAPHIC #2 **<END>** g03368296

OPERATOR STATION

7Y-0059 LITERATURE GP

S/N: PBB1-UP; KBS1-UP

PART OF 454-5588, 454-5589 CHASSIS AR

SMCS-7300 **i05214797**

NOTE	PART NUMBER	QTY	PART NAME 1 2 3 4 5 6 (PRODUCT LEVEL)	SEE PAGE
	099-3645	1	CABLE-LANYARD	
	5P-8500	2	KEY (LITERATURE COMPARTMENT)	
	5P-7958	2	SLEEVE-CABLE SPLICE	

<END>

330-1162 MIRROR GP-DOWN VIEW—FUEL TANK, RH

S/N: PBB1-UP; KBS1-UP
PART OF 456-0917 CAMERA & MIRROR AR
AN ATTACHMENT

SMCS-7319 **i05164798**

NOTE	REF NO	GRAPHIC REF	PART NUMBER	QTY	PART NAME 1 2 3 4 5 6 (PRODUCT LEVEL)	SEE PAGE
M	1	1	**135-8575**	3	BOLT AS	
	2	1	**320-5525**	1	TUBE AS	
C	3	1	**394-9459**	1	MIRROR GP-SIDE VIEW (SIDE, RH)	
M		1	**191-8921**	2	BOLT-SOCKET HEAD (M6X1X25-MM)	
		1	**9X-8256**	2	WASHER (6.6X12X2-MM THK)	
C	4	1	**394-9460**	1	MIRROR GP-SIDE VIEW (FUEL TANK)	
M		1	**191-8921**	2	BOLT-SOCKET HEAD (M6X1X25-MM)	
		1	**9X-8256**	2	WASHER (6.6X12X2-MM THK)	

C - CHANGE FROM PREVIOUS TYPE
M - METRIC PART

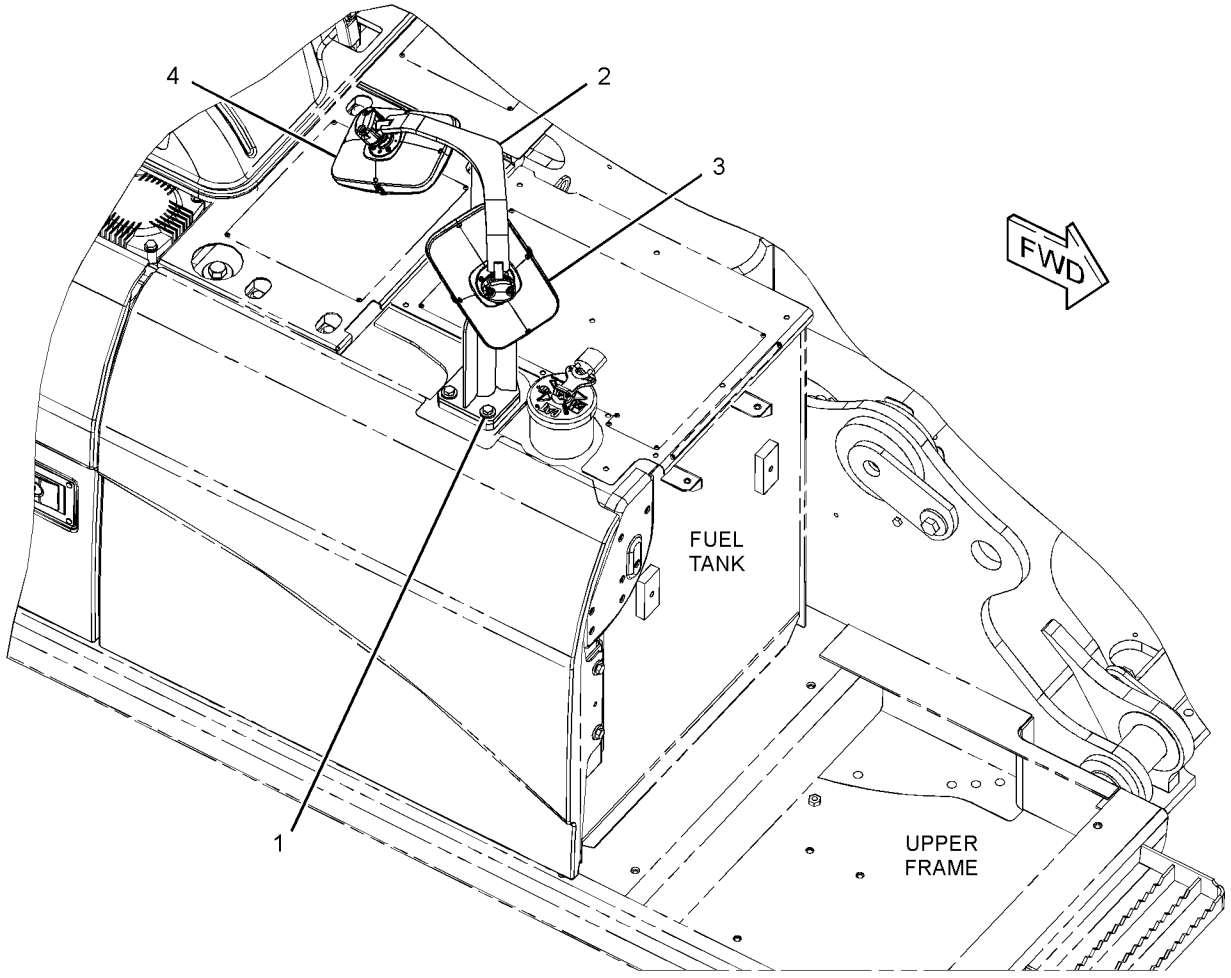

GRAPHIC #1 **<END>** g01619310

142-3836 MIRROR GP-REAR VIEW

S/N: PBB1-UP; KBS1-UP

PART OF 454-5588, 454-5589 CHASSIS AR

SMCS-7319 **i05253856**

NOTE	REF NO	GRAPHIC REF	PART NUMBER	QTY	PART NAME 1 2 3 4 5 6 (PRODUCT LEVEL)	SEE PAGE
	1	1	**8T-7971**	4	WASHER-HARD (13.5X25.5X5-MM THK)	
	2	1	**137-2270**	1	MIRROR	
	3	1	**165-3065**	1	BRACKET-MIRROR	
M	4	1	**8T-4192**	4	BOLT (M12X1.75X25-MM)	

M - METRIC PART

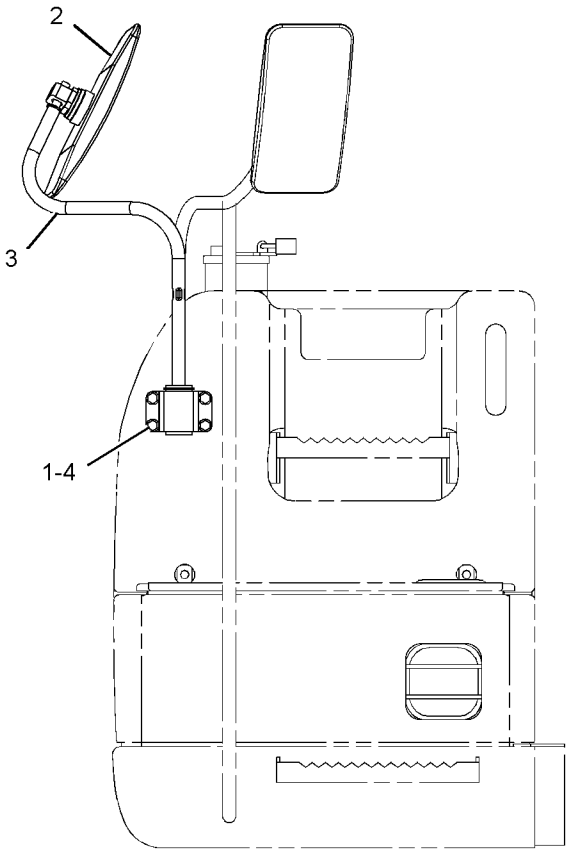

FRONT VIEW

GRAPHIC #1 **<END>** g02169635

327-6550 MIRROR GP-REAR VIEW

S/N: PBB1-UP; KBS1-UP
PART OF 346-8058, 388-9102 CAB GP
AN ATTACHMENT

SMCS-7319 **i05364206**

NOTE	REF NO	GRAPHIC REF	PART NUMBER	QTY	PART NAME 1 2 3 4 5 6 (PRODUCT LEVEL)	SEE PAGE
M	1	1	**105-3487**	2	BOLT-SOCKET HEAD (M6X1X20-MM)	
	2	1	**9X-8256**	2	WASHER (6.6X12X2-MM THK)	

M - METRIC PART

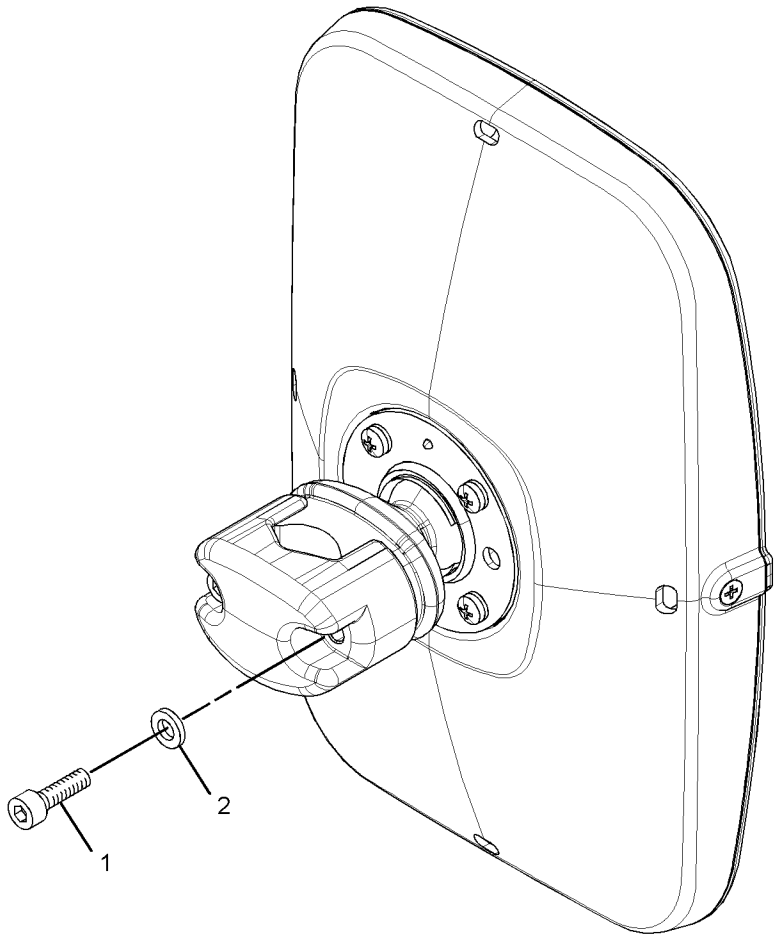

GRAPHIC #1 **<END>** g03058362

327-6552 MIRROR GP-REAR VIEW

S/N: PBB1-UP; KBS1-UP

CANNOT BE USED WITH WINDOW GUARD, 171-7485—PAGE: 874, 164-0534—PAGE: 872

AN ATTACHMENT

SMCS-7319 **i05858221**

NOTE	REF NO	GRAPHIC REF	PART NUMBER	QTY	PART NAME 1 2 3 4 5 6 (PRODUCT LEVEL)	SEE PAGE
CY	1	1	**443-7858**	1	MIRROR GP-REAR VIEW	900
	2	1	**327-6576**	1	SUPPORT AS	
M	3	1	**447-1704**	1	BOLT (M16X2X90-MM)	
	4	1	**451-2175**	1	WASHER-HARD (17.5X30X3.5-MM THK)	

C - CHANGE FROM PREVIOUS TYPE
M - METRIC PART
Y - SEPARATE ILLUSTRATION

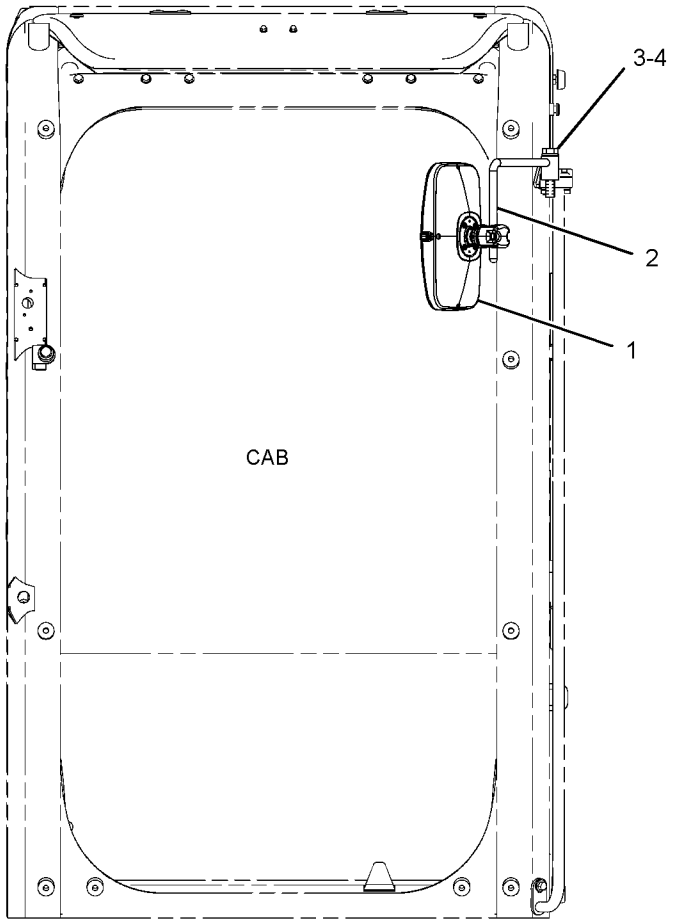

FRONT VIEW

GRAPHIC #1 **<END>** g01615557

327-6553 MIRROR GP-REAR VIEW

S/N: PBB1-UP; KBS1-UP
FOR USE WITH WINDOW GUARD, 171-7485—PAGE: 874, 164-0534—PAGE: 872
AN ATTACHMENT

SMCS-7319 **i05858541**

NOTE	REF NO	GRAPHIC REF	PART NUMBER	QTY	PART NAME 1 2 3 4 5 6 (PRODUCT LEVEL)	SEE PAGE
	1	1	**316-8989**	1	SUPPORT AS	
CY	2	1	**443-7858**	1	MIRROR GP-REAR VIEW	900
M	3	1	**447-1711**	1	BOLT (M16X2X50-MM)	
	4	1	**451-2175**	1	WASHER-HARD (17.5X30X3.5-MM THK)	

C - CHANGE FROM PREVIOUS TYPE
M - METRIC PART
Y - SEPARATE ILLUSTRATION

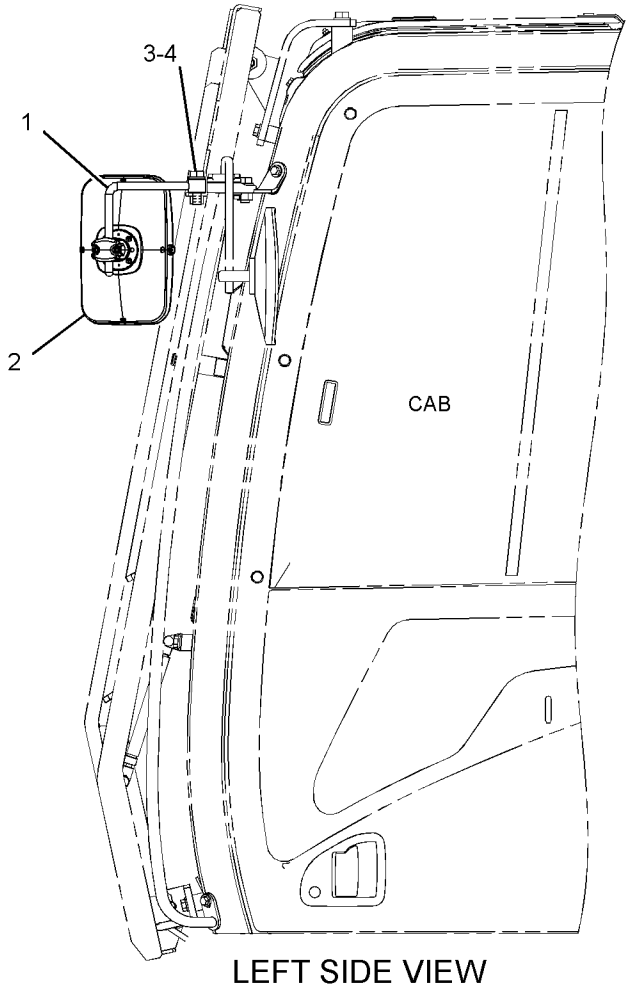

LEFT SIDE VIEW

GRAPHIC #1 **<END>** g01615542

443-7858 MIRROR GP-REAR VIEW

S/N: PBB1-UP; KBS1-UP
PART OF 327-6552, 327-6553 MIRROR GP-REAR VIEW
AN ATTACHMENT

SMCS-7319 **i05858255**

NOTE	REF NO	GRAPHIC REF	PART NUMBER	QTY	PART NAME 1 2 3 4 5 6 (PRODUCT LEVEL)	SEE PAGE
M	1	1	**105-3487**	2	BOLT-SOCKET HEAD (M6X1X20-MM)	
	2	1	**9X-8256**	2	WASHER (6.6X12X2-MM THK)	

M - METRIC PART

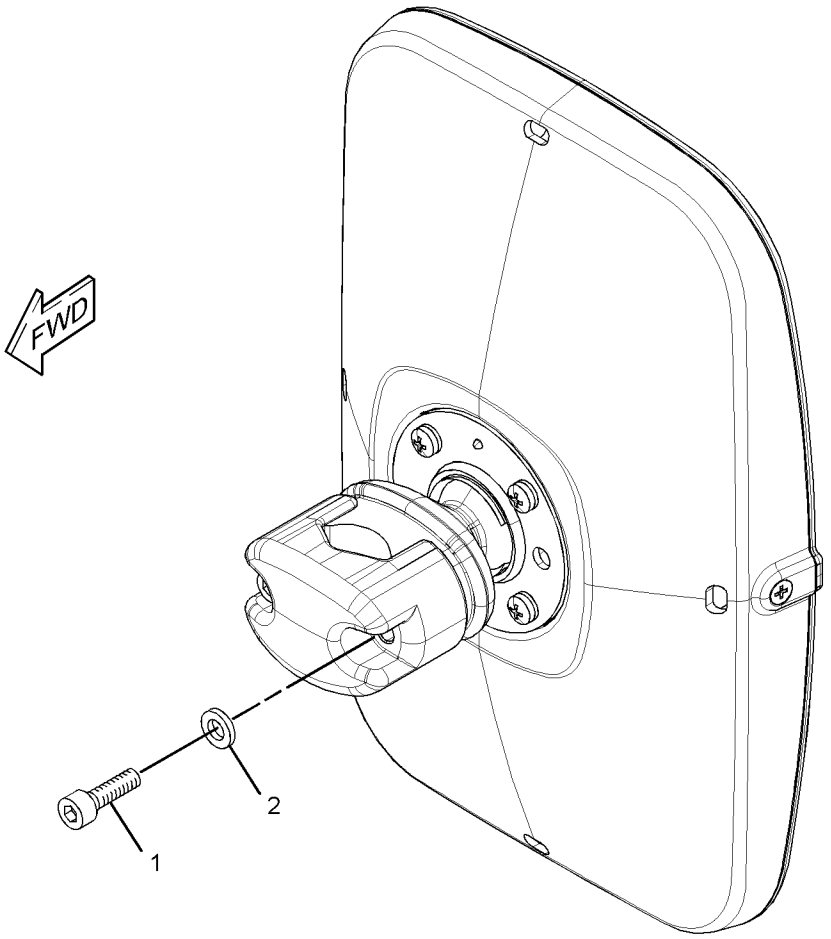

GRAPHIC #1 **<END>** g01615528

420-4514 MONITOR & MTG GP-OPERATOR

S/N: PBB1-UP; KBS1-UP

PART OF 422-0645 OPERATOR AR

SMCS-7490 **i05857299**

NOTE	REF NO	GRAPHIC REF	PART NUMBER	QTY	PART NAME 1 2 3 4 5 6 (PRODUCT LEVEL)	SEE PAGE
	1	1	**422-0265**	1	BRACKET AS	
	2	1	**422-0268**	1	BRACKET	
Y	3	1	**456-2194**	1	MONITOR GP-OPERATOR	902
	4	1	**163-6795**	1	STRAP-CABLE	
	5	1	**3S-2093**	3	STRAP-CABLE	
M	6	1	**9X-2042**	5	SCREW-TRUSS HEAD (M6X1X12-MM)	
M	7	1	**9X-2044**	3	SCREW-TRUSS HEAD (M6X1X16-MM)	

M - METRIC PART
Y - SEPARATE ILLUSTRATION

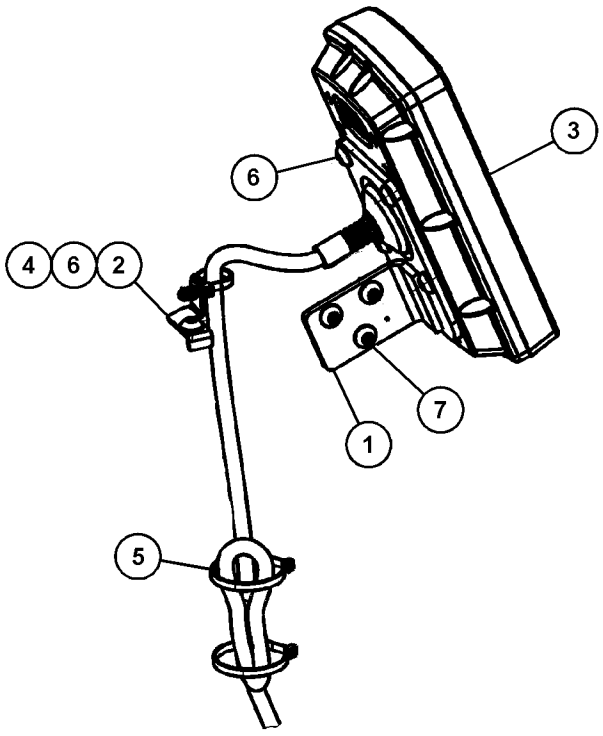

VIEW OF AREA A

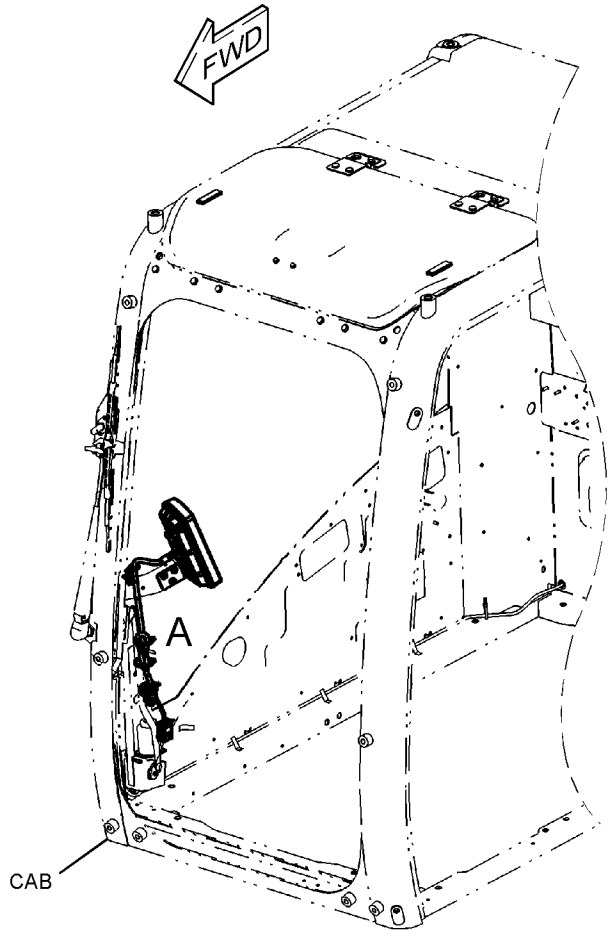

GRAPHIC #1 **<END>** g03443737

OPERATOR STATION

456-2194 MONITOR GP-OPERATOR

S/N: PBB1-UP; KBS1-UP

PART OF 420-4514 MONITOR & MTG GP-OPERATOR

SMCS-7490 **i05827155**

NOTE	REF NO	GRAPHIC REF	PART NUMBER	QTY	PART NAME 1 2 3 4 5 6 (PRODUCT LEVEL)	SEE PAGE
	1	1	**309-5711**	1	MONITOR GP-OPERATOR	
		1	**9X-3401**	18	PIN-CONNECTOR (16-GA TO 18-GA)	
					—OR—	
		1	**126-1767**	18	PIN-CONNECTOR (14-GA TO 16-GA)	
		1	**230-4010**	1	RECEPTACLE AS-CONNECTOR (12-PIN)	
		1	**243-4508**	1	RECEPTACLE AS-CONNECTOR (6-PIN)	
	2	1	**456-2195**	1	SOFTWARE GP-MONITOR	

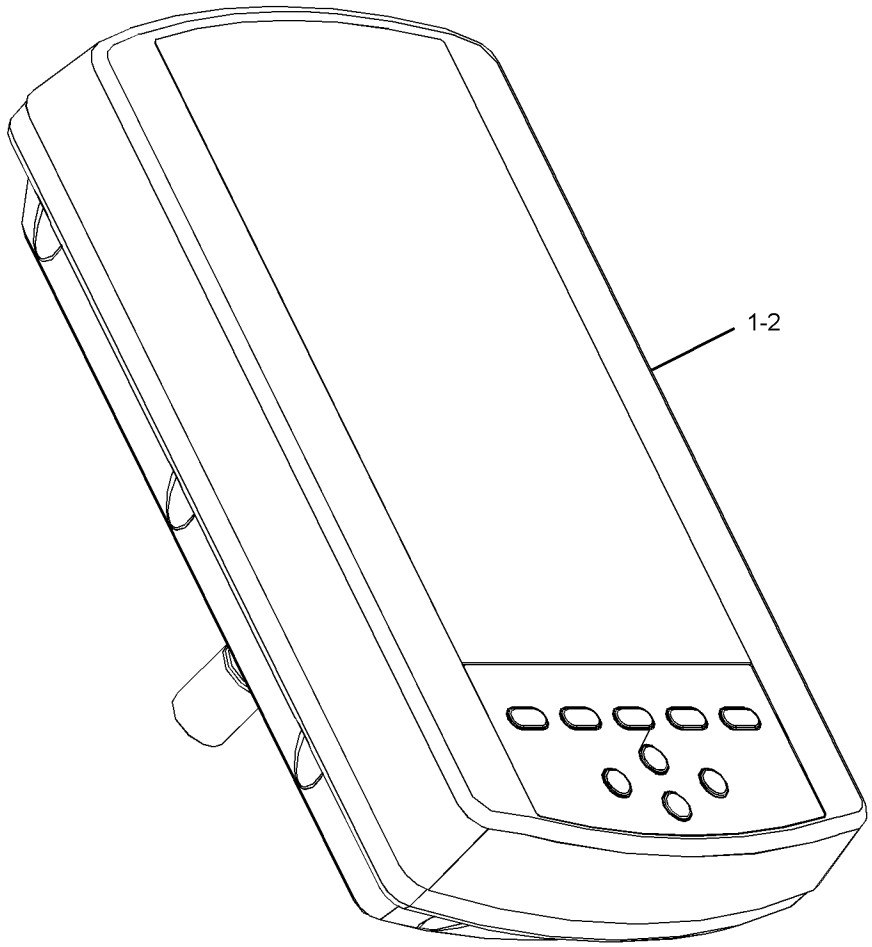

GRAPHIC #1 **<END>** g02240734

270-5603 MOUNTING GP-ANTENNA—GRADE CONTROL

S/N: PBB1-UP; KBS1-UP
PART OF 396-2389, 456-1032 INSTALLATION AR
AN ATTACHMENT

SMCS-7338, 7606

i02862871

NOTE	REF NO	GRAPHIC REF	PART NUMBER	QTY	PART NAME 1 2 3 4 5 6 (PRODUCT LEVEL)	SEE PAGE
	1	1	**309-5849**	1	BRACKET AS	
M	2	1	**7X-2552**	2	BOLT (M16X2X30-MM)	
	3	1	**9X-8257**	2	WASHER (17.5X30X3.5-MM THK)	

M - METRIC PART

270-5603 **MOUNTING GP-ANTENNA (*contd.*)** **i02862871**

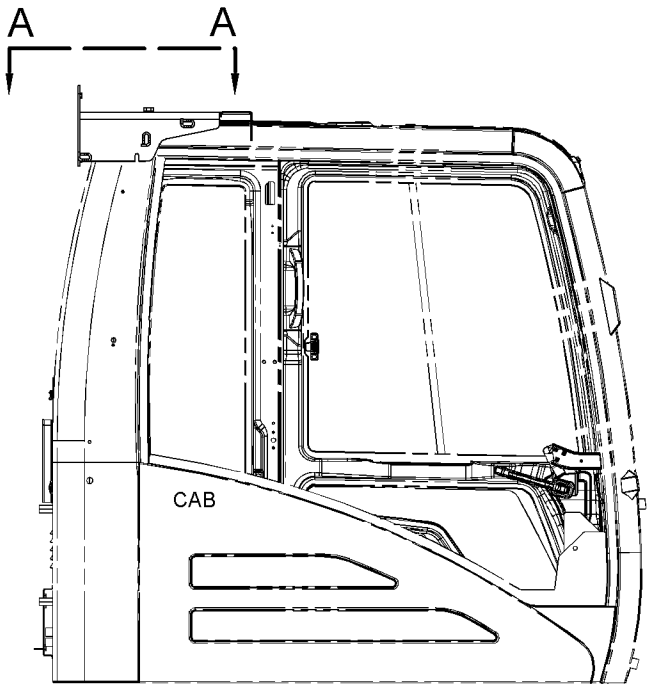

RIGHT SIDE VIEW
(WITHOUT CAB GUARD)

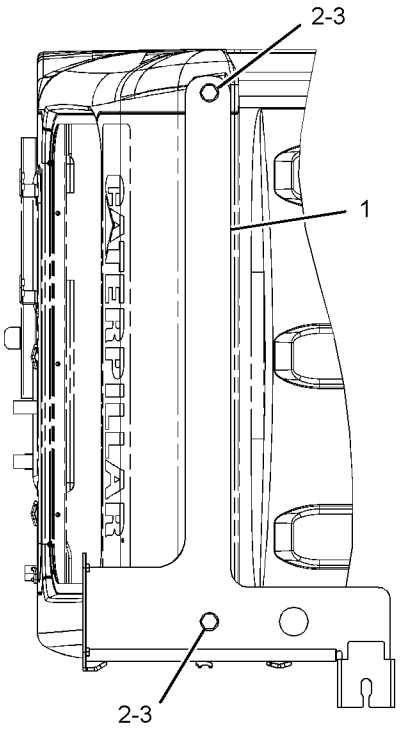

VIEW A-A

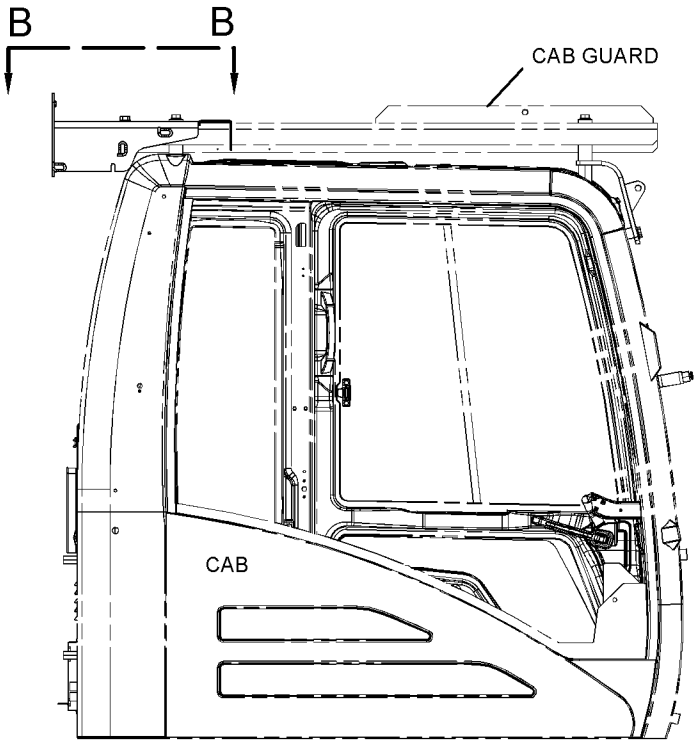

RIGHT SIDE VIEW
(WITH CAB GUARD)

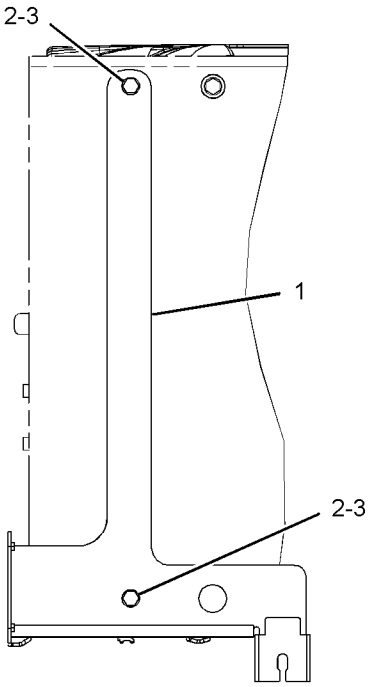

VIEW B-B

GRAPHIC #1 **<END>** g01435822

309-5771 MOUNTING GP-ANTENNA–PRODUCT LINK

S/N: PBB1-UP; KBS1-UP
PART OF 383-5427 INSTALLATION AR-COMMUNICATION
AN ATTACHMENT

SMCS-7338, 7606 **i04158242**

NOTE	REF NO	GRAPHIC REF	PART NUMBER	QTY	PART NAME 1 2 3 4 5 6 (PRODUCT LEVEL)	SEE PAGE
	1	1	**3S-2093**	2	STRAP-CABLE	
C	2	1	**141-6519**	1	SPACER (6.6X19X10-MM THK)	
M	3	1	**143-9397**	3	SCREW-PAN HEAD (M4X0.7X12-MM)	
	4	1	**284-8532**	1	ANTENNA AS (ROOF)	
		1	**355-0598**	1	NUT-SPECIAL	
		1	**301-0589**	1	ANTENNA (FLEXIBLE)	
C	5	1	**349-5413**	1	BRACKET	
C	6	1	**349-5414**	1	BRACKET AS	
	7	1	**095-0910**	4	CLIP	
	8	1	**161-6987**	3	WASHER-HARD (5.2X16X1.5-MM THK)	
CM	9	1	**6V-7357**	1	BOLT (M6X1X25-MM)	
C	10	1	**8T-4121**	2	WASHER-HARD (11X21X2.5-MM THK)	
CM	11	1	**8T-4137**	2	BOLT (M10X1.5X20-MM)	
M	12	1	**8T-4190**	1	BOLT (M16X2X25-MM)	
	13	1	**9X-2026**	1	WASHER (6.5X17X1-MM THK)	
	14	1	**9X-6165**	1	WASHER (6.5X22X2.5-MM THK)	
	15	1	**120-5737**	1	WASHER (17.5X40X4-MM THK)	

C - CHANGE FROM PREVIOUS TYPE
M - METRIC PART

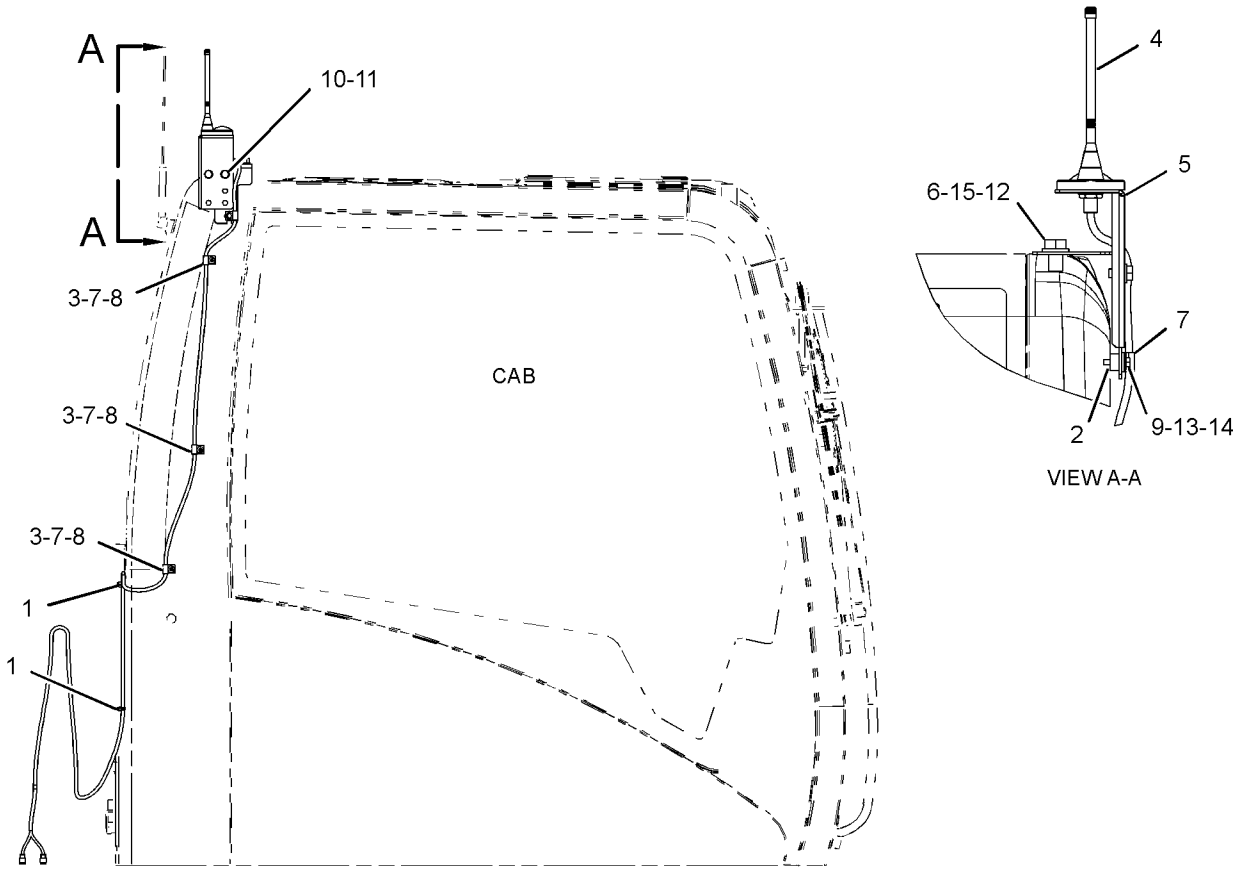

RIGHT SIDE VIEW

GRAPHIC #1 **<END>** g02148772

399-4217 MOUNTING GP-ANTENNA—PRODUCT LINK

S/N: PBB1-UP; KBS1-UP

PART OF 383-5449 CONTROL AR-COMMUNICATION

AN ATTACHMENT

SMCS-7338, 7606

i05858872

NOTE	REF NO	GRAPHIC REF	PART NUMBER	QTY	PART NAME 1 2 3 4 5 6 (PRODUCT LEVEL)	SEE PAGE
	1	1	**7I-2673**	1	STRAP-CABLE	
	2	1	**111-4836**	1	CLIP	
	3	1	**346-9376**	1	ANTENNA AS	
		1	**355-1213**	1	PLUG	
		1	**361-1045**	1	NUT-SPECIAL (5/8-18-THD)	
	4	1	**373-8961**	1	BRACKET	
	5	1	**373-8970**	1	CABLE AS-ANTENNA	
	6	1	**381-7417**	1	BRACKET AS	
	7	1	**096-2626**	3	CLIP	
M	8	1	**143-9397**	3	SCREW-PAN HEAD (M4X0.7X12-MM)	
	9	1	**161-6987**	3	WASHER-HARD (5.2X16X1.5-MM THK)	
	10	1	**3S-2093**	2	STRAP-CABLE	
	11	1	**7K-1181**	5	STRAP-CABLE	
	12	1	**8T-4121**	3	WASHER-HARD (11X21X2.5-MM THK)	
M	13	1	**8T-4137**	1	BOLT (M10X1.5X20-MM)	
M	14	1	**8T-4190**	1	BOLT (M16X2X25-MM)	
M	15	1	**8T-4191**	2	BOLT (M10X1.5X16-MM)	
M	16	1	**8T-4970**	1	BOLT (M6X1X14-MM)	
	17	1	**9X-2026**	1	WASHER (6.5X17X1-MM THK)	
	18	1	**9X-8257**	1	WASHER (17.5X30X3.5-MM THK)	

M - METRIC PART

399-4217 **MOUNTING GP-ANTENNA (*contd.*)** **i05858872**

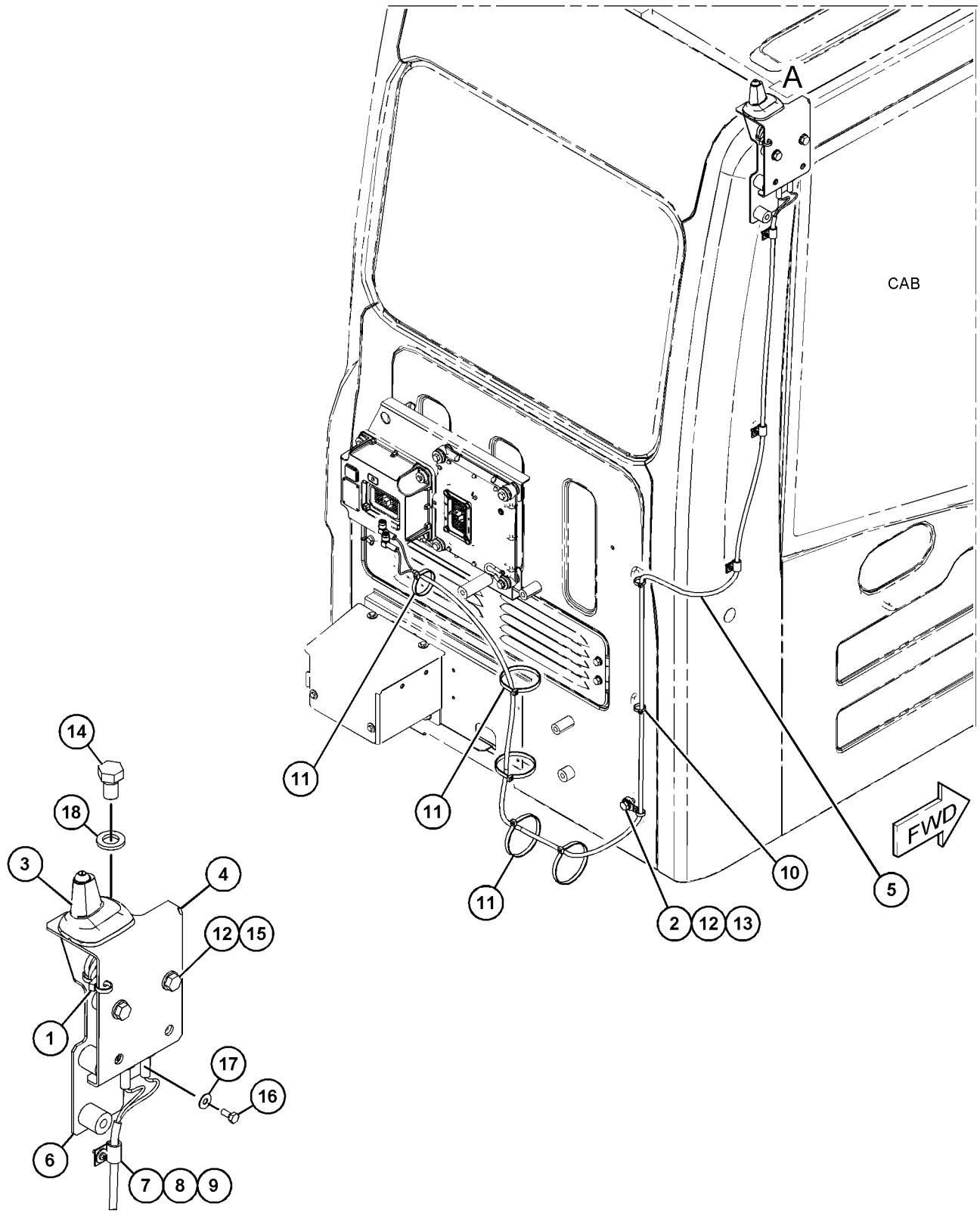

VIEW OF AREA A

GRAPHIC #1 **<END>** g03462478

245-7811 MOUNTING GP-PLATFORM

S/N: PBB1-UP; KBS1-UP

PART OF 454-5588, 454-5589 CHASSIS AR

SMCS-7253 **i02217210**

NOTE	REF NO	GRAPHIC REF	PART NUMBER	QTY	PART NAME 1 2 3 4 5 6 (PRODUCT LEVEL)	SEE PAGE
	1	1	**235-8862**	4	MOUNT AS	
	2	1	**8T-4121**	16	WASHER-HARD (11X21X2.5-MM THK)	
M	3	1	**8T-4195**	16	BOLT (M10X1.5X30-MM)	

M - METRIC PART

245-7811 **MOUNTING GP-PLATFORM (*contd.*)** **i02217210**

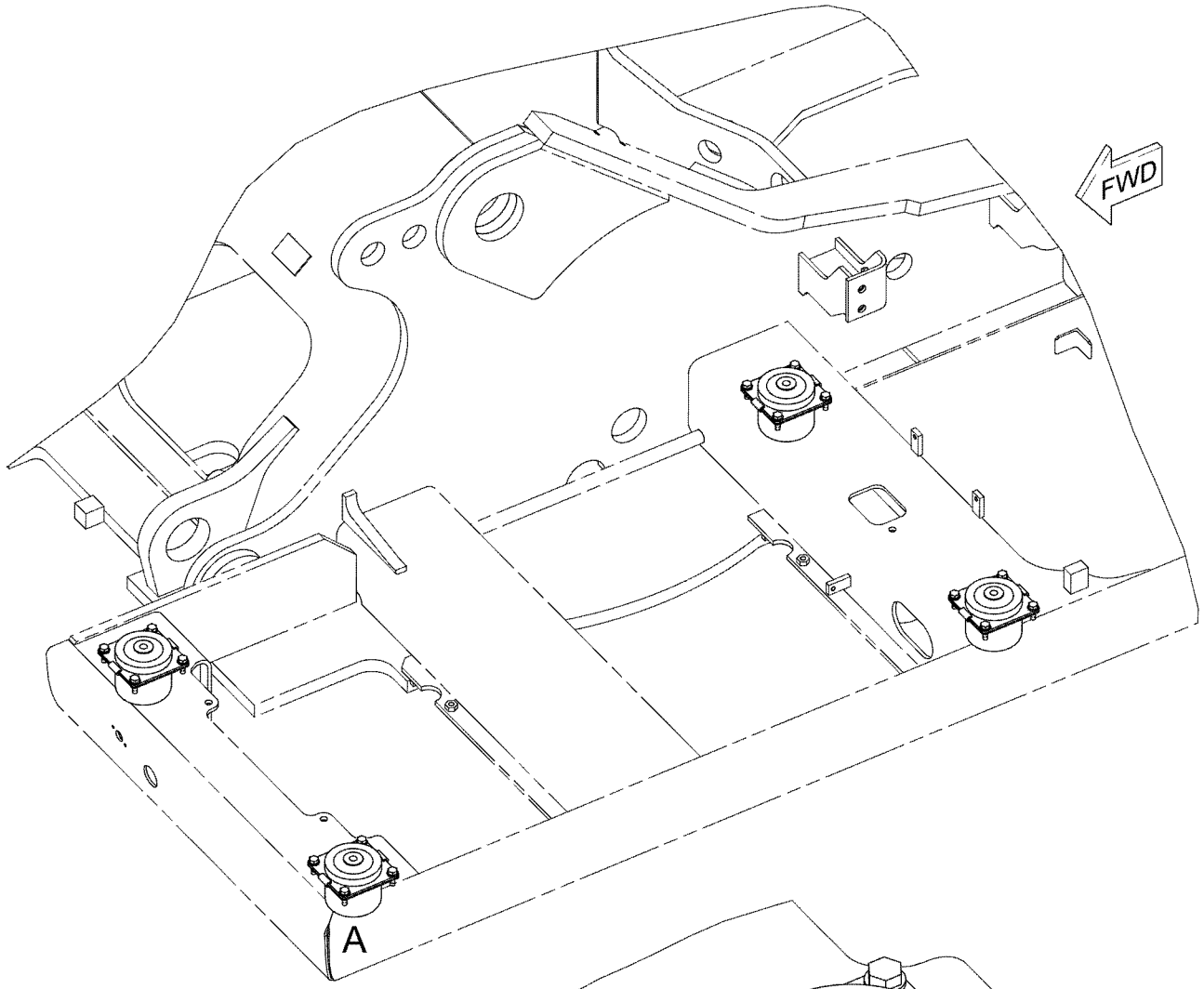

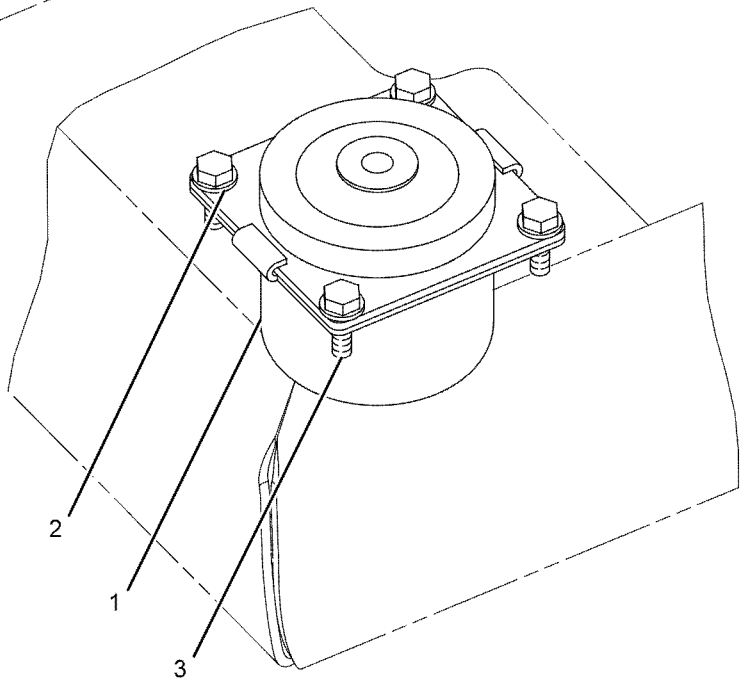

VIEW OF AREA A

GRAPHIC #1 **<END>** g01101486

OPERATOR STATION

422-0645 OPERATOR AR

S/N: PBB1-UP; KBS1-UP
PART OF 454-5588, 454-5589 CHASSIS AR

SMCS-7301 **i05852050**

NOTE	PART NUMBER	QTY	PART NAME 1 2 3 4 5 6 (PRODUCT LEVEL)	SEE PAGE
Y	*421-1431*	1	CONSOLE GP-OPERATOR	831
Y	*399-2618*	1	CONTROL & MTG GP-ELECTRONIC	117
Y	*170-9497*	1	CONTROL GP-PILOT OPERATED HYD (TRAVEL)	854
Y	*420-4514*	1	MONITOR & MTG GP-OPERATOR	901
Y	*399-2648*	1	PANEL & MTG GP-CIRCUIT BREAKER	152
Y	*229-9078*	1	PLATFORM GP-OPERATOR	911
Y	*327-6523*	1	SUPPORT GP-SEAT	928
Y	*398-7003*	1	WIRING GP-CAB	187
Y	*448-1392*	1	WIRING GP-CAB	195
Y	*398-7005*	1	WIRING GP-CONSOLE	214
Y	*398-7004*	1	WIRING GP-PLATFORM	225

Y - SEPARATE ILLUSTRATION

<END>

255-5845 PEDAL AR-AUXILIARY—HIGH PRESSURE, LH

S/N: PBB1-UP; KBS1-UP
AN ATTACHMENT

SMCS-5059 **i03196539**

NOTE	PART NUMBER	QTY	PART NAME 1 2 3 4 5 6 (PRODUCT LEVEL)	SEE PAGE
Y	*221-8884*	1	CONTROL & MTG GP-PEDAL (LH)	838
Y	*259-5293*	1	FASTENER GP-WIRING HARNESS (PEDAL CONTROL)	123
Y	*247-7418*	1	FILM GP (OPERATOR CONTROLS, NOTICE)	971

Y - SEPARATE ILLUSTRATION

<END>

259-7178 PEDAL AR-AUXILIARY—THIRD PEDAL, STRAIGHT TRAVEL

S/N: PBB1-UP; KBS1-UP
AN ATTACHMENT

SMCS-5059 **i05170035**

NOTE	PART NUMBER	QTY	PART NAME 1 2 3 4 5 6 (PRODUCT LEVEL)	SEE PAGE
Y	*259-7179*	1	CONTROL GP-HYDRAULIC PEDAL	847
Y	*251-0526*	1	FASTENER GP-WIRING HARNESS (STRAIGHT TRAVEL)	121
Y	*255-1843*	1	LINES GP-PILOT (THIRD PEDAL, PILOT VALVE)	508
Y	*260-7965*	1	LINES GP-PILOT (CONTROL VALVE, TRAVEL VALVE)	510
	260-6948	1	FILM-INSTRUCTION (OPERATOR CONTROLS, READ OMM)	
			(LOCATED IN CAB)	

Y - SEPARATE ILLUSTRATION

<END>

229-9078 PLATFORM GP-OPERATOR

S/N: PBB1-UP; KBS1-UP

PART OF 422-0645 OPERATOR AR

SMCS-7253 **i05637009**

NOTE	REF NO	GRAPHIC REF	PART NUMBER	QTY	PART NAME 1 2 3 4 5 6 (PRODUCT LEVEL)	SEE PAGE
	1	1	**135-8965**	1	GROMMET	
	2	1	**135-8966**	1	GROMMET	
	3	1	**245-7916**	1	PLATFORM AS	
	4	1	**161-3717**	1	STRIP	
	5	1	**4I-3266**	1	STRIP	
M	6	1	**453-1259**	4	BOLT (M16X2X40-MM)	
	7	1	**8T-4121**	4	WASHER-HARD (11X21X2.5-MM THK)	
M	8	1	**8T-4191**	4	BOLT (M10X1.5X16-MM)	
	9	1	**451-2175**	4	WASHER-HARD (17.5X30X3.5-MM THK)	

M - METRIC PART

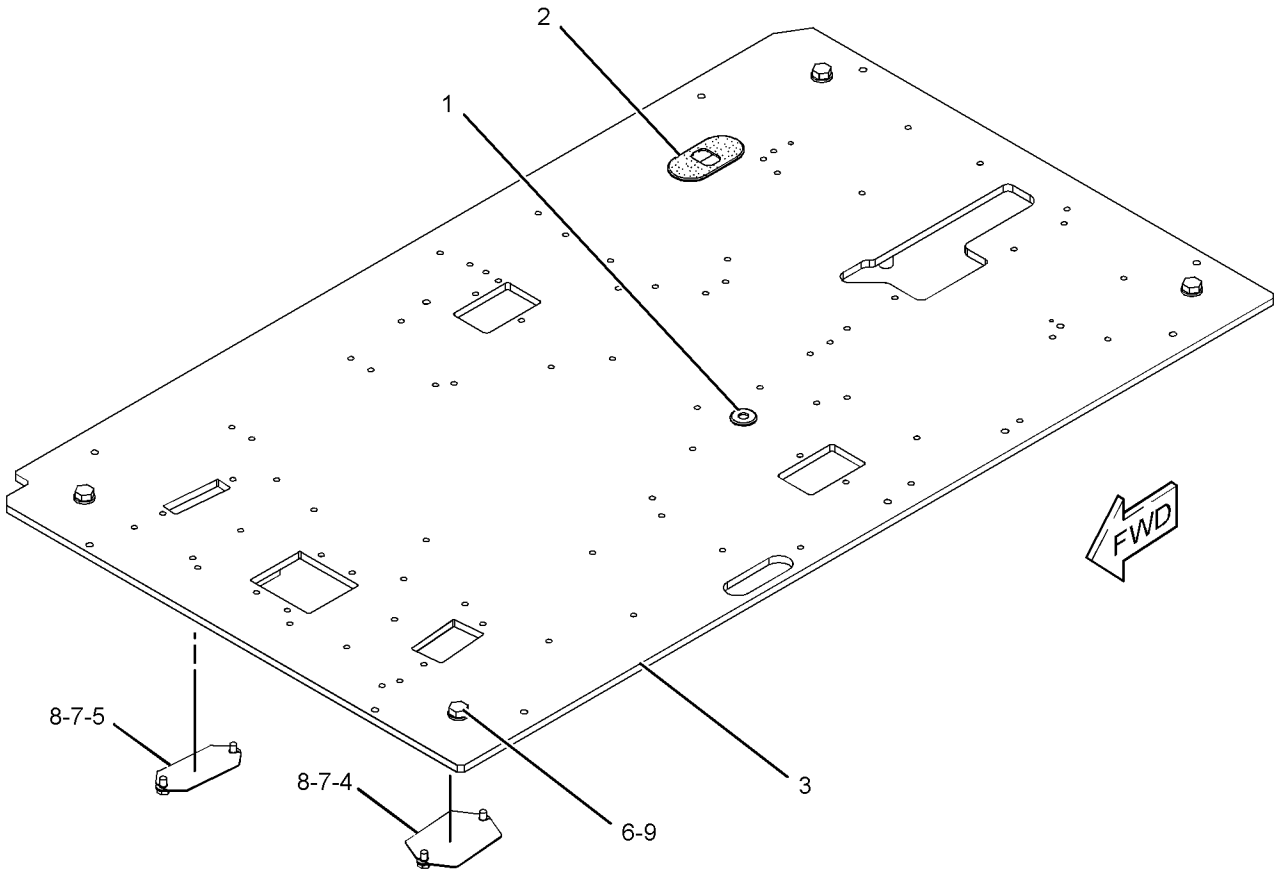

GRAPHIC #1 **<END>** g01188224

251-0538 RADIO GP–AM/FM

S/N: PBB1-UP; KBS1-UP
PART OF 456-0837, 456-0839 OPTION AR-CAB
AN ATTACHMENT

SMCS-7338, 733C

i05162351

NOTE	REF NO	GRAPHIC REF	PART NUMBER	QTY	PART NAME 1 2 3 4 5 6 (PRODUCT LEVEL)	SEE PAGE
	1	1	**3S-2093**	2	STRAP-CABLE	
	2	1	**7K-1181**	2	STRAP-CABLE	
M	3	1	**095-0736**	2	SCREW-MACHINE (M5X0.8X10-MM)	
	4	1	**238-2260**	1	CABLE	
	5	1	**306-8802**	1	RADIO-AM/FM	
	6	1	**259-4914**	1	BRACKET AS	
	7	1	**119-5026**	2	SCREW-PAN HEAD (10-16X0.63-IN)	

M - METRIC PART

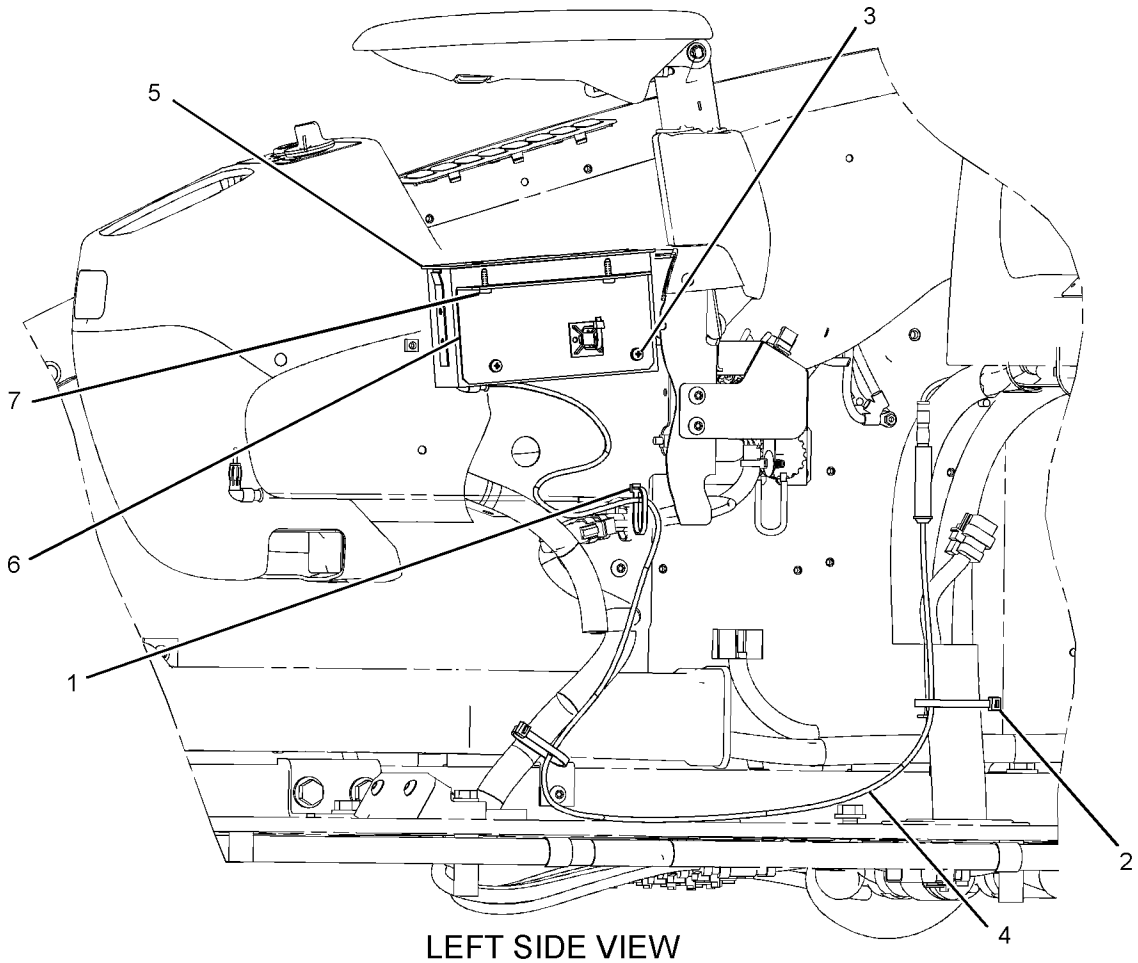

LEFT SIDE VIEW

GRAPHIC #1

<END>

g01520813

245-7881 SCREEN GP-SUN

S/N: PBB1-UP; KBS1-UP
PART OF 456-0837, 456-0839 OPTION AR-CAB
AN ATTACHMENT

SMCS-7165 **i05196481**

NOTE	REF NO	GRAPHIC REF	PART NUMBER	QTY	PART NAME 1 2 3 4 5 6 (PRODUCT LEVEL)	SEE PAGE
	1	1	**255-4410**	1	SCREEN AS (CAB)	
	2	1	**259-7214**	3	HOOK-RETAINER	
	3	1	**259-7215**	3	HOOK-RETAINER	
M	4	1	**153-3568**	6	BOLT-SOCKET HEAD (M5X0.8X10-MM)	

M - METRIC PART

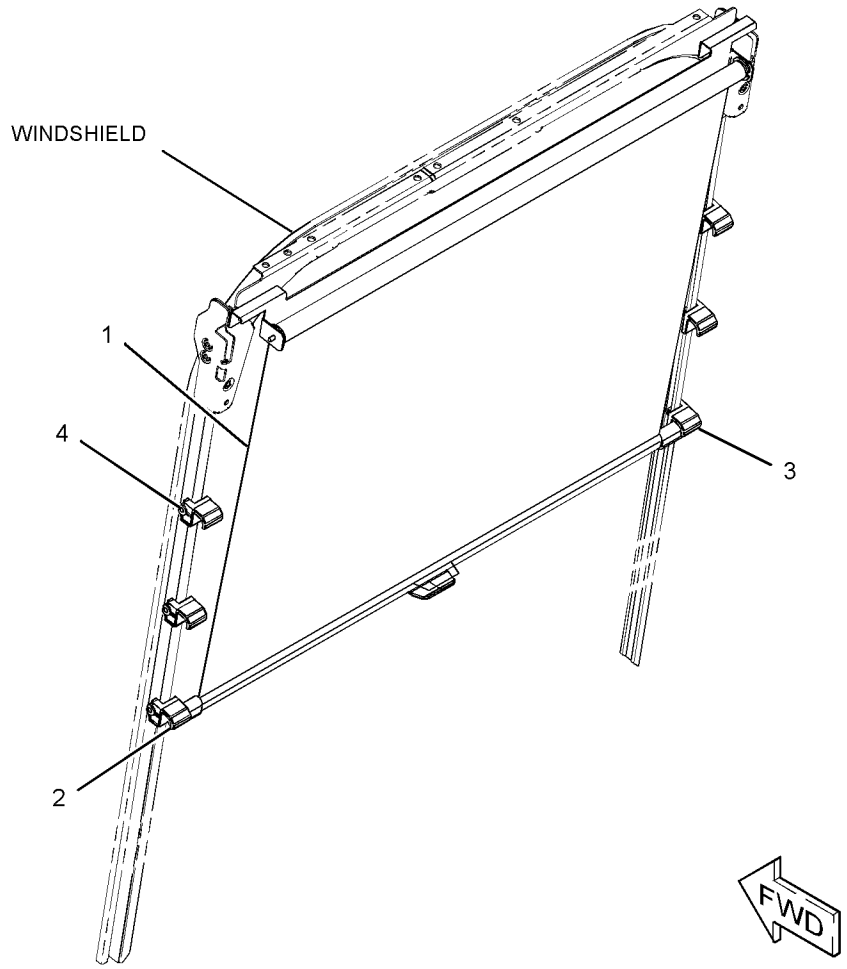

GRAPHIC #1 **<END>** g01177458

327-6501 SEAT & MOUNTING GP—HIGH BACK, TILT

S/N: PBB1-UP; KBS1-UP
CLOTH
PART OF 456-0836, 456-0838, 456-0892 OPTION AR-CAB
AN ATTACHMENT

SMCS-7312 **i04903800**

NOTE	REF NO	GRAPHIC REF	PART NUMBER	QTY	PART NAME 1 2 3 4 5 6 (PRODUCT LEVEL)	SEE PAGE
Y	1	1	*327-6507*	1	SEAT GP-SUSPENSION (HIGH BACK, TILT)	925
M	2	1	**6V-8202**	4	BOLT-SOCKET HEAD (M8X1.25X16-MM)	

M - METRIC PART
Y - SEPARATE ILLUSTRATION

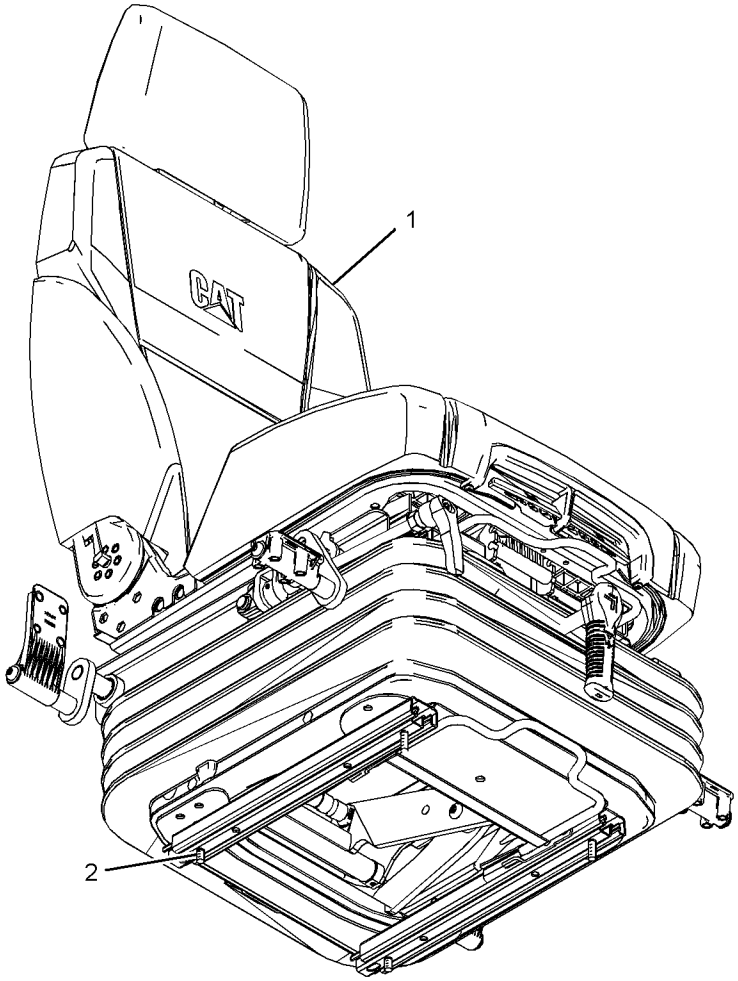

GRAPHIC #1 **<END>** g03058376

327-6503 SEAT & MOUNTING GP—HIGH BACK, WITH HEATER

S/N: PBB1-UP; KBS1-UP
CLOTH
PART OF 456-0837, 456-0839 OPTION AR-CAB
AN ATTACHMENT

SMCS-7312 **i05238936**

NOTE	REF NO	GRAPHIC REF	PART NUMBER	QTY	PART NAME 1 2 3 4 5 6 (PRODUCT LEVEL)	SEE PAGE
	1	1	**238-2211**	1	SWITCH AS-ROCKER (HEATED SEAT)	
		1	**167-3542**	1	RECEPTACLE-CONNECTOR (5-PIN)	
		1	**167-3543**	4	TERMINAL (MALE)	
Y	2	1	*327-6509*	1	SEAT GP-SUSPENSION (HIGH BACK, WITH HEATER)	926
M	3	1	**6V-8202**	4	BOLT-SOCKET HEAD (M8X1.25X16-MM)	

M - METRIC PART
Y - SEPARATE ILLUSTRATION

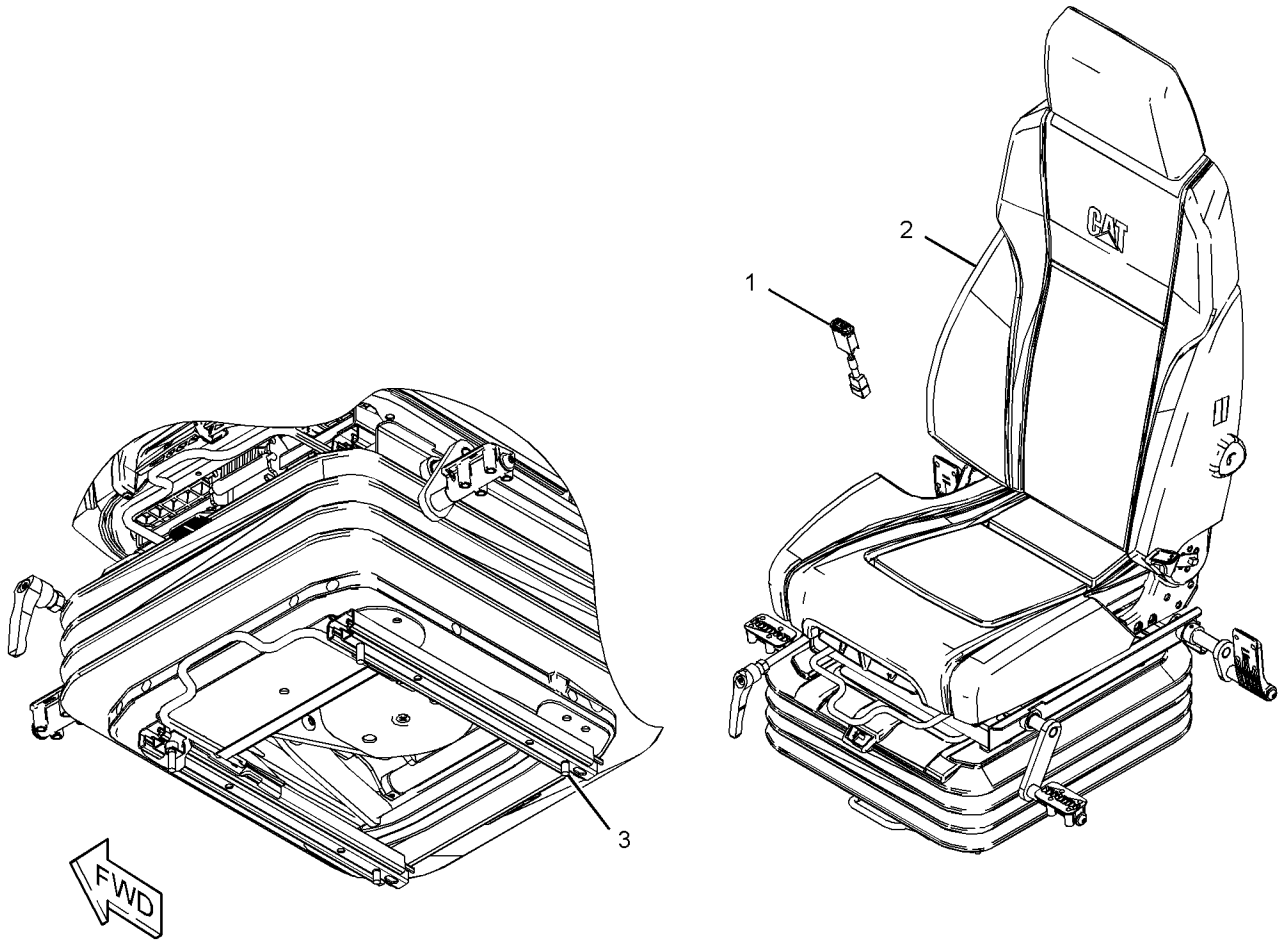

GRAPHIC #1 **<END>** g03058436

380-7183 SEAT & MOUNTING GP

S/N: KBS1-UP
PART OF 456-0842 OPTION AR-CAB
AN ATTACHMENT

SMCS-7312 **i05190631**

NOTE	REF NO	GRAPHIC REF	PART NUMBER	QTY	PART NAME 1 2 3 4 5 6 (PRODUCT LEVEL)	SEE PAGE
Y	1	1	**258-4095**	1	SEAT BELT GP (RETRACTABLE, 51-MM (2-IN))	917
Y	2	1	*366-5260*	1	SEAT GP-SUSPENSION	927
	3	1	**0T-0489**	1	BOLT (7/16-20X2-IN)	
	4	1	**1V-5872**	1	SPACER (0.493X0.675X0.95-IN THK)	
M	5	1	**6V-8202**	4	BOLT-SOCKET HEAD (M8X1.25X16-MM)	
	6	1	**7J-8337**	1	BOLT (7/16-20-THD)	
	7	1	**7X-0599**	1	WASHER-HARD (13X20X2-MM THK)	
	8	1	**8T-4223**	1	WASHER-HARD (13.5X25.5X3-MM THK)	

M - METRIC PART
Y - SEPARATE ILLUSTRATION

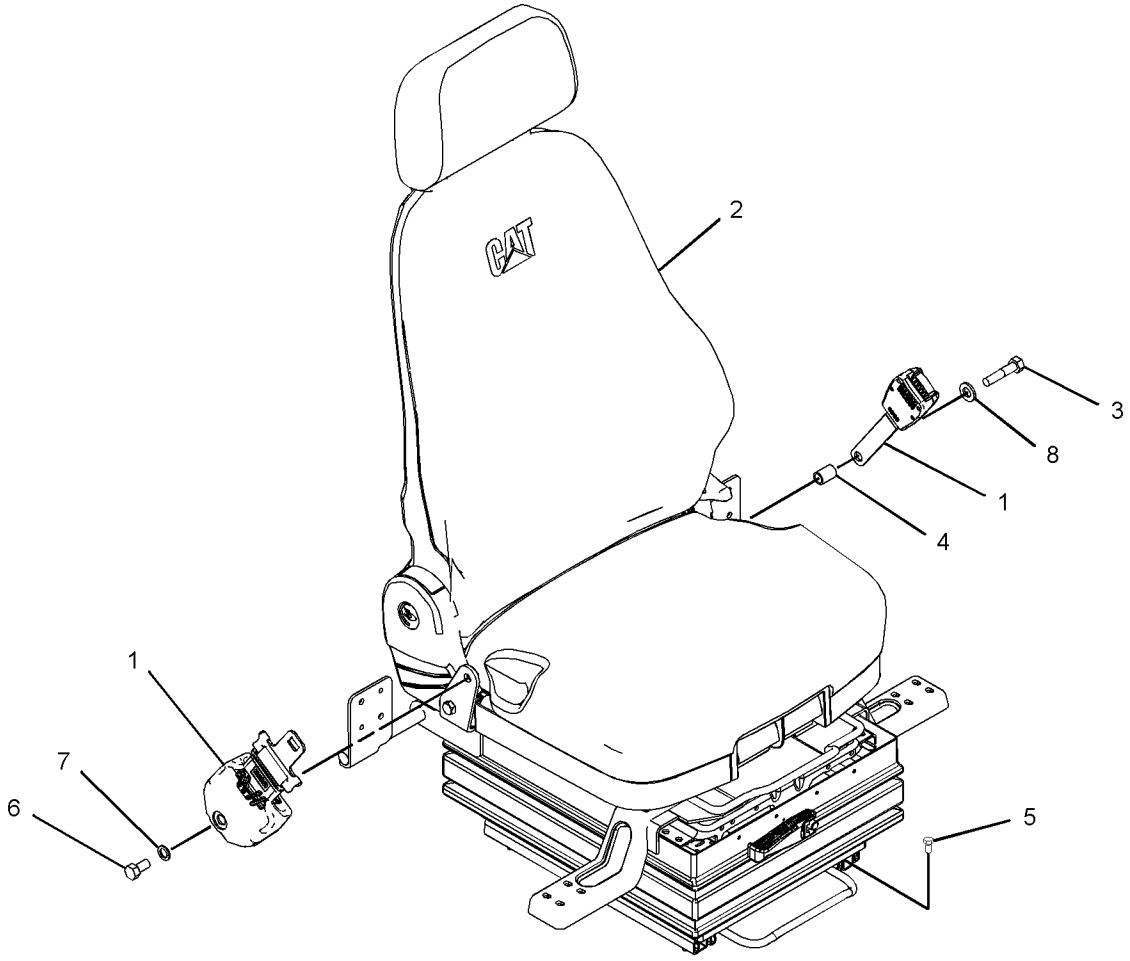

GRAPHIC #1 **<END>** g02735335

258-4095 SEAT BELT GP–RETRACTABLE

S/N: KBS1-UP
51-MM (2-IN)
PART OF 380-7183 SEAT & MOUNTING GP
AN ATTACHMENT

SMCS-7327 **i05190627**

NOTE	REF NO	GRAPHIC REF	PART NUMBER	QTY	PART NAME 1 2 3 4 5 6 (PRODUCT LEVEL)	SEE PAGE
F			**2D-6412**	2	WASHER (7/16X15/16X1/4-IN THK)	
F			**8S-0934**	2	LOCKNUT-FLANGE (7/16-20-THD)	
F			**8S-4723**	2	BOLT (7/16-20X1.5-IN)	
F			**8T-4223**	2	WASHER-HARD (13.5X25.5X3-MM THK)	

F - NOT SHOWN

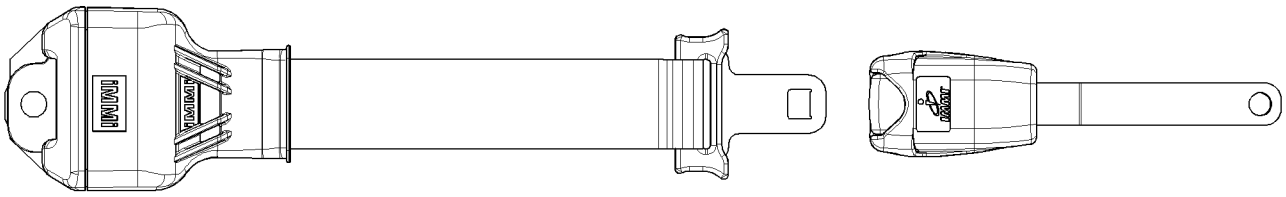

GRAPHIC #1 **<END>** g01345229

305-0466 SEAT BELT GP–RETRACTABLE

S/N: PBB1-UP; KBS1-UP
76-MM (3-IN)
PART OF 456-0837, 456-0839 OPTION AR-CAB
AN ATTACHMENT

SMCS-7327 **i05378335**

NOTE	REF NO	GRAPHIC REF	PART NUMBER	QTY	PART NAME 1 2 3 4 5 6 (PRODUCT LEVEL)	SEE PAGE
C	1	1	**327-6540**	1	SEAT BELT GP (RETRACTABLE, 76-MM (3-IN))	
					(INCLUDES MOUNTING HARDWARE)	

C - CHANGE FROM PREVIOUS TYPE

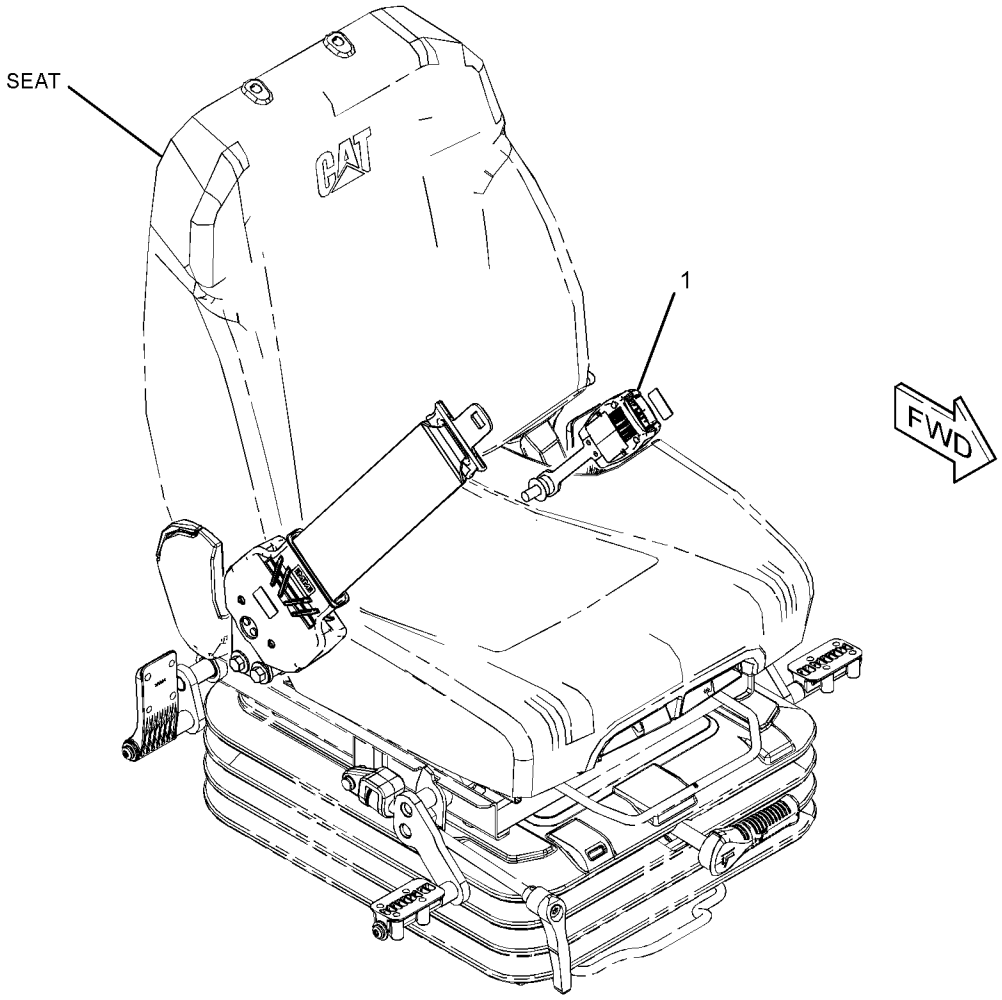

GRAPHIC #1 **<END>** g03407743

305-0467 SEAT BELT GP–RETRACTABLE

S/N: PBB1-UP; KBS1-UP
PART OF 456-0836, 456-0838, 456-0892 OPTION AR-CAB
AN ATTACHMENT

SMCS-7327 **i05768567**

NOTE	REF NO	GRAPHIC REF	PART NUMBER	QTY	PART NAME 1 2 3 4 5 6 (PRODUCT LEVEL)	SEE PAGE
C	1	1	**327-6541**	1	SEAT BELT GP (RETRACTABLE, 51-MM (2-IN))	

C - CHANGE FROM PREVIOUS TYPE

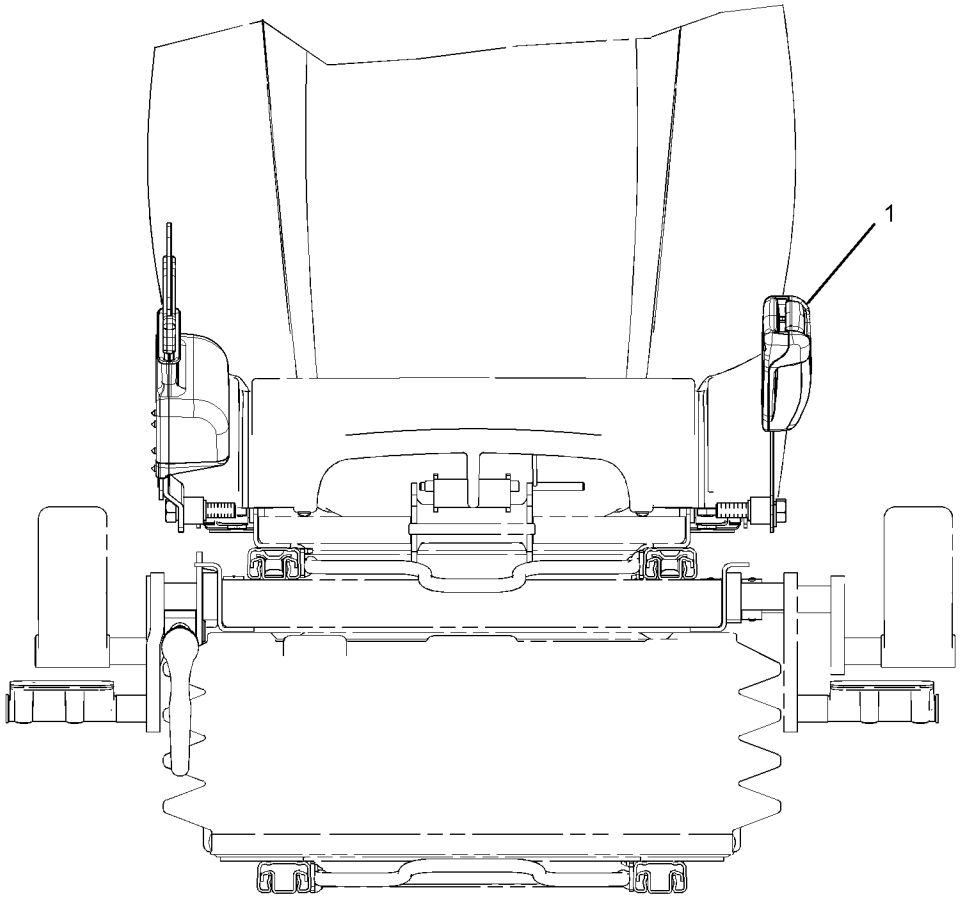

FRONT VIEW

GRAPHIC #1 **<END>** g01576478

327-6512 SEAT GP–HIGH BACK, TILT

S/N: PBB1-UP; KBS1-UP
PART OF 327-6507 SEAT GP-SUSPENSION
AN ATTACHMENT

SMCS-7312 **i05733600**

NOTE	REF NO	GRAPHIC REF	PART NUMBER	QTY	PART NAME 1 2 3 4 5 6 (PRODUCT LEVEL)	SEE PAGE
	1	1	**178-5659**	1	HANDLE (LUMBAR SUPPORT ADJUSTER)	
	2	1	**316-8987**	2	BRACKET	
	3	1	**327-6515**	1	HEADREST AS-SEAT (CLOTH)	
	4	1	**327-6640**	1	KIT-HANDLE (RECLINER)	
	5	1	**327-6642**	1	KIT-SEAT TILT (ADJUSTER)	
	6	1	**327-6643**	1	KIT-ADJUSTER (CUSHION POSITIONING)	
	7	1	**333-4160**	1	KIT-SEAT (HIGH BACK, MANUAL)	
		1	**332-0195**	1	CLIP	
		1	**383-5647**	1	SPRING	
		1	**440-5584**	1	LEVER	
		1	**440-5585**	1	PIN	
	8	1	**333-4179**	2	BOLT-SPECIAL	
M	9	1	**9X-2616**	4	SCREW-SOCKET (M8X1.25X16-MM)	

M - METRIC PART

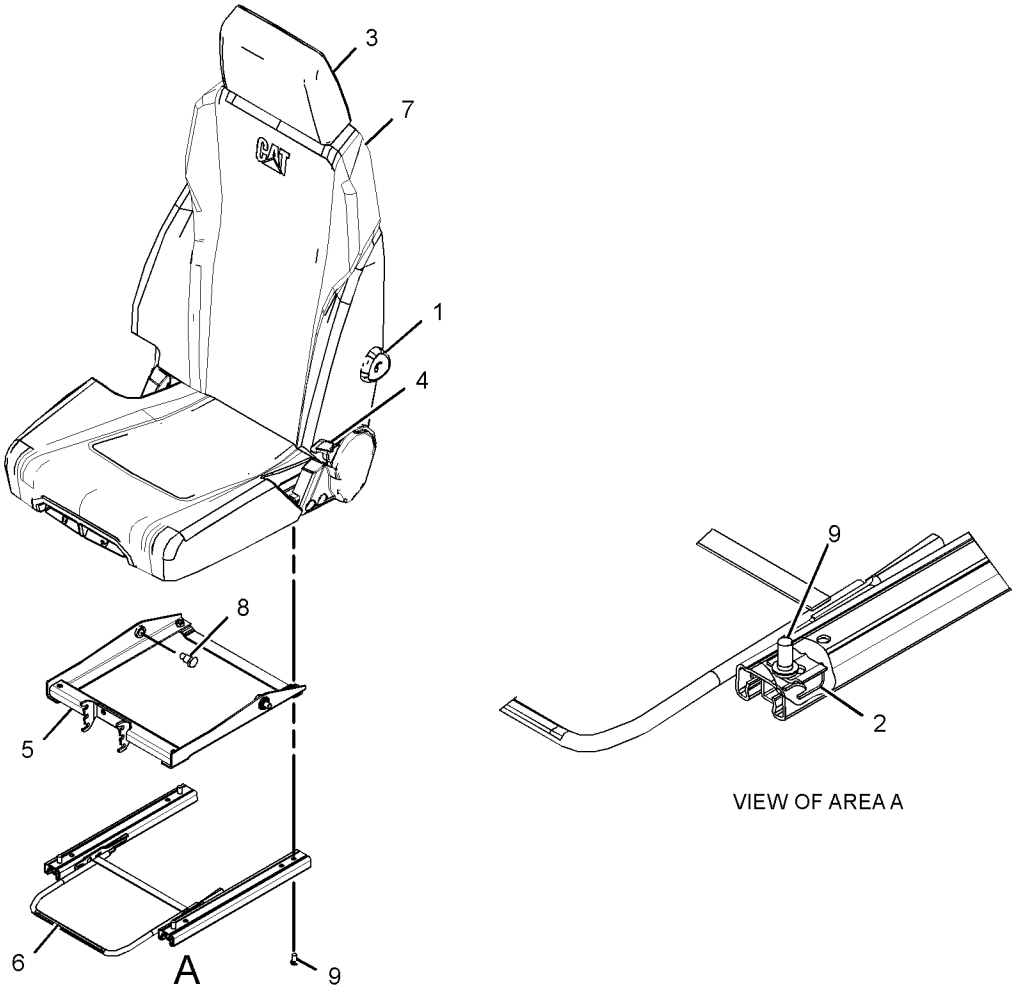

VIEW OF AREA A

GRAPHIC #1 **<END>** g03058636

327-6513 SEAT GP–HIGH BACK, WITH HEATER

S/N: PBB1-UP; KBS1-UP
PART OF 327-6509 SEAT GP-SUSPENSION
AN ATTACHMENT

SMCS-7312 **i05770073**

NOTE	REF NO	GRAPHIC REF	PART NUMBER	QTY	PART NAME 1 2 3 4 5 6 (PRODUCT LEVEL)	SEE PAGE
	1	1	**178-5659**	1	HANDLE (LUMBAR SUPPORT ADJUSTER)	
	2	1	**316-8987**	2	BRACKET	
	3	1	**327-6515**	1	HEADREST AS-SEAT (CLOTH)	
	4	1	**327-6640**	1	KIT-HANDLE (RECLINER)	
	5	1	**327-6642**	1	KIT-SEAT TILT (ADJUSTER)	
	6	1	**327-6643**	1	KIT-ADJUSTER (CUSHION POSITIONING)	
	7	1	**423-6161**	1	KIT-SEAT (HIGH BACK, WITH HEATER)	
	8	1	**333-4179**	2	BOLT-SPECIAL	
M	9	1	**9X-2616**	4	SCREW-SOCKET (M8X1.25X16-MM)	

M - METRIC PART

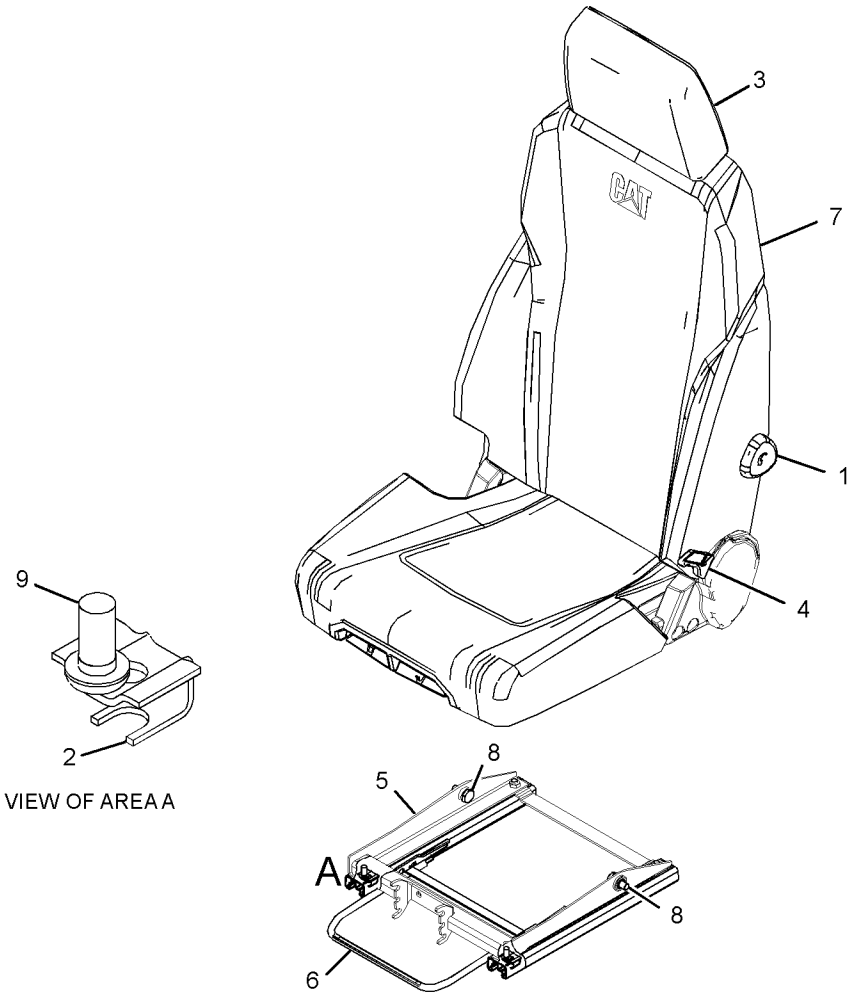

GRAPHIC #1 **<END>** g03058639

366-5257 SEAT GP—DELUXE, CLOTH

S/N: KBS1-UP
PART OF 384-2207 SEAT GP
AN ATTACHMENT

SMCS-7312 **i04956700**

NOTE	REF NO	GRAPHIC REF	PART NUMBER	QTY	PART NAME 1 2 3 4 5 6 (PRODUCT LEVEL)	SEE PAGE
	1	1	**3H-5368**	1	BOLT (7/16-14X1.375-IN)	
	2	1	**190-0386**	10	BOLT (M5X0.8X16-MM)	
	3	1	**366-5267**	1	CUSHION AS-BACK	
	4	1	**366-5269**	1	CUSHION AS-SEAT	
	5	1	**366-5271**	1	PAN AS	
	6	1	**373-2588**	1	HEADREST AS-SEAT	
	7	1	**373-2590**	1	PAN AS-SEAT	
	8	1	**373-2591**	1	PAN AS-SEAT	
	9	1	**373-2594**	1	BUSHING	
	10	1	**373-2595**	1	BRACKET AS	
	11	1	**373-2596**	1	COVER (LH)	
	12	1	**373-2597**	1	COVER (RH)	
	13	1	**373-2600**	2	SPRING	
	14	1	**374-5958**	1	HANDLE	
	15	1	**377-2843**	1	HOLDER	
	16	1	**4K-9429**	4	RIVET-POP	
M	17	1	**8T-3991**	2	SCREW-BUTTON HEAD (M6X1X20-MM)	
	18	1	**8U-7803**	1	SCREW	
E	19	1	**7X-7877**		STRIP-EDGE (13-CM)	

E - ORDER BY THE CENTIMETER
M - METRIC PART

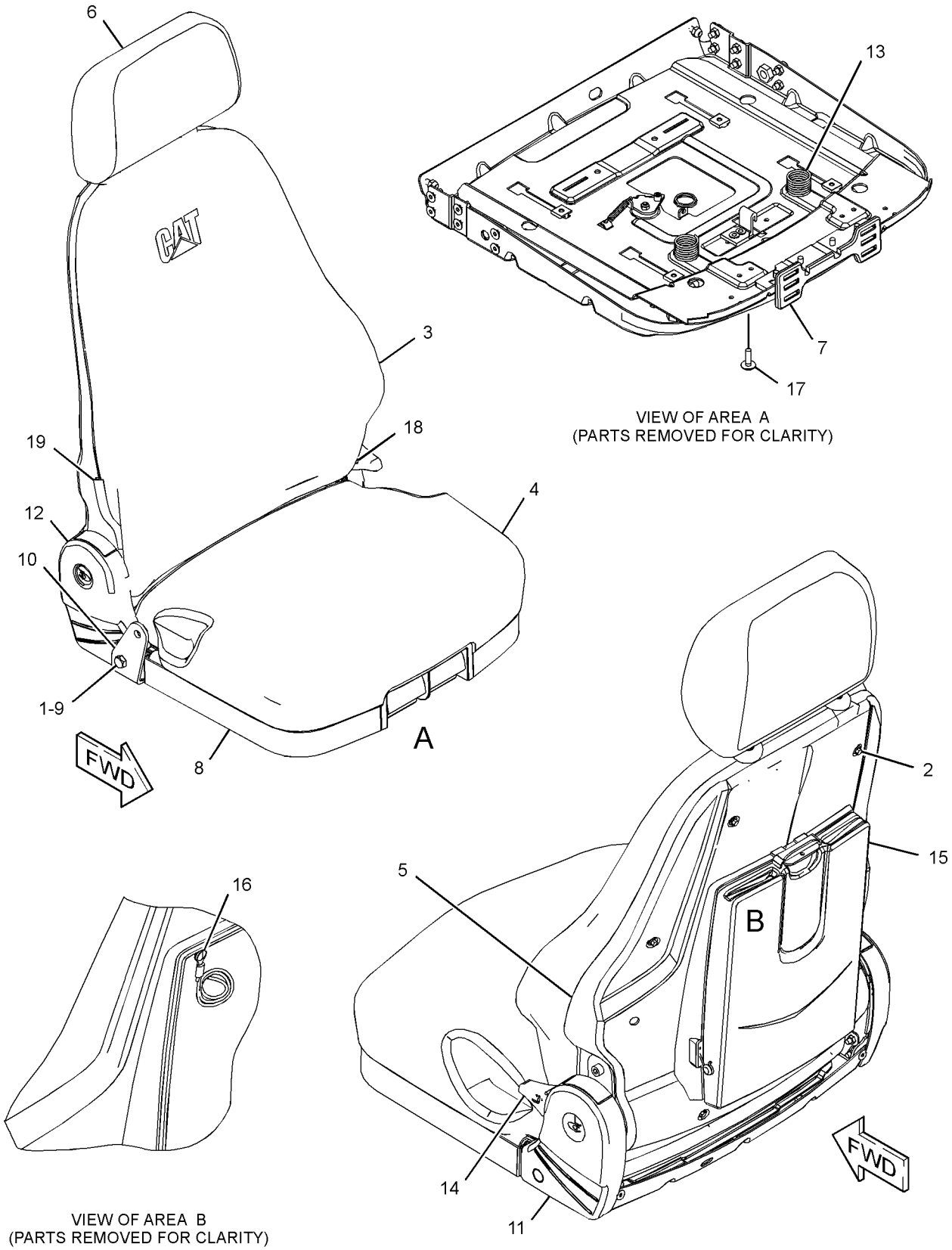

GRAPHIC #1 **<END>** g03078058

384-2207 SEAT GP–DELUXE, CLOTH

S/N: KBS1-UP

PART OF 366-5260 SEAT GP-SUSPENSION

AN ATTACHMENT

SMCS-7312 **i04969125**

NOTE	REF NO	GRAPHIC REF	PART NUMBER	QTY	PART NAME 1 2 3 4 5 6 (PRODUCT LEVEL)	SEE PAGE
Y	1	1	*366-5257*	1	SEAT GP-SUSPENSION (DELUXE, CLOTH)	922
	2	1	**366-5265**	1	KIT-SLIDE (UPPER)	
					(ALSO INCLUDES BAR, LH & RH SLIDE AS)	
M		1	**6V-7743**	2	LOCKNUT (M6X1-THD)	
		1	**8T-0334**	4	WASHER-HARD (6.6X12.5X1.6-MM THK)	
	3	1	**107-2961**	4	WASHER (8.25X17X1.136-MM THK)	
M	4	1	**6V-8202**	4	BOLT-SOCKET HEAD (M8X1.25X16-MM)	
	5	1	**7X-0579**	4	WASHER-HARD (8.8X25.5X2-MM THK)	

M - METRIC PART
Y - SEPARATE ILLUSTRATION

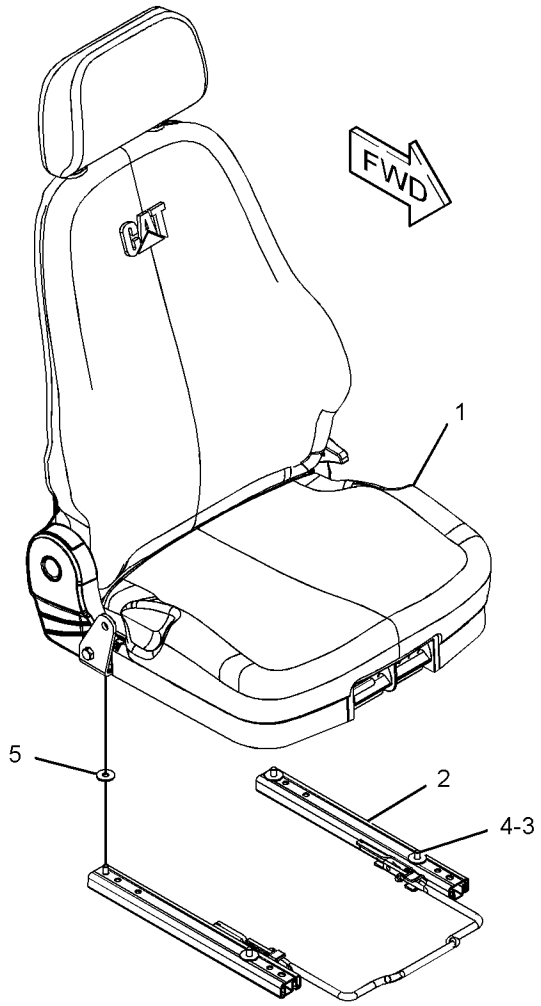

GRAPHIC #1 **<END>** g02798928

327-6507 SEAT GP-SUSPENSION—HIGH BACK, TILT

S/N: PBB1-UP; KBS1-UP
PART OF 327-6501 SEAT & MOUNTING GP
AN ATTACHMENT

SMCS-7324, 7336 **i05443860**

NOTE	REF NO	GRAPHIC REF	PART NUMBER	QTY	PART NAME 1 2 3 4 5 6 (PRODUCT LEVEL)	SEE PAGE
	1	1	**316-8987**	2	BRACKET	
Y	2	1	**327-6512**	1	SEAT GP (HIGH BACK, TILT)	920
Y	3	1	**327-6520**	1	SUSPENSION GP-SEAT (MECHANICAL)	929
M	4	1	**5A-3604**	4	BOLT-SOCKET HEAD (M8X1.25X25-MM)	

M - METRIC PART
Y - SEPARATE ILLUSTRATION

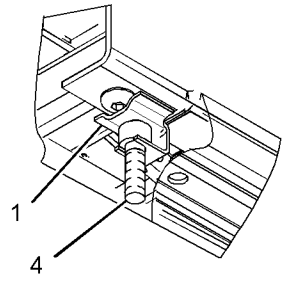

VIEW OF AREA A

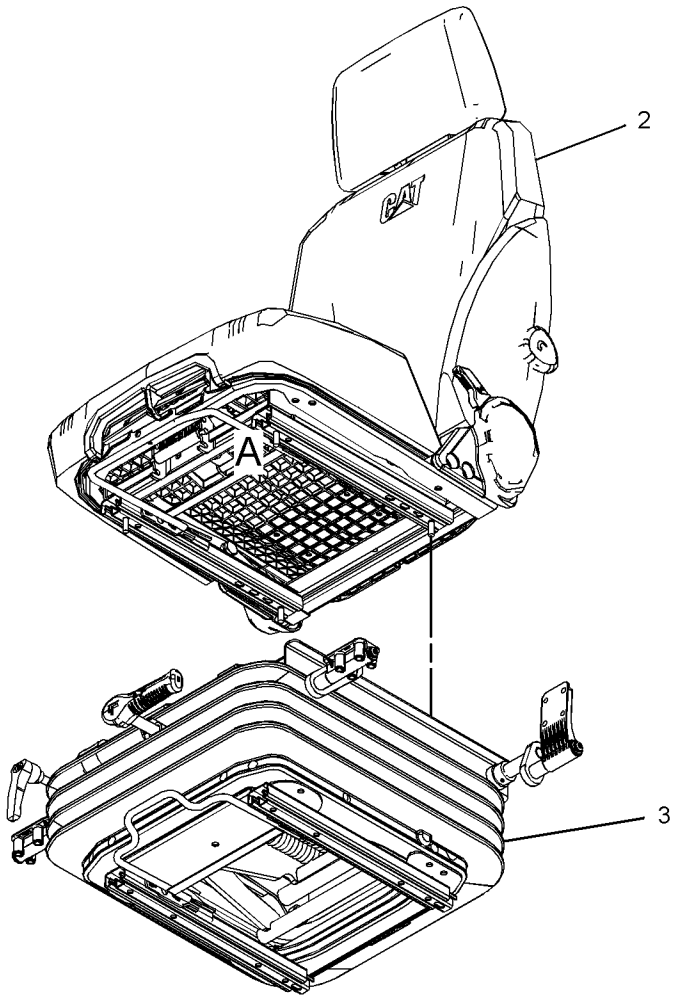

GRAPHIC #1 **<END>** g03058768

327-6509 SEAT GP-SUSPENSION—HIGH BACK, WITH HEATER

S/N: PBB1-UP; KBS1-UP
PART OF 327-6503 SEAT & MOUNTING GP
AN ATTACHMENT

SMCS-7324, 7336 **i04903896**

NOTE	REF NO	GRAPHIC REF	PART NUMBER	QTY	PART NAME 1 2 3 4 5 6 (PRODUCT LEVEL)	SEE PAGE
	1	1	**316-8987**	2	BRACKET	
Y	2	1	**327-6513**	1	SEAT GP (HIGH BACK, WITH HEATER)	921
Y	3	1	**327-6521**	1	SUSPENSION GP-SEAT (AIR)	930
M	4	1	**5A-3604**	4	BOLT-SOCKET HEAD (M8X1.25X25-MM)	
	5	1	**7I-2673**	1	STRAP-CABLE	

M - METRIC PART
Y - SEPARATE ILLUSTRATION

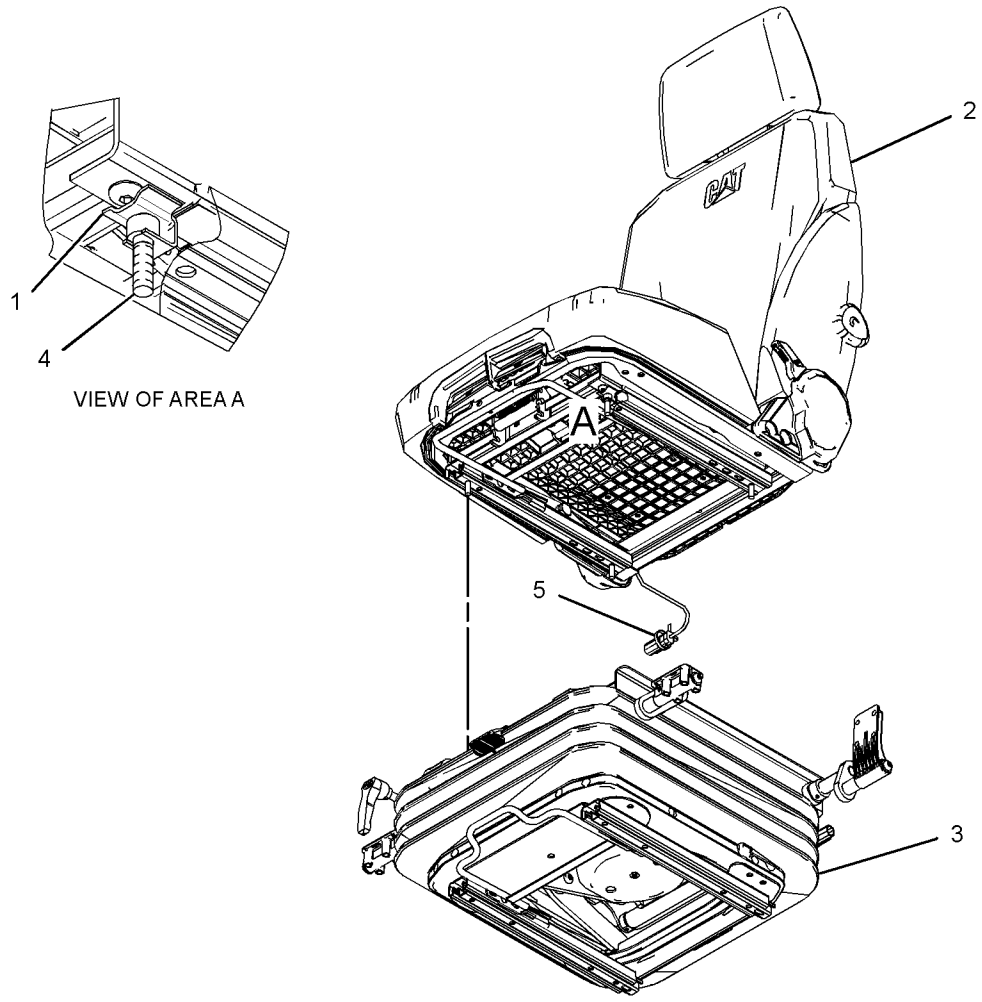

GRAPHIC #1 **<END>** g03058786

366-5260 SEAT GP-SUSPENSION—HIGH BACK, TILT

S/N: KBS1-UP
MECHANICAL SUSPENSION
PART OF 380-7183 SEAT & MOUNTING GP
AN ATTACHMENT

SMCS-7324, 7336 **i05873742**

NOTE	REF NO	GRAPHIC REF	PART NUMBER	QTY	PART NAME 1 2 3 4 5 6 (PRODUCT LEVEL)	SEE PAGE
Y	1	1	**384-2207**	1	SEAT GP (DELUXE, CLOTH)	924
	2	1	**373-3495**	4	PLATE	
Y	3	1	*377-2012*	1	SUSPENSION GP-SEAT (MECHANICAL)	934
M	4	1	**096-0001**	4	BOLT-SOCKET HEAD (M8X1.25X40-MM)	

M - METRIC PART
Y - SEPARATE ILLUSTRATION

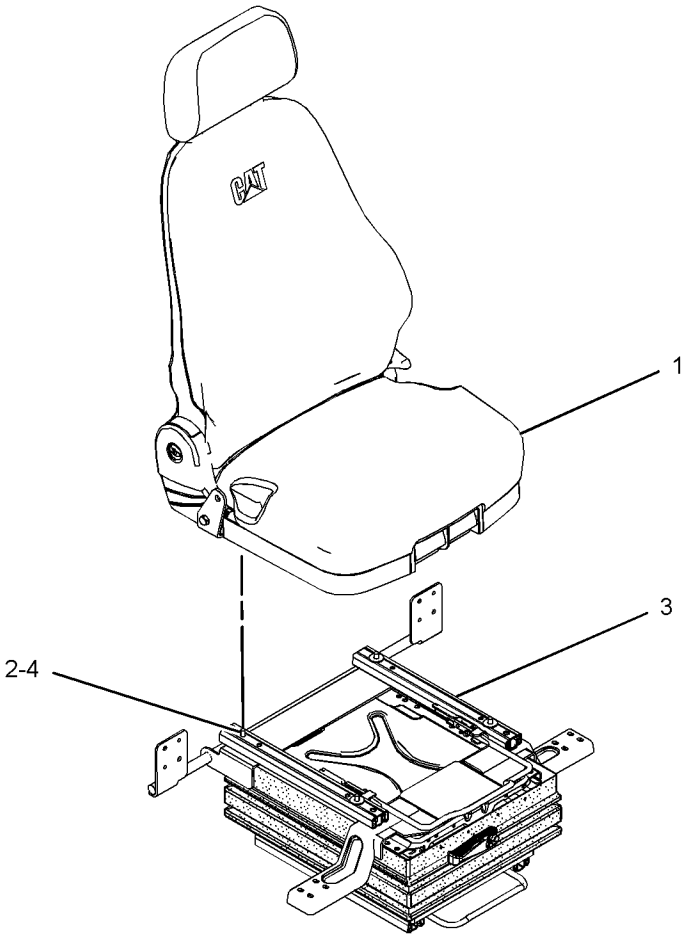

GRAPHIC #1 **<END>** g02797187

OPERATOR STATION

327-6523 SUPPORT GP-SEAT

S/N: PBB1-UP; KBS1-UP

PART OF 422-0645 OPERATOR AR

SMCS-7321 **i03467960**

NOTE	REF NO	GRAPHIC REF	PART NUMBER	QTY	PART NAME 1 2 3 4 5 6 (PRODUCT LEVEL)	SEE PAGE
	1	1	**327-6538**	1	SUPPORT AS-SEAT	
	2	1	**8T-4121**	4	WASHER-HARD (11X21X2.5-MM THK)	
M	3	1	**8T-4191**	4	BOLT (M10X1.5X16-MM)	

M - METRIC PART

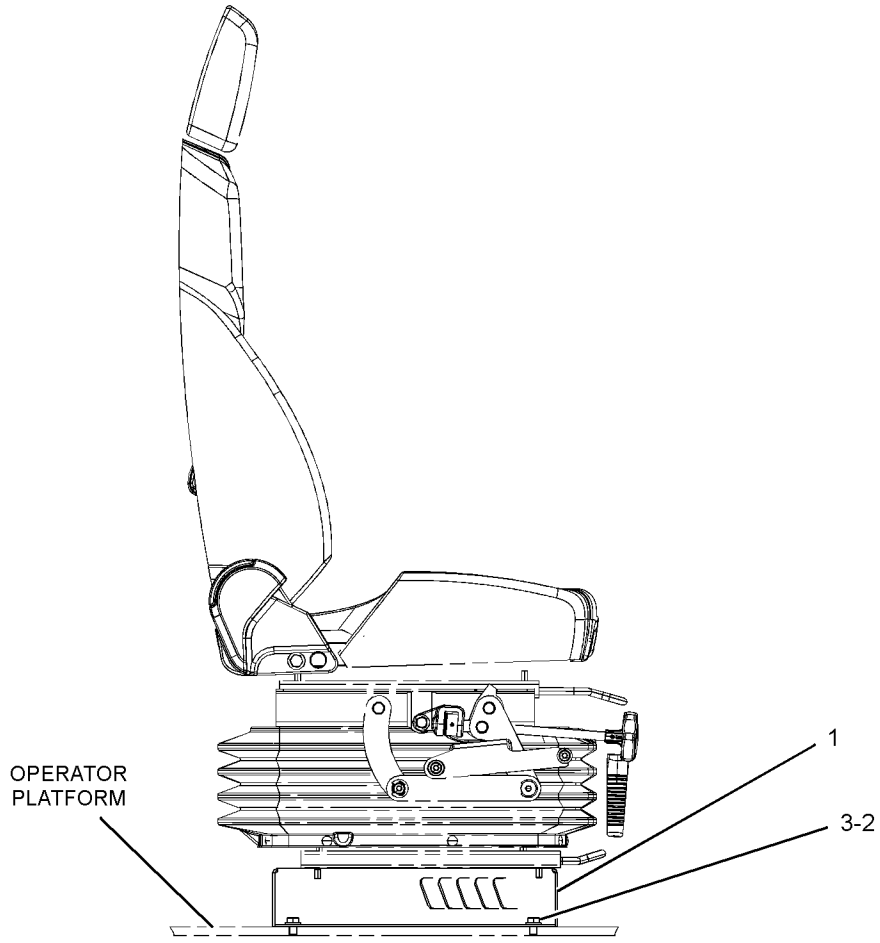

RIGHT SIDE VIEW

GRAPHIC #1 **<END>** g01809475

327-6520 SUSPENSION GP-SEAT—MECHANICAL

S/N: PBB1-UP; KBS1-UP
PART OF 327-6507 SEAT GP-SUSPENSION
AN ATTACHMENT

SMCS-7324 **i05443949**

NOTE	REF NO	GRAPHIC REF	PART NUMBER	QTY	PART NAME 1 2 3 4 5 6 (PRODUCT LEVEL)	SEE PAGE
	1	1	**327-6644**	1	KIT-BRACKET (CONSOLE RAISE, LOWER)	
	1A	1	**372-9306**	16	SPACER (16.5X28.5X0.1-MM THK)	
	2	1	**327-6645**	1	KIT-SEAT SUSPENSION (MECHANICAL)	
	3	1	**327-6648**	1	KIT-ADJUSTER (SEAT POSITION)	
M	4	1	**198-3899**	4	SCREW-BUTTON HEAD (M8X1.25X20-MM)	
	5	1	**245-7895**	1	KIT-CLIP (SEAT)	
					(INCLUDES 28 CLIPS)	
	6	1	**327-6646**	1	KIT-CYLINDER (DAMPENER)	
	7	1	**327-6647**	1	KIT-COVER (SUSPENSION)	
	8	1	**333-4180**	6	SCREW-BUTTON HEAD (M8X1.25X20-MM)	
	9	1	**333-4181**	1	KIT-HANDLE (SEAT HEIGHT) (SEAT HEIGHT)	

M - METRIC PART

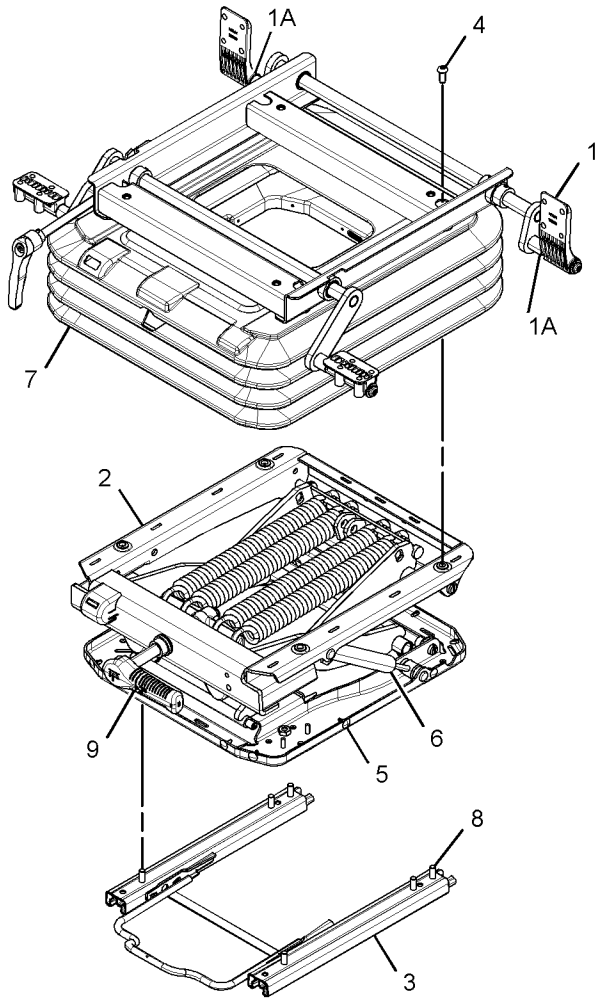

GRAPHIC #1 **<END>** g03058881

327-6521 SUSPENSION GP-SEAT–AIR

S/N: PBB1-UP; KBS1-UP
PART OF 327-6509 SEAT GP-SUSPENSION
AN ATTACHMENT

SMCS-7324 **i05589888**

NOTE	REF NO	GRAPHIC REF	PART NUMBER	QTY	PART NAME 1 2 3 4 5 6 (PRODUCT LEVEL)	SEE PAGE
	1	1	**7I-2673**	1	STRAP-CABLE	
M	2	1	**198-3899**	4	SCREW-BUTTON HEAD (M8X1.25X20-MM)	
	3	1	**245-7895**	1	KIT-CLIP	
					(INCLUDES 28 CLIPS)	
	4	1	**327-6644**	1	KIT-BRACKET (CONSOLE RAISE, LOWER)	
	4A	1	**372-9306**	16	SPACER (16.5X28.5X0.1-MM THK)	
	5	1	**327-6646**	1	KIT-CYLINDER (DAMPENER)	
	6	1	**327-6648**	1	KIT-ADJUSTER (SEAT POSITION)	
	7	1	**333-4157**	1	KIT-SEAT SUSPENSION (AIR)	
	8	1	**333-4158**	1	KIT-COVER (SUSPENSION)	
	9	1	**333-4159**	1	KIT-VALVE (AIR SEAT)	
	10	1	**333-4178**	1	NUT-SPECIAL	
	11	1	**333-4180**	6	SCREW-BUTTON HEAD (M8X1.25X20-MM)	

M - METRIC PART

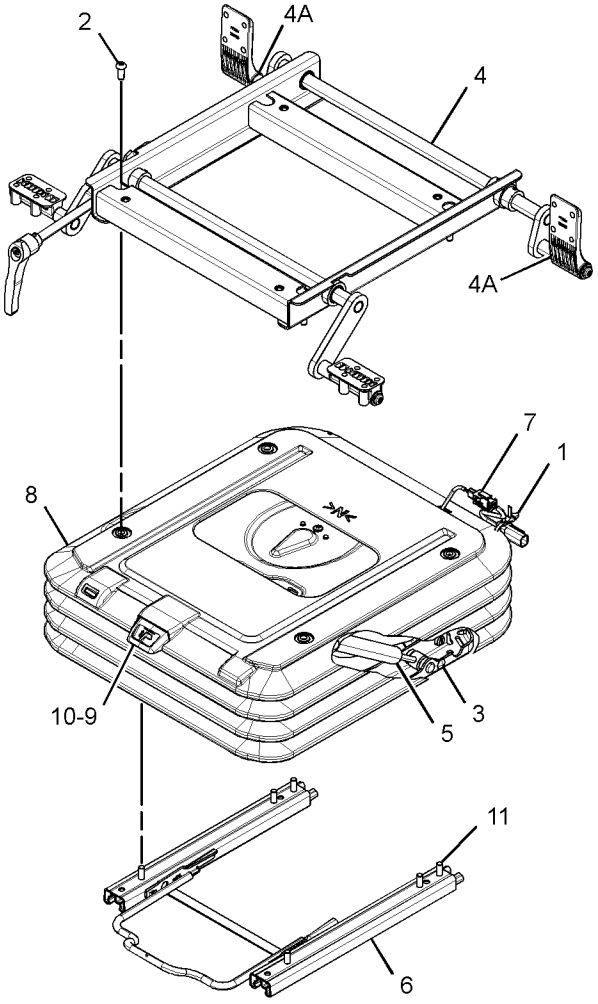

GRAPHIC #1 **<END>** g03058882

366-5262 SUSPENSION GP-SEAT—MECHANICAL

S/N: KBS1-UP

PART OF 377-2012 SUSPENSION GP-SEAT

AN ATTACHMENT

SMCS-7324 **i04969144**

NOTE	REF NO	GRAPHIC REF	PART NUMBER	QTY	PART NAME 1 2 3 4 5 6 (PRODUCT LEVEL)	SEE PAGE
	1	2	**6W-8281**	2	BUMPER	
	2	1	**9V-6754**	31	FASTENER	
	3	2	**039-9452**	2	WASHER	
	4	1	**356-2353**	1	BUSHING	
	5	1	**359-3576**	1	PLATE	
	6	1	**359-3582**	1	BOOT	
	7	2	**371-7140**	1	ARM AS-SUSPENSION	
	8	1	**371-7141**	1	HOUSING AS (UPPER)	
	9	2	**371-7142**	1	HOUSING AS (LOWER)	
	10	2	**371-7144**	4	ROLLER	
	11	2	**371-7146**	1	KIT-SPRING (SUSPENSION SEAT)	
	12	2	**371-7148**	1	SHAFT	
	13	2	**380-6351**	2	BUSHING	
	14	2	**385-1278**	1	LINK AS	
	15	1	**385-1279**	1	ADJUSTER AS	
		1	**6V-8235**	1	PIN-SPRING	
		1	**371-7147**	1	HANDLE	
	16	1,2	**385-1400**	4	BUMPER	
	17	2	**386-6071**	2	BOLT-PIVOT	
	18	1	**386-6072**	1	BOLT-PIVOT	
	19	1	**107-2961**	1	WASHER (8.25X17X1.136-MM THK)	
	20	2	**5P-8244**	2	WASHER-HARD (12X22.5X2.5-MM THK)	
	21	2	**5V-1497**	1	RETAINER	
	22	1	**8T-0114**	1	PIN-SPRING	
M	23	1	**8T-0389**	1	LOCKNUT (M10X1.5-THD)	
	24	2	**9M-5048**	2	LOCKNUT (7/16-14-THD)	
	25	2	**385-2474**	1	INDICATOR AS (SEAT ADJUSTMENT)	
	26	2	**371-7143**	1	KIT-SHOCK ABSORBER (SUSPENSION SEAT)	

M - METRIC PART

REFER TO ALL ILLUSTRATIONS OF
THIS GROUP FOR AUXILIARY VIEWS

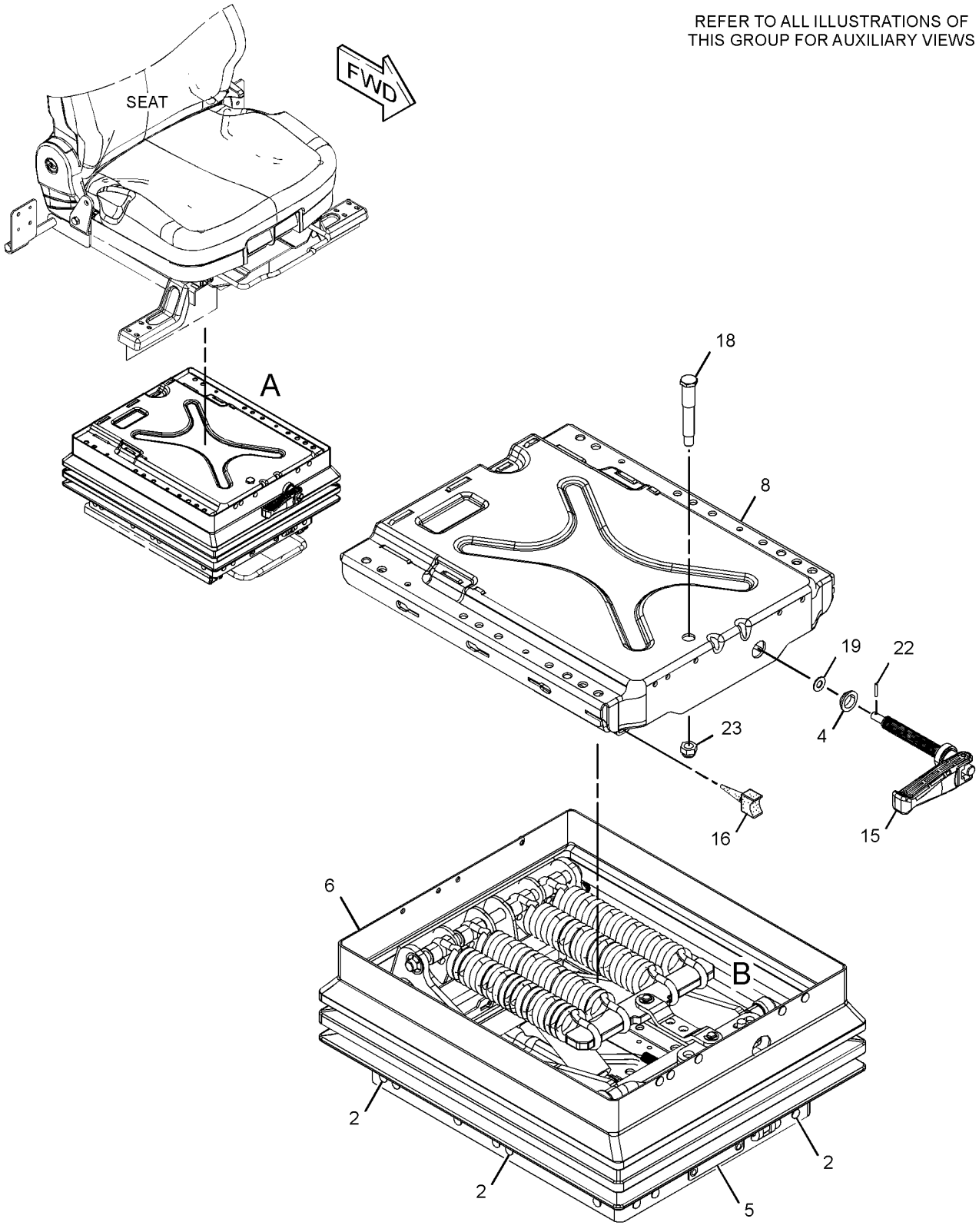

VIEW OF AREA A
(EXPLODED)

GRAPHIC #1 g02805016

366-5262 **SUSPENSION GP-SEAT (*contd.*)** **i04969144**

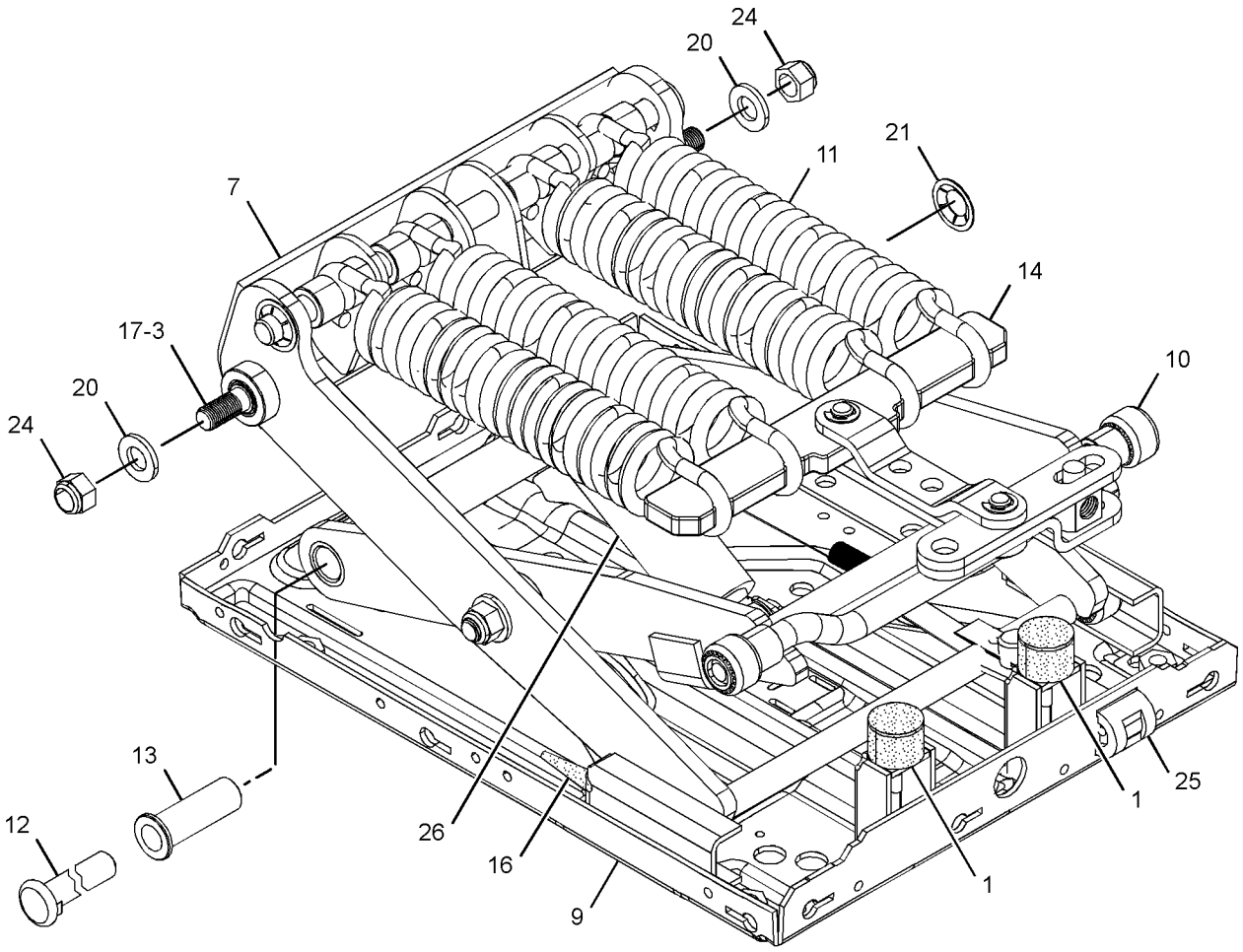

VIEW OF AREA B
(PARTS REMOVED FOR CLARITY)

GRAPHIC #2 **<END>** g02805017

377-2012 SUSPENSION GP-SEAT—MECHANICAL

S/N: KBS1-UP

PART OF 366-5260 SEAT GP-SUSPENSION

AN ATTACHMENT

SMCS-7324 **i05496276**

NOTE	REF NO	GRAPHIC REF	PART NUMBER	QTY	PART NAME 1 2 3 4 5 6 (PRODUCT LEVEL)	SEE PAGE
Y	1	1	**366-5262**	1	SUSPENSION GP-SEAT (MECHANICAL)	931
	2	1	**366-5264**	1	BRACKET AS	
	3	1	**366-5266**	1	KIT-SLIDE (LOWER)	
					(ALSO INCLUDES BAR, LH & RH SLIDE ASSEMBLIES)	
M		1	**6V-7743**	2	LOCKNUT (M6X1-THD)	
		1	**8T-0334**	4	WASHER-HARD (6.6X12.5X1.6-MM THK)	
	4	1	**384-2205**	4	BLOCK	
	5	1	**107-2961**	4	WASHER (8.25X17X1.136-MM THK)	
M	6	1	**193-7720**	4	SCREW-BUTTON HEAD (M6X1X35-MM)	
M	7	1	**209-8296**	4	BOLT-SOCKET HEAD (M8X1.25X25-MM)	

M - METRIC PART
Y - SEPARATE ILLUSTRATION

377-2012 **SUSPENSION GP-SEAT (*contd.*)** **i05496276**

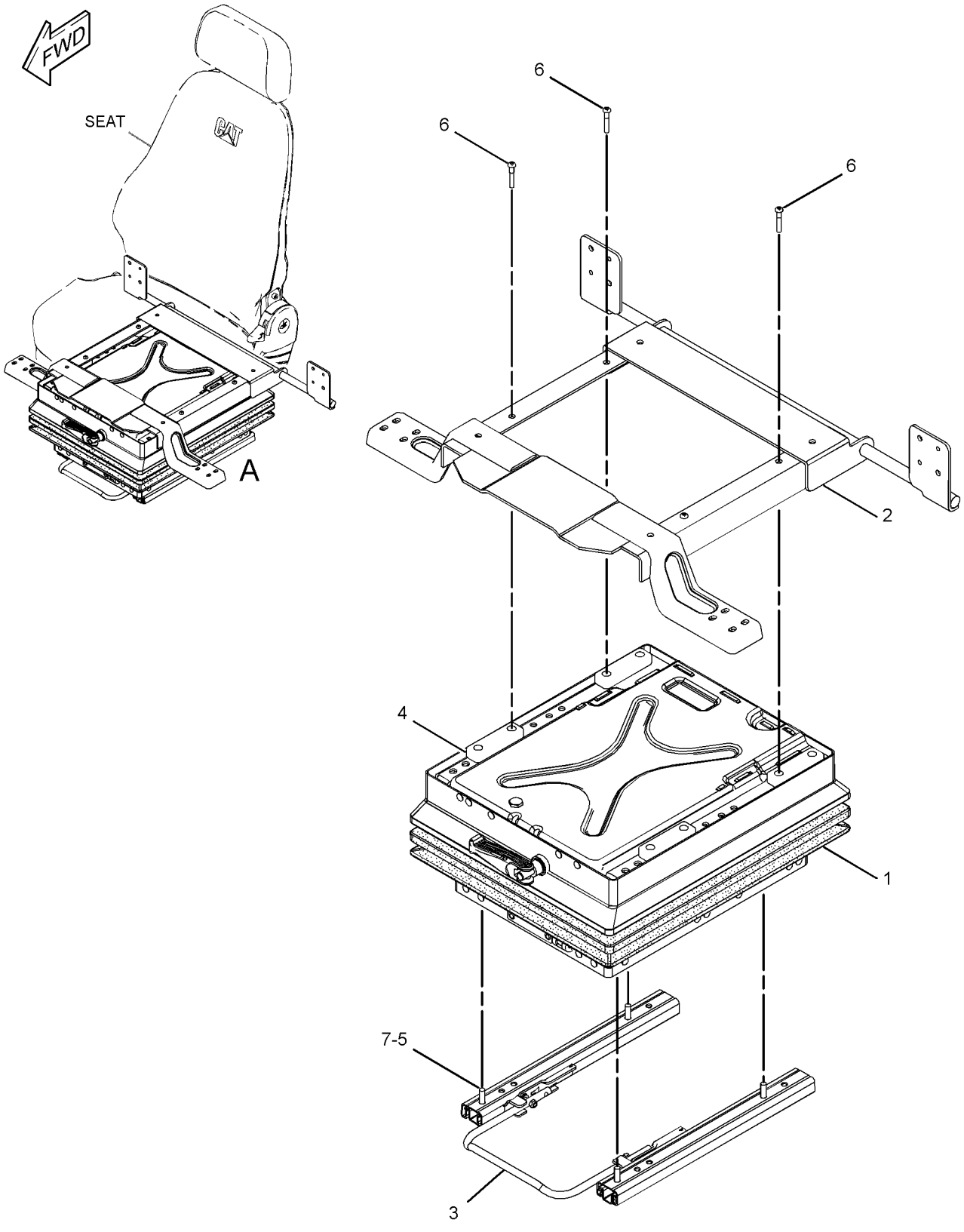

VIEW OF AREA A

GRAPHIC #1 **<END>** g03476567

161-3751 VISOR GP-CAB—SUN

S/N: PBB1-UP; KBS1-UP

PART OF 456-0836, 456-0838, 456-0842, 456-0892 OPTION AR-CAB

AN ATTACHMENT

SMCS-7301 **i05227471**

NOTE	REF NO	GRAPHIC REF	PART NUMBER	QTY	PART NAME 1 2 3 4 5 6 (PRODUCT LEVEL)	SEE PAGE
	1	1	**164-0639**	1	BRACKET AS	
	2	1	**210-5827**	1	PLATE	
	3	1	**210-5828**	1	PLATE	
	4	1	**210-5829**	2	BOLT (M6X1X20-MM)	
	5	1	**210-5834**	1	BRACKET AS	
	6	1	**210-5836**	1	VISOR	
	7	1	**210-5837**	2	STRIP	
	8	1	**210-5838**	4	PACKING	
	9	1	**8H-3481**	2	LOCKWASHER	
M	10	1	**9X-2044**	8	SCREW-TRUSS HEAD (M6X1X16-MM)	
M	11	1	**9X-2046**	2	SCREW-TRUSS HEAD (M6X1X35-MM)	
	12	1	**9X-8256**	2	WASHER (6.6X12X2-MM THK)	

M - METRIC PART

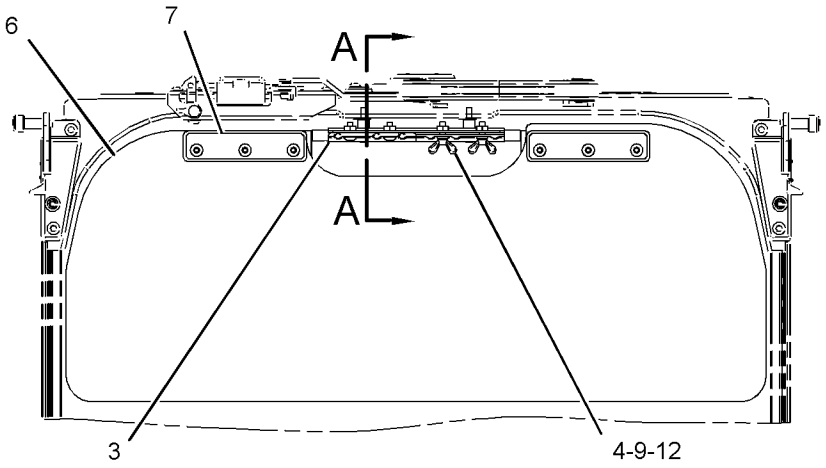

FRONT VIEW

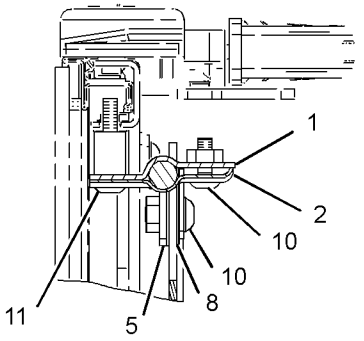

SECTION A-A

GRAPHIC #1 **<END>** g01447299

161-3750 VISOR GP-PROTECTION—RAIN

S/N: PBB1-UP; KBS1-UP

AN ATTACHMENT

SMCS-7340 **i05162340**

NOTE	REF NO	GRAPHIC REF	PART NUMBER	QTY	PART NAME 1 2 3 4 5 6 (PRODUCT LEVEL)	SEE PAGE
M	1	1	**4I-5049**	8	NUT-SPACER (M6X1-THD)	
	2	1	**164-0618**	2	BRACKET	
	3	1	**164-0619**	1	BRACKET	
	4	1	**164-0620**	1	BRACKET	
	5	1	**327-6581**	1	VISOR	
M	6	1	**6V-7357**	8	BOLT (M6X1X25-MM)	
M	7	1	**8T-4189**	4	BOLT (M8X1.25X20-MM)	
	8	1	**8T-4224**	4	WASHER-HARD (8.8X16X2-MM THK)	
	9	1	**9X-8256**	8	WASHER (6.6X12X2-MM THK)	
D	10	1	**5P-8309**		SEAL (1.4-M)	
					—OR—	
HJ		1	**348-5410**		SEAL (14-DM)	

D - ORDER BY THE METER
H - FOR AKASHI PLANT
J - ORDER BY THE DECIMETER
M - METRIC PART

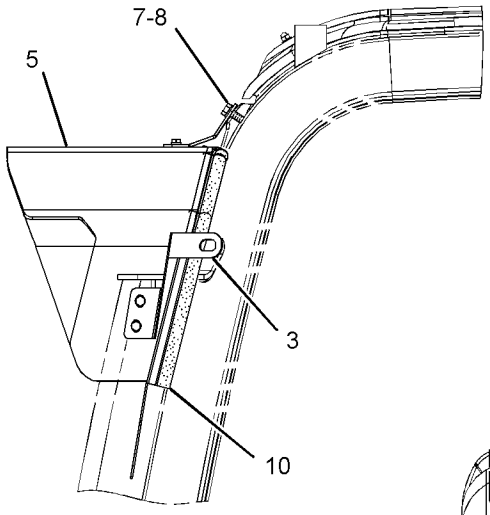

LEFT SIDE VIEW

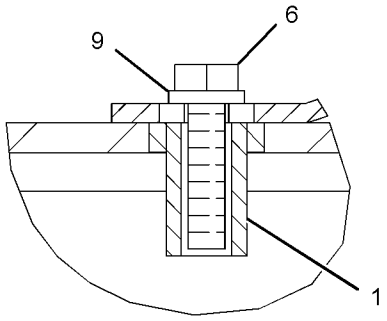

SECTION A-A

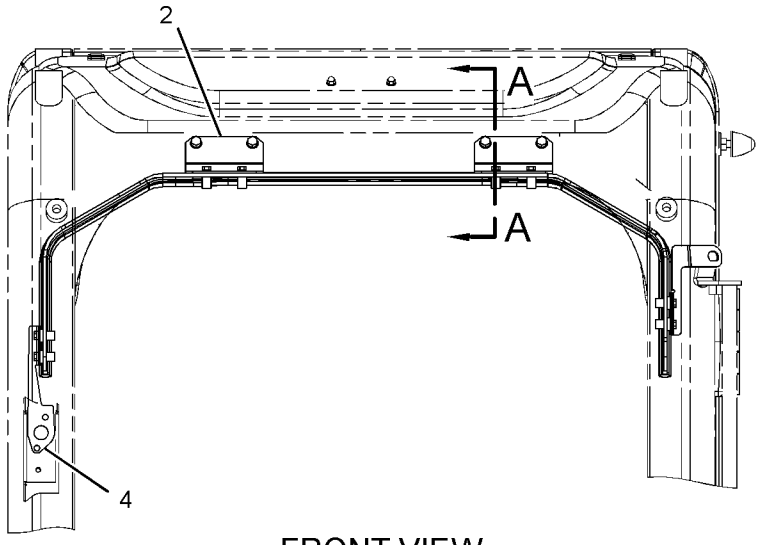

FRONT VIEW

GRAPHIC #1 **<END>** g01592616

229-9070 WASHER GP-WINDOW

S/N: PBB1-UP; KBS1-UP
CANNOT BE USED WITH 229-9086—PAGE: 965
PART OF 456-0817, 456-0818, 456-0819, 456-0820, 456-0821, 456-0823, 456-0824, 456-0825, 456-0826, 456-0827, 456-0828, 456-0829, 456-0830, 456-0918, 456-0919, 456-0920, 456-0921, 456-0922, 456-0923, 456-0932, 456-0933, 456-0942, 456-0943 DISTRIBUTION AR, 456-0836, 456-0838, 456-0842, 456-0892 OPTION AR-CAB AN ATTACHMENT

SMCS-7306 **i05238913**

NOTE	REF NO	GRAPHIC REF	PART NUMBER	QTY	PART NAME 1 2 3 4 5 6 (PRODUCT LEVEL)	SEE PAGE
	1	1	**7Y-3474**	1	VALVE AS-CHECK (WINDOW WASHER)	
	2	1	**163-6795**	2	STRAP-CABLE	
	3	1	**176-1931**	1	TANK AS-WINDOW WASHER	
		1	**5C-8138**	1	GROMMET	
		1	**7T-8890**	1	PUMP AS-WASHER (24-VOLT)	
		1	**178-5431**	1	CAP AS (WINDOW WASHER)	
		1	**3W-6399**		PACKING	
	4	1	**235-9012**	1	SUPPORT AS	
M	5	1	**8T-4970**	2	BOLT (M6X1X14-MM)	
	6	1	**9X-8256**	2	WASHER (6.6X12X2-MM THK)	
CE	7	1	**144-0195**		HOSE (13-CM)	
	8	1	**3S-2093**	1	STRAP-CABLE	

C - CHANGE FROM PREVIOUS TYPE
E - ORDER BY THE CENTIMETER
M - METRIC PART

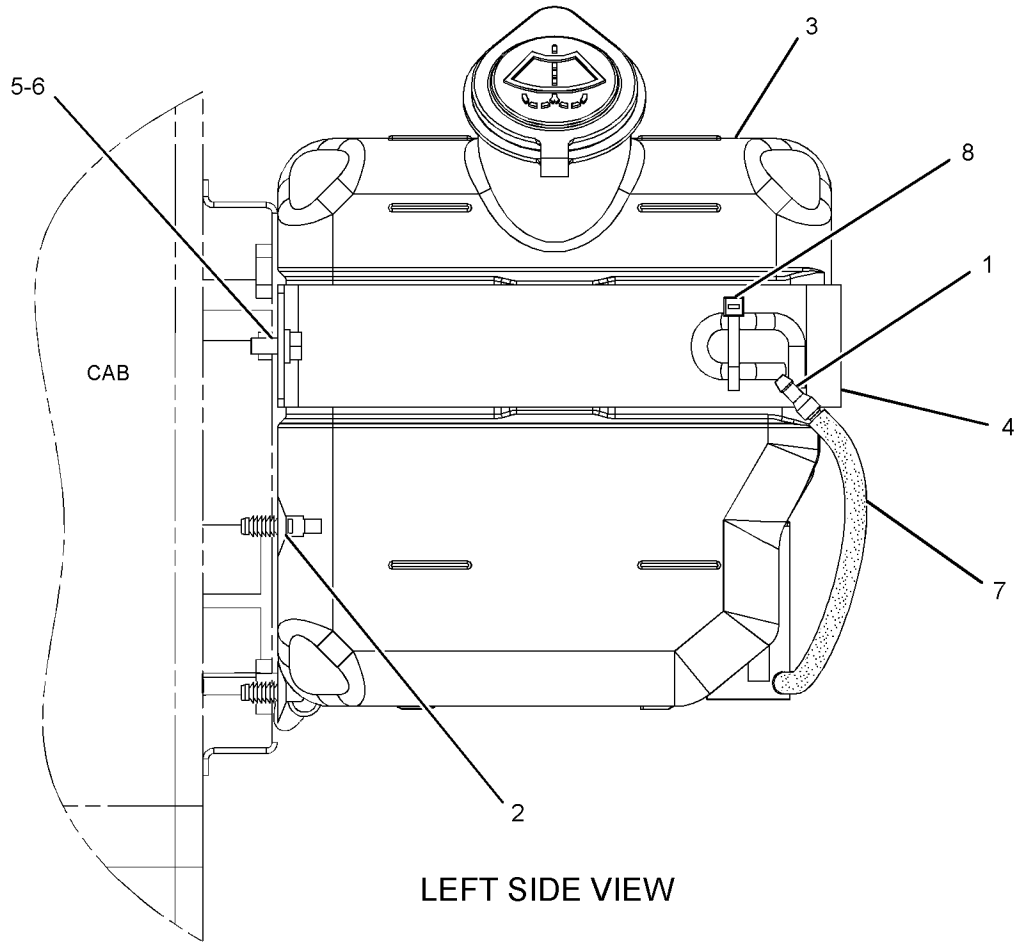

LEFT SIDE VIEW

GRAPHIC #1 **<END>** g01307642

229-9088 WASHER GP-WINDOW—LOWER

S/N: PBB1-UP; KBS1-UP
PART OF 229-9086 WIPER AR-WINDOW
AN ATTACHMENT

SMCS-7306 **i02703029**

NOTE	REF NO	GRAPHIC REF	PART NUMBER	QTY	PART NAME 1 2 3 4 5 6 (PRODUCT LEVEL)	SEE PAGE
	1	1	**3S-2093**	2	STRAP-CABLE	
	2	1	**293-1256**	2	VALVE AS-CHECK	
	3	1	**163-6795**	2	STRAP-CABLE	
	4	1	**170-9492**	1	PLATE	
E	5	1	**144-0195**		HOSE (290-CM)	
E	5A	1	**144-0195**		HOSE (30-CM)	
E	5B	1	**144-0195**		HOSE (13-CM)	
	6	1	**235-9012**	1	SUPPORT AS	
	7	1	**176-1932**	1	TANK AS-WINDOW WASHER	
	8	1	**178-5500**	1	NOZZLE AS	
		1	**085-8037**	1	NOZZLE	
		1	**105-9526**	1	ADAPTER	
		1	**105-9527**	1	GASKET	
M	9	1	**3E-9872**	2	SCREW AS (M4X0.7X12-MM)	
	10	1	**6V-3265**	10	CLIP	
	11	1	**8T-4121**	10	WASHER-HARD (11X21X2.5-MM THK)	
M	12	1	**8T-4191**	10	BOLT (M10X1.5X16-MM)	
M	13	1	**8T-4970**	2	BOLT (M6X1X14-MM)	
	14	1	**9X-8256**	2	WASHER (6.6X12X2-MM THK)	

E - ORDER BY THE CENTIMETER
M - METRIC PART

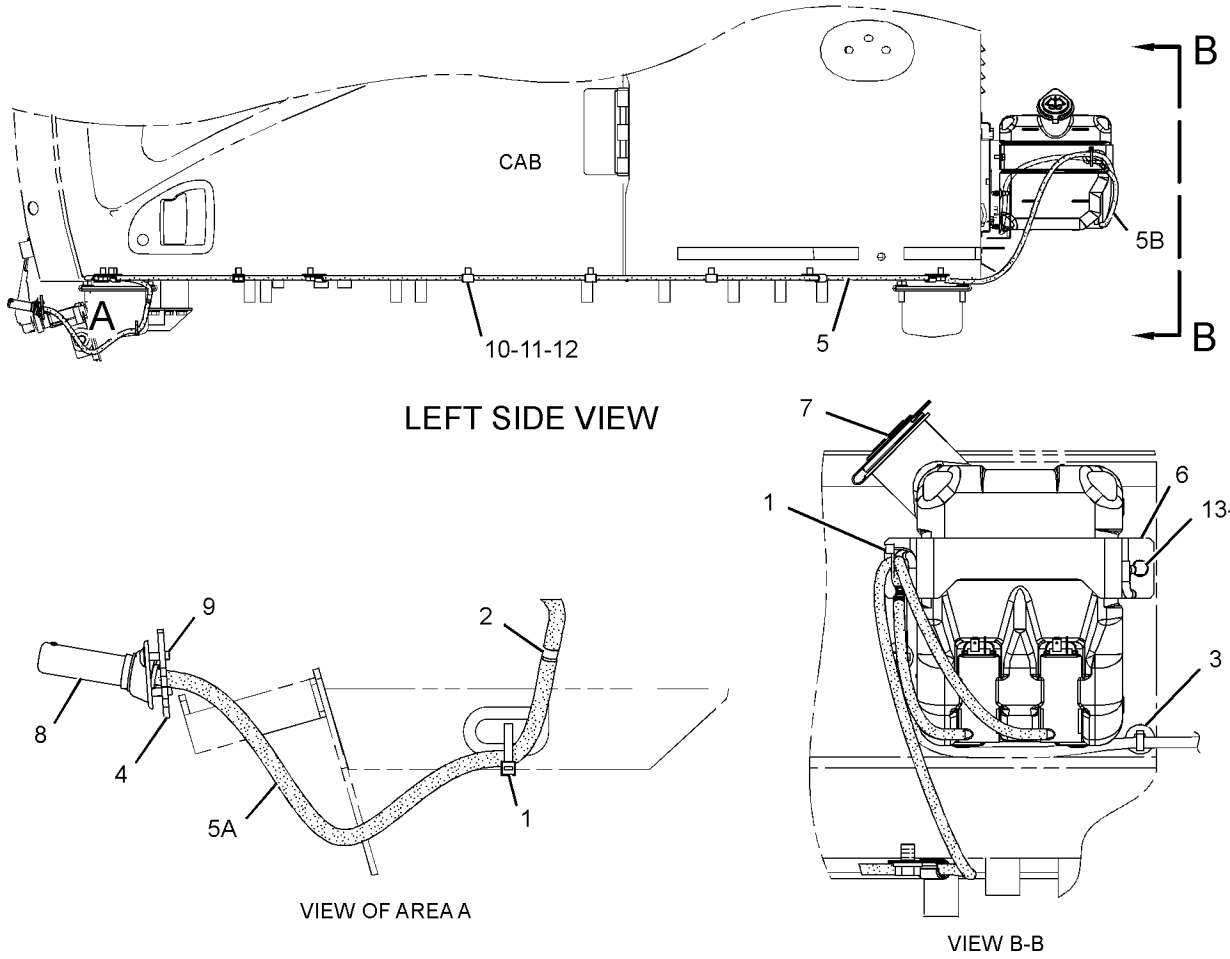

GRAPHIC #1 **<END>** g01292034

139-7101 WINDOW GP-CAB—FRONT, UPPER

S/N: PBB1-UP; KBS1-UP
PART OF 399-0057, 399-0058 CAB GP
AN ATTACHMENT

SMCS-7310 **i05120409**

NOTE	REF NO	GRAPHIC REF	PART NUMBER	QTY	PART NAME 1 2 3 4 5 6 (PRODUCT LEVEL)	SEE PAGE
	1	2	**170-9722**	1	CUSHION	
	2	1	**151-6703**	1	HANDLE-PULL	
	3	1	**151-6704**	2	CAP	
	4	2	**151-6778**	1	FRAME AS	
	4A	2	**156-6470**	1	HANDLE	
	5	1	**151-6785**	1	BRACKET AS	
	6	1	**151-6813**	1	BRACKET AS	
	7	1	**151-6815**	1	BRACKET AS	
	8	1	**273-5345**	1	LINK AS	
	9	1	**273-5346**	1	LINK AS	
	10	1	**151-6831**	1	LOCK AS	
	11	1	**151-6832**	1	LEVER AS	
	12	2	**151-6844**	1	COVER	
	13	1	**151-9557**	2	STOP-RUBBER	
	14	2	**156-6472**	1	GLASS	
	15	2	**156-6554**	1	CABLE AS	
	16	1	**156-6555**	1	STRIKER AS	
	17	2	**156-6562**	1	BRACKET	
	18	2	**273-5274**	1	CATCH AS	
					—OR—	
		2	**156-6563**	1	CATCH AS	
	19	2	**156-6579**	1	STOP	
	20	2	**156-6601**	1	SEAL AS	
	21	2	**156-6627**	1	STOP AS	
	22	1	**161-3684**	2	STOP	
	23	1	**161-3698**	1	SEAL	
	24	2	**164-0648**	1	BRACKET AS	
	25	1	**178-5576**	1	STOP	
M	26	2	**6V-5210**	2	SCREW-MACHINE (M4X0.7X10-MM)	
M	27	2	**185-8182**	4	BOLT (M10X1.5X20-MM)	
M	28	2	**5C-8312**	1	NUT (M4X0.7-THD)	
	29	2	**185-8187**	4	WASHER (10.2X22X3.2-MM THK)	
M	30	1	**142-0485**	1	NUT (M10X1.5-THD)	
	31	1	**185-8221**	1	STOP	
M	32	1	**099-0823**	2	SCREW-MACHINE (M6X1X6-MM)	
M	33	1	**101-8900**	2	SCREW AS (M6X1X20-MM)	
	34	1	**117-6306**	1	SWITCH (WINDOW LOWER LIMIT)	
	35	1	**151-9576**	4	ROLLER	
	36	1	**4I-0420**	1	STRIP	
	37	1	**7X-0578**	1	WASHER-HARD (10.2X32X2.5-MM THK)	
M	38	2	**9X-2042**	20	SCREW-TRUSS HEAD (M6X1X12-MM)	
M	39	1,2	**9X-2044**	5	SCREW-TRUSS HEAD (M6X1X16-MM)	
M	40	2	**9X-2045**	3	SCREW-TRUSS HEAD (M6X1X20-MM)	
	41	2	**9X-8256**	2	WASHER (6.6X12X2-MM THK)	

M - METRIC PART

139-7101 **WINDOW GP-CAB (*contd.*)** **i05120409**

REFER TO ALL ILLUSTRATIONS OF
THIS GROUP FOR AUXILIARY VIEWS

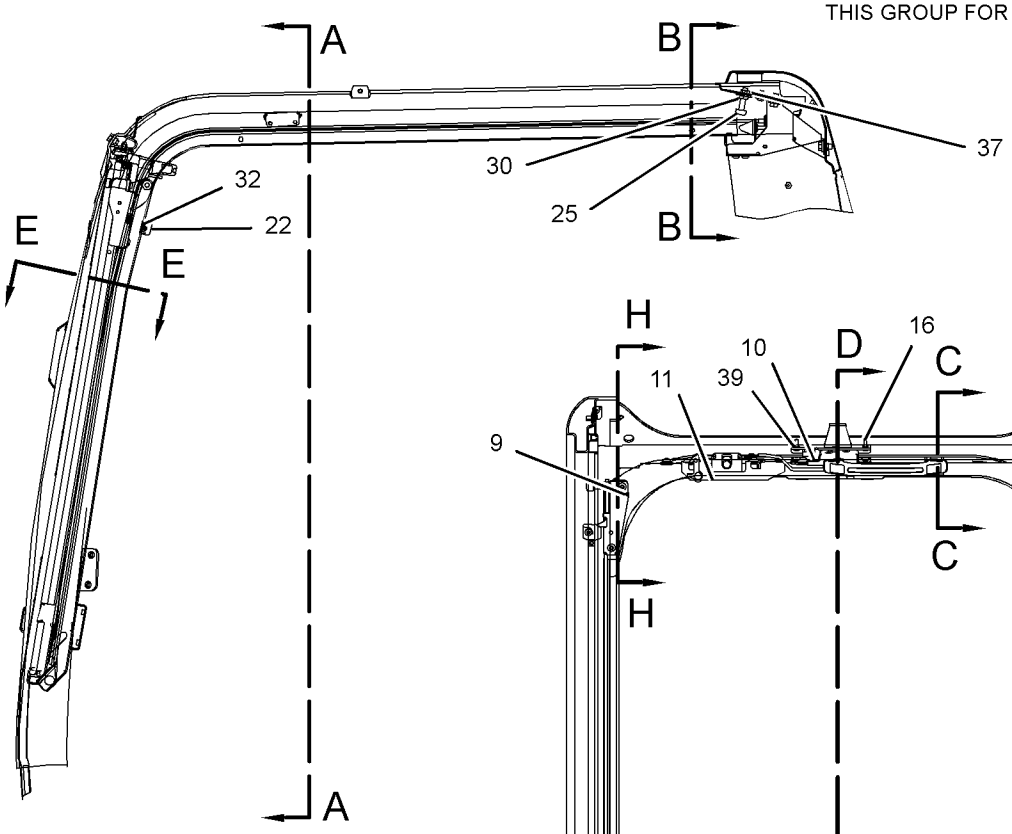

LEFT SIDE VIEW

SECTION A-A

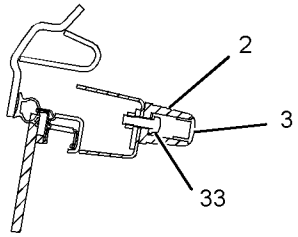

SECTION C-C

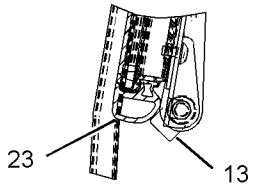

SECTION D-D

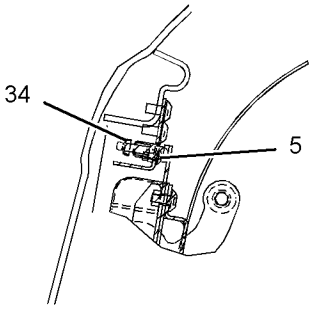

SECTION F-F

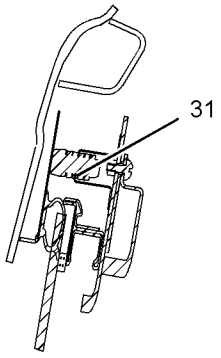

SECTION H-H

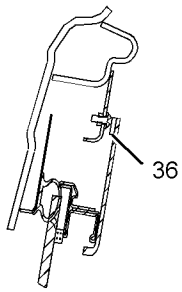

SECTION J-J

GRAPHIC #1 g01231378

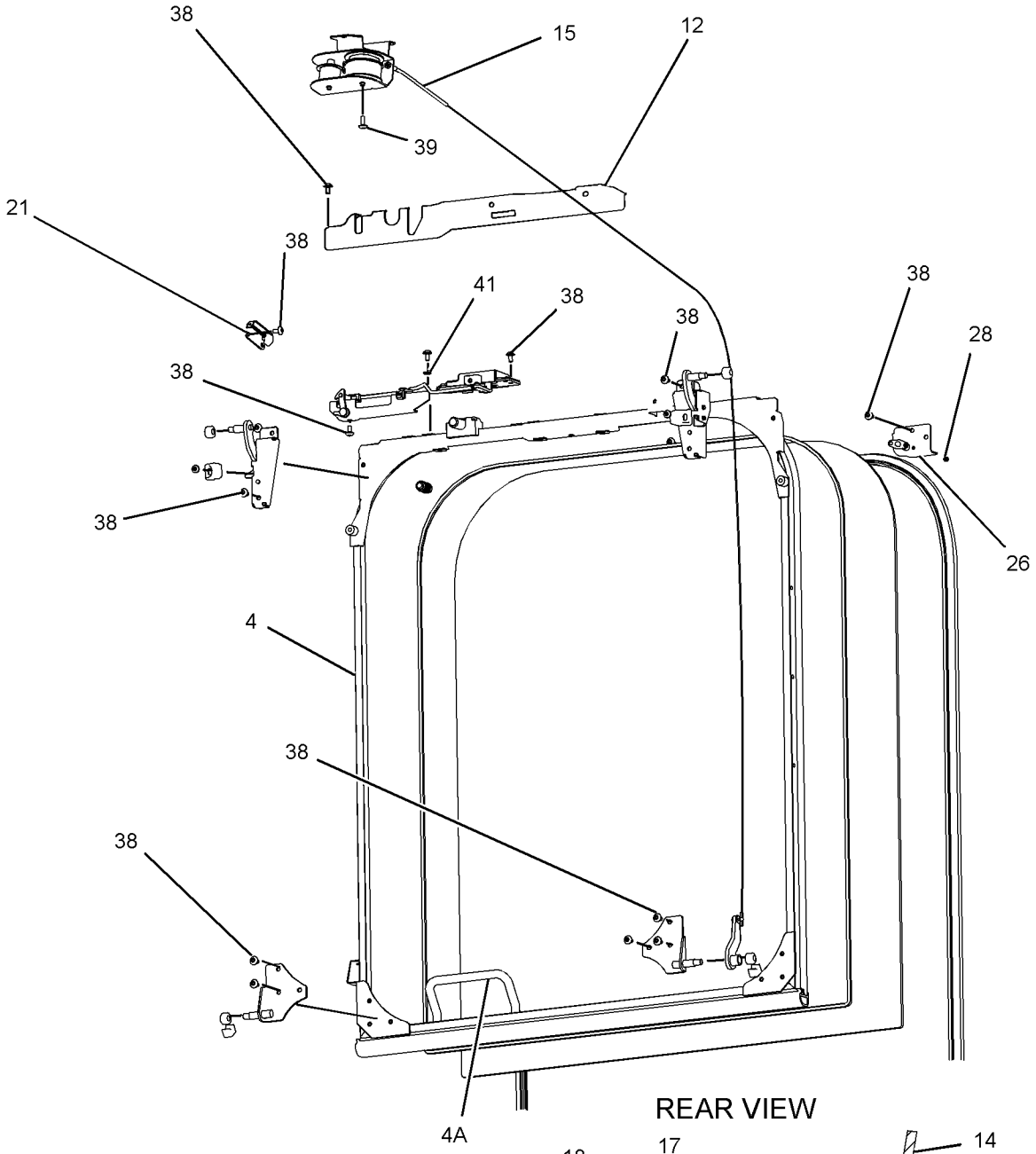

REAR VIEW

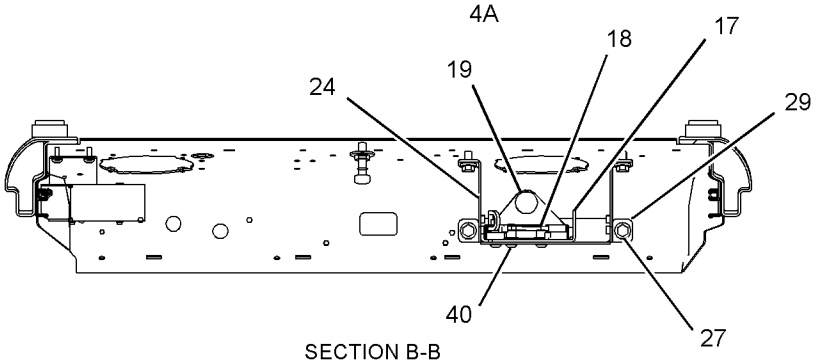

SECTION B-B

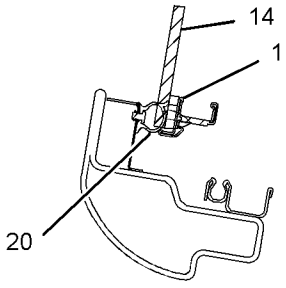

SECTION E-E

GRAPHIC #2 **<END>** g02157234

156-6647 WINDOW GP-CAB–FRONT, LOWER

S/N: PBB1-UP; KBS1-UP
PART OF 229-9087 WIPER & WASHER GP-WINDOW
AN ATTACHMENT

SMCS-7310 **i05458934**

NOTE	REF NO	GRAPHIC REF	PART NUMBER	QTY	PART NAME 1 2 3 4 5 6 (PRODUCT LEVEL)	SEE PAGE
	1	1	*156-6648*	1	GLASS	
M	2	1	**9X-2042**	2	SCREW-TRUSS HEAD (M6X1X12-MM)	
	3	1	**151-6705**	1	PACKING	
	4	1	**124-3966**	1	STOP	
	5	1	**144-9692**	2	RETAINER	
	6	1	**144-9691**	2	PACKING	

M - METRIC PART

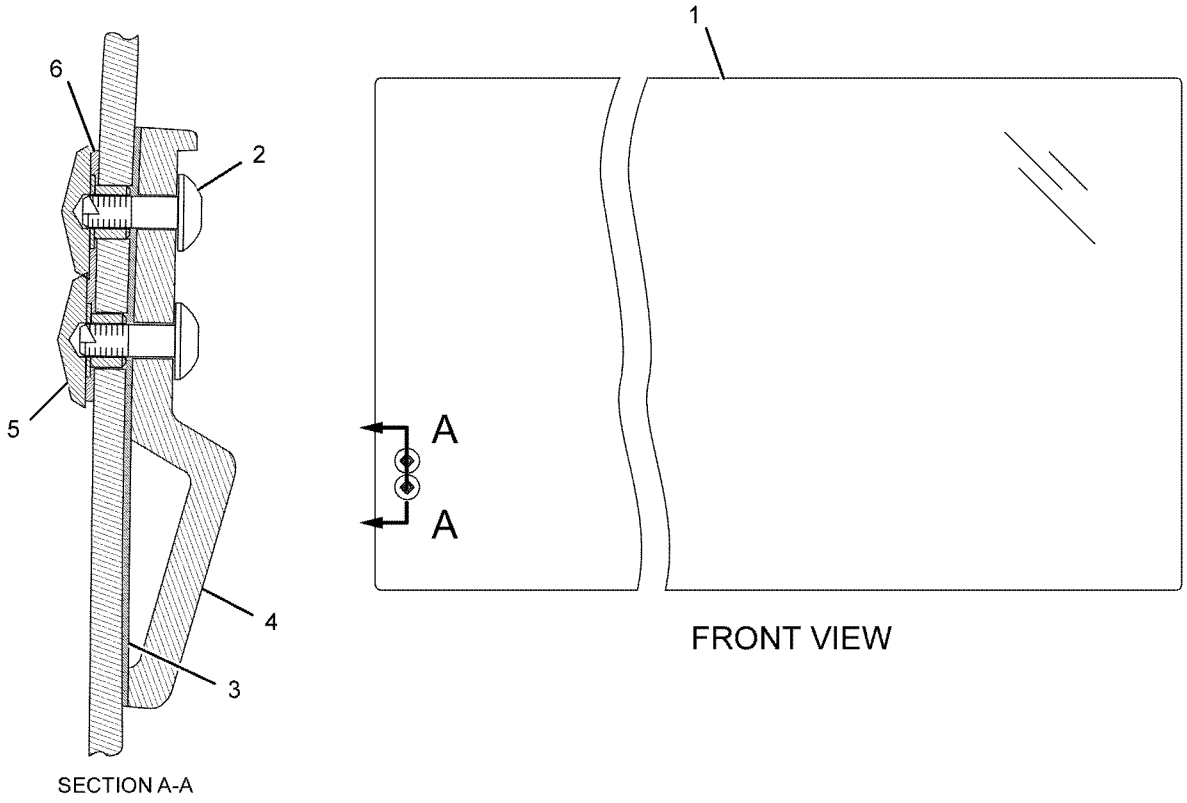

GRAPHIC #1 **<END>** g01131367

171-7503 WINDOW GP-CAB—FRONT, UPPER

S/N: PBB1-UP; KBS1-UP
FOR SERVICE REPAIR OF 139-7101 WINDOW GP-CAB
PART OF 399-0057, 399-0058 CAB GP
AN ATTACHMENT

SMCS-7310 **i05407004**

NOTE	REF NO	GRAPHIC REF	PART NUMBER	QTY	PART NAME 1 2 3 4 5 6 (PRODUCT LEVEL)	SEE PAGE
	1	1	**161-3698**	1	SEAL	
M	2	1	**101-8900**	2	SCREW AS (M6X1X20-MM)	
	3	1	**151-6703**	1	HANDLE-PULL	
	4	1	**151-6704**	2	CAP	
	5	1	**151-6778**	1	FRAME AS	
	5A	1	**156-6470**	1	HANDLE	
	6	1	**151-6813**	1	BRACKET AS	
	7	1	**151-6815**	1	BRACKET AS	
	8	1	**273-5345**	1	LINK AS	
	9	1	**273-5346**	1	LINK AS	
	10	1	**151-6831**	1	LOCK AS	
	11	1	**151-6832**	1	LEVER AS	
	12	1	**156-6472**	1	GLASS	
	13	1	**170-9722**	1	CUSHION	
	14	1	**151-9576**	4	ROLLER	
M	15	1	**9X-2042**	15	SCREW-TRUSS HEAD (M6X1X12-MM)	

M - METRIC PART

171-7503 **WINDOW GP-CAB (*contd.*)** **i05407004**

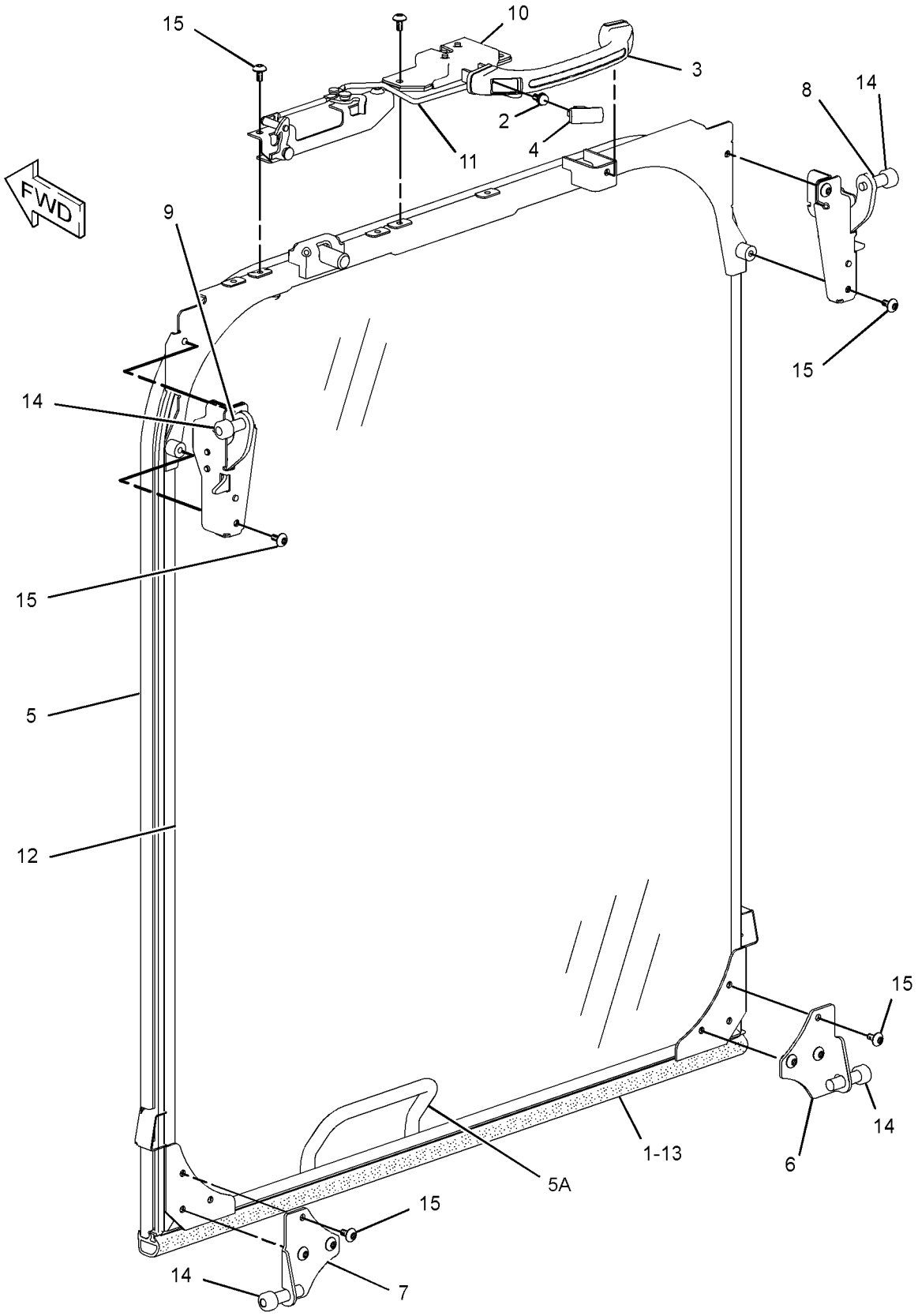

GRAPHIC #1 **<END>** g01935199

176-1958 WINDOW GP-CAB—FRONT, LOWER

S/N: PBB1-UP; KBS1-UP
PART OF 399-0057, 399-0058 CAB GP
AN ATTACHMENT

SMCS-7310 **i02793691**

NOTE	REF NO	GRAPHIC REF	PART NUMBER	QTY	PART NAME 1 2 3 4 5 6 (PRODUCT LEVEL)	SEE PAGE
	1	1	**156-6473**	1	GLASS (LOWER FRONT)	
	2	1	**156-6631**	2	STOP	
	3	1	**305-0361**	1	SEAL	
	4	1	**178-5569**	2	SEAL	
	5	1	**189-2702**	2	SEAL	
	6	1	**139-7119**	2	PLUG	

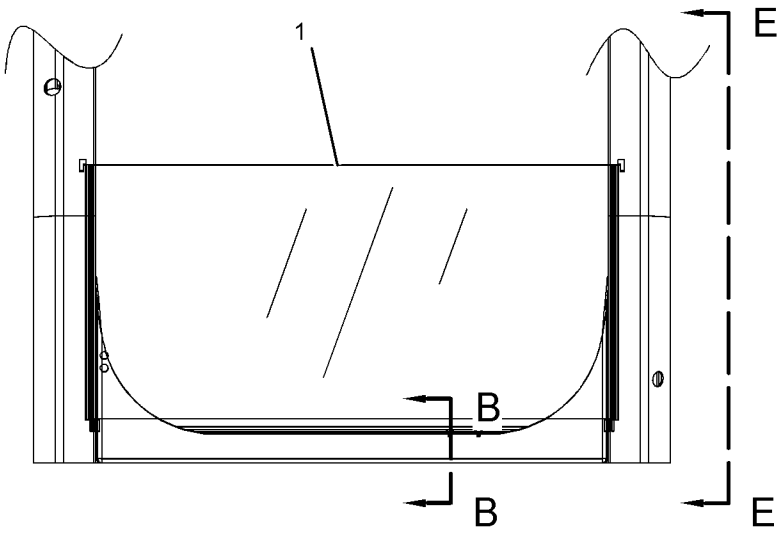

FRONT VIEW

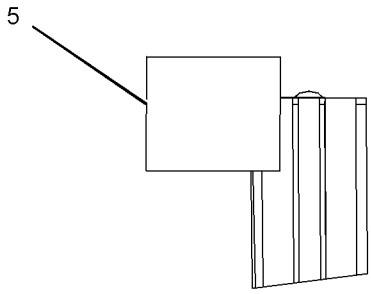

VIEW OF AREA D

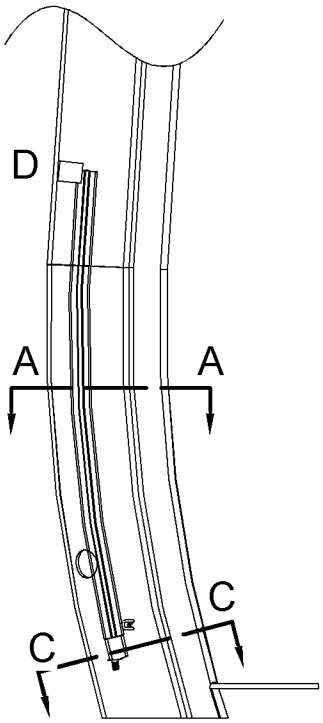

VIEW E-E

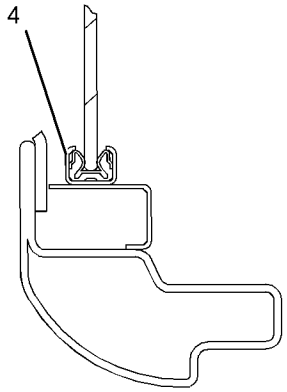

SECTION A-A

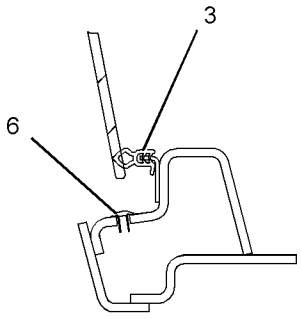

SECTION B-B

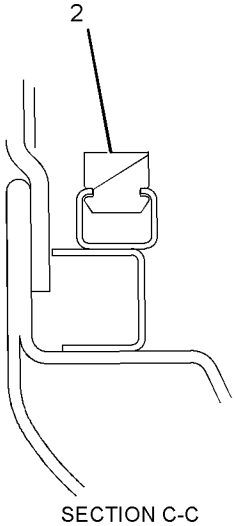

SECTION C-C

GRAPHIC #1 **<END>** g01398601

207-0144 WINDOW GP-CAB—FRONT, UPPER

S/N: PBB1-UP; KBS1-UP
PART OF 399-0057, 399-0058 CAB GP
AN ATTACHMENT

SMCS-7310 **i05458974**

NOTE	REF NO	GRAPHIC REF	PART NUMBER	QTY	PART NAME 1 2 3 4 5 6 (PRODUCT LEVEL)	SEE PAGE
	1	1	**170-9722**	1	CUSHION	
	2	1	**156-6472**	1	GLASS	
	3	1	**161-3698**	1	SEAL	
	4	1	**4I-0420**	1	STRIP	
	5	1	**156-6470**	1	HANDLE	

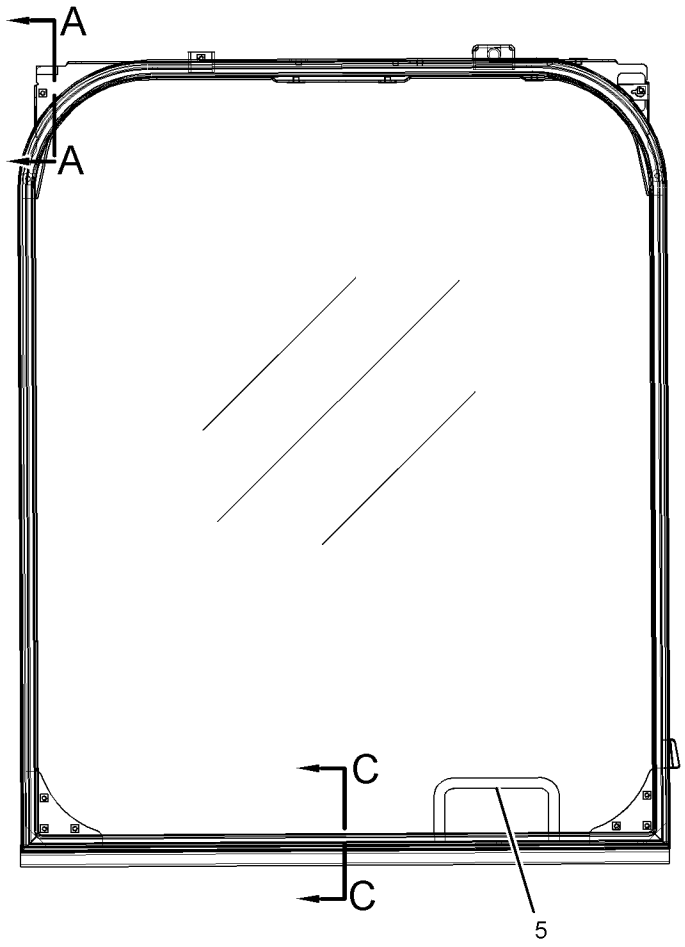

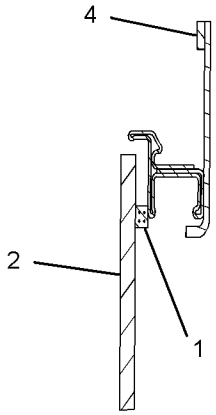

SECTION A-A

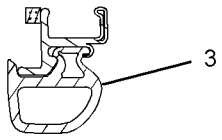

SECTION C-C

GRAPHIC #1 **<END>** g01935314

235-8909 WINDOW GP-CAB—SIDE, REAR

S/N: PBB1-UP; KBS1-UP
PART OF 399-0057, 399-0058 CAB GP
AN ATTACHMENT

SMCS-7310 **i05907469**

NOTE	REF NO	GRAPHIC REF	PART NUMBER	QTY	PART NAME 1 2 3 4 5 6 (PRODUCT LEVEL)	SEE PAGE
	1	1	**151-6790**	1	GLASS (LH)	
	2	1	**156-6469**	1	GLASS (REAR)	
	3	1	**164-0666**	1	SEAL	
	4	1	**178-5572**	4	SPACER-SPECIAL (WINDOW)	
	5	1	**234-6489**	1	GLASS (RH)	
	6	1	**099-3629**	1	RING-KEY	
	7	1	**178-5573**	4	SPACER	
	8	1	**178-5574**	9	SPACER	

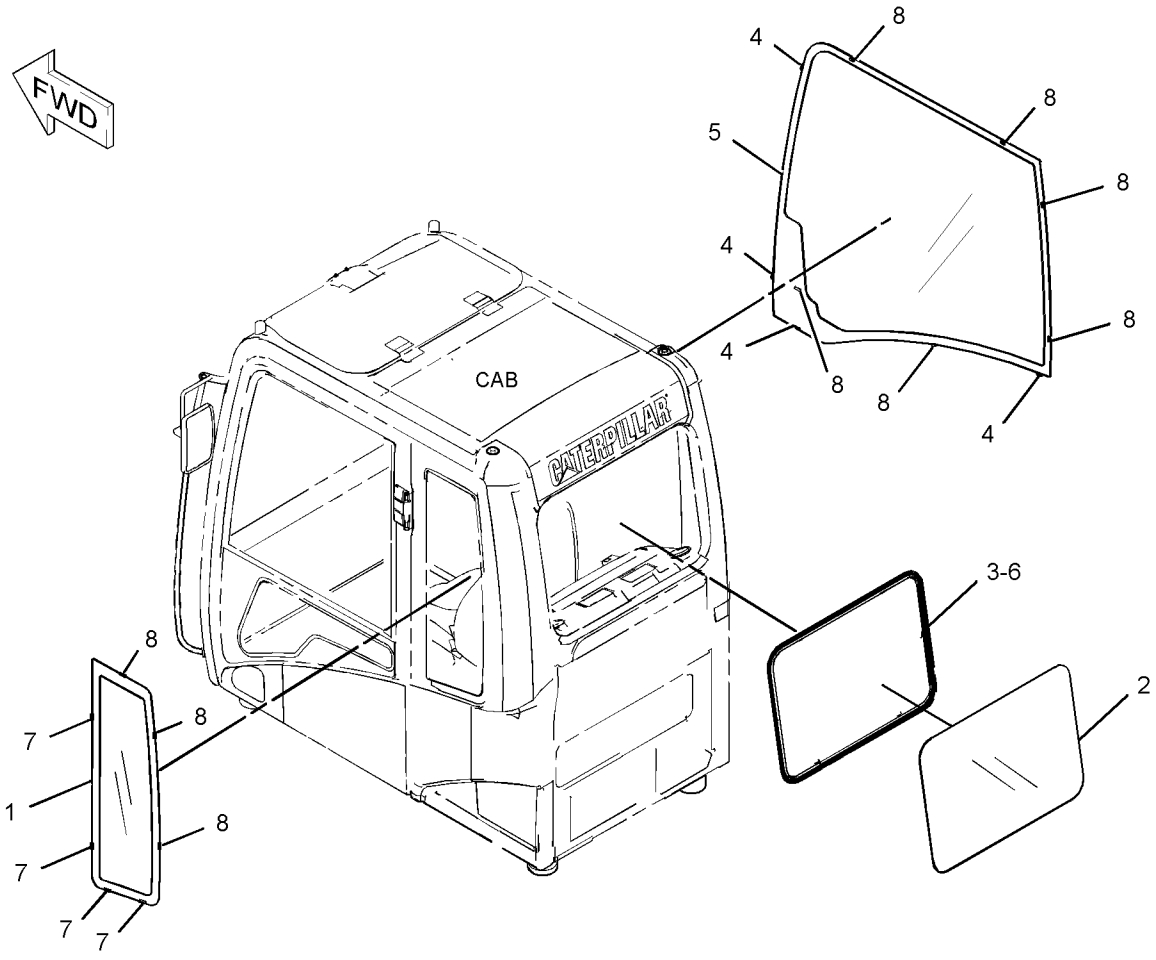

GRAPHIC #1 **<END>** g01432743

388-9107 WINDOW GP-CAB—SIDE, REAR

S/N: PBB1-UP; KBS1-UP

PART OF 388-0065, 416-9607, 424-5477 CAB GP

AN ATTACHMENT

SMCS-7310 **i05503870**

NOTE	REF NO	GRAPHIC REF	PART NUMBER	QTY	PART NAME 1 2 3 4 5 6 (PRODUCT LEVEL)	SEE PAGE
	1	1	**383-6931**	1	GLASS (LH)	
	2	1	**383-6929**	1	GLASS (REAR)	
	3	1	**164-0666**	1	SEAL	
	4	1	**178-5572**	4	SPACER-SPECIAL (WINDOW)	
	5	1	**383-6932**	1	GLASS (RH)	
	6	1	**099-3629**	1	RING-KEY	
	7	1	**178-5573**	4	SPACER	
	8	1	**178-5574**	10	SPACER	

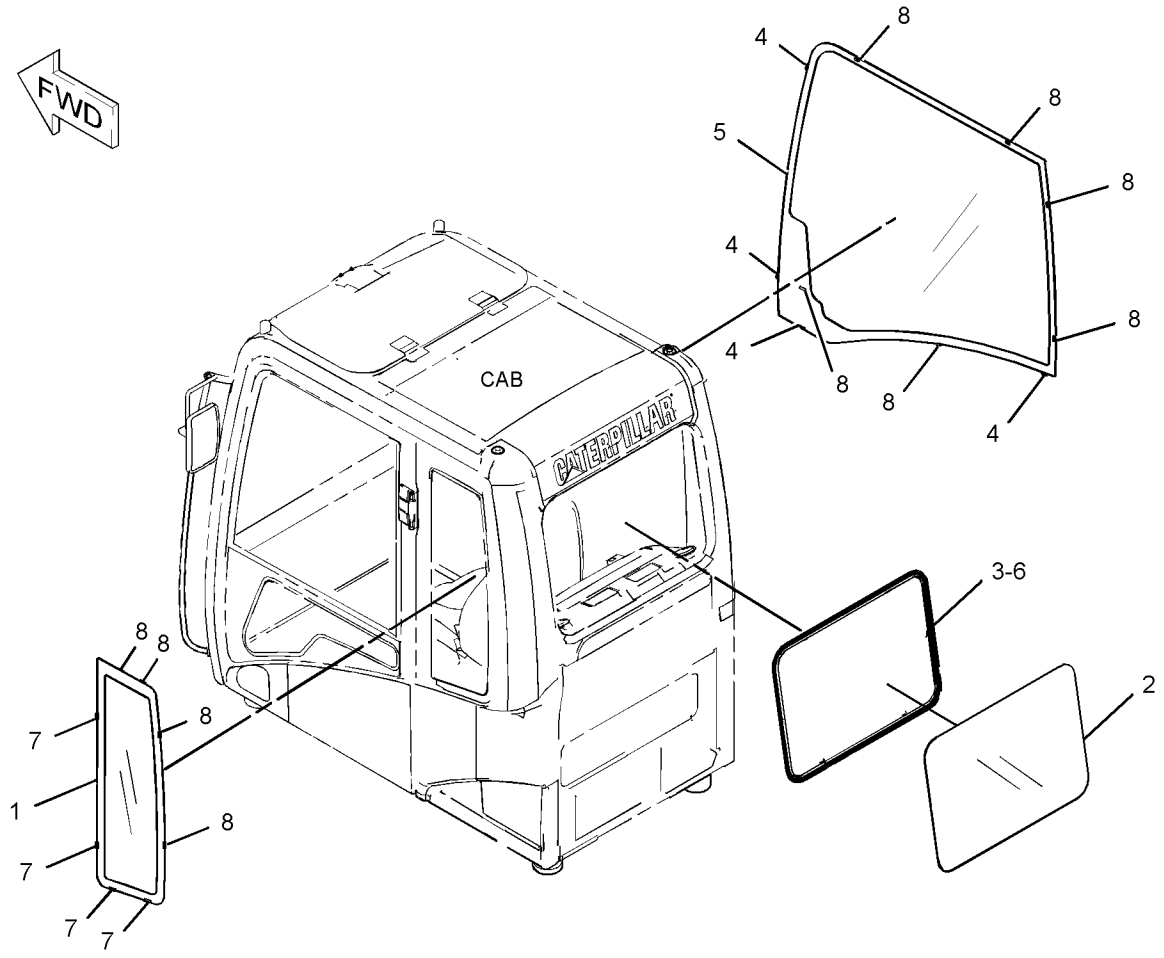

GRAPHIC #1 **<END>** g03499618

388-9108 WINDOW GP-CAB—FRONT, LOWER

S/N: PBB1-UP; KBS1-UP

PART OF 388-0065, 416-9607, 424-5477 CAB GP

AN ATTACHMENT

SMCS-7310 **i04956959**

NOTE	REF NO	GRAPHIC REF	PART NUMBER	QTY	PART NAME 1 2 3 4 5 6 (PRODUCT LEVEL)	SEE PAGE
	1	1	**383-6930**	1	GLASS (FRONT, LOWER)	
	2	1	**156-6631**	2	STOP	
	3	1	**305-0361**	1	SEAL	
	4	1	**178-5569**	2	SEAL	
	5	1	**189-2702**	2	SEAL	
	6	1	**139-7119**	2	PLUG	

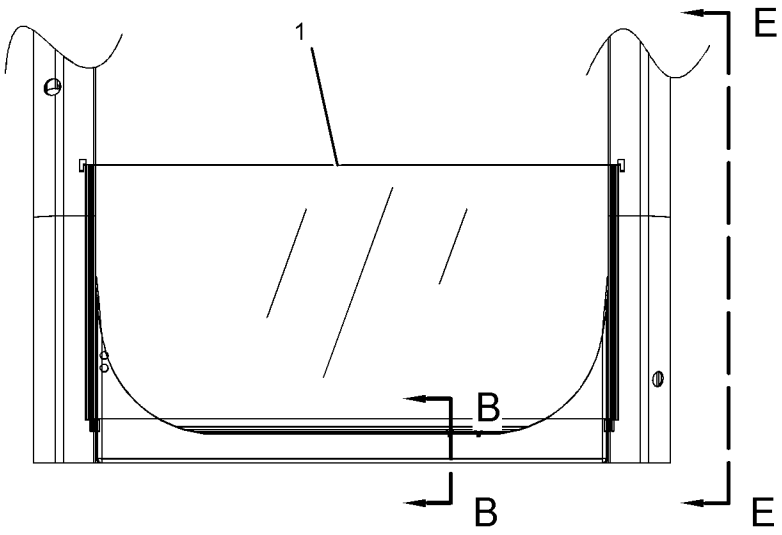

FRONT VIEW

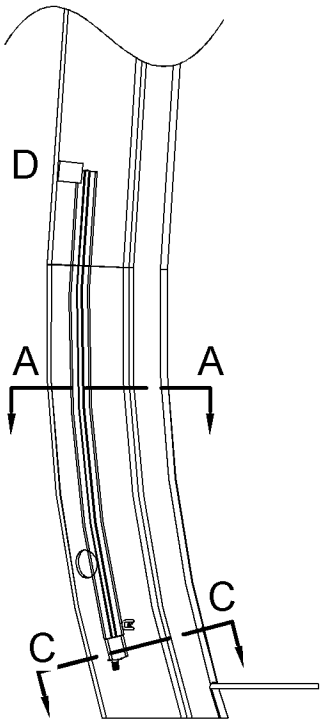

VIEW E-E

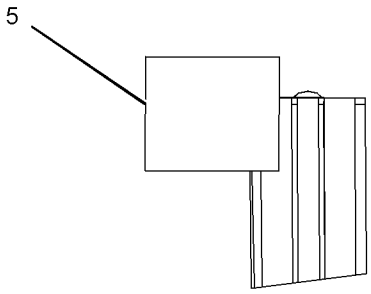

VIEW OF AREA D

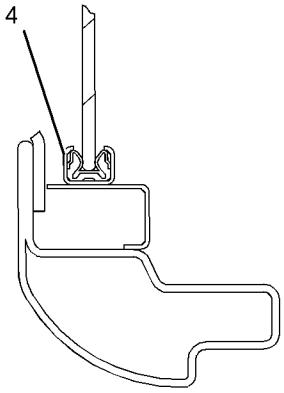

SECTION A-A

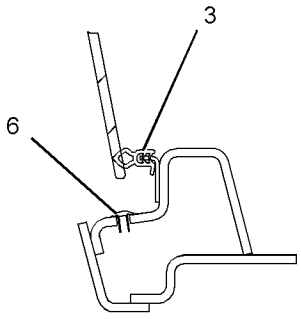

SECTION B-B

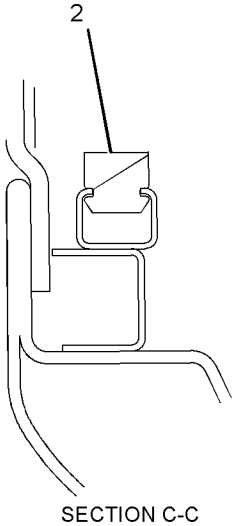

SECTION C-C

GRAPHIC #1 **<END>** g01398601

388-9109 WINDOW GP-CAB—FRONT, UPPER

S/N: PBB1-UP; KBS1-UP
PART OF 388-0065, 416-9607, 424-5477 CAB GP
AN ATTACHMENT

SMCS-7310 **i05437816**

NOTE	REF NO	GRAPHIC REF	PART NUMBER	QTY	PART NAME 1 2 3 4 5 6 (PRODUCT LEVEL)	SEE PAGE
	1	2	**170-9722**	1	CUSHION	
	2	1	**151-6703**	1	HANDLE-PULL	
	3	1	**151-6704**	2	CAP	
	4	2	**151-6778**	1	FRAME AS	
	4A	2	**156-6470**	1	HANDLE	
	5	1	**417-1143**	1	BRACKET AS	
	6	1	**151-6813**	1	BRACKET AS	
	7	1	**151-6815**	1	BRACKET AS	
	8	1	**273-5345**	1	LINK AS	
	9	1	**273-5346**	1	LINK AS	
	10	1	**398-7109**	1	LOCK AS	
	11	1	**151-6832**	1	LEVER AS	
	12	2	**388-9097**	1	COVER	
	13	1	**151-9557**	2	STOP-RUBBER	
	14	2	**383-8541**	1	GLASS	
	15	2	**156-6554**	1	CABLE AS	
	16	1	**398-7110**	1	STRIKER AS	
	17	2	**156-6562**	1	BRACKET	
	18	2	**156-6563**	1	CATCH AS	
					(TWO JAW)	
					—OR—	
			273-5274	1	CATCH AS	
					(ONE JAW)	
	19	2	**156-6579**	1	STOP	
	20	2	**418-8379**	1	SEAL AS	
	21	2	**156-6627**	1	STOP AS	
	22	1	**161-3684**	2	STOP	
	23	1	**161-3698**	1	SEAL	
	24	2	**164-0648**	1	BRACKET AS	
	25	1	**178-5576**	1	STOP	
M	26	2	**138-8454**	2	SCREW-TRUSS HEAD (M4X0.7X10-MM)	
M	27	2	**185-8182**	4	BOLT (M10X1.5X20-MM)	
M	28	2	**5C-8312**	1	NUT (M4X0.7-THD)	
	29	1	**5P-1075**	4	WASHER-HARD (10.2X22.5X3-MM THK)	
M	30	1	**142-0485**	1	NUT (M10X1.5-THD)	
	31	1	**185-8221**	1	STOP	
M	32	1	**099-0823**	2	SCREW-MACHINE (M6X1X6-MM)	
M	33	1	**101-8900**	2	SCREW AS (M6X1X20-MM)	
	34	1	**117-6306**	1	SWITCH (WINDOW LOWER LIMIT)	
	35	1	**151-9576**	4	ROLLER	
	36	1	**4I-0420**	1	STRIP	
	37	1	**7X-0578**	1	WASHER-HARD (10.2X32X2.5-MM THK)	
M	38	2	**9X-2042**	20	SCREW-TRUSS HEAD (M6X1X12-MM)	
M	39	1,2	**9X-2044**	5	SCREW-TRUSS HEAD (M6X1X16-MM)	
M	40	2	**9X-2045**	3	SCREW-TRUSS HEAD (M6X1X20-MM)	
	41	2	**9X-8256**	2	WASHER (6.6X12X2-MM THK)	

M - METRIC PART

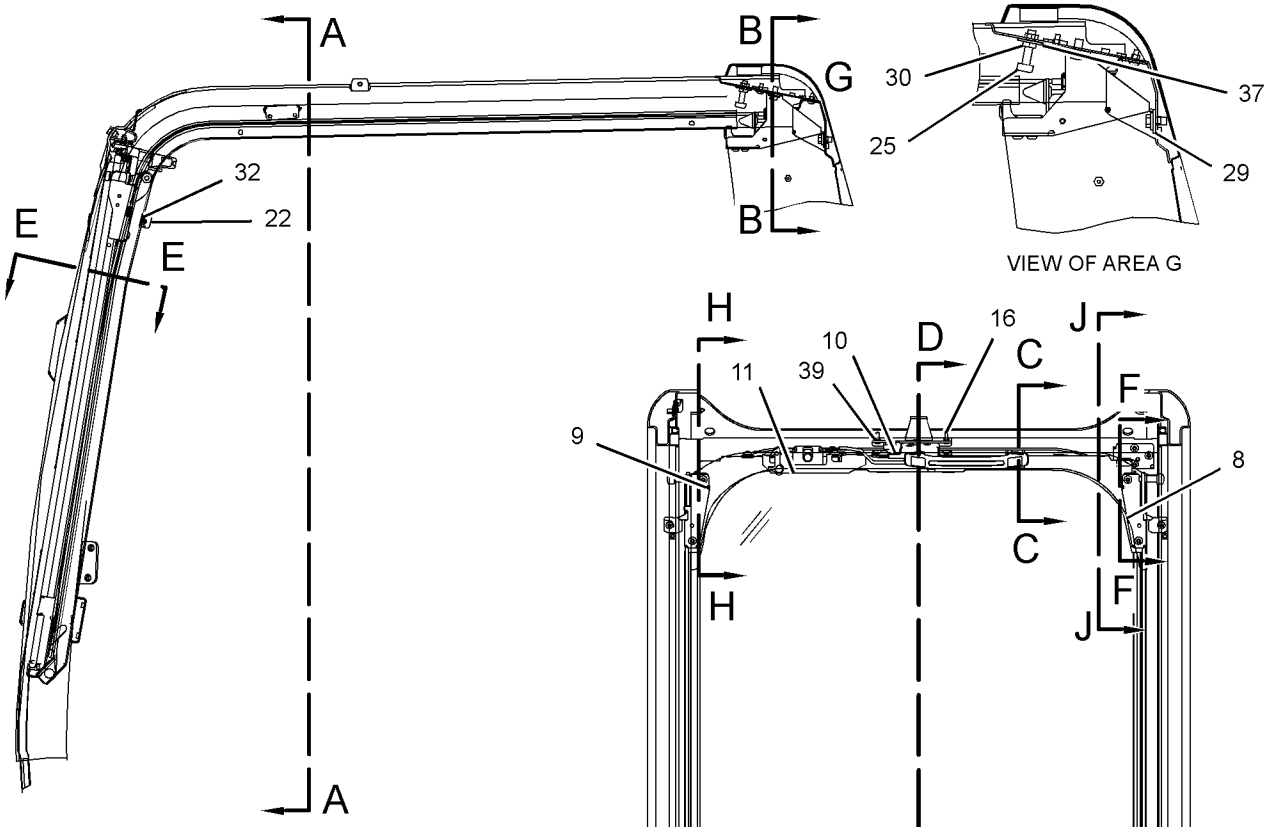

LEFT SIDE VIEW

REFER TO ALL ILLUSTRATIONS OF THIS GROUP FOR AUXILIARY VIEWS

SECTION A-A

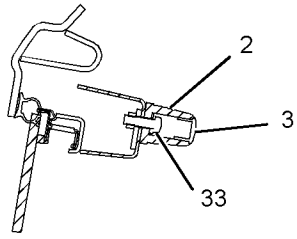

SECTION C-C

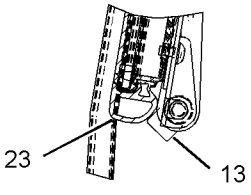

SECTION D-D

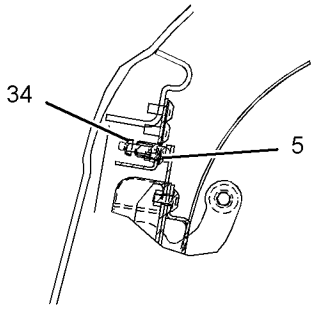

SECTION F-F

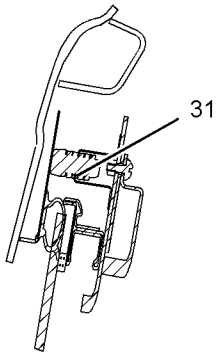

SECTION H-H

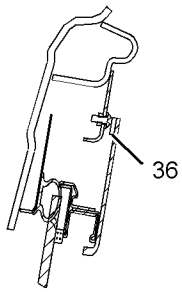

SECTION J-J

GRAPHIC #1 g03445379

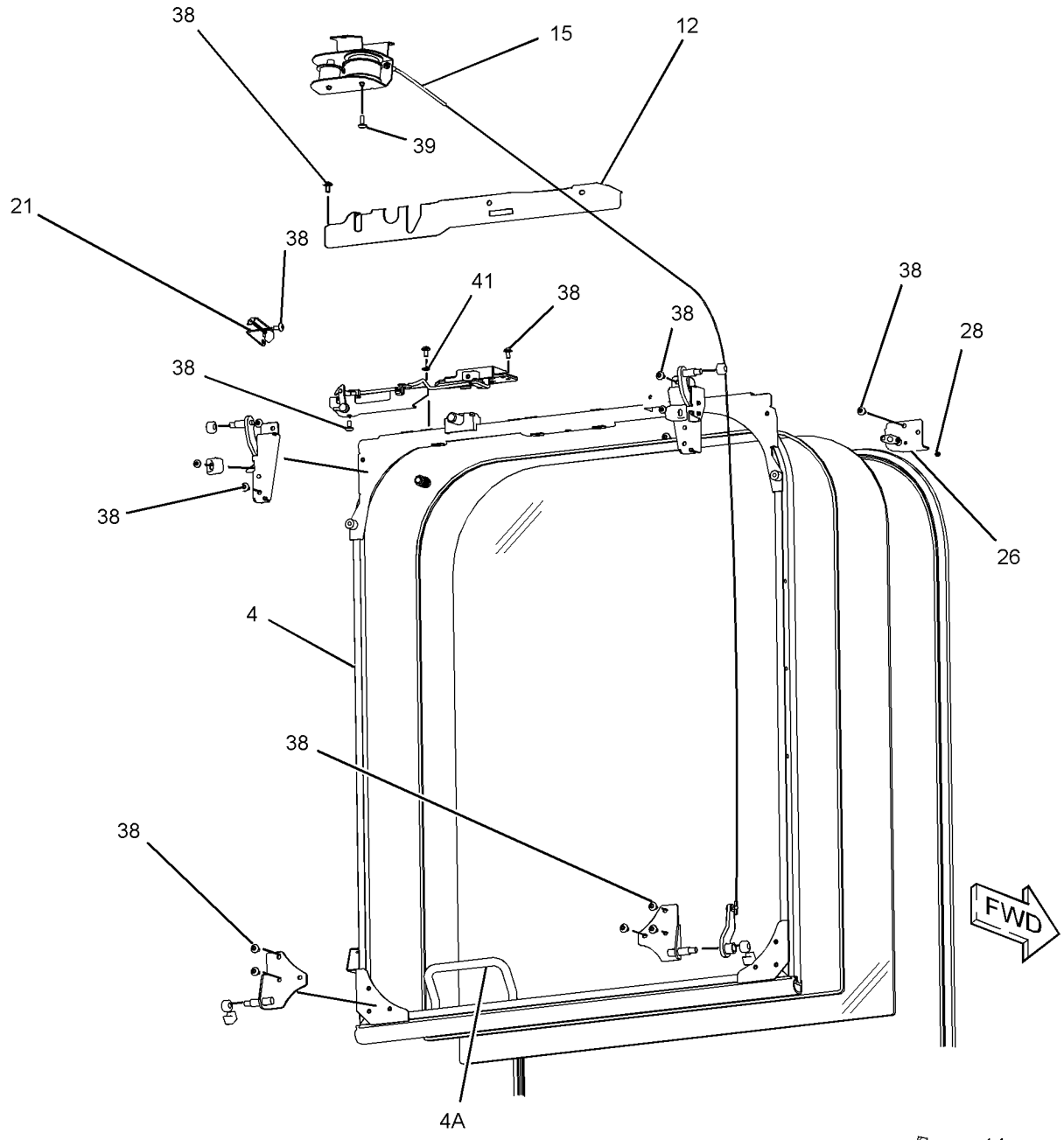

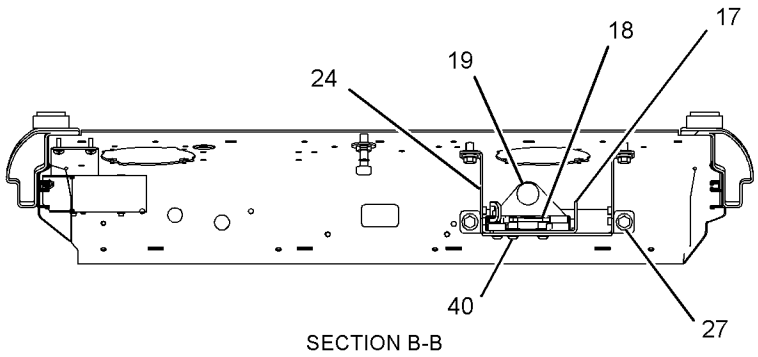

SECTION B-B

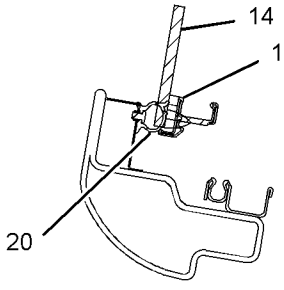

SECTION E-E

GRAPHIC #2 **<END>** g03445380

388-9116 WINDOW GP-CAB—FRONT, UPPER

S/N: PBB1-UP; KBS1-UP

PART OF 388-0065, 416-9607, 424-5477 CAB GP

AN ATTACHMENT

SMCS-7310 **i05589868**

NOTE	REF NO	GRAPHIC REF	PART NUMBER	QTY	PART NAME 1 2 3 4 5 6 (PRODUCT LEVEL)	SEE PAGE
	1	1	**161-3698**	1	SEAL	
M	2	1	**101-8900**	2	SCREW AS (M6X1X20-MM)	
	3	1	**151-6703**	1	HANDLE-PULL	
	4	1	**151-6704**	2	CAP	
	5	1	**151-6778**	1	FRAME AS	
	5A	1	**156-6470**	1	HANDLE	
	6	1	**151-6813**	1	BRACKET AS	
	7	1	**151-6815**	1	BRACKET AS	
	8	1	**273-5345**	1	LINK AS	
	9	1	**273-5346**	1	LINK AS	
	10	1	**151-6831**	1	LOCK AS	
	11	1	**151-6832**	1	LEVER AS	
	12	1	**383-8541**	1	GLASS	
	13	1	**170-9722**	1	CUSHION	
	14	1	**151-9576**	4	ROLLER	
M	15	1	**9X-2042**	15	SCREW-TRUSS HEAD (M6X1X12-MM)	

M - METRIC PART

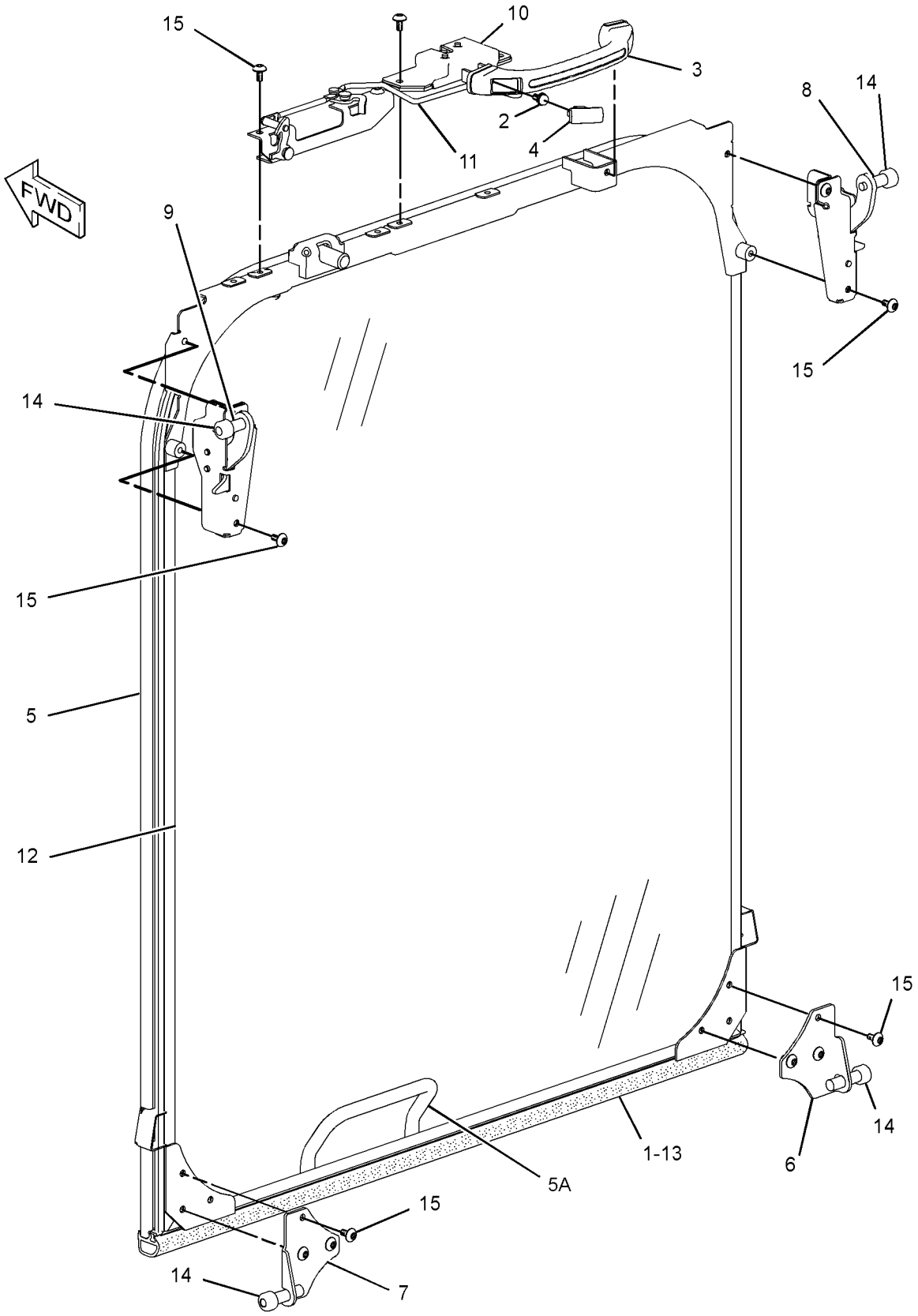

GRAPHIC #1 **<END>** g01935199

388-9117 WINDOW GP-CAB—FRONT, UPPER

S/N: PBB1-UP; KBS1-UP

PART OF 388-0065, 416-9607, 424-5477 CAB GP

AN ATTACHMENT

SMCS-7310 **i05458915**

NOTE	REF NO	GRAPHIC REF	PART NUMBER	QTY	PART NAME 1 2 3 4 5 6 (PRODUCT LEVEL)	SEE PAGE
	1	1	**170-9722**	1	CUSHION	
	2	1	**151-6778**	1	FRAME AS	
	3	1	**161-3698**	1	SEAL	
	4	1	**383-8541**	1	GLASS	
	5	1	**4I-0420**	1	STRIP	

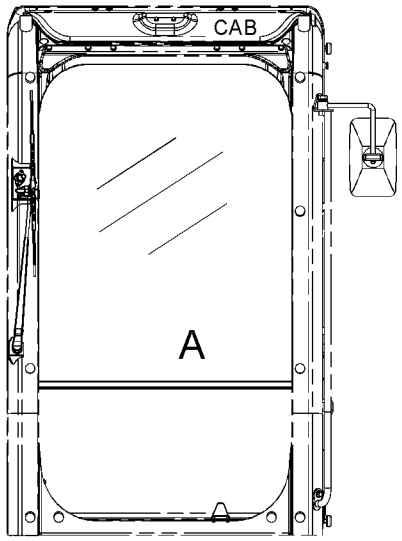

FRONT VIEW

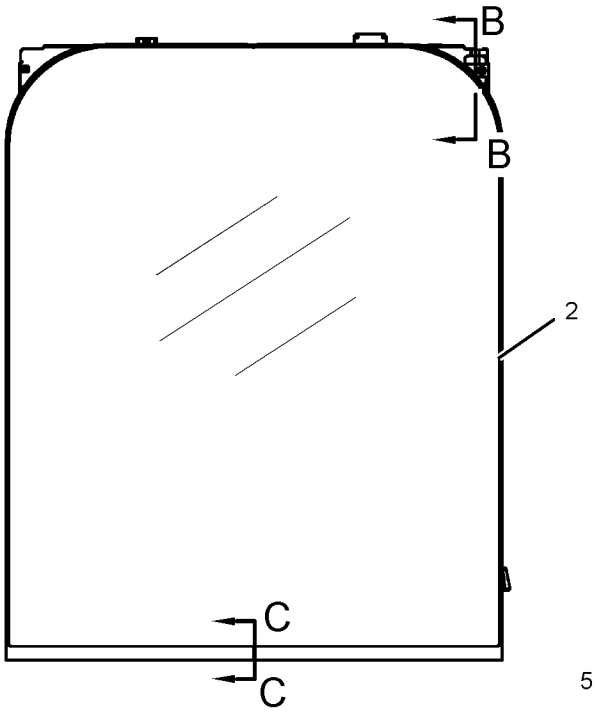

VIEW OF AREA A

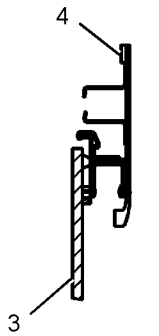

SECTION B-B

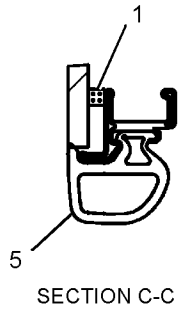

SECTION C-C

GRAPHIC #1 **<END>** g03399737

151-6792 WINDOW GP-DOOR

S/N: PBB1-UP; KBS1-UP
PART OF 307-1818 DOOR GP-CAB
AN ATTACHMENT

SMCS-7308, 7310

i05405454

NOTE	REF NO	GRAPHIC REF	PART NUMBER	QTY	PART NAME 1 2 3 4 5 6 (PRODUCT LEVEL)	SEE PAGE
Y	1	1	**085-6444**	2	LATCH GP-WINDOW	886
	2	1	**151-6793**	1	FRAME AS	
		1	**4I-4298**	1	STOPPER	
		1	**4I-4300**	1	CATCH	
		1	**099-0139**	3	RIVET	
	3	1	**151-6841**	1	SEAL	
	4	1	**156-6474**	1	GLASS	
	5	1	**156-6475**	1	GLASS	
	6	1	**161-3695**	1	SEAL	
	7	1	**161-3705**	1	SEAL	
	8	1	**164-0516**	1	RUBBER	
	9	1	**164-0517**	1	RUBBER	
	10	1	**164-0518**	1	RUBBER	
	11	1	**171-7413**	1	SPACER	
	12	1	**171-7414**	1	SPACER	
	13	1	**176-1951**	1	SPACER	
	14	1	**176-1952**	1	SPACER	
	15	1	**176-1953**	1	STOP	
	16	1	**176-1954**	1	SEAL	
	17	1	**176-1955**	1	SEAL	
	18	1	**176-1956**	1	SEAL	
	19	1	**176-1957**	1	SEAL	

Y - SEPARATE ILLUSTRATION

151-6792 **WINDOW GP-DOOR (*contd.*)** **i05405454**

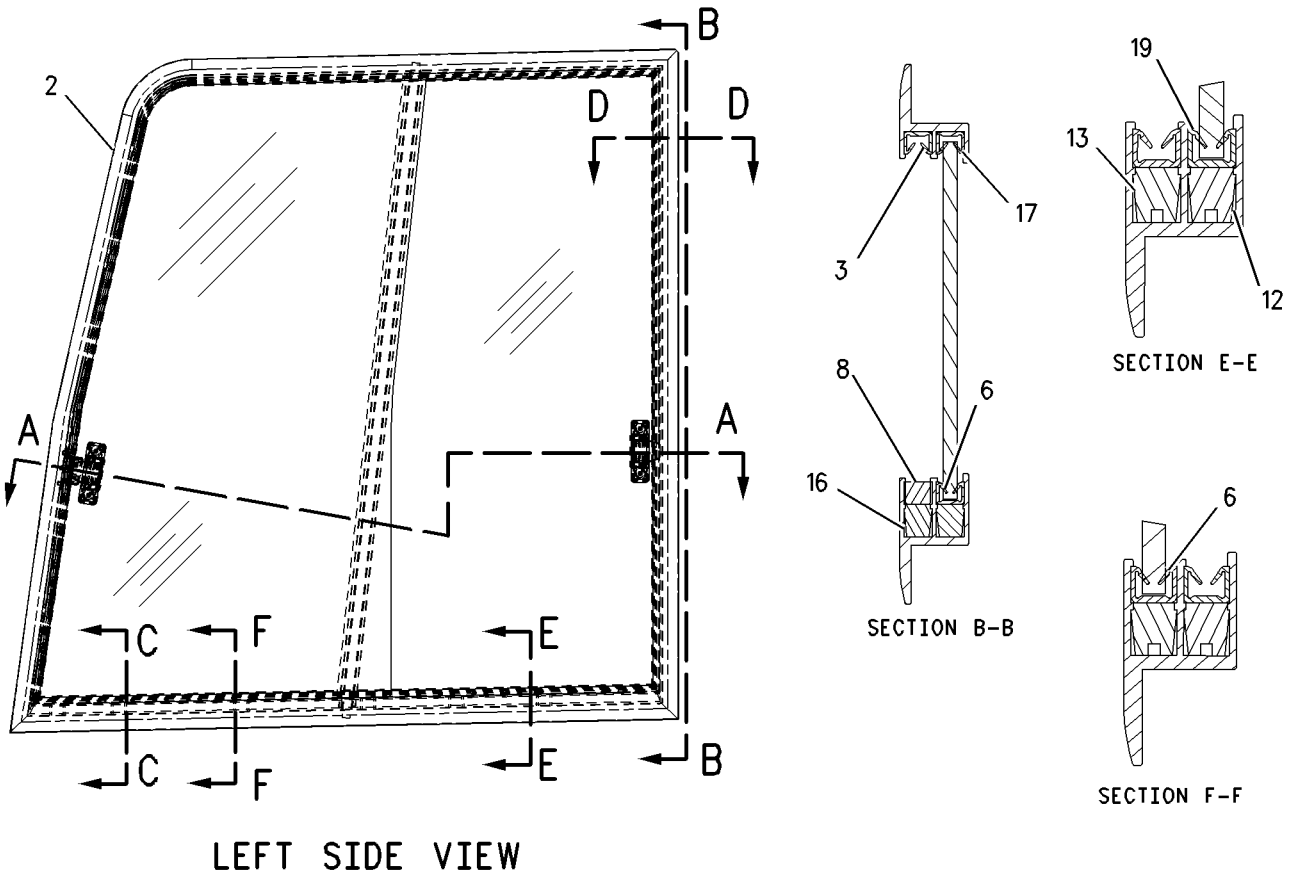

GRAPHIC #1 **<END>** g00722948

384-6533 WINDOW GP-DOOR

S/N: PBB1-UP; KBS1-UP
PART OF 388-9105 DOOR GP-CAB
AN ATTACHMENT

SMCS-7308, 7310

i05354875

NOTE	REF NO	GRAPHIC REF	PART NUMBER	QTY	PART NAME 1 2 3 4 5 6 (PRODUCT LEVEL)	SEE PAGE
	1	1	**385-8757**	2	CATCH AS	
	2	1	**387-2846**	1	GLASS	
	3	1	**387-2847**	1	GLASS	
	4	1	**387-2848**	1	PILLAR	
	5	1	**387-2849**	1	HOOK	
C	6	1	**438-4951**	1	SEAL	
C	7	1	**438-4952**	1	SEAL	
C	8	1	**438-4953**	1	SEAL	
C	9	1	**438-4954**	1	SEAL	
C	10	1	**438-4955**	1	SEAL	
C	11	1	**438-4956**	1	SEAL	
C	12	1	**438-4957**	1	SEAL	
C	13	1	**438-4958**	1	SEAL	
CE	14	1	**430-4119**		RUBBER (10-CM)	
CE	14A	1	**430-4119**		RUBBER (5.2-CM EACH)	

C - CHANGE FROM PREVIOUS TYPE
E - ORDER BY THE CENTIMETER

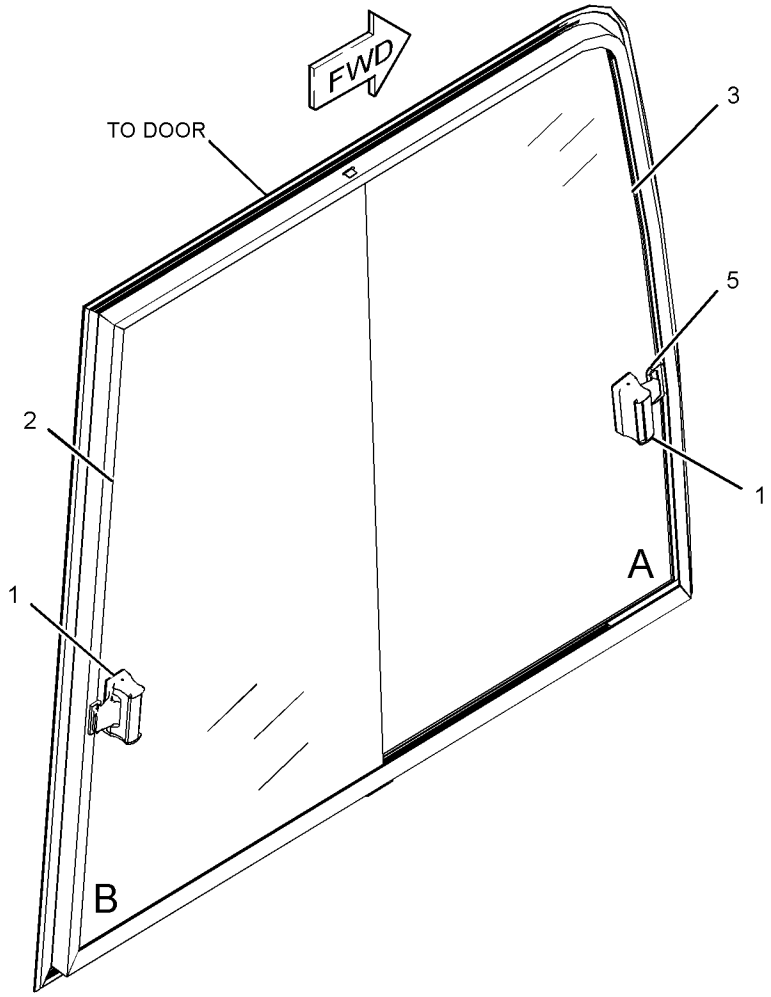

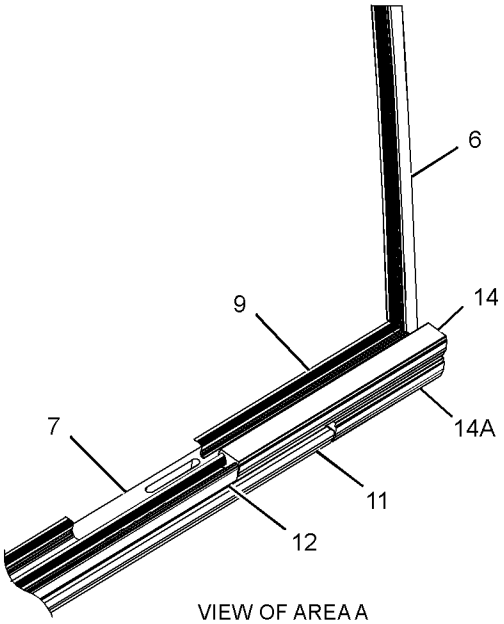

VIEW OF AREA A
(PARTS REMOVED FOR CLARITY)

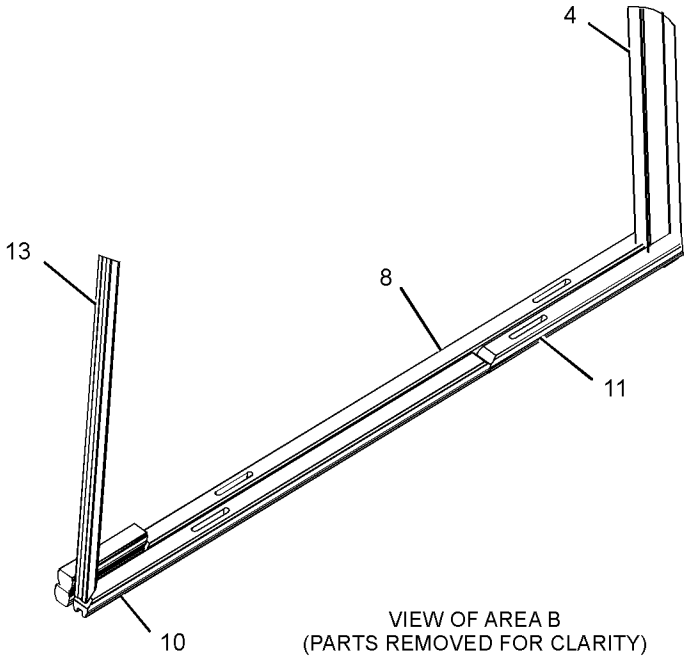

VIEW OF AREA B
(PARTS REMOVED FOR CLARITY)

GRAPHIC #1 **<END>** g03405579

229-9087 WIPER & WASHER GP-WINDOW—FRONT, LOWER

S/N: PBB1-UP; KBS1-UP
PART OF 229-9086 WIPER AR-WINDOW
AN ATTACHMENT

SMCS-7305, 7306 **i05589898**

NOTE	REF NO	GRAPHIC REF	PART NUMBER	QTY	PART NAME 1 2 3 4 5 6 (PRODUCT LEVEL)	SEE PAGE
	1	1	**4I-5021**	1	BLADE AS-WIPER (275-MM) (LOWER)	
	2	1	**235-8974**	1	BRACKET AS	
C	3	1	**293-1140**	1	MOTOR AS-WINDOW WIPER (LOWER)	
	4	1	**3S-2093**	1	STRAP-CABLE	
	5	1	**9X-8256**	5	WASHER (6.6X12X2-MM THK)	
M	6	1	**5C-2890**	3	NUT (M6X1-THD)	
M	7	1	**9X-2044**	2	SCREW-TRUSS HEAD (M6X1X16-MM)	
	8	1	**156-6646**	1	BRACKET	
	9	1	**8T-4121**	4	WASHER-HARD (11X21X2.5-MM THK)	
	10	1	**4I-5020**	1	ARM AS-WIPER	
M	11	1	**8T-4191**	4	BOLT (M10X1.5X16-MM)	
	12	1	**4I-1163**	1	BRACKET	
M	13	1	**5C-9553**	2	BOLT (M6X1X16-MM)	
Y	14	1	**156-6647**	1	WINDOW GP-CAB (FRONT, LOWER)	943
	15	1	**129-6466**	1	SWITCH AS-ROLLER (WIPER, LOWER)	
	15A	1	**9X-0199**	1	BOOT-SWITCH	
	15B	1	**6V-8370**	1	NUT-HEX (3/4-32-THD)	
		1	**2H-3922**	1	LOCKWASHER	
	15C	1	**6V-8363**	2	SCREW (10-32X0.312-IN)	
		1	**8F-1434**	2	LOCKWASHER	

C - CHANGE FROM PREVIOUS TYPE
M - METRIC PART
Y - SEPARATE ILLUSTRATION

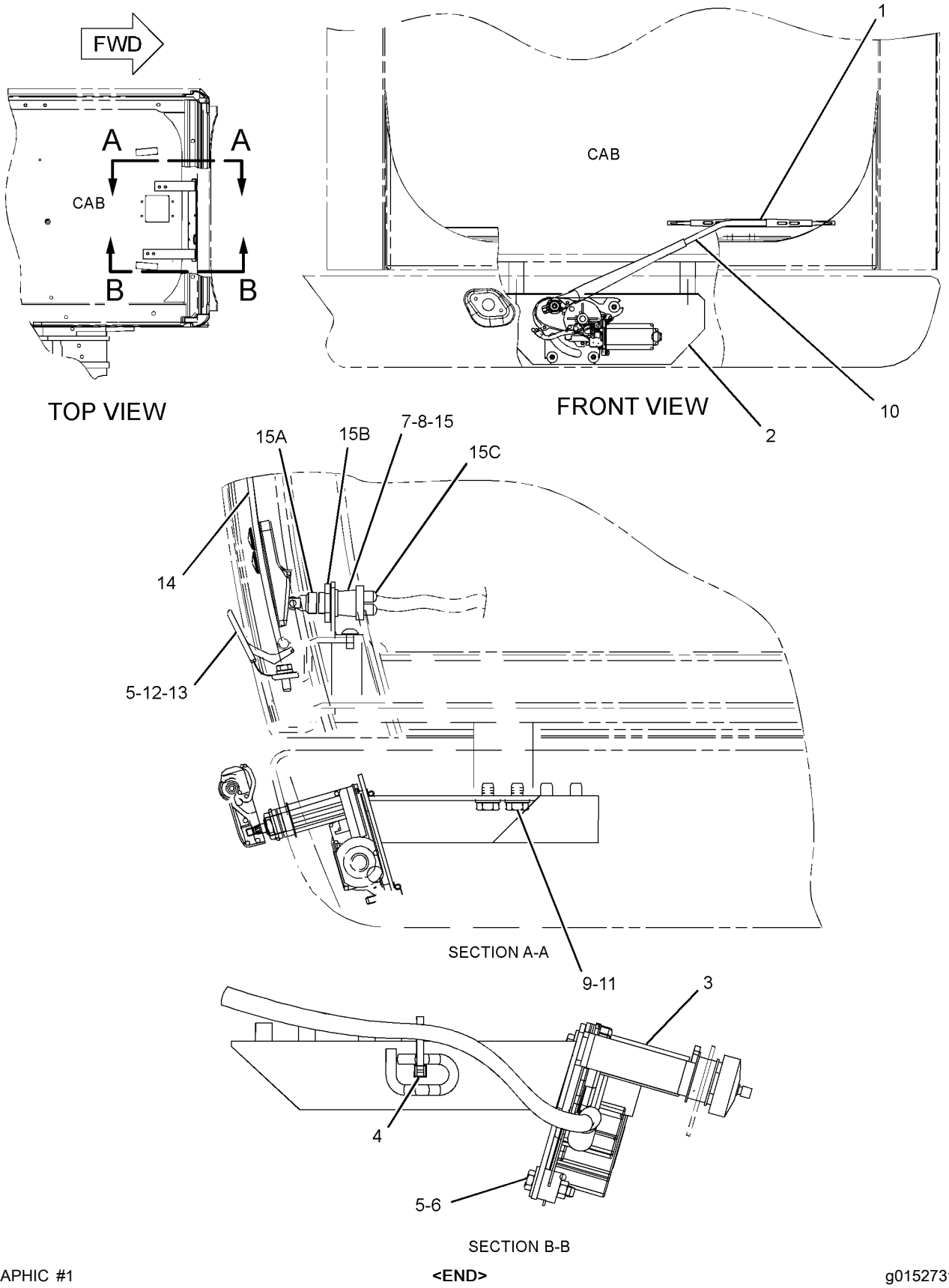

GRAPHIC #1 **<END>** g01527310

229-9086 WIPER AR-WINDOW—LOWER

S/N: PBB1-UP; KBS1-UP
CANNOT BE USED WITH 229-9070—PAGE: 938
PART OF 456-0837, 456-0839 OPTION AR-CAB
AN ATTACHMENT

SMCS-7305 **i05589897**

NOTE	PART NUMBER	QTY	PART NAME 1 2 3 4 5 6 (PRODUCT LEVEL)	SEE PAGE
Y	*238-2208*	1	SWITCH GP-WIPER (LOWER)	176
Y	*229-9088*	1	WASHER GP-WINDOW (LOWER)	939
Y	*229-9087*	1	WIPER & WASHER GP-WINDOW (FRONT, LOWER)	963

Y - SEPARATE ILLUSTRATION

<END>

234-6594 WIPER GP-WINDOW—FRONT, UPPER

S/N: PBB1-UP; KBS1-UP

PART OF 388-0065, 399-0057, 399-0058, 416-9607, 424-5477 CAB GP

AN ATTACHMENT

SMCS-7305 **i04807719**

NOTE	REF NO	GRAPHIC REF	PART NUMBER	QTY	PART NAME 1 2 3 4 5 6 (PRODUCT LEVEL)	SEE PAGE
	1	1	**161-3677**	1	HOLDER	
	2	1	**245-7931**	1	MOTOR AS-WINDOW WIPER	
M		1	**6V-8231**	1	NUT (M10X1.25-THD)	
M		1	**7Y-3470**	1	NUT (M20X1-THD)	
		1	**7Y-3472**	1	CAP	
		1	**124-3953**	1	WASHER (20.5X30X2-MM THK)	
	3	1	**235-8932**	1	NOZZLE AS	
	4	1	**155-7042**	1	RELAY AS (WIPER)	
	5	1	**372-9334**	1	ARM GP-WINDOW WIPER	
		1	**161-3669**	1	GUIDE	
		1	**161-3670**	1	BLADE AS-WIPER (600-MM)	
		1	**185-8290**	1	SCREW AS (M3.5X0.6X9-MM)	
		1	**372-9285**	1	ARM AS-WIPER	
	6	1	**163-6795**	1	STRAP-CABLE	
M	7	1	**3E-9872**	2	SCREW AS (M4X0.7X12-MM)	
	8	1	**4I-3090**	1	SEAL	
	9	1	**7Y-7364**	1	GROMMET	
M	10	1	**5C-2890**	4	NUT (M6X1-THD)	
M	11	1	**9X-2042**	2	SCREW-TRUSS HEAD (M6X1X12-MM)	
M	12	1	**9X-2044**	3	SCREW-TRUSS HEAD (M6X1X16-MM)	

M - METRIC PART

234-6594 **WIPER GP-WINDOW (*contd.*)** **i04807719**

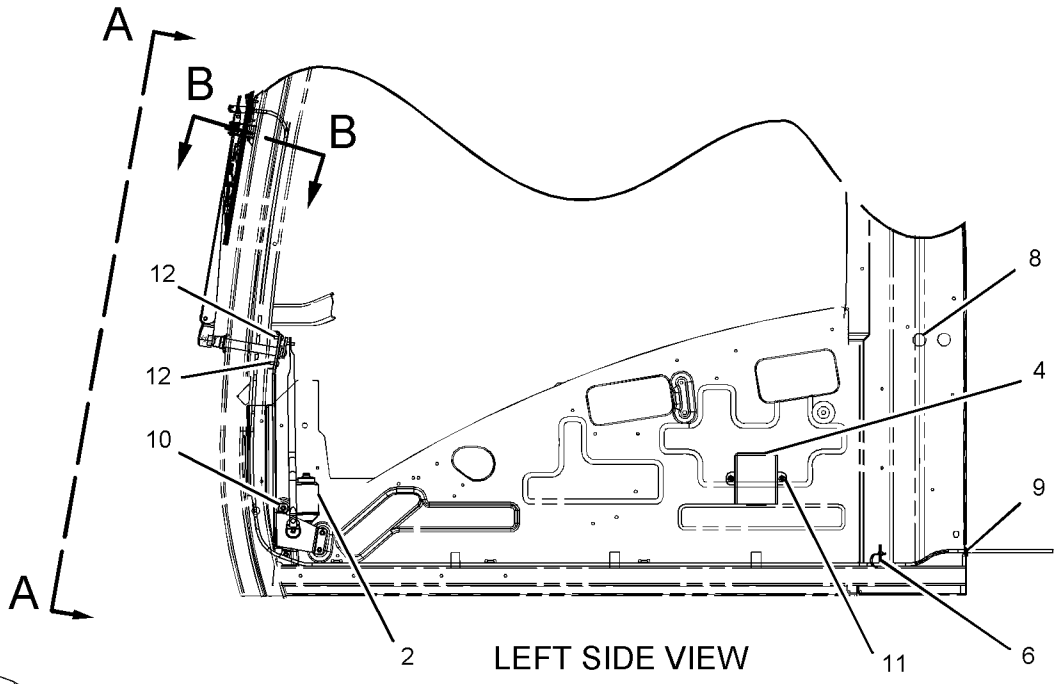

LEFT SIDE VIEW

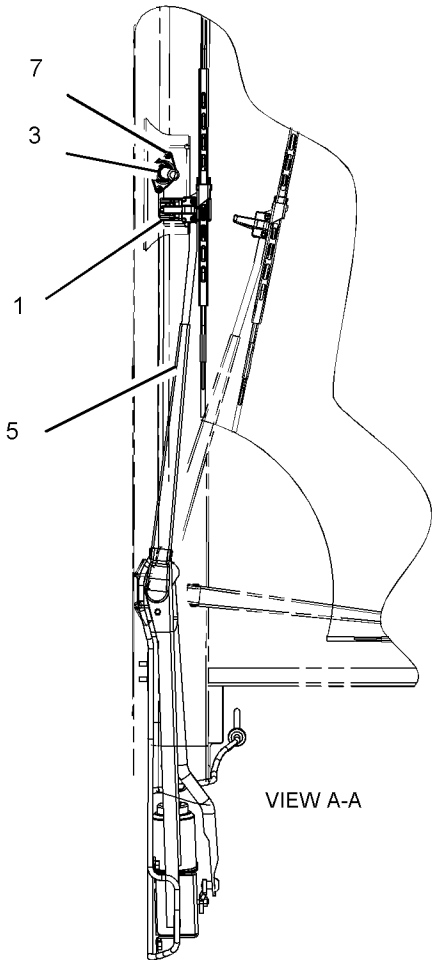

VIEW A-A

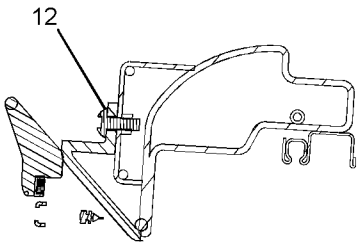

SECTION B-B

GRAPHIC #1 **<END>** g01098021

247-7410 FILM GP–OPERATOR CONTROLS, NOTICE

S/N: PBB1-UP

PART OF 270-5687 CONTROL AR-AUXILIARY

AN ATTACHMENT

SMCS-7405, 7557

i02426165

NOTE	REF NO	GRAPHIC REF	PART NUMBER	QTY	PART NAME 1 2 3 4 5 6 (PRODUCT LEVEL)	SEE PAGE
	1	1	**250-8054**	1	FILM-NOTICE (HAMMER, READ OMM)	
	2	1	**260-6941**	1	FILM-INFORMATION (OPERATOR CONTROLS, READ OMM)	

247-7410 **FILM GP (*contd.*)** **i02426165**

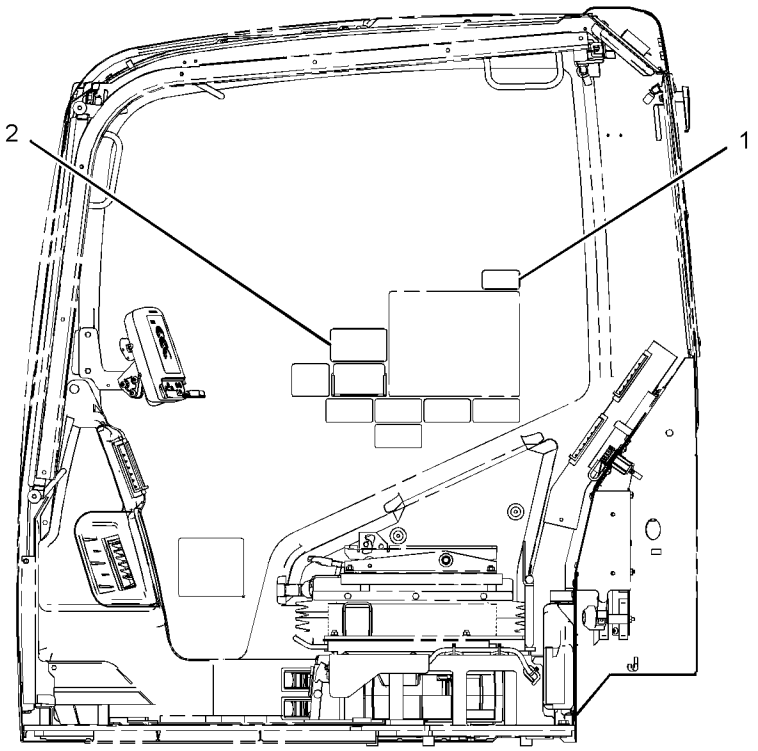

LEFT SIDE VIEW
(328D MODELS)

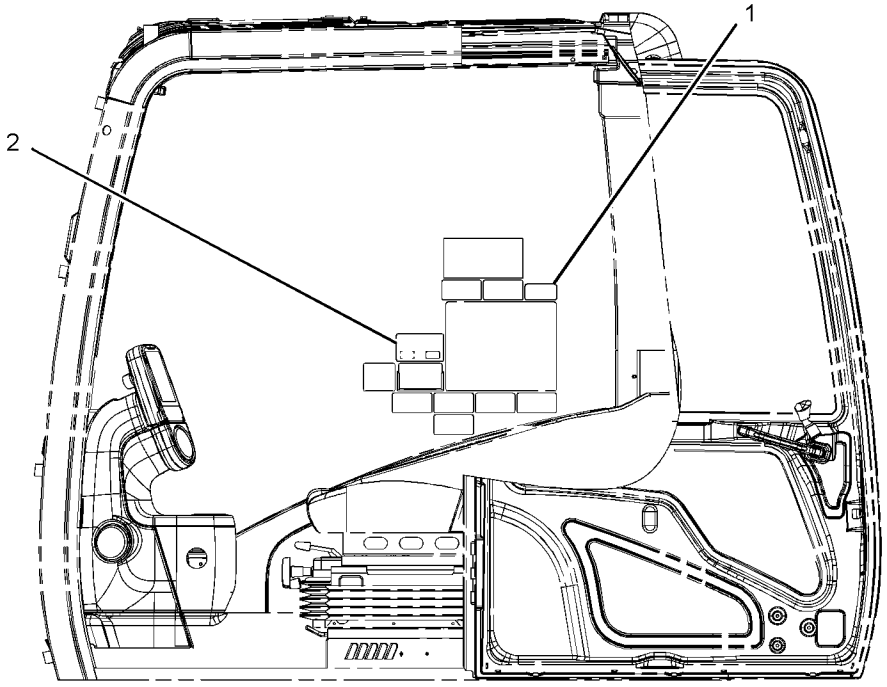

LEFT SIDE VIEW
(ALL OTHER MODELS)

GRAPHIC #1 **<END>** g01246655

247-7416 FILM GP—OPERATOR CONTROLS, NOTICE

S/N: PBB1-UP; KBS1-UP
PART OF 349-2209 CONTROL AR-AUXILIARY
AN ATTACHMENT

SMCS-7405, 7557

i02421497

NOTE	REF NO	GRAPHIC REF	PART NUMBER	QTY	PART NAME 1 2 3 4 5 6 (PRODUCT LEVEL)	SEE PAGE
	1	1	**118-6054**	1	FILM-NOTICE (HYDRAULIC HAMMER OPERATION)	
	2	1	**260-6946**	1	FILM-INSTRUCTION (OPERATOR CONTROL PEDALS)	

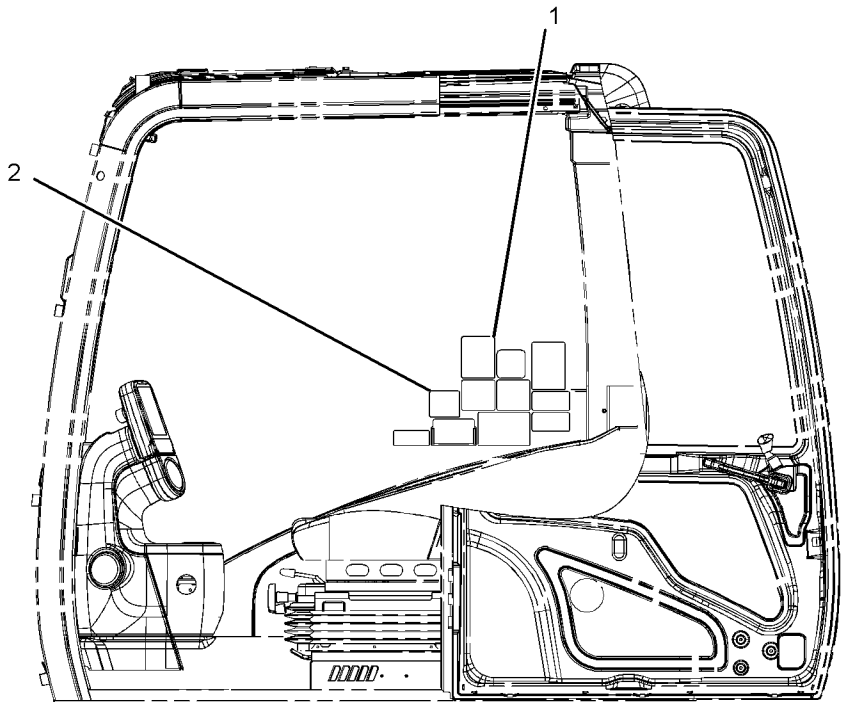

LEFT SIDE VIEW

GRAPHIC #1

<END>

g01220073

247-7418 FILM GP—OPERATOR CONTROLS, NOTICE

S/N: PBB1-UP; KBS1-UP
PART OF 255-5845 PEDAL AR-AUXILIARY
AN ATTACHMENT

SMCS-7405, 7557

i02430392

NOTE	REF NO	GRAPHIC REF	PART NUMBER	QTY	PART NAME 1 2 3 4 5 6 (PRODUCT LEVEL)	SEE PAGE
	1	1	**250-8054**	1	FILM-NOTICE (HAMMER, READ OMM)	
	2	1	**260-6948**	1	FILM-INSTRUCTION (OPERATOR CONTROLS, READ OMM)	

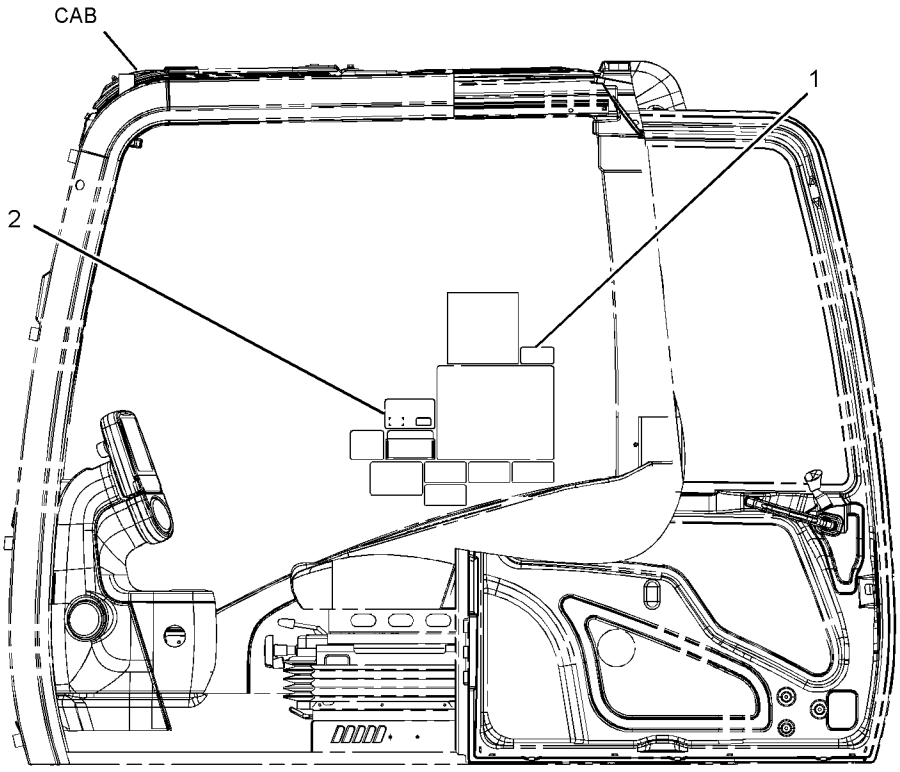

LEFT SIDE VIEW

GRAPHIC #1

<END>

g01203264

247-7420 FILM GP–TOOL CONTROL

S/N: PBB1-UP; KBS1-UP
PART OF 349-2211 CONTROL AR-AUXILIARY
AN ATTACHMENT

SMCS-7405, 7557

i02421338

NOTE	REF NO	GRAPHIC REF	PART NUMBER	QTY	PART NAME 1 2 3 4 5 6 (PRODUCT LEVEL)	SEE PAGE
	1	1	**118-6054**	1	FILM-NOTICE (HYDRAULIC HAMMER OPERATION)	
	2	1	**260-6945**	1	FILM-INSTRUCTION (OPERATOR CONTROL PEDALS)	

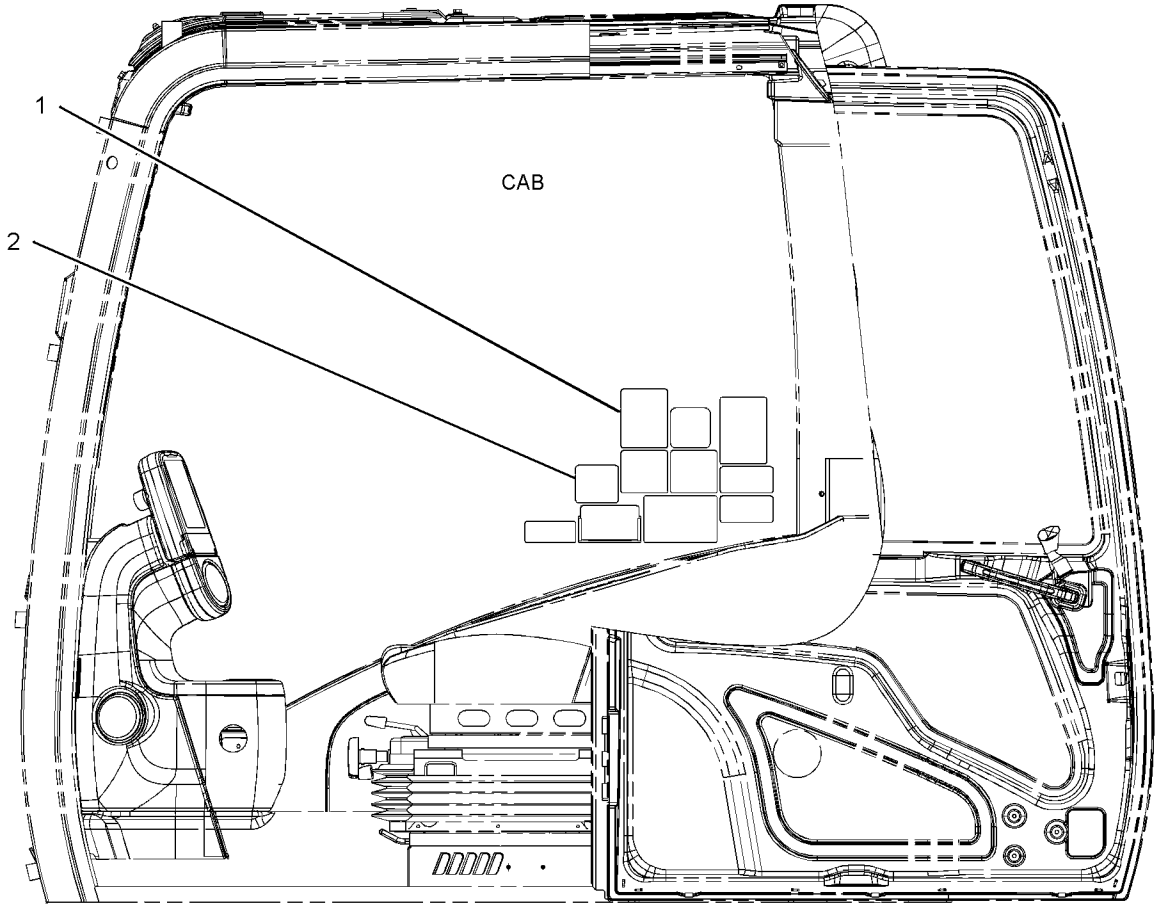

LEFT SIDE VIEW

GRAPHIC #1

<END>

g01226748

247-7423 FILM GP—TOOL CONTROL

S/N: PBB1-UP; KBS1-UP
PART OF 349-2211 CONTROL AR-AUXILIARY
AN ATTACHMENT

SMCS-7405, 7557

i02905367

NOTE	REF NO	GRAPHIC REF	PART NUMBER	QTY	PART NAME 1 2 3 4 5 6 (PRODUCT LEVEL)	SEE PAGE
	1	1	**260-6945**	1	FILM-INSTRUCTION (OPERATOR CONTROL PEDALS)	
	2	1	**250-8054**	1	FILM-NOTICE (HAMMER, READ OMM)	

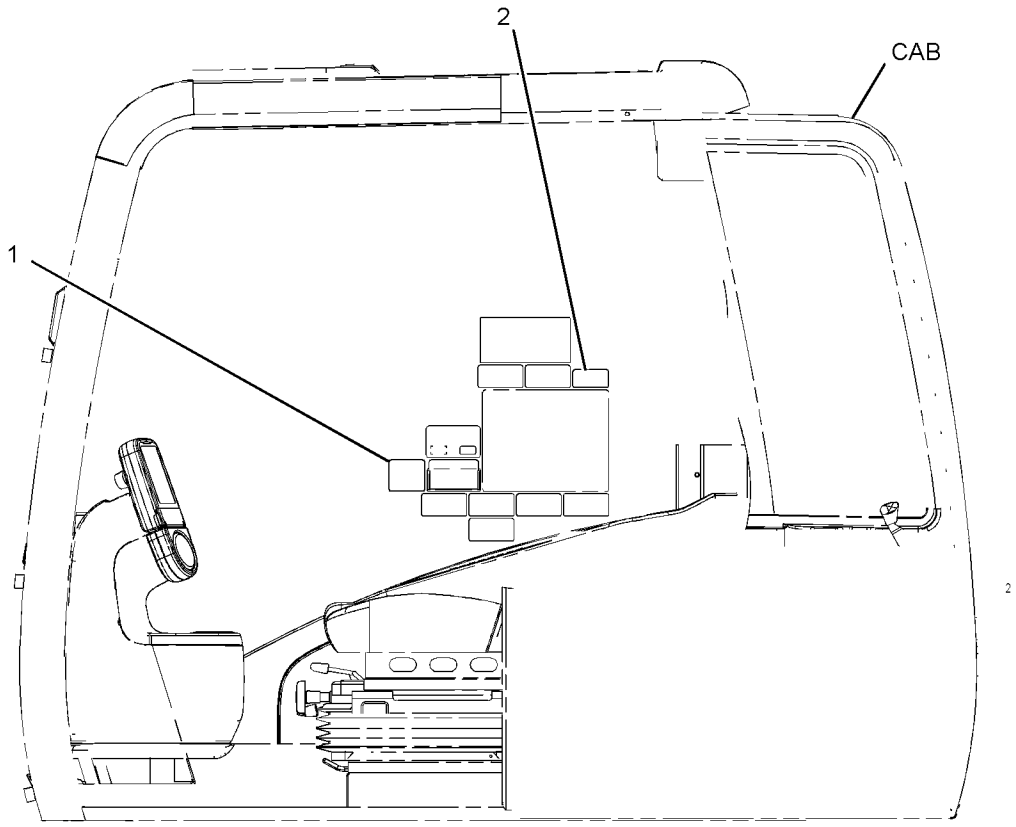

LEFT SIDE VIEW

GRAPHIC #1

<END>

g01231531

247-7424 FILM GP–OPERATOR CONTROLS, NOTICE

S/N: PBB1-UP; KBS1-UP
PART OF 349-2209 CONTROL AR-AUXILIARY
AN ATTACHMENT

SMCS-7405, 7557

i02412793

NOTE	REF NO	GRAPHIC REF	PART NUMBER	QTY	PART NAME 1 2 3 4 5 6 (PRODUCT LEVEL)	SEE PAGE
	1	1	**260-6946**	1	FILM-INSTRUCTION (OPERATOR CONTROL PEDALS)	
	2	1	**250-8054**	1	FILM-NOTICE (HAMMER, READ OMM)	

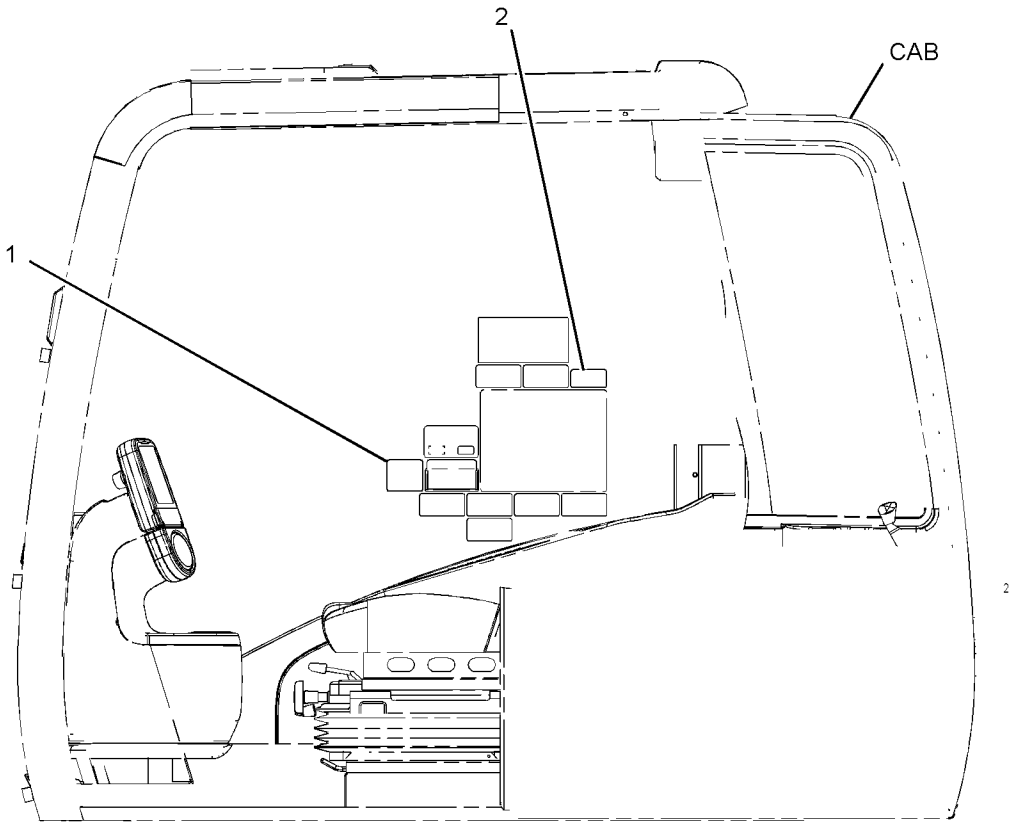

LEFT SIDE VIEW

GRAPHIC #1

<END>

g01231531

247-7465 FILM GP–HAMMER CONTROL, FOOT SWITCH

S/N: PBB1-UP; KBS1-UP
PART OF 270-6106 CONTROL AR-AUXILIARY
AN ATTACHMENT

SMCS-7405, 7557

i02424961

NOTE	REF NO	GRAPHIC REF	PART NUMBER	QTY	PART NAME 1 2 3 4 5 6 (PRODUCT LEVEL)	SEE PAGE
	1	1	**176-2815**	1	FILM-INSTRUCTION (HAMMER CONTROL)	
	2	1	**250-8054**	1	FILM-NOTICE (HAMMER, READ OMM)	

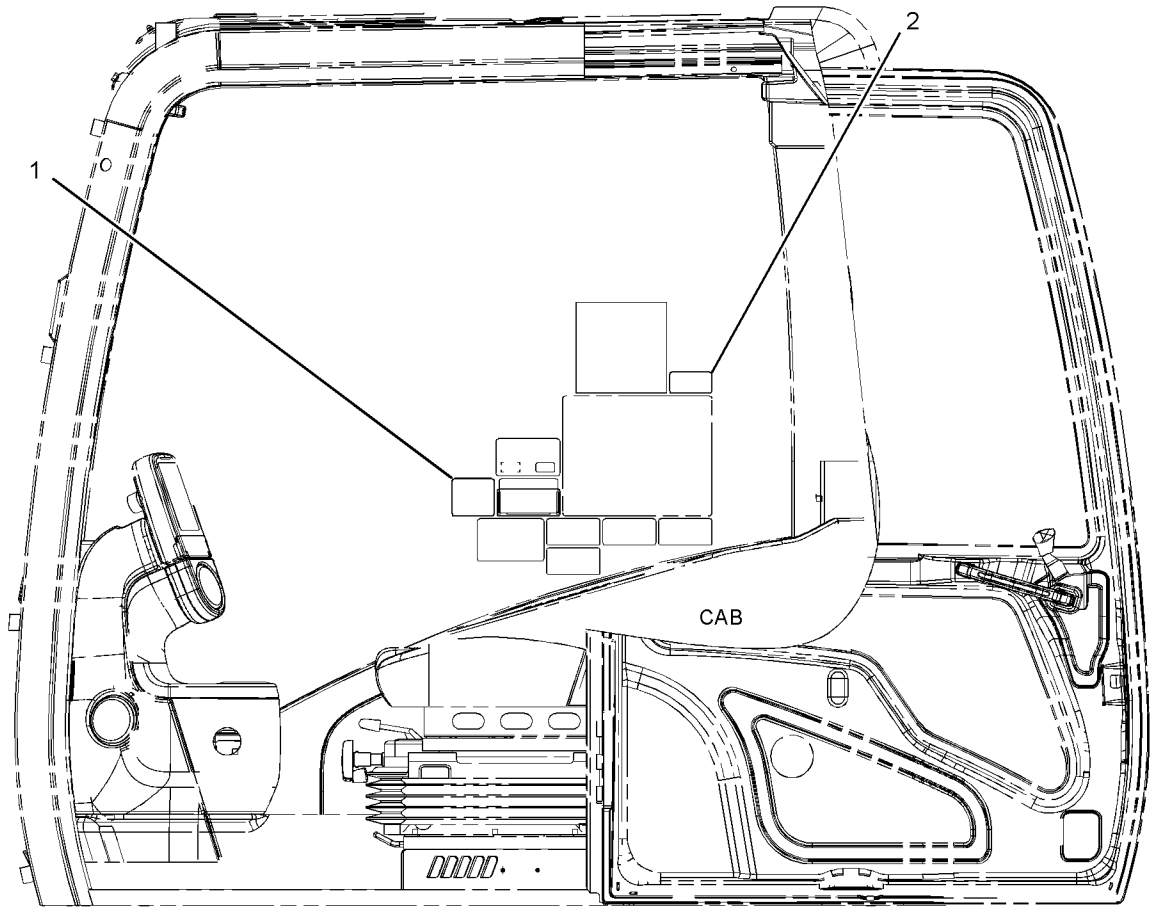

LEFT SIDE VIEW

GRAPHIC #1

<END>

g01157047

247-7492 FILM GP—ALT PATTERN CONTROL, WARNING

S/N: PBB1-UP; KBS1-UP

PART OF 349-2224 VALVE AR-ALT PATTERN CONTROL

AN ATTACHMENT

SMCS-7405, 7557 **i02436751**

NOTE	REF NO	GRAPHIC REF	PART NUMBER	QTY	PART NAME 1 2 3 4 5 6 (PRODUCT LEVEL)	SEE PAGE
	1	1	**4I-2885**	1	CASE	
	2	1	**176-2688**	1	FILM-INFORMATION (OPERATOR CONTROLS, READ OMM)	
	3	1	**214-4531**	1	PLATE-INSTRUCTION (OPERATOR CONTROLS, READ OMM)	
	4	1	**214-4532**	1	PLATE-INSTRUCTION (OPERATOR CONTROLS, READ OMM)	
	5	1	**257-4547**	1	FILM-WARNING (CRUSH HAZARD, READ OMM, INTL)	

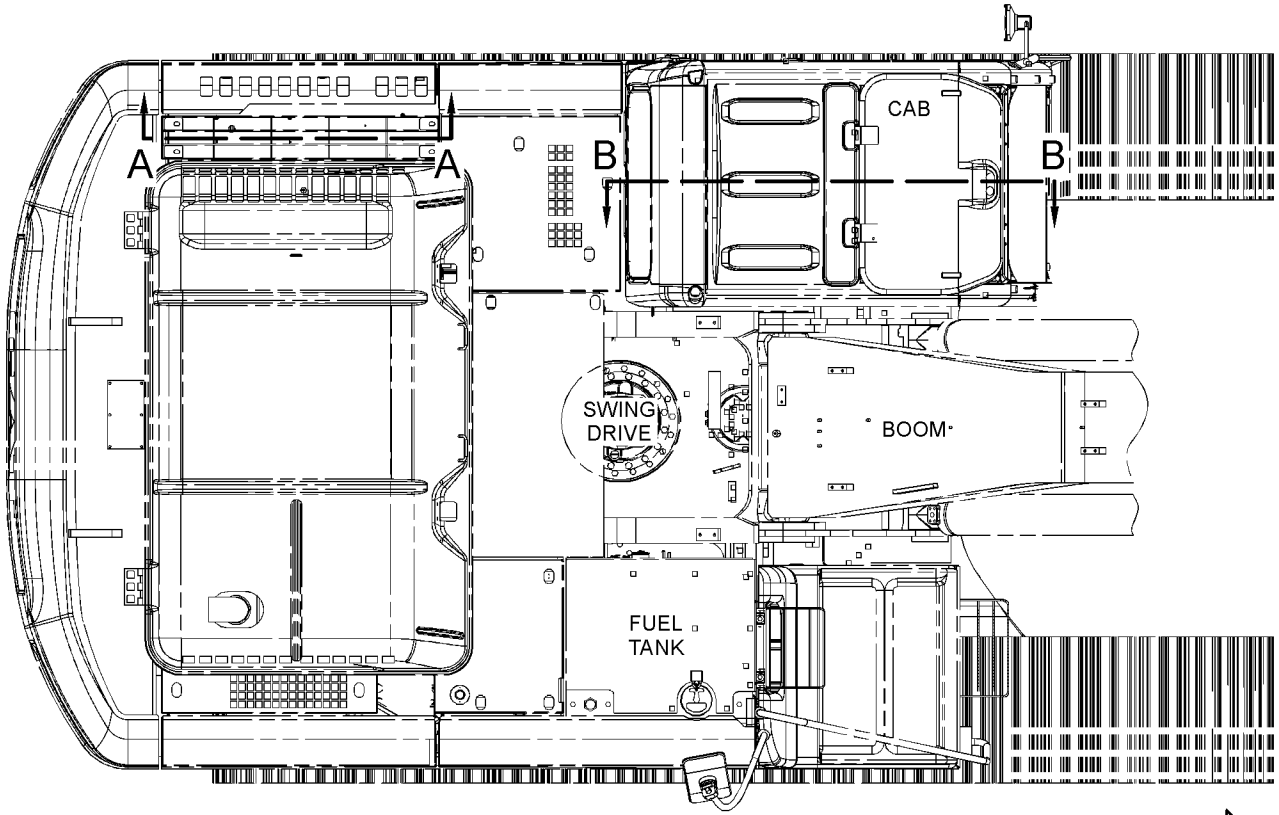

TOP VIEW

FWD

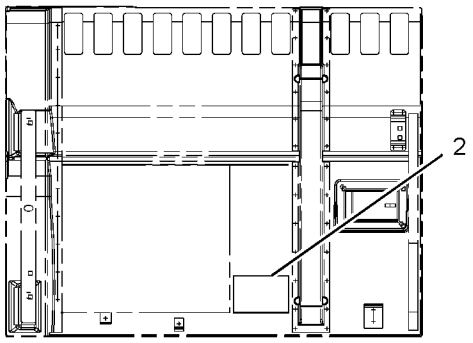

SECTION A-A

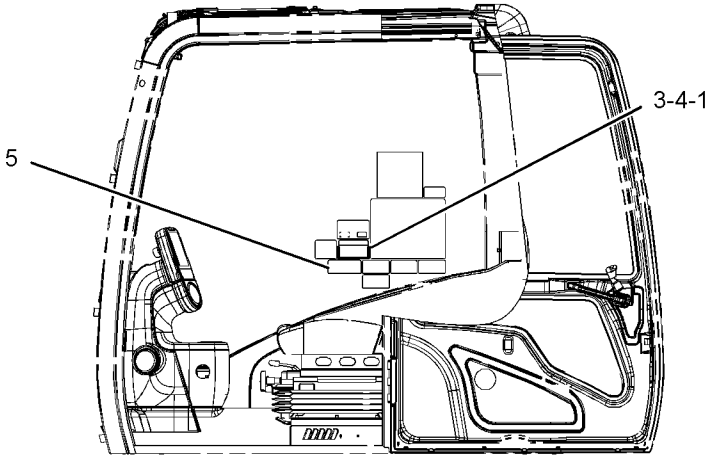

SECTION B-B

GRAPHIC #1 **<END>** g01217306

268-6816 FILM GP–QUICK COUPLER

S/N: PBB1-UP; KBS1-UP
PART OF 349-2218 CONTROL AR-COUPLER
AN ATTACHMENT

SMCS-7405, 7557 **i02490845**

NOTE	REF NO	GRAPHIC REF	PART NUMBER	QTY	PART NAME 1 2 3 4 5 6 (PRODUCT LEVEL)	SEE PAGE
	1	1	**268-6817**	1	FILM-IDENTIFICATION (QUICK COUPLER)	

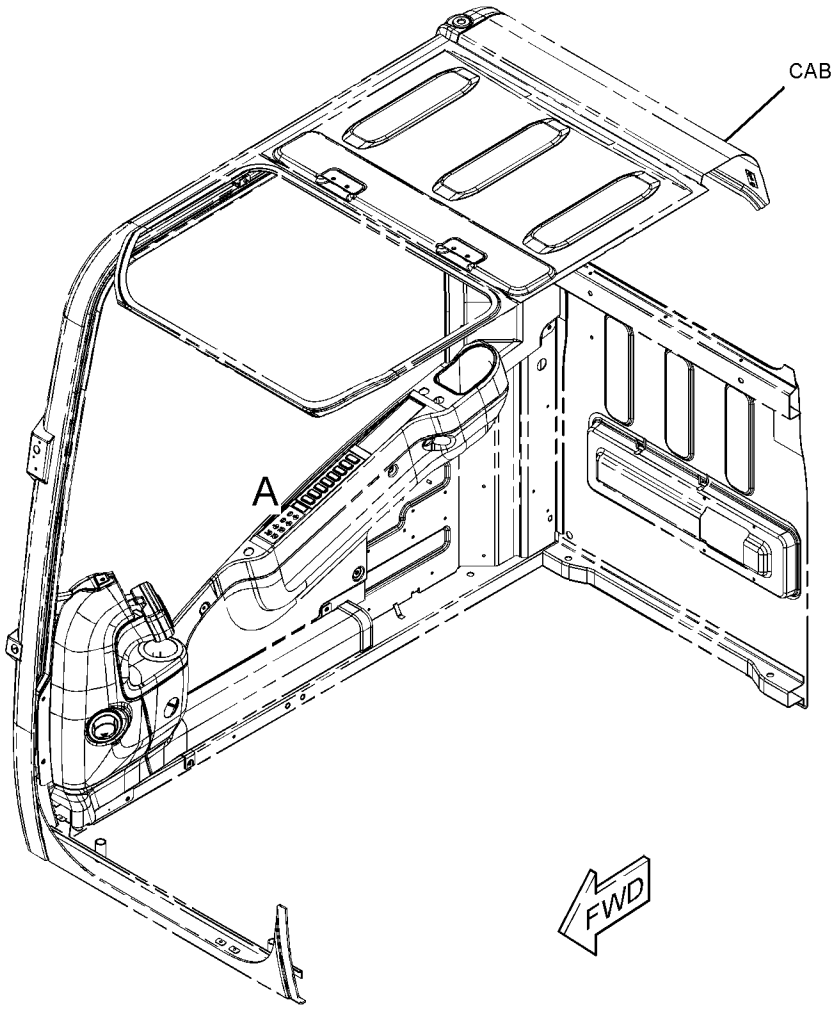

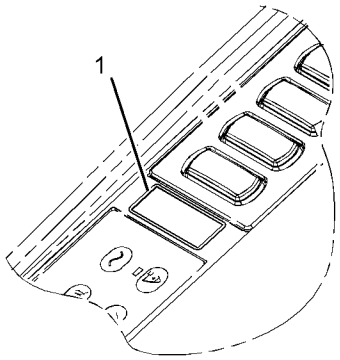

VIEW OF AREA A

GRAPHIC #1 **<END>** g01199575

282-5705 FILM GP–QUICK COUPLER

S/N: PBB1-UP; KBS1-UP
PART OF 349-2220, 456-0934 CONTROL AR-QUICK COUPLER
AN ATTACHMENT

SMCS-7405, 7557

i02817497

NOTE	REF NO	GRAPHIC REF	PART NUMBER	QTY	PART NAME 1 2 3 4 5 6 (PRODUCT LEVEL)	SEE PAGE
	1	1	**268-4530**	1	FILM-WARNING (CRUSH HAZARD, READ OMM, U.S.)	
					–OR–	
		1	**269-0120**	1	FILM-WARNING (CRUSH HAZARD, READ OMM, INTL)	
	2	1	**268-4531**	1	FILM-INSTRUCTION (COUPLER OPERATION)	
	3	1	**268-8872**	1	FILM-WARNING (CRUSH HAZARD, READ OMM, U.S.)	
					–OR–	
		1	**269-0121**	1	FILM-WARNING (CRUSH HAZARD, READ OMM, INTL)	

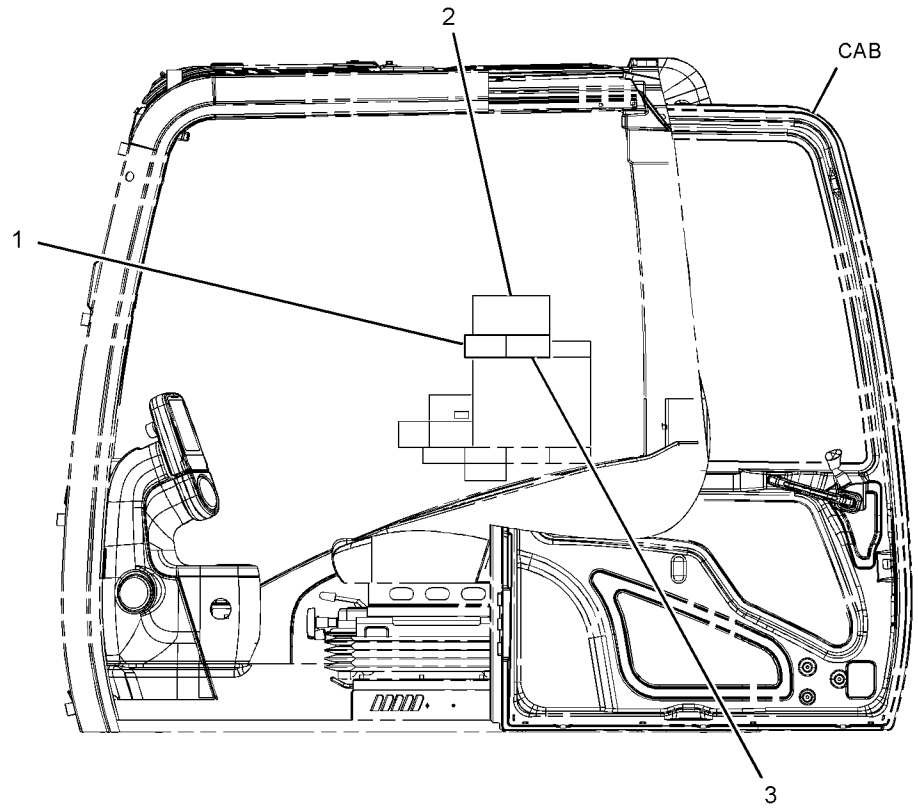

LEFT SIDE VIEW

GRAPHIC #1

<END>

g01238116

SERVICE EQUIPMENT AND SUPPLIES

298-4258 FILM GP–FUEL TRANSFER PUMP

S/N: PBB1-UP; KBS1-UP
PART OF 229-1784 PUMP AR-FUEL TRANSFER
AN ATTACHMENT

SMCS-7405, 7557 **i03023882**

NOTE	REF NO	GRAPHIC REF	PART NUMBER	QTY	PART NAME 1 2 3 4 5 6 (PRODUCT LEVEL)	SEE PAGE
	1	1	**309-3872**	1	FILM-WARNING (EXPLOSION HAZARD, READ OMM)	

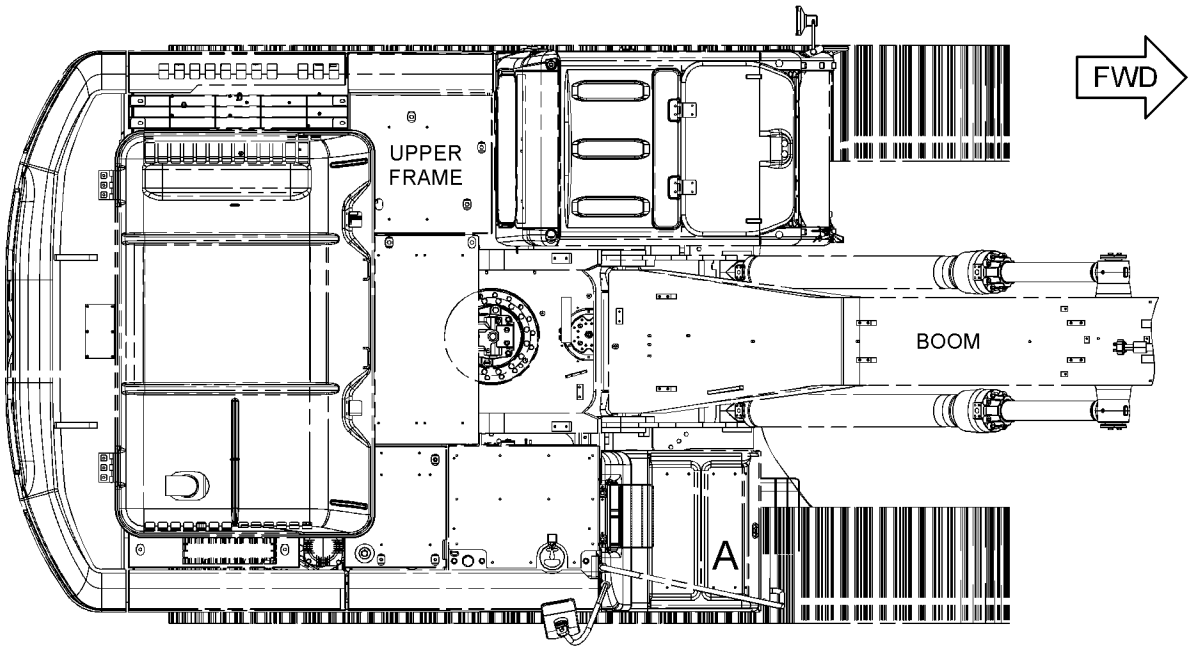

TOP VIEW

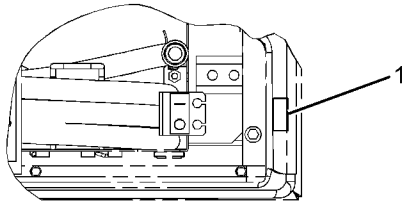

VIEW OF AREA A

GRAPHIC #1 **<END>** g01428719

302-9210 FILM GP–LONG REACH

S/N: PBB1-UP
PART OF 420-0298 LINKAGE AR-FRONT
AN ATTACHMENT

SMCS-7405, 7557 **i04751590**

NOTE	REF NO	GRAPHIC REF	PART NUMBER	QTY	PART NAME 1 2 3 4 5 6 (PRODUCT LEVEL)	SEE PAGE
	1	1	**116-9135**	1	FILM-INFORMATION (READ OMM)	
	2	1	**362-3642**	1	FILM-IDENTIFICATION (CAT, RH)	
	3	1	**362-3643**	1	FILM-IDENTIFICATION (CAT, LH)	
C	4	1	**339-0695**	1	FILM-INFORMATION (LIFTING CAPACITY)	

C - CHANGE FROM PREVIOUS TYPE

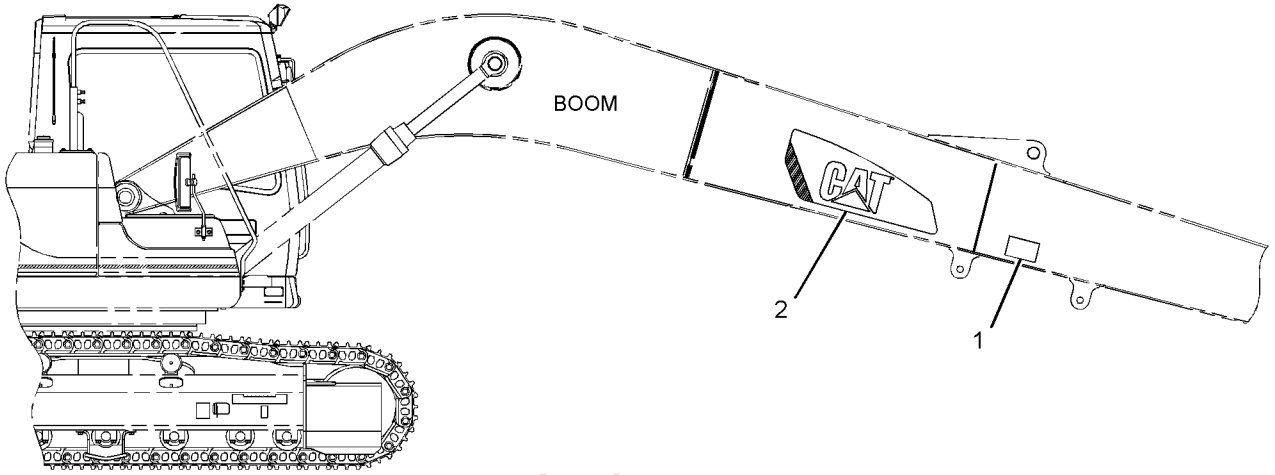

RIGHT SIDE VIEW

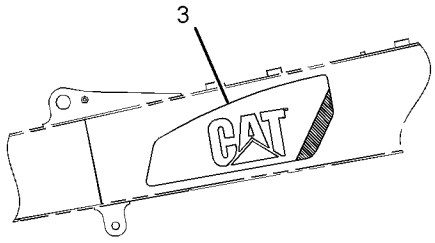

LEFT SIDE VIEW
(BOOM)

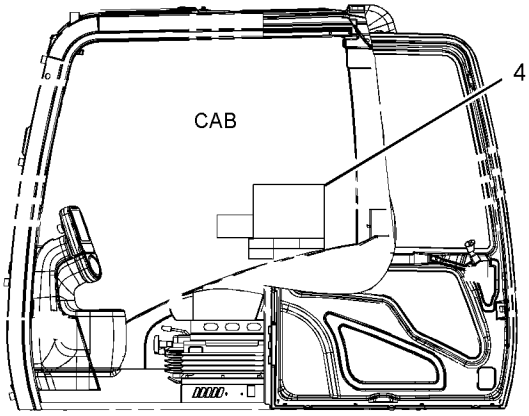

LEFT SIDE VIEW
(CAB)

GRAPHIC #1 **<END>** g01363789

303-2787 FILM GP—WORK AREA VISUAL SYSTEM, REAR

S/N: PBB1-UP; KBS1-UP
PART OF 456-0917 CAMERA & MIRROR AR
AN ATTACHMENT

SMCS-7405, 7557

i03128324

NOTE	REF NO	GRAPHIC REF	PART NUMBER	QTY	PART NAME 1 2 3 4 5 6 (PRODUCT LEVEL)	SEE PAGE
	1	1	**319-9152**	1	FILM-INSTRUCTION (BATTERY LIFE, CAMERA)	

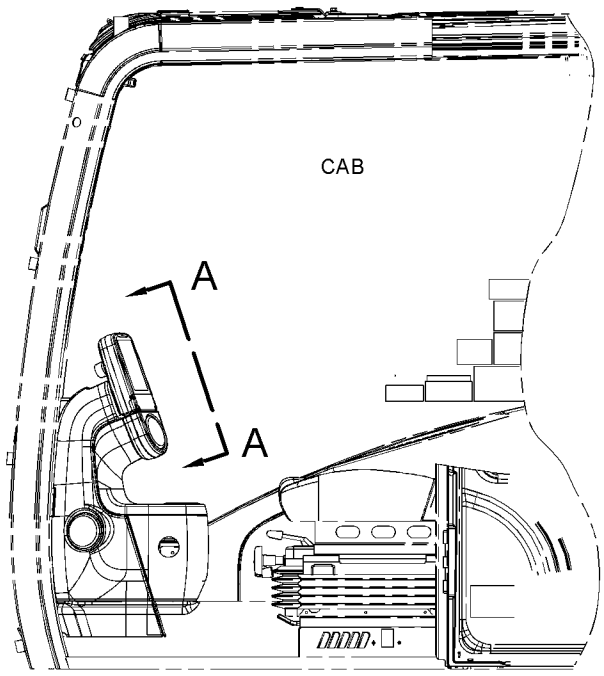

LEFT SIDE VIEW

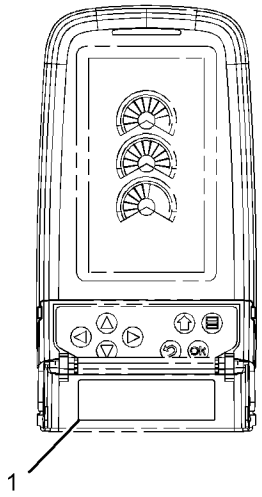

VIEW A-A

GRAPHIC #1

<END>

g01620358

SERVICE EQUIPMENT AND SUPPLIES

314-3848 FILM GP

S/N: PBB1-UP; KBS1-UP
CHINA MARKET
AN ATTACHMENT

SMCS-7405, 7557

i05811122

NOTE	REF NO	GRAPHIC REF	PART NUMBER	QTY	PART NAME 1 2 3 4 5 6 (PRODUCT LEVEL)	SEE PAGE
	1	1	**359-2380**	1	FILM-INSTRUCTION (SERVICE CHART)	
					(ON INSIDE OF CAB DOOR)	

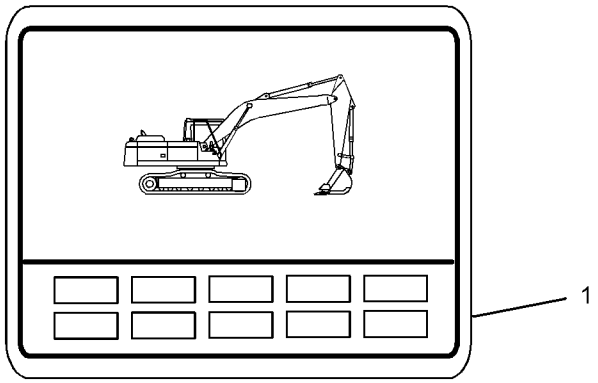

GRAPHIC #1

<END>

g03684385

366-8770 FILM GP–PRODUCT LINK RADIO, U.S.

S/N: PBB1-UP; KBS1-UP
PART OF 383-5449 CONTROL AR-COMMUNICATION
AN ATTACHMENT

SMCS-7405, 7557

i05471792

NOTE	REF NO	GRAPHIC REF	PART NUMBER	QTY	PART NAME 1 2 3 4 5 6 (PRODUCT LEVEL)	SEE PAGE
	1	1	**230-1340**	1	FILM-WARNING (PRODUCT LINK RADIO, U.S.)	
	2	1	**307-0047**	1	FILM-INFORMATION (PRODUCT LINK, READ OMM)	

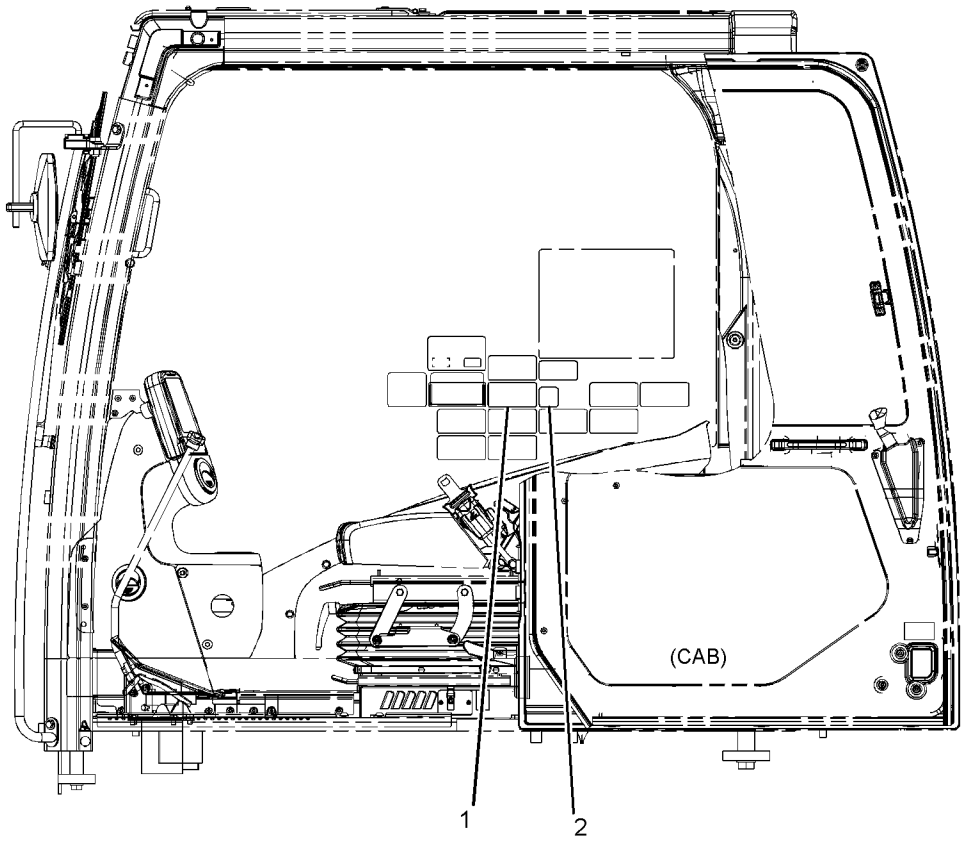

LEFT SIDE VIEW

GRAPHIC #1

<END>

g03458498

366-8771 FILM GP—PRODUCT LINK RADIO, INTL

S/N: PBB1-UP; KBS1-UP
PART OF 383-5449 CONTROL AR-COMMUNICATION
AN ATTACHMENT

SMCS-7405, 7557

i05406856

NOTE	REF NO	GRAPHIC REF	PART NUMBER	QTY	PART NAME 1 2 3 4 5 6 (PRODUCT LEVEL)	SEE PAGE
	1	1	**230-1341**	1	FILM-WARNING (PRODUCT LINK RADIO, INTL)	
	2	1	**307-0047**	1	FILM-INFORMATION (PRODUCT LINK, READ OMM)	

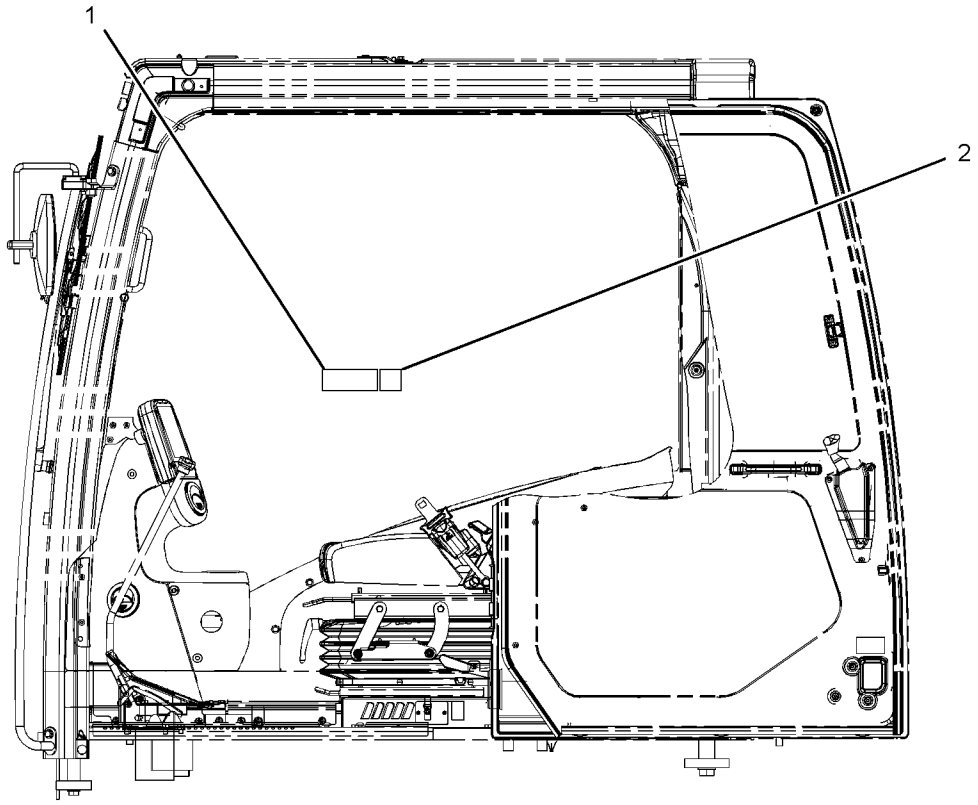

LEFT SIDE VIEW
(CAB)

GRAPHIC #1

<END>

g03439537

SERVICE EQUIPMENT AND SUPPLIES

417-9077 FILM GP—MASS EXCAVATOR

S/N: PBB1-UP; KBS1-UP

AN ATTACHMENT

SMCS-7405, 7557 **i05455309**

NOTE	REF NO	GRAPHIC REF	PART NUMBER	QTY	PART NAME 1 2 3 4 5 6 (PRODUCT LEVEL)	SEE PAGE
	1	1	**385-4171**	2	FILM-IDENTIFICATION (ME)	

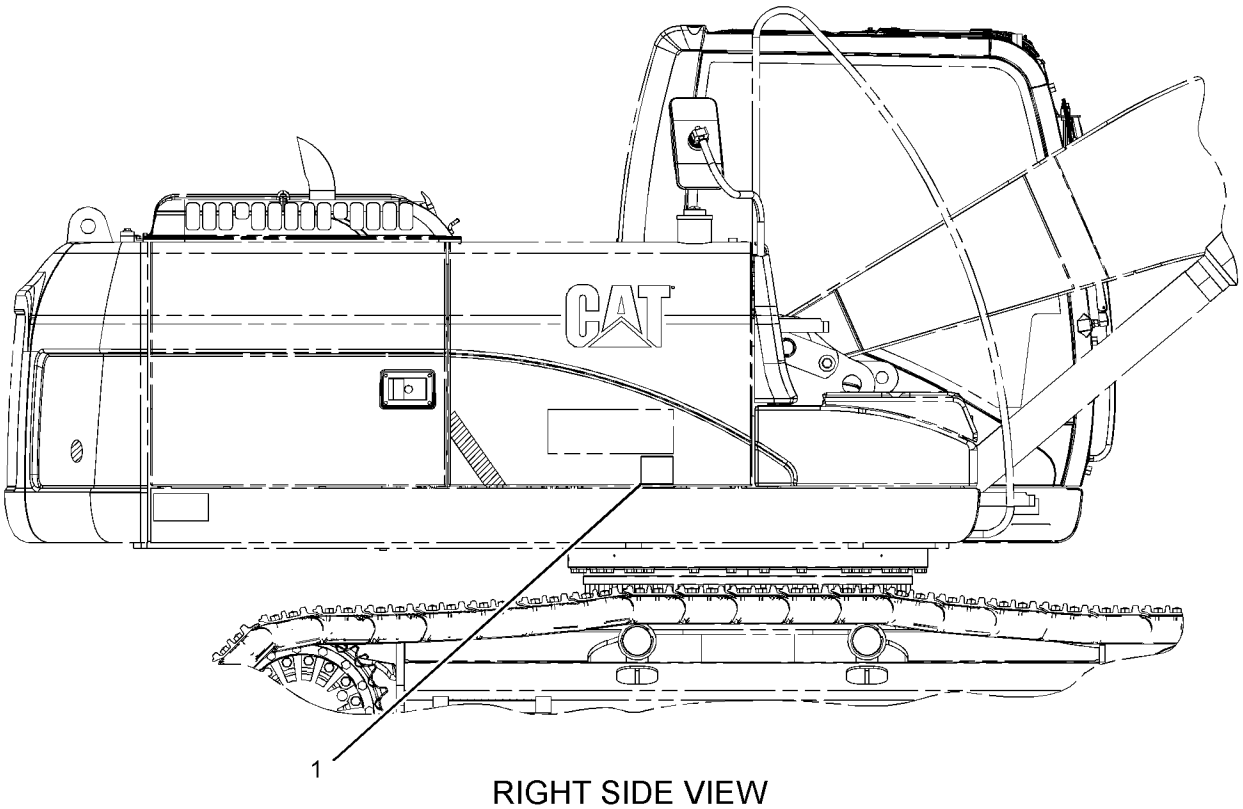

RIGHT SIDE VIEW

GRAPHIC #1 **<END>** g03372702

420-5793 FILM GP–BRAZIL

S/N: PBB1-UP; KBS1-UP
PART OF 456-0818, 456-0819 DISTRIBUTION AR
AN ATTACHMENT

SMCS-7405, 7557

i05859515

NOTE	REF NO	GRAPHIC REF	PART NUMBER	QTY	PART NAME 1 2 3 4 5 6 (PRODUCT LEVEL)	SEE PAGE
	1	1	**202-9824**	1	FILM-INFORMATION (BRAZIL)	

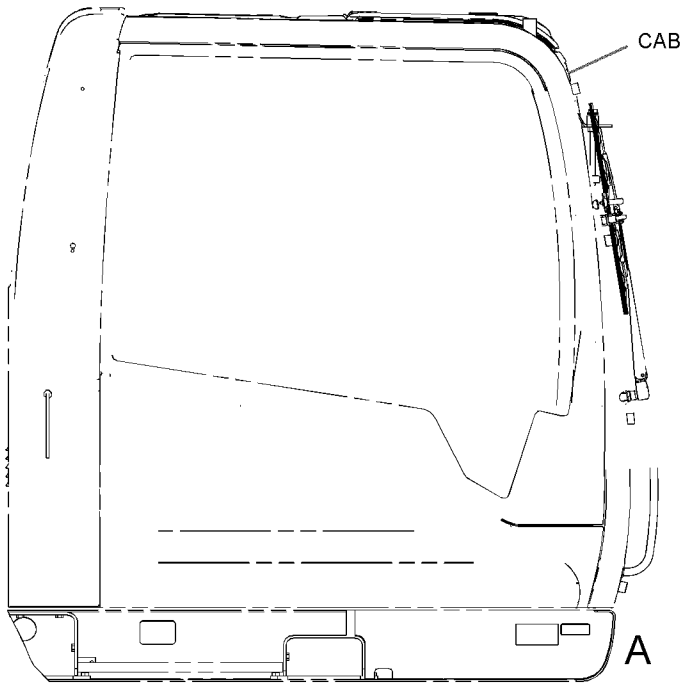

RIGHT SIDE VIEW

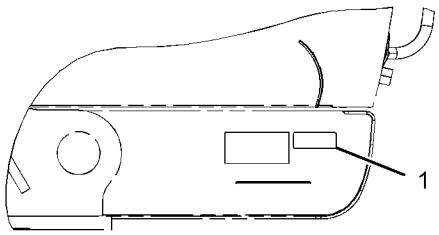

VIEW OF AREA A

GRAPHIC #1

<END>

g03350586

422-8442 FILM GP–COUNTERWEIGHT

S/N: PBB1-UP; KBS1-UP
PART OF 422-8440, 422-8441 COUNTERWEIGHT AR
AN ATTACHMENT

SMCS-7405, 7557 **i05155851**

NOTE	REF NO	GRAPHIC REF	PART NUMBER	QTY	PART NAME 1 2 3 4 5 6 (PRODUCT LEVEL)	SEE PAGE
	1	1	**361-6533**	1	FILM-IDENTIFICATION (CAT)	

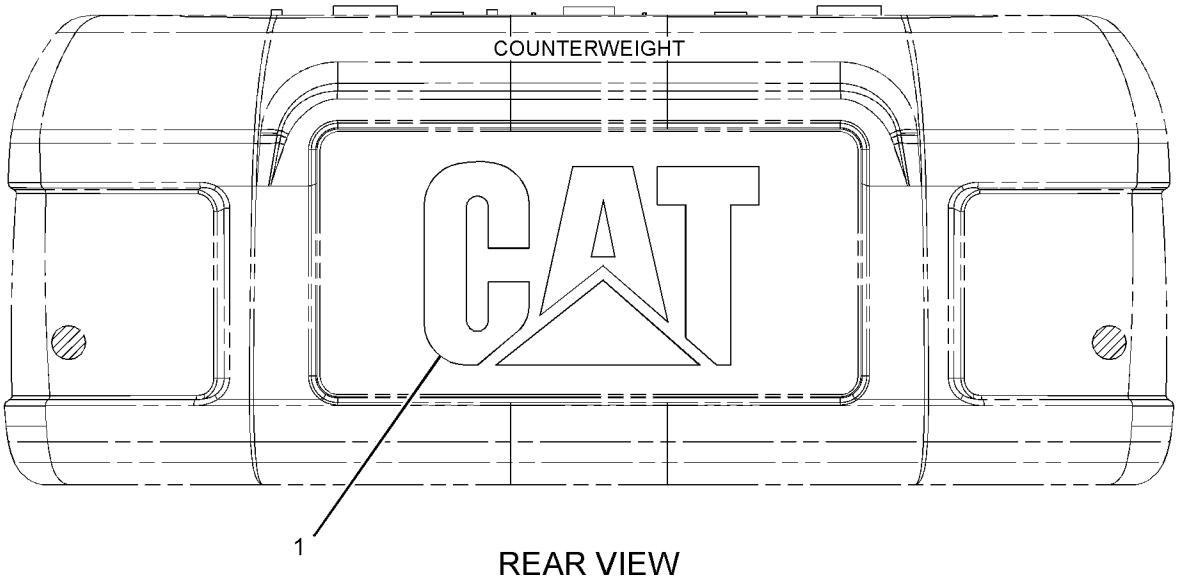

REAR VIEW

GRAPHIC #1 **<END>** g03317216

346-1967 PLATE & FILM GP–ENGINE

S/N: D7A1-UP

PART OF 417-3389 ENGINE AR-PRIMARY

SMCS-7405, 7557 **i05845454**

NOTE	REF NO	GRAPHIC REF	PART NUMBER	QTY	PART NAME 1 2 3 4 5 6 (PRODUCT LEVEL)	SEE PAGE
	1	1	**298-5630**	1	PLATE-IDENTIFICATION (CAT)	
	2	1	**326-9052**	1	FILM-WARNING (DO NOT SPRAY, READ OMM)	

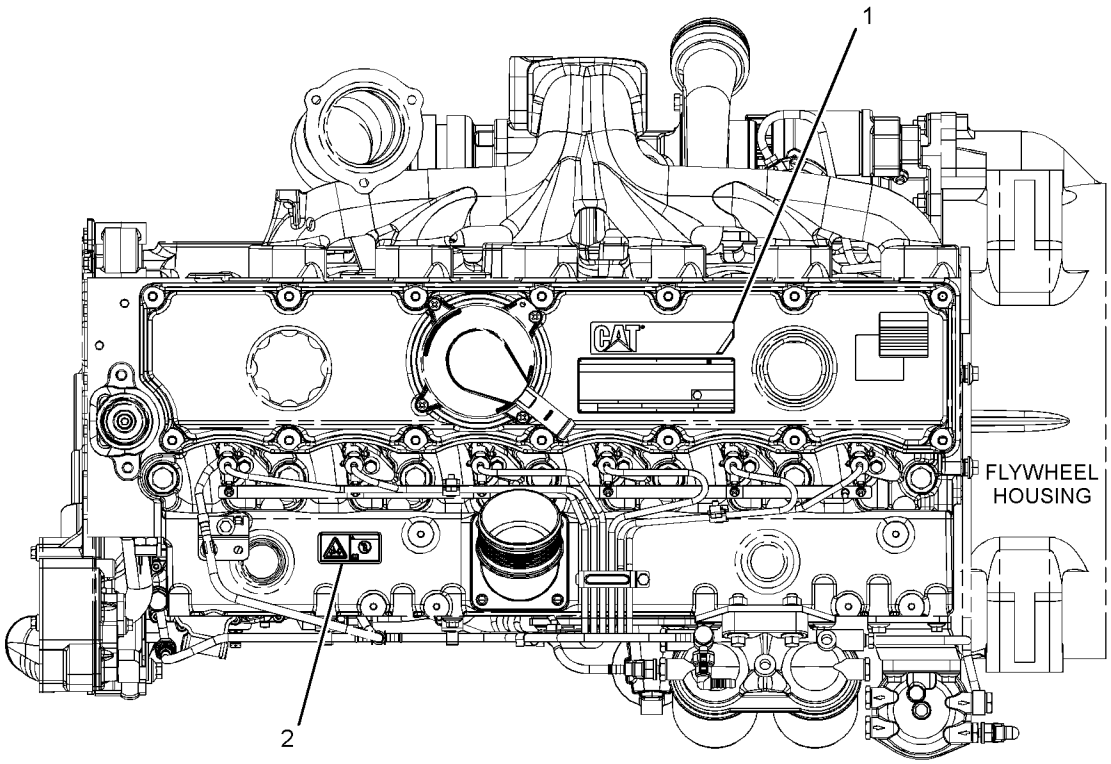

TOP VIEW OF ENGINE

GRAPHIC #1 **<END>** g03318790

SERVICE EQUIPMENT AND SUPPLIES

394-7464 PLATE & FILM GP

S/N: KBS1-UP

PART OF 454-5588 CHASSIS AR

SMCS-7405, 7557 **i05430234**

NOTE	REF NO	GRAPHIC REF	PART NUMBER	QTY	PART NAME 1 2 3 4 5 6 (PRODUCT LEVEL)	SEE PAGE
	1	1,2	**1P-2807**	4	FILM-IDENTIFICATION (LIFT EYE LOCATION)	
	2	2	**7X-7644**	4	FILM-IDENTIFICATION (TIE-DOWN)	
	3	4	**8T-6842**	1	FILM-INSTRUCTION (PULL RING, ALTERNATE EXIT)	
	4	3	**110-6393**	1	PLATE-INSTRUCTION (AIR CONDITIONER)	
	5	1	**134-7258**	1	FILM-INFORMATION (EXTENDED LIFE COOLANT)	
	6	4	**146-6747**	1	FILM-INFORMATION (24-VOLT)	
	7	1,3,4	**167-7270**	2	FILM-INSTRUCTION (NO STEP)	
	8	2	**187-0661**	1	FILM-INSTRUCTION (ALTERNATE EXIT)	
	9	2	**190-5386**	2	FILM-IDENTIFICATION (ROUND RED REFLECTIVE)	
	10	3	**214-7915**	1	FILM-INSTRUCTION (ENGINE SHUTOFF)	
	11	3	**221-8045**	1	FILM-WARNING (SEAT BELT, INTERNATIONAL)	
	12	3	**223-9818**	1	FILM-INSTRUCTION (WINDOW CLEANING, READ OMM)	
	13	3	**224-0554**	1	FILM-WARNING (UNIVERSAL, READ OMM)	
	14	2	**224-8946**	1	FILM-WARNING (NO ETHER SPRAY/AIR INTK, INTL)	
	15	4	**225-0312**	1	FILM-WARNING (JUMP START, READ OMM, INTL)	
	16	1,4	**225-4257**	2	FILM-WARNING (HOT FLUID UNDER PRESS)	
X	17	1,2	**228-2781**	2	FILM-WARNING (MACHINE SWING, CRUSHING, INTL)	
	18	1,4	**228-7316**	2	FILM-WARNING (HOT SURFACE, HANDS CLEAR, INTL)	
	19	3	**228-9254**	1	FILM-WARNING (ELEC HAZARD, READ OMM, INTL)	
	20	2	**229-0887**	1	FILM-INFORMATION (AIR CLEANER)	
	21	1	**239-6986**	1	PLATE-SERIAL NUMBER (MACHINE)	
	22	1	**242-1510**	1	FILM-INSTRUCTION (HYDRAULIC OIL CHECK)	
	23	3	**242-1588**	1	FILM-WARNING (FRONT WINDOW, READ OMM, INTL)	
	24	1	**242-6092**	1	FILM-WARNING (ACCUMULATOR PRESSURE)	
	25	2	**247-7436**	1	FILM-IDENTIFICATION (CAT)	
	26	4	**247-7437**	1	FILM-IDENTIFICATION (BATTERY CIRCUIT BREAKER)	
	27	4	**247-7438**	1	FILM-IDENTIFICATION (ELECTRICAL CIRCUIT BREAKER)	
	28	3	**266-5431**	1	FILM-WARNING (CRUSH HAZARD, READ OMM, INTL)	
	29	1,2	**290-1729**	2	FILM-IDENTIFICATION (CAT)	
	30	1,2	**415-9627**	2	FILM-IDENTIFICATION (320D2)	
	31	2	**298-4282**	2	FILM-WARNING (CRUSH HAZARD, STAY BACK, INTL)	
	32	1	**331-7972**	1	FILM-IDENTIFICATION (CAT, RH)	
	33	2	**331-7973**	1	FILM-IDENTIFICATION (CAT, LH)	
J	34	1	**334-4603**	1	FILM-INFORMATION (HYDO ADVANCED 10)	
	35	2	**358-6390**	1	FILM-STRIPE (LH)	
	36	2	**367-0844**	1	FILM-INSTRUCTION (FUEL, READ OMM)	
	37	4	**369-4243**	1	FILM-INFORMATION (BELT ROUTING)	
	38	3	**381-1372**	1	FILM-IDENTIFICATION (FUSE, RELAY PANEL)	
	39	4	**381-1373**	1	FILM-IDENTIFICATION (CIRCUIT BREAKER)	
	40	1	**385-4093**	1	FILM-STRIPE (RH)	
	41	3	**4I-8472**	1	FILM-INSTRUCTION (OPERATOR CONTROLS)	
	42	1	**443-5690**	2	FILM-WARNING (LIFTING EYE, READ OMM)	
AF			**350-8958**	1	PLATE-SERIAL NUMBER (ENGINE)	
					(ON LH SIDE OF CYLINDER BLOCK, TOWARDS THE BOTTOM & REAR)	

A - NOT PART OF THIS GROUP
F - NOT SHOWN
J - REQUIRED ONLY WHEN HYDRAULIC TANK IS FILLED WITH HYDO ADVANCED 10 OIL
X - AREAS MARKED X IN GRAPHICS SHOW ALTERNATE FILM LOCATION ON MACHINE EQUIPPED WITH BUMPERS

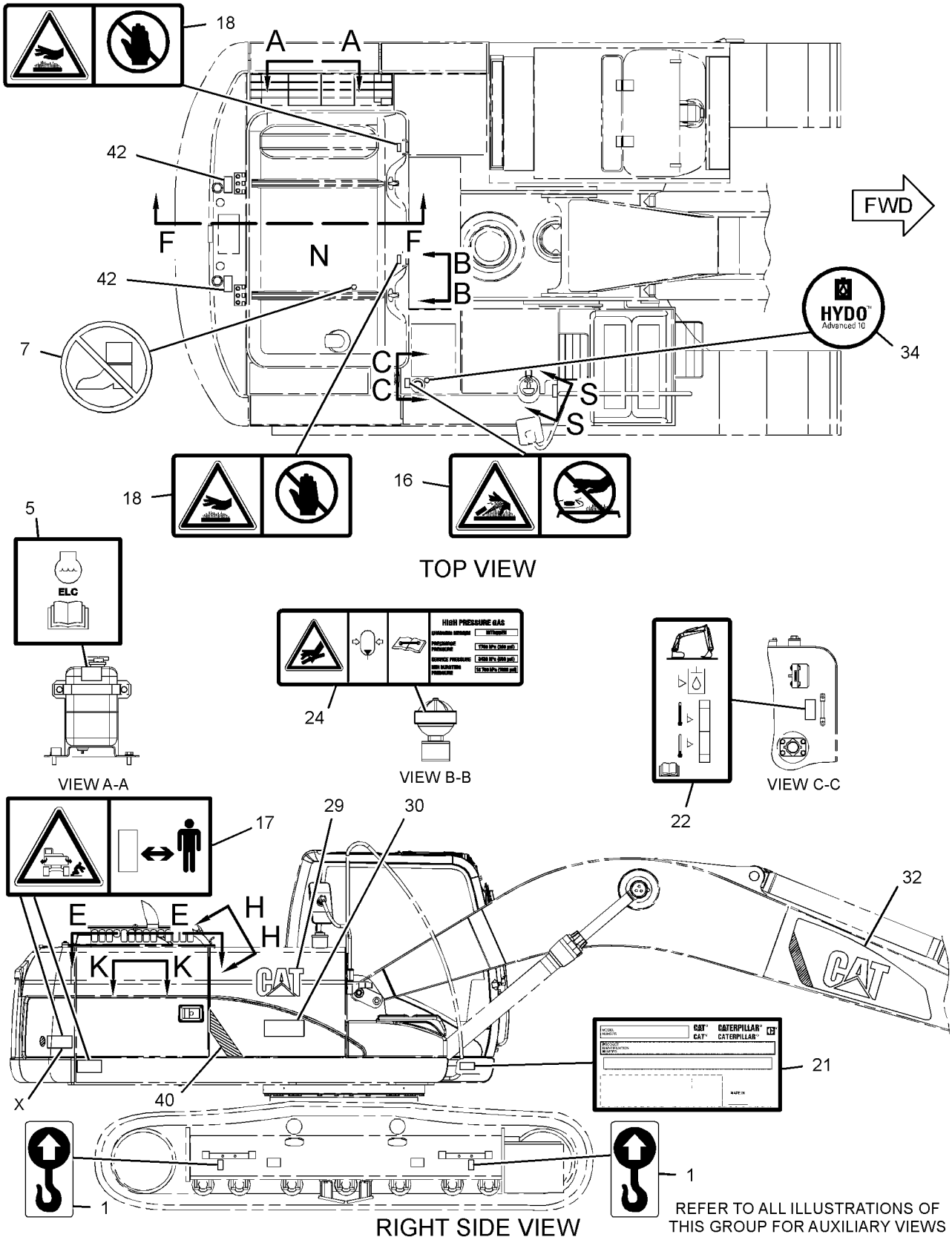

GRAPHIC #1 g03448589

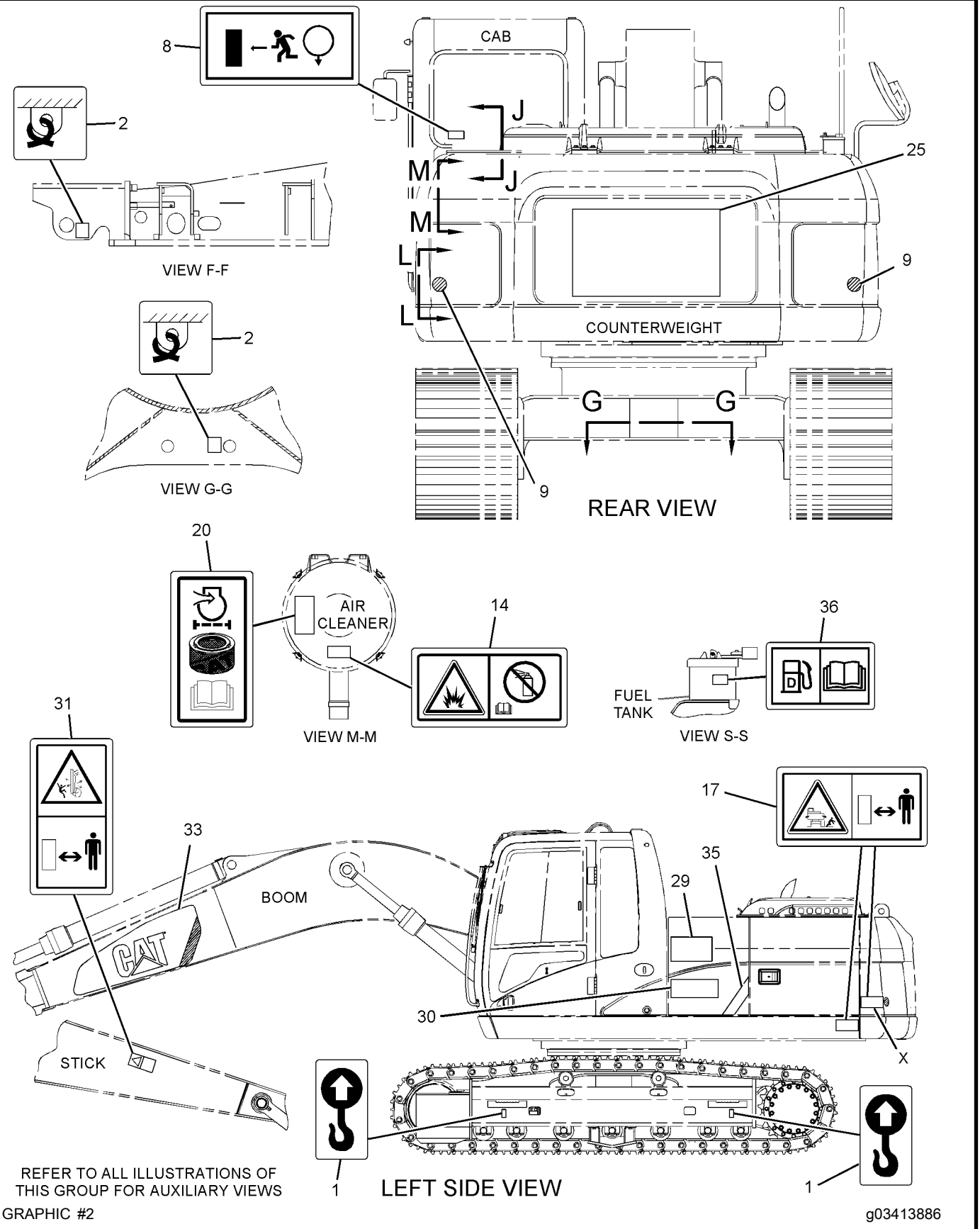
8
2
CAB
J
M
J
M
L
L
25
9
COUNTERWEIGHT
G
G
9
REAR VIEW
VIEW F-F
2
VIEW G-G
20
AIR CLEANER
14
VIEW M-M
36
FUEL TANK
VIEW S-S
31
33
BOOM
CAT
STICK
17
35
29
30
X
1
LEFT SIDE VIEW
1
REFER TO ALL ILLUSTRATIONS OF THIS GROUP FOR AUXILIARY VIEWS
GRAPHIC #2
g03413886

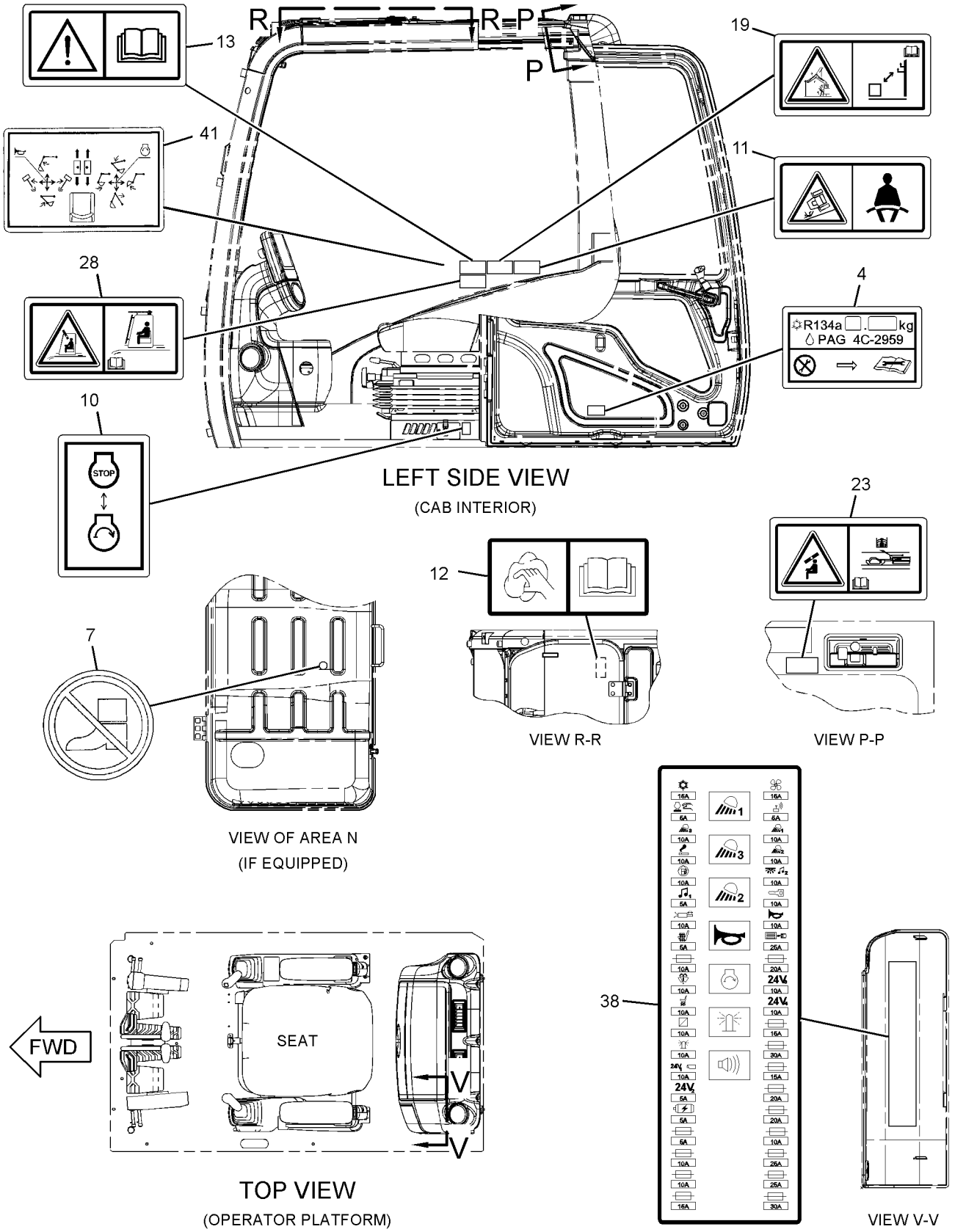

GRAPHIC #3

g03413887

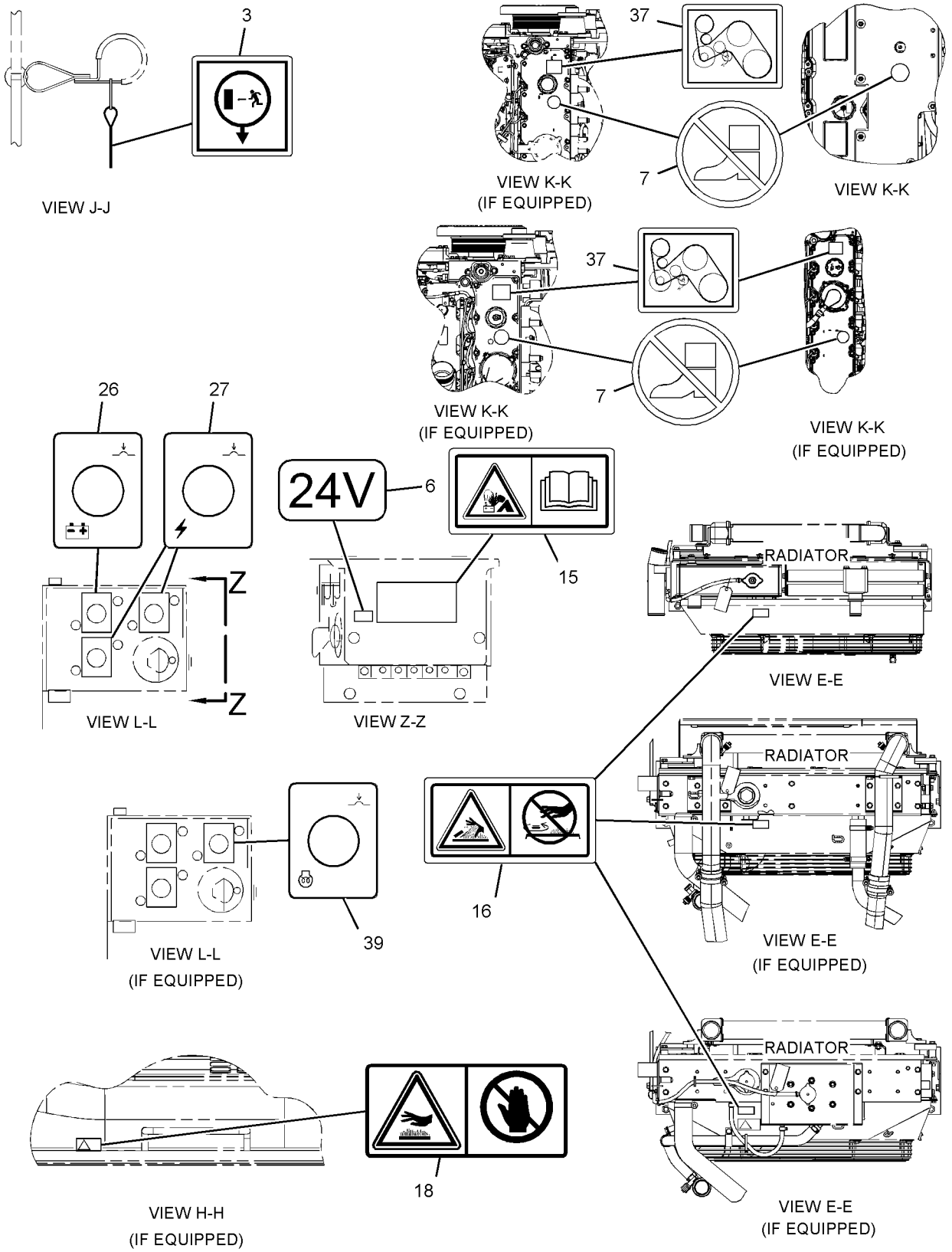

GRAPHIC #4 **<END>** g03414260

394-7465 PLATE & FILM GP

S/N: PBB1-UP

PART OF 454-5589 CHASSIS AR

SMCS-7405, 7557 **i05909473**

NOTE	REF NO	GRAPHIC REF	PART NUMBER	QTY	PART NAME 1 2 3 4 5 6 (PRODUCT LEVEL)	SEE PAGE
	1	1,2	**1P-2807**	4	FILM-IDENTIFICATION (LIFT EYE LOCATION)	
	2	2	**7X-7644**	4	FILM-IDENTIFICATION (TIE-DOWN)	
	3	4	**8T-6842**	1	FILM-INSTRUCTION (PULL RING, ALTERNATE EXIT)	
	4	3	**110-6393**	1	PLATE-INSTRUCTION (AIR CONDITIONER)	
	5	1	**134-7258**	1	FILM-INFORMATION (EXTENDED LIFE COOLANT)	
	6	4	**146-6747**	1	FILM-INFORMATION (24-VOLT)	
	7	1,3,4	**167-7270**	2	FILM-INSTRUCTION (NO STEP)	
	8	2	**187-0661**	1	FILM-INSTRUCTION (ALTERNATE EXIT)	
	9	2	**190-5386**	2	FILM-IDENTIFICATION (ROUND RED REFLECTIVE)	
	10	3	**214-7915**	1	FILM-INSTRUCTION (ENGINE SHUTOFF)	
	11	3	**221-8045**	1	FILM-WARNING (SEAT BELT, INTERNATIONAL)	
	12	3	**223-9818**	1	FILM-INSTRUCTION (WINDOW CLEANING, READ OMM)	
	13	3	**224-0554**	1	FILM-WARNING (UNIVERSAL, READ OMM)	
	14	2	**224-8946**	1	FILM-WARNING (NO ETHER SPRAY/AIR INTK, INTL)	
	15	4	**225-0312**	1	FILM-WARNING (JUMP START, READ OMM, INTL)	
	16	1,4	**225-4257**	2	FILM-WARNING (HOT FLUID UNDER PRESS)	
N	17	1,2	**228-2781**	2	FILM-WARNING (MACHINE SWING, CRUSHING, INTL)	
	18	1,4	**228-7316**	2	FILM-WARNING (HOT SURFACE, HANDS CLEAR, INTL)	
	19	3	**228-9254**	1	FILM-WARNING (ELEC HAZARD, READ OMM, INTL)	
	20	2	**229-0887**	1	FILM-INFORMATION (AIR CLEANER)	
	21	1	**239-6986**	1	PLATE-SERIAL NUMBER (MACHINE)	
	22	1	**242-1510**	1	FILM-INSTRUCTION (HYDRAULIC OIL CHECK)	
	23	3	**242-1588**	1	FILM-WARNING (FRONT WINDOW, READ OMM, INTL)	
	24	1	**242-6092**	1	FILM-WARNING (ACCUMULATOR PRESSURE)	
	25	2	**247-7436**	1	FILM-IDENTIFICATION (CAT)	
	26	4	**247-7437**	1	FILM-IDENTIFICATION (BATTERY CIRCUIT BREAKER)	
	27	4	**247-7438**	1	FILM-IDENTIFICATION (ELECTRICAL CIRCUIT BREAKER)	
	28	3	**266-5431**	1	FILM-WARNING (CRUSH HAZARD, READ OMM, INTL)	
	29	1,2	**290-1729**	2	FILM-IDENTIFICATION (CAT)	
	30	1,2	**415-9627**	2	FILM-IDENTIFICATION (320D2)	
	31	2	**298-4282**	2	FILM-WARNING (CRUSH HAZARD, STAY BACK, INTL)	
	32	1	**331-7972**	1	FILM-IDENTIFICATION (CAT, RH)	
	33	2	**331-7973**	1	FILM-IDENTIFICATION (CAT, LH)	
J	34	1	**334-4603**	1	FILM-INFORMATION (HYDO ADVANCED 10)	
	35	2	**358-6390**	1	FILM-STRIPE (LH)	
	36	2	**367-0844**	1	FILM-INSTRUCTION (FUEL, READ OMM)	
	37	4	**369-4243**	1	FILM-INFORMATION (BELT ROUTING)	
	38	3	**381-1372**	1	FILM-IDENTIFICATION (FUSE, RELAY PANEL)	
	39	4	**381-1373**	1	FILM-IDENTIFICATION (CIRCUIT BREAKER)	
	40	1	**385-4093**	1	FILM-STRIPE (RH)	
	41	1,2	**385-4169**	2	FILM-IDENTIFICATION (L)	
	42	3	**4I-8472**	1	FILM-INSTRUCTION (OPERATOR CONTROLS)	
	43	1	**443-5690**	2	FILM-WARNING (LIFTING EYE, READ OMM)	
AF			**350-8958**	1	PLATE-SERIAL NUMBER (ENGINE)	
					(ON LH SIDE OF CYLINDER BLOCK, TOWARDS THE BOTTOM & REAR)	

A - NOT PART OF THIS GROUP
F - NOT SHOWN
J - REQUIRED ONLY WHEN HYDRAULIC TANK IS FILLED WITH HYDO ADVANCED 10 OIL
N - AREAS MARKED N IN GRAPHICS SHOW ALTERNATE FILM LOCATION ON MACHINE EQUIPPED WITH BUMPERS

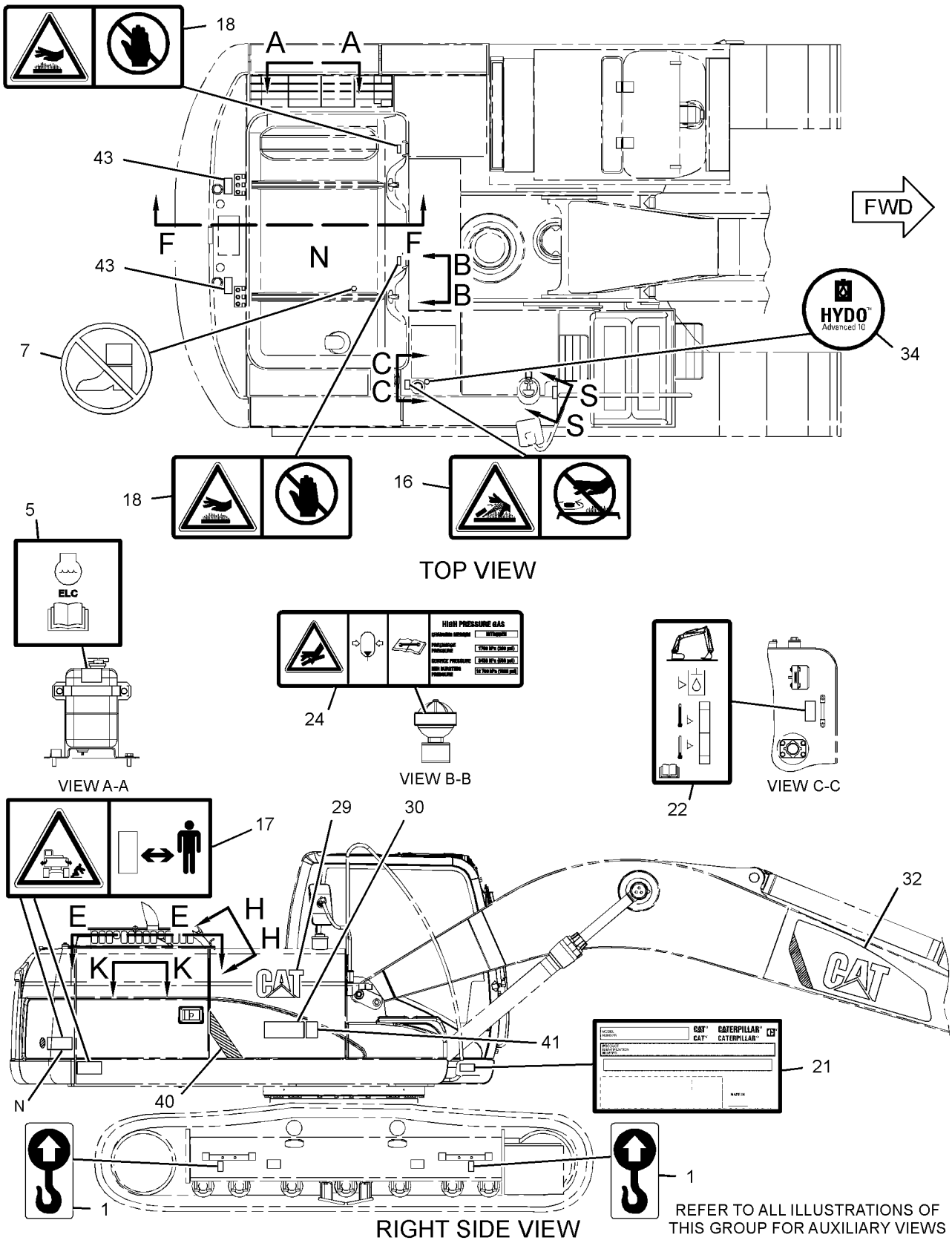

GRAPHIC #1 g03449179

394-7465 **PLATE & FILM GP (*contd.*)** **i05909473**

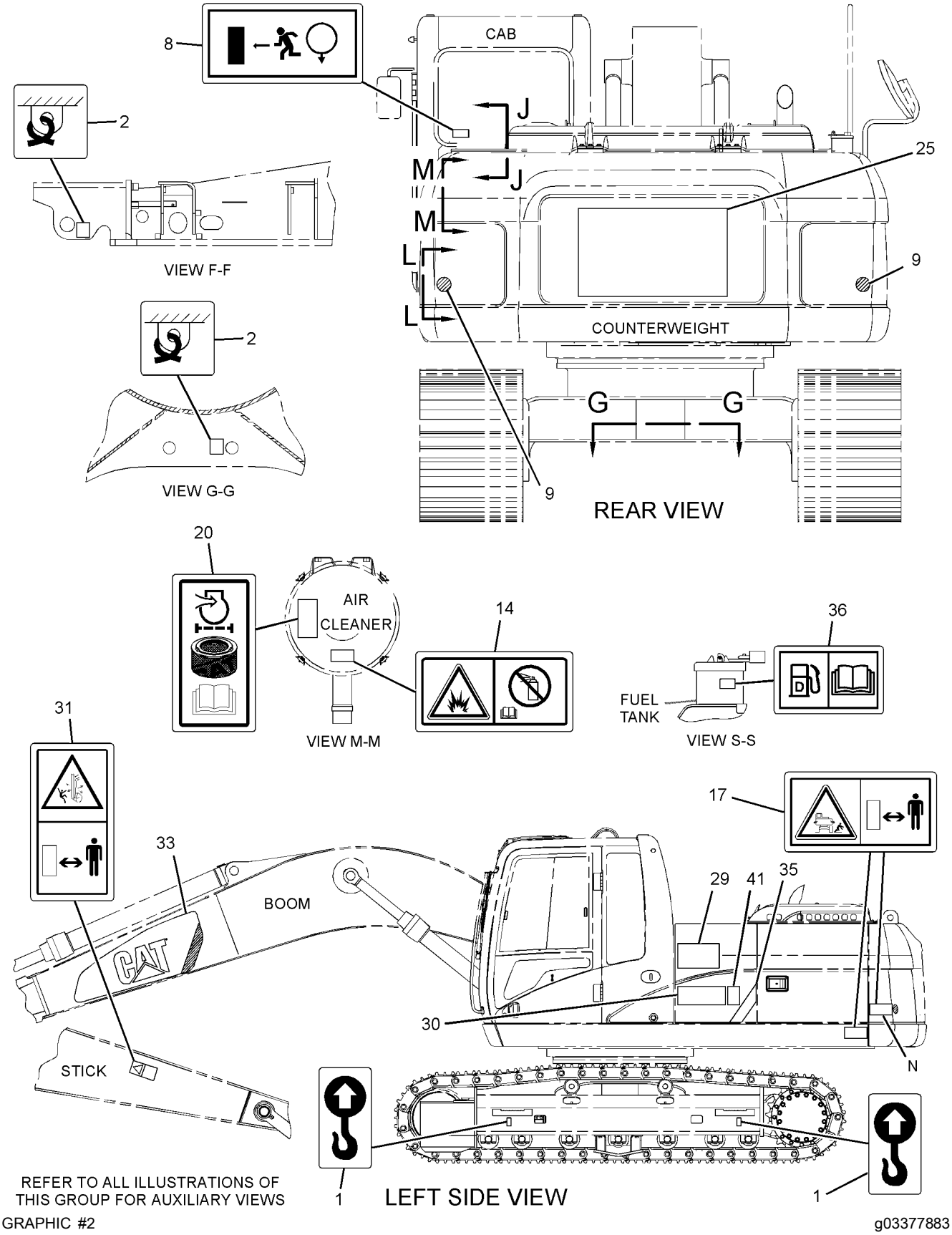

REFER TO ALL ILLUSTRATIONS OF THIS GROUP FOR AUXILIARY VIEWS

GRAPHIC #2

g03377883

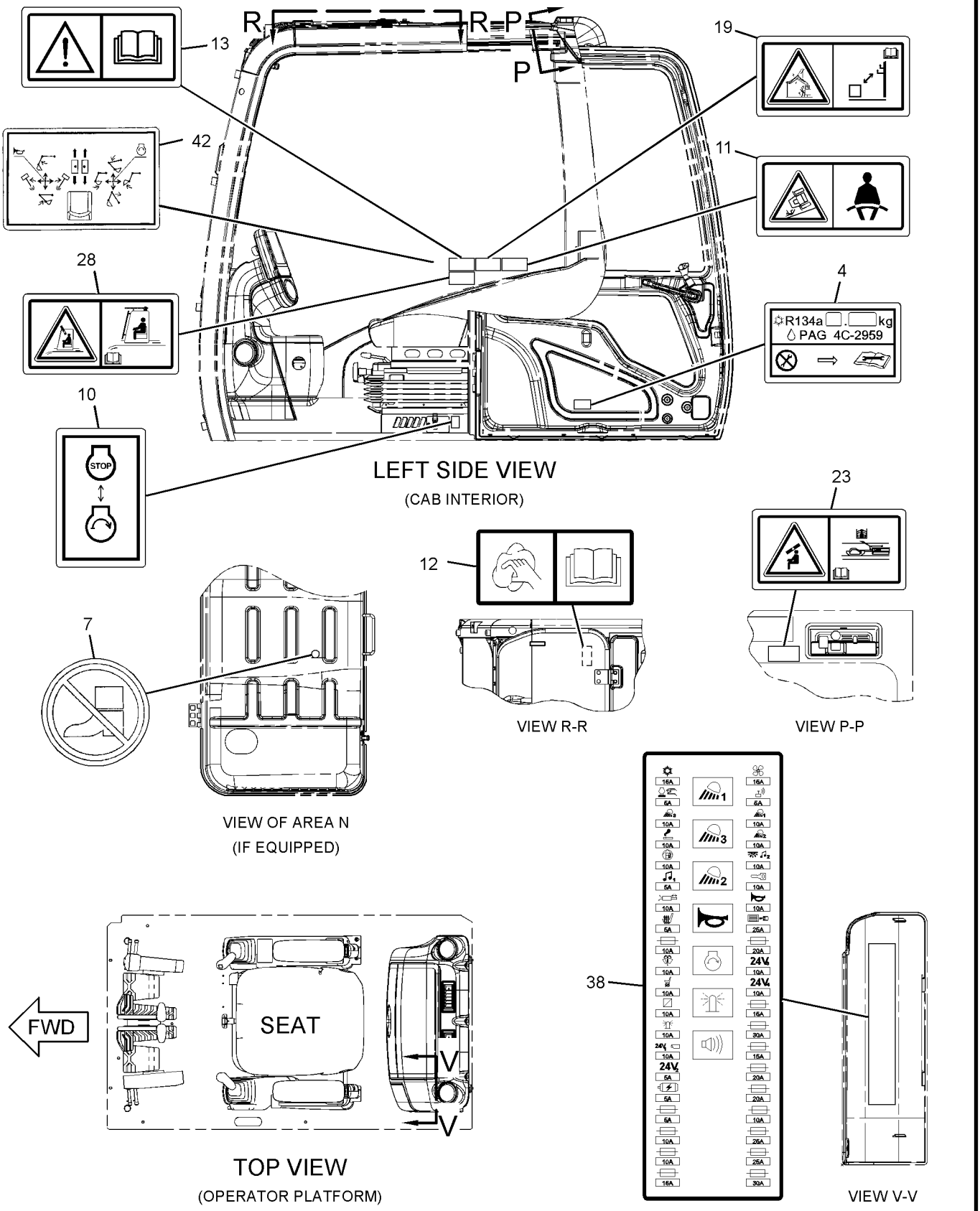

GRAPHIC #3

g03720962

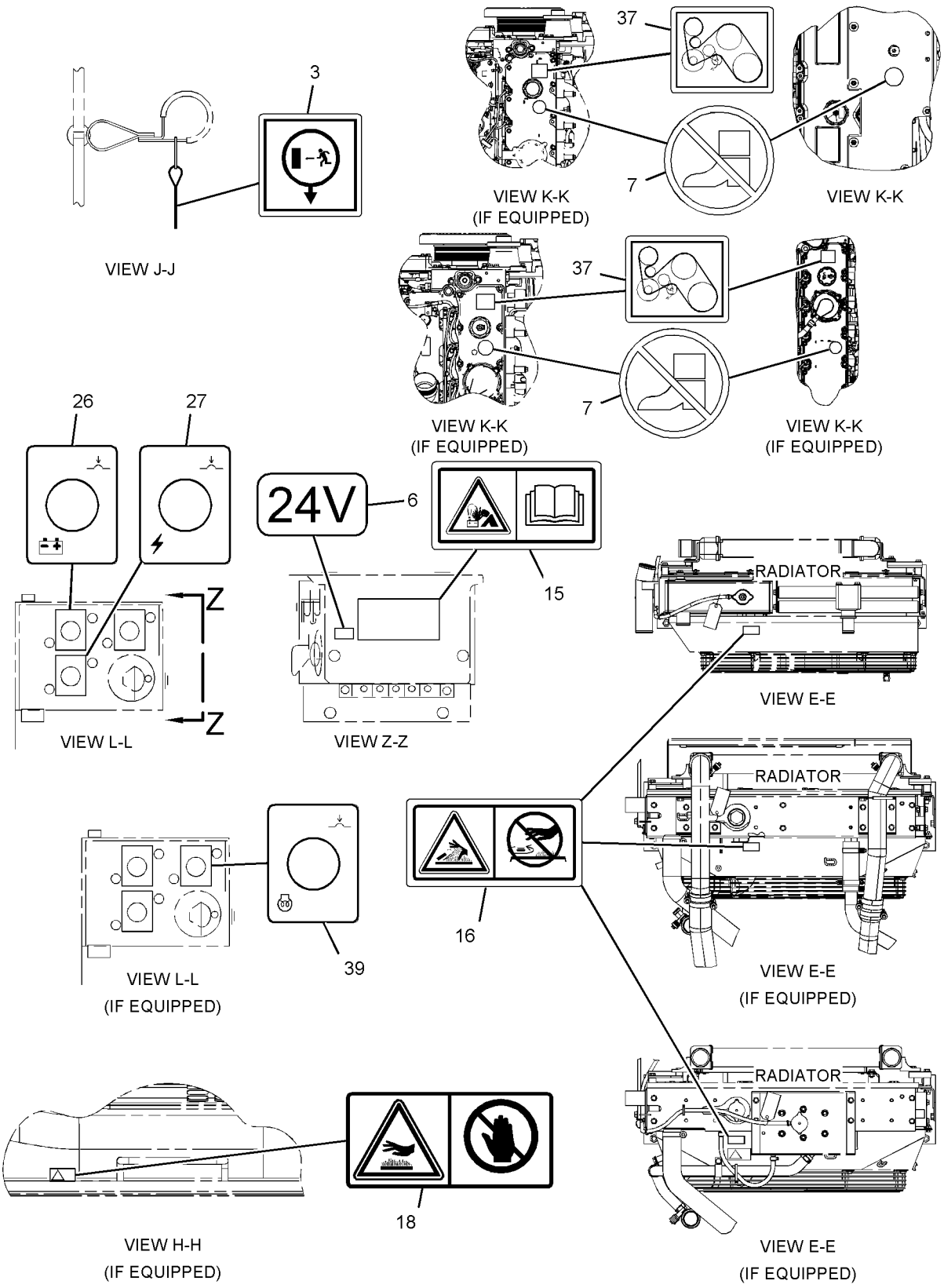

GRAPHIC #4 **<END>** g03720998

417-9101 PLATE & FILM GP–CHINA

S/N: PBB1-UP

PART OF 456-0817, 456-0918, 456-0919, 456-0920, 456-0921, 456-0922, 456-0923 DISTRIBUTION AR

AN ATTACHMENT

SMCS-7405, 7557

i05861532

NOTE	REF NO	GRAPHIC REF	PART NUMBER	QTY	PART NAME 1 2 3 4 5 6 (PRODUCT LEVEL)	SEE PAGE
	1	1	**359-2380**	1	FILM-INSTRUCTION (SERVICE CHART)	
					(ON INSIDE OF CAB DOOR)	
	2	1	**312-5525**	1	FILM-WARNING (CUTTING HAZARD HAND, STAY BACK)	
					(ON TOP OF RADIATOR)	
	3	1	**158-7864**	1	FILM-IDENTIFICATION (HYDRAULIC OIL)	
					(ON TOP OF HYDRAULIC TANK)	

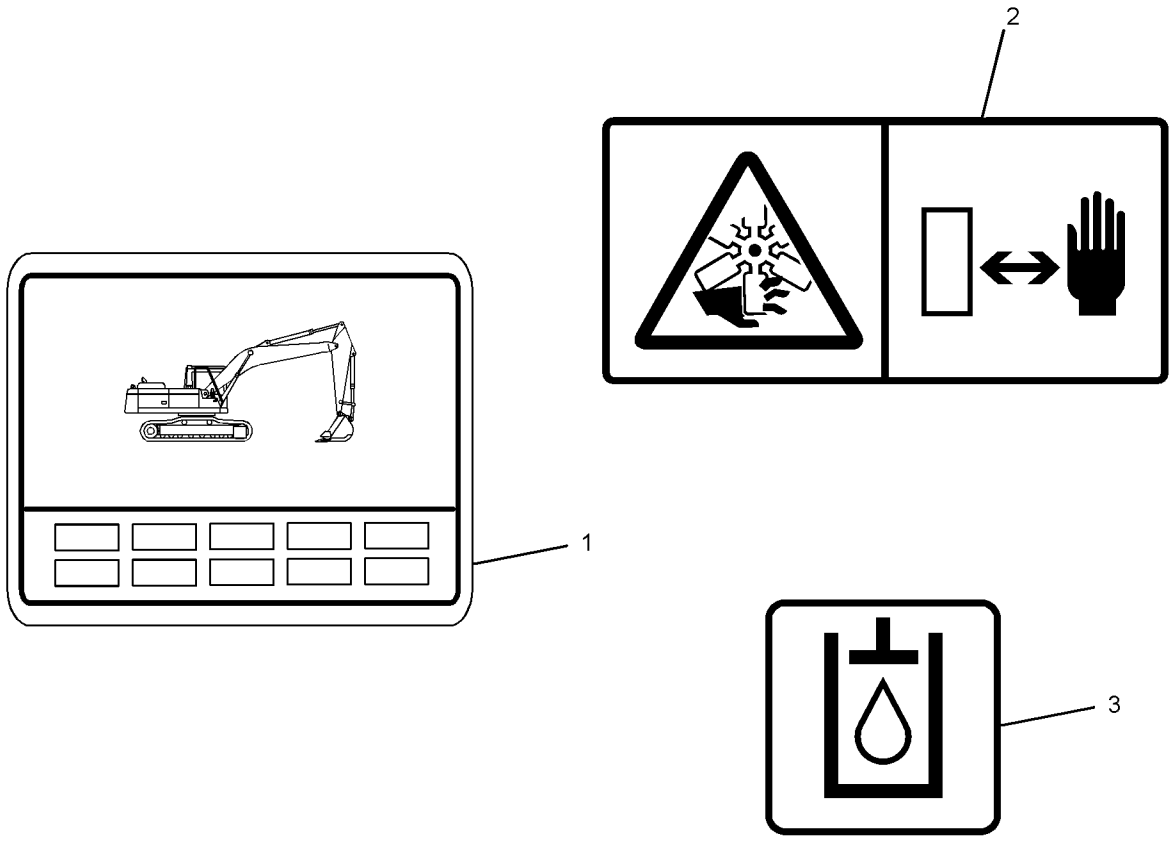

GRAPHIC #1

<END>

g02477306

SERVICE EQUIPMENT AND SUPPLIES

314-3786 PLATE GP-INFORMATION

S/N: PBB1-UP; KBS1-UP
RUSSIA
AN ATTACHMENT

SMCS-7557 **i03593319**

NOTE	REF NO	GRAPHIC REF	PART NUMBER	QTY	PART NAME 1 2 3 4 5 6 (PRODUCT LEVEL)	SEE PAGE
	1	1	**333-9952**	1	PLATE-INFORMATION (MACHINE)	
	2	1	**332-1063**	1	PLATE-IDENTIFICATION (SERIAL NUMBER)	

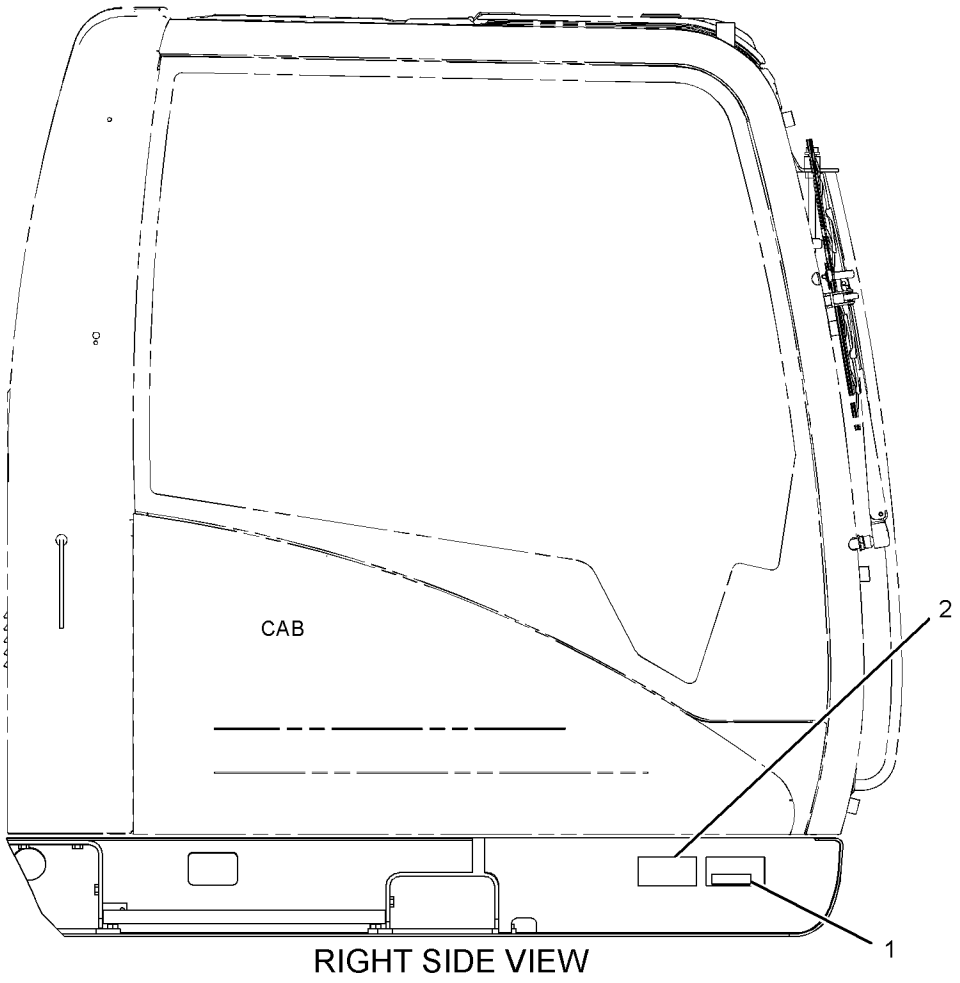

RIGHT SIDE VIEW

GRAPHIC #1 **<END>** g01932098

PART NUMBER INDEX

Part	Page
0	
0S-1603	33
0T-0489	916
1	
1F-0425	667
1H-3244	153
1H-4393	884
1J-9671	477
1M-6119	104
	107
	219
1M-6120	104
	107
	219
1P-2807	990
	995
1P-3702	463
	464
	475
	481
	485
	487
	552
	553
	599
	609
	641
	642
	656
1P-3703	417
	421
	423
	425
	429
	432
	441
	444
	448
	455
	459
	463
	464
	465
	475
	479
	481
	485
	487
	545
	551
	552
	553
	558
	560
	563
1P-3704	423
	425
	429
	432
	446
	488
	555
	558
1P-3705	425
	429
1P-4578	488
	545
1P-4579	545
1P-5767	423
	425
	429
	432
1R-1804	90
1R-5998	780
	787
1S-0812	170
	171
1S-4923	768
1S-7251	219
1S-7252	104
	107
	219
1S-9593	683
1U-2827	595
1U-8846	233
	268
	390
	392
	393
	560
	563
1V-5872	916
2	
2C-9259	746
	747
	748
	749
	750
	751
	752
2D-6398	770
2D-6412	917
2D-6642	578
	604
	634
	669
2G-1830	219
2G-8767	107
2H-3922	167
	963
2K-1594	768
2L-8050	153
	201
	225
2L-8052	225
2L-8058	153
	201
	225
2L-8060	225
2L-8065	188
	229
	884
2L-8066	188
2L-8067	188
	229
2L-8069	127
	198
	201
	225
2L-8074	225
2L-8075	140
	141
	143
	155
	157
	188
	201
	229
	835
	884
2L-8076	188
	201
2L-8077	194
	208
	210
	229
2L-8078	201
2L-8079	206
	222
	228
	229
2M-9780	454
	477
	491
	549
	560
	563
	578
	611
	620
	626
	631
2P-1279	473
	474
	770
2Q-4703	835
2S-1647	198
2S-2596	604
	615
	617
	634
2S-4078	91
	465
	480
	484
2S-5926	327
2U-2552	779
2U-5338	382
2Y-5503	395
3	
3B-0551	98
3B-4501	132
	133
3B-4509	450
	451
	452
	453
3B-4510	787
3B-4618	276
3B-8489	267
	268
	350
	352
	354
	356
	358
	360
	362
	363
	365
	367
	370
	372
	374
	376
	377
	383
	707
	709
	710
	712
	713
	717
	719
	721
	722
	723
	724
	725
	734
	736
	737
	738
	740
	742
	743
	768
3D-2824	448
	454
	455
	480
	481
	484
	487
	525
	545
	549
	551
	558
	583
	631
	660
	662
	663
	664
	665
3D-2891	350
	352
	354
	358
	360
	365
	406
	409
3D-9143	241
3E-2310	528
	531
	534
3E-2338	233
3E-2345	545
3E-3217	322
	323
3E-3371	164
3E-4297	400
3E-5169	225
3E-6910	363
3E-7389	171
3E-7410	492
3E-8020	780
	787
3E-8320	153
3E-9375	215
3E-9872	939
	966
3F-7147	383
3G-5083	587
3H-0442	604
	634
3H-5368	922
3J-1907	81
	340
	385
	388

► **PRIMARY REFERENCE**

PART NUMBER INDEX

Part	Page
	406
	409
	448
	454
	455
	472
	477
	491
	492
	498
	499
	502
	504
	506
	508
	512
	517
	519
	520
	521
	525
	527
	528
	531
	534
	535
	537
	539
	541
	547
	558
	560
	563
	567
	574
	576
	604
	607
	620
	626
	634
	637
	639
	643
	669
	670
	671
	691
	770
3J-7354	81
	82
	385
	454
	472
	499
	544
	595
	604
	634
	691
	770
3K-0360	30
	81
	338
	390
	434
	436
	438
	448
	454
	465
	481
	484
	487
	491
	498
	512
	515
	519
	520
	525
	539
	549
	551
	560
	563
	567
	568
	578
	588
	595
	615
	617
	637
	639
3K-0835	170
	171
3L-8187	183
3P-0647	78
3P-1932	81
3P-9847	66
3R-9965	198
3S-2093	66
	82
	113
	121
	125
	126
	127
	128
	141
	145
	150
	155
	157
	168
	174
	177
	179
	183
	185
	187
	189
	194
	196
	197
	198
	200
	206
	208
	210
	212
	215
	221
	222
	224
	225
	228
	229
	547
	772
	883
	884
	901
	905
	906
	912
	938
	939
	963
3T-5760	107
3T-7528	400
3V-0046	472
3V-4791	197
3V-9744	439
	467
	468
3W-6399	938
3Y-9267	649
4	
4B-4158	324
	325
4B-4278	241
	780
	787
4B-9783	670
	671
4B-9808	383
4B-9880	356
	367
	370
	372
	374
	377
	673
4D-1322	768
	770
4D-1836	226
4D-7794	770
4D-9986	129
	130
4E-5724	153
4F-2294	169
4H-6112	392
	393
4I-0118	275
4I-0232	275
4I-0379	81
4I-0420	940
	948
	953
	958
4I-0800	515
4I-0818	519
4I-0836	519
	539
4I-1022	588
4I-1025	506
4I-1037	519
4I-1163	963
4I-1205	780
	787
4I-1206	780
	787
4I-1260	879
4I-1536	►332
	336
4I-1539	332
4I-1631	517
4I-1671	531
4I-1674	441
	444
	446
	448
	454
4I-1676	441
	444
	446
4I-1704	504
	506
	508
4I-1739	519
4I-1780	519
4I-1878	527
4I-2885	976
4I-3038	168
4I-3063	780
	787
4I-3090	780
	787
	966
4I-3144	780
4I-3266	911
4I-3308	695
	697
	699
	701
	703
	705
4I-3309	695
	697
	699
	701
	703
	705
4I-3510	660
	662
	663
4I-3569	620
	626
4I-3573	560
4I-3615	350
	352
	358
	360
	365
4I-3621	450
	451
	452
	453
4I-3627	370
	372
	374
	377
4I-3628	354
	356
	370
	372
	374
	377
4I-3631	370
	372
	374
	377
4I-3941	527
4I-3981	517
4I-3988	527
	534
	541
4I-3991	541
4I-3994	517
4I-4270	780
4I-4286	859
	861
4I-4298	959
4I-4300	959
4I-4361	879
4I-4392	780
	787
4I-4543	707
	710
	712

► PRIMARY REFERENCE

PART NUMBER INDEX

Part	Page
4I-4544	707
	710
	712
4I-4618	705
	743
4I-4809	695
	697
	699
	701
	703
	734
	736
	737
	738
	740
	742
4I-4811	734
	736
	737
	738
	740
	742
4I-4812	263
	265
4I-5020	963
4I-5021	963
4I-5049	937
4I-5409	1
	136
4I-5556	457
4I-5795	519
4I-5862	332
4I-5906	519
4I-5933	519
4I-6054	517
	534
4I-6365	645
	647
	648
4I-6397	611
	620
	626
	631
4I-6602	872
	874
4I-6608	707
4I-6610	707
4I-7714	660
	662
4I-7745	448
4I-7889	198
	200
	219
	222
	508
4I-8019	275
4I-8267	333
4I-8472	990
	995
4I-8785	463
4I-8789	446
	479
4I-8864	350
	352
4I-8965	637
	639
4I-9521	455
	491
	498
	510
	517
	519
	527
	534
	541
	547
4I-9522	455
	491
	498
	502
	510
	517
	519
	527
	534
	541
	547
4I-9523	498
	502
	512
	517
	519
	527
	531
	534
	537
	541
4I-9524	498
	502
	517
	519
	527
	531
	534
	537
	541
4I-9525	455
	498
	510
	517
	519
	527
	531
	534
	541
4I-9526	455
	491
	498
	510
	517
	534
	537
	539
	541
	547
4I-9527	491
	498
	517
	519
	527
	531
	534
	539
	541
	549
4I-9528	498
	517
	519
	541
4J-0519	641
	642
4J-0520	416
	420
	611
	631
4J-0522	488
	545
4J-0524	465
	545
4J-0527	465
	488
	492
	595
4J-5267	475
	547
	607
4J-5268	475
	551
4J-5309	620
	626
4J-5477	470
	471
	473
	474
	491
	492
	547
	558
	770
4J-7385	654
	655
4J-7386	654
	655
4J-7533	400
	567
	602
	604
	620
	626
	634
	637
	639
4J-8998	599
	609
	656
4K-1388	654
	655
4K-8864	104
	107
	219
	521
4K-9429	922
4M-8973	770
4N-9170	268
4P-7428	197
	198
	201
4P-7581	189
	196
	197
	201
	206
	499
	772
4T-0987	604
	634
4T-3148	620
	626
4T-5074	620
	626
5	
5A-3604	925
	926
5B-0935	770
5B-9079	50
5C-2874	604
	634
5C-2889	133
5C-2890	79
	179
	189
	963
	966
5C-7261	68
	104
	107
	135
	201
	276
	651
5C-7793	780
	787
5C-7883	201
5C-8138	938
5C-8312	940
	953
5C-9553	153
	219
	241
	276
	595
	772
	963
5D-1026	395
5D-4822	872
	874
	878
	880
5D-8159	68
5G-2247	322
5H-5672	592
5H-8624	544
5H-8936	709
5I-3121	525
5I-3878	202
5I-4076	519
	539
5I-4111	654
	655
5I-4174	552
5I-4216	463
5I-4393	442
5I-4396	506
	519
	531
	534
5I-7233	457
5I-7235	▶707
	716
5I-7238	709
5I-7239	709
5I-8270	104
	107
5I-8416	▶333
	336
5I-8417	574
	576
5I-8426	574
	576
5I-8510	432
5I-8511	637
	639
5I-8623	574
	576
5I-8625	574
	576
5I-8670	397
5I-8708	519
5I-8825	515
5I-8853	517
5K-2298	713
5K-3294	891
5K-8451	492

► **PRIMARY REFERENCE**

PART NUMBER INDEX

Part	Page
	537
5K-9090	404
	414
	417
	421
	446
	448
	465
	475
	479
	480
	481
	484
	485
	487
	495
	551
5K-9242	709
	713
5K-9243	268
	707
	709
	710
	712
5L-4758	340
5L-8091	72
5M-2057	595
5M-6213	64
5P-0372	276
5P-0743	56
5P-0747	104
5P-0761	104
5P-0767	395
	888
	891
5P-1046	96
	98
5P-1075	261
	787
	808
	953
5P-1076	270
	273
	448
	872
	874
5P-1318	477
5P-1442	82
5P-2321	188
5P-2568	691
5P-3108	654
	655
5P-3455	153
5P-4115	153
	219
	276
5P-4116	64
	68
	102
	196
	202
	241
	825
5P-4571	200
5P-4906	96
	98
5P-4924	96
	98
5P-5649	66
5P-5995	212
5P-5998	168
5P-6271	188
5P-7462	521
5P-7463	521
5P-7464	521
	549
5P-7465	521
	549
5P-7466	481
	488
5P-7467	481
	488
5P-7468	465
	481
	485
	545
5P-7469	465
	481
	485
	545
5P-7470	488
5P-7471	488
5P-7604	767
5P-7958	894
5P-8112	481
	488
5P-8182	488
5P-8244	931
5P-8309	288
	937
5P-8444	465
	481
	485
5P-8500	93
	94
	173
	894
5P-8523	825
5P-9085	891
5P-9297	138
	141
	143
5P-9436	770
5P-9909	66
5Q-4212	442
	467
	468
	470
	471
5Q-4213	442
	467
	468
	558
5V-1497	931
5V-9155	55
	82

6

Part	Page
6C-3679	261
6C-6760	434
	436
6C-8382	872
	874
6D-0692	233
6D-1641	888
	891
6D-3479	528
	888
	891
6D-5257	198
6D-9157	544
	595
6E-2163	615
	617
6E-2271	606
	614
	615
	617
	633
6E-2274	609
	611
	620
	626
	631
6E-2313	607
6E-3653	620
	626
6E-5169	620
	626
6E-5431	607
6E-5434	607
6E-5438	607
6E-5439	607
6E-5643	620
	626
6E-5731	609
	611
	620
	626
	631
6F-0253	170
	171
6F-4855	405
6F-6672	405
6F-7045	167
6G-2256	107
6G-2263	107
	202
6H-3615	448
	479
6I-0217	35
	41
	51
	61
	65
	78
6I-0233	166
6I-0254	24
	65
6I-0260	41
	59
	89
6I-0291	89
6I-0363	41
6I-0455	61
6I-0563	78
6I-0572	41
6I-0593	31
6I-0645	35
	74
6I-0650	35
6I-0654	31
	38
	41
6I-0839	65
6I-0917	34
6I-1090	57
6I-1418	117
6I-4200	41
6I-4681	41
6I-4793	59
	61
6I-5134	713
6I-5135	713
6I-5136	713
6I-5298	839
	841
6I-5342	879
6I-5470	781
	787
6I-5976	241
6I-6033	275
6I-6354	754
	755
	756
	757
	759
	763
6I-6355	754
	755
	756
	757
	759
	763
6I-6356	754
	755
	756
	757
	759
	763
6I-6583	233
6I-6585	233
6I-6721	446
6I-6795	660
	662
	663
6I-6923	667
6I-9454	329
6J-2680	549
	595
6J-7836	770
6K-0806	849
	850
	851
	852
6K-8178	104
	107
6L-3616	707
	709
	710
	712
	713
6M-5062	583
	631
6N-1604	129
	130
6S-8620	82
6T-3631	183
6T-3632	183
6T-3633	183
6T-5598	200
6T-9442	170
6V-0357	462
6V-0400	423
	425
	429
	432
	441
	444
	463
	464
	465
	475
	488
	544
	553
	560
	563
6V-0683	521
6V-0852	477
	492
	525
	528

PART NUMBER INDEX

Part	Page
	531
	535
	537
	545
	595
6V-1249	521
6V-1874	545
6V-2722	107
	219
6V-3265	79
	888
	891
	939
6V-3342	709
	713
6V-3922	611
	620
	626
	631
6V-3938	667
6V-3965	477
	492
	525
	528
	531
	534
	537
	545
	595
6V-4249	462
6V-4298	398
6V-5200	569
	570
6V-5210	132
	133
	189
	940
6V-5326	604
	634
6V-5393	620
	626
6V-5556	620
	626
	657
6V-5589	768
6V-5597	609
	611
	620
	626
	631
6V-5645	153
6V-5683	779
6V-5782	477
6V-5842	462
6V-7238	30
	390
6V-7357	836
	837
	888
	891
	905
	937
6V-7636	780
	787
6V-7646	835
6V-7658	315
	400
6V-7661	321
6V-7743	924
	934
6V-8200	406
	409
	554
	556
	557
6V-8202	649
	667
	914
	915
	916
	924
6V-8218	660
	662
	663
6V-8231	966
6V-8235	931
6V-8337	438
6V-8362	173
6V-8363	963
6V-8370	963
6V-8374	183
6V-8397	442
	448
	454
	455
	470
	471
	473
	474
	491
	492
	498
	499
	502
	504
	506
	508
	512
	515
	517
	519
	520
	521
	525
	527
	528
	531
	534
	537
	539
	541
	547
	549
	558
	560
	563
6V-8398	427
	434
	436
	438
	439
	442
	448
	465
	467
	468
	470
	471
	477
	491
	498
	512
	519
	520
	525
	549
	558
	560
	563
	674
	675
6V-8399	644
6V-8400	649
6V-8624	491
	549
6V-8625	448
	512
	520
	560
	563
6V-8626	454
6V-8627	492
	547
	558
6V-8632	438
6V-8633	558
6V-8635	52
	404
	446
	479
	495
6V-8636	448
	454
	491
	498
	502
	504
	506
	508
	512
	520
	525
	527
	534
	537
	539
	541
	770
6V-8637	549
	551
6V-8639	520
6V-8641	491
6V-8647	770
6V-8713	454
6V-8714	52
6V-8716	480
6V-8724	454
	492
	498
	502
	504
	506
	508
	517
	520
	525
	528
	531
	534
	537
	541
	560
	563
6V-8774	492
	521
6V-8781	455
	502
	517
	520
6V-8935	470
	471
	492
	547
6V-8936	470
	471
6V-8978	660
	662
	663
6V-8979	473
	474
	770
6V-8980	473
	474
	770
6V-8994	442
6V-9001	448
	498
	504
	506
	508
	520
	528
	534
	537
	541
	547
6V-9002	465
	498
	520
	525
	549
6V-9004	481
	484
	487
	525
6V-9005	480
	484
	487
6V-9007	480
	484
	487
	525
	549
6V-9008	52
	465
	495
	551
6V-9027	68
6V-9028	82
6V-9168	442
	473
	474
	770
6V-9175	455
6V-9182	487
6V-9491	155
	157
6V-9632	150
	275
6V-9672	189
6V-9746	418
	441
	444
	446
	448
	455
	457
	479
	480
	481
	484
	487

► **PRIMARY REFERENCE**

PART NUMBER INDEX

Part	Page
	488
	525
	545
	547
	549
	551
	553
	555
	558
6V-9828	770
6V-9829	512
	528
	531
	539
	770
6V-9832	462
6V-9833	495
6V-9836	512
	515
	520
	528
	531
	539
6V-9837	448
6V-9839	481
6V-9840	481
	484
	495
6V-9843	512
	521
6V-9849	491
6V-9850	448
	491
	520
6V-9854	495
6V-9872	454
6V-9875	480
	484
6V-9876	491
	515
	549
6W-2464	472
6W-6005	104
	107
6W-7293	888
	891
6W-8281	931
6Y-0473	322
6Y-0846	329
	330
6Y-8186	316
	317

7

Part	Page
7B-3039	595
7C-4616	35
7E-4846	666
7F-0560	110
7F-3708	276
7F-8268	322
	323
7G-1060	225
7G-5984	465
7G-5985	465
7G-5986	465
7H-3171	315
	321
7I-0717	250
	251
	252
	253
	254
7I-0966	657
7I-1248	609
	611
	620
	626
	631
7I-2272	406
	567
	568
	607
	621
	626
	676
	677
	678
	679
	682
7I-2673	66
	122
	138
	140
	141
	143
	196
	200
	906
	926
	930
7I-4949	79
7I-6843	717
7I-7131	593
7I-7439	454
7I-8084	673
	676
	682
7J-8337	916
7J-9108	427
	438
	439
	454
	455
7J-9933	657
7K-1181	82
	91
	112
	113
	129
	130
	177
	179
	183
	185
	187
	194
	196
	197
	198
	200
	206
	208
	210
	212
	215
	222
	224
	225
	228
	229
	442
	454
	472
	473
	474
	492
	495
	498
	502
	510
	512
	515
	517
	519
	525
	527
	531
	535
	537
	539
	541
	547
	549
	551
	560
	563
	831
	835
	888
	891
	906
	912
7K-9592	768
7M-7410	568
7M-8485	233
	404
	446
	448
	465
	479
	480
	481
	484
	487
	495
	545
	551
	588
	602
	611
	621
	627
	631
7N-0719	153
	167
7N-2353	174
7N-3718	140
	141
7T-1099	64
	198
	275
7T-6799	173
7T-8890	938
7W-4669	58
7X-0578	780
	787
	940
	953
7X-0579	924
7X-0599	916
7X-0796	462
7X-0818	117
	506
7X-0873	547
7X-1448	81
7X-2459	492
	528
	531
7X-2533	827
7X-2536	326
	838
	845
	846
	847
7X-2537	79
7X-2543	434
	436
7X-2544	465
7X-2549	425
	427
	429
	442
	463
	464
	553
7X-2550	545
7X-2552	138
	140
	141
	143
	903
7X-2557	588
7X-2565	318
	319
7X-2619	79
	229
7X-2621	121
	123
	124
	126
	179
	202
	208
	226
	488
	621
	627
7X-3164	434
	436
7X-6315	119
	120
7X-7644	990
	995
7X-7729	66
	68
	465
	585
	772
7X-7877	922
7Y-0059	1
	894
7Y-0223	233
7Y-0225	233
7Y-0252	390
7Y-0463	344
7Y-0466	344
7Y-0467	344
7Y-0468	344
	345
7Y-0623	872
	874
7Y-0633	262
	265
7Y-0682	327
7Y-1426	233
7Y-1430	233
7Y-1431	233
7Y-1432	233
7Y-1433	233
7Y-1434	233
	390
7Y-1558	233
7Y-1607	301

PART NUMBER INDEX

Part	Page
	318
7Y-1608	301
	319
7Y-1647	268
7Y-1648	268
7Y-1650	268
7Y-1746	324
	325
7Y-1781	326
7Y-1863	268
7Y-1976	66
	68
7Y-2219	▶745
	746
	747
	748
	749
	750
	751
	752
7Y-2670	713
7Y-2853	275
7Y-2854	276
7Y-3470	966
7Y-3472	966
7Y-3474	938
7Y-3721	418
	547
7Y-3729	480
	487
7Y-3730	475
7Y-3731	421
	480
	484
7Y-3732	479
7Y-3919	883
	884
7Y-3920	883
	884
7Y-3950	174
	183
	187
7Y-3951	155
	157
	187
7Y-3952	155
	157
	187
7Y-3953	174
	183
7Y-3954	187
7Y-3955	187
7Y-3958	187
7Y-3962	137
	145
	147
	148
	150
	155
	157
	187
	194
7Y-3963	137
	145
	147
	148
	150
	155
	157
	188
	212
	215
7Y-3964	137
	145
	147
	148
	150
	155
	157
	188
	194
7Y-3965	137
	145
	147
	148
	150
	155
	157
	188
	212
	215
7Y-3966	148
	157
	187
	194
7Y-3967	148
	157
	188
	215
7Y-4193	517
7Y-4199	527
	534
7Y-4202	578
7Y-4212	578
7Y-4213	578
7Y-4215	578
	588
7Y-4216	578
7Y-4217	578
7Y-4222	579
7Y-4224	578
7Y-4267	574
	576
7Y-4268	574
	576
7Y-4366	534
7Y-4390	517
	563
7Y-4444	▶334
	336
7Y-4538	423
	425
	429
	432
7Y-4631	356
7Y-4817	593
7Y-4868	427
	441
	444
	446
	457
	459
	555
7Y-5074	52
	418
7Y-5116	380
7Y-5119	380
7Y-5215	386
7Y-5216	380
7Y-5219	621
	627
7Y-5221	574
	576
7Y-5247	465
7Y-5272	340
7Y-5456	200
7Y-5458	172
7Y-5464	172
7Y-5505	187
7Y-6641	726
7Y-6649	726
7Y-7364	966
7Y-7904	457
7Y-8099	611
	631
7Y-8165	202
7Y-8167	202
7Y-8478	541
7Y-8484	491
7Y-8487	519
7Y-8561	825
8	
8C-0564	491
8C-3206	416
	420
8C-3445	52
8C-3446	52
	595
8C-3451	595
8C-5608	82
	115
	116
8C-5723	52
8C-5917	104
	107
	219
8C-5918	104
	107
8C-6354	188
8C-6358	110
8C-6561	472
8C-6965	649
8C-8400	545
8C-8451	115
	116
8C-8580	835
8C-8729	571
8C-8988	454
8C-8992	270
	273
8E-4359	315
8E-5031	322
8E-5032	322
8E-5035	322
8E-5037	322
	323
8E-5599	322
	323
8E-5600	318
	319
	320
	321
8E-5601	321
8E-5602	321
8E-5604	321
8E-5605	321
8E-5606	321
8E-5608	321
8E-6792	321
8E-6793	321
8E-8585	316
	317
8E-8586	316
	317
8E-9805	239
8F-0212	607
8F-1434	963
8H-3481	936
8H-5303	167
8H-5306	167
8J-4645	588
8J-6815	604
	634
8J-8782	595
8J-8783	595
8L-2786	42
8L-8413	104
	107
	198
	219
8M-2770	202
	888
	891
8M-2772	707
	709
	710
	712
	713
8M-2773	888
8N-0869	107
	219
8P-9770	753
	754
	755
	756
	757
	758
	759
	760
	761
	762
	763
	764
8S-0934	917
8S-2634	219
8S-4723	917
8T-0075	502
	527
	531
	537
	539
8T-0078	481
	487
	545
8T-0114	838
	845
	846
	847
	931
8T-0122	153
8T-0164	547
8T-0198	480
	484
8T-0267	595
8T-0269	835
8T-0271	462
8T-0288	689
8T-0328	96
	98
	153
	189
	229
	280
	283
	284
	398
8T-0334	924
	934
8T-0337	226
8T-0360	268
8T-0362	268
8T-0389	931

► **PRIMARY REFERENCE**

PART NUMBER INDEX

Part	Page
8T-0439	768
8T-1159	321
8T-1447	350
	352
	358
	360
	365
8T-1687	549
8T-1779	508
	519
	560
	563
8T-1889	82
8T-1890	82
8T-1905	492
	508
	525
	528
	531
	534
	537
8T-2920	549
8T-3008	602
8T-3298	595
8T-3490	64
	275
	293
	480
	891
8T-3518	110
8T-3597	275
	291
	299
	300
	480
8T-3612	79
	275
	280
	283
	284
	300
8T-3653	450
	451
	452
	453
8T-3991	922
8T-4121	55
	66
	68
	72
	75
	79
	82
	104
	107
	111
	113
	121
	123
	124
	126
	137
	138
	140
	141
	143
	152
	177
	179
	197
	198
	202
	206
	208
	210
	217
	219
	221
	222
	226
	268
	276
	423
	427
	432
	434
	436
	448
	455
	459
	463
	464
	465
	473
	474
	475
	481
	485
	488
	492
	499
	502
	521
	528
	535
	537
	539
	541
	545
	547
	552
	553
	555
	558
	560
	563
	584
	593
	595
	609
	611
	621
	627
	631
	707
	709
	710
	712
	713
	770
	772
	825
	827
	831
	835
	838
	845
	846
	847
	854
	882
	883
	884
	888
	891
	905
	906
	908
	911
	928
	939
	963
8T-4123	265
	318
	319
	736
8T-4127	189
8T-4131	39
	406
	409
8T-4132	876
8T-4133	75
	104
	107
	137
	138
	140
	141
	143
	406
	409
	592
	649
	707
	710
	712
	713
	726
	780
	787
	825
8T-4136	66
	68
	75
	79
	82
	107
	202
	217
	219
	221
	268
	406
	409
	434
	436
	455
	465
	481
	485
	488
	492
	502
	521
	528
	535
	537
	560
	563
	588
	593
	595
	637
	639
	770
	772
	838
	845
	846
	847
	854
	888
	891
8T-4137	55
	66
	68
	72
	79
	82
	107
	111
	113
	137
	152
	197
	202
	206
	210
	219
	221
	226
	268
	276
	324
	325
	473
	474
	492
	499
	521
	537
	770
	772
	780
	787
	825
	827
	835
	845
	846
	884
	888
	891
	905
	906
8T-4138	82
	113
	276
	888
	891
8T-4139	66
	423
	425
	427
	429
	432
	434
	436
	438
	439
	441
	442
	444
	446
	448
	457
	459
	465
	467
	468
	488
	495
	521
	549
	555
	558

PART NUMBER INDEX

Part	Page
	588
	604
	634
	872
	874
8T-4140	588
	641
8T-4149	545
8T-4171	153
	217
	828
8T-4172	521
8T-4175	588
8T-4176	439
	481
	485
	588
8T-4177	528
	531
	535
8T-4178	448
	508
8T-4179	197
	326
	553
	743
	783
	794
	796
	806
	816
	825
8T-4182	107
	202
	448
	463
	464
	552
	553
8T-4183	425
	429
	434
	436
	481
	485
	488
	545
	595
8T-4184	423
	425
	427
	429
	432
	441
	444
	467
	468
	539
	560
	563
8T-4185	68
	107
	202
	427
	434
	436
	455
	459
	547
8T-4186	72
	107
	465
	558
8T-4189	68
	102
	196
	202
	276
	280
	283
	284
	388
	506
	825
	888
	891
	937
8T-4190	248
	783
	794
	796
	806
	816
	905
	906
8T-4191	66
	82
	104
	177
	197
	198
	202
	206
	210
	222
	499
	528
	541
	707
	709
	710
	712
	838
	847
	854
	883
	888
	891
	906
	911
	928
	939
	963
8T-4192	52
	104
	274
	388
	448
	455
	488
	492
	495
	521
	528
	531
	539
	541
	545
	588
	872
	874
	896
8T-4193	641
	745
	787
8T-4194	91
	398
	423
	425
	427
	429
	432
	465
	475
	488
	544
	547
8T-4195	68
	202
	206
	261
	481
	488
	584
	585
	595
	607
	609
	611
	621
	627
	631
	831
	882
	908
8T-4196	82
	202
	406
	409
	450
	451
	452
	453
	455
	458
	459
	460
	461
	481
	485
	488
	545
	554
	555
	556
	557
	558
	589
	595
8T-4198	499
	539
	552
8T-4199	202
	229
	268
8T-4200	64
	66
	79
	129
	130
	145
	147
	148
	150
	888
	891
8T-4223	52
	66
	91
	104
	132
	133
	197
	198
	241
	243
	274
	398
	406
	409
	423
	425
	427
	429
	432
	434
	436
	438
	439
	441
	442
	444
	446
	448
	455
	457
	458
	459
	460
	461
	463
	464
	465
	467
	468
	470
	471
	475
	477
	479
	481
	485
	488
	492
	495
	521
	528
	532
	539
	541
	544
	545
	547
	549
	553
	554
	555
	556
	557
	558
	560
	563
	595
	695
	697
	699
	701
	703
	705
	743
	783
	794
	796
	806
	816
	825

► **PRIMARY REFERENCE**

PART NUMBER INDEX

Part	Page
	872
	874
	916
	917
8T-4224	52
	55
	66
	68
	79
	82
	117
	129
	130
	135
	145
	147
	148
	150
	202
	229
	276
	280
	283
	284
	477
	506
	528
	532
	535
	541
	595
	607
	838
	845
	846
	847
	859
	861
	872
	874
	888
	891
	937
8T-4226	104
	107
8T-4244	91
	132
	133
	243
	427
	442
	467
	468
8T-4648	198
	425
	429
	439
	446
	448
	545
	555
	558
8T-4779	780
8T-4780	265
	736
8T-4896	450
	451
	452
	453
	458
	460
	461
	554
	556
	557
8T-4908	82
	541
	595
	888
	891
8T-4910	448
	458
	460
	461
	479
	492
	554
	556
	783
	794
	796
	806
	816
8T-4944	578
8T-4956	423
	432
	455
	465
	470
	471
	477
	479
	481
	485
	488
	545
	549
	695
	697
	699
	701
	703
	705
8T-4970	117
	145
	147
	153
	502
	906
	938
	939
8T-4971	825
	888
	891
8T-4985	64
8T-4986	73
8T-5005	202
	219
	222
8T-5049	388
8T-5092	481
	485
8T-5878	318
	319
8T-6466	107
	198
	202
	455
	528
	726
8T-6685	423
	432
	621
	627
8T-6693	189
	280
	283
	284
	398
8T-6703	64
	66
	497
8T-6759	568
	593
	604
	607
	621
	627
	634
	649
	687
	689
8T-6842	990
	995
8T-6868	467
	468
	783
	794
	796
	806
	816
8T-6869	202
8T-6870	55
	528
	535
	537
	607
8T-7087	465
	481
	485
8T-7547	52
	135
8T-7811	691
8T-7930	442
8T-7971	545
	595
	896
8T-8137	82
8T-8729	91
	96
	102
	127
	128
	145
	150
	177
	200
	206
	208
	210
	212
	225
	229
	681
8T-8730	127
	128
	169
	177
	187
	194
	200
	206
	212
	215
	221
	225
	228
	229
	835
8T-8737	79
	127
	128
	155
	157
	172
	177
	179
	185
	188
	194
	198
	200
	206
	208
	210
	212
	215
	222
	225
	228
	229
	853
8T-8748	170
	171
8T-8799	200
8T-8827	200
8T-8874	280
	283
	284
8T-8887	547
8T-8899	545
8T-9403	448
	463
	464
	475
	552
	553
8T-9533	667
8T-9535	50
8T-9756	104
	107
8T-9757	104
	107
8U-7803	922
8V-1715	876
8Y-6352	791
	801
	803
8Y-6967	783
	794
	796
	806
	816
9	
9B-0453	132
9B-7233	173
9F-2167	383
	385
	448
	479
9F-5644	167
9G-0002	104
	107
9G-0003	104
	107
9G-0004	104
	107
	219
9G-0005	104
	107
9G-4343	153
	187

PART NUMBER INDEX

Part	Page
9G-8909	107
9J-0705	583
	631
9J-7031	595
9M-3786	545
9M-5048	931
9M-5590	644
	682
9M-7958	91
9N-0869	117
9R-2060	275
9R-2613	770
9R-5271	299
9S-4180	400
9S-4181	481
	485
9S-4182	52
	81
	544
9S-4185	42
	81
	454
	481
	484
	487
	539
	549
	551
	578
	589
9S-4188	52
9S-4191	388
	406
	454
	498
	504
	506
	520
	539
	607
	639
9S-6130	98
	465
9S-8002	383
	385
9S-8004	383
	385
	492
	567
	637
	643
9S-8005	567
	568
	637
	639
9T-0836	587
9T-1614	604
	634
9V-6754	931
9W-0335	187
9W-0625	170
9W-0742	►110
	219
9W-0844	82
	127
	188
	198
	200
	206
	212
	215
	221
	225
	228
	884
9W-0852	82
	127
	143
	185
	200
	206
	208
	210
	212
	225
	228
	823
9W-1951	188
9W-2142	322
9W-2146	323
9W-2201	315
9W-3137	316
	317
9W-3138	316
	317
9W-3340	382
9W-3361	328
	329
	330
	331
9W-3619	328
	329
	330
	331
9W-9455	315
9X-0199	963
9X-1386	162
9X-1813	102
	164
9X-2026	905
	906
9X-2038	111
9X-2041	780
	787
	798
	800
	812
	829
	833
	857
	858
9X-2042	145
	150
	175
	183
	189
	193
	780
	787
	791
	801
	803
	810
	814
	833
	859
	861
	880
	901
	940
	943
	944
	953
	956
	966
9X-2043	111
	145
	150
9X-2044	189
	780
	787
	801
	814
	901
	936
	940
	953
	963
	966
9X-2045	781
	787
	831
	879
	940
	953
9X-2046	831
	936
9X-2201	73
	544
	545
9X-2297	492
9X-2404	367
9X-2616	920
	921
9X-3401	42
	79
	98
	127
	160
	162
	172
	185
	188
	198
	201
	206
	208
	210
	222
	225
	498
	504
	506
	508
	527
	842
	843
	853
	902
9X-3402	127
	148
	150
	155
	157
	185
	188
	198
	200
	206
	208
	210
	212
	215
	222
	225
9X-3463	133
	134
	135
	137
9X-3495	229
9X-3592	380
9X-3598	386
9X-3959	58
9X-3982	81
9X-4184	171
9X-4244	135
9X-6032	450
	451
	452
	453
	458
	460
	461
9X-6153	779
9X-6165	82
	115
	116
	905
9X-6582	470
	471
	492
	547
9X-8256	79
	82
	113
	117
	145
	147
	153
	179
	189
	202
	217
	229
	241
	276
	502
	595
	772
	828
	835
	836
	837
	888
	891
	895
	897
	900
	936
	937
	938
	939
	940
	953
	963
9X-8257	138
	140
	141
	143
	641
	745
	780
	783
	787
	794
	796
	806
	816
	903
	906
9X-8600	96
	98
9X-9896	81
	115
	116

► **PRIMARY REFERENCE**

PART NUMBER INDEX

Part	Page
0	
006-6803	667
030-1712	200
033-8248	707
	710
	712
039-9452	931
067-3045	55
067-6006	28
067-6043	26
067-6095	21
067-6135	21
	25
067-6179	35
067-6823	26
	58
085-6444	▶886
	959
085-6445	886
085-6446	886
085-6447	886
085-6448	886
085-6449	879
	886
085-7079	667
085-7080	667
085-7081	667
085-7083	667
085-7084	667
085-7356	492
	535
	537
	547
085-8037	939
085-8604	367
	370
	372
	374
	377
085-8605	367
	370
	372
	374
	377
085-9310	93
	94
	597
086-0255	350
	352
	358
	360
	365
086-0297	743
086-0321	745
086-0322	745
086-0523	717
086-1345	354
086-1346	354
087-3533	245
087-3908	275
087-3909	275
087-4402	498
	502
	504
	506
	508
	537
087-4411	519
	534
	537
087-4454	333
	▶335
087-4456	▶336
	338
087-4531	519
087-4575	335
087-4576	335
087-4577	335
087-4587	200
087-4683	168
087-4710	649
087-4742	578
087-4743	578
087-4786	578
087-5166	637
	639
087-5303	517
087-5431	386
087-5434	386
087-5436	386
087-5510	380
087-5708	649
087-5760	519
087-5761	491
087-5762	508
	519
087-5764	527
087-5765	508
087-5766	502
	508
	531
087-5768	525
087-5772	502
	519
	527
087-5774	519
087-5780	541
087-5805	721
	722
	723
	724
	725
	727
087-5838	713
087-5840	707
087-5841	275
087-5908	301
	▶304
087-5966	709
087-6583	510
090-8865	876
091-5928	382
	767
091-9035	107
	200
093-0083	263
	265
093-0084	695
	697
	699
	701
	703
	705
093-0115	263
	265
093-0116	695
	697
	699
	701
	703
093-0349	263
	265
	695
	697
	699
	701
	703
	705
	719
	734
	736
	737
	738
	740
	742
	743
093-0357	743
093-0363	263
	265
	695
	697
	699
	701
	703
	705
	734
	736
	737
	738
	740
	742
	743
093-1291	427
093-1294	558
093-1433	743
093-1436	327
093-1512	327
093-1571	354
093-1572	386
093-1729	390
093-2065	81
093-2069	835
093-7521	403
094-0580	233
094-0584	390
094-0611	233
	390
094-0747	350
	352
	358
	360
	365
094-0876	645
	647
	648
094-1399	578
094-1509	390
094-1516	390
094-1528	233
094-1875	388
	406
	409
	578
	588
094-1881	406
	409
094-1882	406
	409
	578
	588
094-1900	574
	576
094-1920	450
	451
	452
	453
094-1931	370
	372
	374
	377
095-0707	571
095-0723	189
095-0728	854
095-0735	838
	839
	841
	845
	846
	847
095-0736	96
	98
	912
095-0742	189
095-0755	780
	787
095-0826	883
095-0827	828
095-0843	241
095-0863	316
	317
095-0882	574
	576
095-0886	390
095-0891	233
	390
095-0910	905
095-0924	768
095-0929	386
	588
095-0946	588
095-0965	667
095-1022	390
095-1260	649
095-1270	233
095-1388	56
095-1519	681
095-1547	465
095-1572	578
095-1575	578
	620
	626
	644
	649
095-1576	687
	689
095-1578	644
	664
	665
	673
	682
095-1579	644
	660
	662
	663
	681
095-1580	651
095-1582	402
	651
	691
095-1583	666
095-1584	397
	644
	660
095-1585	578
	602
095-1586	578
	645
	647
	648
	658
	674
	675
	680
095-1587	660
	662

▶ **PRIMARY REFERENCE**

PART NUMBER INDEX

Part	Page
	663
	691
095-1590	397
	609
	611
	620
	626
	631
	651
	660
	662
	663
	666
	667
095-1594	604
	634
	637
	639
095-1595	574
	576
095-1596	397
095-1597	450
	451
	458
	461
	686
095-1600	554
	557
095-1601	602
095-1602	602
095-1603	620
	626
095-1604	686
095-1608	595
095-1625	593
095-1632	386
095-1657	602
095-1680	388
095-1681	400
095-1685	571
095-1698	657
	687
	689
095-1700	578
	602
095-1704	327
095-1710	667
095-1716	593
095-1717	350
	352
	358
	360
	365
	380
	402
095-1719	354
095-1720	356
095-1721	370
	372
	374
095-1723	367
095-1730	595
095-1750	674
	675
095-1751	674
	675
095-1778	620
	626
095-1785	658
095-1786	660
	662
	663
095-1787	609
	611
	620
	626
	631
	637
	639
095-1788	406
	409
095-1789	604
	634
	637
	639
095-1791	686
095-6639	592
095-7378	578
095-7380	578
095-7382	578
095-7383	578
095-7384	578
095-7386	578
095-7387	578
095-7930	883
	884
096-0001	927
096-0015	770
096-0121	388
096-0131	743
096-1519	578
096-1521	578
096-1522	578
096-1523	578
096-1567	352
	365
096-1568	350
	352
	358
	360
	365
096-1570	370
	372
	374
	377
096-1571	370
	372
	374
	377
096-1628	645
	647
	648
096-1773	233
096-1774	233
096-1775	233
096-1776	233
096-1777	233
096-1778	233
096-1779	233
096-1780	233
096-1781	233
096-2591	229
096-2622	859
	861
096-2626	906
096-2665	386
096-2902	691
096-3216	350
	352
	358
	360
	365
096-3780	241
096-3785	578
096-3786	578
096-3787	578
096-3788	578
096-3884	859
	861
096-3944	588
096-3964	350
	352
	358
	360
	365
096-3978	578
096-3983	588
096-4003	578
096-4035	66
	68
096-4129	280
	283
	284
096-4255	315
096-4279	321
096-4295	322
096-4376	578
096-4377	578
096-4378	578
096-4402	350
	352
	358
	360
	365
096-4412	460
	461
096-4430	356
096-4447	557
096-4480	458
	460
	461
	554
	556
096-4514	691
096-4755	395
096-4876	717
096-4882	872
	874
096-4883	465
096-4902	268
096-5625	370
	372
	374
	377
096-5819	66
096-5915	578
096-5916	578
096-5919	578
096-5962	189
096-6073	402
096-6166	155
	157
	189
	226
	854
096-6210	356
	367
	370
	372
	374
	377
096-6837	768
096-7803	350
	352
	358
	360
	365
099-0139	959
099-0707	717
099-0724	717
099-0823	780
	787
	940
	953
099-2096	388
099-3506	878
	880
099-3607	780
099-3629	949
	950
099-3645	894
099-3649	520
099-3669	406
	409
099-3670	406
	409
099-3671	406
	409
099-5572	367
099-5573	367
099-6025	557
099-6109	406
	409
099-6110	406
	409
099-6111	406
	409
099-6112	406
	409
099-6113	406
	409
099-6115	406
	409
099-6117	406
	409
099-6118	406
	409
099-6119	406
	409
099-6120	406
	409
099-6121	406
	409
099-6122	406
	409
099-6123	406
	409
099-6124	406
	409
099-6125	406
	409
099-6126	406
	409
099-6127	406
	409
099-6128	406
	409
099-6137	645
	647
	648
	649
099-6141	649
099-6144	649
099-6145	649
099-6418	201
	259
	260
099-7127	187
099-7857	825
099-8232	480
	484
	666
	1
100-2881	879

► **PRIMARY REFERENCE**

PART NUMBER INDEX

Part	Page
100-3320	200
100-3751	35
100-4336	888
	891
100-4458	84
100-4463	103
100-4830	89
100-4841	37
101-0852	120
101-2846	189
101-3895	35
101-7397	475
	480
	484
101-7398	448
	479
101-7401	480
	484
	487
101-7402	388
	465
	480
	484
	487
	491
101-7403	475
101-7404	448
	462
	475
	480
	484
	487
	547
101-8899	859
	861
	863
101-8900	859
	861
	940
	944
	953
	956
101-9848	280
	283
	284
102-0818	691
102-1120	553
102-1248	480
	484
102-1279	553
102-1291	553
102-2240	▶164
	595
102-6455	237
102-6457	237
102-7964	188
	215
	225
102-7965	183
	188
	215
	225
102-8802	42
	82
	96
	98
	101
	102
	127
	145
	150
	155
	157
	162
	200
	225
	498
	504
	506
	508
	527
	681
102-8803	145
	150
	164
	168
	187
	200
	208
	210
102-8804	225
102-8806	215
103-2529	200
	221
103-8177	620
	626
103-8252	664
	665
103-8253	664
	665
103-8254	664
	665
103-8255	664
	665
103-8378	386
103-8379	386
103-8380	386
104-4980	547
104-6871	198
104-8774	541
104-8783	541
104-8838	519
104-8903	541
104-8950	491
105-2169	780
	787
	878
	880
105-2575	354
105-2578	354
105-2579	354
105-2583	354
105-3477	475
	480
	484
	487
105-3478	545
	584
105-3483	475
105-3484	520
105-3486	82
105-3487	241
	276
	897
	900
105-5175	183
105-6431	707
	709
	710
	712
	713
105-7781	545
105-9526	939
105-9527	939
106-0210	172
106-0615	329
	330
106-8715	545
107-1567	551
107-2961	924
	931
	934
107-6370	654
	655
107-6371	654
	655
107-6479	644
	673
	682
107-6540	660
	662
107-6541	660
	662
107-6631	499
	504
	506
	508
107-6954	578
107-6955	578
107-6969	578
107-7640	382
108-1782	487
	558
108-4282	480
	487
108-7118	560
	563
108-7313	527
	534
108-7354	448
108-7360	541
108-7375	531
	541
108-7516	504
	506
	508
108-7550	448
109-2665	654
109-2667	▶654
	656
109-5152	611
	631
	▶655
109-5153	655
109-9329	39
110-5496	519
110-5525	574
	576
110-6393	990
	995
111-0988	527
	531
111-1567	200
111-3422	88
111-3423	88
111-4799	168
111-4816	188
111-4836	113
	138
	140
	141
	143
	177
	198
	200
	206
	221
	225
	772
	906
111-4837	138
	143
	200
	221
111-4838	200
	225
111-4839	200
	225
111-6511	438
111-6752	541
	560
111-8222	84
111-9916	406
	▶674
	678
	679
	682
111-9959	611
	620
	627
	631
111-9998	651
112-0083	508
	▶669
112-0085	669
113-2127	695
	697
	699
	701
	703
	705
113-6479	417
	475
113-8129	65
113-8490	187
113-8491	185
	187
113-8492	187
113-8493	187
114-0623	674
	675
114-0706	367
114-0710	367
114-0711	367
114-0713	367
114-0756	380
114-0757	386
114-1398	392
	393
114-1399	392
	393
114-1539	233
114-1581	390
114-6285	276
114-6289	280
	283
	284
115-1184	200
115-2677	710
115-2678	710
115-8634	560
	563
115-8645	517
	541
116-0118	81
	121
	123
	124
	126
	138
	143
	179
	196
	200
	206
	208

PART NUMBER INDEX

Part	Page
	210
	222
	225
116-0126	200
	229
116-0128	86
	200
	229
116-0210	187
116-0255	188
	200
	225
	229
116-1665	250
	251
	252
	253
	254
116-3412	527
	531
	534
116-9115	716
	▶726
116-9135	981
117-5540	302
	303
117-6306	940
	953
117-6349	854
117-6350	854
117-6356	854
117-8683	842
	843
117-8929	825
	827
117-9436	768
118-4044	637
	639
118-4057	578
	588
118-4086	645
	647
	648
118-4087	645
	647
	648
118-4140	767
118-5982	734
	736
	737
	738
	740
	742
118-6054	970
	972
118-9902	527
118-9930	39
119-2321	459
119-2323	459
119-2324	555
119-2325	555
119-2804	454
119-3662	153
	188
	198
	200
	225
	229
119-5026	155
	157
	772
	912
119-5388	649
119-5389	649
119-5391	649
119-5398	660
	662
120-5737	905
120-7164	▶305
120-7165	▶306
120-7167	▶307
120-7168	▶308
120-9027	168
121-1022	188
121-1023	153
121-1029	79
	275
121-1038	86
	200
	229
121-1039	86
	200
	225
	229
121-1168	155
	157
	188
	225
121-1173	155
	157
	183
	188
	225
121-1371	377
121-1372	370
	372
	374
	377
121-1491	567
	568
	607
	620
	626
	▶675
	676
	677
121-1548	367
121-1549	367
	370
	372
	374
	377
121-1558	578
121-1611	350
	352
	358
	360
	365
121-1865	838
	846
121-7098	888
	891
121-7136	819
	821
	888
	891
121-7137	819
	821
	888
	891
121-7138	888
122-3979	275
122-3980	275
122-4101	260
122-4120	275
122-5114	578
122-5318	574
	576
122-7797	604
	634
122-9605	888
	891
122-9608	854
122-9609	854
122-9610	854
122-9611	845
	846
122-9617	831
122-9657	888
	891
123-1373	104
	107
123-2003	398
123-2008	578
123-2060	386
123-2485	620
	626
123-2511	670
123-2549	▶670
	672
123-2552	670
	671
123-2899	38
	65
123-4750	491
124-0988	519
124-1008	527
	531
	539
124-1019	554
	556
124-1020	554
	556
124-1035	491
124-1047	448
124-1062	448
124-1107	425
	429
124-1108	425
	429
124-1212	549
124-1266	563
124-3536	43
	44
124-3548	187
124-3708	85
124-3709	85
124-3815	35
	41
124-3953	966
124-3966	943
124-4009	839
	841
124-4010	839
	841
125-4766	225
125-4784	188
125-4785	188
125-4840	188
125-4841	188
	215
	225
125-7874	127
	128
	177
	183
	185
	188
	198
	200
	206
	208
	210
	212
	222
	225
125-7875	170
	171
	177
	183
	185
	188
	198
	200
	210
	212
	215
	225
	229
125-7876	153
	187
	200
126-1767	42
	79
	162
	172
	185
	188
	201
	206
	208
	210
	225
	498
	504
	506
	508
	527
	842
	843
	853
	902
126-1768	148
	150
	185
	188
	200
	206
	210
	212
	215
	225
126-1774	208
	210
126-1865	649
126-1866	649
126-1876	370
	374
	377
126-1885	354
126-1935	350
	352
126-2043	380
126-2055	574
	576
126-5011	200
126-5062	328
	330
126-6514	680
126-6515	680
126-6516	680
126-6872	492
126-9993	667
127-0580	780
	787
127-3913	743

▶ **PRIMARY REFERENCE**

PART NUMBER INDEX

Part	Page
127-6624	▶457
	716
127-6625	▶709
	716
127-6780	423
128-2135	783
	791
	794
	796
	801
	803
	806
	810
	814
	816
	829
	833
128-2136	791
	801
	803
	810
	814
128-2173	838
128-8950	188
129-3400	495
	541
129-5874	425
	429
129-6466	963
129-7784	592
129-7853	588
129-7855	588
129-7857	388
	588
129-7859	588
129-7863	588
129-7921	588
129-7927	588
129-7978	407
	409
129-7979	588
129-8034	398
130-0252	888
	891
130-0270	888
130-4276	272
131-5818	649
131-5915	645
	647
	648
132-1531	709
132-1805	107
132-1829	▶101
	187
132-5789	82
	177
	189
	196
	197
	198
	201
	206
	210
	222
	224
	883
	888
	891
133-1011	35
133-1207	768
133-2425	263
	265
133-5813	498
	512
	515
133-5828	448
133-6777	578
133-6788	689
133-6904	370
	372
	374
	377
133-6909	367
133-8016	780
	787
134-2540	185
	198
134-3284	138
	140
	141
	143
134-3296	188
	225
134-3297	188
	201
	225
134-3355	107
134-4126	119
	120
134-7113	601
134-7114	601
134-7115	601
134-7258	990
	995
134-8850	▶272
134-8851	272
134-8875	2
	5
	6
	7
	8
	9
	10
	11
	▶273
134-8876	273
134-8878	273
134-8948	745
134-9137	712
135-2274	847
135-3980	467
	468
135-4063	432
135-8572	91
135-8573	91
	261
	276
135-8574	75
135-8575	276
	895
135-8576	270
	271
135-8577	240
	276
135-8578	274
	276
135-8579	94
135-8965	911
135-8966	911
136-0139	244
	246
	247
	248
136-0207	512
	541
137-0856	418
137-2270	896
137-3623	400
137-3624	400
137-3625	400
137-3626	340
	400
137-3628	340
	400
137-3631	340
137-3709	450
	451
	452
	453
138-2053	21
138-5184	188
138-5708	425
	429
138-8454	953
139-7099	798
	812
	▶878
139-7101	798
	800
	▶940
139-7119	946
	951
139-7126	780
139-7127	780
140-0674	653
140-0677	653
141-2759	187
141-6519	905
142-0038	480
	484
	495
142-0485	940
	953
142-3835	1
	▶274
142-3836	1
	▶896
142-5546	854
142-6582	423
142-7764	421
142-7765	414
142-7768	448
142-7769	448
143-4254	519
143-9397	905
	906
144-0195	938
	939
144-0367	64
	465
144-9691	943
144-9692	943
145-2237	492
145-3031	327
145-3035	326
145-3042	231
	▶239
145-4911	33
145-5106	336
	▶337
146-6747	990
	995
147-2645	88
147-4184	637
147-5835	380
147-5860	578
148-4632	390
148-4633	390
148-4634	390
148-4635	390
148-4636	390
148-4637	390
148-4638	390
148-4640	390
148-4642	390
148-4643	390
148-4644	▶390
	392
	393
148-4679	238
	▶392
148-4685	267
148-4689	268
148-4703	268
148-4704	268
148-4705	236
148-4708	236
148-4715	233
148-4732	390
148-4733	390
148-8321	491
148-8323	480
	484
148-8325	491
148-8326	454
148-8327	549
	551
148-8328	558
148-8330	480
	484
148-8335	446
	479
	495
148-8336	448
	454
	491
	498
	502
	504
	506
	508
	512
	520
	525
	527
	534
	537
	539
	541
148-8338	502
	527
	531
	537
	539
148-8339	480
148-8340	520
148-8341	454
148-8342	438
148-8347	480
	484
	487
	525
	549
148-8351	491
148-8352	495
148-8353	448
	498
	504
	506
	508
	520
	527
	534
	537
	541
	547

▶ **PRIMARY REFERENCE**

PART NUMBER INDEX

Part	Page
148-8354	465
	498
	520
	525
	549
148-8355	480
	484
	487
148-8357	465
	495
	551
148-8358	491
	549
148-8360	487
148-8363	491
	515
	549
148-8364	448
	512
	520
	560
	563
148-8367	448
	491
	520
148-8368	491
	547
	558
148-8371	454
148-8378	454
	492
	498
	502
	504
	506
	508
	517
	520
	525
	528
	531
	534
	537
	541
	560
	563
148-8384	473
	474
148-8390	454
148-8395	637
	639
148-8407	454
	498
	504
	506
	520
	539
	607
	639
148-8411	81
	454
	480
	484
	487
	539
	549
	551
148-8415	470
	471
148-8419	470
	471
	492
	547
148-8429	481
	484
	495
148-8430	547
148-8433	512
	515
	520
	528
	531
	539
148-8434	512
	521
148-8435	455
	502
	517
	520
148-8439	492
	520
148-8443	492
	528
	531
148-8444	448
148-8449	481
149-1738	434
	436
	438
	439
	454
149-5050	179
	183
	229
149-5051	229
149-5069	183
	188
	229
149-5070	183
	188
	229
149-5071	188
149-5452	442
150-3030	81
150-3033	547
150-3036	492
	508
	525
	▶132
	531
	534
	537
150-4027	528
	531
	534
150-4044	508
	519
	560
	563
150-4049	545
150-5782	588
150-5797	407
	410
150-5827	356
150-5828	356
150-6256	112
151-1846	441
151-6703	859
	861
	940
	944
	953
151-6704	859
	861
	940
	944
	953
	956
151-6705	943
151-6767	857
151-6777	798
	857
151-6778	940
	944
	953
	956
	958
151-6785	940
151-6790	949
151-6792	859
	▶959
151-6793	959
151-6813	940
	944
	953
	956
151-6815	940
	944
	953
	956
151-6831	940
	944
	956
151-6832	940
	944
	953
	956
151-6841	959
151-6844	940
151-9272	527
151-9461	859
	861
151-9497	859
	861
151-9557	940
	953
151-9576	940
	944
	953
	956
152-3968	88
153-2521	▶132
	138
	140
	141
	143
153-2523	▶133
	136
153-2540	155
	157
153-2541	155
	157
153-2602	188
153-2620	225
153-2631	188
153-3568	913
153-5223	649
153-5239	656
153-5276	606
	614
	615
	617
	633
153-5286	611
	631
153-5288	611
	620
	626
	631
153-5289	611
	620
	626
	631
153-5290	611
	620
	626
	631
153-5291	611
	620
	626
	631
153-5292	611
	620
	626
	631
153-5293	611
	620
	626
	631
153-5298	620
	626
153-5299	620
	626
153-5306	620
	626
153-5309	620
	626
153-5311	620
	626
153-5313	641
	642
	▶656
153-6237	481
	484
	487
	525
153-6249	547
153-6267	547
153-8623	407
	410
153-8723	838
153-8753	846
153-8762	845
	846
153-8763	845
	846
153-8798	425
	429
153-8867	427
	439
154-9023	68
155-0576	117
155-2255	210
155-2258	210
155-2260	82
	185
	198
	201
	208
	210
	212
155-2265	215
155-2267	185
155-2270	127
	128
	148
	150
	155
	157
	169
	177
	188
	201
	206
	221

► **PRIMARY REFERENCE**

PART NUMBER INDEX

Part	Page
	222
	225
	229
	835
155-2271	225
155-3624	81
	544
155-7042	966
156-5970	683
156-6469	949
156-6470	940
	944
	948
	953
	956
156-6471	859
156-6472	940
	944
	948
156-6473	946
156-6474	959
156-6475	959
156-6554	940
	953
156-6555	940
156-6562	940
	953
156-6563	940
	953
156-6579	940
	953
156-6598	859
	861
156-6599	780
	787
156-6600	859
156-6601	940
156-6618	787
156-6627	940
	953
156-6631	946
	951
156-6642	887
156-6643	859
	861
156-6645	859
156-6646	963
156-6647	▶943
	963
156-6648	943
156-6656	801
	814
156-6657	801
	814
156-8845	491
157-0670	68
157-1669	81
157-3184	79
158-4380	316
	317
158-4381	316
	317
158-7864	1000
158-8150	620
	626
158-8159	609
	611
	620
	626
	631
158-8186	653
158-8206	620
	626
158-8207	620
	626
158-8985	392
	▶569
158-8987	▶397
	595
158-9062	380
158-9063	380
158-9064	386
158-9065	386
158-9085	▶687
	688
159-4700	337
159-7782	593
159-7784	398
159-8035	768
159-8036	768
	770
159-8049	104
	107
	219
159-8050	107
	219
159-9322	201
	208
	210
160-7689	201
160-7690	208
	210
160-8290	765
	766
160-8759	354
161-1980	383
161-3128	187
161-3639	859
	861
161-3650	859
	861
161-3663	859
	861
161-3665	859
	861
161-3669	966
161-3670	966
161-3677	966
161-3684	940
	953
161-3685	780
	787
161-3694	879
161-3695	959
161-3697	780
	787
161-3698	940
	944
	948
	953
	956
	958
161-3705	959
161-3717	911
161-3750	▶937
161-3751	14
	15
	16
	▶936
161-6987	905
	906
162-0177	492
	637
162-2168	323
162-9994	85
163-3729	262
	265
163-4143	318
	319
	▶322
163-6637	201
163-6704	145
	150
163-6759	225
163-6773	201
163-6795	137
	145
	147
	148
	150
	187
	212
	215
	901
	938
	939
	966
163-6803	183
	188
164-0497	871
	▶876
164-0514	859
164-0515	859
	861
164-0516	959
164-0517	959
164-0518	959
164-0519	859
164-0523	780
164-0527	780
	787
164-0528	780
	787
	▶887
164-0534	▶872
164-0614	847
164-0617	847
164-0618	937
164-0619	937
164-0620	937
164-0639	936
164-0646	791
	801
	803
	810
	814
164-0648	940
	953
164-0655	791
	801
	803
	810
	814
164-0664	887
164-0666	949
	950
164-4180	481
	484
164-5546	492
164-5552	448
164-5567	477
	492
	525
	528
	531
	534
	537
	545
	595
164-5578	455
164-5590	595
164-5606	481
	487
	545
164-5608	549
164-5628	498
	504
	506
	508
164-5629	504
	506
	508
164-5639	519
164-6872	560
	563
164-6874	492
	535
	537
	547
164-6979	506
	519
	▶671
164-6980	491
	▶672
164-6981	▶338
	519
164-7468	103
164-8474	783
	791
	794
	796
	801
	803
	806
	816
164-8977	519
164-8983	519
164-9640	492
164-9869	492
165-2823	270
165-2976	258
	259
	260
165-3065	896
165-3102	250
	251
	252
	253
	254
165-3103	250
	251
	252
	253
	254
165-3120	250
	251
	252
	253
	254
165-3165	414
165-3173	417
165-3185	475
165-3190	475
165-3256	595
165-3260	549
165-7951	81
165-9431	645
	647
	648
165-9435	645
	647
	648
165-9436	645
	647
	648
165-9438	645

PART NUMBER INDEX

Part	Page
	647
	648
165-9442	645
	647
	648
165-9443	645
	647
	648
165-9444	645
	647
	648
165-9460	645
	647
	648
165-9464	673
165-9470	541
	▶667
165-9513	604
	634
165-9514	604
	634
165-9549	527
	▶676
165-9552	649
165-9554	649
166-1433	695
166-1478	▶310
166-1482	717
166-1486	695
	697
	699
	701
	703
	705
	721
	722
	723
	724
	725
	734
	736
	737
	738
	740
	742
166-1487	695
	697
	699
	701
	703
	705
	719
166-1492	363
166-1494	350
	352
	354
	358
	360
	362
	365
	367
	370
	372
	374
	376
	377
	721
	722
	723
	724
	725
	734
	737
	738
	740
	742
166-1495	356
	695
	697
	699
	701
	703
	705
	719
	734
	736
	737
	738
	740
	742
	▶134
	145
	147
167-3456	145
	147
167-3487	188
167-3542	176
	183
	187
	195
	915
167-3543	176
	187
	195
	915
167-3593	187
167-3630	188
167-3631	188
167-7018	780
	787
167-7039	859
	861
167-7042	780
	787
167-7270	990
	995
167-8987	127
168-0765	657
168-1968	492
168-1969	477
168-3332	81
168-6761	324
	325
168-8806	81
168-9523	417
168-9759	498
	539
168-9760	413
168-9762	416
169-5326	89
169-7397	81
170-0848	619
170-2755	241
170-2983	241
170-3015	255
	256
170-3016	275
170-6888	187
170-6890	188
170-6891	185
	188
170-6929	104
	107
170-6993	132
	133
170-9294	▶137
170-9295	137
170-9324	155
	157
170-9360	241
170-9394	189
170-9417	132
	133
170-9418	132
	133
170-9492	939
170-9497	▶854
	910
170-9498	854
170-9499	854
170-9722	940
	944
	948
	953
	956
	958
170-9724	791
	801
	803
	810
	814
171-0035	662
	663
171-0036	662
	663
171-0037	660
	662
	663
171-0087	645
	647
	648
171-0123	651
171-0124	651
171-0126	651
171-0127	651
171-0128	651
171-0150	609
171-0183	667
171-0184	667
171-0185	667
171-2208	153
171-2210	153
171-3369	66
171-5349	162
171-5956	767
171-6723	545
171-7325	777
	778
	833
171-7413	959
171-7414	959
171-7420	791
	801
	803
	810
	814
171-7426	780
	787
171-7477	879
171-7485	871
	▶874
171-7503	798
	800
	▶944
171-9077	66
171-9383	390
171-9464	268
172-2939	693
	▶710
172-4432	607
172-8402	▶382
	767
172-8406	382
172-8487	382
172-9966	557
173-3384	407
	410
173-3397	407
	410
173-3406	388
173-3413	407
	410
173-3427	588
173-3428	588
173-3436	388
173-3439	574
	576
173-3440	574
	576
173-3441	574
	576
173-3442	574
	576
173-3443	574
	576
173-3444	574
	576
173-3445	574
	576
173-3447	574
	576
173-3450	574
	576
173-3451	574
	576
173-3452	572
	573
	▶657
173-3454	574
	576
173-3496	588
173-3498	588
173-3503	▶340
	398
173-3505	340
173-3506	340
173-3507	398
173-3510	398
173-3513	400
173-3515	400
173-3516	400
173-3517	400
173-3518	398
173-3529	400
173-3536	▶658
	687
	689
173-4664	480
	484
173-4816	465
173-7895	427
	438
	439
173-7916	423
	425
	429
	432
173-7995	425
	429
173-8093	438
	▶601

▶ **PRIMARY REFERENCE**

PART NUMBER INDEX

Part	Page
174-0503	198
	210
174-3016	188
	201
174-4874	233
174-7791	132
	133
175-4291	135
175-4430	671
176-0773	31
176-1477	201
176-1521	201
176-1902	888
	891
176-1916	831
176-1925	874
176-1928	872
	874
176-1931	938
176-1932	939
176-1937	780
176-1938	780
176-1939	780
	787
176-1941	887
176-1946	801
	814
176-1947	801
	814
176-1949	880
176-1951	959
176-1952	959
176-1953	959
176-1954	959
176-1955	959
176-1956	959
176-1957	959
176-1958	798
	800
	▶946
176-1972	791
	801
	803
	810
	814
176-1986	780
	787
176-1996	863
176-2278	695
	697
	699
	701
	703
	705
176-2688	976
176-2815	975
176-4366	541
176-4463	519
176-4469	519
176-4684	541
176-4708	517
176-4746	81
176-4755	519
176-4770	549
176-9299	188
	200
	210
177-1061	480
	484
	495
177-2215	104
177-2470	588
177-2471	588
177-2553	400
177-2584	574
	576
177-2585	388
177-2611	350
	358
	360
	365
177-2619	340
177-2653	480
	484
	▶659
177-5739	255
	256
177-5877	274
177-5879	274
177-5880	274
177-6315	265
177-7707	198
177-8572	434
177-8628	▶727
	765
	766
178-0852	262
	265
178-5422	831
178-5423	831
178-5431	938
178-5500	939
178-5549	▶871
178-5569	946
	951
178-5570	780
	787
178-5572	949
	950
178-5573	859
	861
	949
	950
178-5574	859
	861
	949
	950
178-5576	940
	953
178-5659	920
	921
178-5955	525
178-6450	66
179-5005	429
179-5006	429
179-5030	442
179-5260	427
179-7456	508
179-7467	555
179-7578	506
179-7616	527
179-9667	386
179-9674	380
179-9806	400
180-3861	132
	133
180-7521	243
180-7525	243
180-7529	243
180-7533	243
180-9286	545
183-1035	137
183-1343	166
184-5724	262
	265
184-8850	241
184-8862	259
184-9156	541
184-9216	547
	436
184-9253	441
184-9254	441
	436
184-9256	441
184-9257	441
185-0169	407
	410
185-0194	354
185-0201	407
	409
185-0334	352
185-0423	651
185-0462	498
	▶673
185-0463	673
	682
185-0884	26
185-1546	50
185-1861	201
185-8161	831
185-8180	859
	861
185-8182	798
	800
	808
	812
	940
	953
185-8187	798
	800
	812
	940
185-8196	780
	787
185-8205	791
	801
	803
	810
	814
185-8214	801
	803
185-8221	940
	953
185-8280	887
185-8281	887
185-8284	774
	829
185-8286	168
	777
	778
185-8290	966
185-8293	888
185-8300	775
	844
185-8302	775
185-9208	155
186-3735	101
	164
	168
	683
186-5649	719
186-5662	719
187-0661	990
	995
187-5589	477
187-5669	515
187-5954	418
187-6058	464
	552
187-6696	553
187-7070	519
187-9977	434
	436
187-9978	434
187-9981	434
	436
188-2315	721
188-3064	316
	317
188-4140	▶398
	595
188-4142	398
	▶400
188-4143	400
188-4181	370
	372
	374
	377
189-2678	791
	801
	803
	810
	814
189-2690	859
	861
189-2693	879
189-2694	879
189-2702	946
	951
189-2704	780
	787
189-2716	879
189-2717	880
189-2847	878
	880
189-2849	878
	▶879
189-2853	791
	803
	810
189-2854	791
	803
	810
189-2855	801
	803
189-2864	780
	787
189-3925	719
189-9377	42
189-9763	407
	409
	588
190-0386	922
190-3523	316
	317
190-3524	316
	317
190-4896	588
190-5386	990
	995
190-6880	275
190-7081	275
190-7673	406
	409
190-7674	406
	409
190-7750	647
	648
190-7819	644
190-7826	465
190-7865	639
191-2578	390
191-3235	233
191-5537	▶388
	389
191-5539	388
191-5540	388

PART NUMBER INDEX

Part	Page
191-5541	388
191-5543	574
	576
191-5601	388
191-5707	406
	409
191-8921	895
192-0573	588
192-3039	250
	251
	252
	253
	254
193-1736	588
193-5014	745
	770
193-5015	745
193-6606	425
	429
193-7720	934
194-0174	▶413
	475
194-0176	413
	▶414
194-0180	▶415
	475
194-0181	415
	▶416
194-0182	415
	▶417
194-1608	▶316
	328
	329
	330
194-1609	▶317
	329
	330
	331
194-1910	2
	6
	7
	8
	9
	11
	▶328
194-1911	2
	3
	13
	▶329
194-1914	▶329
194-1917	▶329
194-1920	3
	4
	13
	▶330
194-8353	367
194-8355	367
194-8359	367
	370
	372
	374
	377
195-0090	601
196-0711	582
196-0807	465
196-1569	872
	874
196-1571	872
	874
196-1572	872
	874
196-1666	844
197-0196	567
	568
197-0199	567
	568
197-0273	567
	568
197-2362	436
197-4385	201
	229
198-3899	929
	930
199-1286	475
199-1965	519
199-2045	545
199-4561	390
199-7394	465
199-7403	465
199-9267	22
199-9751	45
	163

2

Part	Page
200-3244	406
	409
200-3245	406
	409
200-3246	406
	409
200-3255	406
	409
200-3327	584
200-3333	588
200-3334	588
200-3365	342
	▶584
201-3665	767
201-4391	859
201-4417	780
	787
201-4530	780
	787
201-4534	872
	874
201-4535	872
201-9263	620
	626
201-9299	400
201-9378	551
201-9379	512
202-1713	487
202-3855	444
202-3856	444
202-3857	444
202-3858	444
202-3915	427
	439
	442
202-4004	517
	519
202-6996	444
202-7127	425
	429
202-7128	425
	429
202-9824	987
203-2287	52
203-3470	491
204-1611	200
	206
204-1673	81
	201
204-2281	519
	527
	531
	534
204-2762	400
204-2763	340
204-2800	587
204-3622	352
	365
204-3623	377
205-1339	835
205-1340	835
205-6295	780
	787
206-1265	320
	▶323
206-1345	55
206-3336	▶644
	845
	846
	847
206-9211	323
207-0144	798
	800
	▶948
207-0216	872
207-2755	90
207-2757	90
207-6222	480
	484
207-6403	595
207-6404	595
207-6666	418
207-6667	418
208-4289	258
	260
209-3312	323
209-3313	323
209-5894	578
209-5909	578
209-5992	571
	▶578
209-6000	592
209-8296	934
209-9219	27
210-5827	936
210-5828	936
210-5829	936
210-5834	936
210-5836	936
210-5837	936
210-5838	936
210-9966	471
212-2838	263
	265
212-5148	484
212-5419	527
212-5423	527
213-0677	42
213-0772	187
	229
213-3745	491
213-8433	385
213-9100	102
214-4400	404
214-4501	372
214-4511	▶404
	475
214-4518	404
214-4531	976
214-4532	976
214-7566	52
214-7568	96
	98
	160
	492
	525
	528
	531
	535
	537
	545
	595
214-7915	990
	995
215-4909	397
215-5037	519
	▶566
215-9961	406
	409
215-9962	406
	409
216-4970	153
216-6485	436
	438
216-6589	425
	429
216-6676	402
216-6677	402
216-6678	402
216-6682	712
216-8634	35
217-8185	81
218-1139	480
	484
218-5199	243
219-0305	874
	876
219-8468	305
	306
219-8469	307
	308
220-9084	753
220-9094	758
	760
	761
	762
	764
221-2014	90
221-4883	510
	517
221-8045	990
	995
221-8884	▶838
	910
222-0085	663
222-0124	451
	453
222-0126	450
	452
222-0225	839
	841
222-2277	77
222-6617	90
223-9818	990
	995
224-0554	990
	995
224-1685	402
224-1687	▶402
	495
224-8946	990
	995
225-0311	81
225-0312	990
	995
225-4257	990
	995
225-4548	593
225-4549	593

▶ **PRIMARY REFERENCE**

PART NUMBER INDEX

Part	Page
225-4592	347
	▶458
225-4607	406
	409
225-4785	454
	▶634
225-4787	634
225-4789	604
	634
225-4790	604
	634
225-4791	604
	634
225-4792	604
	634
225-4793	604
	634
225-4796	604
	634
225-4797	604
	634
225-4803	604
	634
225-4804	567
	602
	604
	620
	626
	634
	637
	639
225-4815	647
	648
225-4818	567
	604
	620
	626
	634
	637
	639
225-4820	604
	634
225-4821	604
	634
	691
225-4830	604
	634
225-4831	604
	634
225-4832	604
	634
225-4833	604
	634
225-5625	50
225-5638	50
225-5640	50
225-5959	50
225-5961	50
225-5962	50
225-6522	51
225-6524	51
225-7738	65
225-7944	61
225-8019	65
225-8287	35
225-8858	26
226-3065	429
226-8770	165
227-0265	497
227-0581	465
227-0590	595
227-6034	233
227-6071	267
227-6081	▶267
	268
227-6105	268
227-6106	268
227-6147	▶268
	301
227-6166	238
	▶395
227-6215	392
	393
227-6221	392
	393
227-6228	390
227-6884	557
227-7625	838
227-8807	▶339
228-2781	990
	995
228-5463	243
228-5614	736
228-5615	356
	719
	730
	734
	736
	737
	738
	740
	743
228-7093	52
228-7096	98
228-7100	161
228-7316	990
	995
228-9254	990
	995
229-0887	990
	995
229-1091	743
229-1092	717
229-1095	363
	743
229-1096	728
	730
	731
	734
	737
	738
	740
229-1784	5
	6
	10
	11
	▶87
229-1785	87
	▶91
229-1859	▶86
	91
229-1861	91
229-9070	2
	3
	4
	5
	6
	7
	8
	9
	10
	11
	12
	14
	15
	16
	▶938
229-9078	910
	▶911
229-9082	774
	▶863
229-9086	15
	▶965
229-9087	▶963
	965
229-9088	▶939
	965
230-1340	113
	984
230-1341	113
	985
230-4009	127
	185
	188
	198
	201
	215
	226
230-4010	902
230-4011	177
	188
	201
	212
	215
	221
	226
	228
	229
	883
	884
230-4012	166
	683
230-4013	201
230-5008	183
	185
	215
230-5010	155
	194
	201
	206
	212
	215
	226
230-8094	41
230-8989	89
231-1771	17
	▶102
231-1827	107
231-1836	▶212
	214
231-2295	198
	201
	215
231-4457	84
231-4475	201
231-6805	367
232-1322	27
	45
232-1793	89
232-1794	89
232-2085	753
232-2086	753
232-2095	758
	760
	761
	762
	764
232-2096	758
	760
	761
	762
	764
232-3126	84
232-3149	89
232-3274	89
232-3657	35
232-3666	35
232-3751	61
232-3861	22
232-4113	602
232-4114	602
232-7449	27
232-7596	26
232-7597	26
232-7599	26
	52
233-5260	838
	845
	846
	847
234-1097	187
234-1122	225
234-1156	155
234-1158	155
	157
234-3927	719
234-3928	719
234-3930	719
234-3931	719
234-4440	560
	563
	▶593
234-4452	406
	409
234-4453	406
	409
234-4492	448
234-4573	367
234-4574	367
234-4580	356
234-4581	356
234-4582	356
234-4583	356
234-4584	356
234-4585	356
234-4586	356
234-4589	356
234-4591	458
234-4592	458
234-6467	800
234-6468	791
	801
	803
	810
	814
234-6469	791
	801
	803
	810
	814
234-6470	791
	801
	803
	810
	814
234-6471	791
	801
	803
	810
	814
234-6472	791
	801
	803
	810
	814
234-6473	791

PART NUMBER INDEX

Part	Page
	801
	803
	810
	814
234-6474	791
234-6476	791
	801
	803
	810
	814
234-6477	791
	801
	803
	810
	814
234-6480	791
234-6483	791
	801
	803
	810
	814
234-6485	791
	801
	803
	810
	814
234-6489	949
234-6490	791
	801
	803
	810
	814
234-6491	791
	801
	803
	810
	814
234-6497	791
	801
	803
	810
	814
234-6498	791
	801
	803
	810
	814
234-6499	855
234-6500	▶856
234-6501	783
	794
	796
	806
	816
	▶855
234-6502	855
234-6521	791
234-6547	801
	803
234-6548	801
	803
234-6549	801
	803
234-6550	801
	803
234-6579	791
	801
	803
	810
	814
	829
	833
234-6580	829
	833
234-6593	855
234-6594	785
	798
	800
	808
	812
	▶966
234-6602	829
234-6603	833
234-6604	829
234-6605	833
234-6608	829
	833
234-6609	829
	833
234-6610	829
	833
234-6612	833
234-6613	▶168
	833
234-6614	833
234-6615	168
235-0723	472
	▶767
235-7520	302
	303
235-7679	354
	356
	358
	360
	362
	363
	365
	717
	734
	736
	737
	738
	740
	742
235-7764	▶297
	328
235-7769	360
	380
235-8862	908
235-8874	772
235-8875	772
235-8876	863
235-8877	863
235-8878	863
235-8879	863
235-8880	828
235-8891	888
	891
235-8893	831
235-8894	831
235-8909	798
	800
	▶949
235-8912	780
	787
235-8914	829
	833
235-8916	798
	808
	812
235-8922	801
	803
235-8923	791
	801
	803
	810
	814
235-8926	814
235-8928	801
	814
235-8929	814
235-8930	791
	803
	810
235-8932	966
235-8933	780
	787
235-8950	774
	791
	801
	803
	810
	814
235-8951	777
235-8952	778
235-8965	833
235-8966	829
235-8969	▶839
	850
235-8970	▶841
	849
235-8974	963
235-8996	777
	778
235-8997	777
235-8998	778
235-9001	783
	794
	796
	806
	816
235-9005	772
235-9012	938
	939
235-9014	888
	891
235-9015	888
	891
236-2843	498
236-2844	498
236-2848	499
236-3200	547
236-3212	▶418
	475
236-3213	▶418
	475
236-3214	▶418
236-3215	▶418
236-3257	405
236-3259	405
236-3702	261
236-3703	261
236-6365	717
	721
	722
	723
	724
	725
236-6366	722
	723
	724
	725
	727
236-6419	609
	611
	620
	626
	631
236-6421	611
	620
	626
	631
236-8341	301
	▶302
236-8357	302
236-8358	302
236-8360	303
237-0947	385
237-3184	▶423
238-1506	153
238-1570	87
	▶229
238-1579	229
238-1594	▶170
	229
238-1595	170
238-1596	▶171
	229
238-1597	171
238-2171	221
238-2208	▶176
	965
238-2209	176
238-2210	176
238-2211	915
238-2212	187
	195
238-2260	912
238-2279	153
238-2280	153
238-2318	187
238-2319	189
238-2326	145
	150
238-2363	189
	215
	226
238-2366	155
	157
	189
	226
238-2390	187
238-2391	187
238-2478	▶174
	175
	193
238-2479	174
238-2485	▶175
	765
238-2501	104
	107
238-2528	104
	107
238-5080	96
	98
238-5082	52
238-5083	52
238-5084	52
238-8288	74
238-8292	78
238-8671	89
239-1699	422
	▶448
239-1714	422
	▶475
239-1716	422
	▶560
239-1717	422
	▶563
239-1732	▶441
	693
239-4341	301
	▶312
239-4362	315
239-4378	326

▶ **PRIMARY REFERENCE**

PART NUMBER INDEX

Part	Page
239-4382	326
239-4383	326
239-4384	326
239-4385	312
	▶313
239-4386	312
	▶314
239-4387	313
	▶324
239-4388	314
	▶325
239-4389	324
	325
	▶326
239-4390	326
	▶327
239-4391	327
239-4392	327
239-4393	326
239-4394	327
239-6986	990
	995
239-7352	212
	215
	226
239-7356	127
	185
239-8693	342
	▶845
239-8695	341
	▶846
239-8697	566
	▶567
239-8998	566
	▶568
240-2912	721
	722
	723
	724
	725
240-2913	350
	352
	728
	730
	731
	734
	737
	738
	740
240-2914	354
	370
	372
	374
	377
240-2978	255
	256
240-2979	255
	256
240-2988	304
	309
240-3822	14
	▶301
240-3881	2
	3
	4
	13
	▶598
240-5071	2
	3
	17
	▶864
240-5073	17
	▶865
240-5074	863
240-5571	84
241-7286	693
	694
	▶712
241-7287	693
	▶695
241-7288	695
241-7301	▶728
	729
241-7319	725
241-7325	724
241-7381	386
241-7382	358
	360
	365
	380
241-8368	153
	▶169
241-9264	75
242-1510	990
	995
242-1588	990
	995
242-6092	990
	995
242-6475	2
	6
	11
	▶425
242-6476	▶427
242-6478	▶467
242-6479	▶429
242-6482	▶468
242-6487	2
	6
	11
	▶432
242-6488	▶434
242-6490	▶470
242-6492	▶436
242-6494	▶471
242-6505	▶442
	600
242-6732	346
	▶450
242-6735	348
	349
	▶554
242-6737	346
	▶451
242-6803	588
243-4505	91
	138
	143
	189
	201
	212
	222
	225
	228
	229
	823
243-4507	127
	185
	226
243-4508	128
	172
	179
	208
	210
	212
	226
	902
243-4509	79
	177
	185
	226
243-4510	127
	177
	185
	198
	201
	206
	226
243-5362	198
244-4254	721
	722
	724
	725
244-4255	721
	722
	723
	724
	725
244-4277	695
	697
	699
	701
	703
	705
	728
	734
	736
	738
	740
	743
244-4360	721
	722
	723
	724
	725
244-7927	259
244-8194	244
	245
	246
	247
	248
244-8198	495
244-8228	275
244-8255	275
244-8277	298
244-8278	298
244-8284	288
244-8400	▶606
	609
245-5079	498
245-5416	563
245-5427	560
245-7749	825
	827
	▶828
245-7750	828
245-7751	828
245-7756	888
245-7757	888
245-7760	187
245-7790	791
	801
	803
	810
	814
	829
	833
245-7791	863
245-7792	863
245-7793	863
245-7794	▶866
245-7796	▶867
245-7811	1
	▶908
245-7813	844
245-7814	844
245-7815	844
245-7816	844
245-7817	775
245-7818	775
245-7819	775
245-7820	775
245-7823	775
245-7824	775
245-7825	775
245-7826	775
245-7827	775
245-7828	775
245-7829	775
245-7830	775
245-7831	775
245-7832	775
245-7833	775
245-7834	775
245-7835	775
245-7836	775
	▶819
245-7837	819
	821
245-7838	775
245-7839	775
245-7842	839
245-7844	841
245-7846	775
	▶844
245-7847	775
245-7850	888
	891
245-7851	888
	891
245-7856	775
245-7872	863
245-7873	863
245-7881	15
	▶913
245-7895	929
	930
245-7900	263
	265
245-7901	263
	265
245-7905	819
	821
245-7916	911
245-7925	833
245-7926	829
245-7929	855
245-7931	966
245-7948	829
	833
245-9191	66
246-2641	93
	94
246-4383	84
246-5425	315
247-2693	212
	842
	843
	853
247-5112	853
247-7410	341
	▶968
247-7416	341
	▶970
247-7418	910
	▶971

PART NUMBER INDEX

Part	Page
247-7420	342
	▶972
247-7423	342
	▶973
247-7424	341
	▶974
247-7436	990
	995
247-7437	990
	995
247-7438	990
	995
247-7454	14
	▶301
247-7457	2
	4
	5
	6
	7
	8
	9
	10
	11
	12
	▶600
247-7465	341
	▶975
247-7492	600
	▶976
247-7587	607
247-8751	380
247-8791	386
247-8864	350
	352
247-8865	350
	352
	358
	360
	365
247-8869	450
	452
247-8870	451
	453
247-8873	370
	372
	374
	377
247-8874	370
	372
	374
	377
247-8883	554
	556
247-8885	358
	360
	365
247-8886	360
247-8887	360
247-8920	588
247-9006	354
247-9030	425
247-9033	425
247-9034	425
247-9073	558
247-9074	558
247-9076	558
247-9078	558
247-9129	427
247-9132	427
247-9135	427
247-9138	427
247-9141	427
247-9144	427
247-9147	427
247-9164	467
247-9173	467
247-9177	467
247-9294	467
	468
247-9298	427
248-7143	313
	314
	▶315
248-7174	327
248-7820	717
248-7822	717
248-7823	717
248-7831	716
	▶717
248-7832	717
248-7835	717
248-7836	717
248-7857	363
248-8943	299
248-8961	259
248-8992	270
248-8994	270
248-8995	270
248-9633	▶552
	732
248-9825	422
	▶498
248-9853	▶549
	597
248-9925	349
	▶555
248-9926	347
	▶459
250-1440	434
	436
250-2402	705
250-2446	620
	626
250-2447	620
	626
250-5054	258
250-8054	968
	971
	973
	974
	975
251-0299	225
251-0303	153
251-0304	153
251-0452	219
251-0467	200
251-0483	217
251-0526	▶121
	910
251-0529	▶179
	341
251-0538	15
	▶912
251-0542	16
	▶155
251-0580	212
251-0598	179
251-0637	187
251-2597	715
	▶719
252-6438	48
	49
253-1346	324
	325
253-2695	198
253-2866	▶16
253-6445	432
253-6453	432
253-6454	432
253-6455	434
253-6548	470
253-6551	470
253-6685	436
253-6688	471
253-6691	471
253-6694	423
253-6697	423
254-2996	719
254-3022	301
	▶303
254-3023	303
254-3024	303
254-3052	721
	722
	723
	724
	725
254-3053	721
	722
	723
	724
	725
254-3080	491
	▶607
254-3954	48
	49
255-1592	459
255-1659	▶502
	598
255-1665	498
255-1666	498
255-1781	541
255-1800	342
	▶504
255-1802	341
	▶506
255-1843	▶508
	910
255-2068	537
255-2751	155
	157
	▶173
255-4410	913
255-5594	620
	626
	653
255-5680	475
	▶637
255-5683	475
	▶639
255-5713	341
	342
	▶599
255-5845	▶910
256-0093	▶406
	588
256-0096	▶409
	588
256-6454	163
256-7704	23
256-9806	767
256-9807	767
257-4547	976
258-0330	872
	874
258-4095	916
	▶917
258-6749	491
	▶677
259-0647	458
259-0675	354
259-0680	600
	▶688
259-0918	592
259-3543	261
259-4883	187
259-4884	175
	183
259-4914	912
259-5043	▶138
	693
	694
	716
259-5047	2
	5
	6
	10
	11
	▶140
259-5048	▶141
259-5052	1
	▶221
259-5081	187
259-5082	187
259-5097	219
259-5129	221
259-5225	104
259-5229	104
259-5237	▶122
	598
259-5293	▶123
	910
259-5294	▶124
	341
259-5295	▶125
	341
259-5317	200
259-5326	138
259-5327	140
259-7178	▶910
259-7179	▶847
	910
259-7180	175
	193
259-7202	833
259-7214	913
259-7215	913
259-7220	183
259-7345	777
	778
259-7346	▶777
	829
259-7347	▶778
	833
259-7348	▶829
	831
259-7350	785
	800
	808
	▶880
259-7351	880
259-7352	880
259-7353	791
	803
	810
	814
259-7354	859
	861
259-7378	599
	▶609
259-7429	534
	▶678
259-7430	537
	▶679
259-7464	422
	▶641

▶ **PRIMARY REFERENCE**

PART NUMBER INDEX

Part	Page
259-7465	▶611
	641
259-7631	611
	▶614
259-7632	▶615
	626
259-7733	520
259-7788	604
	634
259-7848	660
259-7849	660
259-7850	660
259-7851	660
259-7877	846
260-1555	129
260-1556	130
260-1566	129
260-1569	130
260-2109	▶842
	851
260-2110	▶843
	852
260-2111	842
	843
260-2288	715
	▶721
260-2289	721
	722
	723
260-3003	619
260-3883	683
260-6941	968
260-6945	972
	973
260-6946	970
	974
260-6948	910
	971
260-7868	422
	▶582
260-7872	480
	484
	487
260-7904	582
260-7906	582
260-7910	▶419
	475
260-7911	419
	▶420
260-7912	420
260-7913	419
	▶421
260-7914	421
260-7965	▶510
	910
260-7970	▶512
	600
260-7988	475
260-7992	475
260-7996	475
260-8000	475
260-8010	▶444
	693
	694
260-8015	342
	▶477
260-8043	480
	484
260-8315	444
260-8316	444
260-8320	441
260-8321	441
260-9144	81
260-9172	487
261-2445	619
261-2452	619
262-2313	295
	296
262-2333	289
262-2335	289
262-2347	288
262-2363	275
262-2365	275
262-2406	251
262-3390	470
262-3494	▶765
262-3496	▶472
	765
262-3497	▶722
	765
262-3589	467
262-4781	315
263-9088	113
	▶159
263-9574	104
264-1702	695
	697
	699
	701
	703
264-7029	188
	212
	215
	221
	226
	228
	229
	884
264-7031	185
	215
264-7032	155
	194
	206
	212
	215
	226
264-7033	198
	215
264-7034	127
	185
	188
	198
	215
	226
264-9961	620
	626
265-7724	▶129
266-0908	477
266-0912	480
	484
266-0913	480
	484
266-0955	545
266-0982	491
266-1045	465
266-1108	527
	531
	539
266-1110	454
266-1111	454
266-1114	454
266-1115	454
266-1116	454
266-1133	491
266-1147	454
266-1258	495
266-1278	480
	484
	487
266-1279	480
	484
	487
266-1303	480
	484
	487
266-5431	990
	995
266-7964	452
	453
	460
266-7965	556
266-7968	377
266-8011	352
266-8012	377
266-8022	346
	▶452
266-8023	346
	▶453
266-8024	349
	▶556
266-8025	348
	▶460
266-8057	365
267-0138	▶713
	732
267-0139	713
267-0140	713
267-0141	713
267-0339	▶130
267-4051	491
267-6767	14
	▶238
267-6783	▶235
	238
267-6785	392
	393
267-7626	141
267-7627	▶143
	693
267-7628	143
267-7642	▶183
	343
267-7644	183
267-7671	183
267-7672	183
267-7676	183
267-7976	155
	157
267-8071	1
	▶882
268-0720	280
	283
	284
268-1621	549
268-4530	979
268-4531	768
	979
268-6787	427
268-6790	427
268-6816	343
	▶978
268-6817	978
268-6850	442
	531
268-6966	429
268-6969	429
268-6970	429
268-6971	468
268-6974	468
268-6977	468
268-6980	468
268-6983	468
268-6986	468
268-7046	▶446
	716
268-7047	446
268-7048	446
268-7049	446
268-7074	▶479
	716
268-7122	16
	▶438
268-7124	439
268-7127	439
268-7129	438
268-7130	438
268-7131	438
268-7183	479
268-7185	479
268-7186	479
268-7238	446
268-7239	446
268-7240	446
268-7256	▶348
	716
268-8209	683
268-8643	197
268-8872	979
269-0120	979
269-0121	979
269-9919	502
270-0012	477
270-0013	477
270-0014	477
270-0015	477
270-5603	885
	▶903
270-5687	▶341
270-5689	341
	▶836
270-5949	649
270-5950	649
270-5953	645
270-5974	▶600
270-6106	▶341
270-6107	341
	▶835
271-7843	842
	843
	849
	850
272-4180	527
	531
	534
272-5000	185
	198
273-4159	767
273-4160	767
273-4161	767
273-4162	767
273-4163	767
273-4165	767
273-5167	774
	▶825
273-5274	940
	953
273-5333	870
273-5345	940
	944
	953
	956
273-5346	940
	944
	953
	956
273-5358	▶870

PART NUMBER INDEX

Part	Page
273-5359	870
273-5360	870
273-5399	825
273-7677	250
	251
	252
	253
	254
273-8314	588
273-8315	584
	588
273-8316	406
	409
273-8317	406
	409
273-8318	406
	409
273-8319	406
	409
273-9292	31
274-1935	46
274-2547	460
	461
275-1361	549
275-1362	595
275-1439	480
	484
	487
275-1440	480
	487
275-1442	519
275-1443	519
275-1444	519
275-1503	519
275-1538	491
275-1712	512
275-1713	512
275-6841	▶127
	198
275-6842	▶127
	198
275-6993	229
275-9897	41
276-4836	72
276-5600	26
276-5602	26
276-5603	27
276-7391	25
276-7478	43
	44
276-9200	50
277-0121	34
277-0588	33
277-0786	425
	429
277-1974	51
277-1975	51
277-2500	59
277-2537	61
277-2538	61
277-2923	65
277-2925	65
277-3012	35
277-3013	35
277-4223	35
277-4374	74
277-6078	31
277-7148	▶330
277-9463	78
277-9940	78
278-0017	78
278-3818	261
278-3837	296
278-6587	454
278-6593	454
278-6875	454
278-6877	454
279-4093	758
279-7609	198
279-9361	78
279-9651	38
280-1384	41
280-2747	455
	481
	485
	488
281-0791	819
	821
281-5987	81
281-7039	59
281-7040	59
281-8744	65
281-8803	201
281-8804	201
281-8805	160
282-4539	716
	▶723
282-4540	723
282-5567	442
282-5705	765
	▶979
282-7055	545
282-7079	512
282-7135	495
282-7161	▶551
	600
282-7162	▶515
	600
282-7615	491
283-4662	34
283-8301	40
283-8302	40
284-4426	780
	787
284-4552	891
284-7313	354
	356
284-8532	905
285-1142	120
285-1332	835
285-1333	835
285-1337	835
285-1340	▶617
	620
285-1399	520
285-1465	520
285-1531	477
	▶619
285-1777	619
285-2423	491
285-2428	491
285-2663	547
285-2664	547
285-4470	406
	409
285-9066	874
286-6495	▶454
	600
286-6720	454
286-6721	454
286-6731	454
286-7851	78
287-0047	345
287-2352	607
287-2499	660
287-8597	34
288-6974	34
288-6975	34
288-7410	442
288-7502	425
	429
288-7603	16
	▶439
288-7604	439
288-7605	439
288-7606	439
288-7607	439
289-5336	491
289-5657	499
289-5672	475
289-5681	545
289-5690	463
	464
	553
289-6603	270
289-6698	275
289-6700	287
289-7934	386
289-7937	386
289-7949	380
289-8194	▶403
	595
289-8195	403
290-1729	990
	995
290-1788	▶732
290-1837	3
	4
	13
	▶732
290-9180	367
290-9192	693
	▶697
290-9193	697
290-9195	694
	▶699
290-9196	699
290-9198	693
	▶701
290-9199	701
290-9216	732
	▶734
290-9222	732
	▶736
290-9223	736
291-5216	75
291-7559	▶883
	885
291-7560	883
	884
291-7561	883
291-7593	200
292-3462	89
292-4151	765
	▶768
292-7153	549
292-7297	595
293-1118	891
293-1119	891
293-1120	891
293-1137	775
293-1140	963
293-1168	▶868
293-1183	863
293-1184	863
293-1256	939
293-1501	241
293-5146	768
294-0286	35
294-1480	694
	▶703
294-1481	703
294-2955	759
	763
294-3794	427
294-3795	427
294-3796	427
294-3797	427
294-8011	▶383
	768
295-7964	768
296-6220	233
296-6268	233
296-6269	233
296-6272	▶393
	394
296-6288	4
	5
	11
	12
	▶394
296-6300	233
	▶238
296-6301	▶236
	238
296-6302	▶237
	238
296-7024	487
296-7067	480
	484
296-7069	480
	484
296-7229	527
	531
	534
297-0265	487
	▶684
297-0370	480
	▶602
297-0483	653
297-0529	▶645
	849
	850
297-0530	▶647
	851
297-0531	▶648
	852
297-0532	837
	▶849
297-0533	837
	▶850
297-0538	836
	▶851
297-0539	836
	▶852
297-4589	842
297-4590	843
297-9132	▶320
298-4127	▶732
298-4258	87
	▶980
298-4282	990
	995
298-5630	989
299-9265	81
	▶90
3	
300-5183	82
301-0091	219
301-0589	905
301-6874	406
	409

▶ **PRIMARY REFERENCE**

PART NUMBER INDEX

Part	Page
301-8294	406
	409
302-2852	491
302-5941	768
302-5943	768
302-6859	768
302-6860	768
302-8411	90
302-9210	716
	▶981
302-9466	643
302-9635	515
303-2787	818
	▶982
303-9933	96
	98
303-9937	96
	98
304-5062	38
304-5063	38
305-0326	▶869
305-0330	791
	801
	803
	810
	814
305-0331	843
305-0332	842
305-0333	791
305-0361	946
	951
305-0441	888
	891
305-0442	888
	891
305-0466	15
	▶918
305-0467	14
	15
	16
	▶919
305-4951	344
305-4952	344
305-6873	81
305-7664	66
306-1611	425
306-1614	425
306-1615	425
306-8349	▶185
	885
306-8350	185
306-8401	200
306-8802	912
307-0047	113
	984
	985
307-1818	798
	857
	858
	▶859
307-4918	448
307-4919	448
307-4920	551
307-5034	444
307-5035	441
307-5097	549
307-5098	549
307-5120	525
307-5121	455
307-7656	260
308-8775	263
	265
308-8776	263
	265
308-8777	263
	265
309-3872	980
309-5130	52
309-5137	52
309-5711	902
309-5769	498
	504
	506
	508
	527
309-5771	131
	▶905
309-5808	838
	▶853
309-5849	903
309-5881	▶113
	131
309-9941	619
310-0078	17
	▶837
310-0210	520
	▶651
310-0404	▶583
	611
	631
310-0405	583
	631
310-0419	649
310-0420	649
311-6184	200
312-2645	91
312-5525	1000
312-5694	746
	747
	748
	749
	750
	751
	752
312-8338	68
313-3762	68
313-3763	68
313-3764	68
313-3766	68
313-3769	68
313-7878	495
313-8623	491
314-3728	2
	3
	4
	5
	6
	10
	11
	12
	13
	▶732
314-3730	▶733
314-3786	▶1001
314-3797	4
	5
	▶328
314-3798	5
	7
	8
	9
	10
	▶328
314-3848	▶983
314-3868	3
	4
	5
	7
	8
	9
	10
	11
	12
	13
	▶17
314-6506	68
314-6509	68
314-6510	68
314-8124	495
314-8128	520
314-8205	480
315-0800	263
	265
315-1040	732
	▶737
315-1041	737
315-3393	48
	49
315-3394	48
	49
315-4370	393
	▶570
315-4412	▶680
	689
315-5313	780
	787
316-4084	472
316-4085	472
316-6166	785
	798
	800
	▶857
316-8846	775
316-8847	775
316-8849	775
316-8908	874
316-8916	772
	▶775
316-8918	775
316-8920	775
316-8921	775
316-8987	920
	921
	925
	926
316-8989	899
316-9351	42
317-4712	480
	484
317-5482	43
	44
317-5483	43
	44
317-5485	25
317-5486	25
318-1181	▶162
	200
319-1335	229
319-4420	155
	▶172
319-6212	52
319-6220	52
319-9152	982
319-9845	551
319-9888	465
320-0013	454
320-0198	441
320-3060	161
320-3063	81
320-5525	895
320-5737	241
321-8649	52
321-9994	31
322-3154	52
	▶54
322-3155	54
322-8714	571
	▶691
322-8716	448
	▶689
323-7770	498
323-7897	620
	626
323-7898	620
	626
	▶653
323-7942	487
	▶685
323-9312	43
	44
324-0444	35
324-0967	732
	▶738
324-0981	733
	▶740
324-4488	39
324-4489	39
324-4551	▶47
	62
324-5761	91
324-5770	217
324-5771	217
325-4471	▶135
	148
	150
325-8634	▶161
	163
325-8865	480
	484
	487
326-0316	98
326-0319	52
326-7289	23
326-7401	▶59
	61
326-9052	989
327-4930	601
327-6501	14
	15
	16
	▶914
327-6503	15
	▶915
327-6507	914
	▶925
327-6509	915
	▶926
327-6512	▶920
	925
327-6513	▶921
	926
327-6515	▶881
	920
	921
327-6520	925
	▶929
327-6521	926
	▶930
327-6523	910
	▶928
327-6538	928
327-6540	918
327-6541	919
327-6550	780
	787
	▶897

▶ PRIMARY REFERENCE

PART NUMBER INDEX

Part	Page
327-6552	▶898
327-6553	▶899
327-6576	898
327-6581	937
327-6593	823
327-6594	823
327-6601	872
327-6640	920
	921
327-6642	920
	921
327-6643	920
	921
327-6644	929
	930
327-6645	929
327-6646	929
	930
327-6647	929
327-6648	929
	930
327-7538	187
327-8740	586
328-0021	155
328-2035	547
	▶683
329-3796	37
329-5254	103
329-5255	47
329-5534	52
330-1162	818
	▶895
330-2384	527
	531
	534
330-2470	487
330-2568	520
331-0290	43
	44
331-1682	▶26
	27
331-1924	760
	762
331-1925	764
331-1926	760
	762
331-1927	764
331-7972	990
	995
331-7973	990
	995
332-0195	920
332-1063	1001
332-4192	68
332-5077	715
	▶724
332-8903	330
	331
332-8908	328
	▶330
332-8915	328
	▶331
333-4157	930
333-4158	930
333-4159	930
333-4160	920
333-4178	930
333-4179	920
	921
333-4180	929
	930
333-4181	929
333-4609	519
333-9952	1001
334-4603	990
	995
334-9940	691
334-9968	569
	▶572
334-9969	570
	▶573
334-9976	572
	▶574
334-9977	573
	▶576
334-9981	574
	576
334-9986	232
	▶571
335-0084	684
	685
	▶686
335-0136	644
335-0138	644
335-2092	34
335-5602	48
	▶50
335-5604	50
335-5605	50
335-5607	48
	49
335-6264	28
335-6883	▶23
	24
335-7055	28
336-3545	▶159
336-3566	159
336-4591	68
336-4757	89
337-1141	487
337-1142	487
337-1145	487
337-1148	487
337-1182	475
337-1205	517
337-1424	480
	487
337-1426	480
337-1435	487
337-2709	547
337-6501	81
339-0695	981
339-3730	383
339-8780	31
340-4212	61
340-8237	326
340-8949	▶354
341-1842	96
	98
341-2177	348
	▶367
341-2181	▶347
	715
341-2182	347
	▶356
341-2788	▶346
	693
	694
	716
341-2789	▶346
	693
	694
	716
341-2790	346
	▶350
341-2801	▶348
	693
	694
341-2802	348
	▶370
341-2806	▶349
	694
341-2807	349
	▶372
341-2808	▶349
	693
341-2809	349
	▶374
341-2813	▶347
	715
	716
341-2814	347
	▶358
341-2831	588
341-2834	588
341-2839	588
341-2840	588
341-2841	588
341-2842	588
341-2860	▶586
	588
341-2862	588
342-0932	270
342-0965	270
342-1861	584
342-1962	707
342-2972	189
	201
	215
	226
342-2974	201
	215
	226
342-2975	201
342-2976	201
342-6510	46
342-8584	81
342-9022	119
342-9290	119
343-0701	19
	▶21
343-3917	81
343-4295	28
343-5645	77
343-7352	81
344-1722	103
344-5081	103
344-5360	81
344-7700	46
345-2568	46
345-3156	▶473
	765
345-4467	473
	474
346-0407	35
346-0408	35
346-0411	19
	▶65
346-0495	19
	▶35
346-0643	383
346-0737	19
	▶57
346-0773	19
	▶74
346-1340	578
346-1841	19
	▶45
346-1967	19
	▶989
346-2911	19
	▶58
346-3046	473
	474
346-3047	473
	474
346-3229	52
346-5591	383
346-5592	383
346-5593	383
346-5594	383
346-5595	383
346-5596	383
346-7204	301
	▶311
346-7232	310
346-7233	310
346-7236	311
346-7237	311
346-7375	▶779
	780
346-7763	119
346-8012	825
346-8058	▶780
	798
	800
346-9376	906
347-2081	544
347-4416	82
347-4734	201
347-6081	▶405
	595
347-6082	405
347-6708	▶746
347-6714	746
	▶753
347-6730	▶747
347-6736	747
	▶758
347-6739	▶747
347-6741	747
	▶759
347-6743	▶748
347-6744	▶749
347-6745	748
	▶760
347-6746	749
	▶761
347-6849	▶750
347-6852	▶750
347-6853	▶750
347-7468	753
347-7479	755
	757
347-7480	754
	756
347-7482	755
	757
347-7483	754
	756
347-7507	753
347-7508	753
347-7510	753
347-7516	758
347-7517	753
	760
347-7518	761
347-7544	758
	759
	763
347-7545	760
	762
347-7546	761
347-7547	764
347-7551	758
	759

▶ PRIMARY REFERENCE

PART NUMBER INDEX

Part	Page
	763
347-7552	761
347-7556	758
	759
	763
347-7557	761
347-7571	758
	760
	761
	762
	764
347-7572	758
	760
	761
	762
	764
347-7574	758
	759
	760
	761
	762
	763
	764
348-3094	760
	762
348-3095	761
348-3184	762
348-3185	764
348-3196	753
348-3201	753
348-3283	18
	19
	▶27
348-3285	18
	19
	▶25
348-3296	19
	▶43
348-3300	18
	▶44
348-3503	18
	19
	▶37
348-4330	768
348-5409	241
	293
348-5410	937
348-5434	31
349-2209	▶341
349-2211	17
	▶342
349-2216	▶342
349-2218	▶343
349-2220	▶765
349-2224	▶600
349-2290	▶342
349-4087	584
	▶587
349-4133	▶347
	765
349-4134	347
	▶360
349-5084	189
	201
349-5085	189
	201
349-5413	905
349-5414	905
349-6114	768
	770
349-7059	96
	98
350-0637	21
350-0952	350
	358
	360
350-0953	354
350-0954	356
350-0955	370
	372
	374
350-0956	367
350-0957	350
	358
	360
350-0958	354
350-0959	356
350-0960	370
	372
	374
350-0961	367
350-0962	350
350-0967	358
	360
350-0970	370
	374
350-0971	372
350-0972	354
350-0975	367
350-0976	356
350-7492	63
350-7735	96
	98
350-8250	14
	15
	16
	▶217
350-8958	990
	995
350-9337	354
350-9339	367
350-9342	354
350-9344	367
351-0286	520
351-1724	46
351-3886	20
	▶39
351-4089	82
351-4318	81
351-4321	82
351-4749	41
351-8488	119
351-8490	118
	▶119
351-8602	▶765
351-9918	132
352-1096	350
	352
352-1098	370
	372
	377
352-1099	374
352-1100	358
	365
352-1102	350
	352
352-1104	370
	372
	377
352-1105	374
352-1106	358
	365
352-6815	671
352-6864	660
	662
	663
352-7057	606
	614
	615
	617
	633
352-7058	614
	615
	617
	633
352-7059	614
	615
	617
	633
352-7063	569
	570
352-7113	620
	▶660
352-7116	626
	▶662
352-7117	659
	▶663
352-7122	609
	611
	620
	626
	631
	▶664
352-7123	604
	634
	637
	639
	▶665
352-7132	▶620
	642
352-7138	▶626
	641
352-7176	502
	▶681
352-7190	604
352-7243	558
	▶604
352-7775	68
352-9554	▶309
353-0545	▶231
	238
353-0609	231
	▶232
353-0611	232
	▶233
353-0612	233
353-2149	839
353-2150	841
353-2151	▶821
353-4847	71
353-5109	96
	98
354-3701	487
354-3703	487
354-3704	487
354-3863	527
354-3864	534
	537
354-4754	65
354-5671	166
354-5833	54
354-6246	81
354-8322	41
355-0468	68
355-0598	905
355-0632	81
355-1213	906
355-5804	770
355-5818	380
355-5820	380
355-8007	271
355-8008	271
355-8010	271
355-8013	271
355-8014	271
356-2353	931
356-7732	187
356-8174	467
356-8177	467
357-0147	23
357-2637	47
357-3877	845
	846
	847
357-4101	825
357-5709	731
	734
	738
	740
	743
357-5711	370
	372
	374
	377
357-5712	358
	365
357-5717	350
	352
357-7540	327
358-0921	259
	260
358-6390	990
	995
359-2380	983
	1000
359-2434	5
	11
	12
	▶693
359-2435	5
	11
	12
	▶715
359-2912	473
359-2913	473
359-3576	931
359-3582	931
359-5808	297
359-6616	28
359-8335	96
	98
359-8784	446
359-8787	446
360-0074	356
360-1564	43
	44
360-1978	25
360-4583	691
360-4584	691
360-4585	691
360-4586	691
360-4587	691
360-4588	▶666
	691
361-1045	906
361-6533	988
361-7519	78
362-3642	981
362-3643	981
363-0559	25
363-6132	527
	531
	534
363-6133	527
363-6134	534
	537

▶ PRIMARY REFERENCE

PART NUMBER INDEX

Part	Page
363-9545	825
363-9548	825
363-9550	825
363-9644	20
	▶827
363-9645	827
364-0935	▶349
	693
364-0936	349
	▶376
364-0937	376
	▶386
364-0938	▶347
	715
364-0939	347
	▶362
364-0940	362
	▶380
364-0952	380
364-0955	386
364-1614	824
364-1975	666
364-1976	666
364-1977	666
364-1978	666
364-2862	85
364-2863	85
364-2864	85
364-2866	85
364-2879	85
364-2882	85
364-2901	▶85
	89
364-5145	25
365-4584	78
366-0149	44
366-1059	525
366-4622	187
366-5257	▶922
	924
366-5260	916
	▶927
366-5262	▶931
	934
366-5264	934
366-5265	924
366-5266	934
366-5267	922
366-5269	922
366-5271	922
366-6495	91
366-8770	118
	▶984
366-8771	118
	▶985
366-9331	200
366-9342	5
	6
	▶145
366-9343	3
	4
	▶147
366-9344	145
	147
366-9345	145
	147
367-0844	990
	995
367-8465	717
367-8467	721
	722
	723
	724
	725
367-8468	719
368-7675	20
	▶52
368-8651	683
369-0239	▶206
	341
369-0242	▶177
	342
369-0243	▶224
	342
369-0244	▶196
	343
369-0245	▶228
	765
369-0246	▶222
	343
369-0249	▶219
369-0286	▶128
	224
369-2258	63
369-2259	64
369-2263	64
369-2264	64
369-2265	64
369-3869	23
369-4243	990
	995
369-4371	▶343
369-8420	465
369-8502	498
	▶649
369-8507	649
369-8508	649
369-8509	649
369-8510	649
369-8568	649
369-8569	649
369-9620	557
369-9673	348
	▶557
369-9677	347
	▶461
369-9678	460
	461
370-6545	26
370-7998	43
371-2539	19
	▶33
371-2553	19
	▶61
371-7140	931
371-7141	931
371-7142	931
371-7143	931
371-7144	931
371-7146	931
371-7147	931
371-7148	931
371-9082	750
	▶754
371-9085	750
	▶762
371-9086	750
	▶764
371-9130	754
	756
371-9146	764
372-9285	966
372-9295	▶823
	824
372-9306	929
	930
372-9334	966
372-9387	1
	▶888
372-9388	774
	▶891
372-9407	888
372-9409	888
	891
372-9410	891
372-9414	▶774
372-9551	825
372-9565	876
373-2588	922
373-2590	922
373-2591	922
373-2594	922
373-2595	922
373-2596	922
373-2597	922
373-2600	922
373-3495	927
373-8014	57
373-8961	906
373-8970	906
373-9516	588
373-9518	588
374-4017	1
	▶270
374-4019	▶271
374-4161	270
374-5000	68
374-5958	922
374-5981	75
374-6000	▶345
	585
374-6001	▶344
	345
374-6004	20
	▶56
374-6025	75
374-6038	75
374-6040	75
374-6053	344
375-2985	68
375-5008	19
	▶40
375-8749	280
	283
	284
375-8750	280
	283
	284
376-0601	40
376-2384	40
376-4074	25
376-6308	422
	▶465
376-6309	422
	▶517
376-6310	422
	▶519
376-6311	422
	▶525
376-6313	422
	▶544
376-6316	341
	▶527
376-6317	341
	▶480
376-6318	342
	▶531
376-6319	342
	▶484
376-6321	422
	▶497
376-6324	342
	▶534
376-6325	342
	▶487
376-6326	342
	▶545
376-6327	342
	▶537
376-6329	343
	▶491
376-6331	▶547
	765
376-6332	343
	▶495
376-6335	537
376-6336	▶539
376-6340	▶541
	600
376-6342	520
376-6464	19
376-6478	116
	▶118
376-7248	119
377-2012	927
	▶934
377-2843	922
377-3289	539
377-3291	480
	484
377-3294	527
	531
	534
377-3314	545
377-3318	545
377-3319	545
377-3322	545
377-3336	491
	547
377-3343	495
377-3445	547
377-3449	527
377-5000	68
377-5001	68
377-5002	68
377-5003	68
377-5004	68
377-5005	68
377-5006	68
377-5419	▶751
377-5887	884
377-6019	386
377-6022	386
377-6536	▶884
	885
377-6667	275
	▶287
377-6679	271
377-6681	271
377-6708	275
	▶288
377-6715	270
377-6716	271
377-6727	290
377-6743	287
377-6746	290
377-6749	288
377-6760	293
377-6767	300
377-6782	293
377-6786	275
377-6809	300
377-8041	153
377-8043	153
377-8044	153
377-8051	200

▶ **PRIMARY REFERENCE**

PART NUMBER INDEX

Part	Page
377-8080	2
	3
	4
	5
	6
	7
	8
	9
	10
	11
	13
	▶104
377-8092	177
378-0319	754
	755
	756
	757
378-0320	754
	756
378-0361	759
	763
378-0362	759
	763
378-0363	759
	763
378-1556	370
	372
	374
	377
378-4739	33
378-6177	68
378-6179	68
378-6180	68
378-8587	41
379-2022	31
379-2023	31
379-4415	20
	▶824
379-4430	75
379-4463	52
379-4464	52
379-4465	52
379-4666	534
379-7391	1
	▶244
379-7392	244
	▶250
379-7398	▶245
	716
379-7399	245
	▶251
379-7425	275
	▶299
379-7426	299
379-7489	104
	▶289
379-7490	289
379-7509	299
379-7518	275
380-6351	931
380-7183	16
	▶916
381-1372	990
	995
381-1373	990
	995
381-5822	487
381-6119	2
	6
	7
	8
	9
	11
	▶17
381-6235	48
	49
381-7416	882
	▶885
381-7417	906
381-9061	81
381-9064	81
382-0664	81
383-2514	716
	▶725
383-5427	2
	3
	4
	5
	13
	▶131
383-5449	2
	5
	6
	7
	8
	9
	10
	11
	▶118
383-5626	824
383-5647	920
383-5706	801
383-5709	888
	891
383-5767	801
	803
	810
	814
383-6929	950
383-6930	951
383-6931	950
383-6932	950
383-6933	861
383-8541	953
	956
	958
383-9204	465
383-9558	506
384-2205	934
384-2207	▶924
	927
384-2286	78
384-6533	861
	▶961
385-1278	931
385-1279	931
385-1400	931
385-2474	931
385-2834	348
	▶363
385-2890	363
385-2967	462
385-3458	259
	260
385-4093	990
	995
385-4169	995
385-4171	986
385-5773	96
	98
385-8000	19
	▶166
385-8757	961
386-3439	79
386-3444	117
386-3453	112
386-6071	931
386-6072	931
387-2637	81
387-2846	961
387-2847	961
387-2848	961
387-2849	961
387-3699	498
387-3783	▶592
	595
387-5174	294
388-0026	16
	▶783
388-0065	783
	▶785
388-0067	766
	▶770
388-0084	770
388-0085	770
388-0086	770
388-0088	770
388-0090	770
388-0091	770
388-0099	770
388-0105	770
388-0110	770
388-1869	31
388-6760	107
388-6788	104
388-6844	1
	▶79
388-6867	219
388-6876	770
388-7014	75
388-9091	791
	810
	814
388-9094	791
	810
	814
388-9095	791
	810
	814
388-9097	953
388-9102	785
	▶787
	808
	812
388-9104	785
	▶791
388-9105	785
	808
	812
	▶861
388-9107	785
	808
	812
	▶950
388-9108	785
	808
	812
	▶951
388-9109	785
	808
	812
	▶953
388-9115	808
	812
	▶858
388-9116	785
	808
	812
	▶956
388-9117	785
	808
	812
	▶958
389-2407	423
	432
	▶643
389-5891	44
389-7188	43
	44
390-2252	39
390-4157	363
390-4158	363
390-4159	363
390-4219	363
390-4220	363
390-4221	363
390-4225	363
390-4226	363
390-4227	363
390-5448	751
	▶755
390-5451	755
	757
390-6802	755
	757
390-7446	250
390-7449	251
390-9505	▶385
	770
391-0665	406
391-0666	409
391-0668	406
	409
391-1497	68
391-1498	68
391-3193	19
	▶28
	29
391-3197	19
	▶48
391-4751	275
391-4752	275
391-9636	294
391-9642	291
391-9646	275
	▶290
391-9651	275
391-9655	275
392-1262	275
392-2185	498
392-2667	275
392-6626	588
393-0879	19
	▶165
393-4006	34
393-7499	770
394-2220	20
	▶64
394-2224	20
	▶66
394-2229	64
394-2235	66
394-4810	2
	3
	4
	5
	6
	7
	8
	9
	10
	11
	12
	13
	▶263
394-4812	▶262

PART NUMBER INDEX

Part	Page
	263
394-5780	▶243
394-5874	34
394-5886	▶265
394-5887	265
394-7014	19
	▶30
394-7410	290
394-7464	1
	▶990
394-7465	1
	▶995
394-7468	1
	▶81
394-7469	14
	▶18
394-7470	18
	▶75
394-7474	20
	▶55
394-7686	81
394-7689	73
394-7970	55
394-8010	241
394-9459	895
394-9460	895
395-0021	595
395-1699	55
396-1865	422
	▶585
396-2351	810
	814
396-2352	810
	814
396-2389	▶885
396-2395	41
396-3531	79
396-3533	79
396-3538	79
396-3542	275
396-3545	275
396-3547	275
396-3569	275
396-4502	19
	▶89
396-6322	19
	▶78
396-6895	772
396-6954	19
	▶34
396-6969	19
	▶84
396-6979	19
	▶31
396-6983	19
	▶103
396-7683	▶280
	282
396-7695	293
396-7696	293
396-7697	293
396-7698	293
396-7706	280
	283
	284
396-8145	▶197
	818
396-8257	89
396-8523	275
	▶291
396-8524	291
396-9388	▶255
	275
397-1472	▶389
397-1501	19
	▶41
397-3680	585
	▶588
397-4688	2
	3
	4
	13
	▶17
397-9009	275
	▶300
397-9010	300
397-9013	280
397-9014	282
397-9294	380
398-1498	▶88
	89
398-1507	89
398-1900	386
398-2282	527
	531
	534
	▶682
398-3877	84
398-7003	▶187
	910
398-7004	▶225
	910
398-7005	▶214
	910
398-7006	214
	▶215
398-7007	14
	15
	16
	▶157
398-7012	215
398-7013	157
398-7105	861
398-7106	861
398-7107	861
398-7109	953
398-7110	953
398-7111	861
398-8931	157
399-0055	15
	▶794
399-0056	14
	▶796
399-0057	794
	▶798
399-0058	796
	▶800
399-0059	798
	▶801
399-0060	800
	▶803
399-0061	801
	803
	810
	814
399-0062	801
	803
	810
	814
399-0065	801
	803
	810
	814
399-0797	200
399-0819	▶256
	257
399-1110	118
	▶208
399-2560	95
	▶257
399-2618	▶117
	910
399-2648	▶152
	910
399-2649	152
	▶153
399-3647	1
	▶107
399-3648	▶198
	885
399-4217	118
	▶906
399-5223	733
	▶742
399-5224	▶729
	742
399-5225	729
	▶730
399-5308	117
399-5413	729
	▶731
399-6263	291
	292
399-6306	▶246
399-6308	▶292
	389
399-6309	▶282
	885
399-6315	279
	282
399-7534	66
399-7623	544
399-7626	544

4

415-1396	▶693
415-1399	▶693
415-3687	200
415-4315	43
415-4600	19
	▶38
415-7773	79
415-7775	79
415-8447	2
	3
	4
	5
	6
	10
	11
	12
	13
	▶694
415-8537	64
415-8976	491
415-9627	990
	995
416-0664	62
	▶63
416-0762	198
416-0961	▶694
416-0965	68
416-1002	▶733
416-1005	▶715
416-1008	5
	6
	10
	11
	▶715
416-1009	2
	3
	4
	12
	13
	▶715
416-1011	▶716
416-1295	363
416-1296	363
416-1297	363
416-1298	363
416-1299	363
416-1300	363
416-1301	363
416-1302	363
416-1303	363
416-1798	▶772
	774
416-1802	772
416-2386	75
416-4309	780
	787
416-4969	20
	▶163
416-9606	15
	16
	▶806
416-9607	806
	▶808
416-9608	808
	▶810
417-0252	246
	▶252
417-0253	252
417-0270	1
	▶93
417-1143	953
417-1197	292
417-1198	292
417-3389	18
	▶19
417-5871	19
	▶51
417-7185	19
	▶22
417-7187	19
	▶46
417-7782	65
417-9077	▶986
417-9090	66
417-9101	2
	8
	9
	10
	11
	▶1000
417-9771	▶716
417-9812	▶193
	765
417-9821	131
	▶210
418-0749	▶126
	342
418-1084	▶115
	131
418-5090	888
	891
418-5104	▶705
	716
418-5105	705
418-5108	716
	▶743
418-5109	743
418-5243	▶751

▶ **PRIMARY REFERENCE**

PART NUMBER INDEX

Part	Page
418-5244	▶756
418-5499	5
	6
	10
	11
	▶379
418-5502	▶346
	379
418-5510	▶346
	379
418-5511	346
	▶352
418-5512	▶349
	379
418-5513	349
	▶377
418-8379	953
418-8772	▶348
	379
418-8777	348
	▶365
418-9085	▶348
	716
418-9086	348
	▶462
418-9897	14
	15
	16
	▶774
419-5123	▶600
419-5136	▶558
	600
419-6412	228
419-6413	▶127
	196
419-6414	206
419-7580	75
420-0298	▶716
420-1013	558
420-1015	558
420-2083	81
420-2087	81
420-2089	81
420-2092	81
420-2096	81
420-3151	858
420-3351	751
	▶757
420-3353	▶751
420-3356	▶752
420-3366	752
	▶763
420-4514	▶901
	910
420-5299	81
420-5793	2
	3
	▶987
420-7262	193
421-1431	▶831
	910
421-1434	831
	▶833
421-1894	208
421-1960	187
421-2864	210
421-3762	270
421-3867	222
422-0265	901
422-0268	901
422-0645	1
	▶910
422-5388	▶258
	276
422-8440	2
	3
	▶249
422-8441	▶249
422-8442	249
	▶988
422-9111	462
422-9112	462
422-9113	462
423-2370	▶247
	249
423-2371	▶248
	249
423-4409	66
423-5178	247
	▶253
423-5179	253
423-5180	248
	▶254
423-5181	254
423-5183	276
	▶283
	286
423-5184	283
423-5186	271
423-6161	921
423-6434	81
	▶160
424-5477	▶812
	816
424-5478	812
	▶814
424-5480	15
	▶816
424-6681	770
424-8398	462
425-0779	▶18
	19
425-3316	19
	▶29
425-6092	▶259
	275
425-7079	858
426-1498	19
	▶24
426-4006	194
426-4906	▶116
	118
428-5842	275
	▶293
428-5843	293
428-7524	250
	252
	253
	254
428-7937	115
	▶120
430-4119	961
430-5530	▶194
	818
430-5643	279
	▶284
430-5645	284
431-0101	275
	▶294
431-0102	275
431-0103	275
431-0455	▶463
	732
	733
431-1641	▶553
	732
431-1642	▶464
	732
431-1802	464
431-1805	553
431-4572	78
431-9792	18
	▶62
432-6280	81
432-6281	81
432-6282	81
432-8507	79
433-5158	68
433-5159	68
433-5163	66
	▶68
434-1356	159
434-3436	525
434-9157	785
434-9163	787
435-1482	598
	▶642
435-1484	▶631
	642
435-1485	631
	▶633
435-2848	110
436-0520	48
	49
436-1868	14
	▶120
436-1869	120
436-1901	800
	808
	812
	858
437-4170	78
438-2505	93
	▶96
438-2506	94
	▶98
438-2507	▶260
	276
	286
438-2508	260
438-2674	91
438-3180	29
	▶49
438-4951	961
438-4952	961
438-4953	961
438-4954	961
438-4955	961
438-4956	961
438-4957	961
438-4958	961
438-4965	644
439-3322	241
439-4128	107
439-7520	120
440-5314	770
440-5315	770
440-5584	920
440-5585	920
441-1014	738
441-1020	734
441-6375	2
	4
	5
	11
	12
	13
	▶148
441-6376	148
	150
441-6377	148
	150
441-6379	148
	150
441-7659	225
442-3947	91
	▶100
442-6441	118
443-5690	990
	995
443-7858	898
	899
	▶900
443-9824	740
444-6735	1
	▶240
444-6736	240
	▶241
444-6737	241
444-7841	91
445-2220	2
	5
	6
	7
	8
	9
	10
	11
	▶95
445-2221	▶94
	95
445-5175	82
445-5177	82
445-6262	1
	▶261
445-6263	261
446-7944	770
447-0758	▶71
	72
447-0761	71
447-0762	71
447-1703	876
447-1704	898
447-1706	599
447-1707	93
	94
	272
	313
	314
	597
	642
447-1709	297
	544
	545
447-1711	642
	899
447-1715	39
447-1717	239
447-1719	395
447-1725	320
447-1726	395
447-1730	246
447-1731	320
447-1733	244
	245
	246
	247
	248
448-1392	▶195
	910
448-4180	474
448-4181	474
449-1136	▶474
	766
449-4094	241

PART NUMBER INDEX

Part	Page
450-1781	86
450-1782	86
450-1783	86
450-5325	20
	▶72
450-7126	100
450-9263	28
451-0548	78
451-2175	297
	425
	429
	544
	545
	569
	570
	582
	642
	872
	874
	876
	898
	899
	911
451-2176	39
	233
	263
	304
	305
	306
	307
	308
	309
	320
	395
	695
	697
	699
	701
	703
	705
	719
	734
	737
	738
	740
	742
	743
451-2177	395
451-2182	39
	390
451-2183	717
	721
	722
	723
	724
	725
	727
451-2184	719
451-4098	275
451-4099	275
451-4100	275
	▶298
451-5170	275
	▶295
451-6724	100
451-6726	100
451-6728	100
452-4201	72
453-0110	73
453-1121	295
453-1169	1
	▶200
453-1195	200
453-1259	425
	429
	544
	872
	874
	911
453-2835	582
453-2838	66
453-2840	876
453-2841	569
	570
453-2844	263
	695
	697
	699
	701
	703
	705
	734
	737
	738
	740
	742
	743
453-2845	304
	305
	306
	307
	308
	309
	719
453-2865	272
453-3432	63
453-3441	63
453-3447	390
453-3450	39
453-3451	63
453-3454	63
453-4137	233
453-6156	41
	▶42
453-6523	385
453-8030	310
	311
454-5584	▶14
454-5585	▶14
454-5588	▶1
	14
454-5589	▶1
	14
454-8704	10
	11
	▶150
455-0464	2
	5
	6
	7
	8
	9
	10
	11
	▶14
455-0704	177
	201
455-0705	201
455-0707	201
455-0708	201
455-0709	201
455-3378	20
	▶73
455-3909	▶766
455-3910	▶766
455-4062	1
	▶275
455-4063	275
455-4068	▶296
	495
455-4086	14
	▶20
455-4363	422
	▶597
455-4364	▶595
	597
456-0404	14
	▶422
456-0405	14
	▶422
456-0817	▶2
456-0818	▶2
456-0819	▶3
456-0820	▶3
456-0821	▶4
456-0823	▶4
456-0824	▶5
456-0825	▶5
456-0826	▶6
456-0827	▶6
456-0828	▶7
456-0829	▶7
456-0830	▶8
456-0836	3
	4
	5
	6
	7
	8
	▶14
456-0837	▶15
456-0838	8
	9
	10
	11
	13
	▶15
456-0839	▶15
456-0842	▶16
456-0892	2
	4
	5
	11
	12
	▶16
456-0917	▶818
456-0918	▶8
456-0919	▶9
456-0920	▶9
456-0921	▶10
456-0922	▶10
456-0923	▶11
456-0932	▶11
456-0933	▶12
456-0934	▶765
456-0942	▶12
456-0943	▶12
456-1026	▶13
456-1027	▶13
456-1032	▶885
456-2194	901
	▶902
456-2195	902
456-5182	78
457-8206	71
458-3267	770
458-3274	770
458-3275	770
459-0359	▶111
	818
459-0360	111
459-1731	874
459-1732	876
459-2094	465
459-2098	465
460-2006	112
460-6371	111
	▶112
463-1603	770
464-1226	▶286
464-1227	▶279
	885
464-1275	279

▶ **PRIMARY REFERENCE**

MEMORANDA



©2014 Caterpillar
All Rights Reserved

CAT, CATERPILLAR, their respective logos, “Caterpillar Yellow”, and the POWER EDGE trade dress as well as corporate and product identity used herein, are trademarks of Caterpillar and may not be used without permission.