SEBP6512
March 2013

RUTHZIL TRATOR COMERCIAL DE PEÇAS LTDA 11 97083-6812 ROLANDO

Parts Manual

320D2 Excavators

DNP1-Up (Machine)
FKK1-Up (Machine)
D7A1-Up (Engine)

Powered By C7.1 Engine

Product and Dealer Information

Note: For product identification plate locations, see the section “Product Identification Information” in the Operation and Maintenance Manual.

Delivery Date: _____

Product Information

Model: _____

Product Identification Number: _____

Engine Serial Number: _____

Transmission Serial Number: _____

Generator Serial Number: _____

Attachment Serial Numbers: _____

Attachment Information: _____

Customer Equipment Number: _____

Dealer Equipment Number: _____

Dealer Information

Name: _____ Branch: _____

Address: _____

_____

_____

	Dealer Contact	Phone Number	Hours
Sales:	_____	_____	_____
Parts:	_____	_____	_____
Service:	_____	_____	_____

MEMORANDA

TABLE OF CONTENTS

NAME	PAGE
GENERAL INFORMATION	**A4**
REPAIR ALTERNATIVES	**A7**
SUPPLEMENTAL COOLANT ADDITIVES	A8
MAINTENANCE PARTS	**A9**
INDEX	**A11**
MACHINE ARRANGEMENT	**1**
CHASSIS AR	1
GENERAL AR	2
PARTS GP-MISCELLANEOUS	3
ENGINE ARRANGEMENT	**4**
ENGINE AR-COMPLETE	4
ENGINE AR-PRIMARY	4
INSTALLATION AR-ENGINE	5
BASIC ENGINE	**6**
CAMSHAFT GP	6
CONTACTOR GP-ALARM	7
COVER GP-VALVE MECHANISM	8
CRANKSHAFT GP	9
CYLINDER BLOCK AS	10
CYLINDER BLOCK GP	11
CYLINDER HEAD AS	12
CYLINDER HEAD GP	13
DRAIN GP-ENGINE OIL	14
DRIVE GP-FAN	15
FLYWHEEL GP	17
HOUSING GP-FLYWHEEL	18
HOUSING GP-FRONT	19
JET GP-PISTON COOLING	21
LIFTING GP-ENGINE	22
MOUNTING GP-ENGINE	23
PAN GP-OIL	25
PISTON & ROD GP	26
PULLEY GP-CRANKSHAFT	27
PULLEY GP-ENGINE	28
ROCKER ARM GP	29
VALVE MECHANISM GP	30
LUBRICATION SYSTEM	**31**
FILLER GP-ENGINE OIL	31
FILTER & MTG GP-ENGINE OIL	32
FUMES DISPOSAL GP	34
LINES GP-ENGINE OIL DRAIN	35
PUMP GP-ENGINE OIL	36
COOLING SYSTEM	**37**
COOLER GP-ENGINE OIL	37
FAN AR-SUCTION	40
FAN GP-SUCTION	41
LINES GP-COOLING	42
PUMP GP-WATER	43
RADIATOR & HYD OIL COOLER GP	44
AIR INLET AND EXHAUST SYSTEM	**49**
AIR CLEANER & MOUNTING GP	49
AIR CLEANER GP	50
LINES GP-AIR	51
MANIFOLD GP-INLET	52
MUFFLER & MOUNTING GP	53
TURBOCHARGER GP	55
FUEL SYSTEM	**56**
CONTROL GP-GOVERNOR	56
FILTER GP-FUEL	58
LINES GP-FUEL	59
LINES GP-FUEL FILTER	62
PUMP GP-FUEL INJECTION	63
TANK & MTG GP-FUEL	64
TANK GP-FUEL	65
ELECTRICAL AND STARTING SYSTEM	67
ALARM GP	67
ALTERNATOR GP-CHARGING	68
BATTERY & WIRING GP	69
CONTROL & MTG GP-COMMUNICATION	72
CONTROL & MTG GP-MACHINE	73
CONTROL AR-COMMUNICATION	74
CONTROL GP-COMMUNICATION	74
CONTROL GP-UNPROGRAMMED	75
ELECTRONICS GP-MACHINE	76
ELECTRONICS GP-MONITOR	76
HARNESS AS-AUXILIARY	76
HARNESS AS-WIRING	77
LAMP GP-FLOOD	78
LIGHTING GP-FLOOD	81
PANEL & MTG GP-CIRCUIT BREAKER	85
PANEL GP-CIRCUIT BREAKER	86
PANEL GP-SWITCH	88
SENSOR GP-LIQUID LEVEL	90
SENSOR GP-PRESSURE	91
SENSOR GP-SPEED	92
SENSOR GP-TEMP & PRESS	93
SENSOR GP-TEMPERATURE	94
STARTING AID GP	95
STARTING MOTOR GP-ELECTRIC	96
SWITCH GP-DISCONNECT	97
SWITCH GP-LIMIT	98
SWITCH GP-MAGNETIC	99
SWITCH GP-ROTARY	100
SWITCH GP-START	101
WIRING GP-CAB	102
WIRING GP-CHASSIS	114

TABLE OF CONTENTS

NAME	PAGE
WIRING GP-COMMUNICATION	120
WIRING GP-CONSOLE	122
WIRING GP-CONVERTER	127
WIRING GP-PLATFORM	131
POWER TRAIN	**134**
DRIVE GP-FINAL	134
GEAR GP-RING	138
GEAR GP-TRANSFER	141
POWER TRAIN AR	141
SPROCKET GP	142
FRAME AND BODY	**143**
BOX & MTG GP-STORAGE	143
BOX GP-STORAGE	144
COUNTERWEIGHT GP	146
COVER AS-SOUND SUPPRESSION	148
DOOR AS-ACCESS	149
DOOR GP-ACCESS	150
FRAME AS-UPPER	152
FRAME GP-UPPER	153
GEAR & BEARING GP-SWING	154
GUARD GP-BOTTOM	157
HANDRAIL GP	158
HOOD & GUARD GP	159
HOOD GP-ENGINE	163
SHEET AS-SOUND SUPPRESSION	164
STEP GP	171
SUPPORT AS-ENCLOSURE	172
SUPPORT AS-SOUND SUPPRESSION	173
UNDERCARRIAGE	**175**
FRAME AR-UNDERCARRIAGE	175
FRAME AS-UNDERCARRIAGE	176
GUARD GP-TRACK GUIDE	178
GUARD GP-TRAVEL MOTOR	179
IDLER GP-FRONT	180
LINK AS-TRACK	184
ROLLER AR-TRACK & CARRIER	186
ROLLER GP-TRACK CARRIER	188
ROLLER GP-TRACK-SINGLE FLANGE	189
TRACK ADJUSTER & RECOIL GP	190
TRACK GP	194
HYDRAULIC SYSTEM	**195**
ACCUMULATOR GP-HYDRAULIC	195
BLOCK GP-HYDRAULIC	202
BREATHER GP	203
COUPLING GP-FLEXIBLE	204
COUPLING GP-PUMP	205
CYLINDER & LINES GP-BOOM	206
CYLINDER & LINES GP-BUCKET	206
CYLINDER & LINES GP-STICK	206
CYLINDER & SEAL GP-BOOM	207
CYLINDER & SEAL GP-BUCKET	209
CYLINDER & SEAL GP-STICK	211
DRIVE GP-SWING	213
FASTENER GP-SWING & FINAL DR	216
FILTER & VALVE GP-PILOT	218
FILTER GP-OIL	219
FITTING GP-HYDRAULIC	224
GAUGE GP-SIGHT	225
HEAD GP-PUMP	226
HOSE GP-HYDRAULIC	233
HYDRAULIC AR	244
LINES AR-AUXILIARY HYDRAULIC	244
LINES GP-AUXILIARY HYDRAULIC	245
LINES GP-BOOM	249
LINES GP-BOOM CYLINDER	251
LINES GP-BUCKET CYLINDER	253
LINES GP-CYLINDER	255
LINES GP-FRONT	257
LINES GP-HYDRAULIC OIL COOLER	261
LINES GP-PILOT	264
LINES GP-PUMP	280
LINES GP-RETURN	281
LINES GP-STICK CYLINDER	283
LINES GP-TRAVEL MOTOR	284
MANIFOLD GP-CONTROL	290
MOTOR & MTG GP-SWING	293
MOTOR & MTG GP-TRAVEL	294
MOTOR GP-SWING	295
MOTOR GP-TRAVEL	298
MOUNTING GP-MAIN CONTROL VALVE	302
PLUG GP-CONTROL VALVE	303
PUMP & MTG GP-MAIN HYDRAULIC	304
PUMP GP-GEAR	305
PUMP GP-MAIN HYDRAULIC	306
SCREEN GP-HYDRAULIC	310
SWIVEL GP	311
TANK & FILTER GP-HYDRAULIC	313
TANK & MTG GP-HYDRAULIC	315
VALVE GP-CONTROL	316
VALVE GP-LOAD CONTROL	327
VALVE GP-MAIN CONTROL	331
VALVE GP-PILOT	332
VALVE GP-PRESSURE REDUCING	336
VALVE GP-PRIORITY	339
VALVE GP-RELIEF	340
VALVE GP-SHUTTLE	349
VALVE GP-SOLENOID	352
VALVE GP-SWING CUSHION	354
VALVE GP-TRAVEL COUNTERBALANCE	355
IMPLEMENTS	**356**
BOOM AR-1 PIECE LONG	356

TABLE OF CONTENTS

NAME	PAGE
BOOM GP	357
LINES GP-GREASE	359
LINKAGE AR-BUCKET	360
LINKAGE GP-BUCKET	361
STICK AR-HOE	362
STICK GP-HOE	363
WORK TOOLS	**365**
ADJUSTER GP-BUCKET	365
BUCKET & ADJUSTER GP	366
BUCKET AR-GENERAL PURPOSE	367
BUCKET AS-GENERAL PURPOSE	368
SIDECUTTER GP	371
TIP GP-LONG	372
OPERATOR STATION	**373**
AIR CONDITIONER & MOUNTING GP	373
AIR CONDITIONER AR	375
AIR CONDITIONER GP	376
ARMREST GP	378
BRACKET GP-MIRROR	380
CAB GP	381
COIL GP-EVAPORATOR	390
COMPRESSOR GP-REFRIGERANT	394
CONDENSER & MTG GP-REFRIGERANT	396
CONDENSER GP-REFRIGERANT	397
CONSOLE GP	398
CONSOLE GP-OPERATOR	400
CONTROL & MTG GP-JOYSTICK	408
CONTROL GP-HANDLE	409
CONTROL GP-HEAT & AIR COND	412
CONTROL GP-JOYSTICK	413
CONTROL GP-PILOT OPERATED HYD	415
COVER GP-CAB	416
COVER GP-PLATFORM	417
DOOR & MTG GP-CAB	418
DOOR GP-CAB	419
DUCT GP-CAB AIR	423
FAN GP-CIRCULATING	424
FLOOR MAT	426
HATCH GP-ROOF	427
HORN GP-ELECTRIC	428
INSTALLATION GP-RADIO	430
LATCH GP-WINDOW	432
LEVER GP-CAB DOOR	433
LINES GP-AIR CONDITIONER	434
LITERATURE GP	437
MIRROR GP-REAR VIEW	438
MONITOR & MTG GP-OPERATOR	440
MONITOR GP-OPERATOR	441
MOUNTING GP-ANTENNA	444
MOUNTING GP-PLATFORM	446
MOUNTING GP-RADIO	448
OPERATOR AR	450
PLATFORM GP-OPERATOR	451
SEAT & MOUNTING GP	452
SEAT BELT GP	453
SEAT GP	454
SEAT GP-SUSPENSION	455
SUPPORT GP-SEAT	458
SUSPENSION GP-SEAT	459
VISOR GP-CAB	464
WASHER GP-WINDOW	465
WINDOW AS-FRONT	466
WINDOW GP-CAB	467
WINDOW GP-DOOR	473
WINDOW GP-FRONT	476
WIPER GP-WINDOW	478
SERVICE EQUIPMENT AND SUPPLIES	**480**
PLATE & FILM GP	480
PART NUMBER INDEX	**B1**

1. MACHINE IDENTIFICATION

Cat machines are identified by Product Identification Numbers (PIN). Some components included in a machine may be identified by Serial Numbers (S/N). Typical components that will be serialized include engines, transmissions, bulldozers, and rippers. The machine and engine are further identified by arrangement numbers and in some cases modification numbers. These numbers are shown on the product identification plate(s) and on the master plate in the operator's compartment.

Cat dealers need all of these numbers to determine accurate parts identification.

Effective First Quarter 2001 the Cat Product Identification Number (PIN) changed from 8 to 17 characters. In an effort to provide uniform equipment identification, Caterpillar and other construction equipment manufacturers are moving to comply with the latest version of the product identification numbering standard. Non-road machine PINs are defined by ISO 10261. The new PIN format will apply to all Cat machines and generator sets. The PIN plates and frame marking will display the 17 character PIN. The new format will look like the following:

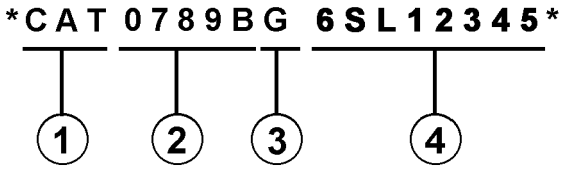

Where:

1. Caterpillar's World Manufacturing Code (characters 1-3)

2. Machine Descriptor (characters 4-8)

3. Check Character (character 9)

4. Machine Indicator Section (MIS) or Product Sequence Number (characters 10-17). These were previously referred to as the Serial Number.

Machines and generator sets produced before First Quarter 2001 will maintain their 8 character PIN format.

Components such as engines, transmissions, axles, etc. and work tools will continue to use an 8 character Serial Number (S/N).

2. ORDERING PARTS

⚠ WARNING

When replacement parts are required for this product Caterpillar recommends using Caterpillar replacement parts or parts with equivalent specifications including, but not limited to, physical dimensions, type, strength and material.

Failure to heed this warning can lead to premature failures, product damage, personal injury or death.

Quality Cat replacement parts are available from Cat dealers throughout the world. Their parts inventories are up to date and include all parts normally required to protect your investment in Cat machines. Dealers may offer repair kits or remanufactured parts to allow selection of the most effective repair alternative for a particular situation. When ordering parts, your order should specify the quantity, part number, part name, and the serial number/product identification number of the machine for which the parts are needed.

3. PARTS MANUAL ORGANIZATION

Product information in this manual is presented as "information elements" that represent all of the components for the specific model. Engine Arrangement and Seat Group are examples of information elements. The information elements are organized alphabetically by part name and secondarily by part number within each major section of the manual.

4. TABLE OF CONTENTS

A table of contents (TOC) is found at the beginning of the manual. The TOC lists each section of the manual with a complete list of all information elements organized as they appear in the manual. Page numbers are provided for quick reference to detailed parts identification illustrations and serviceable consist lists.

5. MAINTENANCE PARTS INDEX

The Maintenance Parts Index, located near the beginning of the manual, references most frequently used maintenance part numbers, providing description, quantity, usage and page number. This information is organized alphabetically by part description.

6. INDEX

The index located near the front of the manual is an alphabetical listing of all information elements included in the manual. Page numbers are provided for quick reference to detailed parts identification illustrations and serviceable consist lists.

7. PART NUMBER INDEX

A numerical index listing all part numbers and the corresponding page number(s) appears at the back of the manual.

8. CAPTIONS

Captions located at the beginning of each information element identify the part number and part name along with additional descriptive information. PIN and S/N information found in each caption should be used to select correct information for a specific machine. Field replacement options, identification of optional attachment components, and where used ("part of") information is also provided.

The first line of a caption is shown in larger type font to indicate the beginning of an information element. Captions for additional pages that may be required to illustrate an information element will be shown in standard type font and will include the term *(contd.)* .

9. NON-SERVICED PARTS

In some instances it is necessary to display non-serviced parts that are a link to a lower level serviceable consist lists. These non-serviced part numbers are shown in *italic* type indicating that they are not available.

10. PARTS LIST REFERENCE NUMBERS

Numbers shown in the Ref No column correspond to numbers used in the associated graphic(s). An alphabetic suffix may be added to a reference number to identify lower level consist items. Numbers shown in the Graphic Ref column refer to the graphic number identifier displayed in the lower left corner of each illustration. The Graphic Ref number may be used in combination with the item Ref No to determine the correct part number. There may be intentional omission of a Ref No in a consist list as information is updated to reflect the latest serviceable part numbers.

11. INDENTED PART NAMES

When a part name is indented in a parts list, it is part of (included in) the group or assembly under which it is indented.

12. ILLUSTRATION REFERENCE LETTERS

When necessary, illustrations contain reference letters (A, B, C etc.) that are intended to track lines and harnesses from one point to another. They are also used to show where to reconnect illustrations that have been separated.

13. ABBREVIATIONS AND SYMBOLS

O.D. – Outside Diameter
I.D. – Inside Diameter
A – Not Part Of This Group
B – Use As Required
C – Change From Previous Type
D – Order By The Meter
E – Order By The Centimeter
F – Not Shown
G – Order By The Inch
I – Refer To Hydraulic Information System
M – Metric Part
R – Remfg Part May Be Available
Y – Separate Illustration
Z – Not Serviced Separately

14. DESCRIPTION OF TYPE CHANGES

Type - A type is defined as any configuration change that requires an additional Information Element for an Arrangement, Group, or Assembly. If serial number breaks for types are not available, a type # (Type 1, Type 2, etc.) will be displayed in the caption. These "type" changes are identified with a "C" note (change from previous type) in the Parts List. Only the "types" that apply to this Parts Manual will be included. Additional types may exist causing "C" notes to appear on an Information Element when no other types are shown.

15.<END>

This symbol indicates the end of an information element.

NOTE:

Continuing improvement and advancement of product design may cause changes to your machine which may not be included in this publication. Whenever a question arises regarding your Cat product or this publication, please consult your Cat dealer for the latest available information.

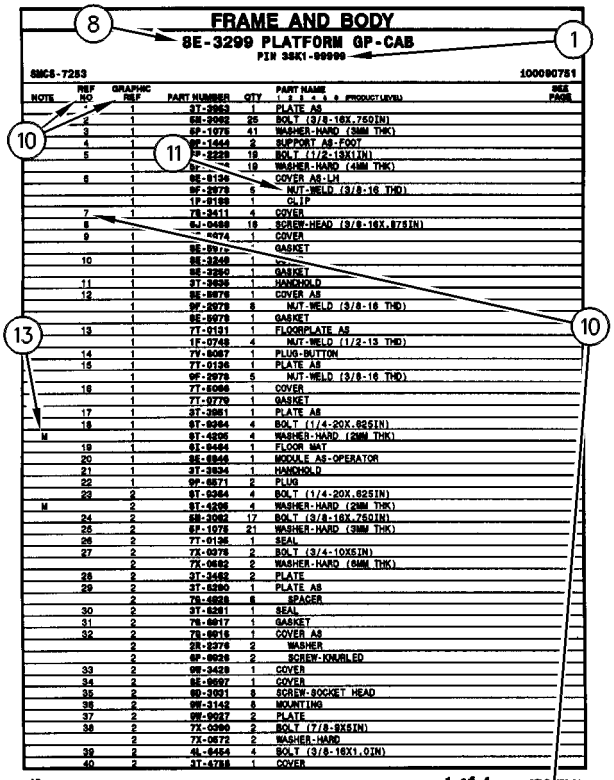

FRAME AND BODY

8E-3299 PLATFORM GP-CAB

PIN 3SK1-00999

SMCS-7283 100090751

NOTE	REF NO	GRAPHIC REF	PART NUMBER	QTY	PART NAME (1 2 3 4 5 6 PRODUCT LEVEL)	SEE PAGE
		1	3T-3963	1	PLATE AS	
	2	1	6M-3982	25	BOLT (3/8-16X.75DIN)	
	3	1	5P-1078	41	WASHER-HARD (3MM THK)	
	4	1	9F-1444	2	SUPPORT AS-FOOT	
	5	1	7P-2229	19	BOLT (1/2-13X1IN)	
		1	5P-[illegible]	19	WASHER-HARD (4MM THK)	
	6	1	8E-8136	1	COVER AS-LH	
		1	9F-2979	6	NUT-WELD (3/8-16 THD)	
		1	1F-8188	1	CLIP	
	7	1	7S-3411	4	COVER	
	8		6J-0488	19	SCREW-HEAD (3/8-16X.875IN)	
	9	1	[illegible]-0474	1	COVER	
		1	8E-8976	1	GASKET	
	10	1	8E-3249	1	[illegible]	
		1	8E-3250	1	GASKET	
	11	1	3T-3935	1	HANDHOLD	
	12	1	8E-8978	1	COVER AS	
		1	9F-2979	8	NUT-WELD (3/8-16 THD)	
		1	8E-8979	1	GASKET	
	13	1	7T-0131	1	FLOORPLATE AS	
		1	1F-0748	4	NUT-WELD (1/2-13 THD)	
	14	1	7V-8067	1	PLUG-BUTTON	
	15	1	7T-0136	1	PLATE AS	
		1	9F-2979	5	NUT-WELD (3/8-16 THD)	
	16	1	7T-8066	1	COVER	
		1	7T-0779	1	GASKET	
	17	1	3T-3961	1	PLATE AS	
	18	1	6T-9364	4	BOLT (1/4-20X.625IN)	
M		1	6T-4236	4	WASHER-HARD (2MM THK)	
	19	1	6T-9494	1	FLOOR MAT	
	20	1	8E-8946	1	MODULE AS-OPERATOR	
	21	1	3T-3934	1	HANDHOLD	
	22	1	9F-8571	2	PLUG	
	23	2	6T-9364	4	BOLT (1/4-20X.625IN)	
M		2	6T-4236	4	WASHER-HARD (2MM THK)	
	24	2	6M-3982	17	BOLT (3/8-16X.75DIN)	
	25	2	5P-1078	21	WASHER-HARD (3MM THK)	
	26	2	7T-0136	1	SEAL	
	27	2	7X-0378	2	BOLT (3/4-10X5IN)	
		2	7X-0682	2	WASHER-HARD (6MM THK)	
	28	2	3T-3462	2	PLATE	
	29	2	3T-8280	1	PLATE AS	
		2	7S-4828	6	SPACER	
	30	2	3T-8281	1	SEAL	
	31	2	7S-8017	1	GASKET	
	32	2	7S-8016	1	COVER AS	
		2	2S-2376	2	WASHER	
		2	6P-8628	2	SCREW-KNURLED	
	33	2	9W-3429	1	COVER	
	34	2	8E-8697	1	COVER	
	35	2	9D-3931	8	SCREW-SOCKET HEAD	
	36	2	9W-3142	8	MOUNTING	
	37	2	9W-9927	2	PLATE	
	38	2	7X-0290	2	BOLT (7/8-9X5IN)	
		2	7X-0572	2	WASHER-HARD	
	39	2	4L-6454	4	BOLT (3/8-16X1.0IN)	
	40	2	3T-4788	1	COVER	

12 FRAME AND BODY 1 of 4 SELP[illegible]70-01

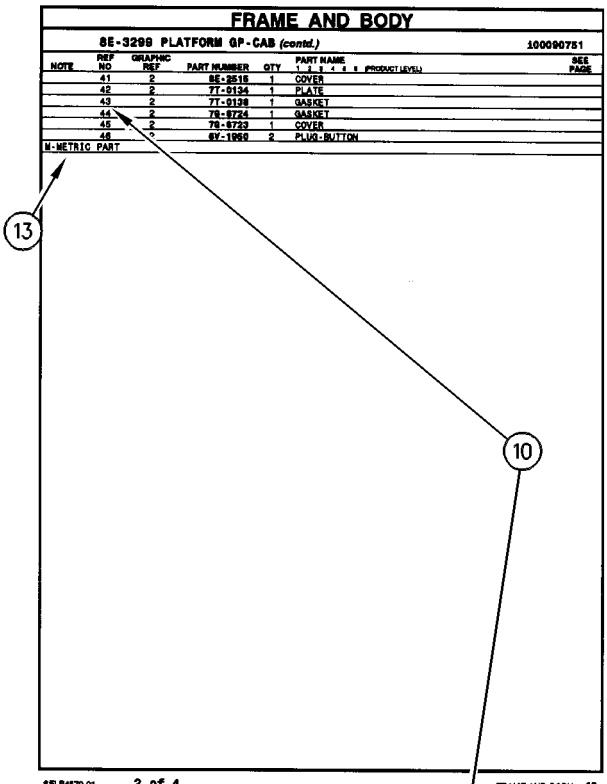

FRAME AND BODY

8E-3299 PLATFORM GP-CAB (contd.) 100090751

NOTE	REF NO	GRAPHIC REF	PART NUMBER	QTY	PART NAME (1 2 3 4 5 6 PRODUCT LEVEL)	SEE PAGE
	41	2	8E-2516	1	COVER	
	42	2	7T-0134	1	PLATE	
	43	2	7T-0138	1	GASKET	
	44	2	7S-8724	1	GASKET	
	45	2	7S-8723	1	COVER	
	46	2	6V-1960	2	PLUG-BUTTON	

M-METRIC PART

SELP4570-01 2 of 4 FRAME AND BODY 13

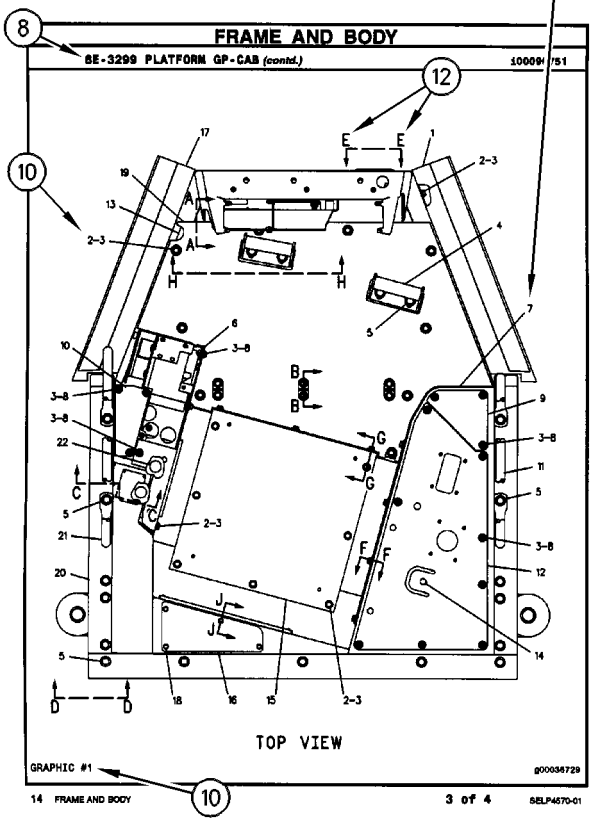

FRAME AND BODY

8E-3299 PLATFORM GP-CAB (contd.) 100090751

TOP VIEW

GRAPHIC #1 g00036729

14 FRAME AND BODY 3 of 4 SELP4570-01

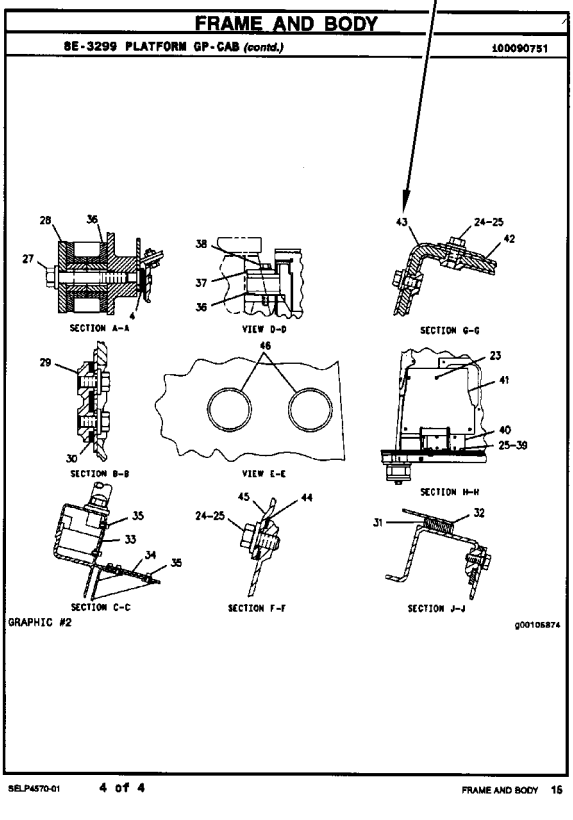

FRAME AND BODY

8E-3299 PLATFORM GP-CAB (contd.) 100090751

SECTION A-A

VIEW D-D

SECTION G-G

SECTION B-B

VIEW E-E

SECTION H-H

SECTION C-C

SECTION F-F

SECTION J-J

GRAPHIC #2 g00105874

SELP4570-01 4 of 4 FRAME AND BODY 15

REMANUFACTURED COMPONENTS

As an option when making repairs consider Cat Remanufactured Components. Components that are available through the Cat Remanufactured Program are identified three ways in the parts book:

- with the letter R in the note field of the parts list
- with an R* at the beginning of the first line of the caption
- with an *R at the end of the first line of the caption

Typical components included in the Remanufacturing Program include:

ALTERNATORS
CONNECTING RODS
CRANKSHAFTS - UNDERSIZE
CRANKSHAFTS - UPGRADE TO NEW
CYLINDER HEADS
ELECTRONIC CONTROL MODULES (ECM)
ELECTRONIC SENSORS
FUEL INJECTORS
FUEL NOZZLES
FUEL PUMPS
GOVERNORS
OIL PUMPS
PISTONS
SHORT BLOCKS
STARTERS
TURBOCHARGERS - COMPLETE
TURBOCHARGER CARTRIDGES
WATER PUMPS

Cat Remanufactured engines for many engine arrangements are also available.

SUPPLEMENTAL COOLANT ADDITIVES

CUSTOMER BENEFITS:

Protects against cavitation, foam, erosion, corrosion, and scale buildup in cooling systems.

- Provides measured coolant conditioner.

DESCRIPTION:

Additives deplete from the coolant with normal operation. For this reason, Supplemental Coolant Additives (SCA) must be added to all heavy duty coolants at regular intervals. In addition, when not using a fully formulated, pre-charged antifreeze, like Cat DEAC, an initial charge of SCA must be added to the cooling system. The amount of SCA added to the system is dependent on the capacity of the system.

The SCA for initial fill is provided as a liquid. SCA's for maintenance intervals are available in liquid form and as a spin-on element. (No Spin-on available for 3600 Family of Engines)

NOTE:

The amount of SCA added at initial fill is not the same as the amount added at maintenance intervals.

The coolant additive elements can be used with any ethylene or propylene glycol type antifreeze which meets ASTM D4985 or ASTM D5345 Specifications.

NOTE:

For use with standard heavy duty coolant only, not for use with Extended Life Coolant.

PARTS NEEDED:

Cooling System Capacity		Liquid SCA at Initial Fill	Liquid SCA at Maintenance*	Spin-on SCA Maintenance Element*
Liters	Gallons			
22-30	(6-8)	3P-2044 (1)	6V-3542 (1)	111-2370 (1)
30-38	(8-10)	3P-2044 (1) 6V-3542 (1)	111-2372 (1)	111-2369 (1)
38-49	(10-13)	3P-2044 (1) 8T-1589 (1)	111-2372 (1)	111-2369 (1)
49-64	(13-17)	3P-2044 (2)	8T-1589 (1)	9N-3368 (1)
64-83	(17-22)	3P-2044 (2) 8T-1589 (1)	111-2372 (1) 6V-3542 (1)	111-2371 (1)
83-114	(22-30)	3P-2044 (3) 8T-1589 (1)	3P-2044 (1)	9N-3718 (1)
114-163	(30-43)	3P-2044 (5)	3P-2044 (1) 6V-3542 (1)	111-2371 (2)
163-242	(43-64)	3P-2044 (8)	3P-2044 (2)	9N-3718 (2)

** Normal maintenance period is 250 hrs. See your Operation and Maintenance Manual for complete coolant maintenance instructions.*

( ) Indicates quantity required.

MAINTENANCE PARTS

DESCRIPTION	PART NUMBER	QTY	WHERE USED	PAGE
AIR INLET AND EXHAUST SYSTEM				
FILTER ELEMENT AS-AIR (PRIMARY)	131-8822	1	AIR CLEANER GP	50
FILTER ELEMENT AS-AIR (SECONDARY)	131-8821	1	AIR CLEANER GP	50
FILTER ELEMENT AS-AIR (ULTRA HIGH EFFICIENCY) (PRIMARY)	134-0685	1	AIR CLEANER GP	50
BASIC ENGINE				
BELT-SERPENTINE	357-2637	1	PULLEY GP-ENGINE	28
GASKET-OIL PAN	351-4749	1	PAN GP-OIL	25
SEAL-VALVE COVER	256-7704	1	COVER GP-VALVE MECHANISM	8
COOLING SYSTEM				
CAP AS (COOLANT RECOVERY)	171-3369	1	RADIATOR & HYD OIL COOLER GP	47
CAP-RADIATOR	360-9274		RADIATOR & HYD OIL COOLER GP	47
GASKET-WATER REGULATOR	281-8744	1	PUMP GP-WATER	43
HOSE-RADIATOR (LOWER)	369-2271	1	RADIATOR & HYD OIL COOLER GP	47
	369-2272	1	RADIATOR & HYD OIL COOLER GP	47
HOSE-RADIATOR (UPPER)	394-2235	1	RADIATOR & HYD OIL COOLER GP	47
REGULATOR AS (WATER TEMPERATURE)	417-7782	1	PUMP GP-WATER	43
ELECTRICAL AND STARTING SYSTEM				
CAP AS-FILLER (BATTERY)	123-1373	6	BATTERY & WIRING GP	69
CIRCUIT BREAKER AS (120-AMPERE) (ALTERNATOR)	216-4970	1	PANEL GP-CIRCUIT BREAKER	86
CIRCUIT BREAKER AS (60-AMPERE) (GLOW PLUG)	171-2208	1	PANEL GP-CIRCUIT BREAKER	86
CIRCUIT BREAKER AS (80-AMPERE) (MAIN)	171-2210	1	PANEL GP-CIRCUIT BREAKER	86
FUSE (10-AMPERE)	113-8490	20	WIRING GP-CAB	102
		20	WIRING GP-CAB	108
FUSE (15-AMPERE)	113-8491	5	WIRING GP-CAB	102
		5	WIRING GP-CAB	108
FUSE (20-AMPERE)	113-8492	3	WIRING GP-CAB	102
		3	WIRING GP-CAB	108
FUSE (25-AMPERE)	113-8493	3	WIRING GP-CAB	102
		3	WIRING GP-CAB	108
FUSE (30-AMPERE)	124-3548	2	WIRING GP-CAB	102
		2	WIRING GP-CAB	108
FUSE (5-AMPERE)	141-2759	1	PANEL GP-CIRCUIT BREAKER	86
		7	WIRING GP-CAB	102
		7	WIRING GP-CAB	108
GLOW PLUG (24-VOLT)	226-8770	6	STARTING AID GP	95
KEY (BATTERY DISCONNECT)	8H-5306	1	SWITCH GP-DISCONNECT	97
LAMP AS (24-VOLT, 3-WATT)	170-9324	1	PANEL GP-SWITCH	88
LAMP-HALOGEN (24-VOLT, 70-WATT)	351-9918	1	LAMP GP-FLOOD	78

MAINTENANCE PARTS

DESCRIPTION	PART NUMBER	QTY	WHERE USED	PAGE
		1	LAMP GP-FLOOD	80
	9X-3463	1	LAMP GP-FLOOD	79
FUEL SYSTEM				
CAP AS-FUEL (DEBRIS BOOT, LOCKABLE)	349-7059	1	TANK GP-FUEL	65
FILTER AS-WATER SEP & FUEL (ULTRA HIGH EFFICIENCY)	382-0664	1	LINES GP-FUEL	59
FILTER ELEMENT-WTR SEP & FUEL	1R-1804	1	FILTER GP-FUEL	58
STRAINER (FUEL FILTER)	387-6403	1	FILTER GP-FUEL	58
STRAINER AS-FUEL (FLOAT GAUGE)	303-9933	1	TANK GP-FUEL	65
HYDRAULIC SYSTEM				
BREATHER (HYDRAULIC TANK)	227-0590	1	TANK & FILTER GP-HYDRAULIC	313
BREATHER (SWING DRIVE)	4H-6112	1	DRIVE GP-SWING	215
BREATHER AS (SWING DRIVE)	227-6221	1	DRIVE GP-SWING	215
FILTER ELEMENT AS-OIL (ADVANCED EFFICIENCY) (HYDRAULIC RETURN)	179-9806	1	FILTER GP-OIL	222
FILTER-OIL (ADVANCED EFFICIENCY) (HYDRAULIC, CASE DRAIN)	093-7521	1	FILTER GP-OIL	221
FILTER-OIL (ADVANCED EFFICIENCY) (HYDRAULIC, PILOT)	5I-8670	1	FILTER & VALVE GP-PILOT	218
PLUG-DRAIN	321-8665	1	TANK & FILTER GP-HYDRAULIC	313
SCREEN AS (HYDRAULIC TANK)	209-6000	1	SCREEN GP-HYDRAULIC	310
SCREEN-FILTER (RELIEF VALVE)	119-5398	1	VALVE GP-RELIEF	345
LUBRICATION SYSTEM				
FILTER ELEMENT-ENGINE OIL	322-3155	1	FILTER & MTG GP-ENGINE OIL	32
OPERATOR STATION				
BLADE AS-WIPER (600-MM)	161-3670	1	WIPER GP-WINDOW	478
CAP AS (WINDOW WASHER)	178-5431	1	WASHER GP-WINDOW	465
DRYER-REFRIGERANT (RECEIVER)	176-1902	1	LINES GP-AIR CONDITIONER	434
FILTER ELEMENT-CAB AIR	245-7823	1	AIR CONDITIONER GP	376
	293-1184	1	DUCT GP-CAB AIR	423
FUSE (5-AMPERE)	141-2759	1	FAN GP-CIRCULATING	424
LAMP (24-VOLT, 10-WATT)	201-4417	1	CAB GP	383
LAMP AS-DOME	176-1986	1	CAB GP	383
SEAT BELT GP (RETRACTABLE, 51-MM)	258-4095	1	SEAT & MOUNTING GP	452

INDEX

NAME PAGE

A

ACCUMULATOR GP-HYDRAULIC–CHARGED . . . 195
196
197
198
199
200
ACCUMULATOR GP-HYDRAULIC–UNCHARGED 201
ADAPTER GP 59
ADAPTER GP-PLUG 313
ADJUSTER GP-BUCKET–B-FAMILY 365
AIR CLEANER & MOUNTING GP 49
AIR CLEANER GP 50
AIR CONDITIONER & MOUNTING GP 373
AIR CONDITIONER AR 375
AIR CONDITIONER GP 376
ALARM GP 67
ALARM GP (24-VOLT) (FAULT) 102
108
ALTERNATOR GP (CHARGING) 68
ALTERNATOR GP-CHARGING 68
ARMREST GP–LH 379
ARMREST GP–RH 378

B

BATTERY & WIRING GP 69
BATTERY GP (12-VOLT, 750-CCA) 69
BELT-SERPENTINE 28
BLADE AS-WIPER (600-MM) 478
BLOCK GP-HYDRAULIC–HYDRAULIC 202
BOOM AR-1 PIECE LONG–HEAVY-DUTY 356
BOOM GP–HEAVY-DUTY 357
BOX & MTG GP-STORAGE 143
BOX GP-STORAGE 144
BRACKET GP-MIRROR 380
383
BREATHER (HYDRAULIC TANK) 313
BREATHER (SWING DRIVE) 215
BREATHER AS (SWING DRIVE) 215
BREATHER GP 203
BUCKET & ADJUSTER GP–B-FAMILY 366
BUCKET & ADJUSTER GP–GENERAL PURPOSE, B-FAMILY 366
BUCKET AR-GENERAL PURPOSE–B-FAMILY 367
BUCKET AS-GENERAL PURPOSE–B-FAMILY 368
369
370

C

CAB GP 386
388
CAB GP–EXTERIOR 383
CAB GP–INTERIOR 381
CAMSHAFT GP 6
CAP AS (COOLANT RECOVERY) 47
CAP AS (WINDOW WASHER) 465
CAP AS-FILLER (BATTERY) 69
CAP AS-FUEL (DEBRIS BOOT, LOCKABLE) 65
CAP-RADIATOR 47
CHASSIS AR 1
CIRCUIT BREAKER AS (120-AMPERE) (ALTERNATOR) 86
CIRCUIT BREAKER AS (60-AMPERE) (GLOW PLUG) 86
CIRCUIT BREAKER AS (80-AMPERE) (MAIN) . . . 86
COIL GP-EVAPORATOR 390
392
COMPRESSOR GP-REFRIGERANT 394
395
CONDENSER & MTG GP-REFRIGERANT 396
CONDENSER GP-REFRIGERANT 397
CONNECTING ROD GP 26
CONSOLE GP 398
CONSOLE GP-OPERATOR 400
406
CONSOLE GP-OPERATOR–LH 404
CONSOLE GP-OPERATOR–RH 402
CONTACTOR GP-ALARM 7
CONTROL & MTG GP-COMMUNICATION–PRODUCT LINK CELLULAR 72
CONTROL & MTG GP-JOYSTICK 408
CONTROL & MTG GP-MACHINE 73
CONTROL AR-COMMUNICATION–PRODUCT LINK CELLULAR 74
CONTROL GP-COMMUNICATION–PRODUCT LINK CELLULAR 74
CONTROL GP-GOVERNOR 56
CONTROL GP-HANDLE–JOYSTICK, LH 409
CONTROL GP-HANDLE–JOYSTICK, RH 411
CONTROL GP-HEAT & AIR COND–AIR INLET 412
CONTROL GP-JOYSTICK–LH 414
CONTROL GP-JOYSTICK–RH 413
CONTROL GP-PILOT OPERATED HYD–TRAVEL 415
CONTROL GP-UNPROGRAMMED 73
CONTROL GP-UNPROGRAMMED–PRODUCT LINK 522 75
COOLER GP-ENGINE OIL 37
39
CORE AS-HEATER 376
CORE AS-OIL COOLER (HYDRAULIC) 44
COUNTERWEIGHT GP 146
147
COUPLING GP-FLEXIBLE 204
COUPLING GP-PUMP 205
COVER AS-SOUND SUPPRESSION–FUEL, HYDRAULIC TANKS 148
COVER GP-CAB–REAR 416
COVER GP-PLATFORM 417
COVER GP-VALVE MECHANISM–CYLINDER HEAD 8
CRANKSHAFT GP 9
CYLINDER & LINES GP-BOOM–LH 206

INDEX

NAME PAGE

CYLINDER & LINES GP-BOOM–RH 206
CYLINDER & LINES GP-BUCKET 206
CYLINDER & LINES GP-STICK. 206
CYLINDER & SEAL GP-BOOM 207
CYLINDER & SEAL GP-BUCKET 209
CYLINDER & SEAL GP-STICK 211
CYLINDER BLOCK AS. 10
CYLINDER BLOCK GP 11
CYLINDER HEAD AS 12
CYLINDER HEAD GP. 13

D

DOOR & MTG GP-CAB. 418
DOOR AS-ACCESS–AIR CLEANER, BATTERY 149
DOOR GP-ACCESS 150, 151
DOOR GP-CAB 419, 421
DRAIN GP-ENGINE OIL. 14
DRIVE GP-FAN 15
DRIVE GP-FINAL–WITH MOTOR 137
DRIVE GP-FINAL–WITH MOTOR, SPROCKET 136
DRIVE GP-FINAL–WITHOUT MOTOR 134
DRIVE GP-SWING–WITH MOTOR 215
DRIVE GP-SWING–WITHOUT MOTOR 213
DRYER-REFRIGERANT (RECEIVER). 434
DUCT GP-CAB AIR. 423

E

ELECTRONICS GP-MACHINE 76
ELECTRONICS GP-MONITOR 76
ENGINE AR-COMPLETE 4
ENGINE AR-PRIMARY 4

F

FAN AR-SUCTION. 40
FAN GP-CIRCULATING 424
FAN GP-SUCTION–DIRECT DRIVE 41
FASTENER GP-SWING & FINAL DR 216
FILLER GP-ENGINE OIL 31
FILM-IDENTIFICATION (OIL FILL, READ OMM). . . 8
FILM-INFORMATION (DO NOT LIFT) 146
FILM-INSTRUCTION (HYDRAULIC OIL RETURN FILTER). 222
FILM-INSTRUCTION (TOP, AIR CLEANER COVER) 50
FILM-WARNING (DO NOT SPRAY, READ OMM). 480
FILM-WARNING (HIGH PRESSURE CYLINDER) 199
FILTER & MTG GP-ENGINE OIL 32
FILTER & VALVE GP-PILOT–HYDRAULIC OIL 218

NAME PAGE

FILTER AS-WATER SEP & FUEL (ULTRA HIGH EFFICIENCY). 59
FILTER ELEMENT AS-AIR (PRIMARY). 50
FILTER ELEMENT AS-AIR (SECONDARY) 50
FILTER ELEMENT AS-AIR (ULTRA HIGH EFFICIENCY) (PRIMARY) 50
FILTER ELEMENT AS-OIL (ADVANCED EFFICIENCY) (HYDRAULIC RETURN) 222
FILTER ELEMENT-CAB AIR. 376, 423
FILTER ELEMENT-ENGINE OIL 32
FILTER ELEMENT-WTR SEP & FUEL 58
FILTER GP-CAB AIR 423
FILTER GP-FUEL. 58
FILTER GP-OIL (ENGINE). 32
FILTER GP-OIL–HYDRAULIC RETURN. 219, 222
FILTER GP-OIL–HYDRAULIC, CASE DRAIN. . . . 221
FILTER-OIL (ADVANCED EFFICIENCY) (HYDRAULIC, CASE DRAIN) 221
FILTER-OIL (ADVANCED EFFICIENCY) (HYDRAULIC, PILOT) 218
FINAL DRIVE GP 134, 136, 137
FITTING GP-HYDRAULIC–4-BOLT FLANGE 224
FLOOR MAT 426
FLYWHEEL GP 17
FRAME AR-UNDERCARRIAGE 175
FRAME AS-UNDERCARRIAGE 176, 177
FRAME AS-UPPER 152
FRAME GP-UPPER. 153
FUMES DISPOSAL GP 34
FUSE (10-AMPERE) 102, 108
FUSE (15-AMPERE) 102, 108
FUSE (20-AMPERE) 102, 108
FUSE (25-AMPERE) 102, 108
FUSE (30-AMPERE) 102, 108
FUSE (5-AMPERE) 86, 102, 108, 424

G

GASKET-OIL PAN 25
GASKET-WATER REGULATOR. 43
GAUGE GP-SIGHT–HYDRAULIC OIL LEVEL . . . 225
GAUGE-OIL LEVEL (SWING DRIVE). 215
GEAR & BEARING GP-SWING. 154, 155
GEAR GP-RING. 138, 139, 140

INDEX

NAME PAGE

GEAR GP-TRANSFER 141
GENERAL AR 2
GLOW PLUG (24-VOLT) 95
GUARD GP-BOTTOM 157
GUARD GP-TRACK GUIDE–CENTER 178
GUARD GP-TRAVEL MOTOR 179

H

HANDRAIL GP 158
HARNESS AS-AUXILIARY 76
HARNESS AS-CAB 102
108
HARNESS AS-CHASSIS 114
HARNESS AS-CHASSIS (HORN) 429
HARNESS AS-CONSOLE 88
122
125
HARNESS AS-CONTROL (PRODUCT LINK) 120
HARNESS AS-HEATER & AIR COND 376
HARNESS AS-HEATER & AIR COND (LOW SIDE) 373
HARNESS AS-LIGHTING 82
HARNESS AS-LIGHTING (CAB FLOODLIGHT) . . . 84
HARNESS AS-PLATFORM 131
HARNESS AS-RADIO 430
448
HARNESS AS-SWITCH (SECONDARY SHUTDOWN) 131
HARNESS AS-WIRING 77
424
HATCH GP-ROOF 427
HEAD GP-MOTOR 296
HEAD GP-PUMP–DRIVE 226
HEAD GP-PUMP–DRIVEN 229
HOOD & GUARD GP 159
HOOD GP-ENGINE 163
HORN GP-ELECTRIC 428
429
HOSE GP-HYDRAULIC 239
240
HOSE GP-HYDRAULIC–CONTROL VALVE, BOOM 235
236
237
HOSE GP-HYDRAULIC–CONTROL VALVE, STICK 233
234
HOSE GP-HYDRAULIC–FRONT 238
241
242
243
HOSE-RADIATOR (LOWER) 47
HOSE-RADIATOR (UPPER) 47
HOUSING GP-FLYWHEEL 18
HOUSING GP-FRONT 19
HYDRAULIC AR 244

NAME PAGE

I

IDLER GP-FRONT 180
183
IDLER GP-FRONT–LH 182
IDLER GP-FRONT–RH 181
INDICATOR AS (HYDRAULIC RETURN FILTER) 219
INDICATOR AS (SEAT ADJUSTMENT) 459
INDICATOR AS-AIR FILTER CHANGE (AIR RESTRICTION) 50
INDICATOR-FUEL FILTER CHANGE 59
INSTALLATION AR-ENGINE 5
INSTALLATION GP-RADIO 430

J

JET GP-PISTON COOLING 21

K

KEY (BATTERY DISCONNECT) 97

L

LAMP (24-VOLT, 10-WATT) 383
LAMP AS (24-VOLT, 3-WATT) 88
LAMP AS-DOME 383
LAMP GP-FLOOD 78
79
80
LAMP-HALOGEN (24-VOLT, 70-WATT) 78
79
80
LATCH GP-WINDOW 432
LEVER GP-CAB DOOR 433
LIFTING GP-ENGINE 22
LIGHTING GP-FLOOD–BOOM, LH 82
LIGHTING GP-FLOOD–CAB 84
LIGHTING GP-FLOOD–FRONT, RH 81
LINE GP-TURBOCHARGER 55
LINES AR-AUXILIARY HYDRAULIC 244
LINES GP-AIR 51
LINES GP-AIR CONDITIONER 434
LINES GP-AUXILIARY HYDRAULIC–2.5-M (8.2-FT) STICK 247
LINES GP-AUXILIARY HYDRAULIC–REACH BOOM, HIGH PRESSURE 245
LINES GP-BOOM 249
LINES GP-BOOM CYLINDER–LH 251
LINES GP-BOOM CYLINDER–RH 252
LINES GP-BUCKET CYLINDER 253
254
LINES GP-COOLING 42
LINES GP-CYLINDER–BOOM 255
LINES GP-ENGINE OIL DRAIN 35
LINES GP-FRONT 257

INDEX

NAME PAGE

LINES GP-FRONT–SYSTEM 3 PRIME, 1-WAY, 2-PUMP 259
LINES GP-FUEL 59
LINES GP-FUEL FILTER 62
LINES GP-GREASE–BOOM 359
LINES GP-HYDRAULIC OIL COOLER 263
LINES GP-HYDRAULIC OIL COOLER–CONTROL VALVE, PUMP 261
LINES GP-PILOT 268
LINES GP-PILOT–FILTER, PILOT PUMP 278
LINES GP-PILOT–JOYSTICK, PEDALS 264
LINES GP-PILOT–MAIN CONTROL VALVE 271 273
LINES GP-PUMP–SUPPLY, MAIN PUMP 280
LINES GP-RETURN–HYDRAULIC TANK 281
LINES GP-STICK CYLINDER 283
LINES GP-TRAVEL MOTOR 284
LINES GP-TRAVEL MOTOR–LONG UNDERCARRIAGE 287
LINK AS-TRACK 184 185
LINKAGE AR-BUCKET–B1-FAMILY, WITH LIFTING EYE 360
LINKAGE GP-BUCKET–B1-FAMILY, WITH LIFTING EYE 361
LITERATURE GP 1 437

M

MANIFOLD GP-CONTROL–PILOT OIL SUPPLY 290 291 292
MANIFOLD GP-INLET 52
MIRROR GP-REAR VIEW 383 439
MIRROR GP-REAR VIEW–FRONT, RH 438
MONITOR & MTG GP-OPERATOR 440
MONITOR GP-OPERATOR 441 442 443
MOTOR & MTG GP-SWING 293
MOTOR & MTG GP-TRAVEL 294
MOTOR AS-WINDOW WIPER 478
MOTOR GP-SWING 295 296
MOTOR GP-TRAVEL 298
MOUNTING GP-ANTENNA–PRODUCT LINK CELLULAR 444
MOUNTING GP-ENGINE 23 24
MOUNTING GP-MAIN CONTROL VALVE 302
MOUNTING GP-PLATFORM 446
MOUNTING GP-RADIO 448
MUFFLER & MOUNTING GP 53

O

OPERATOR AR 450

P

PADLOCK GP 64 481
PAN GP-OIL 25
PANEL & MTG GP-CIRCUIT BREAKER 85
PANEL GP-CIRCUIT BREAKER 86
PANEL GP-SWITCH–ENGINE SPEED, START . . . 88
PARTS GP-MISCELLANEOUS 3
PISTON & ROD GP 26
PLATE & FILM GP 480 481
PLATFORM GP-OPERATOR 451
PLUG GP-CONTROL VALVE 303
PLUG-DRAIN 313
POWER TRAIN AR 141
PULLEY GP-CRANKSHAFT 27
PULLEY GP-ENGINE 28
PUMP & MTG GP-MAIN HYDRAULIC 304
PUMP GP-ENGINE OIL 36
PUMP GP-FUEL INJECTION 63
PUMP GP-GEAR 305
PUMP GP-MAIN HYDRAULIC 306
PUMP GP-WATER 43

R

RADIATOR & HYD OIL COOLER GP 44 47
RECEPTACLE GP-CONNECTOR (8-PIN) 430 448
REGULATOR AS (WATER TEMPERATURE) 43
RELAY (24-VOLT) (BOOM LIGHTS) 102 108
RELAY (24-VOLT) (CAB LIGHT) 102 108
RELAY (24-VOLT) (CHASSIS LIGHT) 102 108
RELAY (24-VOLT) (HORN) 102 108
RELAY (24-VOLT) (NEUTRAL START) 102 108
RELAY (24-VOLT) (TRAVEL ALARM) 102 108
RELAY (BLOWER) 412
RELAY (COMPRESSOR CLUTCH) 412
RELAY AS (WIPER) 478
ROCKER ARM GP 29
ROLLER AR-TRACK & CARRIER 186 187
ROLLER GP-TRACK CARRIER 188
ROLLER GP-TRACK-SINGLE FLANGE 189

INDEX

NAME PAGE

S

SCREEN AS (HYDRAULIC TANK) 310
SCREEN GP-HYDRAULIC 310
SCREEN-FILTER (RELIEF VALVE) 345
SEAL GP-DUO-CONE 188
SEAL-VALVE COVER 8
SEAT & MOUNTING GP–HIGH BACK, TILT 452
SEAT BELT GP (RETRACTABLE, 51-MM) 452
SEAT BELT GP–RETRACTABLE 453
SEAT GP-SUSPENSION–DELUXE, CLOTH 455
SEAT GP-SUSPENSION–HIGH BACK, TILT 457
SEAT GP–DELUXE, CLOTH 454
SENDER AS-FUEL LEVEL 65
SENDER AS-TEMPERATURE (HYDRAULIC OIL) 313
SENDER GP-TEMPERATURE (COOLANT) 93
SENSOR AS-PRESSURE (DRIVE PUMP) 278
SENSOR AS-PRESSURE (DRIVEN PUMP) 278
SENSOR AS-TEMPERATURE (AIR) 412
SENSOR AS-TEMPERATURE (AMBIENT AIR TEMP) 376
SENSOR AS-TEMPERATURE (COOLANT) 376
SENSOR GP-LIQUID LEVEL 59 90
SENSOR GP-PRESSURE 59 91
SENSOR GP-PRESSURE (FUEL) 93
SENSOR GP-SPEED 92
SENSOR GP-SPEED (MAGNETIC) (ENGINE) . . . 114
SENSOR GP-TEMP & PRESS 93
SENSOR GP-TEMPERATURE 94
SENSOR-PRESSURE 59
SENSOR-PRESSURE (FUEL) 91
SENSOR-TEMPERATURE (AMBIENT AIR) 373
SHEET AS-SOUND SUPPRESSION 164 165 166 167 168 169 170
SIDECUTTER GP 371
SOFTWARE GP-COMMUNICATION 74
SOFTWARE GP-ELECTRONIC 75
SOFTWARE GP-MACHINE 76
SOFTWARE GP-MONITOR 76
SPRING AS-GAS 427
SPRING AS-GAS (ENGINE HOOD) 159
SPROCKET GP 142
STARTING AID GP 95
STARTING MOTOR GP-ELECTRIC 96
STEP GP 171
STICK AR-HOE–REACH 362
STICK GP-HOE–REACH 363
STRAINER (FUEL FILTER) 58
STRAINER AS-FUEL (FLOAT GAUGE) 65
SUN VISOR 464
SUPPORT AS-ENCLOSURE 172
SUPPORT AS-SOUND SUPPRESSION 173 174
SUPPORT GP-SEAT 458
SUSPENSION GP-SEAT–MECHANICAL 459 462
SWITCH (WINDOW LOWER LIMIT) 470
SWITCH AS-LIMIT (HYDRAULIC LOCKOUT) 98
SWITCH AS-MAGNETIC (24-VOLT) (MAIN RELAY) 102 108
SWITCH AS-PRESSURE (IMPLEMENT, SWING) 264
SWITCH AS-PRESSURE (REFRIGERANT) 434
SWITCH AS-PRESSURE (TRAVEL, LH) 264
SWITCH AS-PRESSURE (TRAVEL, RH) 264
SWITCH AS-PUSH BUTTON (HORN) 409
SWITCH AS-PUSH BUTTON (MANUAL LOW IDLE) 411
SWITCH AS-ROCKER (CIRCULATING FAN) 424
SWITCH AS-ROCKER (RADIO MUTE) 430 448
SWITCH AS-TOGGLE (SECONDARY SHUTDOWN) 132
SWITCH GP-DISCONNECT–BATTERY 97
SWITCH GP-LIMIT–HYDRAULIC LOCKOUT 98
SWITCH GP-MAGNETIC (24-VOLT) (GLOW PLUG) 86
SWITCH GP-MAGNETIC–GLOW PLUG 99
SWITCH GP-ROTARY (THROTTLE POSITION) 88
SWITCH GP-ROTARY–THROTTLE POSITION . . 100
SWITCH GP-START (ENGINE, KEY) 88
SWITCH GP-START–ENGINE, KEY 101
SWITCH-TEMPERATURE 63
SWIVEL GP 311

T

TANK & FILTER GP-HYDRAULIC 313
TANK & MTG GP-FUEL 64
TANK & MTG GP-HYDRAULIC 315
TANK GP-FUEL 65
TIP GP-LONG 372
TRACK ADJUSTER & RECOIL GP 192 193
TRACK ADJUSTER & RECOIL GP–LH 191
TRACK ADJUSTER & RECOIL GP–RH 190
TRACK GP–2-REQUIRED 194
TURBOCHARGER GP 55

V

VALVE GP-CONTROL 320 322
VALVE GP-CONTROL–BOOM, STICK, BUCKET 316
VALVE GP-CONTROL–WITHOUT COVERS, HOUSINGS 319
VALVE GP-FLUID SAMPLING (HYDRAULIC OIL) 313

INDEX

NAME	PAGE
VALVE GP-LOAD CONTROL–BOOM DRIFT RED, LINE RELIEF	329
VALVE GP-LOAD CONTROL–STICK DRIFT RED, LINE RELIEF	327
VALVE GP-MAIN CONTROL	331
VALVE GP-PILOT RELIEF (HYDRAULIC FILTER)	218
VALVE GP-PILOT–JOYSTICK	332
VALVE GP-PILOT–TRAVEL	334
VALVE GP-PRESSURE REDUCING	336
VALVE GP-PRESSURE REDUCING–BOOM, SWING PRIORITY	337
VALVE GP-PRIORITY–SWING	339
VALVE GP-RELIEF	340
	343
	344
	345
	346
	348
VALVE GP-RELIEF (LINE) (STICK 1)	322
VALVE GP-RELIEF–LINE	347
VALVE GP-RELIEF–NEGATIVE FLOW CONTROL	341
	342
VALVE GP-SHUTTLE	268
	349
	350
	351
VALVE GP-SOLENOID	226
	352
	353
VALVE GP-SOLENOID (HYDRAULIC LOCKOUT)	291
	292
VALVE GP-SOLENOID (STRAIGHT TRAVEL)	322
VALVE GP-SOLENOID (SWING BRAKE RELEASE)	291
	292
VALVE GP-SOLENOID (TRAVEL SPEED)	291
	292
VALVE GP-SWING CUSHION–CROSSOVER RELIEF	354
VALVE GP-TRAVEL COUNTERBALANCE	355
VALVE MECHANISM GP	30
VISOR GP-CAB–SUN	464

W

NAME	PAGE
WASHER GP-WINDOW	465
WINDOW AS-FRONT–UPPER	466
WINDOW GP-CAB	467
WINDOW GP-CAB–FRONT, UPPER	470
WINDOW GP-CAB–LOWER	468
WINDOW GP-DOOR	473
	475
WINDOW GP-FRONT–UPPER	476
WIPER GP-WINDOW–FRONT, UPPER	478
WIRING GP-CAB	102
	108
WIRING GP-CHASSIS	114
WIRING GP-COMMUNICATION–PRODUCT LINK CELLULAR	120
WIRING GP-CONSOLE	124
WIRING GP-CONSOLE–LH	122
WIRING GP-CONSOLE–RH	125
WIRING GP-CONVERTER	129
WIRING GP-CONVERTER–12-VOLT, 10-AMPERE	127
WIRING GP-PLATFORM	131

MACHINE ARRANGEMENT

421-6926 CHASSIS AR

S/N: DNP1-UP

PART OF 421-6925 GENERAL AR

SMCS-7000 **i05266020**

NOTE	PART NUMBER	QTY	PART NAME 1 2 3 4 5 6 (PRODUCT LEVEL)	SEE PAGE
Y	*399-3647*	1	BATTERY & WIRING GP	69
Y	*390-7988*	1	BOX & MTG GP-STORAGE	143
Y	*388-6844*	1	CONTROL GP-GOVERNOR	56
Y	*421-6935*	1	COUNTERWEIGHT GP	146
Y	*421-6943*	1	FRAME GP-UPPER	153
Y	*374-4017*	1	GUARD GP-BOTTOM	157
Y	*142-3835*	1	HANDRAIL GP	158
Y	*421-6929*	1	HOOD & GUARD GP	159
Y	*267-8071*	1	HORN GP-ELECTRIC	428
Y	*4I-5409*	1	LIGHTING GP-FLOOD (FRONT, RH)	81
Y	*372-9387*	1	LINES GP-AIR CONDITIONER	434
Y	*394-7468*	1	LINES GP-FUEL	59
Y	*7Y-0059*	1	LITERATURE GP	437
Y	*142-3836*	1	MIRROR GP-REAR VIEW (FRONT, RH)	438
Y	*245-7811*	1	MOUNTING GP-PLATFORM	446
Y	*421-6944*	1	OPERATOR AR	450
Y	*421-6945*	1	PLATE & FILM GP	481
Y	*391-8786*	1	STEP GP	171
Y	*421-8479*	1	TANK & MTG GP-FUEL	64
Y	*388-6841*	1	WIRING GP-CHASSIS	114

Y - SEPARATE ILLUSTRATION

<END>

433-6906 CHASSIS AR

S/N: FKK1-UP

PART OF 433-2638 GENERAL AR

SMCS-7000 **i05259102**

NOTE	PART NUMBER	QTY	PART NAME 1 2 3 4 5 6 (PRODUCT LEVEL)	SEE PAGE
Y	*399-3647*	1	BATTERY & WIRING GP	69
Y	*390-7988*	1	BOX & MTG GP-STORAGE	143
Y	*388-6844*	1	CONTROL GP-GOVERNOR	56
Y	*421-6935*	1	COUNTERWEIGHT GP	146
Y	*383-2741*	1	COVER GP-PLATFORM	417
Y	*421-6943*	1	FRAME GP-UPPER	153
Y	*374-4017*	1	GUARD GP-BOTTOM	157
Y	*142-3835*	1	HANDRAIL GP	158
Y	*421-6929*	1	HOOD & GUARD GP	159
Y	*267-8071*	1	HORN GP-ELECTRIC	428
Y	*4I-5409*	1	LIGHTING GP-FLOOD (FRONT, RH)	81
Y	*394-7468*	1	LINES GP-FUEL	59
Y	*7Y-0059*	1	LITERATURE GP	437
Y	*142-3836*	1	MIRROR GP-REAR VIEW (FRONT, RH)	438
Y	*245-7811*	1	MOUNTING GP-PLATFORM	446
Y	*433-6907*	1	OPERATOR AR	450
Y	*421-6945*	1	PLATE & FILM GP	481
Y	*391-8786*	1	STEP GP	171
Y	*421-8479*	1	TANK & MTG GP-FUEL	64
Y	*388-6841*	1	WIRING GP-CHASSIS	114

Y - SEPARATE ILLUSTRATION

<END>

MACHINE ARRANGEMENT

421-6925 GENERAL AR

S/N: DNP1-UP

SMCS-7000 **i05266756**

NOTE	PART NUMBER	QTY	PART NAME 1 2 3 4 5 6 (PRODUCT LEVEL)	SEE PAGE
Y	*421-6926*	1	CHASSIS AR	1
Y	*383-5108*	1	ELECTRONICS GP-MACHINE	76
Y	*221-8861*	1	ELECTRONICS GP-MONITOR	76
Y	*394-7469*	1	ENGINE AR-COMPLETE	4
Y	*421-6946*	1	HYDRAULIC AR	244
Y	*394-7471*	1	INSTALLATION AR-ENGINE	5
Y	*267-6767*	1	POWER TRAIN AR	141

Y - SEPARATE ILLUSTRATION

<END>

433-2638 GENERAL AR

S/N: FKK1-UP

SMCS-7000 **i05259097**

NOTE	PART NUMBER	QTY	PART NAME 1 2 3 4 5 6 (PRODUCT LEVEL)	SEE PAGE
Y	*433-6906*	1	CHASSIS AR	1
Y	*383-5108*	1	ELECTRONICS GP-MACHINE	76
Y	*221-8861*	1	ELECTRONICS GP-MONITOR	76
Y	*394-7469*	1	ENGINE AR-COMPLETE	4
Y	*387-9125*	1	FRAME AR-UNDERCARRIAGE	175
Y	*421-6946*	1	HYDRAULIC AR	244
Y	*433-6905*	1	INSTALLATION AR-ENGINE	5
Y	*267-6767*	1	POWER TRAIN AR	141

Y - SEPARATE ILLUSTRATION

<END>

MACHINE ARRANGEMENT

346-2911 PARTS GP-MISCELLANEOUS

S/N: D7A1-UP

PART OF 417-3389 ENGINE AR-PRIMARY

SMCS-1000, 7000 **i05245771**

NOTE	REF NO	GRAPHIC REF	PART NUMBER	QTY	PART NAME 1 2 3 4 5 6 (PRODUCT LEVEL)	SEE PAGE
	1	1	**067-6823**	1	PLUG	
	2	1	**9X-3959**	1	ELBOW	
	3	1	**7W-4669**	1	ADAPTER	

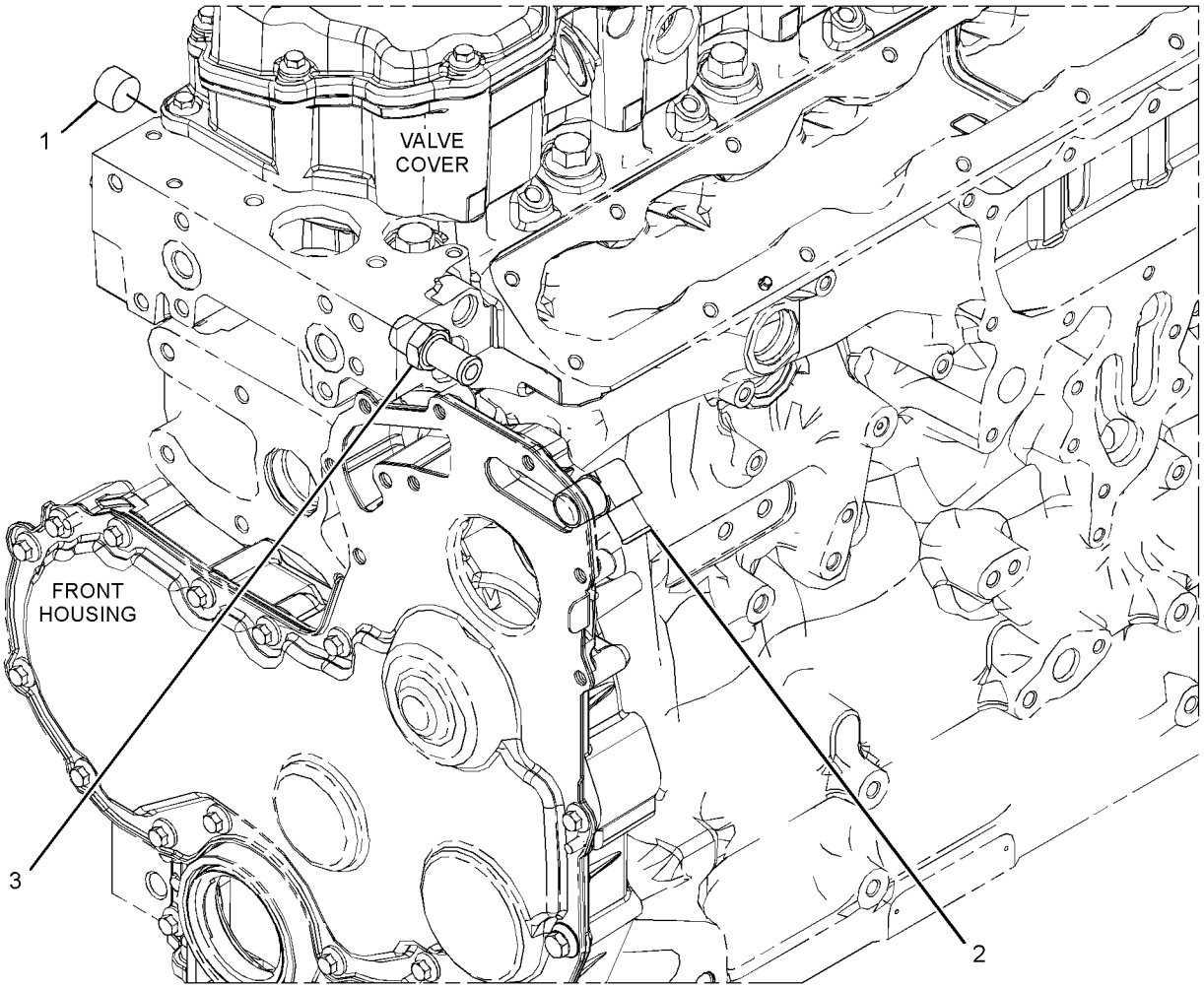

GRAPHIC #1 **<END>** g03105759

ENGINE ARRANGEMENT

394-7469 ENGINE AR-COMPLETE

S/N: FKK1-UP; DNP1-UP

PART OF 421-6925, 433-2638 GENERAL AR

SMCS-1000 **i05259099**

NOTE	PART NUMBER	QTY	PART NAME 1 2 3 4 5 6 (PRODUCT LEVEL)	SEE PAGE
Y	**417-3389**	1	ENGINE AR-PRIMARY	4
Y	*369-2257*	1	FAN AR-SUCTION	40
Y	*394-7470*	1	MUFFLER & MOUNTING GP	53

Y - SEPARATE ILLUSTRATION

<END>

417-3389 ENGINE AR-PRIMARY

S/N: D7A1-UP

112 BRAKE KW (150 BHP) AT 1800 RPM

PART OF 394-7469 ENGINE AR-COMPLETE

SMCS-1000 **i05224934**

NOTE	PART NUMBER	QTY	PART NAME 1 2 3 4 5 6 (PRODUCT LEVEL)	SEE PAGE
Y	*396-6983*	1	ALTERNATOR GP-CHARGING	68
Y	*345-9774*	1	BREATHER GP	203
Y	*343-0701*	1	CAMSHAFT GP	6
Y	*417-7185*	1	CONTACTOR GP-ALARM	7
Y	*371-2553*	1	COOLER GP-ENGINE OIL	39
Y	*348-3285*	1	CRANKSHAFT GP	9
Y	*348-3283*	1	CYLINDER BLOCK GP	11
Y	*391-3193*	1	CYLINDER HEAD GP	13
Y	*394-7014*	1	DRAIN GP-ENGINE OIL	14
Y	*396-6979*	1	DRIVE GP-FAN	15
Y	*417-5871*	1	FILLER GP-ENGINE OIL	31
Y	*371-2539*	1	FLYWHEEL GP	17
Y	*396-6954*	1	HOUSING GP-FLYWHEEL	18
Y	*346-0495*	1	HOUSING GP-FRONT	19
Y	*348-3503*	1	JET GP-PISTON COOLING	21
Y	*415-4600*	1	LIFTING GP-ENGINE	22
Y	*396-6969*	1	LINES GP-FUEL FILTER	62
Y	*346-0773*	1	MANIFOLD GP-INLET	52
Y	*375-5008*	1	MOUNTING GP-ENGINE	24
Y	*397-1501*	1	PAN GP-OIL	25
Y	*346-2911*	1	PARTS GP-MISCELLANEOUS	3
Y	*348-3296*	1	PISTON & ROD GP	26
Y	*346-1967*	1	PLATE & FILM GP	480
Y	*417-7187*	1	PULLEY GP-CRANKSHAFT	27
Y	*346-0737*	1	PUMP GP-ENGINE OIL	36
Y	*396-4502*	1	PUMP GP-FUEL INJECTION	63
Y	*346-0411*	1	PUMP GP-WATER	43
Y	*391-3197*	1	ROCKER ARM GP	29
Y	*346-1841*	1	SENSOR GP-TEMPERATURE	94
Y	*393-0879*	1	STARTING AID GP	95
Y	*385-8000*	1	STARTING MOTOR GP-ELECTRIC	96
Y	*396-6322*	1	TURBOCHARGER GP	55

Y - SEPARATE ILLUSTRATION

<END>

ENGINE ARRANGEMENT

394-7471 INSTALLATION AR-ENGINE

S/N: DNP1-UP

PART OF 421-6925 GENERAL AR

SMCS-1000 **i05265646**

NOTE	PART NUMBER	QTY	PART NAME 1 2 3 4 5 6 (PRODUCT LEVEL)	SEE PAGE
Y	*109-9313*	1	AIR CLEANER & MOUNTING GP	49
Y	*379-4415*	1	COMPRESSOR GP-REFRIGERANT	395
Y	*363-9644*	1	CONDENSER & MTG GP-REFRIGERANT	396
Y	*368-7675*	1	FILTER & MTG GP-ENGINE OIL	32
Y	*394-7474*	1	FUMES DISPOSAL GP	34
Y	*394-7473*	1	LINES GP-AIR	51
Y	*394-2220*	1	LINES GP-COOLING	42
Y	*374-6004*	1	LINES GP-ENGINE OIL DRAIN	35
Y	*351-3886*	1	MOUNTING GP-ENGINE	23
Y	*394-2224*	1	RADIATOR & HYD OIL COOLER GP	47
Y	*394-9997*	1	SENSOR GP-TEMP & PRESS	93

Y - SEPARATE ILLUSTRATION

<END>

433-6905 INSTALLATION AR-ENGINE

S/N: FKK1-UP

PART OF 433-2638 GENERAL AR

SMCS-1000 **i05259101**

NOTE	PART NUMBER	QTY	PART NAME 1 2 3 4 5 6 (PRODUCT LEVEL)	SEE PAGE
Y	*109-9313*	1	AIR CLEANER & MOUNTING GP	49
Y	*379-4415*	1	COMPRESSOR GP-REFRIGERANT	395
Y	*368-7675*	1	FILTER & MTG GP-ENGINE OIL	32
Y	*394-7474*	1	FUMES DISPOSAL GP	34
Y	*394-7473*	1	LINES GP-AIR	51
Y	*394-2220*	1	LINES GP-COOLING	42
Y	*374-6004*	1	LINES GP-ENGINE OIL DRAIN	35
Y	*351-3886*	1	MOUNTING GP-ENGINE	23
Y	*394-2224*	1	RADIATOR & HYD OIL COOLER GP	47
Y	*394-9997*	1	SENSOR GP-TEMP & PRESS	93

Y - SEPARATE ILLUSTRATION

<END>

343-0701 CAMSHAFT GP

S/N: D7A1-UP

PART OF 417-3389 ENGINE AR-PRIMARY

SMCS-1210 **i05245710**

NOTE	REF NO	GRAPHIC REF	PART NUMBER	QTY	PART NAME 1 2 3 4 5 6 (PRODUCT LEVEL)	SEE PAGE
	1	1	**138-2053**	12	TAPPET	
	2	1	**350-0637**	1	CAMSHAFT GP	
		1	**067-6135**	1	KEY-WOODRUFF	
	3	1	**067-6095**	12	ROD	

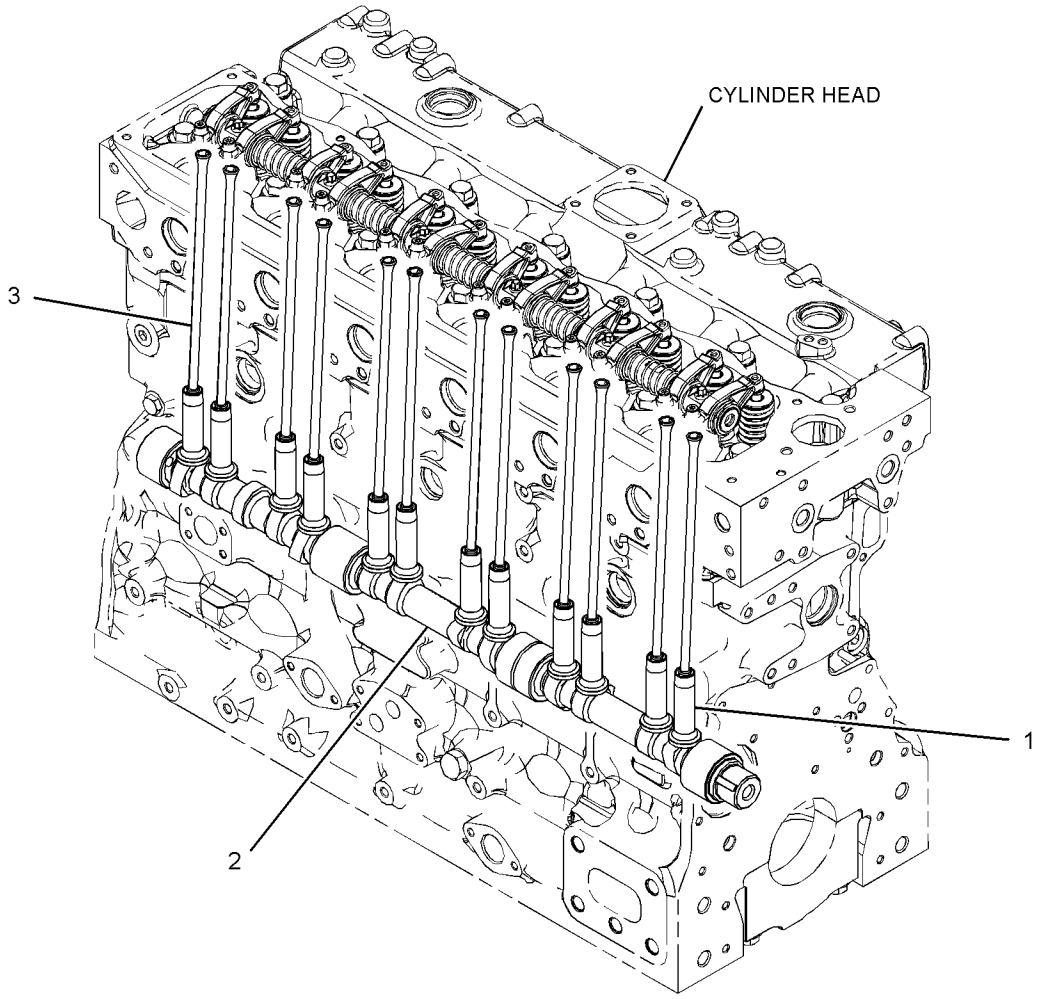

GRAPHIC #1 **<END>** g03320144

417-7185 CONTACTOR GP-ALARM

S/N: D7A1-UP

PART OF 417-3389 ENGINE AR-PRIMARY

SMCS-0663 **i05245841**

NOTE	REF NO	GRAPHIC REF	PART NUMBER	QTY	PART NAME 1 2 3 4 5 6 (PRODUCT LEVEL)	SEE PAGE
	1	1	**199-9267**	1	SEAL-O-RING	
	2	1	**232-3861**	1	PLUG (BLANKING)	

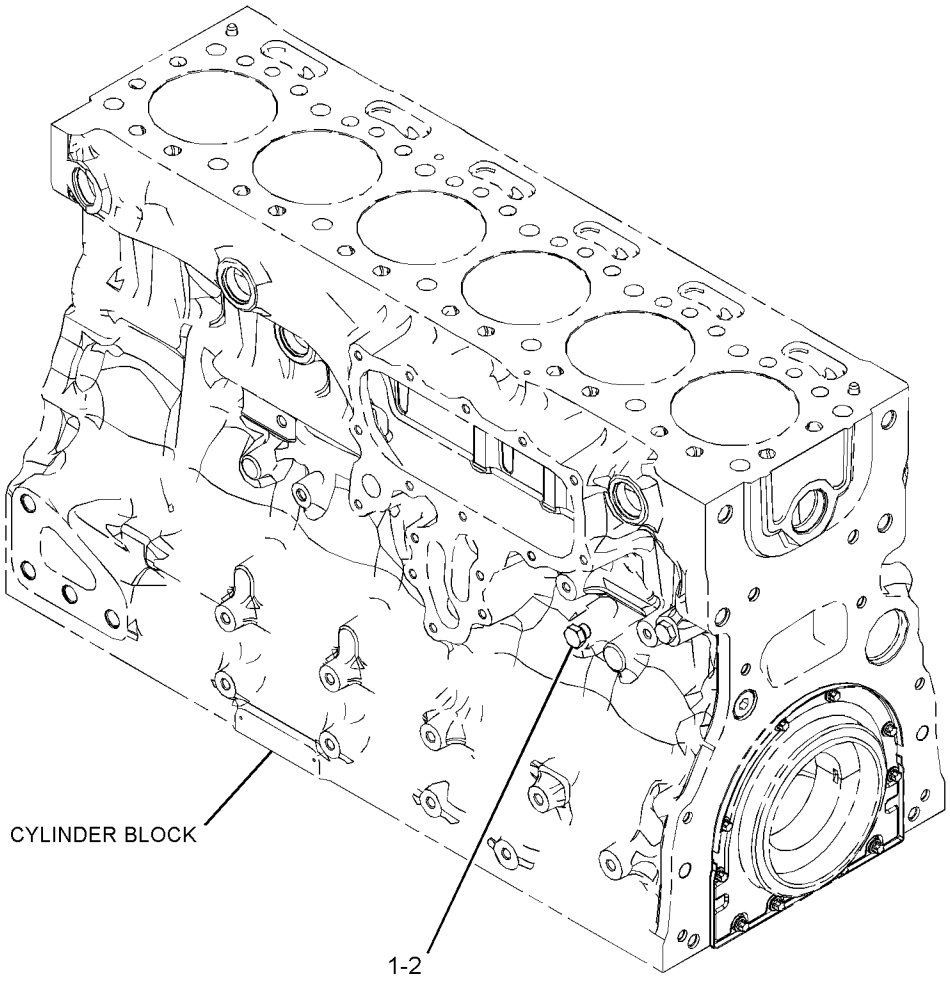

GRAPHIC #1 **<END>** g03317252

335-6883 COVER GP-VALVE MECHANISM–CYLINDER HEAD

S/N: D7A1-UP

PART OF 345-9774 BREATHER GP

SMCS-1107 **i05245708**

NOTE	REF NO	GRAPHIC REF	PART NUMBER	QTY	PART NAME 1 2 3 4 5 6 (PRODUCT LEVEL)	SEE PAGE
	1	1	**256-7704**	1	SEAL-VALVE COVER	
	2	1	**326-7289**	1	SEAL-O-RING	
	3	1	**369-3869**	1	CAP AS	
	3A	1	**357-0147**	1	FILM-IDENTIFICATION (OIL FILL, READ OMM)	

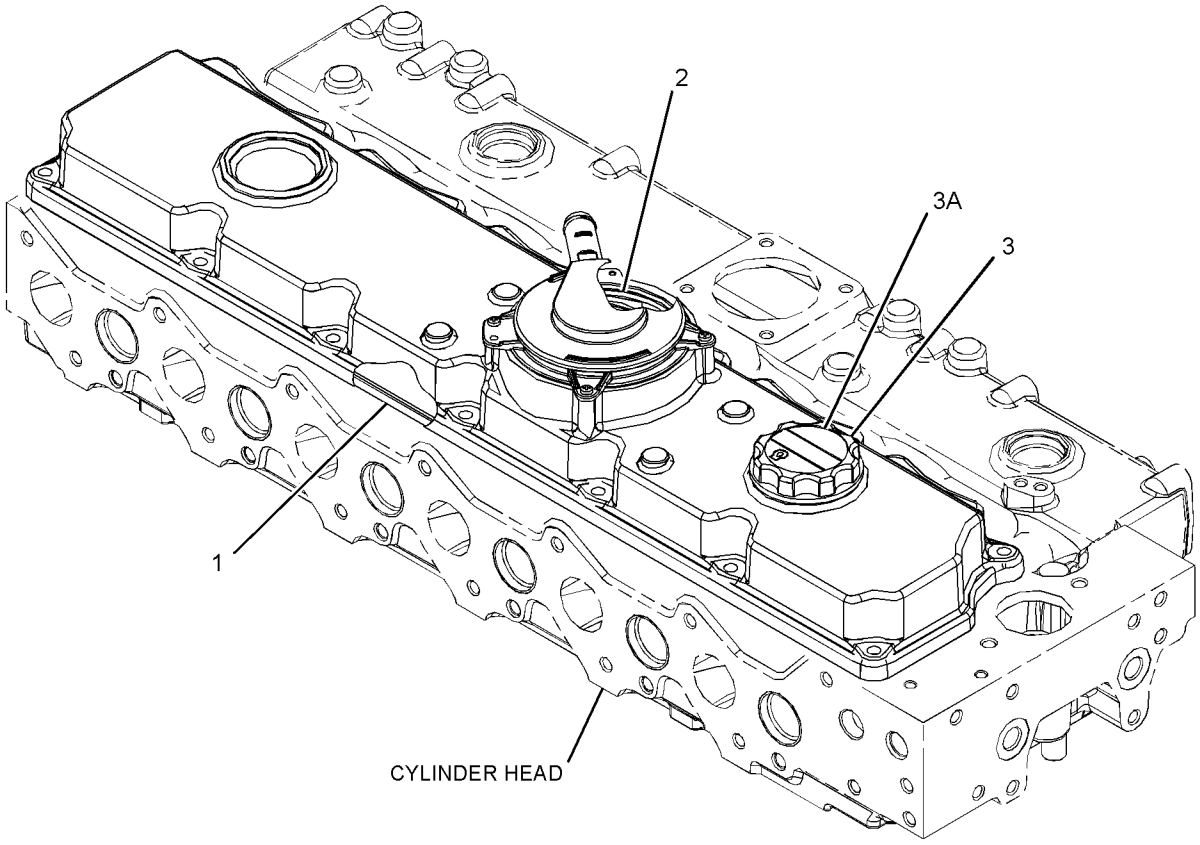

GRAPHIC #1 **<END>** g03320242

348-3285 CRANKSHAFT GP

S/N: D7A1-UP

PART OF 417-3389 ENGINE AR-PRIMARY

SMCS-1202 **i05245803**

NOTE	REF NO	GRAPHIC REF	PART NUMBER	QTY	PART NAME 1 2 3 4 5 6 (PRODUCT LEVEL)	SEE PAGE
L	1	1	*317-5485*	7	BEARING (CRANKSHAFT)	
L	2	1	*317-5486*	7	BEARING (CRANKSHAFT)	
J	3	1	**363-0559**	2	WASHER-THRUST	
	4	1	**376-4074**	1	CRANKSHAFT	
	5	1	**067-6135**	1	KEY-WOODRUFF	
	6	1	**276-7391**	1	GEAR (34-TEETH)	
					AVAILABLE REPAIR KIT(S):	
L			**360-1978**	1	KIT-BEARING (CRANKSHAFT)	
J			**364-5145**	1	KIT-WASHER (CRANKSHAFT)	

J - KIT MARKED J SERVICES PARTS MARKED J
L - KIT MARKED L SERVICES PARTS MARKED L

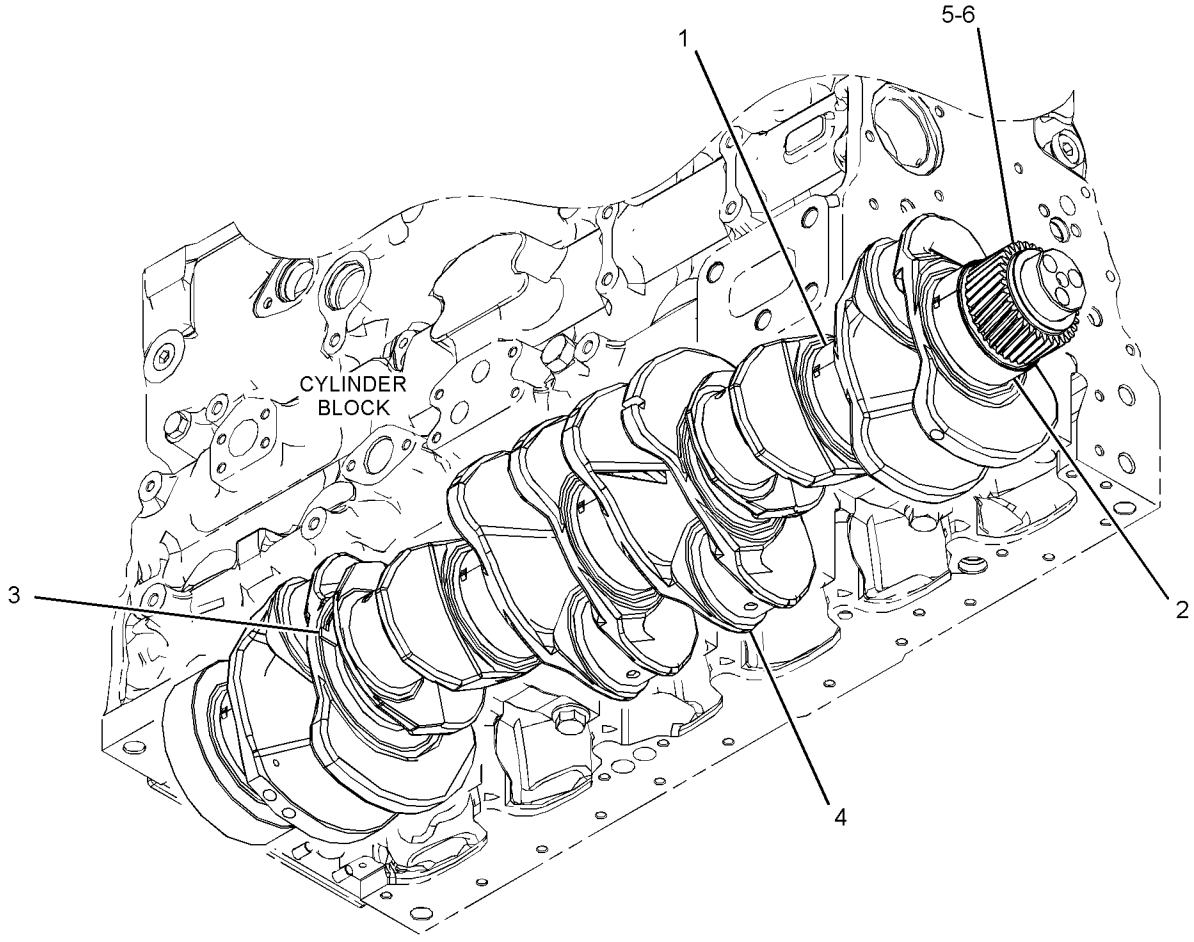

GRAPHIC #1 **<END>** g03320275

331-1682 CYLINDER BLOCK AS

S/N: D7A1-UP

PART OF 348-3283 CYLINDER BLOCK GP

SMCS-1201 **i05245796**

NOTE	REF NO	GRAPHIC REF	PART NUMBER	QTY	PART NAME 1 2 3 4 5 6 (PRODUCT LEVEL)	SEE PAGE
	1	1	**067-6043**	7	PLUG-SIDE	
	2	1	**185-0884**	2	DOWEL	
	3	1	**225-8858**	2	PLUG	
	4	1	**232-7597**	2	PLUG	
	5	1	**232-7599**	2	PLUG	
	6	1	**276-5602**	2	PLUG-CORE	
	7	1	**232-7596**	1	PLUG	
	8	1	**067-6823**	1	PLUG	
	9	1	**276-5600**	14	BOLT-SPECIAL (BEARING CAP)	

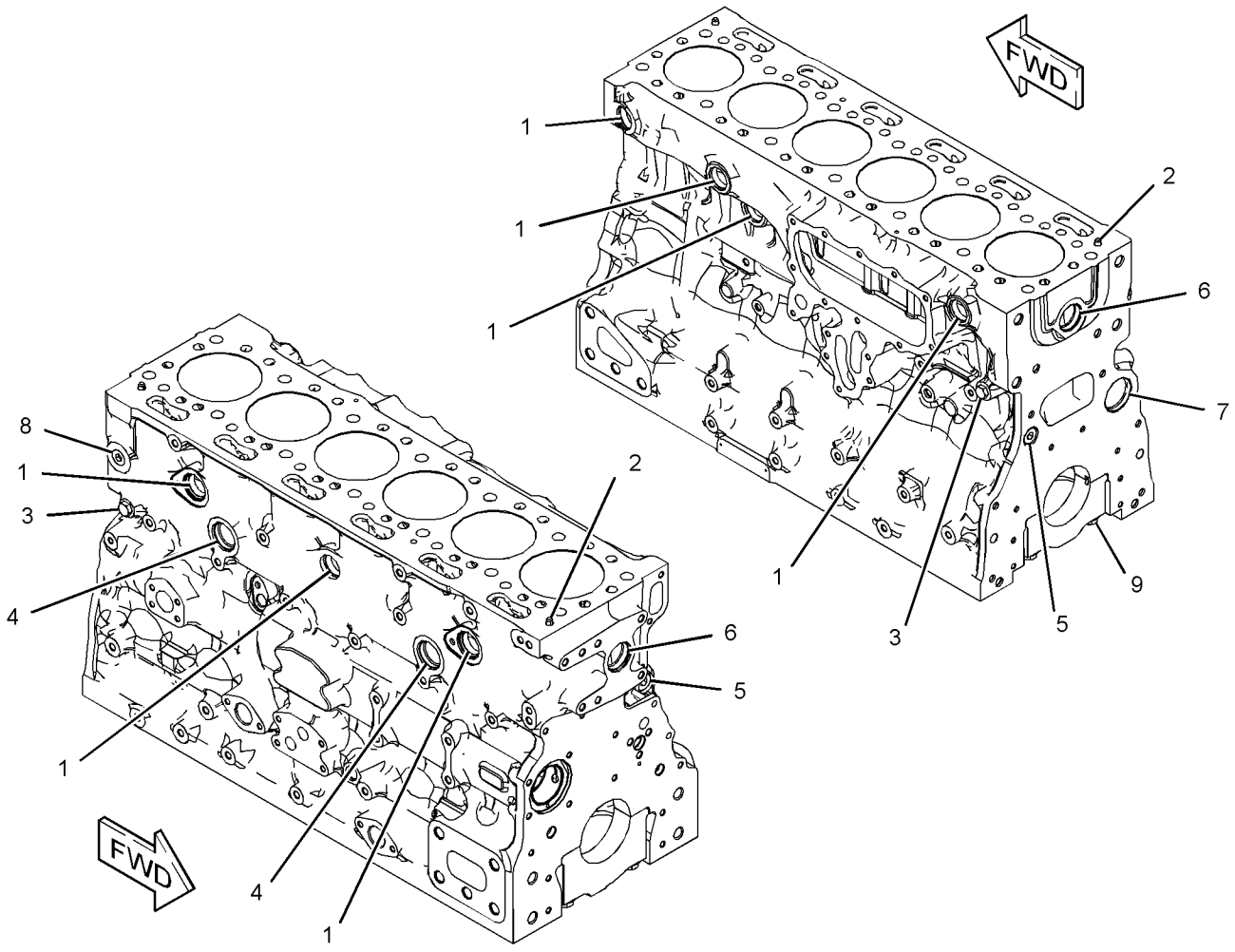

GRAPHIC #1 **<END>** g03320206

348-3283 CYLINDER BLOCK GP

S/N: D7A1-UP

PART OF 417-3389 ENGINE AR-PRIMARY

SMCS-1201 **i05245790**

NOTE	REF NO	GRAPHIC REF	PART NUMBER	QTY	PART NAME 1 2 3 4 5 6 (PRODUCT LEVEL)	SEE PAGE
M	1	1	**209-9219**	10	BOLT (M8X1.25X16-MM)	
	2	1	**232-1322**	1	PLUG	
	3	1	**276-5603**	1	SEAL-O-RING	
Y	4	1	*331-1682*	1	CYLINDER BLOCK AS	10
	5	1	**232-7449**	1	HOUSING AS	

M - METRIC PART
Y - SEPARATE ILLUSTRATION

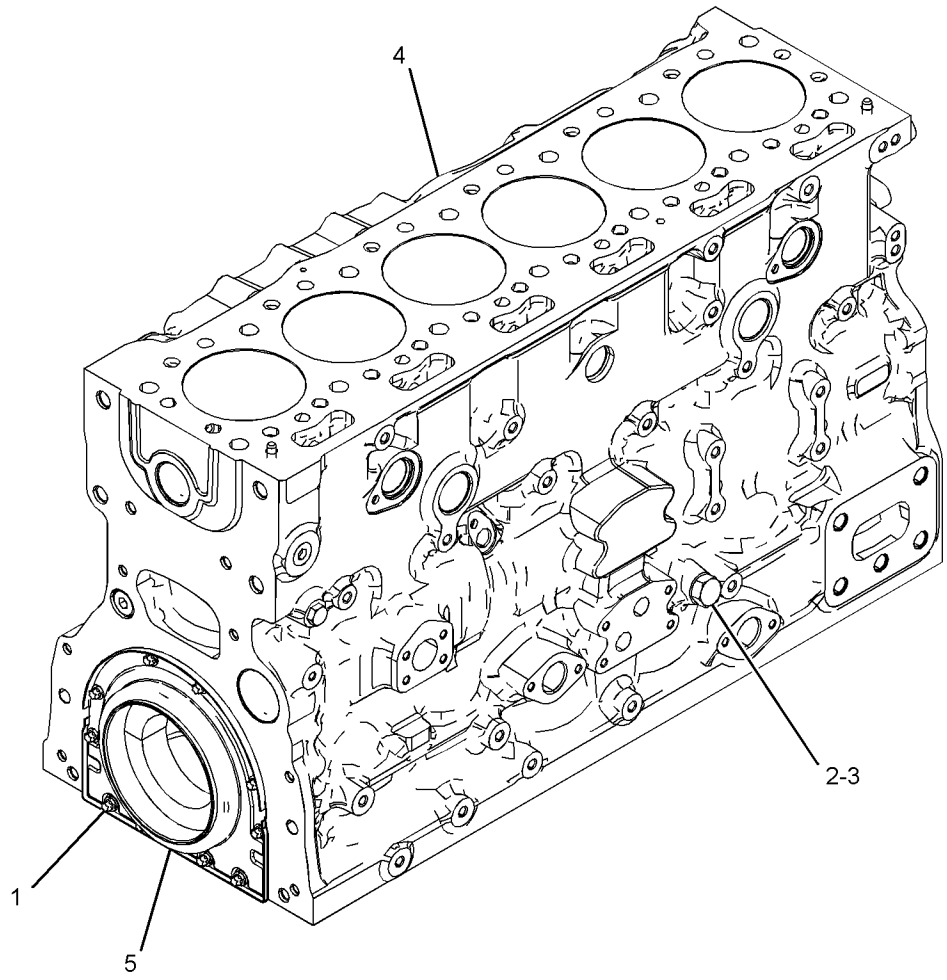

GRAPHIC #1 **<END>** g03318997

382-5079 CYLINDER HEAD AS

S/N: D7A1-UP

PART OF 391-3193 CYLINDER HEAD GP

SMCS-1100 **i05245830**

NOTE	REF NO	GRAPHIC REF	PART NUMBER	QTY	PART NAME 1 2 3 4 5 6 (PRODUCT LEVEL)	SEE PAGE
	1	1	**067-6006**	6	PLUG	
	2	1	**105-5761**	6	PLUG	
	3	1	**343-4295**	8	PLUG	
	4	1	**335-6264**	12	GUIDE-VALVE	
	5	1	**152-2886**	1	BOLT	

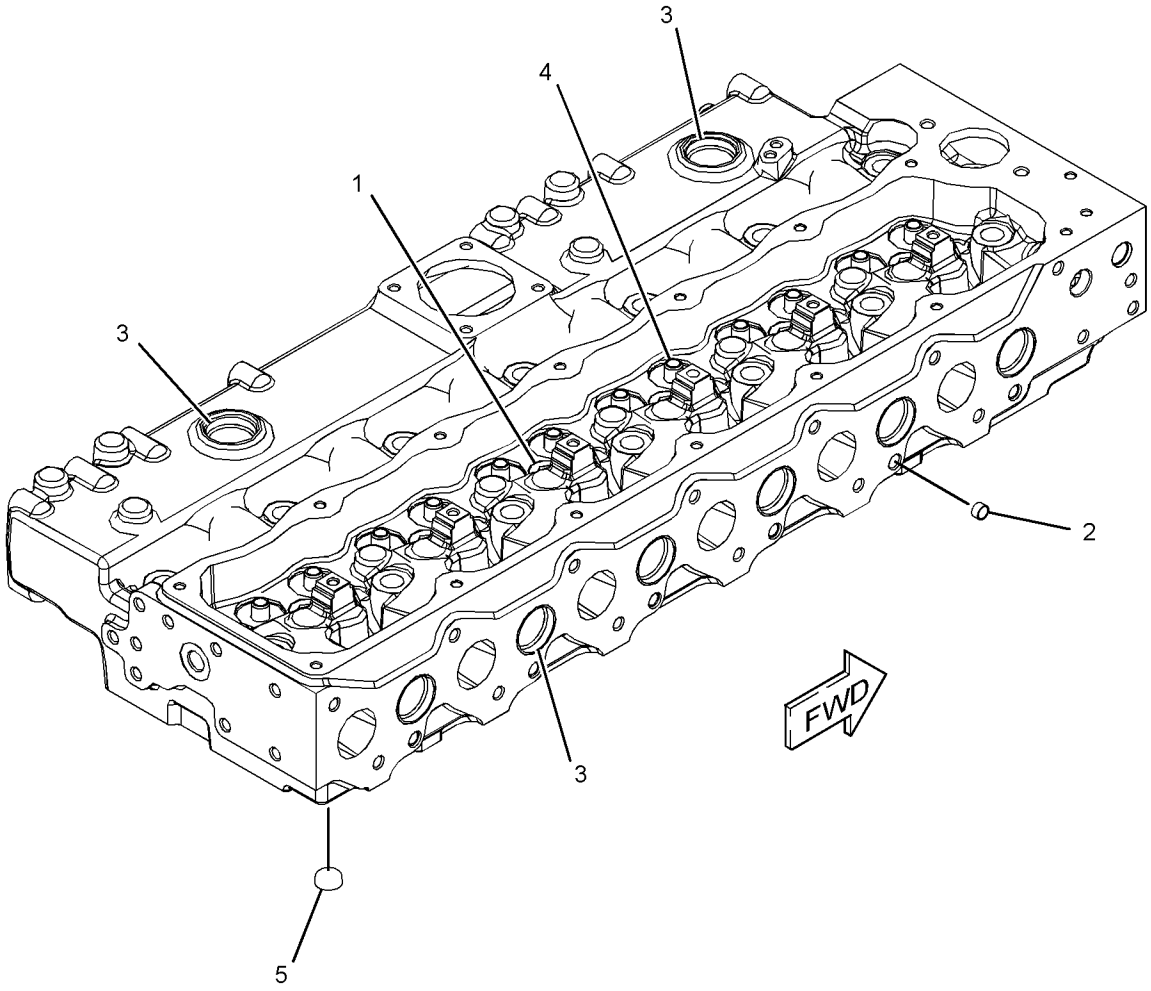

GRAPHIC #1 **<END>** g03320524

391-3193 CYLINDER HEAD GP

S/N: D7A1-UP

PART OF 417-3389 ENGINE AR-PRIMARY

SMCS-1100 **i05245812**

NOTE	PART NUMBER	QTY	PART NAME 1 2 3 4 5 6 (PRODUCT LEVEL)	SEE PAGE
Y	*382-5079*	1	CYLINDER HEAD AS	12
	335-7055	14	BOLT	
	359-6616	1	GASKET	

Y - SEPARATE ILLUSTRATION

<END>

394-7014 DRAIN GP-ENGINE OIL

S/N: D7A1-UP

PART OF 417-3389 ENGINE AR-PRIMARY

SMCS-1302 **i05245826**

NOTE	REF NO	GRAPHIC REF	PART NUMBER	QTY	PART NAME 1 2 3 4 5 6 (PRODUCT LEVEL)	SEE PAGE
	1	1	**3K-0360**	1	SEAL-O-RING	
	2	1	**6V-7238**	1	VALVE-SHUTOFF	

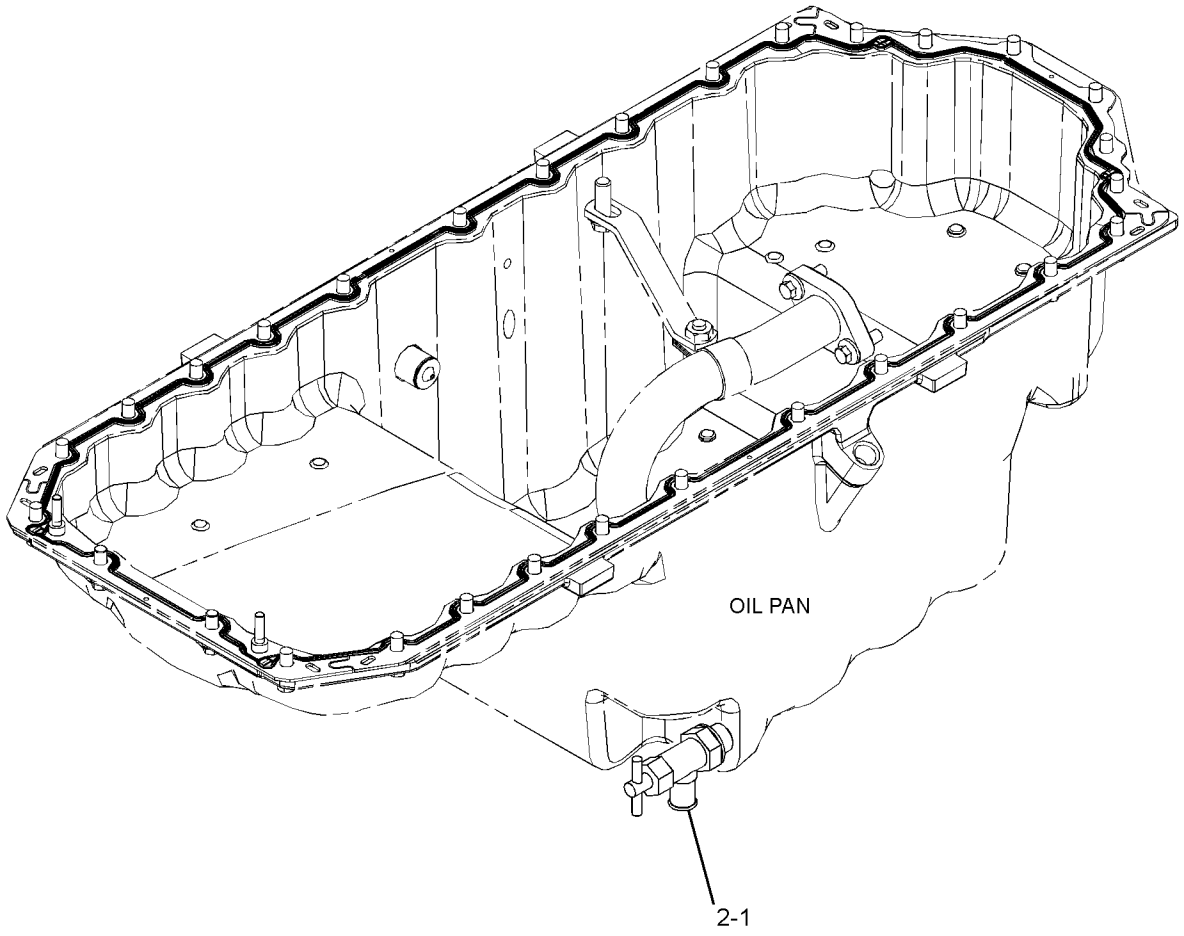

GRAPHIC #1 **<END>** g03317520

396-6979 DRIVE GP-FAN

S/N: D7A1-UP

PART OF 417-3389 ENGINE AR-PRIMARY

SMCS-1359 **i05245916**

NOTE	REF NO	GRAPHIC REF	PART NUMBER	QTY	PART NAME 1 2 3 4 5 6 (PRODUCT LEVEL)	SEE PAGE
M	1	1	**6I-0593**	10	BOLT (M10X1.5X30-MM)	
	2	1	**321-9994**	1	DRIVE AS-FAN	
	2A	1	**176-0773**	1	CLIP	
	3	1	**348-5434**	1	IDLER AS	
	4	1	**379-2023**	1	BRACKET	
	5	1	**388-1869**	1	BRACKET AS	
	5A	1	**339-8780**	1	DOWEL	
	5B	1	**379-2022**	1	BRACKET	
M	6	1	**6I-0654**	3	BOLT (M10X1.5X25-MM)	
	7	1	**273-9292**	2	BOLT	
	8	1	**277-6078**	1	BRACKET	

M - METRIC PART

396-6979 **DRIVE GP-FAN (*contd.*)** **i05245916**

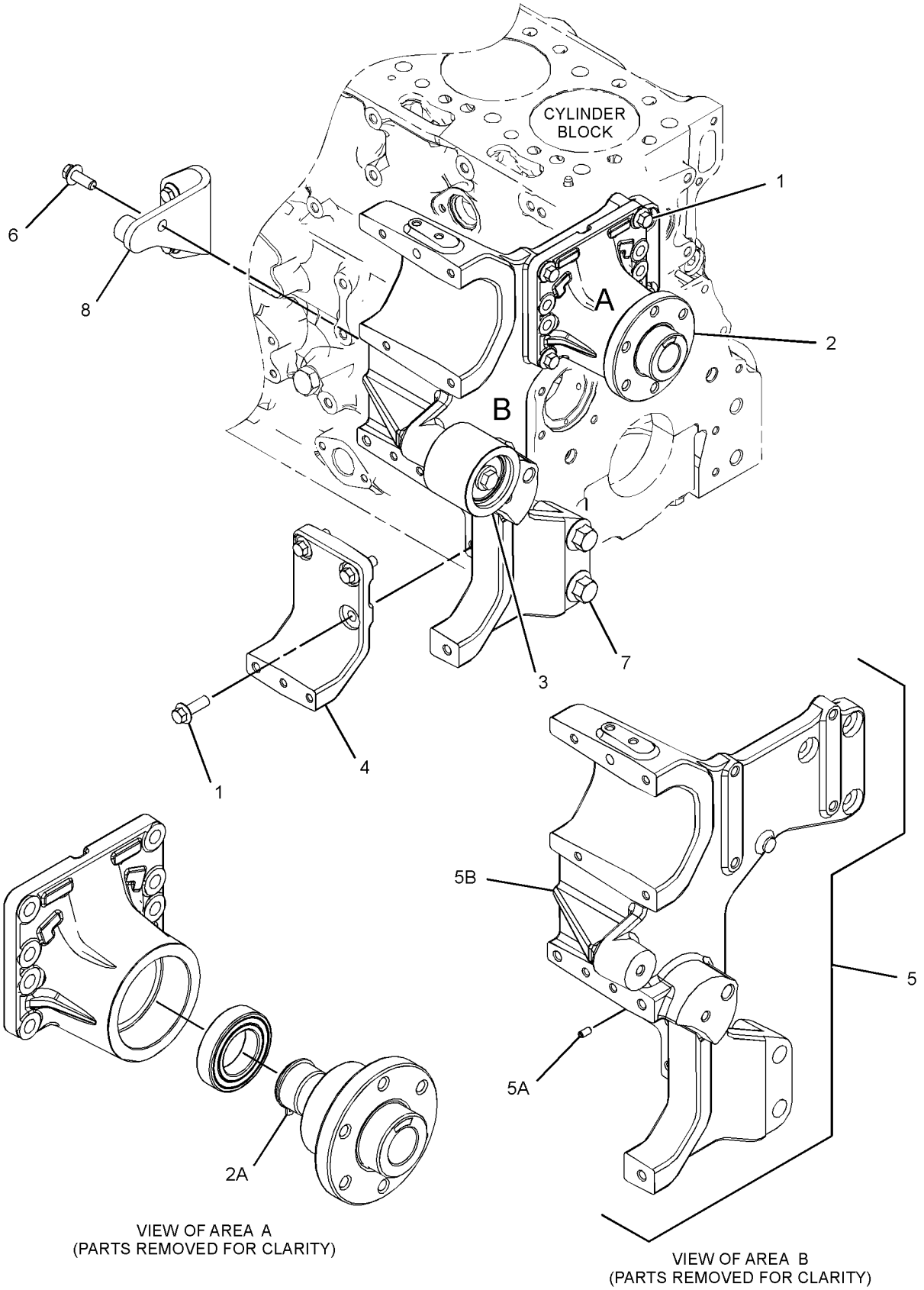

GRAPHIC #1 **<END>** g03319707

371-2539 FLYWHEEL GP

S/N: D7A1-UP

PART OF 417-3389 ENGINE AR-PRIMARY

SMCS-1156 **i05245808**

NOTE	REF NO	GRAPHIC REF	PART NUMBER	QTY	PART NAME 1 2 3 4 5 6 (PRODUCT LEVEL)	SEE PAGE
	1	1	**145-4911**	12	WASHER	
	2	1	**378-4739**	1	FLYWHEEL AS	
		1	**277-0588**	1	GEAR-STARTING MOTOR RING (134-TEETH)	
	3	1	**0S-1603**	12	BOLT (1/2-20X1.5-IN)	

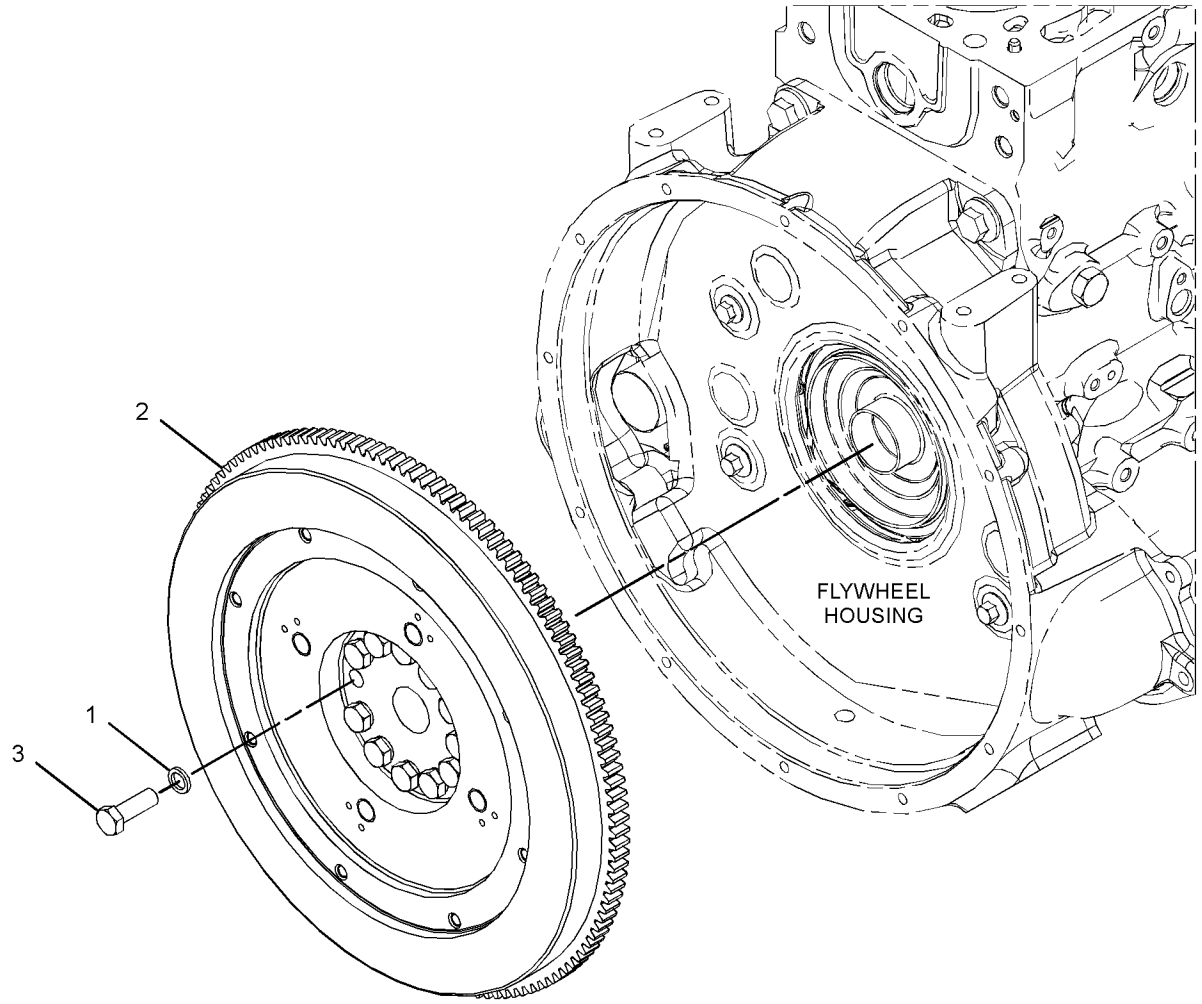

GRAPHIC #1 **<END>** g02629056

396-6954 HOUSING GP-FLYWHEEL

S/N: D7A1-UP

PART OF 417-3389 ENGINE AR-PRIMARY

SMCS-1157 **i05245914**

NOTE	REF NO	GRAPHIC REF	PART NUMBER	QTY	PART NAME 1 2 3 4 5 6 (PRODUCT LEVEL)	SEE PAGE
	1	1	**6I-0917**	2	BOLT (M6X1X25-MM)	
	2	1	**277-0121**	1	PLUG	
	3	1	**283-4662**	2	BOLT-FLANGE HEAD	
	4	1	**287-8597**	2	DOWEL	
	5	1	**288-6974**	4	BOLT	
	6	1	**335-2092**	1	COVER-FLYWHEEL	
	7	1	**393-4006**	1	GASKET	
	8	1	**394-5874**	1	HOUSING-FLYWHEEL	
	9	1	**288-6975**	2	BOLT	

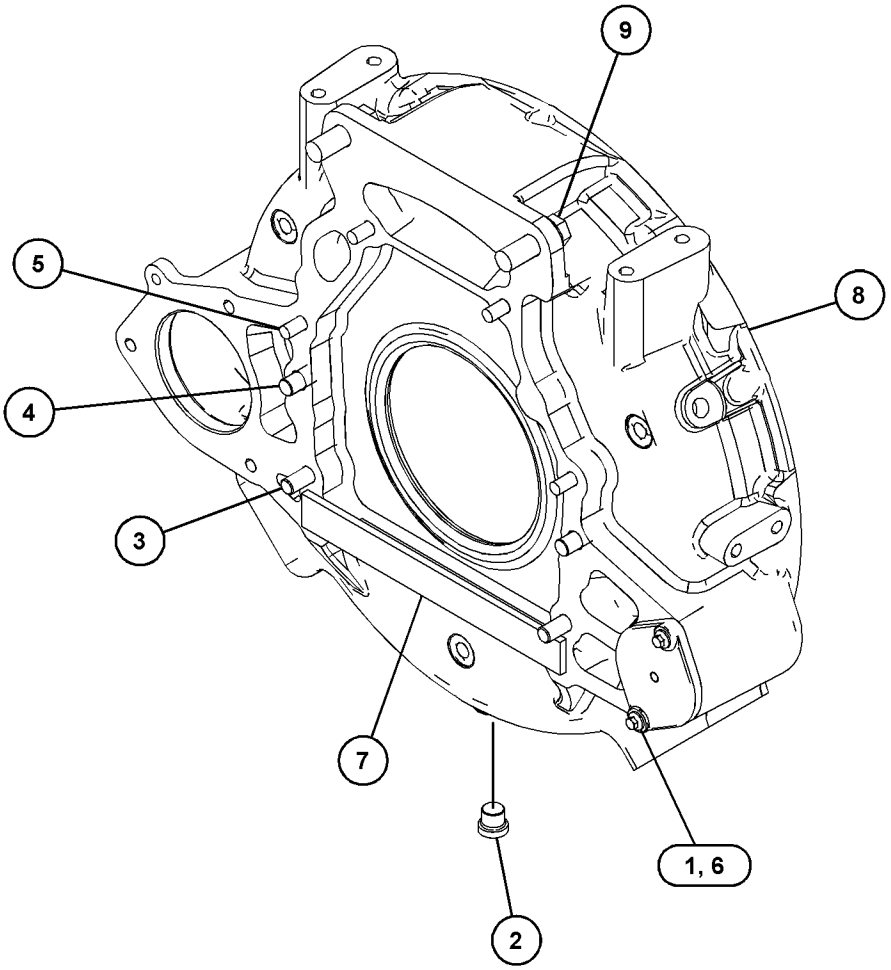

GRAPHIC #1 **<END>** g03319350

346-0495 HOUSING GP-FRONT

S/N: D7A1-UP

PART OF 417-3389 ENGINE AR-PRIMARY

SMCS-1151, 1162, 1206 **i05245727**

NOTE	REF NO	GRAPHIC REF	PART NUMBER	QTY	PART NAME 1 2 3 4 5 6 (PRODUCT LEVEL)	SEE PAGE
M	1	1	**6I-0217**	6	BOLT (M8X1.25X20-MM)	
M	2	1	**6I-0645**	4	BOLT (M8X1.25X25-MM)	
M	3	1	**6I-0650**	3	BOLT (M10X1.5X65-MM)	
	4	1	**7C-4616**	1	BOLT (M12X1.75X45-MM)	
	5	1	**067-6179**	1	DOWEL	
M	6	1	**100-3751**	5	BOLT (M8X1.25X65-MM)	
M	7	1	**101-3895**	2	BOLT (M8X1.25X35-MM)	
M	8	1	**124-3815**	10	BOLT (M8X1.25X16-MM)	
	9	1	**133-1011**	1	WASHER	
	10	1	**216-8634**	1	GEAR-CAMSHAFT (68-TEETH)	
	11	1	**277-3012**	1	GASKET-COVER	
	12	1	**277-3013**	1	SEAL	
	13	1	**277-4223**	1	PLUG	
	14	1	**294-0286**	1	KIT-COVER	
	15	1	**346-0408**	1	PLATE	
	16	1	**232-3657**	1	COVER AS-FRONT	
	16A	1	**225-8287**	1	GASKET	
	17	1	**232-3666**	1	WASHER-THRUST	
	18	1	**324-0444**	1	HUB-IDLER GEAR	
	19	1	**346-0407**	1	GEAR-IDLER	

M - METRIC PART

346-0495 **HOUSING GP-FRONT (*contd.*)** **i05245727**

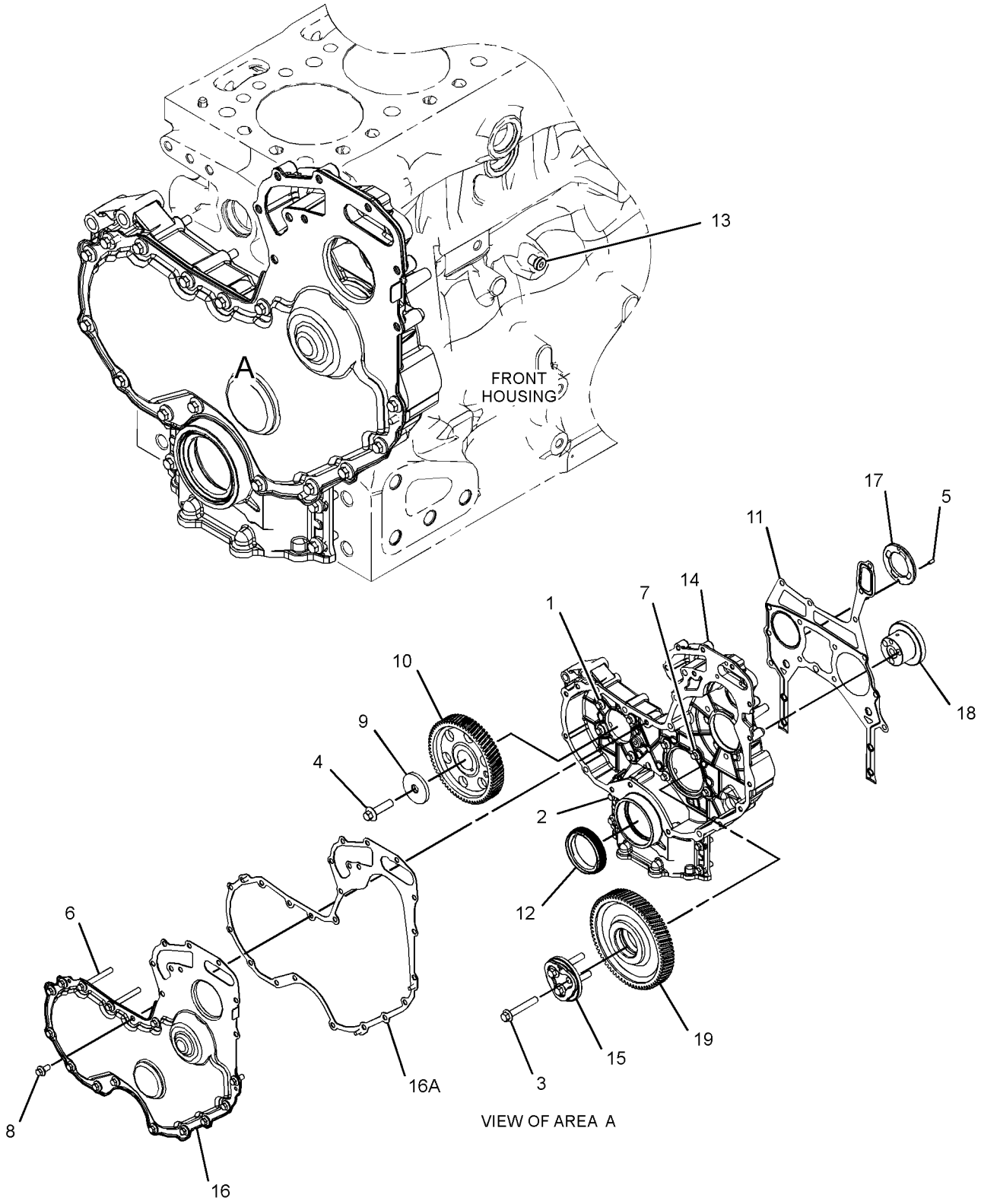

GRAPHIC #1 **<END>** g03316774

348-3503 JET GP-PISTON COOLING

S/N: D7A1-UP

PART OF 417-3389 ENGINE AR-PRIMARY

SMCS-1331 **i05245805**

NOTE	REF NO	GRAPHIC REF	PART NUMBER	QTY	PART NAME 1 2 3 4 5 6 (PRODUCT LEVEL)	SEE PAGE
M	1	1	**100-4841**	6	BOLT (M6X1X10-MM)	
	2	1	**329-3796**	6	TUBE AS-OIL JET	

M - METRIC PART

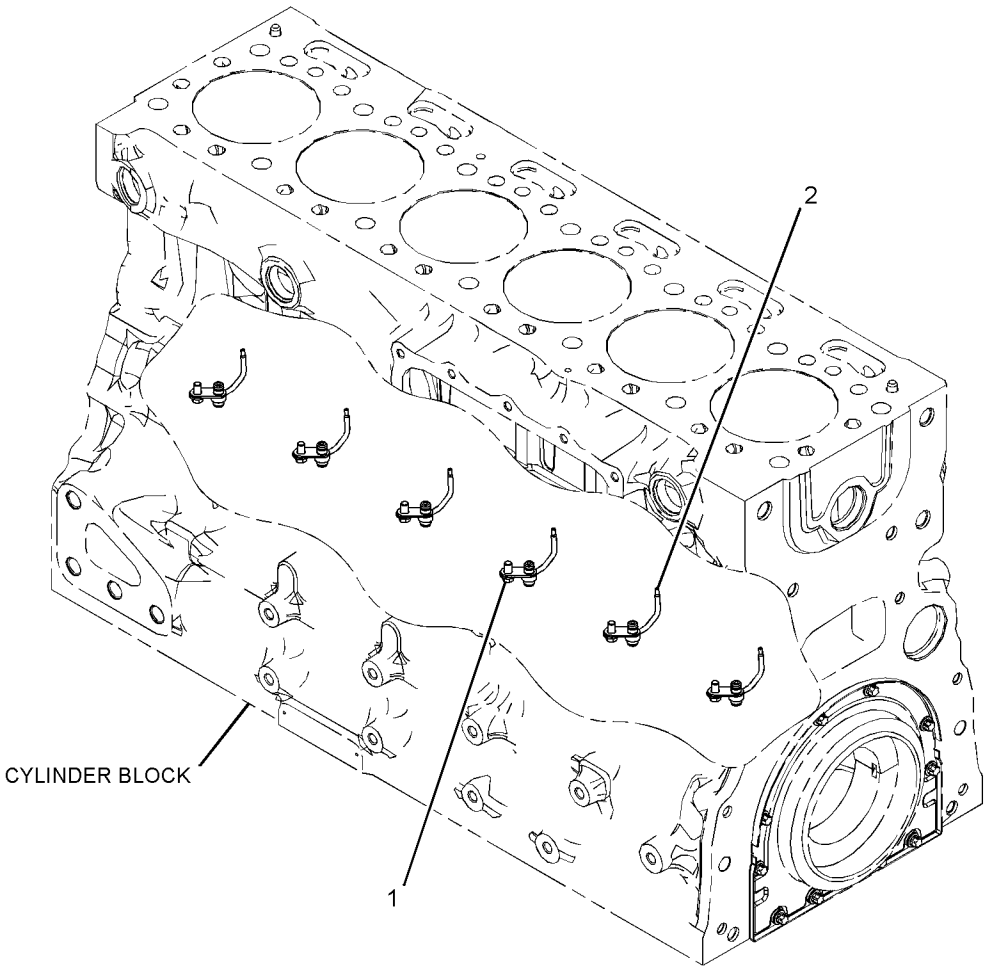

GRAPHIC #1 **<END>** g03316934

415-4600 LIFTING GP-ENGINE

S/N: D7A1-UP

PART OF 417-3389 ENGINE AR-PRIMARY

SMCS-1122 **i05245926**

NOTE	REF NO	GRAPHIC REF	PART NUMBER	QTY	PART NAME 1 2 3 4 5 6 (PRODUCT LEVEL)	SEE PAGE
	1	1	**123-2899**	4	BOLT (M10X1.5X40-MM)	
M	2	1	**6I-0654**	2	BOLT (M10X1.5X25-MM)	
	3	1	**279-9651**	1	PLATE-LIFTING	
	4	1	**304-5062**	1	BRACKET	
	5	1	**304-5063**	1	BRACKET	

M - METRIC PART

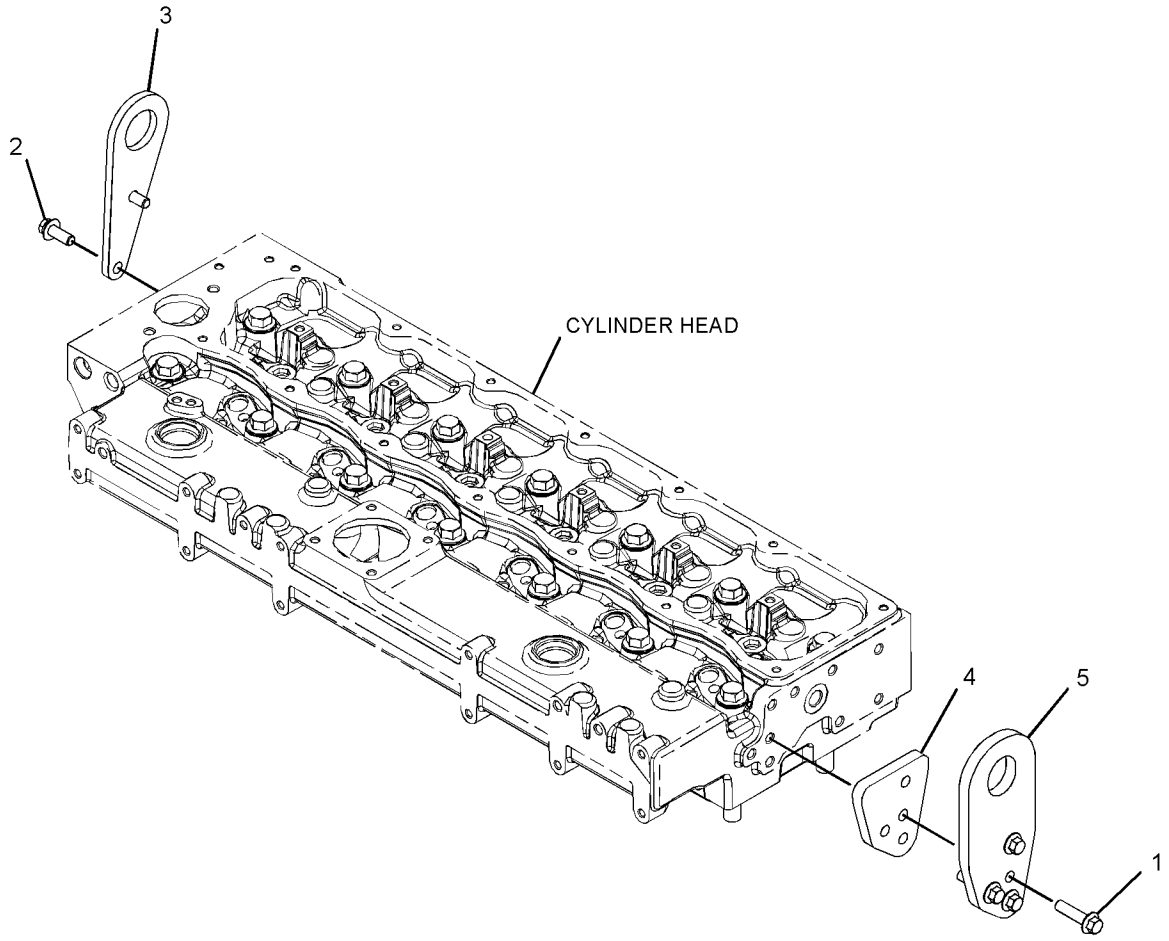

GRAPHIC #1 **<END>** g03317260

351-3886 MOUNTING GP-ENGINE

S/N: FKK1-UP; DNP1-UP

PART OF 394-7471, 433-6905 INSTALLATION AR-ENGINE

SMCS-1152 **i05259450**

NOTE	REF NO	GRAPHIC REF	PART NUMBER	QTY	PART NAME 1 2 3 4 5 6 (PRODUCT LEVEL)	SEE PAGE
	1	1	**118-9930**	4	SUPPORT AS	
M		1	**8T-4131**	1	NUT (M20X2.5-THD)	
	2	1	**324-4488**	4	MOUNT-RUBBER	
	3	1	**324-4489**	4	MOUNT-RUBBER	
	4	1	**390-2252**	2	BRACKET	
	5	1	**109-9329**	4	WASHER (21.5X120X8-MM THK)	
	6	1	**8T-4123**	8	WASHER (22X35X3.5-MM THK)	
	7	1	**8T-4223**	8	WASHER-HARD (13.5X25.5X3-MM THK)	
M	8	1	**8T-4910**	8	BOLT (M12X1.75X60-MM)	
M	9	1	**8T-6381**	4	BOLT (M20X2.5X120-MM)	

M - METRIC PART

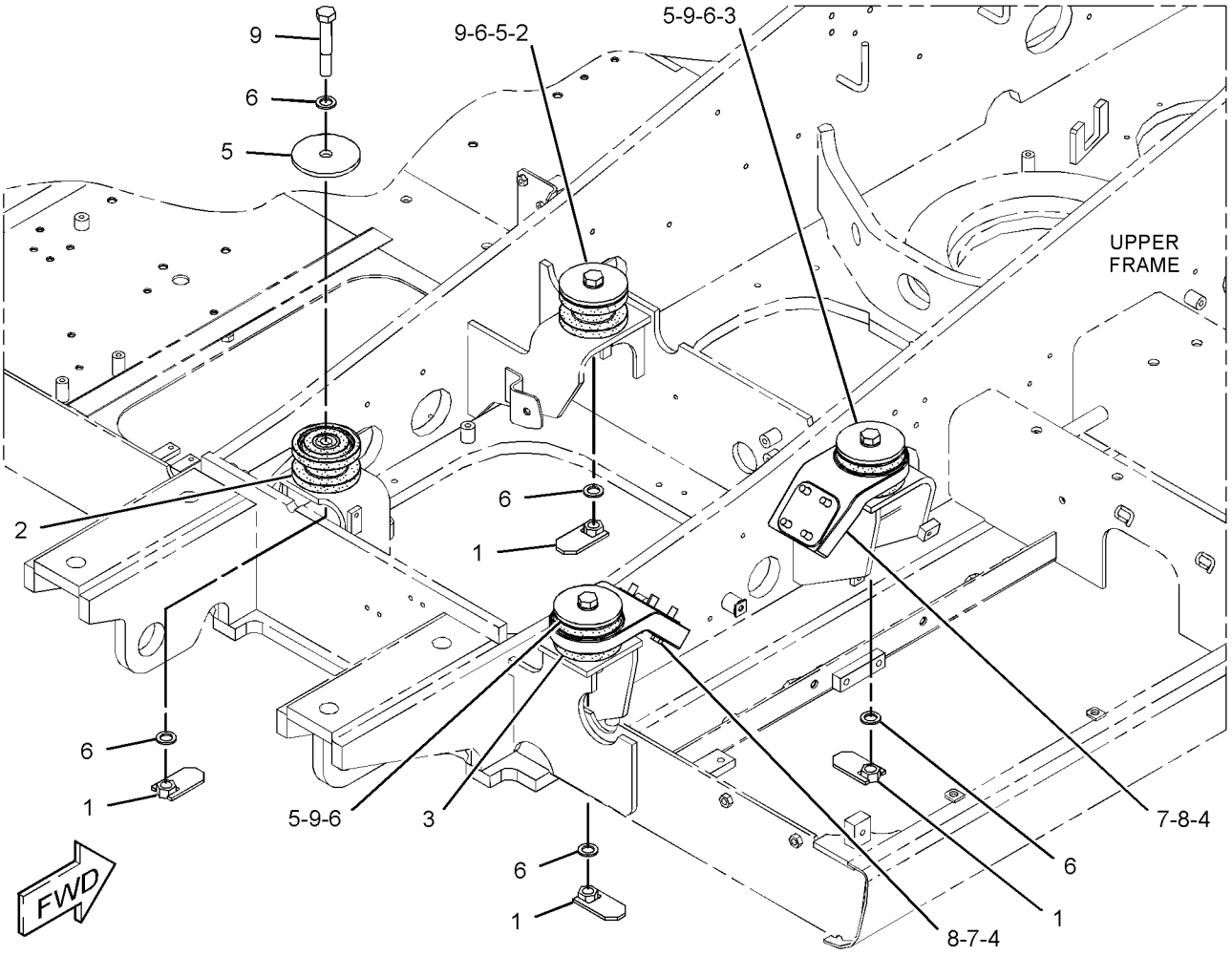

GRAPHIC #1 **<END>** g03103136

375-5008 MOUNTING GP-ENGINE

S/N: D7A1-UP

PART OF 417-3389 ENGINE AR-PRIMARY

SMCS-1152 **i05245811**

NOTE	REF NO	GRAPHIC REF	PART NUMBER	QTY	PART NAME 1 2 3 4 5 6 (PRODUCT LEVEL)	SEE PAGE
	1	1	**283-8301**	3	BOLT	
	2	1	**376-0601**	1	BRACKET	
	3	1	**376-2384**	1	BRACKET	
	4	1	**283-8302**	6	BOLT	

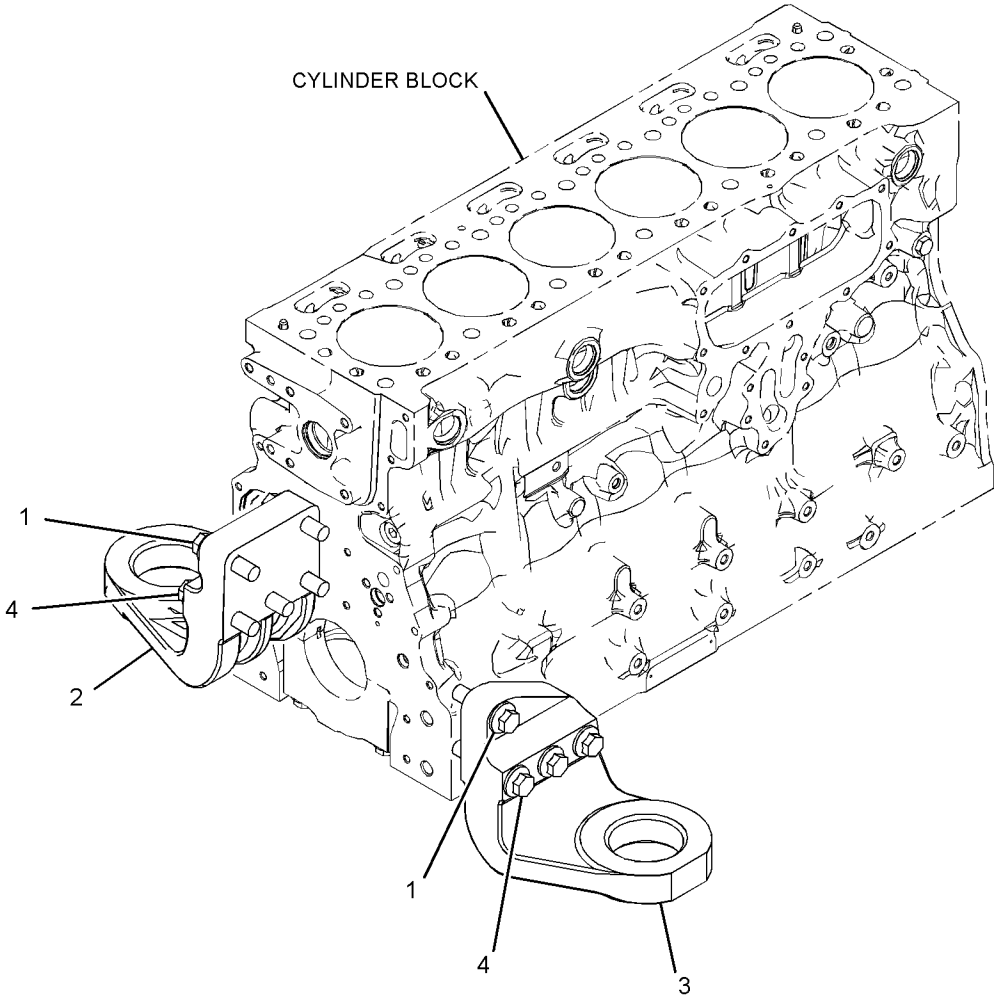

GRAPHIC #1 **<END>** g03317740

397-1501 PAN GP-OIL

S/N: D7A1-UP

PART OF 417-3389 ENGINE AR-PRIMARY

SMCS-1302 **i05245917**

NOTE	REF NO	GRAPHIC REF	PART NUMBER	QTY	PART NAME 1 2 3 4 5 6 (PRODUCT LEVEL)	SEE PAGE
M	1	1	**6I-0217**	29	BOLT (M8X1.25X20-MM)	
M	2	1	**6I-0260**	2	BOLT (M8X1.25X25-MM)	
M	3	1	**6I-0363**	2	BOLT (M6X1X20-MM)	
	4	1	**6I-0572**	2	BOLT (M8X1.25X20-MM)	
M	5	1	**124-3815**	1	BOLT (M8X1.25X16-MM)	
	6	1	**230-8094**	1	BRIDGE	
	7	1	**275-9897**	1	BRACKET	
	8	1	**280-1384**	1	TUBE AS-OIL SUCTION	
	9	1	**351-4749**	1	GASKET-OIL PAN	
	10	1	**354-8322**	1	PLUG	
	11	1	**378-8587**	1	GAUGE GP-OIL LEVEL (DIPSTICK)	
	12	1	**381-6824**	1	PAN GP-OIL	
	13	1	**396-2395**	1	BRACKET AS	
M	14	1	**6I-0654**	1	BOLT (M10X1.5X25-MM)	
	15	1	**6I-4200**	2	BOLT (M10X1.5X16-MM)	
	16	1	**6I-4681**	1	GASKET	

M - METRIC PART

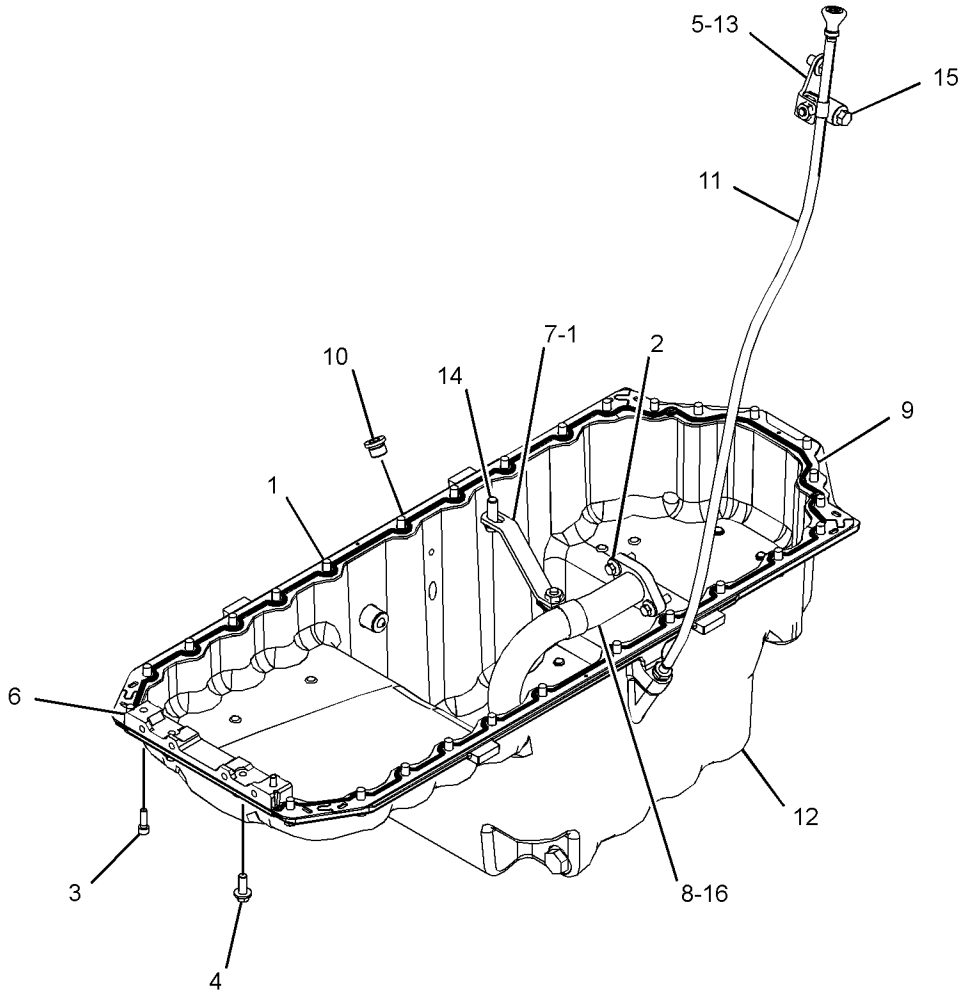

GRAPHIC #1 **<END>** g03319226

348-3296 PISTON & ROD GP

S/N: D7A1-UP

PART OF 417-3389 ENGINE AR-PRIMARY

SMCS-1225 **i05245804**

NOTE	REF NO	GRAPHIC REF	PART NUMBER	QTY	PART NAME 1 2 3 4 5 6 (PRODUCT LEVEL)	SEE PAGE
	1	1	**331-0290**	6	CONNECTING ROD GP	
		1	**276-7478**	1	BUSHING	
		1	**323-9312**	2	BOLT (M10X1X50-MM)	
	2	1	**370-7998**	6	PISTON GP	
L	3	1	*317-5482*	6	BEARING	
L	4	1	*317-5483*	6	BEARING	
N	5	1	**124-3536**	12	RING-RETAINING	
					AVAILABLE REPAIR KIT(S):	
L			**360-1564**	1	KIT-BEARING (PISTON)	
					(KIT INCLUDES BEARINGS)	
			389-7188	1	KIT-RING	
					(KIT INCLUDES RINGS-PISTON)	
N			**415-4315**	1	KIT-PISTON	
					(KIT INCLUDES RINGS-PISTON, RING-RETAINING, PIN, AND PISTON)	

L - KIT MARKED L SERVICES PARTS MARKED L
N - KIT MARKED N SERVICES PARTS MARKED N

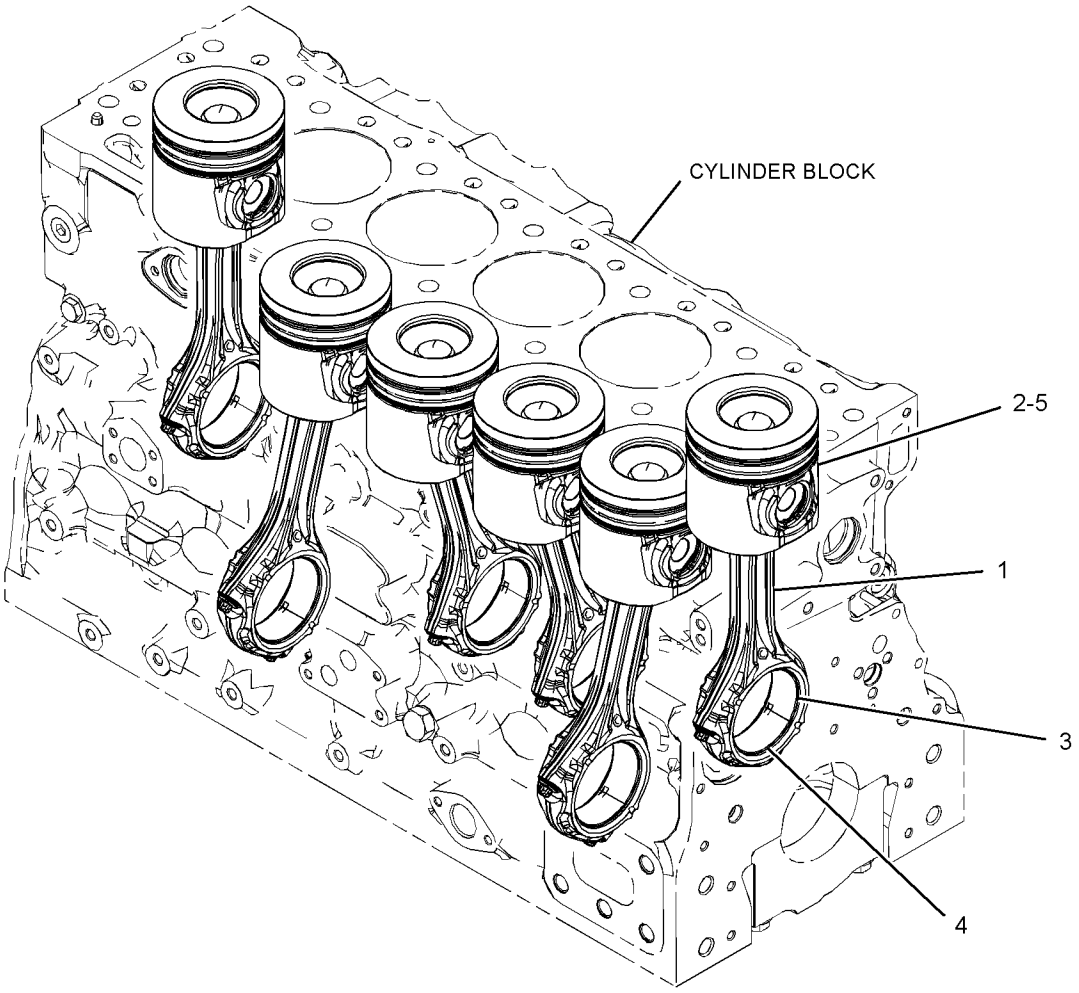

GRAPHIC #1 **<END>** g03320328

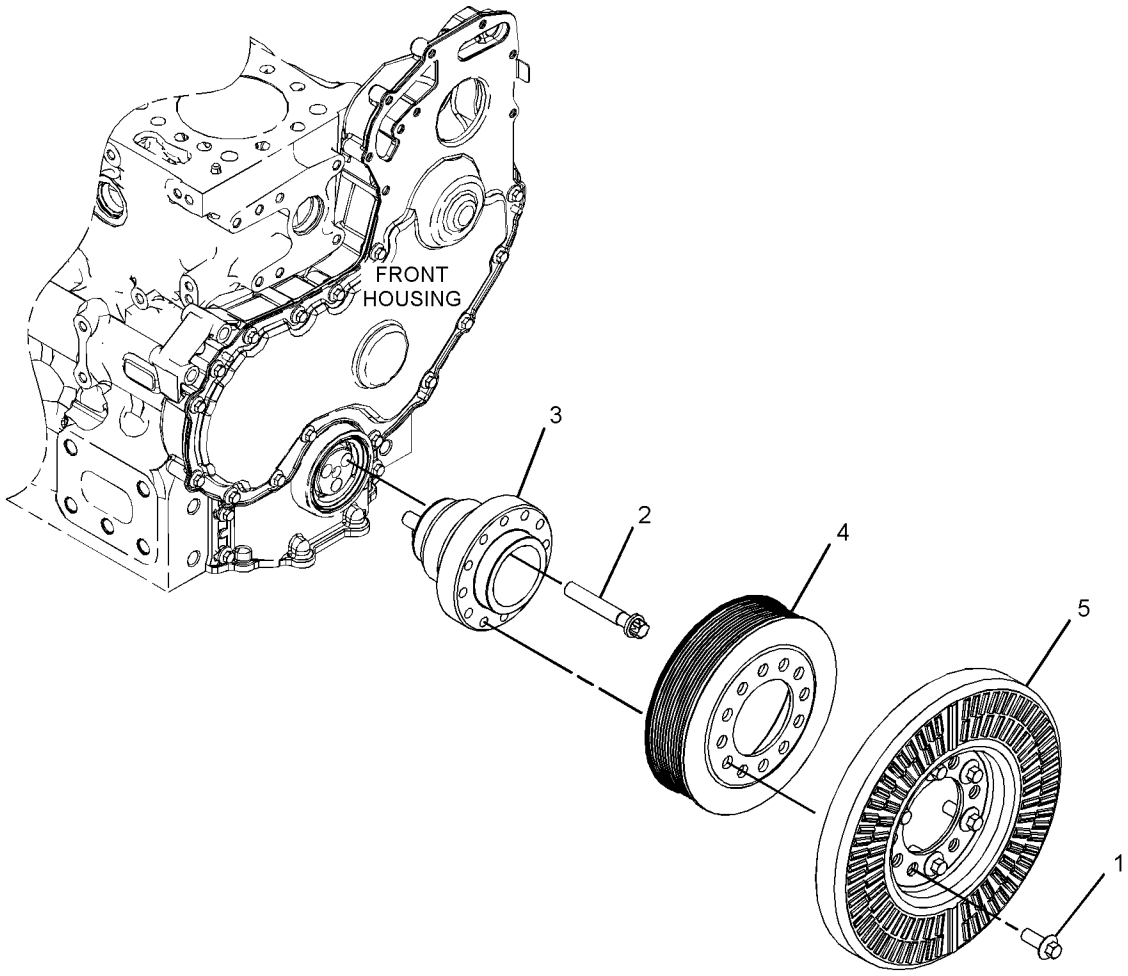

i

324-4551 PULLEY GP-ENGINE

S/N: FKK1-UP; DNP1-UP

PART OF 369-2257 FAN AR-SUCTION

SMCS-1205, 1207, 1359, 1384, 1425 **i05259397**

NOTE	REF NO	GRAPHIC REF	PART NUMBER	QTY	PART NAME 1 2 3 4 5 6 (PRODUCT LEVEL)	SEE PAGE
	1	1	**329-5255**	1	PULLEY (FAN DRIVE)	
	2	1	**357-2637**	1	BELT-SERPENTINE	

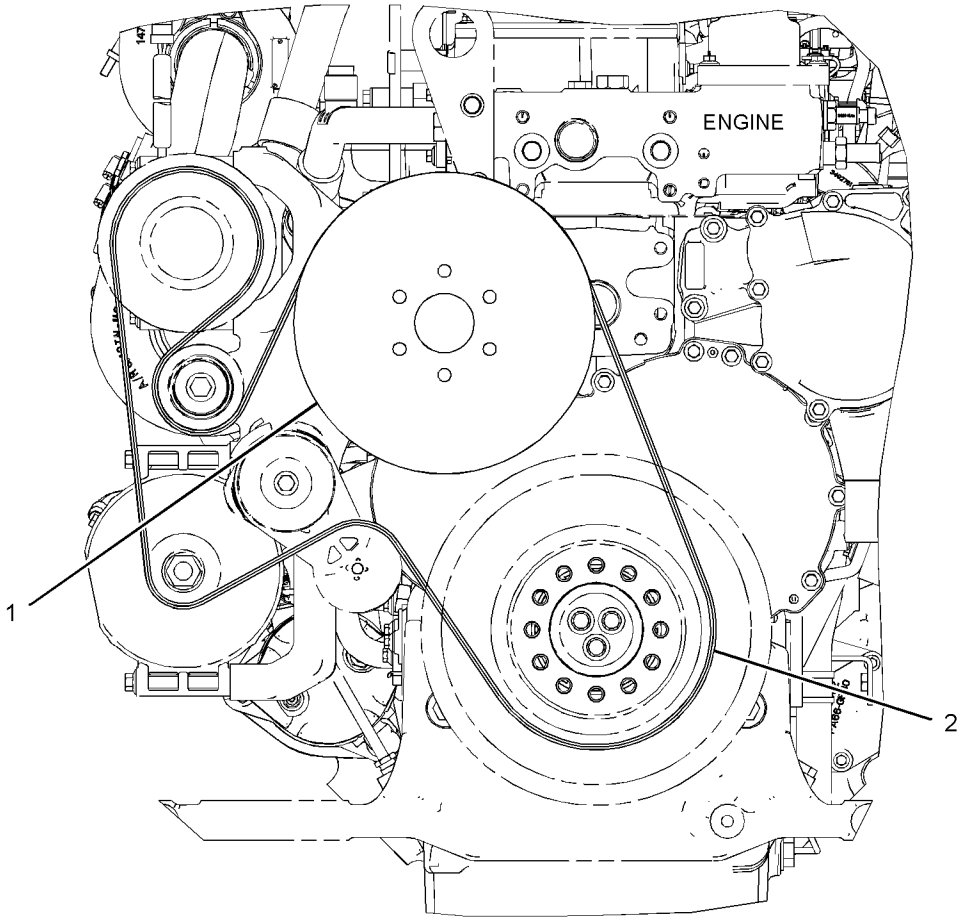

LEFT SIDE VIEW

GRAPHIC #1 **<END>** g02454838

391-3197 ROCKER ARM GP

S/N: D7A1-UP

PART OF 417-3389 ENGINE AR-PRIMARY

SMCS-1123 **i05224910**

NOTE	REF NO	GRAPHIC REF	PART NUMBER	QTY	PART NAME 1 2 3 4 5 6 (PRODUCT LEVEL)	SEE PAGE
	1	1	**252-6438**	6	SEAL-INLET VALVE	
	2	1	**254-3954**	6	SEAL-EXHAUST VALVE	
	3	1	**315-3393**	24	COLLET	
	4	1	**315-3394**	6	VALVE-EXHAUST	
Y	5	1	**335-5602**	1	VALVE MECHANISM GP	30
	6	1	**335-5606**	12	SPRING-VALVE	
	7	1	**335-5607**	12	RETAINER-SPRING	
	8	1	**381-6235**	6	VALVE-INLET	

Y - SEPARATE ILLUSTRATION

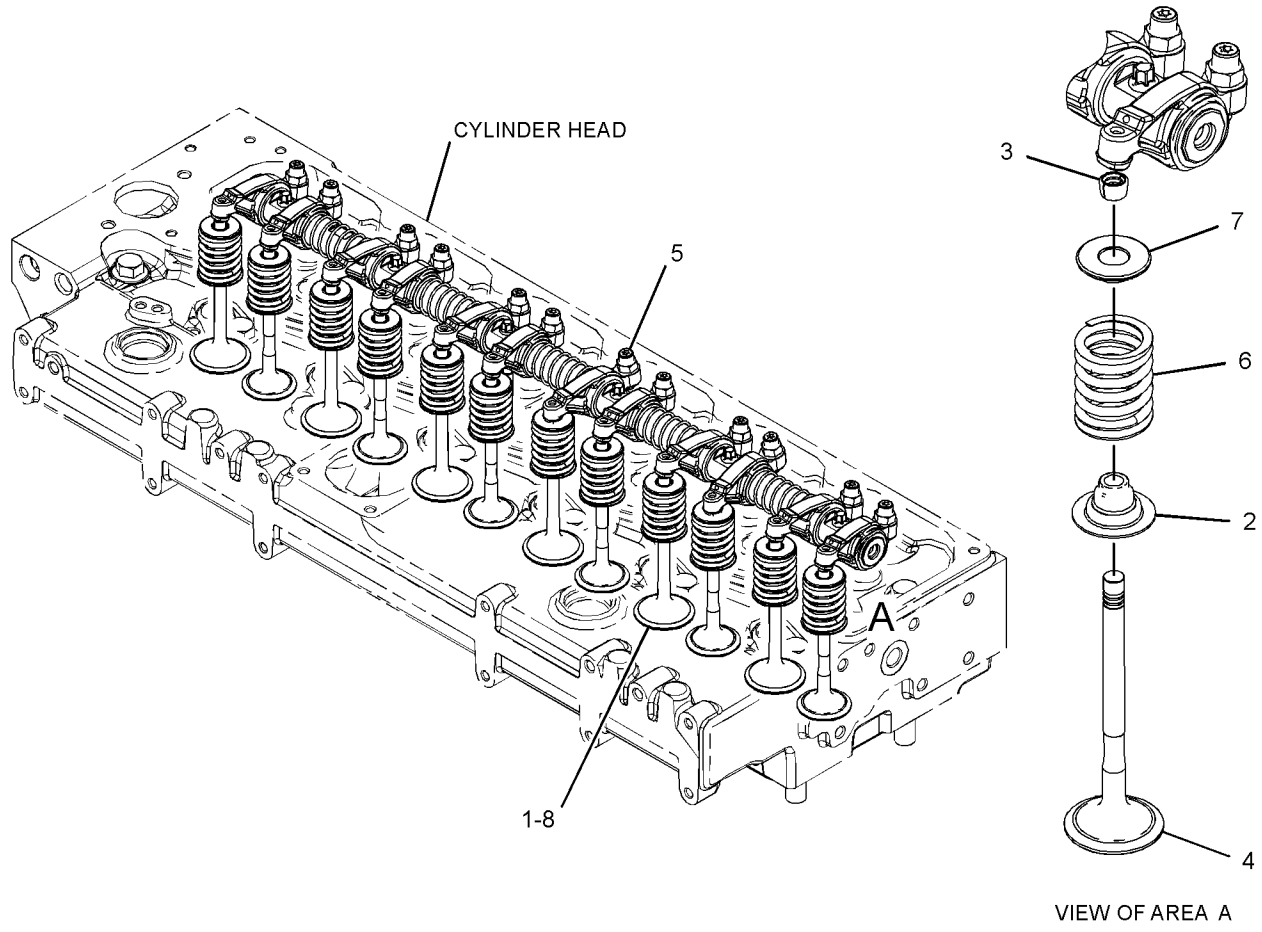

GRAPHIC #1 **<END>** g03317583

335-5602 VALVE MECHANISM GP

S/N: D7A1-UP

PART OF 391-3197 ROCKER ARM GP

SMCS-1209 **i05224912**

NOTE	REF NO	GRAPHIC REF	PART NUMBER	QTY	PART NAME 1 2 3 4 5 6 (PRODUCT LEVEL)	SEE PAGE
	1	1	**335-5604**	1	SHAFT AS-ROCKER ARM	
		1	**276-9200**	2	PLUG-SHAFT END	
		1	**335-5605**	1	SHAFT-ROCKER ARM	
	2	1	**225-5961**	2	WASHER (26.7X34.32X0.38-MM THK)	
M	3	1	**8T-9535**	1	BOLT-SOCKET HEAD (M8X1.25X60-MM)	
	4	1	**225-5962**	5	BOLT (M8X1.25X30-MM)	
	5	1	**225-5959**	2	CLIP	
	6	1	**225-5638**	5	SPRING	
	7	1	**225-5625**	6	LEVER AS	
		1	**5B-9079**	1	NUT-JAM (3/8-24-THD)	
		1	**185-1546**	1	SCREW	
	8	1	**225-5640**	6	LEVER AS	
		1	**5B-9079**	1	NUT-JAM (3/8-24-THD)	
		1	**185-1546**	1	SCREW	

M - METRIC PART

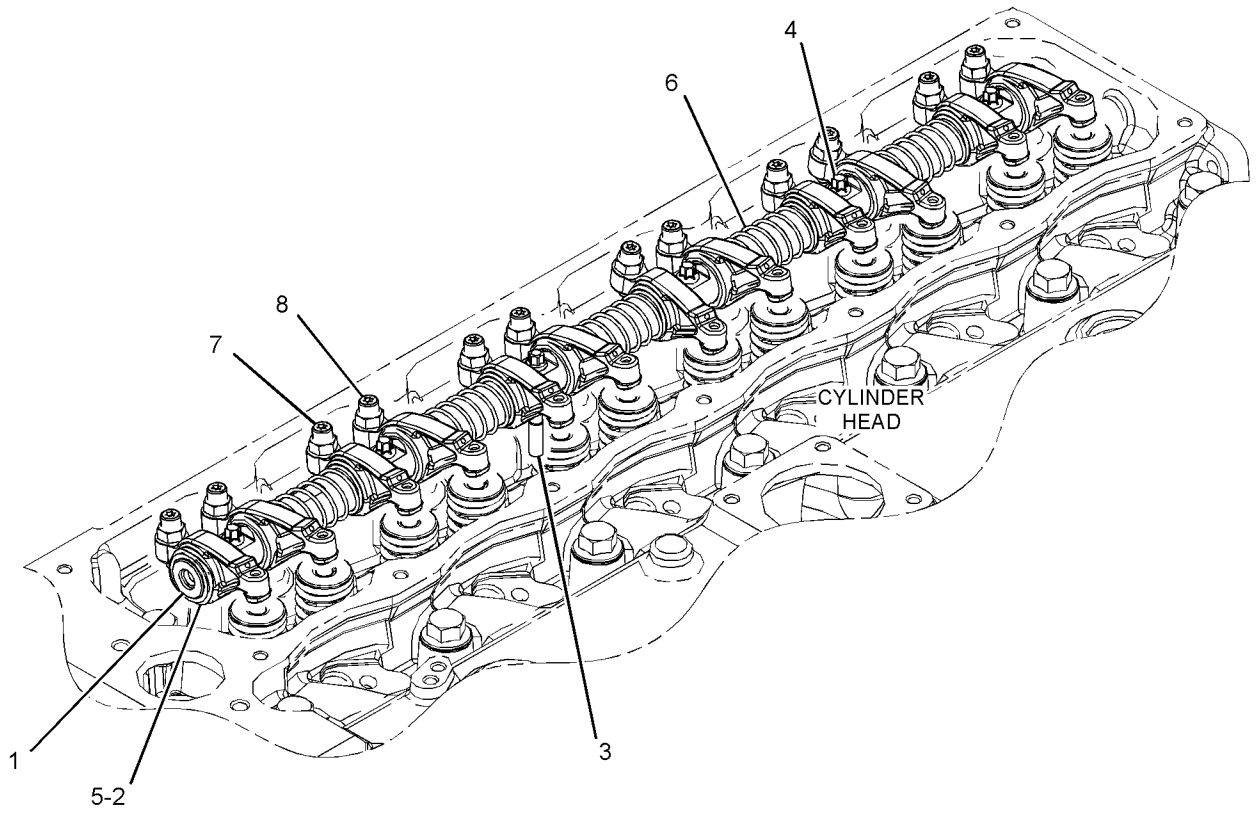

GRAPHIC #1 **<END>** g03319968

417-5871 FILLER GP-ENGINE OIL

S/N: D7A1-UP

PART OF 417-3389 ENGINE AR-PRIMARY

SMCS-1316 **i05245928**

NOTE	REF NO	GRAPHIC REF	PART NUMBER	QTY	PART NAME 1 2 3 4 5 6 (PRODUCT LEVEL)	SEE PAGE
M	1	1	**6I-0217**	2	BOLT (M8X1.25X20-MM)	
	2	1	**225-6522**	1	PLUG-CUP	
	3	1	**225-6524**	1	PLUG-CUP	
	4	1	**277-1974**	1	PLATE AS	
	4A	1	**277-1975**	1	SEAL-O-RING	

M - METRIC PART

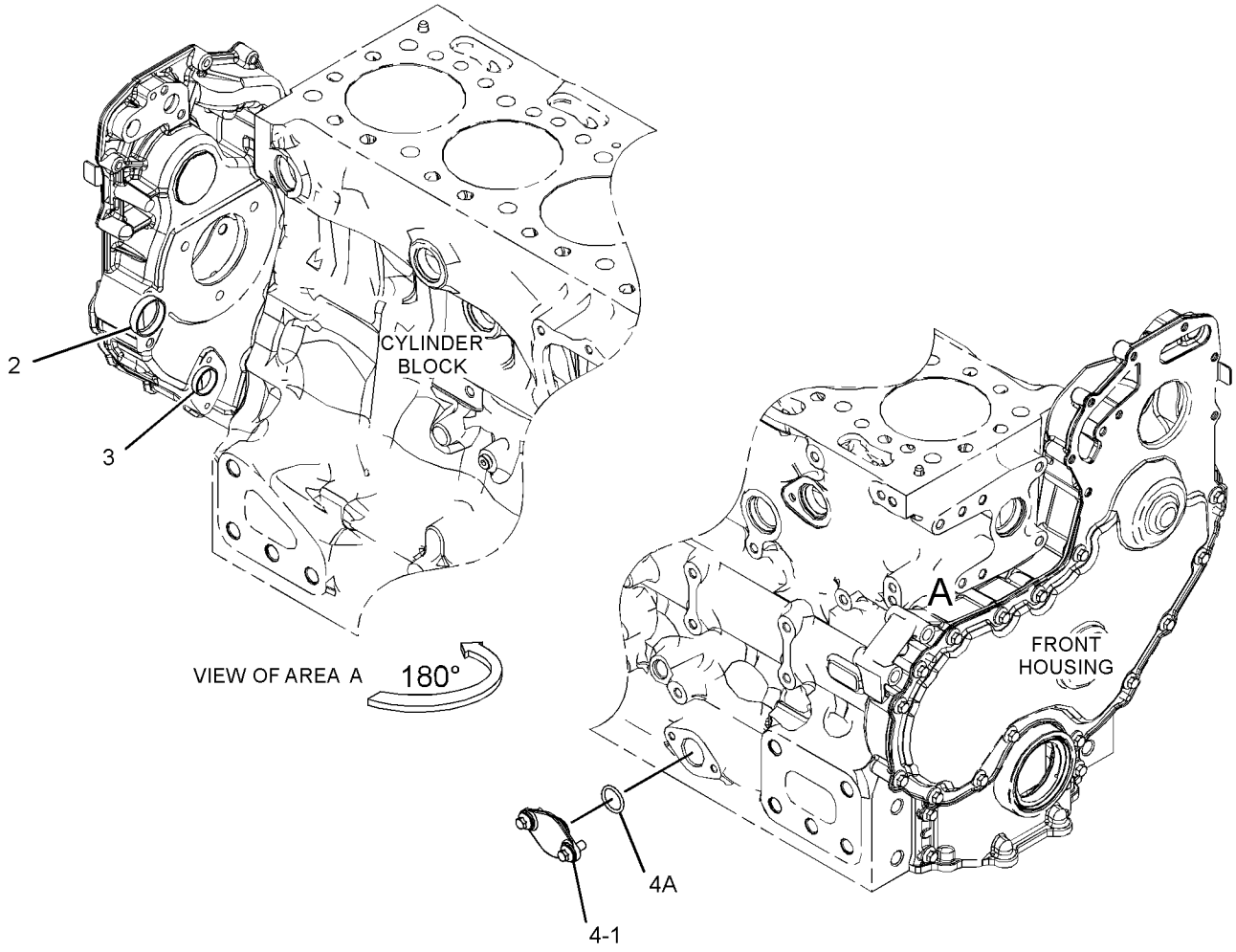

GRAPHIC #1 **<END>** g03316695

368-7675 FILTER & MTG GP-ENGINE OIL

S/N: FKK1-UP; DNP1-UP

PART OF 394-7471, 433-6905 INSTALLATION AR-ENGINE

SMCS-1306, 1308 **i05259454**

NOTE	REF NO	GRAPHIC REF	PART NUMBER	QTY	PART NAME 1 2 3 4 5 6 (PRODUCT LEVEL)	SEE PAGE
	1	1	**322-3154**	1	FILTER GP-OIL (ENGINE)	
		1	**322-3155**	1	FILTER ELEMENT-ENGINE OIL	
		1	**354-5833**	1	KIT-DRAIN (ENGINE OIL FILTER)	
					(INCLUDES DRAIN, KNOB & SEAL)	
	2	1	*329-5534*	1	CONNECTOR AS	
		1	**8C-5723**	1	CONNECTOR	
		1	**228-7093**	1	SEAL-O-RING	
		1	**238-5084**	1	SEAL-O-RING	
	3	1	**346-3229**	1	BASE AS-FILTER	
		1	**232-7599**	1	PLUG	
I	4	1	**379-4463**	1	HOSE AS	
I	5	1	**379-4464**	1	HOSE AS	
	6	1	**379-4465**	1	PLATE AS	
	7	1	**203-2287**	1	CLIP	
	8	1	*309-5130*	1	PLUG AS	
		1	**9S-4182**	1	PLUG-O-RING	
		1	**214-7566**	1	SEAL-O-RING	
	9	1	*309-5137*	1	CONNECTOR AS	
		1	**6V-8635**	1	CONNECTOR	
		1	**228-7093**	1	SEAL-O-RING	
		1	**238-5084**	1	SEAL-O-RING	
	10	1	*319-6212*	1	CONNECTOR AS	
		1	**6V-8714**	1	CONNECTOR	
		1	**228-7093**	1	SEAL-O-RING	
		1	**238-5082**	1	SEAL-O-RING	
	11	1	*319-6220*	1	ELBOW AS	
		1	**6V-9008**	1	ELBOW	
		1	**228-7093**	1	SEAL-O-RING	
		1	**238-5084**	1	SEAL-O-RING	
	12	1	*321-8649*	1	VALVE AS-FLUID SAMPLING (ENGINE OIL)	
		1	**8C-3446**	1	VALVE-FLUID SAMPLING (ENGINE OIL)	
		1	**214-7566**	1	SEAL-O-RING	
	13	1	*326-0319*	1	PLUG AS	
		1	**9S-4188**	1	PLUG	
		1	**238-5083**	1	SEAL-O-RING	
	14	1	**8C-3445**	1	CAP-DUST	
M	15	1	**8T-4192**	3	BOLT (M12X1.75X25-MM)	
	16	1	**8T-4223**	3	WASHER-HARD (13.5X25.5X3-MM THK)	
	17	1	**8T-4224**	4	WASHER-HARD (8.8X16X2-MM THK)	
M	18	1	**8T-7547**	4	BOLT (M8X1.25X30-MM)	
E	19	1	**7Y-5074**		GUARD-HOSE (49-CM)	

E - ORDER BY THE CENTIMETER
I - REFER TO HYDRAULIC INFORMATION SYSTEM
M - METRIC PART

368-7675 **FILTER & MTG GP-ENGINE OIL (*contd.*)** **i05259454**

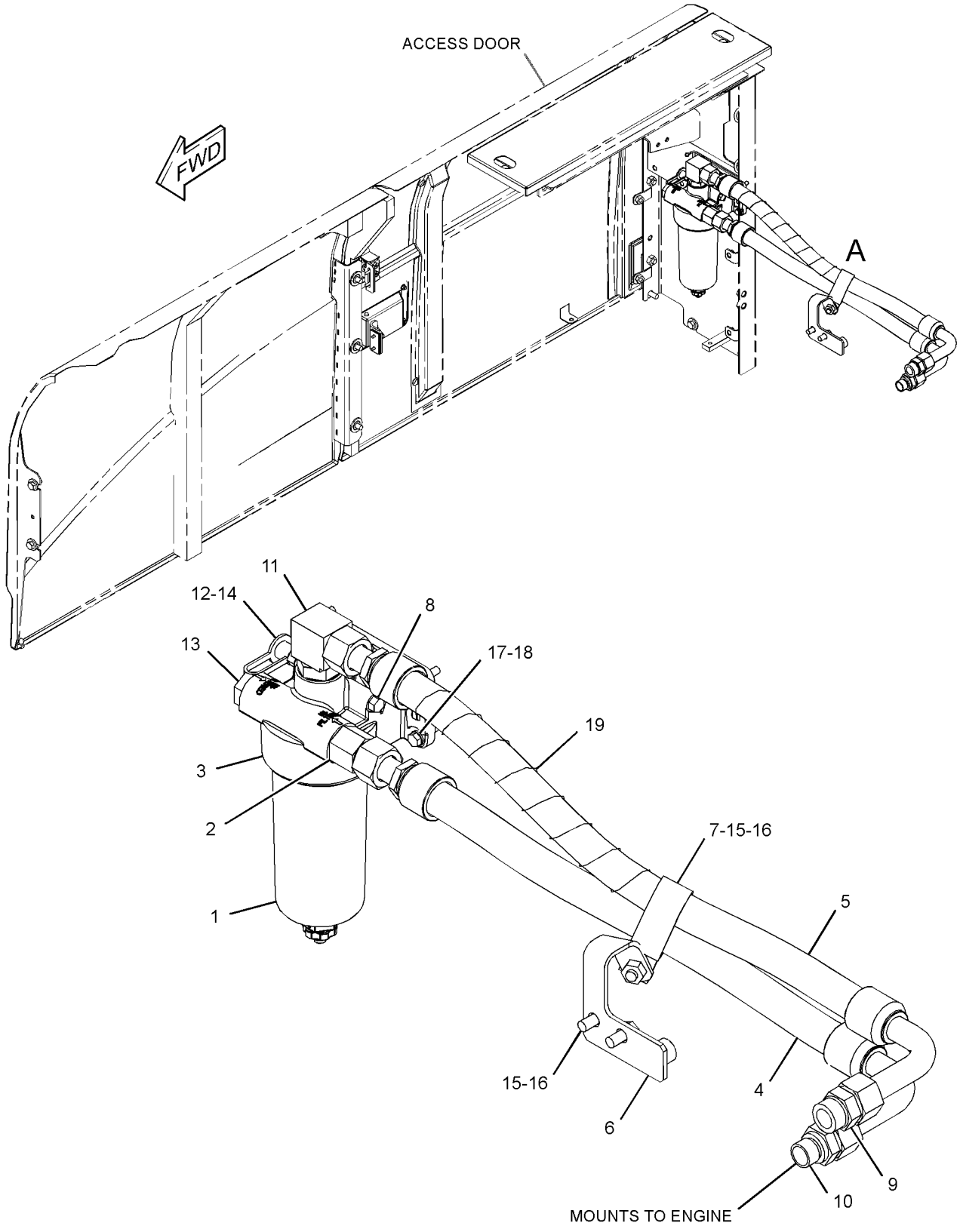

VIEW OF AREA A

GRAPHIC #1 **<END>** g03304439

394-7474 FUMES DISPOSAL GP

S/N: FKK1-UP; DNP1-UP

PART OF 394-7471, 433-6905 INSTALLATION AR-ENGINE

SMCS-1317 **i05259742**

NOTE	REF NO	GRAPHIC REF	PART NUMBER	QTY	PART NAME 1 2 3 4 5 6 (PRODUCT LEVEL)	SEE PAGE
	1	1	**381-5786**	1	SPACER	
	2	1	**394-7970**	1	HOSE-FUMES DISPOSAL	
	3	1	**395-1699**	1	PLATE	
	4	1	**067-3045**	1	CLIP	
	5	1	**206-1345**	1	STRAP-CABLE	
	6	1	**5V-9155**	1	CLAMP-HOSE	
	7	1	**8T-4121**	2	WASHER-HARD (11X21X2.5-MM THK)	
M	8	1	**8T-4137**	2	BOLT (M10X1.5X20-MM)	
	9	1	**8T-4224**	1	WASHER-HARD (8.8X16X2-MM THK)	
M	10	1	**8T-6870**	1	BOLT (M8X1.25X70-MM)	

M - METRIC PART

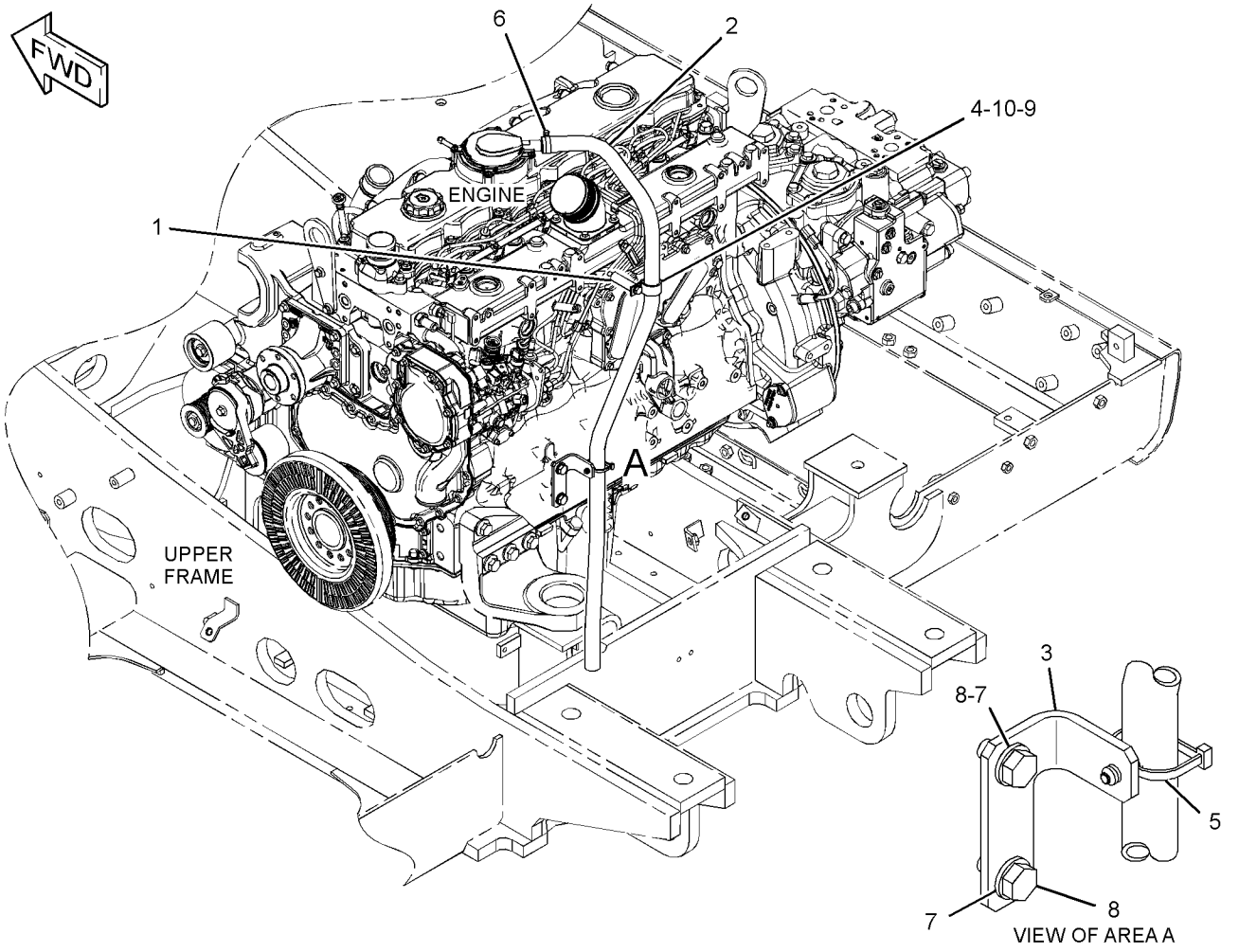

GRAPHIC #1 **<END>** g03307200

374-6004 LINES GP-ENGINE OIL DRAIN

S/N: FKK1-UP; DNP1-UP

PART OF 394-7471, 433-6905 INSTALLATION AR-ENGINE

SMCS-1307 **i05259462**

NOTE	REF NO	GRAPHIC REF	PART NUMBER	QTY	PART NAME 1 2 3 4 5 6 (PRODUCT LEVEL)	SEE PAGE
	1	1	**095-1388**	1	CLAMP-HOSE	
E	2	1	**5P-0743**		HOSE (23-CM)	

E - ORDER BY THE CENTIMETER

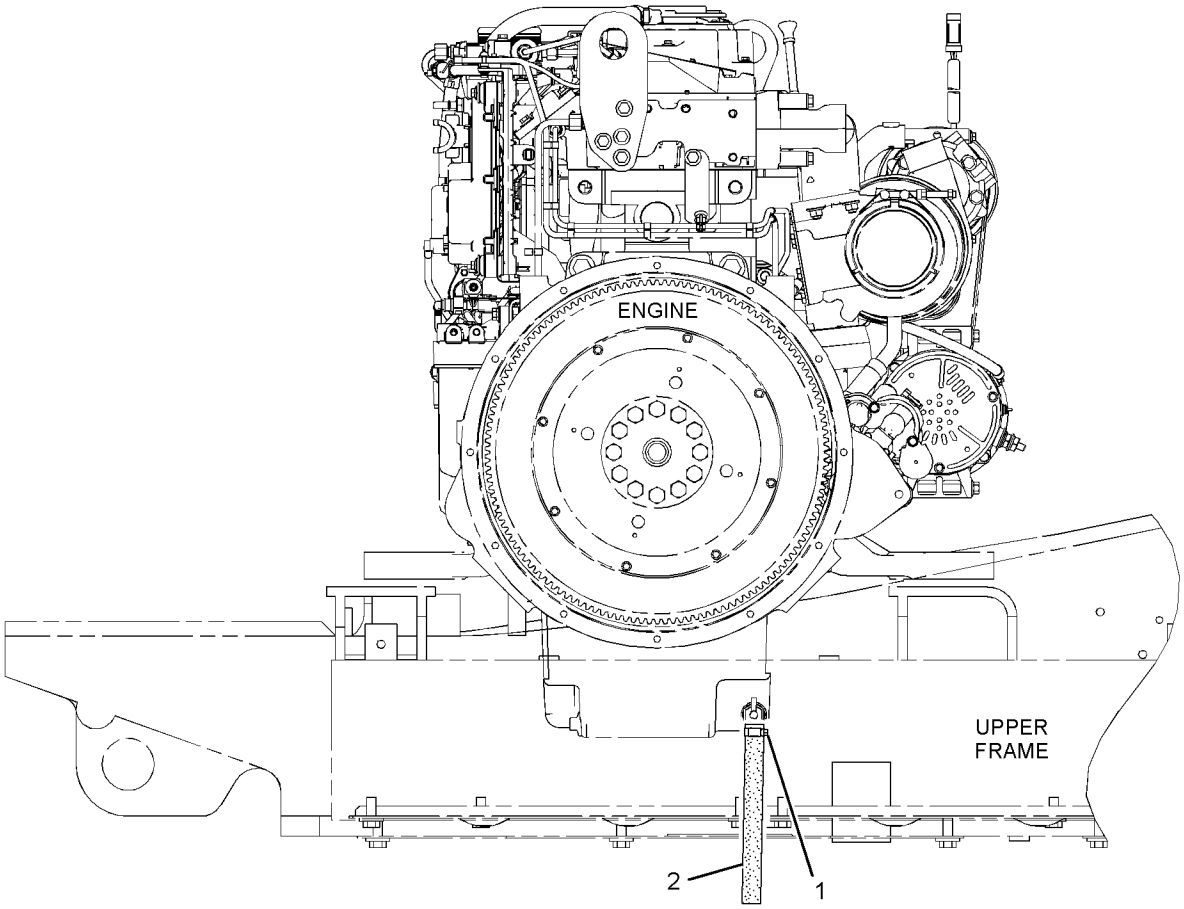

RIGHT SIDE VIEW

GRAPHIC #1 **<END>** g02724625

346-0737 PUMP GP-ENGINE OIL

S/N: D7A1-UP

PART OF 417-3389 ENGINE AR-PRIMARY

SMCS-1304, 1315 **i05245739**

NOTE	REF NO	GRAPHIC REF	PART NUMBER	QTY	PART NAME 1 2 3 4 5 6 (PRODUCT LEVEL)	SEE PAGE
	1	1	**373-8014**	1	PUMP-OIL	
	2	1	**6I-1090**	4	BOLT (M8X1.25X40-MM)	

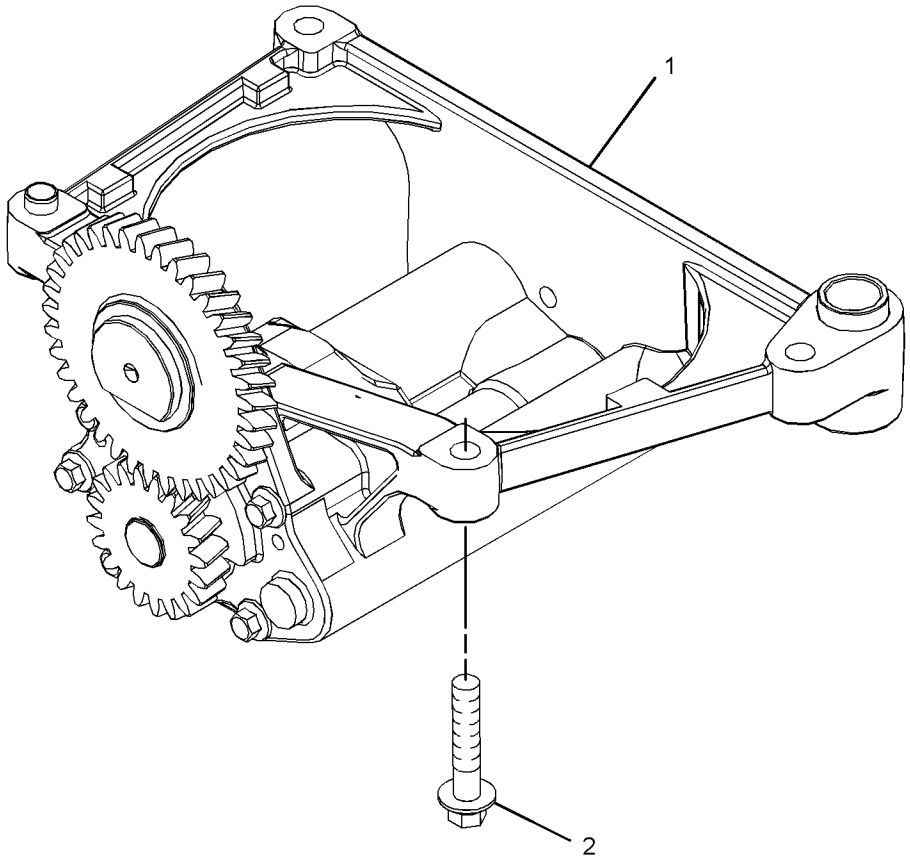

GRAPHIC #1 **<END>** g02815299

326-7401 COOLER GP-ENGINE OIL

S/N: D7A1-UP

PART OF 371-2553 COOLER GP-ENGINE OIL

SMCS-1378 **i05294157**

NOTE	REF NO	GRAPHIC REF	PART NUMBER	QTY	PART NAME 1 2 3 4 5 6 (PRODUCT LEVEL)	SEE PAGE
M	1	1	**6I-0260**	1	BOLT (M8X1.25X25-MM)	
	2	1	**6I-4793**	6	BOLT (M8X1.25X50-MM)	
	3	1	**277-2500**	1	GASKET	
	4	1	**281-7039**	1	COOLER-OIL (ENGINE)	
	5	1	**281-7040**	1	GASKET	

M - METRIC PART

326-7401 **COOLER GP-ENGINE OIL (*contd.*)** **i05294157**

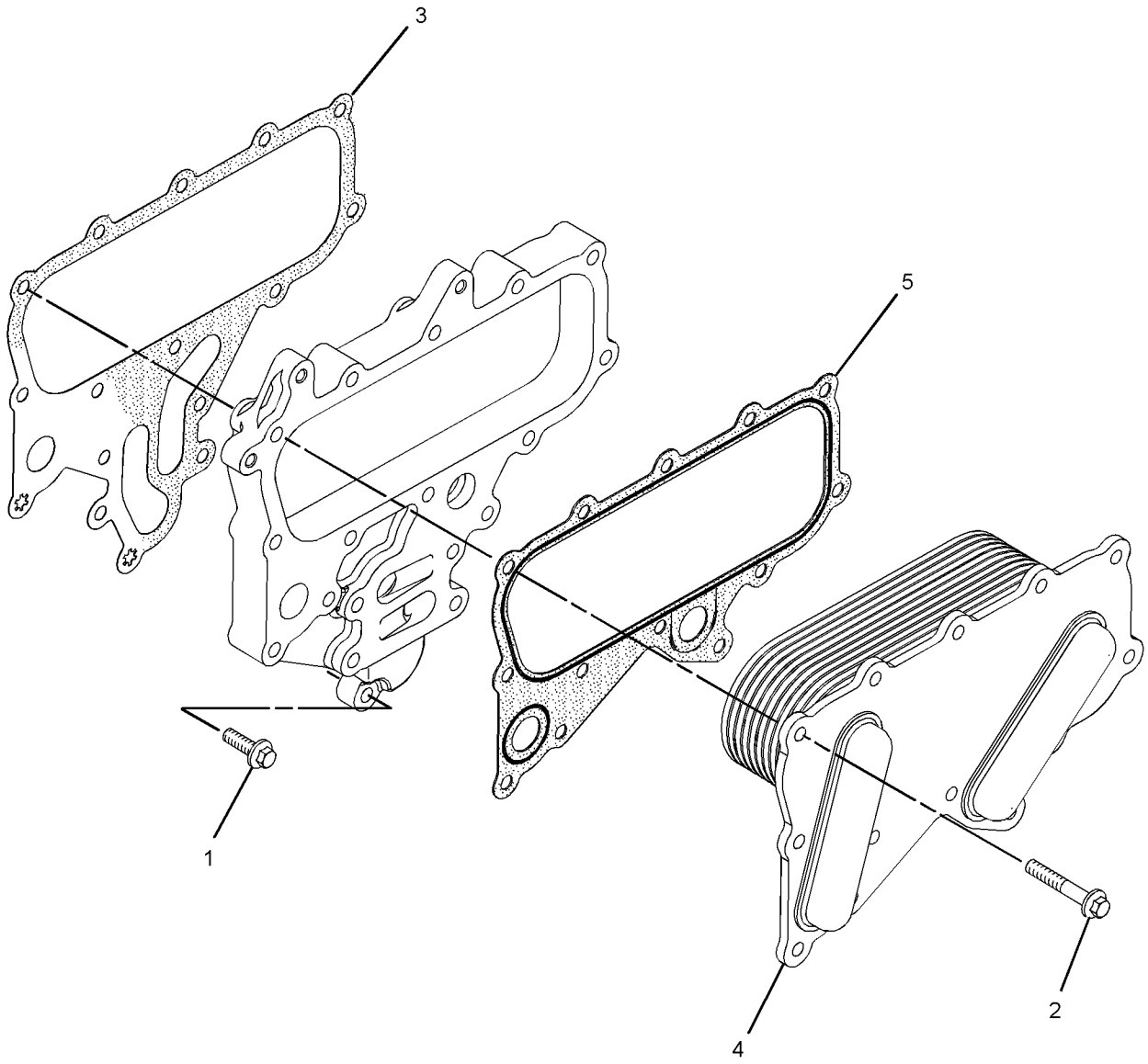

GRAPHIC #1 **<END>** g01508024

371-2553 COOLER GP-ENGINE OIL

S/N: D7A1-UP

PART OF 417-3389 ENGINE AR-PRIMARY

SMCS-1378 **i05292688**

NOTE	REF NO	GRAPHIC REF	PART NUMBER	QTY	PART NAME 1 2 3 4 5 6 (PRODUCT LEVEL)	SEE PAGE
	1	1	**225-7944**	2	GASKET	
	2	1	**232-3751**	1	PLATE	
	3	1	**277-2537**	1	PLATE	
	4	1	**277-2538**	1	GASKET	
Y	5	1	**326-7401**	1	COOLER GP-ENGINE OIL	37
	6	1	**340-4212**	1	ADAPTER	
	9	1	**6I-0455**	4	BOLT (M8X1.25X55-MM)	
M	10	1	**6I-0217**	6	BOLT (M8X1.25X20-MM)	
	11	1	**6I-4793**	7	BOLT (M8X1.25X50-MM)	

M - METRIC PART
Y - SEPARATE ILLUSTRATION

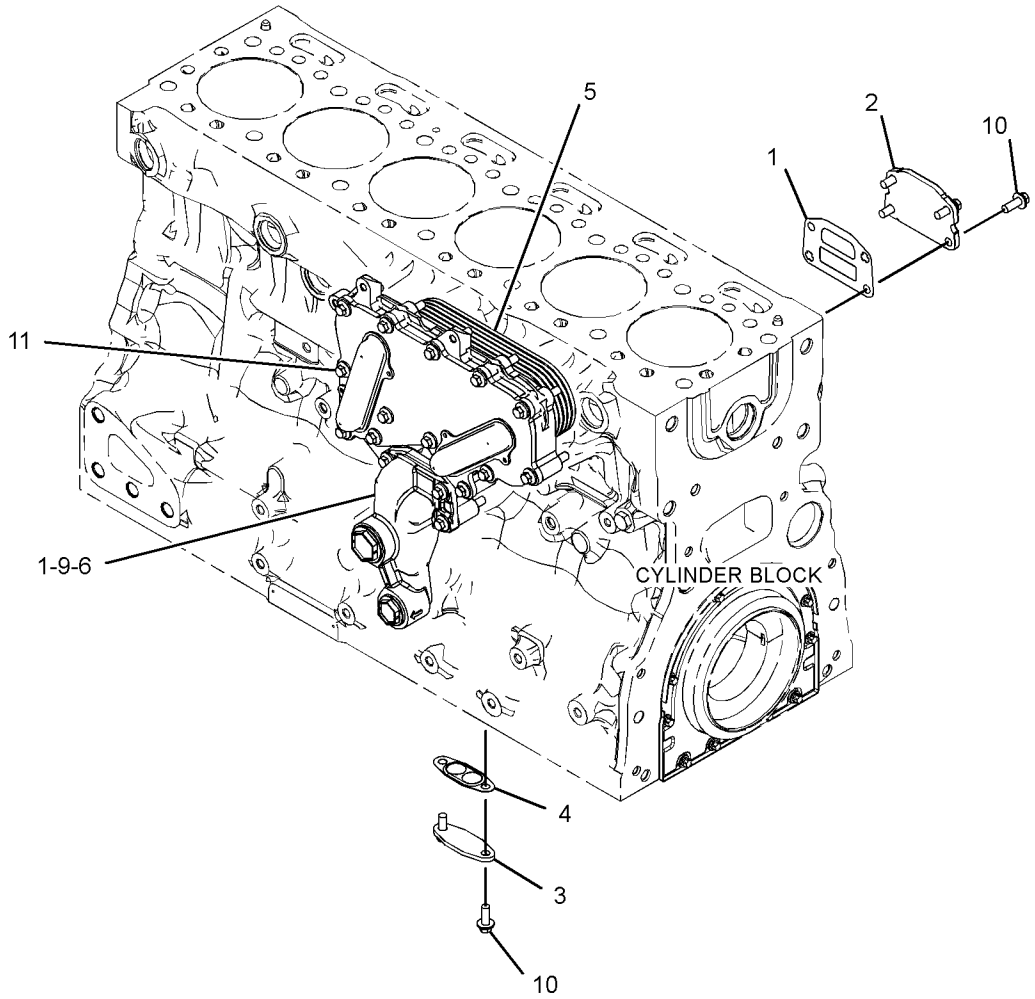

GRAPHIC #1 **<END>** g03360460

369-2257 FAN AR-SUCTION

S/N: FKK1-UP; DNP1-UP

PART OF 394-7469 ENGINE AR-COMPLETE

SMCS-1356 **i05259242**

NOTE	PART NUMBER	QTY	PART NAME 1 2 3 4 5 6 (PRODUCT LEVEL)	SEE PAGE
Y	*369-2248*	1	FAN GP-SUCTION (DIRECT DRIVE)	41
Y	*324-4551*	1	PULLEY GP-ENGINE	28

Y - SEPARATE ILLUSTRATION

<END>

369-2248 FAN GP-SUCTION—DIRECT DRIVE

S/N: FKK1-UP; DNP1-UP

PART OF 369-2257 FAN AR-SUCTION

SMCS-1356 **i05259398**

NOTE	REF NO	GRAPHIC REF	PART NUMBER	QTY	PART NAME 1 2 3 4 5 6 (PRODUCT LEVEL)	SEE PAGE
	1	1	**245-9344**	1	FAN AS (10-BLADE, BOLT MTG DIA 152-MM)	
	2	1	**369-2258**	1	SPACER-FAN	
	3	1	**8T-4121**	6	WASHER-HARD (11X21X2.5-MM THK)	
M	4	1	**8T-4185**	6	BOLT (M10X1.5X50-MM)	
M	5	1	**8T-4189**	6	BOLT (M8X1.25X20-MM)	
	6	1	**8T-4224**	6	WASHER-HARD (8.8X16X2-MM THK)	

M - METRIC PART

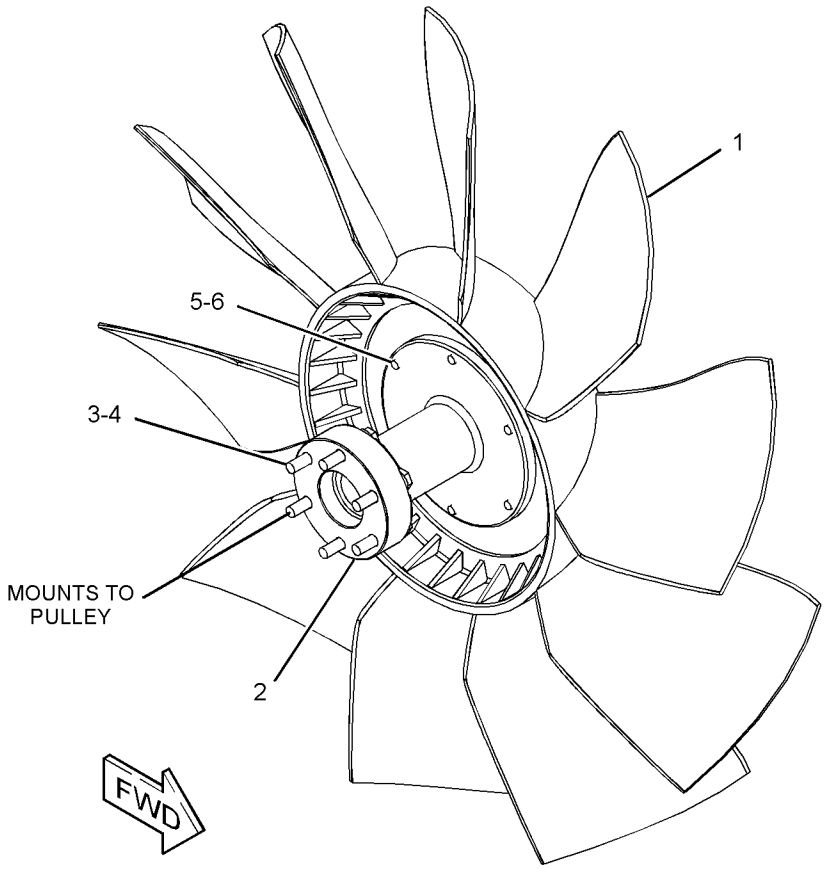

GRAPHIC #1 **<END>** g02732723

394-2220 LINES GP-COOLING

S/N: FKK1-UP; DNP1-UP

PART OF 394-7471, 433-6905 INSTALLATION AR-ENGINE

SMCS-1380, 5057 **i05259467**

NOTE	REF NO	GRAPHIC REF	PART NUMBER	QTY	PART NAME 1 2 3 4 5 6 (PRODUCT LEVEL)	SEE PAGE
	1	1	**369-2259**	1	HOSE	
	2	1	**369-2263**	1	HOSE	
	3	1	**369-2264**	1	HOSE	
	4	1	**369-2265**	1	PIPE AS	
		1	**7T-1099**	1	LINK	
M		1	**8T-3490**	2	NUT-WELD (M10X1.5-THD)	
		1	**369-2266**	1	PIPE	
	5	1	**394-2229**	1	HOSE	
	6	1	**415-8537**	1	PIPE AS	
	7	1	**144-0367**	8	CLAMP-HOSE	
	8	1	**5M-6213**	1	PLUG-PIPE	
	9	1	**5P-4116**	8	WASHER-HARD (8.8X20.5X2-MM THK)	
M	10	1	**8T-4200**	8	BOLT (M8X1.25X16-MM)	
	11	1	**8T-4985**	1	CLAMP-HOSE	
	12	1	**8T-6703**	1	CLAMP-HOSE	

M - METRIC PART

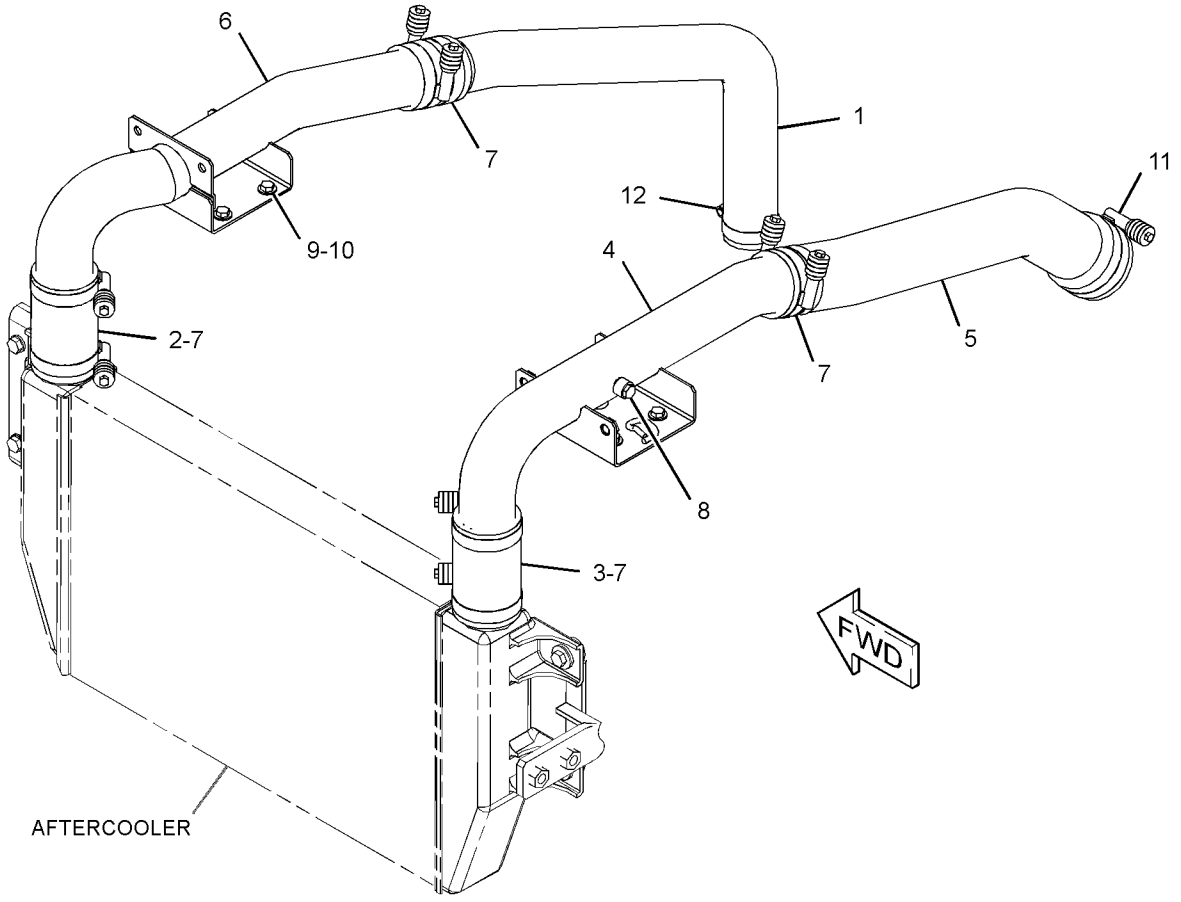

GRAPHIC #1 **<END>** g03306736

346-0411 PUMP GP-WATER

S/N: D7A1-UP

PART OF 417-3389 ENGINE AR-PRIMARY

SMCS-1361 **i05245720**

NOTE	REF NO	GRAPHIC REF	PART NUMBER	QTY	PART NAME 1 2 3 4 5 6 (PRODUCT LEVEL)	SEE PAGE
	1	1	**113-8129**	2	BOLT (M8X1.25X75-MM)	
	2	1	**123-2899**	2	BOLT (M10X1.5X40-MM)	
	4	1	**277-2925**	1	CONNECTION AS	
		1	**225-7738**	1	SEAL-O-RING	
		1	**277-2923**	1	GASKET	
	5	1	**281-8744**	1	GASKET-WATER REGULATOR	
	6	1	**354-4754**	1	KIT-WATER PUMP	
					(KIT INCLUDES GASKET & PUMP GP)	
	7	1	**417-7782**	1	REGULATOR AS (WATER TEMPERATURE)	
M	8	1	**6I-0217**	2	BOLT (M8X1.25X20-MM)	
M	9	1	**6I-0254**	2	BOLT (M8X1.25X30-MM)	
	10	1	**6I-0839**	5	BOLT (M8X1.25X70-MM)	
	11	1	**225-8019**	1	GASKET	

M - METRIC PART

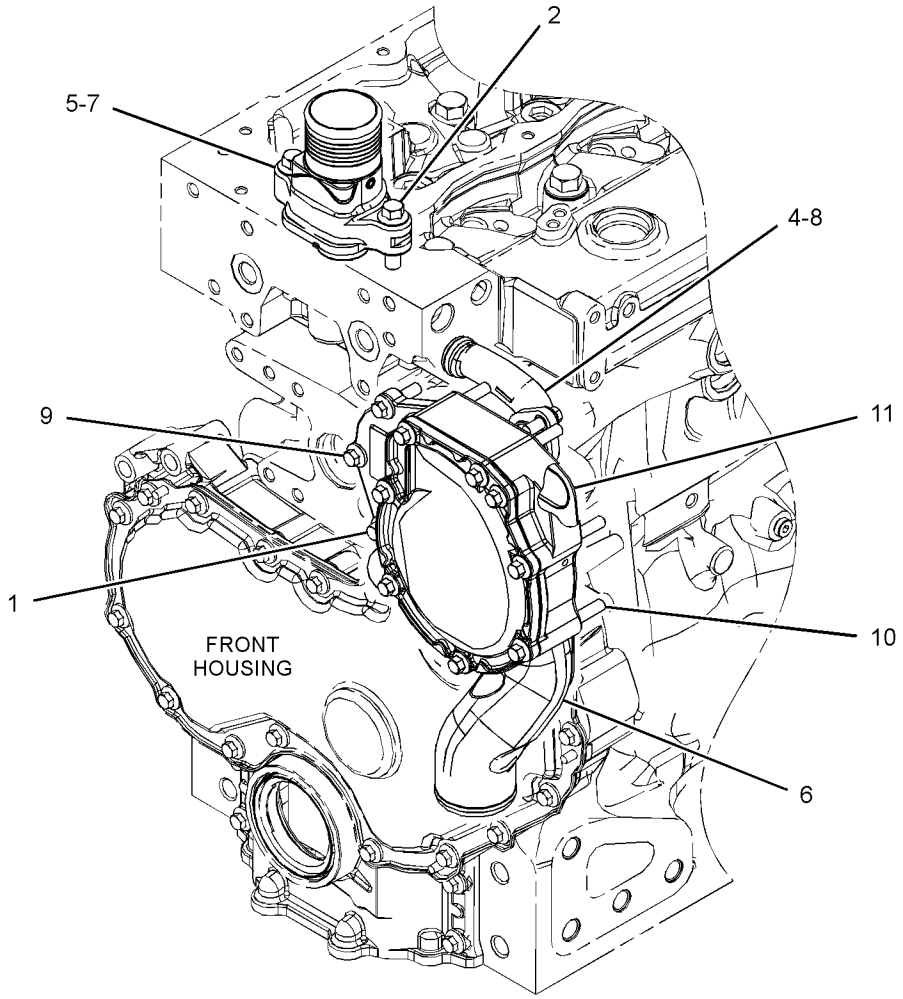

GRAPHIC #1 **<END>** g03357993

378-6176 RADIATOR & HYD OIL COOLER GP

S/N: FKK1-UP; DNP1-UP

PART OF 394-2224 RADIATOR & HYD OIL COOLER GP

SMCS-1351 **i05259802**

NOTE	REF NO	GRAPHIC REF	PART NUMBER	QTY	PART NAME 1 2 3 4 5 6 (PRODUCT LEVEL)	SEE PAGE
	1	1	**5D-8159**	4	PIN AS	
	2	2	**312-8338**	1	CORE AS-OIL COOLER (HYDRAULIC)	
	3	1	**313-3762**	2	CUSHION-RUBBER	
	4	1	**313-3763**	1	SCREEN AS (RADIATOR)	
	5	1	**313-3764**	1	SCREEN AS (OIL COOLER)	
	6	1	**313-3766**	2	SLEEVE	
	7	1	**375-2985**	1	PLATE AS	
	8	1	**313-3769**	2	CUSHION-RUBBER	
	9	1	**314-6506**	2	CUSHION-RUBBER	
	10	1	**314-6509**	2	WASHER-PLATE	
	11	1	**314-6510**	2	PIN	
	12	1	**332-4191**	1	PLUG	
	13	1	**336-4591**	1	BRACKET AS	
M		1	**5C-7261**	4	NUT (M8X1.25-THD)	
	14	1	**374-5000**	1	PLATE AS	
	15	2	**350-7501**	1	ADAPTER	
	16	2	**352-7775**	2	SEAL	
	18	2	**376-6721**	1	PLUG	
	19	2	**377-5000**	2	SEAL	
	20	2	**377-5001**	4	SEAL	
	21	2	**377-5002**	1	SEAL	
	22	2	**377-5003**	2	SEAL	
	23	2	**377-5004**	1	SEAL	
	24	2	**377-5005**	2	SEAL	
	25	2	**377-5006**	2	SEAL	
	26	2	**378-6177**	1	FRAME AS	
	27	2	**378-6178**	1	CORE AS-RADIATOR	
	28	1	**378-6179**	1	AFTERCOOLER AS	
	29	2	**378-6180**	1	SHROUD AS	
	30	2	**378-6181**	1	PLATE AS	
	31	2	**3K-0360**	1	SEAL-O-RING	
	32	1,2	**5P-4116**	6	WASHER-HARD (8.8X20.5X2-MM THK)	
	33	1	**7X-7729**	2	WASHER (11X25X3-MM THK)	
	34	1	**8T-4121**	14	WASHER-HARD (11X21X2.5-MM THK)	
M	35	1	**8T-4136**	10	BOLT (M10X1.5X25-MM)	
M	36	1	**8T-4137**	4	BOLT (M10X1.5X20-MM)	
M	37	1	**8T-4185**	2	BOLT (M10X1.5X50-MM)	
M	38	1,2	**8T-4189**	16	BOLT (M8X1.25X20-MM)	
M	39	1	**8T-4195**	4	BOLT (M10X1.5X30-MM)	
	40	1,2	**8T-4224**	10	WASHER-HARD (8.8X16X2-MM THK)	
	41	2	**157-0670**	1	CAP-DUST	
	42	2	**6V-9027**	1	SEAL-O-RING	
	43	2	**6V-5065**	1	SEAL-O-RING	
	44	2	**154-9023**	1	VALVE-SAMPLING	
	45	1	**096-4035**	1	CLIP	
E	46	1	**7Y-1976**		HOSE-WATER (9-CM)	
	47	1	**332-4192**	1	SEAL-O-RING	

E - ORDER BY THE CENTIMETER
M - METRIC PART

378-6176 **RADIATOR & HYD OIL COOLER GP (*contd.*)** **i05259802**

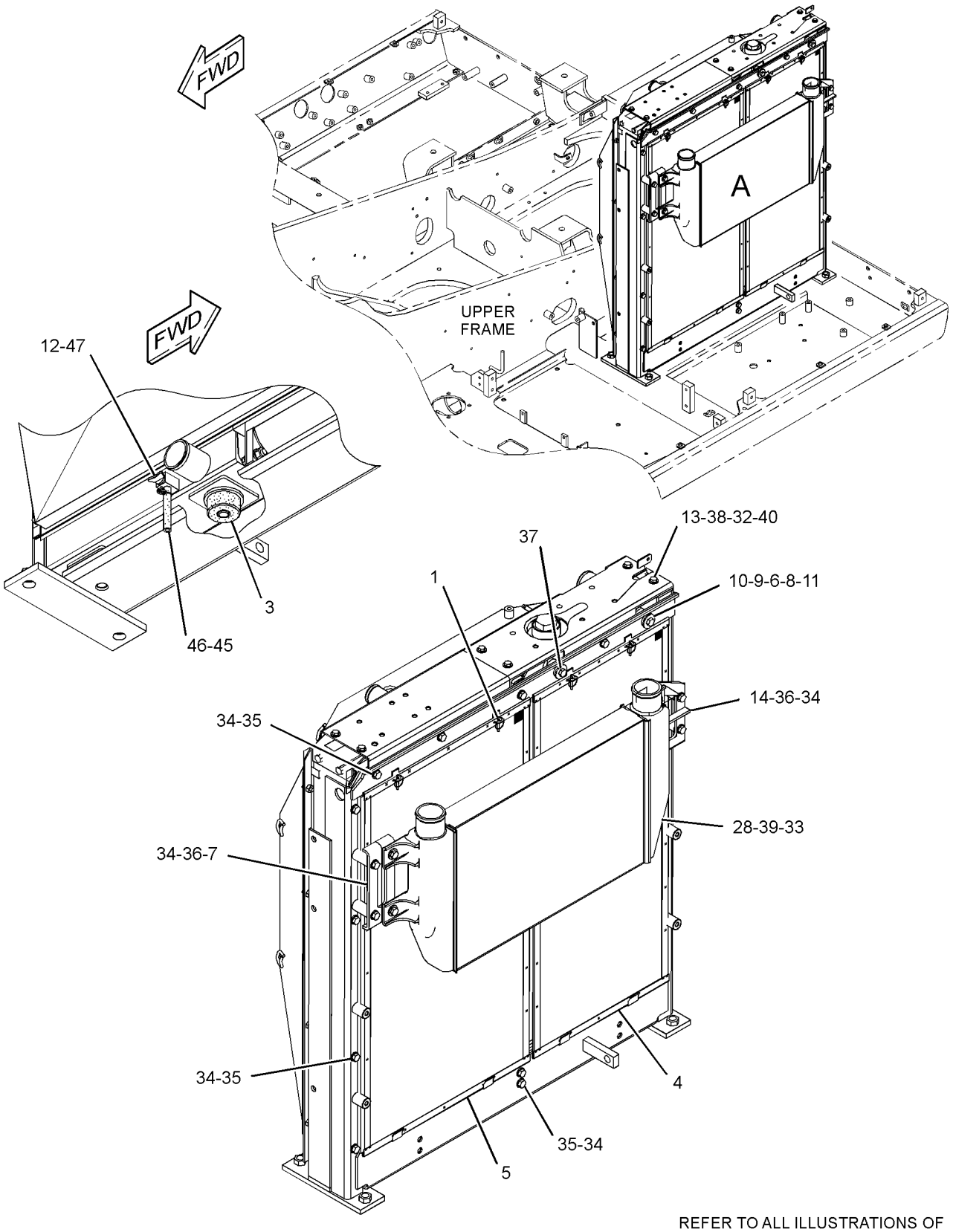

VIEW OF AREA A

REFER TO ALL ILLUSTRATIONS OF THIS GROUP FOR AUXILIARY VIEWS

GRAPHIC #1

g03290938

378-6176 **RADIATOR & HYD OIL COOLER GP (*contd.*)** **i05259802**

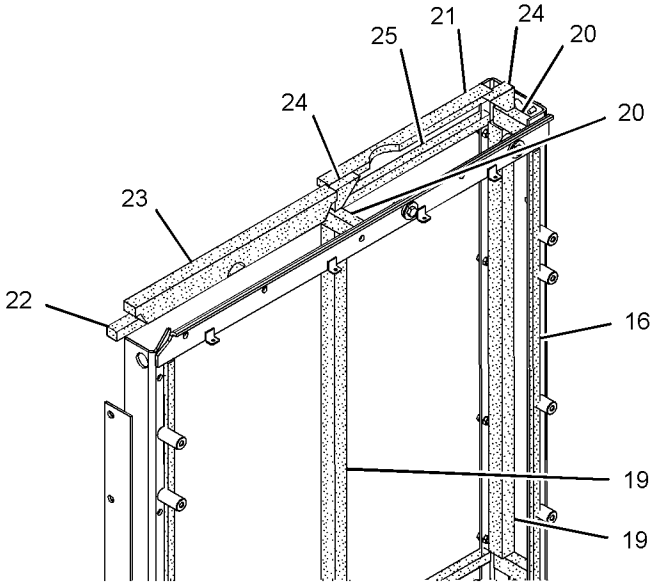

GRAPHIC #2 **<END>** g03126798

COOLING SYSTEM

394-2224 **RADIATOR & HYD OIL COOLER GP (*contd.*)** **i05259689**

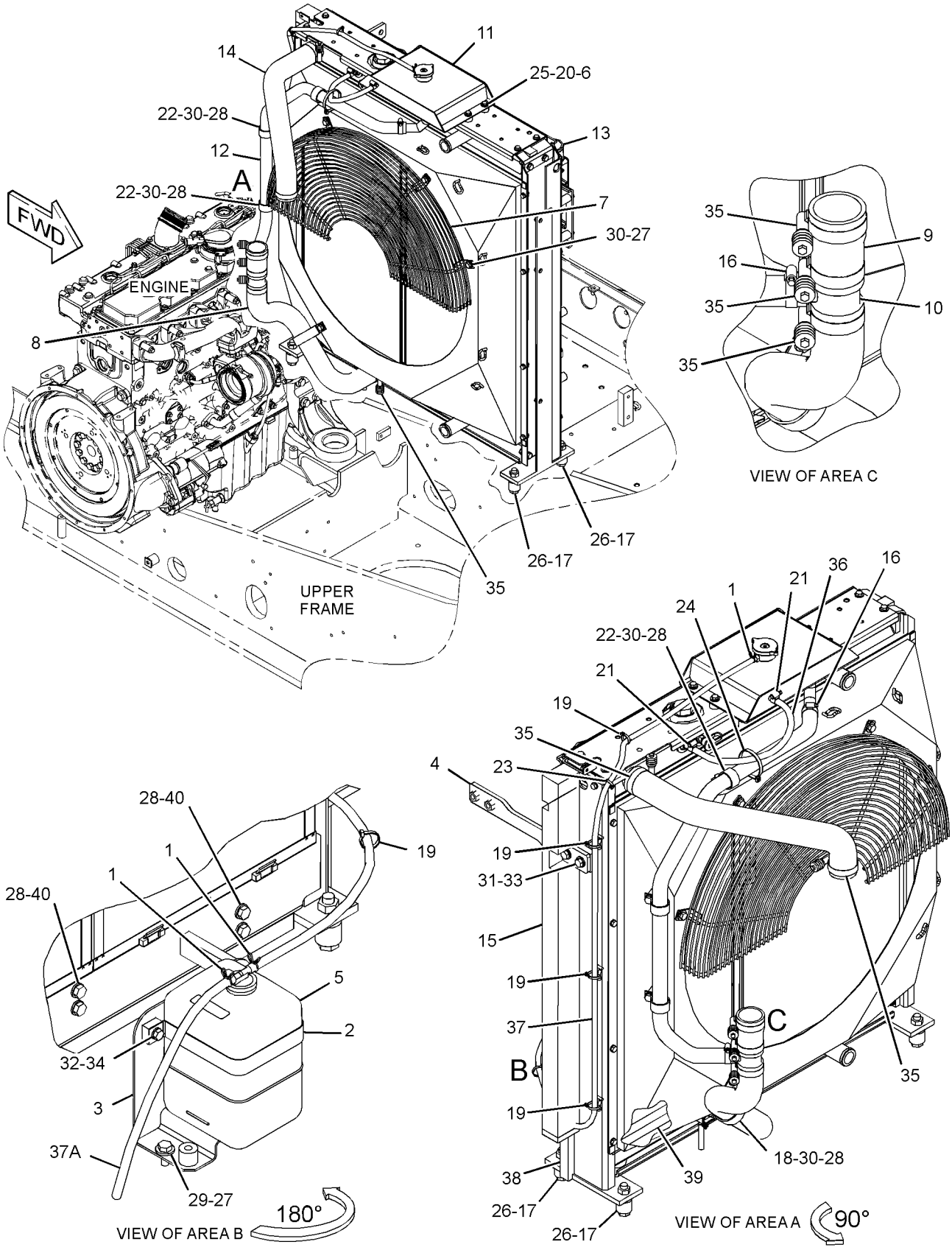

GRAPHIC #1 **<END>** g03356631

109-9313 AIR CLEANER & MOUNTING GP

S/N: FKK1-UP; DNP1-UP

PART OF 394-7471, 433-6905 INSTALLATION AR-ENGINE

SMCS-1051, 1054, 7452 **i04913217**

NOTE	REF NO	GRAPHIC REF	PART NUMBER	QTY	PART NAME 1 2 3 4 5 6 (PRODUCT LEVEL)	SEE PAGE
	1	1	**8T-4121**	4	WASHER-HARD (11X21X2.5-MM THK)	
M	2	1	**8T-4137**	4	BOLT (M10X1.5X20-MM)	
Y	3	1	**310-9667**	1	AIR CLEANER GP	50

M - METRIC PART
Y - SEPARATE ILLUSTRATION

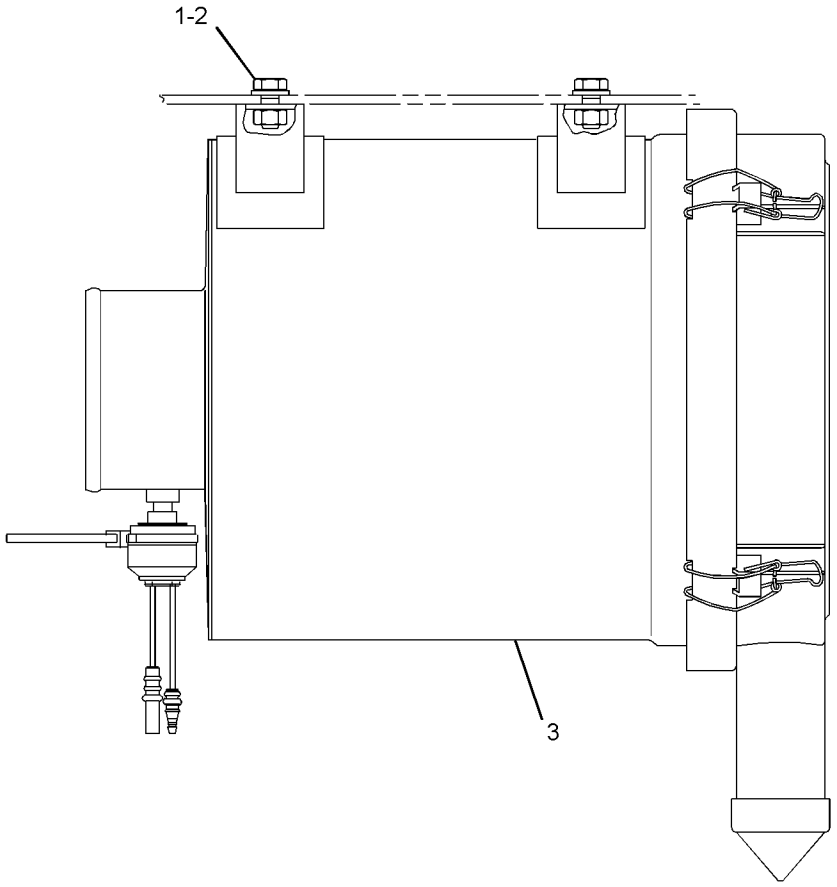

GRAPHIC #1 **<END>** g01528299

310-9667 AIR CLEANER GP

S/N: FKK1-UP; DNP1-UP

PART OF 109-9313 AIR CLEANER & MOUNTING GP

SMCS-1051, 1054 **i04913362**

NOTE	REF NO	GRAPHIC REF	PART NUMBER	QTY	PART NAME 1 2 3 4 5 6 (PRODUCT LEVEL)	SEE PAGE
	1	1	**5L-3233**	1	FITTING-CONNECTOR	
	2	1	**7I-2673**	1	STRAP-CABLE	
	3	1	**112-9717**	1	VALVE-DUST (AIR CLEANER)	
	4	1	**131-8821**	1	FILTER ELEMENT AS-AIR (SECONDARY)	
	5	1	**131-8822**	1	FILTER ELEMENT AS-AIR (PRIMARY)	
					—OR—	
		1	**134-0685**	1	FILTER ELEMENT AS-AIR (ULTRA HIGH EFFICIENCY) (PRIMARY)	
	6	1	**131-8826**	1	FILM-INSTRUCTION (TOP, AIR CLEANER COVER)	
	7	1	**131-8932**	4	LATCH	
	8	1	**184-3983**	1	COVER AS	
	9	1	**255-2966**	1	INDICATOR AS-AIR FILTER CHANGE (AIR RESTRICTION)	

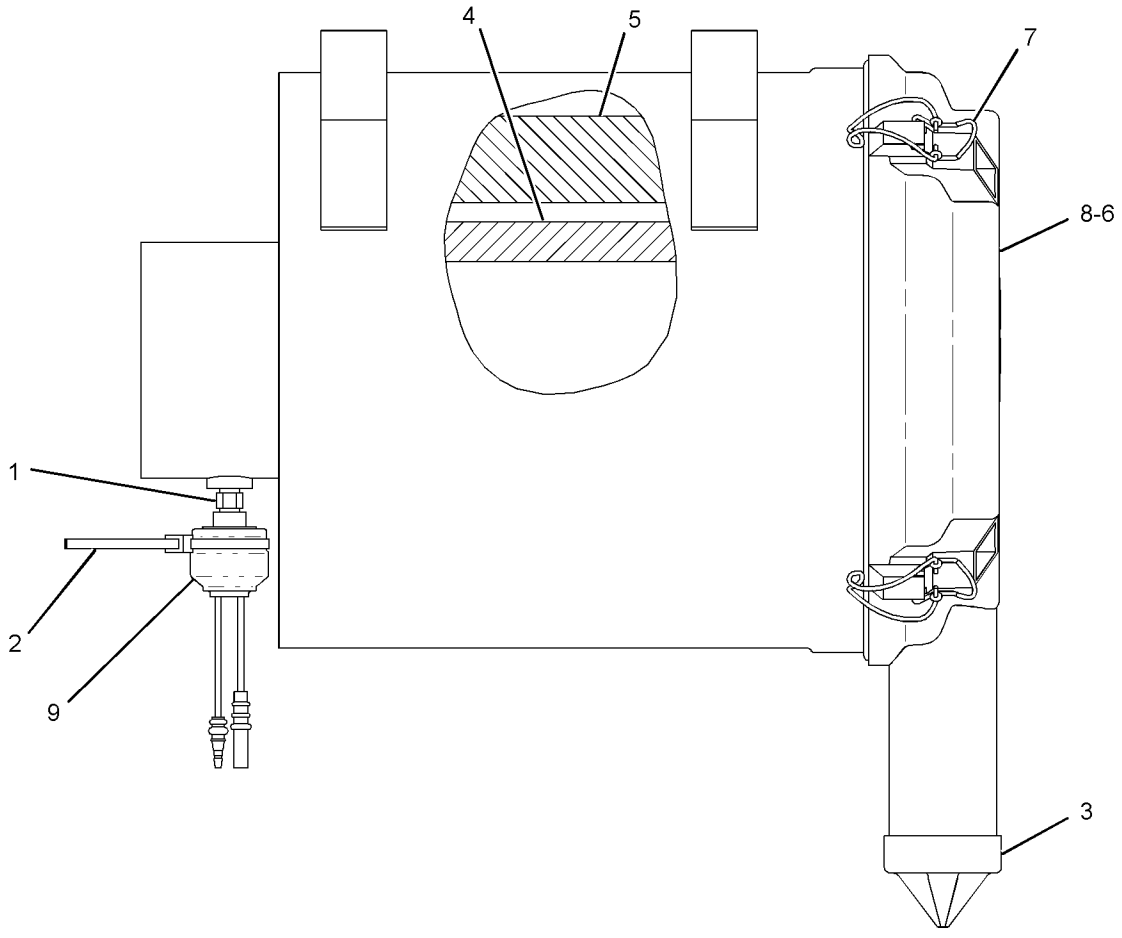

GRAPHIC #1 **<END>** g01504054

394-7473 LINES GP-AIR

S/N: FKK1-UP; DNP1-UP

PART OF 394-7471, 433-6905 INSTALLATION AR-ENGINE

SMCS-1071 **i05259478**

NOTE	REF NO	GRAPHIC REF	PART NUMBER	QTY	PART NAME 1 2 3 4 5 6 (PRODUCT LEVEL)	SEE PAGE
	1	1	**279-7907**	1	HOSE-AIR	
	2	1	**394-7689**	1	HOSE-AIR	
	3	1	**8T-4986**	1	CLAMP-HOSE	
	4	1	**9X-2201**	3	CLAMP-HOSE	

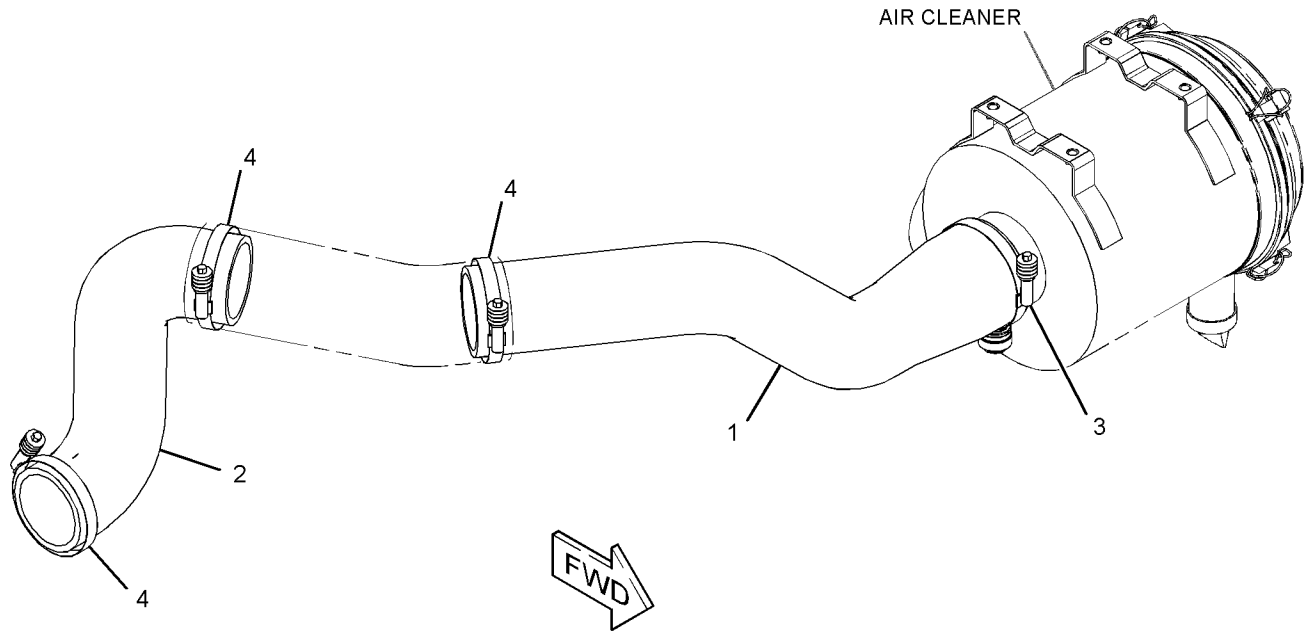

GRAPHIC #1 **<END>** g03306858

346-0773 MANIFOLD GP-INLET

S/N: D7A1-UP

PART OF 417-3389 ENGINE AR-PRIMARY

SMCS-1058, 1090 **i05245742**

NOTE	REF NO	GRAPHIC REF	PART NUMBER	QTY	PART NAME 1 2 3 4 5 6 (PRODUCT LEVEL)	SEE PAGE
	1	1	**277-4374**	1	ELBOW AS-AIR INLET	
		1	**238-8288**	1	GASKET-INLET	
M	2	1	**6I-0645**	4	BOLT (M8X1.25X25-MM)	

M - METRIC PART

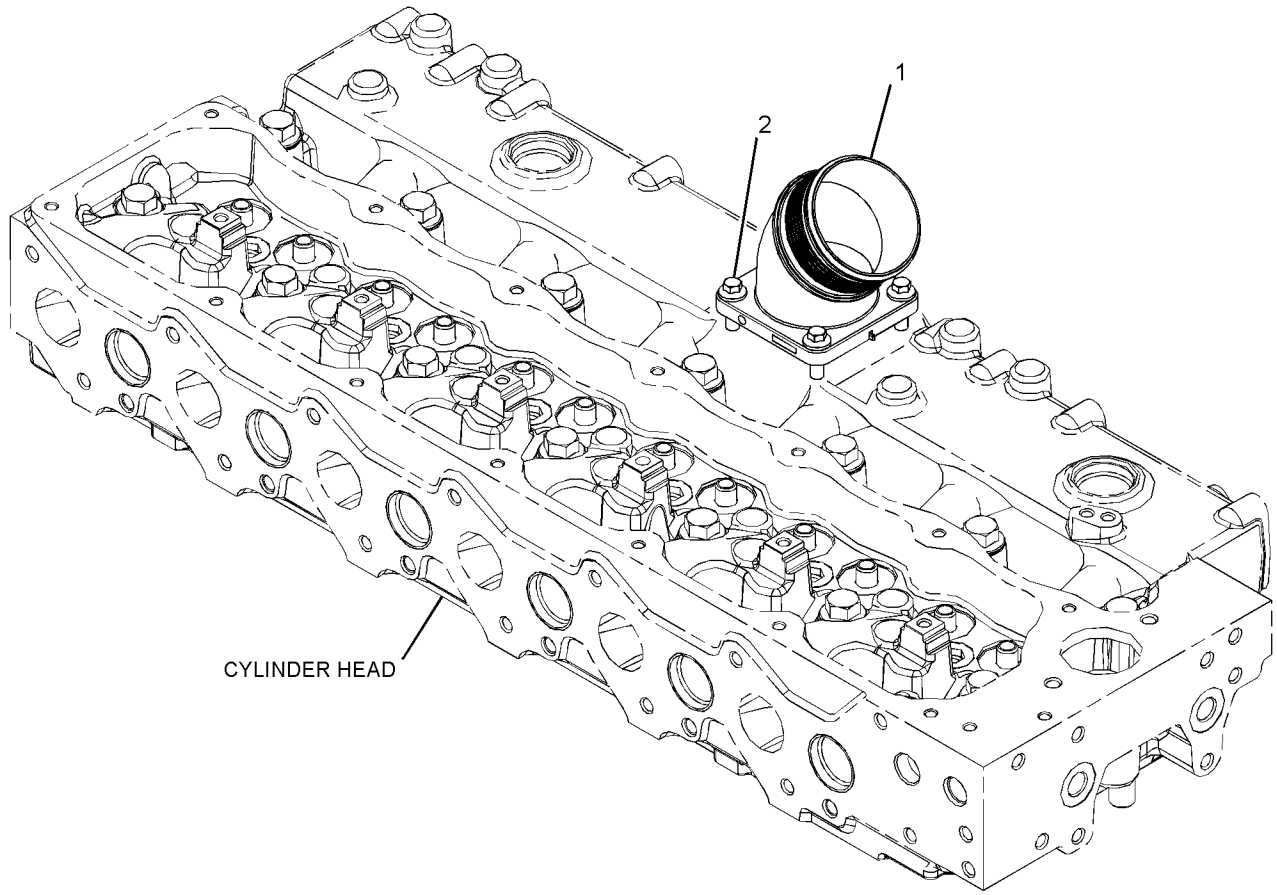

GRAPHIC #1 **<END>** g03316898

394-7470 MUFFLER & MOUNTING GP

S/N: FKK1-UP; DNP1-UP

PART OF 394-7469 ENGINE AR-COMPLETE

SMCS-1062 **i05279384**

NOTE	REF NO	GRAPHIC REF	PART NUMBER	QTY	PART NAME 1 2 3 4 5 6 (PRODUCT LEVEL)	SEE PAGE
	1	1	**241-9264**	1	CLAMP-MUFFLER	
	2	1	**291-5216**	2	STRAP	
	3	1	**374-5981**	1	PIPE AS-EXHAUST	
		1	**374-6025**	1	PIPE	
	4	1	**374-6038**	2	U-BOLT	
	5	1	**374-6040**	1	MUFFLER AS	
	6	1	**379-4430**	1	PIPE-TAIL	
	7	1	**416-2386**	1	SHEET	
	8	1	**419-7580**	1	SUPPORT AS	
M	9	1	**135-8574**	4	BOLT AS	
	10	1	**388-7014**	1	CLAMP-BENT BOLT	
	11	1	**8T-4121**	2	WASHER-HARD (11X21X2.5-MM THK)	
M	12	1	**8T-4133**	8	NUT (M10X1.5-THD)	
M	13	1	**8T-4136**	2	BOLT (M10X1.5X25-MM)	

M - METRIC PART

394-7470 **MUFFLER & MOUNTING GP (*contd.*)** **i05279384**

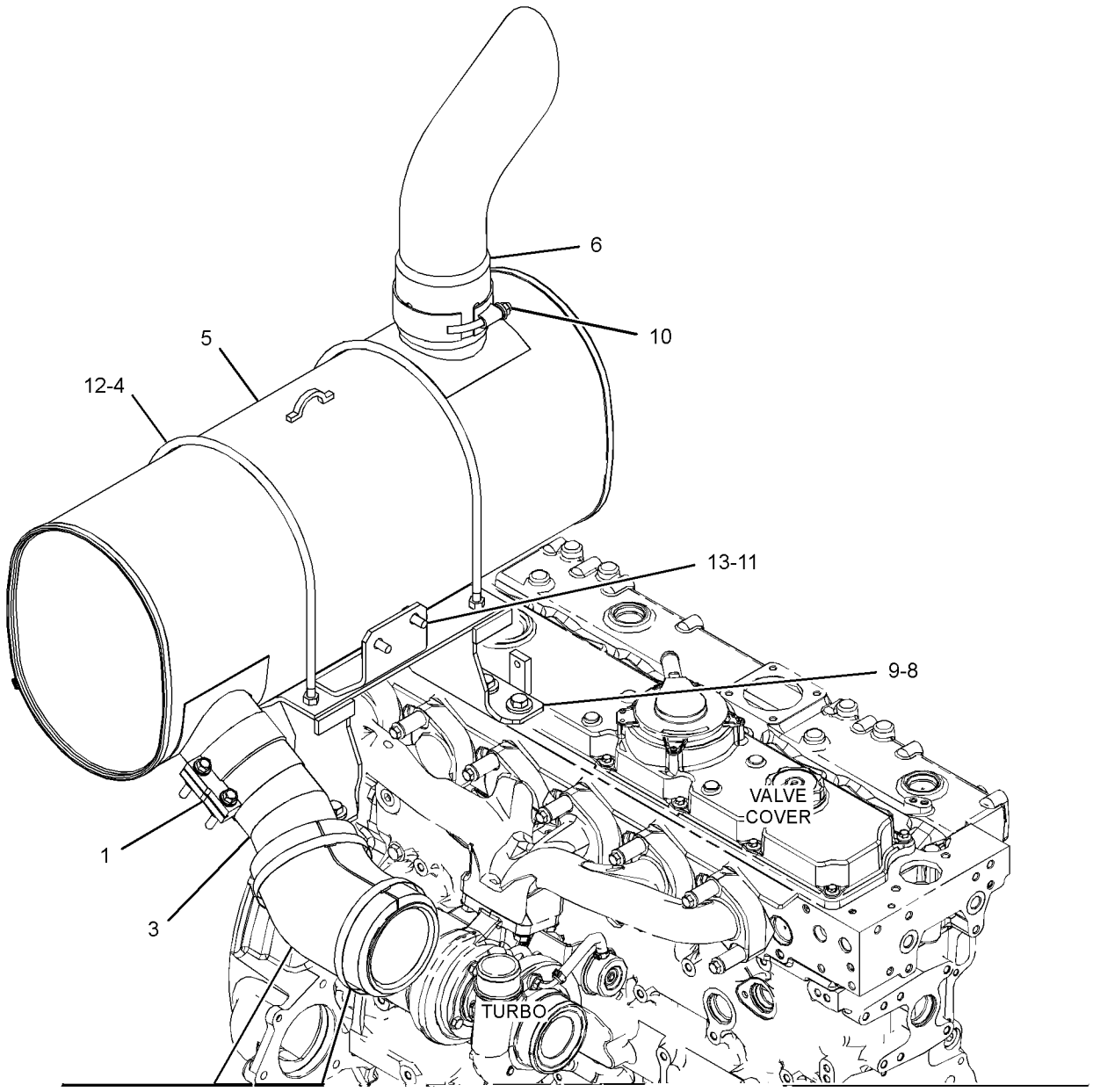

GRAPHIC #1 **<END>** g03320170

396-6322 TURBOCHARGER GP

S/N: D7A1-UP

PART OF 417-3389 ENGINE AR-PRIMARY

SMCS-1052, 1053 **i05245912**

NOTE	REF NO	GRAPHIC REF	PART NUMBER	QTY	PART NAME 1 2 3 4 5 6 (PRODUCT LEVEL)	SEE PAGE
M	1	1	**6I-0217**	5	BOLT (M8X1.25X20-MM)	
	2	1	**238-8292**	12	BOLT-FLANGE HEAD	
	3	1	**278-0016**	1	GASKET	
	4	1	**278-0017**	1	GASKET	
	5	1	**279-9361**	2	GASKET-EXHAUST	
	6	1	**286-7851**	12	SPACER	
	7	1	**331-8917**	1	MANIFOLD-EXHAUST	
	8	1	**365-4584**	1	TUBE AS	
	9	1	**365-4586**	1	LINE GP-TURBOCHARGER	
M	9A	1	**277-9938**	1	BOLT-SPECIAL (BANJO)	
	9B	1	**277-9940**	1	SEAL-O-RING	
	9C	1	**358-6475**	2	WASHER	
	9D	1	**365-4585**	1	TUBE AS	
	10	1	**431-4572**	1	TURBOCHARGER	
	11	1	**277-9463**	1	CLAMP	
	12	1	**361-7519**	4	ROD-THREADED	
	13	1	**6I-0563**	4	NUT (M10X1.5-THD)	

M - METRIC PART

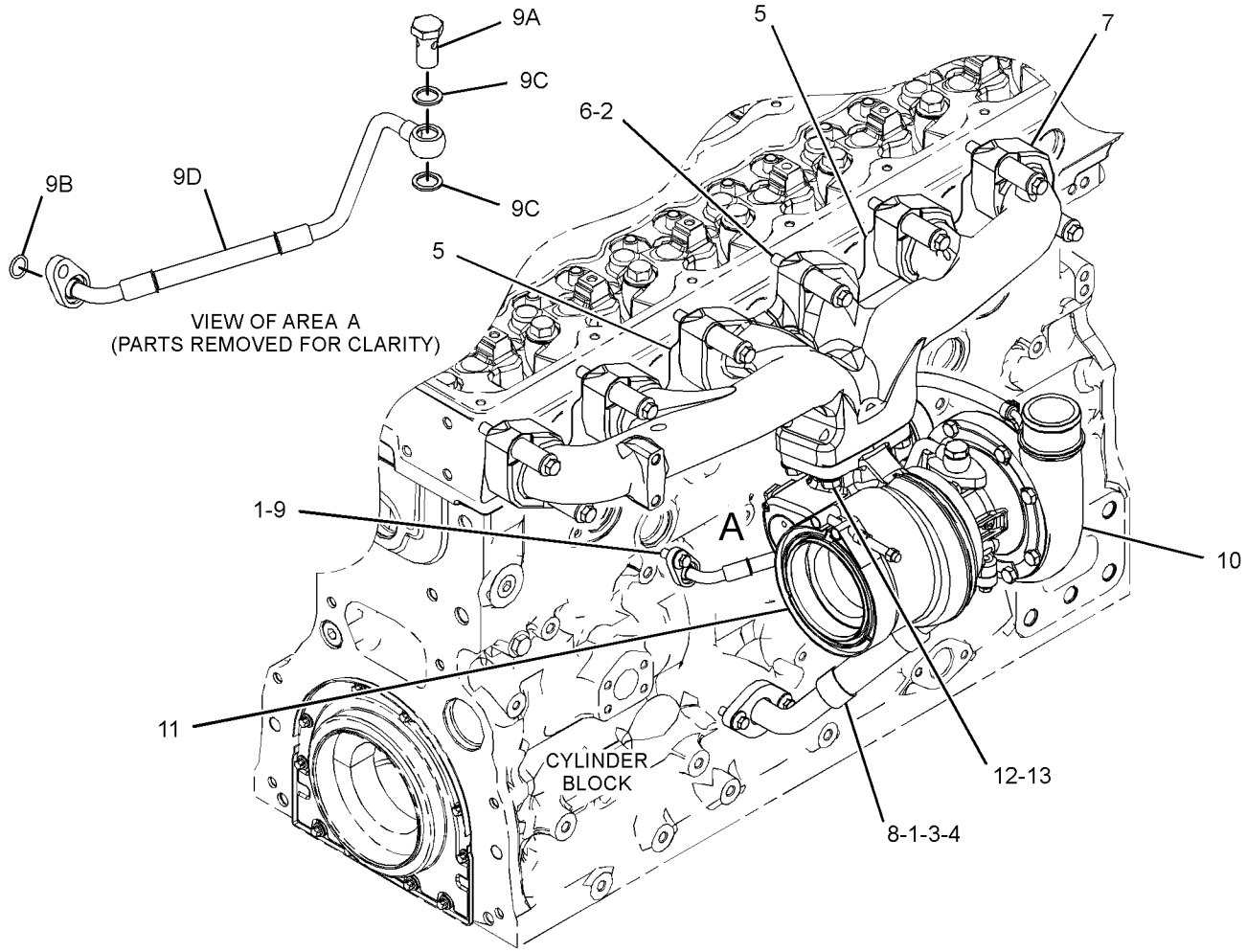

GRAPHIC #1 **<END>** g03323344

388-6844 CONTROL GP-GOVERNOR

S/N: FKK1-UP; DNP1-UP

PART OF 421-6926, 433-6906 CHASSIS AR

SMCS-1265, 1276 **i05259806**

NOTE	REF NO	GRAPHIC REF	PART NUMBER	QTY	PART NAME 1 2 3 4 5 6 (PRODUCT LEVEL)	SEE PAGE
	1	1	**386-3439**	1	MOTOR AS-GOVERNOR	
		1	**8T-8737**	1	PLUG-SEAL	
		1	**9X-3401**	7	PIN-CONNECTOR (16-GA TO 18-GA)	
					—OR—	
		1	**126-1767**	7	PIN-CONNECTOR (14-GA TO 16-GA)	
		1	**157-3184**	1	JOINT	
		1	**243-4509**	1	RECEPTACLE AS-CONNECTOR (8-PIN)	
	2	1	**396-3531**	1	BRACKET AS	
		1	**121-1029**	1	CLIP	
	3	1	**396-3533**	1	BRACKET AS	
M		1	**8T-3612**	1	NUT-WELD (M8X1.25-THD)	
	4	1	**396-3538**	1	BRACKET AS	
M		1	**8T-3612**	1	NUT-WELD (M8X1.25-THD)	
	5	1	**415-7773**	1	BRACKET-SUPPORT	
	6	1	**415-7775**	1	BRACKET AS-LEVER	
M	7	1	**5C-2890**	1	NUT (M6X1-THD)	
	8	1	**6V-3265**	4	CLIP	
M	9	1	**7X-2537**	2	BOLT (M8X1.25X35-MM)	
M	10	1	**7X-2619**	2	BOLT (M6X1X10-MM)	
	11	1	**8T-4121**	4	WASHER-HARD (11X21X2.5-MM THK)	
M	12	1	**8T-4136**	2	BOLT (M10X1.5X25-MM)	
M	13	1	**8T-4137**	2	BOLT (M10X1.5X20-MM)	
M	14	1	**8T-4200**	7	BOLT (M8X1.25X16-MM)	
	15	1	**8T-4224**	9	WASHER-HARD (8.8X16X2-MM THK)	
	16	1	**9X-8256**	4	WASHER (6.6X12X2-MM THK)	

M - METRIC PART

388-6844 **CONTROL GP-GOVERNOR (*contd.*)** **i05259806**

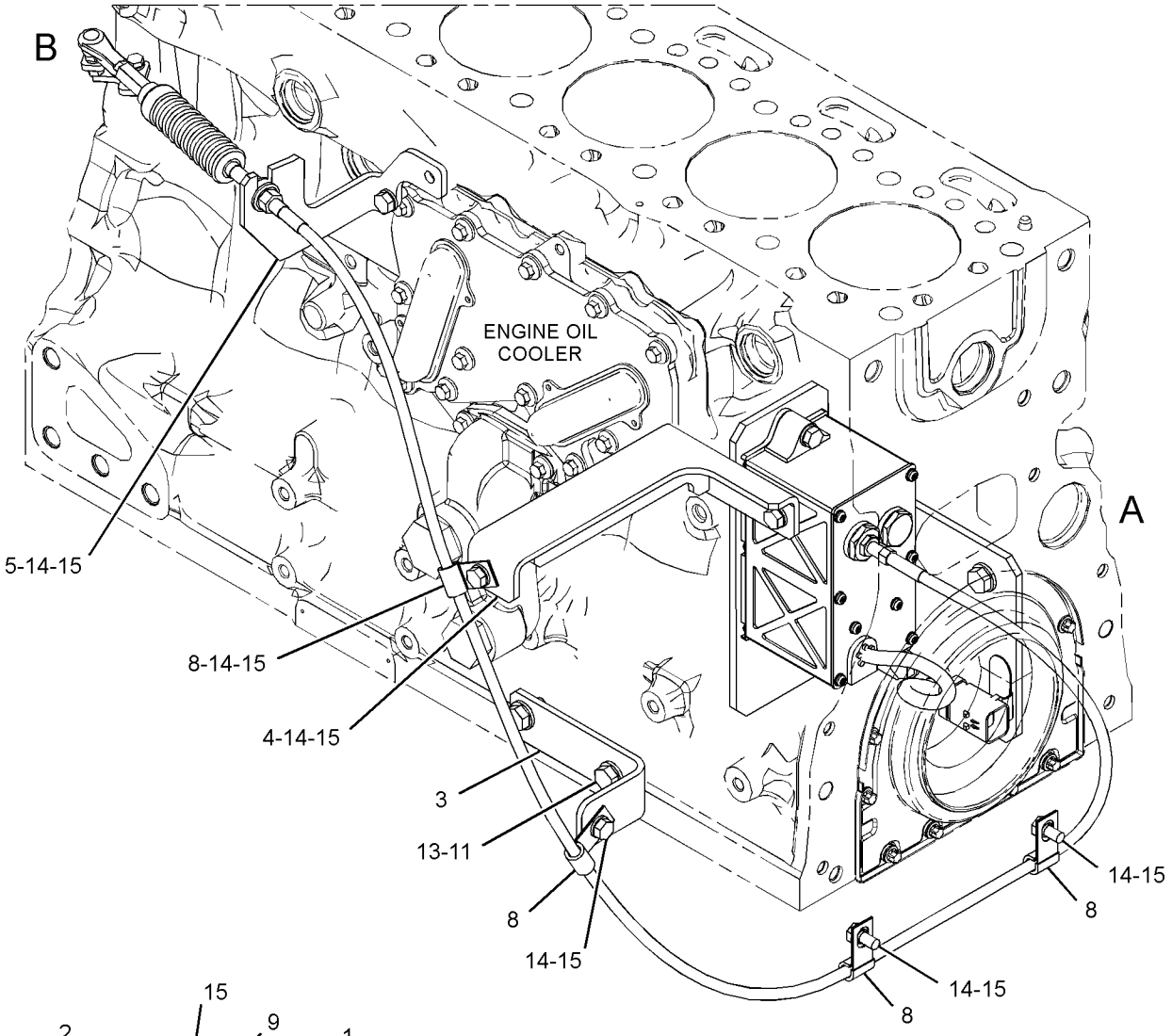

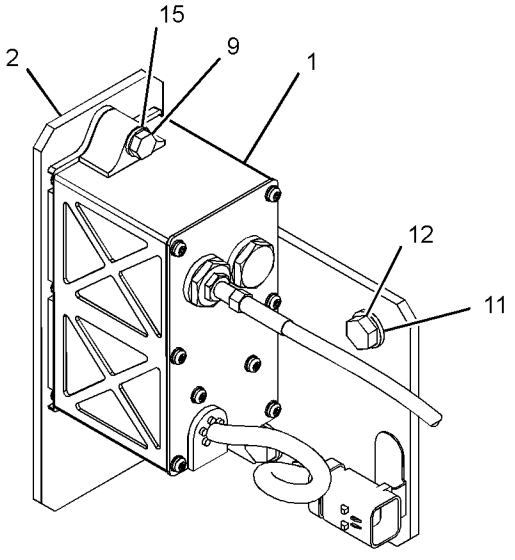

VIEW OF AREA A

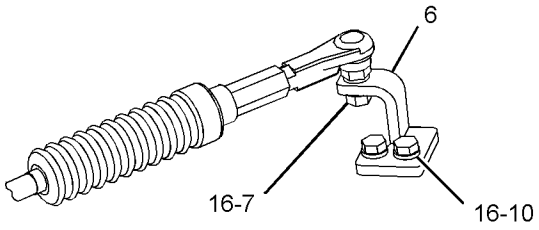

90° VIEW OF AREA B

GRAPHIC #1 **<END>** g03320216

386-0195 FILTER GP-FUEL

S/N: FKK1-UP; DNP1-UP

PART OF 394-7468 LINES GP-FUEL

SMCS-1261 **i05266153**

NOTE	REF NO	GRAPHIC REF	PART NUMBER	QTY	PART NAME 1 2 3 4 5 6 (PRODUCT LEVEL)	SEE PAGE
	1	1	**1R-1804**	1	FILTER ELEMENT-WTR SEP & FUEL	
		1	**207-2757**	1	SEAL	
	2	1	**387-6403**	1	STRAINER (FUEL FILTER)	
	3	1	**395-3437**	1	VALVE AS-DRAIN (FUEL FILTER)	
	4	1	**395-3439**	1	BOWL AS	

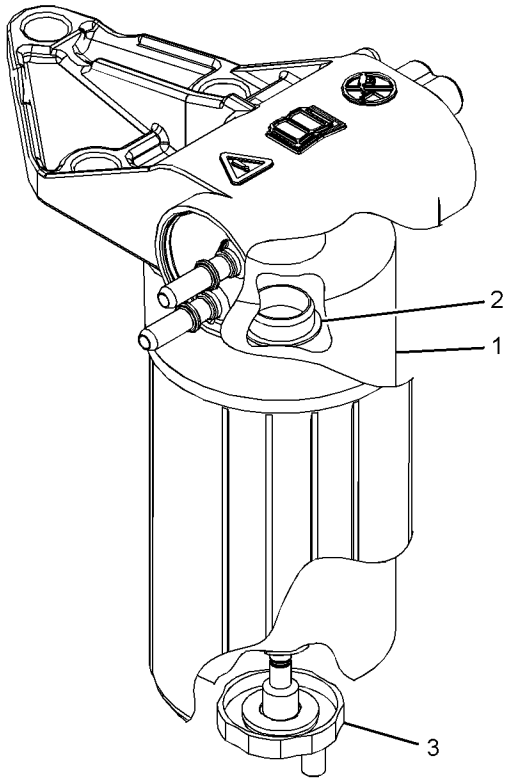

VIEW OF AREA A

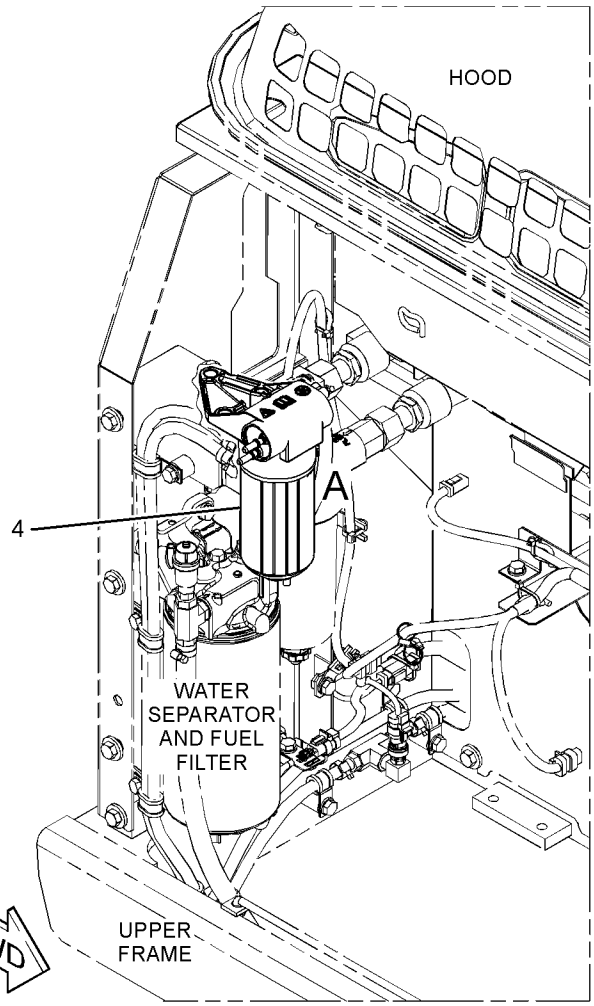

GRAPHIC #1

<END>

g03328605

394-7468 LINES GP-FUEL

S/N: FKK1-UP; DNP1-UP

PART OF 421-6926, 433-6906 CHASSIS AR

SMCS-1274 **i05259810**

NOTE	REF NO	GRAPHIC REF	PART NUMBER	QTY	PART NAME 1 2 3 4 5 6 (PRODUCT LEVEL)	SEE PAGE
	1	1	**4I-0379**	2	VALVE-MANUAL (FUEL)	
	2	1	**8C-6863**	1	ADAPTER	
	3	1	**9X-9896**	6	MOUNT (ISOLATION)	
	4	1	**093-2065**	3	GROMMET	
	5	1	*164-5562*	1	CONNECTOR AS	
		1	**3J-1907**	1	SEAL-O-RING	
		1	**5P-1046**	1	CONNECTOR	
	6	1	*165-7951*	2	CONNECTOR AS	
					(EACH INCLUDES)	
		1	**3J-1907**	1	SEAL-O-RING	
		1	**157-1669**	1	CONNECTOR	
	7	1	**176-4746**	1	GROMMET	
	8	1	*217-8185*	1	ELBOW AS	
		1	**3K-0360**	1	SEAL-O-RING	
		1	**9X-3982**	1	ELBOW	
	9	1	*225-0311*	1	TEE AS	
		1	**3K-0360**	1	SEAL-O-RING	
		1	**168-3332**	1	TEE-ADAPTER	
	10	1	**281-5987**	1	ELBOW	
	11	1	**305-6873**	1	SENSOR GP-PRESSURE	
	12	1	**320-3063**	1	SENSOR-PRESSURE	
	13	1	**342-8584**	3	CONNECTOR	
	14	1	**343-3917**	2	CONNECTION	
	15	1	**343-7352**	1	CONNECTOR-FUEL	
	16	1	**351-4318**	12	CLIP	
	17	1	**354-6246**	2	CONNECTOR	
	18	1	**355-0632**	1	CONNECTOR-SPECIAL	
Y	19	1	**363-5084**	1	SENSOR GP-LIQUID LEVEL	90
	20	1	**381-9061**	1	BASE AS-FUEL FILTER	
	21	1	**381-9064**	1	INDICATOR-FUEL FILTER CHANGE	
	22	1	**382-0664**	1	FILTER AS-WATER SEP & FUEL (ULTRA HIGH EFFICIENCY)	
Y	23	1	**386-0195**	1	FILTER GP-FUEL	58
	24	1	**387-2637**	2	ADAPTER-TEE	
	25	1	**394-7686**	1	HOSE	
	26	1	**420-2083**	1	PLATE AS	
	27	1	**420-2087**	1	HOSE	
	28	1	**420-2089**	1	HOSE	
	29	1	**420-2092**	1	HOSE	
	30	1	**420-2094**	1	HOSE	
	31	1	**420-2096**	1	HOSE	
	32	1	**420-2098**	1	HOSE	
	33	1	**420-2100**	1	HOSE	
	34	1	**420-5299**	4	CLIP	
	35	1	*148-8411*	3	PLUG AS	
					(EACH INCLUDES)	
		1	**3K-0360**	1	SEAL-O-RING	
		1	**9S-4185**	1	PLUG-O-RING	
	36	1	*155-3624*	1	PLUG AS	
		1	**3J-7354**	1	SEAL-O-RING	
		1	**9S-4182**	1	PLUG-O-RING	
	37	1	*169-7397*	1	ADAPTER GP	
		1	**3K-0360**	1	SEAL-O-RING	
		1	**3P-1932**	1	ADAPTER	
	38	1	**204-1673**	1	STRAP-CABLE	
	39	1	**260-9144**	1	CONNECTOR AS	
	40	1	**337-6501**	2	FITTING	
	41	1	**344-5360**	7	CLIP	
	42	1	**347-4416**	2	ADAPTER	

394-7468 **LINES GP-FUEL (*contd.*)** **i05259810**

NOTE	REF NO	GRAPHIC REF	PART NUMBER	QTY	PART NAME 1 2 3 4 5 6 (PRODUCT LEVEL)	SEE PAGE
	43	1	**351-4089**	4	GROMMET	
	44	1	**351-4321**	5	CLIP	
	45	1	**3J-7354**	4	SEAL-O-RING	
	46	1	**3S-2093**	1	STRAP-CABLE	
	47	1	**5V-9155**	4	CLAMP-HOSE	
	48	1	**6S-8620**	15	CLAMP-HOSE	
	49	1	**6V-9028**	5	SEAL-O-RING	
	50	1	**8C-5608**	3	SPACER (6.5X9.5X25.4-MM THK)	
	51	1	**8T-1889**	4	CLIP (SLOT)	
	52	1	**8T-1890**	4	CLIP (TAB)	
	53	1	**8T-4121**	28	WASHER-HARD (11X21X2.5-MM THK)	
M	54	1	**8T-4136**	2	BOLT (M10X1.5X25-MM)	
M	55	1	**8T-4137**	22	BOLT (M10X1.5X20-MM)	
M	56	1	**8T-4138**	3	BOLT (M6X1X20-MM)	
M	57	1	**8T-4195**	1	BOLT (M10X1.5X30-MM)	
M	58	1	**8T-4196**	3	BOLT (M10X1.5X35-MM)	
M	59	1	**9X-2480**	3	BOLT (M6X1X45-MM)	
	60	1	**9X-6165**	3	WASHER (6.5X22X2.5-MM THK)	
	61	1	**9X-8256**	3	WASHER (6.6X12X2-MM THK)	
D	62	1	**5P-1442**		HOSE (29-CM)	
D	62A	1	**5P-1442**		HOSE (61-CM)	

D - ORDER BY THE METER
M - METRIC PART
Y - SEPARATE ILLUSTRATION

394-7468 **LINES GP-FUEL (*contd.*)** **i05259810**

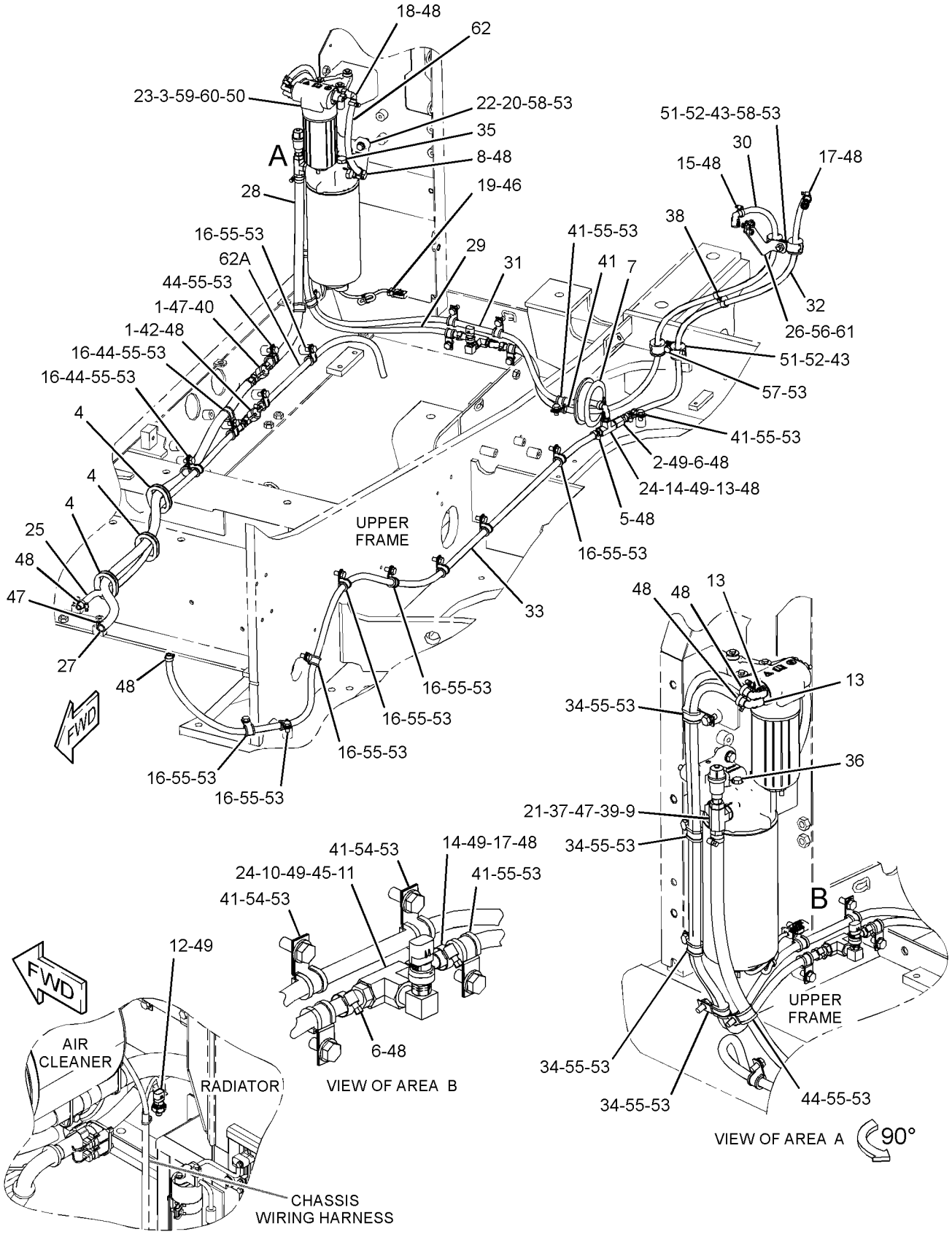

GRAPHIC #1 **<END>** g03327754

396-6969 LINES GP-FUEL FILTER

S/N: D7A1-UP

PART OF 417-3389 ENGINE AR-PRIMARY

SMCS-1261 **i05245915**

NOTE	REF NO	GRAPHIC REF	PART NUMBER	QTY	PART NAME 1 2 3 4 5 6 (PRODUCT LEVEL)	SEE PAGE
	1	1	**100-4458**	4	BOLT (M8X1.25X14-MM)	
	2	1	**111-8222**	1	BOLT (M8X16-MM)	
	3	1	**231-4457**	1	GASKET	
	4	1	**246-4383**	1	PLATE	
	5	1	**398-3877**	1	LINE AS-FUEL	
	6	1	**232-3126**	1	CLIP	
	7	1	**240-5571**	1	BRACKET	

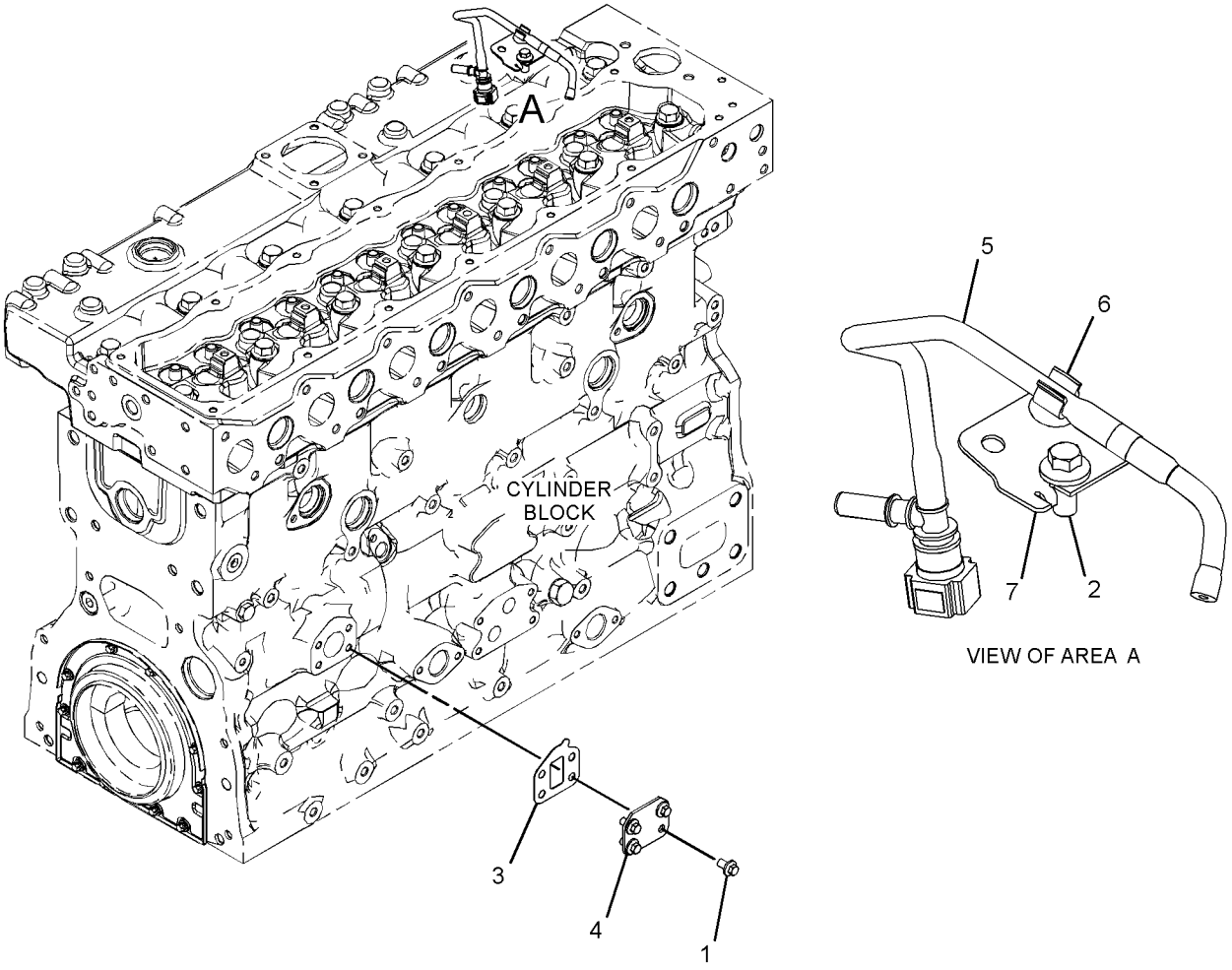

GRAPHIC #1 **<END>** g03319107

396-4502 PUMP GP-FUEL INJECTION

S/N: D7A1-UP
24-VOLT
PART OF 417-3389 ENGINE AR-PRIMARY

SMCS-1251, 1290 **i05245855**

NOTE	REF NO	GRAPHIC REF	PART NUMBER	QTY	PART NAME 1 2 3 4 5 6 (PRODUCT LEVEL)	SEE PAGE
M	1	1	**6I-0260**	4	BOLT (M8X1.25X25-MM)	
M	2	1	**100-4830**	1	BOLT (M10X1.5X20-MM)	
	3	1	**169-5326**	1	SWITCH-TEMPERATURE	
	4	1	**230-8989**	1	GEAR-FUEL PUMP (68-TEETH)	
	5	1	**232-1794**	5	HOSE	
	6	1	**336-4757**	1	BRACKET	
	7	1	**374-0191**	1	LINES GP-FUEL INJECTION	
	8	1	**396-8257**	1	CAP	
	9	1	**398-1498**	1	PUMP AS-FUEL INJECTION	
	10	1	**398-1507**	6	INJECTOR GP-FUEL	
	11	1	**6I-0291**	1	NUT (M8X1.25-THD)	
	12	1	**292-3462**	1	PLUG-PIPE	
	13	1	**232-1793**	1	CABLE	
	14	1	**232-3149**	3	WASHER (8.35X16.85X1.55-MM THK)	
	15	1	**232-3274**	6	BOLT (M8X1.25X48.1-MM)	
	16	1	**238-8671**	6	CLAMP-INJECTOR	

M - METRIC PART

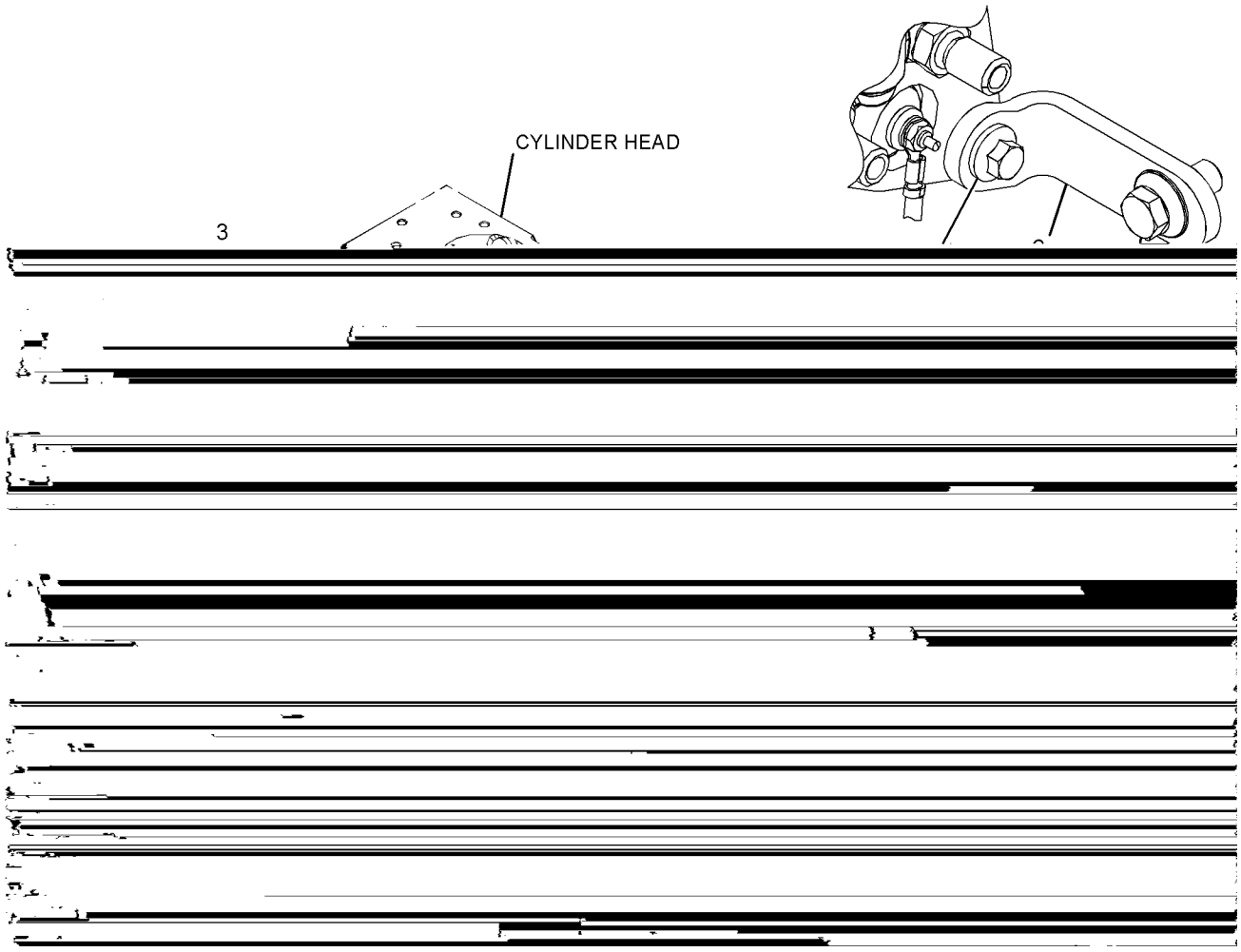

GRAPHIC #1 **<END>** g03317777

421-8479 TANK & MTG GP-FUEL

S/N: FKK1-UP; DNP1-UP

PART OF 421-6926, 433-6906 CHASSIS AR

SMCS-1273 **i05259924**

NOTE	REF NO	GRAPHIC REF	PART NUMBER	QTY	PART NAME 1 2 3 4 5 6 (PRODUCT LEVEL)	SEE PAGE
	1	1	**246-2641**	1	PADLOCK GP	
		1	**5P-8500**	1	KEY	
	2	1	**085-9310**	4	SPACER (16.6X32X26-MM THK)	
Y	3	1	**421-6924**	1	TANK GP-FUEL	65
M	4	1	**8T-4140**	4	BOLT (M16X2X60-MM)	

M - METRIC PART
Y - SEPARATE ILLUSTRATION

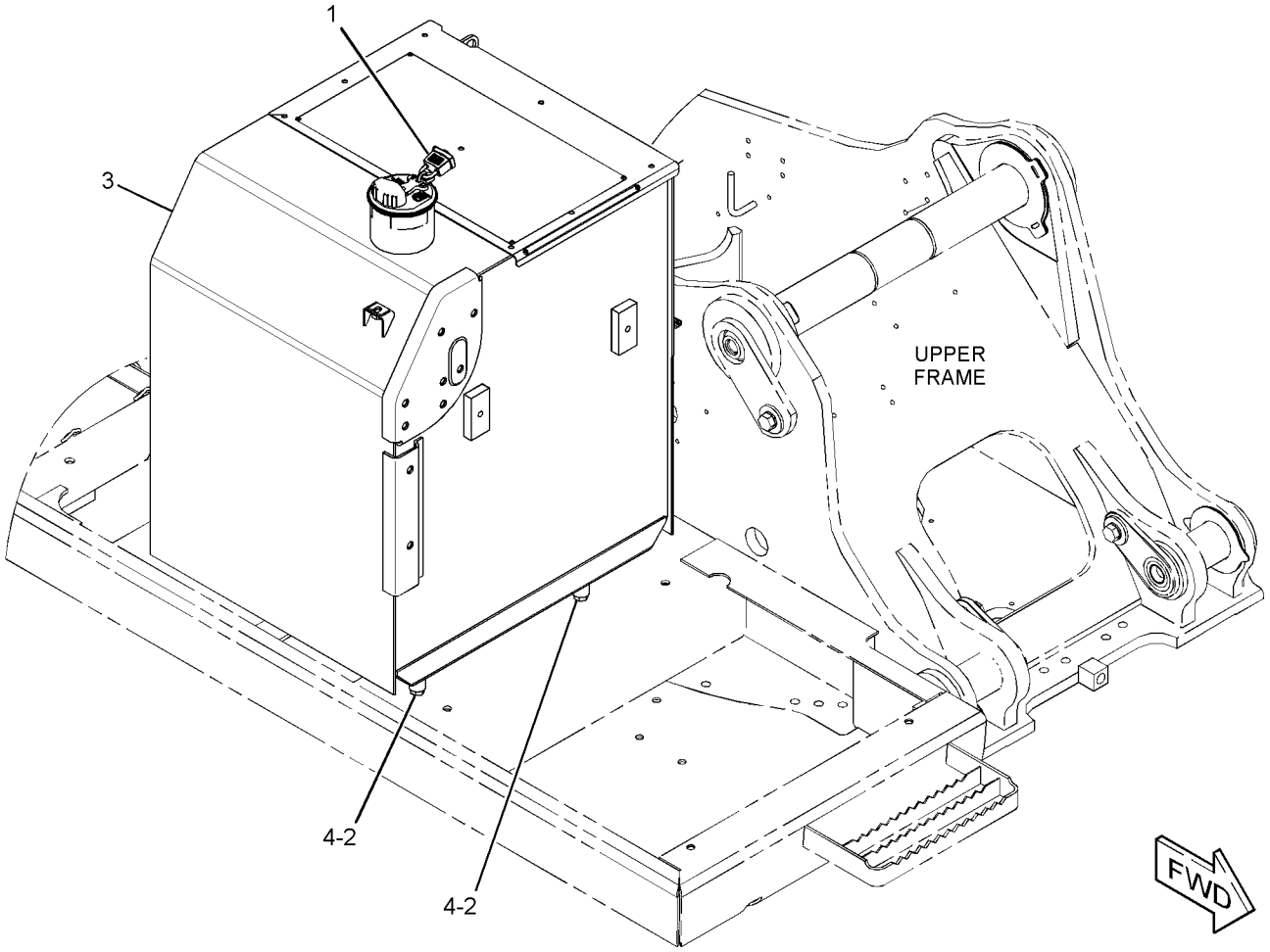

GRAPHIC #1 **<END>** g03306518

421-6924 TANK GP-FUEL

S/N: FKK1-UP; DNP1-UP
410-L (108.3-US GAL)
PART OF 421-6945 PLATE & FILM GP, 421-8479 TANK & MTG GP-FUEL

SMCS-1273 **i05265222**

NOTE	REF NO	GRAPHIC REF	PART NUMBER	QTY	PART NAME 1 2 3 4 5 6 (PRODUCT LEVEL)	SEE PAGE
	1	1	**5P-1046**	1	CONNECTOR	
J	2	1	**303-9933**	1	STRAINER AS-FUEL (FLOAT GAUGE)	
	3	1	**341-1842**	1	SENDER AS-FUEL LEVEL	
		1	**8T-8729**	2	PIN-CONNECTOR (16-GA TO 18-GA)	
		1	**102-8802**	1	KIT-RECEPTACLE (2-PIN)	
					(INCLUDES RECEPTACLE AS & WEDGE)	
	4	1	**349-7059**	1	CAP AS-FUEL (DEBRIS BOOT, LOCKABLE)	
		1	**9X-8600**	1	SEAL-O-RING	
		1	**350-7735**	1	KIT-CAP FILTER (FUEL TANK)	
					(INCLUDES BODY, GASKET, SCREWS & WASHERS)	
	5	1	**359-8335**	1	PACKING	
M	6	1	**095-0736**	5	SCREW-MACHINE (M5X0.8X10-MM)	
	7	1	*150-3024*	1	ELBOW AS	
		1	**3J-1907**	1	SEAL-O-RING	
		1	**5P-4924**	1	ELBOW	
	8	1	*170-0967*	1	ELBOW AS	
		1	**3K-0360**	1	SEAL-O-RING	
		1	**5P-4906**	1	ELBOW	
	9	1	**3J-1907**	1	SEAL-O-RING	
	10	1	**8T-0328**	5	WASHER-HARD (5.5X10X1-MM THK)	
					PARTS SHOWN IN GRAPHIC(S) WITHOUT A REFERENCE NUMBER ARE NOT SERVICED SEPARATELY	
					AVAILABLE REPAIR KIT(S):	
			303-9937	1	KIT-GAUGE (FUEL STRAINER)	
					(INCLUDES STOPPER & GAUGE)	

J - KIT MARKED J SERVICES PART(S) MARKED J
M - METRIC PART

421-6924 **TANK GP-FUEL (*contd.*)** **i05265222**

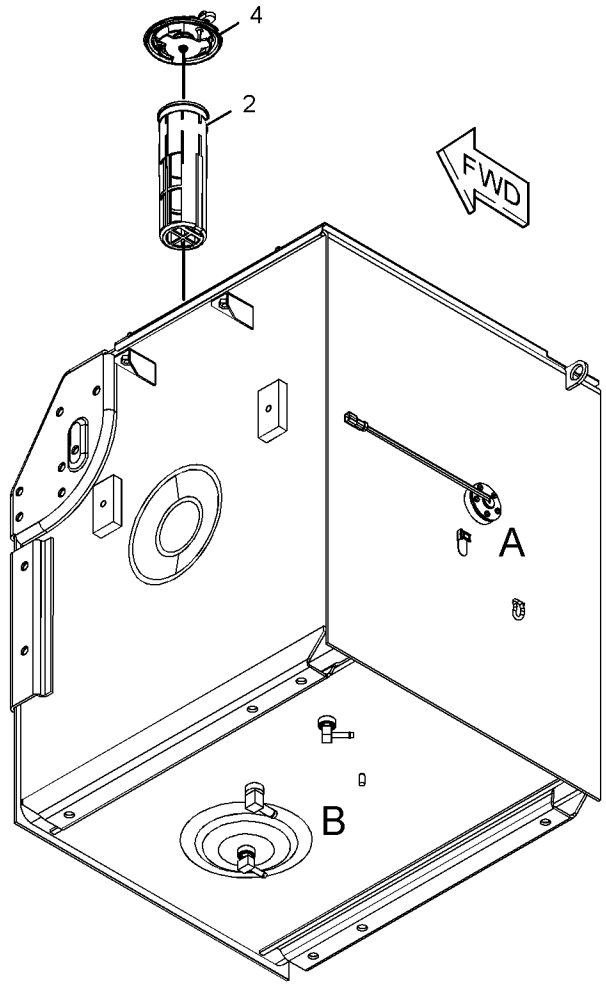

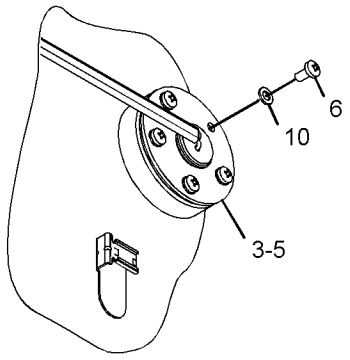

VIEW OF AREA A
(EXPLODED)

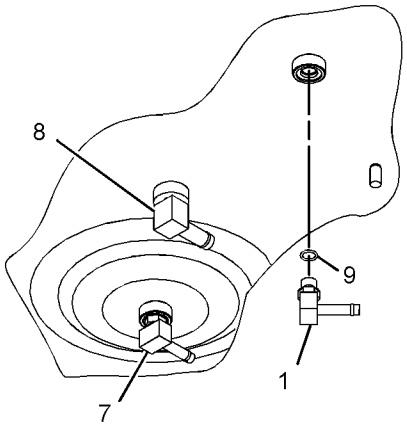

VIEW OF AREA B
(EXPLODED)

GRAPHIC #1 **<END>** g03277156

132-1829 ALARM GP

S/N: FKK1-UP; DNP1-UP
24-VOLT
PART OF 422-4183, 435-0869 WIRING GP-CAB

SMCS-7400, 7402, 7407 **i04912216**

NOTE	REF NO	GRAPHIC REF	PART NUMBER	QTY	PART NAME 1 2 3 4 5 6 (PRODUCT LEVEL)	SEE PAGE
	1	1	**102-8802**	1	KIT-RECEPTACLE (2-PIN)	
					(INCLUDES RECEPTACLE AS & WEDGE)	
	2	1	**8T-8729**	2	PIN-CONNECTOR (16-GA TO 18-GA)	

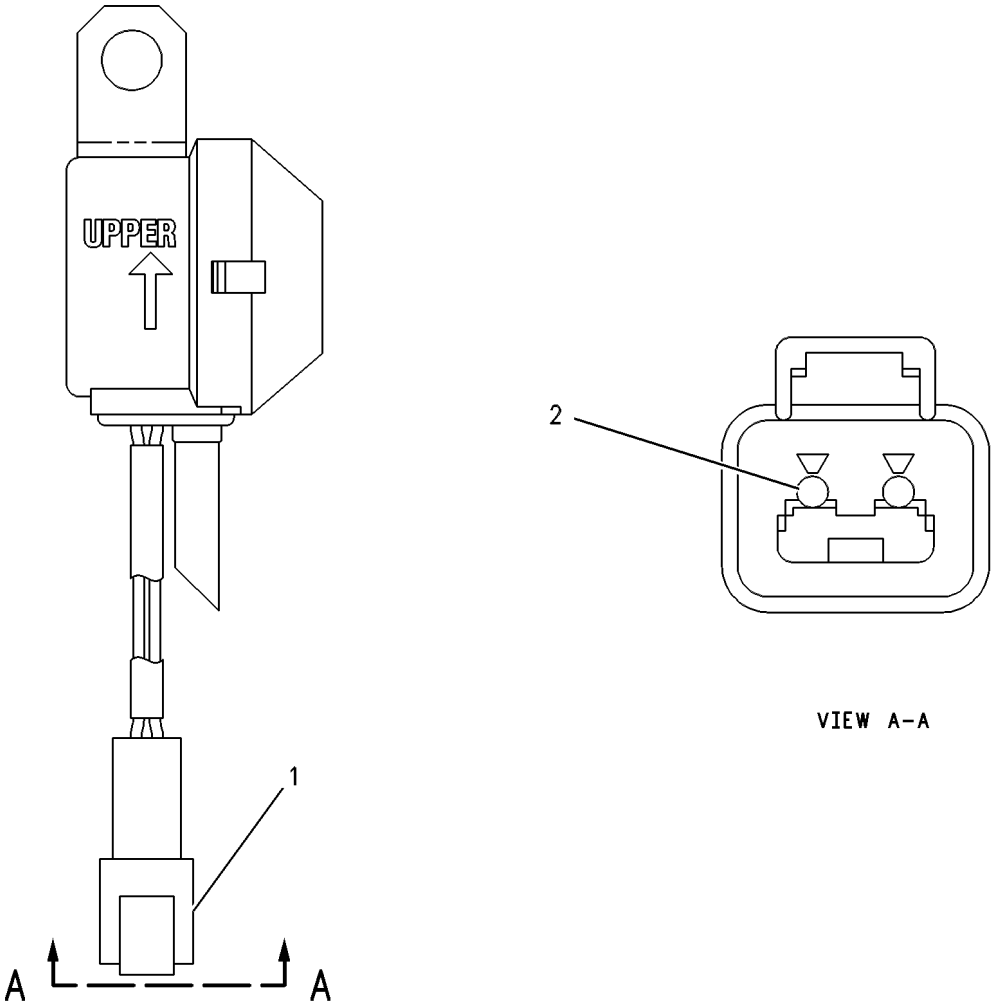

GRAPHIC #1 **<END>** g00272185

396-6983 ALTERNATOR GP-CHARGING

S/N: D7A1-UP

PART OF 417-3389 ENGINE AR-PRIMARY

SMCS-1405 **i05245696**

NOTE	REF NO	GRAPHIC REF	PART NUMBER	QTY	PART NAME 1 2 3 4 5 6 (PRODUCT LEVEL)	SEE PAGE
	1	1	**329-5254**	1	PULLEY (12-GROOVE)	
	2	1	**344-1722**	1	TENSIONER-BELT	
	3	1	**344-5081**	1	ALTERNATOR GP (CHARGING)	
	4	1	**100-4463**	1	BOLT (M10X1.5X80-MM)	
	5	1	**164-7468**	4	BOLT (M10X1.5X95-MM)	

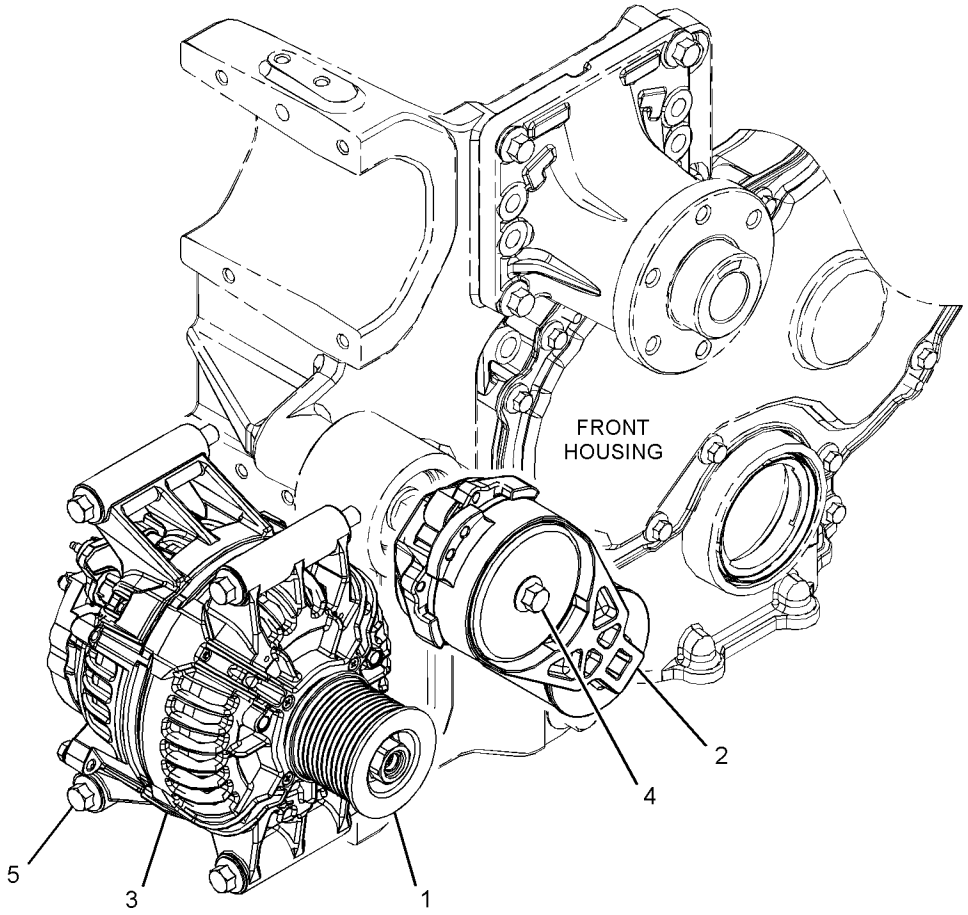

GRAPHIC #1 **<END>** g03317329

399-3647 BATTERY & WIRING GP

S/N: FKK1-UP; DNP1-UP

PART OF 421-6926, 433-6906 CHASSIS AR

SMCS-1401, 1402, 1408 **i05259814**

NOTE	REF NO	GRAPHIC REF	PART NUMBER	QTY	PART NAME 1 2 3 4 5 6 (PRODUCT LEVEL)	SEE PAGE
	1	1	**3T-5760**	2	BATTERY GP (12-VOLT, 750-CCA)	
		1	**123-1373**	6	CAP AS-FILLER (BATTERY)	
	2	1	**5I-8270**	1	COVER-BATTERY	
	3	1	**6W-6005**	1	HOLD-DOWN-BATTERY	
	4	1	**132-1805**	1	STRAP AS-GROUND	
	5	1	**134-3355**	2	STRAP AS	
	6	1	**170-6929**	1	CABLE AS	
E		1	**159-8049**		CABLE (00-GA, RED) (31-CM)	
		1	**9G-0002**	1	COVER AS-TERMINAL (RED)	
		1	**9G-0005**	1	COVER AS-TERMINAL (BLACK)	
					(EACH COVER AS INCLUDES)	
		1	**8L-8413**	1	STRAP-CABLE	
		1	**8C-5918**	1	TERMINAL AS (NEGATIVE)	
		1	**8T-9756**	1	TERMINAL AS (POSITIVE)	
					(EACH TERMINAL AS INCLUDES)	
		1	**1M-6119**	1	BOLT (5/16-18X1.375-IN)	
		1	**1M-6120**	1	NUT (5/16-18-THD)	
	7	1	**231-1827**	1	CABLE AS	
		1	**1S-7252**	1	TERMINAL-CABLE (00-GA, 3/8-IN SCREW)	
E		1	**159-8050**		CABLE (00-GA, BLACK) (23-CM)	
		1	**9G-0003**	1	COVER AS-TERMINAL (BLACK)	
		1	**8L-8413**	1	STRAP-CABLE	
		1	**9G-8909**	1	COVER-TERMINAL (BLACK)	
		1	**8T-9757**	1	TERMINAL AS-BATTERY (NEGATIVE)	
		1	**1M-6119**	1	BOLT (5/16-18X1.375-IN)	
		1	**1M-6120**	1	NUT (5/16-18-THD)	
	8	1	**238-2501**	1	KNOB	
	9	1	**238-2528**	1	ROD	
	10	1	**286-6192**	1	SPACER (11X40X25-MM THK)	
	11	1	**388-6748**	1	BRACKET AS	
	12	1	**388-6760**	1	CABLE AS	
		1	**1S-7252**	1	TERMINAL-CABLE (00-GA, 3/8-IN SCREW)	
D		1	**6V-2722**		TUBE-HEAT SHRINK (25.4-MM DIA) (0.1-M)	
		1	**8N-0869**	1	COVER-TERMINAL (RED)	
		1	**9G-0004**	1	COVER AS-TERMINAL (RED)	
		1	**8L-8413**	1	STRAP-CABLE	
		1	**8C-5917**	1	TERMINAL AS-BATTERY (POSITIVE)	
		1	**1M-6119**	1	BOLT (5/16-18X1.375-IN)	
		1	**1M-6120**	1	NUT (5/16-18-THD)	
E		1	**159-8049**		CABLE (00-GA, RED) (239-CM)	
	13	1	**091-9035**	1	SPACER (11X25X20-MM THK)	
	14	1	**2G-8767**	3	WASHER (10.5X60X3-MM THK)	
	15	1	**4K-8864**	1	CLIP	
M	16	1	**5C-7261**	1	NUT (M8X1.25-THD)	
	17	1	**6G-2256**	2	CLAMP	
	18	1	**6G-2263**	2	SPACER (10.5X19X28.5-MM THK)	
	19	1	**6K-8178**	3	CLIP	
	20	1	**7X-7729**	2	WASHER (11X25X3-MM THK)	
	21	1	**8T-4121**	11	WASHER-HARD (11X21X2.5-MM THK)	
M	22	1	**8T-4133**	1	NUT (M10X1.5-THD)	
M	23	1	**8T-4136**	5	BOLT (M10X1.5X25-MM)	
M	24	1	**8T-4137**	4	BOLT (M10X1.5X20-MM)	
M	25	1	**8T-4178**	1	BOLT (M10X1.5X90-MM)	
M	26	1	**8T-4182**	1	BOLT (M10X1.5X45-MM)	
	27	1	**8T-4226**	1	WASHER-PLATED (10.5X45X3-MM THK)	
M	28	1	**8T-6466**	1	BOLT (M10X1.5X60-MM)	

399-3647 **BATTERY & WIRING GP (*contd.*)** **i05259814**

NOTE	REF NO	GRAPHIC REF	PART NUMBER	QTY	PART NAME 1 2 3 4 5 6 (PRODUCT LEVEL)	SEE PAGE
D - ORDER BY THE METER						
E - ORDER BY THE CENTIMETER						
M - METRIC PART						

399-3647 **BATTERY & WIRING GP (*contd.*)** **i05259814**

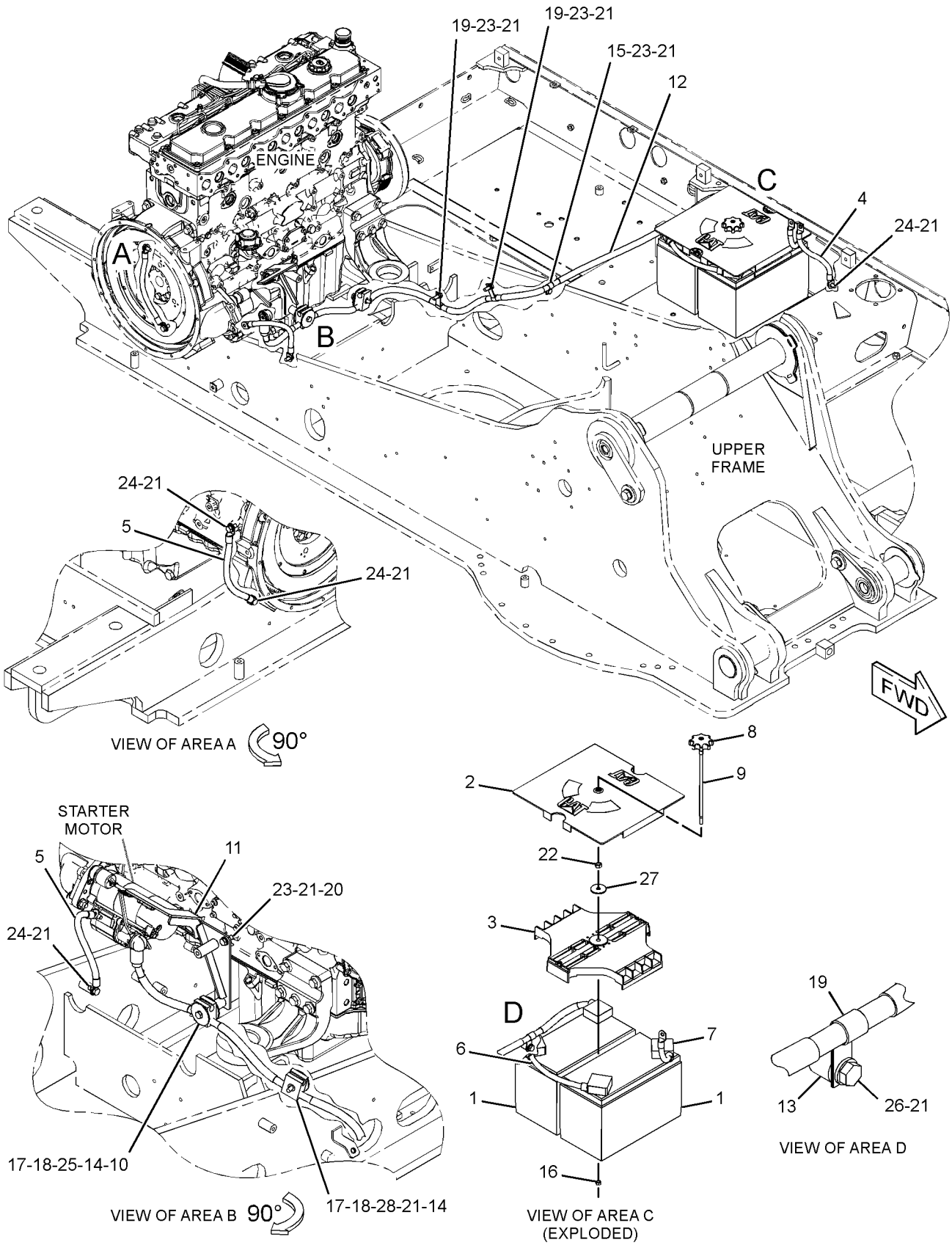

GRAPHIC #1 **<END>** g03309757

381-7372 CONTROL & MTG GP-COMMUNICATION–PRODUCT LINK CELLULAR

S/N: DNP1-UP

PART OF 379-7062 CONTROL AR-COMMUNICATION AN ATTACHMENT

SMCS-7606 **i04925298**

NOTE	REF NO	GRAPHIC REF	PART NUMBER	QTY	PART NAME 1 2 3 4 5 6 (PRODUCT LEVEL)	SEE PAGE
	1	1	**8C-5608**	4	SPACER (6.5X9.5X25.4-MM THK)	
	2	1	**9X-9896**	8	MOUNT (ISOLATION)	
	3	1	**373-8962**	1	BRACKET AS	
Y	4	1	*376-6478*	1	CONTROL GP-COMMUNICATION (PRODUCT LINK CELLULAR)	74
M	5	1	**8C-8451**	4	BOLT (M6X1X40-MM)	
	6	1	**9X-6165**	4	WASHER (6.5X22X2.5-MM THK)	
	7	1	**230-1340**	1	FILM-WARNING (PRODUCT LINK RADIO, U.S.)	
					–OR–	
	8	1	**230-1341**	1	FILM-WARNING (PRODUCT LINK RADIO, INTL)	
	9	1	**307-0047**	1	FILM-INFORMATION (PRODUCT LINK, READ OMM)	

M - METRIC PART
Y - SEPARATE ILLUSTRATION

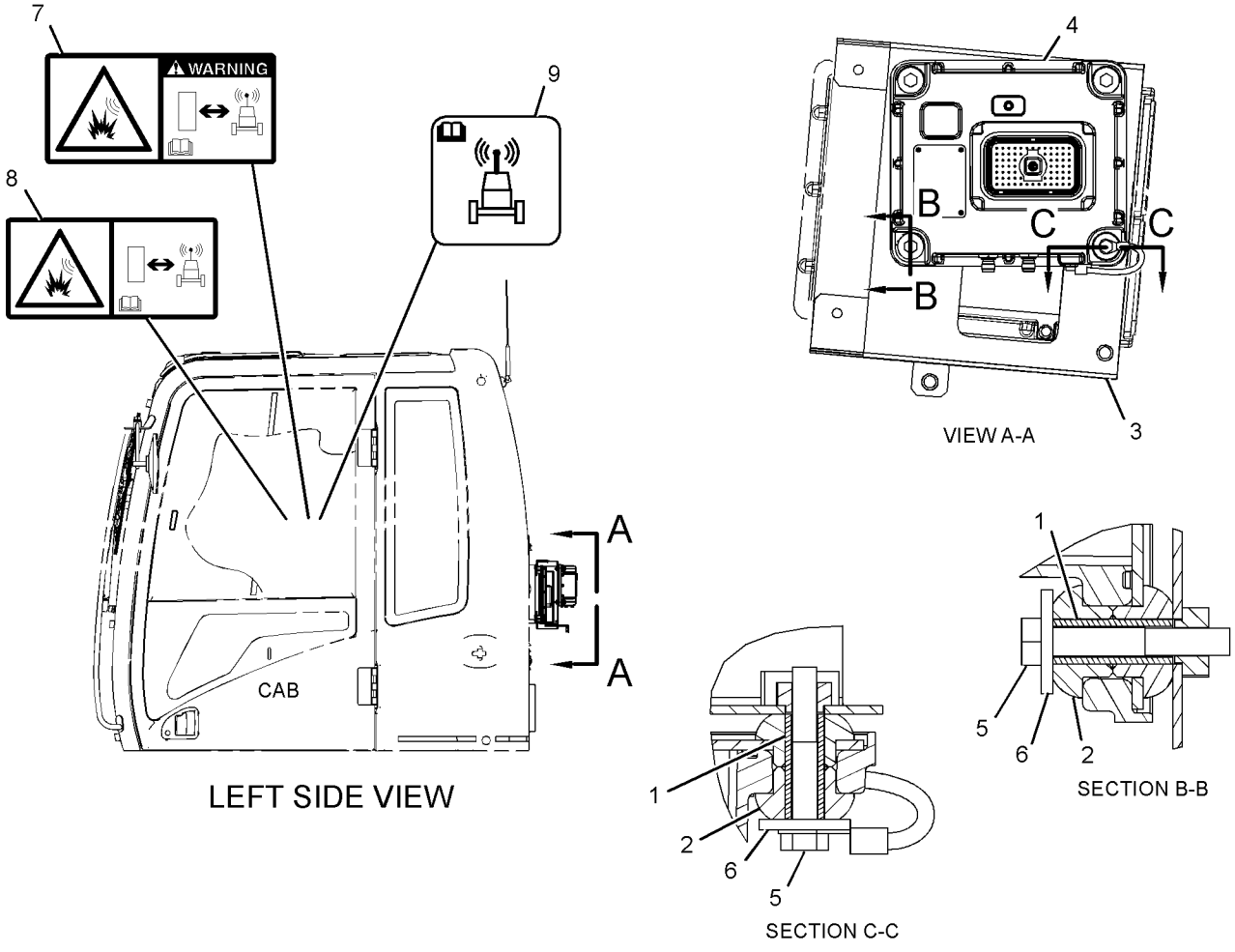

GRAPHIC #1 **<END>** g02684239

221-8872 CONTROL & MTG GP-MACHINE

S/N: FKK1-UP; DNP1-UP

PART OF 421-6944, 433-6907 OPERATOR AR

SMCS-1931, 7600 **i04913540**

NOTE	REF NO	GRAPHIC REF	PART NUMBER	QTY	PART NAME 1 2 3 4 5 6 (PRODUCT LEVEL)	SEE PAGE
	1	1	**366-8821**	1	CONTROL GP-UNPROGRAMMED	
M	2	1	**9X-2480**	4	BOLT (M6X1X45-MM)	
	3	1	**9X-8256**	4	WASHER (6.6X12X2-MM THK)	

M - METRIC PART

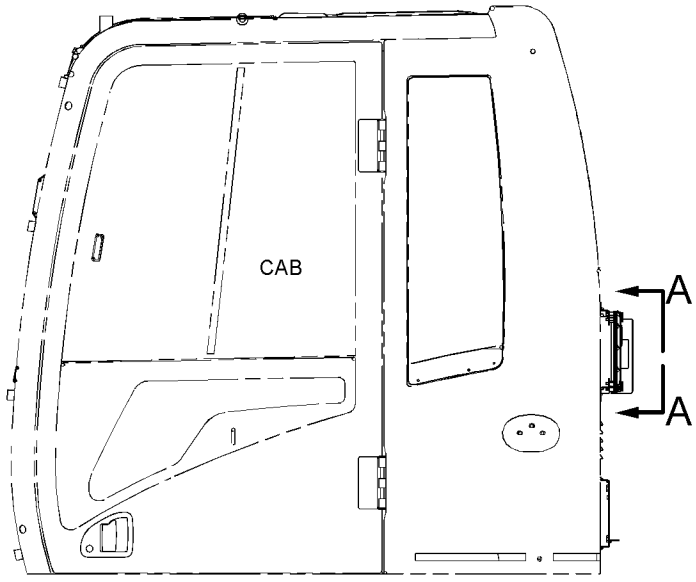

LEFT SIDE VIEW

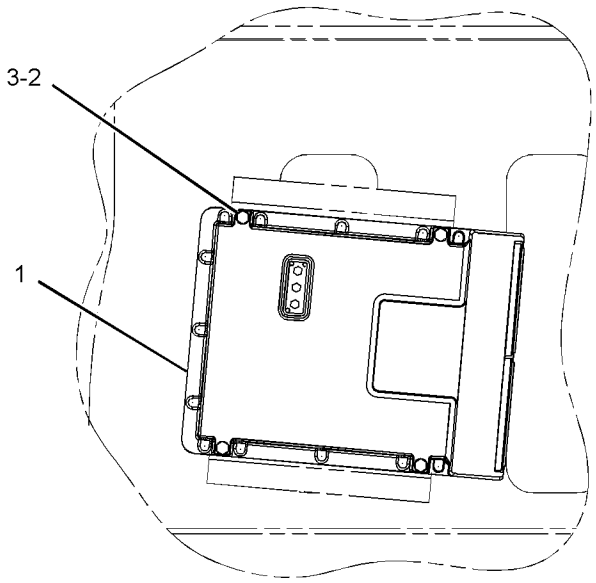

VIEW A-A

GRAPHIC #1 **<END>** g01150750

379-7062 CONTROL AR-COMMUNICATION—PRODUCT LINK CELLULAR

S/N: DNP1-UP

AN ATTACHMENT

SMCS-1400, 7600 **i04925222**

NOTE	PART NUMBER	QTY	PART NAME 1 2 3 4 5 6 (PRODUCT LEVEL)	SEE PAGE
Y	*381-7372*	1	CONTROL & MTG GP-COMMUNICATION (PRODUCT LINK CELLULAR)	72
Y	*366-9355*	1	MOUNTING GP-ANTENNA (PRODUCT LINK)	444
Y	*366-9348*	1	WIRING GP-COMMUNICATION (PRODUCT LINK)	120

Y - SEPARATE ILLUSTRATION

<END>

376-6478 CONTROL GP-COMMUNICATION—PRODUCT LINK CELLULAR

S/N: DNP1-UP

PART OF 381-7372 CONTROL & MTG GP-COMMUNICATION

AN ATTACHMENT

SMCS-7606, 7610, 7620 **i04925310**

NOTE	PART NUMBER	QTY	PART NAME 1 2 3 4 5 6 (PRODUCT LEVEL)	SEE PAGE
Y	**351-8490**	1	CONTROL GP-UNPROGRAMMED (PRODUCT LINK 522)	75
	380-9732	1	SOFTWARE GP-COMMUNICATION	

Y - SEPARATE ILLUSTRATION

<END>

351-8490 CONTROL GP-UNPROGRAMMED–PRODUCT LINK 522

S/N: DNP1-UP
PART OF 376-6478 CONTROL GP-COMMUNICATION
AN ATTACHMENT

SMCS-7610 **i04864189**

NOTE	REF NO	GRAPHIC REF	PART NUMBER	QTY	PART NAME 1 2 3 4 5 6 (PRODUCT LEVEL)	SEE PAGE
	1	1	**346-7763**	1	COVER AS	
	2	1	**351-8488**	1	CARD-MEMORY (SUBSCRIBER IDENTITY MODULE)	
	3	1	**7X-6315**	1	STRAP AS-GROUND	
	4	1	**342-9022**	4	SCREW-PAN HEAD (M2.5X0.45-THD)	
	5	1	**342-9290**	1	SCREW-PAN HEAD (M4X0.7-THD)	
	6	1	**134-4126**	1	WASHER (4.52X8.28X0.76-MM THK)	
F			**382-5982**	1	SOFTWARE GP-ELECTRONIC	

F - NOT SHOWN

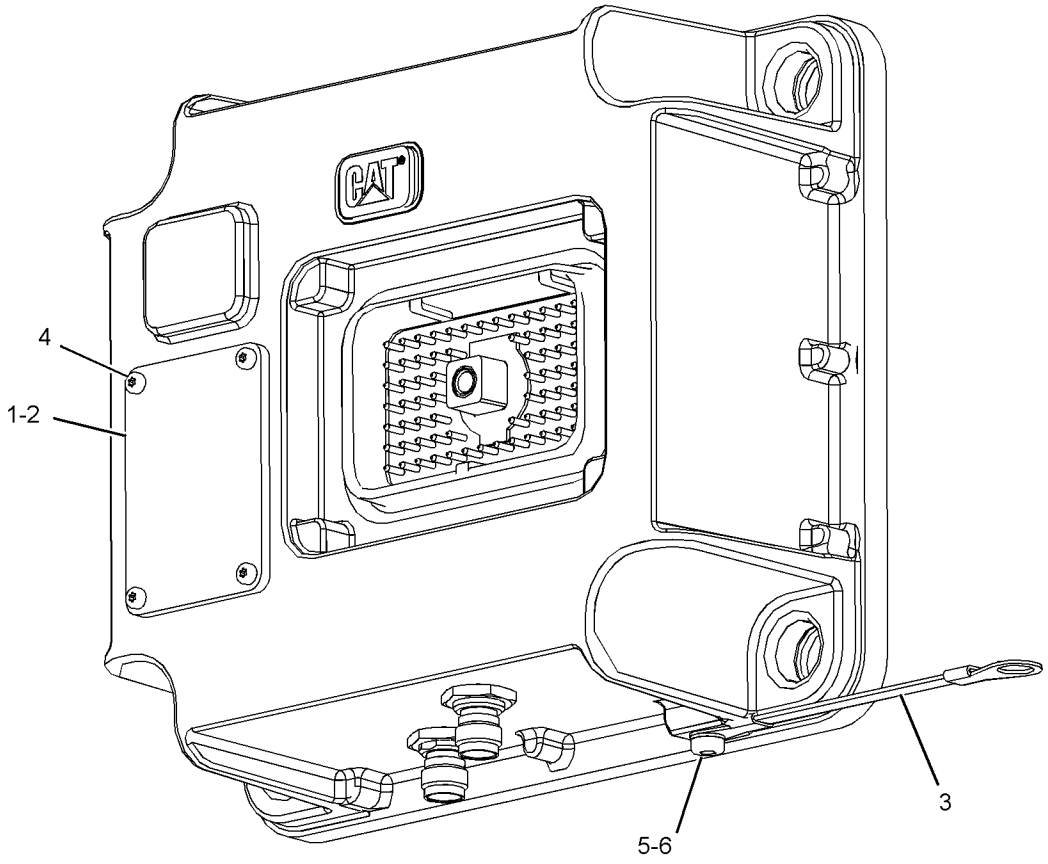

GRAPHIC #1 **<END>** g02330133

383-5108 ELECTRONICS GP-MACHINE

S/N: FKK1-UP; DNP1-UP
PART OF 421-6925, 433-2638 GENERAL AR

SMCS-7610, 7620 **i05259098**

NOTE	PART NUMBER	QTY	PART NAME 1 2 3 4 5 6 (PRODUCT LEVEL)	SEE PAGE
	383-5109	1	SOFTWARE GP-MACHINE	

<END>

221-8861 ELECTRONICS GP-MONITOR

S/N: FKK1-UP; DNP1-UP
PART OF 421-6925, 433-2638 GENERAL AR

SMCS-7490, 7601, 7610, 7620 **i05266140**

NOTE	PART NUMBER	QTY	PART NAME 1 2 3 4 5 6 (PRODUCT LEVEL)	SEE PAGE
	386-3454	1	SOFTWARE GP-MONITOR	
			—OR—	
Y	*386-3458*	1	MONITOR GP-OPERATOR	443
			(OPTIONAL SERVICE REPLACEMENT)(INCLUDES MONITOR GP & SOFTWARE)	

Y - SEPARATE ILLUSTRATION

<END>

434-8823 HARNESS AS-AUXILIARY

S/N: DNP1-UP
AN ATTACHMENT

SMCS-1408 **i05266758**

NOTE	PART NUMBER	QTY	PART NAME 1 2 3 4 5 6 (PRODUCT LEVEL)	SEE PAGE
	155-2270	1	KIT-CONNECTING PLUG (2-PIN)	
			(INCLUDES PLUG AS,WEDGE & INTERFACE SEAL)	
	102-8803	1	KIT-RECEPTACLE (3-PIN)	
			(INCLUDES RECEPTACLE AS & WEDGE)	
	9X-3401	2	PIN-CONNECTOR (16-GA TO 18-GA)	
			—OR—	
	126-1767	2	PIN-CONNECTOR (14-GA TO 16-GA)	
	8T-8737	1	PLUG-SEAL	
	9W-0844	2	SOCKET-CONNECTOR (14-GA TO 16-GA)	
	3E-3371	1	WEDGE-RECEPTACLE LOCK (3-PIN)	

<END>

434-8824 HARNESS AS-WIRING

S/N: DNP1-UP

AN ATTACHMENT

SMCS-1408 **i05266763**

NOTE	PART NUMBER	QTY	PART NAME 1 2 3 4 5 6 (PRODUCT LEVEL)	SEE PAGE
	342-2972	1	CAP-CONNECTOR (2-PIN)	
	9X-3401	1	PIN-CONNECTOR (16-GA TO 18-GA)	
	230-4011	1	PLUG AS-CONNECTOR (2-PIN)	
	264-7029	1	SEAL-CONNECTOR	
	8T-8737	1	PLUG-SEAL	
	9X-3402	1	SOCKET-CONNECTOR (16-GA TO 18-GA)	

<END>

153-2521 LAMP GP-FLOOD

S/N: FKK1-UP; DNP1-UP
24-VOLT
PART OF 259-5043 LIGHTING GP-FLOOD
AN ATTACHMENT

SMCS-1434 **i04923487**

NOTE	REF NO	GRAPHIC REF	PART NUMBER	QTY	PART NAME 1 2 3 4 5 6 (PRODUCT LEVEL)	SEE PAGE
M	1	1	**6V-5210**	2	SCREW-MACHINE (M4X0.7X10-MM)	
	2	1	**3B-4501**	2	LOCKWASHER	
	3	1	**351-9918**	1	LAMP-HALOGEN (24-VOLT, 70-WATT)	
	4	1	**8T-4223**	1	WASHER-HARD (13.5X25.5X3-MM THK)	
M	5	1	**8T-4244**	1	NUT (M12X1.75-THD)	
M	6	1	**174-7791**	1	SCREW-TAPPING	
	7	1	**5C-2889**	1	LOCKWASHER	
	8	1	**170-6993**	1	COVER	
M	9	1	**180-3861**	4	SCREW-TAPPING	
	10	1	**170-9417**	1	LENS AS (FLOODLIGHT)	
	11	1	**170-9418**	1	BAND	

M - METRIC PART

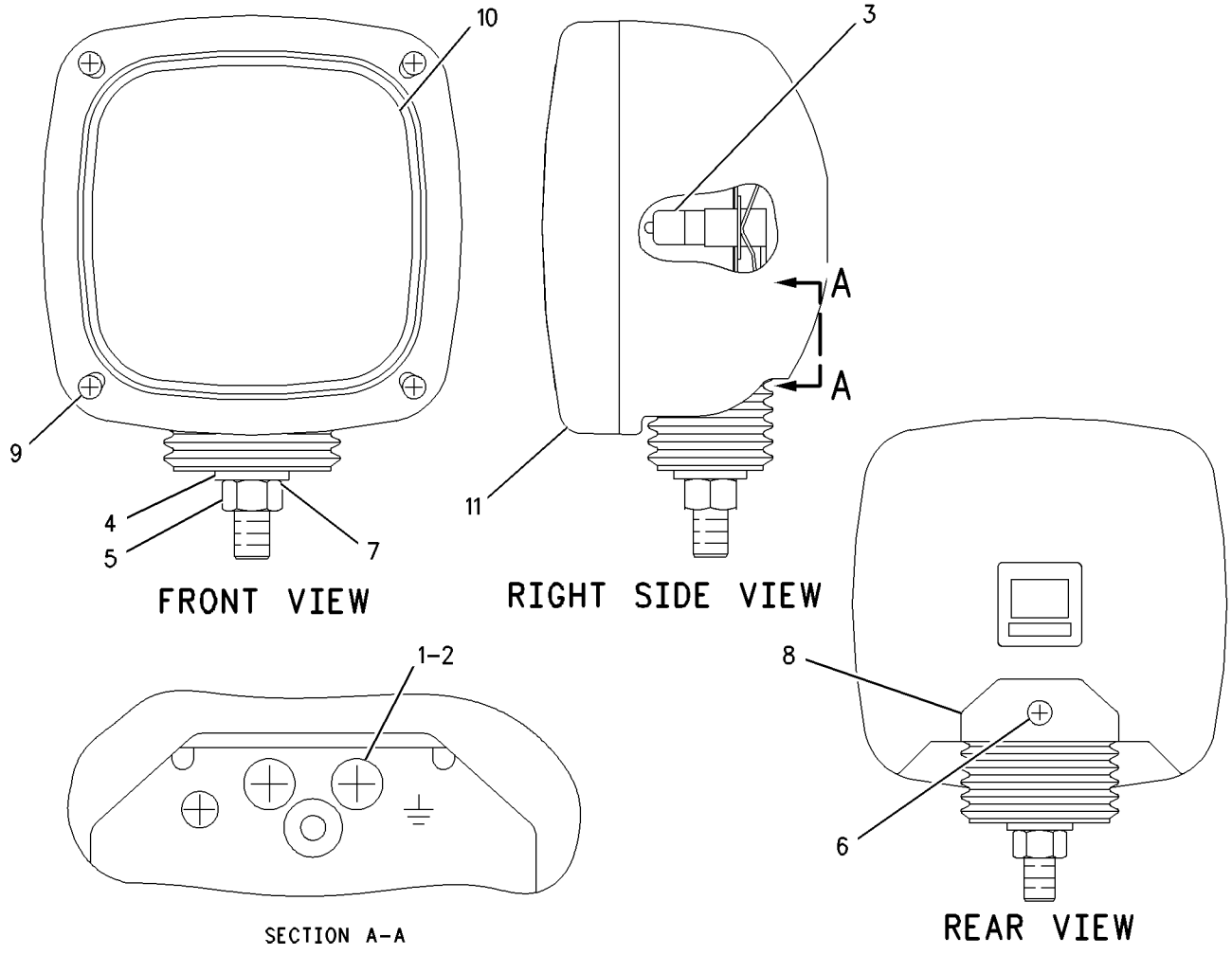

GRAPHIC #1 **<END>** g00645948

153-2523 LAMP GP-FLOOD

S/N: FKK1-UP; DNP1-UP
24-VOLT
PART OF 4I-5409 LIGHTING GP-FLOOD

SMCS-1434 **i04912113**

NOTE	REF NO	GRAPHIC REF	PART NUMBER	QTY	PART NAME 1 2 3 4 5 6 (PRODUCT LEVEL)	SEE PAGE
M	1	1	**6V-5210**	2	SCREW-MACHINE (M4X0.7X10-MM)	
	2	1	**3B-4501**	2	LOCKWASHER	
	3	1	**9X-3463**	1	LAMP-HALOGEN (24-VOLT, 70-WATT)	
	4	1	**8T-4223**	1	WASHER-HARD (13.5X25.5X3-MM THK)	
M	5	1	**8T-4244**	1	NUT (M12X1.75-THD)	
M	6	1	**174-7791**	1	SCREW-TAPPING	
	7	1	**5C-2889**	1	LOCKWASHER	
	8	1	**170-6993**	1	COVER	
M	9	1	**180-3861**	4	SCREW-TAPPING	
	10	1	**170-9417**	1	LENS AS	
	11	1	**170-9418**	1	BAND	

M - METRIC PART

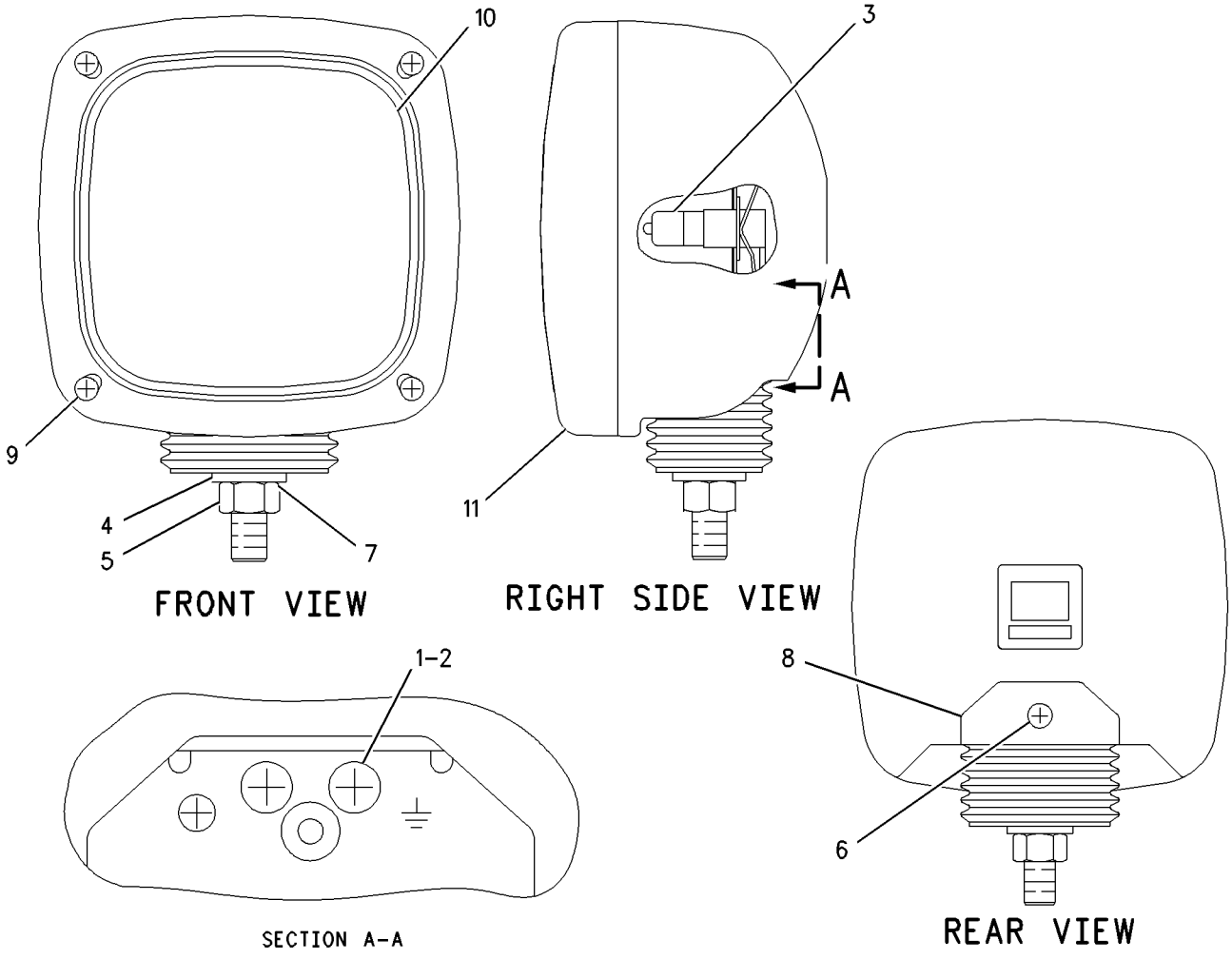

GRAPHIC #1 **<END>** g00645948

167-3441 LAMP GP-FLOOD

S/N: DNP1-UP
24-VOLT
PART OF 366-9343 LIGHTING GP-FLOOD
AN ATTACHMENT

SMCS-1434 **i04922915**

NOTE	REF NO	GRAPHIC REF	PART NUMBER	QTY	PART NAME 1 2 3 4 5 6 (PRODUCT LEVEL)	SEE PAGE
	1	1	**351-9918**	1	LAMP-HALOGEN (24-VOLT, 70-WATT)	

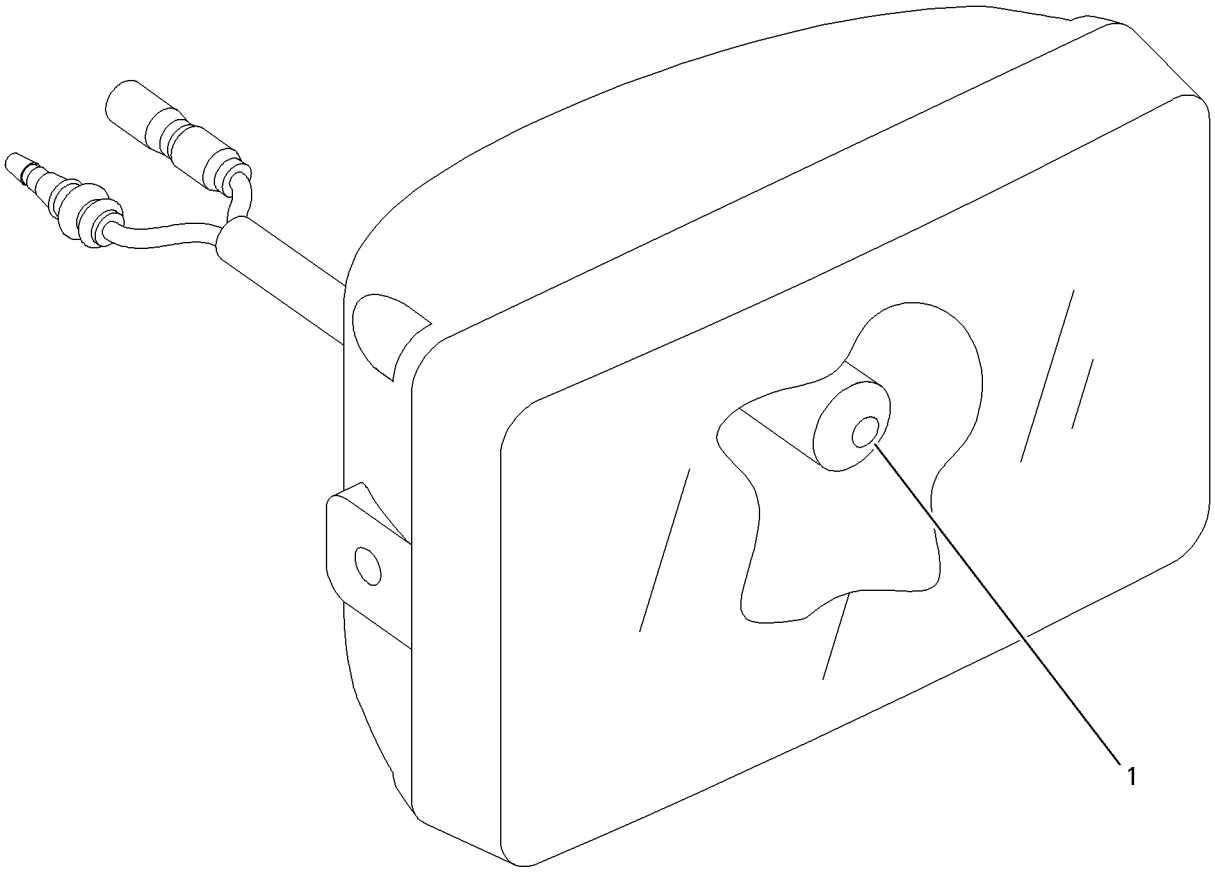

GRAPHIC #1 **<END>** g00692317

4I-5409 LIGHTING GP-FLOOD—FRONT, RH

S/N: FKK1-UP; DNP1-UP

PART OF 421-6926, 433-6906 CHASSIS AR

SMCS-1434 **i04909618**

NOTE	REF NO	GRAPHIC REF	PART NUMBER	QTY	PART NAME 1 2 3 4 5 6 (PRODUCT LEVEL)	SEE PAGE
Y	1	1	**153-2523**	1	LAMP GP-FLOOD (24-VOLT)	79

Y - SEPARATE ILLUSTRATION

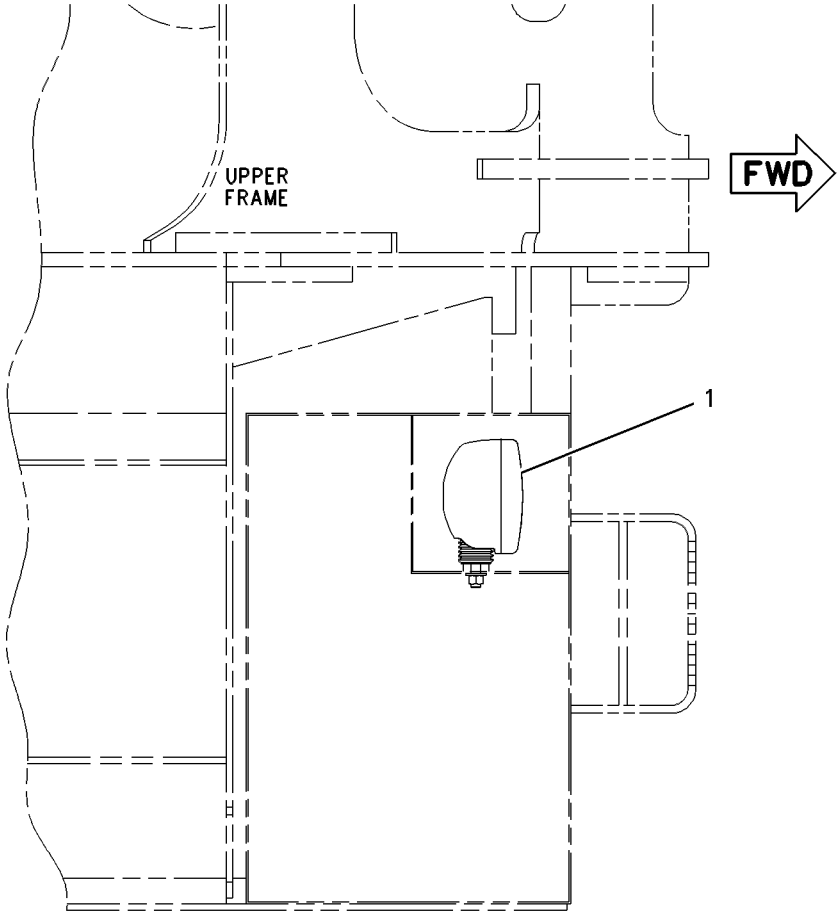

TOP VIEW

GRAPHIC #1 **<END>** g00588573

259-5043 LIGHTING GP-FLOOD—BOOM, LH

S/N: FKK1-UP; DNP1-UP
PART OF 376-1084 BOOM AR-1 PIECE LONG
AN ATTACHMENT

SMCS-1434 **i05262221**

NOTE	REF NO	GRAPHIC REF	PART NUMBER	QTY	PART NAME 1 2 3 4 5 6 (PRODUCT LEVEL)	SEE PAGE
	1	1	**7I-2673**	1	STRAP-CABLE	
	2	1	**111-4836**	4	CLIP	
	3	1	**116-0118**	1	CLIP	
Y	4	1	**153-2521**	1	LAMP GP-FLOOD (24-VOLT)	78
	5	1	**259-5326**	1	HARNESS AS-LIGHTING	
		1	**9W-0852**	2	PIN-CONNECTOR (14-GA TO 16-GA)	
		1	**2L-8075**	2	TERMINAL-RING (14-GA TO 16-GA, NO. 8 SCREW)	
		1	**243-4505**	1	RECEPTACLE AS-CONNECTOR (2-PIN)	
	6	1	**111-4837**	1	CLIP	
	7	1	**134-3284**	1	BRACKET	
	8	1	**5P-9297**	2	CLIP	
	9	1	**8T-4121**	5	WASHER-HARD (11X21X2.5-MM THK)	
M	10	1	**8T-4133**	5	NUT (M10X1.5-THD)	
M	11	1	**7X-2552**	1	BOLT (M16X2X30-MM)	
	12	1	**9X-8257**	1	WASHER (17.5X30X3.5-MM THK)	

M - METRIC PART
Y - SEPARATE ILLUSTRATION

259-5043 **LIGHTING GP-FLOOD (*contd.*)** **i05262221**

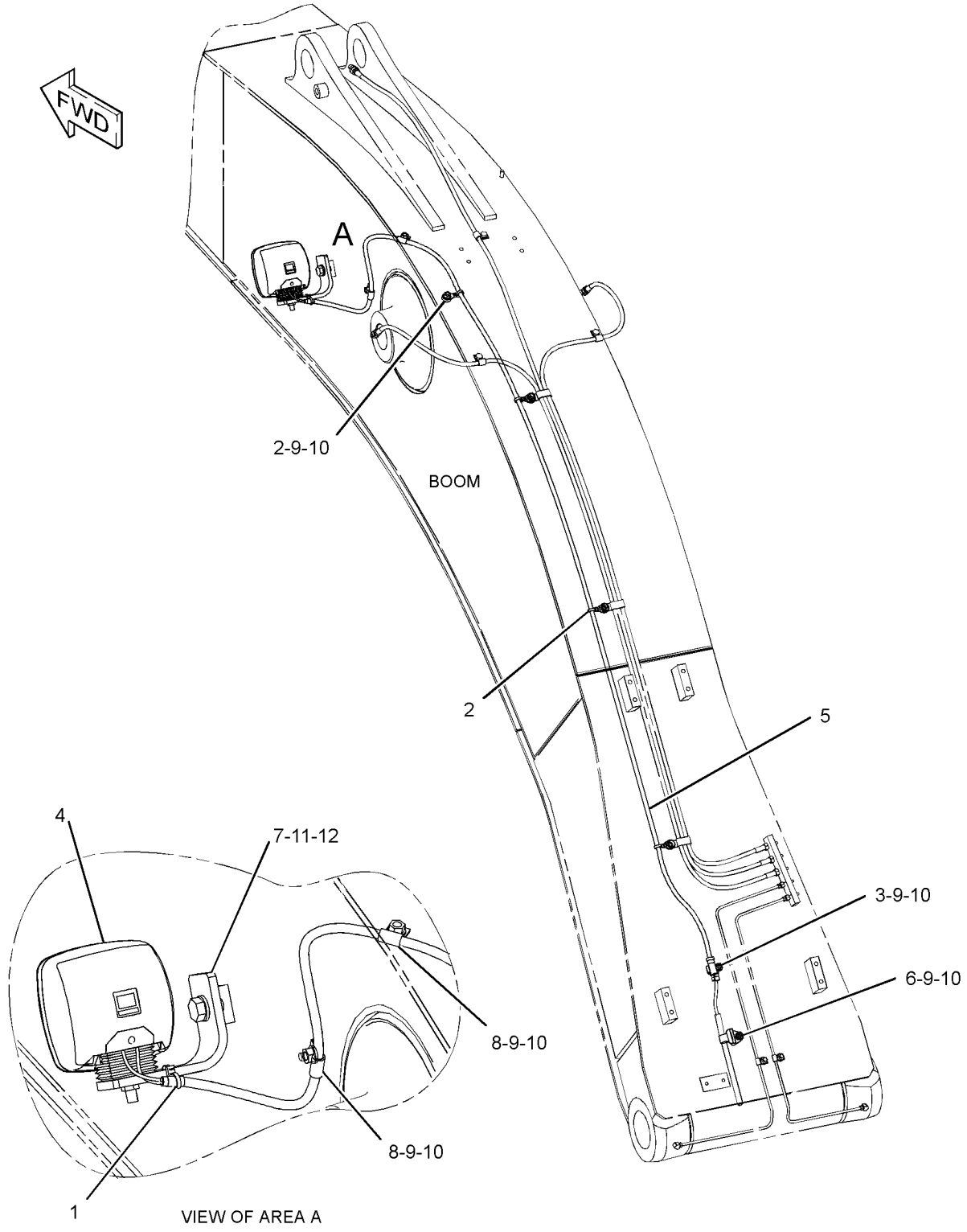

GRAPHIC #1 **<END>** g01226436

366-9343 LIGHTING GP-FLOOD—CAB

S/N: DNP1-UP

AN ATTACHMENT

SMCS-1434 **i05242336**

NOTE	REF NO	GRAPHIC REF	PART NUMBER	QTY	PART NAME 1 2 3 4 5 6 (PRODUCT LEVEL)	SEE PAGE
	1	1	**163-6795**	2	STRAP-CABLE	
Y	2	1	**167-3441**	2	LAMP GP-FLOOD (24-VOLT)	80
	3	1	**167-3456**	2	HARNESS AS-LIGHTING (CAB FLOODLIGHT)	
					(EACH INCLUDES)	
		1	**7Y-3962**	2	TERMINAL-BULLET (MALE)	
		1	**7Y-3964**	2	TUBE (CONNECTOR TERMINAL)	
		1	**7Y-3963**	2	TERMINAL-BULLET (FEMALE)	
		1	**7Y-3965**	2	TUBE (RECEPTACLE TERMINAL)	
	4	1	**366-9344**	1	BRACKET-LIGHT (CAB, LH)	
	5	1	**366-9345**	1	BRACKET-LIGHT (CAB, RH)	
M	6	1	**8T-4200**	2	BOLT (M8X1.25X16-MM)	
	7	1	**8T-4224**	2	WASHER-HARD (8.8X16X2-MM THK)	
M	8	1	**8T-4970**	4	BOLT (M6X1X14-MM)	
	9	1	**9X-8256**	4	WASHER (6.6X12X2-MM THK)	

M - METRIC PART
Y - SEPARATE ILLUSTRATION

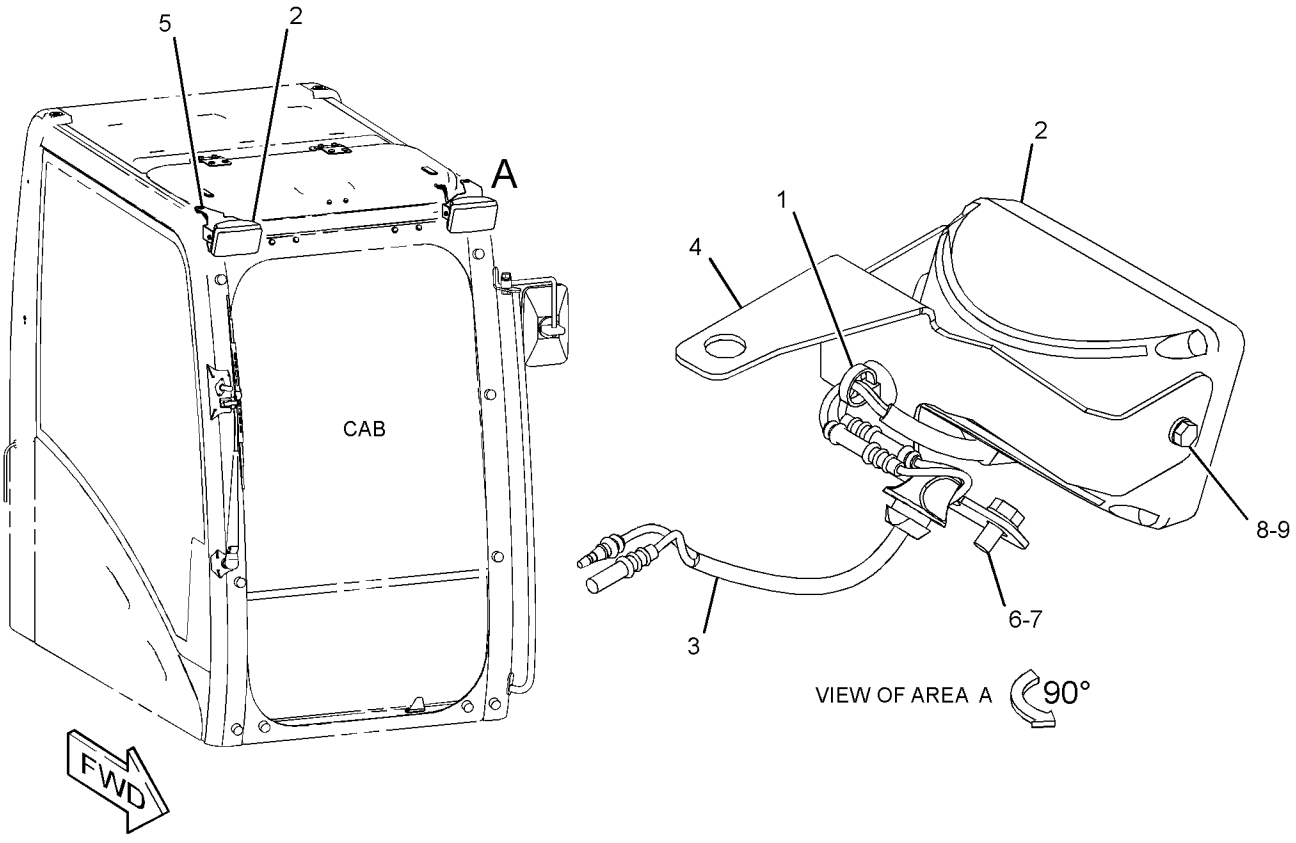

GRAPHIC #1 **<END>** g02768898

388-6842 PANEL & MTG GP-CIRCUIT BREAKER

S/N: FKK1-UP; DNP1-UP

PART OF 421-6944, 433-6907 OPERATOR AR

SMCS-1417, 1420 **i05266081**

NOTE	REF NO	GRAPHIC REF	PART NUMBER	QTY	PART NAME 1 2 3 4 5 6 (PRODUCT LEVEL)	SEE PAGE
Y	1	1	*388-6843*	1	PANEL GP-CIRCUIT BREAKER	86
	2	1	**8T-4121**	4	WASHER-HARD (11X21X2.5-MM THK)	
M	3	1	**8T-4137**	4	BOLT (M10X1.5X20-MM)	

M - METRIC PART
Y - SEPARATE ILLUSTRATION

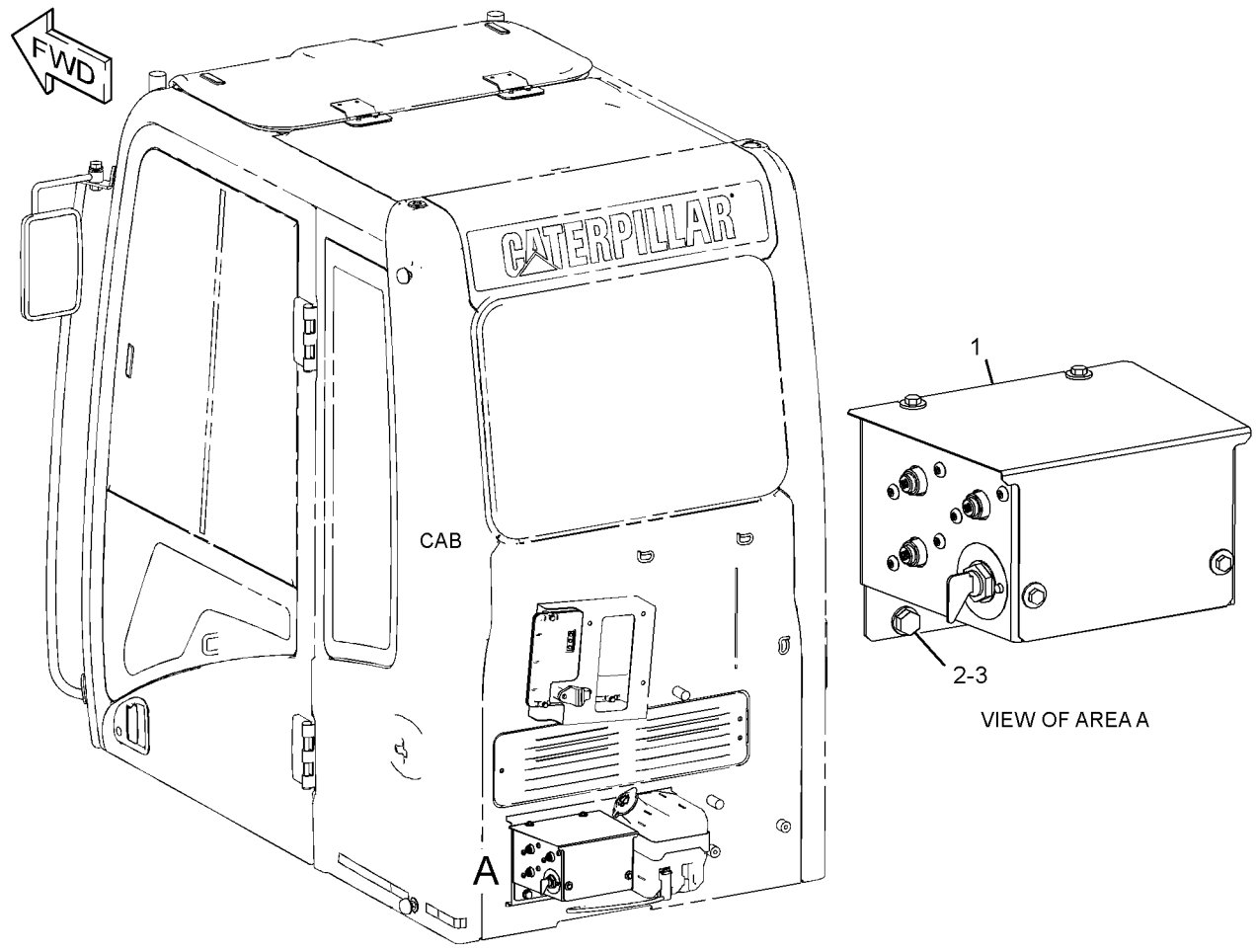

GRAPHIC #1 **<END>** g03271321

388-6843 PANEL GP-CIRCUIT BREAKER

S/N: FKK1-UP; DNP1-UP

PART OF 388-6842 PANEL & MTG GP-CIRCUIT BREAKER

SMCS-1417 **i05266085**

NOTE	REF NO	GRAPHIC REF	PART NUMBER	QTY	PART NAME 1 2 3 4 5 6 (PRODUCT LEVEL)	SEE PAGE
	1	1	**3E-8320**	1	PLATE-INSTRUCTION (BATTERY)	
	2	1	**3S-2093**	1	STRAP-CABLE	
Y	3	1	**7N-0719**	1	SWITCH GP-DISCONNECT	97
	4	1	**121-1023**	1	BLOCK-TERMINAL	
	5	1	**141-2759**	1	FUSE (5-AMPERE)	
	6	1	**171-2208**	1	CIRCUIT BREAKER AS (60-AMPERE) (GLOW PLUG)	
		1	**4E-5724**	2	WASHER (7X12X1-MM THK)	
		1	**8T-0122**	2	NUT-FULL (1/4-28-THD)	
		1	**253-2111**	2	LOCKWASHER	
	7	1	**171-2210**	1	CIRCUIT BREAKER AS (80-AMPERE) (MAIN)	
		1	**4E-5724**	2	WASHER (7X12X1-MM THK)	
		1	**8T-0122**	2	NUT-FULL (1/4-28-THD)	
		1	**253-2111**	2	LOCKWASHER	
	8	1	**216-4970**	1	CIRCUIT BREAKER AS (120-AMPERE) (ALTERNATOR)	
		1	**4E-5724**	2	WASHER (7X12X1-MM THK)	
		1	**8T-0122**	2	NUT-FULL (1/4-28-THD)	
		1	**253-2111**	2	LOCKWASHER	
	9	1	**238-1506**	1	COVER	
	10	1	**238-2279**	1	BAR-BUS	
	11	1	**238-2280**	1	WIRE AS	
Y	12	1	**241-8368**	1	SWITCH GP-MAGNETIC (24-VOLT) (GLOW PLUG)	99
	13	1	**251-0303**	1	CABLE AS	
D		1	**6V-2369**		CABLE (4-GA, BLACK) (0.2-M)	
		1	**9G-4343**	2	TERMINAL-RING (4-GA, 1/4-IN SCREW)	
	14	1	**251-0304**	1	CABLE AS	
D		1	**6V-2369**		CABLE (4-GA, BLACK) (0.2-M)	
		1	**9G-4343**	2	TERMINAL-RING (4-GA, 1/4-IN SCREW)	
	15	1	**266-7379**	1	STRAP-CABLE	
	16	1	**324-5808**	1	HOLDER AS-FUSE	
		1	**8T-8737**	1	PLUG-SEAL	
		1	**243-4505**	1	RECEPTACLE AS-CONNECTOR (2-PIN)	
	17	1	**377-8043**	1	WIRE AS	
	18	1	**377-8044**	1	WIRE AS	
	19	1	**396-4455**	1	BRACKET AS	
M		1	**6V-9632**	8	NUT-WELD (M6X1-THD)	
M	20	1	**5C-9553**	7	BOLT (M6X1X16-MM)	
	21	1	**5P-4115**	4	WASHER-HARD (7.2X19X2-MM THK)	
	22	1	**6V-5645**	6	SCREW-MACHINE (10-32X0.87-IN)	
M	23	1	**8T-4171**	2	BOLT (M6X1X12-MM)	
M	24	1	**8T-4970**	4	BOLT (M6X1X14-MM)	
	25	1	**9X-8256**	9	WASHER (6.6X12X2-MM THK)	

D - ORDER BY THE METER
M - METRIC PART
Y - SEPARATE ILLUSTRATION

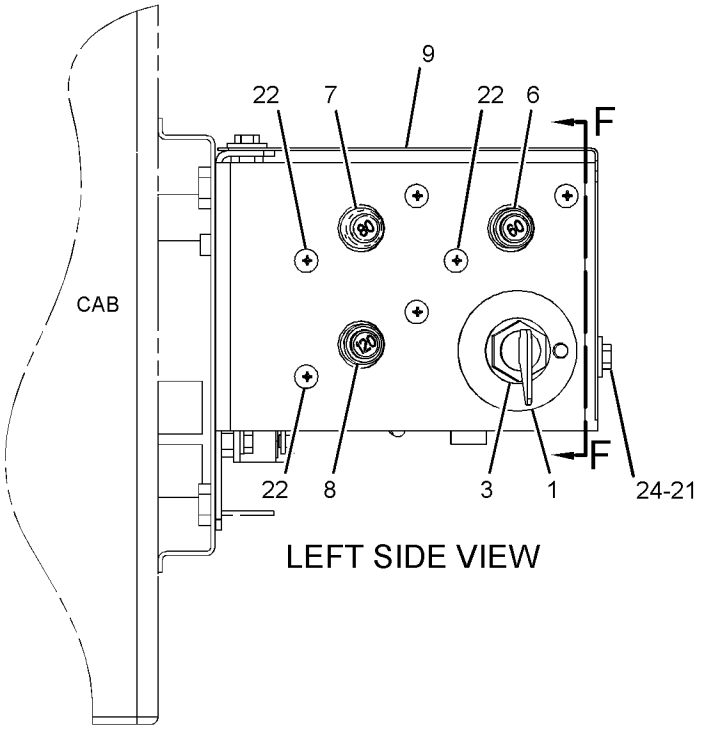

LEFT SIDE VIEW

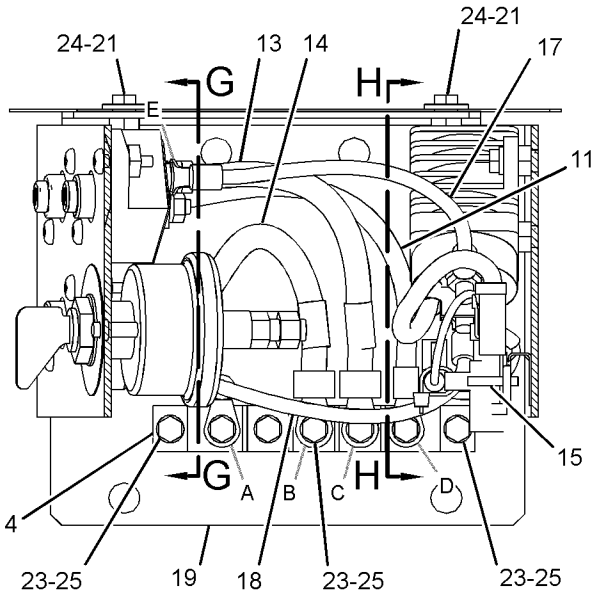

SECTION F-F

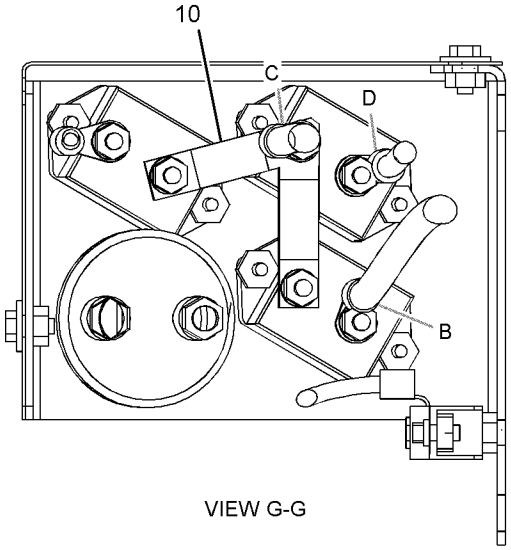

VIEW G-G

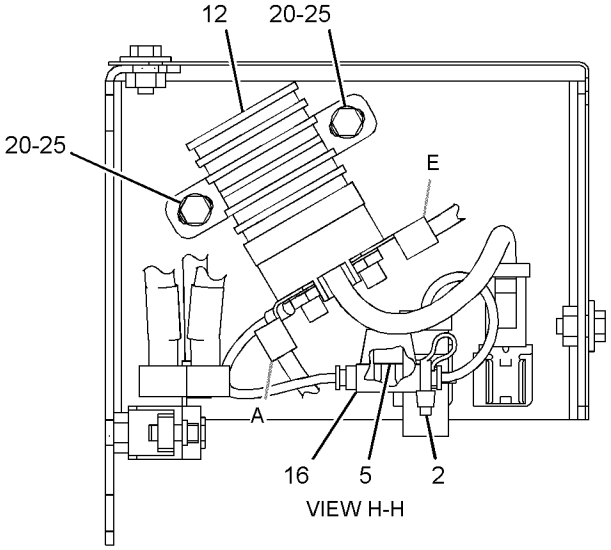

VIEW H-H

GRAPHIC #1 **<END>** g03306757

251-0542 PANEL GP-SWITCH—ENGINE SPEED, START

S/N: FKK1-UP; DNP1-UP

AN ATTACHMENT

SMCS-1408, 1429, 7332, 7451 **i04921957**

NOTE	REF NO	GRAPHIC REF	PART NUMBER	QTY	PART NAME 1 2 3 4 5 6 (PRODUCT LEVEL)	SEE PAGE
	1	1	**3S-2093**	4	STRAP-CABLE	
Y	2	1	**255-2751**	1	SWITCH GP-START (ENGINE, KEY)	101
Y	3	1	**319-4420**	1	SWITCH GP-ROTARY (THROTTLE POSITION)	100
	4	1	**170-9324**	1	LAMP AS (24-VOLT, 3-WATT)	
	5	1	**185-9208**	1	KNOB AS (THROTTLE POSITION)	
	6	1	**234-1156**	1	COVER	
	7	1	**234-1158**	1	COVER	
	8	1	**267-7976**	1	PANEL	
	9	1	**328-0021**	1	HARNESS AS-CONSOLE	
		1	**3S-2093**	3	STRAP-CABLE	
		1	**102-8802**	1	KIT-RECEPTACLE (2-PIN)	
					(INCLUDES RECEPTACLE AS & WEDGE)	
		1	**7Y-3951**	2	TERMINAL-BLADE (14-GA)	
		1	**7Y-3952**	1	PLUG-CONNECTOR (2-PIN)	
		1	**7Y-3962**	1	TERMINAL-BULLET (MALE)	
		1	**7Y-3964**	1	TUBE (CONNECTOR TERMINAL)	
		1	**7Y-3963**	1	TERMINAL-BULLET (FEMALE)	
		1	**7Y-3965**	1	TUBE (RECEPTACLE TERMINAL)	
		1	**8T-8737**	3	PLUG-SEAL	
		1	**121-1168**	1	CONNECTOR-RECEPTACLE	
		1	**121-1173**	14	TERMINAL (MALE)	
		1	**9X-3402**	7	SOCKET-CONNECTOR (16-GA TO 18-GA)	
		1	**2L-8075**	4	TERMINAL-RING (14-GA TO 16-GA, NO. 8 SCREW)	
		1	**153-2540**	10	TERMINAL (FEMALE)	
		1	**153-2541**	1	PLUG-CONNECTOR (10-PIN)	
		1	**155-2270**	1	KIT-CONNECTING PLUG (2-PIN)	
					(INCLUDES PLUG AS, WEDGE & INTERFACE SEAL)	
		1	**230-5010**	1	PLUG AS-CONNECTOR (6-PIN)	
		1	**264-7032**	1	SEAL-CONNECTOR	
		1	**238-2366**	7	TERMINAL (MALE)	
	10	1	**096-6166**	4	WASHER-HARD (4.5X9X1-MM THK)	
	11	1	**119-5026**	4	SCREW-PAN HEAD (10-16X0.63-IN)	
M	12	1	**6V-9491**	4	SCREW-MACHINE (M4X0.7X20-MM)	

M - METRIC PART
Y - SEPARATE ILLUSTRATION

251-0542 **PANEL GP-SWITCH (*contd.*)** **i04921957**

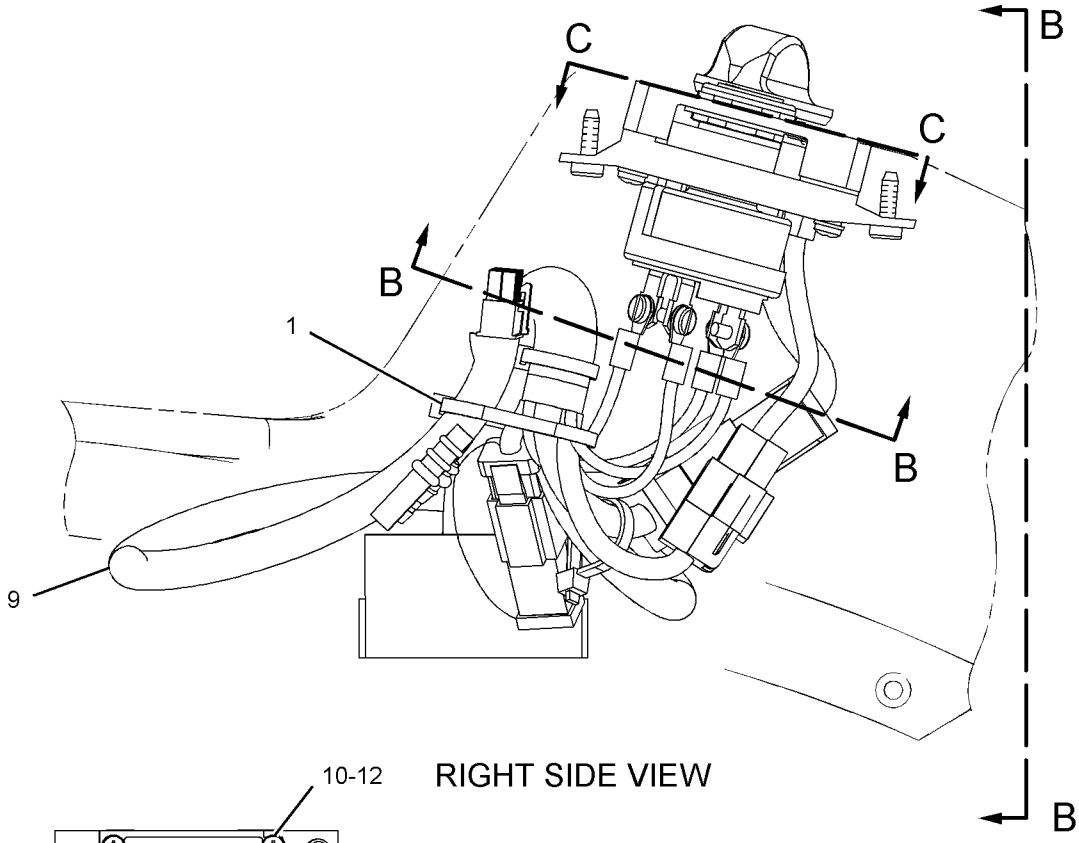

RIGHT SIDE VIEW

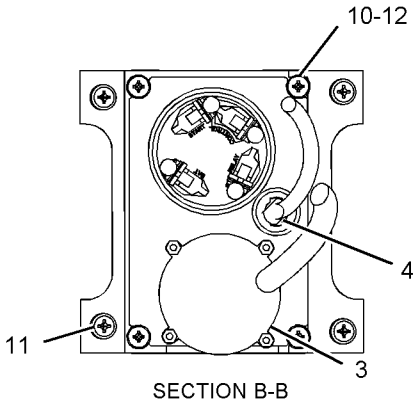

SECTION B-B

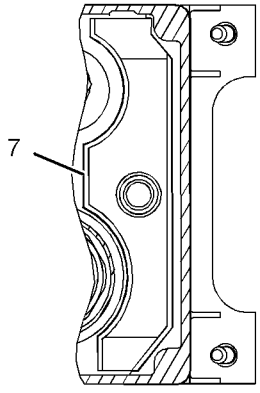

VIEW C-C

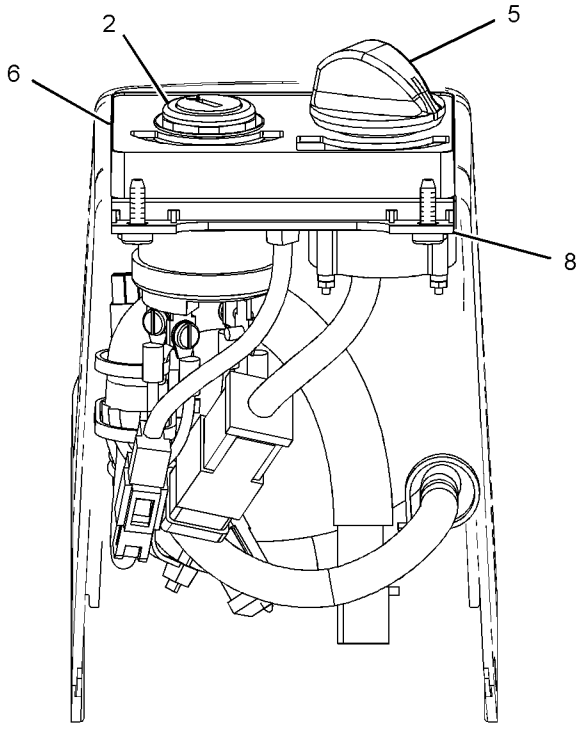

VIEW B-B

GRAPHIC #1 **<END>** g01112022

363-5084 SENSOR GP-LIQUID LEVEL

S/N: FKK1-UP; DNP1-UP
WATER IN FUEL
PART OF 394-7468 LINES GP-FUEL

SMCS-7422 **i05259825**

NOTE	REF NO	GRAPHIC REF	PART NUMBER	QTY	PART NAME 1 2 3 4 5 6 (PRODUCT LEVEL)	SEE PAGE
	1	1	**214-7568**	1	SEAL-O-RING	
	2	1	**281-8805**	1	RECEPTACLE AS-CONNECTOR	
	3	1	**9X-3401**	3	PIN-CONNECTOR (16-GA TO 18-GA)	

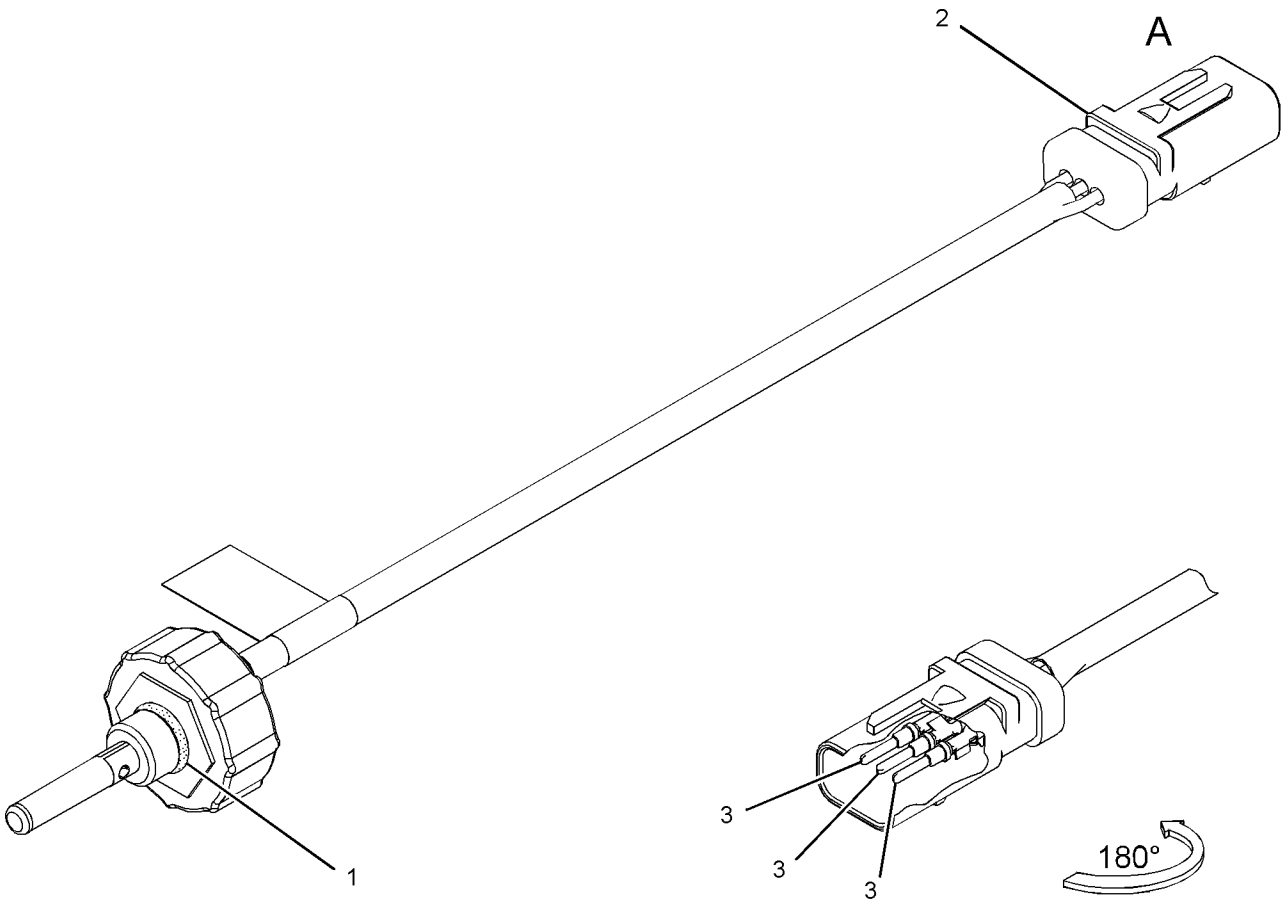

VIEW OF AREA A

GRAPHIC #1 **<END>** g02423836

325-8634 SENSOR GP-PRESSURE

S/N: FKK1-UP; DNP1-UP

PART OF 394-9997 SENSOR GP-TEMP & PRESS

SMCS-1439, 1916, 1917, 1923, 1924

i04552288

NOTE	REF NO	GRAPHIC REF	PART NUMBER	QTY	PART NAME 1 2 3 4 5 6 (PRODUCT LEVEL)	SEE PAGE
	1	1	**320-3060**	1	SENSOR-PRESSURE (FUEL)	
	2	1	**228-7100**	1	SEAL-O-RING	

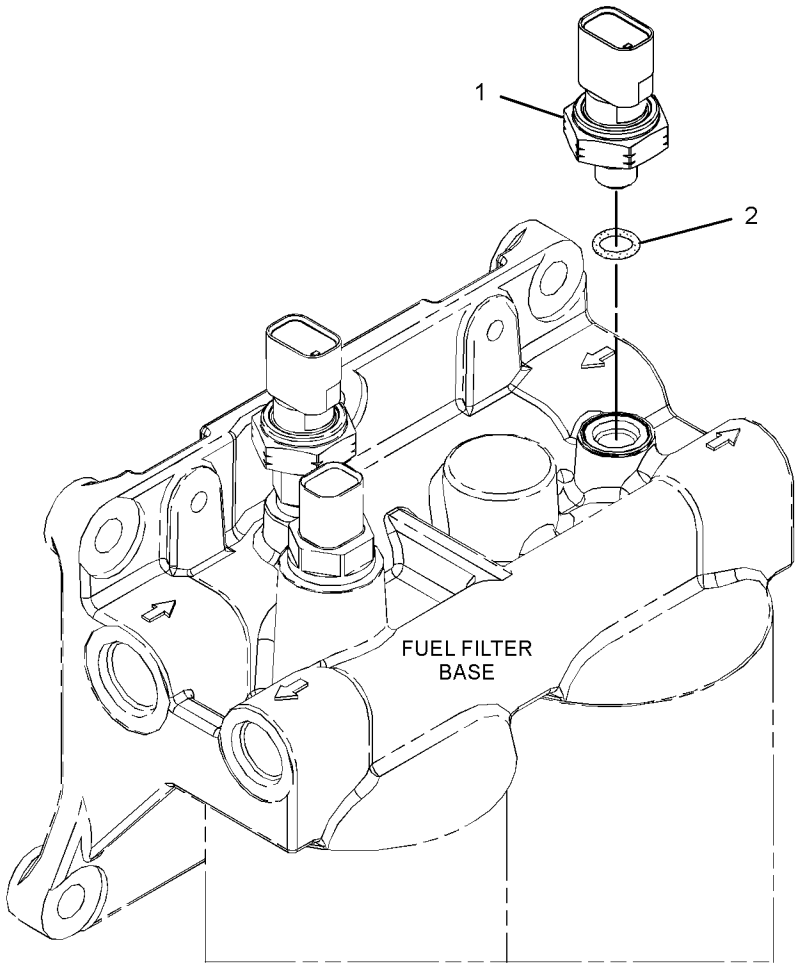

GRAPHIC #1

<END>

g02080674

318-1181 SENSOR GP-SPEED

S/N: FKK1-UP; DNP1-UP

PART OF 388-6841 WIRING GP-CHASSIS

SMCS-1907, 1912, 4803, 7493 **i04560880**

NOTE	REF NO	GRAPHIC REF	PART NUMBER	QTY	PART NAME 1 2 3 4 5 6 (PRODUCT LEVEL)	SEE PAGE
	1	1	**171-5349**	1	STRAP-MARKER	
	2	1	**102-8802**	1	KIT-RECEPTACLE (2-PIN)	
					(INCLUDES RECEPTACLE AS & WEDGE)	
	3	1	**9X-3401**	2	PIN-CONNECTOR (16-GA TO 18-GA)	
					–OR–	
		1	**126-1767**	2	PIN-CONNECTOR (14-GA TO 16-GA)	
E	4	1	**9X-1386**		SLEEVE (14-CM)	

E - ORDER BY THE CENTIMETER

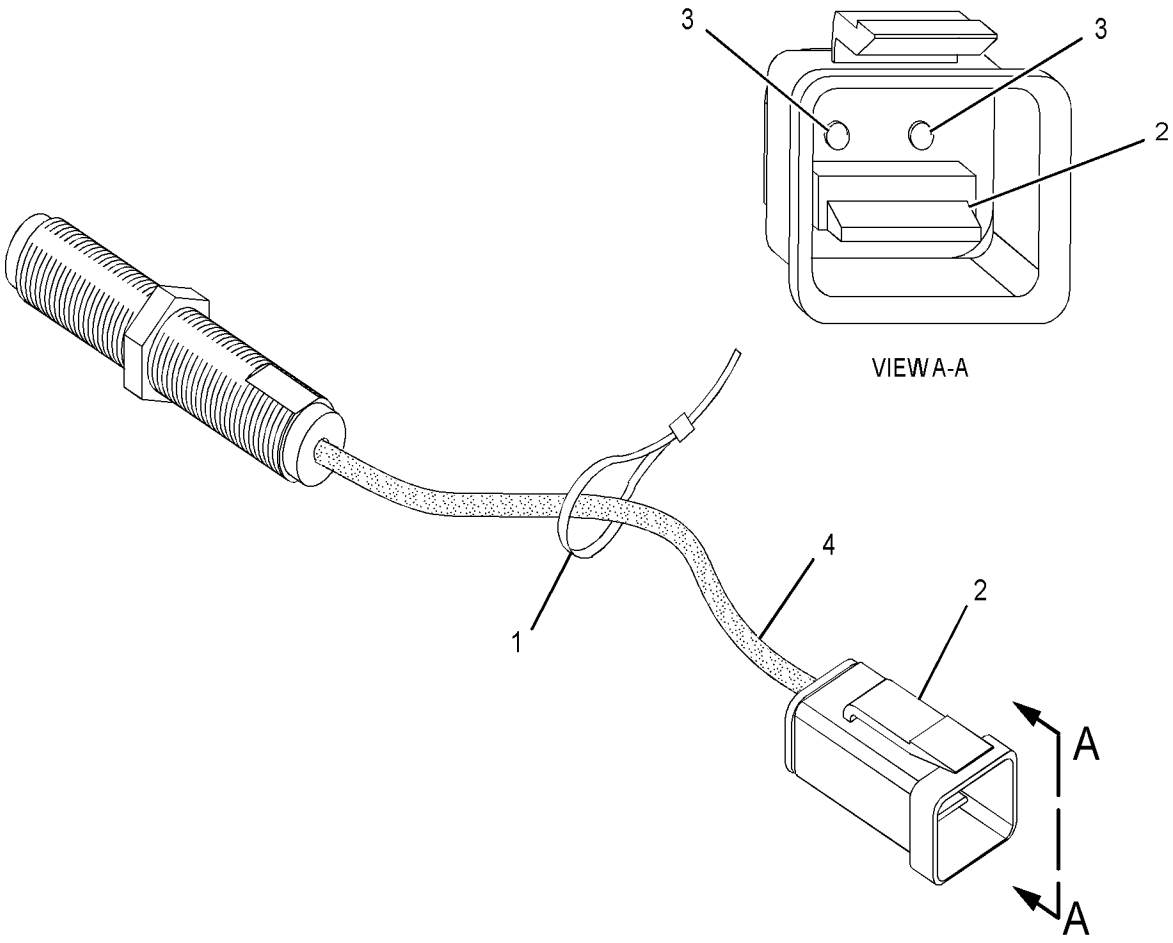

GRAPHIC #1 **<END>** g01353977

394-9997 SENSOR GP-TEMP & PRESS

S/N: FKK1-UP; DNP1-UP

PART OF 394-7471, 433-6905 INSTALLATION AR-ENGINE

SMCS-1408, 1435, 1439, 1906, 1924, 7400 **i05265500**

NOTE	REF NO	GRAPHIC REF	PART NUMBER	QTY	PART NAME 1 2 3 4 5 6 (PRODUCT LEVEL)	SEE PAGE
Y	1	1	*325-8634*	1	SENSOR GP-PRESSURE (FUEL)	91
	2	1	**394-4837**	1	SENDER GP-TEMPERATURE (COOLANT)	
		1	**1H-4393**	2	LOCKWASHER	
M		1	**095-7930**	2	SCREW-MACHINE (M4X0.7X6-MM)	
	3	1	**199-9751**	1	SEAL-O-RING	

M - METRIC PART
Y - SEPARATE ILLUSTRATION

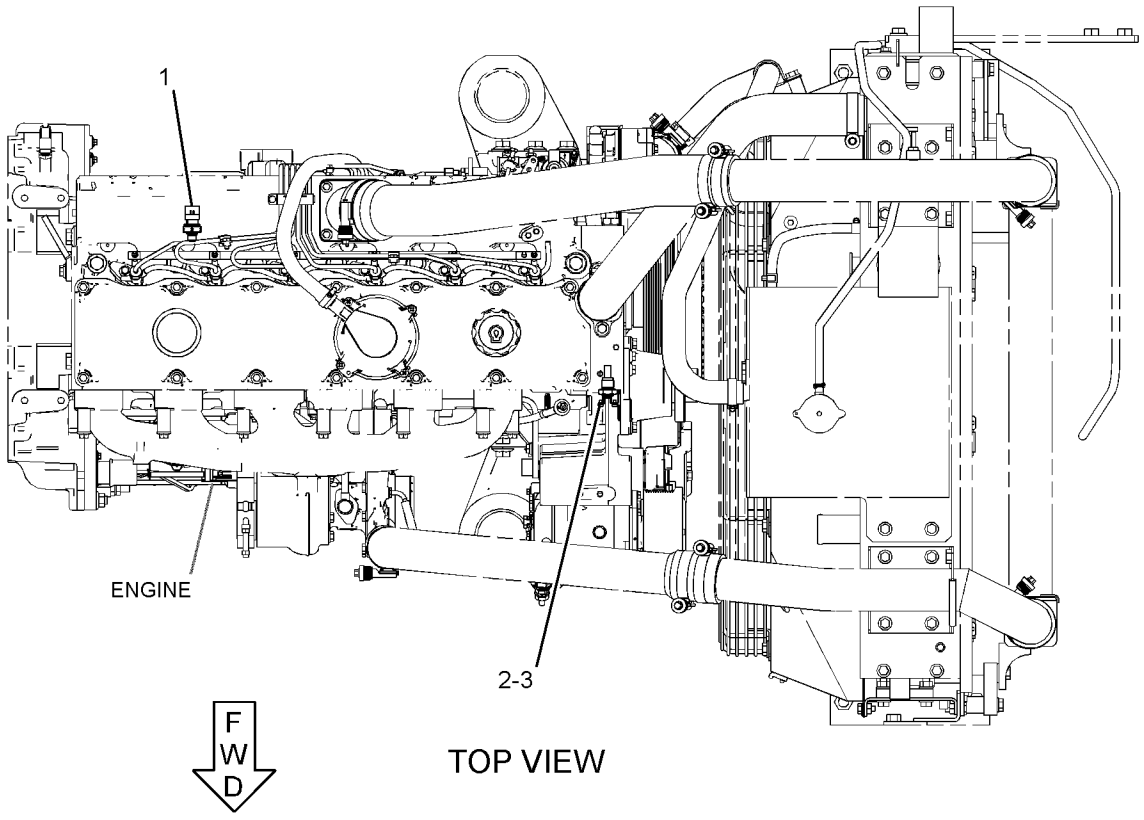

GRAPHIC #1 **<END>** g03307540

346-1841 SENSOR GP-TEMPERATURE

S/N: D7A1-UP

PART OF 417-3389 ENGINE AR-PRIMARY

SMCS-1906, 1921, 1922, 1928, 1929, 3290, 7344 **i05245743**

NOTE	REF NO	GRAPHIC REF	PART NUMBER	QTY	PART NAME 1 2 3 4 5 6 (PRODUCT LEVEL)	SEE PAGE
	1	1	**199-9751**	1	SEAL-O-RING	
	2	1	**232-1322**	1	PLUG	

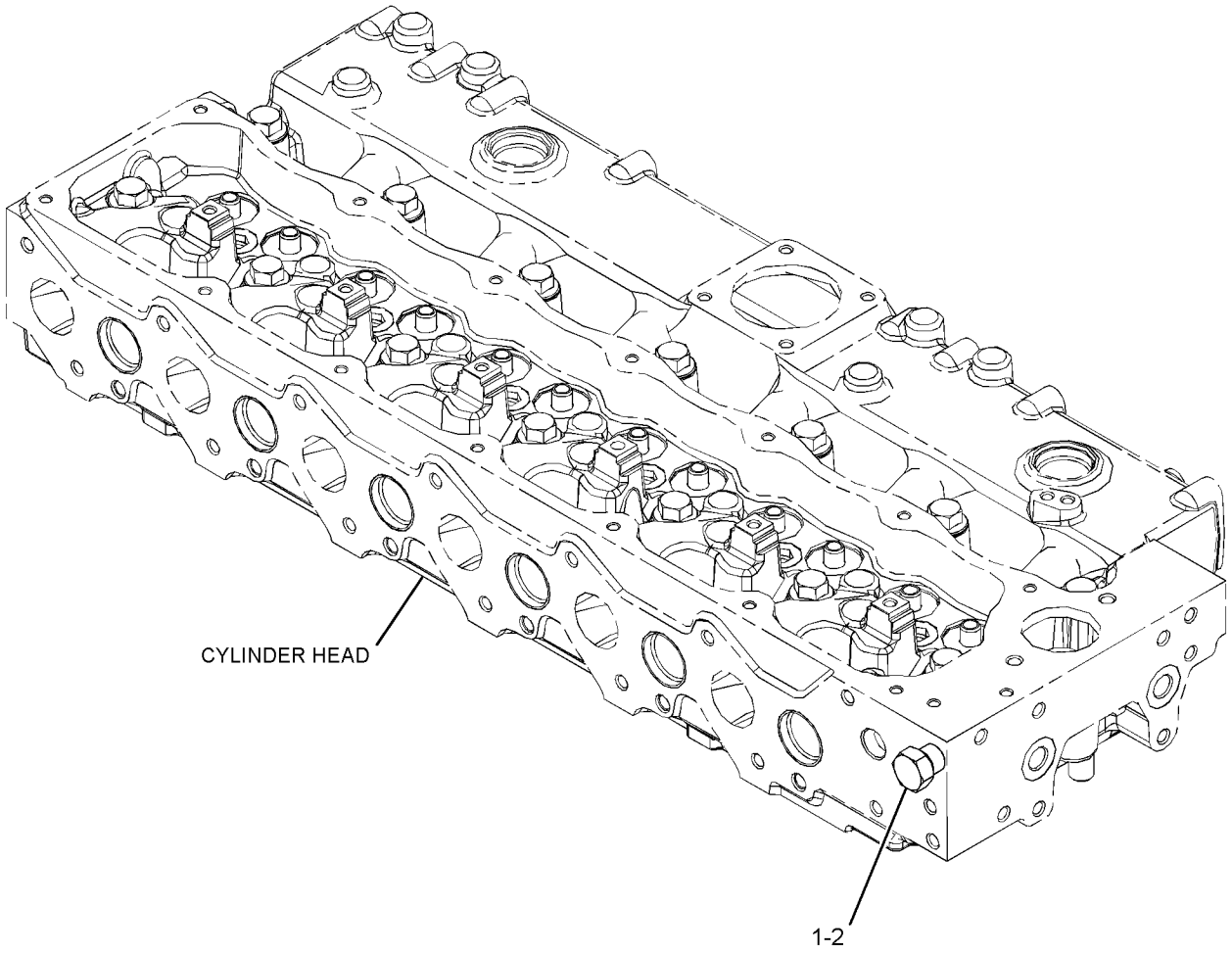

GRAPHIC #1 **<END>** g03316905

393-0879 STARTING AID GP

S/N: D7A1-UP

PART OF 417-3389 ENGINE AR-PRIMARY

SMCS-1090 **i05245825**

NOTE	REF NO	GRAPHIC REF	PART NUMBER	QTY	PART NAME 1 2 3 4 5 6 (PRODUCT LEVEL)	SEE PAGE
	1	1	**337-2958**	1	CONNECTION AS	
	2	1	**226-8770**	6	GLOW PLUG (24-VOLT)	

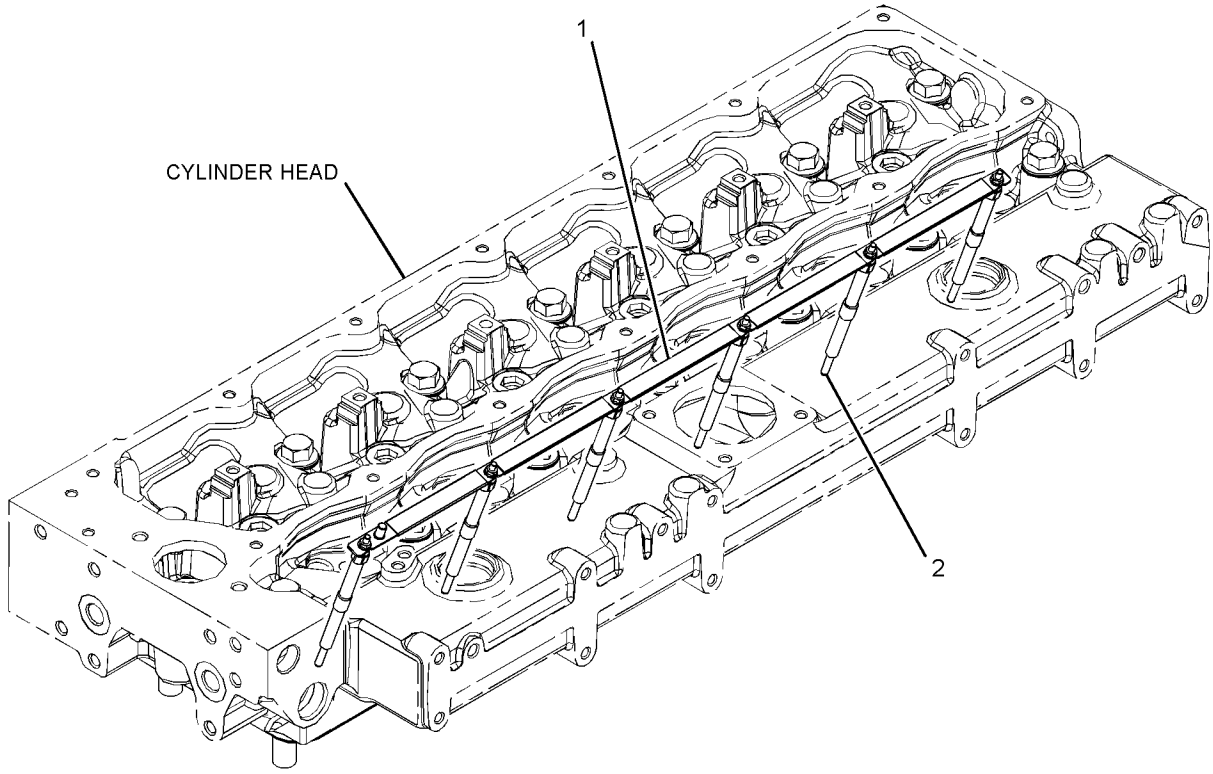

GRAPHIC #1 **<END>** g03317493

385-8000 STARTING MOTOR GP-ELECTRIC

S/N: D7A1-UP

PART OF 417-3389 ENGINE AR-PRIMARY

SMCS-1453 **i05276783**

NOTE	REF NO	GRAPHIC REF	PART NUMBER	QTY	PART NAME 1 2 3 4 5 6 (PRODUCT LEVEL)	SEE PAGE
	1	1	**354-5671**	1	STARTING MOTOR GP-ELECTRIC	
	1A	1	**230-4012**	1	RECEPTACLE AS-CONNECTOR (2-PIN)	
	2	1	**183-1343**	3	STUD	
M	3	1	**6I-0233**	3	NUT (M12X1.75-THD)	

M - METRIC PART

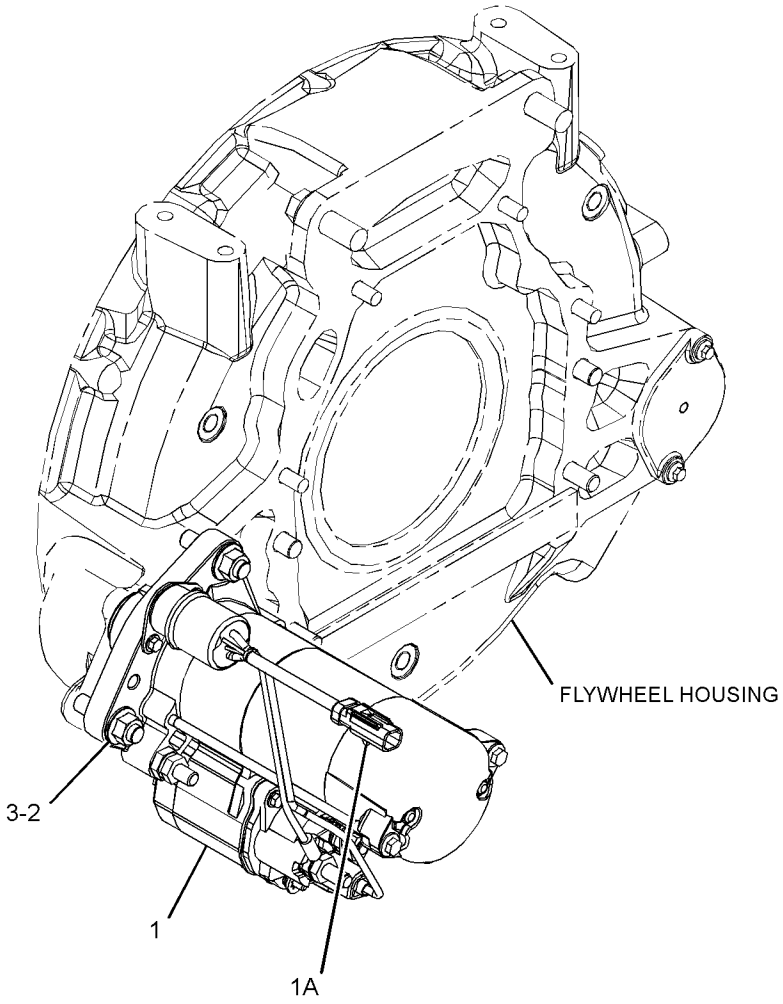

GRAPHIC #1 **<END>** g03317666

7N-0719 SWITCH GP-DISCONNECT–BATTERY

S/N: FKK1-UP; DNP1-UP

PART OF 388-6843 PANEL GP-CIRCUIT BREAKER

SMCS-1411 **i04490276**

NOTE	REF NO	GRAPHIC REF	PART NUMBER	QTY	PART NAME 1 2 3 4 5 6 (PRODUCT LEVEL)	SEE PAGE
	1	1	**8H-5306**	1	KEY (BATTERY DISCONNECT)	
	2	1	**8H-5303**	1	NUT (3/4-16-THD)	
	3	1	**2H-3922**	2	LOCKWASHER	
	4	1	**9F-5644**	2	LOCKWASHER	
	5	1	**6F-7045**	2	NUT-FULL (3/8-24-THD)	

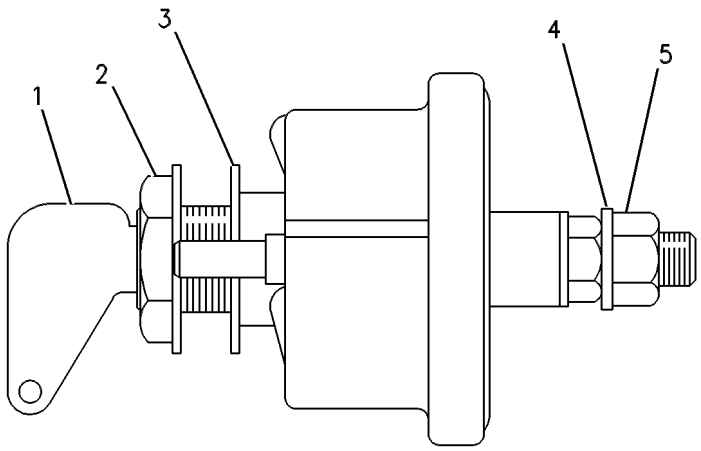

GRAPHIC #1 **<END>** g00117885

234-6613 SWITCH GP-LIMIT–HYDRAULIC LOCKOUT

S/N: FKK1-UP; DNP1-UP

PART OF 436-1213 CONSOLE GP, 259-7349 CONSOLE GP-OPERATOR

SMCS-1435 **i04912170**

NOTE	REF NO	GRAPHIC REF	PART NUMBER	QTY	PART NAME 1 2 3 4 5 6 (PRODUCT LEVEL)	SEE PAGE
	1	1	**3S-2093**	1	STRAP-CABLE	
	2	1	**4I-3038**	2	WASHER (3.3X8X0.5-MM THK)	
	3	1	**111-4799**	1	SWITCH AS-LIMIT (HYDRAULIC LOCKOUT)	
		1	**102-8803**	1	KIT-RECEPTACLE (3-PIN)	
					(INCLUDES RECEPTACLE AS & WEDGE)	
		1	**8T-8729**	3	PIN-CONNECTOR (16-GA TO 18-GA)	
D		1	**5P-5998**		TUBE (0.3-M)	
M	4	1	**185-8286**	2	SCREW-MACHINE (M4X0.7X8-MM)	
	5	1	**234-6615**	1	KNOB	
	6	1	**087-4683**	2	LOCKWASHER	
M	7	1	**120-9027**	2	SCREW-PAN HEAD (M3X0.5X16-MM)	

D - ORDER BY THE METER
M - METRIC PART

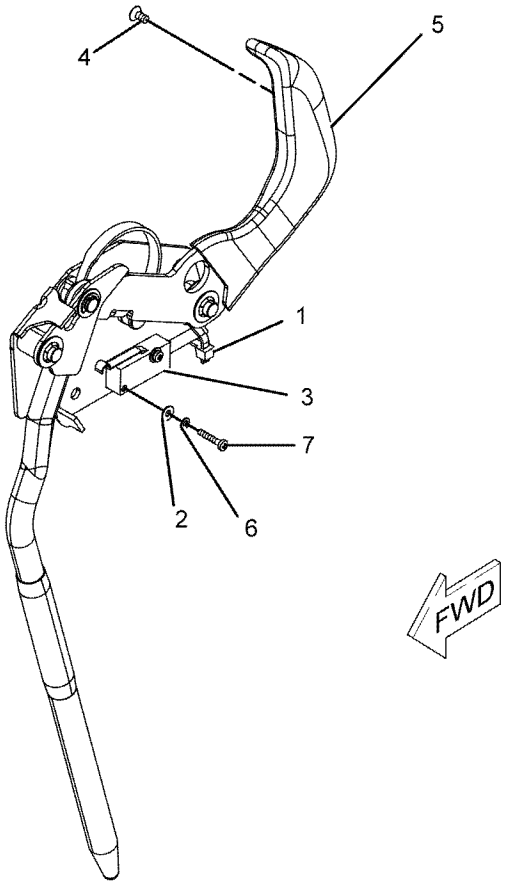

GRAPHIC #1 **<END>** g01096293

241-8368 SWITCH GP-MAGNETIC–GLOW PLUG

S/N: FKK1-UP; DNP1-UP
24-VOLT
PART OF 388-6843 PANEL GP-CIRCUIT BREAKER

SMCS-7499 **i04947076**

NOTE	REF NO	GRAPHIC REF	PART NUMBER	QTY	PART NAME 1 2 3 4 5 6 (PRODUCT LEVEL)	SEE PAGE
	1	1	**155-2270**	1	KIT-CONNECTING PLUG (2-PIN)	
					(INCLUDES PLUG AS, WEDGE, & INTERFACE SEAL)	
	2	1	**4F-2294**	2	NUT-JAM (5/16-24-THD)	
	3	1	**186-3736**	2	SOCKET-CONNECTOR (16-GA TO 18-GA)	

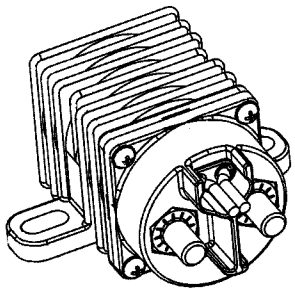

ISOMETRIC VIEW

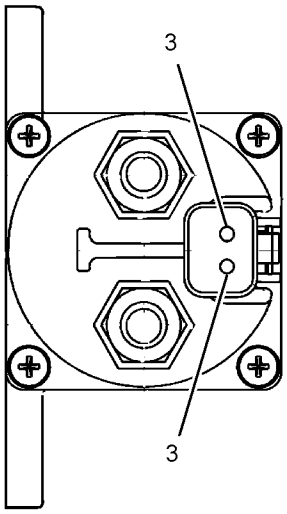

VIEW A-A

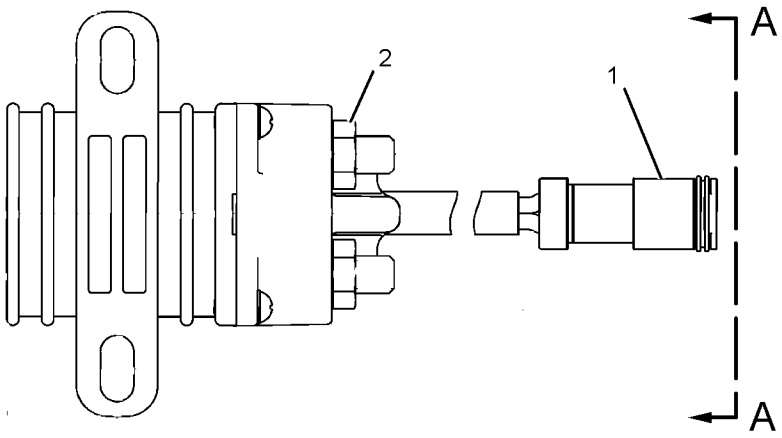

GRAPHIC #1 **<END>** g01077362

319-4420 SWITCH GP-ROTARY–THROTTLE POSITION

S/N: FKK1-UP; DNP1-UP
PART OF 251-0542 PANEL GP-SWITCH
AN ATTACHMENT

SMCS-7332 **i04921949**

NOTE	REF NO	GRAPHIC REF	PART NUMBER	QTY	PART NAME 1 2 3 4 5 6 (PRODUCT LEVEL)	SEE PAGE
	1	1	**243-4508**	1	RECEPTACLE AS-CONNECTOR (6-PIN)	
	2	1	**9X-3401**	5	PIN-CONNECTOR (16-GA TO 18-GA)	
					–OR–	
		1	**126-1767**	5	PIN-CONNECTOR (14-GA TO 16-GA)	
	3	1	**8T-8737**	1	PLUG-SEAL	
M	4	1	**7Y-5458**	1	NUT (M12X1-THD)	
	5	1	**7Y-5464**	1	WASHER (12.2X15.4X0.5-MM THK)	
	6	1	**106-0210**	1	SEAL	

M - METRIC PART

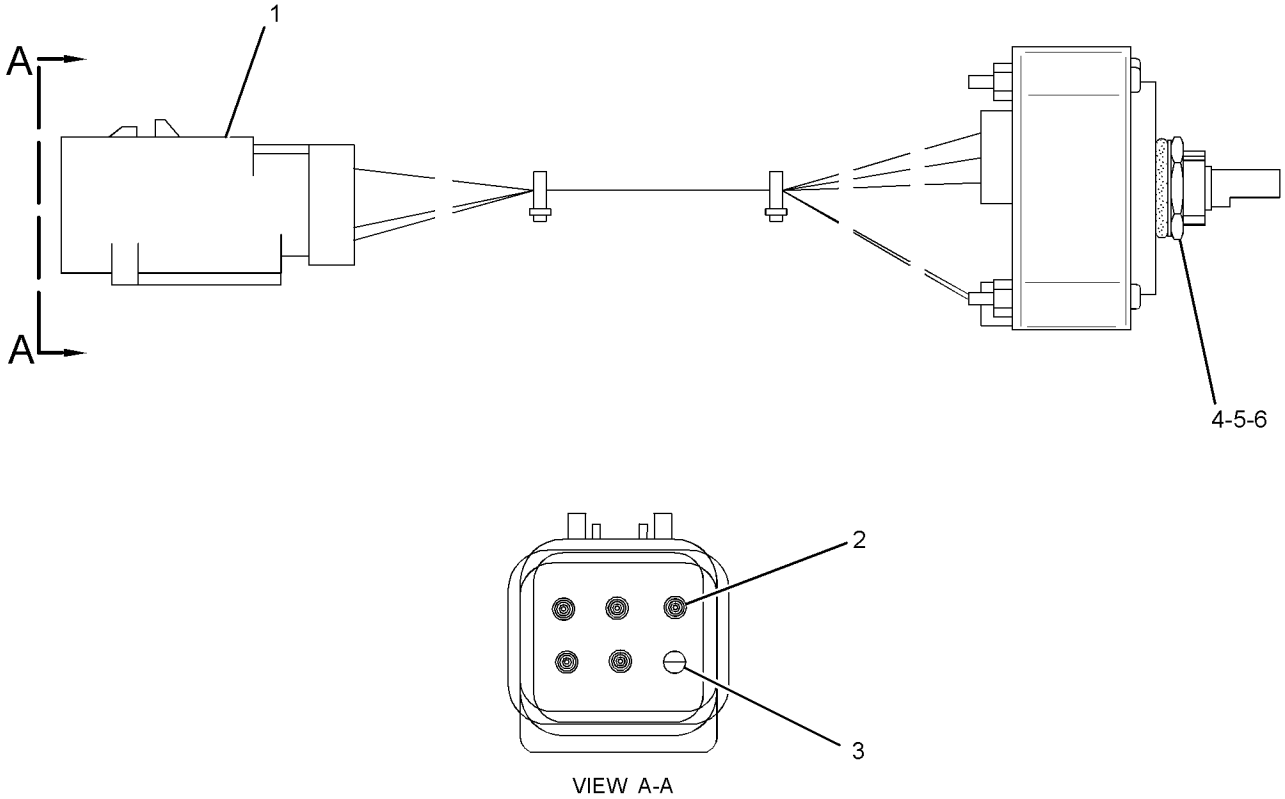

VIEW A-A

GRAPHIC #1 **<END>** g01588034

255-2751 SWITCH GP-START–ENGINE, KEY

S/N: FKK1-UP; DNP1-UP
PART OF 251-0542 PANEL GP-SWITCH
AN ATTACHMENT

SMCS-1416 **i04921946**

NOTE	REF NO	GRAPHIC REF	PART NUMBER	QTY	PART NAME 1 2 3 4 5 6 (PRODUCT LEVEL)	SEE PAGE
	1	1	**6V-8362**	4	SCREW-MACHINE (8-32X0.31-IN)	
	2	1	**9B-7233**	4	LOCKWASHER	
	3	1	**7T-6799**	1	NUT-MOUNTING (1-32-THD)	
AF			**5P-8500**	1	KEY (IGNITION)	

A - NOT PART OF THIS GROUP
F - NOT SHOWN

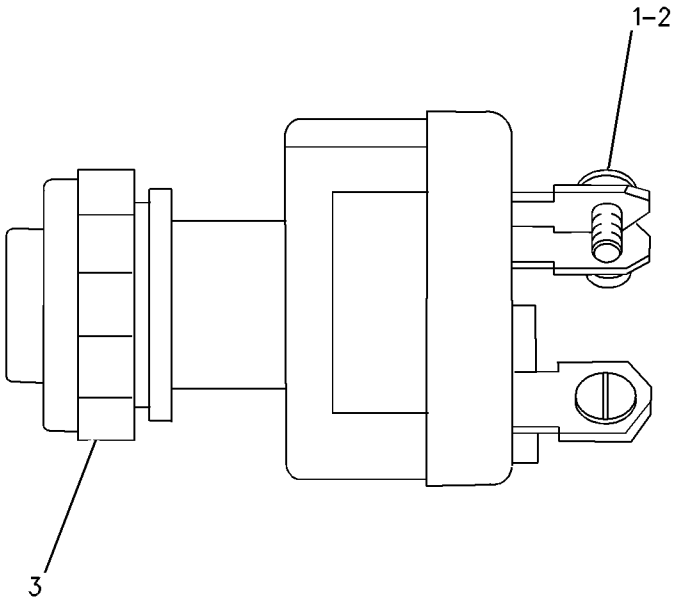

GRAPHIC #1 **<END>** g00699802

422-4183 WIRING GP-CAB

S/N: DNP1-UP

PART OF 421-6944 OPERATOR AR

SMCS-1408, 7301 **i05266082**

NOTE	REF NO	GRAPHIC REF	PART NUMBER	QTY	PART NAME 1 2 3 4 5 6 (PRODUCT LEVEL)	SEE PAGE
	1	1,2	**3S-2093**	2	STRAP-CABLE	
	2	1,2	**7K-1181**	7	STRAP-CABLE	
	3	2	**7Y-5505**	2	SPEAKER AS	
					(EACH INCLUDES)	
		2	**7Y-3951**	2	TERMINAL-BLADE (14-GA)	
		2	**7Y-3954**	1	CONNECTOR-PLUG (3-PIN)	
	4	3	**9W-0335**	1	LIGHTER AS-CIGAR (24-VOLT)	
M	5	3	**099-7127**	8	SCREW-MACHINE (M4X0.7X12-MM)	
	6	2	**113-8490**	20	FUSE (10-AMPERE)	
	7	2	**113-8491**	5	FUSE (15-AMPERE)	
	8	2	**113-8492**	3	FUSE (20-AMPERE)	
	9	2	**113-8493**	3	FUSE (25-AMPERE)	
	10	3	**116-0210**	4	BRACKET AS	
	11	2	**124-3548**	2	FUSE (30-AMPERE)	
Y	12	1	**132-1829**	1	ALARM GP (24-VOLT) (FAULT)	67
	13	2	**141-2759**	7	FUSE (5-AMPERE)	
	14	2	**161-3128**	1	RELAY (24-VOLT) (BOOM LIGHTS)	
	14A	2	**161-3128**	1	RELAY (24-VOLT) (CHASSIS LIGHT)	
	14B	2	**161-3128**	1	RELAY (24-VOLT) (CAB LIGHT)	
	14C	2	**161-3128**	1	RELAY (24-VOLT) (HORN)	
	14D	2	**161-3128**	1	RELAY (24-VOLT) (NEUTRAL START)	
	14E	2	**161-3128**	1	RELAY (24-VOLT) (TRAVEL ALARM)	
	15	2	**163-6758**	1	WIRE AS	
	16	1,2,3	**163-6795**	15	STRAP-CABLE	
	17	3	**167-3593**	1	STRAP	
	18	2	**170-6888**	1	PULLER-FUSE	
	19	1	**213-0772**	1	SWITCH AS-MAGNETIC (24-VOLT) (MAIN RELAY)	
	20	3	**227-7575**	1	PANEL-CONTROL (SWITCH)	
	21	3	**234-1097**	1	BRACKET	
	23	1	**238-2390**	1	CABLE AS	
D		1	**6V-2369**		CABLE (4-GA, BLACK) (0.3-M)	
		1	**9G-4343**	2	TERMINAL-RING (4-GA, 1/4-IN SCREW)	
	24	1	**238-2391**	1	CABLE AS	
D		1	**6V-2369**		CABLE (4-GA, BLACK) (0.3-M)	
		1	**9G-4343**	2	TERMINAL-RING (4-GA, 1/4-IN SCREW)	
	25	2	**245-7760**	8	INSULATION	
	26	2	**251-0637**	1	INSULATION	
	27	1	**259-4883**	1	ANTENNA AS	
		1	**259-5081**	1	ROD	
		1	**259-5082**	1	CABLE AS	
	28	1	**366-4622**	1	KIT-SERVICE METER	
					(INCLUDES SERVICE METER & FILM)	
	29	1	**388-6805**	1	HARNESS AS-CAB	
		1	**102-8803**	3	KIT-RECEPTACLE (3-PIN)	
					(EACH INCLUDES RECEPTACLE AS & WEDGE)	
		1	**8T-8730**	5	SOCKET-CONNECTOR (16-GA TO 18-GA)	
		1	**3S-2093**	102	STRAP-CABLE	
		1	**7Y-3950**	4	TERMINAL-BLADE (14-GA TO 20-GA)	
		1	**7Y-3951**	13	TERMINAL-BLADE (14-GA)	
		1	**7Y-3952**	4	PLUG-CONNECTOR (2-PIN)	
		1	**7Y-3955**	2	CONNECTOR-RECEPTACLE	
		1	**7Y-3958**	1	CONNECTOR-PLUG (6-PIN)	
		1	**7Y-3962**	2	TERMINAL-BULLET (MALE)	
		1	**7Y-3964**	2	TUBE (CONNECTOR TERMINAL)	
		1	**7Y-3963**	10	TERMINAL-BULLET (FEMALE)	
		1	**7Y-3965**	10	TUBE (RECEPTACLE TERMINAL)	
		1	**8C-6354**	1	CAP-RECEPTACLE (ET CONNECTOR)	

422-4183 **WIRING GP-CAB (*contd.*)** **i05266082**

NOTE	REF NO	GRAPHIC REF	PART NUMBER	QTY	PART NAME 1 2 3 4 5 6 (PRODUCT LEVEL)	SEE PAGE
		1	**8T-8737**	17	PLUG-SEAL	
		1	**5P-5624**	1	WIRE (14-GA, BLACK)	
		1	**9W-1951**	1	RECEPTACLE-CONNECTOR (9-PIN)	
		1	**102-7964**	2	PLUG-CONNECTOR (16-PIN)	
		1	**102-7965**	66	TERMINAL (FEMALE)	
		1	**9W-0844**	4	SOCKET-CONNECTOR (14-GA TO 16-GA)	
		1	**111-4816**	1	PLUG-CONNECTOR (13-PIN)	
		1	**116-0255**	1	TERMINAL-BLADE (10-GA TO 20-GA)	
E		1	**119-3662**		TUBE-HEAT SHRINK (10.85-MM DIA) (33-CM)	
		1	**121-1022**	3	DIODE	
		1	**121-1168**	1	CONNECTOR-RECEPTACLE	
		1	**121-1173**	13	TERMINAL (MALE)	
		1	**125-4840**	1	WEDGE-PLUG LOCK (13-PIN)	
		1	**125-4841**	2	WEDGE-PLUG LOCK (21-PIN)	
E		1	**125-7874**		TUBE-HEAT SHRINK (5.72-MM DIA) (50-CM)	
E		1	**125-7875**		TUBE-HEAT SHRINK (7.44-MM DIA) (25-CM)	
		1	**9X-3402**	16	SOCKET-CONNECTOR (16-GA TO 18-GA)	
					—OR—	
		1	**126-1768**	16	SOCKET-CONNECTOR (14-GA TO 16-GA)	
		1	**2L-8065**	3	TERMINAL-RING (10-GA TO 12-GA, NO. 8 SCREW)	
		1	**2L-8066**	2	TERMINAL-RING (10-GA TO 12-GA, NO. 10 SCREW)	
		1	**2L-8067**	6	TERMINAL-RING (10-GA TO 12-GA, 1/4-IN SCREW)	
		1	**2L-8075**	3	TERMINAL-RING (14-GA TO 16-GA, NO. 8 SCREW)	
		1	**2L-8076**	2	TERMINAL-RING (14-GA TO 16-GA, NO. 10 SCREW)	
		1	**128-8950**	1	CONNECTOR-RECEPTACLE	
		1	**5P-2321**	1	TERMINAL-FORK (14-GA TO 16-GA, NO. 6 SCREW)	
		1	**176-9299**	1	KIT-RECEPTACLE (3-PIN)	
					(INCLUDES RECEPTACLE AS & WEDGE)	
		1	**134-3296**	1	HOUSING-PLUG	
		1	**134-3297**	1	SEAL	
		1	**9X-3401**	12	PIN-CONNECTOR (16-GA TO 18-GA)	
					—OR—	
		1	**126-1767**	12	PIN-CONNECTOR (14-GA TO 16-GA)	
		1	**149-5069**	7	TERMINAL-BLADE (14-GA TO 20-GA)	
		1	**149-5070**	14	TERMINAL-BLADE (16-GA TO 20-GA)	
		1	**149-5071**	7	TERMINAL-BLADE (12-GA TO 14-GA)	
		1	**153-2602**	3	RECEPTACLE-CONNECTOR (1-PIN)	
		1	**153-2631**	3	TERMINAL (FEMALE)	
		1	**155-2270**	2	KIT-CONNECTING PLUG (2-PIN)	
		1	**155-2260**	1	KIT-CONNECTING PLUG (3-PIN)	
					(EACH PLUG KIT INCLUDES PLUG AS, WEDGE & INTERFACE SEAL)	
		1	**163-6659**	1	CONNECTOR-PLUG (12-PIN)	
		1	**163-6699**	1	CONNECTOR-PLUG (18-PIN)	
		1	**163-6790**	21	TERMINAL (FEMALE)	
		1	**163-6803**	6	PLUG-CONNECTOR (5-PIN)	
		1	**167-3487**	6	WEDGE-PLUG LOCK (5-PIN)	
		1	**167-3630**	1	CONNECTOR-PLUG	
		1	**167-3631**	2	TERMINAL (FEMALE)	
		1	**170-6890**	5	TERMINAL-BLADE (14-GA)	
		1	**170-6891**	23	TERMINAL-BLADE (16-GA TO 18-GA)	
		1	**174-3016**	1	PLUG AS-CONNECTOR (3-PIN)	
		1	**230-4009**	1	PLUG AS-CONNECTOR (12-PIN)	
		1	**264-7034**	1	SEAL-CONNECTOR	
		1	**230-4011**	1	PLUG AS-CONNECTOR (2-PIN)	
		1	**264-7029**	1	SEAL-CONNECTOR	
		1	**238-2319**	1	BASE AS (FUSE, RELAY PANEL)	
		1	**9X-8256**	2	WASHER (6.6X12X2-MM THK)	
M		1	**095-0742**	2	SCREW-MACHINE (M6X1X16-MM)	
		1	**170-9394**	40	TERMINAL	

422-4183 **WIRING GP-CAB (*contd.*)** **i05266082**

NOTE	REF NO	GRAPHIC REF	PART NUMBER	QTY	PART NAME 1 2 3 4 5 6 (PRODUCT LEVEL)	SEE PAGE
		1	**238-2363**	6	TERMINAL (FEMALE)	
		1	**238-2366**	11	TERMINAL (MALE)	
		1	**239-7356**	1	PLUG AS-CONNECTOR (12-PIN)	
		1	**264-7034**	1	SEAL-CONNECTOR	
		1	**342-2972**	1	CAP-CONNECTOR (2-PIN)	
		1	**349-5084**	3	TERMINAL-BLADE	
		1	**349-5085**	3	RECEPTACLE AS-CONNECTOR	
M	30	3	**095-0723**	3	SCREW-SPECIAL	
	31	3	**096-5962**	3	WASHER-HARD (3.4X7X0.8-MM THK)	
	32	1	**096-6166**	2	WASHER-HARD (4.5X9X1-MM THK)	
	33	1	**132-5789**	6	CLIP	
	34	2	**4P-7581**	1	CLIP	
M	35	3	**5C-2890**	3	NUT (M6X1-THD)	
M	36	3	**6V-5210**	8	SCREW-MACHINE (M4X0.7X10-MM)	
M	37	1	**6V-9672**	2	SCREW-MACHINE (M4X0.7X16-MM)	
	38	1	**8T-0328**	3	WASHER-HARD (5.5X10X1-MM THK)	
M	39	1	**8T-4127**	2	SCREW-MACHINE (M5X0.8X20-MM)	
M	40	1	**8T-6693**	1	SCREW-MACHINE (M5X0.8X16-MM)	
M	41	1,2	**9X-2042**	8	SCREW-TRUSS HEAD (M6X1X12-MM)	
M	42	2,3	**9X-2044**	5	SCREW-TRUSS HEAD (M6X1X16-MM)	
	43	3	**9X-8256**	3	WASHER (6.6X12X2-MM THK)	
E	44	2	**101-2846**		GUARD (9.5-CM)	
E	44A	3	**101-2846**		GUARD (9-CM EACH)	

PARTS SHOWN IN GRAPHIC(S) WITHOUT A REFERENCE NUMBER ARE NOT SERVICED SEPARATELY

D - ORDER BY THE METER
E - ORDER BY THE CENTIMETER
M - METRIC PART
Y - SEPARATE ILLUSTRATION

422-4183 **WIRING GP-CAB (*contd.*)** **i05266082**

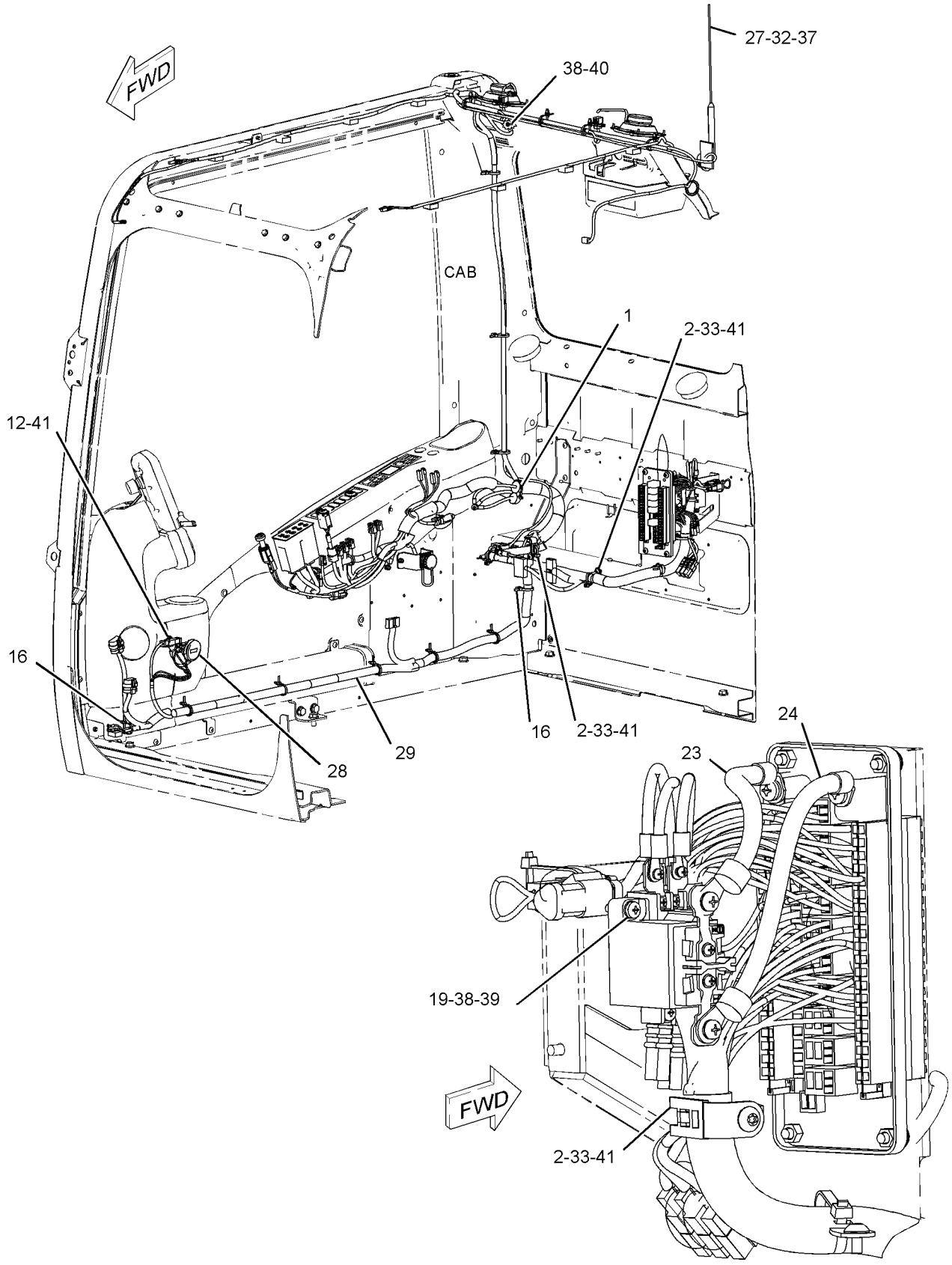

GRAPHIC #1 g03124896

422-4183 **WIRING GP-CAB (*contd.*)** **i05266082**

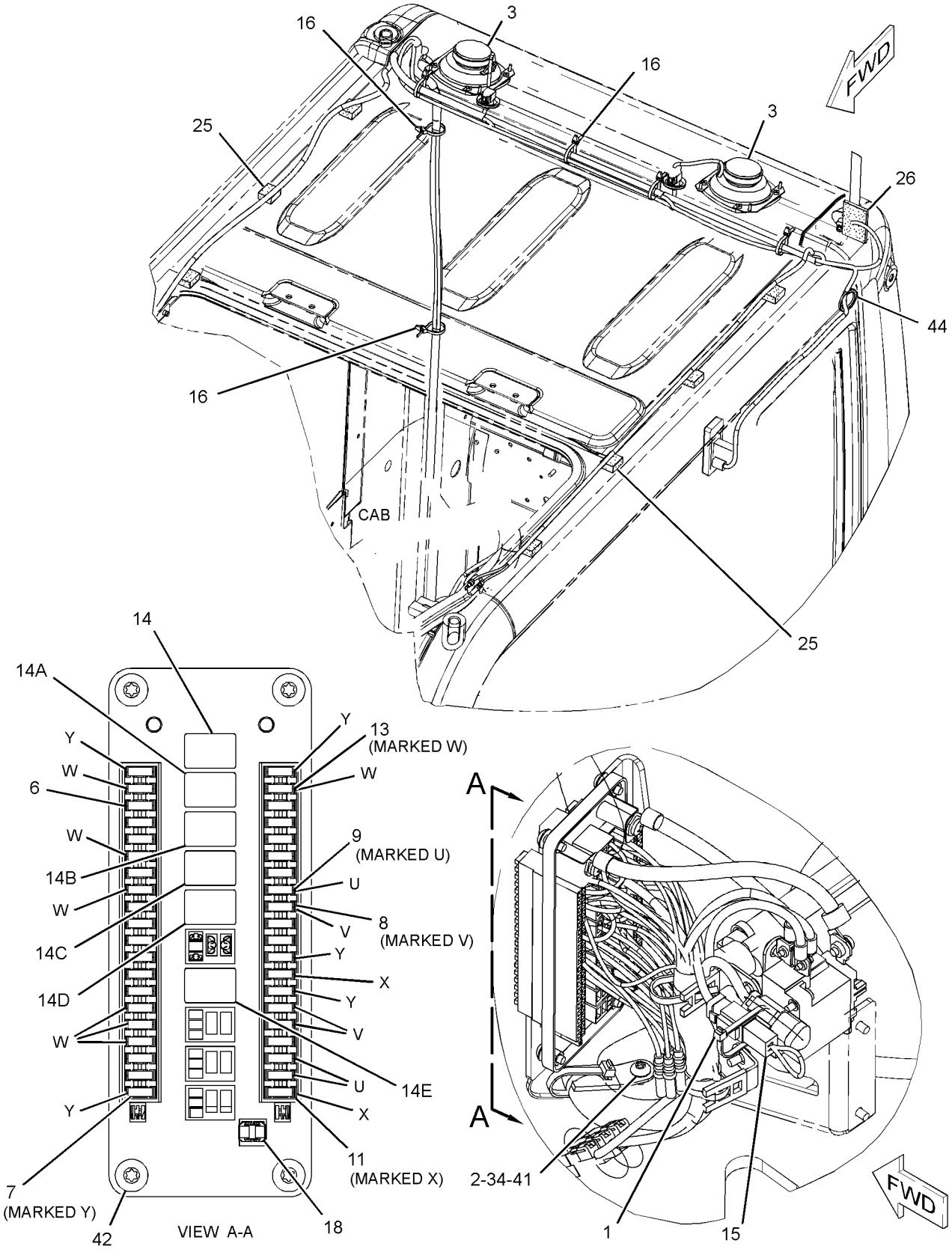

GRAPHIC #2 g03342925

422-4183 **WIRING GP-CAB (*contd.*)** **i05266082**

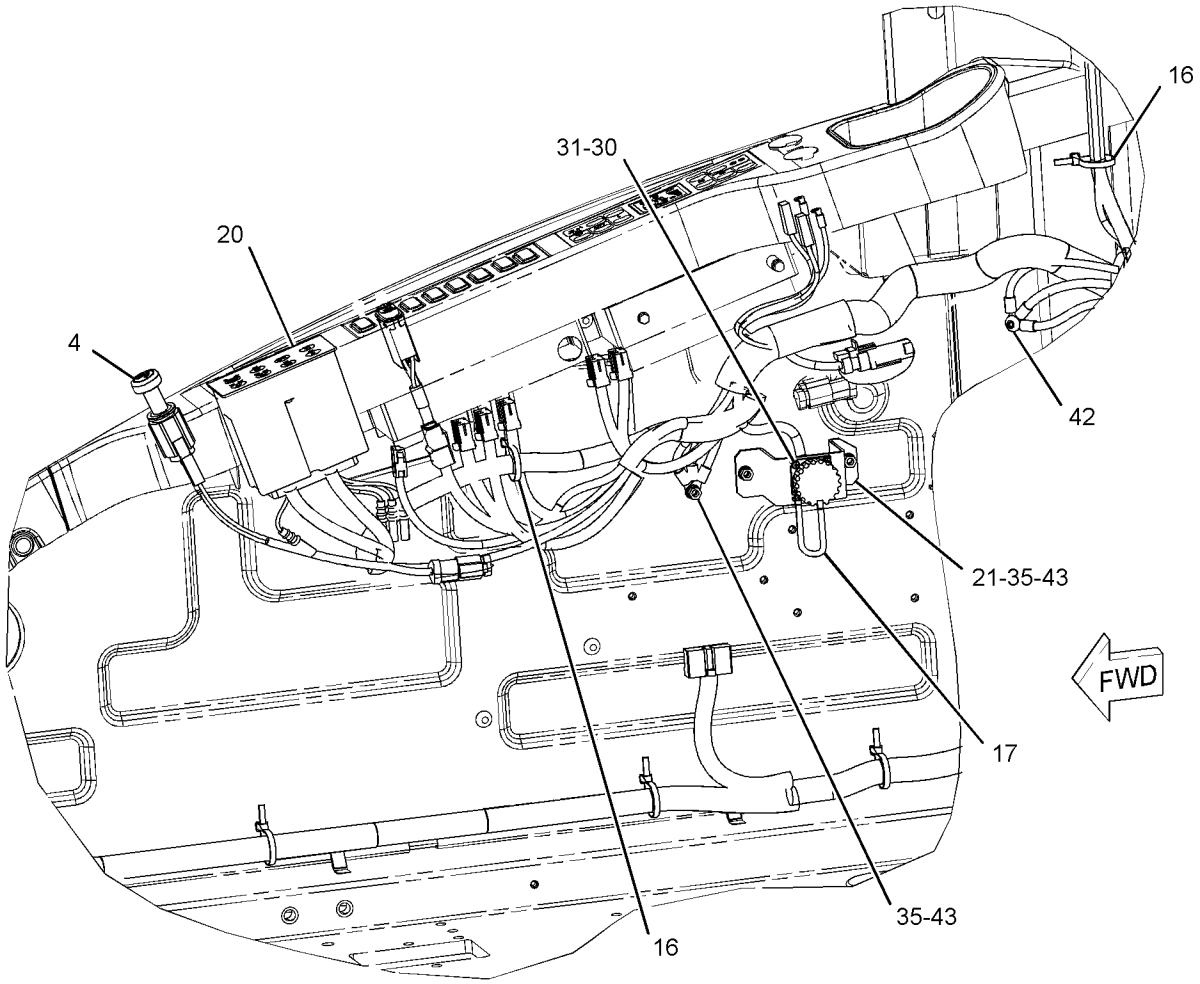

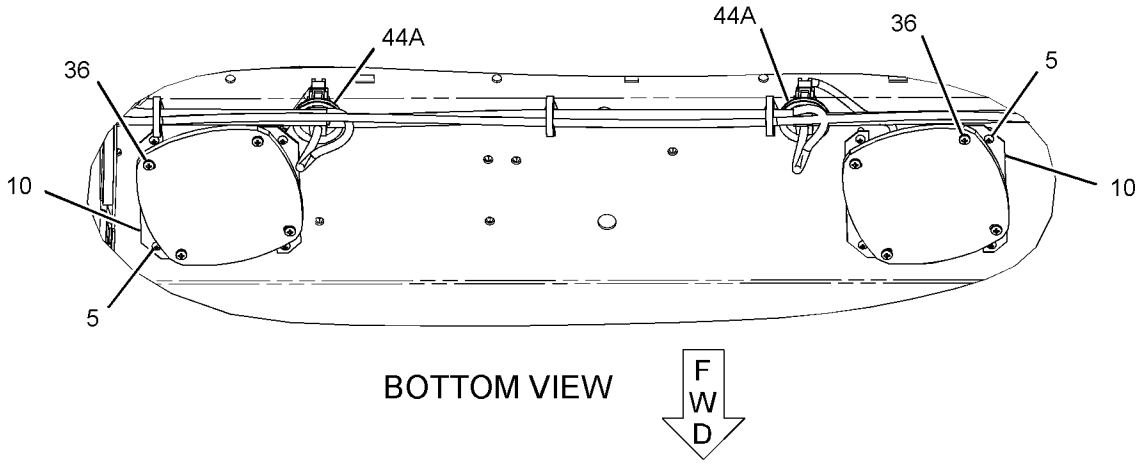

GRAPHIC #3 **<END>** g03362887

435-0869 WIRING GP-CAB

S/N: FKK1-UP

PART OF 433-6907 OPERATOR AR

SMCS-1408, 7301 **i05292377**

NOTE	REF NO	GRAPHIC REF	PART NUMBER	QTY	PART NAME 1 2 3 4 5 6 (PRODUCT LEVEL)	SEE PAGE
	1	1,2	**3S-2093**	3	STRAP-CABLE	
	2	1,2	**7K-1181**	7	STRAP-CABLE	
	3	2	**7Y-5505**	2	SPEAKER AS	
					(EACH INCLUDES)	
		2	**7Y-3951**	2	TERMINAL-BLADE (14-GA)	
		2	**7Y-3954**	1	CONNECTOR-PLUG (3-PIN)	
M	5	3	**099-7127**	8	SCREW-MACHINE (M4X0.7X12-MM)	
	6	2	**113-8490**	20	FUSE (10-AMPERE)	
	7	2	**113-8491**	5	FUSE (15-AMPERE)	
	8	2	**113-8492**	3	FUSE (20-AMPERE)	
	9	2	**113-8493**	3	FUSE (25-AMPERE)	
	10	3	**116-0210**	4	BRACKET AS	
	11	2	**124-3548**	2	FUSE (30-AMPERE)	
Y	12	1	**132-1829**	1	ALARM GP (24-VOLT) (FAULT)	67
	13	2	**141-2759**	7	FUSE (5-AMPERE)	
	14	2	**161-3128**	1	RELAY (24-VOLT) (BOOM LIGHTS)	
	14A	2	**161-3128**	1	RELAY (24-VOLT) (CHASSIS LIGHT)	
	14B	2	**161-3128**	1	RELAY (24-VOLT) (CAB LIGHT)	
	14C	2	**161-3128**	1	RELAY (24-VOLT) (HORN)	
	14D	2	**161-3128**	1	RELAY (24-VOLT) (NEUTRAL START)	
	14E	2	**161-3128**	1	RELAY (24-VOLT) (TRAVEL ALARM)	
	15	2	**163-6758**	1	WIRE AS	
	16	1,2,3	**163-6795**	13	STRAP-CABLE	
	17	3	**167-3593**	1	STRAP	
	18	2	**170-6888**	1	PULLER-FUSE	
	19	1	**213-0772**	1	SWITCH AS-MAGNETIC (24-VOLT) (MAIN RELAY)	
	20	3	**227-7575**	1	PANEL-CONTROL (SWITCH)	
	21	3	**234-1097**	1	BRACKET	
D	22	1	**6V-5817**		CONDUIT-FLEXIBLE (26.1-MM ID, SPLIT) (1-M)	
	23	1	**238-2390**	1	CABLE AS	
E		1	**125-7876**		TUBE-HEAT SHRINK (17.78-MM DIA) (4-CM EACH)	
		1	**9G-4343**	2	TERMINAL-RING (4-GA, 1/4-IN SCREW)	
	24	1	**238-2391**	1	CABLE AS	
E		1	**125-7876**		TUBE-HEAT SHRINK (17.78-MM DIA) (4-CM EACH)	
		1	**9G-4343**	2	TERMINAL-RING (4-GA, 1/4-IN SCREW)	
	25	2	**245-7760**	8	INSULATION	
	26	2	**251-0637**	1	INSULATION	
	27	1	**259-4883**	1	ANTENNA AS	
		1	**259-5081**	1	ROD	
		1	**259-5082**	1	CABLE AS	
	28	1	**366-4622**	1	KIT-SERVICE METER	
					(INCLUDES SERVICE METER & FILM)	
	29	1	**435-0870**	1	HARNESS AS-CAB	
		1	**102-8803**	2	KIT-RECEPTACLE (3-PIN)	
					(EACH INCLUDES RECEPTACLE AS & WEDGE)	
		1	**8T-8730**	5	SOCKET-CONNECTOR (16-GA TO 18-GA)	
		1	**3S-2093**	94	STRAP-CABLE	
		1	**7Y-3950**	4	TERMINAL-BLADE (14-GA TO 20-GA)	
		1	**7Y-3951**	13	TERMINAL-BLADE (14-GA)	
		1	**7Y-3952**	4	PLUG-CONNECTOR (2-PIN)	
		1	**7Y-3955**	2	CONNECTOR-RECEPTACLE	
		1	**7Y-3958**	1	CONNECTOR-PLUG (6-PIN)	
		1	**7Y-3962**	2	TERMINAL-BULLET (MALE)	
		1	**7Y-3964**	2	TUBE (CONNECTOR TERMINAL)	
		1	**7Y-3963**	10	TERMINAL-BULLET (FEMALE)	
		1	**7Y-3965**	10	TUBE (RECEPTACLE TERMINAL)	
		1	**8C-6354**	1	CAP-RECEPTACLE (ET CONNECTOR)	

435-0869 **WIRING GP-CAB (*contd.*)** **i05292377**

NOTE	REF NO	GRAPHIC REF	PART NUMBER	QTY	PART NAME 1 2 3 4 5 6 (PRODUCT LEVEL)	SEE PAGE
		1	**8T-8737**	17	PLUG-SEAL	
		1	**9W-1951**	1	RECEPTACLE-CONNECTOR (9-PIN)	
		1	**102-7964**	2	PLUG-CONNECTOR (16-PIN)	
		1	**102-7965**	65	TERMINAL (FEMALE)	
		1	**9W-0844**	4	SOCKET-CONNECTOR (14-GA TO 16-GA)	
		1	**111-4816**	1	PLUG-CONNECTOR (13-PIN)	
		1	**116-0255**	1	TERMINAL-BLADE (10-GA TO 20-GA)	
E		1	**119-3662**		TUBE-HEAT SHRINK (10.85-MM DIA) (20-CM)	
		1	**121-1022**	3	DIODE	
		1	**121-1168**	1	CONNECTOR-RECEPTACLE	
		1	**121-1173**	13	TERMINAL (MALE)	
		1	**125-4840**	1	WEDGE-PLUG LOCK (13-PIN)	
		1	**125-4841**	2	WEDGE-PLUG LOCK (21-PIN)	
E		1	**125-7874**		TUBE-HEAT SHRINK (5.72-MM DIA) (50-CM)	
E		1	**125-7875**		TUBE-HEAT SHRINK (7.44-MM DIA) (25-CM)	
		1	**9X-3402**	16	SOCKET-CONNECTOR (16-GA TO 18-GA)	
					—OR—	
		1	**126-1768**	16	SOCKET-CONNECTOR (14-GA TO 16-GA)	
		1	**2L-8065**	3	TERMINAL-RING (10-GA TO 12-GA, NO. 8 SCREW)	
		1	**2L-8066**	2	TERMINAL-RING (10-GA TO 12-GA, NO. 10 SCREW)	
		1	**2L-8067**	6	TERMINAL-RING (10-GA TO 12-GA, 1/4-IN SCREW)	
		1	**2L-8075**	2	TERMINAL-RING (14-GA TO 16-GA, NO. 8 SCREW)	
		1	**2L-8076**	2	TERMINAL-RING (14-GA TO 16-GA, NO. 10 SCREW)	
		1	**128-8950**	1	CONNECTOR-RECEPTACLE	
		1	**5P-2321**	1	TERMINAL-FORK (14-GA TO 16-GA, NO. 6 SCREW)	
		1	**176-9299**	1	KIT-RECEPTACLE (3-PIN)	
					(INCLUDES RECEPTACLE AS & WEDGE)	
		1	**134-3296**	1	HOUSING-PLUG	
		1	**134-3297**	1	SEAL	
		1	**9X-3401**	6	PIN-CONNECTOR (16-GA TO 18-GA)	
					—OR—	
		1	**126-1767**	6	PIN-CONNECTOR (14-GA TO 16-GA)	
		1	**149-5069**	7	TERMINAL-BLADE (14-GA TO 20-GA)	
		1	**149-5070**	14	TERMINAL-BLADE (16-GA TO 20-GA)	
		1	**149-5071**	7	TERMINAL-BLADE (12-GA TO 14-GA)	
		1	**153-2602**	1	RECEPTACLE-CONNECTOR (1-PIN)	
		1	**153-2631**	1	TERMINAL (FEMALE)	
		1	**155-2270**	2	KIT-CONNECTING PLUG (2-PIN)	
		1	**155-2260**	1	KIT-CONNECTING PLUG (3-PIN)	
					(EACH PLUG KIT INCLUDES PLUG AS, WEDGE & INTERFACE SEAL)	
		1	**163-6659**	1	CONNECTOR-PLUG (12-PIN)	
		1	**163-6699**	1	CONNECTOR-PLUG (18-PIN)	
		1	**163-6790**	21	TERMINAL (FEMALE)	
		1	**163-6803**	6	PLUG-CONNECTOR (5-PIN)	
		1	**167-3487**	6	WEDGE-PLUG LOCK (5-PIN)	
		1	**167-3630**	1	CONNECTOR-PLUG	
		1	**167-3631**	2	TERMINAL (FEMALE)	
		1	**170-6890**	5	TERMINAL-BLADE (14-GA)	
		1	**170-6891**	22	TERMINAL-BLADE (16-GA TO 18-GA)	
		1	**174-3016**	1	PLUG AS-CONNECTOR (3-PIN)	
		1	**230-4009**	1	PLUG AS-CONNECTOR (12-PIN)	
		1	**264-7034**	1	SEAL-CONNECTOR	
		1	**230-4011**	1	PLUG AS-CONNECTOR (2-PIN)	
		1	**264-7029**	1	SEAL-CONNECTOR	
		1	**238-2319**	1	BASE AS (FUSE, RELAY PANEL)	
		1	**9X-8256**	2	WASHER (6.6X12X2-MM THK)	
M		1	**095-0742**	2	SCREW-MACHINE (M6X1X16-MM)	
		1	**170-9394**	40	TERMINAL	
		1	**238-2363**	6	TERMINAL (FEMALE)	

435-0869 **WIRING GP-CAB (*contd.*)** **i05292377**

NOTE	REF NO	GRAPHIC REF	PART NUMBER	QTY	PART NAME 1 2 3 4 5 6 (PRODUCT LEVEL)	SEE PAGE
		1	**238-2366**	11	TERMINAL (MALE)	
		1	**239-7356**	1	PLUG AS-CONNECTOR (12-PIN)	
		1	**264-7034**	1	SEAL-CONNECTOR	
		1	**342-2972**	1	CAP-CONNECTOR (2-PIN)	
		1	**349-5084**	3	TERMINAL-BLADE	
		1	**349-5085**	3	RECEPTACLE AS-CONNECTOR	
M	30	3	**095-0723**	3	SCREW-SPECIAL	
	31	3	**096-5962**	3	WASHER-HARD (3.4X7X0.8-MM THK)	
	32	1	**096-6166**	2	WASHER-HARD (4.5X9X1-MM THK)	
	33	1	**132-5789**	6	CLIP	
	34	2	**4P-7581**	1	CLIP	
M	35	3	**5C-2890**	3	NUT (M6X1-THD)	
M	36	3	**6V-5210**	8	SCREW-MACHINE (M4X0.7X10-MM)	
M	37	1	**6V-9672**	2	SCREW-MACHINE (M4X0.7X16-MM)	
	38	1	**8T-0328**	3	WASHER-HARD (5.5X10X1-MM THK)	
M	39	1	**8T-4127**	2	SCREW-MACHINE (M5X0.8X20-MM)	
M	40	1	**8T-6693**	1	SCREW-MACHINE (M5X0.8X16-MM)	
M	41	1,2	**9X-2042**	8	SCREW-TRUSS HEAD (M6X1X12-MM)	
M	42	2,3	**9X-2044**	5	SCREW-TRUSS HEAD (M6X1X16-MM)	
	43	3	**9X-8256**	3	WASHER (6.6X12X2-MM THK)	
E	44	2	**101-2846**		GUARD (9.5-CM)	
E	44A	3	**101-2846**		GUARD (9-CM EACH)	

D - ORDER BY THE METER
E - ORDER BY THE CENTIMETER
M - METRIC PART
Y - SEPARATE ILLUSTRATION

435-0869 **WIRING GP-CAB (*contd.*)** **i05292377**

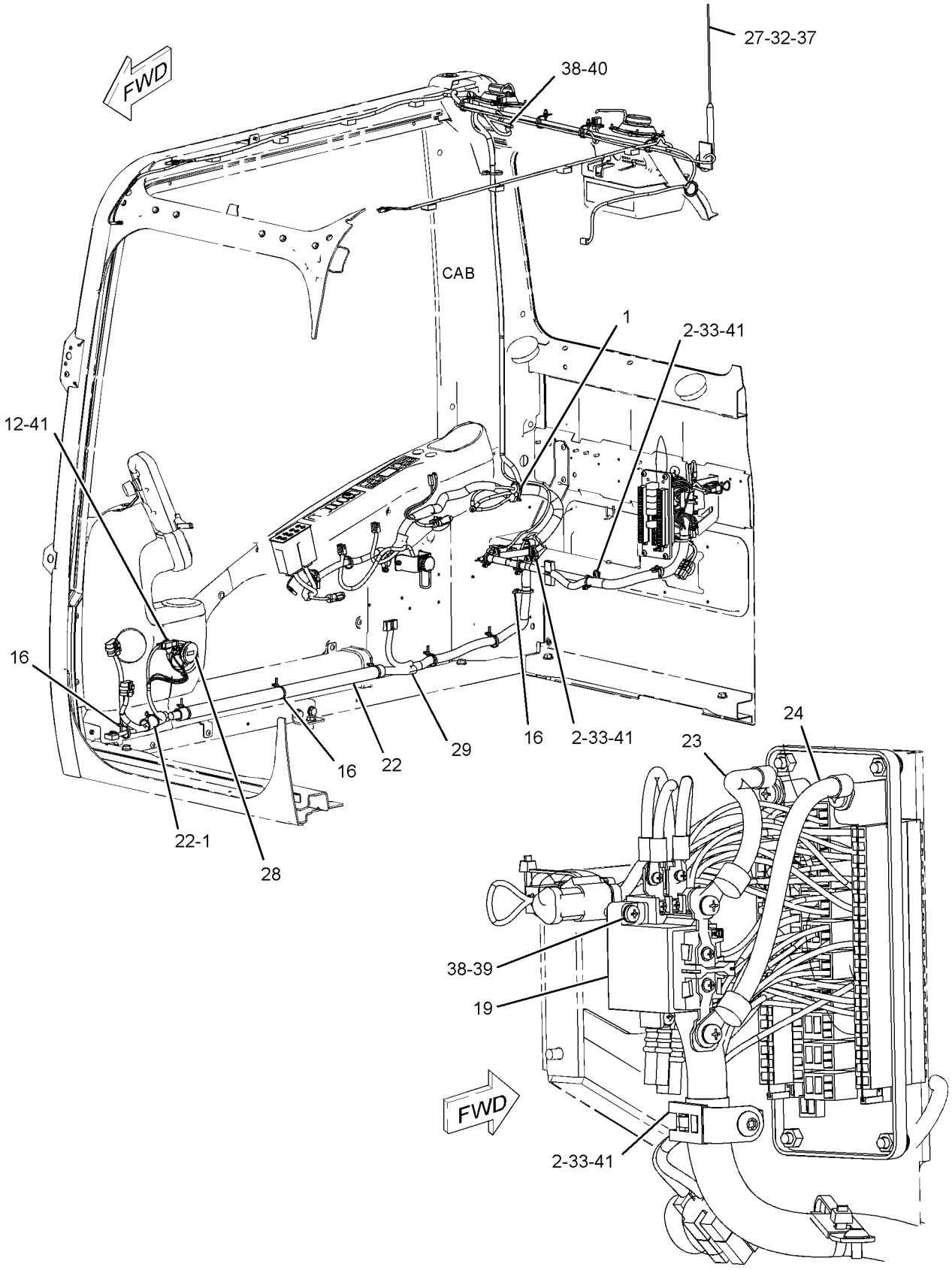

GRAPHIC #1 g03362136

435-0869 **WIRING GP-CAB (*contd.*)** **i05292377**

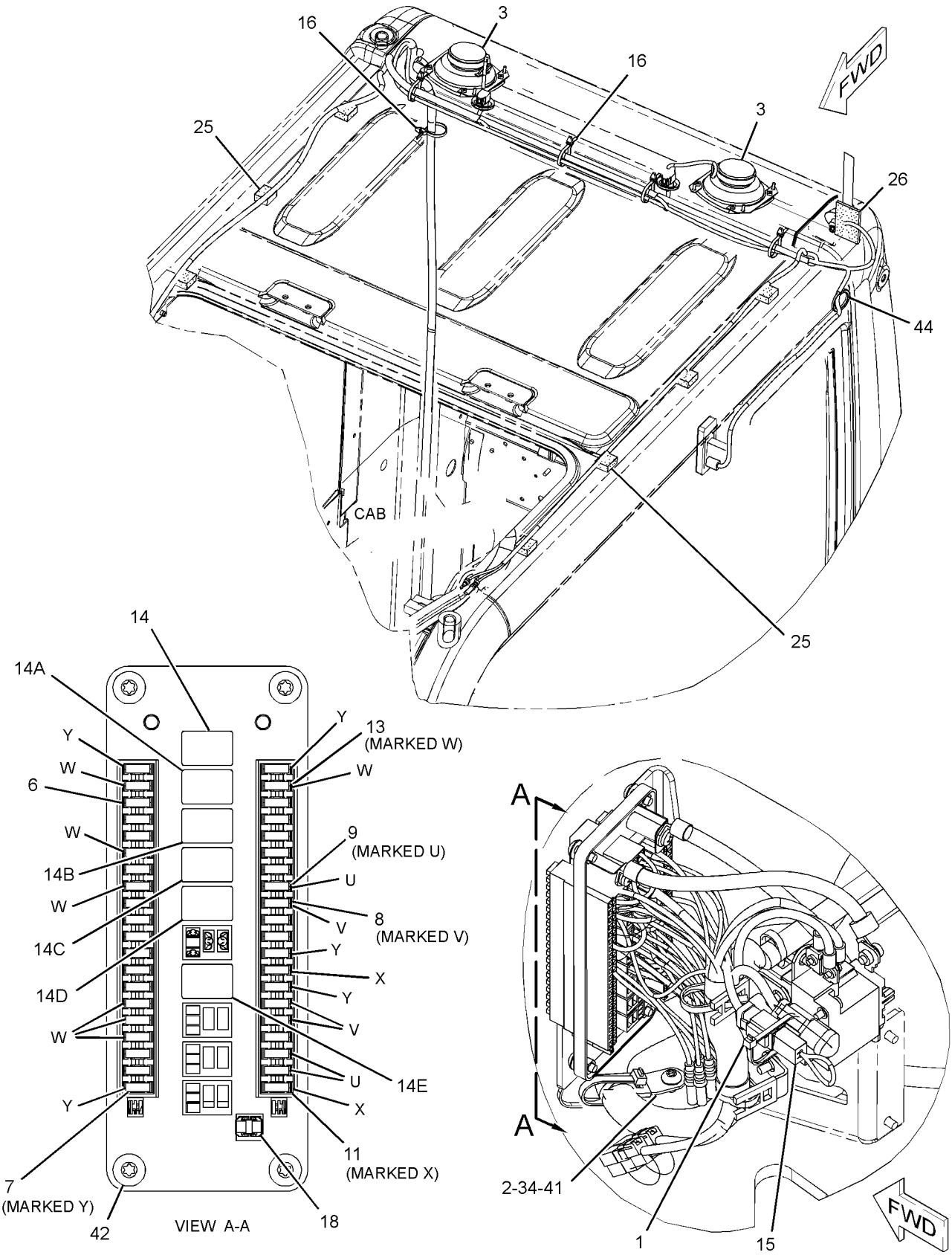

GRAPHIC #2

g03362137

435-0869 **WIRING GP-CAB (*contd.*)** **i05292377**

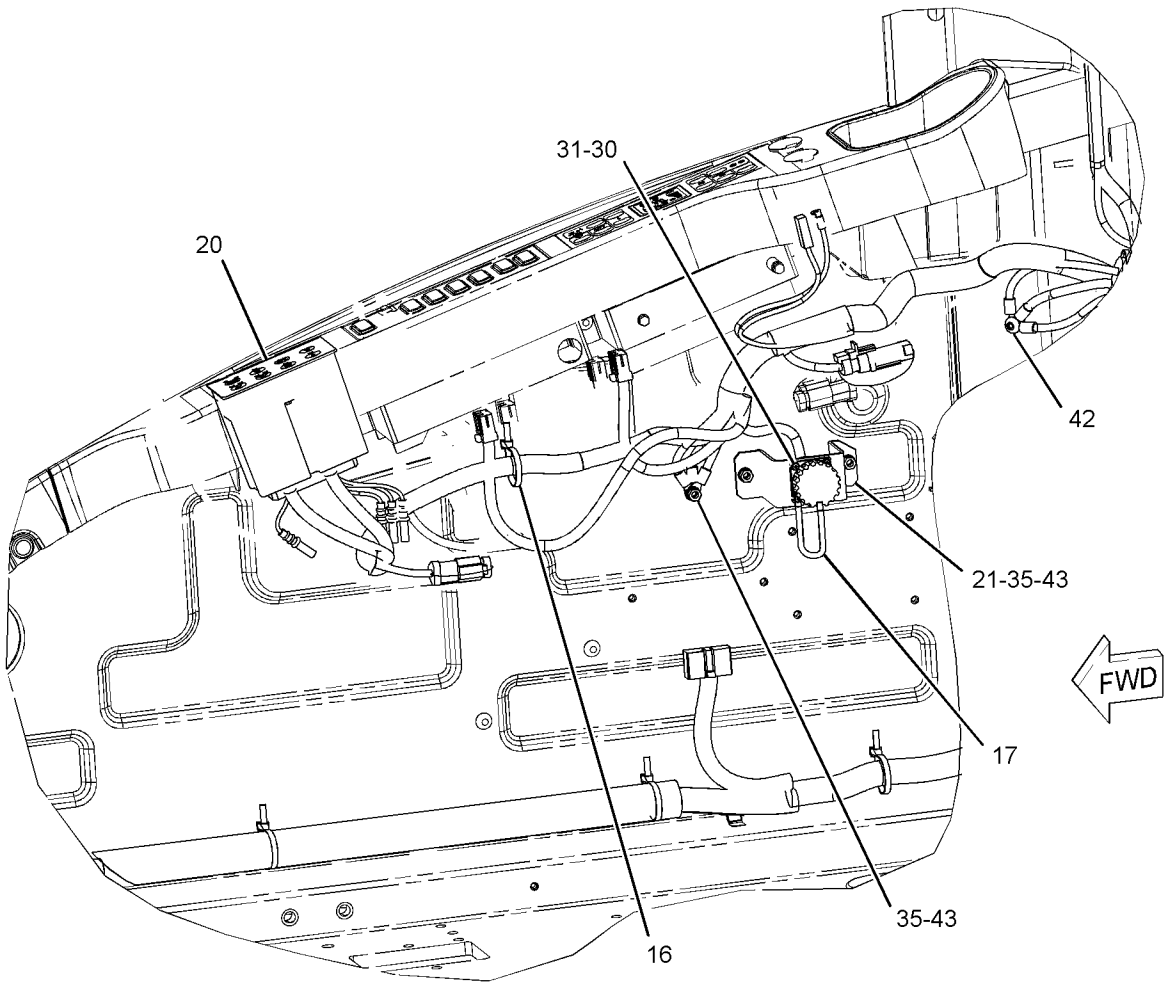

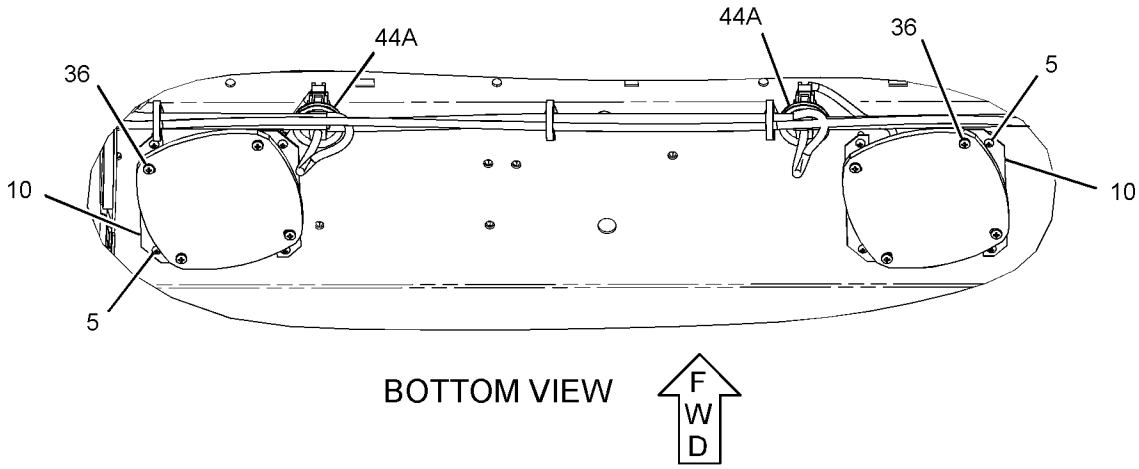

GRAPHIC #3 **<END>** g03362138

ELECTRICAL AND STARTING SYSTEM

388-6841 **WIRING GP-CHASSIS (*contd.*)** **i05292759**

NOTE	REF NO	GRAPHIC REF	PART NUMBER	QTY	PART NAME 1 2 3 4 5 6 (PRODUCT LEVEL)	SEE PAGE
E		1	**125-7874**		TUBE-HEAT SHRINK (5.72-MM DIA) (95-CM)	
E		1	**125-7875**		TUBE-HEAT SHRINK (7.44-MM DIA) (20-CM)	
E		1	**125-7876**		TUBE-HEAT SHRINK (17.78-MM DIA) (12-CM)	
		1	**9X-3402**	106	SOCKET-CONNECTOR (16-GA TO 18-GA)	
					—OR—	
		1	**126-1768**	110	SOCKET-CONNECTOR (14-GA TO 16-GA)	
		1	**2L-8050**	2	TERMINAL-RING (6-GA, 1/4-IN SCREW)	
					—OR—	
		1	**2L-8058**	2	TERMINAL-RING (8-GA, 1/4-IN SCREW)	
		1	**2L-8069**	9	TERMINAL-RING (2-GA TO 10-GA, 3/8-IN SCREW)	
		1	**2L-8075**	4	TERMINAL-RING (14-GA TO 16-GA, NO. 8 SCREW)	
		1	**2L-8076**	1	TERMINAL-RING (14-GA TO 16-GA, NO. 10 SCREW)	
		1	**176-9299**	1	KIT-RECEPTACLE (3-PIN)	
					(INCLUDES RECEPTACLE AS & WEDGE)	
		1	**134-3297**	1	SEAL	
		1	**9X-3401**	42	PIN-CONNECTOR (16-GA TO 18-GA)	
					—OR—	
		1	**126-1767**	42	PIN-CONNECTOR (14-GA TO 16-GA)	
		1	**153-2620**	1	PLUG AS-CONNECTOR (54-PIN, BLACK)	
		1	**163-6759**	1	SEAL	
		1	**153-2630**	1	PLUG AS-CONNECTOR (54-PIN, BROWN)	
		1	**163-6759**	1	SEAL	
		1	**155-2270**	15	KIT-CONNECTING PLUG (2-PIN)	
					(INCLUDES PLUG AS, WEDGE & INTERFACE SEAL)	
		1	**163-6637**	1	RECEPTACLE AS-CONNECTOR (54-PIN, BLACK)	
		1	**163-6773**	2	PLUG-SEAL	
		1	**174-3016**	1	PLUG AS-CONNECTOR (3-PIN)	
		1	**197-4385**	1	DIODE	
		1	**230-4009**	1	PLUG AS-CONNECTOR (12-PIN)	
		1	**264-7034**	1	SEAL-CONNECTOR	
		1	**230-4011**	9	PLUG AS-CONNECTOR (2-PIN)	
					(EACH INCLUDES)	
		1	**264-7029**	1	SEAL-CONNECTOR	
		1	**230-4013**	2	PLUG AS-CONNECTOR (3-PIN)	
					(EACH INCLUDES)	
		1	**264-7030**	1	SEAL-CONNECTOR	
		1	**230-5010**	2	PLUG AS-CONNECTOR (6-PIN)	
					(EACH INCLUDES)	
		1	**264-7032**	1	SEAL-CONNECTOR	
		1	**231-2295**	2	PLUG AS-CONNECTOR (8-PIN)	
					(EACH INCLUDES)	
		1	**264-7033**	1	SEAL-CONNECTOR	
		1	**243-4505**	4	RECEPTACLE AS-CONNECTOR (2-PIN)	
		1	**243-4510**	1	RECEPTACLE AS-CONNECTOR (12-PIN)	
		1	**281-8803**	3	PLUG AS-CONNECTOR (3-PIN)	
					(EACH INCLUDES)	
		1	**264-7030**	1	SEAL-CONNECTOR	
		1	**281-8804**	1	PLUG AS-CONNECTOR (3-PIN)	
		1	**264-7030**	1	SEAL-CONNECTOR	
		1	**342-2972**	2	CAP-CONNECTOR (2-PIN)	
		1	**342-2974**	2	CAP-CONNECTOR (6-PIN)	
		1	**342-2975**	1	CAP-CONNECTOR (8-PIN)	
		1	**342-2976**	1	CAP-CONNECTOR (12-PIN)	
		1	**349-5084**	1	TERMINAL-BLADE	
		1	**349-5085**	1	RECEPTACLE AS-CONNECTOR	
M	25	2	**099-6418**	1	NUT (M6X1-THD)	
	26	2,3	**132-5789**	6	CLIP	
	27	3	**177-2215**	1	STRAP-DUAL CLAMP	
	28	2	**347-4734**	1	CLIP	
	29	2	**4P-7428**	1	CLIP	
	30	2	**4P-7581**	4	CLIP	

388-6841 **WIRING GP-CHASSIS (*contd.*)** **i05292759**

NOTE	REF NO	GRAPHIC REF	PART NUMBER	QTY	PART NAME 1 2 3 4 5 6 (PRODUCT LEVEL)	SEE PAGE
M	31	3	**5C-7883**	4	BOLT-SOCKET HEAD (M6X1X16-MM)	
	32	2	**5I-3878**	1	GROMMET	
	33	2	**5P-4116**	4	WASHER-HARD (8.8X20.5X2-MM THK)	
	34	3	**6G-2263**	1	SPACER (10.5X19X28.5-MM THK)	
M	35	2	**7X-2621**	1	BOLT (M10X1.5X12-MM)	
	36	1,3	**7Y-5456**	2	GROMMET	
	37	2	**7Y-8165**	1	GROMMET	
	38	1	**7Y-8167**	1	GROMMET	
	39	3	**8M-2770**	1	CLIP	
	40	1,2,3	**8T-4121**	60	WASHER-HARD (11X21X2.5-MM THK)	
M	41	1,2,3	**8T-4136**	14	BOLT (M10X1.5X25-MM)	
M	42	1,2,3	**8T-4137**	28	BOLT (M10X1.5X20-MM)	
M	43	2	**8T-4182**	1	BOLT (M10X1.5X45-MM)	
M	44	3	**8T-4185**	1	BOLT (M10X1.5X50-MM)	
M	45	2	**8T-4189**	2	BOLT (M8X1.25X20-MM)	
M	46	2	**8T-4191**	6	BOLT (M10X1.5X16-MM)	
M	47	1,2,3	**8T-4195**	5	BOLT (M10X1.5X30-MM)	
M	48	3	**8T-4196**	1	BOLT (M10X1.5X35-MM)	
M	49	2	**8T-4199**	1	BOLT (M8X1.25X12-MM)	
	50	2	**8T-4224**	2	WASHER-HARD (8.8X16X2-MM THK)	
M	51	2	**8T-5005**	2	BOLT (M10X1.5X70-MM)	
M	52	2	**8T-6466**	1	BOLT (M10X1.5X60-MM)	
M	53	2	**8T-6869**	3	BOLT (M8X1.25X60-MM)	
	54	3	**9X-8256**	4	WASHER (6.6X12X2-MM THK)	

E - ORDER BY THE CENTIMETER
M - METRIC PART
Y - SEPARATE ILLUSTRATION

388-6841 **WIRING GP-CHASSIS (*contd.*)** **i05292759**

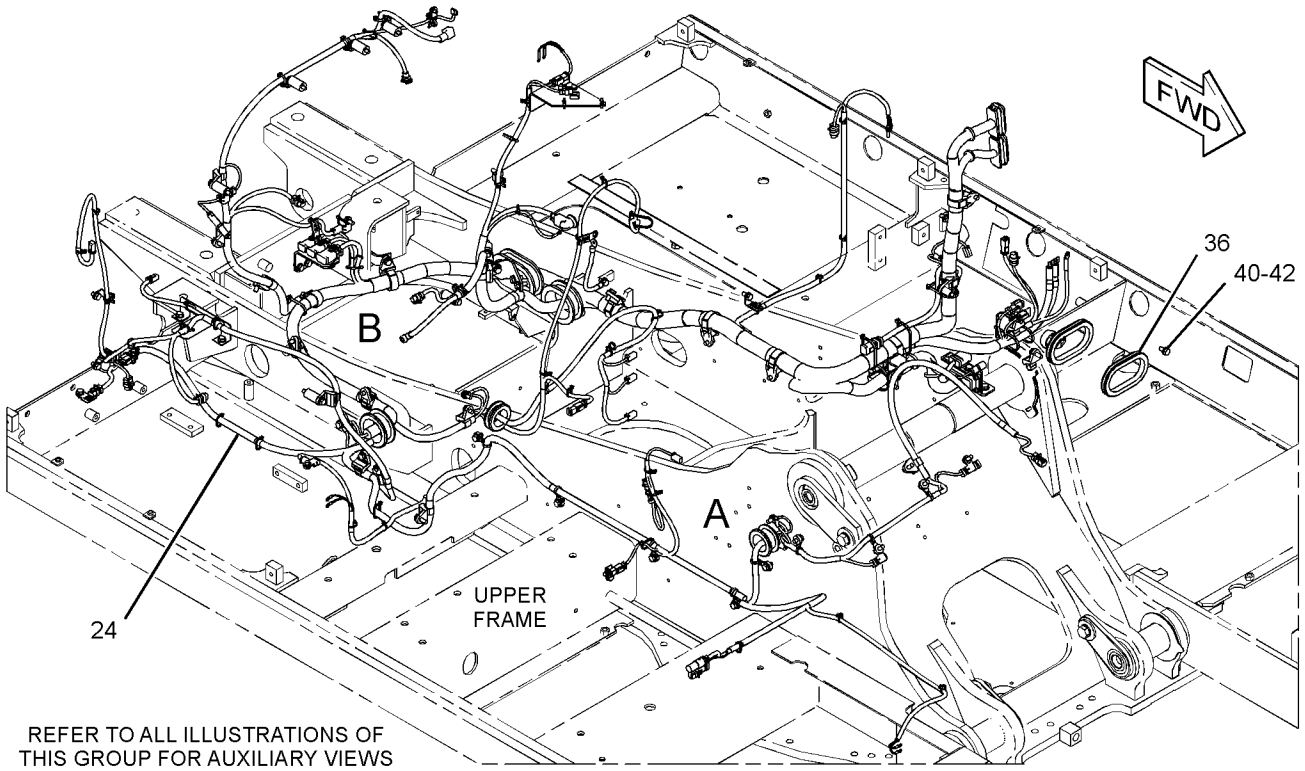

REFER TO ALL ILLUSTRATIONS OF
THIS GROUP FOR AUXILIARY VIEWS

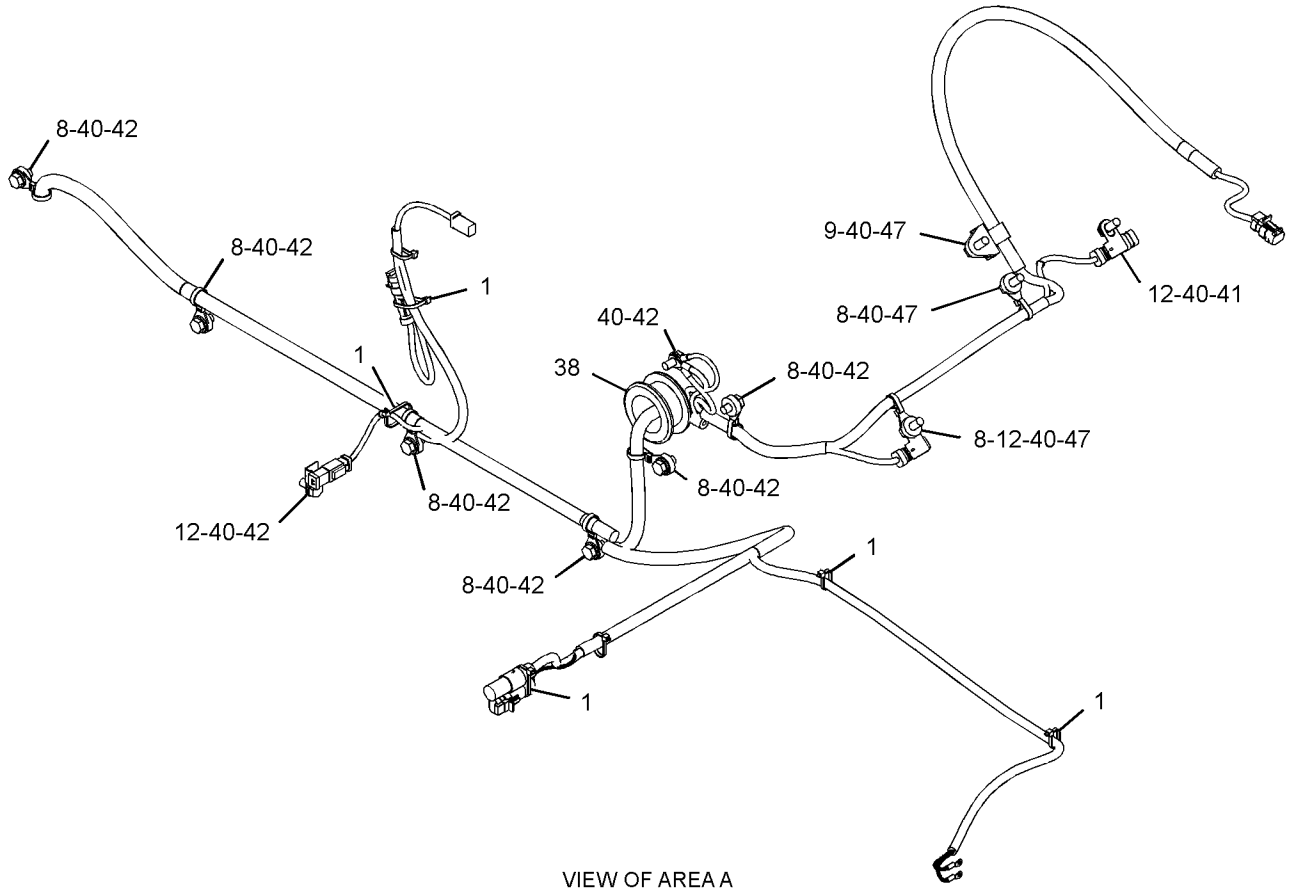

VIEW OF AREA A

GRAPHIC #1 g03362403

388-6841 **WIRING GP-CHASSIS (*contd.*)** **i05292759**

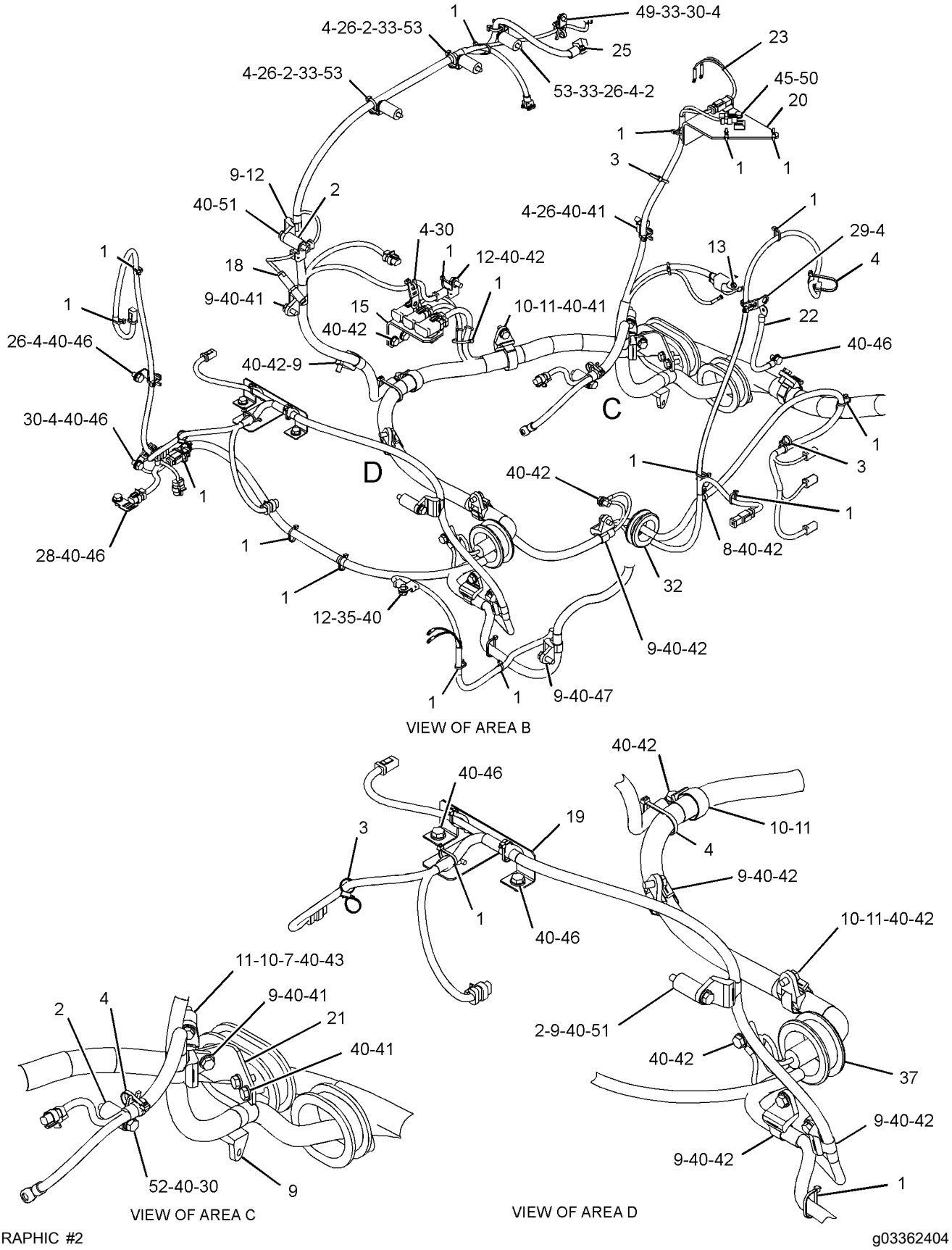

GRAPHIC #2 g03362404

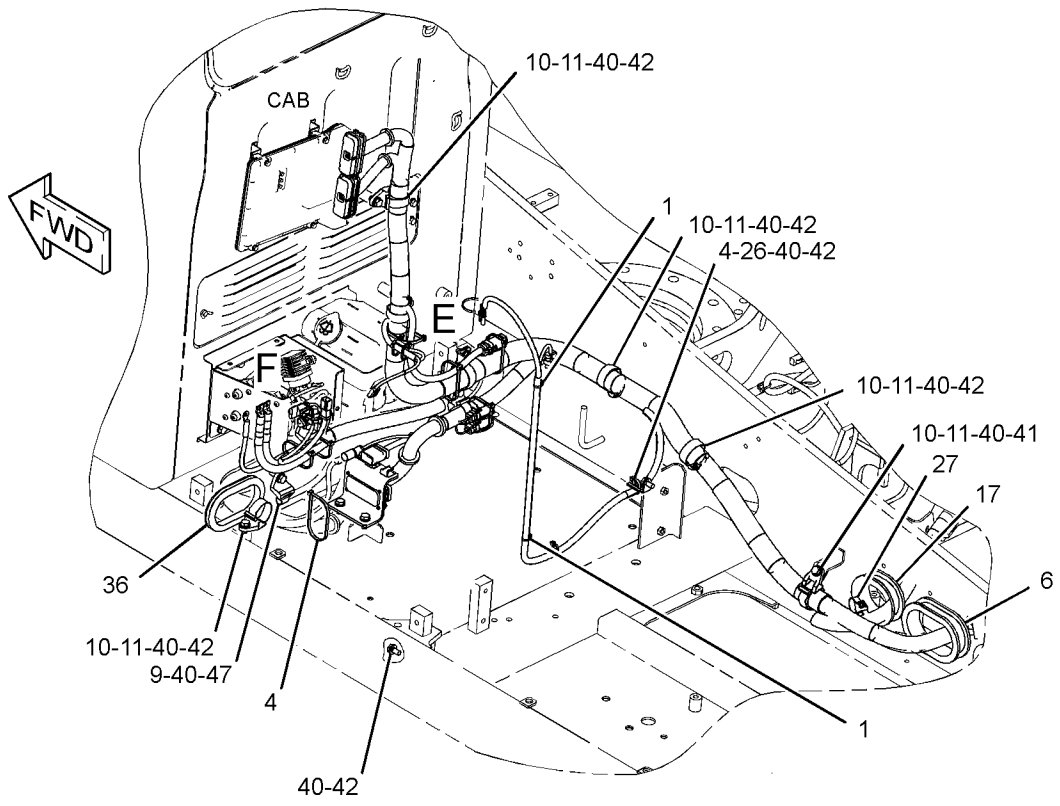

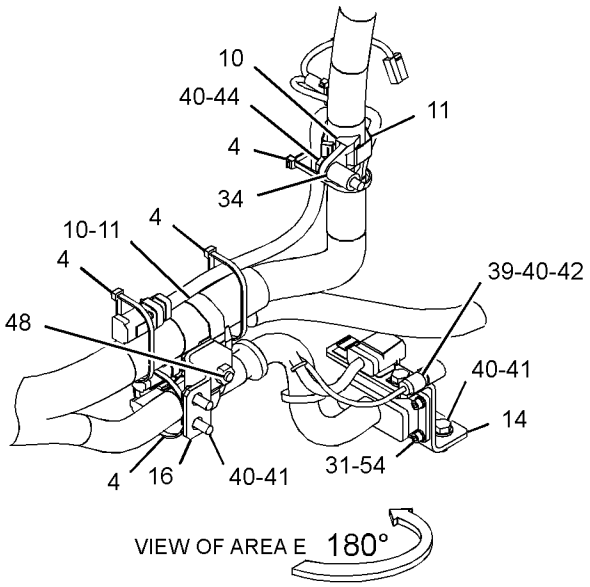

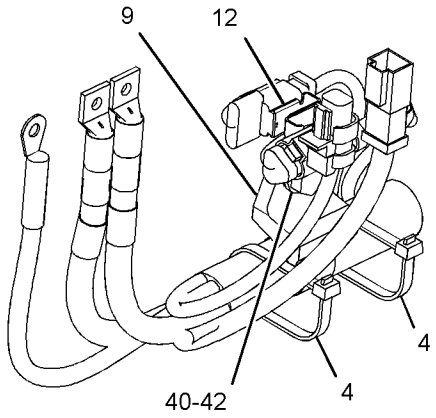

GRAPHIC #3 **<END>** g03362405

366-9348 WIRING GP-COMMUNICATION—PRODUCT LINK CELLULAR

S/N: DNP1-UP

PART OF 379-7062 CONTROL AR-COMMUNICATION

AN ATTACHMENT

SMCS-1408 **i04925244**

NOTE	REF NO	GRAPHIC REF	PART NUMBER	QTY	PART NAME 1 2 3 4 5 6 (PRODUCT LEVEL)	SEE PAGE
	1	1	**4I-7889**	1	SPACER (11X25X45-MM THK)	
	2	1	**7K-1181**	1	STRAP-CABLE	
	3	1	**116-0118**	1	CLIP	
	4	1	**373-8965**	1	HARNESS AS-CONTROL (PRODUCT LINK)	
		1	**8T-8729**	1	PIN-CONNECTOR (16-GA TO 18-GA)	
		1	**3S-2093**	1	STRAP-CABLE	
		1	**8T-8737**	64	PLUG-SEAL	
		1	**9W-0852**	1	PIN-CONNECTOR (14-GA TO 16-GA)	
E		1	**125-7874**		TUBE-HEAT SHRINK (5.72-MM DIA) (5-CM)	
		1	**9X-3402**	6	SOCKET-CONNECTOR (16-GA TO 18-GA)	
					—OR—	
		1	**126-1768**	6	SOCKET-CONNECTOR (14-GA TO 16-GA)	
		1	**126-1774**	1	COVER-CONNECTOR	
		1	**2L-8077**	1	TERMINAL-RING (14-GA TO 16-GA, 1/4-IN SCREW)	
		1	**9X-3401**	4	PIN-CONNECTOR (16-GA TO 18-GA)	
					—OR—	
		1	**126-1767**	4	PIN-CONNECTOR (14-GA TO 16-GA)	
		1	**160-7690**	1	PLUG AS-CONNECTOR (70-PIN)	
		1	**159-9322**	1	SEAL-O-RING	
		1	**243-4508**	1	RECEPTACLE AS-CONNECTOR (6-PIN)	
	5	1	**111-4837**	1	CLIP	
	6	1	**132-5789**	1	CLIP	
	7	1	**8T-4121**	2	WASHER-HARD (11X21X2.5-MM THK)	
M	8	1	**8T-4136**	1	BOLT (M10X1.5X25-MM)	
M	9	1	**8T-4191**	1	BOLT (M10X1.5X16-MM)	
M	10	1	**8T-5005**	1	BOLT (M10X1.5X70-MM)	

E - ORDER BY THE CENTIMETER
M - METRIC PART

366-9348 **WIRING GP-COMMUNICATION (*contd.*)** **i04925244**

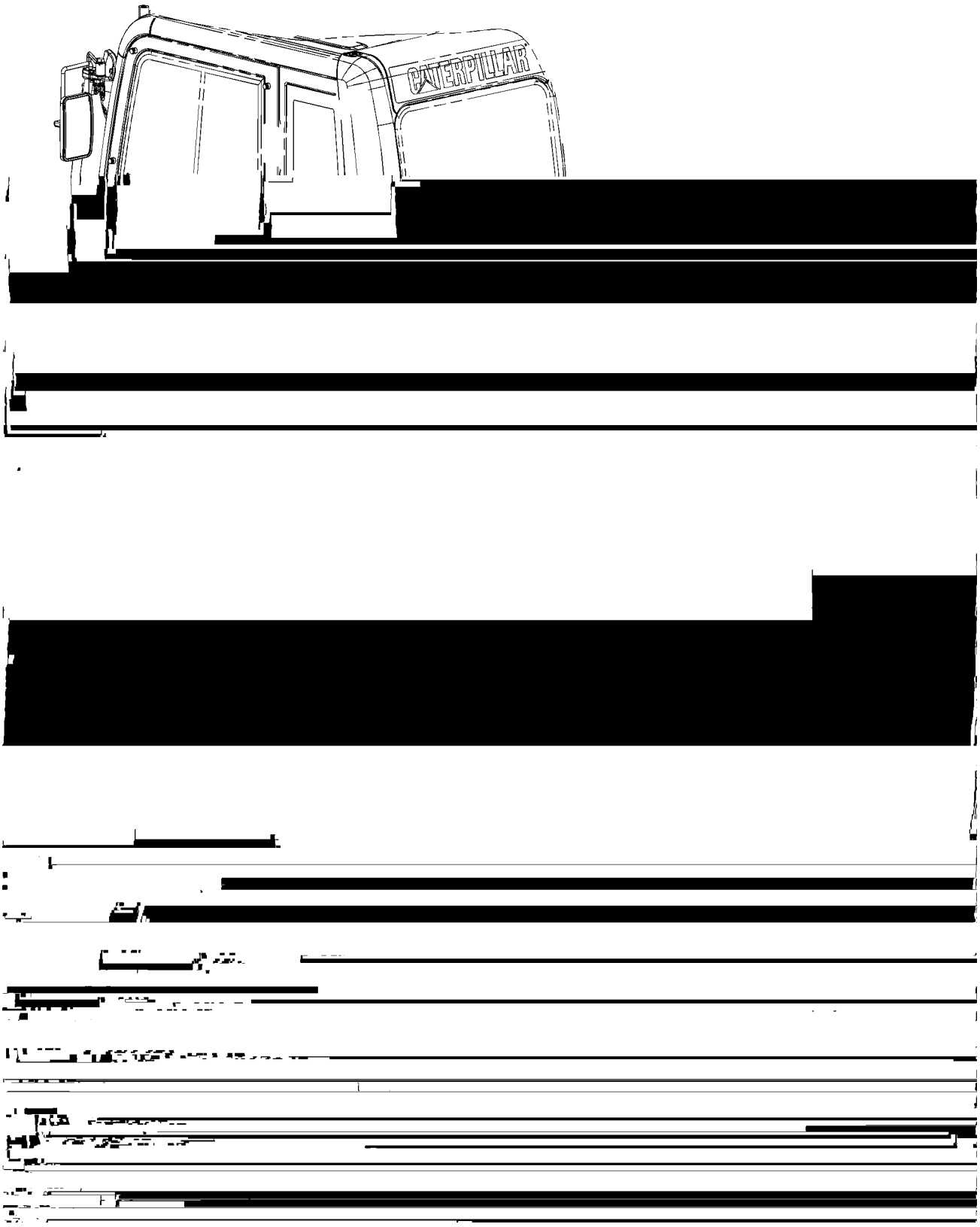

GRAPHIC #1 **<END>** g02681736

231-1836 WIRING GP-CONSOLE—LH

S/N: FKK1-UP; DNP1-UP

PART OF 251-0433 WIRING GP-CONSOLE

SMCS-1408 **i04912199**

NOTE	REF NO	GRAPHIC REF	PART NUMBER	QTY	PART NAME 1 2 3 4 5 6 (PRODUCT LEVEL)	SEE PAGE
	1	1	**3S-2093**	2	STRAP-CABLE	
	2	1	**7K-1181**	1	STRAP-CABLE	
	3	1	**163-6795**	2	STRAP-CABLE	
	4	1	**251-0580**	1	HARNESS AS-CONSOLE	
		1	**8T-8729**	4	PIN-CONNECTOR (16-GA TO 18-GA)	
		1	**8T-8730**	3	SOCKET-CONNECTOR (16-GA TO 18-GA)	
		1	**3S-2093**	9	STRAP-CABLE	
D		1	**5P-5995**		TUBE (0.3-M)	
		1	**7Y-3963**	2	TERMINAL-BULLET (FEMALE)	
		1	**7Y-3965**	2	TUBE (RECEPTACLE TERMINAL)	
		1	**8T-8737**	9	PLUG-SEAL	
		1	**9W-0852**	2	PIN-CONNECTOR (14-GA TO 16-GA)	
		1	**9W-0844**	2	SOCKET-CONNECTOR (14-GA TO 16-GA)	
E		1	**125-7874**		TUBE-HEAT SHRINK (5.72-MM DIA) (5-CM)	
E		1	**125-7875**		TUBE-HEAT SHRINK (7.44-MM DIA) (5-CM)	
		1	**9X-3402**	11	SOCKET-CONNECTOR (16-GA TO 18-GA)	
					—OR—	
		1	**126-1768**	11	SOCKET-CONNECTOR (14-GA TO 16-GA)	
		1	**155-2260**	1	KIT-CONNECTING PLUG (3-PIN)	
					(INCLUDES PLUG AS, WEDGE & INTERFACE SEAL)	
		1	**230-4011**	1	PLUG AS-CONNECTOR (2-PIN)	
		1	**264-7029**	1	SEAL-CONNECTOR	
		1	**230-5010**	1	PLUG AS-CONNECTOR (6-PIN)	
		1	**264-7032**	1	SEAL-CONNECTOR	
		1	**239-7352**	1	PLUG AS-CONNECTOR (6-PIN)	
		1	**264-7032**	1	SEAL-CONNECTOR	
		1	**243-4505**	1	RECEPTACLE AS-CONNECTOR (2-PIN)	
		1	**243-4508**	1	RECEPTACLE AS-CONNECTOR (6-PIN)	
		1	**247-2693**	1	RECEPTACLE AS-CONNECTOR (6-PIN)	

D - ORDER BY THE METER
E - ORDER BY THE CENTIMETER

231-1836 **WIRING GP-CONSOLE (*contd.*)** **i04912199**

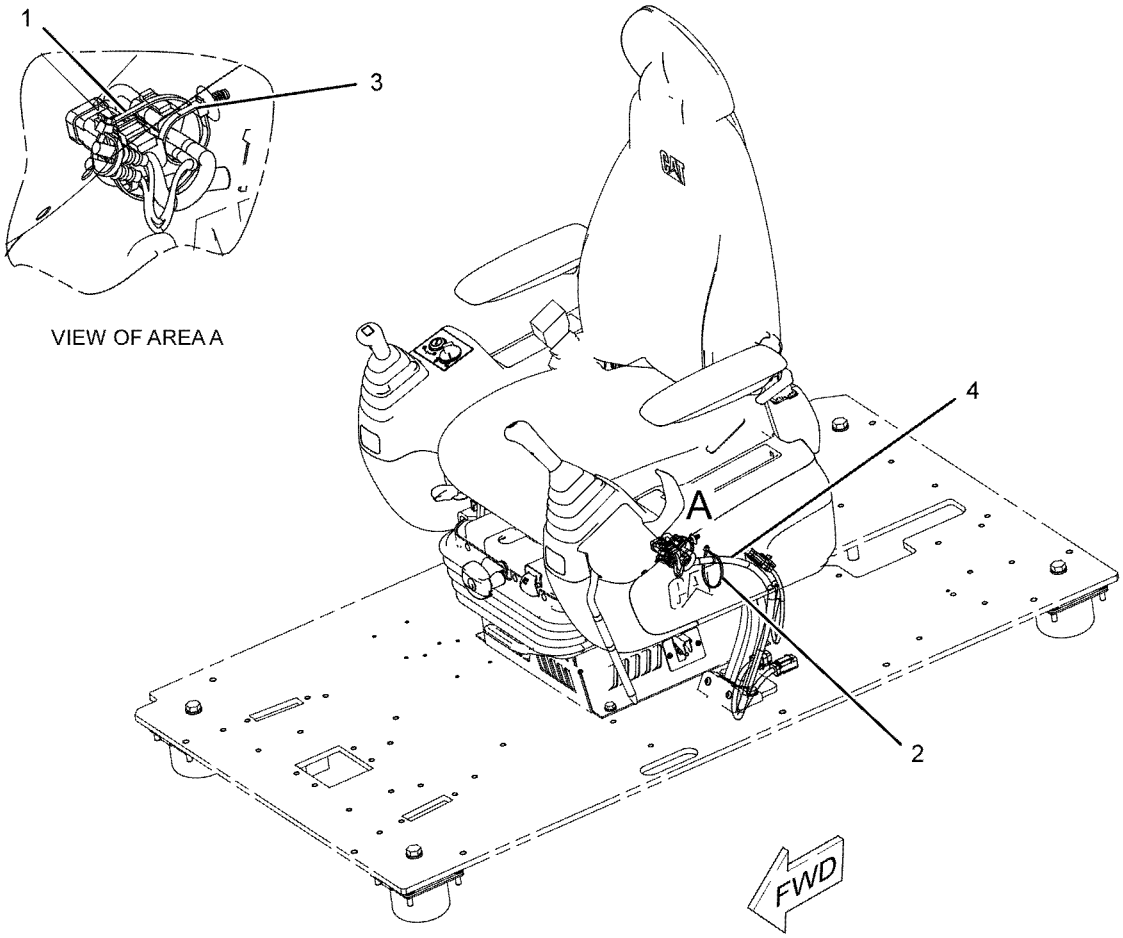

GRAPHIC #1 **<END>** g01150799

251-0433 WIRING GP-CONSOLE

S/N: FKK1-UP; DNP1-UP

PART OF 421-6944, 433-6907 OPERATOR AR

SMCS-1408 **i04913537**

NOTE	PART NUMBER	QTY	PART NAME 1 2 3 4 5 6 (PRODUCT LEVEL)	SEE PAGE
Y	*231-1836*	1	WIRING GP-CONSOLE (LH)	122
Y	*251-0435*	1	WIRING GP-CONSOLE (RH)	125

Y - SEPARATE ILLUSTRATION

<END>

251-0435 WIRING GP-CONSOLE–RH

S/N: FKK1-UP; DNP1-UP

PART OF 251-0433 WIRING GP-CONSOLE

SMCS-1408 **i04912197**

NOTE	REF NO	GRAPHIC REF	PART NUMBER	QTY	PART NAME 1 2 3 4 5 6 (PRODUCT LEVEL)	SEE PAGE
	1	1	**3S-2093**	4	STRAP-CABLE	
	2	1	**7K-1181**	2	STRAP-CABLE	
	3	1	**163-6795**	1	STRAP-CABLE	
	4	1	**373-8980**	1	HARNESS AS-CONSOLE	
		1	**102-8806**	1	KIT-RECEPTACLE (8-PIN)	
					(INCLUDES RECEPTACLE AS & WEDGE)	
		1	**8T-8729**	7	PIN-CONNECTOR (16-GA TO 18-GA)	
		1	**8T-8730**	8	SOCKET-CONNECTOR (16-GA TO 18-GA)	
		1	**3S-2093**	11	STRAP-CABLE	
		1	**7Y-3963**	2	TERMINAL-BULLET (FEMALE)	
		1	**7Y-3965**	2	TUBE (RECEPTACLE TERMINAL)	
		1	**8T-8737**	27	PLUG-SEAL	
		1	**102-7964**	1	PLUG-CONNECTOR (16-PIN)	
		1	**102-7965**	14	TERMINAL (FEMALE)	
		1	**9W-0852**	1	PIN-CONNECTOR (14-GA TO 16-GA)	
		1	**9W-0844**	7	SOCKET-CONNECTOR (14-GA TO 16-GA)	
E		1	**119-3662**		TUBE-HEAT SHRINK (10.85-MM DIA) (7-CM)	
		1	**125-4841**	1	WEDGE-PLUG LOCK (21-PIN)	
E		1	**125-7875**		TUBE-HEAT SHRINK (7.44-MM DIA) (10-CM)	
		1	**155-2265**	1	KIT-CONNECTING PLUG (8-PIN)	
					(INCLUDES PLUG AS, WEDGE & INTERFACE SEAL)	
		1	**9X-3402**	24	SOCKET-CONNECTOR (16-GA TO 18-GA)	
					–OR–	
		1	**126-1768**	24	SOCKET-CONNECTOR (14-GA TO 16-GA)	
		1	**155-2259**	1	WEDGE-PLUG LOCK (8-PIN)	
		1	**230-4009**	1	PLUG AS-CONNECTOR (12-PIN)	
		1	**264-7034**	1	SEAL-CONNECTOR	
		1	**230-4011**	1	PLUG AS-CONNECTOR (2-PIN)	
		1	**264-7029**	1	SEAL-CONNECTOR	
		1	**230-5008**	1	PLUG AS-CONNECTOR (4-PIN)	
		1	**264-7031**	1	SEAL-CONNECTOR	
		1	**230-5010**	1	PLUG AS-CONNECTOR (6-PIN)	
		1	**264-7032**	1	SEAL-CONNECTOR	
		1	**231-2295**	1	PLUG AS-CONNECTOR (8-PIN)	
		1	**264-7033**	1	SEAL-CONNECTOR	
		1	**238-2363**	7	TERMINAL (FEMALE)	
		1	**239-7352**	1	PLUG AS-CONNECTOR (6-PIN)	
		1	**264-7032**	1	SEAL-CONNECTOR	
		1	**243-4505**	1	RECEPTACLE AS-CONNECTOR (2-PIN)	
		1	**243-4510**	1	RECEPTACLE AS-CONNECTOR (12-PIN)	
		1	**247-2693**	1	RECEPTACLE AS-CONNECTOR (6-PIN)	
E	5	1	**3E-9375**		CONDUIT (10-CM)	

E - ORDER BY THE CENTIMETER

251-0435 **WIRING GP-CONSOLE (*contd.*)** **i04912197**

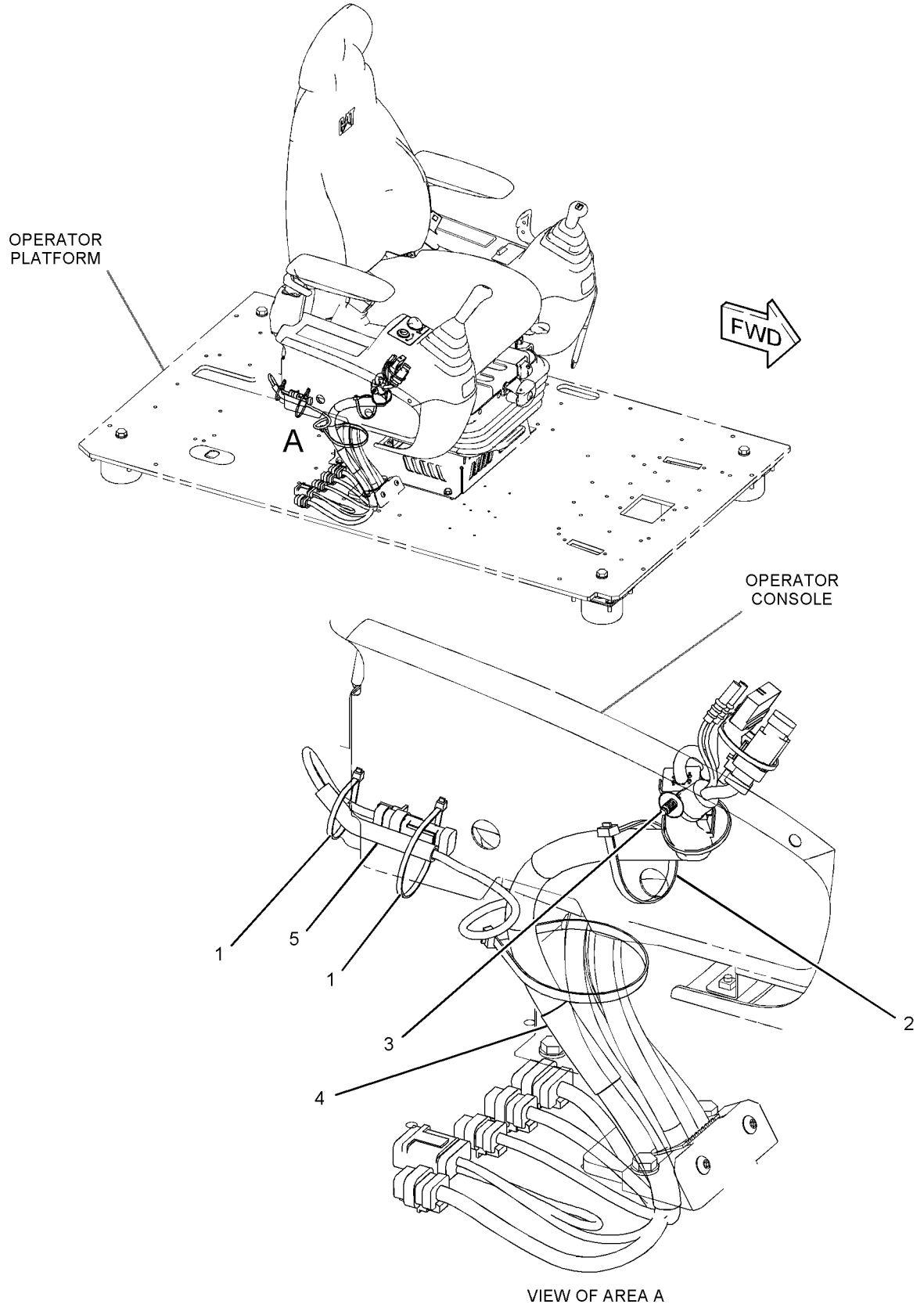

VIEW OF AREA A

GRAPHIC #1 **<END>** g03012784

350-8250 WIRING GP-CONVERTER–12-VOLT, 10-AMPERE

S/N: DNP1-UP

AN ATTACHMENT

SMCS-1421 **i04922417**

NOTE	REF NO	GRAPHIC REF	PART NUMBER	QTY	PART NAME 1 2 3 4 5 6 (PRODUCT LEVEL)	SEE PAGE
	1	1	**251-0483**	1	BRACKET	
	2	1	**324-5770**	1	CONVERTER-POWER (24-VOLT TO 12-VOLT)	
	3	1	**324-5771**	2	SOCKET-AUXILIARY POWER (12-VOLT)	
	4	1	**8T-4121**	2	WASHER-HARD (11X21X2.5-MM THK)	
M	5	1	**8T-4136**	2	BOLT (M10X1.5X25-MM)	
M	6	1	**8T-4171**	4	BOLT (M6X1X12-MM)	
	7	1	**9X-8256**	4	WASHER (6.6X12X2-MM THK)	

M - METRIC PART

350-8250 **WIRING GP-CONVERTER (*contd.*)** **i04922417**

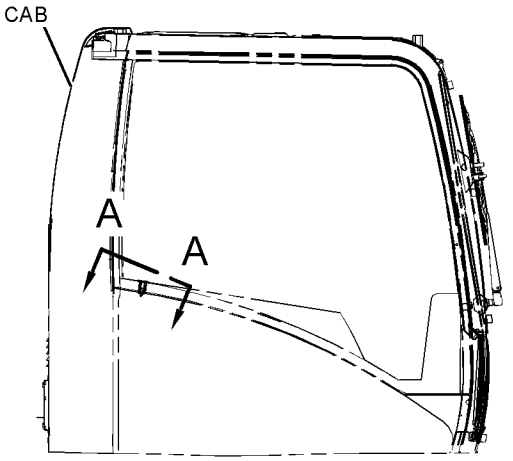

RIGHT SIDE VIEW

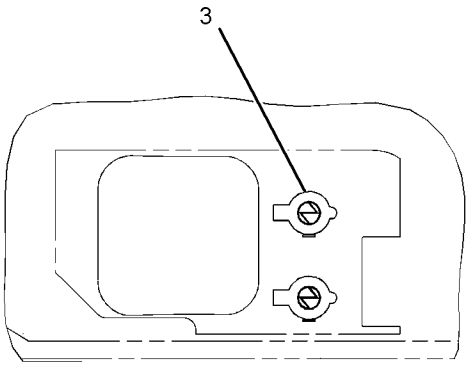

VIEW A-A

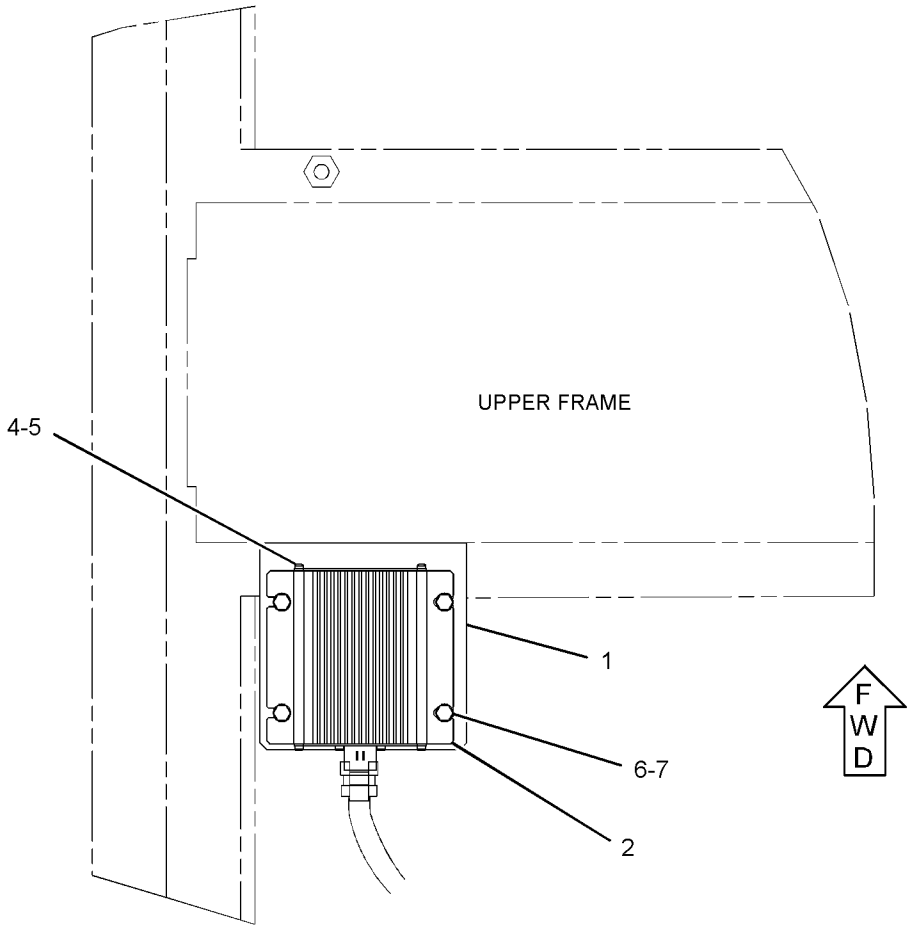

TOP VIEW

GRAPHIC #1 **<END>** g02143732

435-0868 WIRING GP-CONVERTER

S/N: FKK1-UP
12-VOLT, 10-AMPERE
AN ATTACHMENT

SMCS-1421 **i05295238**

NOTE	REF NO	GRAPHIC REF	PART NUMBER	QTY	PART NAME 1 2 3 4 5 6 (PRODUCT LEVEL)	SEE PAGE
	1	1	**251-0483**	1	BRACKET	
	2	1	**324-5770**	1	CONVERTER-POWER (24-VOLT TO 12-VOLT)	
	3	1	**324-5771**	1	SOCKET-AUXILIARY POWER (12-VOLT)	
	4	1	**8T-4121**	2	WASHER-HARD (11X21X2.5-MM THK)	
M	5	1	**8T-4136**	2	BOLT (M10X1.5X25-MM)	
M	6	1	**8T-4171**	4	BOLT (M6X1X12-MM)	
	7	1	**9X-8256**	4	WASHER (6.6X12X2-MM THK)	

M - METRIC PART

435-0868 **WIRING GP-CONVERTER (*contd.*)** **i05295238**

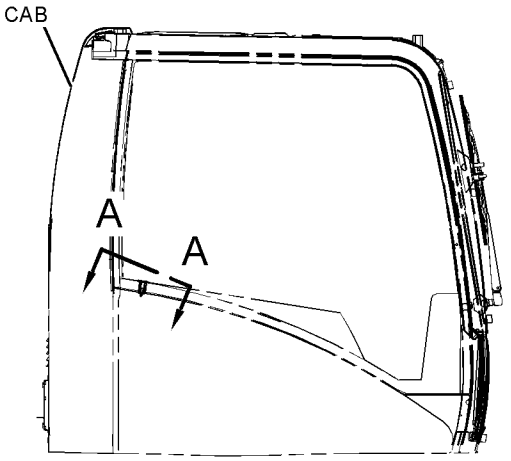

RIGHT SIDE VIEW

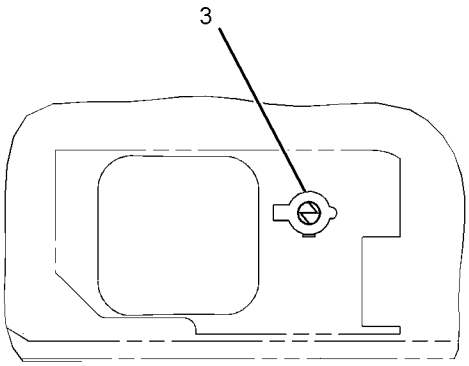

VIEW A-A

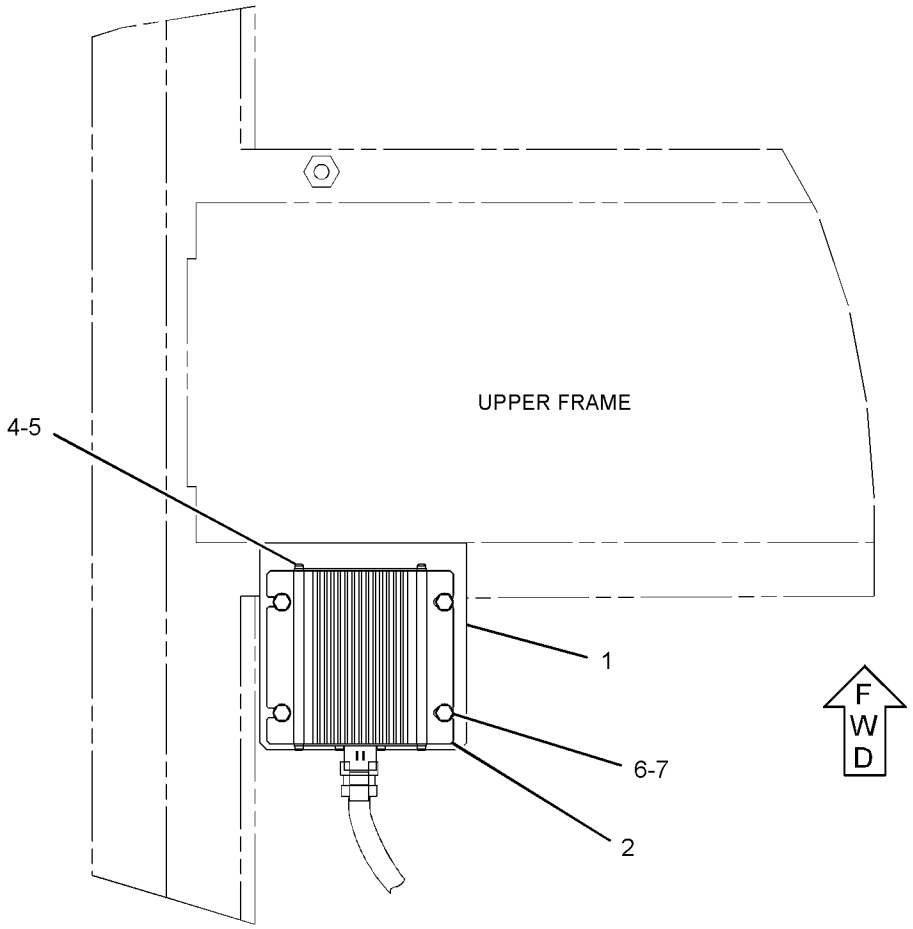

TOP VIEW

GRAPHIC #1 **<END>** g03363175

396-8142 WIRING GP-PLATFORM

S/N: FKK1-UP; DNP1-UP

PART OF 421-6944, 433-6907 OPERATOR AR

SMCS-1408 **i05266080**

NOTE	REF NO	GRAPHIC REF	PART NUMBER	QTY	PART NAME 1 2 3 4 5 6 (PRODUCT LEVEL)	SEE PAGE
	1	1	**3E-5169**	1	GUARD-SWITCH	
	2	1	**3S-2093**	6	STRAP-CABLE	
	3	1	**7G-1060**	1	STRAP AS-GROUND	
	4	1	**7K-1181**	14	STRAP-CABLE	
	5	1	**111-4836**	4	CLIP	
	6	1	**111-4838**	2	CLIP	
	7	1	**111-4839**	2	STRAP	
	8	1	**116-0118**	12	CLIP	
	9	1	**234-1122**	1	COVER	
	10	1	**251-0299**	1	HARNESS AS-SWITCH (SECONDARY SHUTDOWN)	
		1	**2L-8074**	2	TERMINAL-RING (14-GA TO 16-GA, NO. 6 SCREW)	
		1	**9X-3401**	2	PIN-CONNECTOR (16-GA TO 18-GA)	
					—OR—	
		1	**126-1767**	2	PIN-CONNECTOR (14-GA TO 16-GA)	
		1	**243-4505**	1	RECEPTACLE AS-CONNECTOR (2-PIN)	
	11	1	**421-2680**	1	HARNESS AS-PLATFORM	
		1	**102-8802**	5	KIT-RECEPTACLE (2-PIN)	
		1	**102-8804**	1	KIT-RECEPTACLE (4-PIN)	
					(EACH RECEPTACLE KIT INCLUDES RECEPTACLE AS & WEDGE)	
		1	**8T-8729**	6	PIN-CONNECTOR (16-GA TO 18-GA)	
		1	**8T-8730**	18	SOCKET-CONNECTOR (16-GA TO 18-GA)	
		1	**3S-2093**	22	STRAP-CABLE	
		1	**8T-8737**	50	PLUG-SEAL	
		1	**102-7964**	1	PLUG-CONNECTOR (16-PIN)	
		1	**102-7965**	13	TERMINAL (FEMALE)	
		1	**9W-0852**	6	PIN-CONNECTOR (14-GA TO 16-GA)	
		1	**9W-0844**	26	SOCKET-CONNECTOR (14-GA TO 16-GA)	
		1	**116-0255**	1	TERMINAL-BLADE (10-GA TO 20-GA)	
E		1	**119-3662**		TUBE-HEAT SHRINK (10.85-MM DIA) (7-CM)	
		1	**121-1039**	1	TERMINAL (MALE)	
		1	**121-1168**	2	CONNECTOR-RECEPTACLE	
		1	**121-1173**	27	TERMINAL (MALE)	
		1	**125-4766**	1	PLUG-CONNECTOR (17-PIN)	
		1	**125-4841**	1	WEDGE-PLUG LOCK (21-PIN)	
E		1	**125-7874**		TUBE-HEAT SHRINK (5.72-MM DIA) (10-CM)	
E		1	**125-7875**		TUBE-HEAT SHRINK (7.44-MM DIA) (35-CM)	
		1	**9X-3402**	59	SOCKET-CONNECTOR (16-GA TO 18-GA)	
					—OR—	
		1	**126-1768**	59	SOCKET-CONNECTOR (14-GA TO 16-GA)	
		1	**2L-8050**	2	TERMINAL-RING (6-GA, 1/4-IN SCREW)	
					—OR—	
		1	**2L-8058**	2	TERMINAL-RING (8-GA, 1/4-IN SCREW)	
		1	**2L-8052**	2	TERMINAL-RING (6-GA, 3/8-IN SCREW)	
					—OR—	
		1	**2L-8060**	2	TERMINAL-RING (8-GA, 3/8-IN SCREW)	
		1	**2L-8069**	2	TERMINAL-RING (2-GA TO 10-GA, 3/8-IN SCREW)	
		1	**134-3296**	1	HOUSING-PLUG	
		1	**134-3297**	2	SEAL	
		1	**9X-3401**	17	PIN-CONNECTOR (16-GA TO 18-GA)	
					—OR—	
		1	**126-1767**	17	PIN-CONNECTOR (14-GA TO 16-GA)	
		1	**153-2620**	1	PLUG AS-CONNECTOR (54-PIN, BLACK)	
		1	**163-6759**	1	SEAL	
		1	**155-2270**	8	KIT-CONNECTING PLUG (2-PIN)	
		1	**155-2271**	1	KIT-CONNECTING PLUG (4-PIN)	
					(EACH PLUG KIT INCLUDES PLUG AS, WEDGE & INTERFACE SEAL)	

396-8142 **WIRING GP-PLATFORM (*contd.*)** **i05266080**

NOTE	REF NO	GRAPHIC REF	PART NUMBER	QTY	PART NAME 1 2 3 4 5 6 (PRODUCT LEVEL)	SEE PAGE
		1	**230-4009**	3	PLUG AS-CONNECTOR (12-PIN)	
					(EACH INCLUDES)	
		1	**264-7034**	1	SEAL-CONNECTOR	
		1	**230-4011**	2	PLUG AS-CONNECTOR (2-PIN)	
					(EACH INCLUDES)	
		1	**264-7029**	1	SEAL-CONNECTOR	
		1	**230-5010**	2	PLUG AS-CONNECTOR (6-PIN)	
					(EACH INCLUDES)	
		1	**264-7032**	1	SEAL-CONNECTOR	
		1	**238-2363**	11	TERMINAL (FEMALE)	
		1	**238-2366**	6	TERMINAL (MALE)	
		1	**239-7352**	1	PLUG AS-CONNECTOR (6-PIN)	
		1	**264-7032**	1	SEAL-CONNECTOR	
		1	**243-4505**	1	RECEPTACLE AS-CONNECTOR (2-PIN)	
		1	**243-4507**	1	RECEPTACLE AS-CONNECTOR (4-PIN)	
		1	**243-4508**	2	RECEPTACLE AS-CONNECTOR (6-PIN)	
		1	**243-4509**	1	RECEPTACLE AS-CONNECTOR (8-PIN)	
		1	**243-4510**	1	RECEPTACLE AS-CONNECTOR (12-PIN)	
		1	**342-2972**	1	CAP-CONNECTOR (2-PIN)	
		1	**342-2974**	2	CAP-CONNECTOR (6-PIN)	
	12	1	**096-6166**	2	WASHER-HARD (4.5X9X1-MM THK)	
	13	1	**4D-1836**	1	SWITCH AS-TOGGLE (SECONDARY SHUTDOWN)	
M	14	1	**7X-2621**	7	BOLT (M10X1.5X12-MM)	
M	15	1	**8T-0337**	2	SCREW-MACHINE (M4X0.7X12-MM)	
	16	1	**8T-4121**	14	WASHER-HARD (11X21X2.5-MM THK)	
M	17	1	**8T-4137**	7	BOLT (M10X1.5X20-MM)	

E - ORDER BY THE CENTIMETER
M - METRIC PART

396-8142 **WIRING GP-PLATFORM (*contd.*)** **i05266080**

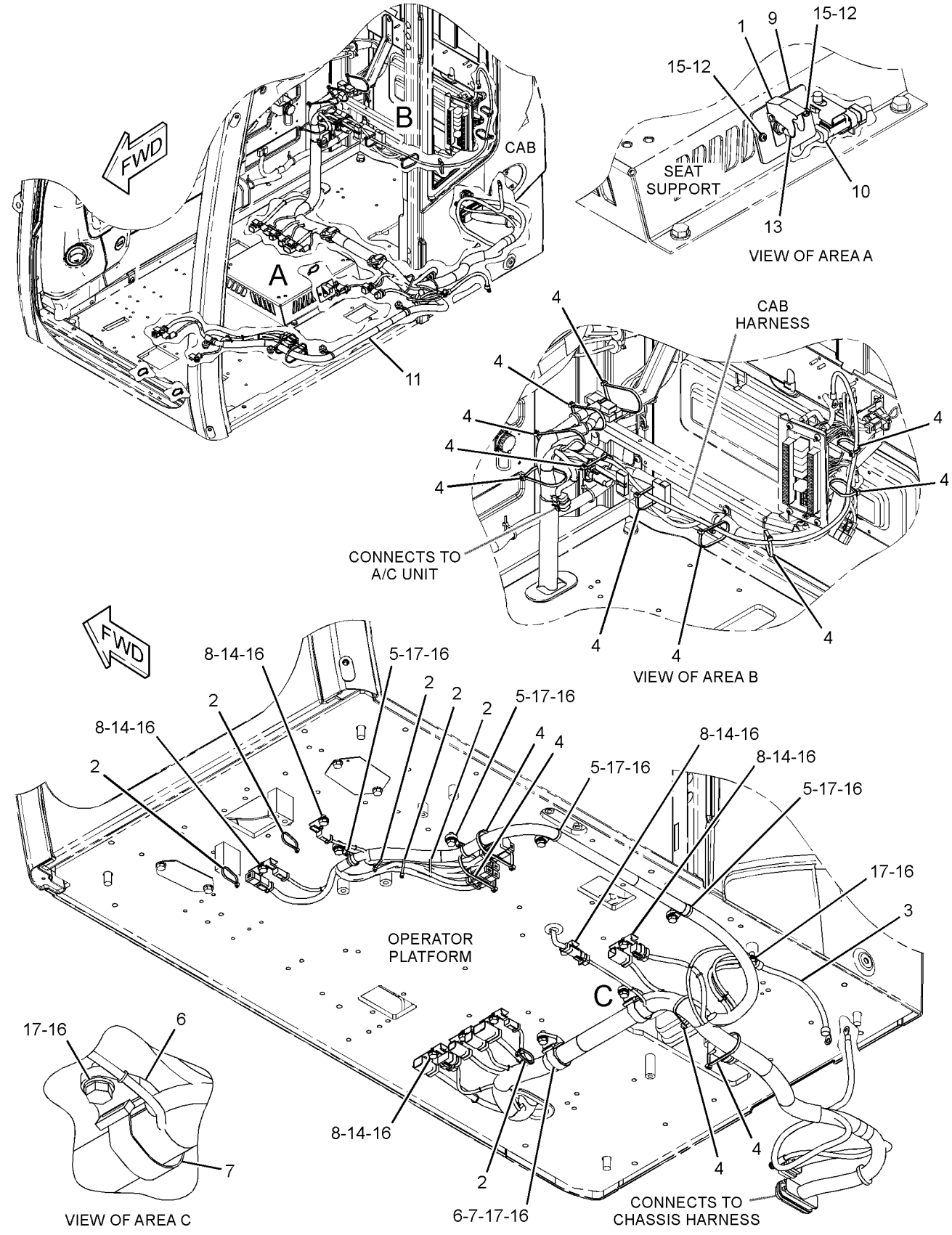

GRAPHIC #1

<END>

g03292865

353-0611 DRIVE GP-FINAL—WITHOUT MOTOR

S/N: FKK1-UP; DNP1-UP

PART OF 353-0646 DRIVE GP-FINAL

SMCS-4050 **i04912671**

NOTE	REF NO	GRAPHIC REF	PART NUMBER	QTY	PART NAME 1 2 3 4 5 6 (PRODUCT LEVEL)	SEE PAGE
	1	1	**6I-6583**	1	GEAR-SUN (13-TEETH)	
	2	1	**6I-6585**	3	GEAR-PLANETARY (44-TEETH)	
	3	1	**7Y-0223**	3	SHAFT-PLANETARY	
	4	1	**7Y-0225**	3	SHAFT-PLANETARY	
	5	1	**7Y-1426**	1	COVER	
	6	1	**7Y-1430**	1	GEAR-SUN (17-TEETH)	
	7	1	**7Y-1431**	3	GEAR-PLANETARY (30-TEETH)	
	8	1	**7Y-1432**	1	CARRIER	
	9	1	**7Y-1433**	1	CARRIER	
	10	1	**7Y-1558**	1	SPACER (90X119.6X7.5-MM THK)	
	11	1	**094-0580**	1	PLATE (10-MM THK)	
	12	1	**094-0611**	6	WASHER (47.3X76X1-MM THK)	
M	13	1	**094-1528**	6	WASHER (53X84X1-MM THK)	
	14	1	**095-0891**	6	PIN-SPRING	
B	15	1	**096-1773**	1	SHIM (0.15-MM THK)	
B			**096-1774**	1	SHIM (0.3-MM THK)	
B			**096-1775**	1	SHIM (0.4-MM THK)	
B			**096-1776**	1	SHIM (0.5-MM THK)	
B			**096-1777**	1	SHIM (0.6-MM THK)	
B			**096-1778**	1	SHIM (0.7-MM THK)	
B			**096-1779**	1	SHIM (0.8-MM THK)	
B			**096-1780**	1	SHIM (1-MM THK)	
B			**096-1781**	1	SHIM (1.6-MM THK)	
	24	1	**114-1539**	6	PIN-DOWEL	
	25	1	**148-4715**	1	GEAR-COUPLING (55-TEETH)	
	26	1	**174-4874**	1	SEAL GP-DUO-CONE	
	27	1	**191-3235**	1	HOUSING	
	28	1	**227-6034**	14	BOLT-FLANGE HEAD (M16X2X60-MM)	
	29	1	**296-6220**	2	BALL BEARING	
	30	1	**296-6268**	3	BEARING AS-ROLLER	
	31	1	**296-6269**	6	BEARING-ROLLER	
Y	32	1	**296-6300**	1	GEAR GP-TRANSFER	141
	33	1	**353-0612**	1	HOUSING-MOTOR	
M	34	1	**095-1270**	2	SETSCREW-SOCKET (M12X1.75X30-MM)	
	35	1	**3E-2338**	2	PLUG-PIPE	
	36	1	**6D-0692**	1	SEAL-O-RING	
	37	1	**7M-8485**	2	SEAL-O-RING	
M	38	1	**7X-2568**	16	BOLT (M20X2.5X180-MM)	
	39	1	**7Y-1434**	1	SPACER (40X69.5X6-MM THK)	
	40	1	**8T-4123**	16	WASHER (22X35X3.5-MM THK)	
B	41	1	**1U-8846**		SEALANT-GASKET	

B - USE AS REQUIRED
M - METRIC PART
Y - SEPARATE ILLUSTRATION

353-0611 **DRIVE GP-FINAL (*contd.*)** **i04912671**

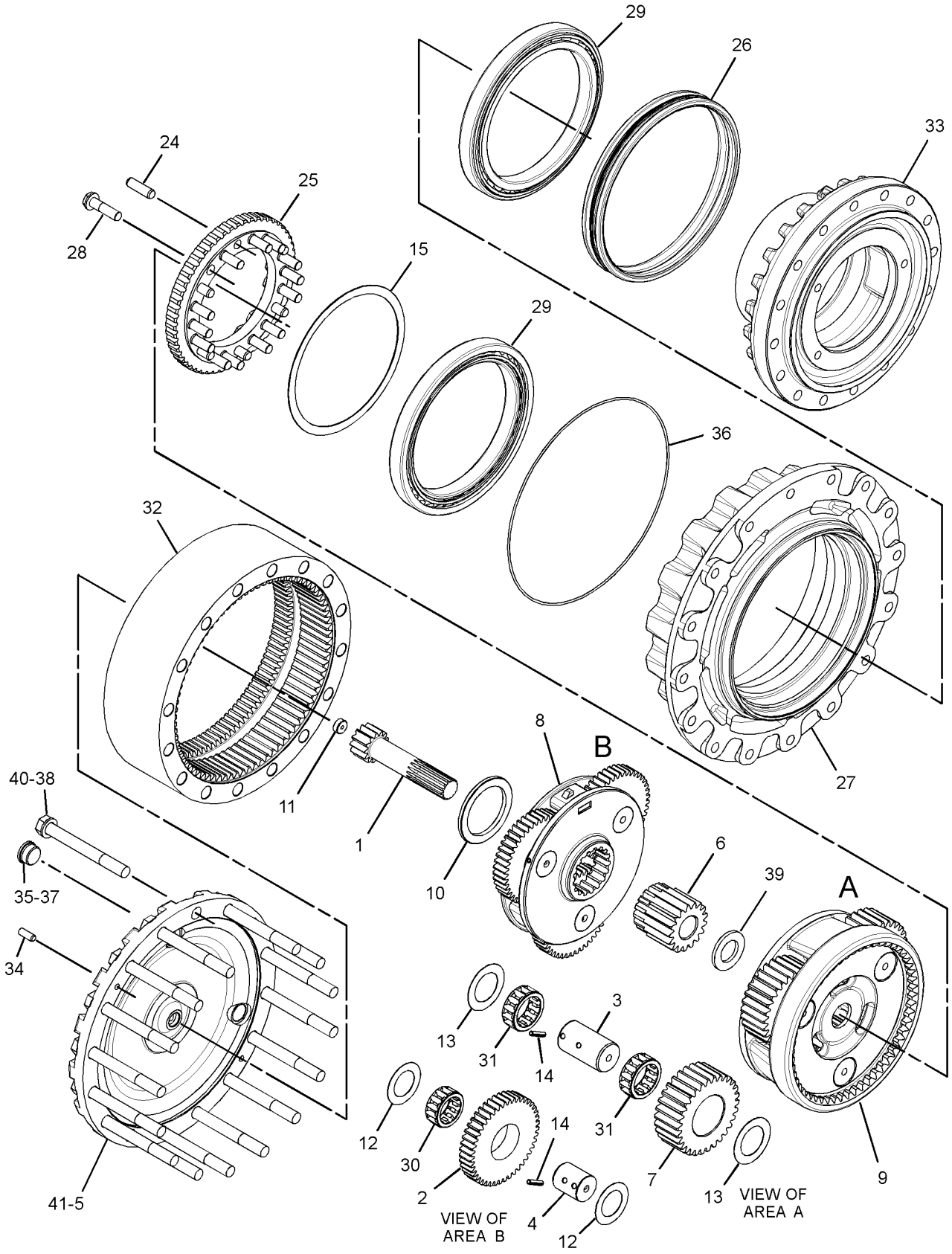

GRAPHIC #1

<END>

g02662318

353-0645 DRIVE GP-FINAL—WITH MOTOR, SPROCKET

S/N: FKK1-UP; DNP1-UP

PART OF 267-6767 POWER TRAIN AR

SMCS-4050 **i04913561**

NOTE	REF NO	GRAPHIC REF	PART NUMBER	QTY	PART NAME 1 2 3 4 5 6 (PRODUCT LEVEL)	SEE PAGE
Y	1	1	*145-3042*	1	SPROCKET GP (NON-SEGMENTED)	142
Y	2	1	*353-0646*	1	DRIVE GP-FINAL (WITH MOTOR)	137

Y - SEPARATE ILLUSTRATION

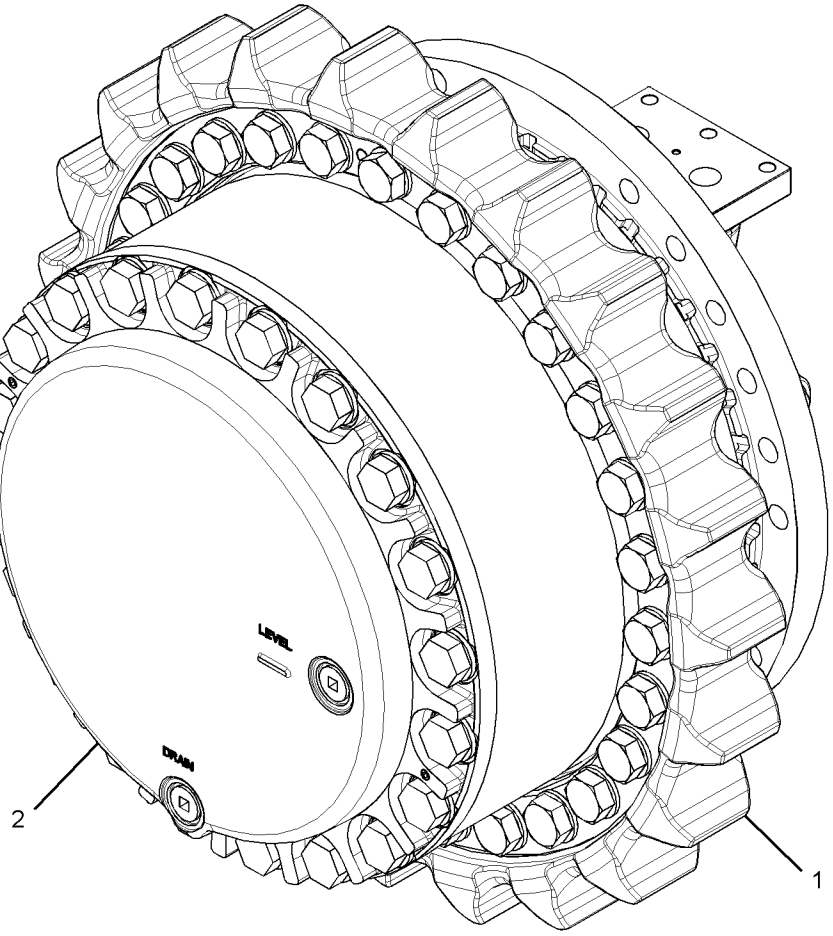

GRAPHIC #1 **<END>** g02190775

353-0646 DRIVE GP-FINAL—WITH MOTOR

S/N: FKK1-UP; DNP1-UP

PART OF 353-0645 DRIVE GP-FINAL

SMCS-4050 **i04913562**

NOTE	REF NO	GRAPHIC REF	PART NUMBER	QTY	PART NAME 1 2 3 4 5 6 (PRODUCT LEVEL)	SEE PAGE
Y	1	1	*215-9982*	1	MOTOR & MTG GP-TRAVEL	294
Y	2	1	**353-0611**	1	DRIVE GP-FINAL (WITHOUT MOTOR)	134

Y - SEPARATE ILLUSTRATION

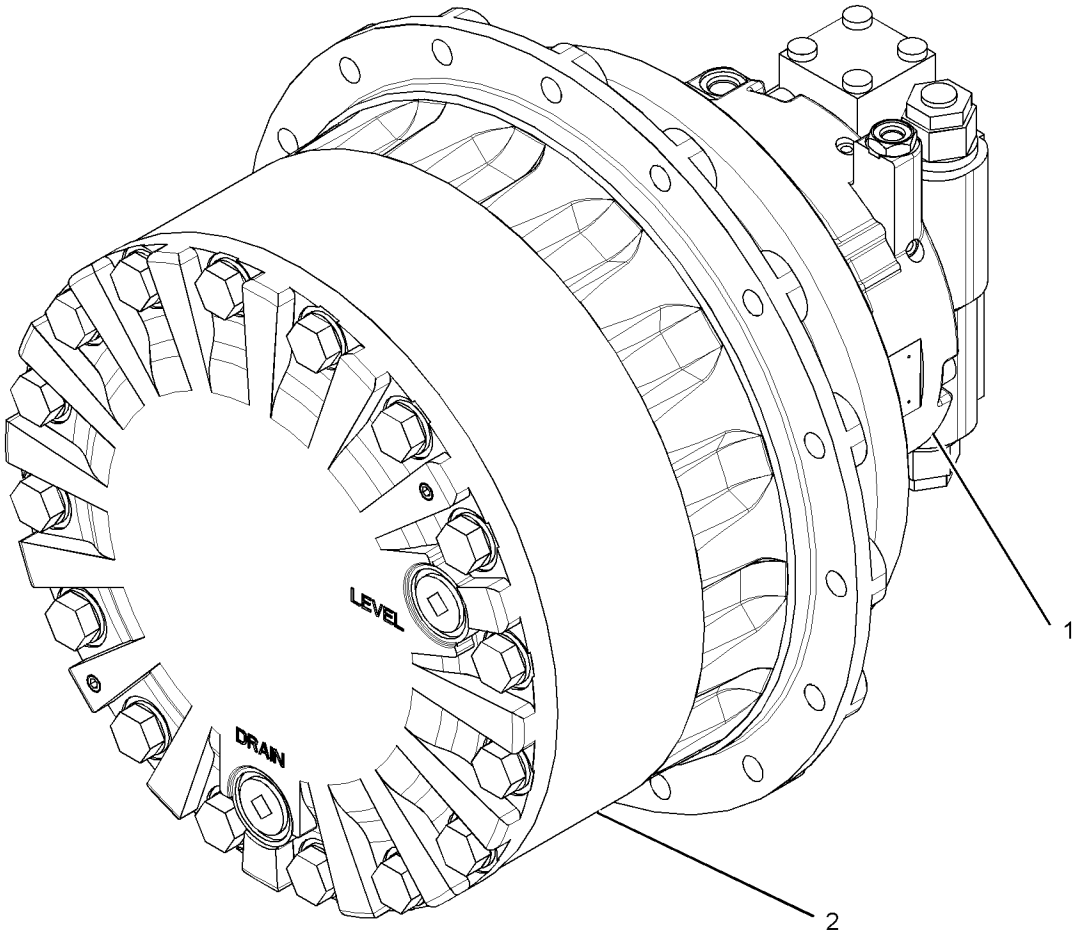

GRAPHIC #1 **<END>** g01522287

267-6783 GEAR GP-RING

S/N: FKK1-UP; DNP1-UP

PART OF 296-6300 GEAR GP-TRANSFER

SMCS- **i04913376**

NOTE	REF NO	GRAPHIC REF	PART NUMBER	QTY	PART NAME 1 2 3 4 5 6 (PRODUCT LEVEL)	SEE PAGE
					(NO SERVICED PARTS)	

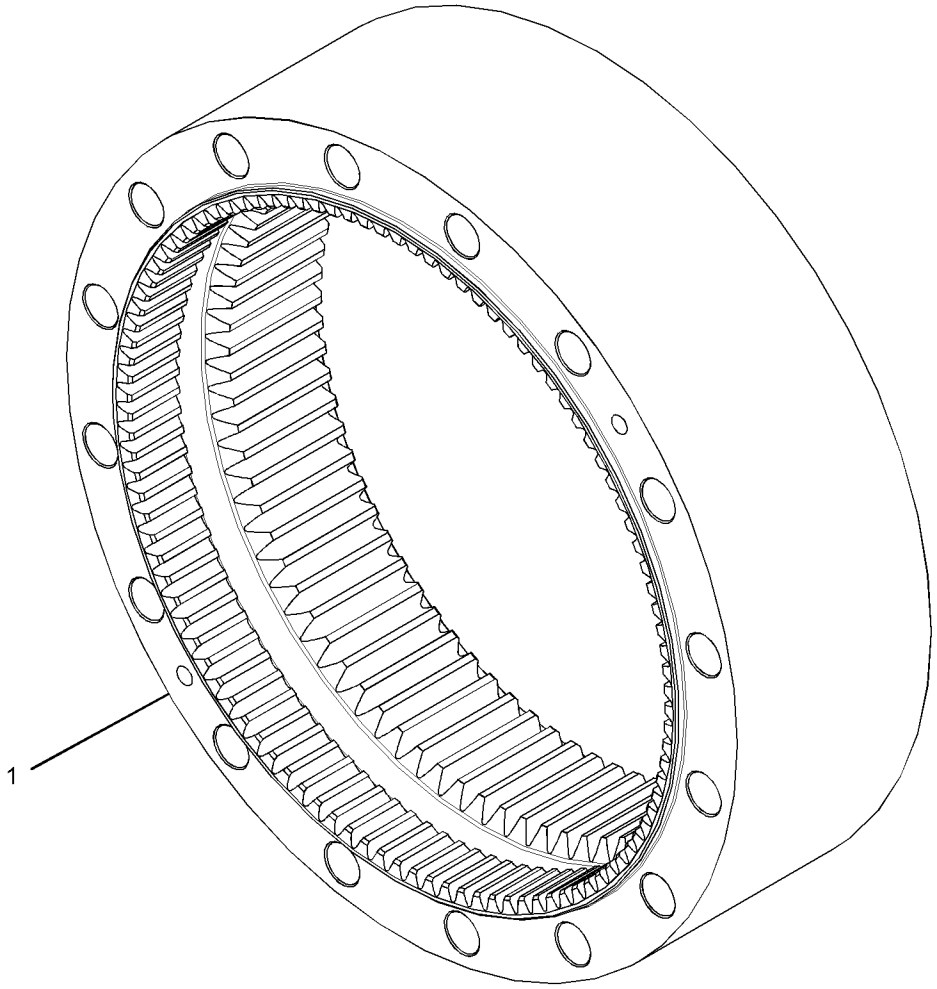

GRAPHIC #1 **<END>** g01731176

296-6301 GEAR GP-RING

S/N: FKK1-UP; DNP1-UP

PART OF 296-6300 GEAR GP-TRANSFER

SMCS- **i04913558**

NOTE	REF NO	GRAPHIC REF	PART NUMBER	QTY	PART NAME 1 2 3 4 5 6 (PRODUCT LEVEL)	SEE PAGE
	1	1	**148-4705**	1	GEAR-RING (104-TEETH)	
	2	1	**148-4708**	1	GEAR-RING (79-TEETH)	

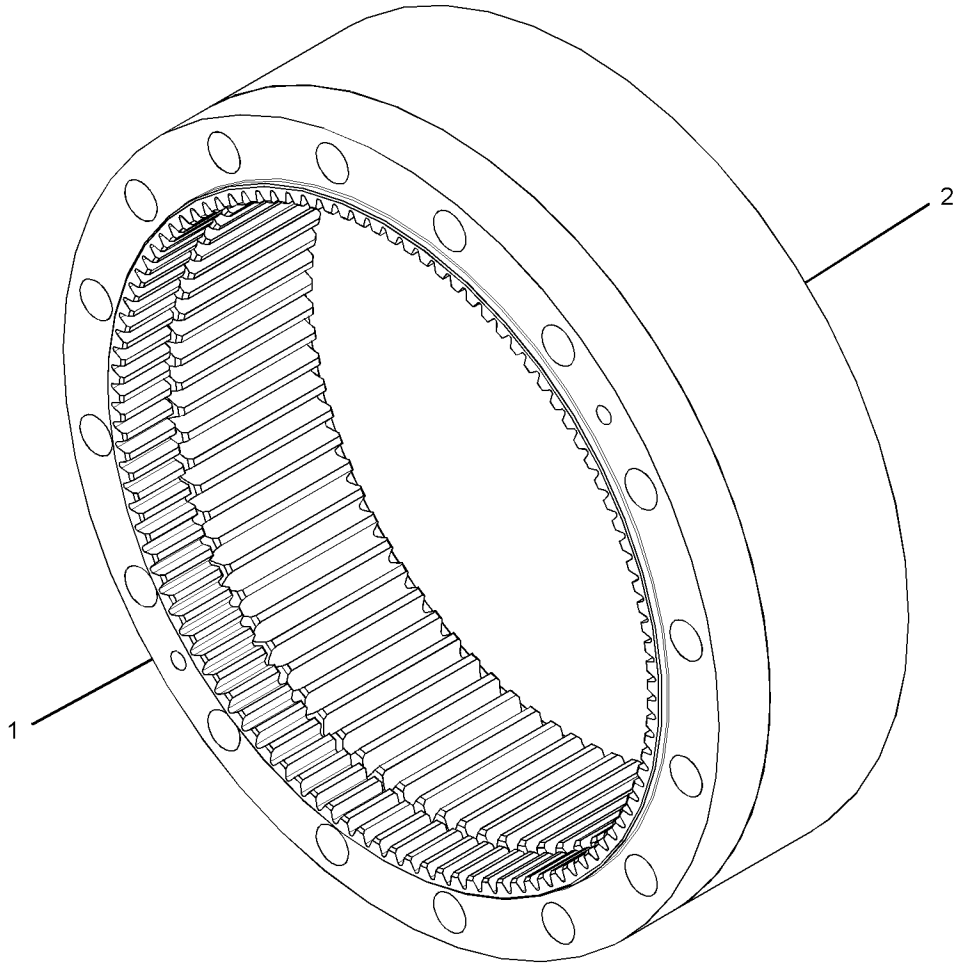

GRAPHIC #1 **<END>** g01731180

296-6302 GEAR GP-RING

S/N: FKK1-UP; DNP1-UP

PART OF 296-6300 GEAR GP-TRANSFER

SMCS- **i04913371**

NOTE	REF NO	GRAPHIC REF	PART NUMBER	QTY	PART NAME 1 2 3 4 5 6 (PRODUCT LEVEL)	SEE PAGE
	1	1	**102-6455**	1	GEAR-RING (104-TEETH)	
	2	1	**102-6457**	1	GEAR-RING (79-TEETH)	

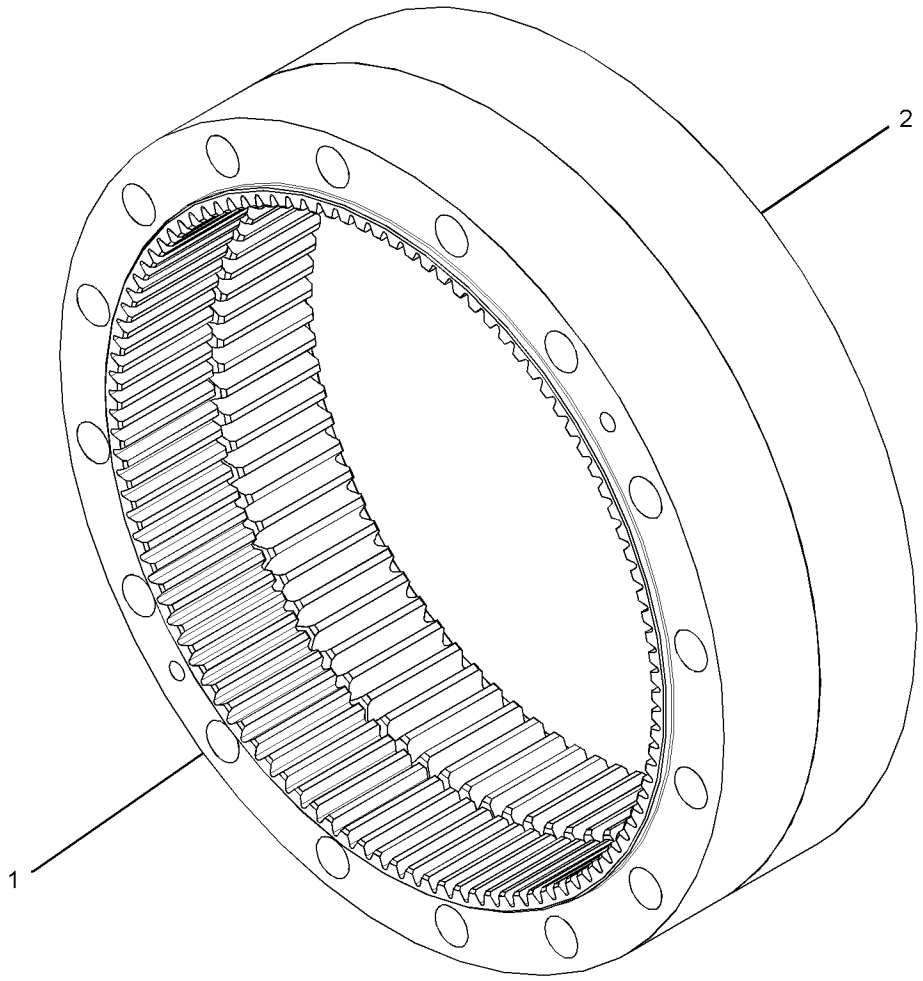

GRAPHIC #1 **<END>** g01731178

296-6300 GEAR GP-TRANSFER

S/N: FKK1-UP; DNP1-UP
PART OF 353-0611 DRIVE GP-FINAL

SMCS-1164, 3159

i04913557

NOTE	PART NUMBER	QTY	PART NAME 1 2 3 4 5 6 (PRODUCT LEVEL)	SEE PAGE
Y	*267-6783*	1	GEAR GP-RING	138
			—OR—	
Y	*296-6301*	1	GEAR GP-RING	139
			—OR—	
Y	*296-6302*	1	GEAR GP-RING	140

Y - SEPARATE ILLUSTRATION

<END>

267-6767 POWER TRAIN AR

S/N: FKK1-UP; DNP1-UP
PART OF 421-6925, 433-2638 GENERAL AR

SMCS-3000, 4000

i04912396

NOTE	PART NUMBER	QTY	PART NAME 1 2 3 4 5 6 (PRODUCT LEVEL)	SEE PAGE
Y	*353-0645*	2	DRIVE GP-FINAL (WITH MOTOR, SPROCKET)	136
Y	*148-4679*	1	DRIVE GP-SWING (WITH MOTOR)	215
Y	*227-6166*	1	FASTENER GP-SWING & FINAL DR	216

Y - SEPARATE ILLUSTRATION

<END>

145-3042 SPROCKET GP

S/N: FKK1-UP; DNP1-UP
NON-SEGMENTED
PART OF 353-0645 DRIVE GP-FINAL

SMCS-4164 **i04913525**

NOTE	REF NO	GRAPHIC REF	PART NUMBER	QTY	PART NAME 1 2 3 4 5 6 (PRODUCT LEVEL)	SEE PAGE
	1	1	**8E-9805**	1	SPROCKET-TRACK (21-TEETH)	
M	2	1	**7X-2562**	16	BOLT (M20X2.5X45-MM)	

M - METRIC PART

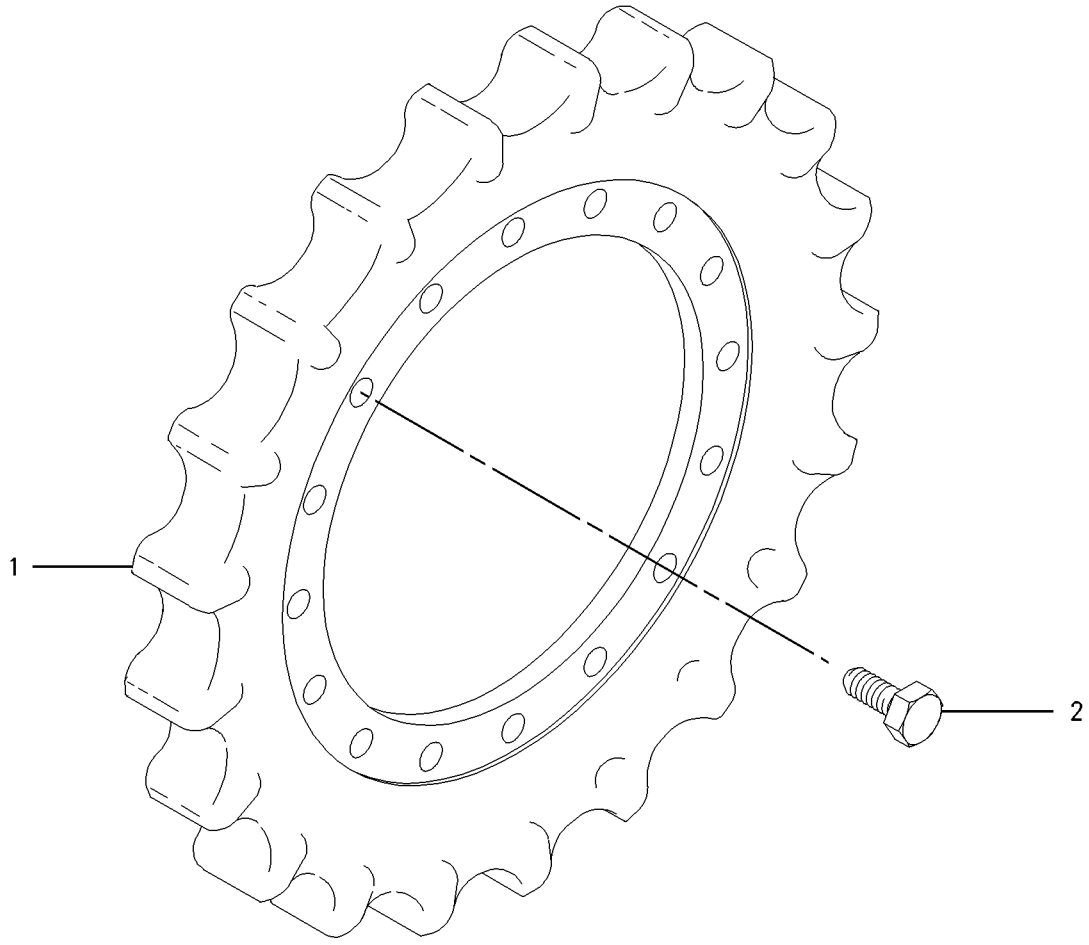

GRAPHIC #1 **<END>** g00935714

390-7988 BOX & MTG GP-STORAGE

S/N: FKK1-UP; DNP1-UP
PART OF 421-6926, 433-6906 CHASSIS AR

SMCS-7268 **i04913885**

NOTE	REF NO	GRAPHIC REF	PART NUMBER	QTY	PART NAME 1 2 3 4 5 6 (PRODUCT LEVEL)	SEE PAGE
M	1	1	**135-8577**	4	BOLT AS	
Y	2	1	**390-7989**	1	BOX GP-STORAGE	144

M - METRIC PART
Y - SEPARATE ILLUSTRATION

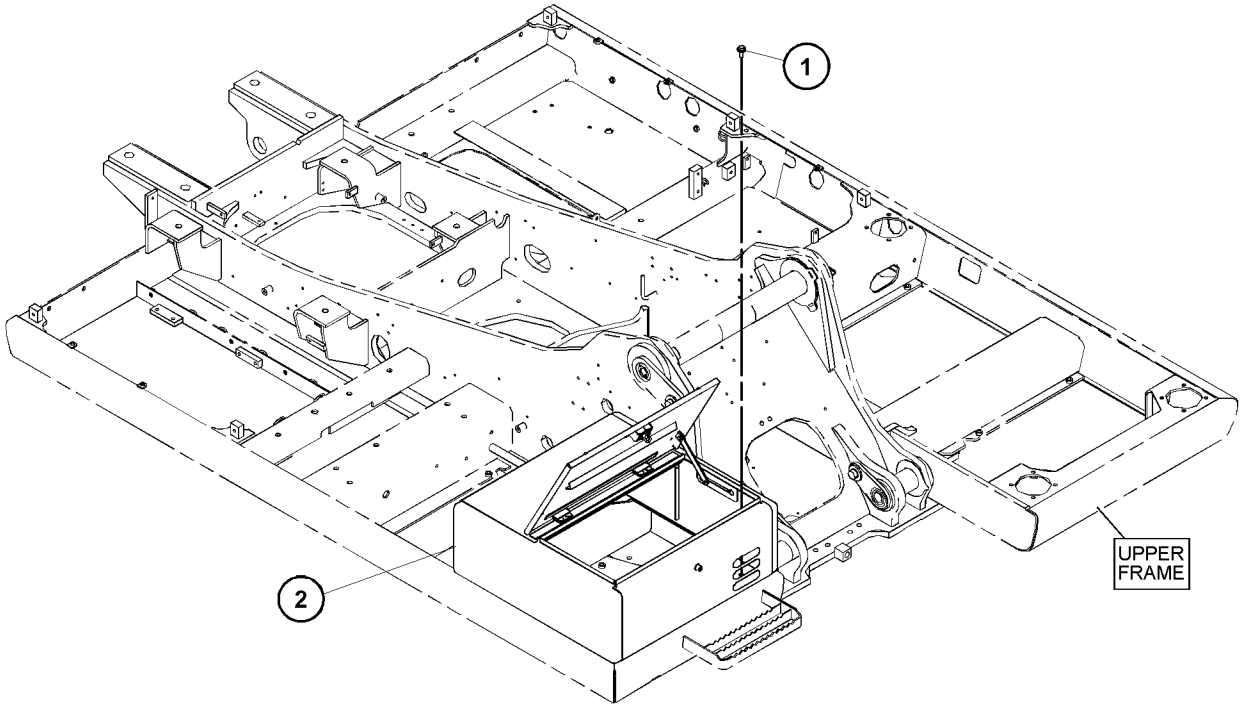

GRAPHIC #1 **<END>** g03090396

390-7989 BOX GP-STORAGE

S/N: FKK1-UP; DNP1-UP

PART OF 390-7988 BOX & MTG GP-STORAGE

SMCS-7268 **i04913893**

NOTE	REF NO	GRAPHIC REF	PART NUMBER	QTY	PART NAME 1 2 3 4 5 6 (PRODUCT LEVEL)	SEE PAGE
	1	1	**4I-2187**	1	SUPPORT AS	
		1	**4B-4278**	1	WASHER (10.2X20.5X1.6-MM THK)	
	2	1	**095-0843**	1	PIN-COTTER	
	3	1	**096-3780**	1	PIN-CLEVIS	
	4	1	**170-2755**	1	HOOK AS	
	5	1	**170-2983**	1	SEAL	
B	6	1	**184-8850**	1	SHIM (0.5-MM THK)	
J	7	1	**320-5737**	1	LOCK AS	
	8	1	*390-7990*	1	BOX GP-STORAGE	
D		1	**5P-9205**		SEAL (2.2-M)	
		1	**390-7992**	1	BODY AS	
	9	1	**390-7991**	1	DOOR AS-ACCESS	
	9A	1	**3D-9143**	2	HINGE-BUTT	
M	10	1	**105-3487**	4	BOLT-SOCKET HEAD (M6X1X20-MM)	
	11	1	**170-9360**	1	GROMMET	
M	12	1	**5C-9553**	2	BOLT (M6X1X16-MM)	
	13	1	**5P-1075**	4	WASHER-HARD (10.2X22.5X3-MM THK)	
	14	1	**5P-4116**	1	WASHER-HARD (8.8X20.5X2-MM THK)	
M	15	1	**8T-4133**	4	NUT (M10X1.5-THD)	
	16	1	**9X-8256**	6	WASHER (6.6X12X2-MM THK)	

B - USE AS REQUIRED
D - ORDER BY THE METER
J - REQUIRES CORPORATE KEY
M - METRIC PART

390-7989 **BOX GP-STORAGE (*contd.*)** **i04913893**

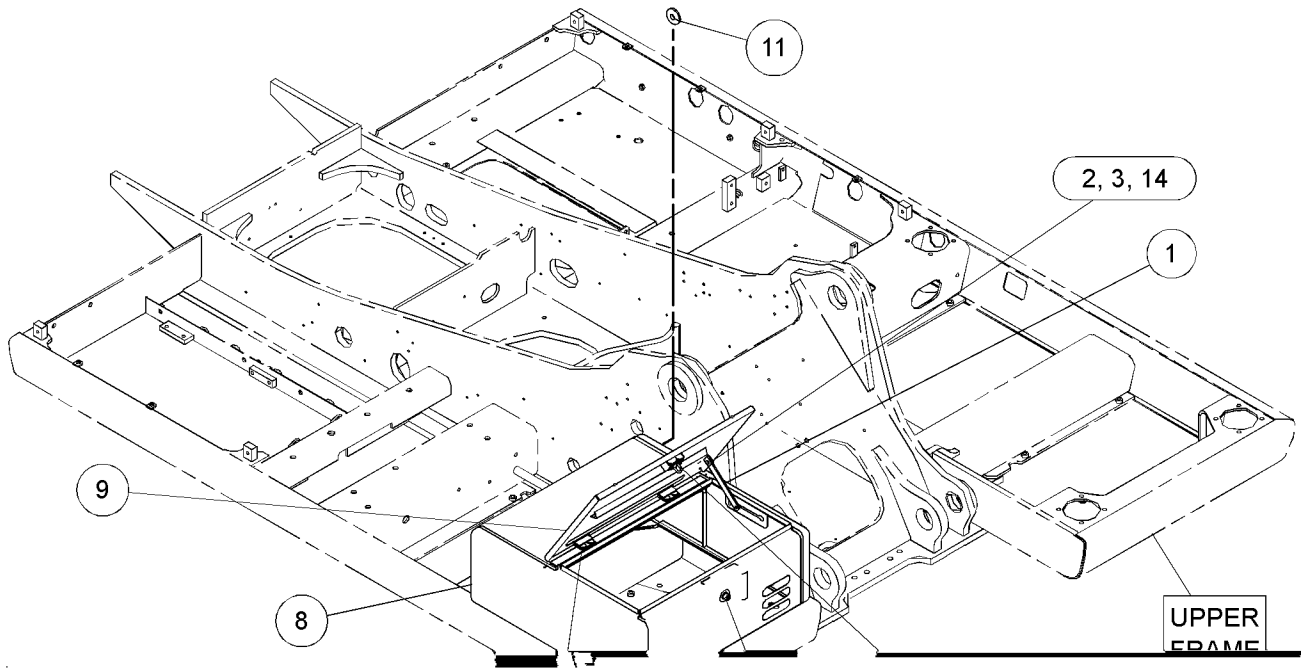

GRAPHIC #1 **<END>** g03089937

421-6935 COUNTERWEIGHT GP

S/N: FKK1-UP; DNP1-UP

PART OF 421-6926, 433-6906 CHASSIS AR

SMCS-7056 **i05259932**

NOTE	REF NO	GRAPHIC REF	PART NUMBER	QTY	PART NAME 1 2 3 4 5 6 (PRODUCT LEVEL)	SEE PAGE
	1		**7Y-0063**	2	FILM-INFORMATION (DO NOT LIFT)	
	2	1	**136-0139**	2	CAP	
	3	1	**244-8194**	4	SPACER (32X65X30-MM THK)	
Y	4	1	*422-2966*	1	COUNTERWEIGHT GP	147
M	5	1	**7X-2583**	4	BOLT (M30X3.5X120-MM)	

M - METRIC PART
Y - SEPARATE ILLUSTRATION

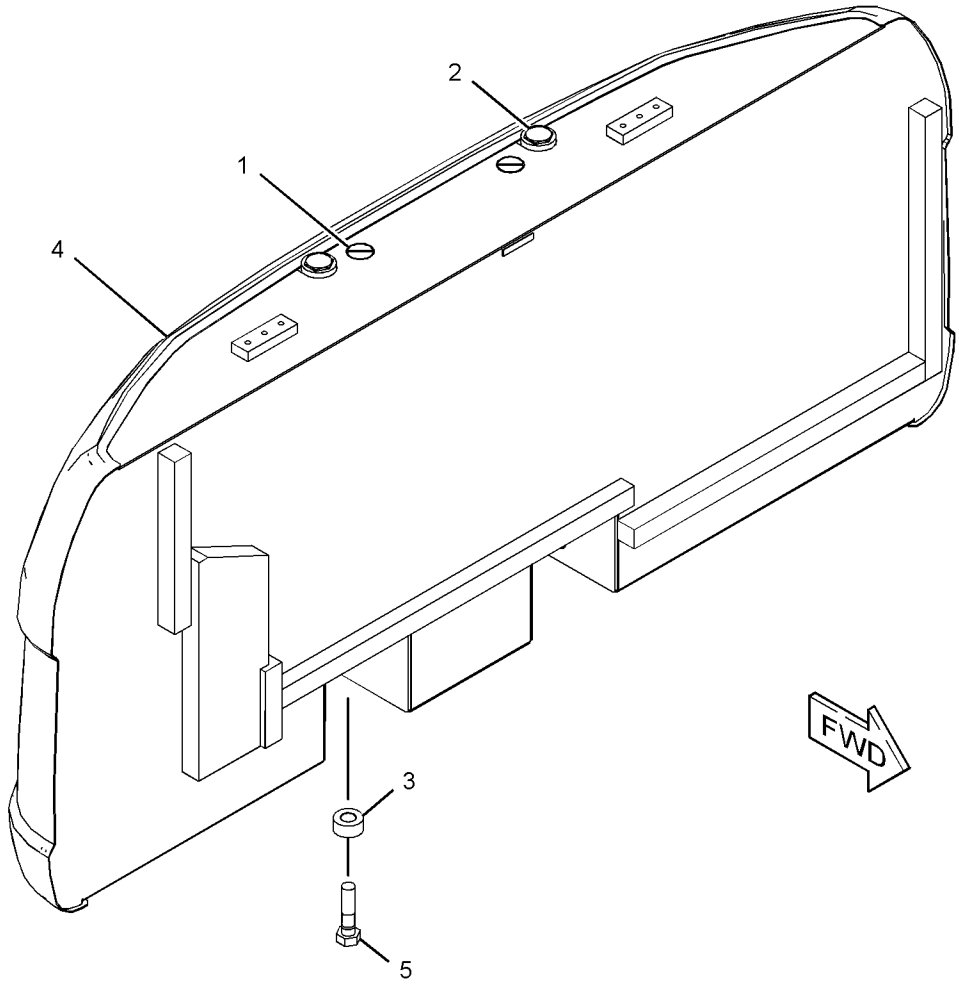

GRAPHIC #1 **<END>** g03354236

422-2966 COUNTERWEIGHT GP

S/N: FKK1-UP; DNP1-UP
3700-KG (8157-LB)
PART OF 421-6935 COUNTERWEIGHT GP

SMCS-7056 **i05265154**

NOTE	REF NO	GRAPHIC REF	PART NUMBER	QTY	PART NAME 1 2 3 4 5 6 (PRODUCT LEVEL)	SEE PAGE
	1	1	**7I-0717**	1	LINER	
	2	1	**116-1665**	1	LINER	
	3	1	**165-3102**	1	LINER	
	4	1	**165-3103**	1	LINER	
	5	1	**273-7677**	1	LINER	
	6	1	**422-2968**	1	COUNTERWEIGHT AS	
	7	1	**428-7524**	1	LINER	

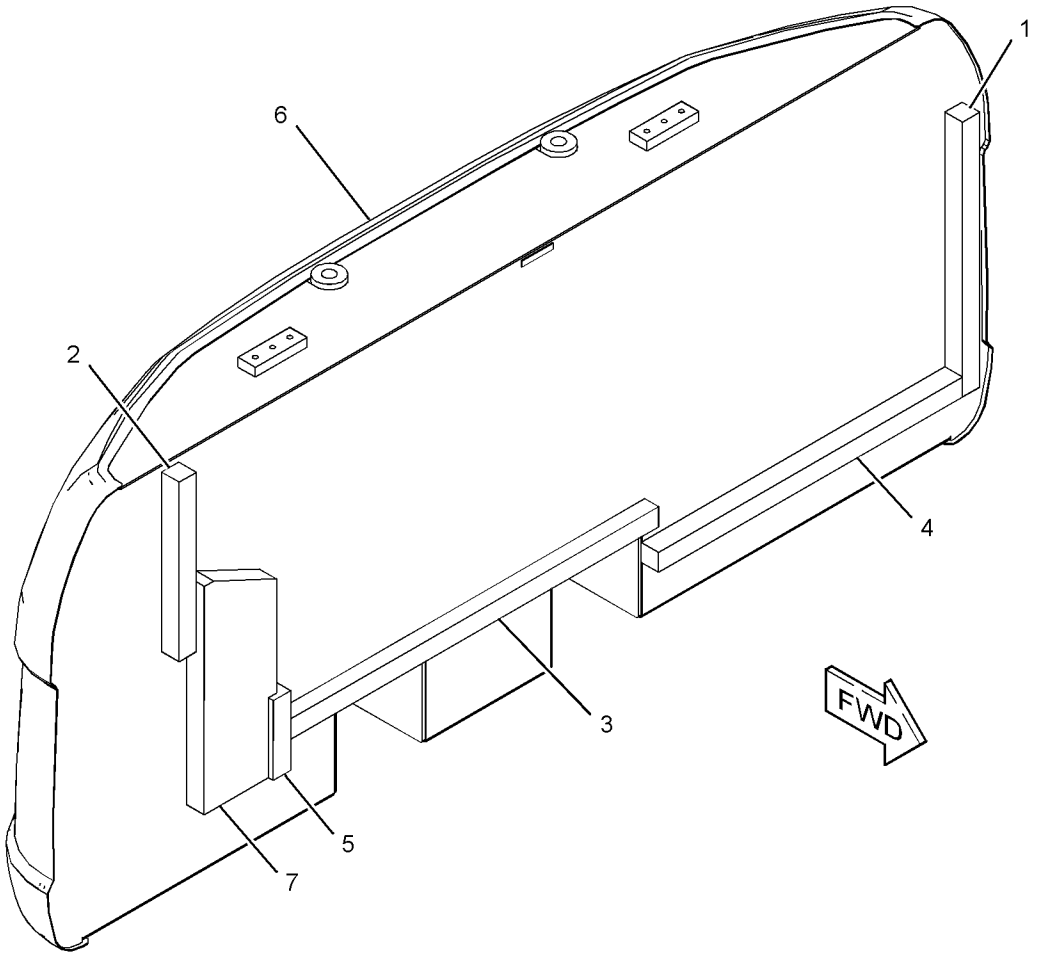

GRAPHIC #1 **<END>** g03354229

430-2804 COVER AS-SOUND SUPPRESSION—FUEL, HYDRAULIC TANKS

S/N: FKK1-UP; DNP1-UP

PART OF 421-6929 HOOD & GUARD GP

SMCS-7253, 7263, 7276, 795C

i05197745

NOTE	REF NO	GRAPHIC REF	PART NUMBER	QTY	PART NAME 1 2 3 4 5 6 (PRODUCT LEVEL)	SEE PAGE
	1	1	**170-3015**	1	BUMPER	
	2	1	**426-3891**	1	LINER	
	3	1	**240-2978**	2	LINER	
	4	1	**240-2979**	1	LINER	

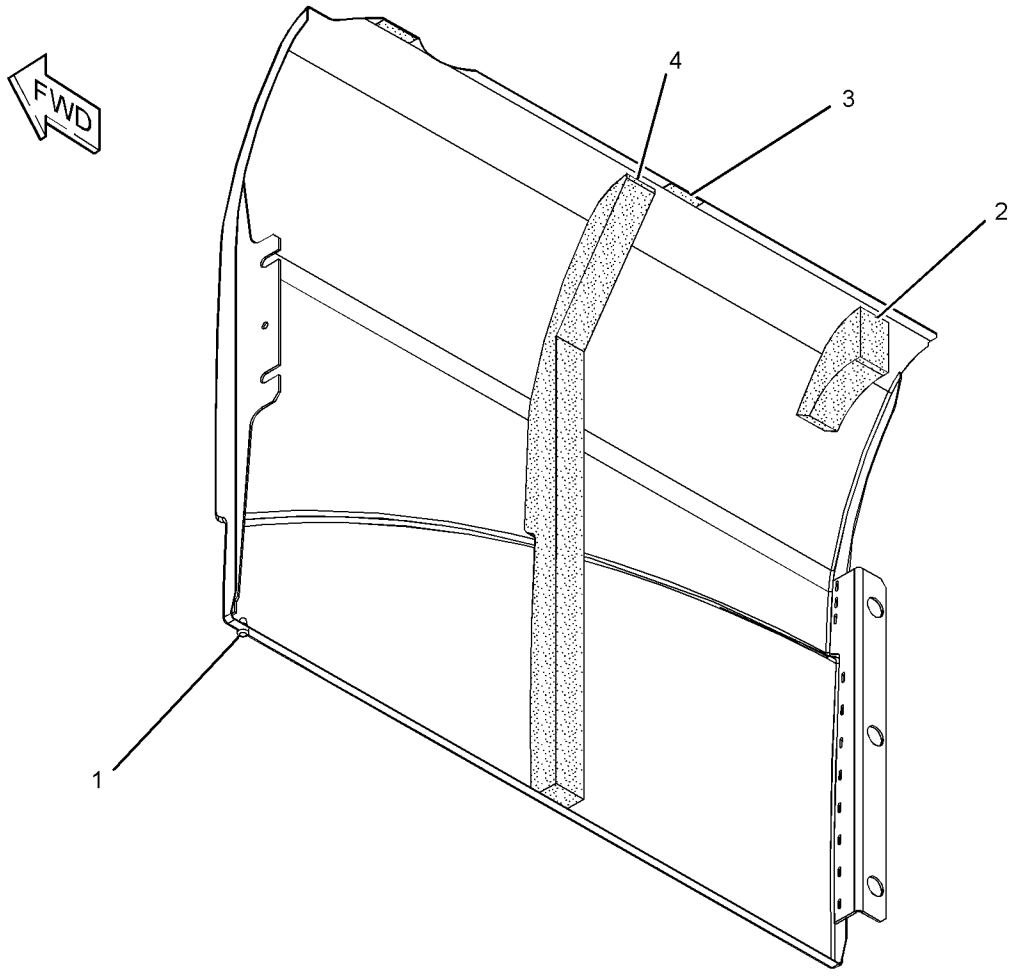

GRAPHIC #1

<END>

g01342289

422-5388 DOOR AS-ACCESS—AIR CLEANER, BATTERY

S/N: FKK1-UP; DNP1-UP

PART OF 421-6929 HOOD & GUARD GP

SMCS-7273 **i05197747**

NOTE	REF NO	GRAPHIC REF	PART NUMBER	QTY	PART NAME 1 2 3 4 5 6 (PRODUCT LEVEL)	SEE PAGE
	1	1	**208-4289**	1	CUSHION	
	2	1	**250-5054**	1	LINER	
	3	1	**165-2976**	2	HINGE	

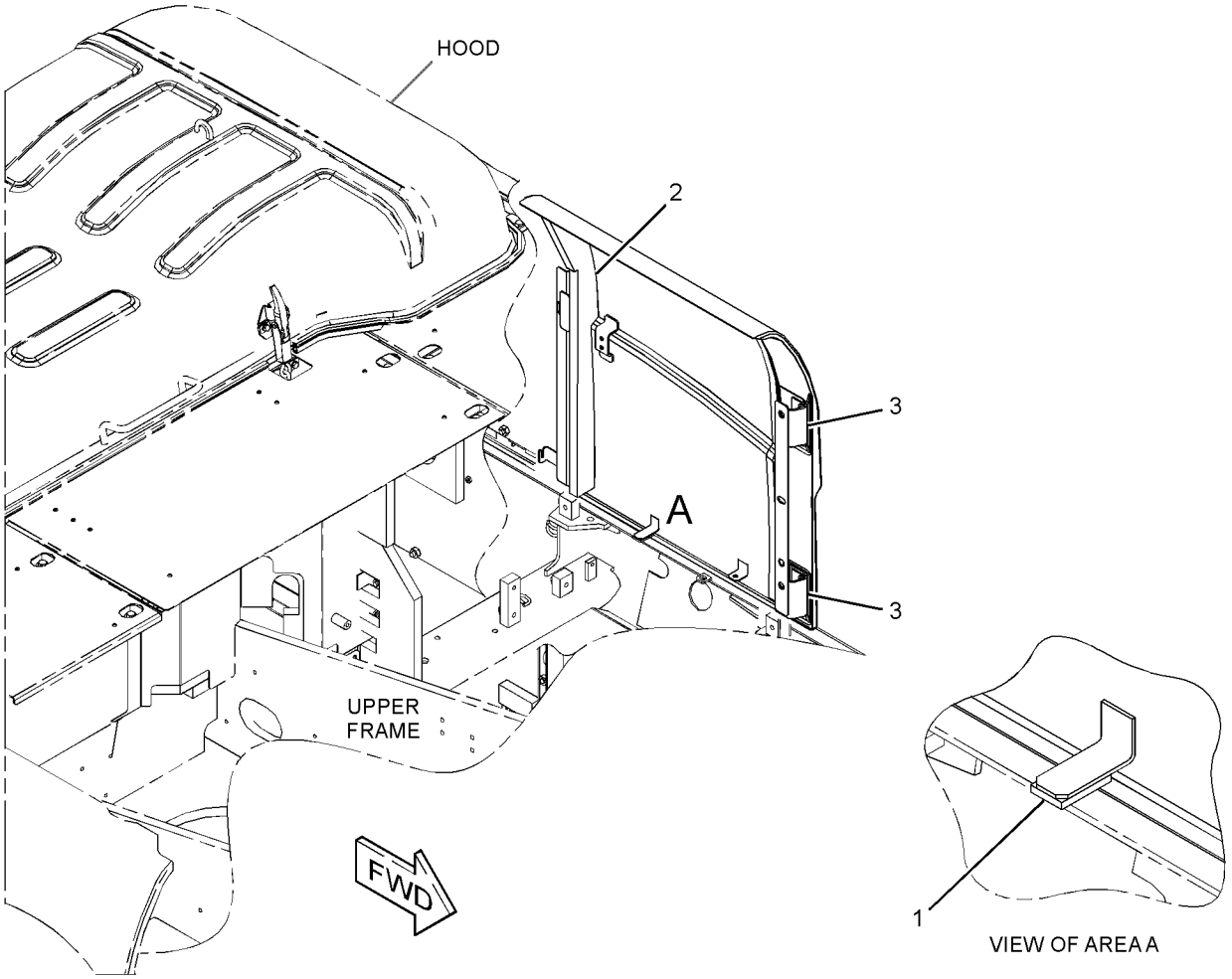

GRAPHIC #1 **<END>** g03309139

434-2654 DOOR GP-ACCESS

S/N: FKK1-UP; DNP1-UP

PART OF 421-6929 HOOD & GUARD GP

SMCS-7273 **i05260305**

NOTE	REF NO	GRAPHIC REF	PART NUMBER	QTY	PART NAME 1 2 3 4 5 6 (PRODUCT LEVEL)	SEE PAGE
	1	1	**122-4101**	1	RUBBER	
	2	1	**208-4289**	1	CUSHION	
	3	1	**307-7656**	1	LINER	
	4	1	*434-2650*	1	DOOR AS-ACCESS (SIDE)	
M	4A	1	**099-6418**	4	NUT (M6X1-THD)	
	4B	1	**358-0921**	1	LATCH AS	
J	4C	1	**385-3458**	1	LOCK AS	
	4D	1	**165-2976**	2	HINGE	

J - REQUIRES CORPORATE KEY
M - METRIC PART

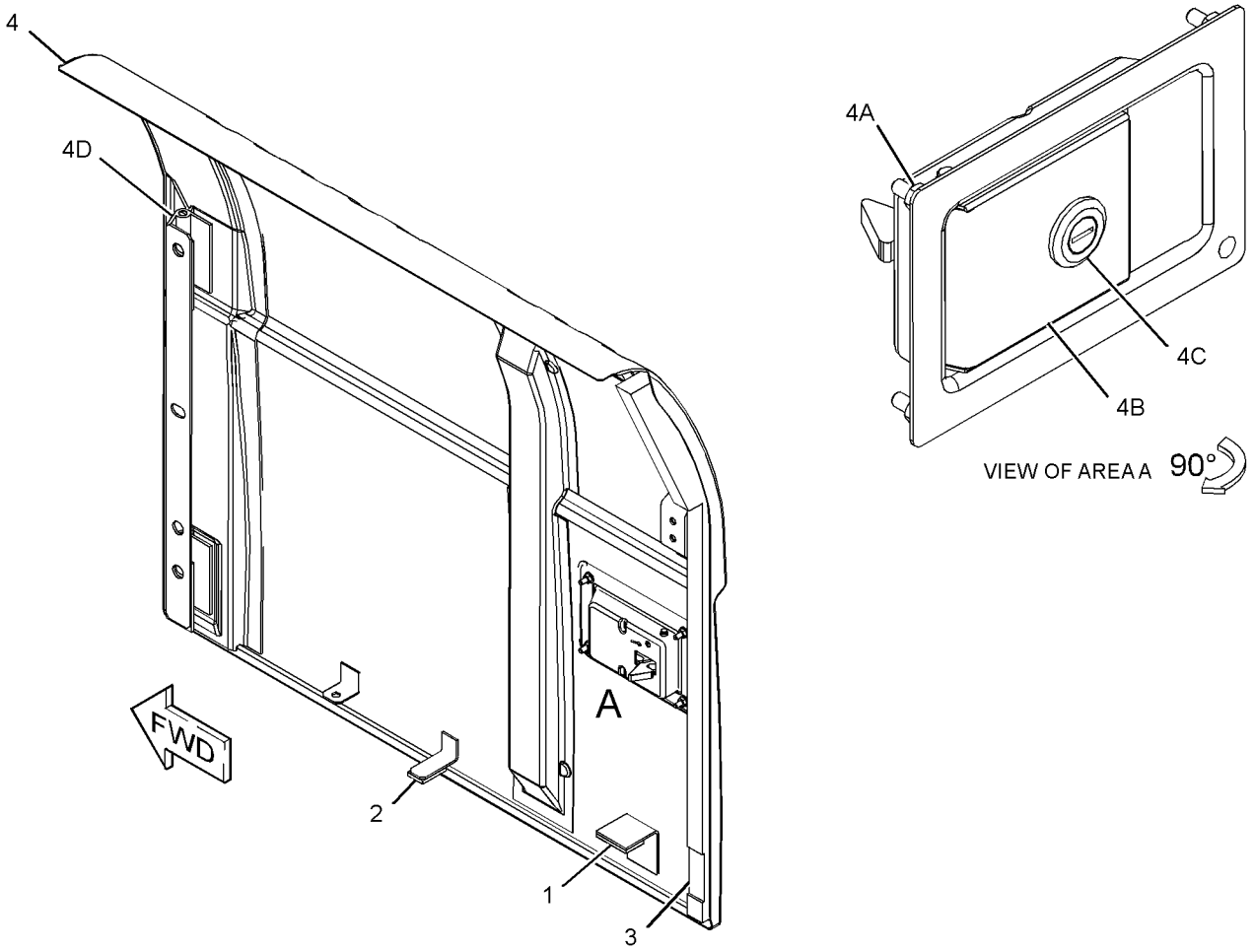

GRAPHIC #1 **<END>** g03354304

434-2655 DOOR GP-ACCESS

S/N: FKK1-UP; DNP1-UP

PART OF 421-6929 HOOD & GUARD GP

SMCS-7273 **i05292332**

NOTE	REF NO	GRAPHIC REF	PART NUMBER	QTY	PART NAME 1 2 3 4 5 6 (PRODUCT LEVEL)	SEE PAGE
	1	1	**184-8862**	1	COVER	
	2	1	**248-8961**	1	LINER	
	3	1	**434-2651**	1	DOOR AS-ACCESS	
M	3A	1	**099-6418**	4	NUT (M6X1-THD)	
	3B	1	**358-0921**	1	LATCH AS	
J		1	**385-3458**	1	LOCK AS	
	3C	1	**165-2976**	2	HINGE	

J - REQUIRES CORPORATE KEY
M - METRIC PART

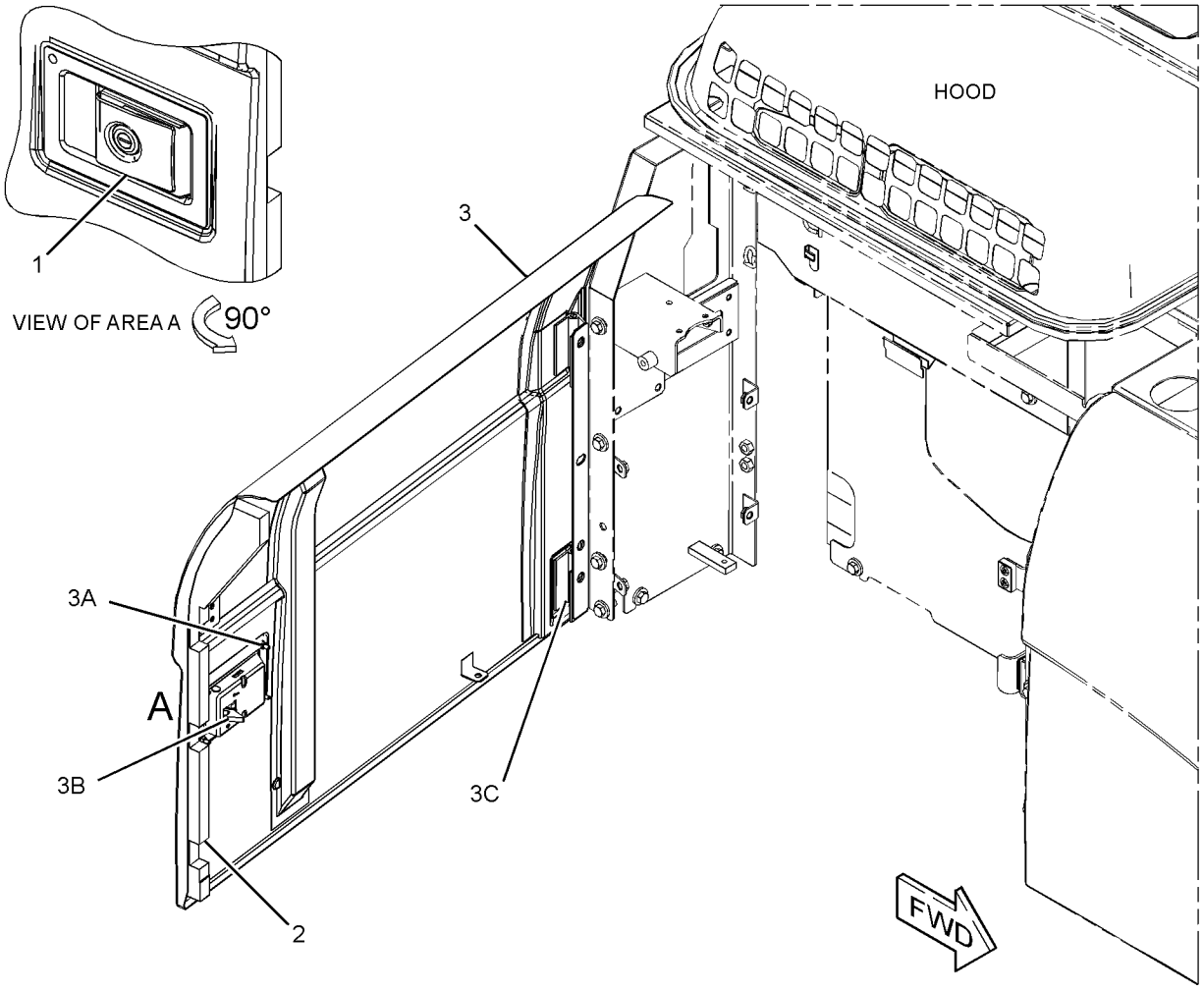

GRAPHIC #1 **<END>** g03363739

422-7722 FRAME AS-UPPER

S/N: FKK1-UP; DNP1-UP

PART OF 421-6943 FRAME GP-UPPER

SMCS-7051 **i05291947**

NOTE	REF NO	GRAPHIC REF	PART NUMBER	QTY	PART NAME 1 2 3 4 5 6 (PRODUCT LEVEL)	SEE PAGE
	1	1	**388-0399**	1	BOSS	
	2	1	**163-3729**	1	STEP AS	
					THE FOLLOWING REPAIR PARTS ARE AVAILABLE FOR REPAIR OF DAMAGED SKIRTS	
F			**178-0852**	1	PLATE-SKIRT (1100-MM)	
F			**184-5724**	1	PLATE-SKIRT (2000-MM)	

F - NOT SHOWN

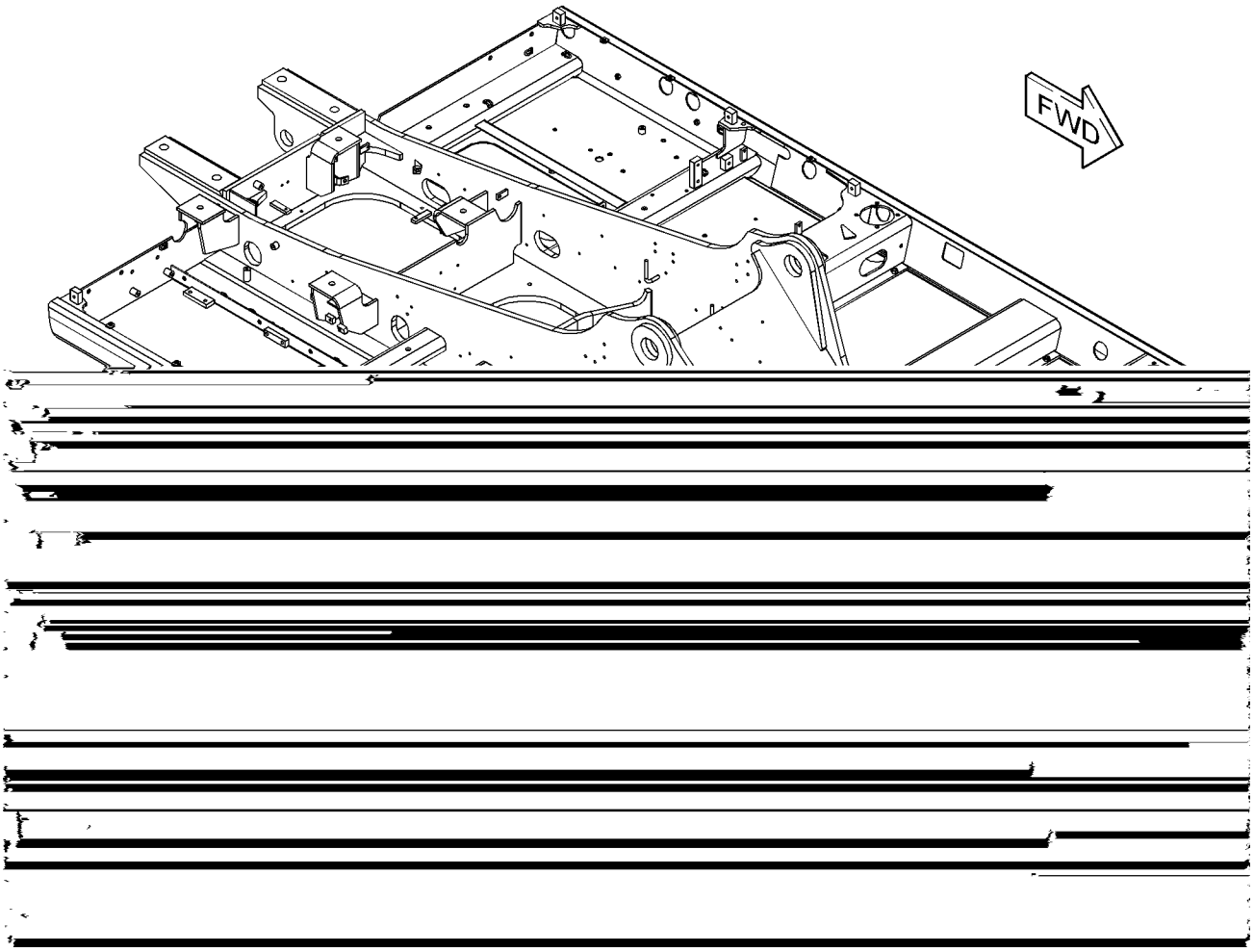

GRAPHIC #1 **<END>** g03303730

421-6943 FRAME GP-UPPER

S/N: FKK1-UP; DNP1-UP
PART OF 421-6926, 433-6906 CHASSIS AR

SMCS-7051 **i05259930**

NOTE	REF NO	GRAPHIC REF	PART NUMBER	QTY	PART NAME 1 2 3 4 5 6 (PRODUCT LEVEL)	SEE PAGE
B	1	1	**093-0083**	4	SHIM (1-MM THK)	
B			**093-0115**	2	SHIM (2-MM THK)	
B			**133-2425**	2	SHIM (0.5-MM THK)	
M	2	1	**8T-4780**	3	BOLT (M20X2.5X30-MM)	
	3	1	**093-0349**	3	WASHER (22X60X6-MM THK)	
	4	1	**093-0363**	2	SPACER (83X120X12-MM THK)	
	5	1	**8T-4123**	3	WASHER (22X35X3.5-MM THK)	
	6	1	**4I-4812**	1	PIN AS	
	7	1	**212-2838**	2	SHIM (2-MM THK)	
B	8	1	**308-8775**	1	SHIM (0.5-MM THK)	
B			**308-8776**	2	SHIM (1-MM THK)	
B			**308-8777**	1	SHIM (2-MM THK)	
Y	9	1	**422-7722**	1	FRAME AS-UPPER	152
	10	1	**315-0800**	1	PIN AS	

B - USE AS REQUIRED
M - METRIC PART
Y - SEPARATE ILLUSTRATION

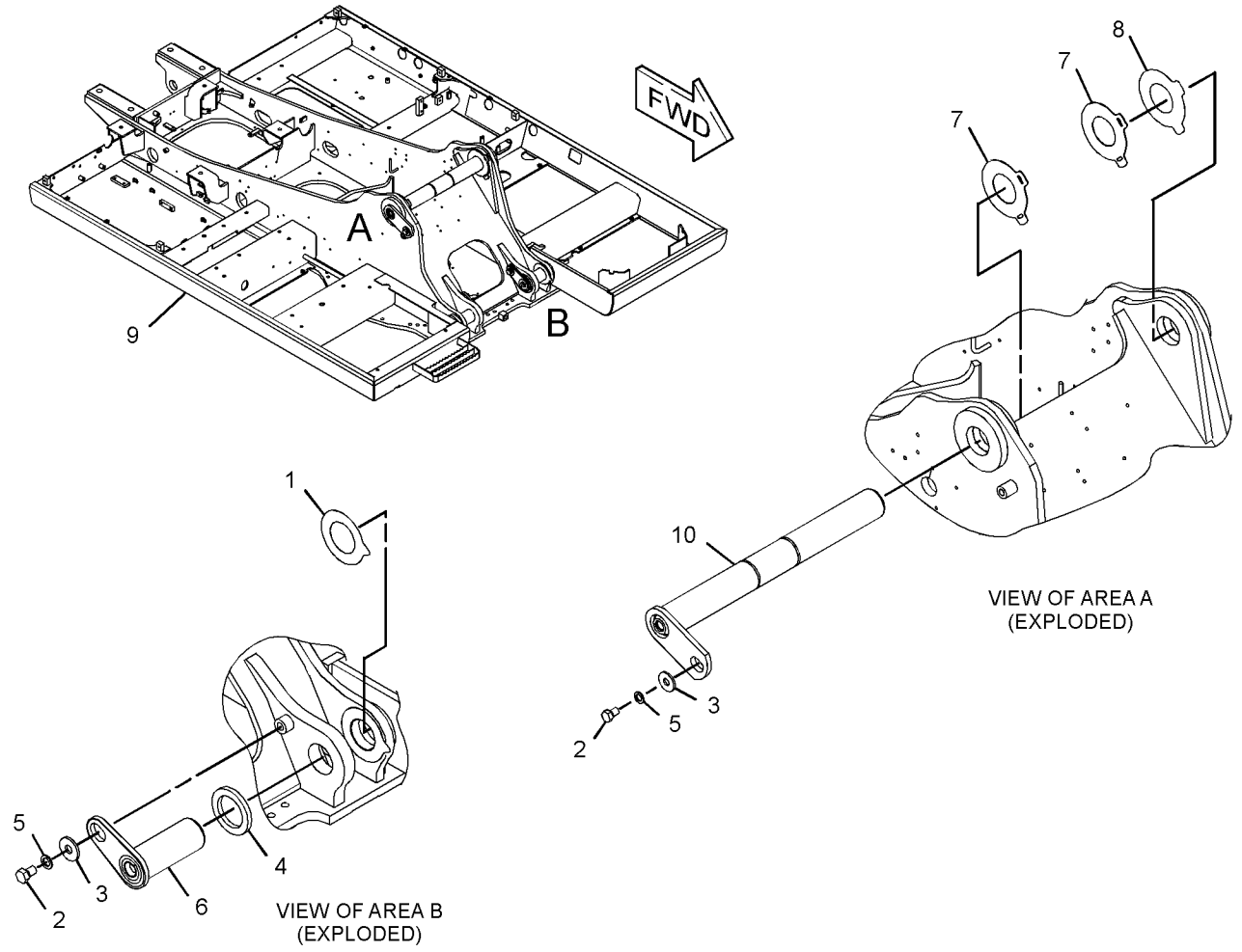

GRAPHIC #1 **<END>** g03354241

227-6081 GEAR & BEARING GP-SWING

S/N: FKK1-UP; DNP1-UP
PART OF 227-6147 GEAR & BEARING GP-SWING
ALSO AN ATTACHMENT

SMCS-7063 **i04909391**

NOTE	REF NO	GRAPHIC REF	PART NUMBER	QTY	PART NAME 1 2 3 4 5 6 (PRODUCT LEVEL)	SEE PAGE
	1	1	**3B-8489**	1	FITTING-GREASE	
	2	1	**227-6071**	1	SEAL-DUST	
E	3	1	**148-4685**		SEAL (368-CM)	

E - ORDER BY THE CENTIMETER

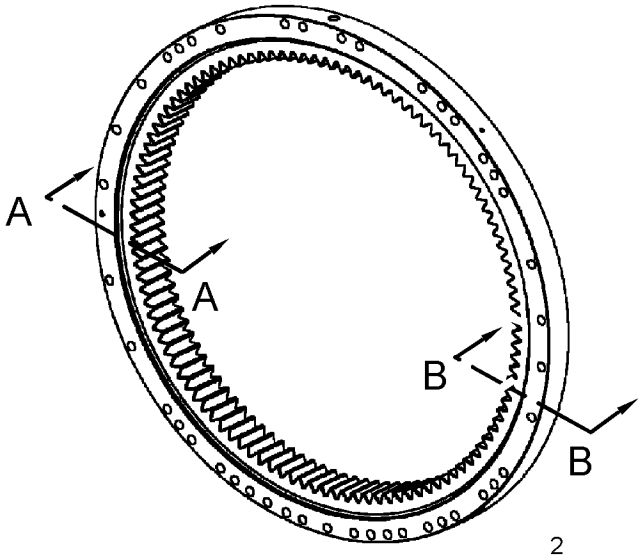

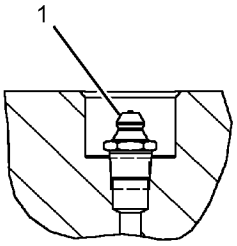

SECTION B-B

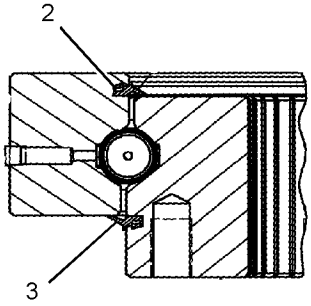

SECTION A-A

GRAPHIC #1 **<END>** g02177687

227-6147 GEAR & BEARING GP-SWING

S/N: FKK1-UP; DNP1-UP
PART OF 387-9125, 432-5008 FRAME AR-UNDERCARRIAGE
ALSO AN ATTACHMENT

SMCS-7063 **i04909383**

NOTE	REF NO	GRAPHIC REF	PART NUMBER	QTY	PART NAME 1 2 3 4 5 6 (PRODUCT LEVEL)	SEE PAGE
	1	1	**5K-9243**	2	ELBOW-FLARED	
	2	1	**7Y-1647**	1	GASKET	
	3	1	**7Y-1650**	1	CLAMP-HOSE	
	4	1	**7Y-1863**	40	SPACER (20.5X38X34-MM THK)	
	5	1	**148-4689**	1	TUBE AS	
	6	1	**171-9464**	37	SPACER (20.6X38X6-MM THK)	
Y	7	1	**227-6081**	1	GEAR & BEARING GP-SWING (118-BEARING)	154
	8	1	**227-6105**	1	BOOT	
	9	1	**227-6106**	1	RETAINER	
	10	1	**096-4902**	1	DOWEL	
	11	1	**148-4703**	1	COVER	
	12	1	**148-4704**	1	GASKET	
	13	1	**3B-8489**	1	FITTING-GREASE	
	14	1	**4N-9170**	2	CLIP	
	15	1	**7Y-1648**	1	STRIP	
M	16	1	**8T-0360**	40	BOLT (M20X2.5X90-MM)	
M	17	1	**8T-0362**	37	BOLT (M20X2.5X110-MM)	
	18	1	**8T-4121**	14	WASHER-HARD (11X21X2.5-MM THK)	
M	19	1	**8T-4137**	2	BOLT (M10X1.5X20-MM)	
M	20	1	**8T-4136**	12	BOLT (M10X1.5X25-MM)	
M	21	1	**8T-4199**	2	BOLT (M8X1.25X12-MM)	
B	22	1	**1U-8846**		SEALANT-GASKET	

B - USE AS REQUIRED
M - METRIC PART
Y - SEPARATE ILLUSTRATION

227-6147 **GEAR & BEARING GP-SWING (*contd.*)** **i04909383**

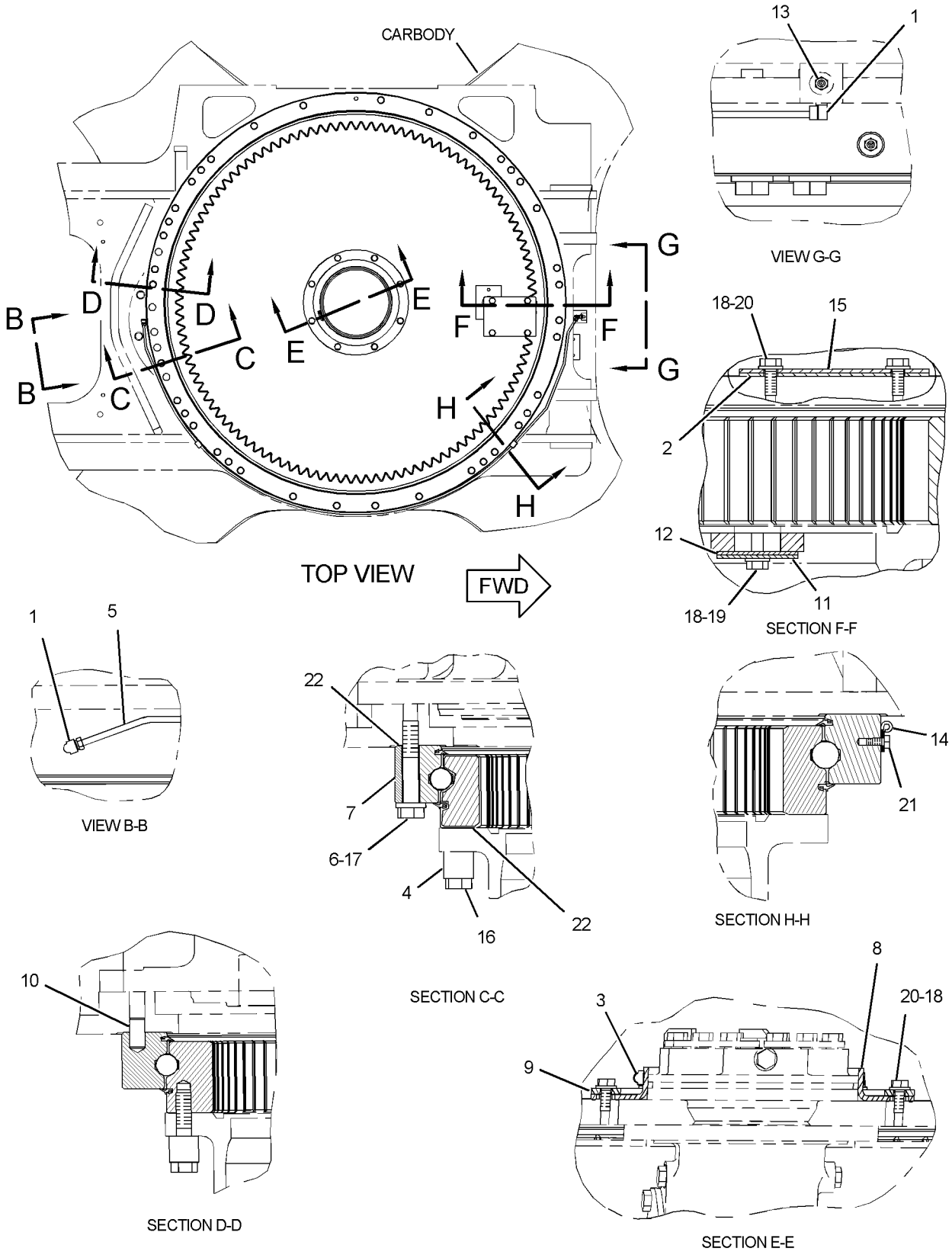

GRAPHIC #1 **<END>** g01276722

374-4017 GUARD GP-BOTTOM

S/N: FKK1-UP; DNP1-UP
PART OF 421-6926, 433-6906 CHASSIS AR

SMCS-7153 **i05259927**

NOTE	REF NO	GRAPHIC REF	PART NUMBER	QTY	PART NAME 1 2 3 4 5 6 (PRODUCT LEVEL)	SEE PAGE
M	1	1	**135-8576**	36	BOLT AS-LOCKING	
	2	1	**165-2823**	1	SHEET	
	3	1	**248-8992**	1	SHEET	
	4	1	**248-8993**	1	SHEET	
	5	1	**248-8994**	1	SHEET	
					—OR—	
J		1	**342-0932**	1	SHEET AS	
	6	1	**248-8995**	1	SHEET	
	7	1	**377-6715**	2	SHEET	
	8	1	**374-4161**	1	SHEET AS	
	9	1	**289-6603**	1	SHEET	
J	10	1	**342-0965**	1	PLATE AS	
JM	11	1	**8C-8992**	2	BOLT-LOCKING (M12X1.75X30-MM)	
J	12	1	**5P-1076**	2	WASHER-HARD (13.5X30X4-MM THK)	

J - OPTIONAL DESIGN FOR COLD WEATHER APPLICATIONS
M - METRIC PART

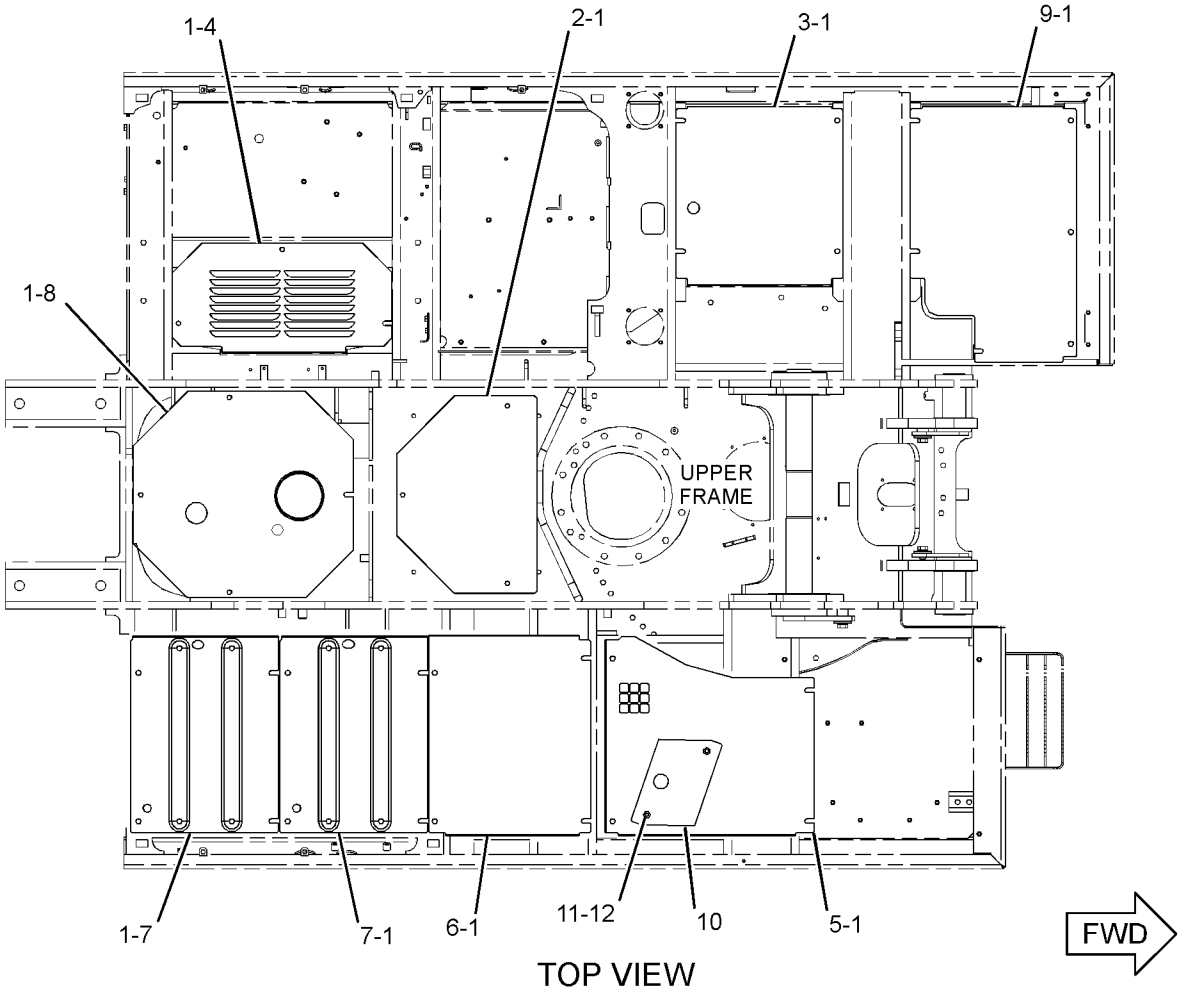

TOP VIEW

GRAPHIC #1 **<END>** g02853316

142-3835 HANDRAIL GP

S/N: FKK1-UP; DNP1-UP

PART OF 421-6926, 433-6906 CHASSIS AR

SMCS-7256 **i04912111**

NOTE	REF NO	GRAPHIC REF	PART NUMBER	QTY	PART NAME 1 2 3 4 5 6 (PRODUCT LEVEL)	SEE PAGE
	1	1	**8T-4223**	2	WASHER-HARD (13.5X25.5X3-MM THK)	
M	2	1	**8T-4192**	2	BOLT (M12X1.75X25-MM)	
	3	1	**177-5880**	2	SLEEVE	
	4	1	**177-5879**	1	CLAMP	
	5	1	**177-5877**	1	HANDHOLD AS	
M	6	1	**135-8578**	3	BOLT AS	

M - METRIC PART

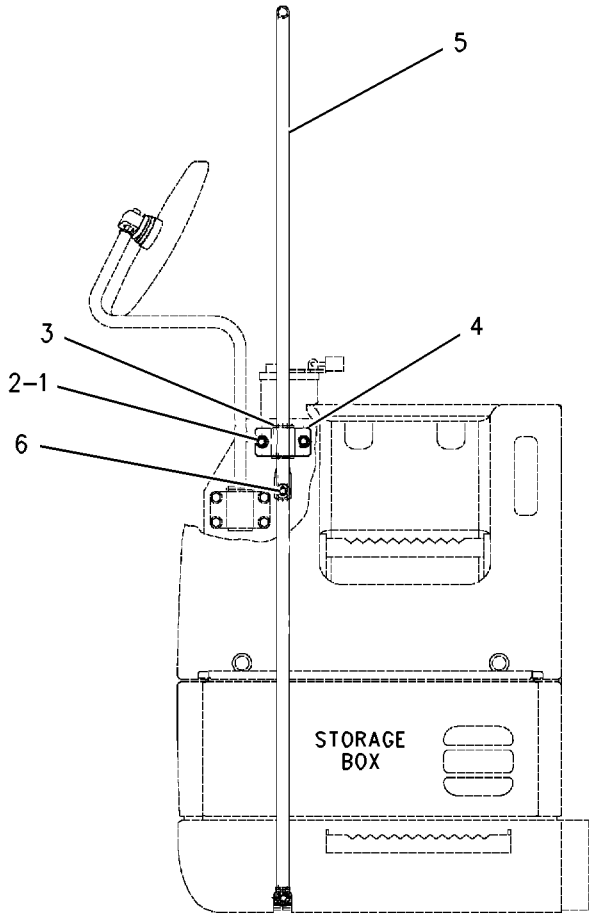

FRONT VIEW

GRAPHIC #1 **<END>** g00678707

421-6929 HOOD & GUARD GP

S/N: FKK1-UP; DNP1-UP

PART OF 421-6926, 433-6906 CHASSIS AR

SMCS-7251, 7276 **i05259928**

NOTE	REF NO	GRAPHIC REF	PART NUMBER	QTY	PART NAME 1 2 3 4 5 6 (PRODUCT LEVEL)	SEE PAGE
	1	2	**4I-0118**	2	HOOK AS	
	2	2	**4I-0232**	2	STRIKER	
	3	1	**4I-8019**	3	SUPPORT	
	4	2	**6I-6033**	3	STOP	
	5	2	**7Y-2853**	8	SPACER (13X38X5-MM THK)	
	6	2	**087-3908**	4	SHIM (1-MM THK)	
	7	2	**087-3909**	4	SHIM (2-MM THK)	
	8	2	**122-3979**	1	BAND	
	9	2	**122-3980**	1	ROD	
	10	1	**122-4120**	3	ROD	
	11	1,2	**170-3016**	15	SPACER (19X32X2-MM THK)	
	12	2	**190-6880**	3	SUPPORT AS	
	13	2	**244-8228**	1	SUPPORT AS	
	14	2	**244-8242**	1	SUPPORT AS	
	15	2	**244-8255**	1	SUPPORT AS	
	16	1	**262-2363**	1	SHEET AS-SOUND SUPPRESSION	
		1	**262-2365**	1	LINER	
	17	2	**289-6698**	1	SUPPORT AS	
	18	2	**289-6805**	1	SUPPORT AS-ENCLOSURE	
Y	19	2	**377-6667**	1	SHEET AS-SOUND SUPPRESSION	164
Y	20	2	**377-6698**	1	SUPPORT AS-ENCLOSURE	172
Y	21	2	**377-6708**	1	SHEET AS-SOUND SUPPRESSION	165
	22	1	**377-6786**	1	COVER AS	
Y	23	1	**379-7425**	1	SUPPORT AS-SOUND SUPPRESSION	173
	24	1	**379-7436**	1	COVER AS	
	25	1	**379-7518**	1	SUPPORT AS	
		1	**7T-1099**	8	LINK	
M		1	**8T-3597**	7	NUT-WELD (M12X1.75-THD)	
		1	**087-5841**	1	PLATE	
		1	**121-1029**	1	CLIP	
Y	26	1	**434-2654**	1	DOOR GP-ACCESS	150
	27	1	**391-4751**	1	COVER AS	
	28	1	**391-4752**	1	COVER AS	
Y	29	2	**391-9646**	1	SHEET AS-SOUND SUPPRESSION	166
	30	2	**391-9651**	1	SHEET AS-SOUND SUPPRESSION	
	31	2	**391-9655**	1	SUPPORT AS	
	32	2	**392-1262**	1	SPRING AS-GAS (ENGINE HOOD)	
	33	1	**392-2667**	1	SUPPORT AS	
	34	2	**396-3542**	1	SUPPORT AS	
	35	1	**396-3545**	1	COVER AS	
		1	**190-7081**	2	SHEET	
Y	36	2	**431-0101**	1	SHEET AS-SOUND SUPPRESSION	170
	37	1	**431-0102**	1	SUPPORT AS	
	38	2	**396-3569**	1	SHEET AS	
Y	39	2	**428-5842**	1	SHEET AS-SOUND SUPPRESSION	169
Y	40	2	**396-8523**	1	SHEET AS-SOUND SUPPRESSION	167
Y	41	1	**430-2804**	1	COVER AS-SOUND SUPPRESSION (FUEL, HYDRAULIC TANKS)	148
Y	42	2	**397-9009**	1	SUPPORT AS-SOUND SUPPRESSION	174
	43	2	**431-0103**	1	SHEET AS	
Y	44	2	**419-3368**	1	SHEET AS-SOUND SUPPRESSION	168
Y	45	1	**422-5388**	1	DOOR AS-ACCESS (AIR CLEANER, BATTERY)	149
Y	46	1	**423-5183**	1	HOOD GP-ENGINE	163
Y	47	1	**434-2655**	1	DOOR GP-ACCESS (PUMP COMPARTMENT)	151
M	48	2	**105-3487**	6	BOLT-SOCKET HEAD (M6X1X20-MM)	
	49	1	**114-6285**	2	BAR	
M	50	1,2	**135-8573**	67	BOLT AS	
M	51	1,2	**135-8575**	34	BOLT AS	
M	52	1	**135-8577**	4	BOLT AS	

421-6929 **HOOD & GUARD GP (*contd.*)** **i05259928**

NOTE	REF NO	GRAPHIC REF	PART NUMBER	QTY	PART NAME 1 2 3 4 5 6 (PRODUCT LEVEL)	SEE PAGE
M	53	1	**135-8578**	6	BOLT AS	
	54	1	**3B-4618**	3	PIN-COTTER	
M	55	2	**5C-7261**	1	NUT (M8X1.25-THD)	
M	56	1,2	**5C-9553**	8	BOLT (M6X1X16-MM)	
	57	2	**5P-0372**	1	LOCK PIN	
	58	2	**5P-4115**	10	WASHER-HARD (7.2X19X2-MM THK)	
	59	2	**7F-3708**	1	PIN	
	60	2	**7Y-2854**	8	SPACER (24X38X3-MM THK)	
	61	1,2	**8T-4121**	12	WASHER-HARD (11X21X2.5-MM THK)	
M	62	1,2	**8T-4137**	7	BOLT (M10X1.5X20-MM)	
M	63	2	**8T-4138**	10	BOLT (M6X1X20-MM)	
M	64	2	**8T-4189**	4	BOLT (M8X1.25X20-MM)	
	65	2	**8T-4224**	5	WASHER-HARD (8.8X16X2-MM THK)	
	66	1,2	**9X-8256**	14	WASHER (6.6X12X2-MM THK)	

M - METRIC PART
Y - SEPARATE ILLUSTRATION

421-6929 **HOOD & GUARD GP (*contd.*)** **i05259928**

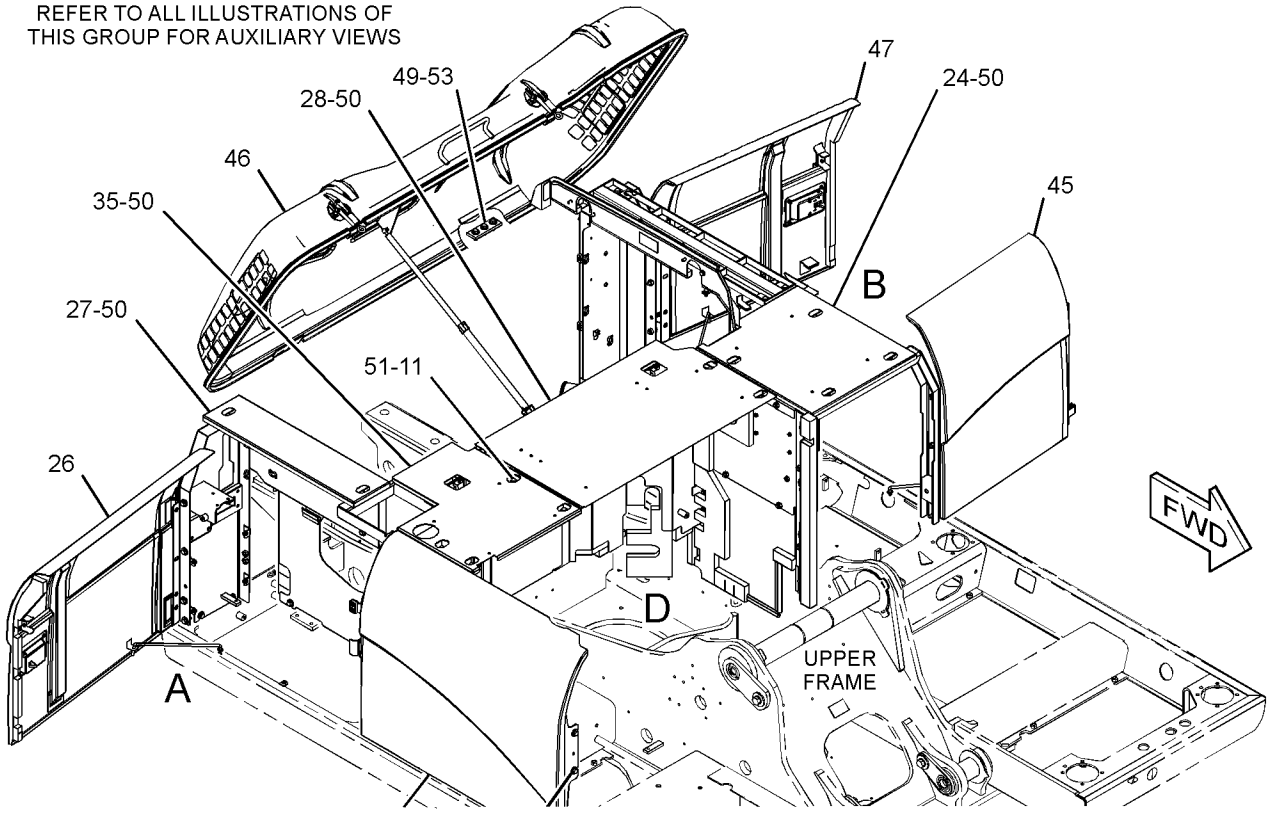

GRAPHIC #1 g03321099

421-6929 **HOOD & GUARD GP (*contd.*)** **i05259928**

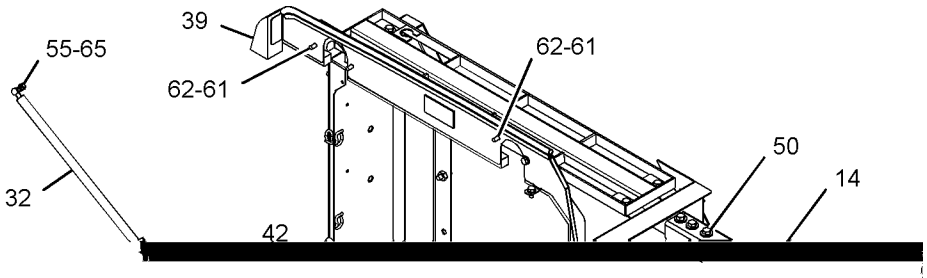

GRAPHIC #2 **<END>** g03321100

423-5183 HOOD GP-ENGINE

S/N: FKK1-UP; DNP1-UP

PART OF 421-6929 HOOD & GUARD GP

SMCS-7251 **i05260210**

NOTE	REF NO	GRAPHIC REF	PART NUMBER	QTY	PART NAME 1 2 3 4 5 6 (PRODUCT LEVEL)	SEE PAGE
	1	1	**096-4129**	2	CUSHION	
J	2	1	**375-8749**	1	LATCH AS	
	3	1	**375-8750**	1	LATCH AS	
	4	1	**396-7706**	1	LINER	
	5	1	**423-5184**	1	HOOD AS-ENGINE	
	5A	1	**114-6289**	2	HINGE	
	5B	1	**268-0720**	1	HANDLE	
M		1	**8T-3612**	4	NUT-WELD (M8X1.25-THD)	
M		1	**8T-8874**	4	NUT-WELD (M5X0.8-THD)	
	6	1	**8T-0328**	4	WASHER-HARD (5.5X10X1-MM THK)	
M	7	1	**8T-4189**	4	BOLT (M8X1.25X20-MM)	
	8	1	**8T-4224**	4	WASHER-HARD (8.8X16X2-MM THK)	
M	9	1	**8T-6693**	4	SCREW-MACHINE (M5X0.8X16-MM)	
D	10	1	**101-9848**		SEAL (22-M)	
D	10A	1	**101-9848**		SEAL (10.1-M)	
D	10B	1	**101-9848**		SEAL (17.1-M)	
D	10C	1	**101-9848**		SEAL (9.7-M)	

D - ORDER BY THE METER
J - REQUIRES CORPORATE KEY
M - METRIC PART

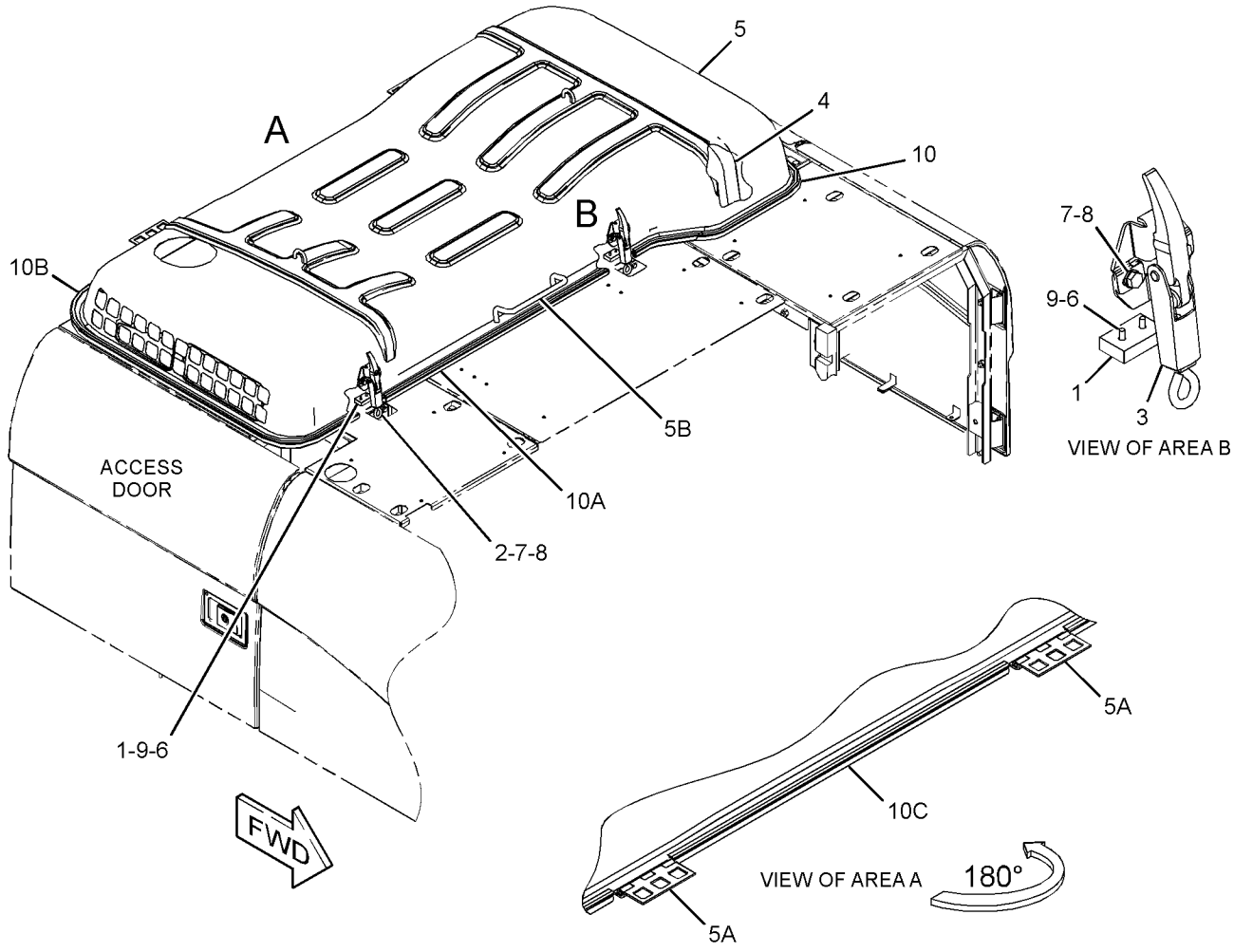

GRAPHIC #1 **<END>** g03309878

377-6667 SHEET AS-SOUND SUPPRESSION

S/N: FKK1-UP; DNP1-UP

PART OF 421-6929 HOOD & GUARD GP

SMCS-1801, 7076, 7251, 7267 **i05260202**

NOTE	REF NO	GRAPHIC REF	PART NUMBER	QTY	PART NAME 1 2 3 4 5 6 (PRODUCT LEVEL)	SEE PAGE
	1	1	**289-6700**	1	LINER	
	2	1	**377-6743**	1	LINER	

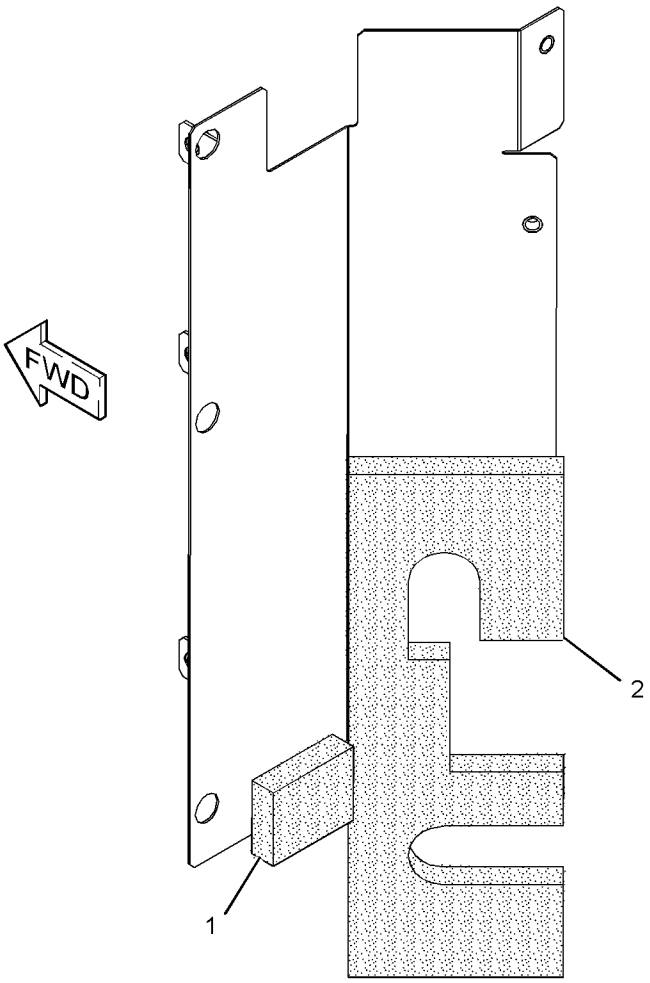

GRAPHIC #1 **<END>** g02732916

377-6708 SHEET AS-SOUND SUPPRESSION

S/N: FKK1-UP; DNP1-UP

PART OF 421-6929 HOOD & GUARD GP

SMCS-1801, 7076, 7251, 7267

i05260206

NOTE	REF NO	GRAPHIC REF	PART NUMBER	QTY	PART NAME 1 2 3 4 5 6 (PRODUCT LEVEL)	SEE PAGE
D	1	1	**5P-8309**		SEAL (0.2-M)	
D	1A	1	**5P-8309**		SEAL (0.3-M)	
	2	1	**377-6749**	1	LINER	
	3	1	**244-8284**	1	LINER	
	4	1	**262-2347**	1	LINER	

D - ORDER BY THE METER

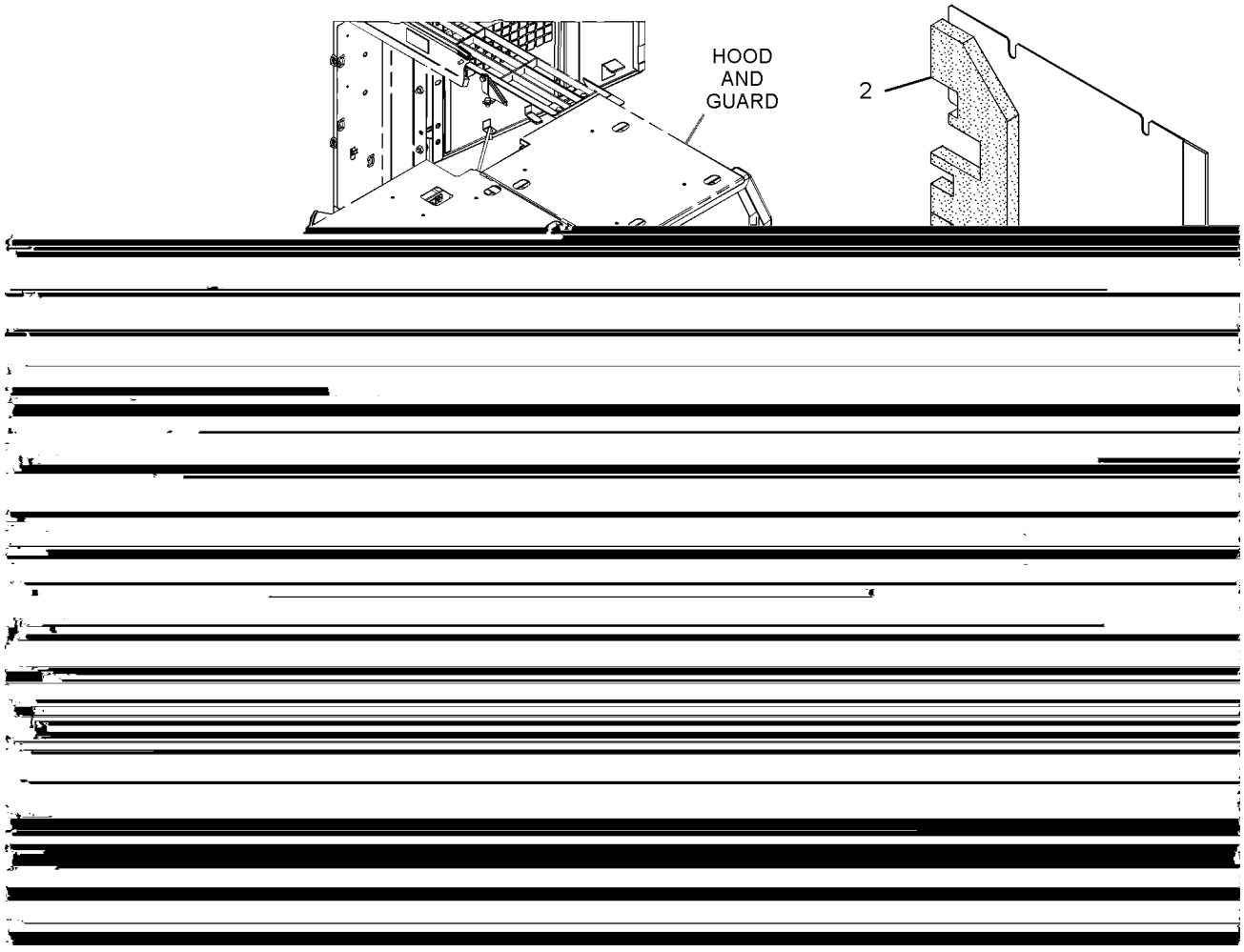

GRAPHIC #1 **<END>** g02732422

391-9646 SHEET AS-SOUND SUPPRESSION

S/N: FKK1-UP; DNP1-UP

PART OF 421-6929 HOOD & GUARD GP

SMCS-1801, 7076, 7251, 7267 **i05260208**

NOTE	REF NO	GRAPHIC REF	PART NUMBER	QTY	PART NAME 1 2 3 4 5 6 (PRODUCT LEVEL)	SEE PAGE
	1	1	**377-6746**	1	LINER	
	2	1	**377-6727**	1	LINER	
	3	1	**394-7410**	1	LINER	

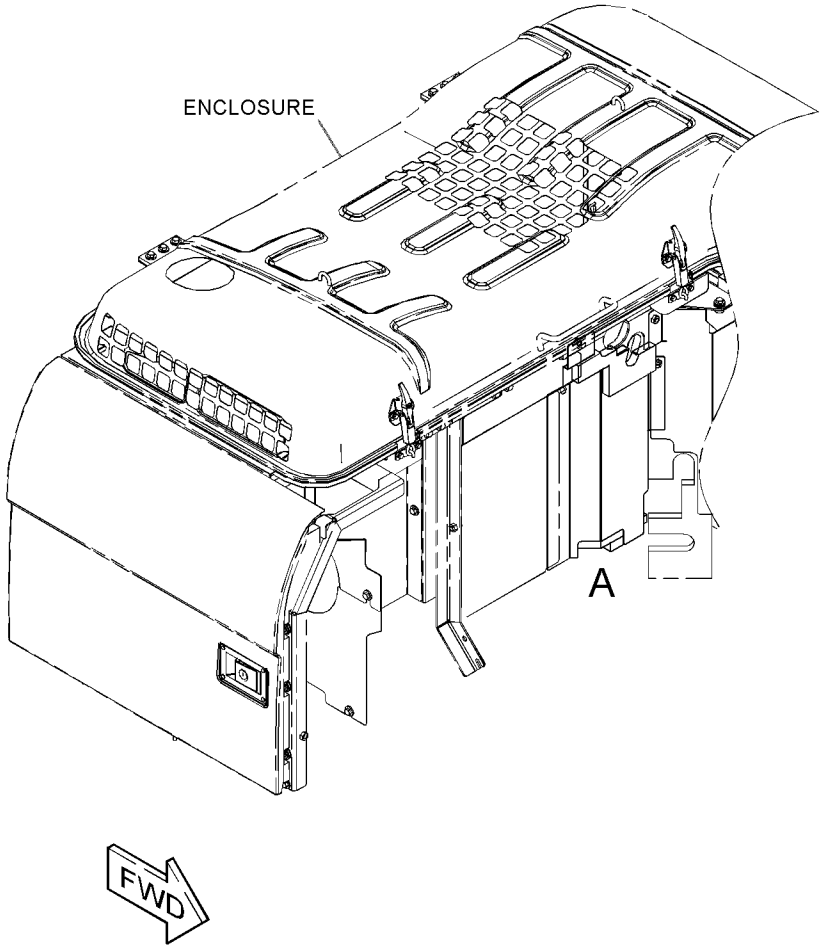

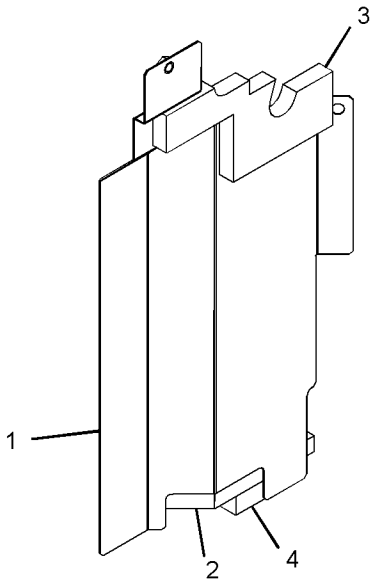

VIEW OF AREA A

GRAPHIC #1 **<END>** g03303477

396-8523 SHEET AS-SOUND SUPPRESSION

S/N: FKK1-UP; DNP1-UP

PART OF 421-6929 HOOD & GUARD GP

SMCS-1801, 7076, 7251, 7267 **i05280812**

NOTE	REF NO	GRAPHIC REF	PART NUMBER	QTY	PART NAME 1 2 3 4 5 6 (PRODUCT LEVEL)	SEE PAGE
	1	1	**391-9642**	1	LINER	
	2	1	*396-8524*	1	SHEET AS	
M		1	**8T-3597**	2	NUT-WELD (M12X1.75-THD)	
	3	1	**399-6263**	1	LINER	

M - METRIC PART

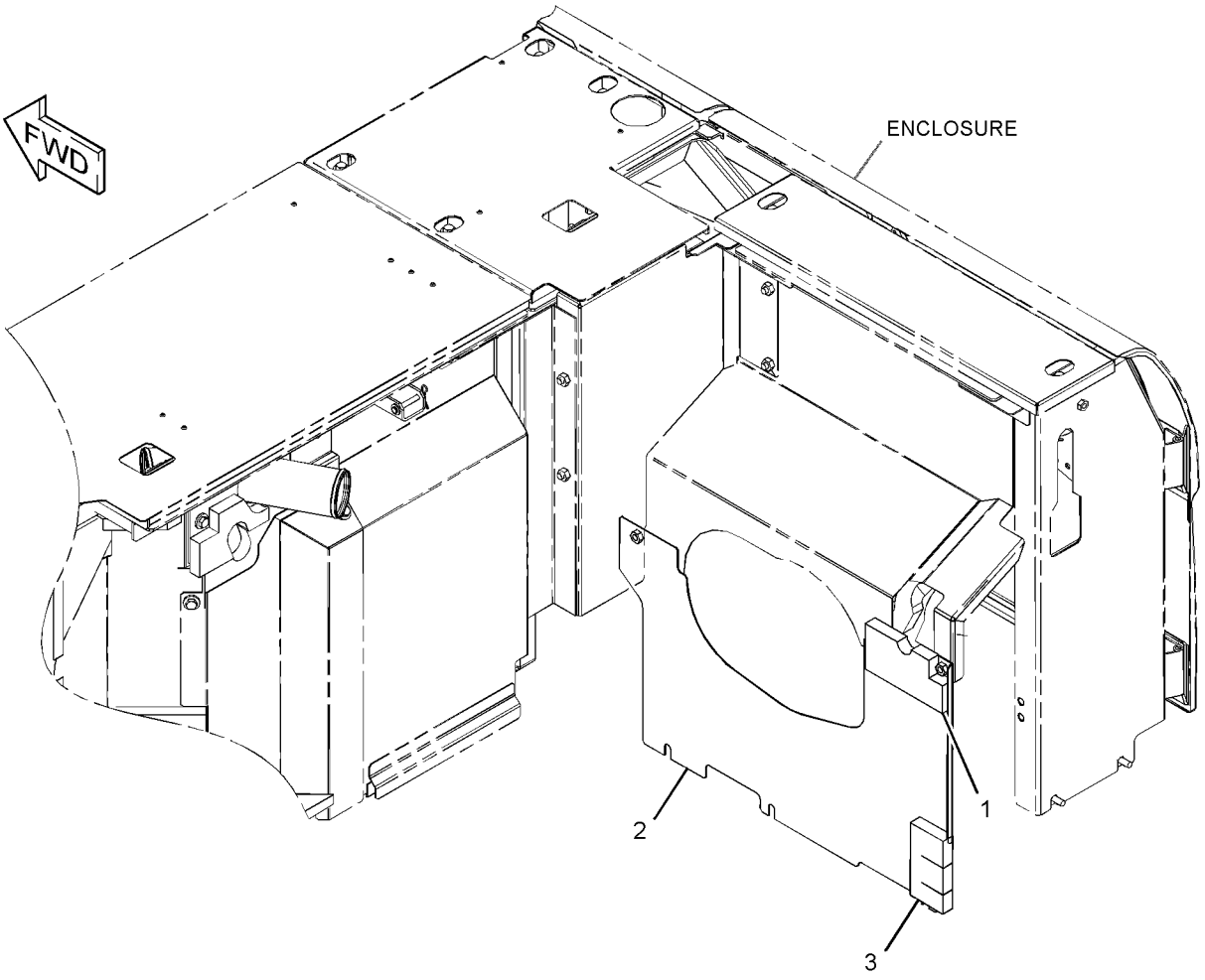

GRAPHIC #1 **<END>** g03358538

419-3368 SHEET AS-SOUND SUPPRESSION

S/N: FKK1-UP; DNP1-UP

PART OF 421-6929 HOOD & GUARD GP

SMCS-1801, 7076, 7251, 7267

i05260214

NOTE	REF NO	GRAPHIC REF	PART NUMBER	QTY	PART NAME 1 2 3 4 5 6 (PRODUCT LEVEL)	SEE PAGE
	1	1	**262-2313**	1	LINER	
	2	1	**278-3837**	1	LINER	
	3	1	*419-3369*	1	SHEET AS	
M		1	**6V-9632**	4	NUT-WELD (M6X1-THD)	
		1	**7T-1099**	3	LINK	
M		1	**8T-3490**	1	NUT-WELD (M10X1.5-THD)	
M		1	**8T-3597**	2	NUT-WELD (M12X1.75-THD)	

M - METRIC PART

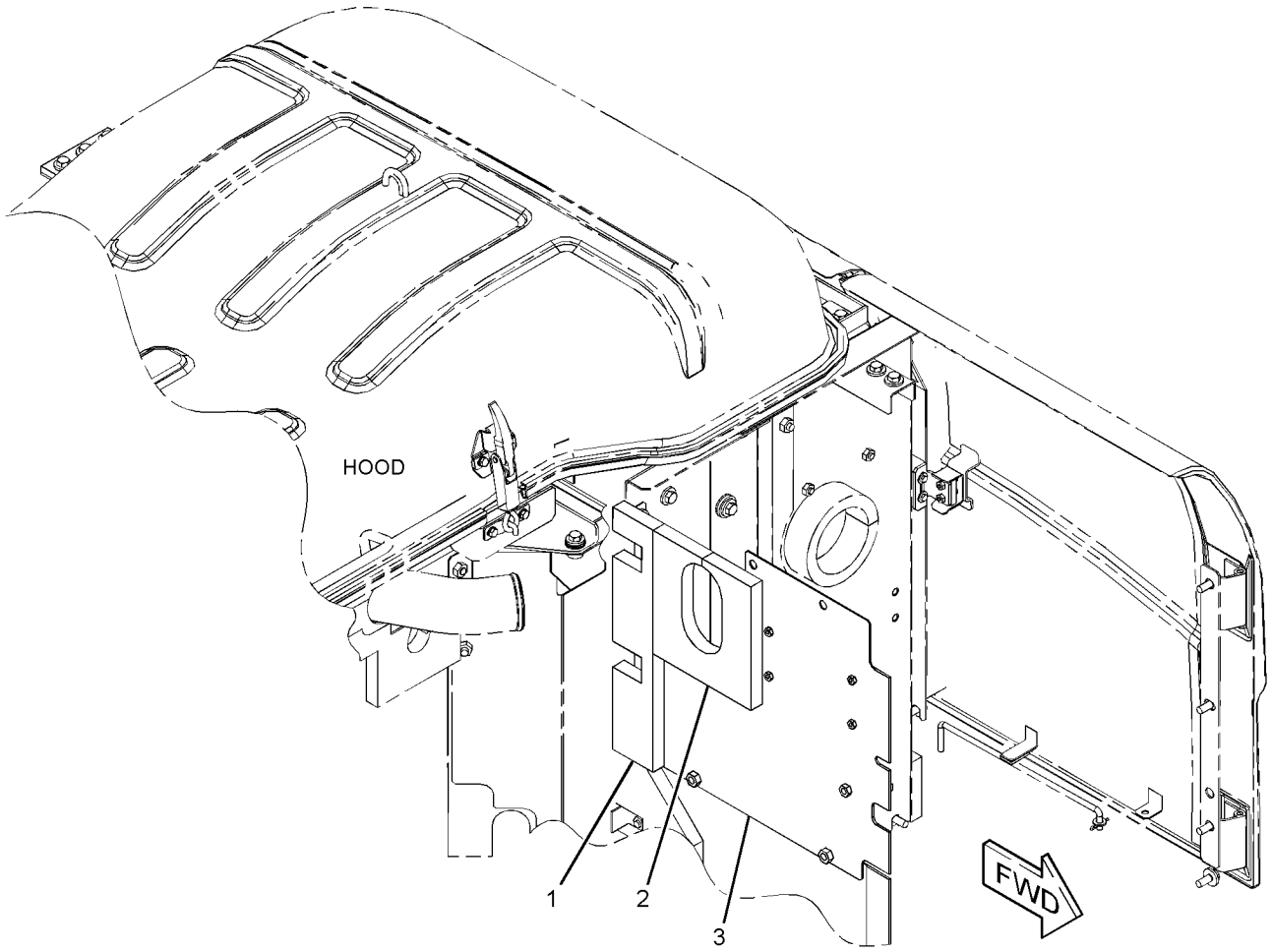

GRAPHIC #1

<END>

g03310497

428-5842 SHEET AS-SOUND SUPPRESSION

S/N: FKK1-UP; DNP1-UP

PART OF 421-6929 HOOD & GUARD GP

SMCS-1801, 7076, 7251, 7267 **i05298531**

NOTE	REF NO	GRAPHIC REF	PART NUMBER	QTY	PART NAME 1 2 3 4 5 6 (PRODUCT LEVEL)	SEE PAGE
	1	1	**377-6760**	1	SHEET-RUBBER	
	2	1	**377-6782**	1	LINER	
	3	1	*428-5843*	1	SUPPORT AS	
M		1	**8T-3490**	2	NUT-WELD (M10X1.5-THD)	
	4	1	**396-7695**	1	LINER	
	5	1	**396-7696**	1	LINER	
	6	1	**396-7697**	1	LINER	
	7	1	**396-7698**	1	LINER	
J	8	1	**348-5409**		SEAL (10-DM)	

J - ORDER BY THE DECIMETER
M - METRIC PART

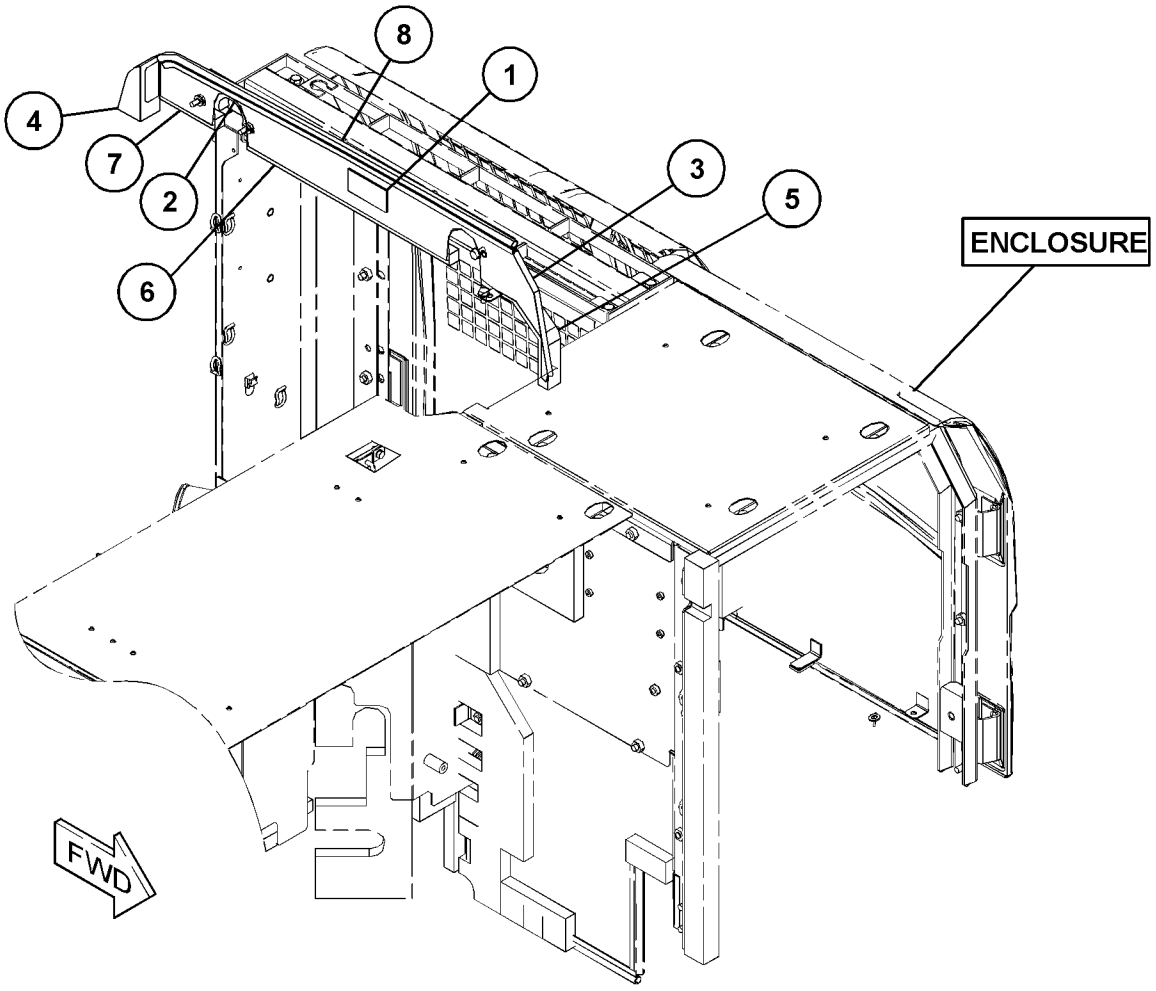

GRAPHIC #1 **<END>** g03301096

431-0101 SHEET AS-SOUND SUPPRESSION

S/N: FKK1-UP; DNP1-UP

PART OF 421-6929 HOOD & GUARD GP

SMCS-1801, 7076, 7251, 7267 **i05260301**

NOTE	REF NO	GRAPHIC REF	PART NUMBER	QTY	PART NAME 1 2 3 4 5 6 (PRODUCT LEVEL)	SEE PAGE
	1	1	**387-5174**	1	LINER	
	2	1	**391-9636**	1	LINER	

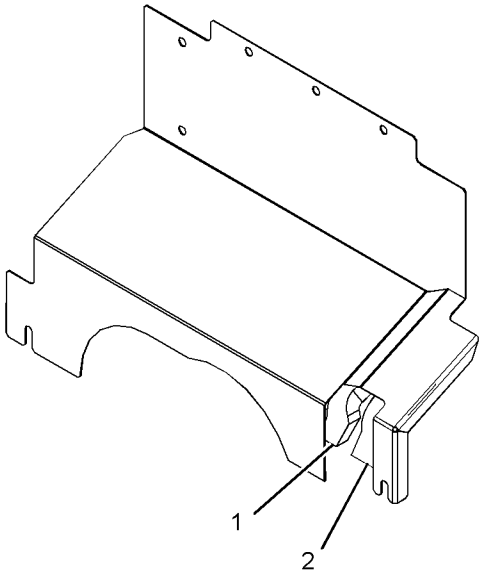

VIEW OF AREA A

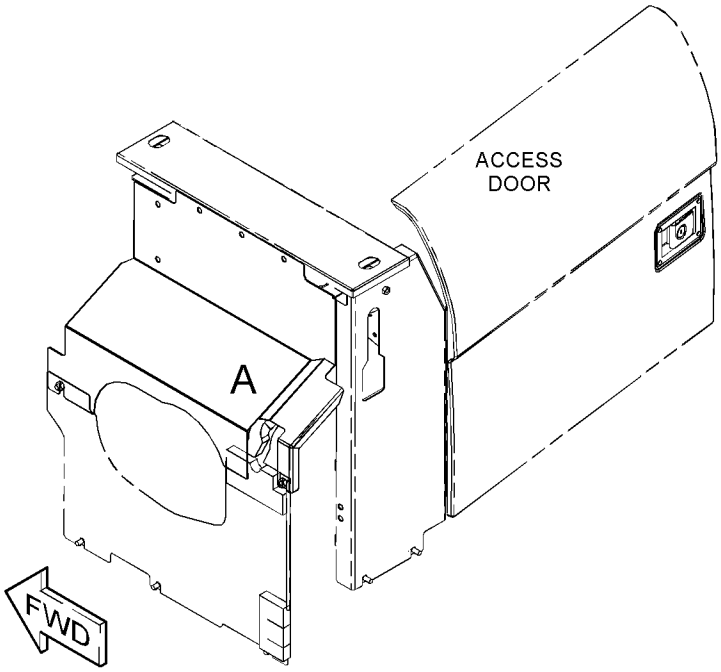

GRAPHIC #1

<END>

g03354224

391-8786 STEP GP

S/N: FKK1-UP; DNP1-UP

PART OF 421-6926, 433-6906 CHASSIS AR

SMCS-7254 **i04913920**

NOTE	REF NO	GRAPHIC REF	PART NUMBER	QTY	PART NAME 1 2 3 4 5 6 (PRODUCT LEVEL)	SEE PAGE
M	1	1	**135-8573**	2	BOLT AS	
	2	1	**391-8787**	1	STEP AS	

M - METRIC PART

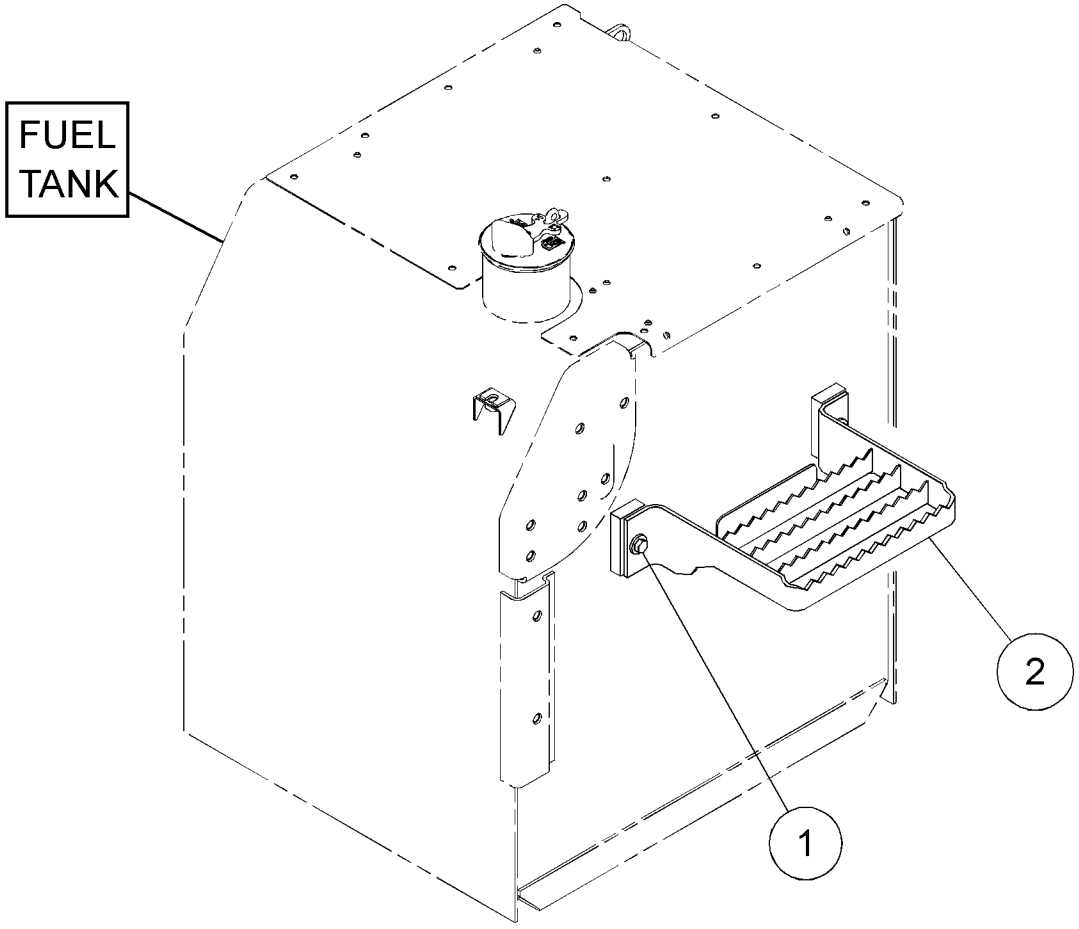

GRAPHIC #1 **<END>** g03094537

377-6698 SUPPORT AS-ENCLOSURE

S/N: FKK1-UP; DNP1-UP

PART OF 421-6929 HOOD & GUARD GP

SMCS-0635, 1801, 7076, 7251, 7263, 7267, 7272, 7276 **i05260205**

NOTE	REF NO	GRAPHIC REF	PART NUMBER	QTY	PART NAME 1 2 3 4 5 6 (PRODUCT LEVEL)	SEE PAGE
	1	1	**244-8277**	1	LINER	
	2	1	**244-8278**	1	LINER	
	3	1	**244-8288**	1	LINER	

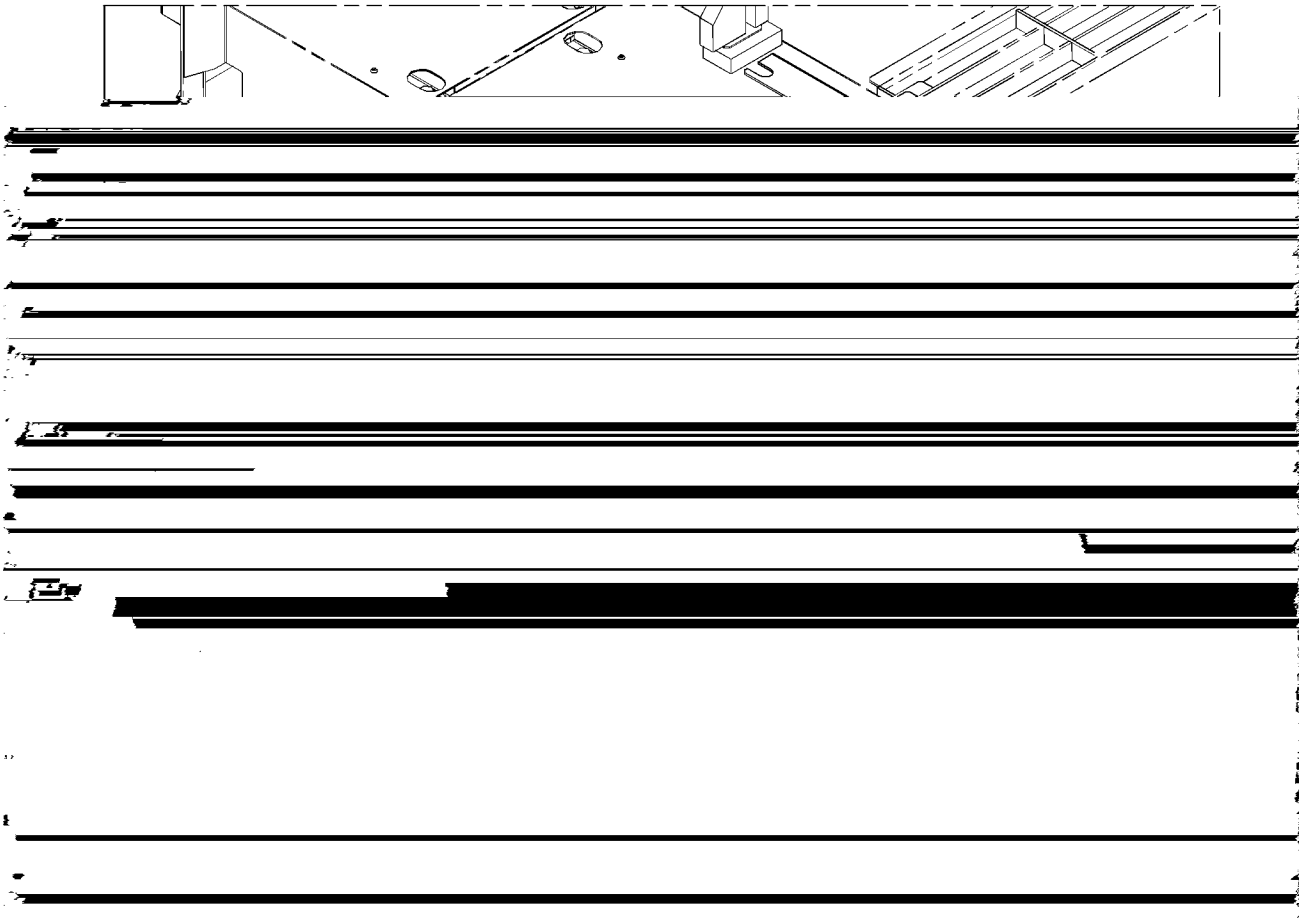

GRAPHIC #1 **<END>** g02733266

379-7425 SUPPORT AS-SOUND SUPPRESSION

S/N: FKK1-UP; DNP1-UP

PART OF 421-6929 HOOD & GUARD GP

SMCS-7276 **i05266161**

NOTE	REF NO	GRAPHIC REF	PART NUMBER	QTY	PART NAME 1 2 3 4 5 6 (PRODUCT LEVEL)	SEE PAGE
	1	1	*379-7426*	1	SUPPORT AS	
M		1	**8T-3597**	5	NUT-WELD (M12X1.75-THD)	
M		1	**9R-5271**	1	BOSS (M10X1.5X25-MM)	
	2	1	**248-8943**	1	LINER	
	3	1	**379-7509**	1	LINER	

M - METRIC PART

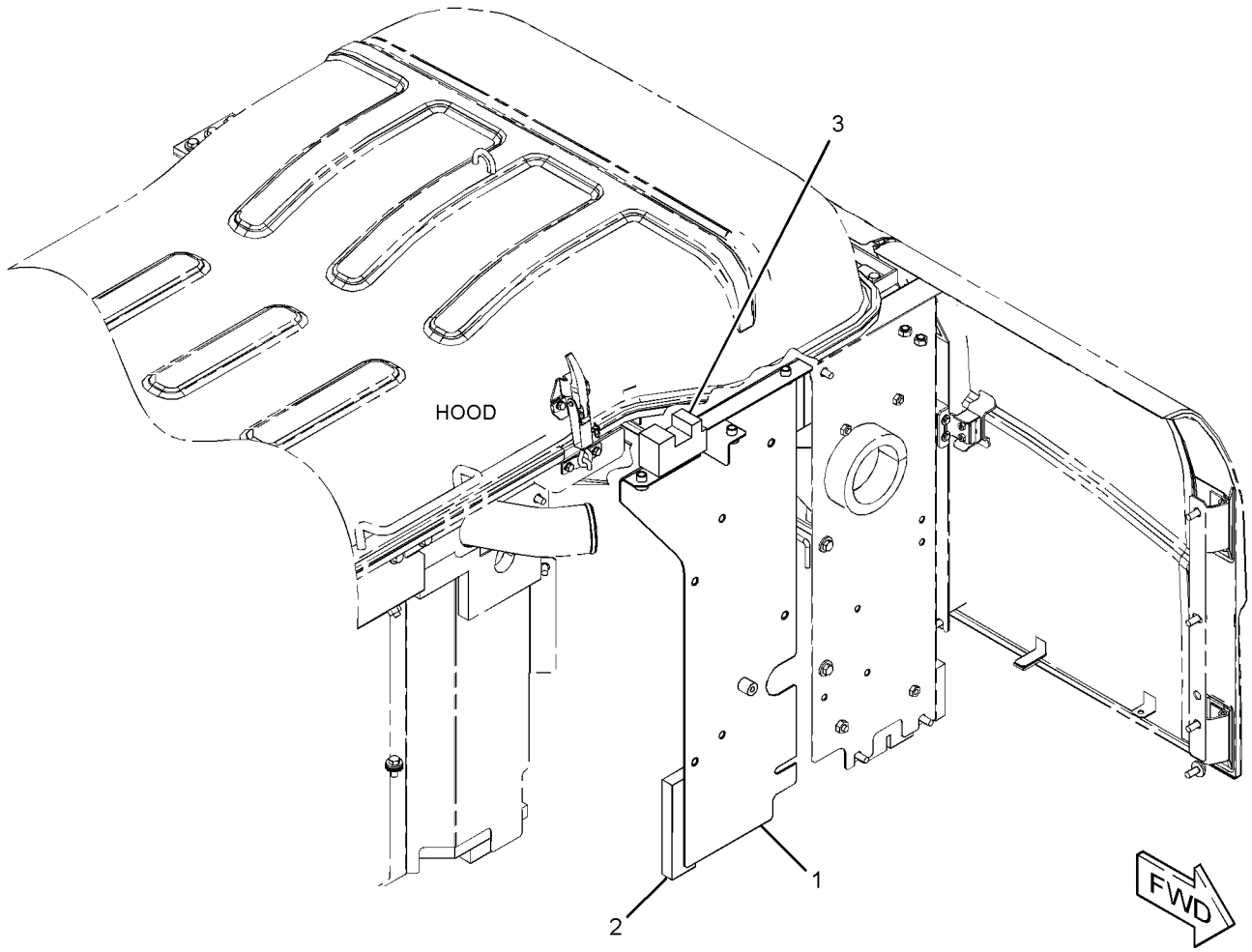

GRAPHIC #1 **<END>** g03310396

397-9009 SUPPORT AS-SOUND SUPPRESSION

S/N: FKK1-UP; DNP1-UP

PART OF 421-6929 HOOD & GUARD GP

SMCS-7276 **i05260213**

NOTE	REF NO	GRAPHIC REF	PART NUMBER	QTY	PART NAME 1 2 3 4 5 6 (PRODUCT LEVEL)	SEE PAGE
	1	1	**377-6767**	1	LINER	
	2	1	**377-6809**	1	LINER	
	3	1	*397-9010*	1	SUPPORT AS	
M		1	**8T-3597**	2	NUT-WELD (M12X1.75-THD)	
M		1	**8T-3612**	2	NUT-WELD (M8X1.25-THD)	

M - METRIC PART

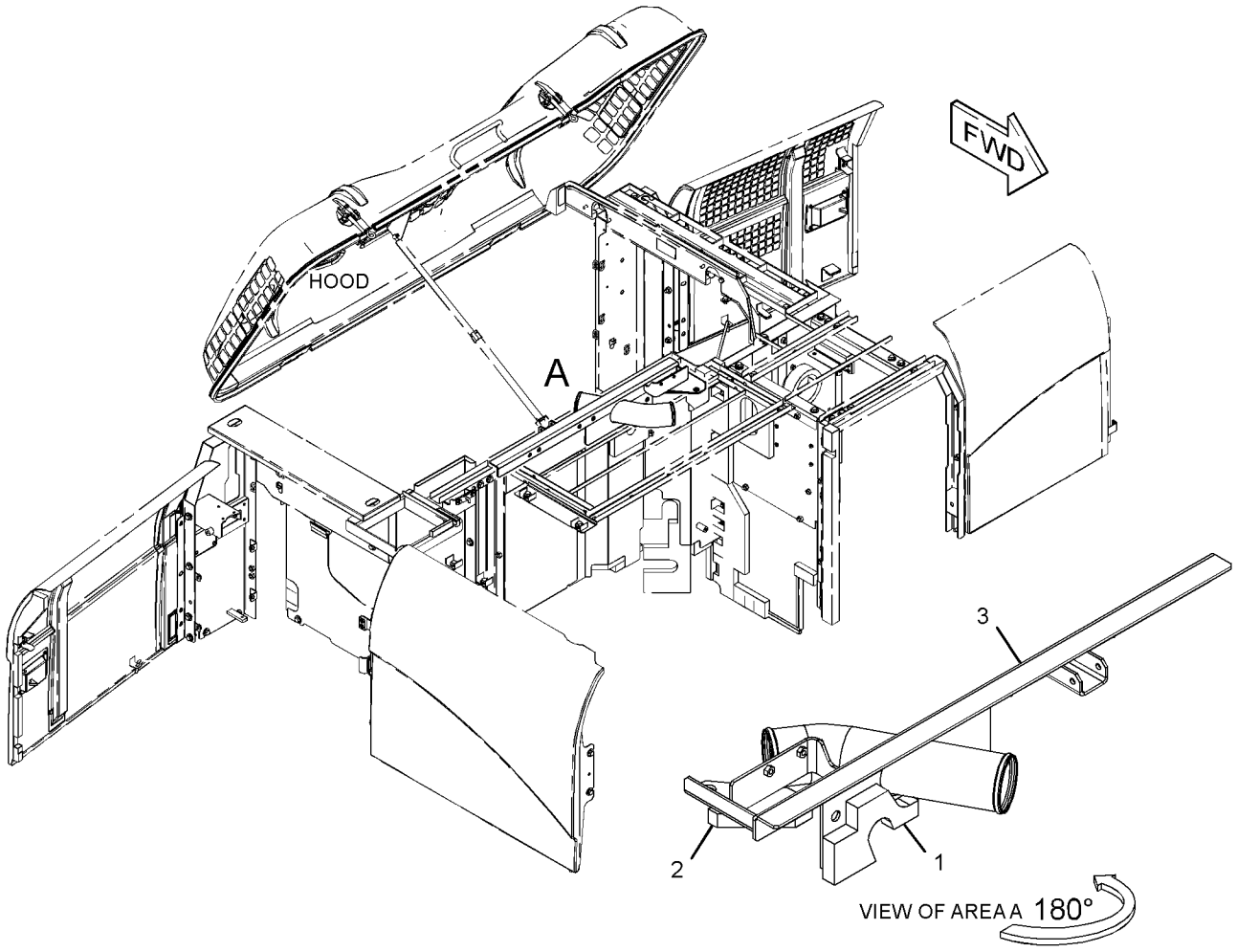

GRAPHIC #1 **<END>** g03303860

387-9125 FRAME AR-UNDERCARRIAGE

S/N: FKK1-UP; DNP1-UP
PART OF 433-2638 GENERAL AR
ALSO AN ATTACHMENT

SMCS-4151 **i05300301**

NOTE	PART NUMBER	QTY	PART NAME 1 2 3 4 5 6 (PRODUCT LEVEL)	SEE PAGE
Y	*386-0233*	1	FRAME AS-UNDERCARRIAGE	177
Y	*227-6147*	1	GEAR & BEARING GP-SWING	155
Y	*087-5908*	2	GUARD GP-TRACK GUIDE (CENTER)	178
Y	*346-7204*	1	GUARD GP-TRAVEL MOTOR	179
Y	*239-4341*	1	IDLER GP-FRONT	180
Y	*239-1716*	1	LINES GP-TRAVEL MOTOR	284
Y	*387-9126*	1	ROLLER AR-TRACK & CARRIER	187

Y - SEPARATE ILLUSTRATION

<END>

432-5008 FRAME AR-UNDERCARRIAGE

S/N: DNP1-UP
AN ATTACHMENT

SMCS-4151 **i05266759**

NOTE	PART NUMBER	QTY	PART NAME 1 2 3 4 5 6 (PRODUCT LEVEL)	SEE PAGE
Y	**236-8341**	1	FRAME AS-UNDERCARRIAGE	176
Y	*227-6147*	1	GEAR & BEARING GP-SWING	155
Y	*087-5908*	1	GUARD GP-TRACK GUIDE (CENTER)	178
Y	*346-7204*	1	GUARD GP-TRAVEL MOTOR	179
Y	*239-4341*	1	IDLER GP-FRONT	180
Y	*239-1717*	1	LINES GP-TRAVEL MOTOR (LONG UNDERCARRIAGE)	287
Y	*297-9132*	1	ROLLER AR-TRACK & CARRIER	186

Y - SEPARATE ILLUSTRATION

<END>

236-8341 FRAME AS-UNDERCARRIAGE

S/N: DNP1-UP

PART OF 432-5008 FRAME AR-UNDERCARRIAGE

AN ATTACHMENT

SMCS-4150, 7062

i05268792

NOTE	REF NO	GRAPHIC REF	PART NUMBER	QTY	PART NAME 1 2 3 4 5 6 (PRODUCT LEVEL)	SEE PAGE
B	1	1	**8P-9770**	1	PLATE	
	2	1	*236-8357*	1	FRAME AS-TRACK ROLLER (RH)	
	2A	1	**117-5540**	2	BRACKET	
	2B	1	**235-7520**	2	STEP	
	3	1	*236-8358*	1	FRAME AS-TRACK ROLLER (LH)	
	3A	1	**117-5540**	2	BRACKET	
	3B	1	**235-7520**	2	STEP	

B - USE AS REQUIRED

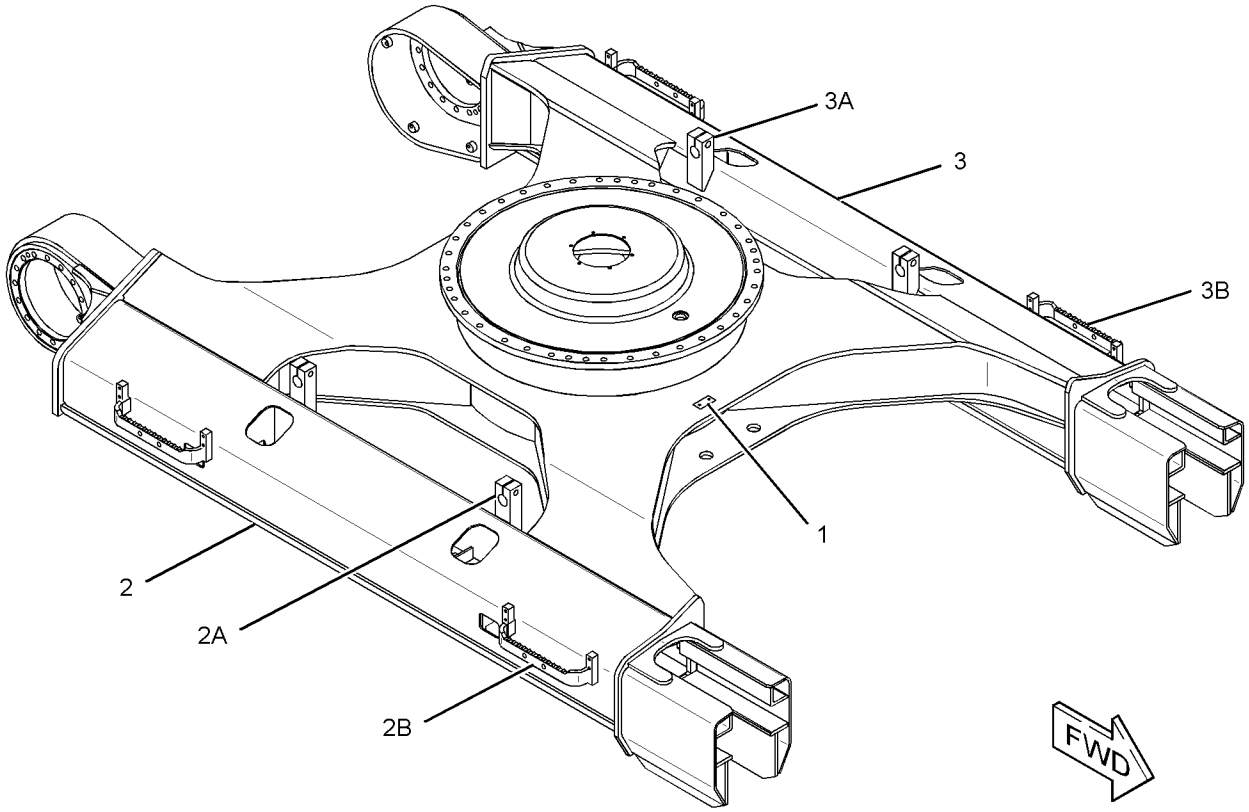

GRAPHIC #1

<END>

g01502813

386-0233 FRAME AS-UNDERCARRIAGE

S/N: FKK1-UP; DNP1-UP
PART OF 387-9125 FRAME AR-UNDERCARRIAGE
ALSO AN ATTACHMENT

SMCS-4150, 7062

i04915009

NOTE	REF NO	GRAPHIC REF	PART NUMBER	QTY	PART NAME 1 2 3 4 5 6 (PRODUCT LEVEL)	SEE PAGE
	1	1	*386-0258*	1	FRAME AS-TRACK ROLLER	
	1A	1	**386-0281**	2	BRACKET	
	1B	1	**386-0285**	2	STEP	
	2	1	*386-0276*	1	FRAME AS-TRACK ROLLER	
	2A	1	**386-0281**	2	BRACKET	
	2B	1	**386-0285**	2	STEP	

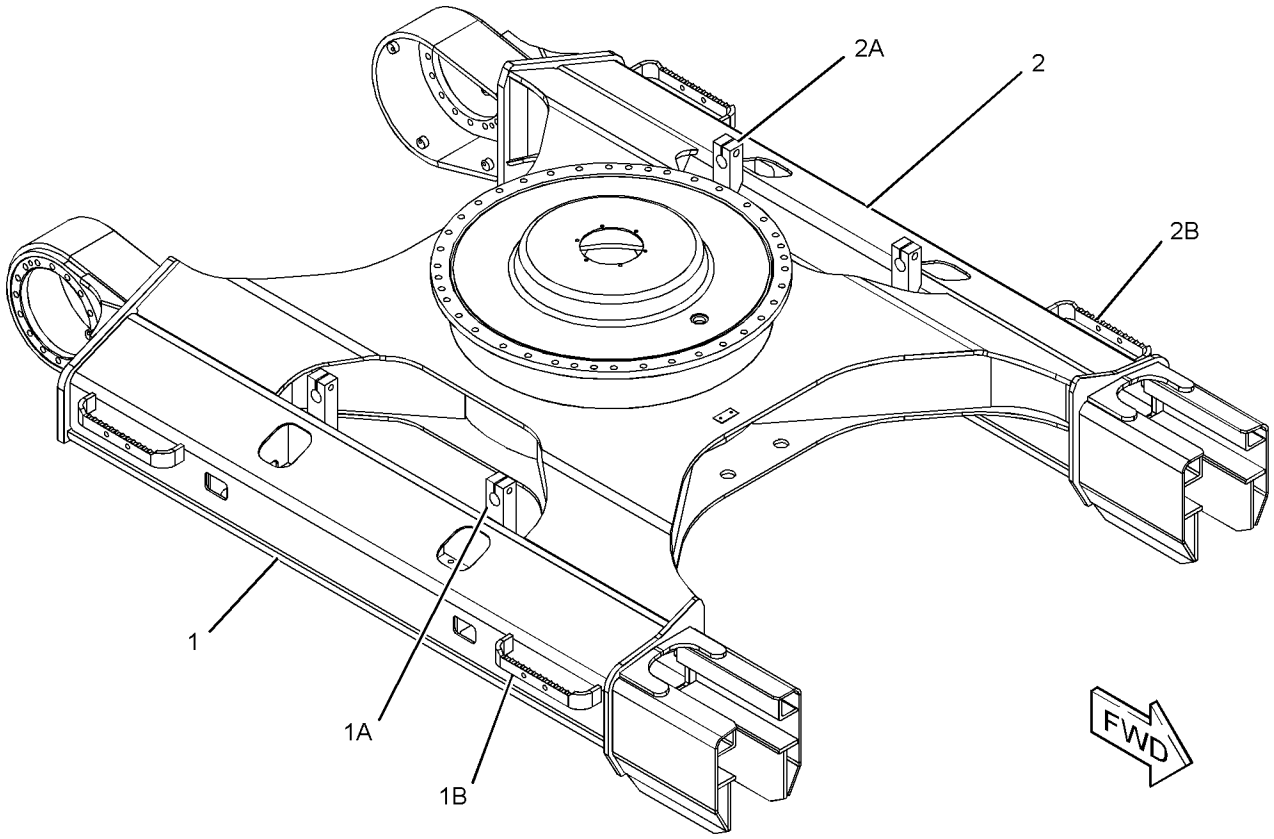

GRAPHIC #1

<END>

g01416824

087-5908 GUARD GP-TRACK GUIDE–CENTER

S/N: FKK1-UP; DNP1-UP
PART OF 387-9125, 432-5008 FRAME AR-UNDERCARRIAGE
ALSO AN ATTACHMENT

SMCS-4177 **i04909379**

NOTE	REF NO	GRAPHIC REF	PART NUMBER	QTY	PART NAME 1 2 3 4 5 6 (PRODUCT LEVEL)	SEE PAGE
	1	1	**240-2988**	1	GUARD AS-TRACK GUIDE	
M	2	1	**8T-5460**	4	BOLT (M20X2.5X40-MM)	
	3	1	**8T-4123**	4	WASHER (22X35X3.5-MM THK)	

M - METRIC PART

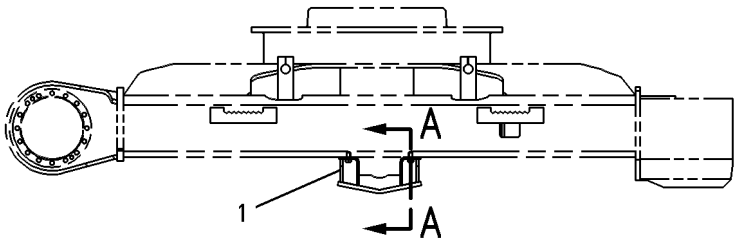

RIGHT SIDE VIEW

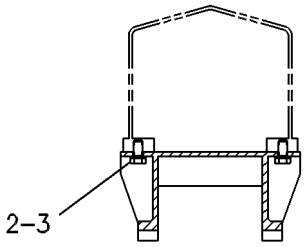

SECTION A–A

GRAPHIC #1 **<END>** g00257014

346-7204 GUARD GP-TRAVEL MOTOR

S/N: FKK1-UP; DNP1-UP
PART OF 387-9125, 432-5008 FRAME AR-UNDERCARRIAGE
ALSO AN ATTACHMENT

SMCS-7163 **i04912093**

NOTE	REF NO	GRAPHIC REF	PART NUMBER	QTY	PART NAME 1 2 3 4 5 6 (PRODUCT LEVEL)	SEE PAGE
M	1	1	**135-8576**	8	BOLT AS-LOCKING	
	2	1	**346-7236**	1	COVER (RH)	
	3	1	**346-7237**	1	COVER (LH)	

M - METRIC PART

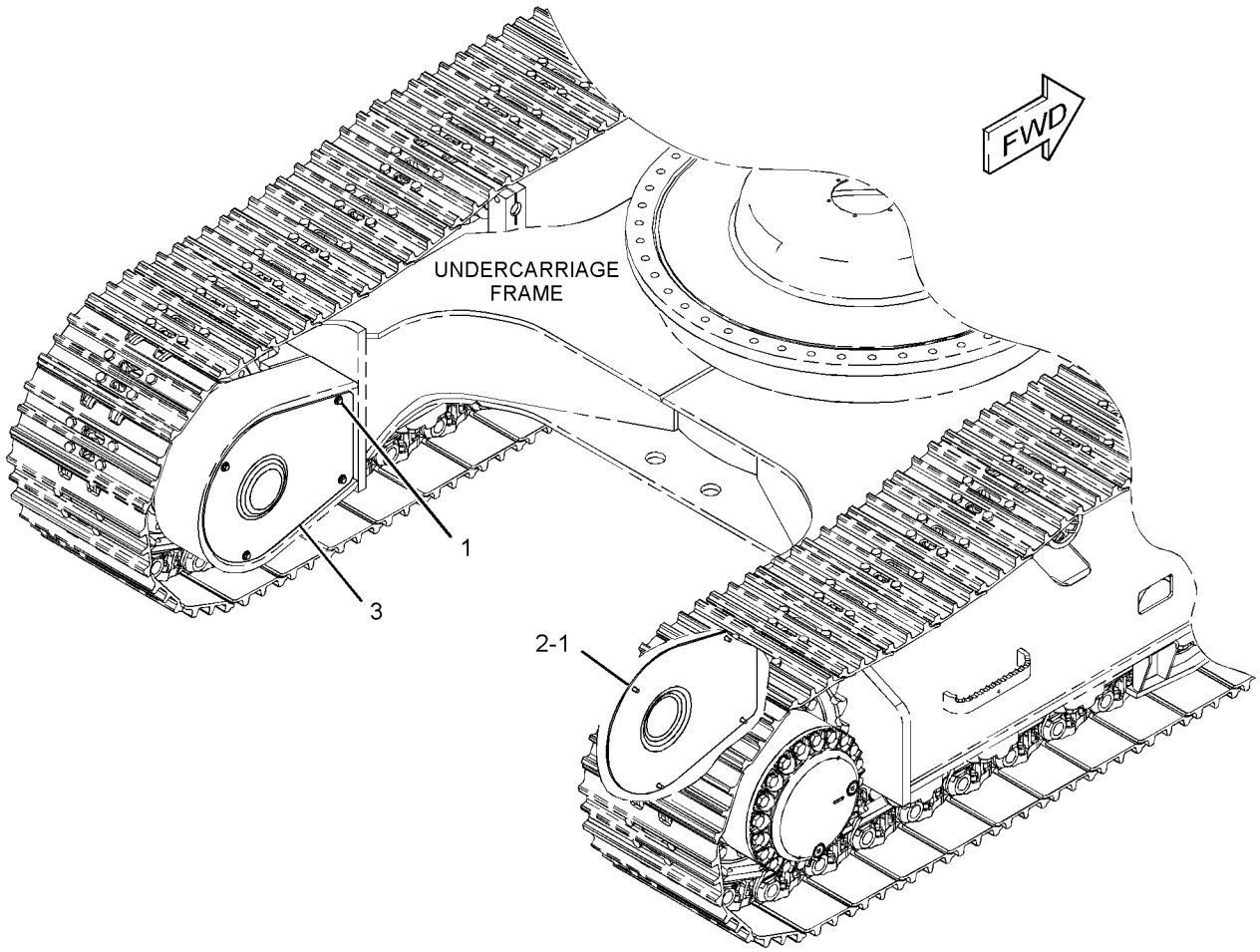

GRAPHIC #1 **<END>** g02723002

239-4341 IDLER GP-FRONT

S/N: FKK1-UP; DNP1-UP
PART OF 387-9125, 432-5008 FRAME AR-UNDERCARRIAGE
ALSO AN ATTACHMENT

SMCS-4159 **i05277499**

NOTE	REF NO	GRAPHIC REF	PART NUMBER	QTY	PART NAME 1 2 3 4 5 6 (PRODUCT LEVEL)	SEE PAGE
Y	1	1	*239-4385*	1	IDLER GP-FRONT (RH)	181
Y	2	1	*239-4386*	1	IDLER GP-FRONT (LH)	182

Y - SEPARATE ILLUSTRATION

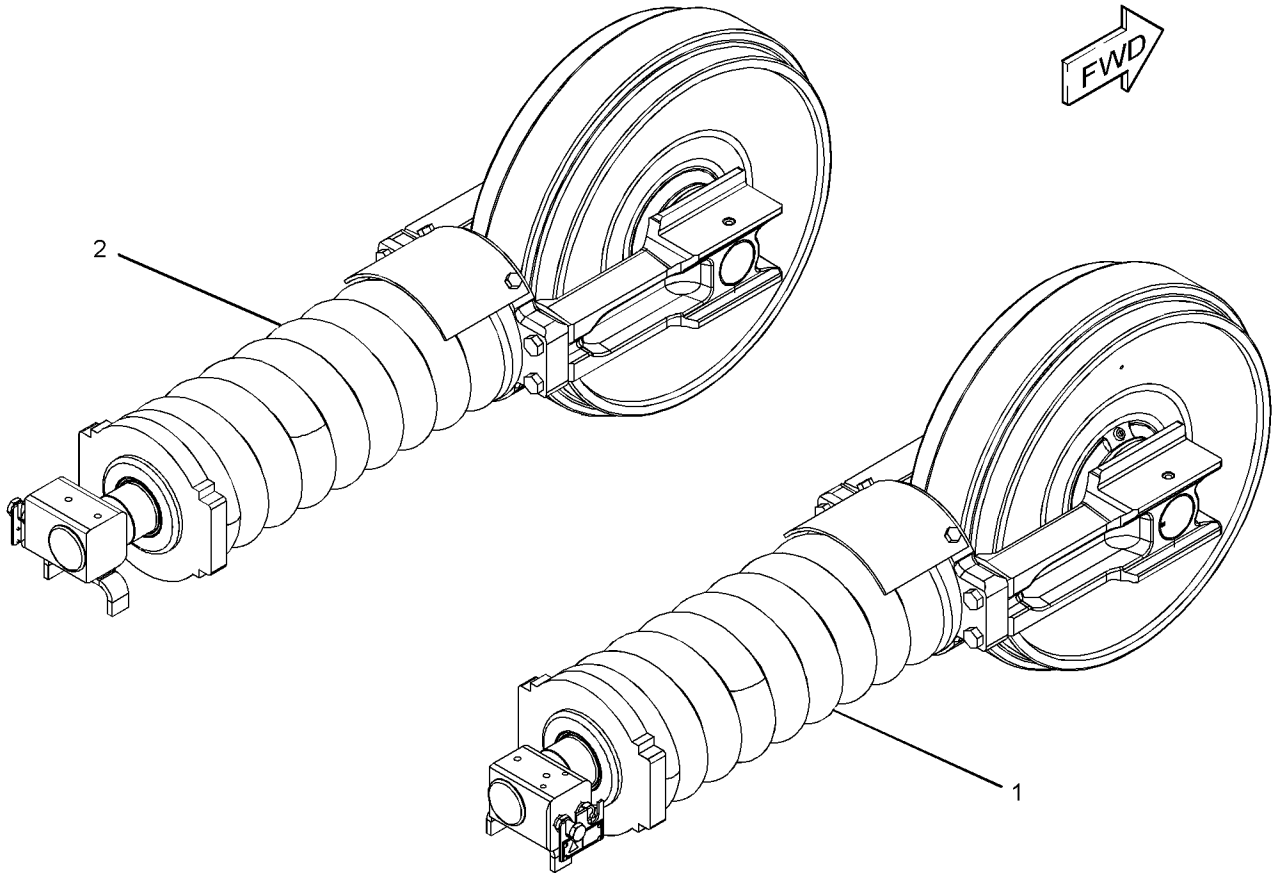

GRAPHIC #1 **<END>** g01217090

239-4385 IDLER GP-FRONT–RH

S/N: FKK1-UP; DNP1-UP
PART OF 239-4341 IDLER GP-FRONT
ALSO AN ATTACHMENT

SMCS-4159 **i04909398**

NOTE	REF NO	GRAPHIC REF	PART NUMBER	QTY	PART NAME 1 2 3 4 5 6 (PRODUCT LEVEL)	SEE PAGE
Y	1	1	*239-4387*	1	TRACK ADJUSTER & RECOIL GP (RH)	190
Y	2	1	**248-7143**	1	IDLER GP-FRONT	183
M	3	1	**8T-4140**	4	BOLT (M16X2X60-MM)	

M - METRIC PART
Y - SEPARATE ILLUSTRATION

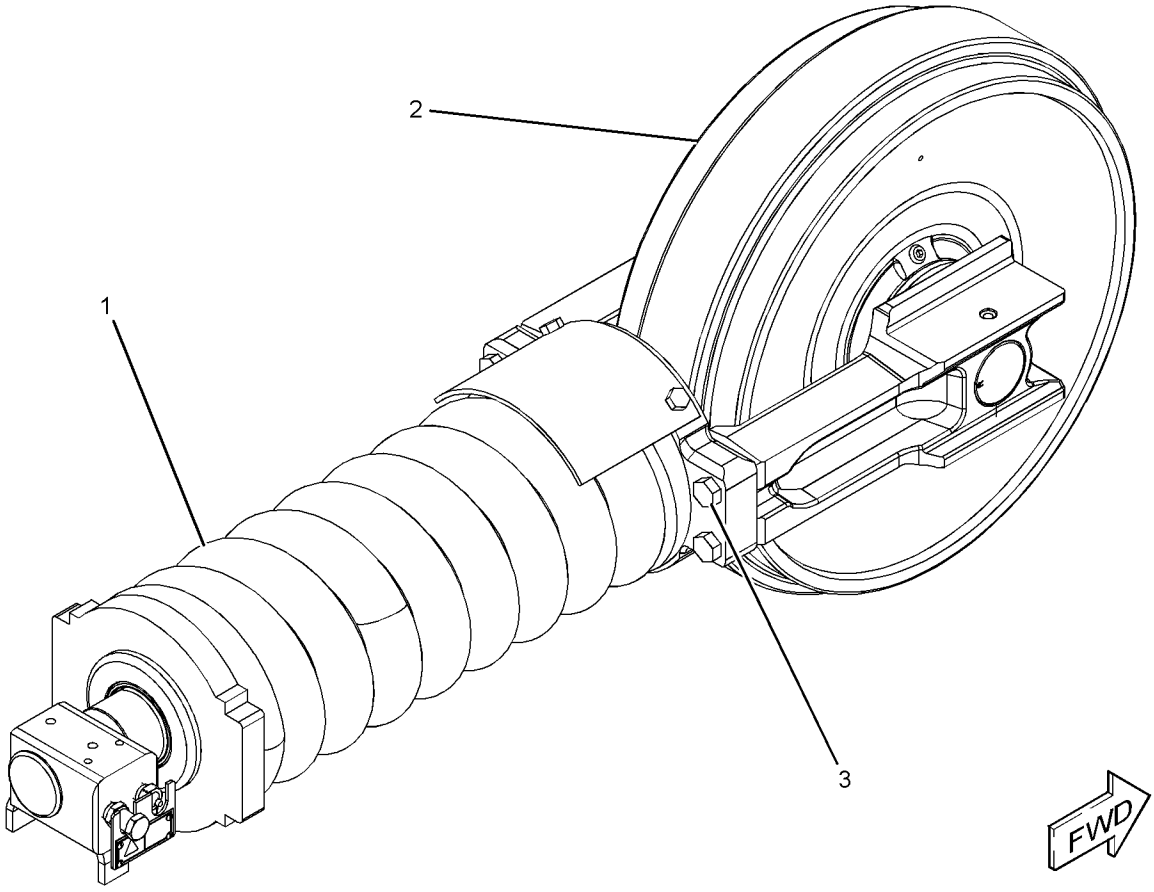

GRAPHIC #1 **<END>** g01217100

239-4386 IDLER GP-FRONT–LH

S/N: FKK1-UP; DNP1-UP
PART OF 239-4341 IDLER GP-FRONT
ALSO AN ATTACHMENT

SMCS-4159 **i04909438**

NOTE	REF NO	GRAPHIC REF	PART NUMBER	QTY	PART NAME 1 2 3 4 5 6 (PRODUCT LEVEL)	SEE PAGE
Y	1	1	*239-4388*	1	TRACK ADJUSTER & RECOIL GP (LH)	191
Y	2	1	**248-7143**	1	IDLER GP-FRONT	183
M	3	1	**8T-4140**	4	BOLT (M16X2X60-MM)	

M - METRIC PART
Y - SEPARATE ILLUSTRATION

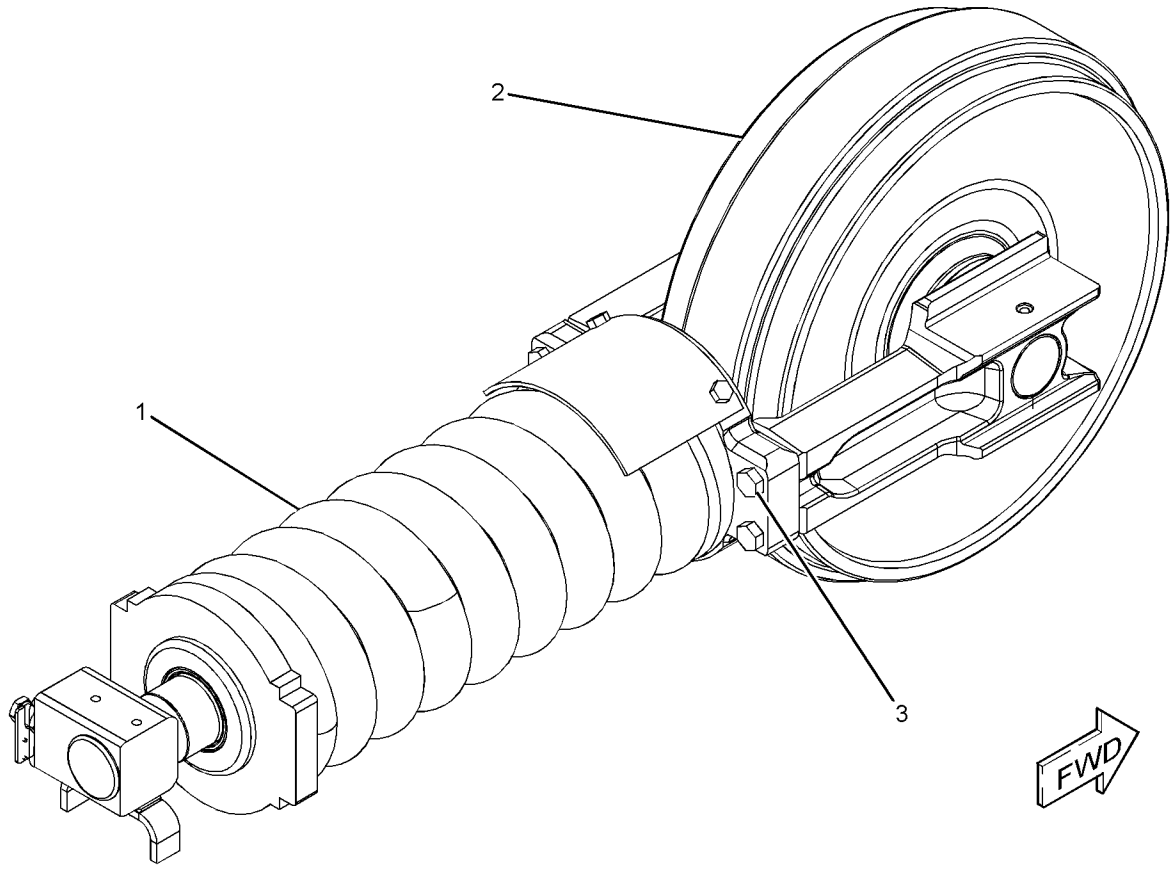

GRAPHIC #1 **<END>** g01217105

248-7143 IDLER GP-FRONT

S/N: FKK1-UP; DNP1-UP
PART OF 239-4385, 239-4386 IDLER GP-FRONT
ALSO AN ATTACHMENT

SMCS-4159 **i04909420**

NOTE	REF NO	GRAPHIC REF	PART NUMBER	QTY	PART NAME 1 2 3 4 5 6 (PRODUCT LEVEL)	SEE PAGE
	1	1	**9W-2201**	2	SEAL GP-DUO-CONE	
					(EACH INCLUDES)	
		1	**096-4255**	2	RING	
	2	1	**239-4362**	2	BEARING (FRONT IDLER)	
	3	1	**246-5425**	1	SHAFT	
	4	1	**262-4781**	1	IDLER & BEARING AS	
		1	**8E-4359**	2	BEARING	
	5	1	**6V-7658**	2	SEAL-O-RING	
	6	1	**7H-3171**	1	PLUG-PIPE	
	7	1	**9W-9455**	2	PIN	

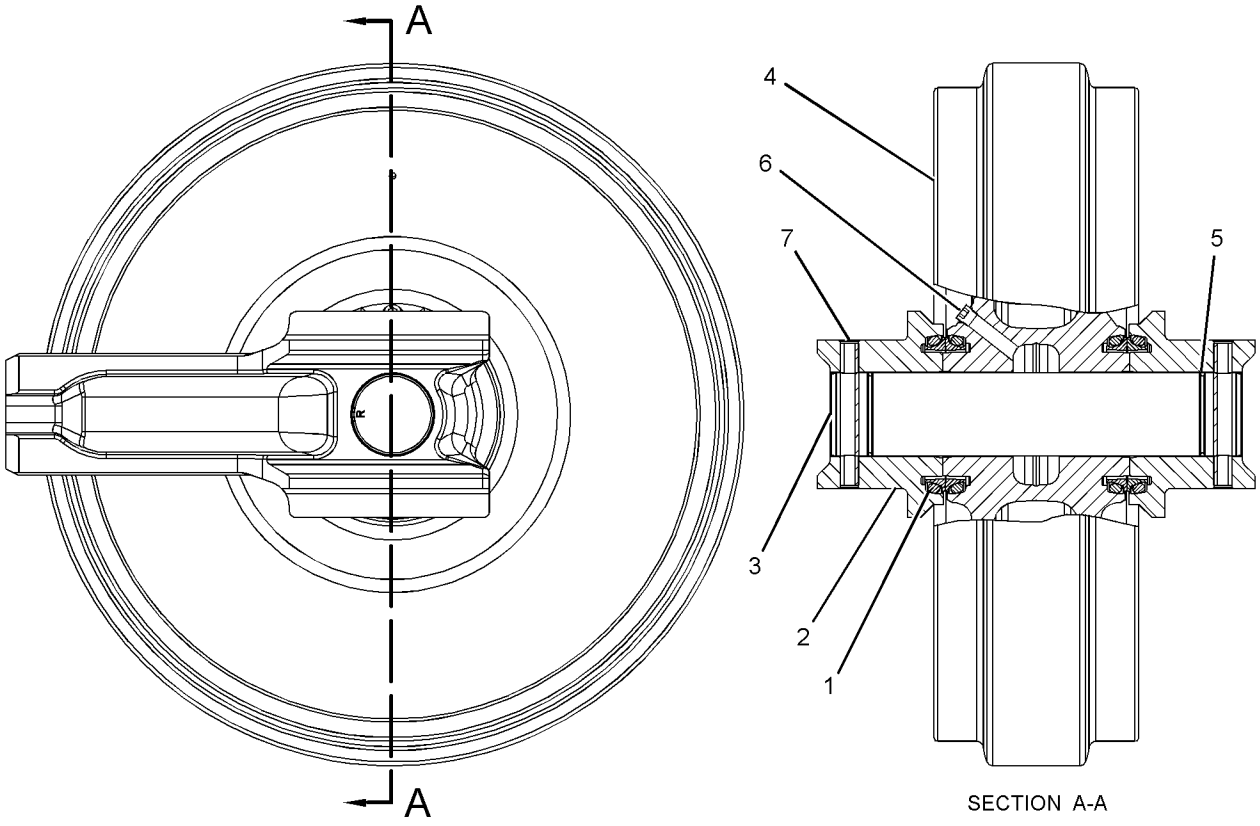

SECTION A-A

GRAPHIC #1 **<END>** g01206925

194-1608 LINK AS-TRACK

S/N: DNP1-UP
PART OF 426-4354 TRACK GP
AN ATTACHMENT

SMCS-4169, 4171

i05294320

NOTE	REF NO	GRAPHIC REF	PART NUMBER	QTY	PART NAME 1 2 3 4 5 6 (PRODUCT LEVEL)	SEE PAGE
	1	1	**9W-3138**	48	LINK-TRACK (LH)	
	2	1	**095-0863**	1	PIN-COTTER	
	3	1	**8E-8586**	1	LINK-MASTER (LH)	
	4	1	**190-3524**	1	BUSHING-TRACK MASTER	
	5	1	**8E-8585**	1	LINK-MASTER (RH)	
	6	1	**188-3064**	1	PIN-TRACK MASTER	
	7	1	**9W-3137**	48	LINK-TRACK (RH)	
	8	1	**6Y-8186**	48	PIN-TRACK	
	10	1	**158-4380**	96	SEAL-TRACK	
	11	1	**190-3523**	48	BUSHING-TRACK	
	12	1	**158-4381**	2	SEAL-TRACK MASTER	

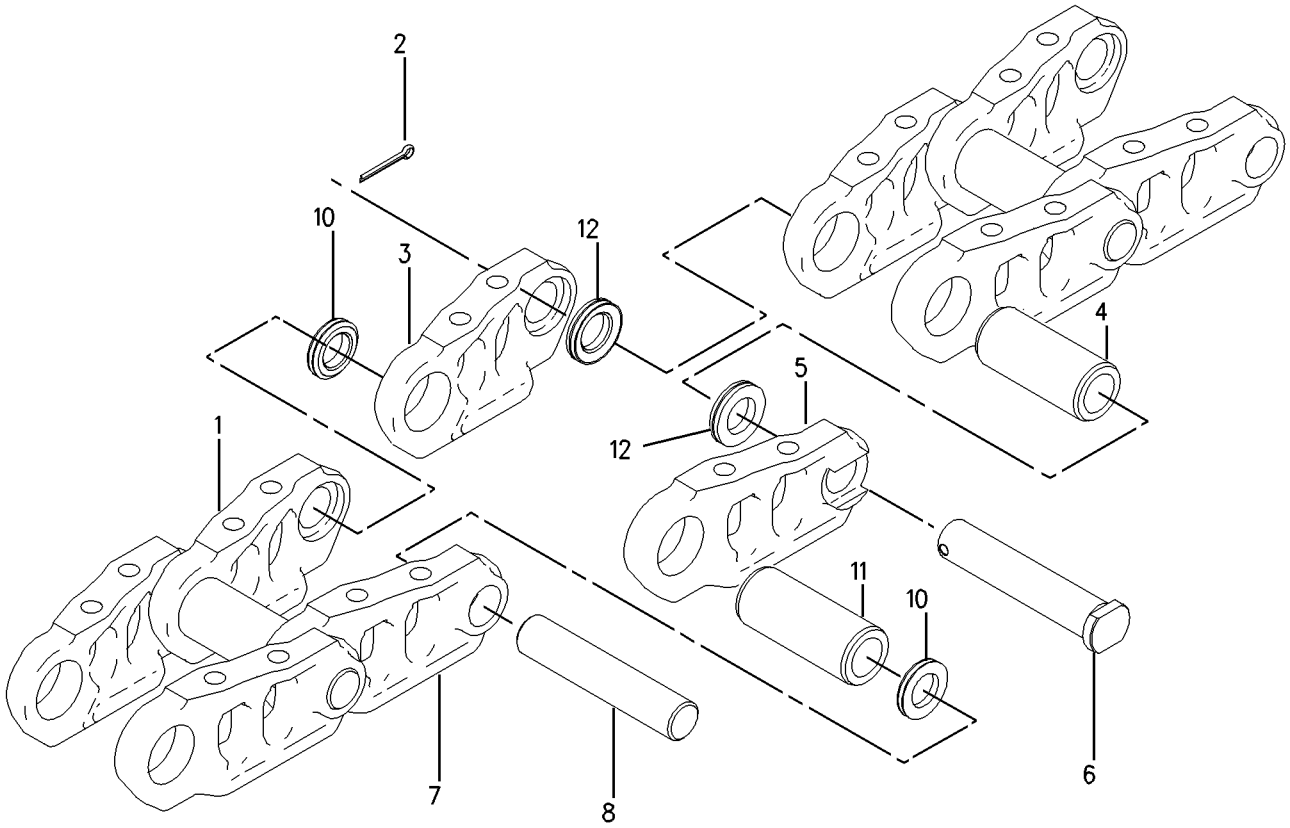

GRAPHIC #1

<END>

g00668766

194-1609 LINK AS-TRACK

S/N: FKK1-UP; DNP1-UP
GREASE LUBRICATED TRACK
PART OF 419-0977 TRACK GP
AN ATTACHMENT

SMCS-4169, 4171

i04918965

NOTE	REF NO	GRAPHIC REF	PART NUMBER	QTY	PART NAME 1 2 3 4 5 6 (PRODUCT LEVEL)	SEE PAGE
	1	1	**9W-3138**	44	LINK-TRACK (LH)	
	2	1	**095-0863**	1	PIN-COTTER	
	3	1	**8E-8586**	1	LINK-MASTER (LH)	
	4	1	**190-3524**	1	BUSHING-TRACK MASTER	
	5	1	**8E-8585**	1	LINK-MASTER (RH)	
	6	1	**188-3064**	1	PIN-TRACK MASTER	
	7	1	**9W-3137**	44	LINK-TRACK (RH)	
	8	1	**6Y-8186**	44	PIN-TRACK	
	10	1	**158-4380**	88	SEAL-TRACK	
	11	1	**190-3523**	44	BUSHING-TRACK	
	12	1	**158-4381**	2	SEAL-TRACK MASTER	

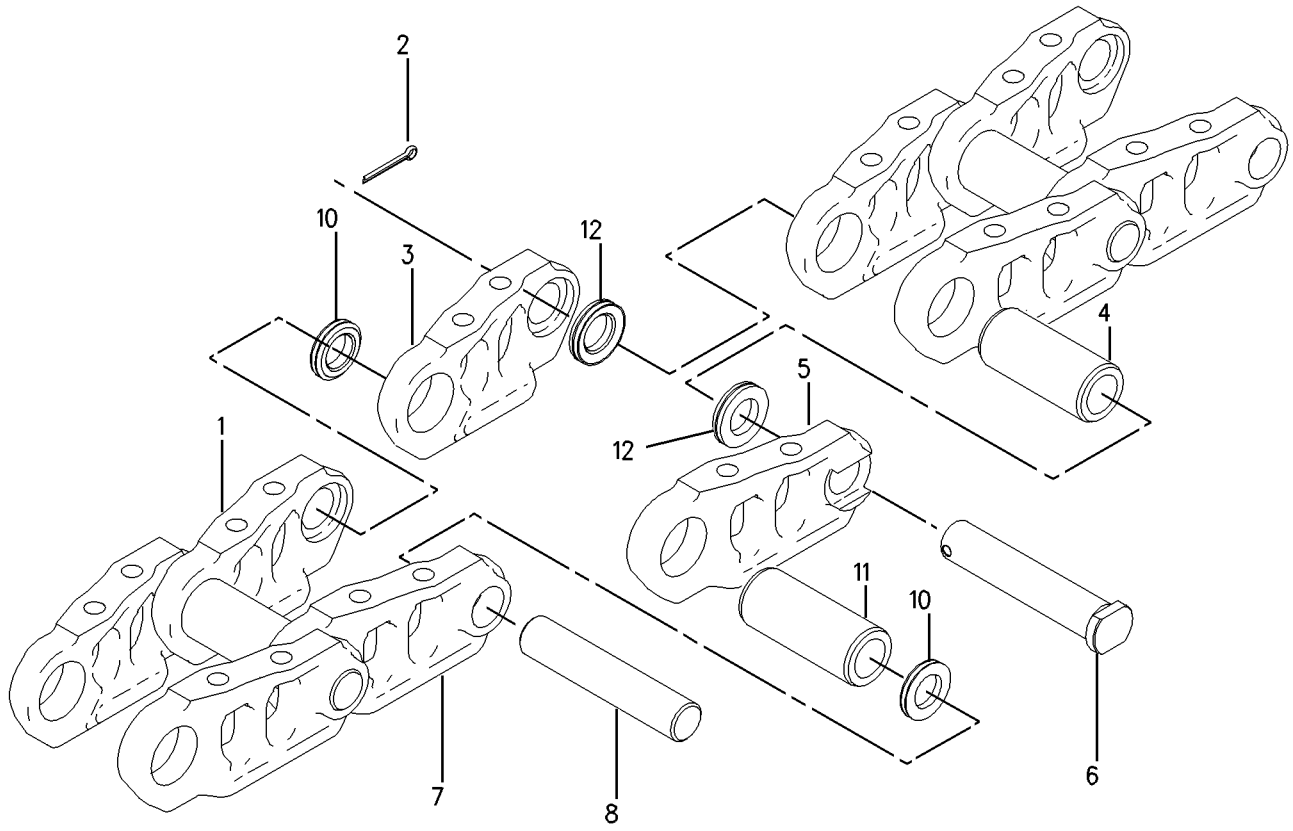

GRAPHIC #1

<END>

g00668766

297-9132 ROLLER AR-TRACK & CARRIER

S/N: DNP1-UP

PART OF 432-5008 FRAME AR-UNDERCARRIAGE

AN ATTACHMENT

SMCS-4154, 4180 **i05268797**

NOTE	REF NO	GRAPHIC REF	PART NUMBER	QTY	PART NAME 1 2 3 4 5 6 (PRODUCT LEVEL)	SEE PAGE
Y	1	1	**8E-5600**	4	ROLLER GP-TRACK CARRIER	188
Y	2	1	**206-1265**	16	ROLLER GP-TRACK-SINGLE FLANGE	189
M	3	1	**7X-2565**	64	BOLT (M20X2.5X100-MM)	
	4	1	**8T-4123**	64	WASHER (22X35X3.5-MM THK)	
M	5	1	**8T-5878**	4	BOLT (M24X3X80-MM)	

M - METRIC PART
Y - SEPARATE ILLUSTRATION
QUANTITIES SHOWN ARE THOSE REQUIRED FOR BOTH LH AND RH SIDES

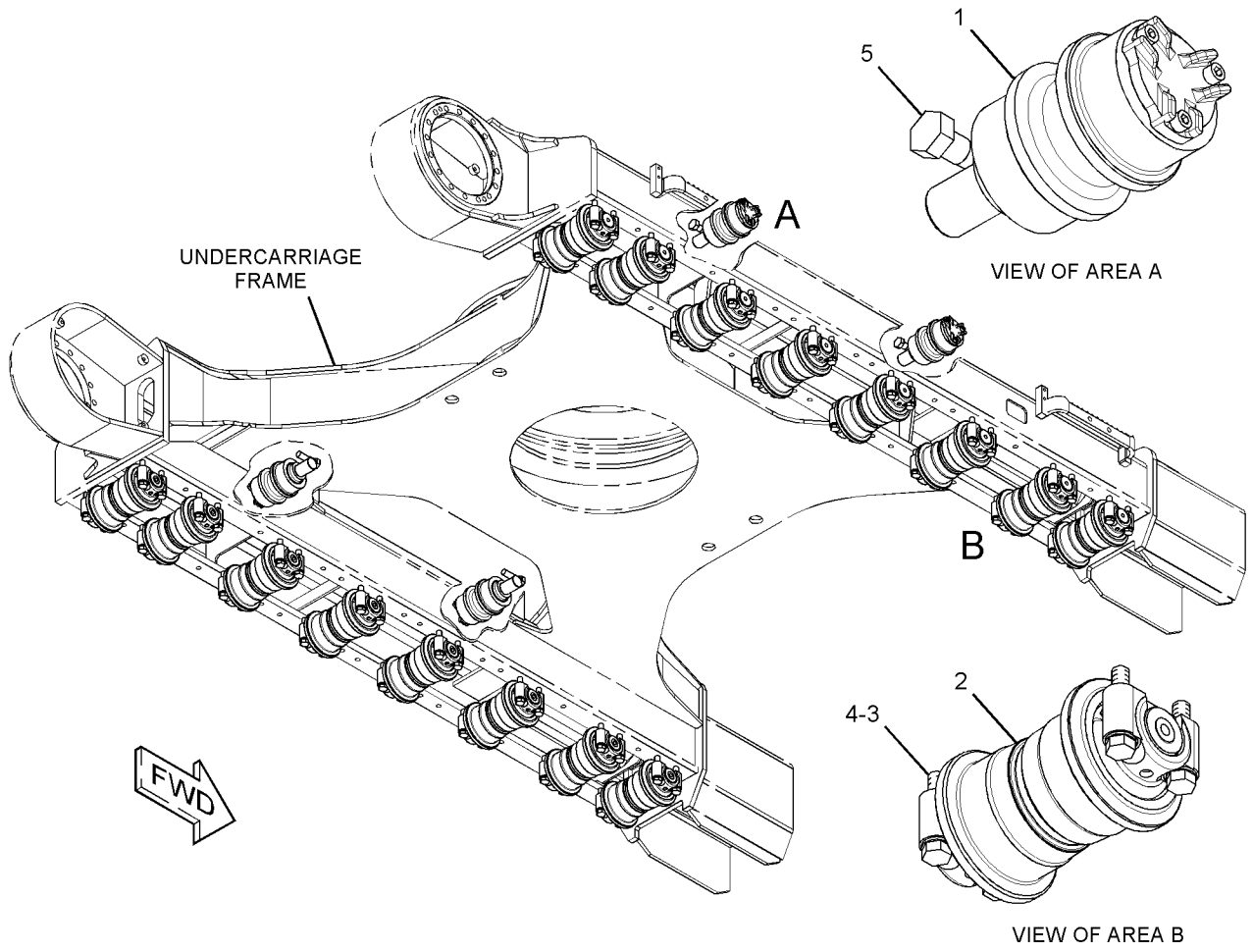

GRAPHIC #1 **<END>** g01360424

387-9126 ROLLER AR-TRACK & CARRIER

S/N: FKK1-UP; DNP1-UP
PART OF 387-9125 FRAME AR-UNDERCARRIAGE
ALSO AN ATTACHMENT

SMCS-4154, 4180

i04965649

NOTE	REF NO	GRAPHIC REF	PART NUMBER	QTY	PART NAME 1 2 3 4 5 6 (PRODUCT LEVEL)	SEE PAGE
Y	1	1	**8E-5600**	4	ROLLER GP-TRACK CARRIER	188
Y	2	1	**206-1265**	14	ROLLER GP-TRACK-SINGLE FLANGE	189
M	3	1	**7X-2565**	56	BOLT (M20X2.5X100-MM)	
	4	1	**8T-4123**	56	WASHER (22X35X3.5-MM THK)	
M	5	1	**8T-5878**	4	BOLT (M24X3X80-MM)	

M - METRIC PART
Y - SEPARATE ILLUSTRATION
QUANTITIES SHOWN ARE THOSE REQUIRED FOR BOTH LH AND RH SIDES

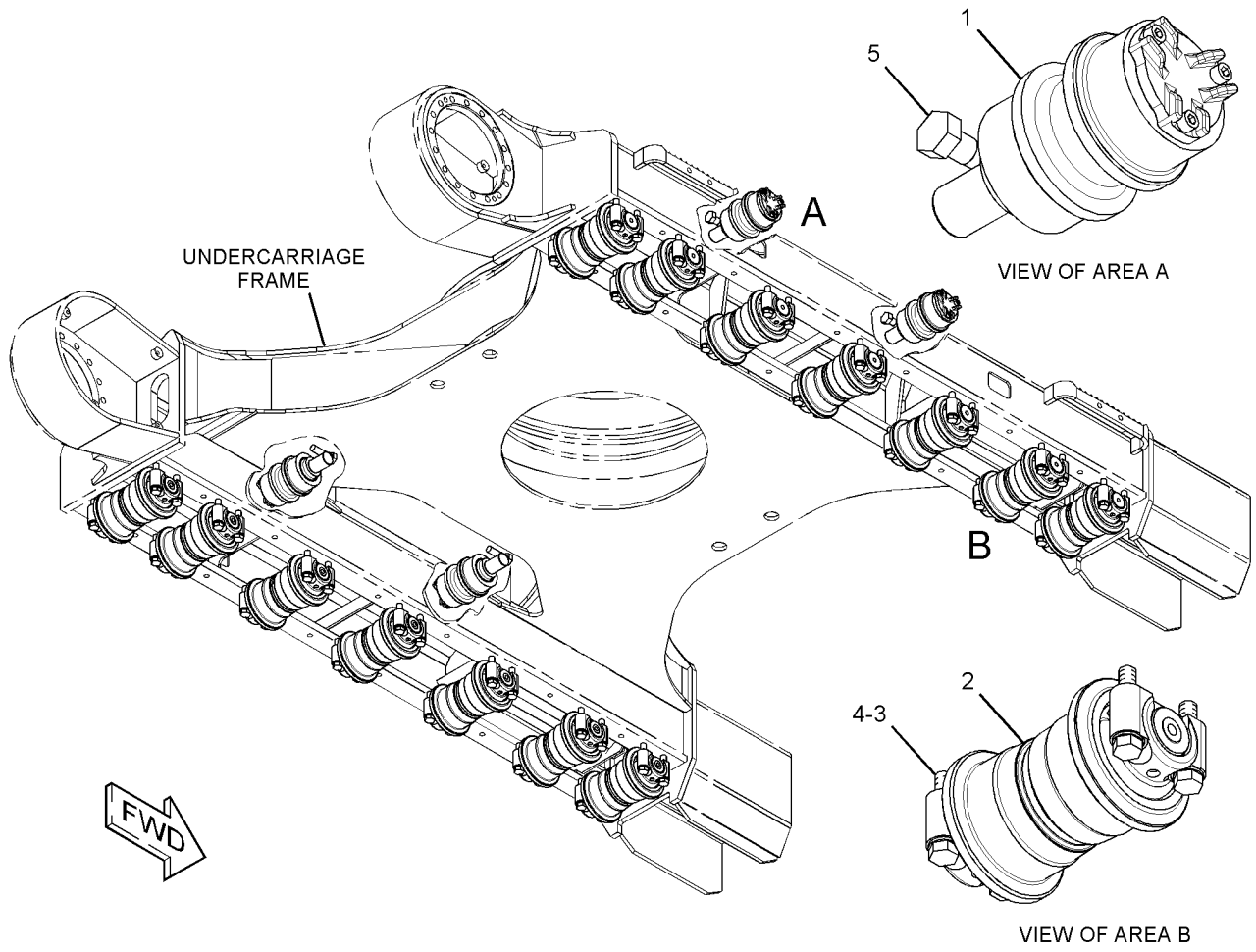

GRAPHIC #1

<END>

g01360426

8E-5600 ROLLER GP-TRACK CARRIER

S/N: FKK1-UP; DNP1-UP
PART OF 297-9132, 387-9126 ROLLER AR-TRACK & CARRIER
ALSO AN ATTACHMENT

SMCS-4154 **i04912097**

NOTE	REF NO	GRAPHIC REF	PART NUMBER	QTY	PART NAME 1 2 3 4 5 6 (PRODUCT LEVEL)	SEE PAGE
	1	1	**8E-5601**	1	SHAFT AS-TRACK ROLLER	
		1	**8E-5604**	1	COLLAR-ROLLER END	
		1	**8E-5607**	1	SHAFT-TRACK ROLLER	
	2	1	**8E-5608**	1	SEAL GP-DUO-CONE	
	3	1	**8E-5602**	1	ROLLER & BEARING AS	
	3A	1	**8E-6792**	1	BEARING-TRACK ROLLER	
	3B	1	**8E-6793**	1	BEARING-TRACK ROLLER	
	4	1	**8E-5606**	1	RETAINER	
	5	1	**6V-7661**	1	SEAL-O-RING	
M	6	1	**8T-1159**	5	BOLT-SOCKET HEAD (M10X1.5X25-MM)	
	7	1	**8E-5605**	1	COVER-CARRIER ROLLER	
	8	1	**7H-3171**	1	PLUG-PIPE	

M - METRIC PART

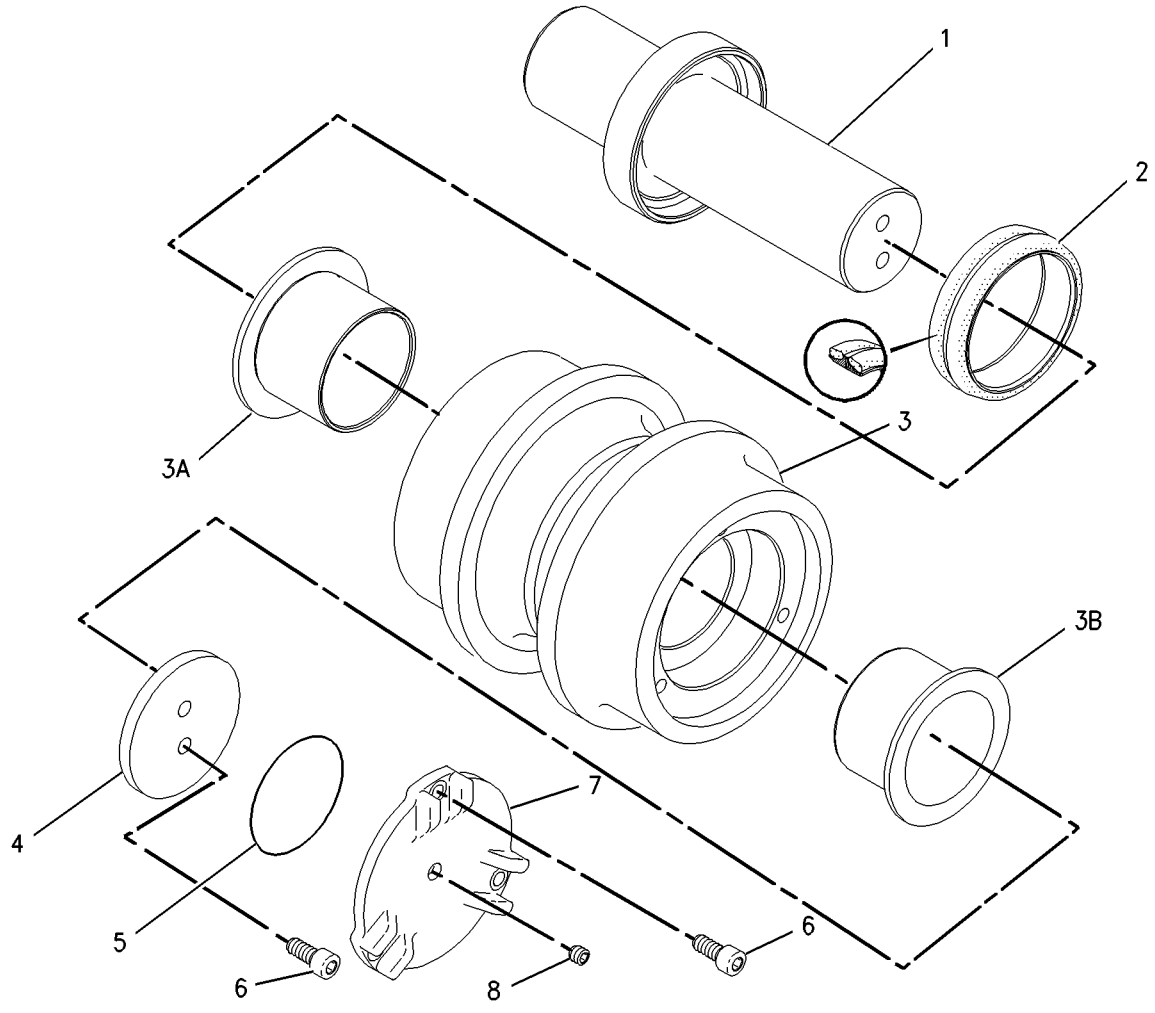

GRAPHIC #1 **<END>** g00715793

206-1265 ROLLER GP-TRACK-SINGLE FLANGE

S/N: FKK1-UP; DNP1-UP
PART OF 297-9132, 387-9126 ROLLER AR-TRACK & CARRIER
ALSO AN ATTACHMENT

SMCS-4180 **i04915095**

NOTE	REF NO	GRAPHIC REF	PART NUMBER	QTY	PART NAME 1 2 3 4 5 6 (PRODUCT LEVEL)	SEE PAGE
	1	1	**209-3313**	1	ROLLER & BEARING AS (SINGLE FLANGE)	
	1A	1	**8E-5599**	2	BEARING-TRACK ROLLER	
	2	1	**7F-8268**	2	SEAL-O-RING	
	3	1	**3E-3217**	2	DOWEL	
	4	1	**8E-5037**	2	COLLAR-TRACK ROLLER	
	5	1	**9W-2146**	1	PLUG	
	6	1	**206-9211**	2	SEAL GP-DUO-CONE	
					(EACH INCLUDES)	
	6A	1	**162-2168**	2	RING-TORIC	
	7	1	**209-3312**	1	SHAFT-TRACK ROLLER	

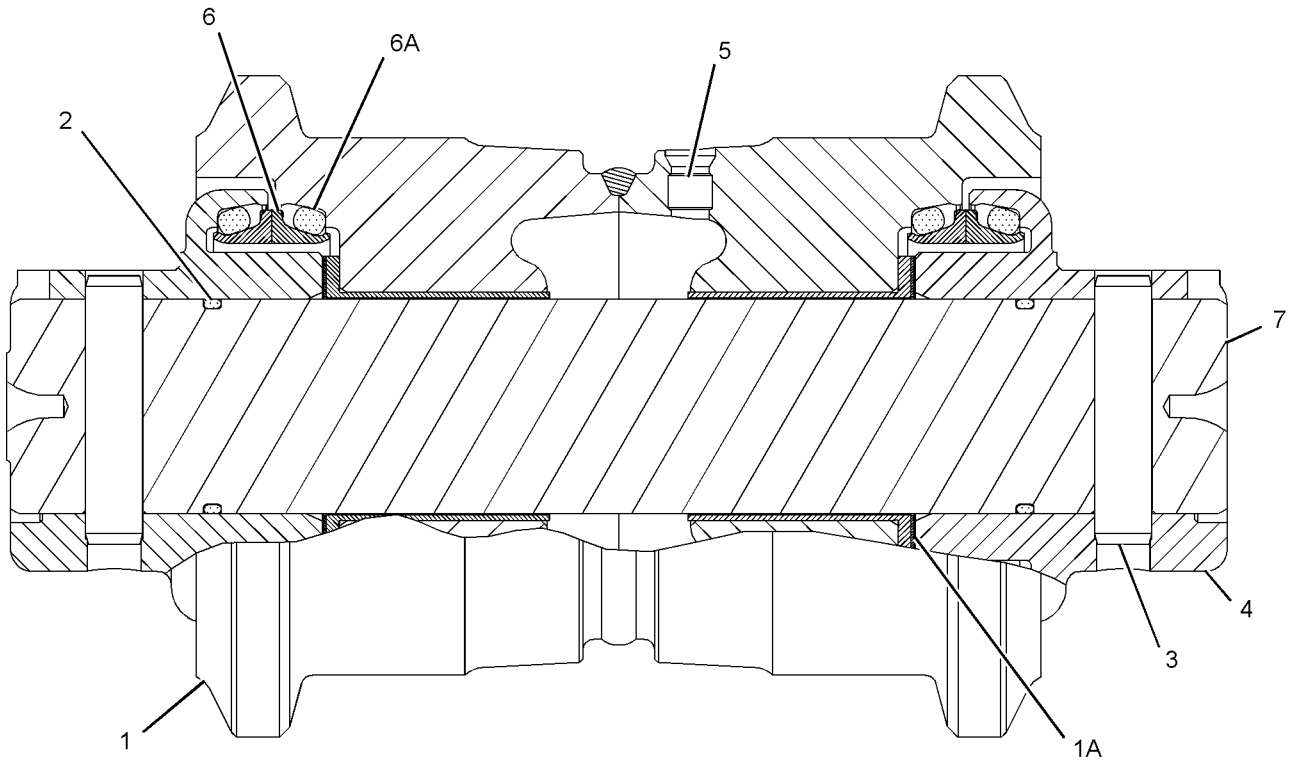

GRAPHIC #1 **<END>** g01099908

239-4387 TRACK ADJUSTER & RECOIL GP–RH

S/N: FKK1-UP; DNP1-UP
PART OF 239-4385 IDLER GP-FRONT
ALSO AN ATTACHMENT

SMCS-4157, 4158 **i04909403**

NOTE	REF NO	GRAPHIC REF	PART NUMBER	QTY	PART NAME 1 2 3 4 5 6 (PRODUCT LEVEL)	SEE PAGE
	1	1	**7Y-1746**	1	PLATE	
	2	1	**168-6761**	1	PLATE AS	
		1	**4B-4158**	4	SCREW-DRIVE (NO 4X0.25-IN)	
		1	**253-1346**	1	PLATE-WARNING (HIGH PRESSURE CYLINDER)	
Y	3	1	*239-4389*	1	TRACK ADJUSTER & RECOIL GP	192
M	4	1	**8T-4137**	2	BOLT (M10X1.5X20-MM)	

M - METRIC PART
Y - SEPARATE ILLUSTRATION

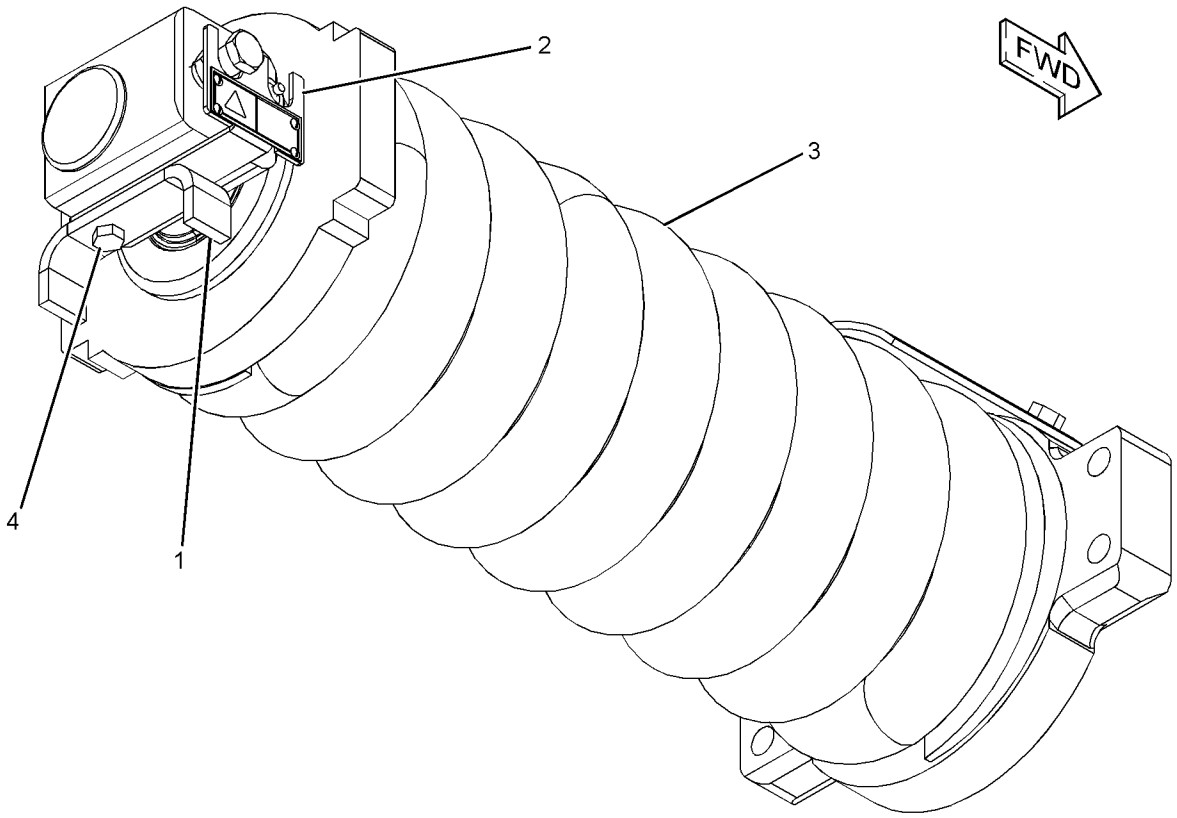

GRAPHIC #1 **<END>** g01217204

239-4388 TRACK ADJUSTER & RECOIL GP–LH

S/N: FKK1-UP; DNP1-UP
PART OF 239-4386 IDLER GP-FRONT
ALSO AN ATTACHMENT

SMCS-4157, 4158 **i04909447**

NOTE	REF NO	GRAPHIC REF	PART NUMBER	QTY	PART NAME 1 2 3 4 5 6 (PRODUCT LEVEL)	SEE PAGE
	1	1	**7Y-1746**	1	PLATE	
	2	1	**168-6761**	1	PLATE AS	
		1	**4B-4158**	4	SCREW-DRIVE (NO 4X0.25-IN)	
		1	**253-1346**	1	PLATE-WARNING (HIGH PRESSURE CYLINDER)	
Y	3	1	*239-4389*	1	TRACK ADJUSTER & RECOIL GP	192
M	4	1	**8T-4137**	2	BOLT (M10X1.5X20-MM)	

M - METRIC PART
Y - SEPARATE ILLUSTRATION

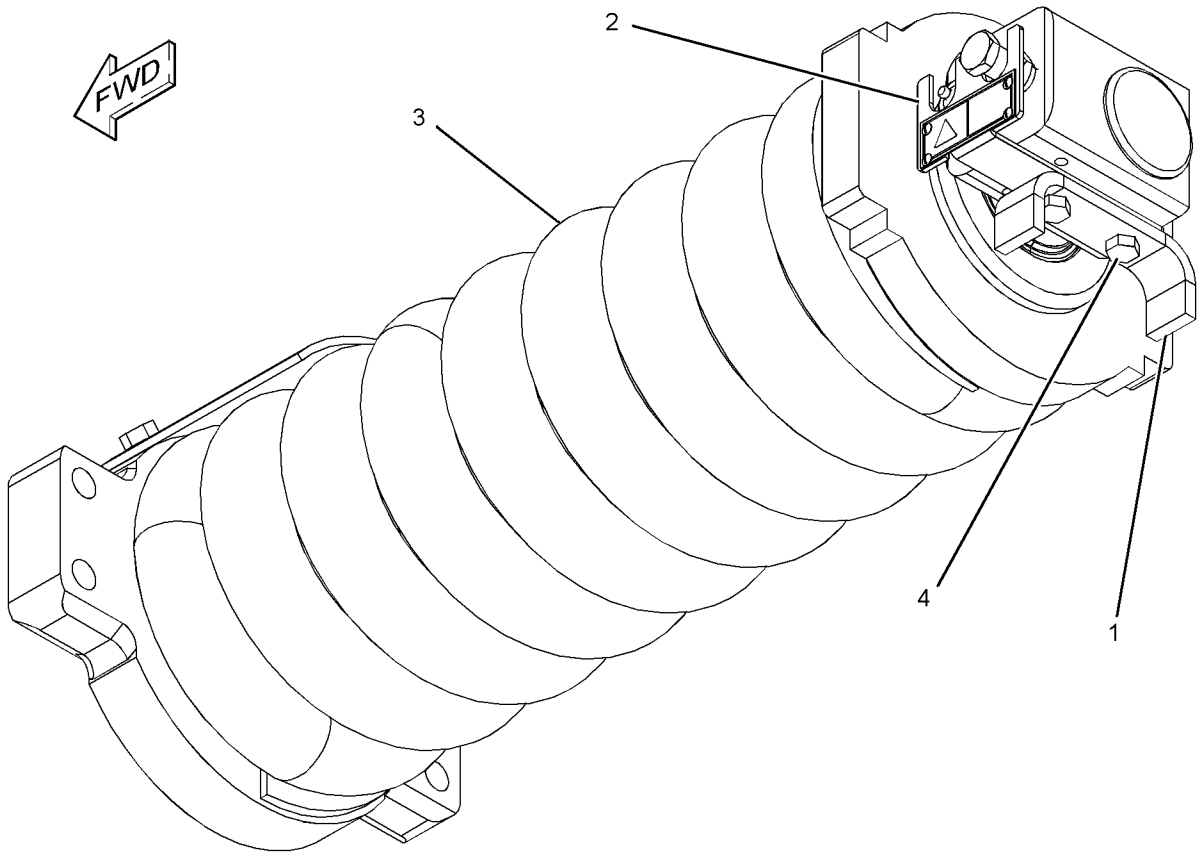

GRAPHIC #1 **<END>** g01217224

239-4389 TRACK ADJUSTER & RECOIL GP

S/N: FKK1-UP; DNP1-UP

PART OF 239-4387, 239-4388 TRACK ADJUSTER & RECOIL GP

ALSO AN ATTACHMENT

SMCS-4157, 4158

i04941436

NOTE	REF NO	GRAPHIC REF	PART NUMBER	QTY	PART NAME 1 2 3 4 5 6 (PRODUCT LEVEL)	SEE PAGE
	1	1	**7Y-1781**	1	COVER	
	2	1	**145-3035**	1	PLATE	
	3	1	**340-8237**	1	SPRING	
	4	1	**239-4378**	1	SUPPORT	
	5	1	**239-4382**	1	NUT (M48X5-THD)	
	6	1	**239-4383**	1	STRIP	
	7	1	**239-4384**	1	SPACER (49X95X72-MM THK)	
Y	8	1	**239-4390**	1	TRACK ADJUSTER & RECOIL GP	193
	9	1	**239-4393**	1	WASHER (50X78X8-MM THK)	
M	10	1	**7X-2536**	2	BOLT (M8X1.25X14-MM)	
M	11	1	**8T-4179**	2	BOLT (M12X1.75X20-MM)	

M - METRIC PART
Y - SEPARATE ILLUSTRATION

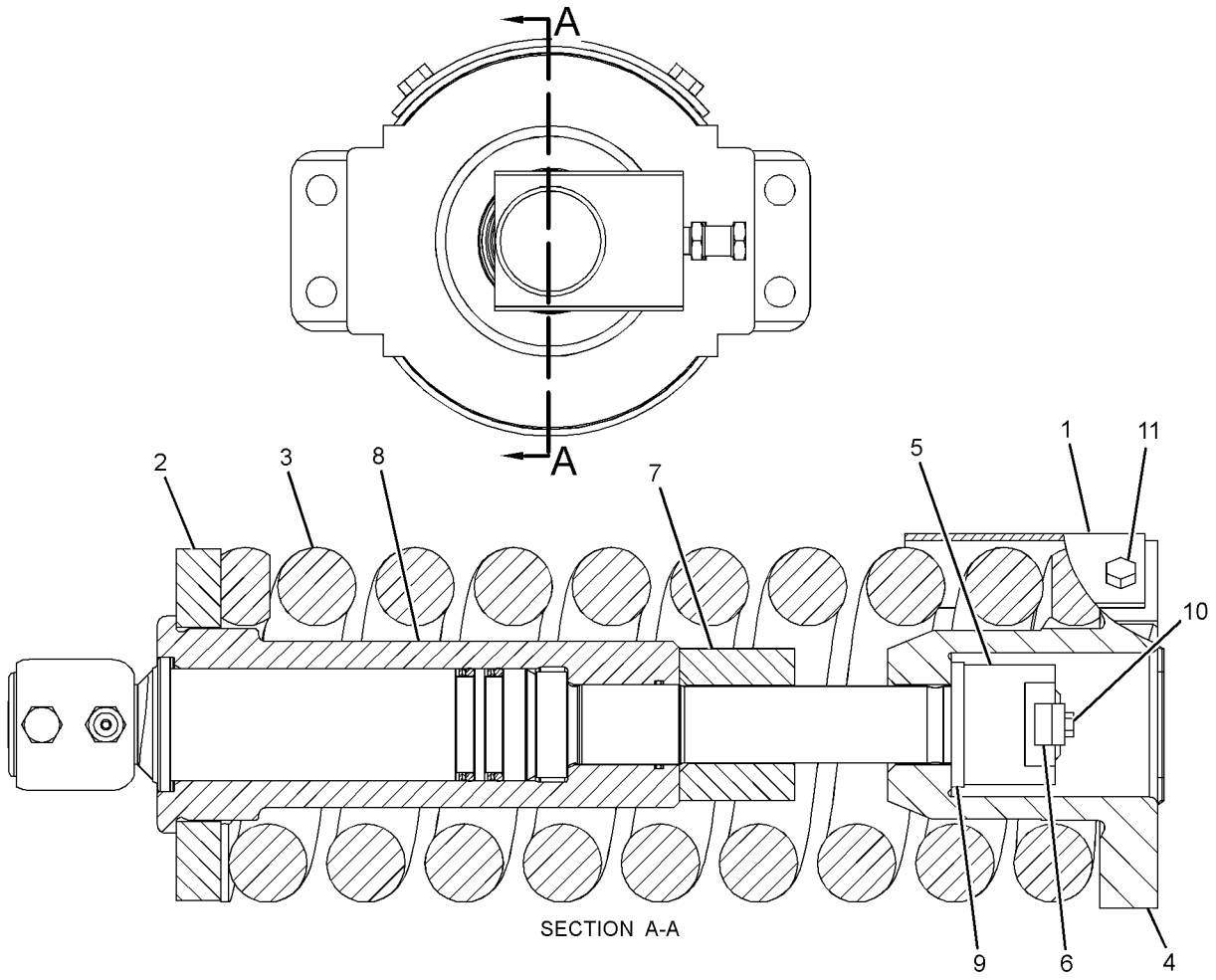

SECTION A-A

GRAPHIC #1

<END>

g01217233

239-4390 TRACK ADJUSTER & RECOIL GP

S/N: FKK1-UP; DNP1-UP
PART OF 239-4389 TRACK ADJUSTER & RECOIL GP
ALSO AN ATTACHMENT

SMCS-4157, 4158 **i04912118**

NOTE	REF NO	GRAPHIC REF	PART NUMBER	QTY	PART NAME 1 2 3 4 5 6 (PRODUCT LEVEL)	SEE PAGE
	1	1	**2S-5926**	1	VALVE-RELIEF	
	2	1	**7Y-0682**	2	RING	
	3	1	**093-1436**	1	SEAL-LIP TYPE	
	4	1	**093-1512**	2	RING	
	5	1	**095-2927**	1	VALVE-FILL	
	6	1	**145-3031**	1	PISTON AS	
	7	1	**239-4391**	1	ROD	
	8	1	**239-4392**	1	CYLINDER	
	9	1	**239-4394**	1	RING-BACKUP	
	10	1	**248-7174**	2	SEAL-O-RING	
	11	1	**095-1704**	1	SEAL-O-RING	

2394390/REP REPARO DE ESTICAR ESTEIRA 320C

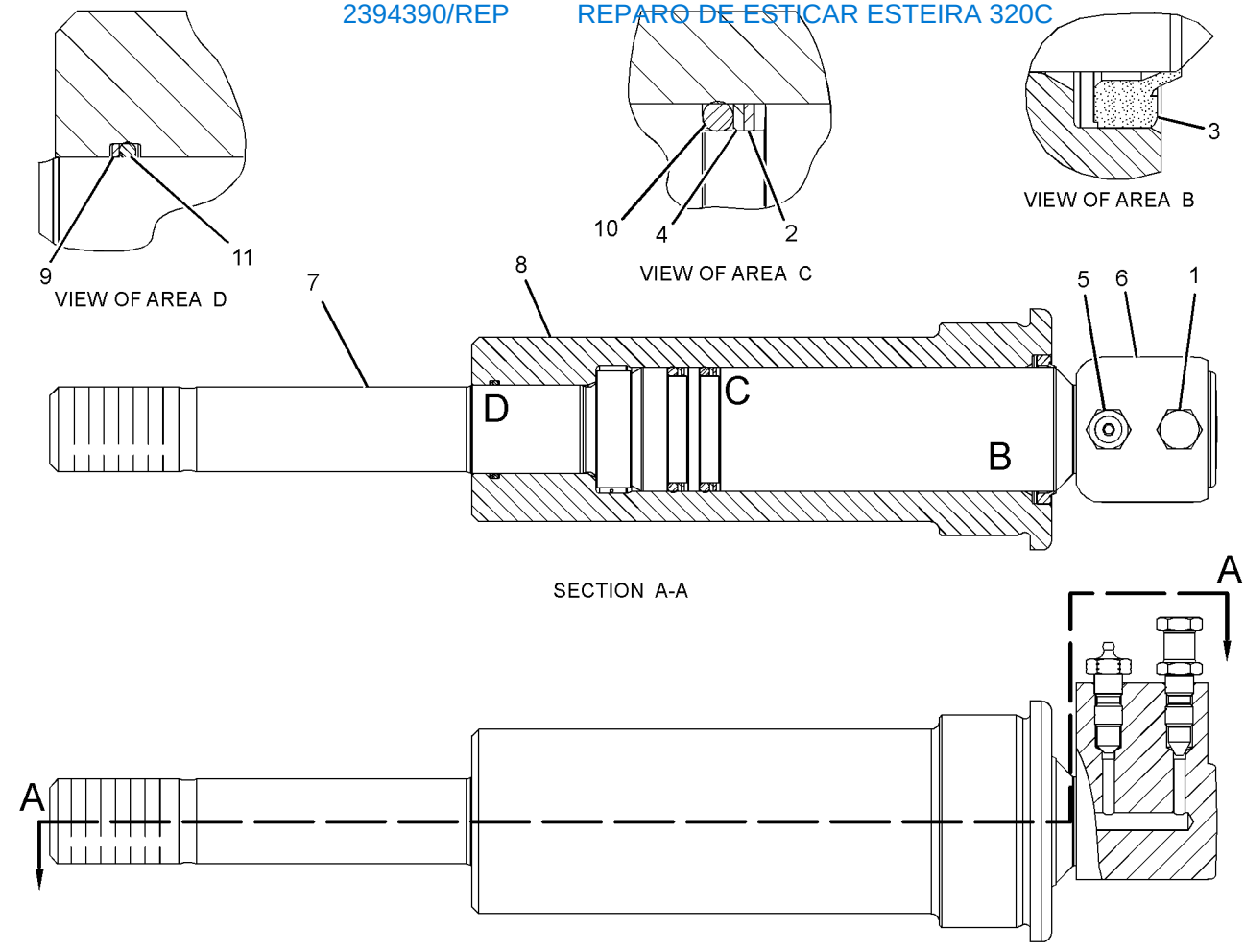

GRAPHIC #1 **<END>** g02512796

419-0977 TRACK GP–2-REQUIRED

S/N: FKK1-UP; DNP1-UP
600-MM (23.6-IN) TRIPLE GROUSER SHOE. GREASE LUBRICATED TRACK
AN ATTACHMENT

SMCS-4170 **i04935978**

NOTE	PART NUMBER	QTY	PART NAME 1 2 3 4 5 6 (PRODUCT LEVEL)	SEE PAGE
Y	**194-1609**	1	LINK AS-TRACK	185
M	**9W-3619**	180	BOLT-TRACK (M20X1.5X55-MM)	
M	**9W-3361**	180	NUT-TRACK (M20X1.5-THD)	
	6I-9453	45	SHOE-TRACK	

M - METRIC PART
Y - SEPARATE ILLUSTRATION

<END>

426-4354 TRACK GP–2-REQUIRED

S/N: DNP1-UP
600-MM (23.6-IN) TRIPLE GROUSER SHOE. GREASE LUBRICATED TRACK
AN ATTACHMENT

SMCS-4170 **i05294315**

NOTE	PART NUMBER	QTY	PART NAME 1 2 3 4 5 6 (PRODUCT LEVEL)	SEE PAGE
Y	**194-1608**	1	LINK AS-TRACK	184
M	**9W-3619**	196	BOLT-TRACK (M20X1.5X55-MM)	
M	**9W-3361**	196	NUT-TRACK (M20X1.5-THD)	
	6I-9453	49	SHOE-TRACK	

M - METRIC PART
Y - SEPARATE ILLUSTRATION

<END>

4I-1536 ACCUMULATOR GP-HYDRAULIC–CHARGED

S/N: FKK1-UP; DNP1-UP

PART OF 087-4456 ACCUMULATOR GP-HYDRAULIC

SMCS-5077 **i04916867**

NOTE	REF NO	GRAPHIC REF	PART NUMBER	QTY	PART NAME 1 2 3 4 5 6 (PRODUCT LEVEL)	SEE PAGE
	1	1	**4I-5862**	1	CAP	
	2	1	**4I-1539**	1	CORE	

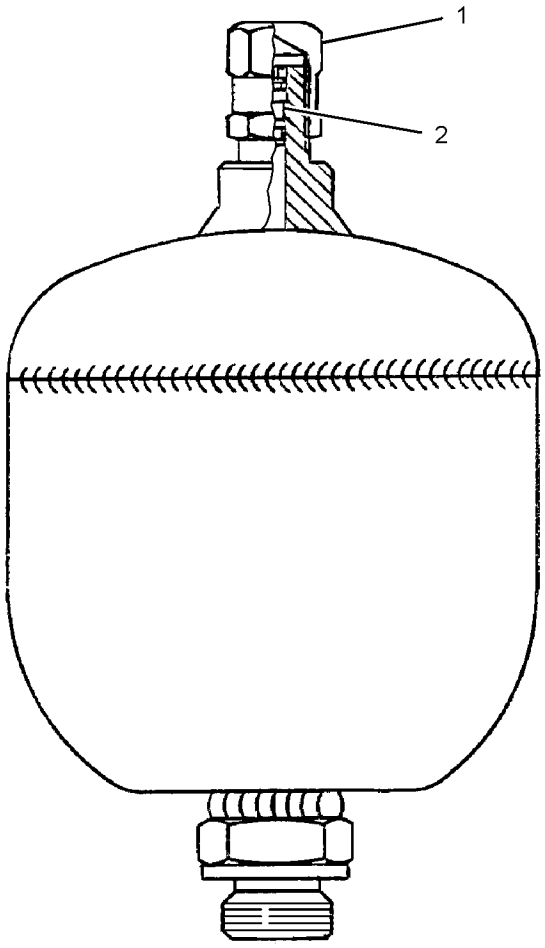

GRAPHIC #1 **<END>** g01769613

5I-8416 ACCUMULATOR GP-HYDRAULIC—CHARGED

S/N: FKK1-UP; DNP1-UP

PART OF 087-4456 ACCUMULATOR GP-HYDRAULIC

SMCS-5077 **i04916869**

NOTE	REF NO	GRAPHIC REF	PART NUMBER	QTY	PART NAME 1 2 3 4 5 6 (PRODUCT LEVEL)	SEE PAGE
	1	1	**4I-8267**	1	CAP	
Y	2	1	*087-4454*	1	ACCUMULATOR GP-HYDRAULIC (CHARGED)	197

Y - SEPARATE ILLUSTRATION

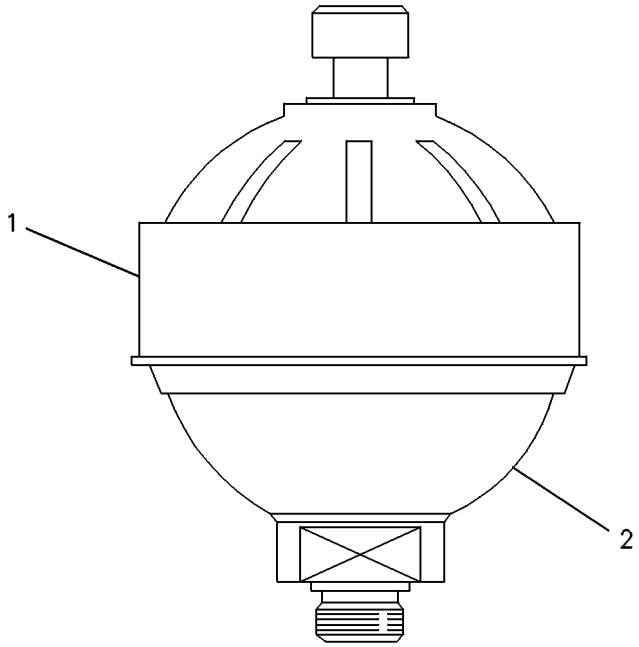

GRAPHIC #1 **<END>** g00237219

087-4454 ACCUMULATOR GP-HYDRAULIC—CHARGED

S/N: FKK1-UP; DNP1-UP

PART OF 5I-8416 ACCUMULATOR GP-HYDRAULIC

SMCS-5077 **i04916871**

NOTE	REF NO	GRAPHIC REF	PART NUMBER	QTY	PART NAME 1 2 3 4 5 6 (PRODUCT LEVEL)	SEE PAGE
	1	1	**087-4577**	1	SEAL	
	2	1	**087-4576**	1	CAP	
	3	1	**087-4575**	1	CORE	

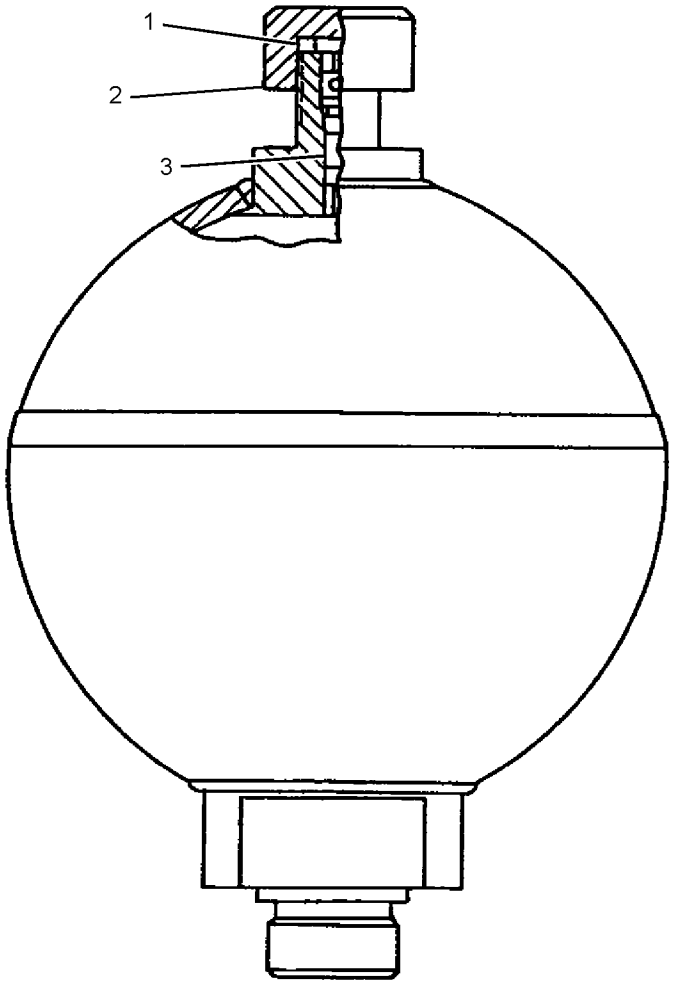

GRAPHIC #1 **<END>** g02304393

087-4456 ACCUMULATOR GP-HYDRAULIC—CHARGED

S/N: FKK1-UP; DNP1-UP
FIELD REPLACEMENT ORDER 227-8807—PAGE: 201
PART OF 164-6981 ACCUMULATOR GP-HYDRAULIC

SMCS-5077 **i04916865**

NOTE	PART NUMBER	QTY	PART NAME 1 2 3 4 5 6 (PRODUCT LEVEL)	SEE PAGE
Y	*4I-1536*	1	ACCUMULATOR GP-HYDRAULIC (CHARGED)	195
			—OR—	
Y	*5I-8416*	1	ACCUMULATOR GP-HYDRAULIC (CHARGED)	196
			—OR—	
Y	*145-5106*	1	ACCUMULATOR GP-HYDRAULIC (CHARGED)	199

Y - SEPARATE ILLUSTRATION

<END>

145-5106 ACCUMULATOR GP-HYDRAULIC–CHARGED

S/N: FKK1-UP; DNP1-UP
FIELD REPLACEMENT ORDER 227-8807–PAGE: 201
PART OF 087-4456 ACCUMULATOR GP-HYDRAULIC

SMCS-5077 **i04916874**

NOTE	REF NO	GRAPHIC REF	PART NUMBER	QTY	PART NAME 1 2 3 4 5 6 (PRODUCT LEVEL)	SEE PAGE
	1	1	**159-4700**	1	FILM-WARNING (HIGH PRESSURE CYLINDER)	

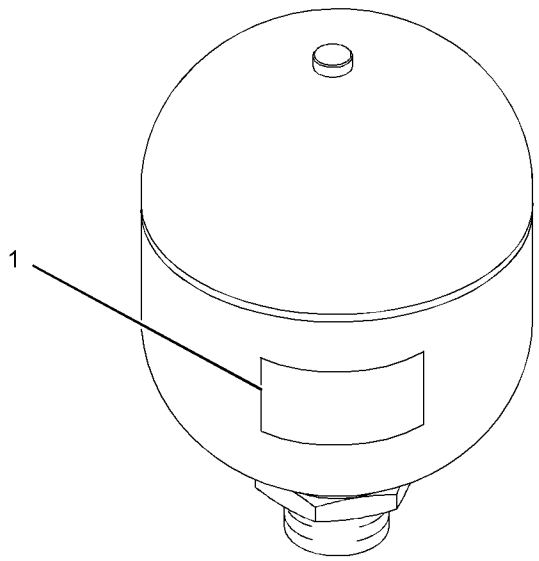

GRAPHIC #1 **<END>** g01229518

164-6981 ACCUMULATOR GP-HYDRAULIC—CHARGED

S/N: FKK1-UP; DNP1-UP

PART OF 376-6310 LINES GP-PILOT

SMCS-5077 **i04916861**

NOTE	PART NUMBER	QTY	PART NAME 1 2 3 4 5 6 (PRODUCT LEVEL)	SEE PAGE
Y	**087-4456**	1	ACCUMULATOR GP-HYDRAULIC (CHARGED)	198
	3K-0360	1	SEAL-O-RING	

Y - SEPARATE ILLUSTRATION

<END>

227-8807 ACCUMULATOR GP-HYDRAULIC—UNCHARGED

S/N: FKK1-UP; DNP1-UP

FIELD REPLACEMENT FOR 087-4456—PAGE: 198: FOR 145-5106—PAGE: 199

SMCS-5077 **i04954760**

NOTE	REF NO	GRAPHIC REF	PART NUMBER	QTY	PART NAME 1 2 3 4 5 6 (PRODUCT LEVEL)	SEE PAGE
					(NO SERVICED PARTS)	

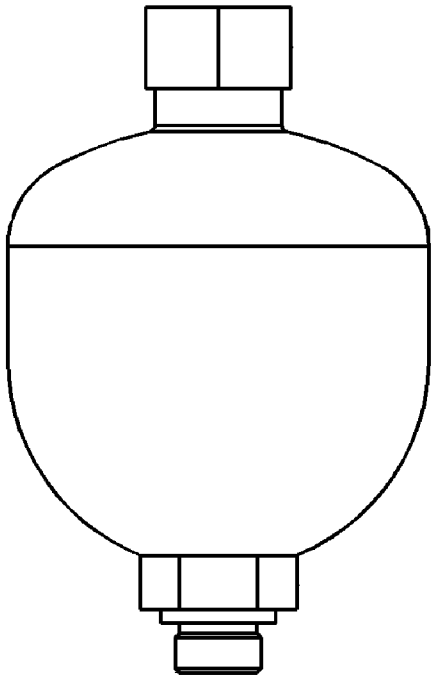

GRAPHIC #1

<END>

g01423820

173-3503 BLOCK GP-HYDRAULIC—HYDRAULIC

S/N: FKK1-UP; DNP1-UP

PART OF 188-4140 FILTER GP-OIL

SMCS-5264 **i04915462**

NOTE	REF NO	GRAPHIC REF	PART NUMBER	QTY	PART NAME 1 2 3 4 5 6 (PRODUCT LEVEL)	SEE PAGE
	1	1	**204-2763**	1	BLOCK	
	2	1	**5L-4758**	1	SEAL-O-RING	
	3	1	**177-2619**	2	PACKING	
	4	1	**173-3505**	1	PLATE-SLIDE	
	5	1	**137-3631**	1	PACKING	
M	6	1	**137-3626**	1	BOLT-SPECIAL	
	7	1	**173-3506**	1	PLUG AS	
	8	1	**3J-1907**	1	SEAL-O-RING	
	9	1	**7Y-5272**	2	PIN-SPRING	
	10	1	**137-3628**	1	SHIM (0.1-MM THK)	

M - METRIC PART

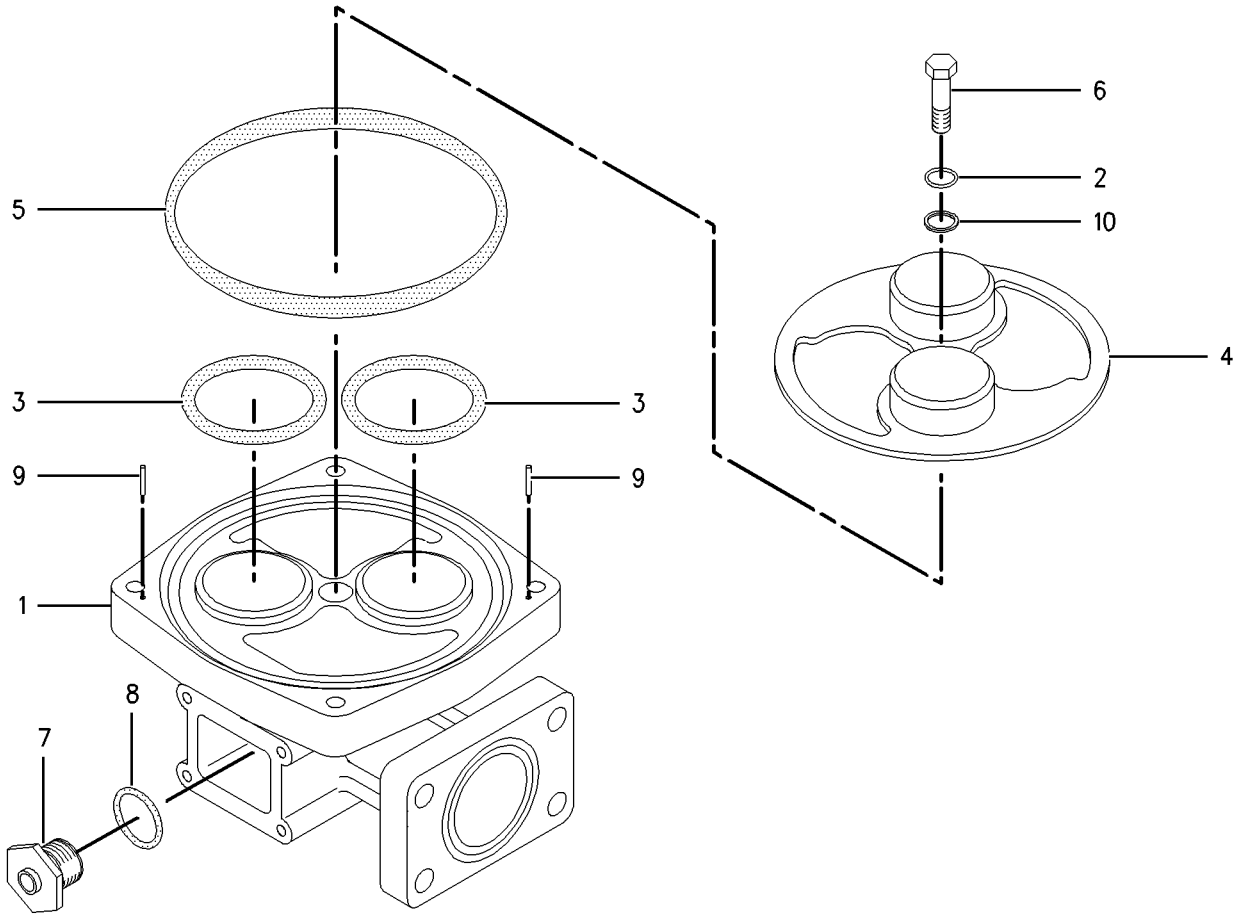

GRAPHIC #1 **<END>** g00671074

345-9774 BREATHER GP

S/N: D7A1-UP

PART OF 417-3389 ENGINE AR-PRIMARY

SMCS-5056 **i05245705**

NOTE	REF NO	GRAPHIC REF	PART NUMBER	QTY	PART NAME 1 2 3 4 5 6 (PRODUCT LEVEL)	SEE PAGE
	1	1	**032-9020**	1	CLIP	
	2	1	**162-1565**	1	SPRING (CRANKCASE BREATHER HOSE)	
	3	1	**198-8645**	1	HOSE (CRANKCASE BREATHER)	
Y	4	1	**335-6883**	1	COVER GP-VALVE MECHANISM	8
M	5	1	**6I-0254**	14	BOLT (M8X1.25X30-MM)	
	6	1	**7C-1281**	1	BRACKET	

M - METRIC PART
Y - SEPARATE ILLUSTRATION

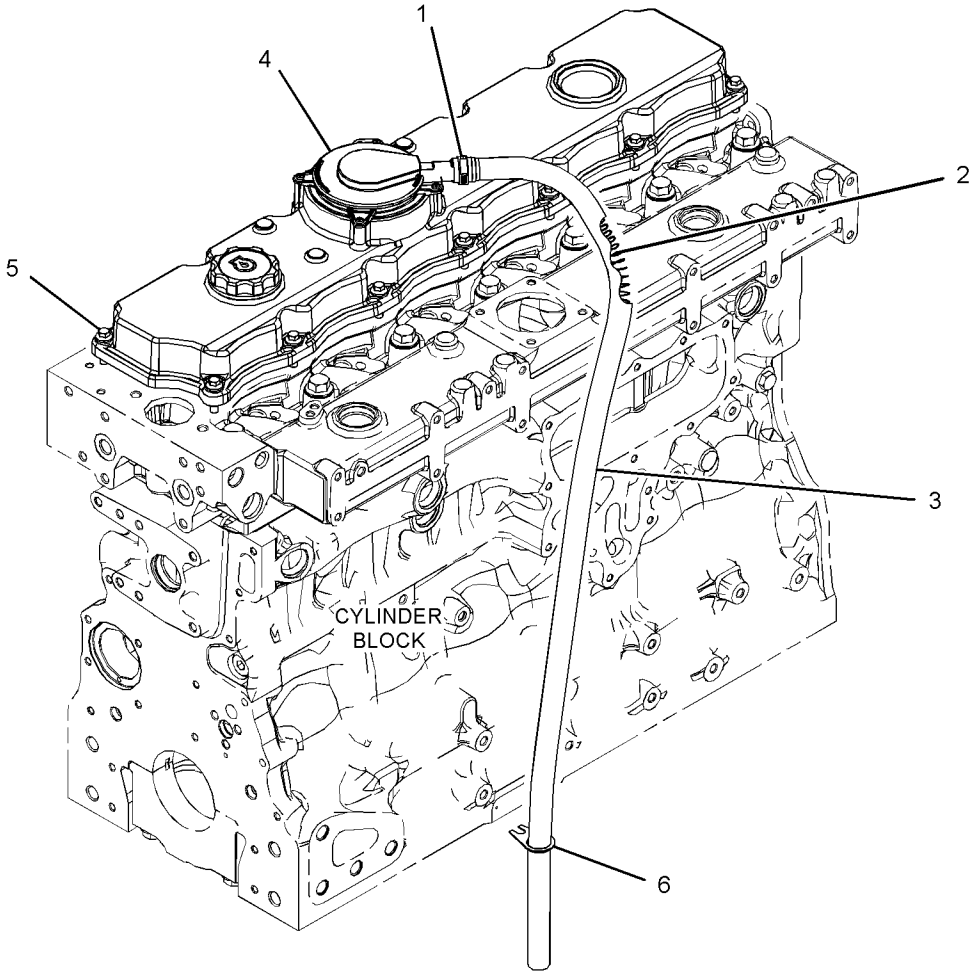

GRAPHIC #1 **<END>** g03319850

374-6001 COUPLING GP-FLEXIBLE

S/N: FKK1-UP; DNP1-UP

PART OF 374-6000 COUPLING GP-PUMP

SMCS-3252 **i05259330**

NOTE	REF NO	GRAPHIC REF	PART NUMBER	QTY	PART NAME 1 2 3 4 5 6 (PRODUCT LEVEL)	SEE PAGE
	1	1	**7Y-0463**	1	ELEMENT-COUPLING (FLEXIBLE RUBBER)	
M	2	1	**7Y-0466**	2	SETSCREW-SOCKET (M16X2X22-MM)	
M	3	1	**7Y-0467**	4	BOLT-SOCKET HEAD (M18X2.5X55-MM)	
	4	1	**374-6053**	1	HUB	
	5	1	**305-4951**	4	INSERT-COUPLING	
	6	1	**305-4952**	4	INSERT-COUPLING	
	7	1	**7Y-0468**	8	PIN-SPRING	

M - METRIC PART

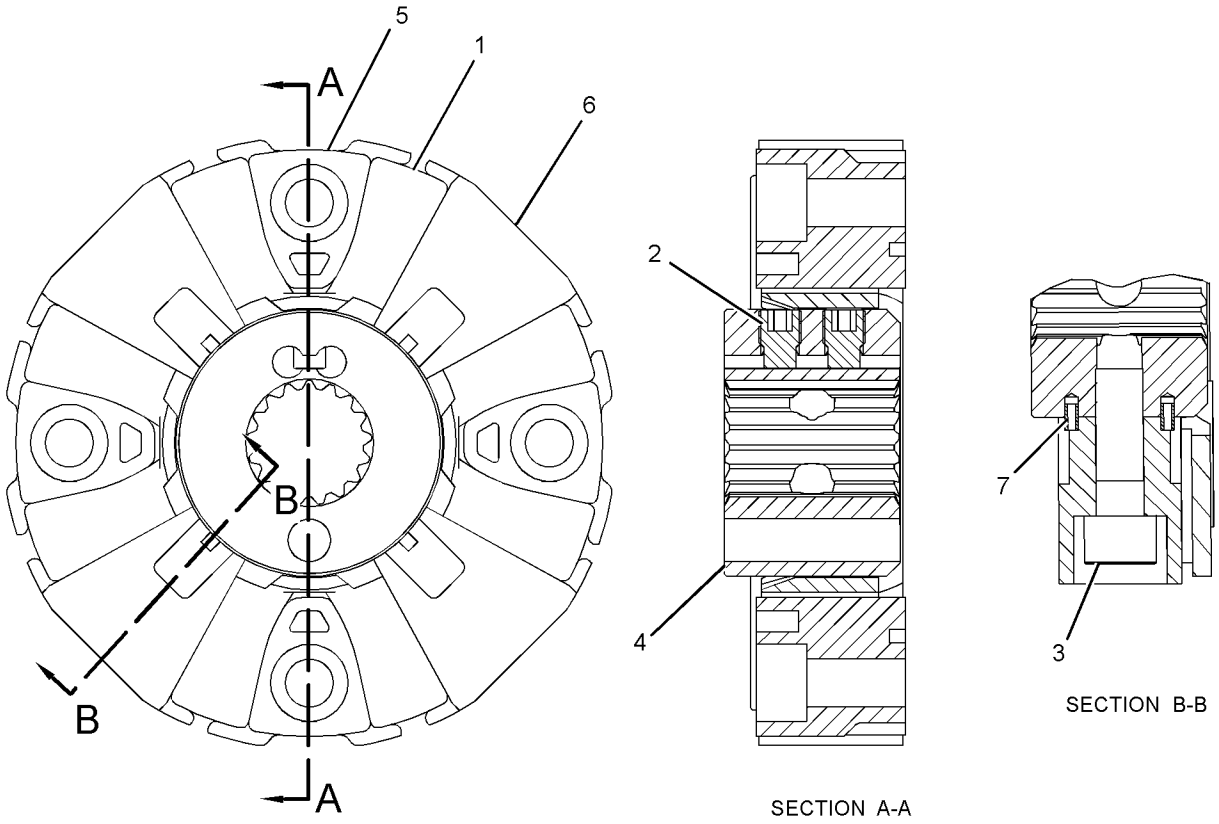

GRAPHIC #1 **<END>** g02725382

374-6000 COUPLING GP-PUMP

S/N: FKK1-UP; DNP1-UP

PART OF 396-1865 PUMP & MTG GP-MAIN HYDRAULIC

SMCS-5062 **i05259329**

NOTE	REF NO	GRAPHIC REF	PART NUMBER	QTY	PART NAME 1 2 3 4 5 6 (PRODUCT LEVEL)	SEE PAGE
Y	1	1	**374-6001**	1	COUPLING GP-FLEXIBLE	204
M	2	1	**287-0047**	4	BOLT-SOCKET HEAD (M18X2.5X60-MM)	
	3	1	**7Y-0468**	4	PIN-SPRING	

M - METRIC PART
Y - SEPARATE ILLUSTRATION

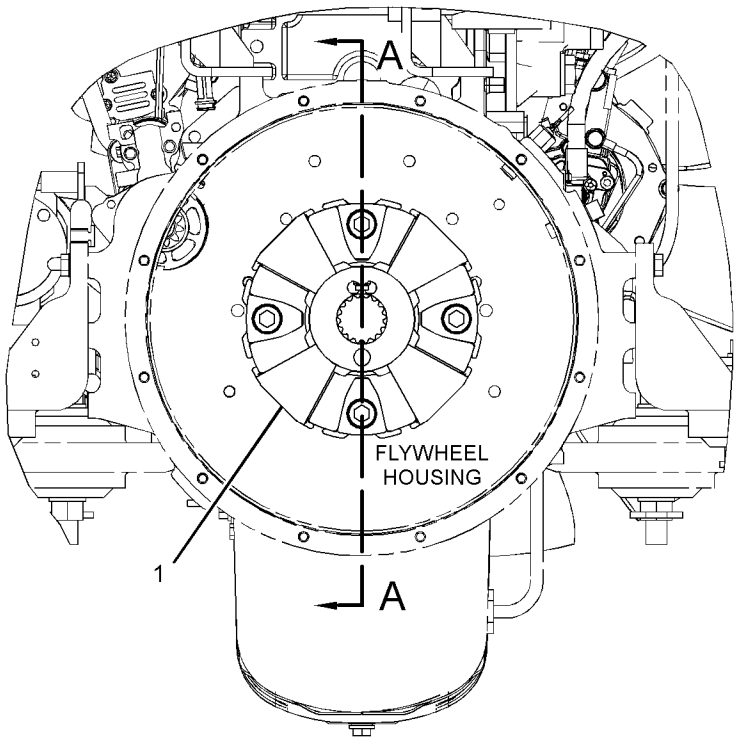

RIGHT SIDE VIEW

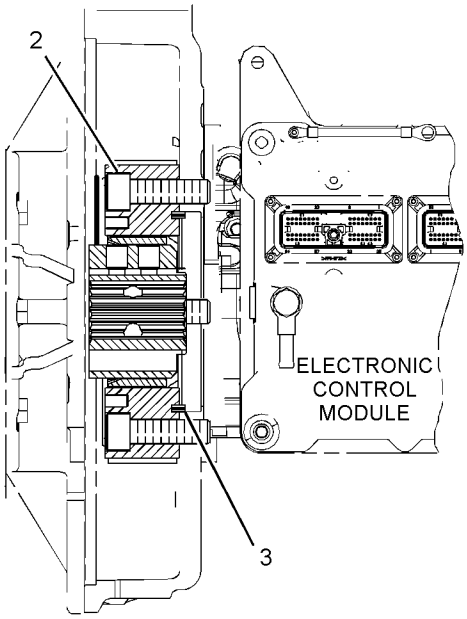

SECTION A-A

GRAPHIC #1 **<END>** g02725277

373-1106 CYLINDER & LINES GP-BOOM–LH

S/N: FKK1-UP; DNP1-UP
PART OF 376-1084 BOOM AR-1 PIECE LONG
AN ATTACHMENT

SMCS-5456, 7562 **i04924839**

NOTE	PART NUMBER	QTY	PART NAME 1 2 3 4 5 6 (PRODUCT LEVEL)	SEE PAGE
Y	**373-1111**	1	CYLINDER & SEAL GP-BOOM	207
Y	*373-1110*	1	LINES GP-BOOM CYLINDER	251

Y - SEPARATE ILLUSTRATION

<END>

373-1107 CYLINDER & LINES GP-BOOM–RH

S/N: FKK1-UP; DNP1-UP
PART OF 376-1084 BOOM AR-1 PIECE LONG
AN ATTACHMENT

SMCS-5456, 7562 **i04925001**

NOTE	PART NUMBER	QTY	PART NAME 1 2 3 4 5 6 (PRODUCT LEVEL)	SEE PAGE
Y	**373-1111**	1	CYLINDER & SEAL GP-BOOM	207
Y	*373-1115*	1	LINES GP-BOOM CYLINDER	252

Y - SEPARATE ILLUSTRATION

<END>

373-1109 CYLINDER & LINES GP-BUCKET

S/N: FKK1-UP; DNP1-UP
PART OF 375-6869 LINKAGE AR-BUCKET
AN ATTACHMENT

SMCS-5457 **i04923177**

NOTE	PART NUMBER	QTY	PART NAME 1 2 3 4 5 6 (PRODUCT LEVEL)	SEE PAGE
Y	**373-1121**	1	CYLINDER & SEAL GP-BUCKET	209
Y	*373-1120*	1	LINES GP-BUCKET CYLINDER	254

Y - SEPARATE ILLUSTRATION

<END>

373-1108 CYLINDER & LINES GP-STICK

S/N: FKK1-UP; DNP1-UP
PART OF 376-1084 BOOM AR-1 PIECE LONG
AN ATTACHMENT

SMCS-5458 **i04925073**

NOTE	PART NUMBER	QTY	PART NAME 1 2 3 4 5 6 (PRODUCT LEVEL)	SEE PAGE
Y	**373-1119**	1	CYLINDER & SEAL GP-STICK	211
Y	*373-1118*	1	LINES GP-STICK CYLINDER	283

Y - SEPARATE ILLUSTRATION

<END>

373-1111 CYLINDER & SEAL GP-BOOM

S/N: FKK1-UP; DNP1-UP
PART OF 373-1106, 373-1107 CYLINDER & LINES GP-BOOM
AN ATTACHMENT

SMCS-5456 **i04924838**

NOTE	REF NO	GRAPHIC REF	PART NUMBER	QTY	PART NAME 1 2 3 4 5 6 (PRODUCT LEVEL)	SEE PAGE
	1	1	**398-0933**	1	CYLINDER AS-BOOM	
	2	1	**398-0934**	1	ROD AS	
	3	1	**240-2937**	1	BUSHING	
J	4	1	**240-6332**	1	SEAL	
J	5	1	**240-6359**	2	RING-EXPANDER	
	6	1	**398-0100**	1	BALL	
	7	1	**398-0106**	1	SCREW-SET (M12X1.75X14-MM)	
	8	1	**398-0109**	12	BOLT-SOCKET HEAD (M16X2X70-MM)	
	9	1	**398-0935**	1	HEAD	
	10	1	**398-0936**	1	PISTON	
	11	1	**398-0937**	1	LOCKNUT-SPECIAL	
	12	1	**398-0938**	1	STOP	
	13	1	**398-0941**	1	BUSHING	
J	14	1	**398-0943**	2	RING	
J	15	1	**398-0944**	1	RING	
	16	1	**398-0945**	1	RING	
	17	1	**398-0946**	1	RING	
J	18	1	**398-0948**	1	RING-BACKUP	
J	19	1	**398-0949**	1	RING	
J	20	1	**398-0951**	1	SEAL	
J	21	1	**398-0952**	1	SEAL	
J	22	1	**398-0953**	2	SEAL	
J	23	1	**398-0954**	2	SEAL	
J	24	1	**398-0955**	1	SEAL	
J	25	1	**398-0956**	1	SEAL	
J	26	1	**398-0962**	1	SEAL AS	
	27	1	**398-2328**	1	BUSHING	
	28	1	**3B-8489**	1	FITTING-GREASE	
					AVAILABLE REPAIR KIT(S):	
J			**398-0963**	1	KIT-SEAL (BOOM CYLINDER)	

J - KIT MARKED J SERVICES PART(S) MARKED J

373-1111 **CYLINDER & SEAL GP-BOOM (*contd.*)** **i04924838**

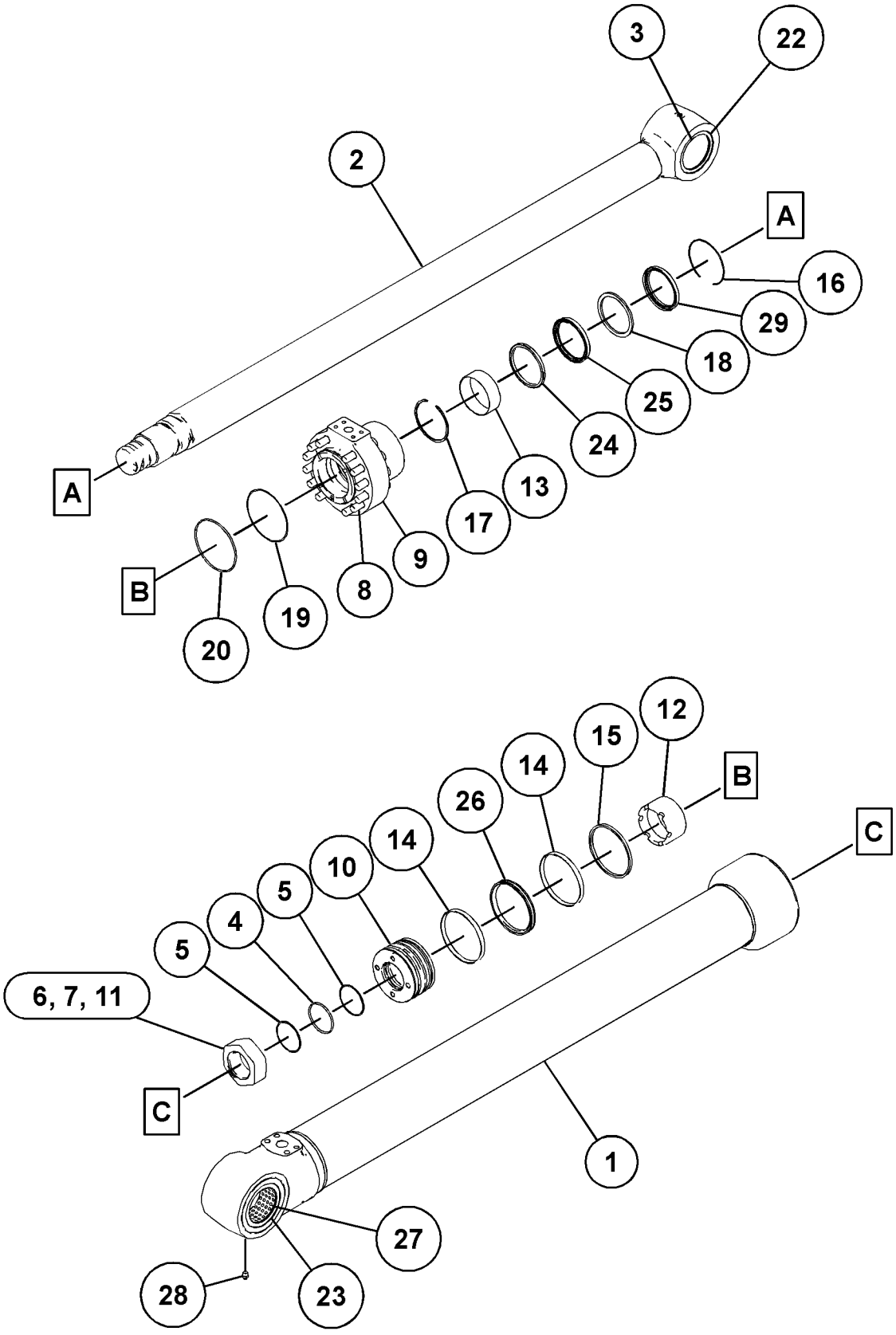

GRAPHIC #1 **<END>** g03110818

373-1121 CYLINDER & SEAL GP-BUCKET

S/N: FKK1-UP; DNP1-UP

PART OF 373-1109 CYLINDER & LINES GP-BUCKET

AN ATTACHMENT

SMCS-5457 **i04923208**

NOTE	REF NO	GRAPHIC REF	PART NUMBER	QTY	PART NAME 1 2 3 4 5 6 (PRODUCT LEVEL)	SEE PAGE
J	1	1	**240-6332**	1	SEAL	
J	2	1	**240-6359**	2	RING-EXPANDER	
	3	1	**241-7382**	1	BUSHING	
	4	1	**284-7313**	1	BUSHING	
	5	1	**398-0100**	1	BALL	
	6	1	**398-0106**	1	SCREW-SET (M12X1.75X14-MM)	
	7	1	**398-0109**	12	BOLT-SOCKET HEAD (M16X2X70-MM)	
	8	1	**398-0935**	1	HEAD	
	9	1	**398-0936**	1	PISTON	
	10	1	**398-0937**	1	LOCKNUT-SPECIAL	
	11	1	**398-0941**	1	BUSHING	
J	12	1	**398-0943**	2	RING	
J	13	1	**398-0944**	1	RING	
	14	1	**398-0945**	1	RING	
	15	1	**398-0946**	1	RING	
J	16	1	**398-0948**	1	RING-BACKUP	
J	17	1	**398-0949**	1	RING	
J	18	1	**398-0951**	1	SEAL	
J	19	1	**398-0952**	1	SEAL	
J	20	1	**398-0953**	2	SEAL	
J	21	1	**398-0955**	1	SEAL	
J	22	1	**398-0956**	1	SEAL	
J	23	1	**398-0962**	1	SEAL AS	
J	24	1	**398-2329**	2	SEAL	
	25	1	**398-2330**	1	CYLINDER AS-HYDRAULIC	
	26	1	**398-2331**	1	ROD AS	
					AVAILABLE REPAIR KIT(S):	
J			**398-2332**	1	KIT-SEAL (BUCKET CYLINDER)	

J - KIT MARKED J SERVICES PART(S) MARKED J

373-1121 **CYLINDER & SEAL GP-BUCKET (*contd.*)** **i04923208**

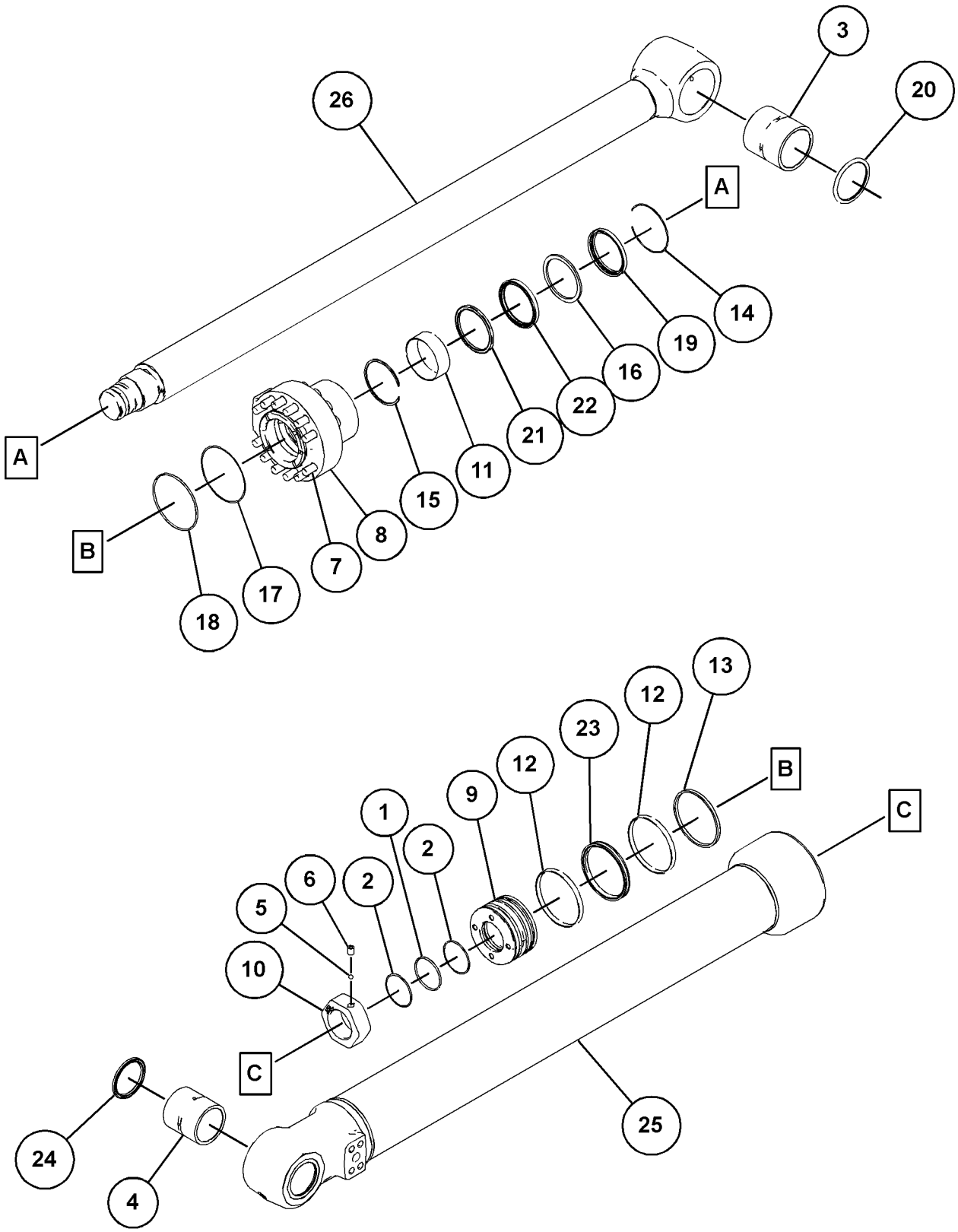

GRAPHIC #1 **<END>** g03112616

373-1119 CYLINDER & SEAL GP-STICK

S/N: FKK1-UP; DNP1-UP

PART OF 373-1108 CYLINDER & LINES GP-STICK

AN ATTACHMENT

SMCS-5458 **i04925078**

NOTE	REF NO	GRAPHIC REF	PART NUMBER	QTY	PART NAME 1 2 3 4 5 6 (PRODUCT LEVEL)	SEE PAGE
	1	1	**240-2915**	2	BUSHING	
	2	1	**397-5469**	1	PISTON	
	3	1	**397-5517**	1	HEAD	
	4	1	**397-5521**	1	ROD AS	
	5	1	**397-5525**	1	CYLINDER AS-STICK	
	6	1	**397-9063**	1	LOCKNUT-SPECIAL	
	7	1	**397-9064**	1	BUSHING	
J	8	1	**397-9066**	1	SEAL-O-RING	
J	9	1	**397-9067**	1	SEAL-O-RING	
J	10	1	**397-9068**	1	SEAL-O-RING	
J	11	1	**397-9069**	1	SEAL (LIP TYPE)	
J	12	1	**397-9070**	4	SEAL (LIP TYPE)	
J	13	1	**397-9076**	1	SEAL-BUFFER	
J	14	1	**397-9077**	1	SEAL-U-CUP	
J	15	1	**397-9078**	2	RING	
J	16	1	**397-9079**	2	RING	
J	17	1	**397-9080**	2	RING	
J	18	1	**397-9081**	1	RING	
J	19	1	**397-9082**	1	RING	
J	20	1	**397-9088**	1	SEAL AS	
	21	1	**397-9089**	1	RING	
	22	1	**397-9090**	1	RING	
	23	1	**397-9092**	1	STOP	
	24	1	**397-9093**	1	STOP-PLUNGER	
	25	1	**397-9273**	1	SPRING	
	26	1	**397-9277**	1	ORIFICE	
	27	1	**398-0095**	1	SPACER	
	28	1	**398-0096**	1	PLUG	
	29	1	**398-0097**	12	BALL	
	30	1	**398-0100**	1	BALL	
	31	1	**398-0105**	1	SCREW-SET (M10X1.5X16-MM)	
	32	1	**398-0106**	1	SCREW-SET (M12X1.75X14-MM)	
	33	1	**398-0109**	14	BOLT-SOCKET HEAD (M16X2X70-MM)	
	34	1	**3B-8489**	1	FITTING-GREASE	
					AVAILABLE REPAIR KIT(S):	
J			**397-9091**	1	KIT-SEAL (STICK CYLINDER)	

J - KIT MARKED J SERVICES PART(S) MARKED J

373-1119 **CYLINDER & SEAL GP-STICK (*contd.*)** **i04925078**

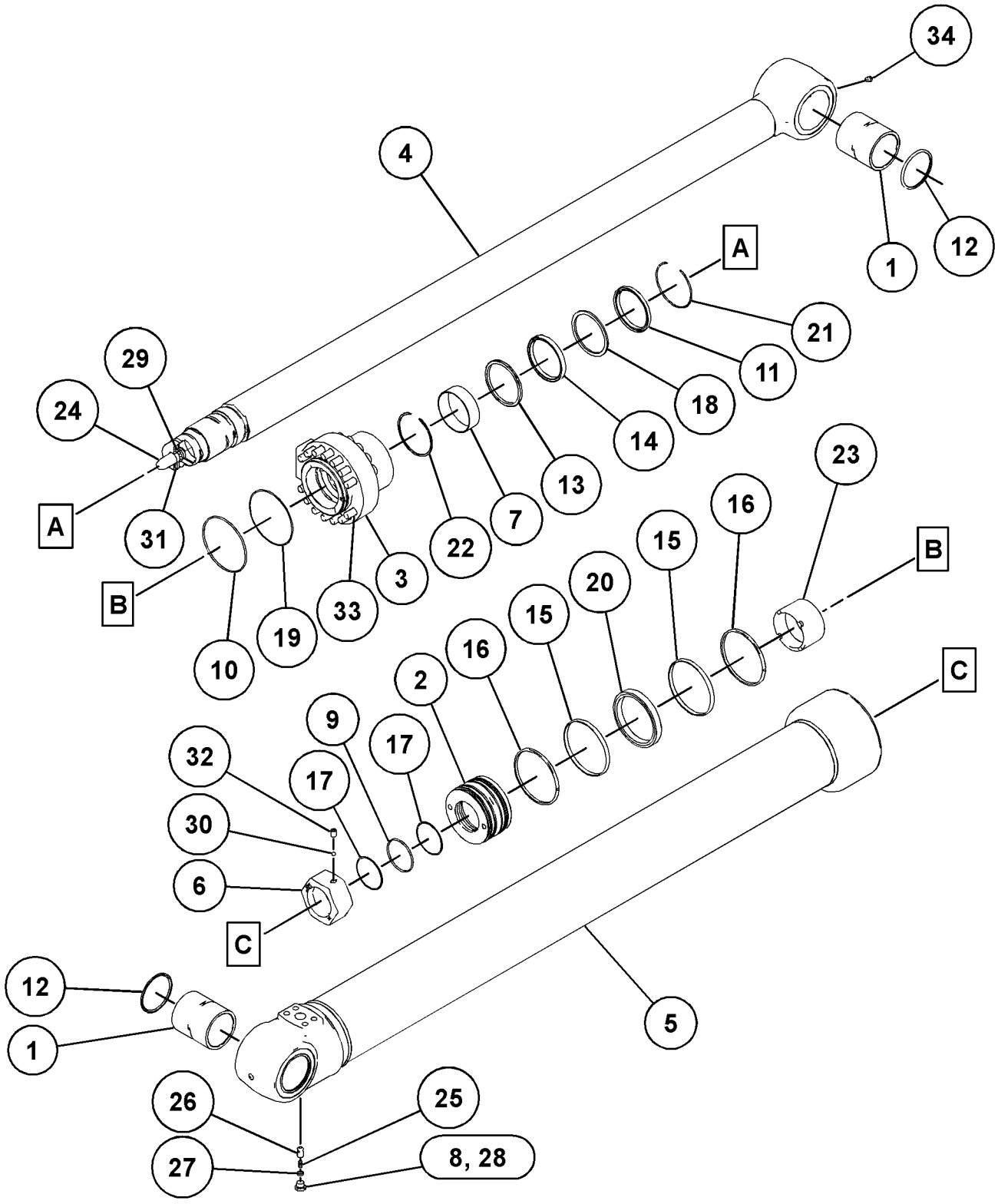

GRAPHIC #1 **<END>** g03111497

148-4644 DRIVE GP-SWING—WITHOUT MOTOR

S/N: FKK1-UP; DNP1-UP

PART OF 148-4679 DRIVE GP-SWING

SMCS-5459 **i04913527**

NOTE	REF NO	GRAPHIC REF	PART NUMBER	QTY	PART NAME 1 2 3 4 5 6 (PRODUCT LEVEL)	SEE PAGE
	1	1	**094-0584**	6	WASHER (40.3X72X1-MM THK)	
	2	1	**094-1509**	3	SHAFT-PLANETARY	
	3	1	**148-4733**	3	GEAR-PLANETARY (26-TEETH)	
	4	1	**114-1581**	1	SPACER (57.5X74X6-MM THK)	
	5	1	**148-4732**	1	GEAR-SUN (20-TEETH)	
	6	1	**093-1729**	2	RING-RETAINING	
	7	1	**148-4632**	1	GEAR-SUN (23-TEETH)	
	8	1	**191-2578**	1	CARRIER-PLANETARY	
	9	1	**7Y-1434**	1	SPACER (40X69.5X6-MM THK)	
	10	1	**148-4637**	1	CARRIER-PLANETARY	
	11	1	**148-4640**	1	RING-RETAINING	
	12	1	**148-4643**	1	BEARING	
	13	1	**095-1022**	1	BEARING-ROLLER	
	14	1	**148-4642**	1	SEAL-O-RING	
	15	1	**227-6228**	1	CAGE	
M	16	1	**8T-4183**	6	BOLT (M12X1.75X40-MM)	
	17	1	**8T-4223**	6	WASHER-HARD (13.5X25.5X3-MM THK)	
	18	1	**199-4561**	2	SEAL-LIP TYPE	
	19	1	**148-4636**	1	SHAFT-PINION	
	20	1	**148-4638**	1	HOUSING	
	21	1	**3K-0360**	1	SEAL-O-RING	
	22	1	**6V-7238**	1	VALVE-SHUTOFF (SWING DRIVE)	
	23	1	**148-4634**	3	SHAFT-PLANETARY	
	24	1	**095-0891**	3	PIN-SPRING	
	25	1	**148-4635**	1	GEAR-RING (73-TEETH)	
	26	1	**148-4633**	3	GEAR-PLANETARY (25-TEETH)	
	27	1	**7Y-0252**	6	BEARING AS-ROLLER	
	28	1	**094-0611**	6	WASHER (47.3X76X1-MM THK)	
	29	1	**095-0886**	3	PIN-SPRING	
	30	1	**094-1516**	3	BEARING-ROLLER	
	31	1	**171-9383**	1	SPACER	
B	32	1	**1U-8846**		SEALANT-GASKET	

B - USE AS REQUIRED
M - METRIC PART

148-4644 **DRIVE GP-SWING (*contd.*)** **i04913527**

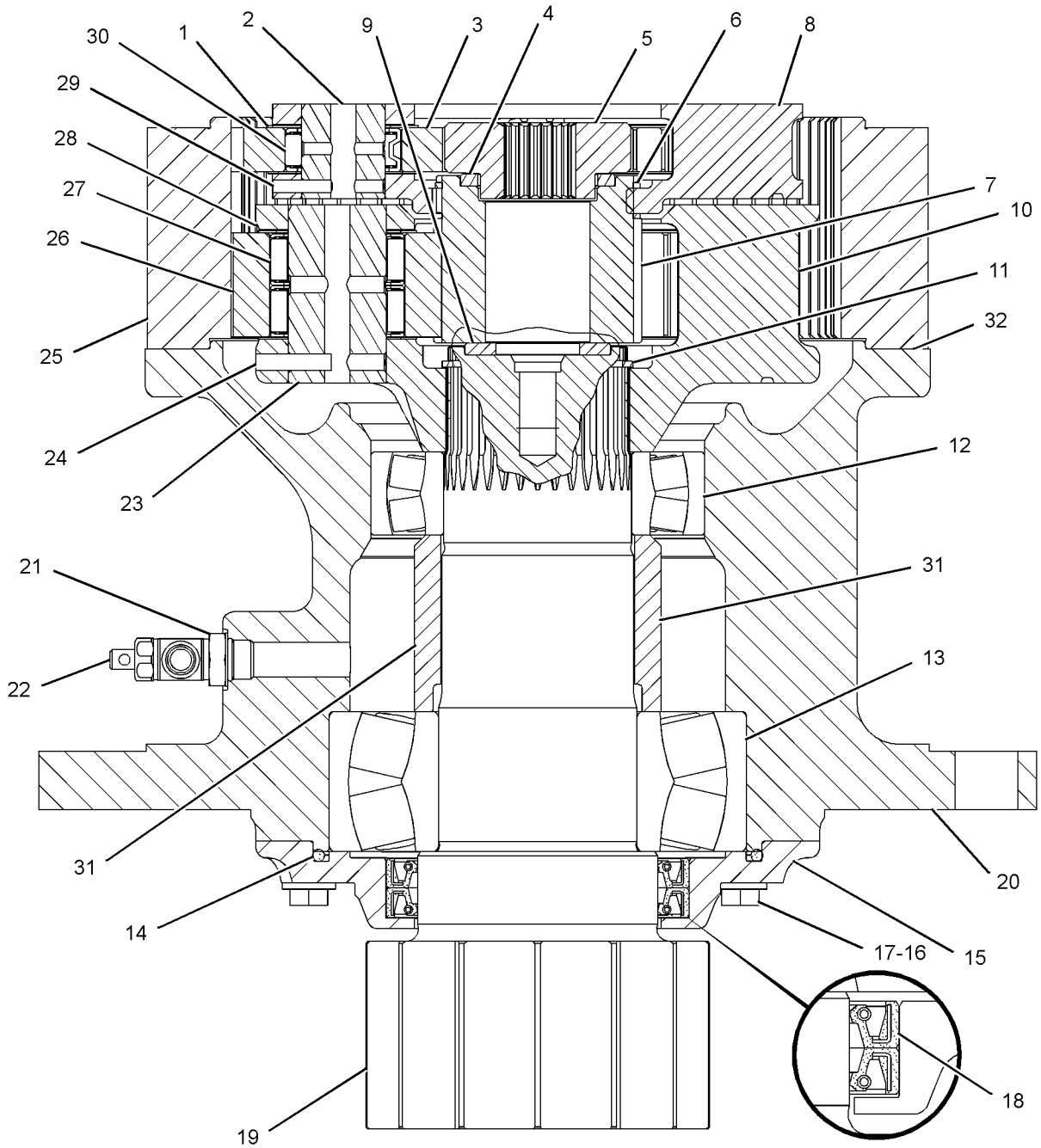

GRAPHIC #1 **<END>** g01619043

148-4679 DRIVE GP-SWING—WITH MOTOR

S/N: FKK1-UP; DNP1-UP

PART OF 267-6767 POWER TRAIN AR

SMCS-5459 **i04912494**

NOTE	REF NO	GRAPHIC REF	PART NUMBER	QTY	PART NAME 1 2 3 4 5 6 (PRODUCT LEVEL)	SEE PAGE
Y	1	1	**148-4644**	1	DRIVE GP-SWING (WITHOUT MOTOR)	213
	2	1	**114-1398**	1	GAUGE-OIL LEVEL (SWING DRIVE)	
	3	1	**114-1399**	1	PIPE-GAUGE	
Y	4	1	*158-8985*	1	MOTOR & MTG GP-SWING	293
	5	1	**227-6221**	1	BREATHER AS (SWING DRIVE)	
	5A	1	**4H-6112**	1	BREATHER (SWING DRIVE)	
	5B	1	**227-6215**	1	BOSS (1/4-18-THD)	
	5C	1	**267-6785**	1	PIPE	
B	6	1	**378-9581**		SEALANT	

B - USE AS REQUIRED
Y - SEPARATE ILLUSTRATION

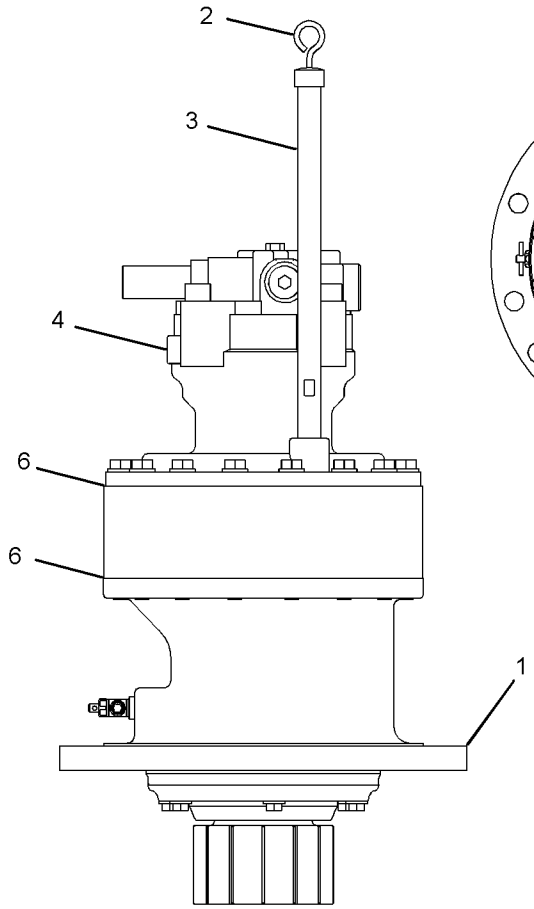

RIGHT SIDE VIEW

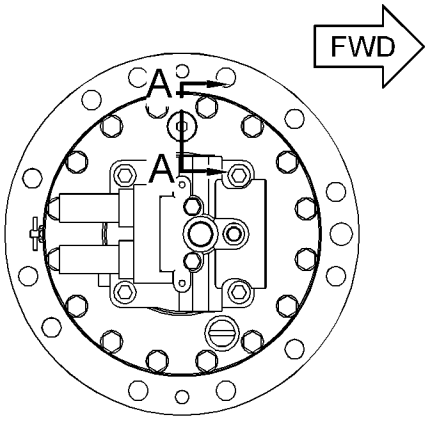

TOP VIEW

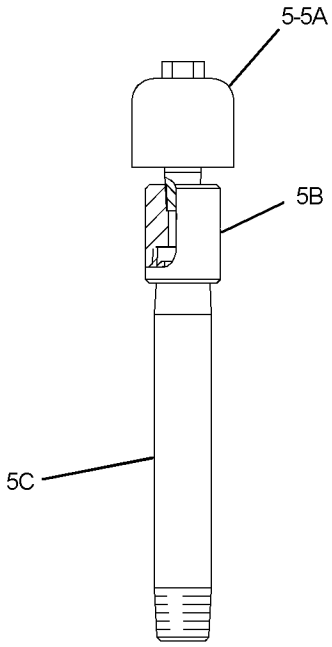

SECTION A-A

GRAPHIC #1 **<END>** g01222725

227-6166 FASTENER GP-SWING & FINAL DR

S/N: FKK1-UP; DNP1-UP

PART OF 267-6767 POWER TRAIN AR

SMCS-4050, 5459 **i04912515**

NOTE	REF NO	GRAPHIC REF	PART NUMBER	QTY	PART NAME 1 2 3 4 5 6 (PRODUCT LEVEL)	SEE PAGE
	1	1	**2Y-5503**	2	CORK	
	2	1	**5D-1026**	1	CLAMP-BAND	
	3	1	**096-4755**	1	PIN	
M	4	1	**7X-2563**	32	BOLT (M20X2.5X60-MM)	
M	5	1	**7X-2576**	12	BOLT (M24X3X70-MM)	
	6	1	**8T-4123**	32	WASHER (22X35X3.5-MM THK)	
	7	1	**8T-4167**	12	WASHER-HARD (26X44X4-MM THK)	
E	8	1	**5P-0767**		HOSE (90-CM)	
B	9	1	**1U-8846**		SEALANT-GASKET	

B - USE AS REQUIRED
E - ORDER BY THE CENTIMETER
M - METRIC PART

227-6166 **FASTENER GP-SWING & FINAL DR (*contd.*)** **i04912515**

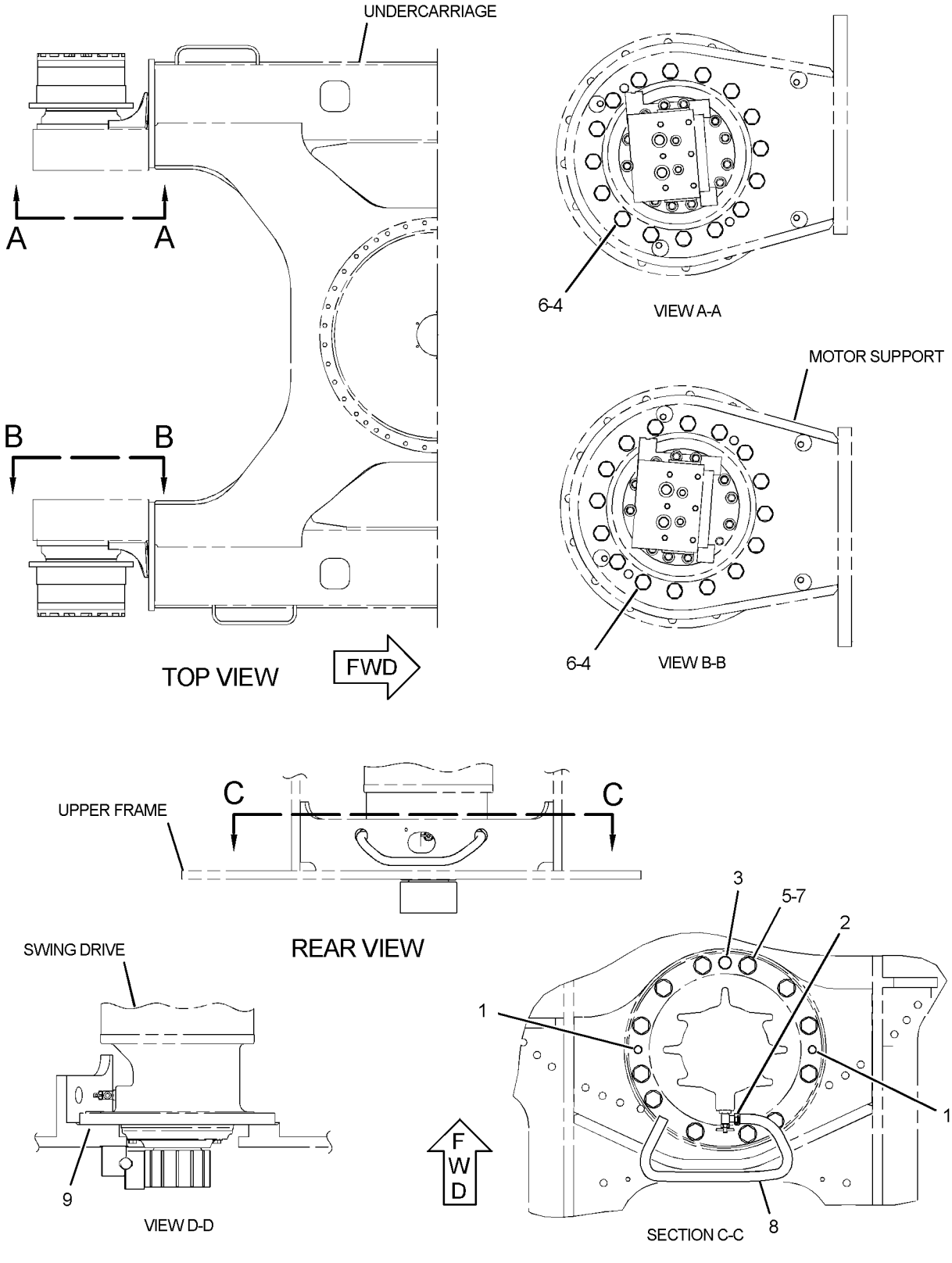

GRAPHIC #1 **<END>** g01224177

158-8987 FILTER & VALVE GP-PILOT–HYDRAULIC OIL

S/N: FKK1-UP; DNP1-UP

PART OF 433-8177 TANK & FILTER GP-HYDRAULIC

SMCS-5072, 5092 **i04915456**

NOTE	REF NO	GRAPHIC REF	PART NUMBER	QTY	PART NAME 1 2 3 4 5 6 (PRODUCT LEVEL)	SEE PAGE
	1	1	**5I-8670**	1	FILTER-OIL (ADVANCED EFFICIENCY) (HYDRAULIC, PILOT)	
	2	1	**215-4909**	1	VALVE GP-PILOT RELIEF (HYDRAULIC FILTER)	
	2A	1	**095-1584**	1	SEAL-O-RING	
	2B	1	**095-1590**	1	SEAL-O-RING	
	2C	1	**095-1596**	1	SEAL-O-RING	

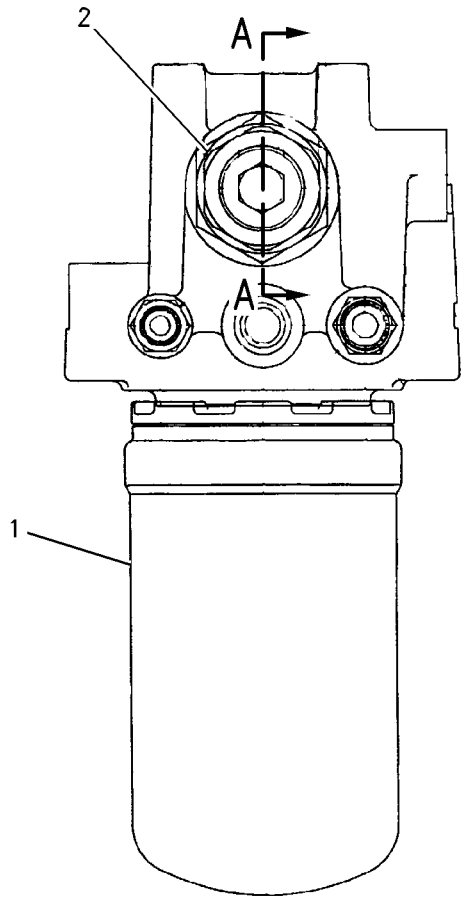

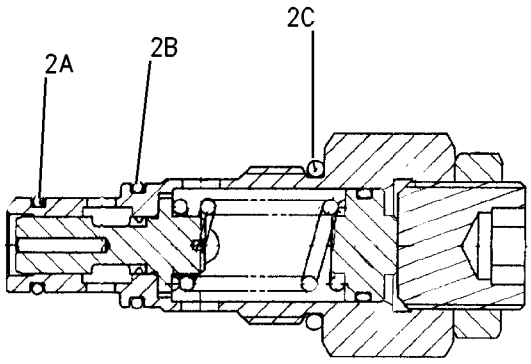

SECTION A–A

GRAPHIC #1 **<END>** g00842119

188-4140 FILTER GP-OIL—HYDRAULIC RETURN

S/N: FKK1-UP; DNP1-UP

PART OF 433-8177 TANK & FILTER GP-HYDRAULIC

SMCS-3004, 4295, 431F, 5068, 5091, 5092 **i05182567**

NOTE	REF NO	GRAPHIC REF	PART NUMBER	QTY	PART NAME 1 2 3 4 5 6 (PRODUCT LEVEL)	SEE PAGE
Y	1	1	**173-3503**	1	BLOCK GP-HYDRAULIC	202
	2	1	**129-8034**	1	VALVE AS-BYPASS	
	3	1	**123-2003**	2	SEAL-O-RING	
	4	1	**173-3507**	1	HOUSING AS	
M	5	1	**8T-4194**	8	BOLT (M12X1.75X50-MM)	
	6	1	**8T-4223**	8	WASHER-HARD (13.5X25.5X3-MM THK)	
CY	7	1	**419-8528**	1	FILTER GP-OIL (HYDRAULIC RETURN)	222
	8	1	**173-3510**	1	COVER	
	9	1	**173-3518**	1	INDICATOR AS (HYDRAULIC RETURN FILTER)	
	10	1	**159-7784**	1	SEAL-O-RING	
	12	1	**8T-0328**	4	WASHER-HARD (5.5X10X1-MM THK)	
M	13	1	**8T-6693**	4	SCREW-MACHINE (M5X0.8X16-MM)	

C - CHANGE FROM PREVIOUS TYPE
M - METRIC PART
Y - SEPARATE ILLUSTRATION

188-4140 **FILTER GP-OIL (*contd.*)** **i05182567**

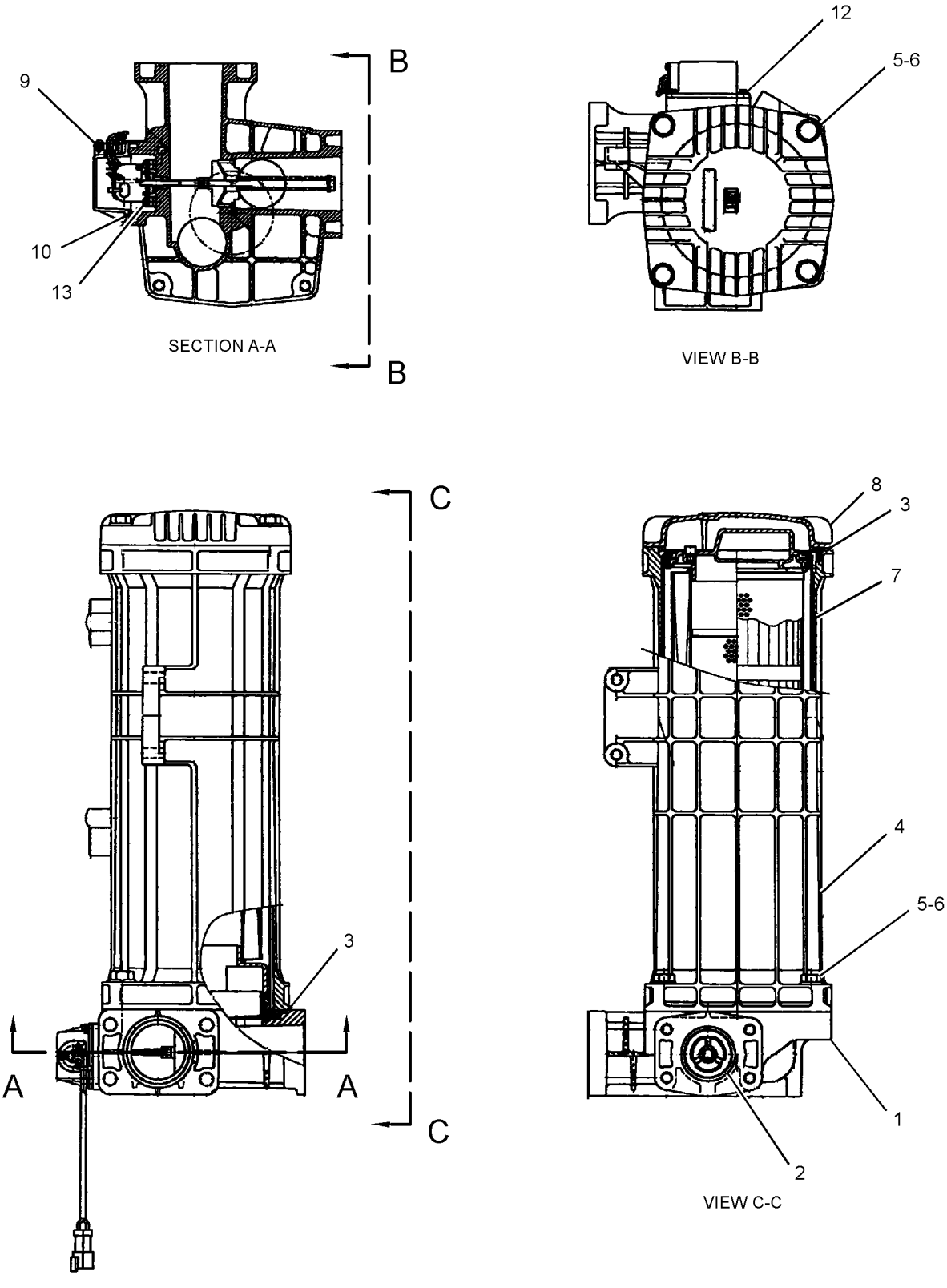

GRAPHIC #1 **<END>** g03327388

289-8194 FILTER GP-OIL—HYDRAULIC, CASE DRAIN

S/N: FKK1-UP; DNP1-UP

PART OF 433-8177 TANK & FILTER GP-HYDRAULIC

SMCS-3004, 4295, 431F, 5068, 5091, 5092 **i04915471**

NOTE	REF NO	GRAPHIC REF	PART NUMBER	QTY	PART NAME 1 2 3 4 5 6 (PRODUCT LEVEL)	SEE PAGE
	1	1	**093-7521**	1	FILTER-OIL (ADVANCED EFFICIENCY) (HYDRAULIC, CASE DRAIN)	
	2	1	**289-8195**	1	HEAD AS-FILTER	

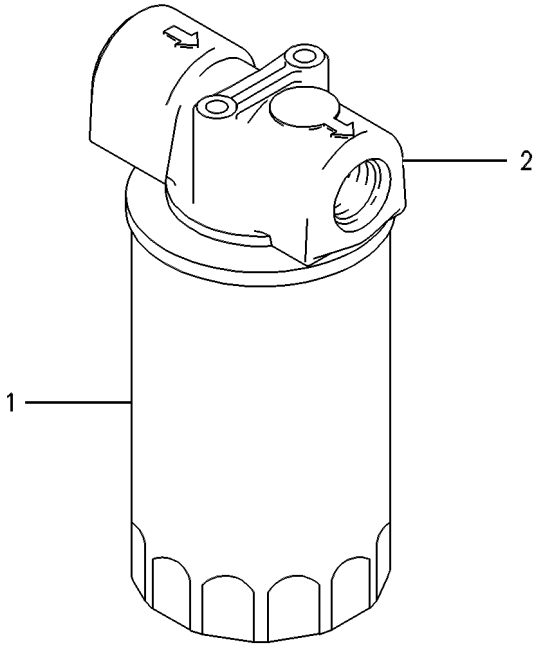

GRAPHIC #1 **<END>** g00258224

419-8528 FILTER GP-OIL—HYDRAULIC RETURN

S/N: FKK1-UP; DNP1-UP

PART OF 188-4140 FILTER GP-OIL

SMCS-3004, 4295, 431F, 5068, 5091, 5092 **i05182573**

NOTE	REF NO	GRAPHIC REF	PART NUMBER	QTY	PART NAME 1 2 3 4 5 6 (PRODUCT LEVEL)	SEE PAGE
	1	1	**419-8531**	1	PLATE-SLIDE	
JM	2	1	**173-3529**	6	BOLT (M6X1X15-MM)	
J	3	1	**3T-7528**	6	SEAL-O-RING	
	4	1	**173-3513**	1	BASE	
J	5	1	**3E-4297**	2	SEAL-O-RING	
M	6	1	**137-3626**	1	BOLT-SPECIAL	
	8	1	**179-9806**	1	FILTER ELEMENT AS-OIL (ADVANCED EFFICIENCY) (HYDRAULIC RETURN)	
J	9	1	**137-3623**	4	SEAL-O-RING	
J	10	1	**6V-7658**	2	SEAL-O-RING	
J	11	1	**177-2553**	1	SEAL-O-RING	
J	12	1	**095-1681**	1	SEAL-O-RING	
	13	1	**173-3515**	1	RING-RETAINING	
	14	1	**173-3516**	1	HANDLE	
J	15	1	**4J-7533**	1	SEAL-O-RING	
J	16	1	**9S-4180**	1	PLUG	
JM	17	1	**137-3624**	8	SCREW (M3X0.5X5-MM)	
J	18	1	**137-3625**	2	PAD	
	19	1	**173-3517**	1	PLATE	
J	20	1	**137-3628**	1	SHIM (0.1-MM THK)	
	21	1	**419-8533**	1	FILM-INSTRUCTION (HYDRAULIC OIL RETURN FILTER)	
					PARTS SHOWN IN GRAPHIC(S) WITHOUT A REFERECE NUMBER ARE NOT SERVICED SEPARATELY	
					AVAILABLE REPAIR KIT(S):	
J			**201-9299**	1	KIT-SERVICE (HYDRAULIC RETURN FILTER)	

J - KIT MARKED J SERVICES PARTS MARKED J
M - METRIC PART

419-8528 **FILTER GP-OIL (*contd.*)** **i05182573**

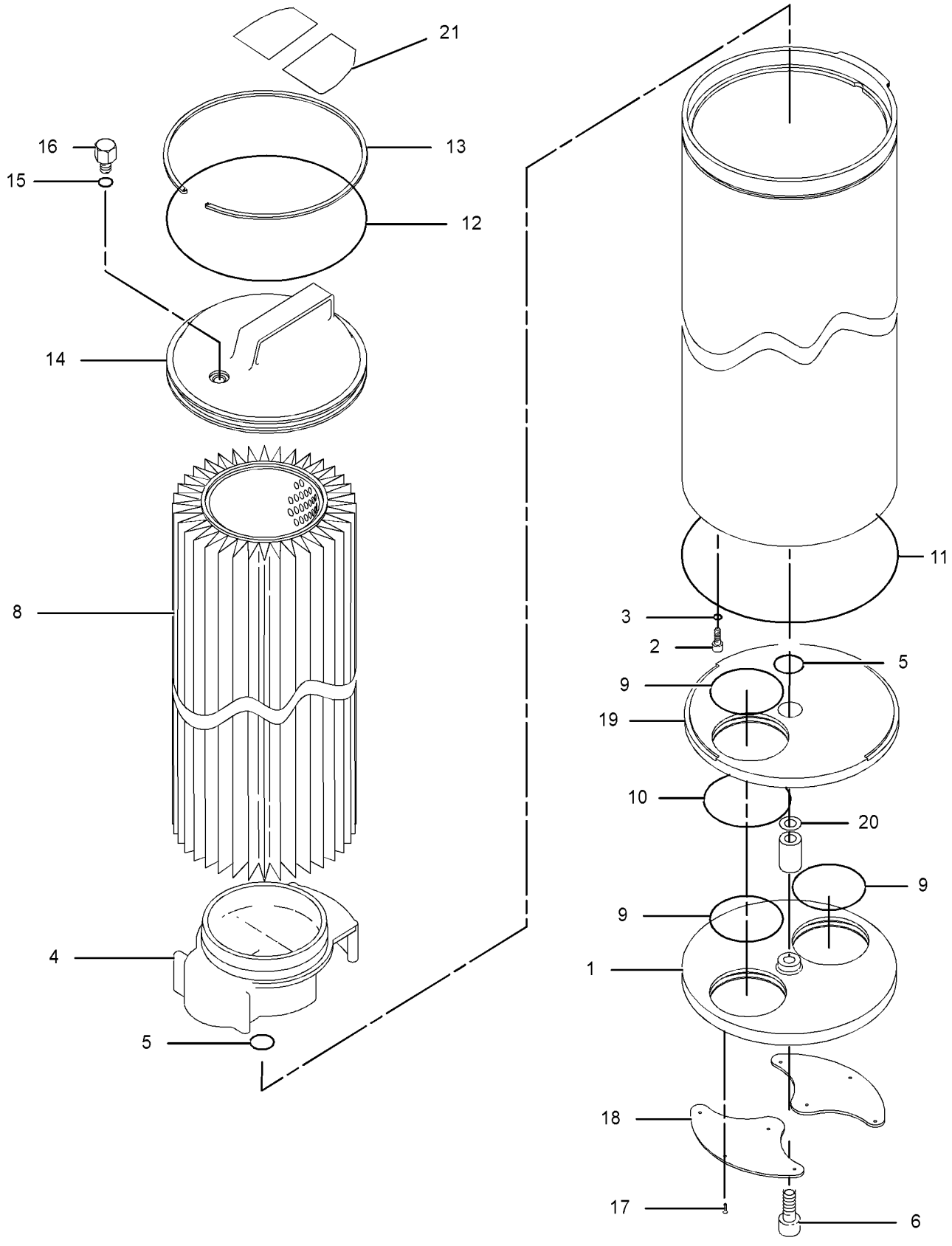

GRAPHIC #1 **<END>** g03323353

214-4511 FITTING GP-HYDRAULIC–4-BOLT FLANGE

S/N: FKK1-UP; DNP1-UP

PART OF 239-1714 LINES GP-FRONT

SMCS-5057, 7553 **i04915553**

NOTE	REF NO	GRAPHIC REF	PART NUMBER	QTY	PART NAME 1 2 3 4 5 6 (PRODUCT LEVEL)	SEE PAGE
	1	1	*214-4400*	1	FLANGE AS	
	1A	1	**5K-9090**	1	SEAL-O-RING	
					-OR-	
	2	1	*214-4518*	1	FLANGE AS	
	2A	1	**5K-9090**	1	SEAL-O-RING	
	2B	1	**6V-8635**	1	CONNECTOR	
	2C	1	**7M-8485**	1	SEAL-O-RING	

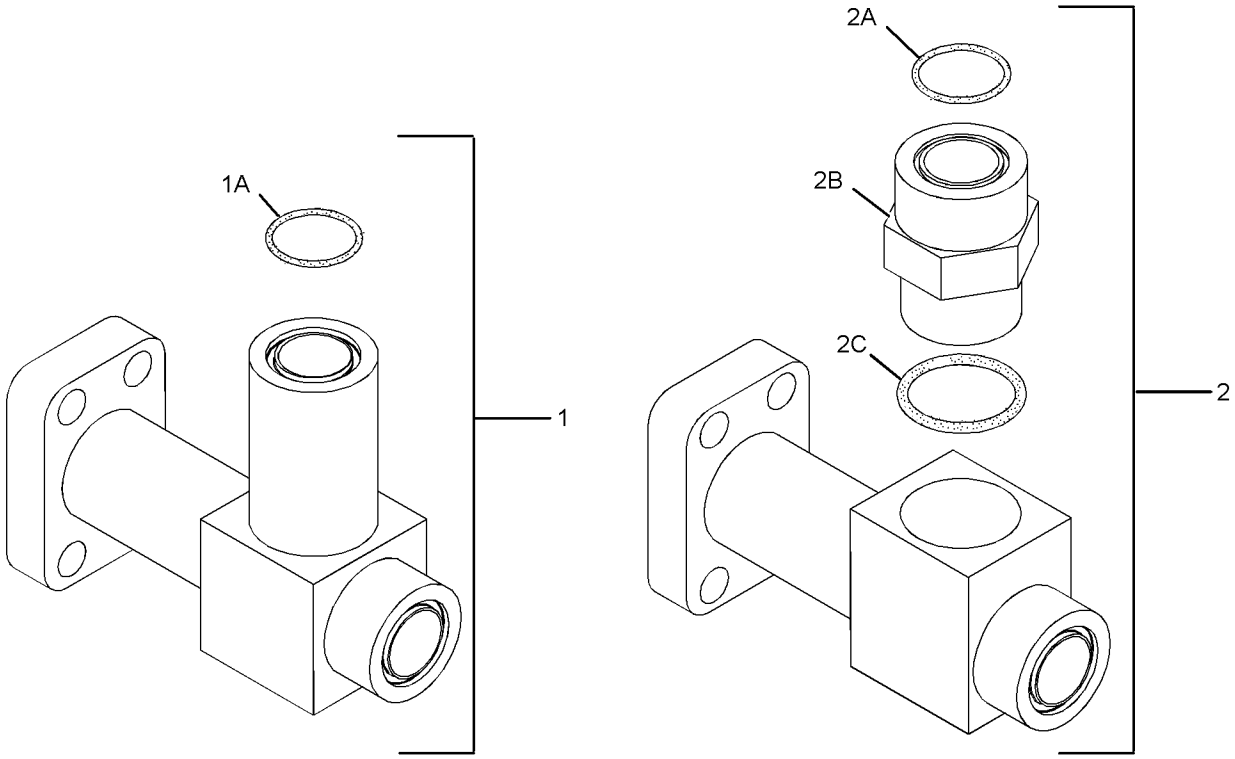

OPTIONAL DESIGN

GRAPHIC #1 **<END>** g02154439

347-6081 GAUGE GP-SIGHT—HYDRAULIC OIL LEVEL

S/N: FKK1-UP; DNP1-UP

PART OF 433-8177 TANK & FILTER GP-HYDRAULIC

SMCS-7479 **i04915472**

NOTE	REF NO	GRAPHIC REF	PART NUMBER	QTY	PART NAME 1 2 3 4 5 6 (PRODUCT LEVEL)	SEE PAGE
	1	1	**347-6082**	2	BLOCK	
M	2	1	**236-3259**	2	BOLT-SPECIAL	
	3	1	**236-3257**	1	PIPE	
	4	1	**6F-6672**	4	SEAL-O-RING	
	5	1	**6F-4855**	4	SEAL-O-RING	

M - METRIC PART

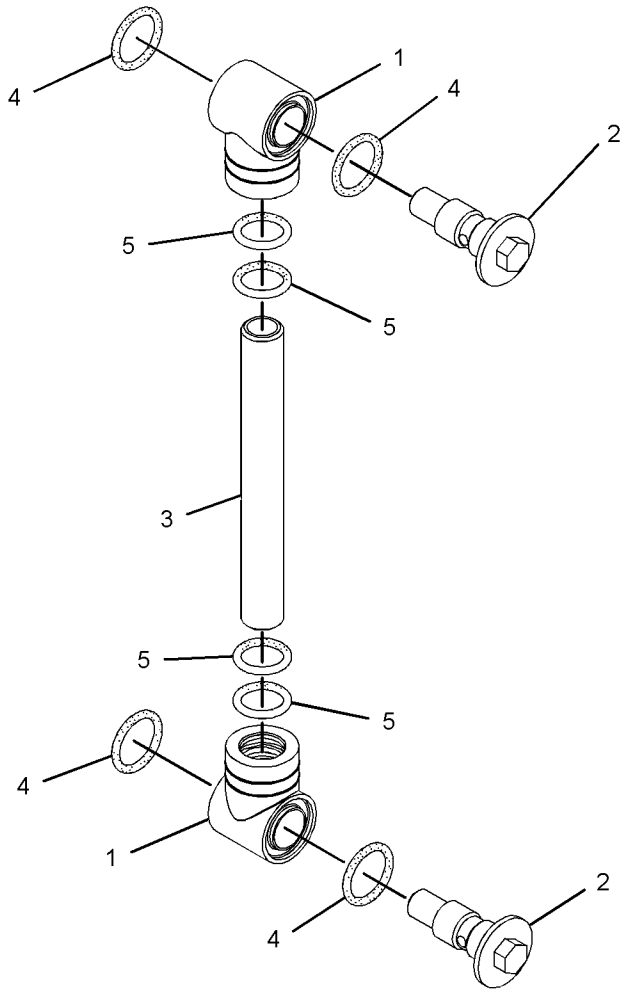

GRAPHIC #1 **<END>** g02270933

256-0093 HEAD GP-PUMP–DRIVE

S/N: FKK1-UP; DNP1-UP

PART OF 397-3680 PUMP GP-MAIN HYDRAULIC

SMCS-3222, 5070, 5086 **i05300137**

NOTE	REF NO	GRAPHIC REF	PART NUMBER	QTY	PART NAME 1 2 3 4 5 6 (PRODUCT LEVEL)	SEE PAGE
B	1	1	**099-3669**	2	SHIM (1-MM THK)	
B		1	**099-3670**	2	SHIM (1.95-MM THK)	
B		1	**099-6109**	2	SHIM (1.05-MM THK)	
B		1	**099-6110**	2	SHIM (1.1-MM THK)	
B		1	**099-6111**	2	SHIM (1.15-MM THK)	
B		1	**099-6112**	2	SHIM (1.2-MM THK)	
B		1	**099-6113**	2	SHIM (1.25-MM THK)	
B		1	**099-6115**	2	SHIM (1.3-MM THK)	
B		1	**099-6117**	2	SHIM (1.35-MM THK)	
B		1	**099-6118**	2	SHIM (1.4-MM THK)	
B		1	**099-6119**	2	SHIM (1.45-MM THK)	
B		1	**099-6120**	2	SHIM (1.5-MM THK)	
B		1	**099-6121**	2	SHIM (1.55-MM THK)	
B		1	**099-6122**	2	SHIM (1.6-MM THK)	
B		1	**099-6123**	2	SHIM (1.65-MM THK)	
B		1	**099-6124**	2	SHIM (1.7-MM THK)	
B		1	**099-6125**	2	SHIM (1.75-MM THK)	
B		1	**099-6126**	2	SHIM (1.8-MM THK)	
B		1	**099-6127**	2	SHIM (1.85-MM THK)	
B		1	**099-6128**	2	SHIM (1.9-MM THK)	
	2	1	**9S-4191**	1	PLUG-O-RING	
	3	1	**8T-4223**	6	WASHER-HARD (13.5X25.5X3-MM THK)	
M	4	1	**8T-4196**	2	BOLT (M10X1.5X35-MM)	
M	5	1	**8T-4136**	2	BOLT (M10X1.5X25-MM)	
M	6	1	**8T-4133**	1	NUT (M10X1.5-THD)	
M	7	1	**7I-2272**	2	BOLT (M5X0.8X12-MM)	
Y	8	1	**111-9916**	1	VALVE GP-SOLENOID	352
	9	1	**391-0668**	1	COVER	
	10	1	**200-3244**	1	SPRING	
	11	1	**200-3245**	1	SPRING	
	12	1	**200-3246**	1	SPRING	
	13	1	**215-9961**	1	STOPPER	
	14	1	**215-9962**	1	STOPPER	
M	15	1	**225-4607**	2	SETSCREW (M20X2.5X45-MM)	
	16	1	**234-4452**	1	COVER	
	17	1	**234-4453**	1	COVER	
	18	1	**273-8316**	1	SEAL-O-RING	
	19	1	**273-8317**	1	SEAL-O-RING	
	20	1	**273-8318**	1	SEAL-O-RING	
	21	1	**273-8319**	1	SEAL-O-RING	
	22	1	**285-4470**	1	SEAL-O-RING	
	23	1	**391-0665**	1	BODY AS (DRIVEN)	
	24	1	**301-6874**	1	RETAINER	
	25	1	**301-8294**	1	ADJUSTER	
	26	1	**094-1875**	1	DOWEL	
	27	1	**094-1881**	1	PLATE-SLIDE	
	28	1	**094-1882**	10	PLUG	
	29	1	**095-1788**	1	RING-BACKUP	
M	30	1	**8T-4131**	1	NUT (M20X2.5-THD)	
M	31	1	**6V-8200**	6	BOLT-SOCKET HEAD (M12X1.75X35-MM)	
	32	1	**099-3671**	1	SPRING	
	33	1	**3J-1907**	2	SEAL-O-RING	
	34	1	**3D-2891**	1	BALL	
M	35	1	**200-3255**	1	NUT (M20X1.5-THD)	
	36	1	**191-5707**	1	SPOOL AS	
	37	1	**190-7674**	1	SEAL-O-RING	
	38	1	**190-7673**	1	SEAL-O-RING	

256-0093 **HEAD GP-PUMP (*contd.*)** **i05300137**

NOTE	REF NO	GRAPHIC REF	PART NUMBER	QTY	PART NAME 1 2 3 4 5 6 (PRODUCT LEVEL)	SEE PAGE
	39	1	**189-9763**	3	SEAL-O-RING	
	40	1	**185-0201**	1	PIN AS	
		1	**129-7978**	1	DOWEL	
	41	1	**185-0169**	1	GUIDE	
	42	1	**173-3413**	1	COVER	
	43	1	**173-3397**	1	LEVER	
	44	1	**173-3384**	1	PISTON	
	45	1	**150-5797**	1	PIN	
	46	1	**153-8623**	1	RING-BACKUP	

B - USE AS REQUIRED
M - METRIC PART
Y - SEPARATE ILLUSTRATION

256-0093 **HEAD GP-PUMP (*contd.*)** **i05300137**

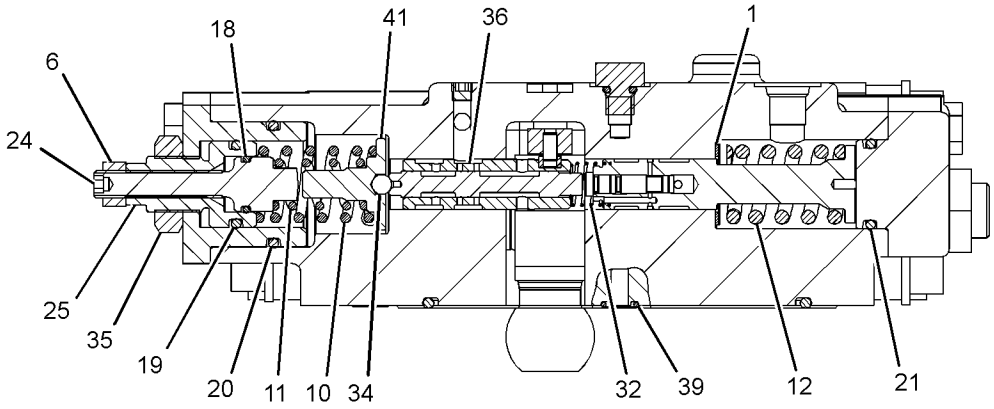

SECTION A-A

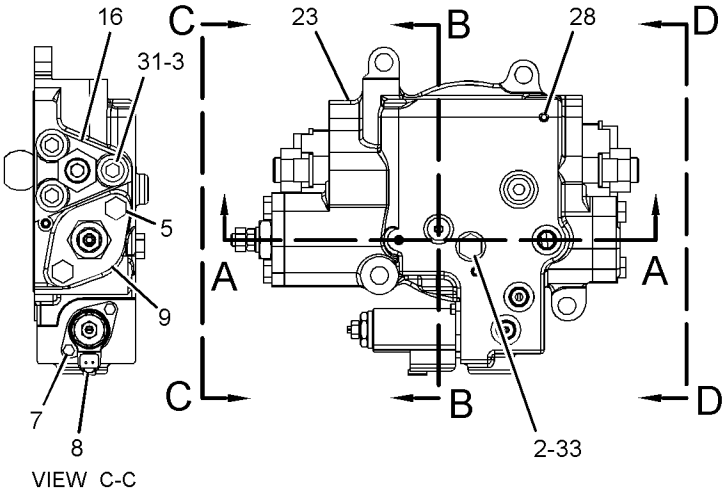

VIEW C-C

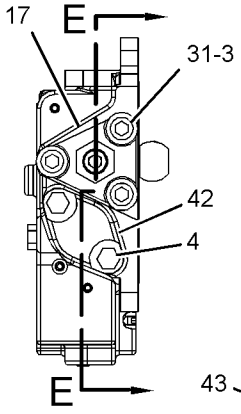

VIEW D-D

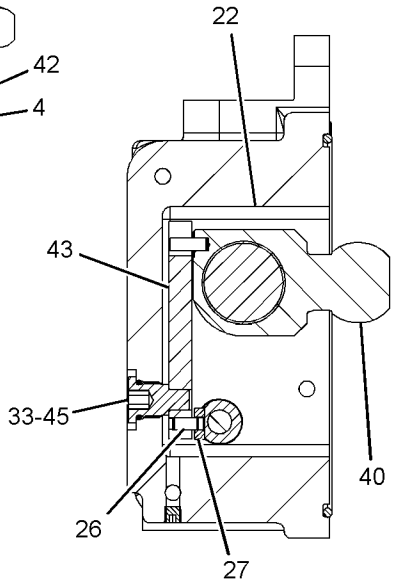

SECTION B-B

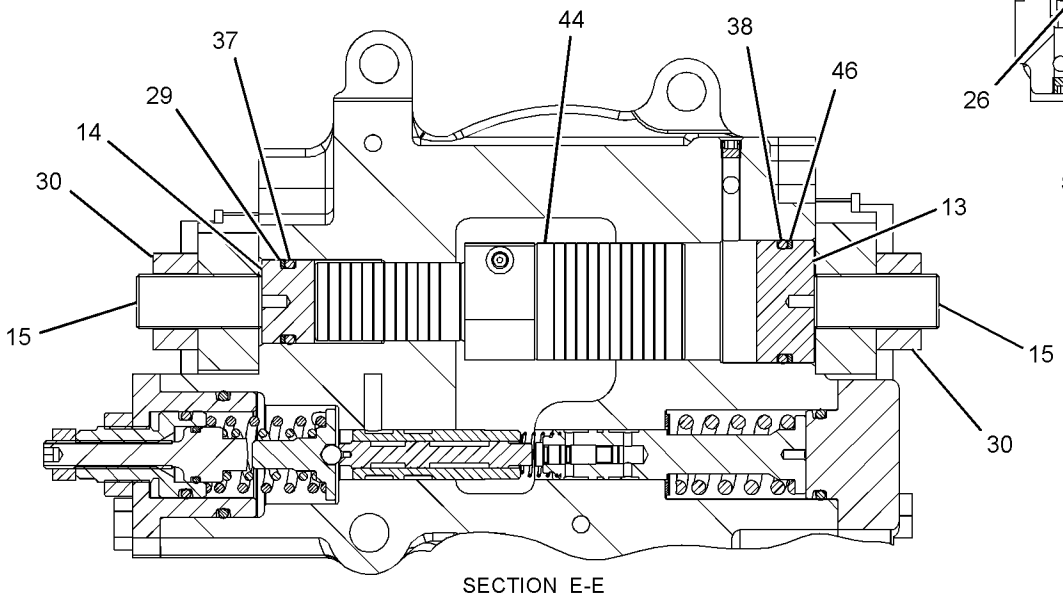

SECTION E-E

GRAPHIC #1 **<END>** g01392644

256-0096 HEAD GP-PUMP–DRIVEN

S/N: FKK1-UP; DNP1-UP

PART OF 397-3680 PUMP GP-MAIN HYDRAULIC

SMCS-3222, 5070, 5086

i04917178

NOTE	REF NO	GRAPHIC REF	PART NUMBER	QTY	PART NAME 1 2 3 4 5 6 (PRODUCT LEVEL)	SEE PAGE
B	1	2	**099-3669**	2	SHIM (1-MM THK)	
B		2	**099-3670**	2	SHIM (1.95-MM THK)	
B		2	**099-6109**	2	SHIM (1.05-MM THK)	
B		2	**099-6110**	2	SHIM (1.1-MM THK)	
B		2	**099-6111**	2	SHIM (1.15-MM THK)	
B		2	**099-6112**	2	SHIM (1.2-MM THK)	
B		2	**099-6113**	2	SHIM (1.25-MM THK)	
B		2	**099-6115**	2	SHIM (1.3-MM THK)	
B		2	**099-6117**	2	SHIM (1.35-MM THK)	
B		2	**099-6118**	2	SHIM (1.4-MM THK)	
B		2	**099-6119**	2	SHIM (1.45-MM THK)	
B		2	**099-6120**	2	SHIM (1.5-MM THK)	
B		2	**099-6121**	2	SHIM (1.55-MM THK)	
B		2	**099-6122**	2	SHIM (1.6-MM THK)	
B		2	**099-6123**	2	SHIM (1.65-MM THK)	
B		2	**099-6124**	2	SHIM (1.7-MM THK)	
B		2	**099-6125**	2	SHIM (1.75-MM THK)	
B		2	**099-6126**	2	SHIM (1.8-MM THK)	
B		2	**099-6127**	2	SHIM (1.85-MM THK)	
B		2	**099-6128**	2	SHIM (1.9-MM THK)	
	2	1,2	**8T-4223**	6	WASHER-HARD (13.5X25.5X3-MM THK)	
M	3	1	**8T-4196**	2	BOLT (M10X1.5X35-MM)	
M	4	2	**8T-4136**	2	BOLT (M10X1.5X25-MM)	
M	5	2	**8T-4133**	1	NUT (M10X1.5-THD)	
M	6	1,2	**6V-8200**	6	BOLT-SOCKET HEAD (M12X1.75X35-MM)	
	7	2	**3J-1907**	1	SEAL-O-RING	
	8	2	**173-3398**	1	COVER	
	9	2	**200-3244**	1	SPRING	
	10	2	**200-3245**	1	SPRING	
	11	2	**200-3246**	1	SPRING	
	12	1	**215-9961**	1	STOPPER	
	13	1	**215-9962**	1	STOPPER	
M	14	1	**225-4607**	2	SETSCREW (M20X2.5X45-MM)	
	15	2	**234-4452**	1	COVER	
	16	1	**234-4453**	1	COVER	
	17	2	**273-8316**	1	SEAL-O-RING	
	18	2	**273-8317**	1	SEAL-O-RING	
	19	2	**273-8318**	1	SEAL-O-RING	
	20	2	**273-8319**	1	SEAL-O-RING	
	21	2	**285-4470**	1	SEAL-O-RING	
	22	1	**300-9716**	1	BODY AS (DRIVEN)	
	23	2	**301-6874**	1	RETAINER	
	24	2	**301-8294**	1	ADJUSTER	
	25	2	**094-1875**	1	DOWEL	
	26	2	**094-1881**	1	PLATE-SLIDE	
	27	1	**094-1882**	9	PLUG	
	28	1	**095-1788**	1	RING-BACKUP	
M	29	1	**8T-4131**	2	NUT (M20X2.5-THD)	
	30	2	**3D-2891**	1	BALL	
	31	2	**099-3671**	1	SPRING	
M	32	2	**200-3255**	1	NUT (M20X1.5-THD)	
	33	2	**191-5707**	1	SPOOL AS	
	34	1	**190-7674**	1	SEAL-O-RING	
	35	1	**190-7673**	1	SEAL-O-RING	
	36	2	**189-9763**	3	SEAL-O-RING	
	37	2	**185-0201**	1	PIN AS	
		2	**129-7978**	1	DOWEL	

256-0096 **HEAD GP-PUMP (*contd.*)** **i04917178**

NOTE	REF NO	GRAPHIC REF	PART NUMBER	QTY	PART NAME 1 2 3 4 5 6 (PRODUCT LEVEL)	SEE PAGE
	38	2	**185-0169**	1	GUIDE	
	39	1	**173-3413**	1	COVER	
	40	2	**173-3397**	1	LEVER	
	41	1	**173-3384**	1	PISTON	
	42	1	**153-8623**	1	RING-BACKUP	
	43	2	**150-5797**	1	PIN	

B - USE AS REQUIRED
M - METRIC PART

256-0096 **HEAD GP-PUMP (*contd.*)** **i04917178**

REFER TO ALL ILLUSTRATIONS OF
THIS GROUP FOR AUXILIARY VIEWS

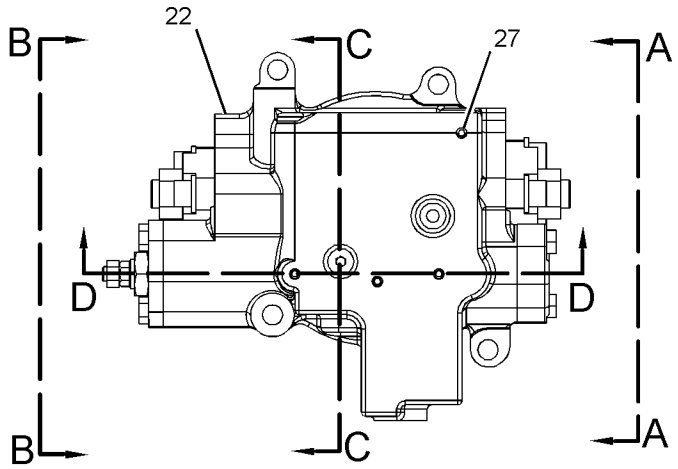

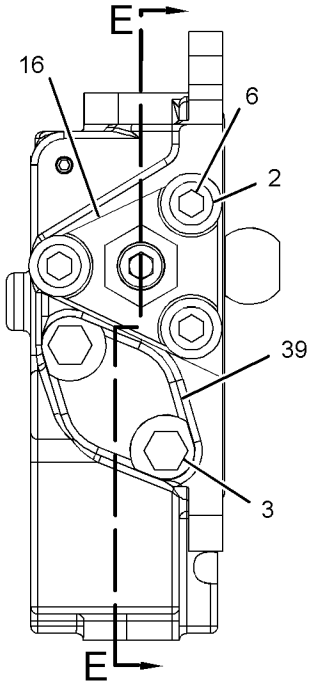

VIEW A-A

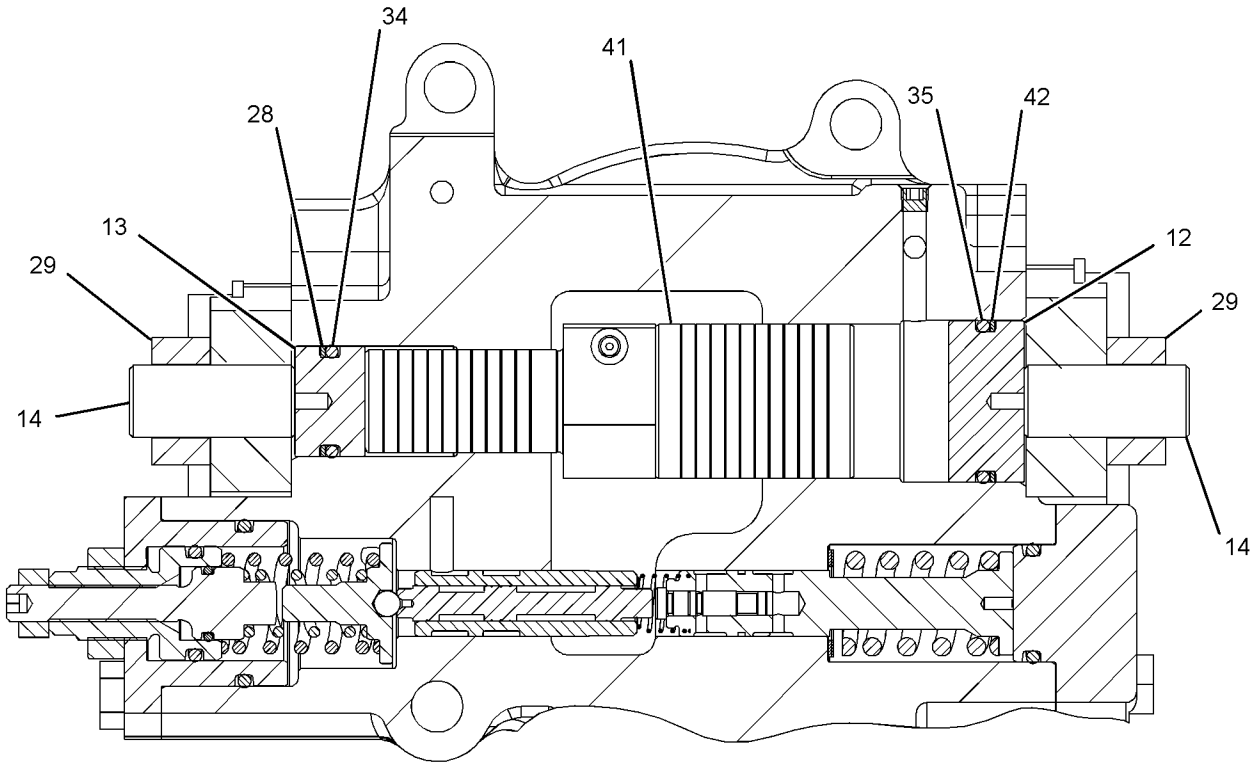

SECTION E-E

GRAPHIC #1 g01393331

256-0096 **HEAD GP-PUMP (*contd.*)** **i04917178**

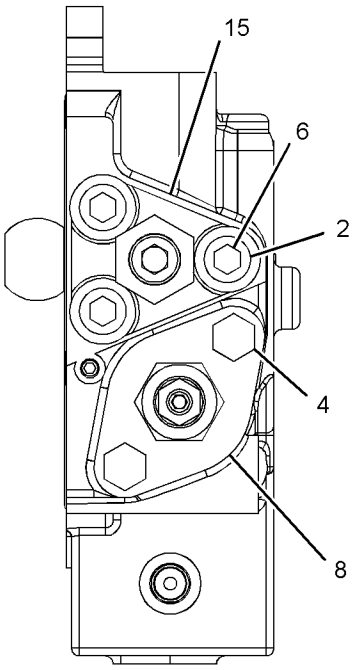

VIEW B-B

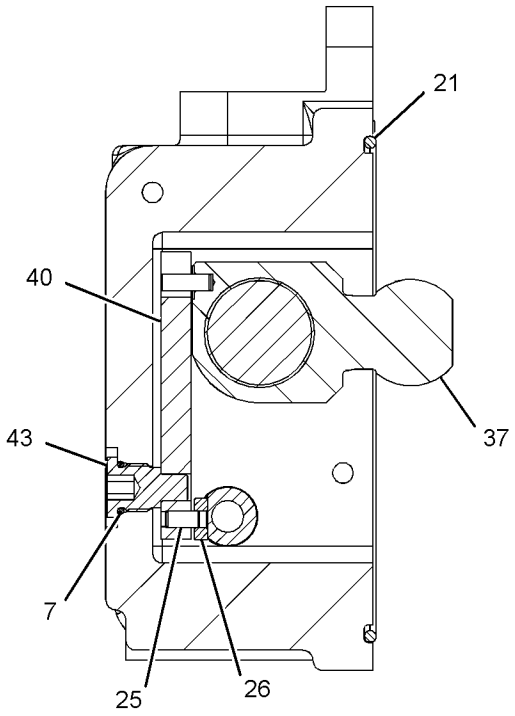

SECTION C-C

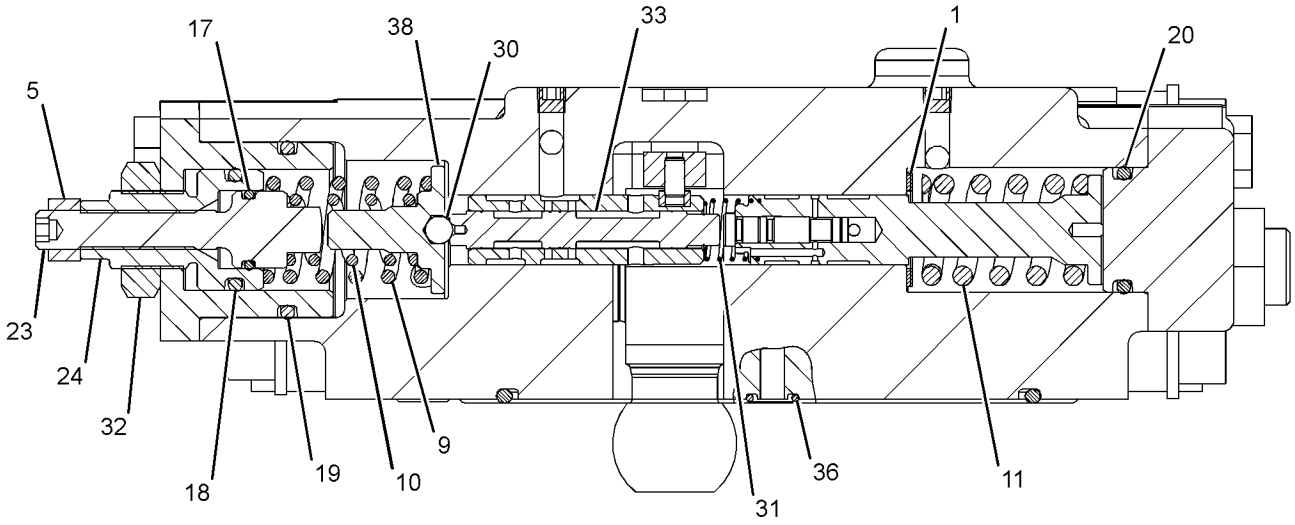

SECTION D-D

GRAPHIC #2 **<END>** g01393359

194-0174 HOSE GP-HYDRAULIC—CONTROL VALVE, STICK

S/N: FKK1-UP; DNP1-UP

PART OF 239-1714 LINES GP-FRONT

SMCS-5057 **i04915497**

NOTE	PART NUMBER	QTY	PART NAME 1 2 3 4 5 6 (PRODUCT LEVEL)	SEE PAGE
Y	*194-0176*	1	HOSE GP-HYDRAULIC (CONTROL VALVE, STICK)	234
			-OR-	
	168-9760	1	HOSE AS (CONTROL VALVE, STICK)	

Y - SEPARATE ILLUSTRATION

<END>

194-0176 HOSE GP-HYDRAULIC—CONTROL VALVE, STICK

S/N: FKK1-UP; DNP1-UP

PART OF 194-0174 HOSE GP-HYDRAULIC

SMCS-5057 **i04915499**

NOTE	REF NO	GRAPHIC REF	PART NUMBER	QTY	PART NAME 1 2 3 4 5 6 (PRODUCT LEVEL)	SEE PAGE
	1	1	**142-7765**	1	TUBE AS	
	2	1	**5K-9090**	1	SEAL-O-RING	
I	3	1	**165-3165**	1	HOSE AS	

I - REFER TO HYDRAULIC INFORMATION SYSTEM

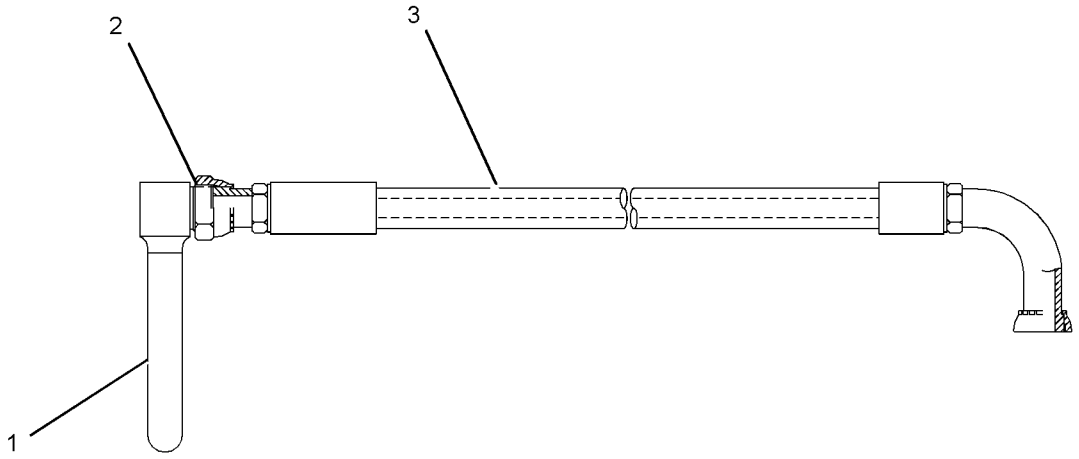

GRAPHIC #1 **<END>** g01041998

194-0180 HOSE GP-HYDRAULIC—CONTROL VALVE, BOOM

S/N: FKK1-UP; DNP1-UP

PART OF 239-1714 LINES GP-FRONT

SMCS-5057 **i04915504**

NOTE	PART NUMBER	QTY	PART NAME 1 2 3 4 5 6 (PRODUCT LEVEL)	SEE PAGE
Y	*194-0181*	1	HOSE GP-HYDRAULIC (CONTROL VALVE, BOOM)	236
			—OR—	
Y	*194-0182*	1	HOSE GP-HYDRAULIC (CONTROL VALVE, BOOM)	237

Y - SEPARATE ILLUSTRATION

<END>

194-0181 HOSE GP-HYDRAULIC—CONTROL VALVE, BOOM

S/N: FKK1-UP; DNP1-UP

PART OF 194-0180 HOSE GP-HYDRAULIC

SMCS-5057 **i04915512**

NOTE	REF NO	GRAPHIC REF	PART NUMBER	QTY	PART NAME 1 2 3 4 5 6 (PRODUCT LEVEL)	SEE PAGE
	1	1	**168-9762**	1	HOSE AS	
	2	1	**8C-3206**	2	FLANGE-HALF	
	3	1	**4J-0520**	1	SEAL-O-RING	



GRAPHIC #1 **<END>** g01049500

194-0182 HOSE GP-HYDRAULIC–CONTROL VALVE, BOOM

S/N: FKK1-UP; DNP1-UP

PART OF 194-0180 HOSE GP-HYDRAULIC

SMCS-5057 **i04915524**

NOTE	REF NO	GRAPHIC REF	PART NUMBER	QTY	PART NAME 1 2 3 4 5 6 (PRODUCT LEVEL)	SEE PAGE
I	1	1	**165-3173**	1	HOSE AS	
	2	1	**168-9523**	1	TUBE AS	
	3	1	**113-6479**	1	FLANGE-SPECIAL	
	4	1	**5K-9090**	2	SEAL-O-RING	
	5	1	**1P-3703**	1	SEAL-RECTANGULAR	

I - REFER TO HYDRAULIC INFORMATION SYSTEM

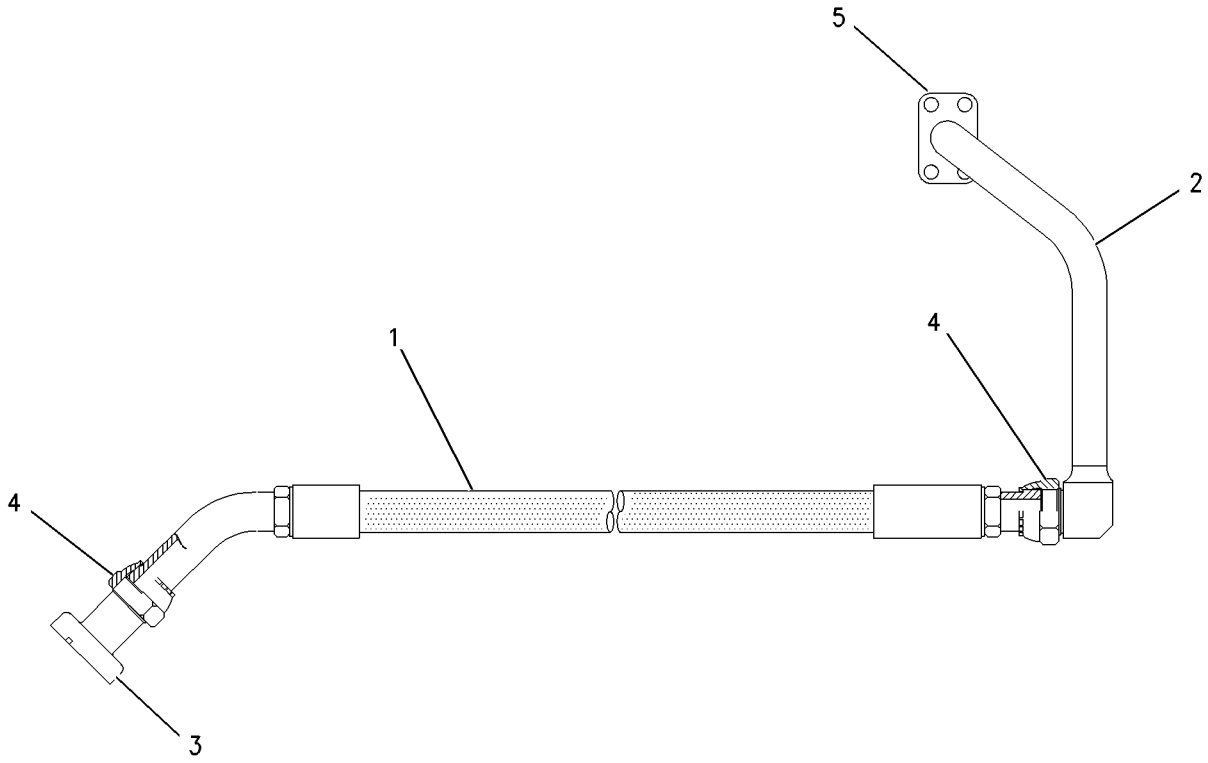

GRAPHIC #1 **<END>** g00834662

236-3212 HOSE GP-HYDRAULIC—FRONT

S/N: FKK1-UP; DNP1-UP

PART OF 239-1714 LINES GP-FRONT

SMCS-5057 **i04915556**

NOTE	PART NUMBER	QTY	PART NAME 1 2 3 4 5 6 (PRODUCT LEVEL)	SEE PAGE
Y	*236-3214*	1	HOSE GP-HYDRAULIC (FRONT)	239
			—OR—	
	207-6666	1	HOSE AS	
BE	**7Y-5074**		GUARD-HOSE	

B - USE AS REQUIRED
E - ORDER BY THE CENTIMETER
Y - SEPARATE ILLUSTRATION

<END>

236-3213 HOSE GP-HYDRAULIC—FRONT

S/N: FKK1-UP; DNP1-UP

PART OF 239-1714 LINES GP-FRONT

SMCS-5057 **i04915571**

NOTE	PART NUMBER	QTY	PART NAME 1 2 3 4 5 6 (PRODUCT LEVEL)	SEE PAGE
Y	*236-3215*	1	HOSE GP-HYDRAULIC (FRONT)	240
			—OR—	
	207-6667	1	HOSE AS	
BE	**7Y-5074**		GUARD-HOSE	

B - USE AS REQUIRED
E - ORDER BY THE CENTIMETER
Y - SEPARATE ILLUSTRATION

<END>

236-3214 HOSE GP-HYDRAULIC

S/N: FKK1-UP; DNP1-UP

PART OF 236-3212 HOSE GP-HYDRAULIC

SMCS-5057 **i04915569**

NOTE	REF NO	GRAPHIC REF	PART NUMBER	QTY	PART NAME 1 2 3 4 5 6 (PRODUCT LEVEL)	SEE PAGE
	1	1	**7Y-3721**	1	TUBE AS	
I	2	1	**187-5954**	1	HOSE AS	
	3	1	**6V-9746**	1	SEAL-O-RING	

I - REFER TO HYDRAULIC INFORMATION SYSTEM

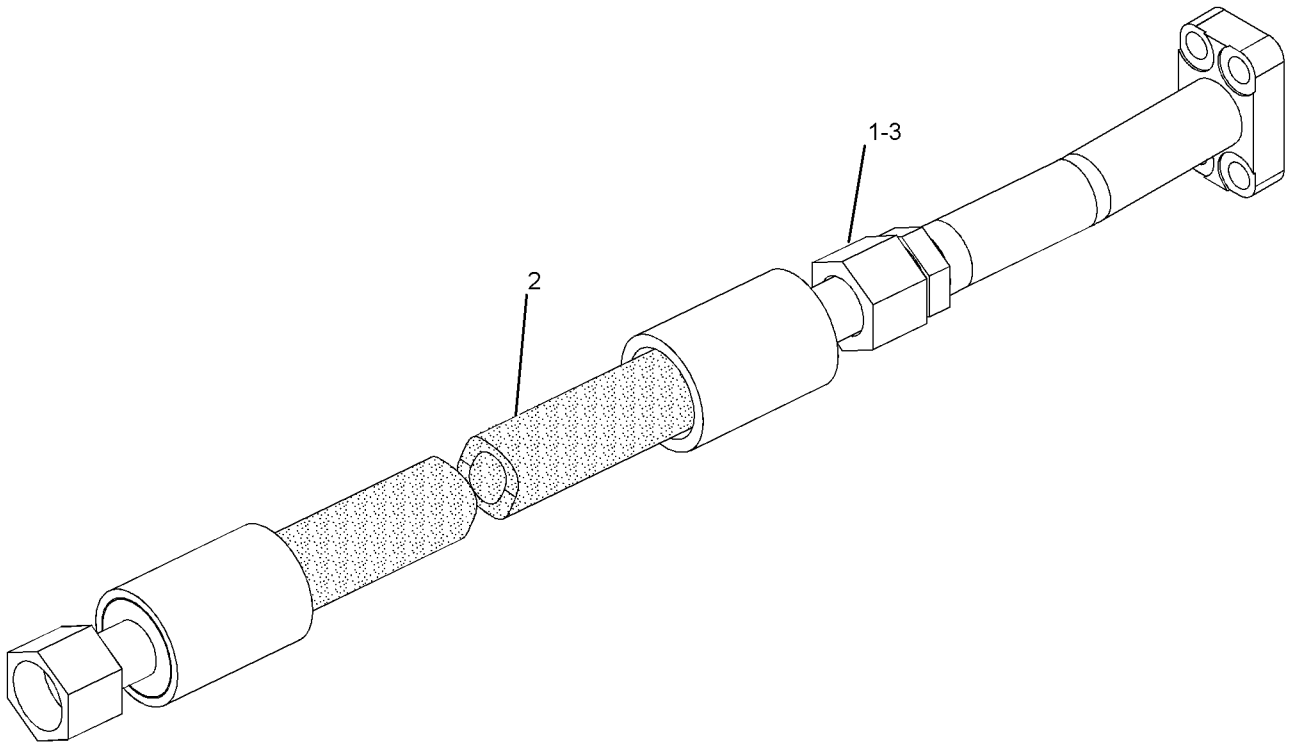

GRAPHIC #1 **<END>** g01133931

236-3215 HOSE GP-HYDRAULIC

S/N: FKK1-UP; DNP1-UP

PART OF 236-3213 HOSE GP-HYDRAULIC

SMCS-5057 **i04915573**

NOTE	REF NO	GRAPHIC REF	PART NUMBER	QTY	PART NAME 1 2 3 4 5 6 (PRODUCT LEVEL)	SEE PAGE
	1	1	**137-0856**	1	TUBE AS	
I	2	1	**187-5954**	1	HOSE AS	
	3	1	**6V-9746**	1	SEAL-O-RING	

I - REFER TO HYDRAULIC INFORMATION SYSTEM

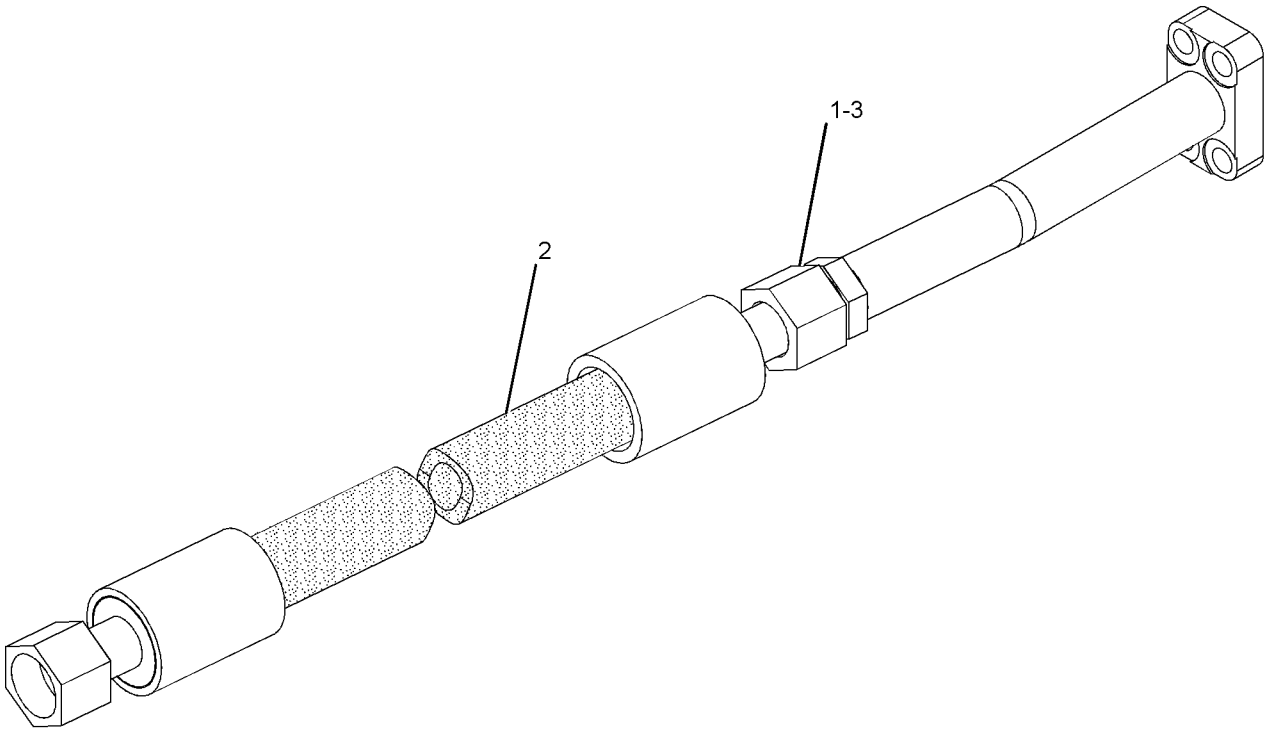

GRAPHIC #1 **<END>** g01133918

260-7910 HOSE GP-HYDRAULIC–FRONT

S/N: FKK1-UP; DNP1-UP

PART OF 239-1714 LINES GP-FRONT

SMCS-5057 **i04915585**

NOTE	PART NUMBER	QTY	PART NAME 1 2 3 4 5 6 (PRODUCT LEVEL)	SEE PAGE
Y	*260-7911*	1	HOSE GP-HYDRAULIC (FRONT)	242
			–OR–	
Y	*260-7913*	1	HOSE GP-HYDRAULIC (FRONT)	243

Y - SEPARATE ILLUSTRATION

<END>

260-7911 HOSE GP-HYDRAULIC–FRONT

S/N: FKK1-UP; DNP1-UP

PART OF 260-7910 HOSE GP-HYDRAULIC

SMCS-5057 **i04915586**

NOTE	REF NO	GRAPHIC REF	PART NUMBER	QTY	PART NAME 1 2 3 4 5 6 (PRODUCT LEVEL)	SEE PAGE
	1	1	**260-7912**	1	HOSE AS	
	2	1	**8C-3206**	2	FLANGE-HALF	
	3	1	**4J-0520**	1	SEAL-O-RING	

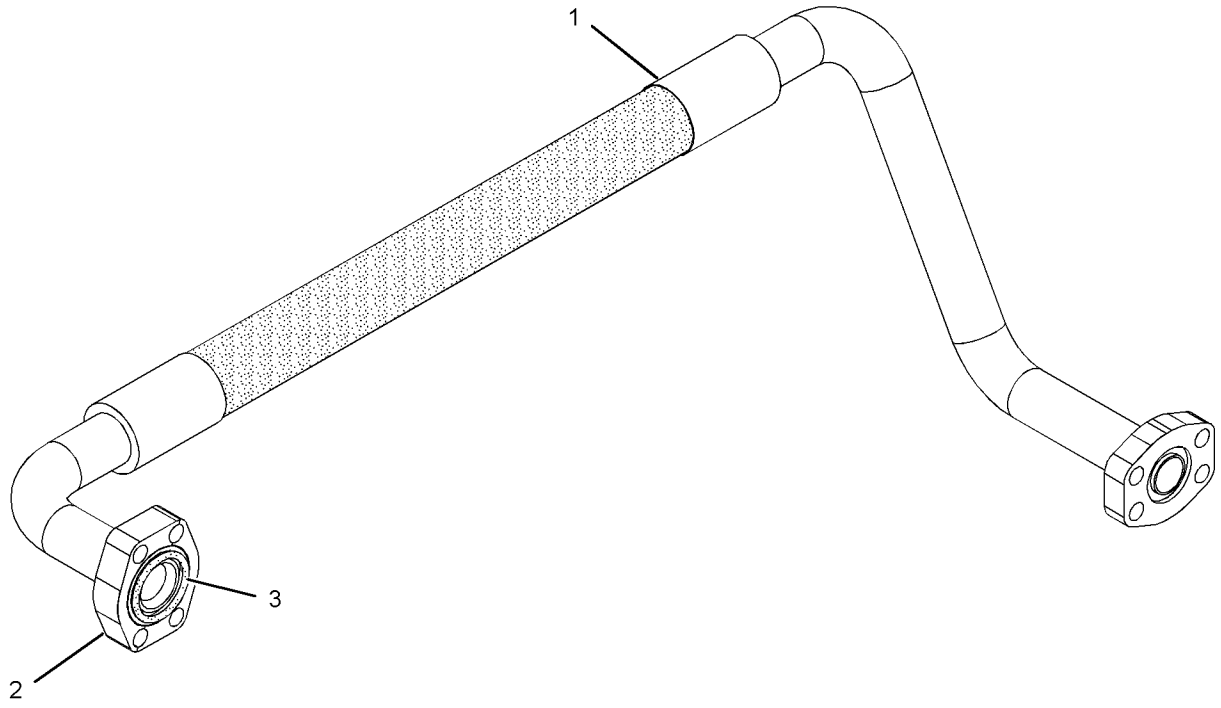

GRAPHIC #1 **<END>** g01277264

260-7913 HOSE GP-HYDRAULIC–FRONT

S/N: FKK1-UP; DNP1-UP

PART OF 260-7910 HOSE GP-HYDRAULIC

SMCS-5057 **i04915588**

NOTE	REF NO	GRAPHIC REF	PART NUMBER	QTY	PART NAME 1 2 3 4 5 6 (PRODUCT LEVEL)	SEE PAGE
	1	1	**142-7764**	1	TUBE AS	
I	2	1	**260-7914**	1	HOSE AS	
	3	1	**1P-3703**	1	SEAL-RECTANGULAR	
	4	1	**5K-9090**	2	SEAL-O-RING	
	5	1	**7Y-3731**	1	FLANGE	

I - REFER TO HYDRAULIC INFORMATION SYSTEM

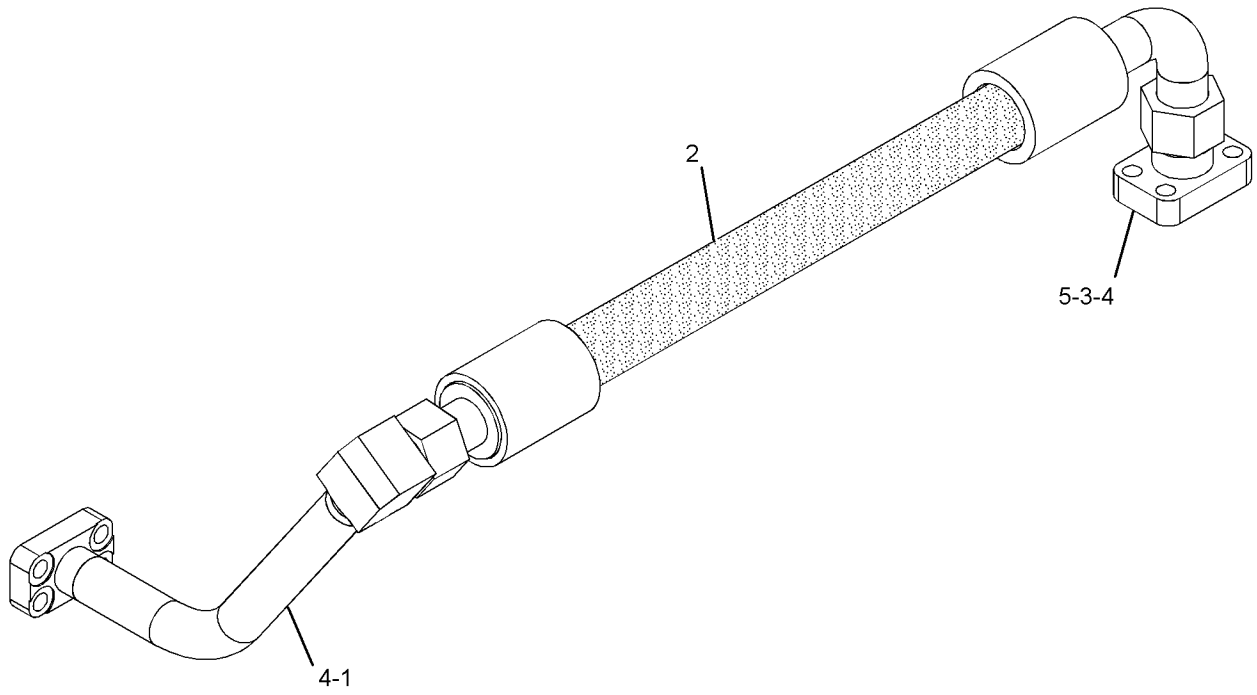

GRAPHIC #1 **<END>** g01277324

421-6946 HYDRAULIC AR

S/N: FKK1-UP; DNP1-UP

PART OF 421-6925, 433-2638 GENERAL AR

SMCS-5050 **i05300153**

NOTE	PART NUMBER	QTY	PART NAME 1 2 3 4 5 6 (PRODUCT LEVEL)	SEE PAGE
Y	*392-4022*	1	LINES GP-CYLINDER (BOOM)	255
Y	*239-1714*	1	LINES GP-FRONT (HYDRAULIC)	257
Y	*376-6308*	1	LINES GP-HYDRAULIC OIL COOLER (REAR) (RH)	261
Y	*376-6321*	1	LINES GP-HYDRAULIC OIL COOLER (REAR, LH)	263
Y	*248-9825*	1	LINES GP-PILOT (JOYSTICK, PEDALS)	264
Y	*376-6309*	1	LINES GP-PILOT (MAIN CONTROL VALVE) (TRAVEL, SWING, STICK, BOOM)	271
Y	*376-6310*	1	LINES GP-PILOT (MAIN CONTROL VALVE) (HYDRAULIC TANK)	273
Y	*376-6311*	1	LINES GP-PILOT (FILTER, PILOT PUMP)	278
Y	*376-6313*	1	LINES GP-PUMP (SUPPLY, MAIN PUMP)	280
Y	*260-7868*	1	MOUNTING GP-MAIN CONTROL VALVE	302
Y	*396-1865*	1	PUMP & MTG GP-MAIN HYDRAULIC	304
Y	*433-8178*	1	TANK & MTG GP-HYDRAULIC	315
Y	**259-7464**	1	VALVE GP-MAIN CONTROL	331

Y - SEPARATE ILLUSTRATION

<END>

385-5148 LINES AR-AUXILIARY HYDRAULIC

S/N: DNP1-UP

2.5-M (8.2-FT) STICK

CANNOT BE USED WITH OTHER AUXILIARY HYDRAULICS

AN ATTACHMENT

SMCS-5057 **i05266754**

NOTE	PART NUMBER	QTY	PART NAME 1 2 3 4 5 6 (PRODUCT LEVEL)	SEE PAGE
Y	*361-6850*	1	LINES GP-AUXILIARY HYDRAULIC (REACH BOOM, HIGH PRESSURE)	245
Y	*385-5149*	1	LINES GP-AUXILIARY HYDRAULIC (2.5-M STICK)	247
Y	*361-6849*	1	LINES GP-FRONT (SYSTEM 3 PRIME, 1-WAY, 2-PUMP)	259
Y	*363-4212*	1	LINES GP-PILOT	268

Y - SEPARATE ILLUSTRATION

<END>

361-6850 LINES GP-AUXILIARY HYDRAULIC—REACH BOOM, HIGH PRESSURE

S/N: DNP1-UP

PART OF 385-5148 LINES AR-AUXILIARY HYDRAULIC

AN ATTACHMENT

SMCS-5057 **i05292606**

NOTE	REF NO	GRAPHIC REF	PART NUMBER	QTY	PART NAME 1 2 3 4 5 6 (PRODUCT LEVEL)	SEE PAGE
	1	1	**153-8798**	2	PLATE	
	2	1	**173-7995**	1	PLATE	
	3	1	**193-6606**	2	PLATE	
	4	1	**202-7128**	2	PLATE	
I	5	1	**361-6841**	2	HOSE AS	
	6	1	**361-7281**	1	TUBE AS	
	7	1	**361-7282**	1	TUBE AS	
	8	1	**361-7283**	1	TUBE AS	
	9	1	**361-7284**	1	TUBE AS	
	10	1	**363-6870**	1	SUPPORT AS	
	11	1	**363-8406**	1	PLATE	
	12	1	**5K-9090**	6	SEAL-O-RING	
	13	1	**6V-8400**	2	SEAL-O-RING	
M	14	1	**7X-2549**	4	BOLT (M12X1.75X100-MM)	
	15	1	**8K-4691**	16	CLAMP-HALF	
M	16	1	**8T-4139**	12	BOLT (M12X1.75X30-MM)	
M	17	1	**8T-4184**	6	BOLT (M12X1.75X45-MM)	
M	18	1	**8T-4194**	2	BOLT (M12X1.75X50-MM)	
	19	1	**8T-4223**	28	WASHER-HARD (13.5X25.5X3-MM THK)	
M	20	1	**8T-4648**	4	BOLT (M12X1.75X70-MM)	

I - REFER TO HYDRAULIC INFORMATION SYSTEM
M - METRIC PART

361-6850 **LINES GP-AUXILIARY HYDRAULIC (*contd.*)** **i05292606**

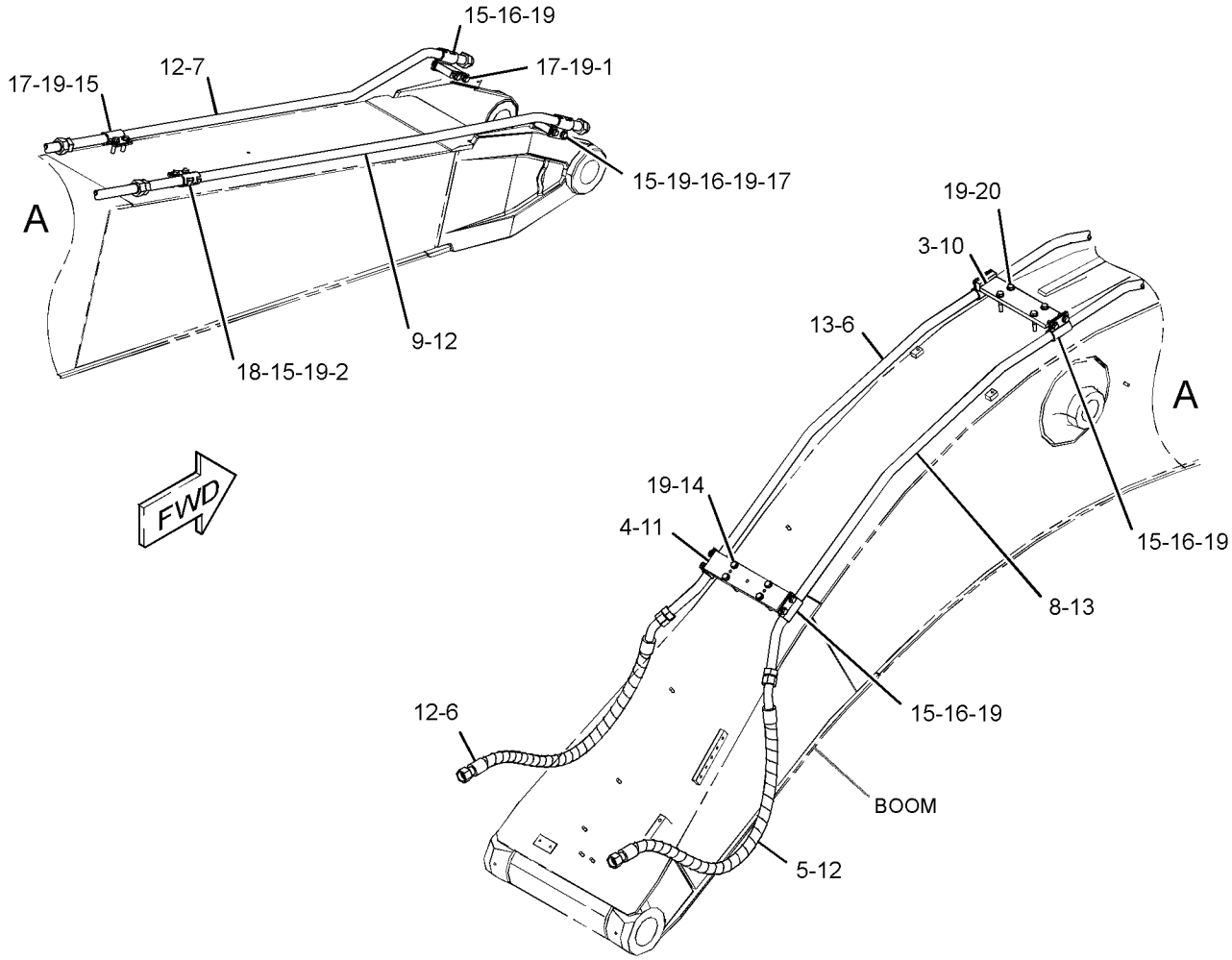

GRAPHIC #1 **<END>** g03362542

385-5149 LINES GP-AUXILIARY HYDRAULIC—2.5-M (8.2-FT)

STICK

S/N: DNP1-UP

PART OF 385-5148 LINES AR-AUXILIARY HYDRAULIC

AN ATTACHMENT

SMCS-5057 **i05298219**

NOTE	REF NO	GRAPHIC REF	PART NUMBER	QTY	PART NAME 1 2 3 4 5 6 (PRODUCT LEVEL)	SEE PAGE
I	1	1	**361-6843**	2	HOSE AS	
	2	1	**361-9860**	2	VALVE AS-BALL	
	3	1	**385-5150**	2	TUBE AS	
	4	1	**390-0868**	1	PLATE	
	5	1	**390-0869**	1	PLATE	
	6	1	*148-8333*	2	CONNECTOR AS	
					(EACH INCLUDES)	
		1	**6V-8400**	1	SEAL-O-RING	
		1	**7M-8485**	1	SEAL-O-RING	
		1	**8T-7927**	1	CONNECTOR	
	7	1	*148-8335*	2	CONNECTOR AS	
					(EACH INCLUDES)	
		1	**5K-9090**	1	SEAL-O-RING	
		1	**6V-8635**	1	CONNECTOR	
		1	**7M-8485**	1	SEAL-O-RING	
	8	1	**5K-9090**	2	SEAL-O-RING	
	9	1	**8K-4691**	8	CLAMP-HALF	
	10	1	**8T-4121**	8	WASHER-HARD (11X21X2.5-MM THK)	
M	11	1	**8T-4137**	4	BOLT (M10X1.5X20-MM)	
M	12	1	**8T-4139**	8	BOLT (M12X1.75X30-MM)	
M	13	1	**8T-4196**	4	BOLT (M10X1.5X35-MM)	
	14	1	**8T-4223**	8	WASHER-HARD (13.5X25.5X3-MM THK)	

I - REFER TO HYDRAULIC INFORMATION SYSTEM
M - METRIC PART

385-5149 **LINES GP-AUXILIARY HYDRAULIC (*contd.*)** **i05298219**

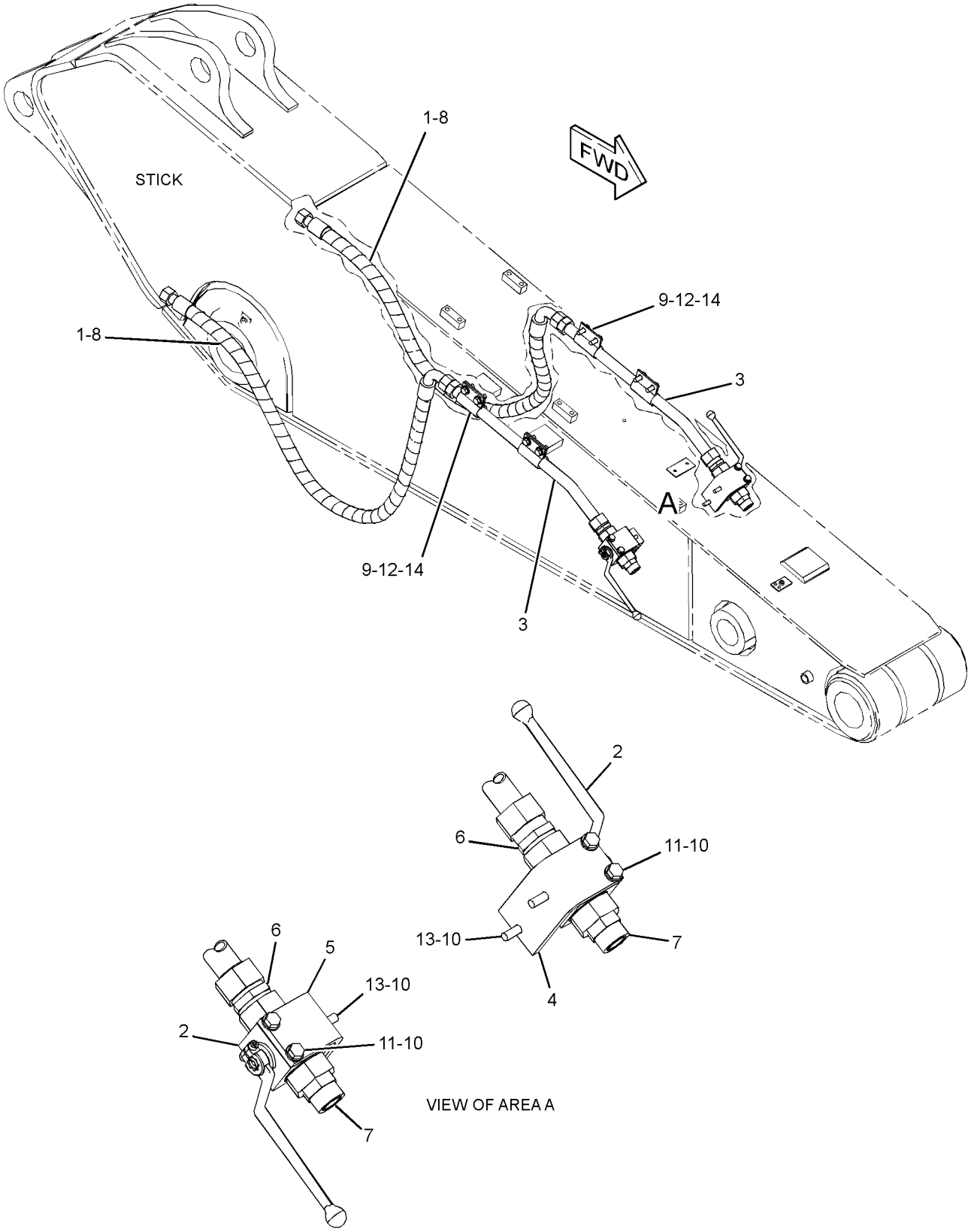

GRAPHIC #1 **<END>** g03362754

260-8010 LINES GP-BOOM

S/N: FKK1-UP; DNP1-UP
PART OF 376-1084 BOOM AR-1 PIECE LONG
AN ATTACHMENT

SMCS-5057 **i04924829**

NOTE	REF NO	GRAPHIC REF	PART NUMBER	QTY	PART NAME 1 2 3 4 5 6 (PRODUCT LEVEL)	SEE PAGE
	1	1	**4I-1674**	6	CLIP	
	2	1	**4I-1676**	6	CLIP	
	3	1	**7Y-4868**	8	CLIP	
	4	1	**307-5034**	1	TUBE AS	
	5	1	**202-3855**	1	TUBE AS	
	6	1	**202-3856**	1	TUBE AS	
	7	1	**202-3857**	1	TUBE AS	
	8	1	**202-3858**	1	TUBE AS	
I	9	1	**202-6996**	1	HOSE AS	
	10	1	**260-8315**	1	TUBE AS	
I	11	1	**260-8316**	1	HOSE AS	
	12	1	**1P-3703**	2	SEAL-RECTANGULAR	
	13	1	**6V-0400**	4	FLANGE-HALF	
	14	1	**6V-9746**	9	SEAL-O-RING	
M	15	1	**8T-4139**	20	BOLT (M12X1.75X30-MM)	
M	16	1	**8T-4184**	8	BOLT (M12X1.75X45-MM)	
	17	1	**8T-4223**	28	WASHER-HARD (13.5X25.5X3-MM THK)	

I - REFER TO HYDRAULIC INFORMATION SYSTEM
M - METRIC PART

260-8010 **LINES GP-BOOM (*contd.*)** **i04924829**

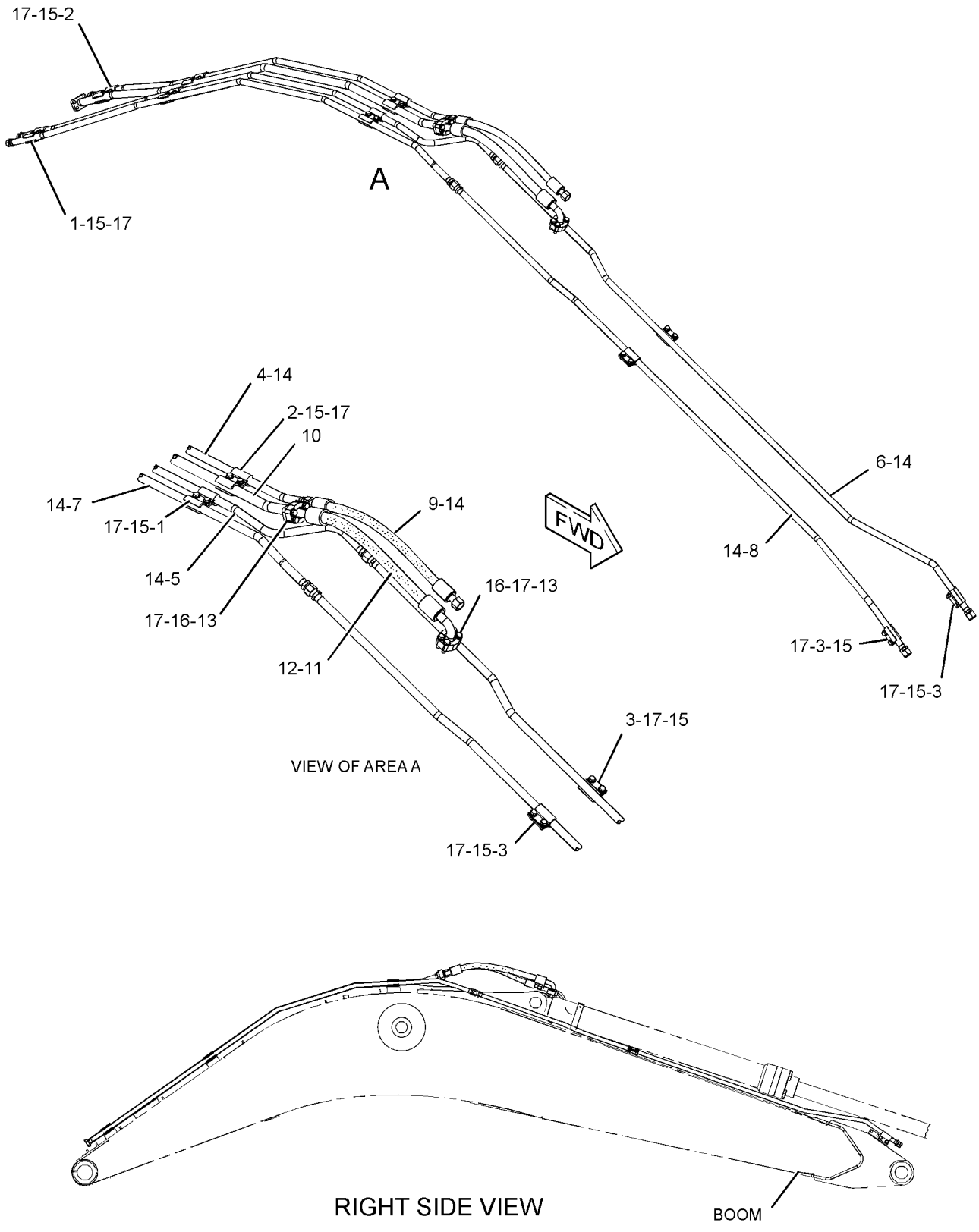

GRAPHIC #1 **<END>** g01366545

373-1110 LINES GP-BOOM CYLINDER–LH

S/N: FKK1-UP; DNP1-UP
PART OF 373-1106 CYLINDER & LINES GP-BOOM
AN ATTACHMENT

SMCS-5057, 5456 **i05300264**

NOTE	REF NO	GRAPHIC REF	PART NUMBER	QTY	PART NAME 1 2 3 4 5 6 (PRODUCT LEVEL)	SEE PAGE
CM	1	1	**8T-4648**	5	BOLT (M12X1.75X70-MM)	
	2	1	**394-6125**	1	TUBE AS	
	3	1	**394-6126**	1	TUBE AS	
	4	1	**394-9371**	1	SUPPORT	
	5	1	**394-9372**	1	SUPPORT AS	
C	6	1	**399-1961**	1	CLAMP	
	7	1	**1P-3703**	1	SEAL-RECTANGULAR	
	8	1	**1P-3704**	1	SEAL-RECTANGULAR	
M	9	1	**8T-4196**	2	BOLT (M10X1.5X35-MM)	
C	10	1	**8T-4223**	5	WASHER-HARD (13.5X25.5X3-MM THK)	
	11	1	**8T-4121**	4	WASHER-HARD (11X21X2.5-MM THK)	
	12	1	**8T-4896**	2	WASHER-HARD (10.2X18.5X2.5-MM THK)	
M	13	1	**8T-6466**	4	BOLT (M10X1.5X60-MM)	

C - CHANGE FROM PREVIOUS TYPE
M - METRIC PART

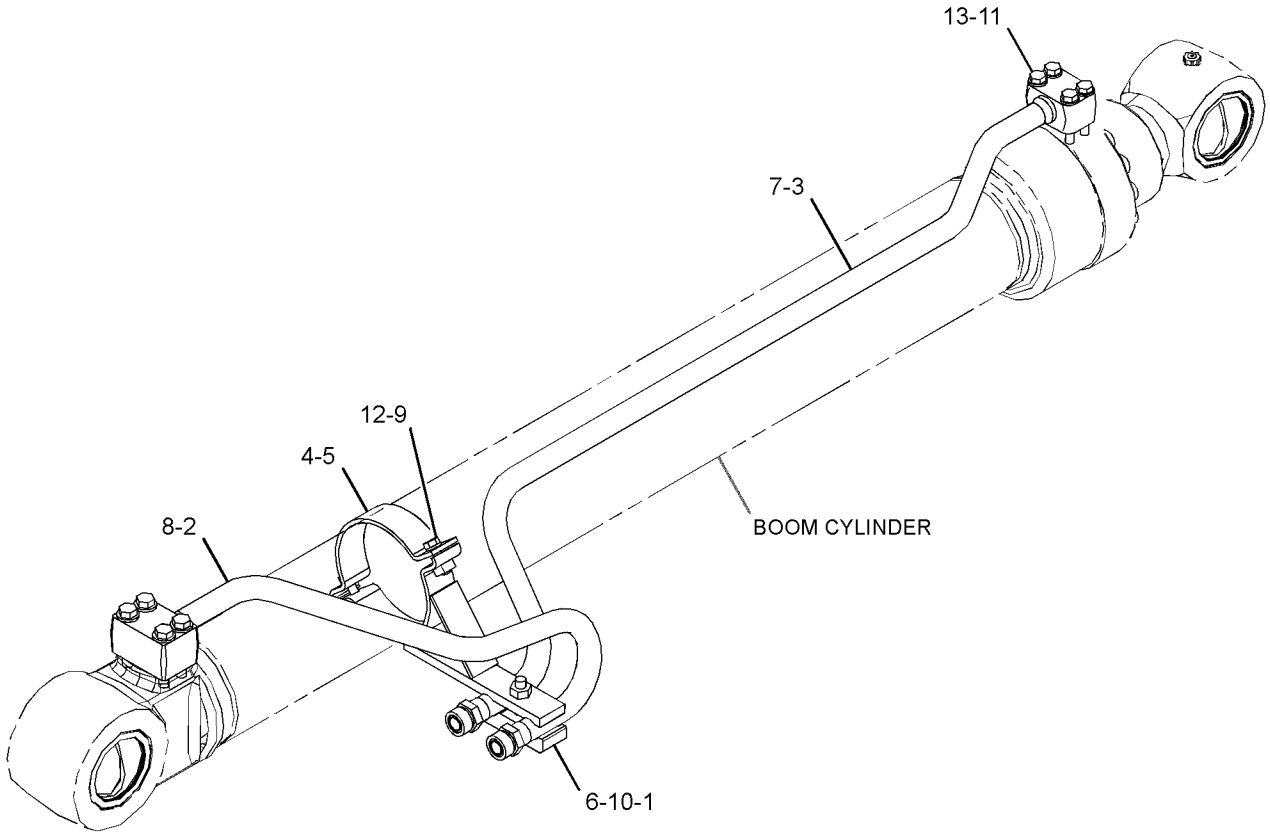

GRAPHIC #1 **<END>** g03363113

373-1115 LINES GP-BOOM CYLINDER—RH

S/N: FKK1-UP; DNP1-UP
PART OF 373-1107 CYLINDER & LINES GP-BOOM
AN ATTACHMENT

SMCS-5057, 5456 **i05300283**

NOTE	REF NO	GRAPHIC REF	PART NUMBER	QTY	PART NAME 1 2 3 4 5 6 (PRODUCT LEVEL)	SEE PAGE
CM	1	1	**8T-4648**	5	BOLT (M12X1.75X70-MM)	
	2	1	**394-6145**	1	TUBE AS	
	3	1	**394-6147**	1	TUBE AS	
	4	1	**394-9371**	1	SUPPORT	
	5	1	**394-9372**	1	SUPPORT AS	
C	6	1	**399-1961**	1	CLAMP	
	7	1	**1P-3703**	1	SEAL-RECTANGULAR	
	8	1	**1P-3704**	1	SEAL-RECTANGULAR	
	9	1	**8T-4121**	4	WASHER-HARD (11X21X2.5-MM THK)	
M	10	1	**8T-4196**	2	BOLT (M10X1.5X35-MM)	
C	11	1	**8T-4223**	5	WASHER-HARD (13.5X25.5X3-MM THK)	
	12	1	**8T-4896**	2	WASHER-HARD (10.2X18.5X2.5-MM THK)	
M	13	1	**8T-6466**	4	BOLT (M10X1.5X60-MM)	

C - CHANGE FROM PREVIOUS TYPE
M - METRIC PART

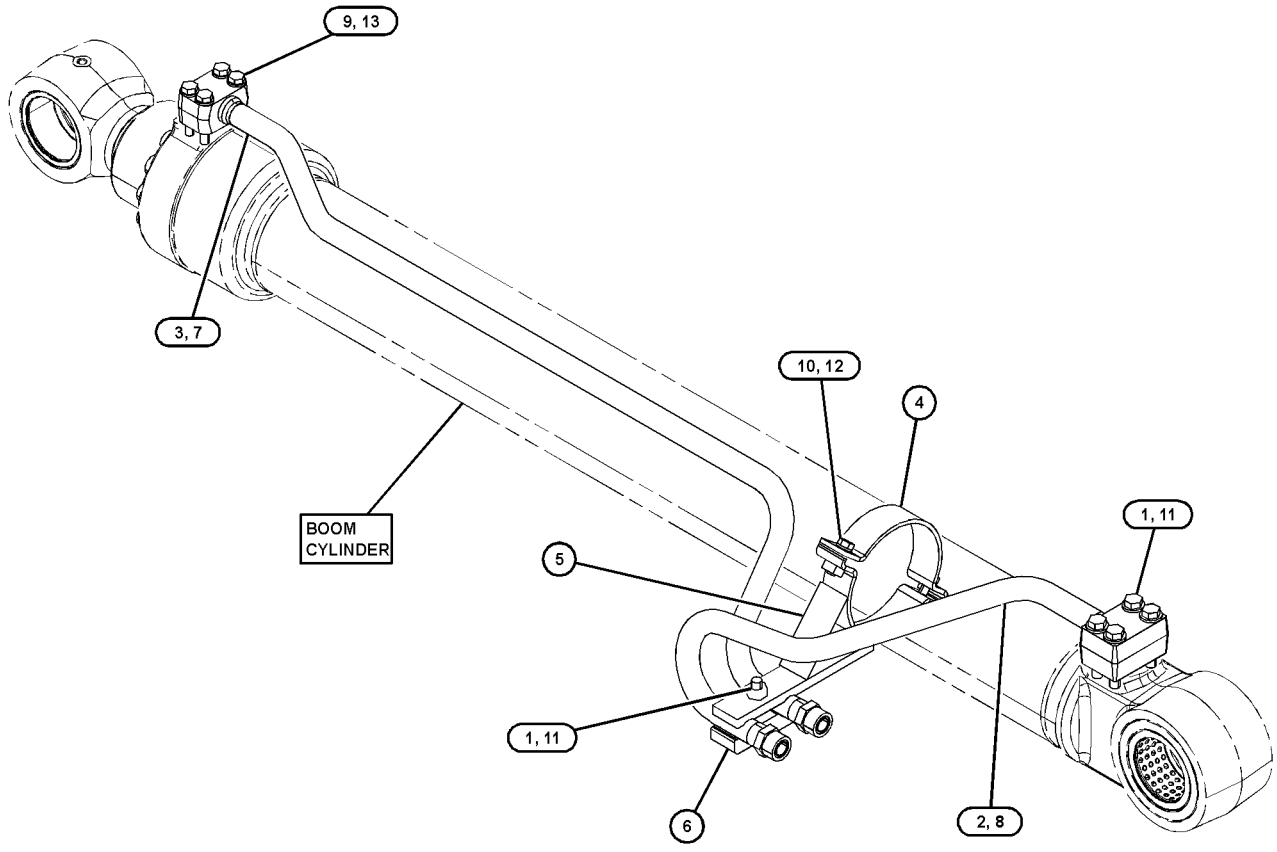

GRAPHIC #1 **<END>** g03362055

260-8011 LINES GP-BUCKET CYLINDER

S/N: FKK1-UP; DNP1-UP
FOR USE WITH 2.5-M (8.2-FT) STICK
PART OF 375-6281 STICK AR-HOE
AN ATTACHMENT

SMCS-5457 **i04923118**

NOTE	REF NO	GRAPHIC REF	PART NUMBER	QTY	PART NAME 1 2 3 4 5 6 (PRODUCT LEVEL)	SEE PAGE
	1	1	**5I-4174**	1	BLOCK	
I	2	1	**187-6058**	2	HOSE AS	
	3	1	**1P-3702**	2	SEAL-RECTANGULAR	
	4	1	**1P-3703**	1	SEAL-RECTANGULAR	
	5	1	**8T-4121**	8	WASHER-HARD (11X21X2.5-MM THK)	
M	6	1	**8T-4182**	4	BOLT (M10X1.5X45-MM)	
M	7	1	**8T-4198**	4	BOLT (M10X1.5X100-MM)	
	8	1	**8T-9403**	4	FLANGE-HALF	

I - REFER TO HYDRAULIC INFORMATION SYSTEM
M - METRIC PART

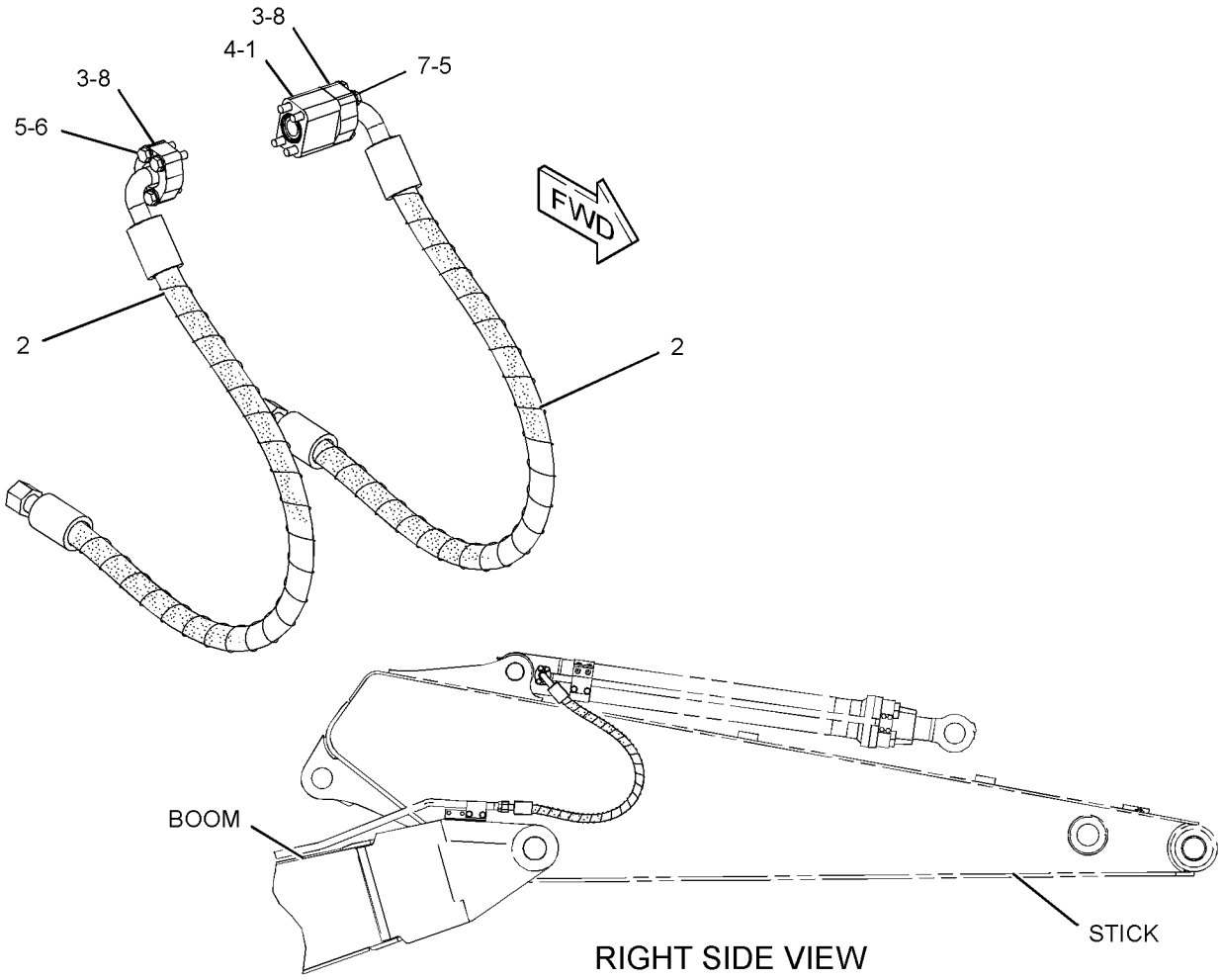

GRAPHIC #1 **<END>** g01224077

373-1120 LINES GP-BUCKET CYLINDER

S/N: FKK1-UP; DNP1-UP
PART OF 373-1109 CYLINDER & LINES GP-BUCKET
AN ATTACHMENT

SMCS-5457 **i04923207**

NOTE	REF NO	GRAPHIC REF	PART NUMBER	QTY	PART NAME 1 2 3 4 5 6 (PRODUCT LEVEL)	SEE PAGE
	1	1	**394-6109**	1	TUBE AS	
	2	1	**394-9371**	1	SUPPORT	
	3	1	**394-9417**	1	SUPPORT AS	
	4	1	**399-1962**	1	CLAMP	
	5	1	**1P-3703**	1	SEAL-RECTANGULAR	
	6	1	**246-4996**	1	WASHER-HARD (13.5X25.5X5-MM THK)	
	7	1	**8T-4121**	4	WASHER-HARD (11X21X2.5-MM THK)	
M	8	1	**8T-4196**	2	BOLT (M10X1.5X35-MM)	
	9	1	**8T-4896**	2	WASHER-HARD (10.2X18.5X2.5-MM THK)	
M	10	1	**8T-4910**	1	BOLT (M12X1.75X60-MM)	
M	11	1	**8T-6466**	4	BOLT (M10X1.5X60-MM)	

M - METRIC PART

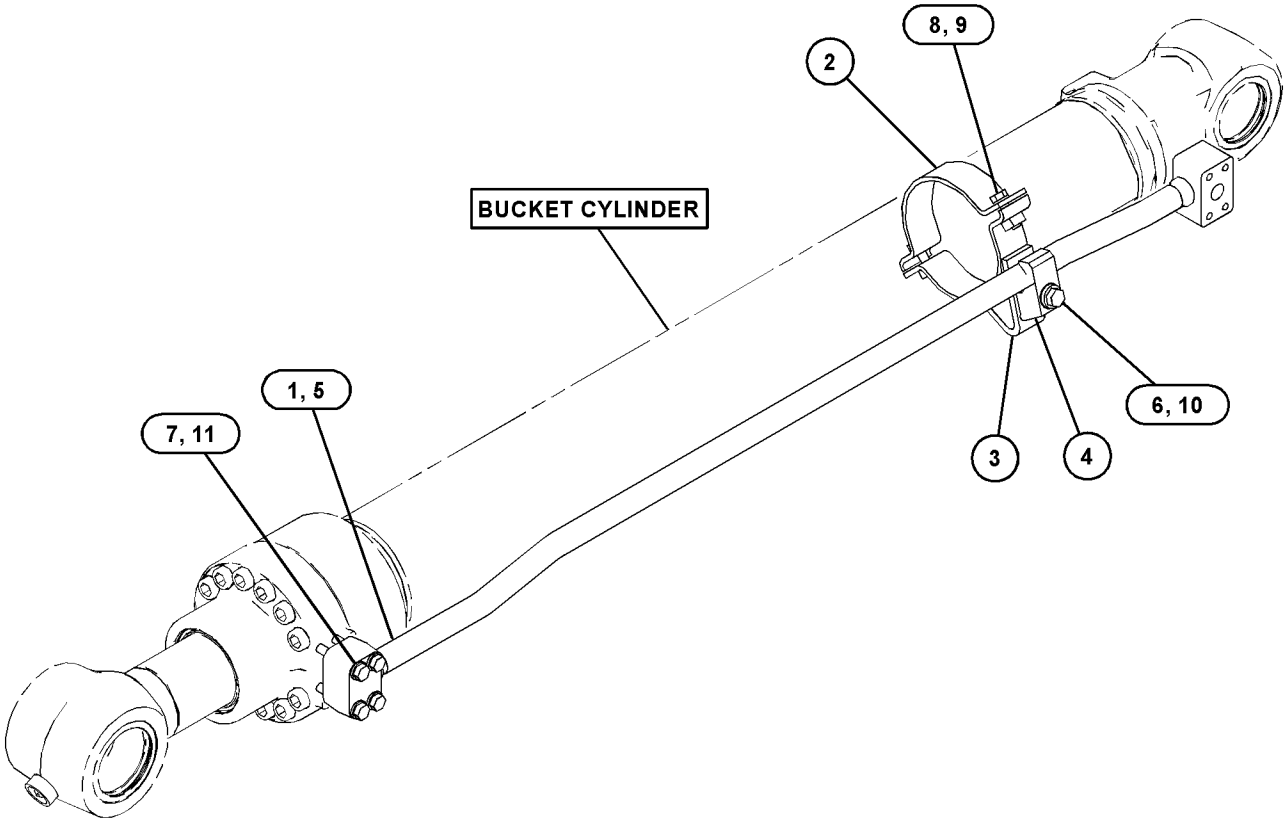

GRAPHIC #1 **<END>** g03110357

392-4022 LINES GP-CYLINDER–BOOM

S/N: FKK1-UP; DNP1-UP

PART OF 421-6946 HYDRAULIC AR

SMCS-5057 **i05257283**

NOTE	REF NO	GRAPHIC REF	PART NUMBER	QTY	PART NAME 1 2 3 4 5 6 (PRODUCT LEVEL)	SEE PAGE
	1	1	**9F-2167**	1	SCREW-PURGE (3/8-24X1.164-IN)	
M	2	1	**101-7398**	4	BOLT-SOCKET HEAD (M10X1.5X40-MM)	
I	3	1	**108-7354**	1	HOSE AS	
I	4	1	**124-1047**	4	HOSE AS	
	5	1	**124-1062**	1	SUPPORT AS	
	6	1	**133-5828**	1	SUPPORT AS	
	7	1	**142-7768**	1	TUBE AS	
	8	1	**142-7769**	1	TUBE AS	
Y	9	1	**158-9085**	1	VALVE GP-SWING CUSHION	354
	10	1	*164-5552*	1	CONNECTOR AS	
		1	**3D-2824**	1	SEAL-O-RING	
		1	**4I-7745**	1	CONNECTOR	
		1	**6V-8398**	1	SEAL-O-RING	
	11	1	**234-4492**	1	SUPPORT	
	12	1	*307-4918*	1	CONNECTOR AS	
		1	**5K-9090**	1	SEAL-O-RING	
		1	**7M-8485**	1	SEAL-O-RING	
		1	**307-4919**	1	CONNECTOR	
M	13	1	**101-7404**	4	BOLT-SOCKET HEAD (M10X1.5X30-MM)	
	14	1	**108-7550**	1	CLIP	
	15	1	*148-8336*	1	CONNECTOR AS	
		1	**3J-1907**	1	SEAL-O-RING	
		1	**6V-8397**	1	SEAL-O-RING	
		1	**6V-8636**	1	CONNECTOR	
	16	1	*148-8353*	1	ELBOW AS	
		1	**3J-1907**	1	SEAL-O-RING	
		1	**6V-8397**	1	SEAL-O-RING	
		1	**6V-9001**	1	ELBOW	
	17	1	*148-8364*	1	ELBOW AS	
		1	**3K-0360**	1	SEAL-O-RING	
		1	**6V-8398**	1	SEAL-O-RING	
		1	**6V-8625**	1	ELBOW	
	18	1	*148-8367*	1	ELBOW AS	
		1	**6V-8397**	1	SEAL-O-RING	
		1	**6V-9850**	1	ELBOW	
	19	1	*148-8444*	1	TEE AS-SWIVEL	
		1	**6V-8398**	2	SEAL-O-RING	
		1	**6V-9837**	1	TEE-SWIVEL	
	20	1	**1P-3703**	2	SEAL-RECTANGULAR	
	21	1	**4I-1674**	2	CLIP	
	22	1	**5P-1076**	2	WASHER-HARD (13.5X30X4-MM THK)	
	23	1	**6V-9746**	4	SEAL-O-RING	
	24	1	**8T-4121**	8	WASHER-HARD (11X21X2.5-MM THK)	
M	25	1	**8T-4139**	2	BOLT (M12X1.75X30-MM)	
M	26	1	**8T-4178**	6	BOLT (M10X1.5X90-MM)	
M	27	1	**8T-4182**	8	BOLT (M10X1.5X45-MM)	
M	28	1	**8T-4192**	2	BOLT (M12X1.75X25-MM)	
	29	1	**8T-4223**	6	WASHER-HARD (13.5X25.5X3-MM THK)	
M	30	1	**8T-4648**	2	BOLT (M12X1.75X70-MM)	
M	31	1	**8T-4910**	2	BOLT (M12X1.75X60-MM)	
	32	1	**8T-9403**	4	FLANGE-HALF	
	33	1	**6H-3615**	1	PLUG-PROTECTION	

I - REFER TO HYDRAULIC INFORMATION SYSTEM
M - METRIC PART
Y - SEPARATE ILLUSTRATION

392-4022 **LINES GP-CYLINDER (*contd.*)** **i05257283**

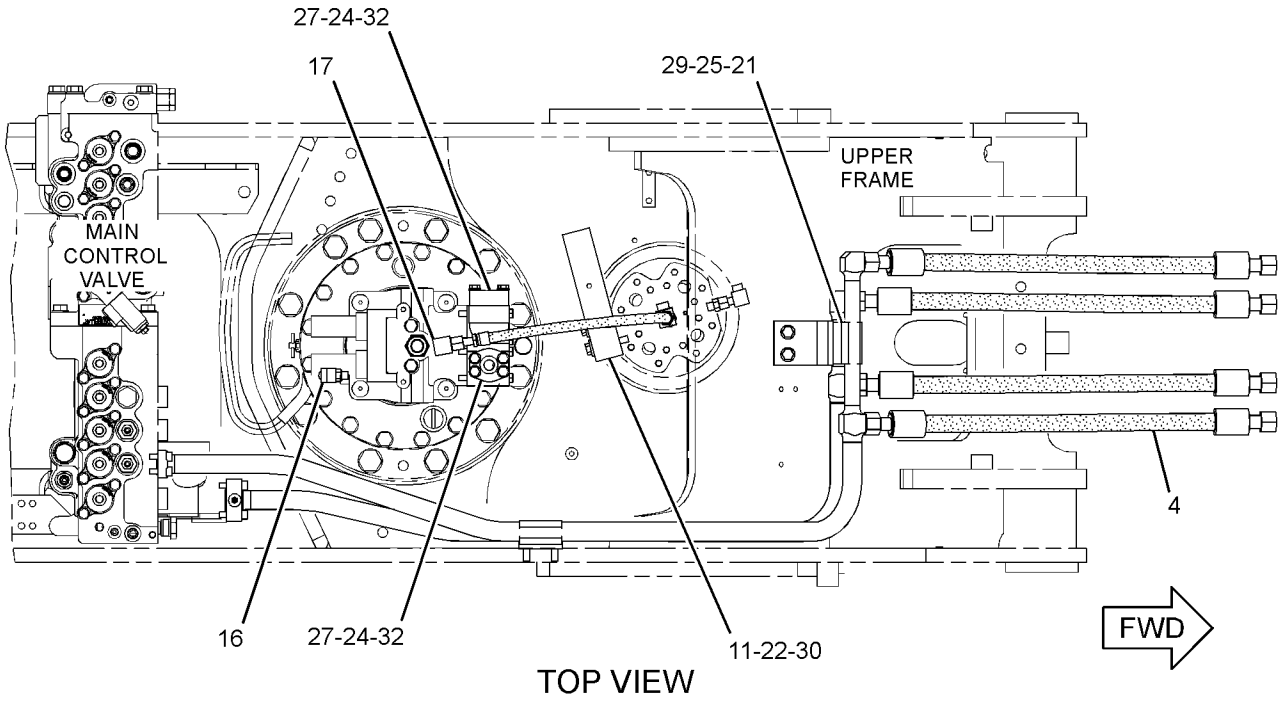

TOP VIEW

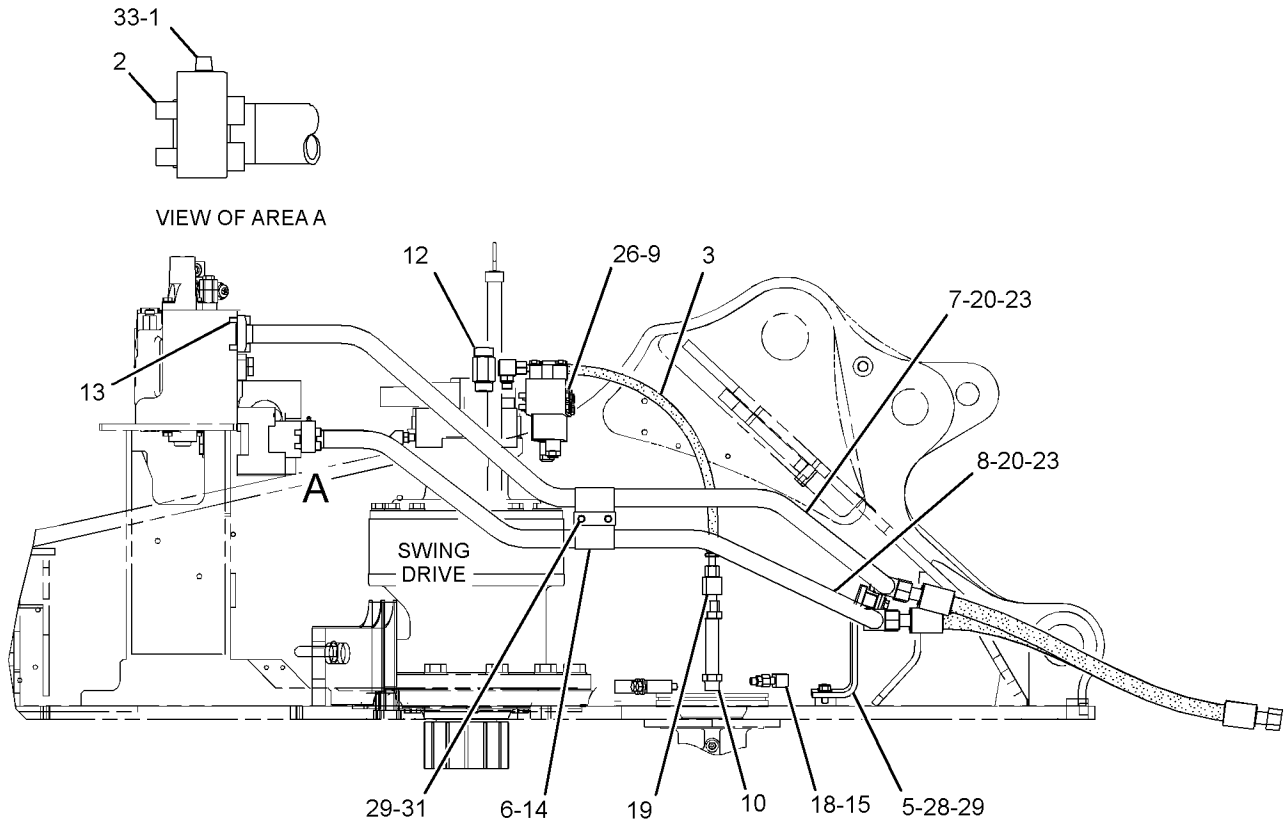

RIGHT SIDE VIEW

GRAPHIC #1 **<END>** g03363234

239-1714 LINES GP-FRONT

S/N: FKK1-UP; DNP1-UP

PART OF 421-6946 HYDRAULIC AR

SMCS-5057 **i04915494**

NOTE	REF NO	GRAPHIC REF	PART NUMBER	QTY	PART NAME 1 2 3 4 5 6 (PRODUCT LEVEL)	SEE PAGE
	1	1	**7Y-3730**	2	FLANGE-SPECIAL	
M	2	1	**101-7403**	2	BOLT-SOCKET HEAD (M10X1.5X80-MM)	
M	3	1	**105-3477**	8	BOLT-SOCKET HEAD (M10X1.5X45-MM)	
M	4	1	**105-3483**	2	BOLT-SOCKET HEAD (M10X1.5X70-MM)	
	5	1	**113-6479**	2	FLANGE-SPECIAL	
I	6	1	**165-3185**	1	HOSE AS	
I	7	1	**165-3190**	1	HOSE AS	
I	8	1	**337-1182**	1	HOSE AS	
Y	9	1	**194-0174**	1	HOSE GP-HYDRAULIC (CONTROL VALVE, STICK)	233
Y	10	1	**194-0180**	1	HOSE GP-HYDRAULIC (CONTROL VALVE, BOOM)	235
Y	11	1	**214-4511**	1	FITTING GP-HYDRAULIC (4-BOLT FLANGE)	224
Y	12	1	**236-3212**	1	HOSE GP-HYDRAULIC (FRONT)	238
Y	13	1	**236-3213**	1	HOSE GP-HYDRAULIC (FRONT)	238
I	14	1	**289-5672**	1	HOSE AS	
Y	15	1	**255-5680**	1	VALVE GP-LOAD CONTROL (STICK DRIFT RED, LINE RELIEF)	327
Y	16	1	**255-5683**	1	VALVE GP-LOAD CONTROL (BOOM DRIFT RED, LINE RELIEF)	329
Y	17	1	**260-7910**	1	HOSE GP-HYDRAULIC (FRONT)	241
I	18	1	**260-7988**	1	HOSE AS	
I	19	1	**260-7992**	1	HOSE AS	
I	20	1	**260-7996**	1	HOSE AS	
I	21	1	**260-8000**	1	HOSE AS	
M	22	1	**101-7397**	4	BOLT-SOCKET HEAD (M12X1.75X50-MM)	
M	23	1	**101-7404**	42	BOLT-SOCKET HEAD (M10X1.5X30-MM)	
M	24	1	**199-1286**	6	BOLT-SOCKET HEAD (M10X1.5X150-MM)	
	25	1	**1P-3702**	4	SEAL-RECTANGULAR	
	26	1	**1P-3703**	9	SEAL-RECTANGULAR	
	27	1	**4J-5267**	10	SEAL-O-RING	
	28	1	**4J-5268**	1	SEAL-O-RING	
	29	1	**5K-9090**	5	SEAL-O-RING	
	30	1	**6V-0400**	4	FLANGE-HALF	
	31	1	**8T-4121**	8	WASHER-HARD (11X21X2.5-MM THK)	
M	32	1	**8T-4194**	4	BOLT (M12X1.75X50-MM)	
	33	1	**8T-4223**	8	WASHER-HARD (13.5X25.5X3-MM THK)	
	34	1	**8T-9403**	4	FLANGE-HALF	

I - REFER TO HYDRAULIC INFORMATION SYSTEM
M - METRIC PART
Y - SEPARATE ILLUSTRATION

239-1714 **LINES GP-FRONT (*contd.*)** **i04915494**

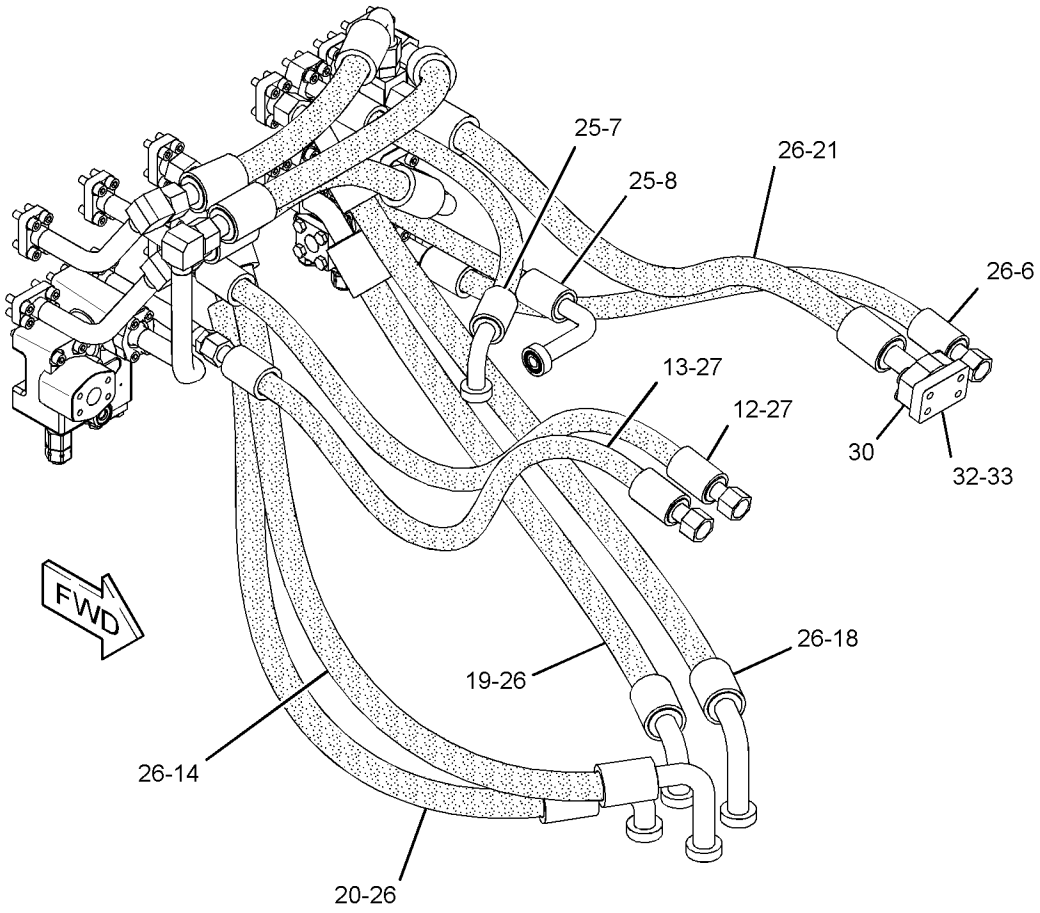

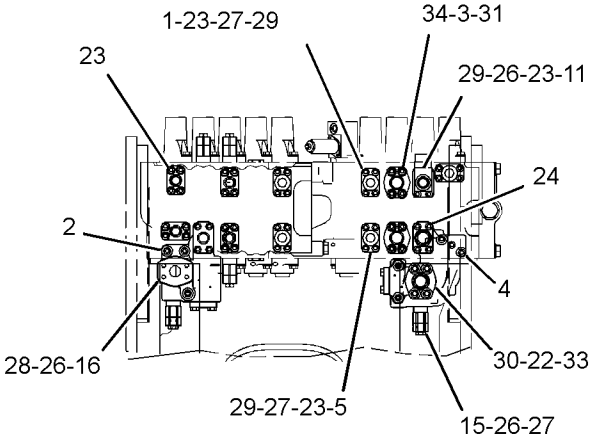

VIEW A-A
(HOSES REMOVED)

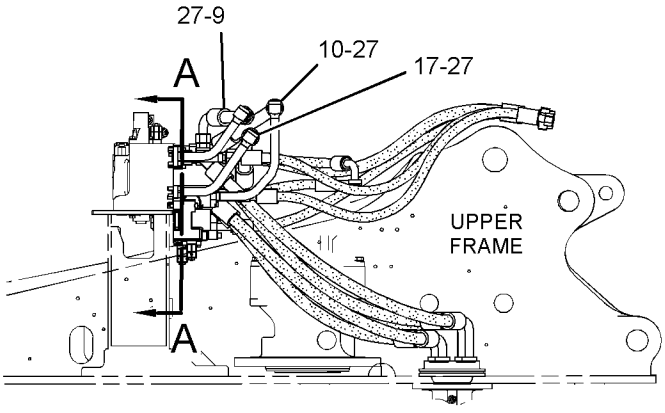

RIGHT SIDE VIEW

GRAPHIC #1 **<END>** g01806235

361-6849 LINES GP-FRONT—SYSTEM 3 PRIME, 1-WAY, 2-PUMP

S/N: DNP1-UP
ONE WAY / TWO PUMP FLOW / FOOT SWITCH
PART OF 385-5148 LINES AR-AUXILIARY HYDRAULIC
AN ATTACHMENT

SMCS-5057 **i05300286**

NOTE	REF NO	GRAPHIC REF	PART NUMBER	QTY	PART NAME 1 2 3 4 5 6 (PRODUCT LEVEL)	SEE PAGE
	1	1	**7Y-3731**	6	FLANGE	
M	2	1	**105-3477**	4	BOLT-SOCKET HEAD (M10X1.5X45-MM)	
	3	1	**260-7872**	1	SUPPORT AS	
	4	1	**266-1279**	1	FLANGE	
	5	1	**275-1439**	1	BLOCK	
	6	1	**325-8865**	1	SUPPORT AS	
I	7	1	**361-6838**	1	HOSE AS	
I	8	1	**361-6839**	1	HOSE AS	
I	9	1	**361-6840**	1	HOSE AS	
	10	1	**361-8818**	1	BLOCK	
	11	1	**361-8820**	1	PLATE	
	12	1	**361-8821**	1	PLATE	
	13	1	**361-8824**	1	VALVE AS-RELIEF	
M	14	1	**101-7401**	4	BOLT-SOCKET HEAD (M10X1.5X20-MM)	
M	15	1	**101-7404**	24	BOLT-SOCKET HEAD (M10X1.5X30-MM)	
	16	1	*148-8323*	1	CONNECTOR AS	
		1	**2S-4078**	1	SEAL-O-RING	
		1	**5K-9090**	1	SEAL-O-RING	
		1	**6V-9875**	1	CONNECTOR	
	17	1	*148-8352*	1	ELBOW AS	
		1	**5K-9090**	1	SEAL-O-RING	
		1	**6V-9854**	1	ELBOW	
	18	1	*148-8362*	1	ELBOW AS	
		1	**3D-2824**	1	SEAL-O-RING	
		1	**5K-9090**	1	SEAL-O-RING	
		1	**8T-6684**	1	ELBOW	
	19	1	**1P-3702**	2	SEAL-RECTANGULAR	
	20	1	**1P-3703**	6	SEAL-RECTANGULAR	
	21	1	**5K-9090**	4	SEAL-O-RING	
	22	1	**5P-7468**	2	CLIP (SLOT)	
	23	1	**5P-7469**	2	CLIP (TAB)	
	24	1	**8T-4121**	6	WASHER-HARD (11X21X2.5-MM THK)	
M	25	1	**8T-4136**	2	BOLT (M10X1.5X25-MM)	
M	26	1	**8T-4183**	4	BOLT (M12X1.75X40-MM)	
M	27	1	**8T-4195**	4	BOLT (M10X1.5X30-MM)	
	28	1	**8T-4223**	6	WASHER-HARD (13.5X25.5X3-MM THK)	
M	29	1	**8T-4956**	2	BOLT (M12X1.75X35-MM)	
	30	1	**8T-7087**	2	GROMMET	

I - REFER TO HYDRAULIC INFORMATION SYSTEM
M - METRIC PART

361-6849 **LINES GP-FRONT (*contd.*)** **i05300286**

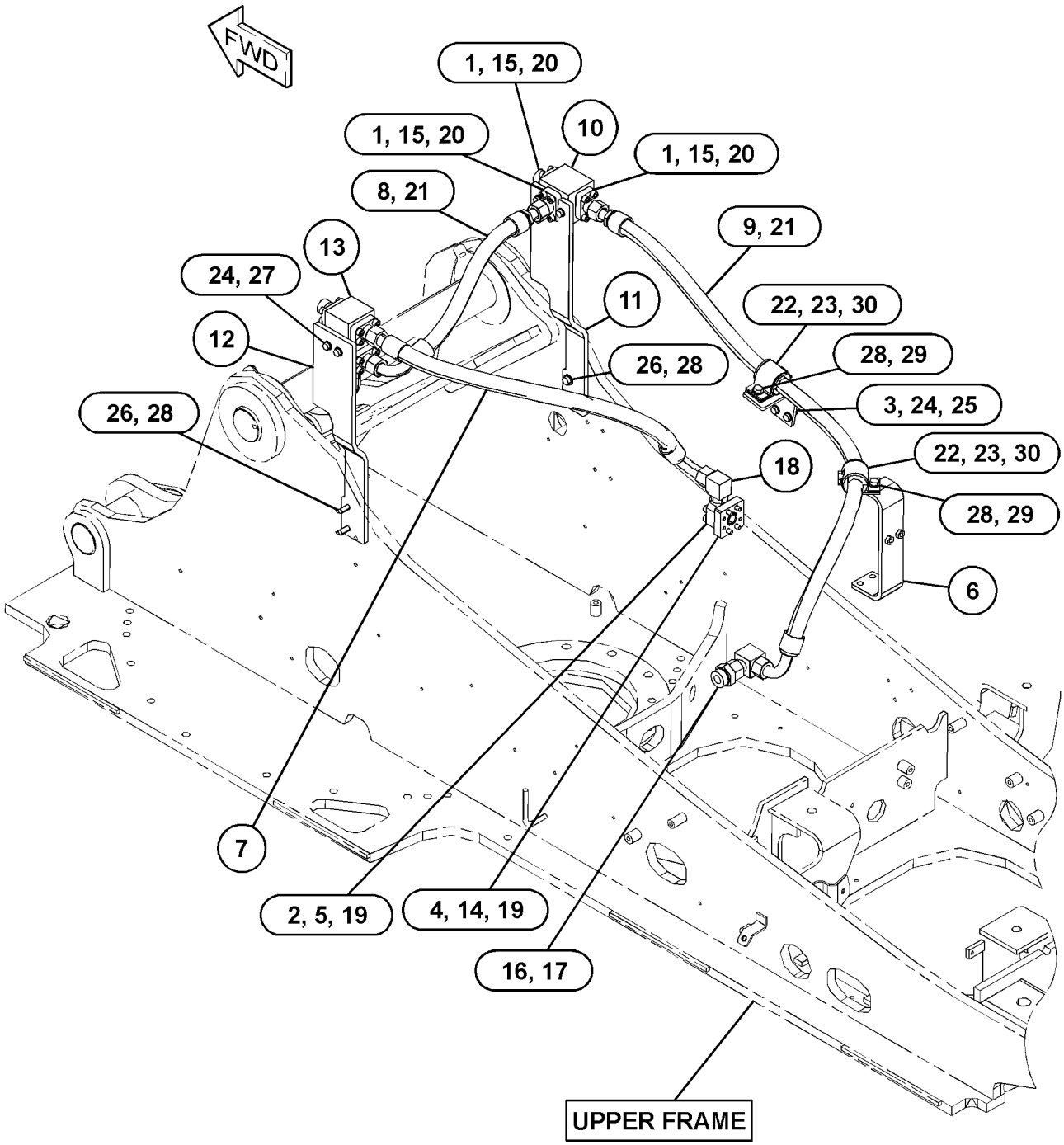

GRAPHIC #1 **<END>** g03362285

376-6308 LINES GP-HYDRAULIC OIL COOLER—CONTROL VALVE, PUMP

S/N: FKK1-UP; DNP1-UP
PART OF 421-6946 HYDRAULIC AR

SMCS-1374 **i05259236**

NOTE	REF NO	GRAPHIC REF	PART NUMBER	QTY	PART NAME 1 2 3 4 5 6 (PRODUCT LEVEL)	SEE PAGE
	1	1	**144-0367**	2	CLAMP-HOSE	
	2	1	**173-4816**	1	SUPPORT AS	
	3	1	**196-0807**	1	PLATE	
	4	1	**199-7394**	1	PIPE AS	
I	5	1	**199-7403**	1	HOSE AS	
	6	1	**227-0581**	1	HOSE	
	7	1	**266-1045**	1	TUBE AS	
	8	1	**319-9888**	1	SUPPORT AS	
	9	1	**369-8420**	1	VALVE GP-CHECK	
		1	**2S-4078**	1	SEAL-O-RING	
		1	**9S-6130**	1	PLUG	
		1	**095-1547**	2	SEAL-O-RING	
		1	**190-7826**	2	PLUG	
I	10	1	**377-3328**	1	HOSE AS	
I	11	1	**377-3331**	1	HOSE AS	
M	12	1	**8T-4956**	7	BOLT (M12X1.75X35-MM)	
M	13	1	**096-4883**	2	LOCKNUT (M10X1.5-THD)	
M	14	1	**101-7402**	4	BOLT-SOCKET HEAD (M12X1.75X30-MM)	
	15	1	*148-8354*	1	ELBOW AS	
		1	**3K-0360**	1	SEAL-O-RING	
		1	**6V-8398**	1	SEAL-O-RING	
		1	**6V-9002**	1	ELBOW	
	16	1	*148-8357*	1	ELBOW AS	
		1	**5K-9090**	1	SEAL-O-RING	
		1	**6V-9008**	1	ELBOW	
		1	**7M-8485**	1	SEAL-O-RING	
	17	1	**1P-3703**	4	SEAL-RECTANGULAR	
	18	1	**4J-0524**	3	SEAL-O-RING	
	19	1	**4J-0527**	1	SEAL-O-RING	
	20	1	**5P-7468**	1	CLIP (SLOT)	
	21	1	**5P-7469**	1	CLIP (TAB)	
	22	1	**5P-8444**	1	GROMMET	
					—OR—	
			8T-7087	1	GROMMET	
	23	1	**6V-0400**	4	FLANGE-HALF	
	24	1	**7G-5984**	1	CLIP (TAB)	
	25	1	**7G-5985**	1	CLIP (SLOT)	
	26	1	**7G-5986**	1	GROMMET	
M	27	1	**7X-2544**	4	BOLT (M10X1.5X104-MM)	
	28	1	**7X-7729**	2	WASHER (11X25X3-MM THK)	
M	29	1	**7Y-5247**	1	U-BOLT	
	30	1	**8T-4121**	8	WASHER-HARD (11X21X2.5-MM THK)	
M	31	1	**8T-4136**	2	BOLT (M10X1.5X25-MM)	
M	32	1	**8T-4139**	4	BOLT (M12X1.75X30-MM)	
M	33	1	**8T-4186**	2	BOLT (M10X1.5X40-MM)	
M	34	1	**8T-4194**	8	BOLT (M12X1.75X50-MM)	
	35	1	**8T-4223**	13	WASHER-HARD (13.5X25.5X3-MM THK)	
	36	1	**383-9204**	1	PIPE AS	

I - REFER TO HYDRAULIC INFORMATION SYSTEM
M - METRIC PART

376-6308 **LINES GP-HYDRAULIC OIL COOLER (*contd.*)** **i05259236**

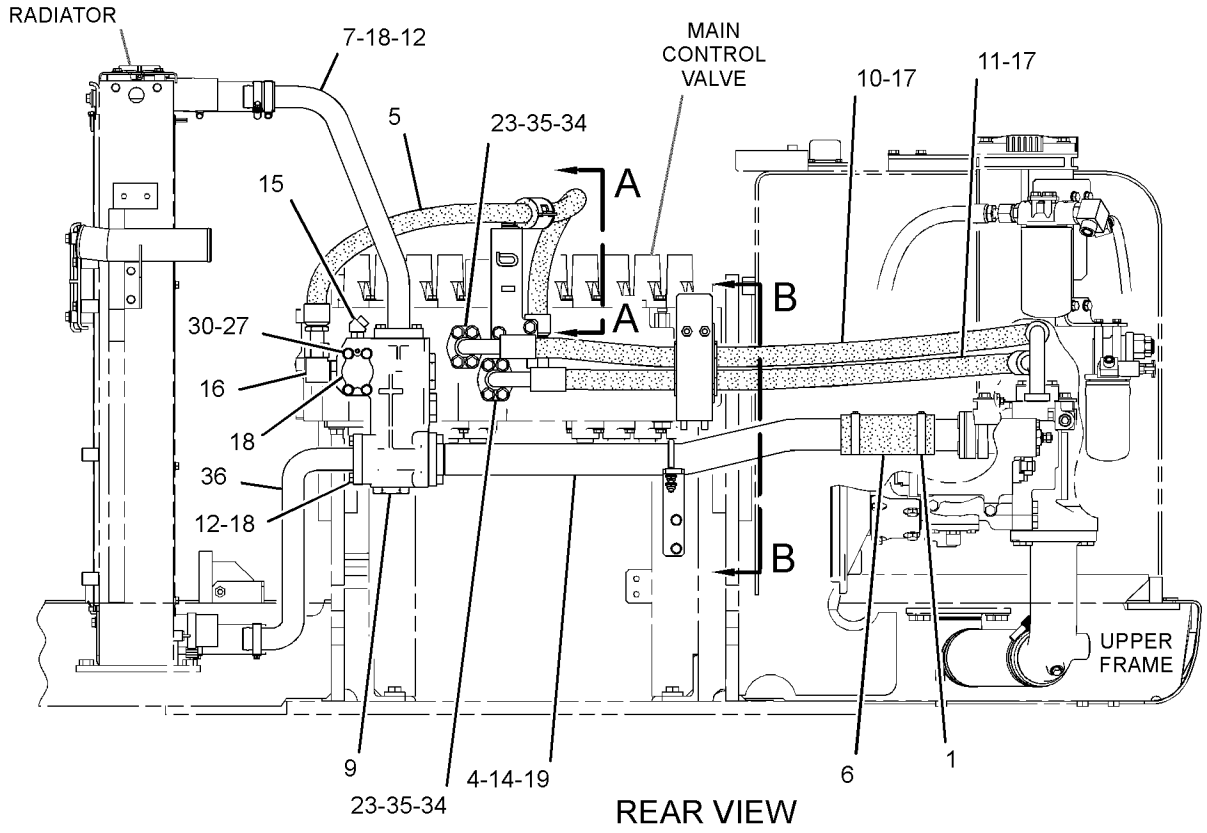

REAR VIEW

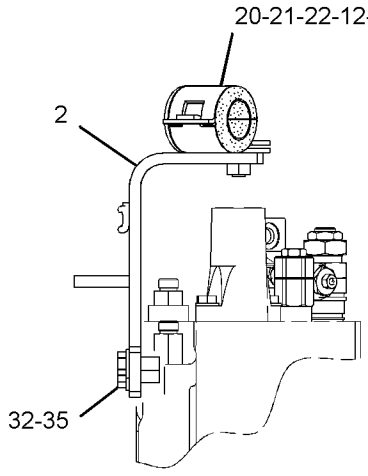

VIEW A-A

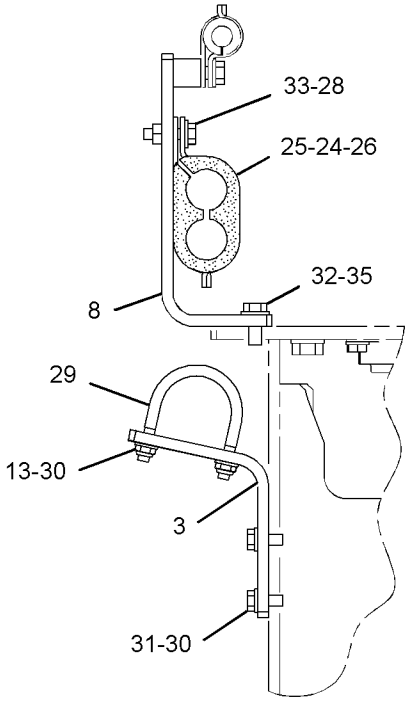

SECTION B-B

GRAPHIC #1 **<END>** g02732396

376-6321 LINES GP-HYDRAULIC OIL COOLER

S/N: FKK1-UP; DNP1-UP

PART OF 421-6946 HYDRAULIC AR

SMCS-1374 **i05259250**

NOTE	REF NO	GRAPHIC REF	PART NUMBER	QTY	PART NAME 1 2 3 4 5 6 (PRODUCT LEVEL)	SEE PAGE
	1	1	**227-0265**	2	HOSE	
	2	1	**8T-6703**	5	CLAMP-HOSE	

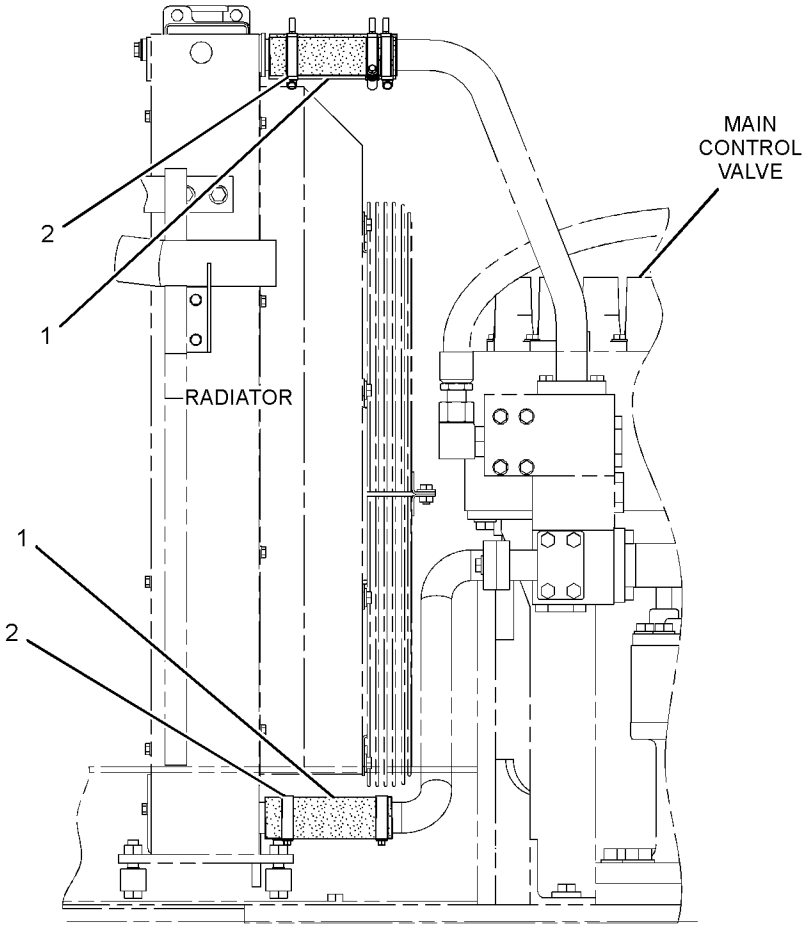

REAR VIEW

GRAPHIC #1 **<END>** g01276111

248-9825 LINES GP-PILOT—JOYSTICK, PEDALS

S/N: FKK1-UP; DNP1-UP

PART OF 421-6946 HYDRAULIC AR

SMCS-5057, 5059 **i04915670**

NOTE	REF NO	GRAPHIC REF	PART NUMBER	QTY	PART NAME 1 2 3 4 5 6 (PRODUCT LEVEL)	SEE PAGE
	1	2	**4I-9521**	2	BAND-MARKER (RED, L1)	
	2	2	**4I-9522**	2	BAND-MARKER (YELLOW, L2)	
	3	2	**4I-9523**	2	BAND-MARKER (BLUE, L3)	
	4	2	**4I-9524**	2	BAND-MARKER (BROWN, L4)	
	5	2	**4I-9525**	2	BAND-MARKER (ORANGE, R1)	
	6	2	**4I-9526**	2	BAND-MARKER (WHITE, R2)	
	7	2	**4I-9527**	2	BAND-MARKER (GREEN, R3)	
	8	2	**4I-9528**	2	BAND-MARKER (PURPLE, R4)	
	9	1,2	**7K-1181**	5	STRAP-CABLE	
I	10	1	**087-4402**	2	HOSE AS	
	11	2	**133-5813**	4	BAND-MARKER (GRAY, P)	
	12	1	**309-5769**	1	SWITCH AS-PRESSURE (IMPLEMENT, SWING)	
	12A	1	**309-5769**	1	SWITCH AS-PRESSURE (TRAVEL, LH)	
	12B	2	**309-5769**	1	SWITCH AS-PRESSURE (TRAVEL, RH)	
					(EACH SWITCH AS INCLUDES)	
		2	**151-9272**	1	KIT-RECEPTACLE (2-PIN)	
					(INCLUDES RECEPTACLE AS & WEDGE)	
		2	**9X-3401**	2	PIN-CONNECTOR (16-GA TO 18-GA)	
					—OR—	
		2	**126-1767**	2	PIN-CONNECTOR (14-GA TO 16-GA)	
	13	2	**168-9759**	1	BLOCK	
	14	1	**184-9336**	3	SUPPORT	
	15	2	**185-0383**	1	BRACKET	
Y	16	2	**185-0462**	1	VALVE GP-SHUTTLE	351
	18	2	**236-2844**	3	HOSE AS	
	19	2	**236-2843**	4	HOSE AS	
	20	2	**245-5079**	1	HOSE AS	
	21	2	**255-1665**	1	HOSE AS	
	22	2	**255-1666**	1	HOSE AS	
Y	23	1	**310-0414**	1	VALVE GP-PILOT (TRAVEL)	334
	24	1,2	*148-8336*	23	CONNECTOR AS	
					(EACH INCLUDES)	
		1,2	**3J-1907**	1	SEAL-O-RING	
		1,2	**6V-8397**	1	SEAL-O-RING	
		1,2	**6V-8636**	1	CONNECTOR	
	25	2	*148-8353*	8	ELBOW AS	
					(EACH INCLUDES)	
		2	**3J-1907**	1	SEAL-O-RING	
		2	**6V-8397**	1	SEAL-O-RING	
		2	**6V-9001**	1	ELBOW	
	26	2	*148-8354*	2	ELBOW AS	
					(EACH INCLUDES)	
		2	**3K-0360**	1	SEAL-O-RING	
		2	**6V-8398**	1	SEAL-O-RING	
		2	**6V-9002**	1	ELBOW	
	27	1,2	*148-8378*	6	ELBOW AS	
					(EACH INCLUDES)	
		1,2	**3J-1907**	1	SEAL-O-RING	
		1,2	**6V-8397**	1	SEAL-O-RING	
		1,2	**6V-8724**	1	ELBOW	
	28	2	*148-8407*	4	PLUG AS	
					(EACH INCLUDES)	
		2	**3J-1907**	1	SEAL-O-RING	
		2	**9S-4191**	1	PLUG-O-RING	
	29	1	*164-5628*	3	CONNECTOR AS	
					(EACH INCLUDES)	
		1	**3J-1907**	1	SEAL-O-RING	

248-9825 **LINES GP-PILOT (*contd.*)** **i04915670**

NOTE	REF NO	GRAPHIC REF	PART NUMBER	QTY	PART NAME 1 2 3 4 5 6 (PRODUCT LEVEL)	SEE PAGE
		1	**6V-8397**	1	SEAL-O-RING	
		1	**107-6631**	1	CONNECTOR-FILTER	
	30	1,2	**8T-4121**	18	WASHER-HARD (11X21X2.5-MM THK)	
M	31	1	**8T-4136**	4	BOLT (M10X1.5X25-MM)	
M	32	1,2	**8T-4137**	13	BOLT (M10X1.5X20-MM)	
M	33	2	**8T-4198**	2	BOLT (M10X1.5X100-MM)	
	34	2	**289-5657**	1	HOSE AS	
	35	2	**4P-7581**	1	CLIP	
	41	2	**236-2848**	1	HOSE AS	

I - REFER TO HYDRAULIC INFORMATION SYSTEM
M - METRIC PART
Y - SEPARATE ILLUSTRATION

248-9825 **LINES GP-PILOT (*contd.*)** **i04915670**

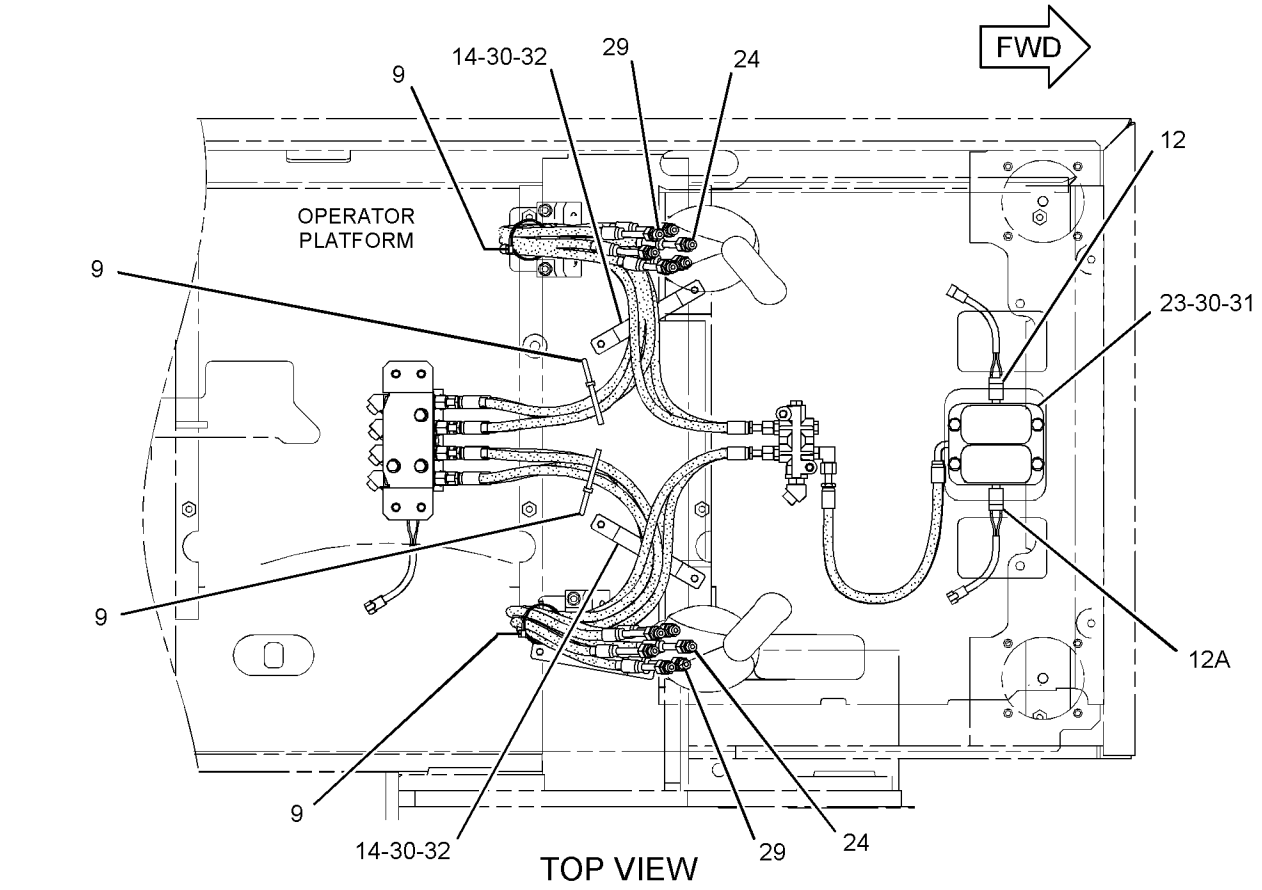

TOP VIEW

REFER TO ALL ILLUSTRATIONS OF
THIS GROUP FOR AUXILIARY VIEWS

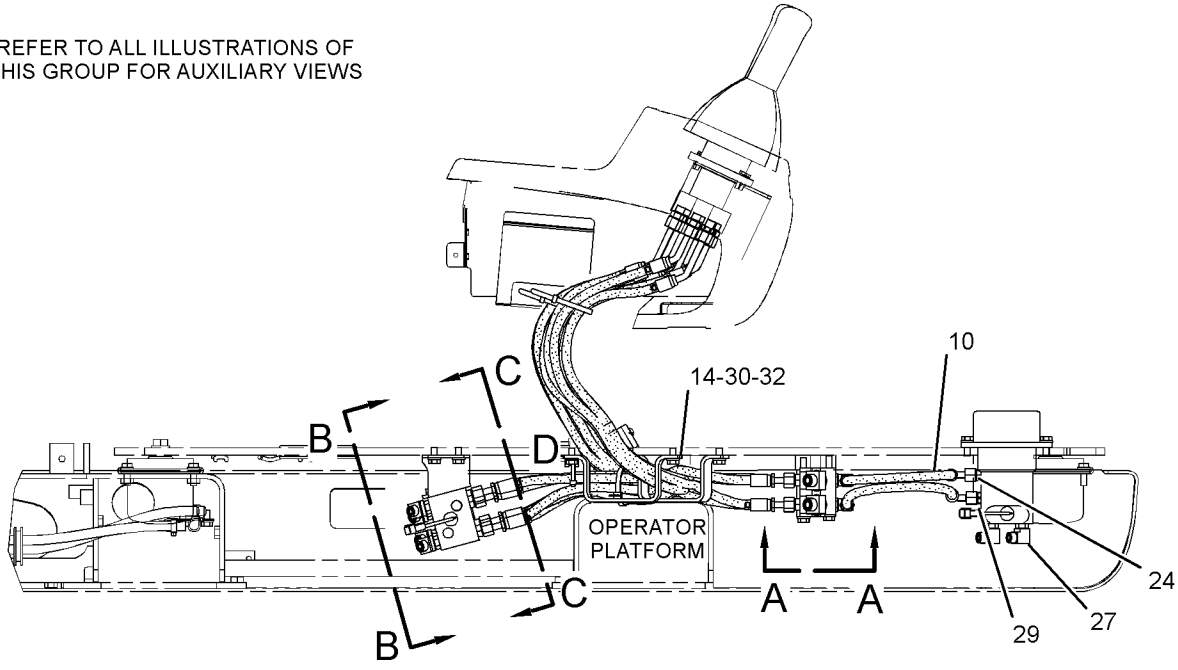

RIGHT SIDE VIEW

GRAPHIC #1 g02202594

248-9825 **LINES GP-PILOT (*contd.*)** **i04915670**

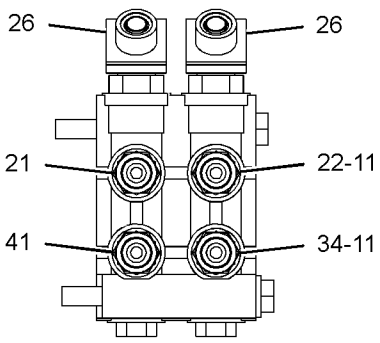

VIEWE-E

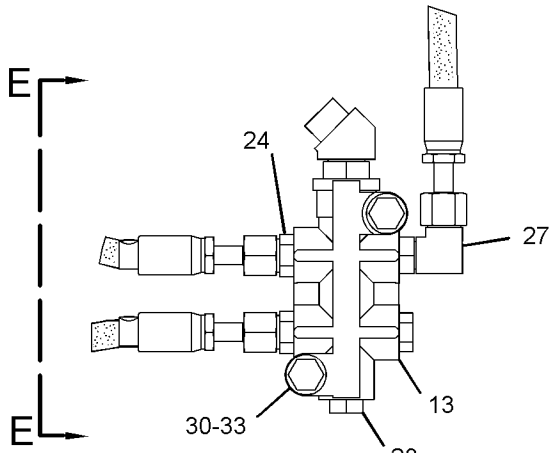

VIEW A-A

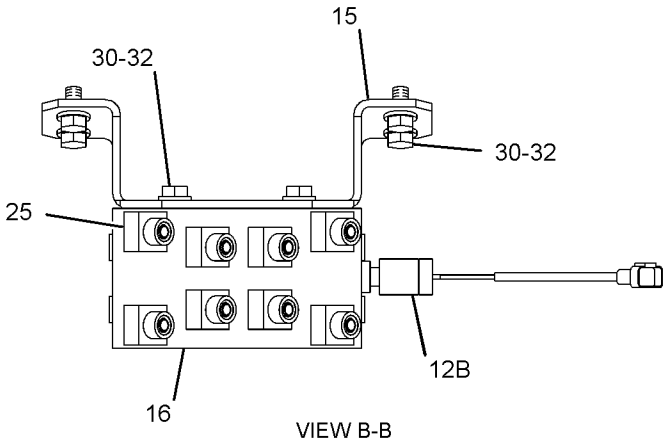

VIEW B-B

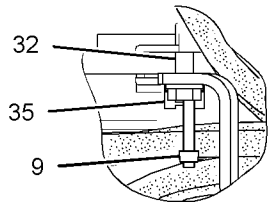

VIEW OF AREA D

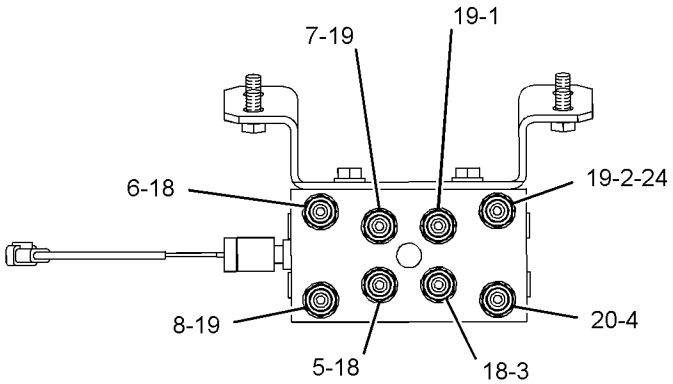

SECTION C-C

GRAPHIC #2 **<END>** g02416058

363-4212 LINES GP-PILOT

S/N: DNP1-UP

PART OF 385-5148 LINES AR-AUXILIARY HYDRAULIC

AN ATTACHMENT

SMCS-5057, 5059

i05292605

NOTE	REF NO	GRAPHIC REF	PART NUMBER	QTY	PART NAME 1 2 3 4 5 6 (PRODUCT LEVEL)	SEE PAGE
Y	1	1	**1U-1100**	1	VALVE GP-PRESSURE REDUCING	336
Y	2	1	**8J-6875**	1	VALVE GP-SHUTTLE	349
	3	1	**242-6985**	2	SPACER (14X32X23 THK)	
I	4	1	**361-6842**	1	HOSE AS	
I	5	1	**361-6844**	1	HOSE AS	
I	6	1	**363-4211**	1	HOSE AS	
	7	1	**363-8036**	1	VALVE AS-PILOT	
I	8	1	**368-3137**	1	HOSE AS	
I	9	1	**373-0112**	1	HOSE AS	
I	10	1	**373-0113**	1	HOSE AS	
	11	1	**374-0424**	1	PLATE	
	12	1	*148-8326*	2	CONNECTOR AS	
					(EACH INCLUDES)	
		1	**3J-7354**	1	SEAL-O-RING	
		1	**6V-8397**	1	SEAL-O-RING	
		1	**6V-9872**	1	CONNECTOR	
	13	1	*148-8336*	6	CONNECTOR AS	
					(EACH INCLUDES)	
		1	**3J-1907**	1	SEAL-O-RING	
		1	**6V-8397**	1	SEAL-O-RING	
		1	**6V-8636**	1	CONNECTOR	
	14	1	*148-8338*	1	CONNECTOR AS	
		1	**3J-1907**	1	SEAL-O-RING	
		1	**6V-8397**	1	SEAL-O-RING	
		1	**8T-0075**	1	CONNECTOR	
	15	1	*148-8353*	2	ELBOW AS	
					(EACH INCLUDES)	
		1	**3J-1907**	1	SEAL-O-RING	
		1	**6V-8397**	1	SEAL-O-RING	
		1	**6V-9001**	1	ELBOW	
	16	1	*148-8361*	1	ELBOW AS	
		1	**3J-7354**	1	SEAL-O-RING	
		1	**6V-8397**	1	SEAL-O-RING	
		1	**6V-9200**	1	ELBOW	
	17	1	*148-8367*	1	ELBOW AS	
		1	**6V-8397**	1	SEAL-O-RING	
		1	**6V-9850**	1	ELBOW	
	18	1	*148-8378*	2	ELBOW AS	
					(EACH INCLUDES)	
		1	**3J-1907**	1	SEAL-O-RING	
		1	**6V-8397**	1	SEAL-O-RING	
		1	**6V-8724**	1	ELBOW	
	19	1	*148-8433*	1	TEE AS	
		1	**6V-8397**	1	SEAL-O-RING	
		1	**6V-9836**	1	TEE-SWIVEL	
	20	1	*148-8434*	1	TEE AS	
		1	**6V-8397**	2	SEAL-O-RING	
		1	**6V-9843**	1	TEE	
	21	1	*164-5549*	1	COUPLING AS	
		1	**3J-1907**	1	SEAL-O-RING	
		1	**4I-6287**	1	COUPLING	
I	22	1	**373-0114**	1	HOSE AS	
M	23	1	**5C-7261**	4	NUT (M8X1.25-THD)	
	24	1	**8T-4121**	2	WASHER-HARD (11X21X2.5-MM THK)	
M	25	1	**8T-4136**	2	BOLT (M10X1.5X25-MM)	
M	26	1	**8T-4194**	2	BOLT (M12X1.75X50-MM)	
	27	1	**8T-4223**	2	WASHER-HARD (13.5X25.5X3-MM THK)	

363-4212 **LINES GP-PILOT (*contd.*)** **i05292605**

NOTE	REF NO	GRAPHIC REF	PART NUMBER	QTY	PART NAME 1 2 3 4 5 6 (PRODUCT LEVEL)	SEE PAGE
	28	1	**8T-4224**	6	WASHER-HARD (8.8X16X2-MM THK)	
M	29	1	**8T-6870**	2	BOLT (M8X1.25X70-MM)	

I - REFER TO HYDRAULIC INFORMATION SYSTEM
M - METRIC PART
Y - SEPARATE ILLUSTRATION

363-4212 **LINES GP-PILOT (*contd.*)** **i05292605**

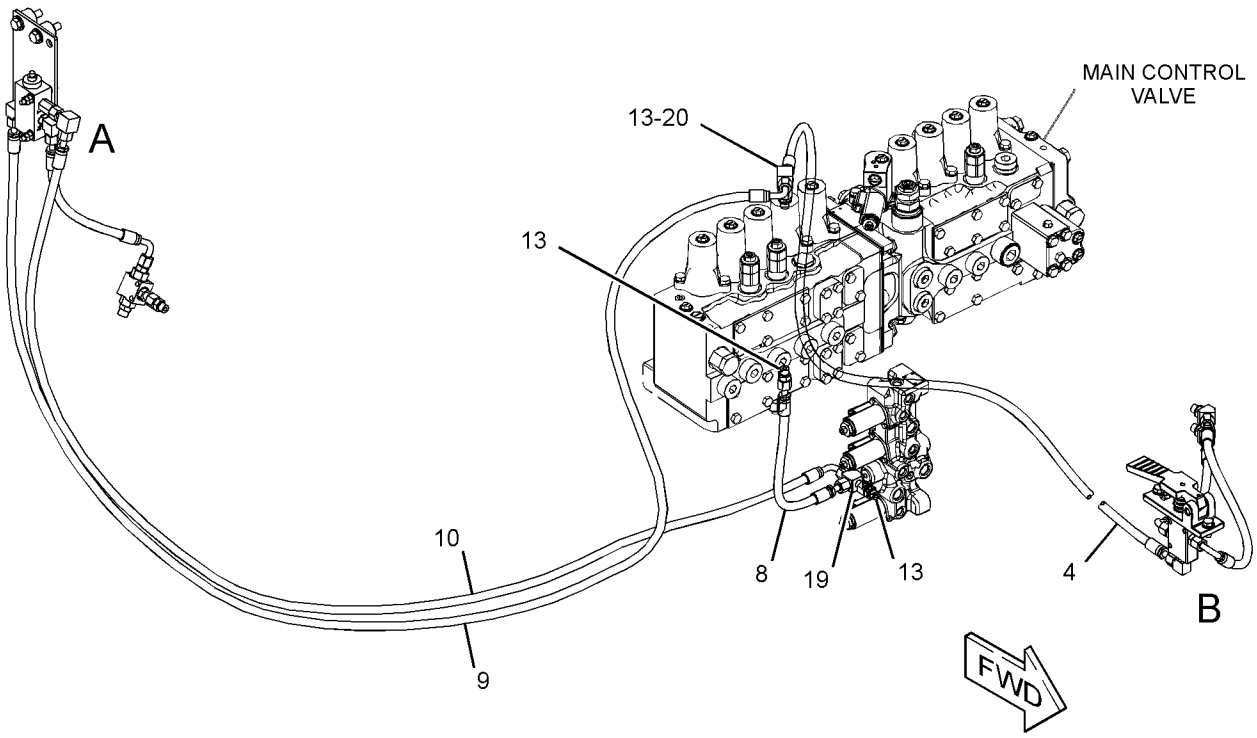

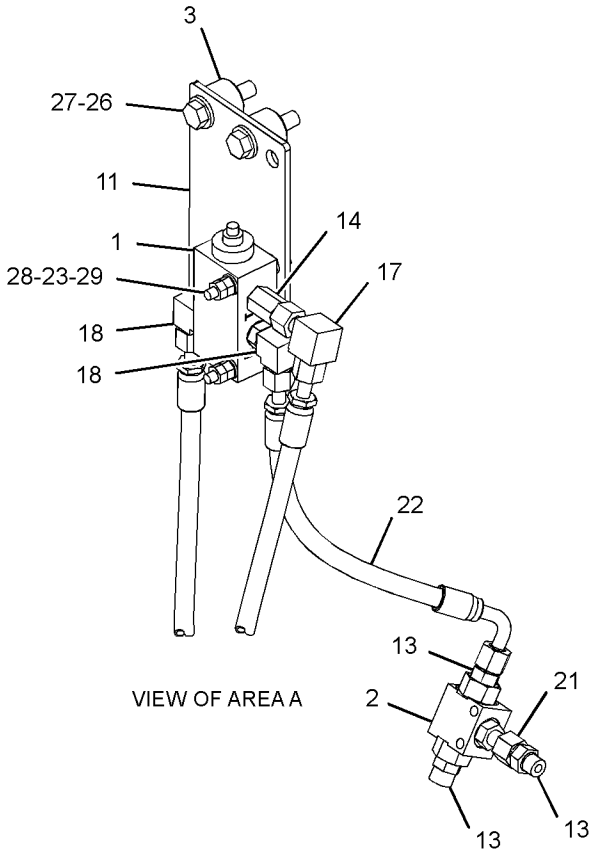

VIEW OF AREA A

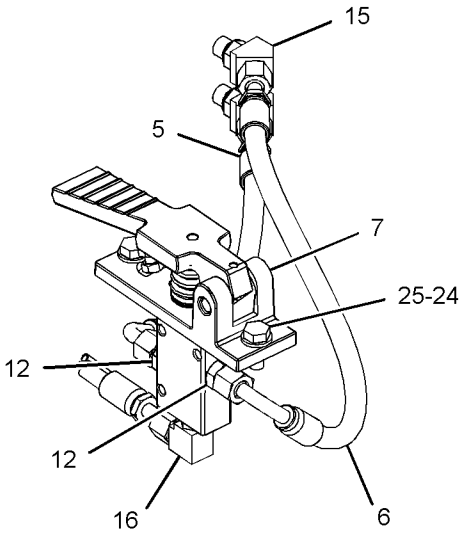

VIEW OF AREA B

GRAPHIC #1 **<END>** g03363193

376-6309 LINES GP-PILOT—MAIN CONTROL VALVE

S/N: FKK1-UP; DNP1-UP

PART OF 421-6946 HYDRAULIC AR

SMCS-5057, 5059 **i05259238**

NOTE	REF NO	GRAPHIC REF	PART NUMBER	QTY	PART NAME 1 2 3 4 5 6 (PRODUCT LEVEL)	SEE PAGE
I	1	1	**4I-1631**	1	HOSE AS	
I	2	1	**4I-3981**	1	HOSE AS	
I	3	1	**4I-3994**	1	HOSE AS	
I	4	1	**4I-6054**	1	HOSE AS	
	5	1	**4I-9521**	6	BAND-MARKER (RED, L1)	
	6	1	**4I-9522**	6	BAND-MARKER (YELLOW, L2)	
	7	1	**4I-9523**	2	BAND-MARKER (BLUE, L3)	
	8	1	**4I-9524**	2	BAND-MARKER (BROWN, L4)	
	9	1	**4I-9525**	6	BAND-MARKER (ORANGE, R1)	
	10	1	**4I-9526**	6	BAND-MARKER (WHITE, R2)	
	11	1	**4I-9527**	2	BAND-MARKER (GREEN, R3)	
	12	1	**4I-9528**	2	BAND-MARKER (PURPLE, R4)	
I	13	1	**5I-8853**	1	HOSE AS	
	14	1	**7K-1181**	13	STRAP-CABLE	
I	15	1	**7Y-4193**	2	HOSE AS	
I	16	1	**7Y-4390**	1	HOSE AS	
I	17	1	**087-5303**	2	HOSE AS	
	18	1	**176-4708**	1	GROMMET	
I	19	1	**221-4883**	2	HOSE AS	
	20	1	**115-8645**	3	GUARD	
	21	1	*148-8378*	6	ELBOW AS	
					(EACH INCLUDES)	
		1	**3J-1907**	1	SEAL-O-RING	
		1	**6V-8397**	1	SEAL-O-RING	
		1	**6V-8724**	1	ELBOW	
	22	1	*148-8435*	6	TEE AS	
					(EACH INCLUDES)	
		1	**3J-1907**	1	SEAL-O-RING	
		1	**6V-8397**	2	SEAL-O-RING	
		1	**6V-8781**	1	TEE	
	23	1	**202-4004**	1	GROMMET	
	24	1	**337-1205**	2	GROMMET	
J	25	1	**337-1205**	1	GROMMET	

I - REFER TO HYDRAULIC INFORMATION SYSTEM
J - USED ONLY ON MODELS EQUIPPED WITH ROPS CAB

376-6309 **LINES GP-PILOT (*contd.*)** **i05259238**

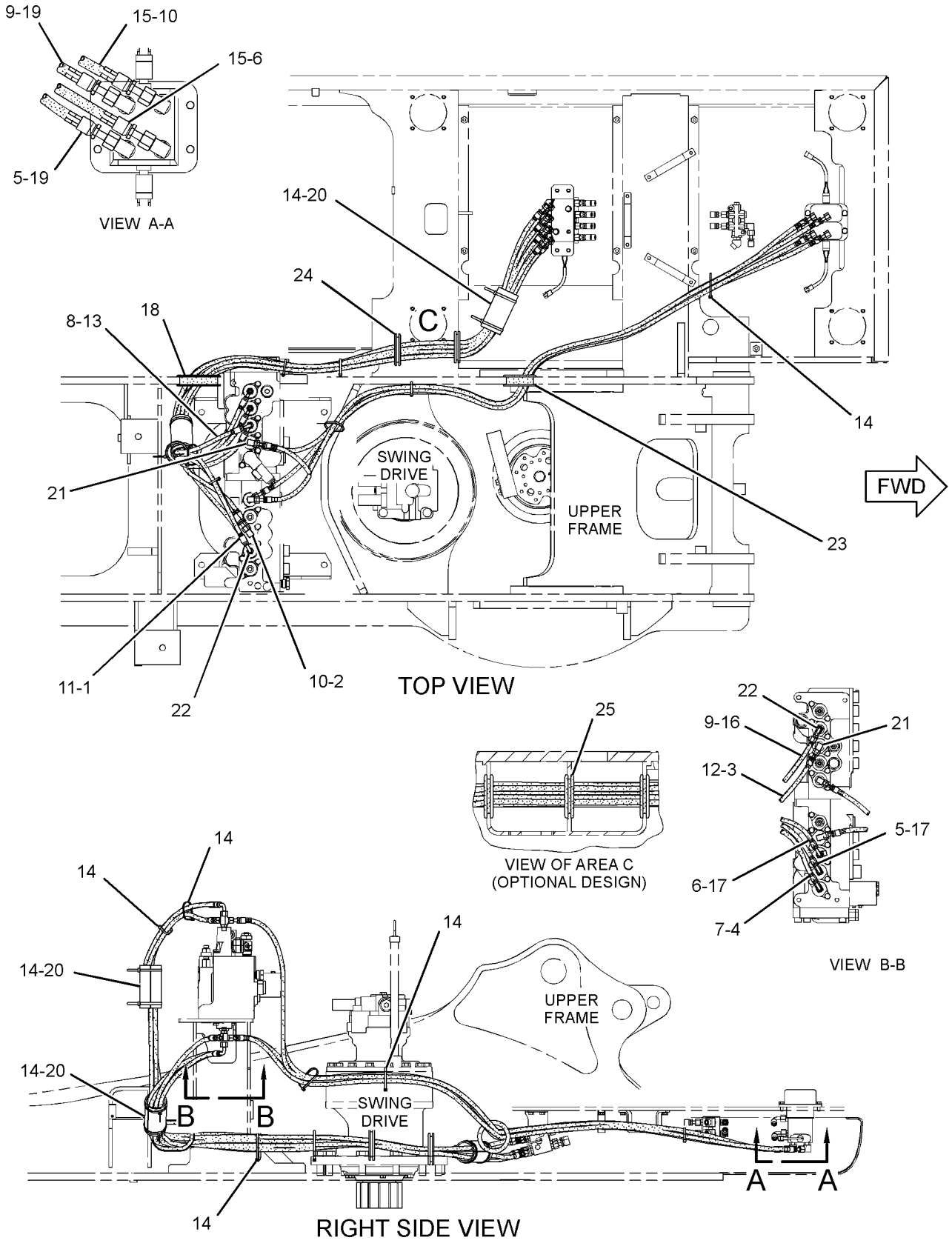

GRAPHIC #1 **<END>** g02728339

376-6310 LINES GP-PILOT—MAIN CONTROL VALVE

S/N: FKK1-UP; DNP1-UP

PART OF 421-6946 HYDRAULIC AR

SMCS-5057, 5059 **i05259245**

NOTE	REF NO	GRAPHIC REF	PART NUMBER	QTY	PART NAME 1 2 3 4 5 6 (PRODUCT LEVEL)	SEE PAGE
I	1	1	**4I-0818**	1	HOSE AS	
I	2	2	**4I-0836**	1	HOSE AS	
I	3	3	**4I-1037**	1	HOSE AS	
I	4	2	**4I-1739**	1	HOSE AS	
I	5	2	**4I-1780**	1	HOSE AS	
I	6	3	**4I-5906**	1	HOSE AS	
I	7	3	**4I-5933**	1	HOSE AS	
	8	2	**4I-9521**	2	BAND-MARKER (RED, L1)	
	9	1,3	**4I-9522**	6	BAND-MARKER (YELLOW, L2)	
	10	1,2	**4I-9523**	4	BAND-MARKER (BLUE, L3)	
	11	1,2	**4I-9524**	6	BAND-MARKER (BROWN, L4)	
	12	3	**4I-9525**	2	BAND-MARKER (ORANGE, R1)	
	13	2	**4I-9527**	4	BAND-MARKER (GREEN, R3)	
	14	3	**4I-9528**	4	BAND-MARKER (PURPLE, R4)	
I	15	1	**5I-4076**	1	HOSE AS	
I	16	3	**5I-4396**	1	HOSE AS	
I	17	2	**5I-8708**	1	HOSE AS	
	18	1,3	**7K-1181**	14	STRAP-CABLE	
I	19	3	**7Y-8487**	1	HOSE AS	
I	20	3	**087-4411**	1	HOSE AS	
I	21	2,3	**087-4531**	2	HOSE AS	
I	22	3	**087-4534**	1	HOSE AS	
I	23	2	**087-5760**	1	HOSE AS	
I	24	3	**087-5762**	1	HOSE AS	
I	25	3	**087-5772**	1	HOSE AS	
I	26	3	**087-5774**	1	HOSE AS	
I	27	2	**104-8838**	1	HOSE AS	
I	28	2	**110-5496**	1	HOSE AS	
I	29	2,3	**143-4254**	2	HOSE AS	
	30	2	*150-4044*	3	CONNECTOR AS	
					(EACH INCLUDES)	
		2	**3J-1907**	1	SEAL-O-RING	
		2	**6V-8397**	1	SEAL-O-RING	
		2	**8T-1779**	1	CONNECTOR	
	31	3	*164-5639*	1	ELBOW AS	
		3	**3K-0360**	1	SEAL-O-RING	
		3	**6V-8398**	1	SEAL-O-RING	
		3	**124-0988**	1	ELBOW-FILTER	
Y	32	3	**164-6979**	1	VALVE GP-SHUTTLE	350
Y	33	2	*164-6981*	1	ACCUMULATOR GP-HYDRAULIC (CHARGED)	200
I	34	2	**164-8977**	1	HOSE AS	
I	35	3	**164-8983**	2	HOSE AS	
	36	3	**176-4463**	1	PLATE	
	37	2	**176-4469**	1	BLOCK	
I	38	3	**176-4755**	1	HOSE AS	
I	39	1	**187-7070**	2	HOSE AS	
I	40	3	**199-1965**	1	HOSE AS	
	41	3	**202-4004**	1	GROMMET	
	42	1	**204-2281**	2	STRAP-CABLE	
Y	43	3	**215-5037**	1	MANIFOLD GP-CONTROL (PILOT OIL SUPPLY)	290
	44	3	**275-1442**	1	CLIP (TAB)	
		3	**275-1443**	1	CLIP (SLOT)	
J		3	**275-1444**	1	GROMMET (19-MM ID)	
					—OR—	
		3	**275-1442**	1	CLIP (TAB)	
		3	**275-1443**	1	CLIP (SLOT)	
J		3	**333-4609**	1	GROMMET (21-MM ID)	
I	47	2	**275-1503**	1	HOSE AS	

376-6310 **LINES GP-PILOT (*contd.*)** **i05259245**

NOTE	REF NO	GRAPHIC REF	PART NUMBER	QTY	PART NAME 1 2 3 4 5 6 (PRODUCT LEVEL)	SEE PAGE
	48	3	*285-1399*	1	CONNECTOR AS	
		3	**3J-1907**	1	SEAL-O-RING	
		3	**6V-8397**	1	SEAL-O-RING	
		3	**285-1465**	1	CONNECTOR	
Y	49	2	**310-0210**	1	VALVE GP-PRESSURE REDUCING (BOOM, SWING PRIORITY)	337
I	50	2	**314-8128**	1	HOSE AS	
I	51	3	**330-2568**	1	HOSE AS	
	52	3	*351-0286*	1	CONNECTOR AS	
		3	**3J-1907**	1	SEAL-O-RING	
		3	**6V-8397**	1	SEAL-O-RING	
		3	**259-7733**	1	CONNECTOR	
I	53	2	**376-6342**	1	HOSE AS	
M	54	3	**099-3649**	2	BOLT (M8X1.25X40-MM)	
M	55	2	**105-3484**	2	BOLT-SOCKET HEAD (M10X1.5X25-MM)	
	56	2,3	*148-8336*	7	CONNECTOR AS	
					(EACH INCLUDES)	
		2,3	**3J-1907**	1	SEAL-O-RING	
		2,3	**6V-8397**	1	SEAL-O-RING	
		2,3	**6V-8636**	1	CONNECTOR	
	57	2,3	*148-8340*	4	CONNECTOR AS	
					(EACH INCLUDES)	
		2,3	**3K-0360**	1	SEAL-O-RING	
		2,3	**6V-8398**	1	SEAL-O-RING	
		2,3	**6V-8639**	1	CONNECTOR	
	58	3	*148-8353*	5	ELBOW AS	
					(EACH INCLUDES)	
		3	**3J-1907**	1	SEAL-O-RING	
		3	**6V-8397**	1	SEAL-O-RING	
		3	**6V-9001**	1	ELBOW	
	59	2	*148-8354*	1	ELBOW AS	
		2	**3K-0360**	1	SEAL-O-RING	
		2	**6V-8398**	1	SEAL-O-RING	
		2	**6V-9002**	1	ELBOW	
	60	3	*148-8364*	1	ELBOW AS	
		3	**3K-0360**	1	SEAL-O-RING	
		3	**6V-8398**	1	SEAL-O-RING	
		3	**6V-8625**	1	ELBOW	
	61	2,3	*148-8367*	2	ELBOW AS	
					(EACH INCLUDES)	
		2,3	**6V-8397**	1	SEAL-O-RING	
		2,3	**6V-9850**	1	ELBOW	
	62	2,3	*148-8378*	8	ELBOW AS	
					(EACH INCLUDES)	
		2,3	**3J-1907**	1	SEAL-O-RING	
		2,3	**6V-8397**	1	SEAL-O-RING	
		2,3	**6V-8724**	1	ELBOW	
	63	2,3	*148-8407*	6	PLUG AS	
					(EACH INCLUDES)	
		2,3	**3J-1907**	1	SEAL-O-RING	
		2,3	**9S-4191**	1	PLUG-O-RING	
	64	3	*148-8433*	3	TEE AS	
					(EACH INCLUDES)	
		3	**6V-8397**	2	SEAL-O-RING	
		3	**6V-9836**	1	TEE-SWIVEL	
	65	2,3	*148-8435*	4	TEE AS	
					(EACH INCLUDES)	
		2,3	**3J-1907**	1	SEAL-O-RING	
		2,3	**6V-8397**	2	SEAL-O-RING	
		2,3	**6V-8781**	1	TEE	
	66	3	*148-8439*	2	TEE AS	
					(EACH INCLUDES)	

376-6310 **LINES GP-PILOT (*contd.*)** **i05259245**

NOTE	REF NO	GRAPHIC REF	PART NUMBER	QTY	PART NAME 1 2 3 4 5 6 (PRODUCT LEVEL)	SEE PAGE
		3	**3J-1907**	1	SEAL-O-RING	
		3	**6V-8397**	2	SEAL-O-RING	
		3	**6V-8774**	1	TEE	
	67	2	**4K-8864**	1	CLIP	
	68	2	**5P-7462**	2	CLIP (SLOT) (USE WITH 30-MM OD GROMMET)	
		2	**5P-7463**	2	CLIP (TAB) (USE WITH 30-MM OD GROMMET)	
J		2	**6V-0683**	2	GROMMET (19-MM ID) (30-MM OD)	
					–OR–	
		2	**5P-7464**	2	CLIP (SLOT) (USE WITH 37-MM OD GROMMET)	
		2	**5P-7465**	2	CLIP (TAB) (USE WITH 37-MM OD GROMMET)	
J		2	**6V-1249**	2	GROMMET (22-MM ID) (37-MM OD)	
	71	3	**6V-8397**	2	SEAL-O-RING	
	72	2,3	**8T-4121**	8	WASHER-HARD (11X21X2.5-MM THK)	
M	73	2	**8T-4136**	1	BOLT (M10X1.5X25-MM)	
M	74	3	**8T-4137**	5	BOLT (M10X1.5X20-MM)	
M	75	2	**8T-4139**	1	BOLT (M12X1.75X30-MM)	
M	76	2	**8T-4172**	2	BOLT (M10X1.5X80-MM)	
M	77	3	**8T-4192**	3	BOLT (M12X1.75X25-MM)	
	78	2,3	**8T-4223**	4	WASHER-HARD (13.5X25.5X3-MM THK)	

I - REFER TO HYDRAULIC INFORMATION SYSTEM
J - SELECT CORRECT GROMMET SIZE TO MATCH HOSE OD
M - METRIC PART
Y - SEPARATE ILLUSTRATION

REFER TO ALL ILLUSTRATIONS OF THIS GROUP FOR AUXILIARY VIEWS

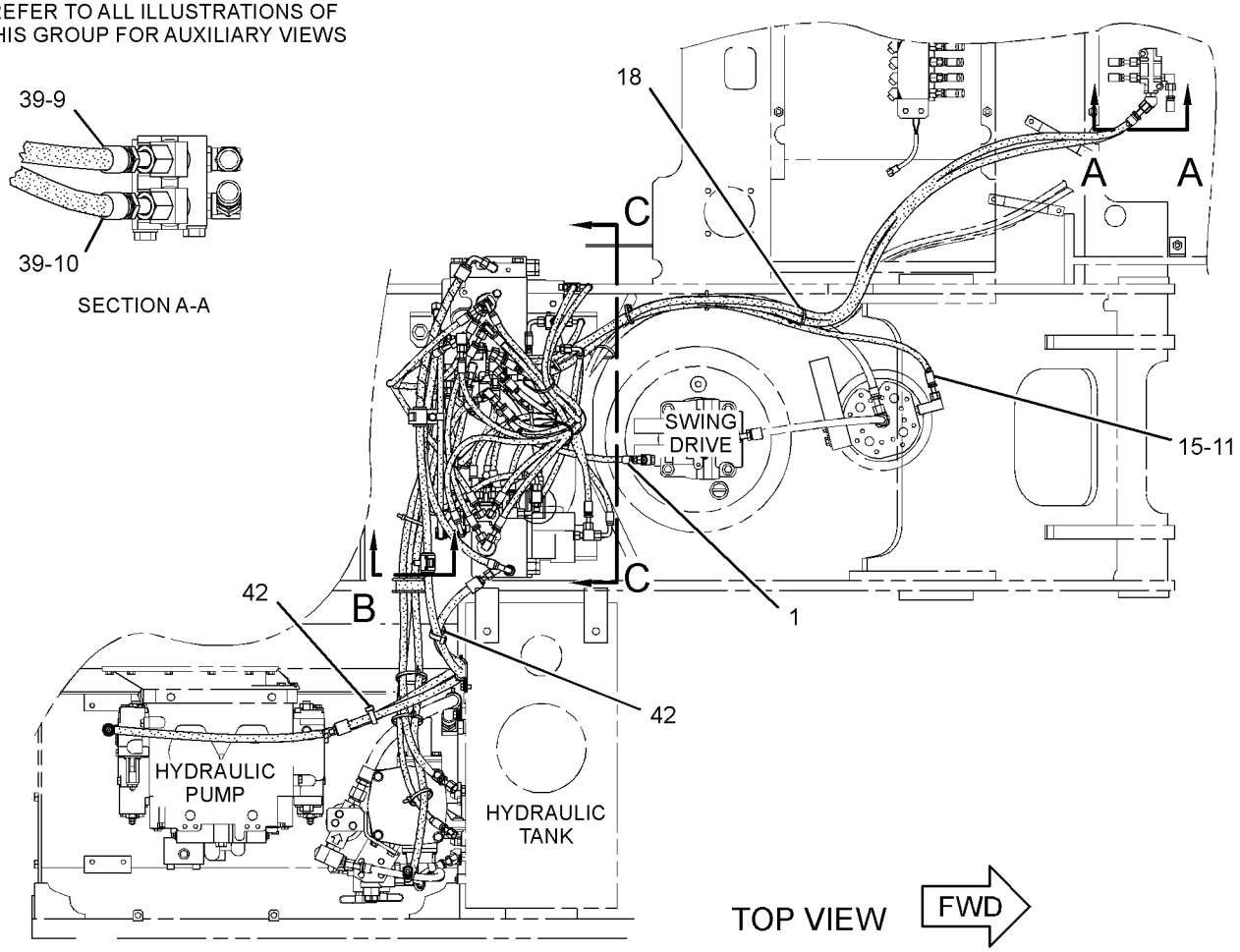

GRAPHIC #1 g02735559

376-6310 **LINES GP-PILOT (*contd.*)** **i05259245**

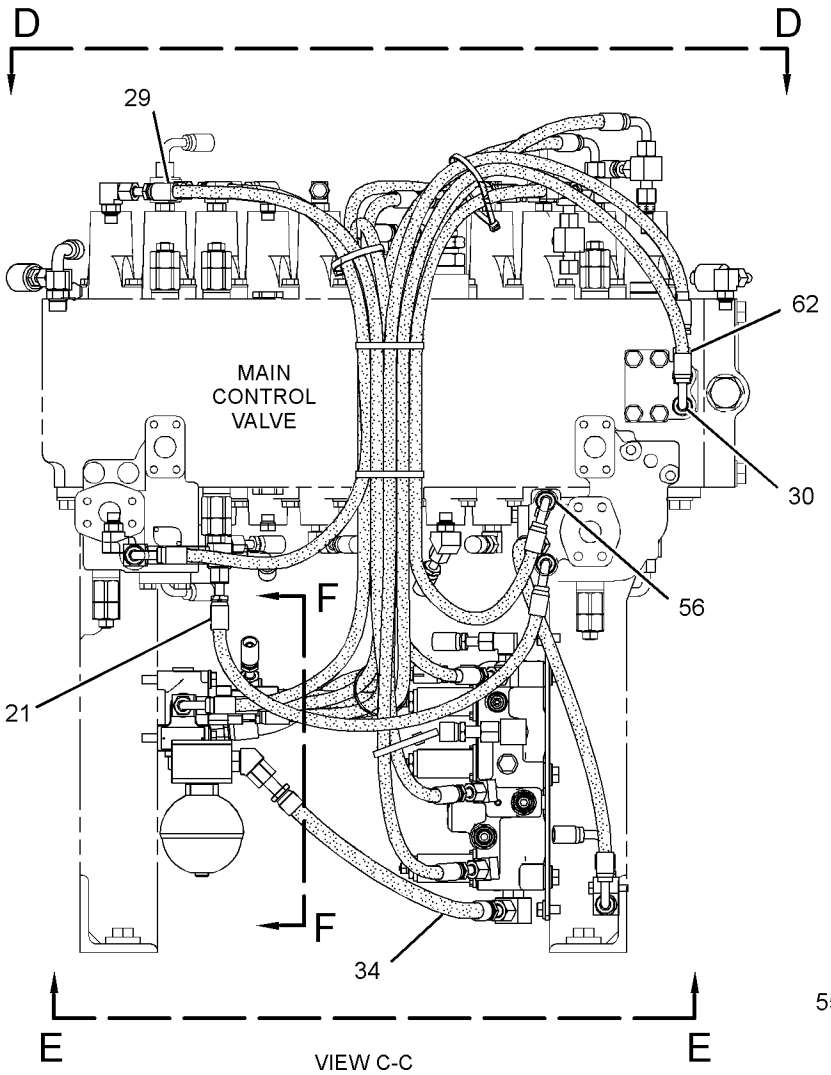

VIEW C-C

REFER TO ALL ILLUSTRATIONS OF THIS GROUP FOR AUXILIARY VIEWS

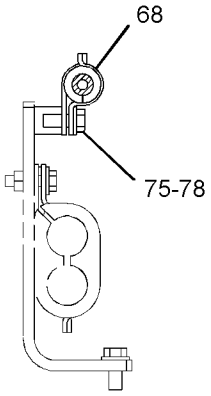

SECTION B

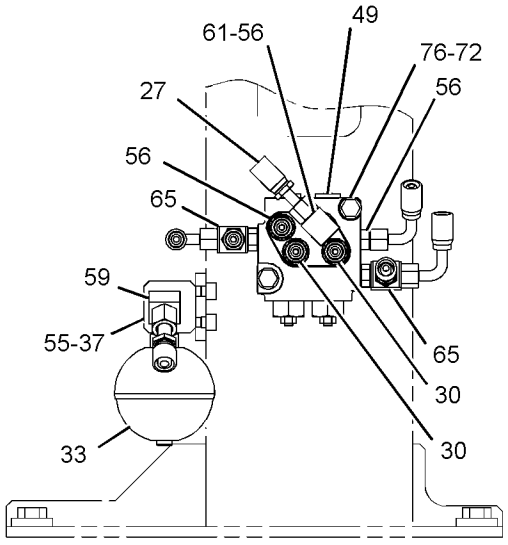

SECTION F-F

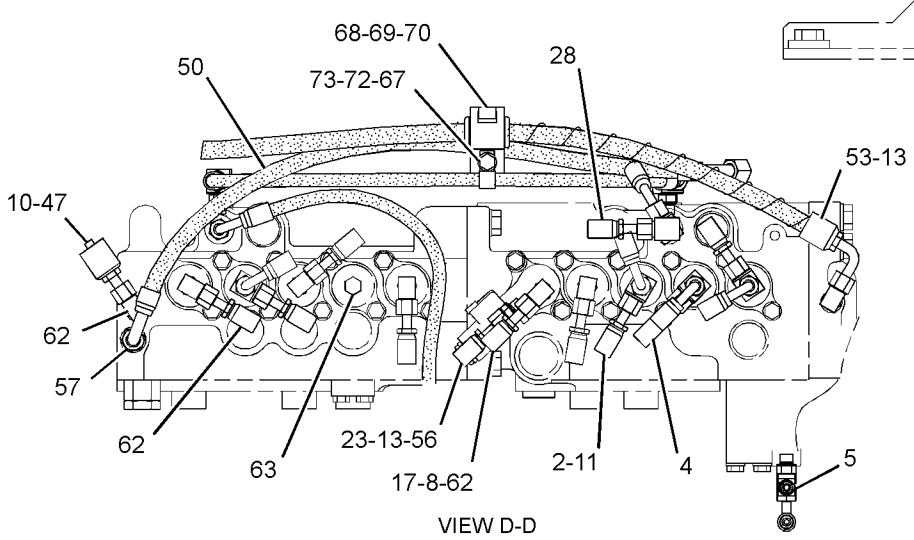

VIEW D-D

GRAPHIC #2 g03323088

376-6310 **LINES GP-PILOT (*contd.*)** **i05259245**

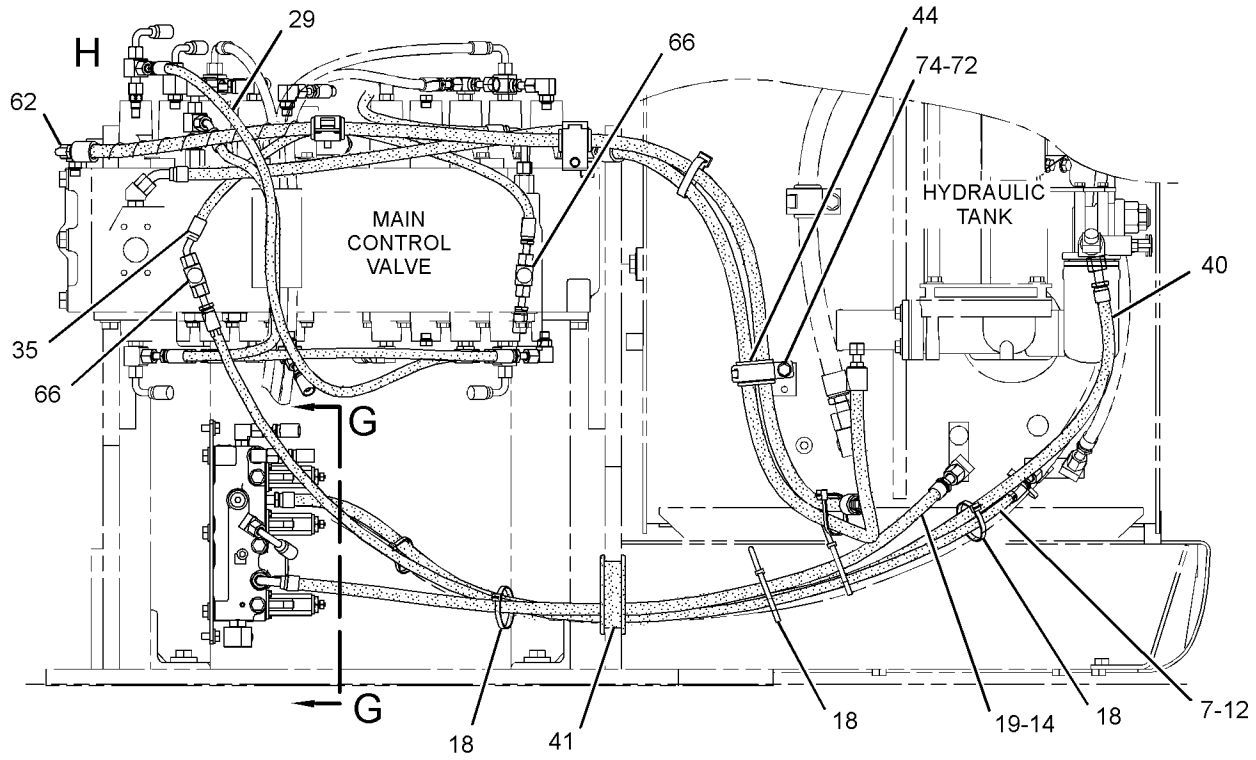

REAR VIEW

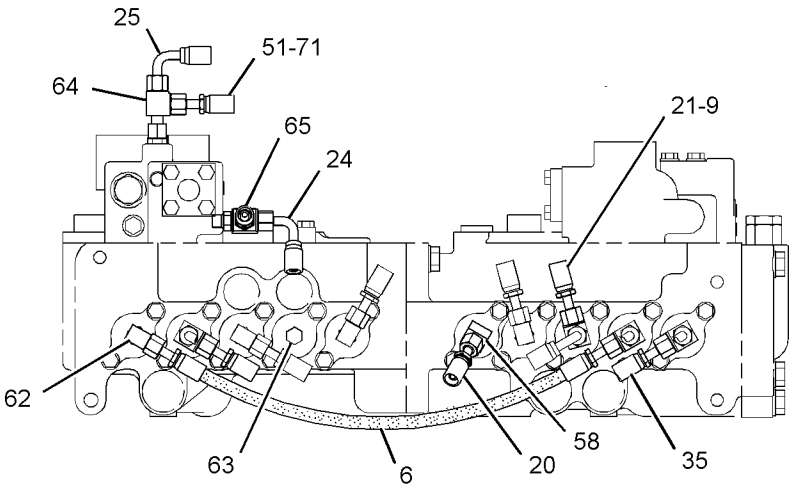

VIEW E-E

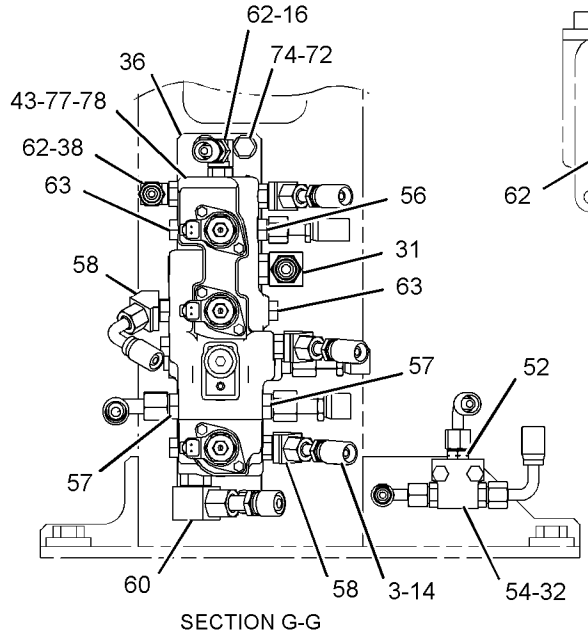

SECTION G-G

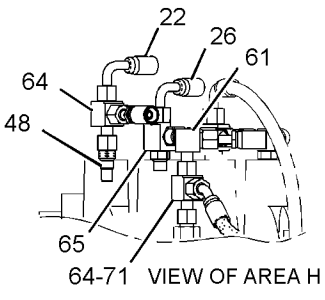

VIEW OF AREA H

GRAPHIC #3 **<END>** g03323093

376-6311 LINES GP-PILOT–FILTER, PILOT PUMP

S/N: FKK1-UP; DNP1-UP

PART OF 421-6946 HYDRAULIC AR

SMCS-5057, 5059 **i05259247**

NOTE	REF NO	GRAPHIC REF	PART NUMBER	QTY	PART NAME 1 2 3 4 5 6 (PRODUCT LEVEL)	SEE PAGE
I	1	1	**5I-3121**	1	HOSE AS	
	2	1	**6V-0852**	5	CAP-DUST	
	3	1	**7K-1181**	3	STRAP-CABLE	
I	4	1	**087-5768**	1	HOSE AS	
I	5	1	**178-5955**	1	HOSE AS	
I	6	1	**307-5120**	1	HOSE AS	
I	7	1	**366-1059**	1	HOSE AS	
	8	1	**366-9312**	1	SENSOR AS-PRESSURE (DRIVE PUMP)	
	8A	1	**366-9312**	1	SENSOR AS-PRESSURE (DRIVEN PUMP)	
					(EACH SENSOR AS INCLUDES)	
		1	**3K-0360**	1	SEAL-O-RING	
	9	1	*148-8336*	2	CONNECTOR AS	
					(EACH INCLUDES)	
		1	**3J-1907**	1	SEAL-O-RING	
		1	**6V-8397**	1	SEAL-O-RING	
		1	**6V-8636**	1	CONNECTOR	
	10	1	*148-8347*	2	ELBOW AS	
					(EACH INCLUDES)	
		1	**3D-2824**	1	SEAL-O-RING	
		1	**6V-9007**	1	ELBOW	
		1	**6V-9746**	1	SEAL-O-RING	
	11	1	*148-8354*	1	ELBOW AS	
		1	**3K-0360**	1	SEAL-O-RING	
		1	**6V-8398**	1	SEAL-O-RING	
		1	**6V-9002**	1	ELBOW	
	12	1	*148-8378*	2	ELBOW AS	
					(EACH INCLUDES)	
		1	**3J-1907**	1	SEAL-O-RING	
		1	**6V-8397**	1	SEAL-O-RING	
		1	**6V-8724**	1	ELBOW	
	13	1	*150-3036*	1	ELBOW AS	
		1	**3J-1907**	1	SEAL-O-RING	
		1	**6V-8397**	1	SEAL-O-RING	
		1	**8T-1905**	1	ELBOW	
	14	1	*153-6237*	1	ELBOW AS	
		1	**3D-2824**	1	SEAL-O-RING	
		1	**6V-9004**	1	ELBOW	
		1	**6V-9746**	1	SEAL-O-RING	
	15	1	*164-5567*	5	COUPLER AS-QUICK DISCONNECT (MALE)	
					(EACH INCLUDES)	
		1	**6V-3965**	1	FITTING (QUICK DISCONNECT)	
		1	**214-7568**	1	SEAL-O-RING	

I - REFER TO HYDRAULIC INFORMATION SYSTEM

376-6311 **LINES GP-PILOT (*contd.*)** **i05259247**

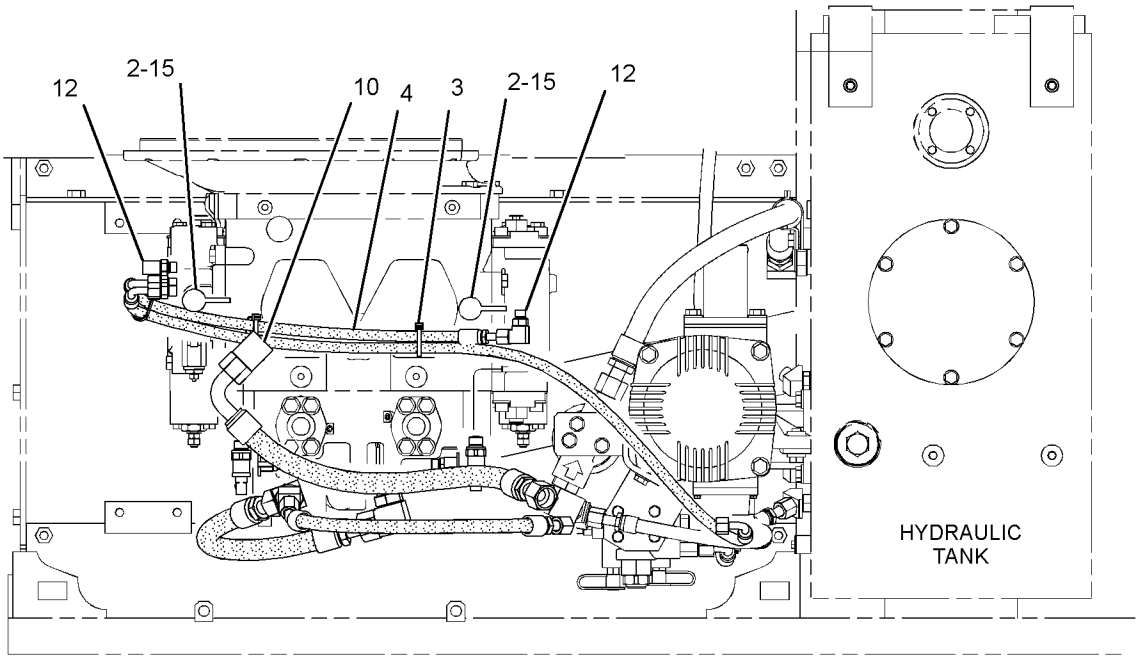

TOP VIEW FWD

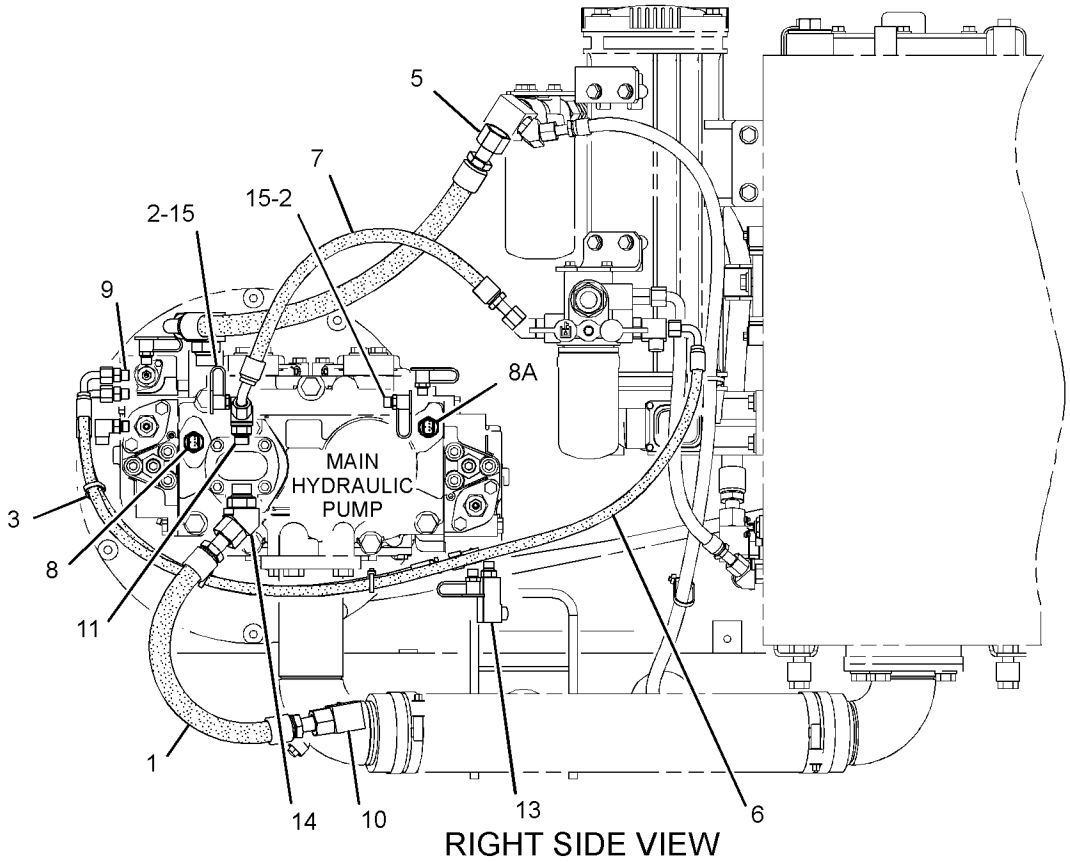

RIGHT SIDE VIEW

GRAPHIC #1 **<END>** g02732420

376-6313 LINES GP-PUMP–SUPPLY, MAIN PUMP

S/N: FKK1-UP; DNP1-UP

PART OF 421-6946 HYDRAULIC AR

SMCS-5057 **i05259248**

NOTE	REF NO	GRAPHIC REF	PART NUMBER	QTY	PART NAME 1 2 3 4 5 6 (PRODUCT LEVEL)	SEE PAGE
	1	1	**9X-8257**	4	WASHER (17.5X30X3.5-MM THK)	
	2	1	**347-2081**	1	HOSE	
	3	1	**9X-2201**	4	CLAMP-HOSE	
	4	1	**377-3298**	1	TUBE AS	
	5	1	**377-3297**	1	TUBE AS	
	6	1	*155-3624*	1	PLUG AS	
		1	**3J-7354**	1	SEAL-O-RING	
		1	**9S-4182**	1	PLUG-O-RING	
	7	1	**5H-8624**	1	SEAL-O-RING	
	8	1	**6D-9157**	1	SEAL-O-RING	
	9	1	**6V-0400**	4	FLANGE-HALF	
M	10	1	**7X-2553**	8	BOLT (M16X2X40-MM)	
M	11	1	**8T-4194**	8	BOLT (M12X1.75X50-MM)	
	12	1	**8T-4223**	8	WASHER-HARD (13.5X25.5X3-MM THK)	

M - METRIC PART

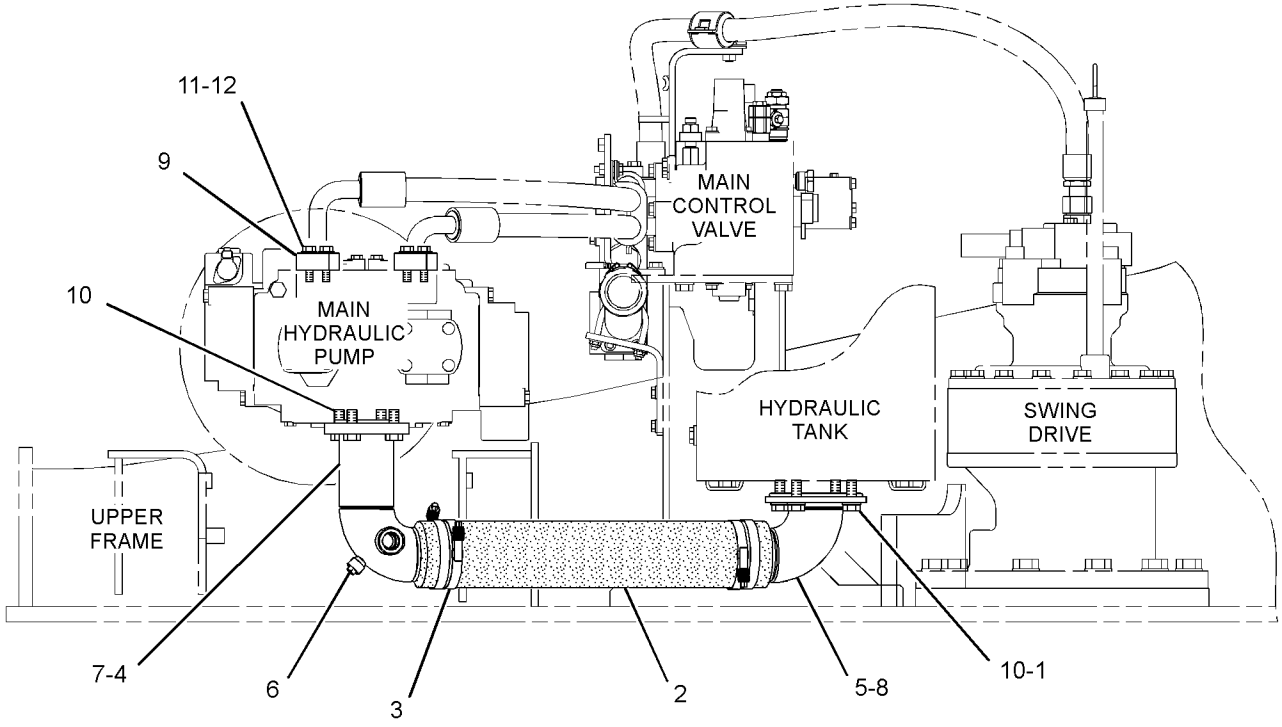

RIGHT SIDE VIEW

GRAPHIC #1 **<END>** g01275930

248-9853 LINES GP-RETURN—HYDRAULIC TANK

S/N: FKK1-UP; DNP1-UP

PART OF 433-8178 TANK & MTG GP-HYDRAULIC

SMCS-5057 **i04915484**

NOTE	REF NO	GRAPHIC REF	PART NUMBER	QTY	PART NAME 1 2 3 4 5 6 (PRODUCT LEVEL)	SEE PAGE
	1	1	**4I-9527**	2	BAND-MARKER (GREEN, R3)	
	2	1	**7K-1181**	2	STRAP-CABLE	
	3	1	*268-1621*	1	FITTING AS	
		1	**3D-2824**	1	SEAL-O-RING	
		1	**6V-9746**	1	SEAL-O-RING	
		1	**124-1212**	1	FITTING	
	4	1	**165-3260**	1	PIPE AS	
I	5	1	**176-4770**	1	HOSE AS	
	6	1	*307-5097*	1	TEE AS	
		1	**2M-9780**	1	SEAL-O-RING	
		1	**6V-8397**	1	SEAL-O-RING	
		1	**6V-8398**	1	SEAL-O-RING	
		1	**307-5098**	1	TEE-ORP TO ORFS	
I	7	1	**275-1361**	1	HOSE AS	
I	8	1	**292-7153**	1	HOSE AS	
	9	1	*148-8327*	1	CONNECTOR AS	
		1	**3D-2824**	1	SEAL-O-RING	
		1	**6V-8637**	1	CONNECTOR	
		1	**6V-9746**	1	SEAL-O-RING	
	10	1	*164-5608*	1	CONNECTOR AS	
		1	**3K-0360**	1	SEAL-O-RING	
		1	**6V-8398**	1	SEAL-O-RING	
		1	**8T-1687**	1	CONNECTOR	
	11	1	*148-8347*	1	ELBOW AS	
		1	**3D-2824**	1	SEAL-O-RING	
		1	**6V-9007**	1	ELBOW	
		1	**6V-9746**	1	SEAL-O-RING	
	12	1	*148-8354*	3	ELBOW AS	
					(EACH INCLUDES)	
		1	**3K-0360**	1	SEAL-O-RING	
		1	**6V-8398**	1	SEAL-O-RING	
		1	**6V-9002**	1	ELBOW	
	13	1	*148-8358*	1	ELBOW AS	
		1	**2M-9780**	1	SEAL-O-RING	
		1	**6V-8398**	1	SEAL-O-RING	
		1	**6V-8624**	1	ELBOW	
	14	1	*148-8363*	1	ELBOW AS	
		1	**3K-0360**	1	SEAL-O-RING	
		1	**6V-8397**	1	SEAL-O-RING	
		1	**6V-9876**	1	ELBOW	
	15	1	*148-8411*	1	PLUG AS	
		1	**3K-0360**	1	SEAL-O-RING	
		1	**9S-4185**	1	PLUG-O-RING	
	17	1	**5P-7464**	1	CLIP (SLOT)	
	18	1	**5P-7465**	1	CLIP (TAB)	
	19	1	**6J-2680**	1	SEAL-O-RING	
	21	1	**8T-2920**	1	GROMMET	
M	22	1	**8T-4139**	1	BOLT (M12X1.75X30-MM)	
	23	1	**8T-4223**	5	WASHER-HARD (13.5X25.5X3-MM THK)	
M	24	1	**8T-4956**	4	BOLT (M12X1.75X35-MM)	

I - REFER TO HYDRAULIC INFORMATION SYSTEM
M - METRIC PART

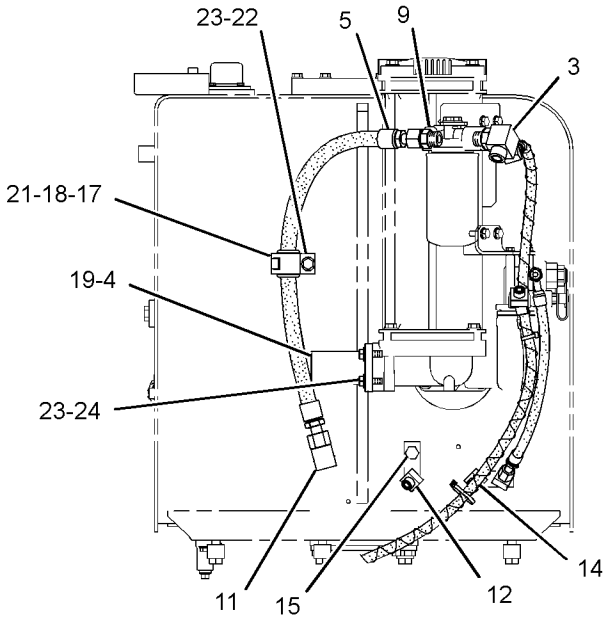

REAR VIEW

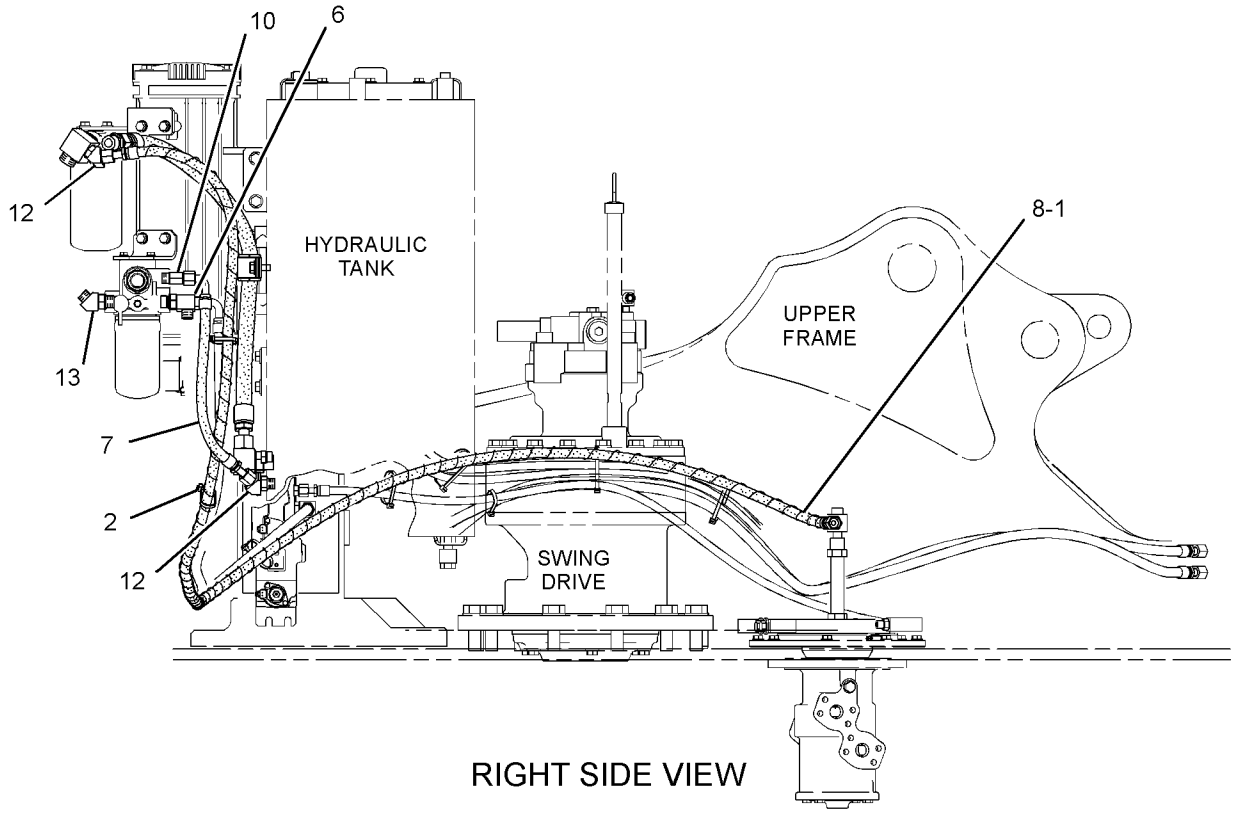

RIGHT SIDE VIEW

GRAPHIC #1 **<END>** g02140028

373-1118 LINES GP-STICK CYLINDER

S/N: FKK1-UP; DNP1-UP

PART OF 373-1108 CYLINDER & LINES GP-STICK

AN ATTACHMENT

SMCS-5458 **i04925076**

NOTE	REF NO	GRAPHIC REF	PART NUMBER	QTY	PART NAME 1 2 3 4 5 6 (PRODUCT LEVEL)	SEE PAGE
	1	1	**394-6123**	1	TUBE AS	
	2	1	**394-9420**	1	SUPPORT	
	3	1	**394-9421**	1	SUPPORT AS	
	4	1	**399-1962**	1	CLAMP	
	5	1	**1P-3704**	1	SEAL-RECTANGULAR	
M	6	1	**8T-4196**	2	BOLT (M10X1.5X35-MM)	
	7	1	**8T-4223**	5	WASHER-HARD (13.5X25.5X3-MM THK)	
M	8	1	**8T-4648**	4	BOLT (M12X1.75X70-MM)	
	9	1	**8T-4896**	2	WASHER-HARD (10.2X18.5X2.5-MM THK)	
M	10	1	**8T-4910**	1	BOLT (M12X1.75X60-MM)	

M - METRIC PART

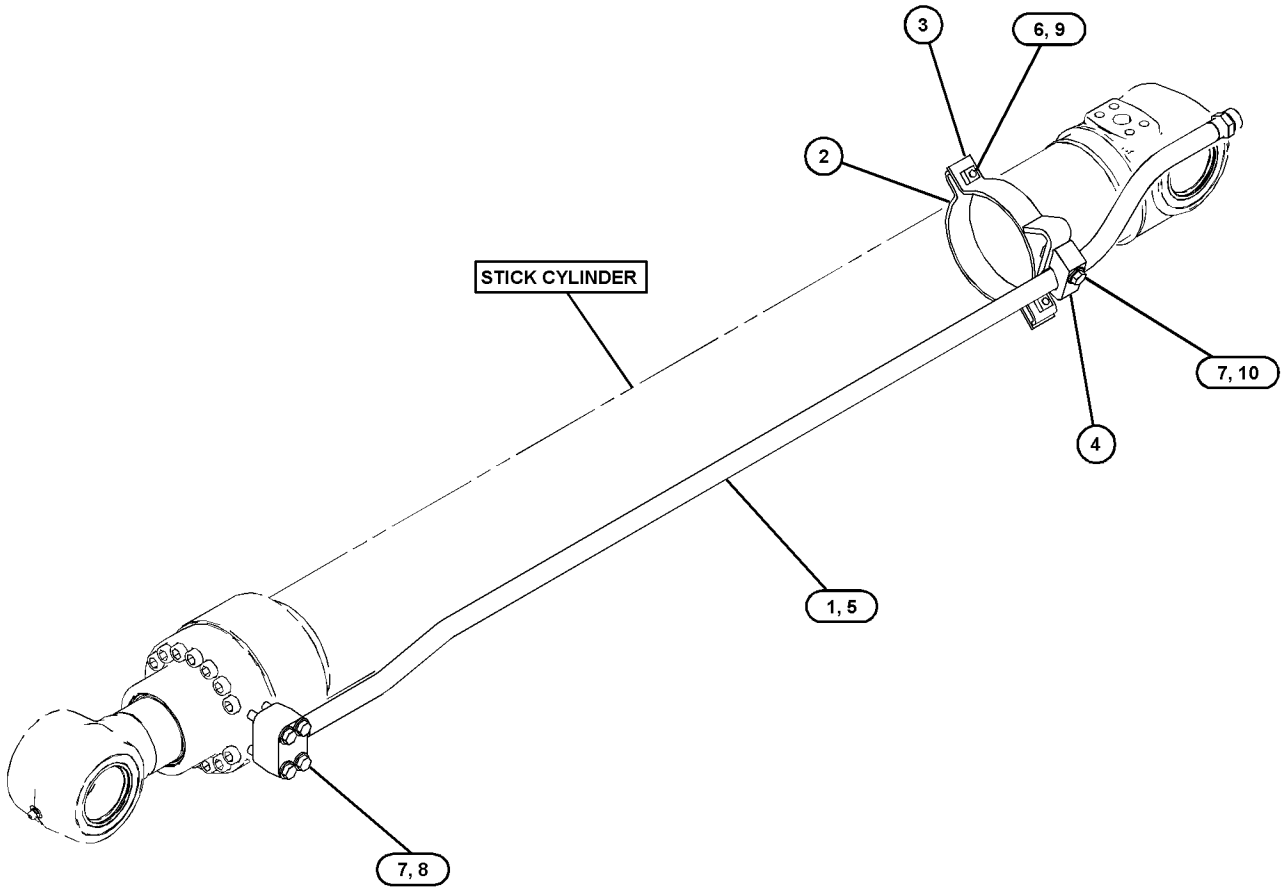

GRAPHIC #1 **<END>** g03110916

239-1716 LINES GP-TRAVEL MOTOR

S/N: FKK1-UP; DNP1-UP
PART OF 387-9125 FRAME AR-UNDERCARRIAGE
ALSO AN ATTACHMENT

SMCS-5057, 5058 **i04915669**

NOTE	REF NO	GRAPHIC REF	PART NUMBER	QTY	PART NAME 1 2 3 4 5 6 (PRODUCT LEVEL)	SEE PAGE
	1	2	**7K-1181**	4	STRAP-CABLE	
	2	2	**108-7118**	4	GROMMET	
I	3	2	**111-6752**	2	HOSE AS	
Y	4	2	**234-4440**	1	SWIVEL GP	311
I	5	2	**245-5427**	4	HOSE AS	
I	6	2	**4I-3573**	2	HOSE AS	
	7	2	*148-8364*	2	ELBOW AS	
					(EACH INCLUDES)	
		2	**3K-0360**	1	SEAL-O-RING	
		2	**6V-8398**	1	SEAL-O-RING	
		2	**6V-8625**	1	ELBOW	
	9	2	*148-8378*	2	ELBOW AS	
					(EACH INCLUDES)	
		2	**3J-1907**	1	SEAL-O-RING	
		2	**6V-8397**	1	SEAL-O-RING	
		2	**6V-8724**	1	ELBOW	
	10	2	*164-6872*	1	TEE AS	
		2	**2M-9780**	1	SEAL-O-RING	
		2	**6V-8398**	2	SEAL-O-RING	
		2	**115-8634**	1	TEE-O-RING	
	11	2	*150-4044*	2	CONNECTOR AS	
					(EACH INCLUDES)	
		2	**3J-1907**	1	SEAL-O-RING	
		2	**6V-8397**	1	SEAL-O-RING	
		2	**8T-1779**	1	CONNECTOR	
	12	2	**1P-3703**	8	SEAL-RECTANGULAR	
	13	2	**6V-0400**	24	FLANGE-HALF	
	14	2	**8T-4121**	6	WASHER-HARD (11X21X2.5-MM THK)	
M	15	2	**8T-4136**	6	BOLT (M10X1.5X25-MM)	
M	16	2	**8T-4184**	48	BOLT (M12X1.75X45-MM)	
	17	2	**8T-4223**	48	WASHER-HARD (13.5X25.5X3-MM THK)	
B	18	2	**1U-8846**		SEALANT-GASKET	

B - USE AS REQUIRED
I - REFER TO HYDRAULIC INFORMATION SYSTEM
M - METRIC PART
Y - SEPARATE ILLUSTRATION

239-1716 **LINES GP-TRAVEL MOTOR (*contd.*)** **i04915669**

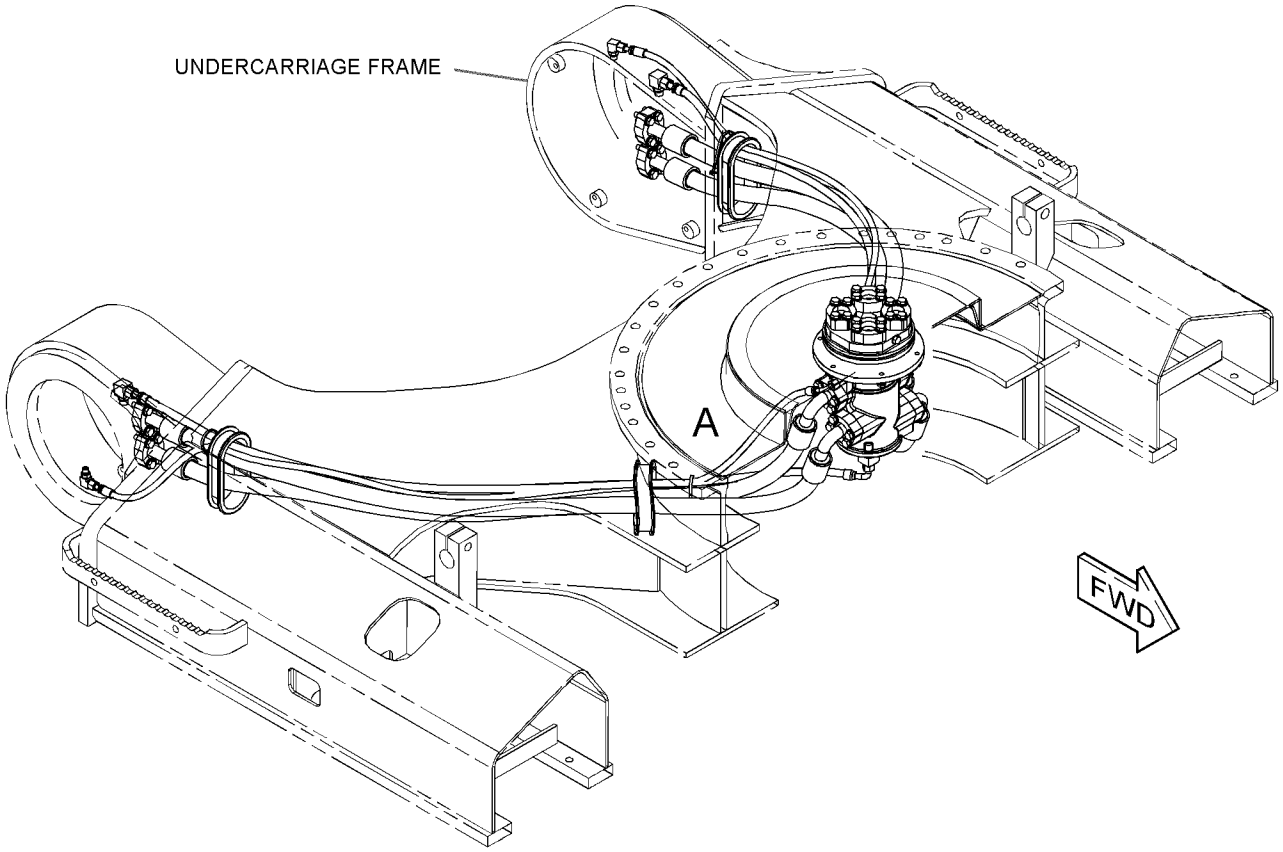

REFER TO ALL ILLUSTRATIONS OF
THIS GROUP FOR AUXILIARY VIEWS

GRAPHIC #1 g02728073

239-1716 **LINES GP-TRAVEL MOTOR (*contd.*)** **i04915669**

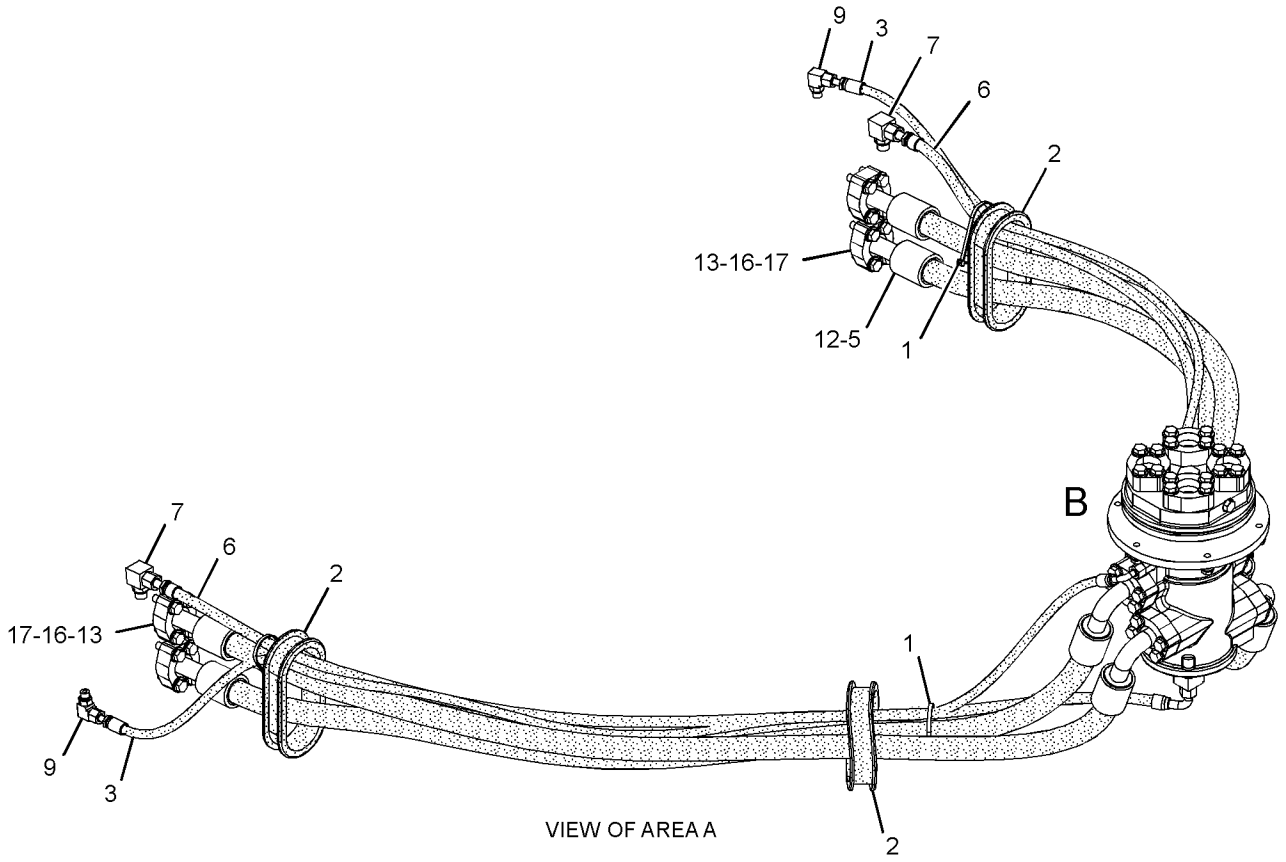

VIEW OF AREA A

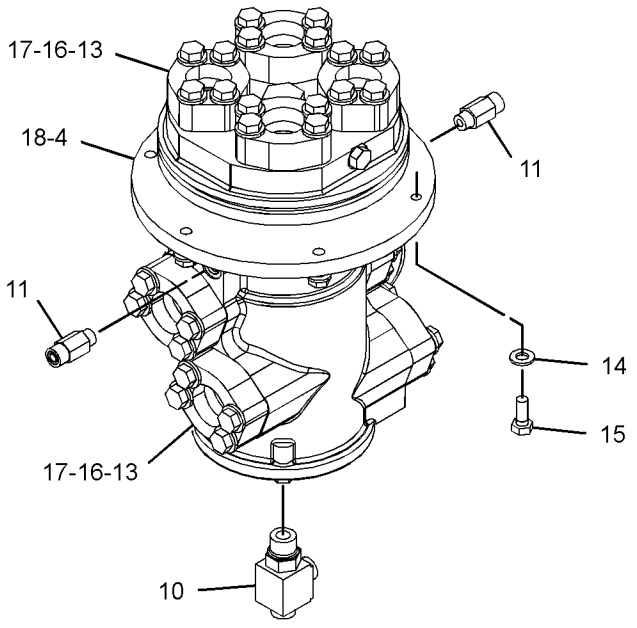

VIEW OF AREA B

GRAPHIC #2 **<END>** g02728075

239-1717 LINES GP-TRAVEL MOTOR—LONG UNDERCARRIAGE

S/N: DNP1-UP
PART OF 432-5008 FRAME AR-UNDERCARRIAGE
AN ATTACHMENT

SMCS-5057, 5058 **i05268794**

NOTE	REF NO	GRAPHIC REF	PART NUMBER	QTY	PART NAME 1 2 3 4 5 6 (PRODUCT LEVEL)	SEE PAGE
	1	1	**7K-1181**	4	STRAP-CABLE	
I	2	2	**7Y-4390**	2	HOSE AS	
	3	1	**108-7118**	4	GROMMET	
CI	4	2	**124-1266**	2	HOSE AS	
Y	5	2	**234-4440**	1	SWIVEL GP	311
I	6	1	**245-5416**	4	HOSE AS	
	7	2	*148-8364*	2	ELBOW AS	
					(EACH INCLUDES)	
		2	**3K-0360**	1	SEAL-O-RING	
		2	**6V-8398**	1	SEAL-O-RING	
		2	**6V-8625**	1	ELBOW	
C	8	2	*164-6872*	1	TEE AS	
		2	**2M-9780**	1	SEAL-O-RING	
		2	**6V-8398**	1	SEAL-O-RING	
		2	**115-8634**	1	TEE-O-RING	
	9	2	*148-8378*	2	ELBOW AS	
					(EACH INCLUDES)	
		2	**3J-1907**	1	SEAL-O-RING	
		2	**6V-8397**	1	SEAL-O-RING	
		2	**6V-8724**	1	ELBOW	
	11	2	*150-4044*	2	CONNECTOR AS	
					(EACH INCLUDES)	
		2	**3J-1907**	1	SEAL-O-RING	
		2	**6V-8397**	1	SEAL-O-RING	
		2	**8T-1779**	1	CONNECTOR	
	12	1	**1P-3703**	8	SEAL-RECTANGULAR	
	13	2	**6V-0400**	24	FLANGE-HALF	
	14	2	**8T-4121**	6	WASHER-HARD (11X21X2.5-MM THK)	
M	15	2	**8T-4136**	6	BOLT (M10X1.5X25-MM)	
M	16	2	**8T-4184**	48	BOLT (M12X1.75X45-MM)	
	17	2	**8T-4223**	48	WASHER-HARD (13.5X25.5X3-MM THK)	
	18	2	**1U-8846**	1	SEALANT-GASKET	

C - CHANGE FROM PREVIOUS TYPE
I - REFER TO HYDRAULIC INFORMATION SYSTEM
M - METRIC PART
Y - SEPARATE ILLUSTRATION

239-1717 **LINES GP-TRAVEL MOTOR (*contd.*)** **i05268794**

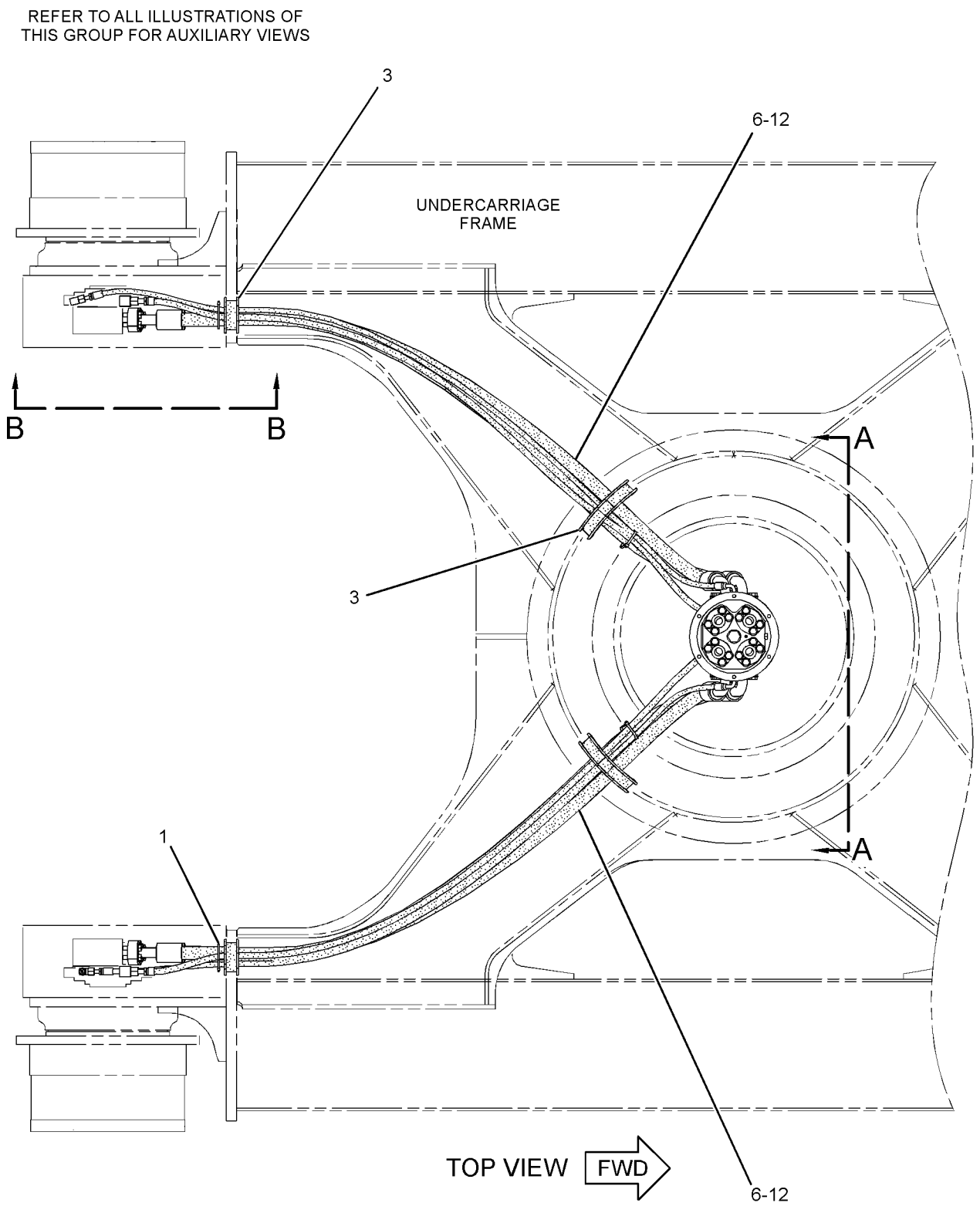

GRAPHIC #1 g02734650

239-1717 **LINES GP-TRAVEL MOTOR (*contd.*)** **i05268794**

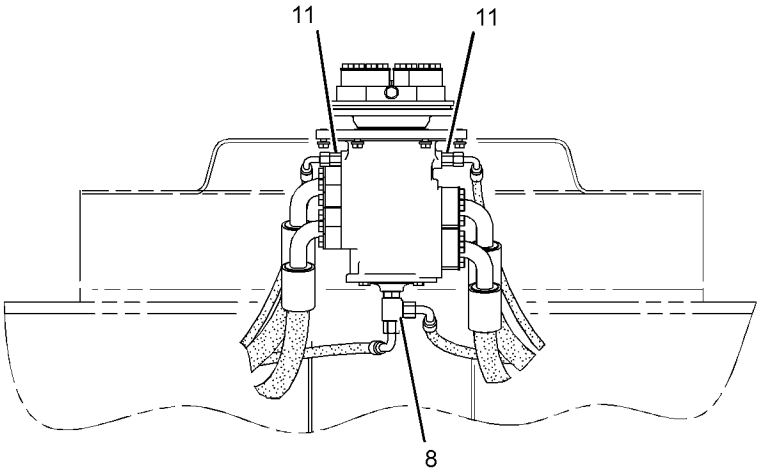

VIEW A-A

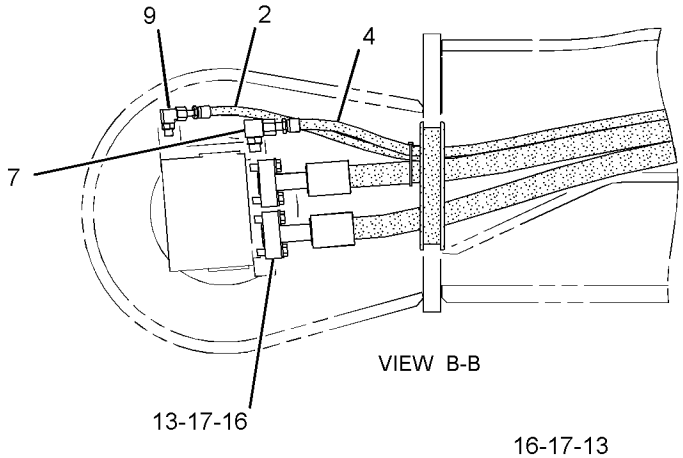

VIEW B-B

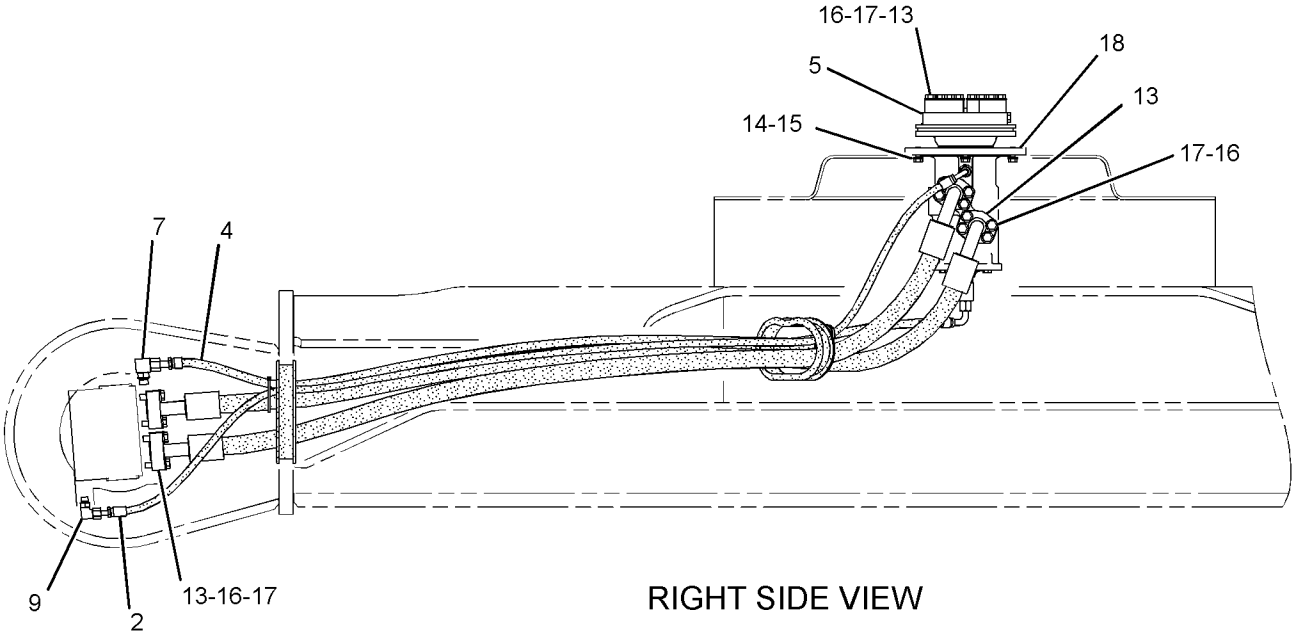

RIGHT SIDE VIEW

GRAPHIC #2 **<END>** g02734651

215-5037 MANIFOLD GP-CONTROL–PILOT OIL SUPPLY

S/N: FKK1-UP; DNP1-UP

PART OF 376-6310 LINES GP-PILOT

SMCS-5264 **i04916876**

NOTE	PART NUMBER	QTY	PART NAME 1 2 3 4 5 6 (PRODUCT LEVEL)	SEE PAGE
Y	*239-8998*	1	MANIFOLD GP-CONTROL (PILOT OIL SUPPLY) (STEEL BODY)	292
			-OR-	
Y	*239-8697*	1	MANIFOLD GP-CONTROL (PILOT OIL SUPPLY) (ALUMINUM BODY)	291

Y - SEPARATE ILLUSTRATION

<END>

239-8697 MANIFOLD GP-CONTROL—PILOT OIL SUPPLY

S/N: FKK1-UP; DNP1-UP
ALUMINUM BODY
PART OF 215-5037 MANIFOLD GP-CONTROL

SMCS-5264 **i04916886**

NOTE	REF NO	GRAPHIC REF	PART NUMBER	QTY	PART NAME 1 2 3 4 5 6 (PRODUCT LEVEL)	SEE PAGE
Y	1	1	**121-1491**	1	VALVE GP-SOLENOID (SWING BRAKE RELEASE)	353
Y	1A	1	**121-1491**	1	VALVE GP-SOLENOID (HYDRAULIC LOCKOUT)	353
Y	1B	1	**121-1491**	1	VALVE GP-SOLENOID (TRAVEL SPEED)	353
	4	1	**197-0196**	1	VALVE-CHECK	
	5	1	**197-0199**	1	SPRING	
	6	1	**197-0273**	1	SPRING	
	7	1	**9S-8005**	4	PLUG-O-RING	
	8	1	**3J-1907**	1	SEAL-O-RING	
	9	1	**3K-0360**	4	SEAL-O-RING	
M	11	1	**7I-2272**	6	BOLT (M5X0.8X12-MM)	
	12	1	*225-4818*	6	PLUG AS	
					(EACH INCLUDES)	
		1	**4J-7533**	1	SEAL-O-RING	
		1	**225-4804**	1	PLUG	
	13	1	**9S-8004**	1	PLUG-O-RING	

M - METRIC PART
Y - SEPARATE ILLUSTRATION

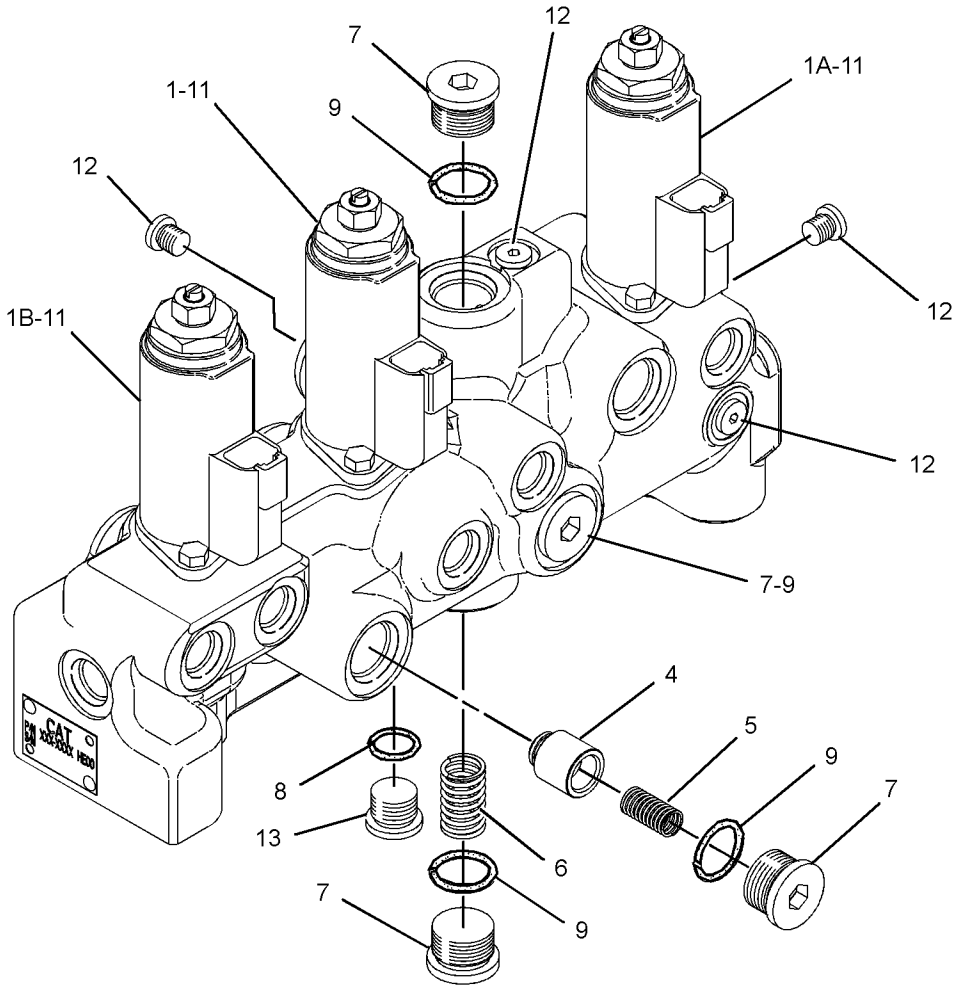

GRAPHIC #1 **<END>** g02345260

239-8998 MANIFOLD GP-CONTROL–PILOT OIL SUPPLY

S/N: FKK1-UP; DNP1-UP
STEEL BODY
PART OF 215-5037 MANIFOLD GP-CONTROL

SMCS-5264 **i04917411**

NOTE	REF NO	GRAPHIC REF	PART NUMBER	QTY	PART NAME 1 2 3 4 5 6 (PRODUCT LEVEL)	SEE PAGE
Y	1	1	**121-1491**	1	VALVE GP-SOLENOID (SWING BRAKE RELEASE)	353
Y	1A	1	**121-1491**	1	VALVE GP-SOLENOID (HYDRAULIC LOCKOUT)	353
Y	1B	1	**121-1491**	1	VALVE GP-SOLENOID (TRAVEL SPEED)	353
	2	1	**7M-7410**	2	PLUG-PIPE	
	3	1	**8T-6759**	6	PLUG-PIPE	
	4	1	**197-0196**	1	VALVE-CHECK	
	5	1	**9S-8005**	3	PLUG-O-RING	
	6	1	**197-0199**	1	SPRING	
	7	1	**197-0273**	1	SPRING	
	8	1	**3K-0360**	3	SEAL-O-RING	
M	9	1	**7I-2272**	6	BOLT (M5X0.8X12-MM)	

M - METRIC PART
Y - SEPARATE ILLUSTRATION

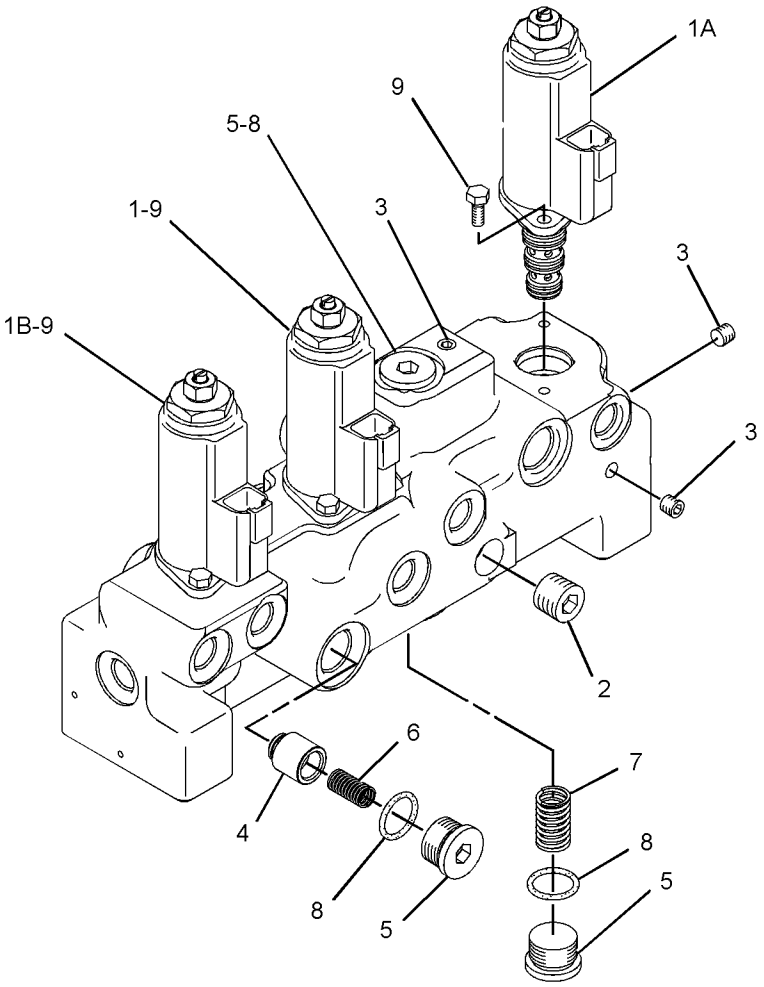

GRAPHIC #1 **<END>** g03089517

158-8985 MOTOR & MTG GP-SWING

S/N: FKK1-UP; DNP1-UP
PART OF 148-4679 DRIVE GP-SWING

SMCS-5058 **i04912495**

NOTE	REF NO	GRAPHIC REF	PART NUMBER	QTY	PART NAME 1 2 3 4 5 6 (PRODUCT LEVEL)	SEE PAGE
YR	1	1	**334-9968**	1	MOTOR GP-SWING	295
	2	1	**6V-5200**	1	RING-RETAINING	
M	3	1	**7X-2558**	16	BOLT (M16X2X150-MM)	
	4	1	**9X-8257**	16	WASHER (17.5X30X3.5-MM THK)	
	5	1	**352-7063**	2	CAP	

M - METRIC PART
R - REMFG PART MAY BE AVAILABLE
Y - SEPARATE ILLUSTRATION

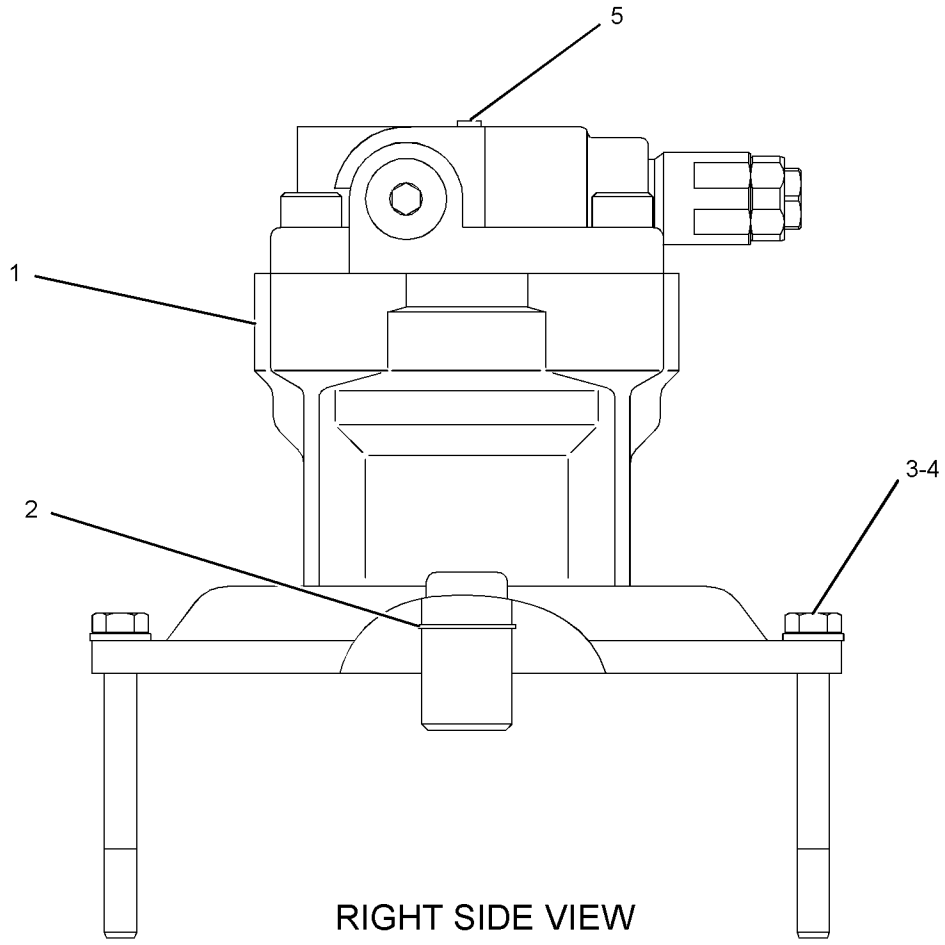

RIGHT SIDE VIEW

GRAPHIC #1 **<END>** g02521782

215-9982 MOTOR & MTG GP-TRAVEL

S/N: FKK1-UP; DNP1-UP

PART OF 353-0646 DRIVE GP-FINAL

SMCS-4351 **i04912645**

NOTE	REF NO	GRAPHIC REF	PART NUMBER	QTY	PART NAME 1 2 3 4 5 6 (PRODUCT LEVEL)	SEE PAGE
YR	1	1	**209-5992**	1	MOTOR GP-TRAVEL	298
Y	2	1	**360-4598**	1	VALVE GP-TRAVEL COUNTERBALANCE	355
M	3	1	**095-0707**	3	BOLT (M16X2X120-MM)	
M	4	1	**3E-6910**	6	BOLT-SOCKET HEAD (M12X1.75X70-MM)	
	5	1	**095-1685**	1	SEAL-O-RING	

M - METRIC PART
R - REMFG PART MAY BE AVAILABLE
Y - SEPARATE ILLUSTRATION

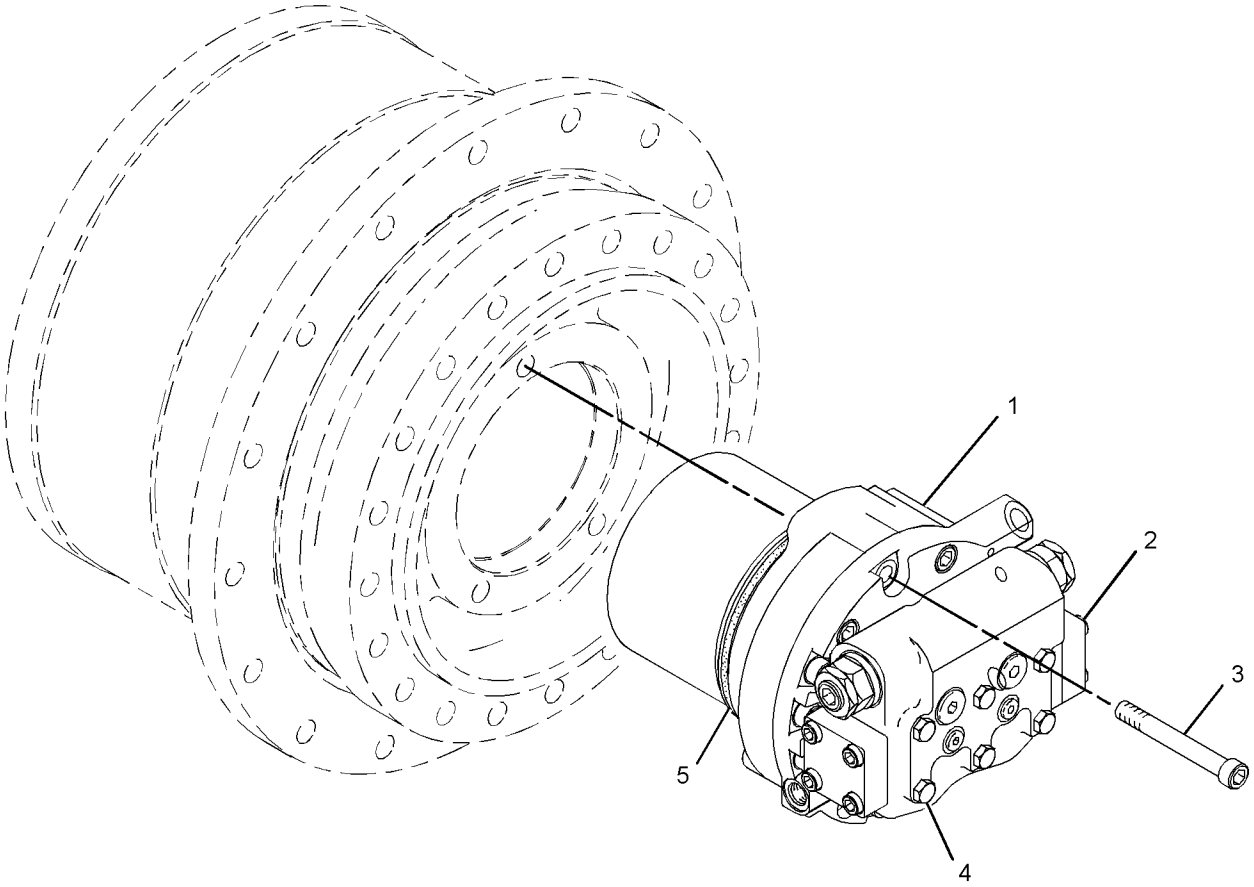

GRAPHIC #1 **<END>** g01959826

334-9968 MOTOR GP-SWING*R

S/N: FKK1-UP; DNP1-UP

PART OF 158-8985 MOTOR & MTG GP-SWING

SMCS-5058 **i04913373**

NOTE	REF NO	GRAPHIC REF	PART NUMBER	QTY	PART NAME 1 2 3 4 5 6 (PRODUCT LEVEL)	SEE PAGE
Y	1	1	**173-3452**	2	VALVE GP-RELIEF (SWING MOTOR)	343
Y	2	1	**334-9976**	1	MOTOR GP-SWING	296

Y - SEPARATE ILLUSTRATION

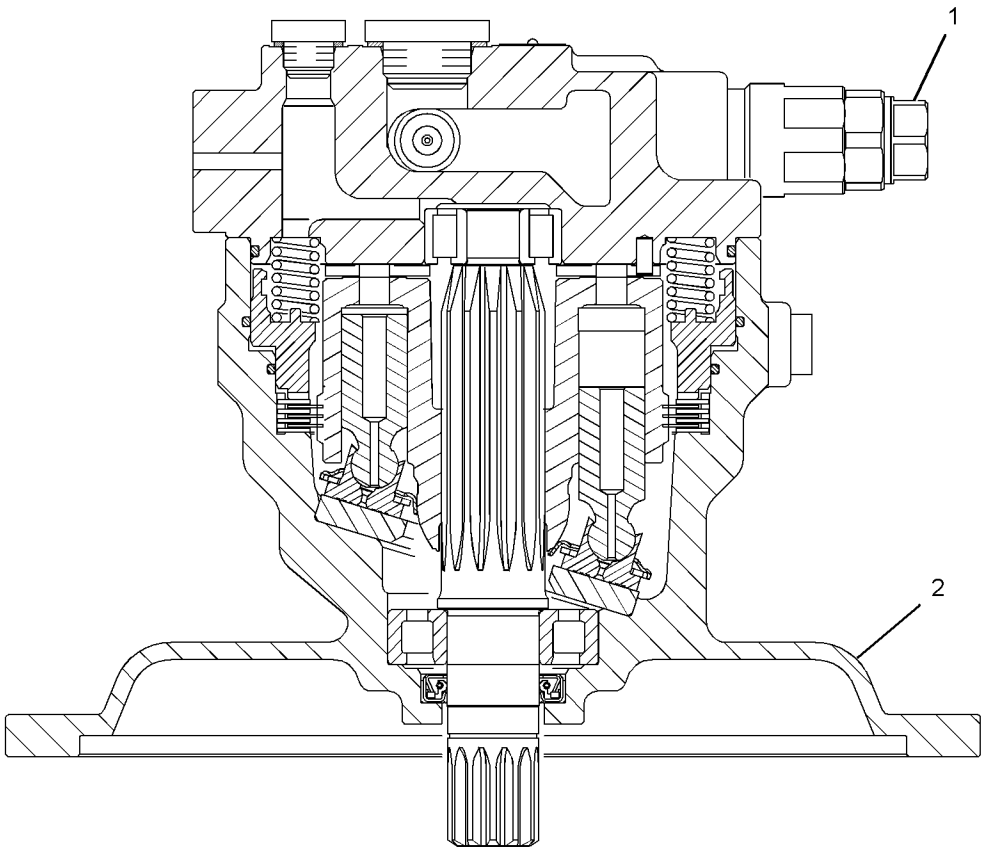

GRAPHIC #1 **<END>** g01793555

334-9976 MOTOR GP-SWING

S/N: FKK1-UP; DNP1-UP

PART OF 334-9968 MOTOR GP-SWING

SMCS-5058 **i04965689**

NOTE	REF NO	GRAPHIC REF	PART NUMBER	QTY	PART NAME 1 2 3 4 5 6 (PRODUCT LEVEL)	SEE PAGE
	1	1	**122-5318**	1	BEARING	
	2	1	**173-3444**	1	PLATE	
	3	1	**334-9981**	1	PISTON AS-PUMP	
	4	1	**173-3443**	1	PLATE	
	5	1	**173-3441**	1	BARREL	
J	6	1	**5I-8426**	1	SEAL-O-RING	
J	7	1	**5I-8417**	1	SEAL-O-RING	
	8	1	**177-2584**	1	PISTON-BRAKE	
J	9	1	**5I-8623**	1	SEAL-O-RING	
	10	1	**126-2055**	20	SPRING	
	11	1	**173-3439**	1	HEAD GP-MOTOR	
		1	**095-0882**	2	PIN-SPRING	
	12	1	**173-3445**	1	PLATE-VALVE	
	13	1	**110-5525**	2	PLUG	
J	14	1	**3J-1907**	2	SEAL-O-RING	
	15	1	**5I-8625**	1	BEARING	
	16	1	**173-3451**	4	PLATE-SEPARATOR	
	17	1	**173-3450**	3	PLATE-FRICTION	
	18	1	**173-3442**	1	SPRING	
	19	1	**191-5543**	1	BODY	
	20	1	**173-3440**	1	SHAFT	
	21	1	**173-3447**	1	SEAL-OIL	
	22	1	**094-1900**	2	PLUG	
	23	1	**095-1595**	2	SEAL-O-RING	
	24	1	**7Y-4268**	2	SPRING	
	25	1	**7Y-4267**	2	VALVE	
M	26	1	**7Y-5221**	4	BOLT-SOCKET HEAD (M20X2.5X45-MM)	
					AVAILABLE REPAIR KIT(S):	
J			**173-3454**	1	KIT-SEAL (SWING MOTOR)	

J - KIT MARKED J SERVICES PART(S) MARKED J
M - METRIC PART

334-9976 **MOTOR GP-SWING (*contd.*)** **i04965689**

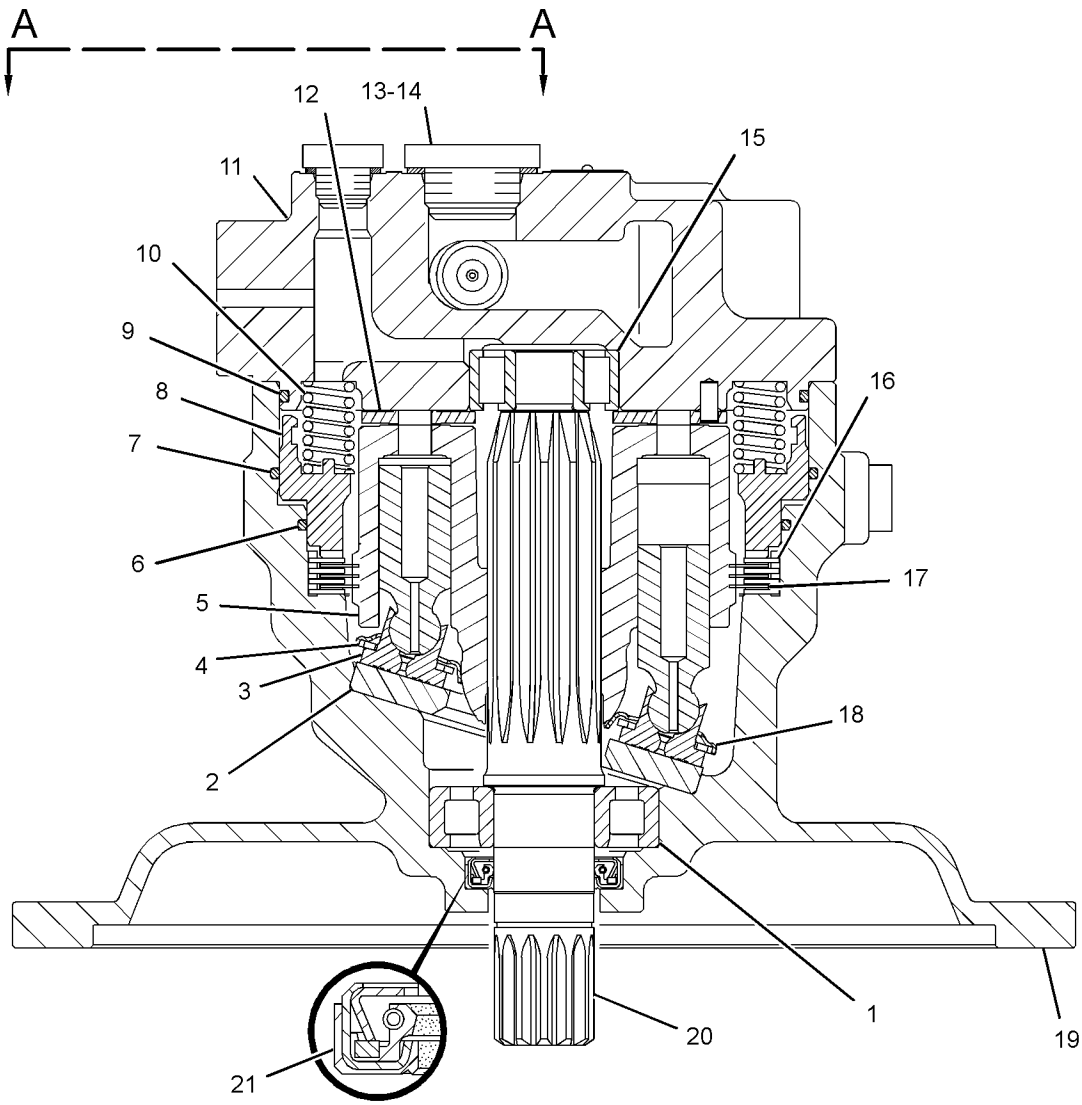

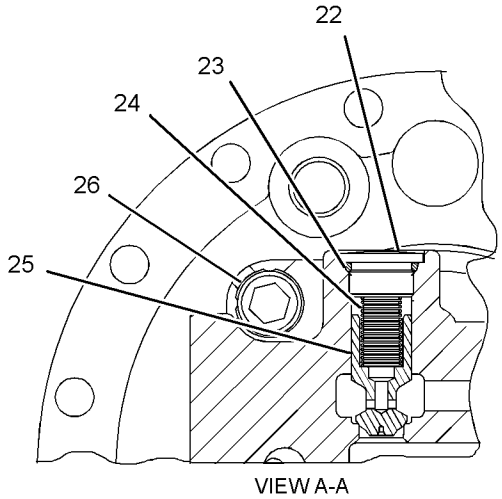

VIEW A-A

GRAPHIC #1 **<END>** g01793353

209-5992 MOTOR GP-TRAVEL*R

S/N: FKK1-UP; DNP1-UP

PART OF 215-9982 MOTOR & MTG GP-TRAVEL

SMCS-4351, 5058

i04912648

NOTE	REF NO	GRAPHIC REF	PART NUMBER	QTY	PART NAME 1 2 3 4 5 6 (PRODUCT LEVEL)	SEE PAGE
	1	1	**7Y-4202**	1	HEAD	
	2	2	**7Y-4212**	1	BEARING	
	3	2	**7Y-4213**	1	PISTON-BRAKE	
	4	1	**7Y-4215**	1	SPACER	
	5	2	**7Y-4216**	1	SPOOL	
	6	2	**7Y-4224**	2	ORIFICE	
	7	2	**087-4742**	1	VALVE	
	8	1	**087-4743**	2	STOP	
	9	2	**087-4786**	1	ADAPTER	
	10	2	**094-1399**	1	RING-RETAINING	
L	11	2	**094-1882**	1	PLUG	
	12	1	**095-7378**	1	WASHER SET	
	13	2	**095-7380**	1	SPRING	
	14	2	**095-7382**	1	RETAINER	
	15	2	**096-1519**	1	SEAT	
B	16	1	**096-1521**	1	SHIM (1-MM THK)	
B	17	1	**096-1522**	1	SHIM (2-MM THK)	
	18	2	**096-1523**	1	GUIDE-PISTON	
B	19	1	**096-3785**	1	SHIM (1.2-MM THK)	
B	20	1	**096-3786**	1	SHIM (1.4-MM THK)	
B	21	1	**096-3787**	1	SHIM (1.6-MM THK)	
B	22	1	**096-3788**	1	SHIM (1.8-MM THK)	
	23	2	**096-3978**	1	SPRING	
	24	1	**096-4003**	1	SET-BEARING	
J	25	2	**096-4376**	1	SEAL-LIP TYPE	
	26	2	**096-5915**	2	RETAINER	
	27	2	**107-6954**	4	PLATE-FRICTION	
	28	2	**107-6955**	5	PLATE-SEPARATOR	
	29	1	**107-6969**	1	BODY	
	30	1	**118-4057**	9	SPRING	
	31	1	**122-5114**	1	GUIDE-BALL	
	32	2	**123-2008**	2	KEY	
	33	1	**133-6777**	1	BARREL AS	
	34	1	**147-5860**	1	PISTON AS	
	35	1	**209-5894**	1	SHAFT	
	36	1	**209-5909**	1	PLATE-CAM	
	38	1	**346-1340**	2	PISTON	
	39	1	**094-1875**	1	DOWEL	
	40	2	**094-1882**	10	PLUG	
J	41	2	**095-1572**	2	SEAL-O-RING	
J	42	2	**095-1575**	3	SEAL-O-RING	
J	43	2	**095-1585**	1	SEAL-O-RING	
J	44	1	**095-1586**	2	SEAL-O-RING	
	46	2	**095-1700**	2	SEAL-O-RING	
J	47	2	**095-7383**	1	SEAL-O-RING	
J	48	2	**095-7384**	1	SEAL-O-RING	
J	49	2	**095-7386**	1	RING-BACKUP	
J	50	2	**095-7387**	1	RING	
J	52	2	**096-4377**	2	SEAL-O-RING	
J	53	2	**096-4378**	1	RING-BACKUP	
	54	2	**096-5916**	2	SEAT	
J	55	2	**096-5919**	2	RING-BACKUP	
	56	2	**121-1558**	2	PIN	
	57	2	**2D-6642**	2	BALL	
J	58	2	**2M-9780**	1	SEAL-O-RING	
J	59	1	**3K-0360**	1	SEAL-O-RING	
J	60	1	**7Y-4217**	2	RING-BACKUP	
M	61	1	**8T-4944**	10	BOLT-SOCKET HEAD (M16X2X40-MM)	
	62	1	**9S-4185**	1	PLUG-O-RING	

209-5992 **MOTOR GP-TRAVEL (*contd.*)** **i04912648**

NOTE	REF NO	GRAPHIC REF	PART NUMBER	QTY	PART NAME 1 2 3 4 5 6 (PRODUCT LEVEL)	SEE PAGE
					AVAILABLE REPAIR KIT(S):	
J			**7Y-4222**	1	KIT-SEAL (TRAVEL MOTOR)	

B - USE AS REQUIRED
J - KIT MARKED J SERVICES PARTS MARKED J
L - NOT REQUIRED FOR OPTIONAL BODY DESIGN
M - METRIC PART

209-5992 **MOTOR GP-TRAVEL (*contd.*)** **i04912648**

REFER TO ALL ILLUSTRATIONS OF
THIS GROUP FOR AUXILIARY VIEWS

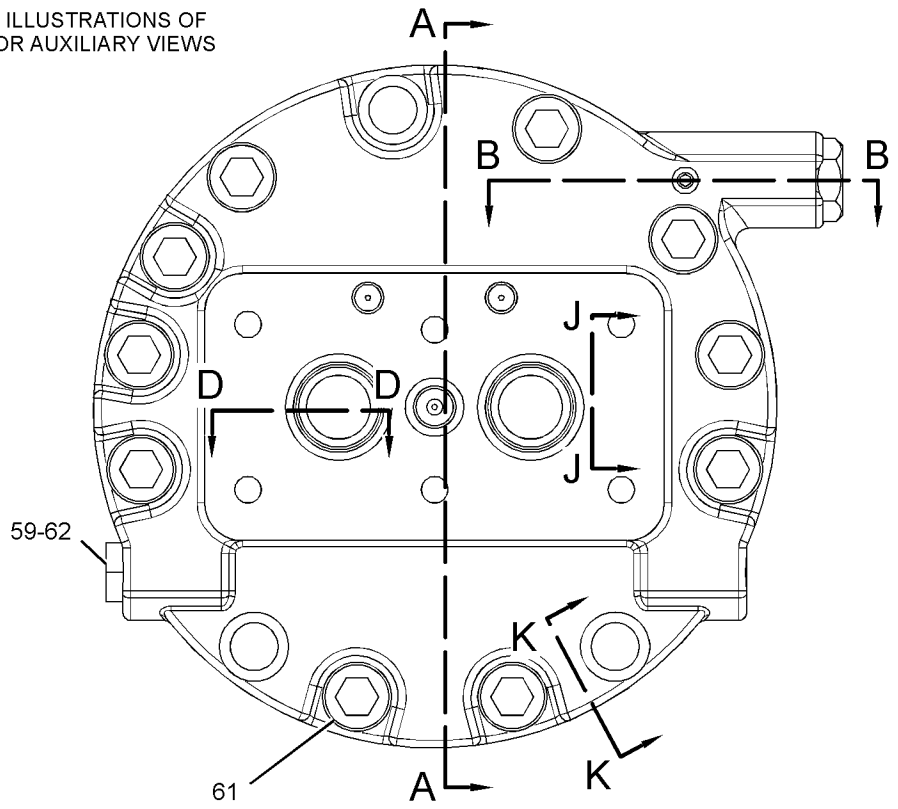

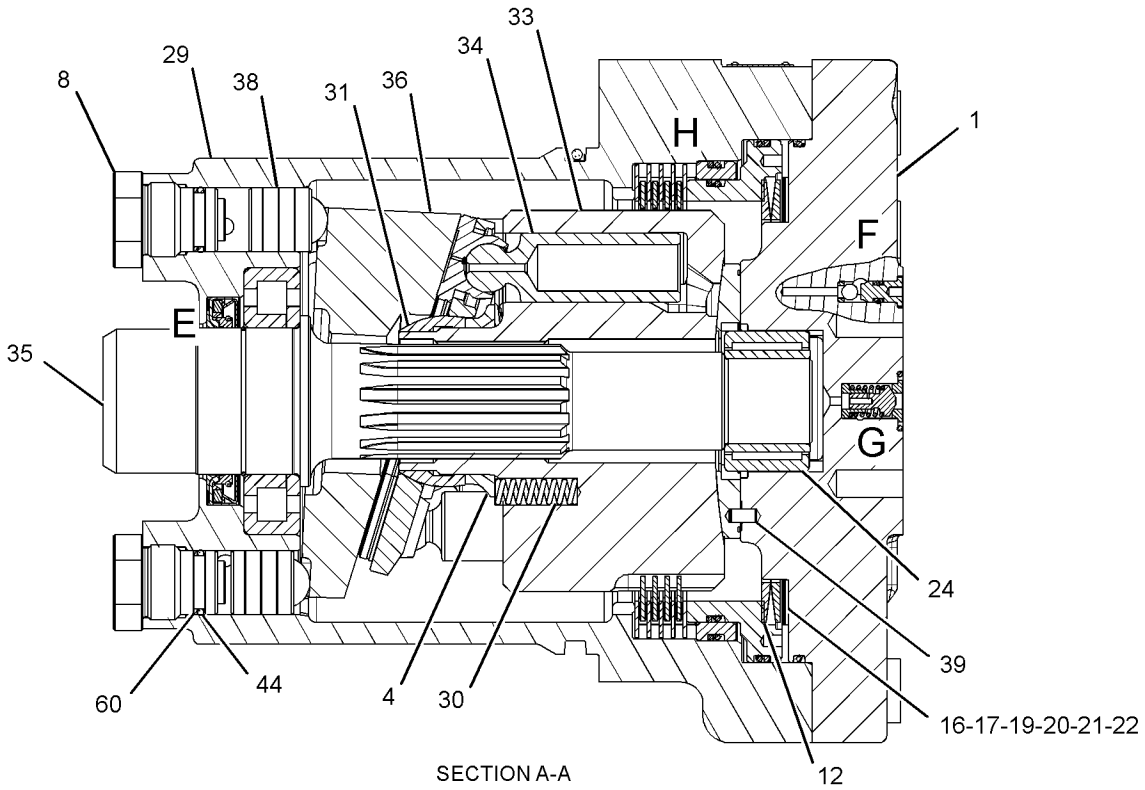

SECTION A-A

GRAPHIC #1

g02354280

209-5992 **MOTOR GP-TRAVEL (*contd.*)** **i04912648**

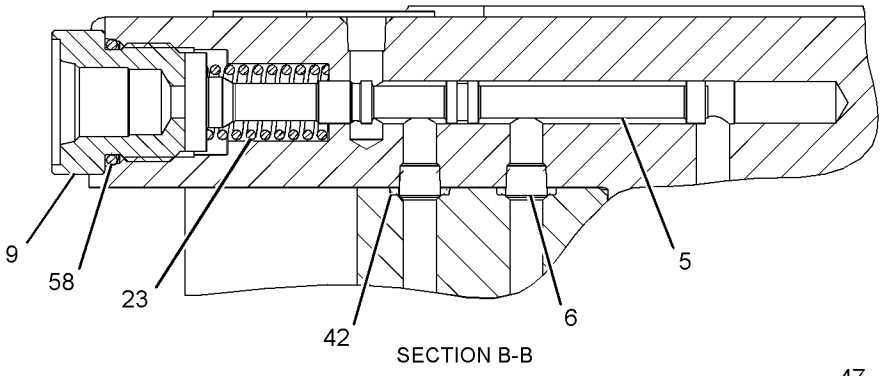

SECTION B-B

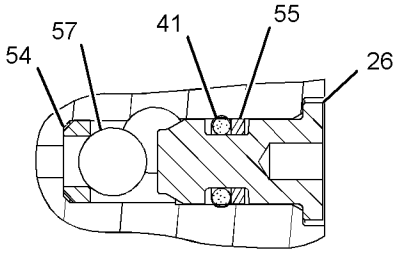

VIEW OF AREA F

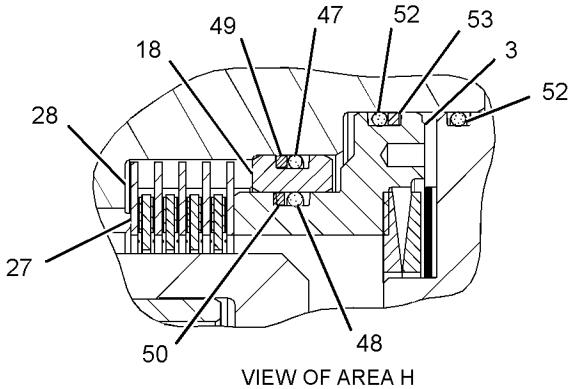

VIEW OF AREA H

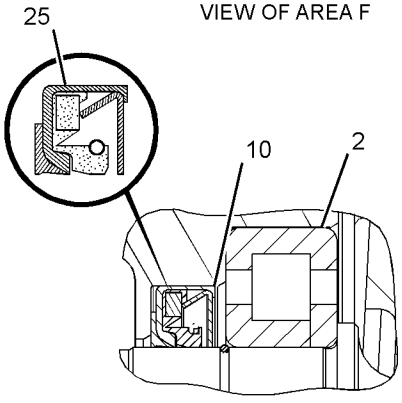

VIEW OF AREA E

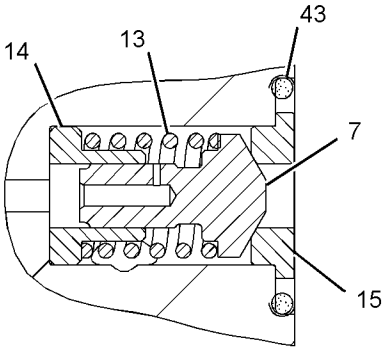

VIEW OF AREA G

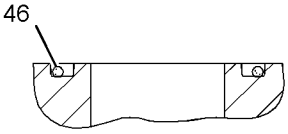

SECTION D-D

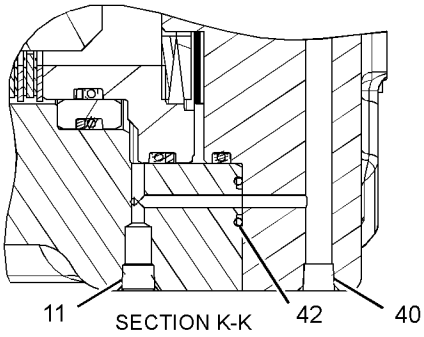

SECTION K-K

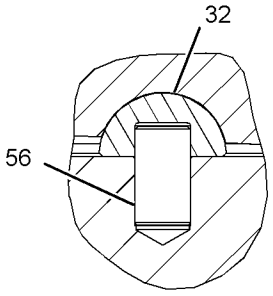

SECTION J-J

GRAPHIC #2 **<END>** g01196115

260-7868 MOUNTING GP-MAIN CONTROL VALVE

S/N: FKK1-UP; DNP1-UP
PART OF 421-6946 HYDRAULIC AR

SMCS-5051 **i04917050**

NOTE	REF NO	GRAPHIC REF	PART NUMBER	QTY	PART NAME 1 2 3 4 5 6 (PRODUCT LEVEL)	SEE PAGE
	1	1	**260-7904**	1	SUPPORT AS	
	2	1	**260-7906**	1	SUPPORT AS	
M	3	1	**100-3866**	8	BOLT-SELF-LOCKING (M16X2X40-MM)	
	4	1	**9X-8257**	4	WASHER (17.5X30X3.5-MM THK)	
	5	1	**196-0711**	4	WASHER (17X40X8-MM THK)	

M - METRIC PART

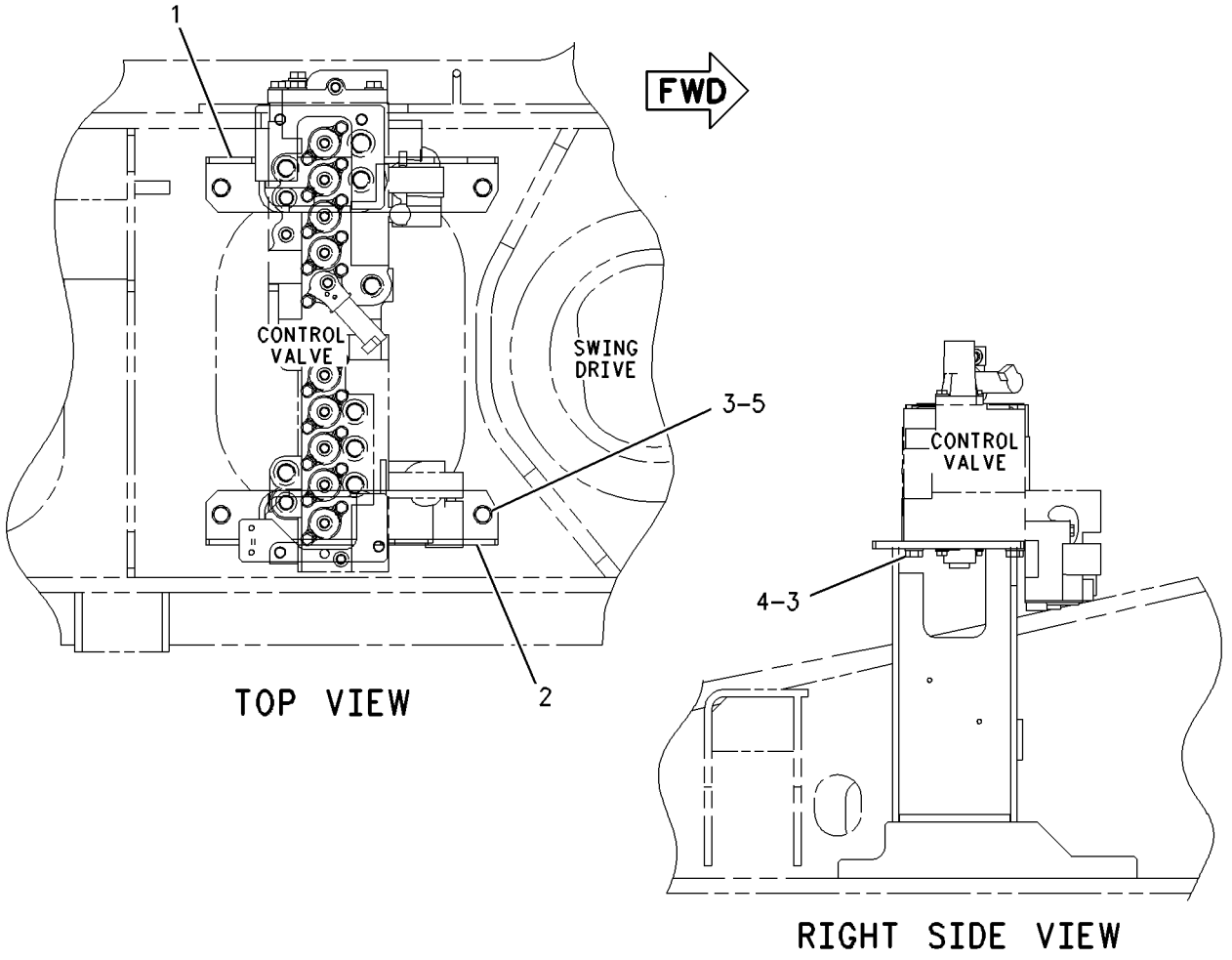

GRAPHIC #1 **<END>** g00676425

6E-4816 PLUG GP-CONTROL VALVE

S/N: FKK1-UP; DNP1-UP

PART OF 259-7465 VALVE GP-CONTROL

SMCS-5051 **i04916911**

NOTE	PART NUMBER	QTY	PART NAME 1 2 3 4 5 6 (PRODUCT LEVEL)	SEE PAGE
	6E-4793	1	PLUG GP-CONTROL VALVE	
	9J-0705	1	RING-BACKUP	
	033-5879	1	SEAL-O-RING	
	033-6036	1	SEAL-O-RING	
			-OR-	
	6E-2746	1	PLUG GP-CONTROL VALVE	
	6E-2745	1	SEAL-O-RING	
	9T-4506	1	PLUG	
			-OR-	
	106-6248	1	PLUG GP-CONTROL VALVE	
	9T-4506	1	PLUG	
	6E-2745	1	SEAL-O-RING	

<END>

396-1865 PUMP & MTG GP-MAIN HYDRAULIC

S/N: FKK1-UP; DNP1-UP
PART OF 421-6946 HYDRAULIC AR

SMCS-5070 **i05259270**

NOTE	REF NO	GRAPHIC REF	PART NUMBER	QTY	PART NAME 1 2 3 4 5 6 (PRODUCT LEVEL)	SEE PAGE
Y	1	1	*374-6000*	1	COUPLING GP-PUMP	205
Y	2	1	**397-3680**	1	PUMP GP-MAIN HYDRAULIC	306
	3	1	**7X-7729**	12	WASHER (11X25X3-MM THK)	
M	4	1	**8T-4195**	12	BOLT (M10X1.5X30-MM)	

M - METRIC PART
Y - SEPARATE ILLUSTRATION

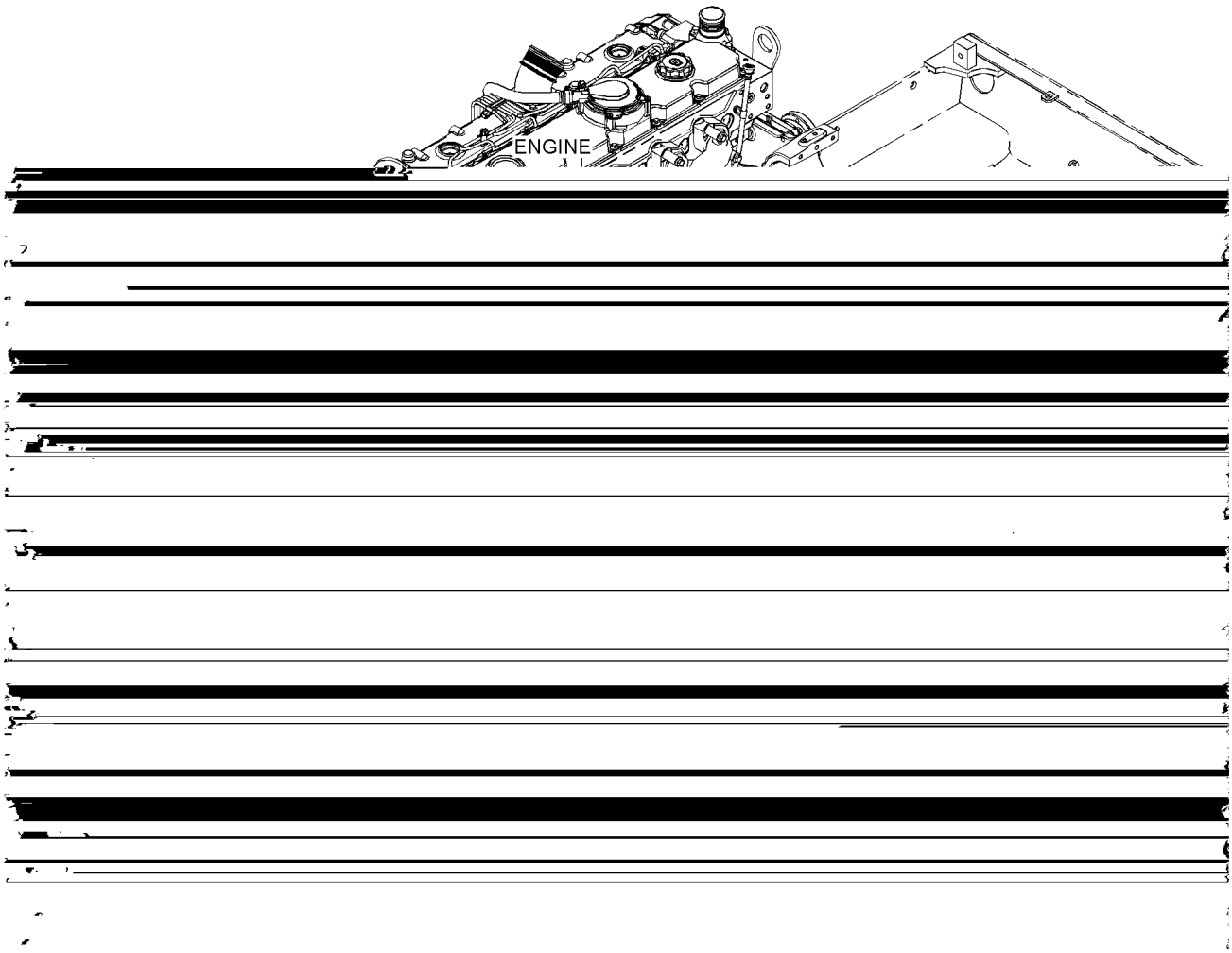

GRAPHIC #1 **<END>** g03303476

341-2860 PUMP GP-GEAR

S/N: FKK1-UP; DNP1-UP

PART OF 397-3680 PUMP GP-MAIN HYDRAULIC

SMCS-5073 **i05259343**

NOTE	REF NO	GRAPHIC REF	PART NUMBER	QTY	PART NAME 1 2 3 4 5 6 (PRODUCT LEVEL)	SEE PAGE
					AVAILABLE REPAIR KIT(S):	
			327-8740	1	KIT-SEAL (GEAR PUMP)	
					(KIT INCLUDES GASKETS, LIP TYPE SEAL, SEAL & RETAINING RING)	

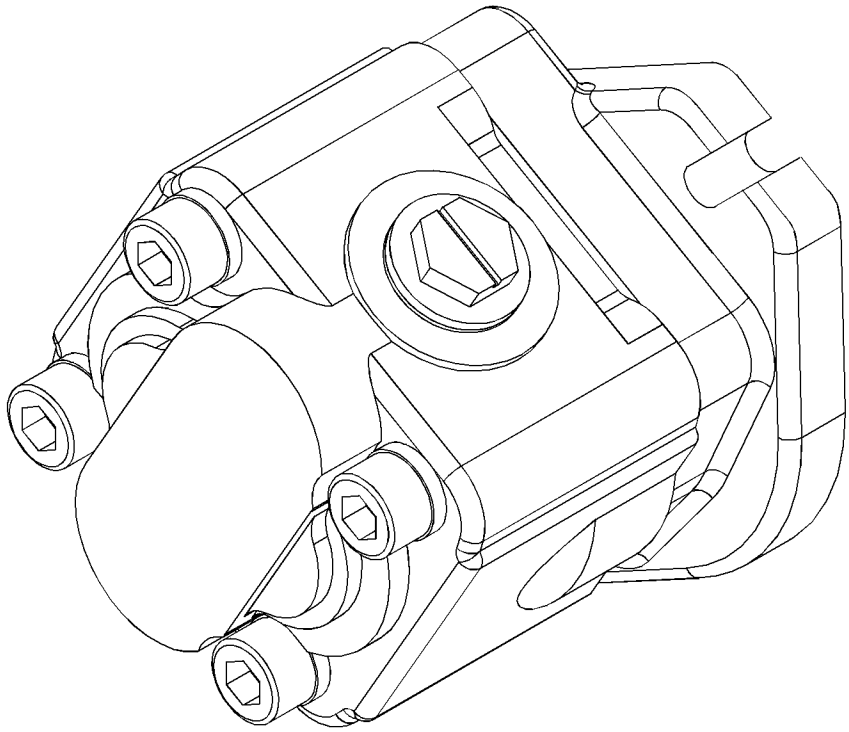

GRAPHIC #1 **<END>** g02484156

397-3680 PUMP GP-MAIN HYDRAULIC

S/N: FKK1-UP; DNP1-UP

PART OF 396-1865 PUMP & MTG GP-MAIN HYDRAULIC

SMCS-5070 **i05259339**

NOTE	REF NO	GRAPHIC REF	PART NUMBER	QTY	PART NAME 1 2 3 4 5 6 (PRODUCT LEVEL)	SEE PAGE
	1	2	**4I-1022**	2	ORIFICE	
	2	2	**7Y-4215**	2	SPACER	
	3	2	**096-3983**	1	RING-RETAINING	
	4	2	**118-4057**	18	SPRING	
	5	2	**129-7853**	2	PLATE-CREEP	
	6	2	**129-7855**	1	GASKET	
	7	1	**129-7857**	1	GASKET	
	8	2	**129-7859**	2	SET-BEARING	
	9	1	**129-7863**	1	COVER	
	10	2	**129-7921**	2	RING-RETAINING	
	11	2	**129-7927**	2	BEARING	
	12	1	**129-7979**	4	DOWEL	
	13	1	**150-5782**	2	COVER	
	14	2	**173-3427**	2	GUIDE-BALL	
	15	2	**173-3496**	1	BARREL AS	
	16	2	**173-3498**	1	BARREL AS	
	17	1	**177-2470**	1	COVER	
	18	1	**177-2471**	1	COVER	
	19	2	**190-4896**	2	PLUG	
	20	2	**192-0573**	4	PIN-DOWEL	
	21	1	**200-3333**	1	HEAD-PUMP	
	22	2	**200-3334**	1	COVER	
	23	2	**247-8920**	2	ORIFICE	
Y	24	1	**256-0093**	1	HEAD GP-PUMP (DRIVE)	226
Y	25	1	**256-0096**	1	HEAD GP-PUMP (DRIVEN)	229
	26	2	**273-8314**	1	SEAL-O-RING	
	27	2	**273-8315**	2	SEAL-O-RING	
	28	2	**341-2831**	1	SHAFT-DRIVE	
	29	2	**341-2834**	1	SHAFT-DRIVEN	
	30	2	**341-2839**	2	GEAR (50-TEETH)	
	31	2	**341-2840**	1	CASE	
	32	1	**341-2841**	1	FLANGE	
	33	1	**341-2842**	1	BODY	
Y	34	2	**341-2860**	1	PUMP GP-GEAR	305
	35	2	**341-2862**	1	SEAL-LIP TYPE	
	36	2	**373-9516**	2	SWASHPLATE AS	
					(EACH INCLUDES)	
		2	**094-1875**	1	DOWEL	
		2	**173-3428**	1	BUSHING	
		2	**242-6803**	2	PIN-DOWEL	
	37	2	**373-9518**	4	BEARING	
	38	2	**392-6626**	2	PISTON AS	
	40	2	**094-1875**	6	DOWEL	
	41	1,2	**094-1882**	16	PLUG	
	42	2	**095-0929**	2	RING-RETAINING	
	43	2	**095-0946**	2	RING-RETAINING	
	45	2	**096-3944**	1	SEAL-O-RING	
	46	1,2	**189-9763**	8	SEAL-O-RING	
	47	2	**193-1736**	4	SEAL-O-RING	
	48	1	**3K-0360**	2	SEAL-O-RING	
	49	2	**7M-8485**	2	SEAL-O-RING	
M	50	1	**7X-2557**	1	BOLT (M16X2X140-MM)	
	51	2	**8J-4645**	2	PLUG (STRAIGHT THREAD O-RING)	
M	52	1,2	**8T-4136**	20	BOLT (M10X1.5X25-MM)	
M	53	1	**8T-4139**	10	BOLT (M12X1.75X30-MM)	
M	54	1	**8T-4140**	4	BOLT (M16X2X60-MM)	
M	55	1	**8T-4175**	2	BOLT (M16X2X90-MM)	
M	56	1	**8T-4176**	2	BOLT (M12X1.75X90-MM)	
M	57	2	**8T-4192**	10	BOLT (M12X1.75X25-MM)	

397-3680 **PUMP GP-MAIN HYDRAULIC (*contd.*)** **i05259339**

NOTE	REF NO	GRAPHIC REF	PART NUMBER	QTY	PART NAME 1 2 3 4 5 6 (PRODUCT LEVEL)	SEE PAGE
M	58	2	**8T-4196**	2	BOLT (M10X1.5X35-MM)	
	59	1	**9S-4185**	2	PLUG-O-RING	

M - METRIC PART
Y - SEPARATE ILLUSTRATION

397-3680 **PUMP GP-MAIN HYDRAULIC (*contd.*)** **i05259339**

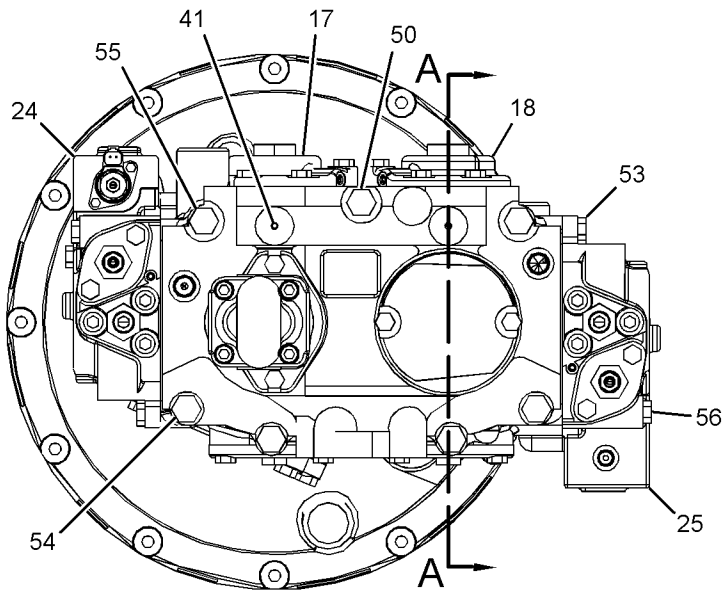

RIGHT SIDE VIEW

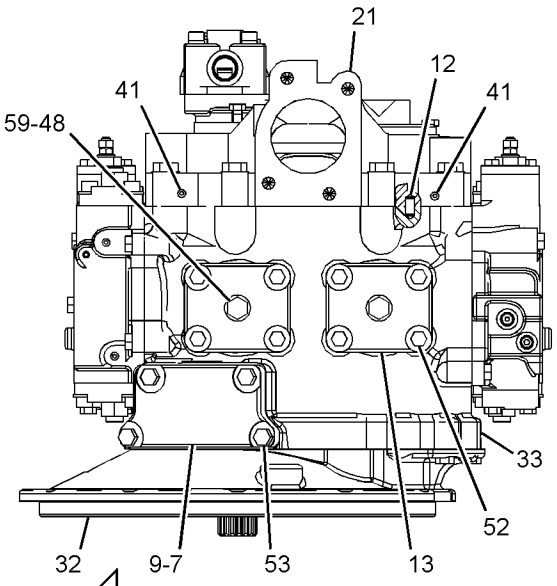

FWD TOP VIEW

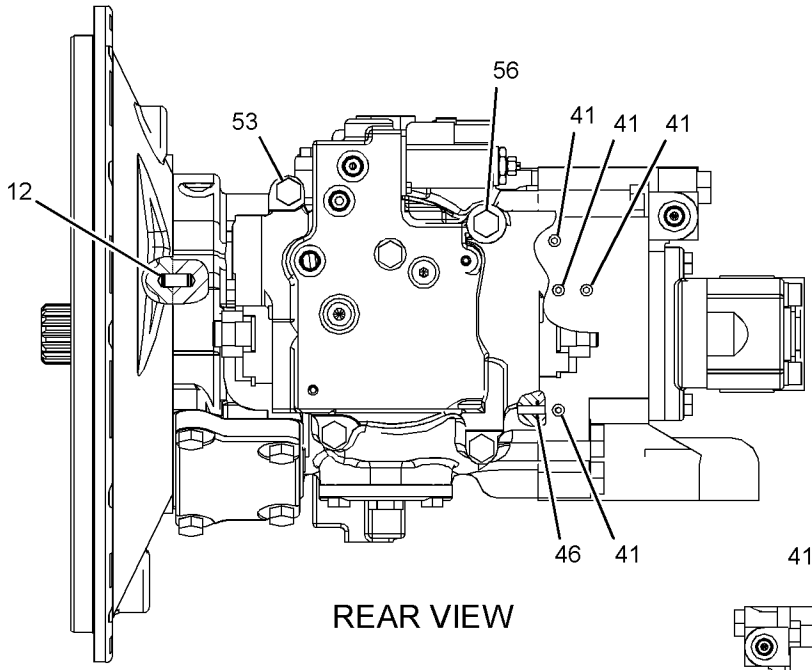

REAR VIEW

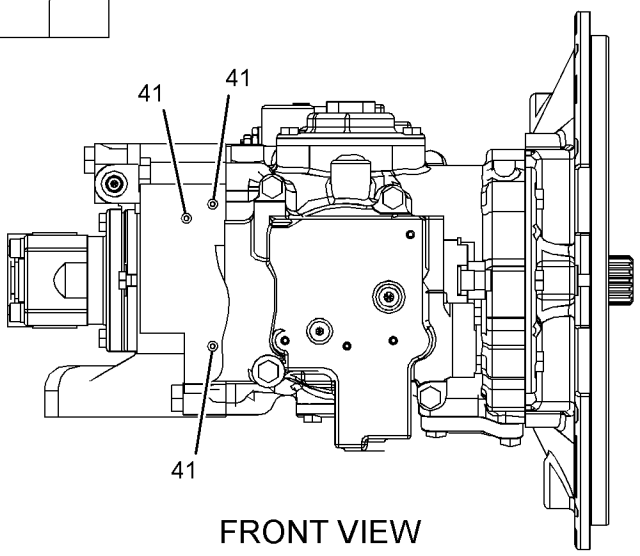

FRONT VIEW

GRAPHIC #1 g03306243

397-3680 **PUMP GP-MAIN HYDRAULIC (*contd.*)** **i05259339**

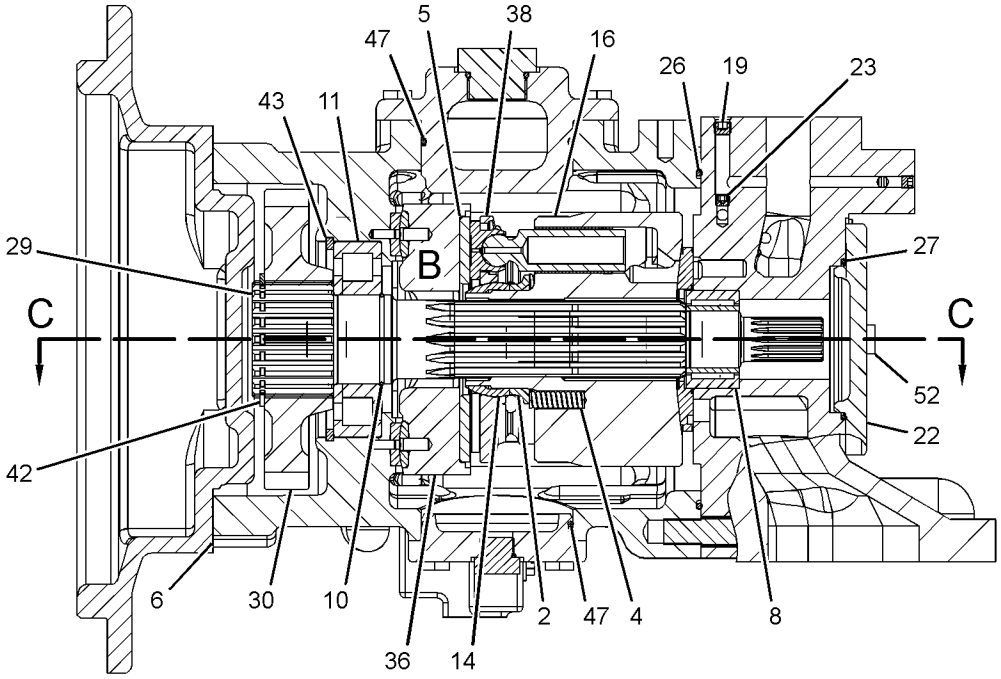

SECTION A-A

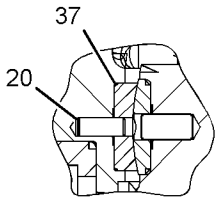

VIEW OF AREA B

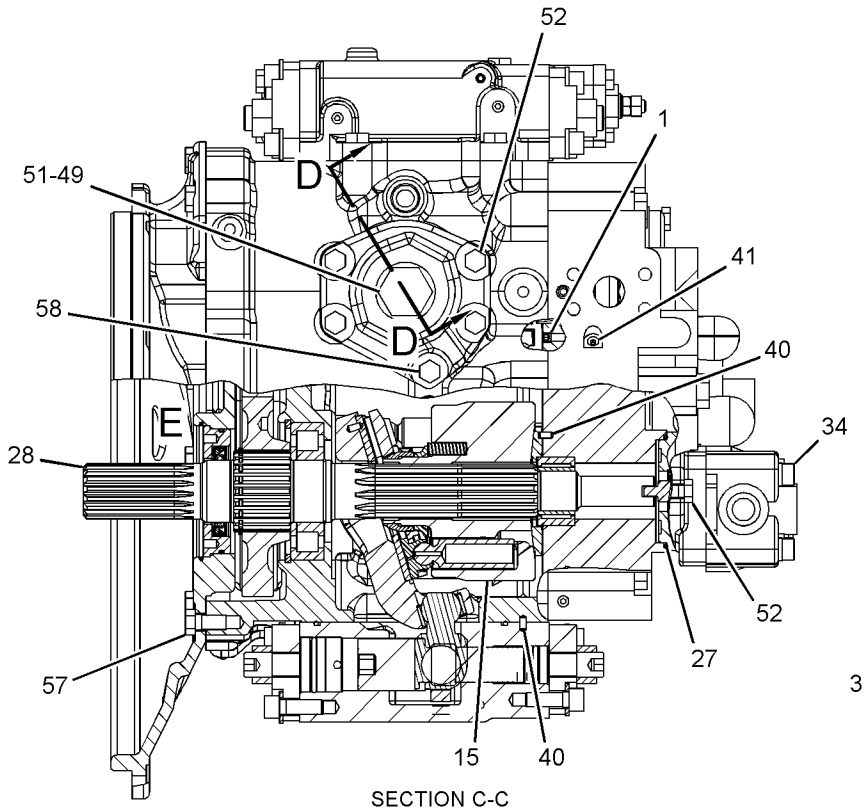

SECTION C-C

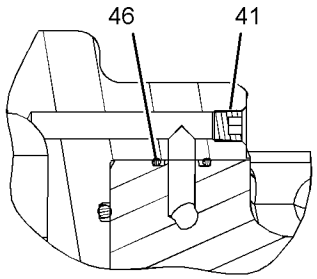

SECTION D-D

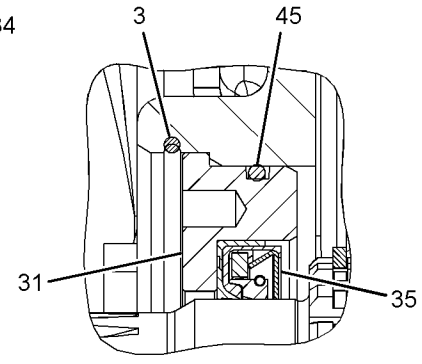

VIEW OF AREA E

GRAPHIC #2 **<END>** g03306256

387-3783 SCREEN GP-HYDRAULIC

S/N: FKK1-UP; DNP1-UP

PART OF 433-8177 TANK & FILTER GP-HYDRAULIC

SMCS-5068 **i05259356**

NOTE	REF NO	GRAPHIC REF	PART NUMBER	QTY	PART NAME 1 2 3 4 5 6 (PRODUCT LEVEL)	SEE PAGE
	1	1	**129-7784**	1	ROD	
	2	1	**209-6000**	1	SCREEN AS (HYDRAULIC TANK)	
	3	1	**259-0918**	1	GUIDE	
	4	1	**095-6639**	1	SPRING	
	5	1	**5H-5672**	1	SEAL-O-RING	
M	6	1	**8T-4133**	2	NUT (M10X1.5-THD)	

M - METRIC PART

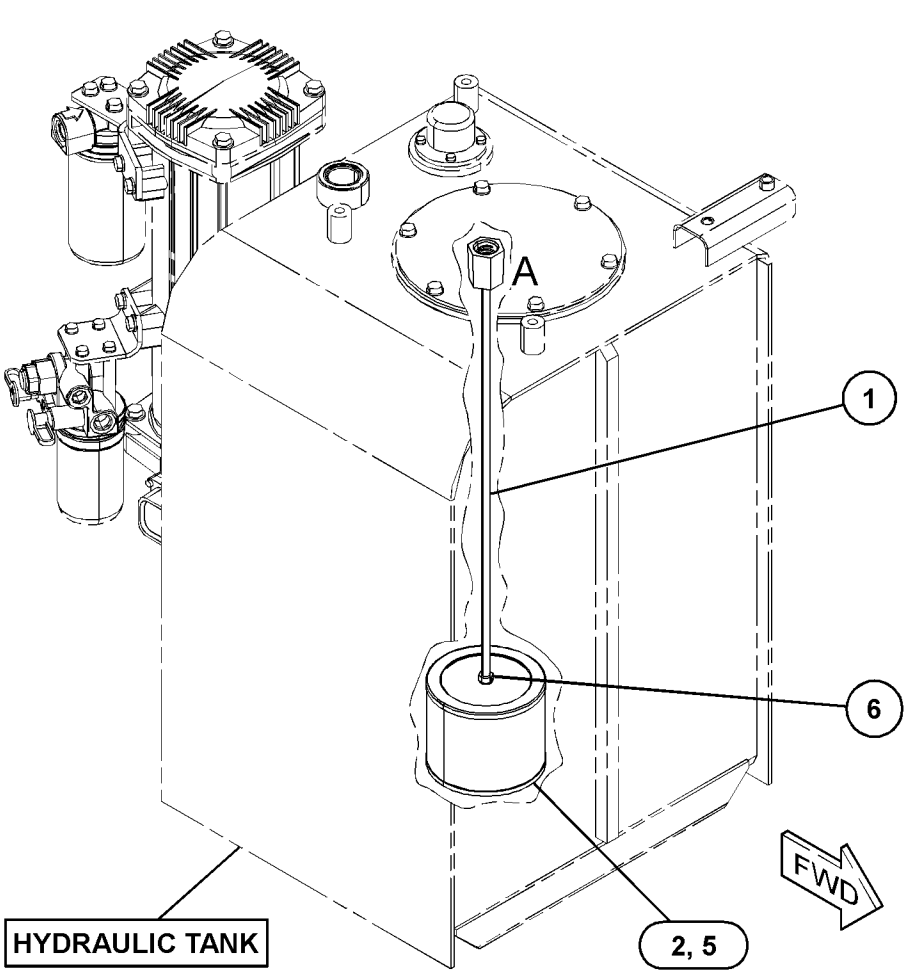

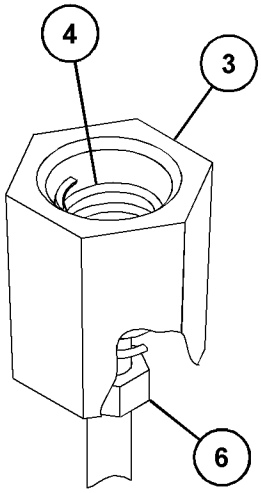

VIEW OF AREA A

GRAPHIC #1 **<END>** g03271036

234-4440 SWIVEL GP

S/N: FKK1-UP; DNP1-UP
PART OF 239-1716, 239-1717 LINES GP-TRAVEL MOTOR
ALSO AN ATTACHMENT

SMCS-5060 **i04915631**

NOTE	REF NO	GRAPHIC REF	PART NUMBER	QTY	PART NAME 1 2 3 4 5 6 (PRODUCT LEVEL)	SEE PAGE
	1	1	**7I-7131**	1	RETAINER	
	2	1	**7Y-4817**	1	COVER	
	3	1	**159-7782**	5	SEAL	
	4	1	**225-4548**	1	HOUSING	
	5	1	**225-4549**	1	ROTOR	
	6	1	**095-1625**	3	SEAL-O-RING	
	7	1	**095-1716**	1	SEAL-O-RING	
	8	1	**8T-4121**	2	WASHER-HARD (11X21X2.5-MM THK)	
M	9	1	**8T-4136**	6	BOLT (M10X1.5X25-MM)	
	10	1	**8T-6759**	1	PLUG-PIPE	

M - METRIC PART

234-4440 **SWIVEL GP (*contd.*)** **i04915631**

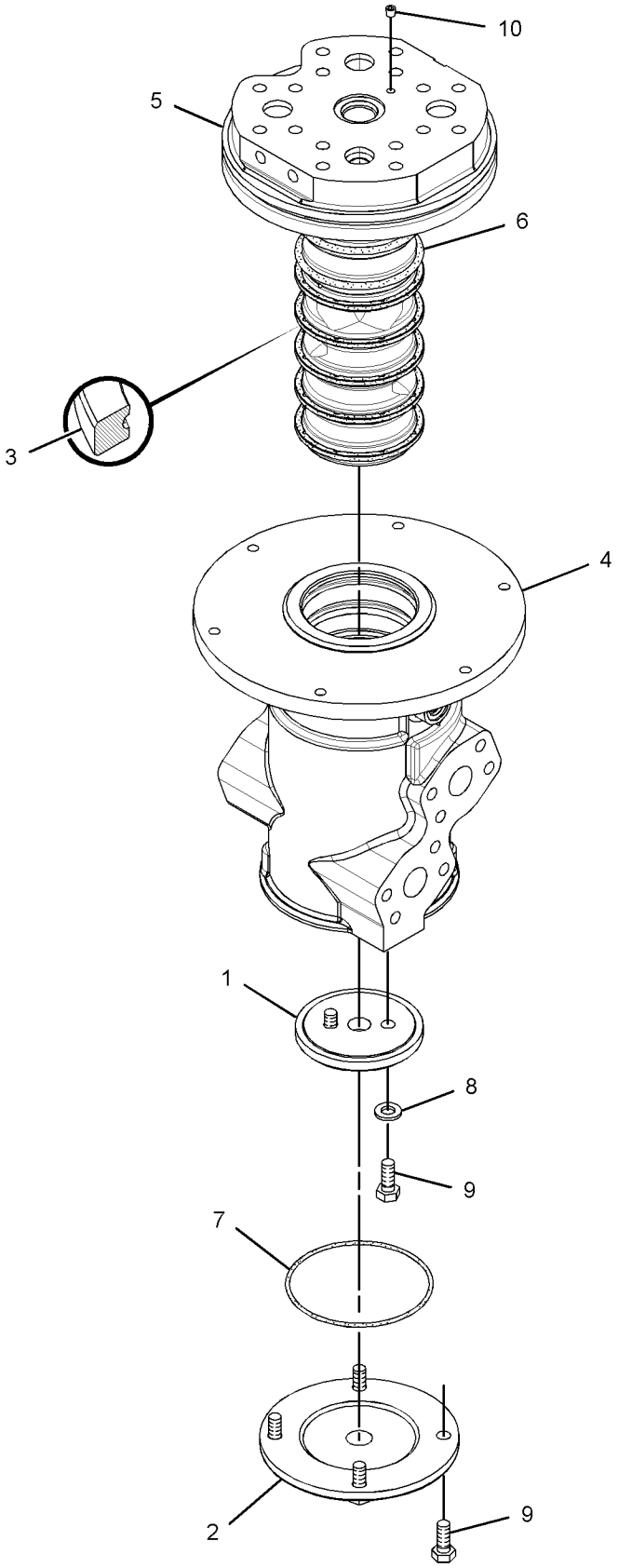

GRAPHIC #1 **<END>** g01373464

433-8177 TANK & FILTER GP-HYDRAULIC

S/N: FKK1-UP; DNP1-UP
210-L (55.5-US GAL)
PART OF 433-8178 TANK & MTG GP-HYDRAULIC

SMCS-5056, 5068 **i05298957**

NOTE	REF NO	GRAPHIC REF	PART NUMBER	QTY	PART NAME 1 2 3 4 5 6 (PRODUCT LEVEL)	SEE PAGE
	1	1	**3K-0360**	1	SEAL-O-RING	
	2	1	**4J-5267**	1	SEAL-O-RING	
	3	1	**6D-9157**	1	SEAL-O-RING	
	4	1	**6J-2680**	1	SEAL-O-RING	
	5	1	**6V-0852**	1	CAP-DUST	
	6	1	**095-1608**	1	SEAL-O-RING	
Y	7	1	**158-8987**	1	FILTER & VALVE GP-PILOT (HYDRAULIC OIL)	218
	8	1	**165-3256**	1	PIPE AS	
	9	1	**207-6403**	1	PLUG	
	10	1	**207-6404**	1	WASHER (49.5X60.5X1.5-MM THK)	
	11	1	**227-0590**	1	BREATHER (HYDRAULIC TANK)	
	12	1	**275-1362**	1	BRACKET	
Y	13	1	**289-8194**	1	FILTER GP-OIL (HYDRAULIC, CASE DRAIN)	221
	14	1	**292-7297**	1	SUPPORT AS	
	15	1	*321-8667*	1	ADAPTER GP-PLUG	
		1	**6V-1322**	1	BOLT (1/4-20X0.375-IN)	
		1	**109-9549**	1	SPACER (0.13-MM THK)	
		1	**321-8665**	1	PLUG-DRAIN	
		1	**321-8666**	1	ADAPTER	
	16	1	**342-2924**	1	SENDER AS-TEMPERATURE (HYDRAULIC OIL)	
M		1	**095-7930**	2	SCREW-MACHINE (M4X0.7X6-MM)	
		1	**1H-4393**	2	LOCKWASHER	
Y	17	1	**347-6081**	1	GAUGE GP-SIGHT (HYDRAULIC OIL LEVEL)	225
Y	18	1	*387-3783*	1	SCREEN GP-HYDRAULIC (TANK)	310
	19	1	**395-0021**	1	COVER AS	
	21	1	**095-1730**	1	SEAL-O-RING	
	22	1	*164-5567*	1	COUPLER AS-QUICK DISCONNECT (MALE)	
		1	**214-7568**	1	SEAL-O-RING	
		1	**6V-3965**	1	FITTING (QUICK DISCONNECT)	
	23	1	*164-5590*	1	VALVE GP-FLUID SAMPLING (HYDRAULIC OIL)	
		1	**3J-7354**	1	SEAL-O-RING	
		1	**8C-3446**	1	VALVE-FLUID SAMPLING (HYDRAULIC OIL)	
Y	24	1	*188-4140*	1	FILTER GP-OIL (HYDRAULIC RETURN)	219
	25	1	**2B-0858**	1	PLUG-PIPE	
	26	1	**4J-0527**	1	SEAL-O-RING	
M	27	1	**5C-9553**	4	BOLT (M6X1X16-MM)	
	28	1	**8C-3451**	1	CAP-DUST	
M	29	1	**8T-0267**	2	BOLT-SOCKET HEAD (M6X1X12-MM)	
	30	1	**8T-4121**	15	WASHER-HARD (11X21X2.5-MM THK)	
M	31	1	**8T-4136**	11	BOLT (M10X1.5X25-MM)	
M	32	1	**8T-4183**	6	BOLT (M12X1.75X40-MM)	
M	33	1	**8T-4195**	4	BOLT (M10X1.5X30-MM)	
	34	1	**8T-4223**	4	WASHER-HARD (13.5X25.5X3-MM THK)	
	35	1	**8T-4224**	4	WASHER-HARD (8.8X16X2-MM THK)	
M	36	1	**8T-4908**	4	BOLT (M8X1.25X25-MM)	
	37	1	**8T-7971**	2	WASHER-HARD (13.5X25.5X5-MM THK)	
	38	1	**9X-8256**	4	WASHER (6.6X12X2-MM THK)	

M - METRIC PART
Y - SEPARATE ILLUSTRATION

433-8177 **TANK & FILTER GP-HYDRAULIC (*contd.*)** **i05298957**

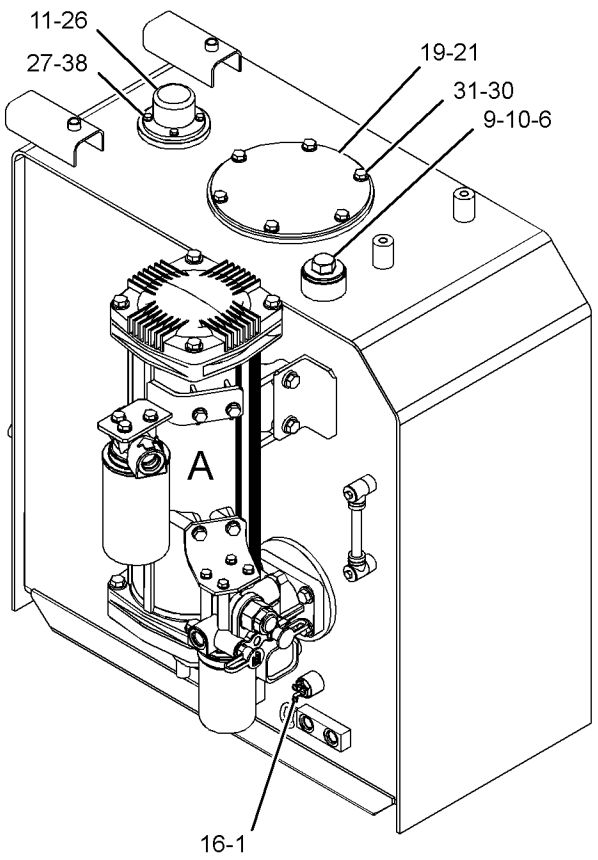

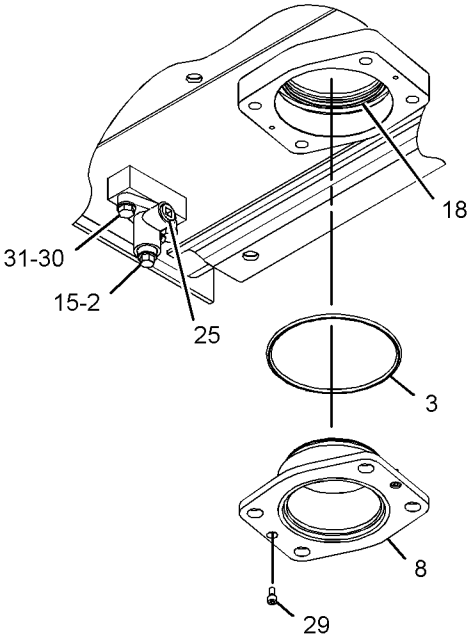

VIEW OF AREA B
(EXPLODED)

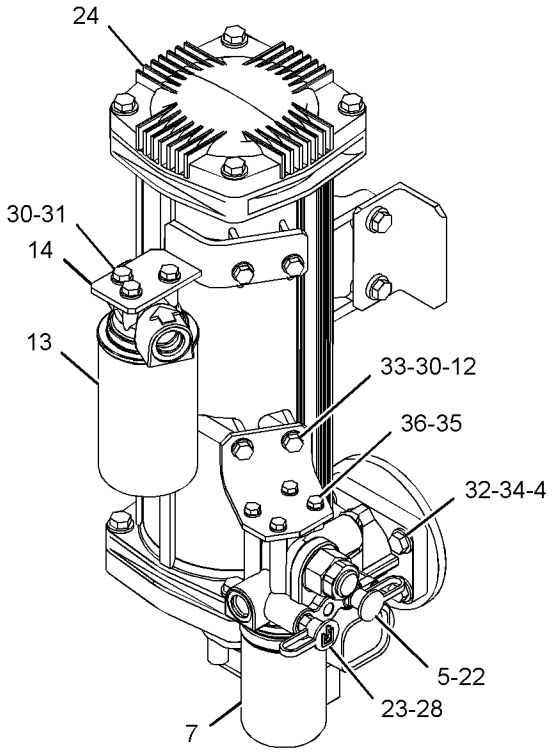

VIEW OF AREA A

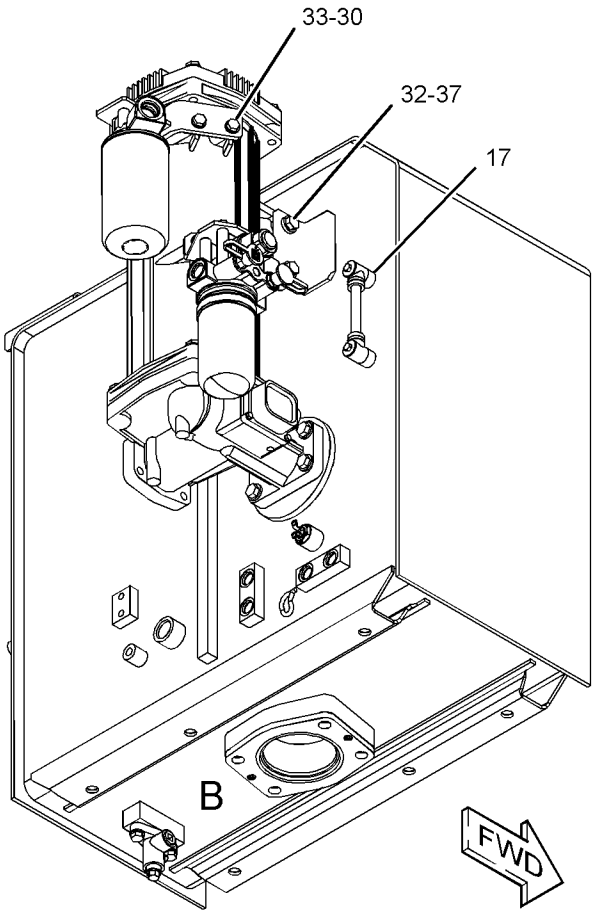

GRAPHIC #1 **<END>** g03354448

433-8178 TANK & MTG GP-HYDRAULIC

S/N: FKK1-UP; DNP1-UP

PART OF 421-6946 HYDRAULIC AR

SMCS-5056 **i05259334**

NOTE	REF NO	GRAPHIC REF	PART NUMBER	QTY	PART NAME 1 2 3 4 5 6 (PRODUCT LEVEL)	SEE PAGE
	1	1	**085-9310**	6	SPACER (16.6X32X26-MM THK)	
Y	2	1	*248-9853*	1	LINES GP-RETURN	281
Y	3	1	**433-8177**	1	TANK & FILTER GP-HYDRAULIC	313
M	4	1	**8T-4140**	6	BOLT (M16X2X60-MM)	

M - METRIC PART
Y - SEPARATE ILLUSTRATION

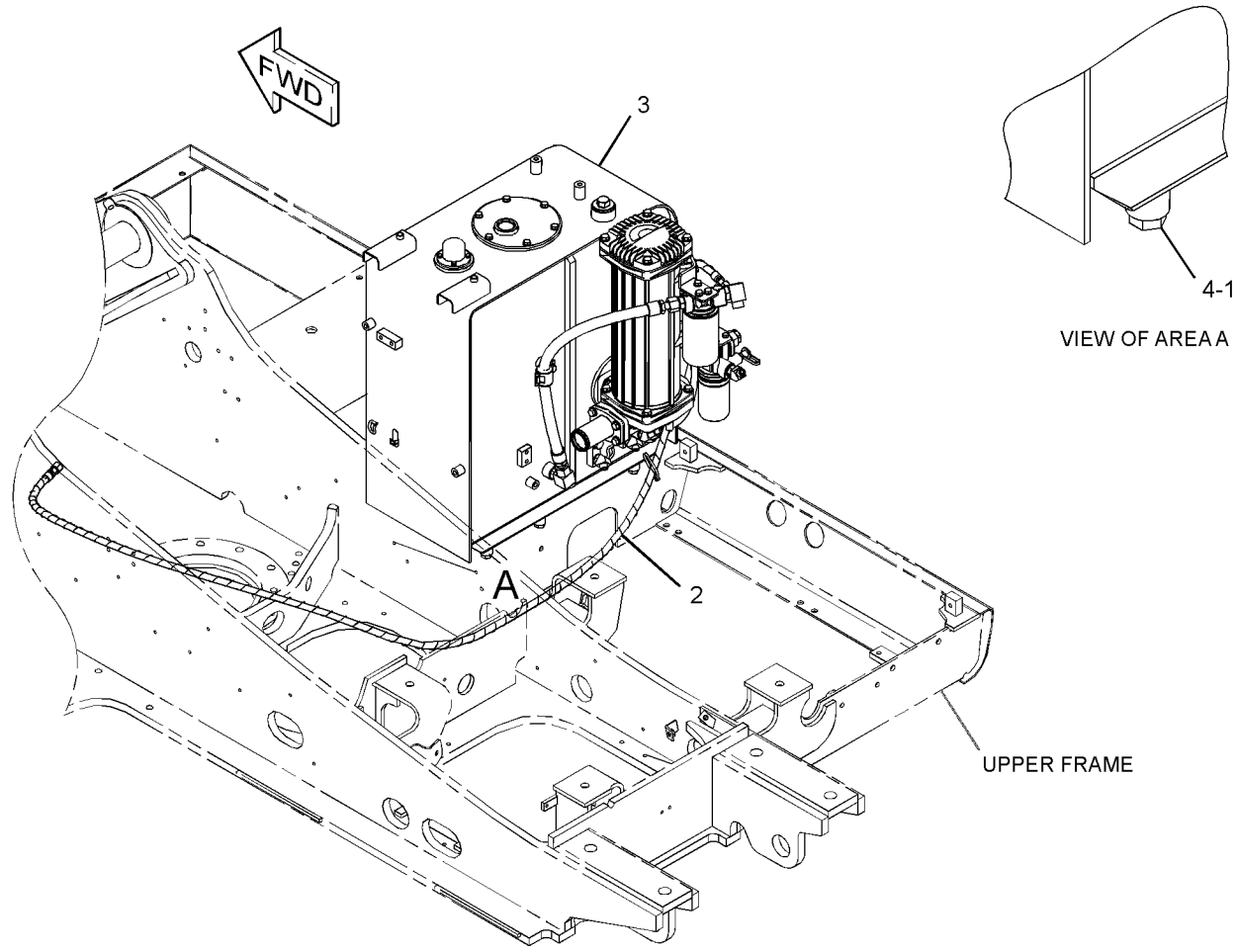

GRAPHIC #1 **<END>** g03303259

259-7465 VALVE GP-CONTROL—BOOM, STICK, BUCKET

S/N: FKK1-UP; DNP1-UP

PART OF 259-7464 VALVE GP-MAIN CONTROL

SMCS-5051 **i04917459**

NOTE	REF NO	GRAPHIC REF	PART NUMBER	QTY	PART NAME 1 2 3 4 5 6 (PRODUCT LEVEL)	SEE PAGE
	1	1	**6E-2274**	5	COVER	
	2	1,2	**6E-5731**	4	VALVE (LOAD CHECK)	
	3	1,2	**7I-1248**	5	SPRING	
	4	2	**153-5286**	1	VALVE (LOAD CHECK) (STICK 2)	
	5	1	**153-5288**	1	SPRING	
	6	1	**153-5289**	1	GUIDE	
	7	1	**153-5290**	1	PLUG	
	8	1	**153-5291**	1	CONNECTOR	
	9	1	**153-5292**	1	VALVE-CHECK	
	10	1	**153-5293**	1	SPRING	
	11	1	**158-8159**	5	HOUSING	
	12	1,2	**236-6419**	5	PLUG	
	13	1	**236-6421**	1	PLUG	
Y	14	2	**352-7122**	3	VALVE GP-RELIEF (LINE)	346
Y	15	1	**259-7631**	1	VALVE GP-CONTROL (WITHOUT COVERS, HOUSINGS)	319
	16	1,2	**095-1590**	5	SEAL-O-RING	
	17	1,2	**095-1787**	5	RING-BACKUP	
Y	18	1	**109-5152**	1	VALVE GP-RELIEF (NEGATIVE FLOW CONTROL)	341
	19	1	**111-9959**	2	PLUG-PIPE	
	20	1	**2M-9780**	1	SEAL-O-RING	
	21	1	**4I-6397**	1	RING-BACKUP	
	22	2	**4J-0520**	2	SEAL-O-RING	
Y	23	2	**6E-4816**	2	PLUG GP-CONTROL VALVE	303
	24	1	**6V-3922**	1	SEAL-O-RING	
	25	2	**6V-5597**	10	SEAL-O-RING	
	26	1	**7M-8485**	1	SEAL-O-RING	
	27	2	**7Y-8099**	2	COVER	
	28	1	**8T-4121**	20	WASHER-HARD (11X21X2.5-MM THK)	
M	29	1,2	**8T-4195**	28	BOLT (M10X1.5X30-MM)	

M - METRIC PART
Y - SEPARATE ILLUSTRATION

259-7465 **VALVE GP-CONTROL (*contd.*)** **i04917459**

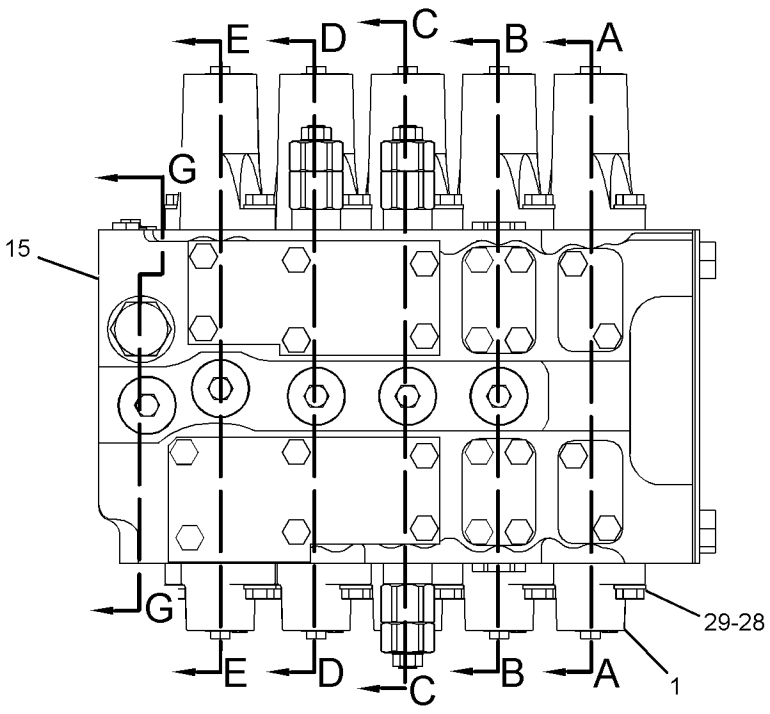

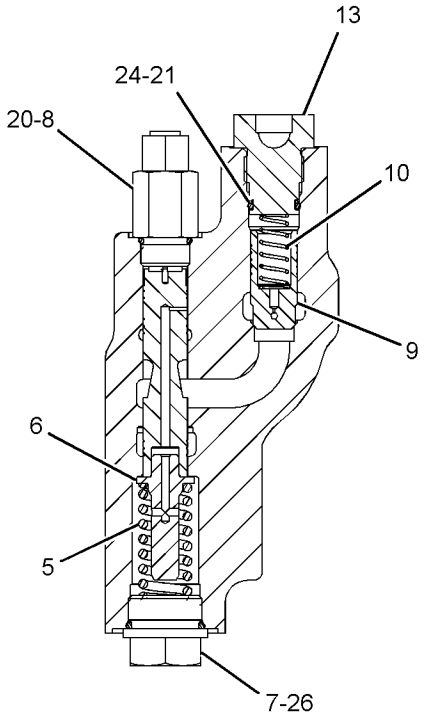

SECTION F-F

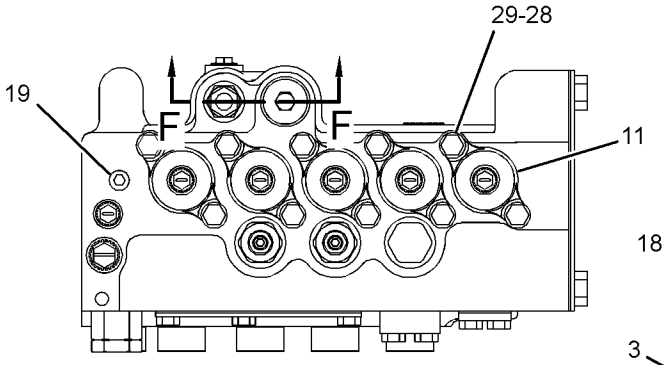

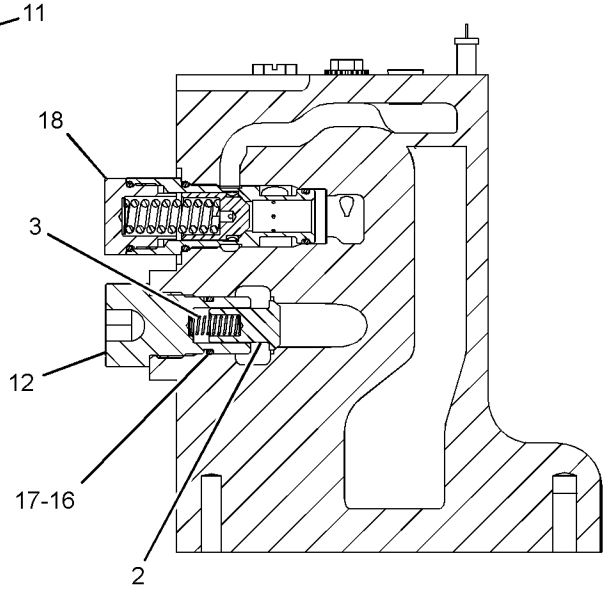

SECTION G-G

REFER TO ALL ILLUSTRATIONS OF
THIS GROUP FOR AUXILIARY VIEWS

GRAPHIC #1

g01226704

259-7465 **VALVE GP-CONTROL (*contd.*)** **i04917459**

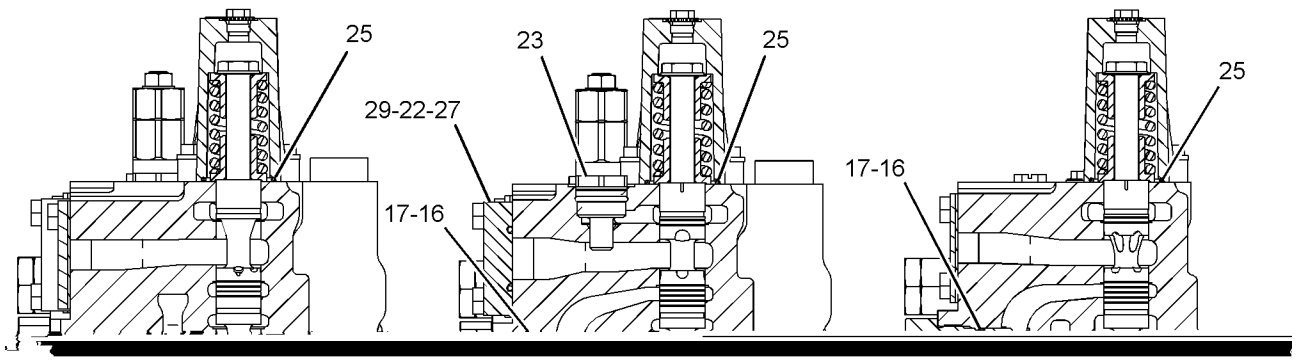

GRAPHIC #2 **<END>** g01226719

259-7631 VALVE GP-CONTROL—WITHOUT COVERS, HOUSINGS

S/N: FKK1-UP; DNP1-UP

PART OF 259-7465 VALVE GP-CONTROL

SMCS-5051 **i04916931**

NOTE	REF NO	GRAPHIC REF	PART NUMBER	QTY	PART NAME 1 2 3 4 5 6 (PRODUCT LEVEL)	SEE PAGE
	1	1	**6E-2271**	10	RETAINER	
	2	1	**352-7057**	3	SPRING-RETURN	
	3	1	**352-7058**	1	SPRING-RETURN	
	4	1	**352-7059**	1	SPRING-RETURN	
M	5	1	**153-5276**	5	BOLT-SPECIAL	

M - METRIC PART

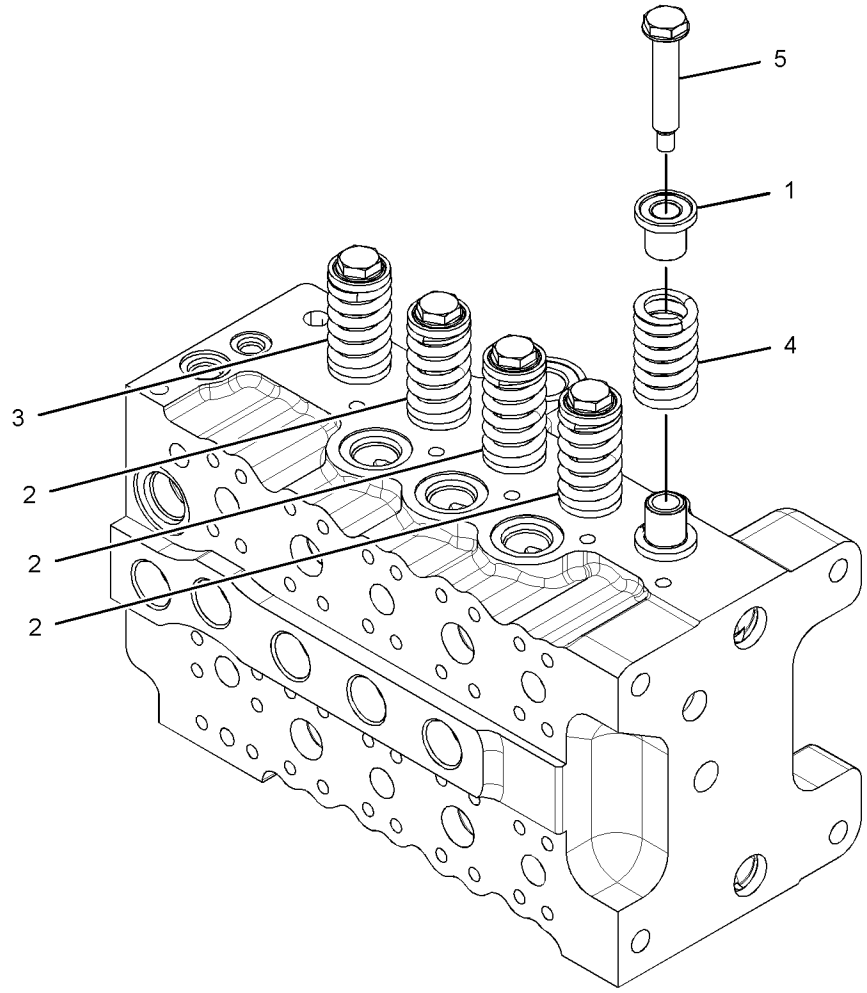

GRAPHIC #1 **<END>** g02736956

259-7632 VALVE GP-CONTROL

S/N: FKK1-UP; DNP1-UP

PART OF 352-7138 VALVE GP-CONTROL

SMCS-5051 **i04916999**

NOTE	REF NO	GRAPHIC REF	PART NUMBER	QTY	PART NAME 1 2 3 4 5 6 (PRODUCT LEVEL)	SEE PAGE
	1	1	**2S-2596**	1	SPRING	
	2	1	**6E-2163**	1	VALVE-CHECK (STRAIGHT TRAVEL)	
	3	1	**6E-2271**	8	RETAINER	
	4	1	**352-7057**	2	SPRING-RETURN	
	5	1	**352-7058**	1	SPRING-RETURN	
	6	1	**352-7059**	1	SPRING-RETURN	
M	7	1	**153-5276**	4	BOLT-SPECIAL	
	8	1	**3K-0360**	1	SEAL-O-RING	

M - METRIC PART

259-7632 **VALVE GP-CONTROL (*contd.*)** **i04916999**

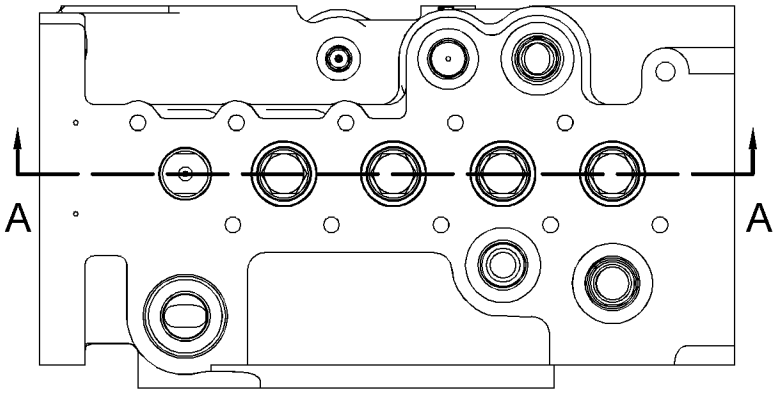

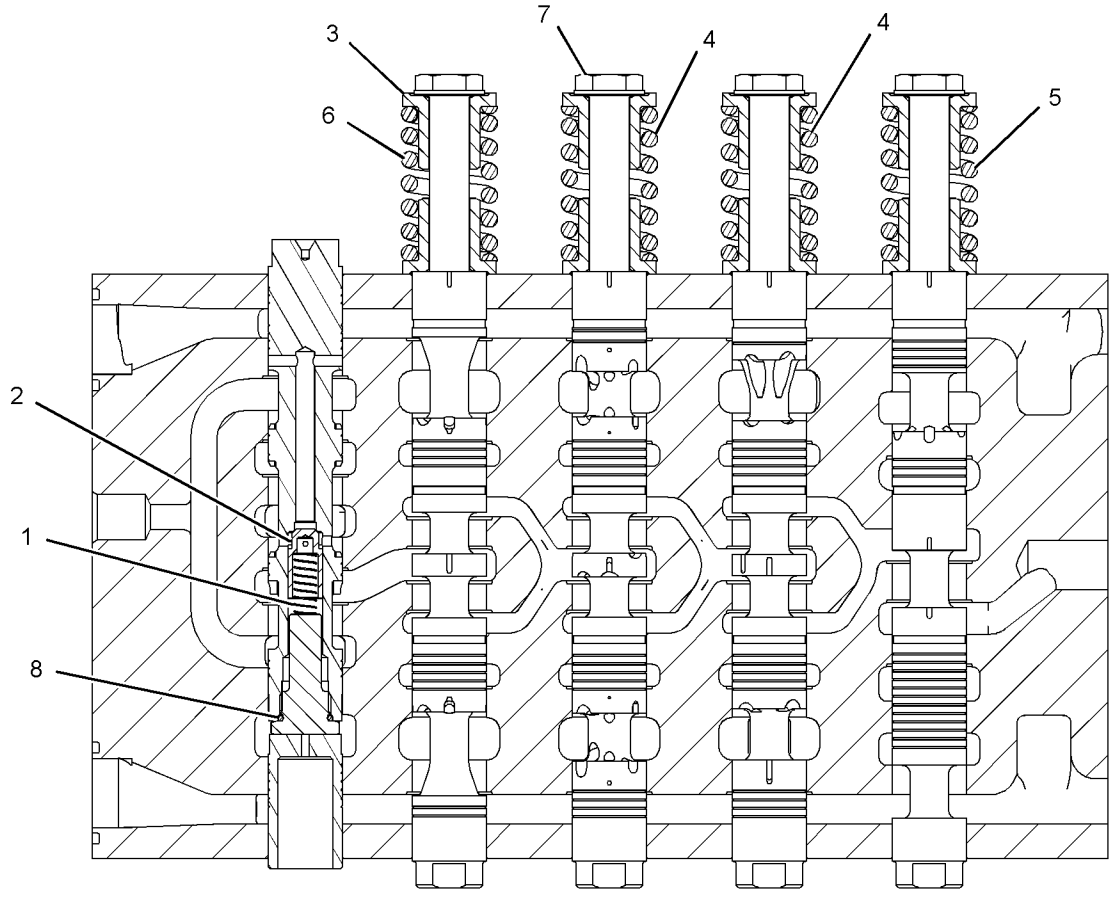

SECTION A-A

GRAPHIC #1 **<END>** g02689837

352-7138 VALVE GP-CONTROL

S/N: FKK1-UP; DNP1-UP

PART OF 259-7464 VALVE GP-MAIN CONTROL

SMCS-5051 **i05294148**

NOTE	REF NO	GRAPHIC REF	PART NUMBER	QTY	PART NAME 1 2 3 4 5 6 (PRODUCT LEVEL)	SEE PAGE
	1	2,3	**4T-3148**	3	SPRING	
	2	1	**6E-2274**	5	COVER	
	3	3	**6E-5169**	1	SPRING	
	4	2,3	**6E-5643**	3	VALVE (LOAD CHECK) (BOOM II, STRAIGHT TRAVEL)	
	5	2	**7I-1248**	1	SPRING	
Y	6	1	**121-1491**	1	VALVE GP-SOLENOID (STRAIGHT TRAVEL)	353
	7	3	**153-5288**	1	SPRING	
	8	3	**153-5289**	1	GUIDE	
	9	3	**153-5290**	2	PLUG	
	10	3	**153-5291**	1	CONNECTOR	
	11	3	**153-5292**	1	VALVE-CHECK (BOOM 2)	
	12	3	**153-5293**	1	SPRING	
Y	13	2	**323-7898**	1	VALVE GP-PRIORITY (BOOM 2)	339
	14	2	**153-5298**	1	SLEEVE	
	15	2	**153-5299**	1	VALVE (STICK 1)	
	16	2	**153-5306**	1	SPRING	
	17	3	**153-5309**	1	SLEEVE	
	18	3	**153-5311**	1	SPRING	
	19	3	**158-8150**	1	VALVE GP-UNLOADING (SWING)	
	20	1	**158-8159**	4	HOUSING	
	21	1	**158-8206**	1	HOUSING	
	22	3	**158-8207**	1	STOPPER	
	23	2	**323-7897**	1	COVER	
	24	3	**201-9263**	2	PLUG	
	25	1,2	*225-4818*	3	PLUG AS	
					(EACH INCLUDES)	
		1,2	**4J-7533**	1	SEAL-O-RING	
		1,2	**225-4804**	1	PLUG	
	26	2	**236-6419**	1	PLUG	
	27	3	**236-6421**	1	PLUG	
	28	2	**250-2446**	1	PLUG	
	29	3	**250-2447**	1	PLUG	
Y	30	3	**352-7116**	1	VALVE GP-RELIEF (PILOT OPERATED) (STRAIGHT TRAVEL)	345
Y	31	2	**352-7122**	1	VALVE GP-RELIEF (LINE) (STICK 1)	346
Y	32	1	**259-7632**	1	VALVE GP-CONTROL	320
	33	2	**264-9961**	1	PLUG	
	34	3	**095-1575**	1	SEAL-O-RING	
	35	2,3	**095-1590**	3	SEAL-O-RING	
	36	3	**095-1603**	1	SEAL-O-RING	
	37	3	**095-1778**	1	RING-BACKUP	
	38	2,3	**095-1787**	3	RING-BACKUP	
	39	2	**255-5594**	1	SEAL-O-RING	
	40	3	**103-8177**	1	ADAPTER	
	41	3	**123-2485**	1	PLUG	
	42	3	**2M-9780**	1	SEAL-O-RING	
	43	3	**3J-1907**	1	SEAL-O-RING	
	44	1	**4I-3569**	1	RING-BACKUP	
	45	3	**4I-6397**	3	RING-BACKUP	
	46	2	**4J-5309**	1	SEAL-O-RING	
	47	2	**4T-5074**	1	RING-BACKUP	
	48	1	**6E-3653**	1	PLUG	
	49	2	**6E-5731**	1	VALVE (LOAD CHECK) (SWING)	
	50	3	**6V-3922**	3	SEAL-O-RING	
	51	3	**6V-5393**	1	SEAL-O-RING	
	52	2	**6V-5556**	1	SEAL-O-RING	
	53	2,3	**6V-5597**	9	SEAL-O-RING	
M	54	1	**7I-2272**	2	BOLT (M5X0.8X12-MM)	

352-7138 **VALVE GP-CONTROL (*contd.*)** **i05294148**

NOTE	REF NO	GRAPHIC REF	PART NUMBER	QTY	PART NAME 1 2 3 4 5 6 (PRODUCT LEVEL)	SEE PAGE
	55	3	**7M-8485**	2	SEAL-O-RING	
M	56	2	**7X-2621**	1	BOLT (M10X1.5X12-MM)	
	57	1	**7Y-5219**	1	SEAL-O-RING	
	58	1,2	**8T-4121**	24	WASHER-HARD (11X21X2.5-MM THK)	
M	59	1	**8T-4195**	20	BOLT (M10X1.5X30-MM)	
M	60	2	**8T-6685**	4	BOLT (M10X1.5X110-MM)	
	61	1	**8T-6759**	2	PLUG-PIPE	
	62	3	**111-9959**	1	PLUG-PIPE	

M - METRIC PART
Y - SEPARATE ILLUSTRATION

352-7138 **VALVE GP-CONTROL (*contd.*)** **i05294148**

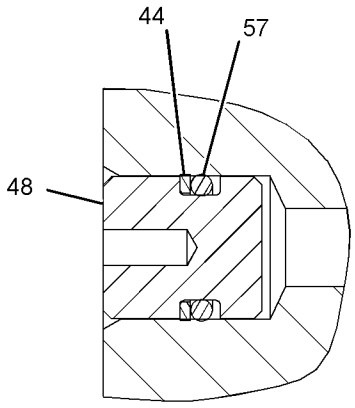

SECTION J-J

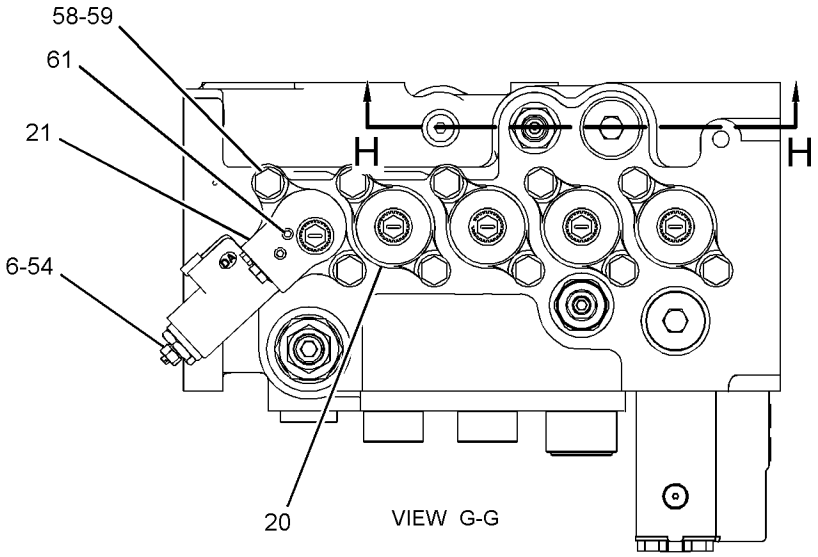

VIEW G-G

REFER TO ALL ILLUSTRATIONS OF THIS GROUP FOR AUXILIARY VIEWS

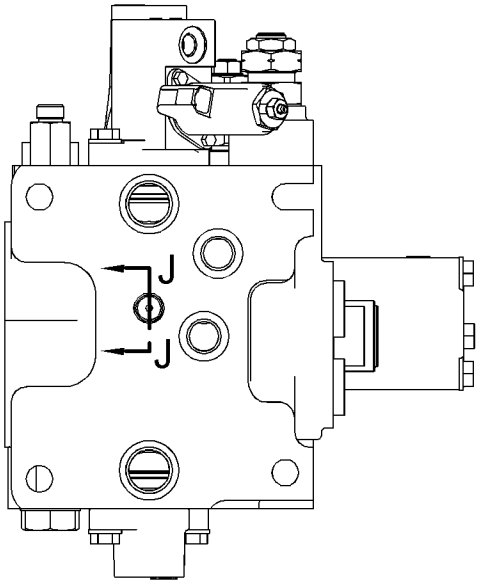

VIEW A-A

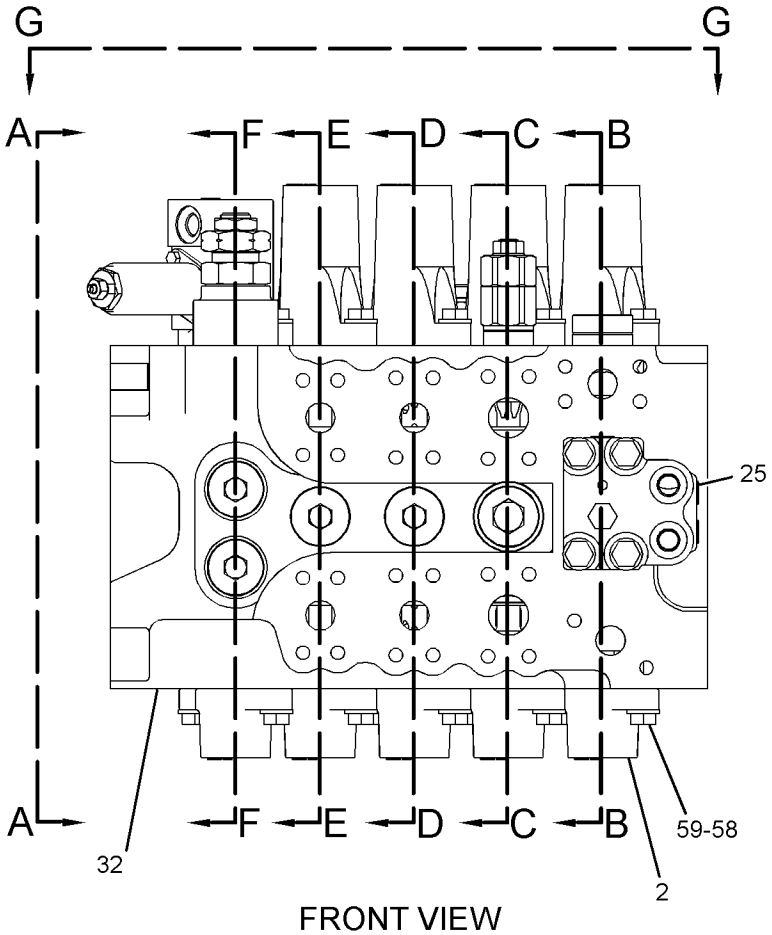

FRONT VIEW

GRAPHIC #1 g02482439

352-7138 **VALVE GP-CONTROL (*contd.*)** **i05294148**

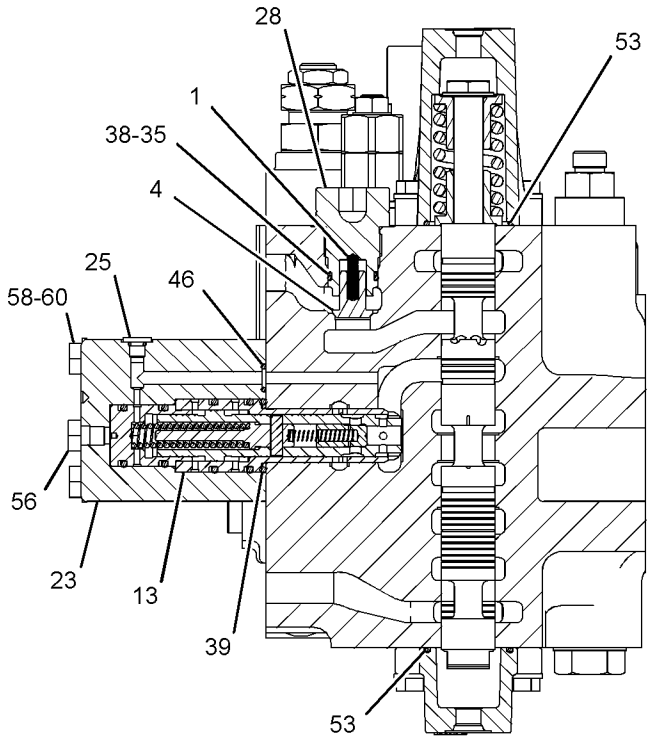

SECTION B-B

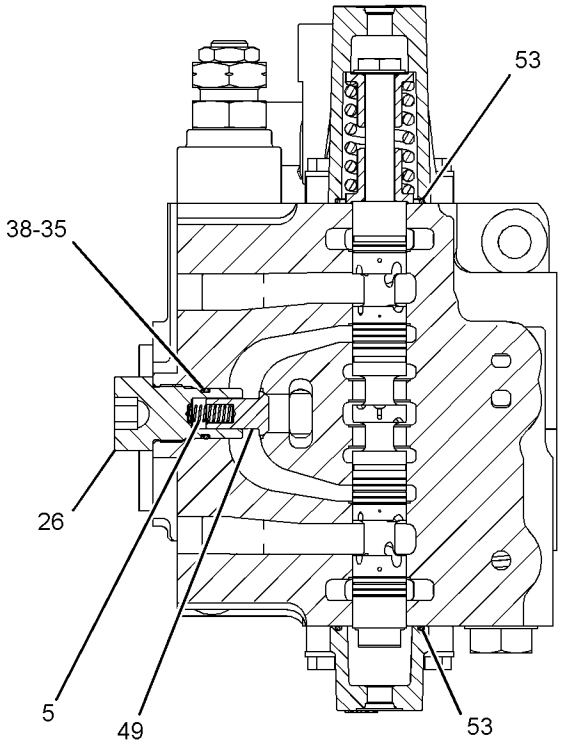

SECTION D-D

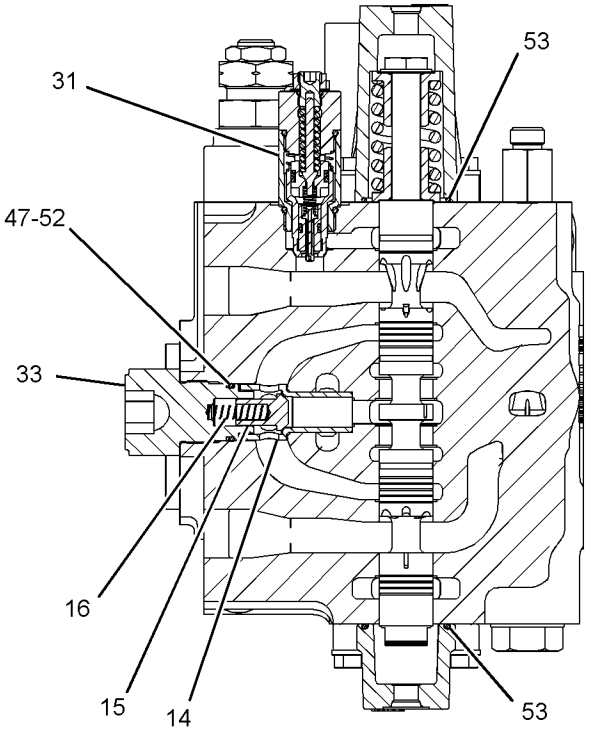

SECTION C-C

GRAPHIC #2 g02482442

352-7138 **VALVE GP-CONTROL (*contd.*)** **i05294148**

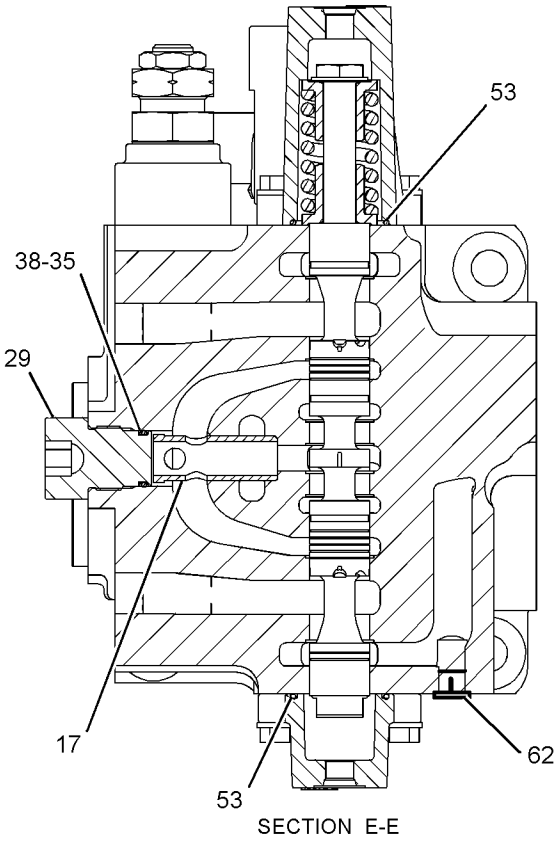

SECTION E-E

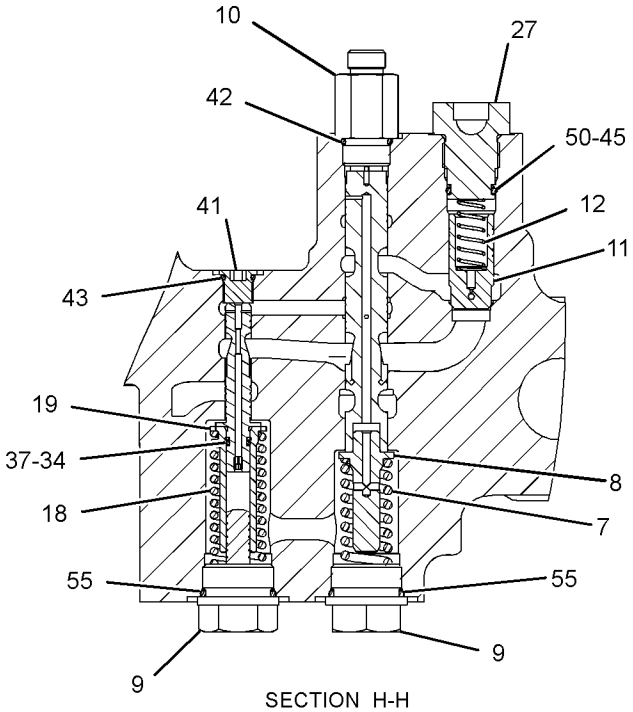

SECTION H-H

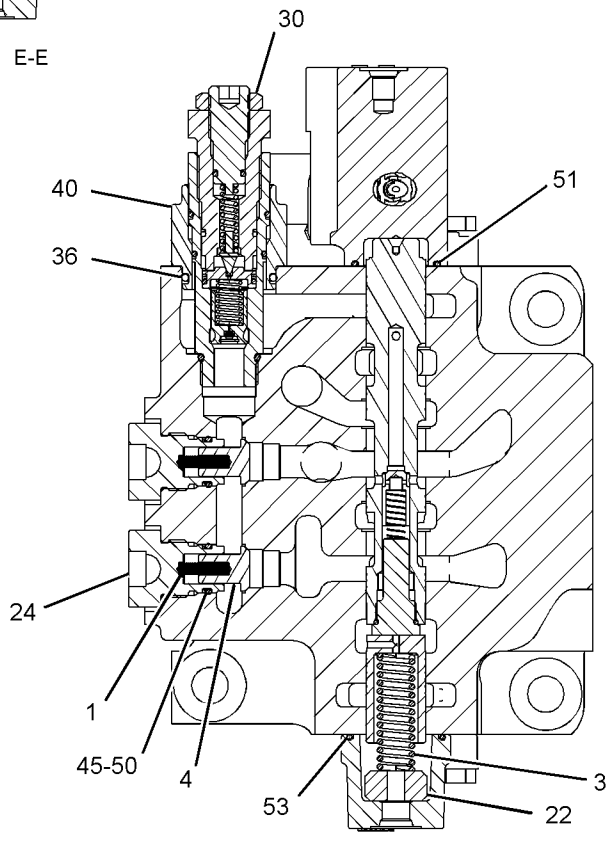

SECTION F-F

GRAPHIC #3 **<END>** g02696758

255-5680 VALVE GP-LOAD CONTROL—STICK DRIFT RED, LINE RELIEF

S/N: FKK1-UP; DNP1-UP

PART OF 239-1714 LINES GP-FRONT

SMCS-5067, 5117, 5147, 5811 **i05282293**

NOTE	REF NO	GRAPHIC REF	PART NUMBER	QTY	PART NAME 1 2 3 4 5 6 (PRODUCT LEVEL)	SEE PAGE
M	1	1	**8T-4136**	4	BOLT (M10X1.5X25-MM)	
	2	1	**4I-8965**	1	GUIDE	
	3	1	**5I-8511**	1	SPRING	
	4	1	**087-5166**	1	SPRING	
	5	1	**118-4044**	1	COVER	
	7	1	**147-4184**	1	PLUG	
	8	1	*225-4818*	2	PLUG AS	
					(EACH INCLUDES)	
		1	**4J-7533**	1	SEAL-O-RING	
		1	**225-4804**	1	PLUG	
Y	9	1	**352-7123**	1	VALVE GP-RELIEF (LINE)	347
	11	1	**095-1594**	1	SEAL-O-RING	
	12	1	**095-1789**	1	RING	
	13	1	*148-8395*	1	PLUG AS	
		1	**3K-0360**	1	SEAL-O-RING	
		1	**9S-8005**	1	PLUG-O-RING	
	14	1	*162-0177*	1	PLUG AS	
		1	**3J-1907**	1	SEAL-O-RING	
		1	**9S-8004**	1	PLUG-O-RING	

M - METRIC PART
Y - SEPARATE ILLUSTRATION

255-5680 **VALVE GP-LOAD CONTROL (*contd.*)** **i05282293**

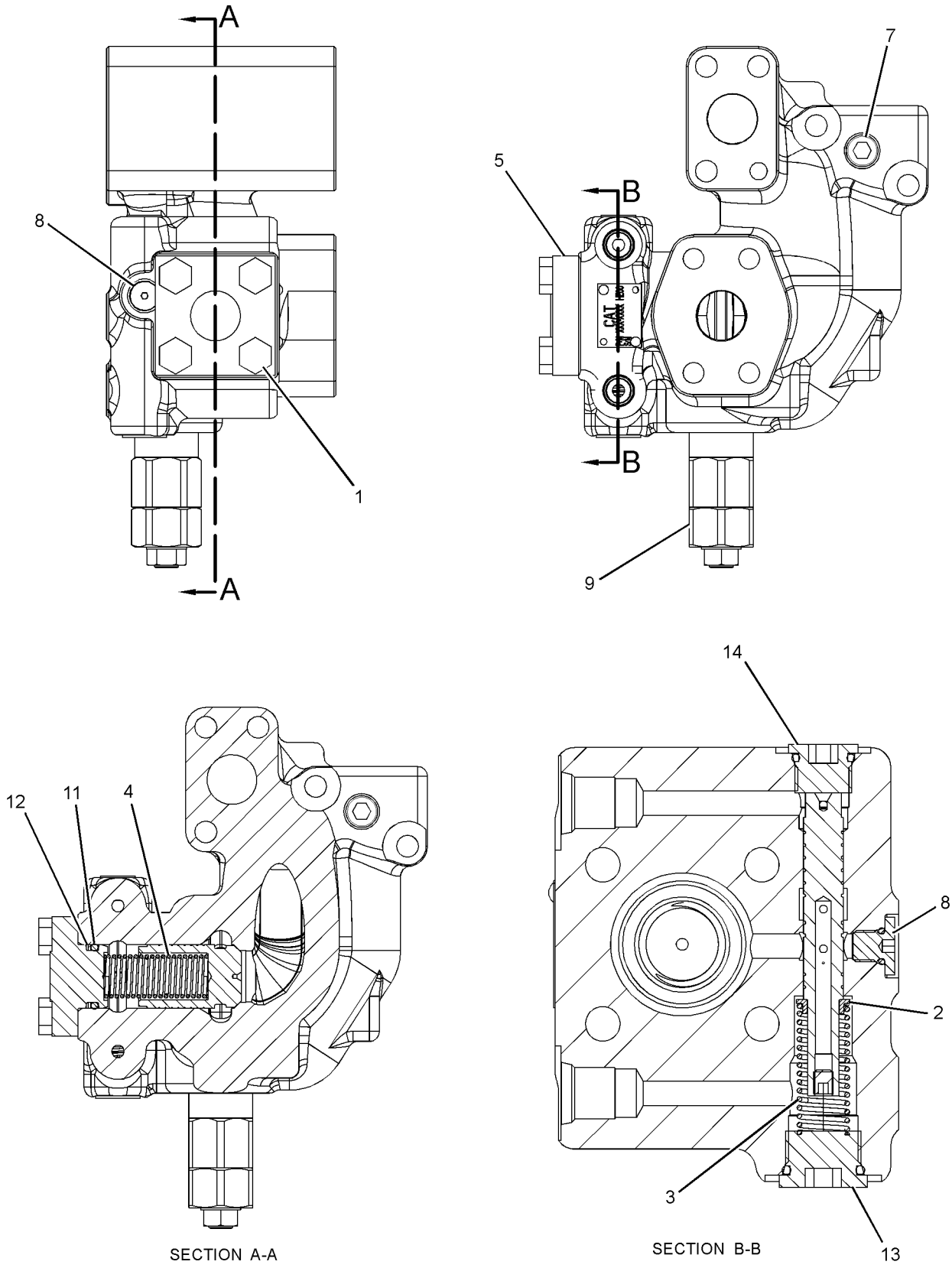

GRAPHIC #1 **<END>** g02320560

255-5683 VALVE GP-LOAD CONTROL—BOOM DRIFT RED, LINE RELIEF

S/N: FKK1-UP; DNP1-UP

PART OF 239-1714 LINES GP-FRONT

SMCS-5067, 5117, 5147, 5811 **i05282303**

NOTE	REF NO	GRAPHIC REF	PART NUMBER	QTY	PART NAME 1 2 3 4 5 6 (PRODUCT LEVEL)	SEE PAGE
M	1	1	**8T-4136**	4	BOLT (M10X1.5X25-MM)	
	2	1	**4I-8965**	1	GUIDE	
	3	1	**5I-8511**	1	SPRING	
	4	1	**087-5166**	1	SPRING	
	5	1	**118-4044**	1	COVER	
	7	1	*225-4818*	2	PLUG AS	
					(EACH INCLUDES)	
		1	**225-4804**	1	PLUG	
	7A	1	**4J-7533**	1	SEAL-O-RING	
CY	8	1	**352-7123**	1	VALVE GP-RELIEF (LINE) (BOOM CYLINDER)	347
	10	1	**095-1594**	1	SEAL-O-RING	
	11	1	**095-1789**	1	RING	
	12	1	*148-8395*	1	PLUG AS	
		1	**9S-8005**	1	PLUG-O-RING	
	12A	1	**3K-0360**	1	SEAL-O-RING	
	13	1	*148-8407*	1	PLUG AS	
		1	**9S-4191**	1	PLUG-O-RING	
	13A	1	**3J-1907**	1	SEAL-O-RING	
	14	1	**190-7865**	1	CONNECTOR	
	15	1	**3J-1907**	1	SEAL-O-RING	
	16	1	**6V-8397**	1	SEAL-O-RING	

C - CHANGE FROM PREVIOUS TYPE
M - METRIC PART
Y - SEPARATE ILLUSTRATION

255-5683 **VALVE GP-LOAD CONTROL (*contd.*)** **i05282303**

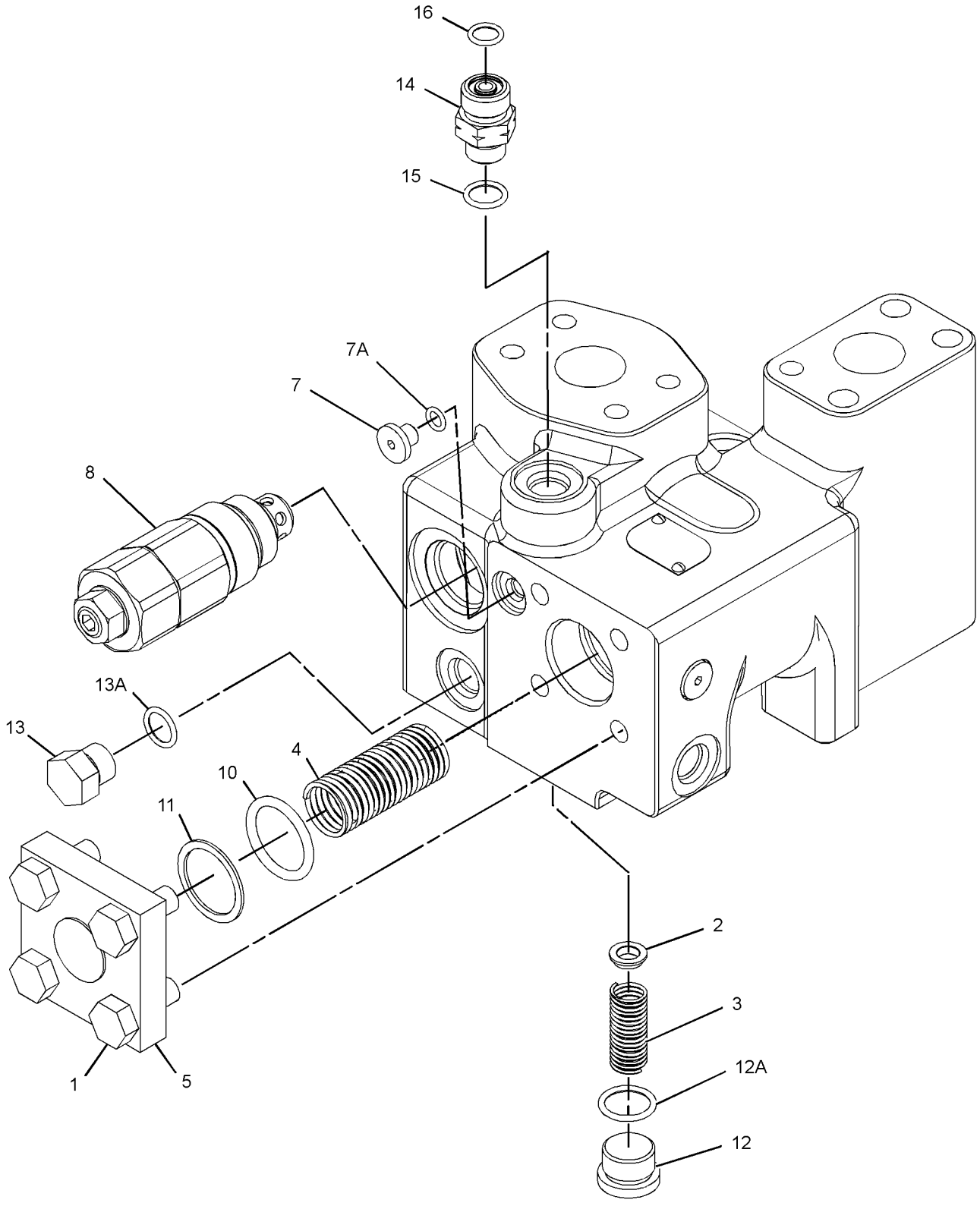

GRAPHIC #1 **<END>** g03358446

259-7464 VALVE GP-MAIN CONTROL

S/N: FKK1-UP; DNP1-UP

PART OF 421-6946 HYDRAULIC AR

SMCS-5051 **i05282309**

NOTE	REF NO	GRAPHIC REF	PART NUMBER	QTY	PART NAME 1 2 3 4 5 6 (PRODUCT LEVEL)	SEE PAGE
Y	1	1	**153-5313**	1	VALVE GP-RELIEF (NEGATIVE FLOW CONTROL)	342
Y	2	1	**259-7465**	1	VALVE GP-CONTROL (BOOM, STICK, BUCKET)	316
Y	3	1	**352-7138**	1	VALVE GP-CONTROL (BOOM, STICK, SWING, TRAVEL)	322
	4	1	**1P-3702**	2	SEAL-RECTANGULAR	
	5	1	**4J-0519**	2	SEAL-O-RING	
M	6	1	**8T-4140**	5	BOLT (M16X2X60-MM)	
M	7	1	**8T-4193**	4	BOLT (M16X2X50-MM)	
	8	1	**9X-8257**	9	WASHER (17.5X30X3.5-MM THK)	

M - METRIC PART
Y - SEPARATE ILLUSTRATION

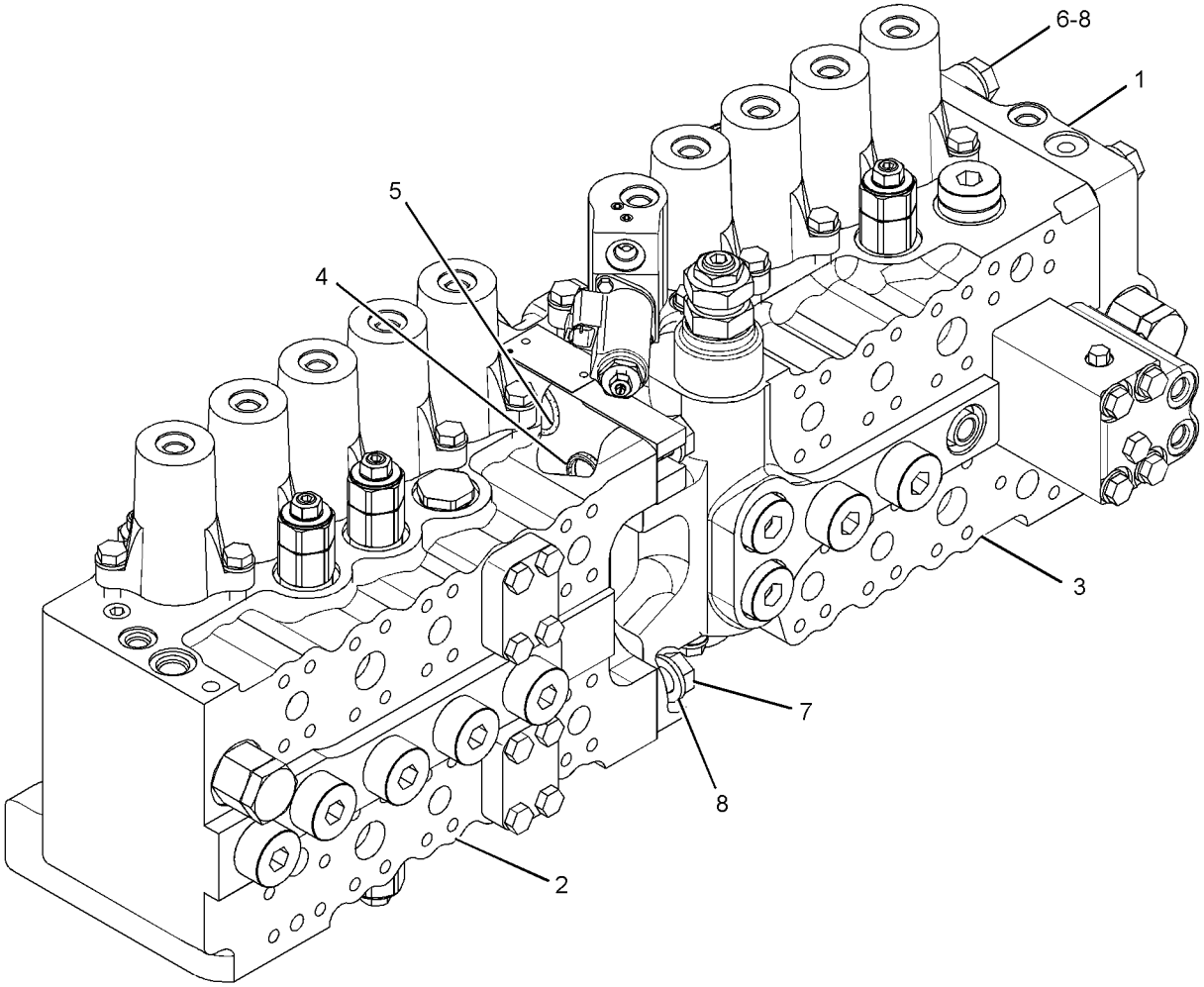

GRAPHIC #1 **<END>** g01190229

297-0529 VALVE GP-PILOT–JOYSTICK

S/N: FKK1-UP; DNP1-UP

PART OF 297-0532, 297-0533 CONTROL GP-JOYSTICK

AN ATTACHMENT

SMCS-5059 **i04921969**

NOTE	REF NO	GRAPHIC REF	PART NUMBER	QTY	PART NAME 1 2 3 4 5 6 (PRODUCT LEVEL)	SEE PAGE
	1	1	**270-5953**	4	SPRING	
	2	1	**095-1586**	4	SEAL-O-RING	
	3	1	**4I-6365**	1	JOINT	
	4	1	**094-0876**	4	SEAL	
	5	1	**096-1628**	4	PLUG	
B	6	1	**099-6137**	4	WASHER (6.1X9X0.2-MM THK)	
	7	1	**118-4086**	4	ROD	
	8	1	**118-4087**	4	SPRING	
M	9	1	**131-5915**	1	NUT-SPECIAL	
	10	1	**165-9431**	1	PLATE	
	11	1	**165-9435**	2	SEAT	
	12	1	**165-9436**	2	SEAT	
	13	1	**165-9438**	1	PLATE	
	14	1	**165-9442**	2	SPRING	
	15	1	**165-9443**	2	SEAT-SPRING	
	16	1	**165-9444**	2	SEAT-SPRING	
	17	1	**165-9460**	2	SPRING	
	18	1	**171-0087**	1	BELLOWS	

PARTS SHOWN IN GRAPHIC(S) WITHOUT A REFERENCE NUMBER ARE NOT SERVICED SEPARATELY

B - USE AS REQUIRED
M - METRIC PART

297-0529 **VALVE GP-PILOT (*contd.*)** **i04921969**

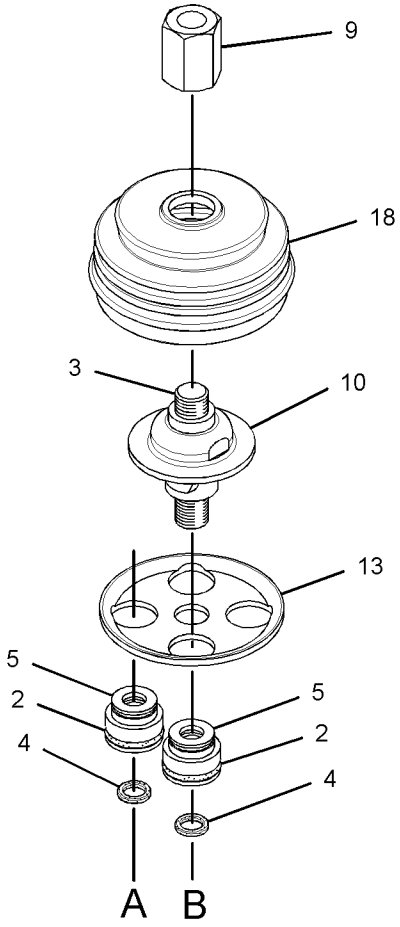

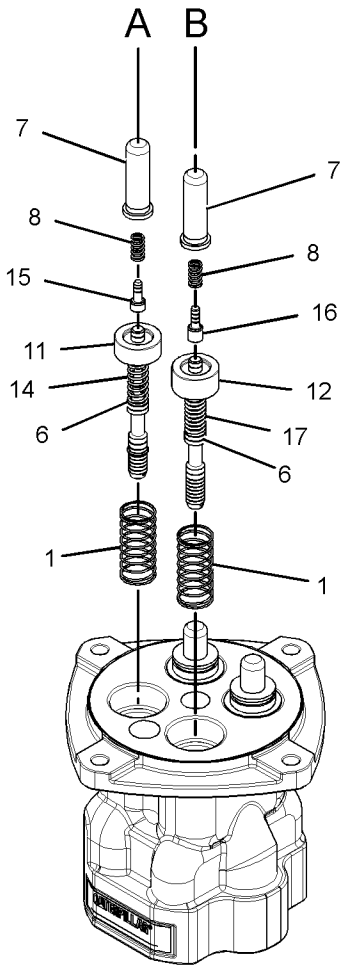

GRAPHIC #1 **<END>** g01528724

310-0414 VALVE GP-PILOT–TRAVEL

S/N: FKK1-UP; DNP1-UP

PART OF 248-9825 LINES GP-PILOT

SMCS-5059 **i04915650**

NOTE	REF NO	GRAPHIC REF	PART NUMBER	QTY	PART NAME 1 2 3 4 5 6 (PRODUCT LEVEL)	SEE PAGE
	1	1	**087-5708**	2	PEDAL	
M	2	1	**095-0673**	2	BOLT-SOCKET HEAD (M12X1.75X60-MM)	
	3	1	**099-6137**	4	WASHER (6.1X9X0.2-MM THK)	
	4	1	**099-6141**	4	WASHER (6.1X11X1.5-MM THK)	
	5	1	**099-6144**	4	BUSHING-TERMINAL	
	6	1	**099-6145**	2	CAMSHAFT	
	7	1	**119-5388**	4	CAP	
	8	1	**119-5389**	4	PACKING	
	9	1	**119-5391**	4	SEAT	
	10	1	**126-1865**	4	SPRING	
	11	1	**126-1866**	4	SPRING	
	12	1	**131-5818**	4	SPRING	
	13	1	**147-4131**	2	BOOT-PROTECTION	
	14	1	**153-5223**	12	BALL	
	15	1	**165-9463**	2	COVER	
	16	1	**165-9552**	4	PUSHROD	
	17	1	**165-9553**	1	COVER	
	18	1	**165-9554**	4	PLUG	
	19	1	**196-3784**	2	PLUG	
	20	1	**270-5949**	4	PISTON	
	21	1	**270-5950**	4	SPRING	
	22	1	**310-0419**	4	SEAT	
	23	1	**310-0420**	4	SEAL-O-RING	
	24	1	**310-0421**	2	BUSHING	
	25	1	**310-0422**	2	SEAT	
	26	1	**323-7770**	2	ADAPTER	
M	27	1	**087-4710**	4	SETSCREW (M10X21-MM)	
M	28	1	**095-1260**	2	SETSCREW-SOCKET (M6X1X6-MM)	
	29	1	**095-1575**	4	SEAL-O-RING	
	30	1	**3J-7354**	2	SEAL-O-RING	
	31	1	**3Y-9267**	2	BALL	
	32	1	**6V-8400**	4	SEAL-O-RING	
M	33	1	**8C-6965**	2	BOLT-SOCKET HEAD (M6X1X45-MM)	
M	34	1	**8T-1158**	2	BOLT-SOCKET HEAD (M8X1.25X20-MM)	
M	35	1	**8T-4133**	4	NUT (M10X1.5-THD)	
	36	1	**8T-6759**	4	PLUG-PIPE	

M - METRIC PART

310-0414 **VALVE GP-PILOT (*contd.*)** **i04915650**

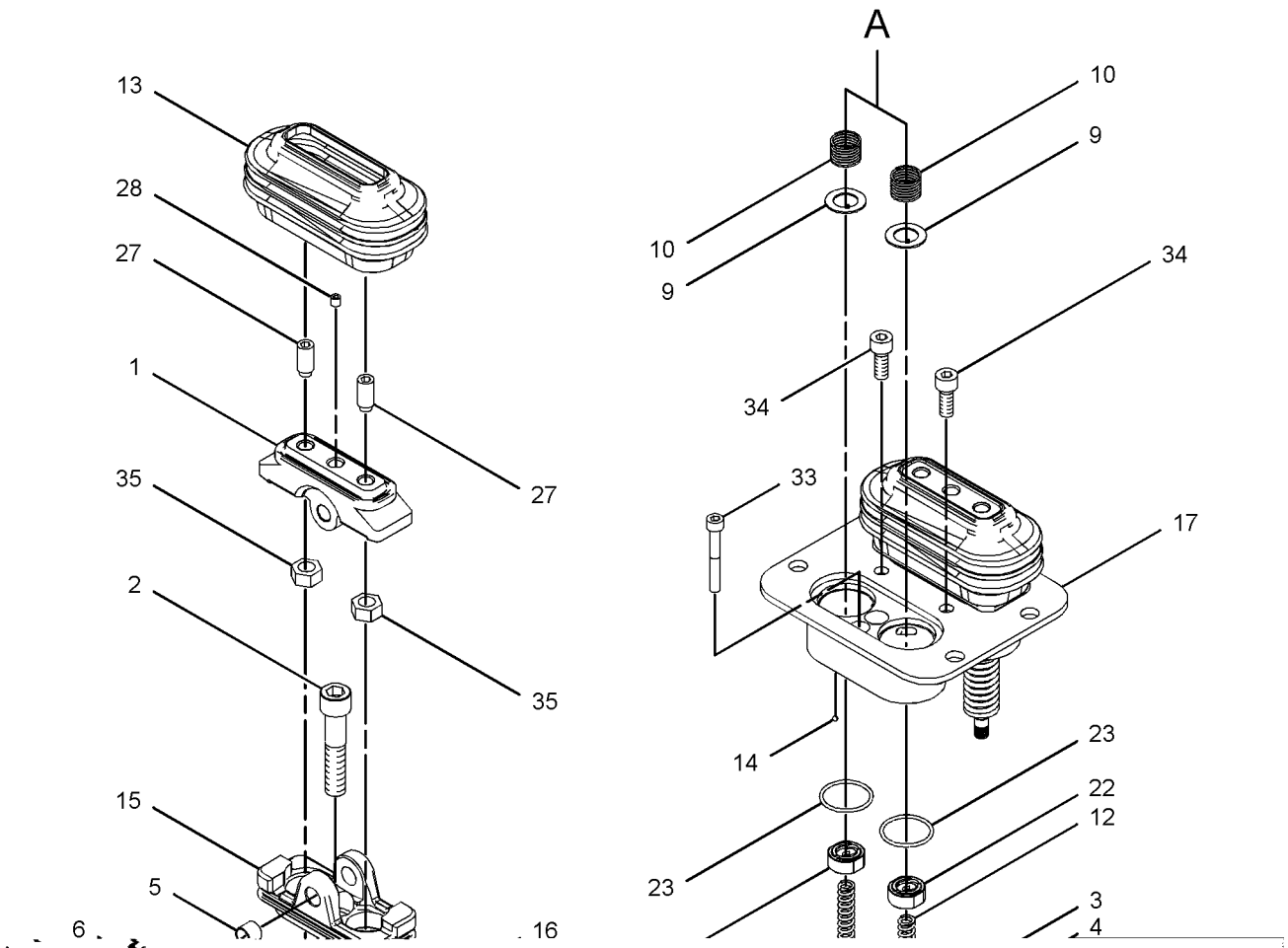

GRAPHIC #1 **<END>** g01622941

1U-1100 VALVE GP-PRESSURE REDUCING

S/N: DNP1-UP
PART OF 363-4212 LINES GP-PILOT
AN ATTACHMENT

SMCS-5117 **i05294172**

NOTE	REF NO	GRAPHIC REF	PART NUMBER	QTY	PART NAME 1 2 3 4 5 6 (PRODUCT LEVEL)	SEE PAGE
	1	1	**3G-0670**	1	SPRING	
	2	1	**3G-0671**	1	END-SPRING	
	3	1	**5B-9318**	1	BALL	
	4	1	**3G-0669**	1	SPRING	
	5	1	**3G-0672**	1	END-SPRING	
	6	1	**3D-4245**	1	SEAL-O-RING	
	7	1	**2D-6642**	1	BALL	
	8	1	**5L-5840**	1	WASHER (9.25X16.92X1.83-MM THK)	
	9	1	**1B-4203**	1	NUT-FULL (3/8-24-THD)	
	10	1	**5P-5477**	1	SETSCREW	

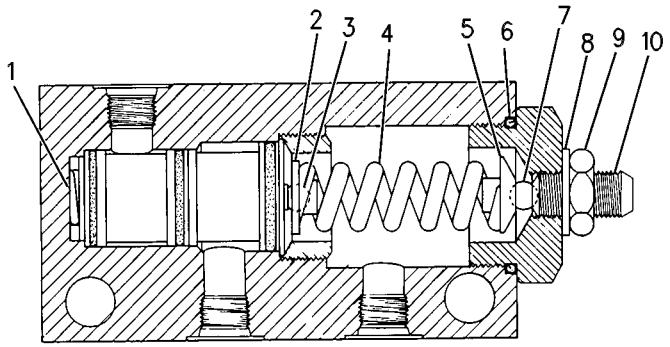

GRAPHIC #1 **<END>** g00564987

310-0210 VALVE GP-PRESSURE REDUCING–BOOM, SWING PRIORITY

S/N: FKK1-UP; DNP1-UP

PART OF 376-6310 LINES GP-PILOT

SMCS-5117 **i04916890**

NOTE	REF NO	GRAPHIC REF	PART NUMBER	QTY	PART NAME 1 2 3 4 5 6 (PRODUCT LEVEL)	SEE PAGE
	1	1	**111-9998**	2	PLUG	
	2	1	**171-0123**	2	PLUG	
M	3	1	**171-0124**	2	SETSCREW (M8X1.25X18-MM)	
	4	1	**171-0126**	2	SEAT-SPRING	
	5	1	**171-0127**	2	SEAT-SPRING	
	6	1	**171-0128**	2	SPRING	
	7	1	**185-0423**	2	STOP	
	8	1	**095-1580**	2	SEAL-O-RING	
	9	1	**095-1582**	2	SEAL-O-RING	
	10	1	**095-1590**	2	SEAL-O-RING	
M	11	1	**5C-7261**	2	NUT (M8X1.25-THD)	

M - METRIC PART

310-0210 **VALVE GP-PRESSURE REDUCING (*contd.*)** **i04916890**

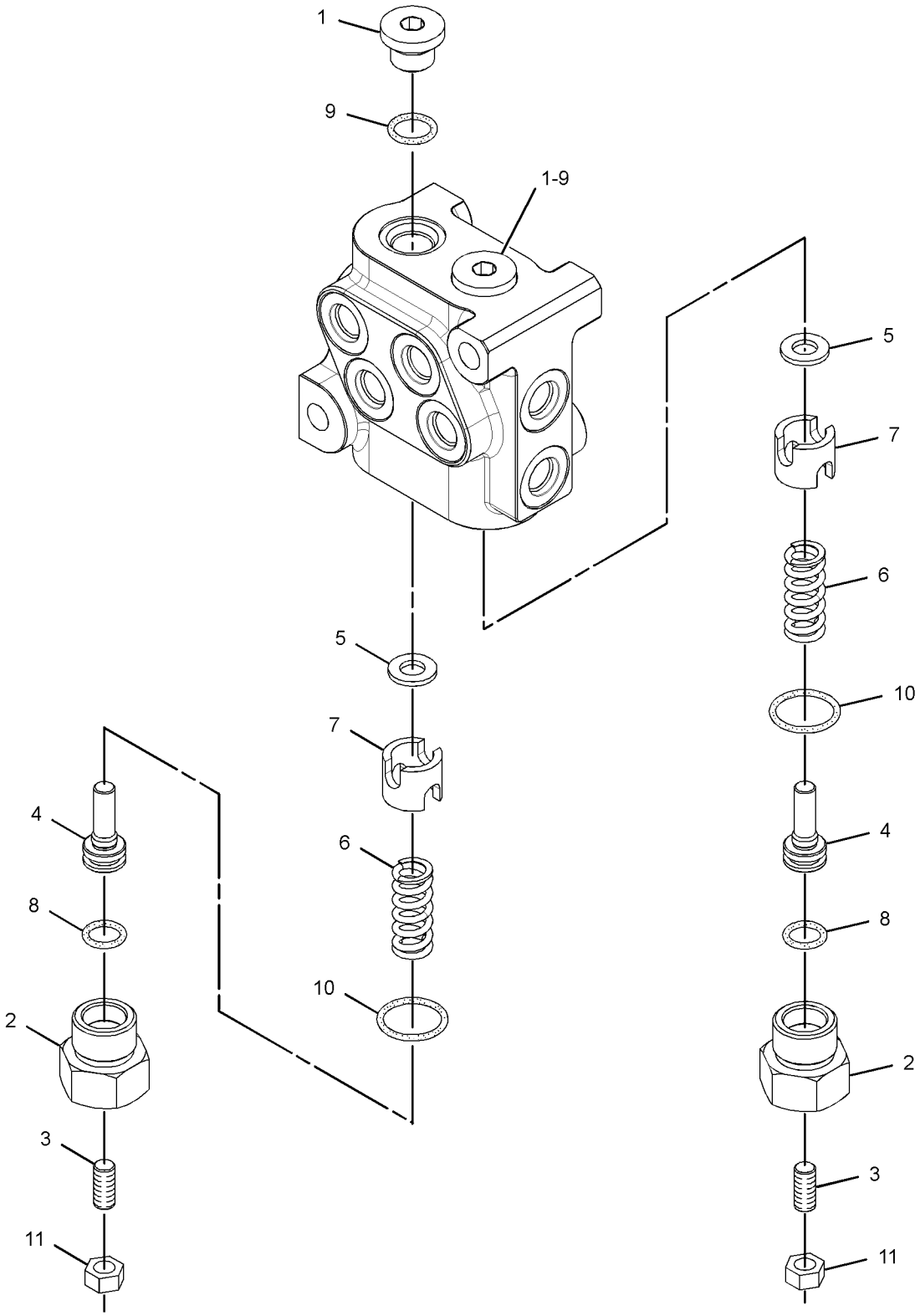

GRAPHIC #1 **<END>** g01506435

323-7898 VALVE GP-PRIORITY–SWING

S/N: FKK1-UP; DNP1-UP

PART OF 352-7138 VALVE GP-CONTROL

SMCS-506P **i04917019**

NOTE	REF NO	GRAPHIC REF	PART NUMBER	QTY	PART NAME 1 2 3 4 5 6 (PRODUCT LEVEL)	SEE PAGE
	1	1	**140-0674**	1	VALVE	
	2	1	**158-8186**	1	SPRING	
	3	1	**255-5594**	2	SEAL-O-RING	
	4	1	**297-0483**	2	SEAL-O-RING	
	5	1	**140-0677**	1	PIN	
					PARTS SHOWN IN GRAPHIC(S) WITHOUT A REFERENCE NUMBER ARE NOT SERVICED SEPARATELY	

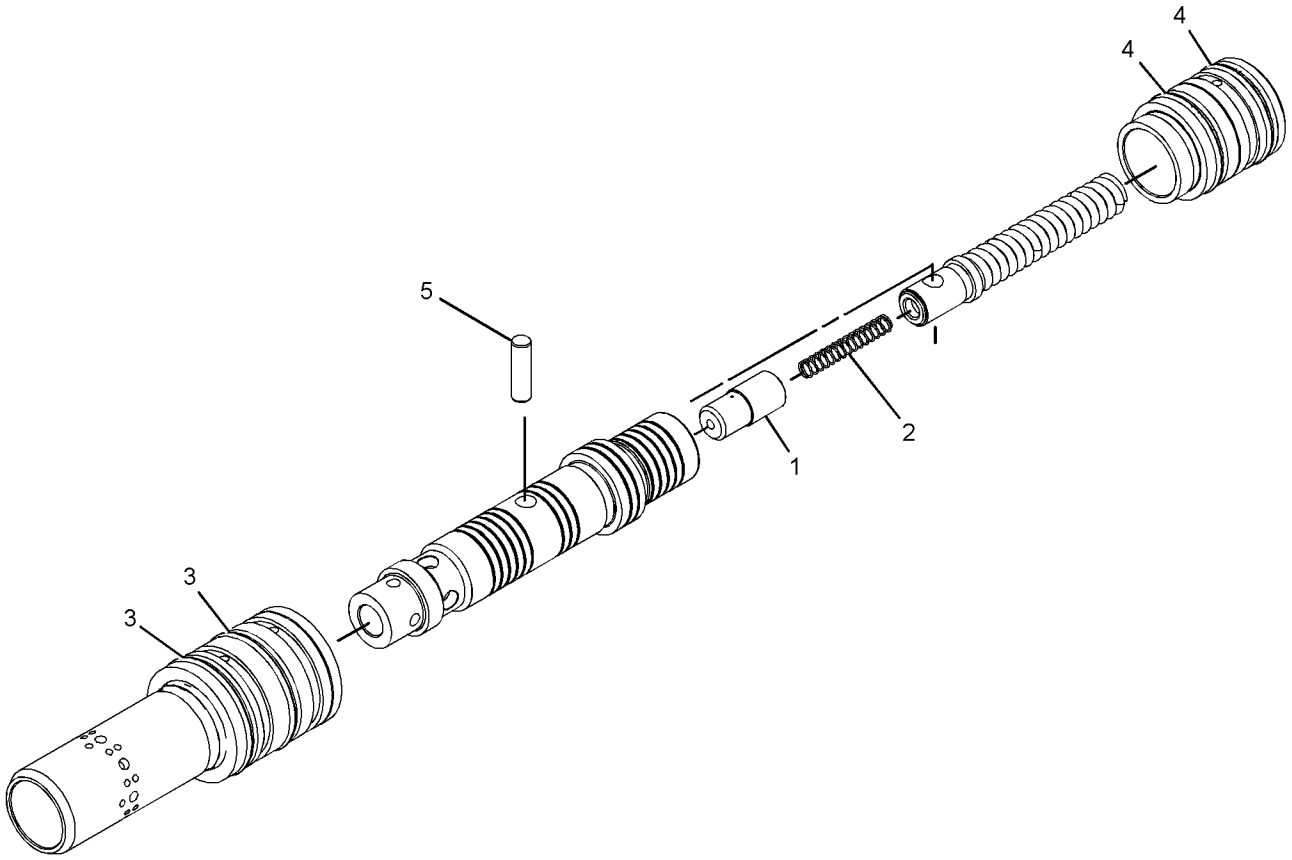

GRAPHIC #1 **<END>** g02144637

109-2667 VALVE GP-RELIEF

S/N: FKK1-UP; DNP1-UP

PART OF 153-5313 VALVE GP-RELIEF

SMCS-5069, 5117 **i04917511**

NOTE	REF NO	GRAPHIC REF	PART NUMBER	QTY	PART NAME 1 2 3 4 5 6 (PRODUCT LEVEL)	SEE PAGE
	1	1	**5I-4111**	1	PLUG	
	2	1	**109-2665**	1	BODY-VALVE	
	3	1	**107-6370**	1	SPRING	
	4	1	**107-6371**	1	VALVE	
	5	1	**4K-1388**	2	SEAL-O-RING	
B	6	1	**4J-7385**	1	SHIM (0.048-IN THK)	
B	7	1	**4J-7386**	5	SHIM (0.01-IN THK)	
	8	1	**5P-3108**	1	SEAL-O-RING	

B - USE AS REQUIRED

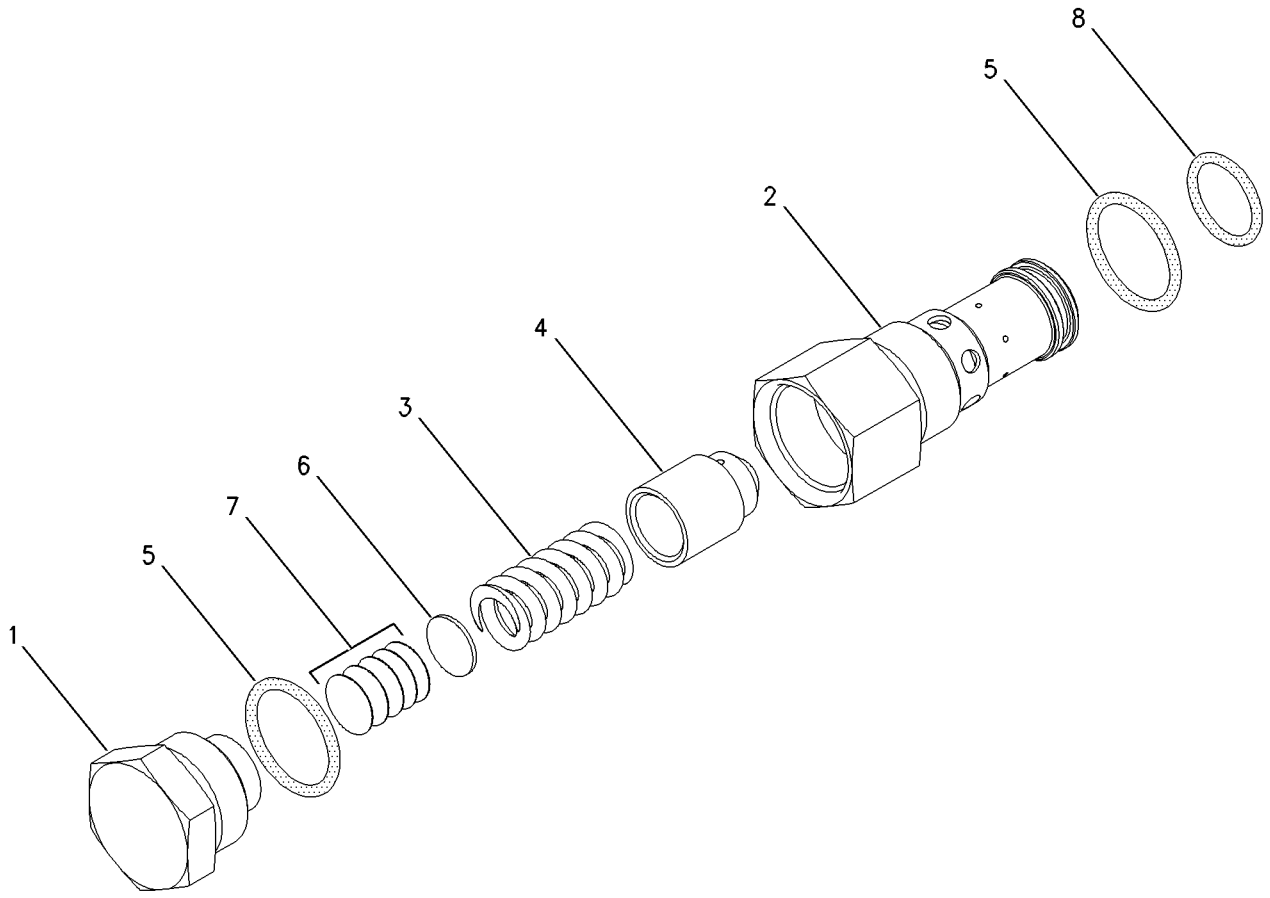

GRAPHIC #1 **<END>** g00672680

109-5152 VALVE GP-RELIEF—NEGATIVE FLOW CONTROL

S/N: FKK1-UP; DNP1-UP

PART OF 259-7465 VALVE GP-CONTROL

SMCS-5069, 5117

i04917438

NOTE	REF NO	GRAPHIC REF	PART NUMBER	QTY	PART NAME 1 2 3 4 5 6 (PRODUCT LEVEL)	SEE PAGE
	1	1	**5I-4111**	1	PLUG	
	3	1	**107-6370**	1	SPRING	
	4	1	**107-6371**	1	VALVE	
	5	1	**4K-1388**	2	SEAL-O-RING	
B	6	1	**4J-7385**	1	SHIM (0.048-IN THK)	
B	7	1	**4J-7386**	1	SHIM (0.01-IN THK)	
	8	1	**5P-3108**	1	SEAL-O-RING	

B - USE AS REQUIRED

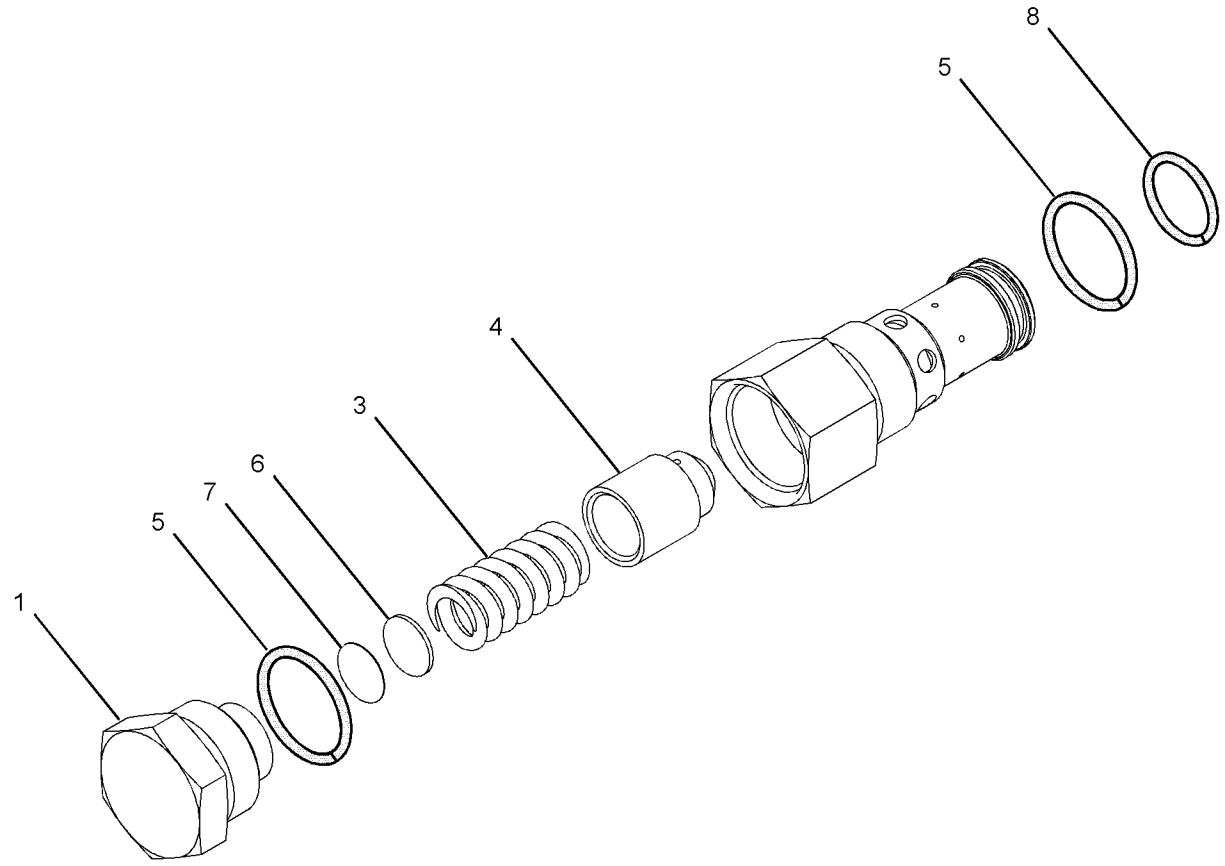

GRAPHIC #1

<END>

g03092324

153-5313 VALVE GP-RELIEF—NEGATIVE FLOW CONTROL

S/N: FKK1-UP; DNP1-UP

PART OF 259-7464 VALVE GP-MAIN CONTROL

SMCS-5069, 5117 **i04916901**

NOTE	REF NO	GRAPHIC REF	PART NUMBER	QTY	PART NAME 1 2 3 4 5 6 (PRODUCT LEVEL)	SEE PAGE
	1	1	**153-5239**	1	COVER	
Y	2	1	**109-2667**	1	VALVE GP-RELIEF	340
	3	1	**1P-3702**	2	SEAL-RECTANGULAR	
	4	1	**4J-8998**	2	SEAL-O-RING	

Y - SEPARATE ILLUSTRATION

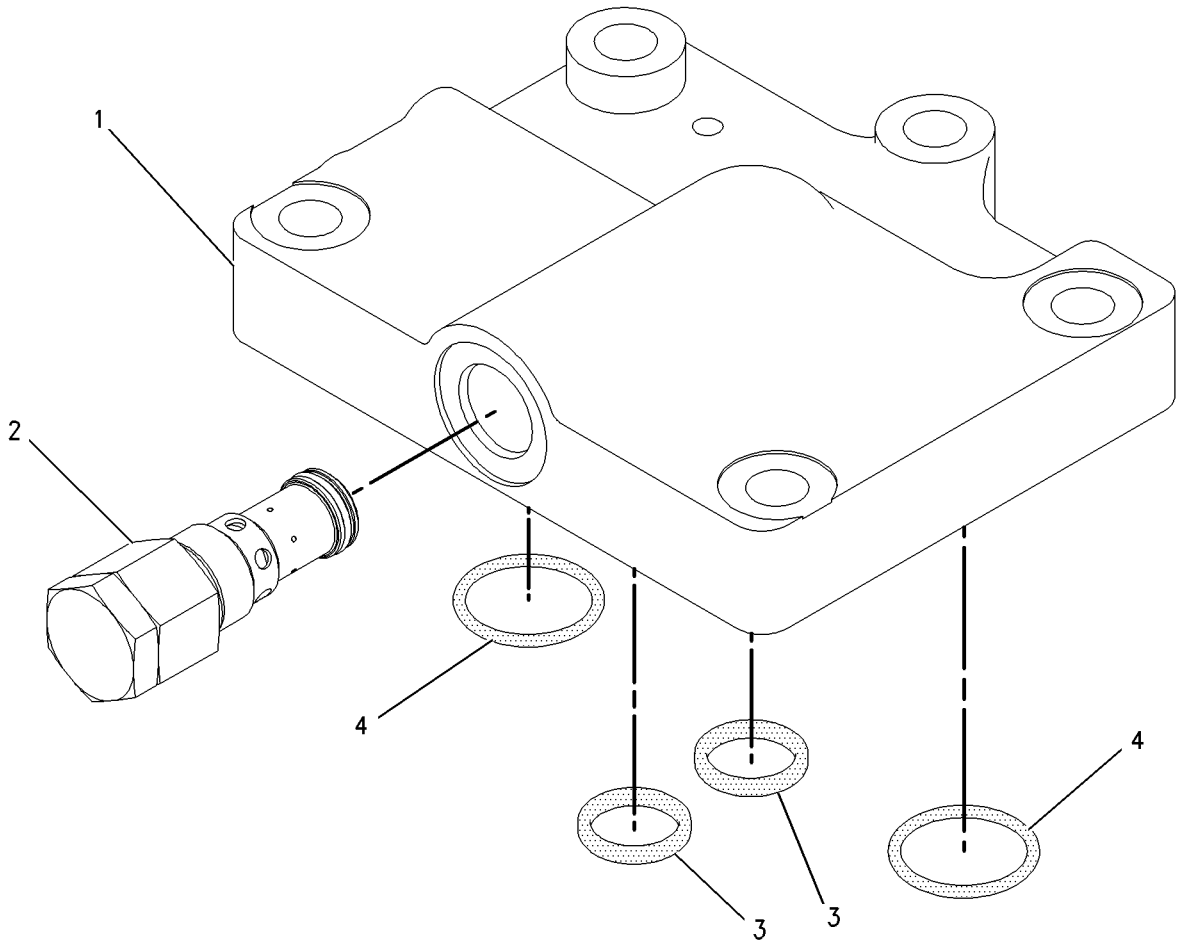

GRAPHIC #1 **<END>** g00743238

173-3452 VALVE GP-RELIEF

S/N: FKK1-UP; DNP1-UP

PART OF 334-9968 MOTOR GP-SWING

SMCS-5069, 5117

i04913528

NOTE	REF NO	GRAPHIC REF	PART NUMBER	QTY	PART NAME 1 2 3 4 5 6 (PRODUCT LEVEL)	SEE PAGE
	1	1	**168-0765**	1	RING-BACKUP	
	2	1	**7J-9933**	1	SEAL-O-RING	
	3	1	**7I-0966**	1	RING-BACKUP	
	4	1	**6V-5556**	1	SEAL-O-RING	
	5	1	**095-1698**	1	SEAL-O-RING	

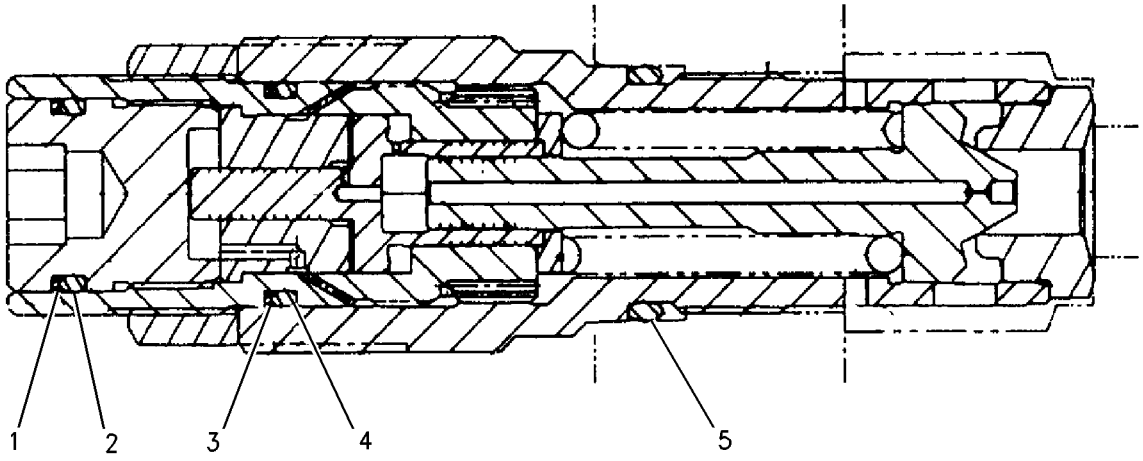

GRAPHIC #1

<END>

g00671043

173-3536 VALVE GP-RELIEF

S/N: FKK1-UP; DNP1-UP

PART OF 158-9085 VALVE GP-SWING CUSHION

SMCS-5069, 5117 **i04917322**

NOTE	REF NO	GRAPHIC REF	PART NUMBER	QTY	PART NAME 1 2 3 4 5 6 (PRODUCT LEVEL)	SEE PAGE
	1	1	**095-1785**	1	RING-BACKUP	
	2	1	**095-1586**	1	SEAL-O-RING	

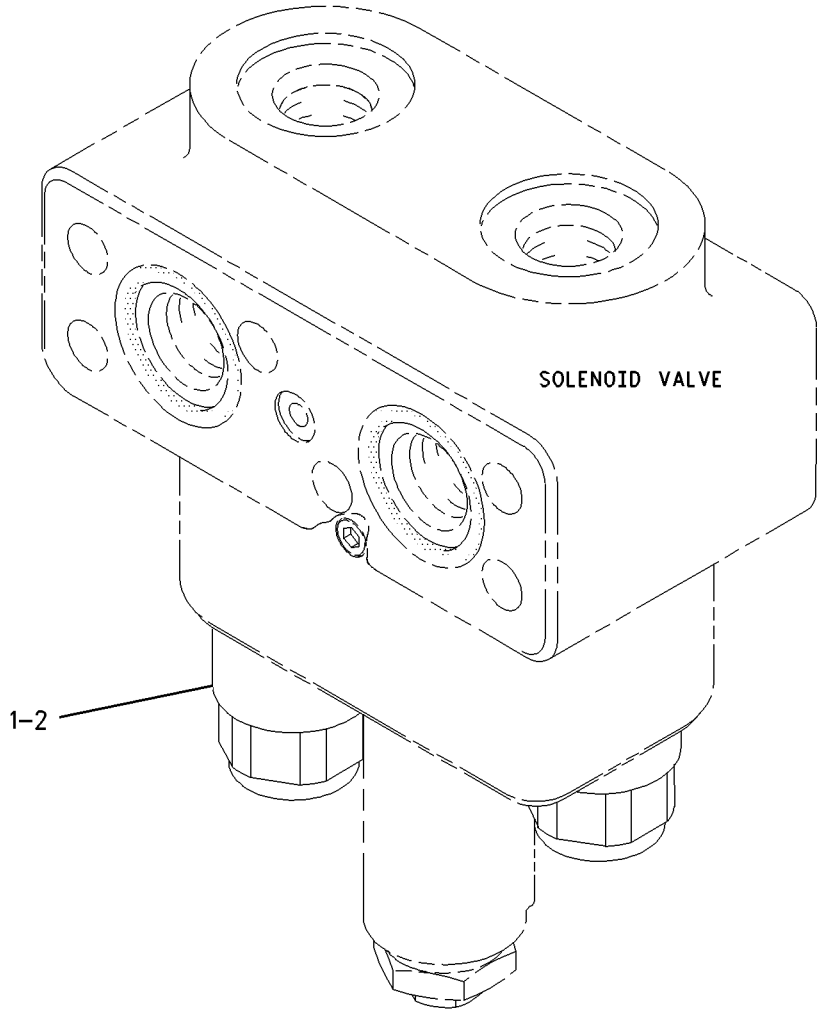

GRAPHIC #1 **<END>** g00672771

352-7116 VALVE GP-RELIEF

S/N: FKK1-UP; DNP1-UP

PART OF 352-7138 VALVE GP-CONTROL

SMCS-5069, 5117 **i04917039**

NOTE	REF NO	GRAPHIC REF	PART NUMBER	QTY	PART NAME 1 2 3 4 5 6 (PRODUCT LEVEL)	SEE PAGE
	1	1	**4I-3510**	1	SPRING	
	2	1	**4I-7714**	1	NUT (3/4-16-THD)	
	3	1	**6I-6795**	1	SPRING	
	4	1	**095-1786**	1	RING-BACKUP	
	5	1	**107-6540**	1	COLLAR	
	6	1	**107-6541**	1	RING-RETAINING	
	7	1	**119-5398**	1	SCREEN-FILTER (RELIEF VALVE)	
	8	1	**171-0035**	1	HOLDER	
	9	1	**171-0036**	1	ADJUSTER	
	10	1	**171-0037**	1	VALVE	
	11	1	**352-6864**	1	SEAT-VALVE	
	12	1	**6V-8978**	1	SEAL-O-RING	
	13	1	**095-1579**	1	SEAL-O-RING	
	14	1	**095-1587**	1	SEAL-O-RING	
	15	1	**095-1590**	1	SEAL-O-RING	
	16	1	**3D-2824**	1	SEAL-O-RING	
	17	1	**6V-8218**	1	SEAL-O-RING	

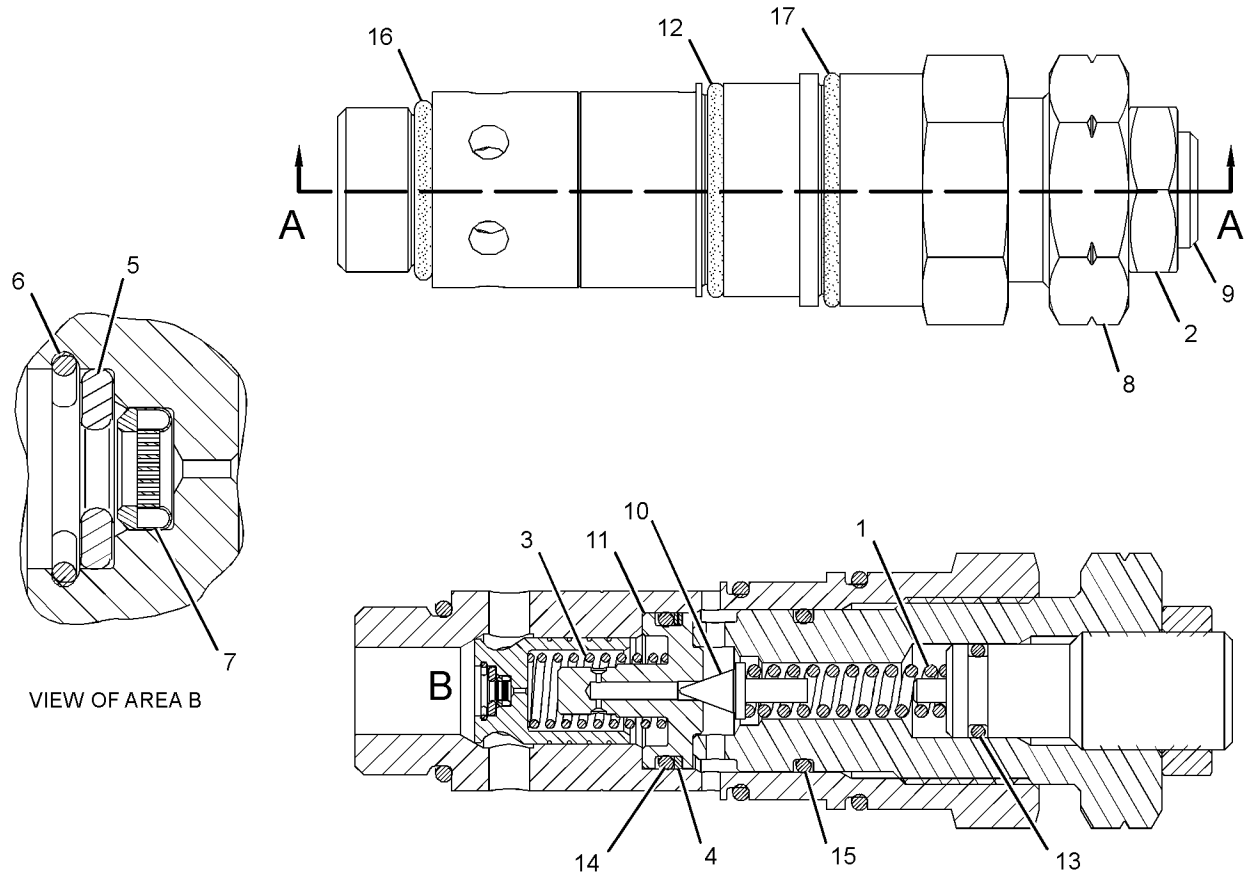

VIEW OF AREA B

SECTION A-A

GRAPHIC #1 **<END>** g02283174

352-7122 VALVE GP-RELIEF

S/N: FKK1-UP; DNP1-UP

PART OF 259-7465, 352-7138 VALVE GP-CONTROL

SMCS-5069, 5117 **i04916934**

NOTE	REF NO	GRAPHIC REF	PART NUMBER	QTY	PART NAME 1 2 3 4 5 6 (PRODUCT LEVEL)	SEE PAGE
	1	1	**095-1578**	1	SEAL-O-RING	
	2	1	**103-8252**	2	RING	
	3	1	**103-8253**	2	RING	
	4	1	**103-8254**	1	SEAL-O-RING	
	5	1	**103-8255**	1	SEAL-O-RING	
	6	1	**3D-2824**	2	SEAL-O-RING	

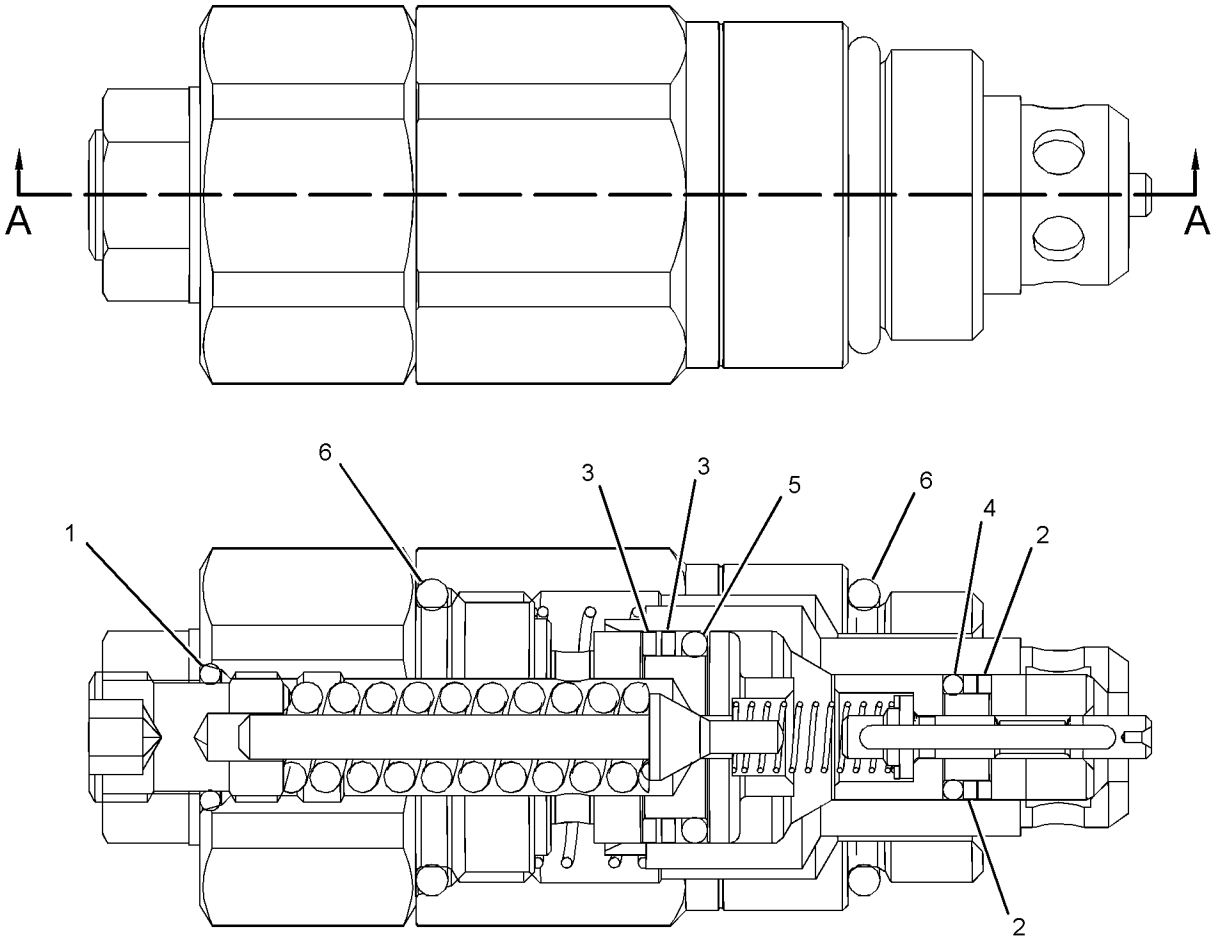

SECTION A-A

GRAPHIC #1 **<END>** g02270493

352-7123 VALVE GP-RELIEF–LINE

S/N: FKK1-UP; DNP1-UP

PART OF 255-5680, 255-5683 VALVE GP-LOAD CONTROL

SMCS-5069, 5117 **i04915580**

NOTE	REF NO	GRAPHIC REF	PART NUMBER	QTY	PART NAME 1 2 3 4 5 6 (PRODUCT LEVEL)	SEE PAGE
	1	1	**095-1578**	1	SEAL-O-RING	
	2	1	**103-8252**	2	RING	
	3	1	**103-8253**	2	RING	
	4	1	**103-8254**	1	SEAL-O-RING	
	5	1	**103-8255**	1	SEAL-O-RING	
	6	1	**3D-2824**	2	SEAL-O-RING	
					PARTS SHOWN IN GRAPHIC(S) WITHOUT A REFERENCE NUMBER ARE NOT SERVICED SEPARATELY	

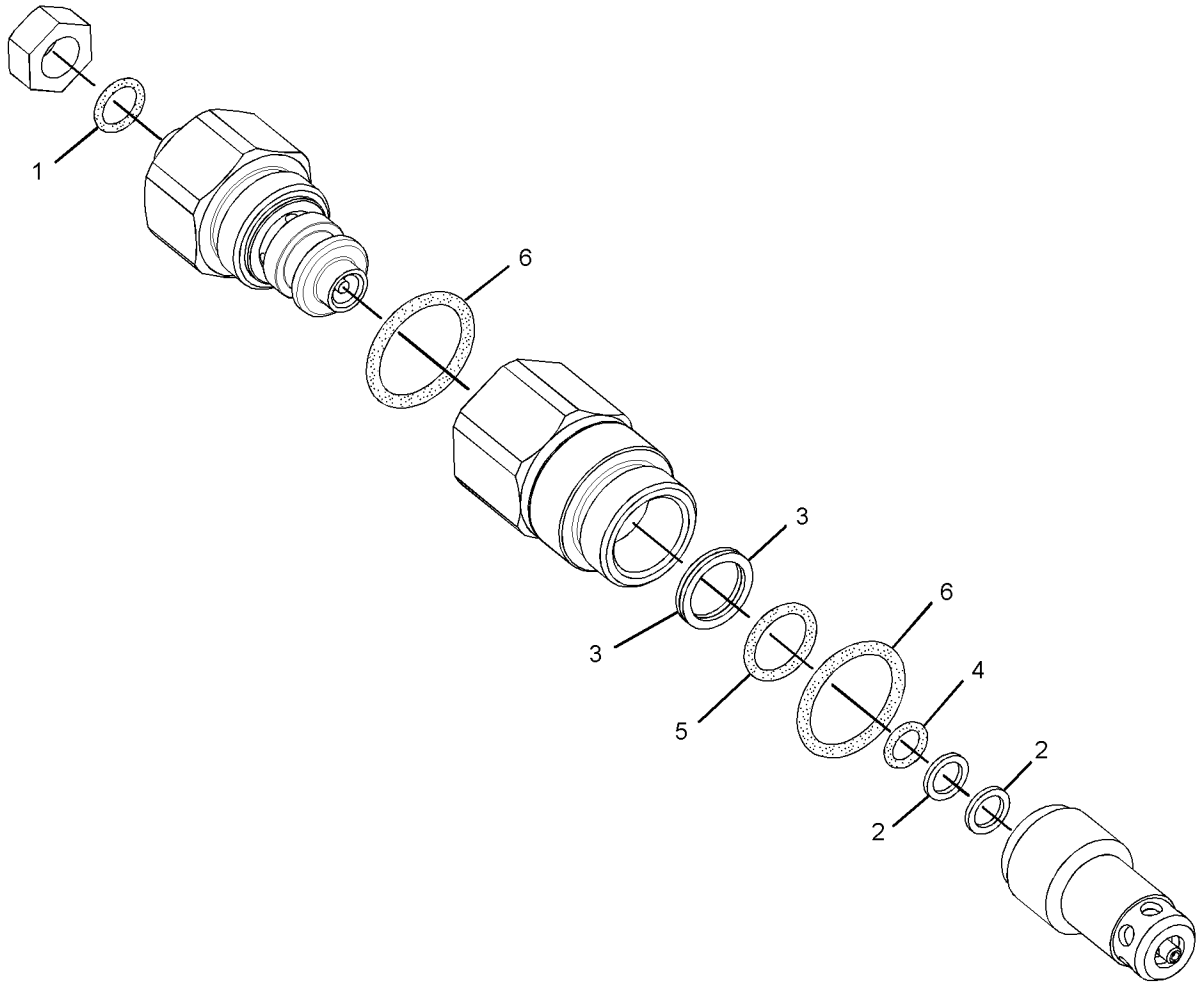

GRAPHIC #1 **<END>** g02217774

360-4599 VALVE GP-RELIEF

S/N: FKK1-UP; DNP1-UP

PART OF 360-4598 VALVE GP-TRAVEL COUNTERBALANCE

SMCS-5069, 5117 **i04913563**

NOTE	REF NO	GRAPHIC REF	PART NUMBER	QTY	PART NAME 1 2 3 4 5 6 (PRODUCT LEVEL)	SEE PAGE
M	1	1	**7Y-8436**	1	SETSCREW (M27X2X27-MM)	
M	2	1	**7Y-8437**	1	NUT (M27X2-THD)	
	3	1	**095-1601**	1	SEAL-O-RING	
	4	1	**095-1787**	2	RING-BACKUP	
	5	1	**095-1590**	1	SEAL-O-RING	
	6	1	**121-1459**	2	RING-BACKUP	
	7	1	**095-1586**	2	SEAL-O-RING	
	8	1	**095-1785**	1	RING-BACKUP	

M - METRIC PART

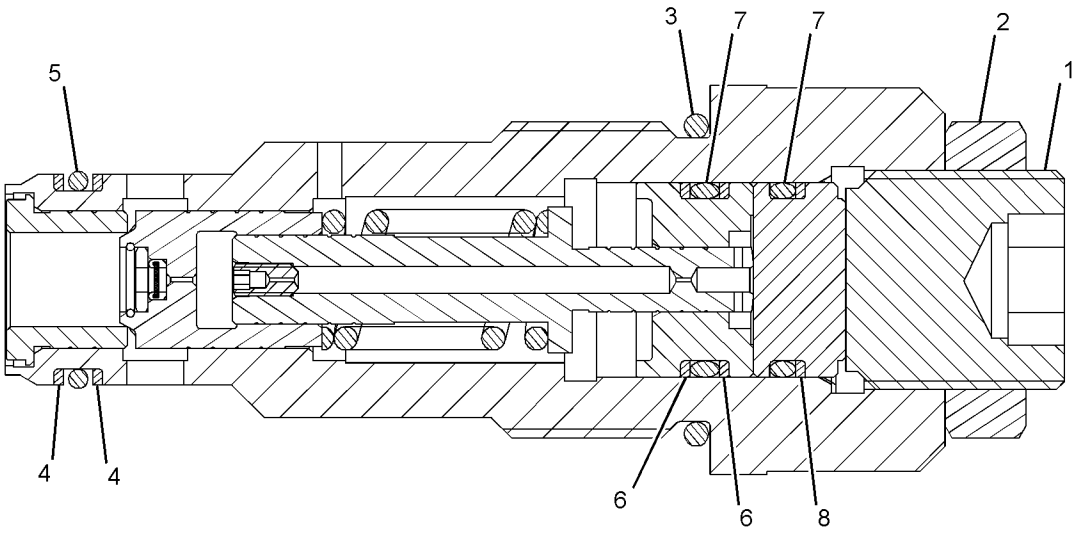

SECTION A-A

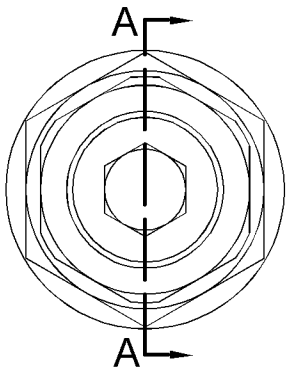

GRAPHIC #1 **<END>** g02295694

8J-6875 VALVE GP-SHUTTLE

S/N: DNP1-UP
PART OF 363-4212 LINES GP-PILOT
AN ATTACHMENT

SMCS-5079 **i02773479**

NOTE	REF NO	GRAPHIC REF	PART NUMBER	QTY	PART NAME 1 2 3 4 5 6 (PRODUCT LEVEL)	SEE PAGE
	1	1	**4T-9905**	2	ADAPTER	
	2	1	**2M-9780**	2	SEAL-O-RING	
	3	1	**4B-9784**	1	BALL	

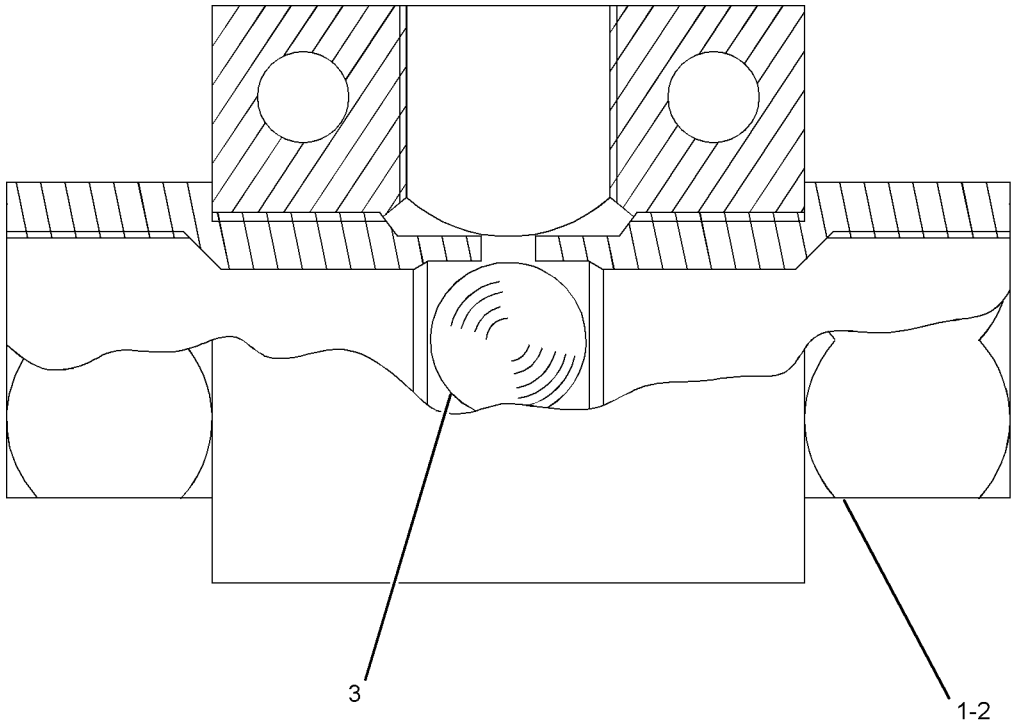

GRAPHIC #1 **<END>** g01047576

164-6979 VALVE GP-SHUTTLE

S/N: FKK1-UP; DNP1-UP

PART OF 376-6310 LINES GP-PILOT

SMCS-5079 **i04916860**

NOTE	REF NO	GRAPHIC REF	PART NUMBER	QTY	PART NAME 1 2 3 4 5 6 (PRODUCT LEVEL)	SEE PAGE
	1	1	**352-6815**	1	BODY-VALVE	
	2	1	**4B-9783**	1	BALL	
	3	1	*175-4430*	2	CONNECTOR AS	
					(EACH INCLUDES)	
		1	**3J-1907**	1	SEAL-O-RING	
		1	**6V-8397**	1	SEAL-O-RING	
		1	**123-2552**	1	CONNECTOR	

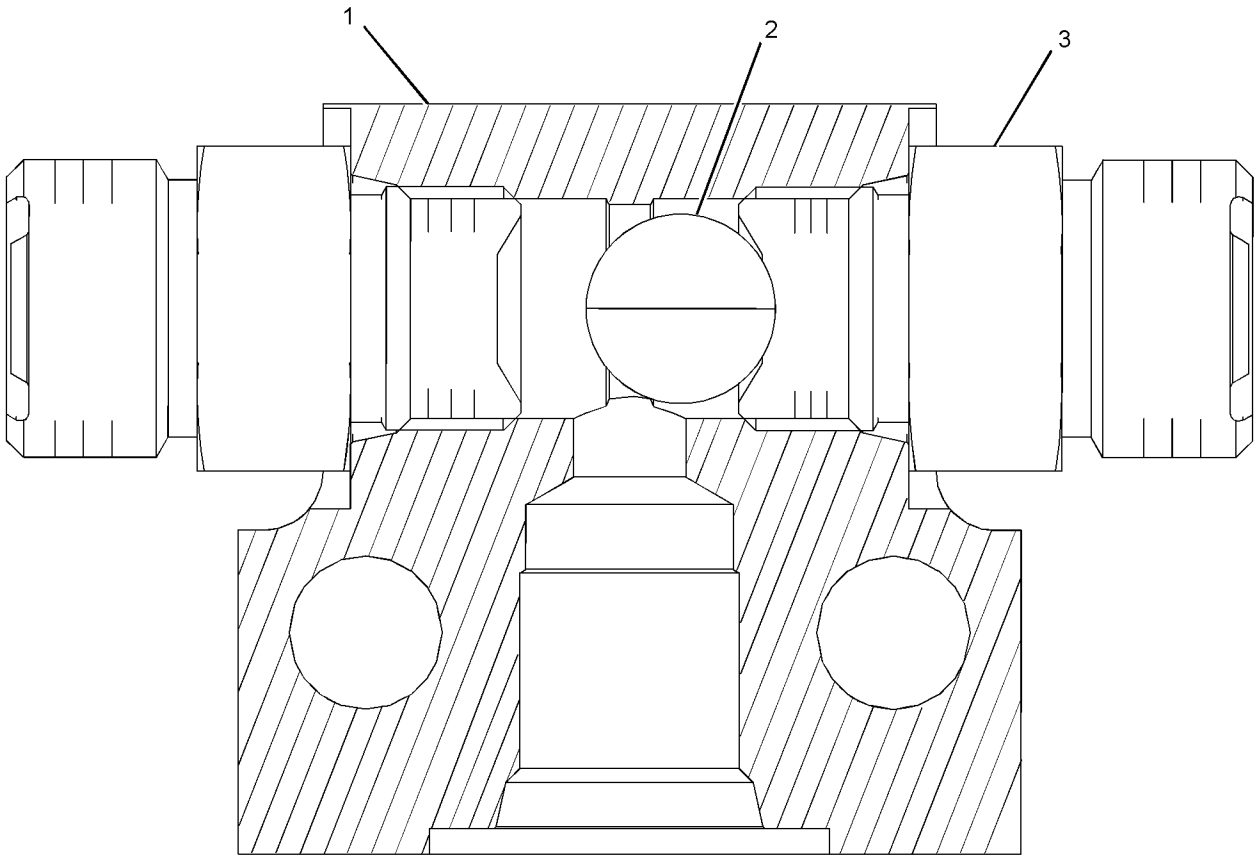

GRAPHIC #1 **<END>** g01955237

185-0462 VALVE GP-SHUTTLE

S/N: FKK1-UP; DNP1-UP

PART OF 248-9825 LINES GP-PILOT

SMCS-5079 **i04915649**

NOTE	REF NO	GRAPHIC REF	PART NUMBER	QTY	PART NAME 1 2 3 4 5 6 (PRODUCT LEVEL)	SEE PAGE
	1	1	**7I-8084**	4	PLUG	
	2	1	**185-0463**	1	SEAT	
	3	1	**4B-9880**	7	BALL	
	4	1	**165-9464**	6	SEAT	
	5	1	**095-1578**	7	SEAL-O-RING	
	6	1	**107-6479**	7	PLUG	

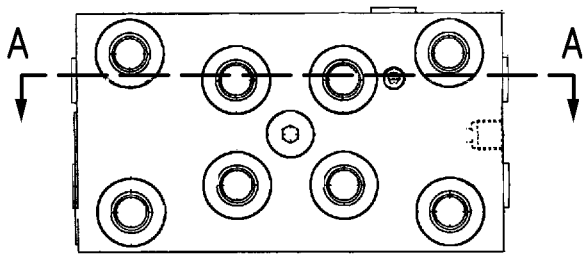

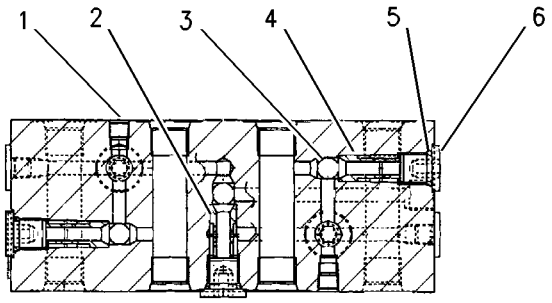

SECTION A-A

GRAPHIC #1 **<END>** g00699270

111-9916 VALVE GP-SOLENOID

S/N: FKK1-UP; DNP1-UP

PART OF 256-0093 HEAD GP-PUMP

SMCS-5479 **i04917148**

NOTE	REF NO	GRAPHIC REF	PART NUMBER	QTY	PART NAME 1 2 3 4 5 6 (PRODUCT LEVEL)	SEE PAGE
	1	1	**095-1750**	1	SEAL-O-RING	
	2	1	**6V-8398**	1	SEAL-O-RING	
	3	1	**095-1751**	1	SEAL-O-RING	
	4	1	**095-1586**	1	SEAL-O-RING	
M	5	1	**114-0623**	1	NUT AS (M6X1-THD)	

M - METRIC PART

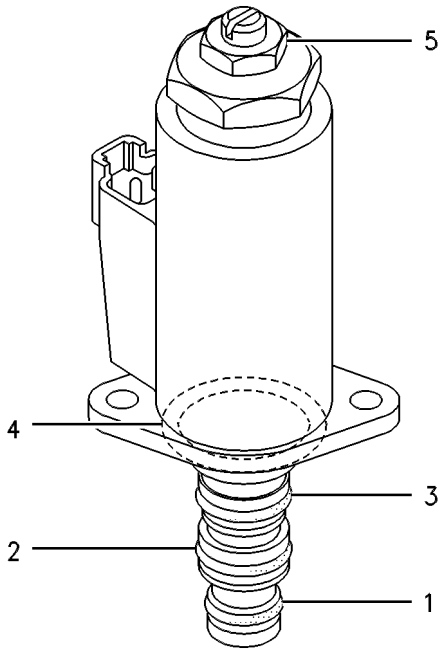

GRAPHIC #1 **<END>** g00258219

121-1491 VALVE GP-SOLENOID

S/N: FKK1-UP; DNP1-UP

PART OF 239-8697, 239-8998 MANIFOLD GP-CONTROL, 352-7138 VALVE GP-CONTROL

SMCS-5479 **i04916880**

NOTE	REF NO	GRAPHIC REF	PART NUMBER	QTY	PART NAME 1 2 3 4 5 6 (PRODUCT LEVEL)	SEE PAGE
	1	1	**095-1750**	1	SEAL-O-RING	
	2	1	**6V-8398**	1	SEAL-O-RING	
	3	1	**095-1751**	1	SEAL-O-RING	
	4	1	**095-1586**	1	SEAL-O-RING	
M	5	1	**114-0623**	1	NUT AS (M6X1-THD)	

M - METRIC PART

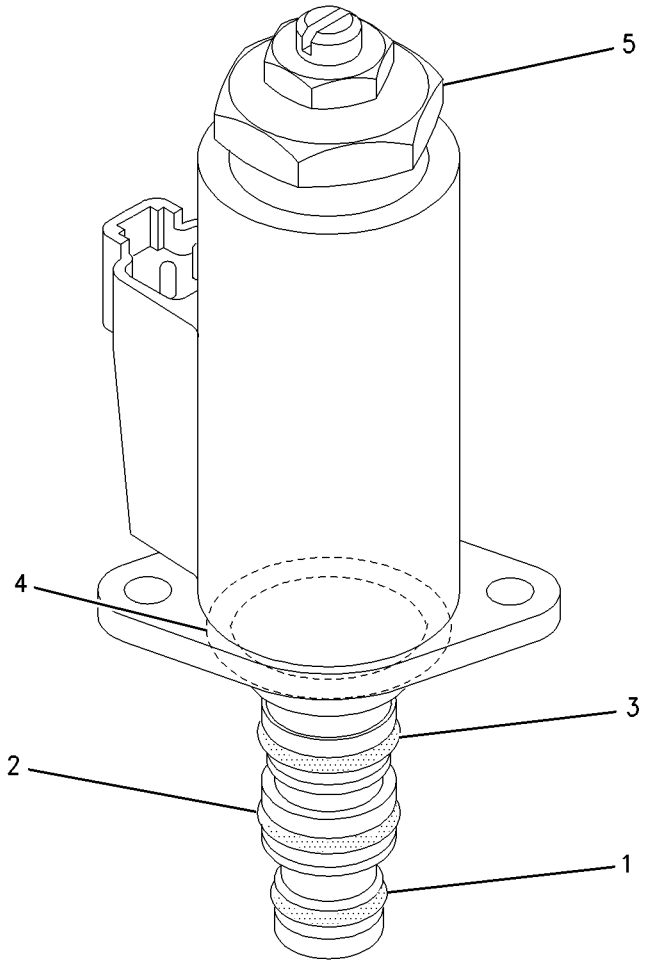

GRAPHIC #1 **<END>** g00928680

158-9085 VALVE GP-SWING CUSHION—CROSSOVER RELIEF

S/N: FKK1-UP; DNP1-UP

PART OF 392-4022 LINES GP-CYLINDER

SMCS-5480 **i04917462**

NOTE	REF NO	GRAPHIC REF	PART NUMBER	QTY	PART NAME 1 2 3 4 5 6 (PRODUCT LEVEL)	SEE PAGE
	1	1	**8T-6759**	4	PLUG-PIPE	
	2	1	**095-1576**	1	SEAL-O-RING	
Y	3	1	**173-3536**	2	VALVE GP-RELIEF	344
	4	1	**095-1698**	2	SEAL-O-RING	

Y - SEPARATE ILLUSTRATION

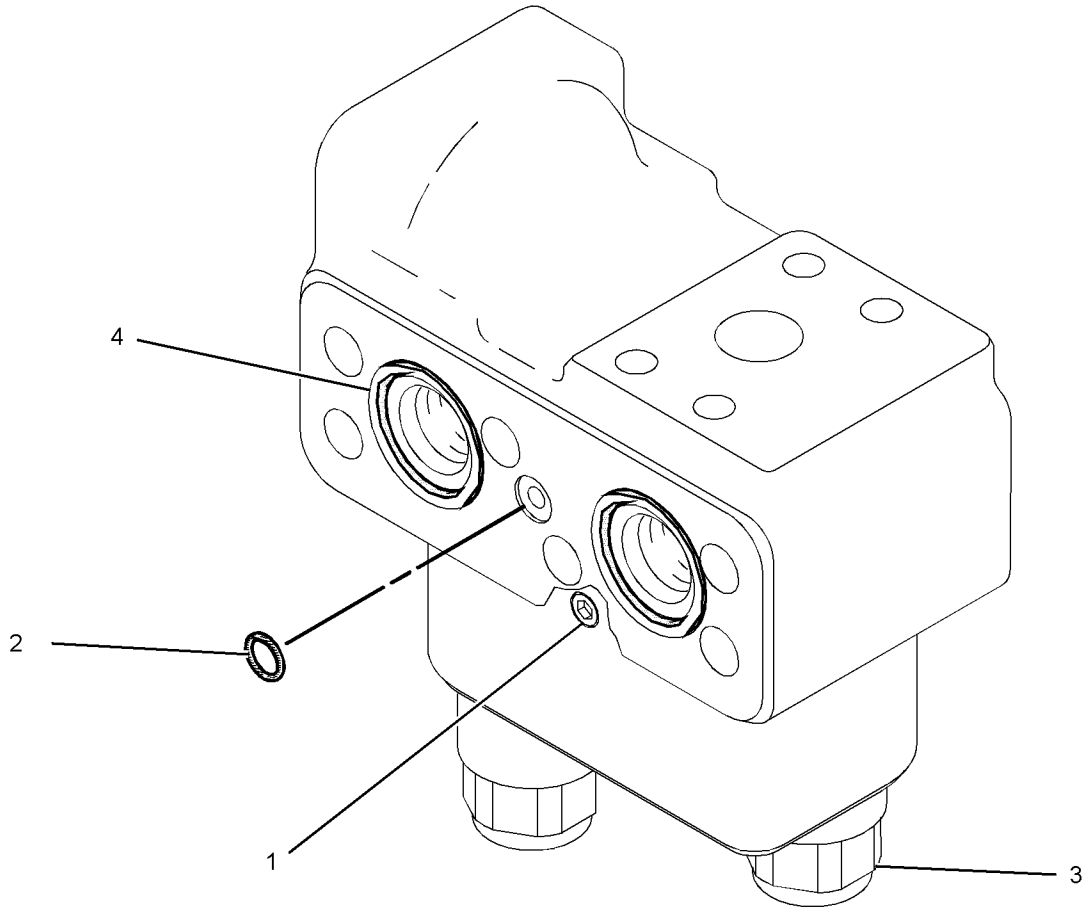

GRAPHIC #1 **<END>** g03087461

360-4598 VALVE GP-TRAVEL COUNTERBALANCE

S/N: FKK1-UP; DNP1-UP

PART OF 215-9982 MOTOR & MTG GP-TRAVEL

SMCS-5811 **i04913363**

NOTE	REF NO	GRAPHIC REF	PART NUMBER	QTY	PART NAME 1 2 3 4 5 6 (PRODUCT LEVEL)	SEE PAGE
Y	1	1	**360-4599**	2	VALVE GP-RELIEF (CROSSOVER)	348
M	2	1	**8T-7811**	8	BOLT-SOCKET HEAD (M12X1.75X50-MM)	
	3	1	**9S-8004**	2	PLUG-O-RING	
	4	1	**3J-1907**	2	SEAL-O-RING	
	5	1	**334-9940**	2	COVER	
	6	1	**096-1545**	2	WASHER (28.5X37X2-MM THK)	
	7	1	**209-5920**	2	SPRING	
	8	1	**5P-2568**	2	SEAL-O-RING	

M - METRIC PART
Y - SEPARATE ILLUSTRATION

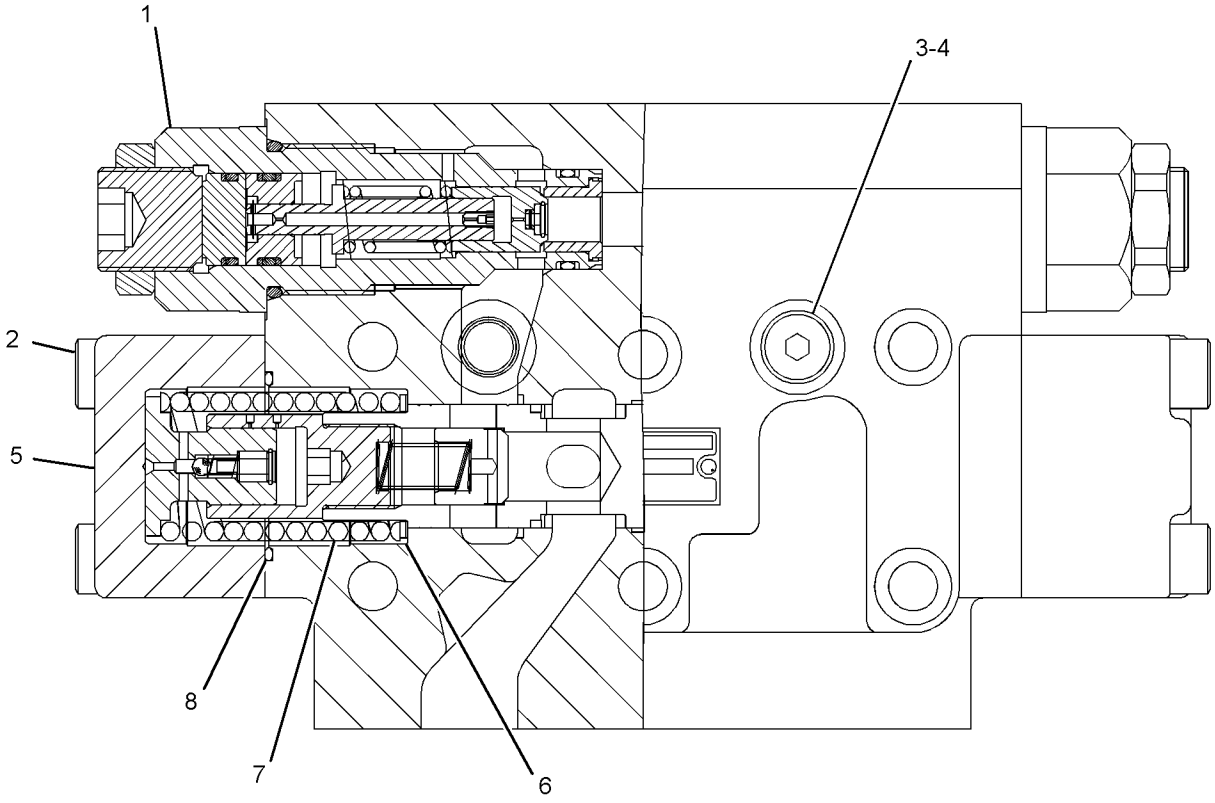

GRAPHIC #1 **<END>** g02296033

376-1084 BOOM AR-1 PIECE LONG—HEAVY-DUTY

S/N: FKK1-UP; DNP1-UP
5.7-M (17.1-FT)
AN ATTACHMENT

SMCS-6501 **i04923392**

NOTE	PART NUMBER	QTY	PART NAME 1 2 3 4 5 6 (PRODUCT LEVEL)	SEE PAGE
Y	*376-1085*	1	BOOM GP (LONG REACH)	357
Y	*373-1106*	1	CYLINDER & LINES GP-BOOM (LH)	206
Y	*373-1107*	1	CYLINDER & LINES GP-BOOM (RH)	206
Y	*373-1108*	1	CYLINDER & LINES GP-STICK	206
Y	*259-5043*	1	LIGHTING GP-FLOOD (BOOM, LH)	82
Y	*260-8010*	1	LINES GP-BOOM (1-PIECE LONG)	249
Y	*241-7286*	1	LINES GP-GREASE (BOOM)	359

Y - SEPARATE ILLUSTRATION

<END>

376-1085 BOOM GP—HEAVY-DUTY

S/N: FKK1-UP; DNP1-UP
5.7-M (17.1-FT)
PART OF 376-1084 BOOM AR-1 PIECE LONG
AN ATTACHMENT

SMCS-6301, 6302, 6460, 6501, 6516, 6521, 6535, 6536 **i04923412**

NOTE	REF NO	GRAPHIC REF	PART NUMBER	QTY	PART NAME 1 2 3 4 5 6 (PRODUCT LEVEL)	SEE PAGE
	1	1	**4I-3308**	2	PLATE	
	2	1	**4I-3309**	2	SPACER (82X110X3-MM THK)	
B	3	1	**093-0116**	2	SHIM (2-MM THK)	
	4	1	**093-0349**	2	WASHER (22X60X6-MM THK)	
	5	1	**093-0363**	1	SPACER (83X120X12-MM THK)	
B	6	1	**113-2127**	1	SHIM (0.5-MM THK)	
	7	1	**166-1486**	2	SHIM (2-MM THK)	
	8	1	**166-1495**	2	SEAL-LIP TYPE	
	9	1	**176-2278**	1	PIN	
	10	1	**264-1702**	1	PIN AS	
	11	1	*376-1087*	1	BOOM & BEARING AS	
	11A	1	**228-5615**	2	BUSHING	
	12	1	**166-1487**	2	SHIM (2-MM THK)	
	13	1	**4I-4809**	1	PIN AS	
	14	1	**8T-4123**	2	WASHER (22X35X3.5-MM THK)	
	15	1	**8T-4223**	6	WASHER-HARD (13.5X25.5X3-MM THK)	
M	16	1	**8T-4780**	2	BOLT (M20X2.5X30-MM)	
M	17	1	**8T-4956**	6	BOLT (M12X1.75X35-MM)	

B - USE AS REQUIRED
M - METRIC PART

376-1085 **BOOM GP (*contd.*)** **i04923412**

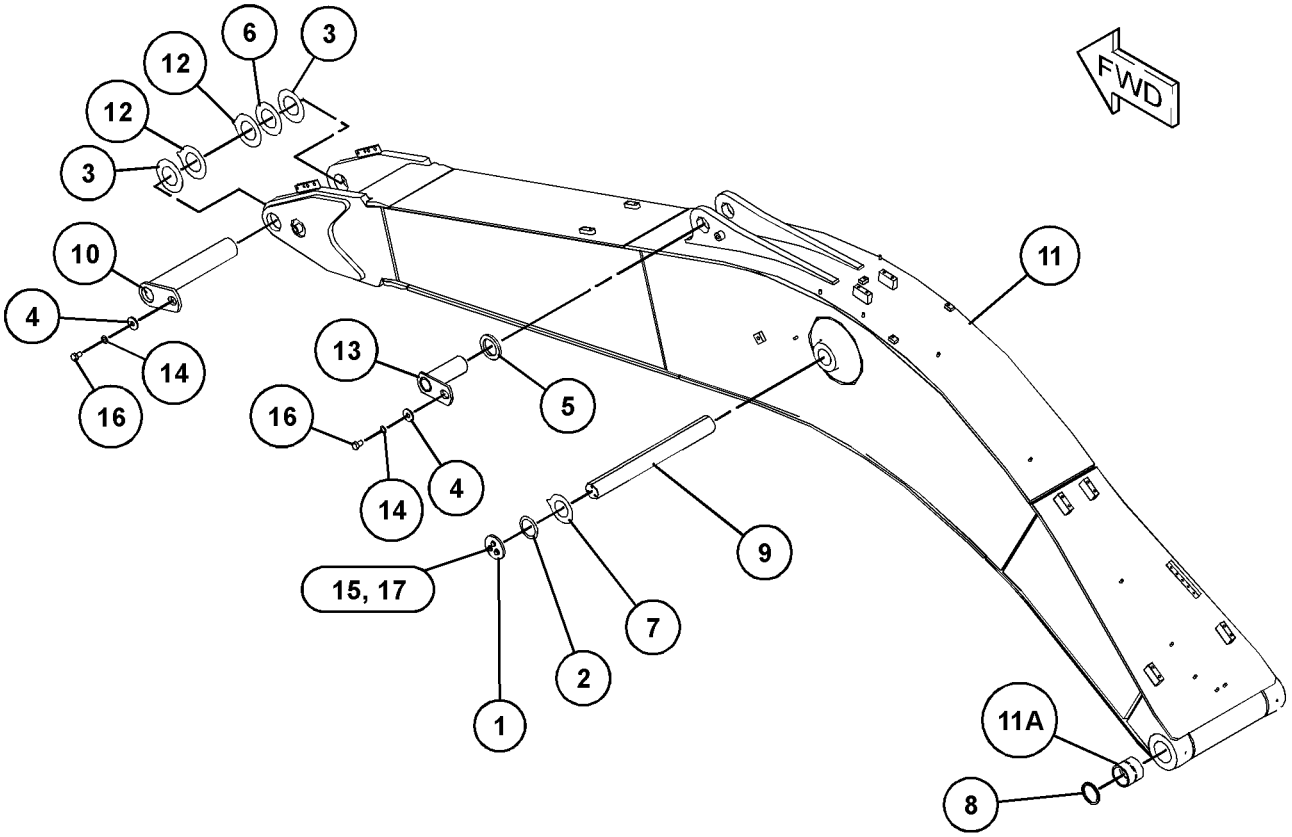

GRAPHIC #1 **<END>** g03104458

241-7286 LINES GP-GREASE–BOOM

S/N: FKK1-UP; DNP1-UP
PART OF 376-1084 BOOM AR-1 PIECE LONG
AN ATTACHMENT

SMCS-7510 **i04923397**

NOTE	REF NO	GRAPHIC REF	PART NUMBER	QTY	PART NAME 1 2 3 4 5 6 (PRODUCT LEVEL)	SEE PAGE
	1	1	**8M-2772**	2	CLIP	
M	2	1	**8T-4133**	5	NUT (M10X1.5-THD)	
	3	1	**8T-4121**	8	WASHER-HARD (11X21X2.5-MM THK)	
	4	1	**166-1579**	3	CLIP	
	5	1	**033-8248**	3	CLIP	
M	6	1	**8T-4191**	3	BOLT (M10X1.5X16-MM)	
	8	1	**134-9137**	1	HOSE AS	
	9	1	**3B-8489**	5	FITTING-GREASE	
	10	1	**6L-3616**	2	CONNECTOR	
	11	1	**5K-9243**	2	ELBOW-FLARED	
	12	1	**4I-4544**	1	TUBE AS	
	13	1	**4I-4543**	1	TUBE AS	
	14	1	**216-6682**	2	HOSE AS	

M - METRIC PART

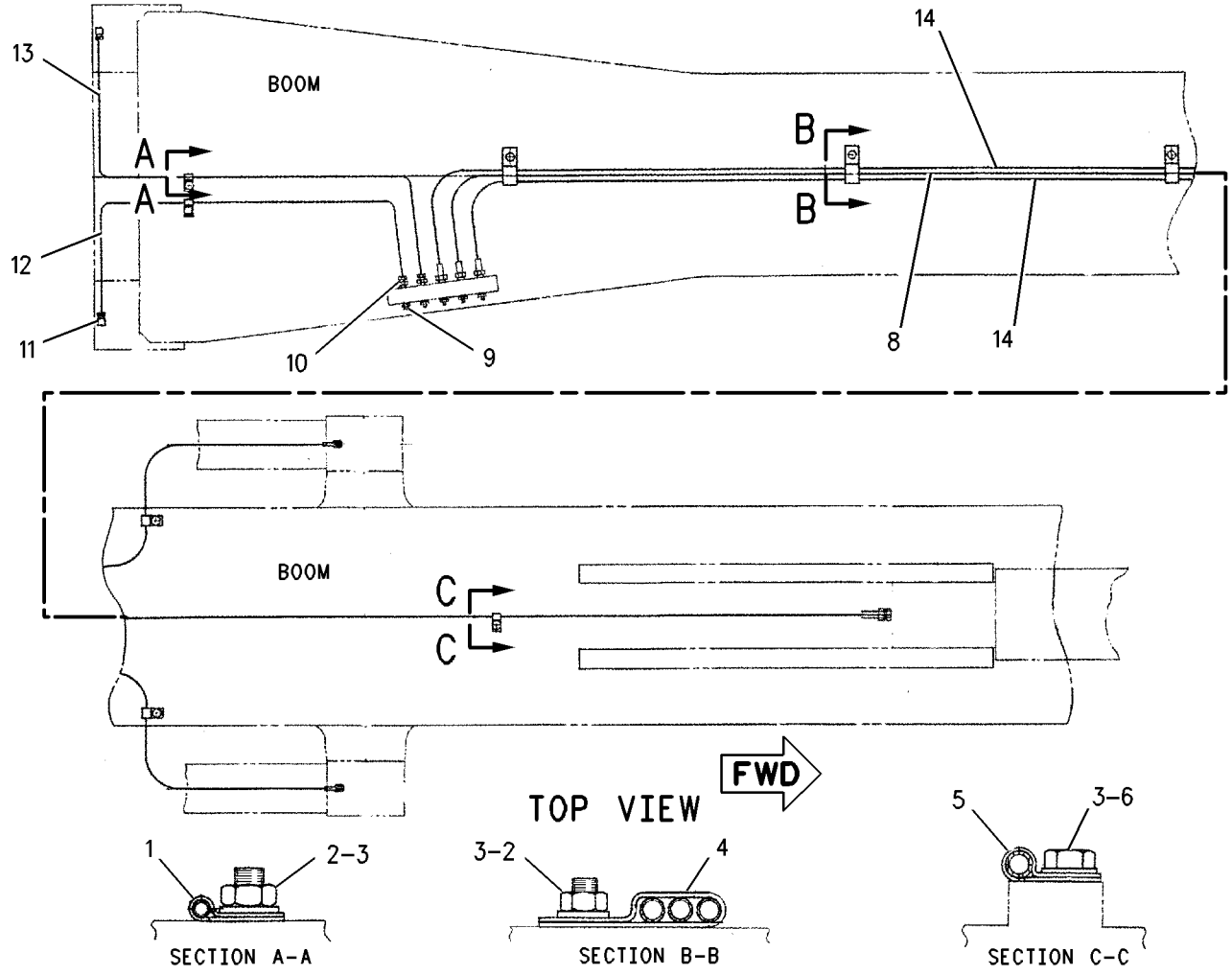

GRAPHIC #1 **<END>** g00781541

375-6869 LINKAGE AR-BUCKET—B1-FAMILY, WITH LIFTING EYE

S/N: FKK1-UP; DNP1-UP

AN ATTACHMENT

SMCS-6513 **i04923164**

NOTE	PART NUMBER	QTY	PART NAME 1 2 3 4 5 6 (PRODUCT LEVEL)	SEE PAGE
Y	*373-1109*	1	CYLINDER & LINES GP-BUCKET	206
Y	*375-6870*	1	LINKAGE GP-BUCKET	361

Y - SEPARATE ILLUSTRATION

<END>

375-6870 LINKAGE GP-BUCKET—B1-FAMILY, WITH LIFTING EYE

S/N: FKK1-UP; DNP1-UP
PART OF 375-6869 LINKAGE AR-BUCKET
AN ATTACHMENT

SMCS-6513 **i05197313**

NOTE	REF NO	GRAPHIC REF	PART NUMBER	QTY	PART NAME 1 2 3 4 5 6 (PRODUCT LEVEL)	SEE PAGE
	1	1	**3B-8489**	5	FITTING-GREASE	
	2	1	**087-5805**	2	PIN	
	3	1	**166-1486**	2	SHIM (2-MM THK)	
	4	1	**375-6871**	1	LINK AS	
	5	1	**375-6872**	1	LINK	
	6	1	**254-3052**	1	PIN	
	7	1	**254-3053**	1	PIN	
C	8	1	**241-7325**	1	LINK & BEARING AS	
	8A	1	**244-4360**	2	BUSHING	
	8B	1	**240-2912**	2	BUSHING	
	9	1	**367-8467**	4	SEAL-O-RING	
	10	1	**166-1494**	6	SEAL-LIP TYPE	
M	11	1	**186-5644**	2	BOLT (M16X2X150-MM)	
M	12	1	**236-6366**	2	BOLT (M16X2X195-MM)	
M	13	1	**8T-4132**	8	NUT (M16X2-THD)	

C - CHANGE FROM PREVIOUS TYPE
M - METRIC PART

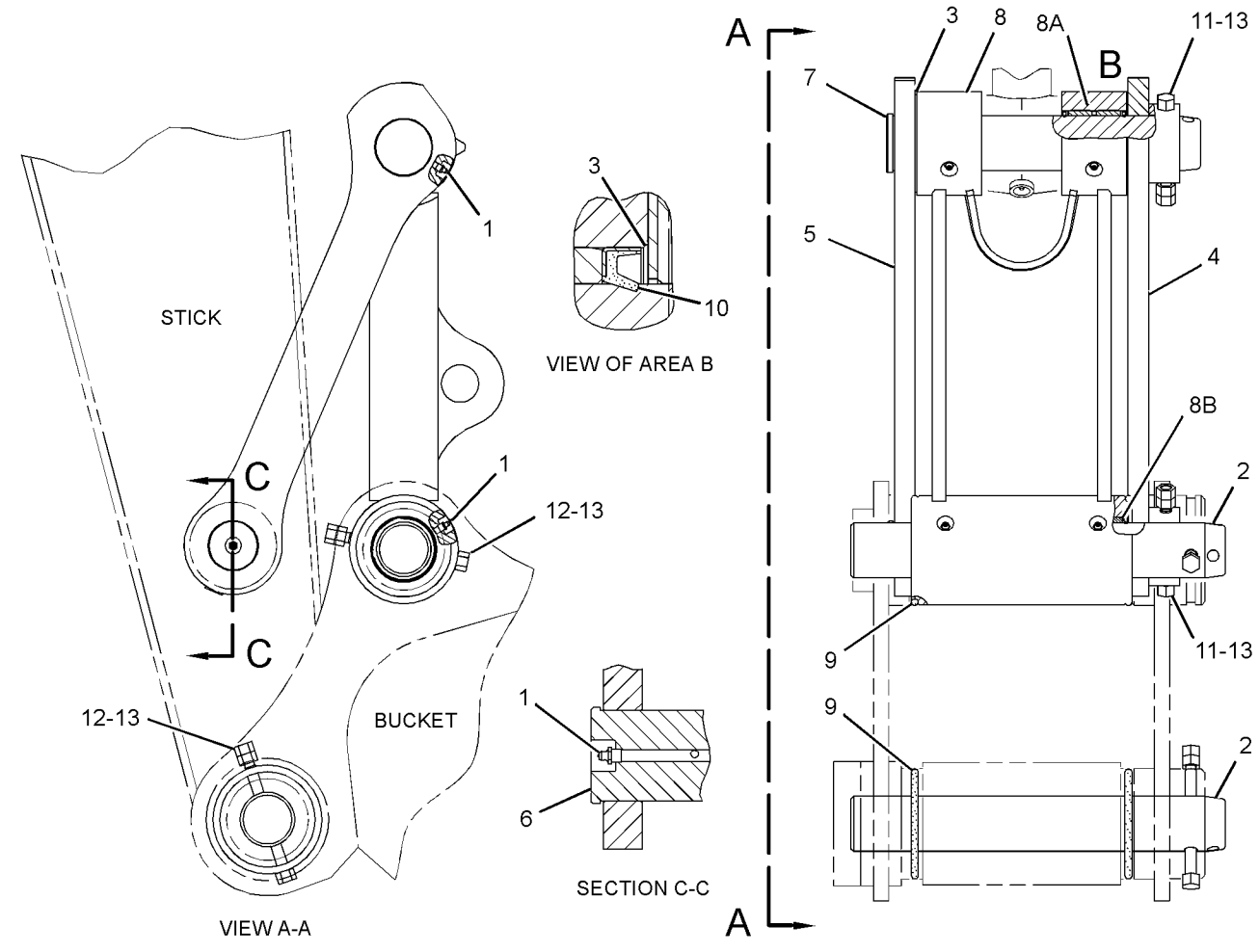

GRAPHIC #1 **<END>** g03331058

375-6281 STICK AR-HOE–REACH

S/N: FKK1-UP; DNP1-UP
2.5-M (8.2-FT). B1-FAMILY, HEAVY-DUTY
AN ATTACHMENT

SMCS-6502 **i04923065**

NOTE	PART NUMBER	QTY	PART NAME 1 2 3 4 5 6 (PRODUCT LEVEL)	SEE PAGE
Y	*260-8011*	1	LINES GP-BUCKET CYLINDER	253
Y	*375-6280*	1	STICK GP-HOE	363

Y - SEPARATE ILLUSTRATION

<END>

375-6280 STICK GP-HOE—REACH

S/N: FKK1-UP; DNP1-UP
2.5-M (8.2-FT). B1-FAMILY, HEAVY-DUTY
PART OF 375-6281 STICK AR-HOE
AN ATTACHMENT

SMCS-6502 **i05197305**

NOTE	REF NO	GRAPHIC REF	PART NUMBER	QTY	PART NAME 1 2 3 4 5 6 (PRODUCT LEVEL)	SEE PAGE
	1	1	**3B-8489**	3	FITTING-GREASE	
	2	1	**4I-4811**	1	PIN AS	
	3	1	**093-0349**	2	WASHER (22X60X6-MM THK)	
	4	1	**093-0363**	1	SPACER (83X120X12-MM THK)	
	5	1	**118-5982**	1	SPACER (73X105X14-MM THK)	
	6	1	**166-1486**	2	SHIM (2-MM THK)	
	7	1	**235-7679**	2	SEAL-LIP TYPE	
	8	1	**375-6276**	1	STICK & BEARING AS	
	8A	1	**229-1096**	2	BUSHING	
	8B	1	**240-2913**	2	BUSHING	
	8C	1	**228-5615**	2	BUSHING	
	9	1	**166-1494**	2	SEAL-LIP TYPE	
	10	1	**166-1495**	2	SEAL-LIP TYPE	
	11	1	**4I-4809**	1	PIN AS	
	12	1	**8T-4123**	2	WASHER (22X35X3.5-MM THK)	
M	13	1	**8T-4780**	2	BOLT (M20X2.5X30-MM)	

M - METRIC PART

375-6280 **STICK GP-HOE (*contd.*)** **i05197305**

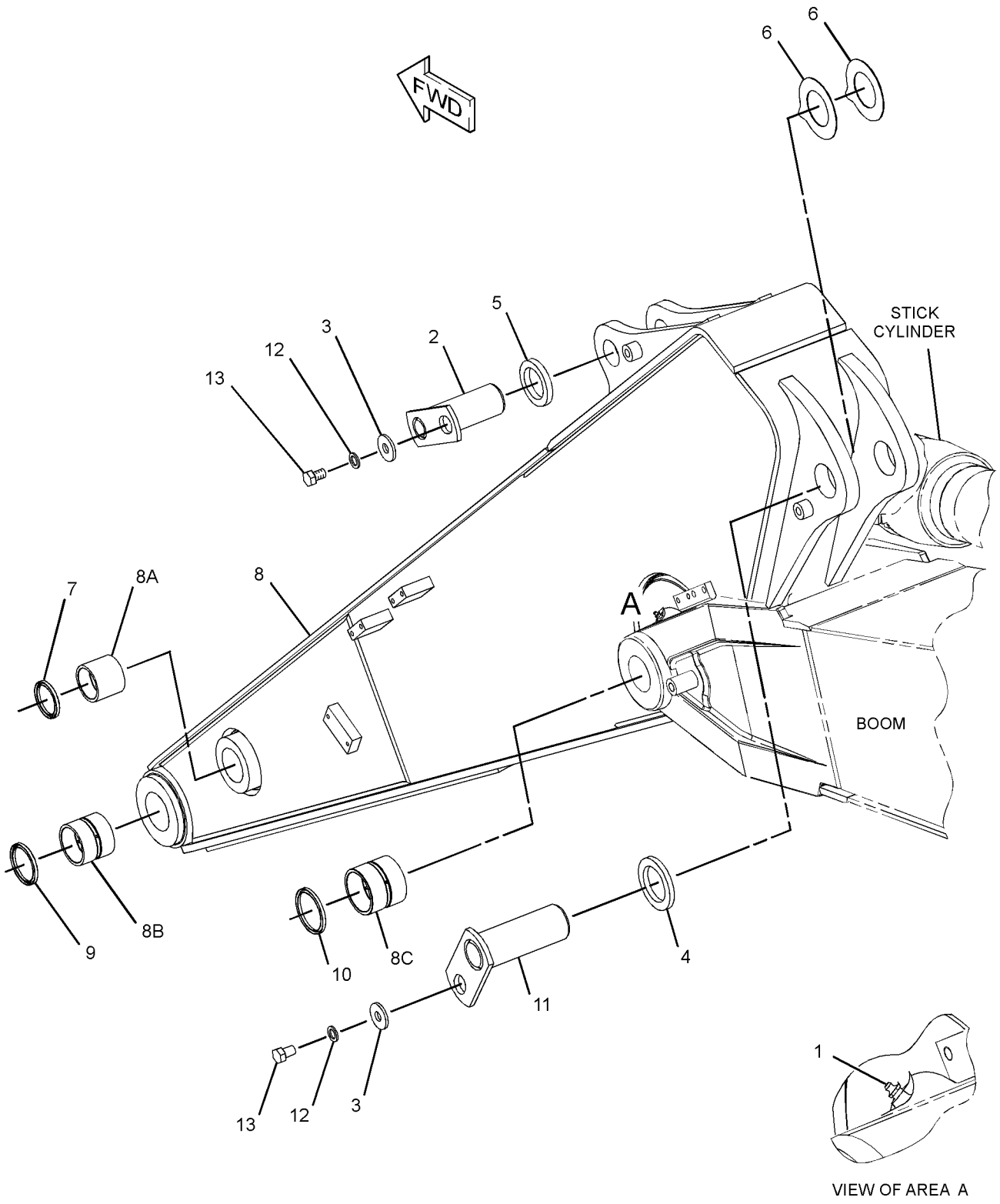

GRAPHIC #1 **<END>** g03330883

7Y-2219 ADJUSTER GP-BUCKET–B-FAMILY

S/N: FKK1-UP; DNP1-UP
PART OF 347-6849, 347-6850, 377-5419 BUCKET & ADJUSTER GP
AN ATTACHMENT

SMCS-6513, 6700

i04922257

NOTE	REF NO	GRAPHIC REF	PART NUMBER	QTY	PART NAME 1 2 3 4 5 6 (PRODUCT LEVEL)	SEE PAGE
B	1	1	**086-0322**	6	SHIM (1-MM THK)	
B	2	1	**086-0321**	4	SHIM (0.5-MM THK)	
	3	1	**193-5014**	1	PIN	
	4	1	**134-8948**	1	PLATE	
M	5	1	**8T-4193**	4	BOLT (M16X2X50-MM)	
	6	1	**9X-8257**	4	WASHER (17.5X30X3.5-MM THK)	
	7	1	**193-5015**	1	FLANGE	

B - USE AS REQUIRED
M - METRIC PART

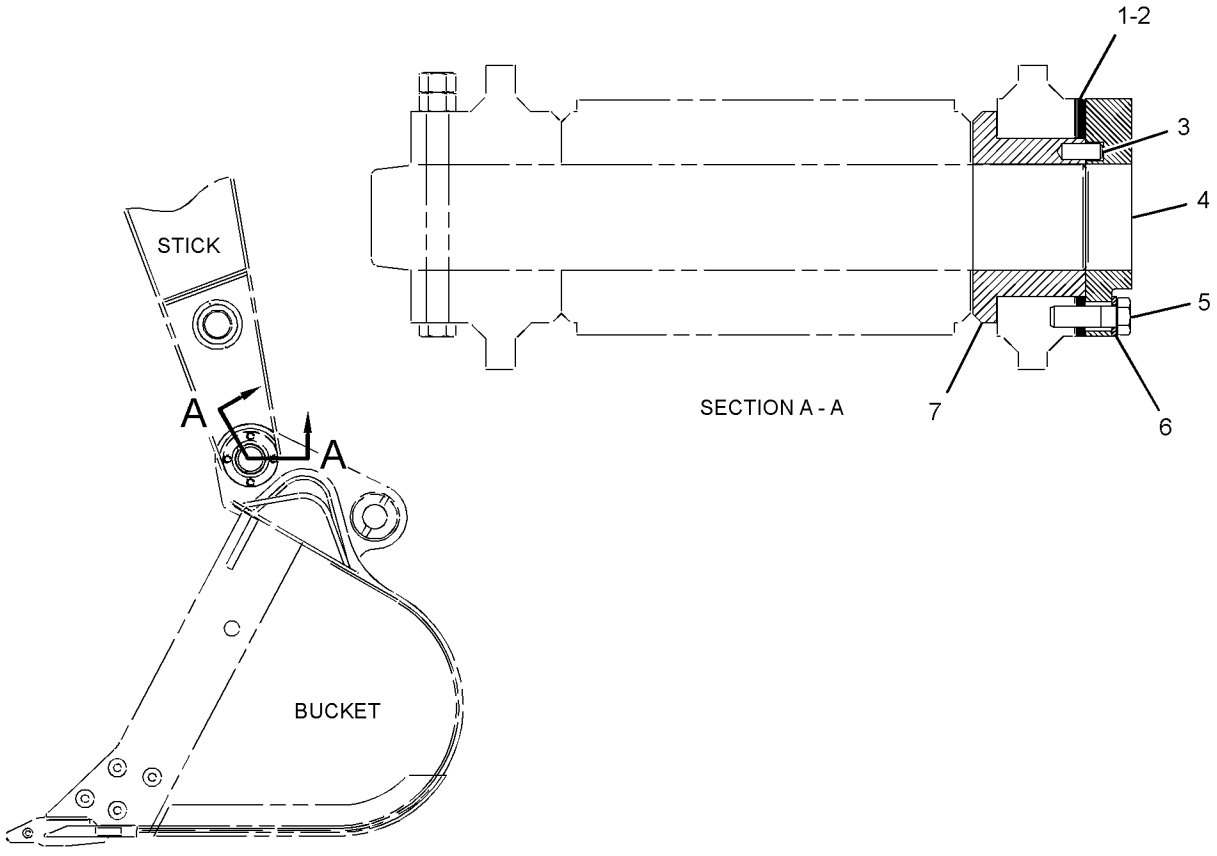

RIGHT SIDE VIEW

GRAPHIC #1

<END>

g02812617

347-6849 BUCKET & ADJUSTER GP—GENERAL PURPOSE, B-FAMILY

S/N: FKK1-UP; DNP1-UP
1250-MM (50-IN) WIDE X 1.0-CU M (1.31-CU YD) CAPACITY. J-350 ADAPTERS, QTY OF 5
PART OF 377-5394 BUCKET AR-GENERAL PURPOSE
AN ATTACHMENT

SMCS-6503, 6513 **i04922256**

NOTE	PART NUMBER	QTY	PART NAME 1 2 3 4 5 6 (PRODUCT LEVEL)	SEE PAGE
Y	**7Y-2219**	1	ADJUSTER GP-BUCKET (B-FAMILY)	365
Y	*371-9082*	1	BUCKET AS-GENERAL PURPOSE (B-FAMILY)	368
	2C-9259	1	PLATE-IDENTIFICATION (CAT)	
			(ON LH SIDE OF BUCKET)	
	312-5694	1	SETSCREW (1/4-20X0.25-IN)	
			(USE TO MOUNT BUCKET INFORMATION PLATE)	
Y - SEPARATE ILLUSTRATION				

<END>

347-6850 BUCKET & ADJUSTER GP—GENERAL PURPOSE, B-FAMILY

S/N: DNP1-UP
1400-MM (56-IN) WIDE X 1.14-CU M (1.49-CU YD) CAPACITY. J-350 ADAPTERS, QTY OF 6
PART OF 377-5395 BUCKET AR-GENERAL PURPOSE
AN ATTACHMENT

SMCS-6503, 6513 **i04922386**

NOTE	PART NUMBER	QTY	PART NAME 1 2 3 4 5 6 (PRODUCT LEVEL)	SEE PAGE
Y	**7Y-2219**	1	ADJUSTER GP-BUCKET (B-FAMILY)	365
Y	*371-9083*	1	BUCKET AS-GENERAL PURPOSE	369
	2C-9259	1	PLATE-IDENTIFICATION (CAT)	
			(ON LH SIDE OF BUCKET)	
	312-5694	1	SETSCREW (1/4-20X0.25-IN)	
			(USE TO MOUNT BUCKET INFORMATION PLATE)	
Y - SEPARATE ILLUSTRATION				

<END>

377-5419 BUCKET & ADJUSTER GP—B-FAMILY

S/N: FKK1-UP
1150-MM (46-IN) WIDE X 0.90-CU M (1.18-CU YD) CAPACITY. J-350 ADAPTERS, QTY OF 5
PART OF 393-5791 BUCKET AR-GENERAL PURPOSE
AN ATTACHMENT

SMCS-6503, 6513 **i05292503**

NOTE	PART NUMBER	QTY	PART NAME 1 2 3 4 5 6 (PRODUCT LEVEL)	SEE PAGE
Y	**7Y-2219**	1	ADJUSTER GP-BUCKET (B-FAMILY)	365
Y	*390-5448*	1	BUCKET AS-GENERAL PURPOSE	370
	2C-9259	1	PLATE-IDENTIFICATION (CAT)	
			(ON LH SIDE OF BUCKET)	
	312-5694	1	SETSCREW (1/4-20X0.25-IN)	
			(USE TO MOUNT BUCKET INFORMATION PLATE)	
Y - SEPARATE ILLUSTRATION				

<END>

377-5394 BUCKET AR-GENERAL PURPOSE—B-FAMILY

S/N: FKK1-UP; DNP1-UP
1250-MM (50-IN) WIDE X 1.0-CU M (1.31-CU YD) CAPACITY
AN ATTACHMENT

SMCS-6101 **i04925173**

NOTE	PART NUMBER	QTY	PART NAME 1 2 3 4 5 6 (PRODUCT LEVEL)	SEE PAGE
Y	**347-6849**	1	BUCKET & ADJUSTER GP (GENERAL PURPOSE, B-FAMILY)	366
Y	*380-1204*	5	SIDECUTTER GP	371
Y	*8J-4955*	1	TIP GP-LONG (J-350)	372
Y - SEPARATE ILLUSTRATION				

<END>

377-5395 BUCKET AR-GENERAL PURPOSE—B-FAMILY

S/N: DNP1-UP
1400-MM (56-IN) WIDE X 1.14-CU M (1.49-CU YD) CAPACITY
AN ATTACHMENT

SMCS-6101 **i04925224**

NOTE	PART NUMBER	QTY	PART NAME 1 2 3 4 5 6 (PRODUCT LEVEL)	SEE PAGE
Y	**347-6850**	1	BUCKET & ADJUSTER GP (GENERAL PURPOSE, B-FAMILY)	366
Y	*380-1204*	6	SIDECUTTER GP	371
Y	*8J-4955*	1	TIP GP-LONG (J-350)	372
Y - SEPARATE ILLUSTRATION				

<END>

393-5791 BUCKET AR-GENERAL PURPOSE—B-FAMILY

S/N: FKK1-UP
1150-M (46-IN) WIDE X 0.90- CU M (1.18-CU YD) CAPACITY. J-350 ADAPTERS, QTY OF 5
AN ATTACHMENT

SMCS-6101 **i05266755**

NOTE	PART NUMBER	QTY	PART NAME 1 2 3 4 5 6 (PRODUCT LEVEL)	SEE PAGE
Y	**377-5419**	1	BUCKET & ADJUSTER GP	366
Y	*380-1204*	1	SIDECUTTER GP (B-FAMILY)	371
Y	*8J-4955*	5	TIP GP-LONG (J-350)	372
Y - SEPARATE ILLUSTRATION				

<END>

371-9082 BUCKET AS-GENERAL PURPOSE—B-FAMILY

S/N: FKK1-UP; DNP1-UP
1250-MM (50-IN) WIDE X 1.0-CU M (1.31-CU YD) CAPACITY. J-350 ADAPTERS, QTY OF 5
PART OF 347-6849 BUCKET & ADJUSTER GP
AN ATTACHMENT

SMCS-6101 **i04922263**

NOTE	REF NO	GRAPHIC REF	PART NUMBER	QTY	PART NAME 1 2 3 4 5 6 (PRODUCT LEVEL)	SEE PAGE
	1	1	**378-0320**	1	EDGE AS	
	1A	1	**6I-6354**	3	ADAPTER-TIP (J-350, 2-STRAP)	
	1B	1	**6I-6355**	1	ADAPTER-TIP (J-350, 2-STRAP, RH)	
	1C	1	**6I-6356**	1	ADAPTER-TIP (J-350, 2-STRAP, LH)	
	1D	1	**8P-9770**	1	PLATE	
	2	1	**347-7480**	1	PLATE-WEAR	
	3	1	**347-7483**	4	PLATE-WEAR	
	4	1	**371-9130**	1	PLATE AS-HINGE	
	5	1	**378-0319**	2	PLATE-WEAR	

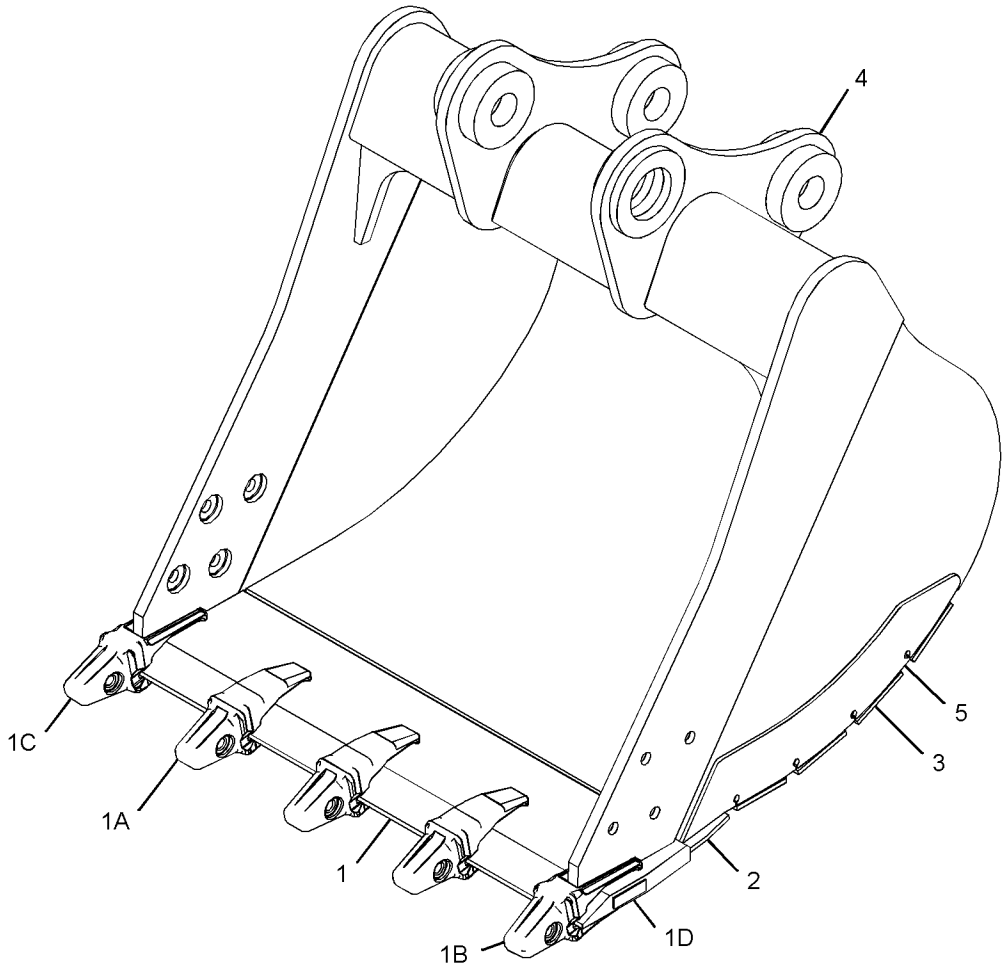

GRAPHIC #1 **<END>** g02979096

371-9083 BUCKET AS-GENERAL PURPOSE–B-FAMILY

S/N: DNP1-UP

1400-MM (56-IN) WIDE X 1.14-CU M (1.49-CU YD) CAPACITY. J-350 ADAPTERS, QTY OF 6

PART OF 347-6850 BUCKET & ADJUSTER GP

AN ATTACHMENT

SMCS-6101 **i04922387**

NOTE	REF NO	GRAPHIC REF	PART NUMBER	QTY	PART NAME 1 2 3 4 5 6 (PRODUCT LEVEL)	SEE PAGE
	1	1	**378-0321**	1	EDGE AS	
	1A	1	**6I-6354**	4	ADAPTER-TIP (J-350, 2-STRAP)	
	1B	1	**6I-6355**	1	ADAPTER-TIP (J-350, 2-STRAP, RH)	
	1C	1	**6I-6356**	1	ADAPTER-TIP (J-350, 2-STRAP, LH)	
	1D	1	**8P-9770**	1	PLATE	
	2	1	**347-7485**	4	PLATE-WEAR	
	3	1	**348-3197**	1	PLATE-WEAR	
	4	1	**371-9131**	1	PLATE AS-HINGE	
	5	1	**378-0319**	2	PLATE-WEAR	

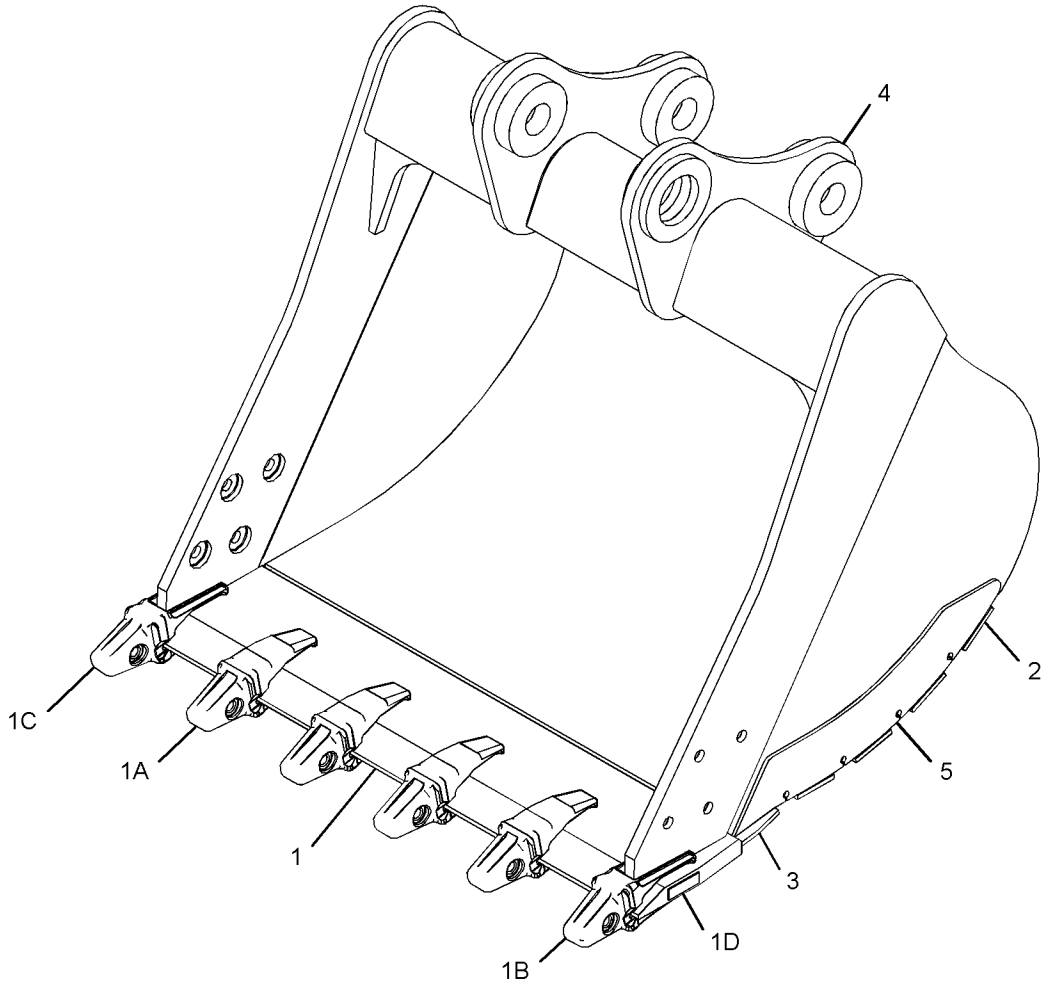

GRAPHIC #1

<END>

g02979197

390-5448 BUCKET AS-GENERAL PURPOSE—B-FAMILY

S/N: FKK1-UP

1150-M (46-IN) WIDE X 0.90-CU M (1.18-CU YD) CAPACITY. J-350 ADAPTERS, QTY OF 5

PART OF 377-5419 BUCKET & ADJUSTER GP

AN ATTACHMENT

SMCS-6101 **i05292506**

NOTE	REF NO	GRAPHIC REF	PART NUMBER	QTY	PART NAME 1 2 3 4 5 6 (PRODUCT LEVEL)	SEE PAGE
	1	1	**390-6802**	1	PLATE AS-HINGE	
	2	1	**347-7479**	1	PLATE-WEAR	
	3	1	**347-7482**	4	PLATE-WEAR	
	4	1	**371-9198**	1	PLATE (LH)	
	5	1	**371-9199**	1	PLATE (RH)	
	6	1	**378-0319**	2	PLATE-WEAR	
	7	1	**390-5451**	1	EDGE AS	
	7A	1	**6I-6354**	3	ADAPTER-TIP (J-350, 2-STRAP, CENTER)	
	7B	1	**6I-6355**	1	ADAPTER-TIP (J-350, 2-STRAP, RH)	
	7C	1	**6I-6356**	1	ADAPTER-TIP (J-350, 2-STRAP, LH)	
	7D	1	**8P-9770**	1	PLATE	

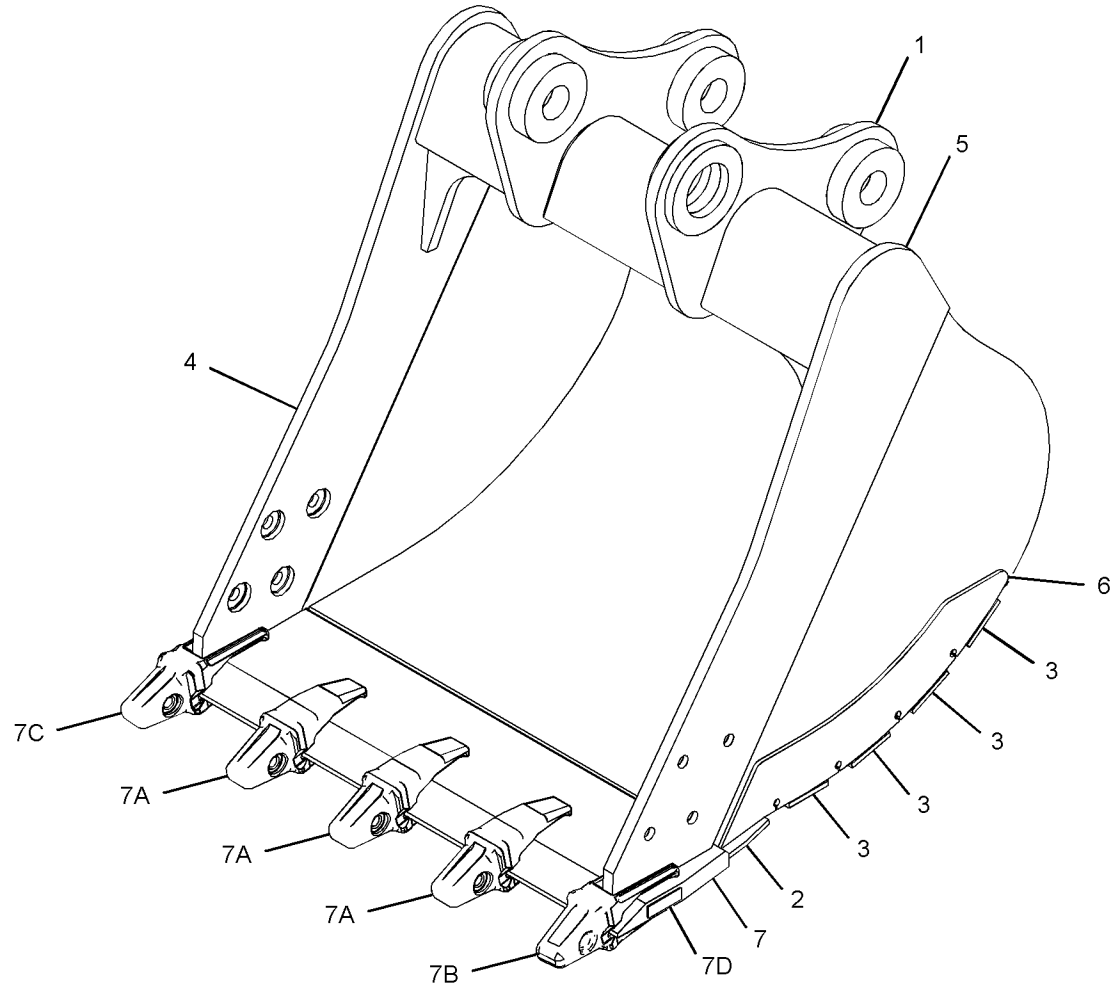

GRAPHIC #1 **<END>** g03317884

380-1204 SIDECUTTER GP

S/N: FKK1-UP; DNP1-UP

PART OF 377-5394, 377-5395, 393-5791 BUCKET AR-GENERAL PURPOSE

AN ATTACHMENT

SMCS-6813 **i04925170**

NOTE	REF NO	GRAPHIC REF	PART NUMBER	QTY	PART NAME 1 2 3 4 5 6 (PRODUCT LEVEL)	SEE PAGE
	1	1	**357-2713**	1	SIDECUTTER (LH)	
	2	1	**357-2714**	1	SIDECUTTER (RH)	
M	3	1	**7X-0851**	8	NUT (M24X3-THD)	
M	4	1	**8T-0380**	8	BOLT (M24X3X60-MM)	

M - METRIC PART

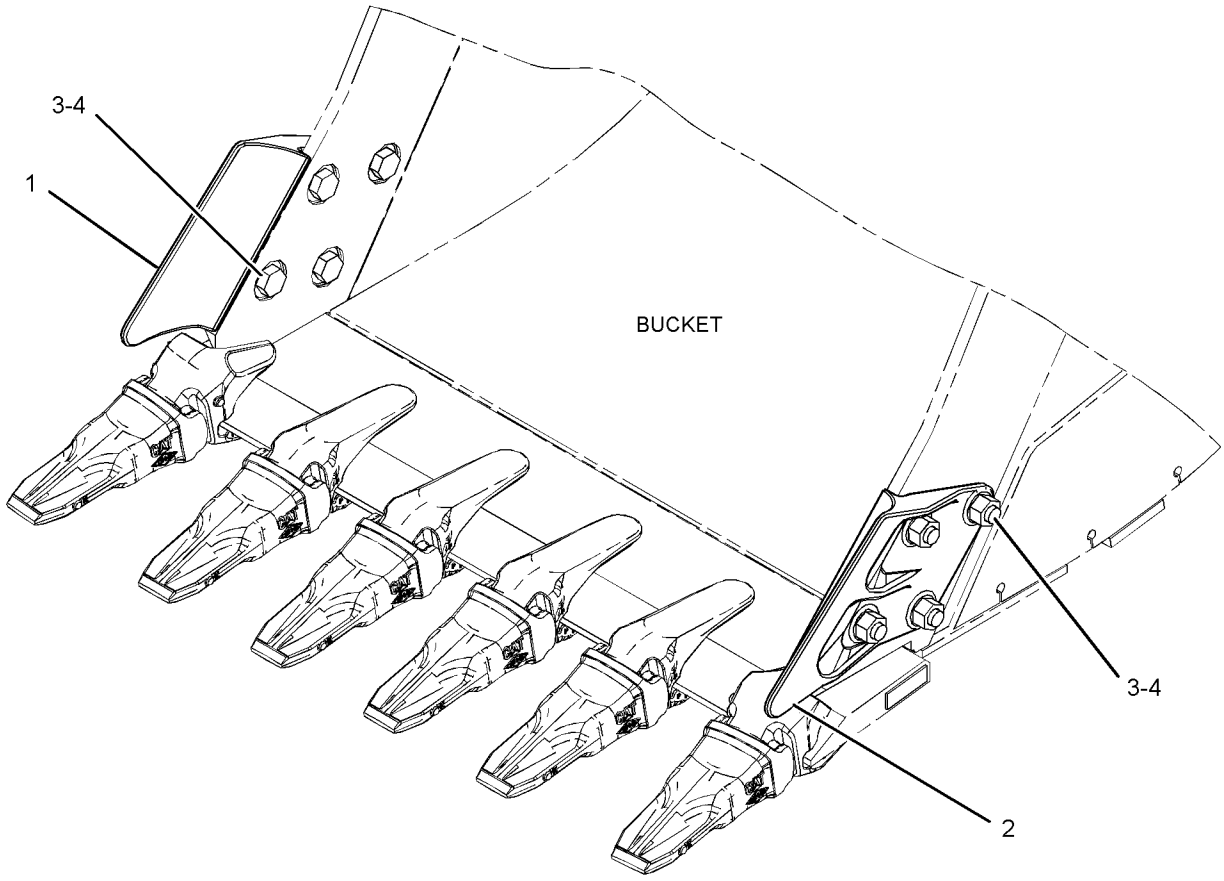

GRAPHIC #1 **<END>** g02719648

8J-4955 TIP GP-LONG

S/N: FKK1-UP; DNP1-UP
HEAVY DUTY
FOR USE WITH HOE BUCKET, J350 ADAPTERS
PART OF 377-5394, 377-5395, 393-5791 BUCKET AR-GENERAL PURPOSE
AN ATTACHMENT

SMCS-6805 **i04925159**

NOTE	REF NO	GRAPHIC REF	PART NUMBER	QTY	PART NAME 1 2 3 4 5 6 (PRODUCT LEVEL)	SEE PAGE
	1	1	**114-0359**	1	RETAINER AS	
	2	1	**1U-3352**	1	TIP-LONG	
	3	1	**114-0358**	1	PIN	

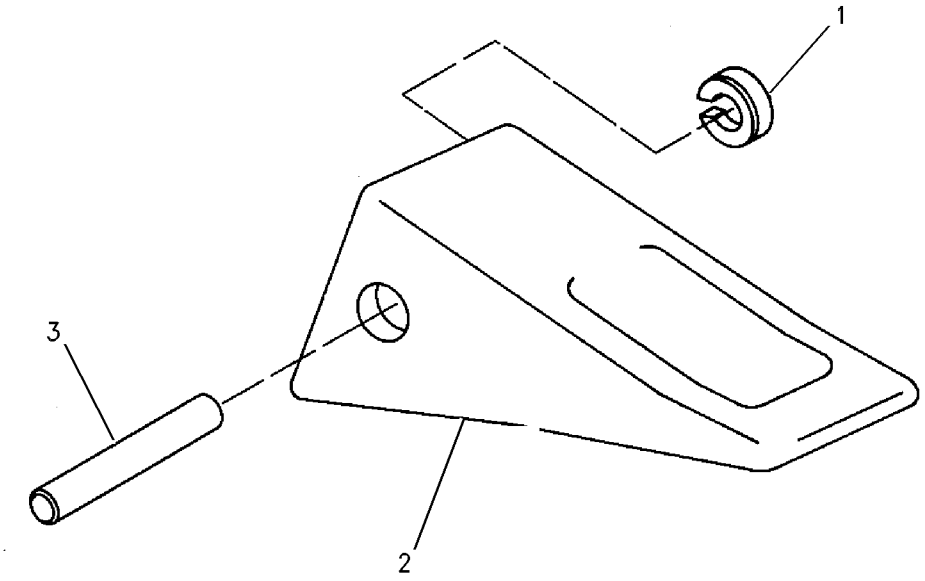

GRAPHIC #1 **<END>** g00523955

416-1798 AIR CONDITIONER & MOUNTING GP

S/N: DNP1-UP
PART OF 418-9897 AIR CONDITIONER AR
AN ATTACHMENT

SMCS-7320 **i05269625**

NOTE	REF NO	GRAPHIC REF	PART NUMBER	QTY	PART NAME 1 2 3 4 5 6 (PRODUCT LEVEL)	SEE PAGE
	1	1	**111-4836**	3	CLIP	
	2	1	**235-8874**	1	SENSOR-TEMPERATURE (AMBIENT AIR)	
	3	1	**235-8875**	1	BRACKET	
	4	1	**235-9005**	1	HARNESS AS-HEATER & AIR COND (LOW SIDE)	
Y	5	1	**316-8916**	1	AIR CONDITIONER GP	376
	6	1	**396-6895**	1	PANEL AS-CONTROL	
	7	1	**416-1802**	1	HARNESS AS-HEATER & AIR COND	
	8	1	**119-5026**	4	SCREW-PAN HEAD (10-16X0.63-IN)	
	9	1	**3S-2093**	1	STRAP-CABLE	
	10	1	**4P-7581**	1	CLIP	
M	11	1	**5C-9553**	1	BOLT (M6X1X16-MM)	
	12	1	**7X-7729**	7	WASHER (11X25X3-MM THK)	
	13	1	**8T-4121**	3	WASHER-HARD (11X21X2.5-MM THK)	
M	14	1	**8T-4136**	7	BOLT (M10X1.5X25-MM)	
M	15	1	**8T-4137**	3	BOLT (M10X1.5X20-MM)	
	16	1	**9X-8256**	1	WASHER (6.6X12X2-MM THK)	

M - METRIC PART
Y - SEPARATE ILLUSTRATION

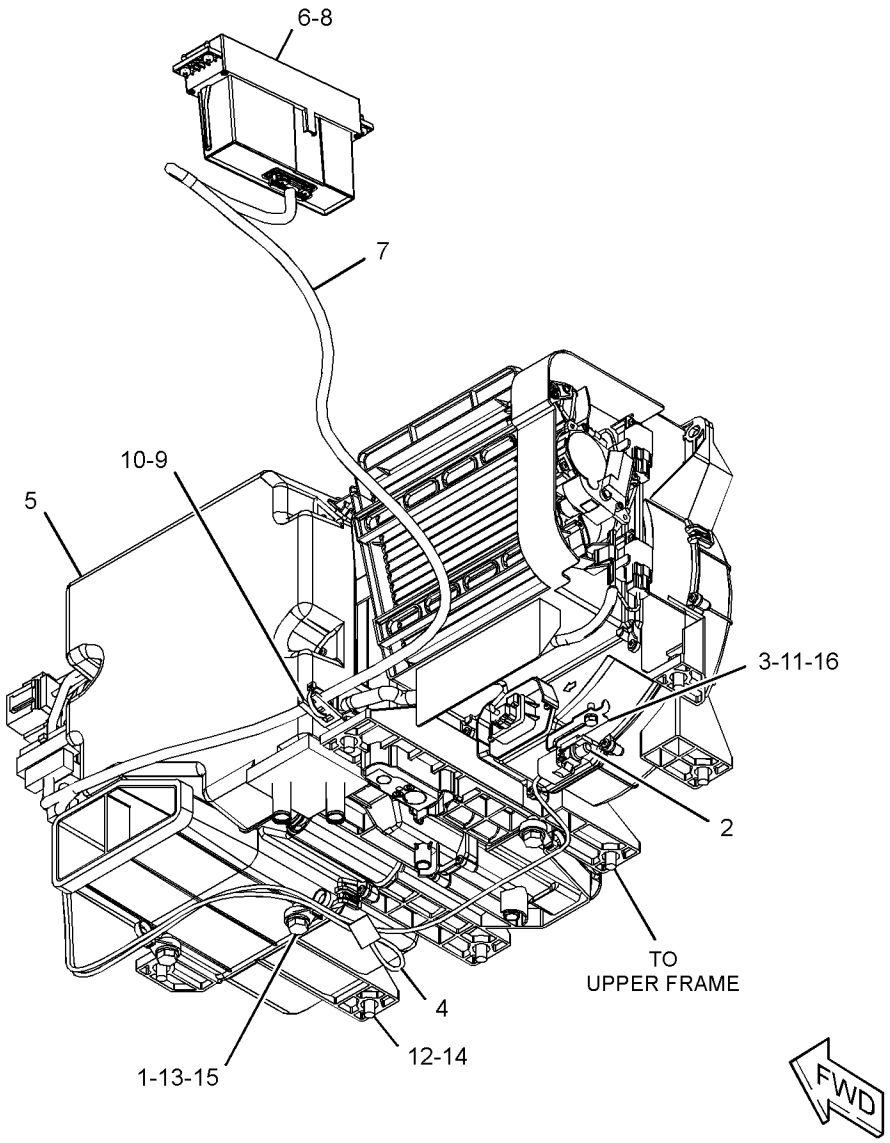

GRAPHIC #1 **<END>** g03312776

418-9897 AIR CONDITIONER AR

S/N: DNP1-UP

AN ATTACHMENT

SMCS-7320 **i05268943**

NOTE	PART NUMBER	QTY	PART NAME 1 2 3 4 5 6 (PRODUCT LEVEL)	SEE PAGE
Y	*416-1798*	1	AIR CONDITIONER & MOUNTING GP	373
Y	*229-9082*	1	DUCT GP-CAB AIR	423
	416-1803	1	COVER AS	
	185-8284	1	COVER	
	235-8950	2	CLIP	

Y - SEPARATE ILLUSTRATION

<END>

316-8916 AIR CONDITIONER GP

S/N: DNP1-UP

PART OF 416-1798 AIR CONDITIONER & MOUNTING GP

AN ATTACHMENT

SMCS-7320 **i04919691**

NOTE	REF NO	GRAPHIC REF	PART NUMBER	QTY	PART NAME 1 2 3 4 5 6 (PRODUCT LEVEL)	SEE PAGE
	1	1	**185-8300**	35	SCREW-TAPPING	
	2	1	**185-8302**	3	SCREW AS-TAPPING	
	3	1	**245-7817**	2	MOTOR AS	
	4	1	**245-7818**	3	CLIP	
	5	1	**245-7819**	2	CLIP	
	6	1	**245-7820**	1	COVER-FRONT	
	7	1	**245-7825**	1	INSULATOR	
	8	1	**245-7826**	1	INSULATOR	
	9	1	**245-7827**	1	INSULATOR	
	10	1	**245-7828**	1	INSULATOR	
	11	1	**245-7829**	1	PACKING	
	12	1	**245-7830**	1	CLIP	
	13	1	**245-7831**	1	SENSOR AS-TEMPERATURE (COOLANT)	
	14	1	**245-7832**	1	CONTROL AS	
	15	1	**245-7833**	1	CORE AS-HEATER	
	16	1	**245-7834**	1	DAMPER AS	
	17	1	**245-7835**	1	SENSOR AS-TEMPERATURE (AMBIENT AIR TEMP)	
Y	18	1	**245-7836**	1	COIL GP-EVAPORATOR	390
	19	1	**245-7838**	1	PACKING	
	20	1	**245-7839**	1	MOTOR AS (WITH FAN)	
Y	21	1	**245-7846**	1	CONTROL GP-HEAT & AIR COND (AIR INLET)	412
	22	1	**245-7847**	1	HARNESS AS-HEATER & AIR COND	
	23	1	**245-7856**	3	SCREW AS-TAPPING	
	24	1	**293-1137**	1	FILTER GP-AIR (AIR CONDITIONER)	
		1	**245-7823**	1	FILTER ELEMENT-CAB AIR	
		1	**245-7824**	1	PACKING	
	25	1	**316-8846**	1	PLATE	
	26	1	**316-8847**	2	ROD	
	27	1	**316-8849**	1	ROD	
	28	1	**316-8918**	1	PLATE	
	29	1	**316-8920**	1	ROD	
	30	1	**316-8921**	1	ROD	

Y - SEPARATE ILLUSTRATION

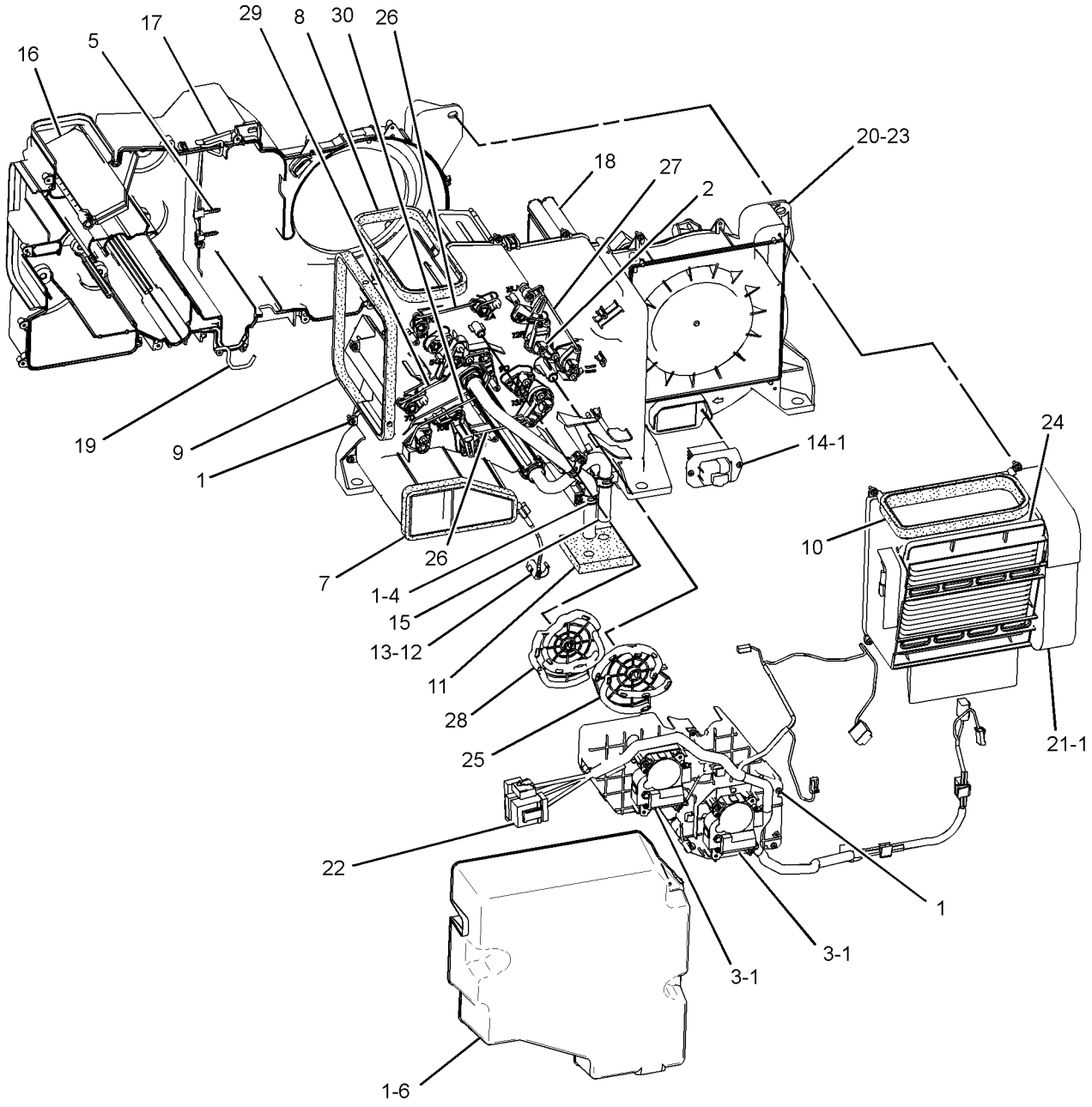

FRONT VIEW
(UPPER RIGHT)

GRAPHIC #1 **<END>** g01684274

259-7346 ARMREST GP–RH

S/N: FKK1-UP; DNP1-UP

PART OF 259-7348 CONSOLE GP-OPERATOR

SMCS-7307 **i04913545**

NOTE	REF NO	GRAPHIC REF	PART NUMBER	QTY	PART NAME 1 2 3 4 5 6 (PRODUCT LEVEL)	SEE PAGE
M	1	1	**171-7325**	3	SCREW-TAPPING (M5X0.8-THD)	
M	2	1	**185-8286**	2	SCREW-MACHINE (M4X0.7X8-MM)	
	3	1	**235-8951**	1	SUPPORT AS	
	4	1	**235-8996**	1	COVER	
	5	1	**235-8997**	1	KNOB	
	6	1	**259-7345**	1	CUSHION	

M - METRIC PART

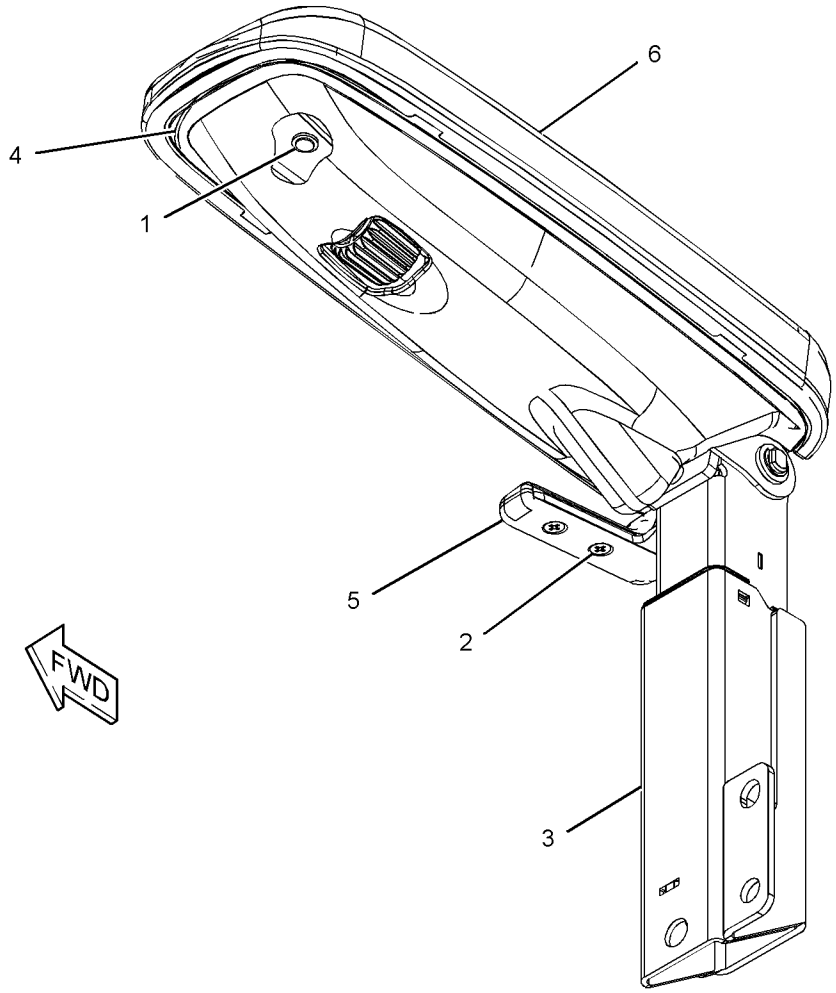

GRAPHIC #1 **<END>** g01217218

259-7347 ARMREST GP–LH

S/N: FKK1-UP; DNP1-UP

PART OF 436-1213 CONSOLE GP, 259-7349 CONSOLE GP-OPERATOR

SMCS-7307 **i04913367**

NOTE	REF NO	GRAPHIC REF	PART NUMBER	QTY	PART NAME 1 2 3 4 5 6 (PRODUCT LEVEL)	SEE PAGE
M	1	1	**171-7325**	3	SCREW-TAPPING (M5X0.8-THD)	
M	2	1	**185-8286**	2	SCREW-MACHINE (M4X0.7X8-MM)	
	3	1	**235-8952**	1	SUPPORT AS	
	4	1	**235-8996**	1	COVER	
	5	1	**235-8998**	1	KNOB	
	6	1	**259-7345**	1	CUSHION	

M - METRIC PART

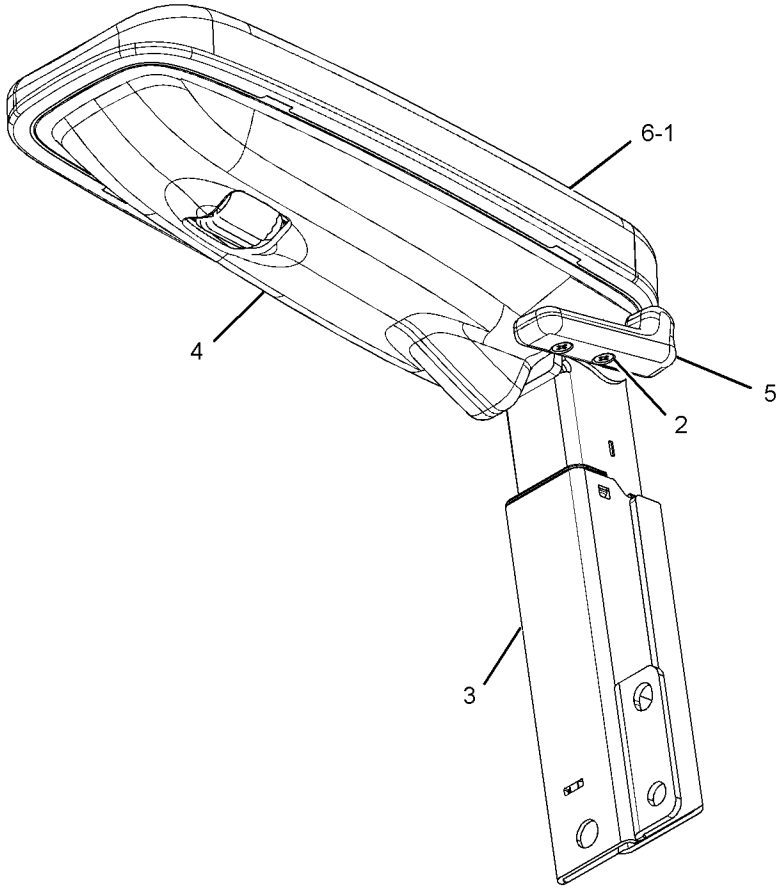

GRAPHIC #1 **<END>** g01210886

346-7375 BRACKET GP-MIRROR

S/N: DNP1-UP
PART OF 346-8058 CAB GP
AN ATTACHMENT

SMCS-7319 **i04922247**

NOTE	REF NO	GRAPHIC REF	PART NUMBER	QTY	PART NAME 1 2 3 4 5 6 (PRODUCT LEVEL)	SEE PAGE
	1	1	**2U-2552**	5	LOCKWASHER	
M	2	1	**6V-5683**	3	BOLT (M6X1X16-MM)	
M	3	1	**9X-6153**	2	BOLT (M6X1X10-MM)	
					PARTS SHOWN IN GRAPHIC(S) WITHOUT A REFERENCE NUMBER ARE NOT SERVICED SEPARATELY	

M - METRIC PART

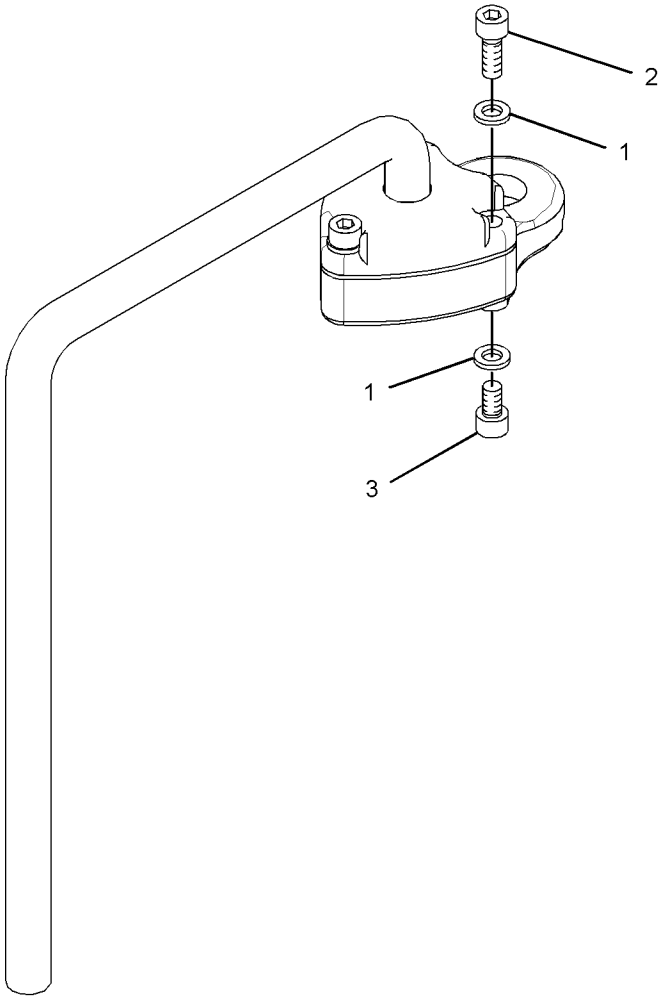

GRAPHIC #1 **<END>** g01962144

235-8917 CAB GP–INTERIOR

S/N: DNP1-UP
PART OF 388-0065 CAB GP
AN ATTACHMENT

SMCS-7301, 7325

i04922215

NOTE	REF NO	GRAPHIC REF	PART NUMBER	QTY	PART NAME 1 2 3 4 5 6 (PRODUCT LEVEL)	SEE PAGE
	1	1	**8Y-6352**	1	LOUVER AS	
	2	1	**164-0646**	1	CUP	
	3	1	**164-0655**	1	PANEL-SWITCH	
	4	1	**164-8474**	2	LOUVER AS-VENT	
	5	1	**170-9724**	5	CLIP	
	6	1	**171-7420**	10	CLIP	
	7	1	**176-1972**	1	COVER	
	8	1	**185-8205**	7	CLIP	
	9	1	**185-8214**	1	BRACKET AS	
	10	1	**189-2678**	3	SPACER	
	11	1	**189-2853**	1	COVER	
	12	1	**189-2854**	1	COVER	
	13	1	**234-6468**	1	COVER AS	
		1	**259-7353**	4	CLIP	
	14	1	**234-6470**	1	COVER-MONITOR	
	15	1	**234-6471**	1	COVER-DUCT	
	16	1	**234-6472**	1	COVER	
	17	1	**234-6473**	1	COVER-FRONT (UPPER, RH)	
	18	1	**234-6474**	1	COVER-CONSOLE (UPPER, RH)	
	20	1	**234-6476**	1	DUCT	
	21	1	**234-6477**	1	BRACKET AS	
	23	1	**234-6480**	1	BRACKET AS	
	24	1	**234-6483**	1	BRACKET AS	
	25	1	**234-6485**	1	BRACKET AS	
	26	1	**234-6490**	1	CUP	
	27	1	**234-6491**	1	COVER	
	28	1	**234-6497**	1	COVER	
	29	1	**234-6498**	3	RIVET	
	30	1	**234-6521**	1	COVER	
	31	1	**234-6547**	1	COVER	
	32	1	**234-6548**	1	COVER	
	33	1	**234-6549**	1	COVER	
	34	1	**234-6550**	1	COVER	
	35	1	**234-6579**	2	NUT-SPEED	
	36	1	**235-8922**	1	COVER	
	37	1	**235-8923**	2	CAP	
	38	1	**235-8930**	1	LINER	
	39	1	**235-8950**	10	CLIP	
	40	1	**245-7790**	2	SCREW-TAPPING	
M	41	1	**128-2135**	13	SCREW-TRUSS HEAD (M6X1X13-MM)	
M	42	1	**128-2136**	1	SCREW-TRUSS HEAD (M6X1X16-MM)	
	43	1	**189-2855**	1	COVER	
	44	1	**234-6469**	1	COVER	
M	45	1	**9X-2042**	23	SCREW-TRUSS HEAD (M6X1X12-MM)	
	46	1	**305-0333**	1	BRACKET	
	47	1	**305-0330**	1	COVER (LOWER, RH)	

M - METRIC PART

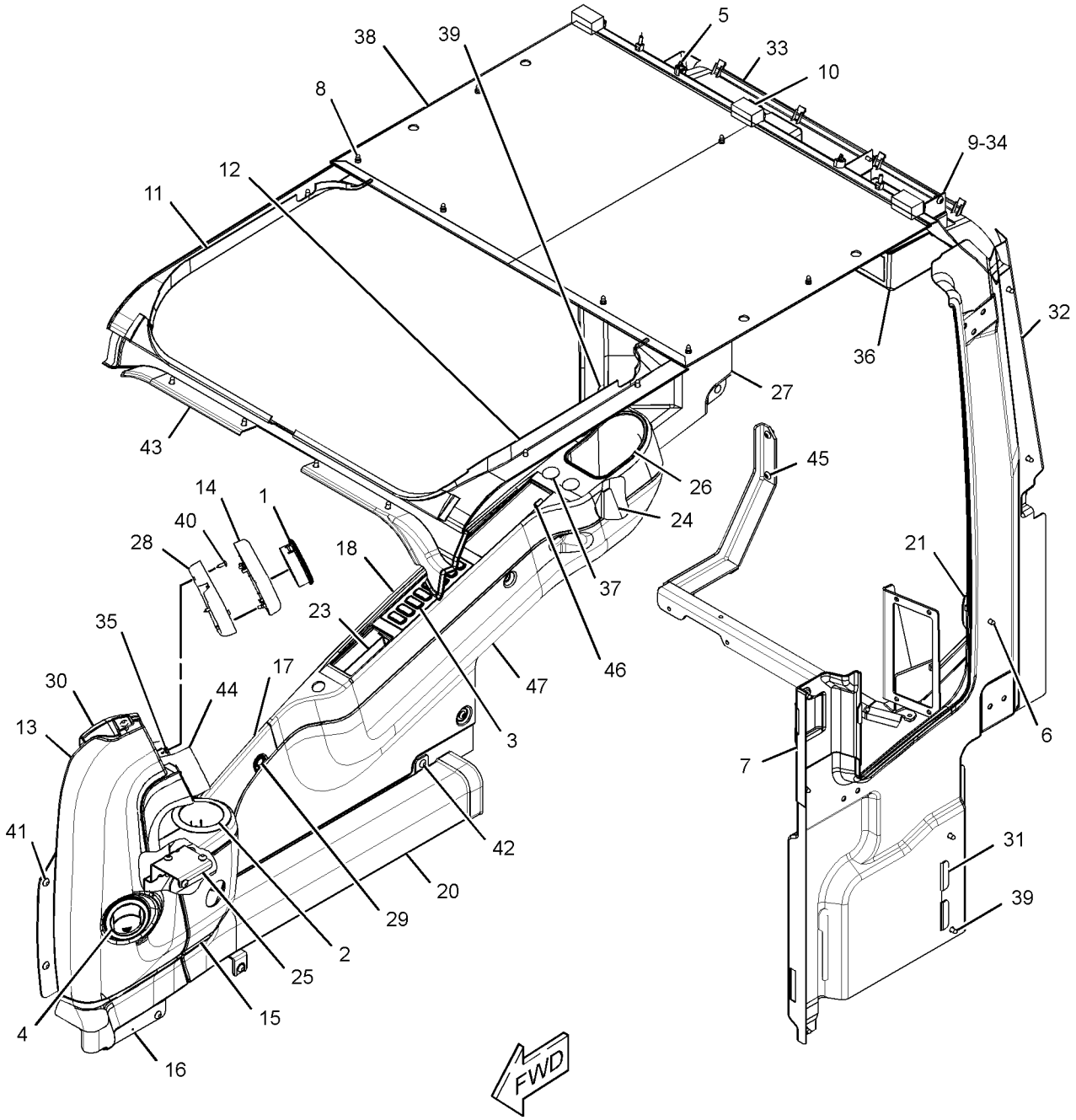

GRAPHIC #1 **<END>** g01421499

OPERATOR STATION

346-8058 CAB GP—EXTERIOR

S/N: DNP1-UP
PART OF 388-0065 CAB GP
AN ATTACHMENT

SMCS-7301, 7325 **i04922250**

NOTE	REF NO	GRAPHIC REF	PART NUMBER	QTY	PART NAME 1 2 3 4 5 6 (PRODUCT LEVEL)	SEE PAGE
	1	1	**139-7126**	1	HOLDER	
	2	1	**139-7127**	1	HOLDER	
	3	1	**156-6599**	1	STRIKER	
	4	1	**161-3685**	1	ROD	
	5	1	**161-3697**	1	GUARD	
	6	1	**164-0523**	1	LEVER AS	
	7	1	**164-0527**	1	ROD	
Y	8	1	*164-0528*	1	LEVER GP-CAB DOOR	433
	9	1	**167-7018**	1	COVER AS	
	10	1	**167-7042**	2	SEAL	
	11	1	**171-7426**	1	CABLE AS	
	12	1	*176-1939*	1	LEVER AS	
M		1	**9X-2044**	1	SCREW-TRUSS HEAD (M6X1X16-MM)	
		1	**176-1937**	1	BRACKET AS	
		1	**176-1938**	1	LEVER	
	13	1	**178-5570**	2	GROMMET	
	14	1	**185-8196**	1	GROMMET	
	15	1	**189-2704**	1	SEAL	
M	16	1	**189-2864**	2	SCREW-FLAT HEAD (M8X1.25X30-MM)	
	17	1	**4B-4278**	3	WASHER (10.2X20.5X1.6-MM THK)	
	18	1	**201-4530**	1	BRACKET AS	
	19	1	**205-6295**	1	LATCH AS	
	20	1	**210-5808**	1	SEAL	
	21	1	**235-8912**	1	HANDLE AS	
	22	1	**235-8933**	1	HANDLE AS	
M	23	1	**284-4426**	1	BOLT-WING (M8X1.25X15-MM)	
	24	1	**315-5313**	1	COVER	
Y	25	1	**327-6550**	1	MIRROR GP-REAR VIEW	439
Y	26	1	**346-7375**	1	BRACKET GP-MIRROR	380
	27	1	**9X-8257**	1	WASHER (17.5X30X3.5-MM THK)	
M	28	1	**099-0823**	3	SCREW-MACHINE (M6X1X6-MM)	
J	29	1	**099-3607**	2	WASHER-HARD (10.2X30X3.2-MM THK)	
M	30	1	**105-2169**	2	BOLT AS	
M	31	1	**127-0580**	2	SCREW-FLAT HEAD (M8X1.25X20-MM)	
	32	1	**133-8016**	1	PACKING	
	33	1	**176-1986**	1	LAMP AS-DOME	
		1	**201-4417**	1	LAMP (24-VOLT, 10-WATT)	
	34	1	**1R-5998**	4	LOCKWASHER	
M	35	1	**3E-8020**	6	SCREW-TRUSS HEAD (M6X1X25-MM)	
M	36	1	**095-0755**	2	SCREW-MACHINE (M4X0.7X12-MM)	
	37	1	**4I-1205**	2	BUMPER	
	38	1	**4I-1206**	2	GUIDE	
	39	1	**4I-3063**	1	SPRING	
	40	1	**4I-3090**	4	SEAL	
M	41	1	**8T-4137**	2	BOLT (M10X1.5X20-MM)	
	42	1	**4I-3144**	2	WASHER-HARD (10.2X22X3.2-MM THK)	
	43	1	**4I-4270**	1	HOLDER-GLASS	
	44	1	**4I-4392**	3	CLIP	
	45	1	**5C-7793**	1	HOOK-COAT	
	46	1	**6V-7636**	4	PIN AS-SPRING	
L	47	1	**7X-0578**	2	WASHER-HARD (10.2X32X2.5-MM THK)	
M	48	1	**8T-4133**	5	NUT (M10X1.5-THD)	
M	49	1	**8T-4779**	1	BOLT (M16X2X35-MM)	
M	50	1	**9X-2041**	3	SCREW-TRUSS HEAD (M10X1.5X20-MM)	
M	51	1	**9X-2042**	5	SCREW-TRUSS HEAD (M6X1X12-MM)	
M	52	1	**9X-2044**	5	SCREW-TRUSS HEAD (M6X1X16-MM)	

346-8058 **CAB GP (*contd.*)** **i04922250**

NOTE	REF NO	GRAPHIC REF	PART NUMBER	QTY	PART NAME 1 2 3 4 5 6 (PRODUCT LEVEL)	SEE PAGE
M	53	1	**9X-2045**	2	SCREW-TRUSS HEAD (M6X1X20-MM)	
E	54	1	**6I-5470**		SEAL (150-CM)	

E - ORDER BY THE CENTIMETER
J - FOR AKASHI & SAGAMI PLANT
L - FOR PLANTS OTHER THAN AKASHI & SAGAMI
M - METRIC PART
Y - SEPARATE ILLUSTRATION

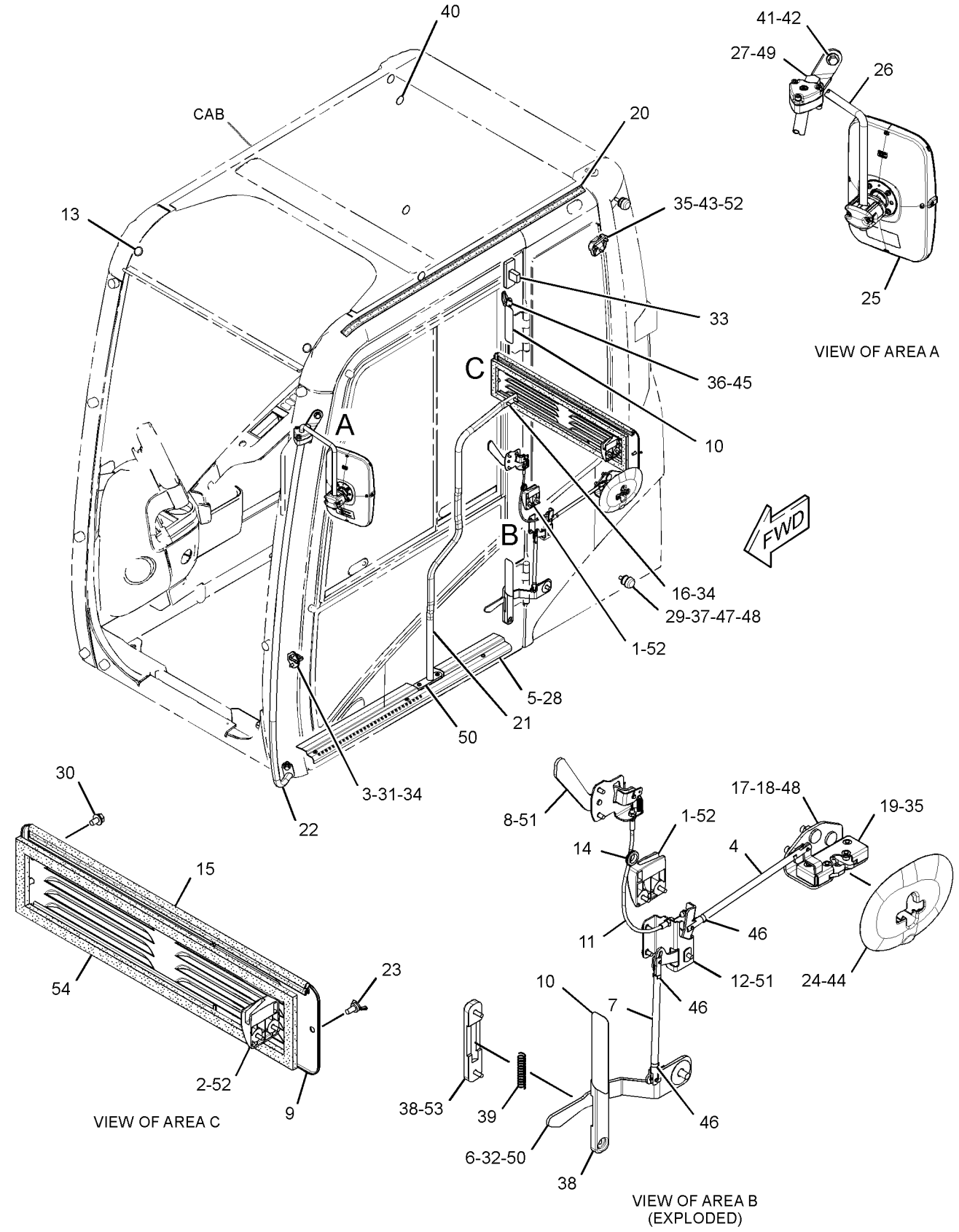

GRAPHIC #1 **<END>** g03092496

OPERATOR STATION

388-0026 CAB GP

S/N: DNP1-UP

AN ATTACHMENT

SMCS-7301, 7325 **i05268944**

NOTE	REF NO	GRAPHIC REF	PART NUMBER	QTY	PART NAME 1 2 3 4 5 6 (PRODUCT LEVEL)	SEE PAGE
M	1	2	**128-2135**	5	SCREW-TRUSS HEAD (M6X1X13-MM)	
	2	2	**164-8474**	2	LOUVER AS-VENT	
Y	3	1	**388-0065**	1	CAB GP	388
Y	4	2	**234-6501**	1	COVER GP-CAB (REAR)	416
	5	2	**235-9001**	1	SUPPORT	
M	6	2	**8T-4179**	5	BOLT (M12X1.75X20-MM)	
M	7	1	**8T-4190**	4	BOLT (M16X2X25-MM)	
	8	2	**8T-4223**	13	WASHER-HARD (13.5X25.5X3-MM THK)	
M	9	2	**8T-4910**	6	BOLT (M12X1.75X60-MM)	
M	10	2	**8T-6868**	2	BOLT (M12X1.75X80-MM)	
	11	2	**8Y-6967**	2	LOUVER AS-VENT	
	12	1	**9X-8257**	6	WASHER (17.5X30X3.5-MM THK)	

M - METRIC PART
Y - SEPARATE ILLUSTRATION

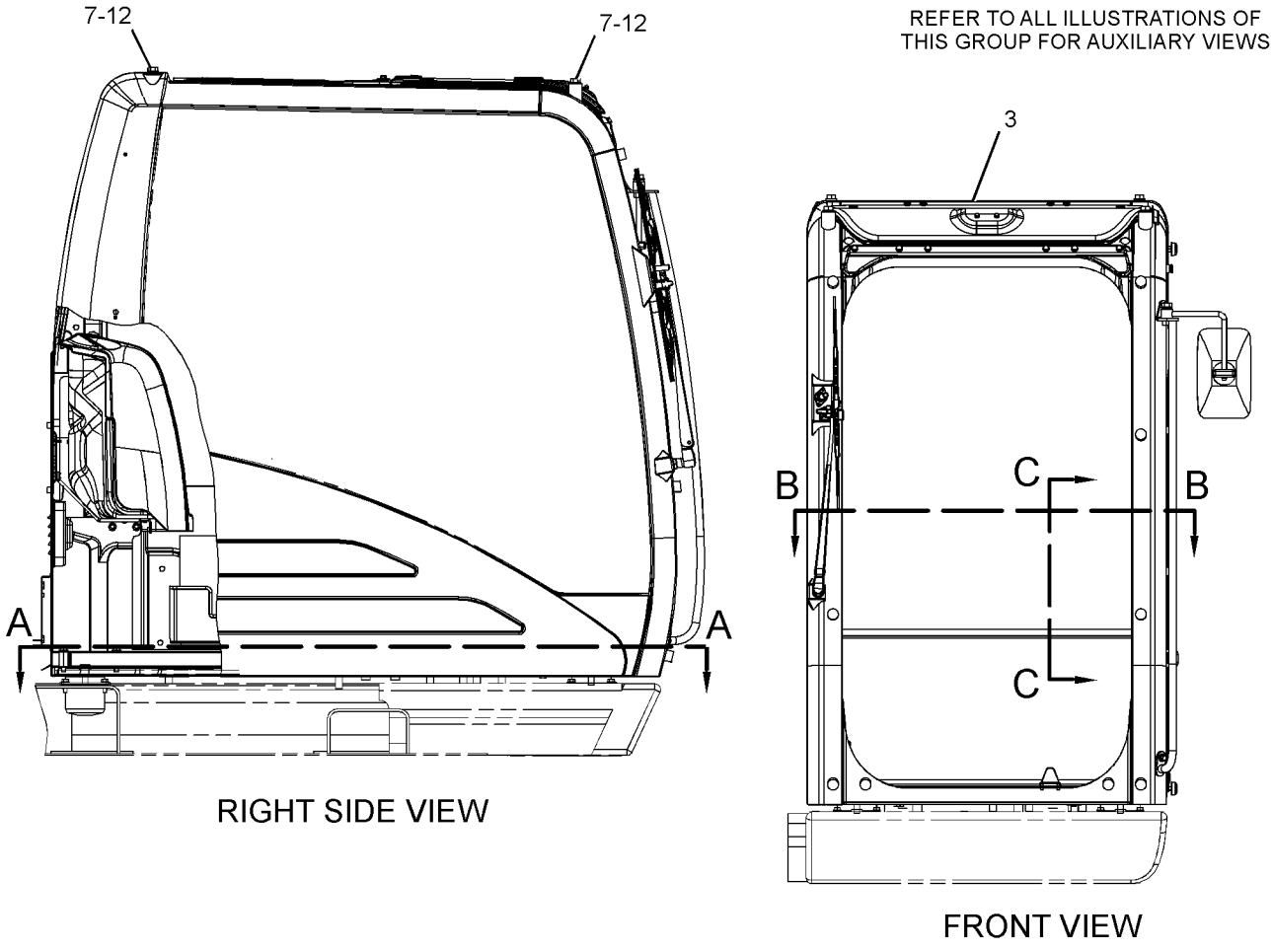

GRAPHIC #1 g02773478

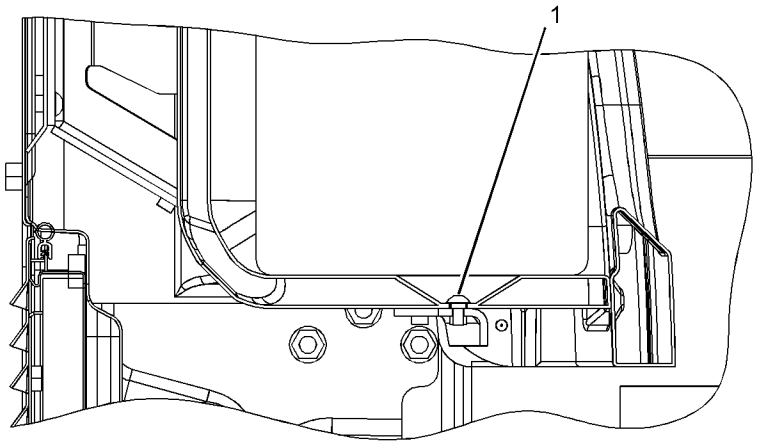

SECTION C-C

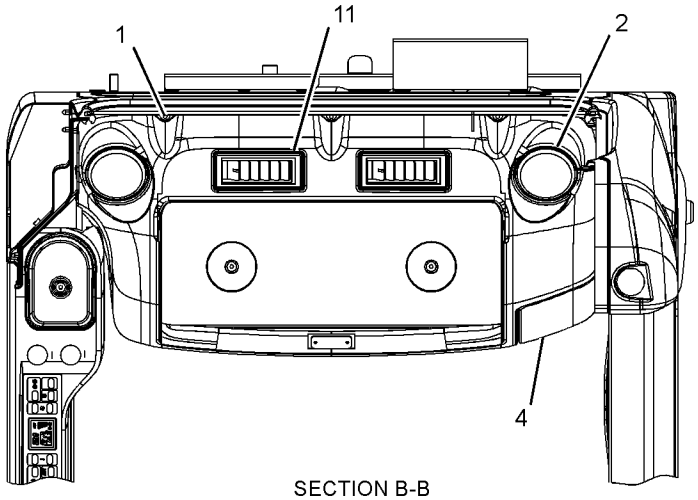

SECTION B-B

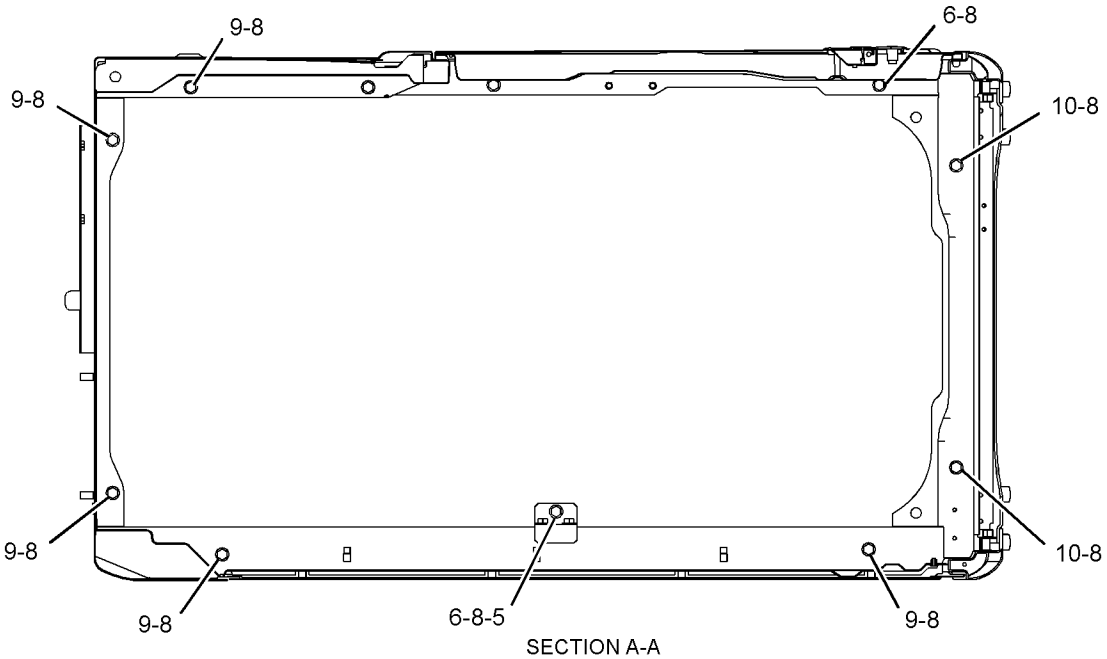

SECTION A-A

GRAPHIC #2 **<END>** g02773484

OPERATOR STATION

388-0065 CAB GP

S/N: DNP1-UP
PART OF 388-0026 CAB GP
AN ATTACHMENT

SMCS-7301, 7325 **i05269643**

NOTE	REF NO	GRAPHIC REF	PART NUMBER	QTY	PART NAME 1 2 3 4 5 6 (PRODUCT LEVEL)	SEE PAGE
	1	1	*235-8916*	1	CAB AS	
M	1A	1	**9X-2041**	6	SCREW-TRUSS HEAD (M10X1.5X20-MM)	
	1B	1	**151-6777**	2	HINGE	
M	1C	1	**185-8182**	6	BOLT (M10X1.5X20-MM)	
	1D	1	**185-8187**	6	WASHER (10.2X22X3.2-MM THK)	
Y	2	1	*346-8058*	1	CAB GP (EXTERIOR)	383
Y	3	1	*235-8917*	1	CAB GP (INTERIOR)	381
Y	4	1	*388-9107*	1	WINDOW GP-CAB (SIDE, REAR)	467
Y	5	1	*234-6594*	1	WIPER GP-WINDOW (FRONT, UPPER)	478
HY	6	1	*388-9105*	1	DOOR GP-CAB (INTERIOR)	421
JY	7	1	*388-9109*	1	WINDOW GP-CAB (FRONT, UPPER)	470
Y	8	1	*388-9108*	1	WINDOW GP-CAB (FRONT, LOWER)	468
Y	9	1	*259-7350*	1	HATCH GP-ROOF	427
FJY			**171-7503**	1	WINDOW GP-FRONT (UPPER)	476
FJY			**207-0144**	1	WINDOW AS-FRONT (UPPER)	466
FHY			**316-6166**	1	DOOR & MTG GP-CAB	418

F - NOT SHOWN
H - ITEM MARKED H AVAILABLE FOR SERVICE REPAIR OF DOOR GP MARKED H
J - ITEMS MARKED J AVAILABLE FOR SERVICE REPAIR OF WINDOW GP MARKED J
M - METRIC PART
Y - SEPARATE ILLUSTRATION

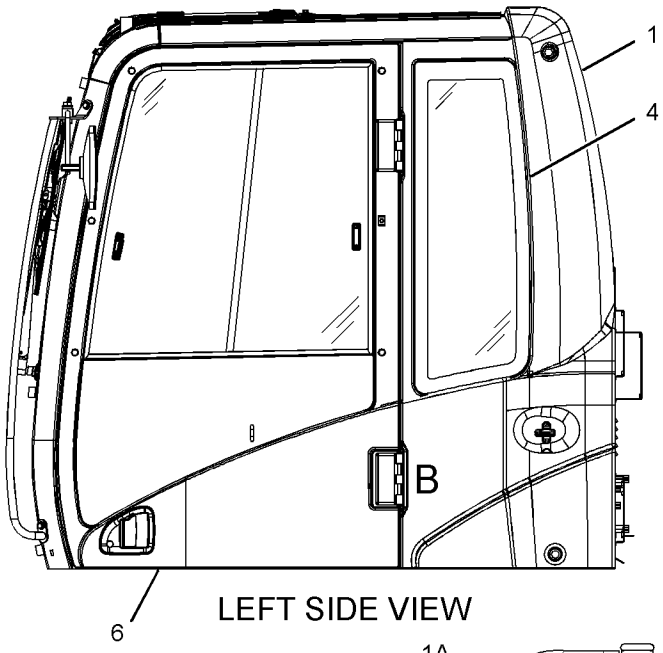

LEFT SIDE VIEW

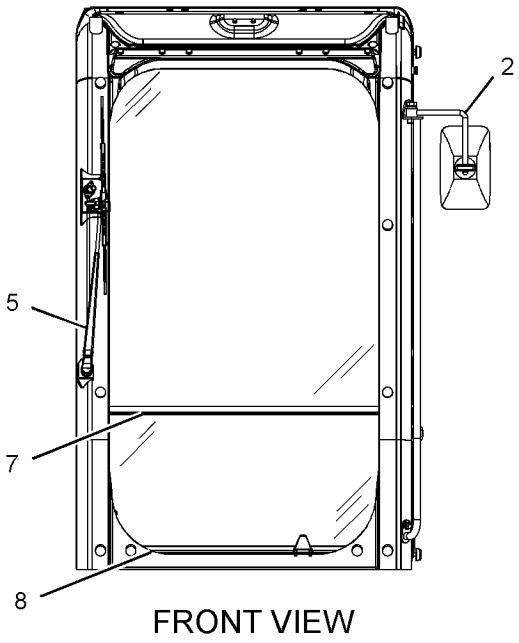

FRONT VIEW

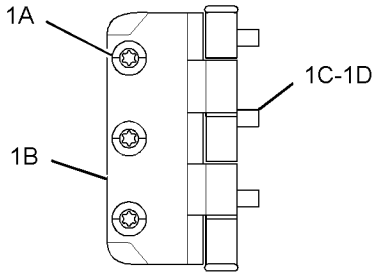

VIEW OF AREA B
(HINGE COVER REMOVED)

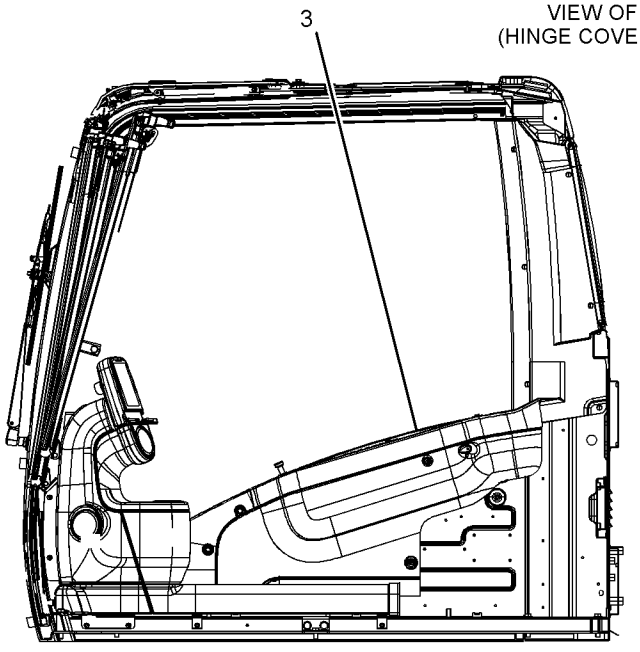

SECTION A-A

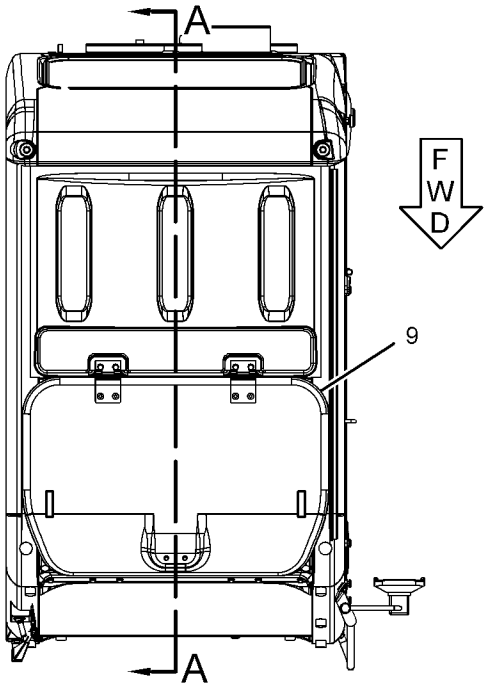

TOP VIEW

GRAPHIC #1 **<END>** g02793335

245-7836 COIL GP-EVAPORATOR

S/N: DNP1-UP
FIELD REPLACEMENT ORDER 353-2151—PAGE: 392
PART OF 316-8916 AIR CONDITIONER GP
AN ATTACHMENT

SMCS-7343 **i04919722**

NOTE	REF NO	GRAPHIC REF	PART NUMBER	QTY	PART NAME 1 2 3 4 5 6 (PRODUCT LEVEL)	SEE PAGE
	1	1	**245-7837**	1	VALVE AS-EXPANSION	
	2	1	**245-7905**	1	INSULATOR	
	3	1	**281-0791**	2	BOLT-SOCKET HEAD (M5X0.8X40-MM)	
	4	1	**121-7136**	1	SEAL-O-RING	
	5	1	**121-7137**	1	SEAL-O-RING	

245-7836 **COIL GP-EVAPORATOR (*contd.*)** **i04919722**

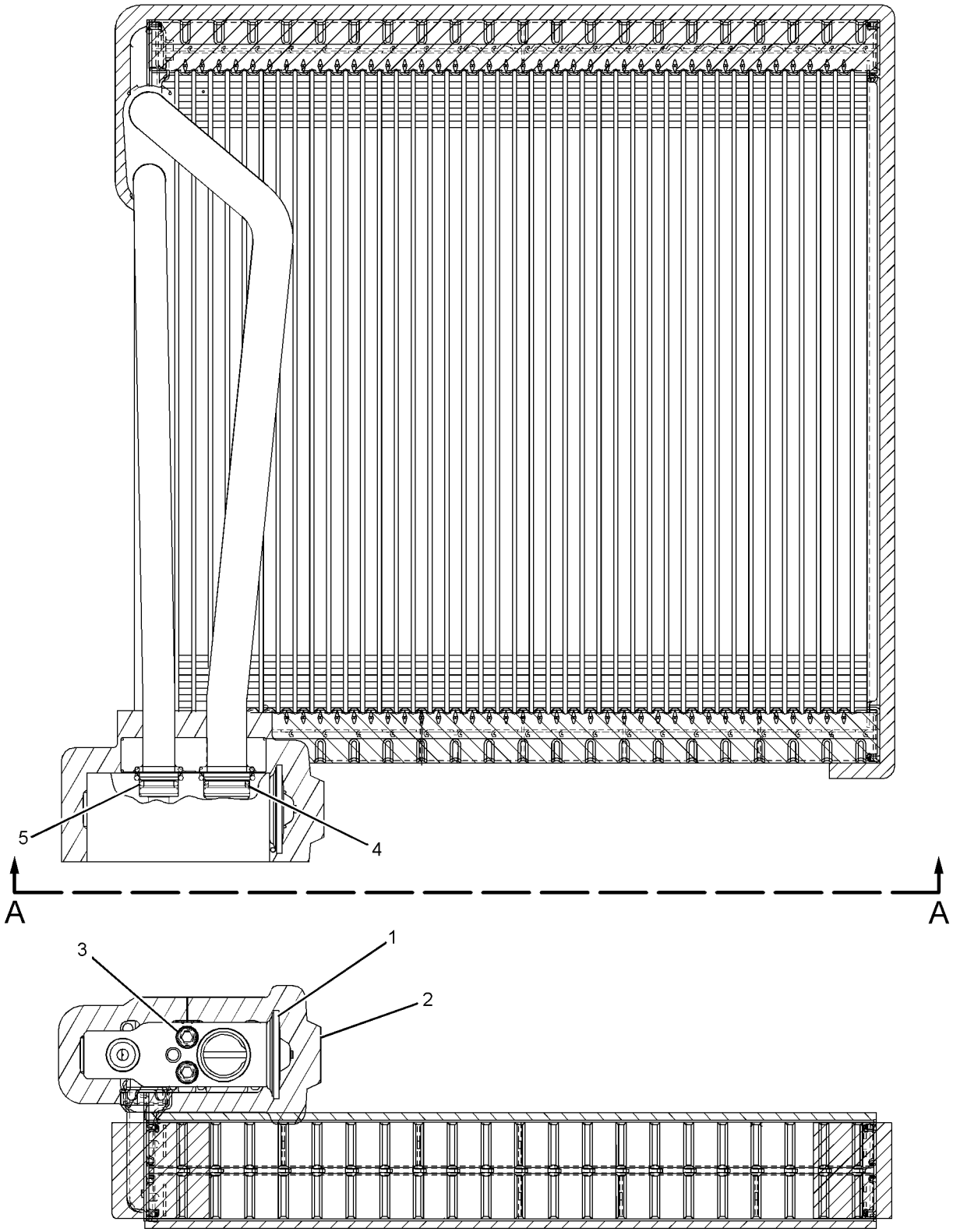

VIEW A-A

GRAPHIC #1 **<END>** g01134658

353-2151 COIL GP-EVAPORATOR

S/N: DNP1-UP

FIELD REPLACEMENT FOR 245-7836—PAGE: 390

SMCS-7343 **i04954773**

NOTE	REF NO	GRAPHIC REF	PART NUMBER	QTY	PART NAME 1 2 3 4 5 6 (PRODUCT LEVEL)	SEE PAGE
	1	1	**245-7837**	1	VALVE AS-EXPANSION	
	2	1	**245-7905**	1	INSULATOR	
	3	1	**281-0791**	2	BOLT-SOCKET HEAD (M5X0.8X40-MM)	
	4	1	**121-7136**	1	SEAL-O-RING	
	5	1	**121-7137**	1	SEAL-O-RING	

353-2151 **COIL GP-EVAPORATOR (*contd.*)** **i04954773**

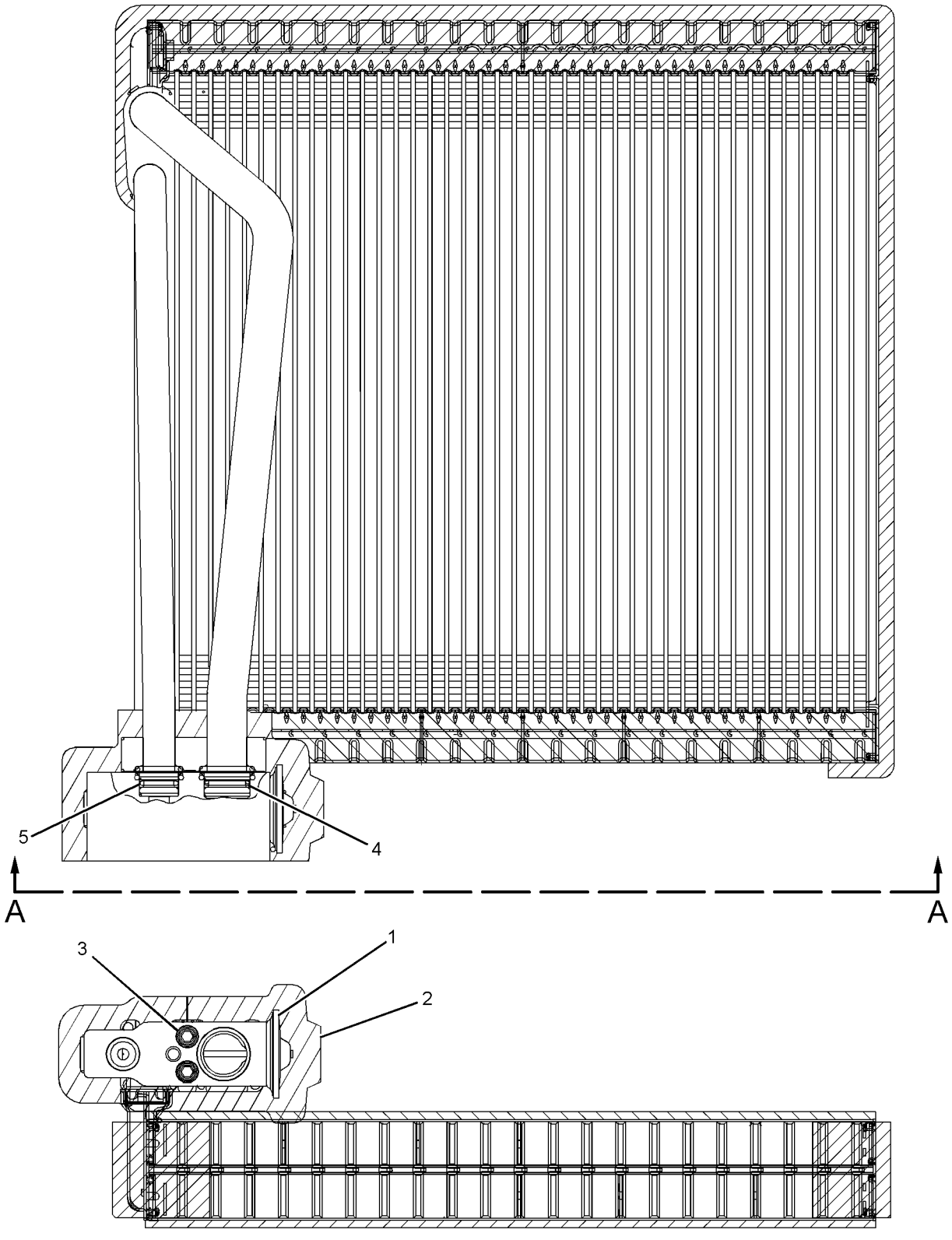

VIEW A-A

GRAPHIC #1 **<END>** g02150001

372-9295 COMPRESSOR GP-REFRIGERANT

S/N: FKK1-UP; DNP1-UP

24-VOLT

PART OF 379-4415 COMPRESSOR GP-REFRIGERANT

SMCS-1802 **i05265327**

NOTE	REF NO	GRAPHIC REF	PART NUMBER	QTY	PART NAME 1 2 3 4 5 6 (PRODUCT LEVEL)	SEE PAGE
	1	1	**9W-0852**	2	PIN-CONNECTOR (14-GA TO 16-GA)	
	2	1	**243-4505**	1	RECEPTACLE AS-CONNECTOR (2-PIN)	
	3	1	**327-6593**	1	SEAL-O-RING	
	4	1	**327-6594**	1	SEAL-O-RING	

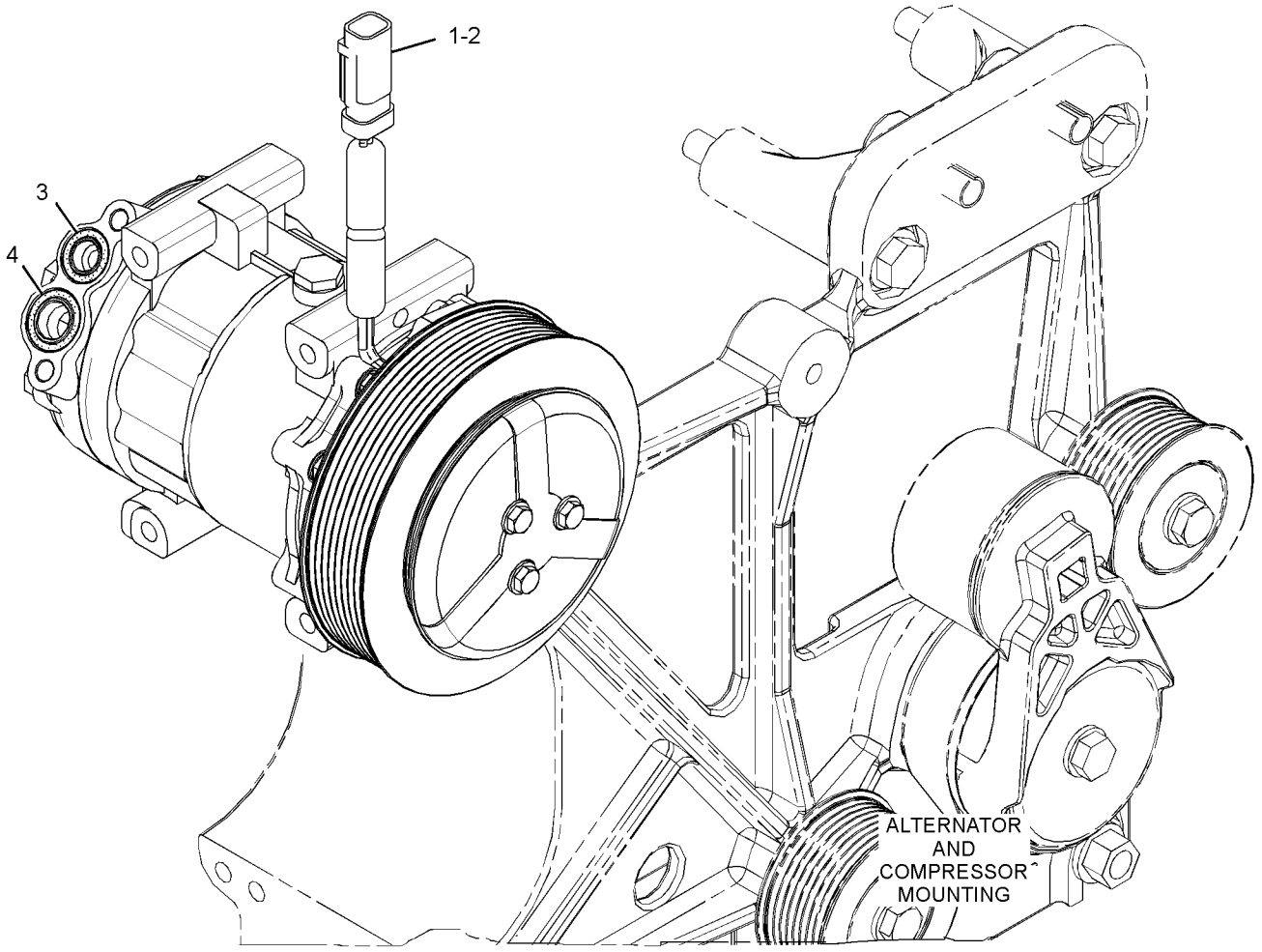

GRAPHIC #1 **<END>** g02149988

379-4415 COMPRESSOR GP-REFRIGERANT

S/N: FKK1-UP; DNP1-UP

PART OF 394-7471, 433-6905 INSTALLATION AR-ENGINE

SMCS-1802 **i05259465**

NOTE	REF NO	GRAPHIC REF	PART NUMBER	QTY	PART NAME 1 2 3 4 5 6 (PRODUCT LEVEL)	SEE PAGE
	1	1	**364-1614**	4	BOLT-FLANGE HEAD (M8X1.25X95-MM)	
Y	2	1	**372-9295**	1	COMPRESSOR GP-REFRIGERANT	394
	3	1	**383-5626**	1	BRACKET AS	

Y - SEPARATE ILLUSTRATION

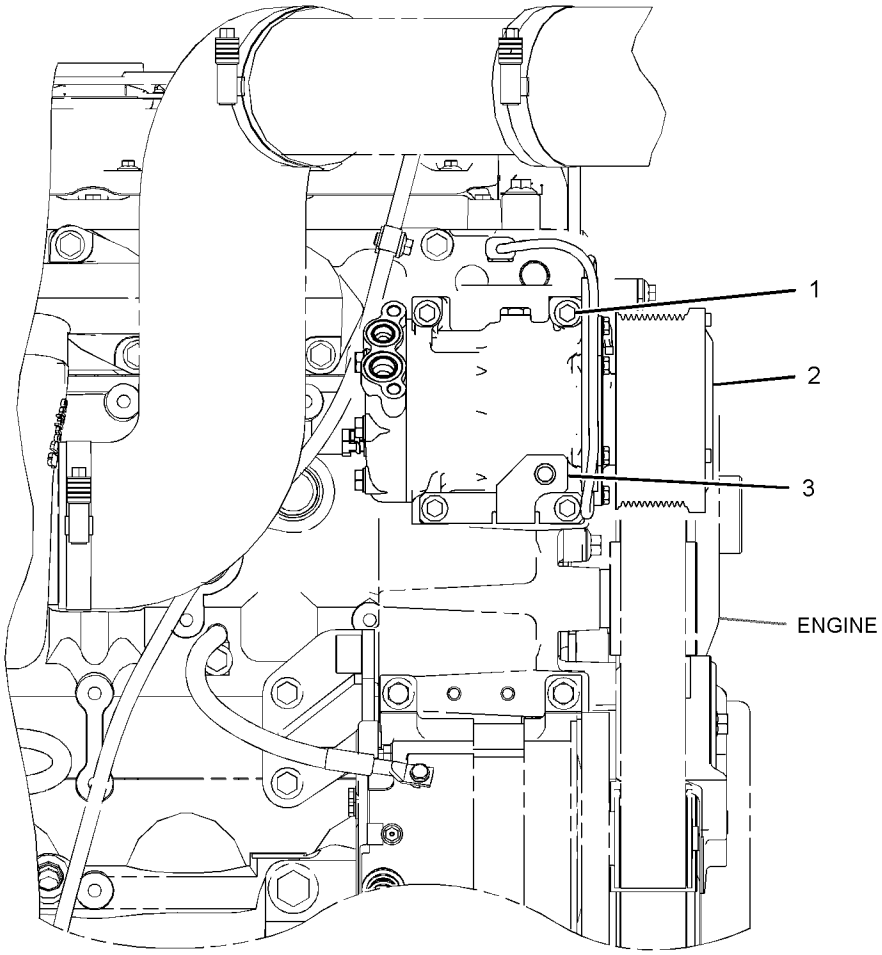

REAR VIEW

GRAPHIC #1 **<END>** g03313158

363-9644 CONDENSER & MTG GP-REFRIGERANT

S/N: DNP1-UP

PART OF 394-7471 INSTALLATION AR-ENGINE

SMCS-1805 **i05266831**

NOTE	REF NO	GRAPHIC REF	PART NUMBER	QTY	PART NAME 1 2 3 4 5 6 (PRODUCT LEVEL)	SEE PAGE
Y	1	1	**245-7749**	1	CONDENSER GP-REFRIGERANT	397
	2	1	**363-9645**	1	SUPPORT AS-CONDENSER	
M	3	1	**7X-2533**	4	BOLT (M6X1X35-MM)	
	4	1	**8T-4121**	4	WASHER-HARD (11X21X2.5-MM THK)	
M	5	1	**8T-4137**	4	BOLT (M10X1.5X20-MM)	
	6	1	**117-8929**	4	WASHER (6.6X22X2-MM THK)	

M - METRIC PART
Y - SEPARATE ILLUSTRATION

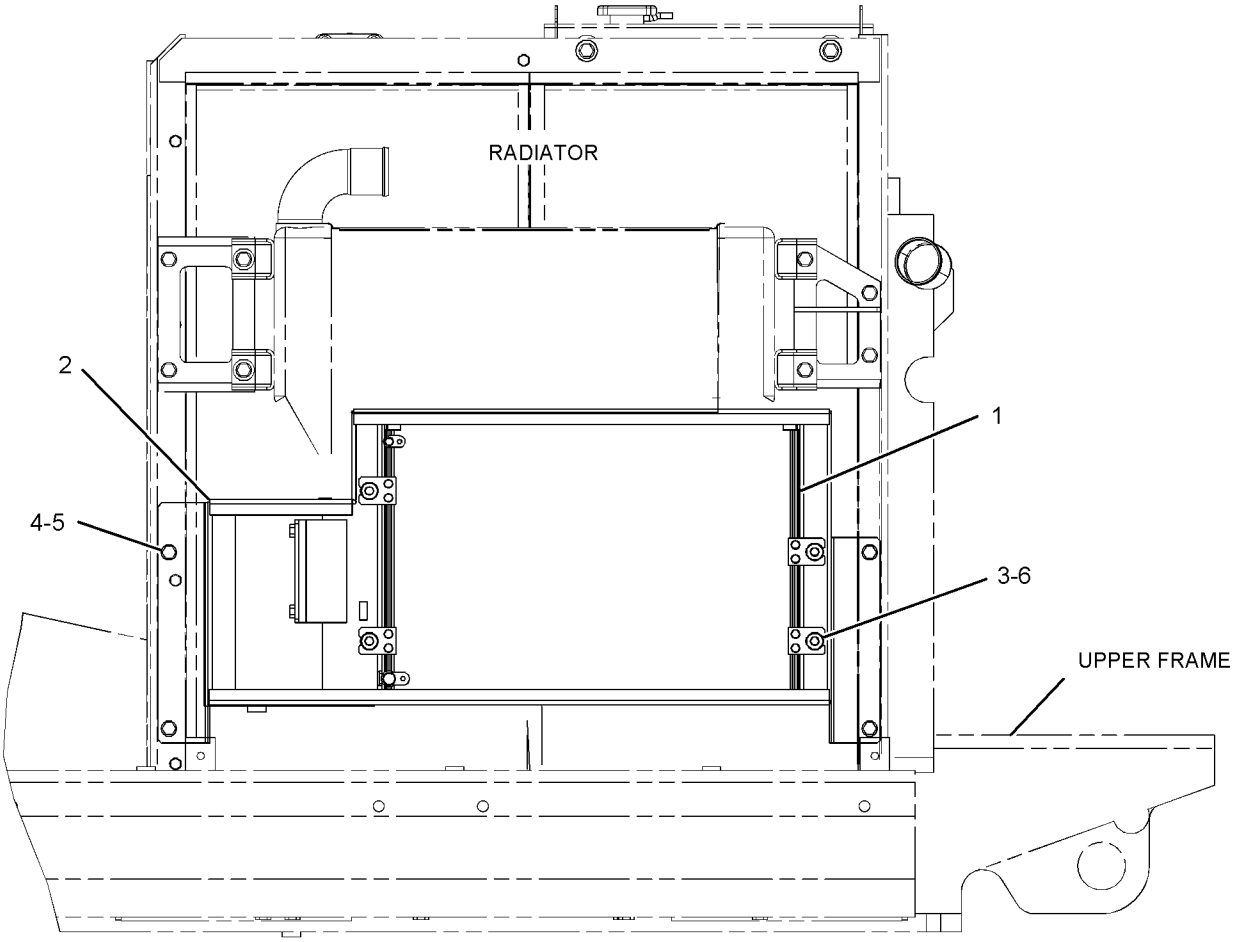

LEFT SIDE VIEW

GRAPHIC #1 **<END>** g02726048

245-7749 CONDENSER GP-REFRIGERANT

S/N: DNP1-UP

PART OF 363-9644 CONDENSER & MTG GP-REFRIGERANT

SMCS-1805 **i04913536**

NOTE	REF NO	GRAPHIC REF	PART NUMBER	QTY	PART NAME 1 2 3 4 5 6 (PRODUCT LEVEL)	SEE PAGE
	1	1	**235-8880**	1	CONDENSER AS	
	2	1	**245-7750**	4	BUSHING-RUBBER	
	3	1	**245-7751**	4	BRACKET	
	4	1	**095-0827**	8	LOCKWASHER	
M	5	1	**8T-4171**	8	BOLT (M6X1X12-MM)	
	6	1	**9X-8256**	8	WASHER (6.6X12X2-MM THK)	

M - METRIC PART

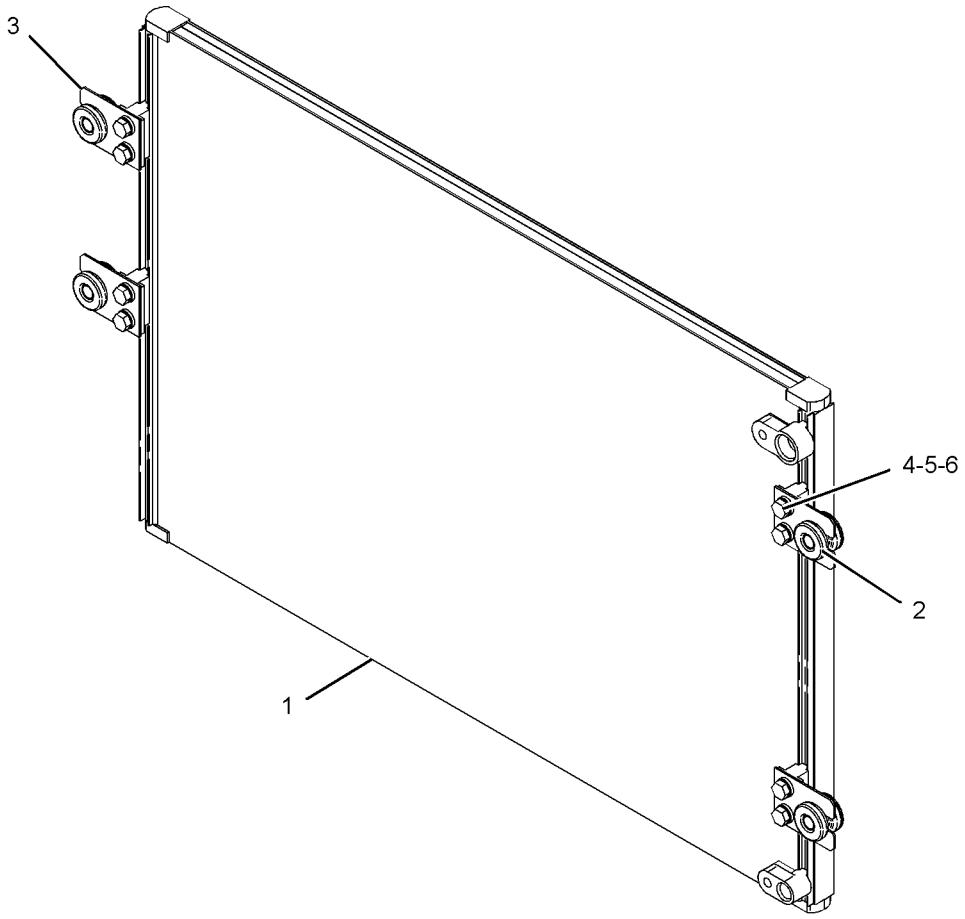

GRAPHIC #1 **<END>** g01086695

OPERATOR STATION

436-1213 CONSOLE GP

S/N: FKK1-UP

PART OF 436-1212 CONSOLE GP-OPERATOR

SMCS-5258, 7451 **i05292532**

NOTE	REF NO	GRAPHIC REF	PART NUMBER	QTY	PART NAME 1 2 3 4 5 6 (PRODUCT LEVEL)	SEE PAGE
M	1	1	**128-2135**	5	SCREW-TRUSS HEAD (M6X1X13-MM)	
M	2	1	**171-7325**	3	SCREW-TAPPING (M5X0.8-THD)	
	3	1	**234-6579**	6	NUT-SPEED	
	4	1	**234-6580**	4	CAP	
	5	1	**234-6603**	1	COVER	
	6	1	**234-6605**	1	COVER	
	7	1	**234-6608**	1	COVER	
	8	1	**234-6609**	1	COVER	
	9	1	**234-6610**	1	COVER	
	10	1	**234-6611**	1	CASE	
	11	1	**234-6612**	1	COVER	
Y	12	1	**234-6613**	1	SWITCH GP-LIMIT	98
	13	1	**234-6614**	1	COVER	
	14	1	**235-8914**	4	NUT-SPEED	
	15	1	**235-8965**	1	GUARD	
	16	1	**245-7790**	3	SCREW-TAPPING	
	17	1	**245-7925**	1	SUPPORT AS	
	18	1	**245-7948**	7	SCREW-TAPPING	
M	19	1	**9X-2042**	2	SCREW-TRUSS HEAD (M6X1X12-MM)	
Y	20	1	**259-7347**	1	ARMREST GP (LH)	379
M	21	1	**9X-2041**	3	SCREW-TRUSS HEAD (M10X1.5X20-MM)	

M - METRIC PART
Y - SEPARATE ILLUSTRATION

436-1213 **CONSOLE GP (*contd.*)** **i05292532**

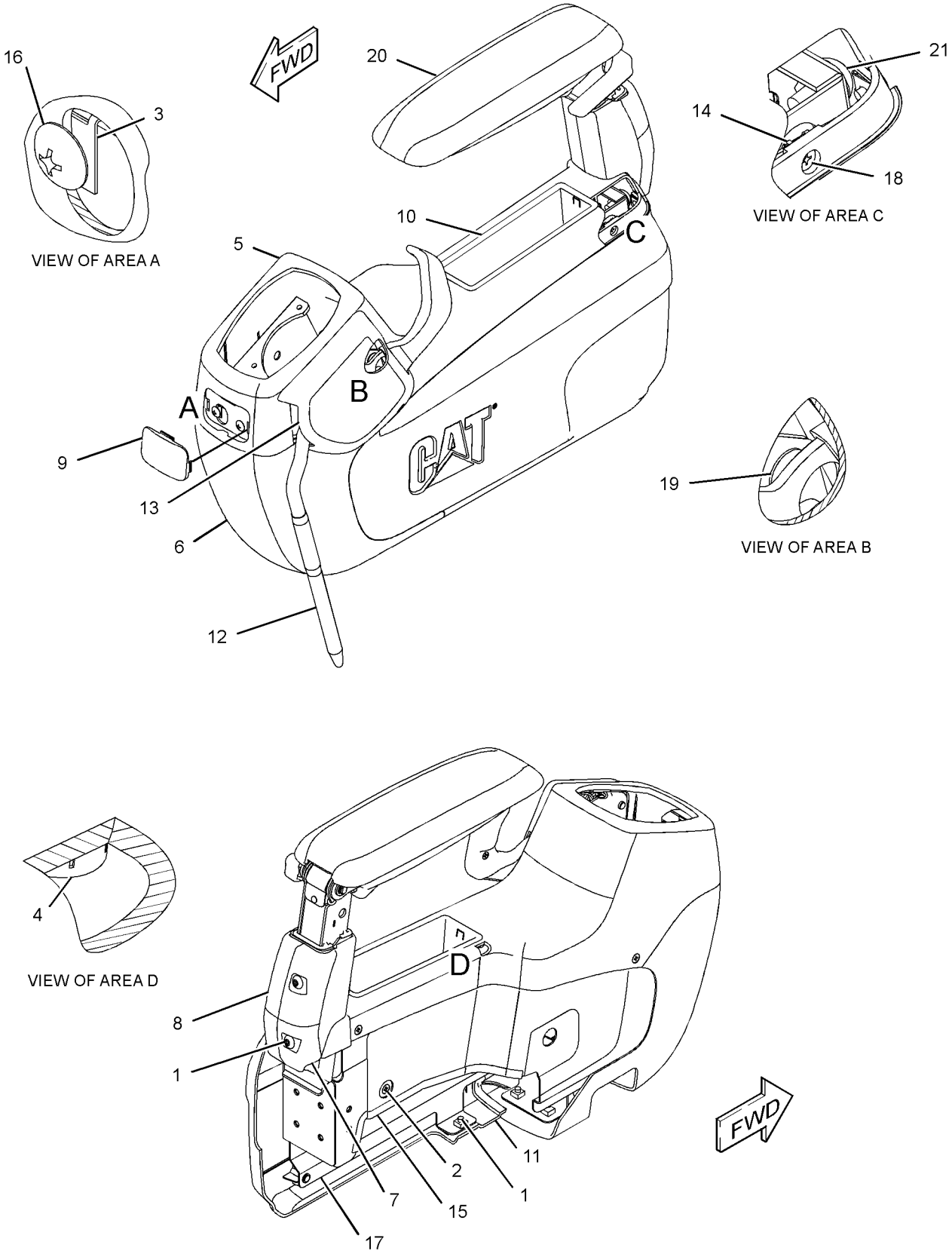

GRAPHIC #1 **<END>** g03362913

245-7922 CONSOLE GP-OPERATOR

S/N: DNP1-UP

PART OF 421-6944 OPERATOR AR

SMCS-5258 **i04912171**

NOTE	REF NO	GRAPHIC REF	PART NUMBER	QTY	PART NAME 1 2 3 4 5 6 (PRODUCT LEVEL)	SEE PAGE
	1	1	**176-1916**	2	GROMMET	
	2	1	**178-5422**	2	GROMMET	
	3	1	**178-5423**	2	GROMMET	
	4	1	**185-8161**	2	INSULATOR	
	5	1	**235-8893**	2	SUPPORT	
	6	1	**235-8894**	2	SUPPORT	
Y	7	1	*259-7349*	1	CONSOLE GP-OPERATOR (LH)	404
Y	8	1	*259-7348*	1	CONSOLE GP-OPERATOR (RH)	402
	9	1	**8T-4121**	4	WASHER-HARD (11X21X2.5-MM THK)	
M	10	1	**8T-4195**	4	BOLT (M10X1.5X30-MM)	
M	11	1	**9X-2046**	8	SCREW-TRUSS HEAD (M6X1X35-MM)	
M	12	1	**9X-2045**	12	SCREW-TRUSS HEAD (M6X1X20-MM)	
	13	1	**7K-1181**	4	STRAP-CABLE	
	14	1	**122-9617**	2	GUARD	

M - METRIC PART
Y - SEPARATE ILLUSTRATION

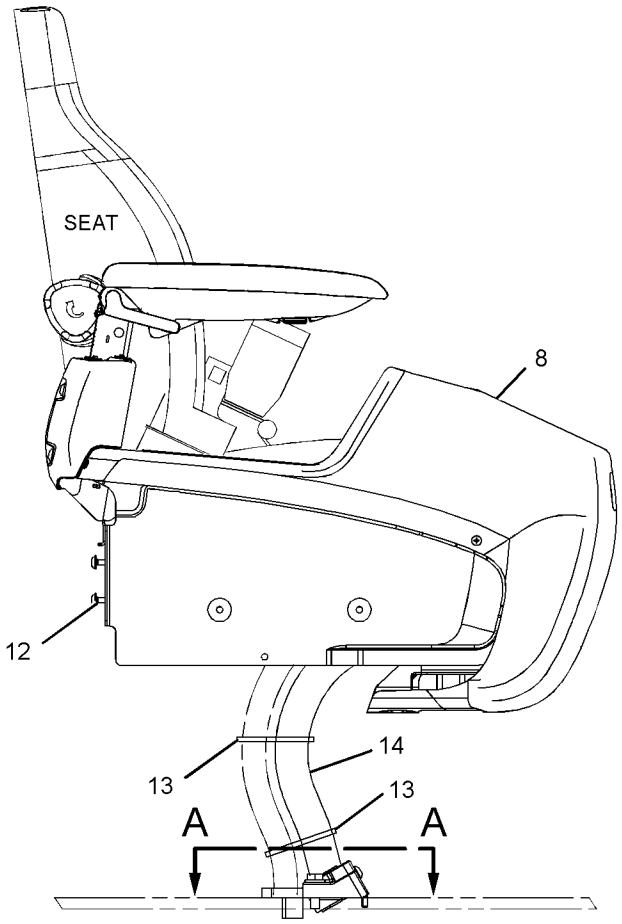

RIGHT SIDE VIEW

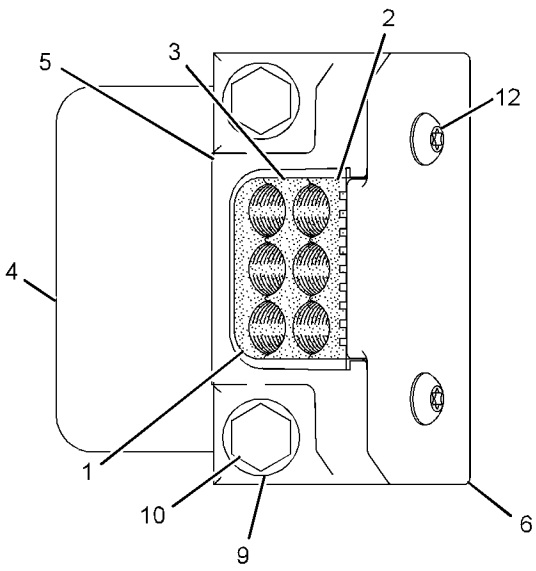

SECTION A-A

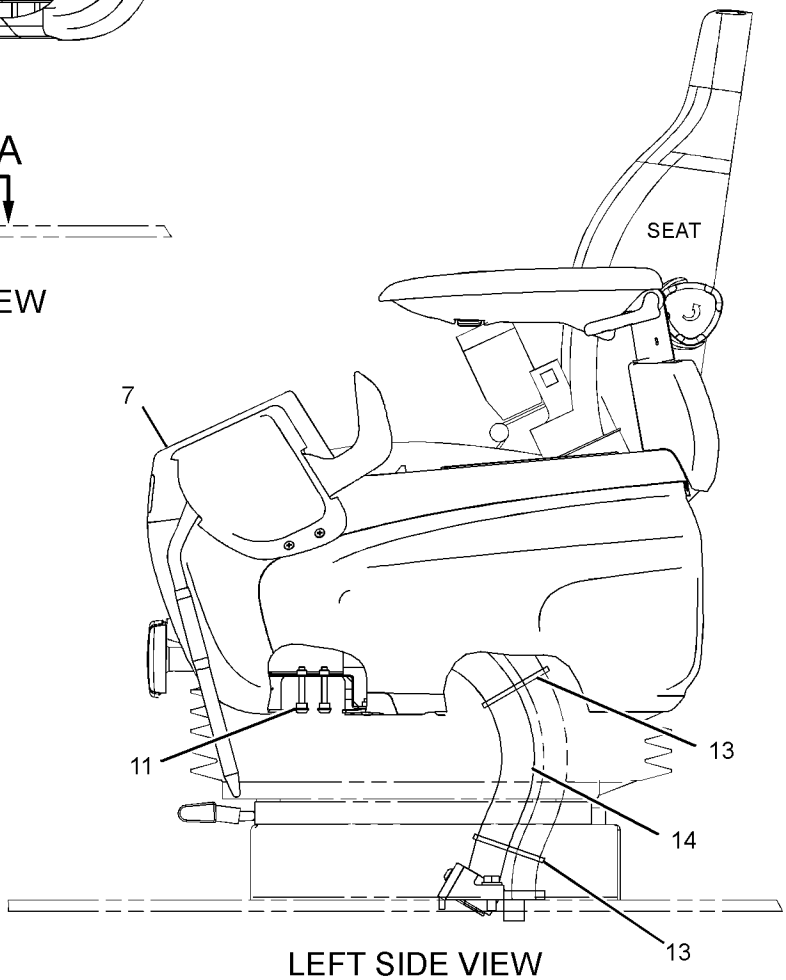

LEFT SIDE VIEW

GRAPHIC #1 **<END>** g01844714

OPERATOR STATION

259-7348 CONSOLE GP-OPERATOR—RH

S/N: FKK1-UP; DNP1-UP

PART OF 245-7922, 436-1212 CONSOLE GP-OPERATOR

SMCS-5258 **i04913368**

NOTE	REF NO	GRAPHIC REF	PART NUMBER	QTY	PART NAME 1 2 3 4 5 6 (PRODUCT LEVEL)	SEE PAGE
M	1	1	**128-2135**	4	SCREW-TRUSS HEAD (M6X1X13-MM)	
	2	1	**185-8284**	1	COVER	
	3	1	**234-6579**	2	NUT-SPEED	
	4	1	**234-6580**	2	CAP	
	5	1	**234-6602**	1	COVER	
	6	1	**234-6604**	1	COVER	
	7	1	**234-6608**	1	COVER	
	8	1	**234-6609**	1	COVER	
	9	1	**234-6610**	1	COVER	
	10	1	**235-8914**	4	NUT-SPEED	
	11	1	**235-8966**	2	BASE-MOUNTING	
	12	1	**245-7790**	2	SCREW-TAPPING	
	13	1	**245-7926**	1	SUPPORT AS	
	14	1	**245-7948**	4	SCREW-TAPPING	
Y	15	1	**259-7346**	1	ARMREST GP (RH)	378
M	16	1	**9X-2041**	3	SCREW-TRUSS HEAD (M10X1.5X20-MM)	

M - METRIC PART
Y - SEPARATE ILLUSTRATION

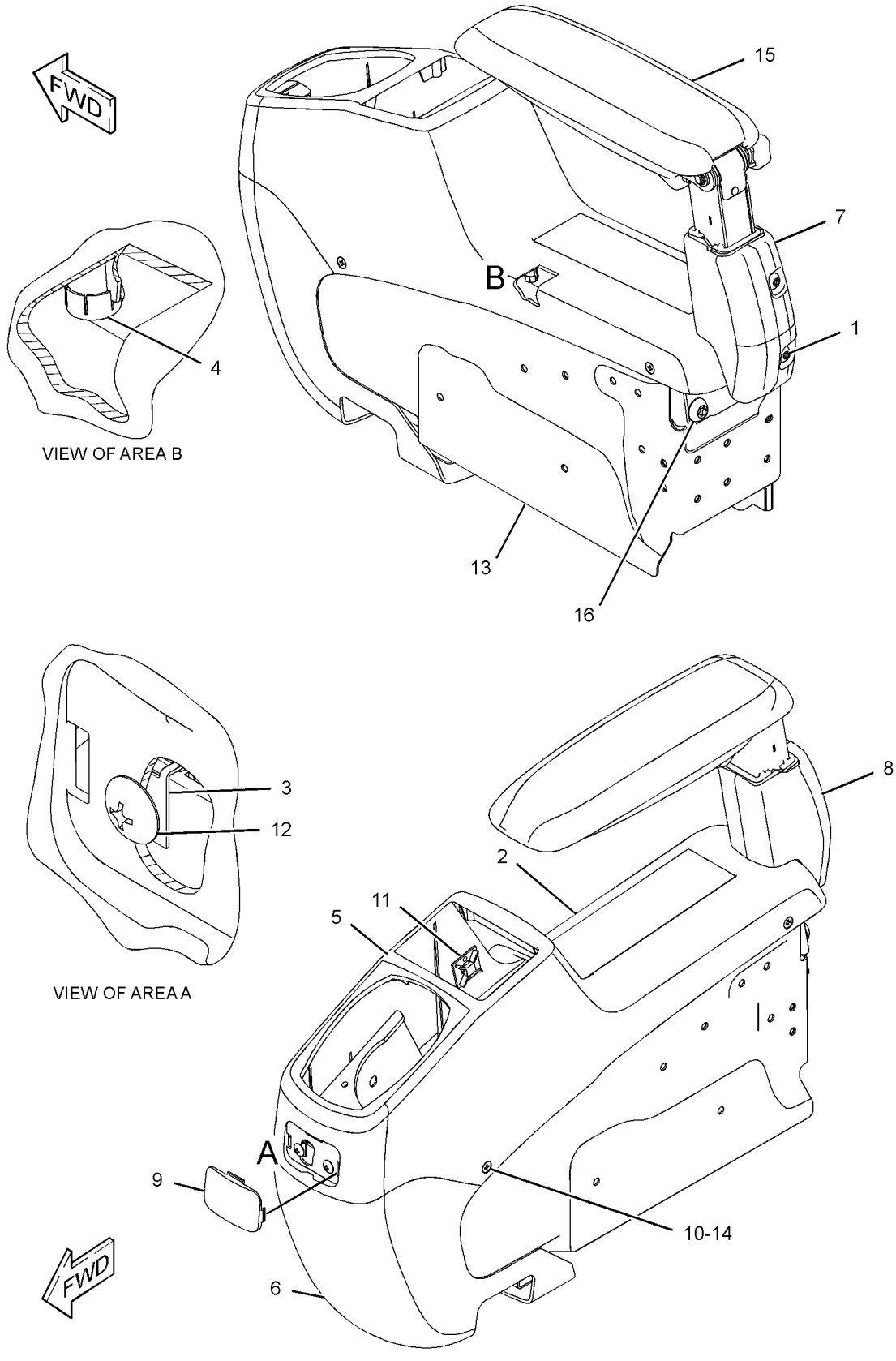

GRAPHIC #1 **<END>** g01217107

259-7349 CONSOLE GP-OPERATOR–LH

S/N: DNP1-UP

PART OF 245-7922 CONSOLE GP-OPERATOR

SMCS-5258 **i04913374**

NOTE	REF NO	GRAPHIC REF	PART NUMBER	QTY	PART NAME 1 2 3 4 5 6 (PRODUCT LEVEL)	SEE PAGE
M	1	1	**128-2135**	5	SCREW-TRUSS HEAD (M6X1X13-MM)	
M	2	1	**171-7325**	3	SCREW-TAPPING (M5X0.8-THD)	
	3	1	**234-6579**	6	NUT-SPEED	
	4	1	**234-6580**	4	CAP	
	5	1	**234-6603**	1	COVER	
	6	1	**234-6605**	1	COVER	
	7	1	**234-6608**	1	COVER	
	8	1	**234-6609**	1	COVER	
	9	1	**234-6610**	1	COVER	
	10	1	**234-6611**	1	CASE	
	11	1	**234-6612**	1	COVER	
Y	12	1	**234-6613**	1	SWITCH GP-LIMIT	98
	13	1	**234-6614**	1	COVER	
	14	1	**235-8914**	4	NUT-SPEED	
	15	1	**235-8965**	1	GUARD	
	16	1	**245-7790**	3	SCREW-TAPPING	
	17	1	**245-7925**	1	SUPPORT AS	
	18	1	**245-7948**	7	SCREW-TAPPING	
	19	1	**259-7202**	1	ASHTRAY	
Y	20	1	**259-7347**	1	ARMREST GP (LH)	379
M	21	1	**9X-2041**	3	SCREW-TRUSS HEAD (M10X1.5X20-MM)	
M	22	1	**9X-2042**	2	SCREW-TRUSS HEAD (M6X1X12-MM)	

M - METRIC PART
Y - SEPARATE ILLUSTRATION

259-7349 **CONSOLE GP-OPERATOR (*contd.*)** **i04913374**

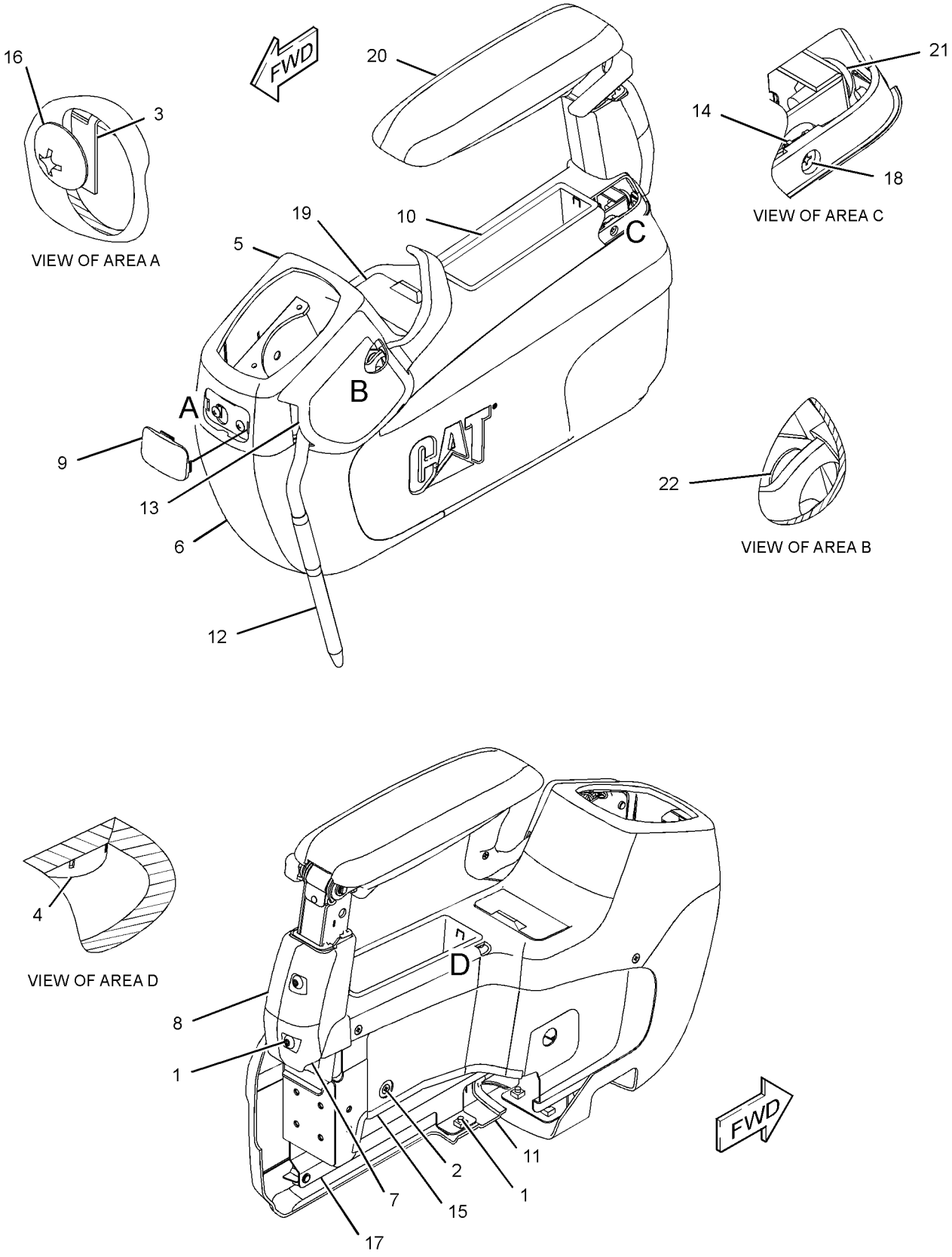

GRAPHIC #1 **<END>** g01217096

436-1212 CONSOLE GP-OPERATOR

S/N: FKK1-UP

PART OF 433-6907 OPERATOR AR

SMCS-5258 **i05292529**

NOTE	REF NO	GRAPHIC REF	PART NUMBER	QTY	PART NAME 1 2 3 4 5 6 (PRODUCT LEVEL)	SEE PAGE
	1	1	**176-1916**	2	GROMMET	
	2	1	**178-5422**	2	GROMMET	
	3	1	**178-5423**	2	GROMMET	
	4	1	**185-8161**	2	INSULATOR	
	5	1	**235-8893**	2	SUPPORT	
	6	1	**235-8894**	2	SUPPORT	
Y	7	1	*436-1213*	1	CONSOLE GP	398
Y	8	1	*259-7348*	1	CONSOLE GP-OPERATOR (RH)	402
	9	1	**8T-4121**	4	WASHER-HARD (11X21X2.5-MM THK)	
M	10	1	**8T-4195**	4	BOLT (M10X1.5X30-MM)	
M	11	1	**9X-2046**	8	SCREW-TRUSS HEAD (M6X1X35-MM)	
M	12	1	**9X-2045**	12	SCREW-TRUSS HEAD (M6X1X20-MM)	
	13	1	**7K-1181**	4	STRAP-CABLE	
	14	1	**122-9617**	2	GUARD	

M - METRIC PART
Y - SEPARATE ILLUSTRATION

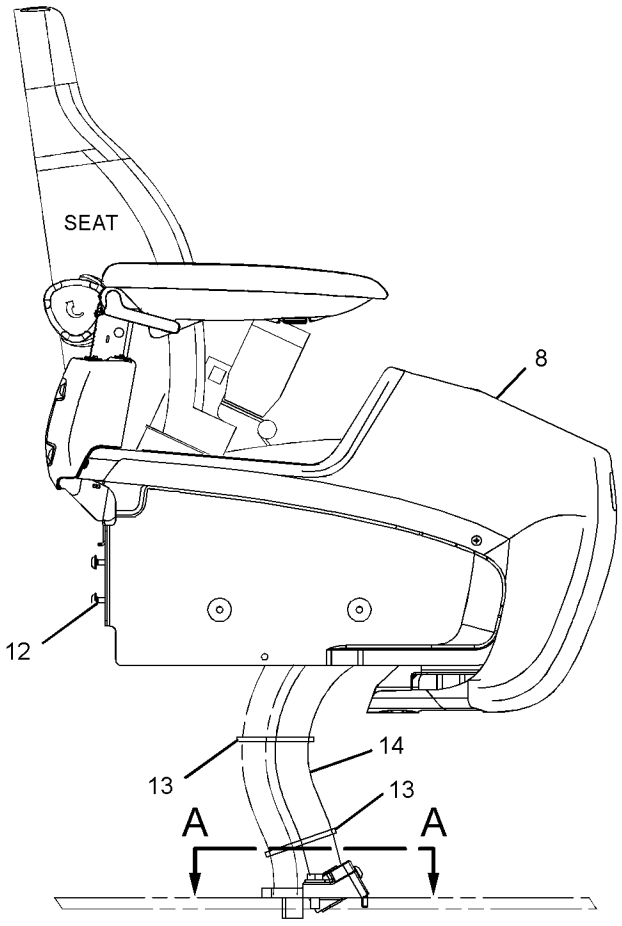

RIGHT SIDE VIEW

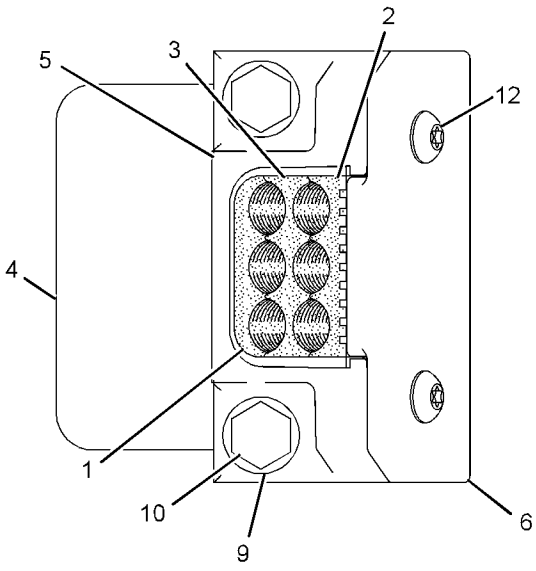

SECTION A-A

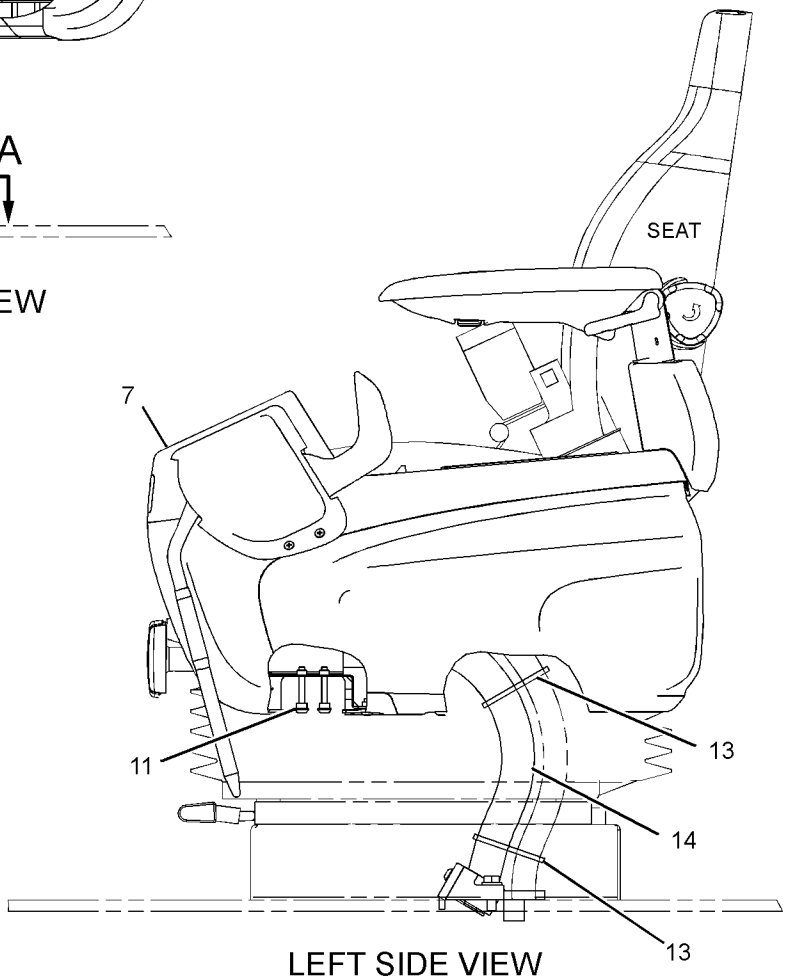

LEFT SIDE VIEW

GRAPHIC #1 **<END>** g01844714

310-0078 CONTROL & MTG GP-JOYSTICK

S/N: FKK1-UP; DNP1-UP

AN ATTACHMENT

SMCS-5063, 5705 **i04921958**

NOTE	REF NO	GRAPHIC REF	PART NUMBER	QTY	PART NAME 1 2 3 4 5 6 (PRODUCT LEVEL)	SEE PAGE
Y	1	1	**297-0532**	1	CONTROL GP-JOYSTICK (RH)	413
Y	2	1	**297-0533**	1	CONTROL GP-JOYSTICK (LH)	414
M	3	1	**6V-7357**	6	BOLT (M6X1X25-MM)	
	4	1	**9X-8256**	6	WASHER (6.6X12X2-MM THK)	

M - METRIC PART
Y - SEPARATE ILLUSTRATION

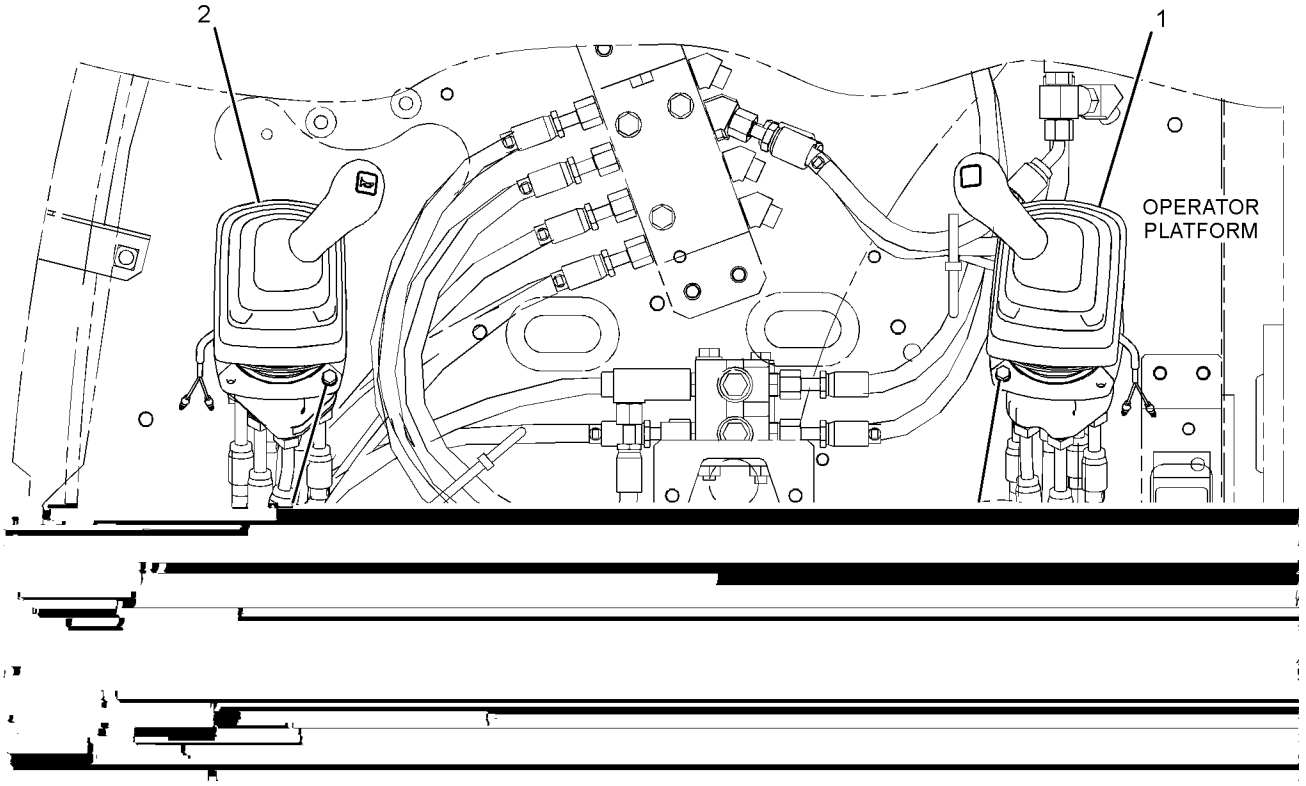

GRAPHIC #1 **<END>** g01442248

235-8969 CONTROL GP-HANDLE—JOYSTICK, LH

S/N: FKK1-UP; DNP1-UP

PART OF 297-0533 CONTROL GP-JOYSTICK

AN ATTACHMENT

SMCS-5705 **i04921983**

NOTE	REF NO	GRAPHIC REF	PART NUMBER	QTY	PART NAME 1 2 3 4 5 6 (PRODUCT LEVEL)	SEE PAGE
	1	1	**124-4010**	1	LEVER	
	2	1	**353-2149**	1	BOOT	
	3	1	**245-7842**	1	KNOB AS	
M		1	**6I-5298**	1	SCREW-TAPPING	
		1	**124-4009**	1	SHAFT	
		1	**222-0225**	1	SWITCH AS-PUSH BUTTON (HORN)	
M	4	1	**095-0735**	2	SCREW-MACHINE (M5X0.8X8-MM)	

M - METRIC PART

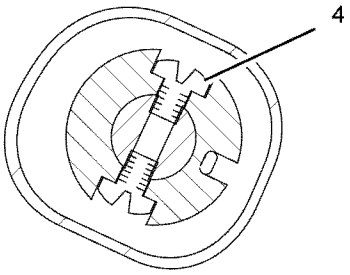

SECTION B-B

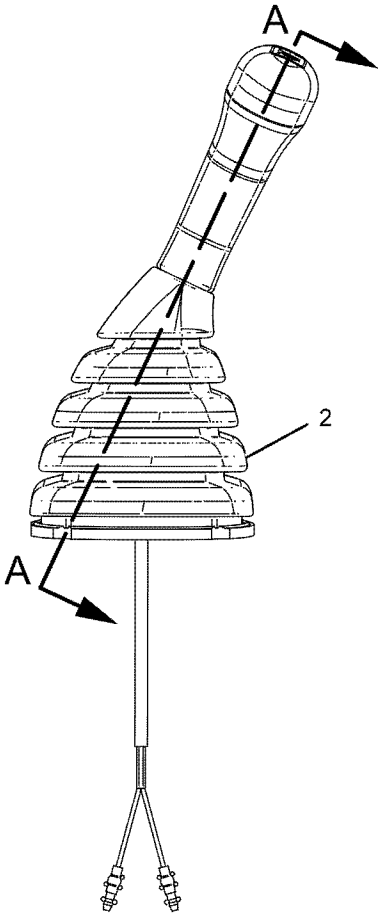

LEFT SIDE VIEW

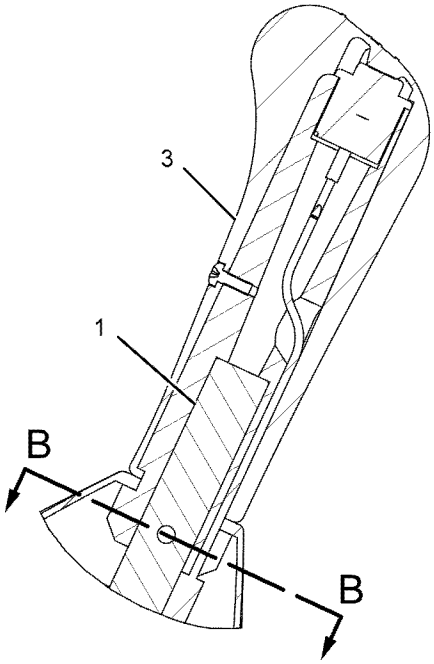

SECTION A-A

GRAPHIC #1 **<END>** g01082395

235-8970 CONTROL GP-HANDLE–JOYSTICK, RH

S/N: FKK1-UP; DNP1-UP
PART OF 297-0532 CONTROL GP-JOYSTICK
AN ATTACHMENT

SMCS-5705 **i04921967**

NOTE	REF NO	GRAPHIC REF	PART NUMBER	QTY	PART NAME 1 2 3 4 5 6 (PRODUCT LEVEL)	SEE PAGE
	1	1	**124-4010**	1	LEVER	
	2	1	**353-2150**	1	BOOT	
	3	1	**245-7844**	1	KNOB AS	
M		1	**6I-5298**	1	SCREW-TAPPING	
		1	**124-4009**	1	SHAFT	
		1	**222-0225**	1	SWITCH AS-PUSH BUTTON (MANUAL LOW IDLE)	
M	4	1	**095-0735**	2	SCREW-MACHINE (M5X0.8X8-MM)	

M - METRIC PART

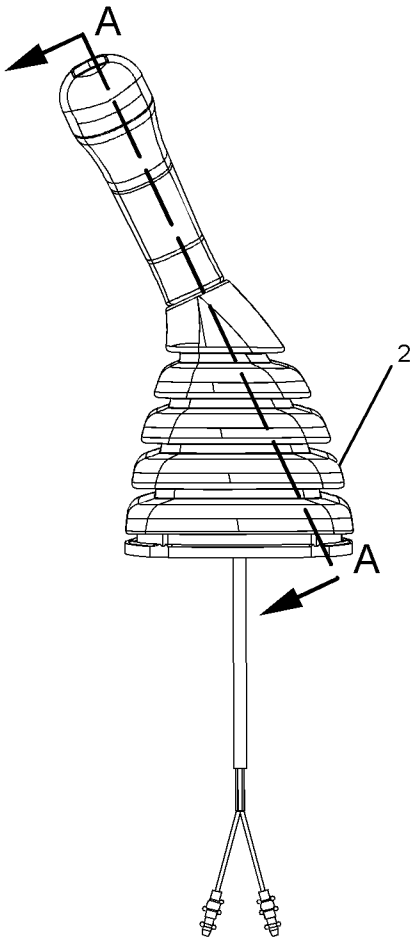

RIGHT SIDE VIEW

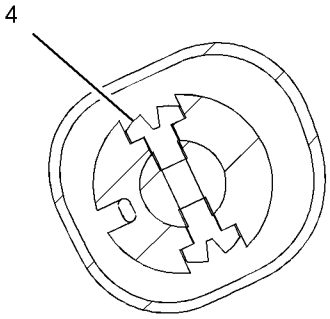

SECTION B-B

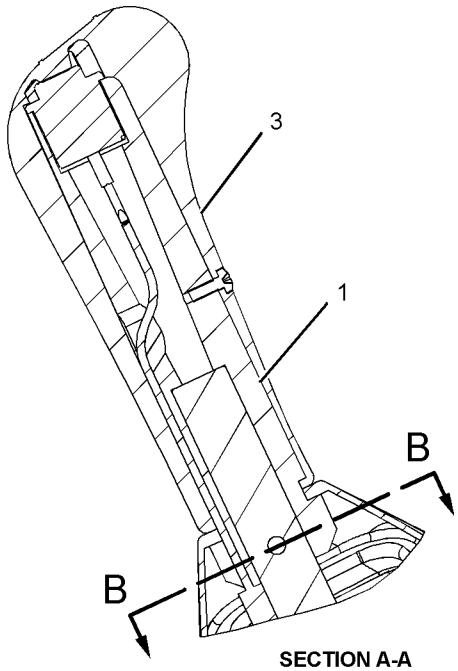

SECTION A-A

GRAPHIC #1 **<END>** g01082427

245-7846 CONTROL GP-HEAT & AIR COND–AIR INLET

S/N: DNP1-UP
PART OF 316-8916 AIR CONDITIONER GP
AN ATTACHMENT

SMCS-7309 **i04919749**

NOTE	REF NO	GRAPHIC REF	PART NUMBER	QTY	PART NAME 1 2 3 4 5 6 (PRODUCT LEVEL)	SEE PAGE
	1	1	**185-8300**	4	SCREW-TAPPING	
	2	1	**196-1666**	1	RELAY (COMPRESSOR CLUTCH)	
	2A	1	**196-1666**	1	RELAY (BLOWER)	
	3	1	**245-7813**	1	MOTOR AS	
	4	1	**245-7814**	1	BRACKET	
	5	1	**245-7815**	1	SENSOR AS-TEMPERATURE (AIR)	
	6	1	**245-7816**	1	DAMPER AS	

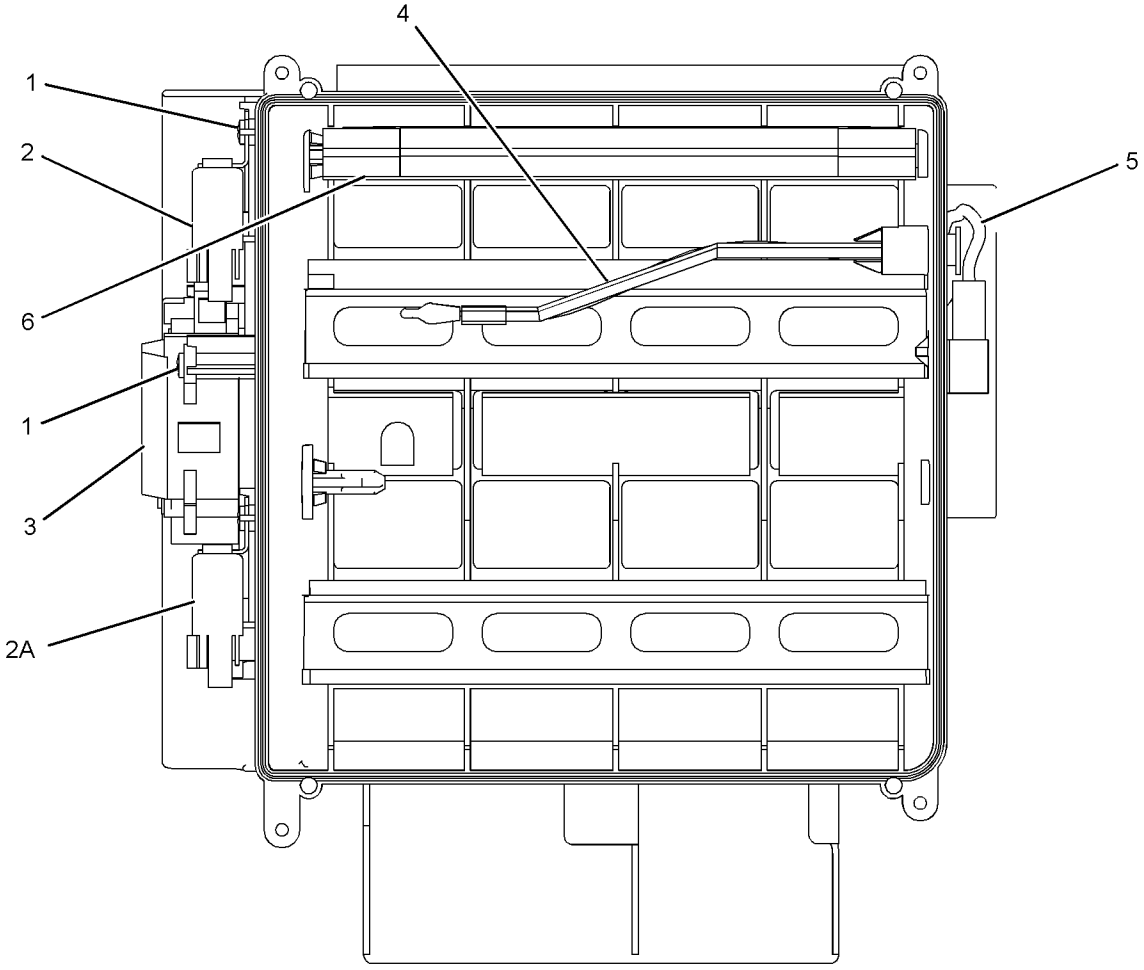

GRAPHIC #1 **<END>** g01245591

297-0532 CONTROL GP-JOYSTICK–RH

S/N: FKK1-UP; DNP1-UP
PART OF 310-0078 CONTROL & MTG GP-JOYSTICK
AN ATTACHMENT

SMCS-5705 **i04921960**

NOTE	REF NO	GRAPHIC REF	PART NUMBER	QTY	PART NAME 1 2 3 4 5 6 (PRODUCT LEVEL)	SEE PAGE
M	1	1	**271-7843**	1	NUT (M14X2-THD)	
Y	2	1	**235-8970**	1	CONTROL GP-HANDLE (JOYSTICK, RH)	411
Y	3	1	**297-0529**	1	VALVE GP-PILOT (JOYSTICK)	332
	4	1	**6K-0806**	1	STRAP-CABLE	

M - METRIC PART
Y - SEPARATE ILLUSTRATION

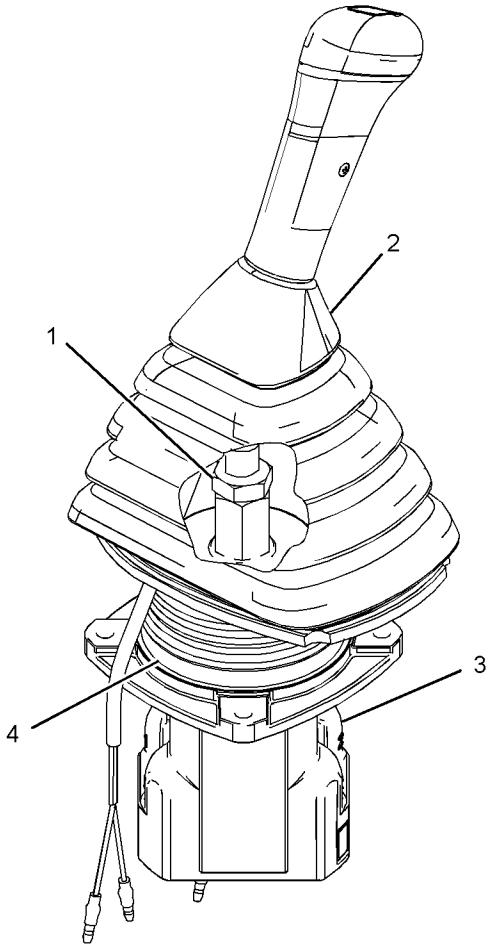

GRAPHIC #1 **<END>** g03057522

297-0533 CONTROL GP-JOYSTICK–LH

S/N: FKK1-UP; DNP1-UP
PART OF 310-0078 CONTROL & MTG GP-JOYSTICK
AN ATTACHMENT

SMCS-5705 **i04921977**

NOTE	REF NO	GRAPHIC REF	PART NUMBER	QTY	PART NAME 1 2 3 4 5 6 (PRODUCT LEVEL)	SEE PAGE
M	1	1	**271-7843**	1	NUT (M14X2-THD)	
Y	2	1	**235-8969**	1	CONTROL GP-HANDLE (JOYSTICK, LH)	409
Y	3	1	**297-0529**	1	VALVE GP-PILOT (JOYSTICK)	332
	4	1	**6K-0806**	1	STRAP-CABLE	

M - METRIC PART
Y - SEPARATE ILLUSTRATION

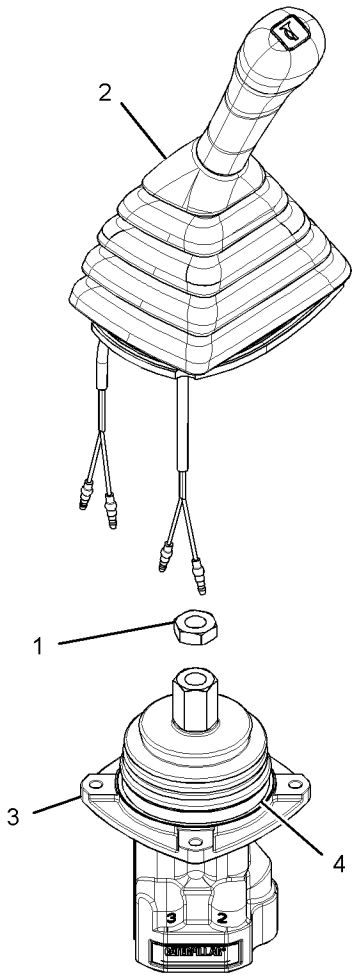

GRAPHIC #1 **<END>** g03057536

170-9497 CONTROL GP-PILOT OPERATED HYD–TRAVEL

S/N: FKK1-UP; DNP1-UP

PART OF 421-6944, 433-6907 OPERATOR AR

SMCS-5059 **i04912143**

NOTE	REF NO	GRAPHIC REF	PART NUMBER	QTY	PART NAME 1 2 3 4 5 6 (PRODUCT LEVEL)	SEE PAGE
	1	1	**096-6166**	2	WASHER-HARD (4.5X9X1-MM THK)	
M	2	1	**8T-0337**	2	SCREW-MACHINE (M4X0.7X12-MM)	
	3	1	**8T-4121**	12	WASHER-HARD (11X21X2.5-MM THK)	
M	4	1	**8T-4136**	4	BOLT (M10X1.5X25-MM)	
M	5	1	**8T-4191**	8	BOLT (M10X1.5X16-MM)	
	6	1	**142-5546**	2	KNOB	
	7	1	**117-6356**	2	STEP AS	
	8	1	**122-9610**	2	STEP	
	9	1	**170-9499**	1	LEVER AS (LH)	
	10	1	**170-9498**	1	LEVER AS (RH)	
	11	1	**122-9608**	1	PEDAL-RUBBER (RH)	
	12	1	**117-6350**	1	PEDAL AS (RH)	
	13	1	**122-9609**	1	PEDAL-RUBBER (LH)	
	14	1	**117-6349**	1	PEDAL AS (LH)	

M - METRIC PART

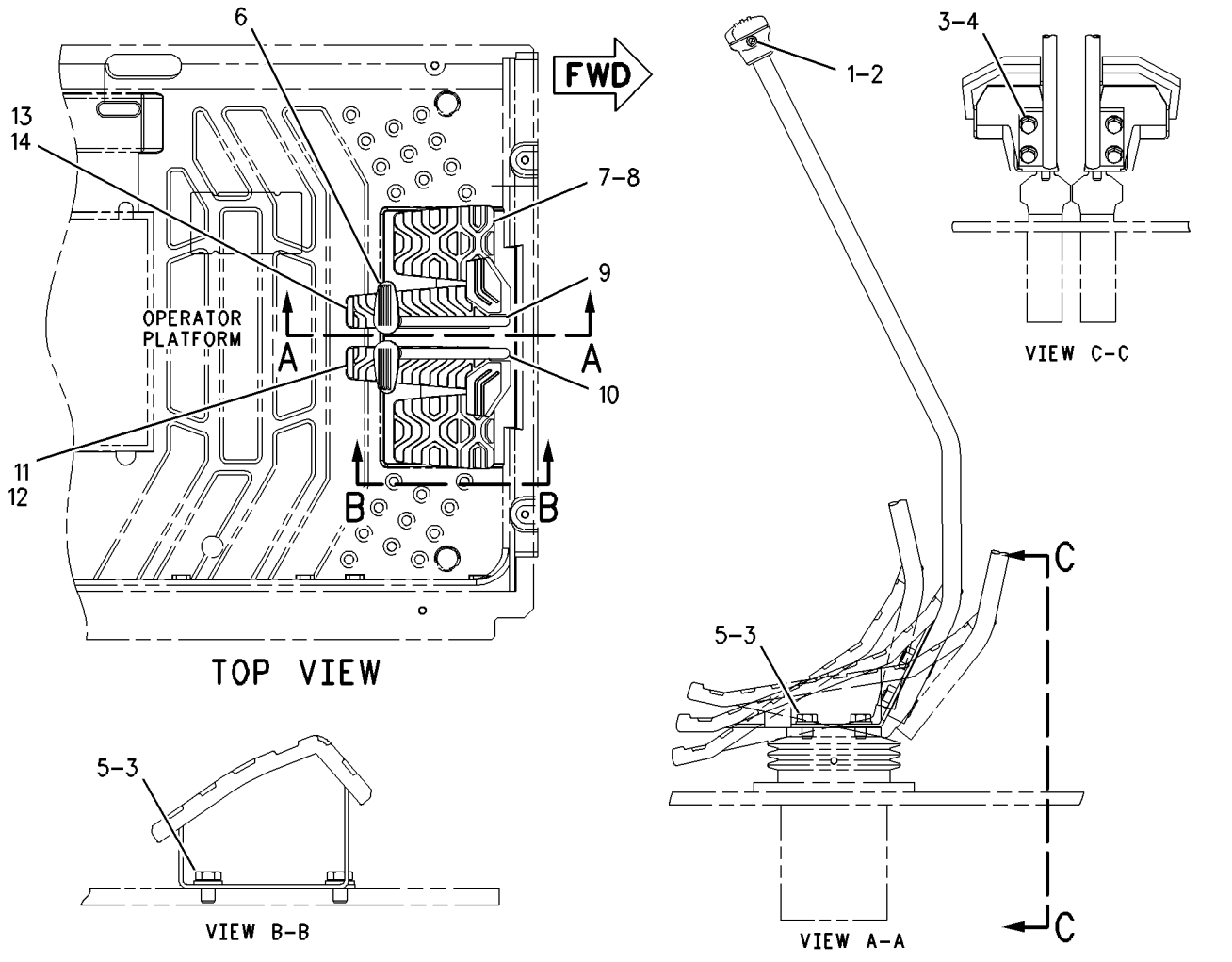

GRAPHIC #1 **<END>** g00672963

234-6501 COVER GP-CAB–REAR

S/N: DNP1-UP
PART OF 388-0026 CAB GP
AN ATTACHMENT

SMCS-7301, 7308

i04922021

NOTE	REF NO	GRAPHIC REF	PART NUMBER	QTY	PART NAME 1 2 3 4 5 6 (PRODUCT LEVEL)	SEE PAGE
	1	1	**234-6499**	1	COVER AS	
	2	1	**234-6502**	1	COVER-ACCESS (FUSE-REAR PANEL)	
	3	1	**245-7929**	2	CLIP	

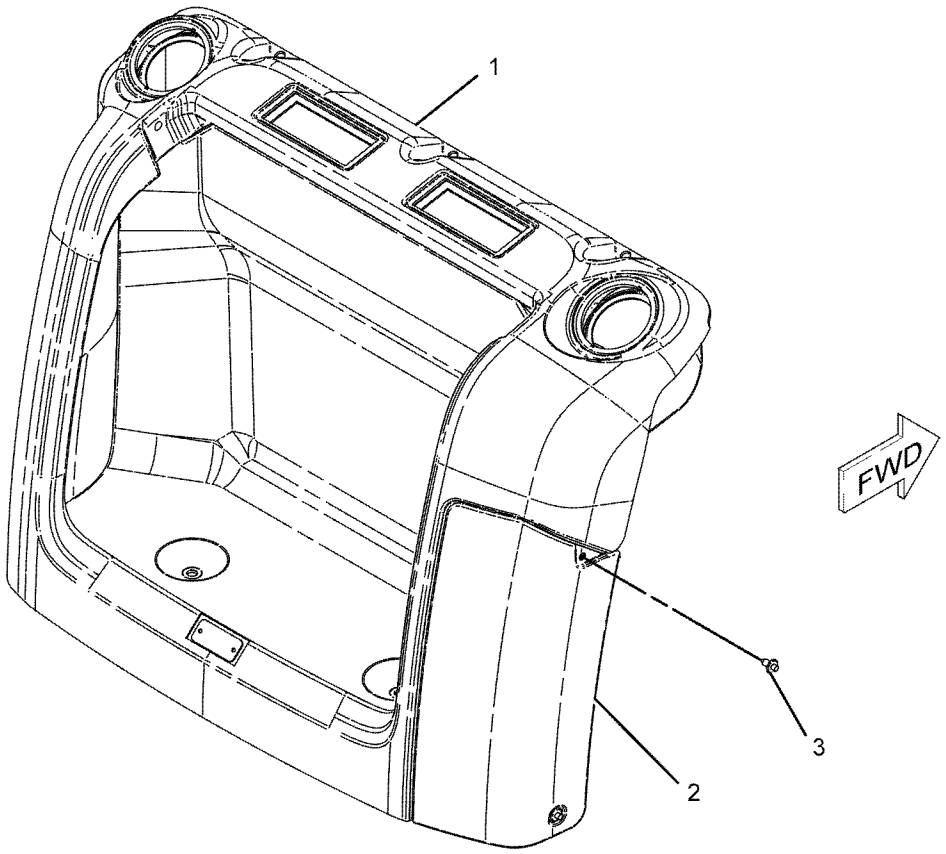

GRAPHIC #1

<END>

g01101423

383-2741 COVER GP-PLATFORM

S/N: FKK1-UP

PART OF 433-6906 CHASSIS AR

SMCS-7253, 7301

i05259933

NOTE	REF NO	GRAPHIC REF	PART NUMBER	QTY	PART NAME 1 2 3 4 5 6 (PRODUCT LEVEL)	SEE PAGE
	1	1	**7X-7729**	3	WASHER (11X25X3-MM THK)	
M	2	1	**6V-8212**	3	BOLT (M10X1.5X16-MM)	

M - METRIC PART

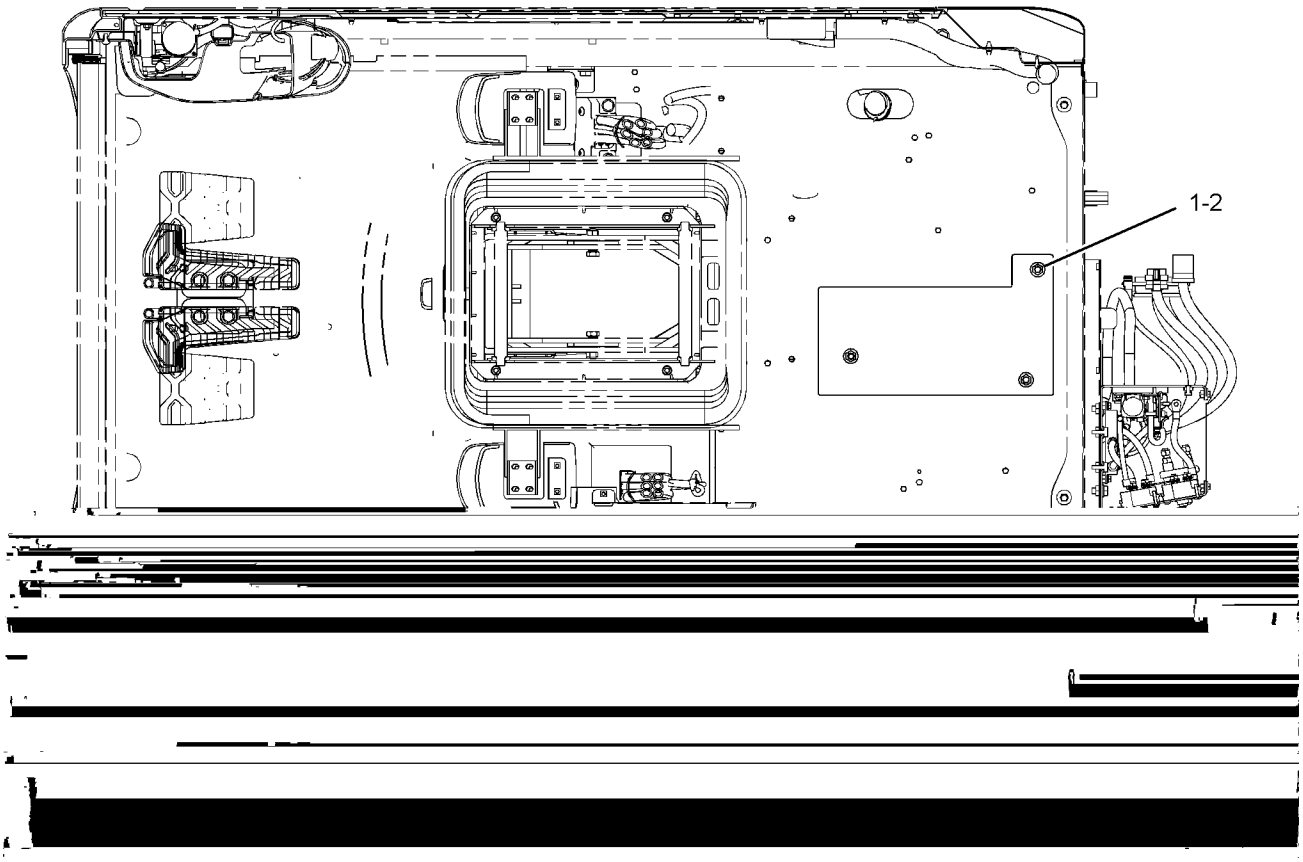

GRAPHIC #1

<END>

g03353477

316-6166 DOOR & MTG GP-CAB

S/N: DNP1-UP
PART OF 388-0065 CAB GP
AN ATTACHMENT

SMCS-7308 **i04922223**

NOTE	REF NO	GRAPHIC REF	PART NUMBER	QTY	PART NAME 1 2 3 4 5 6 (PRODUCT LEVEL)	SEE PAGE
Y	1	1	**307-1818**	1	DOOR GP-CAB	419
	2	1	*151-6767*	1	DOOR AS	
	2A	1	**151-6777**	2	HINGE	
M		1	**9X-2041**	6	SCREW-TRUSS HEAD (M10X1.5X20-MM)	

M - METRIC PART
Y - SEPARATE ILLUSTRATION

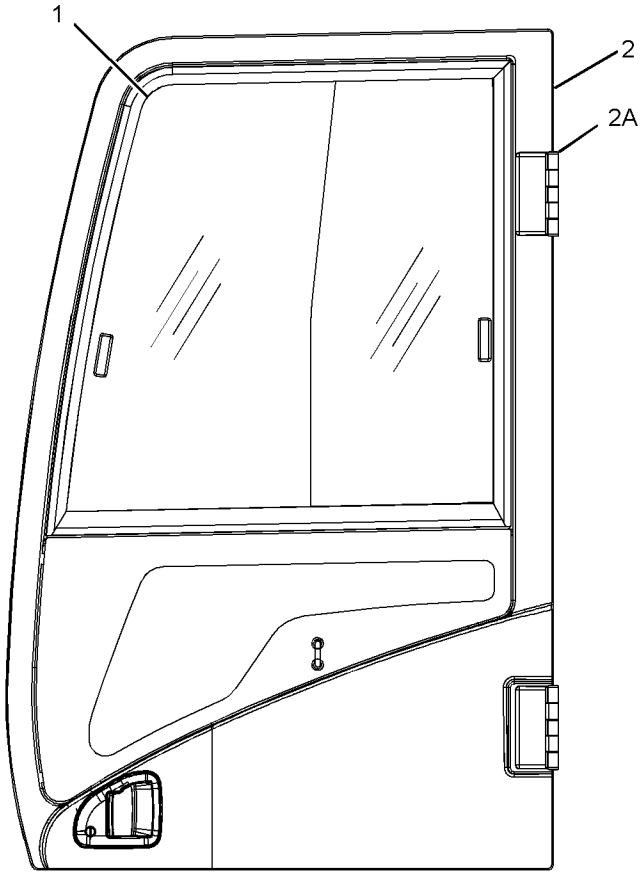

LEFT SIDE VIEW

GRAPHIC #1 **<END>** g03057538

307-1818 DOOR GP-CAB

S/N: DNP1-UP
PART OF 316-6166 DOOR & MTG GP-CAB
AN ATTACHMENT

SMCS-7308 **i04922227**

NOTE	REF NO	GRAPHIC REF	PART NUMBER	QTY	PART NAME 1 2 3 4 5 6 (PRODUCT LEVEL)	SEE PAGE
	1	1	**151-6703**	1	HANDLE-PULL	
	2	1	**151-6704**	2	CAP	
Y	3	1	**151-6792**	1	WINDOW GP-DOOR	473
	4	1	**156-6471**	1	GLASS	
	5	1	**156-6598**	1	HOOK	
	6	1	**156-6600**	1	LOCK AS	
		1	**164-0514**	1	CLIP	
	6A	1	**164-0519**	1	CLIP	
	7	1	**156-6643**	2	COVER	
	8	1	**156-6645**	1	HANDLE AS	
		1	**201-4391**	1	CLIP	
	9	1	**161-3639**	1	HANDLE AS	
	10	1	**161-3650**	1	COVER AS	
	11	1	**161-3663**	1	SEAL AS	
		1	**151-9497**	45	CLIP	
	12	1	**161-3665**	1	SEAL	
	13	1	**164-0515**	1	JOINT	
	14	1	**167-7039**	1	GROMMET	
M	15	1	**185-8180**	3	SCREW (M6X1X16-MM)	
	16	1	**8T-4224**	2	WASHER-HARD (8.8X16X2-MM THK)	
	17	1	**259-7354**	1	COVER	
M	18	1	**096-2622**	2	SCREW-MACHINE (M4X0.7X8-MM)	
M	19	1	**096-3884**	2	NUT-SPRING (M8X1.25-THD)	
M	20	1	**101-8899**	2	SCREW AS (M6X1.0X16-MM)	
M	21	1	**101-8900**	2	SCREW AS (M6X1X20-MM)	
	22	1	**151-9461**	4	SPACER	
	23	1	**178-5573**	4	SPACER	
	24	1	**178-5574**	2	SPACER	
	25	1	**189-2690**	1	HANDLE	
	26	1	**4I-4286**	1	KNOB (HANDLE)	
M	27	1	**9X-2042**	8	SCREW-TRUSS HEAD (M6X1X12-MM)	

M - METRIC PART
Y - SEPARATE ILLUSTRATION

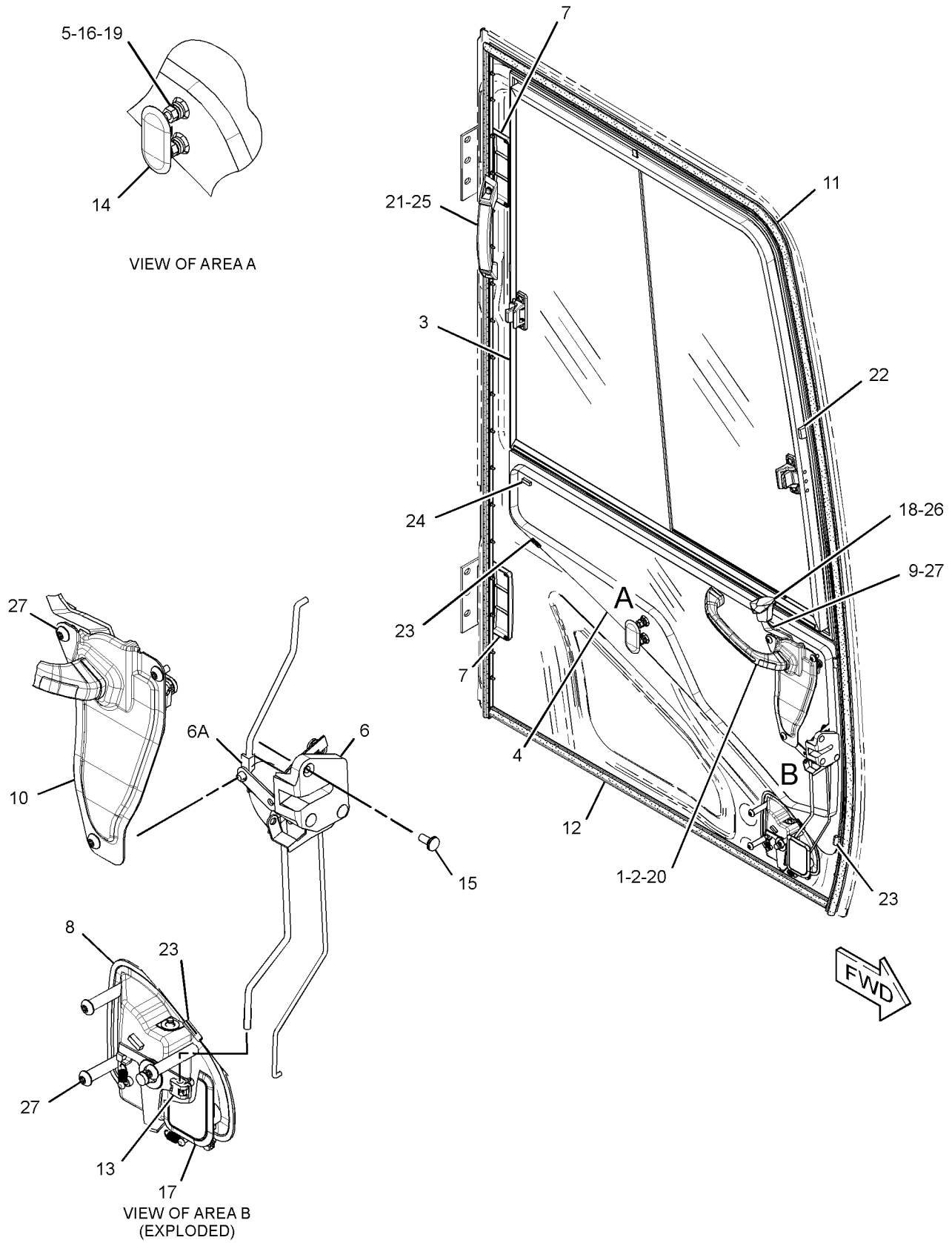

GRAPHIC #1 **<END>** g02178270

388-9105 DOOR GP-CAB

S/N: DNP1-UP
PART OF 388-0065 CAB GP
AN ATTACHMENT

SMCS-7308 **i05269647**

NOTE	REF NO	GRAPHIC REF	PART NUMBER	QTY	PART NAME 1 2 3 4 5 6 (PRODUCT LEVEL)	SEE PAGE
	1	1	**151-6703**	1	HANDLE-PULL	
	2	1	**151-6704**	2	CAP	
Y	3	1	**384-6533**	1	WINDOW GP-DOOR	475
	4	1	**383-6933**	1	GLASS	
	5	1	**156-6598**	1	HOOK	
	6	1	**156-6600**	1	LOCK AS	
		1	**164-0514**	1	CLIP	
	6A	1	**164-0519**	1	CLIP	
	7	1	**156-6643**	2	COVER	
	8	1	**156-6645**	1	HANDLE AS	
		1	**201-4391**	1	CLIP	
	9	1	**161-3639**	1	HANDLE AS	
	10	1	**161-3650**	1	COVER AS	
	11	1	**161-3663**	1	SEAL AS	
		1	**151-9497**	45	CLIP	
	12	1	**161-3665**	1	SEAL	
	13	1	**164-0515**	1	JOINT	
	14	1	**167-7039**	1	GROMMET	
M	15	1	**185-8180**	3	SCREW (M6X1X16-MM)	
	16	1	**8T-4224**	2	WASHER-HARD (8.8X16X2-MM THK)	
	17	1	**259-7354**	1	COVER	
M	18	1	**096-2622**	2	SCREW-MACHINE (M4X0.7X8-MM)	
M	19	1	**096-3884**	2	NUT-SPRING (M8X1.25-THD)	
M	20	1	**101-8899**	2	SCREW AS (M6X1.0X16-MM)	
M	21	1	**101-8900**	2	SCREW AS (M6X1X20-MM)	
	22	1	**151-9461**	4	SPACER	
	23	1	**178-5573**	4	SPACER	
	24	1	**178-5574**	2	SPACER	
	25	1	**189-2690**	1	HANDLE	
	26	1	**4I-4286**	1	KNOB (HANDLE)	
M	27	1	**9X-2042**	8	SCREW-TRUSS HEAD (M6X1X12-MM)	

M - METRIC PART
Y - SEPARATE ILLUSTRATION

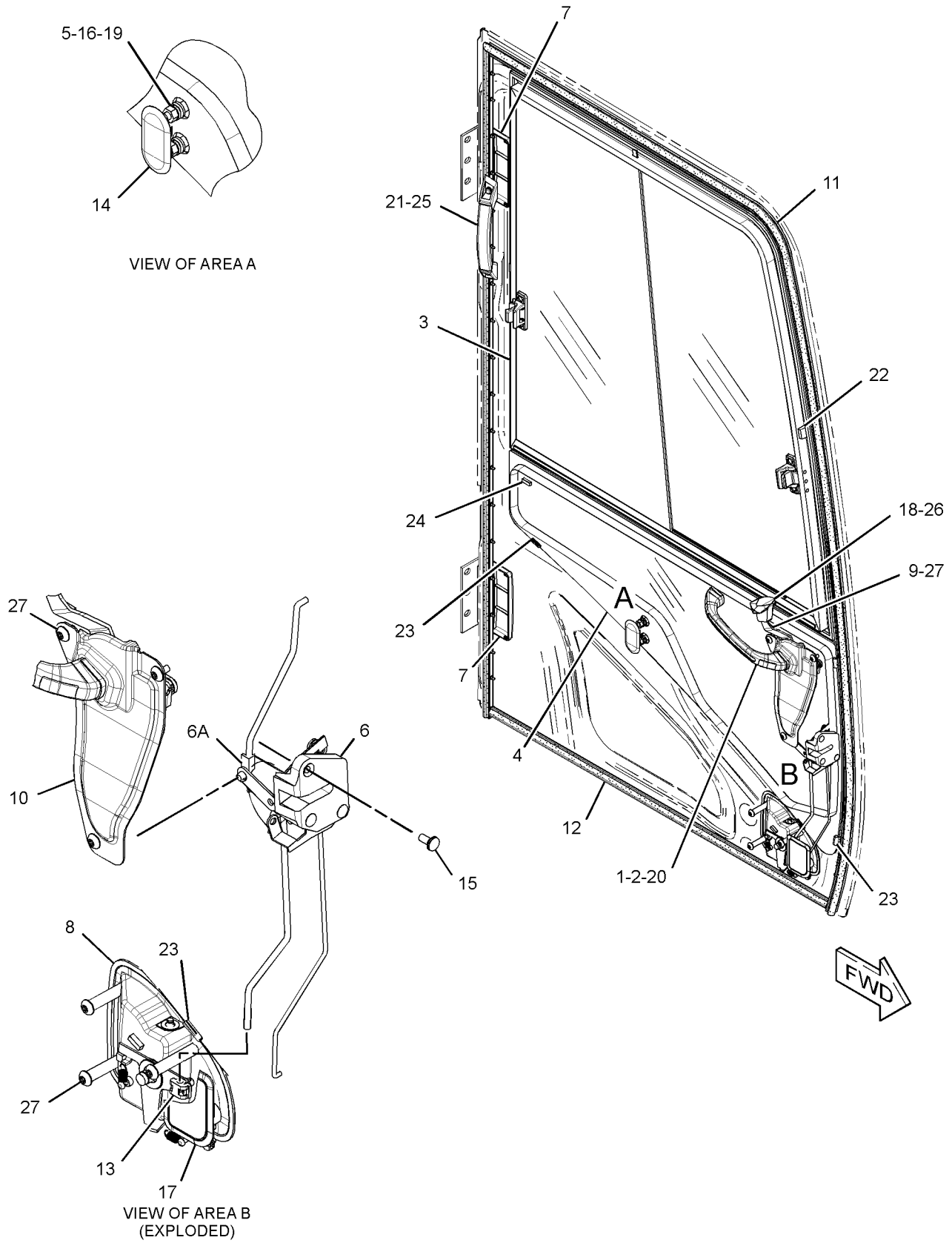

GRAPHIC #1 **<END>** g02178270

229-9082 DUCT GP-CAB AIR

S/N: DNP1-UP
PART OF 418-9897 AIR CONDITIONER AR
AN ATTACHMENT

SMCS-734D **i04919864**

NOTE	REF NO	GRAPHIC REF	PART NUMBER	QTY	PART NAME 1 2 3 4 5 6 (PRODUCT LEVEL)	SEE PAGE
	1	1	**293-1183**	1	FILTER GP-CAB AIR	
		1	**293-1184**	1	FILTER ELEMENT-CAB AIR	
	2	1	**235-8876**	1	DUCT AS (FRESH AIR, UPPER)	
		1	**245-7872**	1	INSULATOR	
	3	1	**235-8877**	1	DUCT AS (VENT, REAR)	
		1	**245-7792**	1	INSULATOR	
	4	1	**235-8878**	1	DUCT AS (VENT, FRONT)	
		1	**245-7793**	1	INSULATOR	
	5	1	**235-8879**	1	DUCT AS (FLOOR)	
		1	**245-7873**	1	INSULATOR	
	6	1	**240-5074**	1	DUCT AS (FRESH AIR, LOWER)	
		1	**245-7791**	1	INSULATOR	
M	7	1	**101-8899**	2	SCREW AS (M6X1.0X16-MM)	
	8	1	**176-1996**	5	CLIP	

M - METRIC PART

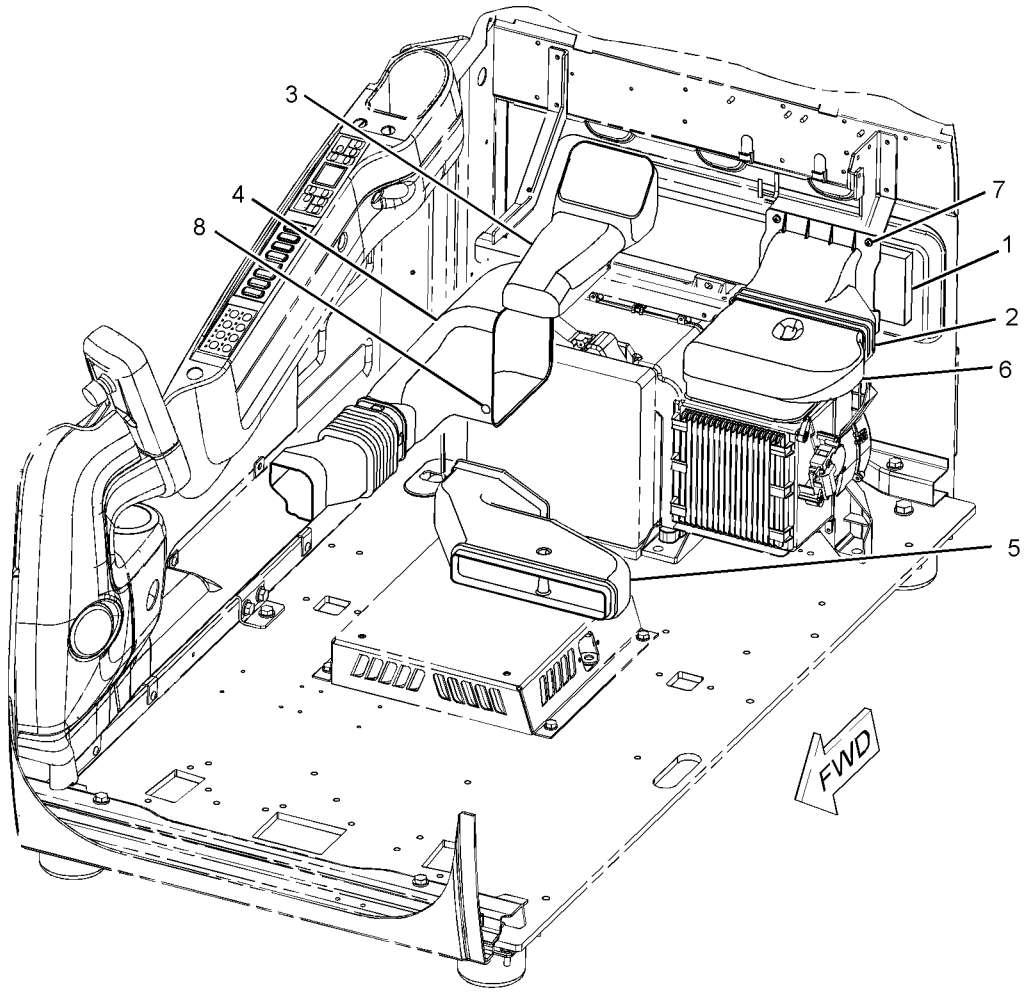

GRAPHIC #1 **<END>** g01126665

383-2757 FAN GP-CIRCULATING

S/N: FKK1-UP

AN ATTACHMENT

SMCS-7316 **i05269726**

NOTE	REF NO	GRAPHIC REF	PART NUMBER	QTY	PART NAME 1 2 3 4 5 6 (PRODUCT LEVEL)	SEE PAGE
	1	1	**3S-2093**	10	STRAP-CABLE	
	2	1	**141-2759**	1	FUSE (5-AMPERE)	
	3	1	**185-8284**	1	COVER	
	4	1	**387-7644**	1	BRACKET AS	
	5	1	**388-1868**	1	HARNESS AS-WIRING	
		1	**8T-8729**	4	PIN-CONNECTOR (16-GA TO 18-GA)	
		1	**7Y-3951**	2	TERMINAL-BLADE (14-GA)	
		1	**7Y-3952**	1	PLUG-CONNECTOR (2-PIN)	
		1	**8T-8737**	8	PLUG-SEAL	
		1	**102-7965**	4	TERMINAL (FEMALE)	
		1	**163-6803**	1	PLUG-CONNECTOR (5-PIN)	
		1	**167-3487**	1	WEDGE-PLUG LOCK (5-PIN)	
		1	**243-4510**	1	RECEPTACLE AS-CONNECTOR (12-PIN)	
	6	1	**388-3306**	1	SWITCH AS-ROCKER (CIRCULATING FAN)	
		1	**167-3542**	1	RECEPTACLE-CONNECTOR (5-PIN)	
		1	**167-3543**	4	TERMINAL (MALE)	
	7	1	**096-6166**	4	WASHER-HARD (4.5X9X1-MM THK)	
M	8	1	**121-4405**	4	BOLT (M4X0.7X12-MM)	
M	9	1	**135-2370**	2	BOLT (M5X0.8X25-MM)	
	10	1	**153-4816**	1	WASHER-HARD	
	11	1	**237-7886**	1	GROMMET	
	12	1	**373-1116**	1	FAN AS-CIRCULATING	
	13	1	**4P-7581**	1	CLIP	
	14	1	**8T-0328**	1	WASHER-HARD (5.5X10X1-MM THK)	

M - METRIC PART

383-2757 **FAN GP-CIRCULATING (*contd.*)** **i05269726**

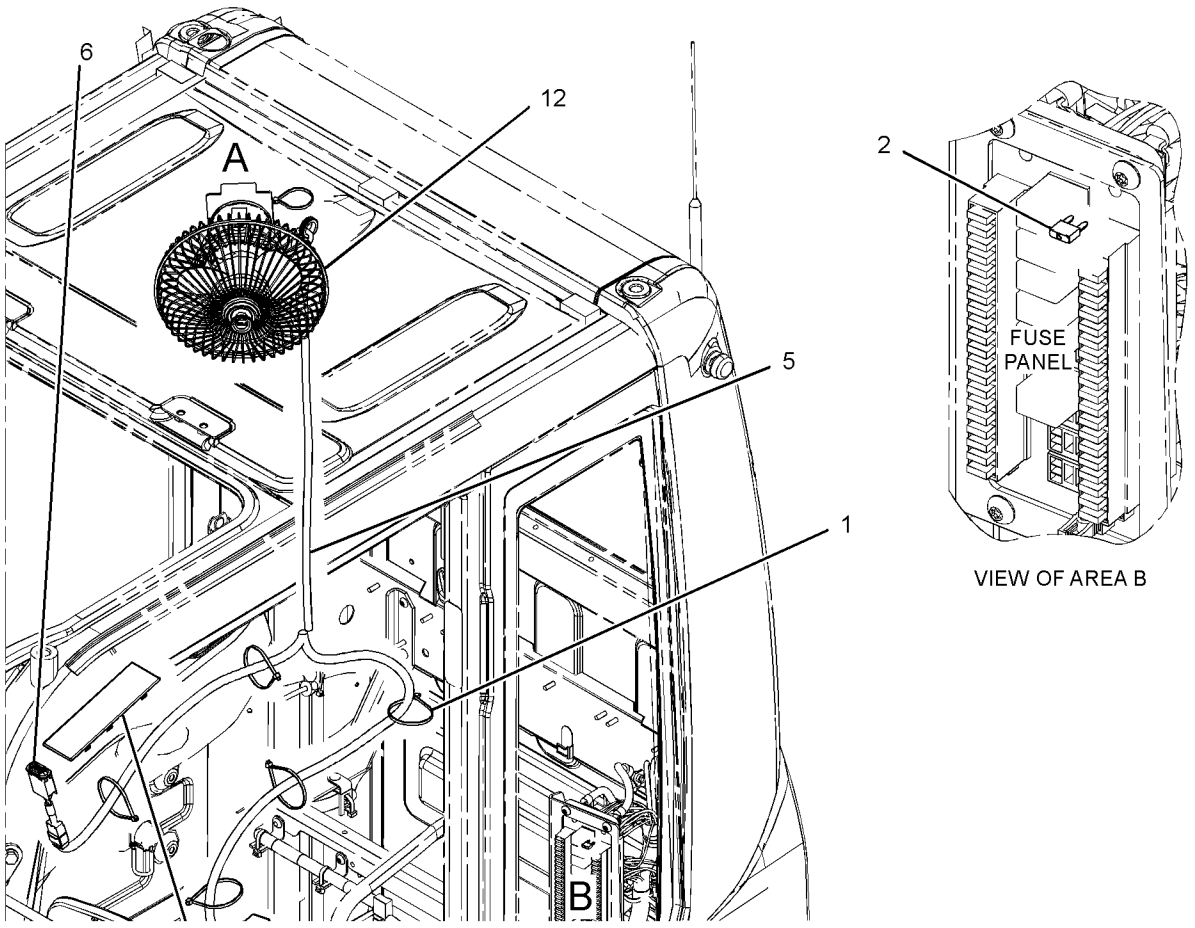

GRAPHIC #1 **<END>** g03362566

OPERATOR STATION

240-5071 FLOOR MAT

S/N: FKK1-UP; DNP1-UP

AN ATTACHMENT

SMCS-726M **i04921932**

NOTE	REF NO	GRAPHIC REF	PART NUMBER	QTY	PART NAME 1 2 3 4 5 6 (PRODUCT LEVEL)	SEE PAGE
					(NO SERVICED PARTS)	

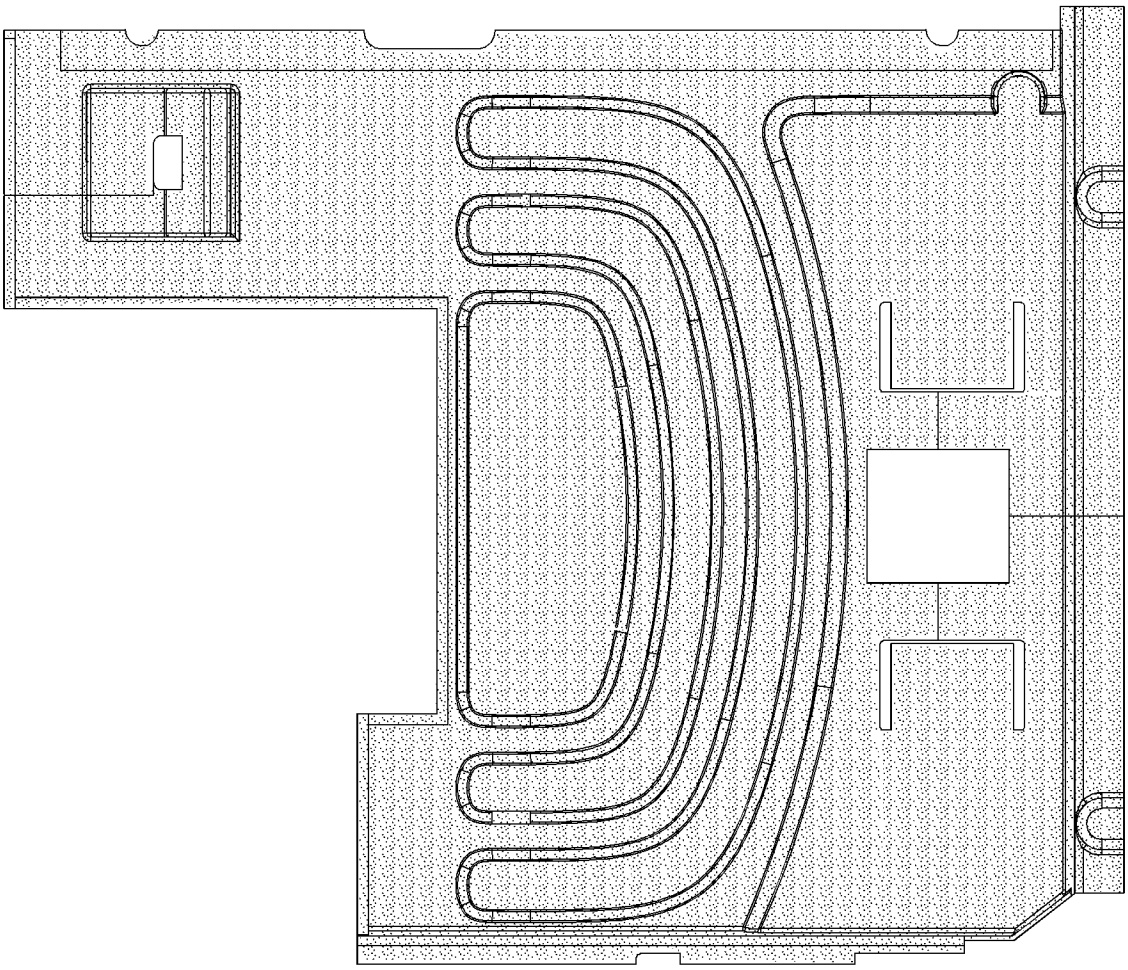

GRAPHIC #1 **<END>** g03057558

259-7350 HATCH GP-ROOF

S/N: DNP1-UP
PART OF 388-0065 CAB GP
AN ATTACHMENT

SMCS-7303 **i04922216**

NOTE	REF NO	GRAPHIC REF	PART NUMBER	QTY	PART NAME 1 2 3 4 5 6 (PRODUCT LEVEL)	SEE PAGE
	1	1	**259-7352**	1	CATCH	
	2	1	**189-2847**	1	SEAL	
	3	1	**259-7351**	1	HATCH AS	
	3A	1	**176-1949**	2	BRACKET AS	
	3B	1	**189-2717**	2	HINGE AS	
	4	1	**099-3506**	2	SPRING AS-GAS	
M	5	1	**105-2169**	4	BOLT AS	
	6	1	**5D-4822**	4	RING-RETAINING	
M	7	1	**9X-2042**	2	SCREW-TRUSS HEAD (M6X1X12-MM)	

M - METRIC PART

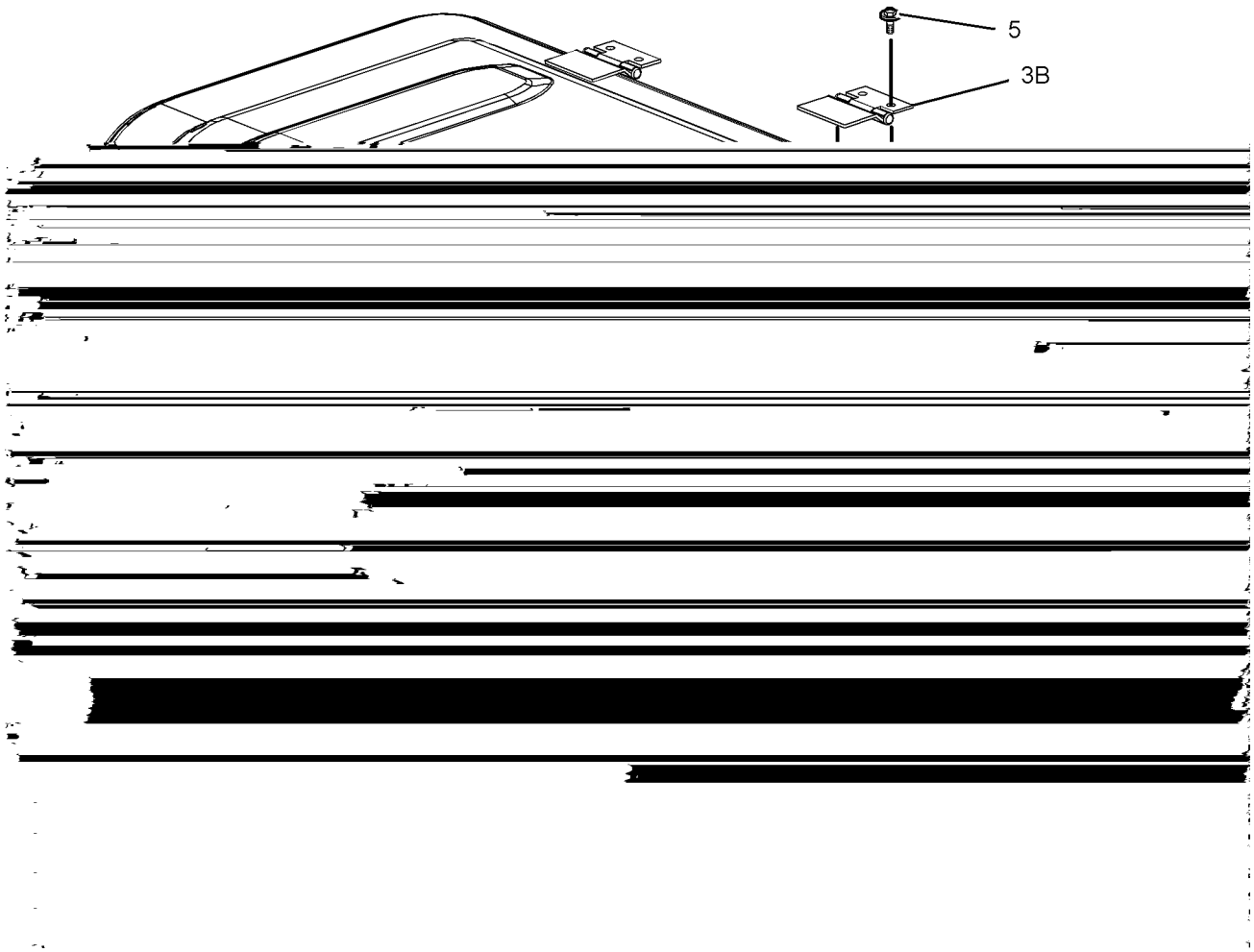

GRAPHIC #1 **<END>** g01242907

267-8071 HORN GP-ELECTRIC

S/N: FKK1-UP; DNP1-UP

PART OF 421-6926, 433-6906 CHASSIS AR

SMCS-7402 **i04909851**

NOTE	REF NO	GRAPHIC REF	PART NUMBER	QTY	PART NAME 1 2 3 4 5 6 (PRODUCT LEVEL)	SEE PAGE
Y	1	1	*291-7559*	1	HORN GP-ELECTRIC	429
	2	1	**8T-4121**	2	WASHER-HARD (11X21X2.5-MM THK)	
M	3	1	**8T-4195**	2	BOLT (M10X1.5X30-MM)	

M - METRIC PART
Y - SEPARATE ILLUSTRATION

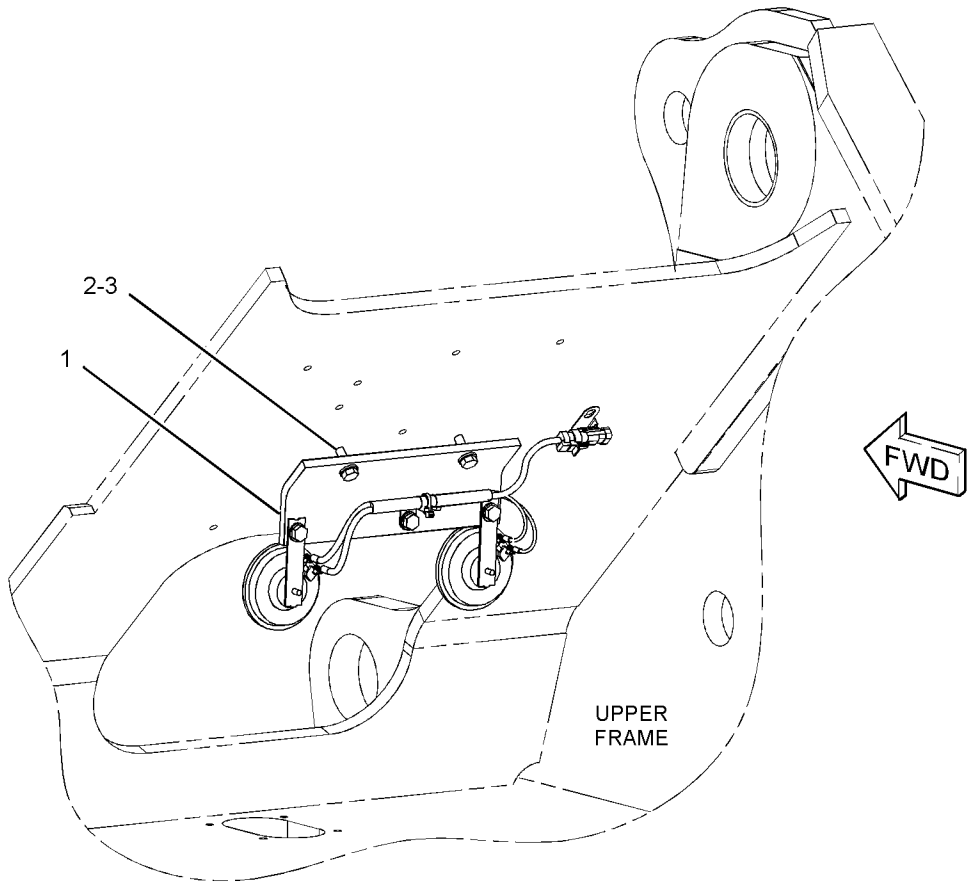

GRAPHIC #1 **<END>** g01289732

291-7559 HORN GP-ELECTRIC

S/N: FKK1-UP; DNP1-UP

PART OF 267-8071 HORN GP-ELECTRIC

SMCS-7402 **i04909908**

NOTE	REF NO	GRAPHIC REF	PART NUMBER	QTY	PART NAME 1 2 3 4 5 6 (PRODUCT LEVEL)	SEE PAGE
	1	1	**3S-2093**	1	STRAP-CABLE	
	2	1	**7Y-3919**	1	HORN AS (24-VOLT, LOW TONE)	
		1	**095-0826**	2	LOCKWASHER	
M		1	**095-7930**	2	SCREW-MACHINE (M4X0.7X6-MM)	
	3	1	**7Y-3920**	1	HORN AS (24-VOLT, HIGH TONE)	
		1	**095-0826**	2	LOCKWASHER	
M		1	**095-7930**	2	SCREW-MACHINE (M4X0.7X6-MM)	
	4	1	**291-7560**	1	HARNESS AS-CHASSIS (HORN)	
		1	**3S-2093**	1	STRAP-CABLE	
		1	**9W-0844**	2	SOCKET-CONNECTOR (14-GA TO 16-GA)	
		1	**2L-8065**	2	TERMINAL-RING (10-GA TO 12-GA, NO. 8 SCREW)	
		1	**2L-8075**	2	TERMINAL-RING (14-GA TO 16-GA, NO. 8 SCREW)	
		1	**230-4011**	1	PLUG AS-CONNECTOR (2-PIN)	
		1	**264-7029**	1	SEAL-CONNECTOR	
	5	1	**291-7561**	1	BRACKET	
	6	1	**132-5789**	1	CLIP	
	7	1	**8T-4121**	3	WASHER-HARD (11X21X2.5-MM THK)	
M	8	1	**8T-4191**	3	BOLT (M10X1.5X16-MM)	

M - METRIC PART

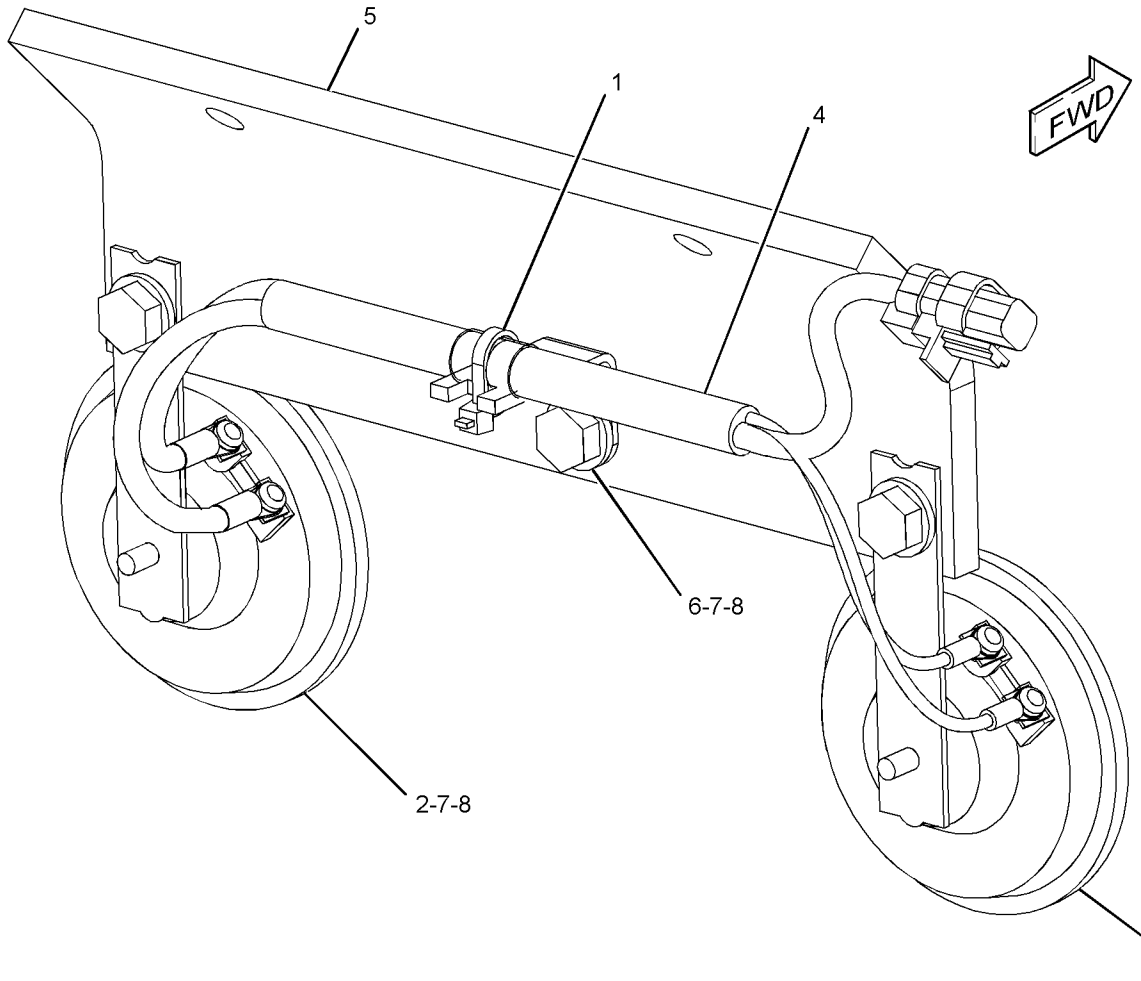

GRAPHIC #1 **<END>** g01302495

231-1768 INSTALLATION GP-RADIO

S/N: DNP1-UP

AN ATTACHMENT

SMCS-7338 **i04919184**

NOTE	REF NO	GRAPHIC REF	PART NUMBER	QTY	PART NAME 1 2 3 4 5 6 (PRODUCT LEVEL)	SEE PAGE
	1	1	**3S-2093**	9	STRAP-CABLE	
	2	1	**7K-1181**	8	STRAP-CABLE	
	3	1	**324-5770**	1	CONVERTER-POWER (24-VOLT TO 12-VOLT)	
	4	1	**234-1124**	1	HARNESS AS-RADIO	
		1	**8T-8729**	2	PIN-CONNECTOR (16-GA TO 18-GA)	
		1	**8T-8730**	18	SOCKET-CONNECTOR (16-GA TO 18-GA)	
		1	**3S-2093**	15	STRAP-CABLE	
		1	**8T-8737**	10	PLUG-SEAL	
		1	**9W-0844**	2	SOCKET-CONNECTOR (14-GA TO 16-GA)	
		1	**230-5010**	1	PLUG AS-CONNECTOR (6-PIN)	
		1	**264-7032**	1	SEAL-CONNECTOR	
		1	**231-2295**	2	PLUG AS-CONNECTOR (8-PIN)	
					(EACH INCLUDES)	
		1	**264-7033**	1	SEAL-CONNECTOR	
		1	**243-4505**	1	RECEPTACLE AS-CONNECTOR (2-PIN)	
		1	**243-4509**	1	RECEPTACLE AS-CONNECTOR (8-PIN)	
	5	1	**238-1463**	1	RECEPTACLE GP-CONNECTOR (8-PIN)	
		1	**8T-8737**	8	PLUG-SEAL	
		1	**243-4509**	1	RECEPTACLE AS-CONNECTOR (8-PIN)	
	6	1	**238-2216**	1	SWITCH AS-ROCKER (RADIO MUTE)	
		1	**167-3543**	5	TERMINAL (MALE)	
		1	**167-3542**	1	RECEPTACLE-CONNECTOR (5-PIN)	
M	7	1	**8T-4171**	4	BOLT (M6X1X12-MM)	
	8	1	**9X-8256**	4	WASHER (6.6X12X2-MM THK)	

M - METRIC PART

231-1768 **INSTALLATION GP-RADIO (*contd.*)** **i04919184**

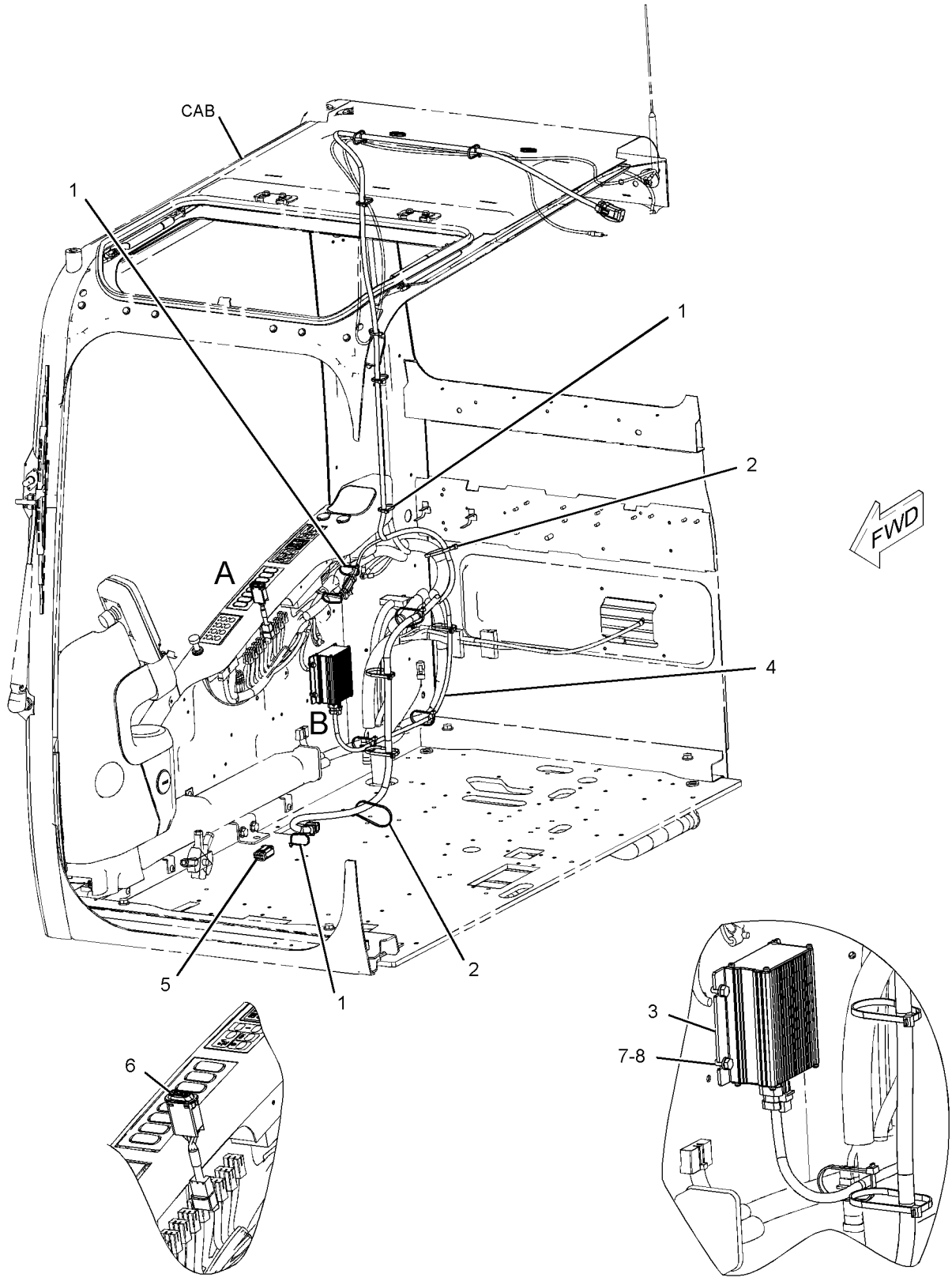

VIEW OF AREA A

VIEW OF AREA B

GRAPHIC #1 **<END>** g01199689

085-6444 LATCH GP-WINDOW

S/N: DNP1-UP
PART OF 151-6792 WINDOW GP-DOOR
AN ATTACHMENT

SMCS-7310 **i04922230**

NOTE	REF NO	GRAPHIC REF	PART NUMBER	QTY	PART NAME 1 2 3 4 5 6 (PRODUCT LEVEL)	SEE PAGE
	1	1	**085-6445**	1	LOCK	
	2	1	**085-6446**	1	LOCK	
	3	1	**085-6447**	1	RETAINER	
M	4	1	**085-6448**	2	SCREW-TAPPING	
	5	1	**085-6449**	1	PACKING	

M - METRIC PART

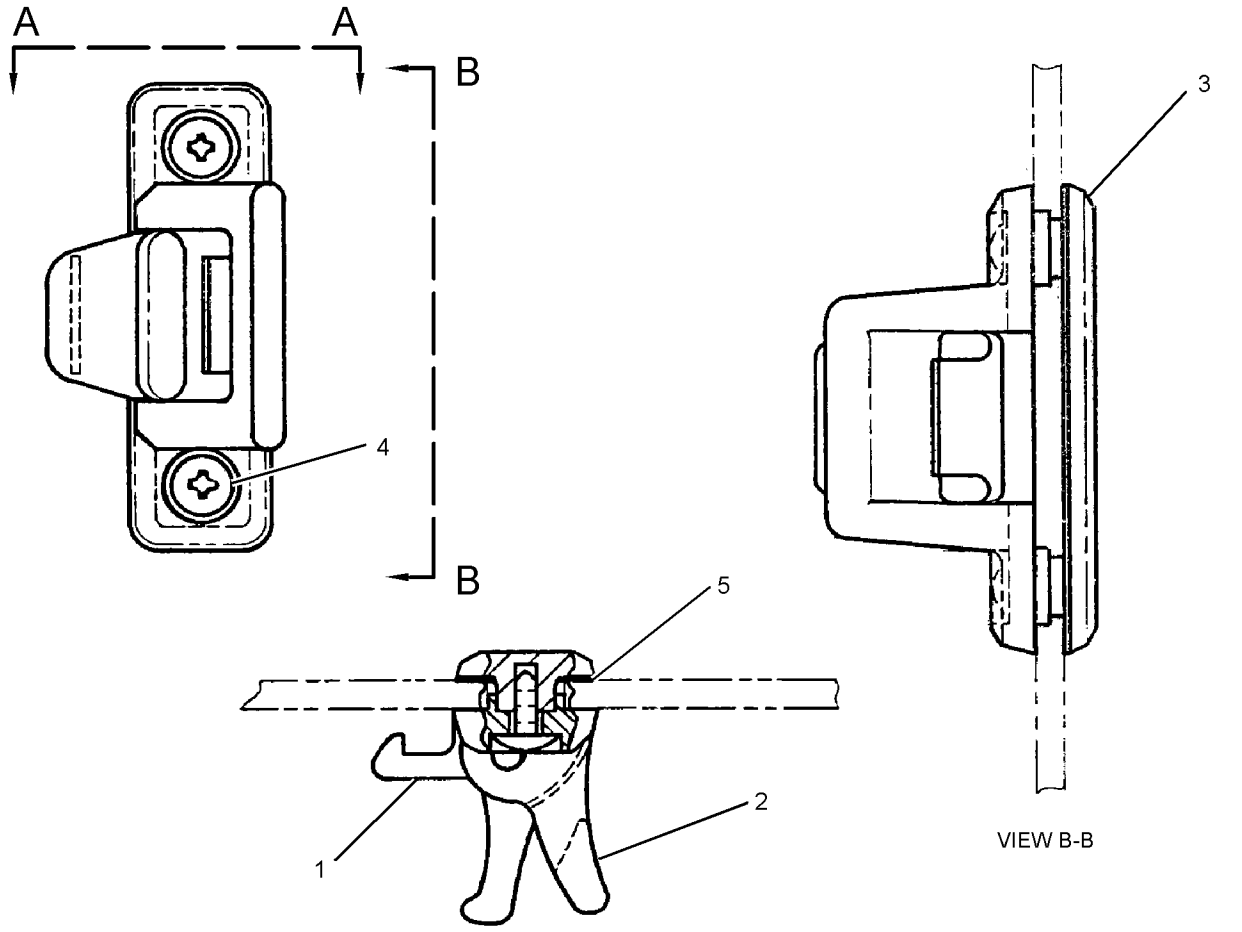

VIEW B-B

VIEW A-A

GRAPHIC #1 **<END>** g01164280

164-0528 LEVER GP-CAB DOOR

S/N: DNP1-UP
PART OF 346-8058 CAB GP
AN ATTACHMENT

SMCS-7308 **i04922241**

NOTE	REF NO	GRAPHIC REF	PART NUMBER	QTY	PART NAME 1 2 3 4 5 6 (PRODUCT LEVEL)	SEE PAGE
	1	1	**156-6642**	1	LEVER AS	
	2	1	**164-0664**	1	BRACKET	
	3	1	**176-1941**	1	PIN	
	4	1	**185-8280**	1	WASHER-WAVE (10.5X15X0.3-MM THK)	
	5	1	**185-8281**	1	SPRING	

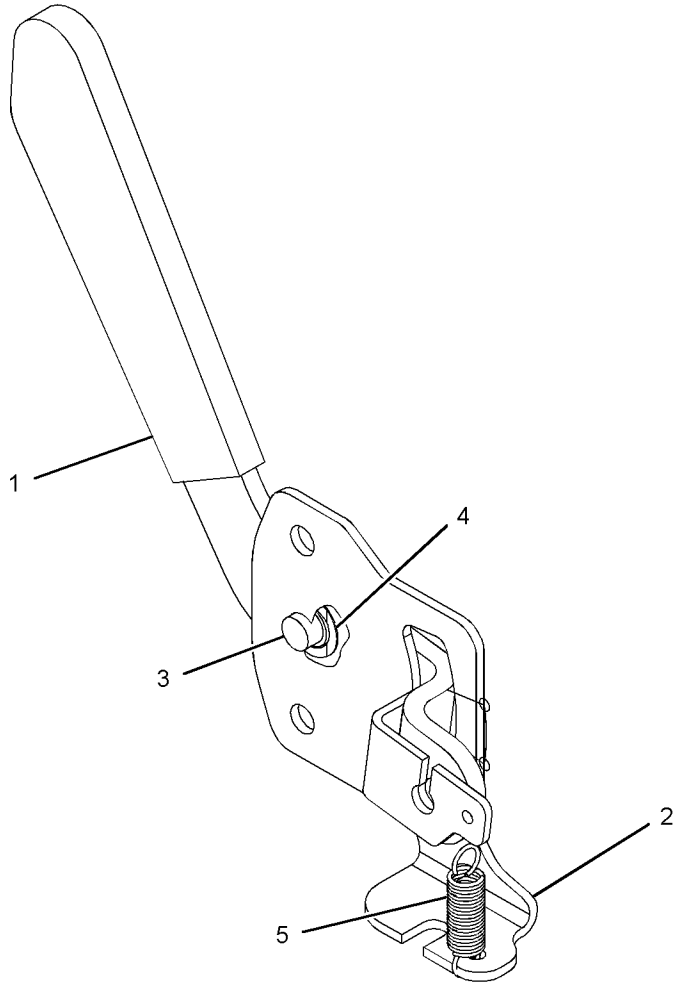

GRAPHIC #1 **<END>** g01217036

OPERATOR STATION

372-9387 LINES GP-AIR CONDITIONER

S/N: DNP1-UP

PART OF 421-6926 CHASSIS AR

SMCS-1808 **i05291946**

NOTE	REF NO	GRAPHIC REF	PART NUMBER	QTY	PART NAME 1 2 3 4 5 6 (PRODUCT LEVEL)	SEE PAGE
	1	1	**122-9605**	2	TUBE	
	2	1	**122-9657**	2	CLAMP	
	3	1	**130-0252**	2	HOSE-DRAIN	
	4	2	**176-1902**	1	DRYER-REFRIGERANT (RECEIVER)	
	5	2	**235-8891**	1	PLATE	
	6	1	**235-9014**	8	CLAMP-SPRING	
	7	1	**235-9015**	2	HOSE	
	8	2	**245-7756**	1	TUBE AS	
		2	**121-7138**	2	SEAL-O-RING	
	9	2	**245-7757**	1	HOSE AS	
		2	**121-7138**	2	SEAL-O-RING	
		2	**130-0270**	1	SWITCH AS-PRESSURE (REFRIGERANT)	
		2	**185-8293**	1	SEAL-O-RING	
	10	1	**305-0441**	2	BAND-MARKER (HS)	
	11	1	**305-0442**	2	BAND-MARKER (HR)	
	12	2	**372-9407**	1	HOSE AS-REFRIGERANT	
		2	**121-7137**	1	SEAL-O-RING	
		2	**245-7850**	1	CAP	
	13	2	**372-9409**	1	HOSE AS-REFRIGERANT	
		2	**121-7136**	1	SEAL-O-RING	
		2	**245-7851**	1	CAP	
	14	1	**383-5709**	1	BRACKET AS	
	15	2	**418-5090**	1	BRACKET AS	
	16	2	**100-4336**	3	CLIP	
	17	2	**121-7098**	1	BRACKET AS	
M		2	**8T-4138**	2	BOLT (M6X1X20-MM)	
		2	**9X-8256**	2	WASHER (6.6X12X2-MM THK)	
	18	1	**132-5789**	1	CLIP	
	19	1,2	**6D-1641**	13	CLIP	
	20	2	**6D-3479**	2	CLIP	
	22	2	**6V-3265**	1	CLIP	
M	23	2	**6V-7357**	3	BOLT (M6X1X25-MM)	
	24	2	**6W-7293**	1	GROMMET	
	25	1	**7K-1181**	1	STRAP-CABLE	
	26	2	**8M-2770**	1	CLIP	
	27	2	**8M-2773**	1	CLIP	
	28	1,2	**8T-4121**	20	WASHER-HARD (11X21X2.5-MM THK)	
M	29	2	**8T-4136**	1	BOLT (M10X1.5X25-MM)	
M	30	1,2	**8T-4137**	18	BOLT (M10X1.5X20-MM)	
M	31	1,2	**8T-4189**	3	BOLT (M8X1.25X20-MM)	
M	32	1	**8T-4191**	1	BOLT (M10X1.5X16-MM)	
M	33	2	**8T-4200**	2	BOLT (M8X1.25X16-MM)	
	34	1,2	**8T-4224**	7	WASHER-HARD (8.8X16X2-MM THK)	
M	35	2	**8T-4908**	2	BOLT (M8X1.25X25-MM)	
M	36	2	**8T-4971**	2	BOLT (M6X1X30-MM)	
	37	2	**9X-8256**	5	WASHER (6.6X12X2-MM THK)	
E	38	1	**5P-0767**		HOSE (370-CM)	
E	38A	1	**5P-0767**		HOSE (350-CM)	

E - ORDER BY THE CENTIMETER
M - METRIC PART

372-9387 **LINES GP-AIR CONDITIONER (*contd.*)** **i05291946**

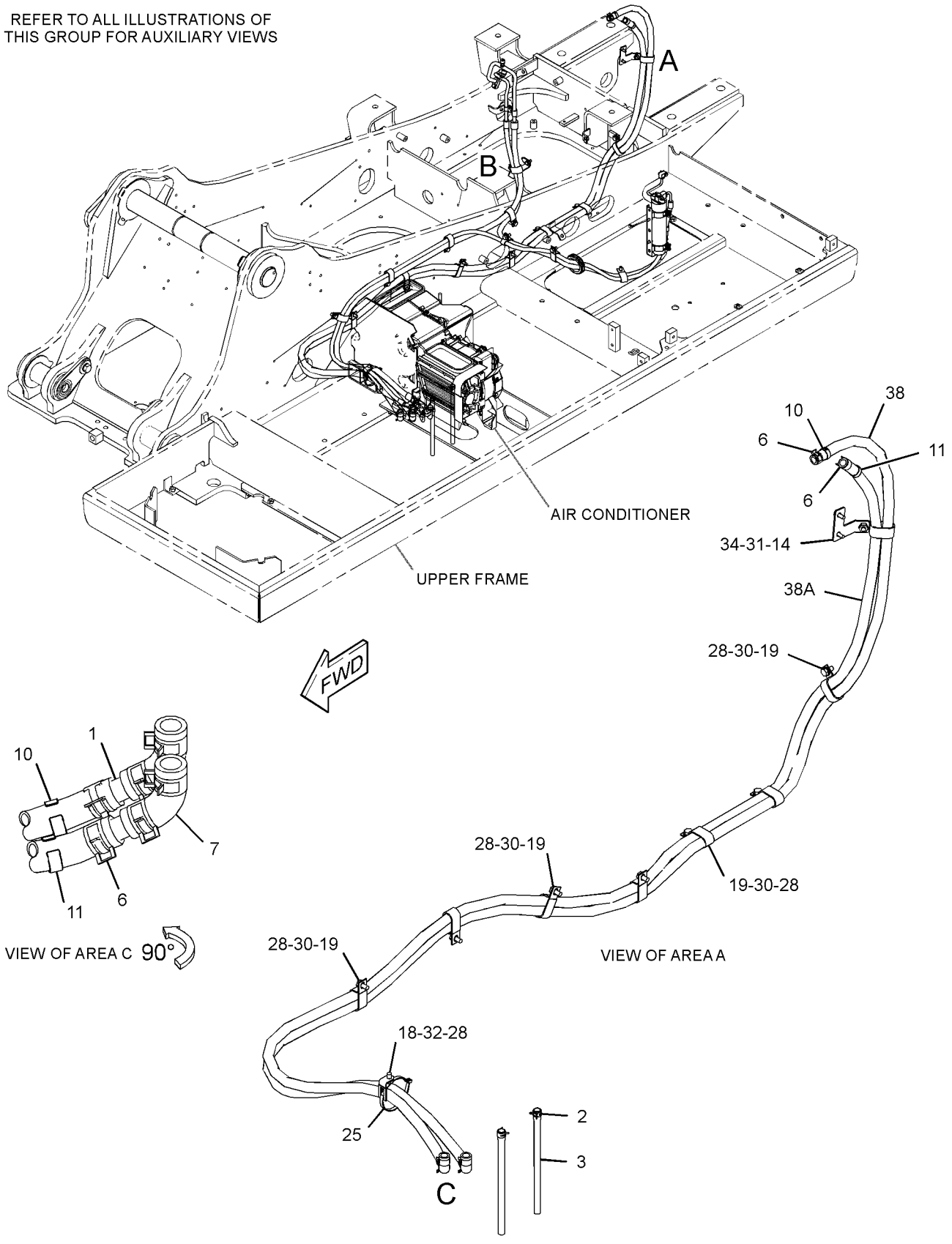

GRAPHIC #1 g03310877

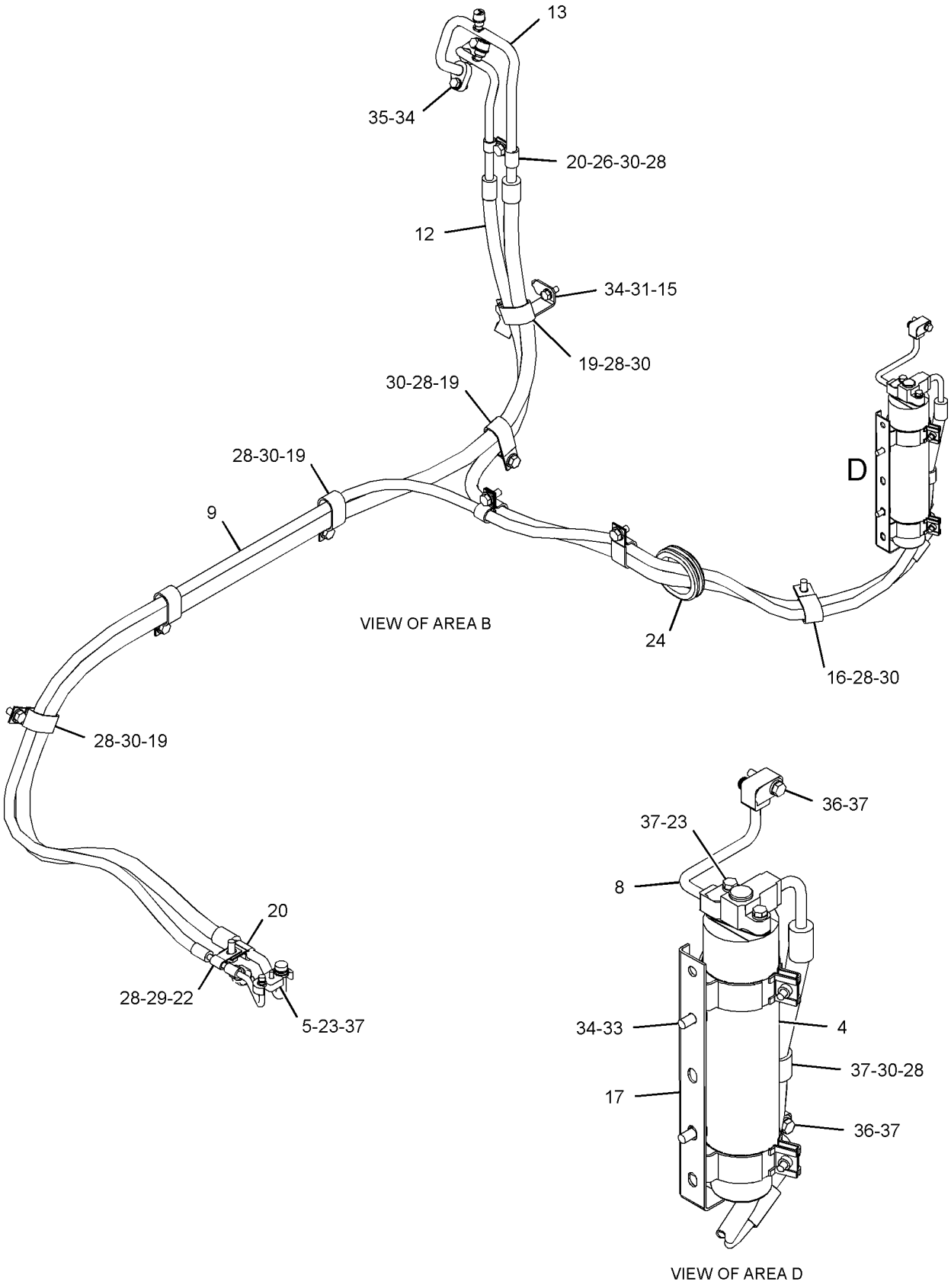

GRAPHIC #2 **<END>** g03361520

7Y-0059 LITERATURE GP

S/N: FKK1-UP; DNP1-UP

PART OF 421-6926, 433-6906 CHASSIS AR

SMCS-7300 **i04965695**

NOTE	PART NUMBER	QTY	PART NAME 1 2 3 4 5 6 (PRODUCT LEVEL)	SEE PAGE
	099-3645	1	CABLE - LANYARD	
	5P-8500	2	KEY	
	5P-7958	2	SLEEVE - CABLE SPLICE	

<END>

142-3836 MIRROR GP-REAR VIEW—FRONT, RH

S/N: FKK1-UP; DNP1-UP

PART OF 421-6926, 433-6906 CHASSIS AR

SMCS-7319 **i05253857**

NOTE	REF NO	GRAPHIC REF	PART NUMBER	QTY	PART NAME 1 2 3 4 5 6 (PRODUCT LEVEL)	SEE PAGE
	1	1	**8T-7971**	4	WASHER-HARD (13.5X25.5X5-MM THK)	
	2	1	**137-2270**	1	MIRROR	
	3	1	**165-3065**	1	BRACKET-MIRROR	
M	4	1	**8T-4192**	4	BOLT (M12X1.75X25-MM)	

M - METRIC PART

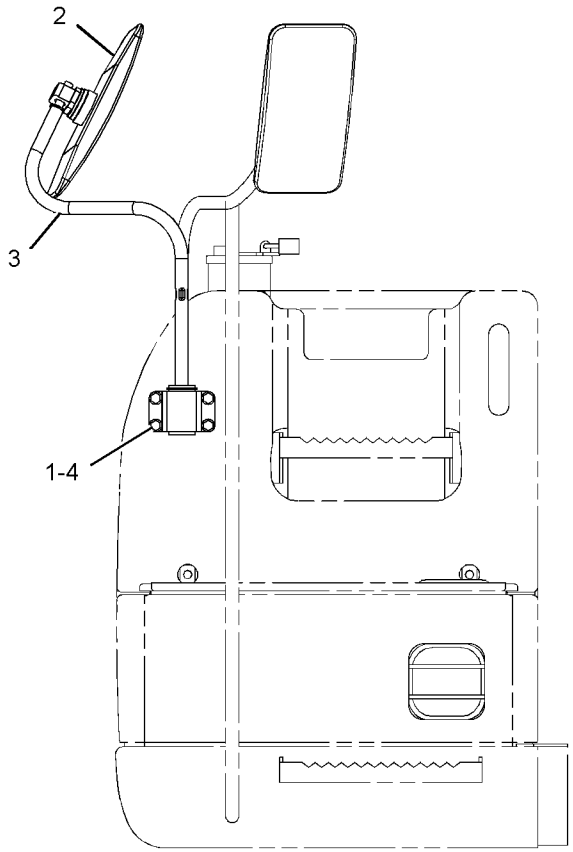

FRONT VIEW

GRAPHIC #1 **<END>** g02169635

327-6550 MIRROR GP-REAR VIEW

S/N: DNP1-UP
PART OF 346-8058 CAB GP
AN ATTACHMENT

SMCS-7319 **i04922243**

NOTE	REF NO	GRAPHIC REF	PART NUMBER	QTY	PART NAME 1 2 3 4 5 6 (PRODUCT LEVEL)	SEE PAGE
M	1	1	**8T-0269**	2	BOLT-SOCKET HEAD (M6X1X20-MM)	
	2	1	**9X-8256**	2	WASHER (6.6X12X2-MM THK)	

M - METRIC PART

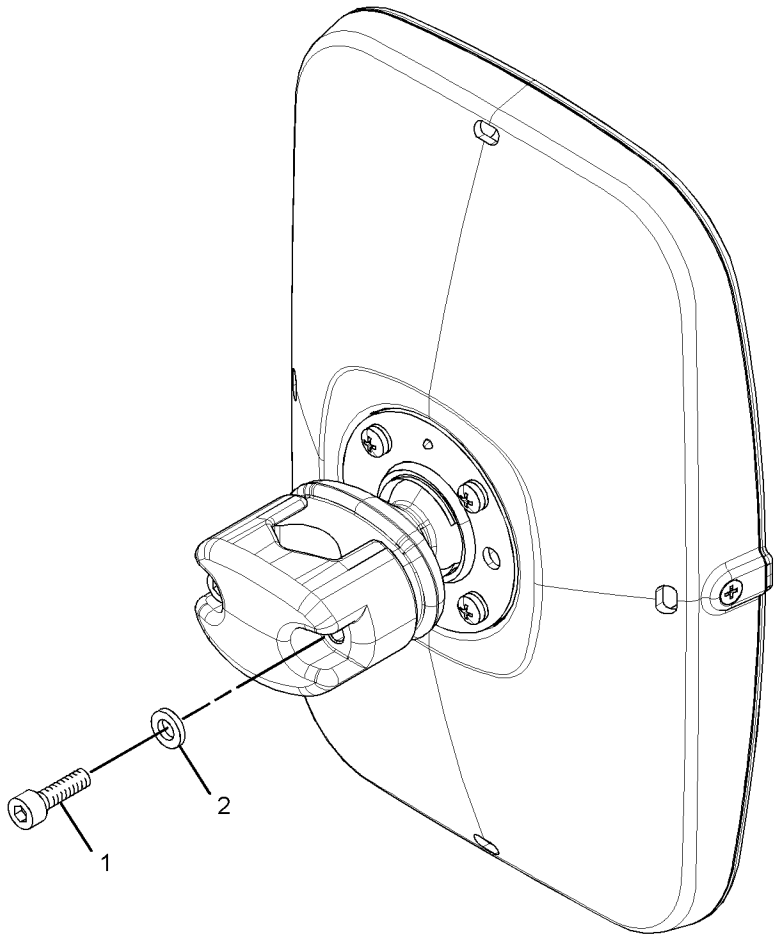

GRAPHIC #1 **<END>** g03058362

221-8813 MONITOR & MTG GP-OPERATOR

S/N: FKK1-UP; DNP1-UP

PART OF 421-6944, 433-6907 OPERATOR AR

SMCS-7490 **i04913532**

NOTE	REF NO	GRAPHIC REF	PART NUMBER	QTY	PART NAME 1 2 3 4 5 6 (PRODUCT LEVEL)	SEE PAGE
Y	1	1	**327-7482**	1	MONITOR GP-OPERATOR	441
M	2	1	**9X-2046**	3	SCREW-TRUSS HEAD (M6X1X35-MM)	

M - METRIC PART
Y - SEPARATE ILLUSTRATION

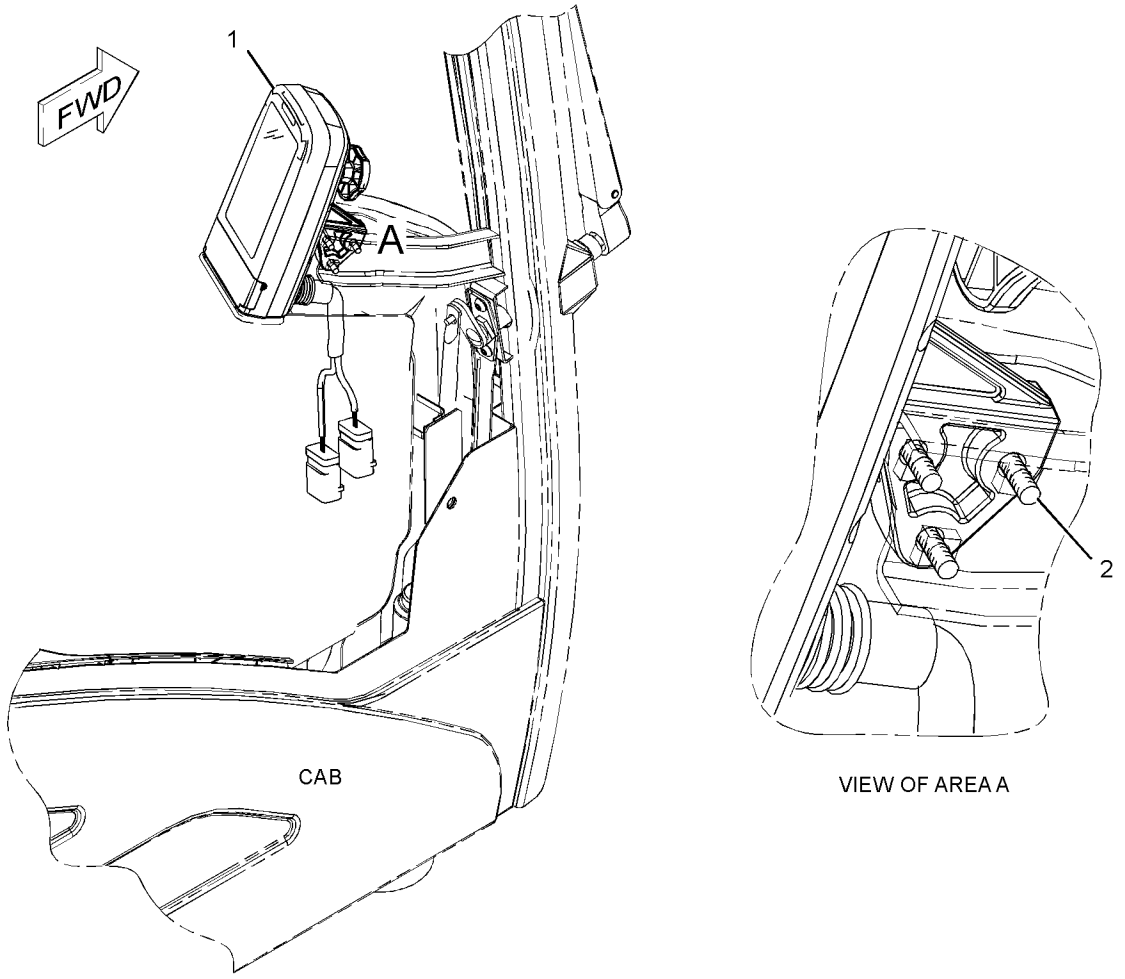

GRAPHIC #1 **<END>** g01231835

327-7482 MONITOR GP-OPERATOR

S/N: FKK1-UP; DNP1-UP

PART OF 221-8813 MONITOR & MTG GP-OPERATOR

SMCS-7490 **i04912092**

NOTE	REF NO	GRAPHIC REF	PART NUMBER	QTY	PART NAME 1 2 3 4 5 6 (PRODUCT LEVEL)	SEE PAGE
	1	1	**247-2694**	1	RECEPTACLE AS-CONNECTOR (12-PIN)	
	2	1	**247-2695**	1	RECEPTACLE AS-CONNECTOR (12-PIN)	
	3	1	**144-1636**	17	PIN-CONNECTOR (14-GA TO 18-GA)	
	4	1	**8T-8737**	7	PLUG-SEAL	
	5	1	**366-8749**	1	COVER AS-MONITOR	

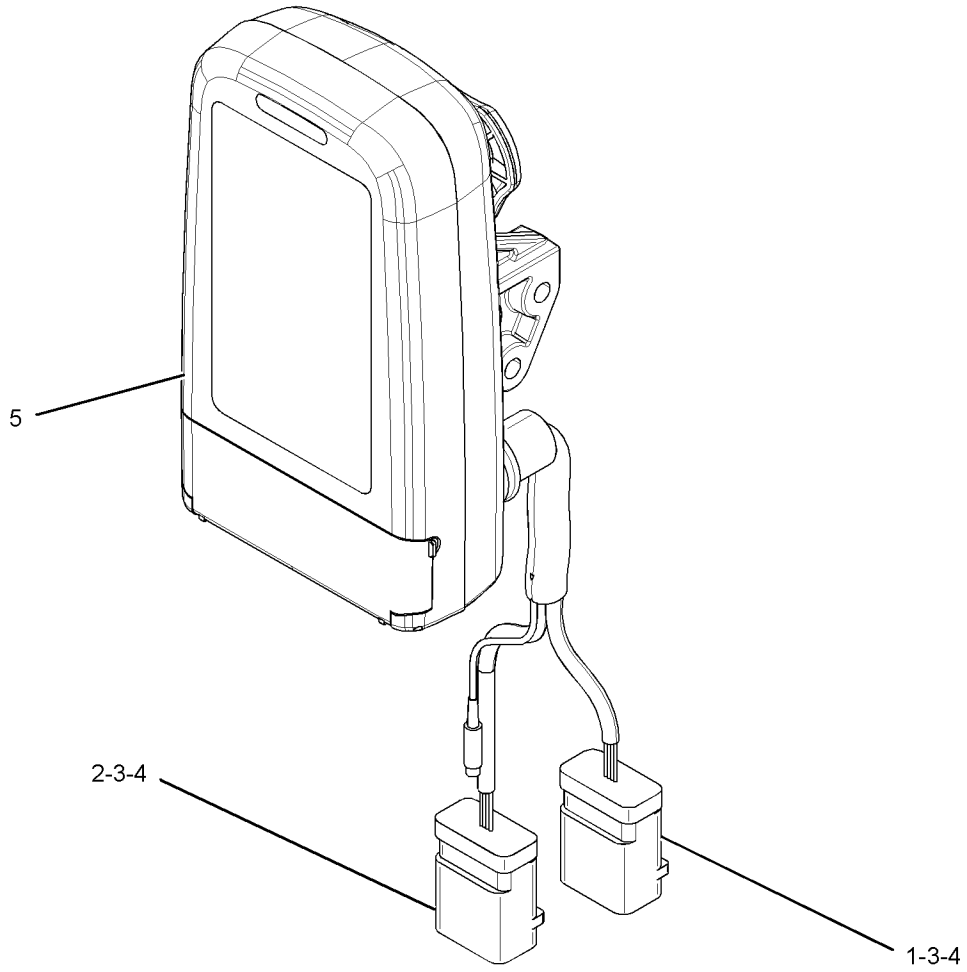

GRAPHIC #1 **<END>** g02046156

OPERATOR STATION

386-3458 MONITOR GP-OPERATOR

S/N: FKK1-UP; DNP1-UP

PART OF 221-8861 ELECTRONICS GP-MONITOR

SMCS-7490 **i05266261**

NOTE	REF NO	GRAPHIC REF	PART NUMBER	QTY	PART NAME 1 2 3 4 5 6 (PRODUCT LEVEL)	SEE PAGE
Y	1	1	*386-3457*	1	MONITOR GP-OPERATOR	442

Y - SEPARATE ILLUSTRATION

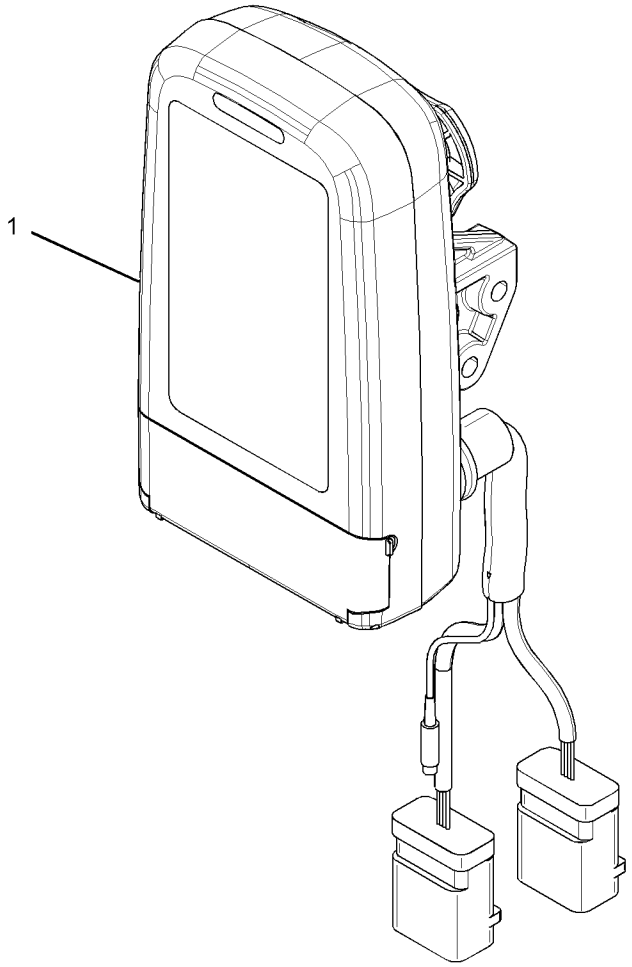

GRAPHIC #1 **<END>** g03352156

366-9355 MOUNTING GP-ANTENNA—PRODUCT LINK CELLULAR

S/N: DNP1-UP

PART OF 379-7062 CONTROL AR-COMMUNICATION

AN ATTACHMENT

SMCS-7338, 7606

i04925287

NOTE	REF NO	GRAPHIC REF	PART NUMBER	QTY	PART NAME 1 2 3 4 5 6 (PRODUCT LEVEL)	SEE PAGE
	1	1	**7I-2673**	1	STRAP-CABLE	
	2	1	**111-4836**	1	CLIP	
M	3	1	**143-9397**	3	SCREW-PAN HEAD (M4X0.7X12-MM)	
	4	1	**346-9376**	1	ANTENNA AS	
		1	**355-1213**	1	PLUG	
		1	**361-1045**	1	NUT-SPECIAL (5/8-18-THD)	
	5	1	**373-8961**	1	BRACKET	
	6	1	**373-8970**	1	CABLE AS-ANTENNA	
	7	1	**381-7417**	1	BRACKET AS	
M		1	**9T-6001**	4	BOSS (M10X1.5-THD)	
	8	1	**096-2626**	3	CLIP	
	9	1	**161-6987**	3	WASHER-HARD (5.2X16X1.5-MM THK)	
	10	1	**3S-2093**	2	STRAP-CABLE	
	11	1	**7K-1181**	5	STRAP-CABLE	
	12	1	**8T-4121**	3	WASHER-HARD (11X21X2.5-MM THK)	
M	13	1	**8T-4137**	1	BOLT (M10X1.5X20-MM)	
M	14	1	**8T-4190**	1	BOLT (M16X2X25-MM)	
M	15	1	**8T-4191**	2	BOLT (M10X1.5X16-MM)	
M	16	1	**8T-4970**	1	BOLT (M6X1X14-MM)	
	17	1	**9X-2026**	1	WASHER (6.5X17X1-MM THK)	
	18	1	**9X-8257**	1	WASHER (17.5X30X3.5-MM THK)	

M - METRIC PART

366-9355 **MOUNTING GP-ANTENNA (*contd.*)** **i04925287**

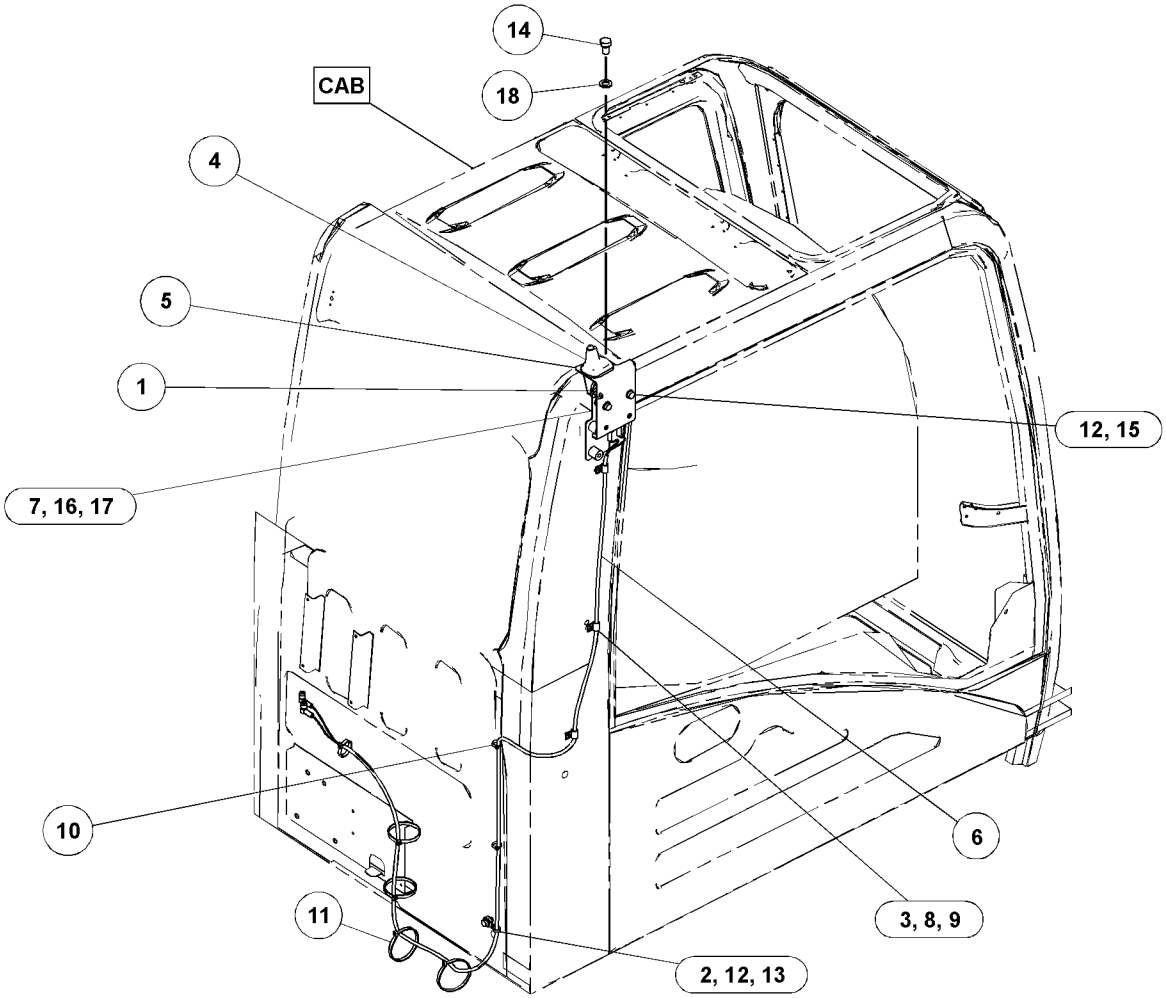

GRAPHIC #1 **<END>** g03097196

245-7811 MOUNTING GP-PLATFORM

S/N: FKK1-UP; DNP1-UP

PART OF 421-6926, 433-6906 CHASSIS AR

SMCS-7253 **i04912115**

NOTE	REF NO	GRAPHIC REF	PART NUMBER	QTY	PART NAME 1 2 3 4 5 6 (PRODUCT LEVEL)	SEE PAGE
	1	1	**235-8862**	4	MOUNT AS	
	2	1	**8T-4121**	16	WASHER-HARD (11X21X2.5-MM THK)	
M	3	1	**8T-4195**	16	BOLT (M10X1.5X30-MM)	

M - METRIC PART

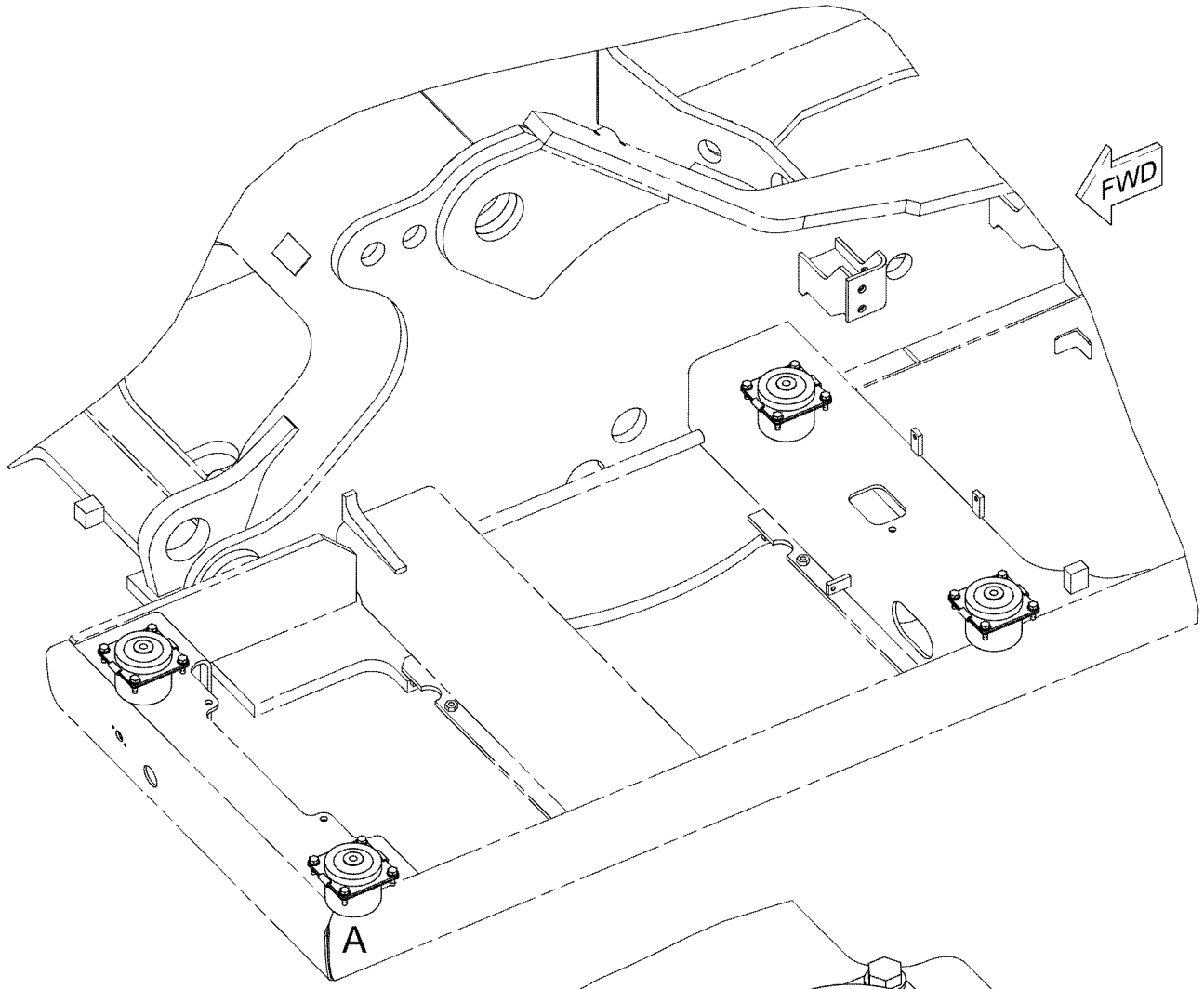

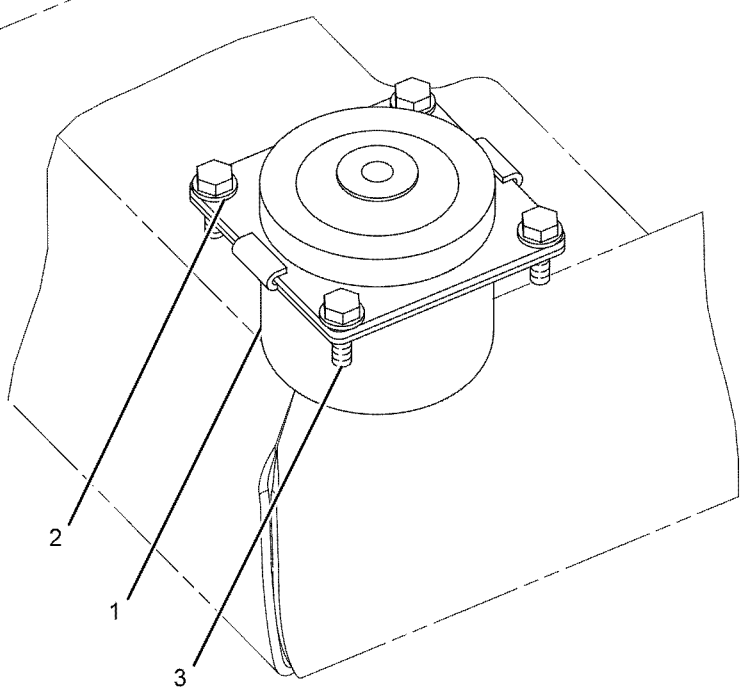

VIEW OF AREA A

GRAPHIC #1 **<END>** g01101486

OPERATOR STATION

436-1944 **MOUNTING GP-RADIO (*contd.*)** **i05295240**

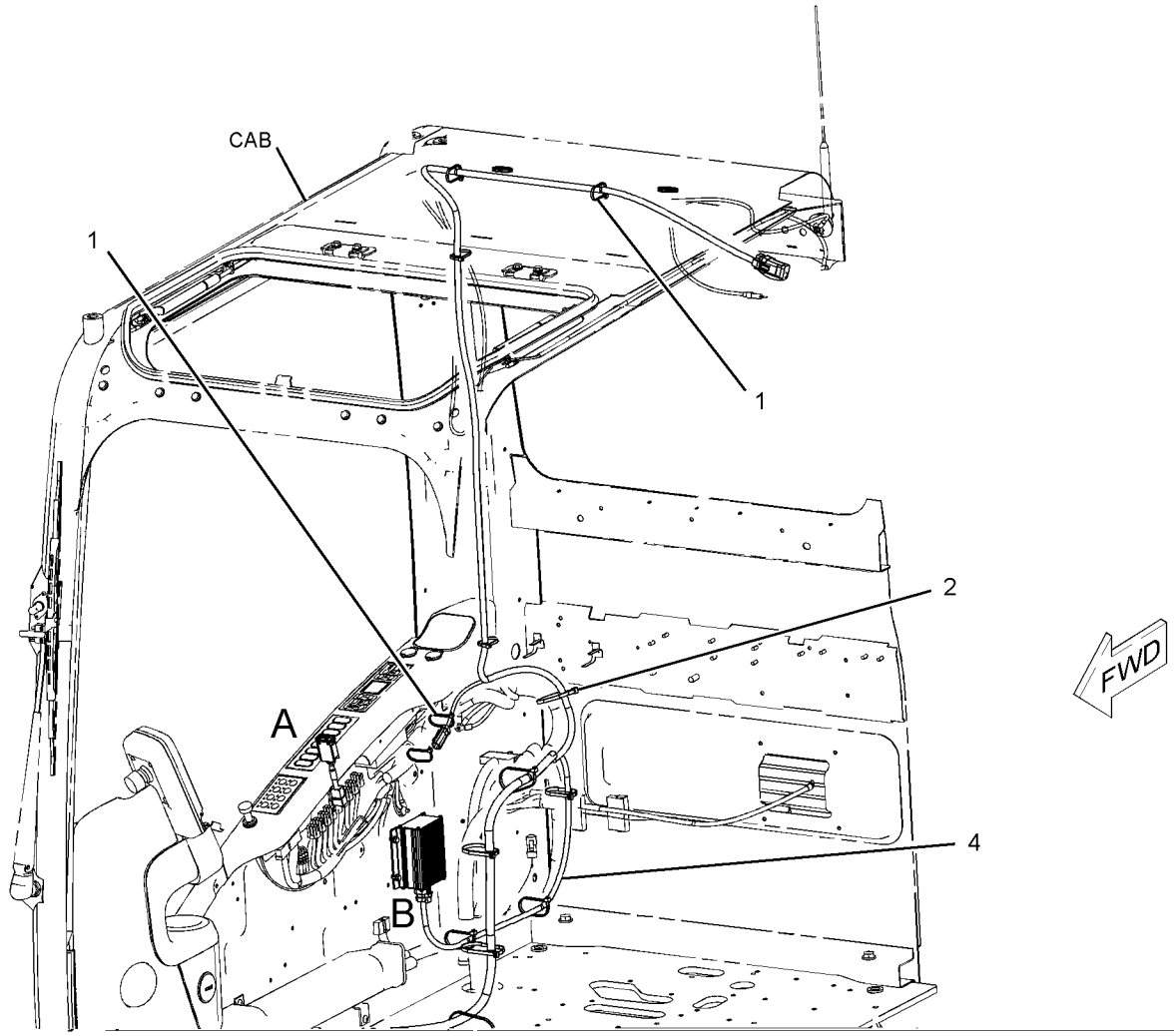

GRAPHIC #1 **<END>** g03363147

OPERATOR STATION

421-6944 OPERATOR AR

S/N: DNP1-UP

PART OF 421-6926 CHASSIS AR

SMCS-7301 **i05266084**

NOTE	PART NUMBER	QTY	PART NAME 1 2 3 4 5 6 (PRODUCT LEVEL)	SEE PAGE
Y	*245-7922*	1	CONSOLE GP-OPERATOR	400
Y	*221-8872*	1	CONTROL & MTG GP-MACHINE	73
Y	*170-9497*	1	CONTROL GP-PILOT OPERATED HYD (TRAVEL)	415
Y	*221-8813*	1	MONITOR & MTG GP-OPERATOR	440
Y	*388-6842*	1	PANEL & MTG GP-CIRCUIT BREAKER	85
Y	*229-9078*	1	PLATFORM GP-OPERATOR	451
Y	*327-6523*	1	SUPPORT GP-SEAT	458
Y	*422-4183*	1	WIRING GP-CAB	102
Y	*251-0433*	1	WIRING GP-CONSOLE	124
Y	*396-8142*	1	WIRING GP-PLATFORM	131

Y - SEPARATE ILLUSTRATION

<END>

433-6907 OPERATOR AR

S/N: FKK1-UP

PART OF 433-6906 CHASSIS AR

SMCS-7301 **i05289135**

NOTE	PART NUMBER	QTY	PART NAME 1 2 3 4 5 6 (PRODUCT LEVEL)	SEE PAGE
Y	*436-1212*	1	CONSOLE GP-OPERATOR	406
Y	*221-8872*	1	CONTROL & MTG GP-MACHINE	73
Y	*170-9497*	1	CONTROL GP-PILOT OPERATED HYD (TRAVEL)	415
Y	*221-8813*	1	MONITOR & MTG GP-OPERATOR	440
Y	*388-6842*	1	PANEL & MTG GP-CIRCUIT BREAKER	85
Y	*229-9078*	1	PLATFORM GP-OPERATOR	451
Y	*327-6523*	1	SUPPORT GP-SEAT	458
Y	*435-0869*	1	WIRING GP-CAB	108
Y	*251-0433*	1	WIRING GP-CONSOLE	124
Y	*396-8142*	1	WIRING GP-PLATFORM	131

Y - SEPARATE ILLUSTRATION

<END>

229-9078 PLATFORM GP-OPERATOR

S/N: FKK1-UP; DNP1-UP

PART OF 421-6944, 433-6907 OPERATOR AR

SMCS-7253 **i04913535**

NOTE	REF NO	GRAPHIC REF	PART NUMBER	QTY	PART NAME 1 2 3 4 5 6 (PRODUCT LEVEL)	SEE PAGE
	1	1	**135-8965**	1	GROMMET	
	2	1	**135-8966**	1	GROMMET	
	3	1	**245-7916**	1	PLATFORM AS	
	4	1	**161-3717**	1	STRIP	
	5	1	**4I-3266**	1	STRIP	
M	6	1	**7X-2553**	4	BOLT (M16X2X40-MM)	
	7	1	**8T-4121**	4	WASHER-HARD (11X21X2.5-MM THK)	
M	8	1	**8T-4191**	4	BOLT (M10X1.5X16-MM)	
	9	1	**9X-8257**	4	WASHER (17.5X30X3.5-MM THK)	

M - METRIC PART

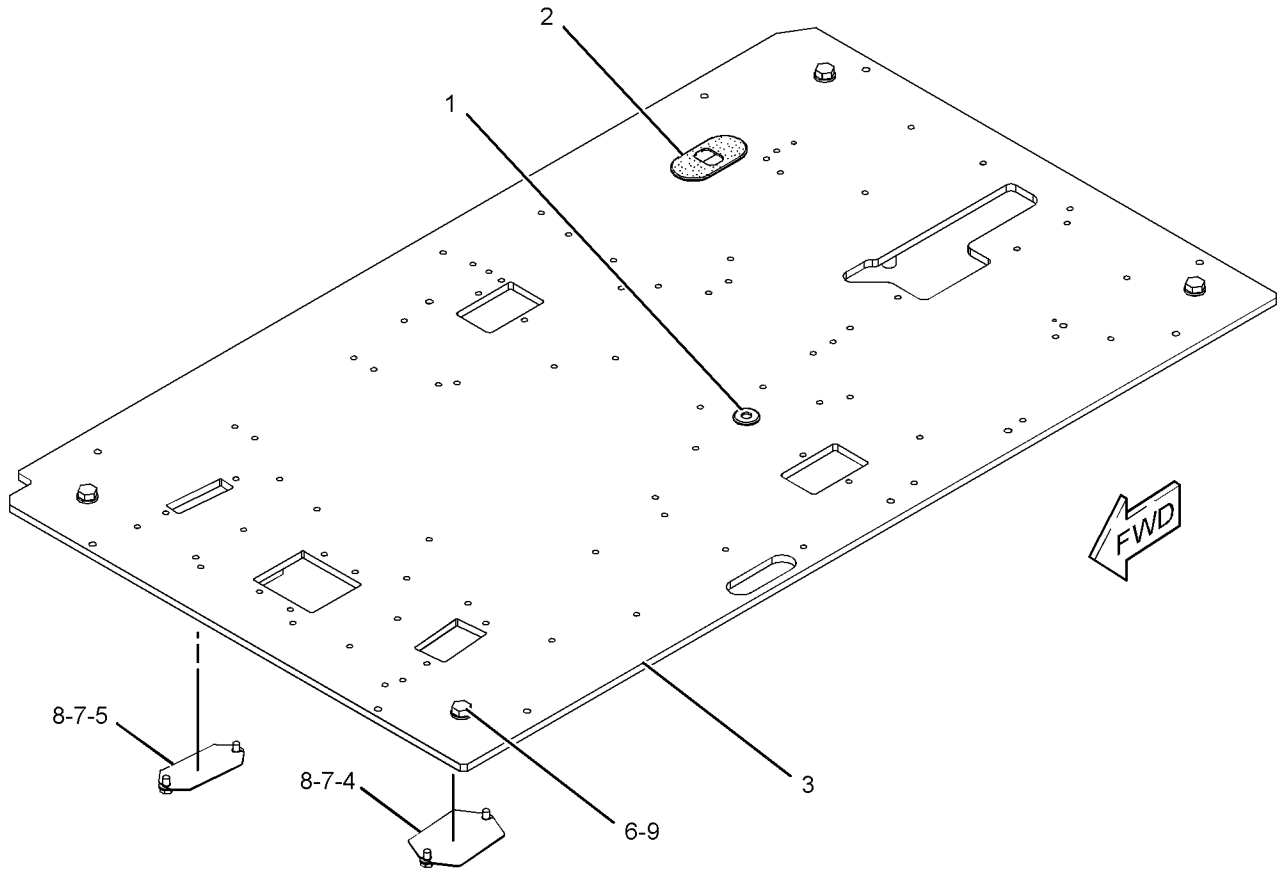

GRAPHIC #1 **<END>** g01188224

OPERATOR STATION

380-7183 SEAT & MOUNTING GP—HIGH BACK, TILT

S/N: FKK1-UP; DNP1-UP

AN ATTACHMENT

SMCS-7312 **i04926059**

NOTE	REF NO	GRAPHIC REF	PART NUMBER	QTY	PART NAME 1 2 3 4 5 6 (PRODUCT LEVEL)	SEE PAGE
Y	1	1	**258-4095**	1	SEAT BELT GP (RETRACTABLE, 51-MM)	453
Y	2	1	*366-5260*	1	SEAT GP-SUSPENSION	457
	3	1	**0T-0489**	1	BOLT (7/16-20X2-IN)	
	4	1	**1V-5872**	1	SPACER (0.493X0.675X0.95-IN THK)	
M	5	1	**6V-8202**	4	BOLT-SOCKET HEAD (M8X1.25X16-MM)	
	6	1	**7J-8337**	1	BOLT (7/16-20-THD)	
	7	1	**7X-0599**	1	WASHER-HARD (13X20X2-MM THK)	
	8	1	**8T-4223**	1	WASHER-HARD (13.5X25.5X3-MM THK)	

M - METRIC PART
Y - SEPARATE ILLUSTRATION

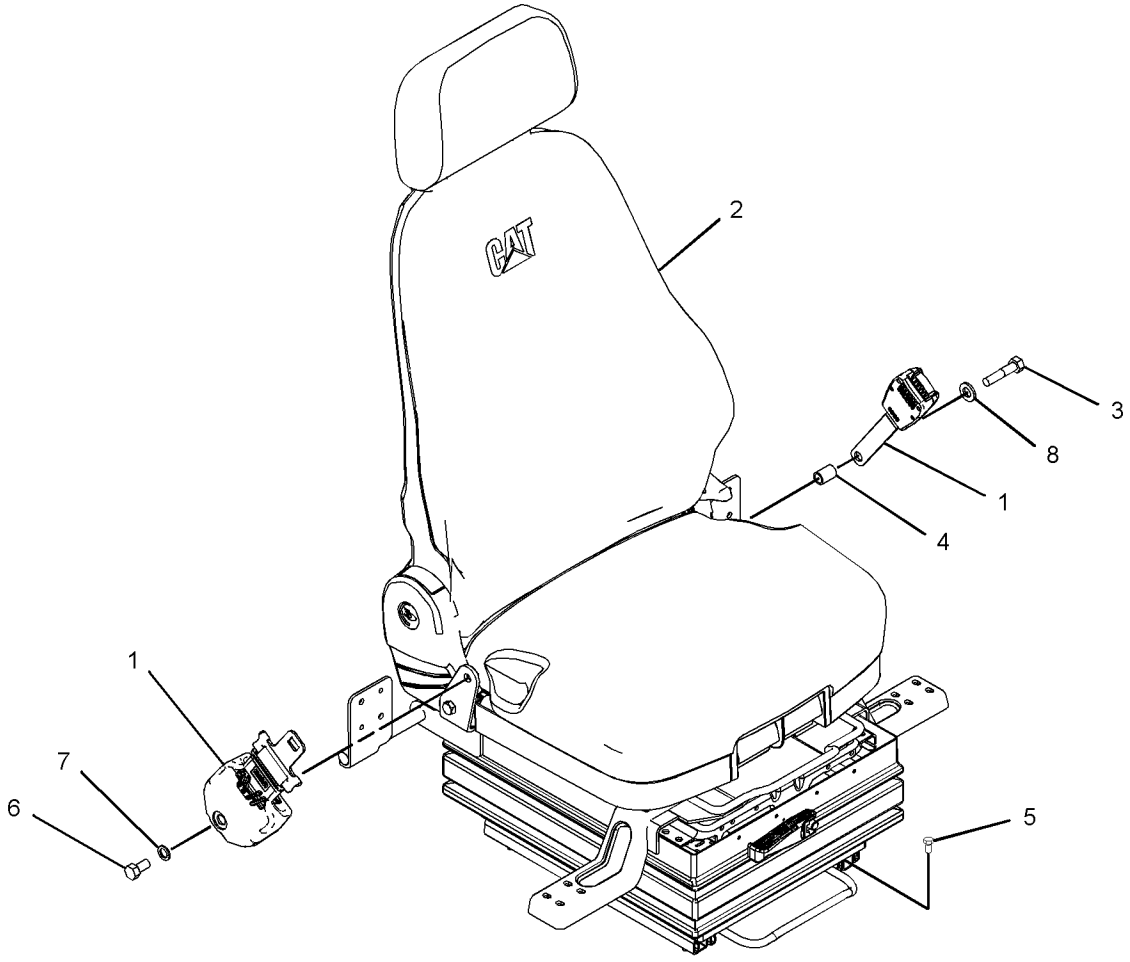

GRAPHIC #1 **<END>** g02735335

258-4095 SEAT BELT GP–RETRACTABLE

S/N: FKK1-UP; DNP1-UP
51-MM (2-IN)
PART OF 380-7183 SEAT & MOUNTING GP
AN ATTACHMENT

SMCS-7327 **i04926063**

NOTE	REF NO	GRAPHIC REF	PART NUMBER	QTY	PART NAME 1 2 3 4 5 6 (PRODUCT LEVEL)	SEE PAGE
F			**2D-6412**	2	WASHER (7/16X15/16X1/4-IN THK)	
F			**8S-0934**	2	LOCKNUT-FLANGE (7/16-20-THD)	
F			**8S-4723**	2	BOLT (7/16-20X1.5-IN)	
F			**8T-4223**	2	WASHER-HARD (13.5X25.5X3-MM THK)	

F - NOT SHOWN

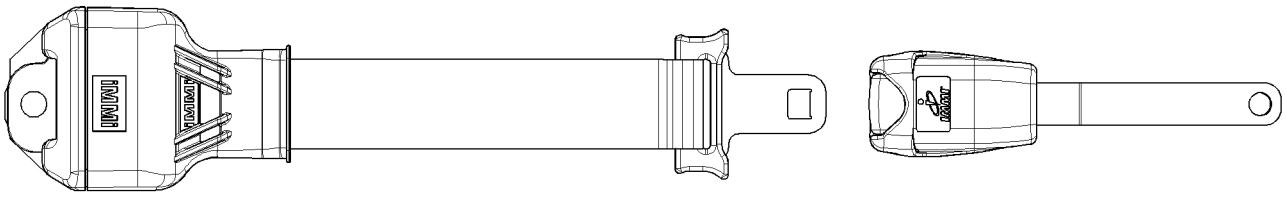

GRAPHIC #1 **<END>** g01345229

384-2207 SEAT GP–DELUXE, CLOTH

S/N: FKK1-UP; DNP1-UP
PART OF 366-5260 SEAT GP-SUSPENSION
AN ATTACHMENT

SMCS-7312 **i04926073**

NOTE	REF NO	GRAPHIC REF	PART NUMBER	QTY	PART NAME 1 2 3 4 5 6 (PRODUCT LEVEL)	SEE PAGE
Y	1	1	*366-5257*	1	SEAT GP-SUSPENSION (DELUXE, CLOTH)	455
	2	1	**366-5265**	1	KIT-SLIDE (UPPER)	
					(ALSO INCLUDES BAR, LH & RH SLIDE AS)	
M		1	**6V-7743**	2	LOCKNUT (M6X1-THD)	
		1	**8T-0334**	4	WASHER-HARD (6.6X12.5X1.6-MM THK)	
	3	1	**107-2961**	4	WASHER (8.25X17X1.136-MM THK)	
M	4	1	**6V-8202**	4	BOLT-SOCKET HEAD (M8X1.25X16-MM)	
	5	1	**7X-0579**	4	WASHER-HARD (8.8X25.5X2-MM THK)	

M - METRIC PART
Y - SEPARATE ILLUSTRATION

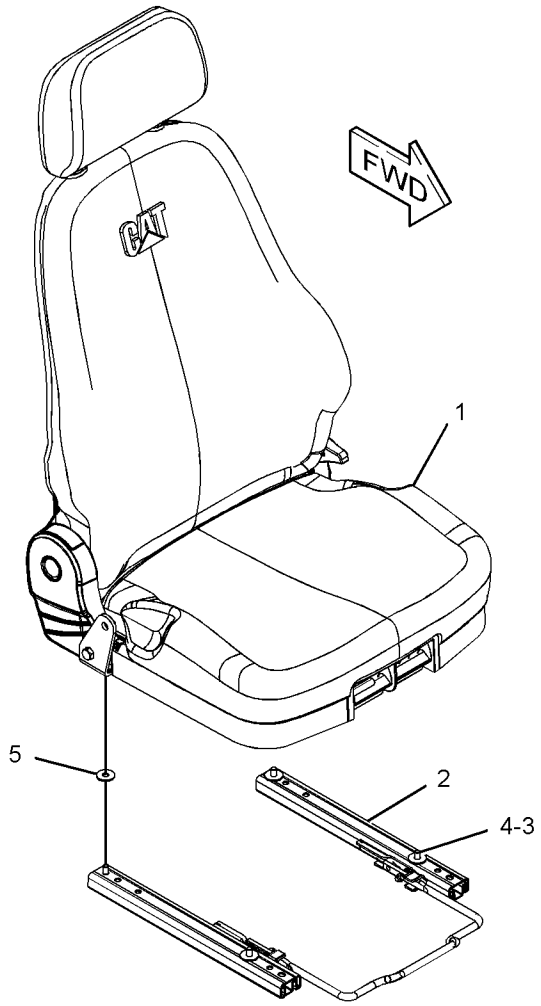

GRAPHIC #1 **<END>** g02798928

366-5257 SEAT GP-SUSPENSION—DELUXE, CLOTH

S/N: FKK1-UP; DNP1-UP
PART OF 384-2207 SEAT GP
AN ATTACHMENT

SMCS-7324, 7336

i04926074

NOTE	REF NO	GRAPHIC REF	PART NUMBER	QTY	PART NAME 1 2 3 4 5 6 (PRODUCT LEVEL)	SEE PAGE
	1	1	**3H-5368**	1	BOLT (7/16-14X1.375-IN)	
	2	1	**190-0386**	10	BOLT	
	3	1	**366-5267**	1	CUSHION AS-BACK	
	4	1	**366-5269**	1	CUSHION AS-SEAT	
	5	1	**366-5271**	1	PAN AS	
	6	1	**373-2588**	1	HEADREST AS-SEAT	
	7	1	**373-2590**	1	PAN AS-SEAT	
	8	1	**373-2591**	1	PAN AS-SEAT	
	9	1	**373-2594**	1	BUSHING	
	10	1	**373-2595**	1	BRACKET AS	
	11	1	**373-2596**	1	COVER (LH)	
	12	1	**373-2597**	1	COVER (RH)	
	13	1	**373-2600**	2	SPRING	
	14	1	**374-5958**	1	HANDLE	
	15	1	**377-2843**	1	HOLDER	
	16	1	**4K-9429**	4	RIVET-POP	
M	17	1	**8T-3991**	2	SCREW-BUTTON HEAD (M6X1X20-MM)	
M	18	1	**8U-7803**	1	SCREW	
E	19	1	**7X-7877**		STRIP-EDGING (13-CM)	

E - ORDER BY THE CENTIMETER
M - METRIC PART

366-5257 **SEAT GP-SUSPENSION (*contd.*)** **i04926074**

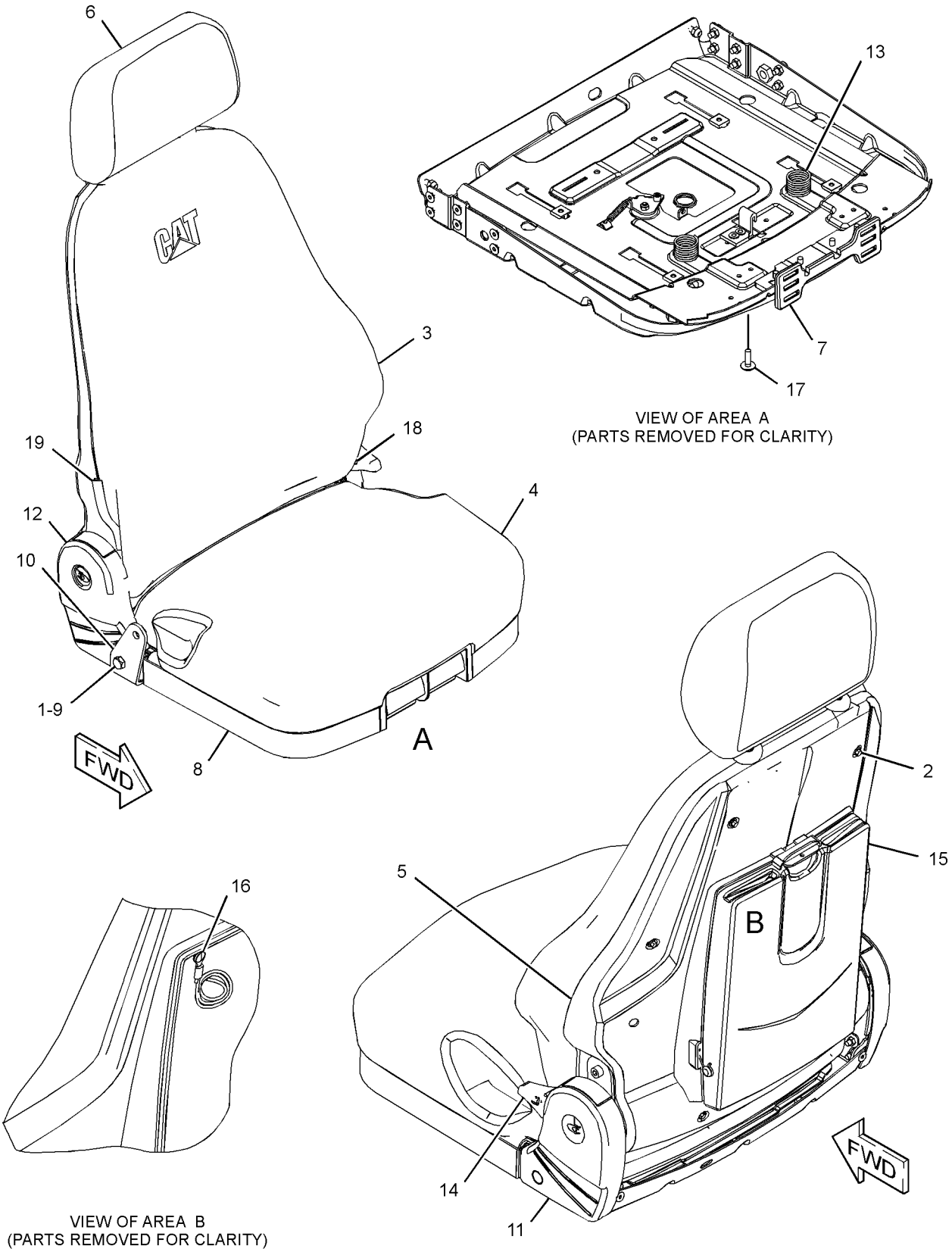

GRAPHIC #1 **<END>** g03078058

366-5260 SEAT GP-SUSPENSION—HIGH BACK, TILT

S/N: FKK1-UP; DNP1-UP
MECHANICAL SUSPENSION
PART OF 380-7183 SEAT & MOUNTING GP
AN ATTACHMENT

SMCS-7324, 7336 **i04926067**

NOTE	REF NO	GRAPHIC REF	PART NUMBER	QTY	PART NAME 1 2 3 4 5 6 (PRODUCT LEVEL)	SEE PAGE
Y	1	1	**384-2207**	1	SEAT GP (DELUXE, CLOTH)	454
	2	1	**373-3495**	4	PLATE	
Y	3	1	*377-2012*	1	SUSPENSION GP-SEAT (MECHANICAL)	462
M	4	1	**8T-0338**	4	BOLT-SOCKET HEAD (M8X1.25X45-MM)	

M - METRIC PART
Y - SEPARATE ILLUSTRATION

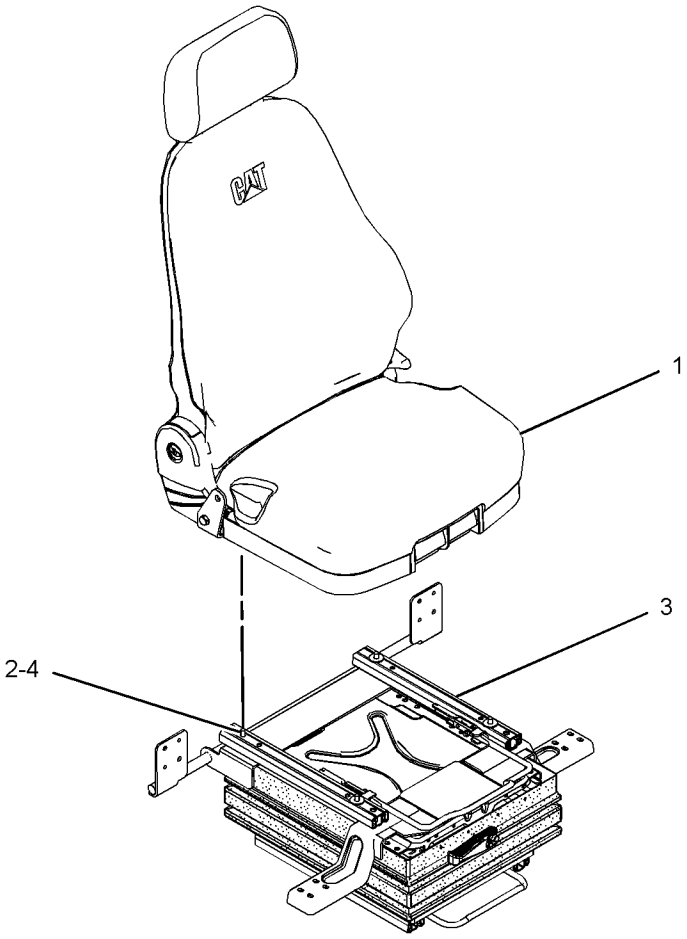

GRAPHIC #1 **<END>** g02797187

OPERATOR STATION

327-6523 SUPPORT GP-SEAT

S/N: FKK1-UP; DNP1-UP

PART OF 421-6944, 433-6907 OPERATOR AR

SMCS-7321 **i04913559**

NOTE	REF NO	GRAPHIC REF	PART NUMBER	QTY	PART NAME 1 2 3 4 5 6 (PRODUCT LEVEL)	SEE PAGE
	1	1	**327-6538**	1	SUPPORT AS-SEAT	
	2	1	**8T-4121**	4	WASHER-HARD (11X21X2.5-MM THK)	
M	3	1	**8T-4191**	4	BOLT (M10X1.5X16-MM)	

M - METRIC PART

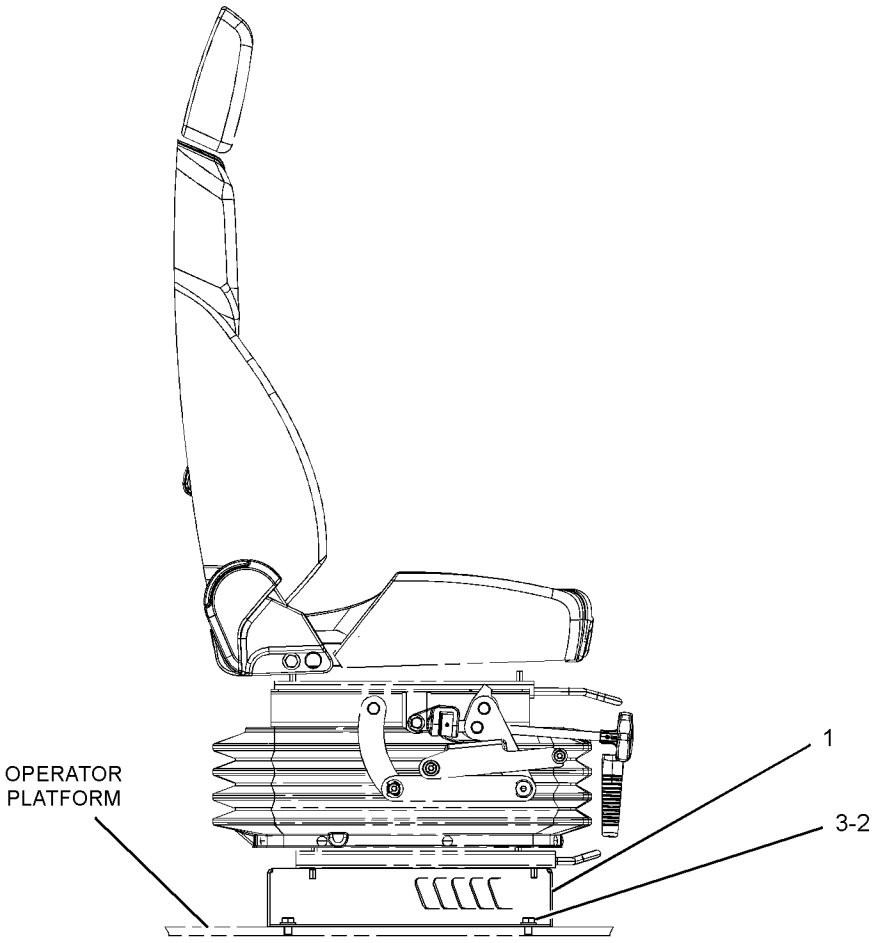

RIGHT SIDE VIEW

GRAPHIC #1 **<END>** g01809475

366-5262 SUSPENSION GP-SEAT—MECHANICAL

S/N: FKK1-UP; DNP1-UP
PART OF 377-2012 SUSPENSION GP-SEAT
AN ATTACHMENT

SMCS-7324 **i04926071**

NOTE	REF NO	GRAPHIC REF	PART NUMBER	QTY	PART NAME 1 2 3 4 5 6 (PRODUCT LEVEL)	SEE PAGE
	1	2	**6W-8281**	2	BUMPER	
	2	1	**9V-6754**	31	FASTENER	
	3	2	**039-9452**	2	WASHER	
	4	1	**356-2353**	1	BUSHING	
	5	1	**359-3576**	1	PLATE	
	6	1	**359-3582**	1	BOOT	
	7	2	**371-7140**	1	ARM AS-SUSPENSION	
	8	1	**371-7141**	1	HOUSING AS (UPPER)	
	9	2	**371-7142**	1	HOUSING AS (LOWER)	
	10	2	**371-7144**	4	ROLLER	
	11	2	**371-7146**	1	KIT-SPRING (SUSPENSION SEAT)	
	12	2	**371-7148**	1	SHAFT	
	13	2	**380-6351**	2	BUSHING	
	14	2	**385-1278**	1	LINK AS	
	15	1	**385-1279**	1	ADJUSTER AS	
		1	**6V-8235**	1	PIN-SPRING	
		1	**371-7147**	1	HANDLE	
	16	1,2	**385-1400**	4	BUMPER	
	17	2	**386-6071**	2	BOLT-PIVOT	
	18	1	**386-6072**	1	BOLT-PIVOT	
	19	1	**107-2961**	1	WASHER (8.25X17X1.136-MM THK)	
	20	2	**5P-8244**	2	WASHER-HARD (12X22.5X2.5-MM THK)	
	21	2	**5V-1497**	1	RETAINER	
	22	1	**8T-0114**	1	PIN-SPRING	
M	23	1	**8T-0389**	1	LOCKNUT (M10X1.5-THD)	
	24	2	**9M-5048**	2	LOCKNUT (7/16-14-THD)	
	25	2	**385-2474**	1	INDICATOR AS (SEAT ADJUSTMENT)	
	26	2	**371-7143**	1	KIT-SHOCK ABSORBER (SUSPENSION SEAT)	

M - METRIC PART

REFER TO ALL ILLUSTRATIONS OF
THIS GROUP FOR AUXILIARY VIEWS

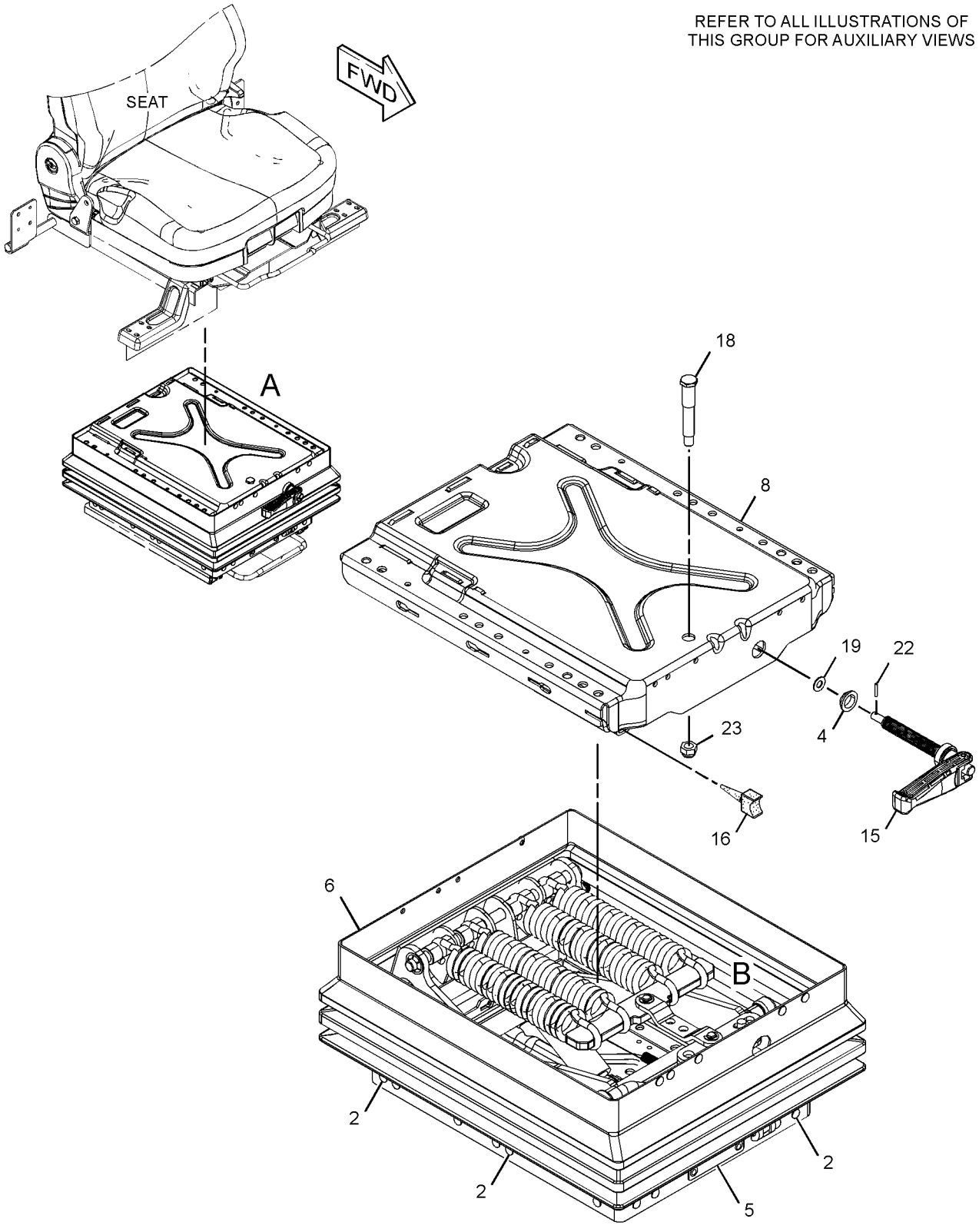

VIEW OF AREA A
(EXPLODED)

GRAPHIC #1 g02805016

366-5262 **SUSPENSION GP-SEAT (*contd.*)** **i04926071**

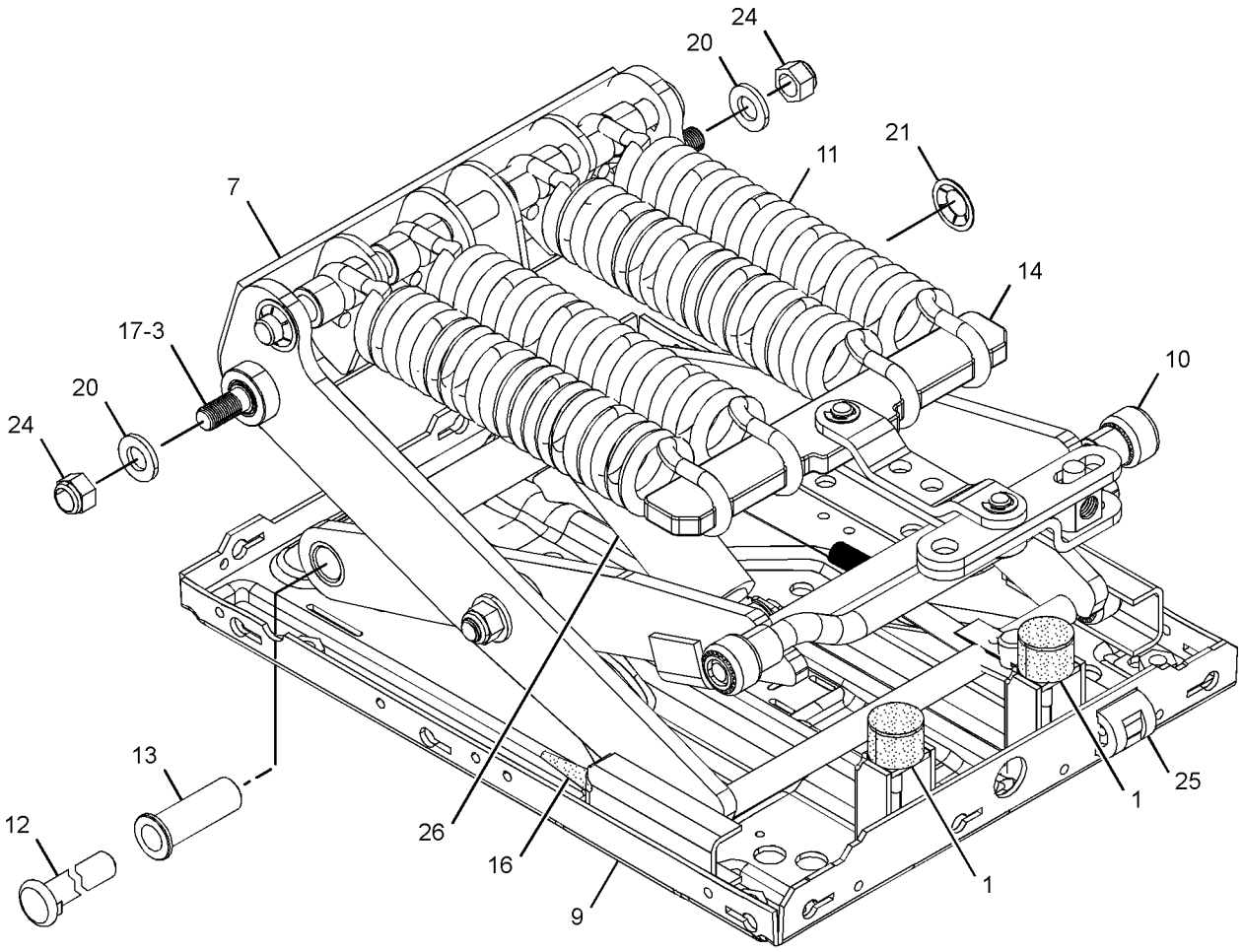

VIEW OF AREA B
(PARTS REMOVED FOR CLARITY)

GRAPHIC #2 **<END>** g02805017

377-2012 SUSPENSION GP-SEAT—MECHANICAL

S/N: FKK1-UP; DNP1-UP
PART OF 366-5260 SEAT GP-SUSPENSION
AN ATTACHMENT

SMCS-7324 **i04926068**

NOTE	REF NO	GRAPHIC REF	PART NUMBER	QTY	PART NAME 1 2 3 4 5 6 (PRODUCT LEVEL)	SEE PAGE
Y	1	1	**366-5262**	1	SUSPENSION GP-SEAT	459
	2	1	**366-5264**	1	BRACKET AS	
	3	1	**366-5266**	1	KIT-SLIDE (LOWER)	
					(ALSO INCLUDES BAR, LH & RH SLIDE ASSEMBLIES)	
M		1	**6V-7743**	2	LOCKNUT (M6X1-THD)	
		1	**8T-0334**	4	WASHER-HARD (6.6X12.5X1.6-MM THK)	
	4	1	**384-2205**	4	BLOCK	
	5	1	**107-2961**	4	WASHER (8.25X17X1.136-MM THK)	
M	6	1	**193-7720**	4	SCREW-BUTTON HEAD (M6X1X35-MM)	
	7	1	**209-8296**	4	BOLT-SOCKET HEAD (M8X1.25X25-MM)	

M - METRIC PART
Y - SEPARATE ILLUSTRATION

377-2012 **SUSPENSION GP-SEAT (*contd.*)** **i04926068**

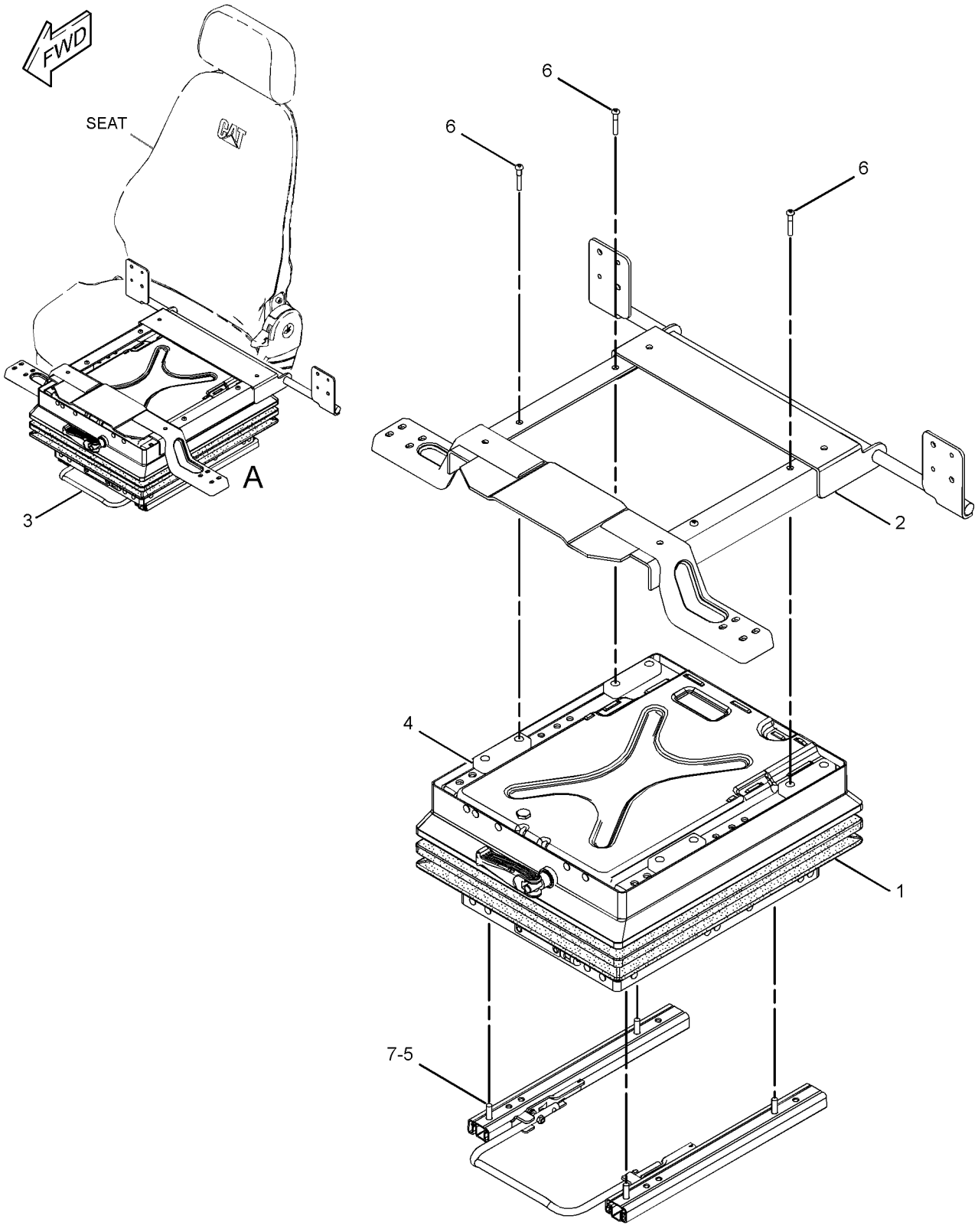

VIEW OF AREA A

GRAPHIC #1 **<END>** g02798856

161-3751 VISOR GP-CAB—SUN

S/N: DNP1-UP

AN ATTACHMENT

SMCS-7301 **i04918736**

N i N

NOTE

23(5$725 67$7,21

:$6+(5*3 :,1'2:

6 1 '13 83

$1$77$&+0(17

60&6 L

127(	5() 12	*5$3+,& 5()	3$57 180%(5	47<	3$57 1$0(352'8&7/(9(/	6((3$*(
			<		9$/9($6 &+(&.:,1'2::$6+(5	
					675$3 &$*/(54.1795 c (Tj 5.6787 0 Td ( )Tj /F3 1 Tf 5.5515 0 Td (	

207-0144 WINDOW AS-FRONT–UPPER

S/N: DNP1-UP
PART OF 388-0065 CAB GP
AN ATTACHMENT

SMCS-7340 **i04922201**

NOTE	REF NO	GRAPHIC REF	PART NUMBER	QTY	PART NAME 1 2 3 4 5 6 (PRODUCT LEVEL)	SEE PAGE
	1	1	**170-9722**	1	CUSHION	
	2	1	**156-6472**	1	GLASS	
	3	1	**161-3698**	1	SEAL	
	4	1	**4I-0420**	1	STRIP	
	5	1	**156-6470**	1	HANDLE	

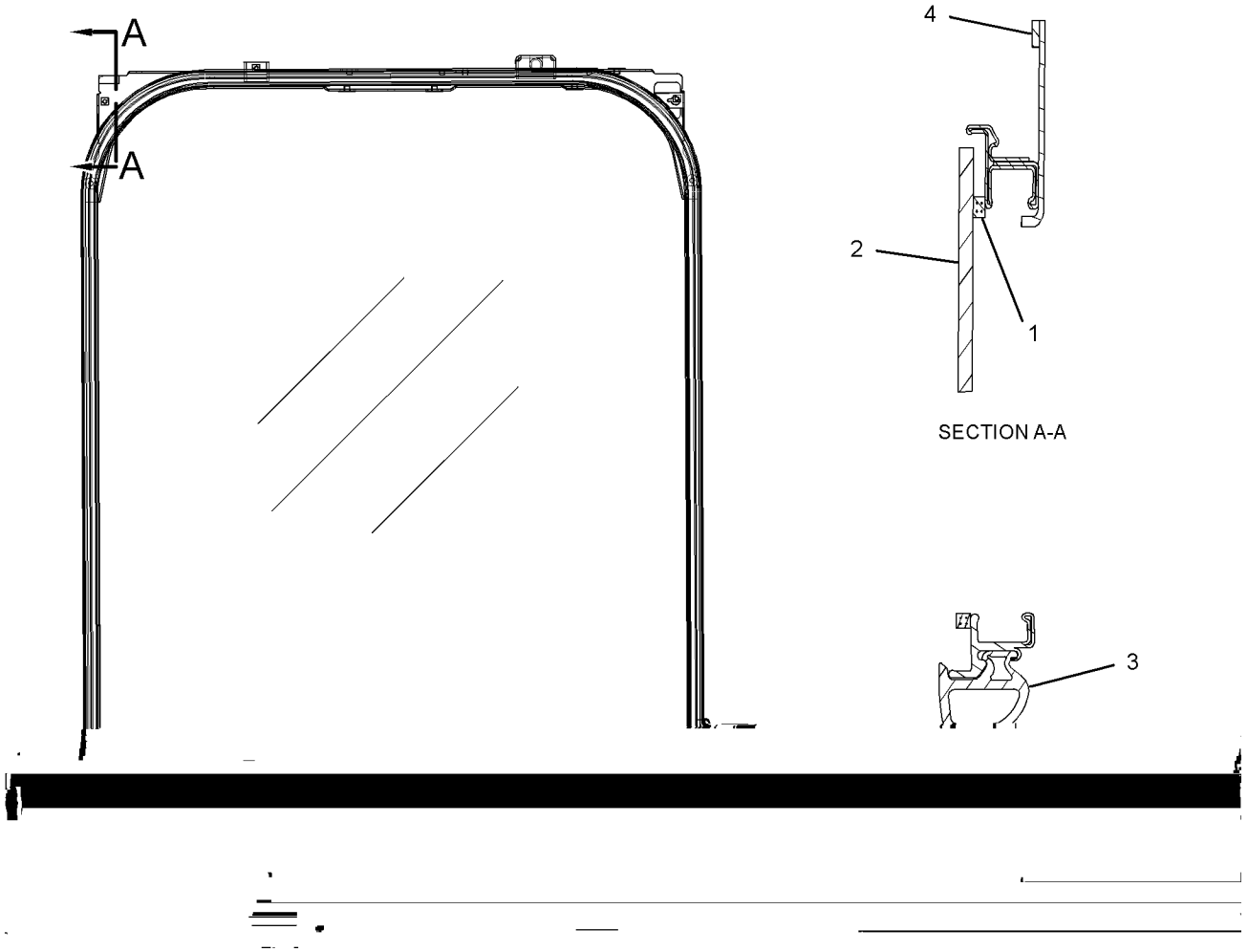

GRAPHIC #1 **<END>** g01935314

388-9107 WINDOW GP-CAB

S/N: DNP1-UP
PART OF 388-0065 CAB GP
AN ATTACHMENT

SMCS-7310 **i05269649**

NOTE	REF NO	GRAPHIC REF	PART NUMBER	QTY	PART NAME 1 2 3 4 5 6 (PRODUCT LEVEL)	SEE PAGE
	1	1	**383-6931**	1	GLASS (LH)	
	2	1	**383-6929**	1	GLASS (REAR)	
	3	1	**164-0666**	1	SEAL	
	4	1	**178-5572**	4	SPACER	
	5	1	**383-6932**	1	GLASS (RH)	
	6	1	**099-3629**	1	RING-KEY	
	7	1	**178-5573**	4	SPACER	
	8	1	**178-5574**	9	SPACER	

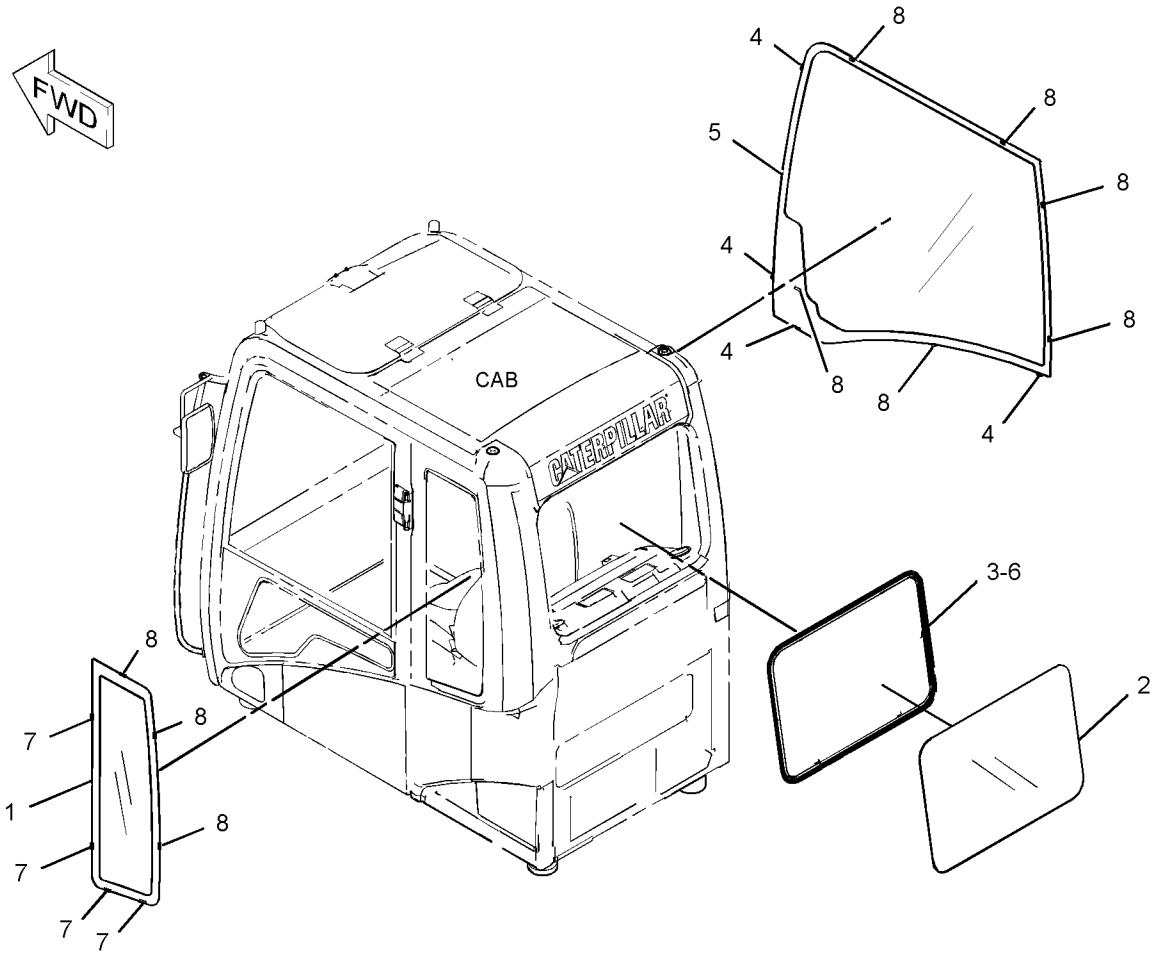

GRAPHIC #1 **<END>** g01432743

388-9108 WINDOW GP-CAB—LOWER

S/N: DNP1-UP
PART OF 388-0065 CAB GP
AN ATTACHMENT

SMCS-7310 **i05269651**

NOTE	REF NO	GRAPHIC REF	PART NUMBER	QTY	PART NAME 1 2 3 4 5 6 (PRODUCT LEVEL)	SEE PAGE
	1	1	**383-6930**	1	GLASS (FRONT, LOWER)	
	2	1	**156-6631**	2	STOP	
	3	1	**305-0361**	1	SEAL	
	4	1	**178-5569**	2	SEAL	
	5	1	**189-2702**	2	SEAL	
	6	1	**139-7119**	2	PLUG	

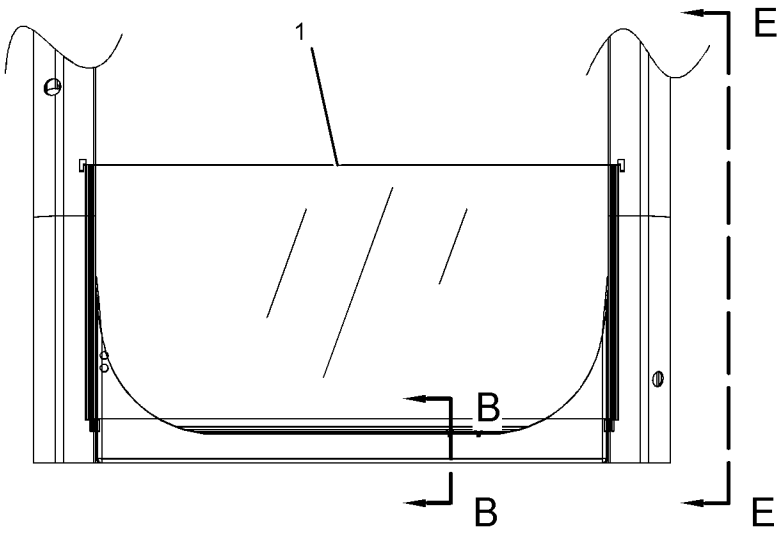

FRONT VIEW

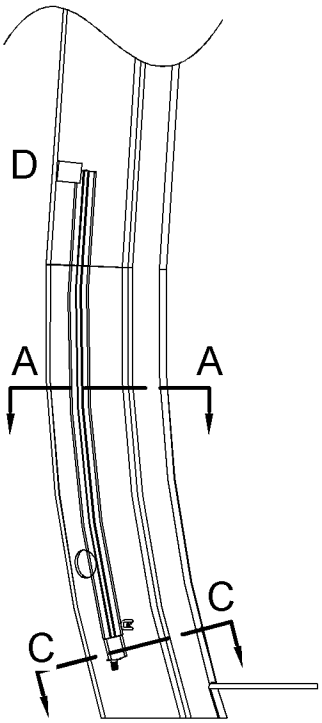

VIEW E-E

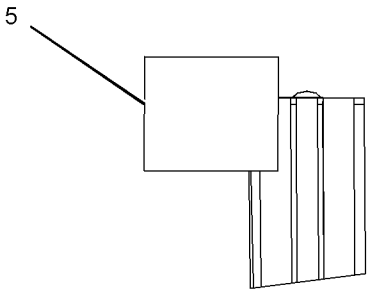

VIEW OF AREA D

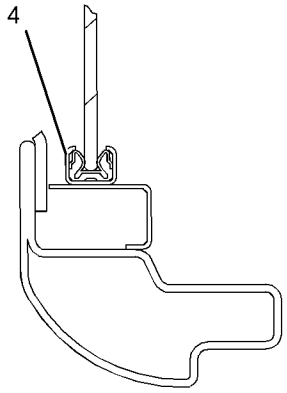

SECTION A-A

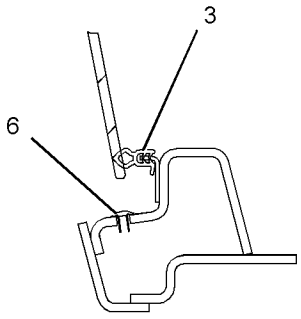

SECTION B-B

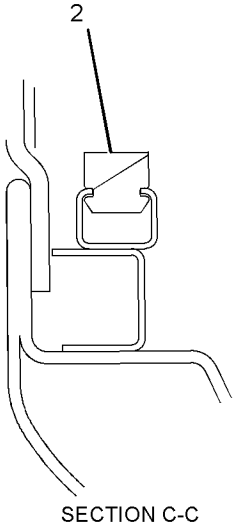

SECTION C-C

GRAPHIC #1 **<END>** g01398601

388-9109 WINDOW GP-CAB—FRONT, UPPER

S/N: DNP1-UP
PART OF 388-0065 CAB GP
AN ATTACHMENT

SMCS-7310 **i05269652**

NOTE	REF NO	GRAPHIC REF	PART NUMBER	QTY	PART NAME 1 2 3 4 5 6 (PRODUCT LEVEL)	SEE PAGE
	1	2	**170-9722**	1	CUSHION	
	2	1	**151-6703**	1	HANDLE-PULL	
	3	1	**151-6704**	2	CAP	
	4	2	**151-6778**	1	FRAME AS	
	4A	2	**156-6470**	1	HANDLE	
	5	1	**151-6785**	1	BRACKET AS	
	6	1	**151-6813**	1	BRACKET AS	
	7	1	**151-6815**	1	BRACKET AS	
	8	1	**273-5345**	1	LINK AS	
	9	1	**273-5346**	1	LINK AS	
	10	1	**151-6831**	1	LOCK AS	
	11	1	**151-6832**	1	LEVER AS	
	12	2	**151-6844**	1	COVER	
	13	1	**151-9557**	2	STOP-RUBBER	
	14	2	**156-6472**	1	GLASS	
	15	2	**156-6554**	1	CABLE AS	
	16	1	**156-6555**	1	STRIKER AS	
	17	2	**156-6562**	1	BRACKET	
	18	2	**156-6563**	1	CATCH AS	
					(TWO JAW)	
					—OR—	
		2	**273-5274**	1	CATCH AS	
					(ONE JAW)	
	19	2	**156-6579**	1	STOP	
	20	2	**156-6601**	1	SEAL AS	
	21	2	**156-6627**	1	STOP AS	
	22	1	**161-3684**	2	STOP	
	23	1	**161-3698**	1	SEAL	
	24	2	**164-0648**	1	BRACKET AS	
	25	1	**178-5576**	1	STOP	
M	26	2	**185-8181**	2	SCREW (M4X0.7X10-MM)	
M	27	2	**185-8182**	4	BOLT (M10X1.5X20-MM)	
M	28	2	**5C-8312**	1	NUT (M4X0.7-THD)	
	29	2	**185-8187**	4	WASHER (10.2X22X3.2-MM THK)	
M	30	1	**185-8197**	1	NUT (M10X1.5-THD)	
	31	1	**185-8221**	1	STOP	
M	32	1	**099-0823**	2	SCREW-MACHINE (M6X1X6-MM)	
M	33	1	*101-8900*	2	SCREW AS (M6X1X20-MM)	
					(EACH INCLUDES)	
M		1	**8T-6412**	1	SCREW-MACHINE (M6X1X20-MM)	
		1	**095-0827**	1	LOCKWASHER	
	34	1	**117-6306**	1	SWITCH (WINDOW LOWER LIMIT)	
	35	1	**151-9576**	4	ROLLER	
	36	1	**4I-0420**	1	STRIP	
	37	1	**7X-0578**	1	WASHER-HARD (10.2X32X2.5-MM THK)	
M	38	2	**9X-2042**	20	SCREW-TRUSS HEAD (M6X1X12-MM)	
M	39	1,2	**9X-2044**	5	SCREW-TRUSS HEAD (M6X1X16-MM)	
M	40	2	**9X-2045**	3	SCREW-TRUSS HEAD (M6X1X20-MM)	
	41	2	**9X-8256**	2	WASHER (6.6X12X2-MM THK)	

M - METRIC PART

388-9109 **WINDOW GP-CAB (*contd.*)** **i05269652**

REFER TO ALL ILLUSTRATIONS OF
THIS GROUP FOR AUXILIARY VIEWS

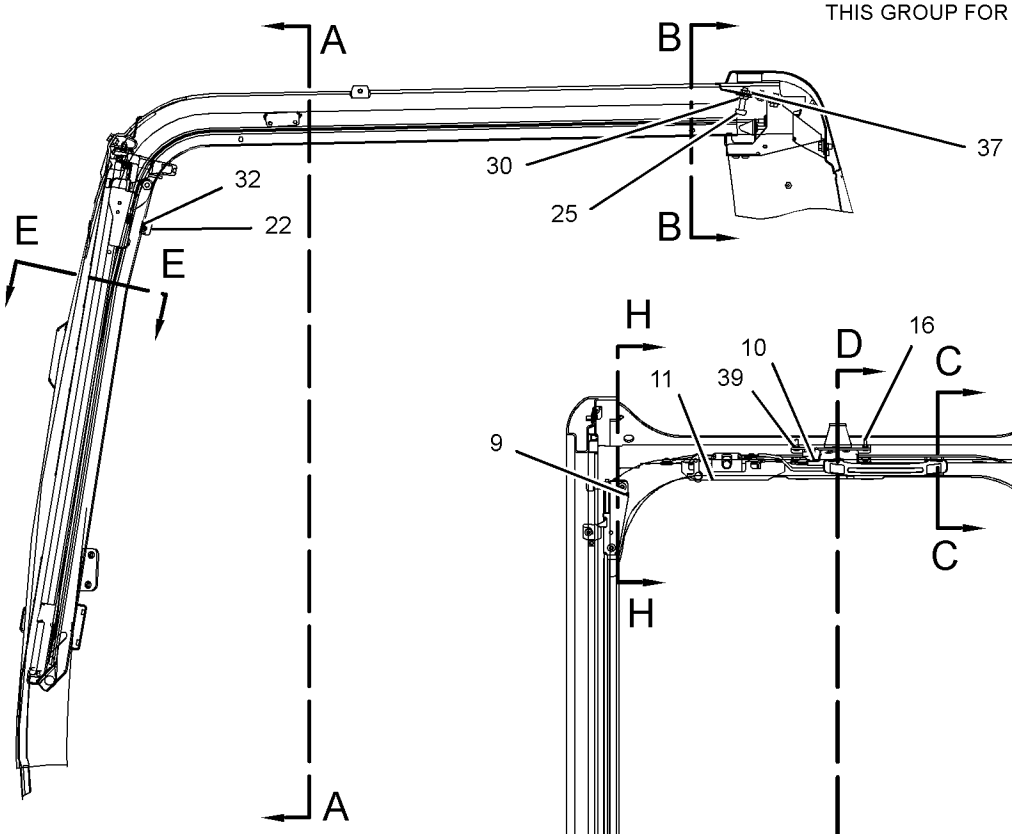

LEFT SIDE VIEW

SECTION A-A

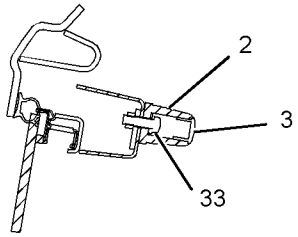

SECTION C-C

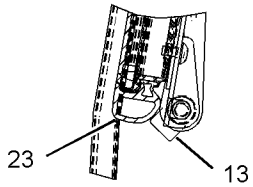

SECTION D-D

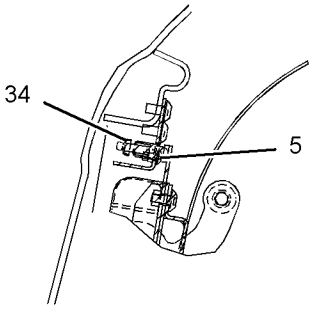

SECTION F-F

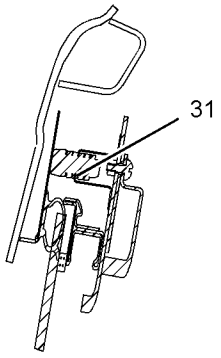

SECTION H-H

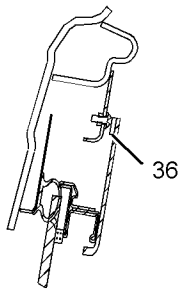

SECTION J-J

GRAPHIC #1 g01231378

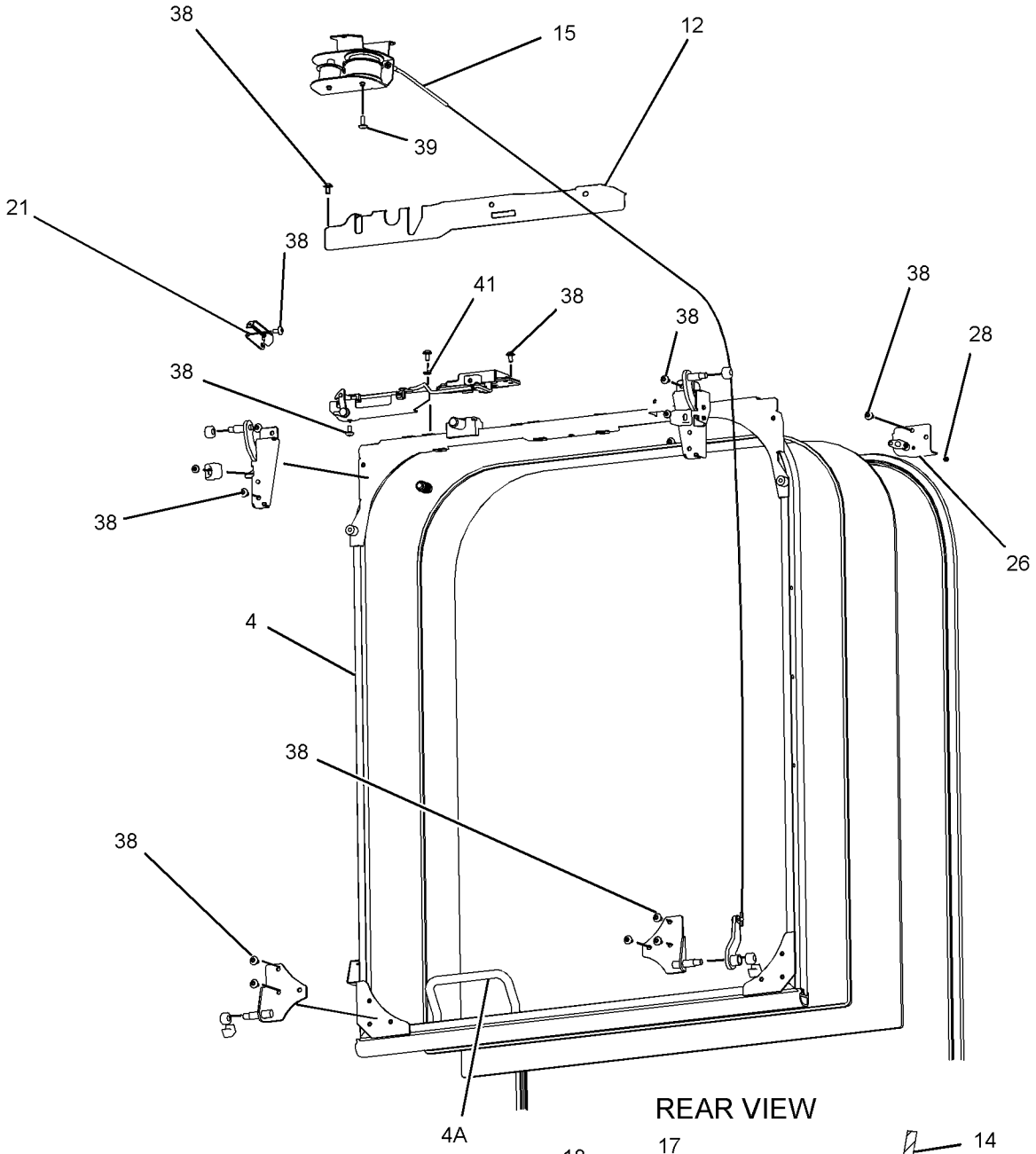

GRAPHIC #2 **<END>** g02157234

151-6792 WINDOW GP-DOOR

S/N: DNP1-UP
PART OF 307-1818 DOOR GP-CAB
AN ATTACHMENT

SMCS-7308, 7310

i04922228

NOTE	REF NO	GRAPHIC REF	PART NUMBER	QTY	PART NAME 1 2 3 4 5 6 (PRODUCT LEVEL)	SEE PAGE
Y	1	1	**085-6444**	2	LATCH GP-WINDOW	432
	2	1	**151-6793**	1	FRAME AS	
		1	**4I-4298**	1	STOPPER	
		1	**4I-4300**	1	CATCH	
		1	**099-0139**	3	RIVET	
	3	1	**151-6841**	1	SEAL	
	4	1	**156-6474**	1	GLASS	
	5	1	**156-6475**	1	GLASS	
	6	1	**161-3695**	1	SEAL	
	7	1	**161-3705**	1	SEAL	
	8	1	**164-0516**	1	RUBBER	
	9	1	**164-0517**	1	RUBBER	
	10	1	**164-0518**	1	RUBBER	
	11	1	**171-7413**	1	SPACER	
	12	1	**171-7414**	1	SPACER	
	13	1	**176-1951**	1	SPACER	
	14	1	**176-1952**	1	SPACER	
	15	1	**176-1953**	1	STOP	
	16	1	**176-1954**	1	SEAL	
	17	1	**176-1955**	1	SEAL	
	18	1	**176-1956**	1	SEAL	
	19	1	**176-1957**	1	SEAL	

Y - SEPARATE ILLUSTRATION

151-6792 **WINDOW GP-DOOR (*contd.*)** **i04922228**

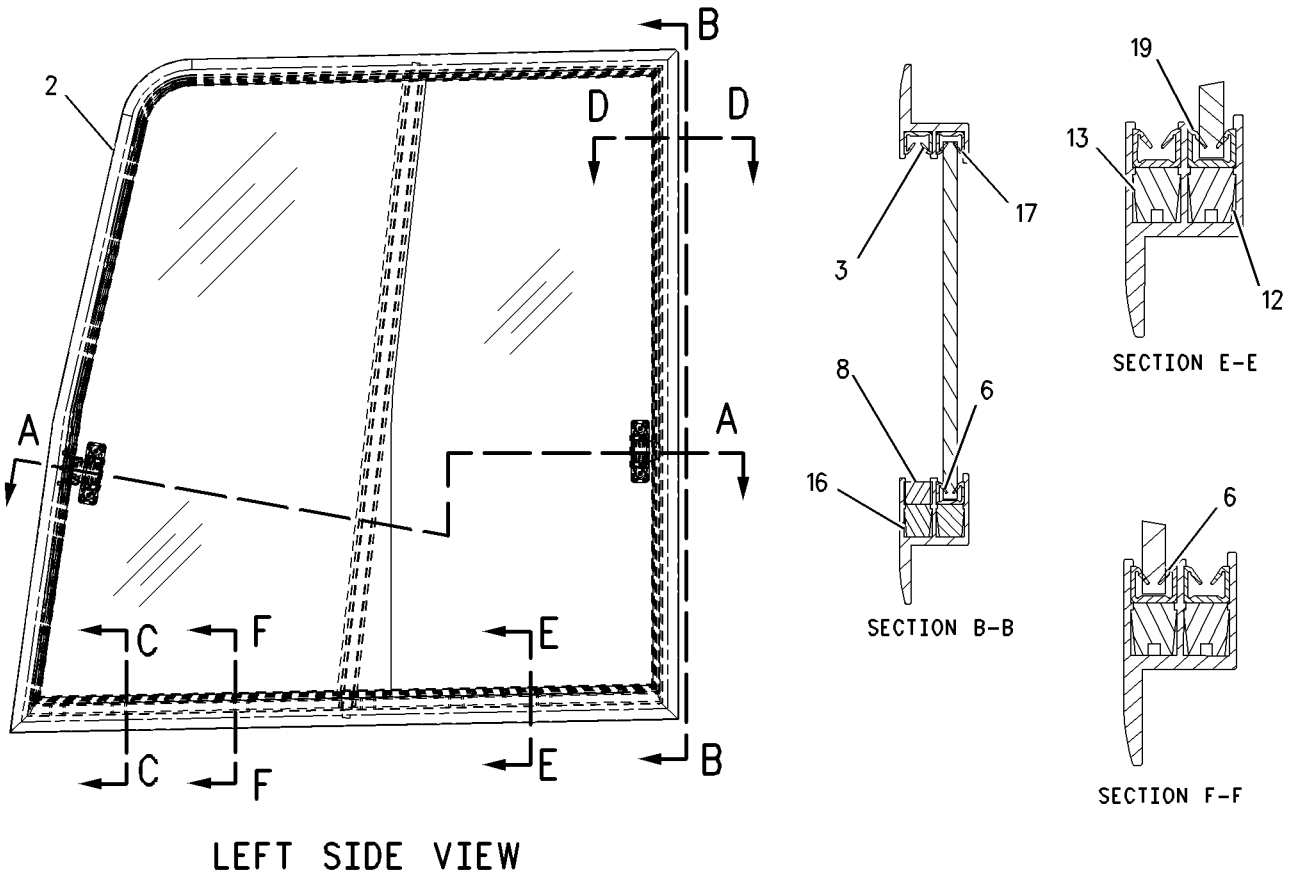

GRAPHIC #1 **<END>** g00722948

384-6533 WINDOW GP-DOOR

S/N: DNP1-UP
PART OF 388-9105 DOOR GP-CAB
AN ATTACHMENT

SMCS-7308, 7310

i05269658

NOTE	PART NUMBER	QTY	PART NAME 1 2 3 4 5 6 (PRODUCT LEVEL)	SEE PAGE
			NO BREAKDOWN OF SERVICABLE PARTS AVAILABLE AT TIME OF PUBLICATION	
			<END>	

171-7503 WINDOW GP-FRONT—UPPER

S/N: DNP1-UP
FOR SERVICE REPAIR OF 139-7101 WINDOW GP-CAB
PART OF 388-0065 CAB GP
AN ATTACHMENT

SMCS-7340 **i04922076**

NOTE	REF NO	GRAPHIC REF	PART NUMBER	QTY	PART NAME 1 2 3 4 5 6 (PRODUCT LEVEL)	SEE PAGE
	1	1	**161-3698**	1	SEAL	
M	2	1	**101-8900**	2	SCREW AS (M6X1X20-MM)	
	3	1	**151-6703**	1	HANDLE-PULL	
	4	1	**151-6704**	2	CAP	
	5	1	**151-6778**	1	FRAME AS	
	5A	1	**156-6470**	1	HANDLE	
	6	1	**151-6813**	1	BRACKET AS	
	7	1	**151-6815**	1	BRACKET AS	
	8	1	**273-5345**	1	LINK AS	
	9	1	**273-5346**	1	LINK AS	
	10	1	**151-6831**	1	LOCK AS	
	11	1	**151-6832**	1	LEVER AS	
	12	1	**156-6472**	1	GLASS	
	13	1	**170-9722**	1	CUSHION	
	14	1	**151-9576**	4	ROLLER	
M	15	1	**9X-2042**	15	SCREW-TRUSS HEAD (M6X1X12-MM)	

M - METRIC PART

171-7503 **WINDOW GP-FRONT (*contd.*)** **i04922076**

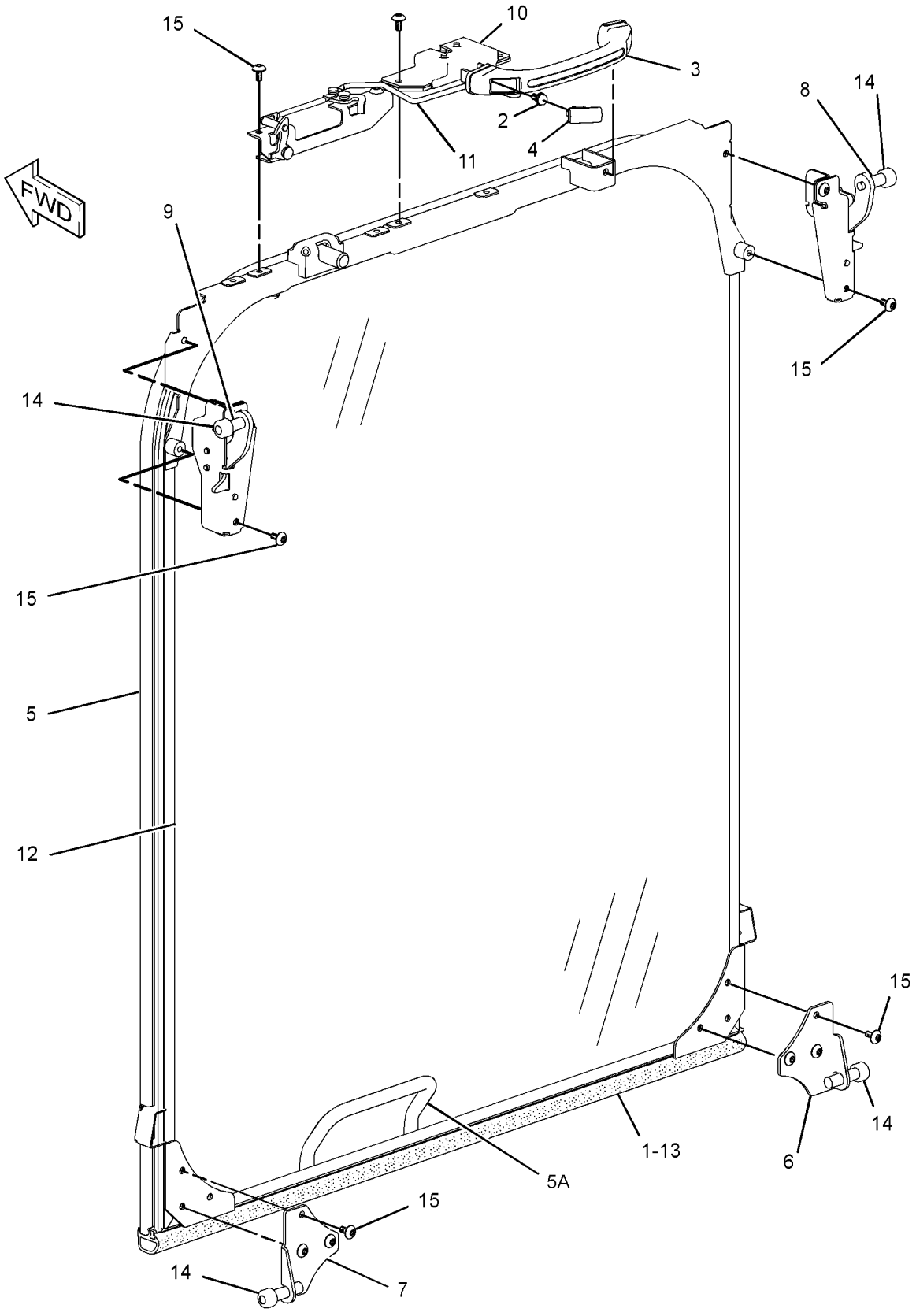

GRAPHIC #1 **<END>** g01935199

234-6594 WIPER GP-WINDOW–FRONT, UPPER

S/N: DNP1-UP
PART OF 388-0065 CAB GP
AN ATTACHMENT

SMCS-7305 **i04922205**

NOTE	REF NO	GRAPHIC REF	PART NUMBER	QTY	PART NAME 1 2 3 4 5 6 (PRODUCT LEVEL)	SEE PAGE
	1	1	**161-3677**	1	HOLDER	
	2	1	**245-7931**	1	MOTOR AS-WINDOW WIPER	
M		1	**6V-8231**	1	NUT (M10X1.25-THD)	
M		1	**7Y-3470**	1	NUT (M20X1-THD)	
		1	**7Y-3472**	1	CAP	
		1	**124-3953**	1	WASHER (20.5X30X2-MM THK)	
	3	1	**235-8932**	1	NOZZLE AS	
	4	1	**155-7042**	1	RELAY AS (WIPER)	
	5	1	**161-3668**	1	ARM AS-WIPER	
		1	**161-3669**	1	GUIDE	
		1	**161-3670**	1	BLADE AS-WIPER (600-MM)	
		1	**185-8290**	1	SCREW AS (M3.5X0.6X9-MM)	
		1	**161-3671**	1	ARM AS-WIPER	
	6	1	**163-6795**	1	STRAP-CABLE	
M	7	1	**3E-9872**	2	SCREW AS (M4X0.7X12-MM)	
	8	1	**4I-3090**	1	SEAL	
	9	1	**7Y-7364**	1	GROMMET	
M	10	1	**5C-2890**	4	NUT (M6X1-THD)	
M	11	1	**9X-2042**	2	SCREW-TRUSS HEAD (M6X1X12-MM)	
M	12	1	**9X-2044**	3	SCREW-TRUSS HEAD (M6X1X16-MM)	

M - METRIC PART

234-6594 **WIPER GP-WINDOW (*contd.*)** **i04922205**

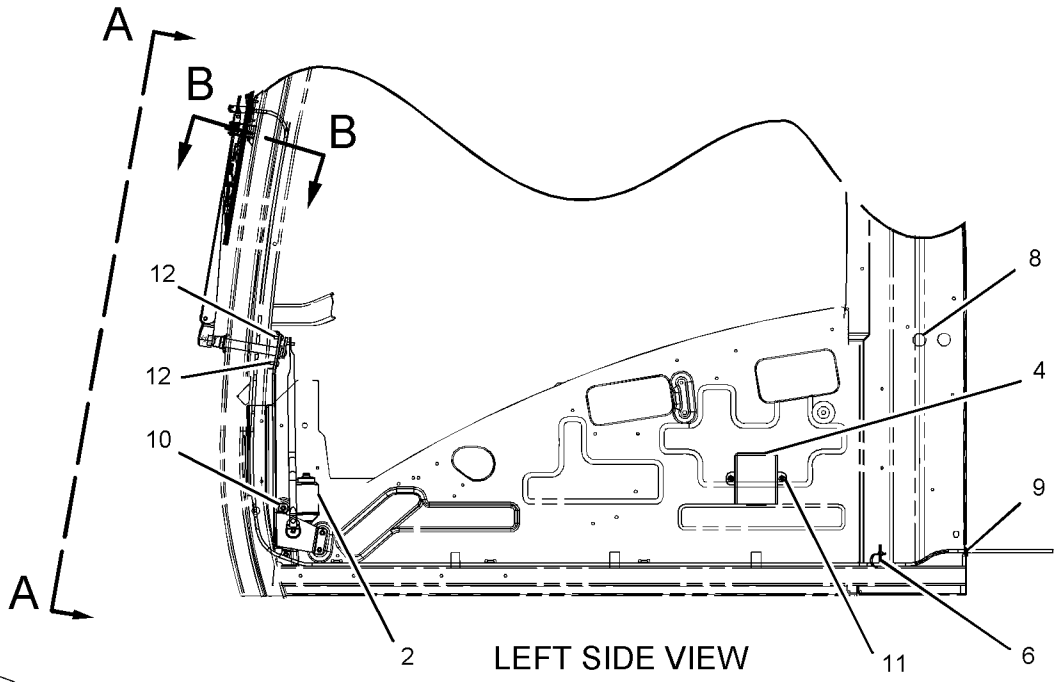

LEFT SIDE VIEW

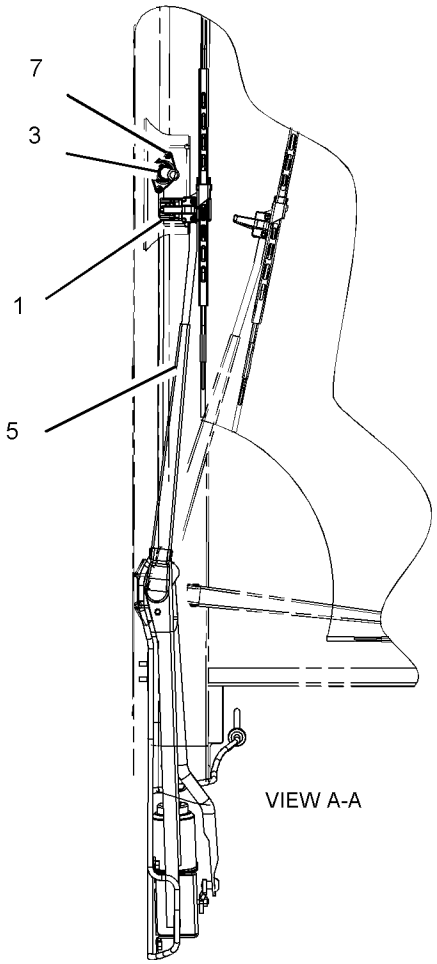

VIEW A-A

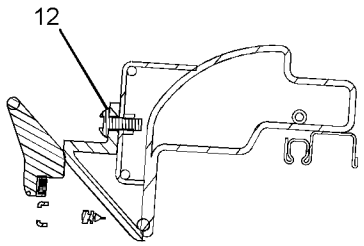

SECTION B-B

GRAPHIC #1 **<END>** g01098021

SERVICE EQUIPMENT AND SUPPLIES

346-1967 PLATE & FILM GP

S/N: D7A1-UP

PART OF 417-3389 ENGINE AR-PRIMARY

SMCS-7405, 7557 **i05278635**

NOTE	REF NO	GRAPHIC REF	PART NUMBER	QTY	PART NAME 1 2 3 4 5 6 (PRODUCT LEVEL)	SEE PAGE
	1	1	**298-5630**	1	PLATE-IDENTIFICATION (CAT)	
	2	1	**326-9052**	1	FILM-WARNING (DO NOT SPRAY, READ OMM)	

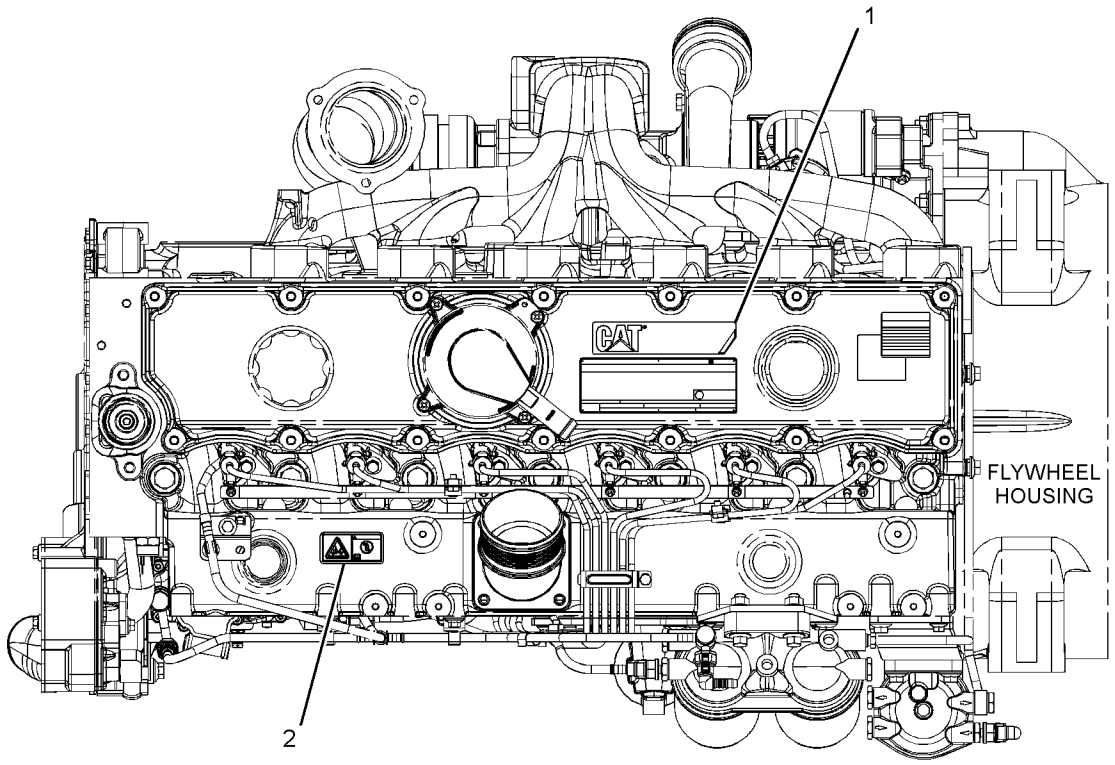

TOP VIEW OF ENGINE

GRAPHIC #1 **<END>** g03318790

421-6945 PLATE & FILM GP

S/N: FKK1-UP; DNP1-UP

PART OF 421-6926, 433-6906 CHASSIS AR

SMCS-7405, 7557 **i05259925**

NOTE	REF NO	GRAPHIC REF	PART NUMBER	QTY	PART NAME 1 2 3 4 5 6 (PRODUCT LEVEL)	SEE PAGE
	1	1	**246-2641**	1	PADLOCK GP	
		1	**5P-8500**	1	KEY	
	2	1	**085-9310**	4	SPACER (16.6X32X26-MM THK)	
Y	3	1	**421-6924**	1	TANK GP-FUEL	65
M	4	1	**8T-4140**	4	BOLT (M16X2X60-MM)	

M - METRIC PART
Y - SEPARATE ILLUSTRATION

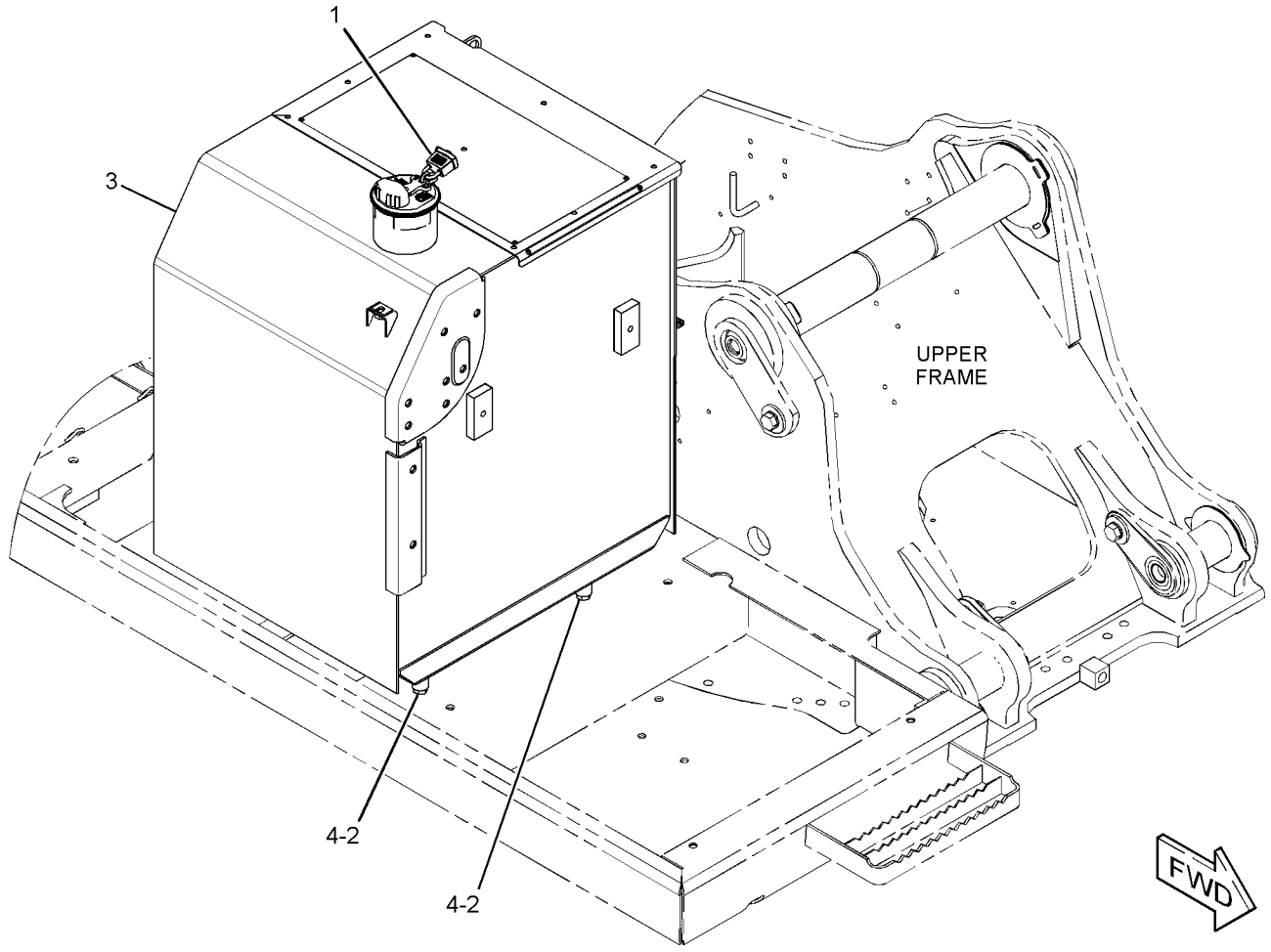

GRAPHIC #1 **<END>** g03306518

PART NUMBER INDEX

Part	Page
0	
0S-1603	17
0T-0489	452
1	
1B-4203	336
1H-4393	93
	313
1M-6119	69
1M-6120	69
1P-3702	253
	257
	259
	331
	342
1P-3703	237
	243
	249
	251
	252
	253
	254
	255
	257
	259
	261
	284
	287
1P-3704	251
	252
	283
1R-1804	58
1R-5998	383
1S-7252	69
1U-1100	268
	336
1U-3352	372
1U-8846	134
	155
	213
	216
	284
	287
1V-5872	452
2	
2B-0858	313
2C-9259	366
2D-6412	453
2D-6642	298
	336
2G-8767	69
2H-3922	97
2L-8050	115
	131
2L-8052	131
2L-8058	115
	131
2L-8060	131
2L-8065	103
	109
	429
2L-8066	103
	109
2L-8067	103
	109
2L-8069	115
	131
2L-8074	131
2L-8075	82
	88
	103
	109
	114
	115
	429
2L-8076	103
	109
	115
2L-8077	120
2M-9780	281
	284
	287
	298
	316
	322
	349
2S-2596	320
2S-4078	259
	261
2S-5926	193
2U-2552	380
2Y-5503	216
3	
3B-4501	78
	79
3B-4618	160
3B-8489	154
	155
	207
	211
	359
	361
	363
3D-2824	255
	259
	278
	281
	345
	346
	347
3D-2891	226
	229
3D-4245	336
3D-9143	144
3E-2338	134
3E-3217	189
3E-3371	76
3E-4297	222
3E-5169	131
3E-6910	294
3E-8020	383
3E-8320	86
3E-9375	125
3E-9872	478
3G-0669	336
3G-0670	336
3G-0671	336
3G-0672	336
3H-5368	455
3J-1907	59
	65
	202
	226
	229
	255
	264
	268
	271
	273
	274
	275
	278
	284
	287
	291
	296
	322
	327
	329
	350
	355
3J-7354	59
	60
	268
	280
	313
	334
3K-0360	14
	44
	59
	65
	200
	213
	255
	261
	264
	273
	274
	278
	281
	284
	287
	291
	292
	298
	306
	313
	320
	327
	329
3P-1932	59
3P-9847	47
3S-2093	47
	60
	86
	88
	98
	102
	108
	114
	120
	122
	125
	131
	373
	424
	429
	430
	444
	448
	465
3T-5760	69
3T-7528	222
3W-6399	465
3Y-9267	334
4	
4B-4158	190
	191
4B-4278	144
	383
4B-9783	350
4B-9784	349
4B-9880	351
4D-1836	132
4E-5724	86
4F-2294	99
4H-6112	215
4I-0118	159
4I-0232	159
4I-0379	59
4I-0420	466
	470
4I-0818	273
4I-0836	273
4I-1022	306
4I-1037	273
4I-1205	383
4I-1206	383
4I-1536	►195
	198
4I-1539	195
4I-1631	271
4I-1674	249
	255
4I-1676	249
4I-1739	273
4I-1780	273
4I-2187	144
4I-3038	98
4I-3063	383
4I-3090	383
	478
4I-3144	383
4I-3266	451
4I-3308	357
4I-3309	357
4I-3510	345
4I-3569	322
4I-3573	284
4I-3981	271
4I-3994	271
4I-4270	383
4I-4286	419
	421
4I-4298	473
4I-4300	473
4I-4392	383
4I-4543	359
4I-4544	359
4I-4809	357
	363
4I-4811	363
4I-4812	153
4I-5409	1
	81
4I-5862	195
4I-5906	273
4I-5933	273
4I-6054	271
4I-6287	268
4I-6365	332
4I-6397	316
	322
4I-7714	345
4I-7745	255
4I-7889	114
	120
4I-8019	159

► **PRIMARY REFERENCE**

PART NUMBER INDEX

Part	Page
4I-8267	196
4I-8965	327
	329
4I-9521	264
	271
	273
4I-9522	264
	271
	273
4I-9523	264
	271
	273
4I-9524	264
	271
	273
4I-9525	264
	271
	273
4I-9526	264
	271
4I-9527	264
	271
	273
	281
4I-9528	264
	271
	273
4J-0519	331
4J-0520	236
	242
	316
4J-0524	261
4J-0527	261
	313
4J-5267	257
	313
4J-5268	257
4J-5309	322
4J-7385	340
	341
4J-7386	340
	341
4J-7533	222
	291
	322
	327
	329
4J-8998	342
4K-1388	340
	341
4K-8864	69
	275
4K-9429	455
4N-9170	155
4P-7428	115
4P-7581	104
	110
	115
	265
	373
	424
4T-3148	322
4T-5074	322
4T-9905	349

5

Part	Page
5B-9079	30
5B-9318	336
5C-2889	78
	79
5C-2890	56
	104
	110
	478
5C-7261	44
	69
	114
	160
	268
	337
5C-7793	383
5C-7883	116
5C-8138	465
5C-8312	470
5C-9553	86
	144
	160
	313
	373
5D-1026	216
5D-4822	427
5D-8159	44
5H-5672	310
5H-8624	280
5I-3121	278
5I-3878	116
5I-4076	273
5I-4111	340
	341
5I-4174	253
5I-4396	273
5I-8270	69
5I-8416	►196
	198
5I-8417	296
5I-8426	296
5I-8511	327
	329
5I-8623	296
5I-8625	296
5I-8670	218
5I-8708	273
5I-8853	271
5K-9090	224
	234
	237
	243
	245
	247
	255
	257
	259
	261
5K-9243	155
	359
5L-3233	50
5L-4758	202
5L-5840	336
5M-6213	42
5P-0372	160
5P-0743	35
5P-0767	216
	434
5P-1046	59
	65
5P-1075	144
5P-1076	157
	255
5P-1420	47
5P-1442	60
5P-2321	103
	109
5P-2568	355
5P-3108	340
	341
5P-4115	86
	160
5P-4116	42
	44
	47
	116
	144
5P-4906	65
5P-4924	65
5P-4961	47
5P-5477	336
5P-5624	103
5P-5649	47
5P-5995	122
5P-5998	98
5P-7462	275
5P-7463	275
5P-7464	275
	281
5P-7465	275
	281
5P-7468	259
	261
5P-7469	259
	261
5P-7958	437
5P-8244	459
5P-8309	165
5P-8444	261
5P-8500	64
	101
	437
	481
5P-9205	144
5P-9297	82
5P-9909	47
5V-1497	459
5V-9155	34
	60

6

Part	Page
6D-0692	134
6D-1641	434
6D-3479	434
6D-9157	280
	313
6E-2163	320
6E-2271	319
	320
6E-2274	316
	322
6E-2745	303
6E-2746	303
6E-3653	322
6E-4793	303
6E-4816	►303
	316
6E-5169	322
6E-5643	322
6E-5731	316
	322
6F-4855	225
6F-6672	225
6F-7045	97
6G-2256	69
6G-2263	69
	116
6H-3615	255
6I-0217	19
	25
	31
	39
	43
	55
6I-0233	96
6I-0254	43
	203
6I-0260	25
	37
	63
6I-0291	63
6I-0363	25
6I-0455	39
6I-0563	55
6I-0572	25
6I-0593	15
6I-0645	19
	52
6I-0650	19
6I-0654	15
	22
	25
6I-0839	43
6I-0917	18
6I-1090	36
6I-4200	25
6I-4681	25
6I-4793	37
	39
6I-5298	409
	411
6I-5470	384
6I-6033	159
6I-6354	368
	369
	370
6I-6355	368
	369
	370
6I-6356	368
	369
	370
6I-6583	134
6I-6585	134
6I-6795	345
6I-9453	194
6J-2680	281
	313
6K-0806	413
	414
6K-8178	69
6L-3616	359
6S-8620	60
6T-5598	114
6V-0400	249
	257
	261
	280
	284
	287
6V-0683	275
6V-0852	278
	313
6V-1249	275
6V-1322	313
6V-2369	86
	102
6V-2722	69
6V-3265	56
	434
6V-3922	316
	322
6V-3965	278
	313
6V-5065	44

► PRIMARY REFERENCE

PART NUMBER INDEX

Part	Page
6V-5200	293
6V-5210	78
	79
	104
	110
6V-5393	322
6V-5556	322
	343
6V-5597	316
	322
6V-5645	86
6V-5683	380
6V-5817	108
6V-7238	14
	213
6V-7357	408
	434
6V-7636	383
6V-7658	183
	222
6V-7661	188
6V-7743	454
	462
6V-8200	226
	229
6V-8202	452
	454
6V-8212	417
6V-8218	345
6V-8231	478
6V-8235	459
6V-8362	101
6V-8397	255
	264
	265
	268
	271
	273
	274
	275
	278
	281
	284
	287
	329
	350
6V-8398	255
	261
	264
	273
	274
	278
	281
	284
	287
	352
	353
6V-8400	245
	247
	334
6V-8624	281
6V-8625	255
	274
	284
	287
6V-8635	32
	224
	247
6V-8636	255
	264
	268
	274
	278
6V-8637	281
6V-8639	274
6V-8714	32
6V-8724	264
	268
	271
	274
	278
	284
	287
6V-8774	275
6V-8781	271
	274
6V-8978	345
6V-9001	255
	264
	268
	274
6V-9002	261
	264
	274
	278
	281
6V-9004	278
6V-9007	278
	281
6V-9008	32
	261
6V-9027	44
6V-9028	60
6V-9200	268
6V-9491	88
6V-9632	86
	168
6V-9672	104
	110
6V-9746	239
	240
	249
	255
	278
	281
6V-9836	268
	274
6V-9837	255
6V-9843	268
6V-9850	255
	268
	274
6V-9854	259
6V-9872	268
6V-9875	259
6V-9876	281
6W-6005	69
6W-7293	434
6W-8281	459
6Y-8186	184
	185

7

Part	Page
7C-1281	203
7C-4616	19
7D-7233	47
7F-3708	160
7F-8268	189
7G-1060	131
7G-5984	261
7G-5985	261
7G-5986	261
7H-3171	183
	188
7I-0717	147
7I-0966	343
7I-1248	316
	322
7I-2272	226
	291
	292
	322
7I-2673	47
	50
	82
	114
	444
7I-7131	311
7I-8084	351
7J-8337	452
7J-9933	343
7K-1181	47
	102
	108
	114
	120
	122
	125
	131
	264
	271
	273
	278
	281
	284
	287
	400
	406
	430
	434
	444
	448
7M-7410	292
7M-8485	134
	224
	247
	255
	261
	306
	316
	323
7N-0719	86
	97
7T-1099	42
	159
	168
7T-6799	101
7T-8890	465
7W-4669	3
7X-0578	383
	470
7X-0579	454
7X-0599	452
7X-0851	371
7X-2533	396
7X-2536	192
7X-2537	47
	56
7X-2544	261
7X-2549	245
7X-2552	82
7X-2553	280
	451
7X-2554	47
7X-2557	306
7X-2558	293
7X-2562	142
7X-2563	216
7X-2565	186
	187
7X-2568	134
7X-2576	216
7X-2583	146
7X-2619	56
7X-2621	116
	132
	323
7X-6315	75
7X-7729	44
	47
	69
	261
	304
	373
	417
7X-7877	455
7Y-0059	1
	437
7Y-0063	146
7Y-0223	134
7Y-0225	134
7Y-0252	213
7Y-0463	204
7Y-0466	204
7Y-0467	204
7Y-0468	204
	205
7Y-0682	193
7Y-1426	134
7Y-1430	134
7Y-1431	134
7Y-1432	134
7Y-1433	134
7Y-1434	134
	213
7Y-1558	134
7Y-1647	155
7Y-1648	155
7Y-1650	155
7Y-1746	190
	191
7Y-1781	192
7Y-1863	155
7Y-1976	44
	47
7Y-2219	►365
	366
7Y-2853	159
7Y-2854	160
7Y-3470	478
7Y-3472	478
7Y-3474	465
7Y-3721	239
7Y-3730	257
7Y-3731	243
	259
7Y-3919	429
7Y-3920	429
7Y-3950	102
	108
7Y-3951	88
	102
	108
	424
7Y-3952	88
	102
	108
	424
7Y-3954	102
	108
7Y-3955	102
	108
7Y-3958	102

► **PRIMARY REFERENCE**

PART NUMBER INDEX

Part	Page
	108
7Y-3962	84
	88
	102
	108
	114
7Y-3963	84
	88
	102
	108
	114
	122
	125
7Y-3964	84
	88
	102
	108
	114
7Y-3965	84
	88
	102
	108
	114
	122
	125
7Y-4193	271
7Y-4202	298
7Y-4212	298
7Y-4213	298
7Y-4215	298
	306
7Y-4216	298
7Y-4217	298
7Y-4222	299
7Y-4224	298
7Y-4267	296
7Y-4268	296
7Y-4390	271
	287
7Y-4817	311
7Y-4868	249
7Y-5074	32
	238
7Y-5219	323
7Y-5221	296
7Y-5247	261
7Y-5272	202
7Y-5456	116
7Y-5458	100
7Y-5464	100
7Y-5505	102
	108
7Y-7364	478
7Y-8099	316
7Y-8165	116
7Y-8167	116
7Y-8436	348
7Y-8437	348
7Y-8487	273

8

8C-3056	114
8C-3206	236
	242
8C-3445	32
8C-3446	32
	313
8C-3451	313
8C-5608	60
	72
8C-5723	32
8C-5917	69
8C-5918	69
8C-6354	102
	108
8C-6863	59
8C-6965	334
8C-8451	72
8C-8992	157
8E-4359	183
8E-5037	189
8E-5599	189
8E-5600	186
	187
	188
8E-5601	188
8E-5602	188
8E-5604	188
8E-5605	188
8E-5606	188
8E-5607	188
8E-5608	188
8E-6792	188
8E-6793	188
8E-8585	184
	185
8E-8586	184
	185
8E-9805	142
8H-3481	464
8H-5303	97
8H-5306	97
8J-4645	306
8J-4955	367
	372
8J-6875	268
	349
8K-4691	245
	247
8L-8413	69
8M-2770	116
	434
8M-2772	359
8M-2773	434
8N-0869	69
8P-9770	176
	368
	369
	370
8S-0934	453
8S-4723	453
8T-0075	268
8T-0114	459
8T-0122	86
8T-0267	313
8T-0269	439
8T-0328	65
	104
	110
	163
	219
	424
8T-0334	454
	462
8T-0337	132
	415
8T-0338	457
8T-0360	155
8T-0362	155
8T-0380	371
8T-0389	459
8T-1158	334
8T-1159	188
8T-1687	281
8T-1779	273
	284
	287
8T-1889	60
8T-1890	60
8T-1905	278
8T-2920	281
8T-3490	42
	168
	169
8T-3597	159
	167
	168
	173
	174
8T-3612	56
	163
	174
8T-3991	455
8T-4121	34
	41
	44
	47
	49
	53
	56
	60
	116
	120
	127
	129
	132
	155
	160
	247
	251
	252
	253
	254
	255
	257
	259
	261
	265
	268
	275
	284
	287
	311
	313
	316
	323
	359
	373
	396
	400
	406
	415
	428
	429
	434
	444
	446
	451
	458
8T-4123	23
	134
	153
	178
	186
	187
	216
	357
	363
8T-4127	104
	110
8T-4131	23
	226
	229
8T-4132	361
8T-4133	53
	69
	82
	144
	226
	229
	310
	334
	359
	383
8T-4136	44
	47
	53
	56
	60
	69
	116
	120
	127
	129
	155
	226
	229
	259
	261
	265
	268
	275
	284
	287
	306
	311
	313
	327
	329
	373
	415
	434
8T-4137	34
	44
	47
	49
	56
	60
	69
	85
	116
	132
	155
	160
	190
	191
	247
	265
	275
	373
	383
	396
	434
	444
8T-4138	60
	160
	434
8T-4139	47
	245
	247

PART NUMBER INDEX

Part	Page
	249
	255
	261
	275
	281
	306
8T-4140	64
	181
	182
	306
	315
	331
	481
8T-4167	216
8T-4171	86
	127
	129
	397
	430
	448
8T-4172	275
8T-4175	306
8T-4176	306
8T-4178	69
	255
8T-4179	192
	386
8T-4182	69
	116
	253
	255
8T-4183	213
	259
	313
8T-4184	245
	249
	284
	287
8T-4185	41
	44
	116
8T-4186	261
8T-4189	41
	44
	116
	160
	163
	434
8T-4190	386
	444
8T-4191	47
	116
	120
	359
	415
	429
	434
	444
	451
	458
8T-4192	32
	158
	255
	275
	306
	438
8T-4193	331
	365
8T-4194	219
	245
	257
	261
	268
	280
8T-4195	44
	60
	116
	259
	304
	313
	316
	323
	400
	406
	428
	446
8T-4196	60
	116
	226
	229
	247
	251
	252
	254
	283
	307
8T-4198	253
	265
8T-4199	116
	155
8T-4200	42
	47
	56
	84
	434
8T-4223	23
	32
	47
	78
	79
	158
	213
	219
	226
	229
	245
	247
	249
	251
	252
	255
	257
	259
	261
	268
	275
	280
	281
	283
	284
	287
	313
	357
	386
	452
	453
8T-4224	32
	34
	41
	44
	47
	56
	84
	116
	160
	163
	269
	313
	419
	421
	434
8T-4226	69
8T-4244	78
	79
8T-4648	245
	251
	252
	255
	283
8T-4779	383
8T-4780	153
	357
	363
8T-4896	251
	252
	254
	283
8T-4908	313
	434
8T-4910	23
	254
	255
	283
	386
8T-4944	298
8T-4956	259
	261
	281
	357
8T-4970	84
	86
	444
	465
8T-4971	434
8T-4985	42
8T-4986	51
8T-5005	116
	120
8T-5460	178
8T-5878	186
	187
8T-6381	23
8T-6412	470
8T-6466	69
	116
	251
	252
	254
8T-6684	259
8T-6685	323
8T-6693	104
	110
	163
	219
8T-6703	42
	47
	263
8T-6759	292
	311
	323
	334
	354
8T-6868	386
8T-6869	116
8T-6870	34
	269
8T-7087	259
	261
8T-7547	32
8T-7811	355
8T-7927	247
8T-7971	313
	438
8T-8729	65
	67
	98
	114
	120
	122
	125
	131
	424
	430
	448
8T-8730	102
	108
	114
	122
	125
	131
	430
	448
8T-8737	56
	76
	77
	86
	88
	100
	103
	109
	114
	120
	122
	125
	131
	424
	430
	441
	442
	448
8T-8799	114
8T-8827	114
8T-8874	163
8T-9403	253
	255
	257
8T-9535	30
8T-9756	69
8T-9757	69
8U-7803	455
8Y-6352	381
8Y-6967	386
9	
9B-7233	101
9F-2167	255
9F-5644	97
9G-0002	69
9G-0003	69
9G-0004	69
9G-0005	69
9G-4343	86
	102
	108
9G-8909	69
9J-0705	303
9M-5048	459
9R-5271	173
9S-4180	222
9S-4182	32
	59
	280
9S-4185	59

► **PRIMARY REFERENCE**

PART NUMBER INDEX

Part	Page
	281
	298
	307
9S-4188	32
9S-4191	226
	264
	274
	329
9S-6130	261
9S-8004	291
	327
	355
9S-8005	291
	292
	327
	329
9T-4506	303
9T-6001	444
9V-6754	459
9W-0335	102
9W-0844	76
	103
	109
	114
	122
	125
	131
	429
	430
	448
9W-0852	82
	114
	120
	122
	125
	131
	394
9W-1951	103
	109
9W-2146	189
9W-2201	183
9W-3137	184
	185
9W-3138	184
	185
9W-3361	194
9W-3619	194
9W-9455	183
9X-0196	114
9X-1386	92
9X-2026	444
9X-2041	383
	388
	398
	402
	404
	418
9X-2042	104
	110
	381
	383
	398
	404
	419
	421
	427
	470
	476
	478
9X-2044	104
	110
	383
	464
	470
	478
9X-2045	384
	400
	406
	470
9X-2046	400
	406
	440
	464
9X-2201	51
	280
9X-2480	60
	73
9X-3401	56
	76
	77
	90
	92
	100
	103
	109
	114
	115
	120
	131
	264
	442
9X-3402	77
	88
	103
	109
	115
	120
	122
	125
	131
9X-3463	79
9X-3959	3
9X-3982	59
9X-6153	380
9X-6165	60
	72
9X-8256	56
	60
	73
	84
	86
	103
	104
	109
	110
	116
	127
	129
	144
	160
	313
	373
	397
	408
	430
	434
	439
	448
	464
	465
	470
9X-8257	82
	280
	293
	302
	331
	365
	383
	386
	444
	451
9X-8600	65
9X-9896	59
	72

0

Part	Page
032-9020	203
033-5879	303
033-6036	303
033-8248	359
039-9452	459
067-3045	34
067-6006	12
067-6043	10
067-6095	6
067-6135	6
	9
067-6179	19
067-6823	3
	10
085-6444	►432
	473
085-6445	432
085-6446	432
085-6447	432
085-6448	432
085-6449	432
085-9310	64
	315
	481
086-0321	365
086-0322	365
087-3908	159
087-3909	159
087-4402	264
087-4411	273
087-4454	196
	►197
087-4456	►198
	200
087-4531	273
087-4534	273
087-4575	197
087-4576	197
087-4577	197
087-4587	114
087-4683	98
087-4710	334
087-4742	298
087-4743	298
087-4786	298
087-5166	327
	329
087-5303	271
087-5708	334
087-5760	273
087-5762	273
087-5768	278
087-5772	273
087-5774	273
087-5805	361
087-5841	159
087-5908	175
	►178
091-9035	69
	114
093-0083	153
093-0115	153
093-0116	357
093-0349	153
	357
	363
093-0363	153
	357
	363
093-1436	193
093-1512	193
093-1729	213
093-2065	59
093-7521	221
094-0580	134
094-0584	213
094-0611	134
	213
094-0876	332
094-1399	298
094-1509	213
094-1516	213
094-1528	134
094-1875	226
	229
	298
	306
094-1881	226
	229
094-1882	226
	229
	298
	306
094-1900	296
095-0673	334
095-0707	294
095-0723	104
	110
095-0735	409
	411
095-0736	65
095-0742	103
	109
095-0755	383
095-0826	429
095-0827	397
	470
095-0843	144
095-0863	184
	185
095-0882	296
095-0886	213
095-0891	134
	213
095-0929	306
095-0946	306
095-1022	213
095-1260	334
095-1270	134
095-1388	35
095-1390	47
095-1547	261
095-1572	298
095-1575	298
	322
	334
095-1576	354
095-1578	346
	347
	351
095-1579	345
095-1580	337
095-1582	337
095-1584	218
095-1585	298
095-1586	298
	332

PART NUMBER INDEX

Part	Page
	344
	348
	352
	353
095-1587	345
095-1590	218
	316
	322
	337
	345
	348
095-1594	327
	329
095-1595	296
095-1596	218
095-1601	348
095-1603	322
095-1608	313
095-1625	311
095-1681	222
095-1685	294
095-1698	343
	354
095-1700	298
095-1704	193
095-1716	311
095-1730	313
095-1750	352
	353
095-1751	352
	353
095-1778	322
095-1785	344
	348
095-1786	345
095-1787	316
	322
	348
095-1788	226
	229
095-1789	327
	329
095-2927	193
095-6639	310
095-7378	298
095-7380	298
095-7382	298
095-7383	298
095-7384	298
095-7386	298
095-7387	298
095-7930	93
	313
	429
096-1519	298
096-1521	298
096-1522	298
096-1523	298
096-1545	355
096-1628	332
096-1773	134
096-1774	134
096-1775	134
096-1776	134
096-1777	134
096-1778	134
096-1779	134
096-1780	134
096-1781	134
096-2622	419
	421
096-2626	444
096-3780	144
096-3785	298
096-3786	298
096-3787	298
096-3788	298
096-3884	419
	421
096-3944	306
096-3978	298
096-3983	306
096-4003	298
096-4035	44
	47
096-4129	163
096-4255	183
096-4376	298
096-4377	298
096-4378	298
096-4755	216
096-4883	261
096-4902	155
096-5819	47
096-5915	298
096-5916	298
096-5919	298
096-5962	104
	110
096-6166	88
	104
	110
	132
	415
	424
099-0139	473
099-0823	383
	470
099-3506	427
099-3607	383
099-3629	467
099-3645	437
099-3649	274
099-3669	226
	229
099-3670	226
	229
099-3671	226
	229
099-6109	226
	229
099-6110	226
	229
099-6111	226
	229
099-6112	226
	229
099-6113	226
	229
099-6115	226
	229
099-6117	226
	229
099-6118	226
	229
099-6119	226
	229
099-6120	226
	229
099-6121	226
	229
099-6122	226
	229
099-6123	226
	229
099-6124	226
	229
099-6125	226
	229
099-6126	226
	229
099-6127	226
	229
099-6128	226
	229
099-6137	332
	334
099-6141	334
099-6144	334
099-6145	334
099-6418	115
	150
	151
099-7127	102
	108

1

Part	Page
100-3320	114
100-3751	19
100-3866	302
100-4336	434
100-4458	62
100-4463	68
100-4830	63
100-4841	21
101-2846	104
	110
101-3895	19
101-7397	257
101-7398	255
101-7401	259
101-7402	261
101-7403	257
101-7404	255
	257
	259
101-8899	419
	421
	423
101-8900	419
	421
	470
	476
101-9848	163
102-6455	140
102-6457	140
102-7964	103
	109
	125
	131
102-7965	103
	109
	125
	131
	424
102-8802	65
	67
	88
	92
	114
	131
102-8803	76
	98
	102
	108
	114
102-8804	131
102-8806	125
103-2529	114
103-8177	322
103-8252	346
	347
103-8253	346
	347
103-8254	346
	347
103-8255	346
	347
104-8838	273
105-2169	383
	427
105-3477	257
	259
105-3483	257
105-3484	274
105-3487	144
	159
105-5761	12
106-0210	100
106-6248	303
107-2961	454
	459
	462
107-6370	340
	341
107-6371	340
	341
107-6479	351
107-6540	345
107-6541	345
107-6631	265
107-6954	298
107-6955	298
107-6969	298
108-7118	284
	287
108-7354	255
108-7550	255
109-2665	340
109-2667	▶340
	342
109-5152	316
	▶341
109-9313	5
	▶49
109-9329	23
109-9549	313
110-5496	273
110-5525	296
111-4799	98
111-4816	103
	109
111-4836	82
	114
	131
	373
	444
111-4837	82
	114
	120
111-4838	114
	131
111-4839	114
	131
111-6752	284
111-8222	62
111-9916	226
	▶352
111-9959	316
	323
111-9998	337
112-9717	50
113-2127	357

▶ **PRIMARY REFERENCE**

PART NUMBER INDEX

Part	Page
113-6479	237
	257
113-8129	43
113-8490	102
	108
113-8491	102
	108
113-8492	102
	108
113-8493	102
	108
114-0358	372
114-0359	372
114-0623	352
	353
114-1398	215
114-1399	215
114-1539	134
114-1581	213
114-6285	159
114-6289	163
115-1184	114
115-8634	284
	287
115-8645	271
116-0118	82
	114
	120
	131
116-0126	114
116-0128	114
116-0210	102
	108
116-0255	103
	109
	114
	131
116-1665	147
117-5540	176
117-6306	470
117-6349	415
117-6350	415
117-6356	415
117-8929	396
118-4044	327
	329
118-4057	298
	306
118-4086	332
118-4087	332
118-5982	363
118-9930	23
119-3662	103
	109
	114
	125
	131
119-5026	88
	373
119-5388	334
119-5389	334
119-5391	334
119-5398	345
120-9027	98
121-1022	103
	109
121-1023	86
121-1029	56
	159
121-1038	114
121-1039	114
	131
121-1168	88
	103
	109
	131
121-1173	88
	103
	109
	131
121-1459	348
121-1491	291
	292
	322
	▶353
121-1558	298
121-4405	424
121-7098	434
121-7136	390
	392
	434
121-7137	390
	392
	434
121-7138	434
122-3979	159
122-3980	159
122-4101	150
122-4120	159
122-5114	298
122-5318	296
122-9605	434
122-9608	415
122-9609	415
122-9610	415
122-9617	400
	406
122-9657	434
123-1373	69
123-2003	219
123-2008	298
123-2485	322
123-2552	350
123-2899	22
	43
124-0988	273
124-1047	255
124-1062	255
124-1212	281
124-1266	287
124-3536	26
124-3548	102
	108
124-3815	19
	25
124-3953	478
124-4009	409
	411
124-4010	409
	411
125-4766	131
125-4840	103
	109
125-4841	103
	109
	125
	131
125-7874	103
	109
	115
	120
	122
	131
125-7875	103
	109
	115
	122
	125
	131
125-7876	108
	115
126-1767	56
	76
	92
	100
	103
	109
	115
	120
	131
	264
	442
126-1768	103
	109
	115
	120
	122
	125
	131
126-1774	120
126-1865	334
126-1866	334
126-2055	296
126-5011	114
127-0580	383
128-2135	381
	386
	398
	402
	404
128-2136	381
128-8950	103
	109
129-7784	310
129-7853	306
129-7855	306
129-7857	306
129-7859	306
129-7863	306
129-7921	306
129-7927	306
129-7978	227
	229
129-7979	306
129-8034	219
130-0252	434
130-0270	434
131-5818	334
131-5915	332
131-8821	50
131-8822	50
131-8826	50
131-8932	50
132-1805	69
132-1829	▶67
	102
	108
132-5789	104
	110
	115
	120
	429
	434
133-1011	19
133-2425	153
133-5813	264
133-5828	255
133-6777	298
133-8016	383
134-0685	50
134-3284	82
134-3296	103
	109
	131
134-3297	103
	109
	115
	131
134-3355	69
134-4126	75
134-8948	365
134-9137	359
135-2370	424
135-8573	159
	171
135-8574	53
135-8575	159
135-8576	157
	179
135-8577	143
	159
135-8578	158
	160
135-8965	451
135-8966	451
136-0139	146
137-0856	240
137-2270	438
137-3623	222
137-3624	222
137-3625	222
137-3626	202
	222
137-3628	202
	222
137-3631	202
138-2053	6
139-7119	468
139-7126	383
139-7127	383
140-0674	339
140-0677	339
141-2759	86
	102
	108
	424
142-3835	1
	▶158
142-3836	1
	▶438
142-5546	415
142-7764	243
142-7765	234
142-7768	255
142-7769	255
143-4254	273
143-9397	444
144-0195	465
144-0367	42
	261
144-1636	441
145-3031	193
145-3035	192
145-3042	136
	▶142
145-4911	17
145-5106	198
	▶199
147-4131	334
147-4184	327
147-5860	298
148-4632	213
148-4633	213
148-4634	213
148-4635	213
148-4636	213

PART NUMBER INDEX

Part	Page
148-4637	213
148-4638	213
148-4640	213
148-4642	213
148-4643	213
148-4644	▶213
	215
148-4679	141
	▶215
148-4685	154
148-4689	155
148-4703	155
148-4704	155
148-4705	139
148-4708	139
148-4715	134
148-4732	213
148-4733	213
148-8323	259
148-8326	268
148-8327	281
148-8333	247
148-8335	247
148-8336	255
	264
	268
	274
	278
148-8338	268
148-8340	274
148-8347	278
	281
148-8352	259
148-8353	255
	264
	268
	274
148-8354	261
	264
	274
	278
	281
148-8357	261
148-8358	281
148-8361	268
148-8362	259
148-8363	281
148-8364	255
	274
	284
	287
148-8367	255
	268
	274
148-8378	264
	268
	271
	274
	278
	284
	287
148-8395	327
	329
148-8407	264
	274
	329
148-8411	59
	281
148-8433	268
	274
148-8434	268
148-8435	271
	274
148-8439	274
148-8444	255
149-5069	103
	109
149-5070	103
	109
149-5071	103
	109
150-3024	65
150-3036	278
150-4044	273
	284
	287
150-5782	306
150-5797	227
	230
151-6703	419
	421
	470
	476
151-6704	419
	421
	470
	476
151-6767	418
151-6777	388
	418
151-6778	470
	476
151-6785	470
151-6792	419
	▶473
151-6793	473
151-6813	470
	476
151-6815	470
	476
151-6831	470
	476
151-6832	470
	476
151-6841	473
151-6844	470
151-9272	264
151-9461	419
	421
151-9497	419
	421
151-9557	470
151-9576	470
	476
152-2886	12
153-2521	▶78
	82
153-2523	▶79
	81
153-2540	88
153-2541	88
153-2602	103
	109
153-2620	115
	131
153-2630	115
153-2631	103
	109
153-4816	424
153-5223	334
153-5239	342
153-5276	319
	320
153-5286	316
153-5288	316
	322
153-5289	316
	322
153-5290	316
	322
153-5291	316
	322
153-5292	316
	322
153-5293	316
	322
153-5298	322
153-5299	322
153-5306	322
153-5309	322
153-5311	322
153-5313	331
	▶342
153-6237	278
153-8623	227
	230
153-8798	245
154-9023	44
155-2259	125
155-2260	103
	109
	122
155-2265	125
155-2270	76
	88
	99
	103
	109
	115
	131
155-2271	131
155-3624	59
	280
155-7042	478
156-6470	466
	470
	476
156-6471	419
156-6472	466
	470
	476
156-6474	473
156-6475	473
156-6554	470
156-6555	470
156-6562	470
156-6563	470
156-6579	470
156-6598	419
	421
156-6599	383
156-6600	419
	421
156-6601	470
156-6627	470
156-6631	468
156-6642	433
156-6643	419
	421
156-6645	419
	421
157-0670	44
157-1669	59
157-3184	56
158-4380	184
	185
158-4381	184
	185
158-8150	322
158-8159	316
	322
158-8186	339
158-8206	322
158-8207	322
158-8985	215
	▶293
158-8987	▶218
	313
158-9085	255
	▶354
159-4700	199
159-7782	311
159-7784	219
159-8049	69
159-8050	69
159-9322	120
160-7690	120
161-3128	102
	108
161-3639	419
	421
161-3650	419
	421
161-3663	419
	421
161-3665	419
	421
161-3668	478
161-3669	478
161-3670	478
161-3671	478
161-3677	478
161-3684	470
161-3685	383
161-3695	473
161-3697	383
161-3698	466
	470
	476
161-3705	473
161-3717	451
161-3751	▶464
161-6987	444
162-0177	327
162-1565	203
162-2168	189
163-3729	152
163-6637	115
163-6659	103
	109
163-6699	103
	109
163-6758	102
	108
163-6759	115
	131
163-6773	115
163-6790	103
	109
163-6795	84
	102
	108
	122
	125
	465
	478
163-6803	103
	109
	424
164-0514	419
	421
164-0515	419
	421
164-0516	473
164-0517	473
164-0518	473

▶ **PRIMARY REFERENCE**

PART NUMBER INDEX

Part	Page
164-0519	419
	421
164-0523	383
164-0527	383
164-0528	383
	▶433
164-0639	464
164-0646	381
164-0648	470
164-0655	381
164-0664	433
164-0666	467
164-5549	268
164-5552	255
164-5562	59
164-5567	278
	313
164-5590	313
164-5608	281
164-5628	264
164-5639	273
164-6872	284
	287
164-6979	273
	▶350
164-6981	▶200
	273
164-7468	68
164-8474	381
	386
164-8977	273
164-8983	273
165-2823	157
165-2976	149
	150
	151
165-3065	438
165-3102	147
165-3103	147
165-3165	234
165-3173	237
165-3185	257
165-3190	257
165-3256	313
165-3260	281
165-7951	59
165-9431	332
165-9435	332
165-9436	332
165-9438	332
165-9442	332
165-9443	332
165-9444	332
165-9460	332
165-9463	334
165-9464	351
165-9552	334
165-9553	334
165-9554	334
166-1486	357
	361
	363
166-1487	357
166-1494	361
	363
166-1495	357
	363
166-1579	359
167-3441	▶80
	84
167-3456	84
167-3487	103
	109
	424
167-3542	424
	430
	448
167-3543	424
	430
	448
167-3593	102
	108
167-3630	103
	109
167-3631	103
	109
167-7018	383
167-7039	419
	421
167-7042	383
168-0765	343
168-3332	59
168-6761	190
	191
168-9523	237
168-9759	264
168-9760	233
168-9762	236
169-5326	63
169-7397	59
170-0967	65
170-2755	144
170-2983	144
170-3015	148
170-3016	159
170-6888	102
	108
170-6890	103
	109
170-6891	103
	109
170-6929	69
170-6993	78
	79
170-9324	88
170-9360	144
170-9394	103
	109
170-9417	78
	79
170-9418	78
	79
170-9497	▶415
	450
170-9498	415
170-9499	415
170-9722	466
	470
	476
170-9724	381
171-0035	345
171-0036	345
171-0037	345
171-0087	332
171-0123	337
171-0124	337
171-0126	337
171-0127	337
171-0128	337
171-2208	86
171-2210	86
171-3369	47
171-5349	92
171-7325	378
	379
	398
	404
171-7413	473
171-7414	473
171-7420	381
171-7426	383
171-7503	388
	▶476
171-9077	47
171-9383	213
171-9464	155
173-3384	227
	230
173-3397	227
	230
173-3398	229
173-3413	227
	230
173-3427	306
173-3428	306
173-3439	296
173-3440	296
173-3441	296
173-3442	296
173-3443	296
173-3444	296
173-3445	296
173-3447	296
173-3450	296
173-3451	296
173-3452	295
	▶343
173-3454	296
173-3496	306
173-3498	306
173-3503	▶202
	219
173-3505	202
173-3506	202
173-3507	219
173-3510	219
173-3513	222
173-3515	222
173-3516	222
173-3517	222
173-3518	219
173-3529	222
173-3536	▶344
	354
173-4816	261
173-7995	245
174-3016	103
	109
	115
174-4874	134
174-7791	78
	79
175-4430	350
176-0773	15
176-1902	434
176-1916	400
	406
176-1931	465
176-1937	383
176-1938	383
176-1939	383
176-1941	433
176-1949	427
176-1951	473
176-1952	473
176-1953	473
176-1954	473
176-1955	473
176-1956	473
176-1957	473
176-1972	381
176-1986	383
176-1996	423
176-2278	357
176-4463	273
176-4469	273
176-4708	271
176-4746	59
176-4755	273
176-4770	281
176-9299	103
	109
	115
177-2215	115
177-2470	306
177-2471	306
177-2553	222
177-2584	296
177-2619	202
177-5877	158
177-5879	158
177-5880	158
178-0852	152
178-5422	400
	406
178-5423	400
	406
178-5431	465
178-5569	468
178-5570	383
178-5572	467
178-5573	419
	421
	467
178-5574	419
	421
	467
178-5576	470
178-5955	278
178-6450	47
179-9806	222
180-3861	78
	79
183-1343	96
184-3983	50
184-5724	152
184-8850	144
184-8862	151
184-9336	264
185-0169	227
	230
185-0201	227
	229
185-0383	264
185-0423	337
185-0462	264
	▶351
185-0463	351
185-0884	10
185-1546	30
185-8161	400
	406
185-8180	419
	421
185-8181	470
185-8182	388
	470
185-8187	388
	470
185-8196	383
185-8197	470
185-8205	381
185-8214	381
185-8221	470
185-8280	433
185-8281	433

▶ PRIMARY REFERENCE

PART NUMBER INDEX

Part	Page
185-8284	375
	402
	424
185-8286	98
	378
	379
185-8290	478
185-8293	434
185-8300	376
	412
185-8302	376
185-9208	88
186-3736	99
186-5644	361
187-5954	239
	240
187-6058	253
187-7070	273
188-3064	184
	185
188-4140	▶219
	313
189-2678	381
189-2690	419
	421
189-2702	468
189-2704	383
189-2717	427
189-2847	427
189-2853	381
189-2854	381
189-2855	381
189-2864	383
189-9763	227
	229
	306
190-0386	455
190-3523	184
	185
190-3524	184
	185
190-4896	306
190-6880	159
190-7081	159
190-7673	226
	229
190-7674	226
	229
190-7826	261
190-7865	329
191-2578	213
191-3235	134
191-5543	296
191-5707	226
	229
192-0573	306
193-1736	306
193-5014	365
193-5015	365
193-6606	245
193-7720	462
194-0174	▶233
	257
194-0176	233
	▶234
194-0180	▶235
	257
194-0181	235
	▶236
194-0182	235
	▶237
194-1608	▶184
	194
194-1609	▶185
	194
196-0711	302
196-0807	261
196-1666	412
196-3784	334
197-0196	291
	292
197-0199	291
	292
197-0273	291
	292
197-4385	115
198-8645	203
199-1286	257
199-1965	273
199-4561	213
199-7394	261
199-7403	261
199-9267	7
199-9751	93
	94
2	
200-3244	226
	229
200-3245	226
	229
200-3246	226
	229
200-3255	226
	229
200-3333	306
200-3334	306
201-4391	419
	421
201-4417	383
201-4530	383
201-9263	322
201-9299	222
202-3855	249
202-3856	249
202-3857	249
202-3858	249
202-4004	271
	273
202-6996	249
202-7128	245
203-2287	32
204-1673	59
204-2281	273
204-2763	202
205-6295	383
206-1265	186
	187
	▶189
206-1345	34
206-9211	189
207-0144	388
	▶466
207-2757	58
207-6403	313
207-6404	313
207-6666	238
207-6667	238
208-4289	149
	150
209-3312	189
209-3313	189
209-5894	298
209-5909	298
209-5920	355
209-5992	294
	▶298
209-6000	310
209-8296	462
209-9219	11
210-5808	383
210-5827	464
210-5828	464
210-5829	464
210-5834	464
210-5836	464
210-5837	464
210-5838	464
212-2838	153
213-0772	102
	108
214-4400	224
214-4511	▶224
	257
214-4518	224
214-7566	32
214-7568	90
	278
	313
215-4909	218
215-5037	273
	▶290
215-9961	226
	229
215-9962	226
	229
215-9982	137
	▶294
216-4970	86
216-6682	359
216-8634	19
217-8185	59
221-4883	271
221-8813	▶440
	450
221-8861	2
	▶76
221-8872	▶73
	450
222-0225	409
	411
225-0311	59
225-4548	311
225-4549	311
225-4607	226
	229
225-4804	291
	322
	327
	329
225-4818	291
	322
	327
	329
225-5625	30
225-5638	30
225-5640	30
225-5959	30
225-5961	30
225-5962	30
225-6522	31
225-6524	31
225-7738	43
225-7944	39
225-8019	43
225-8287	19
225-8858	10
226-8770	95
227-0265	263
227-0581	261
227-0590	313
227-6034	134
227-6071	154
227-6081	▶154
	155
227-6105	155
227-6106	155
227-6147	▶155
	175
227-6166	141
	▶216
227-6215	215
227-6221	215
227-6228	213
227-7575	102
	108
227-8807	▶201
228-5615	357
	363
228-7093	32
228-7100	91
229-1096	363
229-9070	▶465
229-9078	450
	▶451
229-9082	375
	▶423
230-1340	72
230-1341	72
230-4009	103
	109
	115
	125
	132
230-4011	77
	103
	109
	115
	122
	125
	132
	429
230-4012	96
230-4013	115
230-5008	125
230-5010	88
	115
	122
	125
	132
	430
	448
230-8094	25
230-8989	63
231-1768	▶430
231-1827	69
231-1836	▶122
	124
231-2295	115
	125
	430
	448
231-4457	62
232-1322	11
	94
232-1793	63
232-1794	63
232-3126	62
232-3149	63
232-3274	63
232-3657	19
232-3666	19
232-3751	39

PART NUMBER INDEX

Part	Page
232-3861	7
232-7449	11
232-7596	10
232-7597	10
232-7599	10
	32
234-1097	102
	108
234-1122	131
234-1124	430
	448
234-1156	88
234-1158	88
234-4440	284
	287
	▶311
234-4452	226
	229
234-4453	226
	229
234-4492	255
234-6468	381
234-6469	381
234-6470	381
234-6471	381
234-6472	381
234-6473	381
234-6474	381
234-6476	381
234-6477	381
234-6480	381
234-6483	381
234-6485	381
234-6490	381
234-6491	381
234-6497	381
234-6498	381
234-6499	416
234-6501	386
	▶416
234-6502	416
234-6521	381
234-6547	381
234-6548	381
234-6549	381
234-6550	381
234-6579	381
	398
	402
	404
234-6580	398
	402
	404
234-6594	388
	▶478
234-6602	402
234-6603	398
	404
234-6604	402
234-6605	398
	404
234-6608	398
	402
	404
234-6609	398
	402
	404
234-6610	398
	402
	404
234-6611	398
	404
234-6612	398
	404
234-6613	▶98
	398
	404
234-6614	398
	404
234-6615	98
235-7520	176
235-7679	363
235-8862	446
235-8874	373
235-8875	373
235-8876	423
235-8877	423
235-8878	423
235-8879	423
235-8880	397
235-8891	434
235-8893	400
	406
235-8894	400
	406
235-8912	383
235-8914	398
	402
	404
235-8916	388
235-8917	▶381
	388
235-8922	381
235-8923	381
235-8930	381
235-8932	478
235-8933	383
235-8950	375
	381
235-8951	378
235-8952	379
235-8965	398
	404
235-8966	402
235-8969	▶409
	414
235-8970	▶411
	413
235-8996	378
	379
235-8997	378
235-8998	379
235-9001	386
235-9005	373
235-9012	465
235-9014	434
235-9015	434
236-2843	264
236-2844	264
236-2848	265
236-3212	▶238
	257
236-3213	▶238
	257
236-3214	238
	▶239
236-3215	238
	▶240
236-3257	225
236-3259	225
236-6366	361
236-6419	316
	322
236-6421	316
	322
236-8341	175
	▶176
236-8357	176
236-8358	176
237-7886	424
238-1463	430
	448
238-1506	86
238-2216	430
	448
238-2279	86
238-2280	86
238-2319	103
	109
238-2363	104
	109
	125
	132
238-2366	88
	104
	110
	132
238-2390	102
	108
238-2391	102
	108
238-2501	69
238-2528	69
238-5082	32
238-5083	32
238-5084	32
238-8288	52
238-8292	55
238-8671	63
239-1714	244
	▶257
239-1716	175
	▶284
239-1717	175
	▶287
239-4341	175
	▶180
239-4362	183
239-4378	192
239-4382	192
239-4383	192
239-4384	192
239-4385	180
	▶181
239-4386	180
	▶182
239-4387	181
	▶190
239-4388	182
	▶191
239-4389	190
	191
	▶192
239-4390	192
	▶193
239-4391	193
239-4392	193
239-4393	192
239-4394	193
239-7352	122
	125
	132
239-7356	104
	110
239-8697	290
	▶291
239-8998	290
	▶292
240-2912	361
240-2913	363
240-2915	211
240-2937	207
240-2978	148
240-2979	148
240-2988	178
240-5071	▶426
240-5074	423
240-5571	62
240-6332	207
	209
240-6359	207
	209
241-7286	356
	▶359
241-7325	361
241-7382	209
241-8368	86
	▶99
241-9264	53
242-6803	306
242-6985	268
243-4505	82
	86
	115
	122
	125
	131
	132
	394
	430
	448
243-4507	132
243-4508	100
	120
	122
	132
243-4509	56
	132
	430
	448
243-4510	115
	125
	132
	424
244-4360	361
244-8194	146
244-8228	159
244-8242	159
244-8255	159
244-8277	172
244-8278	172
244-8284	165
244-8288	172
245-5079	264
245-5416	287
245-5427	284
245-7749	396
	▶397
245-7750	397
245-7751	397
245-7756	434
245-7757	434
245-7760	102
	108
245-7790	381
	398
	402
	404
245-7791	423
245-7792	423
245-7793	423
245-7811	1
	▶446
245-7813	412
245-7814	412
245-7815	412

▶ PRIMARY REFERENCE

PART NUMBER INDEX

Part	Page
245-7816	412
245-7817	376
245-7818	376
245-7819	376
245-7820	376
245-7823	376
245-7824	376
245-7825	376
245-7826	376
245-7827	376
245-7828	376
245-7829	376
245-7830	376
245-7831	376
245-7832	376
245-7833	376
245-7834	376
245-7835	376
245-7836	376
	▶390
245-7837	390
	392
245-7838	376
245-7839	376
245-7842	409
245-7844	411
245-7846	376
	▶412
245-7847	376
245-7850	434
245-7851	434
245-7856	376
245-7872	423
245-7873	423
245-7905	390
	392
245-7916	451
245-7922	▶400
	450
245-7925	398
	404
245-7926	402
245-7929	416
245-7931	478
245-7948	398
	402
	404
245-9191	47
245-9344	41
246-2641	64
	481
246-4383	62
246-4996	254
246-5425	183
247-2693	122
	125
247-2694	441
	442
247-2695	441
	442
247-8920	306
248-7143	181
	182
	▶183
248-7174	193
248-8943	173
248-8961	151
248-8992	157
248-8993	157
248-8994	157
248-8995	157
248-9825	244
	▶264
248-9853	▶281
	315
250-2446	322
250-2447	322
250-5054	149
251-0299	131
251-0303	86
251-0304	86
251-0433	▶124
	450
251-0435	124
	▶125
251-0467	114
251-0483	127
	129
251-0542	▶88
251-0580	122
251-0637	102
	108
252-6438	29
253-1346	190
	191
253-2111	86
254-3052	361
254-3053	361
254-3954	29
255-1665	264
255-1666	264
255-2751	88
	▶101
255-2966	50
255-5594	322
	339
255-5680	257
	▶327
255-5683	257
	▶329
256-0093	▶226
	306
256-0096	▶229
	306
256-7704	8
258-4095	452
	▶453
259-0918	310
259-4883	102
	108
259-5043	▶82
	356
259-5081	102
	108
259-5082	102
	108
259-5317	114
259-5326	82
259-7202	404
259-7345	378
	379
259-7346	▶378
	402
259-7347	▶379
	398
	404
259-7348	400
	▶402
	406
259-7349	400
	▶404
259-7350	388
	▶427
259-7351	427
259-7352	427
259-7353	381
259-7354	419
	421
259-7464	244
	▶331
259-7465	▶316
	331
259-7631	316
	▶319
259-7632	▶320
	322
259-7733	274
260-7868	244
	▶302
260-7872	259
260-7904	302
260-7906	302
260-7910	▶241
	257
260-7911	241
	▶242
260-7912	242
260-7913	241
	▶243
260-7914	243
260-7988	257
260-7992	257
260-7996	257
260-8000	257
260-8010	▶249
	356
260-8011	▶253
	362
260-8315	249
260-8316	249
260-9144	59
262-2313	168
262-2347	165
262-2363	159
262-2365	159
262-4781	183
264-1702	357
264-7029	77
	103
	109
	115
	122
	125
	132
	429
264-7030	115
264-7031	125
264-7032	88
	115
	122
	125
	132
	430
	448
264-7033	115
	125
	430
	448
264-7034	103
	104
	109
	110
	115
	125
	132
264-9961	322
266-1045	261
266-1279	259
266-7379	86
267-6767	2
	▶141
267-6783	▶138
	141
267-6785	215
267-7976	88
267-8071	1
	▶428
268-0720	163
268-1621	281
270-5949	334
270-5950	334
270-5953	332
271-7843	413
	414
273-5274	470
273-5345	470
	476
273-5346	470
	476
273-7677	147
273-8314	306
273-8315	306
273-8316	226
	229
273-8317	226
	229
273-8318	226
	229
273-8319	226
	229
273-9292	15
274-1935	27
275-1361	281
275-1362	313
275-1439	259
275-1442	273
275-1443	273
275-1444	273
275-1503	273
275-9897	25
276-5600	10
276-5602	10
276-5603	11
276-7391	9
276-7478	26
276-9200	30
277-0121	18
277-0588	17
277-1974	31
277-1975	31
277-2500	37
277-2537	39
277-2538	39
277-2923	43
277-2925	43
277-3012	19
277-3013	19
277-4223	19
277-4374	52
277-6078	15
277-9463	55
277-9938	55
277-9940	55
278-0016	55
278-0017	55
278-3837	168
279-7907	51
279-9361	55
279-9651	22
280-1384	25
281-0791	390
	392
281-5987	59
281-7039	37
281-7040	37
281-8744	43

▶ **PRIMARY REFERENCE**

PART NUMBER INDEX

Part	Page
281-8803	115
281-8804	115
281-8805	90
283-4662	18
283-8301	24
283-8302	24
284-4426	383
284-7313	209
285-1399	274
285-1465	274
285-4470	226
	229
286-6192	69
286-7851	55
287-0047	205
287-8597	18
288-6974	18
288-6975	18
289-5657	265
289-5672	257
289-6603	157
289-6698	159
289-6700	164
289-6805	159
289-8194	▶221
	313
289-8195	221
291-5216	53
291-7559	428
	▶429
291-7560	429
291-7561	429
291-7593	114
292-3462	63
292-7153	281
292-7297	313
293-1137	376
293-1183	423
293-1184	423
294-0286	19
296-6220	134
296-6268	134
296-6269	134
296-6300	134
	▶141
296-6301	▶139
	141
296-6302	▶140
	141
297-0483	339
297-0529	▶332
	413
	414
297-0532	408
	▶413
297-0533	408
	▶414
297-9132	175
	▶186
298-5630	480

3

Part	Page
300-9716	229
301-6874	226
	229
301-8294	226
	229
303-9933	65
303-9937	65
304-5062	22
304-5063	22
305-0330	381
305-0333	381
305-0361	468
305-0441	434
305-0442	434
305-4951	204
305-4952	204
305-5362	114
305-6873	59
305-7664	47
306-8401	114
307-0047	72
307-1818	418
	▶419
307-4918	255
307-4919	255
307-5034	249
307-5097	281
307-5098	281
307-5120	278
307-7656	150
308-8775	153
308-8776	153
308-8777	153
309-5130	32
309-5137	32
309-5769	264
310-0078	▶408
310-0210	274
	▶337
310-0414	264
	▶334
310-0419	334
310-0420	334
310-0421	334
310-0422	334
310-9667	49
	▶50
312-5694	366
312-8338	44
313-3762	44
313-3763	44
313-3764	44
313-3766	44
313-3769	44
314-6506	44
314-6509	44
314-6510	44
314-8128	274
315-0800	153
315-3393	29
315-3394	29
315-5313	383
316-6166	388
	▶418
316-8846	376
316-8847	376
316-8849	376
316-8916	373
	▶376
316-8918	376
316-8920	376
316-8921	376
317-5482	26
317-5483	26
317-5485	9
317-5486	9
318-1181	▶92
	114
319-4420	88
	▶100
319-6212	32
319-6220	32
319-9888	261
320-3060	91
320-3063	59
320-5737	144
321-8649	32
321-8665	313
321-8666	313
321-8667	313
321-9994	15
322-3154	32
322-3155	32
323-7770	334
323-7897	322
323-7898	322
	▶339
323-9312	26
324-0444	19
324-4488	23
324-4489	23
324-4551	▶28
	40
324-5770	127
	129
	430
	448
324-5771	127
	129
324-5808	86
325-8634	▶91
	93
325-8865	259
326-0319	32
326-7289	8
326-7401	▶37
	39
326-9052	480
327-6523	450
	▶458
327-6538	458
327-6550	383
	▶439
327-6593	394
327-6594	394
327-7482	440
	▶441
327-8740	305
328-0021	88
329-3796	21
329-5254	68
329-5255	28
329-5534	32
330-2568	274
331-0290	26
331-1682	▶10
	11
331-8917	55
332-4191	44
332-4192	44
332-5856	47
333-4609	273
334-9940	355
334-9968	293
	▶295
334-9976	295
	▶296
334-9981	296
335-2092	18
335-5602	29
	▶30
335-5604	30
335-5605	30
335-5606	29
335-5607	29
335-6264	12
335-6883	▶8
	203
335-7055	13
336-4591	44
336-4757	63
337-1182	257
337-1205	271
337-2958	95
337-6501	59
339-8780	15
340-4212	39
340-8237	192
341-1842	65
341-2831	306
341-2834	306
341-2839	306
341-2840	306
341-2841	306
341-2842	306
341-2860	▶305
	306
341-2862	306
342-0932	157
342-0965	157
342-2924	313
342-2972	77
	104
	110
	115
	132
342-2974	115
	132
342-2975	115
342-2976	115
342-6510	27
342-8584	59
342-9022	75
342-9290	75
343-0701	4
	▶6
343-3917	59
343-4295	12
343-7352	59
344-1722	68
344-5081	68
344-5360	59
344-7700	27
345-2568	27
345-9774	4
	▶203
346-0407	19
346-0408	19
346-0411	4
	▶43
346-0495	4
	▶19
346-0737	4
	▶36
346-0773	4
	▶52
346-1340	298
346-1841	4
	▶94
346-1967	4
	▶480
346-2911	▶3
	4
346-3229	32
346-7204	175
	▶179
346-7236	179
346-7237	179
346-7375	▶380
	383
346-7763	75

PART NUMBER INDEX

Part	Page
346-8058	▶383
	388
346-9376	444
347-2081	280
347-4416	59
347-4734	115
347-6081	▶225
	313
347-6082	225
347-6849	▶366
	367
347-6850	▶366
	367
347-7479	370
347-7480	368
347-7482	370
347-7483	368
347-7485	369
348-3197	369
348-3283	4
	▶11
348-3285	4
	▶9
348-3296	4
	▶26
348-3503	4
	▶21
348-5409	169
348-5434	15
349-5084	104
	110
	115
349-5085	104
	110
	115
349-7059	65
350-0637	6
350-7501	44
350-7735	65
350-8250	▶127
351-0286	274
351-1724	27
351-3886	5
	▶23
351-4089	60
351-4318	59
351-4321	60
351-4749	25
351-8488	75
351-8490	74
	▶75
351-9918	78
	80
352-6815	350
352-6864	345
352-7057	319
	320
352-7058	319
	320
352-7059	319
	320
352-7063	293
352-7116	322
	▶345
352-7122	316
	322
	▶346
352-7123	327
	329
	▶347
352-7138	▶322
	331
352-7775	44
353-0611	▶134
	137
353-0612	134
353-0645	▶136
	141
353-0646	136
	▶137
353-2149	409
353-2150	411
353-2151	▶392
354-4754	43
354-5671	96
354-5833	32
354-6246	59
354-8322	25
355-0632	59
355-1213	444
356-2353	459
357-0147	8
357-2637	28
357-2713	371
357-2714	371
358-0921	150
	151
358-6475	55
359-3576	459
359-3582	459
359-6616	13
359-8335	65
360-1564	26
360-1978	9
360-4598	294
	▶355
360-4599	▶348
	355
360-9274	47
361-1045	444
361-6838	259
361-6839	259
361-6840	259
361-6841	245
361-6842	268
361-6843	247
361-6844	268
361-6849	244
	▶259
361-6850	244
	▶245
361-7281	245
361-7282	245
361-7283	245
361-7284	245
361-7519	55
361-8818	259
361-8820	259
361-8821	259
361-8824	259
361-9860	247
363-0559	9
363-4211	268
363-4212	244
	▶268
363-5084	59
	▶90
363-6870	245
363-8036	268
363-8406	245
363-9644	5
	▶396
363-9645	396
364-1614	395
364-5145	9
365-4584	55
365-4585	55
365-4586	55
366-1059	278
366-4622	102
	108
366-5257	454
	▶455
366-5260	452
	▶457
366-5262	▶459
	462
366-5264	462
366-5265	454
366-5266	462
366-5267	455
366-5269	455
366-5271	455
366-8749	441
	442
366-8821	73
366-9312	278
366-9331	114
366-9343	▶84
366-9344	84
366-9345	84
366-9348	74
	▶120
366-9355	74
	▶444
367-8467	361
368-3137	268
368-7675	5
	▶32
369-2248	40
	▶41
369-2257	4
	▶40
369-2258	41
369-2259	42
369-2263	42
369-2264	42
369-2265	42
369-2266	42
369-2271	47
369-2272	47
369-2273	47
369-3869	8
369-8420	261
370-7998	26
371-2539	4
	▶17
371-2553	4
	▶39
371-7140	459
371-7141	459
371-7142	459
371-7143	459
371-7144	459
371-7146	459
371-7147	459
371-7148	459
371-9082	366
	▶368
371-9083	366
	▶369
371-9130	368
371-9131	369
371-9198	370
371-9199	370
372-9295	▶394
	395
372-9387	1
	▶434
372-9407	434
372-9409	434
373-0112	268
373-0113	268
373-0114	268
373-1106	▶206
	356
373-1107	▶206
	356
373-1108	▶206
	356
373-1109	▶206
	360
373-1110	206
	▶251
373-1111	206
	▶207
373-1115	206
	▶252
373-1116	424
373-1118	206
	▶283
373-1119	206
	▶211
373-1120	206
	▶254
373-1121	206
	▶209
373-2588	455
373-2590	455
373-2591	455
373-2594	455
373-2595	455
373-2596	455
373-2597	455
373-2600	455
373-3495	457
373-8014	36
373-8961	444
373-8962	72
373-8965	120
373-8970	444
373-8980	125
373-9516	306
373-9518	306
374-0191	63
374-0424	268
374-4017	1
	▶157
374-4161	157
374-5000	44
374-5958	455
374-5981	53
374-6000	▶205
	304
374-6001	▶204
	205
374-6004	5
	▶35
374-6025	53
374-6038	53
374-6040	53
374-6053	204
375-2985	44
375-5008	4
	▶24
375-5656	47
375-5657	47
375-6276	363
375-6280	362
	▶363
375-6281	▶362
375-6869	▶360
375-6870	360
	▶361
375-6871	361
375-6872	361

▶ **PRIMARY REFERENCE**

PART NUMBER INDEX

Part	Page
375-8749	163
375-8750	163
376-0601	24
376-1084	▶356
376-1085	356
	▶357
376-1087	357
376-2384	24
376-4074	9
376-6308	244
	▶261
376-6309	244
	▶271
376-6310	244
	▶273
376-6311	244
	▶278
376-6313	244
	▶280
376-6321	244
	▶263
376-6342	274
376-6478	72
	▶74
376-6721	44
377-2012	457
	▶462
377-2843	455
377-3297	280
377-3298	280
377-3328	261
377-3331	261
377-5000	44
377-5001	44
377-5002	44
377-5003	44
377-5004	44
377-5005	44
377-5006	44
377-5394	▶367
377-5395	▶367
377-5419	▶366
	367
377-6667	159
	▶164
377-6698	159
	▶172
377-6708	159
	▶165
377-6715	157
377-6727	166
377-6743	164
377-6746	166
377-6749	165
377-6760	169
377-6767	174
377-6782	169
377-6786	159
377-6809	174
377-8043	86
377-8044	86
377-8051	114
378-0319	368
	369
	370
378-0320	368
378-0321	369
378-4739	17
378-6176	▶44
	47
378-6177	44
378-6178	44
378-6179	44
378-6180	44
378-6181	44
378-8587	25
378-9581	215
379-2022	15
379-2023	15
379-4415	5
	▶395
379-4430	53
379-4463	32
379-4464	32
379-4465	32
379-7062	▶74
379-7425	159
	▶173
379-7426	173
379-7436	159
379-7509	173
379-7518	159
380-1204	367
	▶371
380-6351	459
380-7183	▶452
380-9732	74
381-5786	34
381-6235	29
381-6824	25
381-7372	▶72
	74
381-7417	444
381-9061	59
381-9064	59
382-0664	59
382-5079	▶12
	13
382-5982	75
383-2741	1
	▶417
383-2757	▶424
383-5108	2
	▶76
383-5109	76
383-5626	395
383-5709	434
383-6929	467
383-6930	468
383-6931	467
383-6932	467
383-6933	421
383-9204	261
384-2205	462
384-2207	▶454
	457
384-6533	421
	▶475
385-1278	459
385-1279	459
385-1400	459
385-2474	459
385-3458	150
	151
385-5148	▶244
385-5149	244
	▶247
385-5150	247
385-8000	4
	▶96
386-0195	▶58
	59
386-0233	175
	▶177
386-0258	177
386-0276	177
386-0281	177
386-0285	177
386-3439	56
386-3454	76
386-3457	▶442
	443
386-3458	76
	▶443
386-6071	459
386-6072	459
387-2637	59
387-3783	▶310
	313
387-5174	170
387-6403	58
387-7644	424
387-9125	2
	▶175
387-9126	175
	▶187
388-0026	▶386
388-0065	386
	▶388
388-0399	152
388-1868	424
388-1869	15
388-3306	424
388-6748	69
388-6760	69
388-6805	102
388-6841	1
	▶114
388-6842	▶85
	450
388-6843	85
	▶86
388-6844	1
	▶56
388-7014	53
388-9105	388
	▶421
388-9107	388
	▶467
388-9108	388
	▶468
388-9109	388
	▶470
389-7188	26
390-0868	247
390-0869	247
390-2252	23
390-5448	366
	▶370
390-5451	370
390-6802	370
390-7988	1
	▶143
390-7989	143
	▶144
390-7990	144
390-7991	144
390-7992	144
391-0665	226
391-0668	226
391-3193	4
	▶13
391-3197	4
	▶29
391-4751	159
391-4752	159
391-8786	1
	▶171
391-8787	171
391-9636	170
391-9642	167
391-9646	159
	▶166
391-9651	159
391-9655	159
392-1262	159
392-2667	159
392-4022	244
	▶255
392-6626	306
393-0879	4
	▶95
393-4006	18
393-5791	▶367
394-2220	5
	▶42
394-2224	5
	▶47
394-2229	42
394-2235	47
394-4837	93
394-5874	18
394-6109	254
394-6123	283
394-6125	251
394-6126	251
394-6145	252
394-6147	252
394-7014	4
	▶14
394-7410	166
394-7468	1
	▶59
394-7469	2
	▶4
394-7470	4
	▶53
394-7471	2
	▶5
394-7473	5
	▶51
394-7474	5
	▶34
394-7686	59
394-7689	51
394-7970	34
394-9371	251
	252
	254
394-9372	251
	252
394-9417	254
394-9420	283
394-9421	283
394-9997	5
	▶93
395-0021	313
395-1699	34
395-3437	58
395-3439	58
396-1865	244
	▶304
396-2395	25
396-3531	56
396-3533	56
396-3538	56
396-3542	159
396-3545	159
396-3569	159
396-4455	86
396-4502	4
	▶63
396-6322	4
	▶55
396-6895	373
396-6954	4

PART NUMBER INDEX

Part	Page
	▶18
396-6969	4
	▶62
396-6979	4
	▶15
396-6983	4
	▶68
396-7695	169
396-7696	169
396-7697	169
396-7698	169
396-7706	163
396-8142	▶131
	450
396-8257	63
396-8523	159
	▶167
396-8524	167
397-1501	4
	▶25
397-3680	304
	▶306
397-5469	211
397-5517	211
397-5521	211
397-5525	211
397-9009	159
	▶174
397-9010	174
397-9063	211
397-9064	211
397-9066	211
397-9067	211
397-9068	211
397-9069	211
397-9070	211
397-9076	211
397-9077	211
397-9078	211
397-9079	211
397-9080	211
397-9081	211
397-9082	211
397-9088	211
397-9089	211
397-9090	211
397-9091	211
397-9092	211
397-9093	211
397-9273	211
397-9277	211
398-0095	211
398-0096	211
398-0097	211
398-0100	207
	209
	211
398-0105	211
398-0106	207
	209
	211
398-0109	207
	209
	211
398-0933	207
398-0934	207
398-0935	207
	209
398-0936	207
	209
398-0937	207
	209
398-0938	207
398-0941	207
	209
398-0943	207
	209
398-0944	207
	209
398-0945	207
	209
398-0946	207
	209
398-0948	207
	209
398-0949	207
	209
398-0951	207
	209
398-0952	207
	209
398-0953	207
	209
398-0954	207
398-0955	207
	209
398-0956	207
	209
398-0962	207
	209
398-0963	207
398-1498	63
398-1507	63
398-2328	207
398-2329	209
398-2330	209
398-2331	209
398-2332	209
398-3877	62
399-0797	114
399-1961	251
	252
399-1962	254
	283
399-3647	1
	▶69
399-6263	167
399-7534	47

4

Part	Page
415-3687	114
415-4315	26
415-4600	4
	▶22
415-7773	56
415-7775	56
415-8537	42
416-1798	▶373
	375
416-1802	373
416-1803	375
416-2386	53
417-3389	▶4
417-5871	4
	▶31
417-7185	4
	▶7
417-7187	4
	▶27
417-7782	43
417-9090	47
418-5090	434
418-6323	114
418-9897	▶375
419-0977	▶194
419-3368	159
	▶168
419-3369	168
419-7580	53
419-8528	219
	▶222
419-8531	222
419-8533	222
420-2083	59
420-2087	59
420-2089	59
420-2092	59
420-2094	59
420-2096	59
420-2098	59
420-2100	59
420-5299	59
421-2680	131
421-6924	64
	▶65
	481
421-6925	▶2
421-6926	▶1
	2
421-6929	1
	▶159
421-6935	1
	▶146
421-6943	1
	▶153
421-6944	1
	▶450
421-6945	1
	▶481
421-6946	2
	▶244
421-8479	1
	▶64
422-2966	146
	▶147
422-2968	147
422-4183	▶102
	450
422-5388	▶149
	159
422-7722	▶152
	153
423-5183	159
	▶163
423-5184	163
426-3891	148
426-4354	▶194
428-5842	159
	▶169
428-5843	169
428-7524	147
430-2804	▶148
	159
431-0101	159
	▶170
431-0102	159
431-0103	159
431-4572	55
431-9251	114
432-5008	▶175
433-2638	▶2
433-6905	2
	▶5
433-6906	▶1
	2
433-6907	1
	▶450
433-8177	▶313
	315
433-8178	244
	▶315
434-2650	150
434-2651	151
434-2654	▶150
	159
434-2655	▶151
	159
434-8823	▶76
434-8824	▶77
435-0868	▶129
435-0869	▶108
	450
435-0870	108
436-1212	▶406
	450
436-1213	▶398
	406
436-1944	▶448

▶ **PRIMARY REFERENCE**

MEMORANDA



©2013 Caterpillar
All Rights Reserved

CAT, CATERPILLAR, their respective logos, “Caterpillar Yellow”, and the POWER EDGE trade dress as well as corporate and product identity used herein, are trademarks of Caterpillar and may not be used without permission.