CATERPILLAR®

SEBP5476
August 2009

VOLUME II
Pages 471-1138

RUTHZIL TRATOR COMERCIAL DE PEÇAS LTDA 11 97083-6812 ROLANDO

Parts Manual

SIS

See “General Information” for New Parts Manual Features.

323D, 323D L & 323D LN Excavators

CWG1-Up (Machine)
WNE1-Up (Machine)
ZMF1-Up (Machine)
GDC1874-Up (Engine)

Powered By C6.4 Engine

Product and Dealer Information

Note: For product identification plate locations, see the section “Product Identification Information” in the Operation and Maintenance Manual.

Delivery Date: _____

Product Information

Model: _____

Product Identification Number: _____

Engine Serial Number: _____

Transmission Serial Number: _____

Generator Serial Number: _____

Attachment Serial Numbers: _____

Attachment Information: _____

Customer Equipment Number: _____

Dealer Equipment Number: _____

Dealer Information

Name: _____ Branch: _____

Address: _____

_____

_____

	Dealer Contact	Phone Number	Hours
Sales:	_____	_____	_____
Parts:	_____	_____	_____
Service:	_____	_____	_____

MEMORANDA

TABLE OF CONTENTS

Name	Page
GENERAL INFORMATION	A5
REPAIR ALTERNATIVES	A8
SUPPLEMENTAL COOLANT ADDITIVES	A9
MAINTENANCE PARTS	A10
INDEX	A13
MACHINE ARRANGEMENT	1
CHASSIS AR	1
DISTRIBUTION AR	3
GENERAL AR	4
OPTION AR-CAB	5
OPTION AR-CONTROL	6
OPTION AR-HYDRAULIC	7
OPTION AR-LIGHTING	8
OPTION AR-LINKAGE	8
OPTION AR-UNDERCARRIAGE	13
ENGINE ARRANGEMENT	15
ENGINE AR	15
ENGINE AR-COMPLETE	19
INSTALLATION AR-ENGINE	21
BASIC ENGINE	23
CAMSHAFT GP	23
COVER GP-VALVE MECHANISM	24
CRANKSHAFT GP	26
CYLINDER BLOCK GP	27
CYLINDER HEAD AS	31
CYLINDER HEAD GP	32
FLYWHEEL GP	33
GEAR GP-FRONT	34
HOUSING GP-FLYWHEEL	35
HOUSING GP-FRONT	36
MOUNTING GP-ALTERNATOR	39
MOUNTING GP-ENGINE	40
MOUNTING GP-STARTING MOTOR	41
PAN GP-OIL	42
PISTON & ROD GP	46
PULLEY GP-ENGINE	48
PULLEY GP-IDLER	50
VALVE MECHANISM GP	52
LUBRICATION SYSTEM	54
ADAPTER GP-REMOTE OIL FILTER	54
BREATHER GP	56
FILTER & MTG GP-ENGINE OIL	58
LINES GP-ENGINE OIL	62
LINES GP-ENGINE OIL DRAIN	64
LINES GP-TURBOCHARGER OIL	66
COOLING SYSTEM	67
COOLER GP-ENGINE OIL	67
FAN GP-BLOWER	68
FAN GP-SUCTION	72
HOUSING & REGULATOR GP	74
PUMP GP-WATER	75
RADIATOR & HYD OIL COOLER GP	77
AIR INLET AND EXHAUST SYSTEM	88
AIR CLEANER & MOUNTING GP	88
AIR CLEANER AR	89
AIR CLEANER GP	90
CARTRIDGE AS-TURBOCHARGER	95
DRAIN GP-MUFFLER	96
LINES GP-AIR	97
MANIFOLD GP-EXHAUST	104
MANIFOLD GP-INLET	106
MUFFLER GP	109
TURBOCHARGER GP	113
FUEL SYSTEM	116
CAP GP-FUEL FILLER	116
FILTER GP-FUEL	117
FILTER GP-WATER SEP & FUEL	123
INJECTOR GP-FUEL	124
LINES GP-FUEL	126
MOUNTING GP-FUEL FILTER	133
MOUNTING GP-PUMP	136
PUMP & MOTOR GP-REFUELING	137
PUMP AR-FUEL TRANSFER	138
PUMP GP-FUEL	139
PUMP GP-REFUELING	140
TANK & MTG GP-FUEL	142
TANK GP-FUEL	144
VALVE GP-FUEL SHUTOFF	154
ELECTRICAL AND STARTING SYSTEM	155
ALARM GP	155
ALARM GP-TRAVEL	156
ALTERNATOR GP-CHARGING	157
BATTERY & WIRING GP	158
BLOCK GP-JUNCTION	181
CAMERA & MOUNTING GP	183
CAMERA & WIRING GP	186
CAMERA GP	187
CONTROL & MTG GP-COMMUNICATION	188
CONTROL & MTG GP-ENGINE ELEK	191
CONTROL & MTG GP-MACHINE	192
CONTROL AR-MACHINE	193
ELECTRONICS GP-COMMUNICATION	193
ELECTRONICS GP-MACHINE	193
ELECTRONICS GP-MONITOR	194
FASTENER GP-WIRING HARNESS	195

TABLE OF CONTENTS

Name	Page
GRADE CONTROL AR	199
INSTALLATION AR-COMMUNICATION	199
INSTALLATION GP-COMMUNICATION	199
INSTALLATION GP-SECURITY	200
LAMP GP-FLOOD	202
LIGHTING GP-CHASSIS	205
LIGHTING GP-FLOOD	206
PANEL & MTG GP-CIRCUIT BREAKER	220
PANEL GP-CIRCUIT BREAKER	222
PANEL GP-SWITCH	225
SENSOR GP-ENGINE	229
SENSOR GP-LIQUID LEVEL	230
STARTING MOTOR GP-ELECTRIC	233
SWITCH GP-DISCONNECT	235
SWITCH GP-MAGNETIC	236
SWITCH GP-POSITION	239
SWITCH GP-PUSH BUTTON	240
SWITCH GP-ROTARY	242
SWITCH GP-START	243
SWITCH GP-TOGGLE	244
SWITCH GP-WIPER	247
WARNING AR-OVERLOAD	248
WIRING GP-AUXILIARY CONTROL	249
WIRING GP-BOOM FLOAT	258
WIRING GP-CAB	263
WIRING GP-CAMERA	276
WIRING GP-CHASSIS	278
WIRING GP-COMMUNICATION	284
WIRING GP-CONSOLE	288
WIRING GP-CONVERTER	292
WIRING GP-ELECTRONIC CONTROL	294
WIRING GP-ENGINE	296
WIRING GP-FAN	298
WIRING GP-FINE SWING	302
WIRING GP-MEDIUM PRESSURE	303
WIRING GP-OVERLOAD WARNING	305
WIRING GP-PLATFORM	306
WIRING GP-QUICK COUPLER	309
WIRING GP-RADIO	314
WIRING GP-REFUELING PUMP	316
POWER TRAIN	318
FINAL DRIVE GP	318
DRIVE GP-FINAL	319
GEAR GP-RING	323
GEAR GP-TRANSFER	326
POWER TRAIN AR	326
SPROCKET GP	327
FRAME AND BODY	328
BOX & MTG GP-STORAGE	328
BOX GP-STORAGE	330
BUMPER GP	334
BUMPER GP-FRONT	336
COUNTERWEIGHT & MOUNTING GP	338
COUNTERWEIGHT GP	344
COVER AS-ACCESS	349
COVER AS-SOUND SUPPRESSION	350
COVER GP-HOOD	354
DOOR AS-ACCESS	356
DOOR GP-ACCESS	358
FENDER & COVER GP	363
FRAME GP-UPPER	367
GEAR & BEARING GP-SWING	371
GUARD AR	380
GUARD GP-BOTTOM	381
GUARD GP-SWIVEL	385
HANDRAIL GP	386
HOOD & GUARD GP	388
HOOD GP-ENGINE	397
SHEET AS-SOUND SUPPRESSION	406
STEP GP	423
SUPPORT AS-ENCLOSURE	426
UNDERCARRIAGE	435
FRAME AR-UNDERCARRIAGE	435
FRAME AS-UNDERCARRIAGE	436
GUARD GP-TRACK GUIDE	439
GUARD GP-TRAVEL MOTOR	443
IDLER GP-FRONT	445
LINK AS-TRACK	449
ROLLER AR-TRACK & CARRIER	451
ROLLER GP-TRACK CARRIER	454
ROLLER GP-TRACK-SINGLE FLANGE	455
TRACK ADJUSTER & RECOIL GP	458
TRACK AR	462
TRACK GP	463
HYDRAULIC SYSTEM	471
ACCUMULATOR GP-HYDRAULIC	471
BASE GP-OIL FILTER	478
CONTROL AR-AUXILIARY	479
CONTROL AR-BOOM	482
CONTROL AR-COUPLER	483
COUPLING GP-FLEXIBLE	484
COUPLING GP-PUMP	485
CYLINDER & LINES GP-BOOM	486
CYLINDER & LINES GP-BUCKET	487
CYLINDER & LINES GP-STICK	488
CYLINDER & SEAL GP-BOOM	490
CYLINDER & SEAL GP-BUCKET	495
CYLINDER & SEAL GP-STICK	503
CYLINDER GP-BOOM	510
CYLINDER GP-STICK	512
DRIVE GP-SWING	514
FASTENER GP-SWING & FINAL DR	517
FILTER & VALVE GP-PILOT	521
FILTER GP-OIL	522
FITTING GP-HYDRAULIC	527
GAUGE GP-SIGHT	528

TABLE OF CONTENTS

Name	Page
HEAD GP-PUMP	529
HOSE GP-HYDRAULIC	536
HYDRAULIC AR	545
HYDRAULIC AR-BIODEGRADABLE OIL	546
LINES GP-AUXILIARY HYDRAULIC	547
LINES GP-BOOM	570
LINES GP-BOOM CYLINDER	577
LINES GP-BUCKET CYLINDER	595
LINES GP-COUPLER	603
LINES GP-FRONT	611
LINES GP-HYDRAULIC OIL COOLER	650
LINES GP-PILOT	655
LINES GP-PUMP	730
LINES GP-RETURN	747
LINES GP-SENSOR	758
LINES GP-STICK CYLINDER	759
LINES GP-TRAVEL MOTOR	765
MANIFOLD GP-CONTROL	772
MOTOR & MTG GP-SWING	775
MOTOR & MTG GP-TRAVEL	776
MOTOR GP-PISTON	778
MOTOR GP-SWING	786
MOUNTING GP-MAIN CONTROL VALVE	789
PLUG GP-CONTROL VALVE	790
PUMP & MTG GP-AUXILIARY	791
PUMP & MTG GP-MAIN HYDRAULIC	792
PUMP GP-GEAR	793
PUMP GP-MAIN HYDRAULIC	794
SCREEN GP-HYDRAULIC	799
SWIVEL GP	800
TANK & FILTER GP-HYDRAULIC	802
TANK & MTG GP-HYDRAULIC	806
VALVE & MTG GP-CONTROL	809
VALVE AR-CHECK & RELIEF	812
VALVE AR-LOAD CONTROL	813
VALVE AR-SWING	813
VALVE GP-CHECK	814
VALVE GP-CONTROL	821
VALVE GP-FLOW CONTROL	840
VALVE GP-LOAD CONTROL	841
VALVE GP-MAIN CONTROL	850
VALVE GP-MANUAL	851
VALVE GP-PILOT	852
VALVE GP-PRESSURE REDUCING	861
VALVE GP-PRIORITY	863
VALVE GP-RELIEF	864
VALVE GP-SELECTOR	876
VALVE GP-SHUTTLE	878
VALVE GP-SOLENOID	885
VALVE GP-SOLENOID & PRESS REDC	896
VALVE GP-SOLENOID & RELIEF	897
VALVE GP-SWING CUSHION	900
VALVE GP-TRAVEL COUNTERBALANCE	904
IMPLEMENTS	905
BOOM AR-1 PIECE LONG	905
BOOM AR-1 PIECE SHORT	906
BOOM AR	906
BOOM GP	907
BOOM GP-1 PIECE	915
CONVERSION GP-LINKAGE	917
LINES GP-GREASE	918
LINKAGE AR-BUCKET	921
LINKAGE GP-BUCKET	923
STICK AR-HOE	927
STICK GP-HOE	929
WORK TOOLS	938
ADJUSTER GP-BUCKET	938
BUCKET & ADJUSTER GP	939
BUCKET AS-EXCAVATION	945
BUCKET AS-EXTREME EXCAVATION	952
SIDECUTTER GP	955
TIP GP-DOUBLE SPIKE	956
TIP GP-EXTRA-DUTY	957
TIP GP-GENERAL PURPOSE	958
TIP GP-PENETRATION	959
TIP GP-PENETRATION PLUS	960
TIP GP-SPIKE	962
TIP GP-WIDE	963
OPERATOR STATION	964
AIR CONDITIONER & MOUNTING GP	964
AIR CONDITIONER AR	966
AIR CONDITIONER GP	967
ARMREST GP	969
CAB GP	971
CAMERA & MIRROR AR	977
COIL GP-EVAPORATOR	978
COMPRESSOR GP-REFRIGERANT	980
CONDENSER & MTG GP-REFRIGERANT	983
CONDENSER GP-REFRIGERANT	988
CONSOLE GP-OPERATOR	989
CONTROL & MTG GP-JOYSTICK	995
CONTROL GP-FOOT	999
CONTROL GP-HANDLE	1000
CONTROL GP-HEAT & AIR COND	1006
CONTROL GP-HYDRAULIC PEDAL	1007
CONTROL GP-JOYSTICK	1009
CONTROL GP-PILOT OPERATED HYD	1011
COVER GP-CAB	1016
COVER GP-STORAGE	1018
DOOR GP-CAB	1019
DUCT GP-CAB AIR	1021

TABLE OF CONTENTS

Name	Page
FLOOR MAT	1022
GUARD GP-CAB	1028
GUARD GP-WINDOW	1029
HATCH GP-ROOF	1034
HEATER & MTG GP-CAB	1037
HEATER AR-CAB	1039
HORN GP-ELECTRIC	1040
INSTALLATION AR	1042
INSTALLATION GP-RADIO	1043
KIT-SEAT SUSPENSION	1047
LATCH GP-FRONT WINDOW	1049
LEVER GP-CAB DOOR	1050
LINES GP-AIR CONDITIONER	1052
LINES GP-HEATER	1062
LITERATURE GP	1065
MIRROR AR-DOWN VIEW	1065
MIRROR AR-REAR VIEW	1065
MIRROR GP-DOWN VIEW	1066
MIRROR GP-REAR VIEW	1067
MONITOR & MTG GP-OPERATOR	1072
MONITOR GP-OPERATOR	1073
MOTOR AS-WINDOW WIPER	1074
MOUNTING GP-ANTENNA	1075
MOUNTING GP-MIRROR	1079
MOUNTING GP-PLATFORM	1080
MOUNTING GP-ROPS	1081
OPERATOR AR	1082
PEDAL AR-THIRD	1082
PLATFORM GP-OPERATOR	1083
RADIO GP	1084
RADIO GP-COMMUNICATION	1085
SCREEN GP-SUN	1086
SEAT & MOUNTING GP	1087
SEAT BELT GP	1090
SEAT GP	1091
SEAT GP-SUSPENSION	1093
STRIKER GP-LATCH	1096
SUPPORT AS	1098
SUPPORT GP-SEAT	1099
SUSPENSION GP-SEAT	1100
TRIM GP-CAB	1102
VISOR GP-CAB	1106
VISOR GP-PROTECTION	1108
WASHER GP-WINDOW	1109
WINDOW GP-CAB	1111
WINDOW GP-DOOR	1115
WINDOW GP-FRONT	1116
WIPER & WASHER GP-WINDOW	1118
WIPER GP-WINDOW	1120
SERVICE EQUIPMENT AND SUPPLIES	1121
FILM GP	1121
PLATE & FILM GP	1134
PART NUMBER INDEX	B1

HYDRAULIC SYSTEM

4I-1536 ACCUMULATOR GP-HYDRAULIC—CHARGED

S/N: WNE1-UP; ZMF1-UP; CWG1-UP

PART OF 087-4456 ACCUMULATOR GP-HYDRAULIC

SMCS-5077 **i03413820**

NOTE	REF NO	GRAPHIC REF	PART NUMBER	QTY	PART NAME 1 2 3 4 5 6 (PRODUCT LEVEL)	SEE PAGE
	1	1	**4I-5862**	1	CAP	
	2	1	**4I-1539**	1	CORE	

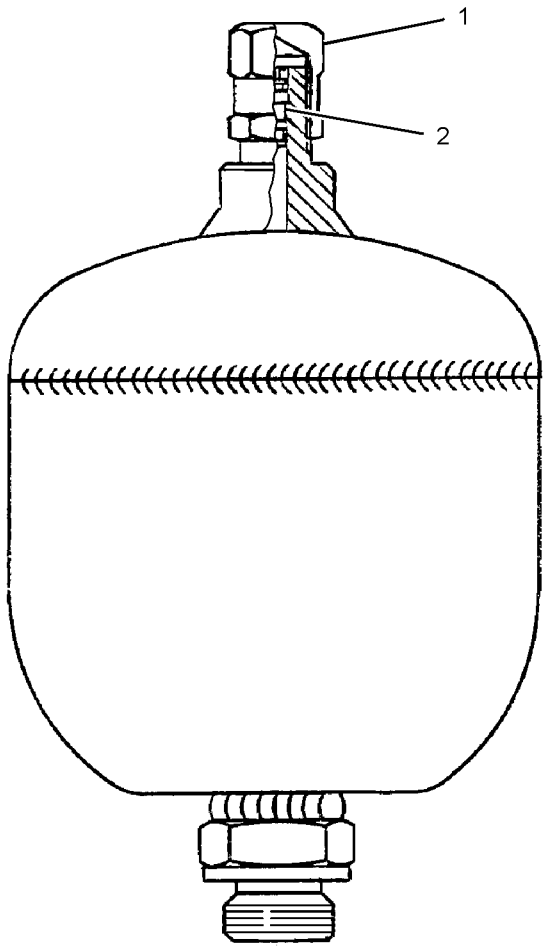

GRAPHIC #1 **<END>** g01769613

5I-8416 ACCUMULATOR GP-HYDRAULIC–CHARGED

S/N: WNE1-UP; ZMF1-UP; CWG1-UP

PART OF 087-4456 ACCUMULATOR GP-HYDRAULIC

SMCS-5077 **i01548084**

NOTE	REF NO	GRAPHIC REF	PART NUMBER	QTY	PART NAME 1 2 3 4 5 6 (PRODUCT LEVEL)	SEE PAGE
	1	1	**4I-8267**	1	CAP	
Y	2	1	*087-4454*	1	ACCUMULATOR GP-HYDRAULIC (CHARGED)	473

Y-SEPARATE ILLUSTRATION

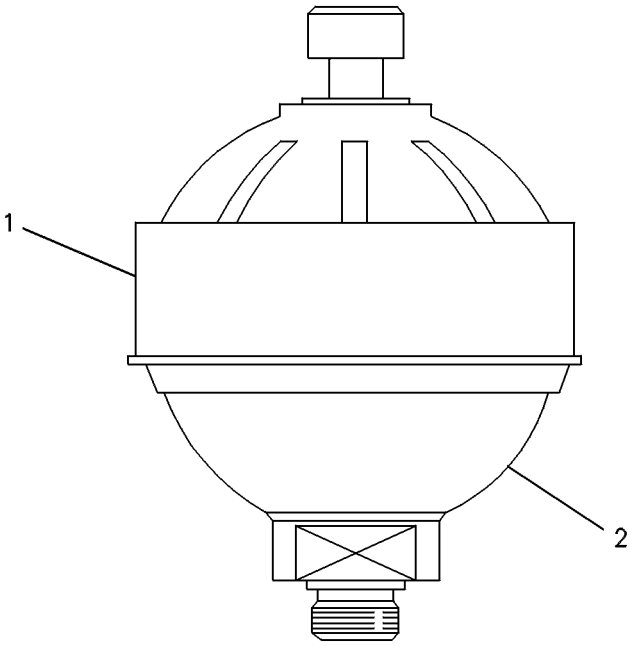

GRAPHIC #1 **<END>** g00237219

087-4454 ACCUMULATOR GP-HYDRAULIC—CHARGED

S/N: WNE1-UP; ZMF1-UP; CWG1-UP

PART OF 5I-8416 ACCUMULATOR GP-HYDRAULIC

SMCS-5077 **i01611978**

NOTE	REF NO	GRAPHIC REF	PART NUMBER	QTY	PART NAME 1 2 3 4 5 6 (PRODUCT LEVEL)	SEE PAGE
	1	1	**087-4577**	1	SEAL	
	2	1	**087-4576**	1	CAP	
	3	1	**087-4575**	1	CORE	
	4	1	**5P-3779**	1	TAG-NOTICE (SHIPPING INSTRUCTIONS)	

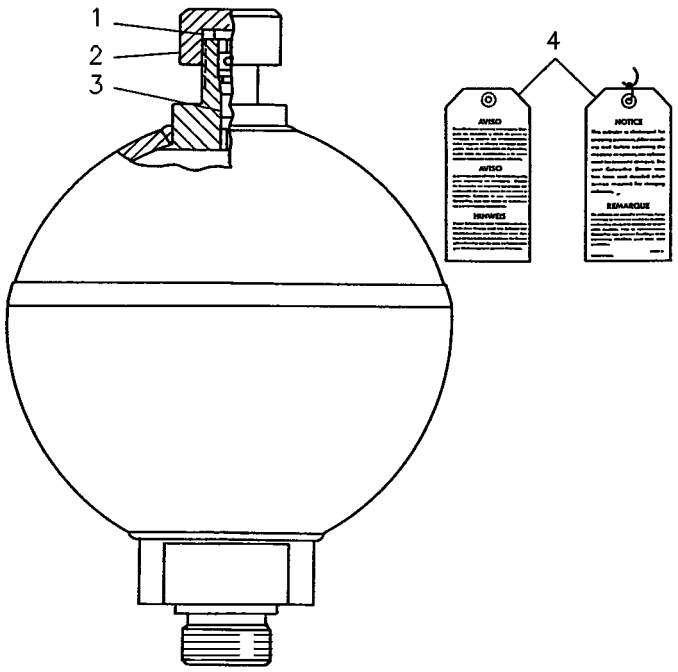

GRAPHIC #1 **<END>** g00237220

HYDRAULIC SYSTEM

087-4456 ACCUMULATOR GP-HYDRAULIC—CHARGED

S/N: WNE1-UP; ZMF1-UP; CWG1-UP
PART OF 164-6981 ACCUMULATOR GP-HYDRAULIC
FIELD REPLACEMENT ORDER 227-8807—PAGE 477

SMCS-5077 **i02290967**

NOTE	PART NUMBER	QTY	PART NAME 1 2 3 4 5 6 (PRODUCT LEVEL)	SEE PAGE
Y	*4I-1536*	1	ACCUMULATOR GP-HYDRAULIC (CHARGED)	471
			-OR-	
Y	*5I-8416*	1	ACCUMULATOR GP-HYDRAULIC (CHARGED)	472
			-OR-	
Y	*145-5106*	1	ACCUMULATOR GP-HYDRAULIC (CHARGED)	475

Y-SEPARATE ILLUSTRATION

<END>

145-5106 ACCUMULATOR GP-HYDRAULIC–CHARGED

S/N: WNE1-UP; ZMF1-UP; CWG1-UP
PART OF 087-4456 ACCUMULATOR GP-HYDRAULIC
FIELD REPLACEMENT ORDER 227-8807–PAGE 477

SMCS-5077 **i02464714**

NOTE	REF NO	GRAPHIC REF	PART NUMBER	QTY	PART NAME 1 2 3 4 5 6 (PRODUCT LEVEL)	SEE PAGE
	1	1	**159-4700**	1	FILM-WARNING (HIGH PRESSURE CYLINDER)	

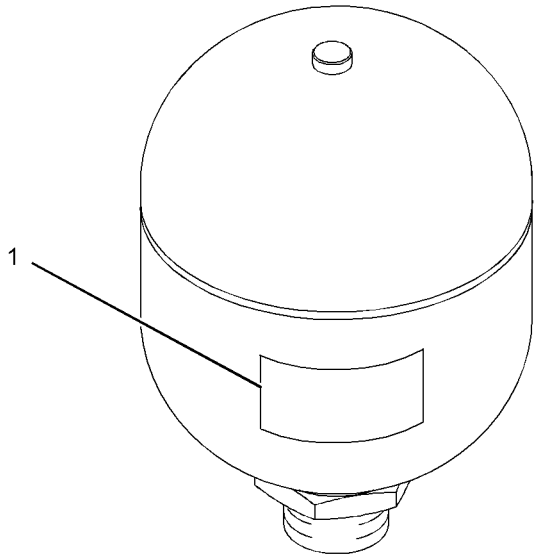

GRAPHIC #1 **<END>** g01229518

HYDRAULIC SYSTEM

164-6981 ACCUMULATOR GP-HYDRAULIC—CHARGED

S/N: WNE1-UP; ZMF1-UP; CWG1-UP

PART OF 266-0963, 275-1408 LINES GP-PILOT

SMCS-5077 **i01284579**

NOTE	PART NUMBER	QTY	PART NAME 1 2 3 4 5 6 (PRODUCT LEVEL)	SEE PAGE
Y	**087-4456**	1	ACCUMULATOR GP-HYDRAULIC (CHARGED)	474
	3K-0360	1	SEAL-O-RING	

Y-SEPARATE ILLUSTRATION

<END>

227-8807 ACCUMULATOR GP-HYDRAULIC—UNCHARGED

S/N: WNE1-UP; ZMF1-UP; CWG1-UP

FIELD REPLACEMENT FOR 087-4456—PAGE 474, 145-5106—PAGE 475

SMCS-5077 **i02847478**

NOTE	REF NO	GRAPHIC REF	PART NUMBER	QTY	PART NAME 1 2 3 4 5 6 (PRODUCT LEVEL)	SEE PAGE
					(NO SERVICED PARTS)	

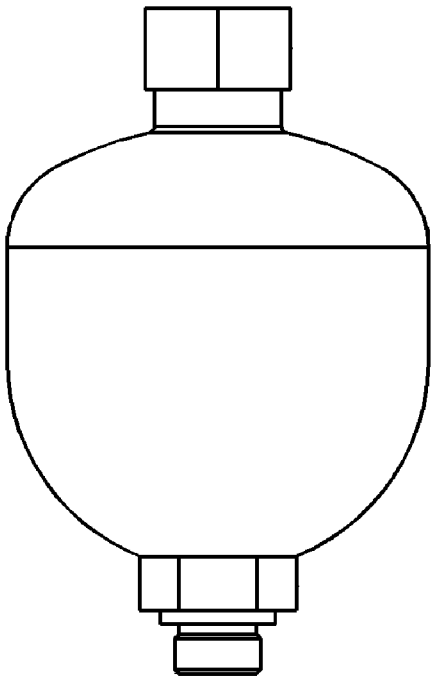

GRAPHIC #1 **<END>** g01423820

HYDRAULIC SYSTEM

173-3503 BASE GP-OIL FILTER—HYDRAULIC

S/N: WNE1-UP; ZMF1-UP; CWG1-UP
PART OF 188-4140 FILTER GP-OIL

SMCS-5068 **i01611138**

NOTE	REF NO	GRAPHIC REF	PART NUMBER	QTY	PART NAME 1 2 3 4 5 6 (PRODUCT LEVEL)	SEE PAGE
	1	1	**204-2763**	1	BLOCK	
	2	1	**5L-4758**	1	SEAL-O-RING	
	3	1	**177-2619**	2	PACKING	
	4	1	**173-3505**	1	PLATE-SLIDE	
	5	1	**137-3631**	1	PACKING	
M	6	1	**137-3626**	1	BOLT-SHOULDER (M6X1X28.75-MM)	
	7	1	**173-3506**	1	PLUG AS	
	8	1	**3J-1907**	1	SEAL-O-RING	
	9	1	**7Y-5272**	2	PIN-SPRING	
	10	1	**137-3628**	1	SHIM (0.1-MM THK)	

M-METRIC PART

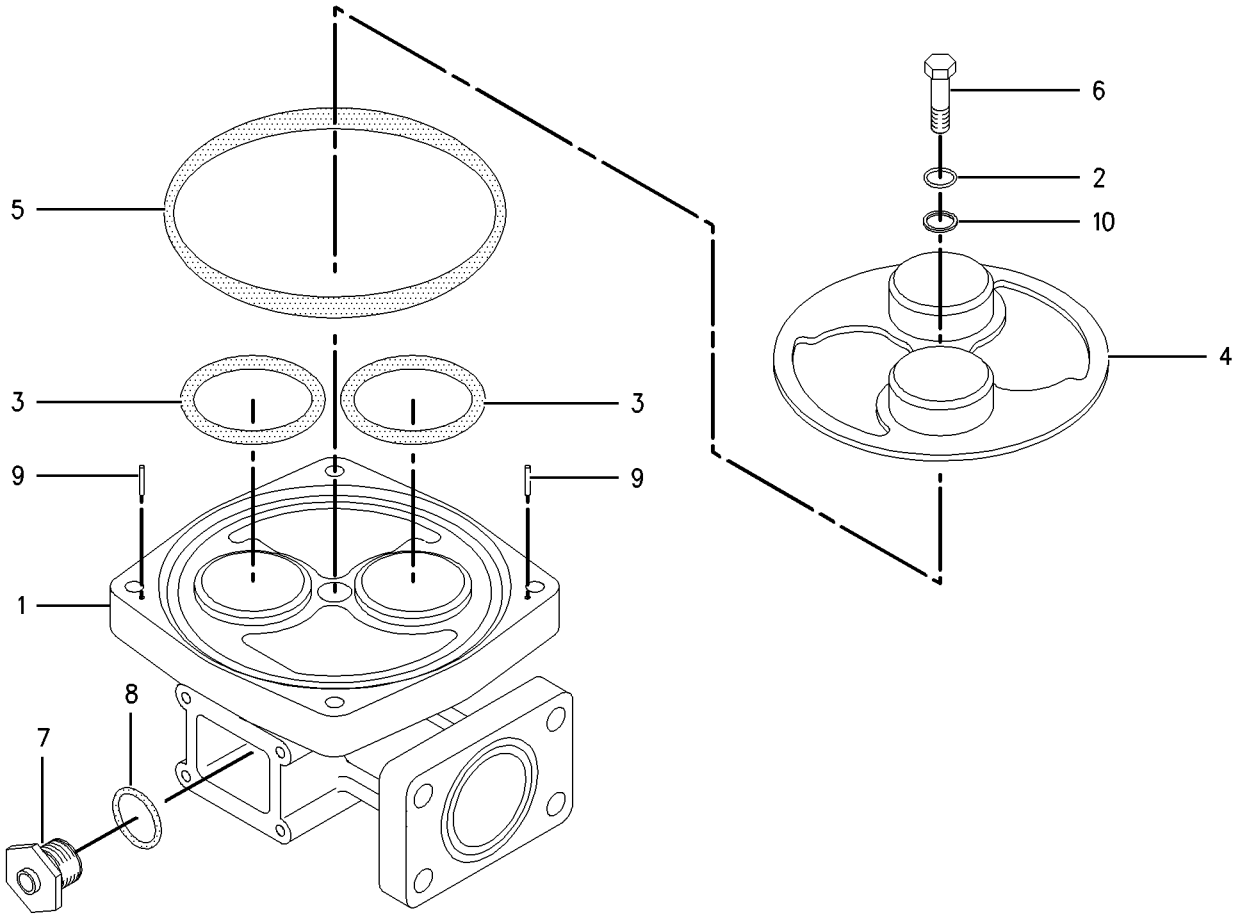

GRAPHIC #1 **<END>** g00671074

259-7499 CONTROL AR-AUXILIARY—SYSTEM 16, 1-WAY, 2-PUMP

S/N: WNE1-UP; ZMF1-UP
FOR USE WITH 270-6106—PAGE 481, 270-5687—PAGE 995, 270-5688—PAGE 995, 260-7984—PAGE 683
AN ATTACHMENT

SMCS-5051 **i02946519**

NOTE	PART NUMBER	QTY	PART NAME 1 2 3 4 5 6 (PRODUCT LEVEL)	SEE PAGE
Y	*260-8013*	1	LINES GP-FRONT (SYSTEM 16, 1-WAY, 2-PUMP)	613
Y	*260-7976*	1	LINES GP-PILOT (1-WAY FLOW)	674
Y	*285-1376*	1	VALVE & MTG GP-CONTROL (SYSTEM 16, 1-WAY, 2-PUMP)	811
Y	*267-8004*	1	WIRING GP-AUXILIARY CONTROL (SYSTEM 16, 1-WAY, 2-PUMP)	251

Y-SEPARATE ILLUSTRATION

<END>

259-7501 CONTROL AR-AUXILIARY—MEDIUM PRESSURE

S/N: WNE1-UP; ZMF1-UP
PART OF 314-3917 OPTION AR-CONTROL
FOR USE WITH 270-5687—PAGE 995, 270-5688—PAGE 995, 260-7984—PAGE 683. CANNOT BE USED WITH 259-7502—PAGE 479
AN ATTACHMENT

SMCS-5051 **i02981400**

NOTE	PART NUMBER	QTY	PART NAME 1 2 3 4 5 6 (PRODUCT LEVEL)	SEE PAGE
Y	*260-8015*	1	LINES GP-FRONT (MEDIUM PRESSURE)	621
Y	*260-7982*	1	LINES GP-PILOT (MEDIUM PRESSURE)	681
Y	*260-7983*	1	LINES GP-PUMP (HYD OIL COOLER, PILOT SYSTEM)	731
Y	*200-3365*	1	PUMP & MTG GP-AUXILIARY	791
Y	*267-8005*	1	WIRING GP-MEDIUM PRESSURE	304

Y-SEPARATE ILLUSTRATION

<END>

259-7502 CONTROL AR-AUXILIARY—COOLING CIRCUIT, HYDRAULIC OIL

S/N: WNE1-UP; ZMF1-UP
FOR USE WITH 259-7499—PAGE 479, 297-0497—PAGE 481. CANNOT BE USED WITH 259-7501—PAGE 479
AN ATTACHMENT

SMCS-5051 **i02947598**

NOTE	PART NUMBER	QTY	PART NAME 1 2 3 4 5 6 (PRODUCT LEVEL)	SEE PAGE
Y	*260-8016*	1	LINES GP-PUMP (COOLING CIRCUIT, HYDRAULIC OIL)	735
Y	*200-3365*	1	PUMP & MTG GP-AUXILIARY	791

Y-SEPARATE ILLUSTRATION

<END>

259-7619 CONTROL AR-AUXILIARY—SYSTEM 16, 1-WAY, 2-PUMP

S/N: CWG1-UP
PART OF 347-9906 OPTION AR-CONTROL
AN ATTACHMENT

SMCS-5051 **i03646134**

NOTE	PART NUMBER	QTY	PART NAME 1 2 3 4 5 6 (PRODUCT LEVEL)	SEE PAGE
Y	*272-4362*	1	LINES GP-FRONT (AUXILIARY)	632
Y	*266-0965*	1	LINES GP-PILOT	697
Y	*285-1376*	1	VALVE & MTG GP-CONTROL (SYSTEM 16, 1-WAY, 2-PUMP)	811
Y	*259-5281*	1	WIRING GP-AUXILIARY CONTROL (SYSTEM 16, 1-WAY, 2-PUMP)	249

Y-SEPARATE ILLUSTRATION

<END>

259-7621 CONTROL AR-AUXILIARY—MEDIUM PRESSURE

S/N: CWG1-UP
PART OF 347-9905 OPTION AR-CONTROL
AN ATTACHMENT

SMCS-5051 **i03646447**

NOTE	PART NUMBER	QTY	PART NAME 1 2 3 4 5 6 (PRODUCT LEVEL)	SEE PAGE
Y	*266-0969*	1	LINES GP-FRONT (MEDIUM PRESSURE)	628
Y	*266-0970*	1	LINES GP-PILOT (MEDIUM PRESSURE)	701
Y	*266-0971*	1	LINES GP-PUMP	742
Y	*200-3365*	1	PUMP & MTG GP-AUXILIARY	791
Y	*259-5283*	1	WIRING GP-MEDIUM PRESSURE	303

Y-SEPARATE ILLUSTRATION

<END>

259-7622 CONTROL AR-AUXILIARY—COOLING

S/N: CWG1-UP
PART OF 347-9906 OPTION AR-CONTROL
FOR USE WITH 259-7619—PAGE 480. CANNOT BE USED WITH 259-7621—PAGE 480
AN ATTACHMENT

SMCS-5051 **i03646135**

NOTE	PART NUMBER	QTY	PART NAME 1 2 3 4 5 6 (PRODUCT LEVEL)	SEE PAGE
Y	*266-0973*	1	LINES GP-PUMP (COOLER, PILOT OIL)	745
Y	*200-3365*	1	PUMP & MTG GP-AUXILIARY	791

Y-SEPARATE ILLUSTRATION

<END>

270-6106 CONTROL AR-AUXILIARY–FOOT SWITCH

S/N: WNE1-UP; ZMF1-UP; CWG1-UP

AN ATTACHMENT

SMCS-5051 **i03669814**

NOTE	PART NUMBER	QTY	PART NAME 1 2 3 4 5 6 (PRODUCT LEVEL)	SEE PAGE
Y	*270-6107*	1	CONTROL GP-FOOT (LEFT ON/OFF SWITCH)	999
Y	*259-5294*	1	FASTENER GP-WIRING HARNESS (FOOT SWITCH)	197
Y	*247-7465*	1	FILM GP (HAMMER CONTROL, FOOT SWITCH)	1124

Y-SEPARATE ILLUSTRATION

<END>

297-0491 CONTROL AR-AUXILIARY–

SYSTEM 17, COMBINED FN, MED PR

S/N: CWG1-UP

PART OF 347-9905 OPTION AR-CONTROL

AN ATTACHMENT

SMCS-5051 **i03646449**

NOTE	PART NUMBER	QTY	PART NAME 1 2 3 4 5 6 (PRODUCT LEVEL)	SEE PAGE
Y	*302-3315*	1	LINES GP-FRONT (SYSTEM 17, COMBINED FN, MED PR)	646
Y	*302-3316*	1	LINES GP-PILOT (SYSTEM 17, COMBINED FN, MED PR)	726
Y	*255-5713*	1	VALVE & MTG GP-CONTROL (AUXILIARY)	809
Y	*299-3053*	1	WIRING GP-AUXILIARY CONTROL (SYSTEM 17, COMBINED FN, MED PR)	256

Y-SEPARATE ILLUSTRATION

<END>

297-0497 CONTROL AR-AUXILIARY–

SYSTEM 17, COMBINED FN, MED PR

S/N: WNE1-UP; ZMF1-UP

PART OF 314-3917 OPTION AR-CONTROL

FOR USE WITH 270-6106–PAGE 481, 270-5687–PAGE 995, 270-5688–PAGE 995

AN ATTACHMENT

SMCS-5051 **i02953449**

NOTE	PART NUMBER	QTY	PART NAME 1 2 3 4 5 6 (PRODUCT LEVEL)	SEE PAGE
Y	*260-8014*	1	LINES GP-FRONT (SYSTEM 17, COMBINED FN, MED PR)	616
Y	*260-7981*	1	LINES GP-PILOT (SYSTEM 17, COMBINED FN, MED PR)	677
Y	*255-5713*	1	VALVE & MTG GP-CONTROL (AUXILIARY)	809
Y	*291-7752*	1	WIRING GP-AUXILIARY CONTROL (SYSTEM 17, COMBINED FN, MED PR)	253

Y-SEPARATE ILLUSTRATION

<END>

340-3819 CONTROL AR-AUXILIARY–BOOM FLOAT

S/N: CWG1-UP
PART OF 347-9903 OPTION AR-UNDERCARRIAGE
AN ATTACHMENT

SMCS-5051 **i03647061**

NOTE	PART NUMBER	QTY	PART NAME 1 2 3 4 5 6 (PRODUCT LEVEL)	SEE PAGE
Y	*298-4341*	1	FILM GP (SMARTBOOM)	1130
Y	*337-1276*	1	LINES GP-BOOM CYLINDER	592
Y	*275-1495*	1	LINES GP-PILOT (CAB)	719
Y	*289-5397*	1	LINES GP-PILOT (BOOM FLOAT)	721
Y	*289-5396*	1	LINES GP-RETURN (BOOM FLOAT)	754
Y	*278-6894*	1	LINES GP-SENSOR (OVERLOAD WARNING DEVICE)	758
Y	*336-6204*	1	WIRING GP-BOOM FLOAT	260
Y	*336-6156*	1	WIRING GP-CAB (BOOM FLOAT)	272
Y-SEPARATE ILLUSTRATION				

<END>

343-1177 CONTROL AR-BOOM–SMARTBOOM

S/N: WNE1-UP; ZMF1-UP
AN ATTACHMENT

SMCS-5063, 6501 **i03648732**

NOTE	PART NUMBER	QTY	PART NAME 1 2 3 4 5 6 (PRODUCT LEVEL)	SEE PAGE
Y	*298-4341*	1	FILM GP (SMARTBOOM)	1130
Y	*278-6874*	1	LINES GP-BOOM CYLINDER	583
Y	*260-7969*	1	LINES GP-PILOT (BOOM FLOAT)	667
Y	*275-1495*	1	LINES GP-PILOT (CAB)	719
Y	*275-1397*	1	LINES GP-RETURN (BOOM FLOAT)	751
Y	*278-6894*	1	LINES GP-SENSOR (OVERLOAD WARNING DEVICE)	758
Y	*336-6155*	1	WIRING GP-BOOM FLOAT	258
Y	*336-6156*	1	WIRING GP-CAB (BOOM FLOAT)	272
Y-SEPARATE ILLUSTRATION				

<END>

343-1178 CONTROL AR-BOOM–SMARTBOOM

S/N: WNE1-UP; ZMF1-UP
PART OF 347-9902, 347-9938 OPTION AR-UNDERCARRIAGE
AN ATTACHMENT

SMCS-5063, 6501 **i03648661**

NOTE	PART NUMBER	QTY	PART NAME 1 2 3 4 5 6 (PRODUCT LEVEL)	SEE PAGE
Y	*298-4341*	1	FILM GP (SMARTBOOM)	1130
Y	*317-4887*	1	LINES GP-BOOM CYLINDER (BOOM LOWERING CONTROL)	589
Y	*260-7969*	1	LINES GP-PILOT (BOOM FLOAT)	667
Y	*275-1495*	1	LINES GP-PILOT (CAB)	719
Y	*275-1397*	1	LINES GP-RETURN (BOOM FLOAT)	751
Y	*278-6894*	1	LINES GP-SENSOR (OVERLOAD WARNING DEVICE)	758
Y	*336-6155*	1	WIRING GP-BOOM FLOAT	258
Y	*336-6156*	1	WIRING GP-CAB (BOOM FLOAT)	272
Y-SEPARATE ILLUSTRATION				

<END>

HYDRAULIC SYSTEM

339-0813 CONTROL AR-COUPLER—HIGH PRESSURE

S/N: WNE1-UP; ZMF1-UP

AN ATTACHMENT

SMCS-6129 **i03648771**

NOTE	PART NUMBER	QTY	PART NAME 1 2 3 4 5 6 (PRODUCT LEVEL)	SEE PAGE
Y	*282-5705*	1	FILM GP (QUICK COUPLER)	1126
Y	*289-5416*	1	LINES GP-FRONT (QUICK COUPLER)	643
Y	*238-2485*	1	SWITCH GP-TOGGLE (QUICK COUPLER LOCK)	246
Y	*336-6135*	1	WIRING GP-QUICK COUPLER	309

Y-SEPARATE ILLUSTRATION

<END>

339-0814 CONTROL AR-COUPLER

S/N: WNE1-UP; ZMF1-UP

PART OF 347-9909, 347-9910 OPTION AR-HYDRAULIC

AN ATTACHMENT

SMCS-6129 **i03648679**

NOTE	PART NUMBER	QTY	PART NAME 1 2 3 4 5 6 (PRODUCT LEVEL)	SEE PAGE
Y	*268-6816*	1	FILM GP (QUICK COUPLER)	1125
Y	*275-1409*	1	LINES GP-FRONT (QUICK COUPLER)	635
Y	*336-6137*	1	WIRING GP-CAB (COUPLER)	270
Y	*336-6136*	1	WIRING GP-QUICK COUPLER	310

Y-SEPARATE ILLUSTRATION

<END>

342-5703 CONTROL AR-COUPLER

S/N: CWG1-UP

PART OF 347-9911, 347-9912 OPTION AR-HYDRAULIC

AN ATTACHMENT

SMCS-6129 **i03635986**

NOTE	PART NUMBER	QTY	PART NAME 1 2 3 4 5 6 (PRODUCT LEVEL)	SEE PAGE
Y	*268-6816*	1	FILM GP (QUICK COUPLER)	1125
Y	*285-2864*	1	LINES GP-FRONT (UNIVERSAL QUICK COUPLER)	639
Y	*336-6137*	1	WIRING GP-CAB (COUPLER)	270
Y	*342-2959*	1	WIRING GP-QUICK COUPLER	312

Y-SEPARATE ILLUSTRATION

<END>

HYDRAULIC SYSTEM

279-7871 COUPLING GP-FLEXIBLE

S/N: WNE1-UP; ZMF1-UP; CWG1-UP

PART OF 279-7870 COUPLING GP-PUMP

SMCS-3252 **i02762411**

NOTE	REF NO	GRAPHIC REF	PART NUMBER	QTY	PART NAME 1 2 3 4 5 6 (PRODUCT LEVEL)	SEE PAGE
	1	1	**7Y-0463**	1	ELEMENT-COUPLING (FLEXIBLE RUBBER)	
M	2	1	**7Y-0466**	2	SETSCREW-SOCKET (M16X2X22-MM)	
M	3	1	**7Y-0467**	4	BOLT-SOCKET HEAD (M18X2.5X55-MM)	
	4	1	**305-4950**	1	HUB	
	5	1	**305-4951**	4	INSERT-COUPLING	
	6	1	**305-4952**	4	INSERT-COUPLING	
	7	1	**7Y-0468**	8	PIN-SPRING	

M-METRIC PART

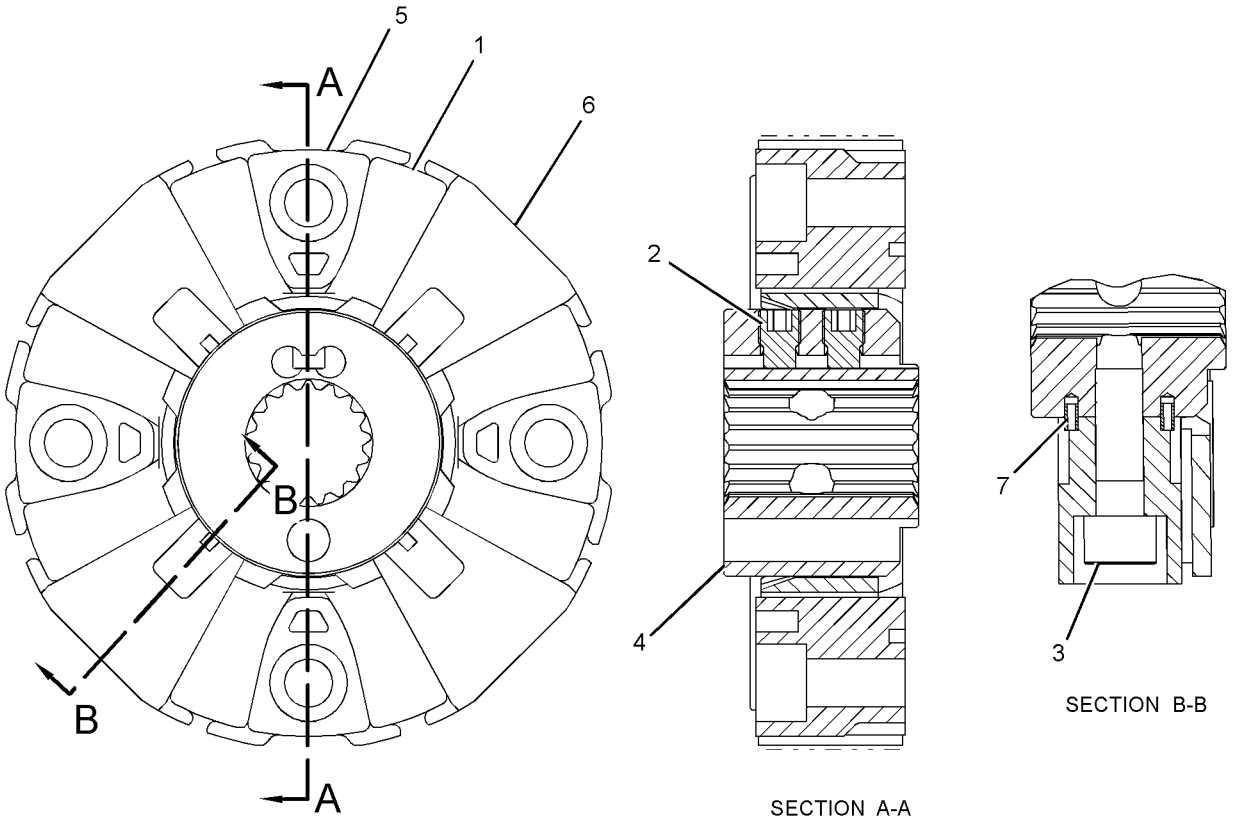

GRAPHIC #1 **<END>** g01380992

279-7870 COUPLING GP-PUMP

S/N: WNE1-UP; ZMF1-UP; CWG1-UP

PART OF 279-7869 PUMP & MTG GP-MAIN HYDRAULIC

SMCS-5062 **i02762412**

NOTE	REF NO	GRAPHIC REF	PART NUMBER	QTY	PART NAME 1 2 3 4 5 6 (PRODUCT LEVEL)	SEE PAGE
Y	1	1	**279-7871**	1	COUPLING GP-FLEXIBLE	484
M	2	1	**287-0047**	4	BOLT-SOCKET HEAD (M18X2.5X600-MM)	
	3	1	**7Y-0468**	4	PIN-SPRING	

M-METRIC PART
Y-SEPARATE ILLUSTRATION

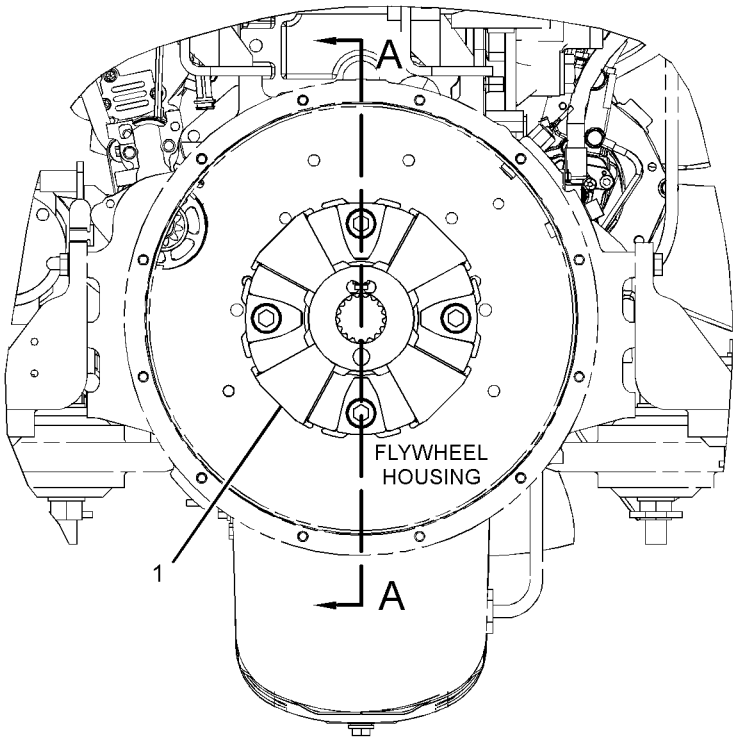

RIGHT SIDE VIEW

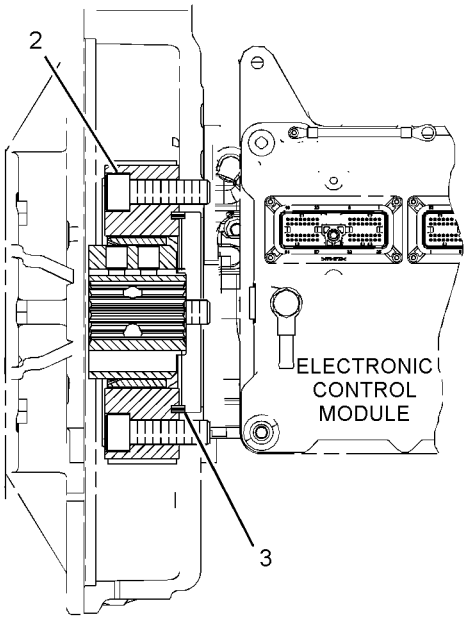

SECTION A-A

GRAPHIC #1 **<END>** g01291991

242-6730 CYLINDER & LINES GP-BOOM—LH

S/N: WNE1-UP; ZMF1-UP; CWG1-UP
PART OF 275-3695, 298-4308, 298-4310 BOOM AR-1 PIECE LONG
AN ATTACHMENT

SMCS-5456, 7562 **i02420758**

NOTE	PART NUMBER	QTY	PART NAME 1 2 3 4 5 6 (PRODUCT LEVEL)	SEE PAGE
Y	**242-6731**	1	CYLINDER & SEAL GP-BOOM	490
Y	*242-6732*	1	LINES GP-BOOM CYLINDER (LH)	581

Y-SEPARATE ILLUSTRATION

<END>

242-6736 CYLINDER & LINES GP-BOOM—RH

S/N: WNE1-UP; ZMF1-UP; CWG1-UP
PART OF 275-3695, 298-4308, 298-4310 BOOM AR-1 PIECE LONG
AN ATTACHMENT

SMCS-5456, 7562 **i02421013**

NOTE	PART NUMBER	QTY	PART NAME 1 2 3 4 5 6 (PRODUCT LEVEL)	SEE PAGE
Y	**242-6731**	1	CYLINDER & SEAL GP-BOOM	490
Y	*242-6737*	1	LINES GP-BOOM CYLINDER (RH)	582

Y-SEPARATE ILLUSTRATION

<END>

242-6738 CYLINDER & LINES GP-BOOM—LH

S/N: CWG1-UP
PART OF 240-3834 BOOM AR-1 PIECE SHORT
AN ATTACHMENT

SMCS-5456, 7562 **i02996469**

NOTE	PART NUMBER	QTY	PART NAME 1 2 3 4 5 6 (PRODUCT LEVEL)	SEE PAGE
Y	*242-6739*	1	CYLINDER & SEAL GP-BOOM	492
Y	*115-8902*	1	LINES GP-BOOM CYLINDER (LH)	577

Y-SEPARATE ILLUSTRATION

<END>

242-6742 CYLINDER & LINES GP-BOOM—RH

S/N: CWG1-UP
PART OF 240-3834 BOOM AR-1 PIECE SHORT
AN ATTACHMENT

SMCS-5456, 7562 **i02996471**

NOTE	PART NUMBER	QTY	PART NAME 1 2 3 4 5 6 (PRODUCT LEVEL)	SEE PAGE
Y	*242-6739*	1	CYLINDER & SEAL GP-BOOM	492
Y	*115-8903*	1	LINES GP-BOOM CYLINDER (RH)	578

Y-SEPARATE ILLUSTRATION

<END>

242-6745 CYLINDER & LINES GP-BOOM—LH

S/N: WNE1-UP; ZMF1-UP; CWG1-UP
PART OF 298-4342 BOOM AR-1 PIECE LONG, 298-4309 BOOM AR-1 PIECE SHORT
AN ATTACHMENT

SMCS-5456, 7562 **i02421350**

NOTE	PART NUMBER	QTY	PART NAME 1 2 3 4 5 6 (PRODUCT LEVEL)	SEE PAGE
Y	**242-6746**	1	CYLINDER & SEAL GP-BOOM	493
Y	*242-6732*	1	LINES GP-BOOM CYLINDER (LH)	581

Y-SEPARATE ILLUSTRATION

<END>

242-6749 CYLINDER & LINES GP-BOOM—RH

S/N: WNE1-UP; ZMF1-UP; CWG1-UP
PART OF 298-4342 BOOM AR-1 PIECE LONG, 298-4309 BOOM AR-1 PIECE SHORT
AN ATTACHMENT

SMCS-5456, 7562 **i02421503**

NOTE	PART NUMBER	QTY	PART NAME 1 2 3 4 5 6 (PRODUCT LEVEL)	SEE PAGE
Y	**242-6746**	1	CYLINDER & SEAL GP-BOOM	493
Y	*242-6737*	1	LINES GP-BOOM CYLINDER (RH)	582

Y-SEPARATE ILLUSTRATION

<END>

225-4590 CYLINDER & LINES GP-BUCKET

S/N: CWG1-UP
PART OF 247-7331 LINKAGE AR-BUCKET
AN ATTACHMENT

SMCS-5457 **i02348508**

NOTE	PART NUMBER	QTY	PART NAME 1 2 3 4 5 6 (PRODUCT LEVEL)	SEE PAGE
Y	**225-4591**	1	CYLINDER & SEAL GP-BUCKET	495
Y	*225-4592*	1	LINES GP-BUCKET CYLINDER	597

Y-SEPARATE ILLUSTRATION

<END>

225-4598 CYLINDER & LINES GP-BUCKET

S/N: WNE1-UP; ZMF1-UP
PART OF 247-7383 LINKAGE AR-BUCKET
AN ATTACHMENT

SMCS-5457 **i02426063**

NOTE	PART NUMBER	QTY	PART NAME 1 2 3 4 5 6 (PRODUCT LEVEL)	SEE PAGE
Y	**225-4599**	1	CYLINDER & SEAL GP-BUCKET	497
Y	*225-4592*	1	LINES GP-BUCKET CYLINDER	597

Y-SEPARATE ILLUSTRATION

<END>

HYDRAULIC SYSTEM

242-6755 CYLINDER & LINES GP-BUCKET

S/N: WNE1-UP; ZMF1-UP; CWG1-UP
PART OF 240-3858, 275-3707 LINKAGE AR-BUCKET
AN ATTACHMENT

SMCS-5457 **i02402144**

NOTE	PART NUMBER	QTY	PART NAME 1 2 3 4 5 6 (PRODUCT LEVEL)	SEE PAGE
Y	**242-6756**	1	CYLINDER & SEAL GP-BUCKET	499
Y	*242-6757*	1	LINES GP-BUCKET CYLINDER	598

Y-SEPARATE ILLUSTRATION

<END>

242-6758 CYLINDER & LINES GP-BUCKET

S/N: WNE1-UP; ZMF1-UP
PART OF 240-3861 LINKAGE AR-BUCKET
AN ATTACHMENT

SMCS-5457 **i02402287**

NOTE	PART NUMBER	QTY	PART NAME 1 2 3 4 5 6 (PRODUCT LEVEL)	SEE PAGE
Y	**242-6759**	1	CYLINDER & SEAL GP-BUCKET	501
Y	*242-6757*	1	LINES GP-BUCKET CYLINDER	598

Y-SEPARATE ILLUSTRATION

<END>

242-6733 CYLINDER & LINES GP-STICK

S/N: WNE1-UP; ZMF1-UP; CWG1-UP
PART OF 275-3695, 298-4308, 298-4310 BOOM AR-1 PIECE LONG
AN ATTACHMENT

SMCS-5458 **i02420898**

NOTE	PART NUMBER	QTY	PART NAME 1 2 3 4 5 6 (PRODUCT LEVEL)	SEE PAGE
Y	**242-6734**	1	CYLINDER & SEAL GP-STICK	503
Y	*242-6735*	1	LINES GP-STICK CYLINDER	759

Y-SEPARATE ILLUSTRATION

<END>

242-6747 CYLINDER & LINES GP-STICK

S/N: WNE1-UP; ZMF1-UP
PART OF 298-4342 BOOM AR-1 PIECE LONG
AN ATTACHMENT

SMCS-5458 **i02421388**

NOTE	PART NUMBER	QTY	PART NAME 1 2 3 4 5 6 (PRODUCT LEVEL)	SEE PAGE
Y	**242-6748**	1	CYLINDER & SEAL GP-STICK	505
Y	*242-6735*	1	LINES GP-STICK CYLINDER	759

Y-SEPARATE ILLUSTRATION

<END>

242-6753 CYLINDER & LINES GP-STICK

S/N: CWG1-UP
PART OF 240-3834 BOOM AR-1 PIECE SHORT
AN ATTACHMENT

SMCS-5458 **i02946678**

NOTE	PART NUMBER	QTY	PART NAME 1 2 3 4 5 6 (PRODUCT LEVEL)	SEE PAGE
Y	*242-6754*	1	CYLINDER & SEAL GP-STICK	507
Y	*248-9925*	1	LINES GP-STICK CYLINDER	760

Y-SEPARATE ILLUSTRATION

<END>

242-6762 CYLINDER & LINES GP-STICK

S/N: WNE1-UP; ZMF1-UP; CWG1-UP
PART OF 298-4309 BOOM AR-1 PIECE SHORT
AN ATTACHMENT

SMCS-5458 **i02424331**

NOTE	PART NUMBER	QTY	PART NAME 1 2 3 4 5 6 (PRODUCT LEVEL)	SEE PAGE
Y	**242-6763**	1	CYLINDER & SEAL GP-STICK	508
Y	*242-6735*	1	LINES GP-STICK CYLINDER	759

Y-SEPARATE ILLUSTRATION

<END>

242-6731 CYLINDER & SEAL GP-BOOM

S/N: WNE1-UP; ZMF1-UP; CWG1-UP
120-MM (4.7-IN) BORE X 1260-MM (49.6-IN) STROKE
PART OF 242-6730, 242-6736 CYLINDER & LINES GP-BOOM
AN ATTACHMENT

SMCS-5456 **i02981403**

NOTE	REF NO	GRAPHIC REF	PART NUMBER	QTY	PART NAME 1 2 3 4 5 6 (PRODUCT LEVEL)	SEE PAGE
J	1	1	**121-1611**	1	SEAL-LIP TYPE	
J	2	1	**096-1568**	1	RING-BACKUP	
J	3	1	**096-1567**	1	SEAL-U-CUP	
J	4	1	**204-3622**	1	SEAL-BUFFER	
	5	1	**096-4402**	1	BEARING-SLEEVE	
	6	1	**094-0747**	1	RING-RETAINING	
	7	1	**185-0334**	1	HEAD	
M	8	1	**8T-1447**	12	BOLT-SOCKET HEAD (M16X2X70-MM)	
J	9	1	**095-1717**	1	SEAL-O-RING	
J	10	1	**096-3964**	1	RING-BACKUP	
	11	1	**247-8866**	1	CYLINDER AS	
	11A	1	**241-7379**	1	BEARING-SLEEVE	
	12	1	**247-8867**	1	ROD AS	
	12A	1	**241-7380**	1	BEARING-SLEEVE	
	13	1	**4I-8864**	1	STOP	
J	14	1	**126-1935**	1	RING-SEAL	
J	15	1	**4I-3615**	2	RING-BACKUP	
J	16	1	**096-7803**	1	SEAL AS	
J	17	1	**247-8865**	2	RING	
J	18	1	**086-0255**	2	RING	
	19	1	**247-8864**	1	PISTON	
M	20	1	**096-3216**	1	SETSCREW-SOCKET (M12X1.75X12-MM)	
	21	1	**3D-2891**	1	BALL	
	22	1	**166-1494**	4	SEAL-LIP TYPE	
	23	1	**3B-8489**	1	FITTING-GREASE	
					AVAILABLE REPAIR KIT(S):	
J			**247-8868**	1	KIT-SEAL (BOOM)	

J-KIT MARKED J SERVICES PART(S) MARKED J
M-METRIC PART

242-6731 CYLINDER & SEAL GP-BOOM *(contd.)*

i02981403

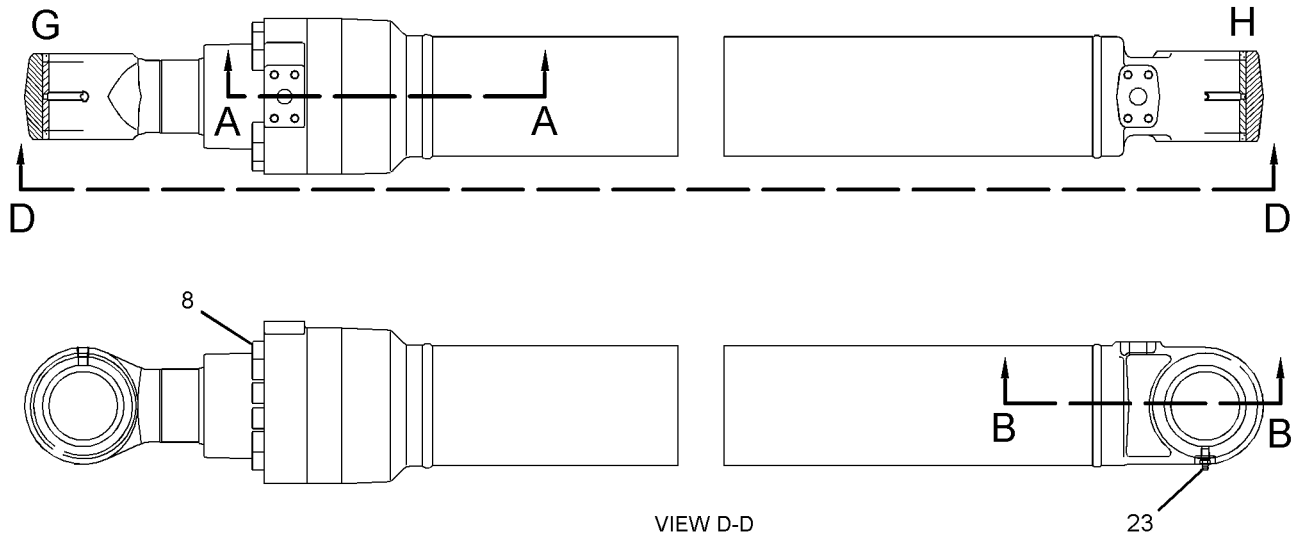

VIEW D-D

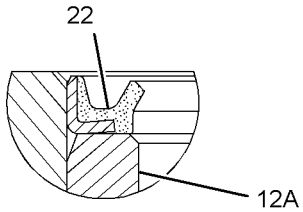

VIEW OF AREA G

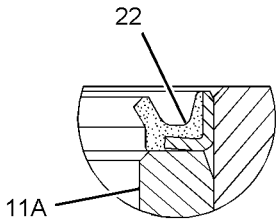

VIEW OF AREA H

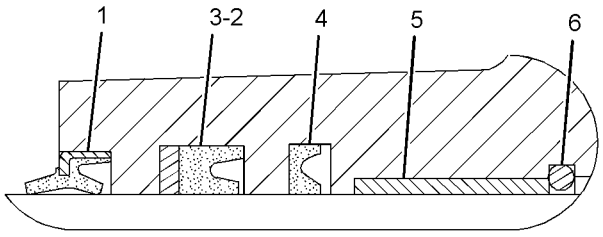

VIEW OF AREA C

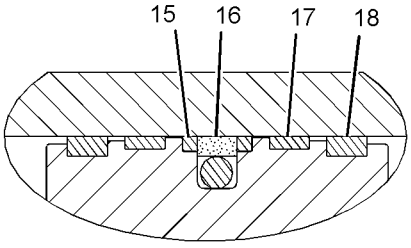

VIEW OF AREA F

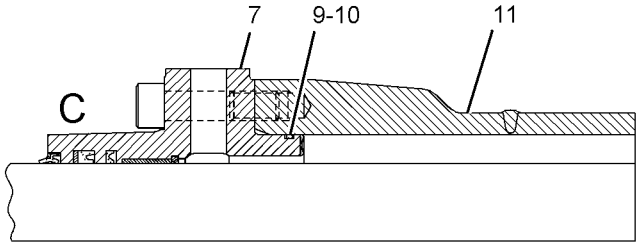

SECTION A-A

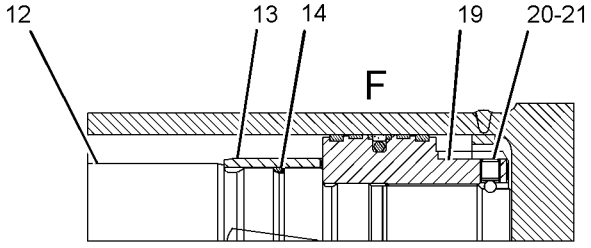

SECTION B-B

GRAPHIC #1 **<END>** g01218786

HYDRAULIC SYSTEM

242-6739 CYLINDER & SEAL GP-BOOM

S/N: CWG1-UP

PART OF 242-6738, 242-6742 CYLINDER & LINES GP-BOOM

AN ATTACHMENT

SMCS-5456 **i02613600**

NOTE	REF NO	GRAPHIC REF	PART NUMBER	QTY	PART NAME 1 2 3 4 5 6 (PRODUCT LEVEL)	SEE PAGE
	1	1	**3B-8489**	1	FITTING-GREASE	
Y	2	1	**242-6764**	1	CYLINDER GP-BOOM	510
	3	1	**166-1494**	4	SEAL-LIP TYPE	

Y-SEPARATE ILLUSTRATION

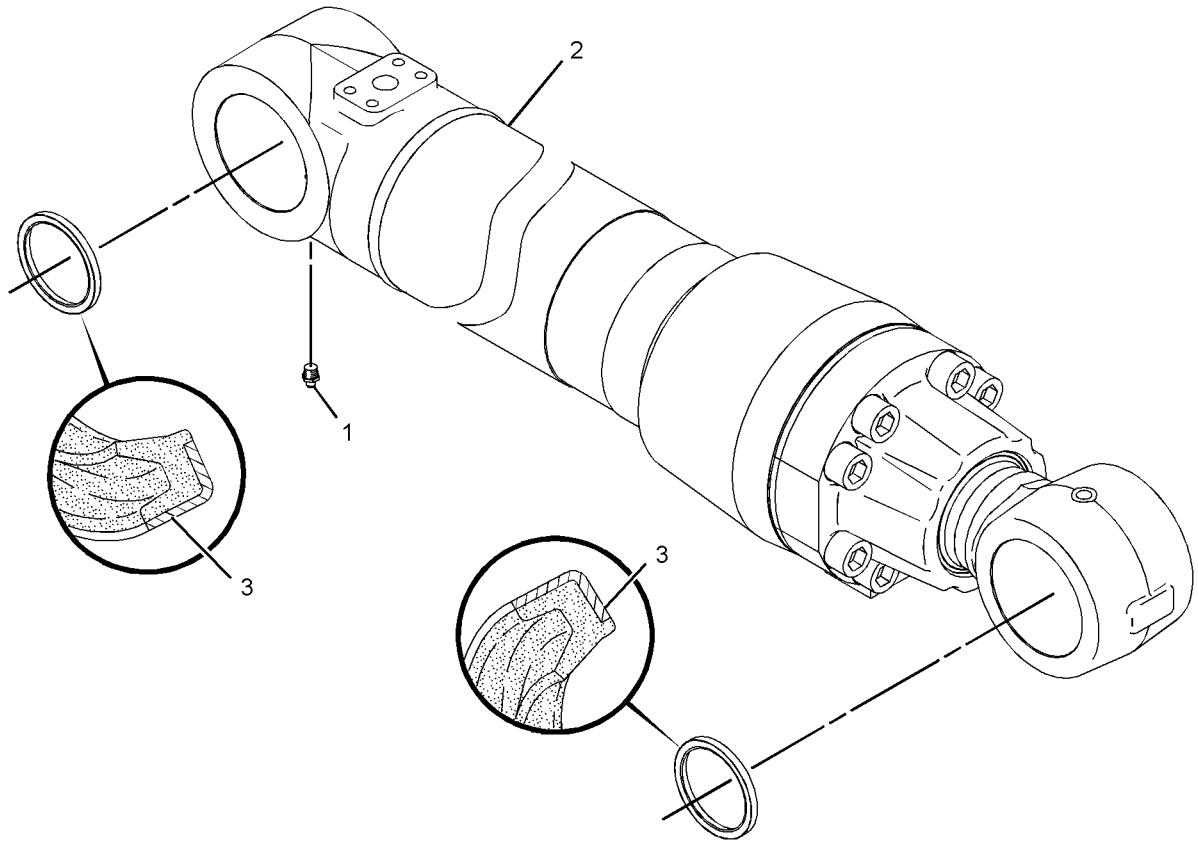

GRAPHIC #1 **<END>** g01222850

HYDRAULIC SYSTEM

242-6746 CYLINDER & SEAL GP-BOOM

S/N: WNE1-UP; ZMF1-UP; CWG1-UP
120-MM (4.7-IN) BORE X 1260-MM (49.6-IN) STROKE
PART OF 242-6745, 242-6749 CYLINDER & LINES GP-BOOM
AN ATTACHMENT

SMCS-5456 **i02769960**

NOTE	REF NO	GRAPHIC REF	PART NUMBER	QTY	PART NAME 1 2 3 4 5 6 (PRODUCT LEVEL)	SEE PAGE
J	1	1	**154-0729**	1	SEAL-LIP TYPE	
J	2	1	**154-0731**	1	RING-BACKUP	
J	3	1	**154-0730**	1	SEAL-U-CUP	
J	4	1	**154-0732**	1	SEAL-BUFFER	
	5	1	**096-4402**	1	BEARING-SLEEVE	
	6	1	**094-0747**	1	RING-RETAINING	
	7	1	**185-0334**	1	HEAD	
M	8	1	**8T-1447**	12	BOLT-SOCKET HEAD (M16X2X70-MM)	
J	9	1	**095-1717**	1	SEAL-O-RING	
J	10	1	**096-3964**	1	RING-BACKUP	
	11	1	**247-8866**	1	CYLINDER AS	
	11A	1	**241-7379**	1	BEARING-SLEEVE	
	12	1	**247-8867**	1	ROD AS	
	12A	1	**241-7380**	1	BEARING-SLEEVE	
	13	1	**4I-8864**	1	STOP	
J	14	1	**126-1935**	1	RING-SEAL	
J	15	1	**4I-3615**	2	RING-BACKUP	
J	16	1	**096-7803**	1	SEAL AS	
J	17	1	**247-8865**	2	RING	
J	18	1	**086-0255**	2	RING	
	19	1	**247-8864**	1	PISTON	
M	20	1	**096-3216**	1	SETSCREW-SOCKET (M12X1.75X12-MM)	
	21	1	**3D-2891**	1	BALL	
	22	1	**166-1494**	4	SEAL-LIP TYPE	
	23	1	**3B-8489**	1	FITTING-GREASE	
					AVAILABLE REPAIR KIT(S):	
J			**266-7891**		KIT-SEAL (CYLINDER) (BOOM)	

J-KIT MARKED J SERVICES PART(S) MARKED J
M-METRIC PART

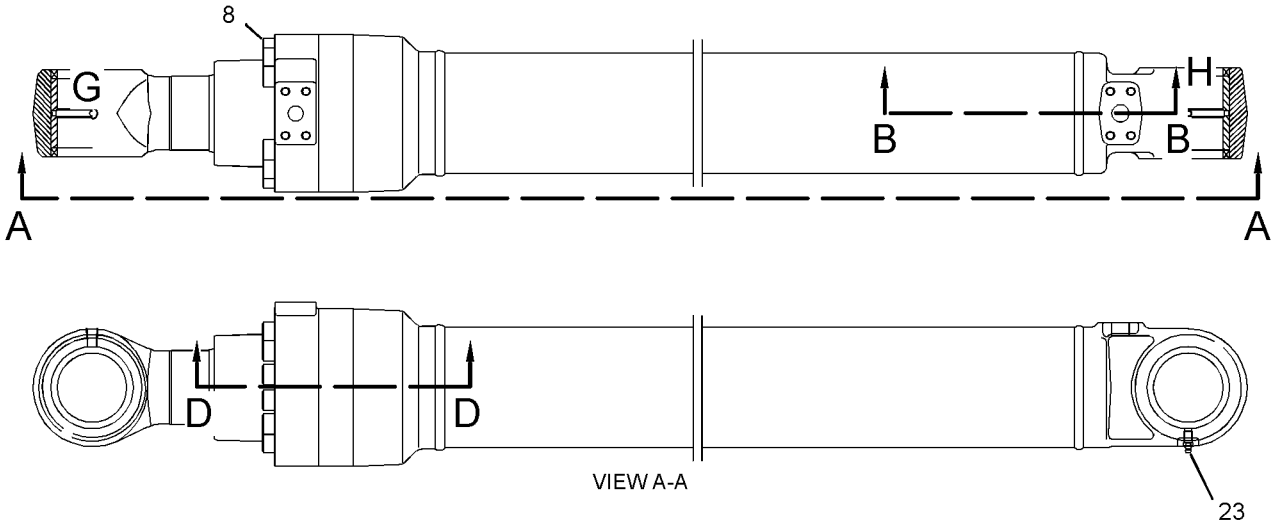

VIEW A-A

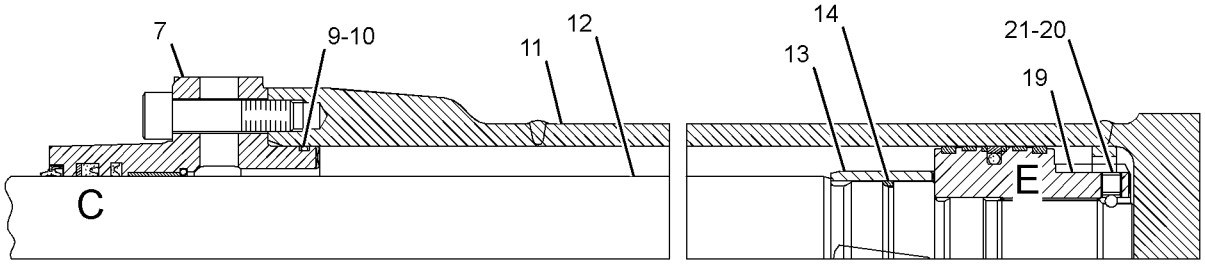

SECTION D-D

SECTION B-B

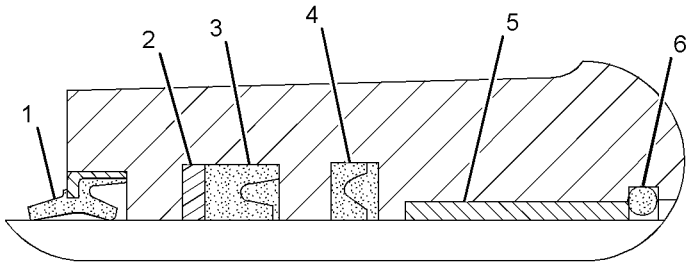

VIEW OF AREA C

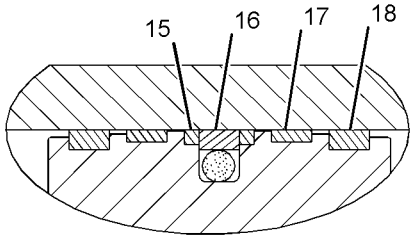

VIEW OF AREA E

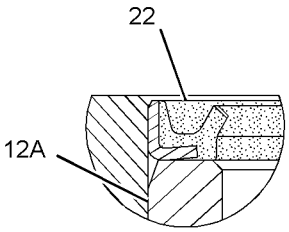

VIEW OF AREA G

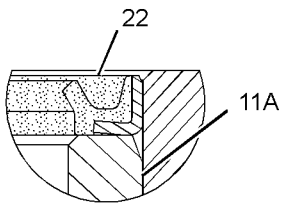

VIEW OF AREA H

GRAPHIC #1 **<END>** g01220837

225-4591 CYLINDER & SEAL GP-BUCKET

S/N: CWG1-UP
135-MM (5.3-IN) BORE X 1156-MM (45.5-IN) STROKE
PART OF 225-4590 CYLINDER & LINES GP-BUCKET
AN ATTACHMENT

SMCS-5457 **i02348509**

NOTE	REF NO	GRAPHIC REF	PART NUMBER	QTY	PART NAME 1 2 3 4 5 6 (PRODUCT LEVEL)	SEE PAGE
J	1	1	**150-5828**	1	SEAL-LIP TYPE	
J	2	1	**150-5827**	1	RING-BACKUP	
J	3	1	**150-5826**	1	SEAL-U-CUP	
J	4	1	**209-5957**	1	SEAL-BUFFER	
	5	1	**096-4430**	1	BEARING-SLEEVE	
	6	1	**7Y-4631**	1	RING-RETAINING	
	7	1	**234-4580**	1	HEAD	
M	8	1	**4I-3628**	12	BOLT-SOCKET HEAD (M18X2.5X80-MM)	
J	9	1	**095-1720**	1	SEAL-O-RING	
J	10	1	**234-4581**	1	RING-BACKUP	
	11	1	**234-4589**	1	ROD AS	
	11A	1	**228-5615**	1	BEARING-SLEEVE	
	12	1	**234-4588**	1	CYLINDER AS	
	12A	1	**235-7769**	1	BEARING-SLEEVE	
J	13	1	**234-4583**	1	SEAL AS	
J	14	1	**234-4584**	2	RING-BACKUP	
J	15	1	**234-4585**	2	RING	
J	16	1	**234-4586**	2	RING	
	17	1	**234-4582**	1	PISTON	
M	18	1	**096-6210**	1	SETSCREW-SOCKET (M14X2X14-MM)	
	19	1	**4B-9880**	1	BALL	
	20	1	**166-1495**	2	SEAL-LIP TYPE	
	21	1	**235-7679**	2	SEAL-LIP TYPE	
	22	1	**3B-8489**	2	FITTING-GREASE	
					AVAILABLE REPAIR KIT(S):	
J			**234-4587**	1	KIT-SEAL (BUCKET CYLINDER)	

J-KIT MARKED J SERVICES PART(S) MARKED J
M-METRIC PART

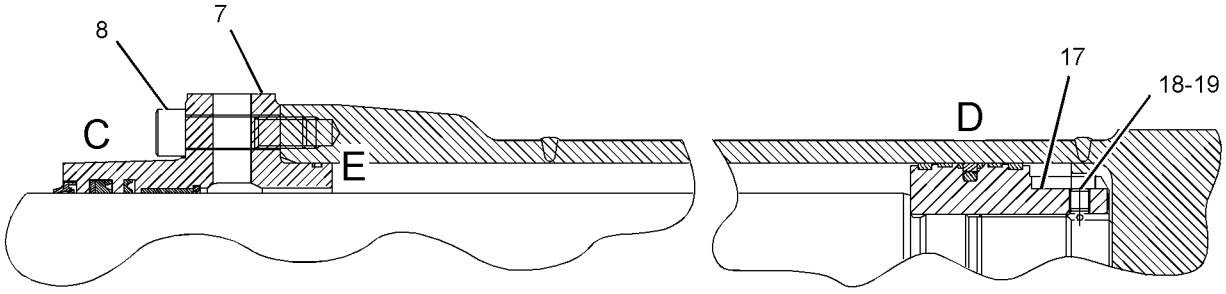

SECTION A-A

SECTION B-B

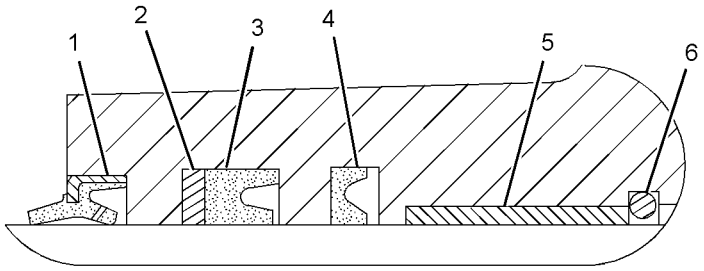

VIEW OF AREA C

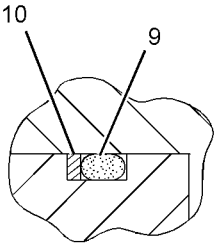

VIEW OF AREA E

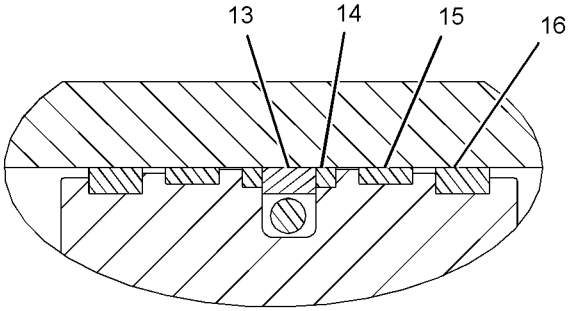

VIEW OF AREA D

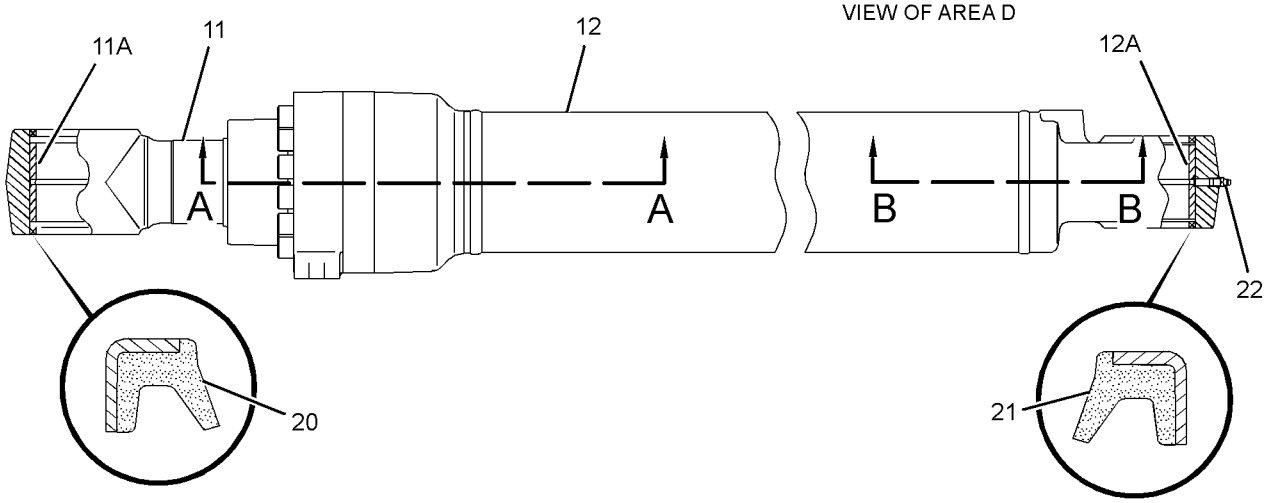

GRAPHIC #1 **<END>** g01191305

225-4599 CYLINDER & SEAL GP-BUCKET

S/N: WNE1-UP; ZMF1-UP
135-MM (5.3-IN) BORE X 1156-MM (45.5-IN) STROKE
PART OF 225-4598 CYLINDER & LINES GP-BUCKET
AN ATTACHMENT

SMCS-5457 **i02593770**

NOTE	REF NO	GRAPHIC REF	PART NUMBER	QTY	PART NAME 1 2 3 4 5 6 (PRODUCT LEVEL)	SEE PAGE
J	1	1	**259-0655**	1	SEAL-LIP TYPE	
J	2	1	**259-0654**	1	RING-BACKUP	
J	3	1	**259-0653**	1	SEAL-U-CUP	
J	4	1	**259-0652**	1	SEAL-BUFFER	
	5	1	**096-4430**	1	BEARING-SLEEVE	
	6	1	**7Y-4631**	1	RING-RETAINING	
	7	1	**234-4580**	1	HEAD	
M	8	1	**4I-3628**	12	BOLT-SOCKET HEAD (M18X2.5X80-MM)	
J	9	1	**095-1720**	1	SEAL-O-RING	
J	10	1	**234-4581**	1	RING-BACKUP	
	11	1	**234-4589**	1	ROD AS	
	11A	1	**228-5615**	1	BEARING-SLEEVE	
	12	1	**234-4588**	1	CYLINDER AS	
	12A	1	**235-7769**	1	BEARING-SLEEVE	
J	13	1	**234-4583**	1	SEAL AS	
J	14	1	**234-4584**	2	RING-BACKUP	
J	15	1	**234-4585**	2	RING	
J	16	1	**234-4586**	2	RING	
	17	1	**234-4582**	1	PISTON	
M	18	1	**096-6210**	1	SETSCREW-SOCKET (M14X2X14-MM)	
	19	1	**4B-9880**	1	BALL	
	20	1	**166-1495**	2	SEAL-LIP TYPE	
	21	1	**235-7679**	2	SEAL-LIP TYPE	
	22	1	**3B-8489**	2	FITTING-GREASE	
					AVAILABLE REPAIR KIT(S):	
J			**259-0656**	1	KIT-SEAL (CYLINDER) (BUCKET)	

J-KIT MARKED J SERVICES PARTS MARKED J
M-METRIC PART

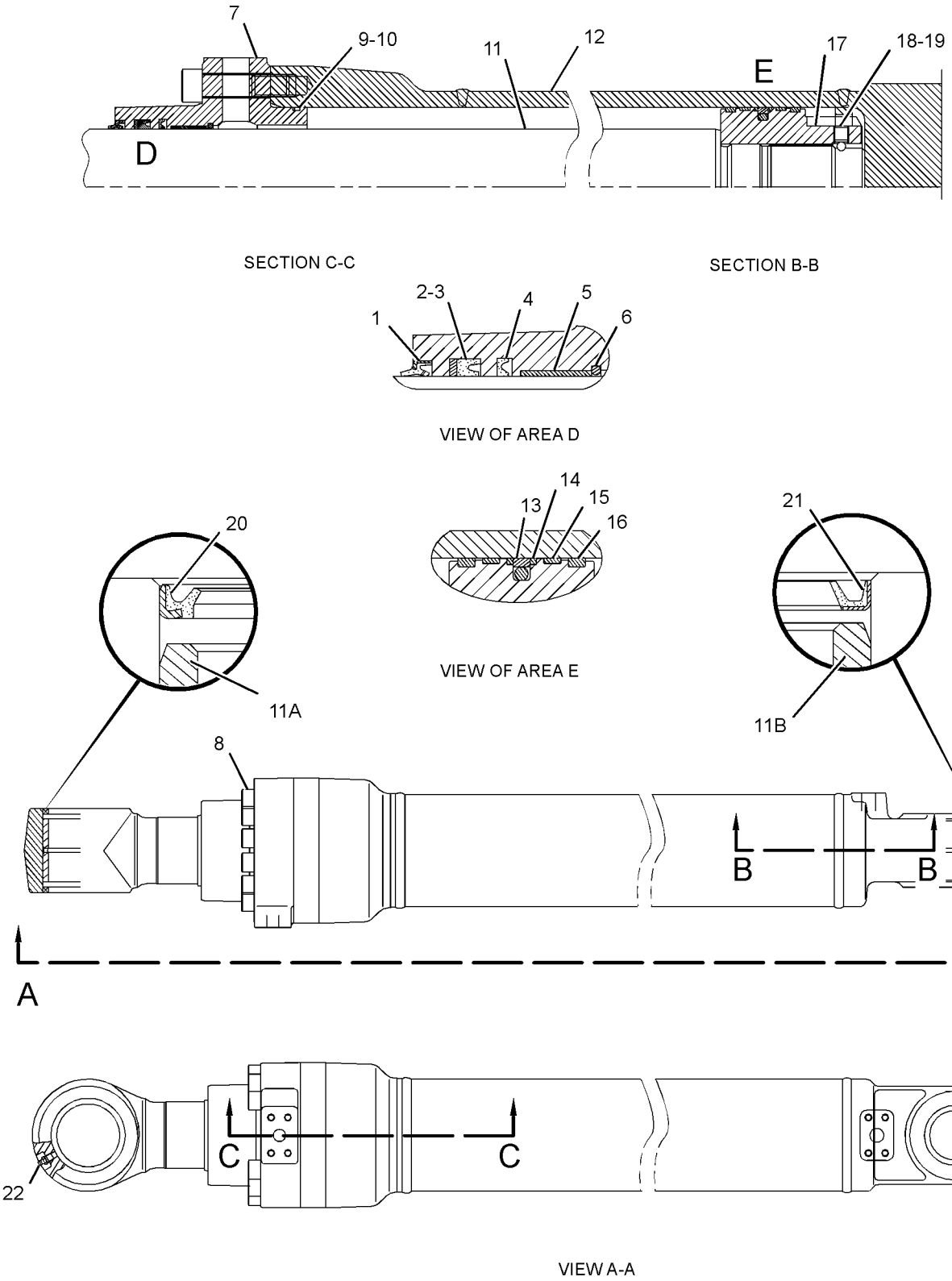

GRAPHIC #1 **<END>** g01230434

HYDRAULIC SYSTEM

242-6756 CYLINDER & SEAL GP-BUCKET

S/N: WNE1-UP; ZMF1-UP; CWG1-UP
120-MM (4.7-IN) BORE X 1104-MM (43.5-IN) STROKE
PART OF 242-6755 CYLINDER & LINES GP-BUCKET
AN ATTACHMENT

SMCS-5457 **i02780693**

NOTE	REF NO	GRAPHIC REF	PART NUMBER	QTY	PART NAME 1 2 3 4 5 6 (PRODUCT LEVEL)	SEE PAGE
J	1	1	**121-1611**	1	SEAL-LIP TYPE	
J	2	1	**096-1568**	1	RING-BACKUP	
J	3	1	**096-1567**	1	SEAL-U-CUP	
J	4	1	**204-3622**	1	SEAL-BUFFER	
	5	1	**096-4402**	1	BEARING-SLEEVE	
	6	1	**094-0747**	1	RING-RETAINING	
	7	1	**177-2611**	1	HEAD	
M	8	1	**8T-1447**	12	BOLT-SOCKET HEAD (M16X2X70-MM)	
J	9	1	**095-1717**	1	SEAL-O-RING	
J	10	1	**096-3964**	1	RING-BACKUP	
	11	1	**247-8886**	1	CYLINDER AS	
	11A	1	**235-7769**	1	BEARING-SLEEVE	
	12	1	**247-8887**	1	ROD AS	
	12A	1	**241-7382**	1	BEARING-SLEEVE	
J	13	1	**4I-3615**	2	RING-BACKUP	
J	14	1	**096-7803**	1	SEAL AS	
J	15	1	**247-8865**	2	RING	
J	16	1	**086-0255**	2	RING	
	17	1	**247-8885**	1	PISTON	
M	18	1	**096-3216**	1	SETSCREW-SOCKET (M12X1.75X12-MM)	
	19	1	**3D-2891**	1	BALL	
	20	1	**166-1494**	2	SEAL-LIP TYPE	
	21	1	**235-7679**	2	SEAL-LIP TYPE	
	22	1	**3B-8489**	2	FITTING-GREASE	
					AVAILABLE REPAIR KIT(S):	
J			**247-8888**	1	KIT-SEAL (BUCKET)	

J-KIT MARKED J SERVICES PART(S) MARKED J
M-METRIC PART

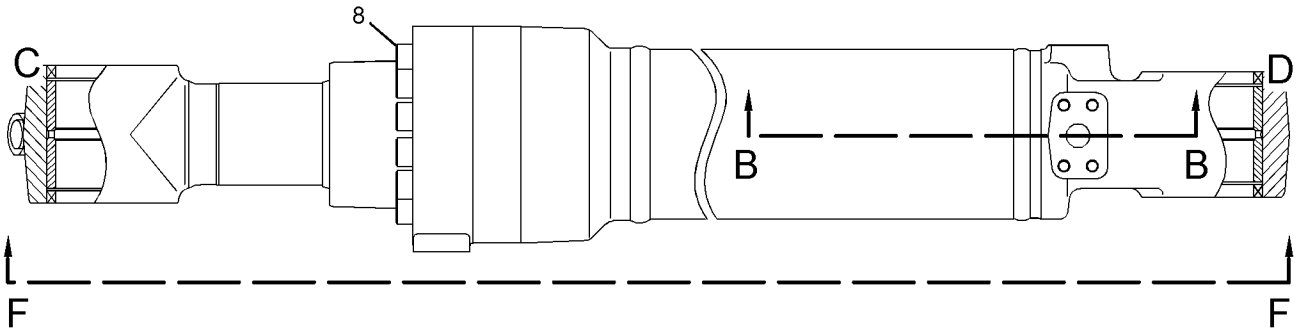

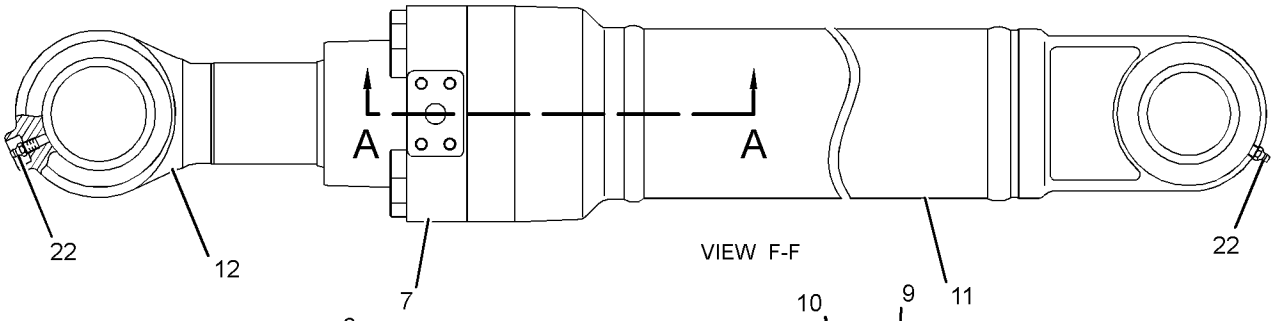

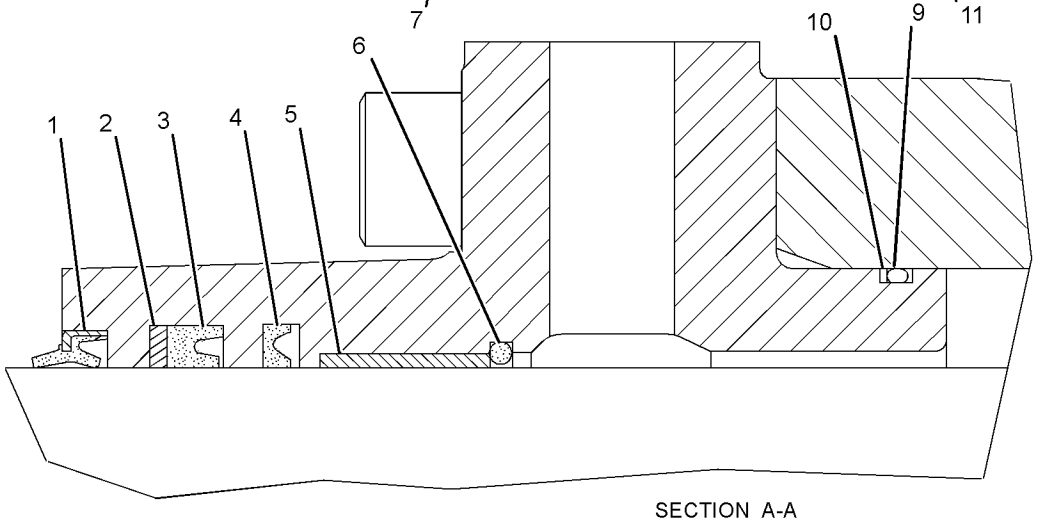

SECTION A-A

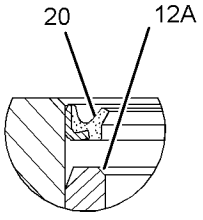

VIEW OF AREA C

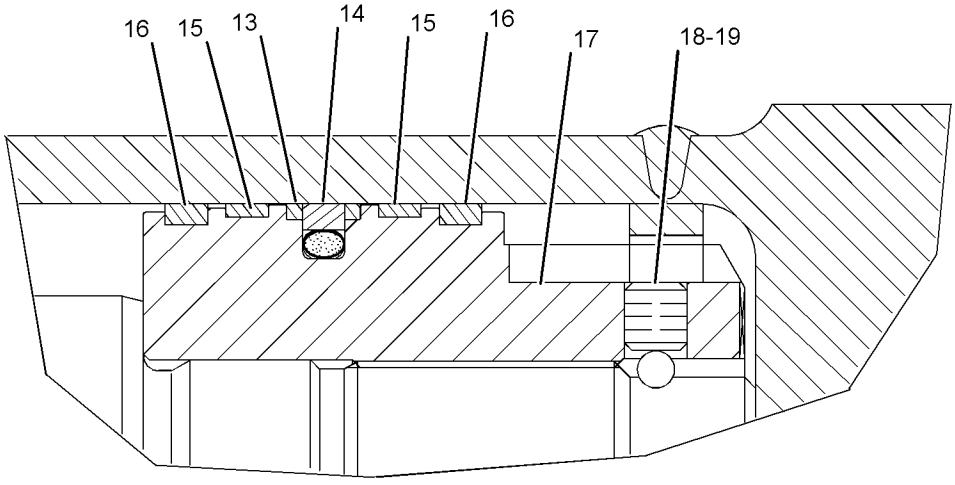

SECTION B-B

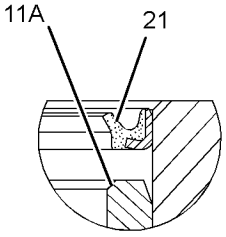

VIEW OF AREA D

GRAPHIC #1 **<END>** g01215259

HYDRAULIC SYSTEM

242-6759 CYLINDER & SEAL GP-BUCKET

S/N: WNE1-UP; ZMF1-UP
120-MM (4.7-IN) BORE X 1104-MM (43.5-IN) STROKE
PART OF 242-6758 CYLINDER & LINES GP-BUCKET
AN ATTACHMENT

SMCS-5457 **i02769987**

NOTE	REF NO	GRAPHIC REF	PART NUMBER	QTY	PART NAME 1 2 3 4 5 6 (PRODUCT LEVEL)	SEE PAGE
J	1	1	**154-0729**	1	SEAL-LIP TYPE	
J	2	1	**154-0731**	1	RING-BACKUP	
J	3	1	**154-0730**	1	SEAL-U-CUP	
J	4	1	**154-0732**	1	SEAL-BUFFER	
	5	1	**096-4402**	1	BEARING-SLEEVE	
	6	1	**094-0747**	1	RING-RETAINING	
	7	1	**177-2611**	1	HEAD	
M	8	1	**8T-1447**	12	BOLT-SOCKET HEAD (M16X2X70-MM)	
J	9	1	**095-1717**	1	SEAL-O-RING	
J	10	1	**096-3964**	1	RING-BACKUP	
	11	1	**247-8886**	1	CYLINDER AS	
	11A	1	**235-7769**	1	BEARING-SLEEVE	
	12	1	**247-8887**	1	ROD AS	
	12A	1	**241-7382**	1	BEARING-SLEEVE	
J	13	1	**4I-3615**	2	RING-BACKUP	
J	14	1	**096-7803**	1	SEAL AS	
J	15	1	**247-8865**	2	RING	
J	16	1	**086-0255**	2	RING	
	17	1	**247-8885**	1	PISTON	
M	18	1	**096-3216**	1	SETSCREW-SOCKET (M12X1.75X12-MM)	
	19	1	**3D-2891**	1	BALL	
	20	1	**166-1494**	2	SEAL-LIP TYPE	
	21	1	**235-7679**	2	SEAL-LIP TYPE	
	22	1	**3B-8489**	2	FITTING-GREASE	
					AVAILABLE REPAIR KIT(S):	
J			**266-7892**	1	KIT-SEAL (HYDRAULIC CYLINDER) (BUCKET)	

J-KIT MARKED J SERVICES PART(S) MARKED J
M-METRIC PART

242-6759 CYLINDER & SEAL GP-BUCKET *(contd.)* i02769987

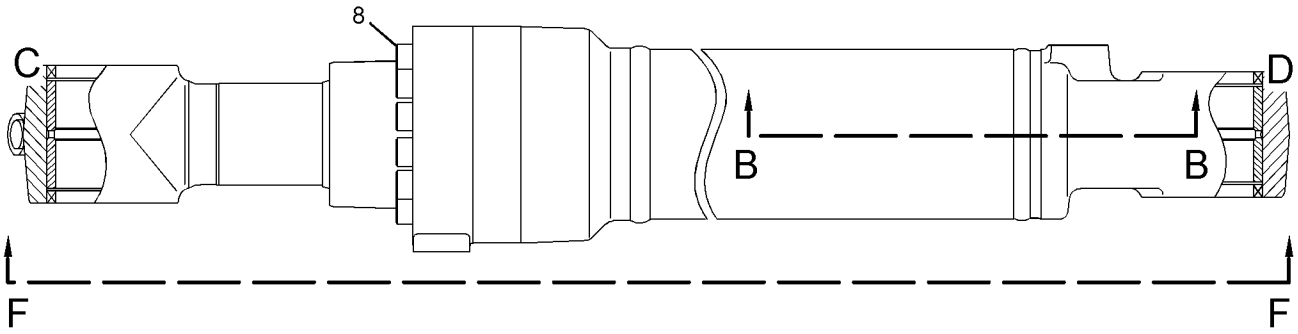

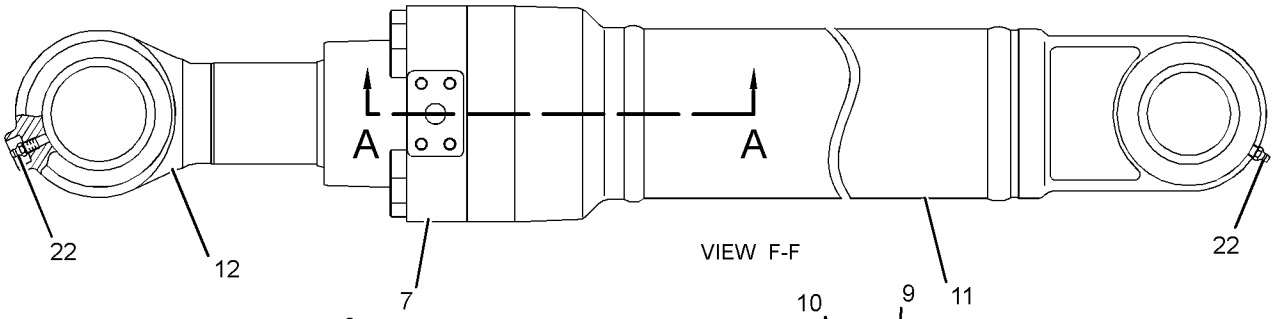

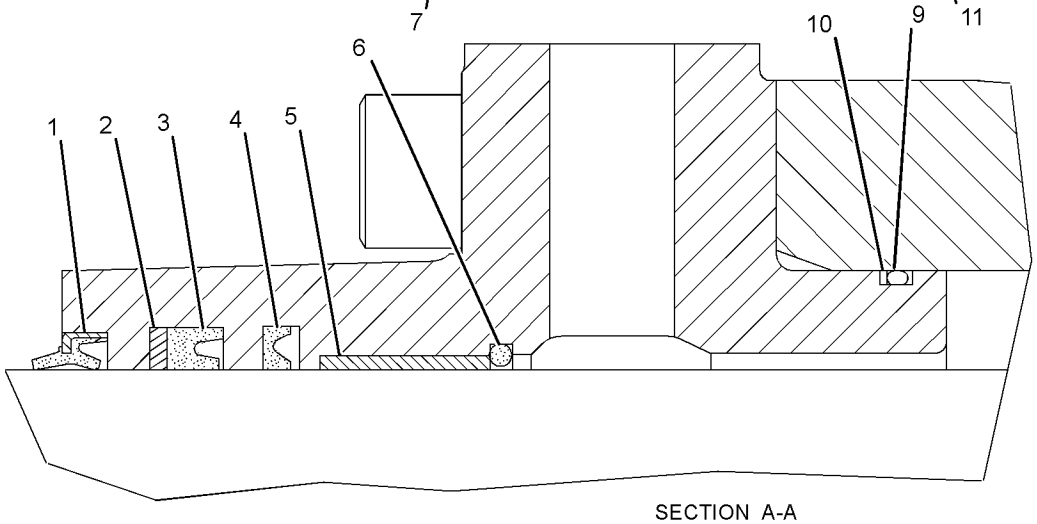

SECTION A-A

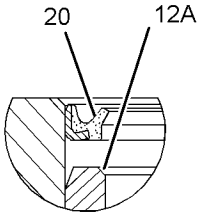

VIEW OF AREA C

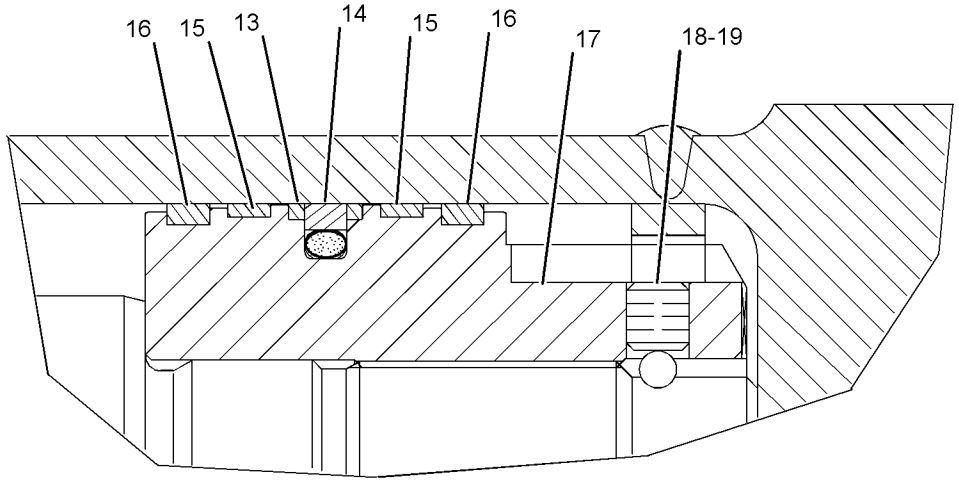

SECTION B-B

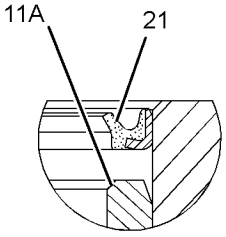

VIEW OF AREA D

GRAPHIC #1 **<END>** g01215279

242-6734 CYLINDER & SEAL GP-STICK

S/N: WNE1-UP; ZMF1-UP; CWG1-UP
140-MM (5.5-IN) BORE X 1504-MM (59.2-IN) STROKE
PART OF 242-6733 CYLINDER & LINES GP-STICK
AN ATTACHMENT

SMCS-5458 **i02981444**

NOTE	REF NO	GRAPHIC REF	PART NUMBER	QTY	PART NAME 1 2 3 4 5 6 (PRODUCT LEVEL)	SEE PAGE
J	1	1	**133-6904**	1	SEAL-LIP TYPE	
J	2	1	**121-1372**	1	RING-BACKUP	
J	3	1	**121-1371**	1	SEAL-U-CUP	
J	4	1	**204-3623**	1	SEAL-BUFFER	
	5	1	**096-5625**	1	BEARING-SLEEVE	
	6	1	**094-1931**	1	RING-RETAINING	
	7	1	**188-4181**	1	HEAD	
M	8	1	**4I-3628**	12	BOLT-SOCKET HEAD (M18X2.5X80-MM)	
J	9	1	**095-1721**	1	SEAL-O-RING	
J	10	1	**4I-3627**	1	RING-BACKUP	
	11	1	**247-8876**	1	CYLINDER AS	
	11A	1	**241-7381**	1	BEARING-SLEEVE	
	12	1	**247-8877**	1	ROD AS	
	12A	1	**241-7381**	1	BEARING-SLEEVE	
	13	1	**4I-8869**	1	STOP	
J	14	1	**126-1876**	1	RING-SEAL	
J	15	1	**4I-3631**	2	RING-BACKUP	
J	16	1	**096-1570**	1	SEAL AS	
J	17	1	**247-8874**	2	RING	
J	18	1	**096-1571**	2	RING	
	19	1	**247-8873**	1	PISTON	
M	20	1	**096-6210**	1	SETSCREW-SOCKET (M14X2X14-MM)	
	21	1	**4B-9880**	1	BALL	
	22	1	**085-8605**	1	RING-RETAINING	
J	23	1	**194-8359**	1	RING-SEAL	
	24	1	**121-1549**	1	STOP	
	25	1	**085-8604**	2	RING-RETAINING	
	26	1	**166-1494**	4	SEAL-LIP TYPE	
	27	1	**3B-8489**	1	FITTING-GREASE	
					AVAILABLE REPAIR KIT(S):	
J			**247-8878**	1	KIT-SEAL (STICK)	

J-KIT MARKED J SERVICES PART(S) MARKED J
M-METRIC PART

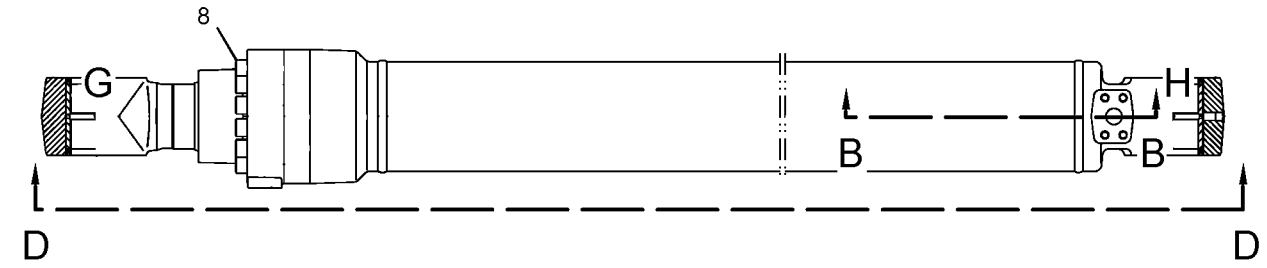

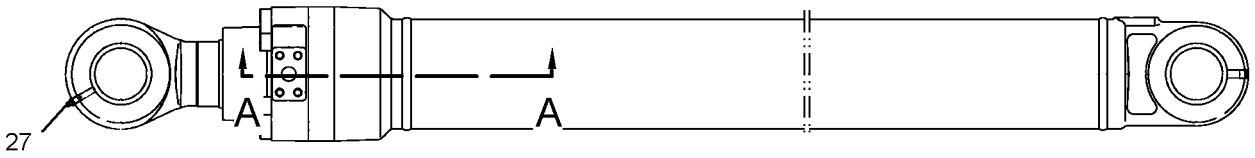

VIEW D-D

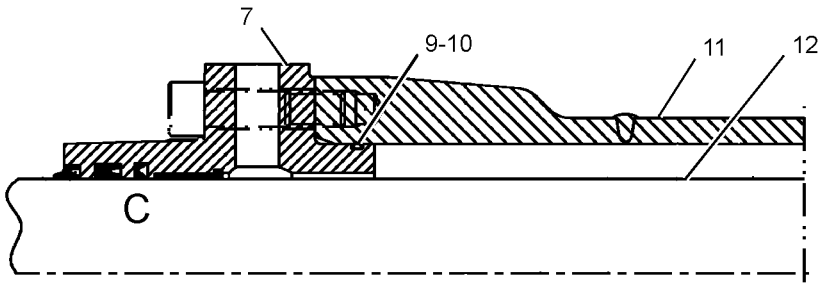

SECTION A-A

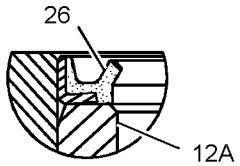

VIEW OF AREA G

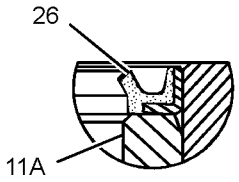

VIEW OF AREA H

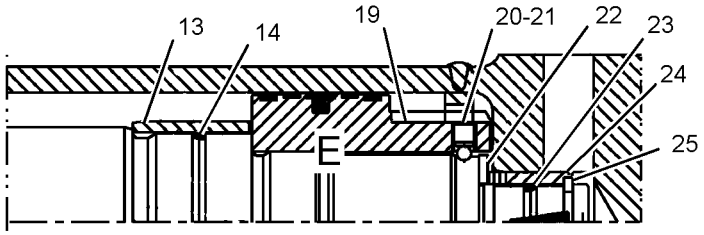

SECTION B-B

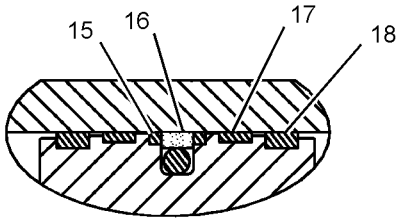

VIEW OF AREA E

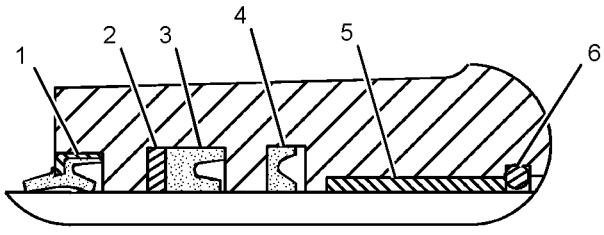

VIEW OF AREA C

GRAPHIC #1 **<END>** g01221010

HYDRAULIC SYSTEM

242-6748 CYLINDER & SEAL GP-STICK

S/N: WNE1-UP; ZMF1-UP
140-MM (5.5-IN) BORE X 1504-MM (59.2-IN) STROKE
PART OF 242-6747 CYLINDER & LINES GP-STICK
AN ATTACHMENT

SMCS-5458 **i02981446**

NOTE	REF NO	GRAPHIC REF	PART NUMBER	QTY	PART NAME 1 2 3 4 5 6 (PRODUCT LEVEL)	SEE PAGE
J	1	1	**154-0736**	1	SEAL-LIP TYPE	
J	2	1	**154-0738**	1	RING-BACKUP	
J	3	1	**154-0737**	1	SEAL-U-CUP	
J	4	1	**154-0739**	1	SEAL-BUFFER	
	5	1	**096-5625**	1	BEARING-SLEEVE	
	6	1	**094-1931**	1	RING-RETAINING	
	7	1	**188-4181**	1	HEAD	
M	8	1	**4I-3628**	12	BOLT-SOCKET HEAD (M18X2.5X80-MM)	
J	9	1	**095-1721**	1	SEAL-O-RING	
J	10	1	**4I-3627**	1	RING-BACKUP	
	11	1	**247-8876**	1	CYLINDER AS	
	11A	1	**241-7381**	1	BEARING-SLEEVE	
	12	1	**247-8877**	1	ROD AS	
	12A	1	**241-7381**	1	BEARING-SLEEVE	
	13	1	**4I-8869**	1	STOP	
J	14	1	**126-1876**	1	RING-SEAL	
J	15	1	**4I-3631**	2	RING-BACKUP	
J	16	1	**096-1570**	1	SEAL AS	
J	17	1	**247-8874**	2	RING	
J	18	1	**096-1571**	2	RING	
	19	1	**247-8873**	1	PISTON	
M	20	1	**096-6210**	1	SETSCREW-SOCKET (M14X2X14-MM)	
	21	1	**4B-9880**	1	BALL	
	22	1	**085-8605**	1	RING-RETAINING	
J	23	1	**194-8359**	1	RING-SEAL	
	24	1	**121-1549**	1	STOP	
	25	1	**085-8604**	2	RING-RETAINING	
	26	1	**166-1494**	4	SEAL-LIP TYPE	
	27	1	**3B-8489**	1	FITTING-GREASE	
					AVAILABLE REPAIR KIT(S):	
J			**259-0775**	1	KIT-SEAL (HYDRAULIC CYLINDER) (STICK)	

J-KIT MARKED J SERVICES PART(S) MARKED J
M-METRIC PART

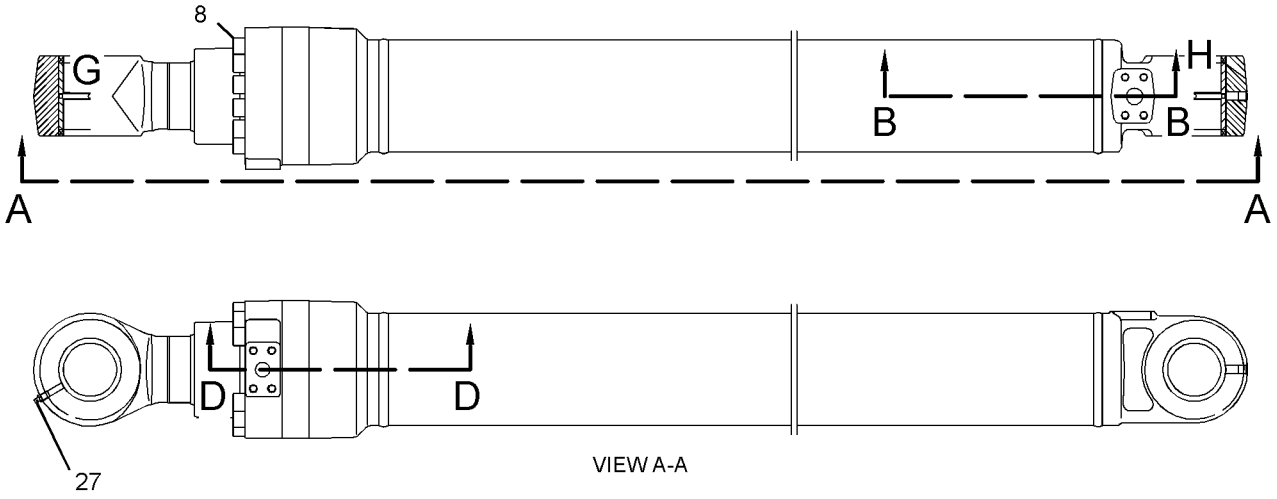

VIEW A-A

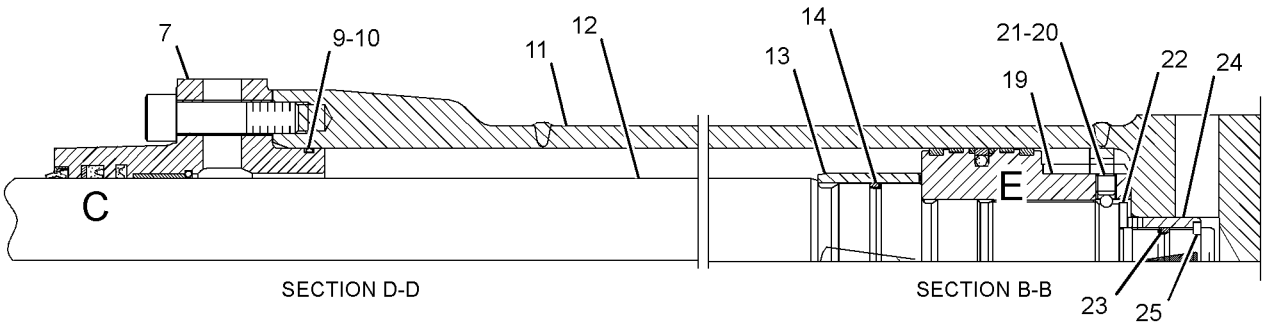

SECTION D-D

SECTION B-B

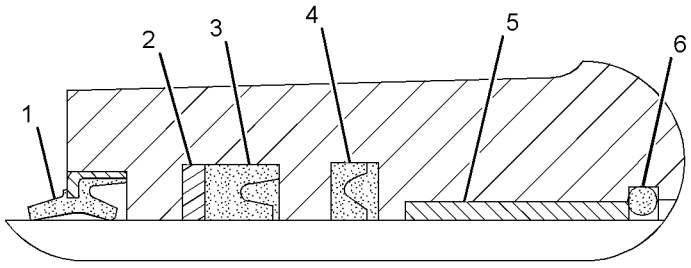

VIEW OF AREA C

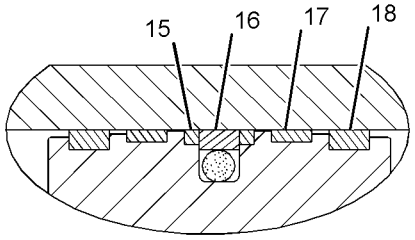

VIEW OF AREA E

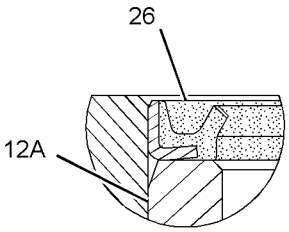

VIEW OF AREA G

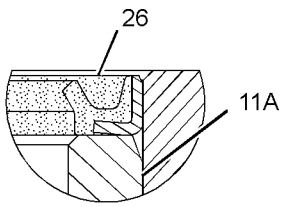

VIEW OF AREA H

GRAPHIC #1 **<END>** g01220057

242-6754 CYLINDER & SEAL GP-STICK

S/N: CWG1-UP
PART OF 242-6753 CYLINDER & LINES GP-STICK
AN ATTACHMENT

SMCS-5458 **i02946679**

NOTE	REF NO	GRAPHIC REF	PART NUMBER	QTY	PART NAME 1 2 3 4 5 6 (PRODUCT LEVEL)	SEE PAGE
	1	1	**3B-8489**	1	FITTING-GREASE	
Y	2	1	*242-6766*	1	CYLINDER GP-STICK	512
	3	1	**166-1494**	4	SEAL-LIP TYPE	

Y-SEPARATE ILLUSTRATION

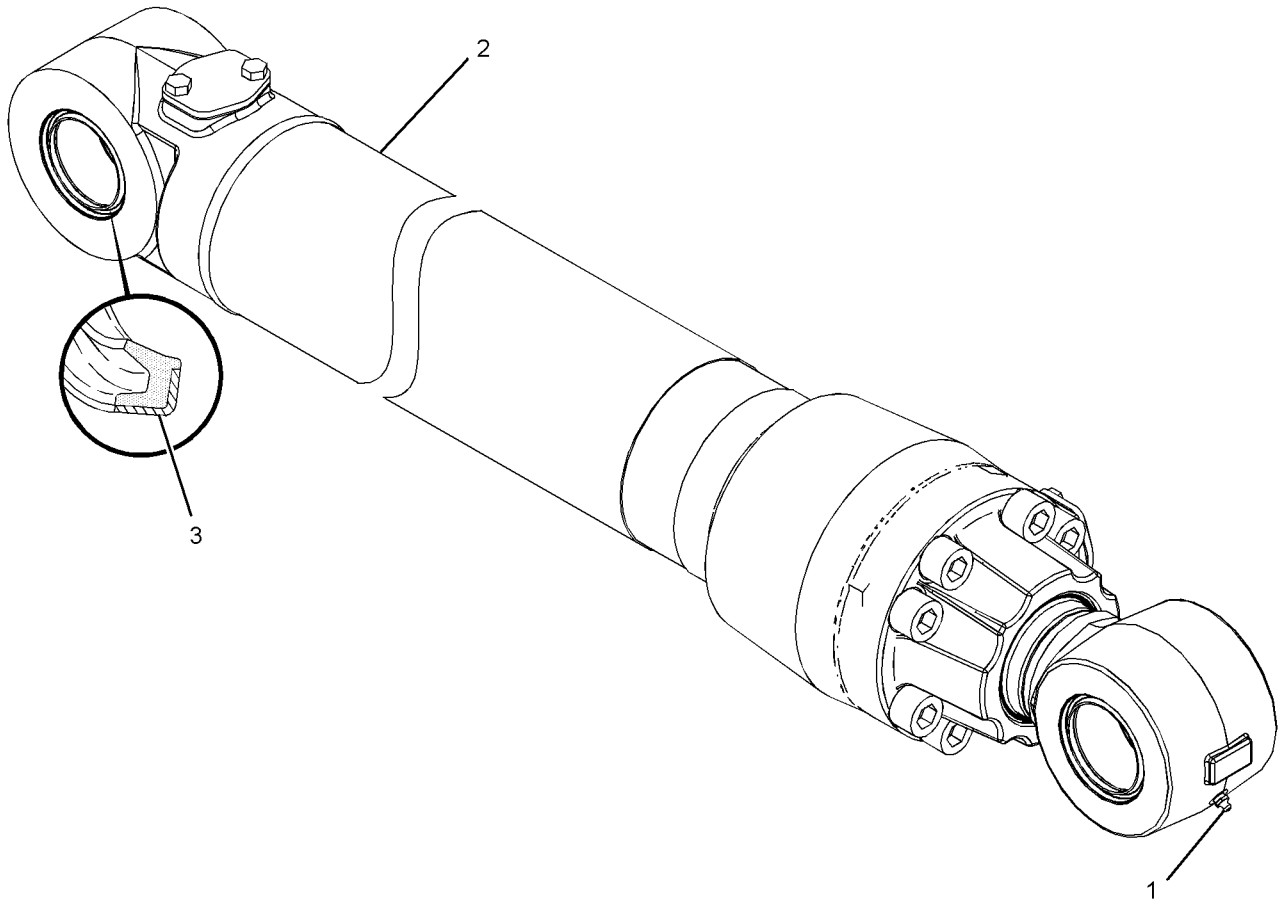

GRAPHIC #1 **<END>** g01231011

HYDRAULIC SYSTEM

242-6763 CYLINDER & SEAL GP-STICK

S/N: WNE1-UP; ZMF1-UP; CWG1-UP
140-MM (5.5-IN) BORE X 1518-MM (59.8-IN) STROKE
PART OF 242-6762 CYLINDER & LINES GP-STICK
AN ATTACHMENT

SMCS-5458 **i02424338**

NOTE	REF NO	GRAPHIC REF	PART NUMBER	QTY	PART NAME 1 2 3 4 5 6 (PRODUCT LEVEL)	SEE PAGE
J	1	1	**154-0736**	1	SEAL-LIP TYPE	
J	2	1	**154-0738**	1	RING-BACKUP	
J	3	1	**154-0737**	1	SEAL-U-CUP	
J	4	1	**154-0739**	1	SEAL-BUFFER	
	5	1	**096-5625**	1	BEARING-SLEEVE	
	6	1	**094-1931**	1	RING-RETAINING	
	7	1	**188-4181**	1	HEAD	
M	8	1	**4I-3628**	12	BOLT-SOCKET HEAD (M18X2.5X80-MM)	
J	9	1	**095-1721**	1	SEAL-O-RING	
J	10	1	**4I-3627**	1	RING-BACKUP	
	11	1	**247-8881**	1	CYLINDER AS	
	11A	1	**241-7381**	1	BEARING-SLEEVE	
	12	1	**247-8882**	1	ROD AS	
	12A	1	**241-7381**	1	BEARING-SLEEVE	
	13	1	**4I-8869**	1	STOP	
J	14	1	**126-1876**	1	RING-SEAL	
J	15	1	**4I-3631**	2	RING-BACKUP	
J	16	1	**096-1570**	1	SEAL AS	
J	17	1	**247-8874**	2	RING	
J	18	1	**096-1571**	2	RING	
	19	1	**247-8873**	1	PISTON	
M	20	1	**096-6210**	1	SETSCREW-SOCKET (M14X2X14-MM)	
	21	1	**4B-9880**	1	BALL	
	22	1	**085-8605**	1	RING-RETAINING	
J	23	1	**194-8359**	1	RING-SEAL	
	24	1	**121-1549**	1	STOP	
	25	1	**085-8604**	2	RING-RETAINING	
	26	1	**166-1494**	4	SEAL-LIP TYPE	
	27	1	**3B-8489**	1	FITTING-GREASE	
					AVAILABLE REPAIR KIT(S):	
J			**259-0775**	1	KIT-SEAL (HYDRAULIC CYLINDER) (STICK)	

J-KIT MARKED J SERVICES PARTS(S) MARKED J
M-METRIC PART

242-6763 CYLINDER & SEAL GP-STICK *(contd.)* i02424338

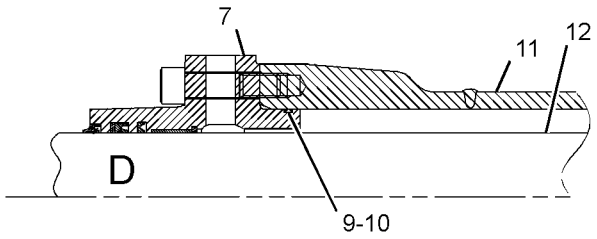

SECTION C-C

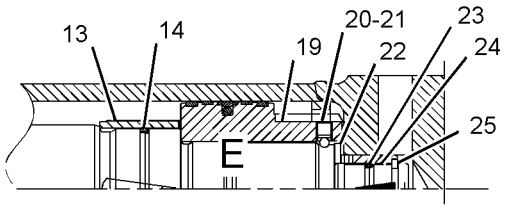

SECTION B-B

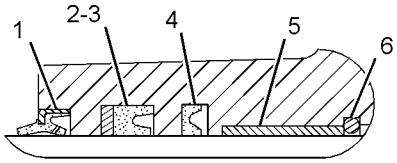

VIEW OF AREA D

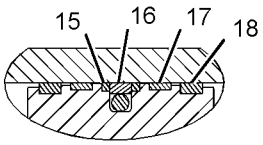

VIEW OF AREA E

VIEW A-A

GRAPHIC #1 **<END>** g01228193

HYDRAULIC SYSTEM

242-6764 CYLINDER GP-BOOM

S/N: CWG1-UP
120-MM (4.7-IN) BORE X 1260-MM (49.6-IN) STROKE
PART OF 242-6739 CYLINDER & SEAL GP-BOOM
AN ATTACHMENT

SMCS-5456 **i02996488**

NOTE	REF NO	GRAPHIC REF	PART NUMBER	QTY	PART NAME 1 2 3 4 5 6 (PRODUCT LEVEL)	SEE PAGE
J	1	1	**247-8789**	1	RING-SEAL	
J	2	1	**7Y-5116**	1	RING	
J	3	1	**170-9860**	1	SEAL-U-CUP	
	4	1	**7Y-5119**	1	RING-RETAINING	
J	5	1	**9X-3592**	1	SEAL AS	
M	6	1	**147-5835**	1	LOCKNUT-SPECIAL	
	7	1	**087-5507**	1	STOP	
J	8	1	**170-9844**	1	SEAL-BUFFER	
	9	1	**126-2043**	1	HEAD	
	10	1	**158-9062**	1	PISTON	
	11	1	**247-8739**	1	CYLINDER AS	
	11A	1	**241-7379**	1	BEARING-SLEEVE	
	12	1	**247-8741**	1	ROD AS	
	12A	1	**241-7380**	1	BEARING-SLEEVE	
J	13	1	**165-9286**	1	SEAL-LIP TYPE	
J	14	1	**179-9674**	1	RING	
J	15	1	**087-5510**	1	RING	
J	16	1	**095-1717**	1	SEAL-O-RING	
	17	1	**114-0756**	1	BEARING-SLEEVE	
J	18	1	**158-9063**	2	RING	
M	19	1	**7Y-5216**	8	BOLT-SOCKET HEAD (M20X2.5X80-MM)	
					AVAILABLE REPAIR KIT(S):	
			247-8790	1	KIT-SEAL (CYLINDER) (BOOM)	

J-KIT MARKED J SERVICES PART(S) MARKED J
M-METRIC PART

242-6764 CYLINDER GP-BOOM *(contd.)* **i02996488**

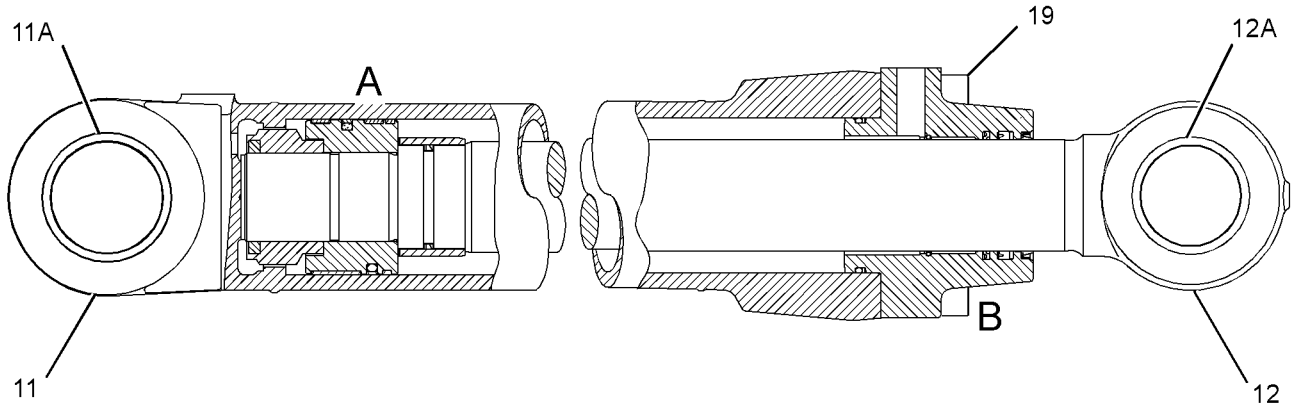

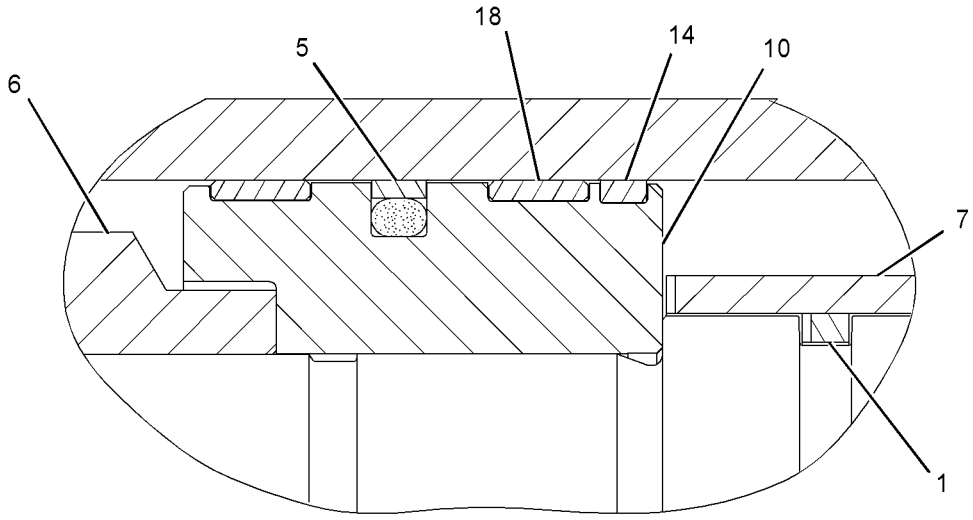

VIEW OF AREA A

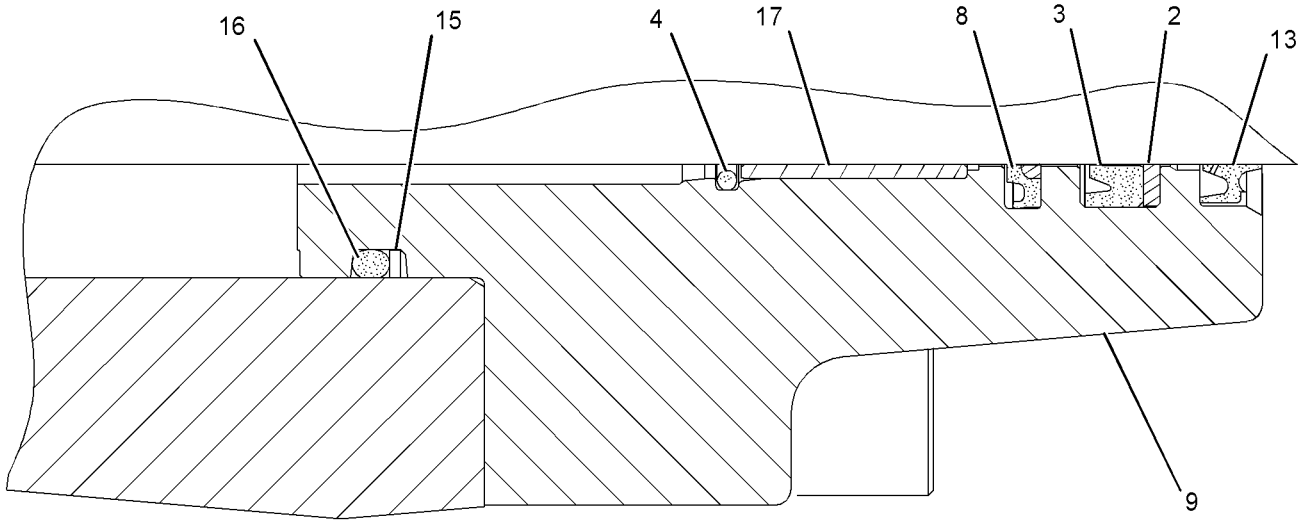

VIEW OF AREA B

GRAPHIC #1 **<END>** g01222978

HYDRAULIC SYSTEM

242-6766 CYLINDER GP-STICK

S/N: CWG1-UP
140-MM (5.5-IN) BORE X 1518-MM (59.8-IN) STROKE
PART OF 242-6754 CYLINDER & SEAL GP-STICK
AN ATTACHMENT

SMCS-5458 **i02946680**

NOTE	REF NO	GRAPHIC REF	PART NUMBER	QTY	PART NAME 1 2 3 4 5 6 (PRODUCT LEVEL)	SEE PAGE
M	1	1	**123-2060**	1	LOCKNUT (M80X2-THD)	
	2	1	**158-9064**	1	PISTON	
J	3	1	**158-9065**	2	RING	
	4	1	**247-8747**	1	CYLINDER AS	
	4A	1	**241-7381**	1	BEARING-SLEEVE	
	5	1	**247-8793**	1	ROD AS	
	5A	1	**241-7381**	1	BEARING-SLEEVE	
J	6	1	**179-9667**	1	RING	
J	7	1	**170-9847**	1	SEAL-BUFFER	
	8	1	**087-5431**	1	STOP	
	9	1	**087-5434**	1	HEAD	
J	10	1	**087-5436**	1	RING-BACKUP	
	11	1	**093-1572**	1	RING-RETAINING	
	12	1	**095-0929**	2	RING-RETAINING	
J	13	1	**095-1632**	1	SEAL-O-RING	
J	14	1	**216-0005**	1	SEAL-U-CUP	
J	15	1	**096-2665**	1	RING-BACKUP	
	16	1	**103-8378**	1	RING-RETAINING	
	17	1	**103-8379**	1	RING	
	18	1	**103-8380**	1	STOP	
	19		**114-0757**	1	BEARING-SLEEVE	
J	20	1	**165-9289**	1	SEAL-LIP TYPE	
J	21	1	**247-8791**	1	RING-SEAL	
M	22	1	**7Y-5215**	8	BOLT-SOCKET HEAD (M24X3X90-MM)	
J	23	1	**9X-3598**	1	SEAL AS	
					AVAILABLE REPAIR KIT(S):	
J			**247-8792**		KIT-SEAL (STICK CYLINDER)	

J-KIT MARKED J SERVICES PART(S) MARKED J
M-METRIC PART

242-6766 **CYLINDER GP-STICK** *(contd.)* **i02946680**

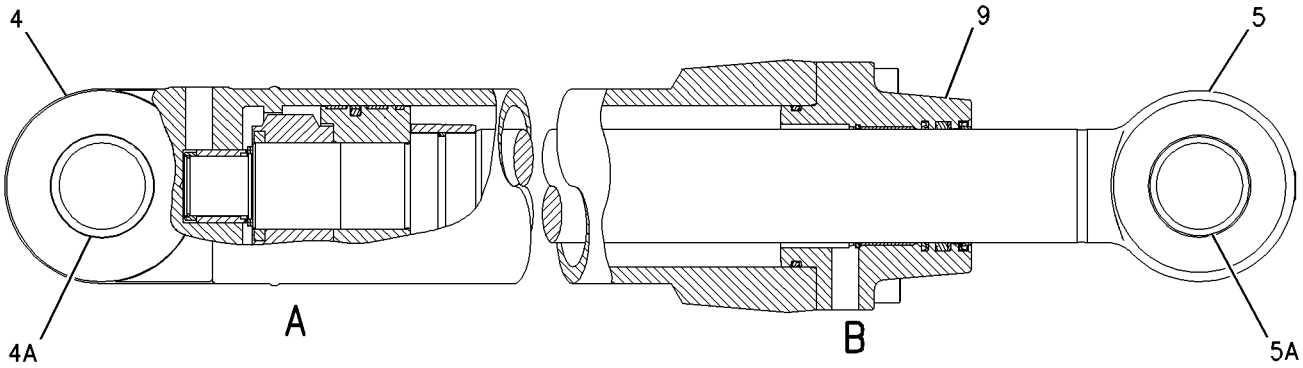

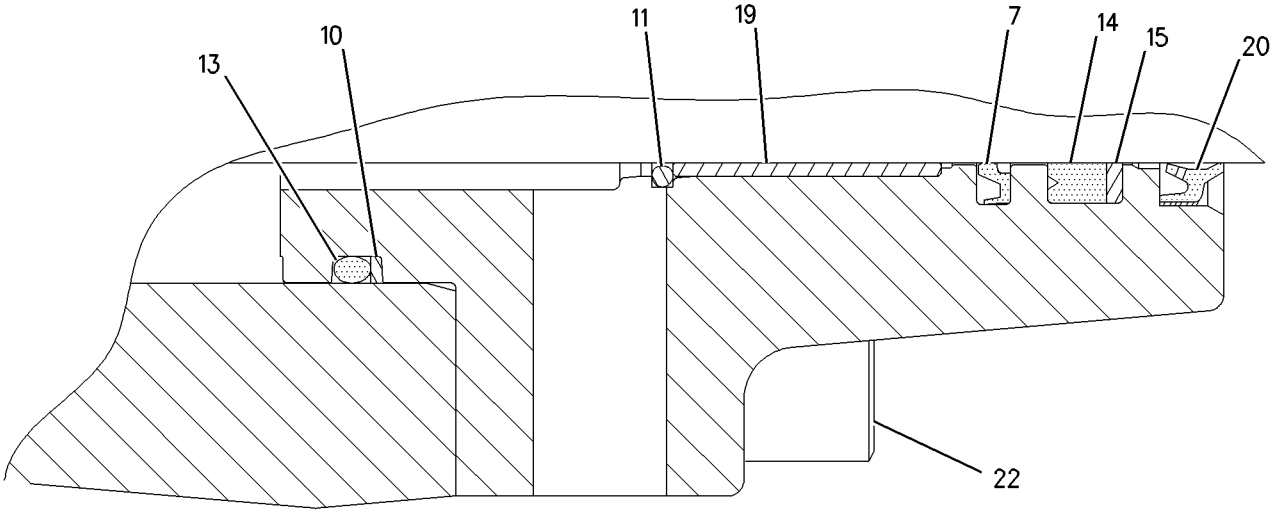

VIEW OF AREA B

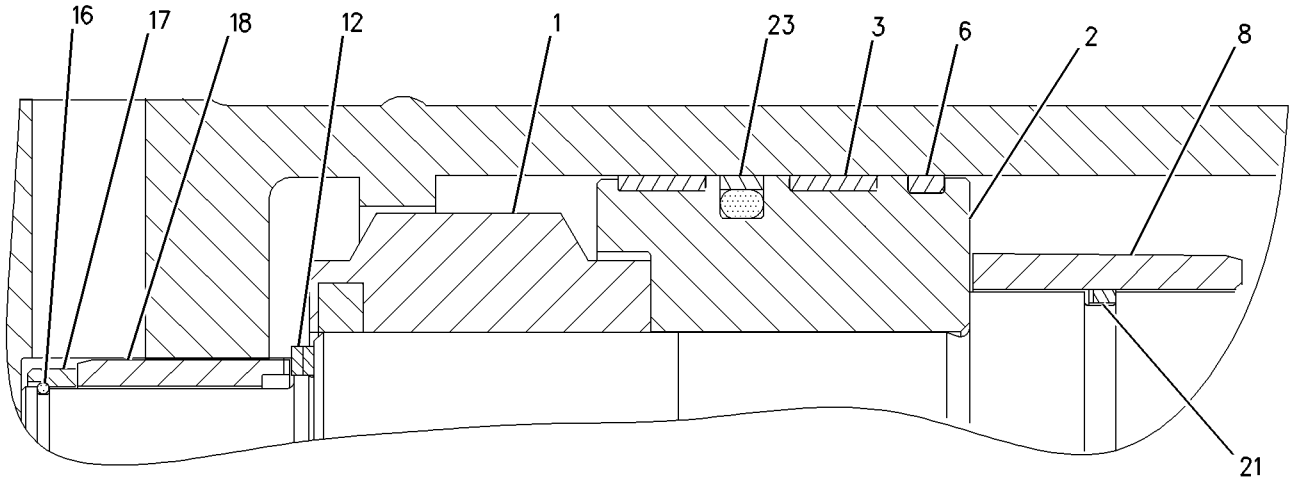

VIEW OF AREA A

GRAPHIC #1 **<END>** g00913777

148-4644 DRIVE GP-SWING—WITHOUT MOTOR

S/N: WNE1-UP; ZMF1-UP; CWG1-UP
PART OF 148-4679 DRIVE GP-SWING

SMCS-5459 **i03669806**

NOTE	REF NO	GRAPHIC REF	PART NUMBER	QTY	PART NAME 1 2 3 4 5 6 (PRODUCT LEVEL)	SEE PAGE
	1	1	**094-0584**	6	WASHER (40.3X72X1-MM THK)	
	2	1	**094-1509**	3	SHAFT-PLANETARY	
	3	1	**148-4733**	3	GEAR-PLANETARY (26-TEETH)	
	4	1	**114-1581**	1	SPACER (57.5X74X6-MM THK)	
	5	1	**148-4732**	1	GEAR-SUN (20-TEETH)	
	6	1	**093-1729**	2	RING-RETAINING	
	7	1	**148-4632**	1	GEAR-SUN (23-TEETH)	
	8	1	**191-2578**	1	CARRIER-PLANETARY	
	9	1	**7Y-1434**	1	SPACER (40X69.5X6-MM THK)	
	10	1	**148-4637**	1	CARRIER-PLANETARY	
	11	1	**148-4640**	1	RING-RETAINING	
	12	1	**148-4643**	1	BEARING	
	13	1	**095-1022**	1	BEARING-ROLLER	
	14	1	**148-4642**	1	SEAL-O-RING	
	15	1	**227-6228**	1	CAGE	
M	16	1	**8T-4183**	6	BOLT (M12X1.75X40-MM)	
	17	1	**8T-4223**	6	WASHER-HARD (13.5X25.5X3-MM THK)	
	18	1	**199-4561**	2	SEAL-LIP TYPE	
	19	1	**148-4636**	1	SHAFT-PINION	
	20	1	**148-4638**	1	HOUSING	
	21	1	**3K-0360**	1	SEAL-O-RING	
	22	1	**6V-7238**	1	VALVE-SHUTOFF (SWING DRIVE)	
	23	1	**148-4634**	3	SHAFT-PLANETARY	
	24	1	**095-0891**	3	PIN-SPRING	
	25	1	**148-4635**	1	GEAR-RING (73-TEETH)	
	26	1	**148-4633**	3	GEAR-PLANETARY (25-TEETH)	
	27	1	**7Y-0252**	6	BEARING AS-ROLLER	
	28	1	**094-0611**	6	WASHER (47.3X76X1-MM THK)	
	29	1	**095-0886**	3	PIN-SPRING	
	30	1	**094-1516**	3	BEARING-ROLLER	
	31	1	**171-9383**	1	SPACER	
B	32	1	**1U-8846**		SEALANT-GASKET	

B-USE AS REQUIRED
M-METRIC PART

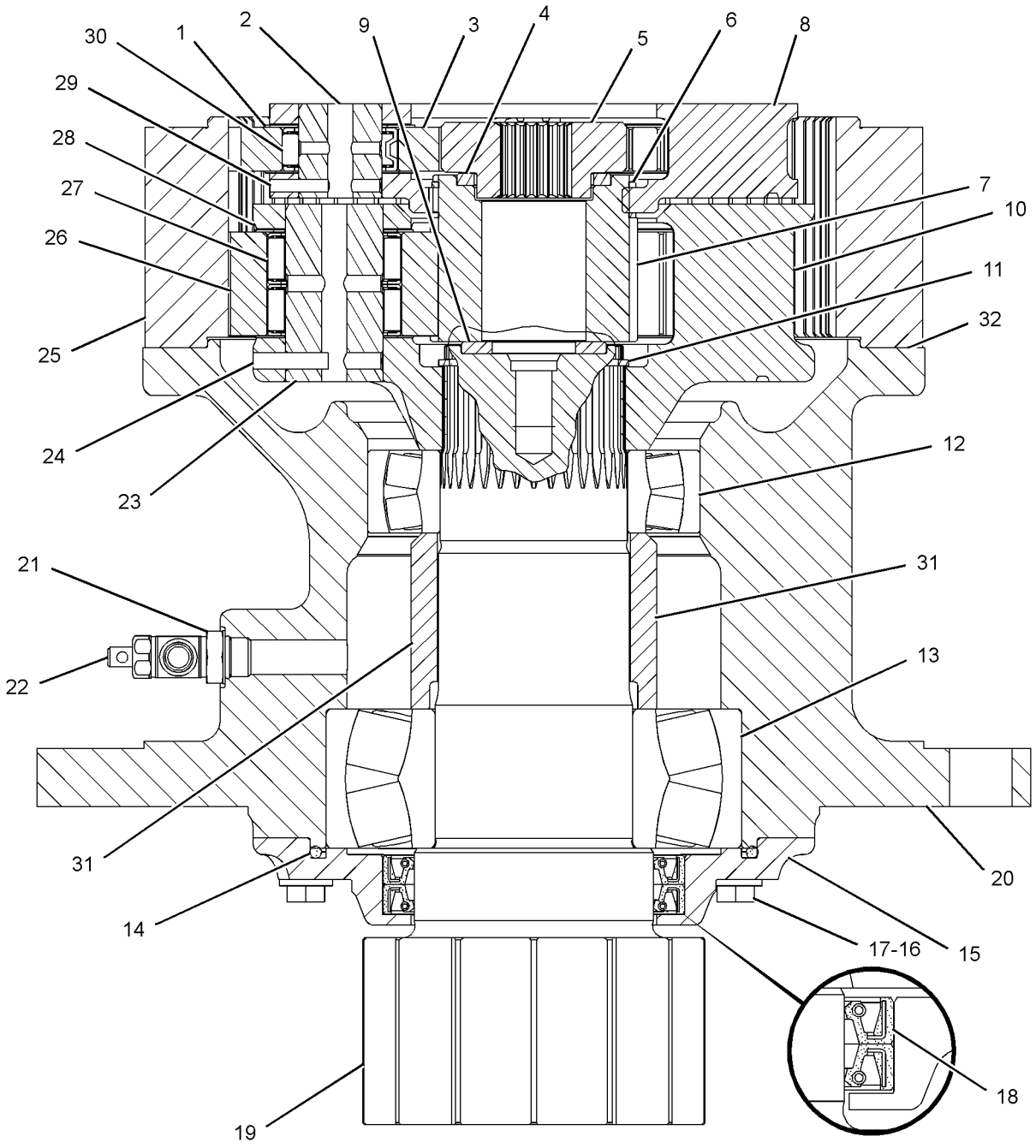

GRAPHIC #1 **<END>** g01619043

148-4679 DRIVE GP-SWING—WITH MOTOR

S/N: WNE1-UP; ZMF1-UP; CWG1-UP

PART OF 227-6167, 267-6767 POWER TRAIN AR

SMCS-5459 **i03040385**

NOTE	REF NO	GRAPHIC REF	PART NUMBER	QTY	PART NAME 1 2 3 4 5 6 (PRODUCT LEVEL)	SEE PAGE
Y	1	1	**148-4644**	1	DRIVE GP-SWING (WITHOUT MOTOR)	514
	2	1	**114-1398**	1	GAUGE-OIL LEVEL (SWING DRIVE)	
	3	1	**114-1399**	1	PIPE-GAUGE	
Y	4	1	*158-8985*	1	MOTOR & MTG GP-SWING	775
	5	1	**227-6221**	1	BREATHER AS (SWING DRIVE)	
	5A	1	**4H-6112**	1	BREATHER (SWING DRIVE)	
	5B	1	**231-6969**	1	NIPPLE-PIPE	
	5C	1	**227-6215**	1	BOSS	
B	6	1	**1U-8846**		SEALANT-GASKET	

B-USE AS REQUIRED
Y-SEPARATE ILLUSTRATION

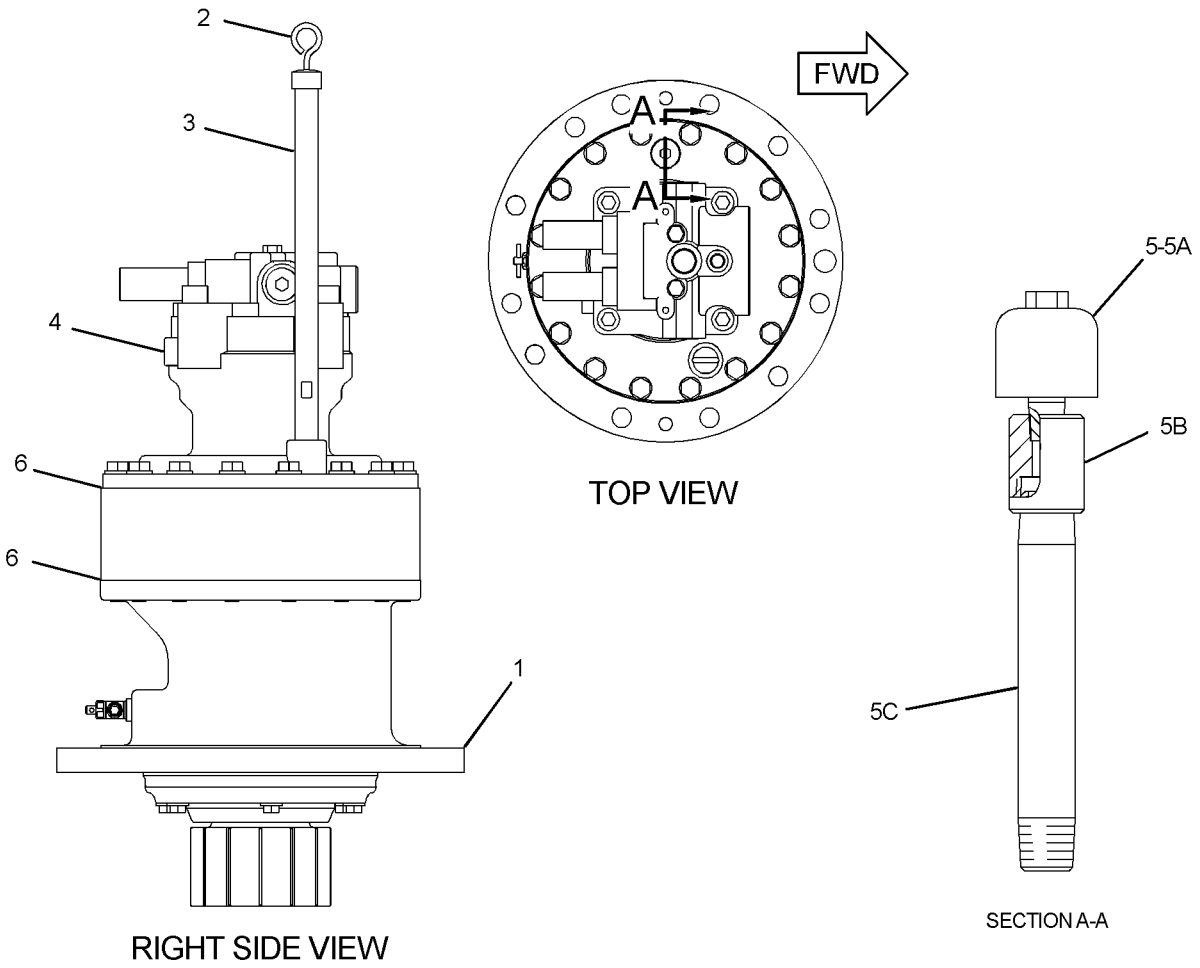

GRAPHIC #1 **<END>** g01222725

HYDRAULIC SYSTEM

227-6166 FASTENER GP-SWING & FINAL DR

S/N: WNE1-UP; ZMF1-UP

PART OF 267-6767 POWER TRAIN AR

SMCS-4050, 5459 **i02418218**

NOTE	REF NO	GRAPHIC REF	PART NUMBER	QTY	PART NAME 1 2 3 4 5 6 (PRODUCT LEVEL)	SEE PAGE
	1	1	**2Y-5503**	2	CORK	
	2	1	**5D-1026**	1	CLAMP-BAND	
	3	1	**096-4755**	1	PIN	
M	4	1	**7X-2563**	32	BOLT (M20X2.5X60-MM)	
M	5	1	**7X-2576**	12	BOLT (M24X3X70-MM)	
	6	1	**8T-4123**	32	WASHER (22X35X3.5-MM THK)	
	7	1	**8T-4167**	12	WASHER-HARD (26X44X4-MM THK)	
E	8	1	**5P-0767**		HOSE (90-CM)	
B	9	1	**1U-8846**	1	SEALANT-GASKET	

B-USE AS REQUIRED
E-ORDER BY THE CENTIMETER
M-METRIC PART

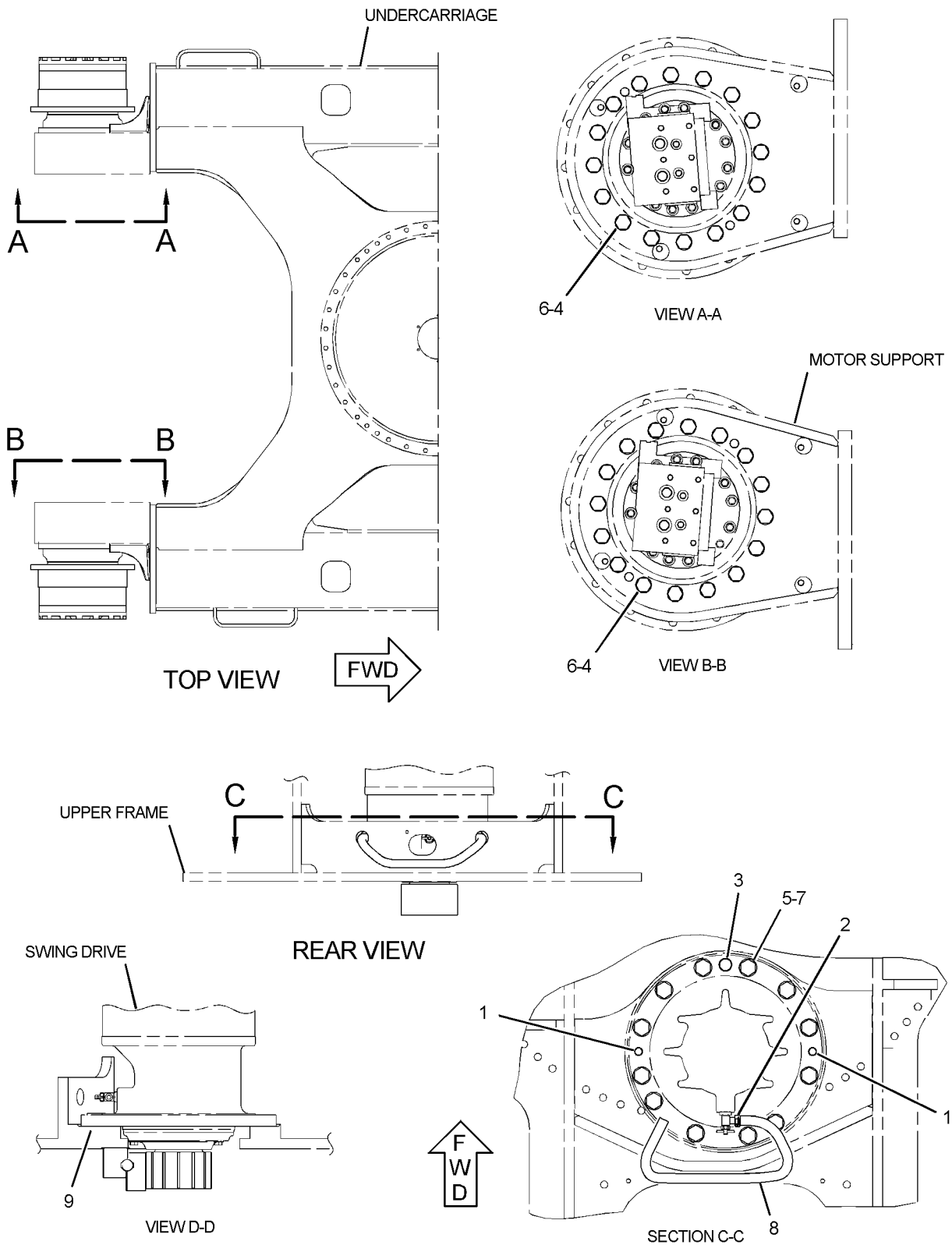

GRAPHIC #1 **<END>** g01224177

227-6168 FASTENER GP-SWING & FINAL DR

S/N: CWG1-UP

PART OF 227-6167 POWER TRAIN AR

SMCS-4050, 5459 **i02814752**

NOTE	REF NO	GRAPHIC REF	PART NUMBER	QTY	PART NAME 1 2 3 4 5 6 (PRODUCT LEVEL)	SEE PAGE
	1	1	**2Y-5503**	2	CORK	
	2	1	**5D-1026**	1	CLAMP-BAND	
	3	1	**096-4755**	1	PIN	
M	4	1	**7X-2563**	32	BOLT (M20X2.5X60-MM)	
M	5	1	**7X-2576**	12	BOLT (M24X3X70-MM)	
	6	1	**8T-4123**	32	WASHER (22X35X3.5-MM THK)	
	7	1	**8T-4167**	12	WASHER-HARD (26X44X4-MM THK)	
E	8	1	**5P-0767**		HOSE (90-CM)	
B	9	1	**1U-8846**		SEALANT-GASKET	

B-USE AS REQUIRED
E-ORDER BY THE CENTIMETER
M-METRIC PART

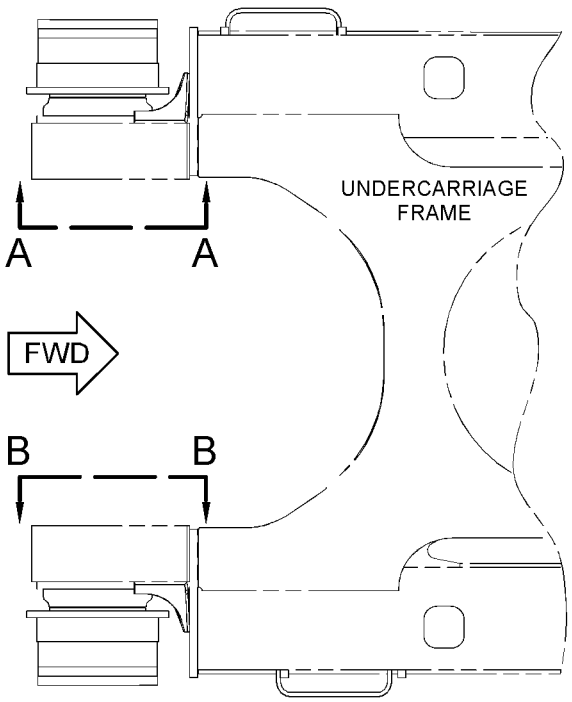

TOP VIEW
(UNDERCARRIAGE FRAME)

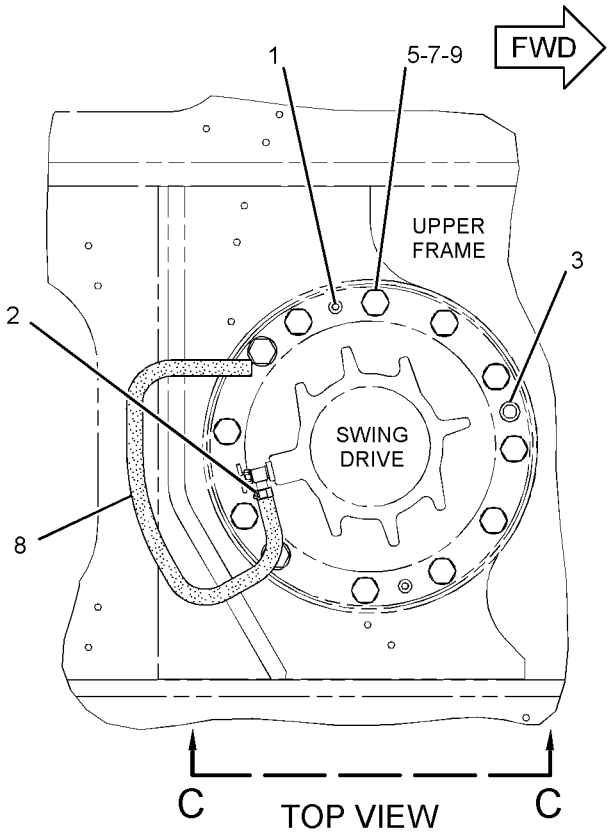

TOP VIEW
(UPPER FRAME)

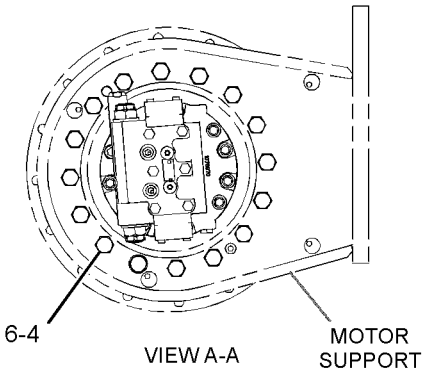

VIEW A-A

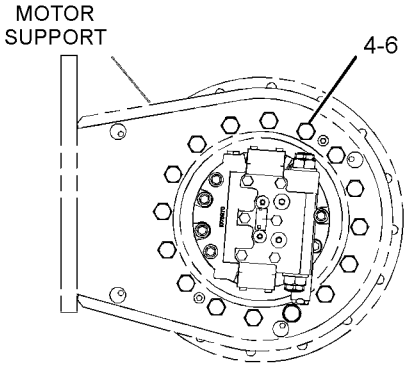

VIEW B-B

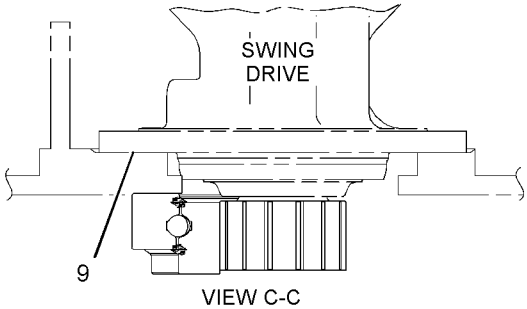

VIEW C-C

GRAPHIC #1

<END>

g01191815

158-8987 FILTER & VALVE GP-PILOT–HYDRAULIC OIL

S/N: WNE1-UP; ZMF1-UP; CWG1-UP

PART OF 239-1711, 245-5140 TANK & FILTER GP-HYDRAULIC

SMCS-5072, 5092 **i03215762**

NOTE	REF NO	GRAPHIC REF	PART NUMBER	QTY	PART NAME 1 2 3 4 5 6 (PRODUCT LEVEL)	SEE PAGE
C	1	1	**5I-8670**	1	FILTER-OIL (ADVANCED EFFICIENCY) (HYDRAULIC)	
C	2	1	**215-4909**	1	VALVE GP-PILOT RELIEF (HYDRAULIC FILTER)	
	2A	1	**095-1584**	1	SEAL-O-RING	
	2B	1	**095-1590**	1	SEAL-O-RING	
	2C	1	**095-1596**	1	SEAL-O-RING	

C-CHANGE FROM PREVIOUS TYPE

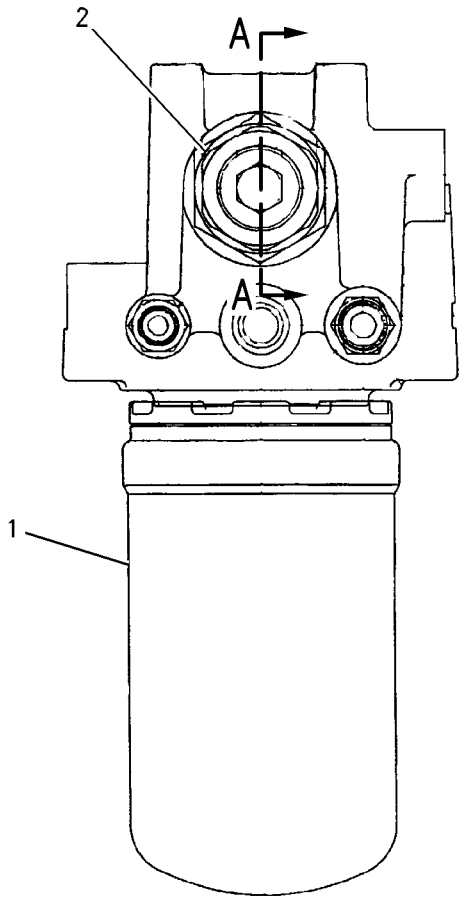

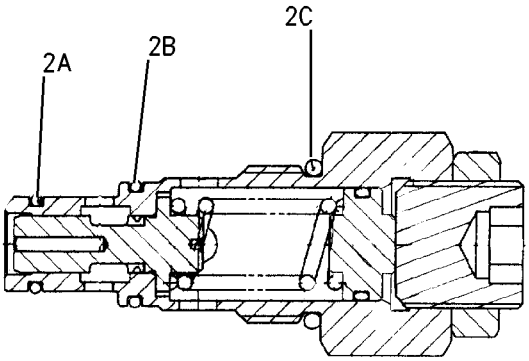

SECTION A–A

GRAPHIC #1 **<END>** g00842119

188-4140 FILTER GP-OIL—HYDRAULIC RETURN

S/N: WNE1-UP; ZMF1-UP; CWG1-UP

PART OF 239-1711, 245-5140 TANK & FILTER GP-HYDRAULIC

SMCS-3004, 4295, 431F, 5068, 5091, 5092 **i01518789**

NOTE	REF NO	GRAPHIC REF	PART NUMBER	QTY	PART NAME 1 2 3 4 5 6 (PRODUCT LEVEL)	SEE PAGE
Y	1	1	**173-3503**	1	BASE GP-OIL FILTER (HYDRAULIC)	478
	2	1	**129-8034**	1	VALVE AS-BYPASS	
	3	1	**123-2003**	2	SEAL-O-RING	
	4	1	**173-3507**	1	HOUSING AS	
M	5	1	**8T-4194**	8	BOLT (M12X1.75X50-MM)	
	6	1	**8T-4223**	8	WASHER-HARD (13.5X25.5X3-MM THK)	
Y	7	1	**188-4142**	1	FILTER GP-OIL (HYDRAULIC RETURN)	524
	8	1	**173-3510**	1	COVER	
	9	1	**173-3518**	1	INDICATOR AS (HYDRAULIC RETURN FILTER)	
	10	1	**159-7784**	1	SEAL-O-RING	
M	11	1	**6V-4298**	4	BOLT (M5X0.8X16-MM)	
	12	1	**8T-0328**	4	WASHER-HARD (5.5X10X1-MM THK)	
M	13	1	**8T-6693**	4	SCREW-MACHINE (M5X0.8X16-MM)	

M-METRIC PART
Y-SEPARATE ILLUSTRATION

188-4140 **FILTER GP-OIL** *(contd.)* **i01518789**

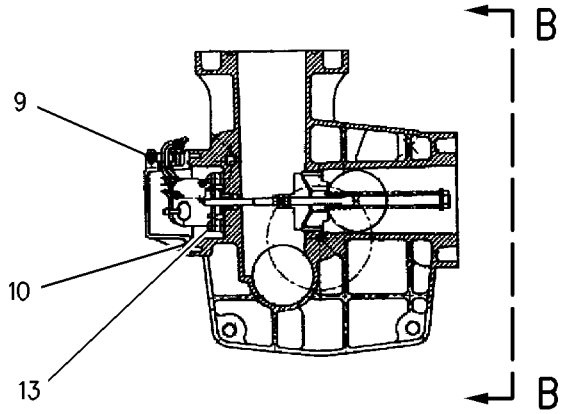

SECTION A-A

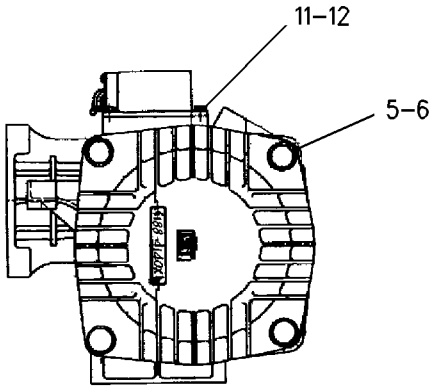

VIEW B-B

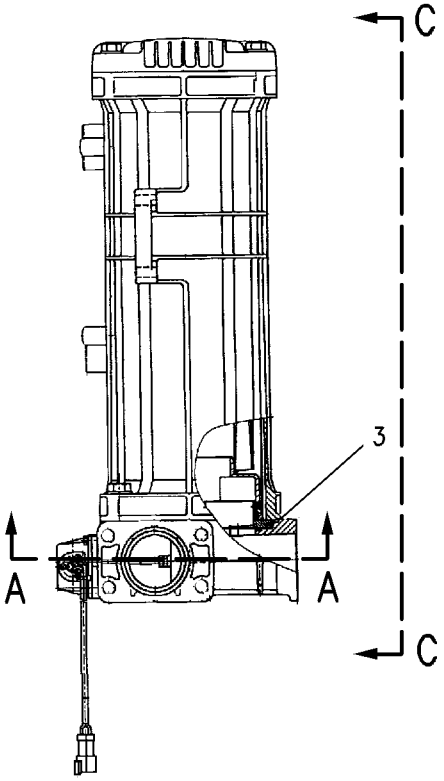

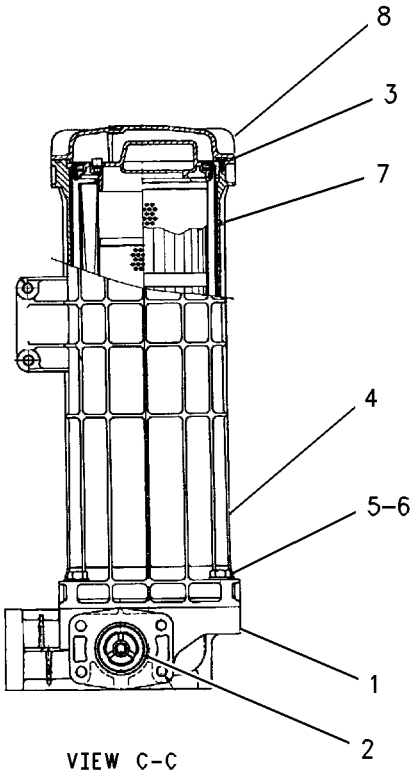

VIEW C-C

GRAPHIC #1 **<END>** g00792787

HYDRAULIC SYSTEM

188-4142 FILTER GP-OIL—HYDRAULIC RETURN

S/N: WNE1-UP; ZMF1-UP; CWG1-UP
PART OF 188-4140 FILTER GP-OIL

SMCS-3004, 4295, 431F, 5068, 5091, 5092 **i03413830**

NOTE	REF NO	GRAPHIC REF	PART NUMBER	QTY	PART NAME 1 2 3 4 5 6 (PRODUCT LEVEL)	SEE PAGE
	1	1	**204-2762**	1	PLATE	
JM	2	1	**173-3529**	6	BOLT (M6X1X15-MM)	
J	3	1	**3T-7528**	6	SEAL-O-RING	
	4	1	**173-3513**	1	BASE	
J	5	1	**3E-4297**	2	SEAL-O-RING	
M	6	1	**137-3626**	1	BOLT-SHOULDER (M6X1X28.75-MM)	
Z	7	1		1	SHELL AS	
	8	1	**179-9806**	1	FILTER ELEMENT AS-OIL (ULTRA HIGH EFFICIENCY) (HYDRAULIC RETURN)	
J	9	1	**137-3623**	4	SEAL-O-RING	
J	10	1	**6V-7658**	2	SEAL-O-RING	
J	11	1	**177-2553**	1	SEAL	
J	12	1	**095-1681**	1	SEAL-O-RING	
	13	1	**173-3515**	1	RING-RETAINING	
	14	1	**173-3516**	1	HANDLE	
J	15	1	**4J-7533**	1	SEAL-O-RING	
J	16	1	**9S-4180**	1	PLUG	
JM	17	1	**137-3624**	8	SCREW (M3X0.5X5-MM)	
J	18	1	**137-3625**	2	PAD	
	19	1	**173-3517**	1	PLATE	
J	20	1	**137-3628**	1	SHIM (0.1-MM THK)	
	21	1	**188-4143**	1	FILM-INSTRUCTION (HYDRAULIC OIL RETURN FILTER)	
					AVAILABLE REPAIR KIT(S):	
J			**201-9299**	1	KIT-SERVICE (HYDRAULIC FILTER) (RETURN)	

J-KIT MARKED J SERVICES PARTS MARKED J
M-METRIC PART
Z-NOT SERVICED SEPARATELY

188-4142 **FILTER GP-OIL** *(contd.)* **i03413830**

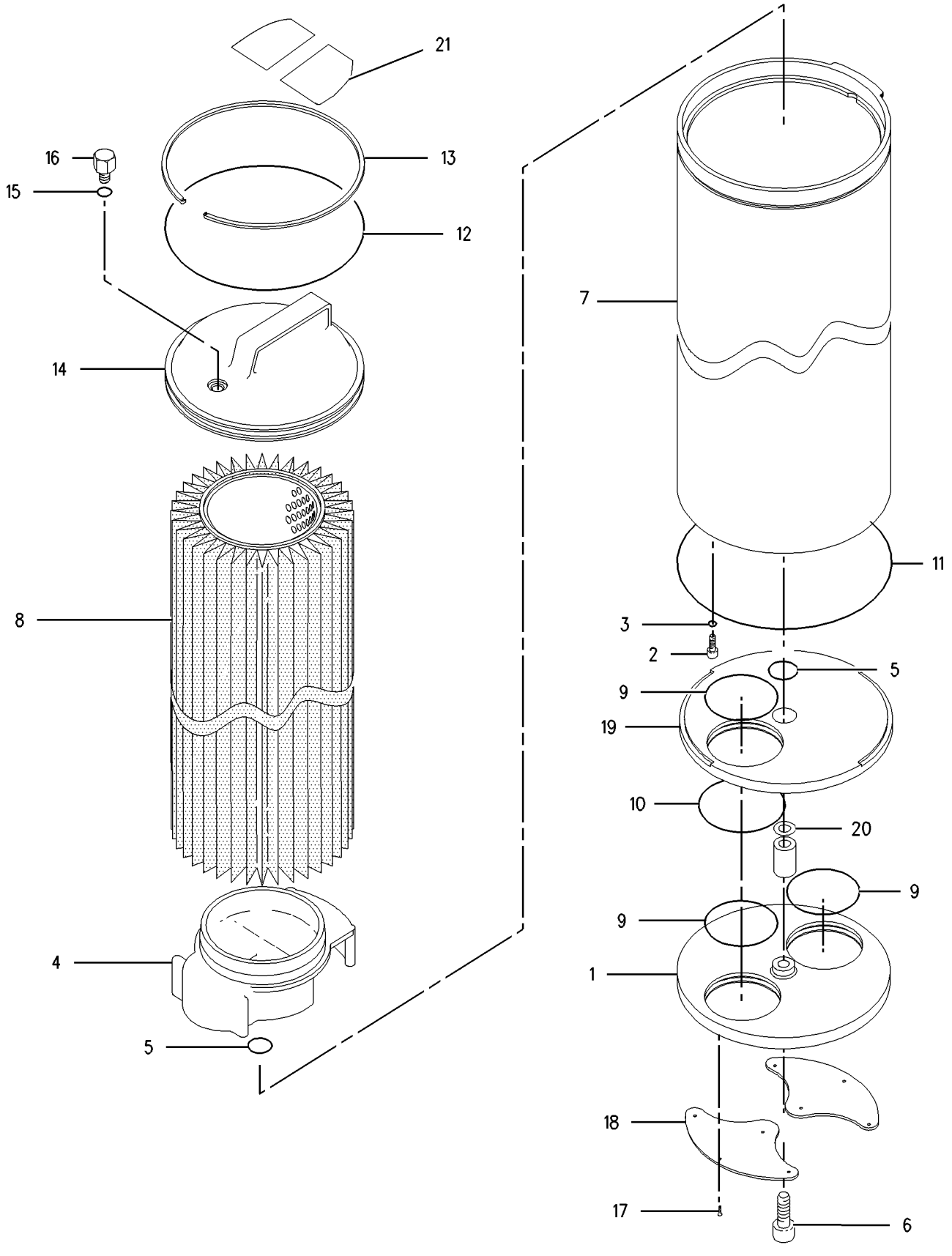

GRAPHIC #1 **<END>** g00923879

289-8194 FILTER GP-OIL–HYDRAULIC, CASE DRAIN

S/N: WNE1-UP; ZMF1-UP; CWG1-UP

PART OF 239-1711, 245-5140 TANK & FILTER GP-HYDRAULIC

SMCS-3004, 4295, 431F, 5068, 5091, 5092 **i02997232**

NOTE	REF NO	GRAPHIC REF	PART NUMBER	QTY	PART NAME 1 2 3 4 5 6 (PRODUCT LEVEL)	SEE PAGE
	1	1	**093-7521**	1	FILTER-OIL (ADVANCED EFFICIENCY) (HYDRAULIC, CASE DRAIN)	
	2	1	**289-8195**	1	HEAD AS-FILTER	

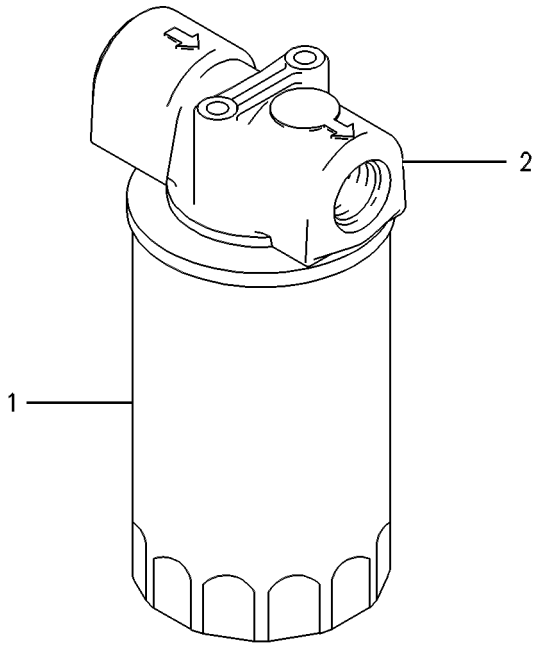

GRAPHIC #1 **<END>** g00258224

214-4511 FITTING GP-HYDRAULIC—4-BOLT FLANGE

S/N: WNE1-UP; ZMF1-UP; CWG1-UP

PART OF 239-1714, 266-0957 LINES GP-FRONT

SMCS-5057, 7553 **i02307340**

NOTE	PART NUMBER	QTY	PART NAME 1 2 3 4 5 6 (PRODUCT LEVEL)	SEE PAGE
	214-4400	1	FLANGE AS	
	5K-9090	1	SEAL-O-RING	
			-OR-	
	214-4518	1	FLANGE AS	
	148-8335	1	CONNECTOR AS	
	5K-9090	1	SEAL-O-RING	
	6V-8635	1	CONNECTOR	
	7M-8485	1	SEAL-O-RING	

<END>

214-4512 FITTING GP-HYDRAULIC

S/N: CWG1-UP

PART OF 266-0956 LINES GP-RETURN

SMCS-5057, 7553 **i01858045**

NOTE	PART NUMBER	QTY	PART NAME 1 2 3 4 5 6 (PRODUCT LEVEL)	SEE PAGE
	214-4401	1	TEE AS (FABRICATED TEE)	
Z		1	TEE	
	2M-9780	1	SEAL-O-RING	
	6V-8397	1	SEAL-O-RING	
	6V-8398	1	SEAL-O-RING	
			-OR-	
	214-4519	1	CONNECTOR AS (TEE & REDUCER)	
			(ALTERNATE DESIGN)	
	115-8634	1	TEE-O-RING	
	6V-8398	2	SEAL-O-RING	
	2M-9780	1	SEAL-O-RING	
	6V-8936	1	REDUCER	
	6V-8397	1	SEAL-O-RING	

Z-NOT SERVICED SEPARATELY

<END>

227-0620 GAUGE GP-SIGHT—HYDRAULIC OIL LEVEL

S/N: WNE1-UP; ZMF1-UP; CWG1-UP

PART OF 239-1711, 245-5140 TANK & FILTER GP-HYDRAULIC

SMCS-7479 **i02220641**

NOTE	REF NO	GRAPHIC REF	PART NUMBER	QTY	PART NAME 1 2 3 4 5 6 (PRODUCT LEVEL)	SEE PAGE
	1	1	**236-3258**	2	BLOCK	
M	2	1	**236-3259**	2	BOLT-SPECIAL	
	3	1	**236-3257**	1	PIPE	
	4	1	**095-1519**	4	SEAL-O-RING	
	5	1	**6F-4855**	4	SEAL-O-RING	

M-METRIC PART

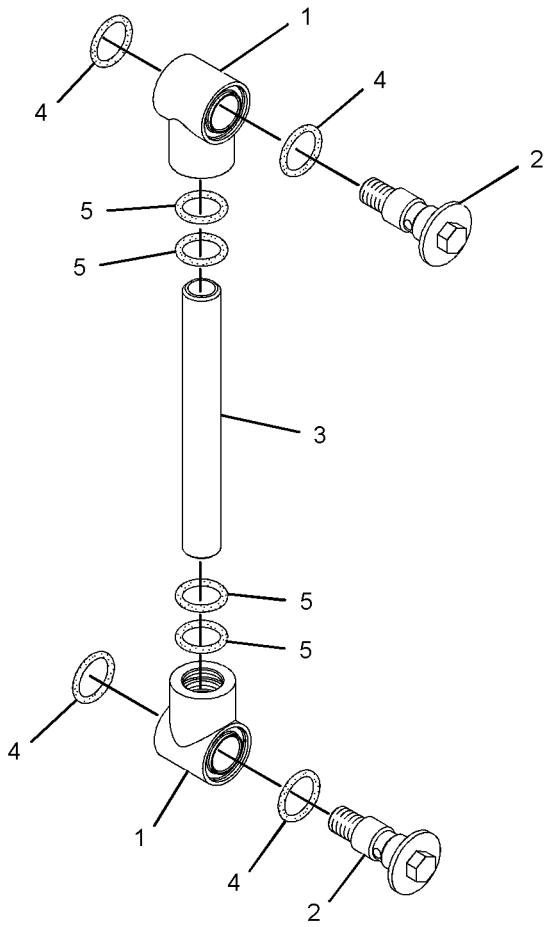

GRAPHIC #1 **<END>** g01091508

256-0093 HEAD GP-PUMP–DRIVE

S/N: WNE1-UP; ZMF1-UP; CWG1-UP

PART OF 272-6955 PUMP GP-MAIN HYDRAULIC

SMCS-3222, 5070, 5086 **i02888353**

NOTE	REF NO	GRAPHIC REF	PART NUMBER	QTY	PART NAME 1 2 3 4 5 6 (PRODUCT LEVEL)	SEE PAGE
B	1	1	**099-3669**	2	SHIM (1-MM THK)	
B		1	**099-3670**	2	SHIM (1.95-MM THK)	
B		1	**099-6109**	2	SHIM (1.05-MM THK)	
B		1	**099-6110**	2	SHIM (1.1-MM THK)	
B		1	**099-6111**	2	SHIM (1.15-MM THK)	
B		1	**099-6112**	2	SHIM (1.2-MM THK)	
B		1	**099-6113**	2	SHIM (1.25-MM THK)	
B		1	**099-6115**	2	SHIM (1.3-MM THK)	
B		1	**099-6117**	2	SHIM (1.35-MM THK)	
B		1	**099-6118**	2	SHIM (1.4-MM THK)	
B		1	**099-6119**	2	SHIM (1.45-MM THK)	
B		1	**099-6120**	2	SHIM (1.5-MM THK)	
B		1	**099-6121**	2	SHIM (1.55-MM THK)	
B		1	**099-6122**	2	SHIM (1.6-MM THK)	
B		1	**099-6123**	2	SHIM (1.65-MM THK)	
B		1	**099-6124**	2	SHIM (1.7-MM THK)	
B		1	**099-6125**	2	SHIM (1.75-MM THK)	
B		1	**099-6126**	2	SHIM (1.8-MM THK)	
B		1	**099-6127**	2	SHIM (1.85-MM THK)	
B		1	**099-6128**	2	SHIM (1.9-MM THK)	
	2	1	**9S-4191**	1	PLUG-O-RING	
	3	1	**8T-4223**	6	WASHER-HARD (13.5X25.5X3-MM THK)	
M	4	1	**8T-4196**	2	BOLT (M10X1.5X35-MM)	
M	5	1	**8T-4136**	2	BOLT (M10X1.5X25-MM)	
M	6	1	**8T-4133**	1	NUT (M10X1.5-THD)	
M	7	1	**7I-2272**	2	BOLT (M5X0.8X12-MM)	
Y	8	1	**111-9916**	1	VALVE GP-SOLENOID	885
	9	1	**173-3398**	1	COVER	
	10	1	**200-3244**	1	SPRING	
	11	1	**200-3245**	1	SPRING	
	12	1	**200-3246**	1	SPRING	
	13	1	**215-9961**	1	STOPPER	
	14	1	**215-9962**	1	STOPPER	
M	15	1	**225-4607**	2	SETSCREW (M20X2.5X45-MM)	
	16	1	**234-4452**	1	COVER	
	17	1	**234-4453**	1	COVER	
	18	1	**273-8316**	1	SEAL-O-RING	
	19	1	**273-8317**	1	SEAL-O-RING	
	20	1	**273-8318**	1	SEAL-O-RING	
	21	1	**273-8319**	1	SEAL-O-RING	
	22	1	**285-4470**	1	SEAL-O-RING	
	23	1	**300-9715**	1	BODY AS (DRIVE)	
C	24	1	**301-6874**	1	RETAINER	
C	25	1	**301-8294**	1	ADJUSTER	
	26	1	**094-1875**	1	DOWEL	
	27	1	**094-1881**	1	PLATE-SLIDE	
	28	1	**094-1882**	13	PLUG	
	29	1	**095-1788**	1	RING-BACKUP	
M	30	1	**8T-4131**	1	NUT (M20X2.5-THD)	
M	31	1	**6V-8200**	6	BOLT-SOCKET HEAD (M12X1.75X35-MM)	
	32	1	**099-3671**	1	SPRING	
	33	1	**3J-1907**	2	SEAL-O-RING	
	34	1	**3D-2891**	1	BALL	
M	35	1	**200-3255**	1	NUT (M20X1.5-THD)	
	36	1	**191-5707**	1	SPOOL AS	
	37	1	**190-7674**	1	SEAL-O-RING	

256-0093 HEAD GP-PUMP *(contd.)* i02888353

NOTE	REF NO	GRAPHIC REF	PART NUMBER	QTY	PART NAME 1 2 3 4 5 6 (PRODUCT LEVEL)	SEE PAGE
	38	1	**190-7673**	1	SEAL-O-RING	
	39	1	**189-9763**	3	SEAL-O-RING	
	40	1	**185-0201**	1	PIN AS	
		1	**129-7978**	1	DOWEL	
	41	1	**185-0169**	1	GUIDE	
	42	1	**173-3413**	1	COVER	
	43	1	**173-3397**	1	LEVER	
	44	1	**173-3384**	1	PISTON	
	45	1	**150-5797**	1	PIN	
	46	1	**153-8623**	1	RING-BACKUP	

B-USE AS REQUIRED
C-CHANGE FROM PREVIOUS TYPE
M-METRIC PART
Y-SEPARATE ILLUSTRATION

256-0093 HEAD GP-PUMP *(contd.)* **i02888353**

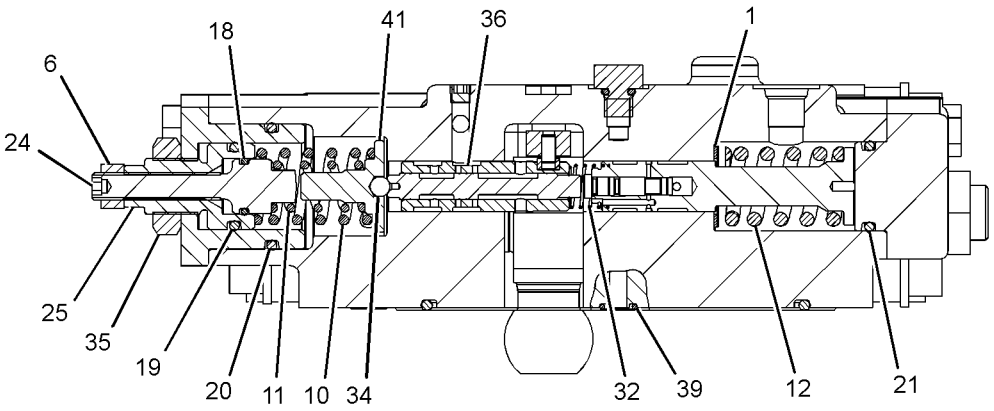

SECTION A-A

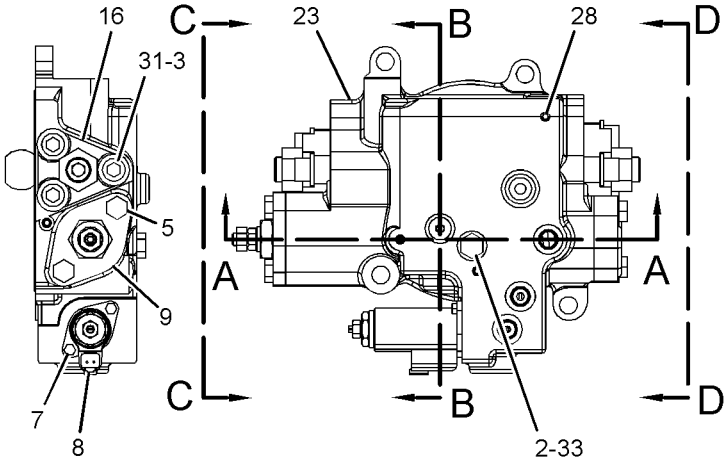

VIEW C-C

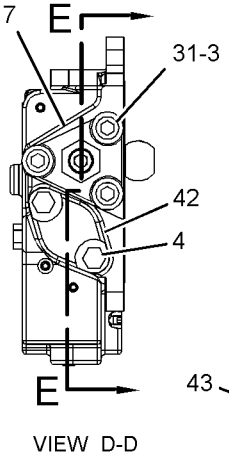

VIEW D-D

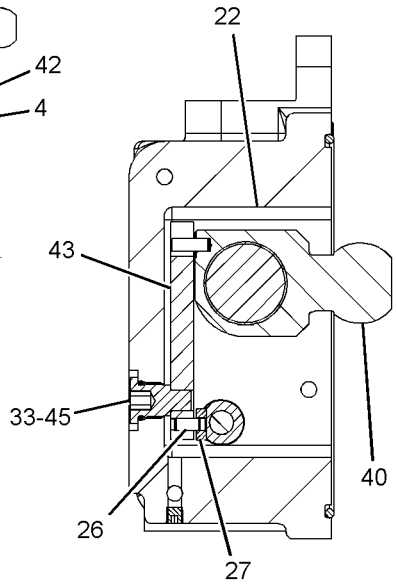

SECTION B-B

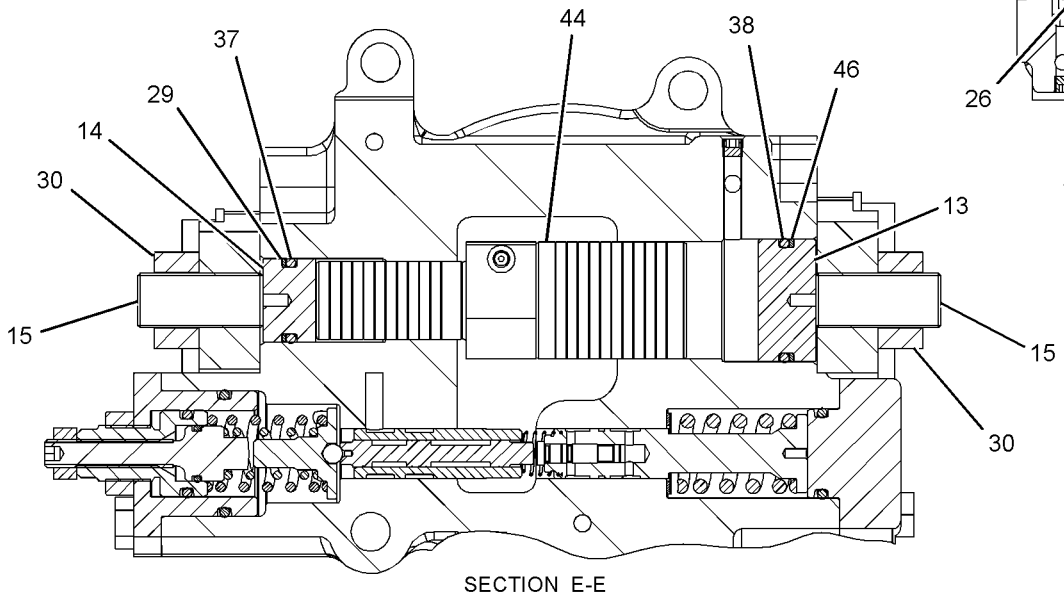

SECTION E-E

GRAPHIC #1 **<END>** g01392644

HYDRAULIC SYSTEM

256-0096 HEAD GP-PUMP–DRIVEN

S/N: WNE1-UP; ZMF1-UP; CWG1-UP

PART OF 272-6955 PUMP GP-MAIN HYDRAULIC

SMCS-3222, 5070, 5086 **i02888384**

NOTE	REF NO	GRAPHIC REF	PART NUMBER	QTY	PART NAME 1 2 3 4 5 6 (PRODUCT LEVEL)	SEE PAGE
B	1	2	**099-3669**	2	SHIM (1-MM THK)	
B		2	**099-3670**	2	SHIM (1.95-MM THK)	
B		2	**099-6109**	2	SHIM (1.05-MM THK)	
B		2	**099-6110**	2	SHIM (1.1-MM THK)	
B		2	**099-6111**	2	SHIM (1.15-MM THK)	
B		2	**099-6112**	2	SHIM (1.2-MM THK)	
B		2	**099-6113**	2	SHIM (1.25-MM THK)	
B		2	**099-6115**	2	SHIM (1.3-MM THK)	
B		2	**099-6117**	2	SHIM (1.35-MM THK)	
B		2	**099-6118**	2	SHIM (1.4-MM THK)	
B		2	**099-6119**	2	SHIM (1.45-MM THK)	
B		2	**099-6120**	2	SHIM (1.5-MM THK)	
B		2	**099-6121**	2	SHIM (1.55-MM THK)	
B		2	**099-6122**	2	SHIM (1.6-MM THK)	
B		2	**099-6123**	2	SHIM (1.65-MM THK)	
B		2	**099-6124**	2	SHIM (1.7-MM THK)	
B		2	**099-6125**	2	SHIM (1.75-MM THK)	
B		2	**099-6126**	2	SHIM (1.8-MM THK)	
B		2	**099-6127**	2	SHIM (1.85-MM THK)	
B		2	**099-6128**	2	SHIM (1.9-MM THK)	
	2	1,2	**8T-4223**	6	WASHER-HARD (13.5X25.5X3-MM THK)	
M	3	1	**8T-4196**	2	BOLT (M10X1.5X35-MM)	
M	4	2	**8T-4136**	2	BOLT (M10X1.5X25-MM)	
M	5	2	**8T-4133**	1	NUT (M10X1.5-THD)	
M	6	1,2	**6V-8200**	6	BOLT-SOCKET HEAD (M12X1.75X35-MM)	
	7	2	**3J-1907**	1	SEAL-O-RING	
	8	2	**173-3398**	1	COVER	
	9	2	**200-3244**	1	SPRING	
	10	2	**200-3245**	1	SPRING	
	11	2	**200-3246**	1	SPRING	
	12	1	**215-9961**	1	STOPPER	
	13	1	**215-9962**	1	STOPPER	
M	14	1	**225-4607**	2	SETSCREW (M20X2.5X45-MM)	
	15	2	**234-4452**	1	COVER	
	16	1	**234-4453**	1	COVER	
	17	2	**273-8316**	1	SEAL-O-RING	
	18	2	**273-8317**	1	SEAL-O-RING	
	19	2	**273-8318**	1	SEAL-O-RING	
	20	2	**273-8319**	1	SEAL-O-RING	
	21	2	**285-4470**	1	SEAL-O-RING	
	22	1	**300-9716**	1	BODY AS (DRIVEN)	
C	23	2	**301-6874**	1	RETAINER	
C	24	2	**301-8294**	1	ADJUSTER	
	25	2	**094-1875**	1	DOWEL	
	26	2	**094-1881**	1	PLATE-SLIDE	
	27	1	**094-1882**	9	PLUG	
	28	1	**095-1788**	1	RING-BACKUP	
M	29	1	**8T-4131**	2	NUT (M20X2.5-THD)	
	30	2	**3D-2891**	1	BALL	
	31	2	**099-3671**	1	SPRING	
M	32	2	**200-3255**	1	NUT (M20X1.5-THD)	
	33	2	**191-5707**	1	SPOOL AS	
	34	1	**190-7674**	1	SEAL-O-RING	
	35	1	**190-7673**	1	SEAL-O-RING	
	36	2	**189-9763**	3	SEAL-O-RING	
	37	2	**185-0201**	1	PIN AS	

256-0096 HEAD GP-PUMP *(contd.)* i02888384

NOTE	REF NO	GRAPHIC REF	PART NUMBER	QTY	PART NAME 1 2 3 4 5 6 (PRODUCT LEVEL)	SEE PAGE
		2	**129-7978**	1	DOWEL	
	38	2	**185-0169**	1	GUIDE	
	39	1	**173-3413**	1	COVER	
	40	2	**173-3397**	1	LEVER	
	41	1	**173-3384**	1	PISTON	
	42	1	**153-8623**	1	RING-BACKUP	
	43	2	**150-5797**	1	PIN	

B-USE AS REQUIRED
C-CHANGE FROM PREVIOUS TYPE
M-METRIC PART

REFER TO ALL ILLUSTRATIONS OF
THIS GROUP FOR AUXILIARY VIEWS

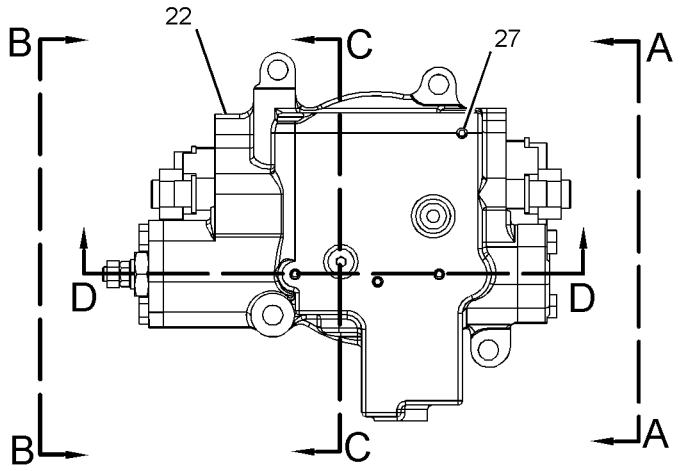

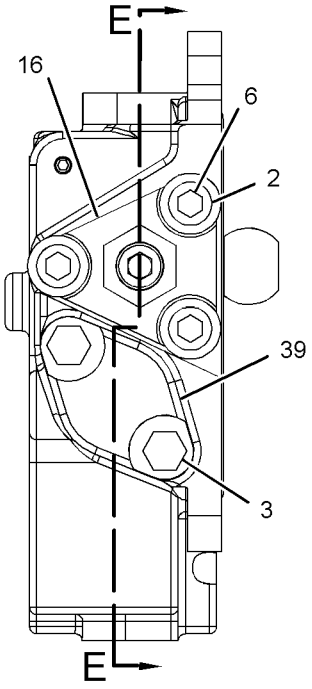

VIEW A-A

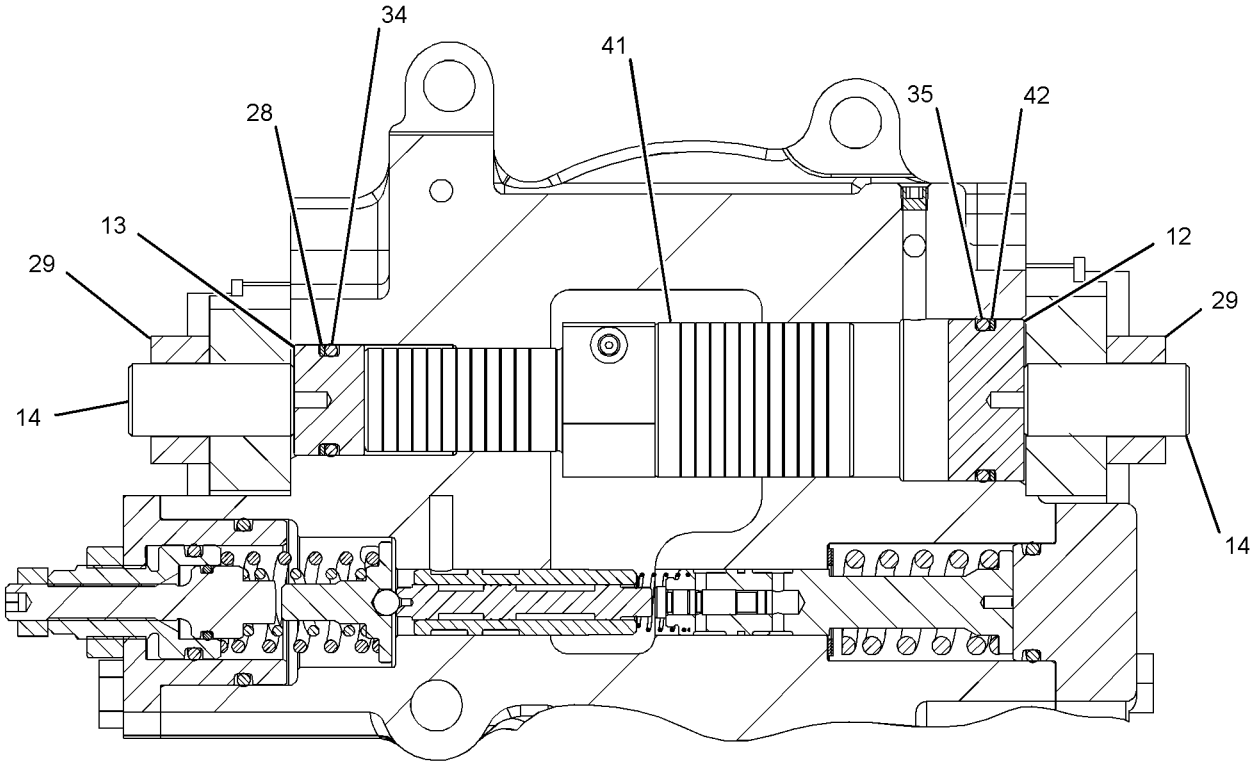

SECTION E-E

GRAPHIC #1

g01393331

256-0096 HEAD GP-PUMP *(contd.)* **i02888384**

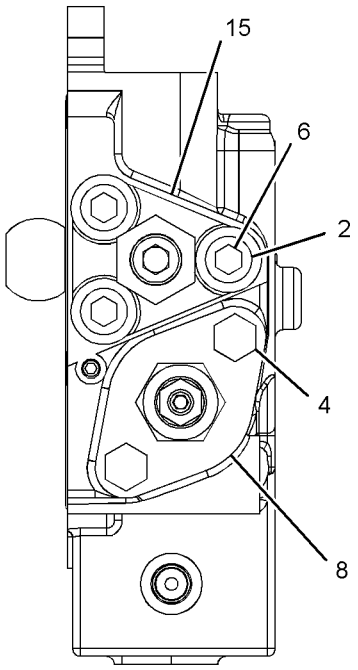

VIEW B-B

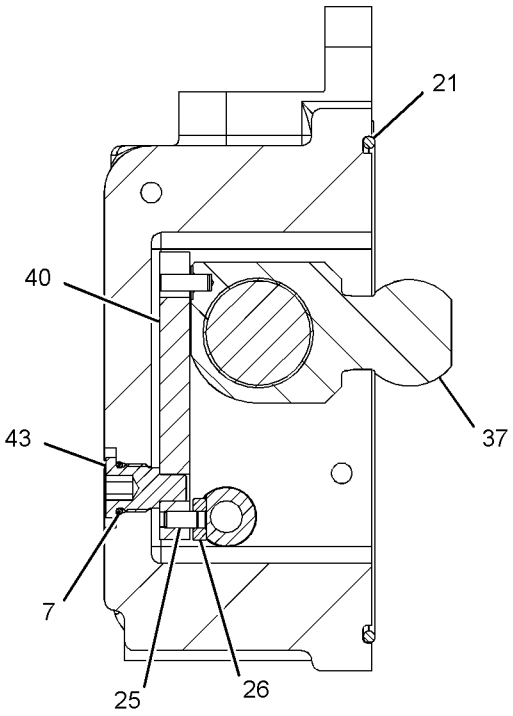

SECTION C-C

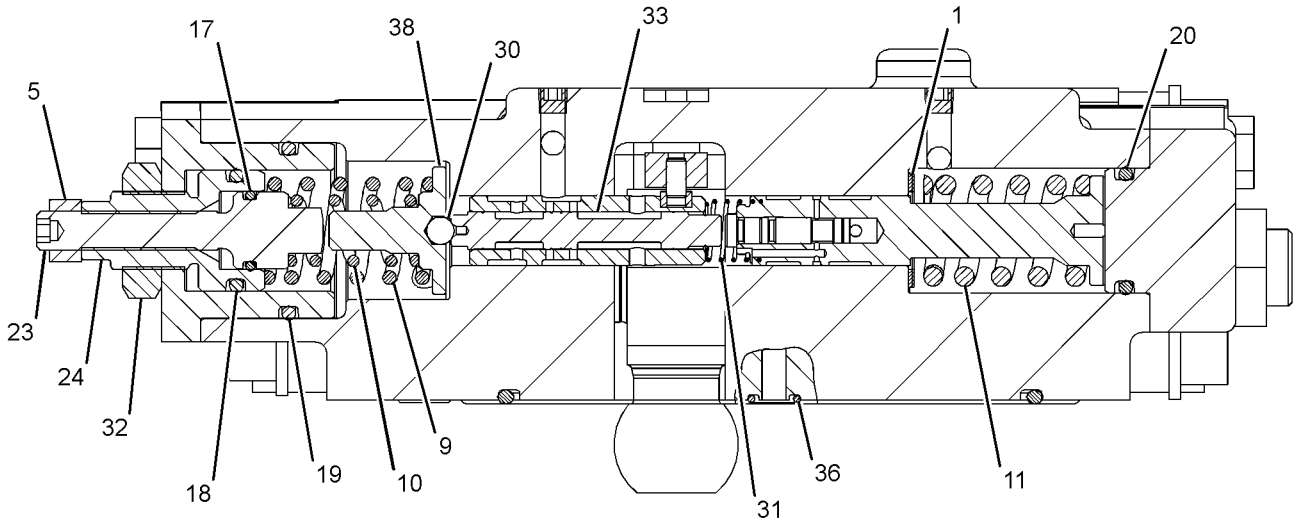

SECTION D-D

GRAPHIC #2 **<END>** g01393359

194-0174 HOSE GP-HYDRAULIC—CONTROL VALVE, STICK

S/N: WNE1-UP; ZMF1-UP; CWG1-UP

PART OF 239-1714, 266-0957 LINES GP-FRONT

SMCS-5057 **i02014074**

NOTE	PART NUMBER	QTY	PART NAME 1 2 3 4 5 6 (PRODUCT LEVEL)	SEE PAGE
Y	*194-0176*	1	HOSE GP-HYDRAULIC	537
			-OR-	
	168-9760	1	HOSE GP-HYDRAULIC	

Y-SEPARATE ILLUSTRATION

<END>

194-0176 HOSE GP-HYDRAULIC—CONTROL VALVE, STICK

S/N: WNE1-UP; ZMF1-UP; CWG1-UP

PART OF 194-0174 HOSE GP-HYDRAULIC

SMCS-5057 **i02014465**

NOTE	REF NO	GRAPHIC REF	PART NUMBER	QTY	PART NAME 1 2 3 4 5 6 (PRODUCT LEVEL)	SEE PAGE
	1	1	**142-7765**	1	TUBE AS	
	2	1	**5K-9090**	1	SEAL-O-RING	
I	3	1	**165-3165**	1	HOSE AS	

I-REFER TO HYDRAULIC INFORMATION SYSTEM

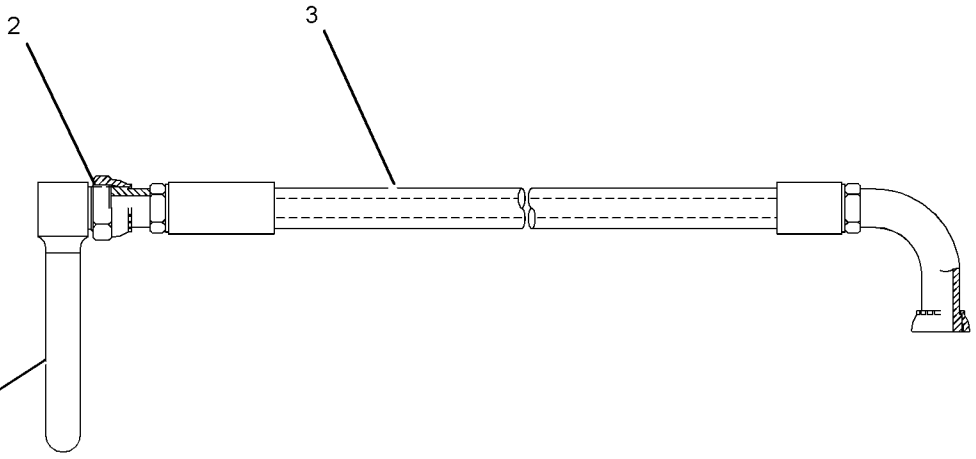

GRAPHIC #1 **<END>** g01041998

194-0180 HOSE GP-HYDRAULIC—CONTROL VALVE, BOOM

S/N: WNE1-UP; ZMF1-UP; CWG1-UP

PART OF 239-1714, 266-0957 LINES GP-FRONT

SMCS-5057 **i03413832**

NOTE	PART NUMBER	QTY	PART NAME 1 2 3 4 5 6 (PRODUCT LEVEL)	SEE PAGE
Y	*194-0181*	1	HOSE GP-HYDRAULIC (FRONT)	539
			—OR—	
Y	*194-0182*	1	HOSE GP-HYDRAULIC (FRONT)	540

Y-SEPARATE ILLUSTRATION

<END>

194-0181 HOSE GP-HYDRAULIC—CONTROL VALVE, BOOM

S/N: WNE1-UP; ZMF1-UP; CWG1-UP

PART OF 194-0180 HOSE GP-HYDRAULIC

SMCS-5057 **i02611124**

NOTE	REF NO	GRAPHIC REF	PART NUMBER	QTY	PART NAME 1 2 3 4 5 6 (PRODUCT LEVEL)	SEE PAGE
	1	1	**168-9762**	1	HOSE AS	
	2	1	**8C-3206**	2	FLANGE-HALF	
	3	1	**4J-0520**	1	SEAL-O-RING	



GRAPHIC #1 **<END>** g01049500

194-0182 HOSE GP-HYDRAULIC—CONTROL VALVE, BOOM

S/N: WNE1-UP; ZMF1-UP; CWG1-UP

PART OF 194-0180 HOSE GP-HYDRAULIC

SMCS-5057 **i01610617**

NOTE	REF NO	GRAPHIC REF	PART NUMBER	QTY	PART NAME 1 2 3 4 5 6 (PRODUCT LEVEL)	SEE PAGE
I	1	1	**165-3173**	1	HOSE AS	
	2	1	**168-9523**	1	TUBE AS	
	3	1	**113-6479**	1	FLANGE-SPECIAL	
	4	1	**5K-9090**	2	SEAL-O-RING	
	5	1	**1P-3703**	1	SEAL-RECTANGULAR	

I-REFER TO HYDRAULIC INFORMATION SYSTEM

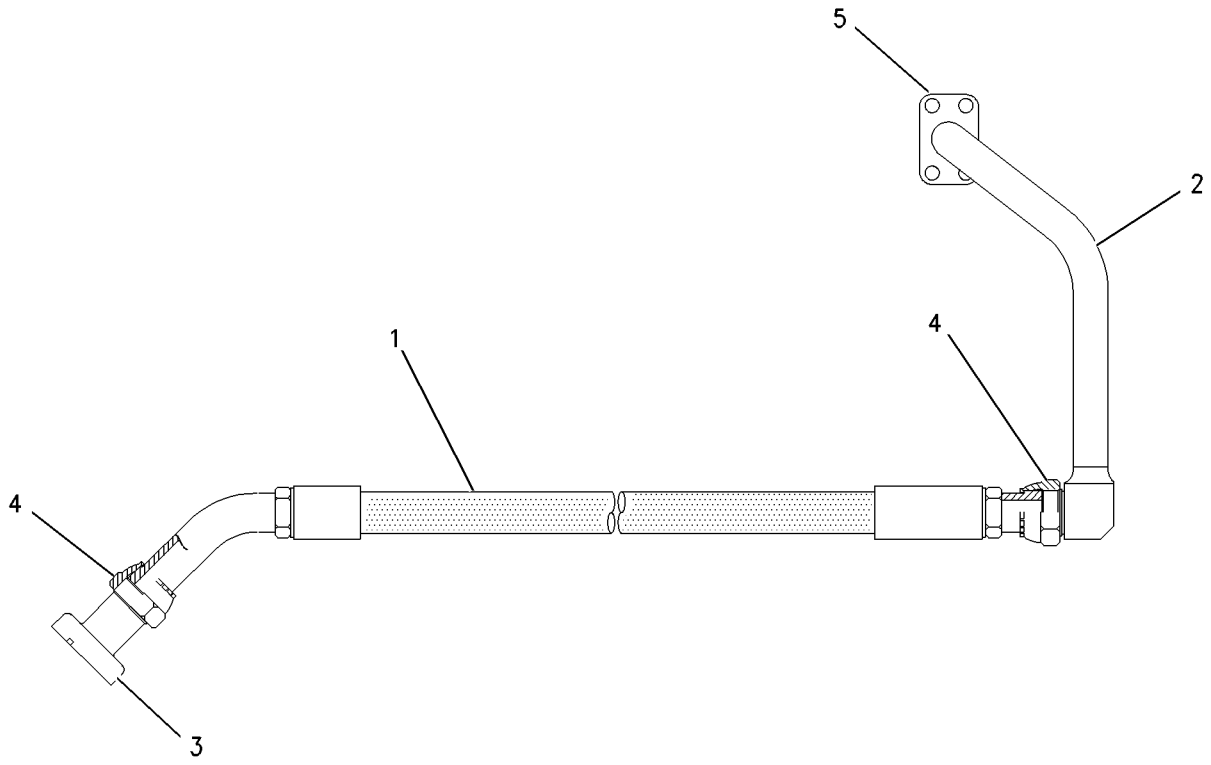

GRAPHIC #1 **<END>** g00834662

236-3212 HOSE GP-HYDRAULIC—FRONT

S/N: WNE1-UP; ZMF1-UP
PART OF 239-1714 LINES GP-FRONT

SMCS-5057 **i03414640**

NOTE	PART NUMBER	QTY	PART NAME 1 2 3 4 5 6 (PRODUCT LEVEL)	SEE PAGE
Y	*236-3214*	1	HOSE GP-HYDRAULIC (FRONT)	541
			—OR—	
	207-6666	1	HOSE AS	
BE	**7Y-5074**		GUARD-HOSE	

B-USE AS REQUIRED
E-ORDER BY THE CENTIMETER
Y-SEPARATE ILLUSTRATION

<END>

236-3213 HOSE GP-HYDRAULIC—FRONT

S/N: WNE1-UP; ZMF1-UP
PART OF 239-1714 LINES GP-FRONT

SMCS-5057 **i03414641**

NOTE	PART NUMBER	QTY	PART NAME 1 2 3 4 5 6 (PRODUCT LEVEL)	SEE PAGE
Y	*236-3215*	1	HOSE GP-HYDRAULIC (FRONT)	541
			—OR—	
	207-6667	1	HOSE AS	
BE	**7Y-5074**		GUARD-HOSE	

B-USE AS REQUIRED
E-ORDER BY THE CENTIMETER
Y-SEPARATE ILLUSTRATION

<END>

236-3214 HOSE GP-HYDRAULIC—FRONT

S/N: WNE1-UP; ZMF1-UP
PART OF 236-3212 HOSE GP-HYDRAULIC

SMCS-5057 **i02424334**

NOTE	PART NUMBER	QTY	PART NAME 1 2 3 4 5 6 (PRODUCT LEVEL)	SEE PAGE
I	**187-5954**	1	HOSE AS	
	6V-9746	1	SEAL-O-RING	
	7Y-3721	1	TUBE AS	

I-REFER TO HYDRAULIC INFORMATION SYSTEM

<END>

236-3215 HOSE GP-HYDRAULIC—FRONT

S/N: WNE1-UP; ZMF1-UP
PART OF 236-3213 HOSE GP-HYDRAULIC

SMCS-5057 **i02424336**

NOTE	PART NUMBER	QTY	PART NAME 1 2 3 4 5 6 (PRODUCT LEVEL)	SEE PAGE
I	**187-5954**	1	HOSE AS	
	6V-9746	1	SEAL-O-RING	
	137-0856	1	TUBE AS	

I-REFER TO HYDRAULIC INFORMATION SYSTEM

<END>

HYDRAULIC SYSTEM

260-7910 HOSE GP-HYDRAULIC–FRONT

S/N: WNE1-UP; ZMF1-UP; CWG1-UP

PART OF 239-1714, 266-0957 LINES GP-FRONT

SMCS-5057 **i02425619**

NOTE	PART NUMBER	QTY	PART NAME 1 2 3 4 5 6 (PRODUCT LEVEL)	SEE PAGE
Y	*260-7911*	1	HOSE GP-HYDRAULIC (FRONT)	543
			–OR–	
Y	*260-7913*	1	HOSE GP-HYDRAULIC (FRONT)	544

Y-SEPARATE ILLUSTRATION

<END>

HYDRAULIC SYSTEM

260-7911 HOSE GP-HYDRAULIC–FRONT

S/N: WNE1-UP; ZMF1-UP; CWG1-UP
PART OF 260-7910 HOSE GP-HYDRAULIC

SMCS-5057 **i02580159**

NOTE	REF NO	GRAPHIC REF	PART NUMBER	QTY	PART NAME 1 2 3 4 5 6 (PRODUCT LEVEL)	SEE PAGE
	1	1	**260-7912**	1	HOSE AS	
	2	1	**8C-3206**	2	FLANGE-HALF	
	3	1	**4J-0520**	1	SEAL-O-RING	

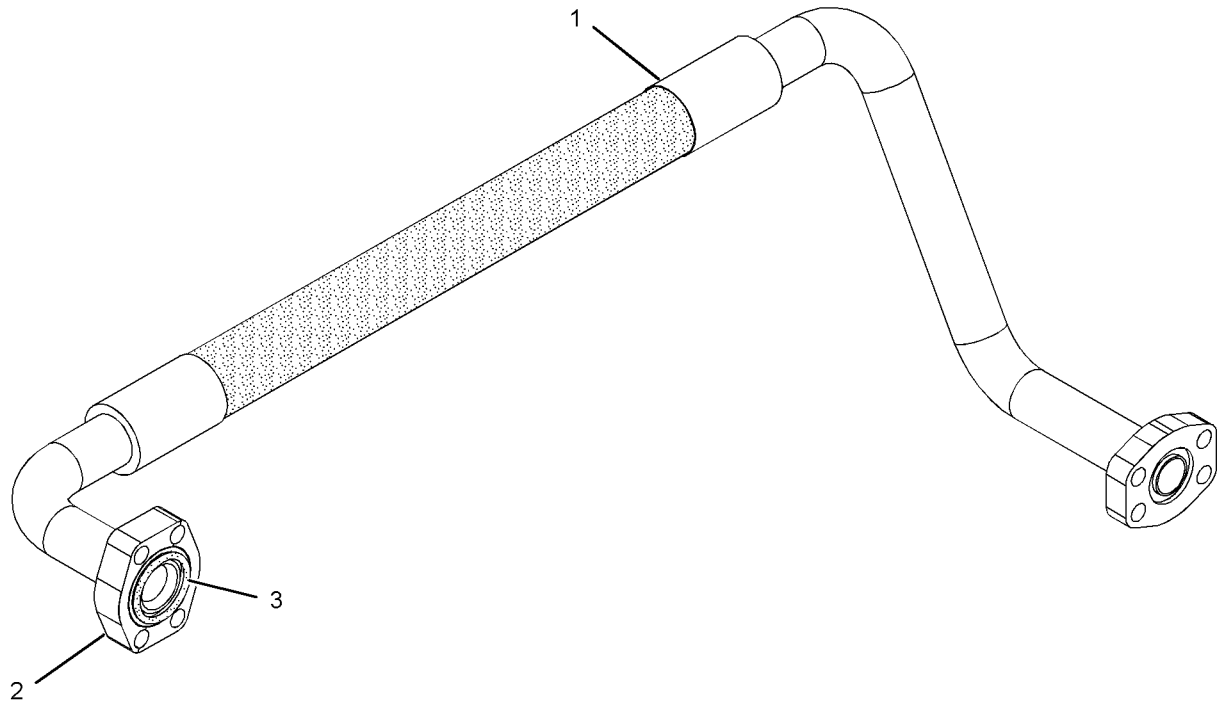

GRAPHIC #1 **<END>** g01277264

HYDRAULIC SYSTEM

260-7913 HOSE GP-HYDRAULIC—FRONT

S/N: WNE1-UP; ZMF1-UP; CWG1-UP

PART OF 260-7910 HOSE GP-HYDRAULIC

SMCS-5057 **i02425626**

NOTE	REF NO	GRAPHIC REF	PART NUMBER	QTY	PART NAME 1 2 3 4 5 6 (PRODUCT LEVEL)	SEE PAGE
	1	1	**142-7764**	1	TUBE AS	
I	2	1	**260-7914**	1	HOSE AS	
	3	1	**1P-3703**	1	SEAL-RECTANGULAR	
	4	1	**5K-9090**	2	SEAL-O-RING	
	5	1	**7Y-3731**	1	FLANGE	

I-REFER TO HYDRAULIC INFORMATION SYSTEM

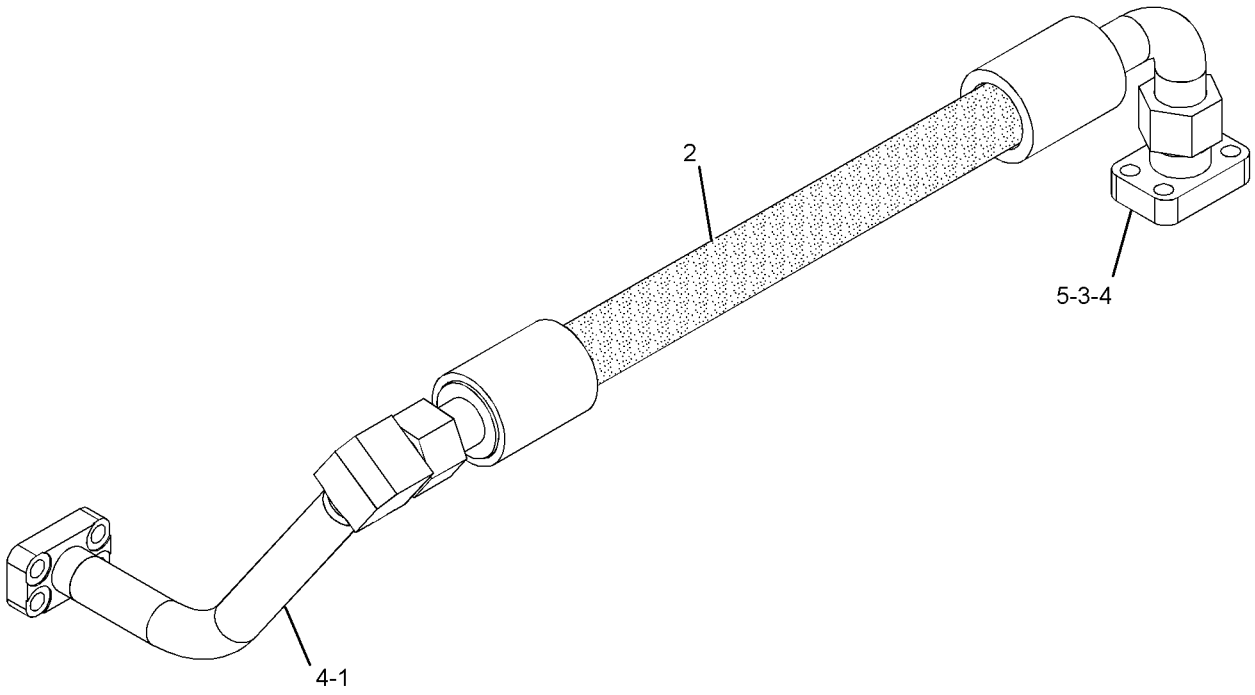

GRAPHIC #1 **<END>** g01277324

270-5712 HYDRAULIC AR

S/N: WNE1-UP

PART OF 343-1015 GENERAL AR

SMCS-5050 **i03016318**

NOTE	PART NUMBER	QTY	PART NAME 1 2 3 4 5 6 (PRODUCT LEVEL)	SEE PAGE
Y	*259-5237*	1	FASTENER GP-WIRING HARNESS (HEAVY LIFT)	196
Y	*239-1699*	1	LINES GP-BOOM CYLINDER	579
Y	*239-1714*	1	LINES GP-FRONT	611
Y	*248-9846*	1	LINES GP-HYDRAULIC OIL COOLER (CONTROL VALVE, PUMP)	650
Y	*248-9848*	1	LINES GP-HYDRAULIC OIL COOLER	653
Y	*248-9825*	1	LINES GP-PILOT (JOYSTICK, PEDALS)	655
Y	*248-9850*	1	LINES GP-PILOT (MAIN CONTROL VALVE)	659
Y	*248-9852*	1	LINES GP-PILOT (FILTER, PILOT PUMP)	661
Y	*255-1659*	1	LINES GP-PILOT (HEAVY LIFT)	663
Y	*275-1408*	1	LINES GP-PILOT (CONTROL VALVE)	713
Y	*248-9847*	1	LINES GP-PUMP (SUPPLY, MAIN PUMP)	730
Y	*239-1716*	1	LINES GP-TRAVEL MOTOR	765
Y	*260-7868*	1	MOUNTING GP-MAIN CONTROL VALVE	789
Y	*279-7869*	1	PUMP & MTG GP-MAIN HYDRAULIC	792
Y	*239-1710*	1	TANK & MTG GP-HYDRAULIC	806
Y	**285-1323**	1	VALVE GP-MAIN CONTROL (HEAVY LIFT)	850

Y-SEPARATE ILLUSTRATION

<END>

270-5713 HYDRAULIC AR

S/N: ZMF1-UP

PART OF 343-1016 GENERAL AR

SMCS-5050 **i02981453**

NOTE	PART NUMBER	QTY	PART NAME 1 2 3 4 5 6 (PRODUCT LEVEL)	SEE PAGE
Y	*259-5237*	1	FASTENER GP-WIRING HARNESS (HEAVY LIFT)	196
Y	*239-1699*	1	LINES GP-BOOM CYLINDER	579
Y	*239-1714*	1	LINES GP-FRONT	611
Y	*248-9846*	1	LINES GP-HYDRAULIC OIL COOLER (CONTROL VALVE, PUMP)	650
Y	*248-9848*	1	LINES GP-HYDRAULIC OIL COOLER	653
Y	*248-9825*	1	LINES GP-PILOT (JOYSTICK, PEDALS)	655
Y	*248-9850*	1	LINES GP-PILOT (MAIN CONTROL VALVE)	659
Y	*248-9852*	1	LINES GP-PILOT (FILTER, PILOT PUMP)	661
Y	*255-1659*	1	LINES GP-PILOT (HEAVY LIFT)	663
Y	*275-1408*	1	LINES GP-PILOT (CONTROL VALVE)	713
Y	*248-9847*	1	LINES GP-PUMP (SUPPLY, MAIN PUMP)	730
Y	*239-1717*	1	LINES GP-TRAVEL MOTOR	767
Y	*260-7868*	1	MOUNTING GP-MAIN CONTROL VALVE	789
Y	*279-7869*	1	PUMP & MTG GP-MAIN HYDRAULIC	792
Y	*239-1710*	1	TANK & MTG GP-HYDRAULIC	806
Y	**285-1323**	1	VALVE GP-MAIN CONTROL (HEAVY LIFT)	850

Y-SEPARATE ILLUSTRATION

<END>

HYDRAULIC SYSTEM

285-1356 HYDRAULIC AR

S/N: CWG1-UP

PART OF 339-2832 GENERAL AR

SMCS-5050 **i03676921**

NOTE	PART NUMBER	QTY	PART NAME 1 2 3 4 5 6 (PRODUCT LEVEL)	SEE PAGE
Y	*259-5237*	1	FASTENER GP-WIRING HARNESS (HEAVY LIFT)	196
Y	*266-0957*	1	LINES GP-FRONT	623
Y	*266-0958*	1	LINES GP-FRONT (BOOM, SWING)	626
Y	*266-0960*	1	LINES GP-HYDRAULIC OIL COOLER	654
Y	*248-9825*	1	LINES GP-PILOT (JOYSTICK, PEDALS)	655
Y	*255-1659*	1	LINES GP-PILOT (HEAVY LIFT)	663
Y	*266-0962*	1	LINES GP-PILOT (MAIN CONTROL VALVE)	685
Y	*266-0964*	1	LINES GP-PILOT (FILTER, PILOT PUMP)	695
Y	*266-0963*	1	LINES GP-PILOT (CONTROL VALVE)	688
Y	*266-0959*	1	LINES GP-PUMP (OUTPUT)	737
Y	*266-0961*	1	LINES GP-PUMP (SUPPLY, MAIN PUMP)	740
Y	*266-0980*	1	LINES GP-TRAVEL MOTOR (LONG NARROW UNDERCARRIAGE)	770
Y	*260-7868*	1	MOUNTING GP-MAIN CONTROL VALVE	789
Y	*279-7869*	1	PUMP & MTG GP-MAIN HYDRAULIC	792
Y	*245-5139*	1	TANK & MTG GP-HYDRAULIC	807
Y	**285-1323**	1	VALVE GP-MAIN CONTROL (HEAVY LIFT)	850

Y-SEPARATE ILLUSTRATION

<END>

264-8607 HYDRAULIC AR-BIODEGRADABLE OIL

S/N: CWG1-UP

AN ATTACHMENT

SMCS-5095 **i03648029**

NOTE	PART NUMBER	QTY	PART NAME 1 2 3 4 5 6 (PRODUCT LEVEL)	SEE PAGE
Y	*333-2983*	2	DRIVE GP-FINAL (WITH MOTOR)	322
Y	*264-8608*	1	PLATE & FILM GP (BIODEGRADABLE HYDRAULIC OIL)	1135

Y-SEPARATE ILLUSTRATION

<END>

264-8771 HYDRAULIC AR-BIODEGRADABLE OIL

S/N: WNE1-UP; ZMF1-UP

AN ATTACHMENT

SMCS-5095 **i02958681**

NOTE	PART NUMBER	QTY	PART NAME 1 2 3 4 5 6 (PRODUCT LEVEL)	SEE PAGE
Y	*215-9983*	2	MOTOR & MTG GP-TRAVEL	777
Y	*264-8602*	1	PLATE & FILM GP	1134

Y-SEPARATE ILLUSTRATION

<END>

237-3184 LINES GP-AUXILIARY HYDRAULIC–STICK, HIGH PRESSURE

S/N: WNE1-UP; ZMF1-UP; CWG1-UP
2.4-M TO 2.5-M (7.87-FT TO 8.2-FT) STICK
PART OF 314-3925, 314-3926, 314-3927, 314-3928 OPTION AR-LINKAGE AN ATTACHMENT

SMCS-5057 **i02954161**

NOTE	REF NO	GRAPHIC REF	PART NUMBER	QTY	PART NAME 1 2 3 4 5 6 (PRODUCT LEVEL)	SEE PAGE
	1	1	**127-6780**	1	TUBE AS	
	2	1	**142-6582**	1	TUBE AS	
	3	1	**173-7916**	4	CLAMP-HALF	
I	4	1	**253-6694**	1	HOSE AS	
I	5	1	**253-6697**	1	HOSE AS	
CY	6	1	**277-0954**	2	VALVE GP-MANUAL (AUXILIARY, SHUTOFF)	851
	7	1	**1P-3703**	3	SEAL-RECTANGULAR	
	8	1	**1P-3704**	3	SEAL-RECTANGULAR	
	9	1	**1P-5767**	4	FLANGE-HALF	
	10	1	**6V-0400**	4	FLANGE-HALF	
	11	1	**7Y-4538**	4	CLAMP-HALF	
	12	1	**8T-4121**	4	WASHER-HARD (11X21X2.5-MM THK)	
M	13	1	**8T-4139**	8	BOLT (M12X1.75X30-MM)	
M	14	1	**8T-4183**	4	BOLT (M12X1.75X40-MM)	
M	15	1	**8T-4184**	8	BOLT (M12X1.75X45-MM)	
M	16	1	**8T-4194**	8	BOLT (M12X1.75X50-MM)	
	17	1	**8T-4223**	24	WASHER-HARD (13.5X25.5X3-MM THK)	
M	18	1	**8T-4956**	4	BOLT (M12X1.75X35-MM)	
M	19	1	**8T-6685**	4	BOLT (M10X1.5X110-MM)	

C-CHANGE FROM PREVIOUS TYPE
I-REFER TO HYDRAULIC INFORMATION SYSTEM
M-METRIC PART
Y-SEPARATE ILLUSTRATION

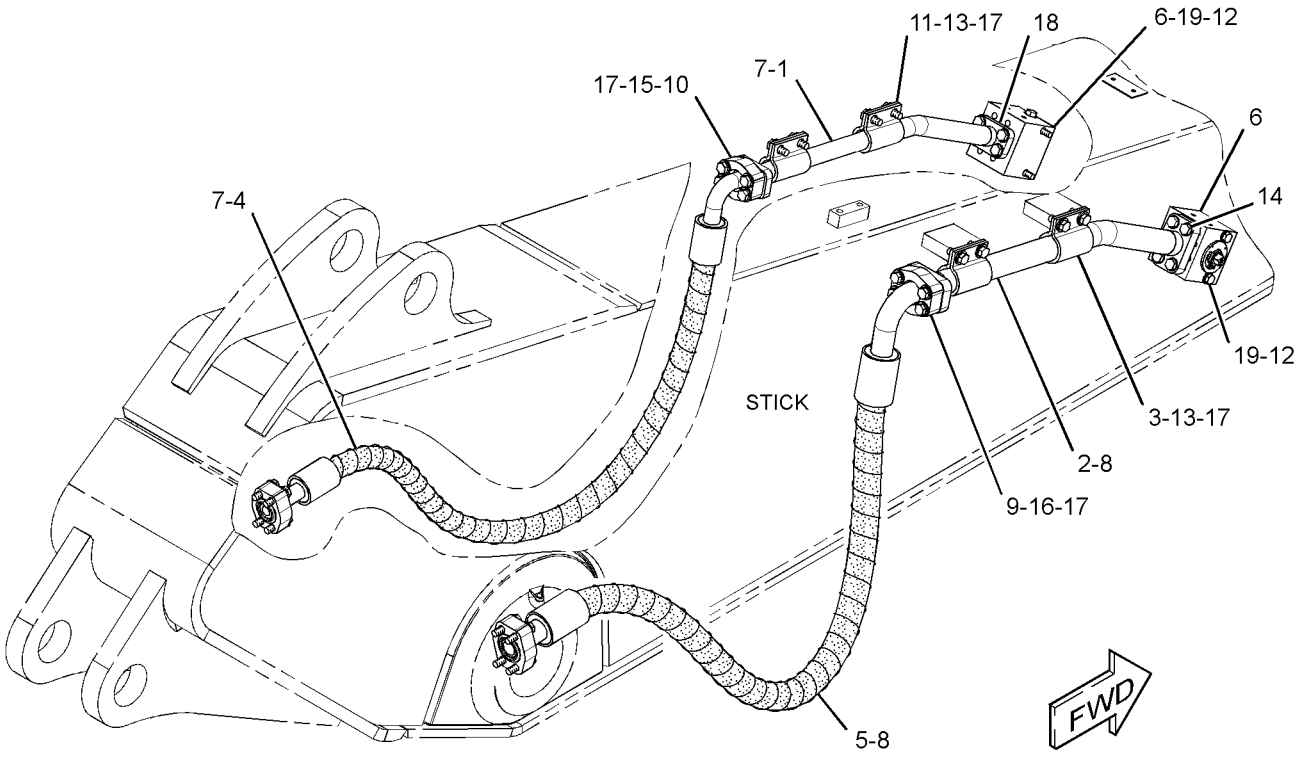

GRAPHIC #1 **<END>** g01475176

HYDRAULIC SYSTEM

242-6475 LINES GP-AUXILIARY HYDRAULIC–BOOM, HIGH PRESSURE

S/N: WNE1-UP; ZMF1-UP; CWG1-UP

PART OF 314-3925, 314-3926, 314-3927, 314-3928, 338-9838, 338-9839, 338-9840, 338-9841, 347-9940 OPTION AR-LINKAGE AN ATTACHMENT

SMCS-5057 **i02889095**

NOTE	REF NO	GRAPHIC REF	PART NUMBER	QTY	PART NAME 1 2 3 4 5 6 (PRODUCT LEVEL)	SEE PAGE
	1	1	**124-1107**	1	GROMMET	
	2	1	**129-5874**	1	GROMMET	
	3	1	**138-5708**	2	CLIP-HALF	
	4	1	**153-8798**	2	PLATE	
	5	1	**173-7916**	6	CLAMP-HALF	
	6	1	**173-7995**	1	PLATE	
	7	1	**193-6606**	2	PLATE	
	8	1	**202-7127**	1	PLATE	
	9	1	**202-7128**	2	PLATE	
I	10	1	**216-6589**	1	HOSE AS	
J	11	1	**306-1611**	1	TUBE GP	
L	11A	1	**306-1614**	1	TUBE AS	
L	11B	1	**306-1615**	1	TUBE AS	
L	11C	1	**1P-3705**	1	SEAL-RECTANGULAR	
LM	11D	1	**8T-4183**	4	BOLT (M12X1.75X40-MM)	
J	12	1	**247-9030**	1	TUBE GP	
L	12A	1	**247-9033**	1	TUBE AS	
L	12B	1	**247-9034**	1	TUBE AS	
L	12C	1	**1P-3703**	1	SEAL-RECTANGULAR	
LM	12D	1	**8T-4139**	4	BOLT (M12X1.75X30-MM)	
	13	1	**277-0786**	1	SUPPORT AS	
I	14	1	**288-7502**	1	HOSE AS	
	15	1	**124-1108**	2	CLIP	
	16	1	**1P-3703**	2	SEAL-RECTANGULAR	
	17	1	**1P-3704**	2	SEAL-RECTANGULAR	
	18	1	**1P-5767**	4	FLANGE-HALF	
	19	1	**6V-0400**	4	FLANGE-HALF	
M	20	1	**7X-2549**	4	BOLT (M12X1.75X100-MM)	
M	21	1	**7X-2553**	2	BOLT (M16X2X40-MM)	
	22	1	**7Y-4538**	6	CLAMP-HALF	
M	23	1	**8T-4139**	10	BOLT (M12X1.75X30-MM)	
M	24	1	**8T-4184**	14	BOLT (M12X1.75X45-MM)	
M	25	1	**8T-4194**	10	BOLT (M12X1.75X50-MM)	
	26	1	**8T-4223**	42	WASHER-HARD (13.5X25.5X3-MM THK)	
M	27	1	**8T-4648**	4	BOLT (M12X1.75X70-MM)	
	28	1	**9X-8257**	2	WASHER (17.5X30X3.5-MM THK)	

I-REFER TO HYDRAULIC INFORMATION SYSTEM
J-TUBE MAY BE 1-PIECE OR 2-PIECE DESIGN (2-PIECE SHOWN)
L-PARTS REQUIRED ONLY WITH 2-PIECE TUBE DESIGN
M-METRIC PART

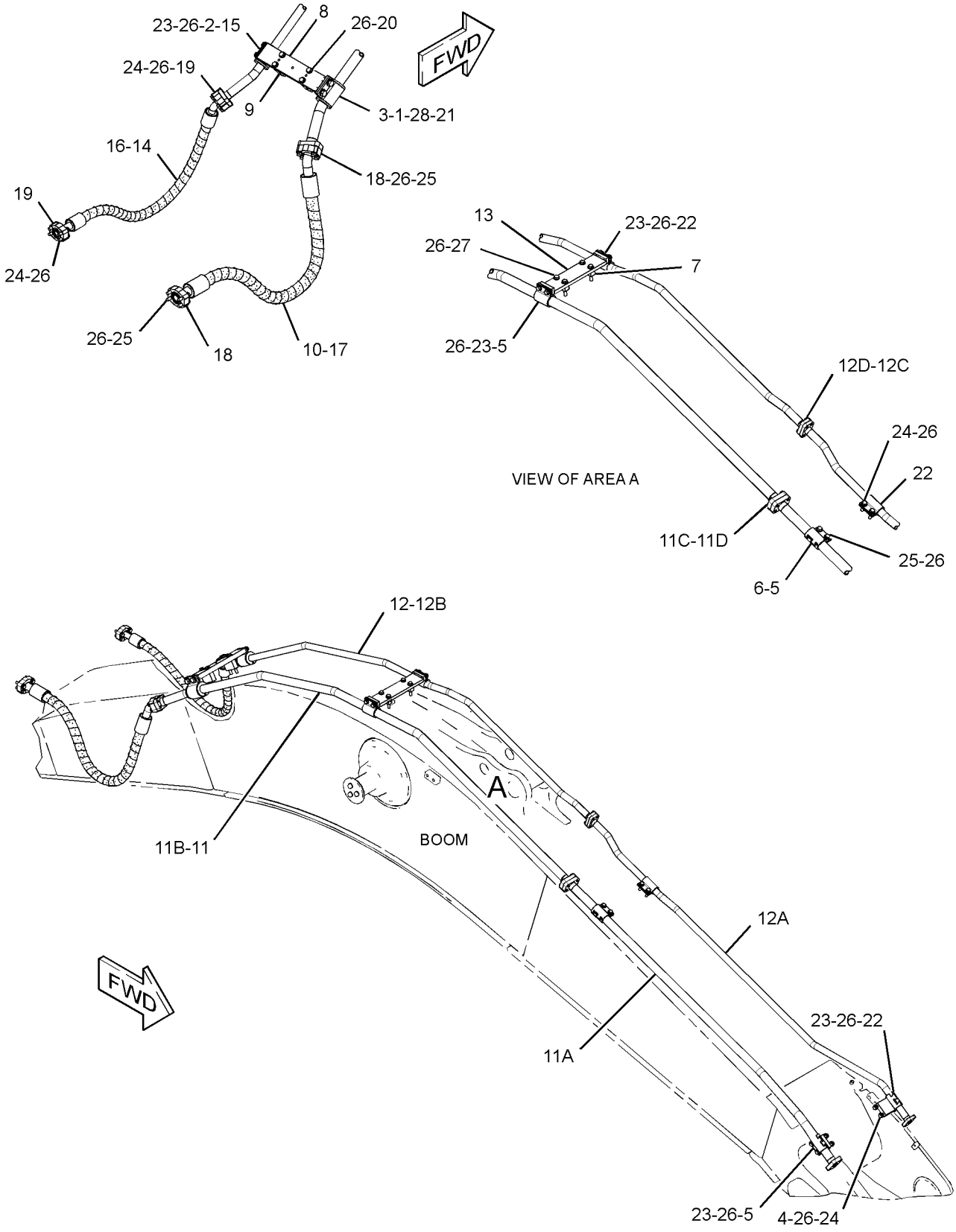

GRAPHIC #1 **<END>** g01426849

HYDRAULIC SYSTEM

242-6476 LINES GP-AUXILIARY HYDRAULIC–BOOM, MEDIUM PRESSURE

S/N: WNE1-UP; ZMF1-UP; CWG1-UP

PART OF 314-3927, 314-3928, 338-9840, 338-9841, 347-9940 OPTION AR-LINKAGE AN ATTACHMENT

SMCS-5057 **i02668599**

NOTE	REF NO	GRAPHIC REF	PART NUMBER	QTY	PART NAME 1 2 3 4 5 6 (PRODUCT LEVEL)	SEE PAGE
	1	1	**153-8867**	2	CLIP	
	2	1	**173-7895**	4	CLIP	
	3	1	**179-5260**	4	CLIP	
	4	1	**202-3915**	1	PLATE	
	5	1	**247-9129**	1	TUBE AS	
J	6	1	**247-9132**	1	TUBE GP	
L	6A	1	**247-9135**	1	TUBE AS	
L	6B	1	**247-9138**	1	TUBE AS	
L	6C	1	**7J-9108**	1	SEAL-O-RING	
	7	1	**247-9141**	1	TUBE AS	
J	8	1	**247-9144**	1	TUBE GP	
L	8A	1	**268-6787**	1	TUBE AS	
L	8B	1	**247-9147**	1	TUBE AS	
L	8C	1	**7J-9108**	1	SEAL-O-RING	
	9	1	**247-9298**	1	CLIP AS	
C	10	1	**294-3796**	1	PLATE	
C	11	1	**294-3797**	1	PLATE	
	12	1	**268-6790**	1	CLIP AS	
	13	1	**093-1291**	2	CLAMP	
	14	1	**6V-8398**	4	SEAL-O-RING	
	15	1	**7J-9108**	2	SEAL-O-RING	
M	16	1	**7X-2549**	2	BOLT (M12X1.75X100-MM)	
	17	1	**7Y-4868**	2	CLIP	
	18	1	**8T-4121**	2	WASHER-HARD (11X21X2.5-MM THK)	
M	19	1	**8T-4194**	4	BOLT (M12X1.75X50-MM)	
M	20	1	**8T-4139**	12	BOLT (M12X1.75X30-MM)	
M	21	1	**8T-4184**	4	BOLT (M12X1.75X45-MM)	
M	22	1	**8T-4185**	2	BOLT (M10X1.5X50-MM)	
	23	1	**8T-4223**	22	WASHER-HARD (13.5X25.5X3-MM THK)	
M	24	1	**8T-4244**	12	NUT (M12X1.75-THD)	
C	25	1	**294-3795**	2	CLIP AS	
C	26	1	**294-3794**	2	CLIP AS	

C-CHANGE FROM PREVIOUS TYPE
J-TUBE MAY BE 1-PIECE OR 2-PIECE DESIGN (2-PIECE SHOWN)
L-PARTS REQUIRED ONLY WITH 2-PIECE TUBE DESIGN
M-METRIC PART

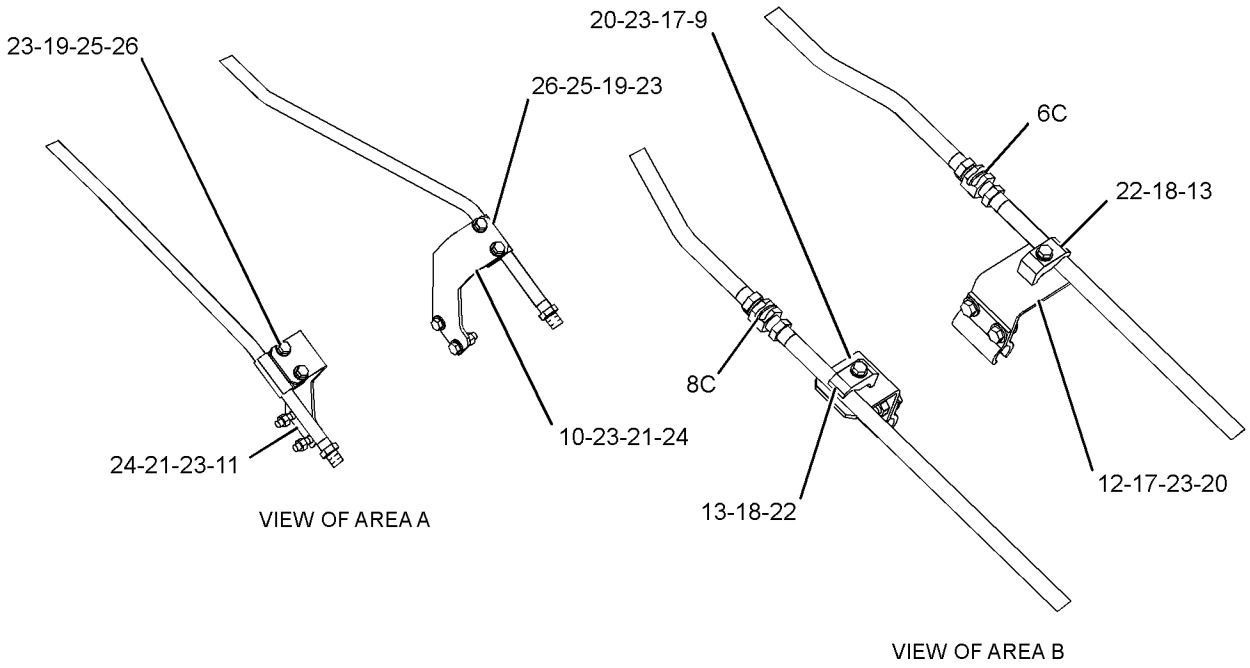

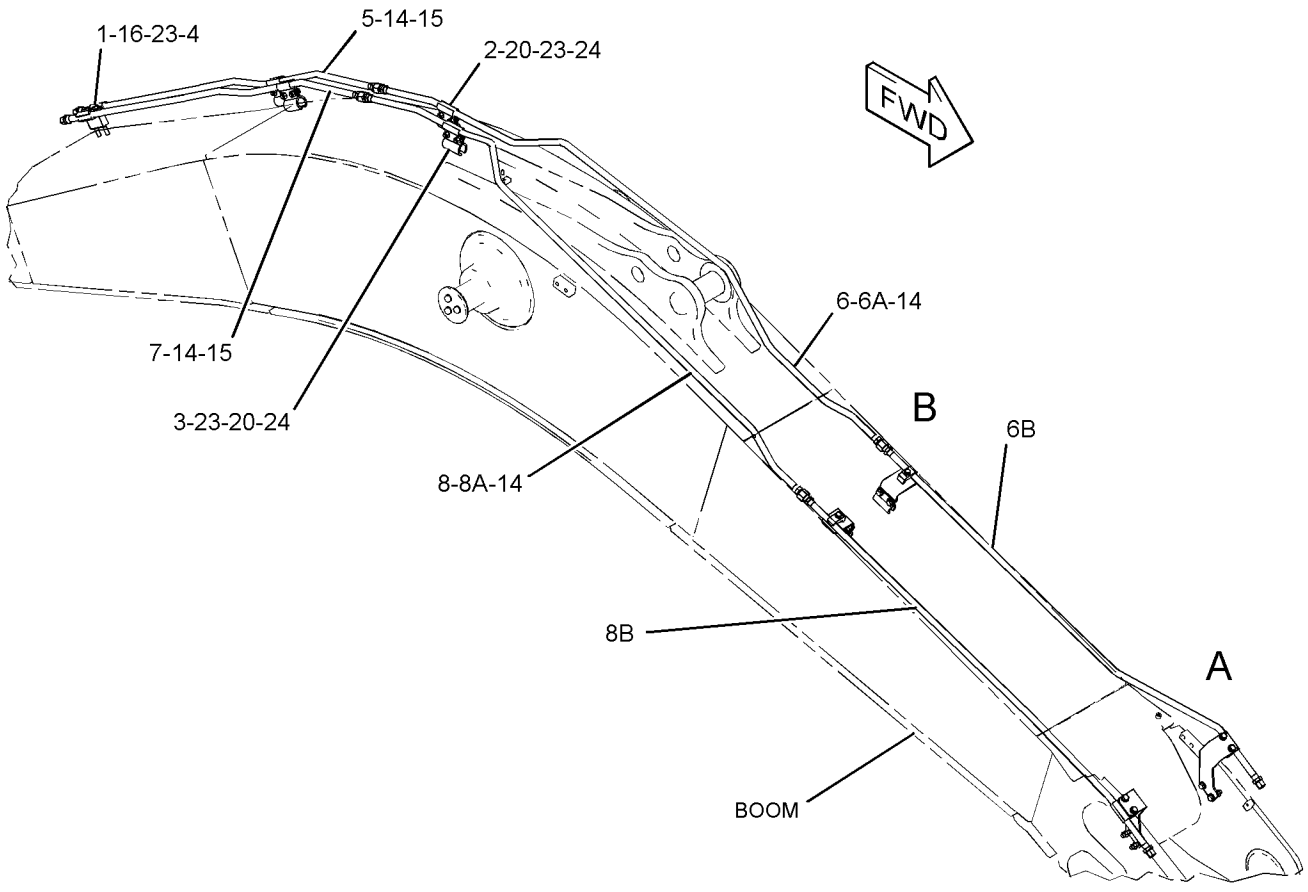

GRAPHIC #1 **<END>** g01282055

242-6479 LINES GP-AUXILIARY HYDRAULIC–
MASS BOOM, HIGH PRESSURE
S/N: CWG1-UP
AN ATTACHMENT

SMCS-5057 **i02981456**

NOTE	REF NO	GRAPHIC REF	PART NUMBER	QTY	PART NAME 1 2 3 4 5 6 (PRODUCT LEVEL)	SEE PAGE
	1	2	**124-1107**	1	GROMMET	
	2	2	**129-5874**	1	GROMMET	
	3	2	**138-5708**	2	CLIP-HALF	
	4	2	**153-8798**	2	PLATE	
	5	2	**173-7916**	6	CLAMP-HALF	
	6	2	**173-7995**	1	PLATE	
	7	2	**193-6606**	2	PLATE	
	8	2	**202-7127**	1	PLATE	
	9	2	**202-7128**	2	PLATE	
I	10	1	**216-6589**	1	HOSE AS	
J	11	1	**226-3065**	1	TUBE GP	
L		1	**1P-3705**	1	SEAL-RECTANGULAR	
L	11A	1	**179-5005**	1	TUBE AS	
L	11B	1	**179-5006**	1	TUBE AS	
LM	11C	1	**8T-4183**	4	BOLT (M12X1.75X40-MM)	
I	12	1	**288-7502**	1	HOSE AS	
J	13	1	**268-6966**	1	TUBE GP	
L		1	**1P-3703**	1	SEAL-RECTANGULAR	
L	13A	1	**268-6969**	1	TUBE AS	
L	13B	1	**268-6970**	1	TUBE AS	
LM	13C	1	**8T-4139**	4	BOLT (M12X1.75X30-MM)	
	14	2	**277-0786**	1	SUPPORT AS	
	15	2	**124-1108**	2	CLIP	
	16	1	**1P-3703**	2	SEAL-RECTANGULAR	
	17	1	**1P-3704**	2	SEAL-RECTANGULAR	
	18	1	**1P-5767**	4	FLANGE-HALF	
	19	1	**6V-0400**	4	FLANGE-HALF	
M	20	2	**7X-2549**	4	BOLT (M12X1.75X100-MM)	
M	21	2	**7X-2553**	2	BOLT (M16X2X40-MM)	
	22	2	**7Y-4538**	6	CLAMP-HALF	
M	23	2	**8T-4139**	10	BOLT (M12X1.75X30-MM)	
M	24	1,2	**8T-4184**	14	BOLT (M12X1.75X45-MM)	
M	25	1,2	**8T-4194**	10	BOLT (M12X1.75X50-MM)	
	26	1,2	**8T-4223**	42	WASHER-HARD (13.5X25.5X3-MM THK)	
M	27	2	**8T-4648**	4	BOLT (M12X1.75X70-MM)	
	28	2	**9X-8257**	2	WASHER (17.5X30X3.5-MM THK)	

I-REFER TO HYDRAULIC INFORMATION SYSTEM
J-TUBE MAY BE 1-PIECE OR 2-PIECE DESIGN (2-PIECE SHOWN)
L-PARTS REQUIRED ONLY WITH 2-PIECE TUBE DESIGN
M-METRIC PART

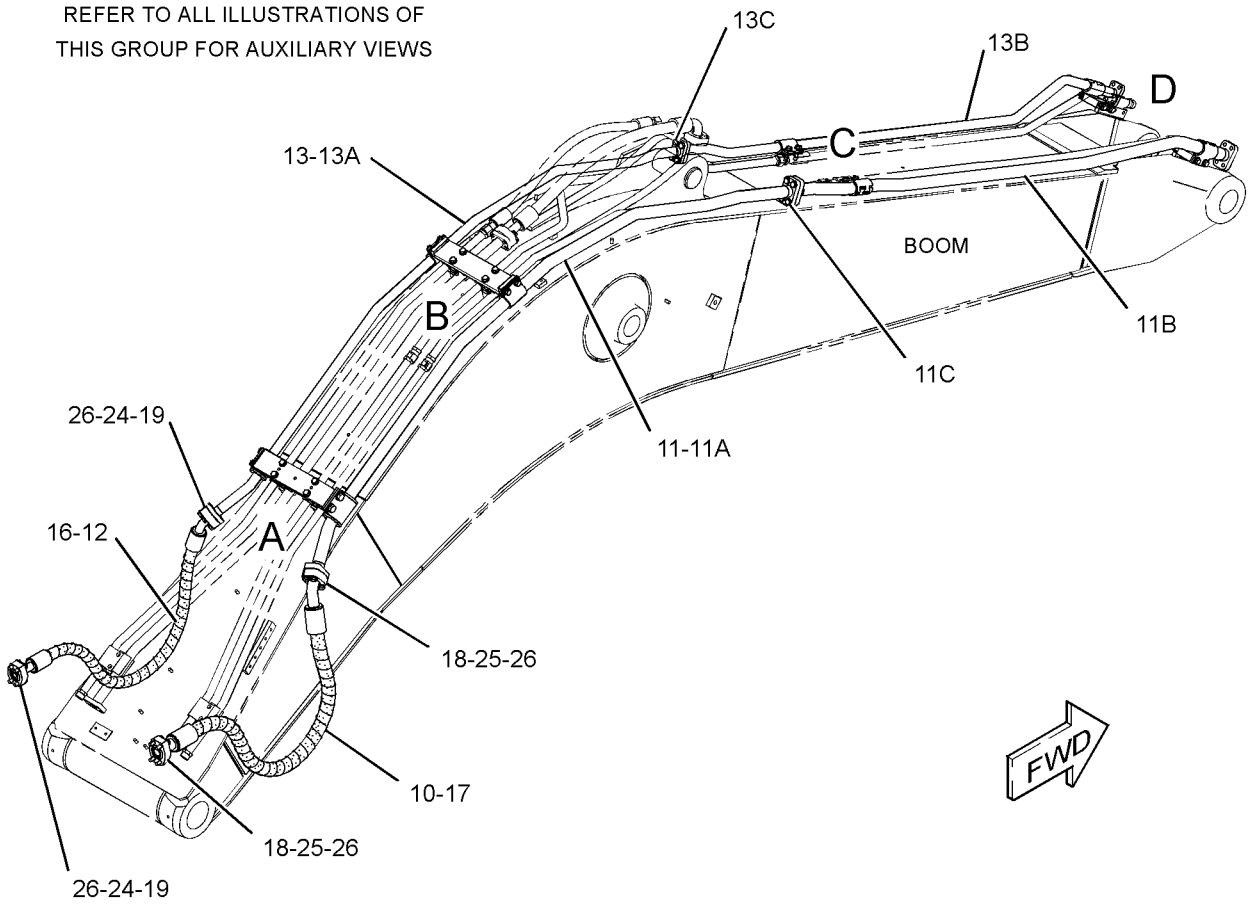

GRAPHIC #1 g01229180

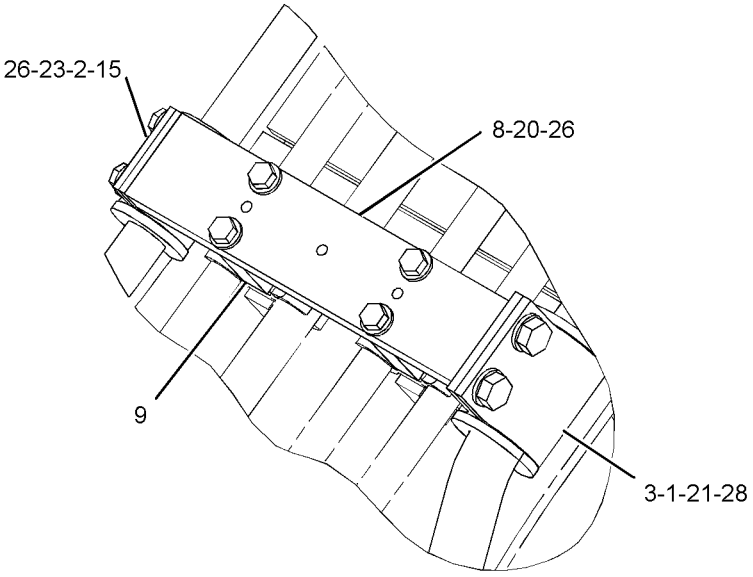

VIEW OF AREA A

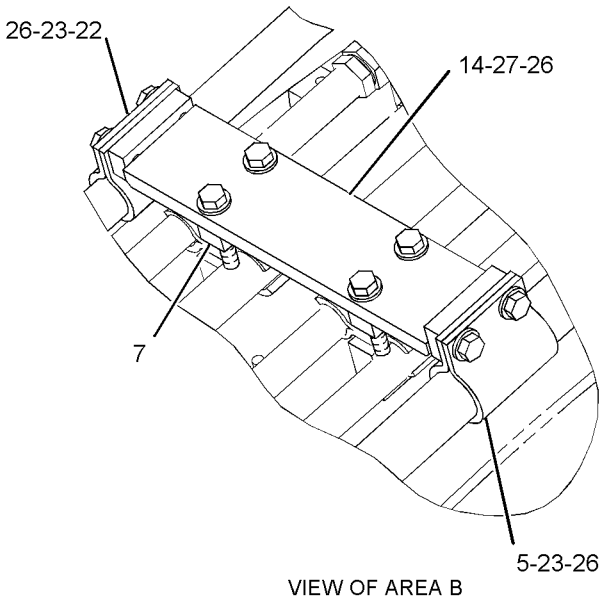

VIEW OF AREA B

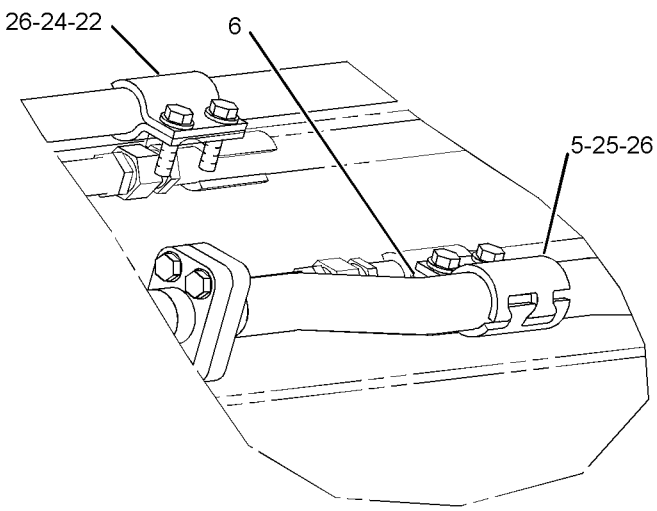

VIEW OF AREA C

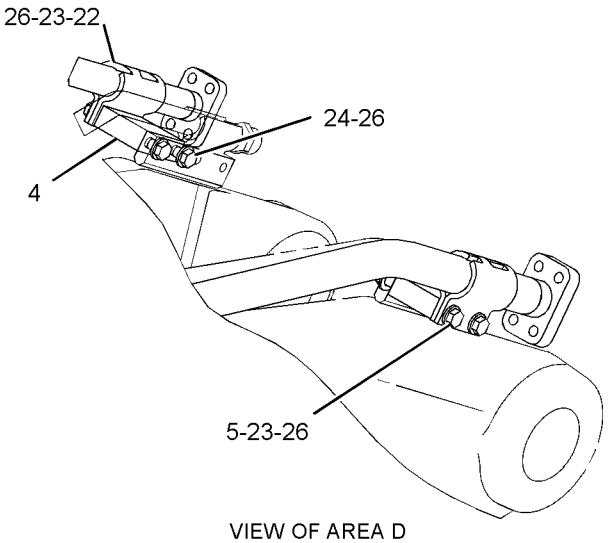

VIEW OF AREA D

GRAPHIC #2 **<END>** g01229181

242-6480 LINES GP-AUXILIARY HYDRAULIC–
MASS BOOM, MEDIUM PRESSURE
S/N: CWG1-UP
AN ATTACHMENT

SMCS-5057 **i02668600**

NOTE	REF NO	GRAPHIC REF	PART NUMBER	QTY	PART NAME 1 2 3 4 5 6 (PRODUCT LEVEL)	SEE PAGE
	1	1	**153-8867**	2	CLIP	
	2	1	**173-7895**	4	CLIP	
	3	1	**179-5260**	4	CLIP	
	4	1	**202-3915**	1	PLATE	
	5	1	**247-9298**	2	CLIP AS	
C	6	1	**294-3796**	1	PLATE	
C	7	1	**294-3797**	1	PLATE	
	8	1	**268-6989**	1	TUBE AS	
J	9	1	**268-6992**	1	TUBE GP	
L	9A	1	**268-6995**	1	TUBE AS	
L	9B	1	**268-6998**	1	TUBE AS	
L	9C	1	**7J-9108**	1	SEAL-O-RING	
	10	1	**268-7001**	1	TUBE AS	
J	11	1	**268-7004**	1	TUBE GP	
L	11A	1	**268-7007**	1	TUBE AS	
L	11B	1	**268-7010**	1	TUBE AS	
L	11C	1	**7J-9108**	1	SEAL-O-RING	
	12	1	**093-1291**	2	CLAMP	
	13	1	**6V-8398**	4	SEAL-O-RING	
	14	1	**7J-9108**	2	SEAL-O-RING	
M	15	1	**7X-2549**	2	BOLT (M12X1.75X100-MM)	
	16	1	**7Y-4868**	2	CLIP	
	17	1	**8T-4121**	2	WASHER-HARD (11X21X2.5-MM THK)	
M	18	1	**8T-4194**	4	BOLT (M12X1.75X50-MM)	
M	19	1	**8T-4139**	12	BOLT (M12X1.75X30-MM)	
M	20	1	**8T-4184**	4	BOLT (M12X1.75X45-MM)	
M	21	1	**8T-4185**	2	BOLT (M10X1.5X50-MM)	
	22	1	**8T-4223**	22	WASHER-HARD (13.5X25.5X3-MM THK)	
M	23	1	**8T-4244**	12	NUT (M12X1.75-THD)	
C	24	1	**294-3795**	2	CLIP AS	
C	25	1	**294-3794**	2	CLIP AS	

C-CHANGE FROM PREVIOUS TYPE
J-TUBE MAY BE 1-PIECE OR 2-PIECE DESIGN (2-PIECE SHOWN)
L-PARTS REQUIRED ONLY WITH 2-PIECE TUBE DESIGN
M-METRIC PART

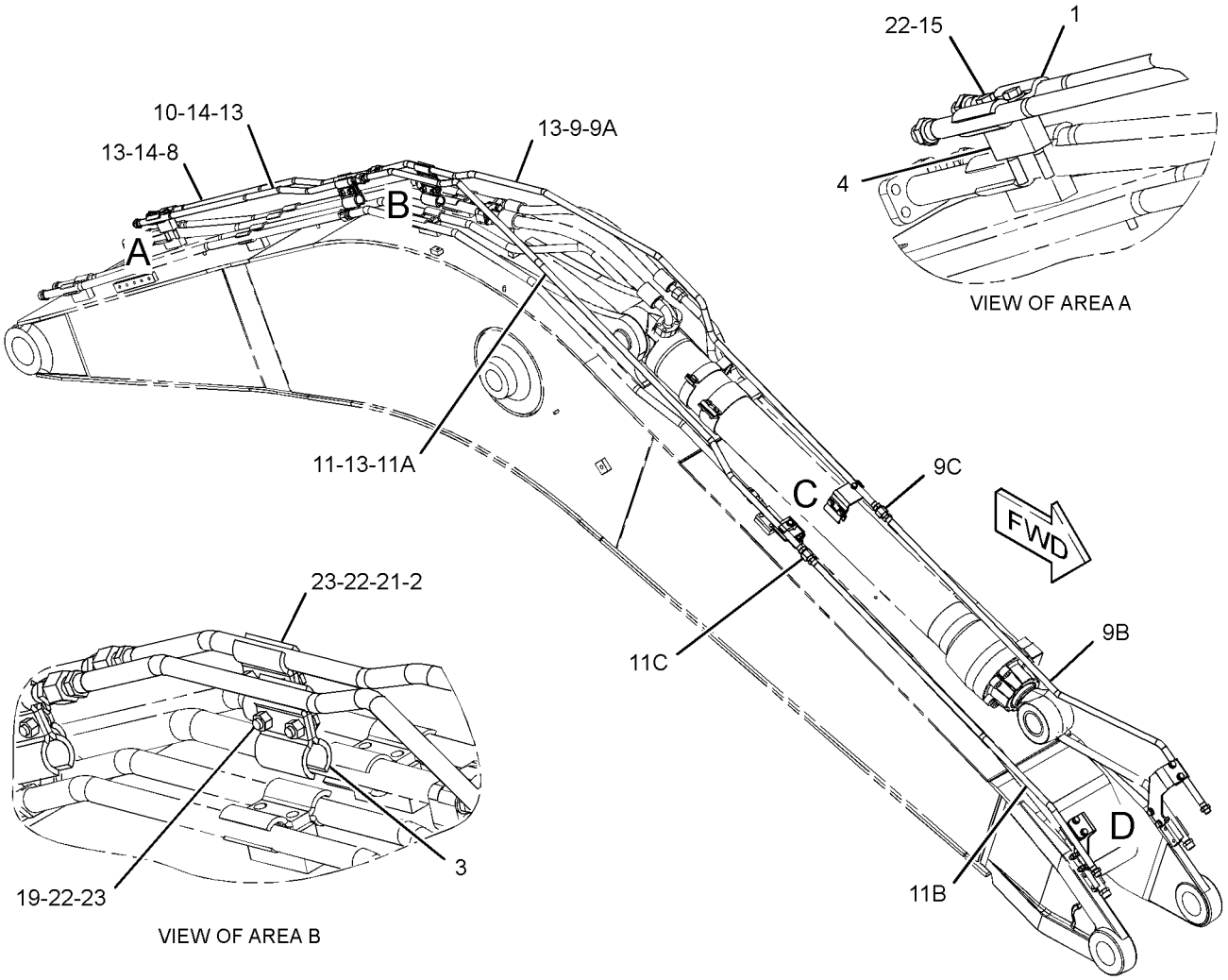

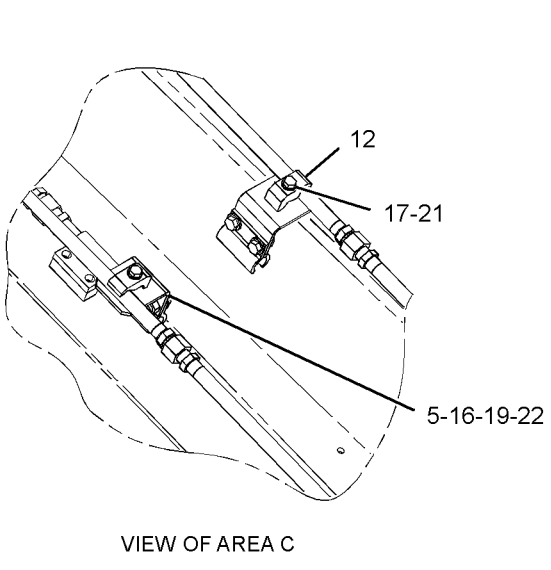

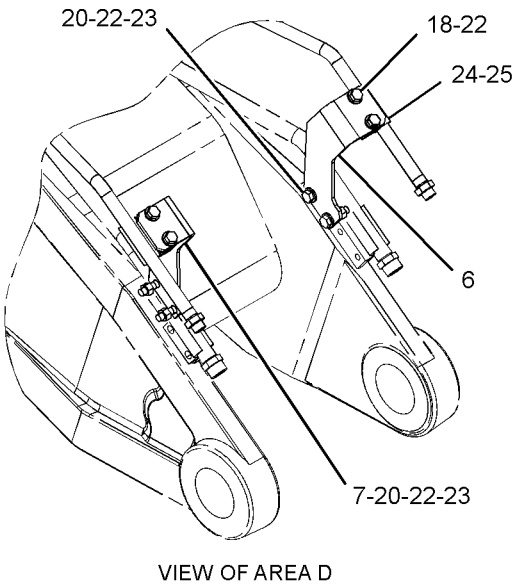

GRAPHIC #1 **<END>** g01344095

HYDRAULIC SYSTEM

242-6487 LINES GP-AUXILIARY HYDRAULIC–

STICK, HIGH PRESSURE

S/N: WNE1-UP; ZMF1-UP; CWG1-UP

2.92-M (9.6-FT)

PART OF 338-9838, 338-9839, 338-9840, 338-9841, 347-9940 OPTION AR-LINKAGE AN ATTACHMENT

SMCS-5057 **i02475649**

NOTE	REF NO	GRAPHIC REF	PART NUMBER	QTY	PART NAME 1 2 3 4 5 6 (PRODUCT LEVEL)	SEE PAGE
I	1	1	**5I-8510**	1	HOSE AS	
	2	1	**173-7916**	4	CLAMP-HALF	
I	3	1	**253-6445**	1	HOSE AS	
	4	1	**253-6453**	1	TUBE AS	
	5	1	**253-6454**	1	TUBE AS	
CY	6	1	**277-0954**	2	VALVE GP-MANUAL (AUXILIARY, SHUTOFF)	851
	7	1	**1P-3703**	3	SEAL-RECTANGULAR	
	8	1	**1P-3704**	3	SEAL-RECTANGULAR	
	9	1	**1P-5767**	4	FLANGE-HALF	
	10	1	**6V-0400**	4	FLANGE-HALF	
	11	1	**7Y-4538**	4	CLAMP-HALF	
	12	1	**8T-4121**	4	WASHER-HARD (11X21X2.5-MM THK)	
M	13	1	**8T-4139**	8	BOLT (M12X1.75X30-MM)	
M	14	1	**8T-4183**	4	BOLT (M12X1.75X40-MM)	
M	15	1	**8T-4184**	8	BOLT (M12X1.75X45-MM)	
M	16	1	**8T-4194**	8	BOLT (M12X1.75X50-MM)	
	17	1	**8T-4223**	24	WASHER-HARD (13.5X25.5X3-MM THK)	
M	18	1	**8T-4956**	4	BOLT (M12X1.75X35-MM)	
M	19	1	**8T-6685**	4	BOLT (M10X1.5X110-MM)	

C-CHANGE FROM PREVIOUS TYPE
I-REFER TO HYDRAULIC INFORMATION SYSTEM
M-METRIC PART
Y-SEPARATE ILLUSTRATION

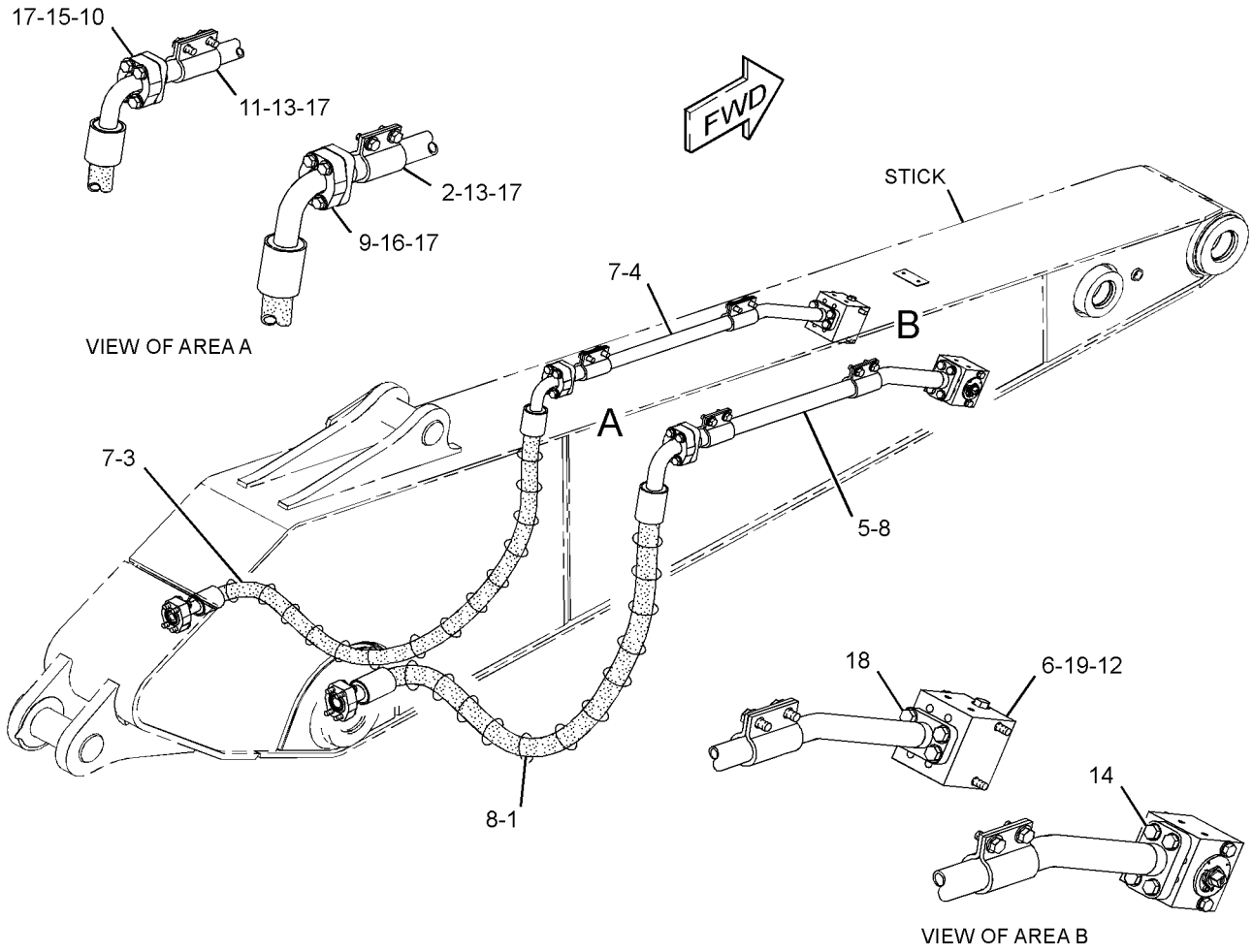

GRAPHIC #1 **<END>** g01240196

HYDRAULIC SYSTEM

242-6488 LINES GP-AUXILIARY HYDRAULIC–STICK, MEDIUM PRESSURE

S/N: WNE1-UP; ZMF1-UP; CWG1-UP

2.92-M (9.6-FT)

PART OF 338-9840, 338-9841, 347-9940 OPTION AR-LINKAGE AN ATTACHMENT

SMCS-5057 **i02997255**

NOTE	REF NO	GRAPHIC REF	PART NUMBER	QTY	PART NAME 1 2 3 4 5 6 (PRODUCT LEVEL)	SEE PAGE
	1	1	**6C-6760**	2	MANIFOLD	
	2	1	**149-1738**	8	CLIP	
I	3	1	**177-8572**	2	HOSE AS	
	4	1	**187-9977**	2	PLATE	
	5	1	**187-9978**	2	SUPPORT AS	
	6	1	**187-9981**	2	SUPPORT AS	
	7	1	*250-1440*	2	ADAPTER AS	
					(EACH INCLUDES)	
		1	**3K-0360**	1	SEAL-O-RING	
		1	**7X-3164**	1	ADAPTER-SWIVEL	
	8	1	**253-6455**	2	TUBE AS	
	9	1	**6V-8398**	4	SEAL-O-RING	
	10	1	**8T-4121**	4	WASHER-HARD (11X21X2.5-MM THK)	
M	11	1	**8T-4136**	4	BOLT (M10X1.5X25-MM)	
M	12	1	**8T-4139**	16	BOLT (M12X1.75X30-MM)	
M	13	1	**8T-4185**	4	BOLT (M10X1.5X50-MM)	
	14	1	**8T-4223**	16	WASHER-HARD (13.5X25.5X3-MM THK)	
JM	15	1	**7X-2543**	4	BOLT (M10X1.5X120-MM)	
JM	16	1	**8T-4183**	8	BOLT (M12X1.75X40-MM)	

I-REFER TO HYDRAULIC INFORMATION SYSTEM
J-USED ONLY WITH HIGH PRESSURE AUXILIARY HYDRAULIC LINES
M-METRIC PART

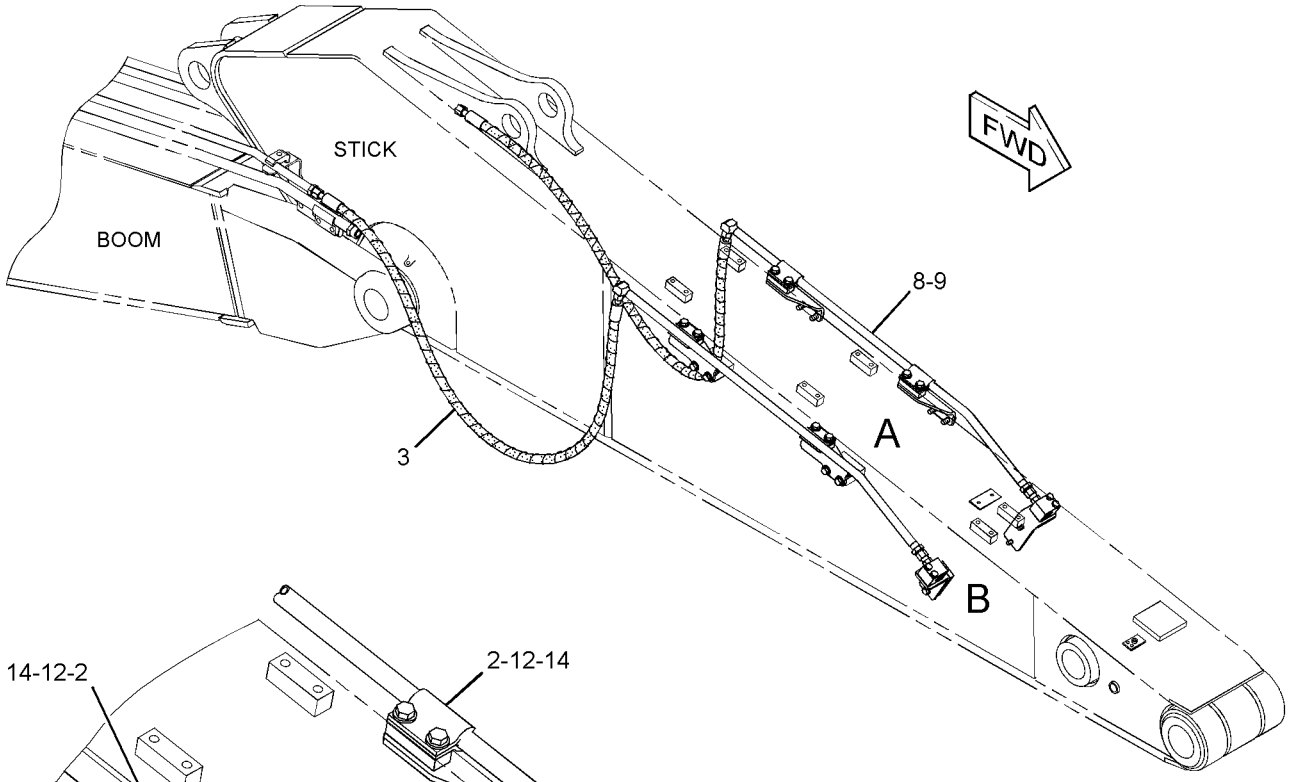

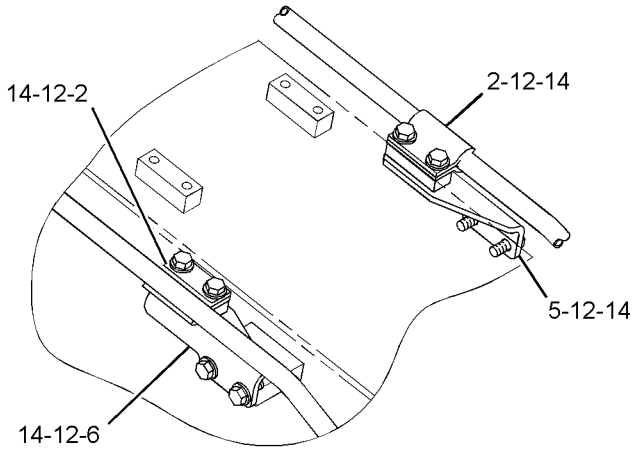

VIEW OF AREA A

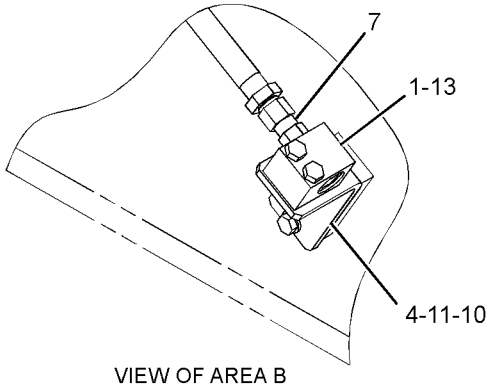

VIEW OF AREA B

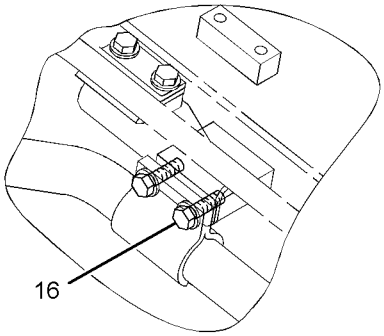

VIEW OF AREA A
(OPTIONAL DESIGN,
WHEN USED WITH HIGH FLOW LINES)

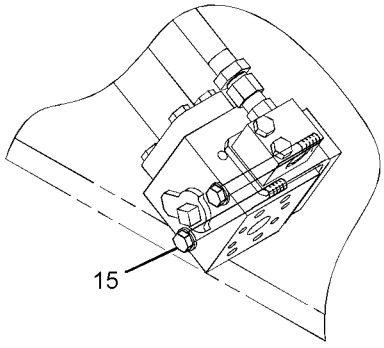

VIEW OF AREA B
(OPTIONAL DESIGN,
WHEN USED WITH HIGH FLOW LINES)

GRAPHIC #1 **<END>** g01519736

242-6492 LINES GP-AUXILIARY HYDRAULIC–STICK, MEDIUM PRESSURE

S/N: WNE1-UP; ZMF1-UP; CWG1-UP
2.4 TO 2.5-M (7.9 TO 8.2-FT)
PART OF 314-3927, 314-3928 OPTION AR-LINKAGE
AN ATTACHMENT

SMCS-5057 **i02997271**

NOTE	REF NO	GRAPHIC REF	PART NUMBER	QTY	PART NAME 1 2 3 4 5 6 (PRODUCT LEVEL)	SEE PAGE
	1	1	**6C-6760**	2	MANIFOLD	
	2	1	**149-1738**	4	CLIP	
	3	1	**187-9977**	2	PLATE	
	4	1	**187-9978**	1	SUPPORT AS	
	5	1	**187-9981**	1	SUPPORT AS	
I	6	1	**216-6485**	2	HOSE AS	
	7	1	*250-1440*	2	ADAPTER AS	
					(EACH INCLUDES)	
		1	**3K-0360**	1	SEAL-O-RING	
		1	**7X-3164**	1	ADAPTER-SWIVEL	
	8	1	**253-6685**	2	TUBE AS	
	9	1	**6V-8398**	4	SEAL-O-RING	
	10	1	**8T-4121**	4	WASHER-HARD (11X21X2.5-MM THK)	
M	11	1	**8T-4136**	4	BOLT (M10X1.5X25-MM)	
M	12	1	**8T-4139**	8	BOLT (M12X1.75X30-MM)	
	13	1	**8T-4223**	8	WASHER-HARD (13.5X25.5X3-MM THK)	
M	14	1	**8T-4185**	4	BOLT (M10X1.5X50-MM)	
J	15	1	**197-2362**	2	PLATE	
JM	16	1	**7X-2543**	4	BOLT (M10X1.5X120-MM)	
JM	17	1	**8T-4183**	8	BOLT (M12X1.75X40-MM)	

I-REFER TO HYDRAULIC INFORMATION SYSTEM
J-USED ONLY WITH HIGH PRESSURE AUXILIARY HYDRAULIC LINES
M-METRIC PART

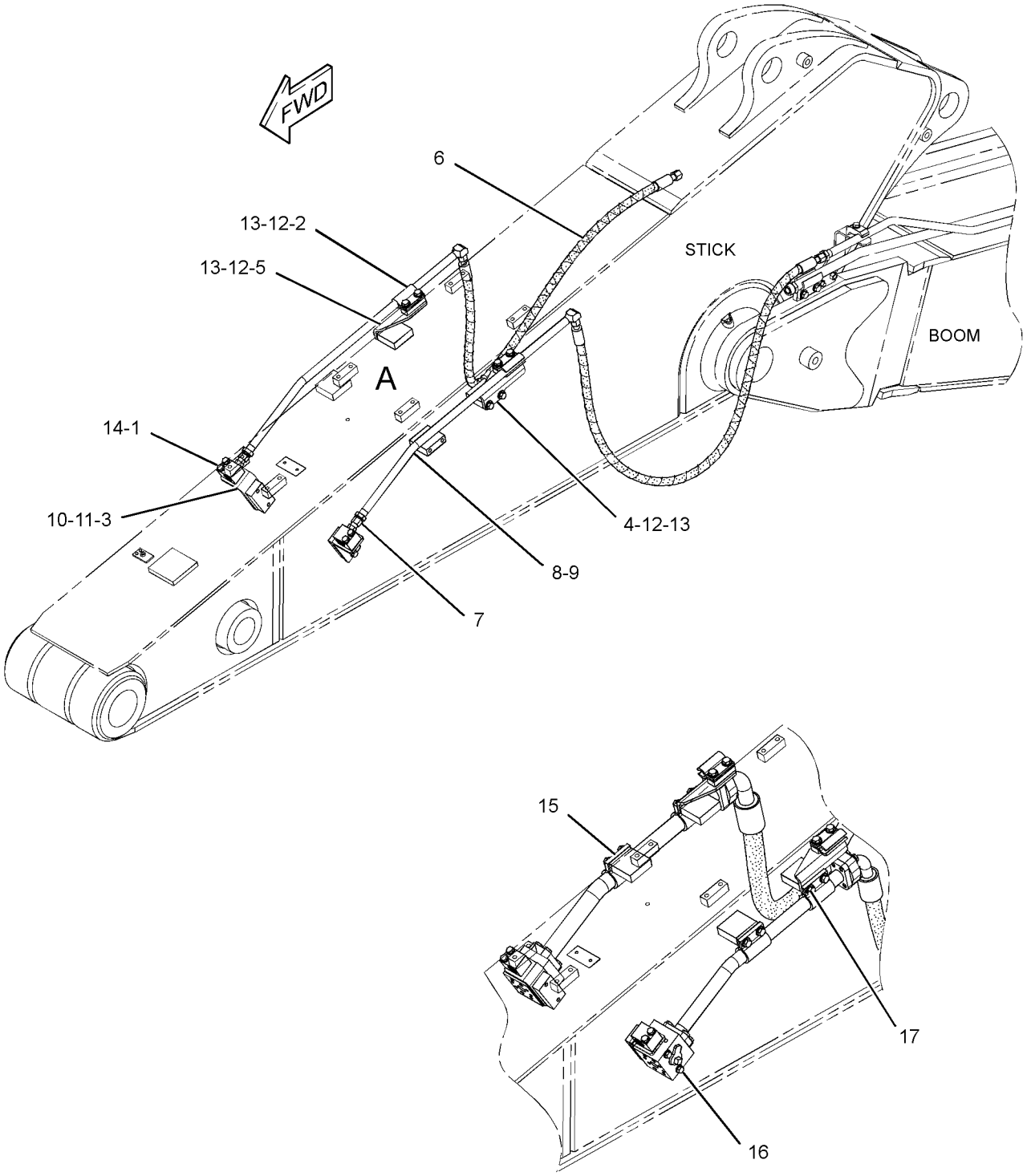

VIEW OF AREA A
(OPTIONAL DESIGN)
(WHEN USED WITH HIGH FLOW LINES)

GRAPHIC #1 **<END>** g01519750

HYDRAULIC SYSTEM

245-2399 LINES GP-AUXILIARY HYDRAULIC–STICK, HIGH PRESSURE

S/N: CWG1-UP

1.9 TO 2-M (6.2 TO 6.6-FT) STICK

AN ATTACHMENT

SMCS-5057 **i02981478**

NOTE	REF NO	GRAPHIC REF	PART NUMBER	QTY	PART NAME 1 2 3 4 5 6 (PRODUCT LEVEL)	SEE PAGE
I	1	1	**207-6282**	1	HOSE AS	
I	2	1	**262-3225**	1	HOSE AS	
CY	3	1	**277-0954**	2	VALVE GP-MANUAL (AUXILIARY, SHUTOFF)	851
	4	1	**1P-3703**	2	SEAL-RECTANGULAR	
	5	1	**1P-3704**	2	SEAL-RECTANGULAR	
	6	1	**1P-5767**	4	FLANGE-HALF	
	7	1	**6V-0400**	4	FLANGE-HALF	
	8	1	**8T-4121**	4	WASHER-HARD (11X21X2.5-MM THK)	
M	9	1	**8T-4184**	4	BOLT (M12X1.75X45-MM)	
M	10	1	**8T-4194**	12	BOLT (M12X1.75X50-MM)	
	11	1	**8T-4223**	16	WASHER-HARD (13.5X25.5X3-MM THK)	
M	12	1	**8T-6685**	4	BOLT (M10X1.5X110-MM)	

C-CHANGE FROM PREVIOUS TYPE
I-REFER TO HYDRAULIC INFORMATION SYSTEM
M-METRIC PART
Y-SEPARATE ILLUSTRATION

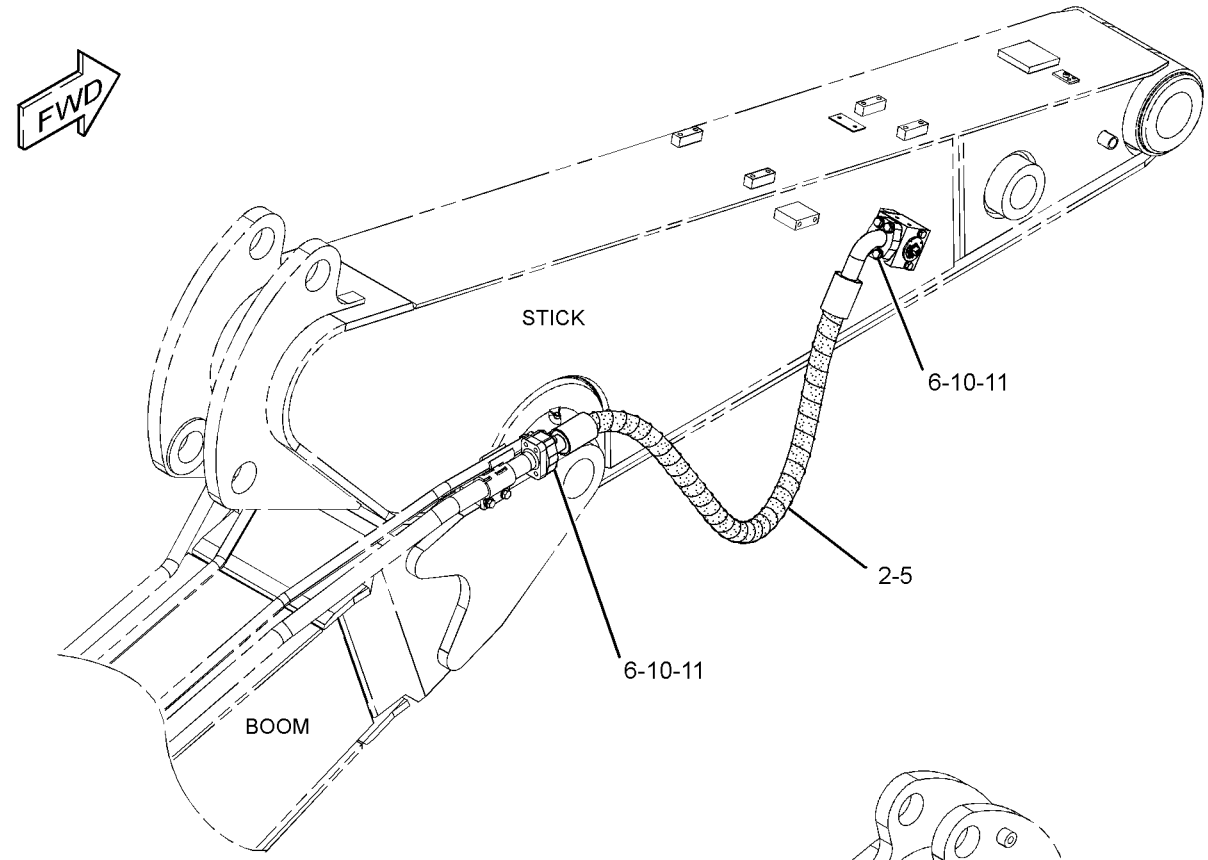

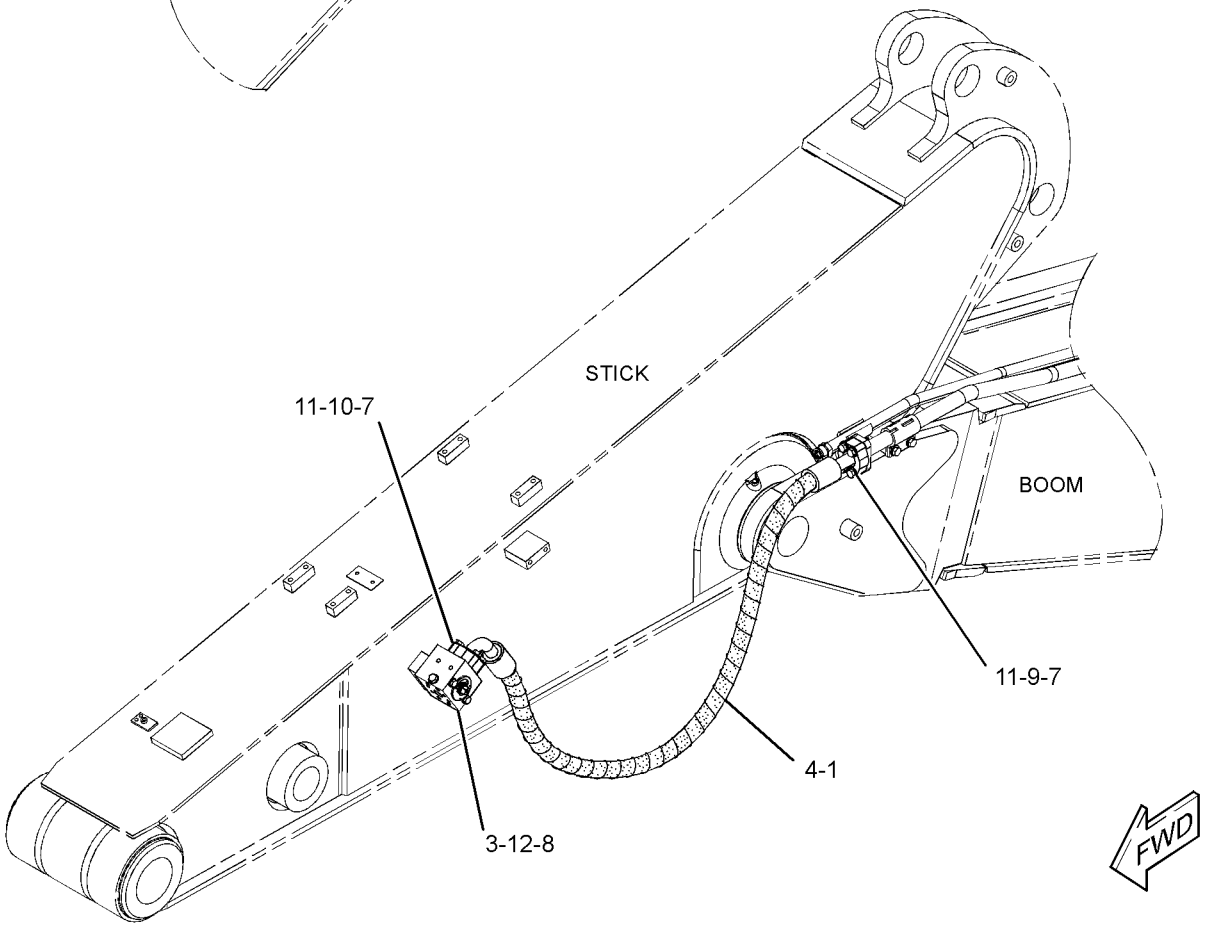

GRAPHIC #1 **<END>** g01239450

253-6591 LINES GP-AUXILIARY HYDRAULIC–STICK, MEDIUM PRESSURE

S/N: CWG1-UP

1.9 TO 2.0-M (6.2 TO 6.6-FT) STICK

AN ATTACHMENT

SMCS-5057 **i02406908**

NOTE	REF NO	GRAPHIC REF	PART NUMBER	QTY	PART NAME 1 2 3 4 5 6 (PRODUCT LEVEL)	SEE PAGE
	1	1	**6C-6760**	2	MANIFOLD	
	2	1	**149-1738**	4	CLIP	
	3	1	**187-9977**	2	PLATE	
	4	1	**188-0055**	2	TUBE AS	
	5	1	**188-0056**	2	SUPPORT AS	
	6	1	*250-1440*	2	ADAPTER AS	
					(EACH INCLUDES)	
		1	**3K-0360**	1	SEAL-O-RING	
		1	**7X-3164**	1	ADAPTER-SWIVEL	
I	7	1	**262-3228**	2	HOSE AS	
	8	1	**6V-8398**	4	SEAL-O-RING	
	9	1	**8T-4121**	4	WASHER-HARD (11X21X2.5-MM THK)	
M	10	1	**8T-4136**	4	BOLT (M10X1.5X25-MM)	
M	11	1	**8T-4139**	8	BOLT (M12X1.75X30-MM)	
M	12	1	**8T-4185**	4	BOLT (M10X1.5X50-MM)	
	13	1	**8T-4223**	8	WASHER-HARD (13.5X25.5X3-MM THK)	
M	14	1	**7X-2543**	4	BOLT (M10X1.5X120-MM)	

I-REFER TO HYDRAULIC INFORMATION SYSTEM
M-METRIC PART

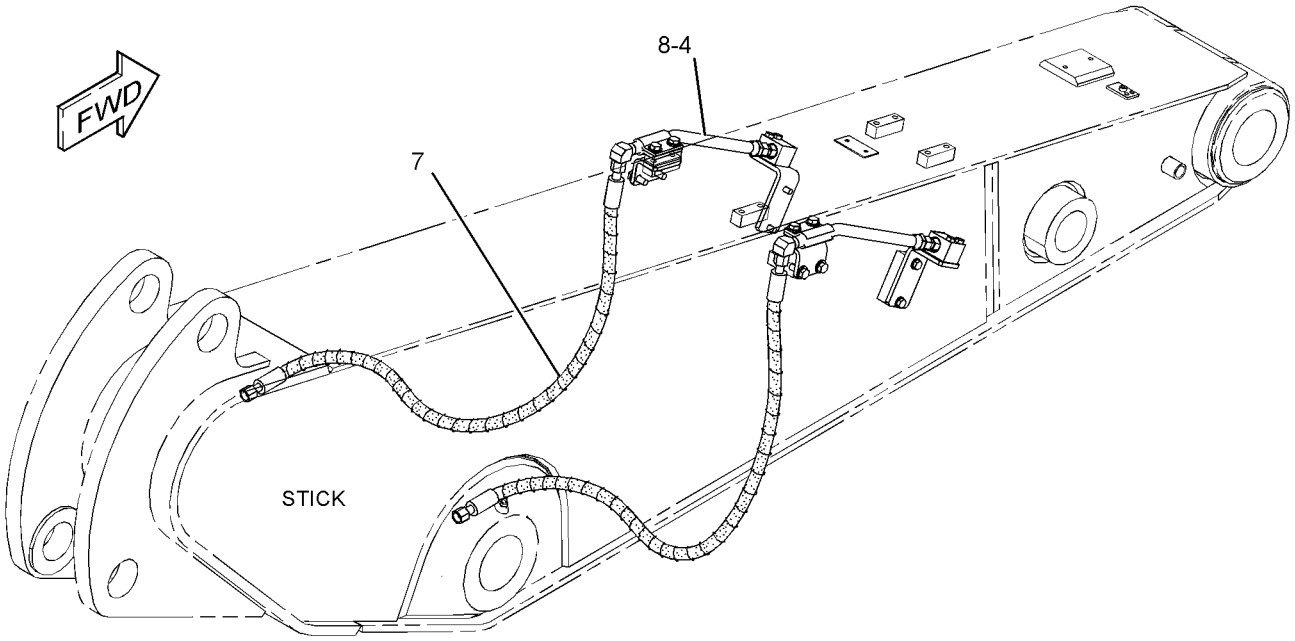

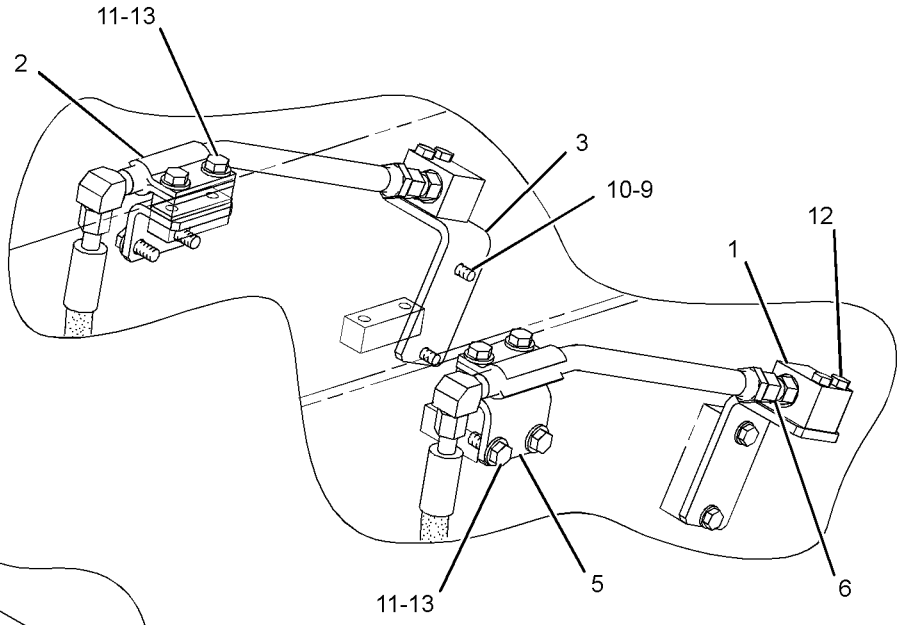

VIEW OF AREA A

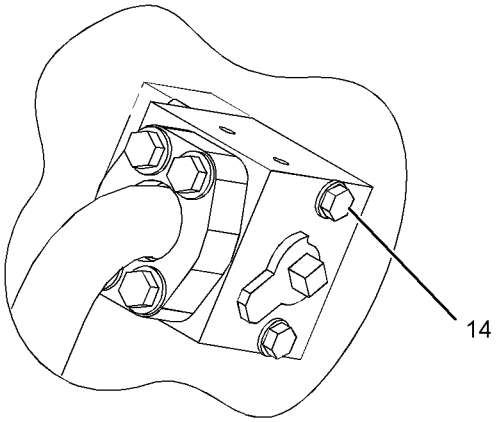

VIEW OF AREA A
(OPTIONAL DESIGN)

GRAPHIC #1 **<END>** g01206586

HYDRAULIC SYSTEM

335-4977 LINES GP-AUXILIARY HYDRAULIC–

VARIABLE ADJ, MEDIUM PRESSURE

S/N: WNE1-UP; ZMF1-UP; CWG1-UP

AN ATTACHMENT

SMCS-5057 **i03646931**

NOTE	REF NO	GRAPHIC REF	PART NUMBER	QTY	PART NAME 1 2 3 4 5 6 (PRODUCT LEVEL)	SEE PAGE
	1	1	**149-1738**	14	CLIP	
	2	1	**153-8867**	2	CLIP	
	3	1	**173-7895**	2	CLIP	
	4	1	**202-3915**	2	PLATE	
	5	1	**294-3794**	2	CLIP AS	
	6	1	**294-3795**	2	CLIP AS	
	7	1	**294-3796**	1	PLATE	
	8	1	**294-3797**	1	PLATE	
I	9	1	**294-6322**	2	HOSE AS	
	10	1	**335-5112**	2	SUPPORT AS	
	11	1	**335-5114**	1	TUBE AS	
	12	1	**335-5115**	1	TUBE AS	
	13	1	**335-5116**	1	TUBE AS	
	14	1	**335-5117**	1	TUBE AS	
	15	1	**6V-8398**	8	SEAL-O-RING	
M	16	1	**7X-2549**	4	BOLT (M12X1.75X100-MM)	
M	17	1	**8T-4139**	14	BOLT (M12X1.75X30-MM)	
M	18	1	**8T-4184**	4	BOLT (M12X1.75X45-MM)	
M	19	1	**8T-4194**	4	BOLT (M12X1.75X50-MM)	
	20	1	**8T-4223**	30	WASHER-HARD (13.5X25.5X3-MM THK)	
M	21	1	**8T-5092**	4	BOLT (M12X1.75X150-MM)	

I-REFER TO HYDRAULIC INFORMATION SYSTEM
M-METRIC PART

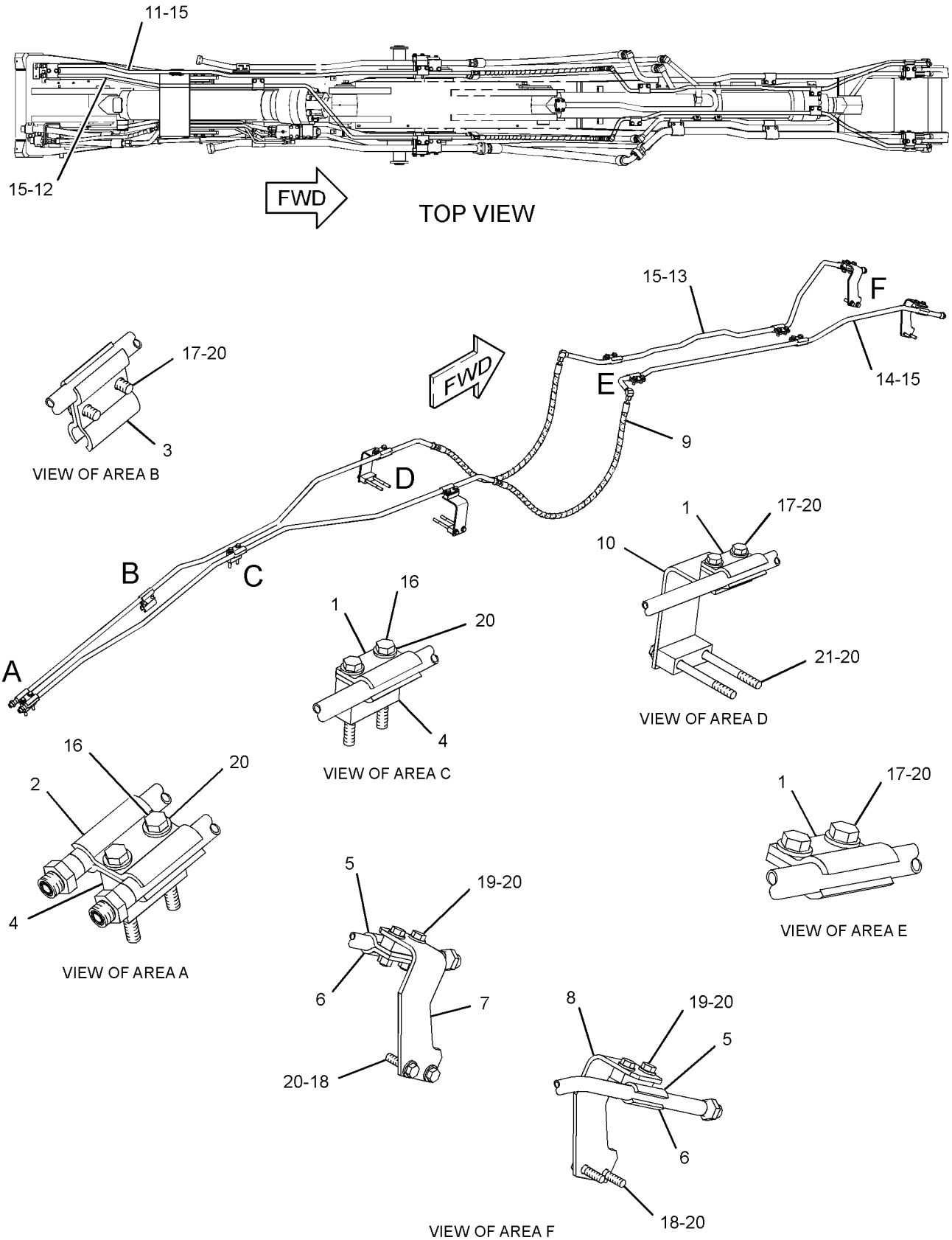

GRAPHIC #1

<END>

g01960758

HYDRAULIC SYSTEM

239-1732 LINES GP-BOOM

S/N: WNE1-UP; ZMF1-UP; CWG1-UP
PART OF 240-3834, 298-4309 BOOM AR-1 PIECE SHORT
AN ATTACHMENT

SMCS-5057 **i02956555**

NOTE	REF NO	GRAPHIC REF	PART NUMBER	QTY	PART NAME 1 2 3 4 5 6 (PRODUCT LEVEL)	SEE PAGE
	1	1	**4I-1674**	6	CLIP	
	2	1	**4I-1676**	6	CLIP	
	3	1	**7Y-4868**	8	CLIP	
I	4	1	**151-1846**	1	HOSE AS	
	5	1	**307-5035**	1	TUBE AS	
	6	1	**184-9253**	2	TUBE AS	
	7	1	**184-9254**	1	TUBE AS	
	8	1	**320-0198**	1	TUBE AS	
	9	1	**184-9256**	1	TUBE AS	
	10	1	**184-9257**	1	TUBE AS	
	11	1	**260-8320**	1	TUBE AS	
I	12	1	**260-8321**	1	HOSE AS	
	13	1	**1P-3703**	2	SEAL-RECTANGULAR	
	14	1	**6V-0400**	4	FLANGE-HALF	
	15	1	**6V-9746**	11	SEAL-O-RING	
M	16	1	**8T-4139**	20	BOLT (M12X1.75X30-MM)	
M	17	1	**8T-4184**	8	BOLT (M12X1.75X45-MM)	
	18	1	**8T-4223**	28	WASHER-HARD (13.5X25.5X3-MM THK)	

I-REFER TO HYDRAULIC INFORMATION SYSTEM
M-METRIC PART

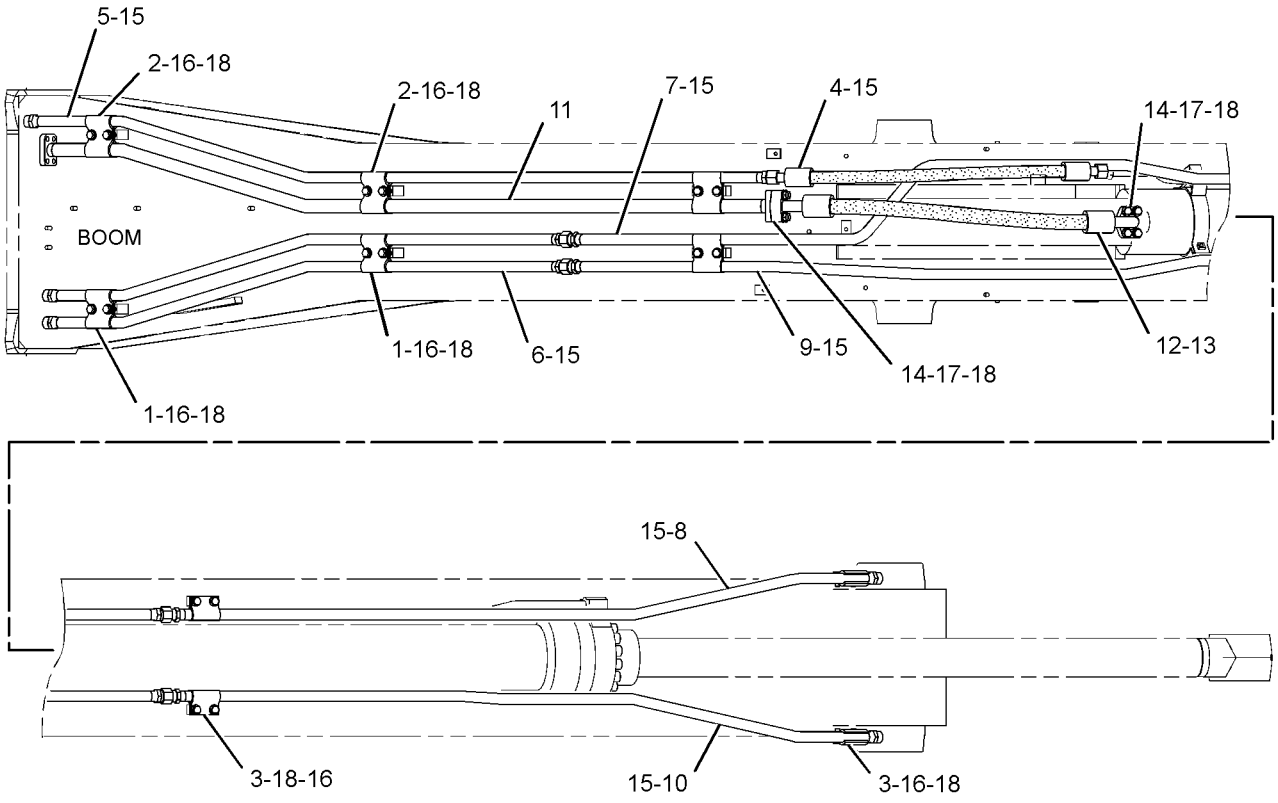

TOP VIEW

GRAPHIC #1 **<END>** g01473969

242-6505 LINES GP-BOOM—STICK LOAD CONTROL

S/N: WNE1-UP; ZMF1-UP; CWG1-UP

PART OF 285-1515 VALVE AR-CHECK & RELIEF, 239-8677 VALVE AR-LOAD CONTROL

AN ATTACHMENT

SMCS-5057 **i02997299**

NOTE	REF NO	GRAPHIC REF	PART NUMBER	QTY	PART NAME 1 2 3 4 5 6 (PRODUCT LEVEL)	SEE PAGE
I	1	1	**5I-4393**	1	HOSE AS	
	2	1	**5Q-4213**	6	CLIP	
	3	1	**7K-1181**	5	STRAP-CABLE	
	4	1	**202-3915**	1	PLATE	
I	5	1	**268-6850**	2	HOSE AS	
	6	1	**288-7410**	1	TUBE AS	
C	7	1	**282-5567**	1	PLATE	
	8	1	*149-5452*	2	UNION AS	
					(EACH INCLUDES)	
		1	**6V-8397**	2	SEAL-O-RING	
		1	**6V-8994**	1	UNION	
	9	1	**5Q-4212**	2	CLIP	
	10	1	**6V-8398**	2	SEAL-O-RING	
	11	1	**6V-9168**	2	NUT (11/16-16-THD)	
M	12	1	**7X-2549**	2	BOLT (M12X1.75X100-MM)	
M	13	1	**8T-4139**	6	BOLT (M12X1.75X30-MM)	
	14	1	**8T-4223**	8	WASHER-HARD (13.5X25.5X3-MM THK)	
M	15	1	**8T-4244**	6	NUT (M12X1.75-THD)	
CJ	16	1	**179-5030**	6	CLIP	
CJM	17	1	**8T-7930**	2	BOLT (M12X1.75X160-MM)	

C-CHANGE FROM PREVIOUS TYPE
I-REFER TO HYDRAULIC INFORMATION SYSTEM
J-USED WITH AUXILIARY HYDRAULIC LINES GROUP (MEDIUM PRESSURE)
M-METRIC PART

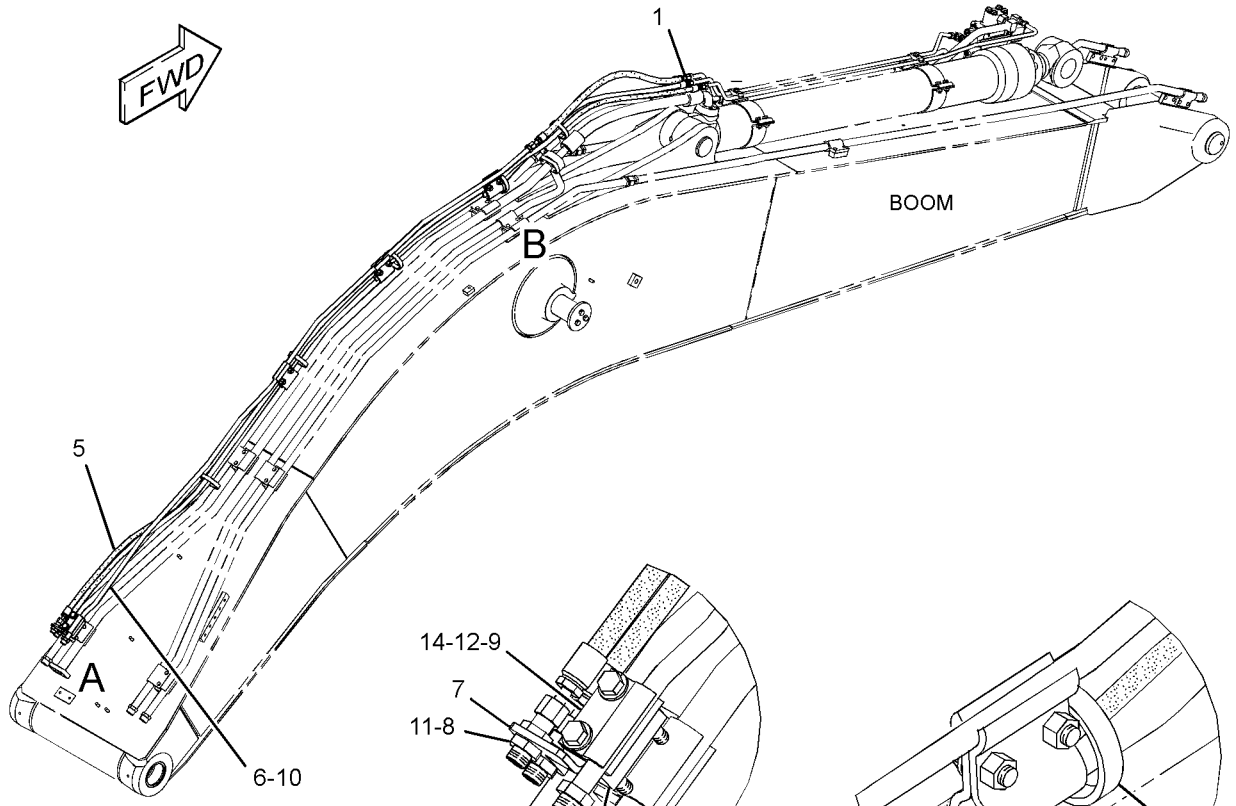

VIEW OF AREA A

VIEW OF AREA B

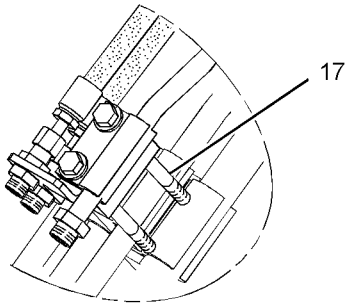

VIEW OF AREA A
(WITH AUXILIARY MEDIUM PRESSURE LINES)

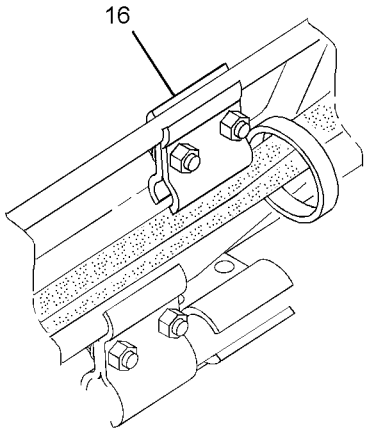

VIEW OF AREA B
(WITH AUXILIARY MEDIUM PRESSURE LINES)

GRAPHIC #1 **<END>** g01487213

HYDRAULIC SYSTEM

260-8010 LINES GP-BOOM

S/N: WNE1-UP; ZMF1-UP; CWG1-UP
PART OF 275-3695, 298-4308, 298-4310, 298-4342 BOOM AR-1 PIECE LONG
AN ATTACHMENT

SMCS-5057 **i02776641**

NOTE	REF NO	GRAPHIC REF	PART NUMBER	QTY	PART NAME 1 2 3 4 5 6 (PRODUCT LEVEL)	SEE PAGE
	1	1	**4I-1674**	6	CLIP	
	2	1	**4I-1676**	6	CLIP	
	3	1	**7Y-4868**	8	CLIP	
	4	1	**307-5034**	1	TUBE AS	
	5	1	**202-3855**	1	TUBE AS	
	6	1	**202-3856**	1	TUBE AS	
	7	1	**202-3857**	1	TUBE AS	
	8	1	**202-3858**	1	TUBE AS	
I	9	1	**202-6996**	1	HOSE AS	
	10	1	**260-8315**	1	TUBE AS	
I	11	1	**260-8316**	1	HOSE AS	
	12	1	**1P-3703**	2	SEAL-RECTANGULAR	
	13	1	**6V-0400**	4	FLANGE-HALF	
	14	1	**6V-9746**	9	SEAL-O-RING	
M	15	1	**8T-4139**	20	BOLT (M12X1.75X30-MM)	
M	16	1	**8T-4184**	8	BOLT (M12X1.75X45-MM)	
	17	1	**8T-4223**	28	WASHER-HARD (13.5X25.5X3-MM THK)	

I-REFER TO HYDRAULIC INFORMATION SYSTEM
M-METRIC PART

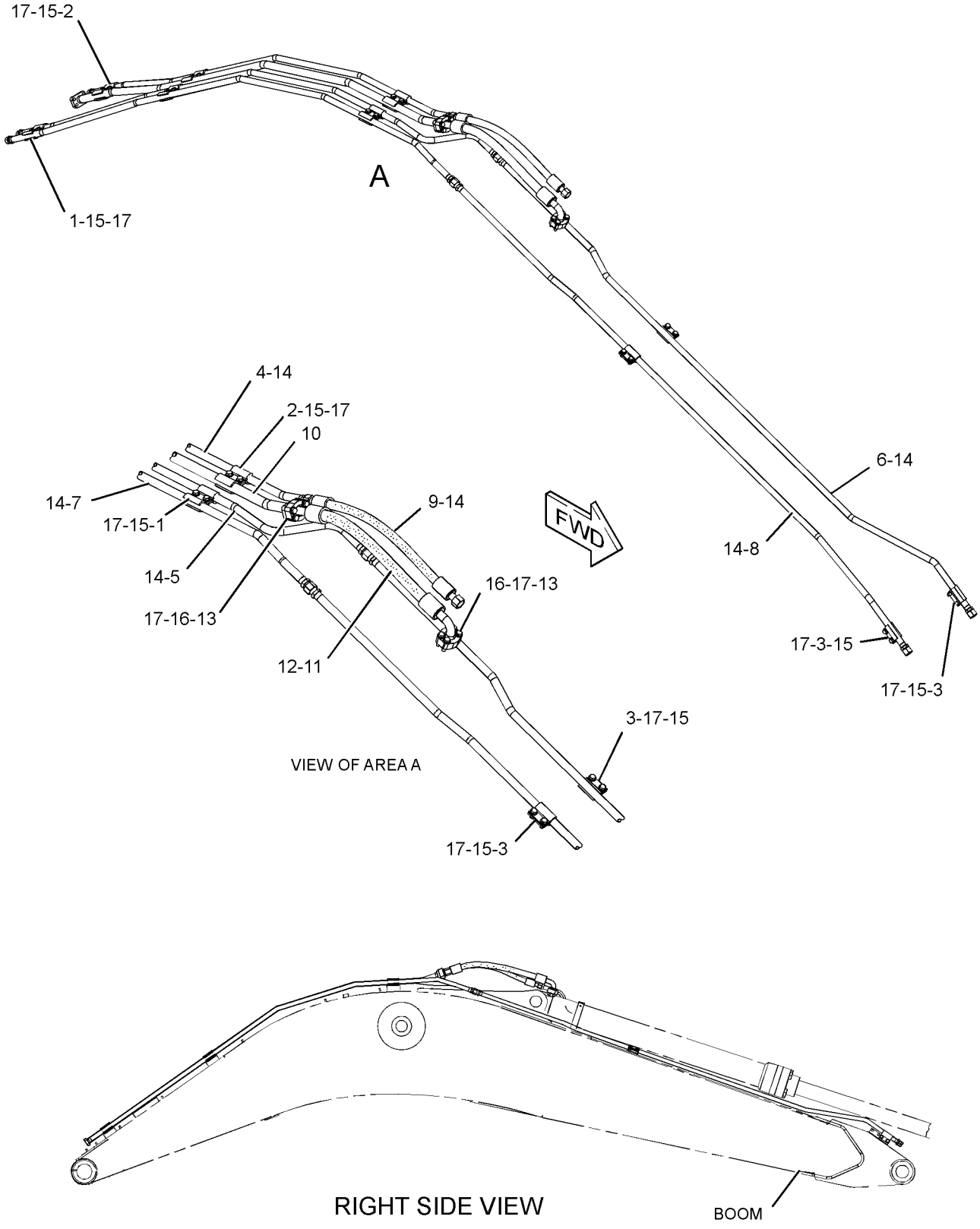

GRAPHIC #1 **<END>** g01366545

335-4980 LINES GP-BOOM–
STICK LOWERING, VARIABLE ADJUSTABLE BOOM
S/N: CWG1-UP
PART OF 335-4979 VALVE AR-CHECK & RELIEF
AN ATTACHMENT

SMCS-5057 **i03657519**

NOTE	REF NO	GRAPHIC REF	PART NUMBER	QTY	PART NAME 1 2 3 4 5 6 (PRODUCT LEVEL)	SEE PAGE
	1	1	**7K-1181**	12	STRAP-CABLE	
	2	1	**226-4664**	1	BRACKET	
	3	1	**302-9730**	2	HOSE AS	
	4	1	**323-0699**	1	BRACKET	
I	5	1	**339-0722**	1	HOSE AS	
I	6	1	**339-0724**	1	HOSE AS	
I	7	1	**339-0725**	2	HOSE AS	
	8	1	*148-8457*	2	UNION AS	
					(EACH INCLUDES)	
		1	**6V-8398**	2	SEAL-O-RING	
		1	**6V-8995**	1	UNION	
	9	1	*149-5452*	4	UNION AS	
					(EACH INCLUDES)	
		1	**6V-8397**	2	SEAL-O-RING	
		1	**6V-8994**	1	UNION	
	10	1	**6V-9168**	4	NUT (11/16-16-THD)	
	11	1	**6V-9169**	2	NUT-BULKHEAD (13/16-16-THD)	
M	12	1	**7X-2549**	2	BOLT (M12X1.75X100-MM)	
	13	1	**8T-4223**	4	WASHER-HARD (13.5X25.5X3-MM THK)	
M	14	1	**8T-5092**	2	BOLT (M12X1.75X150-MM)	
BM	15	1	**8T-4183**	2	BOLT (M12X1.75X40-MM)	

B-USE AS REQUIRED
I-REFER TO HYDRAULIC INFORMATION SYSTEM
M-METRIC PART

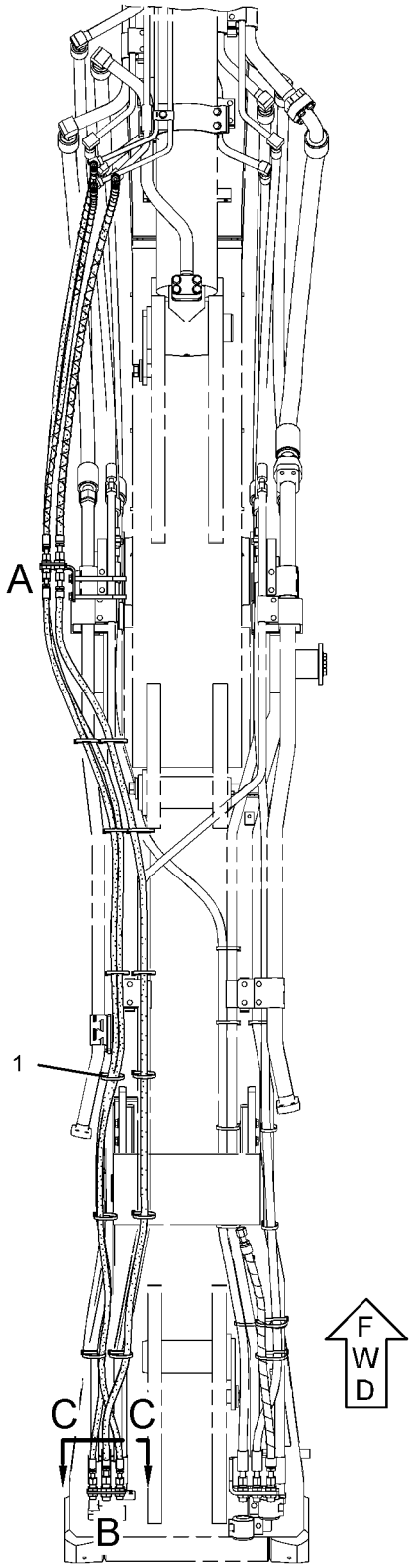

TOP VIEW

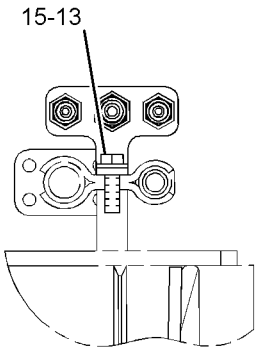

SECTION C-C

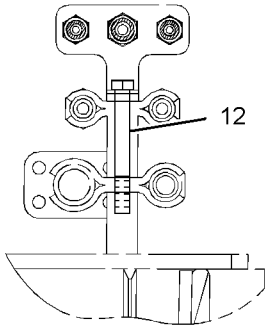

SECTION C-C
(OPTIONAL DESIGN)

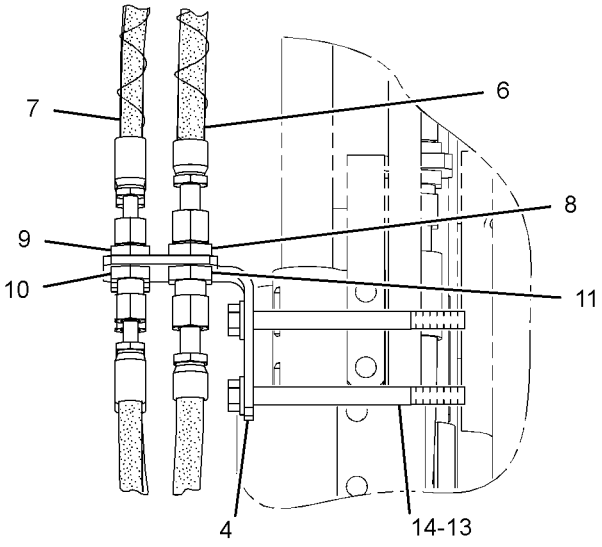

VIEW OF AREA A

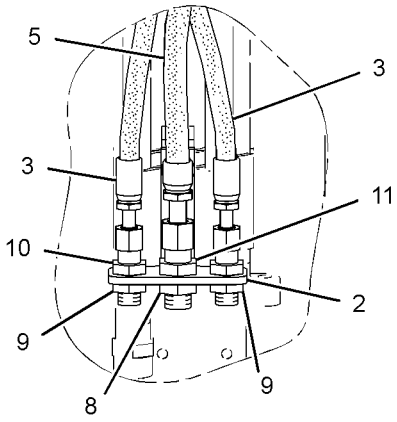

VIEW OF AREA B

GRAPHIC #1 **<END>** g01966640

115-8902 LINES GP-BOOM CYLINDER–LH

S/N: CWG1-UP
PART OF 242-6738 CYLINDER & LINES GP-BOOM
AN ATTACHMENT

SMCS-5057, 5456 **i02553442**

NOTE	REF NO	GRAPHIC REF	PART NUMBER	QTY	PART NAME 1 2 3 4 5 6 (PRODUCT LEVEL)	SEE PAGE
M	1	1	**8T-4185**	8	BOLT (M10X1.5X50-MM)	
	2	1	**119-2434**	1	TUBE AS	
	3	1	**6V-9746**	2	SEAL-O-RING	
	4	1	**119-2435**	1	TUBE AS	
	5	1	**1P-3703**	2	SEAL-RECTANGULAR	
	6	1	**119-2321**	1	SUPPORT AS	
M	7	1	**8T-4196**	4	BOLT (M10X1.5X35-MM)	
	8	1	**8T-4121**	4	WASHER-HARD (11X21X2.5-MM THK)	
	9	1	**119-2320**	1	SUPPORT AS	
	10	1	**4I-1674**	2	CLIP	
M	11	1	**8T-4139**	2	BOLT (M12X1.75X30-MM)	
	12	1	**8T-4223**	2	WASHER-HARD (13.5X25.5X3-MM THK)	

M-METRIC PART

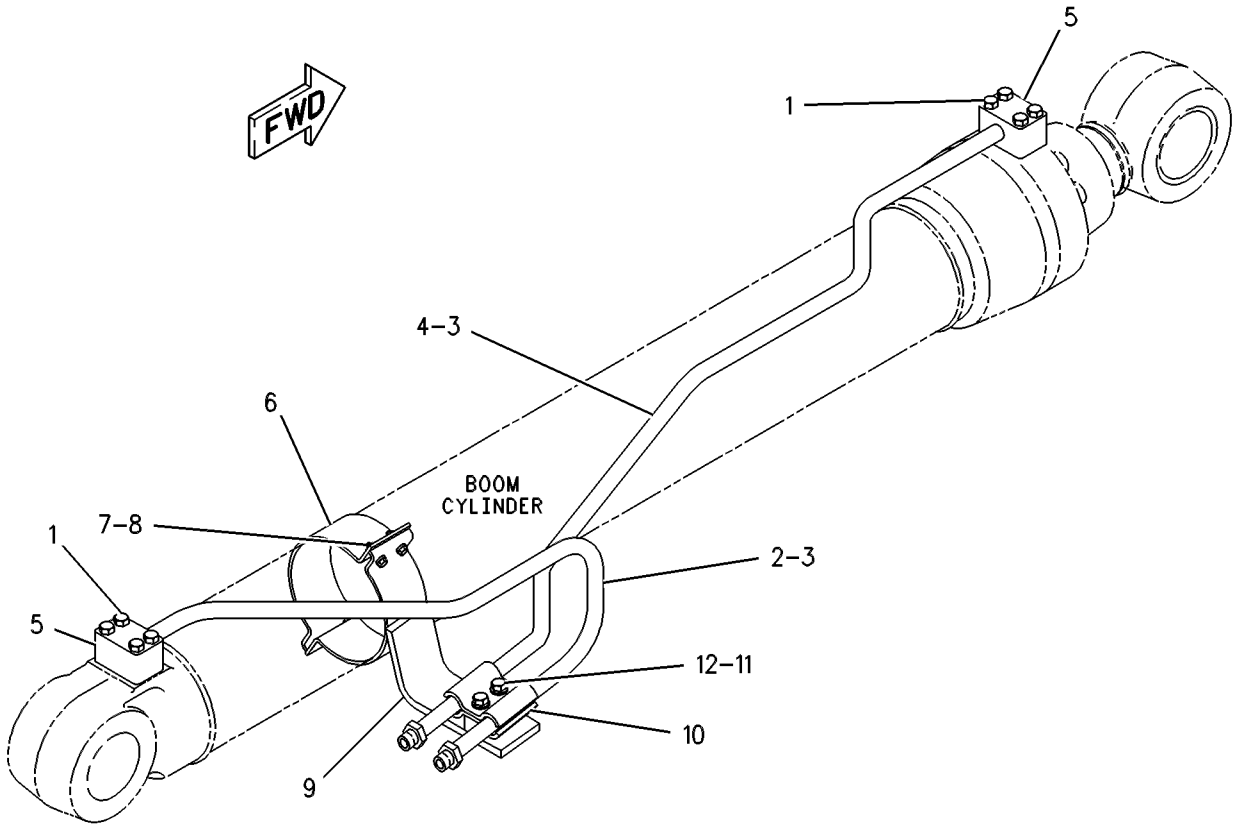

GRAPHIC #1 **<END>** g00266106

HYDRAULIC SYSTEM

115-8903 LINES GP-BOOM CYLINDER—RH

S/N: CWG1-UP
PART OF 242-6742 CYLINDER & LINES GP-BOOM
AN ATTACHMENT

SMCS-5057, 5456 **i02553433**

NOTE	REF NO	GRAPHIC REF	PART NUMBER	QTY	PART NAME 1 2 3 4 5 6 (PRODUCT LEVEL)	SEE PAGE
M	1	1	**8T-4185**	8	BOLT (M10X1.5X50-MM)	
	2	1	**119-2436**	1	TUBE AS	
	3	1	**6V-9746**	2	SEAL-O-RING	
	4	1	**119-2437**	1	TUBE AS	
	5	1	**1P-3703**	2	SEAL-RECTANGULAR	
	6	1	**119-2321**	1	SUPPORT AS	
M	7	1	**8T-4196**	4	BOLT (M10X1.5X35-MM)	
	8	1	**8T-4121**	4	WASHER-HARD (11X21X2.5-MM THK)	
	9	1	**119-2320**	1	SUPPORT AS	
	10	1	**4I-1674**	2	CLIP	
M	11	1	**8T-4139**	2	BOLT (M12X1.75X30-MM)	
	12	1	**8T-4223**	2	WASHER-HARD (13.5X25.5X3-MM THK)	

M-METRIC PART

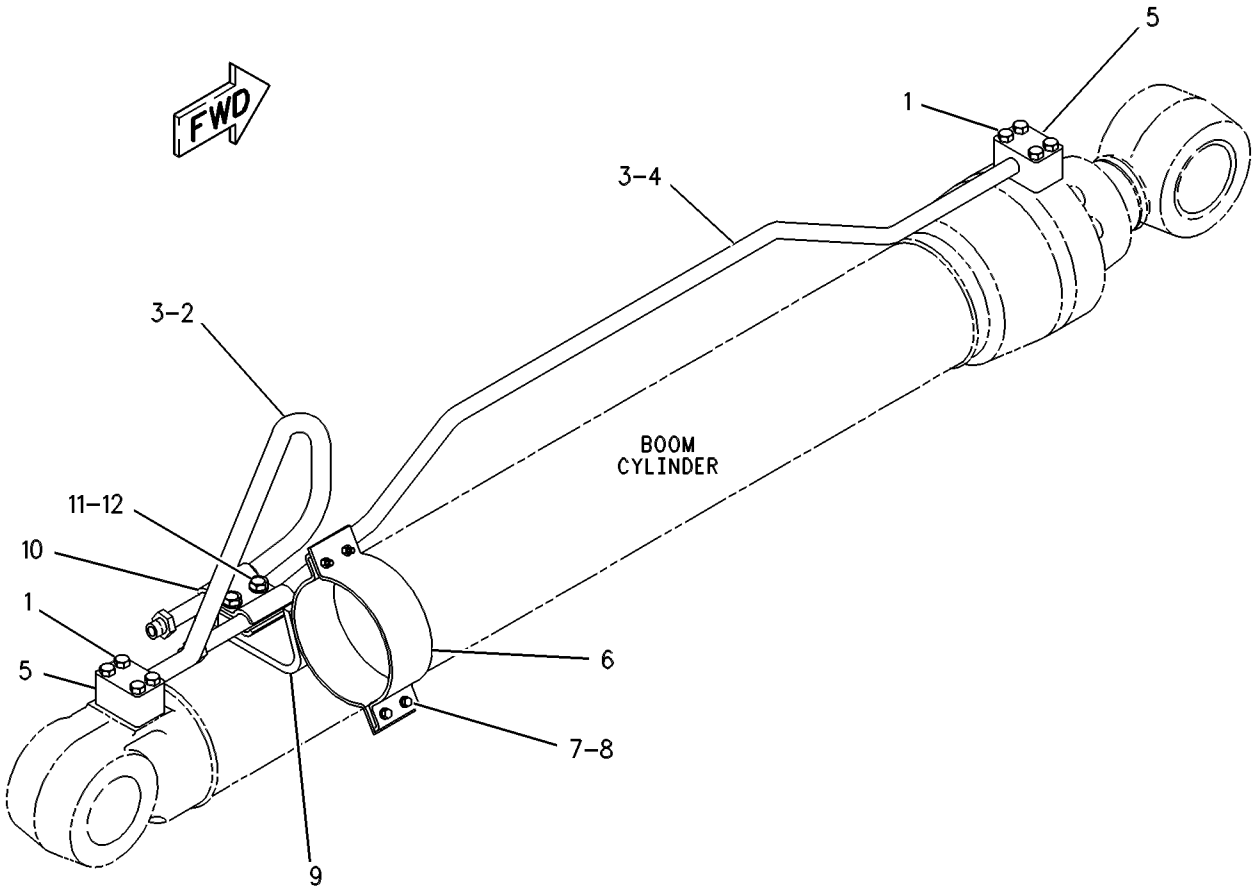

GRAPHIC #1 **<END>** g00266093

HYDRAULIC SYSTEM

239-1699 LINES GP-BOOM CYLINDER

S/N: WNE1-UP; ZMF1-UP

PART OF 270-5712, 270-5713 HYDRAULIC AR

SMCS-5057, 5456 **i03403781**

NOTE	REF NO	GRAPHIC REF	PART NUMBER	QTY	PART NAME 1 2 3 4 5 6 (PRODUCT LEVEL)	SEE PAGE
	1	1	**9F-2167**	1	SCREW-PURGE (3/8-24X1.164-IN)	
M	2	1	**101-7398**	4	BOLT-SOCKET HEAD (M10X1.5X40-MM)	
I	3	1	**108-7354**	1	HOSE AS	
I	4	1	**124-1047**	4	HOSE AS	
	5	1	**124-1062**	1	SUPPORT AS	
	6	1	**133-5828**	1	SUPPORT AS	
	7	1	**142-7768**	1	TUBE AS	
	8	1	**142-7769**	1	TUBE AS	
CY	9	1	**322-8716**	1	VALVE GP-SWING CUSHION (FINE SWING)	902
	10	1	*164-5552*	1	CONNECTOR AS	
		1	**3D-2824**	1	SEAL-O-RING	
		1	**4I-7745**	1	CONNECTOR	
		1	**6V-8398**	1	SEAL-O-RING	
	11	1	**234-4492**	1	SUPPORT	
	12	1	*307-4918*	1	CONNECTOR AS	
		1	**5K-9090**	1	SEAL-O-RING	
		1	**7M-8485**	1	SEAL-O-RING	
		1	**307-4919**	1	CONNECTOR	
M	13	1	**101-7404**	4	BOLT-SOCKET HEAD (M10X1.5X30-MM)	
	14	1	**108-7550**	1	CLIP	
	15	1	*148-8336*	1	CONNECTOR AS	
		1	**3J-1907**	1	SEAL-O-RING	
		1	**6V-8397**	1	SEAL-O-RING	
		1	**6V-8636**	1	CONNECTOR	
	16	1	*148-8353*	1	ELBOW AS	
		1	**3J-1907**	1	SEAL-O-RING	
		1	**6V-8397**	1	SEAL-O-RING	
		1	**6V-9001**	1	ELBOW	
	17	1	*148-8364*	1	ELBOW AS	
		1	**3K-0360**	1	SEAL-O-RING	
		1	**6V-8398**	1	SEAL-O-RING	
		1	**6V-8625**	1	ELBOW	
	18	1	*148-8367*	1	ELBOW AS	
		1	**6V-8397**	1	SEAL-O-RING	
		1	**6V-9850**	1	ELBOW	
	19	1	*148-8444*	1	TEE AS-SWIVEL	
		1	**6V-8398**	2	SEAL-O-RING	
		1	**6V-9837**	1	TEE-SWIVEL	
	20	1	**1P-3703**	2	SEAL-RECTANGULAR	
	21	1	**4I-1674**	2	CLIP	
	22	1	**5P-1076**	2	WASHER-HARD (13.5X30X4-MM THK)	
	23	1	**6V-9746**	4	SEAL-O-RING	
	24	1	**8T-4121**	8	WASHER-HARD (11X21X2.5-MM THK)	
M	25	1	**8T-4139**	2	BOLT (M12X1.75X30-MM)	
M	26	1	**8T-4178**	6	BOLT (M10X1.5X90-MM)	
M	27	1	**8T-4182**	8	BOLT (M10X1.5X45-MM)	
M	28	1	**8T-4192**	2	BOLT (M12X1.75X25-MM)	
	29	1	**8T-4223**	6	WASHER-HARD (13.5X25.5X3-MM THK)	
M	30	1	**8T-4648**	2	BOLT (M12X1.75X70-MM)	
M	31	1	**8T-4910**	2	BOLT (M12X1.75X60-MM)	
	32	1	**8T-9403**	4	FLANGE-HALF	

C-CHANGE FROM PREVIOUS TYPE
I-REFER TO HYDRAULIC INFORMATION SYSTEM
M-METRIC PART
Y-SEPARATE ILLUSTRATION

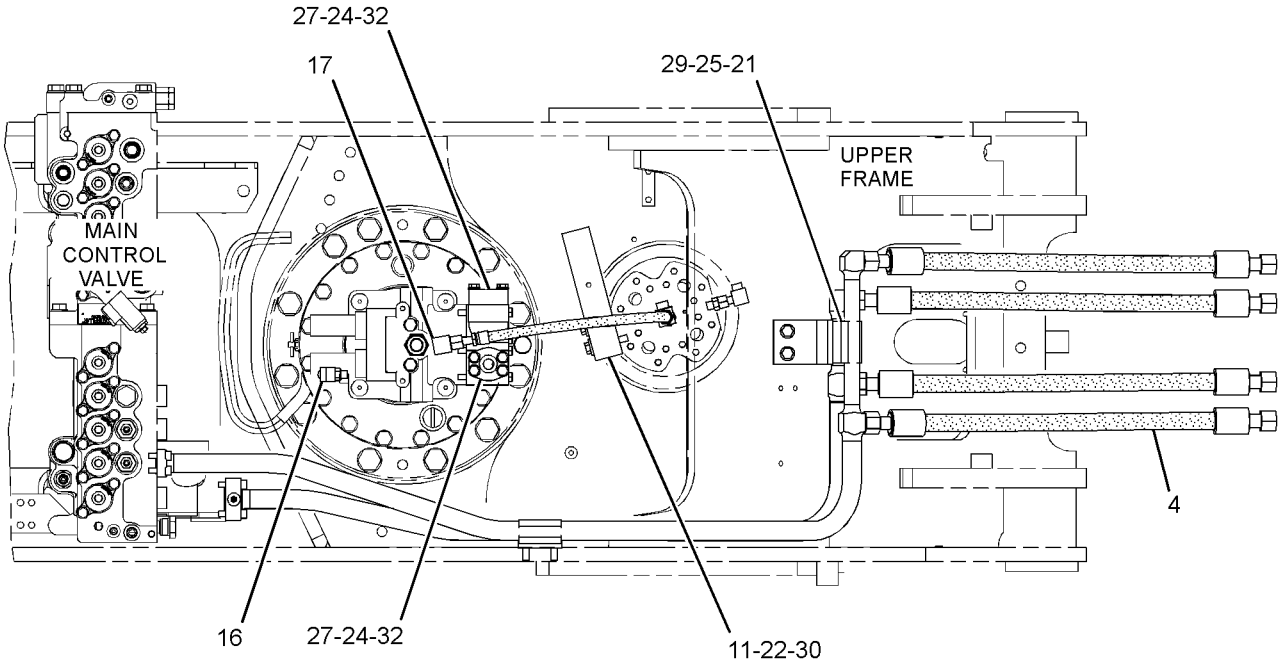

TOP VIEW

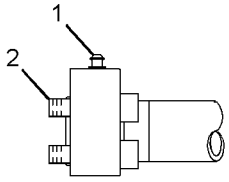

VIEW OF AREA A

FWD

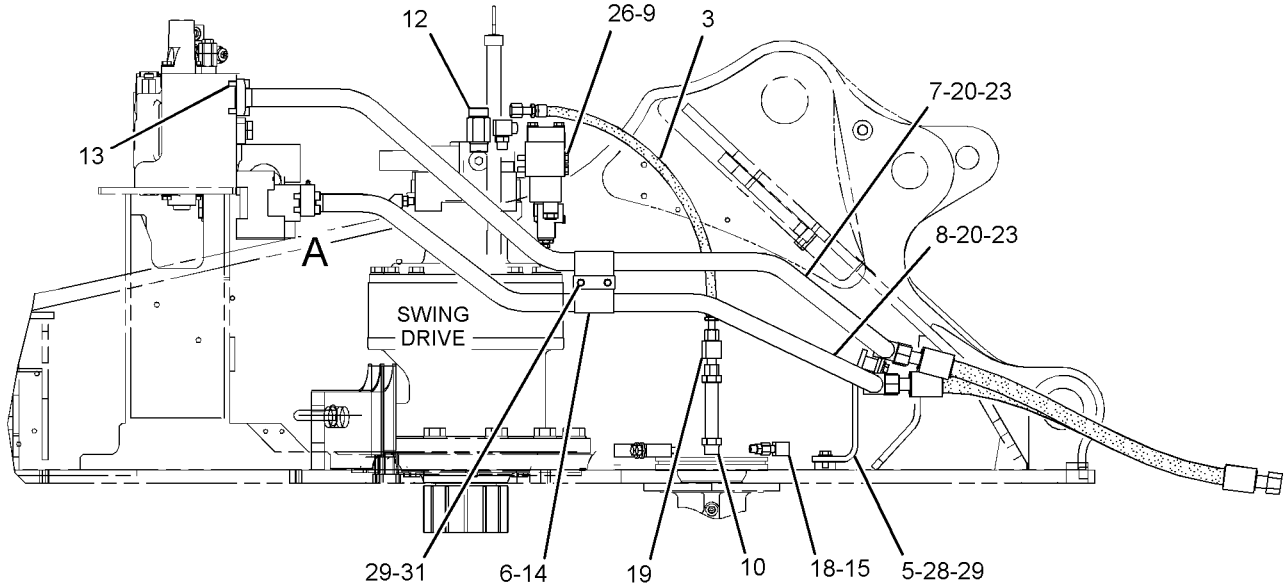

RIGHT SIDE VIEW

GRAPHIC #1 **<END>** g01423221

242-6732 LINES GP-BOOM CYLINDER–LH

S/N: WNE1-UP; ZMF1-UP; CWG1-UP
PART OF 242-6730, 242-6745 CYLINDER & LINES GP-BOOM
AN ATTACHMENT

SMCS-5057, 5456 **i02420835**

NOTE	REF NO	GRAPHIC REF	PART NUMBER	QTY	PART NAME 1 2 3 4 5 6 (PRODUCT LEVEL)	SEE PAGE
	1	1	**247-8869**	1	TUBE AS	
	2	1	**222-0126**	1	TUBE AS	
	3	1	**095-1597**	2	SEAL-O-RING	
M	4	1	**9X-6032**	8	BOLT-SOCKET HEAD (M10X1.5X30-MM)	
	5	1	**137-3709**	1	SUPPORT	
	6	1	**4I-3621**	1	SUPPORT	
M	7	1	**8T-4196**	2	BOLT (M10X1.5X35-MM)	
	8	1	**8T-4896**	2	WASHER-HARD (10.2X18.5X2.5-MM THK)	
M	9	1	**8T-3653**	1	BOLT (M14X2X80-MM)	
	10	1	**3B-4509**	1	LOCKWASHER	
	11	1	**094-1920**	2	CLAMP	

M-METRIC PART

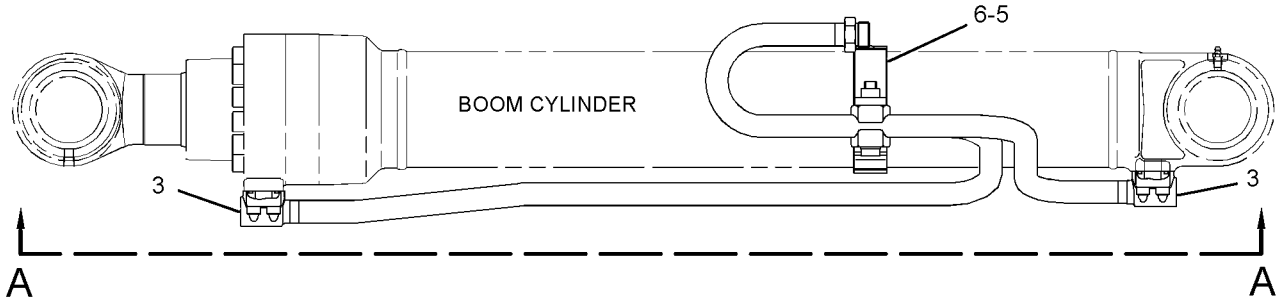

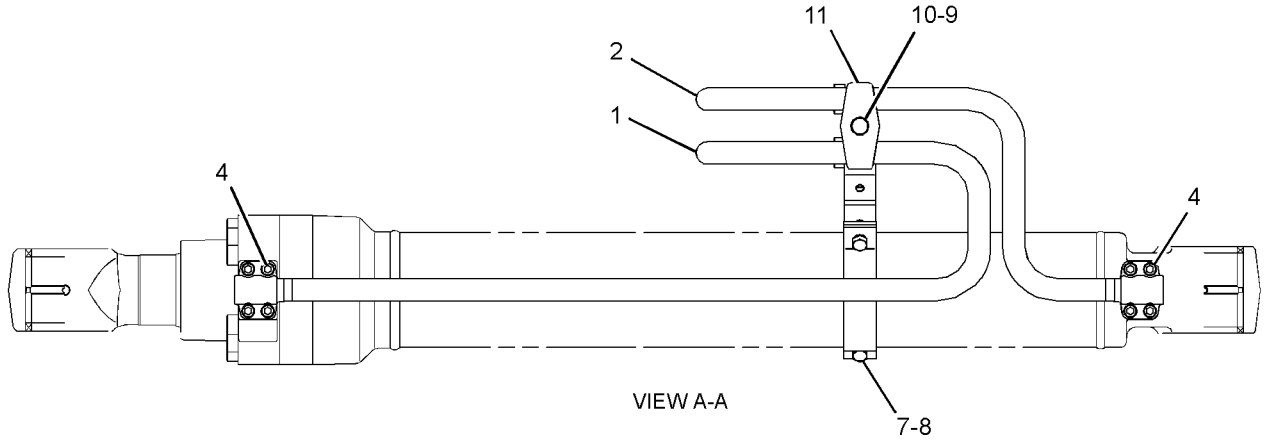

GRAPHIC #1 **<END>** g01220547

242-6737 LINES GP-BOOM CYLINDER–RH

S/N: WNE1-UP; ZMF1-UP; CWG1-UP
PART OF 242-6736, 242-6749 CYLINDER & LINES GP-BOOM
AN ATTACHMENT

SMCS-5057, 5456 **i02421016**

NOTE	REF NO	GRAPHIC REF	PART NUMBER	QTY	PART NAME 1 2 3 4 5 6 (PRODUCT LEVEL)	SEE PAGE
	1	1	**095-1597**	2	SEAL-O-RING	
M	2	1	**9X-6032**	8	BOLT-SOCKET HEAD (M10X1.5X30-MM)	
	3	1	**222-0124**	1	TUBE AS	
	4	1	**247-8870**	1	TUBE AS	
	5	1	**094-1920**	2	CLAMP	
M	6	1	**8T-3653**	1	BOLT (M14X2X80-MM)	
	7	1	**3B-4509**	1	LOCKWASHER	
M	8	1	**8T-4196**	2	BOLT (M10X1.5X35-MM)	
	9	1	**8T-4896**	2	WASHER-HARD (10.2X18.5X2.5-MM THK)	
	10	1	**4I-3621**	1	SUPPORT	
	11	1	**137-3709**	1	SUPPORT	

M-METRIC PART

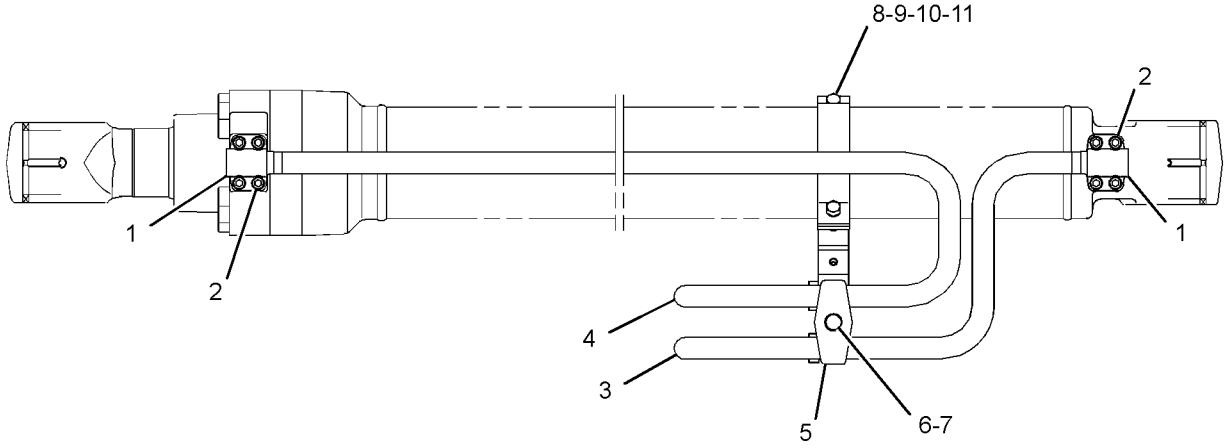

GRAPHIC #1 **<END>** g01221624

HYDRAULIC SYSTEM

278-6874 LINES GP-BOOM CYLINDER

S/N: WNE1-UP; ZMF1-UP
PART OF 343-1177 CONTROL AR-BOOM
AN ATTACHMENT

SMCS-5057, 5456 **i03063343**

NOTE	REF NO	GRAPHIC REF	PART NUMBER	QTY	PART NAME 1 2 3 4 5 6 (PRODUCT LEVEL)	SEE PAGE
	1	1	**4I-1674**	4	CLIP	
	2	1	**7K-1181**	12	STRAP-CABLE	
	3	1	**119-2321**	2	SUPPORT AS	
	4	1	**149-1738**	4	CLIP	
Y	5	1	**225-4785**	2	VALVE GP-LOAD CONTROL (BOOM CYLINDER)	841
	6	1	**266-1150**	1	TUBE AS	
	7	1	**266-1151**	1	TUBE AS	
	8	1	**266-1152**	1	TUBE AS	
	9	1	**266-1153**	1	TUBE AS	
	10	1	**266-1154**	1	TUBE AS	
	11	1	**266-1156**	1	TUBE AS	
	12	1	**266-1197**	2	SUPPORT AS	
	13	1	**275-1648**	4	HOSE AS	
					(EACH INCLUDES)	
E		1	**7I-7439**		GUARD (156-CM)	
	14	1	**278-6587**	1	BLOCK	
I	15	1	**278-6593**	2	HOSE AS	
	16	1	**278-6875**	1	SUPPORT AS	
	17	1	**278-6877**	1	SUPPORT AS	
M	18	1	**280-2747**	8	BOLT-SOCKET HEAD (M10X1.5X60-MM)	
	19	1	*148-8336*	4	CONNECTOR AS	
					(EACH INCLUDES)	
		1	**3J-1907**	1	SEAL-O-RING	
		1	**6V-8397**	1	SEAL-O-RING	
		1	**6V-8636**	1	CONNECTOR	
	20	1	*148-8341*	2	CONNECTOR AS	
					(EACH INCLUDES)	
		1	**3D-2824**	1	SEAL-O-RING	
		1	**6V-8713**	1	CONNECTOR	
		1	**7J-9108**	1	SEAL-O-RING	
	21	1	*148-8378*	2	ELBOW AS	
					(EACH INCLUDES)	
		1	**3J-1907**	1	SEAL-O-RING	
		1	**6V-8397**	1	SEAL-O-RING	
		1	**6V-8724**	1	ELBOW	
	22	1	*148-8390*	1	ELBOW AS	
		1	**2M-9780**	1	SEAL-O-RING	
		1	**6V-8626**	1	ELBOW	
		1	**7J-9108**	1	SEAL-O-RING	
	23	1	*148-8435*	2	TEE AS	
					(EACH INCLUDES)	
		1	**3J-1907**	1	SEAL-O-RING	
		1	**6V-8397**	2	SEAL-O-RING	
		1	**6V-8781**	1	TEE-FACE SEAL	
	24	1	*164-5578*	1	TEE AS	
		1	**3D-2824**	1	SEAL-O-RING	
		1	**6V-9175**	1	TEE (FACE SEAL)	
		1	**6V-9746**	1	SEAL-O-RING	
		1	**7J-9108**	1	SEAL-O-RING	
	25	1	**1P-3703**	6	SEAL-RECTANGULAR	
	26	1	**4I-9521**	2	BAND-MARKER (RED, L1)	
	27	1	**4I-9522**	2	BAND-MARKER (YELLOW, L2)	
	28	1	**4I-9525**	2	BAND-MARKER (ORANGE, R1)	
	29	1	**4I-9526**	2	BAND-MARKER (WHITE, R2)	
	30	1	**6V-9746**	4	SEAL-O-RING	

278-6874 **LINES GP-BOOM CYLINDER** *(contd.)* **i03063343**

NOTE	REF NO	GRAPHIC REF	PART NUMBER	QTY	PART NAME 1 2 3 4 5 6 (PRODUCT LEVEL)	SEE PAGE
	31	1	**7J-9108**	2	SEAL-O-RING	
	32	1	**8T-4121**	18	WASHER-HARD (11X21X2.5-MM THK)	
M	33	1	**8T-4136**	2	BOLT (M10X1.5X25-MM)	
M	34	1	**8T-4185**	8	BOLT (M10X1.5X50-MM)	
M	35	1	**8T-4192**	2	BOLT (M12X1.75X25-MM)	
M	36	1	**8T-4196**	8	BOLT (M10X1.5X35-MM)	
	37	1	**8T-4223**	12	WASHER-HARD (13.5X25.5X3-MM THK)	
M	38	1	**8T-4956**	10	BOLT (M12X1.75X35-MM)	
M	39	1	**8T-6466**	8	BOLT (M10X1.5X60-MM)	
	40	1	**307-5121**	1	GUARD	

E-ORDER BY THE CENTIMETER
I-REFER TO HYDRAULIC INFORMATION SYSTEM
M-METRIC PART
Y-SEPARATE ILLUSTRATION

278-6874 **LINES GP-BOOM CYLINDER** *(contd.)* **i03063343**

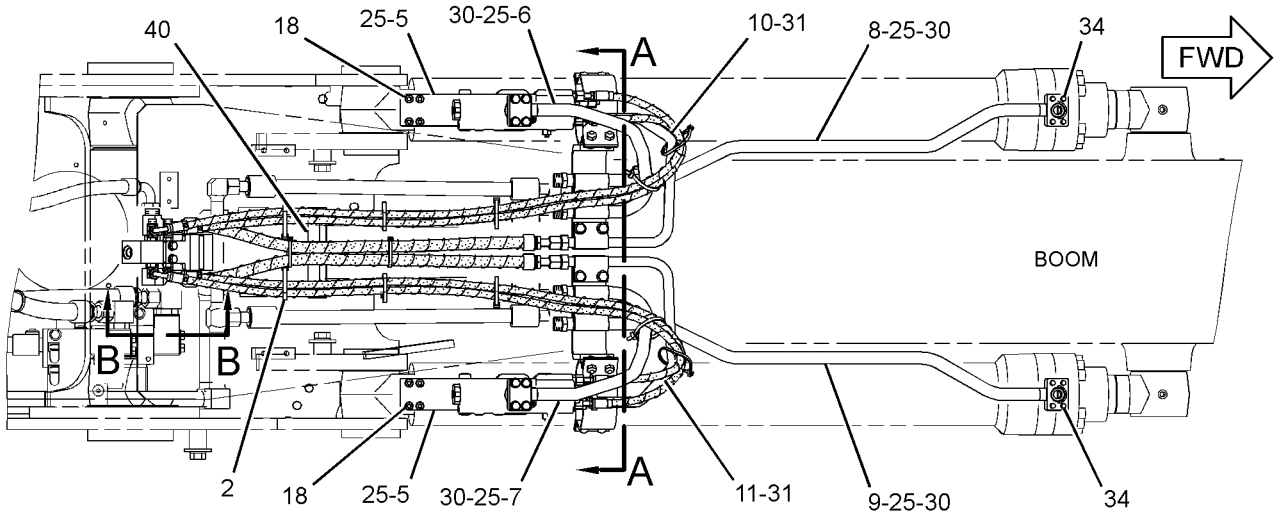

TOP VIEW

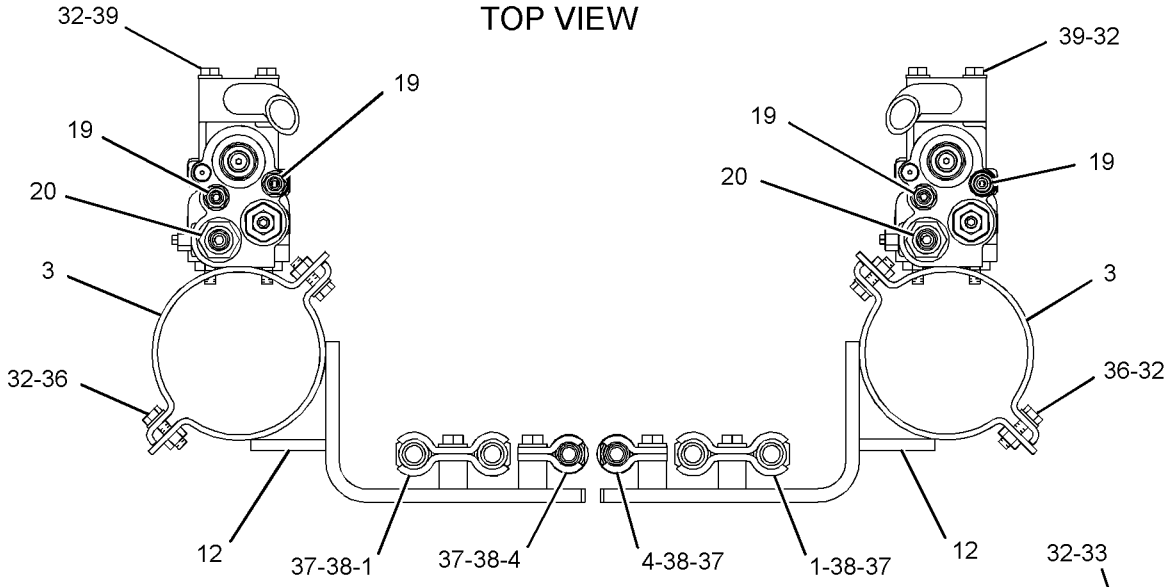

SECTION A-A

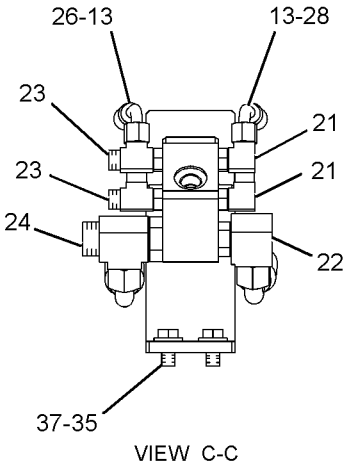

VIEW C-C

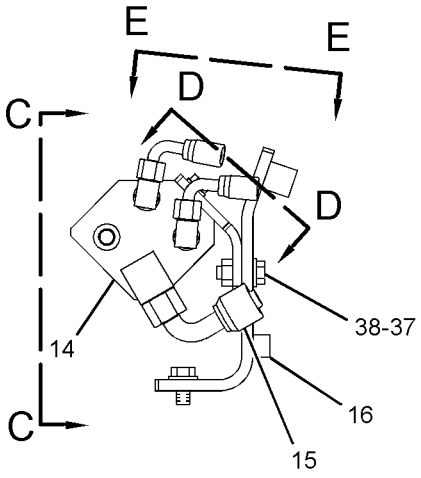

VIEW B-B

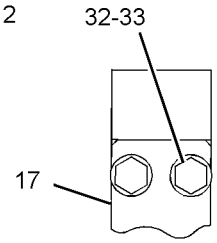

VIEW D-D

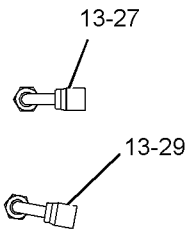

VIEW E-E

GRAPHIC #1 **<END>** g01625060

HYDRAULIC SYSTEM

286-6495 LINES GP-BOOM CYLINDER—BOOM LOWERING CONTROL

S/N: CWG1-UP

PART OF 285-1514 VALVE AR-CHECK & RELIEF

AN ATTACHMENT

SMCS-5057, 5456 **i03567863**

NOTE	REF NO	GRAPHIC REF	PART NUMBER	QTY	PART NAME 1 2 3 4 5 6 (PRODUCT LEVEL)	SEE PAGE
	1	1	**4I-1674**	4	CLIP	
	2	1	**7K-1181**	12	STRAP-CABLE	
	3	1	**119-2804**	2	SUPPORT AS	
	4	1	**149-1738**	4	CLIP	
Y	5	1	**225-4785**	2	VALVE GP-LOAD CONTROL (BOOM CYLINDER)	841
	6	1	**266-1110**	1	TUBE AS	
	7	1	**266-1111**	1	TUBE AS	
	8	1	**266-1114**	1	TUBE AS	
	9	1	**266-1115**	1	TUBE AS	
	10	1	**266-1116**	2	SUPPORT AS	
I	11	1	**266-1147**	1	HOSE AS	
	12	1	**320-0013**	2	HOSE AS	
					(EACH INCLUDES)	
E		1	**7I-7439**		GUARD (171-CM)	
	13	1	**278-6587**	1	BLOCK	
I	14	1	**278-6593**	2	HOSE AS	
	15	1	**278-6875**	1	SUPPORT AS	
	16	1	**278-6877**	1	SUPPORT AS	
	17	1	**286-6731**	2	HOSE AS	
					(EACH INCLUDES)	
E		1	**7I-7439**		GUARD (161-CM)	
	18	1	**286-6720**	1	TUBE AS	
	19	1	**286-6721**	1	TUBE AS	
	20	1	*148-8326*	2	CONNECTOR AS	
					(EACH INCLUDES)	
		1	**3J-7354**	1	SEAL-O-RING	
		1	**6V-8397**	1	SEAL-O-RING	
		1	**6V-9872**	1	CONNECTOR	
	21	1	*148-8336*	4	CONNECTOR AS	
					(EACH INCLUDES)	
		1	**3J-1907**	1	SEAL-O-RING	
		1	**6V-8397**	1	SEAL-O-RING	
		1	**6V-8636**	1	CONNECTOR	
	22	1	*148-8341*	2	CONNECTOR AS	
					(EACH INCLUDES)	
		1	**3D-2824**	1	SEAL-O-RING	
		1	**6V-8713**	1	CONNECTOR	
		1	**7J-9108**	1	SEAL-O-RING	
	23	1	*148-8371*	1	ELBOW AS	
		1	**6V-8397**	1	SEAL-O-RING	
		1	**8C-8988**	1	ELBOW	
	24	1	*148-8378*	2	ELBOW AS	
					(EACH INCLUDES)	
		1	**3J-1907**	1	SEAL-O-RING	
		1	**6V-8397**	1	SEAL-O-RING	
		1	**6V-8724**	1	ELBOW	
	25	1	*148-8390*	1	ELBOW AS	
		1	**2M-9780**	1	SEAL-O-RING	
		1	**6V-8626**	1	ELBOW	
		1	**7J-9108**	1	SEAL-O-RING	
	26	1	*148-8407*	2	PLUG AS	
					(EACH INCLUDES)	
		1	**3J-1907**	1	SEAL-O-RING	
		1	**9S-4191**	1	PLUG-O-RING	

286-6495 **LINES GP-BOOM CYLINDER** *(contd.)* **i03567863**

NOTE	REF NO	GRAPHIC REF	PART NUMBER	QTY	PART NAME 1 2 3 4 5 6 (PRODUCT LEVEL)	SEE PAGE
	27	1	*148-8411*	2	PLUG AS	
					(EACH INCLUDES)	
		1	**3K-0360**	1	SEAL-O-RING	
		1	**9S-4185**	1	PLUG-O-RING	
	28	1	*148-8435*	2	TEE AS	
					(EACH INCLUDES)	
		1	**3J-1907**	1	SEAL-O-RING	
		1	**6V-8397**	2	SEAL-O-RING	
		1	**6V-8781**	1	TEE-FACE SEAL	
	29	1	*164-5578*	1	TEE AS	
		1	**3D-2824**	1	SEAL-O-RING	
		1	**6V-9175**	1	TEE (FACE SEAL)	
		1	**6V-9746**	1	SEAL-O-RING	
		1	**7J-9108**	1	SEAL-O-RING	
	30	1	**1P-3703**	6	SEAL-RECTANGULAR	
	31	1	**4I-9521**	2	BAND-MARKER (RED, L1)	
	32	1	**4I-9522**	2	BAND-MARKER (YELLOW, L2)	
	33	1	**4I-9525**	2	BAND-MARKER (ORANGE, R1)	
	34	1	**4I-9526**	2	BAND-MARKER (WHITE, R2)	
	35	1	**6V-9746**	4	SEAL-O-RING	
	36	1	**7J-9108**	2	SEAL-O-RING	
M	37	1	**280-2747**	8	BOLT-SOCKET HEAD (M10X1.5X60-MM)	
	38	1	**8T-4121**	18	WASHER-HARD (11X21X2.5-MM THK)	
M	39	1	**8T-4136**	2	BOLT (M10X1.5X25-MM)	
M	40	1	**8T-4185**	8	BOLT (M10X1.5X50-MM)	
M	41	1	**8T-4192**	2	BOLT (M12X1.75X25-MM)	
M	42	1	**8T-4196**	8	BOLT (M10X1.5X35-MM)	
	43	1	**8T-4223**	12	WASHER-HARD (13.5X25.5X3-MM THK)	
M	44	1	**8T-4956**	10	BOLT (M12X1.75X35-MM)	
M	45	1	**8T-6466**	8	BOLT (M10X1.5X60-MM)	
	46	1	**307-5121**	1	GUARD	

E-ORDER BY THE CENTIMETER
I-REFER TO HYDRAULIC INFORMATION SYSTEM
M-METRIC PART
Y-SEPARATE ILLUSTRATION

286-6495 **LINES GP-BOOM CYLINDER** *(contd.)* **i03567863**

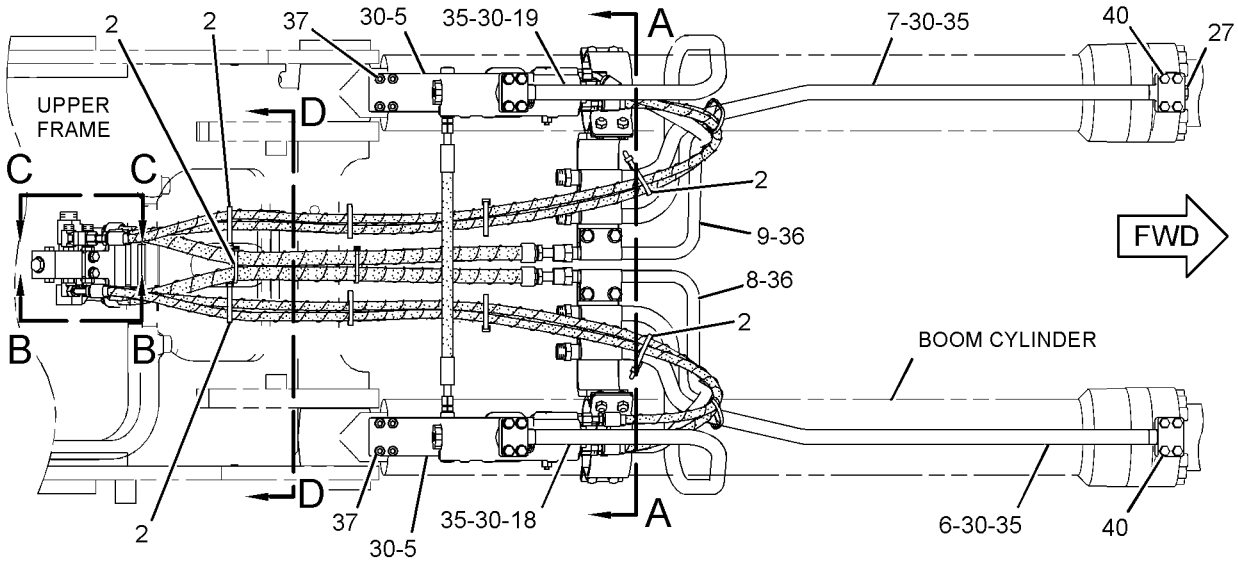

TOP VIEW

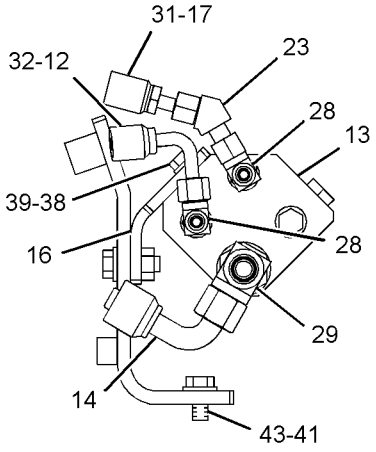

VIEW C-C

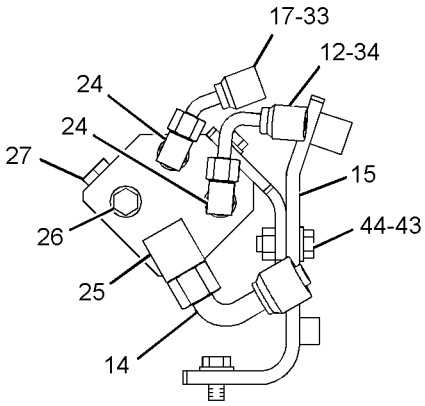

VIEW B-B

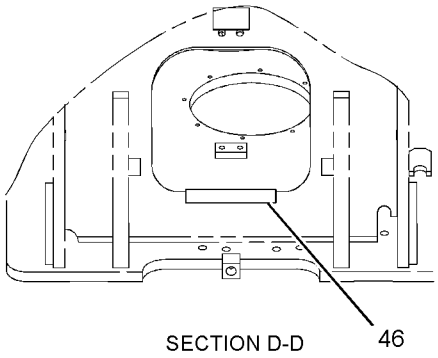

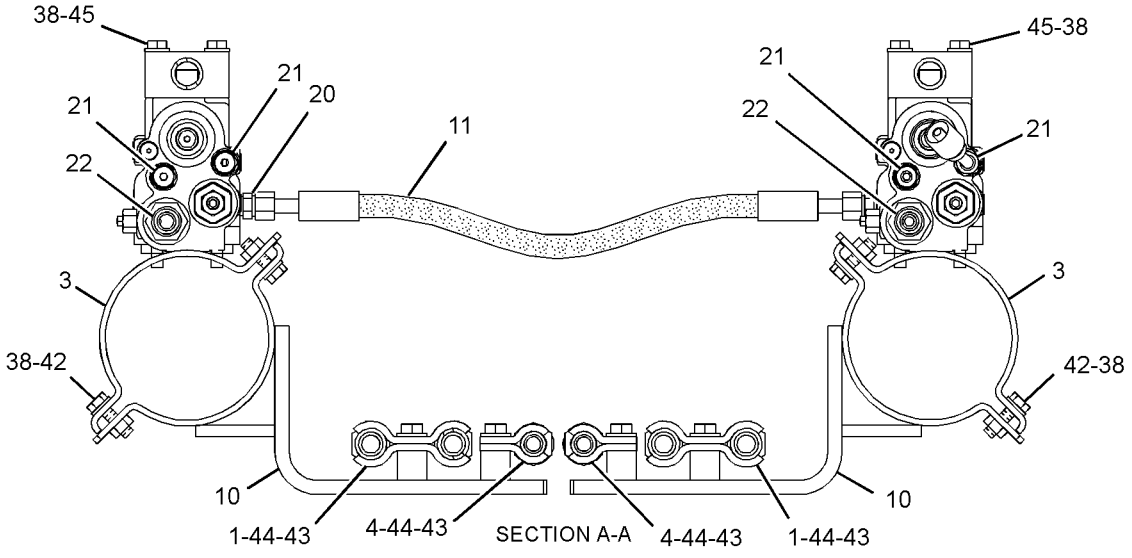

GRAPHIC #1

<END>

g01624660

317-4887 LINES GP-BOOM CYLINDER—BOOM LOWERING CONTROL

S/N: WNE1-UP; ZMF1-UP
PART OF 343-1178 CONTROL AR-BOOM
AN ATTACHMENT

SMCS-5057, 5456 **i02955150**

NOTE	REF NO	GRAPHIC REF	PART NUMBER	QTY	PART NAME 1 2 3 4 5 6 (PRODUCT LEVEL)	SEE PAGE
	1	1	**4I-1674**	4	CLIP	
	2	1	**7K-1181**	12	STRAP-CABLE	
	3	1	**119-2804**	2	SUPPORT AS	
	4	1	**149-1738**	4	CLIP	
Y	5	1	**225-4785**	2	VALVE GP-LOAD CONTROL (BOOM CYLINDER)	841
	6	1	**266-1110**	1	TUBE AS	
	7	1	**266-1111**	1	TUBE AS	
	8	1	**266-1114**	1	TUBE AS	
	9	1	**266-1115**	1	TUBE AS	
	10	1	**266-1116**	2	SUPPORT AS	
	11	1	**275-1648**	2	HOSE AS	
					(EACH INCLUDES)	
E		1	**7I-7439**		GUARD (156-CM)	
	12	1	**278-6587**	1	BLOCK	
I	13	1	**278-6593**	2	HOSE AS	
	14	1	**278-6875**	1	SUPPORT AS	
	15	1	**278-6877**	1	SUPPORT AS	
	16	1	**285-2568**	2	HOSE AS	
					(EACH INCLUDES)	
E		1	**7I-7439**		GUARD (155-CM)	
	17	1	**286-6720**	1	TUBE AS	
	18	1	**286-6721**	1	TUBE AS	
	19	1	**307-5121**	1	GUARD	
	20	1	*148-8336*	4	CONNECTOR AS	
					(EACH INCLUDES)	
		1	**3J-1907**	1	SEAL-O-RING	
		1	**6V-8397**	1	SEAL-O-RING	
		1	**6V-8636**	1	CONNECTOR	
	21	1	*148-8341*	2	CONNECTOR AS	
					(EACH INCLUDES)	
		1	**3D-2824**	1	SEAL-O-RING	
		1	**6V-8713**	1	CONNECTOR	
		1	**7J-9108**	1	SEAL-O-RING	
	22	1	*148-8371*	1	ELBOW AS	
		1	**6V-8397**	1	SEAL-O-RING	
		1	**8C-8988**	1	ELBOW	
	23	1	*148-8378*	2	ELBOW AS	
					(EACH INCLUDES)	
		1	**3J-1907**	1	SEAL-O-RING	
		1	**6V-8397**	1	SEAL-O-RING	
		1	**6V-8724**	1	ELBOW	
	24	1	*148-8390*	1	ELBOW AS	
		1	**2M-9780**	1	SEAL-O-RING	
		1	**6V-8626**	1	ELBOW	
		1	**7J-9108**	1	SEAL-O-RING	
	25	1	*148-8411*	1	PLUG AS	
		1	**3K-0360**	1	SEAL-O-RING	
		1	**9S-4185**	1	PLUG-O-RING	
	26	1	*148-8435*	2	TEE AS	
					(EACH INCLUDES)	
		1	**3J-1907**	1	SEAL-O-RING	
		1	**6V-8397**	2	SEAL-O-RING	
		1	**6V-8781**	1	TEE-FACE SEAL	
	27	1	*164-5578*	1	TEE AS	
		1	**3D-2824**	1	SEAL-O-RING	

317-4887 LINES GP-BOOM CYLINDER *(contd.)* i02955150

NOTE	REF NO	GRAPHIC REF	PART NUMBER	QTY	PART NAME 1 2 3 4 5 6 (PRODUCT LEVEL)	SEE PAGE
		1	**6V-9175**	1	TEE (FACE SEAL)	
		1	**6V-9746**	1	SEAL-O-RING	
		1	**7J-9108**	1	SEAL-O-RING	
	28	1	**1P-3703**	6	SEAL-RECTANGULAR	
	29	1	**4I-9521**	2	BAND-MARKER (RED, L1)	
	30	1	**4I-9522**	2	BAND-MARKER (YELLOW, L2)	
	31	1	**4I-9525**	2	BAND-MARKER (ORANGE, R1)	
	32	1	**4I-9526**	2	BAND-MARKER (WHITE, R2)	
	33	1	**6V-9746**	4	SEAL-O-RING	
	34	1	**7J-9108**	2	SEAL-O-RING	
M	35	1	**8T-0341**	8	BOLT-SOCKET HEAD (M10X1.5X60-MM)	
	36	1	**8T-4121**	18	WASHER-HARD (11X21X2.5-MM THK)	
M	37	1	**8T-4136**	2	BOLT (M10X1.5X25-MM)	
M	38	1	**8T-4185**	8	BOLT (M10X1.5X50-MM)	
M	39	1	**8T-4192**	2	BOLT (M12X1.75X25-MM)	
M	40	1	**8T-4196**	8	BOLT (M10X1.5X35-MM)	
	41	1	**8T-4223**	12	WASHER-HARD (13.5X25.5X3-MM THK)	
M	42	1	**8T-4956**	10	BOLT (M12X1.75X35-MM)	
M	43	1	**8T-6466**	8	BOLT (M10X1.5X60-MM)	

E-ORDER BY THE CENTIMETER
I-REFER TO HYDRAULIC INFORMATION SYSTEM
M-METRIC PART
Y-SEPARATE ILLUSTRATION

317-4887 **LINES GP-BOOM CYLINDER** *(contd.)* **i02955150**

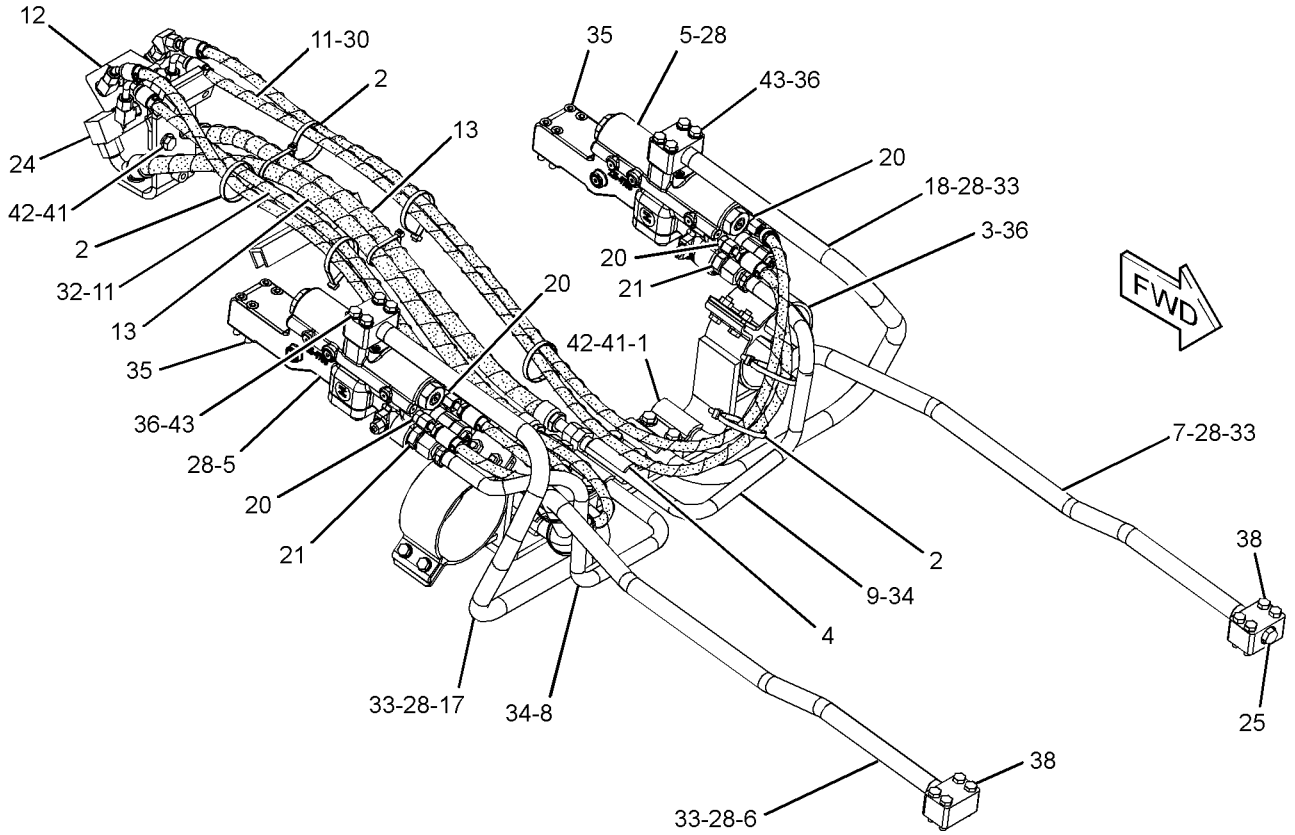

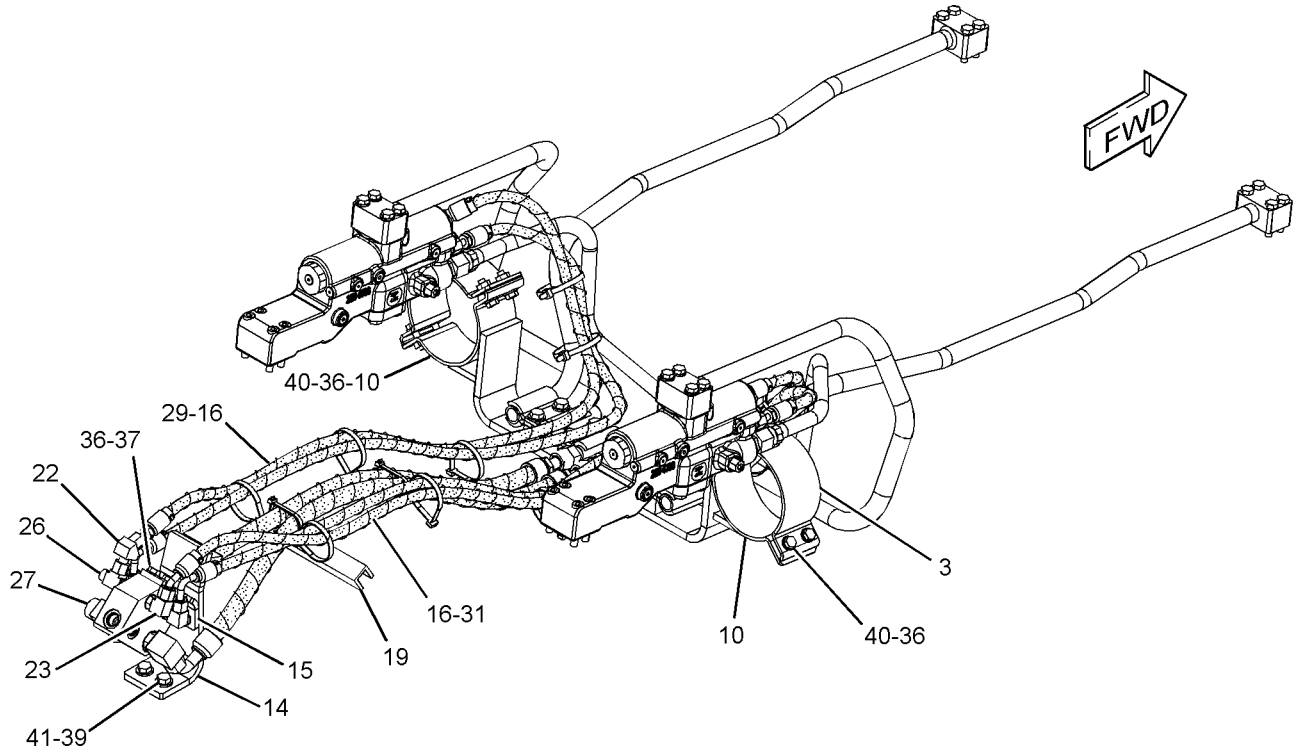

GRAPHIC #1 **<END>** g01474453

HYDRAULIC SYSTEM

337-1276 LINES GP-BOOM CYLINDER—BOOM FLOAT

S/N: CWG1-UP
PART OF 340-3819 CONTROL AR-AUXILIARY
AN ATTACHMENT

SMCS-5057, 5456 **i03647185**

NOTE	REF NO	GRAPHIC REF	PART NUMBER	QTY	PART NAME 1 2 3 4 5 6 (PRODUCT LEVEL)	SEE PAGE
	1	2	**4I-1674**	4	CLIP	
	2	1	**7K-1181**	12	STRAP-CABLE	
	3	2	**119-2804**	2	SUPPORT AS	
	4	2	**149-1738**	4	CLIP	
Y	5	1	**225-4785**	2	VALVE GP-LOAD CONTROL (BOOM CYLINDER)	841
	6	1	**266-1110**	1	TUBE AS	
	7	1	**266-1111**	1	TUBE AS	
	8	1	**266-1114**	1	TUBE AS	
	9	1	**266-1115**	1	TUBE AS	
	10	2	**266-1116**	2	SUPPORT AS	
	11	2	**278-6587**	1	BLOCK	
I	12	2	**278-6593**	2	HOSE AS	
	13	2	**278-6875**	1	SUPPORT AS	
	14	1	**278-6877**	1	SUPPORT AS	
	15	1	**286-6720**	1	TUBE AS	
	16	1	**286-6721**	1	TUBE AS	
	17	2	**286-6731**	2	HOSE AS	
	18	2	**320-0013**	2	HOSE AS	
E	19	2	**102-1174**		GUARD (20-CM)	
	20	2	*148-8336*	4	CONNECTOR AS	
					(EACH INCLUDES)	
		2	**3J-1907**	1	SEAL-O-RING	
		2	**6V-8397**	1	SEAL-O-RING	
		2	**6V-8636**	1	CONNECTOR	
	21	2	*148-8341*	2	CONNECTOR AS	
					(EACH INCLUDES)	
		2	**3D-2824**	1	SEAL-O-RING	
		2	**6V-8713**	1	CONNECTOR	
		2	**7J-9108**	1	SEAL-O-RING	
	22	2	*148-8371*	1	ELBOW AS	
		2	**6V-8397**	1	SEAL-O-RING	
		2	**8C-8988**	1	ELBOW	
	23	2	*148-8378*	2	ELBOW AS	
					(EACH INCLUDES)	
		2	**3J-1907**	1	SEAL-O-RING	
		2	**6V-8397**	1	SEAL-O-RING	
		2	**6V-8724**	1	ELBOW	
	24	2	*148-8390*	1	ELBOW AS	
		2	**2M-9780**	1	SEAL-O-RING	
		2	**6V-8626**	1	ELBOW	
		2	**7J-9108**	1	SEAL-O-RING	
	25	1	*148-8411*	1	PLUG AS	
		1	**3K-0360**	1	SEAL-O-RING	
		1	**9S-4185**	1	PLUG-O-RING	
	26	2	*148-8435*	2	TEE AS	
					(EACH INCLUDES)	
		2	**3J-1907**	1	SEAL-O-RING	
		2	**6V-8397**	2	SEAL-O-RING	
		2	**6V-8781**	1	TEE-FACE SEAL	
	27	2	*164-5578*	1	TEE AS	
		2	**3D-2824**	1	SEAL-O-RING	
		2	**6V-9175**	1	TEE (FACE SEAL)	
		2	**6V-9746**	1	SEAL-O-RING	
		2	**7J-9108**	1	SEAL-O-RING	
	28	1	**1P-3703**	6	SEAL-RECTANGULAR	

337-1276 **LINES GP-BOOM CYLINDER** *(contd.)* **i03647185**

NOTE	REF NO	GRAPHIC REF	PART NUMBER	QTY	PART NAME 1 2 3 4 5 6 (PRODUCT LEVEL)	SEE PAGE
M	29	1	**280-2747**	8	BOLT-SOCKET HEAD (M10X1.5X60-MM)	
	30	2	**4I-9521**	2	BAND-MARKER (RED, L1)	
	31	2	**4I-9522**	2	BAND-MARKER (YELLOW, L2)	
	32	2	**4I-9525**	2	BAND-MARKER (ORANGE, R1)	
	33	2	**4I-9526**	2	BAND-MARKER (WHITE, R2)	
	34	1	**6V-9746**	4	SEAL-O-RING	
	35	1	**7J-9108**	2	SEAL-O-RING	
	36	1,2	**8T-4121**	18	WASHER-HARD (11X21X2.5-MM THK)	
M	37	1	**8T-4136**	2	BOLT (M10X1.5X25-MM)	
M	38	1	**8T-4185**	8	BOLT (M10X1.5X50-MM)	
M	39	2	**8T-4192**	2	BOLT (M12X1.75X25-MM)	
M	40	2	**8T-4196**	8	BOLT (M10X1.5X35-MM)	
	41	2	**8T-4223**	12	WASHER-HARD (13.5X25.5X3-MM THK)	
M	42	2	**8T-4956**	10	BOLT (M12X1.75X35-MM)	
M	43	2	**8T-6466**	8	BOLT (M10X1.5X60-MM)	

E-ORDER BY THE CENTIMETER
I-REFER TO HYDRAULIC INFORMATION SYSTEM
M-METRIC PART
Y-SEPARATE ILLUSTRATION

REFER TO ALL ILLUSTRATIONS OF
THIS GROUP FOR AUXILIARY VIEWS

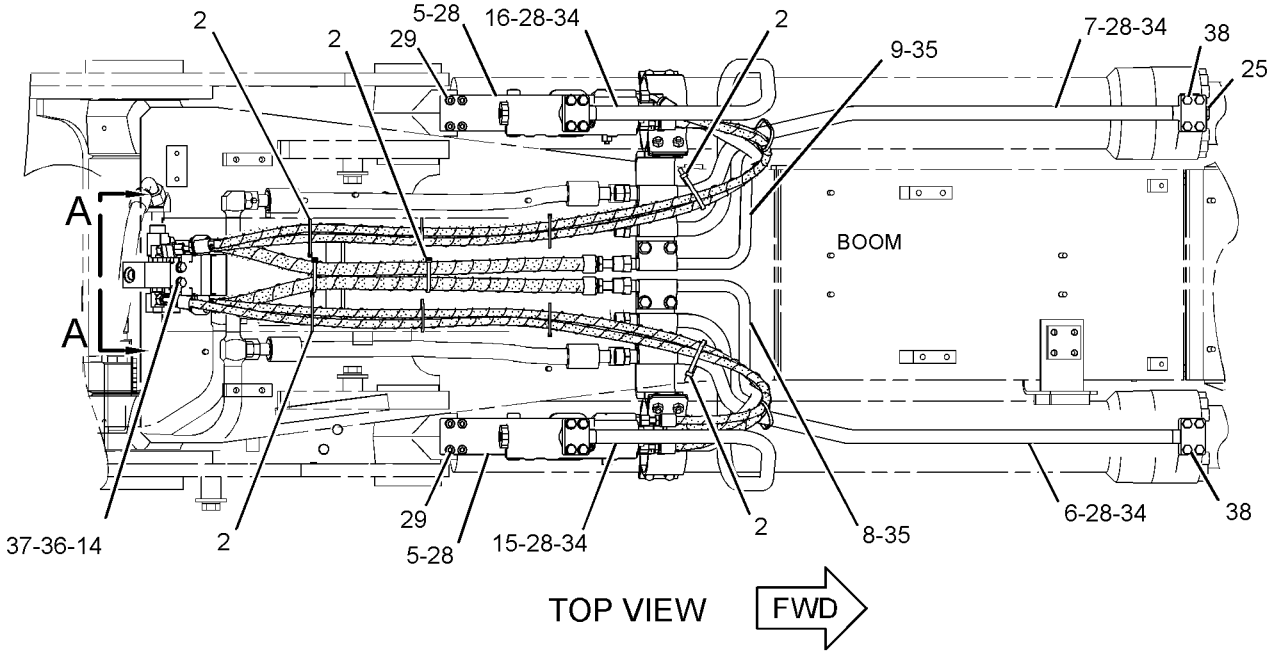

GRAPHIC #1 g01960608

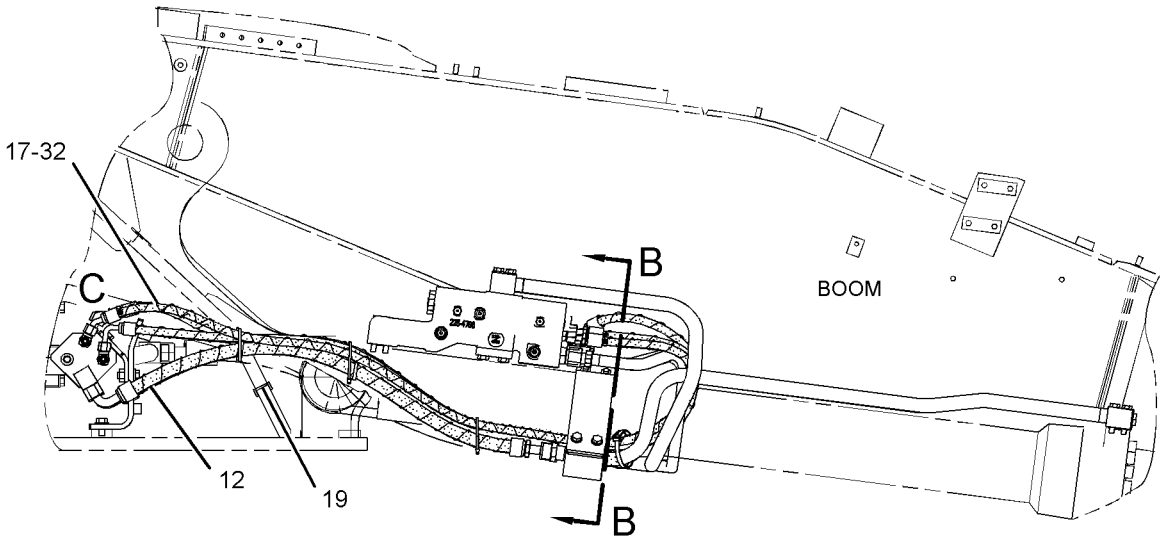

RIGHT SIDE VIEW

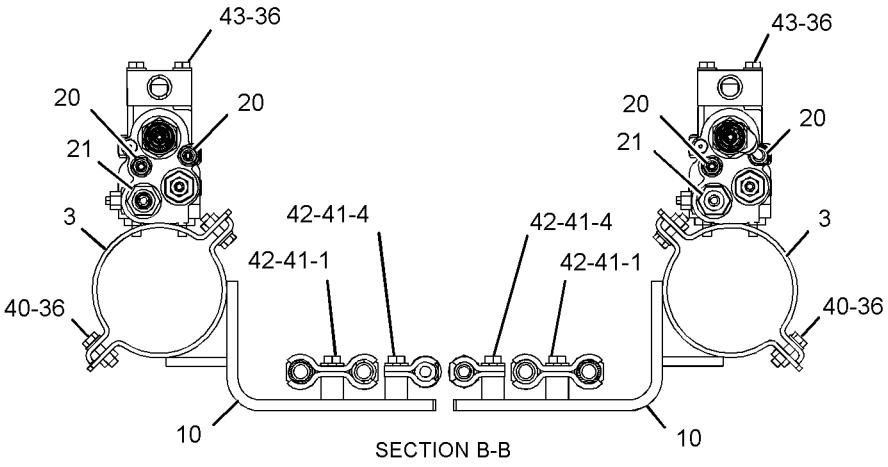

SECTION B-B

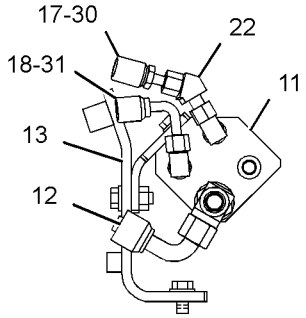

VIEW D-D

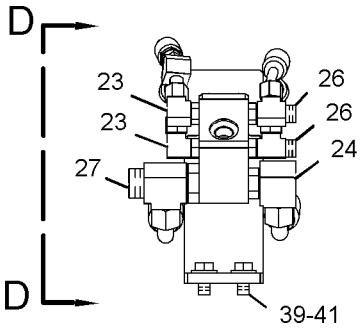

VIEW A-A

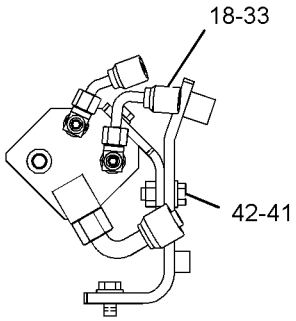

VIEW OF AREA C

GRAPHIC #2 **<END>** g01960603

187-5693 LINES GP-BUCKET CYLINDER

S/N: WNE1-UP; ZMF1-UP; CWG1-UP
PART OF 275-3702, 314-3727, 314-3729 STICK AR-HOE
AN ATTACHMENT

SMCS-5457 **i01339060**

NOTE	REF NO	GRAPHIC REF	PART NUMBER	QTY	PART NAME 1 2 3 4 5 6 (PRODUCT LEVEL)	SEE PAGE
I	1	1	**4I-8785**	2	HOSE AS	
	2	1	**5I-4174**	1	BLOCK	
	3	1	**1P-5765**	4	FLANGE-HALF	
M	4	1	**8T-4198**	4	BOLT (M10X1.5X100-MM)	
	5	1	**8T-4121**	8	WASHER-HARD (11X21X2.5-MM THK)	
	6	1	**1P-3702**	2	SEAL-RECTANGULAR	
	7	1	**1P-3703**	1	SEAL-RECTANGULAR	
M	8	1	**8T-4182**	4	BOLT (M10X1.5X45-MM)	

I-REFER TO HYDRAULIC INFORMATION SYSTEM
M-METRIC PART

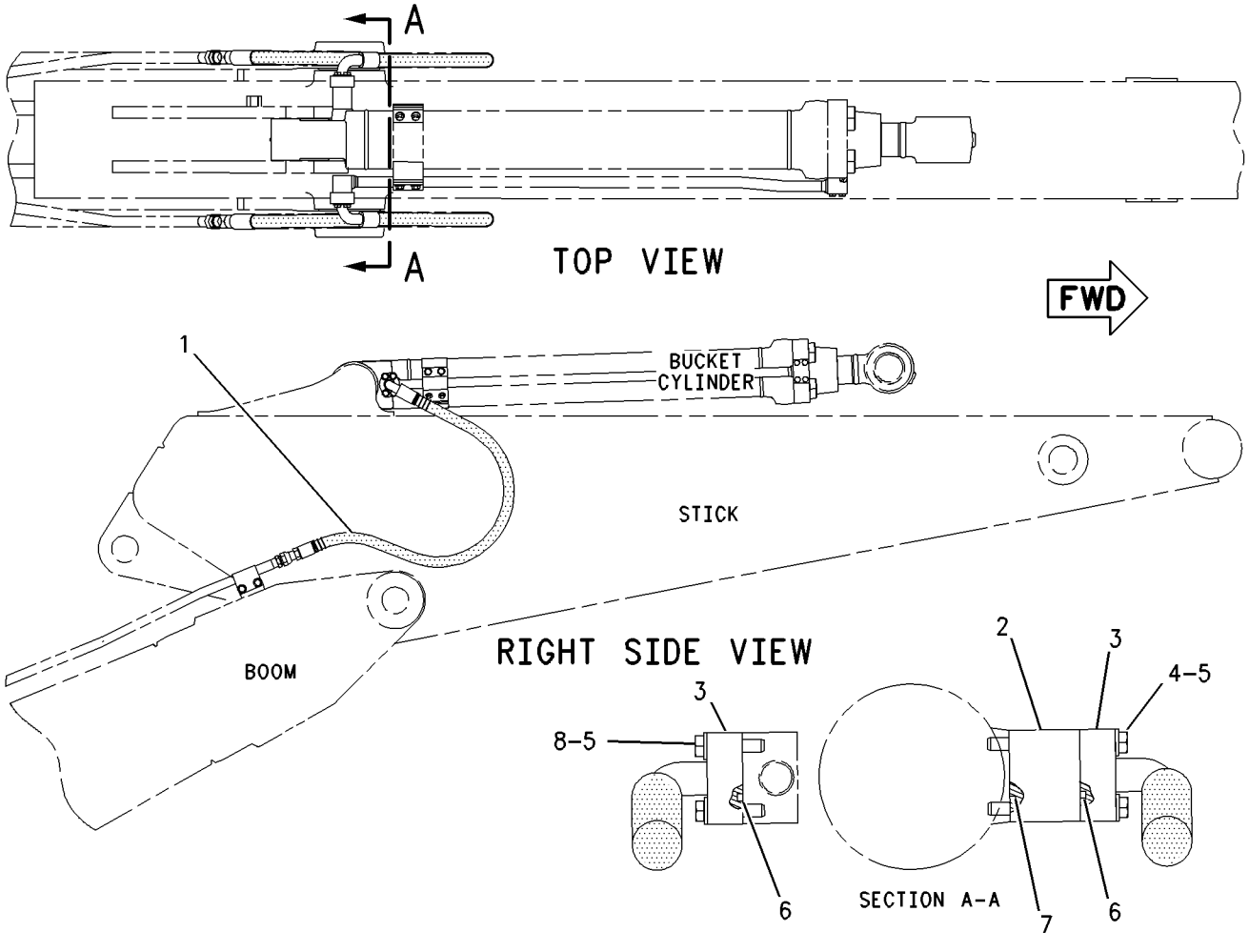

GRAPHIC #1 **<END>** g00708137

HYDRAULIC SYSTEM

187-5975 LINES GP-BUCKET CYLINDER

S/N: CWG1-UP
PART OF 240-3843, 240-3850 STICK AR-HOE
AN ATTACHMENT

SMCS-5457 **i02426128**

NOTE	REF NO	GRAPHIC REF	PART NUMBER	QTY	PART NAME 1 2 3 4 5 6 (PRODUCT LEVEL)	SEE PAGE
	1	1	**5I-4174**	1	BLOCK	
I	2	1	**5I-8715**	2	HOSE AS	
M	3	1	**8T-4198**	4	BOLT (M10X1.5X100-MM)	
	4	1	**8T-4121**	8	WASHER-HARD (11X21X2.5-MM THK)	
	5	1	**1P-3703**	1	SEAL-RECTANGULAR	
	6	1	**1P-5765**	4	FLANGE-HALF	
	7	1	**1P-3702**	2	SEAL-RECTANGULAR	
M	8	1	**8T-4182**	4	BOLT (M10X1.5X45-MM)	

I-REFER TO HYDRAULIC INFORMATION SYSTEM
M-METRIC PART

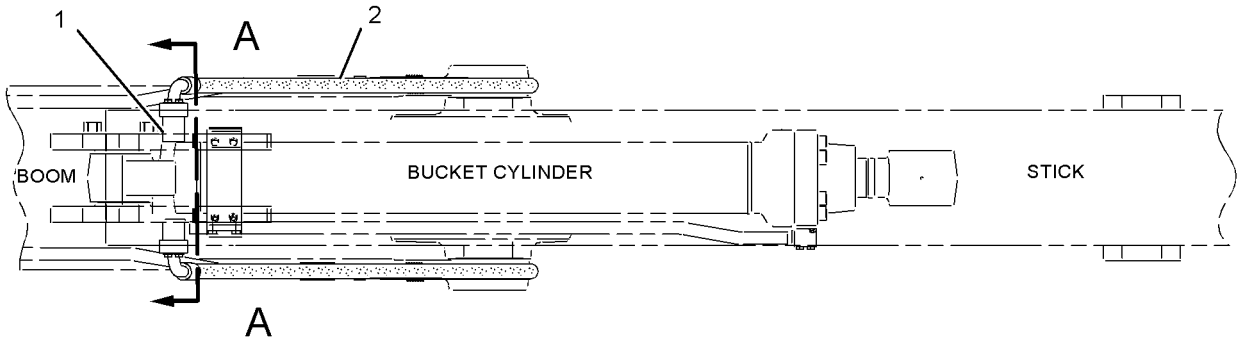

TOP VIEW

FWD

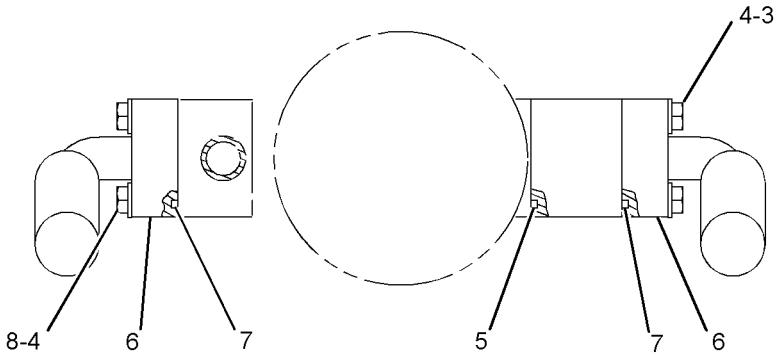

SECTION A-A

GRAPHIC #1 **<END>** g01138740

225-4592 LINES GP-BUCKET CYLINDER

S/N: WNE1-UP; ZMF1-UP; CWG1-UP
PART OF 225-4590, 225-4598 CYLINDER & LINES GP-BUCKET
AN ATTACHMENT

SMCS-5457 **i02348511**

NOTE	REF NO	GRAPHIC REF	PART NUMBER	QTY	PART NAME 1 2 3 4 5 6 (PRODUCT LEVEL)	SEE PAGE
	1	1	**8T-4223**	1	WASHER-HARD (13.5X25.5X3-MM THK)	
M	2	1	**8T-4910**	1	BOLT (M12X1.75X60-MM)	
	3	1	**096-4480**	1	CLAMP	
	4	1	**8T-4896**	2	WASHER-HARD (10.2X18.5X2.5-MM THK)	
M	5	1	**8T-4196**	2	BOLT (M10X1.5X35-MM)	
	6	1	**234-4592**	1	SUPPORT	
	7	1	**234-4591**	1	SUPPORT AS	
	8	1	**095-1597**	1	SEAL-O-RING	
M	9	1	**9X-6032**	4	BOLT-SOCKET HEAD (M10X1.5X30-MM)	
	10	1	**259-0647**	1	TUBE AS	

M-METRIC PART

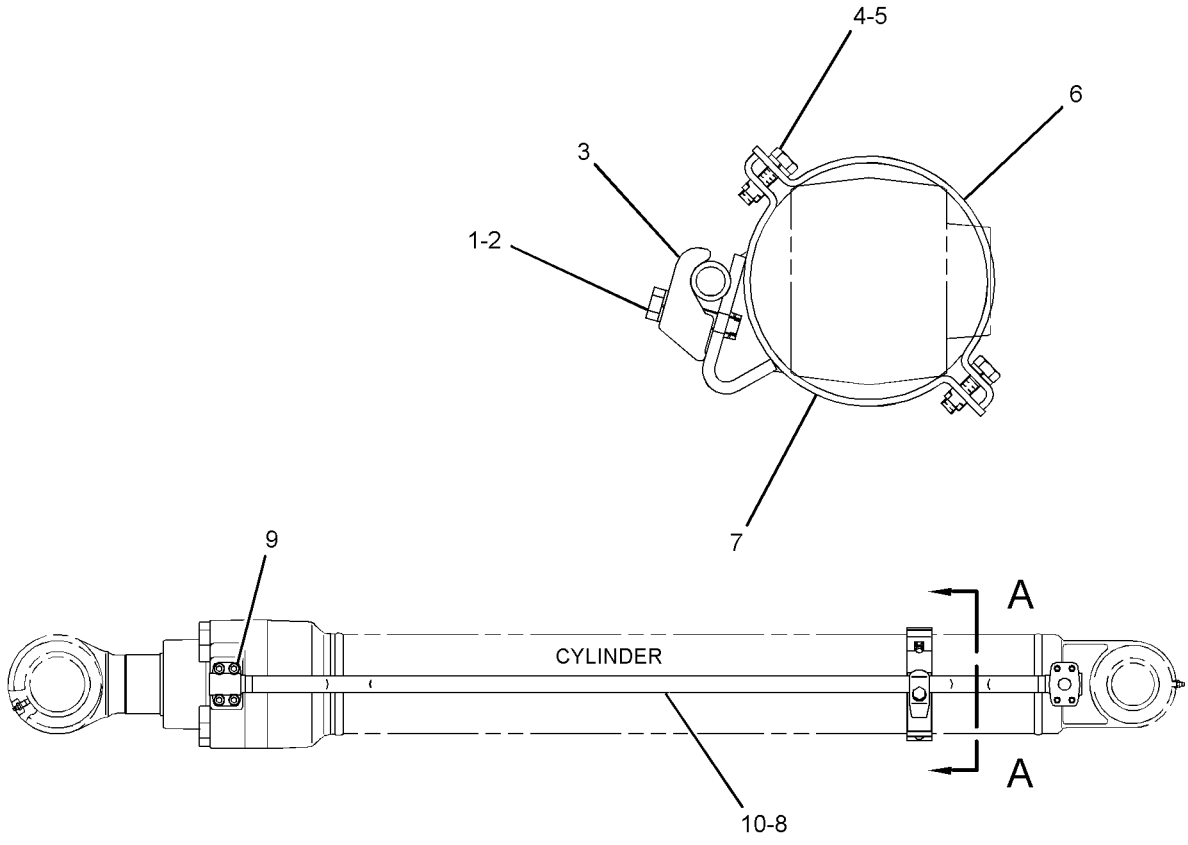

GRAPHIC #1 **<END>** g01188200

HYDRAULIC SYSTEM

242-6757 LINES GP-BUCKET CYLINDER

S/N: WNE1-UP; ZMF1-UP; CWG1-UP
PART OF 242-6755, 242-6758 CYLINDER & LINES GP-BUCKET
AN ATTACHMENT

SMCS-5457 **i02402140**

NOTE	REF NO	GRAPHIC REF	PART NUMBER	QTY	PART NAME 1 2 3 4 5 6 (PRODUCT LEVEL)	SEE PAGE
M	1	1	**9X-6032**	4	BOLT-SOCKET HEAD (M10X1.5X30-MM)	
	2	1	**095-1597**	1	SEAL-O-RING	
	3	1	**274-2547**	1	TUBE AS	
	4	1	**096-4412**	1	SUPPORT	
M	5	1	**8T-4196**	2	BOLT (M10X1.5X35-MM)	
	6	1	**8T-4896**	2	WASHER-HARD (10.2X18.5X2.5-MM THK)	
	7	1	**124-1034**	1	SUPPORT AS	
	8	1	**096-4480**	1	CLAMP	
M	9	1	**8T-4910**	1	BOLT (M12X1.75X60-MM)	
	10	1	**8T-4223**	1	WASHER-HARD (13.5X25.5X3-MM THK)	

M-METRIC PART

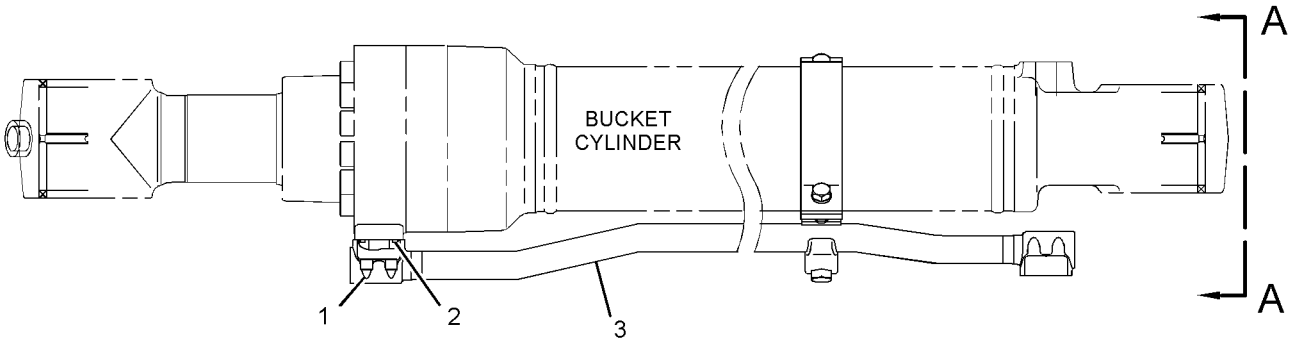

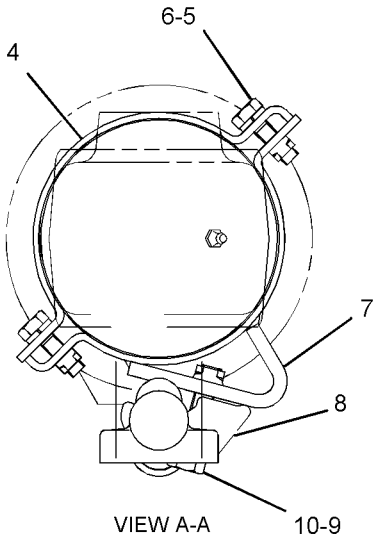

GRAPHIC #1 **<END>** g01220243

HYDRAULIC SYSTEM

248-9633 LINES GP-BUCKET CYLINDER

S/N: WNE1-UP; ZMF1-UP
PART OF 240-3846 STICK AR-HOE
AN ATTACHMENT

SMCS-5457 **i02426124**

NOTE	REF NO	GRAPHIC REF	PART NUMBER	QTY	PART NAME 1 2 3 4 5 6 (PRODUCT LEVEL)	SEE PAGE
	1	1	**5I-4174**	1	BLOCK	
I	2	1	**187-6058**	2	HOSE AS	
	3	1	**1P-3702**	2	SEAL-RECTANGULAR	
	4	1	**1P-3703**	1	SEAL-RECTANGULAR	
	5	1	**8T-4121**	8	WASHER-HARD (11X21X2.5-MM THK)	
M	6	1	**8T-4182**	4	BOLT (M10X1.5X45-MM)	
M	7	1	**8T-4198**	4	BOLT (M10X1.5X100-MM)	
	8	1	**8T-9403**	4	FLANGE-HALF	

I-REFER TO HYDRAULIC INFORMATION SYSTEM
M-METRIC PART

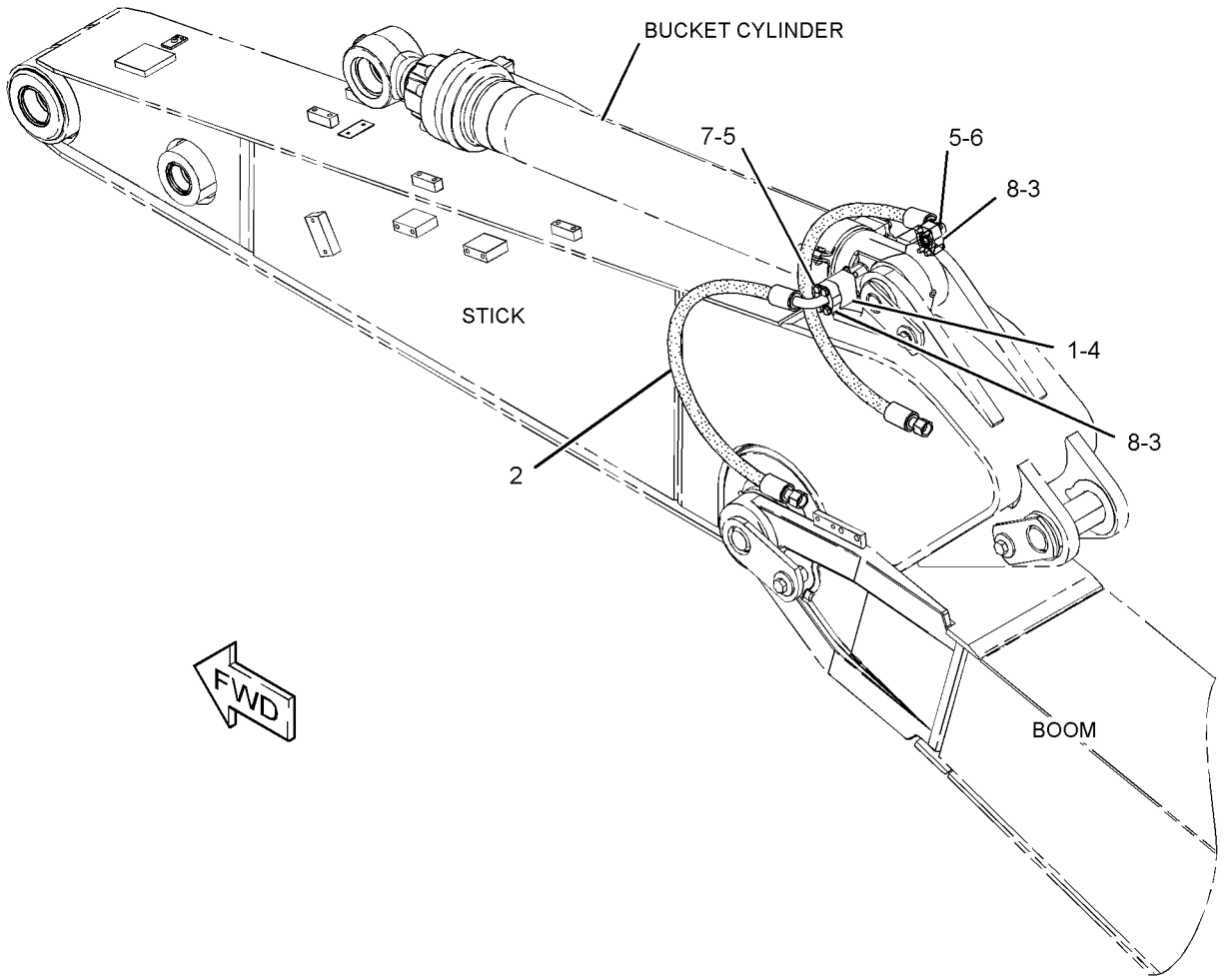

GRAPHIC #1 **<END>** g01227745

HYDRAULIC SYSTEM

260-8011 LINES GP-BUCKET CYLINDER

S/N: WNE1-UP; ZMF1-UP; CWG1-UP
PART OF 240-3854 STICK AR-HOE
AN ATTACHMENT

SMCS-5457 **i02419086**

NOTE	REF NO	GRAPHIC REF	PART NUMBER	QTY	PART NAME 1 2 3 4 5 6 (PRODUCT LEVEL)	SEE PAGE
	1	1	**5I-4174**	1	BLOCK	
I	2	1	**187-6058**	2	HOSE AS	
	3	1	**1P-3702**	2	SEAL-RECTANGULAR	
	4	1	**1P-3703**	1	SEAL-RECTANGULAR	
	5	1	**8T-4121**	8	WASHER-HARD (11X21X2.5-MM THK)	
M	6	1	**8T-4182**	4	BOLT (M10X1.5X45-MM)	
M	7	1	**8T-4198**	4	BOLT (M10X1.5X100-MM)	
	8	1	**8T-9403**	4	FLANGE-HALF	

I-REFER TO HYDRAULIC INFORMATION SYSTEM
M-METRIC PART

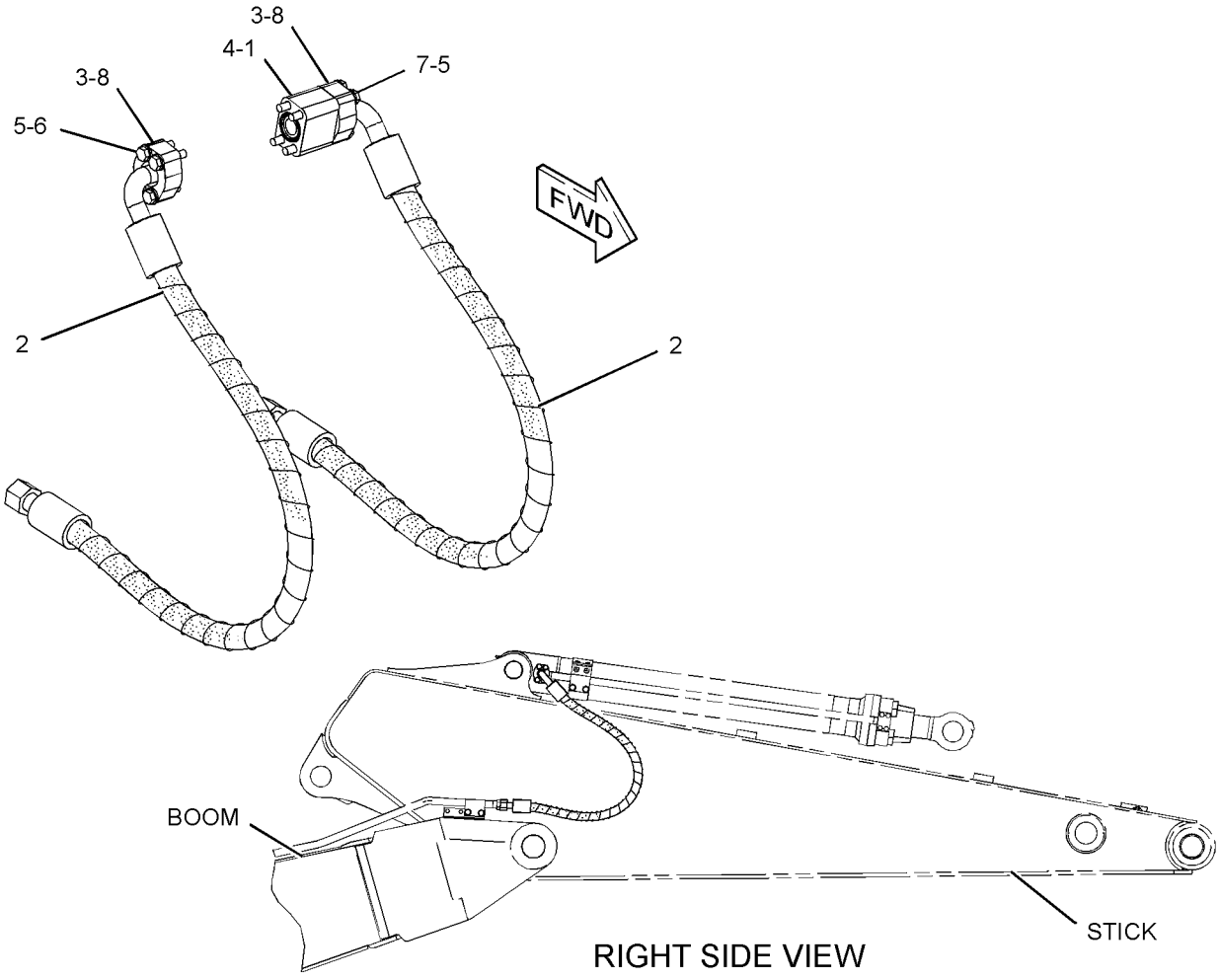

RIGHT SIDE VIEW

GRAPHIC #1 **<END>** g01224077

HYDRAULIC SYSTEM

316-4058 LINES GP-BUCKET CYLINDER—CLAMSHELL

S/N: WNE1-UP; ZMF1-UP

AN ATTACHMENT

SMCS-5457 **i02988769**

NOTE	REF NO	GRAPHIC REF	PART NUMBER	QTY	PART NAME 1 2 3 4 5 6 (PRODUCT LEVEL)	SEE PAGE
	1	1	**4I-1678**	1	SUPPORT AS	
	2	1	**8X-7933**	2	SPACER (33X57X14-MM THK)	
	3	1	**119-2863**	2	PIN	
I	4	1	**144-3624**	2	HOSE AS	
	5	1	**166-5495**	1	CHANNEL	
	6	1	**190-6263**	1	BRACKET	
	7	1	**200-4105**	2	CONNECTOR-SPECIAL	
					(EACH INCLUDES)	
		1	**4K-1388**	1	SEAL-O-RING	
		1	**6V-9746**	1	SEAL-O-RING	
	8	1	**281-6335**	1	BRACKET	
	9	1	**281-7035**	1	BRACKET	
Y	10	1	**290-9750**	1	VALVE GP-SELECTOR (BUCKET/CLAMSHELL, LH)	876
Y	11	1	**290-9755**	1	VALVE GP-SELECTOR (BUCKET/CLAMSHELL, RH)	877
	12	1	**321-0240**	1	TUBE AS	
	13	1	**321-0241**	3	SUPPORT AS	
	14	1	**326-8394**	2	CAP	
	15	1	**1P-3702**	2	SEAL-RECTANGULAR	
	16	1	**1P-3703**	2	SEAL-RECTANGULAR	
	17	1	**1P-5765**	4	FLANGE-HALF	
	18	1	**2P-1293**	2	LOCKNUT (1-3/16-12-THD)	
M	19	1	**7X-2544**	4	BOLT (M10X1.5X104-MM)	
M	20	1	**7X-7900**	2	BOLT (M30X3.5X50-MM)	
	21	1	**7Y-4868**	2	CLIP	
	22	1	**8T-4121**	16	WASHER-HARD (11X21X2.5-MM THK)	
M	23	1	**8T-4139**	6	BOLT (M12X1.75X30-MM)	
M	24	1	**8T-4182**	6	BOLT (M10X1.5X45-MM)	
M	25	1	**8T-4185**	6	BOLT (M10X1.5X50-MM)	
M	26	1	**8T-4196**	12	BOLT (M10X1.5X35-MM)	
	27	1	**8T-4223**	6	WASHER-HARD (13.5X25.5X3-MM THK)	

I-REFER TO HYDRAULIC INFORMATION SYSTEM
M-METRIC PART
Y-SEPARATE ILLUSTRATION

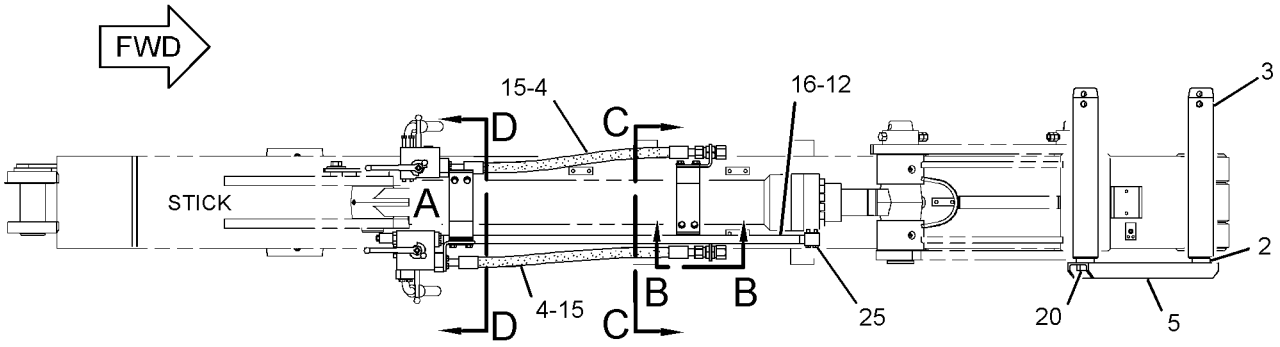

TOP VIEW

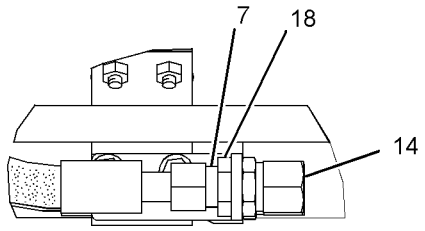

VIEW B-B

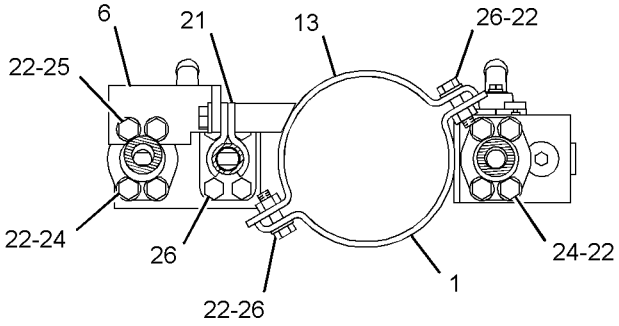

SECTION D-D

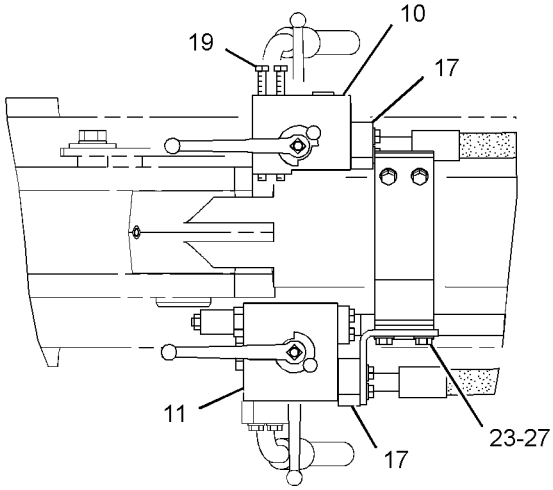

VIEW OF AREA A

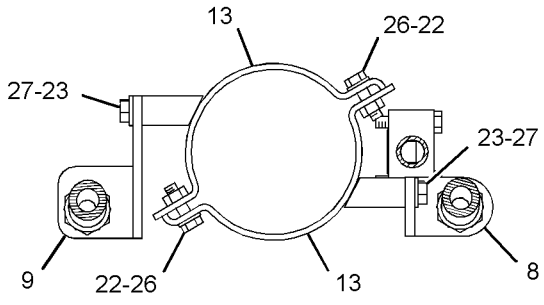

SECTION C-C

GRAPHIC #1 **<END>** g01524208

242-6478 LINES GP-COUPLER–REACH BOOM

S/N: WNE1-UP; ZMF1-UP; CWG1-UP
PART OF 347-9909, 347-9910, 347-9911, 347-9912 OPTION AR-HYDRAULIC
AN ATTACHMENT

SMCS-5057, 5133 **i03636754**

NOTE	REF NO	GRAPHIC REF	PART NUMBER	QTY	PART NAME 1 2 3 4 5 6 (PRODUCT LEVEL)	SEE PAGE
	1	1	**5Q-4213**	14	CLIP	
	2	1	**153-8839**	1	PLATE	
	3	1	**247-9164**	1	TUBE AS	
	4	1	**247-9169**	1	TUBE AS	
	5	1	**247-9173**	1	TUBE AS	
	6	1	**247-9177**	1	TUBE AS	
	7	1	**247-9181**	1	TUBE AS	
	8	1	**247-9294**	2	SUPPORT AS	
	9	1	**262-3589**	1	TUBE AS	
	10	1	**135-3980**	2	CLIP	
	11	1	**5Q-4212**	4	CLIP	
	12	1	**6V-8398**	8	SEAL-O-RING	
M	13	1	**8T-4139**	18	BOLT (M12X1.75X30-MM)	
M	14	1	**8T-4184**	4	BOLT (M12X1.75X45-MM)	
	15	1	**8T-4223**	24	WASHER-HARD (13.5X25.5X3-MM THK)	
M	16	1	**8T-4244**	18	NUT (M12X1.75-THD)	
M	17	1	**8T-6868**	2	BOLT (M12X1.75X80-MM)	

M-METRIC PART

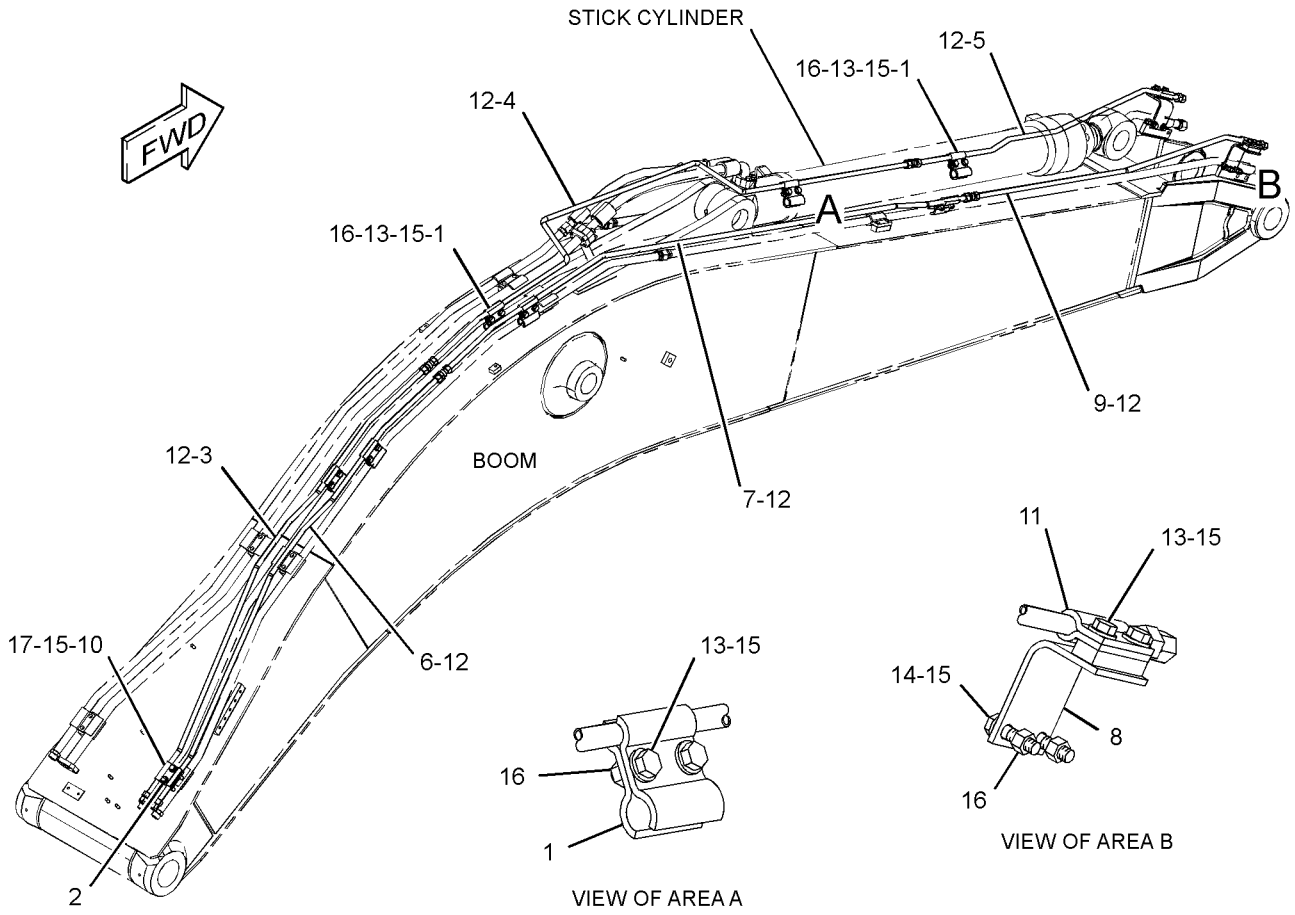

GRAPHIC #1 **<END>** g01952765

HYDRAULIC SYSTEM

242-6482 LINES GP-COUPLER—MASS BOOM

S/N: CWG1-UP

AN ATTACHMENT

SMCS-5057, 5133 **i02423685**

NOTE	REF NO	GRAPHIC REF	PART NUMBER	QTY	PART NAME 1 2 3 4 5 6 (PRODUCT LEVEL)	SEE PAGE
	1	1	**5Q-4213**	14	CLIP	
	2	1	**153-8839**	1	PLATE	
	3	1	**247-9294**	2	SUPPORT AS	
	4	1	**268-6971**	1	TUBE AS	
	5	1	**268-6974**	1	TUBE AS	
	6	1	**268-6977**	1	TUBE AS	
	7	1	**268-6980**	1	TUBE AS	
	8	1	**268-6983**	1	TUBE AS	
	9	1	**268-6986**	1	TUBE AS	
	10	1	**135-3980**	2	CLIP	
	11	1	**5Q-4212**	4	CLIP	
	12	1	**6V-8398**	8	SEAL-O-RING	
M	13	1	**8T-4139**	18	BOLT (M12X1.75X30-MM)	
M	14	1	**8T-4184**	4	BOLT (M12X1.75X45-MM)	
	15	1	**8T-4223**	24	WASHER-HARD (13.5X25.5X3-MM THK)	
M	16	1	**8T-4244**	18	NUT (M12X1.75-THD)	
M	17	1	**8T-6868**	2	BOLT (M12X1.75X80-MM)	

M-METRIC PART

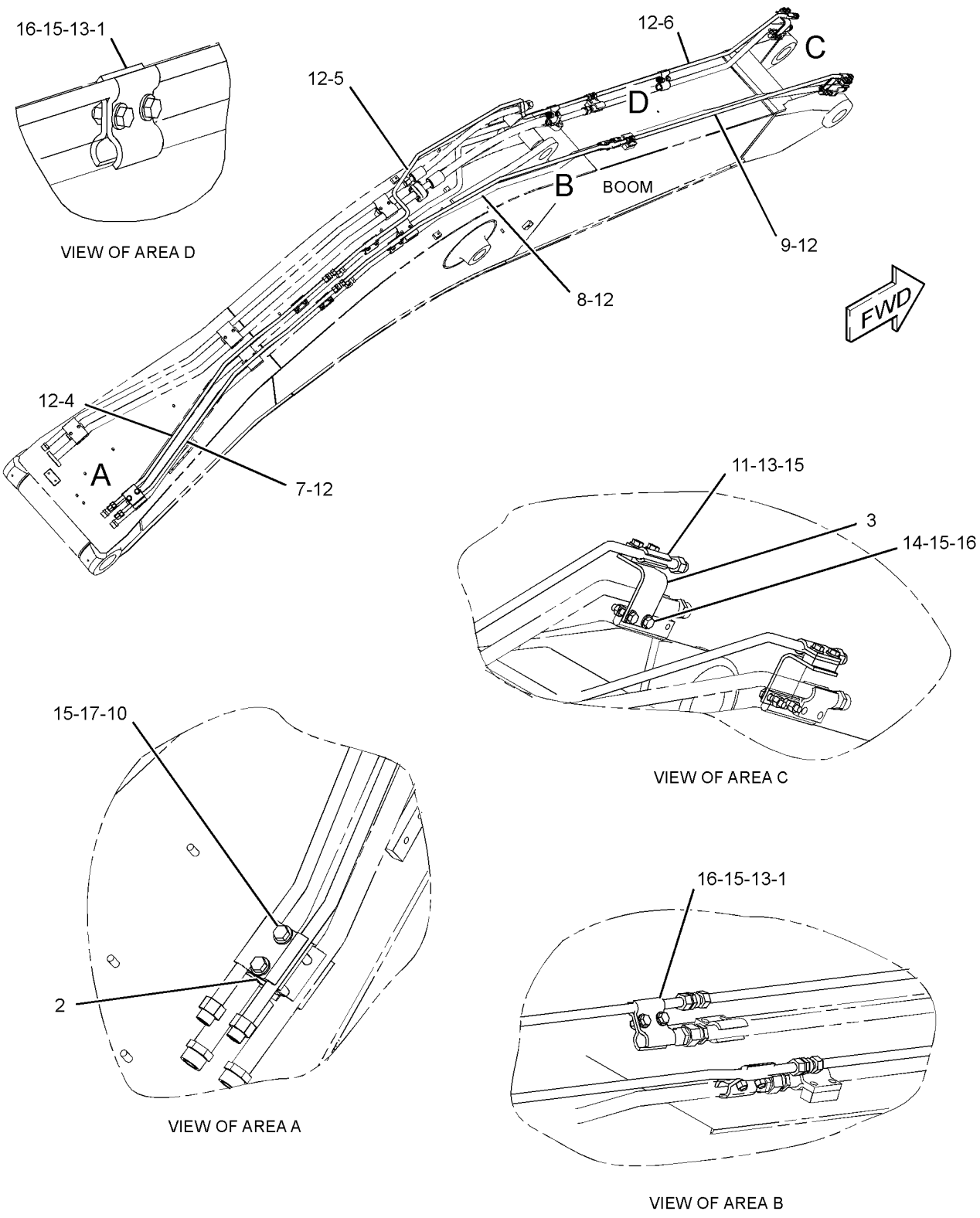

GRAPHIC #1 **<END>** g01230965

HYDRAULIC SYSTEM

242-6490 LINES GP-COUPLER

S/N: WNE1-UP; ZMF1-UP; CWG1-UP
PART OF 347-9909, 347-9911 OPTION AR-HYDRAULIC
FOR USE WITH 2.92-M (9.6-FT) STICK
AN ATTACHMENT

SMCS-5057, 5133 **i02421143**

NOTE	REF NO	GRAPHIC REF	PART NUMBER	QTY	PART NAME 1 2 3 4 5 6 (PRODUCT LEVEL)	SEE PAGE
	1	1	**9X-6582**	1	NUT (13/16-16-THD)	
	2	1	**253-6548**	1	TUBE AS	
	3	1	**253-6551**	1	TUBE AS	
I	4	1	**262-3390**	2	HOSE AS	
	5	1	*148-8415*	1	REDUCER AS	
		1	**6V-8397**	1	SEAL-O-RING	
		1	**6V-8936**	1	REDUCER	
	6	1	*148-8419*	1	REDUCER AS	
		1	**4J-5477**	1	SEAL-O-RING	
		1	**6V-8935**	1	REDUCER-O-RING	
	7	1	**5Q-4212**	12	CLIP	
	8	1	**6V-8398**	4	SEAL-O-RING	
	9	1	**8T-4223**	12	WASHER-HARD (13.5X25.5X3-MM THK)	
M	10	1	**8T-4956**	12	BOLT (M12X1.75X35-MM)	

I-REFER TO HYDRAULIC INFORMATION SYSTEM
M-METRIC PART

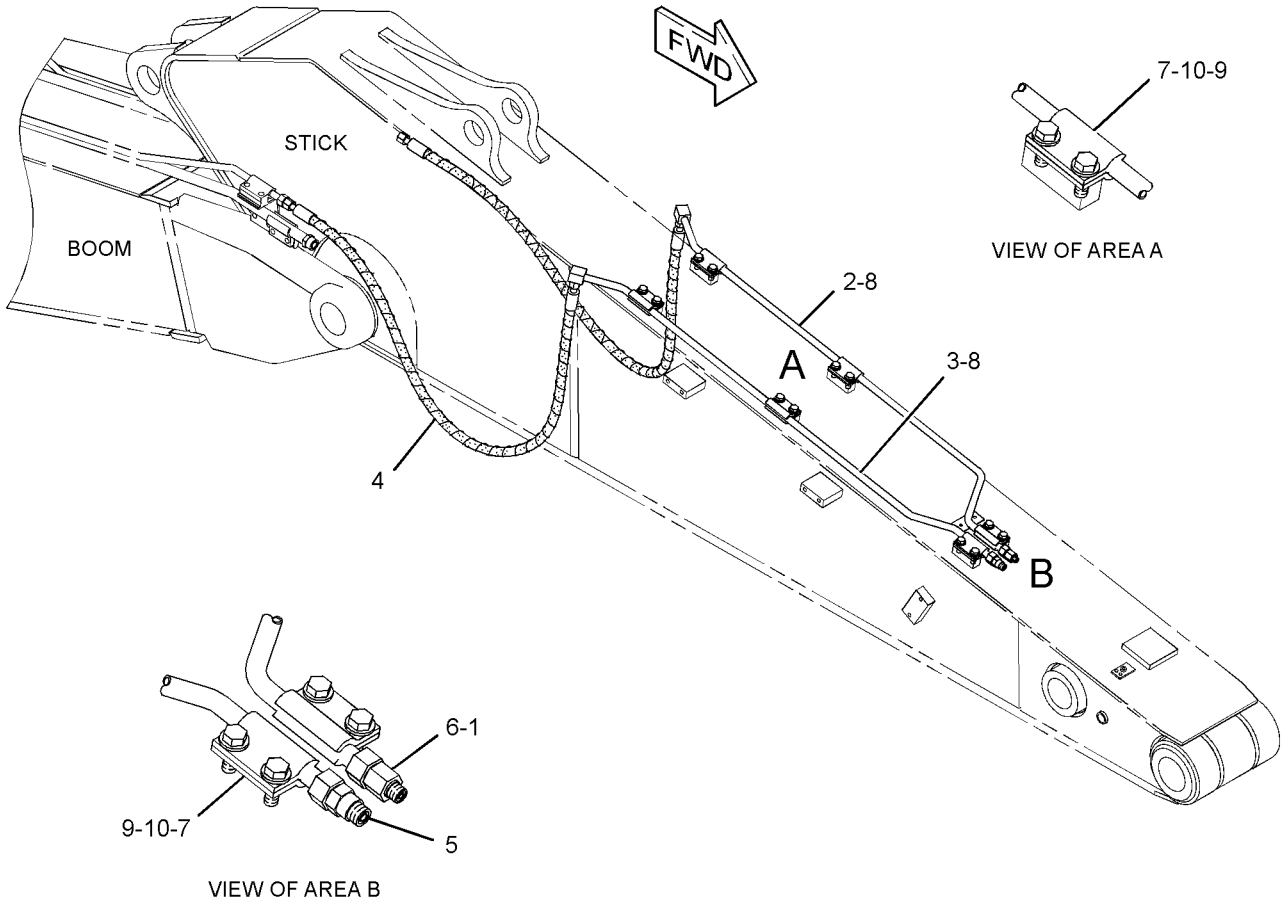

GRAPHIC #1 **<END>** g01217350

HYDRAULIC SYSTEM

242-6494 LINES GP-COUPLER

S/N: WNE1-UP; ZMF1-UP; CWG1-UP
2.4 TO 2.5-M (7.9 TO 8.2-FT) STICK
PART OF 347-9910, 347-9912 OPTION AR-HYDRAULIC
AN ATTACHMENT

SMCS-5057, 5133 **i02406059**

NOTE	REF NO	GRAPHIC REF	PART NUMBER	QTY	PART NAME 1 2 3 4 5 6 (PRODUCT LEVEL)	SEE PAGE
	1	1	**9X-6582**	1	NUT (13/16-16-THD)	
I	2	1	**210-9966**	2	HOSE AS	
	3	1	**253-6688**	1	TUBE AS	
	4	1	**253-6691**	1	TUBE AS	
	5	1	*148-8415*	1	REDUCER AS	
		1	**6V-8397**	1	SEAL-O-RING	
		1	**6V-8936**	1	REDUCER	
	6	1	*148-8419*	1	REDUCER AS	
		1	**4J-5477**	1	SEAL-O-RING	
		1	**6V-8935**	1	REDUCER-O-RING	
	7	1	**5Q-4212**	12	CLIP	
	8	1	**6V-8398**	4	SEAL-O-RING	
	9	1	**8T-4223**	12	WASHER-HARD (13.5X25.5X3-MM THK)	
M	10	1	**8T-4956**	12	BOLT (M12X1.75X35-MM)	

I-REFER TO HYDRAULIC INFORMATION SYSTEM
M-METRIC PART

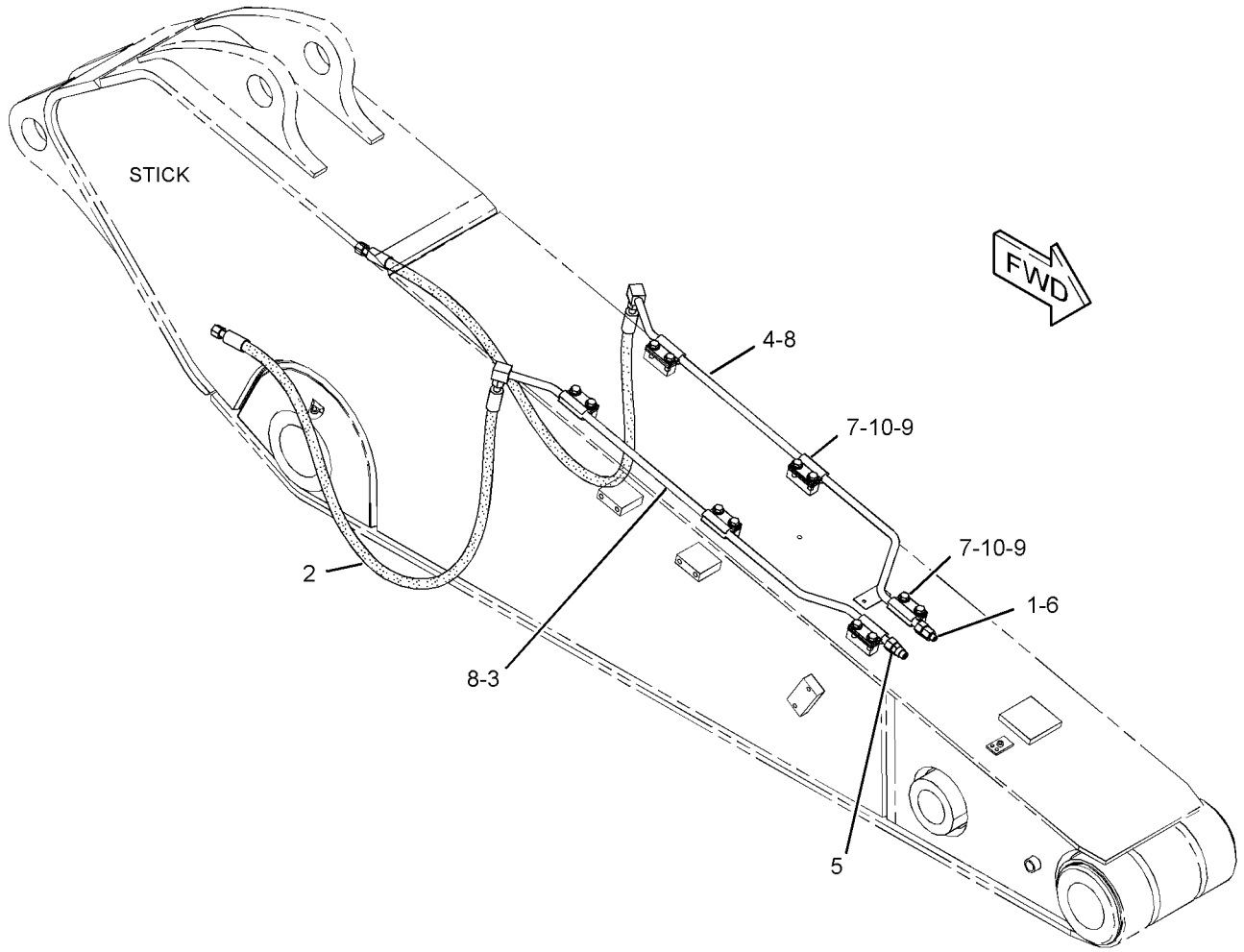

GRAPHIC #1 **<END>** g01236506

HYDRAULIC SYSTEM

253-6592 LINES GP-COUPLER

S/N: CWG1-UP
1.9 TO 2.0-M (6.2 TO 6.6-FT) STICK
AN ATTACHMENT

SMCS-5057, 5133 **i02406916**

NOTE	REF NO	GRAPHIC REF	PART NUMBER	QTY	PART NAME 1 2 3 4 5 6 (PRODUCT LEVEL)	SEE PAGE
	1	1	**9X-6582**	1	NUT (13/16-16-THD)	
I	2	1	**210-9935**	2	HOSE AS	
	3	1	**262-3152**	1	TUBE AS	
	4	1	**262-3155**	1	TUBE AS	
	5	1	*148-8415*	1	REDUCER AS	
		1	**6V-8397**	1	SEAL-O-RING	
		1	**6V-8936**	1	REDUCER	
	6	1	*148-8419*	1	REDUCER AS	
		1	**4J-5477**	1	SEAL-O-RING	
		1	**6V-8935**	1	REDUCER-O-RING	
	7	1	**5Q-4212**	8	CLIP	
	8	1	**6V-8398**	4	SEAL-O-RING	
	9	1	**8T-4223**	8	WASHER-HARD (13.5X25.5X3-MM THK)	
M	10	1	**8T-4956**	8	BOLT (M12X1.75X35-MM)	

I-REFER TO HYDRAULIC INFORMATION SYSTEM
M-METRIC PART

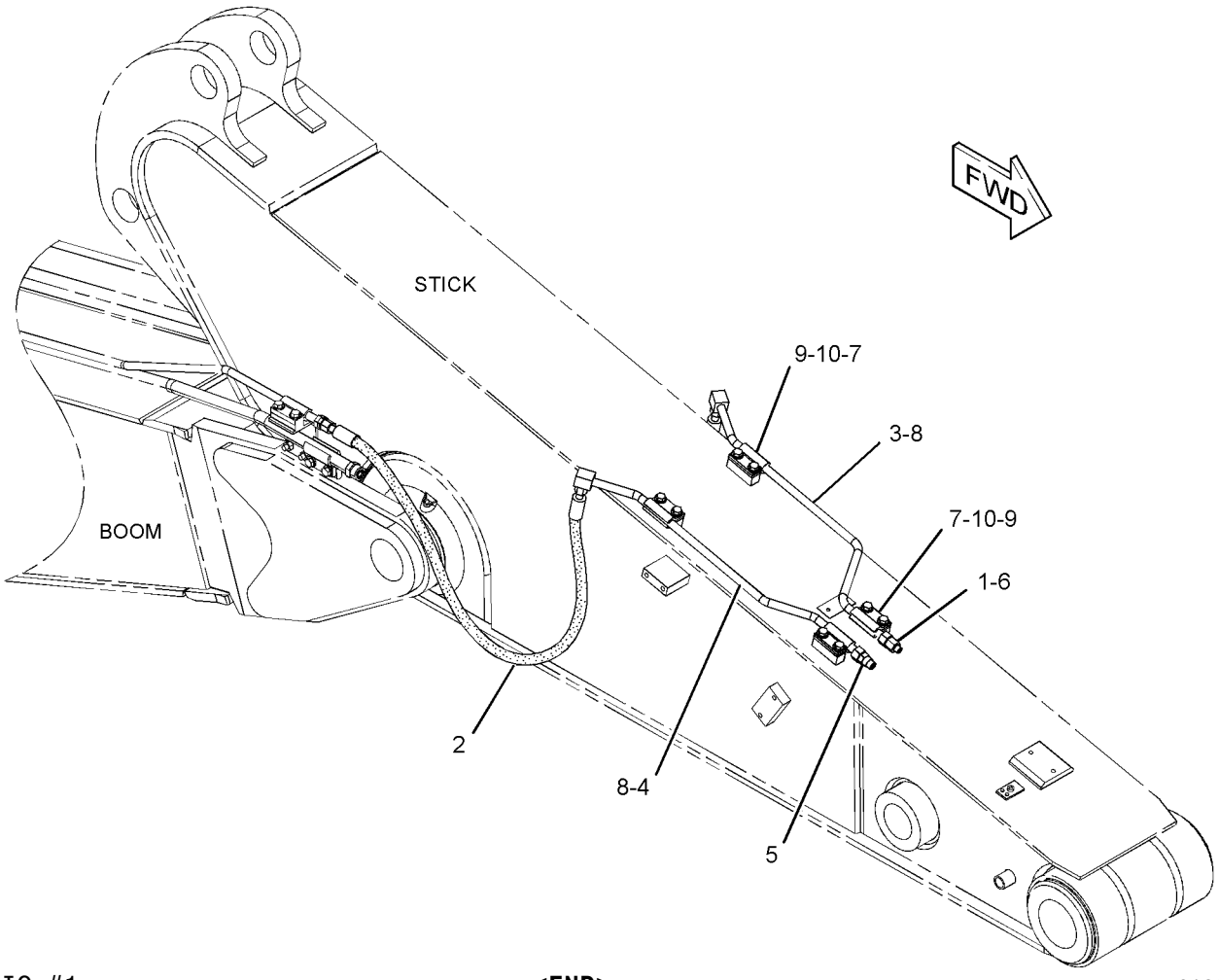

GRAPHIC #1 **<END>** g01206386

HYDRAULIC SYSTEM

335-4978 LINES GP-COUPLER—VARIABLE ADJUSTABLE BOOM

S/N: CWG1-UP

AN ATTACHMENT

SMCS-5057, 5133 **i03646923**

NOTE	REF NO	GRAPHIC REF	PART NUMBER	QTY	PART NAME 1 2 3 4 5 6 (PRODUCT LEVEL)	SEE PAGE
	1	1	**7K-1181**	14	STRAP-CABLE	
	2	1	**179-5235**	1	CLIP	
	3	1	**197-2150**	3	PLATE	
	4	1	**247-9294**	2	SUPPORT AS	
	5	1	**282-5741**	1	CLAMP AS-LOWER	
	6	1	**294-6306**	1	TUBE AS	
	7	1	**335-5055**	1	SUPPORT AS	
	8	1	**335-5056**	1	SUPPORT AS	
	9	1	**335-5057**	1	TUBE AS	
	10	1	**335-5060**	1	HOSE AS	
	11	1	**335-5063**	1	HOSE AS	
	12	1	**335-5066**	2	HOSE AS	
	13	1	*148-8457*	4	UNION AS	
					(EACH INCLUDES)	
		1	**6V-8398**	2	SEAL-O-RING	
		1	**6V-8995**	1	UNION	
	14	1	**5Q-4212**	10	CLIP	
	15	1	**6V-8398**	4	SEAL-O-RING	
	16	1	**6V-9169**	4	NUT-BULKHEAD (13/16-16-THD)	
M	17	1	**8T-4139**	6	BOLT (M12X1.75X30-MM)	
M	18	1	**8T-4184**	8	BOLT (M12X1.75X45-MM)	
	19	1	**8T-4223**	20	WASHER-HARD (13.5X25.5X3-MM THK)	
M	20	1	**8T-5412**	4	BOLT (M12X1.75X140-MM)	
M	21	1	**8T-6868**	2	BOLT (M12X1.75X80-MM)	

M-METRIC PART

335-4978 **LINES GP-COUPLER** *(contd.)* **i03646923**

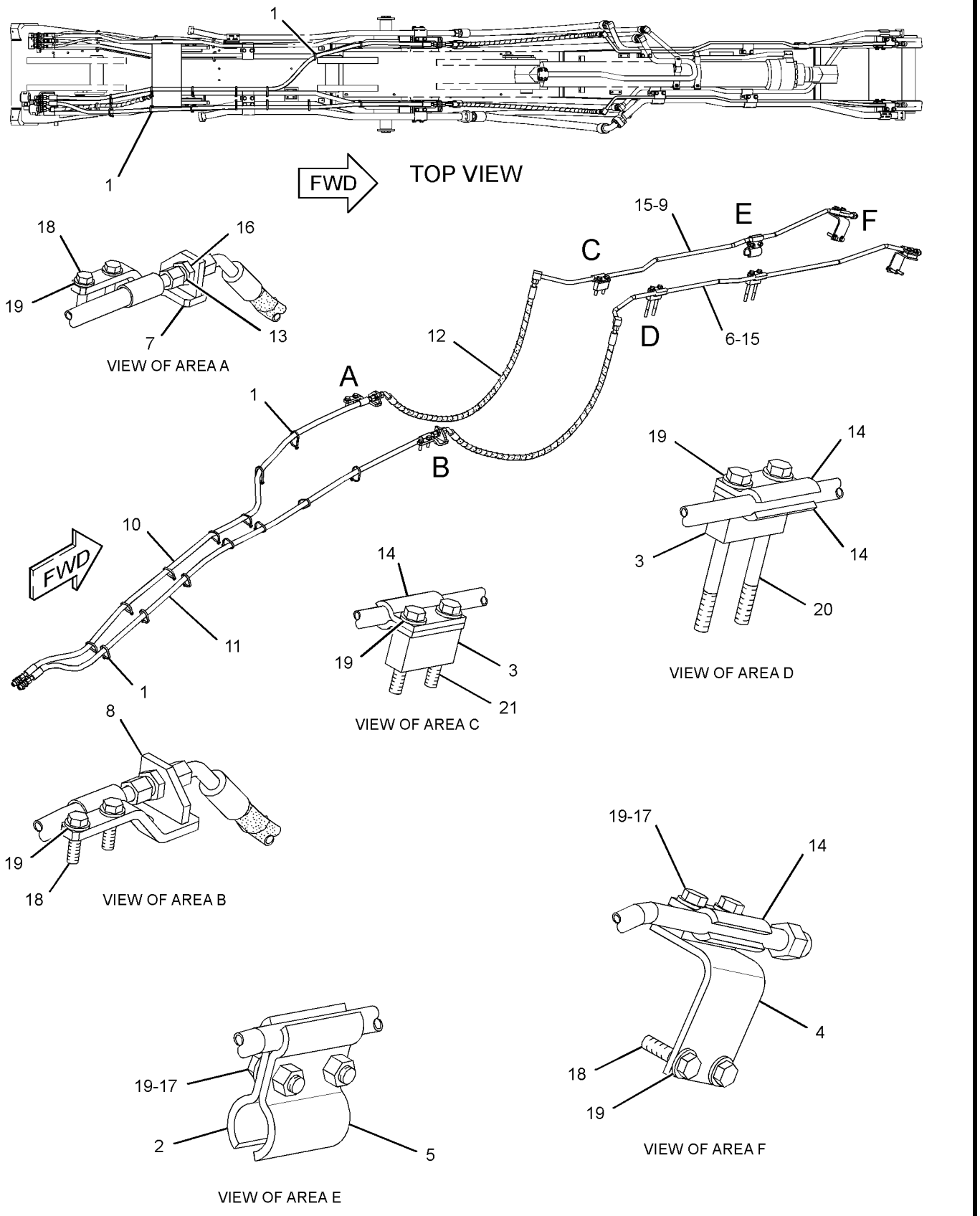

GRAPHIC #1 **<END>** g01960770

HYDRAULIC SYSTEM

239-1714 LINES GP-FRONT

S/N: WNE1-UP; ZMF1-UP

PART OF 270-5712, 270-5713 HYDRAULIC AR

SMCS-5057 **i03439344**

NOTE	REF NO	GRAPHIC REF	PART NUMBER	QTY	PART NAME 1 2 3 4 5 6 (PRODUCT LEVEL)	SEE PAGE
	1	1	**7Y-3730**	2	FLANGE-SPECIAL	
M	2	1	**101-7403**	2	BOLT-SOCKET HEAD (M10X1.5X80-MM)	
M	3	1	**105-3477**	8	BOLT-SOCKET HEAD (M10X1.5X45-MM)	
M	4	1	**105-3483**	2	BOLT-SOCKET HEAD (M10X1.5X70-MM)	
	5	1	**113-6479**	2	FLANGE-SPECIAL	
I	6	1	**165-3185**	1	HOSE AS	
I	7	1	**165-3190**	1	HOSE AS	
I	8	1	**337-1182**	1	HOSE AS	
Y	9	1	**194-0174**	1	HOSE GP-HYDRAULIC (CONTROL VALVE, STICK)	536
Y	10	1	**194-0180**	1	HOSE GP-HYDRAULIC (CONTROL VALVE, BOOM)	538
Y	11	1	**214-4511**	1	FITTING GP-HYDRAULIC (4-BOLT FLANGE)	527
Y	12	1	**236-3212**	1	HOSE GP-HYDRAULIC (FRONT)	541
Y	13	1	**236-3213**	1	HOSE GP-HYDRAULIC (FRONT)	541
I	14	1	**289-5672**	1	HOSE AS	
Y	15	1	**255-5680**	1	VALVE GP-LOAD CONTROL (STICK DRIFT RED, LINE RELIEF)	846
Y	16	1	**255-5683**	1	VALVE GP-LOAD CONTROL (BOOM DRIFT RED, LINE RELIEF)	848
Y	17	1	**260-7910**	1	HOSE GP-HYDRAULIC (FRONT)	542
I	18	1	**260-7988**	1	HOSE AS	
I	19	1	**260-7992**	1	HOSE AS	
I	20	1	**260-7996**	1	HOSE AS	
I	21	1	**260-8000**	1	HOSE AS	
M	22	1	**101-7397**	4	BOLT-SOCKET HEAD (M12X1.75X50-MM)	
M	23	1	**101-7404**	42	BOLT-SOCKET HEAD (M10X1.5X30-MM)	
M	24	1	**199-1286**	6	BOLT-SOCKET HEAD (M10X1.5X150-MM)	
	25	1	**1P-3702**	4	SEAL-RECTANGULAR	
	26	1	**1P-3703**	9	SEAL-RECTANGULAR	
	27	1	**4J-5267**	10	SEAL-O-RING	
	28	1	**4J-5268**	1	SEAL-O-RING	
	29	1	**5K-9090**	5	SEAL-O-RING	
	30	1	**6V-0400**	4	FLANGE-HALF	
	31	1	**8T-4121**	8	WASHER-HARD (11X21X2.5-MM THK)	
M	32	1	**8T-4194**	4	BOLT (M12X1.75X50-MM)	
	33	1	**8T-4223**	8	WASHER-HARD (13.5X25.5X3-MM THK)	
	34	1	**8T-9403**	4	FLANGE-HALF	

I-REFER TO HYDRAULIC INFORMATION SYSTEM
M-METRIC PART
Y-SEPARATE ILLUSTRATION

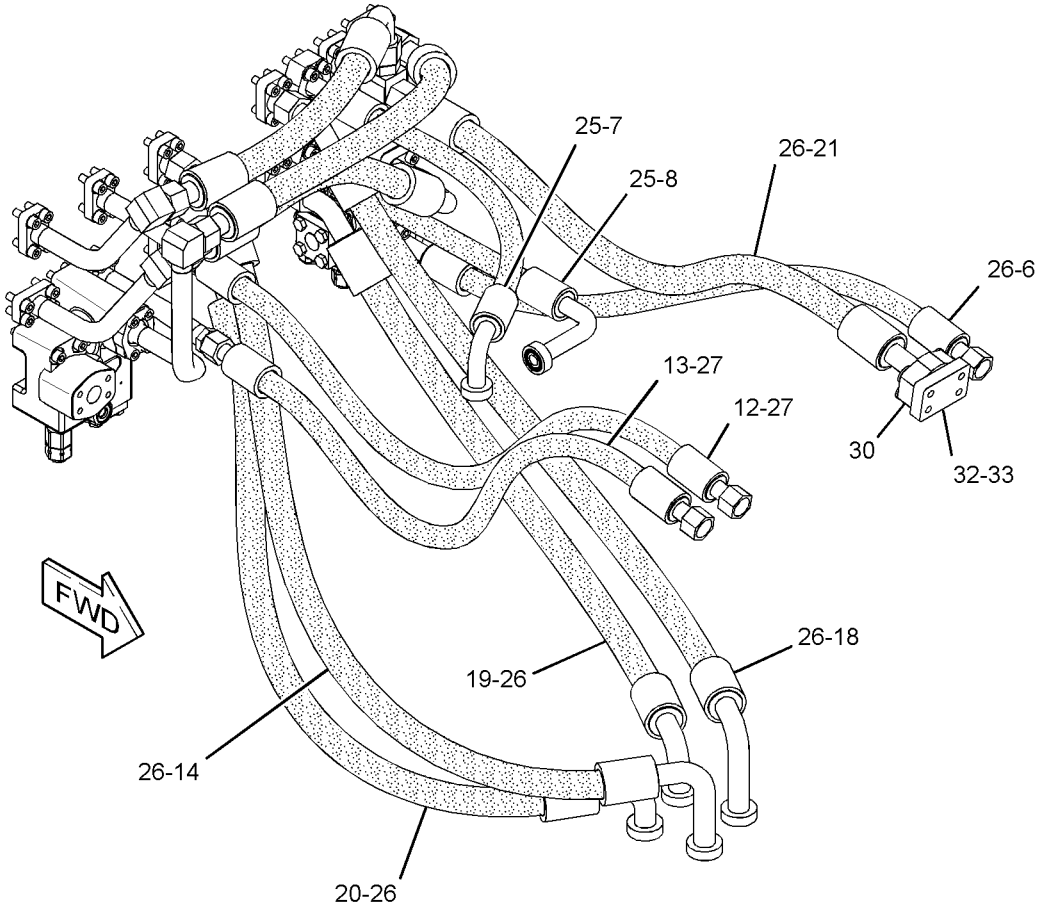

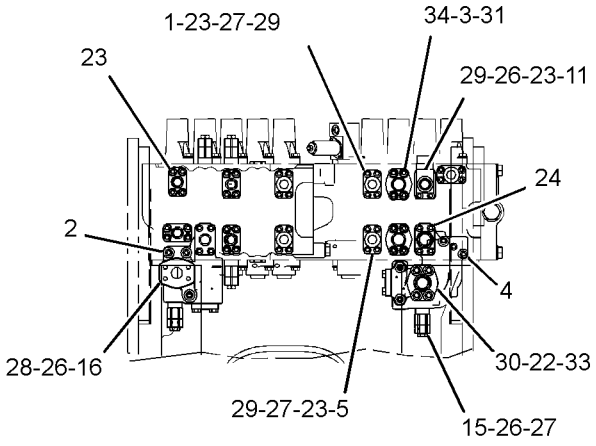

VIEW A-A
(HOSES REMOVED)

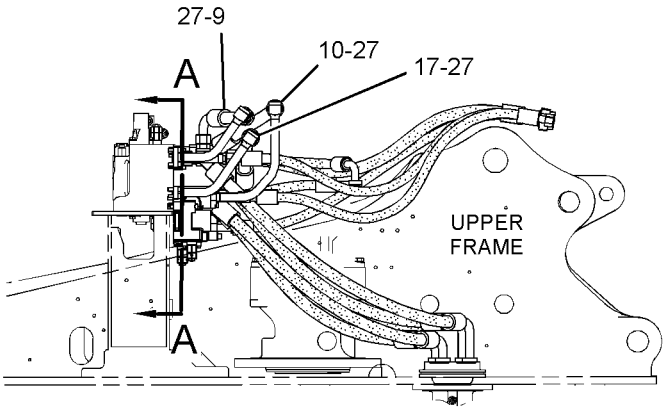

RIGHT SIDE VIEW

GRAPHIC #1 **<END>** g01806235

HYDRAULIC SYSTEM

260-8013 LINES GP-FRONT—SYSTEM 16, 1-WAY, 2-PUMP

S/N: WNE1-UP; ZMF1-UP
PART OF 259-7499 CONTROL AR-AUXILIARY
AN ATTACHMENT

SMCS-5057 **i03087033**

NOTE	REF NO	GRAPHIC REF	PART NUMBER	QTY	PART NAME 1 2 3 4 5 6 (PRODUCT LEVEL)	SEE PAGE
	1	2	**7Y-3731**	1	FLANGE	
M	2	2	**105-3477**	4	BOLT-SOCKET HEAD (M10X1.5X45-MM)	
Y	3	2	**177-2653**	1	VALVE GP-RELIEF (WITH BLOCK)	869
	4	2	**187-5853**	1	BLOCK	
I	5	1	**187-6974**	1	HOSE AS	
	6	2	**212-5148**	1	BLOCK	
	7	2	**255-1936**	1	BLOCK	
	8	2	**260-8043**	1	BLOCK	
	9	2	**296-7069**	1	SUPPORT AS	
	10	2	**296-7067**	1	SUPPORT AS	
	11	2	**266-0912**	1	BRACKET	
	12	2	**266-0913**	1	SUPPORT AS	
	13	2	**325-8865**	1	SUPPORT AS	
	14	2	**266-1278**	1	BLOCK	
	15	2	**266-1279**	1	FLANGE	
I	16	1	**266-1303**	1	HOSE AS	
I	17	1	**317-4712**	1	HOSE AS	
	18	2	**275-1439**	1	BLOCK	
	19	1	**278-6433**	1	TUBE AS	
I	20	1	**278-6435**	1	HOSE AS	
	21	2	**278-6811**	1	SUPPORT AS	
	22	2	**099-8232**	1	SEAL-O-RING	
M	23	2	**101-7401**	4	BOLT-SOCKET HEAD (M10X1.5X20-MM)	
M	24	2	**101-7404**	4	BOLT-SOCKET HEAD (M10X1.5X30-MM)	
	25	1	*148-8334*	1	CONNECTOR AS	
		1	**2S-4078**	1	SEAL-O-RING	
		1	**6V-8400**	1	SEAL-O-RING	
		1	**8T-3611**	1	CONNECTOR	
	26	1	*148-8335*	1	CONNECTOR AS	
		1	**5K-9090**	1	SEAL-O-RING	
		1	**6V-8635**	1	CONNECTOR	
		1	**7M-8485**	1	SEAL-O-RING	
	27	2	*148-8347*	1	ELBOW AS	
		2	**3D-2824**	1	SEAL-O-RING	
		2	**6V-9007**	1	ELBOW	
		2	**6V-9746**	1	SEAL-O-RING	
	28	2	*148-8355*	1	ELBOW AS	
		2	**5K-9090**	1	SEAL-O-RING	
		2	**6V-9005**	1	ELBOW	
		2	**7M-8485**	1	SEAL-O-RING	
	29	1	*153-6237*	1	ELBOW AS	
		1	**3D-2824**	1	SEAL-O-RING	
		1	**6V-9004**	1	ELBOW	
		1	**6V-9746**	1	SEAL-O-RING	
	30	2	*164-4180*	1	PLUG AS	
		2	**7M-8485**	1	SEAL-O-RING	
		2	**9S-4181**	1	PLUG-O-RING	
	31	2	**1P-3702**	3	SEAL-RECTANGULAR	
	32	2	**1P-3703**	3	SEAL-RECTANGULAR	
	33	2	**1P-4578**	2	FLANGE-HALF	
M	34	2	**280-2747**	4	BOLT-SOCKET HEAD (M10X1.5X60-MM)	
	35	1	**4J-0522**	1	SEAL-O-RING	
	36	1	**4J-0524**	1	SEAL-O-RING	
	37	2	**5K-9090**	1	SEAL-O-RING	
	38	1	**5P-7470**	2	CLIP (SLOT)	

260-8013 **LINES GP-FRONT** *(contd.)* **i03087033**

NOTE	REF NO	GRAPHIC REF	PART NUMBER	QTY	PART NAME 1 2 3 4 5 6 (PRODUCT LEVEL)	SEE PAGE
	39	1	**5P-7471**	2	CLIP (TAB)	
	40	1	**5P-8182**	2	GROMMET	
	41	2	**8T-4121**	12	WASHER-HARD (11X21X2.5-MM THK)	
M	42	2	**8T-4136**	6	BOLT (M10X1.5X25-MM)	
M	43	2	**8T-4176**	4	BOLT (M12X1.75X90-MM)	
M	44	2	**8T-4196**	6	BOLT (M10X1.5X35-MM)	
	45	1,2	**8T-4223**	26	WASHER-HARD (13.5X25.5X3-MM THK)	
M	46	1,2	**8T-4956**	6	BOLT (M12X1.75X35-MM)	
M	47	2	**8T-5092**	8	BOLT (M12X1.75X150-MM)	
M	48	1	**8T-6868**	4	BOLT (M12X1.75X80-MM)	
Y	49	1	**201-9329**	1	VALVE GP-CHECK	815
M	50	2	**8T-4183**	8	BOLT (M12X1.75X40-MM)	
	51	2	*148-8330*	1	CONNECTOR AS	
		2	**5K-9090**	1	SEAL-O-RING	
		2	**7M-8485**	1	SEAL-O-RING	
		2	**8T-0198**	1	CONNECTOR	

I-REFER TO HYDRAULIC INFORMATION SYSTEM
M-METRIC PART
Y-SEPARATE ILLUSTRATION

REFER TO ALL ILLUSTRATIONS OF THIS GROUP FOR AUXILIARY VIEWS.

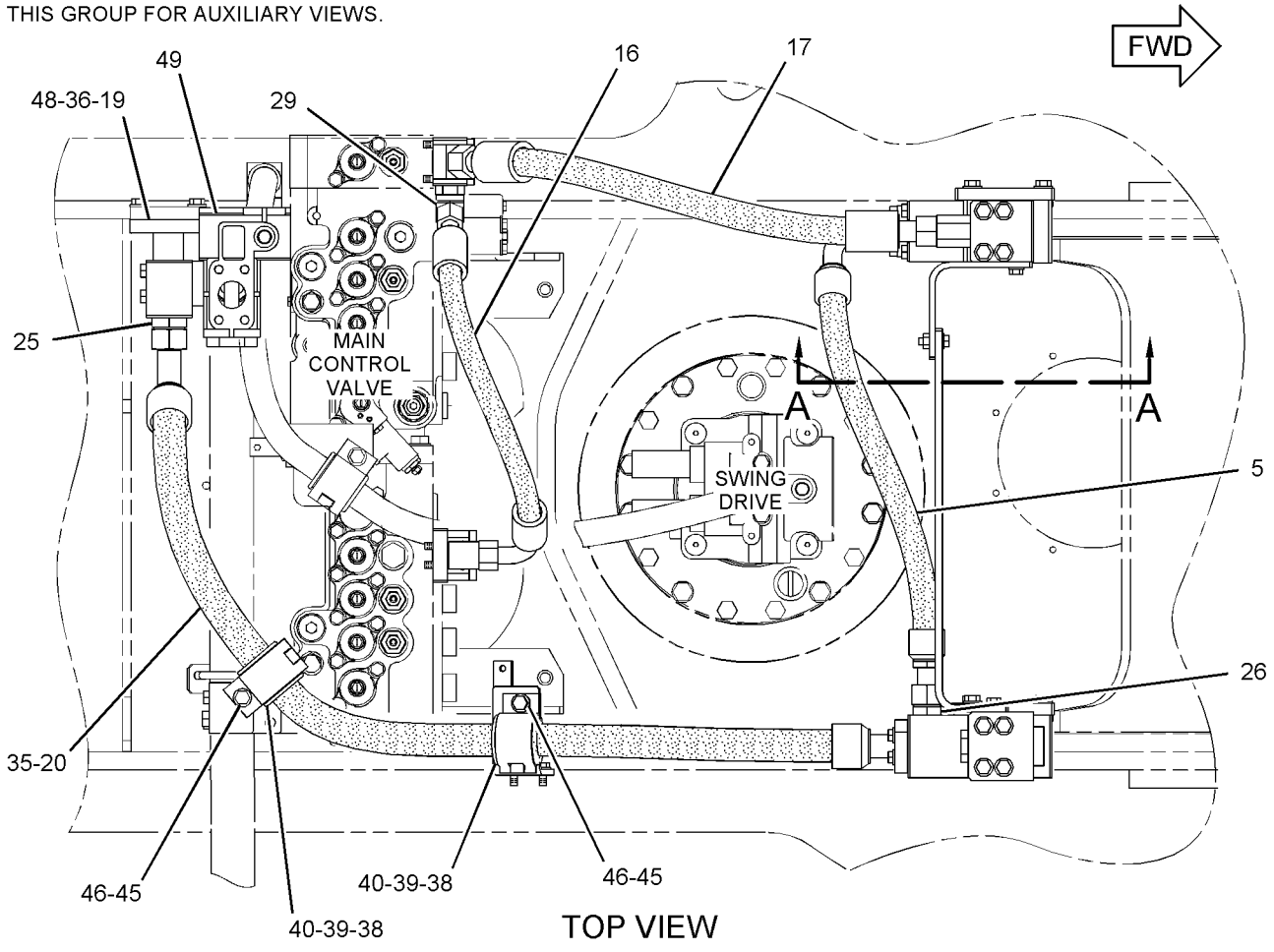

GRAPHIC #1 g01627299

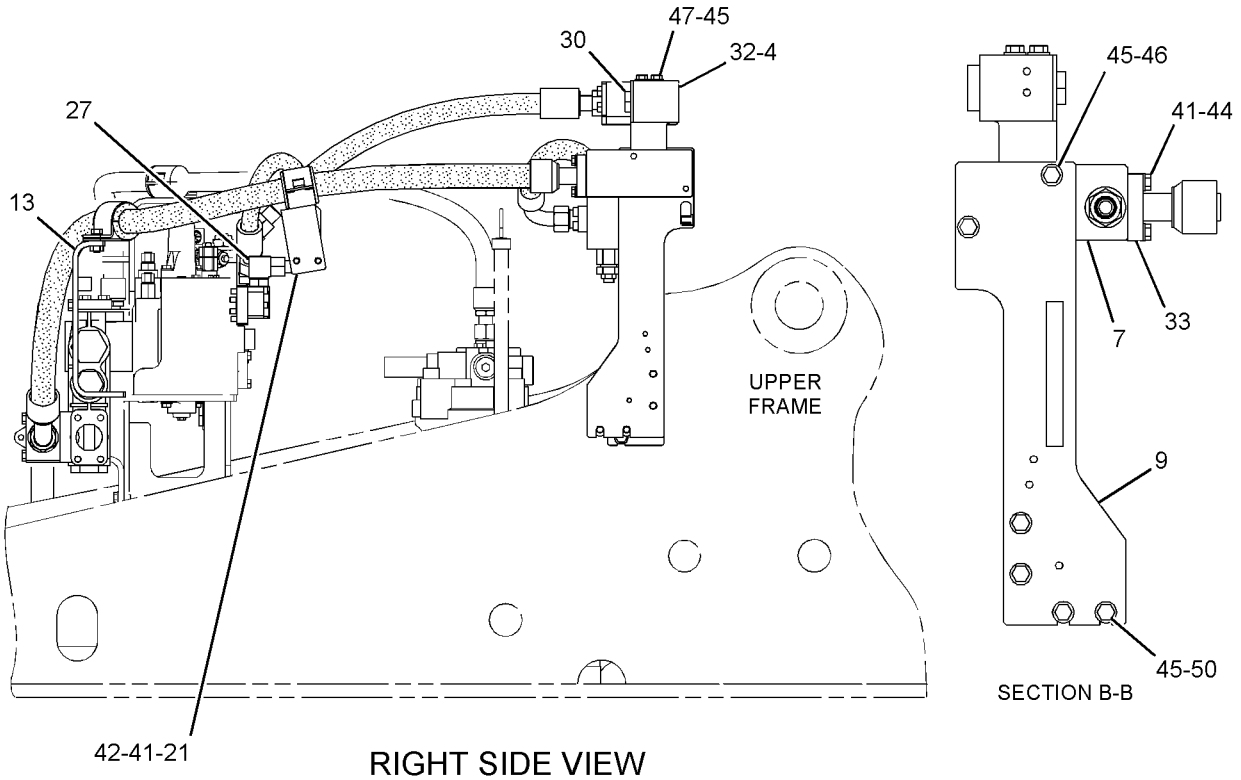

RIGHT SIDE VIEW

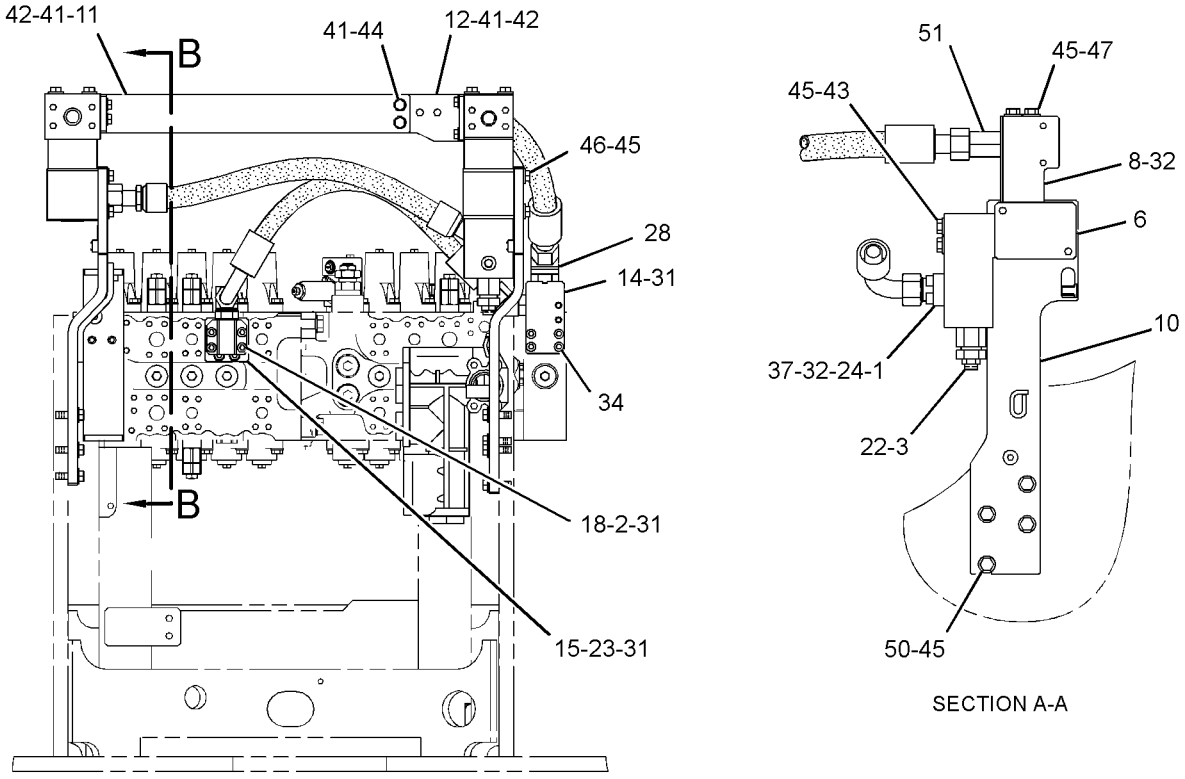

FRONT VIEW

GRAPHIC #2 **<END>** g01624064

HYDRAULIC SYSTEM

260-8014 LINES GP-FRONT—SYSTEM 17, COMBINED FN, MED PR

S/N: WNE1-UP; ZMF1-UP
PART OF 297-0497 CONTROL AR-AUXILIARY
AN ATTACHMENT

SMCS-5057 **i03162714**

NOTE	REF NO	GRAPHIC REF	PART NUMBER	QTY	PART NAME 1 2 3 4 5 6 (PRODUCT LEVEL)	SEE PAGE
	1	2	**7Y-3731**	1	FLANGE	
M	2	2	**105-3477**	4	BOLT-SOCKET HEAD (M10X1.5X45-MM)	
M	3	2	**105-3483**	4	BOLT-SOCKET HEAD (M10X1.5X70-MM)	
I	4	1	**184-9469**	1	HOSE AS	
	5	2	**187-7077**	1	BLOCK	
Y	6	1	**201-9329**	1	VALVE GP-CHECK	815
I	7	2	**204-8393**	1	HOSE AS	
CY	8	2	**323-7558**	2	VALVE GP-SOLENOID & RELIEF (WITH BLOCK) (1-WAY/2-WAY FLOW)	897
	9	2	**260-8043**	1	BLOCK	
	10	2	**266-0912**	1	BRACKET	
	11	2	**266-0913**	1	SUPPORT AS	
	12	1	**325-8865**	1	SUPPORT AS	
	13	1	**266-1266**	1	BLOCK	
	14	2	**266-1278**	1	BLOCK	
	15	2	**266-1279**	1	FLANGE	
I	16	1	**266-1303**	1	HOSE AS	
I	17	1	**317-4712**	1	HOSE AS	
I	18	1	**266-1315**	1	HOSE AS	
	19	2	*268-5145*	1	ELBOW AS	
		2	**3D-2824**	1	SEAL-O-RING	
		2	**6V-9746**	1	SEAL-O-RING	
		2	**194-9041**	1	ELBOW	
	20	2	**269-9976**	1	FLANGE	
	21	2	**275-1439**	1	BLOCK	
	22	2	**275-1440**	1	BLOCK	
	23	2	**278-6428**	1	SUPPORT AS	
	24	2	**278-6433**	1	TUBE AS	
	25	1	**278-6811**	1	SUPPORT AS	
I	26	1	**294-6534**	1	HOSE AS	
	27	2	**296-7067**	1	SUPPORT AS	
	28	2	**296-7408**	1	BLOCK	
	29	2	**296-7409**	1	BLOCK	
	30	1	**296-7410**	1	SUPPORT	
Y	31	2	**297-0370**	3	VALVE GP-CHECK (1-WAY/2-WAY, CHECK)	816
I	32	2	**302-2900**	1	HOSE AS	
I	33	1	**302-2903**	1	HOSE AS	
	34	2	**099-8232**	2	SEAL-O-RING	
M	35	2	**101-7401**	8	BOLT-SOCKET HEAD (M10X1.5X20-MM)	
M	36	2	**101-7404**	8	BOLT-SOCKET HEAD (M10X1.5X30-MM)	
M	37	2	**108-4282**	4	BOLT-SOCKET HEAD (M10X1.5X100-MM)	
	38	2	*148-8327*	1	CONNECTOR AS	
		2	**3D-2824**	1	SEAL-O-RING	
		2	**6V-9746**	1	SEAL-O-RING	
		2	**6V-8637**	1	CONNECTOR	
	39	2	*148-8334*	1	CONNECTOR AS	
		2	**2S-4078**	1	SEAL-O-RING	
		2	**6V-8400**	1	SEAL-O-RING	
		2	**8T-3611**	1	CONNECTOR	
	40	2	*148-8335*	2	CONNECTOR AS	
					(EACH INCLUDES)	
		2	**5K-9090**	1	SEAL-O-RING	
		2	**6V-8635**	1	CONNECTOR	
		2	**7M-8485**	1	SEAL-O-RING	
	41	1	*148-8347*	1	ELBOW AS	

260-8014 **LINES GP-FRONT** *(contd.)* **i03162714**

NOTE	REF NO	GRAPHIC REF	PART NUMBER	QTY	PART NAME 1 2 3 4 5 6 (PRODUCT LEVEL)	SEE PAGE
		1	**3D-2824**	1	SEAL-O-RING	
		1	**6V-9007**	1	ELBOW	
		1	**6V-9746**	1	SEAL-O-RING	
	42	2	*148-8352*	1	ELBOW AS	
		2	**5K-9090**	1	SEAL-O-RING	
		2	**6V-9854**	1	ELBOW	
	43	2	*148-8355*	1	ELBOW AS	
		2	**5K-9090**	1	SEAL-O-RING	
		2	**6V-9005**	1	ELBOW	
		2	**7M-8485**	1	SEAL-O-RING	
	44	2	*148-8357*	1	ELBOW AS	
		2	**5K-9090**	1	SEAL-O-RING	
		2	**6V-9008**	1	ELBOW	
		2	**7M-8485**	1	SEAL-O-RING	
	45	1	*153-6237*	1	ELBOW AS	
		1	**3D-2824**	1	SEAL-O-RING	
		1	**6V-9004**	1	ELBOW	
		1	**6V-9746**	1	SEAL-O-RING	
	46	2	*164-4180*	2	PLUG AS	
					(EACH INCLUDES)	
		2	**7M-8485**	1	SEAL-O-RING	
		2	**9S-4181**	1	PLUG-O-RING	
	47	1	*164-5574*	1	TEE AS	
		1	**3D-2824**	1	SEAL-O-RING	
		1	**6V-8784**	1	TEE-FACE SEAL	
		1	**6V-9746**	2	SEAL-O-RING	
	48	2	*164-5606*	1	CONNECTOR AS	
		2	**3D-2824**	1	SEAL-O-RING	
		2	**6V-9746**	1	SEAL-O-RING	
		2	**8T-0078**	1	CONNECTOR	
	49	2	*183-7262*	2	PLUG AS	
					(EACH INCLUDES)	
		2	**2S-4078**	1	SEAL-O-RING	
		2	**9S-8010**	1	PLUG	
	50	2	**1P-3702**	6	SEAL-RECTANGULAR	
	51	2	**1P-3703**	4	SEAL-RECTANGULAR	
	52	2	**1P-3704**	2	SEAL-RECTANGULAR	
	53	2	**1P-4578**	2	FLANGE-HALF	
M	54	2	**280-2747**	4	BOLT-SOCKET HEAD (M10X1.5X60-MM)	
	55	2	**4J-0522**	1	SEAL-O-RING	
	56	2	**4J-0524**	1	SEAL-O-RING	
	57	2	**5K-9090**	1	SEAL-O-RING	
	58	1	**5P-7470**	2	CLIP (SLOT)	
	59	1	**5P-7471**	2	CLIP (TAB)	
	60	1	**5P-8182**	2	GROMMET	
	61	2	**6V-9746**	1	SEAL-O-RING	
	62	2	**7Y-3729**	1	FLANGE	
	63	1,2	**8T-4121**	14	WASHER-HARD (11X21X2.5-MM THK)	
M	64	1,2	**8T-4136**	8	BOLT (M10X1.5X25-MM)	
M	65	1	**8T-4139**	4	BOLT (M12X1.75X30-MM)	
M	66	2	**8T-4176**	8	BOLT (M12X1.75X90-MM)	
M	67	2	**8T-4196**	6	BOLT (M10X1.5X35-MM)	
	68	1,2	**8T-4223**	42	WASHER-HARD (13.5X25.5X3-MM THK)	
M	69	1,2	**8T-4956**	6	BOLT (M12X1.75X35-MM)	
M	70	2	**8T-5092**	8	BOLT (M12X1.75X150-MM)	
M	71	2	**8T-6868**	12	BOLT (M12X1.75X80-MM)	
M	72	2	**8T-4183**	8	BOLT (M12X1.75X40-MM)	
	73	2	*148-8330*	1	CONNECTOR AS	
		2	**5K-9090**	1	SEAL-O-RING	

260-8014 **LINES GP-FRONT** *(contd.)* **i03162714**

NOTE	REF NO	GRAPHIC REF	PART NUMBER	QTY	PART NAME 1 2 3 4 5 6 (PRODUCT LEVEL)	SEE PAGE
		2	**7M-8485**	1	SEAL-O-RING	
		2	**8T-0198**	1	CONNECTOR	

C-CHANGE FROM PREVIOUS TYPE
I-REFER TO HYDRAULIC INFORMATION SYSTEM
M-METRIC PART
Y-SEPARATE ILLUSTRATION

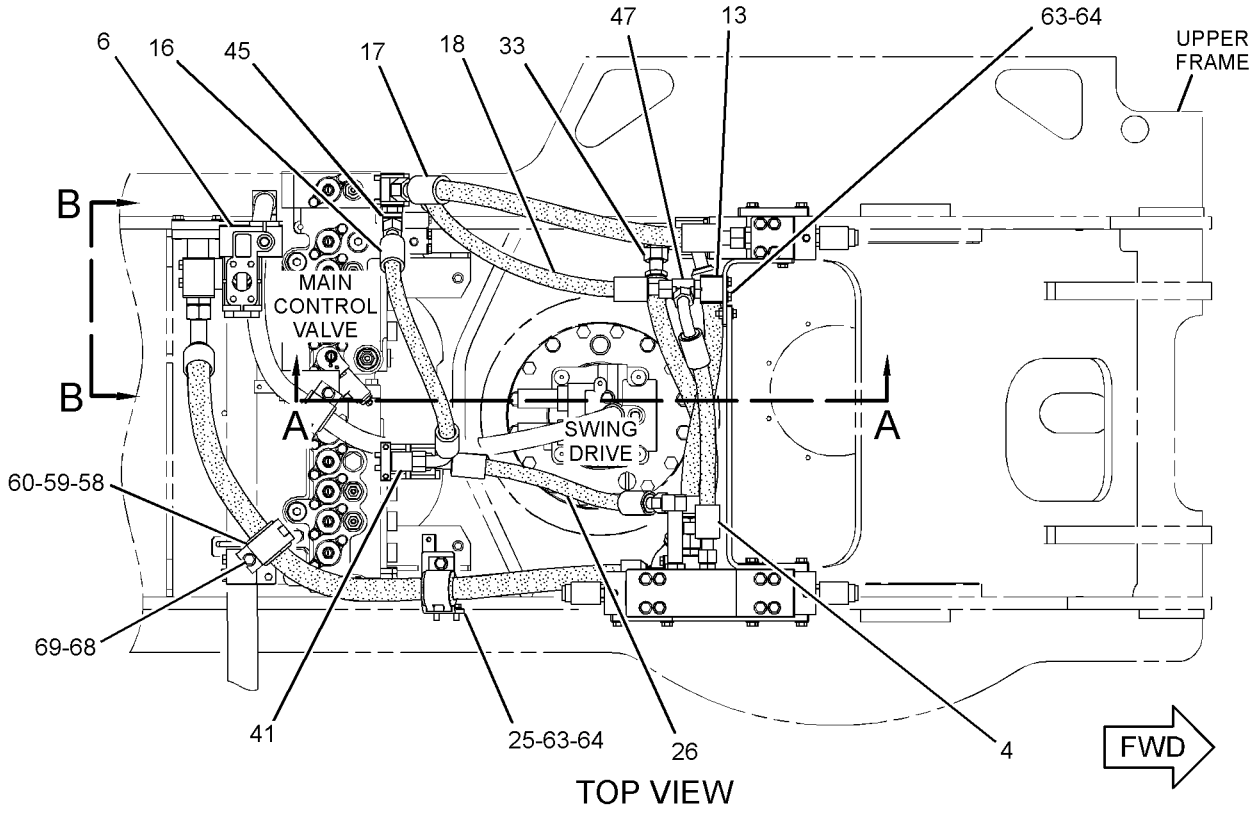

TOP VIEW

REFER TO ALL ILLUSTRATIONS OF THIS GROUP FOR AUXILIARY VIEWS

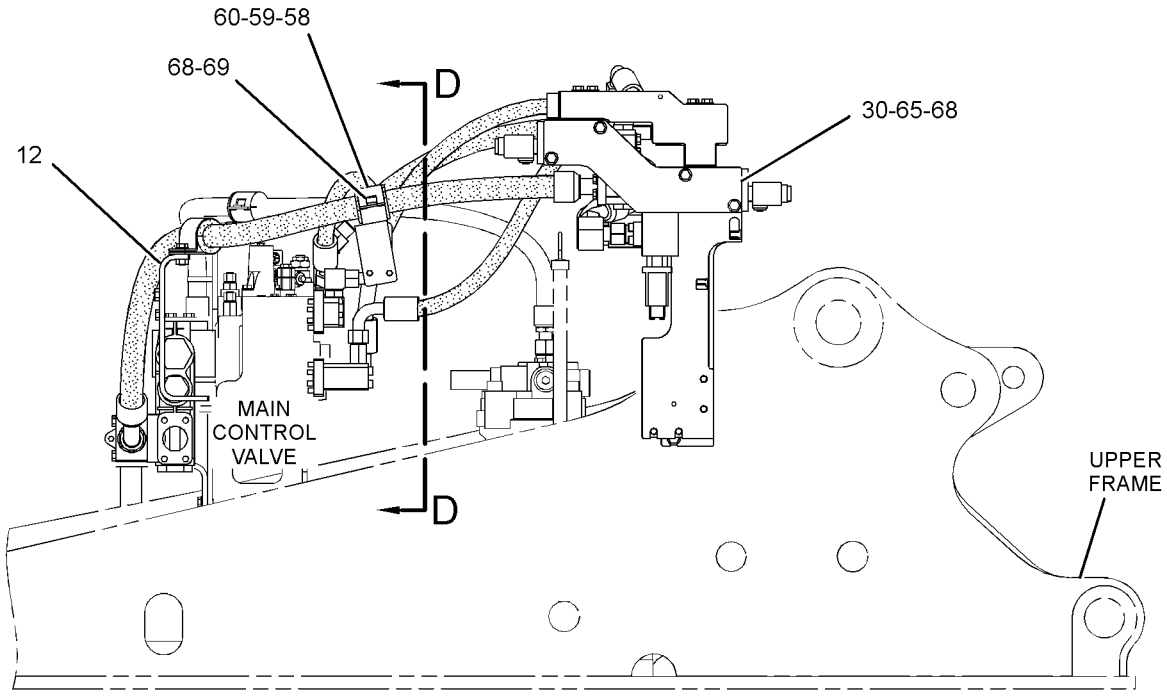

RIGHT SIDE VIEW

GRAPHIC #1 g01522221

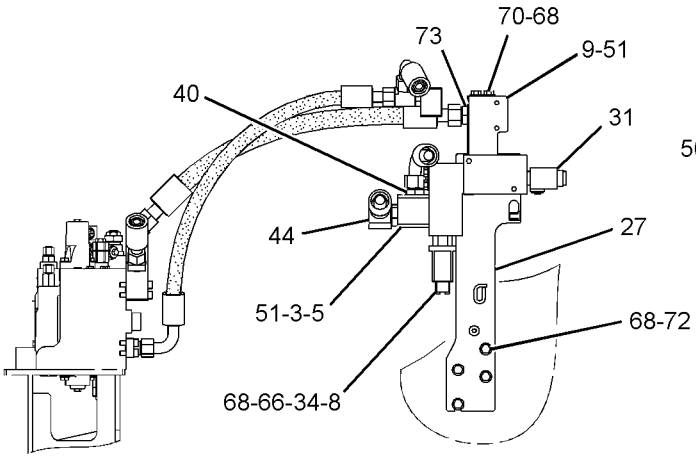

SECTION A-A

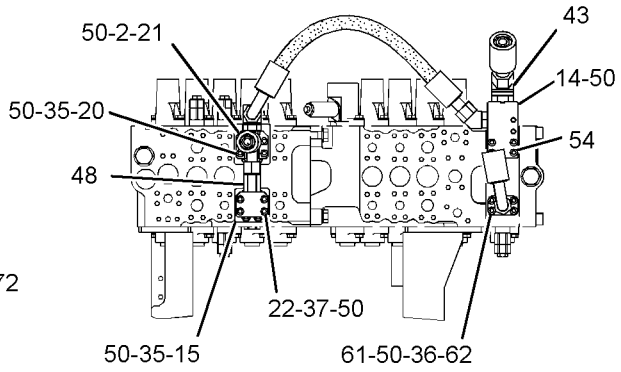

SECTION D-D

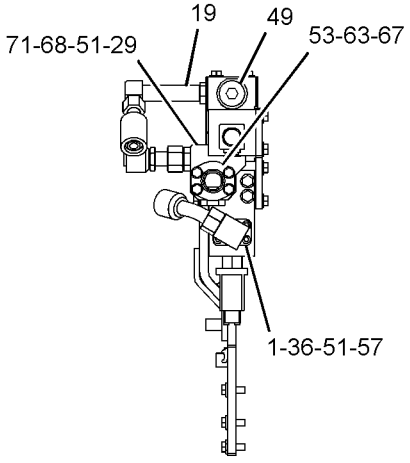

VIEW E-E

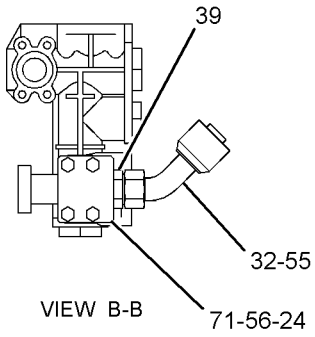

VIEW B-B

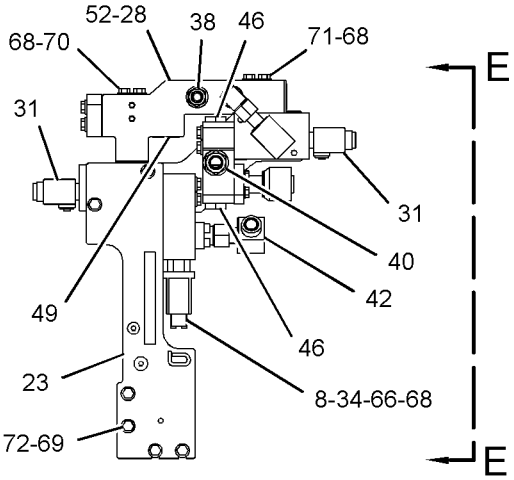

SECTION C-C

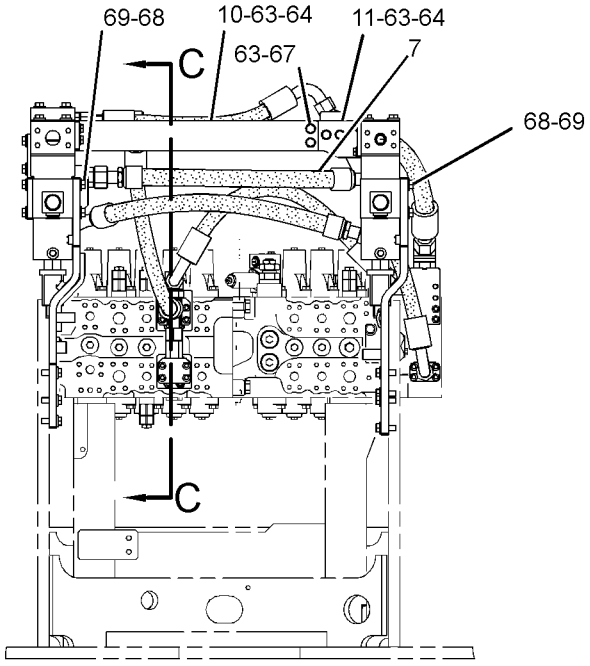

FRONT VIEW

GRAPHIC #2 **<END>** g01522220

HYDRAULIC SYSTEM

260-8015 LINES GP-FRONT—MEDIUM PRESSURE

S/N: WNE1-UP; ZMF1-UP
PART OF 259-7501 CONTROL AR-AUXILIARY
AN ATTACHMENT

SMCS-5057 **i02867545**

NOTE	REF NO	GRAPHIC REF	PART NUMBER	QTY	PART NAME 1 2 3 4 5 6 (PRODUCT LEVEL)	SEE PAGE
	1	1	**6V-0852**	1	CAP-DUST	
I	2	1	**187-5589**	2	HOSE AS	
CY	3	1	**285-1531**	1	VALVE GP-CONTROL (MEDIUM PRESSURE)	839
	4	1	**266-0908**	1	SUPPORT	
	5	1	*270-0012*	1	ELBOW AS	
		1	**2M-9780**	1	SEAL-O-RING	
		1	**6V-8398**	1	SEAL-O-RING	
		1	**270-0013**	1	ELBOW	
	6	1	*270-0014*	1	ELBOW AS	
		1	**2M-9780**	1	SEAL-O-RING	
		1	**6V-8398**	1	SEAL-O-RING	
		1	**270-0015**	1	ELBOW	
	7	1	*164-5567*	1	COUPLER AS-QUICK DISCONNECT	
		1	**3J-1907**	1	SEAL-O-RING	
		1	**6V-3965**	1	FITTING (QUICK DISCONNECT)	
	8	1	*168-1969*	1	ADAPTER AS	
		1	**1J-9671**	1	SEAL-O-RING	
		1	**5P-1318**	1	ADAPTER	
	9	1	**6V-5782**	4	BOLT (5/16-18X1.125-IN)	
	10	1	**8T-4223**	4	WASHER-HARD (13.5X25.5X3-MM THK)	
	11	1	**8T-4224**	4	WASHER-HARD (8.8X16X2-MM THK)	
M	12	1	**8T-4956**	4	BOLT (M12X1.75X35-MM)	

C-CHANGE FROM PREVIOUS TYPE
I-REFER TO HYDRAULIC INFORMATION SYSTEM
M-METRIC PART
Y-SEPARATE ILLUSTRATION

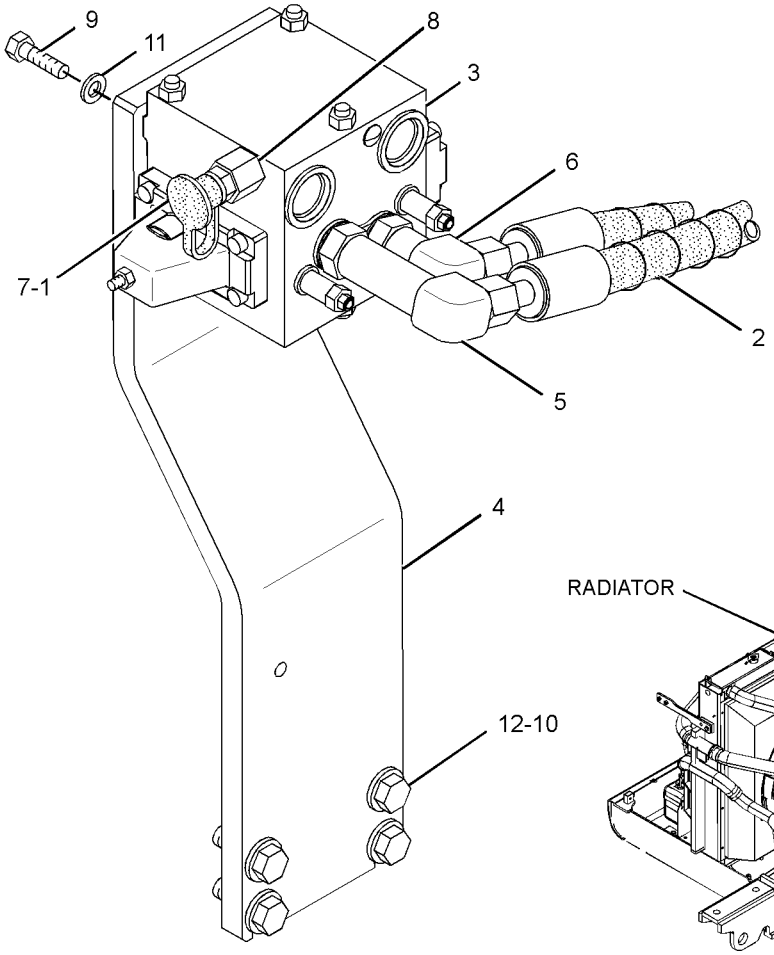

VIEW OF AREA A

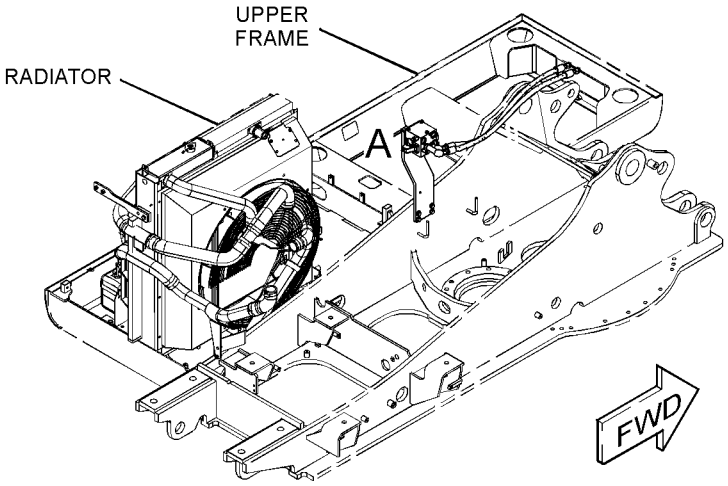

GRAPHIC #1 **<END>** g01286113

HYDRAULIC SYSTEM

266-0957 LINES GP-FRONT

S/N: CWG1-UP

PART OF 285-1356 HYDRAULIC AR

SMCS-5057 **i02814845**

NOTE	REF NO	GRAPHIC REF	PART NUMBER	QTY	PART NAME 1 2 3 4 5 6 (PRODUCT LEVEL)	SEE PAGE
	1	2	**7Y-3721**	1	TUBE AS	
	2	2	**7Y-3730**	1	FLANGE-SPECIAL	
M	3	2	**101-7403**	2	BOLT-SOCKET HEAD (M10X1.5X80-MM)	
M	4	2	**105-3477**	8	BOLT-SOCKET HEAD (M10X1.5X45-MM)	
M	5	2	**105-3483**	2	BOLT-SOCKET HEAD (M10X1.5X70-MM)	
	6	2	**113-6479**	3	FLANGE-SPECIAL	
	7	2	**137-0856**	1	TUBE AS	
I	8	1	**173-5072**	1	HOSE AS	
I	9	1	**173-5080**	1	HOSE AS	
Y	10	1	**194-0174**	1	HOSE GP-HYDRAULIC (CONTROL VALVE, STICK)	536
Y	11	1	**194-0180**	1	HOSE GP-HYDRAULIC (CONTROL VALVE, BOOM)	538
Y	12	2	**214-4511**	1	FITTING GP-HYDRAULIC (4-BOLT FLANGE)	527
Y	13	2	**255-5680**	1	VALVE GP-LOAD CONTROL (STICK DRIFT RED, LINE RELIEF)	846
Y	14	2	**255-5683**	1	VALVE GP-LOAD CONTROL (BOOM DRIFT RED, LINE RELIEF)	848
Y	15	1	**260-7910**	1	HOSE GP-HYDRAULIC (FRONT)	542
I	16	1	**260-8255**	1	HOSE AS	
I	17	1,2	**260-8259**	1	HOSE AS	
I	18	1	**260-8263**	1	HOSE AS	
I	19	1	**260-8267**	1	HOSE AS	
I	20	1	**266-1057**	2	HOSE AS	
I	21	1	**266-1061**	1	HOSE AS	
I	22	1	**307-5298**	1	HOSE AS	
M	23	2	**101-7397**	4	BOLT-SOCKET HEAD (M12X1.75X50-MM)	
M	24	2	**101-7404**	42	BOLT-SOCKET HEAD (M10X1.5X30-MM)	
M	25	2	**199-1286**	6	BOLT-SOCKET HEAD (M10X1.5X150-MM)	
	26	1	**1P-3702**	4	SEAL-RECTANGULAR	
	27	1,2	**1P-3703**	9	SEAL-RECTANGULAR	
	28	1,2	**4J-5267**	10	SEAL-O-RING	
	29	2	**4J-5268**	1	SEAL-O-RING	
	30	2	**5K-9090**	5	SEAL-O-RING	
	31	1,2	**6V-0400**	4	FLANGE-HALF	
	32	1	**6V-9746**	2	SEAL-O-RING	
	33	2	**8T-4121**	8	WASHER-HARD (11X21X2.5-MM THK)	
M	34	1	**8T-4184**	4	BOLT (M12X1.75X45-MM)	
	35	1,2	**8T-4223**	8	WASHER-HARD (13.5X25.5X3-MM THK)	
	36	2	**8T-9403**	4	FLANGE-HALF	

I-REFER TO HYDRAULIC INFORMATION SYSTEM
M-METRIC PART
Y-SEPARATE ILLUSTRATION

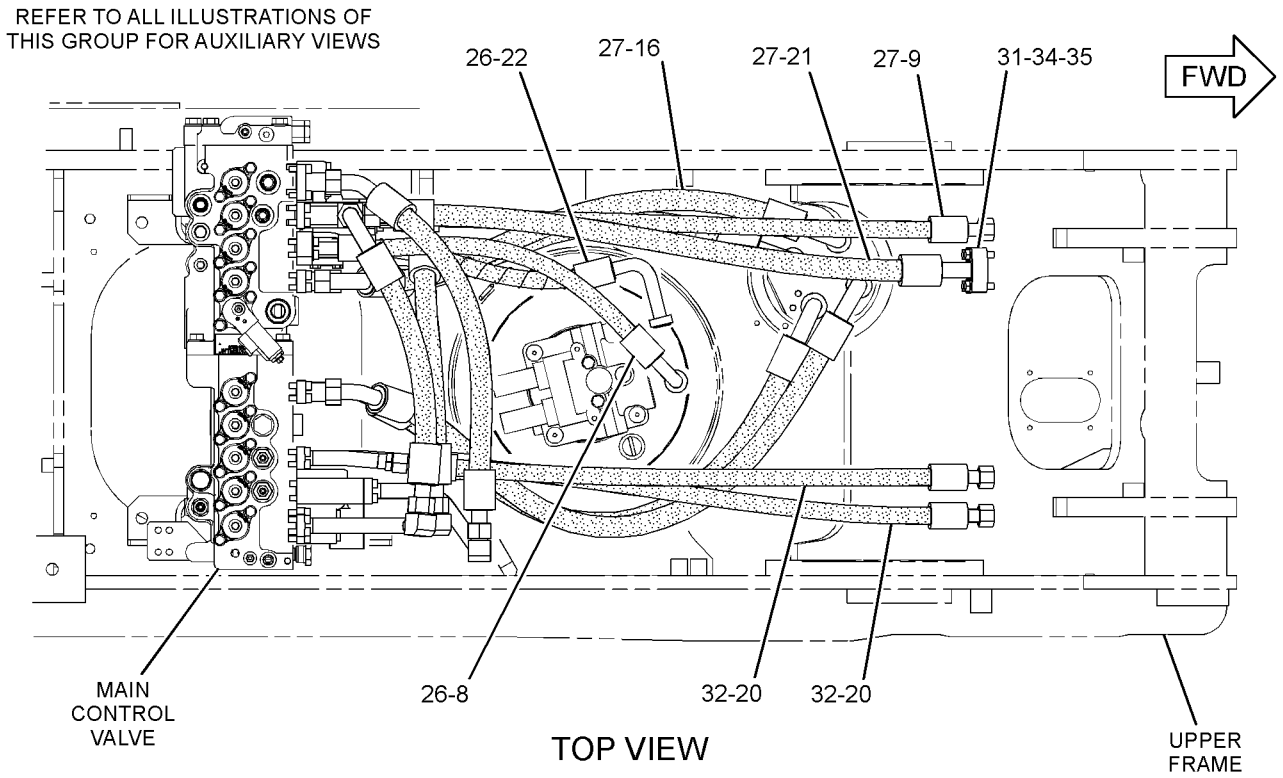

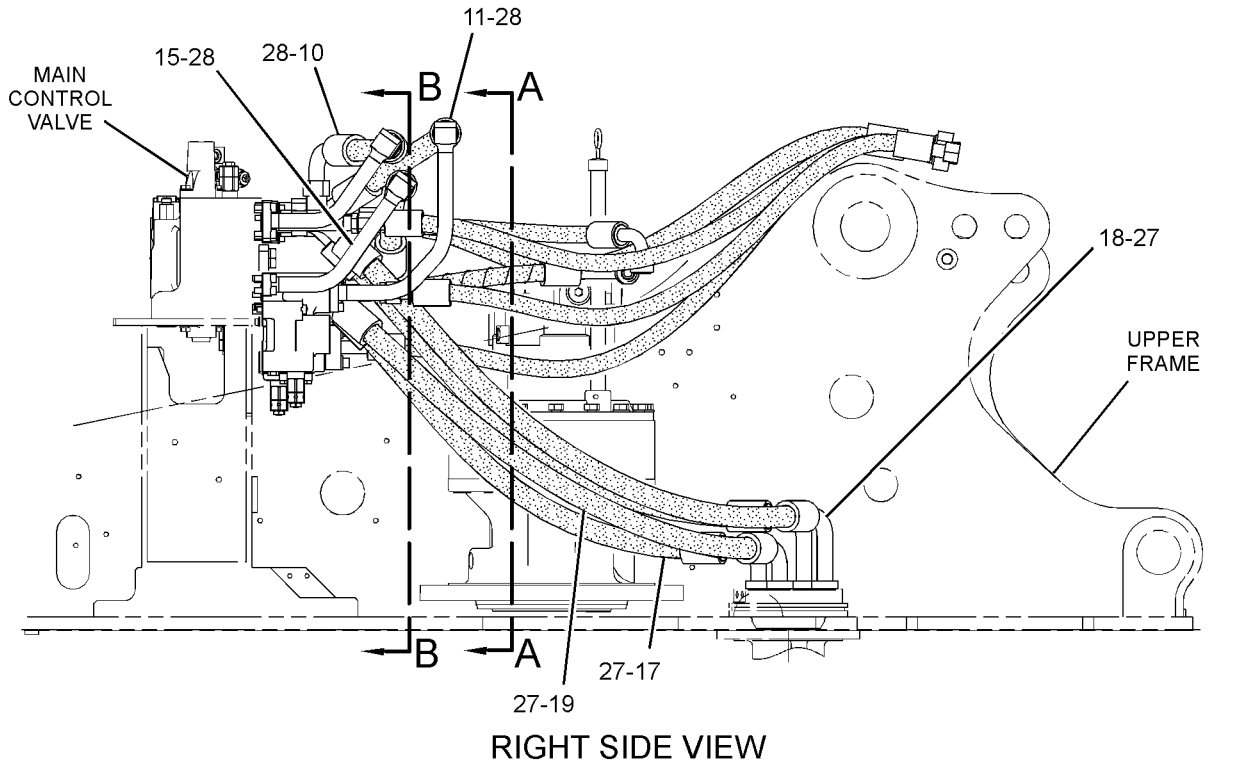

GRAPHIC #1

g01407276

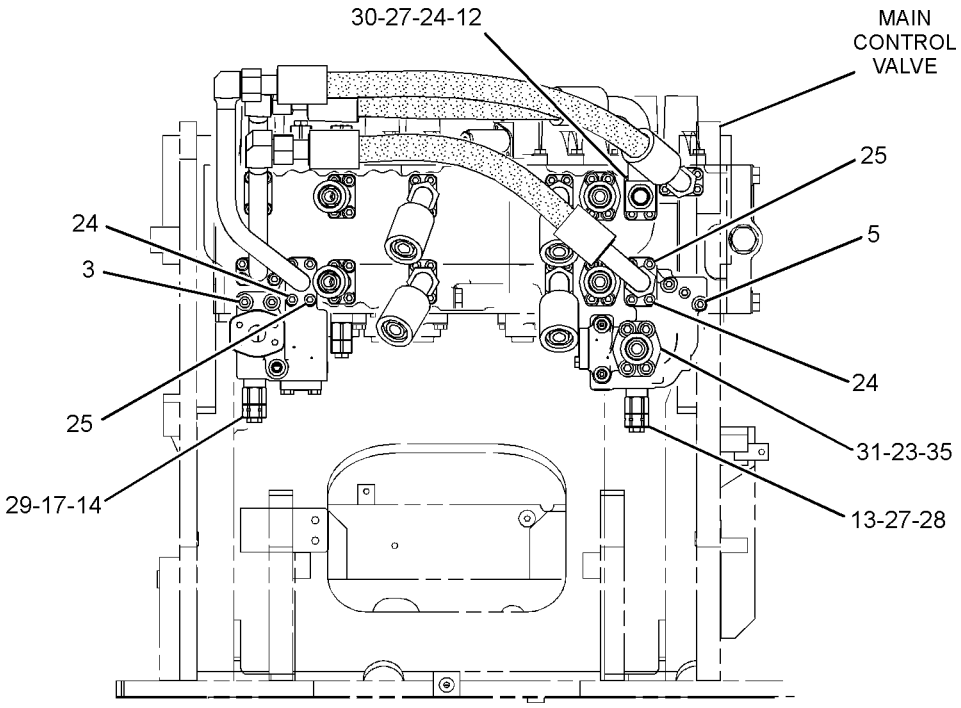

SECTION A-A

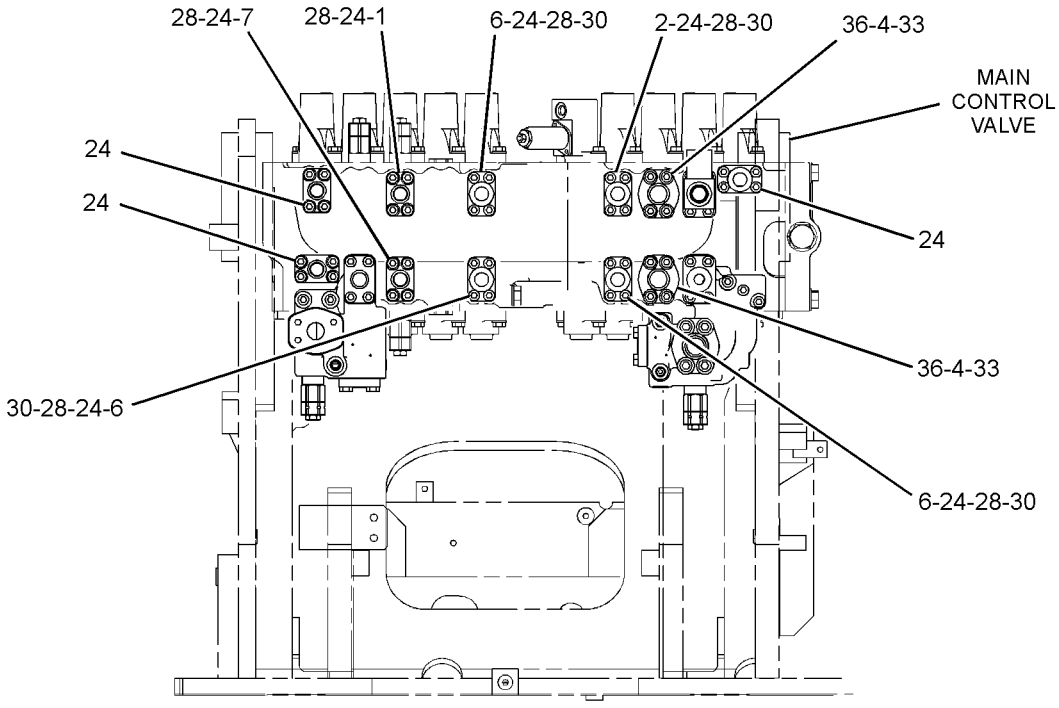

SECTION B-B

GRAPHIC #2 **<END>** g01407277

HYDRAULIC SYSTEM

266-0958 LINES GP-FRONT—BOOM, SWING

S/N: CWG1-UP

PART OF 285-1356 HYDRAULIC AR

SMCS-5057 **i03645197**

NOTE	REF NO	GRAPHIC REF	PART NUMBER	QTY	PART NAME 1 2 3 4 5 6 (PRODUCT LEVEL)	SEE PAGE
	1	1	**4I-1674**	2	CLIP	
	2	1	**9F-2167**	1	SCREW-PURGE (3/8-24X1.164-IN)	
M	3	1	**101-7398**	4	BOLT-SOCKET HEAD (M10X1.5X40-MM)	
	4	1	**108-7550**	1	CLIP	
I	5	1	**124-1047**	4	HOSE AS	
	6	1	**124-1062**	1	SUPPORT AS	
Y	7	1	**322-8716**	1	VALVE GP-SWING CUSHION (FINE SWING)	902
	8	1	*164-5552*	1	CONNECTOR AS	
		1	**3D-2824**	1	SEAL-O-RING	
		1	**4I-7745**	1	CONNECTOR	
		1	**6V-8398**	1	SEAL-O-RING	
	9	1	**234-4492**	1	SUPPORT	
	10	1	**266-1165**	1	TUBE AS	
	11	1	**266-1166**	1	TUBE AS	
I	12	1	**266-1214**	1	HOSE AS	
M	13	1	**101-7404**	4	BOLT-SOCKET HEAD (M10X1.5X30-MM)	
	14	1	**133-5828**	1	SUPPORT AS	
	15	1	*307-4918*	1	CONNECTOR AS	
		1	**5K-9090**	1	SEAL-O-RING	
		1	**7M-8485**	1	SEAL-O-RING	
		1	**307-4919**	1	CONNECTOR	
	16	1	*148-8346*	1	ELBOW AS	
		1	**3K-0360**	1	SEAL-O-RING	
		1	**6V-8398**	1	SEAL-O-RING	
		1	**8T-1686**	1	ELBOW	
	17	1	*148-8353*	1	ELBOW AS	
		1	**3J-1907**	1	SEAL-O-RING	
		1	**6V-8397**	1	SEAL-O-RING	
		1	**6V-9001**	1	ELBOW	
	18	1	*148-8444*	1	TEE AS-SWIVEL	
		1	**6V-8398**	2	SEAL-O-RING	
		1	**6V-9837**	1	TEE-SWIVEL	
	20	1	**1P-3703**	2	SEAL-RECTANGULAR	
	21	1	**5P-1076**	2	WASHER-HARD (13.5X30X4-MM THK)	
	22	1	**6V-9746**	4	SEAL-O-RING	
	23	1	**8T-4121**	8	WASHER-HARD (11X21X2.5-MM THK)	
M	24	1	**8T-4139**	2	BOLT (M12X1.75X30-MM)	
M	25	1	**8T-4178**	6	BOLT (M10X1.5X90-MM)	
M	26	1	**8T-4182**	8	BOLT (M10X1.5X45-MM)	
M	27	1	**8T-4192**	2	BOLT (M12X1.75X25-MM)	
	28	1	**8T-4223**	6	WASHER-HARD (13.5X25.5X3-MM THK)	
M	29	1	**8T-4648**	2	BOLT (M12X1.75X70-MM)	
M	30	1	**8T-4910**	2	BOLT (M12X1.75X60-MM)	
	31	1	**8T-9403**	4	FLANGE-HALF	
	32	1	*148-8336*	1	CONNECTOR AS	
		1	**3J-1907**	1	SEAL-O-RING	
		1	**6V-8397**	1	SEAL-O-RING	
		1	**6V-8636**	1	CONNECTOR	
	33	1	*148-8367*	1	ELBOW AS	
		1	**6V-8397**	1	SEAL-O-RING	
		1	**6V-9850**	1	ELBOW	

I-REFER TO HYDRAULIC INFORMATION SYSTEM
M-METRIC PART
Y-SEPARATE ILLUSTRATION

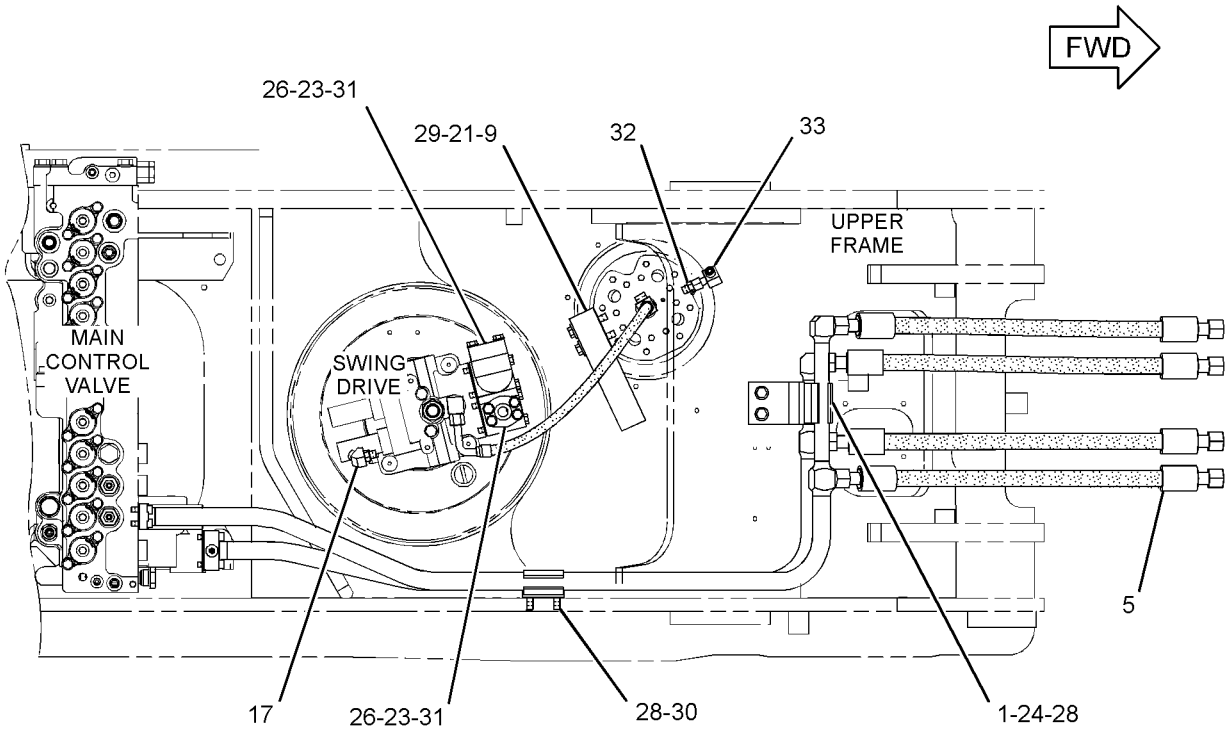

TOP VIEW

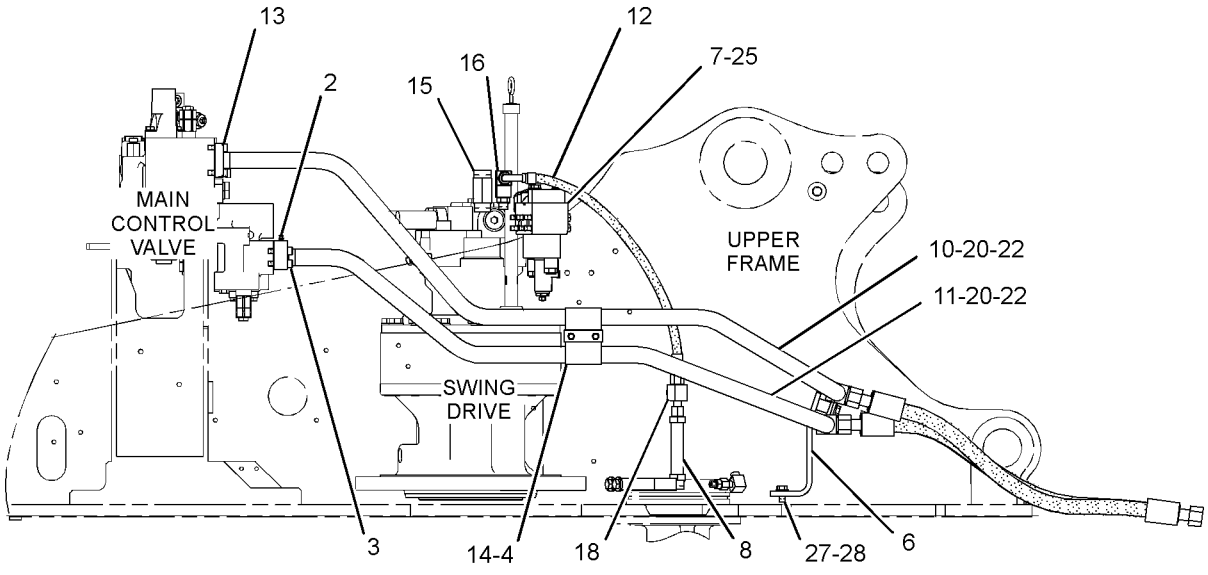

RIGHT SIDE VIEW

GRAPHIC #1 **<END>** g01665713

HYDRAULIC SYSTEM

266-0969 LINES GP-FRONT—MEDIUM PRESSURE

S/N: CWG1-UP
PART OF 259-7621 CONTROL AR-AUXILIARY
AN ATTACHMENT

SMCS-5057 **i03646459**

NOTE	REF NO	GRAPHIC REF	PART NUMBER	QTY	PART NAME 1 2 3 4 5 6 (PRODUCT LEVEL)	SEE PAGE
	1	1	**6V-0852**	1	CAP-DUST	
I	2	1	**187-5589**	2	HOSE AS	
Y	3	1	**285-1531**	1	VALVE GP-CONTROL (MEDIUM PRESSURE)	839
	4	1	**266-0908**	1	SUPPORT	
	5	1	*270-0012*	1	ELBOW AS	
		1	**2M-9780**	1	SEAL-O-RING	
		1	**6V-8398**	1	SEAL-O-RING	
		1	**270-0013**	1	ELBOW	
	6	1	*270-0014*	1	ELBOW AS	
		1	**2M-9780**	1	SEAL-O-RING	
		1	**6V-8398**	1	SEAL-O-RING	
		1	**270-0015**	1	ELBOW	
	7	1	*164-5567*	1	COUPLER AS-QUICK DISCONNECT	
		1	**3J-1907**	1	SEAL-O-RING	
		1	**6V-3965**	1	FITTING (QUICK DISCONNECT)	
	8	1	*168-1969*	1	ADAPTER AS	
		1	**1J-9671**	1	SEAL-O-RING	
		1	**5P-1318**	1	ADAPTER	
	9	1	**6V-5782**	4	BOLT (5/16-18X1.125-IN)	
	10	1	**8T-4223**	4	WASHER-HARD (13.5X25.5X3-MM THK)	
	11	1	**8T-4224**	4	WASHER-HARD (8.8X16X2-MM THK)	
M	12	1	**8T-4956**	4	BOLT (M12X1.75X35-MM)	

I-REFER TO HYDRAULIC INFORMATION SYSTEM
M-METRIC PART
Y-SEPARATE ILLUSTRATION

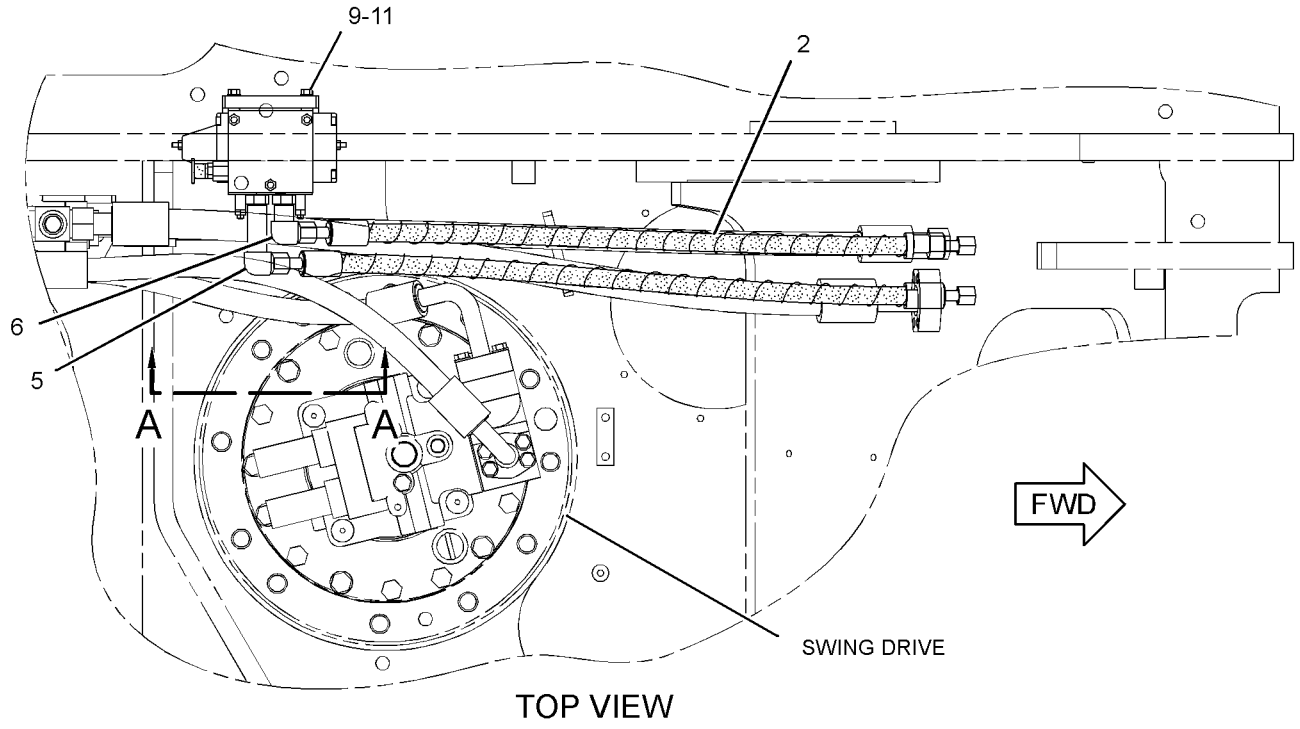

TOP VIEW

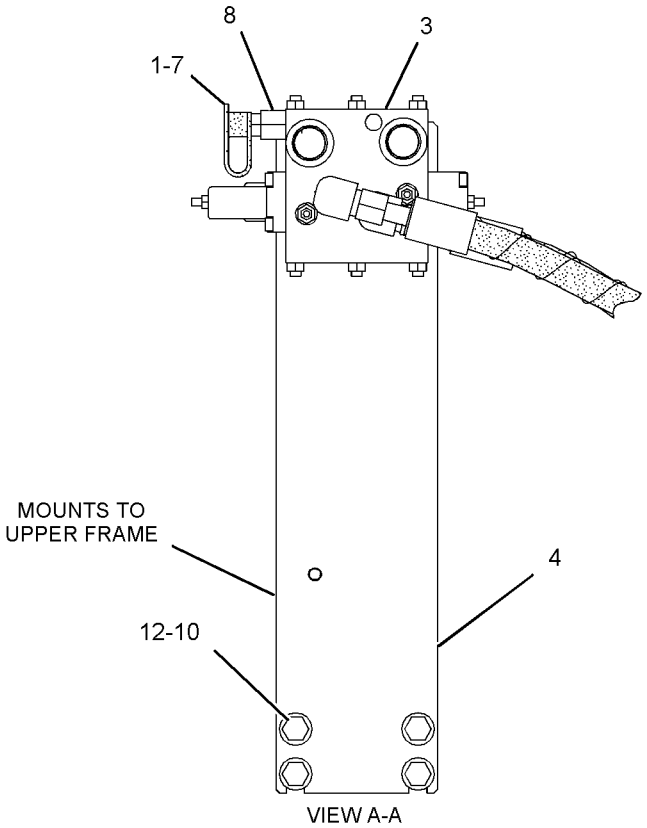

VIEW A-A

GRAPHIC #1 **<END>** g01225429

HYDRAULIC SYSTEM

269-9894 LINES GP-FRONT—VARIABLE ADJUSTABLE BOOM

S/N: CWG1-UP
PART OF 253-2824 CONTROL AR-MACHINE
AN ATTACHMENT

SMCS-5057 **i03648045**

NOTE	REF NO	GRAPHIC REF	PART NUMBER	QTY	PART NAME 1 2 3 4 5 6 (PRODUCT LEVEL)	SEE PAGE
I	1	1	**7I-1118**	1	HOSE AS	
	2	1	**7K-1181**	15	STRAP-CABLE	
	3	1	**7Y-3730**	2	FLANGE-SPECIAL	
	4	1	**108-7550**	2	CLIP	
	5	1	*148-8444*	1	TEE AS-SWIVEL	
		1	**6V-8398**	2	SEAL-O-RING	
		1	**6V-9837**	1	TEE-SWIVEL	
	6	1	*307-5128*	1	FITTING AS	
		1	**307-5079**	1	FITTING	
		1	**6V-9746**	1	SEAL-O-RING	
	7	1	**269-9979**	1	PLATE	
I	8	1	**269-9982**	1	HOSE AS	
I	9	1	**269-9986**	1	HOSE AS	
	10	1	**272-4330**	1	HOSE AS	
	11	1	**282-7138**	1	HOSE AS	
	12	1	**282-7141**	1	HOSE AS	
	13	1	**289-5486**	1	SUPPORT AS	
	14	1	**302-2878**	1	TUBE AS	
	15	1	**302-2879**	1	TUBE AS	
M	16	1	**101-7404**	8	BOLT-SOCKET HEAD (M10X1.5X30-MM)	
	17	1	*148-8357*	1	ELBOW AS	
		1	**5K-9090**	1	SEAL-O-RING	
		1	**6V-9008**	1	ELBOW	
		1	**7M-8485**	1	SEAL-O-RING	
	18	1	*148-8415*	1	REDUCER AS	
		1	**6V-8397**	1	SEAL-O-RING	
		1	**6V-8936**	1	REDUCER	
	19	1	*148-8428*	1	TEE AS	
		1	**3K-0360**	1	SEAL-O-RING	
		1	**6V-8398**	2	SEAL-O-RING	
		1	**6V-8782**	1	TEE	
	20	1	*164-4180*	1	PLUG AS	
		1	**7M-8485**	1	SEAL-O-RING	
		1	**9S-4181**	1	PLUG-O-RING	
	21	1	**1P-3703**	1	SEAL-RECTANGULAR	
	22	1	**4I-9526**	2	BAND-MARKER (WHITE, R2)	
	23	1	**4J-5267**	2	SEAL-O-RING	
	24	1	**5K-9090**	4	SEAL-O-RING	
	25	1	**5P-7468**	1	CLIP (SLOT)	
	26	1	**5P-7469**	1	CLIP (TAB)	
	27	1	**5P-8444**	1	GROMMET	
	28	1	**6V-0400**	2	FLANGE-HALF	
	30	1	**6V-9830**	1	CAP AS	
	31	1	**6V-9832**	1	CAP AS	
	33	1	**8T-4121**	2	WASHER-HARD (11X21X2.5-MM THK)	
M	34	1	**8T-4139**	2	BOLT (M12X1.75X30-MM)	
M	35	1	**8T-4178**	2	BOLT (M10X1.5X90-MM)	
M	36	1	**8T-4184**	4	BOLT (M12X1.75X45-MM)	
	37	1	**8T-4223**	7	WASHER-HARD (13.5X25.5X3-MM THK)	
M	38	1	**8T-4956**	1	BOLT (M12X1.75X35-MM)	

I-REFER TO HYDRAULIC INFORMATION SYSTEM
M-METRIC PART

269-9894 **LINES GP-FRONT** *(contd.)* **i03648045**

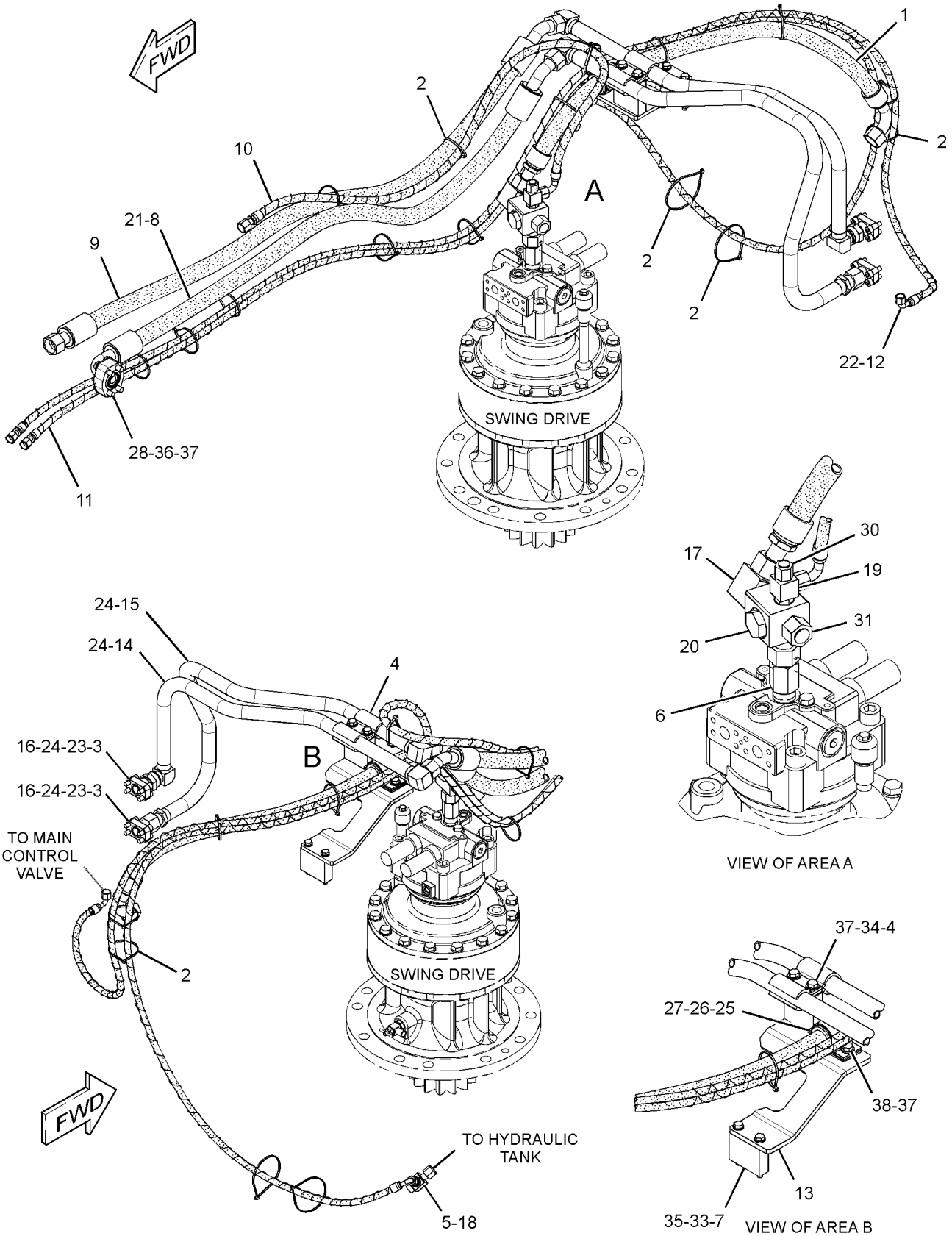

GRAPHIC #1 **<END>** g01667513

HYDRAULIC SYSTEM

272-4362 LINES GP-FRONT—SYSTEM 16, AUXILIARY

S/N: CWG1-UP
PART OF 259-7619 CONTROL AR-AUXILIARY
AN ATTACHMENT

SMCS-5057 **i03646147**

NOTE	REF NO	GRAPHIC REF	PART NUMBER	QTY	PART NAME 1 2 3 4 5 6 (PRODUCT LEVEL)	SEE PAGE
	1	1	**7Y-3731**	1	FLANGE	
M	2	1	**105-3477**	4	BOLT-SOCKET HEAD (M10X1.5X45-MM)	
M	3	1	**105-3489**	4	BOLT-SOCKET HEAD (M12X1.75X80-MM)	
Y	4	1	**177-2653**	1	VALVE GP-RELIEF (WITH BLOCK)	869
	5	1	**187-5853**	1	BLOCK	
I	6	1	**187-6974**	1	HOSE AS	
	7	1	**207-6222**	1	BLOCK	
	8	1	**212-5148**	1	BLOCK	
	9	1	**255-1892**	1	SUPPORT	
	10	1	**260-8043**	1	BLOCK	
	11	1	**296-7075**	1	SUPPORT AS	
	12	1	**296-7077**	1	SUPPORT AS	
	13	1	**266-0906**	1	TUBE AS	
	14	1	**266-0913**	1	SUPPORT AS	
	15	1	**266-0916**	1	BRACKET	
	16	1	**266-1278**	1	BLOCK	
	17	1	**266-1279**	1	FLANGE	
I	18	1	**266-1303**	1	HOSE AS	
I	19	1	**269-9680**	1	HOSE AS	
	20	1	**269-9994**	1	SUPPORT AS	
I	21	1	**270-0036**	1	HOSE AS	
	22	1	**275-1439**	1	BLOCK	
M	23	1	**280-2747**	4	BOLT-SOCKET HEAD (M10X1.5X60-MM)	
	24	1	**099-8232**	2	SEAL-O-RING	
M	25	1	**101-7397**	4	BOLT-SOCKET HEAD (M12X1.75X50-MM)	
M	26	1	**101-7401**	4	BOLT-SOCKET HEAD (M10X1.5X20-MM)	
M	27	1	**101-7402**	4	BOLT-SOCKET HEAD (M12X1.75X30-MM)	
M	28	1	**101-7404**	4	BOLT-SOCKET HEAD (M10X1.5X30-MM)	
	29	1	*148-8330*	1	CONNECTOR AS	
		1	**5K-9090**	1	SEAL-O-RING	
		1	**7M-8485**	1	SEAL-O-RING	
		1	**8T-0198**	1	CONNECTOR	
	30	1	*148-8335*	1	CONNECTOR AS	
		1	**5K-9090**	1	SEAL-O-RING	
		1	**6V-8635**	1	CONNECTOR	
		1	**7M-8485**	1	SEAL-O-RING	
	31	1	*148-8347*	1	ELBOW AS	
		1	**3D-2824**	1	SEAL-O-RING	
		1	**6V-9007**	1	ELBOW	
		1	**6V-9746**	1	SEAL-O-RING	
	32	1	*148-8391*	1	ELBOW AS	
		1	**2S-4078**	1	SEAL-O-RING	
		1	**5K-9090**	1	SEAL-O-RING	
		1	**8T-8987**	1	ELBOW	
	33	1	*148-8411*	1	PLUG AS	
		1	**3K-0360**	1	SEAL-O-RING	
		1	**9S-4185**	1	PLUG-O-RING	
	34	1	*148-8429*	1	TEE AS	
		1	**5K-9090**	2	SEAL-O-RING	
		1	**6V-9840**	1	TEE-SWIVEL	
	35	1	*153-6237*	1	ELBOW AS	
		1	**3D-2824**	1	SEAL-O-RING	
		1	**6V-9004**	1	ELBOW	
		1	**6V-9746**	1	SEAL-O-RING	

272-4362 **LINES GP-FRONT** *(contd.)* **i03646147**

NOTE	REF NO	GRAPHIC REF	PART NUMBER	QTY	PART NAME 1 2 3 4 5 6 (PRODUCT LEVEL)	SEE PAGE
	36	1	*164-4180*	2	PLUG AS	
					(EACH INCLUDES)	
		1	**7M-8485**	1	SEAL-O-RING	
		1	**9S-4181**	1	PLUG-O-RING	
	37	1	**173-4664**	1	FLANGE	
	38	1	**179-7612**	1	BLOCK	
	39	1	**1P-3702**	3	SEAL-RECTANGULAR	
	40	1	**1P-3703**	4	SEAL-RECTANGULAR	
	41	1	**4J-0527**	1	SEAL-O-RING	
	42	1	**5K-9090**	2	SEAL-O-RING	
	43	1	**5P-7468**	2	CLIP (SLOT)	
	44	1	**5P-7469**	2	CLIP (TAB)	
	45	1	**5P-8444**	2	GROMMET	
	46	1	**8T-4121**	8	WASHER-HARD (11X21X2.5-MM THK)	
M	47	1	**8T-4136**	6	BOLT (M10X1.5X25-MM)	
M	48	1	**8T-4176**	4	BOLT (M12X1.75X90-MM)	
M	49	1	**8T-4196**	2	BOLT (M10X1.5X35-MM)	
	50	1	**8T-4223**	28	WASHER-HARD (13.5X25.5X3-MM THK)	
M	51	1	**8T-4956**	8	BOLT (M12X1.75X35-MM)	
M	52	1	**8T-5092**	8	BOLT (M12X1.75X150-MM)	
M	53	1	**8T-4183**	8	BOLT (M12X1.75X40-MM)	

I-REFER TO HYDRAULIC INFORMATION SYSTEM
M-METRIC PART
Y-SEPARATE ILLUSTRATION

272-4362 **LINES GP-FRONT** *(contd.)* **i03646147**

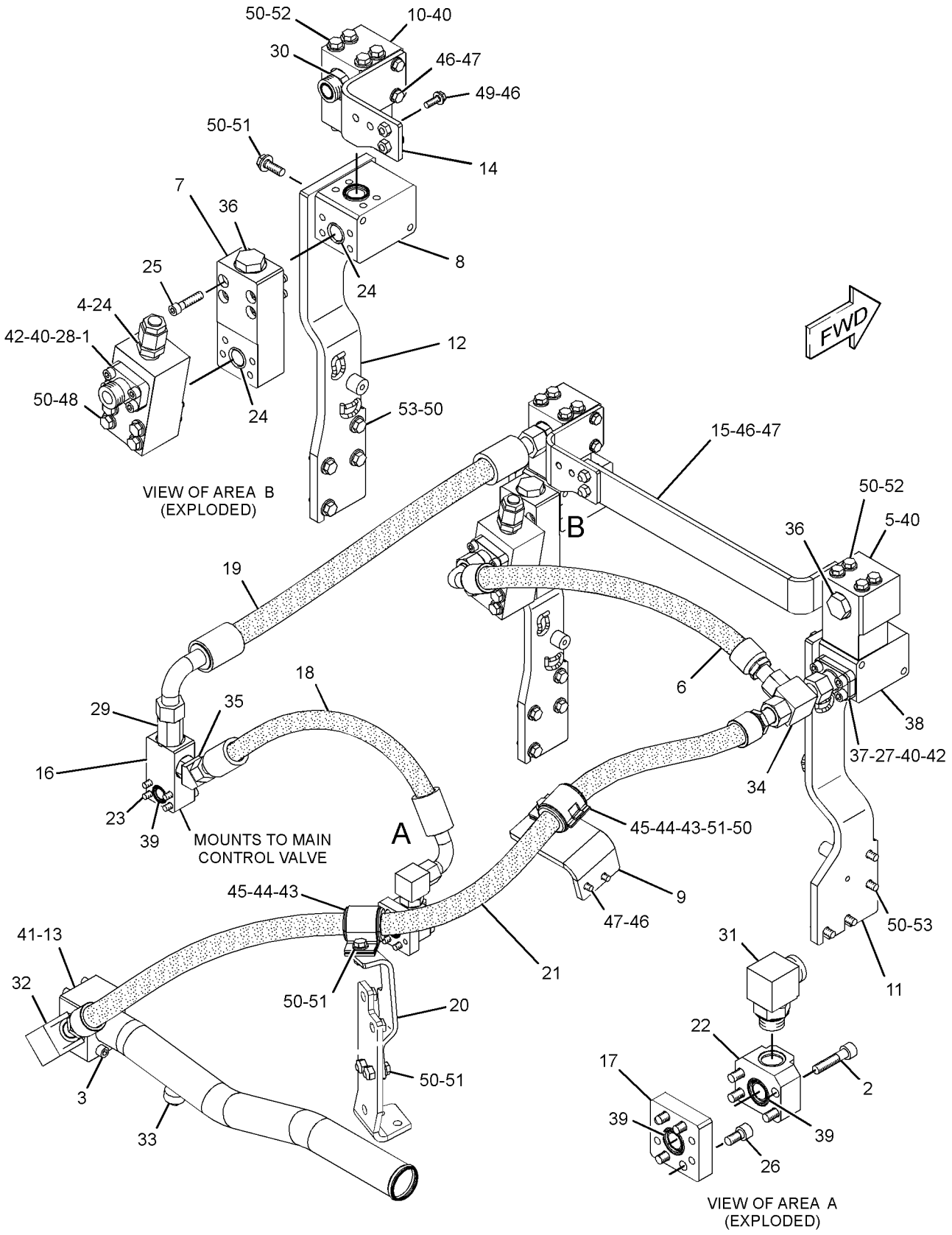

GRAPHIC #1 **<END>** g01665655

HYDRAULIC SYSTEM

275-1409 LINES GP-FRONT—QUICK COUPLER

S/N: WNE1-UP; ZMF1-UP
PART OF 339-0814 CONTROL AR-COUPLER
AN ATTACHMENT

SMCS-5057 **i03087038**

NOTE	REF NO	GRAPHIC REF	PART NUMBER	QTY	PART NAME 1 2 3 4 5 6 (PRODUCT LEVEL)	SEE PAGE
	1	1	**4I-9521**	6	BAND-MARKER (RED, L1)	
	2	1	**4I-9522**	8	BAND-MARKER (YELLOW, L2)	
	3	1	**4I-9526**	6	BAND-MARKER (WHITE, R2)	
	4	2	**4I-9527**	2	BAND-MARKER (GREEN, R3)	
	5	1	**5I-4376**	1	FITTING	
	6	1,2	**6V-0852**	3	CAP-DUST	
	7	1	**7K-1181**	15	STRAP-CABLE	
I	8	2	**7Y-8484**	1	HOSE AS	
	9	1	**9X-6582**	2	NUT (13/16-16-THD)	
CY	10	2	**164-6980**	1	VALVE GP-SHUTTLE	881
	11	1	**123-4750**	1	VALVE-CHECK	
	12	2	**124-1035**	1	FITTING-ORFS	
I	13	2	**143-4308**	1	HOSE AS	
	14	1,2	*164-5567*	3	COUPLER AS-QUICK DISCONNECT	
					(EACH INCLUDES)	
		1,2	**3J-1907**	1	SEAL-O-RING	
		1,2	**6V-3965**	1	FITTING (QUICK DISCONNECT)	
	15	2	*164-9640*	1	CONNECTOR AS	
		2	**3J-1907**	1	SEAL-O-RING	
		2	**4J-5477**	1	SEAL-O-RING	
		2	**145-2237**	1	CONNECTOR	
I	16	1	**194-0027**	1	HOSE AS	
	17	2	**213-3745**	2	ELBOW	
Y	18	2	**254-3080**	1	VALVE GP-CONTROL (QUICK COUPLER)	822
Y	19	2	**258-6749**	1	VALVE GP-SOLENOID (QUICK COUPLER)	890
	20	2	*267-4051*	1	CONNECTOR AS	
		2	**3J-1907**	1	SEAL-O-RING	
		2	**4J-5477**	1	SEAL-O-RING	
		2	**156-8845**	1	CONNECTOR	
	21	1	**275-1468**	1	HOSE AS	
I	22	2	**275-1538**	1	HOSE AS	
	23	2	**282-7615**	1	HOSE AS	
	24	1	**285-2415**	1	SUPPORT AS	
	25	1	**285-2423**	1	TUBE AS	
	26	1	**285-2427**	1	HOSE AS	
	27	2	**285-2428**	1	HOSE AS	
I	28	1	**296-7229**	1	HOSE AS	
	29	2	**302-2852**	1	SUPPORT AS	
I	30	1	**302-3171**	2	HOSE AS	
	31	1	**307-5161**	1	SUPPORT AS	
M	32	1	**101-7402**	4	BOLT-SOCKET HEAD (M12X1.75X30-MM)	
	33	1	**115-8645**	2	GUARD	
	34	2	*148-8321*	1	CONNECTOR AS	
		2	**3J-1907**	1	SEAL-O-RING	
		2	**6V-8397**	1	SEAL-O-RING	
		2	**8C-0564**	1	CONNECTOR	
	35	2	*148-8325*	2	CONNECTOR AS	
					(EACH INCLUDES)	
		2	**3J-1907**	1	SEAL-O-RING	
		2	**4J-5477**	1	SEAL-O-RING	
		2	**6V-8641**	1	CONNECTOR	
	36	1,2	*148-8336*	6	CONNECTOR AS	
					(EACH INCLUDES)	
		1,2	**3J-1907**	1	SEAL-O-RING	
		1,2	**6V-8397**	1	SEAL-O-RING	

275-1409 **LINES GP-FRONT** *(contd.)* **i03087038**

NOTE	REF NO	GRAPHIC REF	PART NUMBER	QTY	PART NAME 1 2 3 4 5 6 (PRODUCT LEVEL)	SEE PAGE
		1,2	**6V-8636**	1	CONNECTOR	
	37	1	*148-8363*	1	ELBOW AS	
		1	**3K-0360**	1	SEAL-O-RING	
		1	**6V-8397**	1	SEAL-O-RING	
		1	**6V-9876**	1	ELBOW	
	38	1,2	*148-8367*	5	ELBOW AS	
					(EACH INCLUDES)	
		1,2	**6V-8397**	1	SEAL-O-RING	
		1,2	**6V-9850**	1	ELBOW	
	39	1,2	*148-8378*	5	ELBOW AS	
					(EACH INCLUDES)	
		1,2	**3J-1907**	1	SEAL-O-RING	
		1,2	**6V-8397**	1	SEAL-O-RING	
		1,2	**6V-8724**	1	ELBOW	
	40	1	*148-8419*	2	REDUCER AS	
					(EACH INCLUDES)	
		1	**4J-5477**	1	SEAL-O-RING	
		1	**6V-8935**	1	REDUCER-O-RING	
	41	2	*148-8435*	1	TEE AS	
		2	**3J-1907**	1	SEAL-O-RING	
		2	**6V-8397**	2	SEAL-O-RING	
		2	**6V-8781**	1	TEE-FACE SEAL	
	42	2	*148-8439*	2	TEE AS	
					(EACH INCLUDES)	
		2	**3J-1907**	1	SEAL-O-RING	
		2	**6V-8397**	2	SEAL-O-RING	
		2	**6V-8774**	1	TEE	
	43	2	*162-0177*	1	PLUG AS	
		2	**3J-1907**	1	SEAL-O-RING	
		2	**9S-8004**	1	PLUG	
	44	2	*164-9869*	1	CONNECTOR AS	
		2	**3J-1907**	1	SEAL-O-RING	
		2	**6V-8397**	1	SEAL-O-RING	
		2	**9X-2297**	1	CONNECTOR	
	45	1	**3J-1907**	1	SEAL-O-RING	
	46	1	**4J-0527**	1	SEAL-O-RING	
	47	1	**5K-8451**	2	CLIP	
C	48	1,2	**6V-8397**	1	SEAL-O-RING	
	49	1,2	**8T-4121**	6	WASHER-HARD (11X21X2.5-MM THK)	
M	50	1,2	**8T-4136**	4	BOLT (M10X1.5X25-MM)	
M	51	2	**8T-4137**	2	BOLT (M10X1.5X20-MM)	
M	52	1	**8T-4139**	2	BOLT (M12X1.75X30-MM)	
M	53	1	**8T-4192**	2	BOLT (M12X1.75X25-MM)	
	54	1,2	**8T-4223**	7	WASHER-HARD (13.5X25.5X3-MM THK)	
M	55	2	**8T-4910**	3	BOLT (M12X1.75X60-MM)	

C-CHANGE FROM PREVIOUS TYPE
I-REFER TO HYDRAULIC INFORMATION SYSTEM
M-METRIC PART
Y-SEPARATE ILLUSTRATION

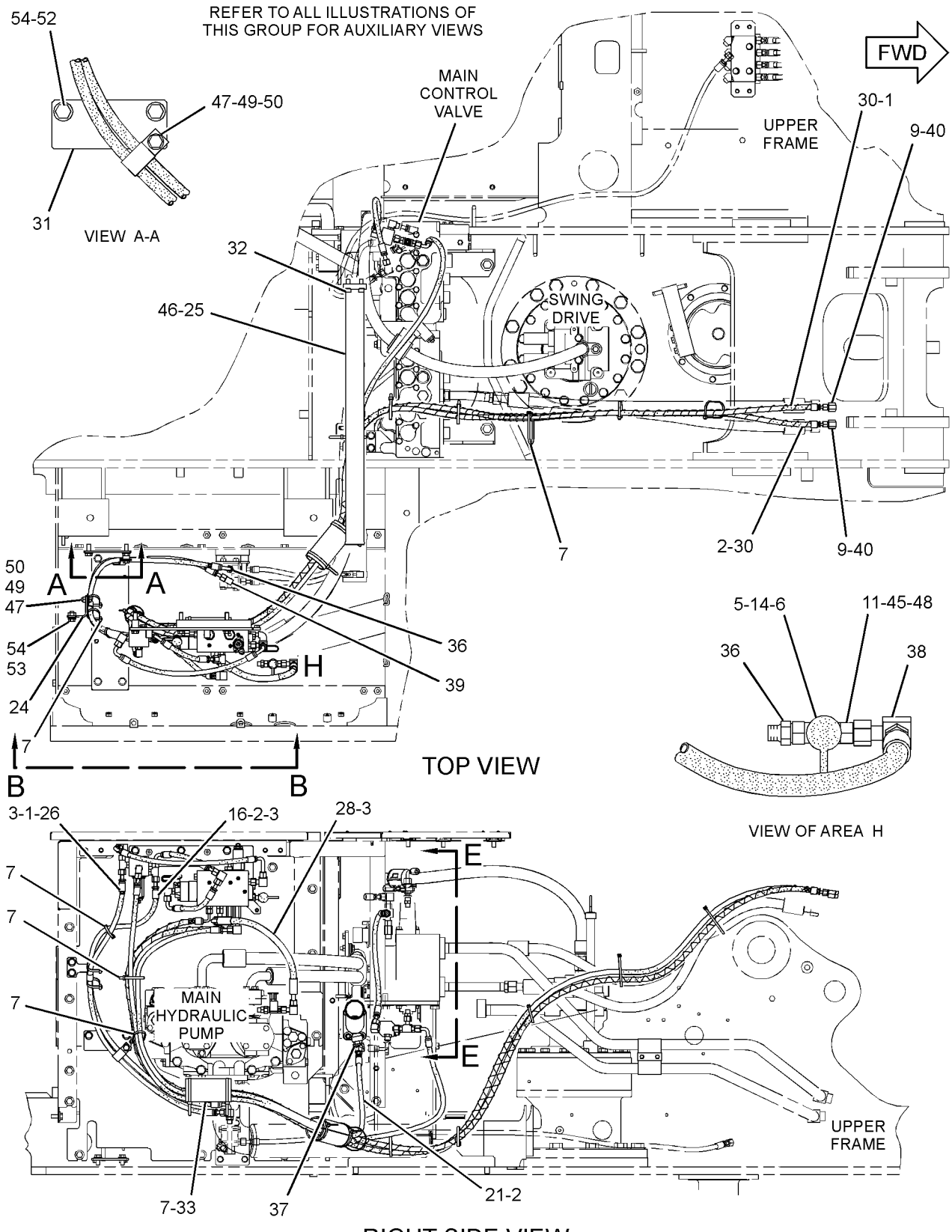

GRAPHIC #1 g01392808

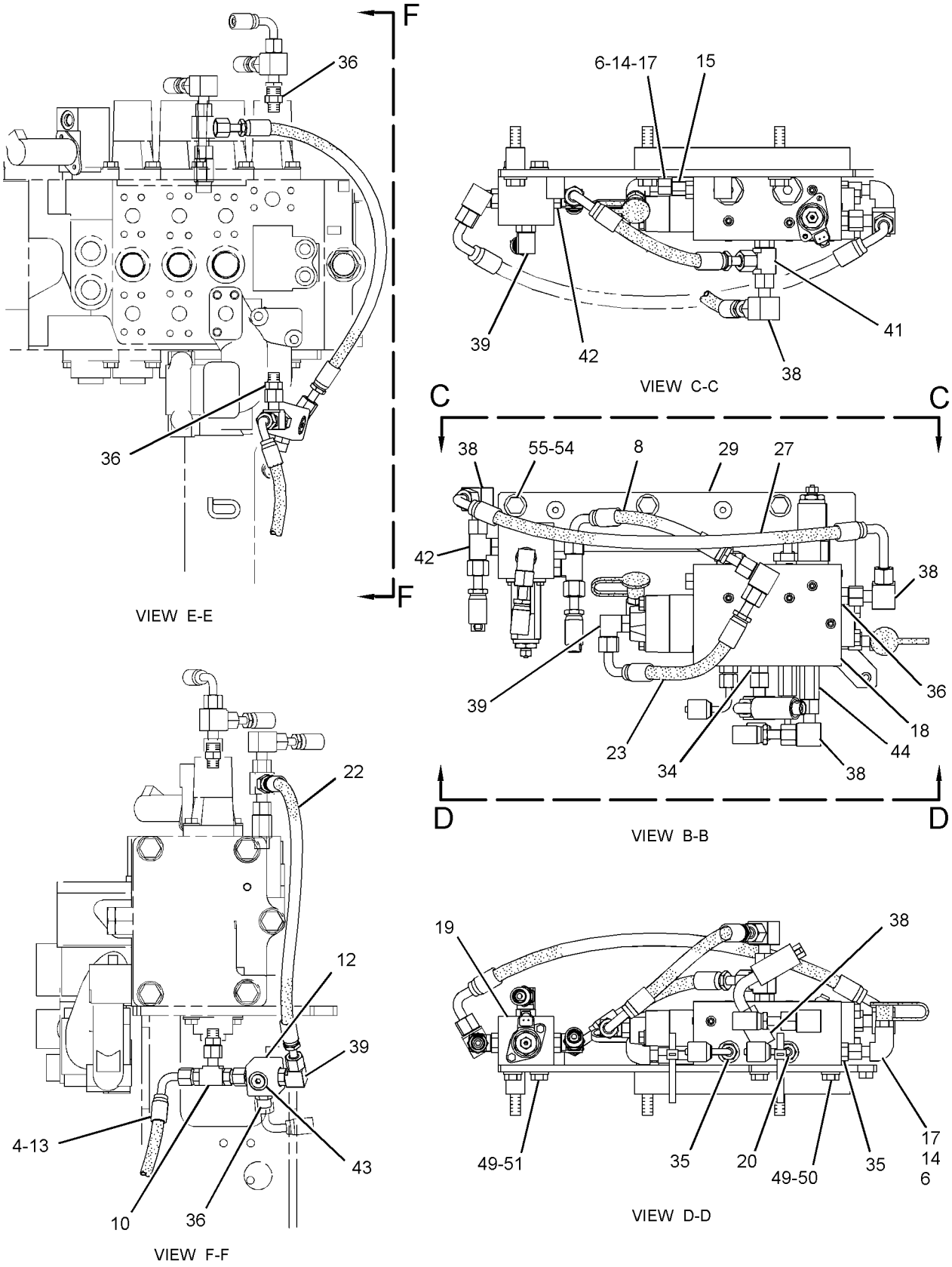

GRAPHIC #2 **<END>** g01525849

HYDRAULIC SYSTEM

285-2864 LINES GP-FRONT—UNIVERSAL QUICK COUPLER

S/N: CWG1-UP
PART OF 342-5703 CONTROL AR-COUPLER
AN ATTACHMENT

SMCS-5057 **i02880280**

NOTE	REF NO	GRAPHIC REF	PART NUMBER	QTY	PART NAME 1 2 3 4 5 6 (PRODUCT LEVEL)	SEE PAGE
I	1	2	**4I-1025**	2	HOSE AS	
	2	2	**5I-4376**	1	FITTING	
	3	1,2	**7K-1181**	14	STRAP-CABLE	
	4	1	**9X-6582**	2	NUT (13/16-16-THD)	
Y	5	1	**123-2549**	1	VALVE GP-SHUTTLE	880
	6	2	**123-4750**	1	VALVE-CHECK	
	7	1	**124-1035**	1	FITTING-ORFS	
	8	2	*164-9640*	1	CONNECTOR AS	
		2	**3J-1907**	1	SEAL-O-RING	
		2	**4J-5477**	1	SEAL-O-RING	
		2	**145-2237**	1	CONNECTOR	
	9	2	**213-3745**	1	ELBOW	
Y	10	2	**254-3080**	1	VALVE GP-CONTROL (QUICK COUPLER)	822
Y	11	2	**258-6749**	1	VALVE GP-SOLENOID (QUICK COUPLER)	890
	12	1	**275-1597**	1	HOSE AS	
	13	2	**285-2904**	1	SUPPORT AS	
I	14	2	**285-2906**	1	HOSE AS	
	15	1	**285-2909**	1	HOSE AS	
I	16	1	**285-2910**	2	HOSE AS	
	17	2	**286-6389**	1	SUPPORT AS	
	18	1	**286-6398**	2	HOSE AS	
	19	2	**286-6471**	1	HOSE AS	
	20	1	**286-6472**	1	HOSE AS	
	21	1	**286-6473**	1	HOSE AS	
	22	1	**286-6475**	1	HOSE AS	
	23	2	*148-8310*	1	ADAPTER AS	
		2	**3J-1907**	1	SEAL-O-RING	
		2	**8T-0151**	1	ADAPTER	
	24	2	*148-8321*	1	CONNECTOR AS	
		2	**6V-8397**	1	SEAL-O-RING	
		2	**3J-1907**	1	SEAL-O-RING	
		2	**8C-0564**	1	CONNECTOR	
	25	1,2	*148-8336*	5	CONNECTOR AS	
					(EACH INCLUDES)	
		1,2	**3J-1907**	1	SEAL-O-RING	
		1,2	**6V-8397**	1	SEAL-O-RING	
		1,2	**6V-8636**	1	CONNECTOR	
	26	2	*148-8353*	1	ELBOW AS	
		2	**3J-1907**	1	SEAL-O-RING	
		2	**6V-8397**	1	SEAL-O-RING	
		2	**6V-9001**	1	ELBOW	
	27	2	*148-8367*	3	ELBOW AS	
					(EACH INCLUDES)	
		2	**6V-8397**	1	SEAL-O-RING	
		2	**6V-9850**	1	ELBOW	
	28	1	*148-8374*	1	ELBOW AS	
		1	**3K-0360**	1	SEAL-O-RING	
		1	**6V-8397**	1	SEAL-O-RING	
		1	**6V-8723**	1	ELBOW	
	29	1,2	*148-8378*	7	ELBOW AS	
					(EACH INCLUDES)	
		1,2	**3J-1907**	1	SEAL-O-RING	
		1,2	**6V-8397**	1	SEAL-O-RING	
		1,2	**6V-8724**	1	ELBOW	

285-2864 **LINES GP-FRONT** *(contd.)* **i02880280**

NOTE	REF NO	GRAPHIC REF	PART NUMBER	QTY	PART NAME 1 2 3 4 5 6 (PRODUCT LEVEL)	SEE PAGE
	30	1	*148-8419*	2	REDUCER AS	
					(EACH INCLUDES)	
		1	**4J-5477**	1	SEAL-O-RING	
		1	**6V-8935**	1	REDUCER-O-RING	
	31	2	*148-8433*	2	TEE AS	
					(EACH INCLUDES)	
		2	**6V-8397**	2	SEAL-O-RING	
		2	**6V-9836**	1	TEE-SWIVEL	
	32	1,2	*148-8439*	3	TEE AS	
					(EACH INCLUDES)	
		1,2	**3J-1907**	1	SEAL-O-RING	
		1,2	**6V-8397**	2	SEAL-O-RING	
		1,2	**6V-8774**	1	TEE	
	33	2	*150-3033*	2	ELBOW AS	
					(EACH INCLUDES)	
		2	**3J-1907**	1	SEAL-O-RING	
		2	**4J-5477**	1	SEAL-O-RING	
		2	**8T-0164**	1	ELBOW	
	34	1	*162-0177*	1	PLUG AS	
		1	**3J-1907**	1	SEAL-O-RING	
		1	**9S-8004**	1	PLUG	
					-OR-	
		1	*148-8336*	1	CONNECTOR AS	
		1	**3J-1907**	1	SEAL-O-RING	
		1	**6V-8397**	1	SEAL-O-RING	
		1	**6V-8636**	1	CONNECTOR	
					(OPTIONAL DESIGN-WHEN EQUIPPED WITH STICK LOWERING CONTROL VALVE)	
	35	2	*164-5567*	2	COUPLER AS-QUICK DISCONNECT	
					(EACH INCLUDES)	
		2	**3J-1907**	1	SEAL-O-RING	
		2	**6V-3965**	1	FITTING (QUICK DISCONNECT)	
	36	2	*165-4931*	1	ELBOW AS	
		2	**3J-1907**	1	SEAL-O-RING	
		2	**6V-8077**	1	ELBOW	
	37	1,2	**4I-9521**	6	BAND-MARKER (RED, L1)	
	38	1,2	**4I-9522**	8	BAND-MARKER (YELLOW, L2)	
	39	2	**4I-9526**	6	BAND-MARKER (WHITE, R2)	
	40	1,2	**4I-9527**	2	BAND-MARKER (GREEN, R3)	
	41	2	**5P-2369**	1	CLIP	
	42	2	**6V-0852**	3	CAP-DUST	
	43	2	**6V-3965**	1	FITTING (QUICK DISCONNECT)	
	44	1	**6V-8397**	2	SEAL-O-RING	
	45	2	**8T-4121**	7	WASHER-HARD (11X21X2.5-MM THK)	
M	46	2	**8T-4136**	7	BOLT (M10X1.5X25-MM)	
M	47	2	**8T-4139**	2	BOLT (M12X1.75X30-MM)	
	48	2	**8T-4223**	2	WASHER-HARD (13.5X25.5X3-MM THK)	

I-REFER TO HYDRAULIC INFORMATION SYSTEM
M-METRIC PART
Y-SEPARATE ILLUSTRATION

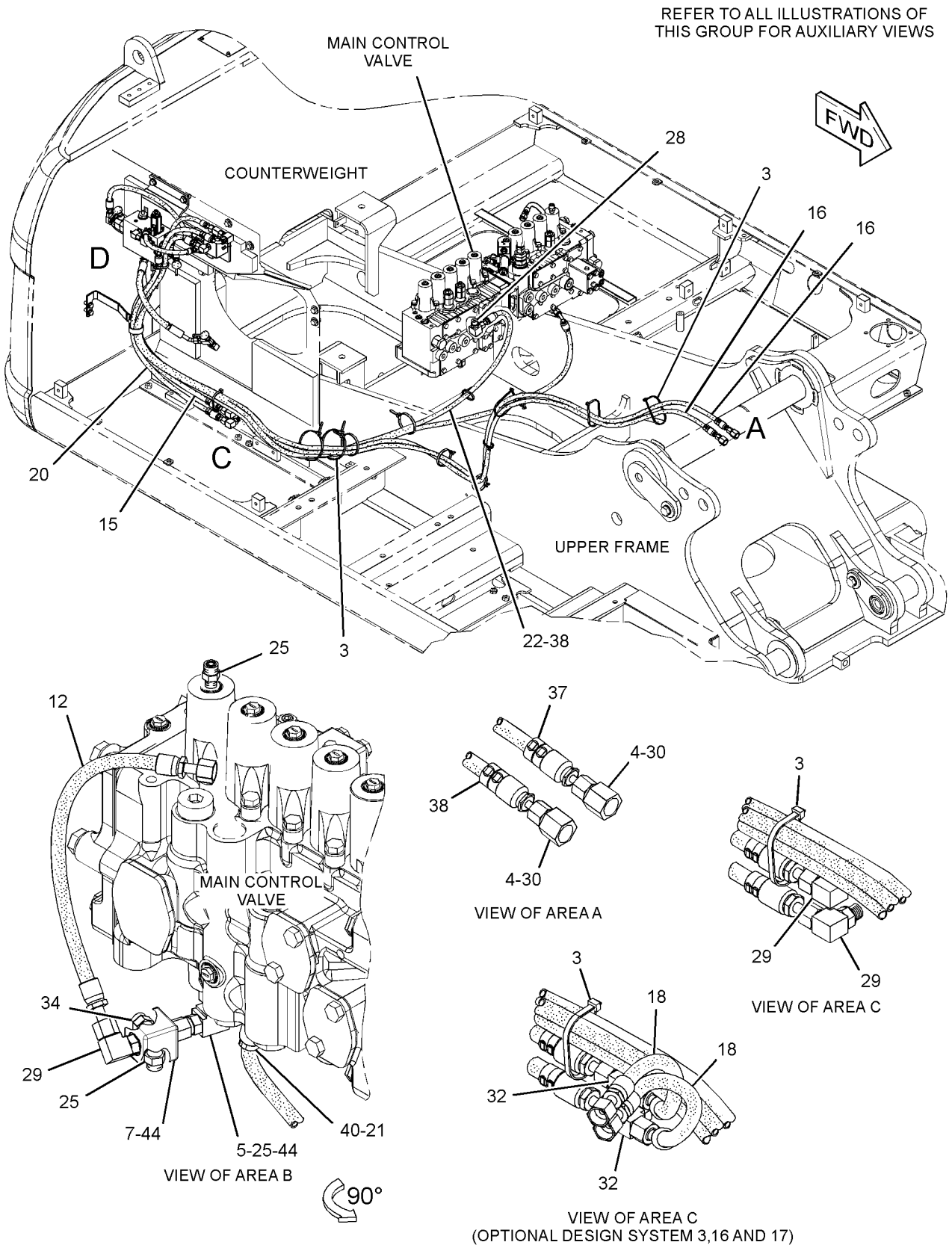

GRAPHIC #1 g01457812

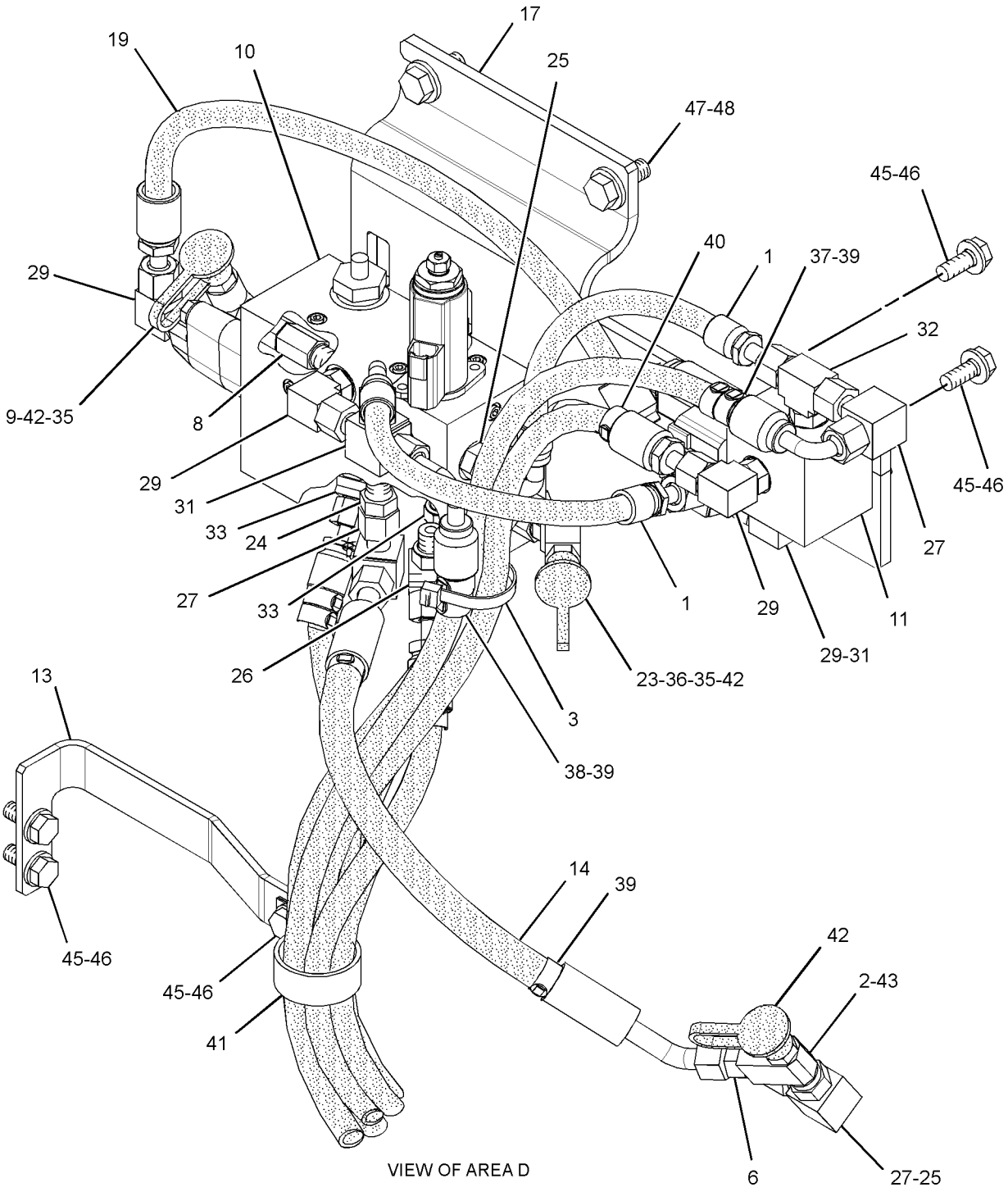

GRAPHIC #2 **<END>** g01457879

HYDRAULIC SYSTEM

289-5416 LINES GP-FRONT—QUICK COUPLER

S/N: WNE1-UP; ZMF1-UP
PART OF 339-0813 CONTROL AR-COUPLER
AN ATTACHMENT

SMCS-5057 **i03012058**

NOTE	REF NO	GRAPHIC REF	PART NUMBER	QTY	PART NAME 1 2 3 4 5 6 (PRODUCT LEVEL)	SEE PAGE
	1	2	**3S-2093**	1	STRAP-CABLE	
	2	1	**4I-9521**	4	BAND-MARKER (RED, L1)	
	3	1	**4I-9522**	4	BAND-MARKER (YELLOW, L2)	
	4	2	**5I-4376**	1	FITTING	
	5	1,2	**7K-1181**	10	STRAP-CABLE	
I	6	1	**7Y-4390**	1	HOSE AS	
	7	1	**9X-6582**	2	NUT (13/16-16-THD)	
	8	2	*148-8368*	1	ELBOW AS	
		2	**3J-1907**	1	SEAL-O-RING	
		2	**4J-5477**	1	SEAL-O-RING	
		2	**6V-8627**	1	ELBOW	
	9	2	*164-5567*	1	COUPLER AS-QUICK DISCONNECT	
		2	**3J-1907**	1	SEAL-O-RING	
		2	**6V-3965**	1	FITTING (QUICK DISCONNECT)	
	10	2	**236-3200**	1	SUPPORT AS	
C	11	2	**328-2035**	1	VALVE GP-SOLENOID & MANIFOLD (QUICK COUPLER)	
		1	**260-3883**	1	COIL AS-SOLENOID	
		1	**1S-9593**	2	STRAP-CABLE	
		1	**186-3735**	2	PIN-CONNECTOR (16-GA TO 18-GA)	
		1	**230-4012**	1	RECEPTACLE AS-CONNECTOR (2-PIN)	
I	12	1	**260-7900**	1	HOSE AS	
	13	2	**285-2415**	1	SUPPORT AS	
	14	2	**289-5607**	1	SUPPORT AS	
	15	2	**307-5161**	1	SUPPORT AS	
I	16	1	**314-8246**	2	HOSE AS	
	17	2	*148-8336*	2	CONNECTOR AS	
					(EACH INCLUDES)	
		2	**3J-1907**	1	SEAL-O-RING	
		2	**6V-8397**	1	SEAL-O-RING	
		2	**6V-8636**	1	CONNECTOR	
	18	2	*148-8367*	1	ELBOW AS	
		2	**6V-8397**	1	SEAL-O-RING	
		2	**6V-9850**	1	ELBOW	
	19	2	*148-8378*	1	ELBOW AS	
		2	**3J-1907**	1	SEAL-O-RING	
		2	**6V-8397**	1	SEAL-O-RING	
		2	**6V-8724**	1	ELBOW	
	20	2	*148-8413*	1	REDUCER AS	
		2	**4J-5477**	1	SEAL-O-RING	
		2	**6V-8934**	1	REDUCER AS	
	21	1	*148-8419*	2	REDUCER AS	
					(EACH INCLUDES)	
		1	**4J-5477**	1	SEAL-O-RING	
		1	**6V-8935**	1	REDUCER-O-RING	
	22	2	*150-3036*	2	ELBOW AS	
					(EACH INCLUDES)	
		2	**3J-1907**	1	SEAL-O-RING	
		2	**6V-8397**	1	SEAL-O-RING	
		2	**8T-1905**	1	ELBOW	
	23	2	*153-6249*	1	CONNECTOR AS	
		2	**3J-1907**	1	SEAL-O-RING	
		2	**6V-8397**	1	SEAL-O-RING	
		2	**8T-8887**	1	CONNECTOR	
	24	2	**5P-7854**	3	CLIP	
	25	2	**6V-0852**	1	CAP-DUST	

289-5416 **LINES GP-FRONT** *(contd.)* **i03012058**

NOTE	REF NO	GRAPHIC REF	PART NUMBER	QTY	PART NAME 1 2 3 4 5 6 (PRODUCT LEVEL)	SEE PAGE
	26	2	**6V-8397**	1	SEAL-O-RING	
	27	2	**8T-4121**	5	WASHER-HARD (11X21X2.5-MM THK)	
M	28	2	**8T-4136**	3	BOLT (M10X1.5X25-MM)	
M	29	2	**8T-4139**	2	BOLT (M12X1.75X30-MM)	
M	30	2	**8T-4184**	2	BOLT (M12X1.75X45-MM)	
M	31	2	**8T-4185**	2	BOLT (M10X1.5X50-MM)	
M	32	2	**8T-4192**	2	BOLT (M12X1.75X25-MM)	
M	33	2	**8T-4194**	2	BOLT (M12X1.75X50-MM)	
	34	2	**8T-4223**	8	WASHER-HARD (13.5X25.5X3-MM THK)	

C-CHANGE FROM PREVIOUS TYPE
I-REFER TO HYDRAULIC INFORMATION SYSTEM
M-METRIC PART

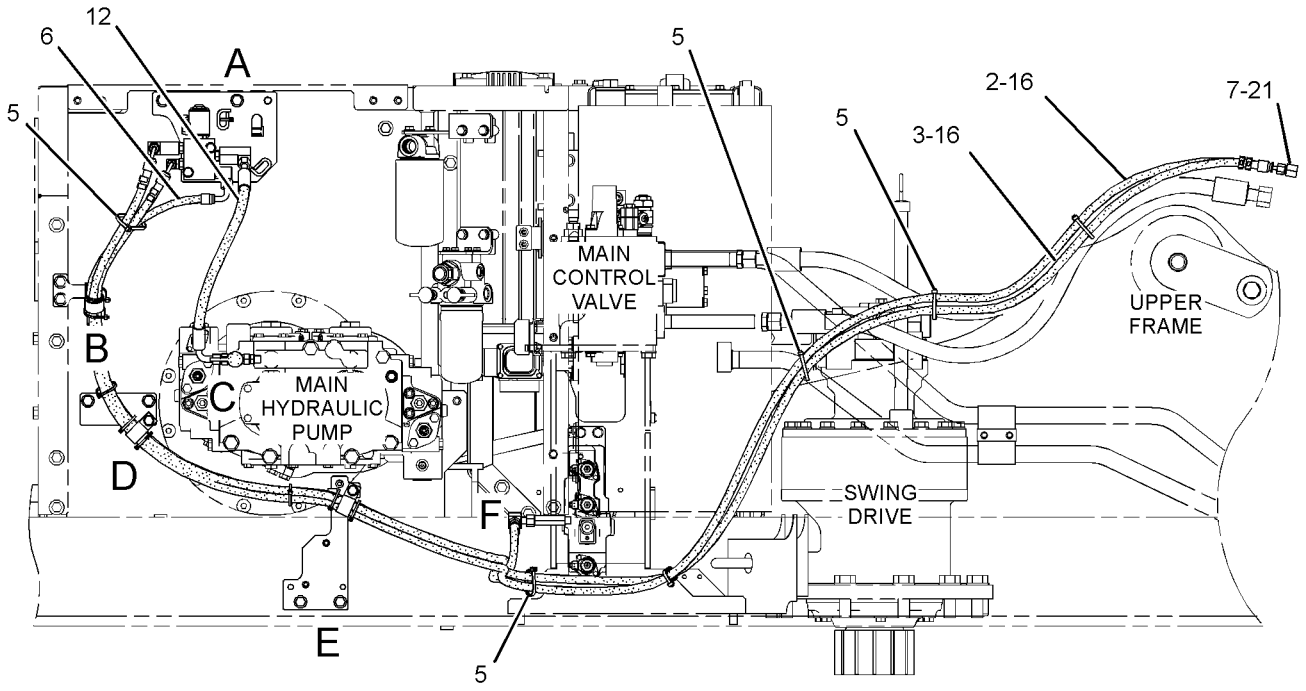

RIGHT SIDE VIEW

REFER TO ALL ILLUSTRATIONS OF
THIS GROUP FOR AUXILIARY VIEWS

GRAPHIC #1 g01525855

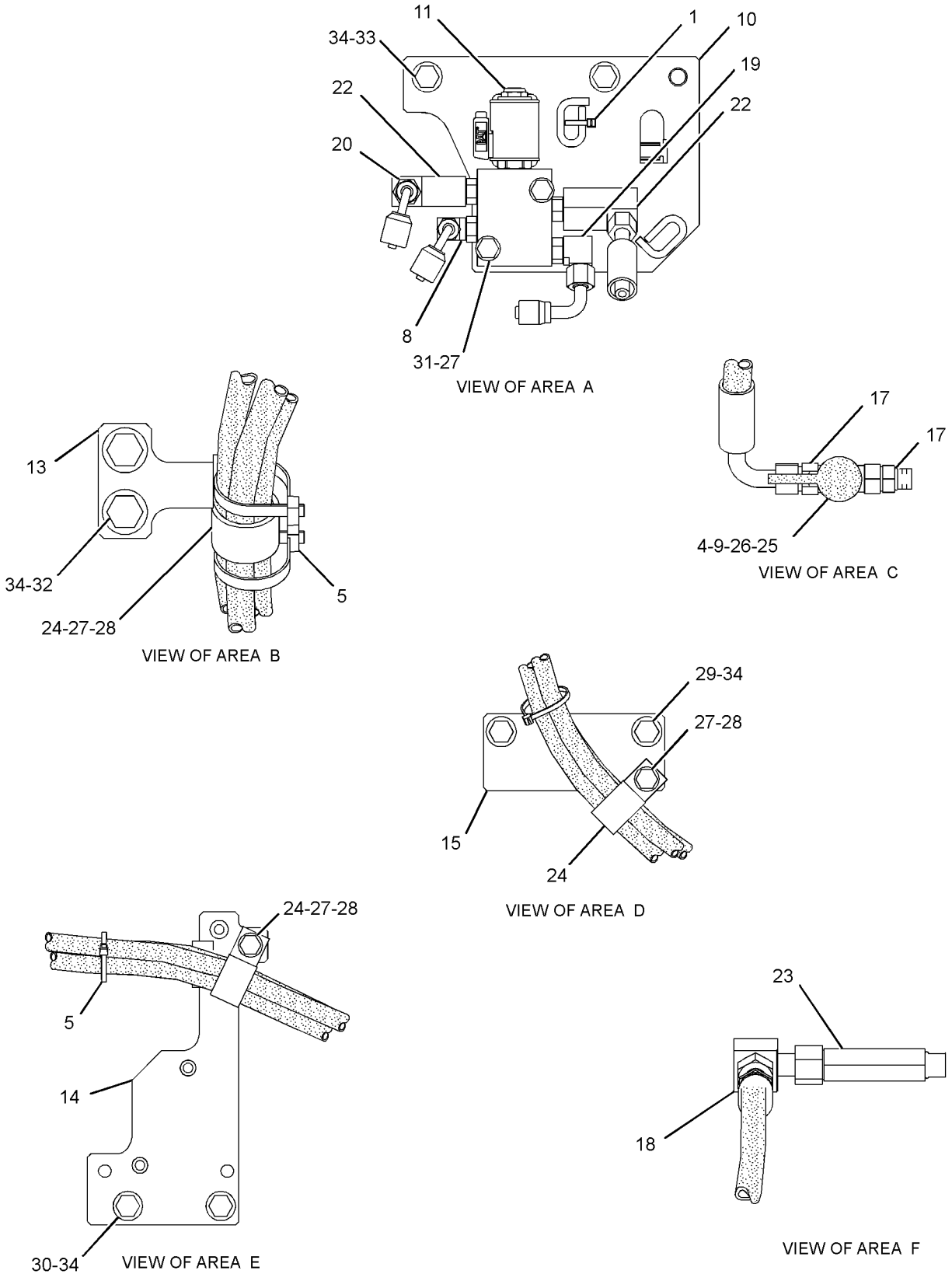

GRAPHIC #2 **<END>** g01525854

HYDRAULIC SYSTEM

302-3315 LINES GP-FRONT—SYSTEM 17, COMBINED FN, MED PR

S/N: CWG1-UP

PART OF 297-0491 CONTROL AR-AUXILIARY

AN ATTACHMENT

SMCS-5057 **i03646482**

NOTE	REF NO	GRAPHIC REF	PART NUMBER	QTY	PART NAME 1 2 3 4 5 6 (PRODUCT LEVEL)	SEE PAGE
	1	2	**7Y-3731**	1	FLANGE	
M	2	1	**105-3477**	4	BOLT-SOCKET HEAD (M10X1.5X45-MM)	
M	3	2	**105-3483**	4	BOLT-SOCKET HEAD (M10X1.5X70-MM)	
M	4	1	**105-3489**	4	BOLT-SOCKET HEAD (M12X1.75X80-MM)	
I	5	2	**184-9469**	1	HOSE AS	
I	6	2	*187-6974*	1	HOSE AS	
	7	2	**187-7077**	1	BLOCK	
	8	2	**260-8043**	1	BLOCK	
I	9	1	**266-0902**	1	HOSE AS	
	10	1	**266-0906**	1	TUBE AS	
	11	2	**266-0913**	1	SUPPORT AS	
	12	1	**266-1266**	1	BLOCK	
	13	2	**266-1278**	1	BLOCK	
	14	1	**266-1279**	1	FLANGE	
I	15	1	**266-1303**	1	HOSE AS	
I	16	1	**269-9680**	1	HOSE AS	
I	17	1	**269-9684**	1	HOSE AS	
	18	1	**269-9976**	1	FLANGE	
	19	1	**269-9994**	1	SUPPORT AS	
	20	1	**275-1439**	1	BLOCK	
	21	1	**275-1440**	1	BLOCK	
M	22	2	**280-2747**	4	BOLT-SOCKET HEAD (M10X1.5X60-MM)	
	23	2	**296-7408**	1	BLOCK	
	24	2	**296-7409**	1	BLOCK	
	25	1	**296-7410**	1	SUPPORT	
	26	1	**296-7411**	1	SUPPORT AS	
I	27	1	**296-7413**	1	HOSE AS	
Y	28	2	**297-0370**	3	VALVE GP-CHECK	816
	29	2	**314-8120**	1	BRACKET	
	30	2	**314-8121**	1	SUPPORT AS	
	31	2	**314-8142**	1	SUPPORT AS	
I	32	2	*314-8212*	1	HOSE AS	
Y	33	2	**323-7558**	2	VALVE GP-SOLENOID & RELIEF (WITH BLOCK)	897
	34	2	**099-8232**	2	SEAL-O-RING	
M	35	1	**101-7401**	8	BOLT-SOCKET HEAD (M10X1.5X20-MM)	
M	36	2	**101-7404**	8	BOLT-SOCKET HEAD (M10X1.5X30-MM)	
M	37	1	**108-4282**	4	BOLT-SOCKET HEAD (M10X1.5X100-MM)	
	38	2	*148-8327*	2	CONNECTOR AS	
					(EACH INCLUDES)	
		2	**3D-2824**	1	SEAL-O-RING	
		2	**6V-8637**	1	CONNECTOR	
		2	**6V-9746**	1	SEAL-O-RING	
	39	2	*148-8330*	1	CONNECTOR AS	
		2	**5K-9090**	1	SEAL-O-RING	
		2	**7M-8485**	1	SEAL-O-RING	
		2	**8T-0198**	1	CONNECTOR	
	40	2	*148-8335*	3	CONNECTOR AS	
					(EACH INCLUDES)	
		2	**5K-9090**	1	SEAL-O-RING	
		2	**6V-8635**	1	CONNECTOR	
		2	**7M-8485**	1	SEAL-O-RING	
	41	1	*148-8347*	1	ELBOW AS	
		1	**3D-2824**	1	SEAL-O-RING	
		1	**6V-9007**	1	ELBOW	
		1	**6V-9746**	1	SEAL-O-RING	

302-3315 **LINES GP-FRONT** *(contd.)* **i03646482**

NOTE	REF NO	GRAPHIC REF	PART NUMBER	QTY	PART NAME 1 2 3 4 5 6 (PRODUCT LEVEL)	SEE PAGE
	42	1	*148-8356*	1	ELBOW AS	
		1	**2S-4078**	1	SEAL-O-RING	
		1	**6V-8400**	1	SEAL-O-RING	
		1	**6V-9009**	1	ELBOW	
	43	2	*148-8357*	1	ELBOW AS	
		2	**5K-9090**	1	SEAL-O-RING	
		2	**6V-9008**	1	ELBOW	
		2	**7M-8485**	1	SEAL-O-RING	
	44	1	*148-8411*	1	PLUG AS	
		1	**3K-0360**	1	SEAL-O-RING	
		1	**9S-4185**	1	PLUG-O-RING	
	45	1	*153-6237*	1	ELBOW AS	
		1	**3D-2824**	1	SEAL-O-RING	
		1	**6V-9004**	1	ELBOW	
		1	**6V-9746**	1	SEAL-O-RING	
	46	2	*164-4180*	2	PLUG AS	
					(EACH INCLUDES)	
		2	**7M-8485**	1	SEAL-O-RING	
		2	**9S-4181**	1	PLUG-O-RING	
	47	2	*164-5574*	1	TEE AS	
		2	**3D-2824**	1	SEAL-O-RING	
		2	**6V-8784**	1	TEE-FACE SEAL	
		2	**6V-9746**	2	SEAL-O-RING	
	48	1	*164-5606*	1	CONNECTOR AS	
		1	**3D-2824**	1	SEAL-O-RING	
		1	**6V-9746**	1	SEAL-O-RING	
		1	**8T-0078**	1	CONNECTOR	
	49	2	*183-7262*	2	PLUG AS	
					(EACH INCLUDES)	
		2	**2S-4078**	1	SEAL-O-RING	
		2	**9S-8010**	1	PLUG	
	50	1,2	**1P-3702**	6	SEAL-RECTANGULAR	
	51	2	**1P-3703**	4	SEAL-RECTANGULAR	
	52	2	**1P-3704**	2	SEAL-RECTANGULAR	
	53	2	**1P-4578**	2	FLANGE-HALF	
	54	1	**4J-0522**	1	SEAL-O-RING	
	55	1	**4J-0527**	1	SEAL-O-RING	
	56	2	**5K-9090**	1	SEAL-O-RING	
	57	1	**5P-7470**	2	CLIP (SLOT)	
	58	1	**5P-7471**	2	CLIP (TAB)	
	59	1	**5P-8182**	2	GROMMET	
	60	2	**6V-9746**	1	SEAL-O-RING	
	61	2	**7Y-3729**	1	FLANGE	
	62	1,2	**8T-4121**	14	WASHER-HARD (11X21X2.5-MM THK)	
M	63	1,2	**8T-4136**	8	BOLT (M10X1.5X25-MM)	
M	64	1	**8T-4139**	4	BOLT (M12X1.75X30-MM)	
M	65	2	**8T-4176**	8	BOLT (M12X1.75X90-MM)	
M	66	2	**8T-4183**	8	BOLT (M12X1.75X40-MM)	
M	67	2	**8T-4196**	6	BOLT (M10X1.5X35-MM)	
	68	1,2	**8T-4223**	44	WASHER-HARD (13.5X25.5X3-MM THK)	
M	69	1,2	**8T-4956**	8	BOLT (M12X1.75X35-MM)	
M	70	2	**8T-5092**	8	BOLT (M12X1.75X150-MM)	
M	71	2	**8T-6868**	8	BOLT (M12X1.75X80-MM)	

I-REFER TO HYDRAULIC INFORMATION SYSTEM
M-METRIC PART
Y-SEPARATE ILLUSTRATION

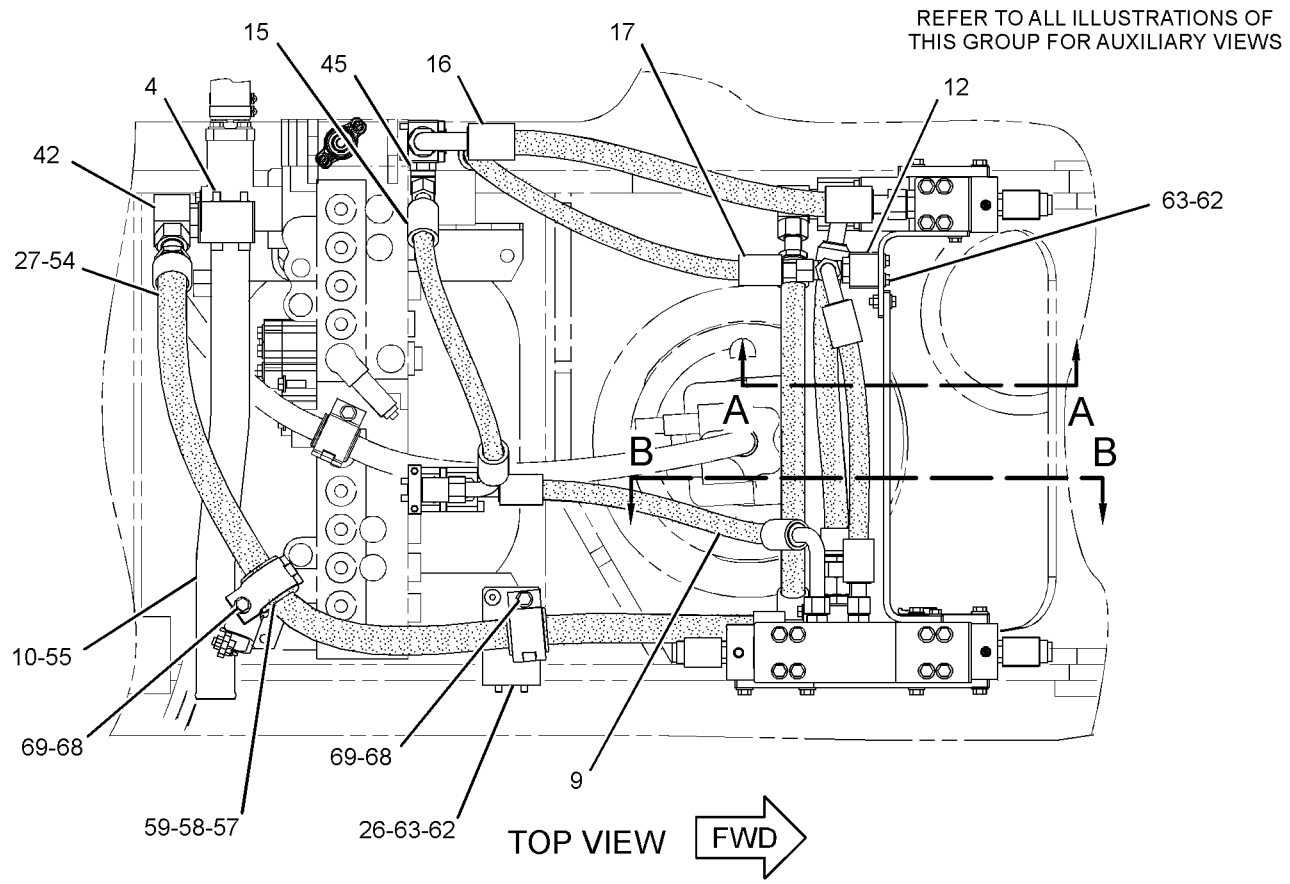

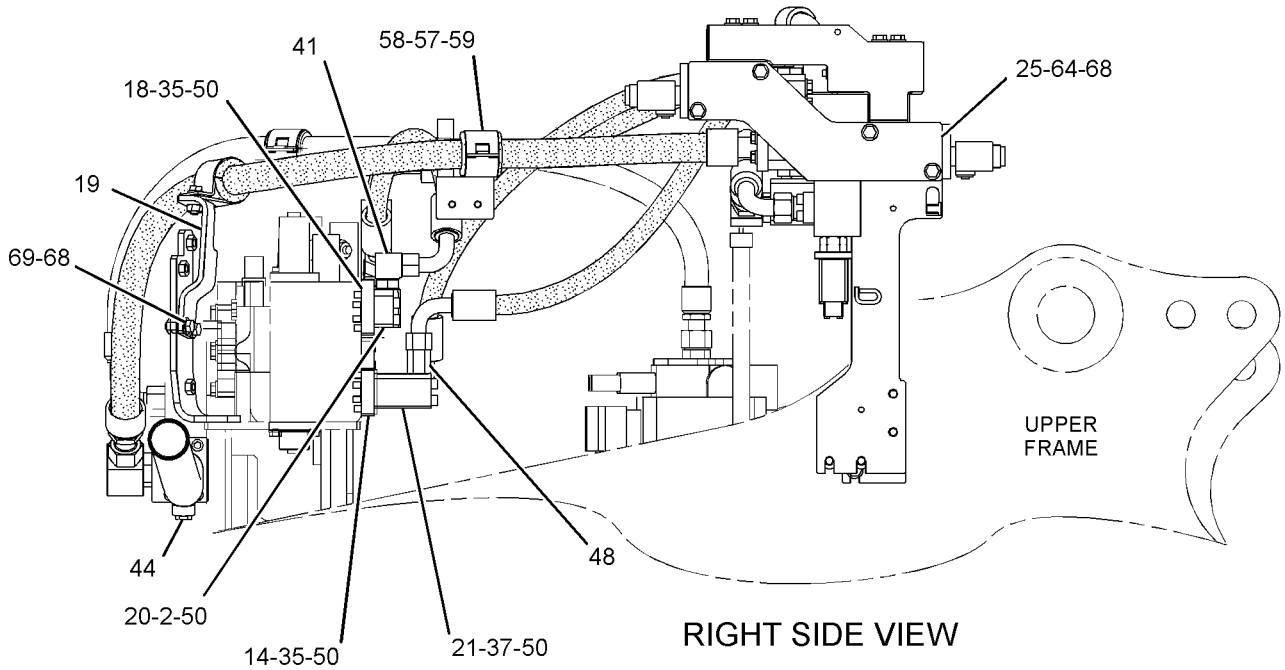

GRAPHIC #1 g01960908

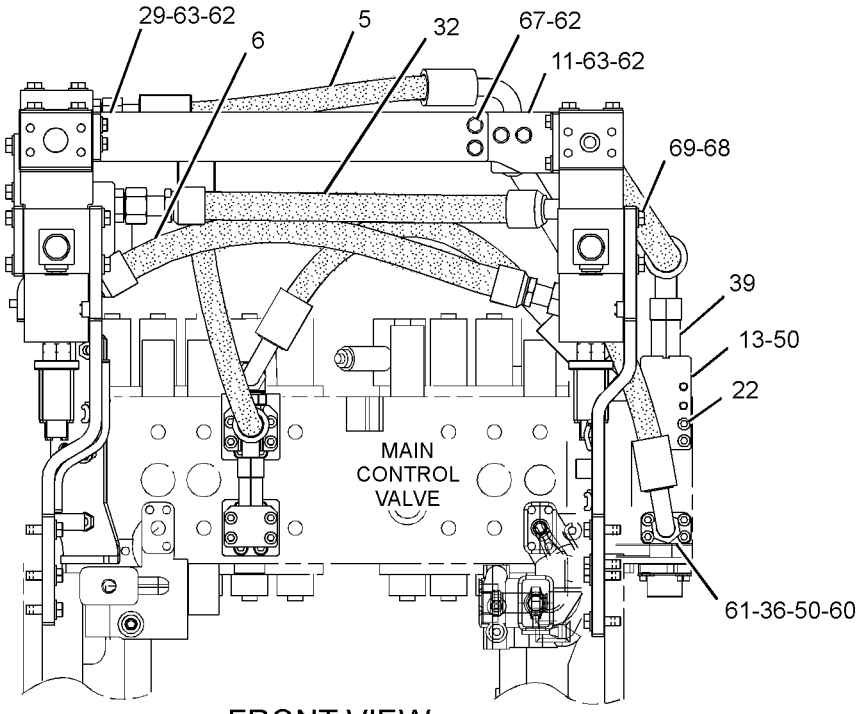

FRONT VIEW

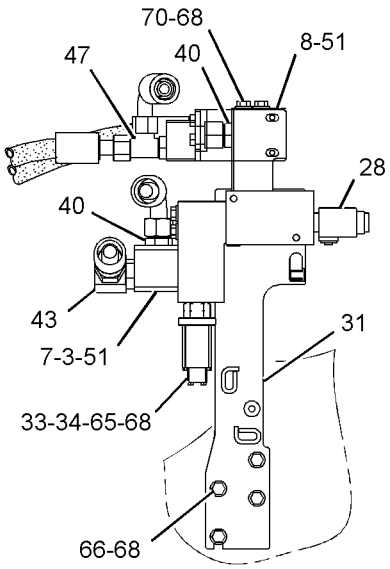

SECTION A-A

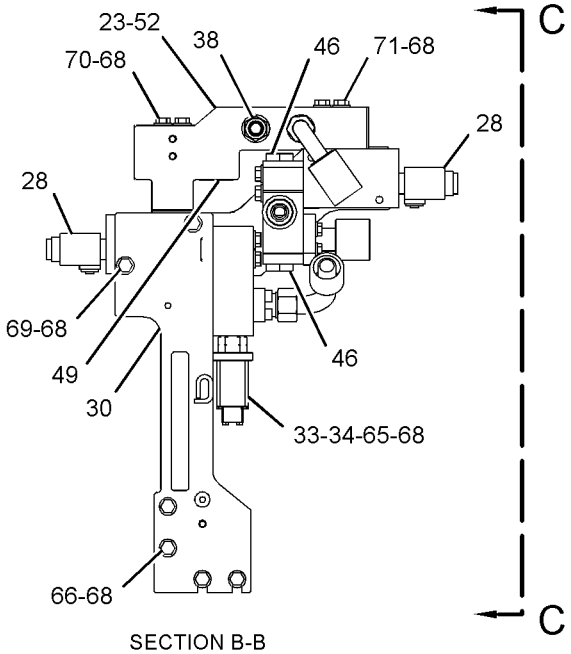

SECTION B-B

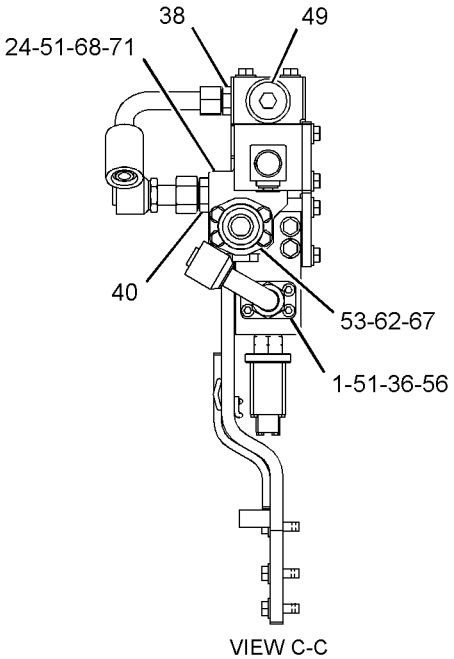

VIEW C-C

GRAPHIC #2 **<END>** g01960909

HYDRAULIC SYSTEM

248-9846 LINES GP-HYDRAULIC OIL COOLER–

CONTROL VALVE, PUMP

S/N: WNE1-UP; ZMF1-UP

PART OF 270-5712, 270-5713 HYDRAULIC AR

SMCS-1374 **i02974822**

NOTE	REF NO	GRAPHIC REF	PART NUMBER	QTY	PART NAME 1 2 3 4 5 6 (PRODUCT LEVEL)	SEE PAGE
	1	1	**144-0367**	2	CLAMP-HOSE	
	2	1	**173-4816**	1	SUPPORT AS	
I	3	2	**179-7863**	1	HOSE AS	
I	4	2	**179-7867**	1	HOSE AS	
	5	2	**196-0807**	1	PLATE	
	6	1	**199-7394**	1	PIPE AS	
I	7	2	**199-7403**	1	HOSE AS	
	8	1	**227-0581**	1	HOSE	
	9	1	**266-1037**	1	TUBE AS	
	10	2	**266-1045**	1	TUBE AS	
	11	2	**319-9888**	1	SUPPORT AS	
Y	12	1	**297-0462**	1	VALVE GP-CHECK	818
M	13	1	**096-4883**	2	LOCKNUT (M10X1.5-THD)	
M	14	1	**101-7402**	4	BOLT-SOCKET HEAD (M12X1.75X30-MM)	
C	15	1	*148-8354*	1	ELBOW AS	
		1	**3K-0360**	1	SEAL-O-RING	
		1	**6V-8398**	1	SEAL-O-RING	
		1	**6V-9002**	1	ELBOW	
	16	1	*148-8357*	1	ELBOW AS	
		1	**5K-9090**	1	SEAL-O-RING	
		1	**6V-9008**	1	ELBOW	
		1	**7M-8485**	1	SEAL-O-RING	
	17	2	**1P-3703**	4	SEAL-RECTANGULAR	
	18	1,2	**4J-0524**	3	SEAL-O-RING	
	19	1	**4J-0527**	1	SEAL-O-RING	
	20	1	**5P-7468**	1	CLIP (SLOT)	
	21	1	**5P-7469**	1	CLIP (TAB)	
	22	1	**5P-8444**	1	GROMMET	
					–OR–	
			8T-7087	1	GROMMET	
	23	1	**6V-0400**	4	FLANGE-HALF	
	24	2	**7G-5984**	1	CLIP (TAB)	
	25	2	**7G-5985**	1	CLIP (SLOT)	
	26	2	**7G-5986**	1	GROMMET	
M	27	1	**7X-2544**	4	BOLT (M10X1.5X104-MM)	
	28	2	**7X-7729**	2	WASHER (11X25X3-MM THK)	
M	29	1	**7Y-5247**	1	U-BOLT	
	30	1,2	**8T-4121**	8	WASHER-HARD (11X21X2.5-MM THK)	
M	31	2	**8T-4136**	2	BOLT (M10X1.5X25-MM)	
M	32	1,2	**8T-4139**	4	BOLT (M12X1.75X30-MM)	
M	33	1	**8T-4183**	2	BOLT (M12X1.75X40-MM)	
M	34	2	**8T-4186**	2	BOLT (M10X1.5X40-MM)	
M	35	1	**8T-4194**	8	BOLT (M12X1.75X50-MM)	
	36	1,2	**8T-4223**	15	WASHER-HARD (13.5X25.5X3-MM THK)	
M	37	1,2	**8T-4956**	5	BOLT (M12X1.75X35-MM)	

C-CHANGE FROM PREVIOUS TYPE
I-REFER TO HYDRAULIC INFORMATION SYSTEM
M-METRIC PART
Y-SEPARATE ILLUSTRATION

REFER TO ALL ILLUSTRATIONS OF THIS GROUP FOR AUXILIARY VIEWS

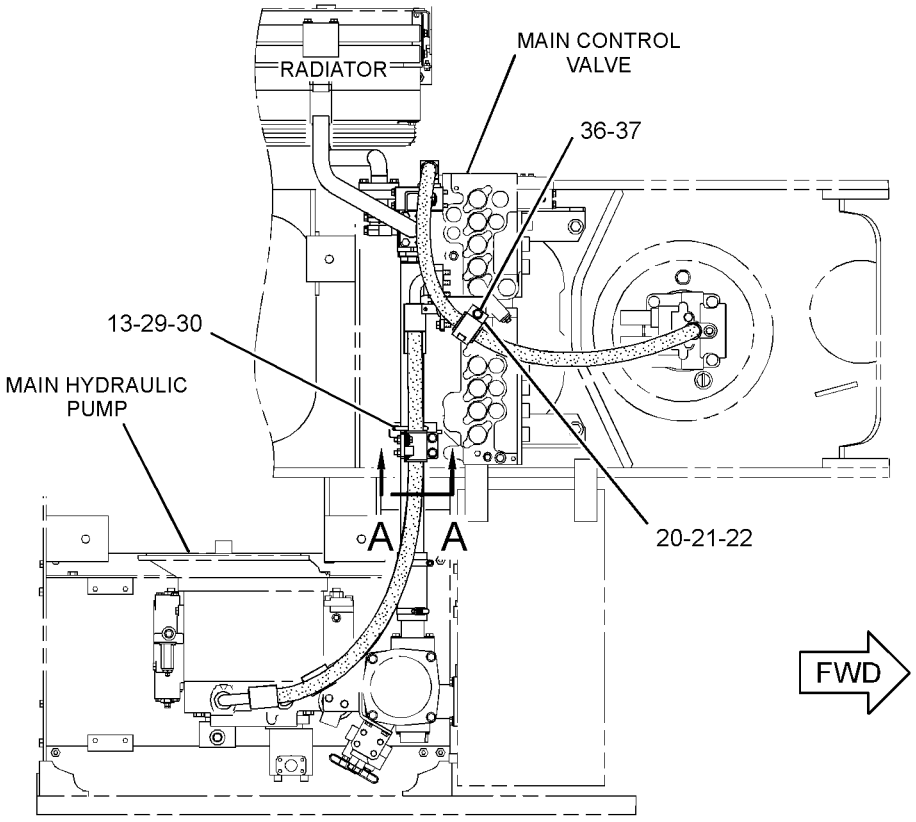

TOP VIEW

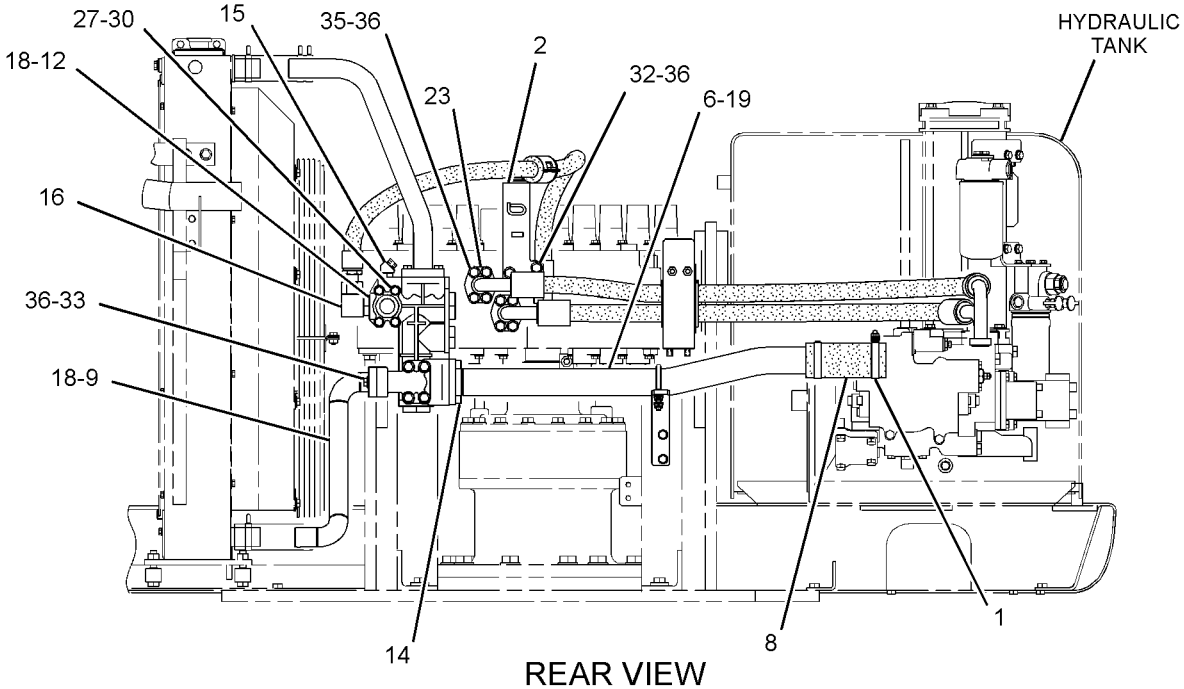

REAR VIEW

GRAPHIC #1

g01516505

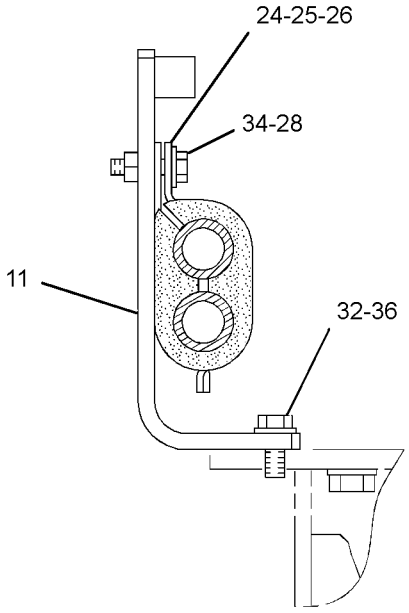

SECTION A-A

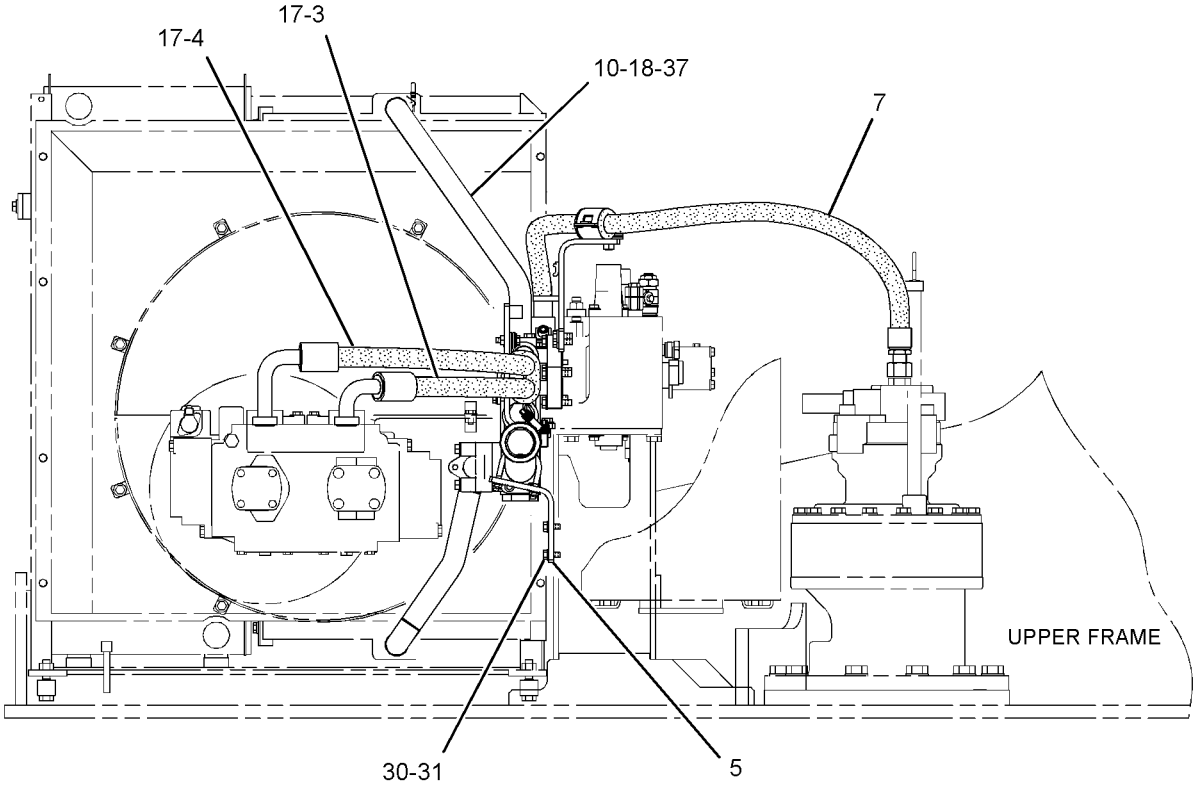

RIGHT SIDE VIEW

GRAPHIC #2 **<END>** g01516506

HYDRAULIC SYSTEM

248-9848 LINES GP-HYDRAULIC OIL COOLER

S/N: WNE1-UP; ZMF1-UP

PART OF 270-5712, 270-5713 HYDRAULIC AR

SMCS-1374 **i02546419**

NOTE	REF NO	GRAPHIC REF	PART NUMBER	QTY	PART NAME 1 2 3 4 5 6 (PRODUCT LEVEL)	SEE PAGE
	1	1	**227-0265**	2	HOSE	
	2	1	**8T-6703**	5	CLAMP-HOSE	

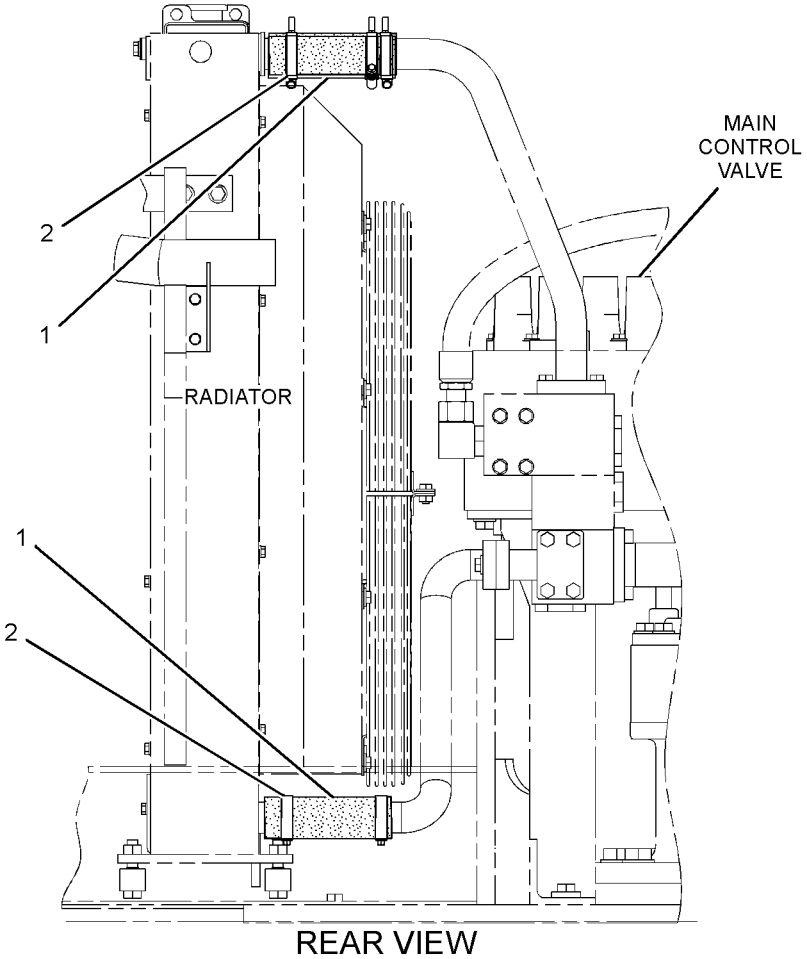

REAR VIEW

GRAPHIC #1 **<END>** g01276111

HYDRAULIC SYSTEM

266-0960 LINES GP-HYDRAULIC OIL COOLER

S/N: CWG1-UP

PART OF 285-1356 HYDRAULIC AR

SMCS-1374 **i02814867**

NOTE	REF NO	GRAPHIC REF	PART NUMBER	QTY	PART NAME 1 2 3 4 5 6 (PRODUCT LEVEL)	SEE PAGE
	1		**229-1019**	2	HOSE	
	2	1	**8T-6703**	6	CLAMP - HOSE	

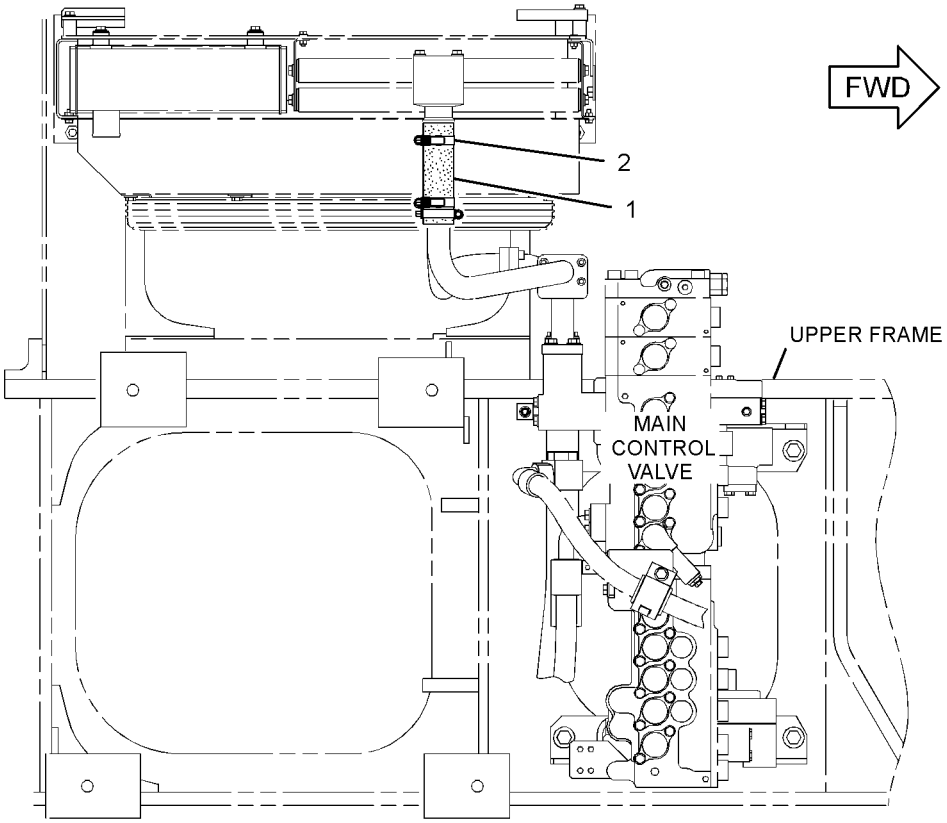

TOP VIEW

GRAPHIC #1 **<END>** g01311378

HYDRAULIC SYSTEM

248-9825 LINES GP-PILOT–JOYSTICK, PEDALS

S/N: WNE1-UP; ZMF1-UP; CWG1-UP

PART OF 270-5712, 270-5713, 285-1356 HYDRAULIC AR

SMCS-5057, 5059 **i03630856**

NOTE	REF NO	GRAPHIC REF	PART NUMBER	QTY	PART NAME 1 2 3 4 5 6 (PRODUCT LEVEL)	SEE PAGE
	1	2	**4I-9521**	2	BAND-MARKER (RED, L1)	
	2	2	**4I-9522**	2	BAND-MARKER (YELLOW, L2)	
	3	2	**4I-9523**	2	BAND-MARKER (BLUE, L3)	
	4	2	**4I-9524**	2	BAND-MARKER (BROWN, L4)	
	5	2	**4I-9525**	2	BAND-MARKER (ORANGE, R1)	
	6	2	**4I-9526**	2	BAND-MARKER (WHITE, R2)	
	7	2	**4I-9527**	2	BAND-MARKER (GREEN, R3)	
	8	2	**4I-9528**	2	BAND-MARKER (PURPLE, R4)	
	9	1	**7K-1181**	3	STRAP-CABLE	
I	10	1	**087-4402**	2	HOSE AS	
	11	2	**133-5813**	4	BAND-MARKER (GRAY, P)	
	12	1	**309-5769**	1	SWITCH AS-PRESSURE (IMPLEMENT, SWING)	
	12A	1	**309-5769**	1	SWITCH AS-PRESSURE (TRAVEL, LH)	
	12B	2	**309-5769**	1	SWITCH AS-PRESSURE (TRAVEL, RH)	
					(EACH SWITCH AS INCLUDES)	
		1,2	**102-8802**	1	KIT-RECEPTACLE (2-PIN)	
					(INCLUDES RECEPTACLE AS & WEDGE)	
		1,2	**9X-3401**	2	PIN-CONNECTOR (16-GA TO 18-GA)	
					–OR–	
		1,2	**126-1767**	2	PIN-CONNECTOR (14-GA)	
	13	2	**168-9759**	1	BLOCK	
	14	1,2	**184-9336**	4	SUPPORT	
	15	2	**185-0383**	1	BRACKET	
Y	16	2	**185-0462**	1	VALVE GP-SHUTTLE	883
	17	2	**236-2843**	4	HOSE AS	
	18	2	**236-2844**	3	HOSE AS	
	19	2	**236-2848**	1	HOSE AS	
	20	2	**245-5079**	1	HOSE AS	
	21	2	**255-1665**	1	HOSE AS	
	22	2	**255-1666**	1	HOSE AS	
CY	23	1	**310-0414**	1	VALVE GP-PILOT (TRAVEL)	859
	24	1,2	*148-8336*	23	CONNECTOR AS	
					(EACH INCLUDES)	
		1,2	**3J-1907**	1	SEAL-O-RING	
		1,2	**6V-8397**	1	SEAL-O-RING	
		1,2	**6V-8636**	1	CONNECTOR	
	25	2	*148-8353*	8	ELBOW AS	
					(EACH INCLUDES)	
		2	**3J-1907**	1	SEAL-O-RING	
		2	**6V-8397**	1	SEAL-O-RING	
		2	**6V-9001**	1	ELBOW	
	26	2	*148-8354*	2	ELBOW AS	
					(EACH INCLUDES)	
		2	**3K-0360**	1	SEAL-O-RING	
		2	**6V-8398**	1	SEAL-O-RING	
		2	**6V-9002**	1	ELBOW	
	27	1,2	*148-8378*	6	ELBOW AS	
					(EACH INCLUDES)	
		1,2	**3J-1907**	1	SEAL-O-RING	
		1,2	**6V-8397**	1	SEAL-O-RING	
		1,2	**6V-8724**	1	ELBOW	
	28	2	*148-8407*	4	PLUG AS	
					(EACH INCLUDES)	
		2	**3J-1907**	1	SEAL-O-RING	
		2	**9S-4191**	1	PLUG-O-RING	

248-9825 **LINES GP-PILOT** *(contd.)* **i03630856**

NOTE	REF NO	GRAPHIC REF	PART NUMBER	QTY	PART NAME 1 2 3 4 5 6 (PRODUCT LEVEL)	SEE PAGE
	29	1,2	*164-5628*	3	CONNECTOR AS	
					(EACH INCLUDES)	
		1,2	**3J-1907**	1	SEAL-O-RING	
		1,2	**6V-8397**	1	SEAL-O-RING	
		1,2	**107-6631**	1	CONNECTOR-FILTER	
	30	1,2	**8T-4121**	20	WASHER-HARD (11X21X2.5-MM THK)	
M	31	1	**8T-4136**	4	BOLT (M10X1.5X25-MM)	
M	32	1,2	**8T-4137**	15	BOLT (M10X1.5X20-MM)	
M	33	2	**8T-4198**	2	BOLT (M10X1.5X100-MM)	
	34	2	**289-5657**	1	HOSE AS	
	35	2	**4P-7581**	1	CLIP	

C-CHANGE FROM PREVIOUS TYPE
I-REFER TO HYDRAULIC INFORMATION SYSTEM
M-METRIC PART
Y-SEPARATE ILLUSTRATION

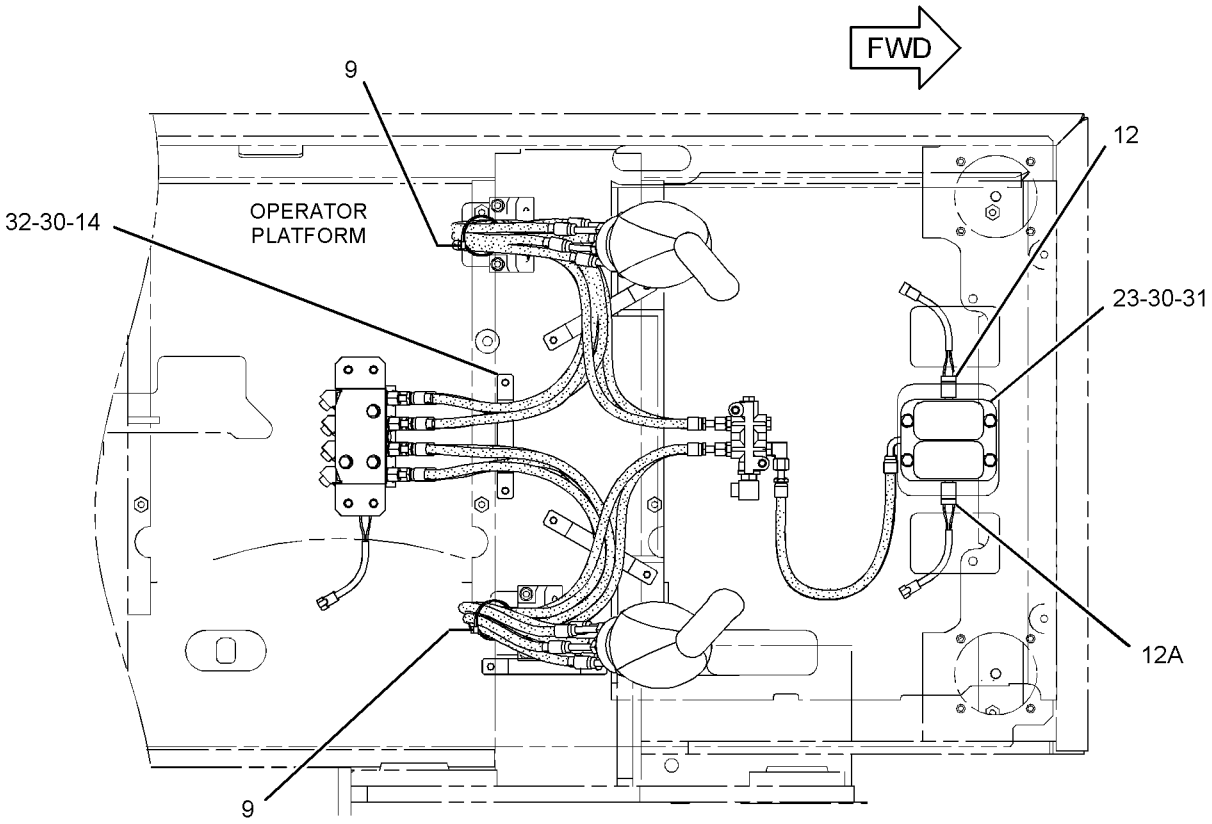

TOP VIEW

REFER TO ALL ILLUSTRATIONS OF
THIS GROUP FOR AUXILIARY VIEWS

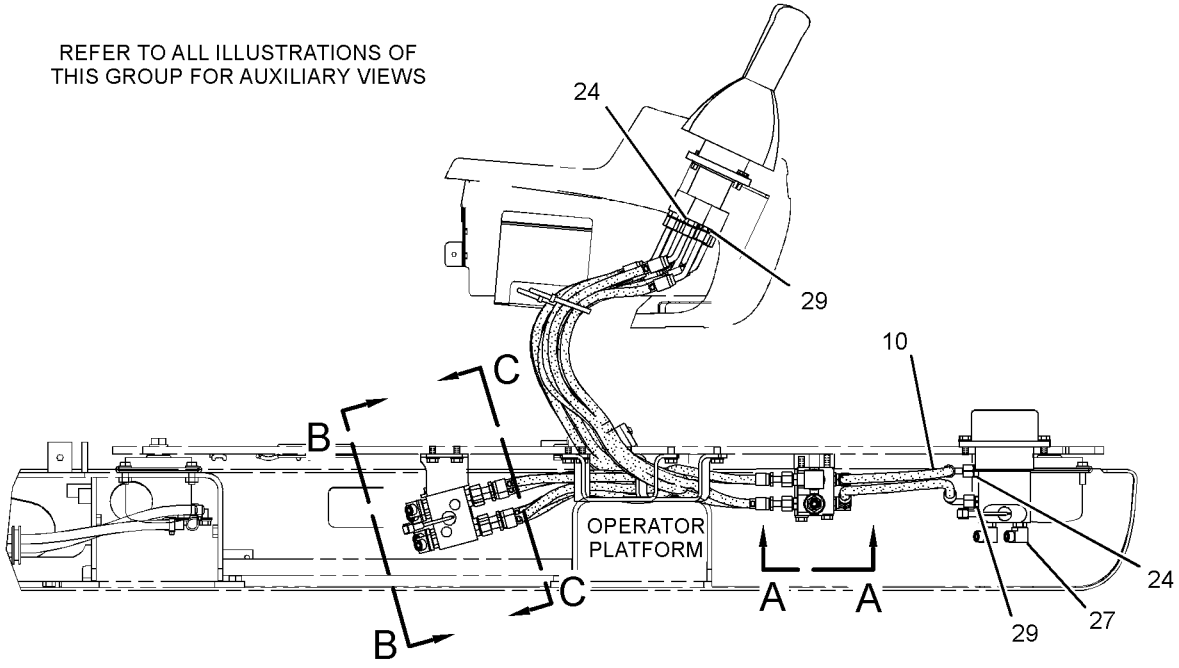

RIGHT SIDE VIEW

GRAPHIC #1

g01269086

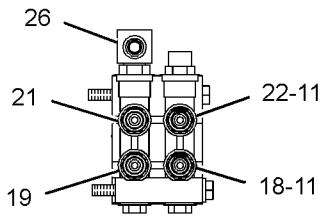

VIEW D-D

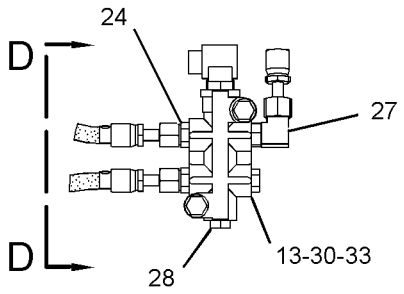

VIEW A-A

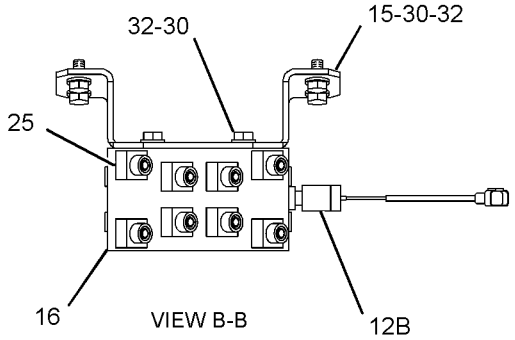

VIEW B-B

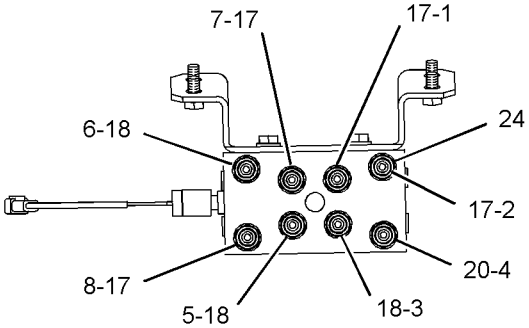

SECTION C-C

GRAPHIC #2 **<END>** g01269087

248-9850 LINES GP-PILOT—MAIN CONTROL VALVE

S/N: WNE1-UP; ZMF1-UP

PART OF 270-5712, 270-5713 HYDRAULIC AR

SMCS-5057, 5059 **i03567856**

NOTE	REF NO	GRAPHIC REF	PART NUMBER	QTY	PART NAME 1 2 3 4 5 6 (PRODUCT LEVEL)	SEE PAGE
I	1	1	**4I-1631**	1	HOSE AS	
I	2	1	**4I-3981**	1	HOSE AS	
I	3	1	**4I-3994**	1	HOSE AS	
I	4	1	**4I-6054**	1	HOSE AS	
	5	1	**4I-9521**	6	BAND-MARKER (RED, L1)	
	6	1	**4I-9522**	6	BAND-MARKER (YELLOW, L2)	
	7	1	**4I-9523**	2	BAND-MARKER (BLUE, L3)	
	8	1	**4I-9524**	2	BAND-MARKER (BROWN, L4)	
	9	1	**4I-9525**	6	BAND-MARKER (ORANGE, R1)	
	10	1	**4I-9526**	6	BAND-MARKER (WHITE, R2)	
	11	1	**4I-9527**	2	BAND-MARKER (GREEN, R3)	
	12	1	**4I-9528**	2	BAND-MARKER (PURPLE, R4)	
I	13	1	**5I-8853**	1	HOSE AS	
	14	1	**7K-1181**	13	STRAP-CABLE	
I	15	1	**7Y-4193**	2	HOSE AS	
I	16	1	**7Y-4390**	1	HOSE AS	
I	17	1	**087-5303**	2	HOSE AS	
	18	1	**176-4708**	1	GROMMET	
I	19	1	**221-4883**	2	HOSE AS	
	20	1	**115-8645**	2	GUARD	
	21	1	*148-8378*	6	ELBOW AS	
					(EACH INCLUDES)	
		1	**3J-1907**	1	SEAL-O-RING	
		1	**6V-8397**	1	SEAL-O-RING	
		1	**6V-8724**	1	ELBOW	
	22	1	*148-8435*	6	TEE AS	
					(EACH INCLUDES)	
		1	**3J-1907**	1	SEAL-O-RING	
		1	**6V-8397**	2	SEAL-O-RING	
		1	**6V-8781**	1	TEE-FACE SEAL	
	23	1	**202-4004**	1	GROMMET	
	24	1	**337-1205**	2	GROMMET	
J	25	1	**337-1205**	1	GROMMET	

I-REFER TO HYDRAULIC INFORMATION SYSTEM
J-USED ONLY ON D-ROPS

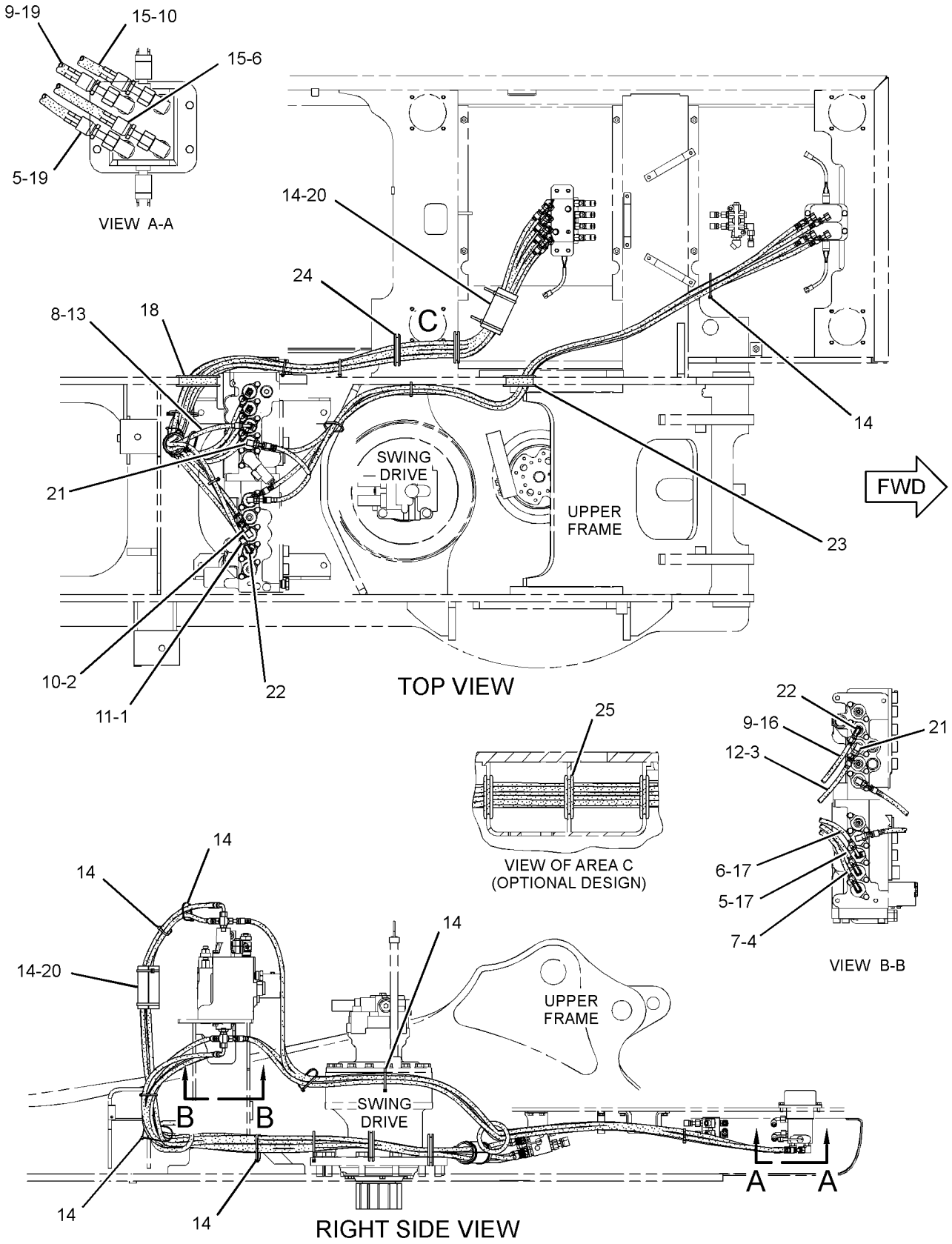

GRAPHIC #1 **<END>** g01899595

248-9852 LINES GP-PILOT—FILTER, PILOT PUMP

S/N: WNE1-UP; ZMF1-UP

PART OF 270-5712, 270-5713 HYDRAULIC AR

SMCS-5057, 5059 **i02881159**

NOTE	REF NO	GRAPHIC REF	PART NUMBER	QTY	PART NAME 1 2 3 4 5 6 (PRODUCT LEVEL)	SEE PAGE
CI	1	1	**307-5120**	1	HOSE AS	
	3	1	**6V-0852**	5	CAP-DUST	
	4	1	**7K-1181**	3	STRAP-CABLE	
I	5	1	**7Y-8379**	1	HOSE AS	
I	6	1	**176-4743**	2	HOSE AS	
	7	1	**221-8859**	2	SENSOR AS-PRESSURE (MAIN PUMP)	
					(EACH INCLUDES)	
		1	**3E-3371**	1	WEDGE-RECEPTACLE LOCK (3-PIN)	
		1	**3K-0360**	1	SEAL-O-RING	
		1	**9X-3401**	1	PIN-CONNECTOR (16-GA TO 18-GA)	
					—OR—	
		1	**126-1767**	1	PIN-CONNECTOR (14-GA)	
		1	**171-0596**	1	RECEPTACLE AS	
	8	1	**266-1028**	1	HOSE AS	
	9	1	*148-8336*	2	CONNECTOR AS	
					(EACH INCLUDES)	
		1	**3J-1907**	1	SEAL-O-RING	
		1	**6V-8397**	1	SEAL-O-RING	
		1	**6V-8636**	1	CONNECTOR	
	10	1	*148-8340*	1	CONNECTOR AS	
		1	**3K-0360**	1	SEAL-O-RING	
		1	**6V-8398**	1	SEAL-O-RING	
		1	**6V-8639**	1	CONNECTOR	
	11	1	*148-8347*	1	ELBOW AS	
		1	**3D-2824**	1	SEAL-O-RING	
		1	**6V-9007**	1	ELBOW	
		1	**6V-9746**	1	SEAL-O-RING	
	12	1	*148-8378*	2	ELBOW AS	
					(EACH INCLUDES)	
		1	**3J-1907**	1	SEAL-O-RING	
		1	**6V-8397**	1	SEAL-O-RING	
		1	**6V-8724**	1	ELBOW	
	13	1	*150-3036*	1	ELBOW AS	
		1	**3J-1907**	1	SEAL-O-RING	
		1	**6V-8397**	1	SEAL-O-RING	
		1	**8T-1905**	1	ELBOW	
	14	1	*153-6237*	2	ELBOW AS	
					(EACH INCLUDES)	
		1	**3D-2824**	1	SEAL-O-RING	
		1	**6V-9004**	1	ELBOW	
		1	**6V-9746**	1	SEAL-O-RING	
	15	1	*164-5567*	5	COUPLER AS-QUICK DISCONNECT	
					(EACH INCLUDES)	
		1	**3J-1907**	1	SEAL-O-RING	
		1	**6V-3965**	1	FITTING (QUICK DISCONNECT)	

C-CHANGE FROM PREVIOUS TYPE
I-REFER TO HYDRAULIC INFORMATION SYSTEM

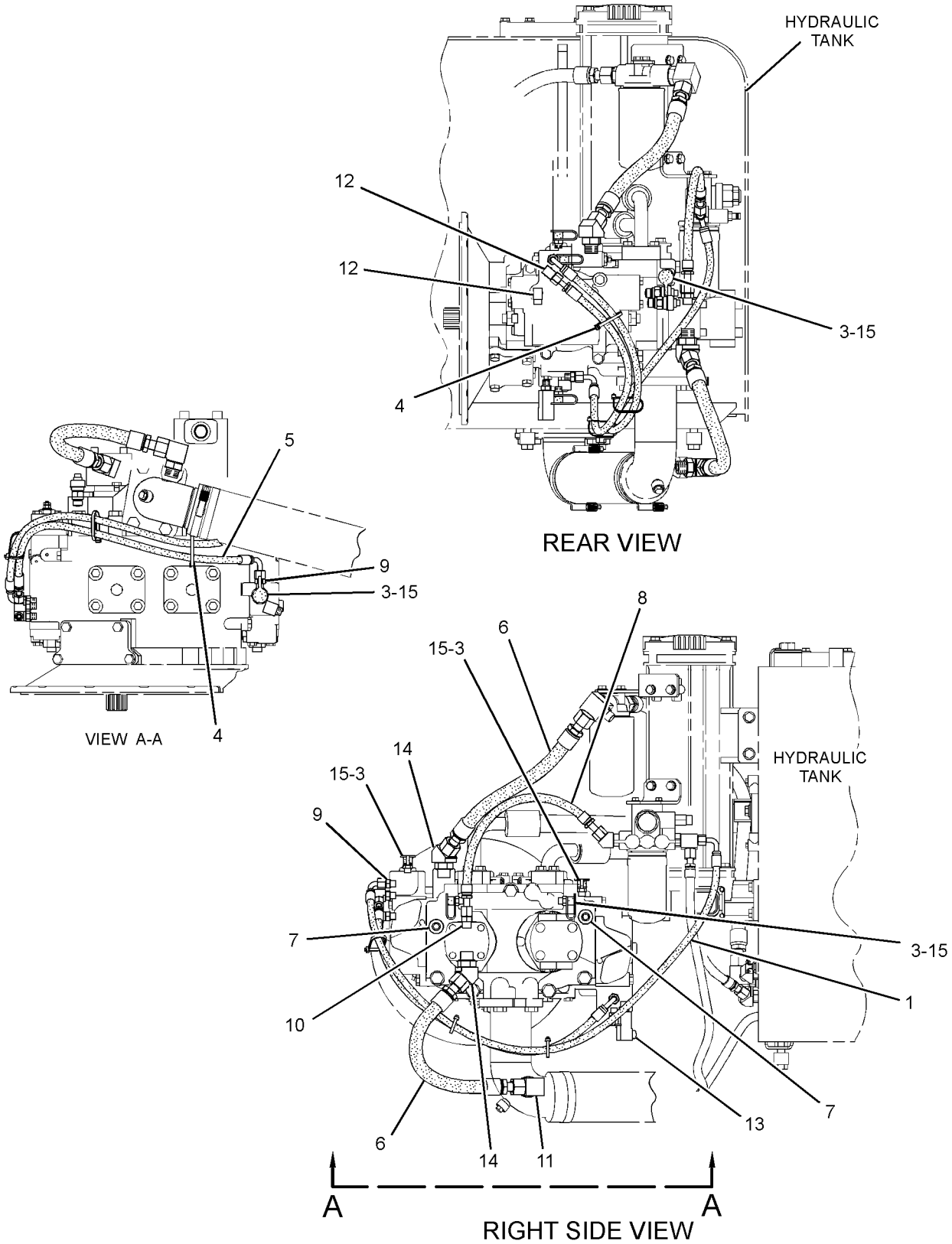

GRAPHIC #1

<END>

g01396358

255-1659 LINES GP-PILOT—HEAVY LIFT

S/N: WNE1-UP; ZMF1-UP; CWG1-UP

PART OF 270-5712, 270-5713, 285-1356 HYDRAULIC AR

SMCS-5057, 5059 **i03326581**

NOTE	REF NO	GRAPHIC REF	PART NUMBER	QTY	PART NAME 1 2 3 4 5 6 (PRODUCT LEVEL)	SEE PAGE
I	1	1	**087-4402**	1	HOSE AS	
CI	2	1	**087-5772**	1	HOSE AS	
	3	1	**4I-9522**	2	BAND-MARKER (YELLOW, L2)	
	4	1	**4I-9523**	2	BAND-MARKER (BLUE, L3)	
	5	1	**4I-9524**	2	BAND-MARKER (BROWN, L4)	
	6	1	**7K-1181**	2	STRAP-CABLE	
I	7	1	**087-5766**	1	HOSE AS	
Y	8	1	**121-6303**	1	VALVE GP-SOLENOID (HEAVY LIFT)	887
	9	1	**269-9919**	1	PLATE	
	10	1	*148-8336*	2	CONNECTOR AS	
					(EACH INCLUDES)	
		1	**3J-1907**	1	SEAL-O-RING	
		1	**6V-8397**	1	SEAL-O-RING	
		1	**6V-8636**	1	CONNECTOR	
	11	1	*148-8338*	1	CONNECTOR AS	
		1	**3J-1907**	1	SEAL-O-RING	
		1	**6V-8397**	1	SEAL-O-RING	
		1	**8T-0075**	1	CONNECTOR	
	13	1	*148-8378*	2	ELBOW AS	
					(EACH INCLUDES)	
		1	**3J-1907**	1	SEAL-O-RING	
		1	**6V-8397**	1	SEAL-O-RING	
		1	**6V-8724**	1	ELBOW	
	14	1	*148-8435*	1	TEE AS	
		1	**3J-1907**	1	SEAL-O-RING	
		1	**6V-8397**	2	SEAL-O-RING	
		1	**6V-8781**	1	TEE-FACE SEAL	
	15	1	**8T-4121**	2	WASHER-HARD (11X21X2.5-MM THK)	
M	16	1	**8T-4136**	2	BOLT (M10X1.5X25-MM)	
M	17	1	**8T-4970**	2	BOLT (M6X1X14-MM)	
	18	1	**9X-8256**	2	WASHER (6.6X12X2-MM THK)	

C-CHANGE FROM PREVIOUS TYPE
I-REFER TO HYDRAULIC INFORMATION SYSTEM
M-METRIC PART
Y-SEPARATE ILLUSTRATION

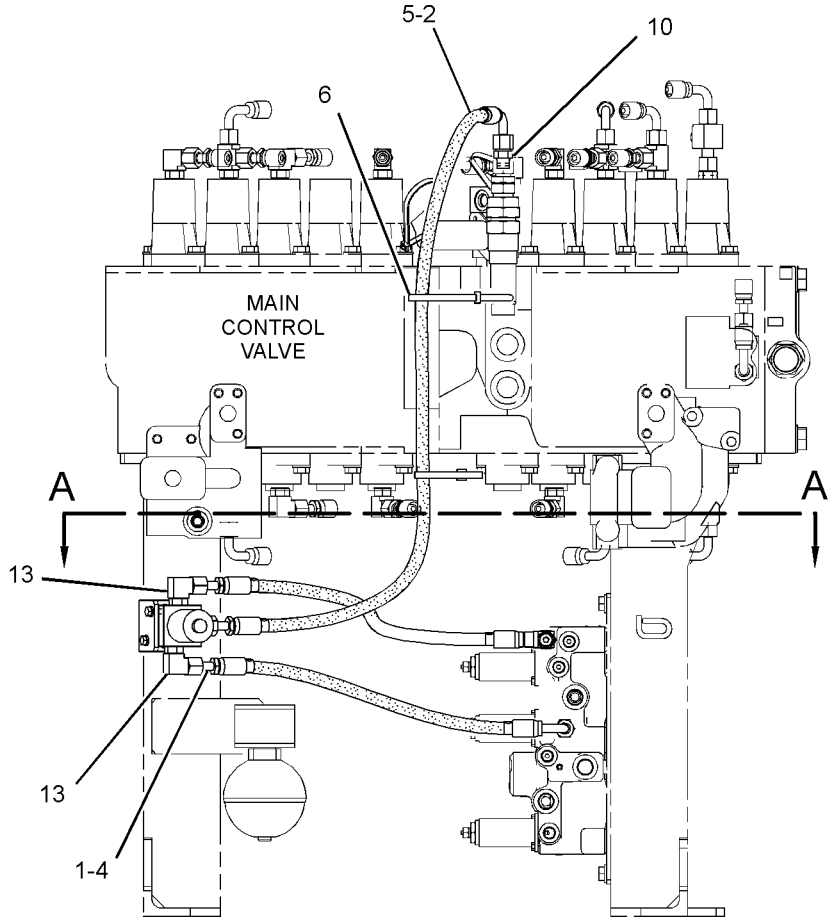

FRONT VIEW

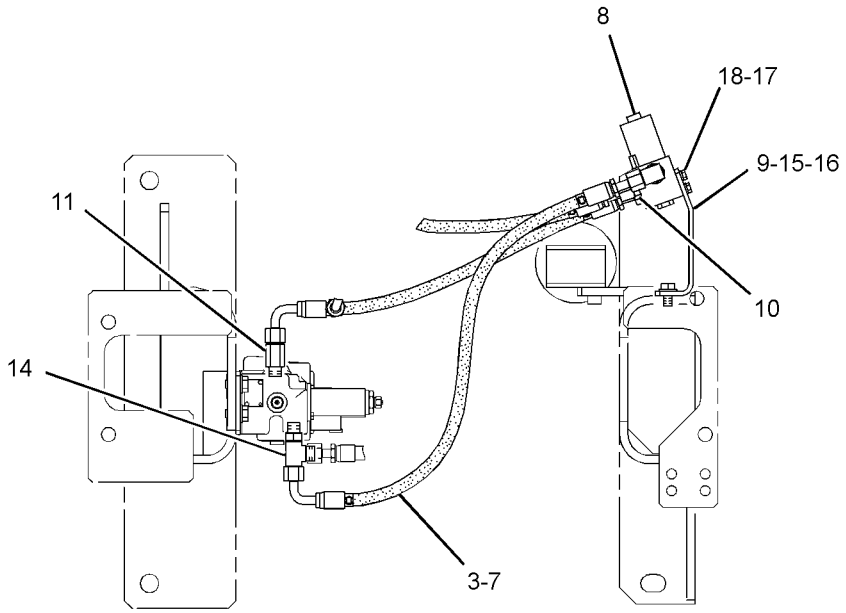

SECTION A-A

GRAPHIC #1 **<END>** g01511702

255-1843 LINES GP-PILOT—THIRD PEDAL, PILOT VALVE

S/N: WNE1-UP; ZMF1-UP; CWG1-UP
PART OF 342-3647, 342-3648 PEDAL AR-THIRD
AN ATTACHMENT

SMCS-5057, 5059 **i02981562**

NOTE	REF NO	GRAPHIC REF	PART NUMBER	QTY	PART NAME 1 2 3 4 5 6 (PRODUCT LEVEL)	SEE PAGE
I	1	1	**4I-1704**	1	HOSE AS	
I	2	1	**087-4402**	1	HOSE AS	
I	3	1	**087-5762**	1	HOSE AS	
I	4	1	**087-5765**	2	HOSE AS	
I	5	1	**087-5766**	1	HOSE AS	
	6	1	*164-5629*	1	FITTING AS	
		1	**3J-1907**	1	SEAL-O-RING	
		1	**108-7516**	1	FITTING	
I	7	1	**179-7456**	2	HOSE AS	
Y	8	1	**112-0083**	1	VALVE GP-SHUTTLE	878
	9	1	*148-8336*	3	CONNECTOR AS	
					(EACH INCLUDES)	
		1	**3J-1907**	1	SEAL-O-RING	
		1	**6V-8397**	1	SEAL-O-RING	
		1	**6V-8636**	1	CONNECTOR	
	10	1	*148-8353*	6	ELBOW AS	
					(EACH INCLUDES)	
		1	**3J-1907**	1	SEAL-O-RING	
		1	**6V-8397**	1	SEAL-O-RING	
		1	**6V-9001**	1	ELBOW	
	11	1	*148-8378*	4	ELBOW AS	
					(EACH INCLUDES)	
		1	**3J-1907**	1	SEAL-O-RING	
		1	**6V-8397**	1	SEAL-O-RING	
		1	**6V-8724**	1	ELBOW	
	12	1	*150-3036*	1	ELBOW AS	
		1	**3J-1907**	1	SEAL-O-RING	
		1	**6V-8397**	1	SEAL-O-RING	
		1	**8T-1905**	1	ELBOW	
	13	1	*150-4044*	1	CONNECTOR AS	
		1	**3J-1907**	1	SEAL-O-RING	
		1	**6V-8397**	1	SEAL-O-RING	
		1	**8T-1779**	1	CONNECTOR	
	14	1	*164-5628*	1	CONNECTOR AS	
		1	**3J-1907**	1	SEAL-O-RING	
		1	**6V-8397**	1	SEAL-O-RING	
		1	**107-6631**	1	CONNECTOR-FILTER	
	15	1	**309-5769**	1	SWITCH AS-PRESSURE (THIRD PEDAL, STRAIGHT TRAVEL)	
		1	**9X-3401**	2	PIN-CONNECTOR (16-GA TO 18-GA)	
					—OR—	
		1	**126-1767**	2	PIN-CONNECTOR (14-GA)	
		1	**102-8802**	1	KIT-RECEPTACLE (2-PIN)	
					(INCLUDES RECEPTACLE AS & WEDGE)	
C	16	1	**4I-7889**	2	SPACER (11X25X45-MM THK)	
CM	17	1	**8T-4178**	2	BOLT (M10X1.5X90-MM)	

C-CHANGE FROM PREVIOUS TYPE
I-REFER TO HYDRAULIC INFORMATION SYSTEM
M-METRIC PART
Y-SEPARATE ILLUSTRATION

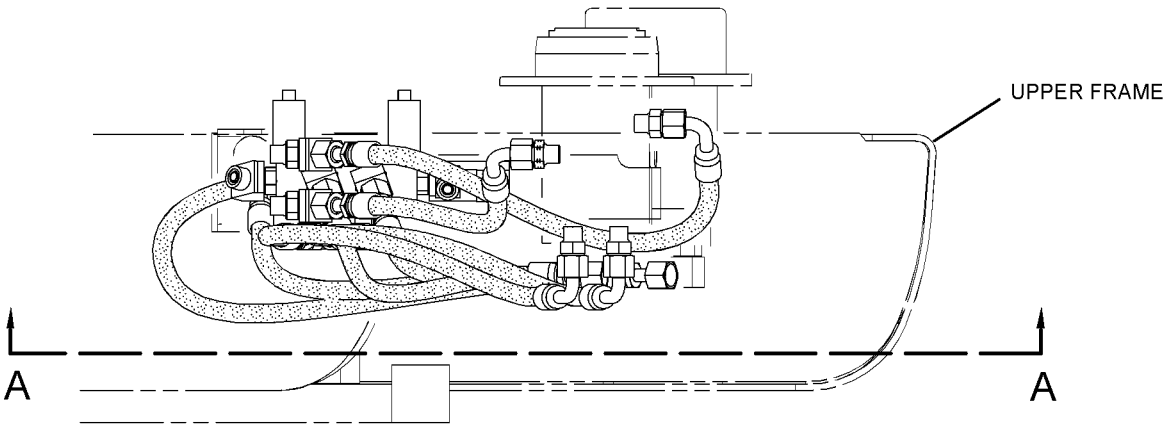

RIGHT SIDE VIEW

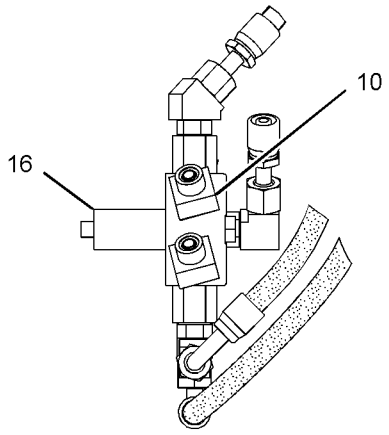

VIEW B-B

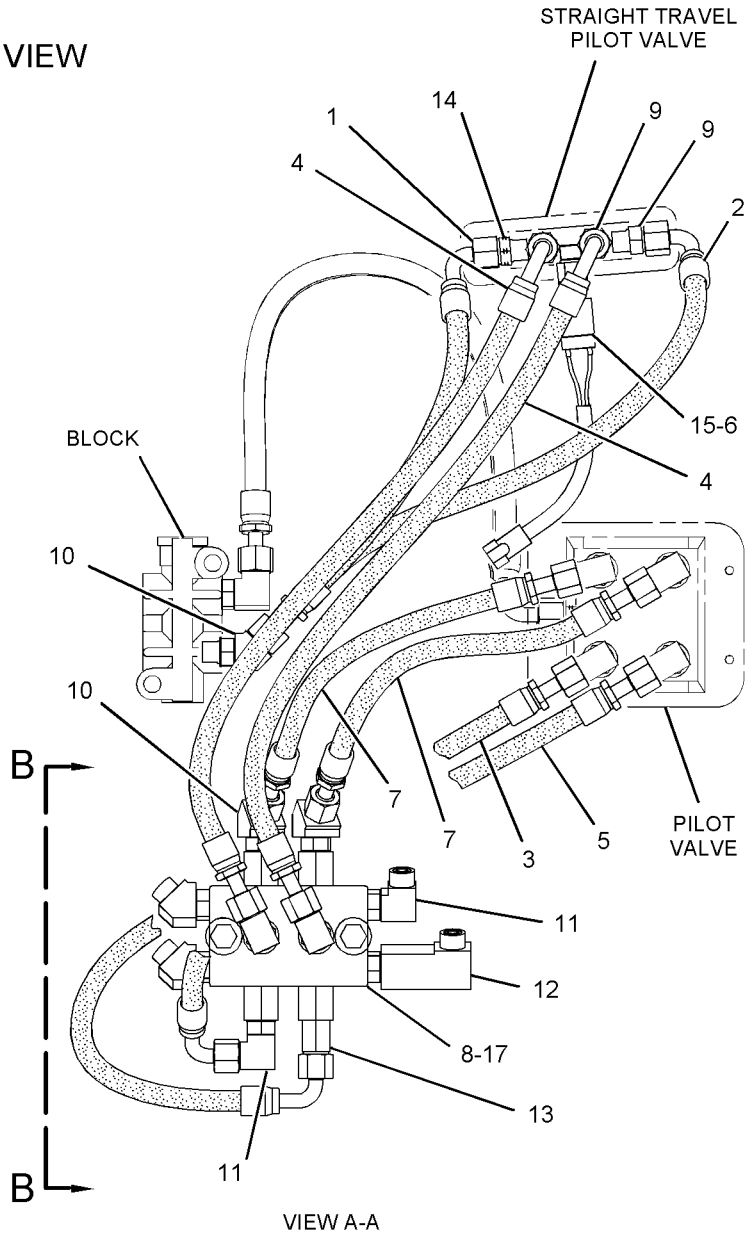

VIEW A-A

GRAPHIC #1 **<END>** g01338160

HYDRAULIC SYSTEM

260-7969 LINES GP-PILOT–BOOM FLOAT

S/N: WNE1-UP; ZMF1-UP

PART OF 343-1177, 343-1178 CONTROL AR-BOOM

AN ATTACHMENT

SMCS-5057, 5059 **i02947620**

NOTE	REF NO	GRAPHIC REF	PART NUMBER	QTY	PART NAME 1 2 3 4 5 6 (PRODUCT LEVEL)	SEE PAGE
I	1	2	**4I-0995**	1	HOSE AS	
I	2	2	**4I-1025**	1	HOSE AS	
I	3	1	**4I-3981**	1	HOSE AS	
I	4	2	**4I-6003**	1	HOSE AS	
	5	2	**4I-9527**	2	BAND-MARKER (GREEN, R3)	
I	6	2	**5I-8853**	1	HOSE AS	
	7	1,2	**7K-1181**	5	STRAP-CABLE	
I	8	1	**7Y-8379**	1	HOSE AS	
I	9	1	**087-5771**	1	HOSE AS	
I	10	1	**087-5777**	1	HOSE AS	
	11	1	**133-5813**	2	BAND-MARKER (GRAY, P)	
	12	2	**164-5547**	1	CONNECTOR AS	
		2	**3J-1907**	1	SEAL-O-RING	
		2	**4I-1694**	1	CONNECTOR	
	13	2	*164-5629*	1	FITTING AS	
		2	**3J-1907**	1	SEAL-O-RING	
		2	**108-7516**	1	FITTING	
	14	1,2	*164-6874*	2	FITTING AS-ELBOW	
					(EACH INCLUDES)	
		1,2	**3J-1907**	1	SEAL-O-RING	
		1,2	**085-7356**	1	FITTING	
	15	2	**309-5769**	1	SWITCH AS-PRESSURE (BOOM FLOAT)	
		2	**9X-3401**	2	PIN-CONNECTOR (16-GA TO 18-GA)	
					–OR–	
		2	**126-1767**	2	PIN-CONNECTOR (14-GA)	
		2	**102-8802**	1	KIT-RECEPTACLE (2-PIN)	
					(INCLUDES RECEPTACLE AS & WEDGE)	
Y	16	2	**185-0472**	1	VALVE GP-SOLENOID (BOOM FLOAT, PILOT OIL)	889
	17	2	**199-2002**	1	SUPPORT AS	
	18	2	**199-2004**	1	BRACKET	
Y	19	1	**201-9236**	1	VALVE GP-FLOW CONTROL (BOOM FLOAT, PILOT OIL)	840
I	20	1	**218-1336**	1	HOSE AS	
I	21	2	**270-0023**	1	HOSE AS	
	22	1	*148-8363*	1	ELBOW AS	
		1	**3K-0360**	1	SEAL-O-RING	
		1	**6V-8397**	1	SEAL-O-RING	
		1	**6V-9876**	1	ELBOW	
	23	1,2	*148-8378*	3	ELBOW AS	
					(EACH INCLUDES)	
		1,2	**3J-1907**	1	SEAL-O-RING	
		1,2	**6V-8397**	1	SEAL-O-RING	
		1,2	**6V-8724**	1	ELBOW	
	24	2	*148-8413*	1	REDUCER AS	
		2	**4J-5477**	1	SEAL-O-RING	
		2	**6V-8934**	1	REDUCER AS	
	25	1	*148-8433*	1	TEE AS	
		1	**6V-8397**	2	SEAL-O-RING	
		1	**6V-9836**	1	TEE-SWIVEL	
	26	1	*148-8434*	1	TEE AS	
		1	**6V-8397**	2	SEAL-O-RING	
		1	**6V-9843**	1	TEE-SWIVEL	
	27	2	*148-8435*	1	TEE AS	
		2	**3J-1907**	1	SEAL-O-RING	
		2	**6V-8397**	2	SEAL-O-RING	
		2	**6V-8781**	1	TEE-FACE SEAL	

260-7969 **LINES GP-PILOT** *(contd.)* **i02947620**

NOTE	REF NO	GRAPHIC REF	PART NUMBER	QTY	PART NAME 1 2 3 4 5 6 (PRODUCT LEVEL)	SEE PAGE
	28	2	*148-8439*	1	TEE AS	
		2	**3J-1907**	1	SEAL-O-RING	
		2	**6V-8397**	2	SEAL-O-RING	
		2	**6V-8774**	1	TEE	
	29	2	*150-4027*	1	TEE AS	
		2	**3E-2310**	1	TEE	
		2	**3J-1907**	1	SEAL-O-RING	
		2	**6V-8397**	1	SEAL-O-RING	
	30	1	**3J-1907**	1	SEAL-O-RING	
M	31	2	**5C-9553**	2	BOLT (M6X1X16-MM)	
	32	1	**5K-8451**	1	CLIP	
	33	1	**6V-8397**	1	SEAL-O-RING	
	34	1	**8T-4121**	1	WASHER-HARD (11X21X2.5-MM THK)	
M	35	2	**8T-4139**	2	BOLT (M12X1.75X30-MM)	
M	36	2	**8T-4189**	2	BOLT (M8X1.25X20-MM)	
M	37	1	**8T-4191**	1	BOLT (M10X1.5X16-MM)	
	38	2	**8T-4223**	2	WASHER-HARD (13.5X25.5X3-MM THK)	
	39	2	**8T-4224**	2	WASHER-HARD (8.8X16X2-MM THK)	
	40	2	**9X-8256**	2	WASHER (6.6X12X2-MM THK)	

I-REFER TO HYDRAULIC INFORMATION SYSTEM
M-METRIC PART
Y-SEPARATE ILLUSTRATION

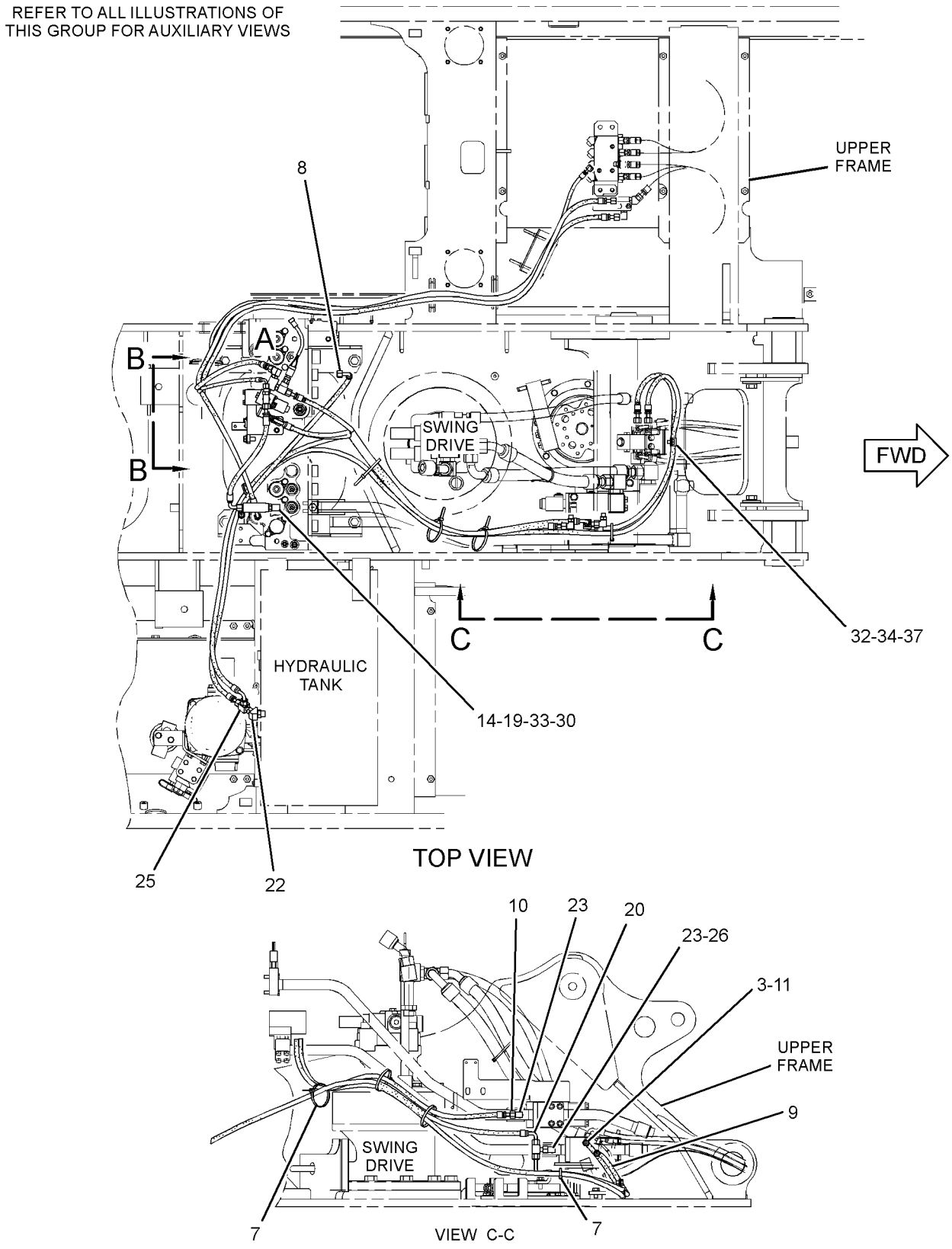

GRAPHIC #1

g01400702

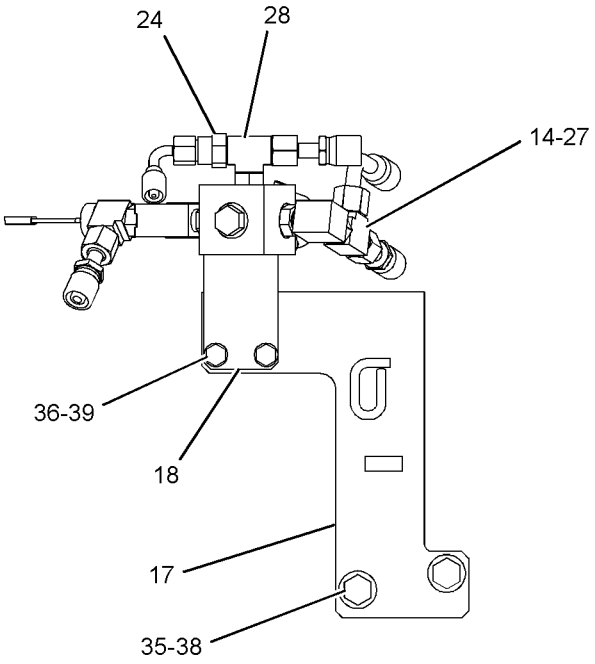

VIEW B-B

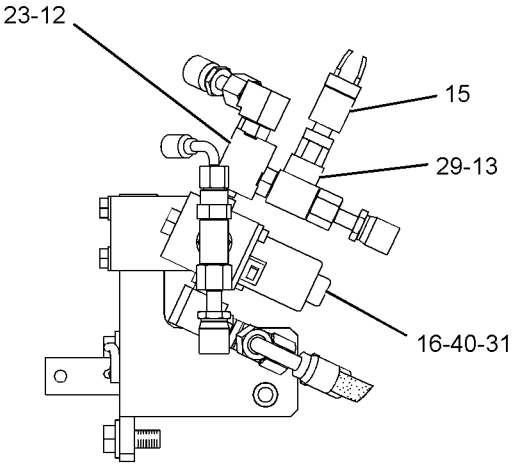

VIEW OF AREA A

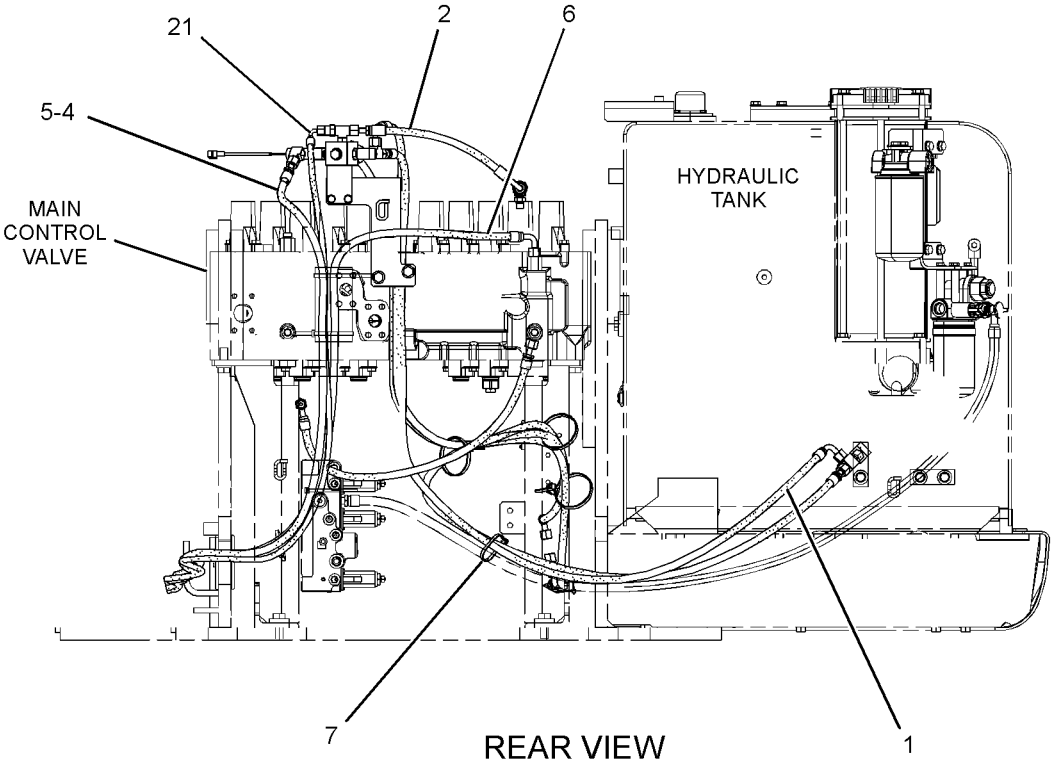

REAR VIEW

GRAPHIC #2 **<END>** g01400703

HYDRAULIC SYSTEM

260-7970 LINES GP-PILOT—LOAD CONTROL, STICK CYLINDER

S/N: WNE1-UP; ZMF1-UP
PART OF 239-8677 VALVE AR-LOAD CONTROL
AN ATTACHMENT

SMCS-5057, 5059 **i02880225**

NOTE	REF NO	GRAPHIC REF	PART NUMBER	QTY	PART NAME 1 2 3 4 5 6 (PRODUCT LEVEL)	SEE PAGE
	1	2	**7K-1181**	7	STRAP-CABLE	
	2	1	**201-9379**	1	BLOCK	
	3	2	**275-1712**	1	HOSE AS	
	4	2	**275-1713**	1	HOSE AS	
	5	2	**282-7079**	1	HOSE AS	
C	6	2	*148-8336*	1	CONNECTOR AS	
		2	**3J-1907**	1	SEAL-O-RING	
		2	**6V-8397**	1	SEAL-O-RING	
		2	**6V-8636**	1	CONNECTOR	
	7	1	*148-8364*	1	ELBOW AS	
		1	**3K-0360**	1	SEAL-O-RING	
		1	**6V-8398**	1	SEAL-O-RING	
		1	**6V-8625**	1	ELBOW	
	8	2	*148-8433*	1	TEE AS	
		2	**6V-8397**	2	SEAL-O-RING	
		2	**6V-9836**	1	TEE-SWIVEL	
	9	2	*148-8434*	1	TEE AS	
		2	**6V-8397**	2	SEAL-O-RING	
		2	**6V-9843**	1	TEE-SWIVEL	
	10	2	**136-0207**	6	STRAP-CABLE	
	11	2	**133-5813**	2	BAND-MARKER (GRAY, P)	
	12	2	**4I-9523**	4	BAND-MARKER (BLUE, L3)	
BC	13	2	**6V-9829**	1	CAP AS	

B-USE AS REQUIRED
C-CHANGE FROM PREVIOUS TYPE

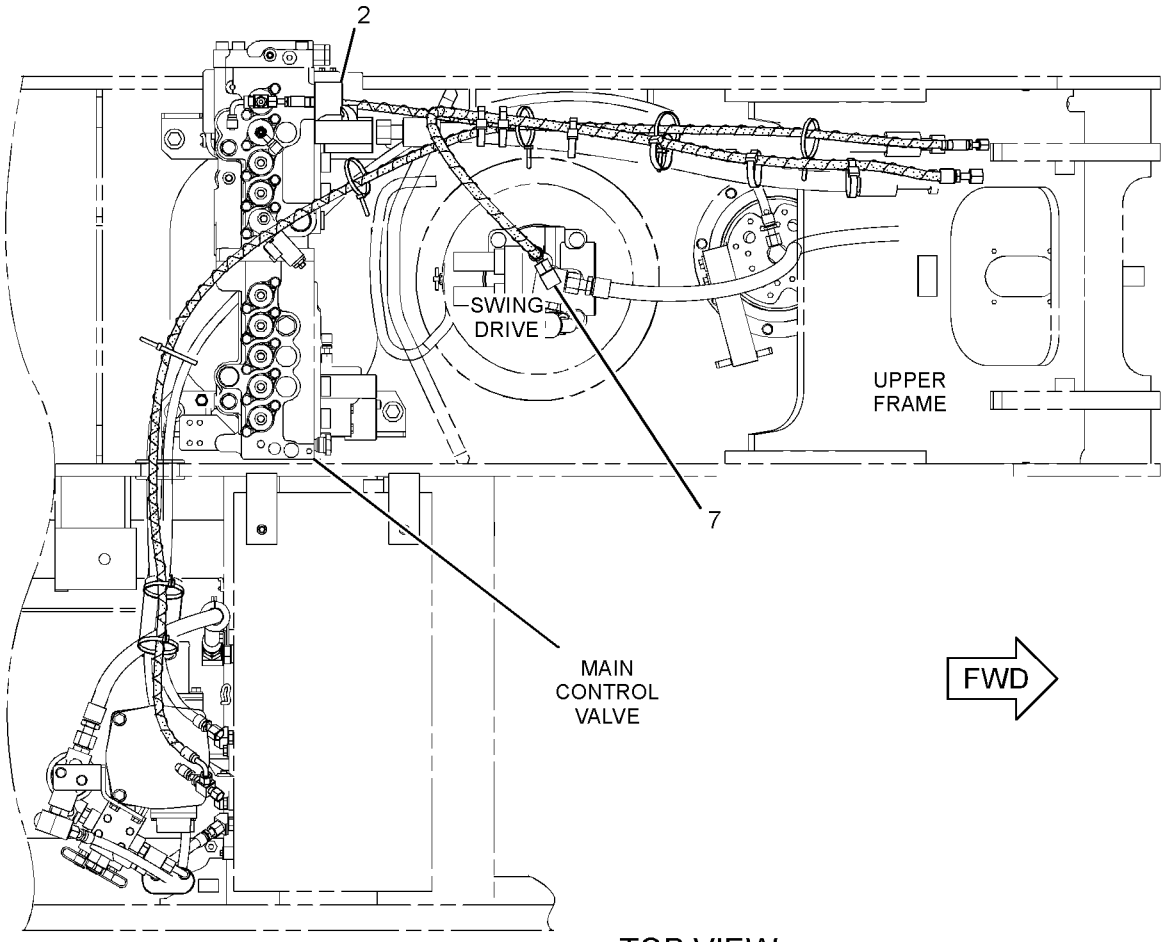

TOP VIEW

GRAPHIC #1 g01444080

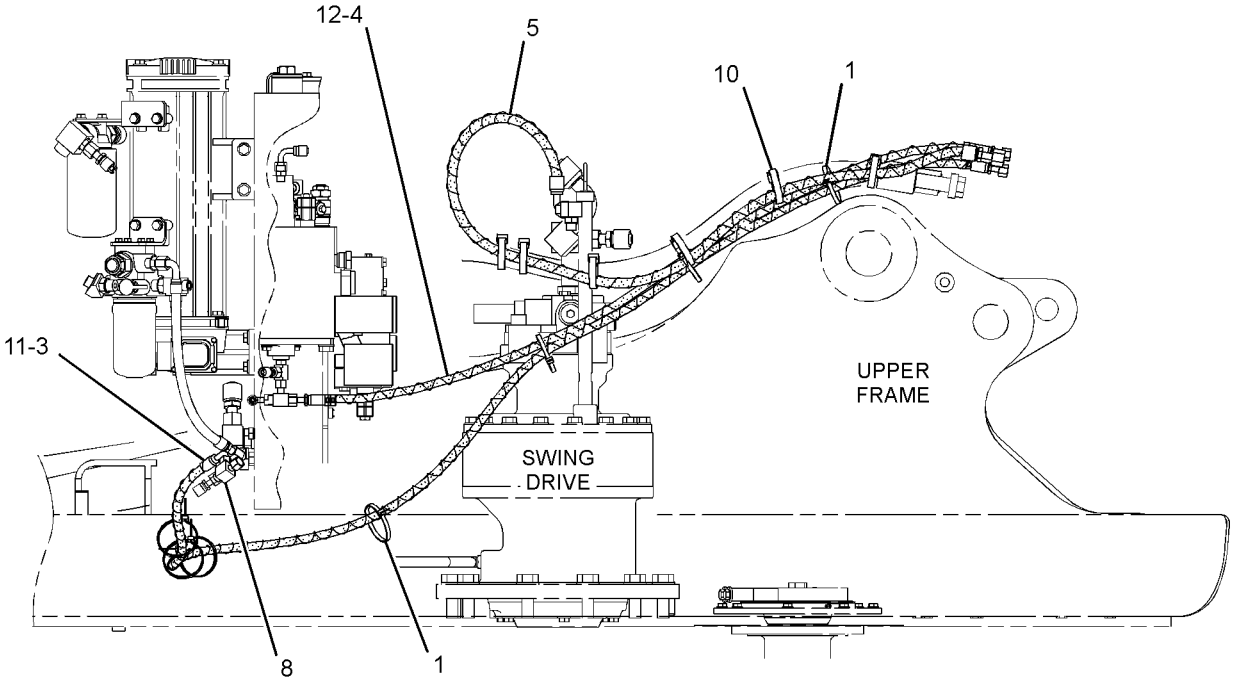

RIGHT SIDE VIEW

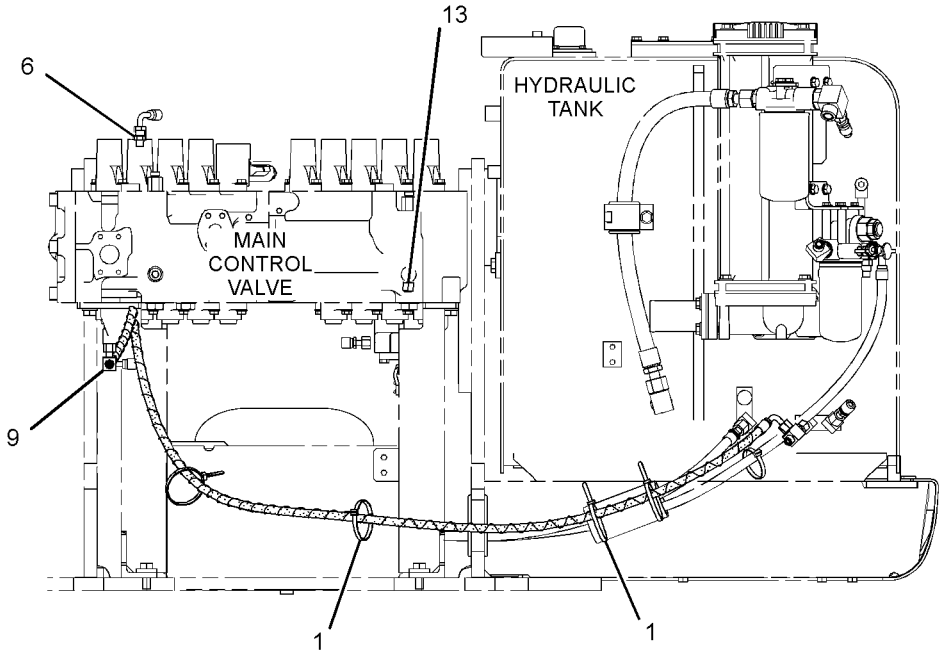

REAR VIEW

GRAPHIC #2 **<END>** g01444081

HYDRAULIC SYSTEM

260-7976 LINES GP-PILOT—1-WAY FLOW

S/N: WNE1-UP; ZMF1-UP
PART OF 259-7499 CONTROL AR-AUXILIARY
AN ATTACHMENT

SMCS-5057, 5059 **i03312682**

NOTE	REF NO	GRAPHIC REF	PART NUMBER	QTY	PART NAME 1 2 3 4 5 6 (PRODUCT LEVEL)	SEE PAGE
I	1	2	**4I-3988**	1	HOSE AS	
I	2	2	**4I-6054**	1	HOSE AS	
	3	2	**4I-9521**	2	BAND-MARKER (RED, L1)	
	4	2	**4I-9522**	2	BAND-MARKER (YELLOW, L2)	
	5	1,2	**4I-9523**	4	BAND-MARKER (BLUE, L3)	
	6	2	**4I-9524**	2	BAND-MARKER (BROWN, L4)	
	7	2	**4I-9525**	2	BAND-MARKER (ORANGE, R1)	
	8	1,2	**4I-9527**	6	BAND-MARKER (GREEN, R3)	
I	9	1	**7Y-4366**	2	HOSE AS	
	10	1,2	**7K-1181**	7	STRAP-CABLE	
CI	11	2	**5I-4396**	1	HOSE AS	
I	12	2	**087-4402**	2	HOSE AS	
CI	13	2	**4I-1671**	1	HOSE AS	
	14	2	**164-6874**	2	FITTING AS-ELBOW	
					(EACH INCLUDES)	
		2	**3J-1907**	1	SEAL-O-RING	
		2	**085-7356**	1	FITTING	
Y	15	2	**259-7430**	1	VALVE GP-SOLENOID (PRESSURE REDUCING) (PUMP FLOW CONTROL, PILOT)	892
I	16	2	**266-1133**	1	HOSE AS	
I	17	1	**330-2384**	1	HOSE AS	
I	18	1	**266-1179**	1	HOSE AS	
	19	2	**289-5475**	1	SUPPORT AS	
	20	2	**275-1442**	1	CLIP (TAB)	
	21	2	**275-1443**	1	CLIP (SLOT)	
	22	2	**275-1444**	1	GROMMET	
I	23	1	**278-6470**	1	HOSE AS	
	24	2	*148-8336*	3	CONNECTOR AS	
					(EACH INCLUDES)	
		2	**3J-1907**	1	SEAL-O-RING	
		2	**6V-8397**	1	SEAL-O-RING	
		2	**6V-8636**	1	CONNECTOR	
C	25	2	*148-8338*	3	CONNECTOR AS	
					(EACH INCLUDES)	
		2	**3J-1907**	1	SEAL-O-RING	
		2	**6V-8397**	1	SEAL-O-RING	
		2	**8T-0075**	1	CONNECTOR	
	27	1,2	*148-8378*	10	ELBOW AS	
					(EACH INCLUDES)	
		1,2	**3J-1907**	1	SEAL-O-RING	
		1,2	**6V-8397**	1	SEAL-O-RING	
		1,2	**6V-8724**	1	ELBOW	
	28	2	*148-8433*	1	TEE AS	
		2	**6V-8397**	2	SEAL-O-RING	
		2	**6V-9836**	1	TEE-SWIVEL	
	29	2	*150-3036*	2	ELBOW AS	
					(EACH INCLUDES)	
		2	**3J-1907**	1	SEAL-O-RING	
		2	**6V-8397**	1	SEAL-O-RING	
		2	**8T-1905**	1	ELBOW	
	30	2	*150-4027*	2	TEE AS	
					(EACH INCLUDES)	
		2	**3E-2310**	1	TEE	
		2	**3J-1907**	1	SEAL-O-RING	
		2	**6V-8397**	1	SEAL-O-RING	

260-7976 **LINES GP-PILOT** *(contd.)* **i03312682**

NOTE	REF NO	GRAPHIC REF	PART NUMBER	QTY	PART NAME 1 2 3 4 5 6 (PRODUCT LEVEL)	SEE PAGE
	32	2	*164-5567*	4	COUPLER AS-QUICK DISCONNECT	
					(EACH INCLUDES)	
		2	**3J-1907**	1	SEAL-O-RING	
		2	**6V-3965**	1	FITTING (QUICK DISCONNECT)	
Y	33	2	**171-0188**	1	VALVE GP-SOLENOID (NEG FLOW CONT, PROPN RED VALVE)	888
	34	2	**6V-0852**	4	CAP-DUST	
	35	2	**8T-4121**	3	WASHER-HARD (11X21X2.5-MM THK)	
M	36	2	**8T-4136**	3	BOLT (M10X1.5X25-MM)	
M	37	2	**8T-4177**	4	BOLT (M8X1.25X90-MM)	
	38	2	**8T-4224**	4	WASHER-HARD (8.8X16X2-MM THK)	
M	39	2	**8T-6870**	2	BOLT (M8X1.25X70-MM)	
	40	2	**4I-9526**	2	BAND-MARKER (WHITE, R2)	

C-CHANGE FROM PREVIOUS TYPE
I-REFER TO HYDRAULIC INFORMATION SYSTEM
M-METRIC PART
Y-SEPARATE ILLUSTRATION

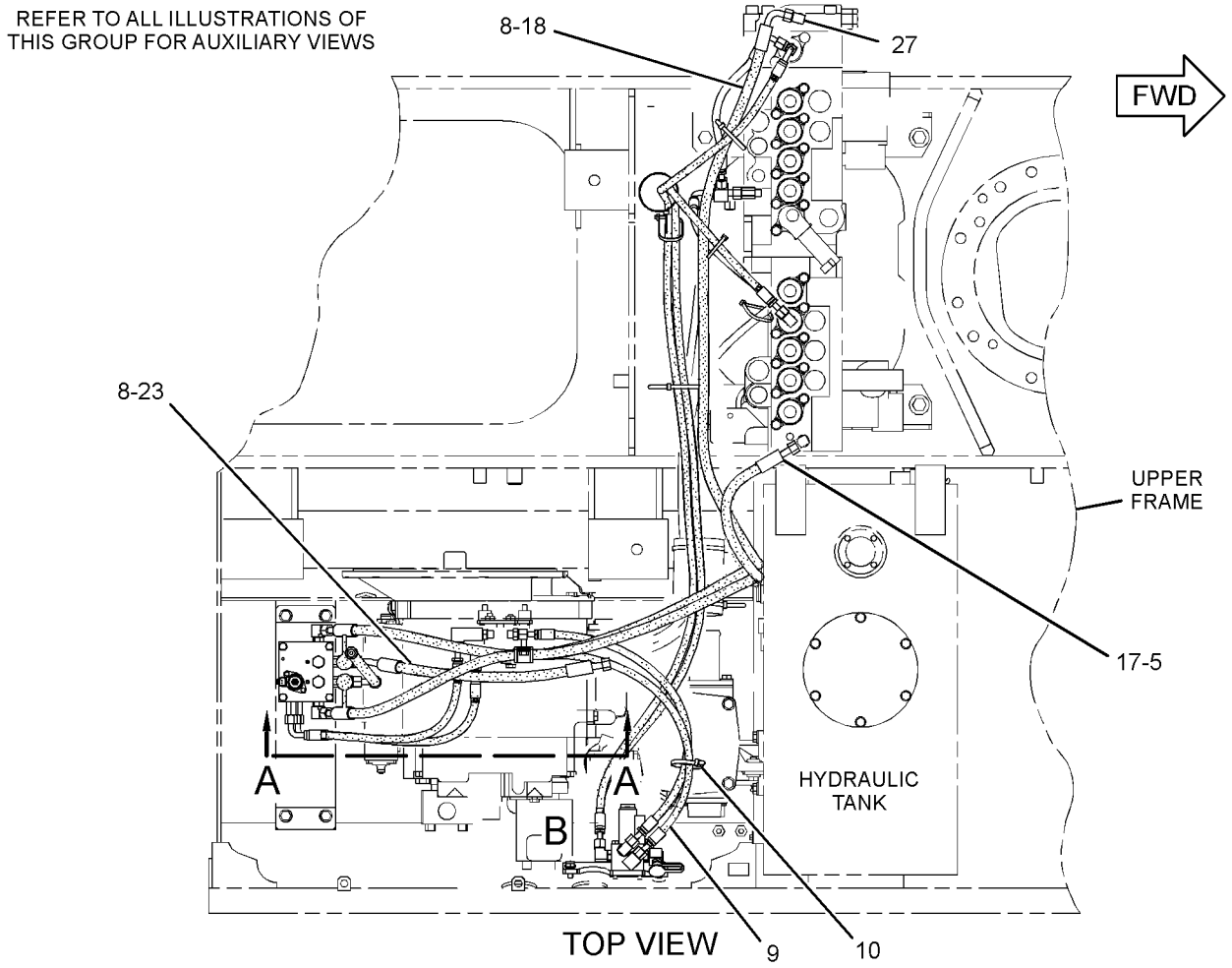

GRAPHIC #1 g01526260

260-7976 **LINES GP-PILOT** *(contd.)* **i03312682**

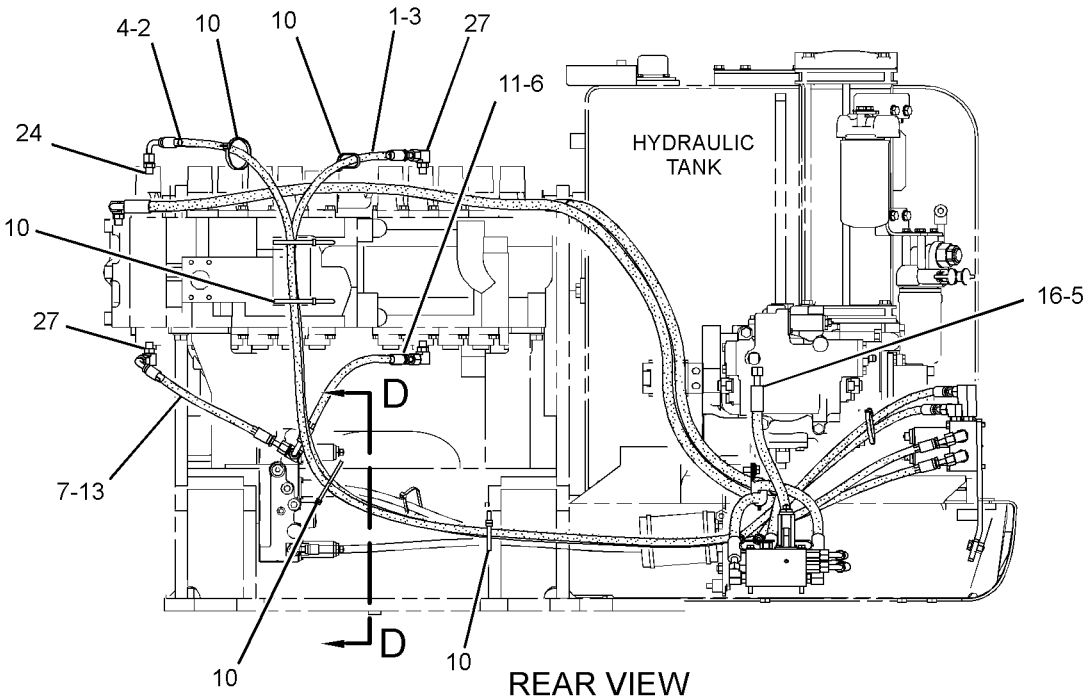

REAR VIEW

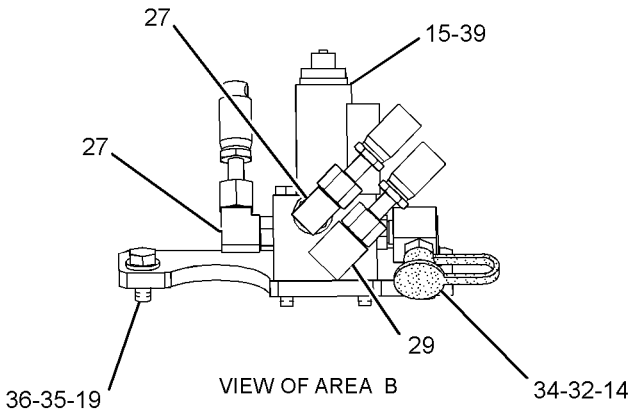

VIEW OF AREA B

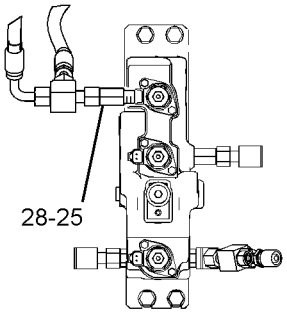

VIEW D-D

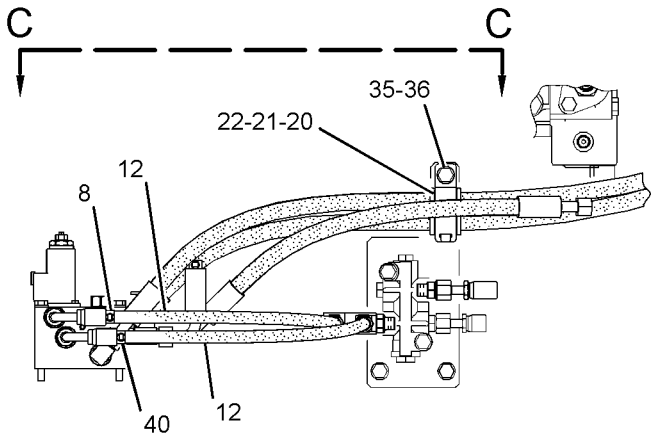

VIEW A-A

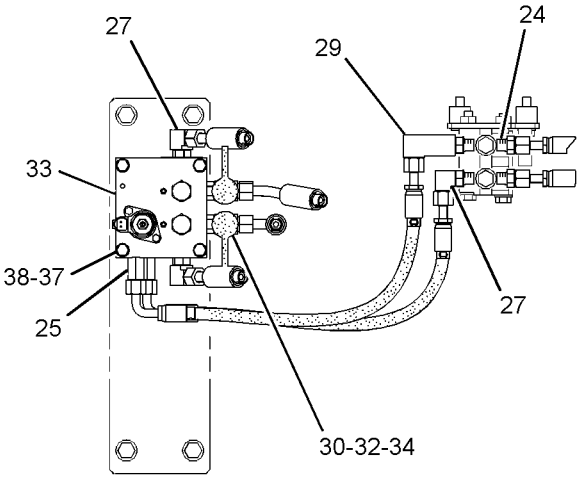

VIEW C-C

GRAPHIC #2 **<END>** g01526259

HYDRAULIC SYSTEM

260-7981 LINES GP-PILOT—SYSTEM 17, COMBINED FN, MED PR

S/N: WNE1-UP; ZMF1-UP
PART OF 297-0497 CONTROL AR-AUXILIARY
AN ATTACHMENT

SMCS-5057, 5059 **i03280382**

NOTE	REF NO	GRAPHIC REF	PART NUMBER	QTY	PART NAME 1 2 3 4 5 6 (PRODUCT LEVEL)	SEE PAGE
I	1	2	**4I-3988**	1	HOSE AS	
I	2	2	**4I-6054**	1	HOSE AS	
	3	2	**4I-9521**	2	BAND-MARKER (RED, L1)	
	4	2	**4I-9522**	2	BAND-MARKER (YELLOW, L2)	
	5	1	**4I-9523**	4	BAND-MARKER (BLUE, L3)	
	6	2	**4I-9524**	2	BAND-MARKER (BROWN, L4)	
	7	2	**4I-9525**	2	BAND-MARKER (ORANGE, R1)	
	8	1	**4I-9526**	6	BAND-MARKER (WHITE, R2)	
	9	1	**4I-9527**	10	BAND-MARKER (GREEN, R3)	
	10	1,2	**7K-1181**	12	STRAP-CABLE	
I	11	2	**7Y-4199**	1	HOSE AS	
I	12	1	**7Y-4366**	2	HOSE AS	
I	13	1	**087-4402**	2	HOSE AS	
I	14	1	**087-5764**	1	HOSE AS	
I	15	2	**108-7313**	1	HOSE AS	
I	16	1	**087-5778**	1	HOSE AS	
	17	2	*164-6874*	4	FITTING AS-ELBOW	
					(EACH INCLUDES)	
		2	**3J-1907**	1	SEAL-O-RING	
		2	**085-7356**	1	FITTING	
Y	18	2	**259-7429**	1	VALVE GP-SOLENOID (WORK TOOL, 4-FUNCTION)	891
I	19	1	**266-1133**	1	HOSE AS	
I	20	1	**330-2384**	1	HOSE AS	
I	21	1	**266-1179**	1	HOSE AS	
	22	1	**275-1442**	1	CLIP (TAB)	
	23	1	**275-1443**	1	CLIP (SLOT)	
	24	1	**275-1444**	1	GROMMET	
I	25	1	**278-6470**	1	HOSE AS	
	26	2	**289-5475**	1	SUPPORT AS	
	27	1	**091-9035**	1	SPACER (11X25X20-MM THK)	
	28	1,2	*148-8336*	4	CONNECTOR AS	
					(EACH INCLUDES)	
		1,2	**3J-1907**	1	SEAL-O-RING	
		1,2	**6V-8397**	1	SEAL-O-RING	
		1,2	**6V-8636**	1	CONNECTOR	
	29	2	*148-8338*	2	CONNECTOR AS	
					(EACH INCLUDES)	
		2	**3J-1907**	1	SEAL-O-RING	
		2	**6V-8397**	1	SEAL-O-RING	
		2	**8T-0075**	1	CONNECTOR	
	30	1	*148-8367*	1	ELBOW AS	
		1	**6V-8397**	1	SEAL-O-RING	
		1	**6V-9850**	1	ELBOW	
	31	1,2	*148-8378*	14	ELBOW AS	
					(EACH INCLUDES)	
		1,2	**3J-1907**	1	SEAL-O-RING	
		1,2	**6V-8397**	1	SEAL-O-RING	
		1,2	**6V-8724**	1	ELBOW	
	32	2	*148-8433*	1	TEE AS	
		2	**6V-8397**	2	SEAL-O-RING	
		2	**6V-9836**	1	TEE-SWIVEL	
	33	1,2	*150-3036*	3	ELBOW AS	
					(EACH INCLUDES)	
		1,2	**3J-1907**	1	SEAL-O-RING	
		1,2	**6V-8397**	1	SEAL-O-RING	

260-7981 **LINES GP-PILOT** *(contd.)* **i03280382**

NOTE	REF NO	GRAPHIC REF	PART NUMBER	QTY	PART NAME 1 2 3 4 5 6 (PRODUCT LEVEL)	SEE PAGE
		1,2	**8T-1905**	1	ELBOW	
	34	2	*150-4027*	2	TEE AS	
					(EACH INCLUDES)	
		2	**3E-2310**	1	TEE	
		2	**3J-1907**	1	SEAL-O-RING	
		2	**6V-8397**	1	SEAL-O-RING	
	35	2	*164-5567*	6	COUPLER AS-QUICK DISCONNECT	
					(EACH INCLUDES)	
		2	**3J-1907**	1	SEAL-O-RING	
		2	**6V-3965**	1	FITTING (QUICK DISCONNECT)	
Y	36	1	**171-0188**	1	VALVE GP-SOLENOID (NEG FLOW CONT, PROPN RED VALVE)	888
	37	1	**6D-3479**	2	CLIP	
	38	2	**6V-0852**	6	CAP-DUST	
	39	1,2	**8T-4121**	6	WASHER-HARD (11X21X2.5-MM THK)	
M	40	1,2	**8T-4136**	3	BOLT (M10X1.5X25-MM)	
M	41	1	**8T-4137**	2	BOLT (M10X1.5X20-MM)	
M	42	1	**8T-4177**	4	BOLT (M8X1.25X90-MM)	
M	43	1	**8T-4186**	1	BOLT (M10X1.5X40-MM)	
	44	1	**8T-4224**	4	WASHER-HARD (8.8X16X2-MM THK)	
M	45	2	**8T-6870**	4	BOLT (M8X1.25X70-MM)	
I	46	1	**296-7390**	1	HOSE AS	
	47	1	*148-8434*	1	TEE AS	
		1	**6V-8397**	2	SEAL-O-RING	
		1	**6V-9843**	1	TEE-SWIVEL	
	48	1	**6K-8178**	1	CLIP	

I-REFER TO HYDRAULIC INFORMATION SYSTEM
M-METRIC PART
Y-SEPARATE ILLUSTRATION

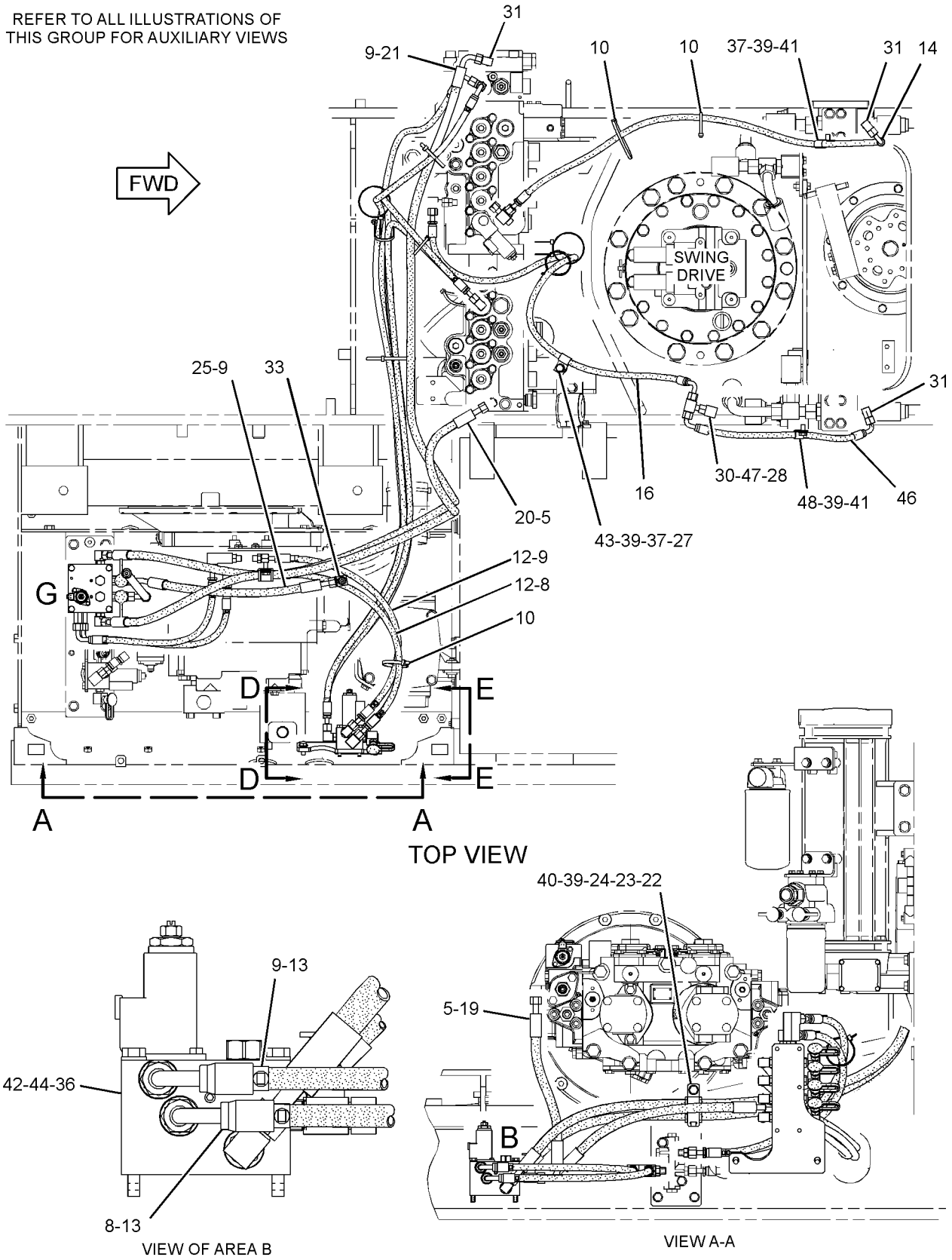

GRAPHIC #1

g01522351

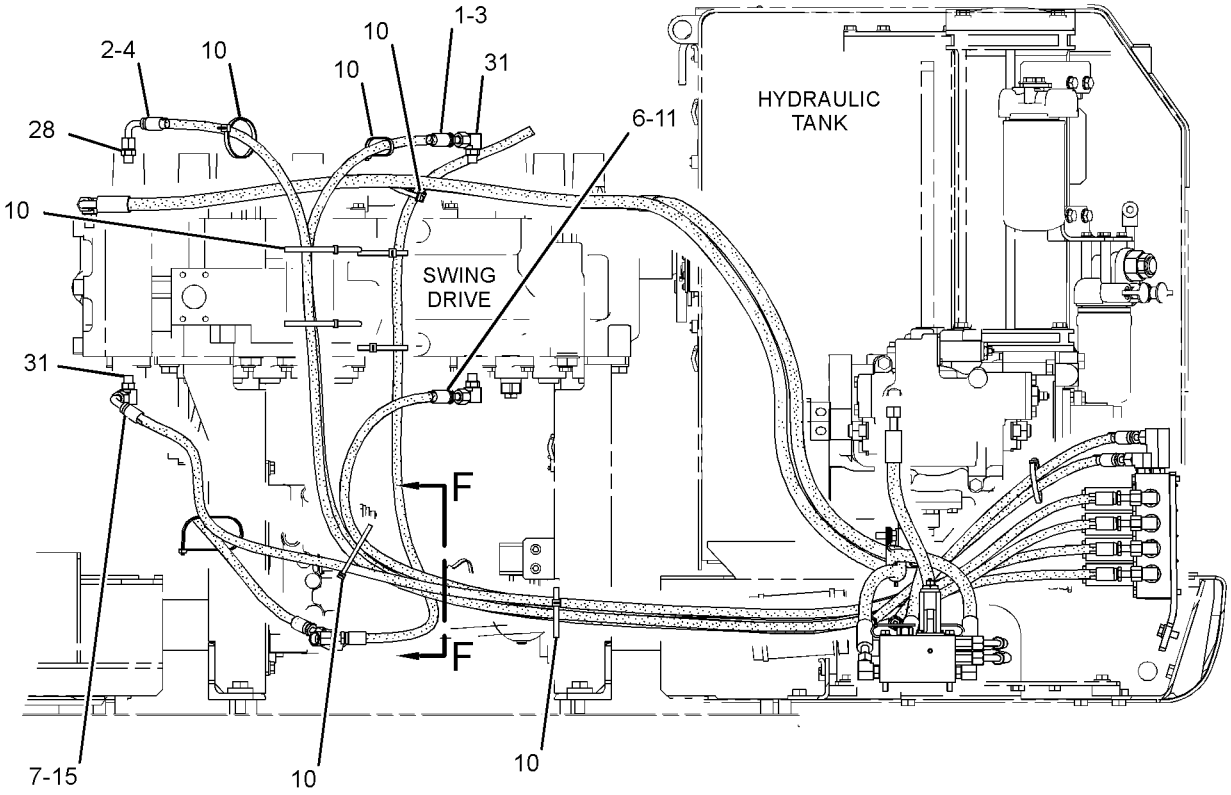

REAR VIEW

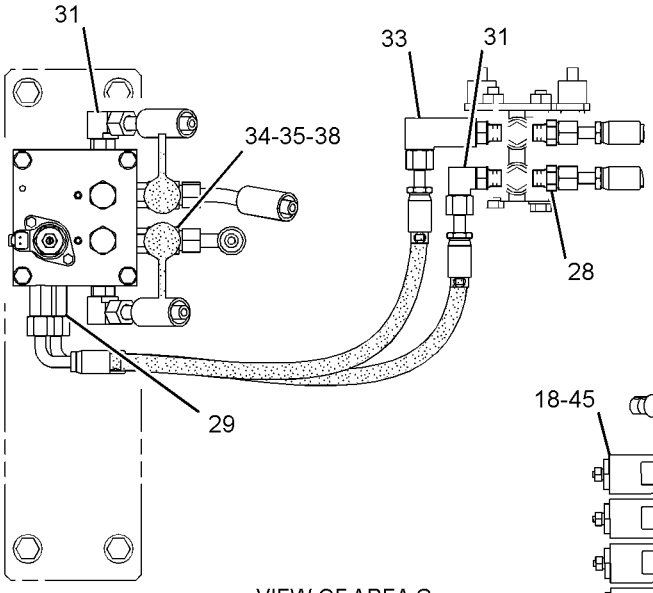

VIEW OF AREA G

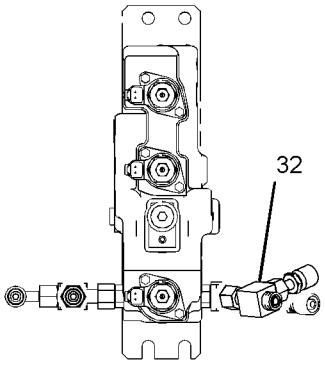

VIEW F-F

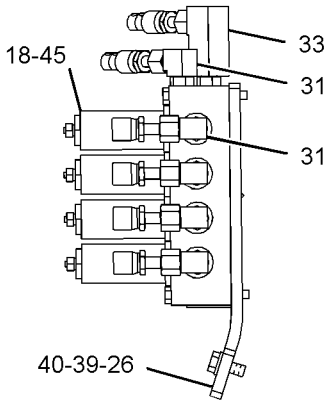

VIEW D-D

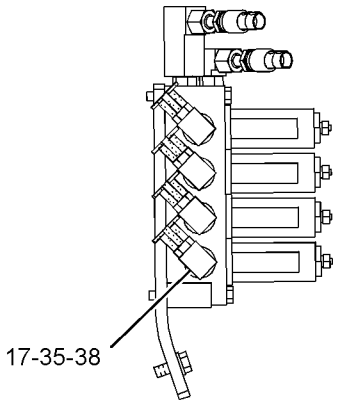

VIEW E-E

GRAPHIC #2 **<END>** g01522352

HYDRAULIC SYSTEM

260-7982 LINES GP-PILOT—MEDIUM PRESSURE

S/N: WNE1-UP; ZMF1-UP
PART OF 259-7501 CONTROL AR-AUXILIARY
AN ATTACHMENT

SMCS-5057, 5059 **i02579703**

NOTE	REF NO	GRAPHIC REF	PART NUMBER	QTY	PART NAME 1 2 3 4 5 6 (PRODUCT LEVEL)	SEE PAGE
I	1	1	**4I-1031**	1	HOSE AS	
	2	1	**4I-9523**	2	BAND-MARKER (BLUE, L3)	
	3	1	**4I-9526**	2	BAND-MARKER (WHITE, R2)	
	4	1	**7K-1181**	3	STRAP-CABLE	
I	5	1	**087-5591**	2	HOSE AS	
I	6	1	**109-7556**	1	HOSE AS	
	7	1	*164-6874*	2	FITTING AS-ELBOW	
					(EACH INCLUDES)	
		1	**3J-1907**	1	SEAL-O-RING	
		1	**085-7356**	1	FITTING	
	8	1	**255-2068**	1	SUPPORT AS	
Y	9	1	**259-7430**	1	VALVE GP-SOLENOID (PRESSURE REDUCING) (ROTATOR)	892
	10	1	*148-8336*	1	CONNECTOR AS	
		1	**3J-1907**	1	SEAL-O-RING	
		1	**6V-8397**	1	SEAL-O-RING	
		1	**6V-8636**	1	CONNECTOR	
	11	1	*148-8338*	1	CONNECTOR AS	
		1	**3J-1907**	1	SEAL-O-RING	
		1	**6V-8397**	1	SEAL-O-RING	
		1	**8T-0075**	1	CONNECTOR	
	12	1	*148-8378*	3	ELBOW AS	
					(EACH INCLUDES)	
		1	**3J-1907**	1	SEAL-O-RING	
		1	**6V-8397**	1	SEAL-O-RING	
		1	**6V-8724**	1	ELBOW	
	13	1	*150-3036*	3	ELBOW AS	
					(EACH INCLUDES)	
		1	**3J-1907**	1	SEAL-O-RING	
		1	**6V-8397**	1	SEAL-O-RING	
		1	**8T-1905**	1	ELBOW	
	14	1	*164-5567*	2	COUPLER AS-QUICK DISCONNECT	
					(EACH INCLUDES)	
		1	**3J-1907**	1	SEAL-O-RING	
		1	**6V-3965**	1	FITTING (QUICK DISCONNECT)	
	15	1	**5K-8451**	1	CLIP	
	16	1	**6V-0852**	2	CAP-DUST	
	17	1	**8T-4121**	3	WASHER-HARD (11X21X2.5-MM THK)	
M	18	1	**8T-4136**	2	BOLT (M10X1.5X25-MM)	
M	19	1	**8T-4137**	1	BOLT (M10X1.5X20-MM)	
M	20	1	**8T-6870**	2	BOLT (M8X1.25X70-MM)	

I-REFER TO HYDRAULIC INFORMATION SYSTEM
M-METRIC PART
Y-SEPARATE ILLUSTRATION

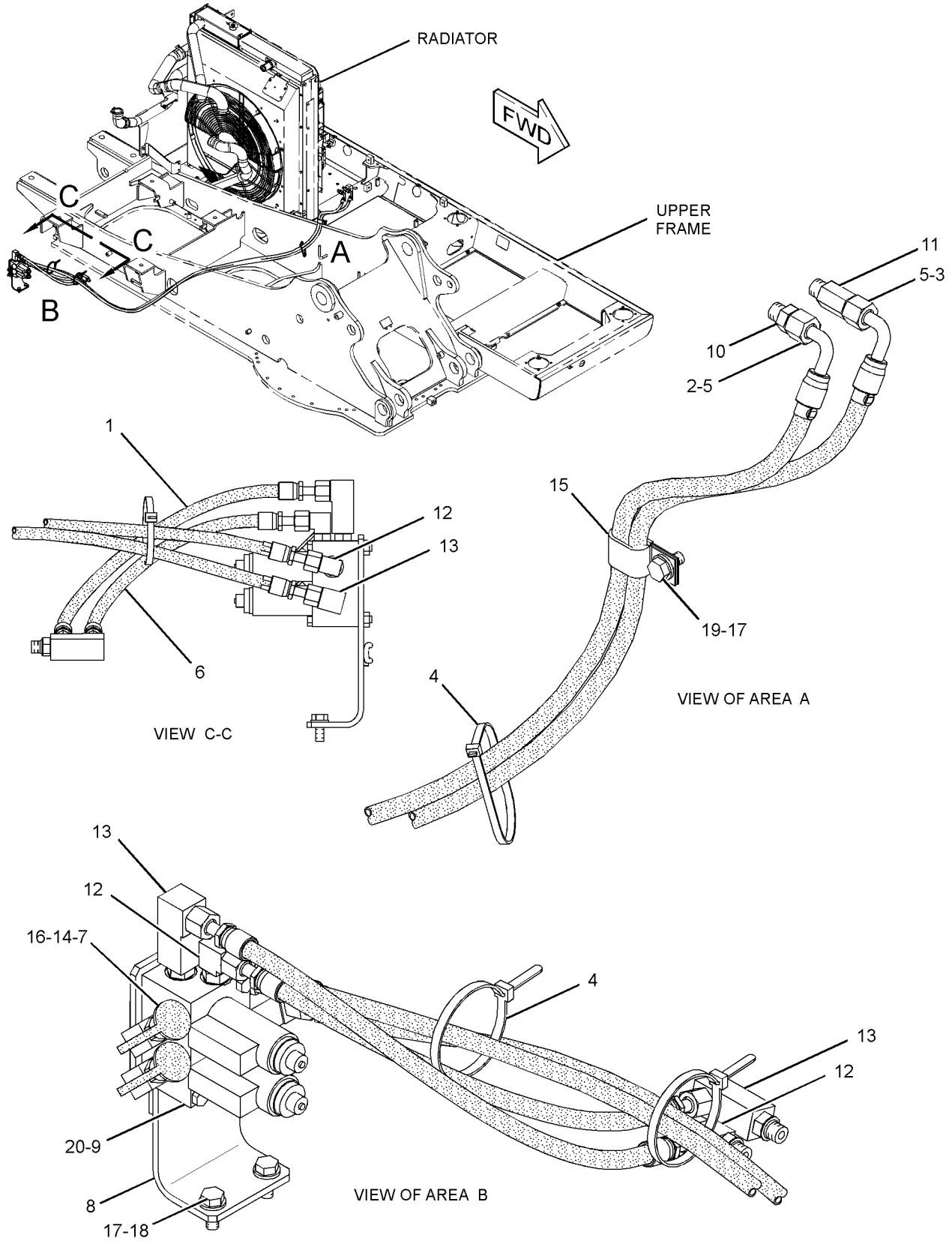

GRAPHIC #1 **<END>** g01286212

HYDRAULIC SYSTEM

260-7984 LINES GP-PILOT—PILOT OIL PRESSURE

S/N: WNE1-UP; ZMF1-UP
PART OF 314-3917 OPTION AR-CONTROL
AN ATTACHMENT

SMCS-5057, 5059 **i02629909**

NOTE	REF NO	GRAPHIC REF	PART NUMBER	QTY	PART NAME 1 2 3 4 5 6 (PRODUCT LEVEL)	SEE PAGE
	1	1	**4I-9526**	2	BAND-MARKER (WHITE, R2)	
	2	1	**4I-9527**	2	BAND-MARKER (GREEN, R3)	
I	3	1	**5I-4076**	1	HOSE AS	
	4	1	**7K-1181**	4	STRAP-CABLE	
I	5	1	**4I-5795**	1	HOSE AS	
	6	1	**124-1008**	1	GUARD	
	7	1	**168-9759**	1	BLOCK	
	8	1	**266-1108**	1	SUPPORT AS	
	9	1	**289-5578**	1	SUPPORT AS	
	10	1	*148-8336*	3	CONNECTOR AS	
					(EACH INCLUDES)	
		1	**3J-1907**	1	SEAL-O-RING	
		1	**6V-8397**	1	SEAL-O-RING	
		1	**6V-8636**	1	CONNECTOR	
	11	1	*148-8338*	1	CONNECTOR AS	
		1	**3J-1907**	1	SEAL-O-RING	
		1	**6V-8397**	1	SEAL-O-RING	
		1	**8T-0075**	1	CONNECTOR	
B	12	1	*148-8407*	8	PLUG AS	
					(EACH INCLUDES)	
		1	**3J-1907**	1	SEAL-O-RING	
		1	**9S-4191**	1	PLUG-O-RING	
	13	1	*148-8411*	2	PLUG AS	
					(EACH INCLUDES)	
		1	**3K-0360**	1	SEAL-O-RING	
		1	**9S-4185**	1	PLUG-O-RING	
	14	1	*148-8433*	2	TEE AS	
					(EACH INCLUDES)	
		1	**6V-8397**	2	SEAL-O-RING	
		1	**6V-9836**	1	TEE-SWIVEL	
B	15	1	**6V-9829**	2	CAP AS	
	16	1	**8T-4121**	2	WASHER-HARD (11X21X2.5-MM THK)	
M	17	1	**8T-4184**	2	BOLT (M12X1.75X45-MM)	
M	18	1	**8T-4192**	4	BOLT (M12X1.75X25-MM)	
M	19	1	**8T-4198**	2	BOLT (M10X1.5X100-MM)	
	20	1	**8T-4223**	6	WASHER-HARD (13.5X25.5X3-MM THK)	

B-USE AS REQUIRED
I-REFER TO HYDRAULIC INFORMATION SYSTEM
M-METRIC PART

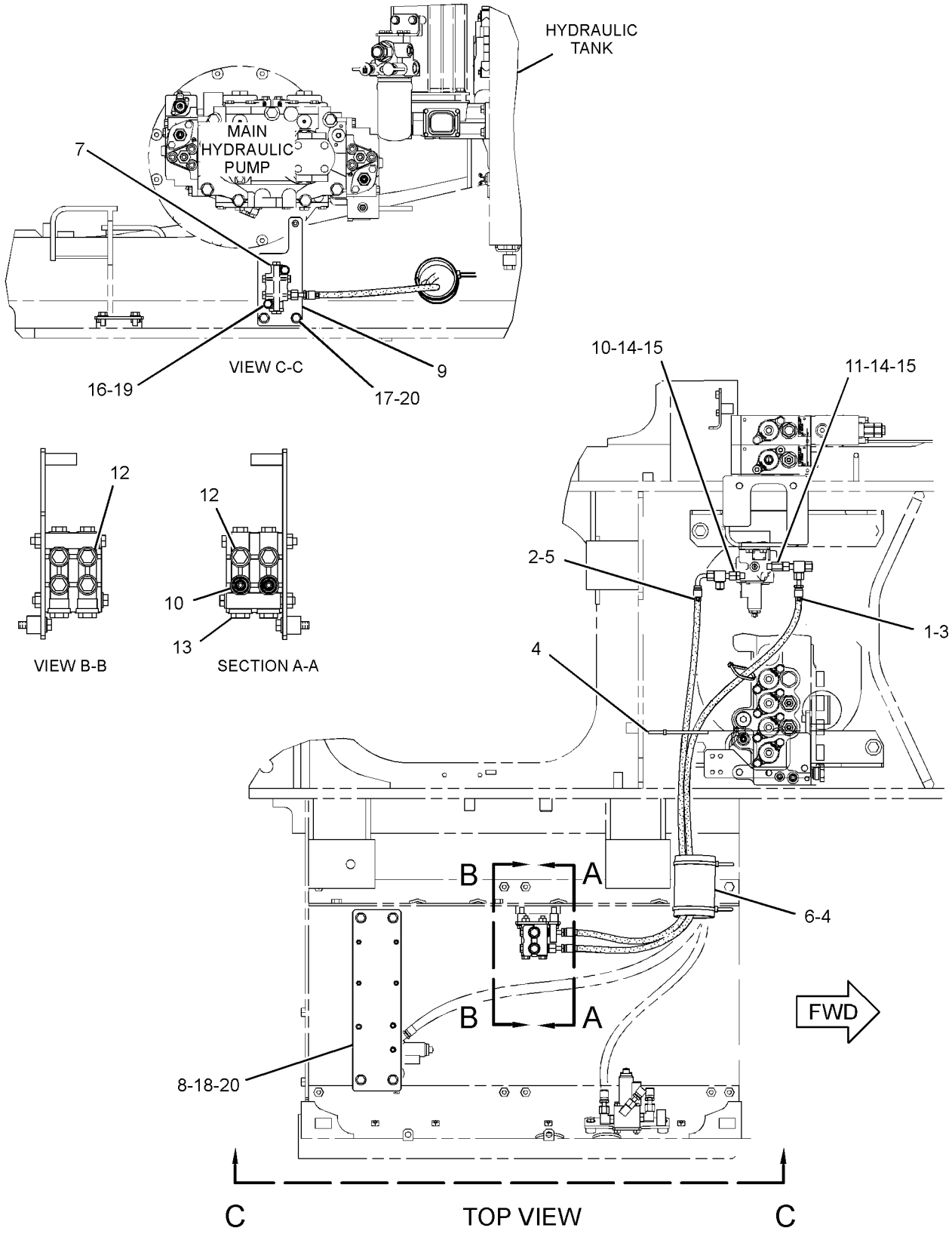

GRAPHIC #1 **<END>** g01323065

266-0962 LINES GP-PILOT—MAIN CONTROL VALVE

S/N: CWG1-UP

PART OF 285-1356 HYDRAULIC AR

SMCS-5057, 5059 **i03645066**

NOTE	REF NO	GRAPHIC REF	PART NUMBER	QTY	PART NAME 1 2 3 4 5 6 (PRODUCT LEVEL)	SEE PAGE
	1	1	**337-1205**	2	GROMMET	
I	2	2	**4I-3994**	1	HOSE AS	
I	3	2	**4I-6054**	1	HOSE AS	
I	4	1	**4I-8799**	1	HOSE AS	
	5	2	**4I-9521**	6	BAND-MARKER (RED, L1)	
	6	2	**4I-9522**	6	BAND-MARKER (YELLOW, L2)	
	7	2	**4I-9523**	2	BAND-MARKER (BLUE, L3)	
	8	1	**4I-9524**	2	BAND-MARKER (BROWN, L4)	
	9	2	**4I-9525**	6	BAND-MARKER (ORANGE, R1)	
	10	1,2	**4I-9526**	6	BAND-MARKER (WHITE, R2)	
	11	1	**4I-9527**	2	BAND-MARKER (GREEN, R3)	
	12	2	**4I-9528**	2	BAND-MARKER (PURPLE, R4)	
	13	1	**7K-1181**	13	STRAP-CABLE	
I	14	1	**7Y-4173**	1	HOSE AS	
I	15	2	**7Y-4390**	1	HOSE AS	
I	16	2	**087-5303**	2	HOSE AS	
I	17	2	**087-6583**	2	HOSE AS	
	18	1	**115-8645**	2	GUARD	
I	19	1	**143-4308**	1	HOSE AS	
I	20	2	**221-4883**	2	HOSE AS	
	21	1	**266-1160**	1	GROMMET	
	22	1	**266-1223**	1	GROMMET	
	23	1,2	*148-8378*	6	ELBOW AS	
					(EACH INCLUDES)	
		1,2	**3J-1907**	1	SEAL-O-RING	
		1,2	**6V-8397**	1	SEAL-O-RING	
		1,2	**6V-8724**	1	ELBOW	
	24	1,2	*148-8435*	6	TEE AS	
					(EACH INCLUDES)	
		1,2	**3J-1907**	1	SEAL-O-RING	
		1,2	**6V-8397**	2	SEAL-O-RING	
		1,2	**6V-8781**	1	TEE-FACE SEAL	
J	25	2	**337-1205**	1	GROMMET	

I-REFER TO HYDRAULIC INFORMATION SYSTEM
J-USED ONLY ON D-ROPS

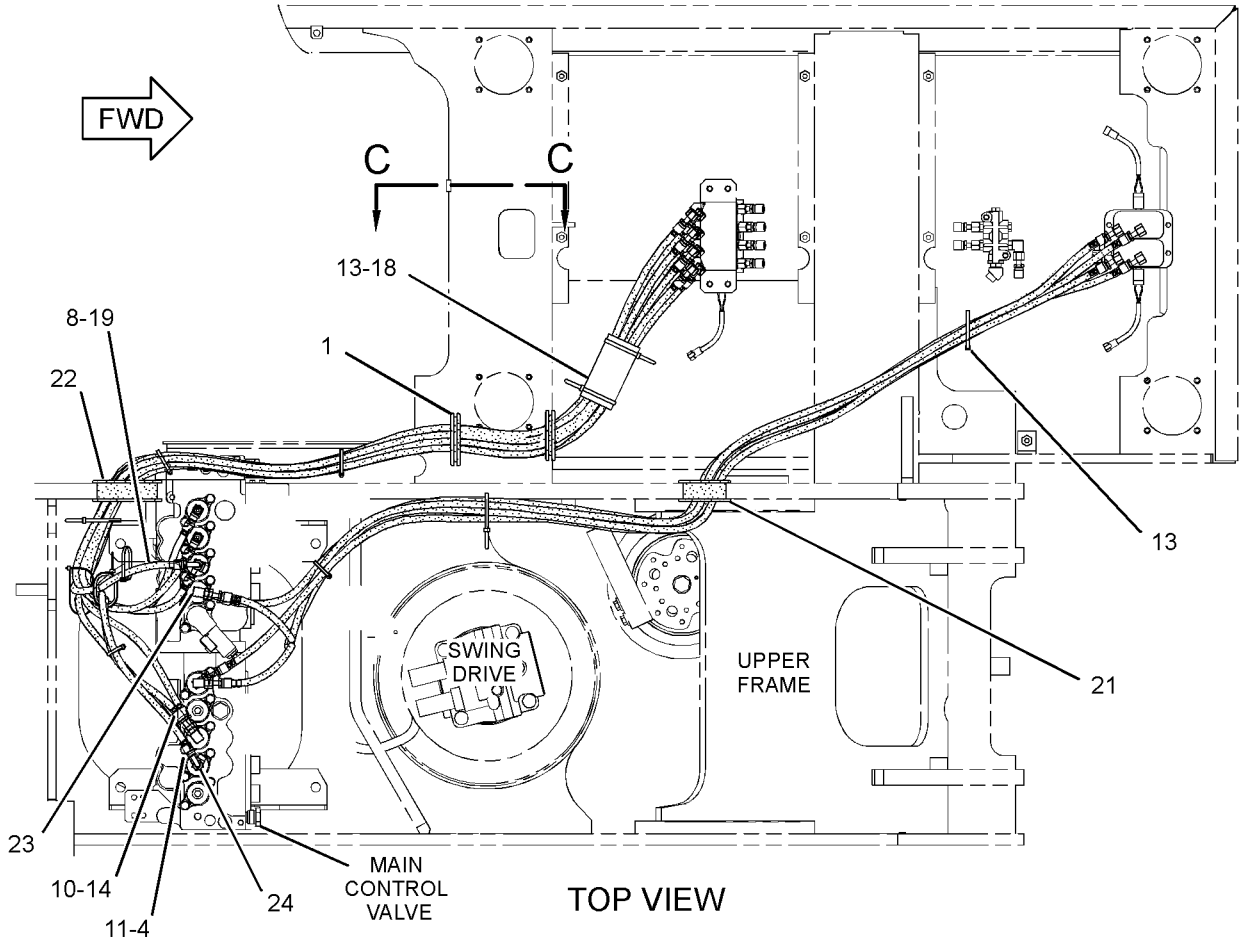

TOP VIEW

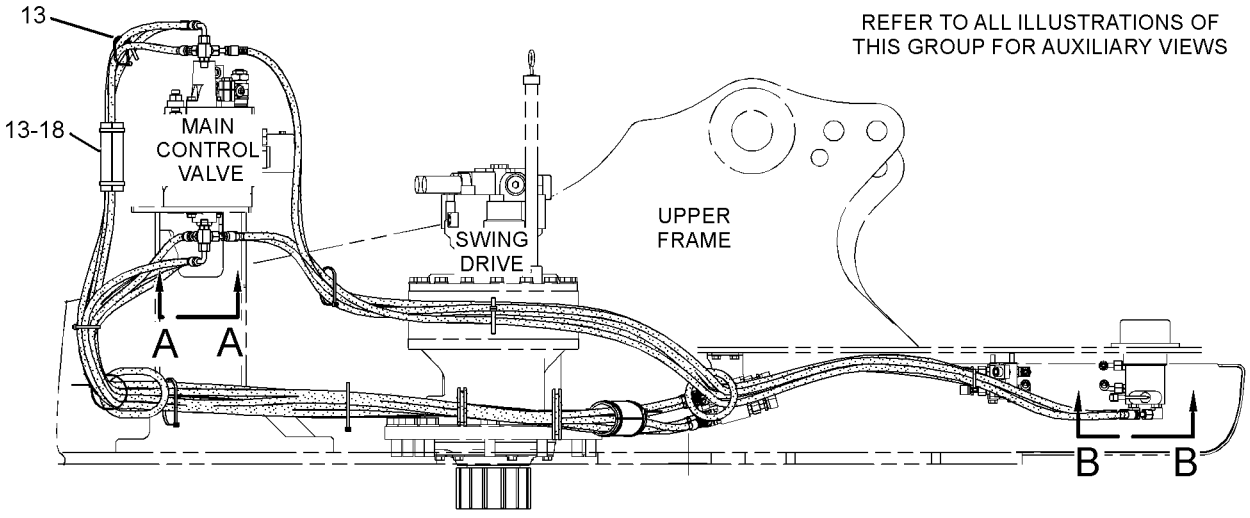

REFER TO ALL ILLUSTRATIONS OF THIS GROUP FOR AUXILIARY VIEWS

RIGHT SIDE VIEW

GRAPHIC #1 g01959874

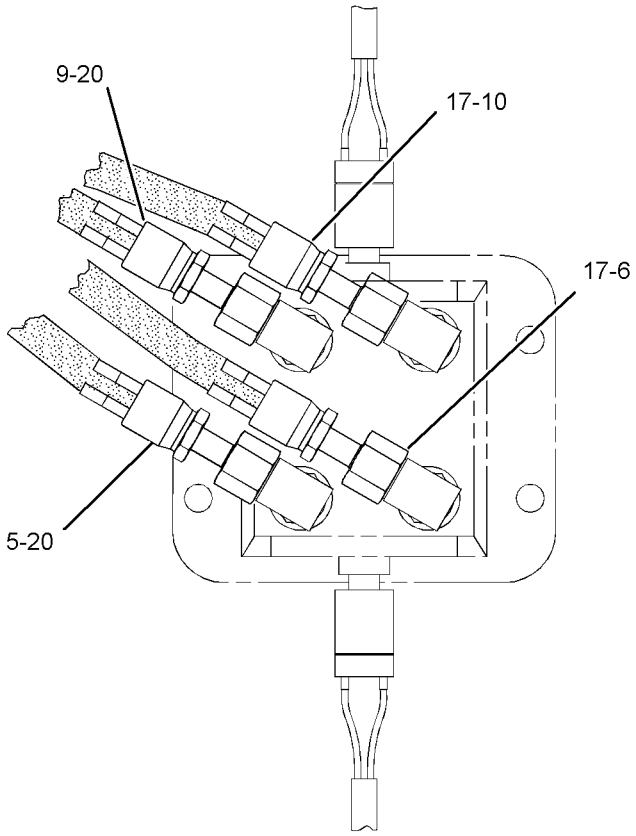

VIEW B-B

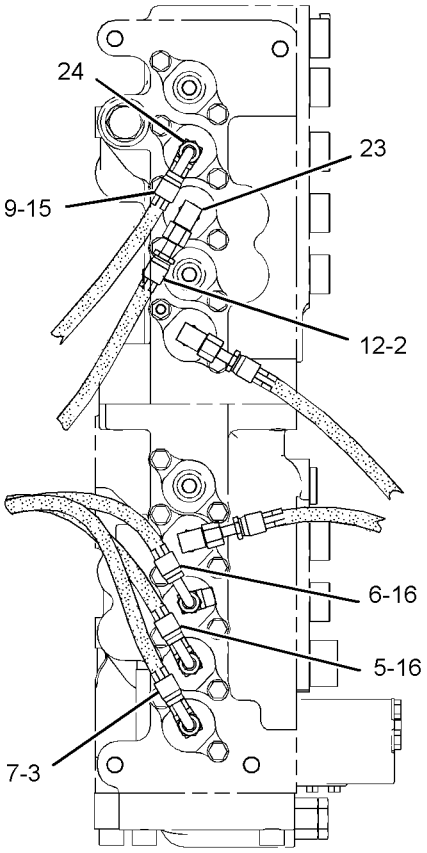

SECTION A-A

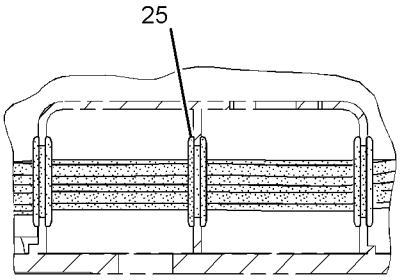

VIEW C-C
(OPTIONAL DESIGN)

GRAPHIC #2 **<END>** g01960601

HYDRAULIC SYSTEM

266-0963 LINES GP-PILOT—CONTROL VALVE

S/N: CWG1-UP

PART OF 285-1356 HYDRAULIC AR

SMCS-5057, 5059 **i03645198**

NOTE	REF NO	GRAPHIC REF	PART NUMBER	QTY	PART NAME 1 2 3 4 5 6 (PRODUCT LEVEL)	SEE PAGE
I	1	1	**4I-0818**	1	HOSE AS	
I	2	3	**4I-0836**	1	HOSE AS	
I	3	3	**4I-1739**	1	HOSE AS	
I	4	3	**4I-5900**	1	HOSE AS	
I	5	3	**4I-5906**	1	HOSE AS	
I	6	2	**4I-6136**	1	HOSE AS	
	7	3	**4I-9521**	2	BAND-MARKER (RED, L1)	
	8	2,3	**4I-9522**	6	BAND-MARKER (YELLOW, L2)	
	9	2,3	**4I-9523**	4	BAND-MARKER (BLUE, L3)	
	10	1,3	**4I-9524**	6	BAND-MARKER (BROWN, L4)	
	11	2	**4I-9525**	2	BAND-MARKER (ORANGE, R1)	
	12	3	**4I-9527**	4	BAND-MARKER (GREEN, R3)	
	13	2,3	**4I-9528**	4	BAND-MARKER (PURPLE, R4)	
I	14	1	**5I-4076**	1	HOSE AS	
	15	4	**5I-4376**	1	FITTING	
I	16	2	**5I-4396**	1	HOSE AS	
I	17	3	**5I-8708**	1	HOSE AS	
	18	1,2,3	**7K-1181**	21	STRAP-CABLE	
I	19	3	**087-4411**	1	HOSE AS	
I	20	2,3	**087-4531**	2	HOSE AS	
I	21	2	**087-4534**	1	HOSE AS	
I	22	3	**087-5760**	1	HOSE AS	
I	23	3	**087-5762**	1	HOSE AS	
I	24	2	**087-5767**	1	HOSE AS	
I	25	3	**087-5772**	1	HOSE AS	
I	26	2,3	**087-5774**	2	HOSE AS	
I	27	2	**104-8838**	1	HOSE AS	
I	28	2	**104-8950**	1	HOSE AS	
I	29	3	**110-5496**	1	HOSE AS	
I	30	2	**115-3780**	1	HOSE AS	
I	31	2	**143-4254**	1	HOSE AS	
	32	4	*148-8364*	2	ELBOW AS	
					(EACH INCLUDES)	
		4	**3K-0360**	1	SEAL-O-RING	
		4	**6V-8398**	1	SEAL-O-RING	
		4	**6V-8625**	1	ELBOW	
	33	3,4	*148-8433*	4	TEE AS	
					(EACH INCLUDES)	
		3,4	**6V-8397**	2	SEAL-O-RING	
		3,4	**6V-9836**	1	TEE-SWIVEL	
	34	3,4	*148-8435*	4	TEE AS	
					(EACH INCLUDES)	
		3,4	**3J-1907**	1	SEAL-O-RING	
		3,4	**6V-8397**	2	SEAL-O-RING	
		3,4	**6V-8781**	1	TEE-FACE SEAL	
	35	3,4	*150-4044*	3	CONNECTOR AS	
					(EACH INCLUDES)	
		3,4	**3J-1907**	1	SEAL-O-RING	
		3,4	**6V-8397**	1	SEAL-O-RING	
		3,4	**8T-1779**	1	CONNECTOR	
	36	4	*164-5567*	1	COUPLER AS-QUICK DISCONNECT	
		4	**3J-1907**	1	SEAL-O-RING	
		4	**6V-3965**	1	FITTING (QUICK DISCONNECT)	
Y	37	4	*164-6981*	1	ACCUMULATOR GP-HYDRAULIC (CHARGED)	476
I	38	2	**164-8977**	1	HOSE AS	
I	39	2	**164-8983**	1	HOSE AS	

266-0963 **LINES GP-PILOT** *(contd.)* **i03645198**

NOTE	REF NO	GRAPHIC REF	PART NUMBER	QTY	PART NAME 1 2 3 4 5 6 (PRODUCT LEVEL)	SEE PAGE
	40	4	**176-4463**	1	PLATE	
	41	4	**176-4469**	1	BLOCK	
I	42	2	**176-4755**	1	HOSE AS	
I	43	3	**184-9593**	1	HOSE AS	
I	44	3	**184-9595**	1	HOSE AS	
I	45	2,3	**187-5676**	2	HOSE AS	
I	46	2	**187-7070**	2	HOSE AS	
	47	2	**202-4004**	1	GROMMET	
	48	2	**212-5402**	1	HOSE AS	
Y	49	4	**215-5037**	1	MANIFOLD GP-CONTROL (PILOT OIL SUPPLY)	772
Y	50	4	**310-0210**	1	VALVE GP-PRESSURE REDUCING (BOOM, SWING PRIORITY)	861
	51	4	**258-0332**	1	SUPPORT-VALVE	
Y	52	4	**123-2430**	1	VALVE GP-SHUTTLE	879
Y	53	4	**264-9967**	1	VALVE GP-SOLENOID & PRESS REDC (BOOM, SWING PRIORITY)	896
	54	2	**266-0982**	1	GUARD	
I	55	3	**266-1290**	1	HOSE AS	
I	56	3	**266-1293**	1	HOSE AS	
	57	1	**275-1442**	1	CLIP (TAB)	
	58	1	**275-1443**	1	CLIP (SLOT)	
	59	1	**275-1444**	1	GROMMET	
	60	3	*285-1399*	1	CONNECTOR AS	
		3	**3J-1907**	1	SEAL-O-RING	
		3	**6V-8397**	1	SEAL-O-RING	
		3	**285-1465**	1	CONNECTOR	
M	61	4	**099-3649**	2	BOLT (M8X1.25X40-MM)	
M	62	4	**105-3484**	2	BOLT-SOCKET HEAD (M10X1.5X25-MM)	
	63	2	**115-8645**	1	GUARD	
	64	3,4	*148-8336*	9	CONNECTOR AS	
					(EACH INCLUDES)	
		3,4	**3J-1907**	1	SEAL-O-RING	
		3,4	**6V-8397**	1	SEAL-O-RING	
		3,4	**6V-8636**	1	CONNECTOR	
	65	4	*148-8340*	3	CONNECTOR AS	
					(EACH INCLUDES)	
		4	**3K-0360**	1	SEAL-O-RING	
		4	**6V-8398**	1	SEAL-O-RING	
		4	**6V-8639**	1	CONNECTOR	
	66	3,4	*148-8353*	5	ELBOW AS	
					(EACH INCLUDES)	
		3,4	**3J-1907**	1	SEAL-O-RING	
		3,4	**6V-8397**	1	SEAL-O-RING	
		3,4	**6V-9001**	1	ELBOW	
	67	4	*148-8354*	1	ELBOW AS	
		4	**3K-0360**	1	SEAL-O-RING	
		4	**6V-8398**	1	SEAL-O-RING	
		4	**6V-9002**	1	ELBOW	
	68	3,4	*148-8367*	2	ELBOW AS	
					(EACH INCLUDES)	
		3,4	**6V-8397**	1	SEAL-O-RING	
		3,4	**6V-9850**	1	ELBOW	
	69	3,4	*148-8378*	10	ELBOW AS	
					(EACH INCLUDES)	
		3,4	**3J-1907**	1	SEAL-O-RING	
		3,4	**6V-8397**	1	SEAL-O-RING	
		3,4	**6V-8724**	1	ELBOW	
	70	3,4	*148-8407*	6	PLUG AS	
					(EACH INCLUDES)	
		3,4	**3J-1907**	1	SEAL-O-RING	

266-0963 **LINES GP-PILOT** *(contd.)* **i03645198**

NOTE	REF NO	GRAPHIC REF	PART NUMBER	QTY	PART NAME 1 2 3 4 5 6 (PRODUCT LEVEL)	SEE PAGE
		3,4	**9S-4191**	1	PLUG-O-RING	
	71	3	*148-8439*	2	TEE AS	
					(EACH INCLUDES)	
		3	**3J-1907**	1	SEAL-O-RING	
		3	**6V-8397**	2	SEAL-O-RING	
		3	**6V-8774**	1	TEE	
	72	4	*150-3036*	1	ELBOW AS	
		4	**3J-1907**	1	SEAL-O-RING	
		4	**6V-8397**	1	SEAL-O-RING	
		4	**8T-1905**	1	ELBOW	
	73	3	*164-5608*	1	CONNECTOR AS	
		3	**3K-0360**	1	SEAL-O-RING	
		3	**6V-8398**	1	SEAL-O-RING	
		3	**8T-1687**	1	CONNECTOR	
	74	1	**4K-8864**	1	CLIP	
	75	1	**5P-7462**	2	CLIP (SLOT)	
	76	1	**5P-7463**	2	CLIP (TAB)	
	77	1	**6V-0683**	2	GROMMET	
	78	4	**6V-0852**	1	CAP-DUST	
	79	3	**6V-8397**	4	SEAL-O-RING	
	80	1,4	**8T-4121**	8	WASHER-HARD (11X21X2.5-MM THK)	
M	81	1	**8T-4136**	1	BOLT (M10X1.5X25-MM)	
M	82	1,4	**8T-4137**	5	BOLT (M10X1.5X20-MM)	
M	83	4	**8T-4178**	2	BOLT (M10X1.5X90-MM)	
M	84	1	**8T-4183**	1	BOLT (M12X1.75X40-MM)	
M	85	4	**8T-4189**	2	BOLT (M8X1.25X20-MM)	
M	86	4	**8T-4192**	3	BOLT (M12X1.75X25-MM)	
	87	1,4	**8T-4223**	4	WASHER-HARD (13.5X25.5X3-MM THK)	
	88	4	**8T-4224**	2	WASHER-HARD (8.8X16X2-MM THK)	

I-REFER TO HYDRAULIC INFORMATION SYSTEM
M-METRIC PART
Y-SEPARATE ILLUSTRATION

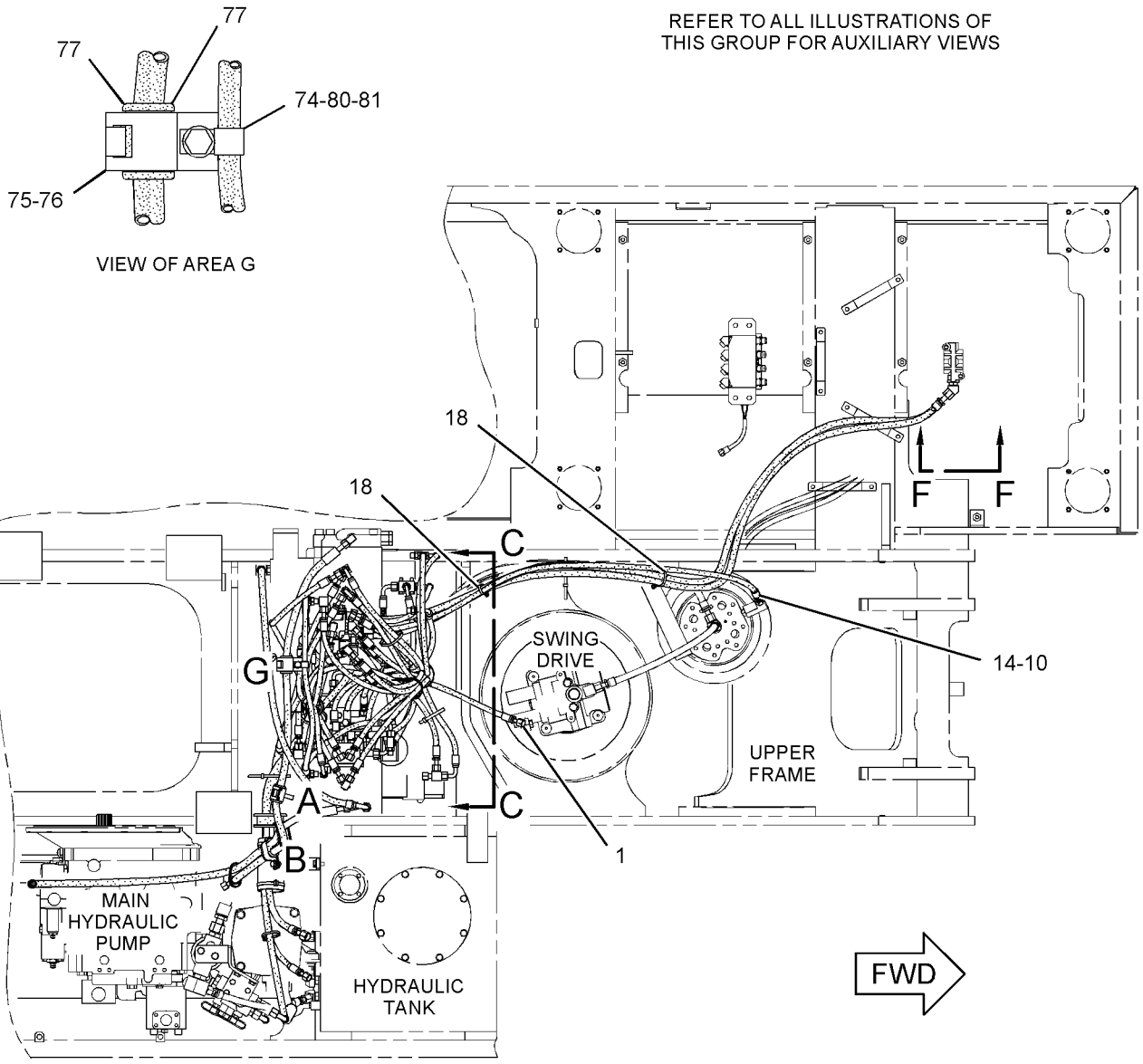

GRAPHIC #1 g01665059

REFER TO ALL ILLUSTRATIONS OF THIS GROUP FOR AUXILIARY VIEWS

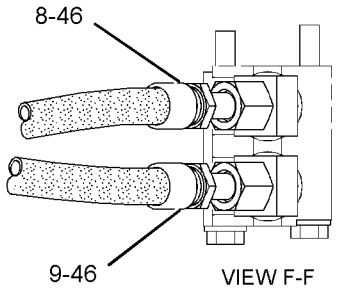

VIEW F-F

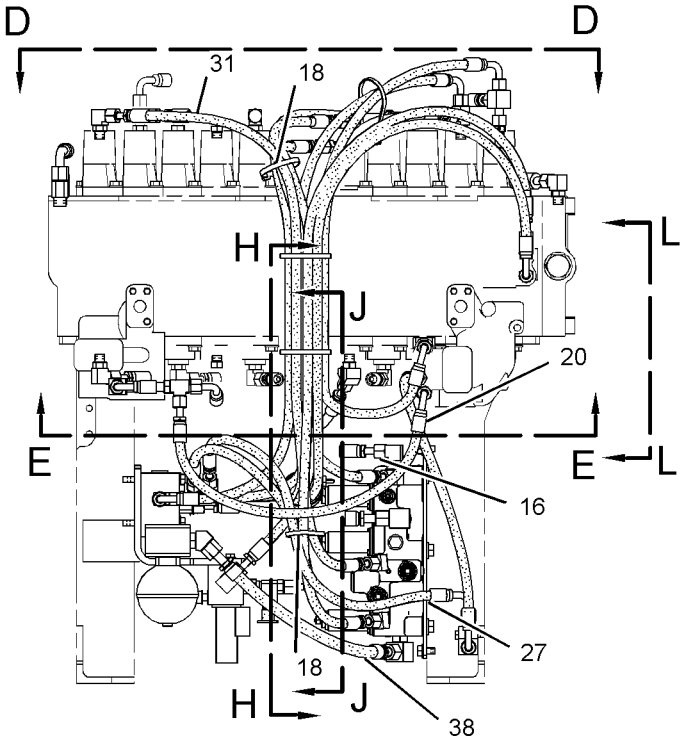

SECTION C-C

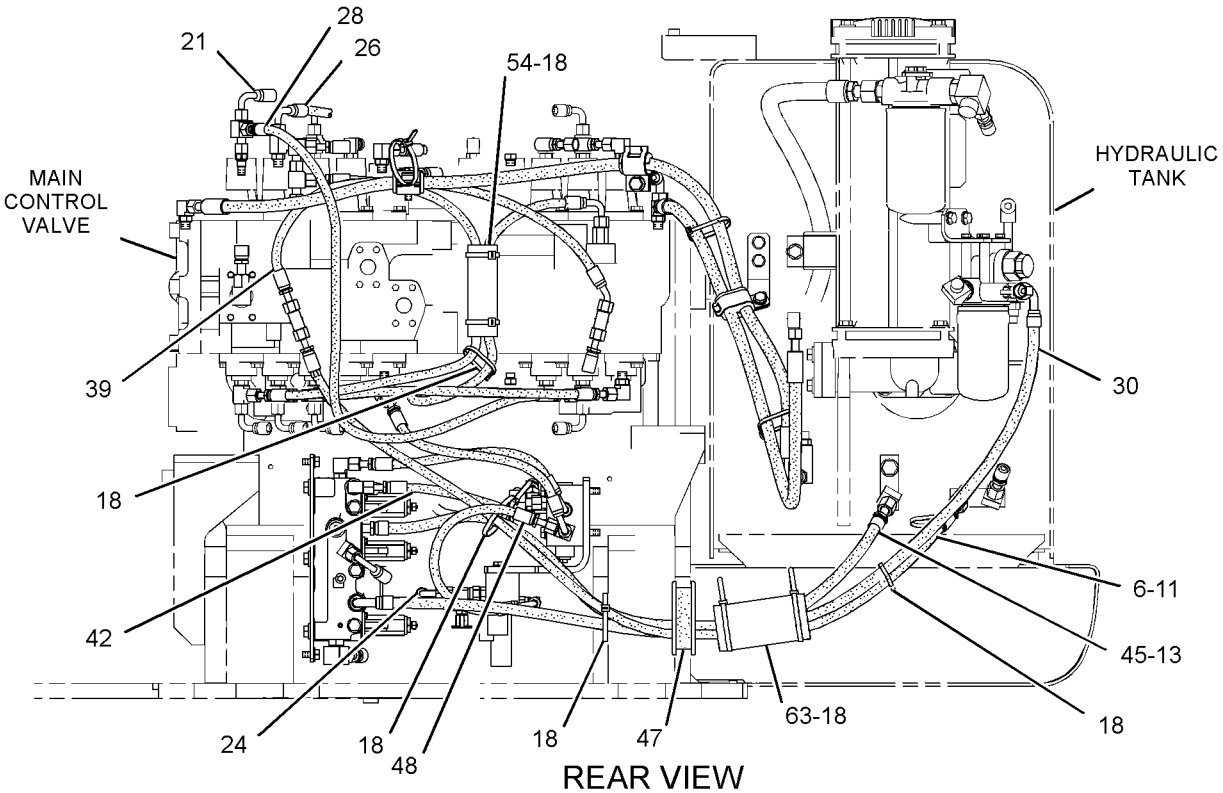

REAR VIEW

GRAPHIC #2

g01665060

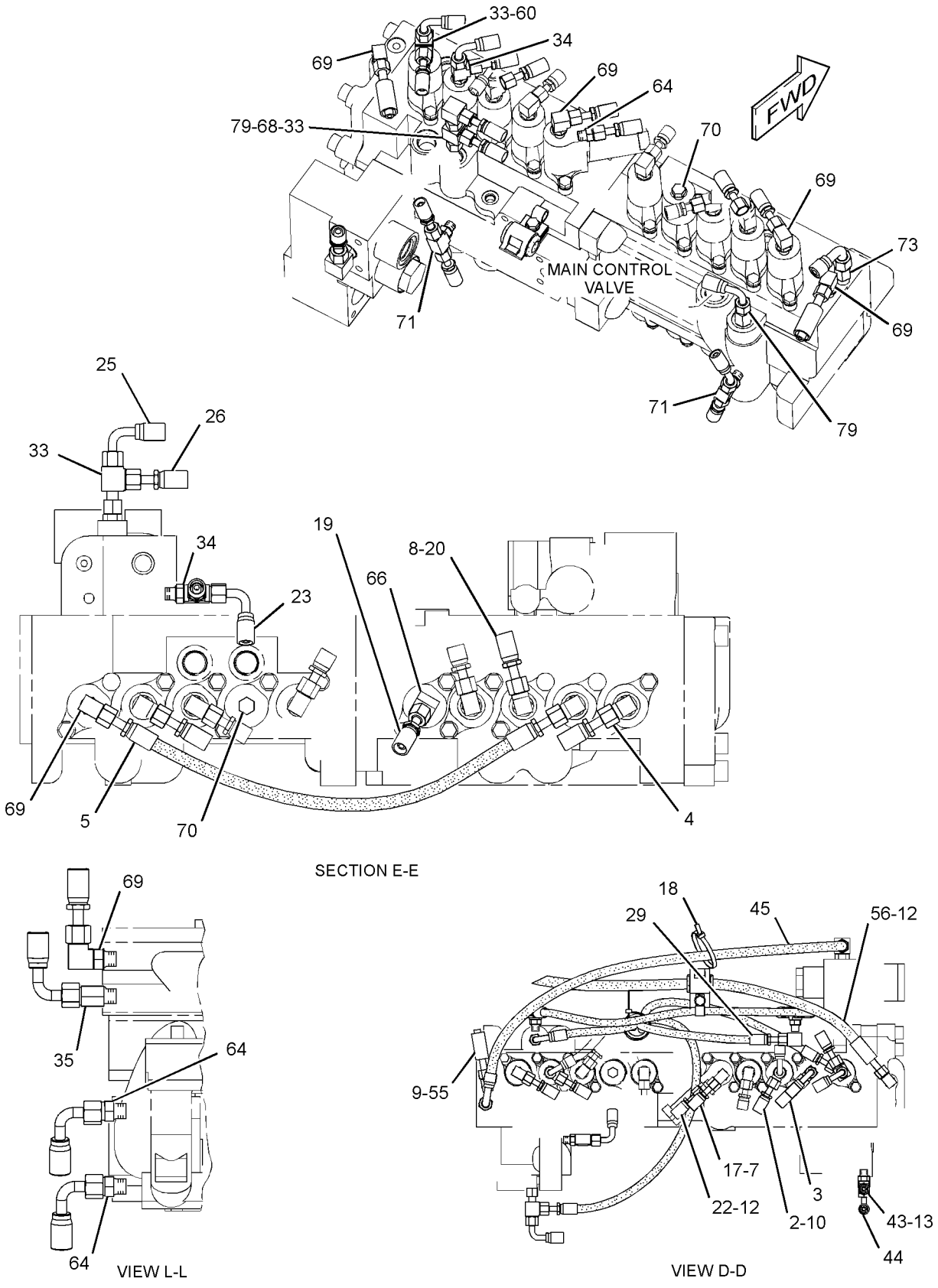

GRAPHIC #3

g01665061

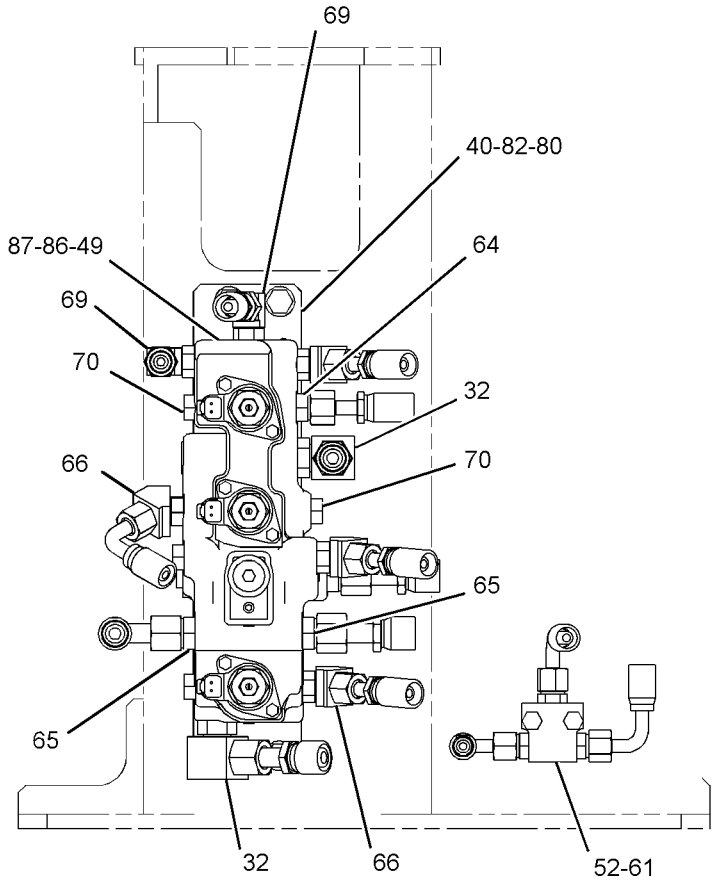

SECTION H-H

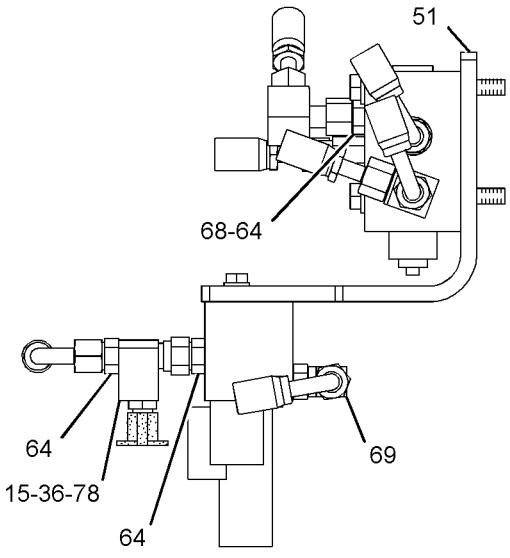

VIEW K-K

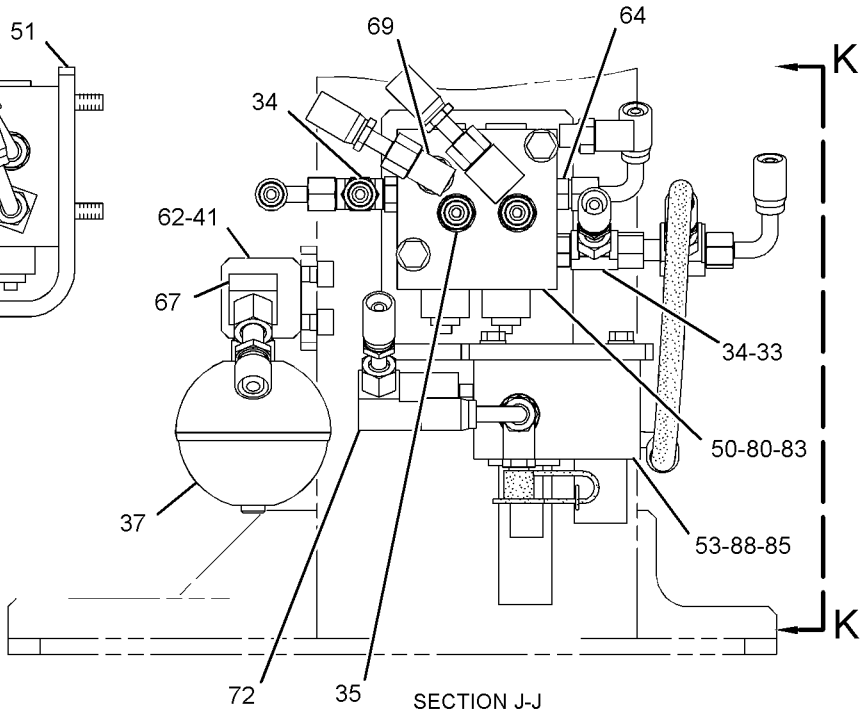

SECTION J-J

GRAPHIC #4 **<END>** g01665062

266-0964 LINES GP-PILOT–FILTER, PILOT PUMP

S/N: CWG1-UP

PART OF 285-1356 HYDRAULIC AR

SMCS-5057, 5059 **i02943988**

NOTE	REF NO	GRAPHIC REF	PART NUMBER	QTY	PART NAME 1 2 3 4 5 6 (PRODUCT LEVEL)	SEE PAGE
I	1	1	**4I-5795**	1	HOSE AS	
	2	1	**6V-0852**	5	CAP-DUST	
	3	1	**7K-1181**	3	STRAP-CABLE	
I	4	1	**7Y-8379**	1	HOSE AS	
I	5	1	**146-7089**	1	HOSE AS	
	6	1	*164-6874*	2	FITTING AS-ELBOW	
					(EACH INCLUDES)	
		1	**3J-1907**	1	SEAL-O-RING	
		1	**085-7356**	1	FITTING	
	7	1	**221-8859**	2	SENSOR AS-PRESSURE (MAIN PUMP)	
					(EACH INCLUDES)	
		1	**3K-0360**	1	SEAL-O-RING	
		1	**171-0596**	1	RECEPTACLE AS	
		1	**9X-3401**	3	PIN-CONNECTOR (16-GA TO 18-GA)	
					–OR–	
		1	**126-1767**	3	PIN-CONNECTOR (14-GA)	
I	8	1	**245-4980**	1	HOSE AS	
	9	1	**266-1028**	1	HOSE AS	
	10	1	*148-8336*	2	CONNECTOR AS	
					(EACH INCLUDES)	
		1	**3J-1907**	1	SEAL-O-RING	
		1	**6V-8397**	1	SEAL-O-RING	
		1	**6V-8636**	1	CONNECTOR	
	11	1	*148-8340*	1	CONNECTOR AS	
		1	**3K-0360**	1	SEAL-O-RING	
		1	**6V-8398**	1	SEAL-O-RING	
		1	**6V-8639**	1	CONNECTOR	
	12	1	*148-8347*	1	ELBOW AS	
		1	**3D-2824**	1	SEAL-O-RING	
		1	**6V-9007**	1	ELBOW	
		1	**6V-9746**	1	SEAL-O-RING	
	13	1	*148-8378*	2	ELBOW AS	
					(EACH INCLUDES)	
		1	**3J-1907**	1	SEAL-O-RING	
		1	**6V-8397**	1	SEAL-O-RING	
		1	**6V-8724**	1	ELBOW	
	14	1	*150-3036*	1	ELBOW AS	
		1	**3J-1907**	1	SEAL-O-RING	
		1	**6V-8397**	1	SEAL-O-RING	
		1	**8T-1905**	1	ELBOW	
	15	1	*153-6237*	2	ELBOW AS	
					(EACH INCLUDES)	
		1	**3D-2824**	1	SEAL-O-RING	
		1	**6V-9004**	1	ELBOW	
		1	**6V-9746**	1	SEAL-O-RING	
	16	1	*164-5567*	5	COUPLER AS-QUICK DISCONNECT	
					(EACH INCLUDES)	
		1	**3J-1907**	1	SEAL-O-RING	
		1	**6V-3965**	1	FITTING (QUICK DISCONNECT)	

I-REFER TO HYDRAULIC INFORMATION SYSTEM

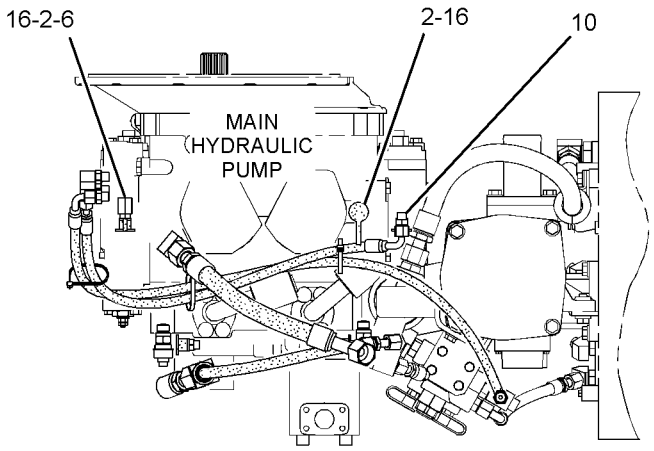

VIEW B-B

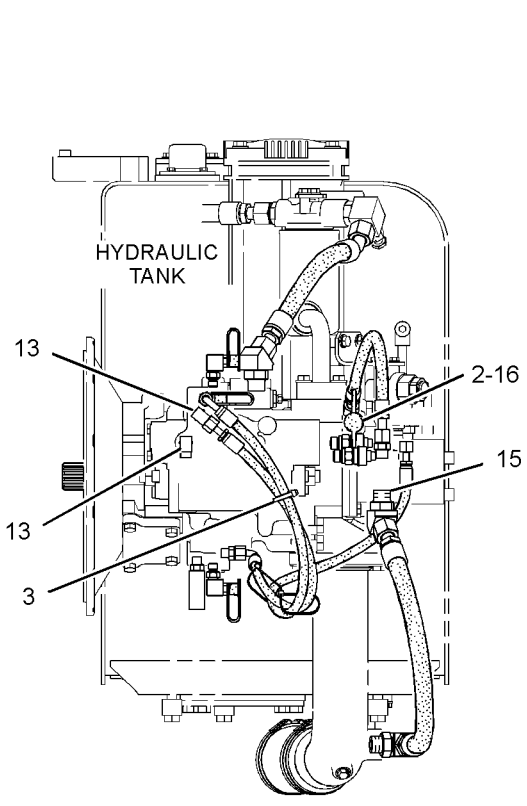

VIEW A-A

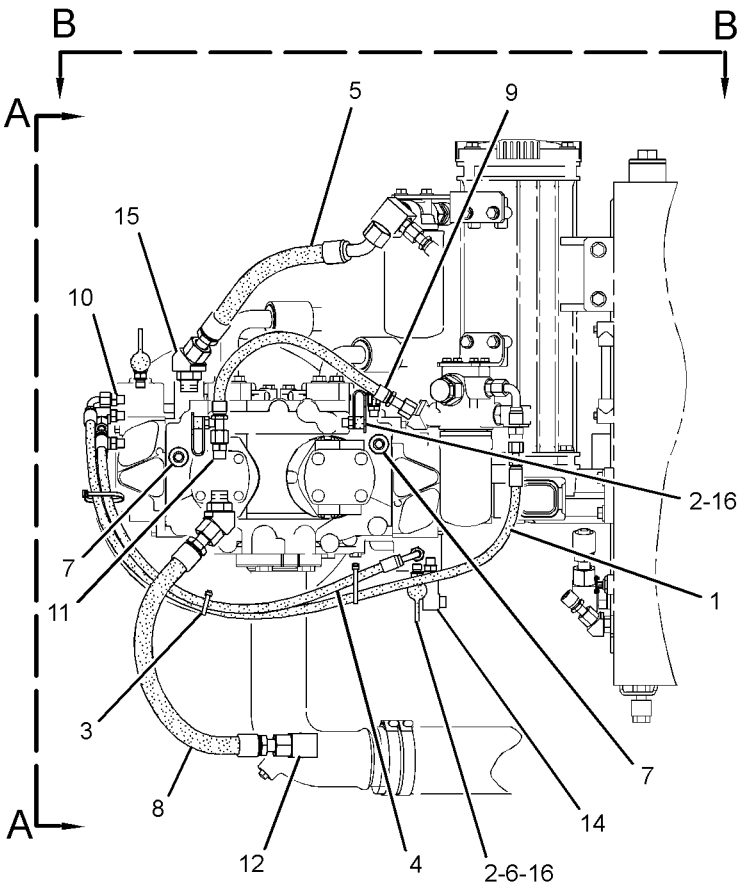

RIGHT SIDE VIEW

GRAPHIC #1 **<END>** g01407216

HYDRAULIC SYSTEM

266-0965 LINES GP-PILOT

S/N: CWG1-UP
PART OF 259-7619 CONTROL AR-AUXILIARY
AN ATTACHMENT

SMCS-5057, 5059 **i03646149**

NOTE	REF NO	GRAPHIC REF	PART NUMBER	QTY	PART NAME 1 2 3 4 5 6 (PRODUCT LEVEL)	SEE PAGE
I	1	1	**4I-1671**	1	HOSE AS	
	2	1	**4I-9521**	2	BAND-MARKER (RED, L1)	
	3	1	**4I-9522**	2	BAND-MARKER (YELLOW, L2)	
	4	1,2	**4I-9523**	4	BAND-MARKER (BLUE, L3)	
	5	1	**4I-9524**	2	BAND-MARKER (BROWN, L4)	
	6	1	**4I-9525**	2	BAND-MARKER (ORANGE, R1)	
	7	1,2	**4I-9527**	4	BAND-MARKER (GREEN, R3)	
I	8	1	**5I-4396**	1	HOSE AS	
	9	1	**7K-1181**	5	STRAP-CABLE	
I	10	2	**087-4402**	2	HOSE AS	
I	11	1	**087-6582**	2	HOSE AS	
I	12	1	**104-8783**	1	HOSE AS	
I	13	1	**108-7387**	1	HOSE AS	
	14	2	*164-6874*	2	FITTING AS-ELBOW	
					(EACH INCLUDES)	
		2	**3J-1907**	1	SEAL-O-RING	
		2	**085-7356**	1	FITTING	
Y	15	2	**259-7430**	1	VALVE GP-SOLENOID (PRESSURE REDUCING) (2-PUMP, 1-WAY FLOW)	892
I	16	2	**266-1389**	1	HOSE AS	
I	17	2	**266-1392**	1	HOSE AS	
I	18	1	**266-1395**	1	HOSE AS	
I	19	1	**269-9548**	1	HOSE AS	
	20	2	**282-7513**	1	SUPPORT AS	
	21	1,2	*148-8336*	3	CONNECTOR AS	
					(EACH INCLUDES)	
		1,2	**3J-1907**	1	SEAL-O-RING	
		1,2	**6V-8397**	1	SEAL-O-RING	
		1,2	**6V-8636**	1	CONNECTOR	
	22	1,2	*148-8338*	3	CONNECTOR AS	
					(EACH INCLUDES)	
		1,2	**3J-1907**	1	SEAL-O-RING	
		1,2	**6V-8397**	1	SEAL-O-RING	
		1,2	**8T-0075**	1	CONNECTOR	
	23	2	*148-8353*	2	ELBOW AS	
					(EACH INCLUDES)	
		2	**3J-1907**	1	SEAL-O-RING	
		2	**6V-8397**	1	SEAL-O-RING	
		2	**6V-9001**	1	ELBOW	
	24	1,2	*148-8378*	9	ELBOW AS	
					(EACH INCLUDES)	
		1,2	**3J-1907**	1	SEAL-O-RING	
		1,2	**6V-8397**	1	SEAL-O-RING	
		1,2	**6V-8724**	1	ELBOW	
	25	2	*148-8433*	1	TEE AS	
		2	**6V-8397**	2	SEAL-O-RING	
		2	**6V-9836**	1	TEE-SWIVEL	
	26	2	*150-3036*	1	ELBOW AS	
		2	**3J-1907**	1	SEAL-O-RING	
		2	**6V-8397**	1	SEAL-O-RING	
		2	**8T-1905**	1	ELBOW	
	27	1	*150-4027*	2	TEE AS	
					(EACH INCLUDES)	
		1	**3E-2310**	1	TEE	
		1	**3J-1907**	1	SEAL-O-RING	

266-0965 **LINES GP-PILOT** *(contd.)* **i03646149**

NOTE	REF NO	GRAPHIC REF	PART NUMBER	QTY	PART NAME 1 2 3 4 5 6 (PRODUCT LEVEL)	SEE PAGE
		1	**6V-8397**	1	SEAL-O-RING	
	28	1,2	*164-5567*	4	COUPLER AS-QUICK DISCONNECT	
					(EACH INCLUDES)	
		1,2	**3J-1907**	1	SEAL-O-RING	
		1,2	**6V-3965**	1	FITTING (QUICK DISCONNECT)	
Y	29	1	**171-0188**	1	VALVE GP-SOLENOID (NEG FLOW CONT, PROPN RED VALVE)	888
	30	2	**3G-8054**	1	CLIP (TAB)	
	31	2	**3G-8057**	1	CLIP (SLOT)	
	32	1,2	**6V-0852**	4	CAP-DUST	
	33	2	**6V-0974**	1	GROMMET	
	34	2	**8T-4121**	4	WASHER-HARD (11X21X2.5-MM THK)	
M	35	2	**8T-4136**	4	BOLT (M10X1.5X25-MM)	
M	36	1	**8T-4177**	4	BOLT (M8X1.25X90-MM)	
	37	1	**8T-4224**	4	WASHER-HARD (8.8X16X2-MM THK)	
M	38	2	**8T-6870**	2	BOLT (M8X1.25X70-MM)	

I-REFER TO HYDRAULIC INFORMATION SYSTEM
M-METRIC PART
Y-SEPARATE ILLUSTRATION

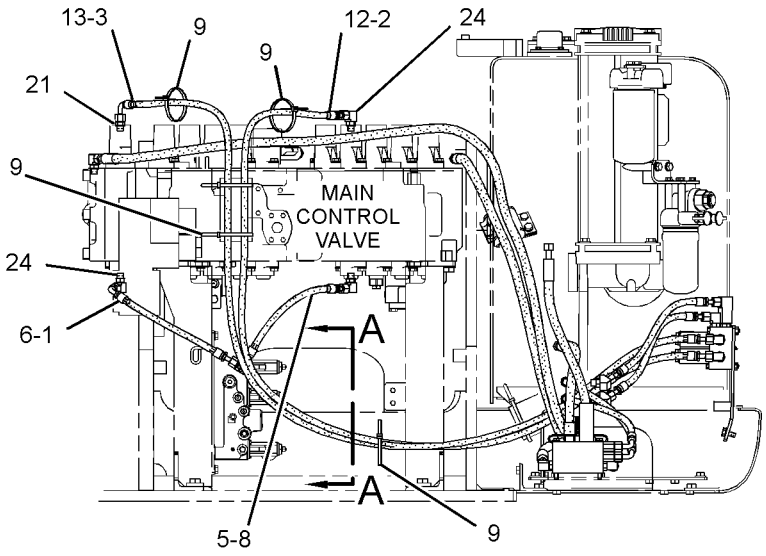

REAR VIEW

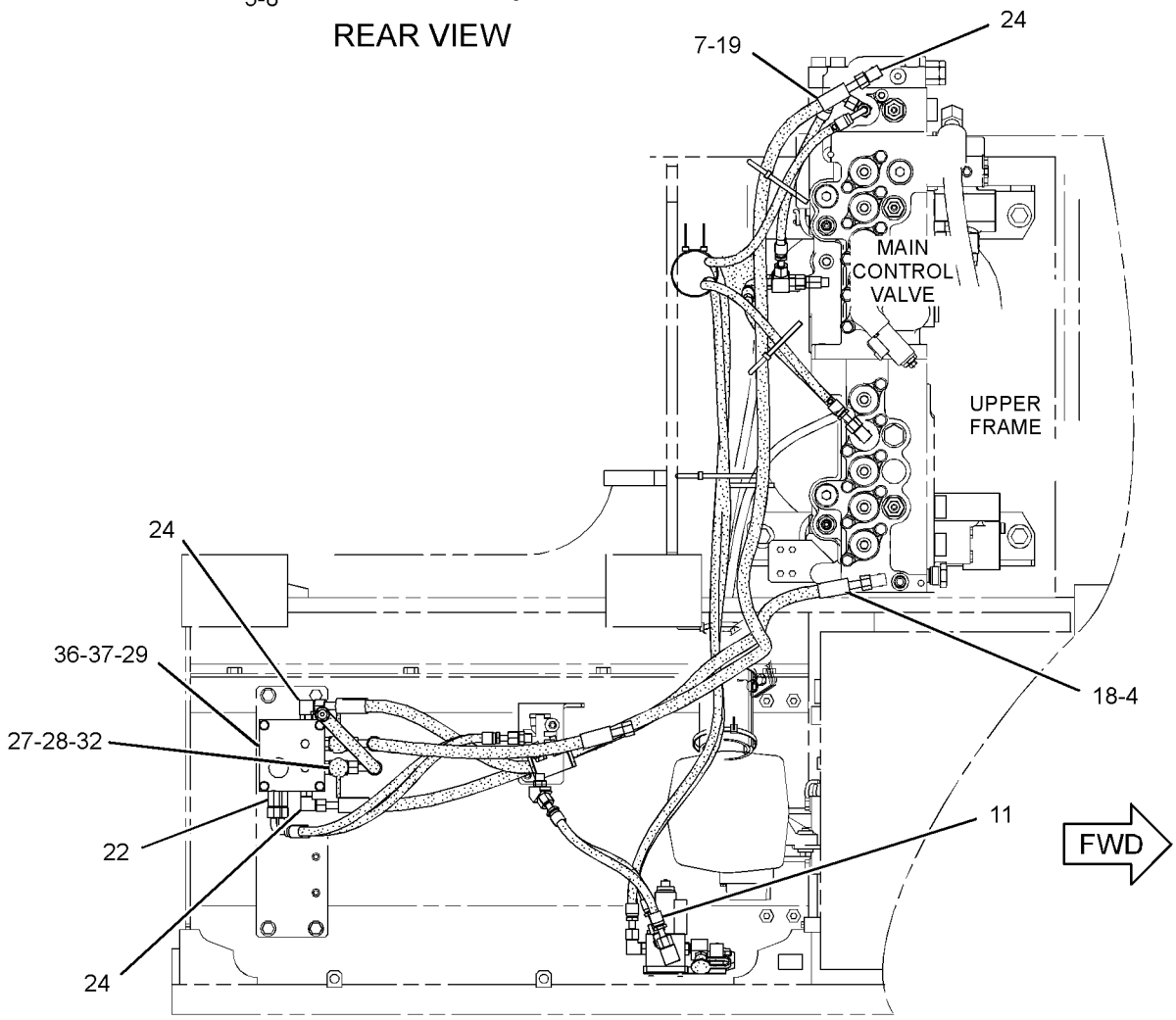

TOP VIEW

GRAPHIC #1 g01365048

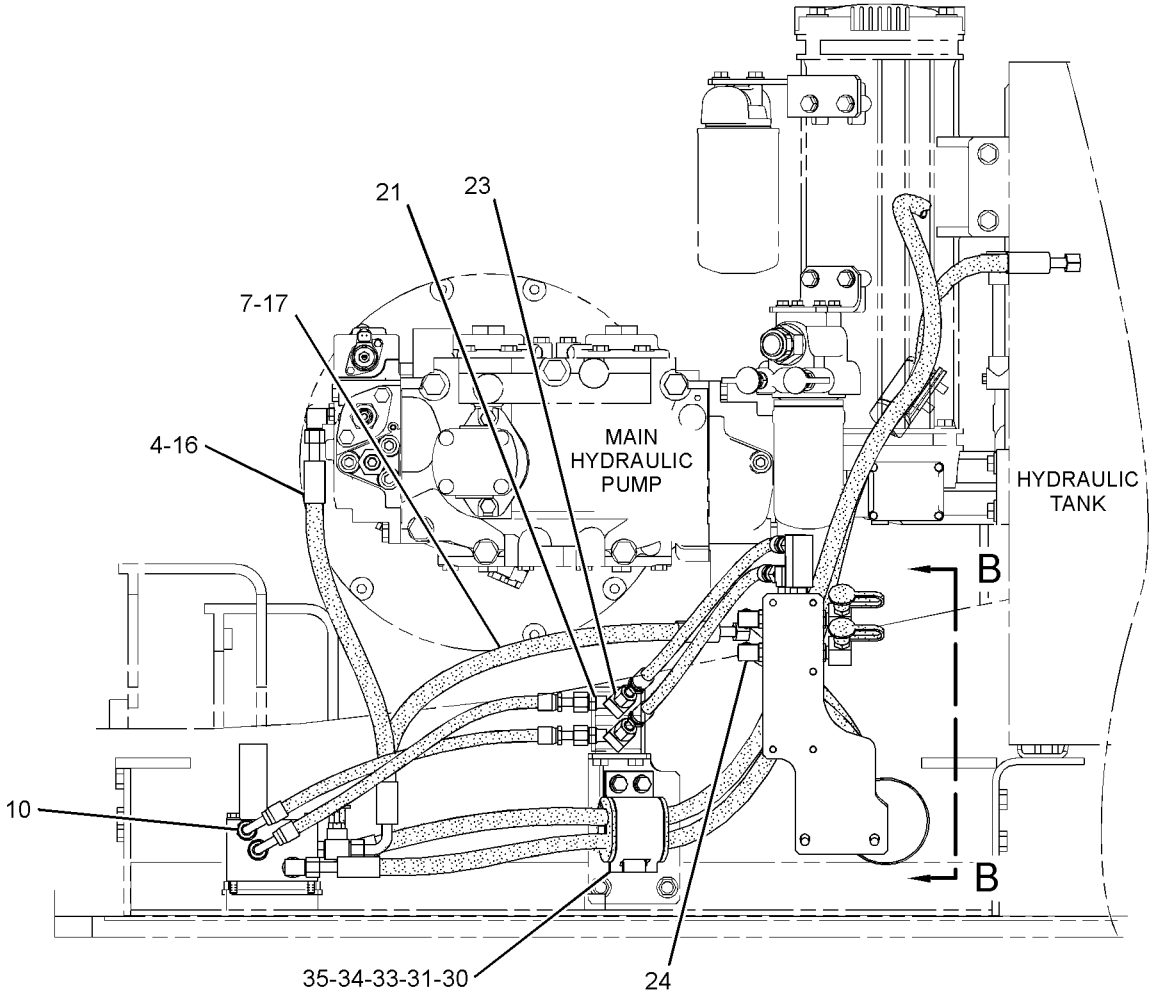

RIGHT SIDE VIEW

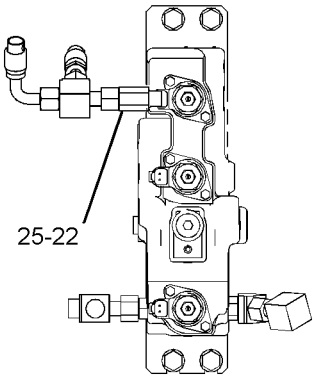

VIEW A-A

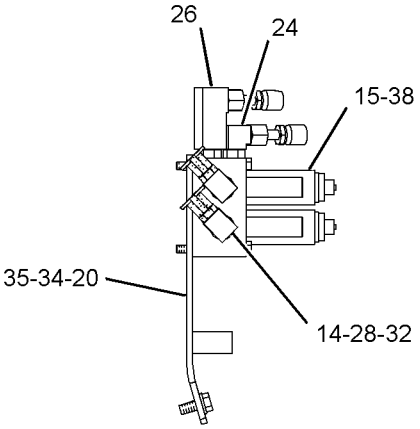

VIEW B-B

GRAPHIC #2 **<END>** g01365049

HYDRAULIC SYSTEM

266-0970 LINES GP-PILOT—MEDIUM PRESSURE

S/N: CWG1-UP
PART OF 259-7621 CONTROL AR-AUXILIARY
AN ATTACHMENT

SMCS-5057, 5059 **i03646461**

NOTE	REF NO	GRAPHIC REF	PART NUMBER	QTY	PART NAME 1 2 3 4 5 6 (PRODUCT LEVEL)	SEE PAGE
I	1	1	**4I-1631**	2	HOSE AS	
	2	1	**4I-9523**	2	BAND-MARKER (BLUE, L3)	
	3	1	**4I-9526**	2	BAND-MARKER (WHITE, R2)	
	4	1	**7K-1181**	3	STRAP-CABLE	
I	5	1	**087-6582**	1	HOSE AS	
	6	1	*164-6874*	2	FITTING AS-ELBOW	
					(EACH INCLUDES)	
		1	**3J-1907**	1	SEAL-O-RING	
		1	**085-7356**	1	FITTING	
I	7	1	**211-6208**	1	HOSE AS	
	8	1	**255-2068**	1	SUPPORT AS	
Y	9	1	**259-7430**	1	VALVE GP-SOLENOID (PRESSURE REDUCING) (ROTATOR)	892
	10	1	*148-8336*	3	CONNECTOR AS	
					(EACH INCLUDES)	
		1	**3J-1907**	1	SEAL-O-RING	
		1	**6V-8397**	1	SEAL-O-RING	
		1	**6V-8636**	1	CONNECTOR	
	11	1	*148-8338*	1	CONNECTOR AS	
		1	**3J-1907**	1	SEAL-O-RING	
		1	**6V-8397**	1	SEAL-O-RING	
		1	**8T-0075**	1	CONNECTOR	
	12	1	*148-8378*	2	ELBOW AS	
					(EACH INCLUDES)	
		1	**3J-1907**	1	SEAL-O-RING	
		1	**6V-8397**	1	SEAL-O-RING	
		1	**6V-8724**	1	ELBOW	
	13	1	*150-3036*	2	ELBOW AS	
					(EACH INCLUDES)	
		1	**3J-1907**	1	SEAL-O-RING	
		1	**6V-8397**	1	SEAL-O-RING	
		1	**8T-1905**	1	ELBOW	
	14	1	*164-5567*	2	COUPLER AS-QUICK DISCONNECT	
					(EACH INCLUDES)	
		1	**3J-1907**	1	SEAL-O-RING	
		1	**6V-3965**	1	FITTING (QUICK DISCONNECT)	
	15	1	**5K-8451**	1	CLIP	
	16	1	**6V-0852**	2	CAP-DUST	
	17	1	**8T-4121**	3	WASHER-HARD (11X21X2.5-MM THK)	
M	18	1	**8T-4136**	2	BOLT (M10X1.5X25-MM)	
M	19	1	**8T-4137**	1	BOLT (M10X1.5X20-MM)	
M	20	1	**8T-6870**	2	BOLT (M8X1.25X70-MM)	

I-REFER TO HYDRAULIC INFORMATION SYSTEM
M-METRIC PART
Y-SEPARATE ILLUSTRATION

266-0970 **LINES GP-PILOT** *(contd.)* **i03646461**

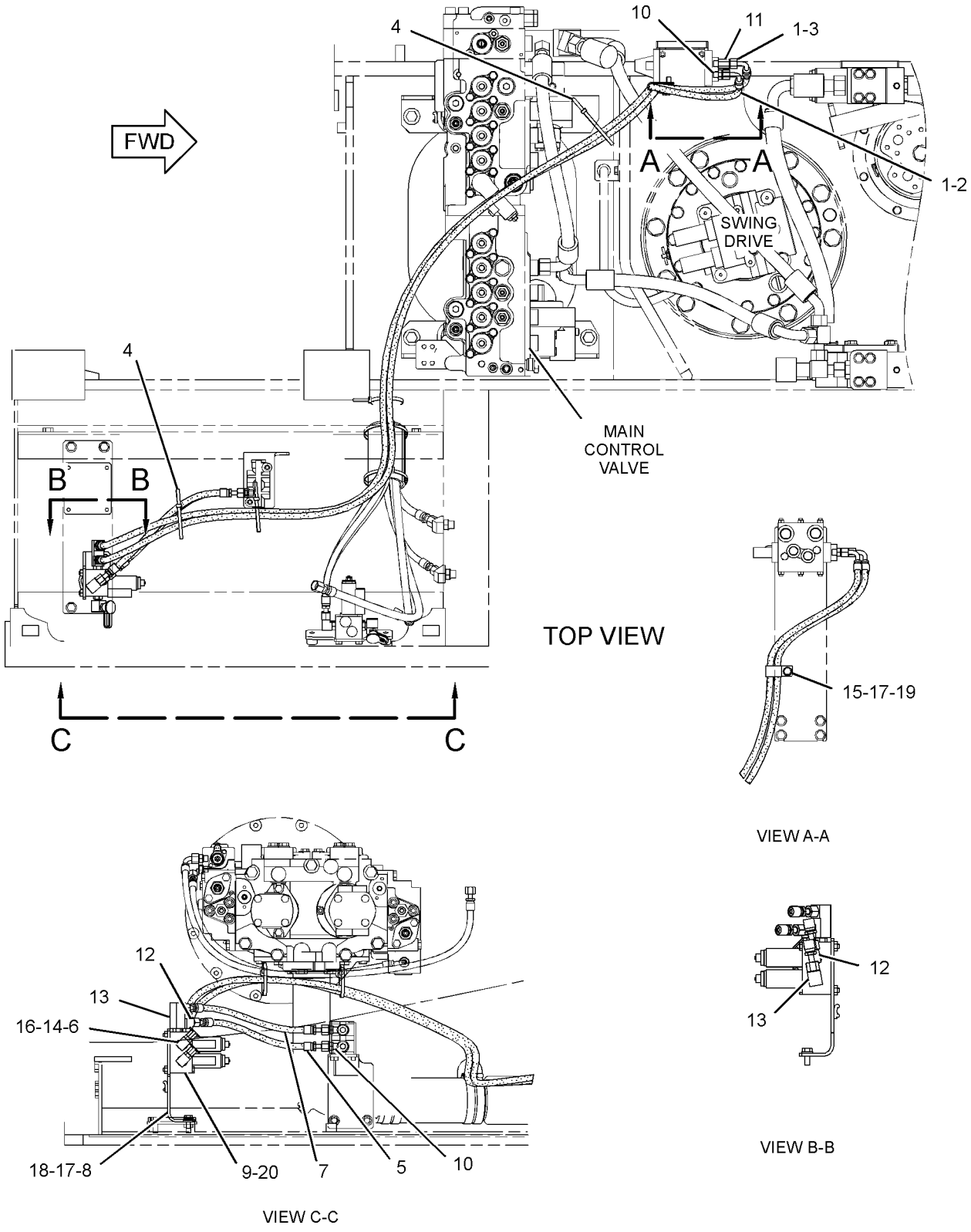

GRAPHIC #1 **<END>** g01225647

HYDRAULIC SYSTEM

266-0972 LINES GP-PILOT–CONTROL VALVE

S/N: CWG1-UP

PART OF 347-9905, 347-9906 OPTION AR-CONTROL

AN ATTACHMENT

SMCS-5057, 5059 **i03646136**

NOTE	REF NO	GRAPHIC REF	PART NUMBER	QTY	PART NAME 1 2 3 4 5 6 (PRODUCT LEVEL)	SEE PAGE
	1	1	**4I-9526**	2	BAND-MARKER (WHITE, R2)	
	2	1	**4I-9527**	2	BAND-MARKER (GREEN, R3)	
	3	1	**7K-1181**	4	STRAP-CABLE	
I	4	1	**087-5761**	1	HOSE AS	
I	5	1	**108-7402**	1	HOSE AS	
	6	1	**124-1008**	1	GUARD	
	7	1	**168-9759**	1	BLOCK	
	8	1	**266-1283**	1	SUPPORT AS	
	9	1	**266-1285**	1	SUPPORT AS	
	10	1	*148-8336*	3	CONNECTOR AS	
					(EACH INCLUDES)	
		1	**3J-1907**	1	SEAL-O-RING	
		1	**6V-8397**	1	SEAL-O-RING	
		1	**6V-8636**	1	CONNECTOR	
	11	1	*148-8338*	1	CONNECTOR AS	
		1	**3J-1907**	1	SEAL-O-RING	
		1	**6V-8397**	1	SEAL-O-RING	
		1	**8T-0075**	1	CONNECTOR	
B	12	1	*148-8407*	8	PLUG AS	
					(EACH INCLUDES)	
		1	**3J-1907**	1	SEAL-O-RING	
		1	**9S-4191**	1	PLUG-O-RING	
	13	1	*148-8411*	2	PLUG AS	
					(EACH INCLUDES)	
		1	**3K-0360**	1	SEAL-O-RING	
		1	**9S-4185**	1	PLUG-O-RING	
	14	1	*148-8433*	2	TEE AS	
					(EACH INCLUDES)	
		1	**6V-8397**	2	SEAL-O-RING	
		1	**6V-9836**	1	TEE-SWIVEL	
B	15	1	**6V-9829**	2	CAP AS	
	16	1	**8T-4121**	2	WASHER-HARD (11X21X2.5-MM THK)	
M	17	1	**8T-4139**	2	BOLT (M12X1.75X30-MM)	
M	18	1	**8T-4192**	4	BOLT (M12X1.75X25-MM)	
M	19	1	**8T-4198**	2	BOLT (M10X1.5X100-MM)	
	20	1	**8T-4223**	6	WASHER-HARD (13.5X25.5X3-MM THK)	

B-USE AS REQUIRED
I-REFER TO HYDRAULIC INFORMATION SYSTEM
M-METRIC PART

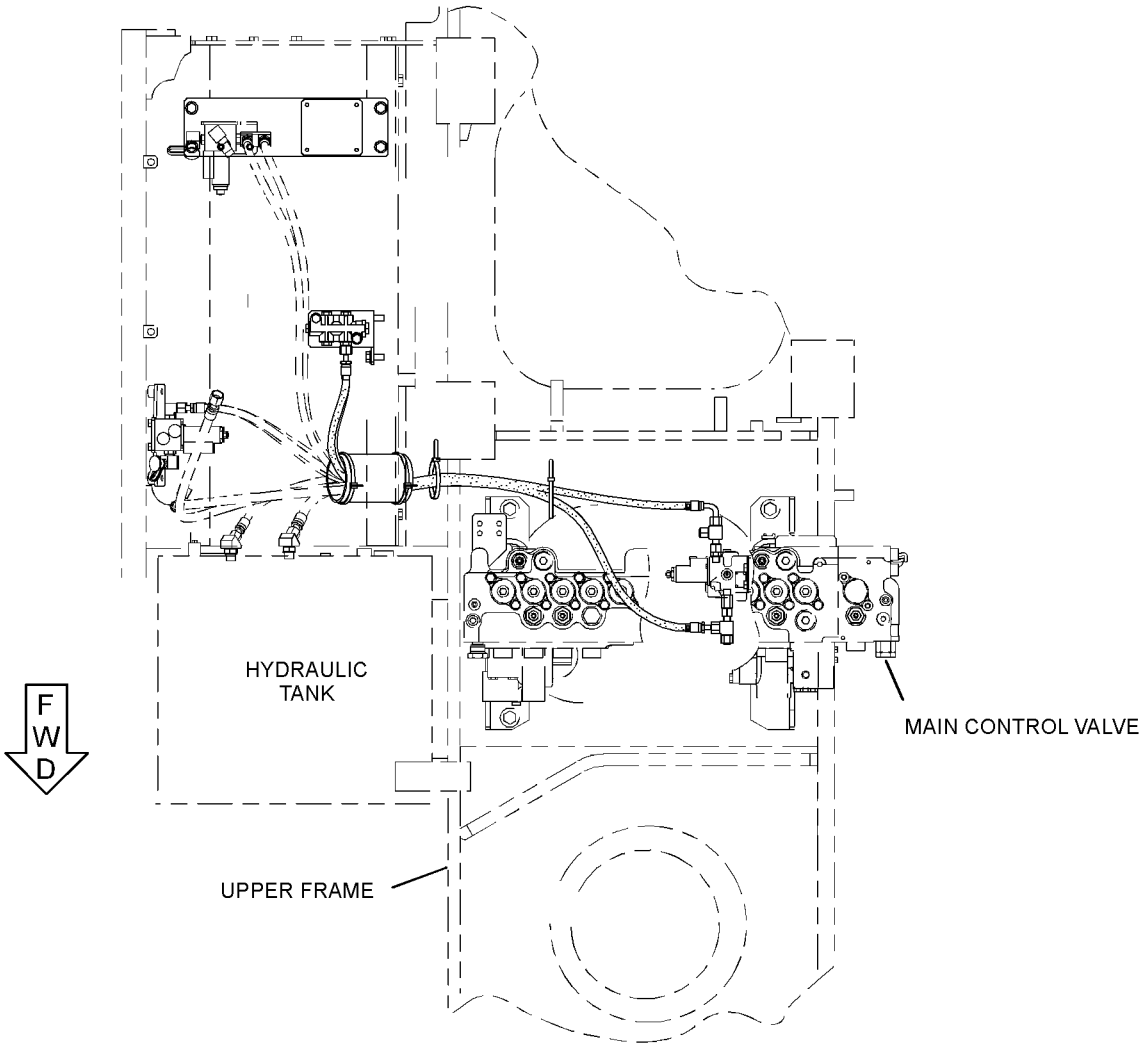

TOP VIEW

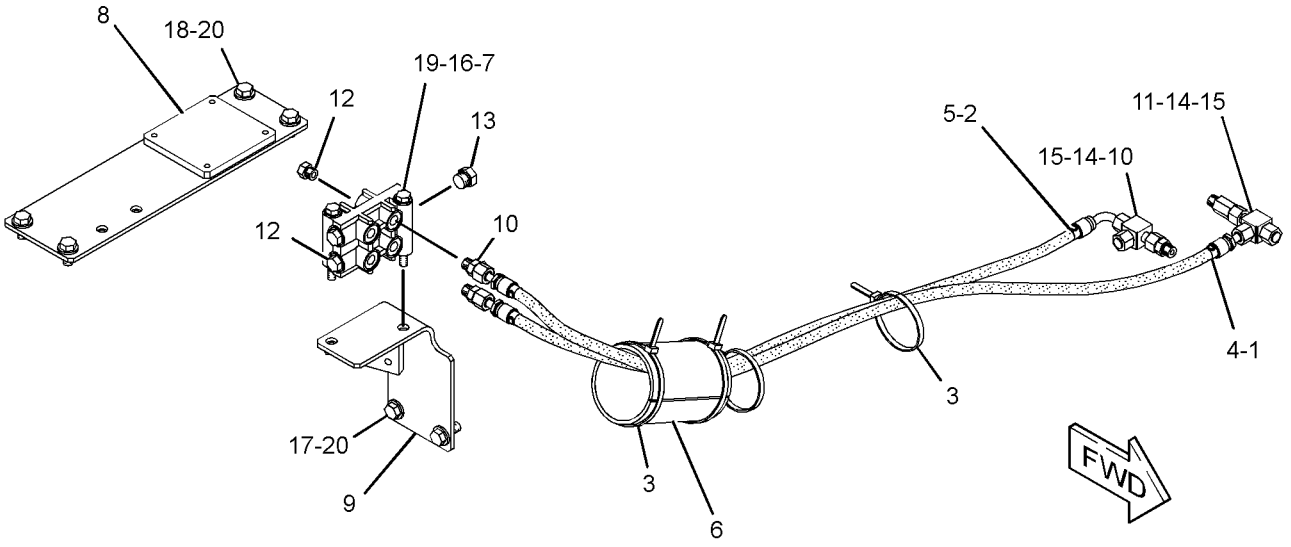

GRAPHIC #1 **<END>** g01226786

HYDRAULIC SYSTEM

266-0978 LINES GP-PILOT—STICK LOWERING CONTROL

S/N: CWG1-UP

PART OF 285-1515, 335-4979 VALVE AR-CHECK & RELIEF

AN ATTACHMENT

SMCS-5057, 5059 **i03467821**

NOTE	REF NO	GRAPHIC REF	PART NUMBER	QTY	PART NAME 1 2 3 4 5 6 (PRODUCT LEVEL)	SEE PAGE
	1	1	**7K-1181**	7	STRAP-CABLE	
	2	1	**201-9379**	1	BLOCK	
	3	1	**275-1832**	1	HOSE AS	
	4	1	**282-7098**	1	HOSE AS	
	5	1	**275-1834**	1	HOSE AS	
	6	1	*148-8336*	1	CONNECTOR AS	
		1	**3J-1907**	1	SEAL-O-RING	
		1	**6V-8397**	1	SEAL-O-RING	
		1	**6V-8636**	1	CONNECTOR	
	7	1	*148-8364*	1	ELBOW AS	
		1	**3K-0360**	1	SEAL-O-RING	
		1	**6V-8398**	1	SEAL-O-RING	
		1	**6V-8625**	1	ELBOW	
	8	1	*148-8433*	1	TEE AS	
		1	**6V-8397**	2	SEAL-O-RING	
		1	**6V-9836**	1	TEE-SWIVEL	
	9	1	*148-8434*	1	TEE AS	
		1	**6V-8397**	2	SEAL-O-RING	
		1	**6V-9843**	1	TEE-SWIVEL	
	10	1	**136-0207**	6	STRAP-CABLE	
B	11	1	**6V-9829**	1	CAP AS	
	12	1	**4I-9523**	4	BAND-MARKER (BLUE, L3)	
	13	1	**133-5813**	2	BAND-MARKER (GRAY, P)	

B-USE AS REQUIRED

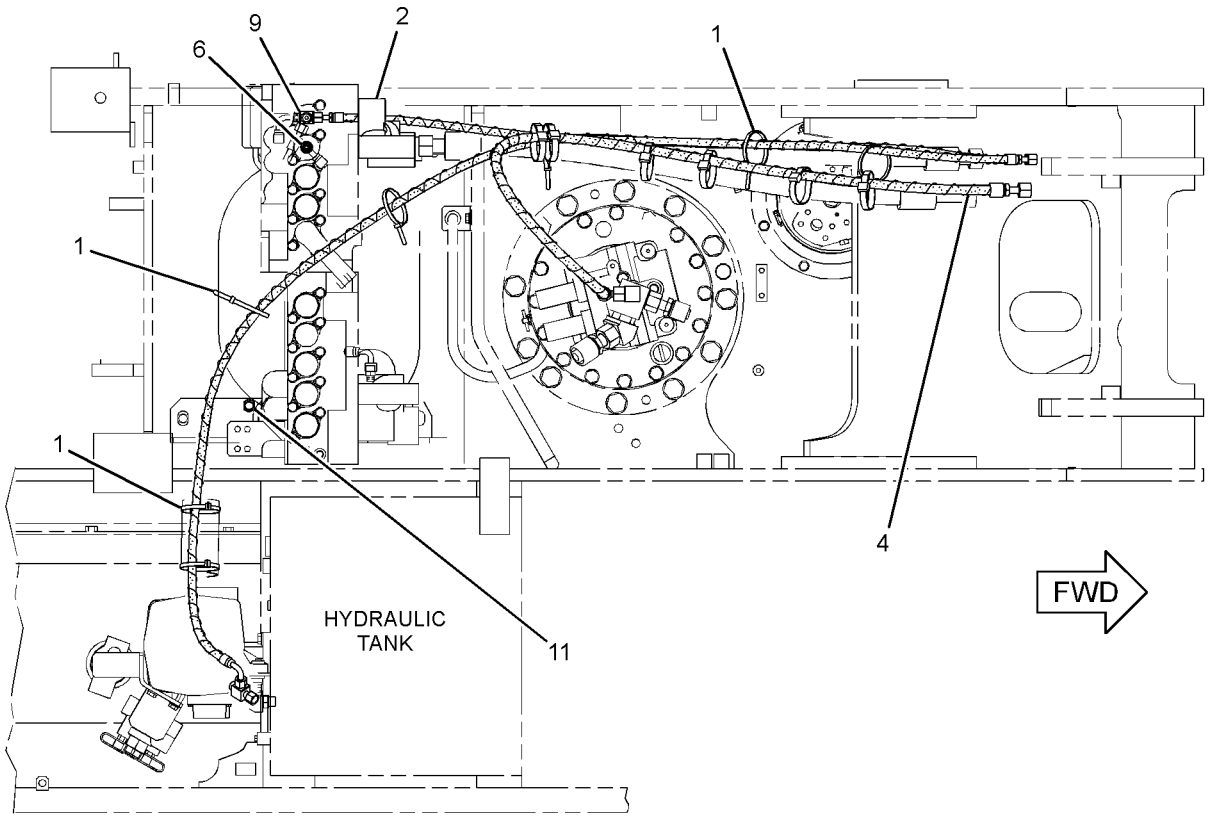

TOP VIEW

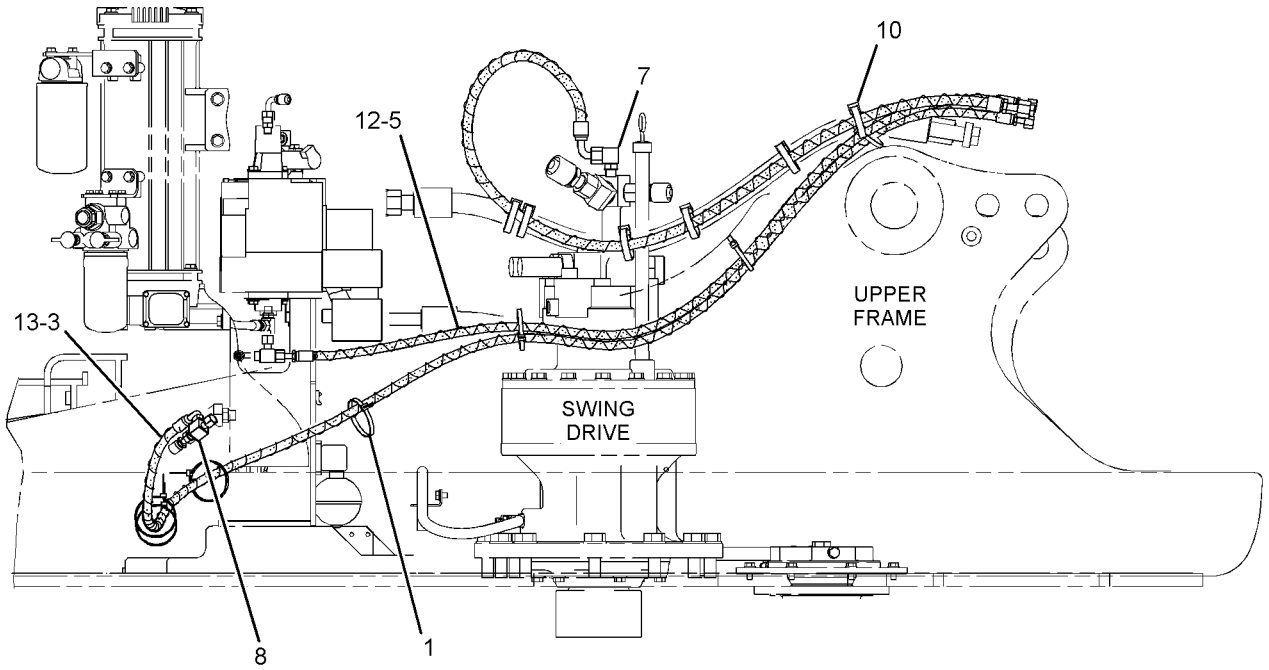

RIGHT SIDE VIEW

GRAPHIC #1 **<END>** g01554337

HYDRAULIC SYSTEM

266-0979 LINES GP-PILOT–PEDAL CONTROLS

S/N: CWG1-UP
PART OF 342-3648 PEDAL AR-THIRD
AN ATTACHMENT

SMCS-5057, 5059 **i02884423**

NOTE	REF NO	GRAPHIC REF	PART NUMBER	QTY	PART NAME 1 2 3 4 5 6 (PRODUCT LEVEL)	SEE PAGE
	1	1	**4I-9521**	4	BAND-MARKER (RED, L1)	
	2	1	**4I-9522**	4	BAND-MARKER (YELLOW, L2)	
	3	1	**4I-9525**	4	BAND-MARKER (ORANGE, R1)	
	4	1	**4I-9526**	4	BAND-MARKER (WHITE, R2)	
	5	1	**7K-1181**	7	STRAP-CABLE	
I	6	1	**108-7203**	2	HOSE AS	
I	7	1	**221-4883**	2	HOSE AS	

I-REFER TO HYDRAULIC INFORMATION SYSTEM

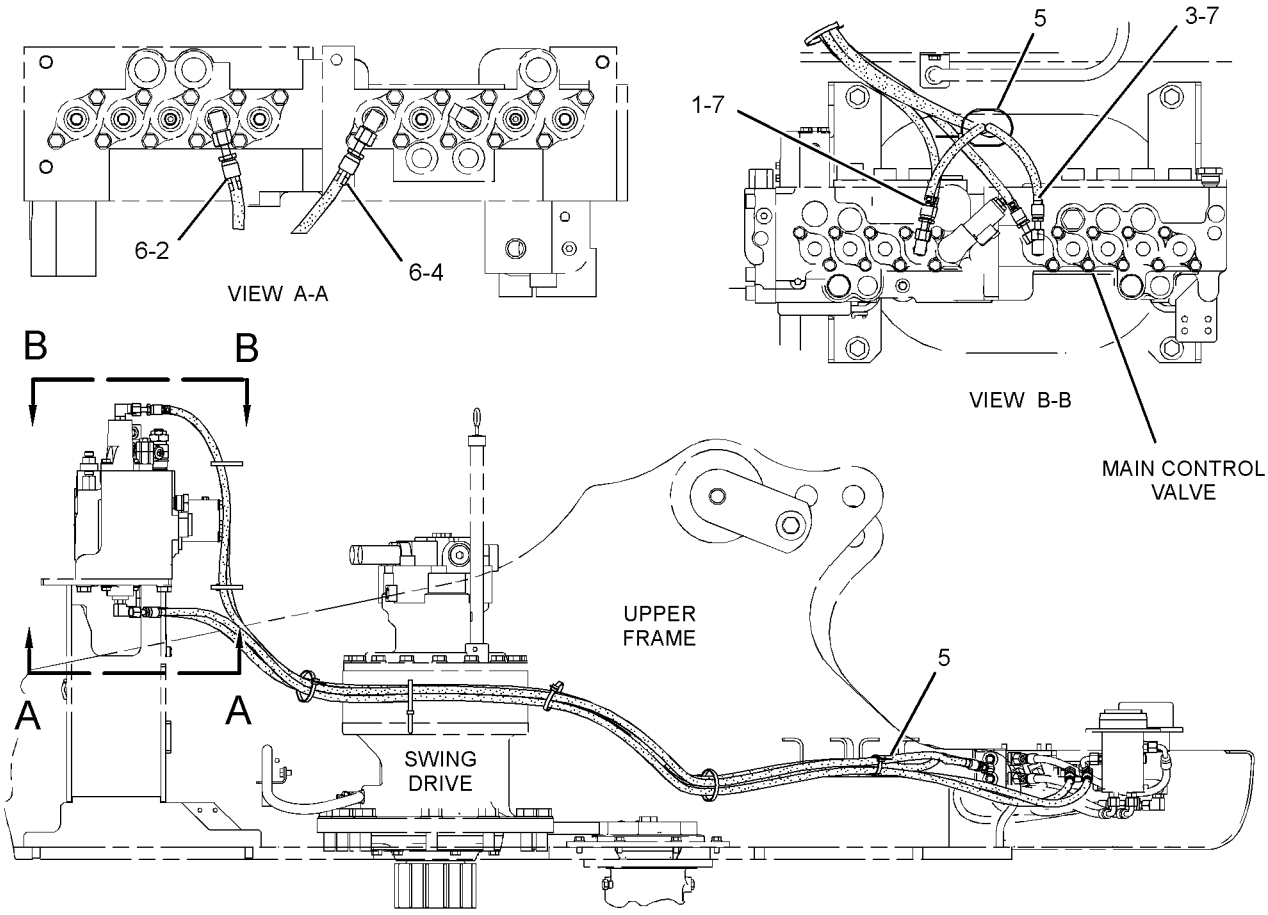

RIGHT SIDE VIEW

GRAPHIC #1 **<END>** g01231665

HYDRAULIC SYSTEM

266-1015 LINES GP-PILOT–THIRD PEDAL, STRAIGHT TRAVEL

S/N: WNE1-UP; ZMF1-UP
PART OF 342-3647 PEDAL AR-THIRD
AN ATTACHMENT

SMCS-5057, 5059 **i02419889**

NOTE	REF NO	GRAPHIC REF	PART NUMBER	QTY	PART NAME 1 2 3 4 5 6 (PRODUCT LEVEL)	SEE PAGE
I	1	1	**4I-3511**	1	HOSE AS	
	2	1	**4I-9521**	4	BAND-MARKER (RED, L1)	
	3	1	**4I-9522**	4	BAND-MARKER (YELLOW, L2)	
	4	1	**4I-9525**	4	BAND-MARKER (ORANGE, R1)	
	5	1	**4I-9526**	4	BAND-MARKER (WHITE, R2)	
	6	1	**7K-1181**	8	STRAP-CABLE	
I	7	1	**134-6946**	1	HOSE AS	
I	8	1	**194-0289**	1	HOSE AS	
I	9	1	**199-1863**	1	HOSE AS	
	10	1	**115-8645**	2	GUARD	

I-REFER TO HYDRAULIC INFORMATION SYSTEM

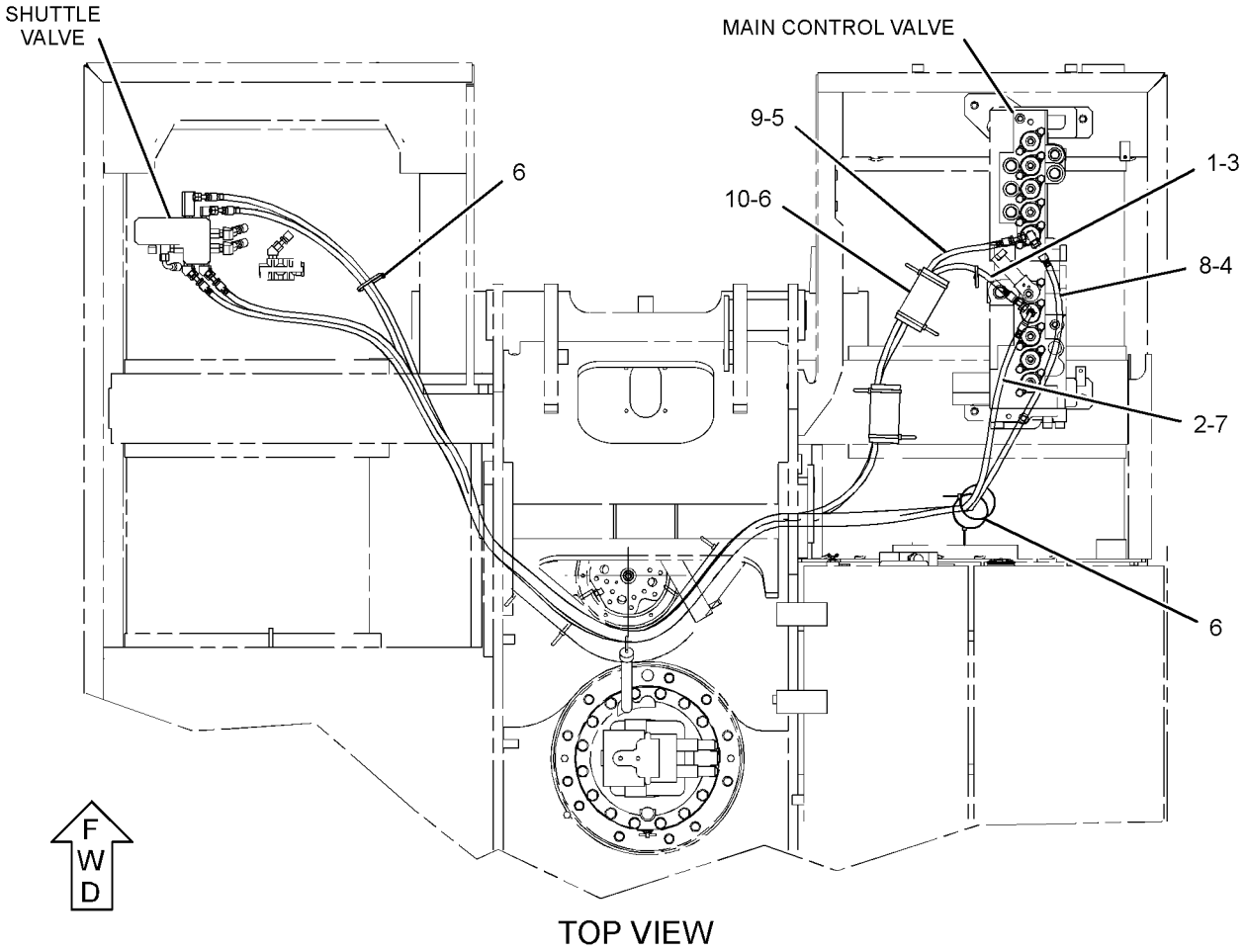

TOP VIEW

GRAPHIC #1 **<END>** g01222793

HYDRAULIC SYSTEM

269-9826 LINES GP-PILOT—TO PILOT VALVE, VAR ADJ BOOM

S/N: CWG1-UP

PART OF 253-2824 CONTROL AR-MACHINE

AN ATTACHMENT

SMCS-5057, 5059 **i02945472**

NOTE	REF NO	GRAPHIC REF	PART NUMBER	QTY	PART NAME 1 2 3 4 5 6 (PRODUCT LEVEL)	SEE PAGE
I	1	1	**4I-1025**	1	HOSE AS	
I	2	1	**4I-1739**	1	HOSE AS	
I	3	1	**087-4402**	1	HOSE AS	
	4	1	**123-2169**	1	FITTING-ORFS	
Y	5	1	*164-6980*	1	VALVE GP-SHUTTLE	881
	6	1	*148-8336*	2	CONNECTOR AS	
					(EACH INCLUDES)	
		1	**3J-1907**	1	SEAL-O-RING	
		1	**6V-8397**	1	SEAL-O-RING	
		1	**6V-8636**	1	CONNECTOR	
	7	1	*148-8353*	1	ELBOW AS	
		1	**3J-1907**	1	SEAL-O-RING	
		1	**6V-8397**	1	SEAL-O-RING	
		1	**6V-9001**	1	ELBOW	
	8	1	*148-8378*	4	ELBOW AS	
					(EACH INCLUDES)	
		1	**3J-1907**	1	SEAL-O-RING	
		1	**6V-8397**	1	SEAL-O-RING	
		1	**6V-8724**	1	ELBOW	
	9	1	*148-8407*	1	PLUG AS	
		1	**3J-1907**	1	SEAL-O-RING	
		1	**9S-4191**	1	PLUG-O-RING	
	10	1	*150-3036*	1	ELBOW AS	
		1	**3J-1907**	1	SEAL-O-RING	
		1	**6V-8397**	1	SEAL-O-RING	
		1	**8T-1905**	1	ELBOW	
	11	1	*164-5628*	1	CONNECTOR AS	
		1	**3J-1907**	1	SEAL-O-RING	
		1	**6V-8397**	1	SEAL-O-RING	
		1	**107-6631**	1	CONNECTOR-FILTER	
	12	1	**6V-8397**	1	SEAL-O-RING	
	13	1	**7K-1181**	1	STRAP-CABLE	

I-REFER TO HYDRAULIC INFORMATION SYSTEM
Y-SEPARATE ILLUSTRATION

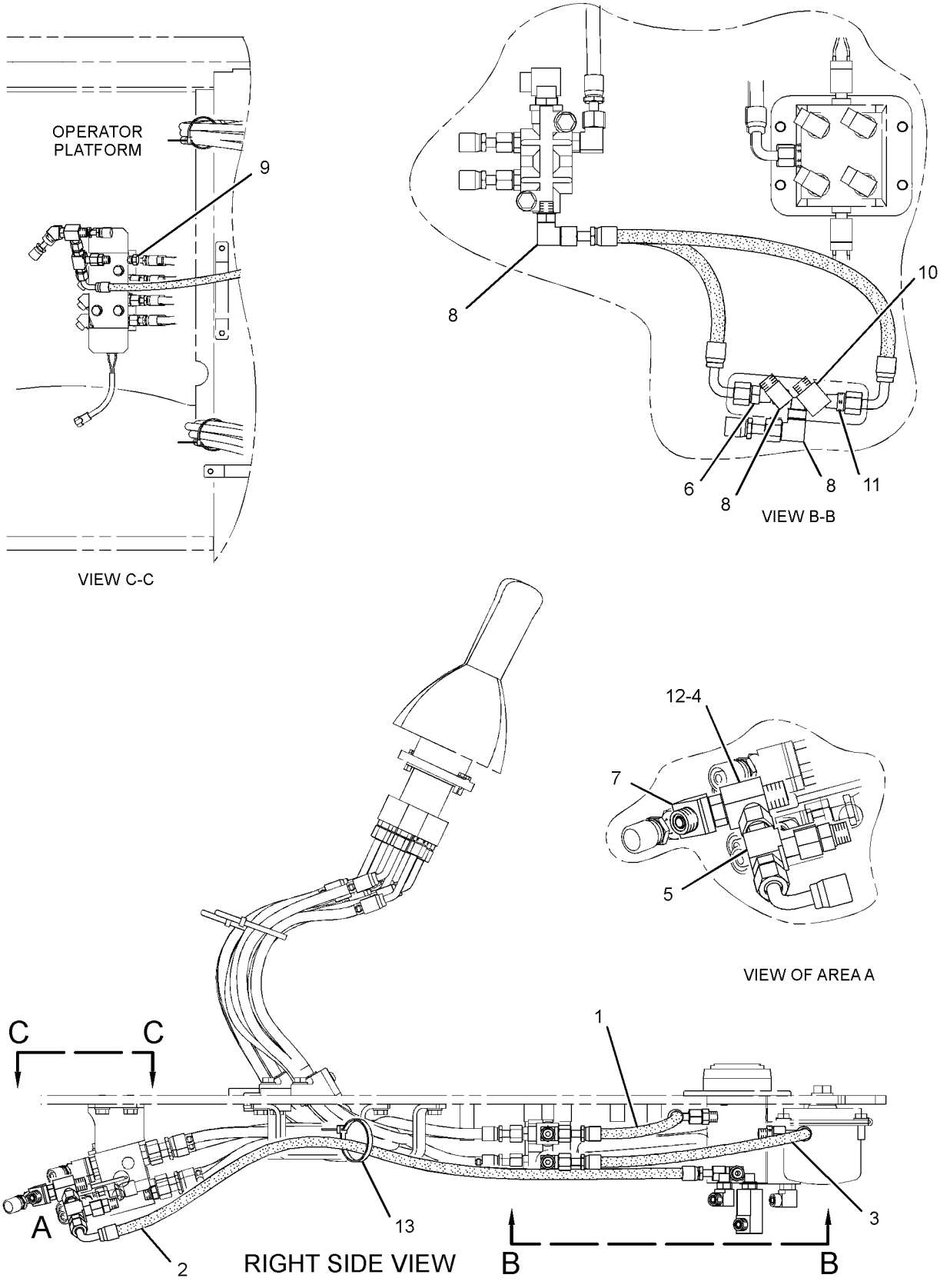

GRAPHIC #1 **<END>** g01271906

269-9827 LINES GP-PILOT—TO CONTROL VALVE, VAR ADJ BOOM

S/N: CWG1-UP
PART OF 253-2824 CONTROL AR-MACHINE
AN ATTACHMENT

SMCS-5057, 5059 **i03647206**

NOTE	REF NO	GRAPHIC REF	PART NUMBER	QTY	PART NAME 1 2 3 4 5 6 (PRODUCT LEVEL)	SEE PAGE
I	1	1	**4I-1780**	1	HOSE AS	
	2	1	**4I-9521**	2	BAND-MARKER (RED, L1)	
	3	1	**4I-9523**	4	BAND-MARKER (BLUE, L3)	
	4	1	**4I-9527**	4	BAND-MARKER (GREEN, R3)	
	5	1	**7K-1181**	10	STRAP-CABLE	
	6	1	*148-8443*	1	TEE AS	
		1	**3J-1907**	1	SEAL-O-RING	
		1	**6V-8397**	1	SEAL-O-RING	
		1	**7X-2459**	1	TEE-O-RING	
Y	7	1	*164-6980*	1	VALVE GP-SHUTTLE	881
I	8	1	**199-1913**	1	HOSE AS	
	9	1	**266-0924**	1	HOSE AS	
E		1	**7I-7439**		GUARD (380-CM)	
	10	1	**111-1065**	1	GUARD	
	11	1	*148-8353*	1	ELBOW AS	
		1	**3J-1907**	1	SEAL-O-RING	
		1	**6V-8397**	1	SEAL-O-RING	
		1	**6V-9001**	1	ELBOW	
	12	1	*148-8367*	1	ELBOW AS	
		1	**6V-8397**	1	SEAL-O-RING	
		1	**6V-9850**	1	ELBOW	
	13	1	*148-8435*	1	TEE AS	
		1	**3J-1907**	1	SEAL-O-RING	
		1	**6V-8397**	2	SEAL-O-RING	
		1	**6V-8781**	1	TEE-FACE SEAL	

E-ORDER BY THE CENTIMETER
I-REFER TO HYDRAULIC INFORMATION SYSTEM
Y-SEPARATE ILLUSTRATION

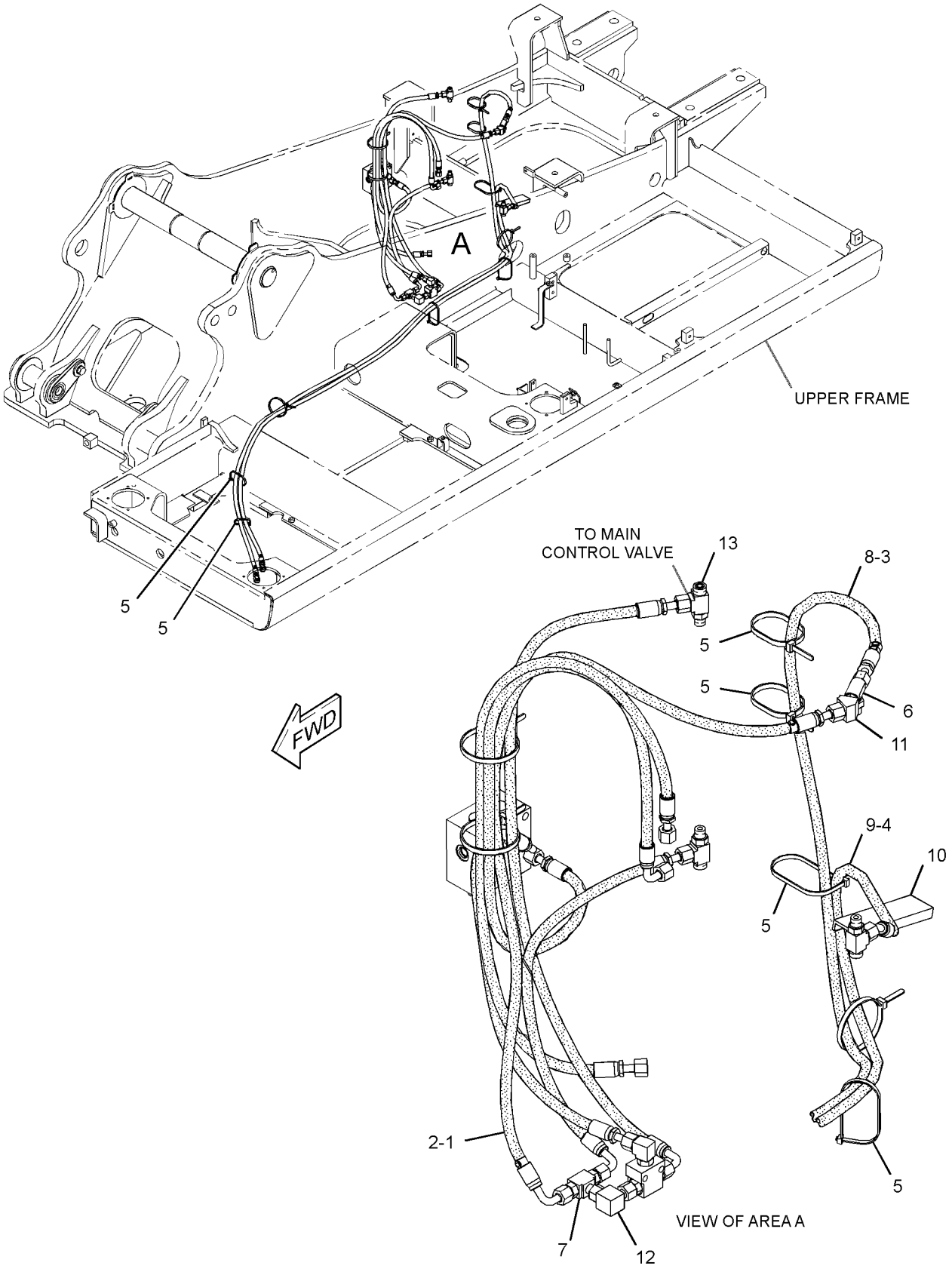

GRAPHIC #1 **<END>** g01958350

HYDRAULIC SYSTEM

275-1408 LINES GP-PILOT—CONTROL VALVE

S/N: WNE1-UP; ZMF1-UP

PART OF 270-5712, 270-5713 HYDRAULIC AR

SMCS-5057, 5059 **i03561800**

NOTE	REF NO	GRAPHIC REF	PART NUMBER	QTY	PART NAME 1 2 3 4 5 6 (PRODUCT LEVEL)	SEE PAGE
I	1	1	**4I-0818**	1	HOSE AS	
I	2	2	**4I-0836**	1	HOSE AS	
I	3	2	**4I-1739**	1	HOSE AS	
I	4	3	**4I-5900**	1	HOSE AS	
I	5	3	**4I-5906**	1	HOSE AS	
I	6	1	**4I-5933**	1	HOSE AS	
	7	2	**4I-9521**	2	BAND-MARKER (RED, L1)	
	8	1,3	**4I-9522**	6	BAND-MARKER (YELLOW, L2)	
	9	1,2	**4I-9523**	4	BAND-MARKER (BLUE, L3)	
	10	1,2	**4I-9524**	6	BAND-MARKER (BROWN, L4)	
	11	1	**4I-9525**	2	BAND-MARKER (ORANGE, R1)	
	12	2	**4I-9527**	4	BAND-MARKER (GREEN, R3)	
	13	1,2	**4I-9528**	4	BAND-MARKER (PURPLE, R4)	
I	14	1	**5I-4076**	1	HOSE AS	
	15	2	**5I-4376**	1	FITTING	
I	16	1	**5I-4396**	1	HOSE AS	
I	17	2	**5I-8708**	1	HOSE AS	
	18	1,3	**7K-1181**	15	STRAP-CABLE	
I	19	1	**7Y-8487**	1	HOSE AS	
I	20	3	**087-4411**	1	HOSE AS	
I	21	1,3	**087-4531**	2	HOSE AS	
I	22	3	**087-4534**	1	HOSE AS	
I	23	2	**087-5760**	1	HOSE AS	
I	24	3	**087-5762**	1	HOSE AS	
I	25	3	**087-5767**	1	HOSE AS	
I	26	3	**087-5772**	1	HOSE AS	
I	27	3	**087-5774**	2	HOSE AS	
I	28	1	**104-8838**	1	HOSE AS	
I	29	3	**104-8950**	1	HOSE AS	
I	30	2	**110-5496**	1	HOSE AS	
I	31	2	**143-4254**	1	HOSE AS	
	32	2	*148-8364*	2	ELBOW AS	
					(EACH INCLUDES)	
		2	**3K-0360**	1	SEAL-O-RING	
		2	**6V-8398**	1	SEAL-O-RING	
		2	**6V-8625**	1	ELBOW	
	33	2,3	*148-8433*	4	TEE AS	
					(EACH INCLUDES)	
		2,3	**6V-8397**	2	SEAL-O-RING	
		2,3	**6V-9836**	1	TEE-SWIVEL	
	34	2,3	*148-8435*	4	TEE AS	
					(EACH INCLUDES)	
		2,3	**3J-1907**	1	SEAL-O-RING	
		2,3	**6V-8397**	2	SEAL-O-RING	
		2,3	**6V-8781**	1	TEE-FACE SEAL	
	35	2,3	*150-4044*	3	CONNECTOR AS	
					(EACH INCLUDES)	
		2,3	**3J-1907**	1	SEAL-O-RING	
		2,3	**6V-8397**	1	SEAL-O-RING	
		2,3	**8T-1779**	1	CONNECTOR	
	36	2	*164-5567*	1	COUPLER AS-QUICK DISCONNECT	
		2	**3J-1907**	1	SEAL-O-RING	
		2	**6V-3965**	1	FITTING (QUICK DISCONNECT)	
Y	37	2	*164-6981*	1	ACCUMULATOR GP-HYDRAULIC (CHARGED)	476
I	38	1	**164-8977**	1	HOSE AS	
I	39	3	**164-8983**	1	HOSE AS	

275-1408 **LINES GP-PILOT** *(contd.)* **i03561800**

NOTE	REF NO	GRAPHIC REF	PART NUMBER	QTY	PART NAME 1 2 3 4 5 6 (PRODUCT LEVEL)	SEE PAGE
	40	2	**176-4463**	1	PLATE	
	41	2	**176-4469**	1	BLOCK	
I	42	1	**199-1965**	1	HOSE AS	
I	43	3	**176-4755**	1	HOSE AS	
I	44	2	**184-9593**	1	HOSE AS	
I	45	2	**184-9595**	1	HOSE AS	
I	46	2	**314-8128**	1	HOSE AS	
I	47	1	**187-7070**	2	HOSE AS	
	48	3	**202-4004**	1	GROMMET	
	49	3	**212-5402**	1	HOSE AS	
Y	50	2	**215-5037**	1	MANIFOLD GP-CONTROL (PILOT OIL SUPPLY)	772
CY	51	2	**310-0210**	1	VALVE GP-PRESSURE REDUCING (BOOM, SWING PRIORITY)	861
	52	2	**258-0332**	1	SUPPORT-VALVE	
CY	53	2	**123-2430**	1	VALVE GP-SHUTTLE	879
Y	54	2	**264-9967**	1	VALVE GP-SOLENOID & PRESS REDC (BOOM, SWING PRIORITY)	896
I	55	2	**266-1098**	1	HOSE AS	
I	56	2	**286-6760**	1	HOSE AS	
	57	3	*285-1399*	1	CONNECTOR AS	
		3	**3J-1907**	1	SEAL-O-RING	
		3	**6V-8397**	1	SEAL-O-RING	
		3	**285-1465**	1	CONNECTOR	
M	58	2	**099-3649**	2	BOLT (M8X1.25X40-MM)	
M	59	2	**105-3484**	2	BOLT-SOCKET HEAD (M10X1.5X25-MM)	
	60	1	**115-8645**	1	GUARD	
C	61	2,3	*148-8336*	9	CONNECTOR AS	
					(EACH INCLUDES)	
		2,3	**3J-1907**	1	SEAL-O-RING	
		2,3	**6V-8397**	1	SEAL-O-RING	
		2,3	**6V-8636**	1	CONNECTOR	
	62	2,3	*148-8340*	4	CONNECTOR AS	
					(EACH INCLUDES)	
		2,3	**3K-0360**	1	SEAL-O-RING	
		2,3	**6V-8398**	1	SEAL-O-RING	
		2,3	**6V-8639**	1	CONNECTOR	
	63	2,3	*148-8353*	5	ELBOW AS	
					(EACH INCLUDES)	
		2,3	**3J-1907**	1	SEAL-O-RING	
		2,3	**6V-8397**	1	SEAL-O-RING	
		2,3	**6V-9001**	1	ELBOW	
	64	2	*148-8354*	1	ELBOW AS	
		2	**3K-0360**	1	SEAL-O-RING	
		2	**6V-8398**	1	SEAL-O-RING	
		2	**6V-9002**	1	ELBOW	
	65	2,3	*148-8367*	2	ELBOW AS	
					(EACH INCLUDES)	
		2,3	**6V-8397**	1	SEAL-O-RING	
		2,3	**6V-9850**	1	ELBOW	
	66	2,3	*148-8378*	10	ELBOW AS	
					(EACH INCLUDES)	
		2,3	**3J-1907**	1	SEAL-O-RING	
		2,3	**6V-8397**	1	SEAL-O-RING	
		2,3	**6V-8724**	1	ELBOW	
	67	2,3	*148-8407*	6	PLUG AS	
					(EACH INCLUDES)	
		2,3	**3J-1907**	1	SEAL-O-RING	
		2,3	**9S-4191**	1	PLUG-O-RING	
	68	3	*148-8439*	2	TEE AS	
					(EACH INCLUDES)	

275-1408 **LINES GP-PILOT** *(contd.)* **i03561800**

NOTE	REF NO	GRAPHIC REF	PART NUMBER	QTY	PART NAME 1 2 3 4 5 6 (PRODUCT LEVEL)	SEE PAGE
		3	**3J-1907**	1	SEAL-O-RING	
		3	**6V-8397**	2	SEAL-O-RING	
		3	**6V-8774**	1	TEE	
	69	2	*150-3036*	1	ELBOW AS	
		2	**3J-1907**	1	SEAL-O-RING	
		2	**6V-8397**	1	SEAL-O-RING	
		2	**8T-1905**	1	ELBOW	
	71	1	**275-1442**	1	CLIP (TAB)	
	72	1	**275-1443**	1	CLIP (SLOT)	
	73	1	**4K-8864**	1	CLIP	
	74	1	**5P-7462**	2	CLIP (SLOT)	
	75	1	**5P-7463**	2	CLIP (TAB)	
	76	1	**6V-0683**	2	GROMMET	
	77	2	**6V-0852**	1	CAP-DUST	
	78	1	**275-1444**	1	GROMMET	
C	79	2,3	**6V-8397**	4	SEAL-O-RING	
	80	1,2	**8T-4121**	8	WASHER-HARD (11X21X2.5-MM THK)	
M	81	1	**8T-4136**	1	BOLT (M10X1.5X25-MM)	
M	82	1,2	**8T-4137**	5	BOLT (M10X1.5X20-MM)	
M	83	2	**8T-4178**	2	BOLT (M10X1.5X90-MM)	
M	84	1	**8T-4139**	1	BOLT (M12X1.75X30-MM)	
M	85	2	**8T-4189**	2	BOLT (M8X1.25X20-MM)	
M	86	2	**8T-4192**	3	BOLT (M12X1.75X25-MM)	
	87	1,2	**8T-4223**	4	WASHER-HARD (13.5X25.5X3-MM THK)	
	88	2	**8T-4224**	2	WASHER-HARD (8.8X16X2-MM THK)	
	89	1	**204-2281**	2	STRAP-TIE	

C-CHANGE FROM PREVIOUS TYPE
I-REFER TO HYDRAULIC INFORMATION SYSTEM
M-METRIC PART
Y-SEPARATE ILLUSTRATION

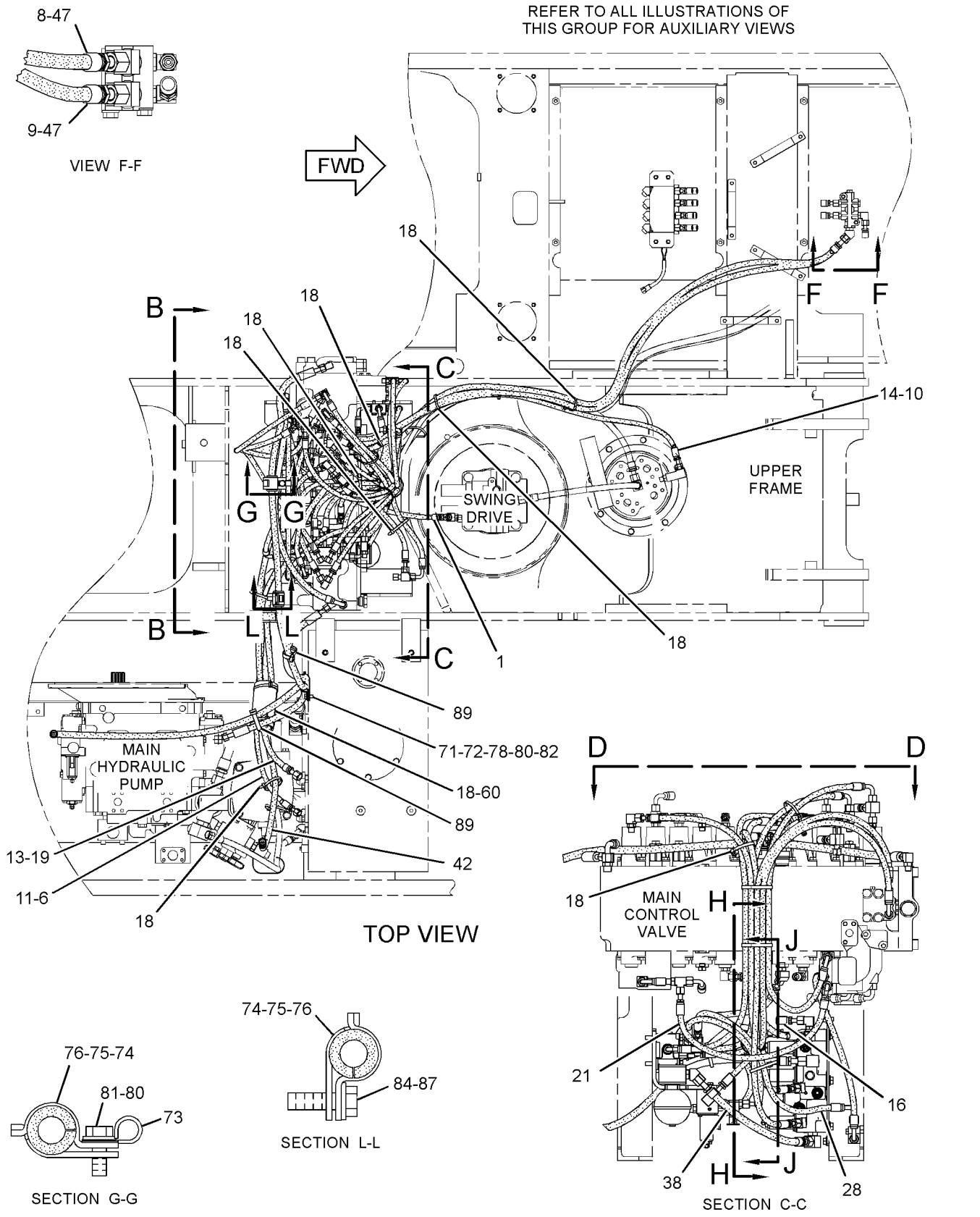

GRAPHIC #1

g01887734

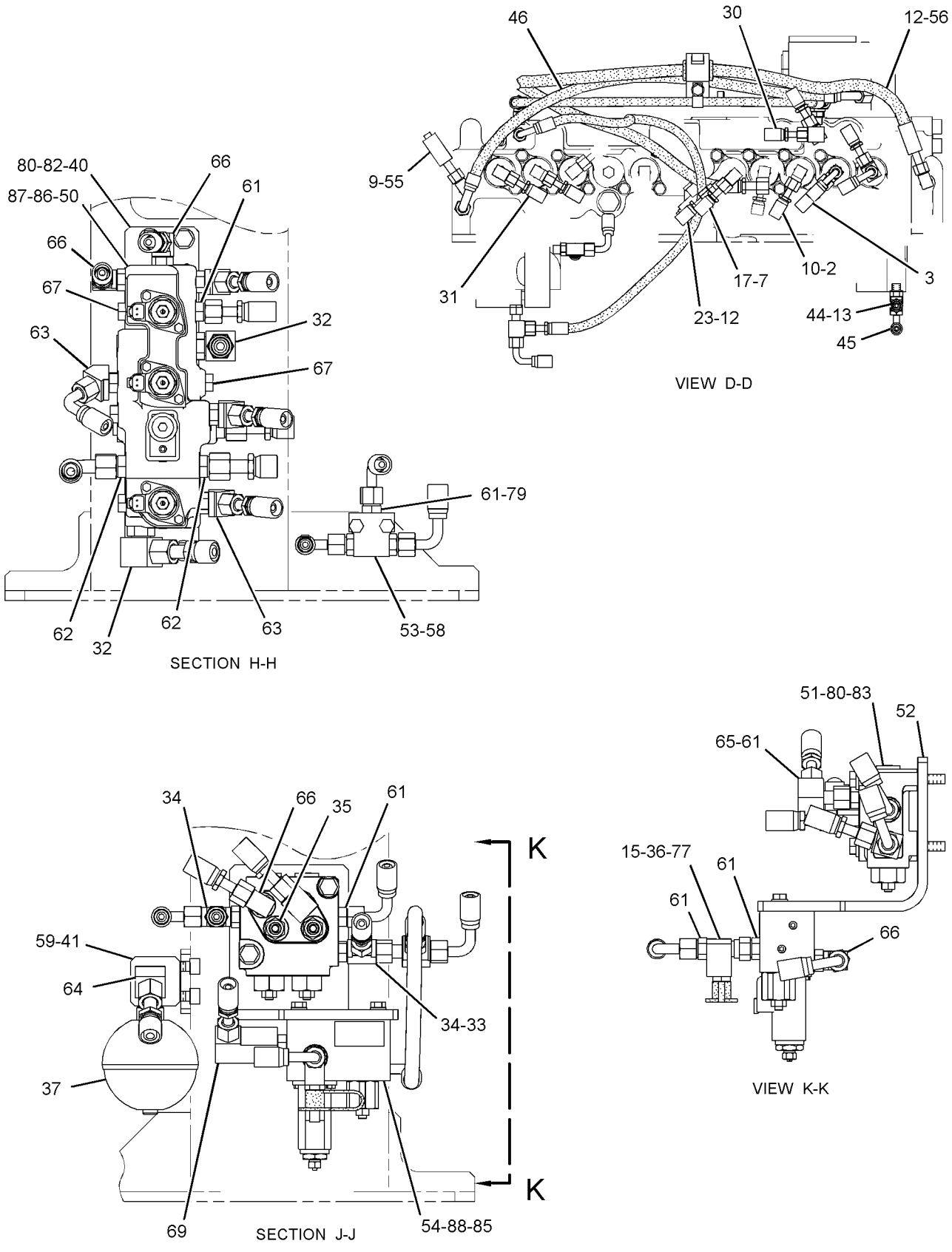

GRAPHIC #2

g01887894

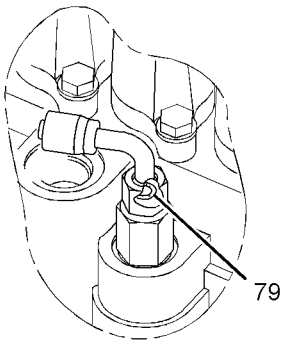

VIEW OF AREA A

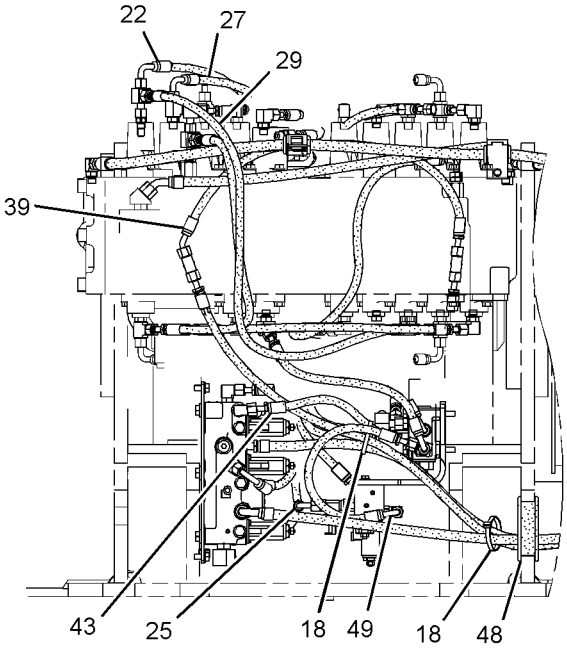

VIEW B-B

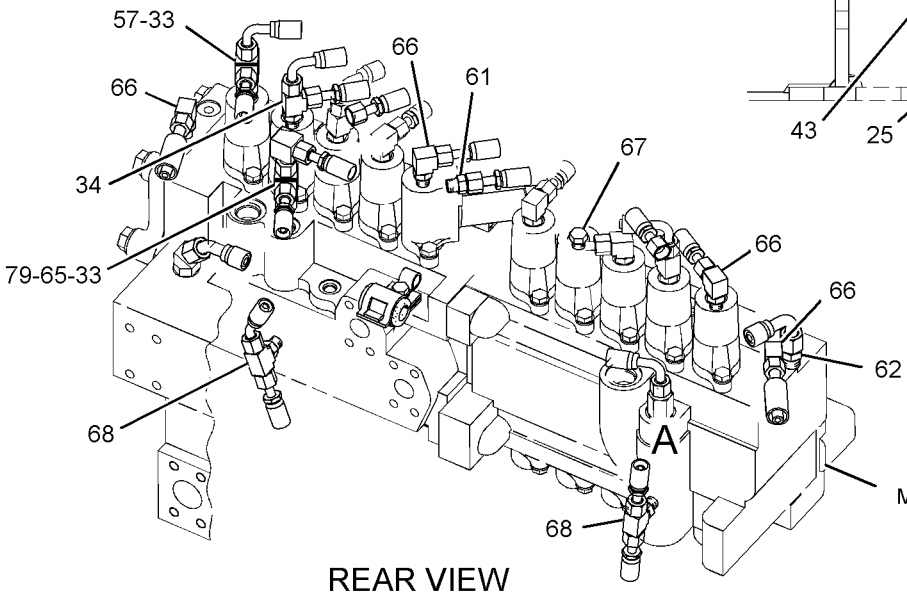

MAIN CONTROL VALVE

REAR VIEW
(UPPER RIGHT)

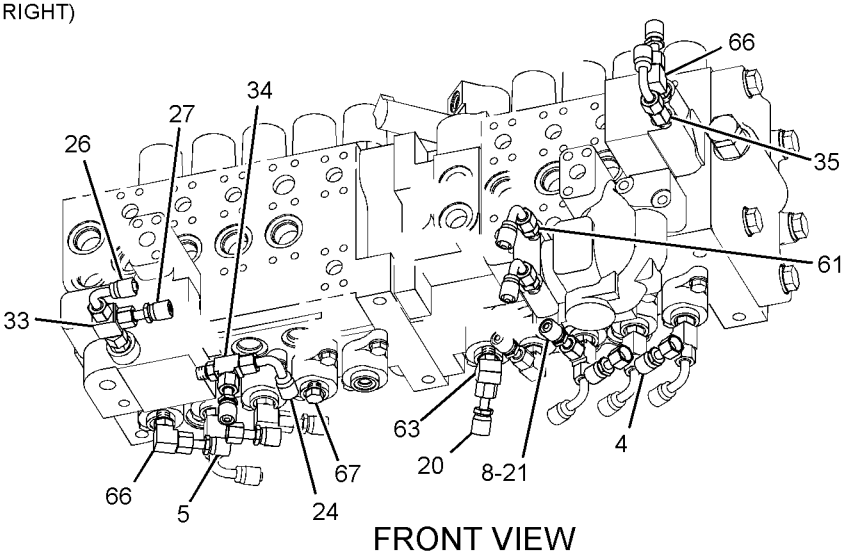

FRONT VIEW
(LOWER LEFT)

GRAPHIC #3 **<END>** g01888338

HYDRAULIC SYSTEM

275-1495 LINES GP-PILOT–CAB

S/N: WNE1-UP; ZMF1-UP; CWG1-UP

PART OF 340-3819 CONTROL AR-AUXILIARY, 343-1177, 343-1178 CONTROL AR-BOOM AN ATTACHMENT

SMCS-5057, 5059 **i02453375**

NOTE	REF NO	GRAPHIC REF	PART NUMBER	QTY	PART NAME 1 2 3 4 5 6 (PRODUCT LEVEL)	SEE PAGE
	1	1	**123-2431**	1	BODY-VALVE	
	2	1	**260-8145**	1	BRACKET AS	
	3	1	*148-8336*	1	CONNECTOR AS	
		1	**3J-1907**	1	SEAL-O-RING	
		1	**6V-8397**	1	SEAL-O-RING	
		1	**6V-8636**	1	CONNECTOR	
	4	1	*148-8353*	1	ELBOW AS	
		1	**3J-1907**	1	SEAL-O-RING	
		1	**6V-8397**	1	SEAL-O-RING	
		1	**6V-9001**	1	ELBOW	
	5	1	*148-8378*	1	ELBOW AS	
		1	**3J-1907**	1	SEAL-O-RING	
		1	**6V-8397**	1	SEAL-O-RING	
		1	**6V-8724**	1	ELBOW	
	6	1	*148-8407*	1	PLUG AS	
		1	**3J-1907**	1	SEAL-O-RING	
		1	**9S-4191**	1	PLUG-O-RING	
	7	1	*150-3033*	1	ELBOW AS	
		1	**3J-1907**	1	SEAL-O-RING	
		1	**4J-5477**	1	SEAL-O-RING	
		1	**8T-0164**	1	ELBOW	
M	8	1	**7X-0818**	2	BOLT (M8X1.25X45-MM)	
	9	1	**8T-4121**	2	WASHER-HARD (11X21X2.5-MM THK)	
M	10	1	**8T-4136**	2	BOLT (M10X1.5X25-MM)	
	11	1	**8T-4224**	2	WASHER-HARD (8.8X16X2-MM THK)	

M-METRIC PART

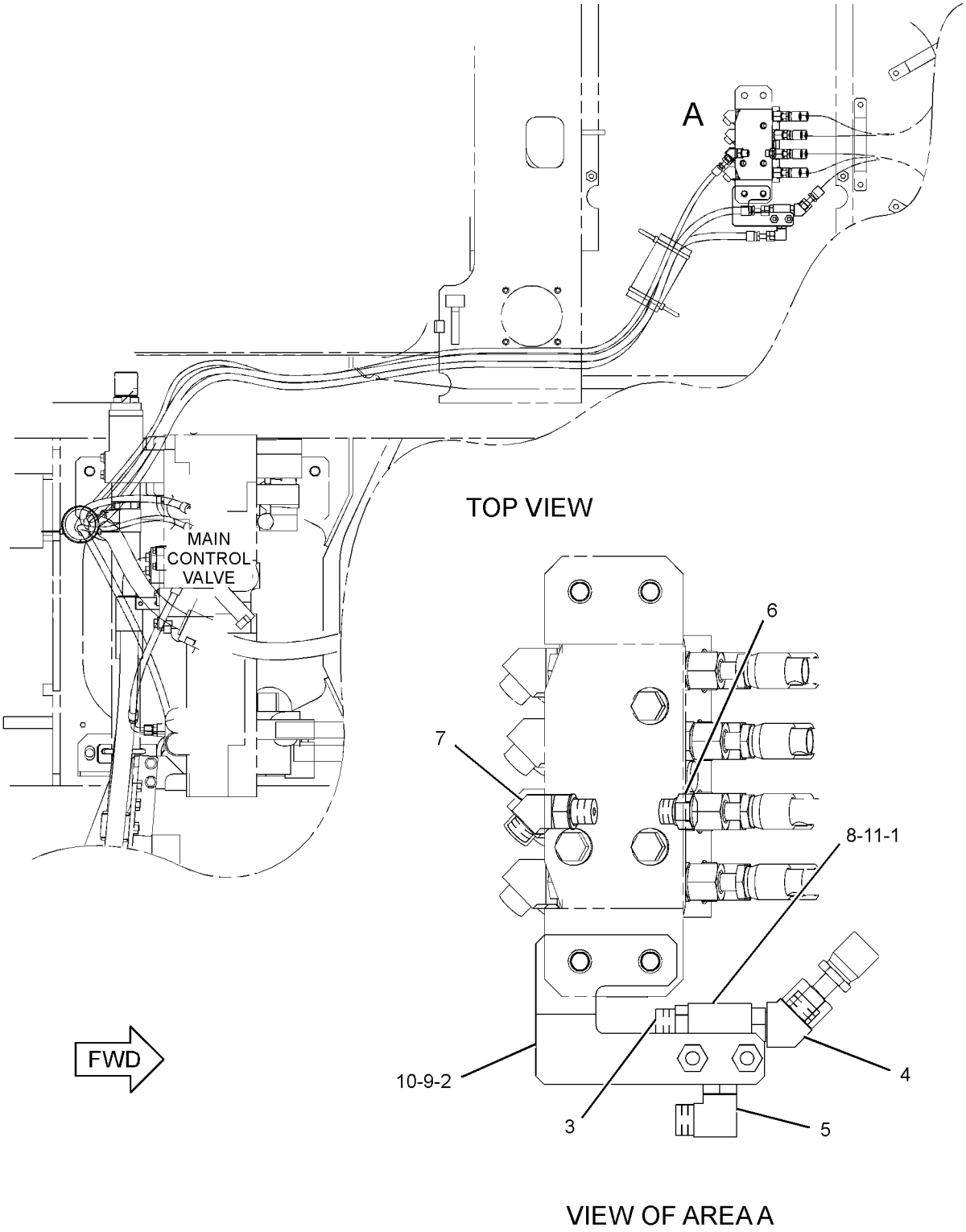

GRAPHIC #1 **<END>** g01206540

HYDRAULIC SYSTEM

289-5397 LINES GP-PILOT–BOOM FLOAT

S/N: CWG1-UP
PART OF 340-3819 CONTROL AR-AUXILIARY
AN ATTACHMENT

SMCS-5057, 5059 **i03646538**

NOTE	REF NO	GRAPHIC REF	PART NUMBER	QTY	PART NAME 1 2 3 4 5 6 (PRODUCT LEVEL)	SEE PAGE
I	1	1	**4I-0800**	1	HOSE AS	
I	2	2	**4I-0833**	1	HOSE AS	
I	3	2	**4I-1025**	1	HOSE AS	
I	4	2	**4I-6003**	1	HOSE AS	
	5	2	**4I-9523**	4	BAND-MARKER (BLUE, L3)	
	6	1,2	**4I-9527**	6	BAND-MARKER (GREEN, R3)	
	7	1	**4I-9528**	4	BAND-MARKER (PURPLE, R4)	
	8	2	**4I-9537**	2	BAND-MARKER (GREEN)	
I	9	2	**5I-8853**	1	HOSE AS	
	10	1,2	**7K-1181**	15	STRAP-CABLE	
I	11	1	**104-8973**	1	HOSE AS	
	12	1,2	**115-8645**	2	GUARD	
	13	1	**133-5813**	2	BAND-MARKER (GRAY, P)	
	14	2	*150-4027*	1	TEE AS	
		2	**3E-2310**	1	TEE	
		2	**3J-1907**	1	SEAL-O-RING	
		2	**6V-8397**	1	SEAL-O-RING	
	15	2	*164-5547*	1	CONNECTOR AS	
		2	**3J-1907**	1	SEAL-O-RING	
		2	**4I-1694**	1	CONNECTOR	
	16	2	*164-5629*	1	FITTING AS	
		2	**3J-1907**	1	SEAL-O-RING	
		2	**108-7516**	1	FITTING	
	17	2	*164-6874*	1	FITTING AS-ELBOW	
		2	**3J-1907**	1	SEAL-O-RING	
		2	**085-7356**	1	FITTING	
Y	18	2	**185-0472**	1	VALVE GP-SOLENOID (BOOM FLOAT)	889
	19	2	**199-2002**	1	SUPPORT AS	
	20	2	**199-2004**	1	BRACKET	
Y	21	2	**201-9236**	1	VALVE GP-FLOW CONTROL (BOOM FLOAT, PILOT OIL)	840
I	22	1	**221-4882**	1	HOSE AS	
I	23	1	**270-0022**	1	HOSE AS	
I	24	2	**270-0023**	1	HOSE AS	
	25	2	**309-5769**	1	SWITCH AS-PRESSURE (BOOM FLOAT)	
		2	**102-8802**	1	KIT-RECEPTACLE (2-PIN)	
					(INCLUDES RECEPTACLE AS & WEDGE)	
		2	**9X-3401**	2	PIN-CONNECTOR (16-GA TO 18-GA)	
					–OR–	
		2	**126-1767**	2	PIN-CONNECTOR (14-GA)	
I	26	1	**320-0048**	1	HOSE AS	
	27	2	*148-8363*	1	ELBOW AS	
		2	**3K-0360**	1	SEAL-O-RING	
		2	**6V-8397**	1	SEAL-O-RING	
		2	**6V-9876**	1	ELBOW	
	28	1,2	*148-8378*	3	ELBOW AS	
					(EACH INCLUDES)	
		1,2	**3J-1907**	1	SEAL-O-RING	
		1,2	**6V-8397**	1	SEAL-O-RING	
		1,2	**6V-8724**	1	ELBOW	
	29	2	*148-8413*	1	REDUCER AS	
		2	**4J-5477**	1	SEAL-O-RING	
		2	**6V-8934**	1	REDUCER AS	
	30	2	*148-8433*	1	TEE AS	
		2	**6V-8397**	2	SEAL-O-RING	
		2	**6V-9836**	1	TEE-SWIVEL	

289-5397 **LINES GP-PILOT** *(contd.)* **i03646538**

NOTE	REF NO	GRAPHIC REF	PART NUMBER	QTY	PART NAME 1 2 3 4 5 6 (PRODUCT LEVEL)	SEE PAGE
	31	1	*148-8434*	1	TEE AS	
		1	**6V-8397**	2	SEAL-O-RING	
		1	**6V-9843**	1	TEE-SWIVEL	
	32	2	*148-8439*	2	TEE AS	
					(EACH INCLUDES)	
		2	**3J-1907**	1	SEAL-O-RING	
		2	**6V-8397**	2	SEAL-O-RING	
		2	**6V-8774**	1	TEE	
	33	2	**3J-1907**	1	SEAL-O-RING	
M	34	2	**5C-9553**	2	BOLT (M6X1X16-MM)	
	35	2	**6V-8397**	1	SEAL-O-RING	
M	36	2	**8T-4139**	2	BOLT (M12X1.75X30-MM)	
M	37	2	**8T-4189**	2	BOLT (M8X1.25X20-MM)	
	38	2	**8T-4223**	2	WASHER-HARD (13.5X25.5X3-MM THK)	
	39	2	**8T-4224**	2	WASHER-HARD (8.8X16X2-MM THK)	
	40	2	**9X-8256**	2	WASHER (6.6X12X2-MM THK)	

I-REFER TO HYDRAULIC INFORMATION SYSTEM
M-METRIC PART
Y-SEPARATE ILLUSTRATION

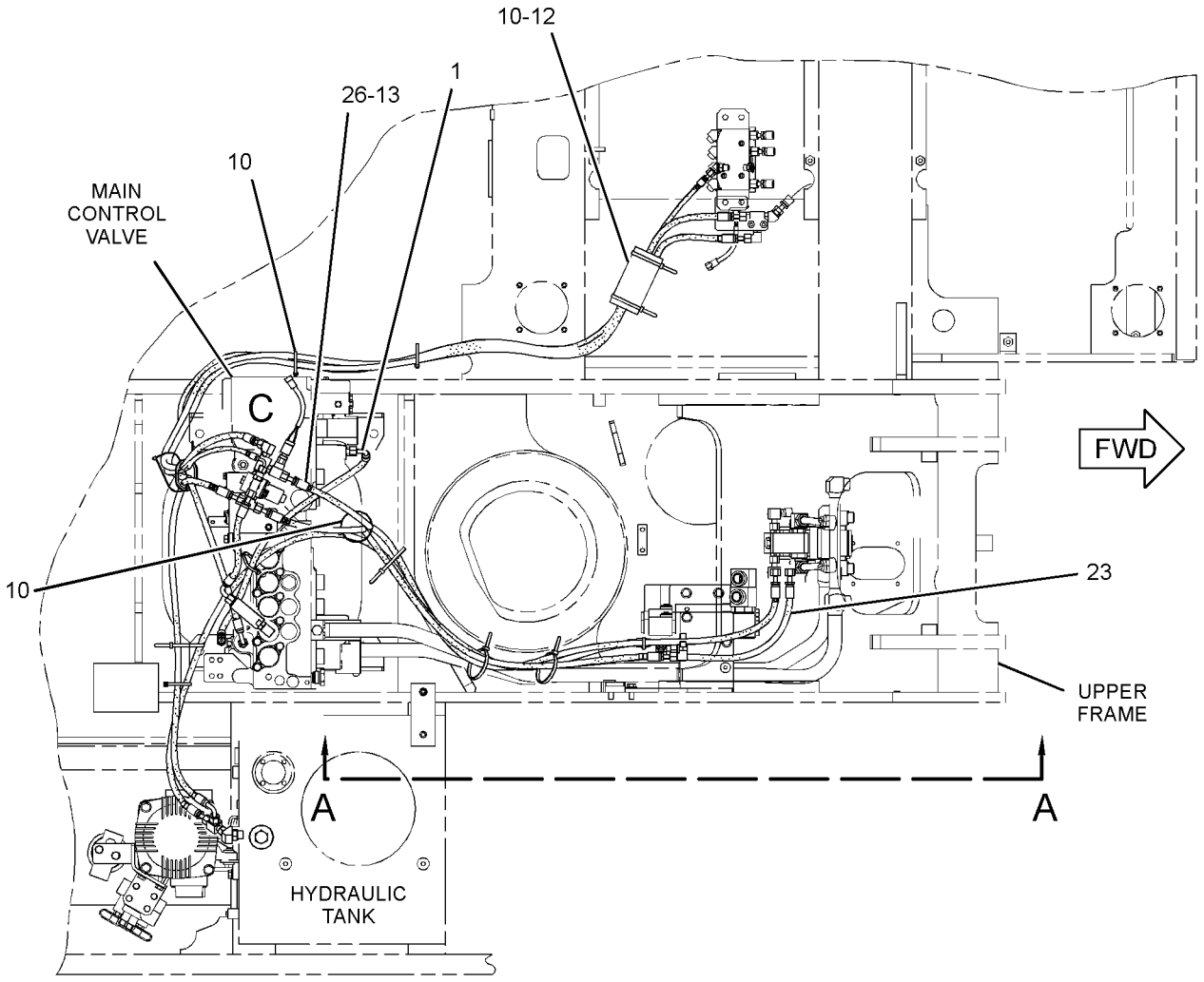

TOP VIEW

REFER TO ALL ILLUSTRATIONS OF
THIS GROUP FOR AUXILIARY VIEWS

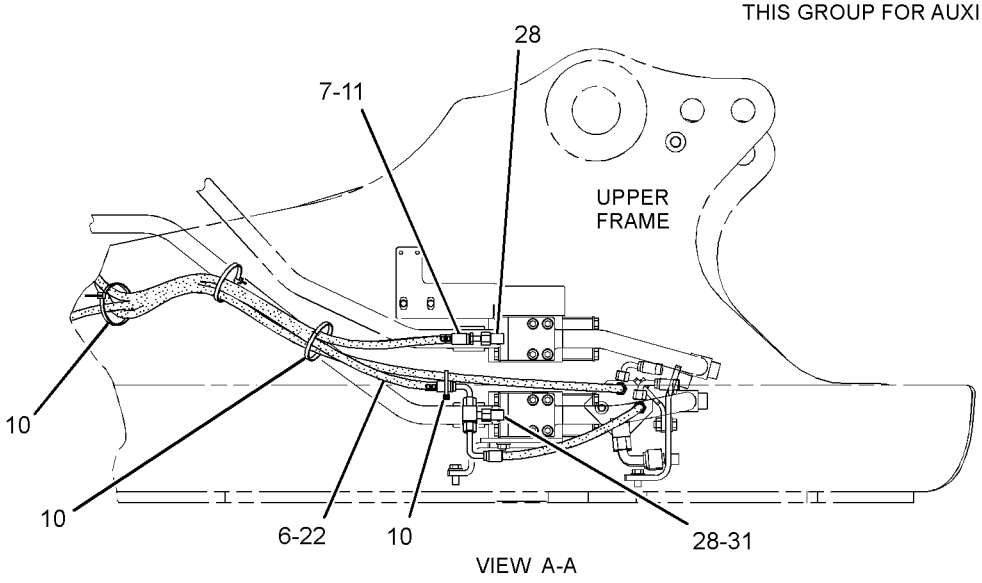

VIEW A-A

GRAPHIC #1

g01622808

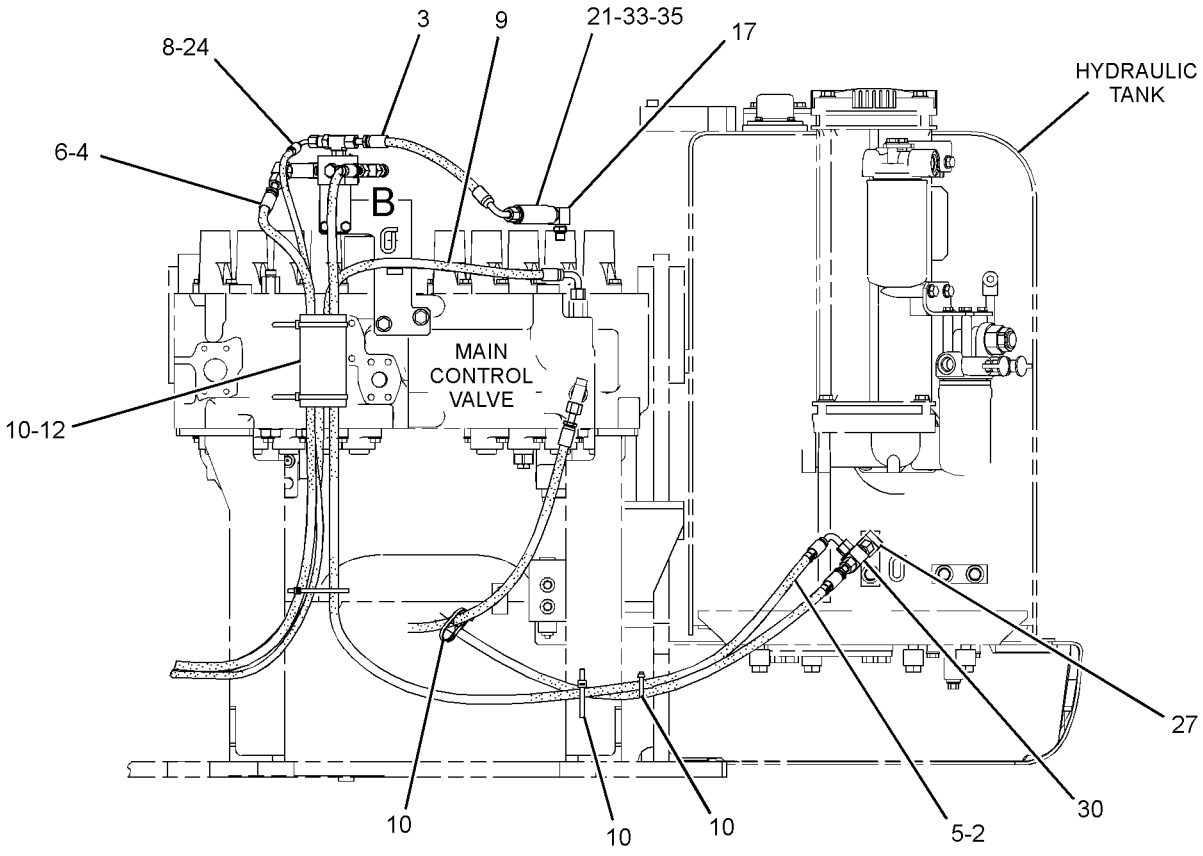

REAR VIEW

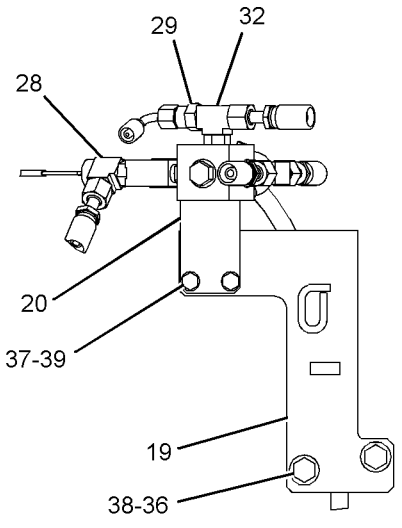

VIEW OF AREA B
(HOSES REMOVED FOR CLARITY)

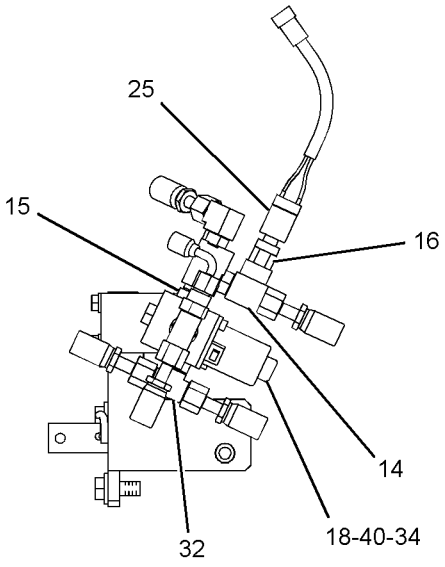

VIEW OF AREA C

GRAPHIC #2 **<END>** g01622809

HYDRAULIC SYSTEM

289-5399 LINES GP-PILOT–BOOM LOWERING CONTROL

S/N: CWG1-UP

PART OF 285-1514 VALVE AR-CHECK & RELIEF

AN ATTACHMENT

SMCS-5057, 5059 **i03467827**

NOTE	REF NO	GRAPHIC REF	PART NUMBER	QTY	PART NAME 1 2 3 4 5 6 (PRODUCT LEVEL)	SEE PAGE
I	1	1	**4I-0800**	1	HOSE AS	
I	2	1	**4I-6003**	1	HOSE AS	
I	3	1	**5I-8825**	1	HOSE AS	
	4	1	**7K-1181**	12	STRAP-CABLE	
I	5	1	**104-8777**	1	HOSE AS	
	6	1	**133-5813**	2	BAND-MARKER (GRAY, P)	
	7	1	*148-8363*	1	ELBOW AS	
		1	**3K-0360**	1	SEAL-O-RING	
		1	**6V-8397**	1	SEAL-O-RING	
		1	**6V-9876**	1	ELBOW	
	8	1	*148-8433*	1	TEE AS	
		1	**6V-8397**	2	SEAL-O-RING	
		1	**6V-9836**	1	TEE-SWIVEL	

I-REFER TO HYDRAULIC INFORMATION SYSTEM

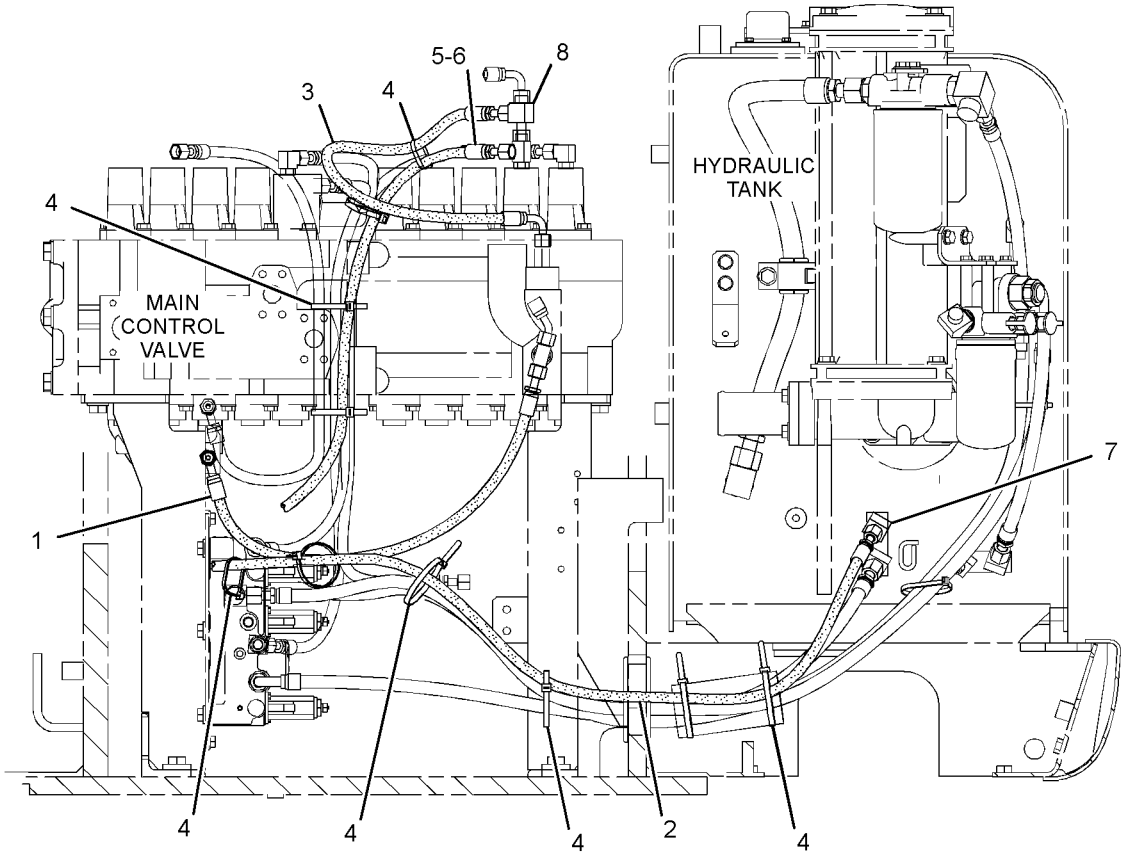

REAR VIEW

GRAPHIC #1 **<END>** g01819733

HYDRAULIC SYSTEM

302-3316 LINES GP-PILOT—SYSTEM 17, COMBINED FN, MED PR

S/N: CWG1-UP
PART OF 297-0491 CONTROL AR-AUXILIARY
AN ATTACHMENT

SMCS-5057, 5059 **i03646486**

NOTE	REF NO	GRAPHIC REF	PART NUMBER	QTY	PART NAME 1 2 3 4 5 6 (PRODUCT LEVEL)	SEE PAGE
I	1	2	**4I-0806**	1	HOSE AS	
I	2	1	**4I-0833**	1	HOSE AS	
I	3	2	**4I-5933**	1	HOSE AS	
	4	2	**4I-9521**	2	BAND-MARKER (RED, L1)	
	5	2	**4I-9522**	2	BAND-MARKER (YELLOW, L2)	
	6	1,2	**4I-9523**	4	BAND-MARKER (BLUE, L3)	
	7	2	**4I-9524**	2	BAND-MARKER (BROWN, L4)	
	8	2	**4I-9525**	2	BAND-MARKER (ORANGE, R1)	
	9	1,2	**4I-9527**	4	BAND-MARKER (GREEN, R3)	
	10	1,2	**7K-1181**	9	STRAP-CABLE	
I	11	2	**087-4402**	2	HOSE AS	
I	12	1	**087-6582**	2	HOSE AS	
I	13	2	**104-8783**	1	HOSE AS	
I	14	2	**108-7387**	1	HOSE AS	
I	15	1	**108-7572**	1	HOSE AS	
	16	1	*150-4027*	2	TEE AS	
					(EACH INCLUDES)	
		1	**3E-2310**	1	TEE	
		1	**3J-1907**	1	SEAL-O-RING	
		1	**6V-8397**	1	SEAL-O-RING	
	17	2	*164-6874*	4	FITTING AS-ELBOW	
					(EACH INCLUDES)	
		2	**3J-1907**	1	SEAL-O-RING	
		2	**085-7356**	1	FITTING	
Y	18	1	**171-0188**	1	VALVE GP-SOLENOID (NEG FLOW CONT, PROPN RED VALVE)	888
Y	19	2	**259-7429**	1	VALVE GP-SOLENOID (WORK TOOL, 4-FUNCTION)	891
I	20	2	**266-1389**	1	HOSE AS	
I	21	2	**266-1392**	1	HOSE AS	
I	22	1	**266-1395**	1	HOSE AS	
I	23	1	**269-9548**	1	HOSE AS	
	24	2	**282-7513**	1	SUPPORT AS	
I	25	1	**296-7390**	1	HOSE AS	
	26	2	*148-8336*	4	CONNECTOR AS	
					(EACH INCLUDES)	
		2	**3J-1907**	1	SEAL-O-RING	
		2	**6V-8397**	1	SEAL-O-RING	
		2	**6V-8636**	1	CONNECTOR	
	27	1	*148-8338*	2	CONNECTOR AS	
					(EACH INCLUDES)	
		1	**3J-1907**	1	SEAL-O-RING	
		1	**6V-8397**	1	SEAL-O-RING	
		1	**8T-0075**	1	CONNECTOR	
	28	2	*148-8353*	2	ELBOW AS	
					(EACH INCLUDES)	
		2	**3J-1907**	1	SEAL-O-RING	
		2	**6V-8397**	1	SEAL-O-RING	
		2	**6V-9001**	1	ELBOW	
	29	1	*148-8367*	1	ELBOW AS	
		1	**6V-8397**	1	SEAL-O-RING	
		1	**6V-9850**	1	ELBOW	
	30	1,2	*148-8378*	13	ELBOW AS	
					(EACH INCLUDES)	
		1,2	**3J-1907**	1	SEAL-O-RING	
		1,2	**6V-8397**	1	SEAL-O-RING	

302-3316 **LINES GP-PILOT** *(contd.)* **i03646486**

NOTE	REF NO	GRAPHIC REF	PART NUMBER	QTY	PART NAME 1 2 3 4 5 6 (PRODUCT LEVEL)	SEE PAGE
		1,2	**6V-8724**	1	ELBOW	
	31	1	*148-8433*	1	TEE AS	
		1	**6V-8397**	2	SEAL-O-RING	
		1	**6V-9836**	1	TEE-SWIVEL	
	32	1	*148-8434*	1	TEE AS	
		1	**6V-8397**	2	SEAL-O-RING	
		1	**6V-9843**	1	TEE-SWIVEL	
	33	1,2	*150-3036*	2	ELBOW AS	
					(EACH INCLUDES)	
		1,2	**3J-1907**	1	SEAL-O-RING	
		1,2	**6V-8397**	1	SEAL-O-RING	
		1,2	**8T-1905**	1	ELBOW	
	34	1,2	*164-5567*	6	COUPLER AS-QUICK DISCONNECT	
					(EACH INCLUDES)	
		1,2	**3J-1907**	1	SEAL-O-RING	
		1,2	**6V-3965**	1	FITTING (QUICK DISCONNECT)	
	35	2	**3G-8054**	1	CLIP (TAB)	
	36	2	**3G-8057**	1	CLIP (SLOT)	
	37	1	**6K-8178**	3	CLIP	
	38	1,2	**6V-0852**	6	CAP-DUST	
	39	2	**6V-0974**	1	GROMMET	
	40	1,2	**8T-4121**	7	WASHER-HARD (11X21X2.5-MM THK)	
M	41	1,2	**8T-4136**	5	BOLT (M10X1.5X25-MM)	
M	42	1	**8T-4137**	2	BOLT (M10X1.5X20-MM)	
M	43	1	**8T-4177**	4	BOLT (M8X1.25X90-MM)	
	44	1	**8T-4224**	4	WASHER-HARD (8.8X16X2-MM THK)	
M	45	2	**8T-6870**	4	BOLT (M8X1.25X70-MM)	

I-REFER TO HYDRAULIC INFORMATION SYSTEM
M-METRIC PART
Y-SEPARATE ILLUSTRATION

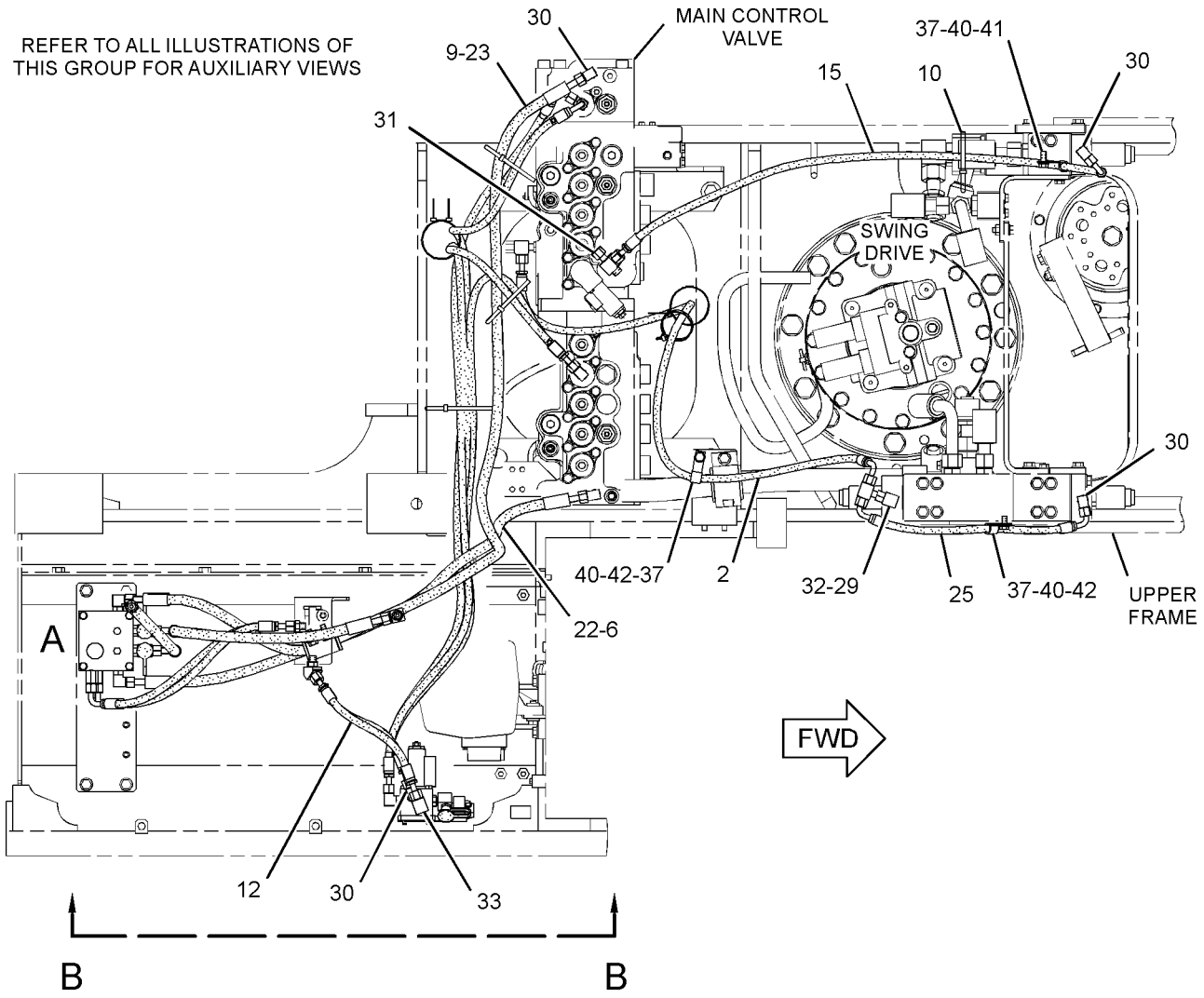

TOP VIEW

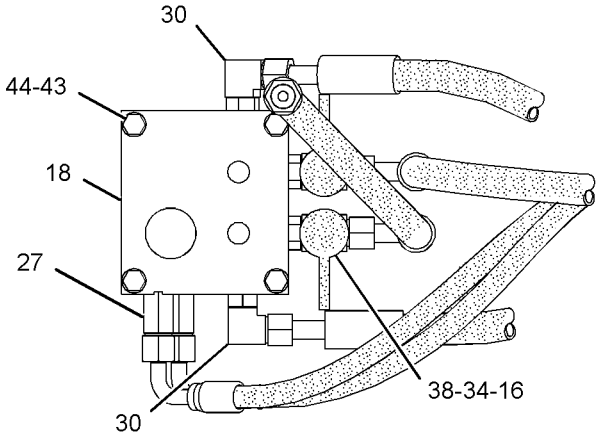

VIEW OF AREA A

GRAPHIC #1 g01610214

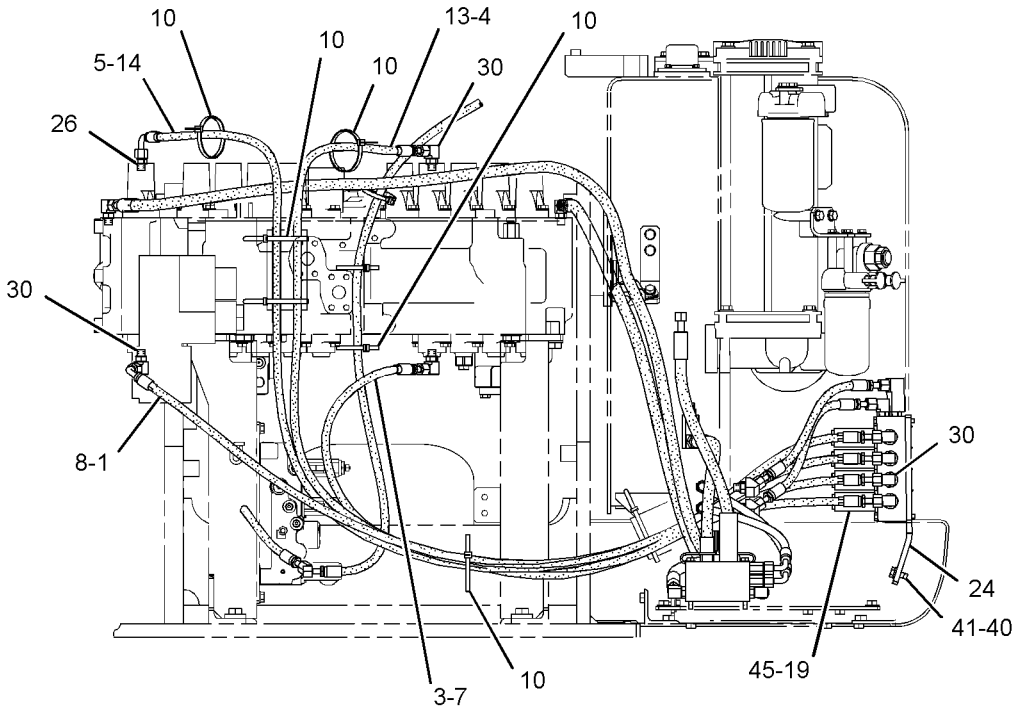

REAR VIEW

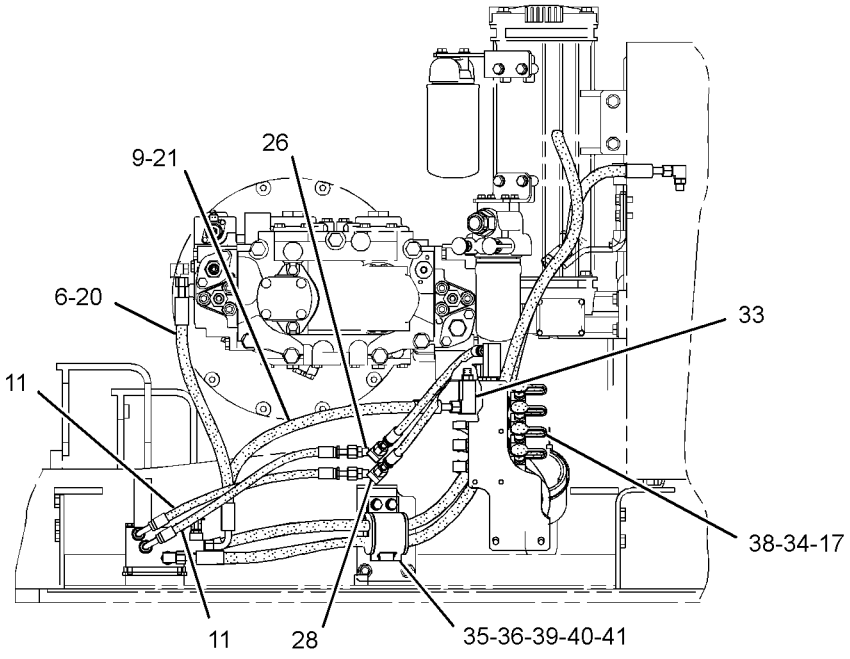

VIEW B-B

GRAPHIC #2 **<END>** g01610213

HYDRAULIC SYSTEM

248-9847 LINES GP-PUMP–SUPPLY, MAIN PUMP

S/N: WNE1-UP; ZMF1-UP

PART OF 270-5712, 270-5713 HYDRAULIC AR

SMCS-5057 **i02546377**

NOTE	REF NO	GRAPHIC REF	PART NUMBER	QTY	PART NAME 1 2 3 4 5 6 (PRODUCT LEVEL)	SEE PAGE
	1	1	**9X-8257**	4	WASHER (17.5X30X3.5-MM THK)	
	2	1	**5P-1296**	1	HOSE	
	3	1	**9X-2201**	4	CLAMP-HOSE	
	4	1	**245-5285**	1	TUBE AS	
	5	1	**245-5287**	1	TUBE AS	
	6	1	*155-3624*	1	PLUG AS	
		1	**3J-7354**	1	SEAL-O-RING	
		1	**9S-4182**	1	PLUG-O RING	
	7	1	**5H-8624**	1	SEAL-O-RING	
	8	1	**6D-9157**	1	SEAL-O-RING	
	9	1	**6V-0400**	4	FLANGE-HALF	
M	10	1	**7X-2553**	8	BOLT (M16X2X40-MM)	
M	11	1	**8T-4194**	8	BOLT (M12X1.75X50-MM)	
	12	1	**8T-4223**	8	WASHER-HARD (13.5X25.5X3-MM THK)	

M-METRIC PART

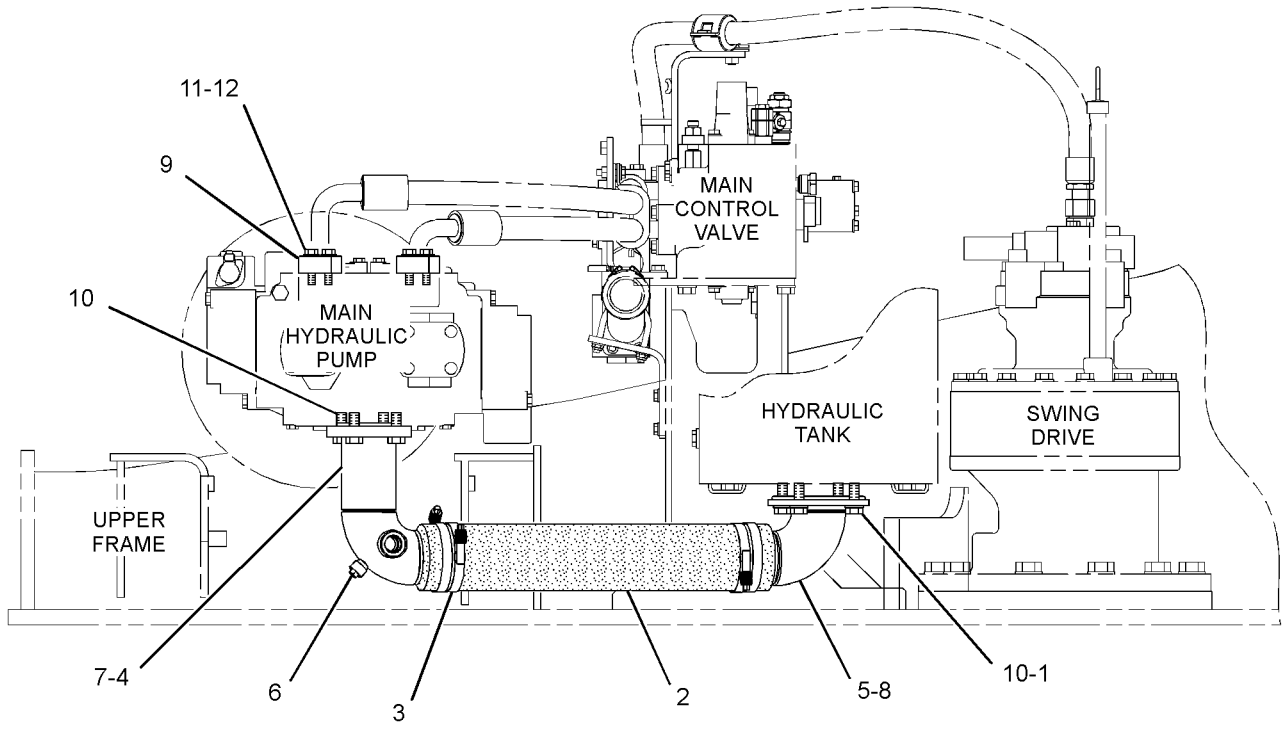

RIGHT SIDE VIEW

GRAPHIC #1 **<END>** g01275930

HYDRAULIC SYSTEM

260-7983 LINES GP-PUMP—HYD OIL COOLER, PILOT SYSTEM

S/N: WNE1-UP; ZMF1-UP
PART OF 259-7501 CONTROL AR-AUXILIARY
AN ATTACHMENT

SMCS-5057 **i03016249**

NOTE	REF NO	GRAPHIC REF	PART NUMBER	QTY	PART NAME 1 2 3 4 5 6 (PRODUCT LEVEL)	SEE PAGE
	1	2	**9X-2201**	4	CLAMP-HOSE	
	2	2	**105-7781**	1	SPACER (13.5X25X40-MM THK)	
	3	1	*106-8715*	1	ELBOW AS	
		1	**3D-2824**	1	SEAL-O-RING	
		1	**6V-9746**	1	SEAL-O-RING	
		1	**8C-8400**	1	ELBOW	
	4	2	*180-9286*	1	TEE AS	
		2	**3D-2824**	1	SEAL-O-RING	
		2	**3E-2345**	1	TEE-O-RING	
		2	**6V-9746**	1	SEAL-O-RING	
	5	2	**199-2045**	1	SPACER (13X25X85-MM THK)	
I	6	2	**289-5731**	1	HOSE AS	
	7	1	**278-6912**	1	TUBE AS	
	8	2	**282-7055**	1	TUBE AS	
CI	9	1	**319-9996**	1	HOSE AS	
I	10	1	**289-5681**	1	HOSE AS	
E	11	2	**7Y-4562**		HOSE (33-CM)	
	12	1	*150-4049*	1	ELBOW AS	
		1	**6V-9746**	1	SEAL-O-RING	
		1	**7M-8485**	1	SEAL-O-RING	
		1	**8T-4149**	1	ELBOW	
	13	2	*164-5567*	1	COUPLER AS-QUICK DISCONNECT	
		2	**3J-1907**	1	SEAL-O-RING	
		2	**6V-3965**	1	FITTING (QUICK DISCONNECT)	
	14	1	*164-5606*	1	CONNECTOR AS	
		1	**3D-2824**	1	SEAL-O-RING	
		1	**6V-9746**	1	SEAL-O-RING	
		1	**8T-0078**	1	CONNECTOR	
C	15	1,2	*171-6723*	2	ELBOW AS	
					(EACH INCLUDES)	
		1,2	**6V-9746**	1	SEAL-O-RING	
		1,2	**8T-8899**	1	ELBOW	
	16	2	**1P-4578**	2	FLANGE-HALF	
	17	1	**1P-4579**	2	FLANGE-HALF	
	18	2	**4J-0522**	1	SEAL-O-RING	
	19	2	**4J-0524**	2	SEAL-O-RING	
	20	1,2	**5P-7468**	3	CLIP (SLOT)	
	21	1,2	**5P-7469**	3	CLIP (TAB)	
	22	2	**6V-0852**	1	CAP-DUST	
	23	1,2	**6V-1874**	3	GROMMET	
M	24	2	**7X-2550**	1	BOLT (M12X1.75X110-MM)	
	25	2	**8T-4121**	4	WASHER-HARD (11X21X2.5-MM THK)	
M	26	1	**8T-4183**	4	BOLT (M12X1.75X40-MM)	
M	27	1	**8T-4192**	1	BOLT (M12X1.75X25-MM)	
M	28	2	**8T-4196**	4	BOLT (M10X1.5X35-MM)	
	29	1,2	**8T-4223**	6	WASHER-HARD (13.5X25.5X3-MM THK)	
M	30	2	**8T-4648**	1	BOLT (M12X1.75X70-MM)	
M	31	2	**8T-4956**	4	BOLT (M12X1.75X35-MM)	
M	32	2	**8T-7338**	4	BOLT (M16X2X45-MM)	
	33	2	**8T-7971**	1	WASHER-HARD (13.5X25.5X5-MM THK)	
	34	1	**9M-3786**	1	SEAL-O-RING	
	35	2	**9X-8257**	4	WASHER (17.5X30X3.5-MM THK)	

C-CHANGE FROM PREVIOUS TYPE
E-ORDER BY THE CENTIMETER
I-REFER TO HYDRAULIC INFORMATION SYSTEM
M-METRIC PART

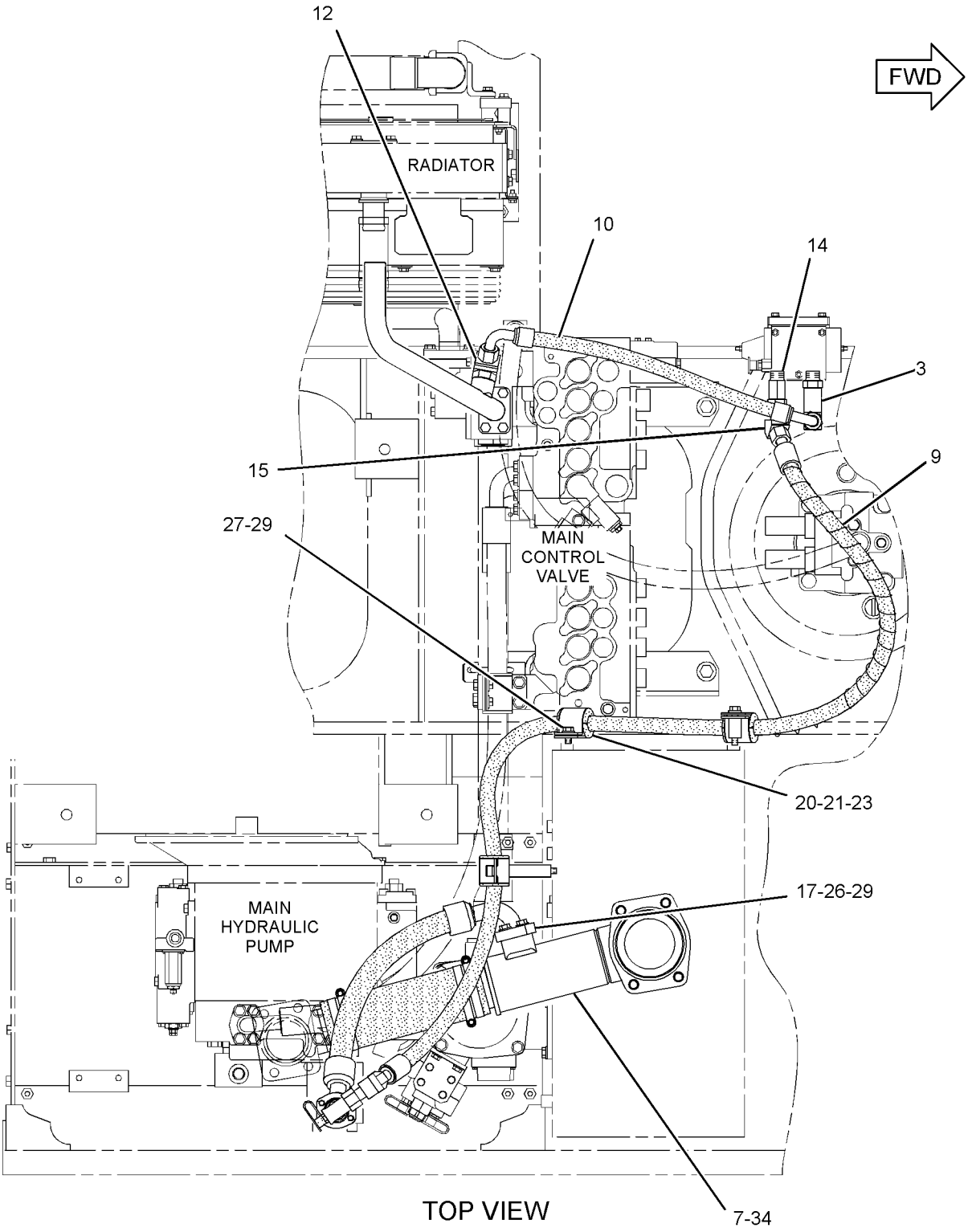

GRAPHIC #1 g01528487

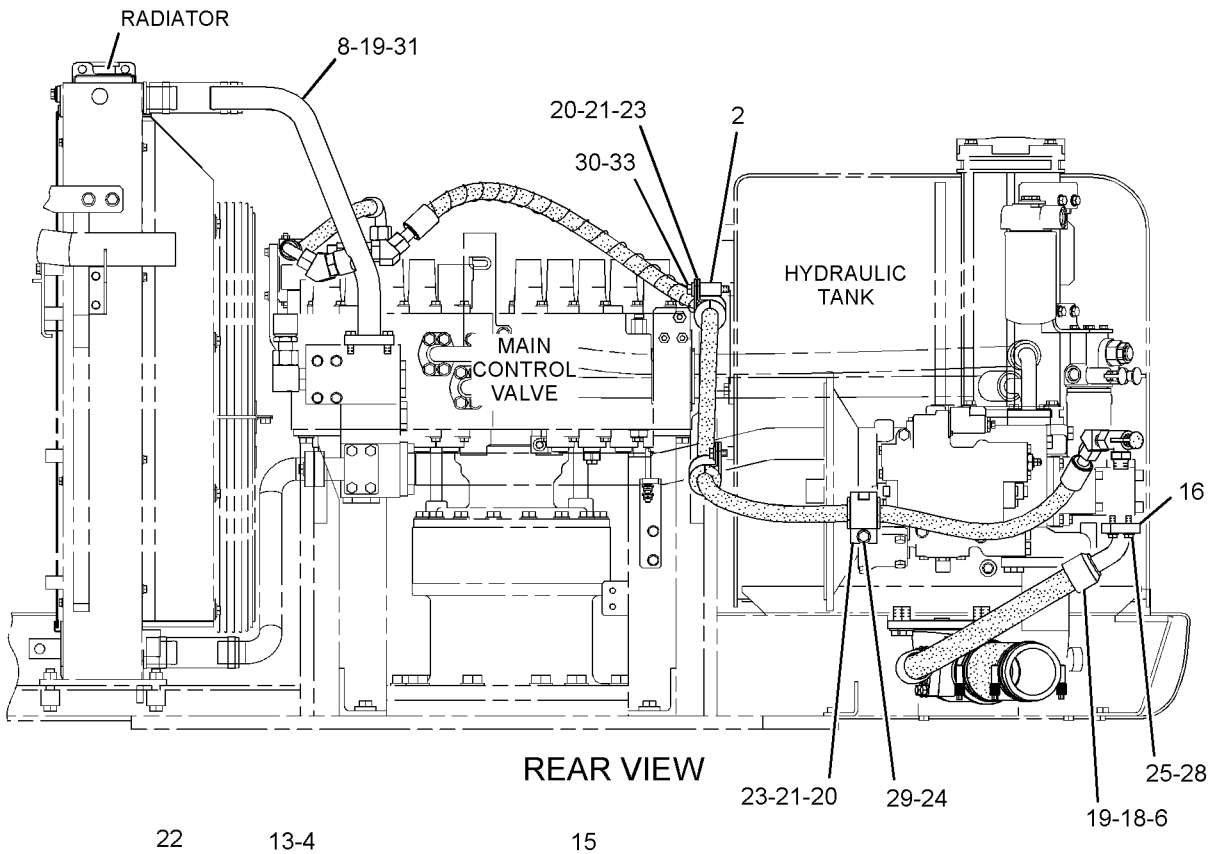

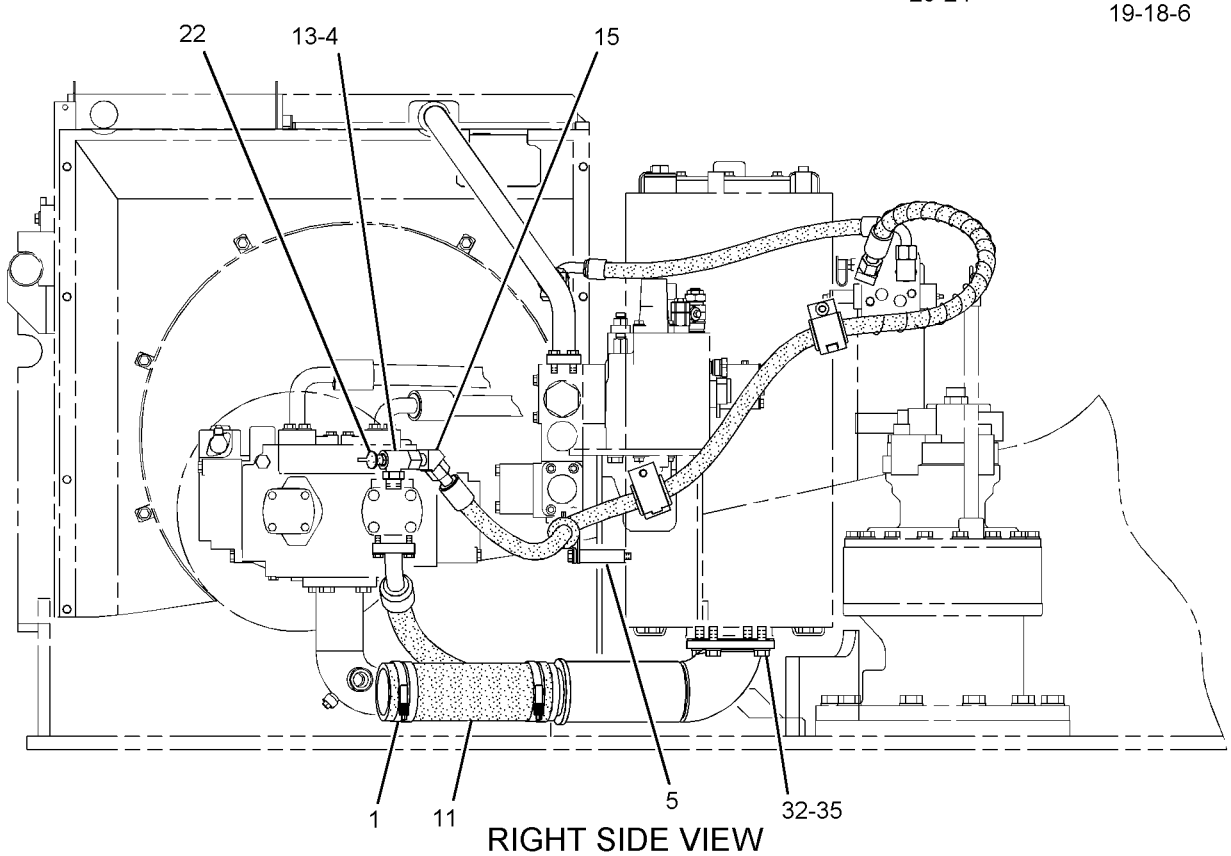

GRAPHIC #2 **<END>** g01528488

HYDRAULIC SYSTEM

260-8016 LINES GP-PUMP—COOLING CIRCUIT, HYDRAULIC OIL

S/N: WNE1-UP; ZMF1-UP
PART OF 259-7502 CONTROL AR-AUXILIARY
AN ATTACHMENT

SMCS-5057 **i02998173**

NOTE	REF NO	GRAPHIC REF	PART NUMBER	QTY	PART NAME 1 2 3 4 5 6 (PRODUCT LEVEL)	SEE PAGE
	1	1	**9X-2201**	4	CLAMP-HOSE	
	2	1	**199-2045**	1	SPACER (13X25X85-MM THK)	
I	3	1	**289-5731**	1	HOSE AS	
	4	1	**278-6912**	1	TUBE AS	
I	5	1	**319-9991**	1	HOSE AS	
E	6	1	**5P-1296**		HOSE (33-CM)	
	7	1	*307-5129*	1	CONNECTOR AS	
		1	**2S-4078**	1	SEAL-O-RING	
		1	**5K-9090**	1	SEAL-O-RING	
		1	**307-5130**	1	CONNECTOR	
	9	1	*148-8362*	1	ELBOW AS	
		1	**3D-2824**	1	SEAL-O-RING	
		1	**5K-9090**	1	SEAL-O-RING	
		1	**8T-6684**	1	ELBOW	
	10	1	*177-1061*	1	ELBOW AS	
		1	**5K-9090**	1	SEAL-O-RING	
		1	**142-0038**	1	ELBOW	
	11	1	**1P-4578**	2	FLANGE-HALF	
	12	1	**1P-4579**	2	FLANGE-HALF	
	13	1	**4J-0522**	1	SEAL-O-RING	
	14	1	**4J-0524**	1	SEAL-O-RING	
	15	1	**5P-7468**	1	CLIP (SLOT)	
	16	1	**5P-7469**	1	CLIP (TAB)	
	17	1	**6V-0545**	1	GROMMET	
M	18	1	**7X-2550**	1	BOLT (M12X1.75X110-MM)	
	19	1	**8T-4121**	4	WASHER-HARD (11X21X2.5-MM THK)	
M	20	1	**8T-4183**	4	BOLT (M12X1.75X40-MM)	
M	21	1	**8T-4196**	4	BOLT (M10X1.5X35-MM)	
	22	1	**8T-4223**	5	WASHER-HARD (13.5X25.5X3-MM THK)	
M	23	1	**8T-7338**	4	BOLT (M16X2X45-MM)	
	24	1	**9M-3786**	1	SEAL-O-RING	
	25	1	**9X-8257**	4	WASHER (17.5X30X3.5-MM THK)	
	26	1	**289-5700**	1	GROMMET	
	27	1	**7K-1181**	2	STRAP-CABLE	

E-ORDER BY THE CENTIMETER
I-REFER TO HYDRAULIC INFORMATION SYSTEM
M-METRIC PART

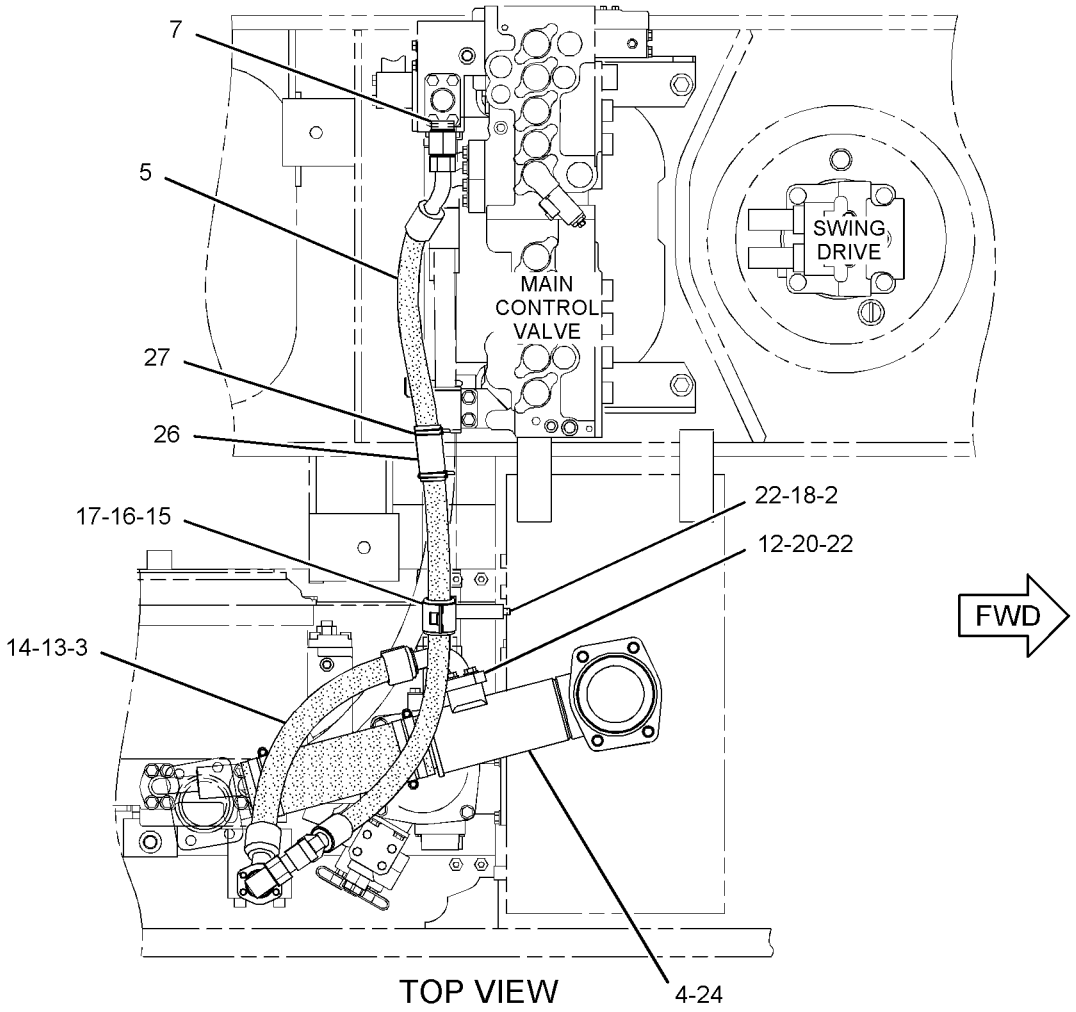

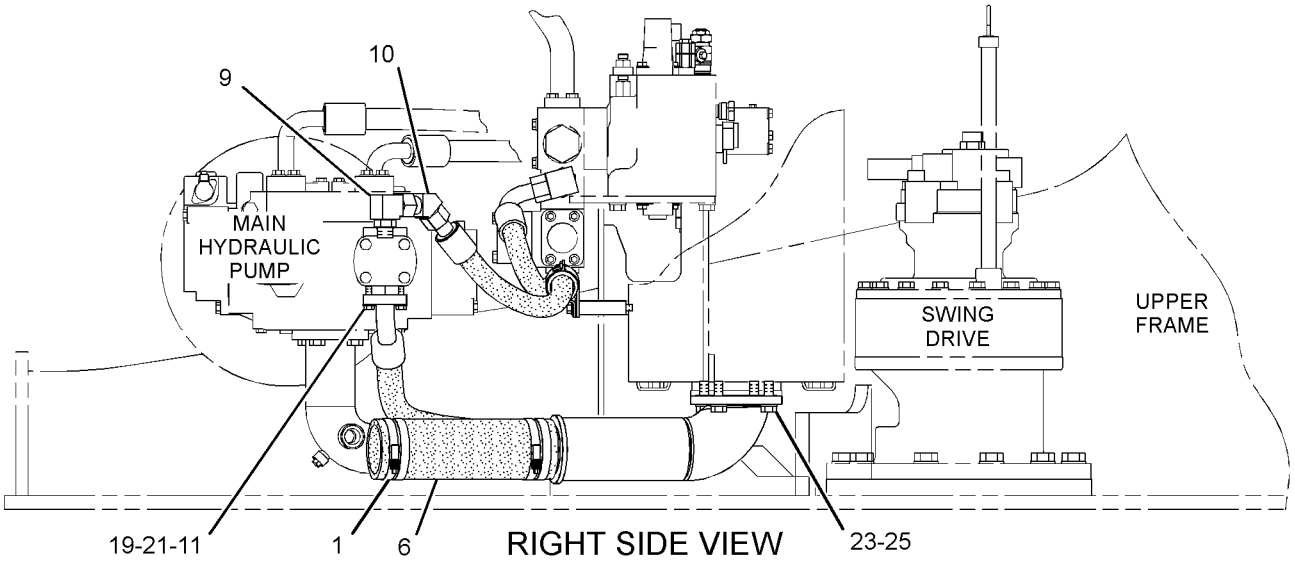

GRAPHIC #1

<END>

g01522290

HYDRAULIC SYSTEM

266-0959 LINES GP-PUMP–OUTPUT

S/N: CWG1-UP

PART OF 285-1356 HYDRAULIC AR

SMCS-5057 **i03110588**

NOTE	REF NO	GRAPHIC REF	PART NUMBER	QTY	PART NAME 1 2 3 4 5 6 (PRODUCT LEVEL)	SEE PAGE
M	1	1,2	**8T-4956**	11	BOLT (M12X1.75X35-MM)	
M	2	2	**105-3483**	4	BOLT-SOCKET HEAD (M10X1.5X70-MM)	
I	3	2	**131-9424**	1	HOSE AS	
Y	4	1	**173-4672**	1	VALVE GP-CHECK (OIL COOLER BYPASS)	814
	5	2	**173-4816**	1	SUPPORT AS	
	6	2	**144-0367**	2	CLAMP-HOSE	
	7	2	**236-6341**	1	HOSE	
	8	2	**266-1234**	1	TUBE AS	
	9	2	**266-1236**	1	TUBE AS	
	10	2	**266-1238**	1	TUBE AS	
	11	2	**266-1240**	1	TUBE AS	
	12	1	**266-1243**	1	SUPPORT AS	
	13	2	**266-1245**	1	SUPPORT	
I	14	2	**266-1246**	1	HOSE AS	
I	15	2	**319-9892**	1	HOSE AS	
	16	2	**270-0040**	1	TUBE AS	
M	17	2	**096-4883**	2	LOCKNUT (M10X1.5-THD)	
M	18	2	**101-7402**	4	BOLT-SOCKET HEAD (M12X1.75X30-MM)	
M	19	2	**105-3478**	4	BOLT-SOCKET HEAD (M10X1.5X35-MM)	
	20	2	*148-8357*	1	ELBOW AS	
		2	**7M-8485**	1	SEAL-O-RING	
		2	**5K-9090**	1	SEAL-O-RING	
		2	**6V-9008**	1	ELBOW	
	21	1	*148-8364*	1	ELBOW AS	
		1	**3K-0360**	1	SEAL-O-RING	
		1	**6V-8398**	1	SEAL-O-RING	
		1	**6V-8625**	1	ELBOW	
	22	2	*148-8411*	1	PLUG AS	
		2	**3K-0360**	1	SEAL-O-RING	
		2	**9S-4185**	1	PLUG-O-RING	
	23	2	*164-4180*	1	PLUG AS	
		2	**7M-8485**	1	SEAL-O-RING	
		2	**9S-4181**	1	PLUG-O-RING	
	24	2	**1P-3703**	4	SEAL-RECTANGULAR	
	25	2	**4J-0523**	1	SEAL-O-RING	
	26	1,2	**4J-0524**	3	SEAL-O-RING	
	27	2	**4J-0527**	1	SEAL-O-RING	
	28	2	**4J-0528**	1	SEAL-O-RING	
	29	1,2	**5P-7468**	3	CLIP (SLOT)	
	30	1,2	**5P-7469**	3	CLIP (TAB)	
	31	1	**8T-7087**	1	GROMMET	
	32	2	**6V-0400**	4	FLANGE-HALF	
M	33	1	**7X-2544**	4	BOLT (M10X1.5X104-MM)	
M	34	2	**7Y-5247**	1	U-BOLT	
	35	2	**8T-2525**	2	GROMMET	
	36	1,2	**8T-4121**	8	WASHER-HARD (11X21X2.5-MM THK)	
M	37	2	**8T-4136**	2	BOLT (M10X1.5X25-MM)	
M	38	1,2	**8T-4139**	4	BOLT (M12X1.75X30-MM)	
M	39	2	**8T-4194**	8	BOLT (M12X1.75X50-MM)	
	40	1,2	**8T-4223**	23	WASHER-HARD (13.5X25.5X3-MM THK)	

I-REFER TO HYDRAULIC INFORMATION SYSTEM
M-METRIC PART
Y-SEPARATE ILLUSTRATION

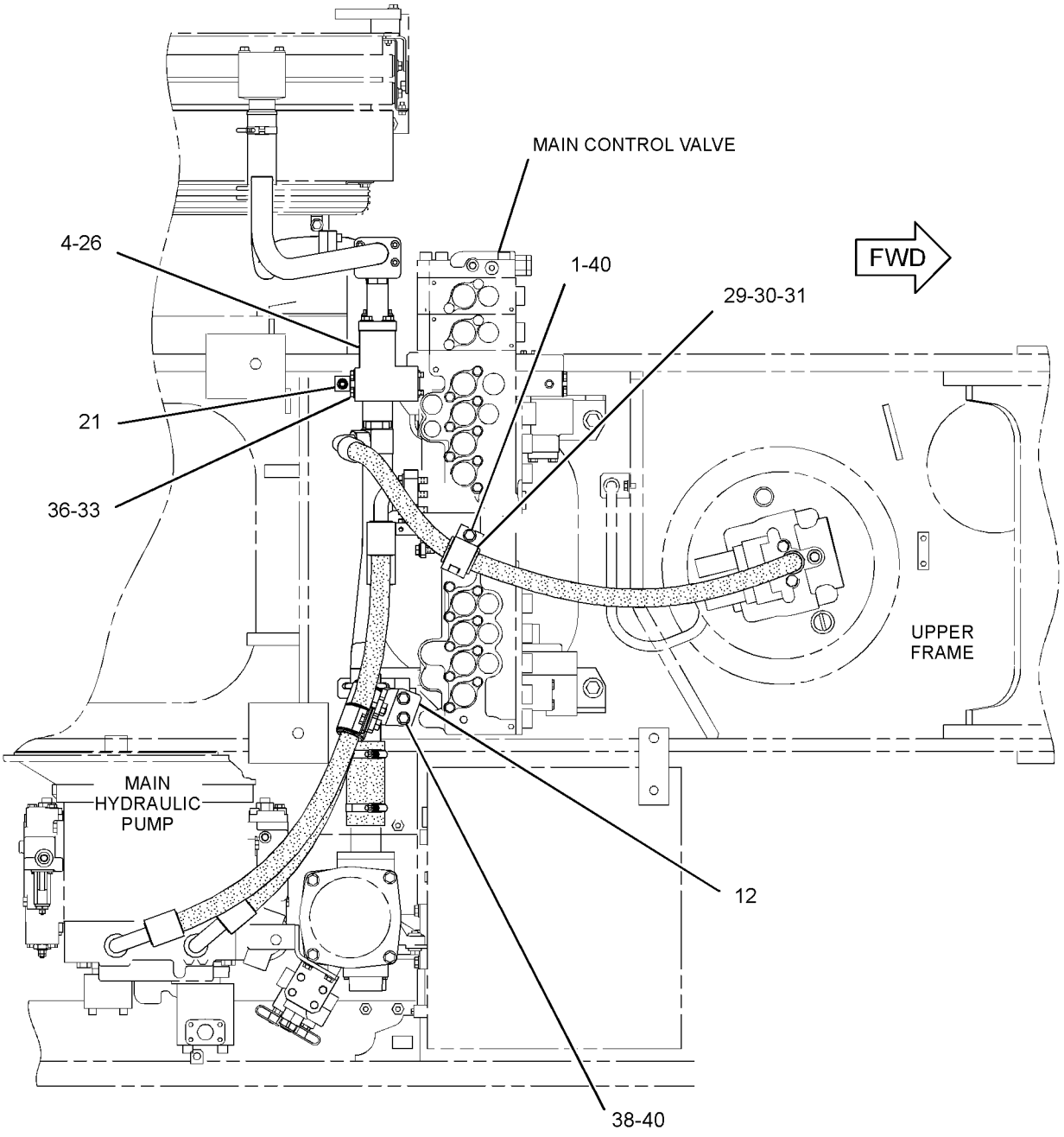

TOP VIEW

GRAPHIC #1 g01318076

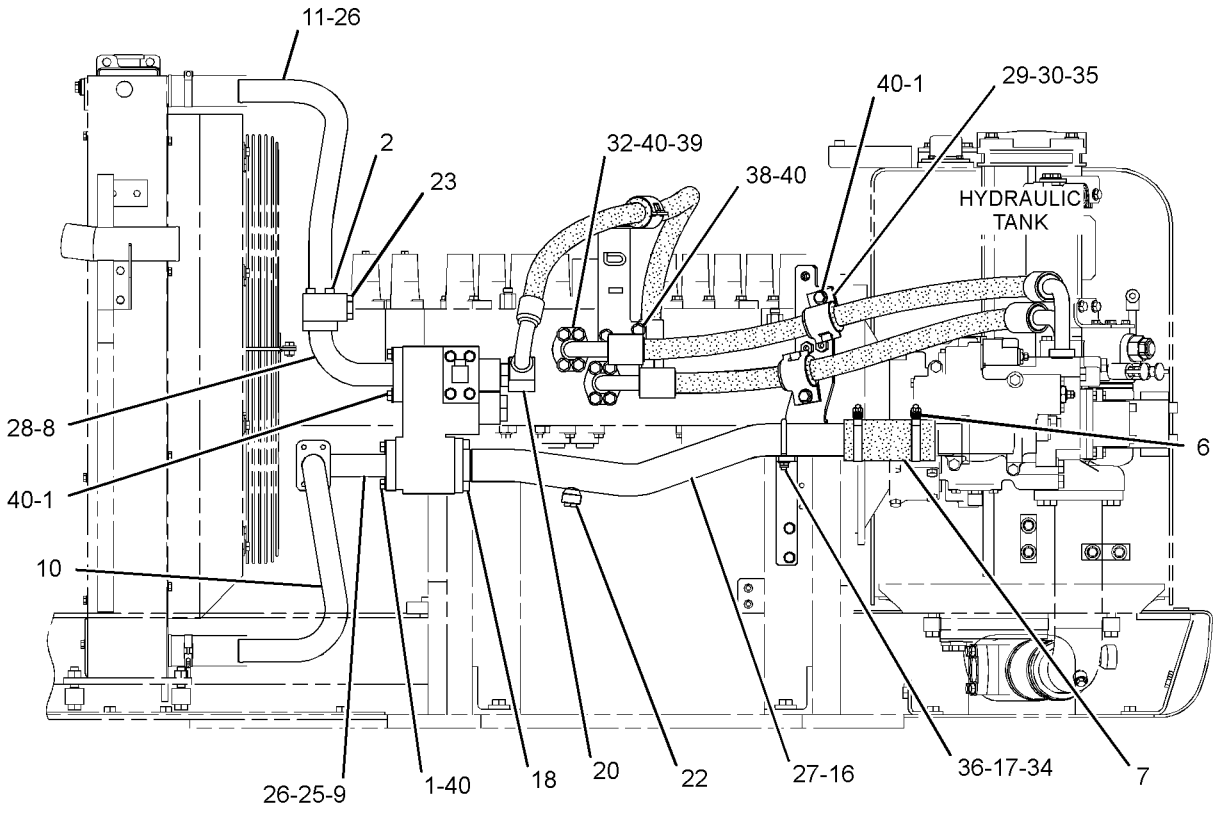

REAR VIEW

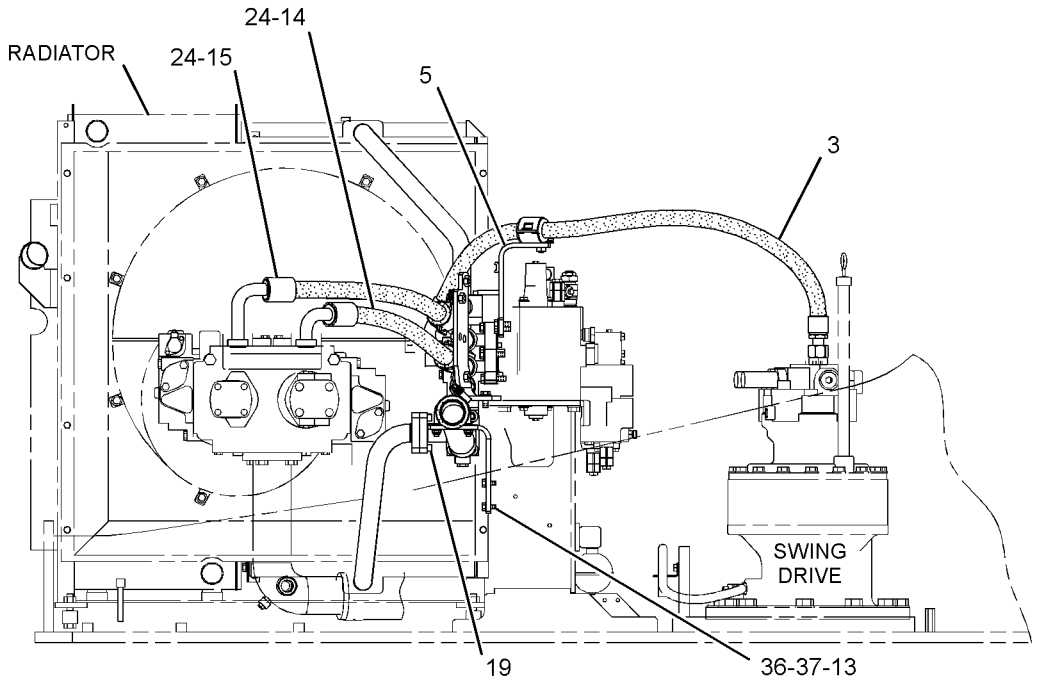

RIGHT SIDE VIEW

GRAPHIC #2 **<END>** g01318078

HYDRAULIC SYSTEM

266-0961 LINES GP-PUMP—SUPPLY, MAIN PUMP

S/N: CWG1-UP

PART OF 285-1356 HYDRAULIC AR

SMCS-5057 **i03645200**

NOTE	REF NO	GRAPHIC REF	PART NUMBER	QTY	PART NAME 1 2 3 4 5 6 (PRODUCT LEVEL)	SEE PAGE
	1	1	**9M-3786**	2	SEAL-O-RING	
	2	1	**176-4412**	1	PIPE AS	
	3	1	**199-2019**	1	FLANGE	
	4	1	**9X-2201**	4	CLAMP-HOSE	
I	5	1	**245-5045**	1	HOSE	
	6	1	**269-9850**	1	HOSE	
	7	1	*155-3624*	1	PLUG AS	
		1	**3J-7354**	1	SEAL-O-RING	
		1	**9S-4182**	1	PLUG-O-RING	
	8	1	**176-4703**	4	WASHER (17X30X8-MM THK)	
	9	1	**1P-4579**	2	FLANGE-HALF	
	10	1	**2J-2668**	1	COVER	
	11	1	**4J-0524**	1	SEAL-O-RING	
	12	1	**5H-8624**	1	SEAL-O-RING	
	13	1	**6V-0400**	4	FLANGE-HALF	
M	14	1	**7X-2553**	4	BOLT (M16X2X40-MM)	
M	15	1	**7X-2555**	4	BOLT (M16X2X80-MM)	
M	16	1	**8T-4183**	4	BOLT (M12X1.75X40-MM)	
M	17	1	**8T-4194**	8	BOLT (M12X1.75X50-MM)	
	18	1	**8T-4223**	12	WASHER-HARD (13.5X25.5X3-MM THK)	

I-REFER TO HYDRAULIC INFORMATION SYSTEM
M-METRIC PART

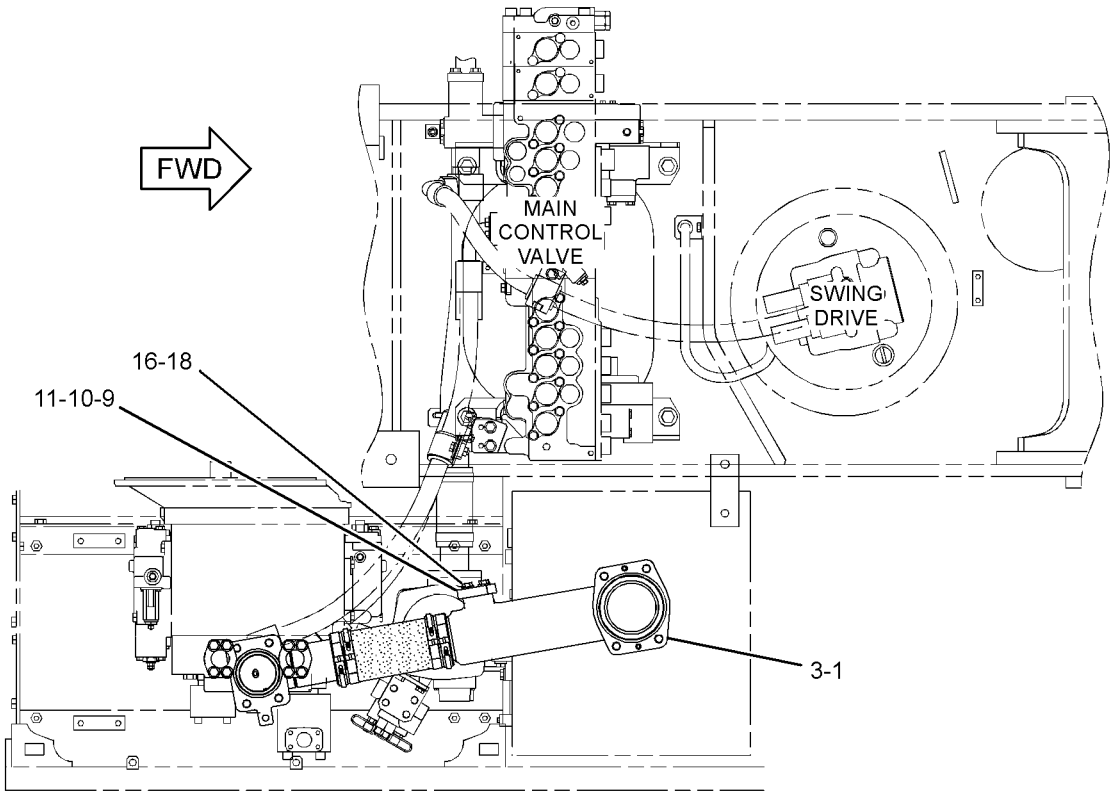

TOP VIEW

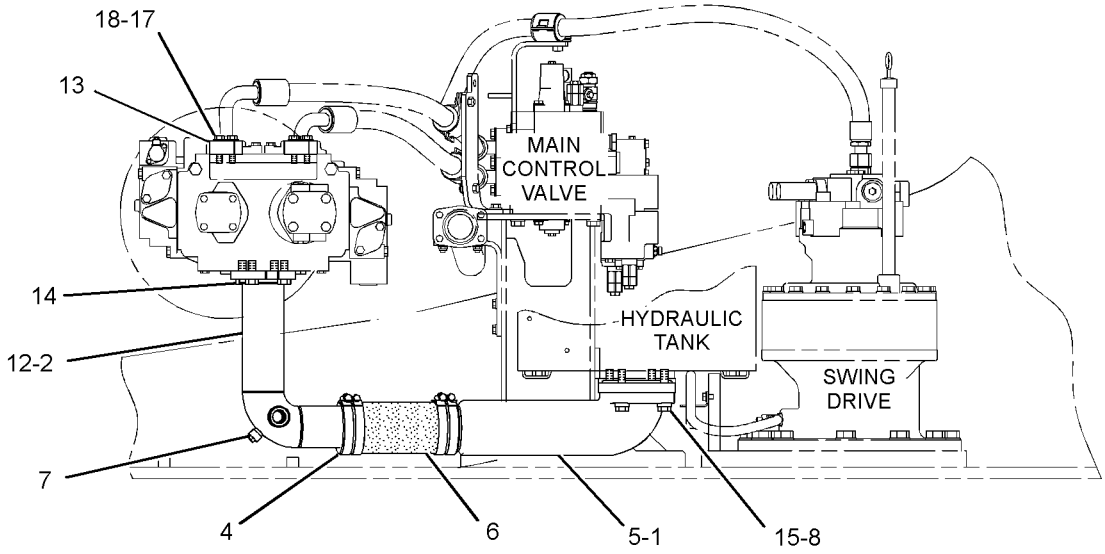

RIGHT SIDE VIEW

GRAPHIC #1 **<END>** g01311017

HYDRAULIC SYSTEM

266-0971 LINES GP-PUMP

S/N: CWG1-UP
PART OF 259-7621 CONTROL AR-AUXILIARY
AN ATTACHMENT

SMCS-5057 **i03646465**

NOTE	REF NO	GRAPHIC REF	PART NUMBER	QTY	PART NAME 1 2 3 4 5 6 (PRODUCT LEVEL)	SEE PAGE
	1	1	**6V-0852**	1	CAP-DUST	
	2	1	**8C-3451**	1	CAP-DUST	
	3	1	**105-7781**	1	SPACER (13.5X25X40-MM THK)	
	4	1	*106-8715*	1	ELBOW AS	
		1	**8C-8400**	1	ELBOW	
		1	**3D-2824**	1	SEAL-O-RING	
		1	**6V-9746**	1	SEAL-O-RING	
	5	1	*164-5586*	1	TEE AS	
		1	**6V-8398**	1	SEAL-O-RING	
		1	**7X-0871**	1	TEE	
	6	1	*180-9286*	1	TEE AS	
		1	**3D-2824**	1	SEAL-O-RING	
		1	**3E-2345**	1	TEE-O-RING	
		1	**6V-9746**	1	SEAL-O-RING	
	7	1	**202-3911**	1	PLATE	
	8	1	**218-1058**	1	HOSE AS	
I	9	1	**266-1365**	1	HOSE AS	
I	10	1	**286-6465**	1	HOSE AS	
I	11	1	**314-8188**	1	HOSE AS	
	12	1	*148-8305*	1	ADAPTER AS	
		1	**3J-1907**	1	SEAL-O-RING	
		1	**5P-9617**	1	ADAPTER	
	13	1	*148-8339*	1	CONNECTOR AS	
		1	**6V-8716**	1	CONNECTOR	
		1	**6V-9746**	1	SEAL-O-RING	
		1	**7M-8485**	1	SEAL-O-RING	
	14	1	*148-8392*	1	ELBOW AS	
		1	**6V-9746**	1	SEAL-O-RING	
		1	**6V-9853**	1	ELBOW	
	15	1	*155-3624*	1	PLUG AS	
		1	**3J-7354**	1	SEAL-O-RING	
		1	**9S-4182**	1	PLUG-O-RING	
	16	1	*164-5567*	1	COUPLER AS-QUICK DISCONNECT	
		1	**6V-3965**	1	FITTING (QUICK DISCONNECT)	
		1	**214-7568**	1	SEAL-O-RING	
	17	1	*164-5590*	1	VALVE AS-FLUID SAMPLING	
		1	**3J-7354**	1	SEAL-O-RING	
		1	**8C-3446**	1	VALVE-FLUID SAMPLING	
	18	1	*164-5606*	1	CONNECTOR AS	
		1	**3D-2824**	1	SEAL-O-RING	
		1	**6V-9746**	1	SEAL-O-RING	
		1	**8T-0078**	1	CONNECTOR	
	19	1	*171-6723*	2	ELBOW AS	
					(EACH INCLUDES)	
		1	**6V-9746**	1	SEAL-O-RING	
		1	**8T-8899**	1	ELBOW	
	20	1	**1P-4578**	2	FLANGE-HALF	
	21	1	**1P-4579**	2	FLANGE-HALF	
	22	1	**4J-0522**	1	SEAL-O-RING	
	23	1	**4J-0524**	1	SEAL-O-RING	
	24	1	**5P-7468**	3	CLIP (SLOT)	
	25	1	**5P-7469**	3	CLIP (TAB)	
	26	1	**6V-1874**	3	GROMMET	
M	27	1	**7X-2550**	1	BOLT (M12X1.75X110-MM)	
	28	1	**8T-4121**	4	WASHER-HARD (11X21X2.5-MM THK)	

266-0971 **LINES GP-PUMP** *(contd.)* **i03646465**

NOTE	REF NO	GRAPHIC REF	PART NUMBER	QTY	PART NAME 1 2 3 4 5 6 (PRODUCT LEVEL)	SEE PAGE
M	29	1	**8T-4183**	5	BOLT (M12X1.75X40-MM)	
M	30	1	**8T-4192**	1	BOLT (M12X1.75X25-MM)	
M	31	1	**8T-4196**	4	BOLT (M10X1.5X35-MM)	
	32	1	**8T-4223**	7	WASHER-HARD (13.5X25.5X3-MM THK)	
M	33	1	**8T-4648**	1	BOLT (M12X1.75X70-MM)	
	34	1	**8T-7971**	1	WASHER-HARD (13.5X25.5X5-MM THK)	

I-REFER TO HYDRAULIC INFORMATION SYSTEM
M-METRIC PART

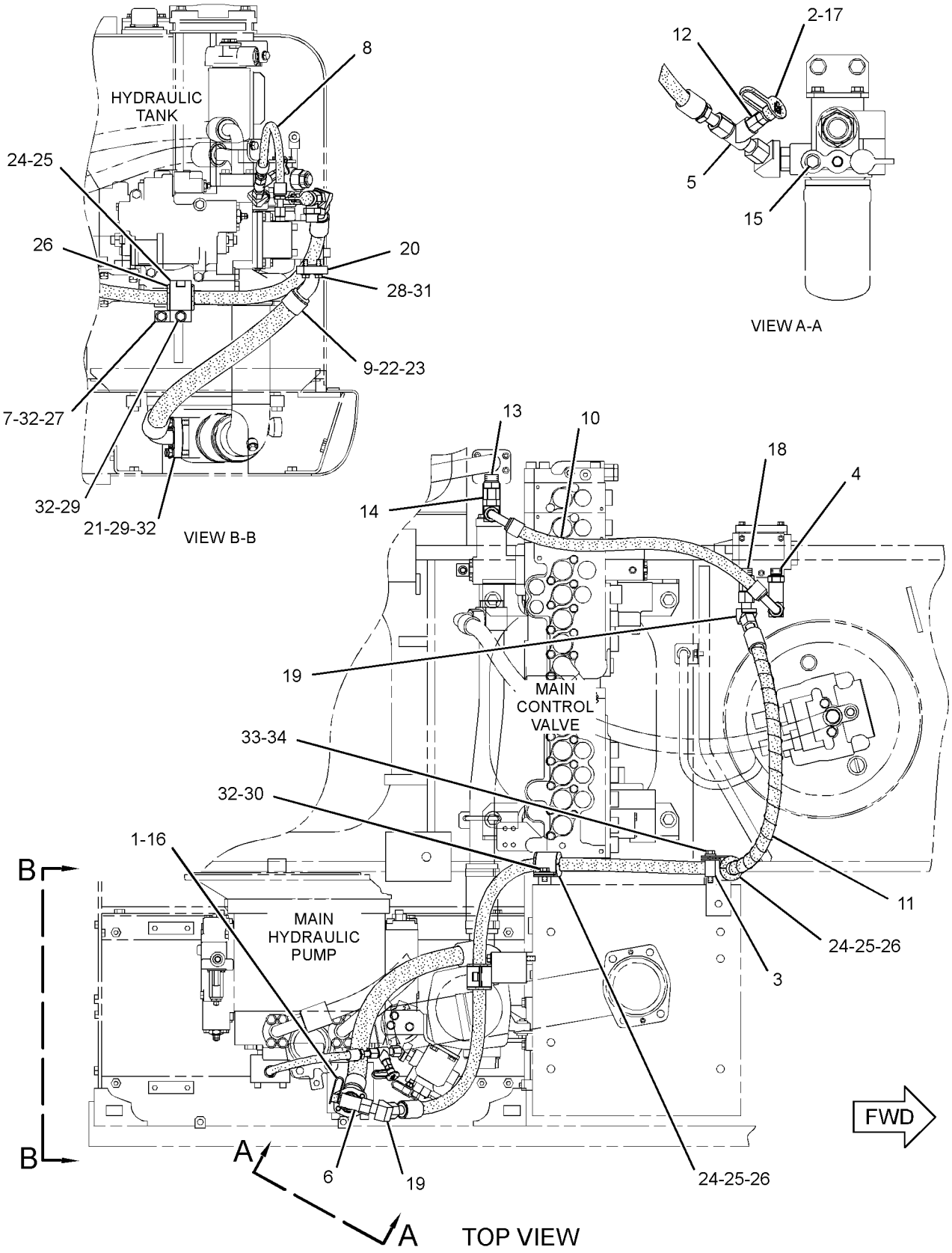

GRAPHIC #1

<END>

g01959329

HYDRAULIC SYSTEM

266-0973 LINES GP-PUMP–COOLER, PILOT OIL

S/N: CWG1-UP

PART OF 259-7622 CONTROL AR-AUXILIARY

AN ATTACHMENT

SMCS-5057 **i03646141**

NOTE	REF NO	GRAPHIC REF	PART NUMBER	QTY	PART NAME 1 2 3 4 5 6 (PRODUCT LEVEL)	SEE PAGE
	1	1	**8C-4082**	1	TEE	
	2	1	**202-3911**	1	PLATE	
I	3	1	**218-1282**	1	HOSE AS	
I	4	1	**266-1365**	1	HOSE AS	
	5	1	*148-8323*	1	CONNECTOR AS	
		1	**2S-4078**	1	SEAL-O-RING	
		1	**5K-9090**	1	SEAL-O-RING	
		1	**6V-9875**	1	CONNECTOR	
	6	1	*148-8352*	1	ELBOW AS	
		1	**5K-9090**	1	SEAL-O-RING	
		1	**6V-9854**	1	ELBOW	
	7	1	*164-5567*	1	COUPLER AS-QUICK DISCONNECT	
		1	**3J-1907**	1	SEAL-O-RING	
		1	**6V-3965**	1	FITTING (QUICK DISCONNECT)	
	8	1	*177-1061*	1	ELBOW AS	
		1	**5K-9090**	1	SEAL-O-RING	
		1	**142-0038**	1	ELBOW	
	9	1	**1P-4578**	2	FLANGE-HALF	
	10	1	**1P-4579**	2	FLANGE-HALF	
	11	1	**3D-2824**	1	SEAL-O-RING	
	12	1	**4J-0522**	1	SEAL-O-RING	
	13	1	**4J-0524**	1	SEAL-O-RING	
	14	1	**5K-9090**	1	SEAL-O-RING	
	15	1	**5P-7468**	1	CLIP (SLOT)	
	16	1	**5P-7469**	1	CLIP (TAB)	
	17	1	**6V-0545**	1	GROMMET	
	18	1	**6V-0852**	1	CAP-DUST	
M	19	1	**7X-2550**	1	BOLT (M12X1.75X110-MM)	
	20	1	**8T-4121**	4	WASHER-HARD (11X21X2.5-MM THK)	
M	21	1	**8T-4183**	5	BOLT (M12X1.75X40-MM)	
M	22	1	**8T-4196**	4	BOLT (M10X1.5X35-MM)	
	23	1	**8T-4223**	6	WASHER-HARD (13.5X25.5X3-MM THK)	
	24	1	**218-1058**	1	HOSE AS	
	25	1	*164-5590*	1	VALVE AS-FLUID SAMPLING	
		1	**3J-7354**	1	SEAL-O-RING	
		1	**8C-3446**	1	VALVE-FLUID SAMPLING	
	26	1	*164-5586*	1	TEE AS	
		1	**6V-8398**	1	SEAL-O-RING	
		1	**7X-0871**	1	TEE	
	27	1	*155-3624*	1	PLUG AS	
		1	**3J-7354**	1	SEAL-O-RING	
		1	**9S-4182**	1	PLUG-O-RING	
	28	1	*148-8305*	1	ADAPTER AS	
		1	**3J-1907**	1	SEAL-O-RING	
		1	**5P-9617**	1	ADAPTER	
	29	1	**8C-3451**	1	CAP-DUST	

I-REFER TO HYDRAULIC INFORMATION SYSTEM
M-METRIC PART

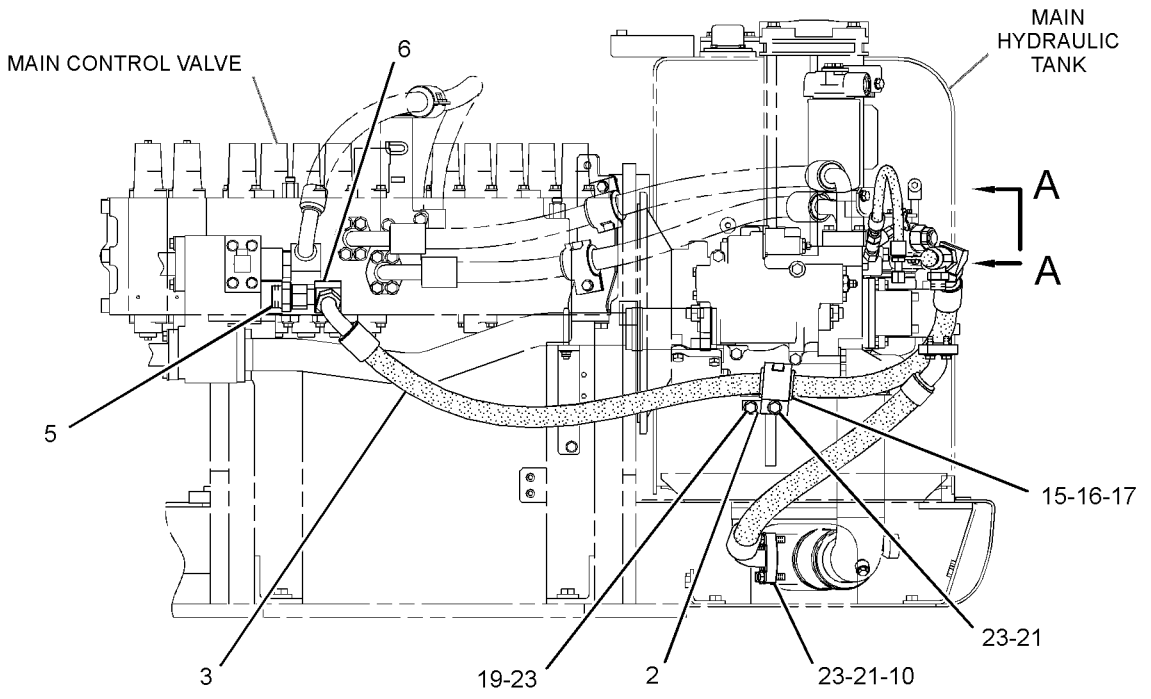

REAR VIEW

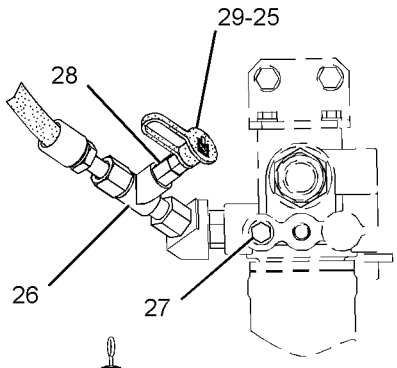

VIEW A-A

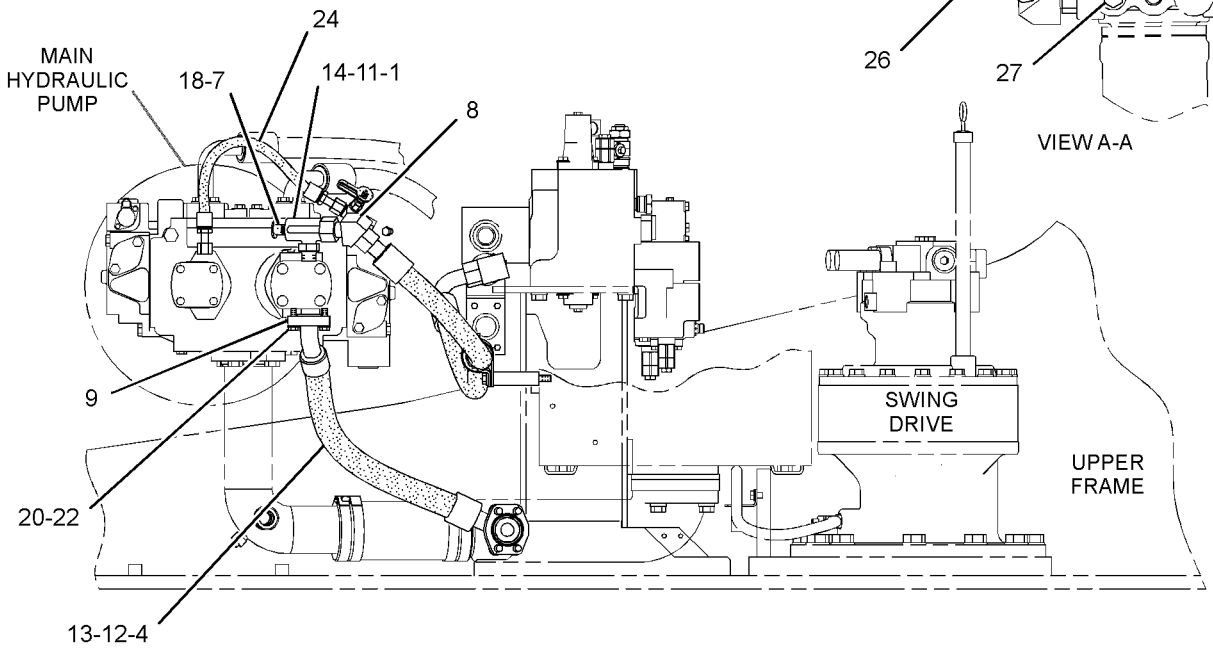

RIGHT SIDE VIEW

GRAPHIC #1 **<END>** g01664715

HYDRAULIC SYSTEM

248-9853 LINES GP-RETURN—HYDRAULIC TANK

S/N: WNE1-UP; ZMF1-UP

PART OF 239-1710 TANK & MTG GP-HYDRAULIC

SMCS-5057 **i02881364**

NOTE	REF NO	GRAPHIC REF	PART NUMBER	QTY	PART NAME 1 2 3 4 5 6 (PRODUCT LEVEL)	SEE PAGE
	1	1	**4I-9527**	2	BAND-MARKER (GREEN, R3)	
	2	1	**7K-1181**	2	STRAP-CABLE	
	3	1	**124-1212**	1	FITTING	
	4	1	**165-3260**	1	PIPE AS	
I	5	1	**176-4770**	1	HOSE AS	
C	6	1	*307-5097*	1	TEE AS	
		1	**2M-9780**	1	SEAL-O-RING	
		1	**6V-8397**	1	SEAL-O-RING	
		1	**6V-8398**	1	SEAL-O-RING	
		1	**307-5098**	1	TEE-ORP TO ORFS	
I	7	1	**275-1361**	1	HOSE AS	
I	8	1	**292-7153**	1	HOSE AS	
	9	1	*148-8327*	1	CONNECTOR AS	
		1	**3D-2824**	1	SEAL-O-RING	
		1	**6V-8637**	1	CONNECTOR	
		1	**6V-9746**	1	SEAL-O-RING	
C	10	1	*164-5608*	1	CONNECTOR AS	
		1	**3K-0360**	1	SEAL-O-RING	
		1	**6V-8398**	1	SEAL-O-RING	
		1	**8T-1687**	1	CONNECTOR	
	11	1	*148-8347*	1	ELBOW AS	
		1	**3D-2824**	1	SEAL-O-RING	
		1	**6V-9007**	1	ELBOW	
		1	**6V-9746**	1	SEAL-O-RING	
	12	1	*148-8354*	3	ELBOW AS	
					(EACH INCLUDES)	
		1	**3K-0360**	1	SEAL-O-RING	
		1	**6V-8398**	1	SEAL-O-RING	
		1	**6V-9002**	1	ELBOW	
	13	1	*148-8358*	1	ELBOW AS	
		1	**2M-9780**	1	SEAL-O-RING	
		1	**6V-8398**	1	SEAL-O-RING	
		1	**6V-8624**	1	ELBOW	
	14	1	*148-8363*	1	ELBOW AS	
		1	**3K-0360**	1	SEAL-O-RING	
		1	**6V-8397**	1	SEAL-O-RING	
		1	**6V-9876**	1	ELBOW	
	15	1	*148-8411*	1	PLUG AS	
		1	**3K-0360**	1	SEAL-O-RING	
		1	**9S-4185**	1	PLUG-O-RING	
	16	1	**3D-2824**	1	SEAL-O-RING	
	17	1	**5P-7464**	1	CLIP (SLOT)	
	18	1	**5P-7465**	1	CLIP (TAB)	
	19	1	**6J-2680**	1	SEAL-O-RING	
	20	1	**6V-9746**	1	SEAL-O-RING	
	21	1	**8T-2920**	1	GROMMET	
M	22	1	**8T-4139**	1	BOLT (M12X1.75X30-MM)	
	23	1	**8T-4223**	5	WASHER-HARD (13.5X25.5X3-MM THK)	
M	24	1	**8T-4956**	4	BOLT (M12X1.75X35-MM)	

C-CHANGE FROM PREVIOUS TYPE
I-REFER TO HYDRAULIC INFORMATION SYSTEM
M-METRIC PART

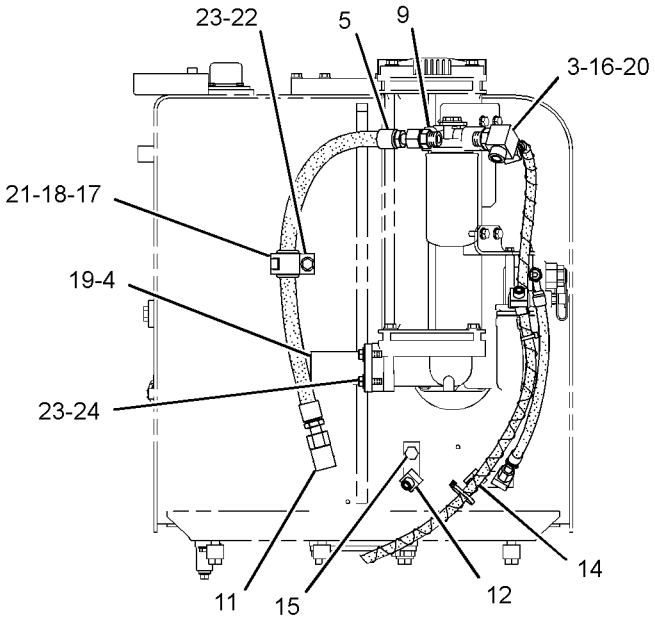

REAR VIEW

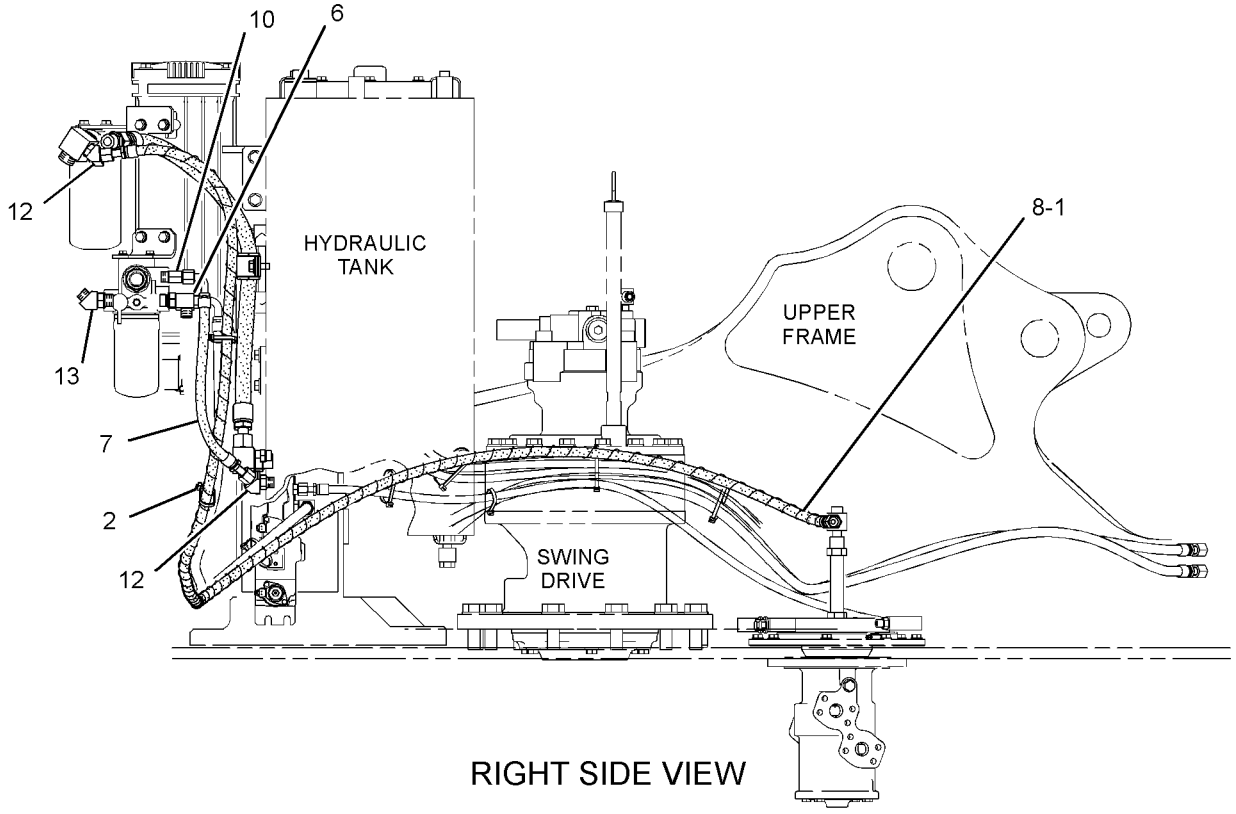

RIGHT SIDE VIEW

GRAPHIC #1 **<END>** g01397456

266-0956 LINES GP-RETURN–HYDRAULIC TANK

S/N: CWG1-UP

PART OF 245-5139 TANK & MTG GP-HYDRAULIC

SMCS-5057 **i03088518**

NOTE	REF NO	GRAPHIC REF	PART NUMBER	QTY	PART NAME 1 2 3 4 5 6 (PRODUCT LEVEL)	SEE PAGE
	1	1	**4I-9527**	2	BAND-MARKER (GREEN, R3)	
	2	1	**7K-1181**	2	STRAP-CABLE	
I	3	1	**275-1361**	1	HOSE AS	
	4	1	**124-1212**	1	FITTING	
I	5	1	**176-4770**	1	HOSE AS	
I	6	1	**307-5307**	1	HOSE AS	
Y	7	1	**214-4512**	1	FITTING GP-HYDRAULIC	527
	8	1	**278-6572**	1	PLATE	
	9	1	*148-8327*	1	CONNECTOR AS	
		1	**3D-2824**	1	SEAL-O-RING	
		1	**6V-8637**	1	CONNECTOR	
		1	**6V-9746**	1	SEAL-O-RING	
	10	1	*148-8340*	2	CONNECTOR AS	
					(EACH INCLUDES)	
		1	**3K-0360**	1	SEAL-O-RING	
		1	**6V-8398**	1	SEAL-O-RING	
		1	**6V-8639**	1	CONNECTOR	
	11	1	*148-8347*	1	ELBOW AS	
		1	**3D-2824**	1	SEAL-O-RING	
		1	**6V-9007**	1	ELBOW	
		1	**6V-9746**	1	SEAL-O-RING	
	12	1	*148-8354*	2	ELBOW AS	
					(EACH INCLUDES)	
		1	**3K-0360**	1	SEAL-O-RING	
		1	**6V-8398**	1	SEAL-O-RING	
		1	**6V-9002**	1	ELBOW	
	13	1	*148-8358*	1	ELBOW AS	
		1	**2M-9780**	1	SEAL-O-RING	
		1	**6V-8398**	1	SEAL-O-RING	
		1	**6V-8624**	1	ELBOW	
	14	1	*148-8363*	1	ELBOW AS	
		1	**3K-0360**	1	SEAL-O-RING	
		1	**6V-8397**	1	SEAL-O-RING	
		1	**6V-9876**	1	ELBOW	
	15	1	*148-8411*	1	PLUG AS	
		1	**3K-0360**	1	SEAL-O-RING	
		1	**9S-4185**	1	PLUG-O-RING	
	16	1	**165-3260**	1	PIPE AS	
	17	1	**3D-2824**	1	SEAL-O-RING	
	18	1	**5P-7464**	1	CLIP (SLOT)	
	19	1	**5P-7465**	1	CLIP (TAB)	
	20	1	**6J-2680**	1	SEAL-O-RING	
	21	1	**6V-9746**	1	SEAL-O-RING	
	22	1	**8T-2920**	1	GROMMET	
	23	1	**8T-4121**	2	WASHER-HARD (11X21X2.5-MM THK)	
M	24	1	**8T-4136**	2	BOLT (M10X1.5X25-MM)	
M	25	1	**8T-4139**	1	BOLT (M12X1.75X30-MM)	
	26	1	**8T-4223**	5	WASHER-HARD (13.5X25.5X3-MM THK)	
M	27	1	**8T-4956**	4	BOLT (M12X1.75X35-MM)	

I-REFER TO HYDRAULIC INFORMATION SYSTEM
M-METRIC PART
Y-SEPARATE ILLUSTRATION

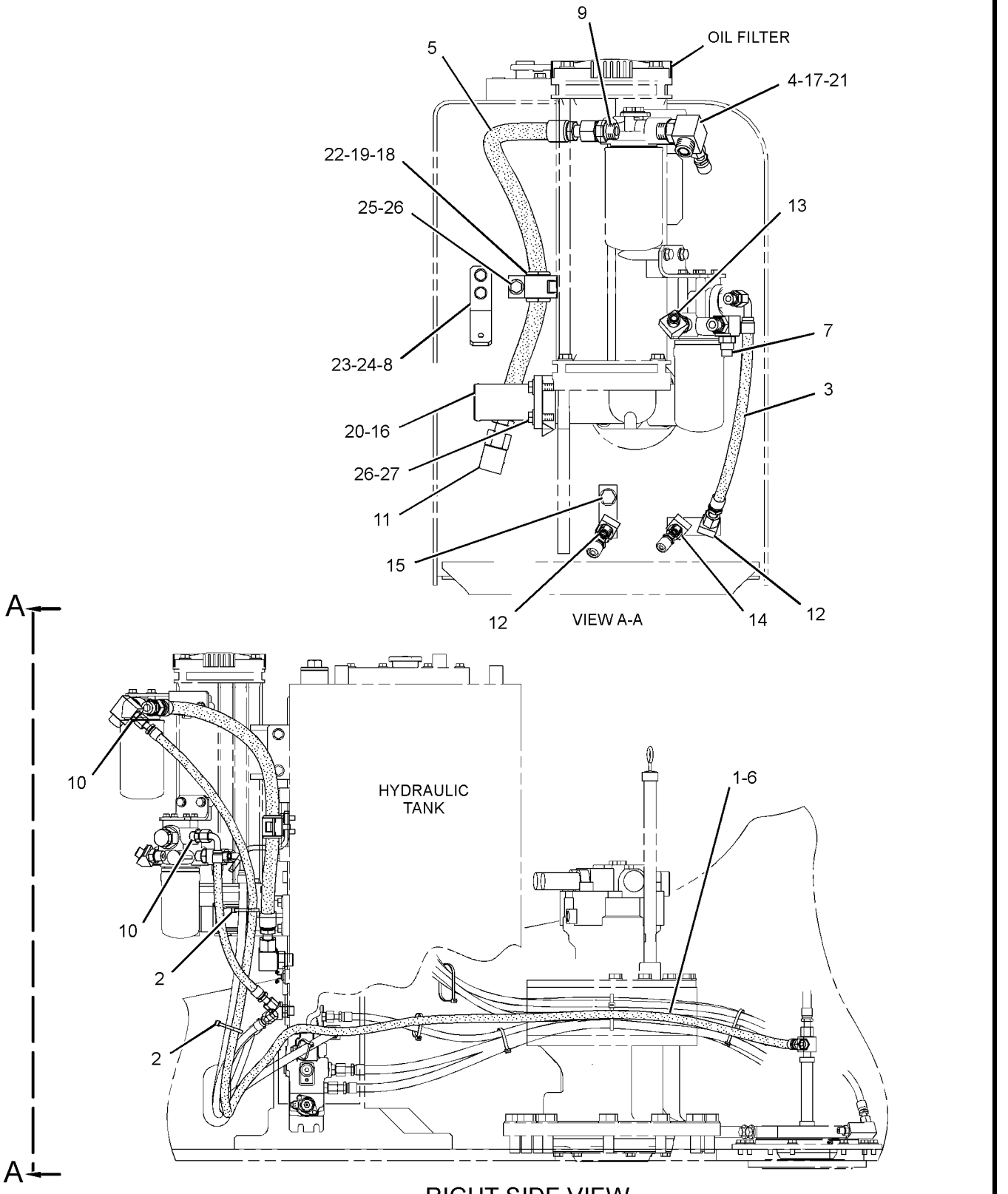

GRAPHIC #1

<END>

g01224966

HYDRAULIC SYSTEM

275-1397 LINES GP-RETURN–BOOM FLOAT

S/N: WNE1-UP; ZMF1-UP
PART OF 343-1177, 343-1178 CONTROL AR-BOOM
AN ATTACHMENT

SMCS-5057 **i02947625**

NOTE	REF NO	GRAPHIC REF	PART NUMBER	QTY	PART NAME 1 2 3 4 5 6 (PRODUCT LEVEL)	SEE PAGE
	1	1	**4I-6464**	1	HOSE AS	
	2	1	**7K-1181**	1	STRAP-CABLE	
I	3	1	**107-1567**	1	HOSE AS	
	4	1	**199-2012**	1	PLATE	
	5	1	**202-9002**	1	SWITCH AS-PRESSURE (BOOM LOWERING)	
		1	**3J-1907**	1	SEAL-O-RING	
		1	**102-8802**	1	KIT-RECEPTACLE (2-PIN)	
					(INCLUDES RECEPTACLE AS AND WEDGE)	
		1	**186-3735**	1	PIN-CONNECTOR (16-GA TO 18-GA)	
Y	6	1	**297-0370**	1	VALVE GP-CHECK (BOOM FLOAT DOWN)	816
	7	1	**218-1125**	1	BLOCK	
	8	1	**218-1126**	1	BLOCK	
C	9	1	*307-5128*	1	FITTING AS	
		1	**6V-9746**	1	SEAL-O-RING	
		1	**307-5079**	1	FITTING	
	10	1	**244-6715**	1	PLATE	
I	11	1	**278-6883**	1	HOSE AS	
I	12	1	**278-6886**	1	HOSE AS	
	13	1	**278-6889**	1	TUBE AS	
	14	1	**278-6890**	1	TUBE AS	
	15	1	**278-6891**	1	TUBE AS	
	16	1	**278-6892**	1	TUBE AS	
	17	1	**307-5311**	1	SUPPORT AS	
	18	1	**292-7587**	1	SUPPORT	
M	19	1	**107-2724**	4	BOLT-SOCKET HEAD (M12X1.75X100-MM)	
M	20	1	**108-1782**	4	BOLT-SOCKET HEAD (M12X1.75X90-MM)	
	22	1	*148-8357*	3	ELBOW AS	
					(EACH INCLUDES)	
		1	**5K-9090**	1	SEAL-O-RING	
		1	**6V-9008**	1	ELBOW	
		1	**7M-8485**	1	SEAL-O-RING	
	23	1	*148-8392*	1	ELBOW AS	
		1	**6V-9746**	1	SEAL-O-RING	
		1	**6V-9853**	1	ELBOW	
	24	1	*148-8411*	1	PLUG AS	
		1	**3K-0360**	1	SEAL-O-RING	
		1	**9S-4185**	1	PLUG-O-RING	
	25	1	*148-8431*	1	TEE AS	
		1	**5K-9090**	2	SEAL-O-RING	
		1	**6V-8785**	1	TEE	
		1	**7M-8485**	1	SEAL-O-RING	
	26	1	**185-0488**	1	BLOCK	
	27	1	**1P-3703**	5	SEAL-RECTANGULAR	
	28	1	**1P-3704**	5	SEAL-RECTANGULAR	
Y	29	1	**297-0371**	1	VALVE GP-SOLENOID (BOOM FLOAT UP)	894
	30	1	**3J-1907**	1	SEAL-O-RING	
	31	1	**4J-5268**	1	SEAL-O-RING	
C	32	1	**6V-9746**	4	SEAL-O-RING	
	34	1	**8T-2525**	1	GROMMET	
M	35	1	**8T-4139**	8	BOLT (M12X1.75X30-MM)	
M	36	1	**8T-4182**	4	BOLT (M10X1.5X45-MM)	
M	37	1	**8T-4192**	2	BOLT (M12X1.75X25-MM)	
	38	1	**8T-4223**	26	WASHER-HARD (13.5X25.5X3-MM THK)	
M	39	1	**8T-4956**	8	BOLT (M12X1.75X35-MM)	
M	40	1	**8T-6466**	4	BOLT (M10X1.5X60-MM)	

275-1397 **LINES GP-RETURN** *(contd.)* **i02947625**

NOTE	REF NO	GRAPHIC REF	PART NUMBER	QTY	PART NAME 1 2 3 4 5 6 (PRODUCT LEVEL)	SEE PAGE
M	41	1	**8T-6868**	8	BOLT (M12X1.75X80-MM)	

C-CHANGE FROM PREVIOUS TYPE
I-REFER TO HYDRAULIC INFORMATION SYSTEM
M-METRIC PART
Y-SEPARATE ILLUSTRATION

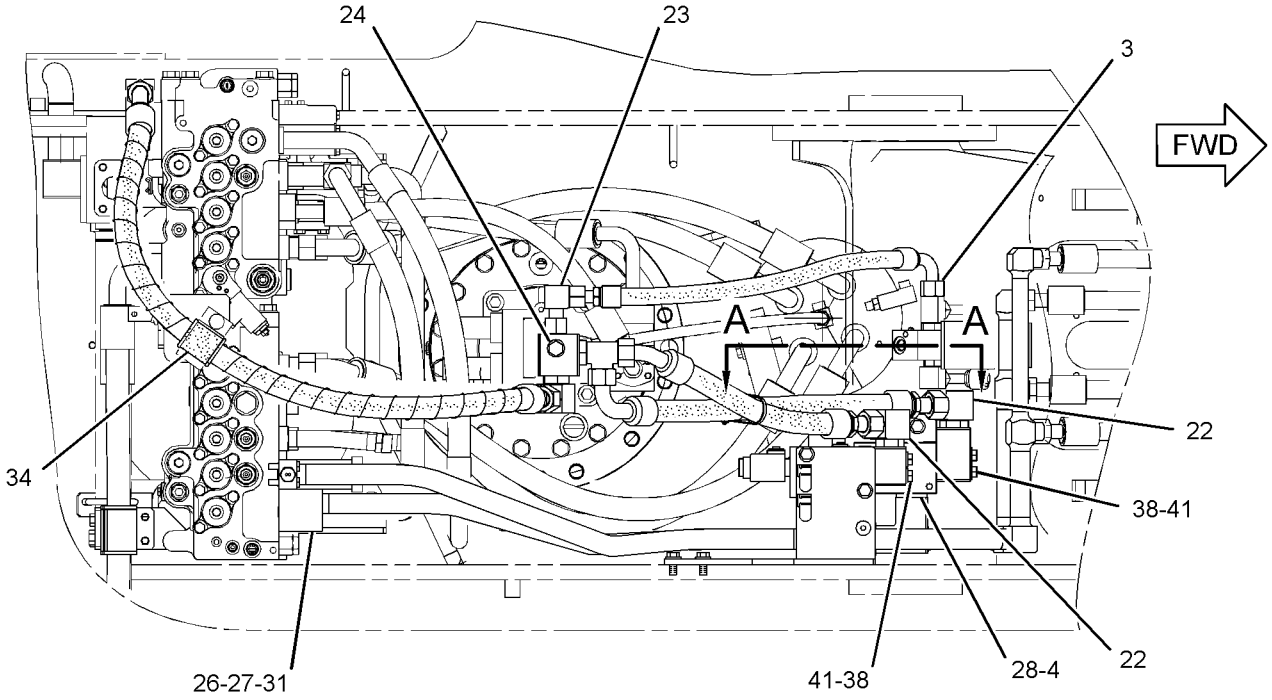

TOP VIEW

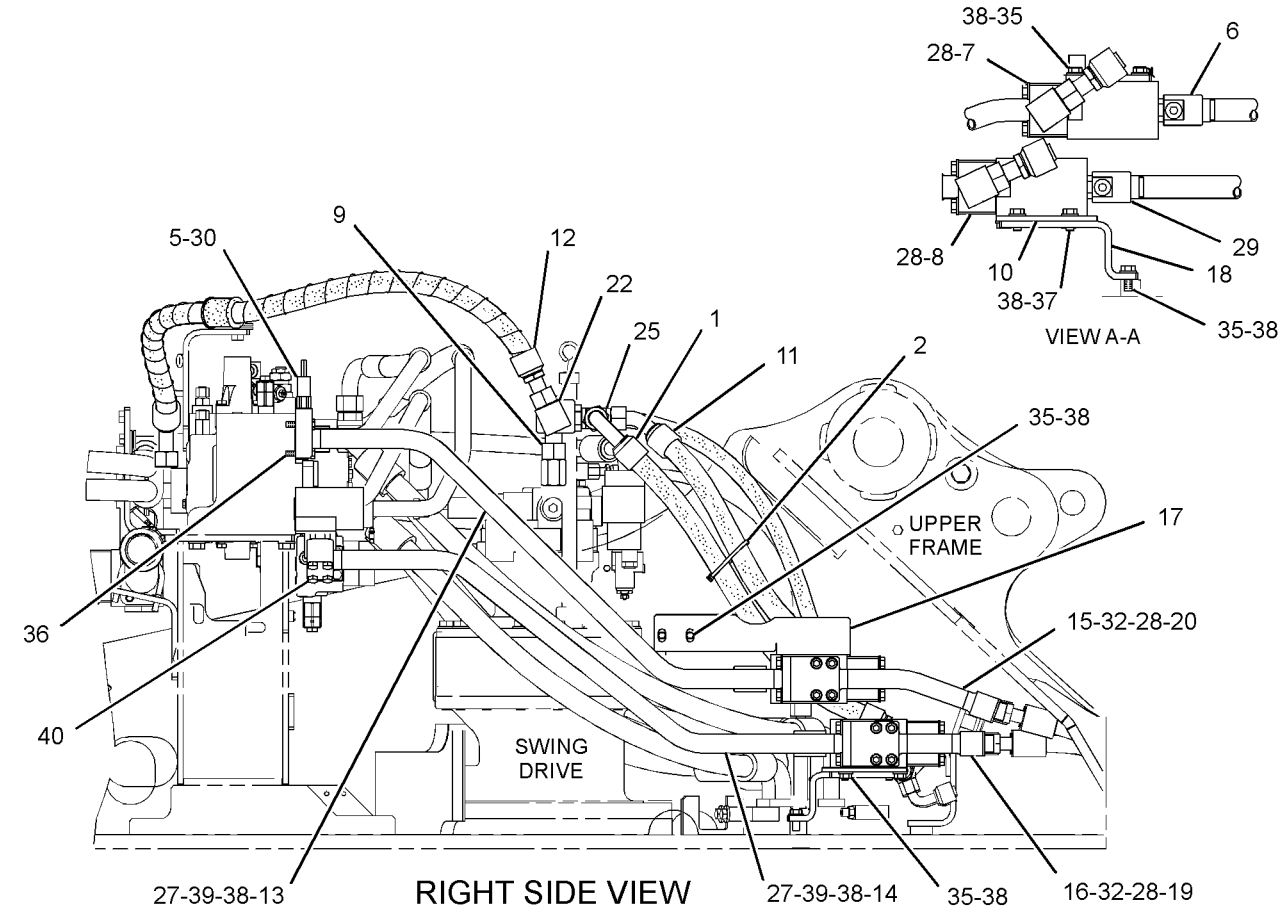

RIGHT SIDE VIEW

GRAPHIC #1 **<END>** g01464267

HYDRAULIC SYSTEM

289-5396 LINES GP-RETURN—BOOM FLOAT

S/N: CWG1-UP
PART OF 340-3819 CONTROL AR-AUXILIARY
AN ATTACHMENT

SMCS-5057 **i03646541**

NOTE	REF NO	GRAPHIC REF	PART NUMBER	QTY	PART NAME 1 2 3 4 5 6 (PRODUCT LEVEL)	SEE PAGE
I	1	1	**7I-1118**	1	HOSE AS	
	2	1	**7K-1181**	3	STRAP-CABLE	
I	3	1	**187-5870**	1	HOSE AS	
	4	1	**199-2012**	1	PLATE	
	5	1	**202-9002**	1	SWITCH AS-PRESSURE (BOOM CYLINDER)	
		1	**3J-1907**	1	SEAL-O-RING	
		1	**102-8802**	1	KIT-RECEPTACLE (2-PIN)	
					(INCLUDES RECEPTACLE AS & WEDGE)	
		1	**8T-8729**	1	PIN-CONNECTOR (16-GA TO 18-GA)	
	6	1	**218-1125**	1	BLOCK	
	7	1	**218-1126**	1	BLOCK	
	8	1	**223-6649**	1	TUBE AS	
	9	1	**223-6650**	1	TUBE AS	
	10	1	**223-6651**	1	TUBE AS	
	11	1	**223-6652**	1	TUBE AS	
	12	1	**236-3202**	1	SUPPORT AS	
	13	1	**244-6715**	1	PLATE	
	14	1	**266-1265**	1	SUPPORT	
Y	15	1	**297-0370**	1	VALVE GP-CHECK	816
Y	16	1	**297-0371**	1	VALVE GP-SOLENOID (BOOM FLOAT)	894
	17	1	*307-5128*	1	FITTING AS	
		1	**6V-9746**	1	SEAL-O-RING	
		1	**307-5079**	1	FITTING	
I	18	1	**314-8107**	1	HOSE AS	
I	19	1	**314-8110**	1	HOSE AS	
M	20	1	**107-2724**	4	BOLT-SOCKET HEAD (M12X1.75X100-MM)	
M	21	1	**108-1782**	4	BOLT-SOCKET HEAD (M12X1.75X90-MM)	
	22	1	*148-8335*	3	CONNECTOR AS	
					(EACH INCLUDES)	
		1	**5K-9090**	1	SEAL-O-RING	
		1	**6V-8635**	1	CONNECTOR	
		1	**7M-8485**	1	SEAL-O-RING	
	23	1	*148-8357*	1	ELBOW AS	
		1	**5K-9090**	1	SEAL-O-RING	
		1	**6V-9008**	1	ELBOW	
		1	**7M-8485**	1	SEAL-O-RING	
	24	1	*148-8392*	1	ELBOW AS	
		1	**6V-9746**	1	SEAL-O-RING	
		1	**6V-9853**	1	ELBOW	
	25	1	*148-8411*	1	PLUG AS	
		1	**3K-0360**	1	SEAL-O-RING	
		1	**9S-4185**	1	PLUG-O-RING	
	26	1	*148-8429*	1	TEE AS	
		1	**5K-9090**	2	SEAL-O-RING	
		1	**6V-9840**	1	TEE-SWIVEL	
	27	1	*171-6723*	1	ELBOW AS	
		1	**6V-9746**	1	SEAL-O-RING	
		1	**8T-8899**	1	ELBOW	
	28	1	**185-0488**	1	BLOCK	
	29	1	**1P-3703**	5	SEAL-RECTANGULAR	
	30	1	**1P-3704**	5	SEAL-RECTANGULAR	
	31	1	**3J-1907**	1	SEAL-O-RING	
	32	1	**4J-5268**	1	SEAL-O-RING	
	33	1	**6V-9746**	4	SEAL-O-RING	
M	34	1	**8T-4139**	8	BOLT (M12X1.75X30-MM)	

289-5396 **LINES GP-RETURN** *(contd.)* **i03646541**

NOTE	REF NO	GRAPHIC REF	PART NUMBER	QTY	PART NAME 1 2 3 4 5 6 (PRODUCT LEVEL)	SEE PAGE
M	35	1	**8T-4182**	4	BOLT (M10X1.5X45-MM)	
M	36	1	**8T-4192**	2	BOLT (M12X1.75X25-MM)	
	37	1	**8T-4223**	26	WASHER-HARD (13.5X25.5X3-MM THK)	
M	38	1	**8T-4956**	8	BOLT (M12X1.75X35-MM)	
M	39	1	**8T-6466**	4	BOLT (M10X1.5X60-MM)	
M	40	1	**8T-6868**	8	BOLT (M12X1.75X80-MM)	

I-REFER TO HYDRAULIC INFORMATION SYSTEM
M-METRIC PART
Y-SEPARATE ILLUSTRATION

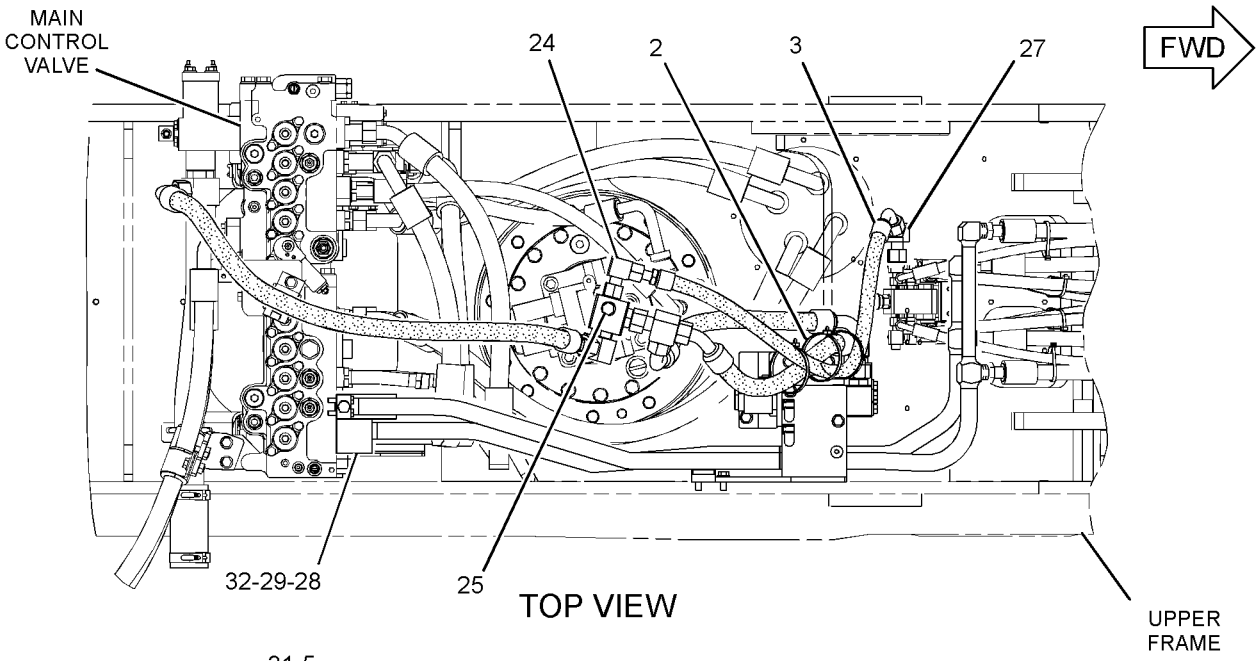

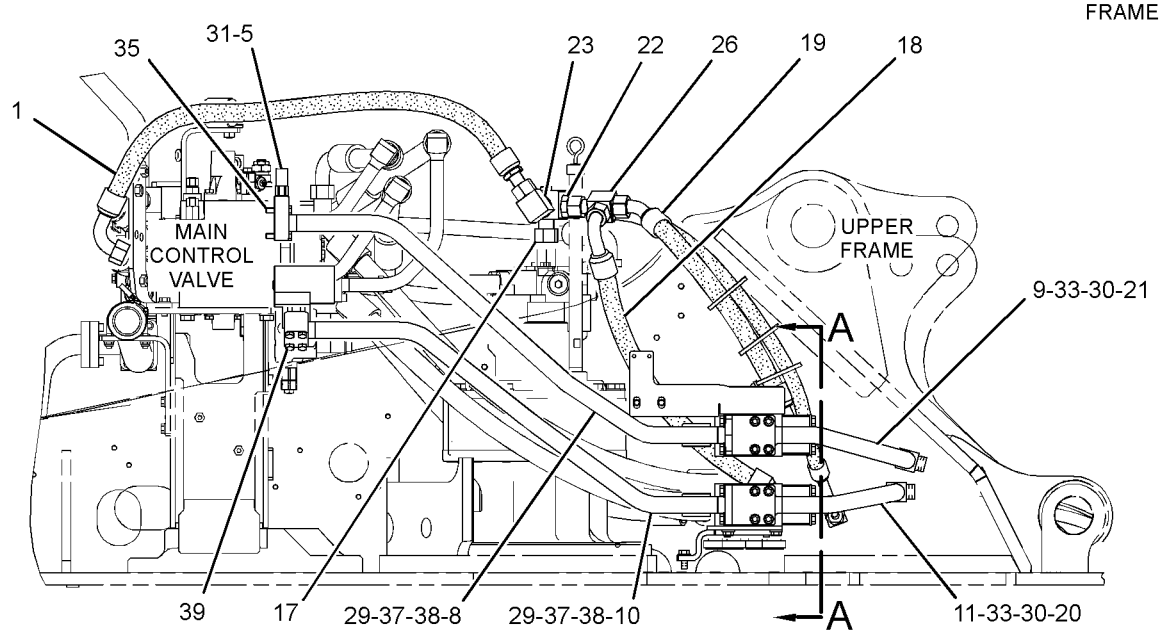

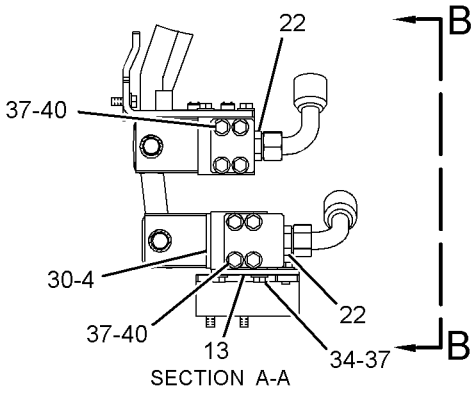

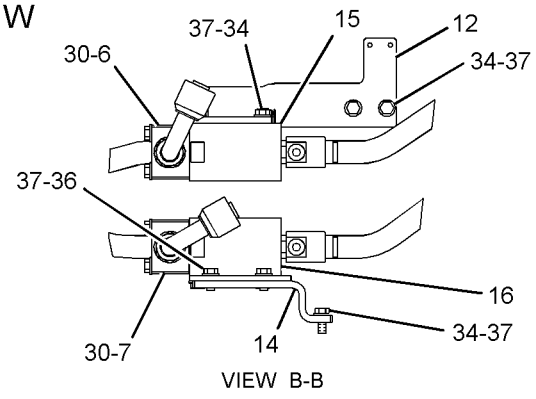

GRAPHIC #1 **<END>** g01622777

289-5398 LINES GP-RETURN—BOOM LOWERING CONTROL

S/N: CWG1-UP

PART OF 285-1514 VALVE AR-CHECK & RELIEF

AN ATTACHMENT

SMCS-5057 **i03467823**

NOTE	REF NO	GRAPHIC REF	PART NUMBER	QTY	PART NAME 1 2 3 4 5 6 (PRODUCT LEVEL)	SEE PAGE
I	1	1	**7I-1118**	1	HOSE AS	
I	2	1	**107-1567**	1	HOSE AS	
	3	1	**201-9378**	1	BLOCK	
	4	1	**307-4920**	1	FITTING	
	5	1	*148-8327*	1	CONNECTOR AS	
		1	**3D-2824**	1	SEAL-O-RING	
		1	**6V-8637**	1	CONNECTOR	
		1	**6V-9746**	1	SEAL-O-RING	
	6	1	*148-8357*	1	ELBOW AS	
		1	**5K-9090**	1	SEAL-O-RING	
		1	**6V-9008**	1	ELBOW	
		1	**7M-8485**	1	SEAL-O-RING	
	7	1	*148-8411*	1	PLUG AS	
		1	**3K-0360**	1	SEAL-O-RING	
		1	**9S-4185**	1	PLUG-O-RING	
	8	1	**1P-3703**	1	SEAL-RECTANGULAR	
	9	1	**4J-5268**	1	SEAL-O-RING	

I-REFER TO HYDRAULIC INFORMATION SYSTEM

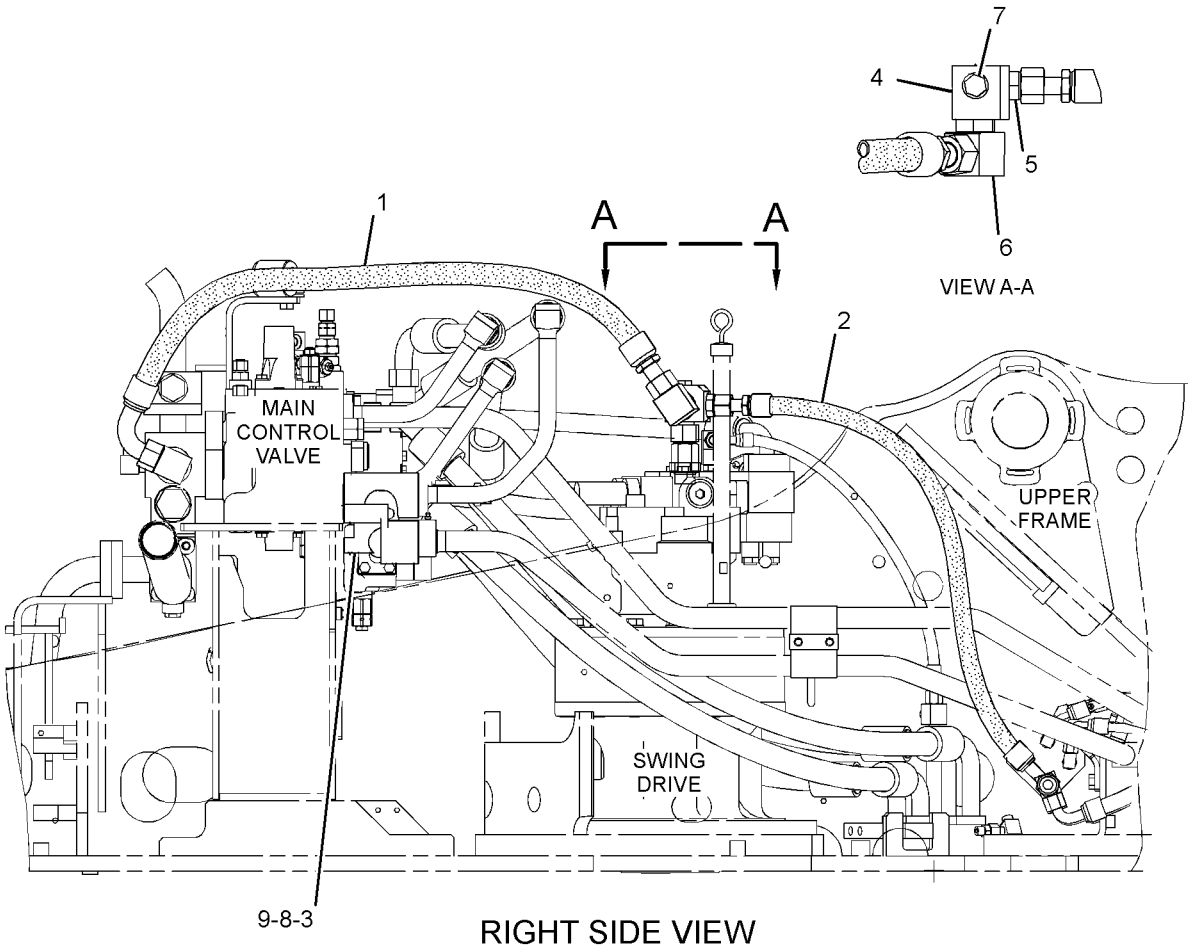

RIGHT SIDE VIEW

GRAPHIC #1 **<END>** g01819773

278-6894 LINES GP-SENSOR—OVERLOAD WARNING DEVICE

S/N: WNE1-UP; ZMF1-UP; CWG1-UP
PART OF 340-3819 CONTROL AR-AUXILIARY, 343-1177, 343-1178 CONTROL AR-BOOM, 314-3856 WARNING AR-OVERLOAD
AN ATTACHMENT

SMCS-1439, 5057 **i02981506**

NOTE	REF NO	GRAPHIC REF	PART NUMBER	QTY	PART NAME 1 2 3 4 5 6 (PRODUCT LEVEL)	SEE PAGE
	1	1	**7K-1181**	8	STRAP-CABLE	
	2	1	**221-8859**	1	SENSOR AS-PRESSURE (OVERLOAD WARNING)	
		1	**3E-3371**	1	WEDGE-RECEPTACLE LOCK (3-PIN)	
		1	**3K-0360**	1	SEAL-O-RING	
		1	**144-1636**	3	PIN-CONNECTOR (14-GA TO 18-GA)	
		1	**171-0596**	1	RECEPTACLE AS	
I	3	1	**278-6907**	2	HOSE AS	
	4	1	*148-8361*	2	ELBOW AS	
					(EACH INCLUDES)	
		1	**3J-7354**	1	SEAL-O-RING	
		1	**6V-8397**	1	SEAL-O-RING	
		1	**6V-9200**	1	ELBOW	
	5	1	*148-8378*	2	ELBOW AS	
					(EACH INCLUDES)	
		1	**3J-1907**	1	SEAL-O-RING	
		1	**6V-8397**	1	SEAL-O-RING	
		1	**6V-8724**	1	ELBOW	

I-REFER TO HYDRAULIC INFORMATION SYSTEM

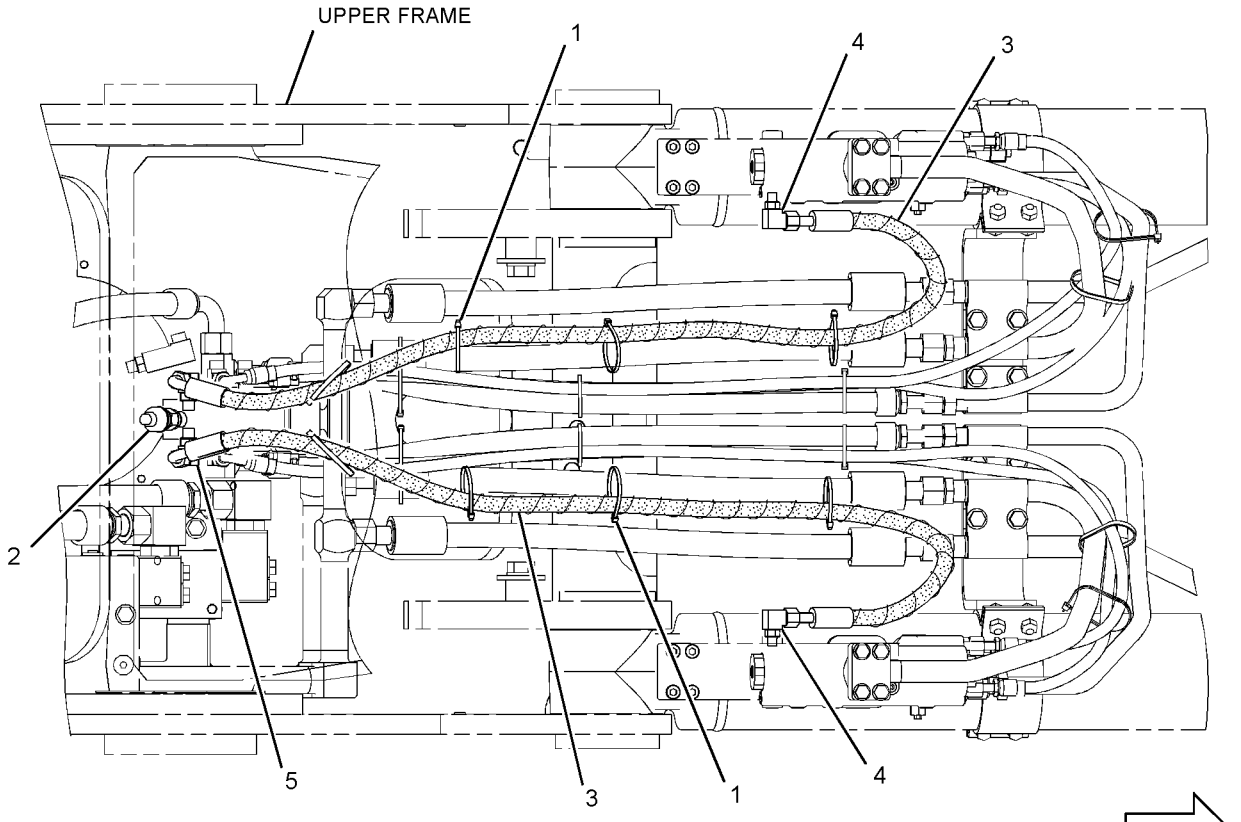

TOP VIEW

GRAPHIC #1 **<END>** g01316191

242-6735 LINES GP-STICK CYLINDER

S/N: WNE1-UP; ZMF1-UP; CWG1-UP

PART OF 242-6733, 242-6747, 242-6762 CYLINDER & LINES GP-STICK

AN ATTACHMENT

SMCS-5458 **i02420908**

NOTE	REF NO	GRAPHIC REF	PART NUMBER	QTY	PART NAME 1 2 3 4 5 6 (PRODUCT LEVEL)	SEE PAGE
M	1	1	**6V-8200**	4	BOLT-SOCKET HEAD (M12X1.75X35-MM)	
	2	1	**095-1600**	1	SEAL-O-RING	
	3	1	**247-8883**	1	TUBE AS	
M	4	1	**8T-4196**	2	BOLT (M10X1.5X35-MM)	
	5	1	**8T-4896**	2	WASHER-HARD (10.2X18.5X2.5-MM THK)	
	6	1	**124-1020**	1	SUPPORT	
	7	1	**124-1019**	1	SUPPORT AS	
	8	1	**096-4480**	1	CLAMP	
M	9	1	**8T-4910**	1	BOLT (M12X1.75X60-MM)	
	10	1	**8T-4223**	1	WASHER-HARD (13.5X25.5X3-MM THK)	

M-METRIC PART

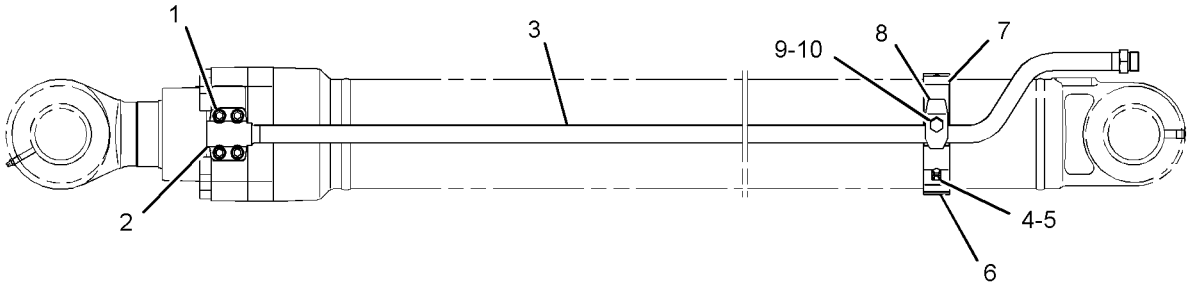

GRAPHIC #1 **<END>** g01220097

HYDRAULIC SYSTEM

248-9925 LINES GP-STICK CYLINDER

S/N: CWG1-UP
PART OF 242-6753 CYLINDER & LINES GP-STICK
AN ATTACHMENT

SMCS-5458 **i02946670**

NOTE	REF NO	GRAPHIC REF	PART NUMBER	QTY	PART NAME 1 2 3 4 5 6 (PRODUCT LEVEL)	SEE PAGE
	1	1	**7Y-4868**	2	CLIP	
	2	1	**119-2324**	1	SUPPORT AS	
	3	1	**119-2325**	1	SUPPORT AS	
	4	1	**179-7467**	1	TUBE AS	
	5	1	**1P-3704**	1	SEAL-RECTANGULAR	
	6	1	**6V-9746**	1	SEAL-O-RING	
	7	1	**8T-4121**	4	WASHER-HARD (11X21X2.5-MM THK)	
M	8	1	**8T-4139**	2	BOLT (M12X1.75X30-MM)	
M	9	1	**8T-4196**	4	BOLT (M10X1.5X35-MM)	
	10	1	**8T-4223**	6	WASHER-HARD (13.5X25.5X3-MM THK)	
M	11	1	**8T-4648**	4	BOLT (M12X1.75X70-MM)	

M-METRIC PART

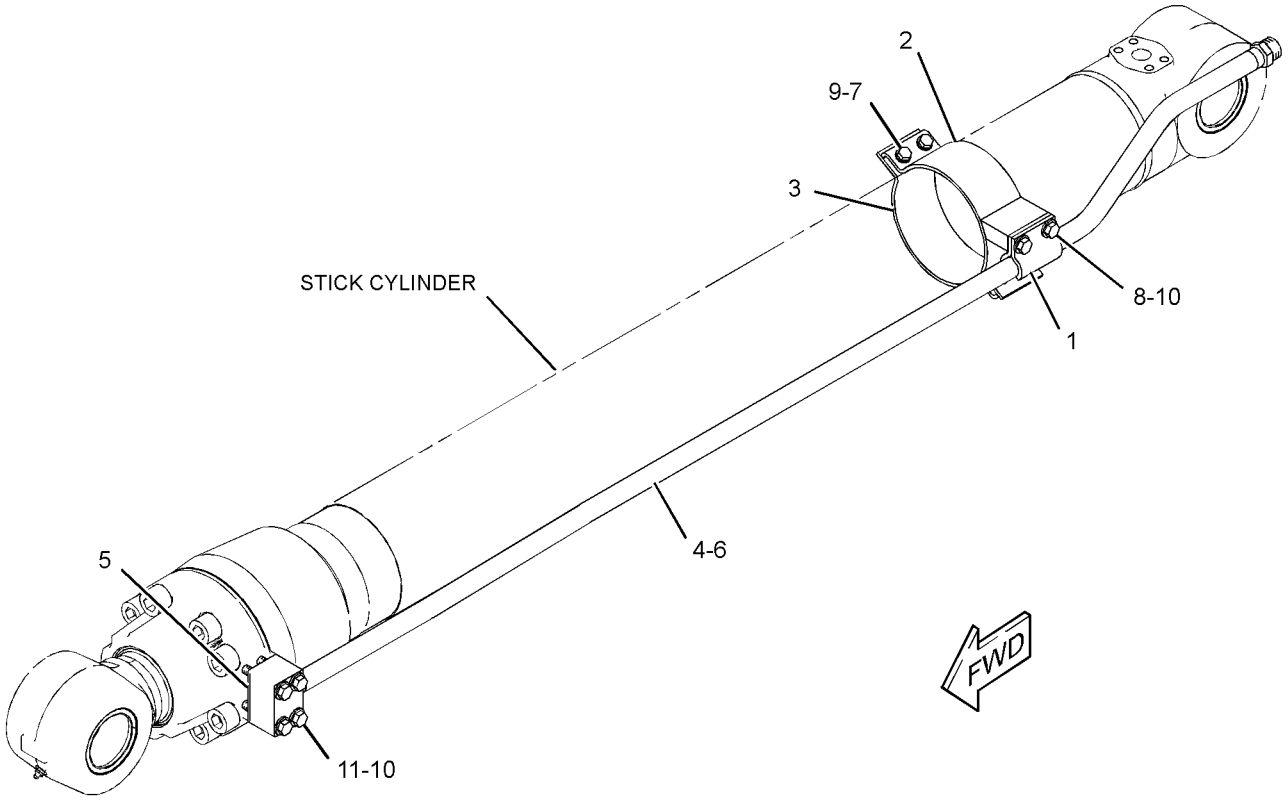

GRAPHIC #1 **<END>** g01222817

262-3471 LINES GP-STICK CYLINDER–
STICK LOWERING CONTROL
S/N: WNE1-UP; ZMF1-UP; CWG1-UP
PART OF 285-1515 VALVE AR-CHECK & RELIEF, 239-8677 VALVE AR-LOAD CONTROL
AN ATTACHMENT

SMCS-5458 **i02421058**

NOTE	REF NO	GRAPHIC REF	PART NUMBER	QTY	PART NAME 1 2 3 4 5 6 (PRODUCT LEVEL)	SEE PAGE
	1	1	**5Q-4213**	4	CLIP	
	2	1	**093-1294**	2	CLAMP	
	3	1	**119-2325**	2	SUPPORT AS	
Y	4	1	**225-4843**	1	VALVE GP-LOAD CONTROL (STICK CYLINDER)	844
	5	1	**247-9073**	1	TUBE AS	
	6	1	**247-9074**	1	TUBE AS	
	7	1	**247-9076**	1	TUBE AS	
	8	1	**247-9078**	1	TUBE AS	
	9	1	**268-7241**	2	SUPPORT AS	
M	10	1	**108-1782**	4	BOLT-SOCKET HEAD (M12X1.75X90-MM)	
	11	1	*148-8328*	1	CONNECTOR AS	
		1	**3D-2824**	1	SEAL-O-RING	
		1	**6V-8398**	1	SEAL-O-RING	
		1	**6V-8633**	1	CONNECTOR	
	12	1	*148-8368*	2	ELBOW AS	
					(EACH INCLUDES)	
		1	**3J-1907**	1	SEAL-O-RING	
		1	**4J-5477**	1	SEAL-O-RING	
		1	**6V-8627**	1	ELBOW	
	13	1	**1P-3703**	1	SEAL-RECTANGULAR	
	14	1	**1P-3704**	1	SEAL-RECTANGULAR	
	15	1	**6V-8397**	2	SEAL-O-RING	
	16	1	**6V-8398**	1	SEAL-O-RING	
	17	1	**6V-9746**	1	SEAL-O-RING	
	18	1	**8T-4121**	10	WASHER-HARD (11X21X2.5-MM THK)	
M	19	1	**8T-4139**	4	BOLT (M12X1.75X30-MM)	
M	20	1	**8T-4186**	2	BOLT (M10X1.5X40-MM)	
M	21	1	**8T-4196**	8	BOLT (M10X1.5X35-MM)	
	22	1	**8T-4223**	8	WASHER-HARD (13.5X25.5X3-MM THK)	
M	23	1	**8T-4648**	4	BOLT (M12X1.75X70-MM)	

M-METRIC PART
Y-SEPARATE ILLUSTRATION

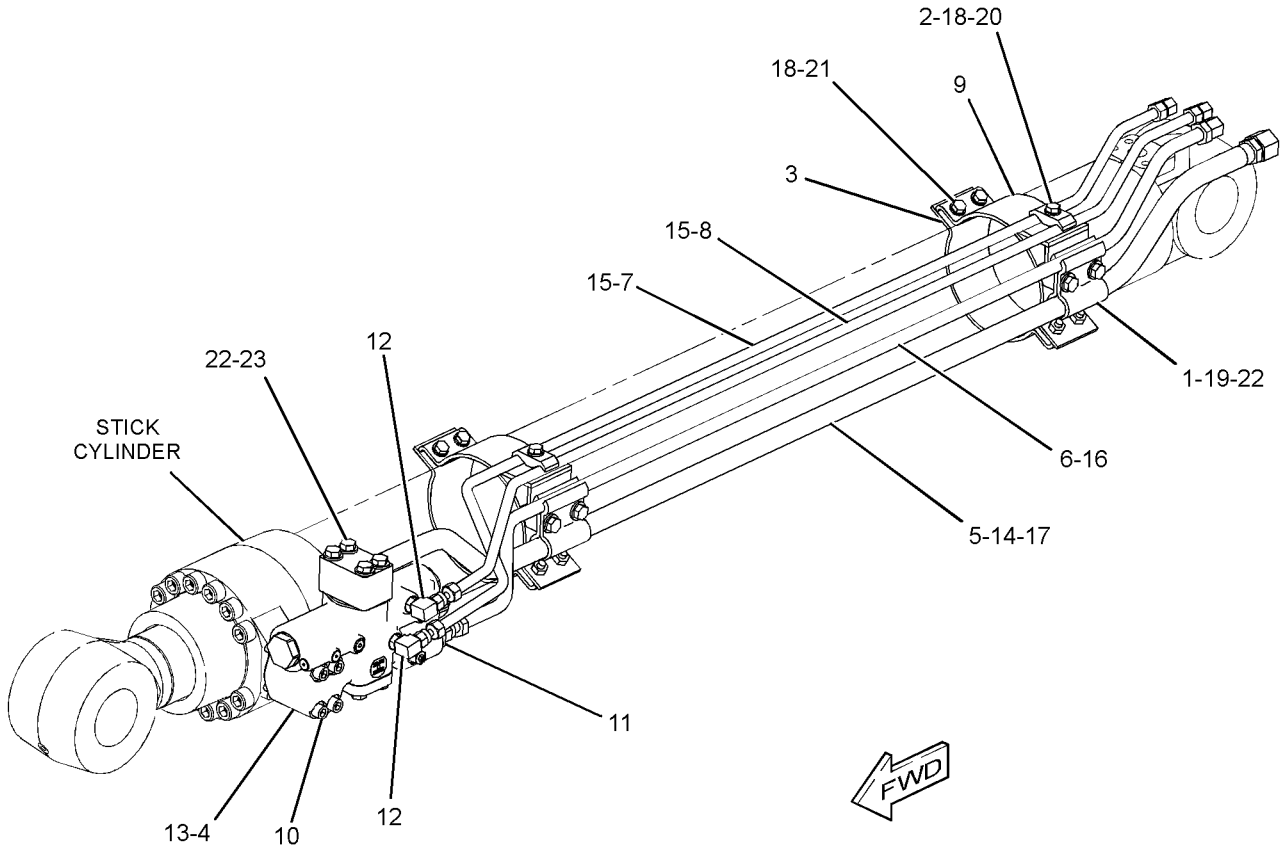

GRAPHIC #1 **<END>** g01221172

335-4981 LINES GP-STICK CYLINDER–
STICK LOWERING CONTROL
S/N: CWG1-UP
PART OF 335-4979 VALVE AR-CHECK & RELIEF
AN ATTACHMENT

SMCS-5458 **i03657521**

NOTE	REF NO	GRAPHIC REF	PART NUMBER	QTY	PART NAME 1 2 3 4 5 6 (PRODUCT LEVEL)	SEE PAGE
	1	1	**5Q-4213**	2	CLIP	
	2	1	**093-1294**	2	CLAMP	
	3	1	**119-2325**	2	SUPPORT AS	
	4	1	**179-5235**	2	CLIP	
Y	5	1	**225-4843**	1	VALVE GP-LOAD CONTROL (STICK CYLINDER)	844
	6	1	**268-7241**	2	SUPPORT AS	
	7	1	**337-2301**	1	TUBE AS	
	8	1	**337-2302**	1	TUBE AS	
	9	1	**337-2303**	1	TUBE AS	
	10	1	**337-2305**	1	PIPE AS	
	11	1	**337-2307**	1	PIPE AS	
M	12	1	**108-1782**	4	BOLT-SOCKET HEAD (M12X1.75X90-MM)	
	13	1	*148-8328*	1	CONNECTOR AS	
		1	**3D-2824**	1	SEAL-O-RING	
		1	**6V-8398**	1	SEAL-O-RING	
		1	**6V-8633**	1	CONNECTOR	
	14	1	*148-8368*	2	ELBOW AS	
					(EACH INCLUDES)	
		1	**3J-1907**	1	SEAL-O-RING	
		1	**4J-5477**	1	SEAL-O-RING	
		1	**6V-8627**	1	ELBOW	
	15	1	**1P-3703**	1	SEAL-RECTANGULAR	
	16	1	**1P-3704**	2	SEAL-RECTANGULAR	
	17	1	**5K-9090**	1	SEAL-O-RING	
	18	1	**6V-8397**	2	SEAL-O-RING	
	19	1	**6V-8398**	1	SEAL-O-RING	
	20	1	**6V-9746**	1	SEAL-O-RING	
	21	1	**8T-4121**	10	WASHER-HARD (11X21X2.5-MM THK)	
M	22	1	**8T-4139**	4	BOLT (M12X1.75X30-MM)	
M	23	1	**8T-4186**	2	BOLT (M10X1.5X40-MM)	
M	24	1	**8T-4196**	8	BOLT (M10X1.5X35-MM)	
	25	1	**8T-4223**	12	WASHER-HARD (13.5X25.5X3-MM THK)	
M	26	1	**8T-4648**	8	BOLT (M12X1.75X70-MM)	

M-METRIC PART
Y-SEPARATE ILLUSTRATION

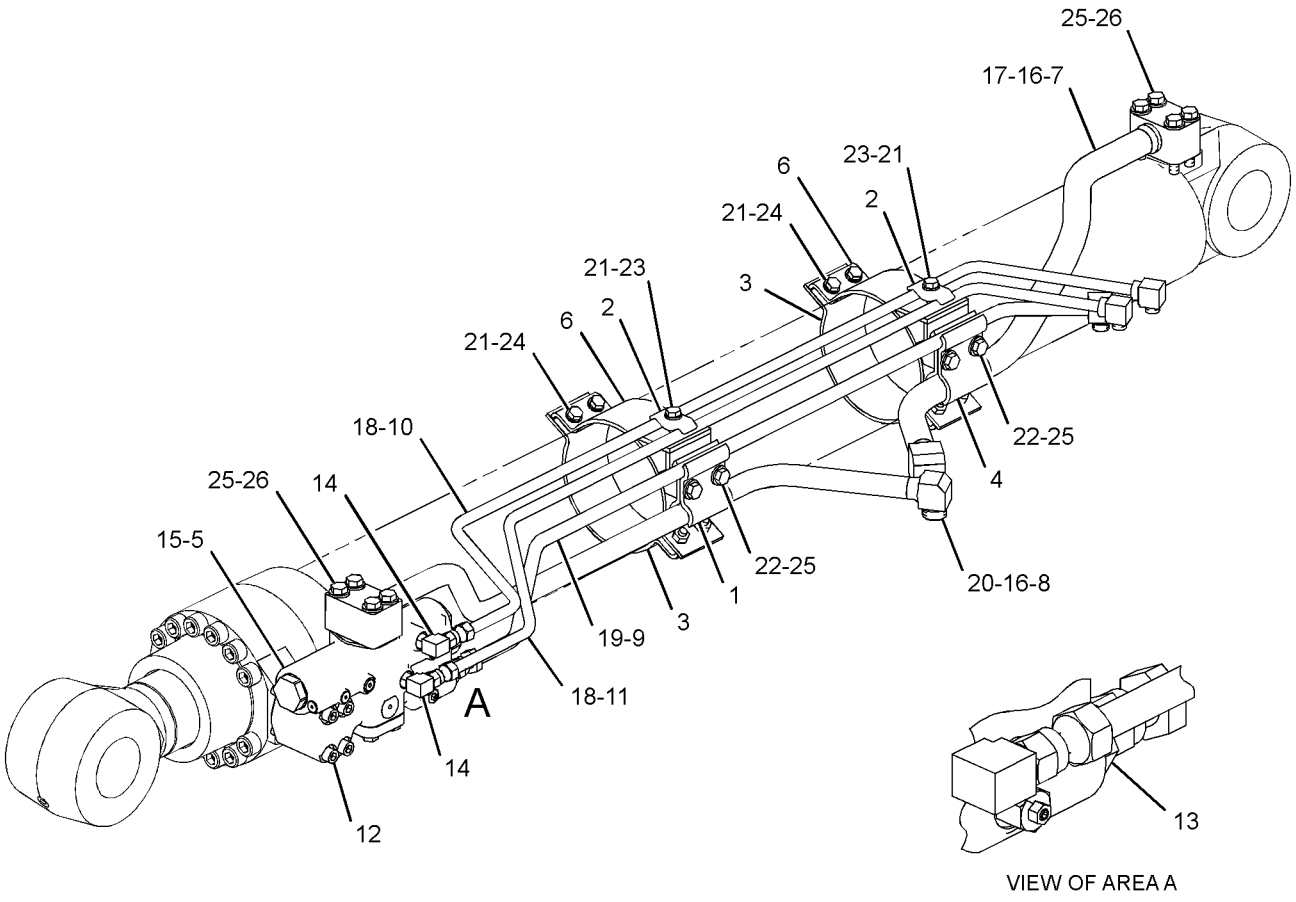

GRAPHIC #1 **<END>** g01966453

HYDRAULIC SYSTEM

239-1716 LINES GP-TRAVEL MOTOR

S/N: WNE1-UP

PART OF 270-5712 HYDRAULIC AR

SMCS-5057, 5058 **i02418082**

NOTE	REF NO	GRAPHIC REF	PART NUMBER	QTY	PART NAME 1 2 3 4 5 6 (PRODUCT LEVEL)	SEE PAGE
	1	1	**7K-1181**	4	STRAP-CABLE	
	2	1	**108-7118**	4	GROMMET	
I	3	1	**111-6752**	2	HOSE AS	
Y	4	1	**234-4440**	1	SWIVEL GP	800
I	5	1	**245-5427**	4	HOSE AS	
	6	1	**248-9428**	2	HOSE AS	
	7	1	*148-8364*	2	ELBOW AS	
					(EACH INCLUDES)	
		1	**3K-0360**	1	SEAL-O-RING	
		1	**6V-8398**	1	SEAL-O-RING	
		1	**6V-8625**	1	ELBOW	
	8	1	*148-8372*	1	ELBOW AS	
		1	**2M-9780**	1	SEAL-O-RING	
		1	**6V-8398**	1	SEAL-O-RING	
		1	**6V-8721**	1	ELBOW	
	9	1	*148-8378*	2	ELBOW AS	
					(EACH INCLUDES)	
		1	**3J-1907**	1	SEAL-O-RING	
		1	**6V-8397**	1	SEAL-O-RING	
		1	**6V-8724**	1	ELBOW	
	10	1	*150-4037*	1	TEE AS	
		1	**6V-8398**	2	SEAL-O-RING	
		1	**6V-9844**	1	TEE-SWIVEL	
	11	1	*150-4044*	2	CONNECTOR AS	
					(EACH INCLUDES)	
		1	**3J-1907**	1	SEAL-O-RING	
		1	**6V-8397**	1	SEAL-O-RING	
		1	**8T-1779**	1	CONNECTOR	
	12	1	**1P-3703**	8	SEAL-RECTANGULAR	
	13	1	**6V-0400**	24	FLANGE-HALF	
	14	1	**8T-4121**	6	WASHER-HARD (11X21X2.5-MM THK)	
M	15	1	**8T-4136**	6	BOLT (M10X1.5X25-MM)	
M	16	1	**8T-4184**	48	BOLT (M12X1.75X45-MM)	
	17	1	**8T-4223**	48	WASHER-HARD (13.5X25.5X3-MM THK)	
B	18	1	**1U-8846**	2	SEALANT-GASKET	

B-USE AS REQUIRED
I-REFER TO HYDRAULIC INFORMATION SYSTEM
M-METRIC PART
Y-SEPARATE ILLUSTRATION

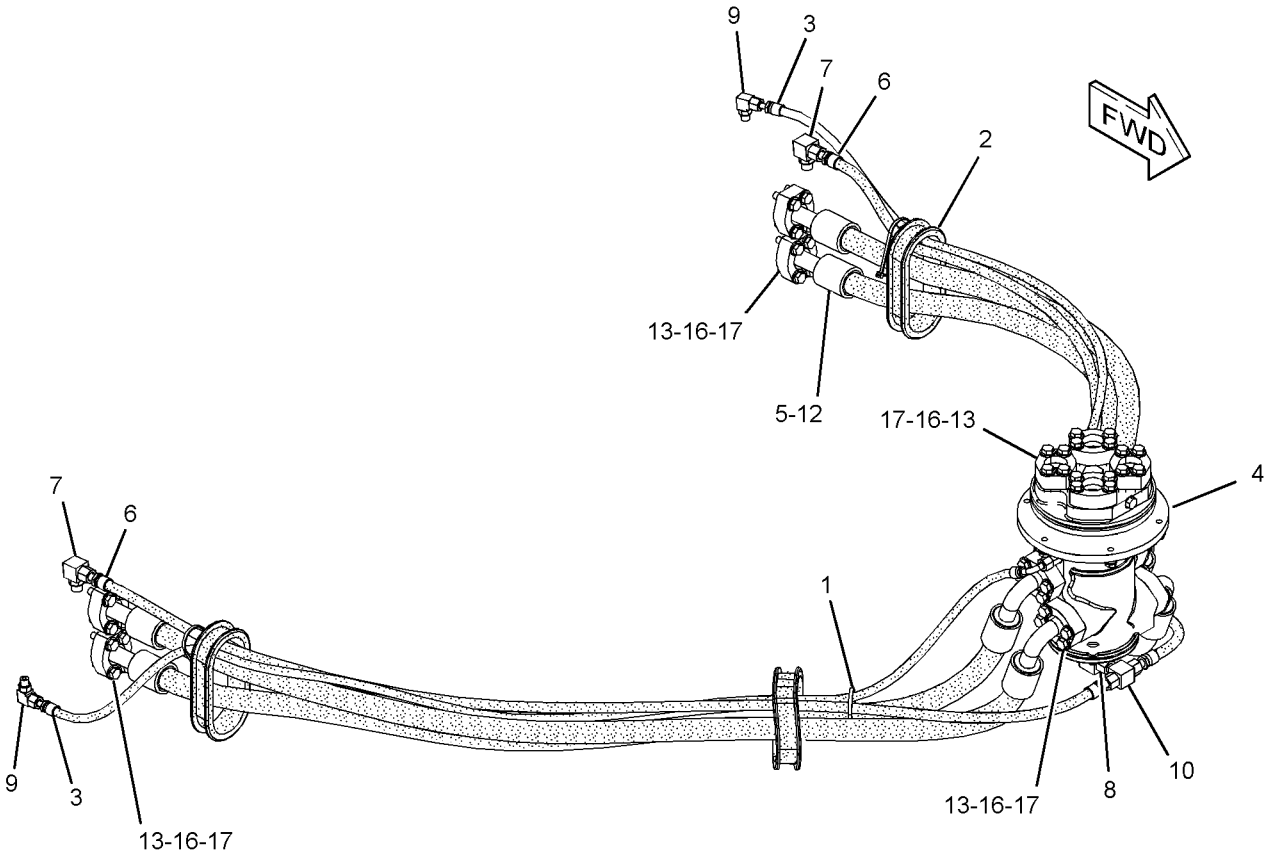

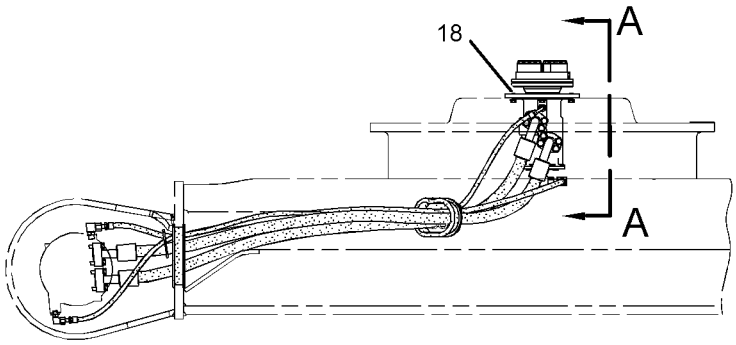

RIGHT SIDE VIEW

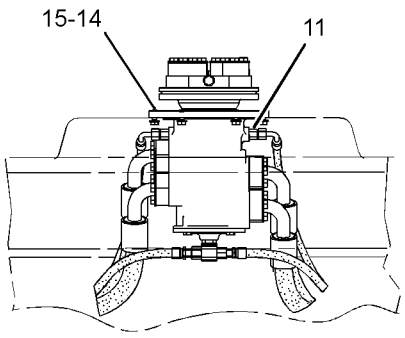

VIEW A-A

GRAPHIC #1 **<END>** g01229296

HYDRAULIC SYSTEM

239-1717 LINES GP-TRAVEL MOTOR—LONG UNDERCARRIAGE

S/N: ZMF1-UP

PART OF 270-5713 HYDRAULIC AR

SMCS-5057, 5058 **i02457291**

NOTE	REF NO	GRAPHIC REF	PART NUMBER	QTY	PART NAME 1 2 3 4 5 6 (PRODUCT LEVEL)	SEE PAGE
	1	1,2	**7K-1181**	4	STRAP-CABLE	
I	2	2	**7Y-4390**	2	HOSE AS	
	3	1	**108-7118**	4	GROMMET	
I	4	2	**173-5089**	2	HOSE AS	
Y	5	2	**234-4440**	1	SWIVEL GP	800
I	6	1	**245-5416**	4	HOSE AS	
	7	2	*148-8364*	2	ELBOW AS	
					(EACH INCLUDES)	
		2	**3K-0360**	1	SEAL-O-RING	
		2	**6V-8398**	1	SEAL-O-RING	
		2	**6V-8625**	1	ELBOW	
	8	2	*148-8372*	1	ELBOW AS	
		2	**2M-9780**	1	SEAL-O-RING	
		2	**6V-8398**	1	SEAL-O-RING	
		2	**6V-8721**	1	ELBOW	
	9	2	*148-8378*	2	ELBOW AS	
					(EACH INCLUDES)	
		2	**3J-1907**	1	SEAL-O-RING	
		2	**6V-8397**	1	SEAL-O-RING	
		2	**6V-8724**	1	ELBOW	
	10	2	*150-4037*	1	TEE AS	
		2	**6V-8398**	2	SEAL-O-RING	
		2	**6V-9844**	1	TEE-SWIVEL	
	11	2	*150-4044*	2	CONNECTOR AS	
					(EACH INCLUDES)	
		2	**3J-1907**	1	SEAL-O-RING	
		2	**6V-8397**	1	SEAL-O-RING	
		2	**8T-1779**	1	CONNECTOR	
	12	1	**1P-3703**	8	SEAL-RECTANGULAR	
	13	2	**6V-0400**	24	FLANGE-HALF	
	14	2	**8T-4121**	6	WASHER-HARD (11X21X2.5-MM THK)	
M	15	2	**8T-4136**	6	BOLT (M10X1.5X25-MM)	
M	16	2	**8T-4184**	48	BOLT (M12X1.75X45-MM)	
	17	2	**8T-4223**	48	WASHER-HARD (13.5X25.5X3-MM THK)	
	18	2	**1U-8846**	1	SEALANT-GASKET	

I-REFER TO HYDRAULIC INFORMATION SYSTEM
M-METRIC PART
Y-SEPARATE ILLUSTRATION

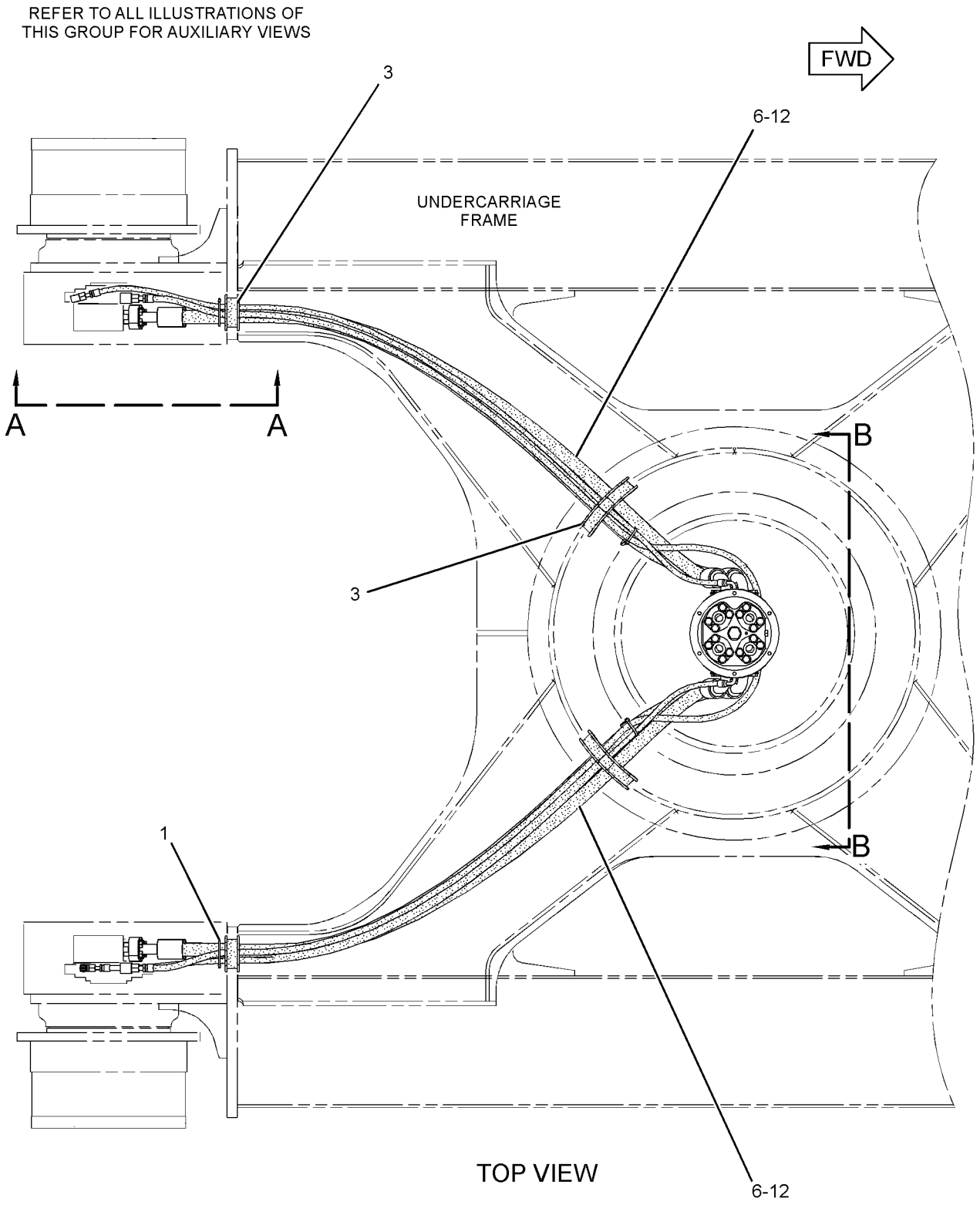

GRAPHIC #1

g01217452

239-1717 **LINES GP-TRAVEL MOTOR** *(contd.)* **i02457291**

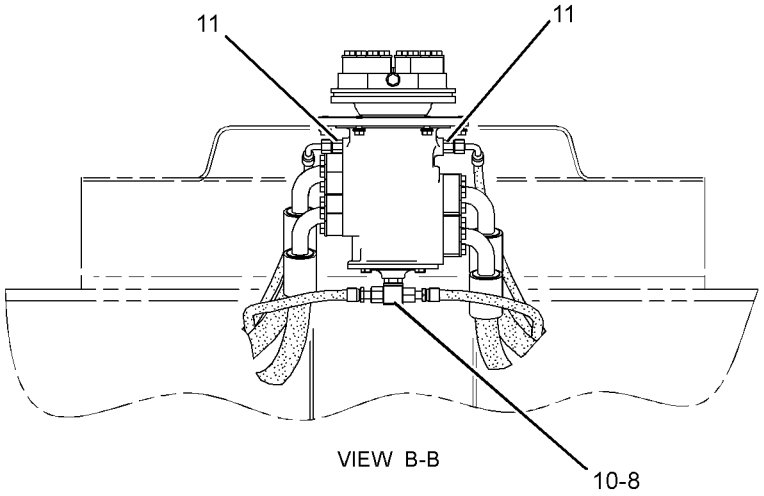

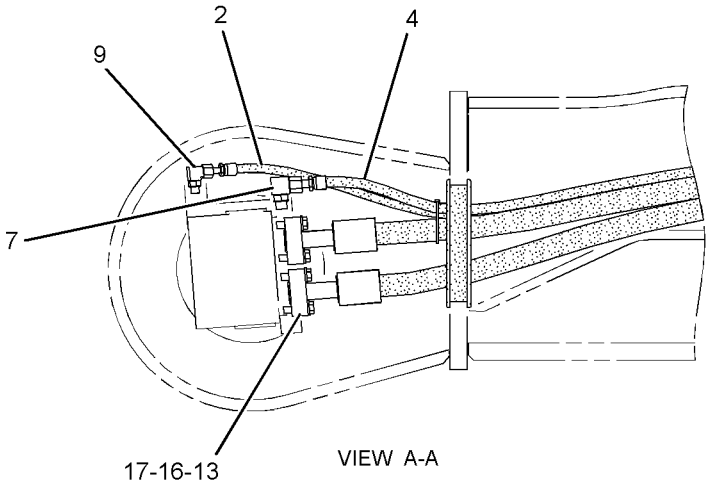

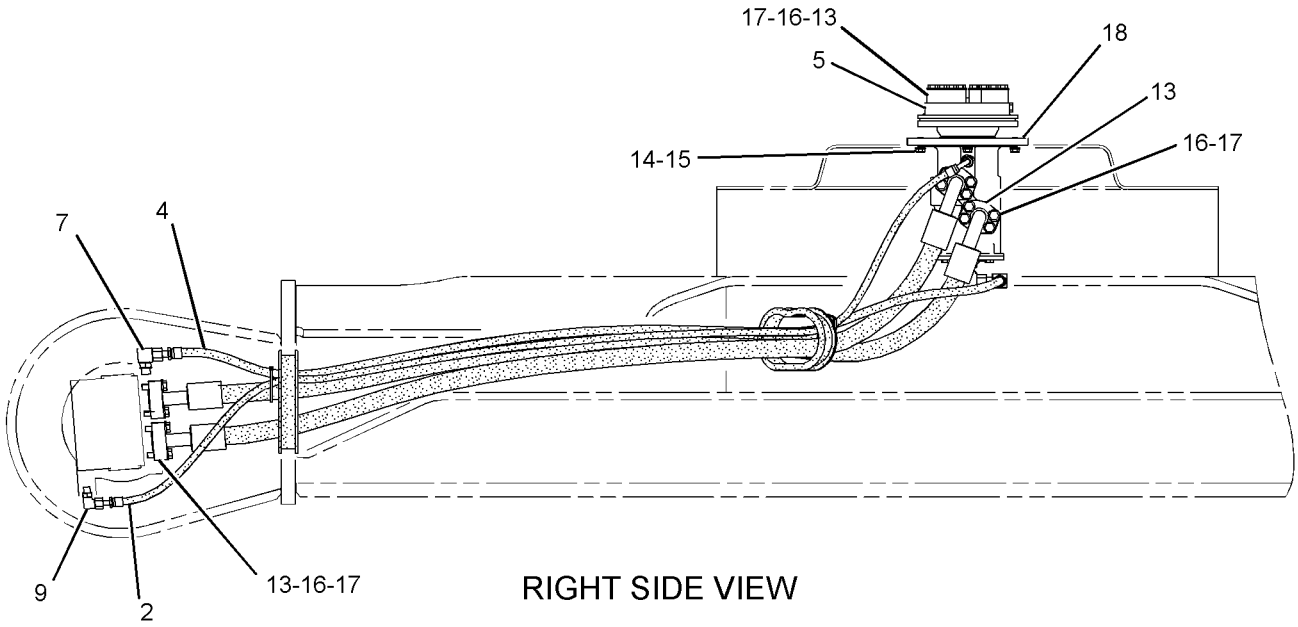

GRAPHIC #2 **<END>** g01226372

HYDRAULIC SYSTEM

266-0980 LINES GP-TRAVEL MOTOR–

LONG NARROW UNDERCARRIAGE

S/N: CWG1-UP

PART OF 285-1356 HYDRAULIC AR

SMCS-5057, 5058 **i02814884**

NOTE	REF NO	GRAPHIC REF	PART NUMBER	QTY	PART NAME 1 2 3 4 5 6 (PRODUCT LEVEL)	SEE PAGE
I	1	1	**4I-6054**	2	HOSE AS	
	2	1	**7K-1181**	4	STRAP-CABLE	
	3	1	**108-7118**	4	GROMMET	
Y	4	1	**234-4440**	1	SWIVEL GP	800
I	5	1	**266-1129**	4	HOSE AS	
I	6	1	**266-1146**	2	HOSE AS	
	7	1	*148-8364*	2	ELBOW AS	
					(EACH INCLUDES)	
		1	**3K-0360**	1	SEAL-O-RING	
		1	**6V-8398**	1	SEAL-O-RING	
		1	**6V-8625**	1	ELBOW	
	8	1	*148-8372*	1	ELBOW AS	
		1	**2M-9780**	1	SEAL-O-RING	
		1	**6V-8398**	1	SEAL-O-RING	
		1	**6V-8721**	1	ELBOW	
	9	1	*148-8378*	2	ELBOW AS	
					(EACH INCLUDES)	
		1	**3J-1907**	1	SEAL-O-RING	
		1	**6V-8397**	1	SEAL-O-RING	
		1	**6V-8724**	1	ELBOW	
	10	1	*150-4037*	1	TEE AS	
		1	**6V-8398**	2	SEAL-O-RING	
		1	**6V-9844**	1	TEE-SWIVEL	
	11	1	*150-4044*	2	CONNECTOR AS	
					(EACH INCLUDES)	
		1	**3J-1907**	1	SEAL-O-RING	
		1	**6V-8397**	1	SEAL-O-RING	
		1	**8T-1779**	1	CONNECTOR	
	12	1	**1P-3703**	8	SEAL-RECTANGULAR	
	13	1	**6V-0400**	24	FLANGE-HALF	
	14	1	**8T-4121**	6	WASHER-HARD (11X21X2.5-MM THK)	
M	15	1	**8T-4136**	6	BOLT (M10X1.5X25-MM)	
M	16	1	**8T-4184**	48	BOLT (M12X1.75X45-MM)	
	17	1	**8T-4223**	48	WASHER-HARD (13.5X25.5X3-MM THK)	
B	18	1	**1U-8846**		SEALANT-GASKET	

B-USE AS REQUIRED
I-REFER TO HYDRAULIC INFORMATION SYSTEM
M-METRIC PART
Y-SEPARATE ILLUSTRATION

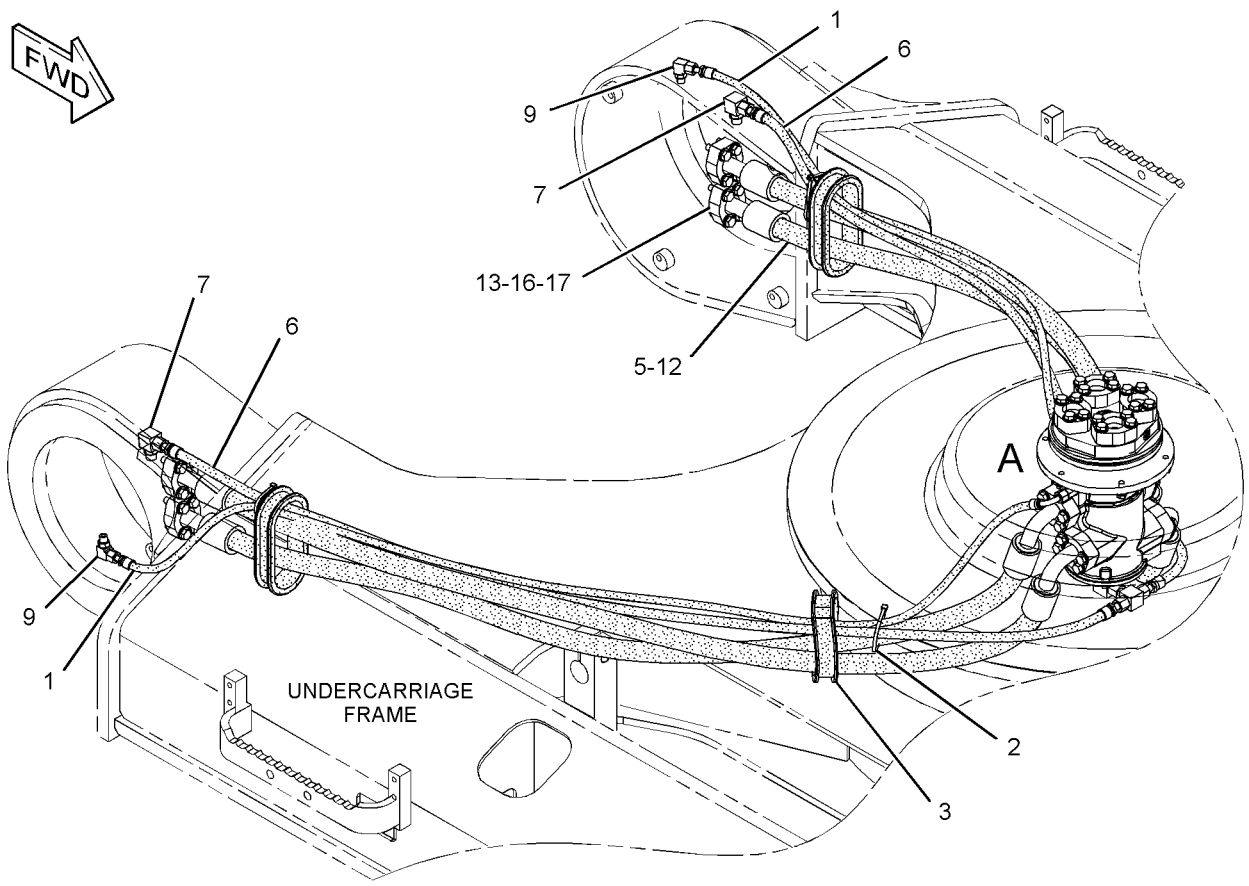

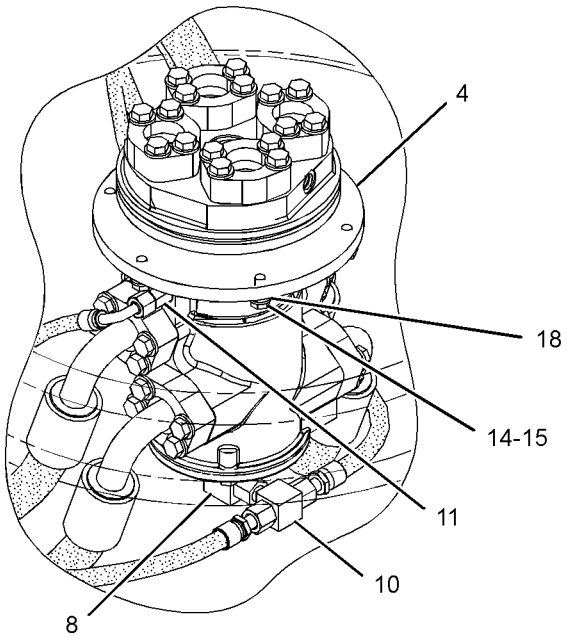

VIEW OF AREA A

GRAPHIC #1 **<END>** g01225800

215-5037 MANIFOLD GP-CONTROL—PILOT OIL SUPPLY

S/N: WNE1-UP; ZMF1-UP; CWG1-UP

PART OF 266-0963, 275-1408 LINES GP-PILOT

SMCS-5264 **i02092079**

NOTE	PART NUMBER	QTY	PART NAME 1 2 3 4 5 6 (PRODUCT LEVEL)	SEE PAGE
Y	*239-8998*	1	MANIFOLD GP-CONTROL (PILOT OIL SUPPLY) (STEEL BODY)	774
			-OR-	
Y	*239-8697*	1	MANIFOLD GP-CONTROL (PILOT OIL SUPPLY) (ALUMINUM BODY)	773

Y-SEPARATE ILLUSTRATION

<END>

239-8697 MANIFOLD GP-CONTROL—PILOT OIL SUPPLY

S/N: WNE1-UP; ZMF1-UP; CWG1-UP
ALUMINUM BODY
PART OF 215-5037 MANIFOLD GP-CONTROL

SMCS-5264 **i02092727**

NOTE	REF NO	GRAPHIC REF	PART NUMBER	QTY	PART NAME 1 2 3 4 5 6 (PRODUCT LEVEL)	SEE PAGE
Y	1	1	**121-1491**	1	VALVE GP-SOLENOID (SWING BRAKE RELEASE)	886
Y	2	1	**121-1491**	1	VALVE GP-SOLENOID (HYDRAULIC LOCKOUT)	886
Y	3	1	**121-1491**	1	VALVE GP-SOLENOID (TRAVEL SPEED)	886
	4	1	**197-0196**	1	VALVE-CHECK	
	5	1	**197-0199**	1	SPRING	
	6	1	**197-0273**	1	SPRING	
Z	7	1		1	MANIFOLD GP-CONTROL	
	8	1	**3J-1907**	1	SEAL-O-RING	
	9	1	**3K-0360**	4	SEAL-O-RING	
	10	1	**4J-7533**	6	SEAL-O-RING	
M	11	1	**7I-2272**	6	BOLT (M5X0.8X12-MM)	
	12	1	**9S-8001**	6	PLUG-O-RING	
	13	1	**9S-8004**	1	PLUG	
	14	1	**9S-8005**	4	PLUG-O-RING	

M-METRIC PART
Y-SEPARATE ILLUSTRATION
Z-NOT SERVICED SEPARATELY

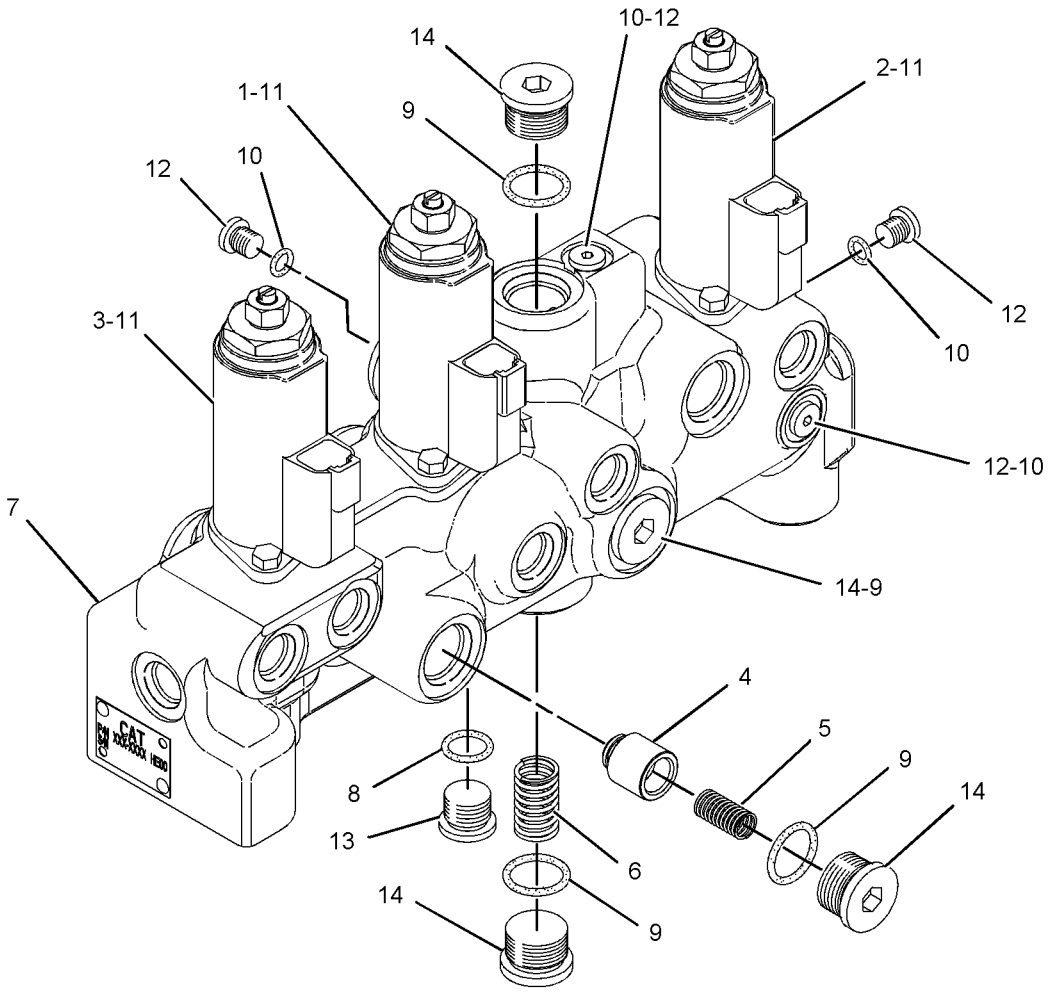

GRAPHIC #1 **<END>** g01084474

HYDRAULIC SYSTEM

239-8998 MANIFOLD GP-CONTROL—PILOT OIL SUPPLY

S/N: WNE1-UP; ZMF1-UP; CWG1-UP
STEEL BODY
PART OF 215-5037 MANIFOLD GP-CONTROL

SMCS-5264 **i02092174**

NOTE	REF NO	GRAPHIC REF	PART NUMBER	QTY	PART NAME 1 2 3 4 5 6 (PRODUCT LEVEL)	SEE PAGE
Y	1	1	**121-1491**	1	VALVE GP-SOLENOID (SWING BRAKE RELEASE)	886
Y	2	1	**121-1491**	1	VALVE GP-SOLENOID (HYDRAULIC LOCKOUT)	886
Y	3	1	**121-1491**	1	VALVE GP-SOLENOID (TRAVEL SPEED)	886
	4	1	**197-0196**	1	VALVE-CHECK	
Z	5	1		1	MANIFOLD GP-CONTROL	
	6	1	**197-0199**	1	SPRING	
	7	1	**197-0273**	1	SPRING	
	8	1	**3K-0360**	3	SEAL-O-RING	
M	9	1	**7I-2272**	6	BOLT (M5X0.8X12-MM)	
	10	1	**7M-7410**	2	PLUG-PIPE	
	11	1	**8T-6759**	6	PLUG-PIPE	
	12	1	**9S-8005**	3	PLUG-O-RING	

M-METRIC PART
Y-SEPARATE ILLUSTRATION
Z-NOT SERVICED SEPARATELY

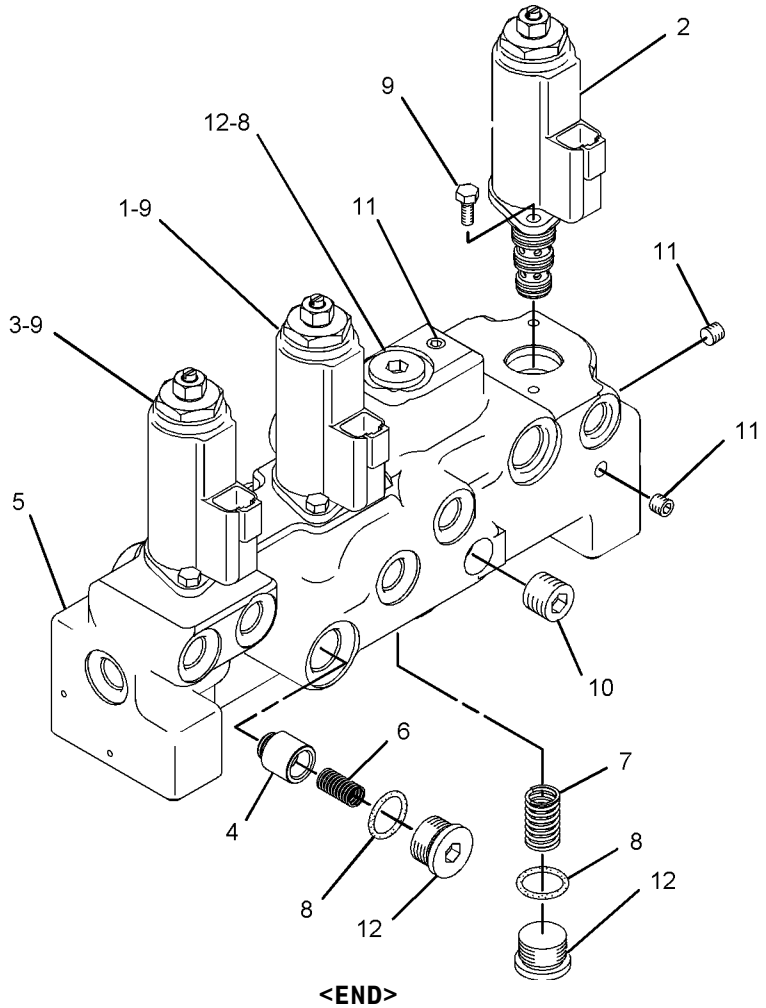

GRAPHIC #1 **<END>** g01083316

HYDRAULIC SYSTEM

158-8985 MOTOR & MTG GP-SWING

S/N: WNE1-UP; ZMF1-UP; CWG1-UP
PART OF 148-4679 DRIVE GP-SWING

SMCS-5058 **i03670541**

NOTE	REF NO	GRAPHIC REF	PART NUMBER	QTY	PART NAME 1 2 3 4 5 6 (PRODUCT LEVEL)	SEE PAGE
CY	1	1	**334-9968**	1	MOTOR GP-SWING	786
	2	1	**6V-5200**	1	RING-RETAINING	
M	3	1	**7X-2558**	16	BOLT (M16X2X150-MM)	
	4	1	**9X-8257**	16	WASHER (17.5X30X3.5-MM THK)	

C-CHANGE FROM PREVIOUS TYPE
M-METRIC PART
Y-SEPARATE ILLUSTRATION

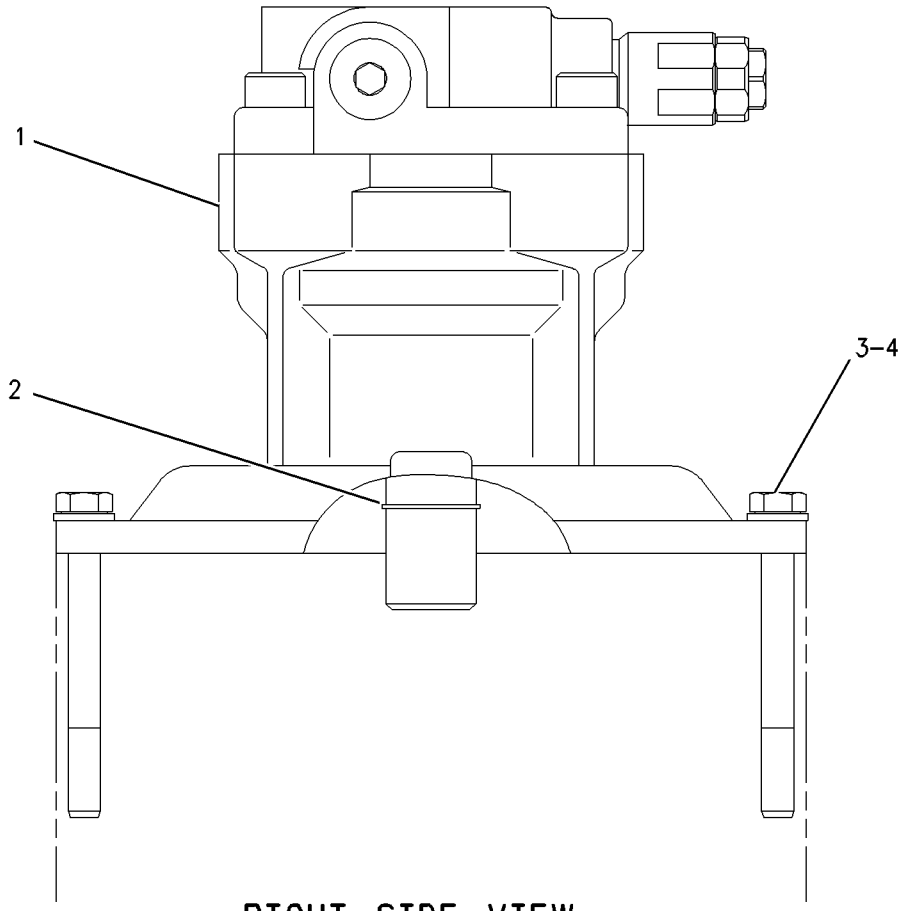

RIGHT SIDE VIEW

GRAPHIC #1 **<END>** g00670538

HYDRAULIC SYSTEM

215-9982 MOTOR & MTG GP-TRAVEL

S/N: WNE1-UP; ZMF1-UP; CWG1-UP
PART OF 296-6298 DRIVE GP-FINAL

SMCS-4351 **i03642007**

NOTE	REF NO	GRAPHIC REF	PART NUMBER	QTY	PART NAME 1 2 3 4 5 6 (PRODUCT LEVEL)	SEE PAGE
Y	1	1	**209-5992**	1	MOTOR GP-PISTON (TRAVEL)	778
Y	2	1	**204-2819**	1	VALVE GP-TRAVEL COUNTERBALANCE	904
M	3	1	**095-0707**	3	BOLT (M16X2X120-MM)	
M	4	1	**3E-6910**	6	BOLT-SOCKET HEAD (M12X1.75X70-MM)	
	5	1	**095-1685**	1	SEAL-O-RING	

M-METRIC PART
Y-SEPARATE ILLUSTRATION

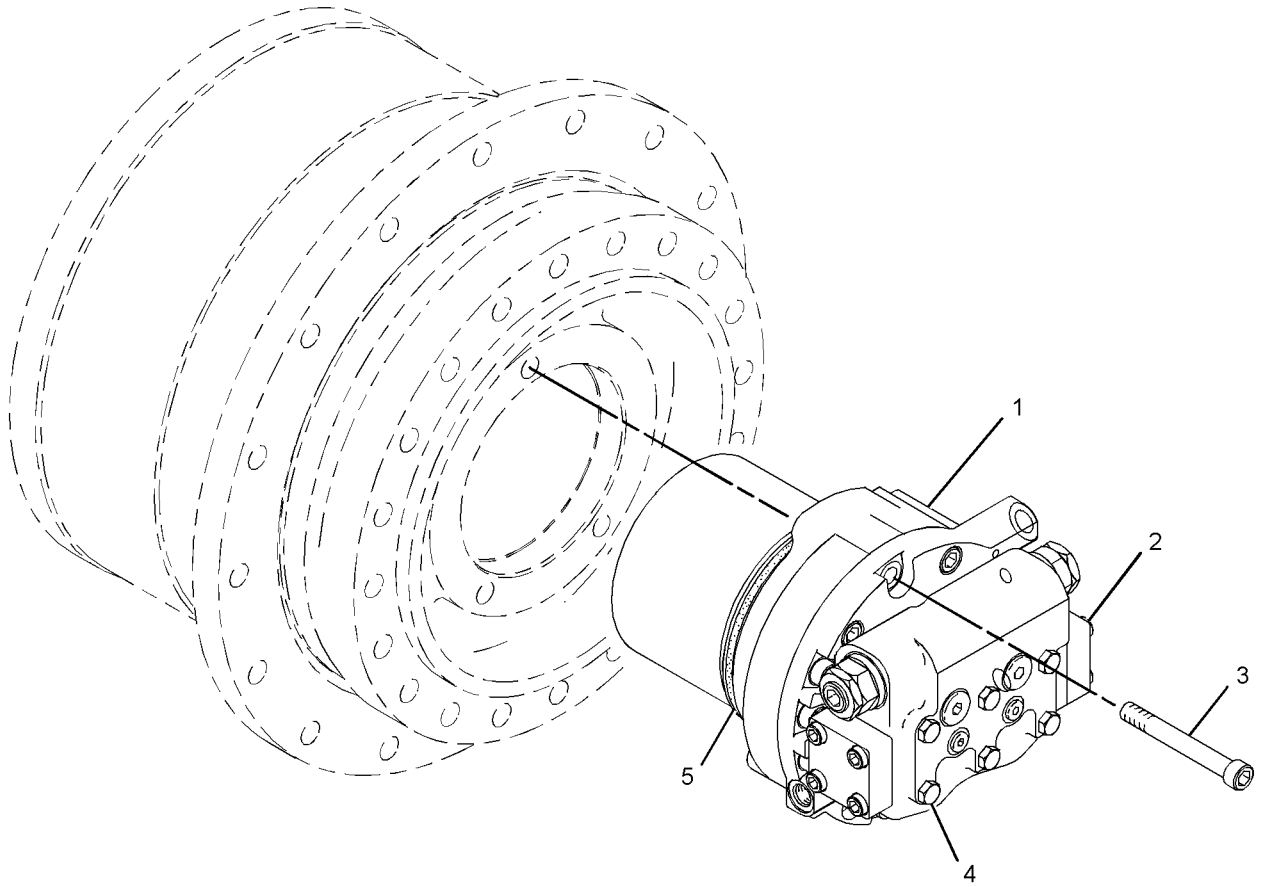

GRAPHIC #1 **<END>** g01959826

215-9983 MOTOR & MTG GP-TRAVEL

S/N: WNE1-UP; ZMF1-UP; CWG1-UP
PART OF 333-2983 DRIVE GP-FINAL, 264-8771 HYDRAULIC AR-BIODEGRADABLE OIL
AN ATTACHMENT

SMCS-4351 **i03567589**

NOTE	REF NO	GRAPHIC REF	PART NUMBER	QTY	PART NAME 1 2 3 4 5 6 (PRODUCT LEVEL)	SEE PAGE
Y	1	1	**209-5994**	1	MOTOR GP-PISTON (TRAVEL)	782
Y	2	1	**204-2819**	1	VALVE GP-TRAVEL COUNTERBALANCE	904
M	3	1	**095-0707**	3	BOLT (M16X2X120-MM)	
M	4	1	**3E-6910**	6	BOLT-SOCKET HEAD (M12X1.75X70-MM)	
	5	1	**095-1685**	1	SEAL-O-RING	

M-METRIC PART
Y-SEPARATE ILLUSTRATION

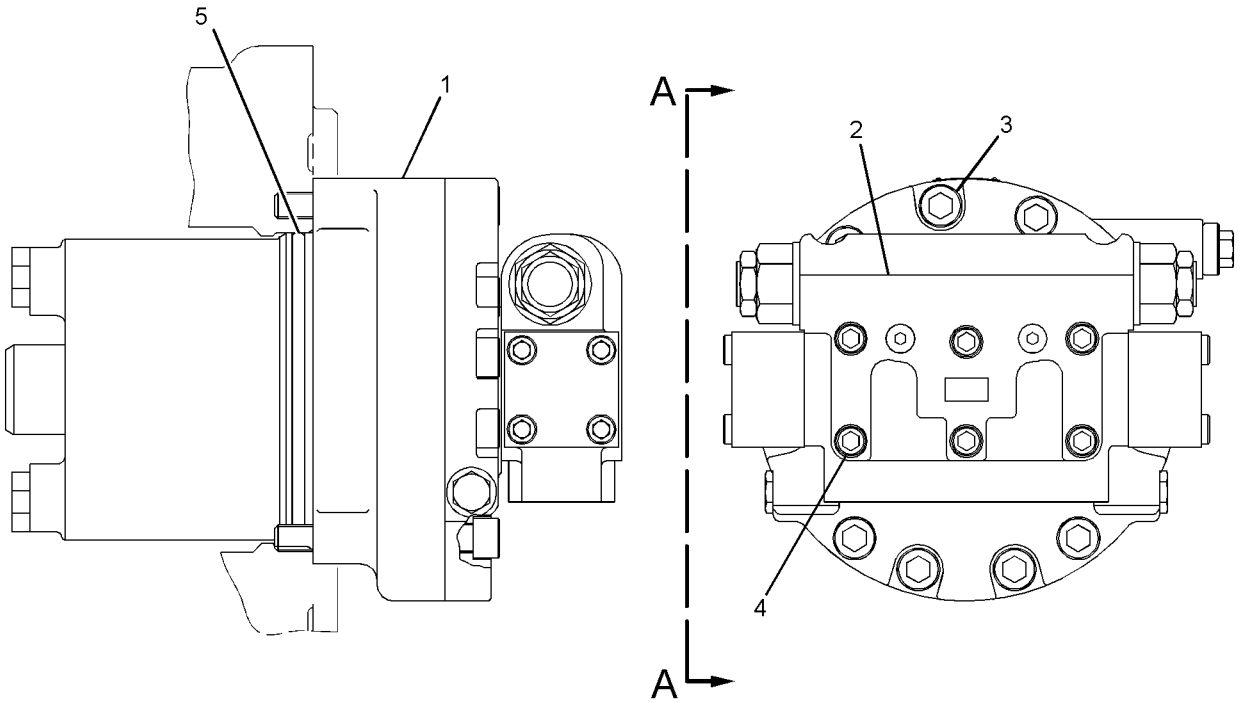

VIEW A-A

GRAPHIC #1 **<END>** g01894535

HYDRAULIC SYSTEM

209-5992 MOTOR GP-PISTON

S/N: WNE1-UP; ZMF1-UP; CWG1-UP

PART OF 215-9982 MOTOR & MTG GP-TRAVEL

SMCS-5058 **i02394066**

NOTE	REF NO	GRAPHIC REF	PART NUMBER	QTY	PART NAME 1 2 3 4 5 6 (PRODUCT LEVEL)	SEE PAGE
	1	1	**7Y-4202**	1	HEAD	
	2	2	**7Y-4212**	1	BEARING	
	3	2	**7Y-4213**	1	PISTON-BRAKE	
	4	1	**7Y-4215**	1	SPACER	
	5	2	**7Y-4216**	1	SPOOL	
	6	2	**7Y-4224**	2	ORIFICE	
	7	2	**087-4742**	1	VALVE	
	8	1	**087-4743**	2	STOP	
	9	2	**087-4786**	1	ADAPTER	
	10	2	**094-1399**	1	RING-RETAINING	
	11	2	**094-1882**	10	PLUG	
	12	1	**095-7378**	1	WASHER SET	
	13	2	**095-7380**	1	SPRING	
	14	2	**095-7382**	1	RETAINER	
	15	2	**096-1519**	1	SEAT	
B	16	1	**096-1521**	1	SHIM (1-MM THK)	
B	17	1	**096-1522**	1	SHIM (2-MM THK)	
	18	2	**096-1523**	1	GUIDE-PISTON	
B	19	1	**096-3785**	1	SHIM (1.2-MM THK)	
B	20	1	**096-3786**	1	SHIM (1.4-MM THK)	
B	21	1	**096-3787**	1	SHIM (1.6-MM THK)	
B	22	1	**096-3788**	1	SHIM (1.8-MM THK)	
	23	2	**096-3978**	1	SPRING	
	24	1	**096-4003**	1	SET-BEARING	
		1	**7Y-4234**	1	RACE-NEEDLE ROLLER	
J	25	2	**096-4376**	1	SEAL-LIP TYPE	
	26	2	**096-5915**	2	RETAINER	
	27	2	**107-6954**	4	PLATE-FRICTION	
	28	2	**107-6955**	5	PLATE-SEPARATOR	
	29	1	**107-6969**	1	BODY	
	30	1	**118-4057**	9	SPRING	
	31	1	**122-5114**	1	GUIDE-BALL	
	32	2	**123-2008**	2	KEY	
	33	1	**133-6777**	1	BARREL AS	
	34	1	**147-5860**	1	PISTON AS	
	35	1	**209-5894**	1	SHAFT	
	36	1	**209-5909**	1	PLATE-CAM	
	38	1	**087-4757**	2	PISTON	
	39	1	**094-1875**	1	DOWEL	
	40	2	**094-1882**	10	PLUG	
J	41	2	**095-1572**	2	SEAL-O-RING	
J	42	2	**095-1575**	3	SEAL-O-RING	
J	43	2	**095-1585**	1	SEAL-O-RING	
J	44	1	**095-1586**	2	SEAL-O-RING	
	45	1	**095-1685**	1	SEAL-O-RING	
	46	2	**095-1700**	2	SEAL-O-RING	
J	47	2	**095-7383**	1	SEAL-O-RING	
J	48	2	**095-7384**	1	SEAL-O-RING	
J	49	2	**095-7386**	1	RING-BACKUP	
J	50	2	**095-7387**	1	RING	
J	52	2	**096-4377**	2	SEAL-O-RING	
J	53	2	**096-4378**	1	RING-BACKUP	
	54	2	**096-5916**	2	SEAT	
J	55	2	**096-5919**	2	RING-BACKUP	
	56	2	**121-1558**	2	PIN	
	57	2	**2D-6642**	2	BALL	

209-5992 MOTOR GP-PISTON *(contd.)* i02394066

NOTE	REF NO	GRAPHIC REF	PART NUMBER	QTY	PART NAME 1 2 3 4 5 6 (PRODUCT LEVEL)	SEE PAGE
J	58	2	**2M-9780**	1	SEAL-O-RING	
J	59	1	**3K-0360**	1	SEAL-O-RING	
J	60	1	**7Y-4217**	2	RING-BACKUP	
M	61	1	**8T-4944**	10	BOLT-SOCKET HEAD (M16X2X40-MM)	
	62	1	**9S-4185**	1	PLUG-O-RING	
					AVAILABLE REPAIR KIT(S):	
J			**7Y-4222**	1	KIT-SEAL (TRAVEL MOTOR)	

B-USE AS REQUIRED
J-KIT MARKED J SERVICES PARTS MARKED J
M-METRIC PART

209-5992 MOTOR GP-PISTON *(contd.)* i02394066

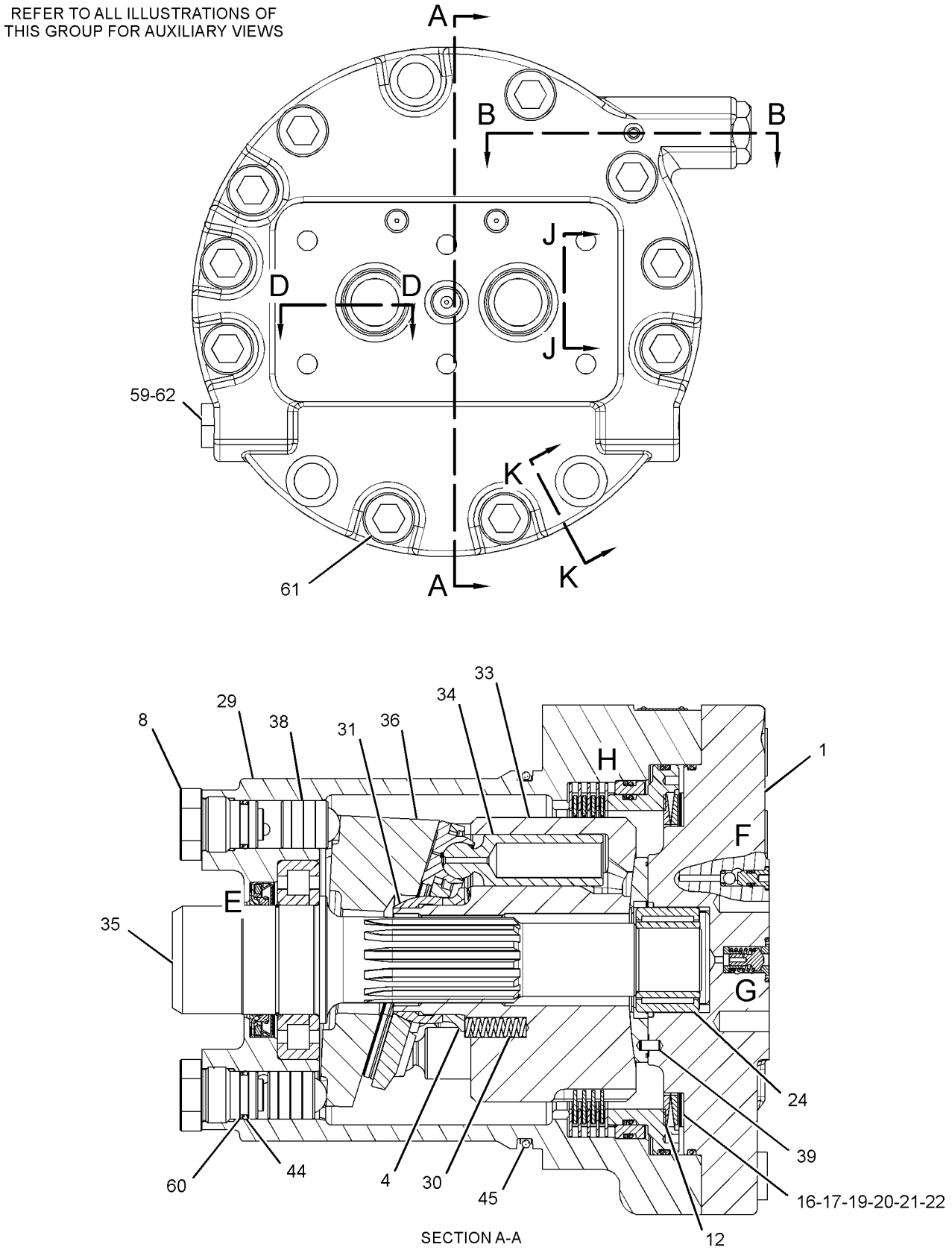

GRAPHIC #1 g01196112

209-5992 MOTOR GP-PISTON *(contd.)* **i02394066**

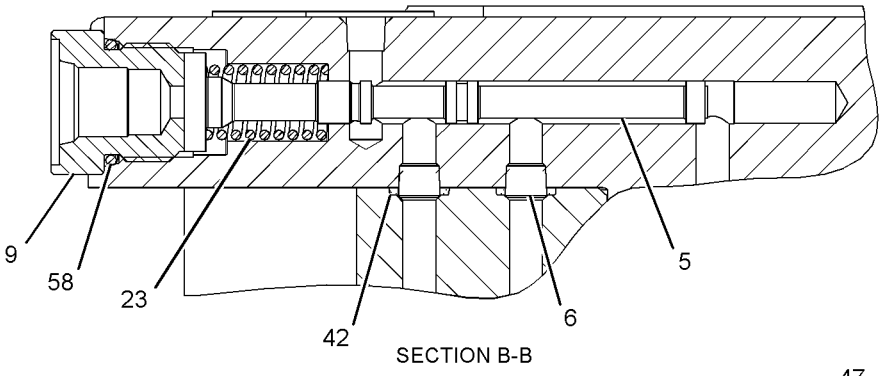

SECTION B-B

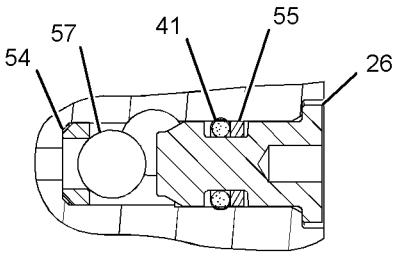

VIEW OF AREA F

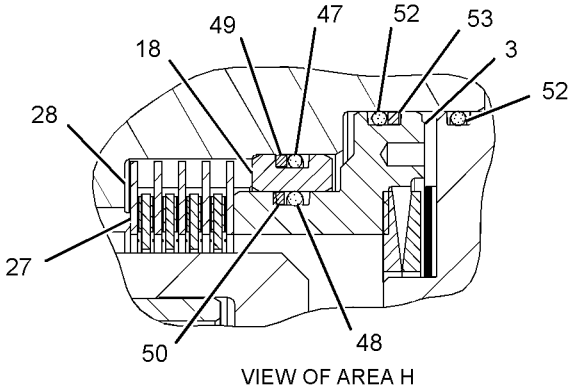

VIEW OF AREA H

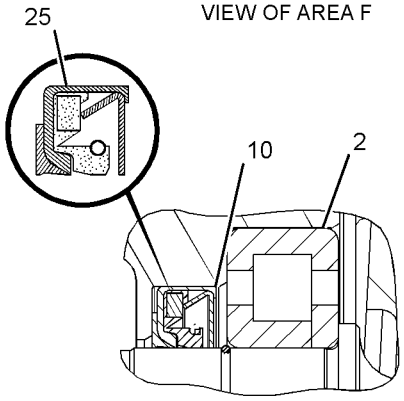

VIEW OF AREA E

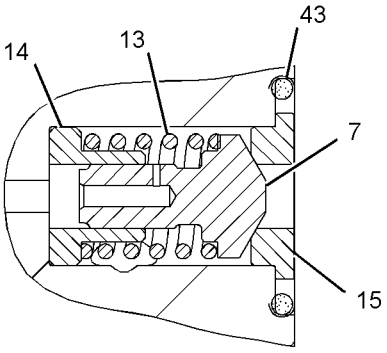

VIEW OF AREA G

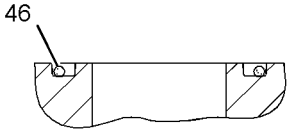

SECTION D-D

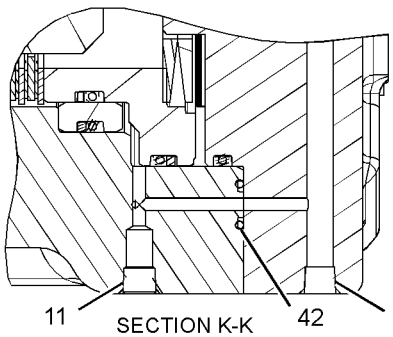

SECTION K-K

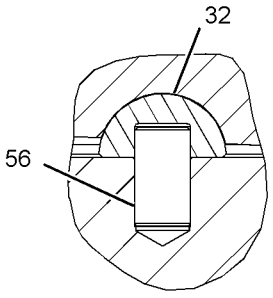

SECTION J-J

GRAPHIC #2 **<END>** g01196115

HYDRAULIC SYSTEM

209-5994 MOTOR GP-PISTON–TRAVEL

S/N: WNE1-UP; ZMF1-UP; CWG1-UP
PART OF 215-9983 MOTOR & MTG GP-TRAVEL
AN ATTACHMENT

SMCS-5058 **i02319673**

NOTE	REF NO	GRAPHIC REF	PART NUMBER	QTY	PART NAME 1 2 3 4 5 6 (PRODUCT LEVEL)	SEE PAGE
	1	2	**7Y-4212**	1	BEARING	
	2	1	**7Y-4215**	1	SPACER	
	3	2	**7Y-4216**	1	SPOOL	
	4	2	**7Y-4224**	2	ORIFICE	
	5	1	**087-4743**	2	STOP	
	6	2	**087-4786**	1	ADAPTER	
	7	2	**094-1399**	1	RING-RETAINING	
L	8	2	**094-1882**	1	PLUG	
	9	2	**095-7380**	1	SPRING	
	10	2	**096-1519**	1	SEAT	
	11	2	**096-3978**	1	SPRING	
	12	1	**096-4003**	1	SET-BEARING	
J	13	2	**096-4376**	1	SEAL-LIP TYPE	
	14	2	**096-5915**	2	RETAINER	
	15	2	**107-6954**	4	PLATE-FRICTION	
	16	2	**107-6955**	5	PLATE-SEPARATOR	
	17	1	**107-6969**	1	BODY	
	18	1	**107-6970**	1	HEAD	
	19	2	**107-6971**	1	PISTON-BRAKE	
	20	2	**107-6972**	1	GUIDE-PISTON	
	21	1	**107-6974**	1	WASHER-SPRING	
B	22	1	**107-6976**	1	SHIM (1.2-MM THK)	
B	23	1	**107-6977**	1	SHIM (1.4-MM THK)	
B	24	1	**107-6978**	1	SHIM (1.6-MM THK)	
B	25	1	**107-6979**	1	SHIM (1.8-MM THK)	
B	26	1	**107-6980**	1	SHIM (1-MM THK)	
B	27	1	**107-6981**	1	SHIM (0.8-MM THK)	
J	28	2	**107-6986**	1	SEAL-O-RING	
	29	1	**118-4057**	9	SPRING	
	30	1	**122-5114**	1	GUIDE-BALL	
	31	2	**123-2008**	2	KEY	
	32	1	**133-6777**	1	BARREL AS	
	33	2	**137-3708**	1	RETAINER	
	34	2	**137-3723**	1	VALVE	
	35	1	**147-5860**	1	PISTON AS	
	36	1	**209-5894**	1	SHAFT	
	37	1	**209-5909**	1	PLATE-CAM	
	38	1	**9S-4185**	1	PLUG-O-RING	
C	39	1	**209-6049**	2	PISTON	
	40	1	**094-1875**	1	DOWEL	
	41	2	**094-1882**	10	PLUG	
J	42	2	**095-1572**	2	SEAL-O-RING	
J	43	2	**095-1575**	3	SEAL-O-RING	
J	44	2	**095-1585**	1	SEAL-O-RING	
J	45	1	**095-1586**	2	SEAL-O-RING	
J	46	1	**095-1685**	1	SEAL-O-RING	
J	47	2	**095-1700**	2	SEAL-O-RING	
J	48	2	**095-7383**	1	SEAL-O-RING	
J	49	2	**095-7386**	1	RING-BACKUP	
M	50	1	**8T-4944**	10	BOLT-SOCKET HEAD (M16X2X40-MM)	
J	51	2	**096-4377**	2	SEAL-O-RING	
J	52	2	**096-4378**	1	RING-BACKUP	
	53	2	**096-5916**	2	SEAT	
J	54	2	**096-5919**	2	RING-BACKUP	
J	55	2	**107-6987**	1	RING-BACKUP	

209-5994 **MOTOR GP-PISTON** *(contd.)* **i02319673**

NOTE	REF NO	GRAPHIC REF	PART NUMBER	QTY	PART NAME 1 2 3 4 5 6 (PRODUCT LEVEL)	SEE PAGE
	56	2	**121-1558**	2	PIN	
	57	2	**2D-6642**	2	BALL	
J	58	2	**2M-9780**	1	SEAL-O-RING	
J	59	1	**3K-0360**	1	SEAL-O-RING	
J	60	1	**7Y-4217**	2	RING-BACKUP	
					AVAILABLE REPAIR KIT(S):	
J			**107-6988**	1	KIT-SEAL (TRAVEL MOTOR)	

B-USE AS REQUIRED
C-CHANGE FROM PREVIOUS TYPE
J-KIT MARKED J SERVICES PARTS MARKED J
L-NOT REQUIRED FOR OPTIONAL BODY DESIGN
M-METRIC PART

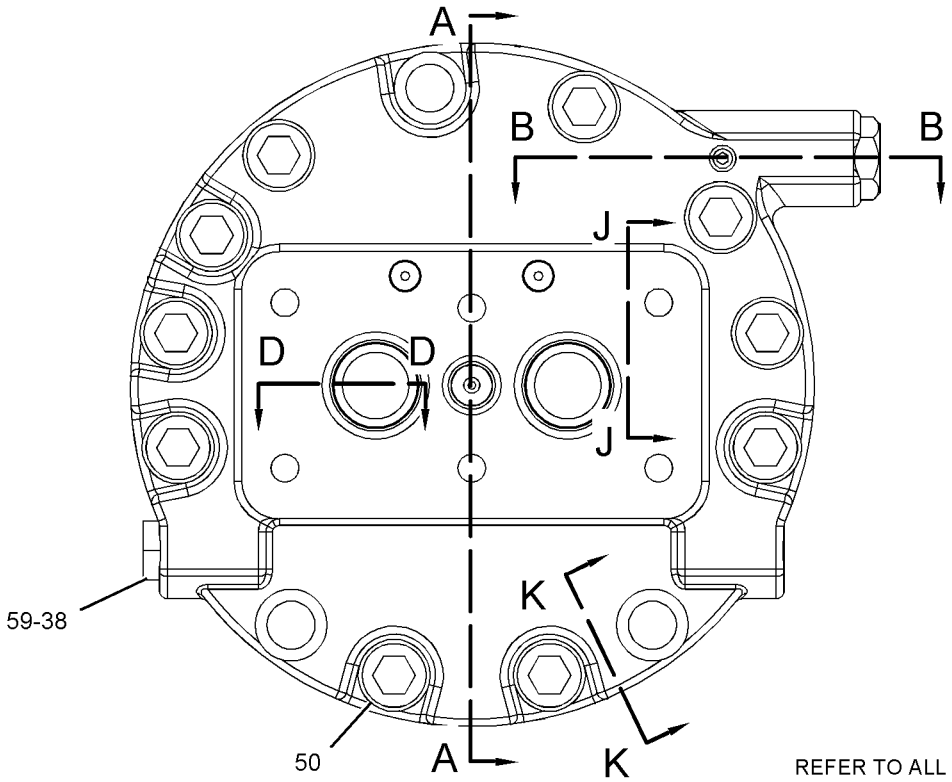

REFER TO ALL ILLUSTRATIONS OF
THIS GROUP FOR AUXILIARY VIEWS

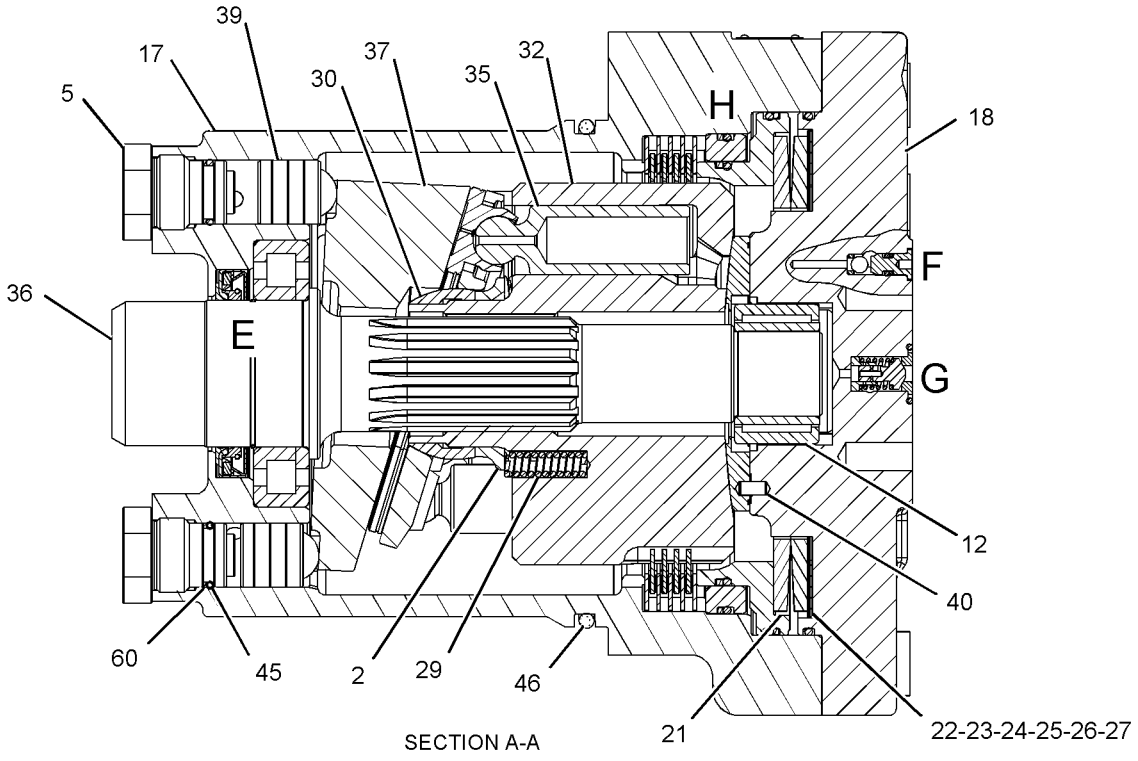

SECTION A-A

GRAPHIC #1

g01232176

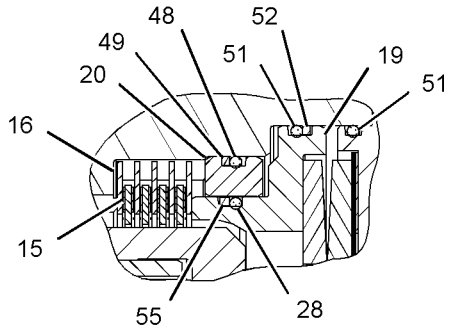

VIEW OF AREA H

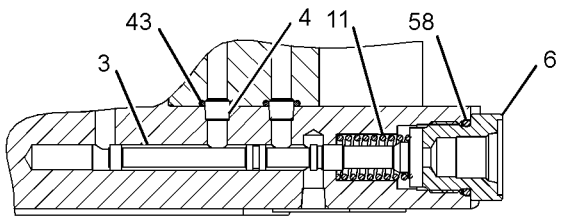

SECTION B-B

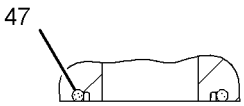

SECTION D-D

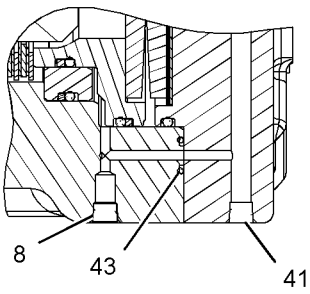

SECTION K-K

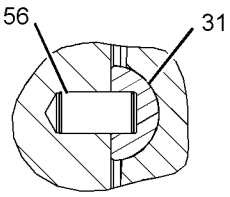

SECTION J-J

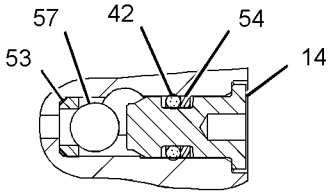

VIEW OF AREA F

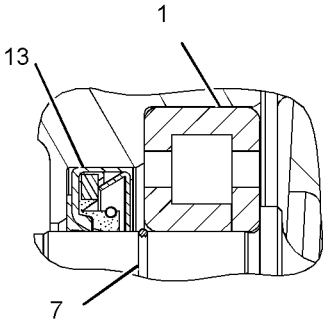

VIEW OF AREA E

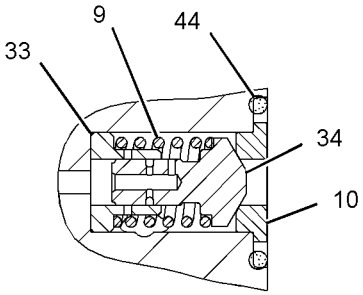

VIEW OF AREA G

GRAPHIC #2 **<END>** g01232177

HYDRAULIC SYSTEM

334-9968 MOTOR GP-SWING

S/N: WNE1-UP; ZMF1-UP; CWG1-UP
PART OF 158-8985 MOTOR & MTG GP-SWING

SMCS-5058 **i03429422**

NOTE	REF NO	GRAPHIC REF	PART NUMBER	QTY	PART NAME 1 2 3 4 5 6 (PRODUCT LEVEL)	SEE PAGE
Y	1	1	**173-3452**	2	VALVE GP-RELIEF (SWING MOTOR)	867
Y	2	1	**334-9976**	1	MOTOR GP-SWING	787

Y-SEPARATE ILLUSTRATION

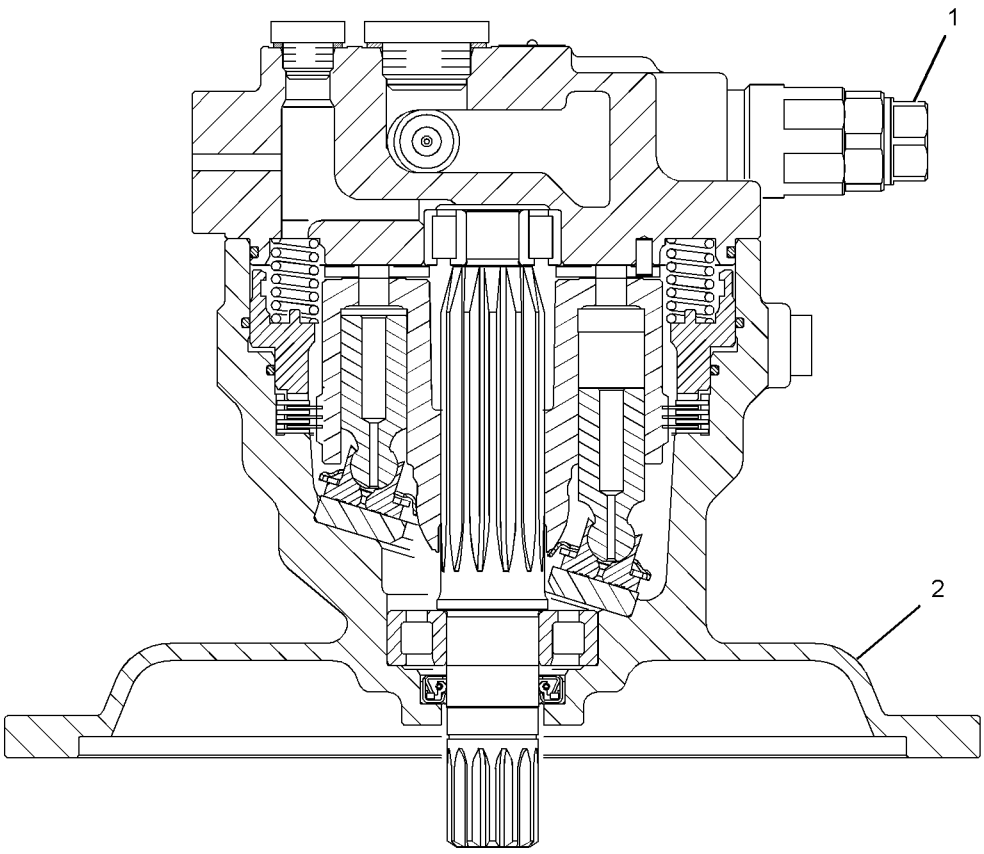

GRAPHIC #1 **<END>** g01793555

334-9976 MOTOR GP-SWING

S/N: WNE1-UP; ZMF1-UP; CWG1-UP
PART OF 334-9968 MOTOR GP-SWING

SMCS-5058 **i03429421**

NOTE	REF NO	GRAPHIC REF	PART NUMBER	QTY	PART NAME 1 2 3 4 5 6 (PRODUCT LEVEL)	SEE PAGE
	1	1	**122-5318**	1	BEARING	
	2	1	**173-3444**	1	PLATE	
	3	1	**334-9981**	1	PISTON AS-PUMP	
	4	1	**173-3443**	1	PLATE	
	5	1	**173-3441**	1	BARREL	
J	6	1	**5I-8426**	1	SEAL-O-RING	
J	7	1	**5I-8417**	1	SEAL-O-RING	
	8	1	**177-2584**	1	PISTON-BRAKE	
J	9	1	**5I-8623**	1	SEAL-O-RING	
	10	1	**126-2055**	20	SPRING	
	11	1	**173-3439**	1	HEAD GP-MOTOR	
		1	**095-0882**	2	PIN-SPRING	
	12	1	**173-3445**	1	PLATE-VALVE	
	13	1	**110-5525**	2	PLUG	
J	14	1	**3J-1907**	2	SEAL-O-RING	
	15	1	**5I-8625**	1	BEARING	
	16	1	**173-3451**	4	PLATE-SEPARATOR	
	17	1	**173-3450**	3	PLATE-FRICTION	
	18	1	**173-3442**	1	SPRING	
	19	1	**191-5543**	1	BODY	
	20	1	**173-3440**	1	SHAFT	
	21	1	**173-3447**	1	SEAL-OIL	
	22	1	**094-1900**	2	PLUG	
	23	1	**095-1595**	2	SEAL-O-RING	
	24	1	**7Y-4268**	2	SPRING	
	25	1	**7Y-4267**	2	VALVE	
M	26	1	**7Y-5221**	4	BOLT-SOCKET HEAD (M20X2.5X45-MM)	
					AVAILABLE REPAIR KIT(S):	
J			**173-3454**	1	KIT-SEAL (SWING MOTOR)	

J-KIT MARKED J SERVICES PART(S) MARKED J
M-METRIC PART

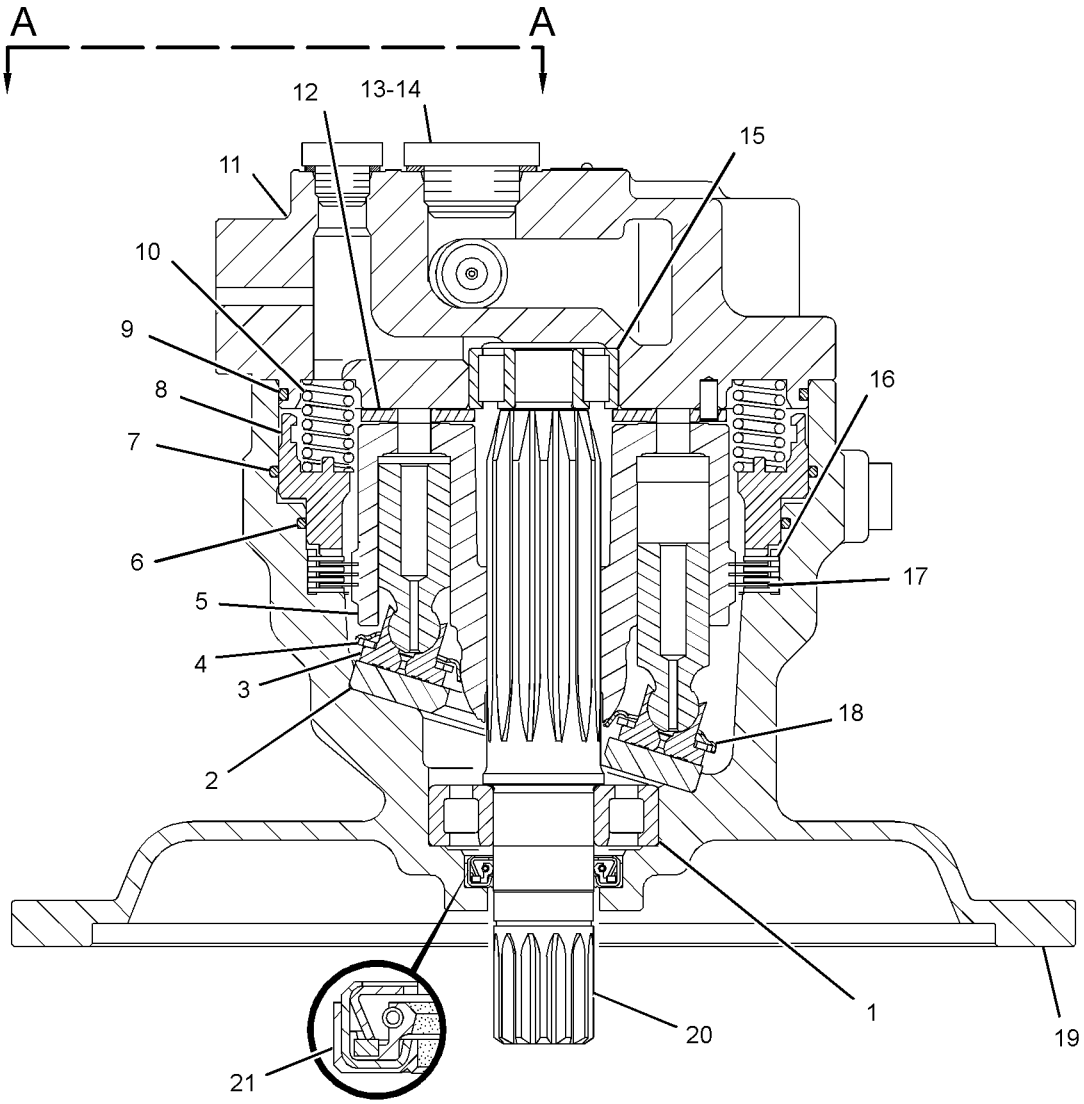

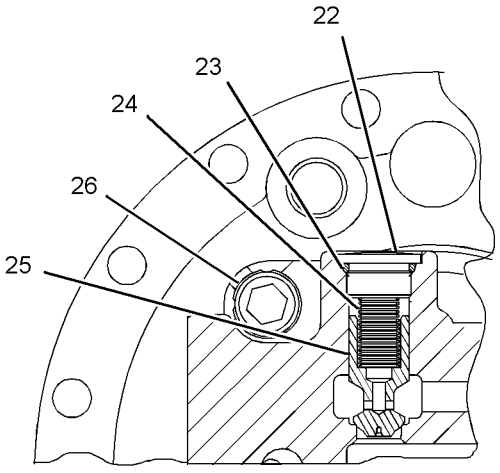

VIEW A-A

GRAPHIC #1 **<END>** g01793353

260-7868 MOUNTING GP-MAIN CONTROL VALVE

S/N: WNE1-UP; ZMF1-UP; CWG1-UP

PART OF 270-5712, 270-5713, 285-1356 HYDRAULIC AR

SMCS-5051 **i02346962**

NOTE	REF NO	GRAPHIC REF	PART NUMBER	QTY	PART NAME 1 2 3 4 5 6 (PRODUCT LEVEL)	SEE PAGE
	1	1	**260-7904**	1	SUPPORT AS	
	2	1	**260-7906**	1	SUPPORT AS	
M	3	1	**100-3866**	8	BOLT-SELF-LOCKING (M16X2X40-MM)	
	4	1	**9X-8257**	4	WASHER (17.5X30X3.5-MM THK)	
	5	1	**196-0711**	4	WASHER (17X40X8-MM THK)	

M-METRIC PART

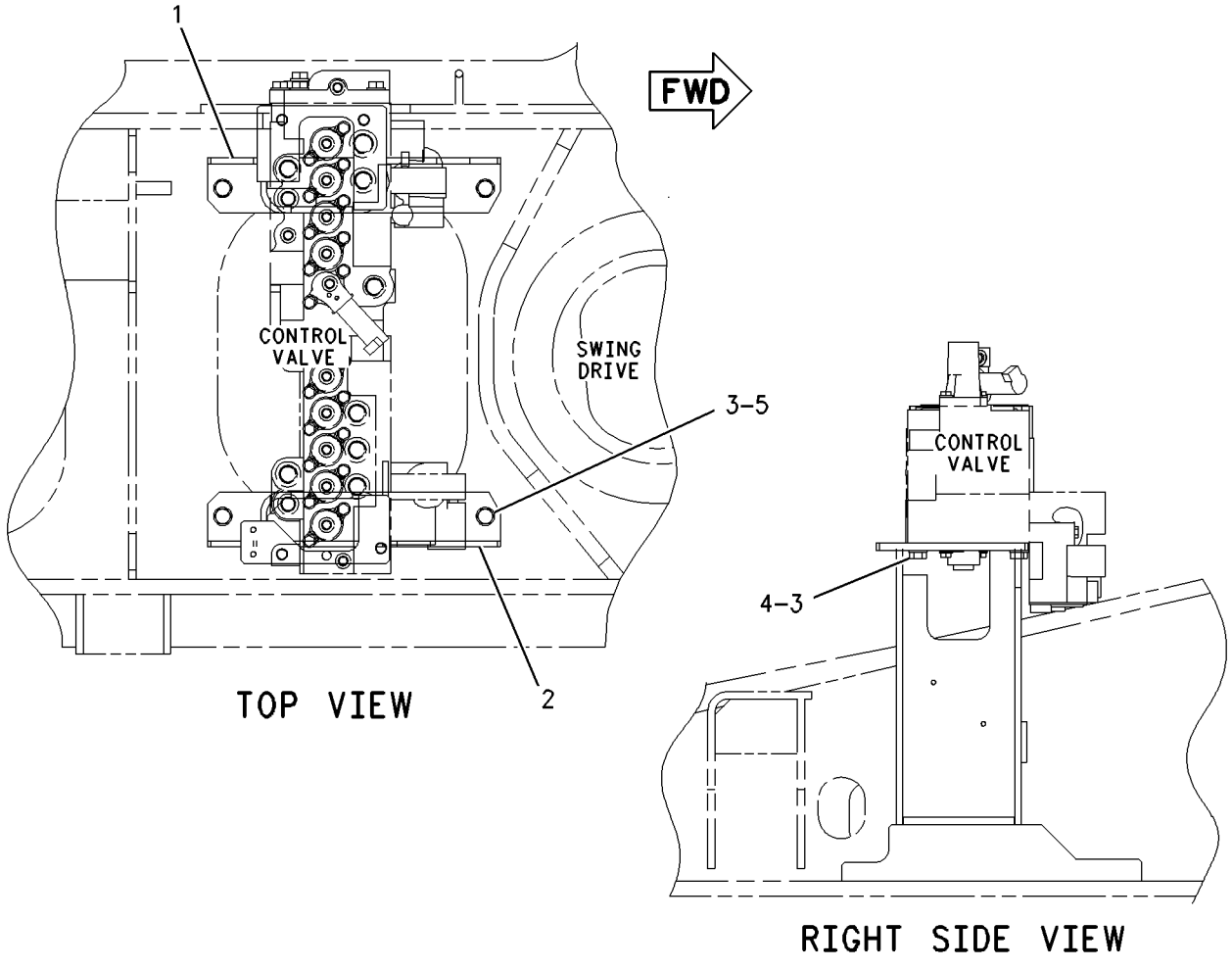

GRAPHIC #1 **<END>** g00676425

HYDRAULIC SYSTEM

6E-4816 PLUG GP-CONTROL VALVE

S/N: WNE1-UP; ZMF1-UP; CWG1-UP
PART OF 259-7465, 285-1375 VALVE GP-CONTROL
ALSO AN ATTACHMENT

SMCS-5051 **i02867891**

NOTE	PART NUMBER	QTY	PART NAME 1 2 3 4 5 6 (PRODUCT LEVEL)	SEE PAGE
	6E-4793	1	PLUG GP-CONTROL VALVE	
	9J-0705	1	RING-BACKUP	
	033-5879	1	SEAL-O-RING	
	033-6036	1	SEAL-O-RING	
			-OR-	
	6E-2746	1	PLUG GP-CONTROL VALVE	
	6E-2745	1	SEAL-O-RING	
	9T-4506	1	PLUG	
			-OR-	
	106-6248	1	PLUG GP-CONTROL VALVE	
	9T-4506	1	PLUG	
	6E-2745	1	SEAL-O-RING	

<END>

HYDRAULIC SYSTEM

200-3365 PUMP & MTG GP-AUXILIARY

S/N: WNE1-UP; ZMF1-UP; CWG1-UP
PART OF 259-7501, 259-7502, 259-7621, 259-7622 CONTROL AR-AUXILIARY
AN ATTACHMENT

SMCS-5070, 5073 **i03650308**

NOTE	REF NO	GRAPHIC REF	PART NUMBER	QTY	PART NAME 1 2 3 4 5 6 (PRODUCT LEVEL)	SEE PAGE
	1	1	**342-1861**	1	SPACER	
	2	1	**200-3327**	1	COUPLING	
Y	3	1	**240-2998**	1	PUMP GP-GEAR (AUXILIARY HYDRAULIC)	793
M	4	1	**105-3478**	2	BOLT-SOCKET HEAD (M10X1.5X35-MM)	
	5	1	**273-8315**	2	SEAL-O-RING	
M	6	1	**8T-4136**	2	BOLT (M10X1.5X25-MM)	

M-METRIC PART
Y-SEPARATE ILLUSTRATION

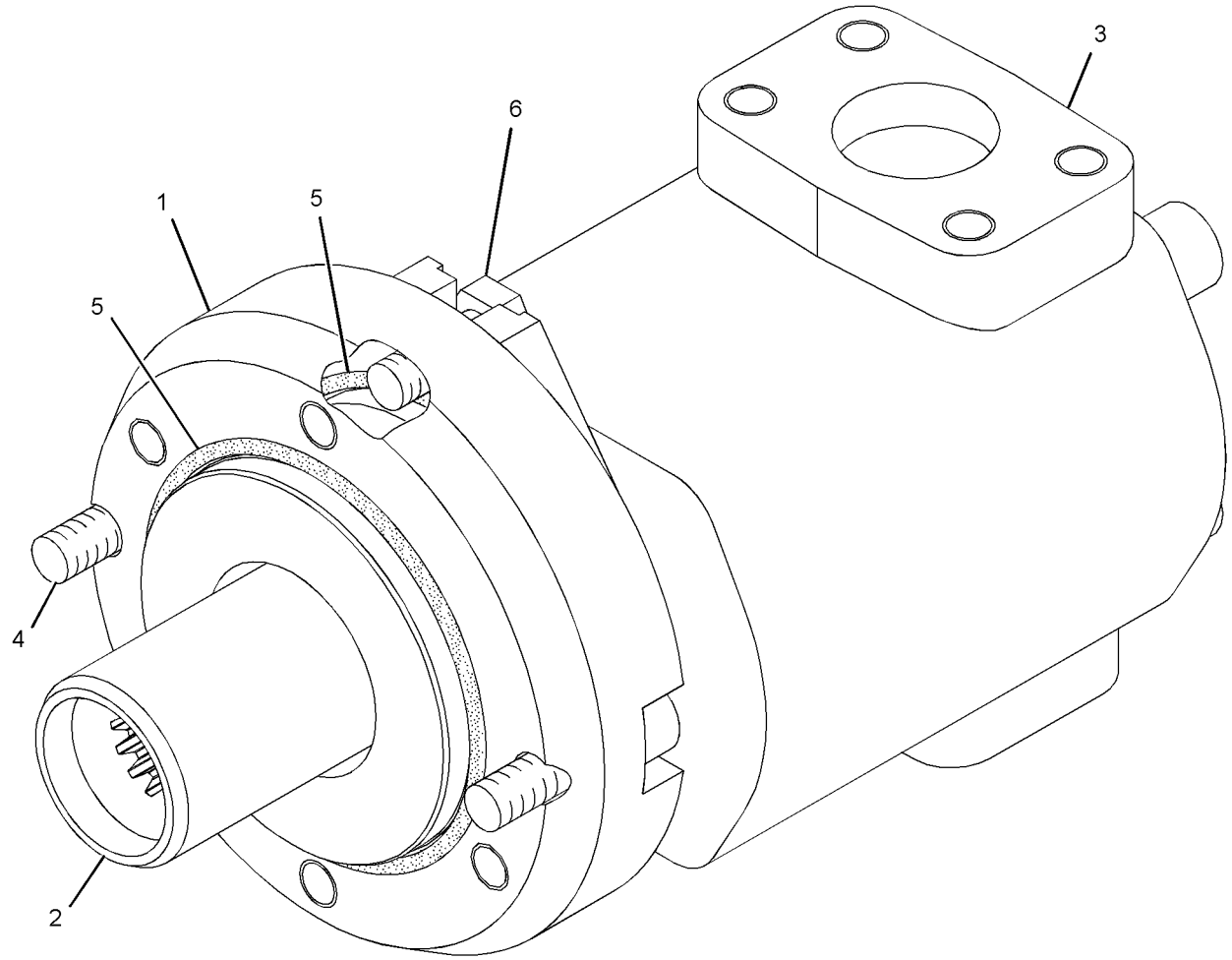

GRAPHIC #1 **<END>** g01966554

HYDRAULIC SYSTEM

279-7869 PUMP & MTG GP-MAIN HYDRAULIC

S/N: WNE1-UP; ZMF1-UP; CWG1-UP

PART OF 270-5712, 270-5713, 285-1356 HYDRAULIC AR

SMCS-5070 **i02577873**

NOTE	REF NO	GRAPHIC REF	PART NUMBER	QTY	PART NAME 1 2 3 4 5 6 (PRODUCT LEVEL)	SEE PAGE
Y	1	1	**272-6955**	1	PUMP GP-MAIN HYDRAULIC	794
Y	2	1	*279-7870*	1	COUPLING GP-PUMP	485
	3	1	**8T-4121**	12	WASHER-HARD (11X21X2.5-MM THK)	
M	4	1	**8T-4195**	12	BOLT (M10X1.5X30-MM)	

M-METRIC PART
Y-SEPARATE ILLUSTRATION

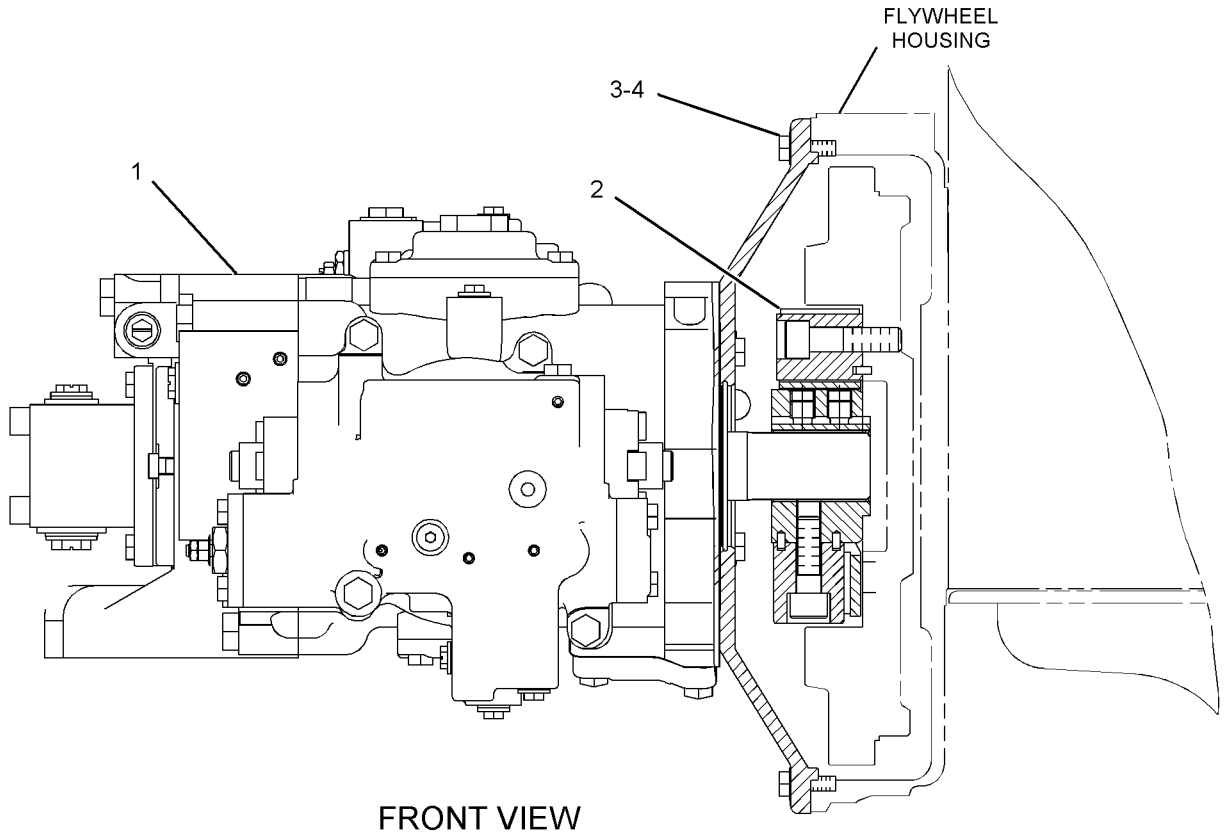

FRONT VIEW

GRAPHIC #1 **<END>** g01285232

240-2998 PUMP GP-GEAR

S/N: WNE1-UP; ZMF1-UP; CWG1-UP
PART OF 200-3365 PUMP & MTG GP-AUXILIARY
AN ATTACHMENT

SMCS-5073 **i02998678**

NOTE	REF NO	GRAPHIC REF	PART NUMBER	QTY	PART NAME 1 2 3 4 5 6 (PRODUCT LEVEL)	SEE PAGE
J	1	1	**9T-0836**	1	RING-RETAINING	
J	2	1	**3G-5083**	1	SEAL-LIP TYPE	
					AVAILABLE REPAIR KIT(S):	
			204-2800	1	KIT-SEAL (GEAR PUMP)	
					(INCLUDES GASKETS, STRIPS & PARTS MARKED J)	
J-KIT MARKED J SERVICES PART(S) MARKED J						

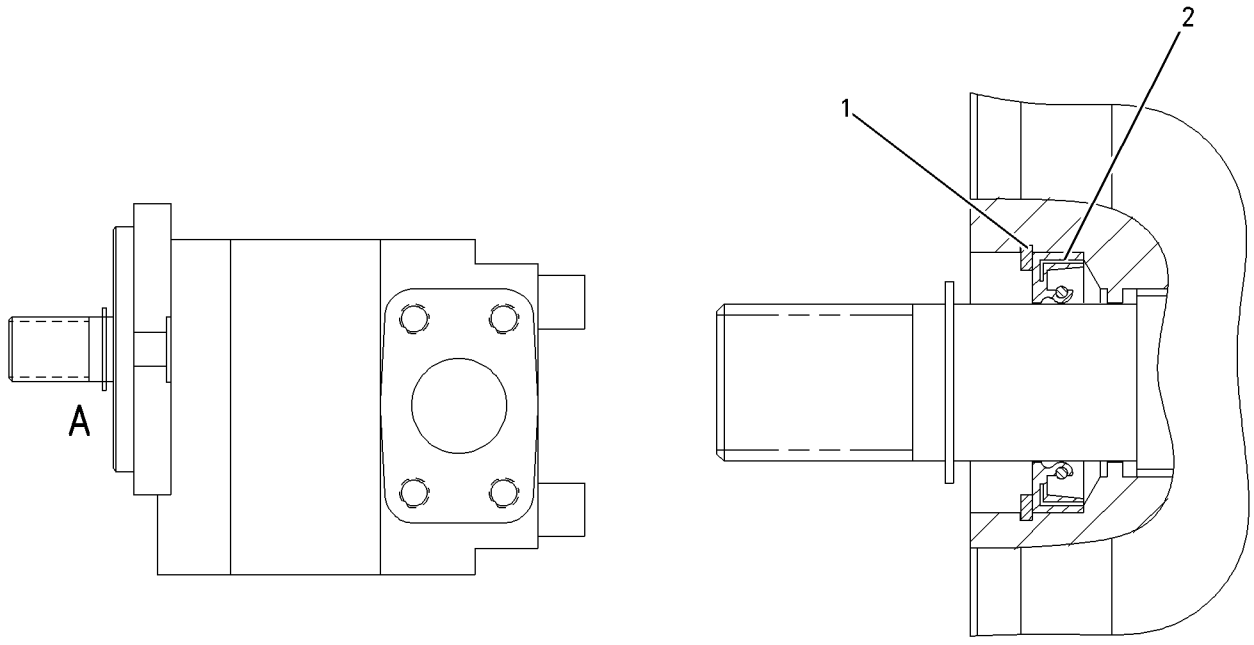

VIEW OF AREA A

GRAPHIC #1 **<END>** g00880819

HYDRAULIC SYSTEM

272-6955 PUMP GP-MAIN HYDRAULIC

S/N: WNE1-UP; ZMF1-UP; CWG1-UP

PART OF 279-7869 PUMP & MTG GP-MAIN HYDRAULIC

SMCS-5070 **i02527652**

NOTE	REF NO	GRAPHIC REF	PART NUMBER	QTY	PART NAME 1 2 3 4 5 6 (PRODUCT LEVEL)	SEE PAGE
	1	3	**4I-1022**	2	ORIFICE	
	2	2	**7Y-4215**	2	SPACER	
	3	3	**096-3983**	1	RING-RETAINING	
	4	2	**118-4057**	18	SPRING	
J	5	3	**126-2016**	1	PUMP GP-GEAR (PILOT)	
		3	**9T-0835**	1	RING-RETAINING	
	6	2	**129-7859**	2	SET-BEARING	
	7	1	**129-7863**	1	COVER	
	8	2	**129-7921**	2	RING-RETAINING	
	9	2	**129-7927**	2	BEARING	
	10	1	**129-7979**	4	DOWEL	
	11	1	**150-5782**	2	COVER	
	12	2	**173-3427**	2	GUIDE-BALL	
	13	2	**173-3473**	2	PLATE	
	14	3	**173-3496**	1	BARREL AS	
	15	2	**173-3498**	1	BARREL AS	
	16	1	**177-2470**	1	COVER	
	17	1	**177-2471**	1	COVER	
	18	1	**179-9763**	1	FLANGE	
	19	2	**191-5709**	2	PISTON AS	
	20	3	**192-0573**	4	PIN-DOWEL	
	21	2,3	**189-9763**	8	SEAL-O-RING	
	22	1	**200-3333**	1	HEAD-PUMP	
	23	2	**200-3334**	1	COVER	
	24	3	**225-4543**	1	SHAFT-DRIVE	
	25	2	**225-4544**	1	SHAFT-DRIVEN	
	26	3	**129-7854**	1	CASE	
	27	1	**129-7857**	1	GASKET	
	28	2	**129-7855**	1	GASKET	
	29	3	**129-7925**	1	SEAL-LIP TYPE	
	30	2	**242-6801**	2	SWASHPLATE AS	
					(EACH INCLUDES)	
		2	**094-1875**	1	DOWEL	
		2	**173-3428**	1	BEARING-SLEEVE	
		2	**242-6803**	2	PIN-DOWEL	
	31	3	**242-6804**	4	BEARING	
	32	2	**247-8920**	2	ORIFICE	
	33	1	**247-8782**	1	BODY	
Y	34	1	**256-0093**	1	HEAD GP-PUMP	529
Y	35	1	**256-0096**	1	HEAD GP-PUMP	532
	37	3	**094-1875**	6	DOWEL	
	38	1,3	**094-1882**	16	PLUG	
	39	2	**095-0946**	2	RING-RETAINING	
	41	3	**096-3944**	1	SEAL-O-RING	
	42	2	**273-8314**	1	SEAL-O-RING	
	43	2	**190-4896**	2	PLUG	
	44	2	**193-1736**	4	SEAL-O-RING	
	45	1	**3K-0360**	2	SEAL-O-RING	
	46	3	**7M-8485**	2	SEAL-O-RING	
M	47	1	**7X-2557**	1	BOLT (M16X2X140-MM)	
	48	3	**8J-4645**	2	PLUG (STRAIGHT THREAD O-RING)	
	49	2,3	**273-8315**	2	SEAL-O-RING	
M	50	1,2,3	**8T-4136**	18	BOLT (M10X1.5X25-MM)	
M	51	3	**8T-4137**	2	BOLT (M10X1.5X20-MM)	
M	52	1,2	**8T-4139**	10	BOLT (M12X1.75X30-MM)	
M	53	1	**8T-4140**	4	BOLT (M16X2X60-MM)	

272-6955 PUMP GP-MAIN HYDRAULIC *(contd.)* i02527652

NOTE	REF NO	GRAPHIC REF	PART NUMBER	QTY	PART NAME 1 2 3 4 5 6 (PRODUCT LEVEL)	SEE PAGE
M	54	1	**8T-4175**	2	BOLT (M16X2X90-MM)	
M	55	1,2	**8T-4176**	2	BOLT (M12X1.75X90-MM)	
M	56	3	**8T-4192**	10	BOLT (M12X1.75X25-MM)	
M	57	3	**8T-4196**	2	BOLT (M10X1.5X35-MM)	
	58	1	**9S-4185**	2	PLUG-O-RING	
					AVAILABLE REPAIR KIT(S):	
J			**250-2503**	1	KIT-SEAL (PILOT GEAR PUMP)	
					(INCLUDES 2 GASKETS, LIP SEAL, SEAL AND RETAINING RING)	

J-KIT MARKED J SERVICES PART(S) MARKED J
M-METRIC PART
Y-SEPARATE ILLUSTRATION

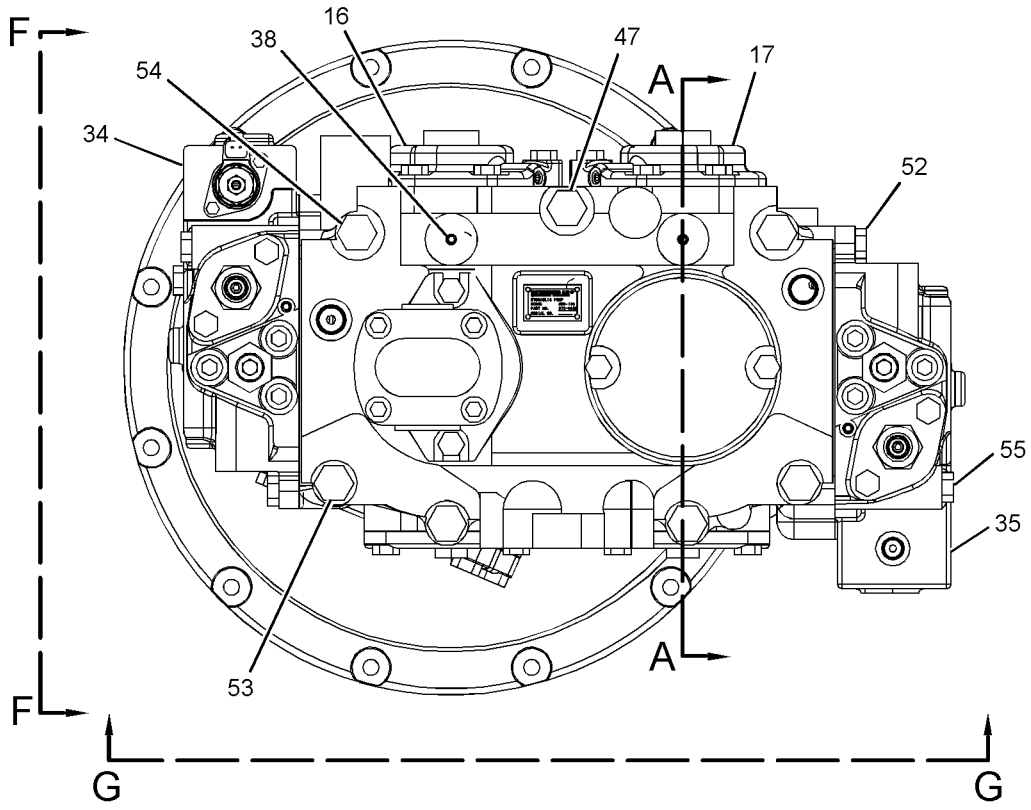

REFER TO ALL ILLUSTRATIONS OF THIS GROUP FOR AUXILIARY VIEWS

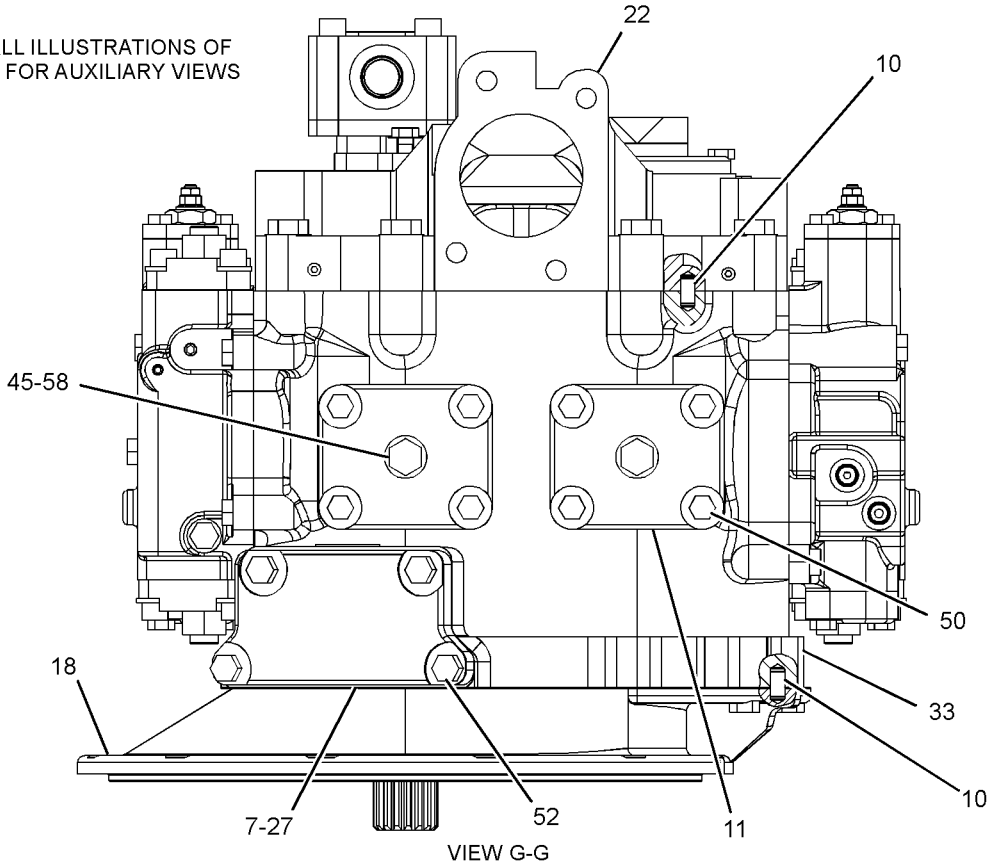

VIEW G-G

GRAPHIC #1

g01277932

272-6955 PUMP GP-MAIN HYDRAULIC *(contd.)* i02527652

REFER TO ALL ILLUSTRATIONS OF
THIS GROUP FOR AUXILIARY VIEWS

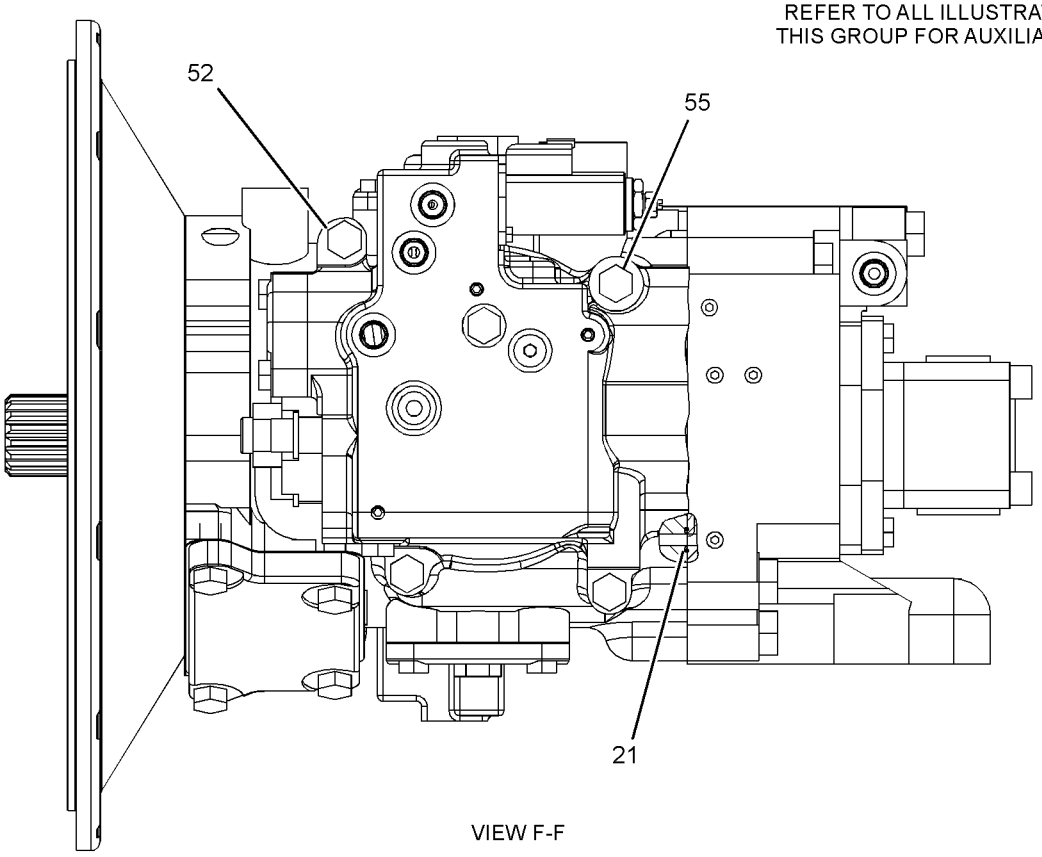

VIEW F-F

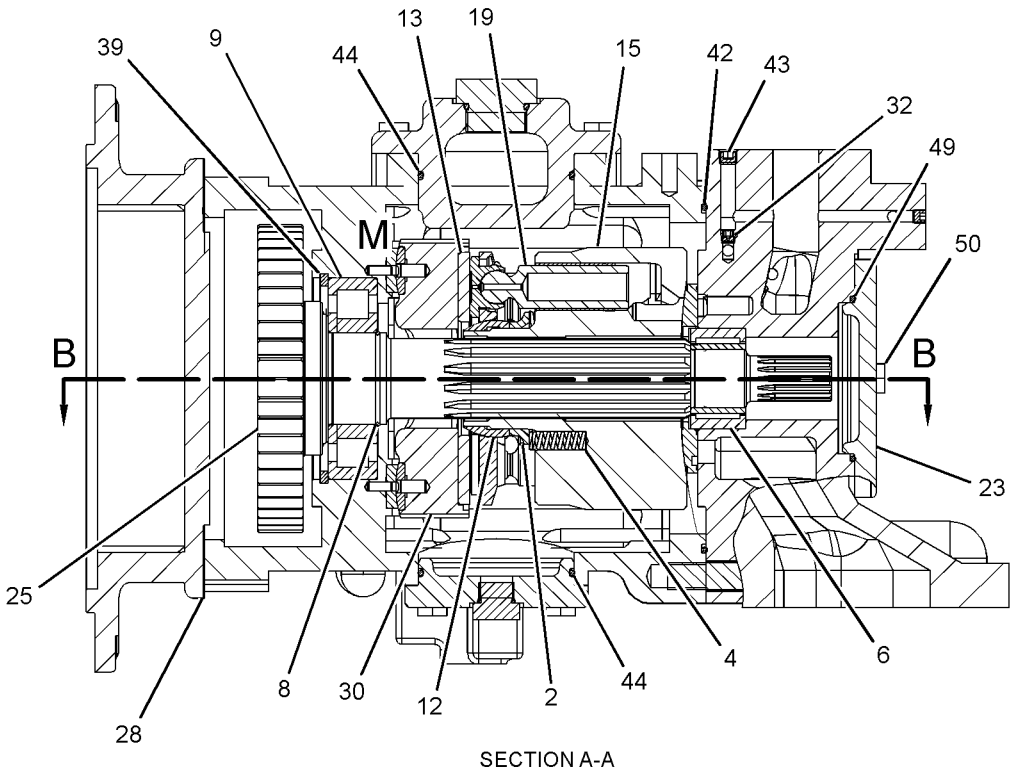

SECTION A-A

GRAPHIC #2 g01277933

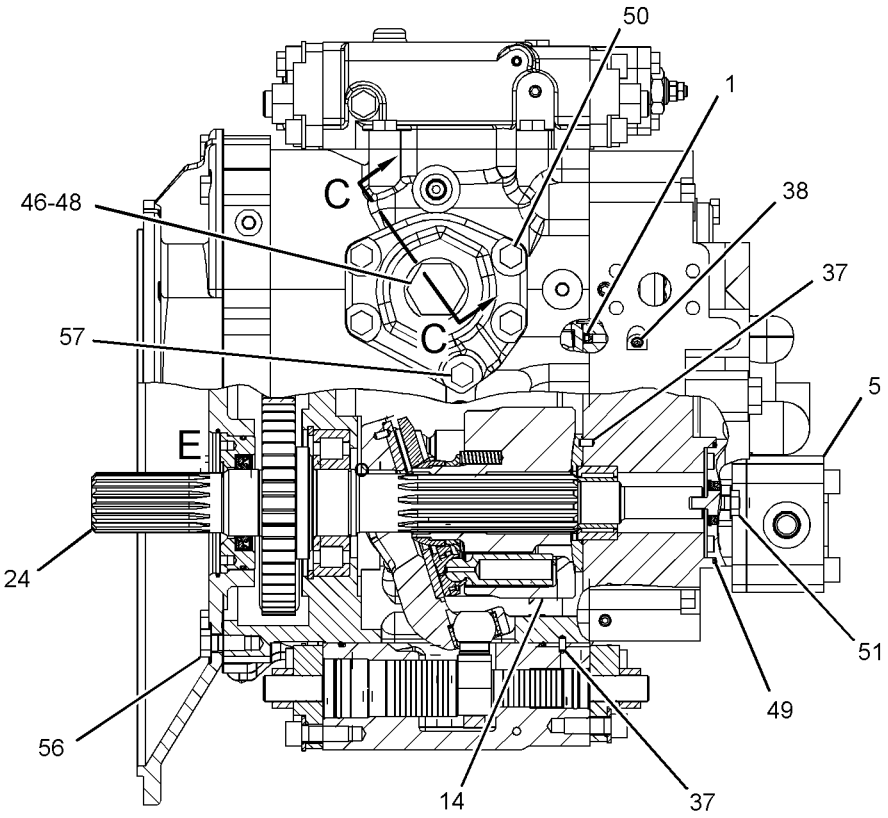

SECTION B-B

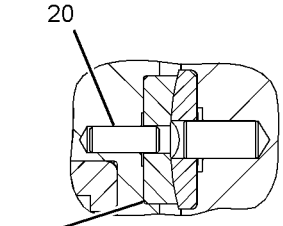

VIEW OF AREA M

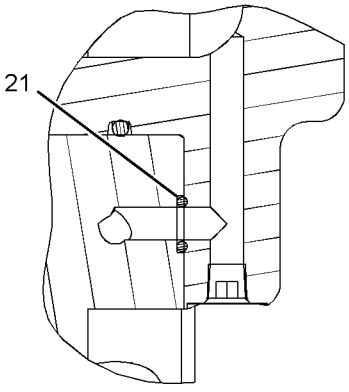

SECTION C-C

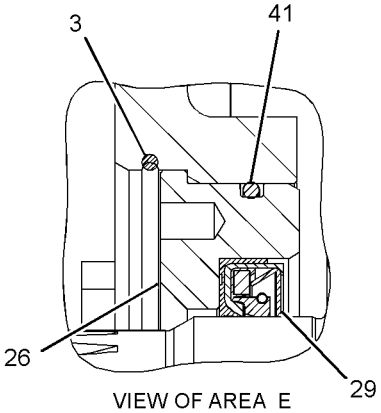

VIEW OF AREA E

GRAPHIC #3 **<END>** g01275923

259-0922 SCREEN GP-HYDRAULIC–TANK

S/N: WNE1-UP; ZMF1-UP; CWG1-UP

PART OF 239-1711, 245-5140 TANK & FILTER GP-HYDRAULIC

SMCS-5068 **i02292934**

NOTE	REF NO	GRAPHIC REF	PART NUMBER	QTY	PART NAME 1 2 3 4 5 6 (PRODUCT LEVEL)	SEE PAGE
	1	1	**259-0918**	1	GUIDE	
	2	1	**095-6639**	1	SPRING	
M	3	1	**8T-4133**	2	NUT (M10X1.5-THD)	
	4	1	**129-7784**	1	ROD	
	5	1	**209-6000**	1	SCREEN AS (HYDRAULIC TANK)	
	6	1	**5H-5672**	1	SEAL-O-RING	

M-METRIC PART

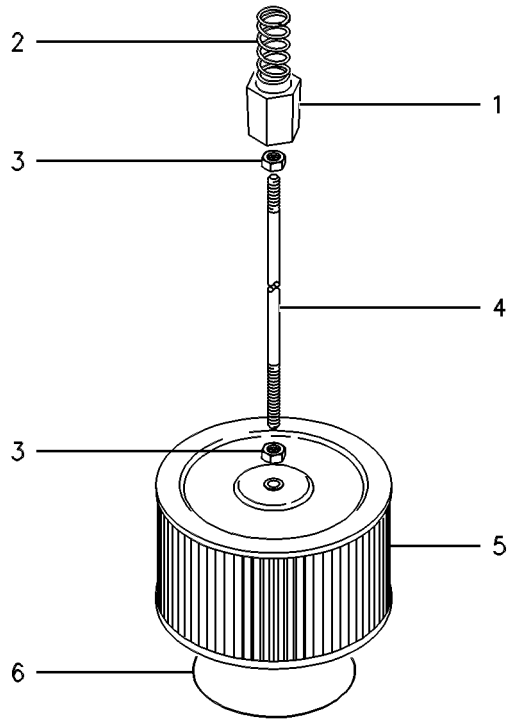

GRAPHIC #1 **<END>** g00267878

HYDRAULIC SYSTEM

234-4440 SWIVEL GP

S/N: WNE1-UP; ZMF1-UP; CWG1-UP

PART OF 239-1716, 239-1717, 266-0980 LINES GP-TRAVEL MOTOR

SMCS-5060 **i02738907**

NOTE	REF NO	GRAPHIC REF	PART NUMBER	QTY	PART NAME 1 2 3 4 5 6 (PRODUCT LEVEL)	SEE PAGE
	1	1	**7I-7131**	1	RETAINER	
	2	1	**7Y-4817**	1	COVER	
	3	1	**159-7782**	5	SEAL	
	4	1	**225-4548**	1	HOUSING	
	5	1	**225-4549**	1	ROTOR	
	6	1	**095-1625**	3	SEAL-O-RING	
	7	1	**095-1716**	1	SEAL-O-RING	
	8	1	**8T-4121**	2	WASHER-HARD (11X21X2.5-MM THK)	
M	9	1	**8T-4136**	6	BOLT (M10X1.5X25-MM)	
	10	1	**8T-6759**	1	PLUG-PIPE	

M-METRIC PART

234-4440 SWIVEL GP *(contd.)* **i02738907**

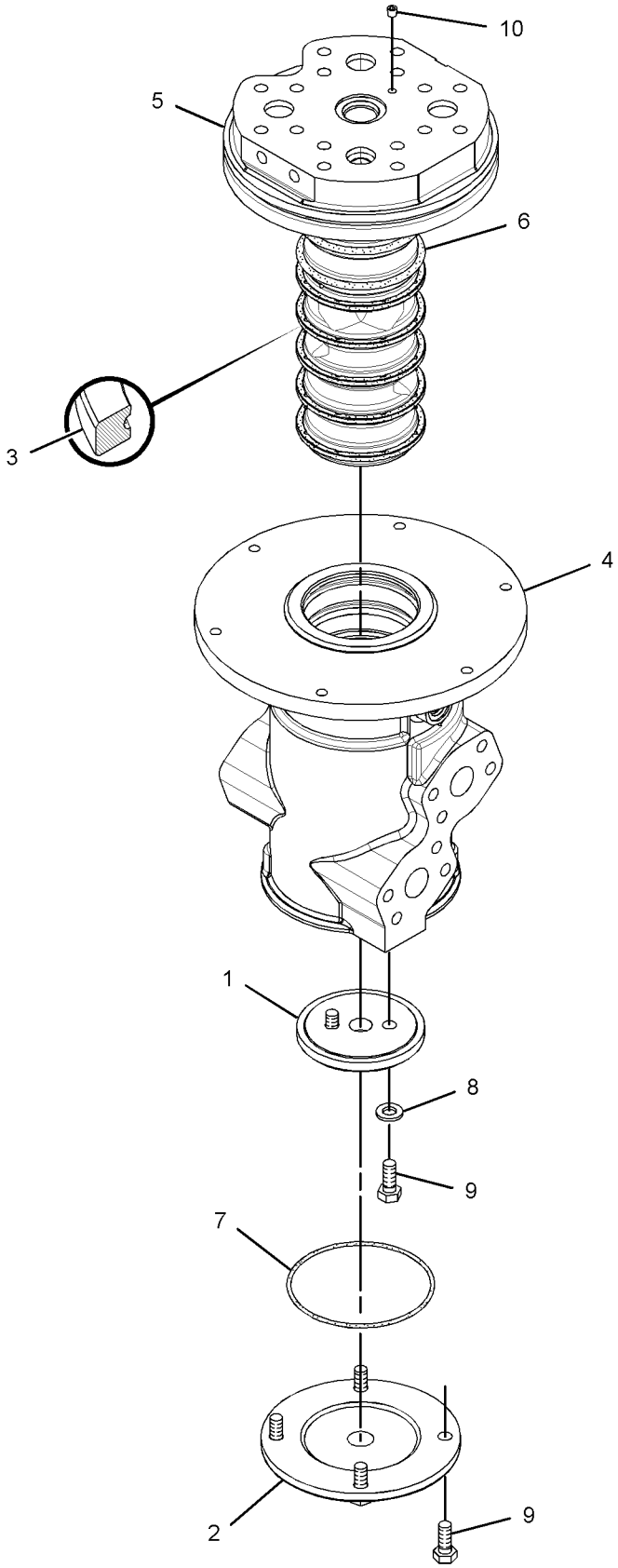

GRAPHIC #1

<END>

g01373464

HYDRAULIC SYSTEM

239-1711 TANK & FILTER GP-HYDRAULIC

S/N: WNE1-UP; ZMF1-UP

PART OF 239-1710 TANK & MTG GP-HYDRAULIC

SMCS-5056, 5068 **i03569922**

NOTE	REF NO	GRAPHIC REF	PART NUMBER	QTY	PART NAME 1 2 3 4 5 6 (PRODUCT LEVEL)	SEE PAGE
	1	1	**4B-7739**	1	PLUG-DRAIN (HYDRAULIC OIL)	
	2	1	**342-2924**	1	SENDER AS-TEMPERATURE (HYDRAULIC OIL)	
M		1	**095-7930**	2	SCREW-MACHINE (M4X0.7X6-MM)	
		1	**095-0826**	2	LOCKWASHER	
	3	1	**4J-5267**	1	SEAL-O-RING	
	4	1	**8H-9819**	1	ADAPTER-PLUG	
	5	1	**095-1608**	1	SEAL-O-RING	
	6	1	**213-0677**	1	SWITCH AS-LIQUID LEVEL (HYDRAULIC OIL)	
		1	**9X-3401**	2	PIN-CONNECTOR (16-GA TO 18-GA)	
		1	**102-8802**	1	KIT-RECEPTACLE (2-PIN)	
					(INCLUDES RECEPTACLE AS & WEDGE)	
	7	1	**227-0590**	1	BREATHER GP (HYDRAULIC TANK)	
Y	8	1	**227-0620**	1	GAUGE GP-SIGHT (HYDRAULIC OIL LEVEL)	528
	9	1	**9X-8256**	4	WASHER (6.6X12X2-MM THK)	
	10	1	**245-5402**	1	COVER AS	
Y	11	1	**259-0922**	1	SCREEN GP-HYDRAULIC (TANK)	799
C	12	1	**292-7297**	1	SUPPORT AS	
	13	1	**207-6403**	1	PLUG	
	14	1	**207-6404**	1	WASHER (49.5X60.5X1.5-MM THK)	
	15	1	**095-1730**	1	SEAL-O-RING	
	16	1	**275-1362**	1	BRACKET	
Y	17	1	**289-8194**	1	FILTER GP-OIL (HYDRAULIC, CASE DRAIN)	526
CY	18	1	**158-8987**	1	FILTER & VALVE GP-PILOT (HYDRAULIC OIL)	521
	19	1	*164-5567*	1	COUPLER AS-QUICK DISCONNECT	
		1	**3J-1907**	1	SEAL-O-RING	
		1	**6V-3965**	1	FITTING (QUICK DISCONNECT)	
	20	1	*164-5590*	1	VALVE AS-FLUID SAMPLING (HYDRAULIC OIL)	
		1	**3J-7354**	1	SEAL-O-RING	
		1	**8C-3446**	1	VALVE-FLUID SAMPLING (HYDRAULIC OIL)	
	21	1	**165-3256**	1	PIPE AS	
Y	22	1	*188-4140*	1	FILTER GP-OIL (HYDRAULIC RETURN)	522
	23	1	**2B-0858**	1	PLUG-PIPE	
	24	1	**8T-7971**	2	WASHER-HARD (13.5X25.5X5-MM THK)	
	25	1	**3D-2824**	1	SEAL-O-RING	
	26	1	**3K-0360**	1	SEAL-O-RING	
	27	1	**4J-0527**	1	SEAL-O-RING	
M	28	1	**5C-9553**	4	BOLT (M6X1X16-MM)	
	29	1	**6D-9157**	1	SEAL-O-RING	
	30	1	**6J-2680**	1	SEAL-O-RING	
	31	1	**6V-0852**	1	CAP-DUST	
	32	1	**8C-3451**	1	CAP-DUST	
M	33	1	**8T-0267**	2	BOLT-SOCKET HEAD (M6X1X12-MM)	
C	34	1	**8T-4121**	15	WASHER-HARD (11X21X2.5-MM THK)	
CM	35	1	**8T-4136**	5	BOLT (M10X1.5X25-MM)	
M	36	1	**8T-4137**	6	BOLT (M10X1.5X20-MM)	
M	37	1	**8T-4183**	6	BOLT (M12X1.75X40-MM)	
M	38	1	**8T-4195**	4	BOLT (M10X1.5X30-MM)	
	39	1	**8T-4223**	4	WASHER-HARD (13.5X25.5X3-MM THK)	
	40	1	**8T-4224**	4	WASHER-HARD (8.8X16X2-MM THK)	
M	41	1	**8T-4908**	4	BOLT (M8X1.25X25-MM)	

C-CHANGE FROM PREVIOUS TYPE
M-METRIC PART
Y-SEPARATE ILLUSTRATION

239-1711 TANK & FILTER GP-HYDRAULIC *(contd.)* i03569922

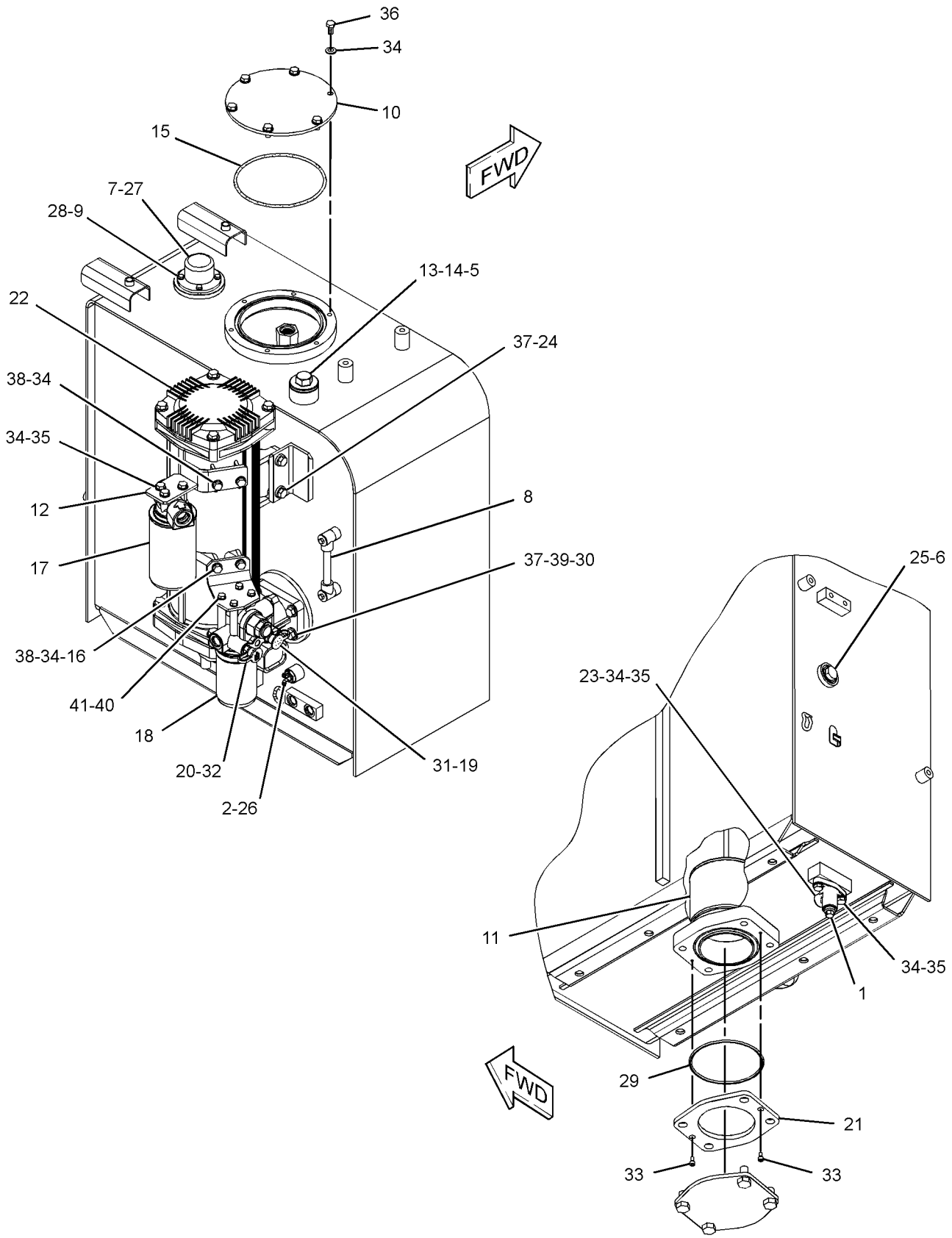

GRAPHIC #1 **<END>** g01898653

HYDRAULIC SYSTEM

245-5140 TANK & FILTER GP-HYDRAULIC

S/N: CWG1-UP
210-L (46.2-US GAL)
PART OF 245-5139 TANK & MTG GP-HYDRAULIC

SMCS-5056, 5068 **i03668752**

NOTE	REF NO	GRAPHIC REF	PART NUMBER	QTY	PART NAME 1 2 3 4 5 6 (PRODUCT LEVEL)	SEE PAGE
	1	1	**4B-7739**	1	PLUG-DRAIN (HYDRAULIC TANK)	
	2	1	**342-2924**	1	SENDER AS-TEMPERATURE (HYDRAULIC OIL)	
M		1	**095-7930**	2	SCREW-MACHINE (M4X0.7X6-MM)	
		1	**095-0826**	2	LOCKWASHER	
	3	1	**4J-5267**	1	SEAL-O-RING	
	4	1	**8H-9819**	1	ADAPTER-PLUG	
	5	1	**095-1608**	1	SEAL-O-RING	
	6	1	**292-7450**	1	SUPPORT AS	
	7	1	**213-0677**	1	SWITCH AS-LIQUID LEVEL (HYDRAULIC TANK)	
		1	**102-8802**	1	KIT-RECEPTACLE (2-PIN)	
					(INCLUDES RECEPTACLE AS & WEDGE)	
		1	**9X-3401**	2	PIN-CONNECTOR (16-GA TO 18-GA)	
					—OR—	
		1	**126-1767**	2	PIN-CONNECTOR (14-GA)	
	8	1	**227-0590**	1	BREATHER GP (HYDRAULIC TANK)	
Y	9	1	**227-0620**	1	GAUGE GP-SIGHT (HYDRAULIC OIL LEVEL)	528
	10	1	**236-3170**	1	COVER AS	
Y	12	1	**259-0922**	1	SCREEN GP-HYDRAULIC (TANK)	799
	13	1	**207-6403**	1	PLUG	
	14	1	**207-6404**	1	WASHER (49.5X60.5X1.5-MM THK)	
	15	1	**095-1735**	1	SEAL-O-RING	
	16	1	**112-0065**	1	BRACKET	
Y	17	1	**289-8194**	1	FILTER GP-OIL (HYDRAULIC, CASE DRAIN)	526
Y	18	1	**158-8987**	1	FILTER & VALVE GP-PILOT (HYDRAULIC OIL)	521
	19	1	*164-5567*	1	COUPLER AS-QUICK DISCONNECT	
		1	**3J-1907**	1	SEAL-O-RING	
		1	**6V-3965**	1	FITTING (QUICK DISCONNECT)	
	20	1	*164-5590*	1	VALVE AS-FLUID SAMPLING	
		1	**3J-7354**	1	SEAL-O-RING	
		1	**8C-3446**	1	VALVE-FLUID SAMPLING	
	21	1	**165-3256**	1	PIPE AS	
Y	22	1	*188-4140*	1	FILTER GP-OIL (HYDRAULIC RETURN)	522
	23	1	**2B-0858**	1	PLUG-PIPE	
	24	1	**8T-7971**	2	WASHER-HARD (13.5X25.5X5-MM THK)	
	25	1	**3D-2824**	1	SEAL-O-RING	
	26	1	**3K-0360**	1	SEAL-O-RING	
	27	1	**4J-0527**	1	SEAL-O-RING	
M	28	1	**5C-9553**	4	BOLT (M6X1X16-MM)	
	29	1	**6D-9157**	1	SEAL-O-RING	
	30	1	**6J-2680**	1	SEAL-O-RING	
	31	1	**6V-0852**	1	CAP-DUST	
	32	1	**8C-3451**	1	CAP-DUST	
M	33	1	**8T-0267**	2	BOLT-SOCKET HEAD (M6X1X12-MM)	
	34	1	**8T-4121**	17	WASHER-HARD (11X21X2.5-MM THK)	
M	35	1	**8T-4136**	5	BOLT (M10X1.5X25-MM)	
M	36	1	**8T-4137**	8	BOLT (M10X1.5X20-MM)	
M	37	1	**8T-4183**	6	BOLT (M12X1.75X40-MM)	
M	38	1	**8T-4195**	4	BOLT (M10X1.5X30-MM)	
	39	1	**8T-4223**	4	WASHER-HARD (13.5X25.5X3-MM THK)	
	40	1	**8T-4224**	4	WASHER-HARD (8.8X16X2-MM THK)	
M	41	1	**8T-4908**	4	BOLT (M8X1.25X25-MM)	
	43	1	**9X-8256**	4	WASHER (6.6X12X2-MM THK)	

M-METRIC PART
Y-SEPARATE ILLUSTRATION

245-5140 TANK & FILTER GP-HYDRAULIC *(contd.)* i03668752

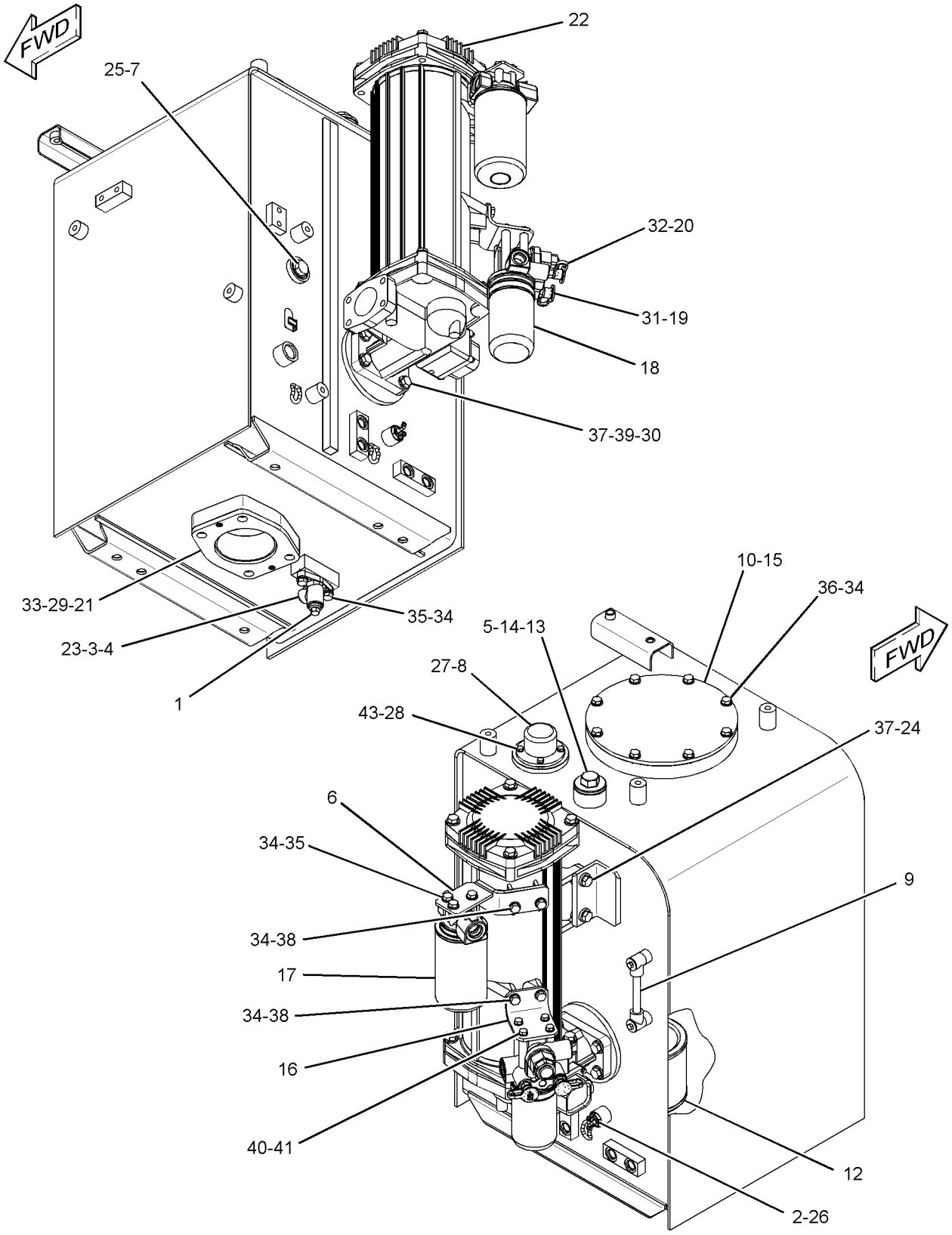

GRAPHIC #1 **<END>** g01893847

HYDRAULIC SYSTEM

239-1710 TANK & MTG GP-HYDRAULIC

S/N: WNE1-UP; ZMF1-UP

PART OF 270-5712, 270-5713 HYDRAULIC AR

SMCS-5056 **i02417873**

NOTE	REF NO	GRAPHIC REF	PART NUMBER	QTY	PART NAME 1 2 3 4 5 6 (PRODUCT LEVEL)	SEE PAGE
Y	1	1	**239-1711**	1	TANK & FILTER GP-HYDRAULIC	802
Y	2	1	*248-9853*	1	LINES GP-RETURN	747
	3	1	**085-9310**	6	SPACER (16.6X32X26-MM THK)	
M	4	1	**8T-4140**	6	BOLT (M16X2X60-MM)	

M-METRIC PART
Y-SEPARATE ILLUSTRATION

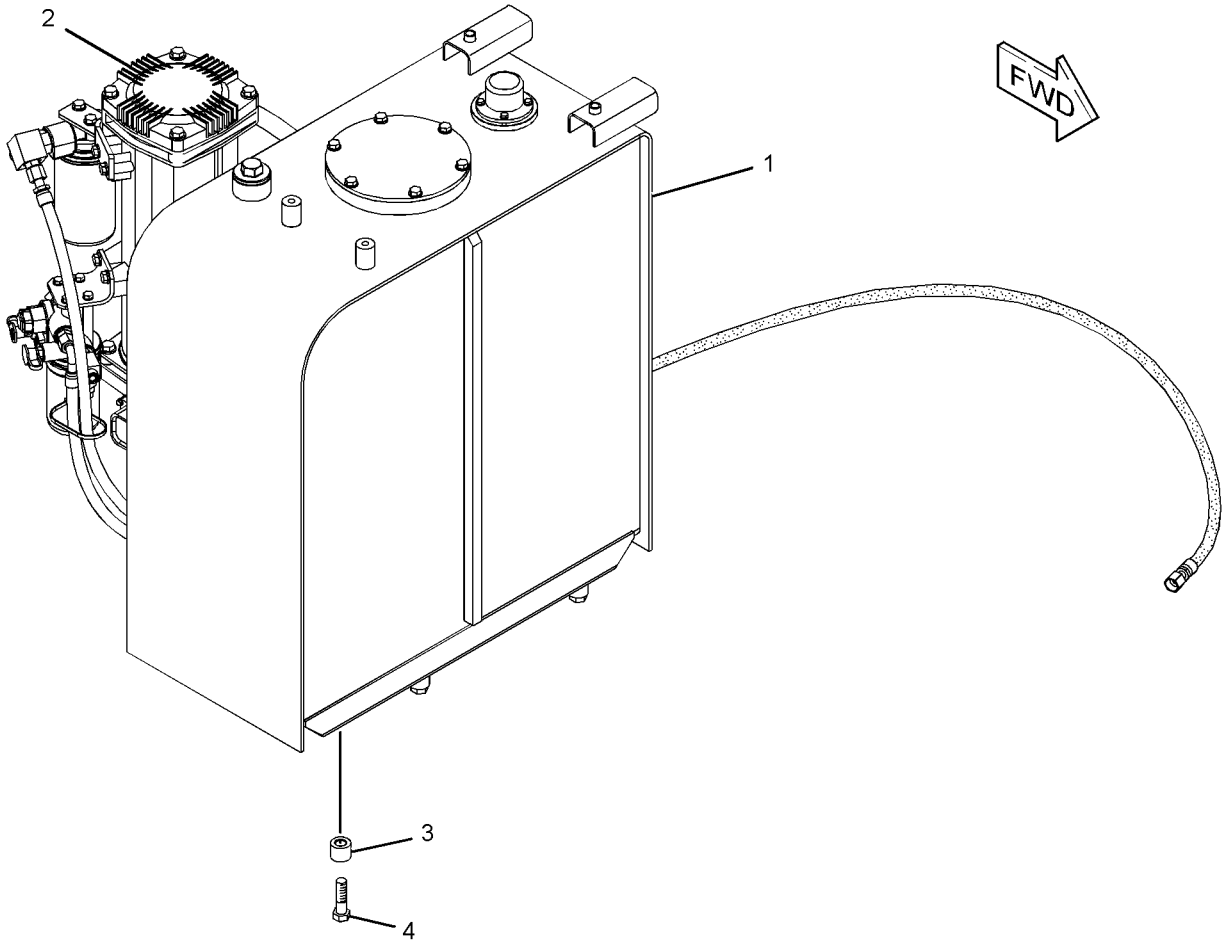

GRAPHIC #1 **<END>** g01227156

HYDRAULIC SYSTEM

245-5139 TANK & MTG GP-HYDRAULIC

S/N: CWG1-UP

PART OF 285-1356 HYDRAULIC AR

SMCS-5056 **i02814764**

NOTE	REF NO	GRAPHIC REF	PART NUMBER	QTY	PART NAME 1 2 3 4 5 6 (PRODUCT LEVEL)	SEE PAGE
Y	1	1	**245-5140**	1	TANK & FILTER GP-HYDRAULIC	804
Y	2	1	**266-0956**	1	LINES GP-RETURN	749
	3	1	**085-9310**	6	SPACER (16.6X32X26-MM THK)	
M	4	1	**8T-4140**	6	BOLT (M16X2X60-MM)	

M-METRIC PART
Y-SEPARATE ILLUSTRATION

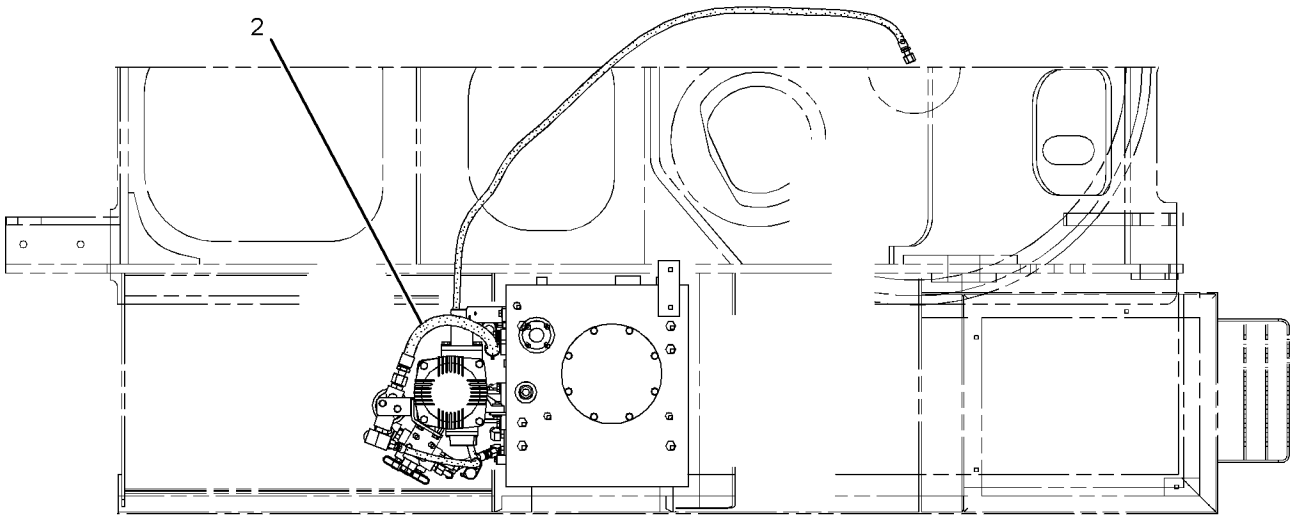

TOP VIEW

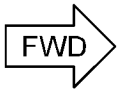

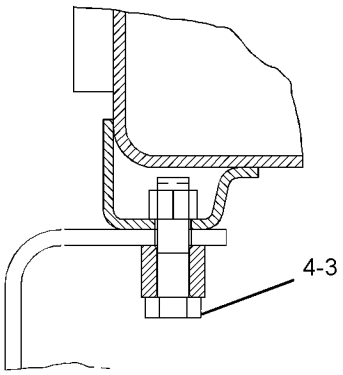

VIEW OF AREA A

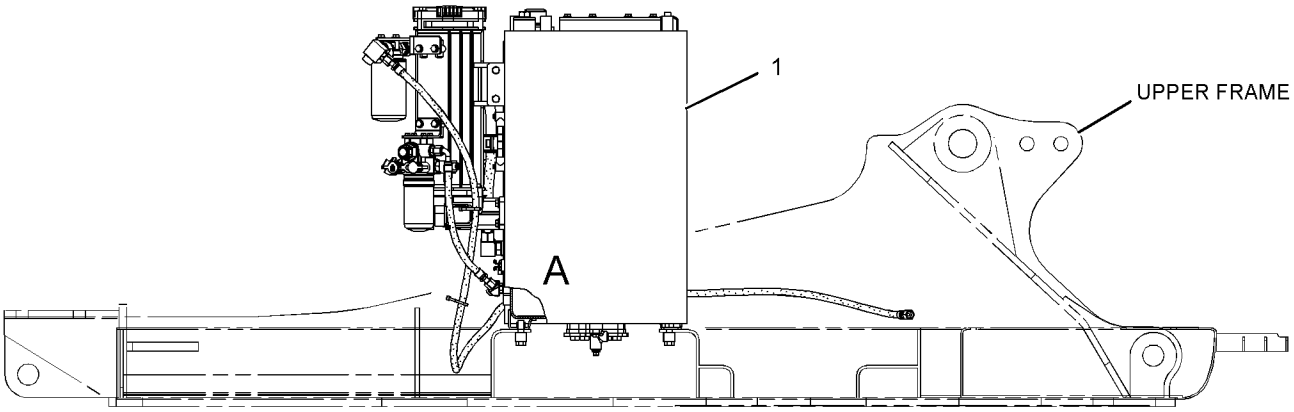

RIGHT SIDE VIEW

GRAPHIC #1 **<END>** g01191828

255-5713 VALVE & MTG GP-CONTROL–AUXILIARY

S/N: WNE1-UP; ZMF1-UP; CWG1-UP
PART OF 297-0491, 297-0497 CONTROL AR-AUXILIARY
AN ATTACHMENT

SMCS-5051 **i02412829**

NOTE	REF NO	GRAPHIC REF	PART NUMBER	QTY	PART NAME 1 2 3 4 5 6 (PRODUCT LEVEL)	SEE PAGE
Y	1	1	**259-7378**	1	VALVE GP-CONTROL (AUXILIARY)	824
M	2	1	**7I-1026**	5	BOLT-SOCKET HEAD (M16X2X130-MM)	
	3	1	**4J-8998**	2	SEAL-O-RING	
	4	1	**1P-3702**	2	SEAL-RECTANGULAR	

M-METRIC PART
Y-SEPARATE ILLUSTRATION

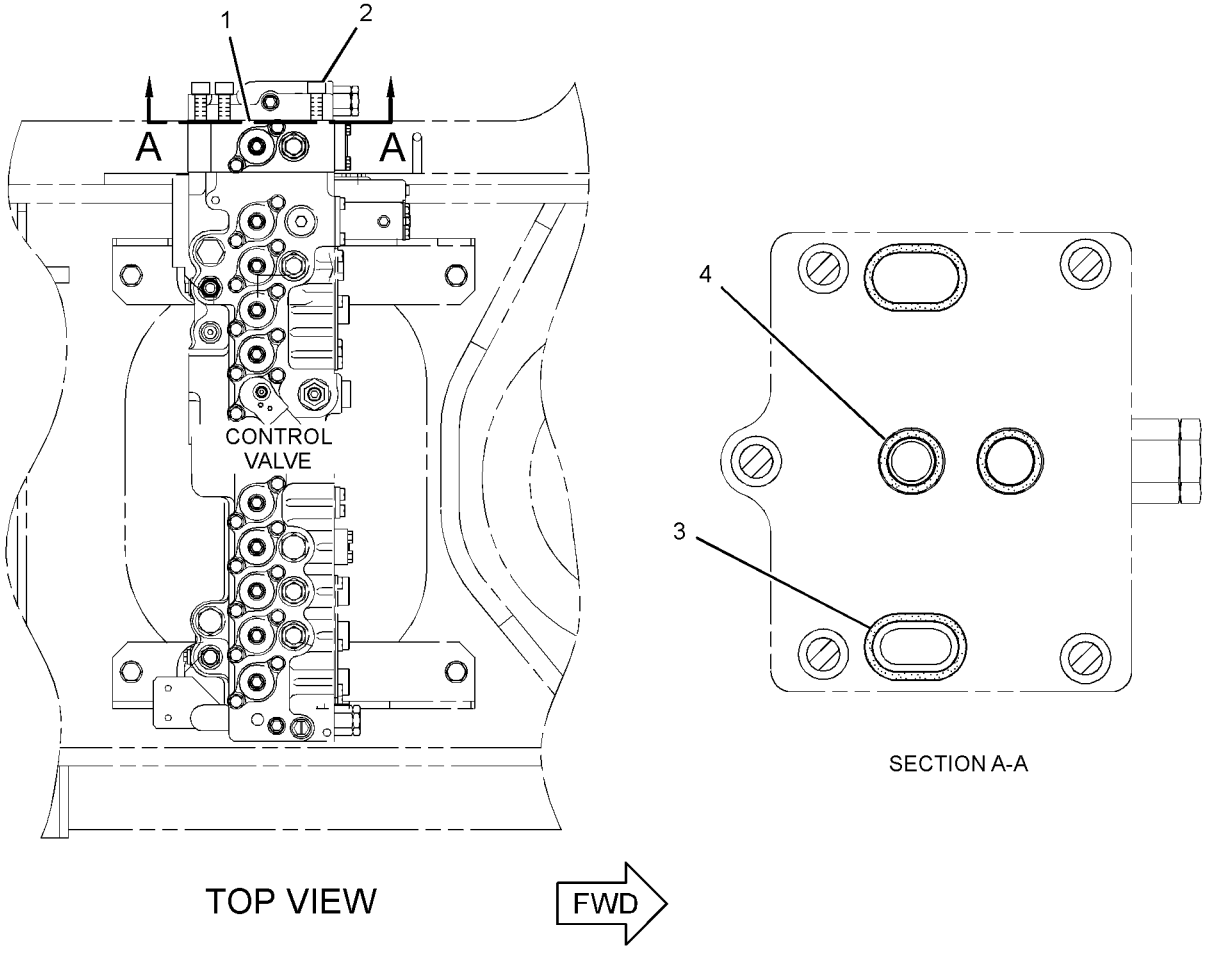

GRAPHIC #1 **<END>** g01214142

270-5677 VALVE & MTG GP-CONTROL–
VARIABLE ADJUSTABLE BOOM
S/N: CWG1-UP
PART OF 253-2824 CONTROL AR-MACHINE
AN ATTACHMENT

SMCS-5051 **i02619390**

NOTE	REF NO	GRAPHIC REF	PART NUMBER	QTY	PART NAME 1 2 3 4 5 6 (PRODUCT LEVEL)	SEE PAGE
	1	1	**4J-8998**	2	SEAL-O-RING	
Y	2	1	**259-7378**	2	VALVE GP-CONTROL (AUXILIARY)	824
	3	1	**1P-3702**	2	SEAL-RECTANGULAR	
M	4	1	**8T-6383**	5	BOLT (M16X2X200-MM)	
	5	1	**9X-8257**	5	WASHER (17.5X30X3.5-MM THK)	

M-METRIC PART
Y-SEPARATE ILLUSTRATION

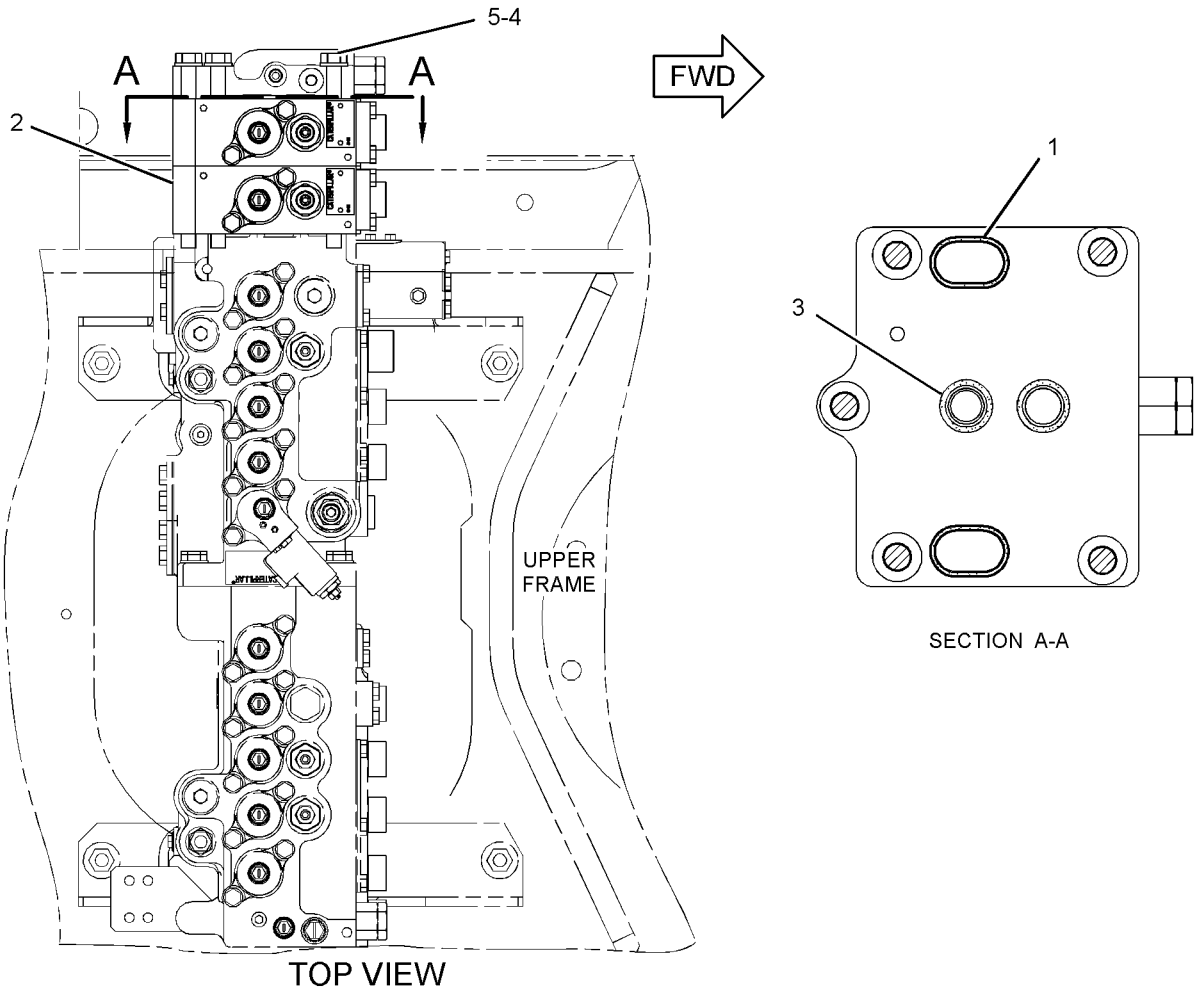

GRAPHIC #1 **<END>** g01231610

285-1376 VALVE & MTG GP-CONTROL–

SYSTEM 16, 1-WAY, 2-PUMP

S/N: WNE1-UP; ZMF1-UP; CWG1-UP

PART OF 259-7499, 259-7619 CONTROL AR-AUXILIARY

AN ATTACHMENT

SMCS-5051 **i02523435**

NOTE	REF NO	GRAPHIC REF	PART NUMBER	QTY	PART NAME 1 2 3 4 5 6 (PRODUCT LEVEL)	SEE PAGE
	1	1	**4J-8998**	2	SEAL-O-RING	
M	2	1	**7I-1026**	5	BOLT-SOCKET HEAD (M16X2X130-MM)	
Y	3	1	**285-1375**	1	VALVE GP-CONTROL (2-PUMP, 1-WAY FLOW)	837
	4	1	**1P-3702**	2	SEAL-RECTANGULAR	

M-METRIC PART
Y-SEPARATE ILLUSTRATION

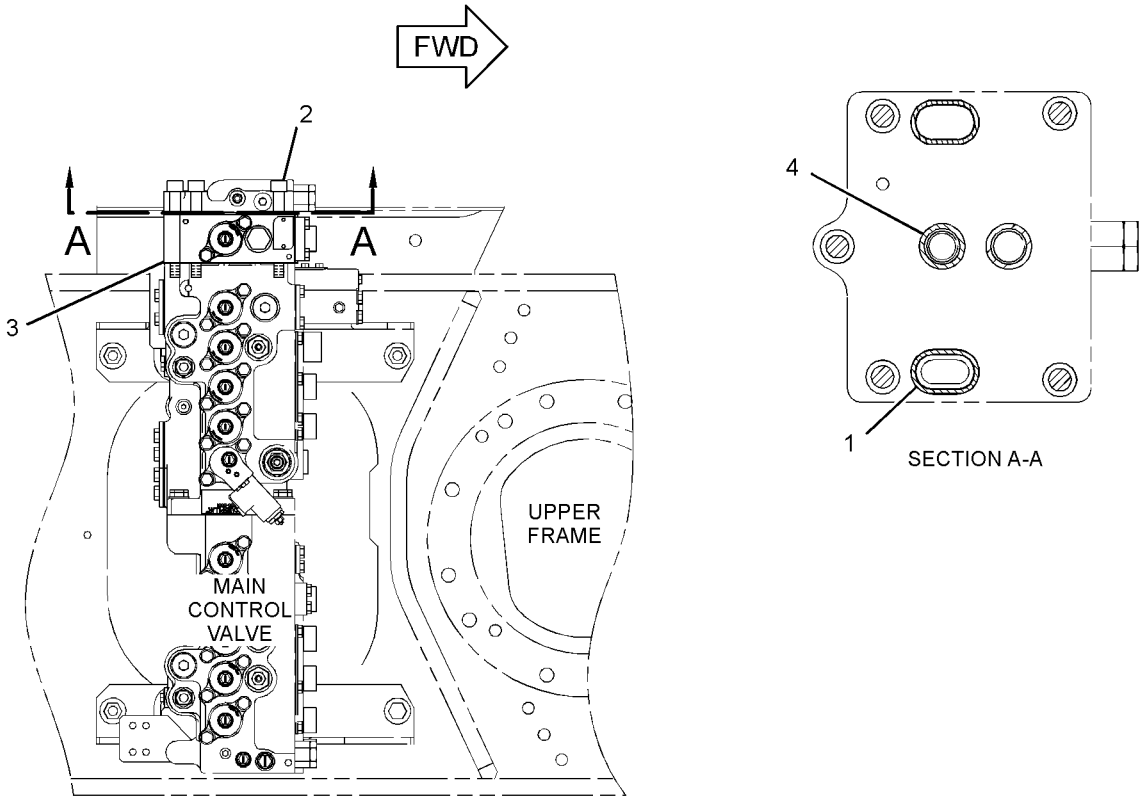

TOP VIEW

GRAPHIC #1 **<END>** g01264271

285-1514 VALVE AR-CHECK & RELIEF–
BOOM LOWERING CONTROL VALVE
S/N: CWG1-UP
AN ATTACHMENT

SMCS-5117, 5453 **i03467766**

NOTE	PART NUMBER	QTY	PART NAME 1 2 3 4 5 6 (PRODUCT LEVEL)	SEE PAGE
Y	*286-6495*	1	LINES GP-BOOM CYLINDER	586
Y	*289-5399*	1	LINES GP-PILOT	725
Y	*289-5398*	1	LINES GP-RETURN	757

Y-SEPARATE ILLUSTRATION

<END>

285-1515 VALVE AR-CHECK & RELIEF–
STICK LOWERING CONTROL VALVE
S/N: CWG1-UP
PART OF 346-4629 DISTRIBUTION AR
AN ATTACHMENT

SMCS-5117, 5453 **i03467764**

NOTE	PART NUMBER	QTY	PART NAME 1 2 3 4 5 6 (PRODUCT LEVEL)	SEE PAGE
Y	*242-6505*	1	LINES GP-BOOM (STICK LOAD CONTROL)	571
Y	*266-0978*	1	LINES GP-PILOT (STICK LOWERING CONTROL)	705
Y	*262-3471*	1	LINES GP-STICK CYLINDER	761

Y-SEPARATE ILLUSTRATION

<END>

335-4979 VALVE AR-CHECK & RELIEF–
STICK LOWERING, VARIABLE ADJUSTABLE BOOM
S/N: CWG1-UP
AN ATTACHMENT

SMCS-5117, 5453 **i03657516**

NOTE	PART NUMBER	QTY	PART NAME 1 2 3 4 5 6 (PRODUCT LEVEL)	SEE PAGE
Y	*335-4980*	1	LINES GP-BOOM (STICK LOWERING, VAR ADJ BOOM)	575
Y	*266-0978*	1	LINES GP-PILOT (STICK LOWERING CONTROL)	705
Y	*335-4981*	1	LINES GP-STICK CYLINDER (STICK LOWERING CONTROL)	763

Y-SEPARATE ILLUSTRATION

<END>

239-8677 VALVE AR-LOAD CONTROL–STICK CYLINDER, REACH BOOM

S/N: WNE1-UP; ZMF1-UP
PART OF 346-4628 DISTRIBUTION AR
AN ATTACHMENT

SMCS-5067, 5117, 5147, 5811 **i02420410**

NOTE	PART NUMBER	QTY	PART NAME 1 2 3 4 5 6 (PRODUCT LEVEL)	SEE PAGE
Y	*242-6505*	1	LINES GP-BOOM (STICK LOAD CONTROL)	571
Y	*260-7970*	1	LINES GP-PILOT (LOAD CONTROL, STICK CYLINDER)	671
Y	*262-3471*	1	LINES GP-STICK CYLINDER	761
Y-SEPARATE ILLUSTRATION				

<END>

247-7457 VALVE AR-SWING–WITHOUT FINE SWING

S/N: WNE1-UP; ZMF1-UP
PART OF 347-9902, 347-9938 OPTION AR-UNDERCARRIAGE
AN ATTACHMENT

SMCS-5480 **i02423739**

NOTE	PART NUMBER	QTY	PART NAME 1 2 3 4 5 6 (PRODUCT LEVEL)	SEE PAGE
Y	*259-0680*	1	VALVE GP-SWING CUSHION	901
Y-SEPARATE ILLUSTRATION				

<END>

290-1720 VALVE AR-SWING–WITHOUT FINE SWING

S/N: CWG1-UP
PART OF 347-9903 OPTION AR-UNDERCARRIAGE
AN ATTACHMENT

SMCS-5480 **i02988783**

NOTE	PART NUMBER	QTY	PART NAME 1 2 3 4 5 6 (PRODUCT LEVEL)	SEE PAGE
Y	*259-0680*	1	VALVE GP-SWING CUSHION	901
Y-SEPARATE ILLUSTRATION				

<END>

173-4672 VALVE GP-CHECK–OIL COOLER BYPASS

S/N: CWG1-UP

PART OF 266-0959 LINES GP-PUMP

SMCS-5067 **i01721698**

NOTE	REF NO	GRAPHIC REF	PART NUMBER	QTY	PART NAME 1 2 3 4 5 6 (PRODUCT LEVEL)	SEE PAGE
	1	1	**190-7826**	1	PLUG	
	2	1	**095-1547**	1	SEAL-O-RING	
	3	1	**177-2713**	1	VALVE AS	
	4	1	**184-3841**	1	RING	
	5	1	**184-3833**	1	VALVE AS	
	6	1	**177-2709**	1	BODY	
	7	1	**9S-6130**	1	PLUG	
	8	1	**2S-4078**	1	SEAL-O-RING	

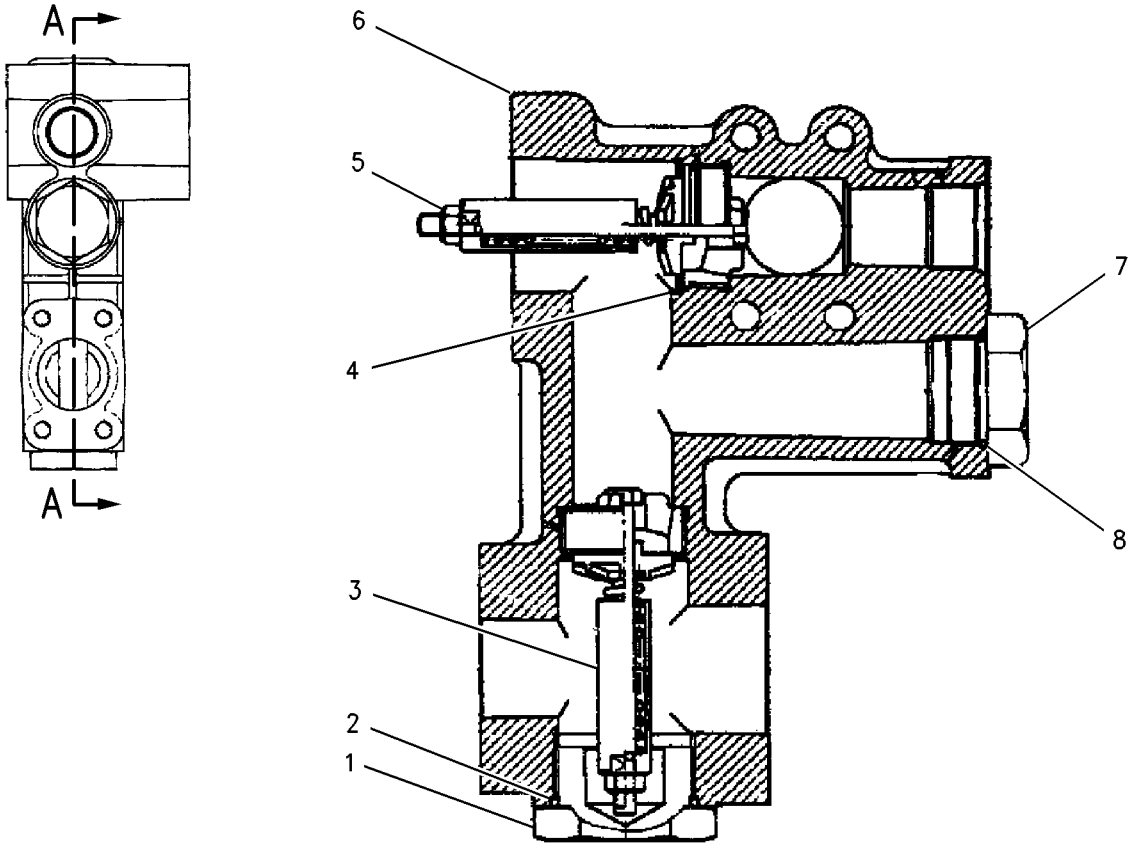

SECTION A-A

GRAPHIC #1 **<END>** g00885076

201-9329 VALVE GP-CHECK

S/N: WNE1-UP; ZMF1-UP
PART OF 260-8013, 260-8014 LINES GP-FRONT, 297-0503, 297-0504 VALVE GP-CHECK
ALSO AN ATTACHMENT

SMCS-5067 **i01820850**

NOTE	REF NO	GRAPHIC REF	PART NUMBER	QTY	PART NAME 1 2 3 4 5 6 (PRODUCT LEVEL)	SEE PAGE
Z	1	1		1	BODY-VALVE	
	2	1	**184-3833**	1	VALVE AS	
	3	1	**190-7826**	2	PLUG	
	4	1	**095-1547**	2	SEAL-O-RING	
	5	1	**177-2713**	1	VALVE AS	
	6	1	**9S-6130**	1	PLUG	
	7	1	**2S-4078**	1	SEAL-O-RING	

Z-NOT SERVICED SEPARATELY

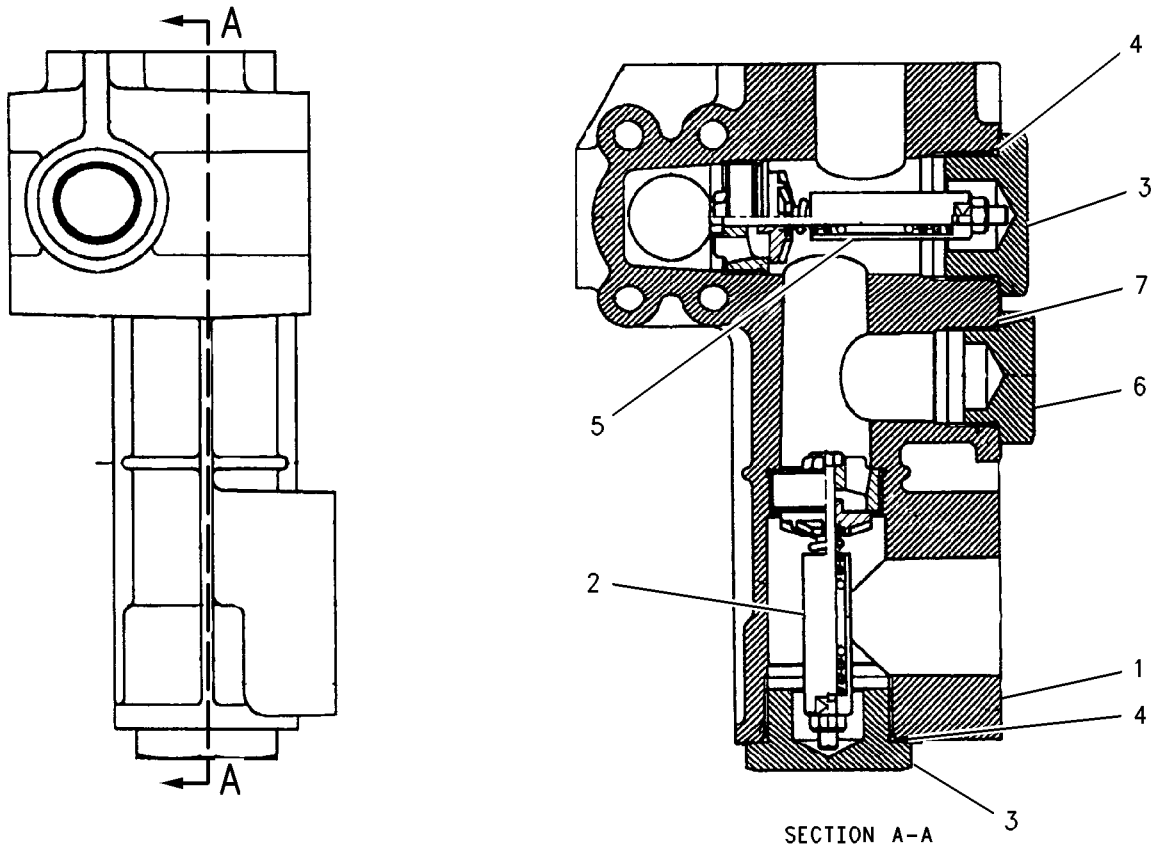

GRAPHIC #1 **<END>** g00932225

HYDRAULIC SYSTEM

297-0370 VALVE GP-CHECK

S/N: WNE1-UP; ZMF1-UP; CWG1-UP
PART OF 260-8014, 302-3315 LINES GP-FRONT, 275-1397, 289-5396 LINES GP-RETURN
AN ATTACHMENT

SMCS-5067 **i02757868**

NOTE	REF NO	GRAPHIC REF	PART NUMBER	QTY	PART NAME 1 2 3 4 5 6 (PRODUCT LEVEL)	SEE PAGE
	1	1	**095-1585**	1	SEAL-O-RING	
	2	1	**225-4804**	3	PLUG	
	3	1	**4J-7533**	3	SEAL-O-RING	
	4	1	**095-1602**	1	SEAL-O-RING	
	5	1	**232-4113**	1	RING	
	6	1	**095-1601**	1	SEAL-O-RING	
	7	1	**8T-3008**	1	RING-BACKUP	
	8	1	**095-1700**	1	SEAL-O-RING	
	9	1	**7M-8485**	1	SEAL-O-RING	
	10	1	**095-1657**	1	SEAL-O-RING	
	11	1	**232-4114**	2	RING	

297-0370 VALVE GP-CHECK *(contd.)* **i02757868**

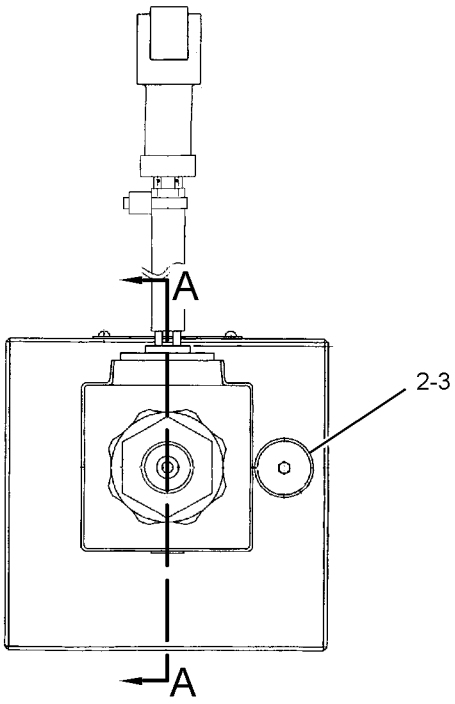

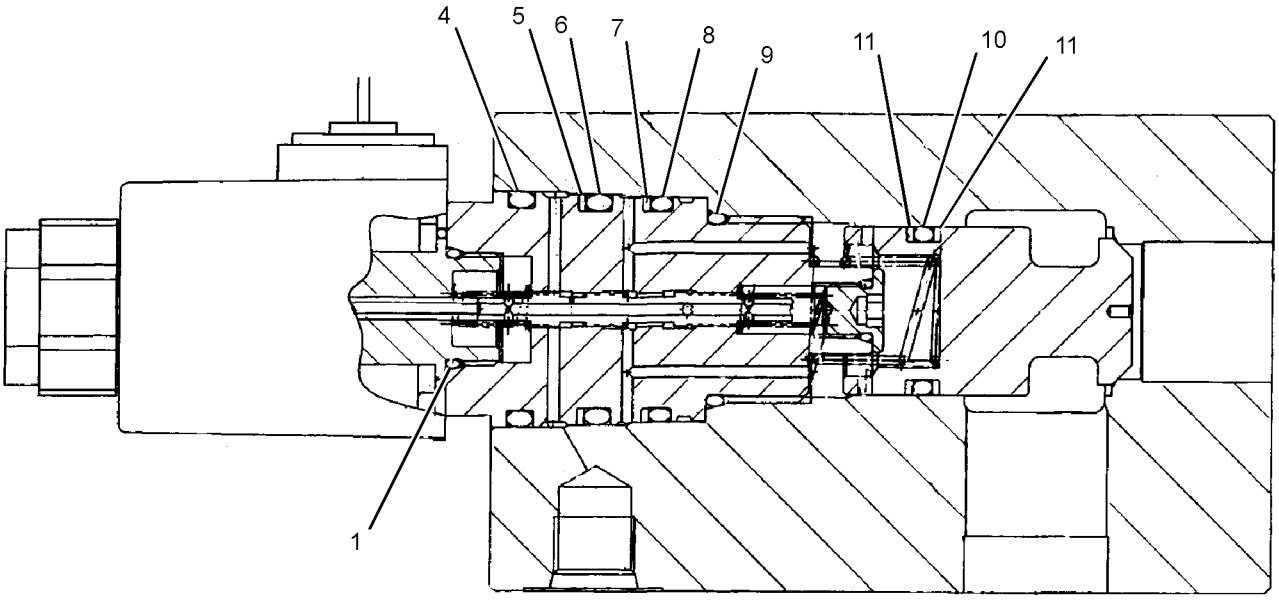

SECTION A-A

GRAPHIC #1 **<END>** g01382946

HYDRAULIC SYSTEM

297-0462 VALVE GP-CHECK

S/N: WNE1-UP; ZMF1-UP

PART OF 248-9846 LINES GP-HYDRAULIC OIL COOLER

SMCS-5067 **i02858415**

NOTE	PART NUMBER	QTY	PART NAME 1 2 3 4 5 6 (PRODUCT LEVEL)	SEE PAGE
Y	**297-0503**	1	VALVE GP-CHECK	819
			—OR—	
Y	**297-0504**	1	VALVE GP-CHECK	820

Y-SEPARATE ILLUSTRATION

<END>

297-0503 VALVE GP-CHECK

S/N: WNE1-UP; ZMF1-UP

PART OF 297-0462 VALVE GP-CHECK

SMCS-5067 **i02858412**

NOTE	REF NO	GRAPHIC REF	PART NUMBER	QTY	PART NAME 1 2 3 4 5 6 (PRODUCT LEVEL)	SEE PAGE
Y	1	1	**201-9329**	1	VALVE GP-CHECK	815
	2	1	**204-3796**	1	PIPE AS	
	3	1	**4J-0524**	1	SEAL-O-RING	
	4	1	**8T-4223**	4	WASHER-HARD (13.5X25.5X3-MM THK)	
M	5	1	**8T-6868**	4	BOLT (M12X1.75X80-MM)	

M-METRIC PART
Y-SEPARATE ILLUSTRATION

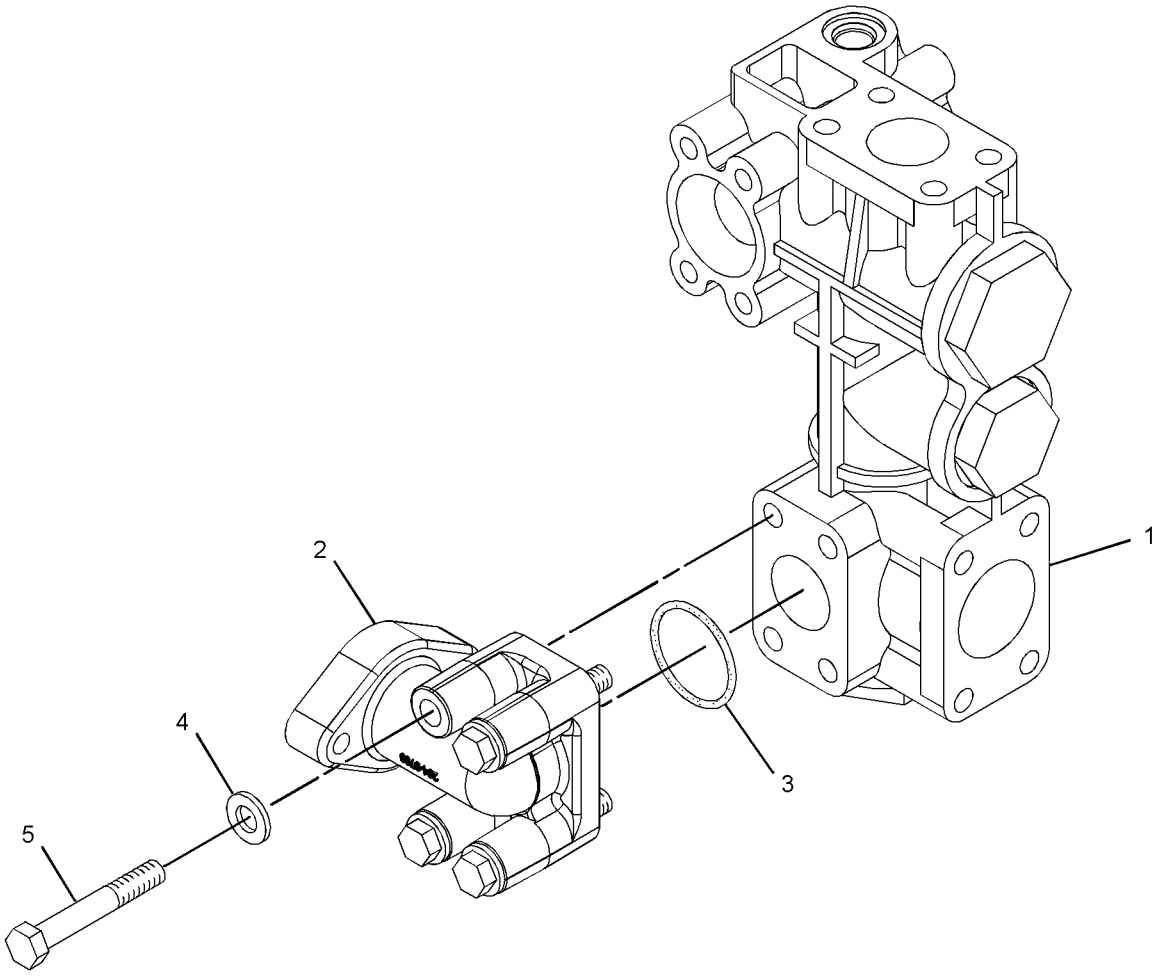

GRAPHIC #1 **<END>** g01393657

297-0504 VALVE GP-CHECK

S/N: WNE1-UP; ZMF1-UP
PART OF 297-0462 VALVE GP-CHECK

SMCS-5067 **i02858416**

NOTE	REF NO	GRAPHIC REF	PART NUMBER	QTY	PART NAME 1 2 3 4 5 6 (PRODUCT LEVEL)	SEE PAGE
Y	1	1	**201-9329**	1	VALVE GP-CHECK	815
	2	1	**302-3196**	1	TUBE AS	
	3	1	**4J-0524**	1	SEAL-O-RING	
	4	1	**8T-4223**	4	WASHER-HARD (13.5X25.5X3-MM THK)	
M	5	1	**8T-6868**	4	BOLT (M12X1.75X80-MM)	

M-METRIC PART
Y-SEPARATE ILLUSTRATION

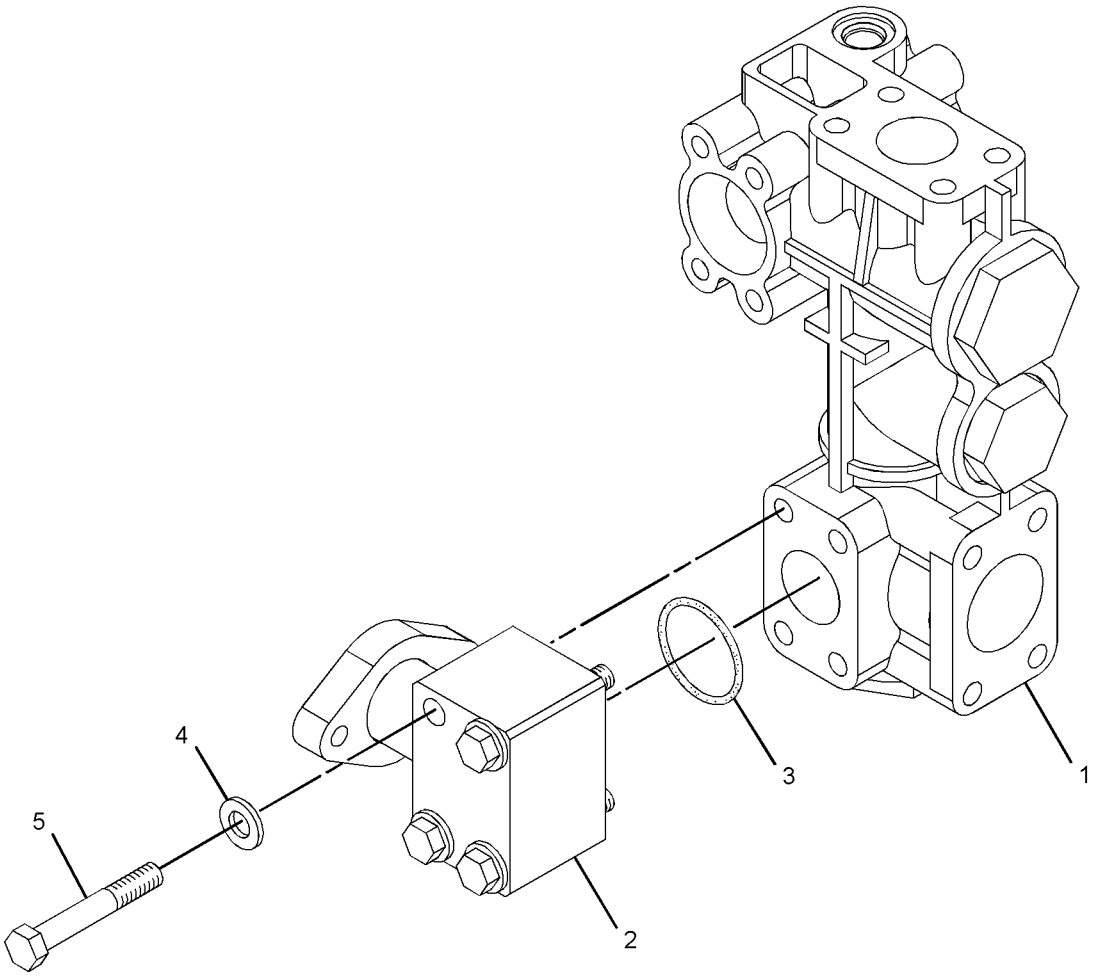

GRAPHIC #1 **<END>** g01393662

244-8400 VALVE GP-CONTROL—WITHOUT COVERS, HOUSINGS

S/N: WNE1-UP; ZMF1-UP; CWG1-UP
PART OF 259-7378, 285-1375 VALVE GP-CONTROL
AN ATTACHMENT

SMCS-5051 **i02344306**

NOTE	REF NO	GRAPHIC REF	PART NUMBER	QTY	PART NAME 1 2 3 4 5 6 (PRODUCT LEVEL)	SEE PAGE
	1	1	**104-7293**	1	SPRING	
Z	2	1		1	STEM-AUXILIARY	
Z	3	1		1	BLOCK	
	4	1	**153-5276**	1	BOLT-SPECIAL	
	5	1	**6E-2271**	2	RETAINER	

Z-NOT SERVICED SEPARATELY

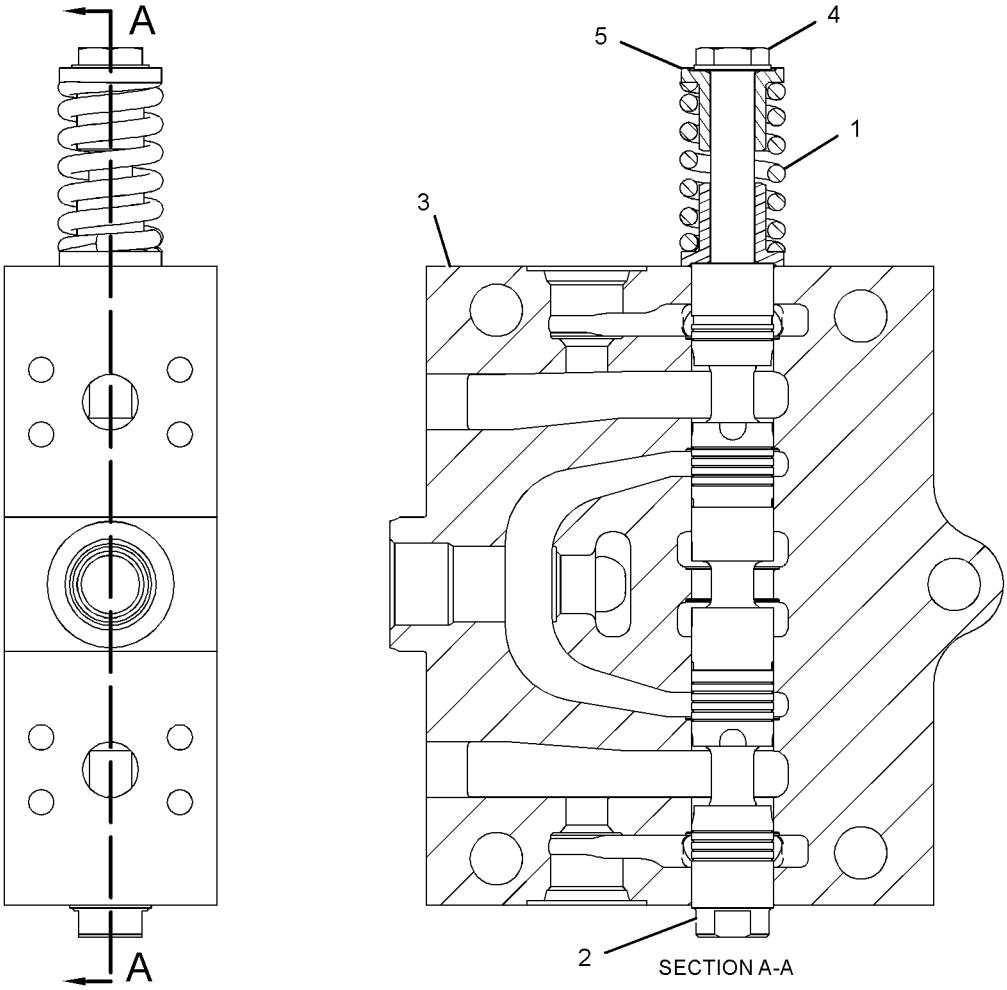

GRAPHIC #1 **<END>** g01218449

HYDRAULIC SYSTEM

254-3080 VALVE GP-CONTROL—QUICK COUPLER

S/N: WNE1-UP; ZMF1-UP; CWG1-UP
PART OF 275-1409, 285-2864 LINES GP-FRONT
AN ATTACHMENT

SMCS-5051 **i02997486**

NOTE	REF NO	GRAPHIC REF	PART NUMBER	QTY	PART NAME 1 2 3 4 5 6 (PRODUCT LEVEL)	SEE PAGE
	1	1	**287-2352**	1	RETAINER-SPRING	
	2	1	**6E-5438**	1	SPRING	
	3	1	**6E-5439**	1	SPRING	
Y	4	1	**121-1491**	1	VALVE GP-SOLENOID (QUICK COUPLER)	886
J	5	1	**247-7587**	2	VALVE GP-PRESSURE REDUCING (QUICK COUPLER)	
Z	6	1		1	BODY-VALVE	
Z	7	1		1	STEM	
	8	1	*148-8407*	2	PLUG AS	
					(EACH INCLUDES)	
		1	**3J-1907**	1	SEAL-O-RING	
		1	**9S-4191**	1	PLUG-O-RING	
	9	1	**4J-5267**	1	SEAL-O-RING	
	10	1	**6E-2313**	1	COVER	
	11	1	**6E-5431**	5	SHIM (0.5-MM THK)	
	12	1	**6E-5434**	1	HOUSING-PILOT	
M	13	1	**7I-2272**	2	BOLT (M5X0.8X12-MM)	
	14	1	**8F-0212**	1	SEAL-O-RING	
M	15	1	**8T-4195**	2	BOLT (M10X1.5X30-MM)	
	16	1	**8T-4224**	2	WASHER-HARD (8.8X16X2-MM THK)	
	17	1	**8T-6759**	12	PLUG-PIPE	
M	18	1	**8T-6870**	2	BOLT (M8X1.25X70-MM)	
					AVAILABLE REPAIR KIT(S):	
J			**172-4432**	1	KIT-SEAL (QUICK COUPLER VALVE)	

J-KIT MARKED J AVAILABLE FOR PART MARKED J
M-METRIC PART
Y-SEPARATE ILLUSTRATION
Z-NOT SERVICED SEPARATELY

254-3080 VALVE GP-CONTROL *(contd.)* **i02997486**

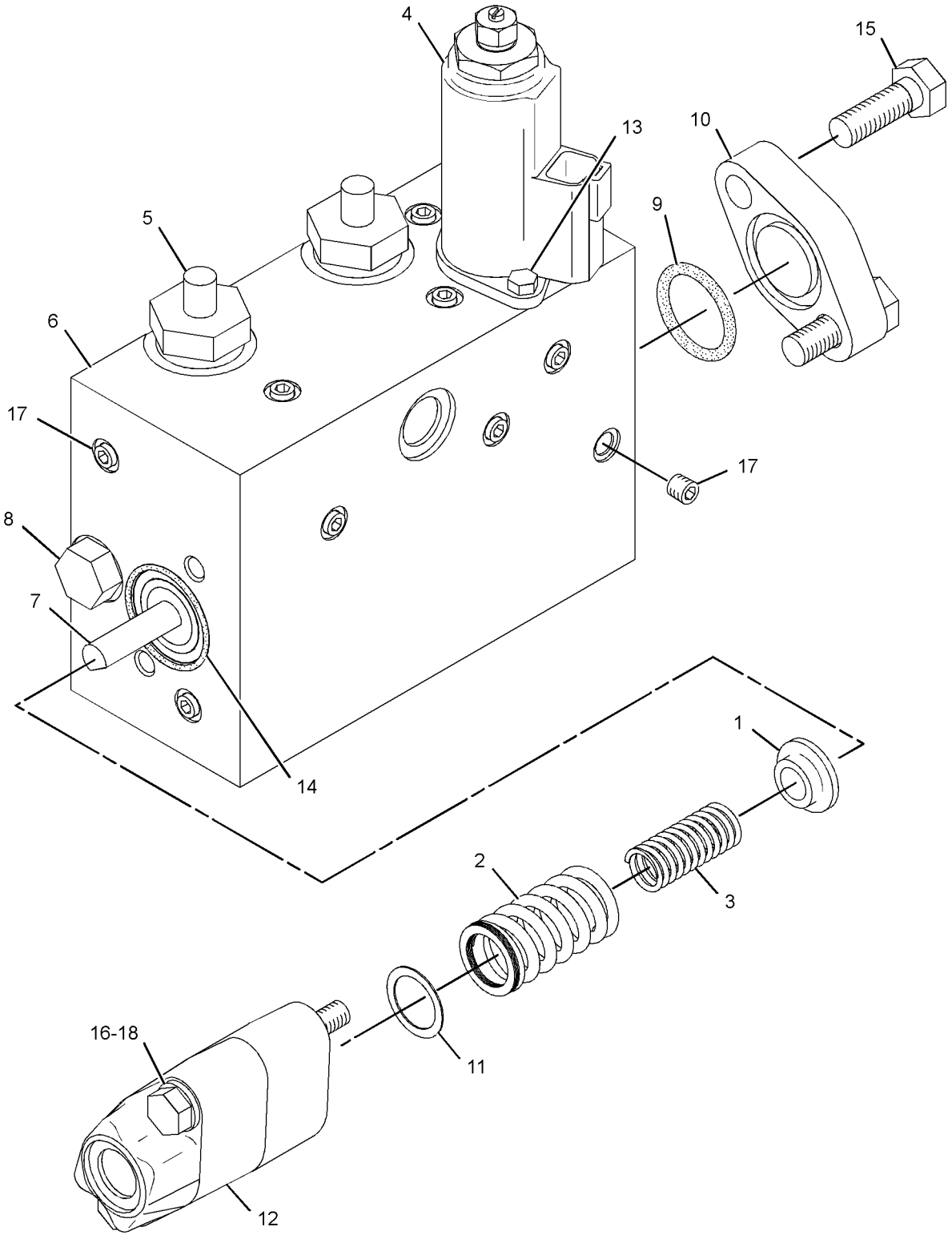

GRAPHIC #1 **<END>** g01245214

HYDRAULIC SYSTEM

259-7378 VALVE GP-CONTROL—AUXILIARY

S/N: WNE1-UP; ZMF1-UP; CWG1-UP
PART OF 255-5713, 270-5677 VALVE & MTG GP-CONTROL
AN ATTACHMENT

SMCS-5051 **i02412589**

NOTE	REF NO	GRAPHIC REF	PART NUMBER	QTY	PART NAME 1 2 3 4 5 6 (PRODUCT LEVEL)	SEE PAGE
M	1	1	**8T-4195**	12	BOLT (M10X1.5X30-MM)	
	2	1	**4J-8998**	2	SEAL-O-RING	
	3	1	**6E-5731**	1	VALVE (LOAD CHECK)	
	4	1	**7I-1248**	1	SPRING	
	5	1	**171-0150**	2	COVER	
	6	1	**236-6419**	1	PLUG	
Y	7	1	*244-8400*	1	VALVE GP-CONTROL (WITHOUT COVERS, HOUSINGS)	821
Y	8	1	**255-5661**	2	VALVE GP-RELIEF (LINE)	871
	9	1	**8T-4121**	4	WASHER-HARD (11X21X2.5-MM THK)	
	10	1	**095-1590**	1	SEAL-O-RING	
	11	1	**095-1787**	1	RING-BACKUP	
	12	1	**158-8159**	1	HOUSING	
	13	1	**1P-3702**	4	SEAL-RECTANGULAR	
	14	1	**6E-2274**	1	COVER	
	15	1	**6V-5597**	2	SEAL-O-RING	

M-METRIC PART
Y-SEPARATE ILLUSTRATION

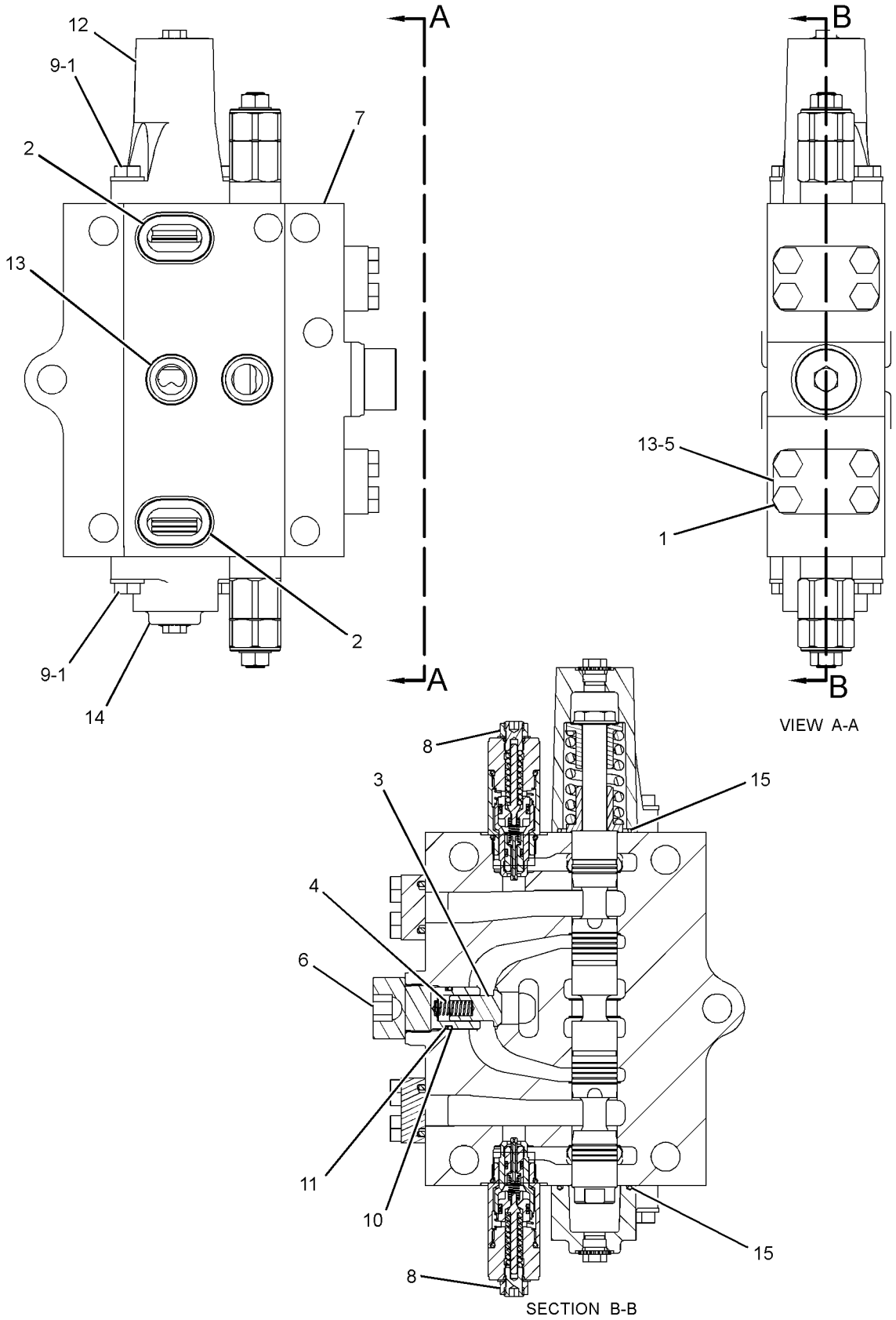

GRAPHIC #1 **<END>** g01219416

HYDRAULIC SYSTEM

259-7465 VALVE GP-CONTROL

S/N: WNE1-UP; ZMF1-UP; CWG1-UP

PART OF 285-1323 VALVE GP-MAIN CONTROL

SMCS-5051 **i03669802**

NOTE	REF NO	GRAPHIC REF	PART NUMBER	QTY	PART NAME 1 2 3 4 5 6 (PRODUCT LEVEL)	SEE PAGE
	1	1	**6E-2274**	5	COVER	
	2	1,2	**6E-5731**	4	VALVE (LOAD CHECK)	
	3	1,2	**7I-1248**	5	SPRING	
	4	2	**153-5286**	1	VALVE (LOAD CHECK)	
	5	1	**153-5288**	1	SPRING	
	6	1	**153-5289**	1	GUIDE	
	7	1	**153-5290**	1	PLUG	
	8	1	**153-5291**	1	CONNECTOR	
	9	1	**153-5292**	1	VALVE-CHECK	
	10	1	**153-5293**	1	SPRING	
	11	1	**158-8159**	5	HOUSING	
	12	1,2	**236-6419**	5	PLUG	
	13	1	**236-6421**	1	PLUG	
Y	14	2	**255-5661**	3	VALVE GP-RELIEF (LINE)	871
Y	15	1	**259-7631**	1	VALVE GP-CONTROL (WITHOUT COVERS, HOUSINGS)	829
	16	1,2	**095-1590**	5	SEAL-O-RING	
	17	1,2	**095-1787**	5	RING-BACKUP	
Y	18	1	**109-5152**	1	VALVE GP-RELIEF (NEGATIVE FLOW CONTROL)	865
	19	1	**111-9959**	1	PLUG-PIPE	
	20	1	**2M-9780**	1	SEAL-O-RING	
	21	1	**4I-6397**	1	RING-BACKUP	
	22	2	**4J-0520**	2	SEAL-O-RING	
Y	23	2	**6E-4816**	2	PLUG GP-CONTROL VALVE	790
	24	1	**6V-3922**	1	SEAL-O-RING	
	25	2	**6V-5597**	10	SEAL-O-RING	
	26	1	**7M-8485**	1	SEAL-O-RING	
	27	2	**7Y-8099**	2	COVER	
	28	1	**8T-4121**	20	WASHER-HARD (11X21X2.5-MM THK)	
M	29	1,2	**8T-4195**	28	BOLT (M10X1.5X30-MM)	

M-METRIC PART
Y-SEPARATE ILLUSTRATION

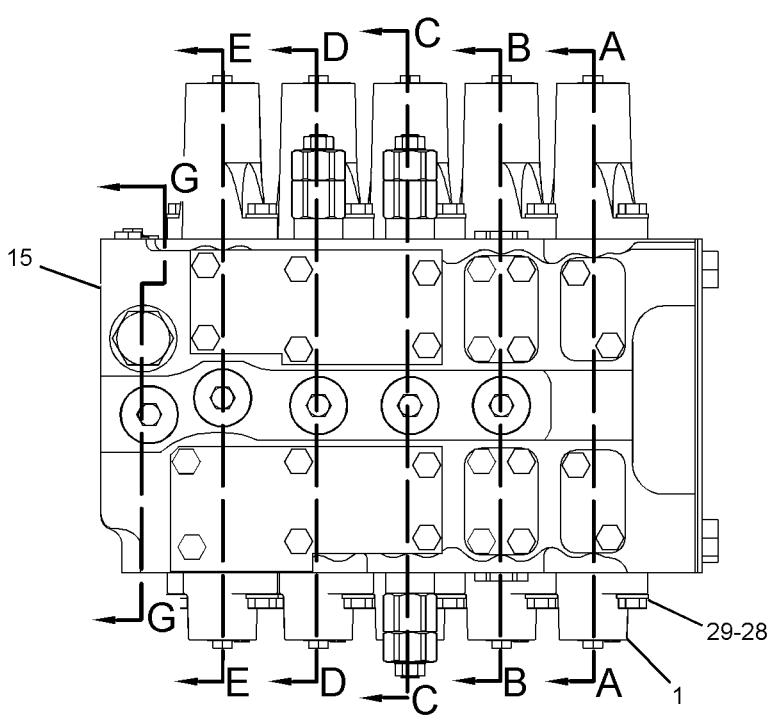

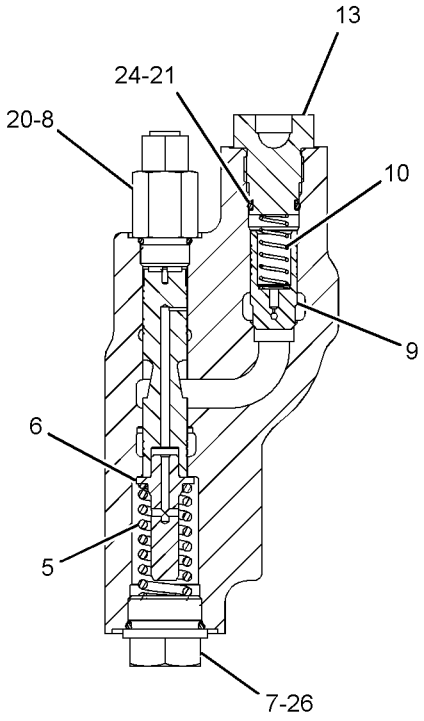

SECTION F-F

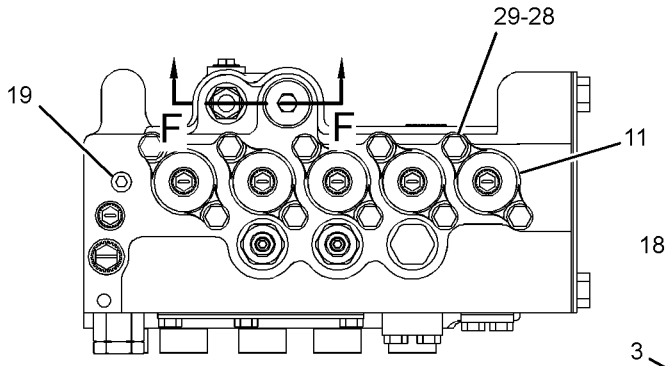

REFER TO ALL ILLUSTRATIONS OF
THIS GROUP FOR AUXILIARY VIEWS

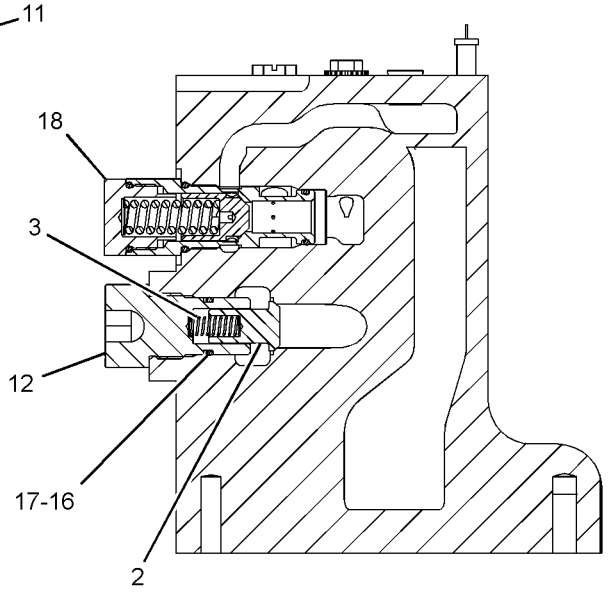

SECTION G-G

GRAPHIC #1 g01226704

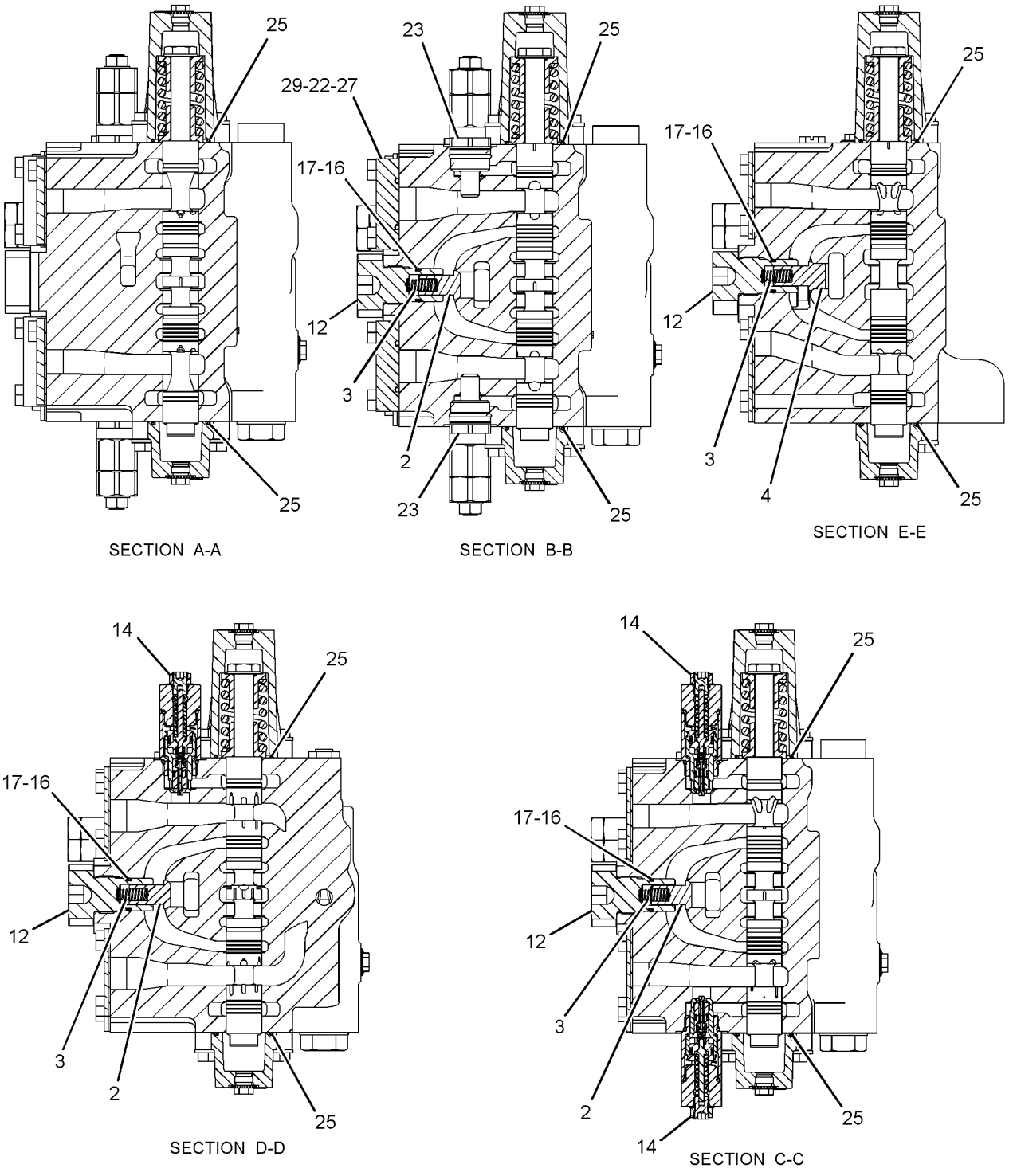

GRAPHIC #2 **<END>** g01226719

259-7631 VALVE GP-CONTROL—WITHOUT COVERS, HOUSINGS

S/N: WNE1-UP; ZMF1-UP; CWG1-UP

PART OF 259-7465 VALVE GP-CONTROL

SMCS-5051 **i03670020**

NOTE	REF NO	GRAPHIC REF	PART NUMBER	QTY	PART NAME 1 2 3 4 5 6 (PRODUCT LEVEL)	SEE PAGE
	1	1	**6E-2271**	10	RETAINER	
	2	1	**104-7293**	3	SPRING	
	3	1	**104-7294**	1	SPRING	
	4	1	**104-7296**	1	SPRING	
Z	5	1		1	STEM-AUXILIARY	
Z	6	1		1	STEM-TRAVEL	
Z	7	1		1	STEM (BOOM DOWN)	
Z	8	1		1	BODY-VALVE	
Z	9	1		1	STEM-BUCKET	
Z	10	1		1	STEM-STICK	
Z	11	1		1	STEM-BOOM	
M	12	1	**153-5276**	5	BOLT-SPECIAL	

M-METRIC PART
Z-NOT SERVICED SEPARATELY

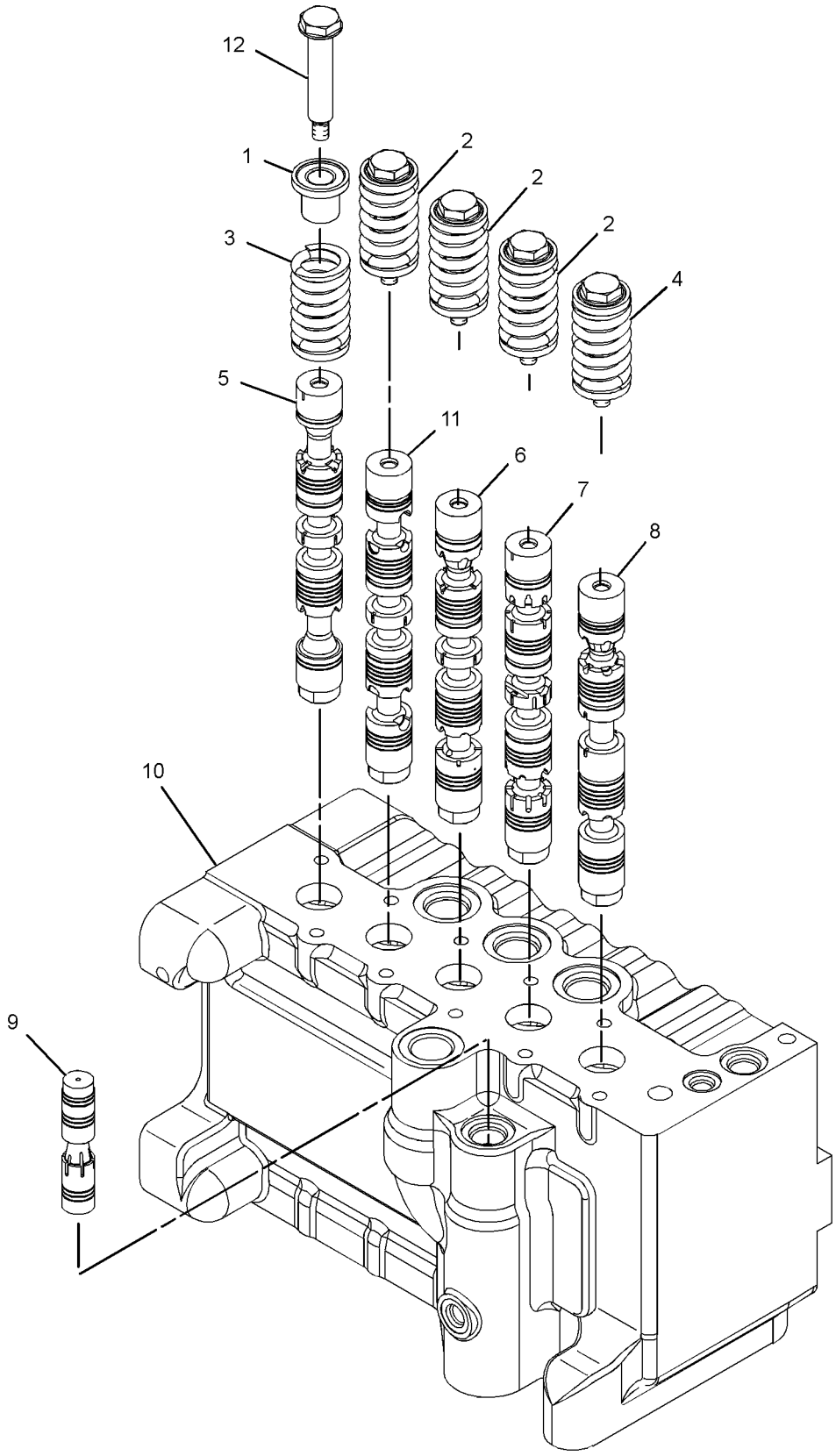

GRAPHIC #1 **<END>** g01230843

HYDRAULIC SYSTEM

285-1339 VALVE GP-CONTROL

S/N: WNE1-UP; ZMF1-UP; CWG1-UP

PART OF 285-1323 VALVE GP-MAIN CONTROL

SMCS-5051 **i03562012**

NOTE	REF NO	GRAPHIC REF	PART NUMBER	QTY	PART NAME 1 2 3 4 5 6 (PRODUCT LEVEL)	SEE PAGE
	1	1	**4I-3569**	1	RING-BACKUP	
	2	2,3	**4T-3148**	3	SPRING	
	3	1	**6E-2274**	5	COVER	
	4	1	**6E-3653**	1	PLUG	
	5	3	**6E-5169**	1	SPRING	
	6	2,3	**6E-5643**	3	VALVE (LOAD CHECK)	
	7	3	**6E-5731**	1	VALVE (LOAD CHECK)	
	8	3	**7I-1248**	1	SPRING	
	9	3	**103-8177**	1	ADAPTER	
Y	10	2	**121-1491**	1	VALVE GP-SOLENOID (STRAIGHT TRAVEL)	886
	11	2	**153-5288**	1	SPRING	
	12	2	**153-5289**	1	GUIDE	
	13	2	**153-5290**	2	PLUG	
	14	2	**153-5291**	1	CONNECTOR	
	15	2	**153-5292**	1	VALVE-CHECK	
	16	2	**153-5293**	1	SPRING	
CY	17	2	**323-7898**	1	VALVE GP-PRIORITY (SWING)	863
	18	2	**153-5298**	1	SLEEVE	
	19	2	**153-5299**	1	VALVE	
	20	2	**153-5306**	1	SPRING	
	21	3	**153-5309**	1	SLEEVE	
	22	2	**153-5311**	1	SPRING	
	23	2	**158-8150**	1	VALVE GP-UNLOADING	
	24	2	**158-8159**	4	HOUSING	
	25	2	**158-8206**	1	HOUSING	
	26	3	**158-8207**	1	STOPPER	
C	27	2	**323-7897**	1	COVER	
	28	3	**201-9263**	2	PLUG	
	29	1,2	*222-4737*	3	PLUG AS	
					(EACH INCLUDES)	
		1,2	**4J-7533**	1	SEAL-O-RING	
		1,2	**9S-4180**	1	PLUG	
	30	3	**236-6419**	1	PLUG	
	31	2	**236-6421**	1	PLUG	
	32	2	**250-2446**	1	PLUG	
	33	3	**250-2447**	1	PLUG	
Y	34	2	**255-5661**	1	VALVE GP-RELIEF (LINE)	871
	35	2	**264-9961**	1	PLUG	
Y	36	1	*285-1340*	1	VALVE GP-CONTROL (WITHOUT COVERS, HOUSINGS)	835
Y	37	3	**310-0393**	1	VALVE GP-RELIEF (MAIN, HEAVY LIFT)	873
	38	2	**095-1575**	1	SEAL-O-RING	
	39	2,3	**095-1590**	3	SEAL-O-RING	
	40	3	**095-1603**	1	SEAL-O-RING	
	41	2	**095-1778**	1	RING-BACKUP	
	42	2,3	**095-1787**	3	RING-BACKUP	
C	43	2	**255-5594**	1	SEAL-O-RING	
	44	2	**123-2485**	1	PLUG	
	45	2	**2M-9780**	1	SEAL-O-RING	
	46	2	**3J-1907**	1	SEAL-O-RING	
	47	2,3	**4I-6397**	3	RING-BACKUP	
	48	2	**4J-5309**	1	SEAL-O-RING	
	49	2	**4T-5074**	1	RING-BACKUP	
	50	2,3	**6V-3922**	3	SEAL-O-RING	
	51	3	**6V-5393**	1	SEAL-O-RING	
	52	2	**6V-5556**	1	SEAL-O-RING	
	53	2,3	**6V-5597**	9	SEAL-O-RING	

285-1339 VALVE GP-CONTROL *(contd.)* i03562012

NOTE	REF NO	GRAPHIC REF	PART NUMBER	QTY	PART NAME 1 2 3 4 5 6 (PRODUCT LEVEL)	SEE PAGE
M	54	2	**7I-2272**	2	BOLT (M5X0.8X12-MM)	
	55	2	**7M-8485**	2	SEAL-O-RING	
M	56	2	**7X-2621**	1	BOLT (M10X1.5X12-MM)	
	57	1	**7Y-5219**	1	SEAL-O-RING	
	58	1,2	**8T-4121**	24	WASHER-HARD (11X21X2.5-MM THK)	
M	59	1,2	**8T-4195**	20	BOLT (M10X1.5X30-MM)	
M	60	2	**8T-6685**	4	BOLT (M10X1.5X110-MM)	
	61	2	**8T-6759**	2	PLUG-PIPE	

C-CHANGE FROM PREVIOUS TYPE
M-METRIC PART
Y-SEPARATE ILLUSTRATION

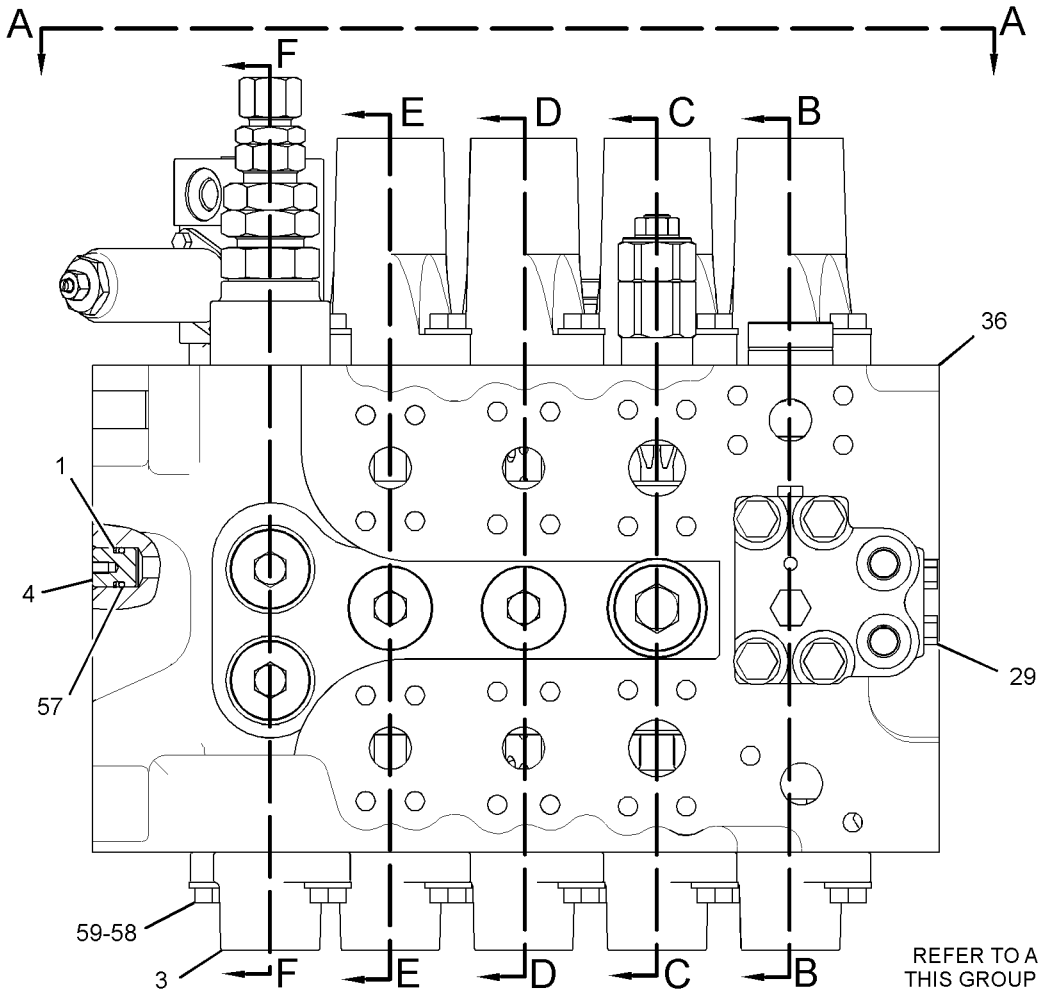

REFER TO ALL ILLUSTRATIONS OF THIS GROUP FOR AUXILIARY VIEWS

GRAPHIC #1 g01889473

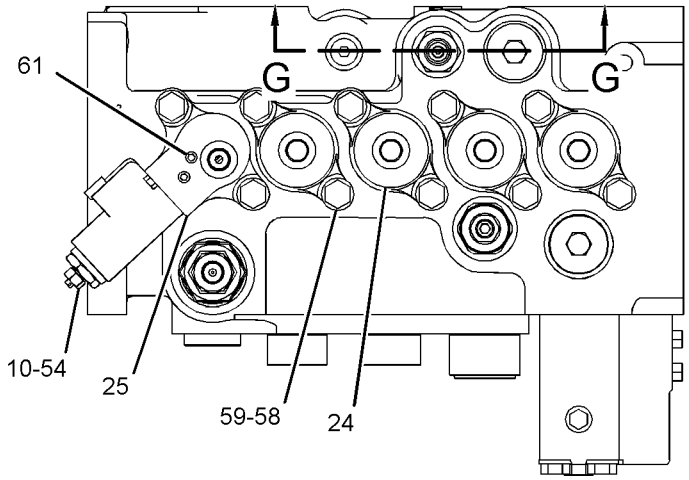

VIEW A-A

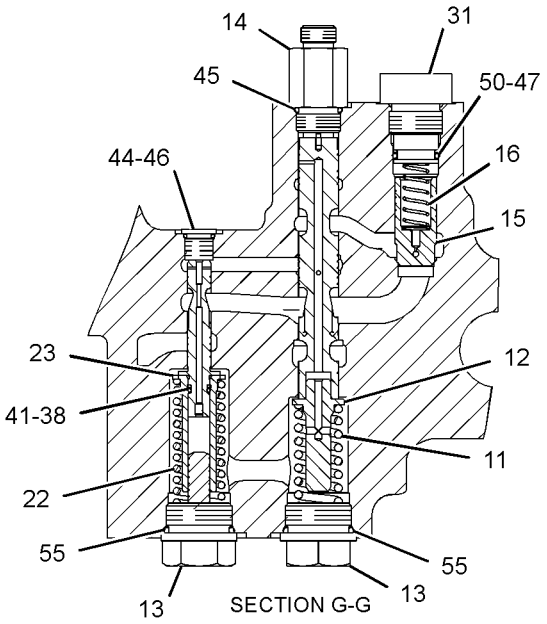

SECTION G-G

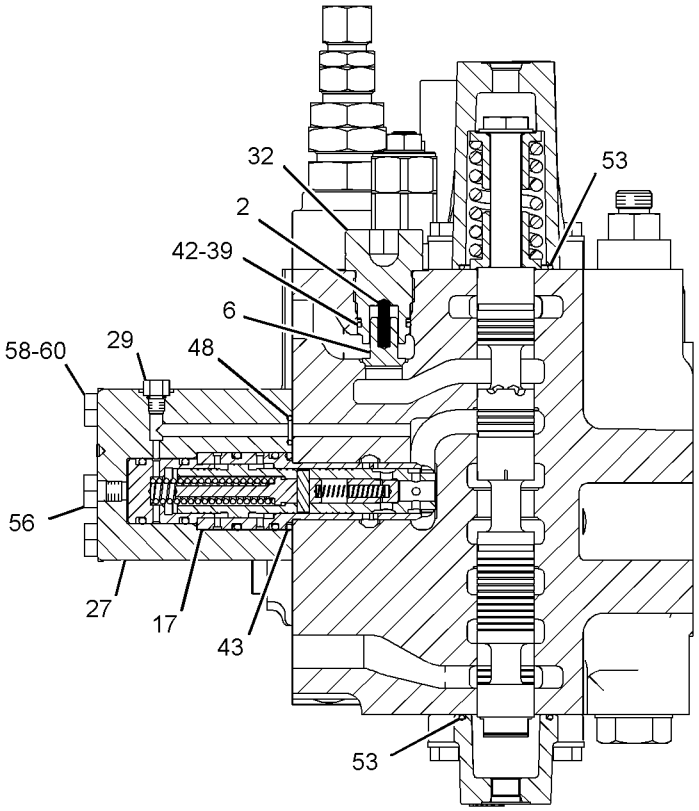

SECTION B-B

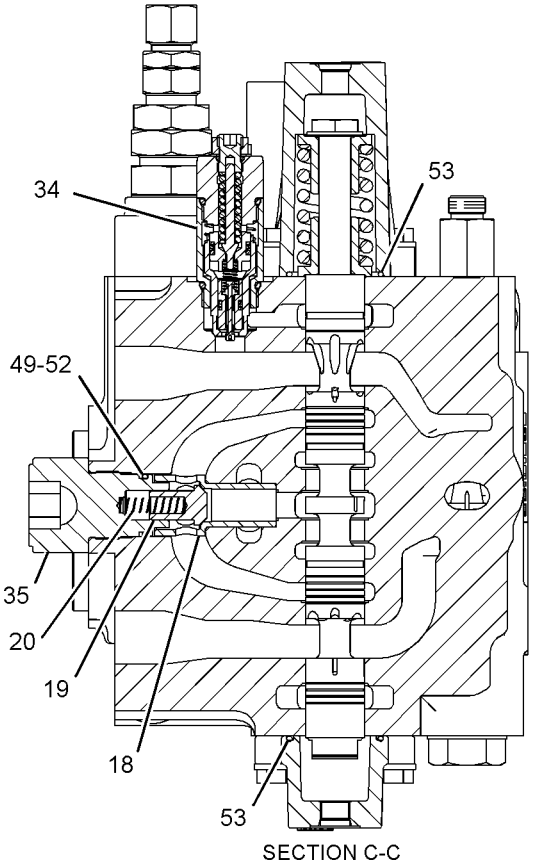

SECTION C-C

GRAPHIC #2

g01889474

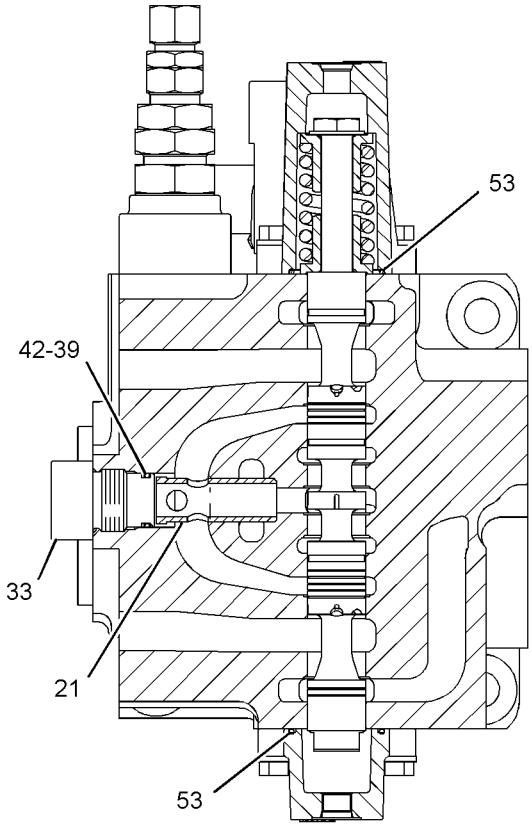

SECTION E-E

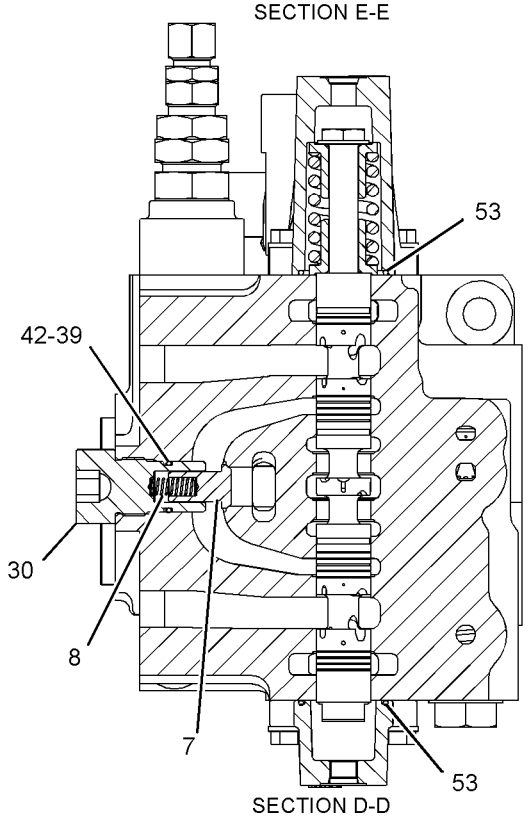

SECTION D-D

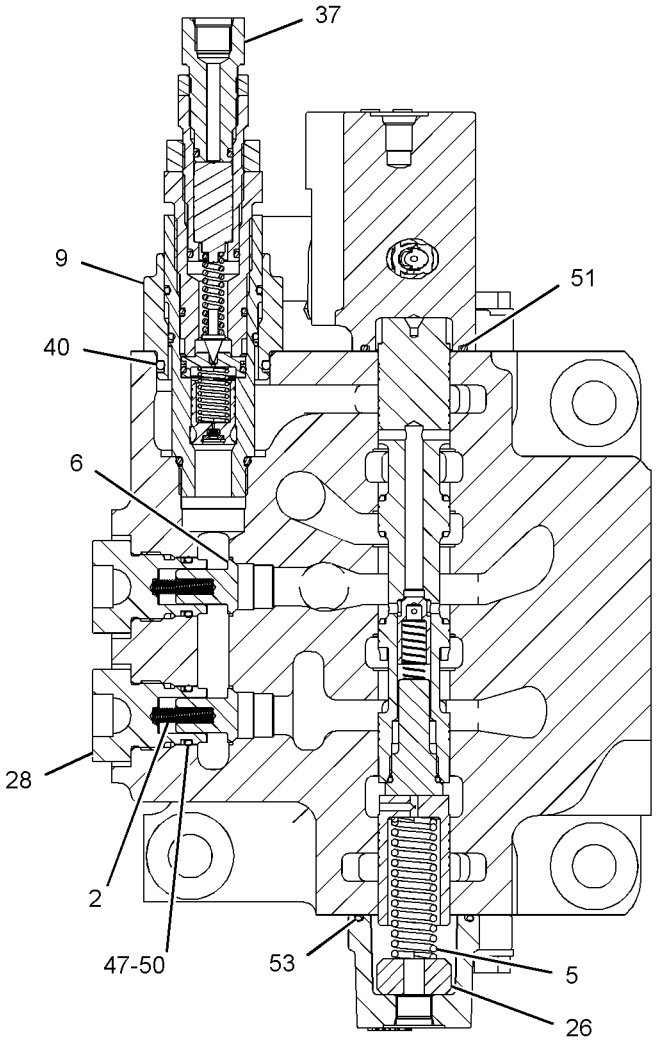

SECTION F-F

GRAPHIC #3 **<END>** g01460449

285-1340 VALVE GP-CONTROL—WITHOUT COVERS, HOUSINGS

S/N: WNE1-UP; ZMF1-UP; CWG1-UP

PART OF 285-1339 VALVE GP-CONTROL

SMCS-5051 **i02945240**

NOTE	REF NO	GRAPHIC REF	PART NUMBER	QTY	PART NAME 1 2 3 4 5 6 (PRODUCT LEVEL)	SEE PAGE
	1	1	**2S-2596**	1	SPRING	
	2	1	**6E-2163**	1	VALVE-CHECK	
	3	1	**6E-2271**	8	RETAINER	
	4	1	**104-7293**	2	SPRING	
	5	1	**104-7294**	1	SPRING	
	6	1	**104-7296**	1	SPRING	
Z	7	1		1	STEM-TRAVEL	
Z	8	1		1	STEM-STRAIGHT TRAVEL	
Z	9	1		1	PISTON	
Z	10	1		1	GUIDE	
Z	11	1		1	VALVE AS	
Z	12	1		1	BODY-VALVE	
Z	13	1		1	STEM-STICK	
Z	14	1		1	STEM	
Z	15	1		1	STEM-BOOM 2	
M	16	1	**153-5276**	4	BOLT-SPECIAL	
Z	17	1			STEM-SWING	
	18	1	**3K-0360**	1	SEAL-O-RING	

M-METRIC PART
Z-NOT SERVICED SEPARATELY

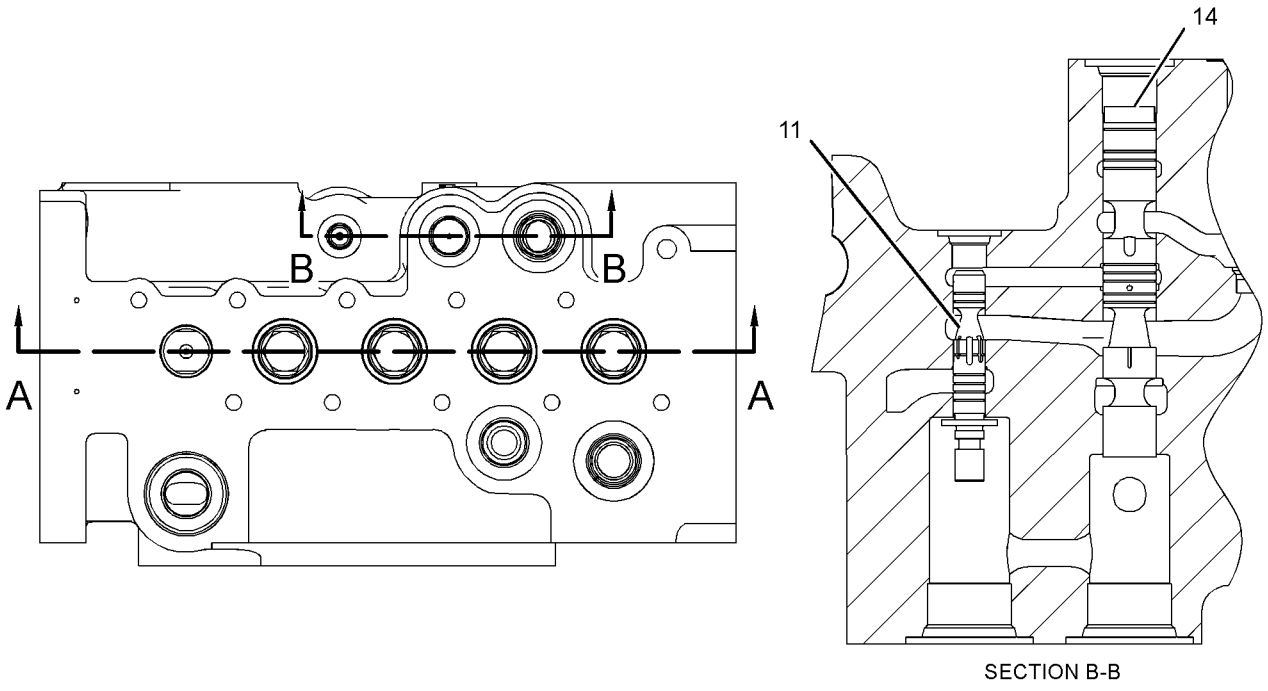

SECTION B-B

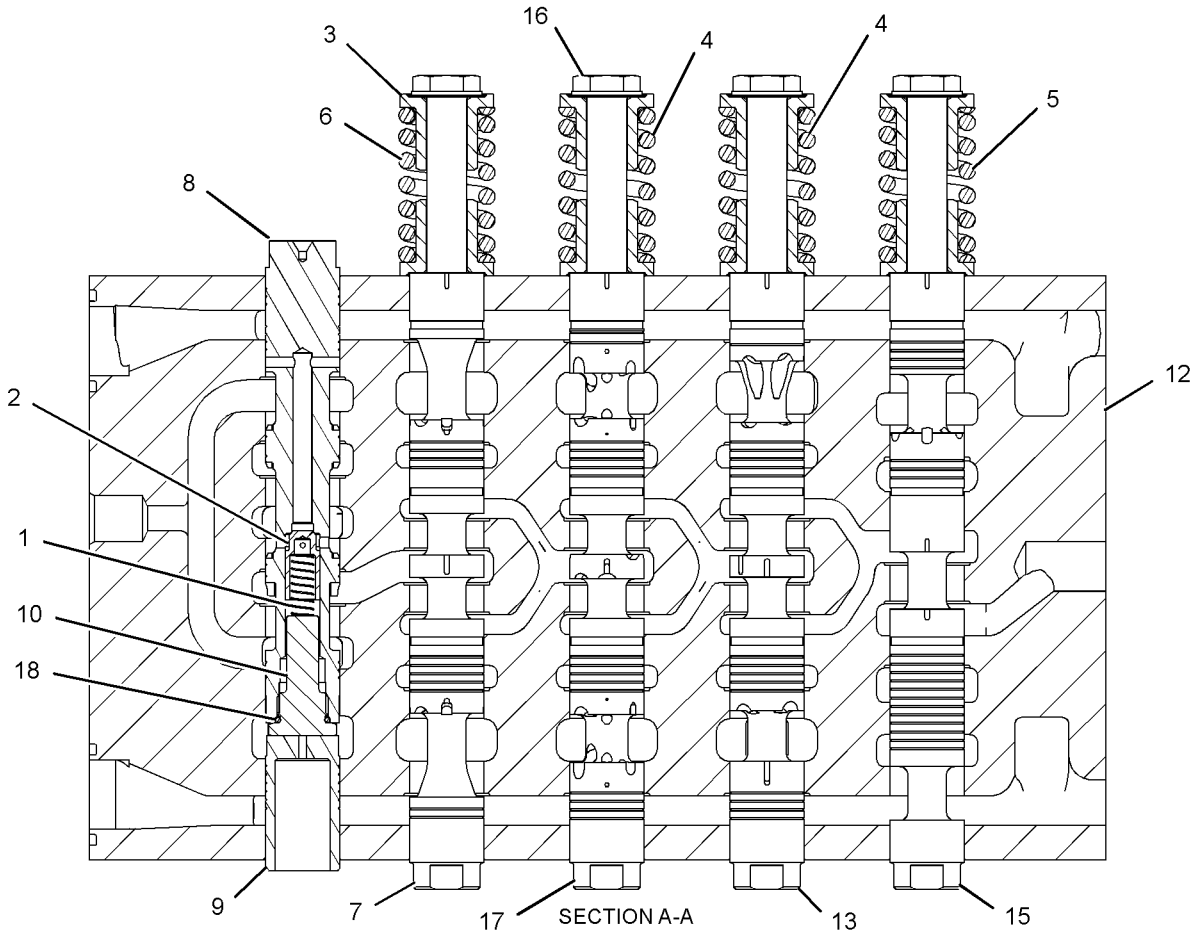

SECTION A-A

GRAPHIC #1

<END>

g01223911

HYDRAULIC SYSTEM

285-1375 VALVE GP-CONTROL

S/N: WNE1-UP; ZMF1-UP; CWG1-UP
PART OF 285-1376 VALVE & MTG GP-CONTROL
AN ATTACHMENT

SMCS-5051 **i02523437**

NOTE	REF NO	GRAPHIC REF	PART NUMBER	QTY	PART NAME 1 2 3 4 5 6 (PRODUCT LEVEL)	SEE PAGE
M	1	1	**8T-4195**	12	BOLT (M10X1.5X30-MM)	
	2	1	**4J-8998**	2	SEAL-O-RING	
	3	1	**6E-2274**	1	COVER	
	4	1	**6E-5731**	1	VALVE (LOAD CHECK)	
	5	1	**7I-1248**	1	SPRING	
	6	1	**171-0150**	2	COVER	
	7	1	**236-6419**	1	PLUG	
Y	8	1	*244-8400*	1	VALVE GP-CONTROL (WITHOUT COVERS, HOUSINGS)	821
	9	1	**8T-4121**	4	WASHER-HARD (11X21X2.5-MM THK)	
	10	1	**095-1590**	1	SEAL-O-RING	
	11	1	**095-1787**	1	RING-BACKUP	
	12	1	**158-8159**	1	HOUSING	
	13	1	**1P-3702**	4	SEAL-RECTANGULAR	
Y	14	1	**6E-4816**	2	PLUG GP-CONTROL VALVE	790
	15	1	**6V-5597**	2	SEAL-O-RING	

M-METRIC PART
Y-SEPARATE ILLUSTRATION

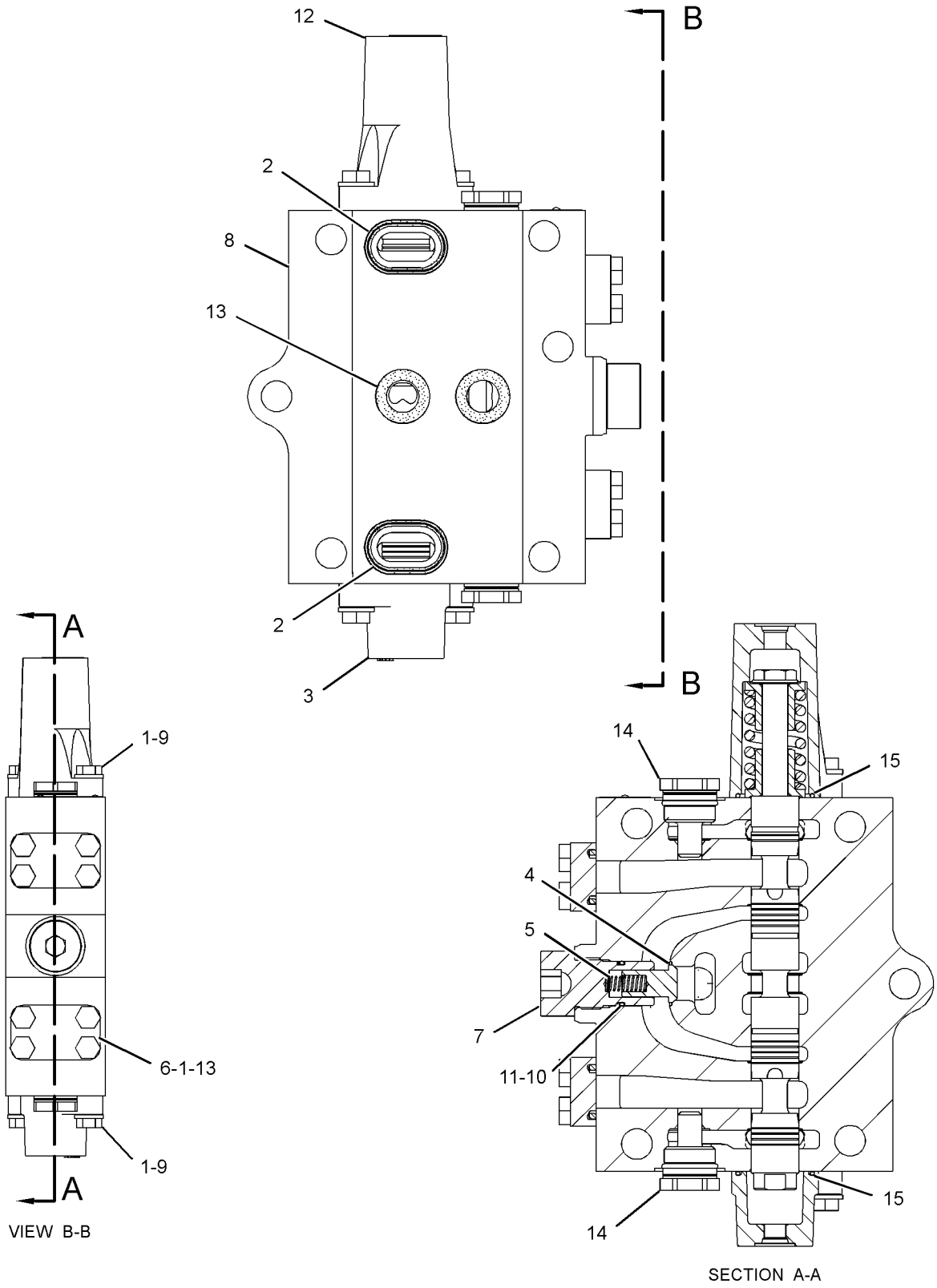

GRAPHIC #1 **<END>** g01264519

285-1531 VALVE GP-CONTROL

S/N: WNE1-UP; ZMF1-UP; CWG1-UP
PART OF 260-8015, 266-0969 LINES GP-FRONT
AN ATTACHMENT

SMCS-5051 **i02762935**

NOTE	REF NO	GRAPHIC REF	PART NUMBER	QTY	PART NAME 1 2 3 4 5 6 (PRODUCT LEVEL)	SEE PAGE
	1	1	**285-1777**	2	VALVE GP-RELIEF (230-BAR (3336-PSI))	
					—OR—	
A			**260-3003**	2	VALVE GP-RELIEF (160-BAR (2321-PSI))	
					(OPTIONAL SERVICE REPLACEMENT)	
					—OR—	
A			**309-9941**	2	VALVE GP-RELIEF (80-BAR (1161-PSI))	
					(OPTIONAL SERVICE REPLACEMENT)	

A-NOT PART OF THIS GROUP

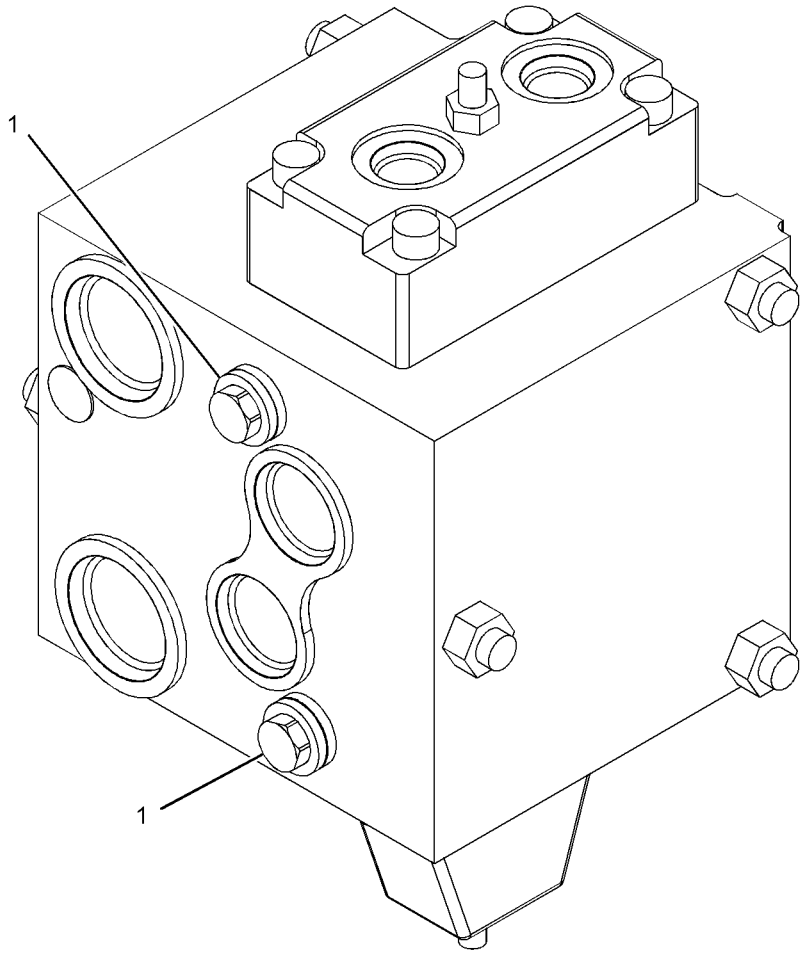

GRAPHIC #1 **<END>** g01384393

HYDRAULIC SYSTEM

201-9236 VALVE GP-FLOW CONTROL–BOOM FLOAT, PILOT OIL

S/N: WNE1-UP; ZMF1-UP; CWG1-UP
PART OF 260-7969, 289-5397 LINES GP-PILOT
AN ATTACHMENT

SMCS-5137 **i01599461**

NOTE	REF NO	GRAPHIC REF	PART NUMBER	QTY	PART NAME 1 2 3 4 5 6 (PRODUCT LEVEL)	SEE PAGE
	1	1	**6I-6904**	1	CONNECTOR	
	2	1	**095-1582**	1	SEAL-O-RING	
	3	1	**6I-6905**	1	BODY	
	4	1	**099-0365**	2	SPRING	
	5	1	**5I-6881**	1	PLUNGER AS	
	6	1	**6I-6907**	1	SLEEVE	
	7	1	**095-1522**	2	SEAL-O-RING	
	8	1	**6V-8754**	1	RING-RETAINING	

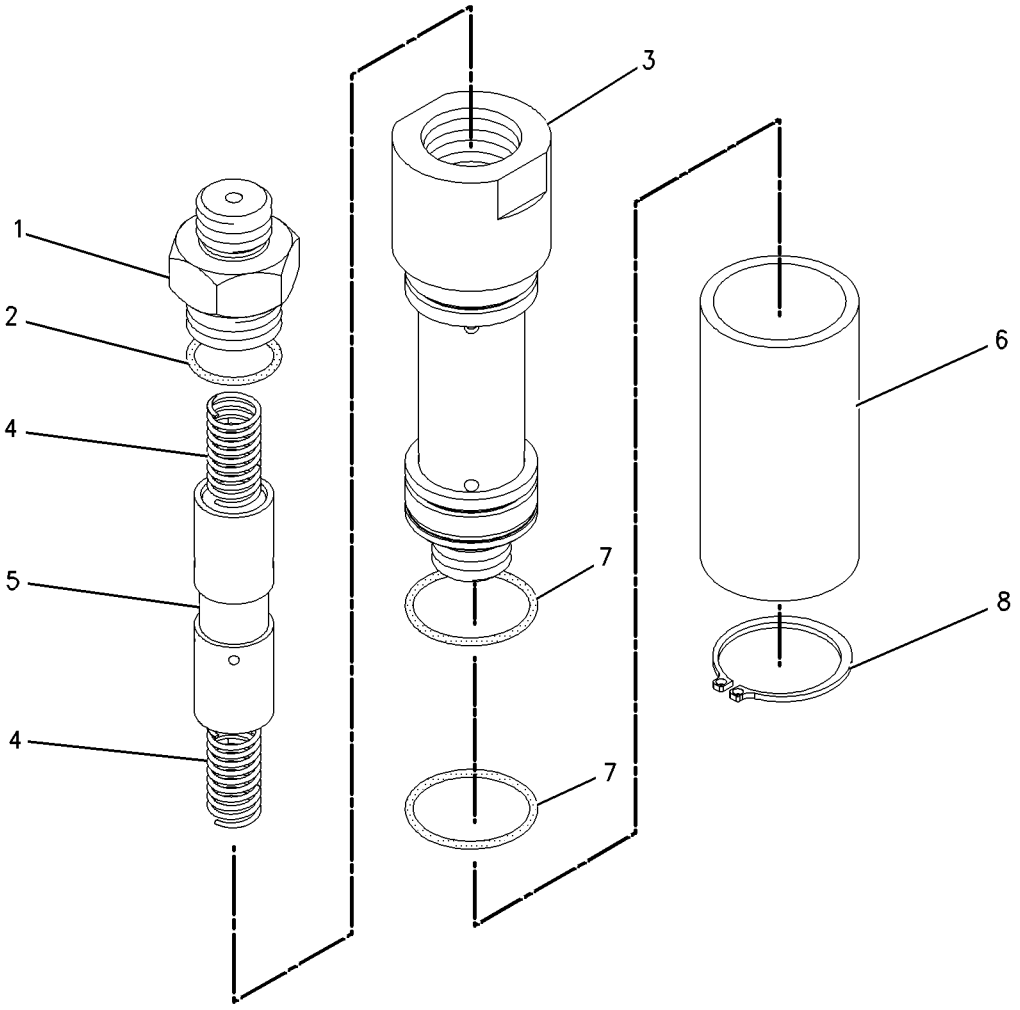

GRAPHIC #1 **<END>** g00830636

225-4785 VALVE GP-LOAD CONTROL—BOOM CYLINDER

S/N: WNE1-UP; ZMF1-UP; CWG1-UP

PART OF 278-6874, 286-6495, 317-4887, 337-1276 LINES GP-BOOM CYLINDER AN ATTACHMENT

SMCS-5067, 5117, 5147, 5811 **i03563925**

NOTE	REF NO	GRAPHIC REF	PART NUMBER	QTY	PART NAME 1 2 3 4 5 6 (PRODUCT LEVEL)	SEE PAGE
	1	2	**2S-2596**	1	SPRING	
	3	1,2	**8J-6815**	3	PLUG-ORIFICE	
	4	2	**9T-1614**	1	VALVE	
	5	2	**165-9513**	1	SEAT	
	6	2	**165-9514**	1	PLUG	
Z	7	1		1	BODY-VALVE	
	8	2	**225-4787**	1	VALVE	
	9	2	**225-4789**	1	VALVE	
	10	2	**225-4790**	1	SPRING	
	11	2	**225-4791**	1	GUIDE	
	12	2	**225-4792**	1	PLUG	
	13	2	**225-4793**	1	VALVE AS	
	14	2	**225-4796**	1	PISTON	
	15	2	**225-4797**	1	VALVE AS	
	16	2	**259-7788**	1	GUIDE AS	
		2	**4T-0987**	1	BEARING-SLEEVE	
	17	1	**225-4803**	1	COVER	
	18	1	**8T-6759**	1	PLUG-PIPE	
	19	1,2	*225-4818*	7	PLUG AS	
					(EACH INCLUDES)	
		1,2	**4J-7533**	1	SEAL-O-RING	
		1,2	**225-4804**	1	PLUG	
	20	1,2	*225-4820*	4	PLUG AS	
					(EACH INCLUDES)	
		1,2	**3J-7354**	1	SEAL-O-RING	
		1,2	**225-4821**	1	PLUG	
B	21	2	**225-4830**	1	SHIM (1.0-MM THK)	
B	22	2	**225-4831**	2	SHIM (0.5-MM THK)	
B	23	2	**225-4832**	2	SHIM (0.2-MM THK)	
B	24	2	**225-4833**	1	SHIM (0.1-MM THK)	
Y	25	1	**255-5662**	1	VALVE GP-RELIEF (LINE) (BOOM CYLINDER)	872
	26	2	**095-1594**	2	SEAL-O-RING	
	27	2	**095-1789**	2	RING	
	28	2	**122-7797**	2	RING	
	29	2	**2D-6642**	1	BALL	
	30	2	**3H-0442**	1	SEAL-O-RING	
	31	2	**3J-1907**	2	SEAL-O-RING	
	32	2	**6V-5326**	2	SEAL-O-RING	
M	33	2	**7Y-5226**	1	NUT (M5X0.8-THD)	
M	34	1	**8T-4139**	4	BOLT (M12X1.75X30-MM)	

B-USE AS REQUIRED
M-METRIC PART
Y-SEPARATE ILLUSTRATION
Z-NOT SERVICED SEPARATELY

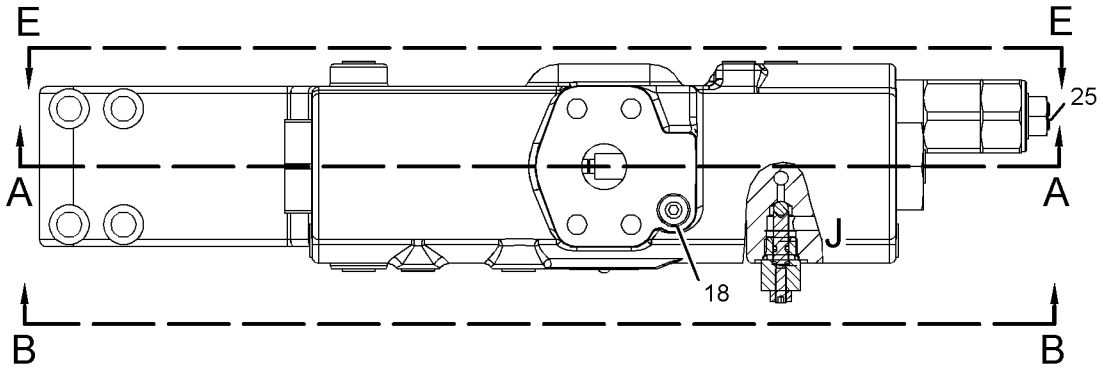

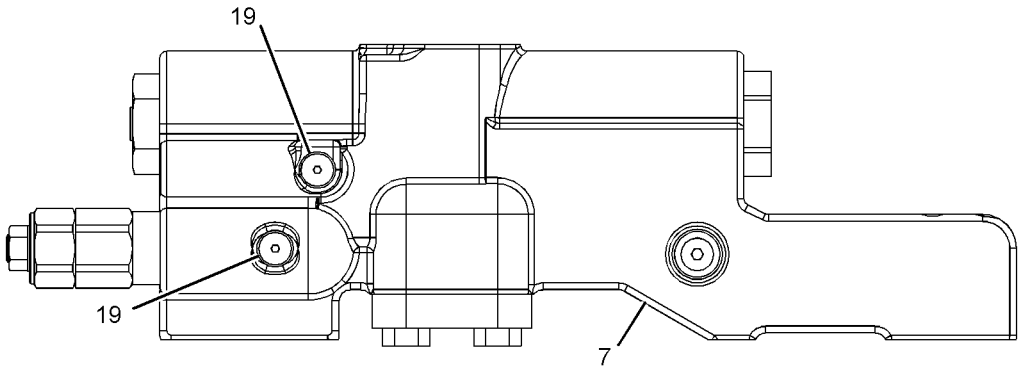

VIEW E-E

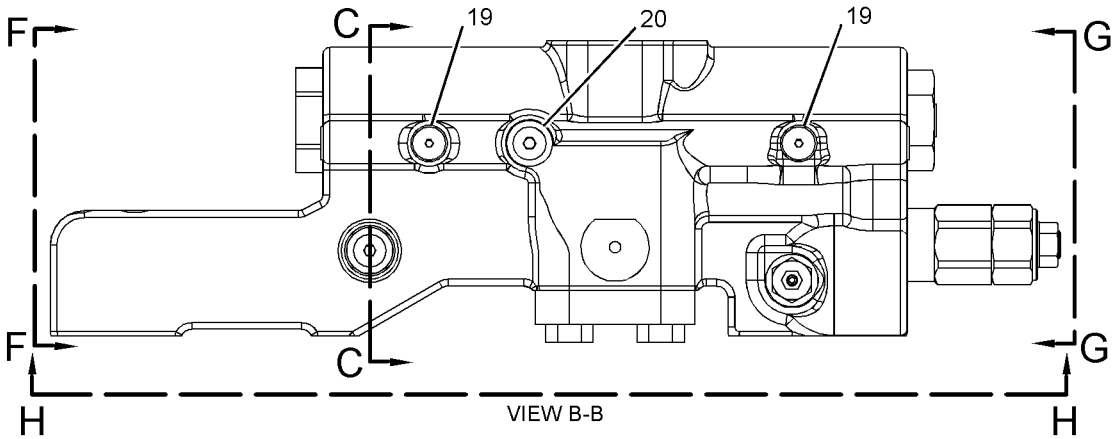

VIEW B-B

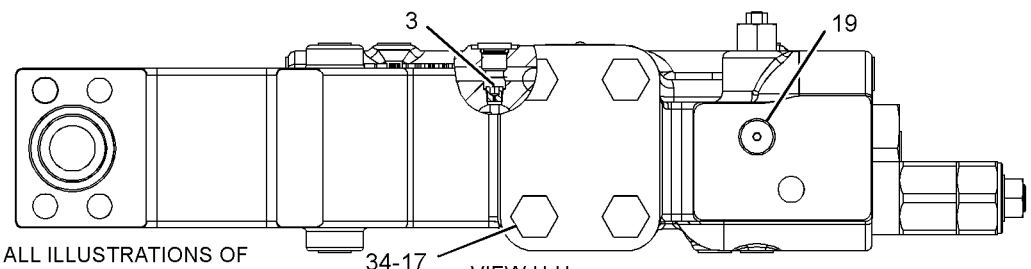

VIEW H-H

REFER TO ALL ILLUSTRATIONS OF THIS GROUP FOR AUXILIARY VIEWS

GRAPHIC #1

g01213798

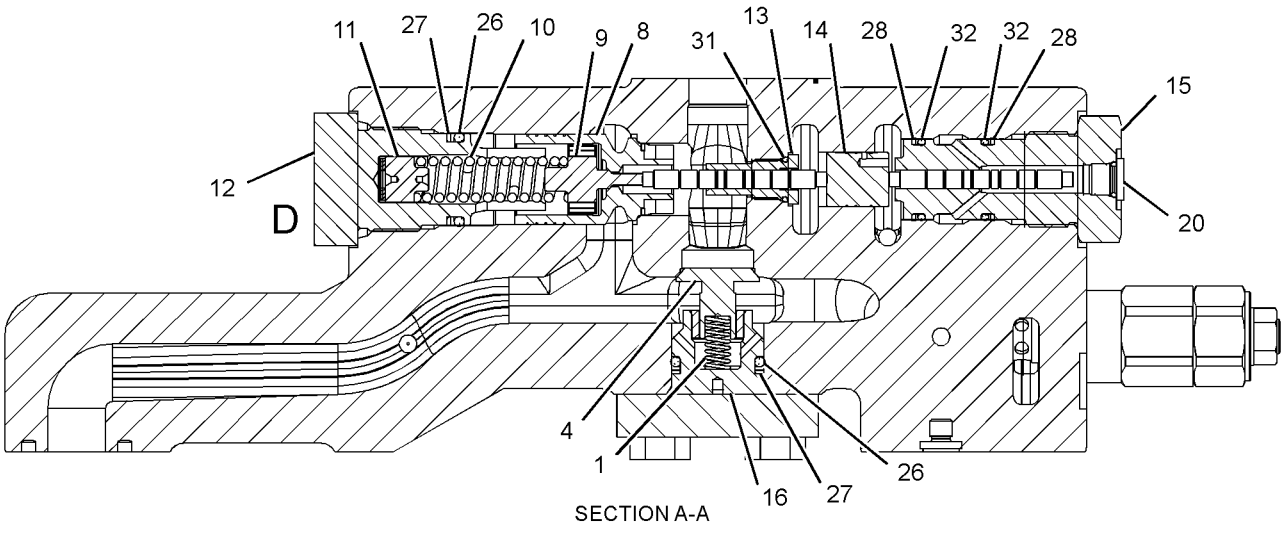

SECTION A-A

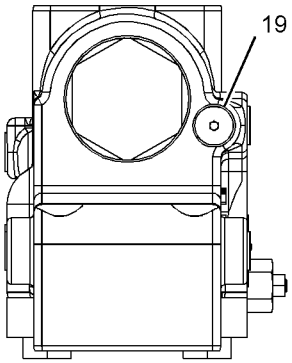

VIEW F-F

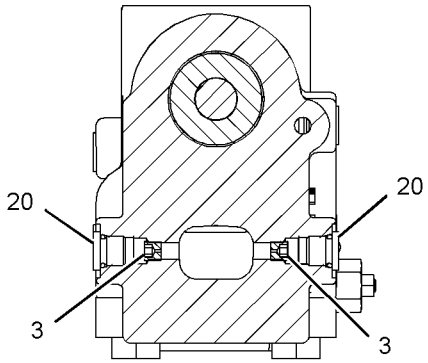

SECTION C-C

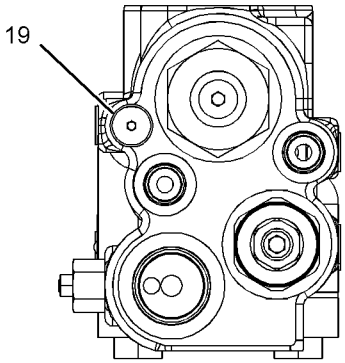

VIEW G-G

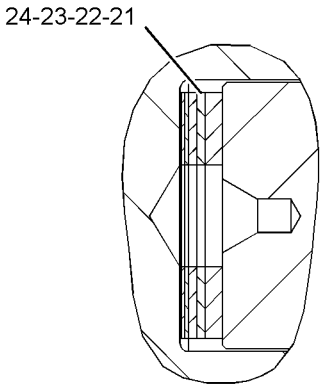

VIEW OF AREA D

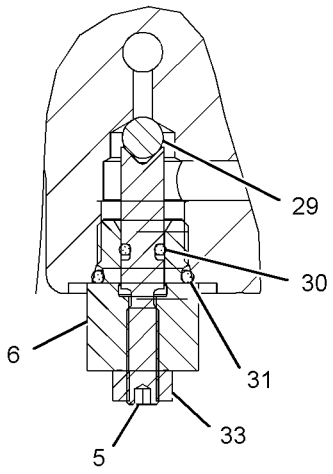

VIEW OF AREA J

GRAPHIC #2 **<END>** g01243563

HYDRAULIC SYSTEM

225-4843 VALVE GP-LOAD CONTROL—STICK CYLINDER

S/N: WNE1-UP; ZMF1-UP; CWG1-UP
PART OF 262-3471, 335-4981 LINES GP-STICK CYLINDER
AN ATTACHMENT

SMCS-5067, 5117, 5147, 5811 **i03563928**

NOTE	REF NO	GRAPHIC REF	PART NUMBER	QTY	PART NAME 1 2 3 4 5 6 (PRODUCT LEVEL)	SEE PAGE
	1	1	**2S-2596**	1	SPRING	
	3	1	**8J-6815**	1	PLUG-ORIFICE	
	4	1	**9T-1614**	1	VALVE	
	5	1	**165-9513**	1	SEAT	
	6	1	**165-9514**	1	PLUG	
	7	1	**225-4787**	1	VALVE	
	8	1	**225-4789**	1	VALVE	
	9	1	**225-4790**	1	SPRING	
	10	1	**225-4791**	1	GUIDE	
	11	1	**225-4792**	1	PLUG	
	12	1	**225-4793**	1	VALVE AS	
	13	1	**225-4796**	1	PISTON	
	14	1	**225-4797**	1	VALVE AS	
	15	1	**259-7788**	1	GUIDE AS	
		1	**4T-0987**	1	BEARING-SLEEVE	
	16	1	**225-4803**	1	COVER	
	17	1	*225-4818*	6	PLUG AS	
					(EACH INCLUDES)	
		1	**4J-7533**	1	SEAL-O-RING	
		1	**225-4804**	1	PLUG	
	18	1	*225-4820*	2	PLUG AS	
					(EACH INCLUDES)	
		1	**3J-7354**	1	SEAL-O-RING	
		1	**225-4821**	1	PLUG	
B	19	1	**225-4830**	1	SHIM (1.0-MM THK)	
B	20	1	**225-4831**	2	SHIM (0.5-MM THK)	
B	21	1	**225-4832**	2	SHIM (0.2-MM THK)	
B	22	1	**225-4833**	1	SHIM (0.1-MM THK)	
	23	1	**225-4844**	1	BODY-VALVE	
Y	25	1	**255-5662**	1	VALVE GP-RELIEF (LINE) (STICK CYLINDER)	872
	26	1	**095-1594**	2	SEAL-O-RING	
	27	1	**095-1789**	2	RING	
	28	1	**122-7797**	2	RING	
	29	1	**2D-6642**	1	BALL	
	30	1	**3H-0442**	1	SEAL-O-RING	
	31	1	**3J-1907**	2	SEAL-O-RING	
	32	1	**6V-5326**	2	SEAL-O-RING	
M	33	1	**7Y-5226**	1	NUT (M5X0.8-THD)	
M	34	1	**8T-4139**	4	BOLT (M12X1.75X30-MM)	
	35	1	**8T-6759**	1	PLUG-PIPE	

B-USE AS REQUIRED
M-METRIC PART
Y-SEPARATE ILLUSTRATION

225-4843 VALVE GP-LOAD CONTROL *(contd.)* i03563928

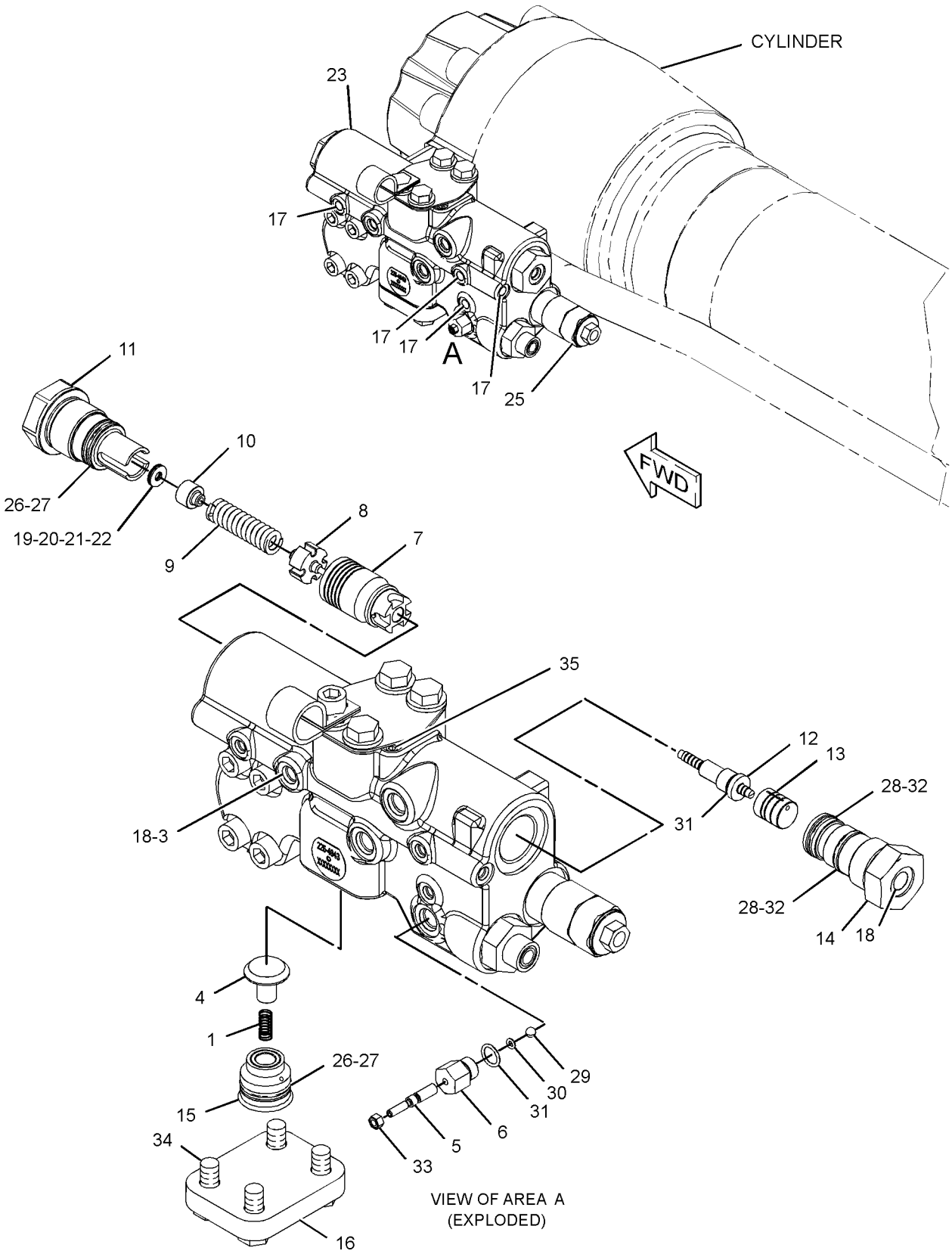

GRAPHIC #1 **<END>** g01296864

HYDRAULIC SYSTEM

255-5680 VALVE GP-LOAD CONTROL–
STICK DRIFT RED, LINE RELIEF
S/N: WNE1-UP; ZMF1-UP; CWG1-UP
PART OF 239-1714, 266-0957 LINES GP-FRONT

SMCS-5067, 5117, 5147, 5811 **i02346907**

NOTE	REF NO	GRAPHIC REF	PART NUMBER	QTY	PART NAME 1 2 3 4 5 6 (PRODUCT LEVEL)	SEE PAGE
	2	1	**4I-8965**	1	GUIDE	
	3	1	**5I-8511**	1	SPRING	
	4	1	**087-5166**	1	SPRING	
	5	1	**118-4044**	1	COVER	
	7	1	**147-4184**	1	PLUG	
	8	1	*225-4818*	2	PLUG AS	
					(EACH INCLUDES)	
		1	**4J-7533**	1	SEAL-O-RING	
		1	**225-4804**	1	PLUG	
Y	9	1	**255-5662**	1	VALVE GP-RELIEF (LINE)	872
Z	10	1		1	VALVE GP-CONTROL (DRIFT CONTROL)	
	11	1	**095-1594**	1	SEAL-O-RING	
	12	1	**095-1789**	1	RING	
	13	1	*148-8395*	1	PLUG AS	
		1	**3K-0360**	1	SEAL-O-RING	
		1	**9S-8005**	1	PLUG-O-RING	
	14	1	*162-0177*	1	PLUG AS	
		1	**3J-1907**	1	SEAL-O-RING	
		1	**9S-8004**	1	PLUG	
M	15	1	**8T-4136**	4	BOLT (M10X1.5X25-MM)	

M-METRIC PART
Y-SEPARATE ILLUSTRATION
Z-NOT SERVICED SEPARATELY

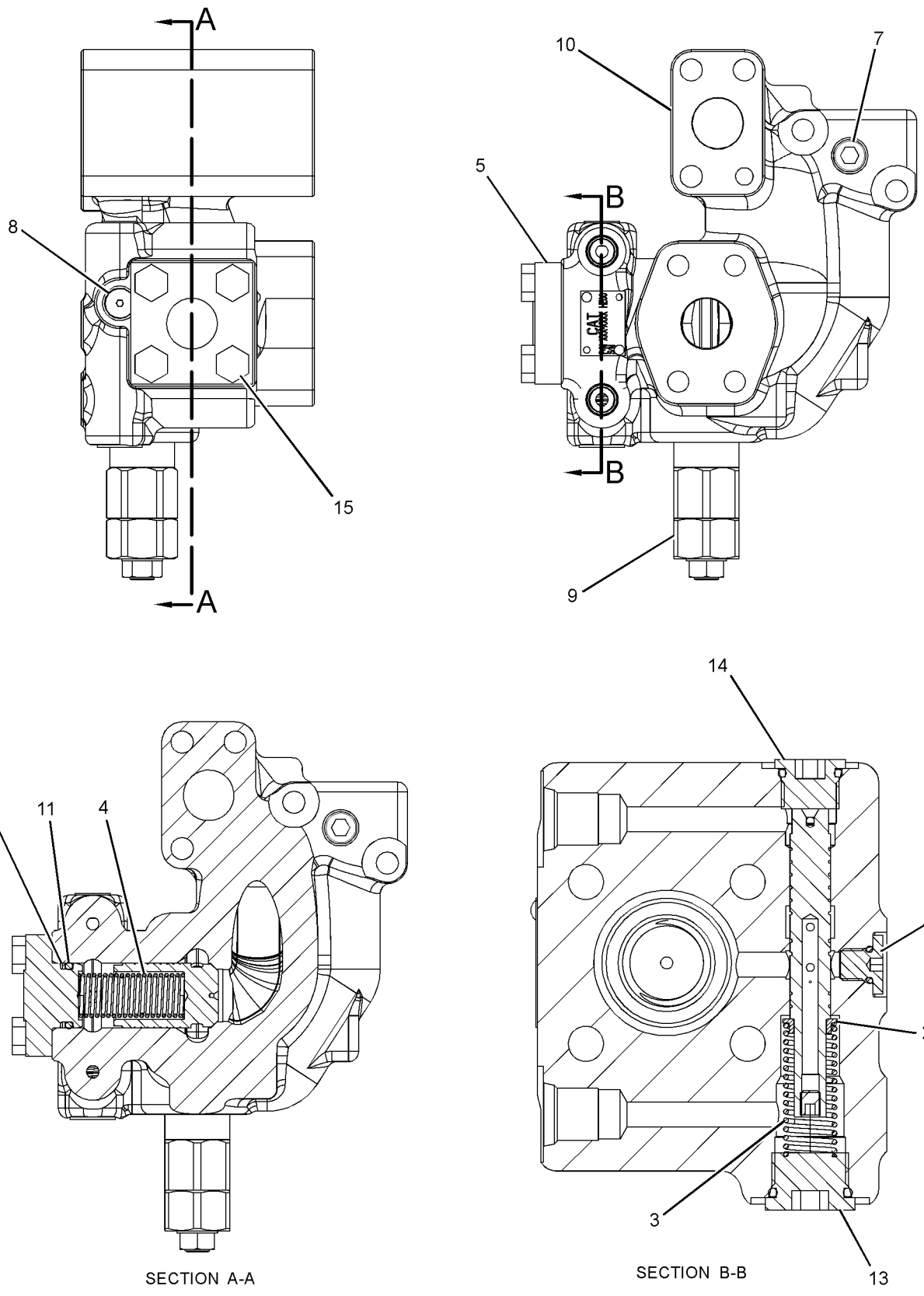

GRAPHIC #1 **<END>** g01174591

HYDRAULIC SYSTEM

255-5683 VALVE GP-LOAD CONTROL–
BOOM DRIFT RED, LINE RELIEF
S/N: WNE1-UP; ZMF1-UP; CWG1-UP
PART OF 239-1714, 266-0957 LINES GP-FRONT

SMCS-5067, 5117, 5147, 5811 **i02346909**

NOTE	REF NO	GRAPHIC REF	PART NUMBER	QTY	PART NAME 1 2 3 4 5 6 (PRODUCT LEVEL)	SEE PAGE
	2	1	**4I-8965**	1	GUIDE	
	3	1	**5I-8511**	1	SPRING	
	4	1	**087-5166**	1	SPRING	
	5	1	**118-4044**	1	COVER	
	7	1	*225-4818*	2	PLUG AS	
					(EACH INCLUDES)	
		1	**225-4804**	1	PLUG	
	7A	1	**4J-7533**	1	SEAL-O-RING	
Y	8	1	**255-5662**	1	VALVE GP-RELIEF (LINE)	872
Z	9	1		1	VALVE GP-CONTROL (DRIFT REDUCTION)	
	10	1	**095-1594**	1	SEAL-O-RING	
	11	1	**095-1789**	1	RING	
	12	1	*148-8395*	1	PLUG AS	
		1	**9S-8005**	1	PLUG-O-RING	
	12A	1	**3K-0360**	1	SEAL-O-RING	
	13	1	*148-8407*	1	PLUG AS	
		1	**9S-4191**	1	PLUG-O-RING	
	13A	1	**3J-1907**	1	SEAL-O-RING	
	14	1	**190-7865**	1	CONNECTOR	
	15	1	**3J-1907**	1	SEAL-O-RING	
	16	1	**6V-8397**	1	SEAL-O-RING	
M	17	1	**8T-4136**	4	BOLT (M10X1.5X25-MM)	

M-METRIC PART
Y-SEPARATE ILLUSTRATION
Z-NOT SERVICED SEPARATELY

255-5683 **VALVE GP-LOAD CONTROL** *(contd.)* **i02346909**

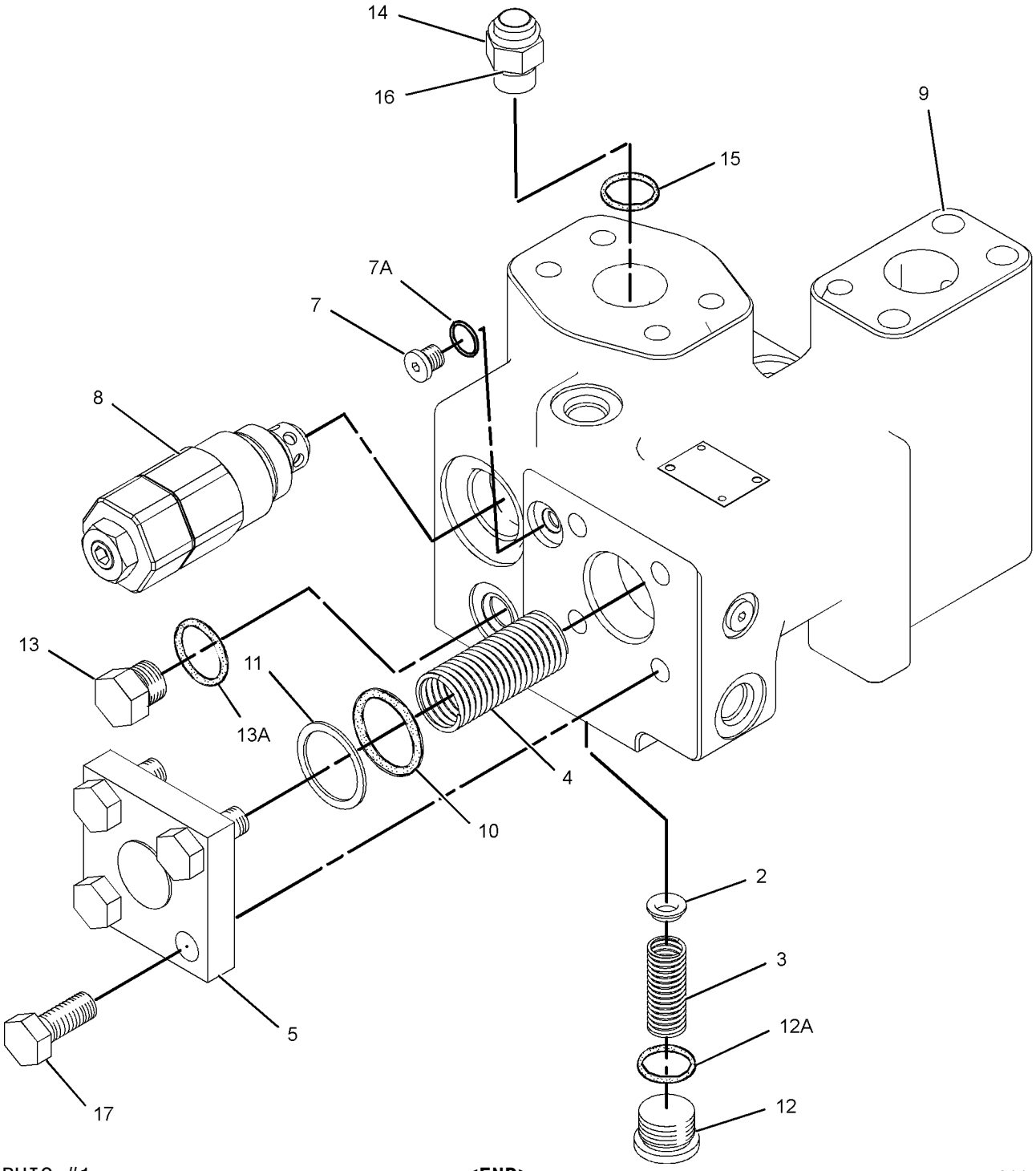

GRAPHIC #1 **<END>** g01152135

285-1323 VALVE GP-MAIN CONTROL–HEAVY LIFT

S/N: WNE1-UP; ZMF1-UP; CWG1-UP

PART OF 270-5712, 270-5713, 285-1356 HYDRAULIC AR

SMCS-5051 **i02945243**

NOTE	REF NO	GRAPHIC REF	PART NUMBER	QTY	PART NAME 1 2 3 4 5 6 (PRODUCT LEVEL)	SEE PAGE
Y	1	1	**153-5313**	1	VALVE GP-RELIEF (NEGATIVE FLOW CONTROL)	866
Y	2	1	**259-7465**	1	VALVE GP-CONTROL (RH)	826
Y	3	1	**285-1339**	1	VALVE GP-CONTROL (LH)	831
	4	1	**1P-3702**	2	SEAL-RECTANGULAR	
	5	1	**4J-0519**	2	SEAL-O-RING	
M	6	1	**8T-4140**	5	BOLT (M16X2X60-MM)	
M	7	1	**8T-4193**	4	BOLT (M16X2X50-MM)	
	8	1	**9X-8257**	9	WASHER (17.5X30X3.5-MM THK)	

M-METRIC PART
Y-SEPARATE ILLUSTRATION

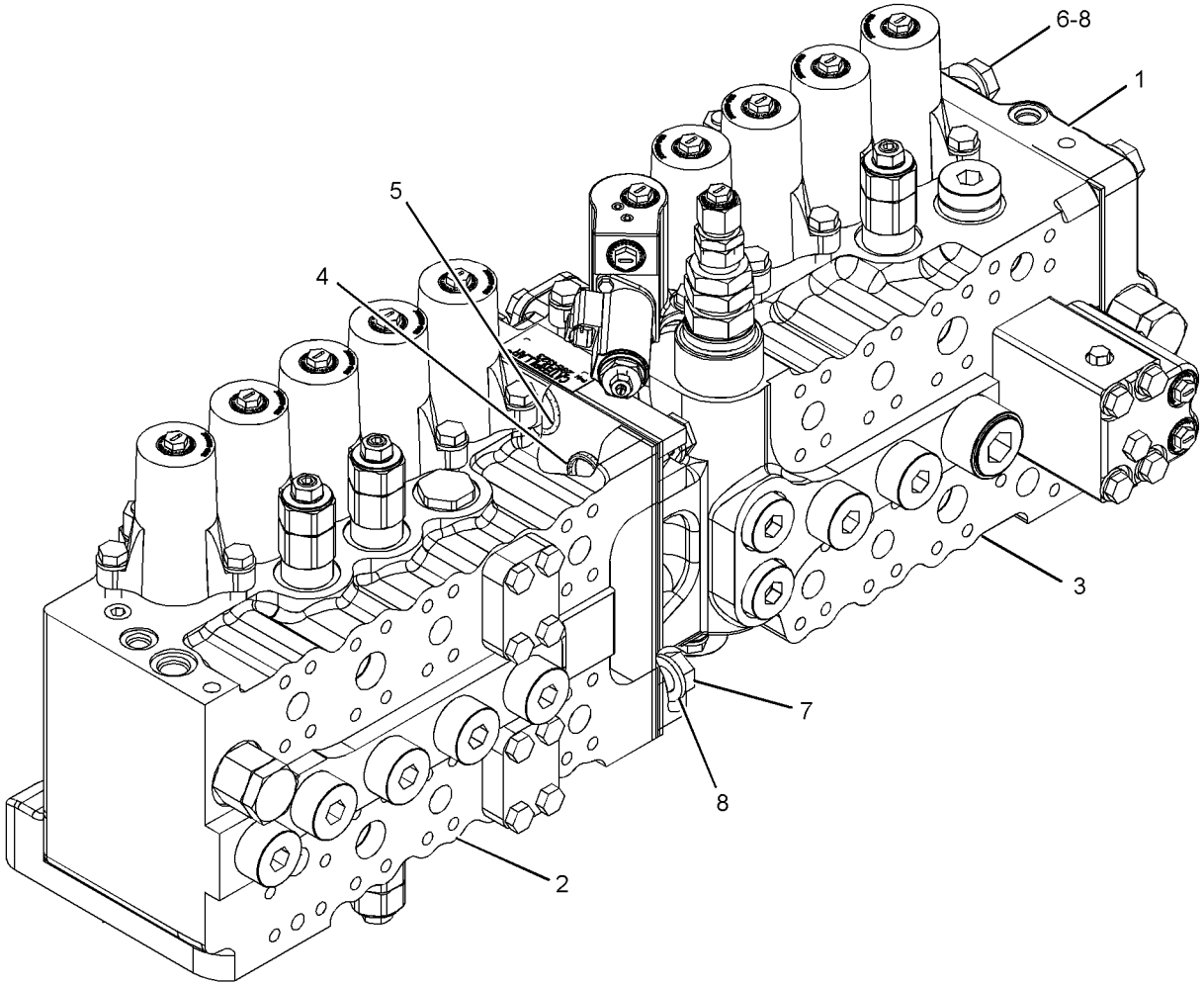

GRAPHIC #1 **<END>** g01361374

HYDRAULIC SYSTEM

277-0954 VALVE GP-MANUAL

S/N: WNE1-UP; ZMF1-UP; CWG1-UP
PART OF 237-3184, 242-6487, 245-2399 LINES GP-AUXILIARY HYDRAULIC
AN ATTACHMENT

SMCS-1329, 5001, 5130 **i02871149**

NOTE	REF NO	GRAPHIC REF	PART NUMBER	QTY	PART NAME 1 2 3 4 5 6 (PRODUCT LEVEL)	SEE PAGE
	1	1	**302-9466**	1	HANDLE	
	2	1	**3J-1907**	1	SEAL-O-RING	
	3	1	**9S-4191**	1	PLUG-O-RING	

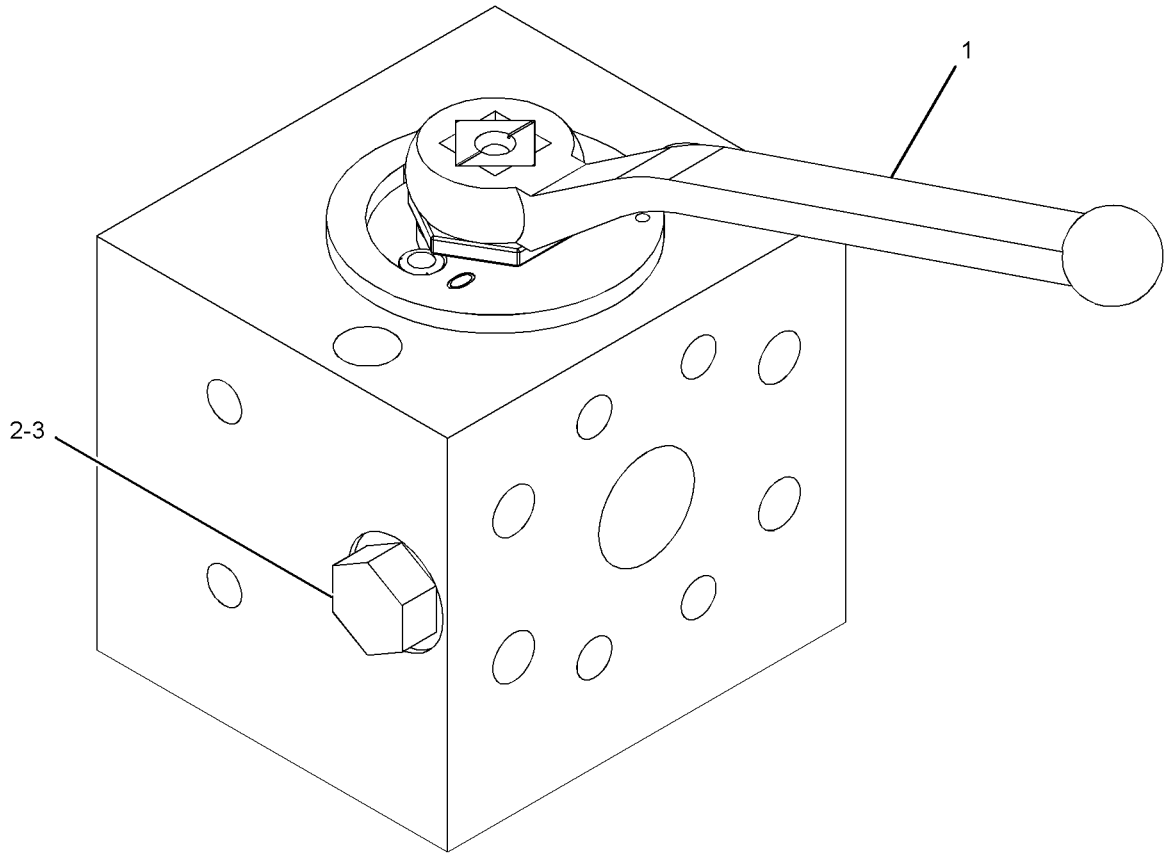

GRAPHIC #1 **<END>** g01236800

206-3336 VALVE GP-PILOT

S/N: WNE1-UP; ZMF1-UP; CWG1-UP
PART OF 316-8842 CONTROL GP-HYDRAULIC PEDAL
AN ATTACHMENT

SMCS-5059 **i03634701**

NOTE	REF NO	GRAPHIC REF	PART NUMBER	QTY	PART NAME 1 2 3 4 5 6 (PRODUCT LEVEL)	SEE PAGE
	1	1	**107-6479**	1	PLUG	
	2	1	**190-7819**	2	SPRING	
	3	1	**335-0136**	1	BELLOWS	
	4	1	**335-0138**	2	PACKING	
	5	1	**095-1575**	1	SEAL-O-RING	
	6	1	**095-1578**	2	SEAL-O-RING	
	7	1	**095-1579**	1	SEAL-O-RING	
	8	1	**095-1584**	1	SEAL-O-RING	
	9	1	**6V-8399**	2	SEAL-O-RING	
	10	1	**9M-5590**	1	BALL	

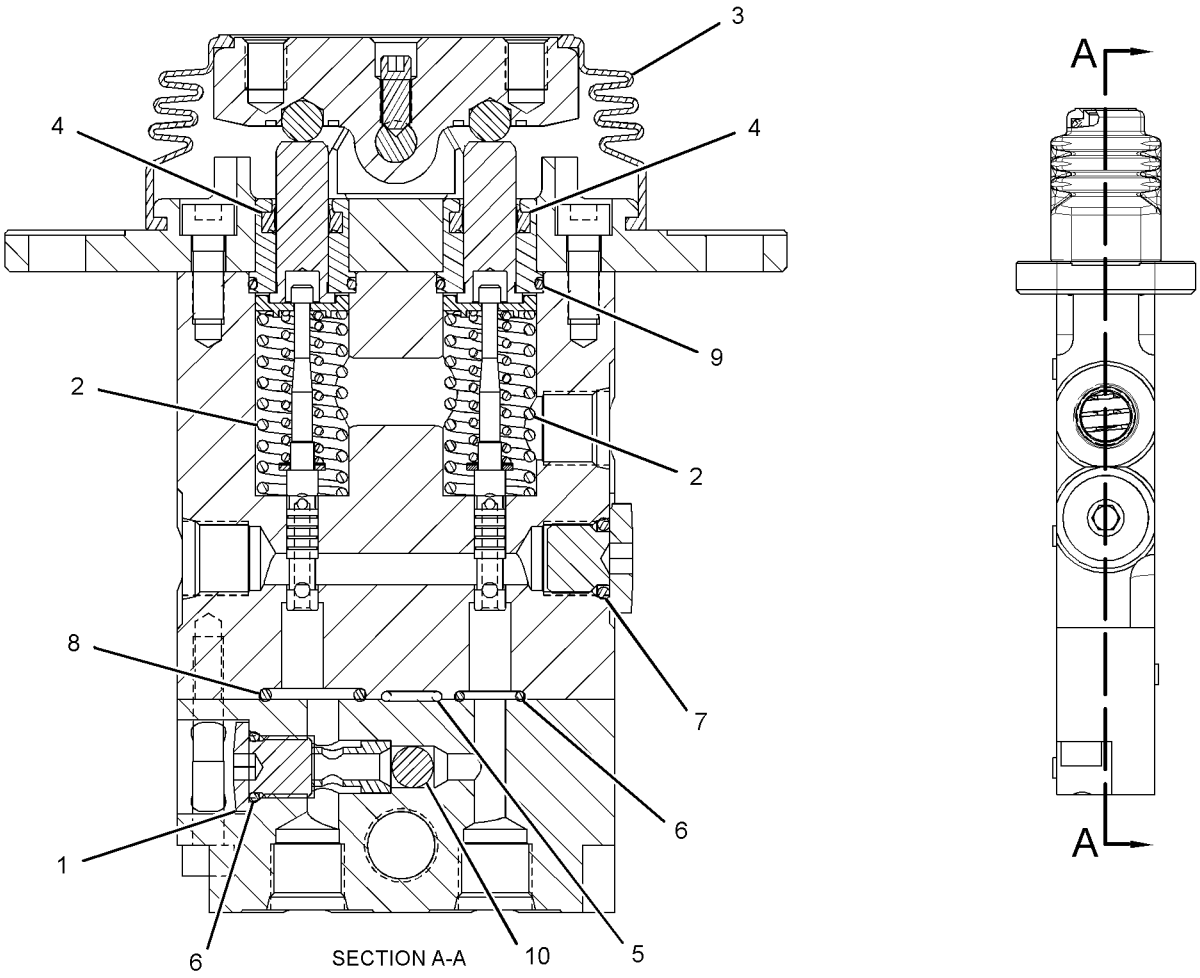

GRAPHIC #1 **<END>** g01952872

HYDRAULIC SYSTEM

297-0529 VALVE GP-PILOT–JOYSTICK

S/N: WNE1-UP; ZMF1-UP

PART OF 297-0532, 297-0533 CONTROL GP-JOYSTICK

AN ATTACHMENT

SMCS-5059 **i03017531**

NOTE	REF NO	GRAPHIC REF	PART NUMBER	QTY	PART NAME 1 2 3 4 5 6 (PRODUCT LEVEL)	SEE PAGE
	1	1	**270-5953**	4	SPRING	
	2	1	**095-1586**	4	SEAL-O-RING	
	3	1	**4I-6365**	1	JOINT	
	4	1	**094-0876**	4	SEAL	
	5	1	**096-1628**	4	PLUG	
B	6	1	**099-6137**	4	WASHER (6.1X9X0.2-MM THK)	
	7	1	**118-4086**	4	ROD	
	8	1	**118-4087**	4	SPRING	
M	9	1	**131-5915**	1	NUT-SPECIAL	
	10	1	**165-9431**	1	PLATE	
	11	1	**165-9435**	2	SEAT	
	12	1	**165-9436**	2	SEAT	
	13	1	**165-9438**	1	PLATE	
	14	1	**165-9442**	2	SPRING	
	15	1	**165-9443**	2	SEAT-SPRING	
	16	1	**165-9444**	2	SEAT-SPRING	
	17	1	**165-9460**	2	SPRING	
	18	1	**171-0087**	1	BELLOWS	

PARTS SHOWN IN GRAPHIC(S) WITHOUT A REFERENCE NUMBER ARE NOT SERVICED SEPARATELY

B-USE AS REQUIRED
M-METRIC PART

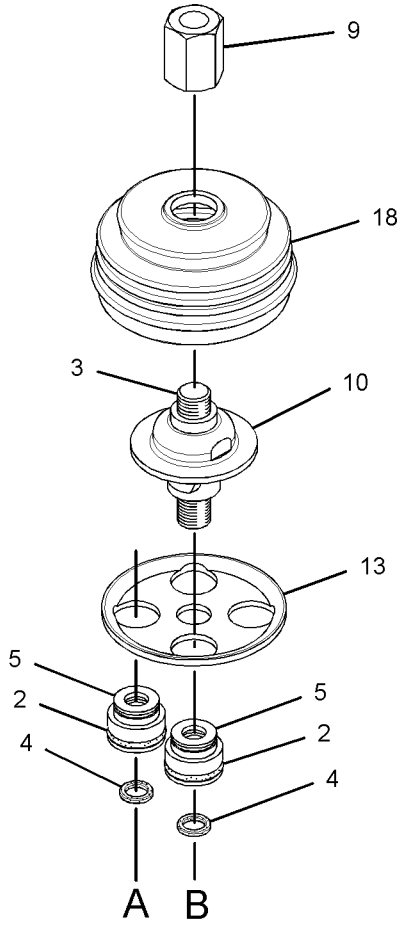

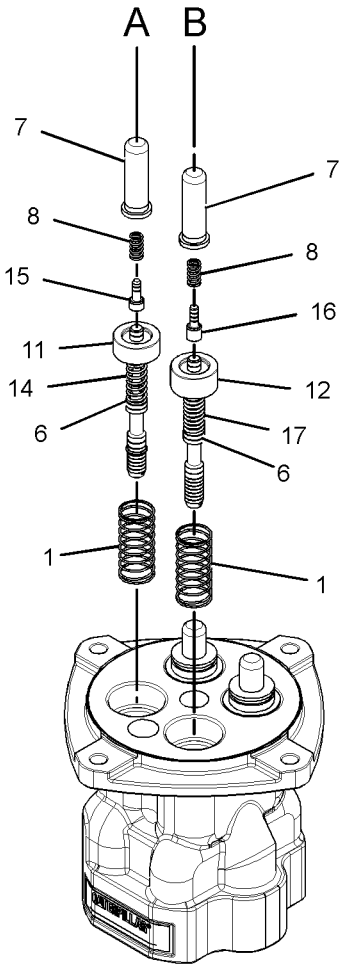

GRAPHIC #1 **<END>** g01528724

297-0530 VALVE GP-PILOT–JOYSTICK, RH

S/N: WNE1-UP; ZMF1-UP; CWG1-UP
PART OF 297-0538, 297-0540 CONTROL GP-PILOT OPERATED HYD
AN ATTACHMENT

SMCS-5059 **i02961332**

NOTE	REF NO	GRAPHIC REF	PART NUMBER	QTY	PART NAME 1 2 3 4 5 6 (PRODUCT LEVEL)	SEE PAGE
	1	1	**4I-6365**	1	JOINT	
	2	1	**094-0876**	4	SEAL	
	3	1	**095-1586**	4	SEAL-O-RING	
	4	1	**096-1628**	4	PLUG	
B	5	1	**099-6137**	4	WASHER (6.1X9X0.2-MM THK)	
	6	1	**118-4086**	4	ROD	
	7	1	**118-4087**	4	SPRING	
M	8	1	**131-5915**	1	NUT-SPECIAL	
	9	1	**165-9431**	1	PLATE	
	10	1	**165-9435**	2	SEAT	
	11	1	**165-9436**	2	SEAT	
	12	1	**165-9438**	1	PLATE	
	13	1	**165-9442**	2	SPRING	
	14	1	**165-9443**	2	SEAT-SPRING	
	15	1	**165-9444**	2	SEAT-SPRING	
	16	1	**165-9460**	1	SPRING	
	17	1	**171-0087**	1	BELLOWS	
	18	1	**190-7750**	4	SPRING	
	19	1	**225-4815**	1	SPRING	

B-USE AS REQUIRED
M-METRIC PART

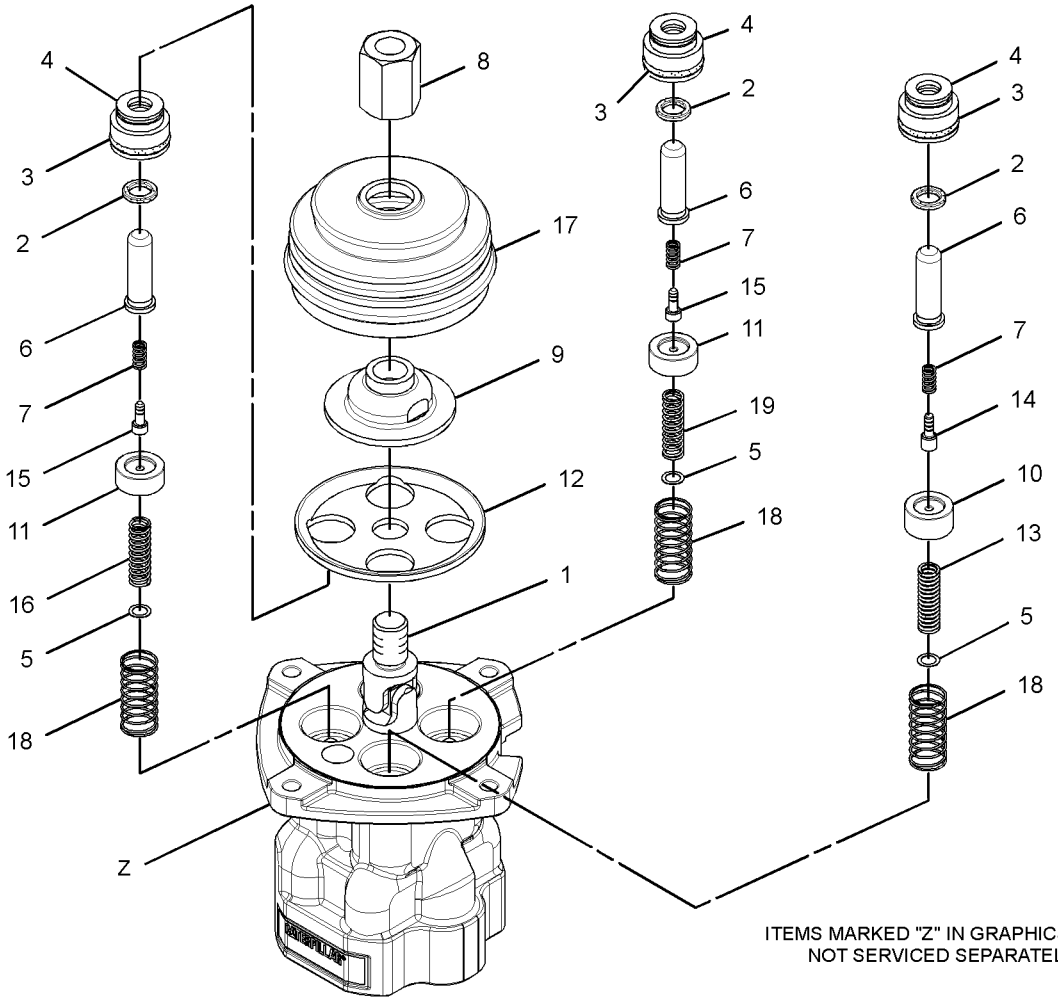

ITEMS MARKED "Z" IN GRAPHICS ARE
NOT SERVICED SEPARATELY

GRAPHIC #1 **<END>** g01515022

297-0531 VALVE GP-PILOT–JOYSTICK, LH

S/N: WNE1-UP; ZMF1-UP; CWG1-UP
PART OF 297-0539, 297-0541 CONTROL GP-PILOT OPERATED HYD
AN ATTACHMENT

SMCS-5059 **i02961333**

NOTE	REF NO	GRAPHIC REF	PART NUMBER	QTY	PART NAME 1 2 3 4 5 6 (PRODUCT LEVEL)	SEE PAGE
	1	1	**4I-6365**	1	JOINT	
	2	1	**094-0876**	4	SEAL	
	3	1	**095-1586**	4	SEAL-O-RING	
	4	1	**096-1628**	4	PLUG	
B	5	1	**099-6137**	4	WASHER (6.1X9X0.2-MM THK)	
	6	1	**118-4086**	4	ROD	
	7	1	**118-4087**	4	SPRING	
M	8	1	**131-5915**	1	NUT-SPECIAL	
	9	1	**165-9431**	1	PLATE	
	10	1	**165-9435**	2	SEAT	
	11	1	**165-9436**	2	SEAT	
	12	1	**165-9438**	1	PLATE	
	13	1	**165-9442**	2	SPRING	
	14	1	**165-9443**	2	SEAT-SPRING	
	15	1	**165-9444**	2	SEAT-SPRING	
	16	1	**165-9460**	1	SPRING	
	17	1	**171-0087**	1	BELLOWS	
	18	1	**190-7750**	4	SPRING	
	19	1	**225-4815**	1	SPRING	

B-USE AS REQUIRED
M-METRIC PART

297-0531 VALVE GP-PILOT *(contd.)* i02961333

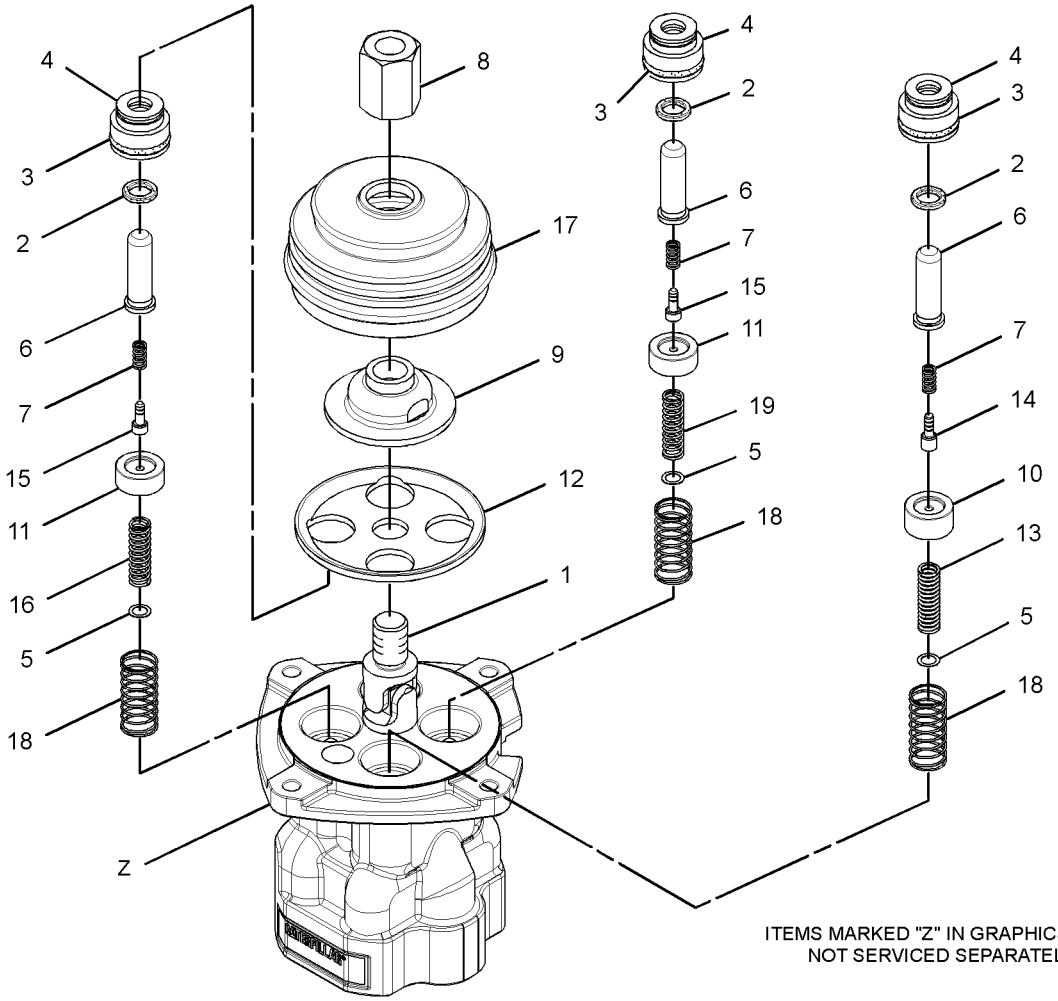

ITEMS MARKED "Z" IN GRAPHICS ARE
NOT SERVICED SEPARATELY

GRAPHIC #1 **<END>** g01515022

310-0414 VALVE GP-PILOT–TRAVEL

S/N: WNE1-UP; ZMF1-UP; CWG1-UP

PART OF 248-9825 LINES GP-PILOT

SMCS-5059 **i03162420**

NOTE	REF NO	GRAPHIC REF	PART NUMBER	QTY	PART NAME 1 2 3 4 5 6 (PRODUCT LEVEL)	SEE PAGE
	1	1	**087-5708**	2	PEDAL	
M	2	1	**095-0673**	2	BOLT-SOCKET HEAD (M12X1.75X60-MM)	
	3	1	**099-6137**	4	WASHER (6.1X9X0.2-MM THK)	
	4	1	**099-6141**	4	WASHER (6.1X11X1.5-MM THK)	
	5	1	**099-6144**	4	BUSHING-TERMINAL	
	6	1	**099-6145**	2	CAMSHAFT	
	7	1	**119-5388**	4	CAP	
	8	1	**119-5389**	4	PACKING	
	9	1	**119-5391**	4	SEAT	
	10	1	**126-1865**	4	SPRING	
	11	1	**126-1866**	4	SPRING	
	12	1	**131-5818**	4	SPRING	
	13	1	**147-4131**	2	BOOT-PROTECTION	
	14	1	**153-5223**	12	BALL	
	15	1	**165-9463**	2	COVER	
	16	1	**165-9552**	4	PUSHROD	
	17	1	**165-9553**	1	COVER	
	18	1	**165-9554**	4	PLUG	
	19	1	**196-3784**	2	PLUG	
	20	1	**270-5949**	4	PISTON	
	21	1	**270-5950**	4	SPRING	
	22	1	**310-0419**	4	SEAT	
	23	1	**310-0420**	4	SEAL-O-RING	
	24	1	**310-0421**	2	BUSHING	
	25	1	**310-0422**	2	SEAT	
	26	1	**323-7770**	2	ADAPTER	
M	27	1	**087-4710**	4	SETSCREW	
M	28	1	**095-1260**	2	SETSCREW-SOCKET (M6X1X6-MM)	
	29	1	**095-1575**	4	SEAL-O-RING	
	30	1	**3J-7354**	2	SEAL-O-RING	
	31	1	**3Y-9267**	2	BALL	
	32	1	**6V-8400**	4	SEAL-O-RING	
M	33	1	**8C-6965**	2	BOLT-SOCKET HEAD (M6X1X45-MM)	
M	34	1	**8T-1158**	2	BOLT-SOCKET HEAD (M8X1.25X20-MM)	
M	35	1	**8T-4133**	4	NUT (M10X1.5-THD)	
	36	1	**8T-6759**	4	PLUG-PIPE	

M-METRIC PART

310-0414 VALVE GP-PILOT *(contd.)* i03162420

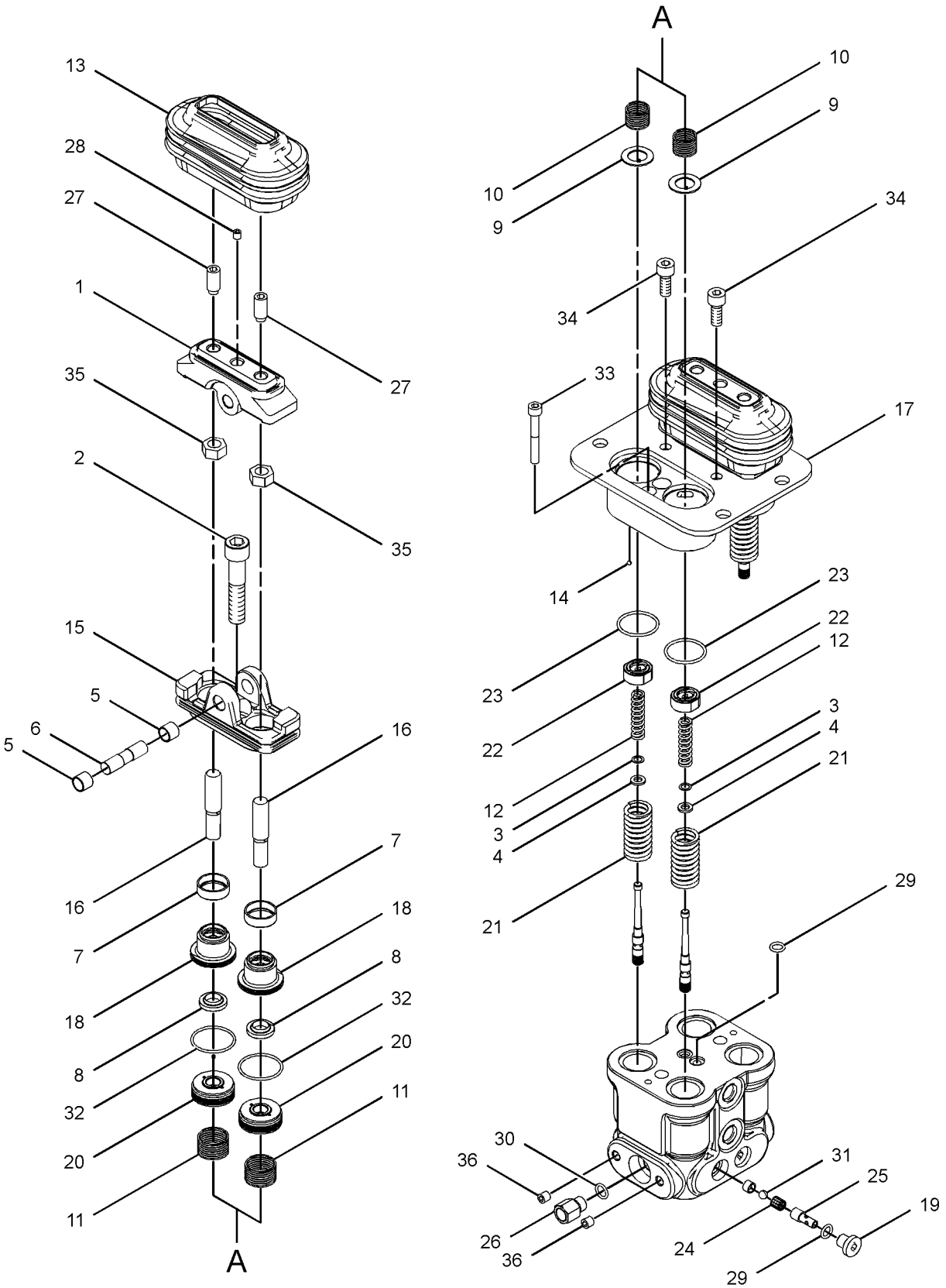

GRAPHIC #1 **<END>** g01622941

310-0210 VALVE GP-PRESSURE REDUCING–
BOOM, SWING PRIORITY
S/N: WNE1-UP; ZMF1-UP; CWG1-UP
PART OF 266-0963, 275-1408 LINES GP-PILOT

SMCS-5117 **i03018448**

NOTE	REF NO	GRAPHIC REF	PART NUMBER	QTY	PART NAME 1 2 3 4 5 6 (PRODUCT LEVEL)	SEE PAGE
	1	1	**111-9998**	2	PLUG	
	2	1	**171-0123**	2	PLUG	
M	3	1	**171-0124**	2	SETSCREW (M8X1.25X18-MM)	
	4	1	**171-0126**	2	SEAT-SPRING	
	5	1	**171-0127**	2	SEAT-SPRING	
	6	1	**171-0128**	2	SPRING	
	7	1	**185-0423**	2	STOP	
	8	1	**095-1580**	2	SEAL-O-RING	
	9	1	**095-1582**	2	SEAL-O-RING	
	10	1	**095-1590**	2	SEAL-O-RING	
M	11	1	**5C-7261**	2	NUT (M8X1.25-THD)	

M-METRIC PART

310-0210 VALVE GP-PRESSURE REDUCING *(contd.)* i03018448

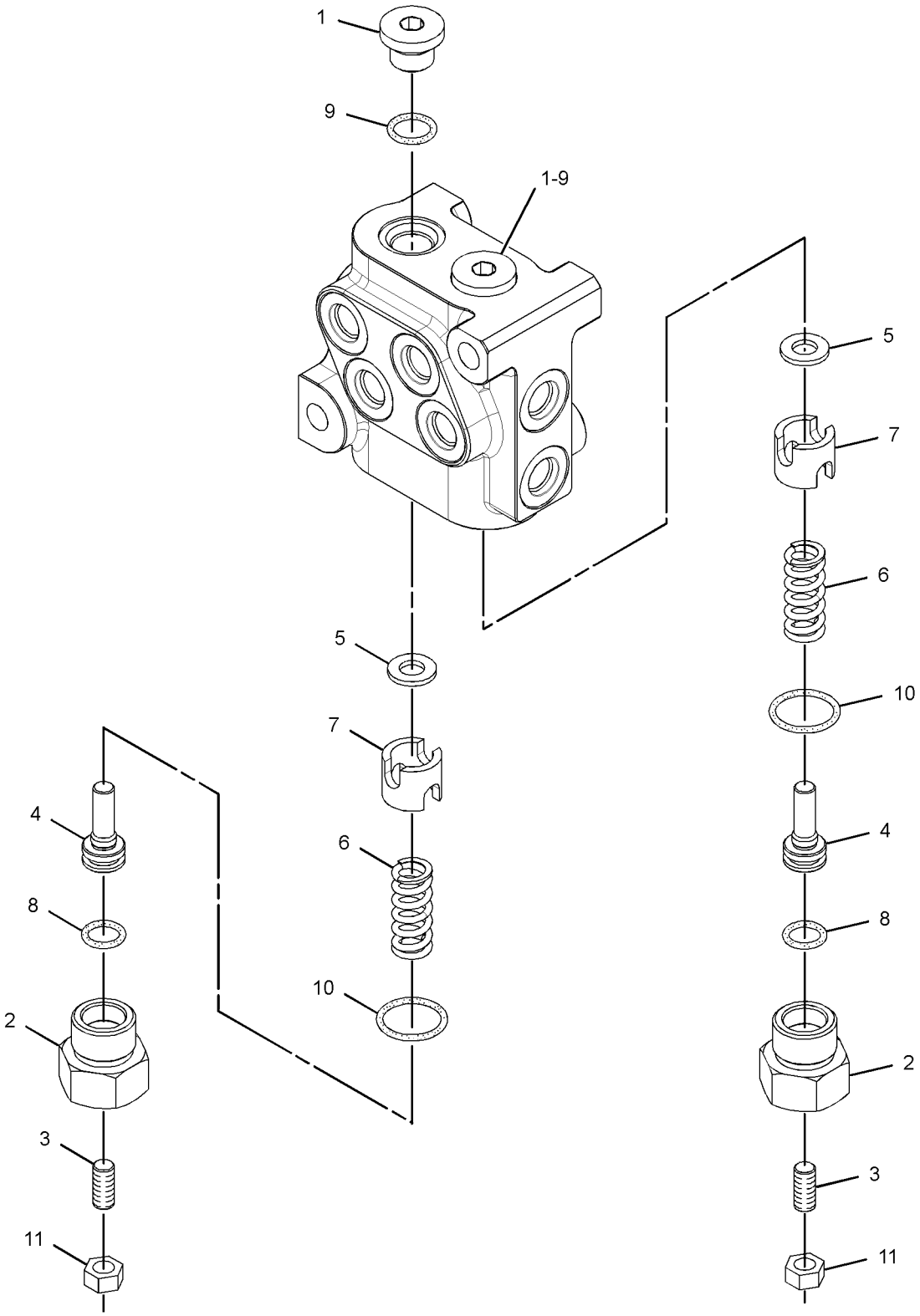

GRAPHIC #1 **<END>** g01506435

323-7898 VALVE GP-PRIORITY–SWING

S/N: WNE1-UP; ZMF1-UP; CWG1-UP

PART OF 285-1339 VALVE GP-CONTROL

SMCS-506P **i03343880**

NOTE	REF NO	GRAPHIC REF	PART NUMBER	QTY	PART NAME 1 2 3 4 5 6 (PRODUCT LEVEL)	SEE PAGE
	1	1	**140-0674**	1	VALVE	
	2	1	**158-8186**	1	SPRING	
	3	1	**255-5594**	2	SEAL-O-RING	
	4	1	**297-0483**	2	SEAL-O-RING	
	5	1	**140-0677**	1	PIN	

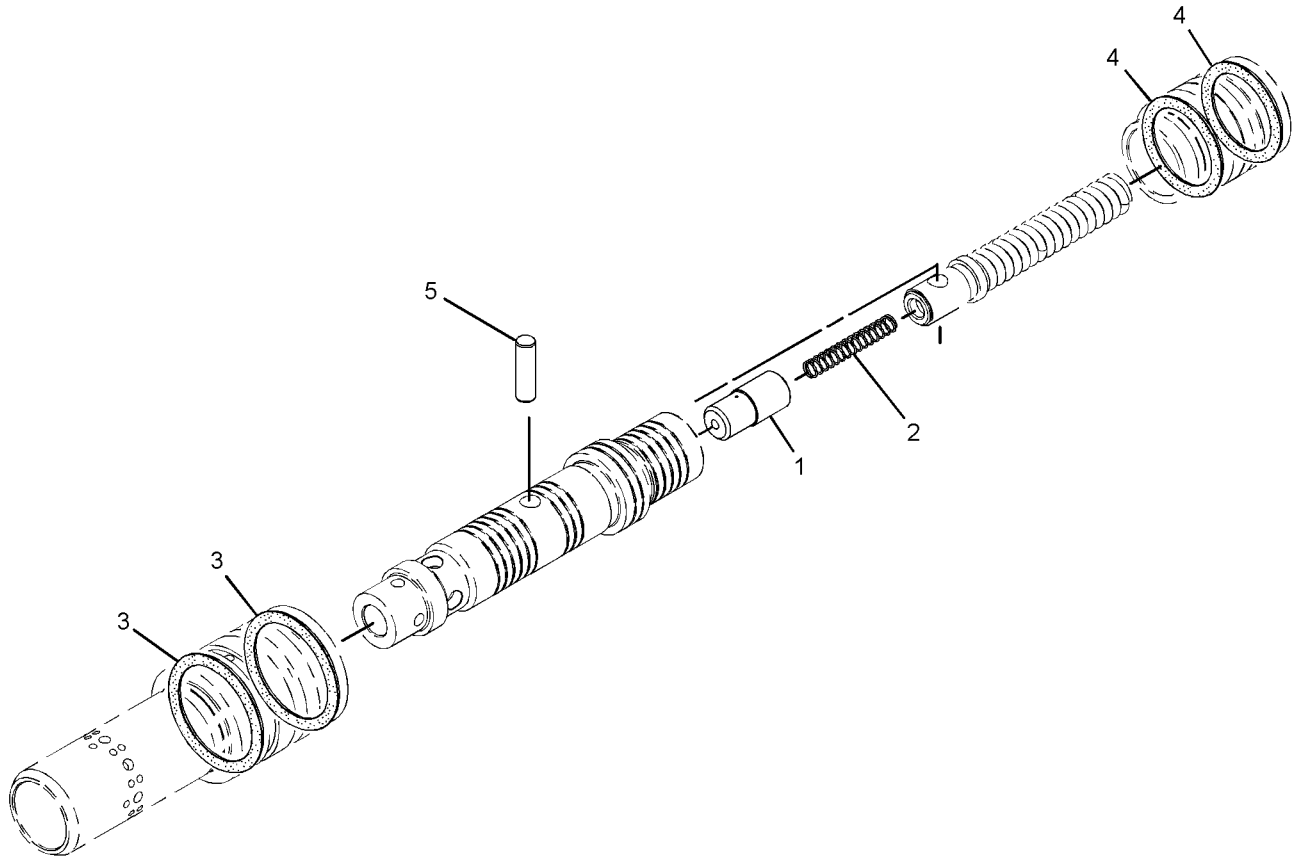

GRAPHIC #1 **<END>** g01682914

HYDRAULIC SYSTEM

109-2667 VALVE GP-RELIEF

S/N: WNE1-UP; ZMF1-UP; CWG1-UP
PART OF 153-5313 VALVE GP-RELIEF

SMCS-5069, 5117 **i01259345**

NOTE	REF NO	GRAPHIC REF	PART NUMBER	QTY	PART NAME 1 2 3 4 5 6 (PRODUCT LEVEL)	SEE PAGE
	1	1	**5I-4111**	1	PLUG	
	2	1	**109-2665**	1	BODY-VALVE	
	3	1	**107-6370**	1	SPRING	
	4	1	**107-6371**	1	VALVE	
	5	1	**4K-1388**	2	SEAL-O-RING	
B	6	1	**4J-7385**	1	SHIM (0.048-IN THK)	
B	7	1	**4J-7386**	5	SHIM (0.01-IN THK)	
	8	1	**5P-3108**	1	SEAL-O-RING	

B-USE AS REQUIRED

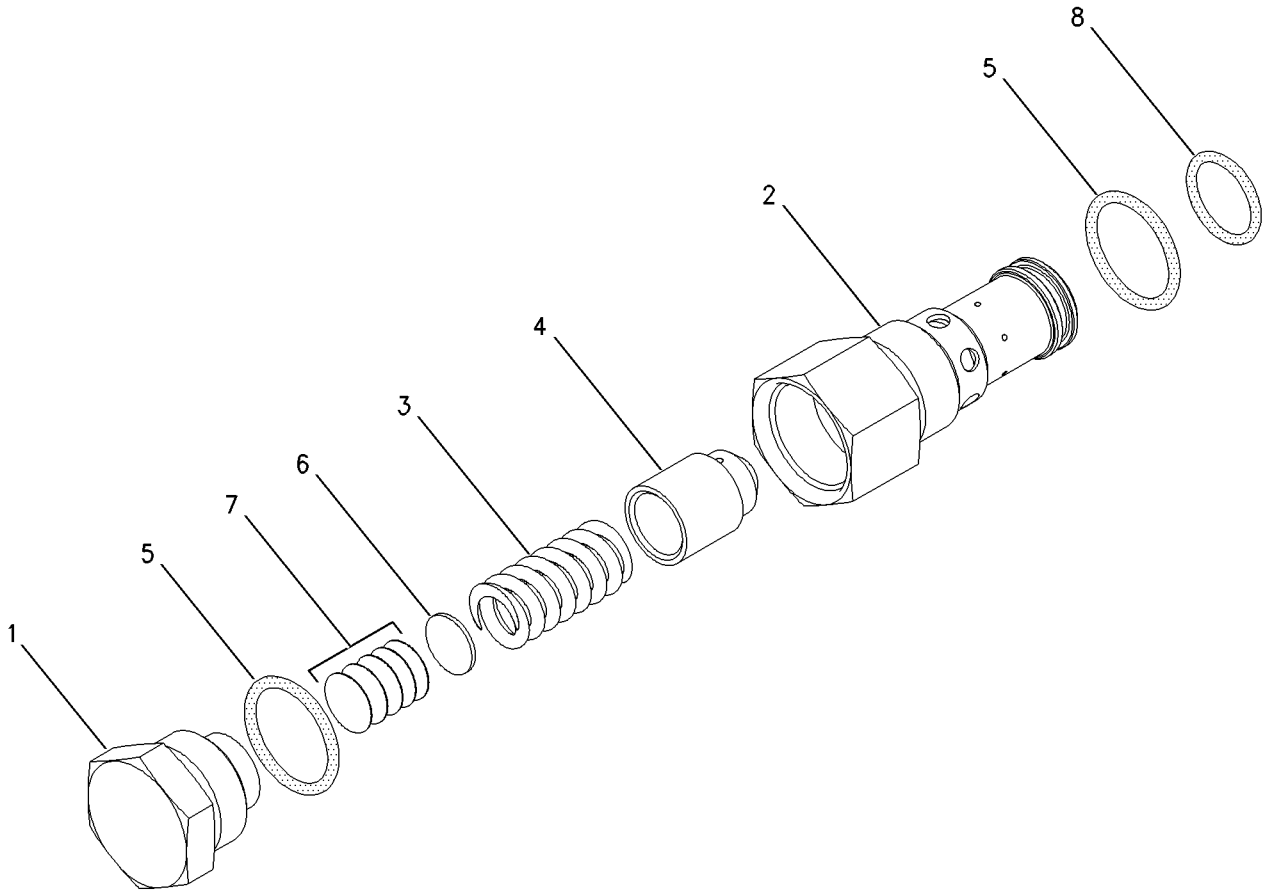

GRAPHIC #1 **<END>** g00672680

109-5152 VALVE GP-RELIEF

S/N: WNE1-UP; ZMF1-UP; CWG1-UP
PART OF 259-7465 VALVE GP-CONTROL

SMCS-5069, 5117 **i01271453**

NOTE	REF NO	GRAPHIC REF	PART NUMBER	QTY	PART NAME 1 2 3 4 5 6 (PRODUCT LEVEL)	SEE PAGE
	1	1	**5I-4111**	1	PLUG	
	2	1	*109-5153*	1	BODY-VALVE	
	3	1	**107-6370**	1	SPRING	
	4	1	**107-6371**	1	VALVE	
	5	1	**4K-1388**	2	SEAL-O-RING	
B	6	1	**4J-7385**	1	SHIM (0.048-IN THK)	
B	7	1	**4J-7386**	1	SHIM (0.01-IN THK)	
	8	1	**5P-3108**	1	SEAL-O-RING	

B-USE AS REQUIRED

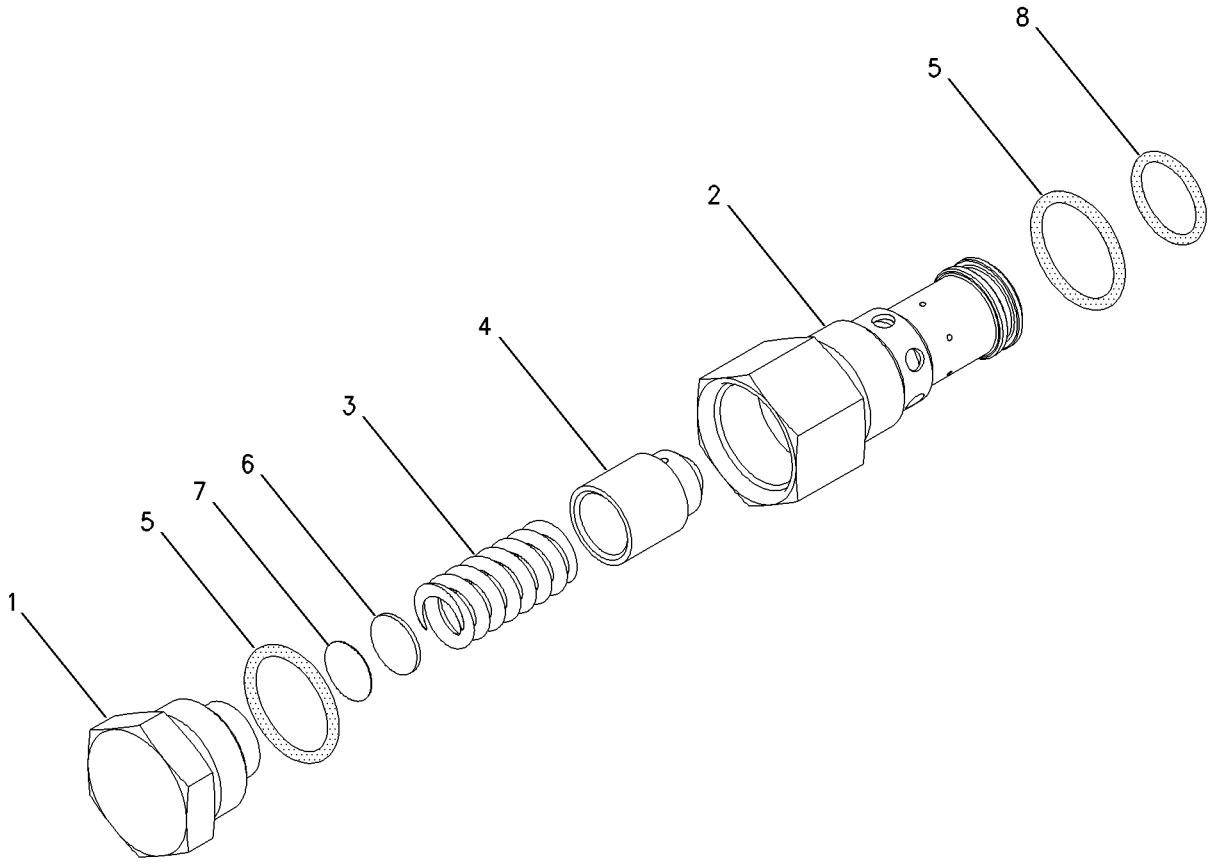

GRAPHIC #1 **<END>** g00680634

153-5313 VALVE GP-RELIEF

S/N: WNE1-UP; ZMF1-UP; CWG1-UP
PART OF 285-1323 VALVE GP-MAIN CONTROL

SMCS-5069, 5117 **i01548212**

NOTE	REF NO	GRAPHIC REF	PART NUMBER	QTY	PART NAME 1 2 3 4 5 6 (PRODUCT LEVEL)	SEE PAGE
	1	1	*153-5239*	1	COVER	
Y	2	1	**109-2667**	1	VALVE GP-RELIEF	864
	3	1	**1P-3702**	2	SEAL-RECTANGULAR	
	4	1	**4J-8998**	2	SEAL-O-RING	

Y-SEPARATE ILLUSTRATION

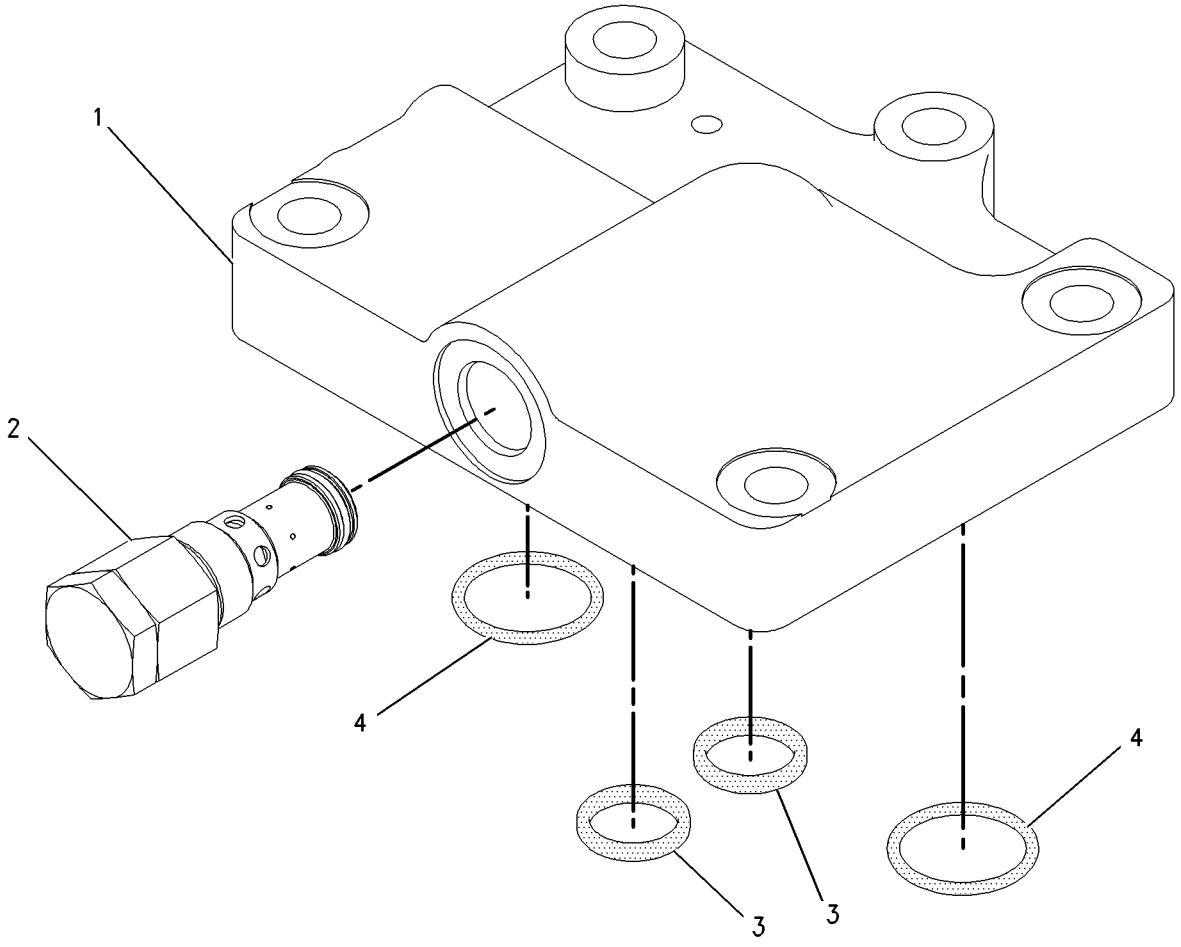

GRAPHIC #1 **<END>** g00743238

173-3452 VALVE GP-RELIEF

S/N: WNE1-UP; ZMF1-UP; CWG1-UP
PART OF 334-9968 MOTOR GP-SWING

SMCS-5069, 5117 **i01255353**

NOTE	REF NO	GRAPHIC REF	PART NUMBER	QTY	PART NAME 1 2 3 4 5 6 (PRODUCT LEVEL)	SEE PAGE
	1	1	**168-0765**	1	RING-BACKUP	
	2	1	**7J-9933**	1	SEAL-O-RING	
	3	1	**7I-0966**	1	RING-BACKUP	
	4	1	**6V-5556**	1	SEAL-O-RING	
	5	1	**095-1698**	1	SEAL-O-RING	

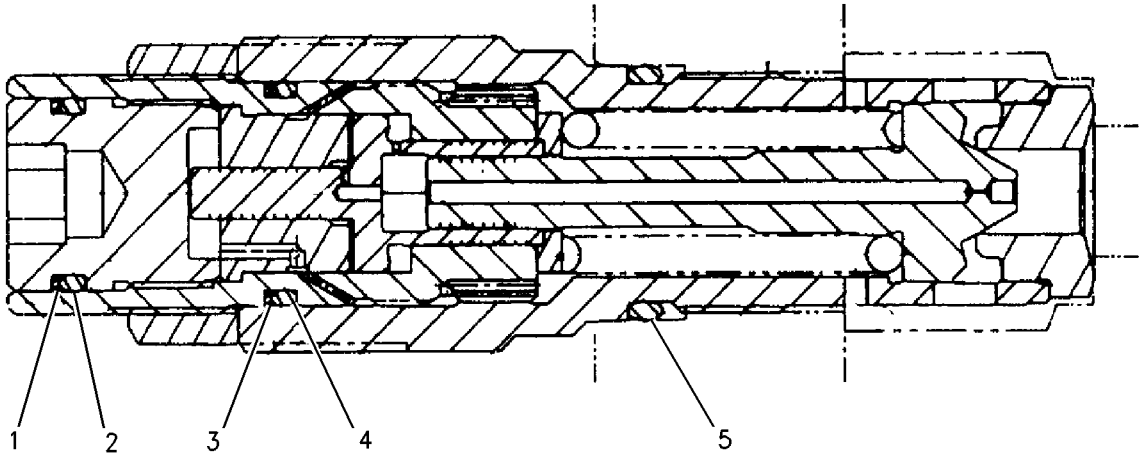

GRAPHIC #1 **<END>** g00671043

HYDRAULIC SYSTEM

173-3536 VALVE GP-RELIEF

S/N: WNE1-UP; ZMF1-UP; CWG1-UP
PART OF 158-9085, 322-8716 VALVE GP-SWING CUSHION
ALSO AN ATTACHMENT

SMCS-5069, 5117 **i01251972**

NOTE	REF NO	GRAPHIC REF	PART NUMBER	QTY	PART NAME 1 2 3 4 5 6 (PRODUCT LEVEL)	SEE PAGE
	1	1	**095-1785**	1	RING-BACKUP	
	2	1	**095-1586**	1	SEAL-O-RING	

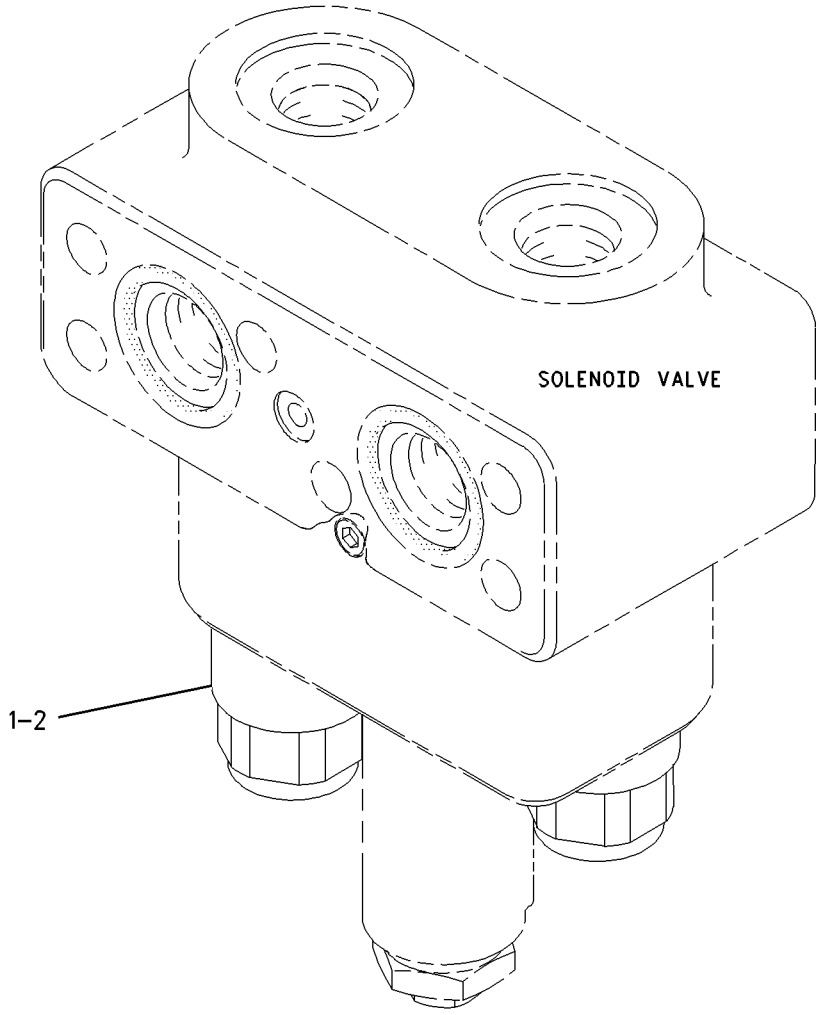

GRAPHIC #1 **<END>** g00672771

HYDRAULIC SYSTEM

177-2653 VALVE GP-RELIEF

S/N: WNE1-UP; ZMF1-UP; CWG1-UP
PART OF 260-8013, 272-4362 LINES GP-FRONT
AN ATTACHMENT

SMCS-5069, 5117 **i03254261**

NOTE	REF NO	GRAPHIC REF	PART NUMBER	QTY	PART NAME 1 2 3 4 5 6 (PRODUCT LEVEL)	SEE PAGE
CY	1	1	**310-0394**	1	VALVE GP-RELIEF (PILOT OPERATED)	875
Z	2	1		1	BLOCK	

C-CHANGE FROM PREVIOUS TYPE
Y-SEPARATE ILLUSTRATION
Z-NOT SERVICED SEPARATELY

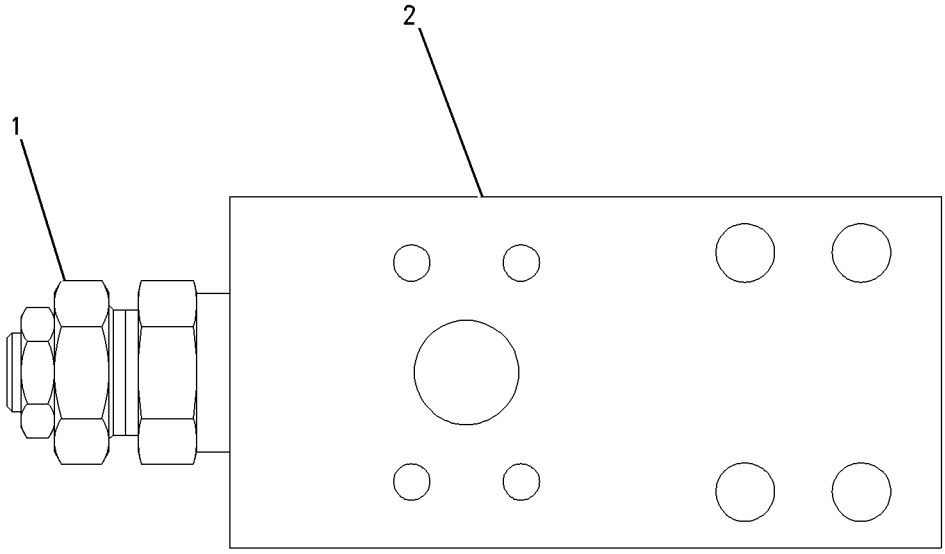

GRAPHIC #1 **<END>** g00684155

HYDRAULIC SYSTEM

204-2755 VALVE GP-RELIEF

S/N: WNE1-UP; ZMF1-UP; CWG1-UP
PART OF 204-2819 VALVE GP-TRAVEL COUNTERBALANCE
ALSO AN ATTACHMENT

SMCS-5069, 5117 **i01593344**

NOTE	REF NO	GRAPHIC REF	PART NUMBER	QTY	PART NAME 1 2 3 4 5 6 (PRODUCT LEVEL)	SEE PAGE
M	1	1	**7Y-8436**	1	SETSCREW (M27X2X27-MM)	
M	2	1	**7Y-8437**	1	NUT (M27X2-THD)	
	3	1	**095-1601**	1	SEAL-O-RING	
	4	1	**095-1787**	2	RING-BACKUP	
	5	1	**095-1590**	1	SEAL-O-RING	
	6	1	**121-1459**	2	RING-BACKUP	
	7	1	**095-1586**	2	SEAL-O-RING	
	8	1	**095-1785**	1	RING-BACKUP	

M-METRIC PART

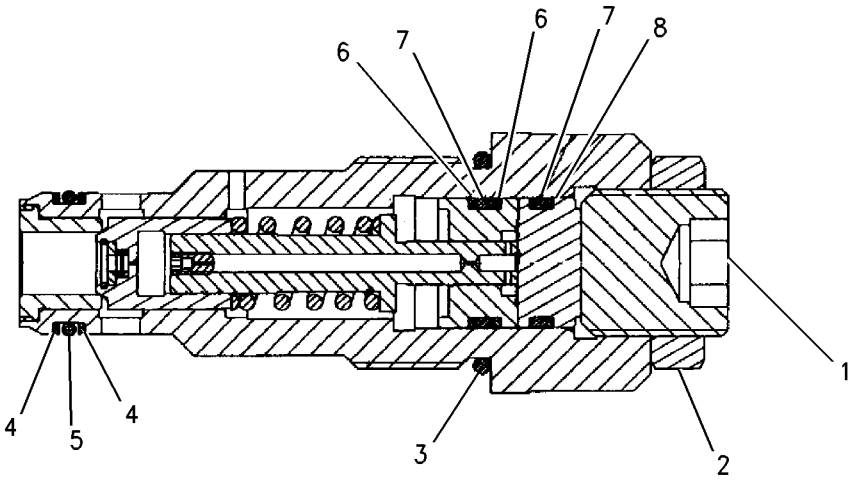

GRAPHIC #1 **<END>** g00826520

255-5661 VALVE GP-RELIEF–LINE

S/N: WNE1-UP; ZMF1-UP; CWG1-UP
PART OF 259-7378, 259-7465, 285-1339 VALVE GP-CONTROL
ALSO AN ATTACHMENT

SMCS-5069, 5117 **i02346991**

NOTE	REF NO	GRAPHIC REF	PART NUMBER	QTY	PART NAME 1 2 3 4 5 6 (PRODUCT LEVEL)	SEE PAGE
	1	1	**095-1578**	1	SEAL-O-RING	
	2	1	**103-8252**	2	RING	
	3	1	**103-8253**	2	RING	
	4	1	**103-8254**	1	SEAL-O-RING	
	5	1	**103-8255**	1	SEAL-O-RING	
	6	1	**3D-2824**	2	SEAL-O-RING	

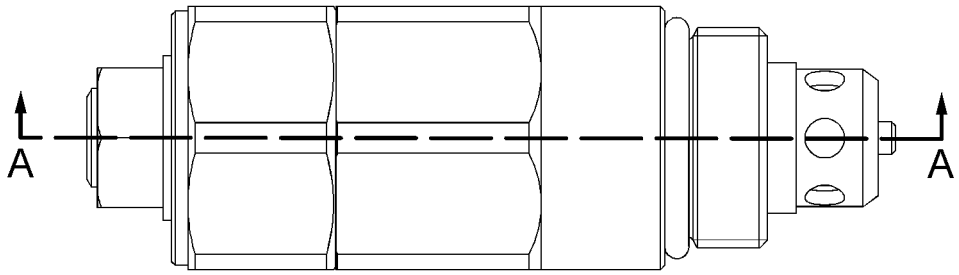

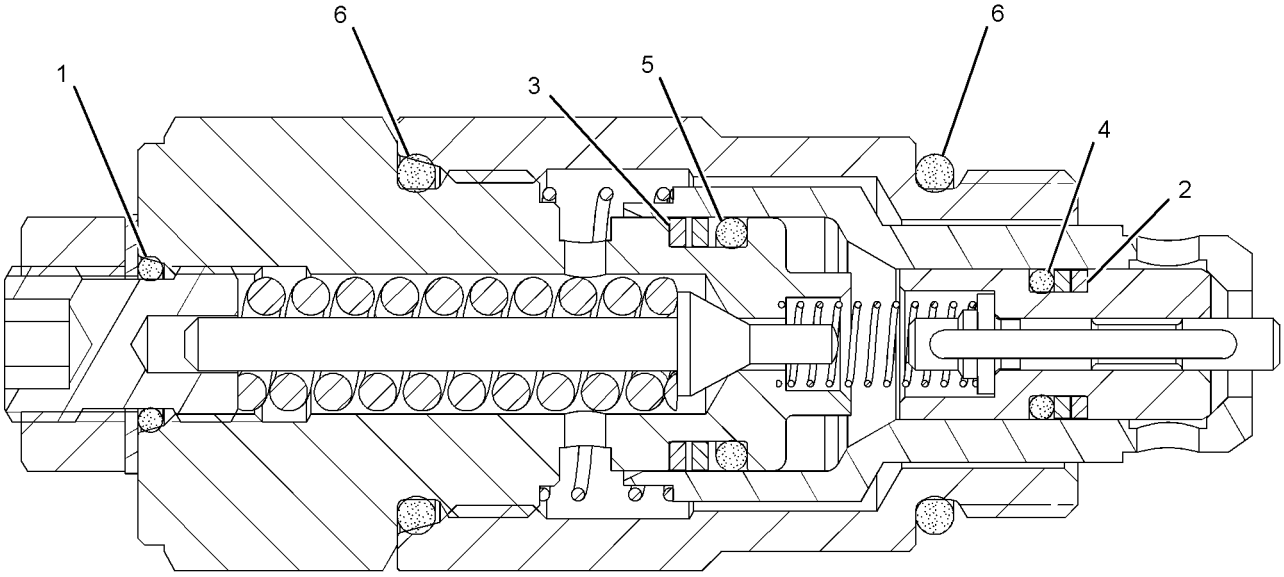

SECTION A-A

GRAPHIC #1 **<END>** g01149370

HYDRAULIC SYSTEM

255-5662 VALVE GP-RELIEF–LINE

S/N: WNE1-UP; ZMF1-UP; CWG1-UP
PART OF 225-4785, 225-4843, 255-5680, 255-5683 VALVE GP-LOAD CONTROL
ALSO AN ATTACHMENT

SMCS-5069, 5117 **i03631862**

NOTE	REF NO	GRAPHIC REF	PART NUMBER	QTY	PART NAME 1 2 3 4 5 6 (PRODUCT LEVEL)	SEE PAGE
	1	1	**095-1578**	1	SEAL-O-RING	
	2	1	**103-8252**	2	RING	
	3	1	**103-8253**	2	RING	
	4	1	**103-8254**	1	SEAL-O-RING	
	5	1	**103-8255**	1	SEAL-O-RING	
	6	1	**3D-2824**	2	SEAL-O-RING	

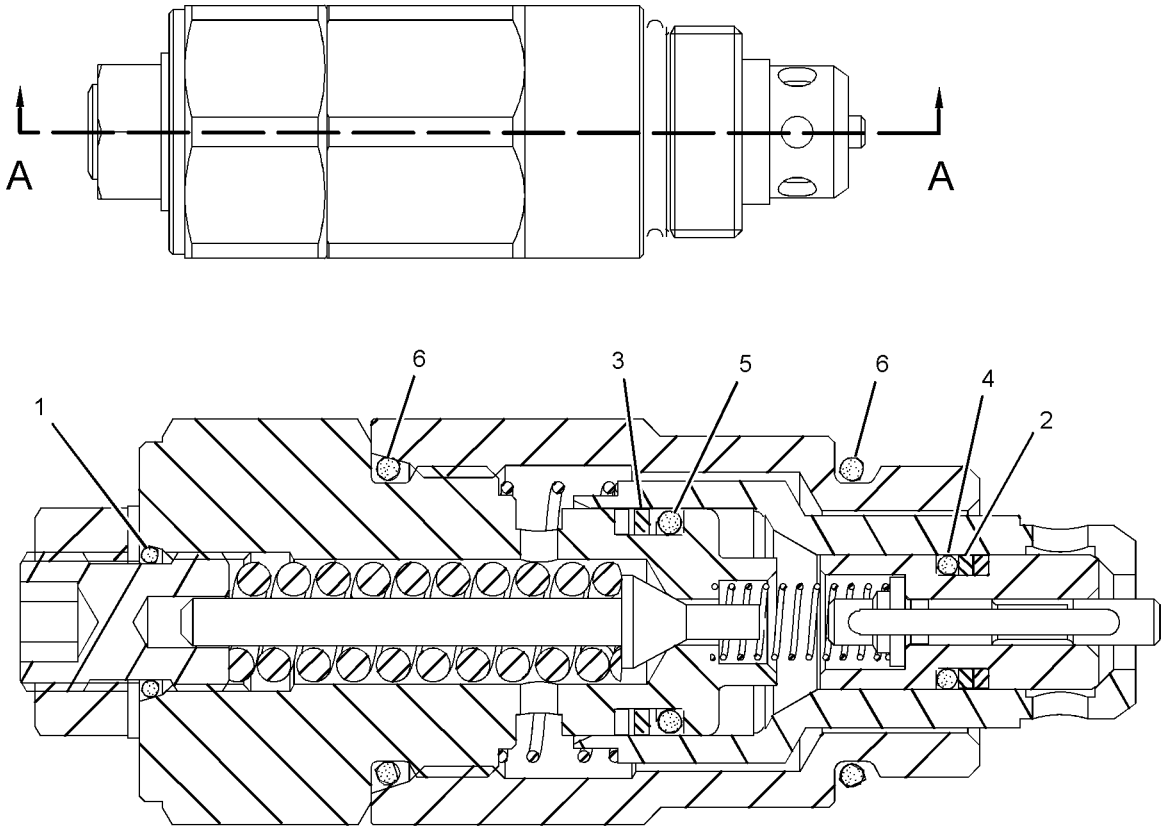

SECTION A-A

GRAPHIC #1 **<END>** g01948015

HYDRAULIC SYSTEM

310-0393 VALVE GP-RELIEF

S/N: WNE1-UP; ZMF1-UP; CWG1-UP

PART OF 285-1339 VALVE GP-CONTROL

SMCS-5069, 5117 **i02945241**

NOTE	REF NO	GRAPHIC REF	PART NUMBER	QTY	PART NAME 1 2 3 4 5 6 (PRODUCT LEVEL)	SEE PAGE
	1	1	**4I-3510**	1	SPRING	
	2	1	**4I-7714**	1	NUT (3/4-16-THD)	
	3	1	**6I-6795**	1	SPRING	
	4	1	**095-1786**	1	RING-BACKUP	
	5	1	**107-6540**	1	COLLAR	
	6	1	**107-6541**	1	RING-RETAINING	
	7	1	**119-5398**	1	SCREEN	
	8	1	**171-0034**	1	SEAT	
	9	1	**171-0037**	1	VALVE	
	10	1	**259-7848**	1	SLEEVE	
	11	1	**259-7849**	1	PISTON	
	12	1	**259-7850**	1	SLEEVE	
	13	1	**259-7851**	1	ADJUSTER	
M	14	1	**259-7852**	1	NUT (M24X2-THD)	
	16	1	**095-1579**	1	SEAL-O-RING	
	17	1	**095-1584**	1	SEAL-O-RING	
	18	1	**095-1587**	1	SEAL-O-RING	
	19	1	**095-1590**	1	SEAL-O-RING	
	20	1	**3D-2824**	1	SEAL-O-RING	
	21	1	**6V-8218**	1	SEAL-O-RING	
	22	1	**6V-8978**	1	SEAL-O-RING	

M-METRIC PART

310-0393 VALVE GP-RELIEF *(contd.)* **i02945241**

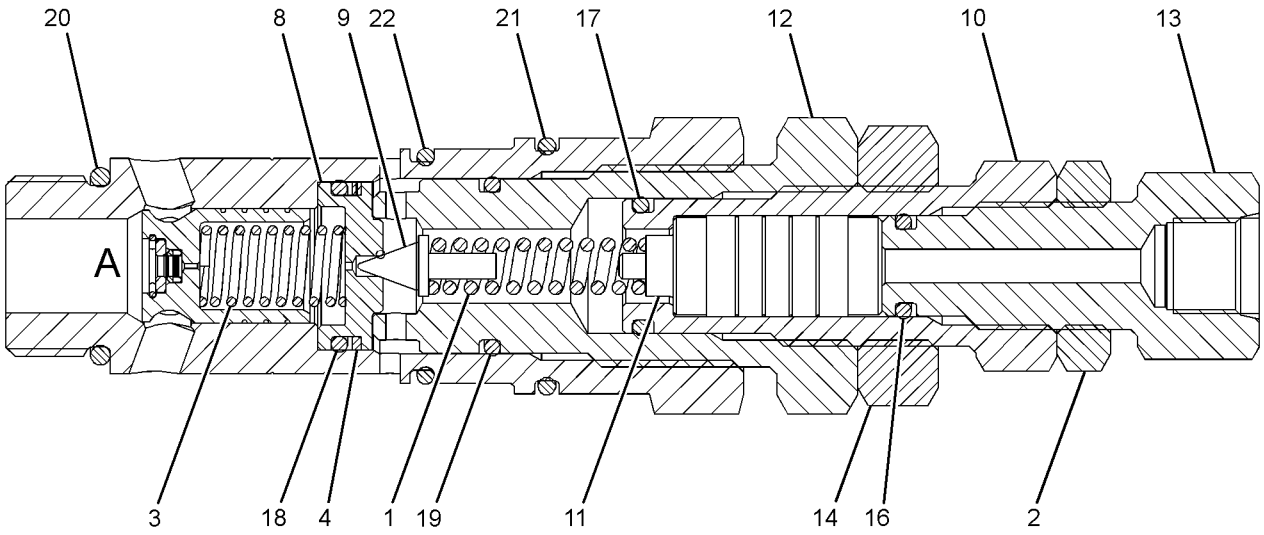

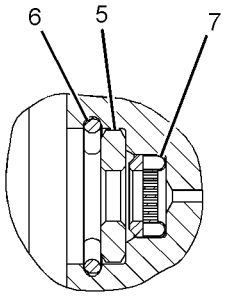

VIEW OF AREA A

GRAPHIC #1 **<END>** g01460589

310-0394 VALVE GP-RELIEF—PILOT OPERATED

S/N: WNE1-UP; ZMF1-UP; CWG1-UP
PART OF 177-2653 VALVE GP-RELIEF
AN ATTACHMENT

SMCS-5069, 5117 **i02990240**

NOTE	REF NO	GRAPHIC REF	PART NUMBER	QTY	PART NAME 1 2 3 4 5 6 (PRODUCT LEVEL)	SEE PAGE
Z	1	1		1	VALVE GP-RELIEF	
	2	1	**6I-6795**	1	SPRING	
	3	1	**171-0034**	1	SEAT	
	4	1	**171-0037**	1	VALVE	
	5	1	**4I-3510**	1	SPRING	
	6	1	**171-0035**	1	HOLDER	
	7	1	**222-0085**	1	NUT (3/4-16-THD)	
	8	1	**171-0036**	1	ADJUSTER	
	9	1	**095-1579**	1	SEAL-O-RING	
	10	1	**6V-8218**	1	SEAL-O-RING	
	11	1	**095-1590**	1	SEAL-O-RING	
	12	1	**6V-8978**	1	SEAL-O-RING	
	13	1	**095-1786**	1	RING-BACKUP	
	14	1	**095-1587**	1	SEAL-O-RING	
	15	1	**3D-2824**	1	SEAL-O-RING	

Z-NOT SERVICED SEPARATELY

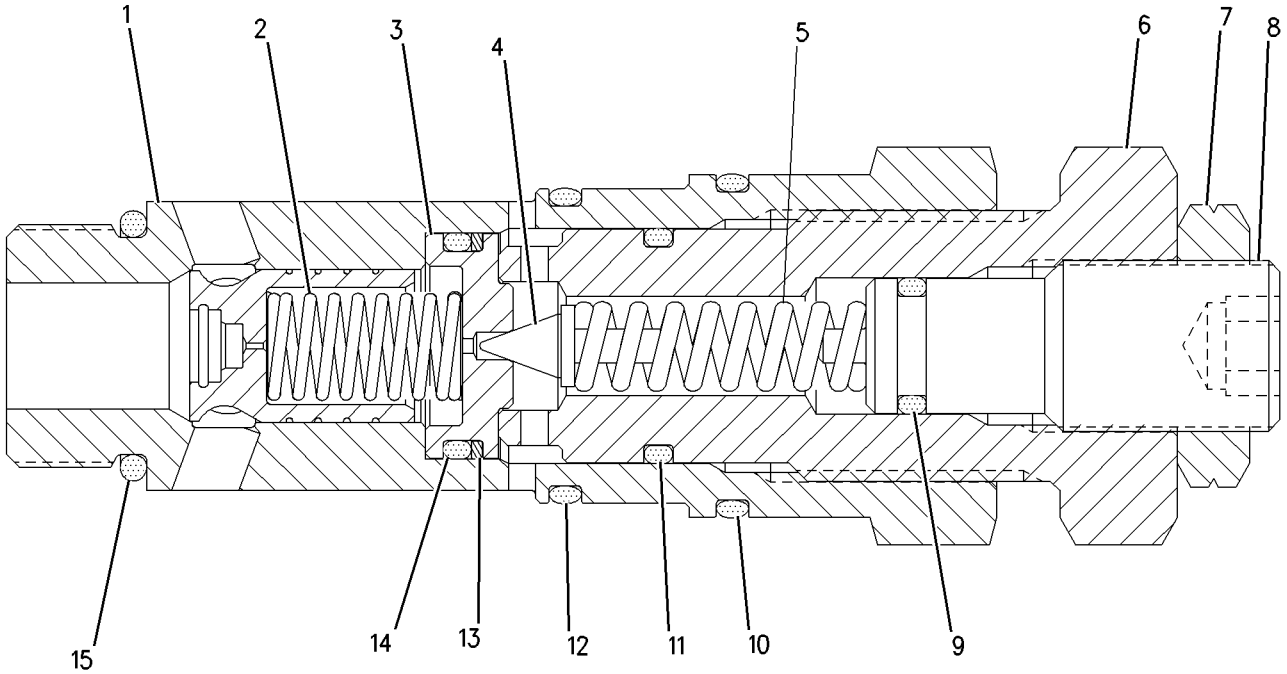

GRAPHIC #1 **<END>** g00927977

HYDRAULIC SYSTEM

290-9750 VALVE GP-SELECTOR—BUCKET/CLAMSHELL, LH

S/N: WNE1-UP; ZMF1-UP
PART OF 316-4058 LINES GP-BUCKET CYLINDER
AN ATTACHMENT

SMCS-5065 **i02998195**

NOTE	REF NO	GRAPHIC REF	PART NUMBER	QTY	PART NAME 1 2 3 4 5 6 (PRODUCT LEVEL)	SEE PAGE
	1	1	**188-0185**	1	VALVE-CHECK	
	2	1	**188-0186**	1	HANDLE LEVER	
					AVAILABLE REPAIR KIT(S):	
			290-9758		KIT-SEAL (SELECTOR VALVE)	

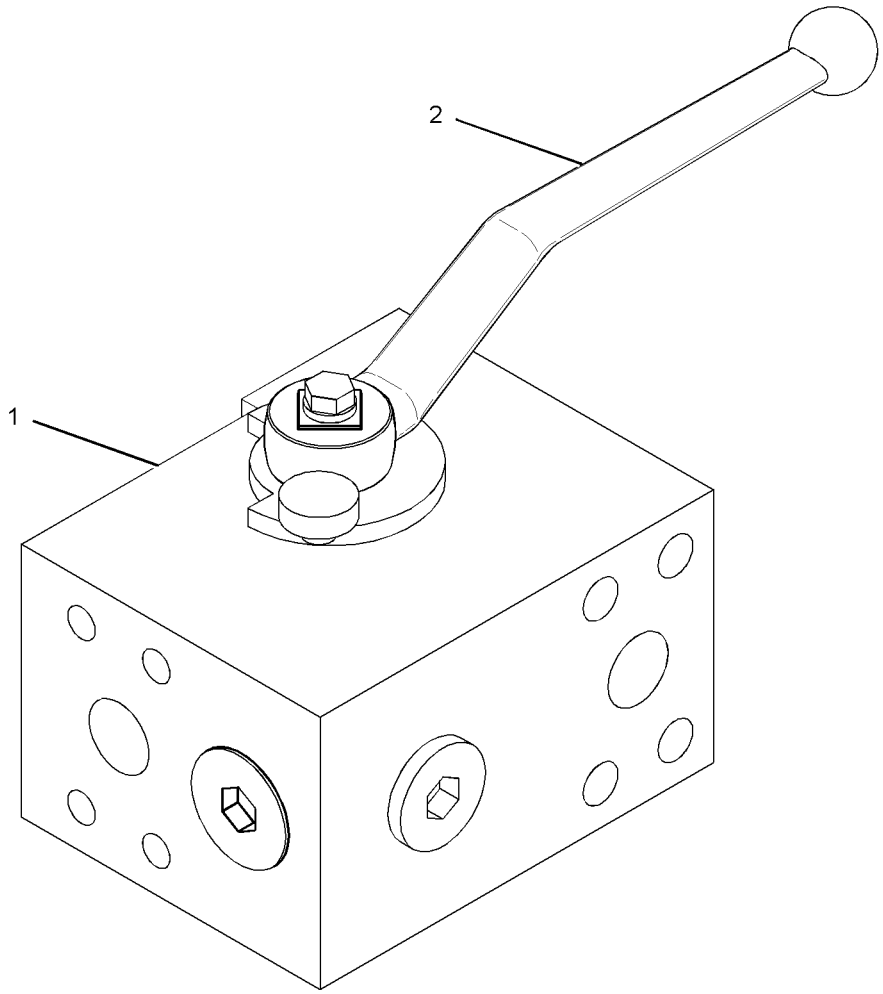

GRAPHIC #1 **<END>** g01523653

HYDRAULIC SYSTEM

290-9755 VALVE GP-SELECTOR–BUCKET/CLAMSHELL, RH

S/N: WNE1-UP; ZMF1-UP
PART OF 316-4058 LINES GP-BUCKET CYLINDER
AN ATTACHMENT

SMCS-5065 **i02998196**

NOTE	REF NO	GRAPHIC REF	PART NUMBER	QTY	PART NAME 1 2 3 4 5 6 (PRODUCT LEVEL)	SEE PAGE
	1	1	**188-0184**	1	VALVE-RELIEF	
	2	1	**188-0185**	1	VALVE-CHECK	
	3	1	**188-0186**	1	HANDLE LEVER	
					AVAILABLE REPAIR KIT(S):	
			290-9758	1	KIT-SEAL (SELECTOR VALVE)	

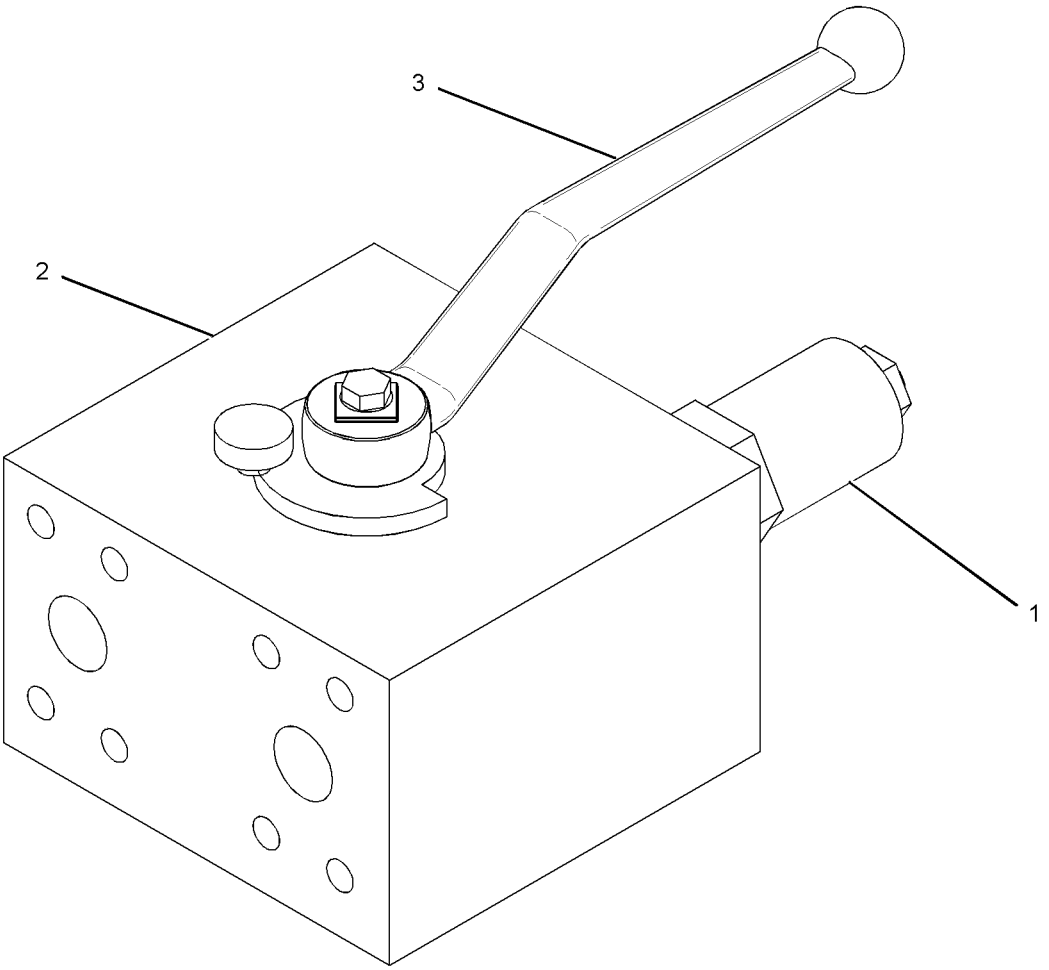

GRAPHIC #1 **<END>** g01523651

HYDRAULIC SYSTEM

112-0083 VALVE GP-SHUTTLE

S/N: WNE1-UP; ZMF1-UP; CWG1-UP
PART OF 255-1843 LINES GP-PILOT
AN ATTACHMENT

SMCS-5079 **i03093680**

NOTE	REF NO	GRAPHIC REF	PART NUMBER	QTY	PART NAME 1 2 3 4 5 6 (PRODUCT LEVEL)	SEE PAGE
Z	1	1		1	BODY	
	2	1	**2D-6642**	4	BALL	
	3	1	**112-0085**	4	PLUG	
	4	1	**3J-1907**	4	SEAL-O-RING	

Z-NOT SERVICED SEPARATELY

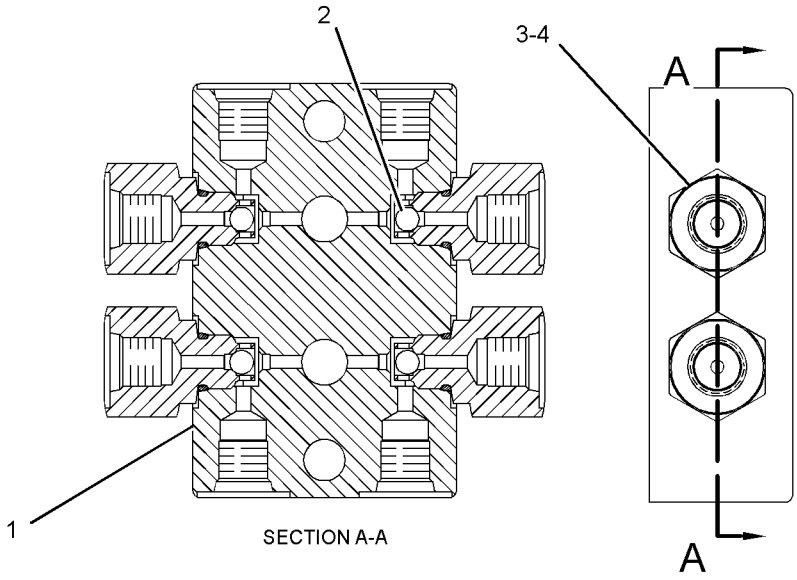

GRAPHIC #1 **<END>** g01206121

HYDRAULIC SYSTEM

123-2430 VALVE GP-SHUTTLE

S/N: WNE1-UP; ZMF1-UP; CWG1-UP

PART OF 266-0963, 275-1408 LINES GP-PILOT

SMCS-5079 **i03439031**

NOTE	REF NO	GRAPHIC REF	PART NUMBER	QTY	PART NAME 1 2 3 4 5 6 (PRODUCT LEVEL)	SEE PAGE
	1	1	**123-2431**	1	BODY-VALVE	
	2	1	**4B-9783**	1	BALL	
	3	1	**3J-1907**	2	SEAL-O-RING	
	4	1	**123-2552**	2	CONNECTOR	

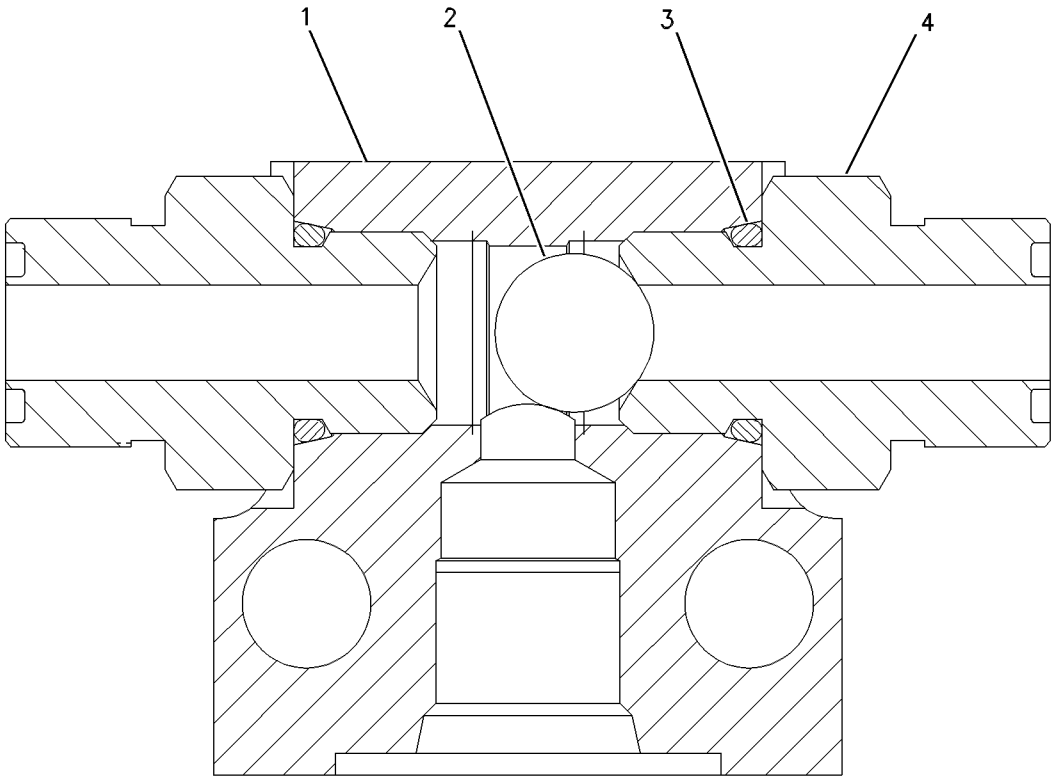

GRAPHIC #1 **<END>** g00652899

HYDRAULIC SYSTEM

123-2549 VALVE GP-SHUTTLE

S/N: WNE1-UP; ZMF1-UP; CWG1-UP
PART OF 285-2864 LINES GP-FRONT, 164-6980 VALVE GP-SHUTTLE
AN ATTACHMENT

SMCS-5079 **i02210148**

NOTE	REF NO	GRAPHIC REF	PART NUMBER	QTY	PART NAME 1 2 3 4 5 6 (PRODUCT LEVEL)	SEE PAGE
	1	1	**123-2511**	1	TEE	
	2	1	**4B-9783**	1	BALL	
	3	1	**123-2552**	2	CONNECTOR	
	4	1	**3J-1907**	2	SEAL-O-RING	

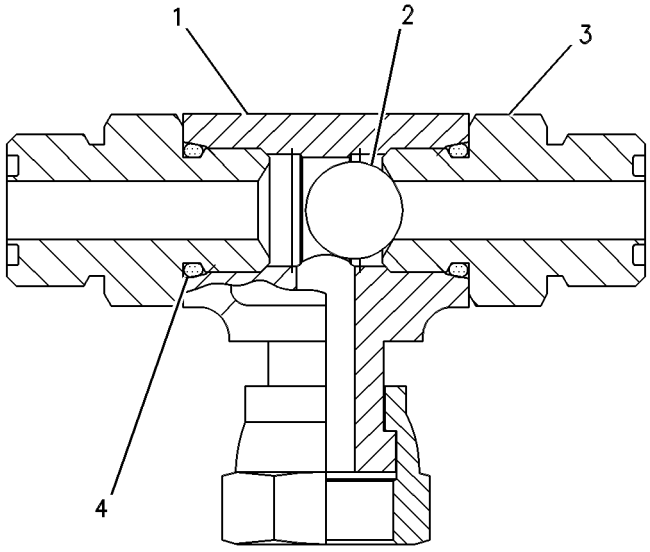

GRAPHIC #1 **<END>** g00274258

164-6980 VALVE GP-SHUTTLE

S/N: WNE1-UP; ZMF1-UP; CWG1-UP
PART OF 275-1409 LINES GP-FRONT, 269-9826, 269-9827 LINES GP-PILOT
AN ATTACHMENT

SMCS-5079 **i03677000**

NOTE	PART NUMBER	QTY	PART NAME 1 2 3 4 5 6 (PRODUCT LEVEL)	SEE PAGE
Y	**123-2549**	1	VALVE GP-SHUTTLE	880
	6V-8397	2	SEAL-O-RING	

Y-SEPARATE ILLUSTRATION

<END>

HYDRAULIC SYSTEM

171-0198 VALVE GP-SHUTTLE

S/N: WNE1-UP; ZMF1-UP; CWG1-UP
PART OF 171-0188 VALVE GP-SOLENOID
AN ATTACHMENT

SMCS-5079 **i03634674**

NOTE	REF NO	GRAPHIC REF	PART NUMBER	QTY	PART NAME 1 2 3 4 5 6 (PRODUCT LEVEL)	SEE PAGE
J	1	1	**095-1751**	1	SEAL-O-RING	
J	2	1	**6V-8399**	2	SEAL-O-RING	
					AVAILABLE REPAIR KIT(S):	
J			**185-0407**	1	KIT-SEAL (SHUTTLE VALVE)	
					(INCLUDES 3 O-RING SEALS & 3 BACKUP RINGS)	

J-KIT MARKED J INCLUDES PART(S) MARKED J

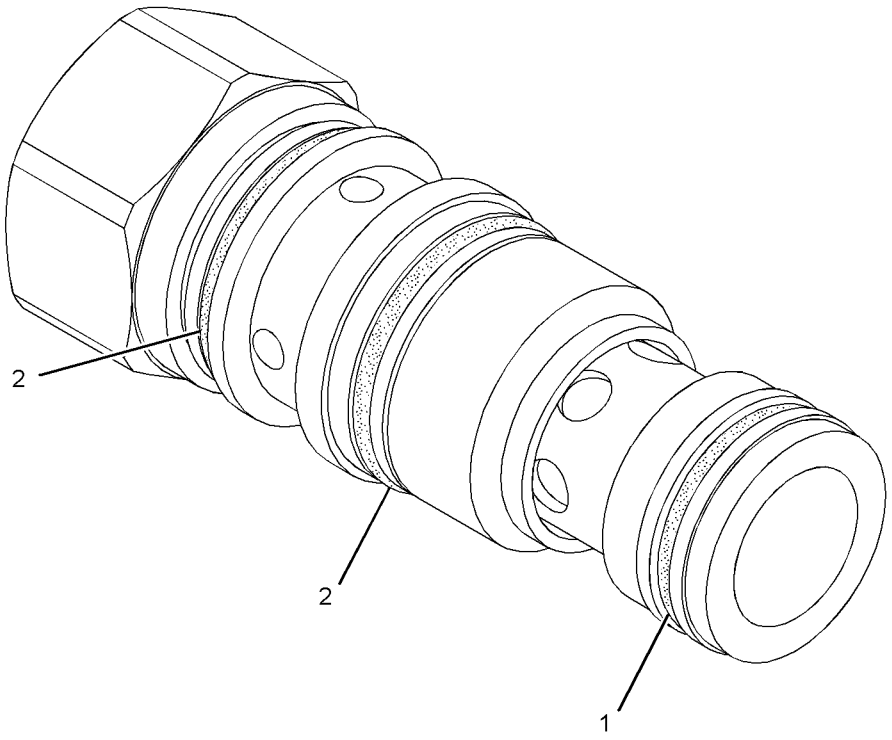

GRAPHIC #1 **<END>** g01951532

185-0462 VALVE GP-SHUTTLE

S/N: WNE1-UP; ZMF1-UP; CWG1-UP
PART OF 248-9825 LINES GP-PILOT

SMCS-5079 **i01612080**

NOTE	REF NO	GRAPHIC REF	PART NUMBER	QTY	PART NAME 1 2 3 4 5 6 (PRODUCT LEVEL)	SEE PAGE
	1	1	**7I-8084**	4	PLUG	
	2	1	**185-0463**	1	SEAT	
	3	1	**4B-9880**	7	BALL	
	4	1	**165-9464**	6	SEAT	
	5	1	**095-1578**	7	SEAL-O-RING	
	6	1	**107-6479**	7	PLUG	

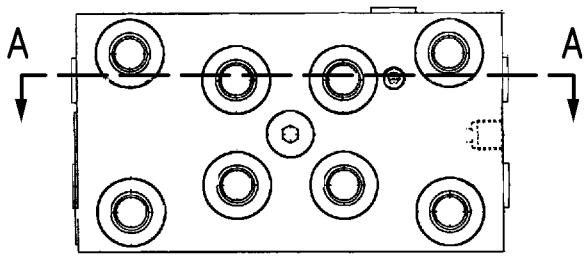

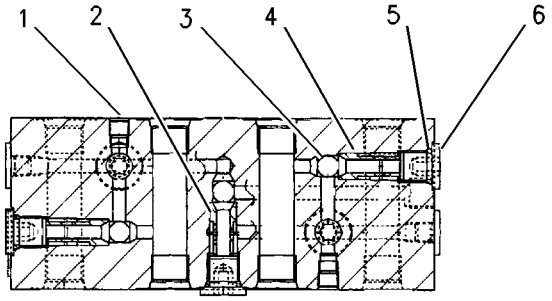

SECTION A-A

GRAPHIC #1 **<END>** g00699270

HYDRAULIC SYSTEM

265-0069 VALVE GP-SHUTTLE

S/N: WNE1-UP; ZMF1-UP; CWG1-UP

PART OF 264-9967 VALVE GP-SOLENOID & PRESS REDC

SMCS-5079 **i02945225**

NOTE	REF NO	GRAPHIC REF	PART NUMBER	QTY	PART NAME 1 2 3 4 5 6 (PRODUCT LEVEL)	SEE PAGE
M	1	1	**171-0124**	1	SETSCREW (M8X1.25X18-MM)	
	2	1	**095-1586**	1	SEAL-O-RING	
	3	1	**095-1750**	1	SEAL-O-RING	
	4	1	**095-1751**	1	SEAL-O-RING	
M	5	1	**5C-7261**	1	NUT (M8X1.25-THD)	
	6	1	**6V-8398**	1	SEAL-O-RING	

M-METRIC PART

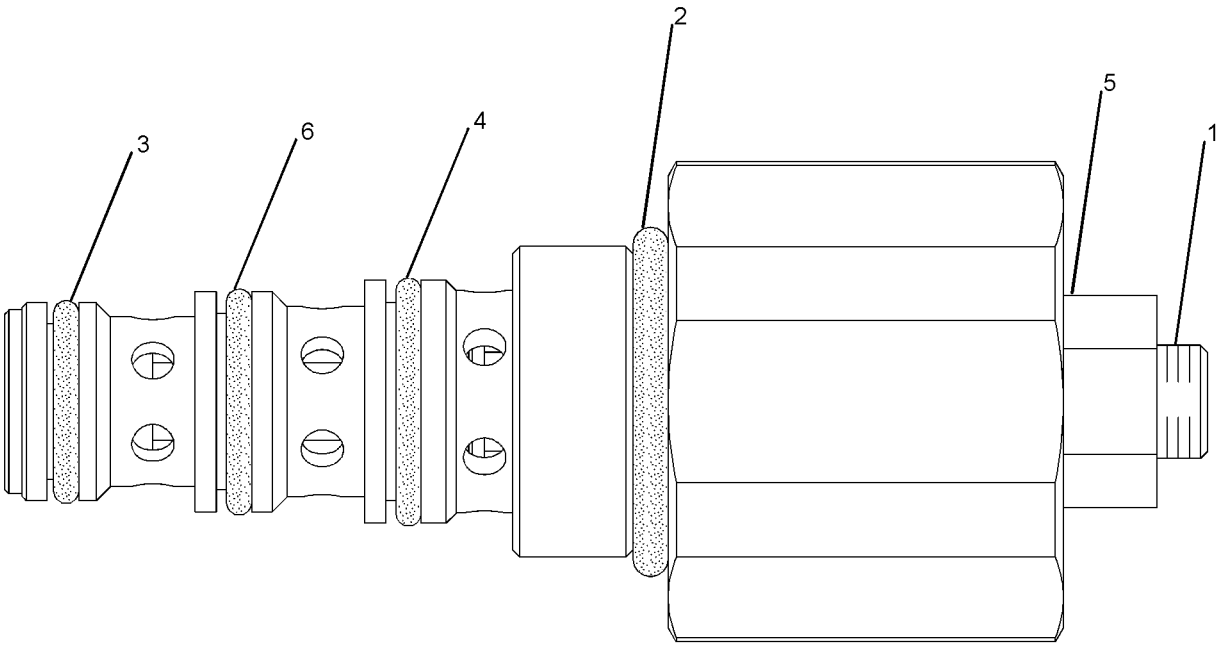

GRAPHIC #1 **<END>** g01191464

111-9916 VALVE GP-SOLENOID

S/N: WNE1-UP; ZMF1-UP; CWG1-UP
PART OF 256-0093 HEAD GP-PUMP, 171-0188, 259-7429, 259-7430 VALVE GP-SOLENOID
ALSO AN ATTACHMENT

SMCS-5479 **i02649387**

NOTE	REF NO	GRAPHIC REF	PART NUMBER	QTY	PART NAME 1 2 3 4 5 6 (PRODUCT LEVEL)	SEE PAGE
	1	1	**095-1750**	1	SEAL-O-RING	
	2	1	**6V-8398**	1	SEAL-O-RING	
	3	1	**095-1751**	1	SEAL-O-RING	
	4	1	**095-1586**	1	SEAL-O-RING	
M	5	1	**114-0623**	1	NUT AS (M6X1-THD)	

M-METRIC PART

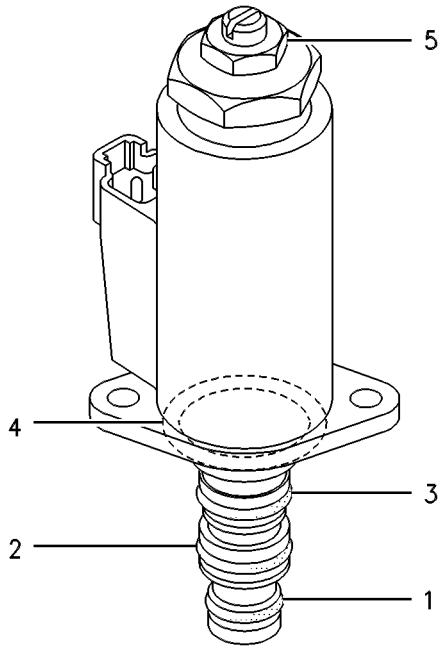

GRAPHIC #1 **<END>** g00258219

HYDRAULIC SYSTEM

121-1491 VALVE GP-SOLENOID

S/N: WNE1-UP; ZMF1-UP; CWG1-UP
PART OF 239-8697, 239-8998 MANIFOLD GP-CONTROL, 254-3080, 285-1339 VALVE GP-CONTROL, 258-6749 VALVE GP-SOLENOID
ALSO AN ATTACHMENT

SMCS-5479 **i02196717**

NOTE	REF NO	GRAPHIC REF	PART NUMBER	QTY	PART NAME 1 2 3 4 5 6 (PRODUCT LEVEL)	SEE PAGE
	1	1	**095-1750**	1	SEAL-O-RING	
	2	1	**6V-8398**	1	SEAL-O-RING	
	3	1	**095-1751**	1	SEAL-O-RING	
	4	1	**095-1586**	1	SEAL-O-RING	
M	5	1	**114-0623**	1	NUT AS (M6X1-THD)	

M-METRIC PART

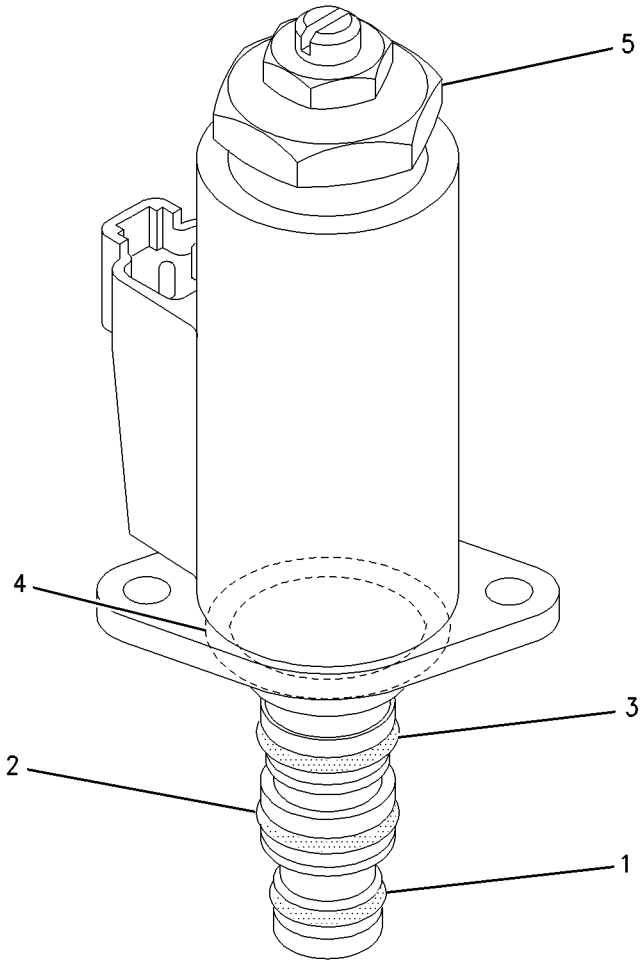

GRAPHIC #1 **<END>** g00928680

HYDRAULIC SYSTEM

121-6303 VALVE GP-SOLENOID

S/N: WNE1-UP; ZMF1-UP; CWG1-UP
PART OF 255-1659 LINES GP-PILOT

SMCS-5479 **i01272110**

NOTE	REF NO	GRAPHIC REF	PART NUMBER	QTY	PART NAME 1 2 3 4 5 6 (PRODUCT LEVEL)	SEE PAGE
	1	1	**7I-8102**	1	VALVE AS	
	2	1	**121-6304**	1	COIL GP	
M	3	1	**099-0822**	2	BOLT-SOCKET HEAD (M5X0.8X10-MM)	
	4	1	**095-1519**	1	SEAL-O-RING	
	5	1	**7I-0986**	1	PLUG	
	6	1	**7I-7403**	1	SPRING	
	7	1	**095-1578**	1	SEAL-O-RING	

M-METRIC PART

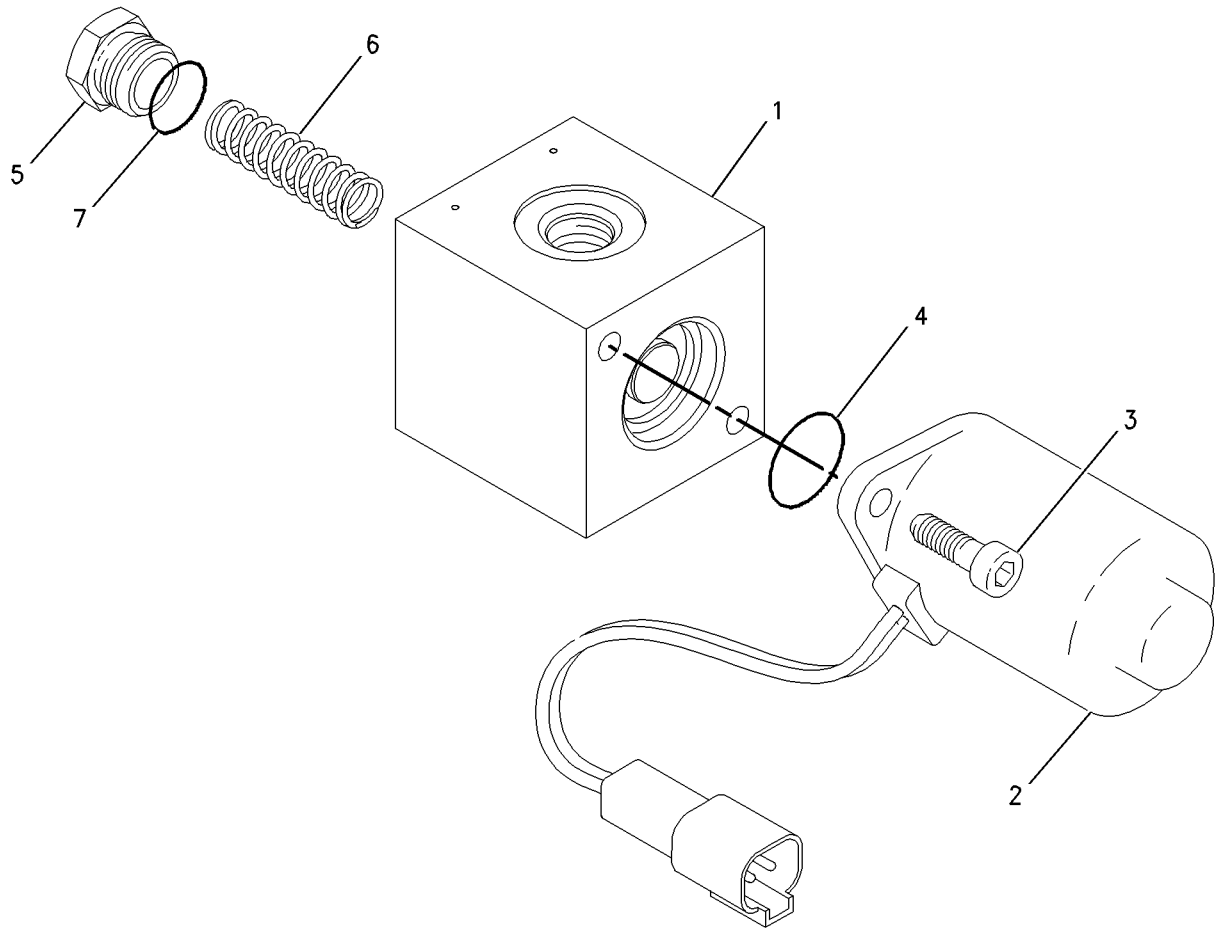

GRAPHIC #1 **<END>** g00685554

HYDRAULIC SYSTEM

171-0188 VALVE GP-SOLENOID

S/N: WNE1-UP; ZMF1-UP; CWG1-UP
PART OF 260-7976, 260-7981, 266-0965, 302-3316 LINES GP-PILOT
AN ATTACHMENT

SMCS-5479 **i03255367**

NOTE	REF NO	GRAPHIC REF	PART NUMBER	QTY	PART NAME 1 2 3 4 5 6 (PRODUCT LEVEL)	SEE PAGE
Y	1	1	**111-9916**	1	VALVE GP-SOLENOID (PRESSURE REDUCING)	885
M	2	1	**8T-0288**	2	BOLT (M5X0.8X12-MM)	
Y	3	1	**171-0198**	2	VALVE GP-SHUTTLE	882
	4	1	**7I-8084**	6	PLUG	

M-METRIC PART
Y-SEPARATE ILLUSTRATION

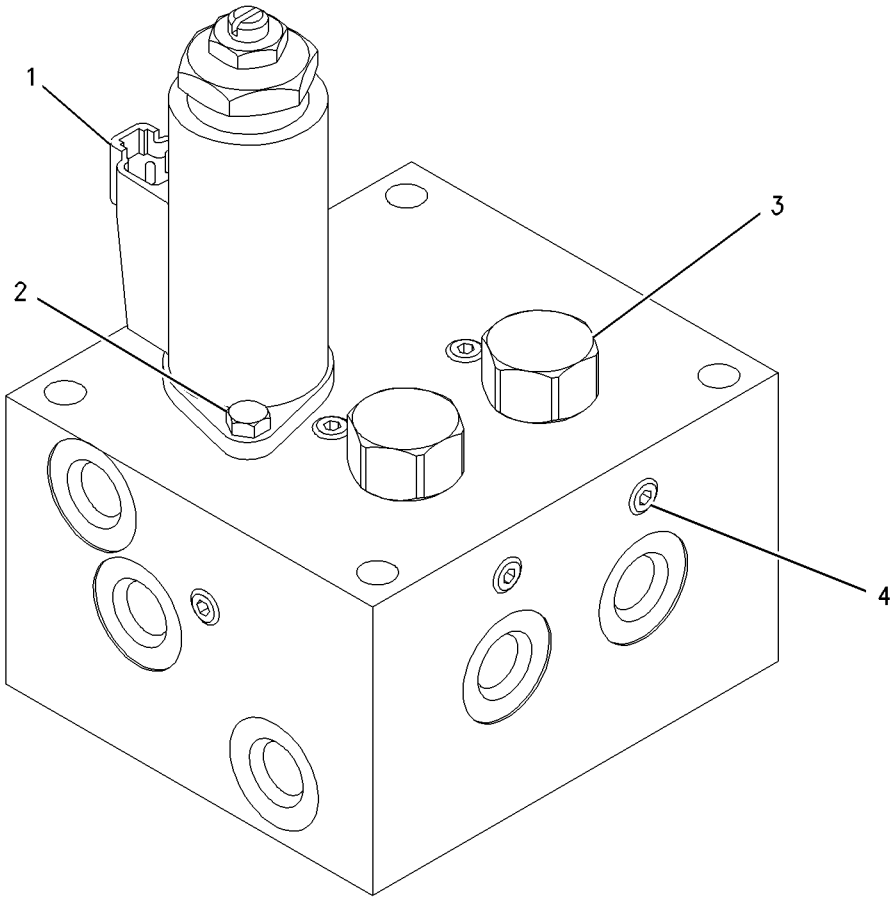

GRAPHIC #1 **<END>** g00681111

185-0472 VALVE GP-SOLENOID

S/N: WNE1-UP; ZMF1-UP; CWG1-UP
PART OF 260-7969, 289-5397 LINES GP-PILOT
AN ATTACHMENT

SMCS-5479 **i01590630**

NOTE	REF NO	GRAPHIC REF	PART NUMBER	QTY	PART NAME 1 2 3 4 5 6 (PRODUCT LEVEL)	SEE PAGE
	1	1	*185-0473*	1	VALVE GP-CONTROL	
	2	1	**121-6304**	1	COIL GP	
M	3	1	**099-0822**	2	BOLT-SOCKET HEAD (M5X0.8X10-MM)	
	4	1	**095-1519**	1	SEAL-O-RING	
	5	1	**7I-0986**	1	PLUG	
	6	1	**7I-7403**	1	SPRING	
	7	1	**095-1578**	1	SEAL-O-RING	

M-METRIC PART

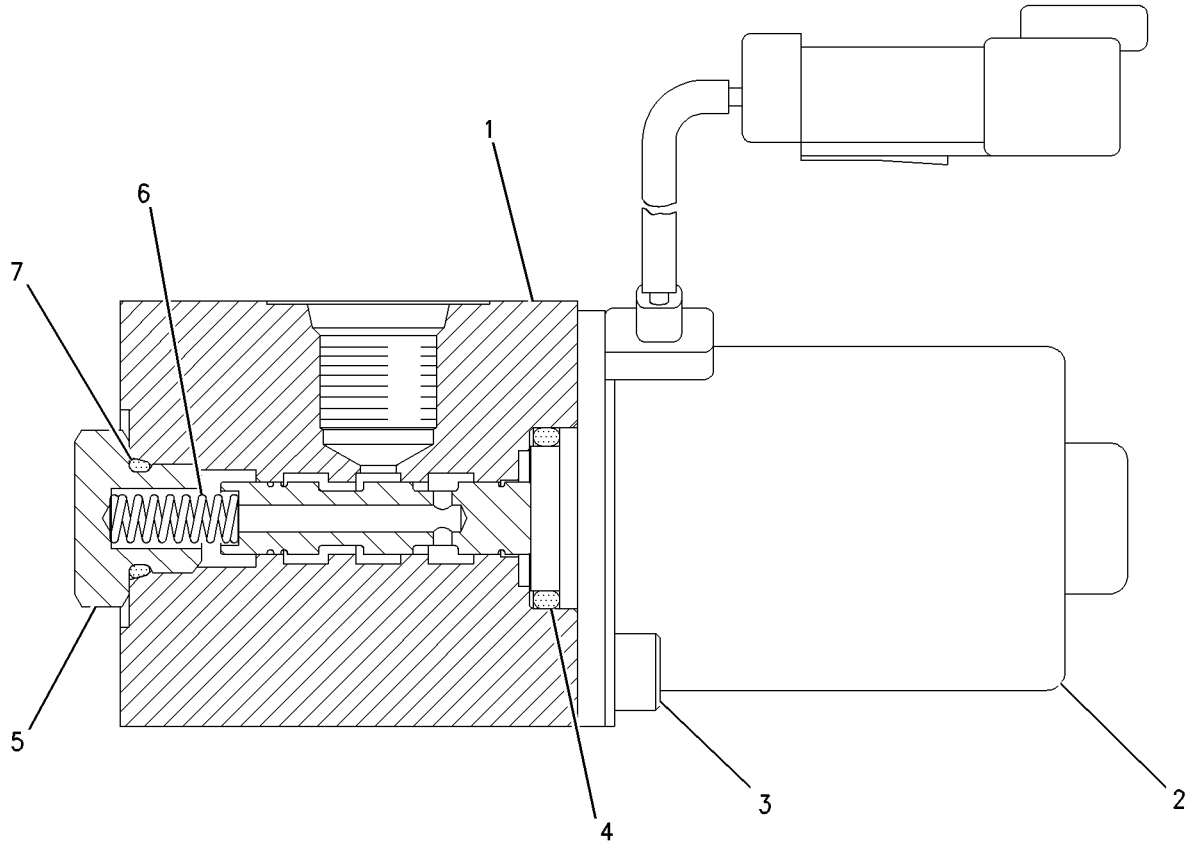

GRAPHIC #1 **<END>** g00804262

HYDRAULIC SYSTEM

258-6749 VALVE GP-SOLENOID

S/N: WNE1-UP; ZMF1-UP; CWG1-UP
PART OF 275-1409, 285-2864 LINES GP-FRONT
AN ATTACHMENT

SMCS-5479 **i03679367**

NOTE	REF NO	GRAPHIC REF	PART NUMBER	QTY	PART NAME 1 2 3 4 5 6 (PRODUCT LEVEL)	SEE PAGE
Y	1	1	**121-1491**	1	VALVE GP-SOLENOID	886
Z	2	1		1	BODY-VALVE	
M	3	1	**8T-0288**	2	BOLT (M5X0.8X12-MM)	

M-METRIC PART
Y-SEPARATE ILLUSTRATION
Z-NOT SERVICED SEPARATELY

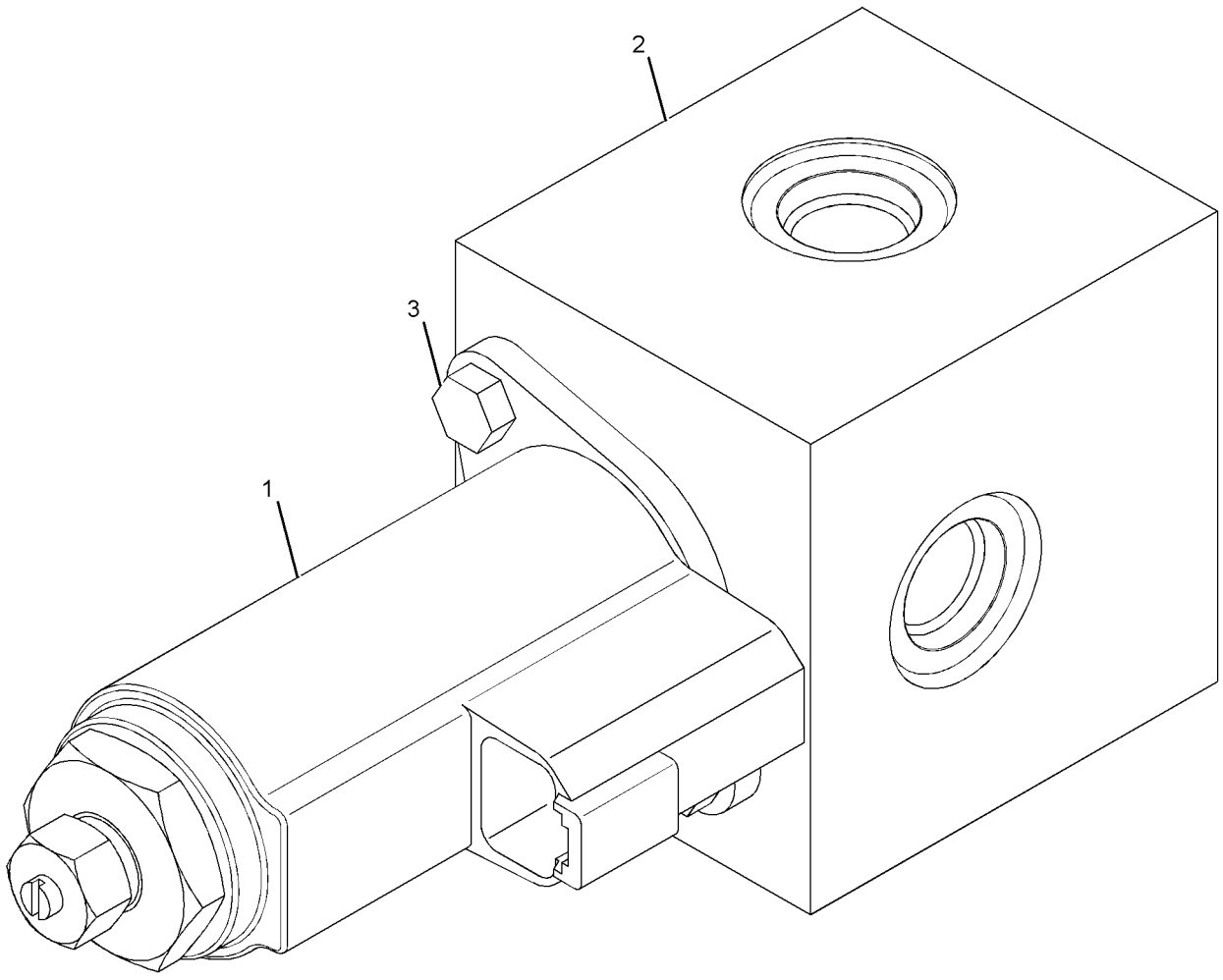

GRAPHIC #1 **<END>** g01137453

259-7429 VALVE GP-SOLENOID

S/N: WNE1-UP; ZMF1-UP; CWG1-UP
PART OF 260-7981, 302-3316 LINES GP-PILOT
AN ATTACHMENT

SMCS-5479 **i03679368**

NOTE	REF NO	GRAPHIC REF	PART NUMBER	QTY	PART NAME 1 2 3 4 5 6 (PRODUCT LEVEL)	SEE PAGE
M	1	1	**8T-0288**	8	BOLT (M5X0.8X12-MM)	
Y	2	1	**111-9916**	4	VALVE GP-SOLENOID	885

M-METRIC PART
Y-SEPARATE ILLUSTRATION

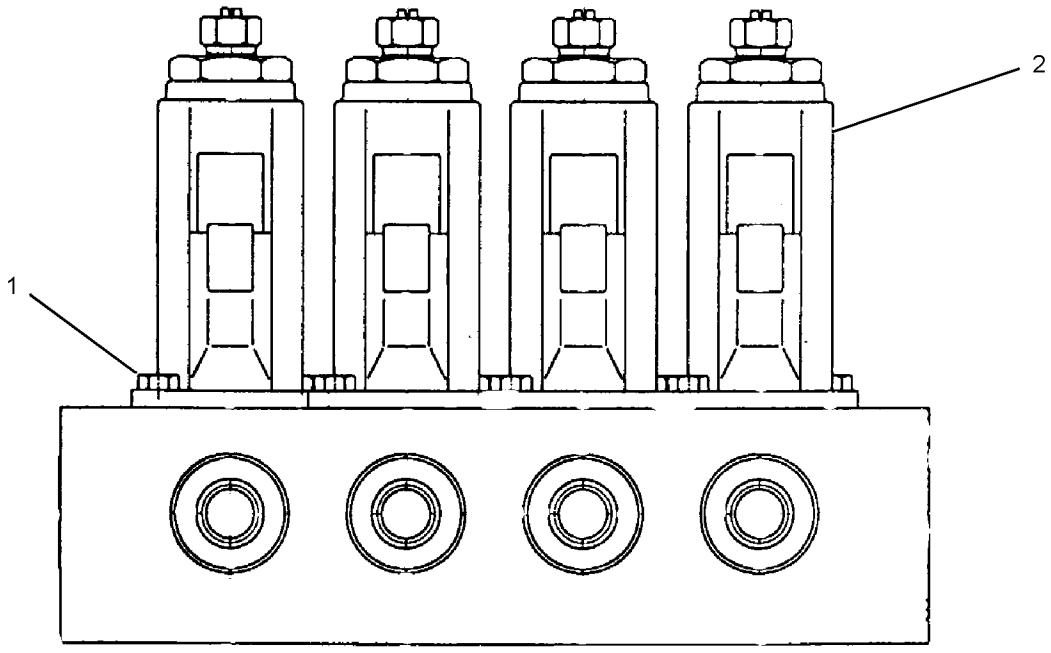

GRAPHIC #1 **<END>** g01014124

HYDRAULIC SYSTEM

259-7430 VALVE GP-SOLENOID

S/N: WNE1-UP; ZMF1-UP; CWG1-UP
PART OF 260-7976, 260-7982, 266-0965, 266-0970 LINES GP-PILOT
AN ATTACHMENT

SMCS-5479 **i03196381**

NOTE	REF NO	GRAPHIC REF	PART NUMBER	QTY	PART NAME 1 2 3 4 5 6 (PRODUCT LEVEL)	SEE PAGE
M	1	1	**8T-0288**	4	BOLT (M5X0.8X12-MM)	
Y	2	1	**111-9916**	2	VALVE GP-SOLENOID (PRESSURE REDUCING)	885

M-METRIC PART
Y-SEPARATE ILLUSTRATION

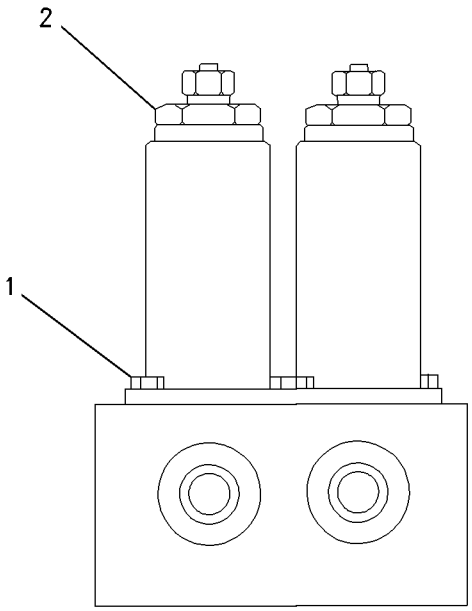

GRAPHIC #1 **<END>** g00785417

265-0067 VALVE GP-SOLENOID

S/N: WNE1-UP; ZMF1-UP; CWG1-UP

PART OF 264-9967 VALVE GP-SOLENOID & PRESS REDC

SMCS-5479 **i02945224**

NOTE	REF NO	GRAPHIC REF	PART NUMBER	QTY	PART NAME 1 2 3 4 5 6 (PRODUCT LEVEL)	SEE PAGE
M	1	1	**114-0623**	1	NUT AS (M6X1-THD)	
	2	1	**095-1586**	1	SEAL-O-RING	
	3	1	**095-1750**	1	SEAL-O-RING	
	4	1	**095-1751**	1	SEAL-O-RING	
	5	1	**6V-8398**	1	SEAL-O-RING	

M-METRIC PART

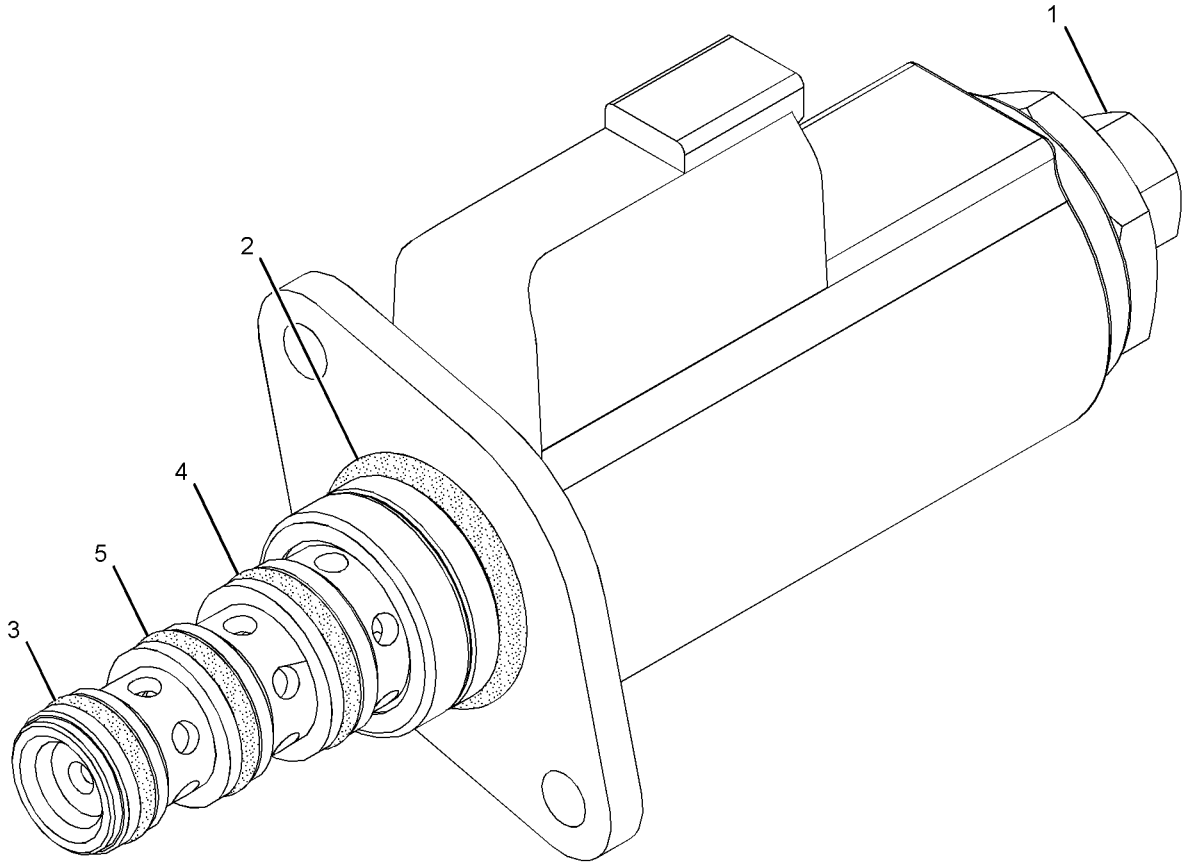

GRAPHIC #1 **<END>** g01191463

297-0371 VALVE GP-SOLENOID

S/N: WNE1-UP; ZMF1-UP; CWG1-UP
PART OF 275-1397, 289-5396 LINES GP-RETURN
AN ATTACHMENT

SMCS-5479 **i02947628**

NOTE	REF NO	GRAPHIC REF	PART NUMBER	QTY	PART NAME 1 2 3 4 5 6 (PRODUCT LEVEL)	SEE PAGE
	1	1	**095-1657**	1	SEAL-O-RING	
	2	1	**225-4804**	3	PLUG	
	3	1	**4J-7533**	3	SEAL-O-RING	
	4	1	**095-1602**	1	SEAL-O-RING	
	5	1	**232-4113**	1	RING	
	6	1	**095-1601**	1	SEAL-O-RING	
	7	1	**8T-3008**	1	RING-BACKUP	
	8	1	**095-1700**	1	SEAL-O-RING	
	9	1	**7M-8485**	1	SEAL-O-RING	
	10	1	**095-1575**	1	SEAL-O-RING	
	11	1	**232-4114**	2	RING	

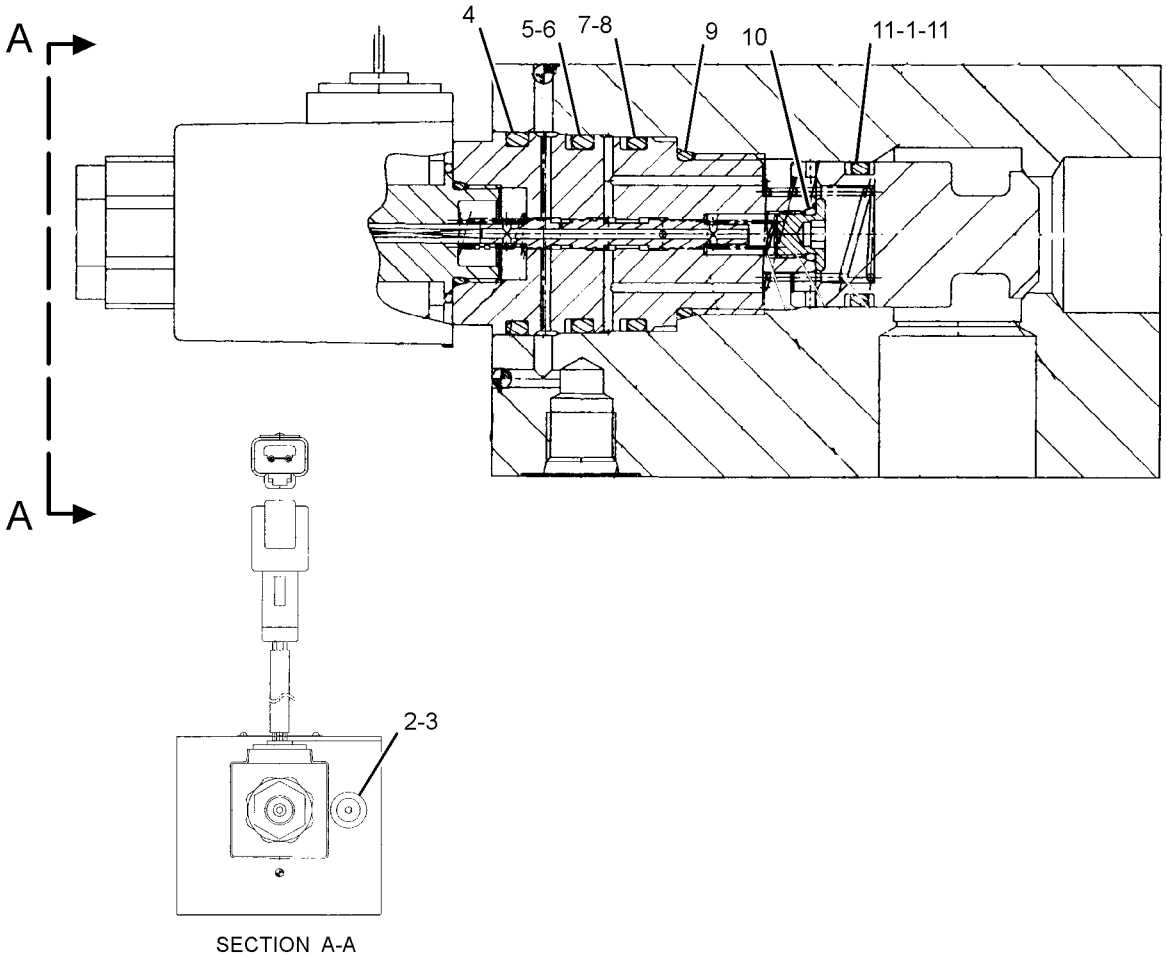

SECTION A-A

GRAPHIC #1 **<END>** g01430982

315-4412 VALVE GP-SOLENOID

S/N: WNE1-UP; ZMF1-UP; CWG1-UP
PART OF 322-8716 VALVE GP-SWING CUSHION

SMCS-5479 **i02954227**

NOTE	REF NO	GRAPHIC REF	PART NUMBER	QTY	PART NAME 1 2 3 4 5 6 (PRODUCT LEVEL)	SEE PAGE
	1	1	**126-6514**	1	SEAL-O-RING	
	2	1	**126-6515**	1	SEAL-O-RING	
	3	1	**126-6516**	1	SEAL-O-RING	
	4	1	**095-1586**	1	SEAL-O-RING	

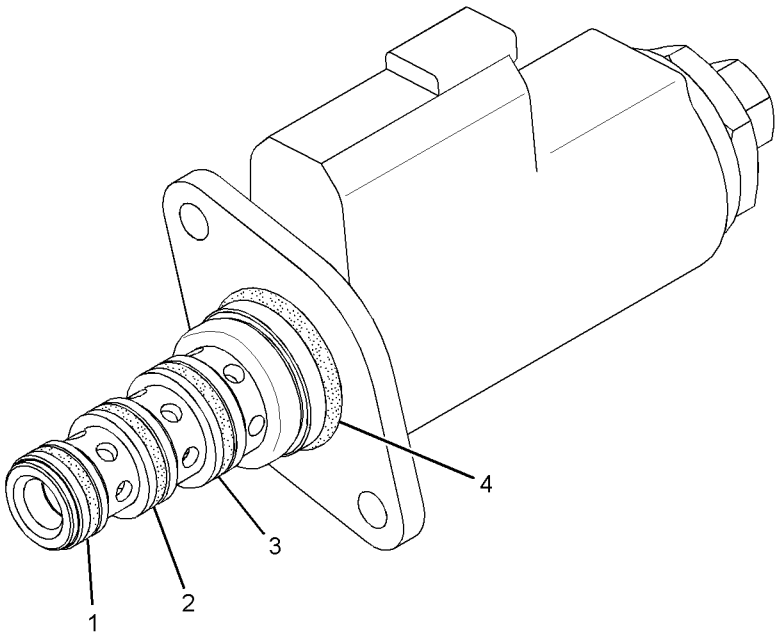

GRAPHIC #1 **<END>** g01456627

HYDRAULIC SYSTEM

264-9967 VALVE GP-SOLENOID & PRESS REDC–

BOOM, SWING PRIORITY

S/N: WNE1-UP; ZMF1-UP; CWG1-UP

PART OF 266-0963, 275-1408 LINES GP-PILOT

SMCS-5467, 5479 **i02945216**

NOTE	REF NO	GRAPHIC REF	PART NUMBER	QTY	PART NAME 1 2 3 4 5 6 (PRODUCT LEVEL)	SEE PAGE
	1	1	**7I-8084**	5	PLUG	
Y	2	1	**265-0067**	1	VALVE GP-SOLENOID	893
Y	3	1	**265-0069**	1	VALVE GP-SHUTTLE	884
M	4	1	**8T-0288**	2	BOLT (M5X0.8X12-MM)	

M-METRIC PART
Y-SEPARATE ILLUSTRATION

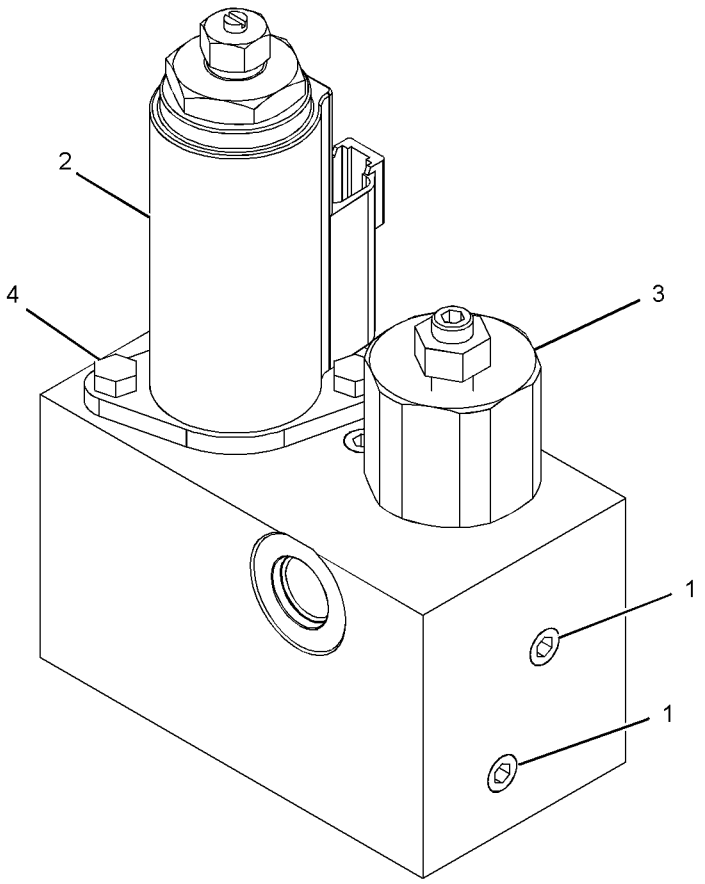

GRAPHIC #1 **<END>** g01191474

323-7558 VALVE GP-SOLENOID & RELIEF–WITH BLOCK

S/N: WNE1-UP; ZMF1-UP; CWG1-UP
PART OF 260-8014, 302-3315 LINES GP-FRONT
AN ATTACHMENT

SMCS-5571 **i03677003**

NOTE	REF NO	GRAPHIC REF	PART NUMBER	QTY	PART NAME 1 2 3 4 5 6 (PRODUCT LEVEL)	SEE PAGE
Y	1	1	**323-7559**	1	VALVE GP-SOLENOID & RELIEF	898

Y-SEPARATE ILLUSTRATION

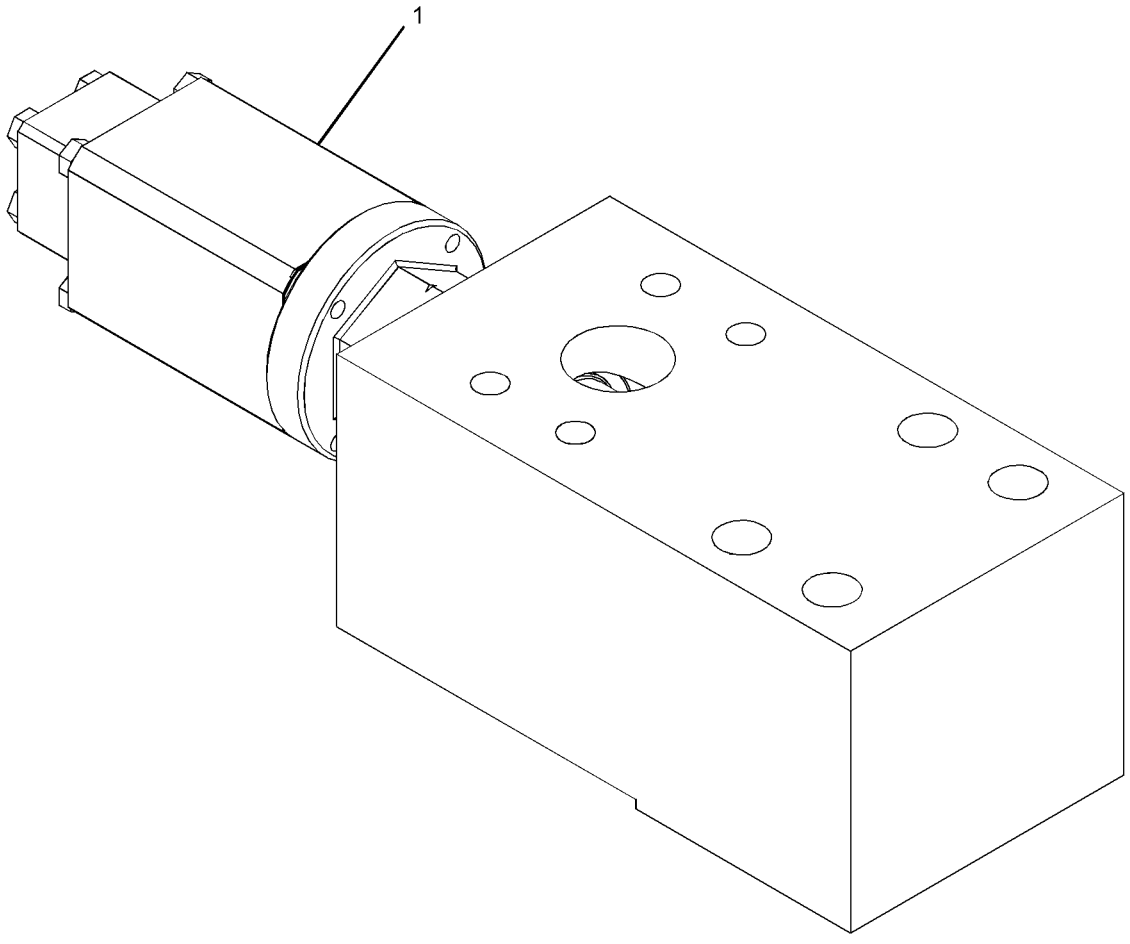

GRAPHIC #1 **<END>** g01586597

HYDRAULIC SYSTEM

323-7559 VALVE GP-SOLENOID & RELIEF

S/N: WNE1-UP; ZMF1-UP; CWG1-UP
PART OF 323-7558 VALVE GP-SOLENOID & RELIEF
AN ATTACHMENT

SMCS-5571 **i03635115**

NOTE	REF NO	GRAPHIC REF	PART NUMBER	QTY	PART NAME 1 2 3 4 5 6 (PRODUCT LEVEL)	SEE PAGE
	1	1	**107-6541**	1	RING-RETAINING	
	2	1	**107-7017**	1	SPRING	
B	3	1	**111-9977**	2	SHIM (0.1-MM THK)	
	4	1	**111-9985**	1	RING	
	5	1	**112-0090**	1	COIL AS	
	6	1	**119-5259**	1	VALVE	
	7	1	**119-5260**	1	ADAPTER	
B	8	1	**119-5262**	2	SHIM (0.2-MM THK)	
B	9	1	**123-2516**	2	SHIM (0.15-MM THK)	
	10	1	**171-0023**	1	SEAT	
B	11	1	**197-0252**	2	SHIM (0.5-MM THK)	
	12	1	**6V-9746**	1	SEAL-O-RING	
	13	1	**323-7772**	1	COLLAR	
	15	1	**085-7538**	1	SEAL-O-RING	
	16	1	**107-7018**	1	RING-BACKUP	
	17	1	**111-9986**	1	SEAL-O-RING	
M	18	1	**114-0489**	4	BOLT (M5X0.8X75-MM)	
	19	1	**3D-2824**	1	SEAL-O-RING	

PARTS SHOWN IN GRAPHIC(S) WITHOUT A REFERENCE NUMBER ARE NOT SERVICED SEPARATELY

B-USE AS REQUIRED
M-METRIC PART

323-7559 VALVE GP-SOLENOID & RELIEF *(contd.)* i03635115

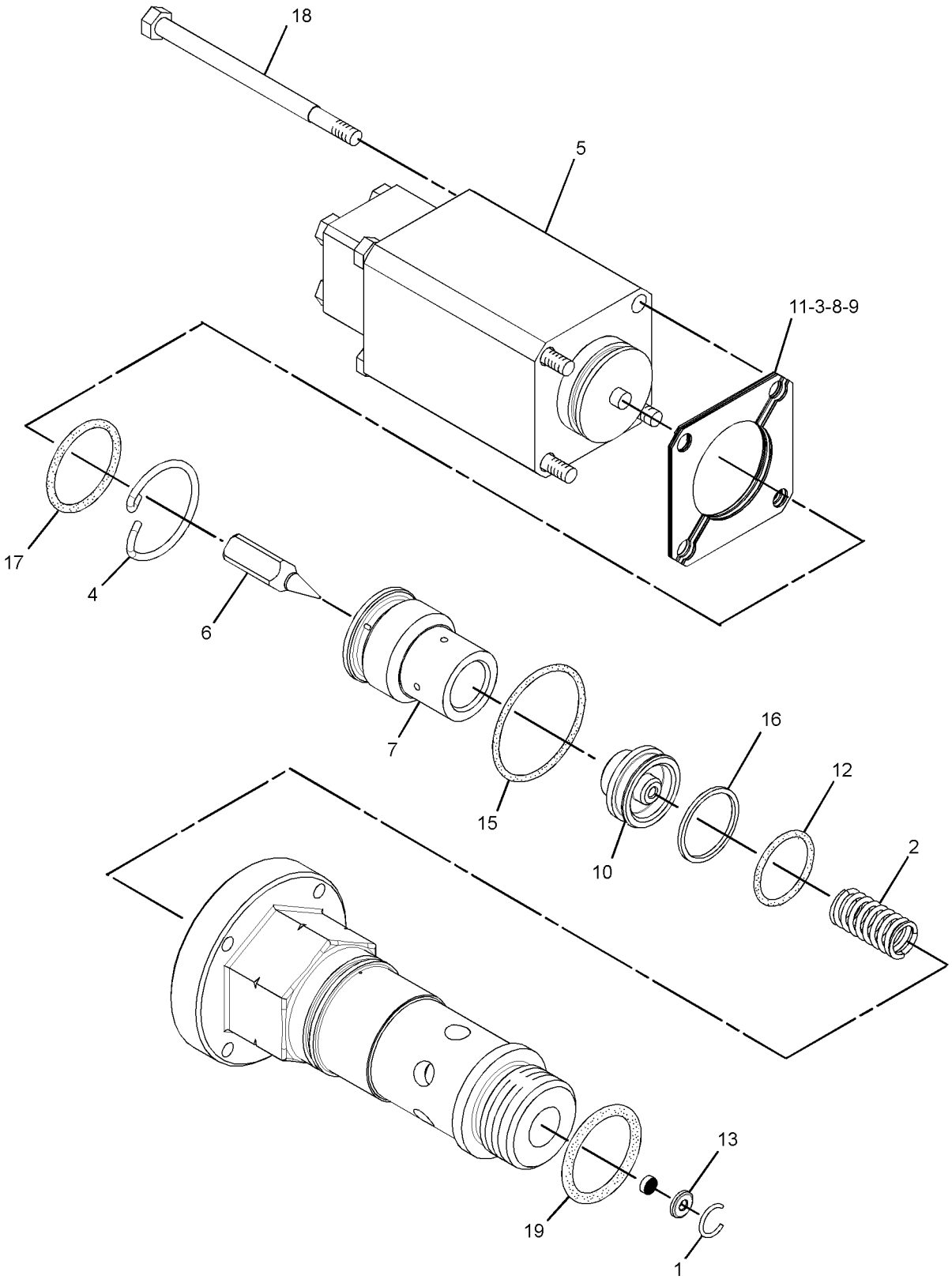

GRAPHIC #1 **<END>** g01950696

HYDRAULIC SYSTEM

158-9085 VALVE GP-SWING CUSHION

S/N: WNE1-UP; ZMF1-UP; CWG1-UP
PART OF 259-0680 VALVE GP-SWING CUSHION
AN ATTACHMENT

SMCS-5480 **i01550090**

NOTE	REF NO	GRAPHIC REF	PART NUMBER	QTY	PART NAME 1 2 3 4 5 6 (PRODUCT LEVEL)	SEE PAGE
	1	1	*173-3535*	1	BODY	
	2	1	**095-1576**	1	SEAL-O-RING	
Y	3	1	**173-3536**	2	VALVE GP-RELIEF	868
	4	1	**095-1698**	2	SEAL-O-RING	
	5	1	**8T-6759**	4	PLUG-PIPE	

Y-SEPARATE ILLUSTRATION

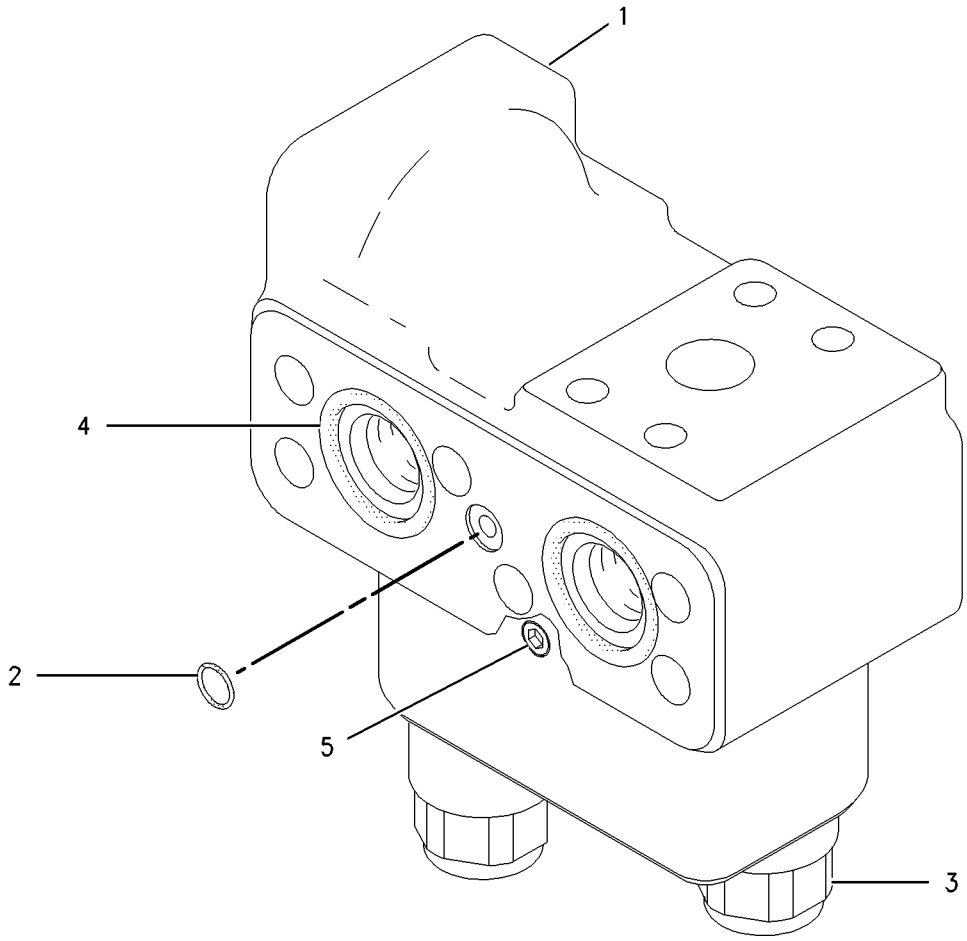

GRAPHIC #1 **<END>** g00673144

HYDRAULIC SYSTEM

259-0680 VALVE GP-SWING CUSHION

S/N: WNE1-UP; ZMF1-UP; CWG1-UP
PART OF 247-7457, 290-1720 VALVE AR-SWING
AN ATTACHMENT

SMCS-5480 **i02407559**

NOTE	REF NO	GRAPHIC REF	PART NUMBER	QTY	PART NAME 1 2 3 4 5 6 (PRODUCT LEVEL)	SEE PAGE
Y	1	1	**158-9085**	1	VALVE GP-SWING CUSHION	900

Y-SEPARATE ILLUSTRATION

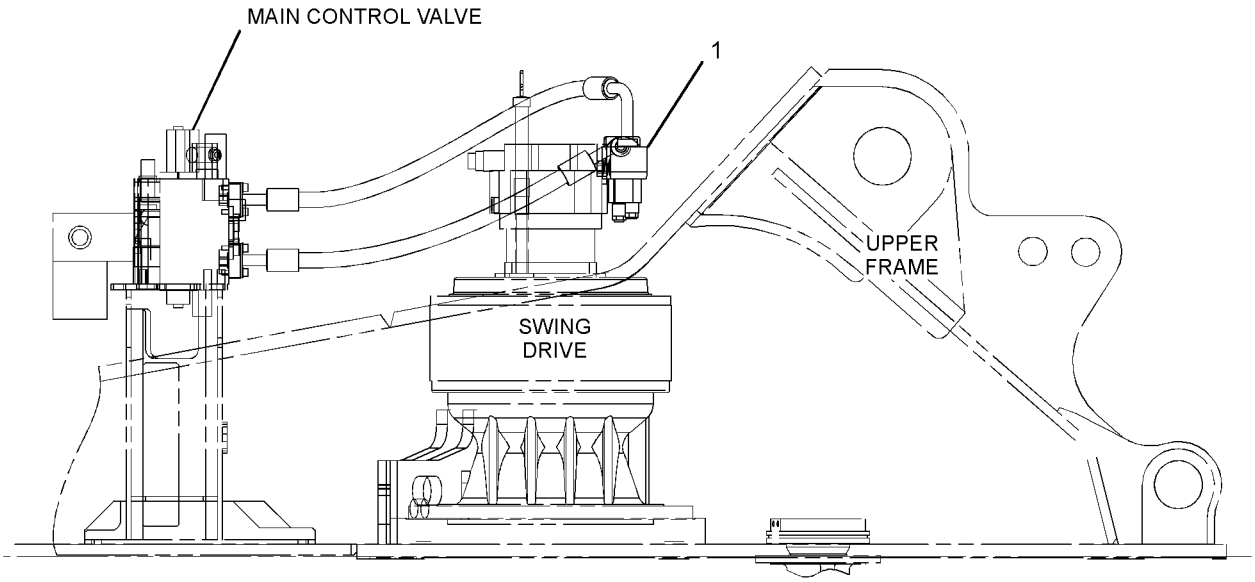

RIGHT SIDE VIEW

GRAPHIC #1 **<END>** g01212011

HYDRAULIC SYSTEM

322-8716 VALVE GP-SWING CUSHION—FINE SWING

S/N: WNE1-UP; ZMF1-UP; CWG1-UP

PART OF 239-1699 LINES GP-BOOM CYLINDER, 266-0958 LINES GP-FRONT

SMCS-5480 **i03300041**

NOTE	REF NO	GRAPHIC REF	PART NUMBER	QTY	PART NAME 1 2 3 4 5 6 (PRODUCT LEVEL)	SEE PAGE
Y	1	1	**315-4412**	1	VALVE GP-SOLENOID	895
Y	2	1	**173-3536**	2	VALVE GP-RELIEF	868
	3	1	**095-1698**	2	SEAL-O-RING	
M	4	1	**8T-0288**	2	BOLT (M5X0.8X12-MM)	
	5	1	**133-6788**	2	ORIFICE	
	6	1	**8T-6759**	6	PLUG-PIPE	
	7	1	**095-1576**	1	SEAL-O-RING	

M-METRIC PART
Y-SEPARATE ILLUSTRATION

322-8716 VALVE GP-SWING CUSHION *(contd.)* **i03300041**

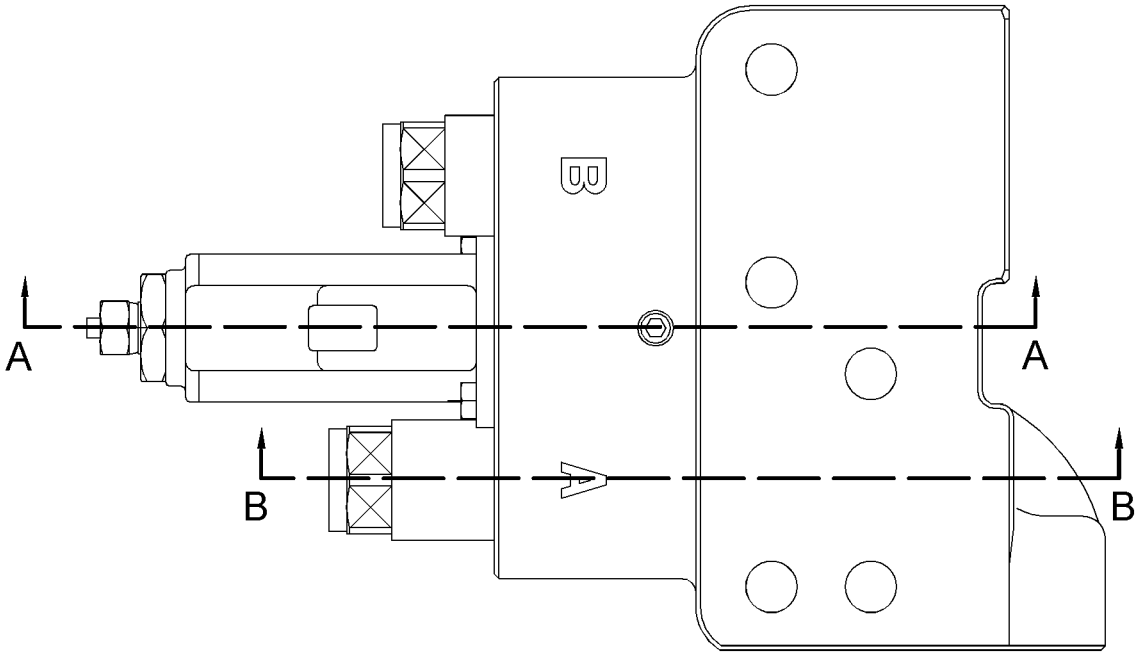

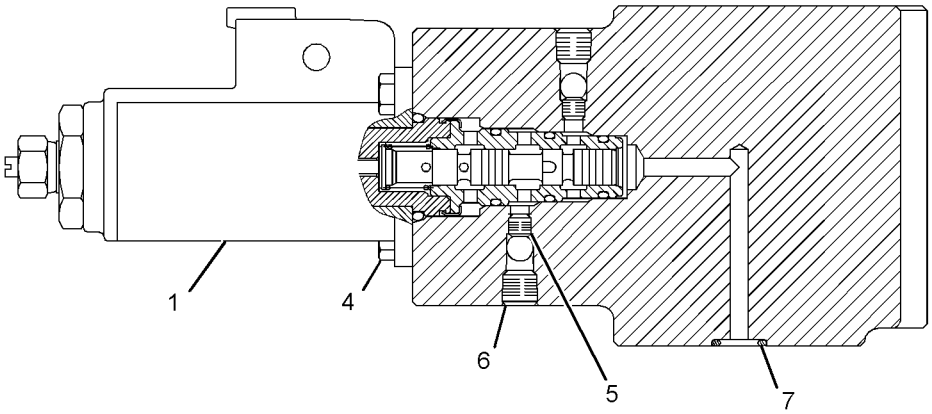

SECTION A-A

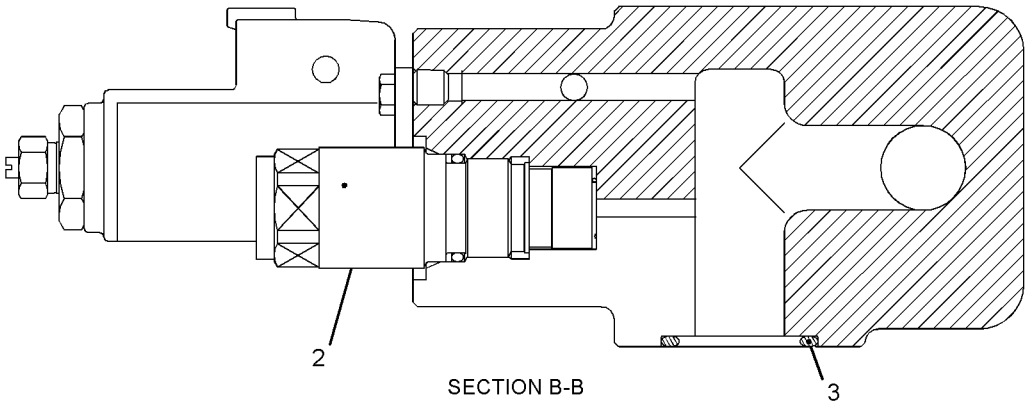

SECTION B-B

GRAPHIC #1 **<END>** g01572033

HYDRAULIC SYSTEM

204-2819 VALVE GP-TRAVEL COUNTERBALANCE

S/N: WNE1-UP; ZMF1-UP; CWG1-UP
PART OF 215-9982, 215-9983 MOTOR & MTG GP-TRAVEL
ALSO AN ATTACHMENT

SMCS-5811 **i03492281**

NOTE	REF NO	GRAPHIC REF	PART NUMBER	QTY	PART NAME 1 2 3 4 5 6 (PRODUCT LEVEL)	SEE PAGE
	1	1	**5P-2568**	2	SEAL-O-RING	
Y	2	1	**204-2755**	2	VALVE GP-RELIEF	870
	3	1	**9S-8004**	2	PLUG	
	4	1	**3J-1907**	2	SEAL-O-RING	
	5	1	**096-1545**	2	WASHER (28.5X37X2-MM THK)	
	6	1	**209-5920**	2	SPRING	
	7	1	**334-9940**	2	COVER	
M	8	1	**8T-7811**	8	BOLT-SOCKET HEAD (M12X1.75X50-MM)	

M-METRIC PART
Y-SEPARATE ILLUSTRATION

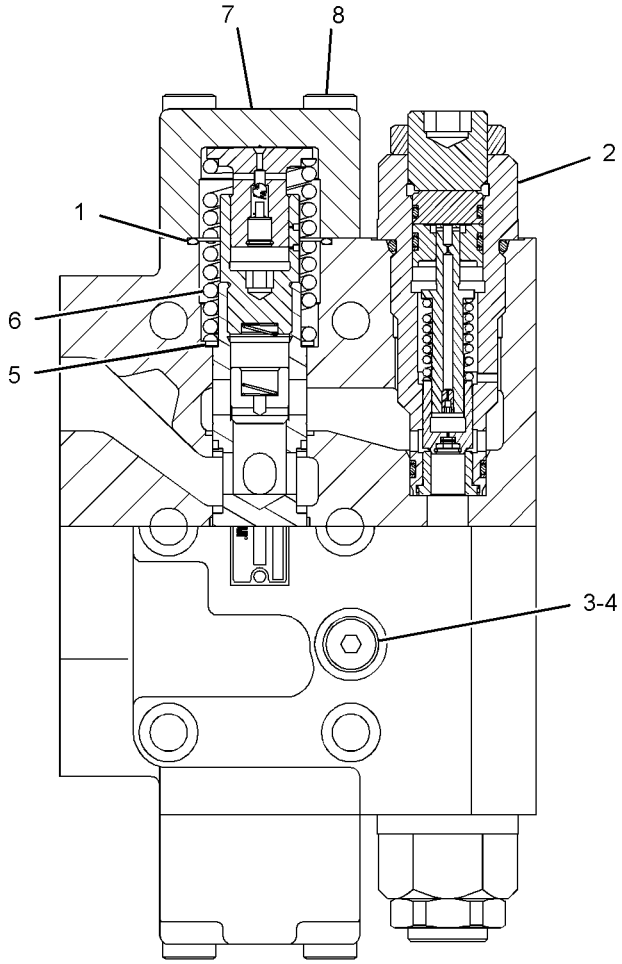

GRAPHIC #1 **<END>** g01829393

275-3695 BOOM AR-1 PIECE LONG

S/N: CWG1-UP
ACCUGRADE READY
FOR USE WITH 275-3702—PAGE 928, 275-3707—PAGE 922
AN ATTACHMENT

SMCS-6501 **i02558582**

NOTE	PART NUMBER	QTY	PART NAME 1 2 3 4 5 6 (PRODUCT LEVEL)	SEE PAGE
Y	*282-4533*	1	BOOM GP	909
Y	*242-6730*	1	CYLINDER & LINES GP-BOOM (LH)	486
Y	*242-6736*	1	CYLINDER & LINES GP-BOOM (RH)	486
Y	*242-6733*	1	CYLINDER & LINES GP-STICK	488
Y	*259-5043*	1	LIGHTING GP-FLOOD (BOOM, LH)	206
Y	*260-8010*	1	LINES GP-BOOM	573
Y	*241-7286*	1	LINES GP-GREASE	920

Y-SEPARATE ILLUSTRATION

<END>

298-4308 BOOM AR-1 PIECE LONG

S/N: WNE1-UP; ZMF1-UP; CWG1-UP
PART OF 314-3923, 314-3925, 314-3927, 314-3929, 338-9838, 338-9840 OPTION AR-LINKAGE
AN ATTACHMENT

SMCS-6501 **i02954798**

NOTE	PART NUMBER	QTY	PART NAME 1 2 3 4 5 6 (PRODUCT LEVEL)	SEE PAGE
Y	*315-1049*	1	BOOM GP	911
Y	*242-6730*	1	CYLINDER & LINES GP-BOOM (LH)	486
Y	*242-6736*	1	CYLINDER & LINES GP-BOOM (RH)	486
Y	*242-6733*	1	CYLINDER & LINES GP-STICK	488
Y	*259-5043*	1	LIGHTING GP-FLOOD (BOOM, LH)	206
Y	*260-8010*	1	LINES GP-BOOM	573
Y	*241-7286*	1	LINES GP-GREASE (BOOM)	920

Y-SEPARATE ILLUSTRATION

<END>

298-4310 BOOM AR-1 PIECE LONG—ACCUGRADE READY

S/N: WNE1-UP; ZMF1-UP; CWG1-UP
PART OF 347-9939, 347-9940 OPTION AR-LINKAGE
FOR USE WITH 275-3707—PAGE 922, 278-3912—PAGE 344
AN ATTACHMENT

SMCS-6501 **i02954859**

NOTE	PART NUMBER	QTY	PART NAME 1 2 3 4 5 6 (PRODUCT LEVEL)	SEE PAGE
Y	*315-1064*	1	BOOM GP	913
Y	*242-6730*	1	CYLINDER & LINES GP-BOOM (LH)	486
Y	*242-6736*	1	CYLINDER & LINES GP-BOOM (RH)	486
Y	*242-6733*	1	CYLINDER & LINES GP-STICK	488
Y	*259-5043*	1	LIGHTING GP-FLOOD (BOOM, LH)	206
Y	*260-8010*	1	LINES GP-BOOM	573
Y	*241-7286*	1	LINES GP-GREASE (BOOM)	920

Y-SEPARATE ILLUSTRATION

<END>

IMPLEMENTS

298-4342 BOOM AR-1 PIECE LONG—HIGH AMBIENT

S/N: WNE1-UP; ZMF1-UP
PART OF 314-3924, 314-3926, 314-3928, 314-3930, 338-9839, 338-9841 OPTION AR-LINKAGE
AN ATTACHMENT

SMCS-6501 **i02955379**

NOTE	PART NUMBER	QTY	PART NAME 1 2 3 4 5 6 (PRODUCT LEVEL)	SEE PAGE
Y	*315-1049*	1	BOOM GP	911
Y	*242-6745*	1	CYLINDER & LINES GP-BOOM (LH)	487
Y	*242-6749*	1	CYLINDER & LINES GP-BOOM (RH)	487
Y	*242-6747*	1	CYLINDER & LINES GP-STICK	488
Y	*259-5043*	1	LIGHTING GP-FLOOD (BOOM, LH)	206
Y	*260-8010*	1	LINES GP-BOOM	573
Y	*241-7286*	1	LINES GP-GREASE (BOOM)	920
Y-SEPARATE ILLUSTRATION				

<END>

240-3834 BOOM AR-1 PIECE SHORT

S/N: CWG1-UP
AN ATTACHMENT

SMCS-6501 **i03040443**

NOTE	PART NUMBER	QTY	PART NAME 1 2 3 4 5 6 (PRODUCT LEVEL)	SEE PAGE
Y	*241-7291*	1	BOOM GP	907
Y	*242-6738*	1	CYLINDER & LINES GP-BOOM (LH)	486
Y	*242-6742*	1	CYLINDER & LINES GP-BOOM (RH)	486
Y	*242-6753*	1	CYLINDER & LINES GP-STICK	489
Y	*267-7627*	1	LIGHTING GP-FLOOD (SHORT BOOM, LH)	211
Y	*239-1732*	1	LINES GP-BOOM	570
Y	*172-2939*	1	LINES GP-GREASE (BOOM)	918
Y-SEPARATE ILLUSTRATION				

<END>

298-4309 BOOM AR—1-PIECE SHORT

S/N: WNE1-UP; ZMF1-UP; CWG1-UP
PART OF 338-9896 OPTION AR-LINKAGE
AN ATTACHMENT

SMCS-6501 **i02954819**

NOTE	PART NUMBER	QTY	PART NAME 1 2 3 4 5 6 (PRODUCT LEVEL)	SEE PAGE
Y	*315-1070*	1	BOOM GP	915
Y	*242-6745*	1	CYLINDER & LINES GP-BOOM (LH)	487
Y	*242-6749*	1	CYLINDER & LINES GP-BOOM (RH)	487
Y	*242-6762*	1	CYLINDER & LINES GP-STICK	489
Y	*267-7627*	1	LIGHTING GP-FLOOD (SHORT BOOM, LH)	211
Y	*239-1732*	1	LINES GP-BOOM	570
Y	*172-2939*	1	LINES GP-GREASE (BOOM)	918
Y-SEPARATE ILLUSTRATION				

<END>

IMPLEMENTS

241-7291 BOOM GP

S/N: CWG1-UP
5.2-M (17.1-FT)
PART OF 240-3834 BOOM AR-1 PIECE SHORT
AN ATTACHMENT

SMCS-6301, 6302, 6460, 6501, 6516, 6521, 6535, 6536 **i03040442**

NOTE	REF NO	GRAPHIC REF	PART NUMBER	QTY	PART NAME 1 2 3 4 5 6 (PRODUCT LEVEL)	SEE PAGE
	1	1	**4I-3308**	2	PLATE	
	2	1	**4I-3309**	2	SPACER (82X110X3-MM THK)	
B	3	1	**093-0084**	2	SHIM (1-MM THK)	
J	4	1	**093-0116**	2	SHIM (2-MM THK)	
	5	1	**093-0349**	2	WASHER (22X60X6-MM THK)	
	6	1	**093-0363**	1	SPACER (83X120X12-MM THK)	
B	7	1	**113-2127**	1	SHIM (0.5-MM THK)	
	8	1	**166-1486**	2	SHIM (2-MM THK)	
	9	1	**166-1495**	2	SEAL-LIP TYPE	
	10	1	**176-2278**	1	PIN	
	11	1	**241-7292**	1	BOOM & BEARING AS	
	11A	1	**244-4277**	1	BEARING-SLEEVE	
	12	1	**264-1702**	1	PIN AS	
	13	1	**166-1487**	2	SHIM (2-MM THK)	
	14	1	**4I-4809**	1	PIN AS	
	15	1	**8T-4123**	2	WASHER (22X35X3.5-MM THK)	
	16	1	**8T-4223**	6	WASHER-HARD (13.5X25.5X3-MM THK)	
M	17	1	**8T-4780**	2	BOLT (M20X2.5X30-MM)	
M	18	1	**8T-4956**	6	BOLT (M12X1.75X35-MM)	

B-USE AS REQUIRED
J-USED ONLY ON OPTIONAL DESIGN BOOM END
M-METRIC PART

241-7291 **BOOM GP** *(contd.)* **i03040442**

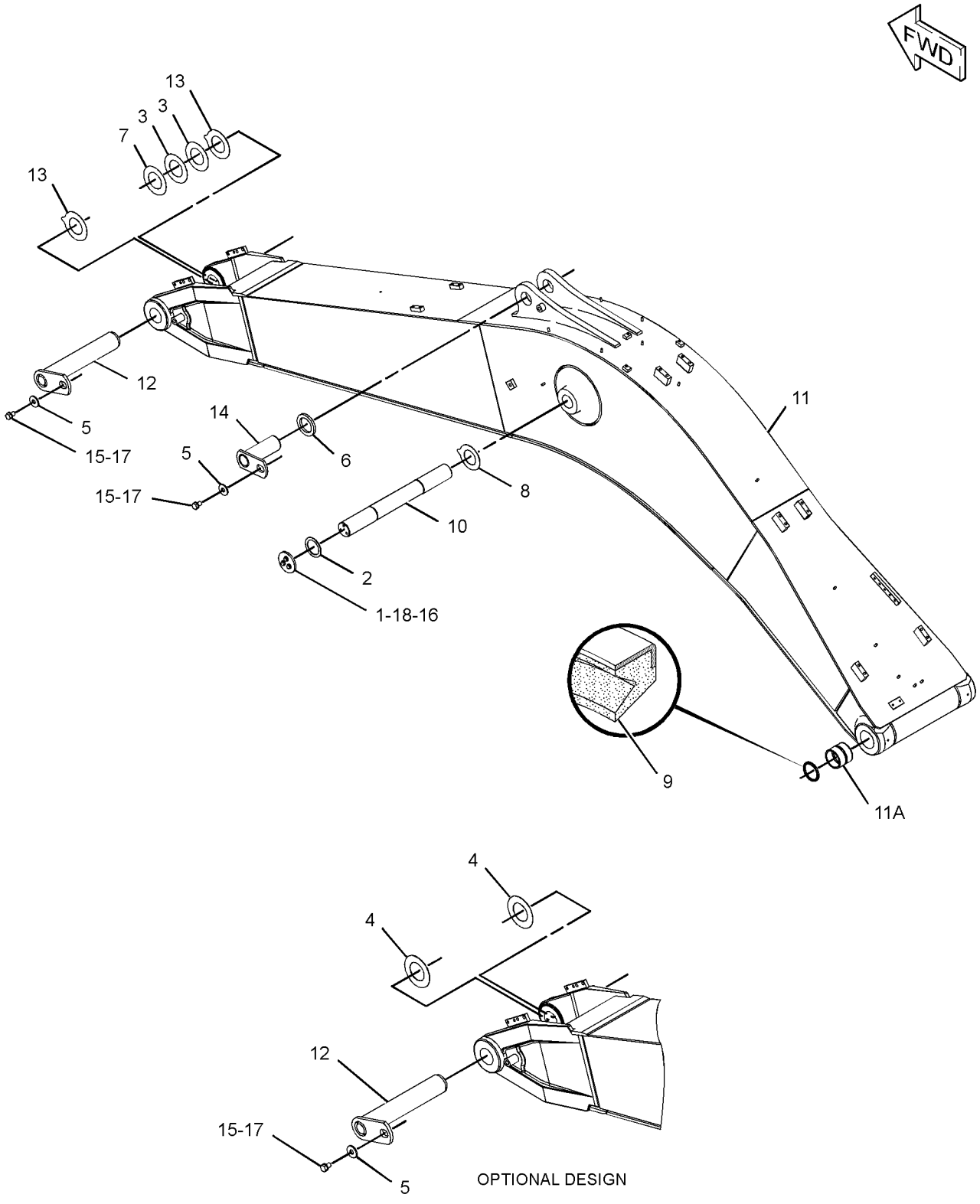

GRAPHIC #1 **<END>** g01227886

282-4533 BOOM GP–ACCUGRADE

S/N: CWG1-UP
5.7-M (18.7-FT)
PART OF 275-3695 BOOM AR-1 PIECE LONG
AN ATTACHMENT

SMCS-6301, 6302, 6460, 6501, 6516, 6521, 6535, 6536 **i02558595**

NOTE	REF NO	GRAPHIC REF	PART NUMBER	QTY	PART NAME 1 2 3 4 5 6 (PRODUCT LEVEL)	SEE PAGE
	1	1	**4I-3308**	2	PLATE	
	2	1	**4I-3309**	2	SPACER (82X110X3-MM THK)	
B	3	1	**093-0084**	2	SHIM (1-MM THK)	
J	4	1	**093-0116**	2	SHIM (2-MM THK)	
	5	1	**093-0349**	2	WASHER (22X60X6-MM THK)	
	6	1	**093-0363**	1	SPACER (83X120X12-MM THK)	
B	7	1	**113-2127**	1	SHIM (0.5-MM THK)	
	8	1	**166-1486**	2	SHIM (2-MM THK)	
	9	1	**176-2278**	1	PIN	
	10	1	**264-1702**	1	PIN AS	
	11	1	**282-4534**	1	BOOM & BEARING AS	
	11A	1	**244-4277**	2	BEARING-SLEEVE	
	12	1	**166-1487**	2	SHIM (2-MM THK)	
	13	1	**166-1495**	2	SEAL-LIP TYPE	
	14	1	**4I-4809**	1	PIN AS	
	15	1	**8T-4123**	2	WASHER (22X35X3.5-MM THK)	
	16	1	**8T-4223**	6	WASHER-HARD (13.5X25.5X3-MM THK)	
M	17	1	**8T-4780**	2	BOLT (M20X2.5X30-MM)	
M	18	1	**8T-4956**	6	BOLT (M12X1.75X35-MM)	

B-USE AS REQUIRED
J-USE ONLY ON OPTIONAL DESIGN
M-METRIC PART

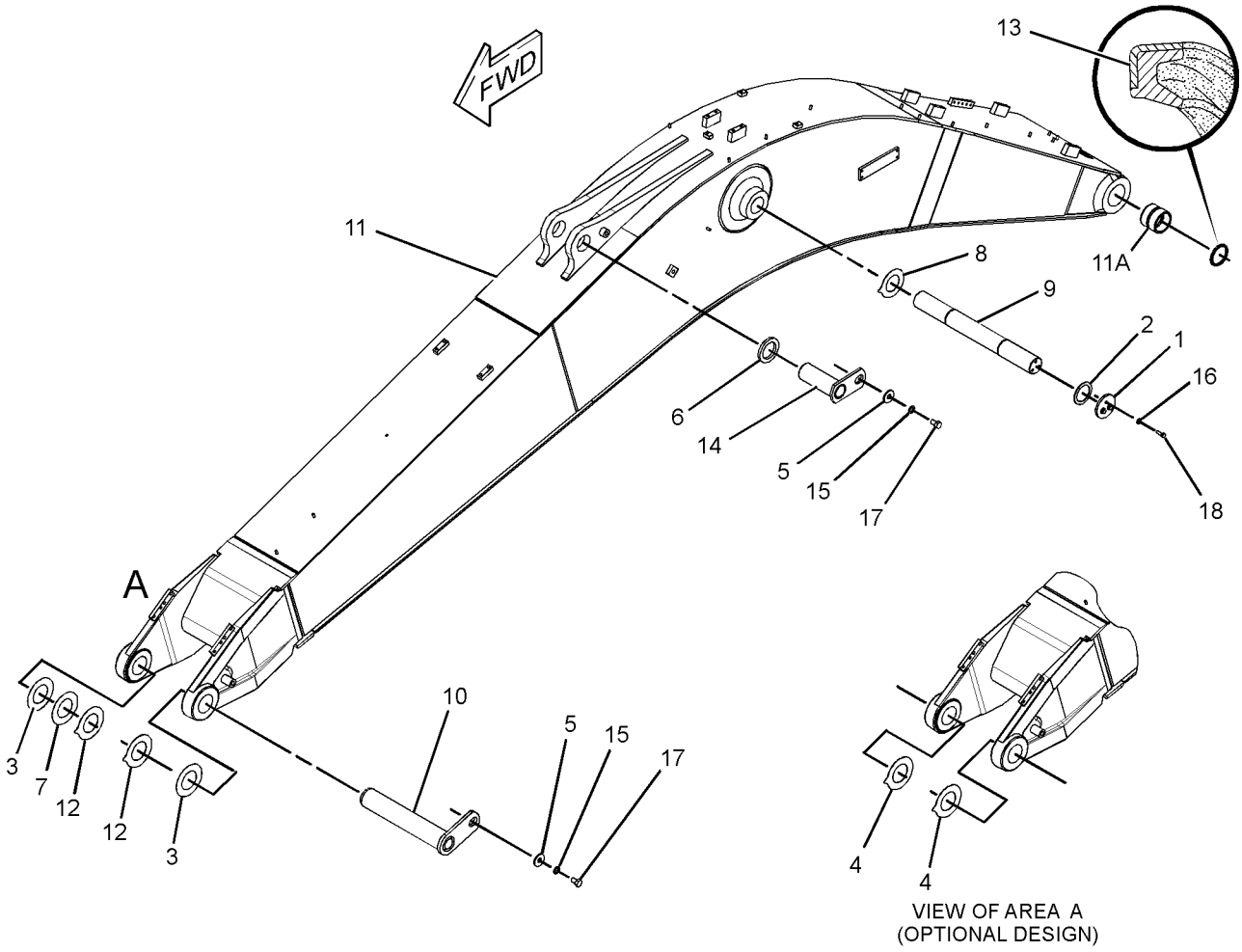

GRAPHIC #1 **<END>** g01289909

315-1049 BOOM GP

S/N: WNE1-UP; ZMF1-UP; CWG1-UP
5.7-M (18.7-FT)
PART OF 298-4308, 298-4342 BOOM AR-1 PIECE LONG
AN ATTACHMENT

SMCS-6301, 6302, 6460, 6501, 6516, 6521, 6535, 6536 **i02954802**

NOTE	REF NO	GRAPHIC REF	PART NUMBER	QTY	PART NAME 1 2 3 4 5 6 (PRODUCT LEVEL)	SEE PAGE
	1	1	**4I-3308**	2	PLATE	
	2	1	**4I-3309**	2	SPACER (82X110X3-MM THK)	
B	3	1	**093-0084**	2	SHIM (1-MM THK)	
J	4	1	**093-0116**	2	SHIM (2-MM THK)	
	5	1	**093-0349**	2	WASHER (22X60X6-MM THK)	
	6	1	**093-0363**	1	SPACER (83X120X12-MM THK)	
B	7	1	**113-2127**	1	SHIM (0.5-MM THK)	
	8	1	**166-1486**	2	SHIM (2-MM THK)	
	9	1	**166-1495**	2	SEAL-LIP TYPE	
	10	1	**176-2278**	1	PIN	
	11	1	**264-1702**	1	PIN AS	
	12	1	**315-1050**	1	BOOM & BEARING AS	
	12A	1	**228-5615**	2	BEARING-SLEEVE	
	13	1	**166-1487**	2	SHIM (2-MM THK)	
	14	1	**4I-4809**	1	PIN AS	
	15	1	**8T-4123**	2	WASHER (22X35X3.5-MM THK)	
	16	1	**8T-4223**	6	WASHER-HARD (13.5X25.5X3-MM THK)	
M	17	1	**8T-4780**	2	BOLT (M20X2.5X30-MM)	
M	18	1	**8T-4956**	6	BOLT (M12X1.75X35-MM)	

B-USE AS REQUIRED
J-USE ONLY ON OPTIONAL DESIGN
M-METRIC PART

315-1049 **BOOM GP** ***(contd.)*** **i02954802**

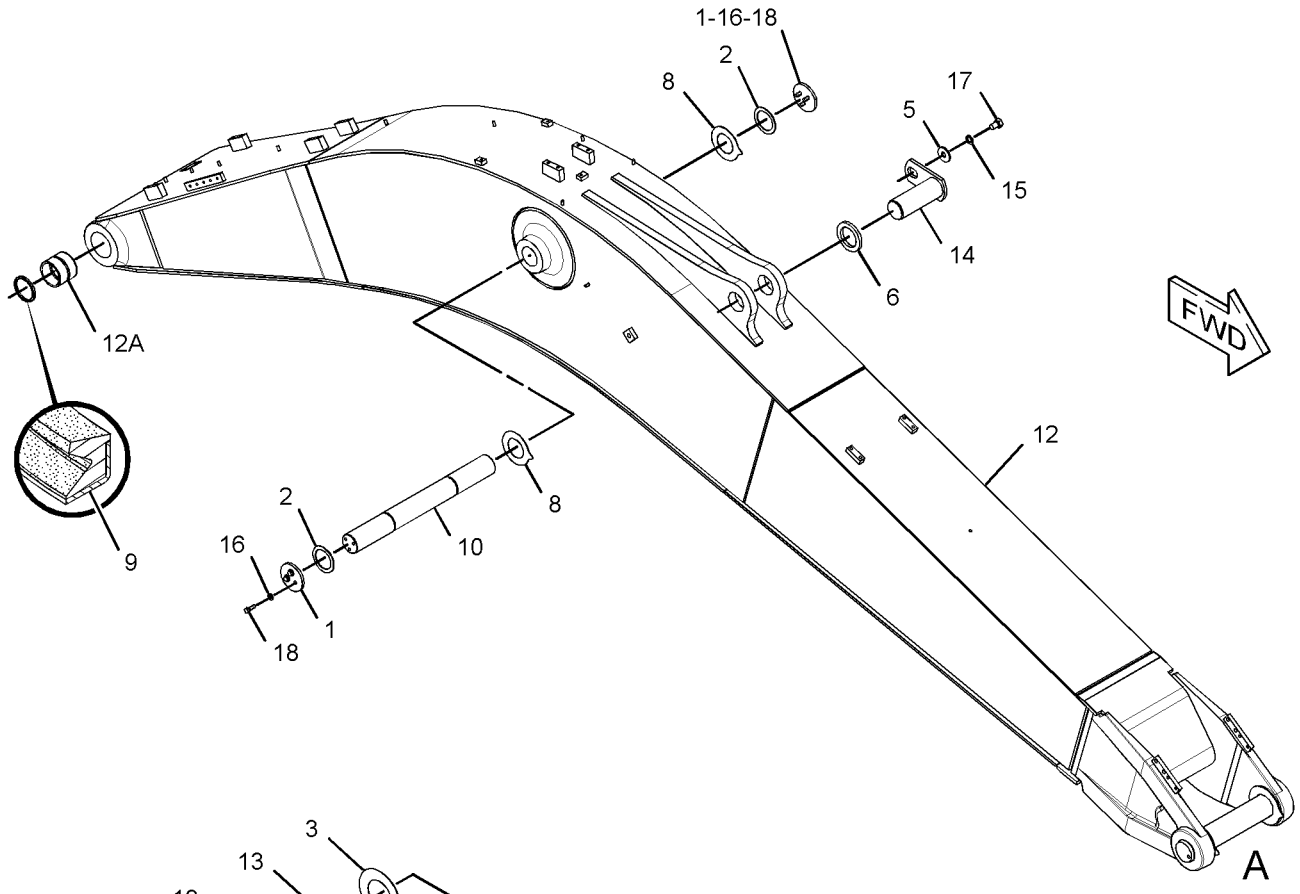

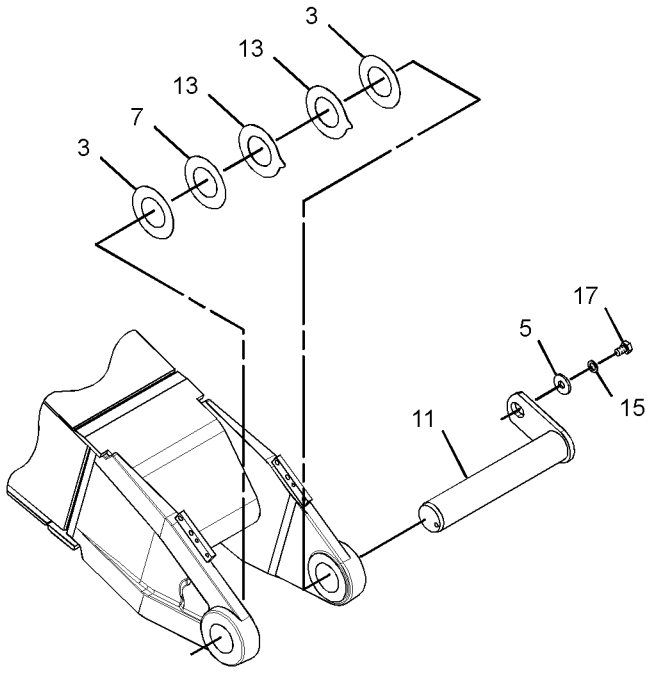

VIEW OF AREA A

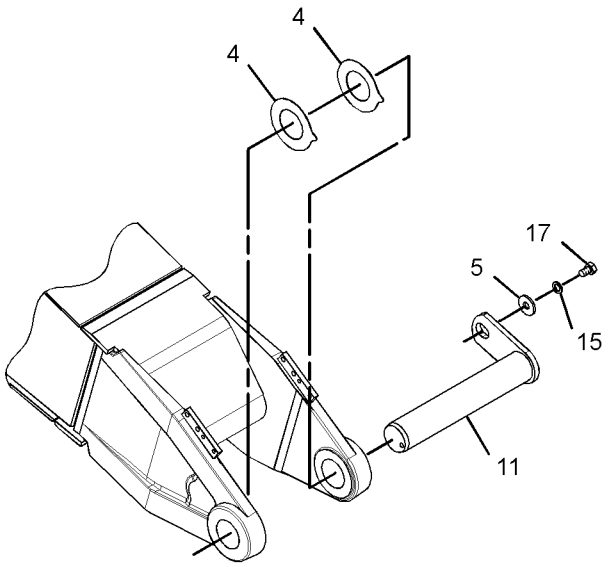

VIEW OF AREA A
(OPTIONAL DESIGN)

GRAPHIC #1 **<END>** g01486696

315-1064 BOOM GP—ACCUGRADE READY

S/N: WNE1-UP; ZMF1-UP; CWG1-UP
5.7-M (18.7-FT)
PART OF 298-4310 BOOM AR-1 PIECE LONG
AN ATTACHMENT

SMCS-6301, 6302, 6460, 6501, 6516, 6521, 6535, 6536 **i02958958**

NOTE	REF NO	GRAPHIC REF	PART NUMBER	QTY	PART NAME 1 2 3 4 5 6 (PRODUCT LEVEL)	SEE PAGE
	1	1	**4I-3308**	2	PLATE	
	2	1	**4I-3309**	2	SPACER (82X110X3-MM THK)	
B	3	1	**093-0084**	2	SHIM (1-MM THK)	
J	4	1	**093-0116**	2	SHIM (2-MM THK)	
	5	1	**093-0349**	2	WASHER (22X60X6-MM THK)	
	6	1	**093-0363**	1	SPACER (83X120X12-MM THK)	
B	7	1	**113-2127**	1	SHIM (0.5-MM THK)	
	8	1	**166-1486**	2	SHIM (2-MM THK)	
	9	1	**166-1495**	2	SEAL-LIP TYPE	
	10	1	**176-2278**	1	PIN	
	11	1	**264-1702**	1	PIN AS	
	12	1	**315-1065**	1	BOOM & BEARING AS	
	12A	1	**228-5615**	2	BEARING-SLEEVE	
	13	1	**166-1487**	2	SHIM (2-MM THK)	
	14	1	**4I-4809**	1	PIN AS	
	15	1	**8T-4123**	2	WASHER (22X35X3.5-MM THK)	
	16	1	**8T-4223**	6	WASHER-HARD (13.5X25.5X3-MM THK)	
M	17	1	**8T-4780**	2	BOLT (M20X2.5X30-MM)	
M	18	1	**8T-4956**	6	BOLT (M12X1.75X35-MM)	

B-USE AS REQUIRED
J-USE ONLY ON OPTIONAL DESIGN
M-METRIC PART

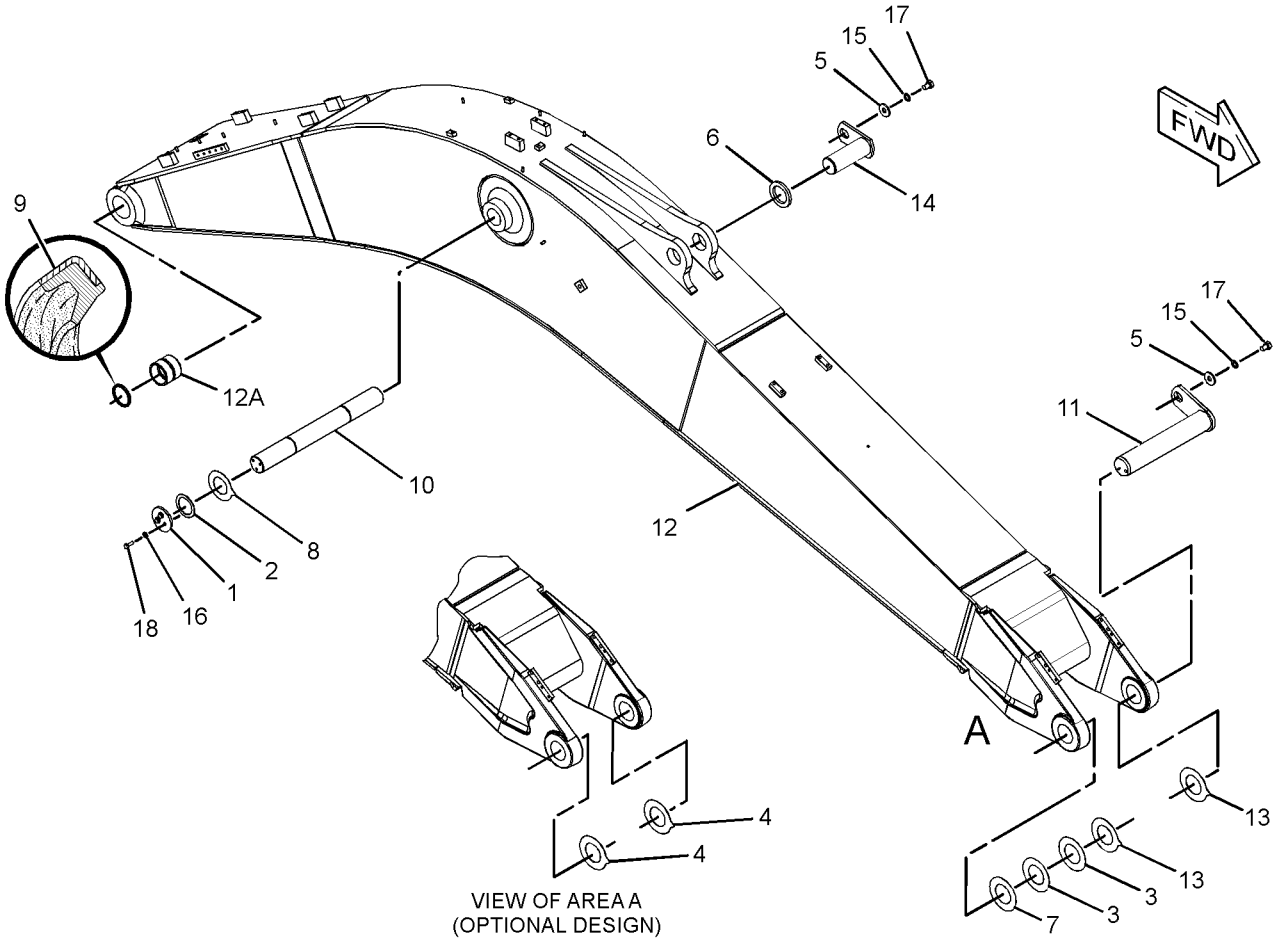

GRAPHIC #1

<END>

g01473901

315-1070 BOOM GP-1 PIECE

S/N: WNE1-UP; ZMF1-UP; CWG1-UP
5.2-M (17.1-FT)
PART OF 298-4309 BOOM AR-1 PIECE SHORT
AN ATTACHMENT

SMCS-6301, 6302, 6460, 6501, 6516, 6521, 6535, 6536 **i02954817**

NOTE	REF NO	GRAPHIC REF	PART NUMBER	QTY	PART NAME 1 2 3 4 5 6 (PRODUCT LEVEL)	SEE PAGE
	1	1	**4I-3308**	2	PLATE	
	2	1	**4I-3309**	2	SPACER (82X110X3-MM THK)	
B	3	1	**093-0084**	2	SHIM (1-MM THK)	
J	4	1	**093-0116**	2	SHIM (2-MM THK)	
	5	1	**093-0349**	2	WASHER (22X60X6-MM THK)	
	6	1	**093-0363**	1	SPACER (83X120X12-MM THK)	
B	7	1	**113-2127**	1	SHIM (0.5-MM THK)	
	8	1	**166-1486**	2	SHIM (2-MM THK)	
	9	1	**166-1495**	2	SEAL-LIP TYPE	
	10	1	**176-2278**	1	PIN	
	11	1	**264-1702**	1	PIN AS	
	12	1	**315-1071**	1	BOOM & BEARING AS	
	12A	1	**228-5615**	2	BEARING-SLEEVE	
	13	1	**166-1487**	2	SHIM (2-MM THK)	
	14	1	**4I-4809**	1	PIN AS	
	15	1	**8T-4123**	2	WASHER (22X35X3.5-MM THK)	
	16	1	**8T-4223**	6	WASHER-HARD (13.5X25.5X3-MM THK)	
M	17	1	**8T-4780**	2	BOLT (M20X2.5X30-MM)	
M	18	1	**8T-4956**	6	BOLT (M12X1.75X35-MM)	

B-USE AS REQUIRED
J-USE ONLY ON OPTIONAL DESIGN
M-METRIC PART

315-1070 **BOOM GP-1 PIECE** *(contd.)* **i02954817**

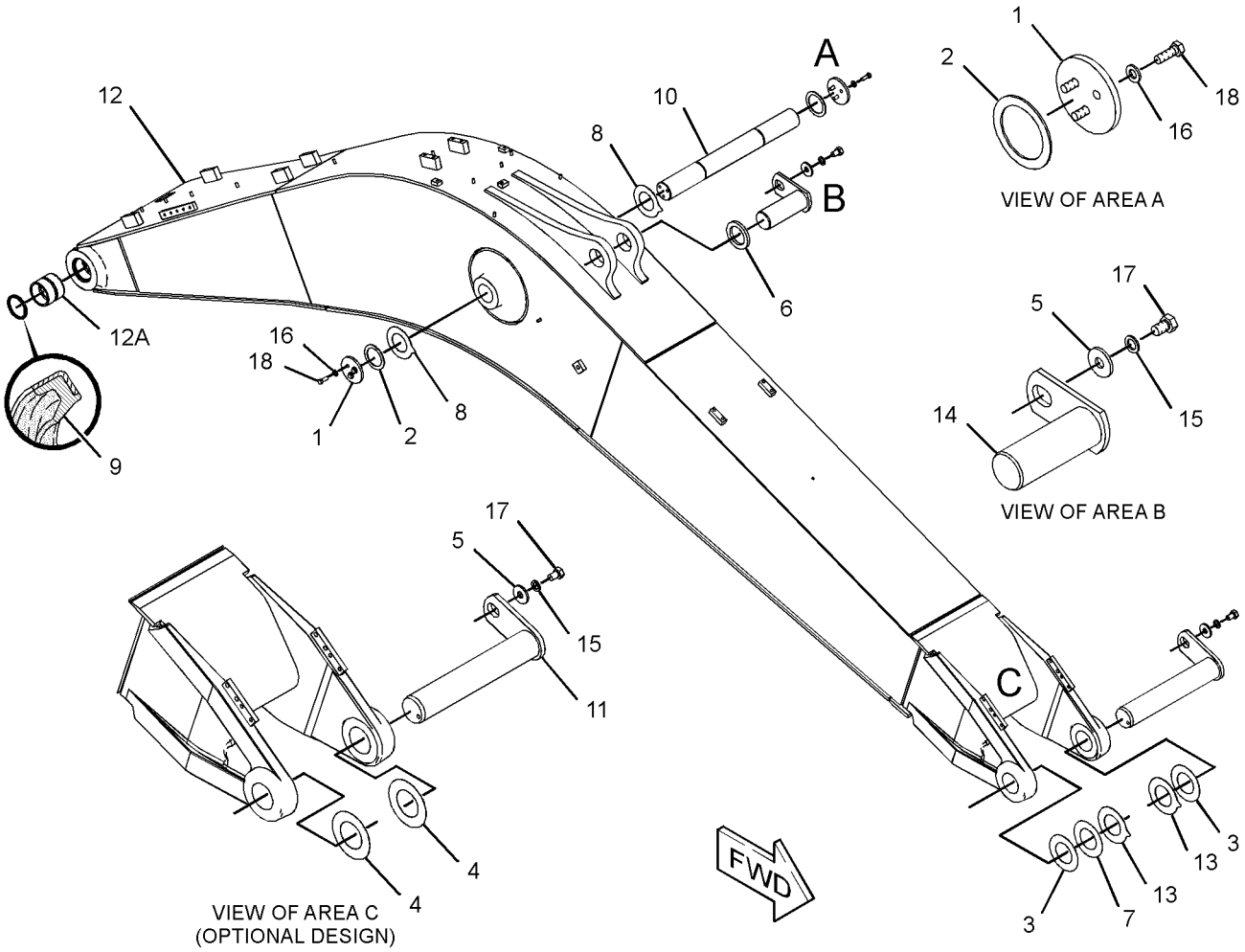

GRAPHIC #1 **<END>** g01473963

244-8503 CONVERSION GP-LINKAGE

S/N: WNE1-UP; ZMF1-UP; CWG1-UP
B-FAMILY. FOR EUROPE
PART OF 346-4628, 346-4629 DISTRIBUTION AR
AN ATTACHMENT

SMCS-6513 **i02397738**

NOTE	PART NUMBER	QTY	PART NAME 1 2 3 4 5 6 (PRODUCT LEVEL)	SEE PAGE
M	**7X-2552**	2	BOLT (M16X2X30-MM)	
	244-8504	2	PIN AS	
	7Y-3110	2	WASHER-SPECIAL (17X65X6-MM THK)	

M-METRIC PART

<END>

172-2939 LINES GP-GREASE–BOOM

S/N: WNE1-UP; ZMF1-UP; CWG1-UP
PART OF 240-3834, 298-4309 BOOM AR-1 PIECE SHORT
AN ATTACHMENT

SMCS-7510 **i01296193**

NOTE	REF NO	GRAPHIC REF	PART NUMBER	QTY	PART NAME 1 2 3 4 5 6 (PRODUCT LEVEL)	SEE PAGE
	1	1	**8M-2772**	2	CLIP	
M	2	1	**8T-4133**	5	NUT (M10X1.5-THD)	
	3	1	**8T-4121**	8	WASHER-HARD (11X21X2.5-MM THK)	
	4	1	**166-1579**	3	CLIP	
	5	1	**033-8248**	3	CLIP	
M	6	1	**8T-4191**	3	BOLT (M10X1.5X16-MM)	
	7	1	**166-3152**	1	HOSE AS	
I	8	1	**115-2678**	1	HOSE AS	
	9	1	**3B-8489**	5	FITTING-GREASE	
	10	1	**6L-3616**	2	CONNECTOR	
	11	1	**5K-9243**	2	ELBOW-FLARED	
	12	1	**4I-4544**	1	TUBE AS	
	13	1	**4I-4543**	1	TUBE AS	
I	14	1	**115-2677**	1	HOSE AS	

I-REFER TO HYDRAULIC INFORMATION SYSTEM
M-METRIC PART

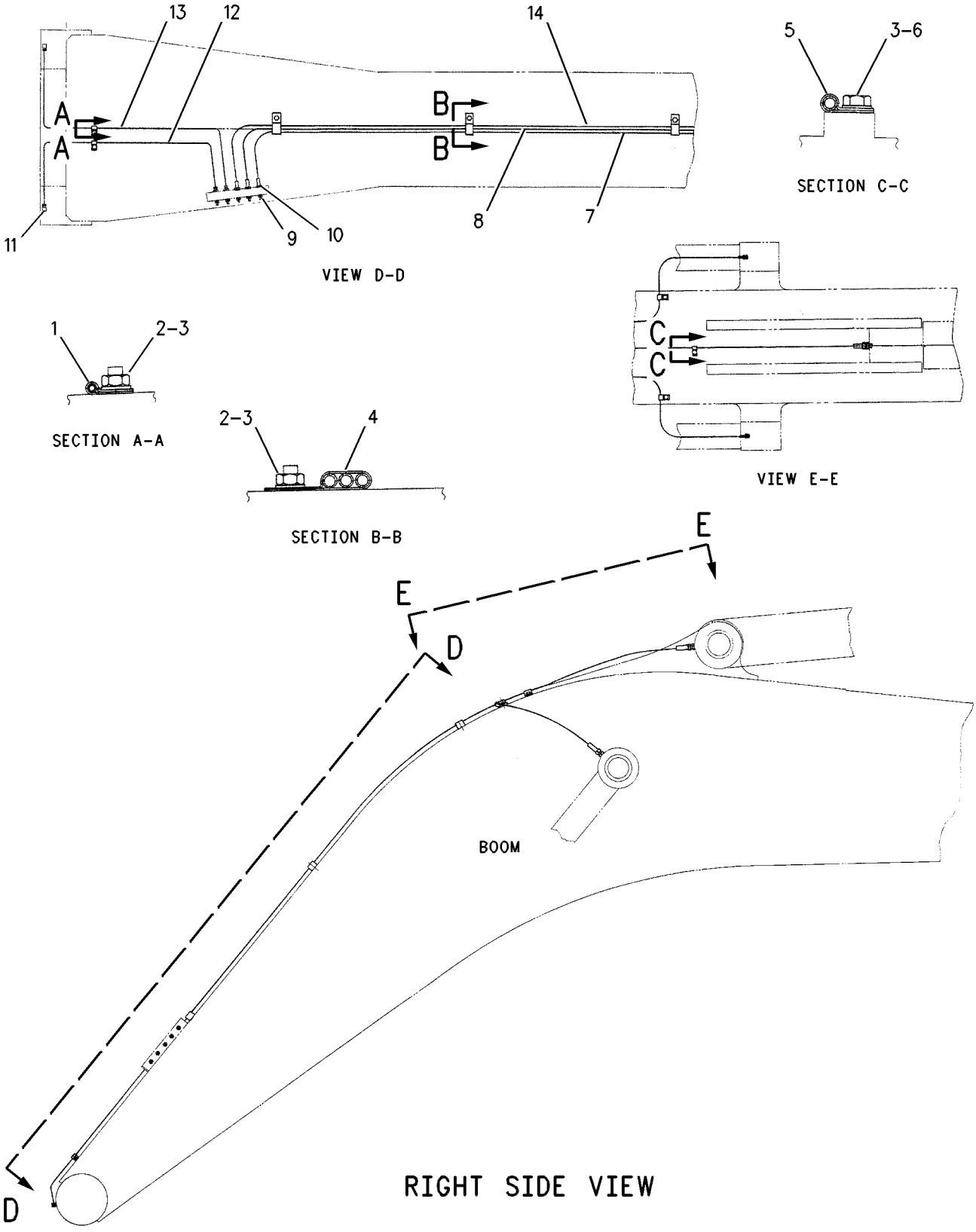

GRAPHIC #1 **<END>** g00675837

IMPLEMENTS

241-7286 LINES GP-GREASE–BOOM

S/N: WNE1-UP; ZMF1-UP; CWG1-UP
PART OF 275-3695, 298-4308, 298-4310, 298-4342 BOOM AR-1 PIECE LONG
AN ATTACHMENT

SMCS-7510 **i02420748**

NOTE	REF NO	GRAPHIC REF	PART NUMBER	QTY	PART NAME 1 2 3 4 5 6 (PRODUCT LEVEL)	SEE PAGE
	1	1	**8M-2772**	2	CLIP	
M	2	1	**8T-4133**	5	NUT (M10X1.5-THD)	
	3	1	**8T-4121**	8	WASHER-HARD (11X21X2.5-MM THK)	
	4	1	**166-1579**	3	CLIP	
	5	1	**033-8248**	3	CLIP	
M	6	1	**8T-4191**	3	BOLT (M10X1.5X16-MM)	
I	8	1	**120-7226**	1	HOSE AS	
	9	1	**3B-8489**	5	FITTING-GREASE	
	10	1	**6L-3616**	2	CONNECTOR	
	11	1	**5K-9243**	2	ELBOW-FLARED	
	12	1	**4I-4544**	1	TUBE AS	
	13	1	**4I-4543**	1	TUBE AS	
	14	1	**166-3152**	2	HOSE AS	

I-REFER TO HYDRAULIC INFORMATION SYSTEM
M-METRIC PART

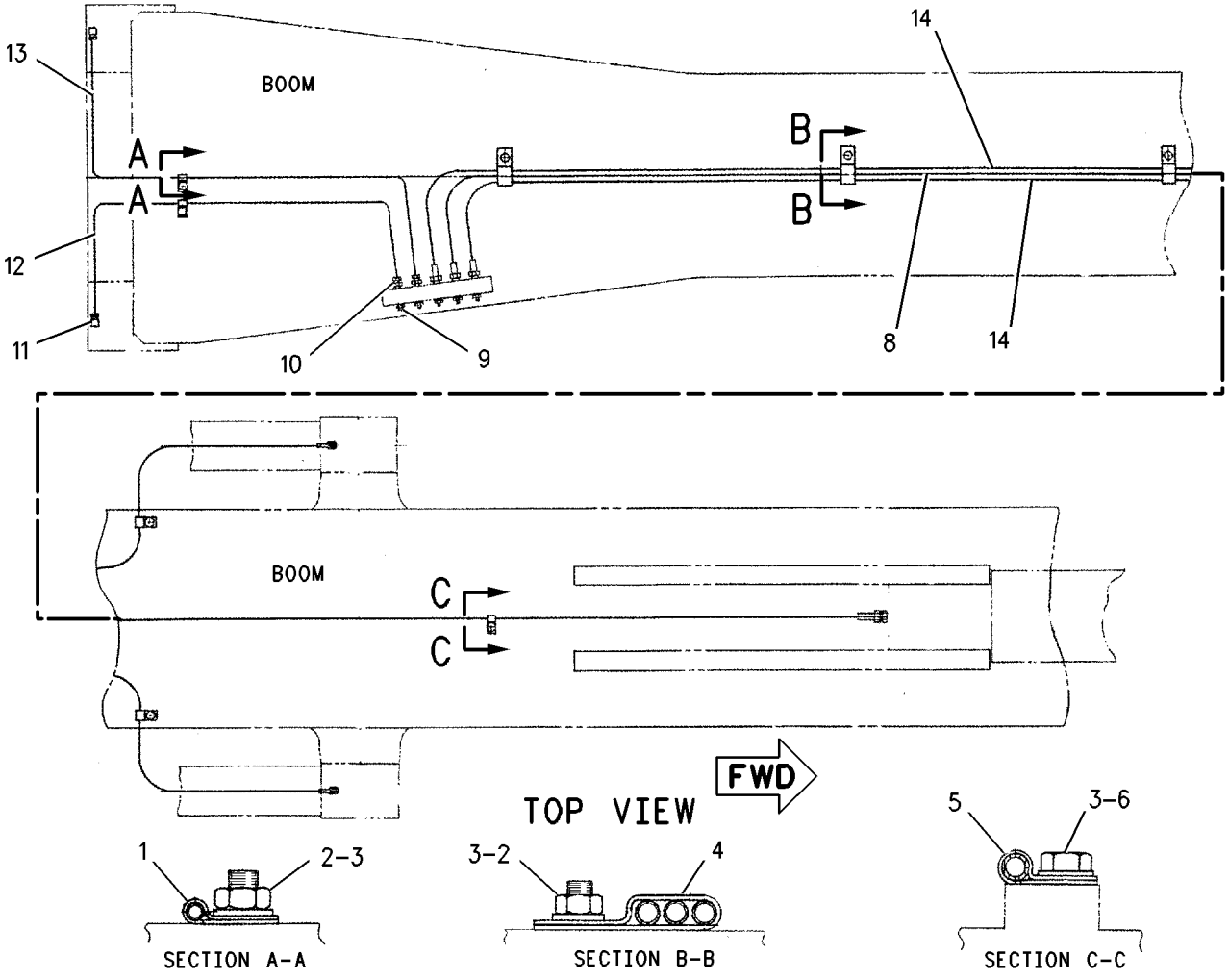

GRAPHIC #1 **<END>** g00781541

240-3858 LINKAGE AR-BUCKET—B1-FAMILY, WITH LIFTING EYE

S/N: WNE1-UP; ZMF1-UP; CWG1-UP
PART OF 314-3923, 314-3925, 314-3927, 314-3929, 338-9838, 338-9840 OPTION AR-LINKAGE
AN ATTACHMENT

SMCS-6513 **i02401797**

NOTE	PART NUMBER	QTY	PART NAME 1 2 3 4 5 6 (PRODUCT LEVEL)	SEE PAGE
Y	*242-6755*	1	CYLINDER & LINES GP-BUCKET	488
Y	*260-2288*	1	LINKAGE GP-BUCKET (B1-FAMILY, WITH LIFTING EYE)	925

Y-SEPARATE ILLUSTRATION

<END>

240-3861 LINKAGE AR-BUCKET—B1-FAMILY, WITH LIFTING EYE

S/N: WNE1-UP; ZMF1-UP
PART OF 314-3924, 314-3926, 314-3928, 314-3930, 338-9839, 338-9841 OPTION AR-LINKAGE
AN ATTACHMENT

SMCS-6513 **i02402288**

NOTE	PART NUMBER	QTY	PART NAME 1 2 3 4 5 6 (PRODUCT LEVEL)	SEE PAGE
Y	*242-6758*	1	CYLINDER & LINES GP-BUCKET	488
Y	*260-2288*	1	LINKAGE GP-BUCKET (B1-FAMILY, WITH LIFTING EYE)	925

Y-SEPARATE ILLUSTRATION

<END>

247-7331 LINKAGE AR-BUCKET—CB2-FAMILY

S/N: CWG1-UP
AN ATTACHMENT

SMCS-6513 **i02426029**

NOTE	PART NUMBER	QTY	PART NAME 1 2 3 4 5 6 (PRODUCT LEVEL)	SEE PAGE
Y	*225-4590*	1	CYLINDER & LINES GP-BUCKET	487
Y	*251-2597*	1	LINKAGE GP-BUCKET	923

Y-SEPARATE ILLUSTRATION

<END>

247-7383 LINKAGE AR-BUCKET—CB2-FAMILY

S/N: WNE1-UP; ZMF1-UP
HIGH TEMPERATURE
PART OF 338-9896 OPTION AR-LINKAGE
AN ATTACHMENT

SMCS-6513 **i02426027**

NOTE	PART NUMBER	QTY	PART NAME 1 2 3 4 5 6 (PRODUCT LEVEL)	SEE PAGE
Y	*225-4598*	1	CYLINDER & LINES GP-BUCKET	487
Y	*251-2597*	1	LINKAGE GP-BUCKET	923

Y-SEPARATE ILLUSTRATION

<END>

IMPLEMENTS

275-3707 LINKAGE AR-BUCKET—B1-FAMILY, WITH LIFTING EYE

S/N: WNE1-UP; ZMF1-UP; CWG1-UP
ACCUGRADE READY
PART OF 347-9939, 347-9940 OPTION AR-LINKAGE
AN ATTACHMENT

SMCS-6513 **i02558563**

NOTE	PART NUMBER	QTY	PART NAME 1 2 3 4 5 6 (PRODUCT LEVEL)	SEE PAGE
Y	*242-6755*	1	CYLINDER & LINES GP-BUCKET	488
Y	*282-4539*	1	LINKAGE GP-BUCKET (B1-FAMILY)	926

Y-SEPARATE ILLUSTRATION

<END>

251-2597 LINKAGE GP-BUCKET—CB2-FAMILY

S/N: WNE1-UP; ZMF1-UP; CWG1-UP
PART OF 247-7331, 247-7383 LINKAGE AR-BUCKET
AN ATTACHMENT

SMCS-6513 **i02426033**

NOTE	REF NO	GRAPHIC REF	PART NUMBER	QTY	PART NAME 1 2 3 4 5 6 (PRODUCT LEVEL)	SEE PAGE
	1	1	**3B-8489**	5	FITTING-GREASE	
M	2	1	**8T-4131**	4	NUT (M20X2.5-THD)	
	3	1	**093-0349**	2	WASHER (22X60X6-MM THK)	
	4	1	**186-5662**	1	PIN	
	5	1	**234-3927**	1	LINK AS	
	6	1	**234-3928**	1	LINK	
	7	1	**234-3930**	1	PIN	
	8	1	**234-3931**	2	PIN AS	
	9	1	**254-2996**	1	LINK & BEARING AS	
	9A	1	**228-5615**	4	BEARING-SLEEVE	
	10	1	**093-1345**	4	SEAL-O-RING	
	11	1	**166-1487**	2	SHIM (2-MM THK)	
	12	1	**166-1495**	6	SEAL-LIP TYPE	
M	13	1	**186-5649**	1	BOLT (M20X2.5X160-MM)	
M	14	1	**189-3925**	1	BOLT (M20X2.5X170-MM)	
	15	1	**8T-4123**	2	WASHER (22X35X3.5-MM THK)	
M	16	1	**8T-5460**	2	BOLT (M20X2.5X40-MM)	

M-METRIC PART

251-2597 LINKAGE GP-BUCKET *(contd.)* i02426033

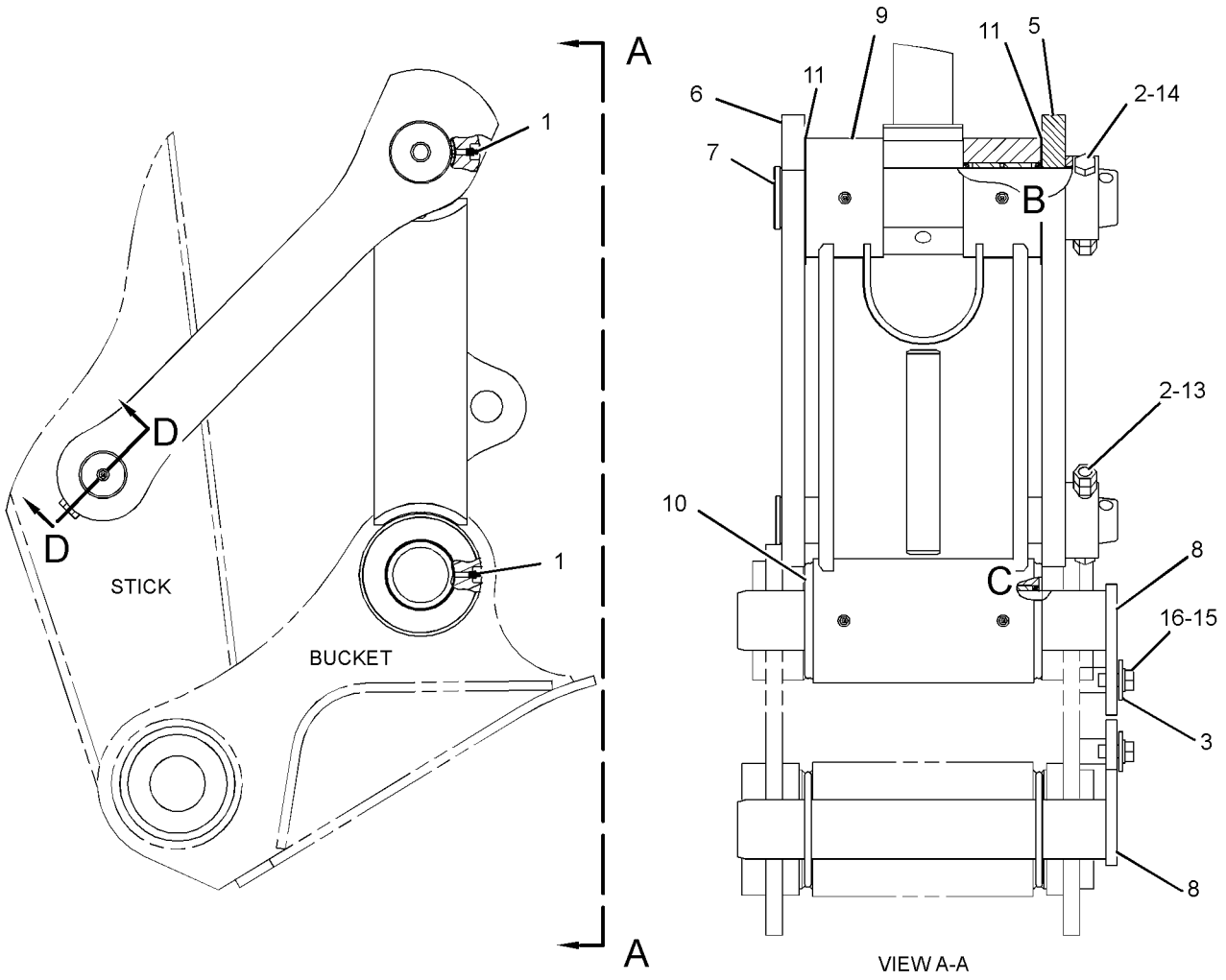

VIEW A-A

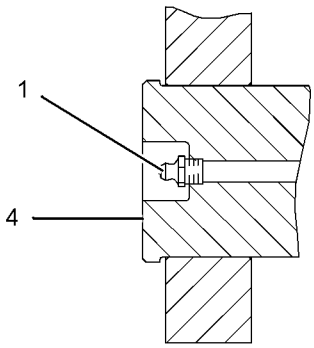

SECTION D-D

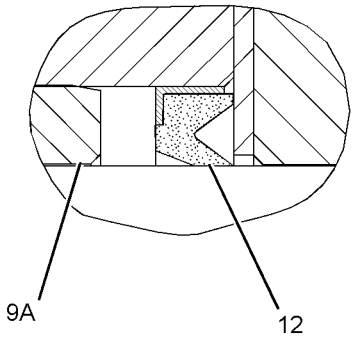

VIEW OF AREA B

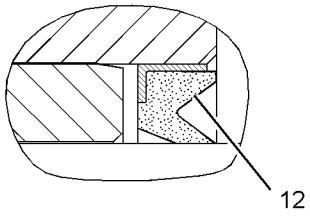

VIEW OF AREA C

GRAPHIC #1 **<END>** g01212616

260-2288 LINKAGE GP-BUCKET—B1-FAMILY, WITH LIFTING EYE

S/N: WNE1-UP; ZMF1-UP; CWG1-UP
PART OF 240-3858, 240-3861 LINKAGE AR-BUCKET
AN ATTACHMENT

SMCS-6513 **i03084609**

NOTE	REF NO	GRAPHIC REF	PART NUMBER	QTY	PART NAME 1 2 3 4 5 6 (PRODUCT LEVEL)	SEE PAGE
	1	1	**3B-8489**	5	FITTING-GREASE	
	2	1	**087-5805**	2	PIN	
	3	1	**166-1486**	2	SHIM (2-MM THK)	
	4	1	**244-4254**	1	LINK AS	
	5	1	**244-4255**	1	LINK	
	6	1	**254-3052**	1	PIN	
	7	1	**254-3053**	1	PIN	
	8	1	**260-2289**	1	LINK & BEARING AS	
	8A	1	**244-4360**	2	BEARING-SLEEVE	
	8B	1	**240-2912**	2	BEARING-SLEEVE	
	9	1	**093-1344**	4	SEAL-O-RING	
	10	1	**166-1494**	6	SEAL-LIP TYPE	
M	11	1	**236-6365**	2	BOLT (M16X2X150-MM)	
M	12	1	**188-2315**	2	BOLT (M16X2X195-MM)	
M	13	1	**8T-4132**	8	NUT (M16X2-THD)	

M-METRIC PART

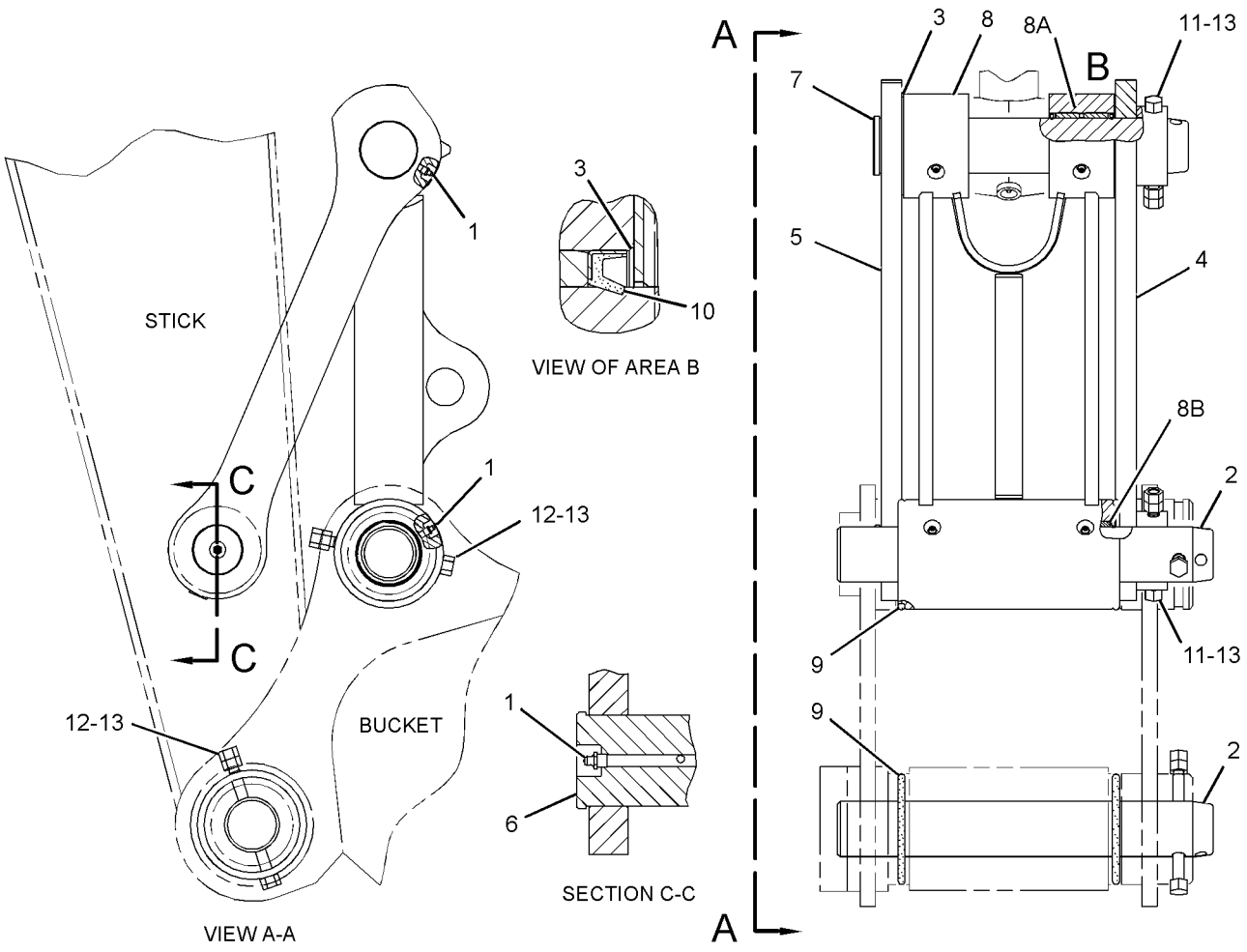

GRAPHIC #1 **<END>** g01217608

282-4539 LINKAGE GP-BUCKET–B1-FAMILY

S/N: WNE1-UP; ZMF1-UP; CWG1-UP
PART OF 275-3707 LINKAGE AR-BUCKET
AN ATTACHMENT

SMCS-6513 **i02558566**

NOTE	REF NO	GRAPHIC REF	PART NUMBER	QTY	PART NAME 1 2 3 4 5 6 (PRODUCT LEVEL)	SEE PAGE
	1	1	**3B-8489**	5	FITTING-GREASE	
	2	1	**087-5805**	2	PIN	
	3	1	**166-1486**	2	SHIM (2-MM THK)	
	4	1	**244-4255**	1	LINK	
	5	1	**254-3052**	1	PIN	
	6	1	**254-3053**	1	PIN	
	7	1	**260-2289**	1	LINK & BEARING AS	
	7A	1	**244-4360**	2	BEARING-SLEEVE	
	7B	1	**240-2912**	2	BEARING-SLEEVE	
	8	1	**282-4540**	1	LINK AS	
	9	1	**093-1344**	4	SEAL-O-RING	
	10	1	**166-1494**	6	SEAL-LIP TYPE	
M	11	1	**236-6365**	2	BOLT (M16X2X150-MM)	
M	12	1	**236-6366**	2	BOLT (M16X2X195-MM)	
M	13	1	**8T-4132**	8	NUT (M16X2-THD)	

M-METRIC PART

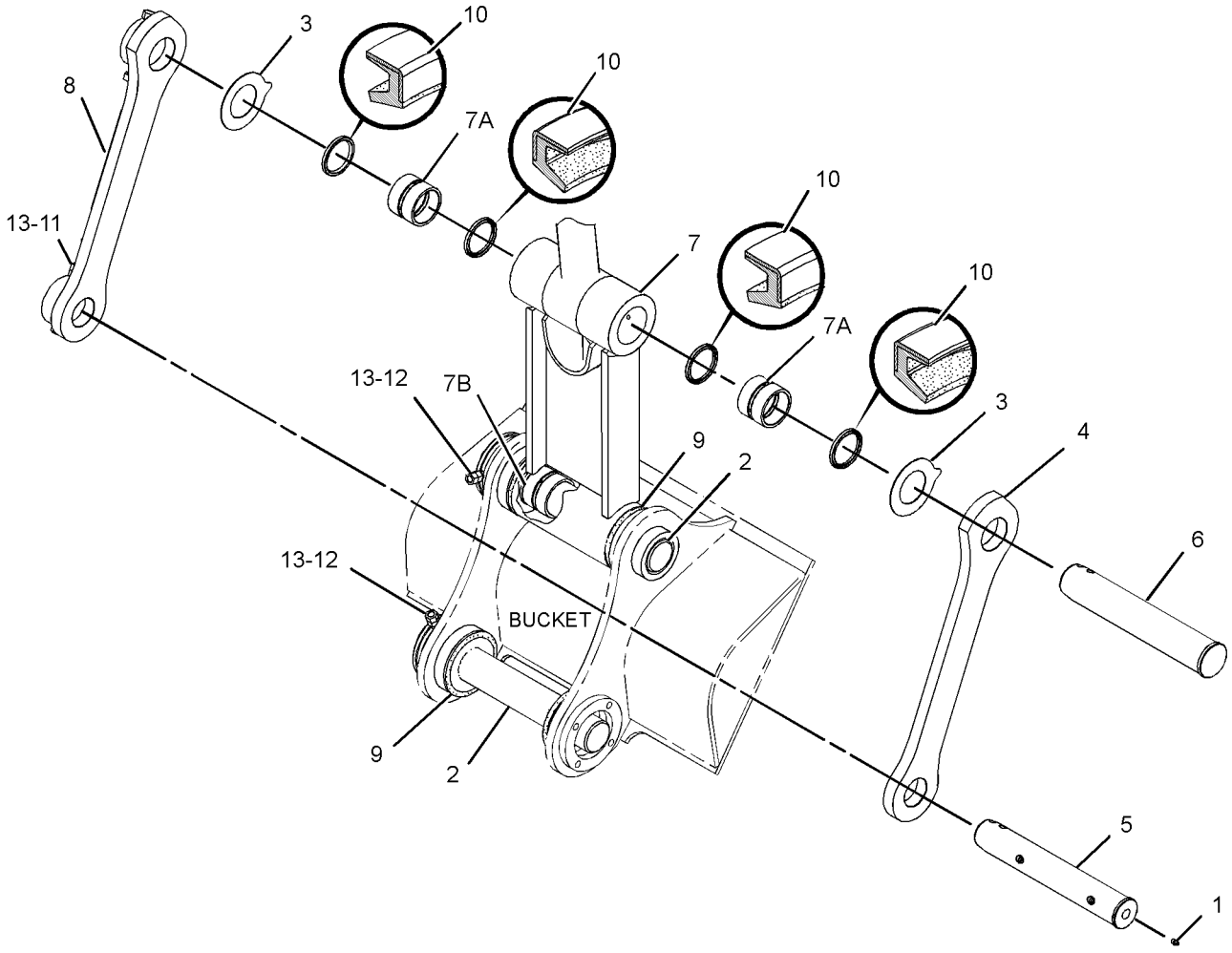

GRAPHIC #1 **<END>** g01296259

240-3843 STICK AR-HOE—REACH

S/N: CWG1-UP
1.9-M (6.2-FT). CB2-FAMILY
AN ATTACHMENT

SMCS-6502 **i02426091**

NOTE	PART NUMBER	QTY	PART NAME 1 2 3 4 5 6 (PRODUCT LEVEL)	SEE PAGE
Y	*187-5975*	1	LINES GP-BUCKET CYLINDER	596
Y	*241-7312*	1	STICK GP-HOE	931
Y-SEPARATE ILLUSTRATION				

<END>

240-3846 STICK AR-HOE—MASS

S/N: WNE1-UP; ZMF1-UP
2.4-M (7.9-FT). CB2-FAMILY
PART OF 338-9896 OPTION AR-LINKAGE
AN ATTACHMENT

SMCS-6502 **i02426089**

NOTE	PART NUMBER	QTY	PART NAME 1 2 3 4 5 6 (PRODUCT LEVEL)	SEE PAGE
Y	*248-9633*	1	LINES GP-BUCKET CYLINDER	599
Y	*241-7315*	1	STICK GP-HOE	932
Y-SEPARATE ILLUSTRATION				

<END>

240-3850 STICK AR-HOE—MASS

S/N: CWG1-UP
1.9-M (6.2-FT)
AN ATTACHMENT

SMCS-6502 **i02946685**

NOTE	PART NUMBER	QTY	PART NAME 1 2 3 4 5 6 (PRODUCT LEVEL)	SEE PAGE
Y	*187-5975*	1	LINES GP-BUCKET CYLINDER	596
Y	*241-7327*	1	STICK GP-HOE	934
Y-SEPARATE ILLUSTRATION				

<END>

240-3854 STICK AR-HOE—REACH

S/N: WNE1-UP; ZMF1-UP; CWG1-UP
2.5-M (8.2-FT). HEAVY-DUTY, B-FAMILY
PART OF 314-3923, 314-3924, 314-3925, 314-3926, 314-3927, 314-3928 OPTION AR-LINKAGE
AN ATTACHMENT

SMCS-6502 **i02426093**

NOTE	PART NUMBER	QTY	PART NAME 1 2 3 4 5 6 (PRODUCT LEVEL)	SEE PAGE
Y	*260-8011*	1	LINES GP-BUCKET CYLINDER	600
Y	*241-7309*	1	STICK GP-HOE	929
Y-SEPARATE ILLUSTRATION				

<END>

275-3702 STICK AR-HOE—REACH, ACCUGRADE READY

S/N: CWG1-UP
2.9-M (9.5-FT). B1-FAMILY
FOR USE WITH 275-3695—PAGE 905, 275-3707—PAGE 922
AN ATTACHMENT

SMCS-6502 **i02558572**

NOTE	PART NUMBER	QTY	PART NAME 1 2 3 4 5 6 (PRODUCT LEVEL)	SEE PAGE
Y	*187-5693*	1	LINES GP-BUCKET CYLINDER	595
Y	*282-4536*	1	STICK GP-HOE	935

Y-SEPARATE ILLUSTRATION

<END>

314-3727 STICK AR-HOE—HEAVY-DUTY, REACH

S/N: WNE1-UP; ZMF1-UP; CWG1-UP
2.9-M (9.5-FT). B1-FAMILY
PART OF 314-3929, 314-3930, 338-9838, 338-9839, 338-9840, 338-9841 OPTION AR-LINKAGE
AN ATTACHMENT

SMCS-6502 **i02955401**

NOTE	PART NUMBER	QTY	PART NAME 1 2 3 4 5 6 (PRODUCT LEVEL)	SEE PAGE
Y	*187-5693*	1	LINES GP-BUCKET CYLINDER	595
Y	*324-0966*	1	STICK GP-HOE	936

Y-SEPARATE ILLUSTRATION

<END>

314-3729 STICK AR-HOE—B1-FAMILY, HEAVY-DUTY

S/N: WNE1-UP; ZMF1-UP; CWG1-UP
2.9-M (9.5-FT). ACCUGRADE READY
PART OF 347-9939, 347-9940 OPTION AR-LINKAGE
AN ATTACHMENT

SMCS-6502 **i03164742**

NOTE	PART NUMBER	QTY	PART NAME 1 2 3 4 5 6 (PRODUCT LEVEL)	SEE PAGE
Y	*187-5693*	1	LINES GP-BUCKET CYLINDER	595
Y	*324-0980*	1	STICK GP-HOE	937

Y-SEPARATE ILLUSTRATION

<END>

241-7309 STICK GP-HOE—REACH

S/N: WNE1-UP; ZMF1-UP; CWG1-UP
2.5-M (8.2-FT). HEAVY-DUTY, B-FAMILY
PART OF 240-3854 STICK AR-HOE
AN ATTACHMENT

SMCS-6502 **i02586887**

NOTE	REF NO	GRAPHIC REF	PART NUMBER	QTY	PART NAME 1 2 3 4 5 6 (PRODUCT LEVEL)	SEE PAGE
	1	1	**3B-8489**	3	FITTING-GREASE	
	2	1	**4I-4811**	1	PIN AS	
	3	1	**093-0349**	2	WASHER (22X60X6-MM THK)	
	4	1	**093-0363**	1	SPACER (83X120X12-MM THK)	
	5	1	**118-5982**	1	SPACER (73X105X14-MM THK)	
	6	1	**166-1486**	2	SHIM (2-MM THK)	
	7	1	**235-7679**	2	SEAL-LIP TYPE	
	8	1	**284-7325**	1	STICK & BEARING AS	
	8A	1	**229-1096**	2	BEARING-SLEEVE	
	8B	1	**240-2913**	2	BEARING-SLEEVE	
	8C	1	**244-4277**	2	BEARING-SLEEVE	
	9	1	**166-1494**	2	SEAL-LIP TYPE	
	10	1	**166-1495**	2	SEAL-LIP TYPE	
	11	1	**4I-4809**	1	PIN AS	
	12	1	**8T-4123**	2	WASHER (22X35X3.5-MM THK)	
M	13	1	**8T-4780**	2	BOLT (M20X2.5X30-MM)	

M-METRIC PART

241-7309 **STICK GP-HOE** *(contd.)* **i02586887**

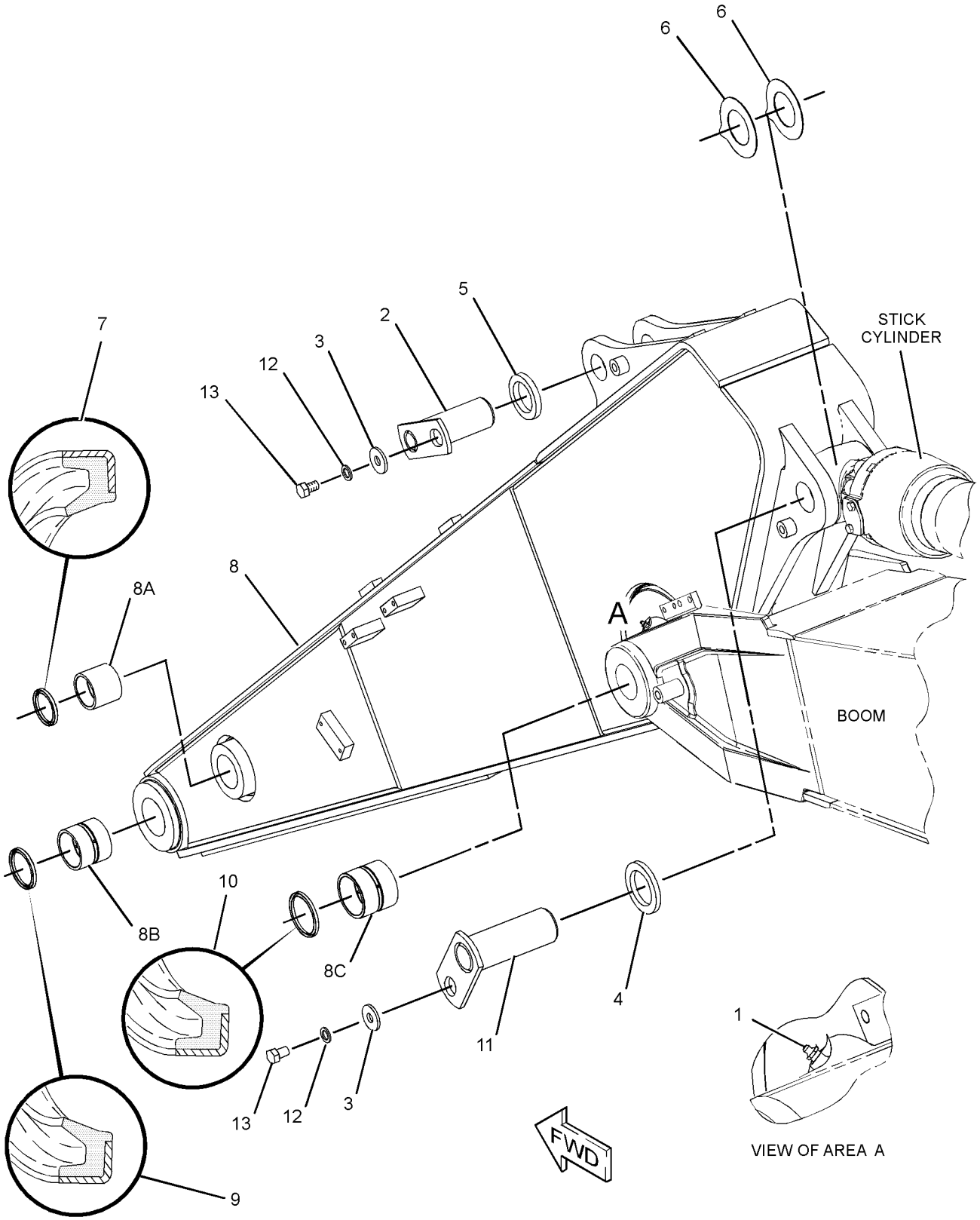

GRAPHIC #1 **<END>** g01231476

241-7312 STICK GP-HOE—REACH

S/N: CWG1-UP
1.9-M (6.2-FT). CB2-FAMILY
PART OF 240-3843 STICK AR-HOE
AN ATTACHMENT

SMCS-6502 **i02650499**

NOTE	REF NO	GRAPHIC REF	PART NUMBER	QTY	PART NAME 1 2 3 4 5 6 (PRODUCT LEVEL)	SEE PAGE
	1	1	**3B-8489**	3	FITTING-GREASE	
	2	1	**4I-4814**	1	PIN AS	
	3	1	**7Y-2496**	2	SHIM (1.6-MM THK)	
	4	1	**093-0349**	2	WASHER (22X60X6-MM THK)	
	5	1	**093-0363**	1	SPACER (83X120X12-MM THK)	
	6	1	**118-5982**	1	SPACER (73X105X14-MM THK)	
	7	1	**166-1486**	2	SHIM (2-MM THK)	
	8	1	**166-1495**	4	SEAL-LIP TYPE	
	9	1	**235-7679**	2	SEAL-LIP TYPE	
	10	1	**241-7313**	1	STICK & BEARING AS	
	10A	1	**228-5615**	2	BEARING-SLEEVE	
	10B	1	**228-5614**	2	BEARING-SLEEVE	
	10C	1	**244-4277**	2	BEARING-SLEEVE	
	11	1	**4I-4809**	1	PIN AS	
	12	1	**8T-4123**	2	WASHER (22X35X3.5-MM THK)	
M	13	1	**8T-4780**	2	BOLT (M20X2.5X30-MM)	

M-METRIC PART

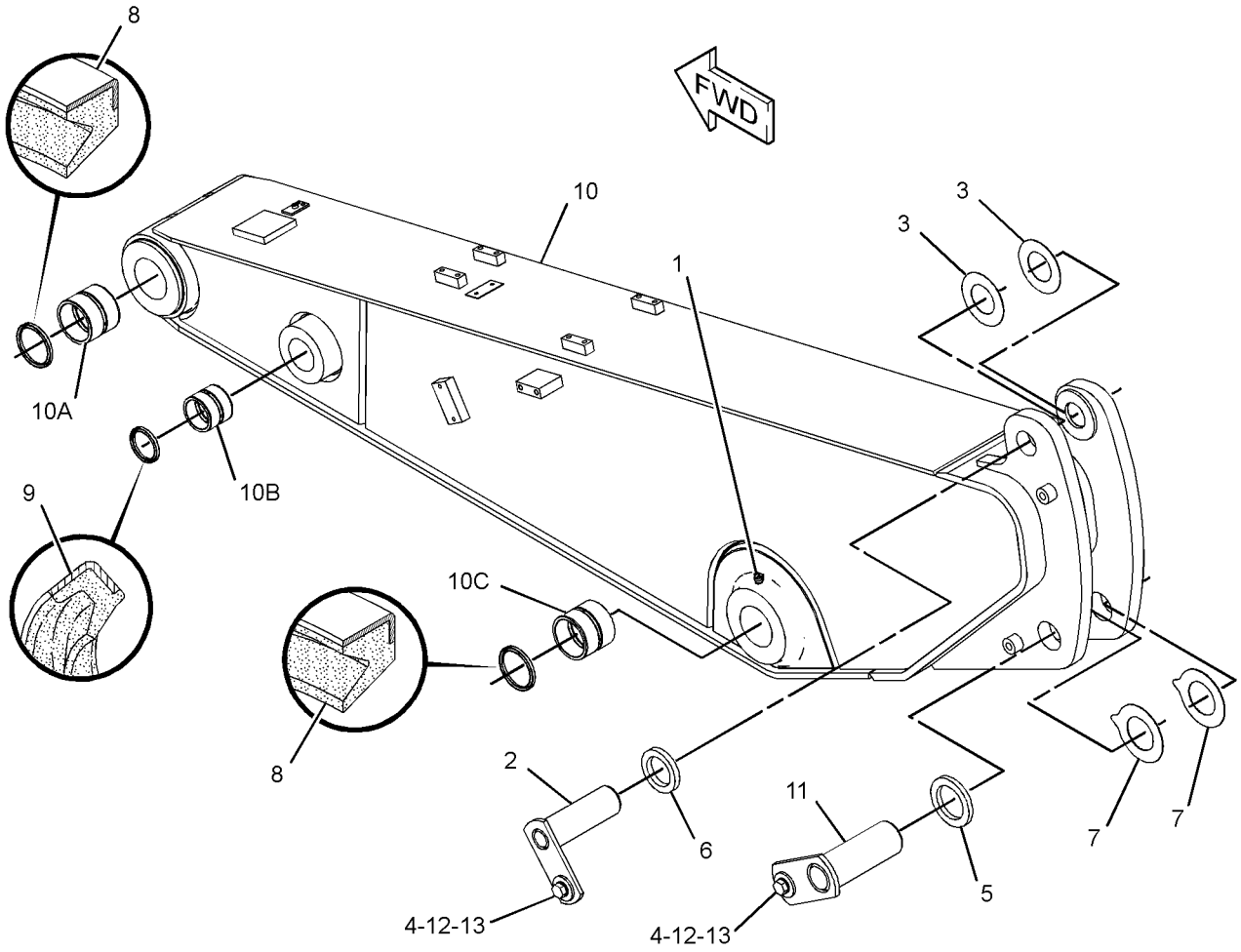

GRAPHIC #1 **<END>** g01223209

241-7315 STICK GP-HOE–MASS

S/N: WNE1-UP; ZMF1-UP
2.4-M (7.9-FT). CB2-FAMILY
PART OF 240-3846 STICK AR-HOE
AN ATTACHMENT

SMCS-6502 **i02426095**

NOTE	REF NO	GRAPHIC REF	PART NUMBER	QTY	PART NAME 1 2 3 4 5 6 (PRODUCT LEVEL)	SEE PAGE
	1	1	**3B-8489**	3	FITTING-GREASE	
	2	1	**4I-4811**	1	PIN AS	
	3	1	**093-0349**	2	WASHER (22X60X6-MM THK)	
	4	1	**093-0363**	1	SPACER (83X120X12-MM THK)	
	5	1	**118-5982**	1	SPACER (73X105X14-MM THK)	
	6	1	**166-1486**	2	SHIM (2-MM THK)	
	7	1	**166-1495**	4	SEAL-LIP TYPE	
	8	1	**235-7679**	2	SEAL-LIP TYPE	
	9	1	**241-7316**	1	STICK & BEARING AS	
	9A	1	**228-5615**	2	BEARING-SLEEVE	
	9B	1	**228-5614**	2	BEARING-SLEEVE	
	9C	1	**244-4277**	2	BEARING-SLEEVE	
	10	1	**4I-4809**	1	PIN AS	
	11	1	**8T-4123**	2	WASHER (22X35X3.5-MM THK)	
M	12	1	**8T-4780**	2	BOLT (M20X2.5X30-MM)	

M-METRIC PART

241-7315 **STICK GP-HOE** *(contd.)* **i02426095**

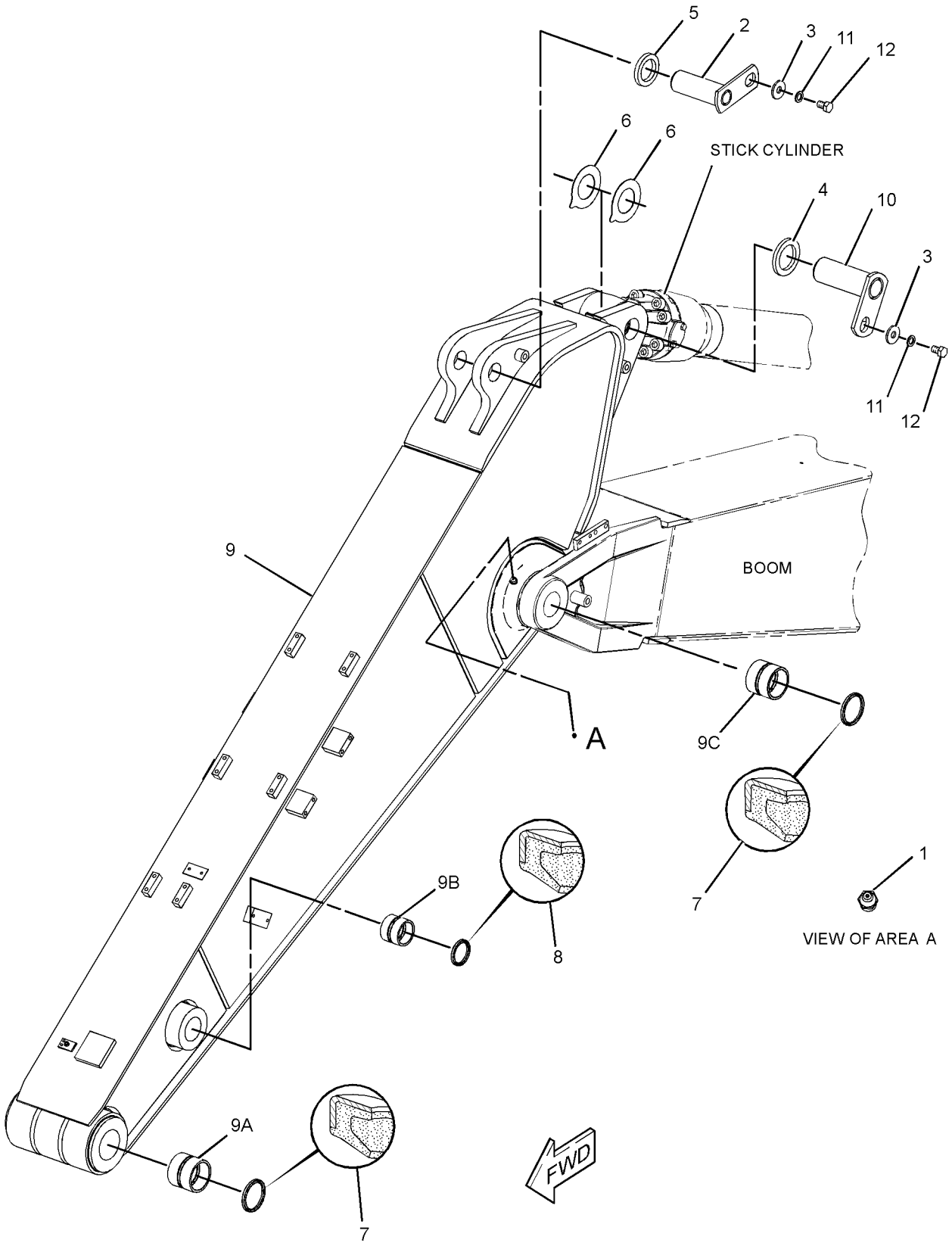

GRAPHIC #1 **<END>** g01230123

IMPLEMENTS

241-7327 STICK GP-HOE

S/N: CWG1-UP
1.9-M (6.2-FT)
PART OF 240-3850 STICK AR-HOE
AN ATTACHMENT

SMCS-6502 **i02946694**

NOTE	REF NO	GRAPHIC REF	PART NUMBER	QTY	PART NAME 1 2 3 4 5 6 (PRODUCT LEVEL)	SEE PAGE
	1	1	**3B-8489**	3	FITTING-GREASE	
	2	1	**4I-4814**	1	PIN AS	
B	3	1	**7Y-2496**	2	SHIM (1.6-MM THK)	
	4	1	**093-0349**	2	WASHER (22X60X6-MM THK)	
	5	1	**093-0363**	1	SPACER (83X120X12-MM THK)	
	6	1	**118-5982**	1	SPACER (73X105X14-MM THK)	
B	7	1	**166-1486**	2	SHIM (2-MM THK)	
	8	1	**166-1495**	4	SEAL-LIP TYPE	
	9	1	**235-7679**	2	SEAL-LIP TYPE	
	10	1	**241-7328**	1	STICK & BEARING AS	
	10A	1	**228-5614**	2	BEARING-SLEEVE	
	10B	1	**228-5615**	2	BEARING-SLEEVE	
	10C	1	**244-4277**	2	BEARING-SLEEVE	
	11	1	**4I-4809**	1	PIN AS	
	12	1	**8T-4123**	2	WASHER (22X35X3.5-MM THK)	
M	13	1	**8T-4780**	2	BOLT (M20X2.5X30-MM)	

B-USE AS REQUIRED
M-METRIC PART

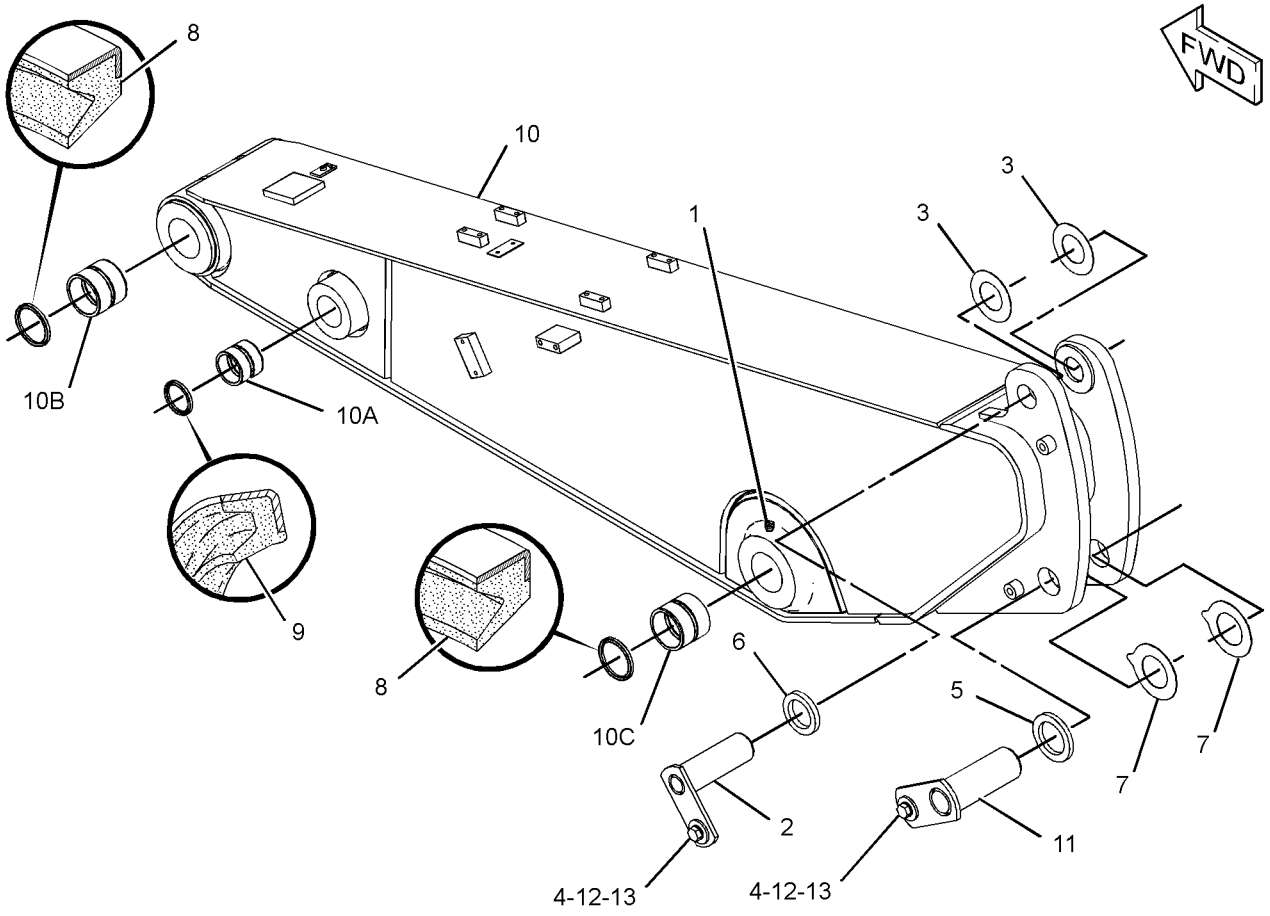

GRAPHIC #1 **<END>** g01231354

282-4536 STICK GP-HOE

S/N: CWG1-UP
2.9-M (9.5-FT) REACH. ACCUGRADE READY
PART OF 275-3702 STICK AR-HOE
AN ATTACHMENT

SMCS-6502 **i02558576**

NOTE	REF NO	GRAPHIC REF	PART NUMBER	QTY	PART NAME 1 2 3 4 5 6 (PRODUCT LEVEL)	SEE PAGE
	1	1	**3B-8489**	3	FITTING-GREASE	
	2	1	**4I-4811**	1	PIN AS	
	3	1	**093-0349**	2	WASHER (22X60X6-MM THK)	
	4	1	**093-0363**	1	SPACER (83X120X12-MM THK)	
	5	1	**118-5982**	1	SPACER (73X105X14-MM THK)	
	6	1	**166-1486**	2	SHIM (2-MM THK)	
	7	1	**166-1494**	2	SEAL-LIP TYPE	
	8	1	**235-7679**	2	SEAL-LIP TYPE	
	9	1	**282-4537**	1	STICK & BEARING AS	
	9A	1	**229-1096**	2	BEARING-SLEEVE	
	9B	1	**240-2913**	2	BEARING-SLEEVE	
	9C	1	**244-4277**	2	BEARING-SLEEVE	
	10	1	**166-1495**	2	SEAL-LIP TYPE	
	11	1	**4I-4809**	1	PIN AS	
	12	1	**8T-4123**	2	WASHER (22X35X3.5-MM THK)	
M	13	1	**8T-4780**	2	BOLT (M20X2.5X30-MM)	

M-METRIC PART

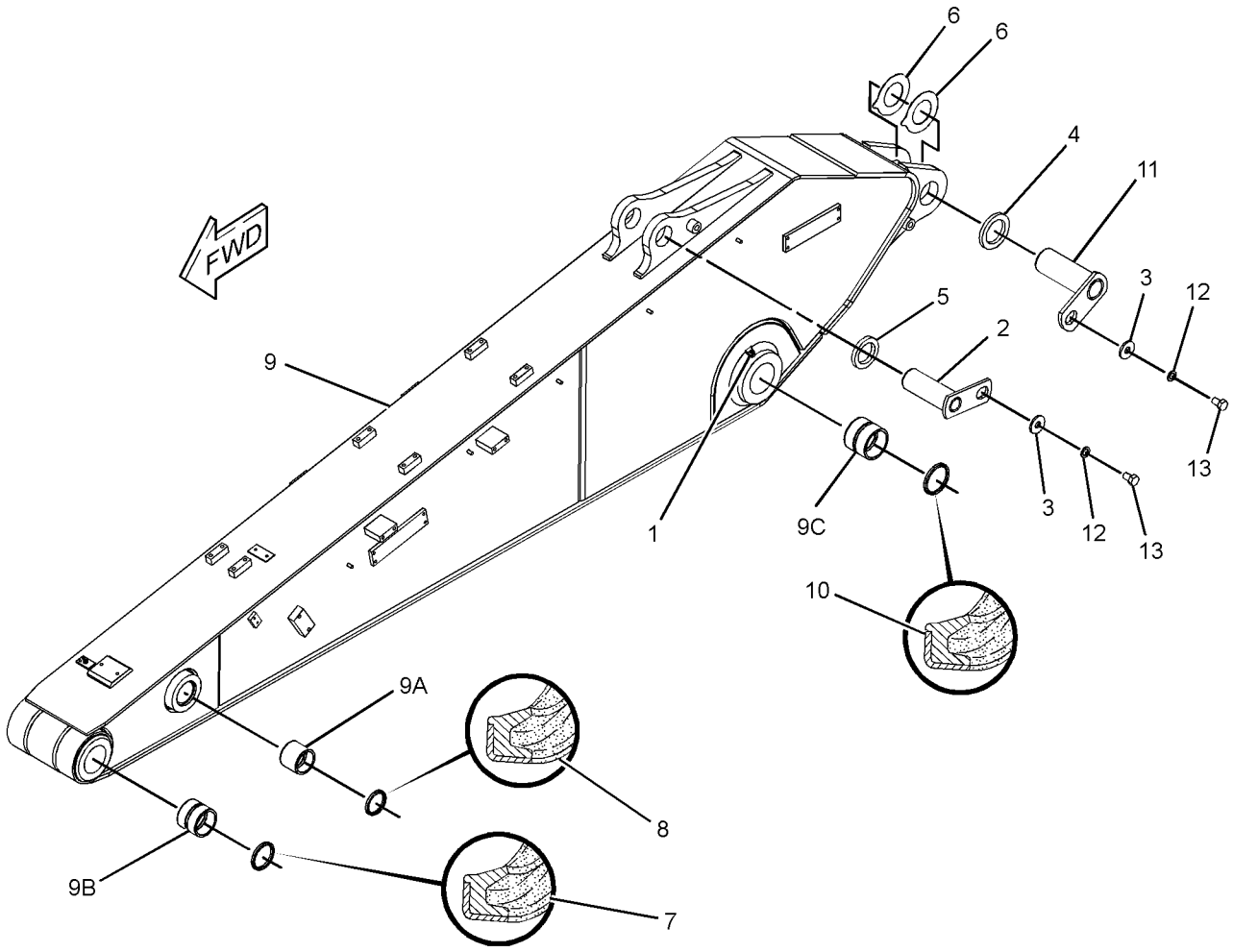

GRAPHIC #1 **<END>** g01289862

IMPLEMENTS

324-0966 STICK GP-HOE

S/N: WNE1-UP; ZMF1-UP; CWG1-UP
2.9-M (9.5-FT) REACH
PART OF 314-3727 STICK AR-HOE
AN ATTACHMENT

SMCS-6502 **i02955402**

NOTE	REF NO	GRAPHIC REF	PART NUMBER	QTY	PART NAME 1 2 3 4 5 6 (PRODUCT LEVEL)	SEE PAGE
	1	1	**3B-8489**	3	FITTING-GREASE	
	2	1	**4I-4809**	1	PIN AS	
	3	1	**4I-4811**	1	PIN AS	
	4	1	**093-0349**	2	WASHER (22X60X6-MM THK)	
	5	1	**093-0363**	1	SPACER (83X120X12-MM THK)	
	6	1	**118-5982**	1	SPACER (73X105X14-MM THK)	
	7	1	**166-1486**	2	SHIM (2-MM THK)	
	8	1	**166-1494**	2	SEAL-LIP TYPE	
	9	1	**166-1495**	2	SEAL-LIP TYPE	
	10	1	**235-7679**	2	SEAL-LIP TYPE	
	11	1	**324-0968**	1	STICK & BEARING AS	
	11A	1	**229-1096**	2	BEARING-SLEEVE	
	11B	1	**240-2913**	2	BEARING-SLEEVE	
	11C	1	**244-4277**	2	BEARING-SLEEVE	
	12	1	**8T-4123**	2	WASHER (22X35X3.5-MM THK)	
M	13	1	**8T-4780**	2	BOLT (M20X2.5X30-MM)	

M-METRIC PART

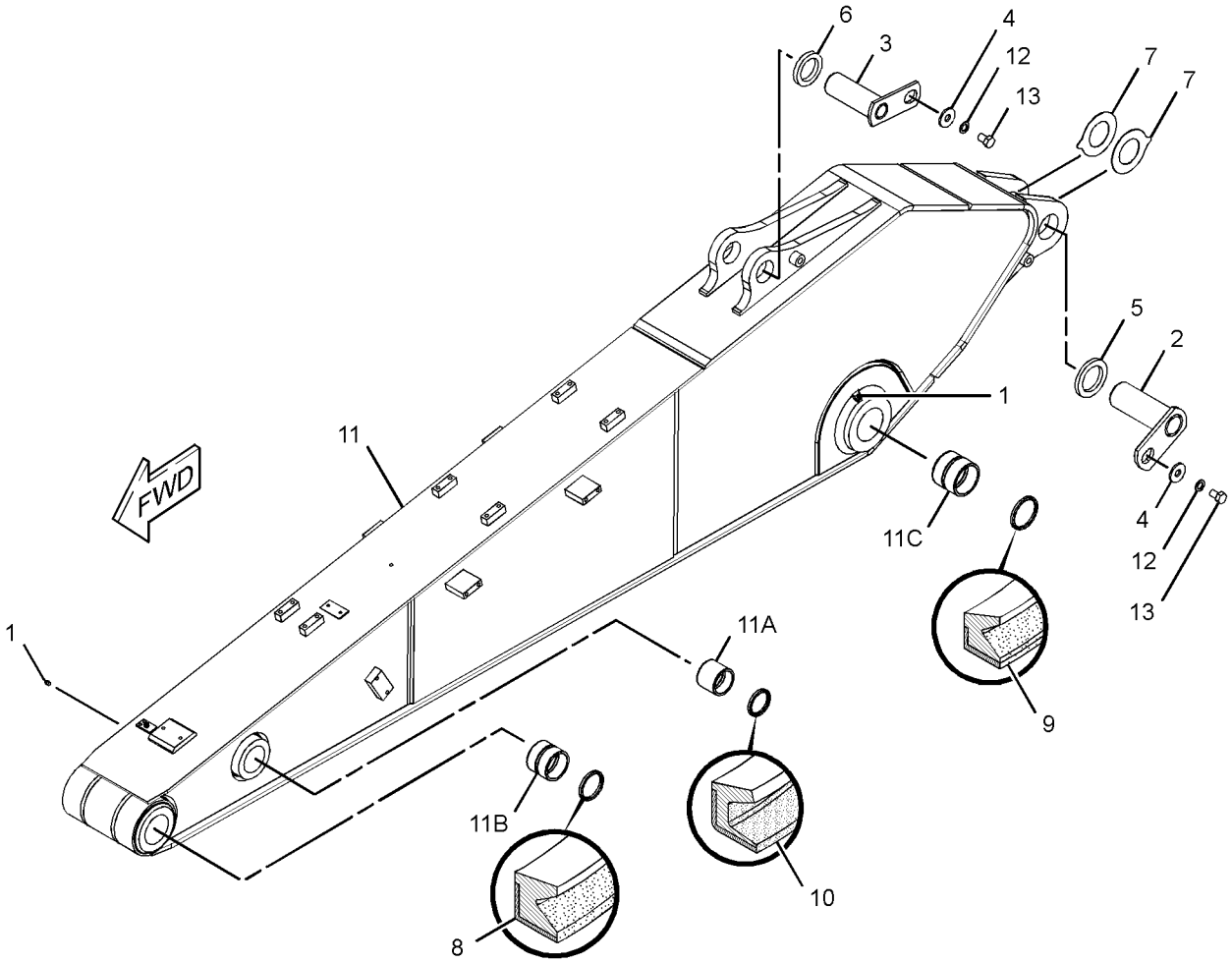

GRAPHIC #1 **<END>** g01475955

324-0980 STICK GP-HOE–ACCUGRADE READY

S/N: WNE1-UP; ZMF1-UP; CWG1-UP
2.9-M (9.5-FT)
PART OF 314-3729 STICK AR-HOE
AN ATTACHMENT

SMCS-6502 **i03082060**

NOTE	REF NO	GRAPHIC REF	PART NUMBER	QTY	PART NAME 1 2 3 4 5 6 (PRODUCT LEVEL)	SEE PAGE
	1	1	**3B-8489**	3	FITTING-GREASE	
	2	1	**4I-4809**	1	PIN AS	
	3	1	**4I-4811**	1	PIN AS	
	4	1	**093-0349**	2	WASHER (22X60X6-MM THK)	
	5	1	**093-0363**	1	SPACER (83X120X12-MM THK)	
	6	1	**118-5982**	1	SPACER (73X105X14-MM THK)	
	7	1	**166-1486**	2	SHIM (2-MM THK)	
	8	1	**166-1494**	2	SEAL-LIP TYPE	
	9	1	**166-1495**	2	SEAL-LIP TYPE	
	10	1	**235-7679**	2	SEAL-LIP TYPE	
	11	1	**324-0983**	1	STICK & BEARING AS	
	11A	1	**229-1096**	2	BEARING-SLEEVE	
	11B	1	**240-2913**	2	BEARING-SLEEVE	
	11C	1	**244-4277**	2	BEARING-SLEEVE	
	12	1	**8T-4123**	2	WASHER (22X35X3.5-MM THK)	
M	13	1	**8T-4780**	2	BOLT (M20X2.5X30-MM)	

M-METRIC PART

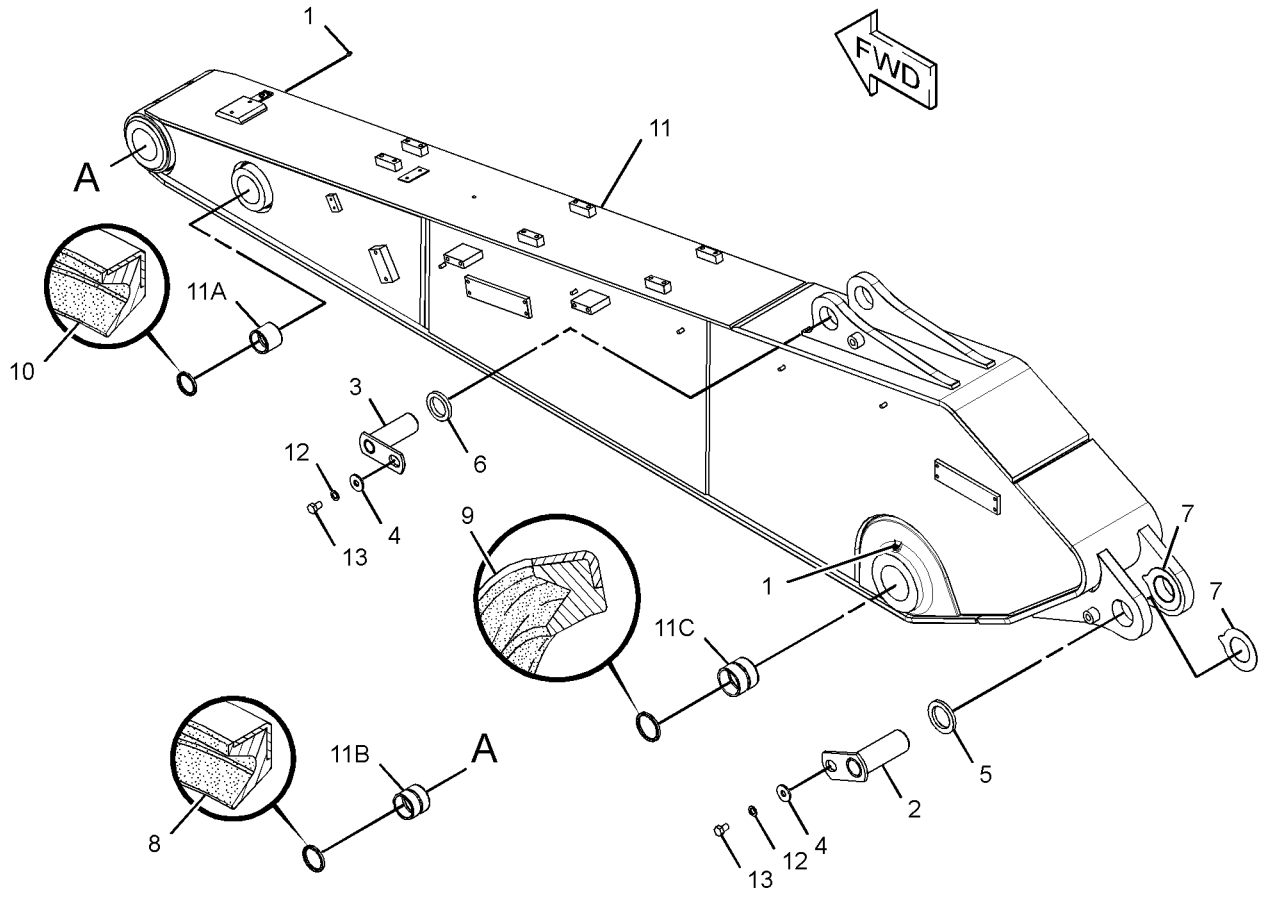

GRAPHIC #1 **<END>** g01624044

WORK TOOLS

7Y-2219 ADJUSTER GP-BUCKET—B-FAMILY

S/N: WNE1-UP; ZMF1-UP; CWG1-UP
PART OF 251-3870, 251-3871, 251-3872, 251-3873, 251-3874, 251-3875, 251-3877, 251-5545, 251-5546, 252-8926 BUCKET & ADJUSTER GP
AN ATTACHMENT

SMCS-6513, 6700 **i01834945**

NOTE	REF NO	GRAPHIC REF	PART NUMBER	QTY	PART NAME 1 2 3 4 5 6 (PRODUCT LEVEL)	SEE PAGE
B	1	1	**086-0322**	6	SHIM (1-MM THK)	
B	2	1	**086-0321**	4	SHIM (0.5-MM THK)	
	3	1	**193-5014**	1	PIN	
	4	1	**134-8948**	1	PLATE	
M	5	1	**8T-4193**	4	BOLT (M16X2X50-MM)	
	6	1	**9X-8257**	4	WASHER (17.5X30X3.5-MM THK)	
	7	1	**193-5015**	1	FLANGE	

B-USE AS REQUIRED
M-METRIC PART

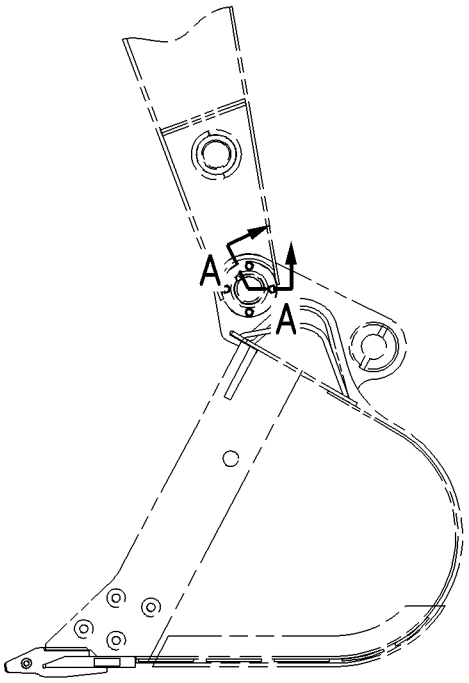

RIGHT SIDE VIEW

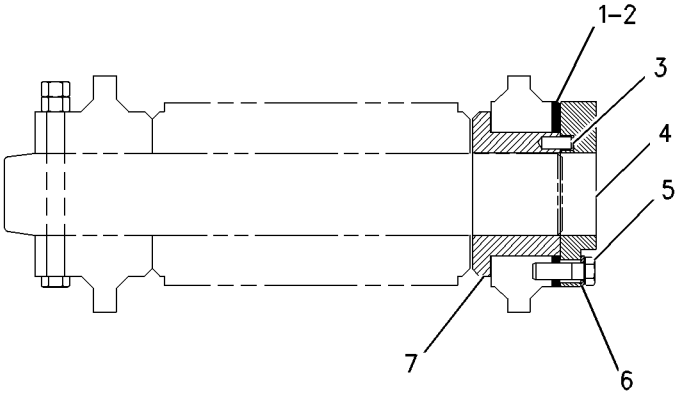

*XTR1

GRAPHIC #1 **<END>** g00705038

WORK TOOLS

251-3870 BUCKET & ADJUSTER GP—EXCAVATION, B-FAMILY

S/N: WNE1-UP; ZMF1-UP; CWG1-UP
1000-MM (39.5-IN) WIDE X 0.86-CU-M (1.1-CU YD) CAPACITY.
K-80 ADAPTERS, QTY OF 4
AN ATTACHMENT

SMCS-6503, 6513 **i03648484**

NOTE	PART NUMBER	QTY	PART NAME 1 2 3 4 5 6 (PRODUCT LEVEL)	SEE PAGE
Y	**7Y-2219**	1	ADJUSTER GP-BUCKET (B-FAMILY)	938
Y	*251-3922*	1	BUCKET AS-EXCAVATION (B-FAMILY)	945
	2C-9259	2	PLATE-IDENTIFICATION (CAT)	
			(NAMEPLATE, ONE EACH ON RH & LH SIDES OF BUCKET)	

Y-SEPARATE ILLUSTRATION

<END>

251-3871 BUCKET & ADJUSTER GP—EXCAVATION, B-FAMILY

S/N: WNE1-UP; ZMF1-UP; CWG1-UP
1200-MM (47.24-IN) WIDE X 1.08-CU M (1.41-CU YD) CAPACITY.
K-80 ADAPTERS, QTY OF 5
AN ATTACHMENT

SMCS-6503, 6513 **i03592187**

NOTE	REF NO	GRAPHIC REF	PART NUMBER	QTY	PART NAME 1 2 3 4 5 6 (PRODUCT LEVEL)	SEE PAGE
	1	1	**2C-9259**	2	PLATE-IDENTIFICATION (CAT)	
Y	2	1	**7Y-2219**	1	ADJUSTER GP-BUCKET (B-FAMILY)	938
Y	3	1	*251-3923*	1	BUCKET AS-EXCAVATION (B-FAMILY)	946

Y-SEPARATE ILLUSTRATION

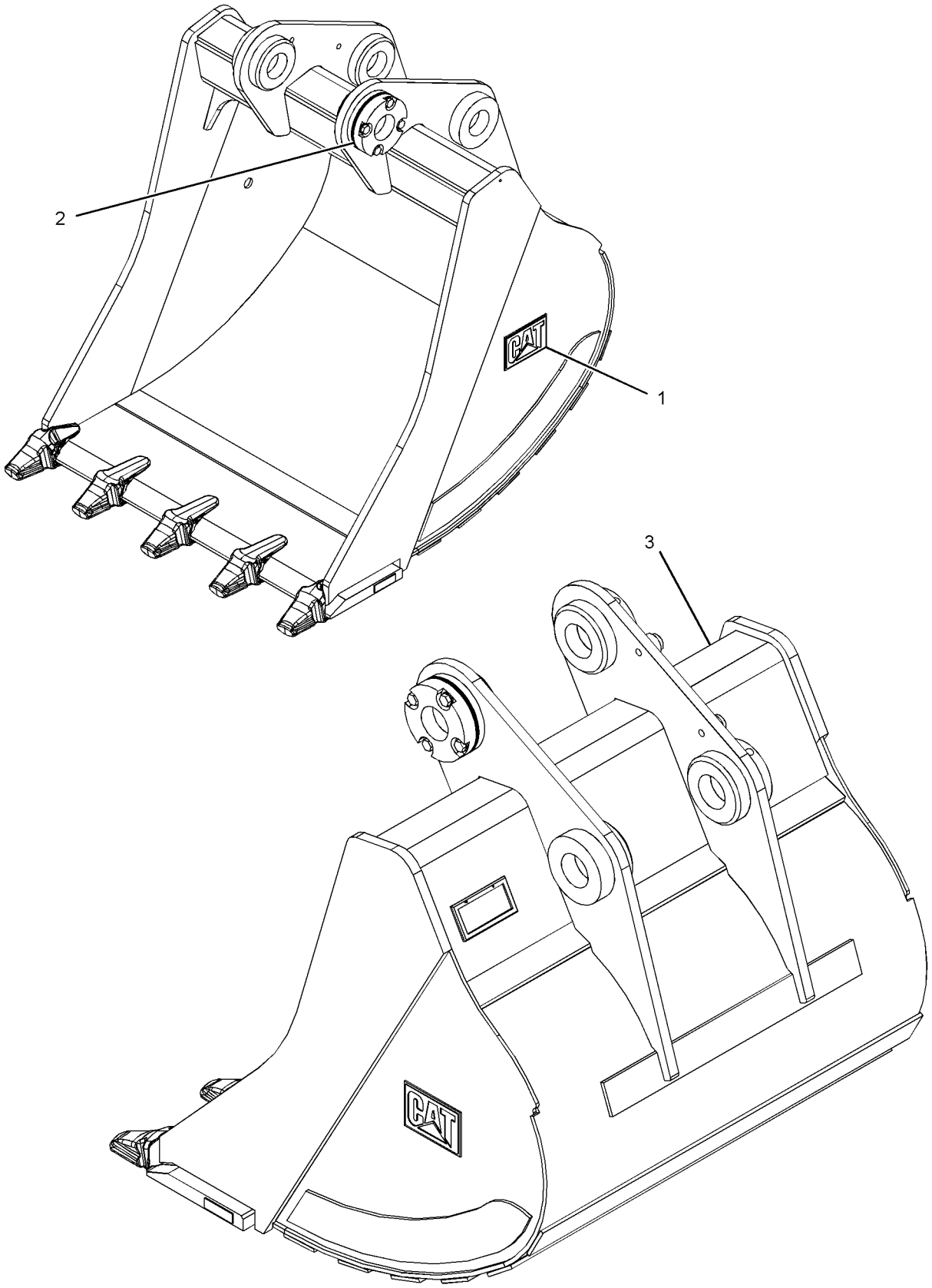

GRAPHIC #1 **<END>** g01947367

251-3872 BUCKET & ADJUSTER GP—EXCAVATION, B-FAMILY

S/N: WNE1-UP; ZMF1-UP; CWG1-UP
1250-MM (49.3-IN) WIDE X 1.13-CU M (1.48-CU YD) CAPACITY.
K-80 ADAPTERS, QTY OF 5
AN ATTACHMENT

SMCS-6503, 6513 **i03648447**

NOTE	PART NUMBER	QTY	PART NAME 1 2 3 4 5 6 (PRODUCT LEVEL)	SEE PAGE
Y	**7Y-2219**	1	ADJUSTER GP-BUCKET (B-FAMILY)	938
Y	*251-3924*	1	BUCKET AS-EXCAVATION (B-FAMILY)	947
	2C-9259	2	PLATE-IDENTIFICATION (CAT)	
			(NAMEPLATE, ONE EACH ON RH & LH SIDES OF BUCKET)	

Y-SEPARATE ILLUSTRATION

<END>

251-3873 BUCKET & ADJUSTER GP—EXCAVATION, B-FAMILY

S/N: WNE1-UP; ZMF1-UP; CWG1-UP
1300-MM (51.2-IN) WIDE X 1.19-CU M (1.56-CU YD) CAPACITY.
K-80 ADAPTERS, QTY OF 5
AN ATTACHMENT

SMCS-6503, 6513 **i03648443**

NOTE	PART NUMBER	QTY	PART NAME 1 2 3 4 5 6 (PRODUCT LEVEL)	SEE PAGE
Y	**7Y-2219**	1	ADJUSTER GP-BUCKET (B-FAMILY)	938
Y	*251-3925*	1	BUCKET AS-EXCAVATION (B-FAMILY)	948
	2C-9259	2	PLATE-IDENTIFICATION (CAT)	
			(NAMEPLATE, ONE EACH ON RH & LH SIDES OF BUCKET)	

Y-SEPARATE ILLUSTRATION

<END>

251-3874 BUCKET & ADJUSTER GP—EXCAVATION, B-FAMILY

S/N: WNE1-UP; ZMF1-UP; CWG1-UP
1400-MM (55.3-IN) WIDE X 1.3-CU M (1.7-CU YD) CAPACITY.
K-80 ADAPTERS, QTY OF 5
AN ATTACHMENT

SMCS-6503, 6513 **i03648440**

NOTE	PART NUMBER	QTY	PART NAME 1 2 3 4 5 6 (PRODUCT LEVEL)	SEE PAGE
Y	**7Y-2219**	1	ADJUSTER GP-BUCKET (B-FAMILY)	938
Y	*251-3926*	1	BUCKET AS-EXCAVATION (B-FAMILY)	949
	2C-9259	2	PLATE-IDENTIFICATION (CAT)	
			(NAMEPLATE, ONE EACH ON RH & LH SIDES OF BUCKET)	

Y-SEPARATE ILLUSTRATION

<END>

251-3875 BUCKET & ADJUSTER GP—EXCAVATION, B-FAMILY

S/N: WNE1-UP; ZMF1-UP; CWG1-UP
1500-MM (59-IN) WIDE X 1.41-CU M (1.84-CU YD) CAPACITY.
K-80 ADAPTERS, QTY OF 5
AN ATTACHMENT

SMCS-6503, 6513 **i03648435**

NOTE	PART NUMBER	QTY	PART NAME 1 2 3 4 5 6 (PRODUCT LEVEL)	SEE PAGE
Y	**7Y-2219**	1	ADJUSTER GP-BUCKET (B-FAMILY)	938
Y	*251-3927*	1	BUCKET AS-EXCAVATION (B-FAMILY)	950
	2C-9259	2	PLATE-IDENTIFICATION (CAT)	
			(NAMEPLATE, ONE EACH ON RH & LH SIDES OF BUCKET)	

Y-SEPARATE ILLUSTRATION

<END>

251-3877 BUCKET & ADJUSTER GP—EXTREME EXCAVATION, B-FAMILY

S/N: WNE1-UP; ZMF1-UP; CWG1-UP
1250-MM (49.3-IN) WIDE X 1.13-CU M (1.48-CU YD) CAPACITY.
K-90 ADAPTERS, QTY OF 4
AN ATTACHMENT

SMCS-6503, 6513 **i03653552**

NOTE	PART NUMBER	QTY	PART NAME 1 2 3 4 5 6 (PRODUCT LEVEL)	SEE PAGE
Y	**7Y-2219**	1	ADJUSTER GP-BUCKET (B-FAMILY)	938
Y	*251-3929*	1	BUCKET AS-EXTREME EXCAVATION (B-FAMILY)	952
	2C-9259	2	PLATE-IDENTIFICATION (CAT)	
			(NAMEPLATE, ONE EACH ON RH & LH SIDES OF BUCKET)	

Y-SEPARATE ILLUSTRATION

<END>

251-5545 BUCKET & ADJUSTER GP—EXTREME EXCAVATION, B-FAMILY

S/N: WNE1-UP; ZMF1-UP; CWG1-UP
1300-MM (51.2-IN) WIDE X 1.19-CU M (1.56-CU YD) CAPACITY.
K-90 ADAPTERS, QTY OF 5
AN ATTACHMENT

SMCS-6503, 6513 **i03648429**

NOTE	PART NUMBER	QTY	PART NAME 1 2 3 4 5 6 (PRODUCT LEVEL)	SEE PAGE
Y	**7Y-2219**	1	ADJUSTER GP-BUCKET (B-FAMILY)	938
Y	*251-5547*	1	BUCKET AS-EXTREME EXCAVATION (B-FAMILY)	953
	2C-9259	2	PLATE-IDENTIFICATION (CAT)	
			(NAMEPLATE, ONE EACH ON RH & LH SIDES OF BUCKET)	

Y-SEPARATE ILLUSTRATION

<END>

251-5546 BUCKET & ADJUSTER GP–EXTREME EXCAVATION, B-FAMILY

S/N: WNE1-UP; ZMF1-UP; CWG1-UP
1400-MM (55.2-IN) WIDE X 1.3-CU M (1.7-CU YD) CAPACITY.
K-90 ADAPTERS, QTY OF 5
AN ATTACHMENT

SMCS-6503, 6513 **i03648426**

NOTE	PART NUMBER	QTY	PART NAME 1 2 3 4 5 6 (PRODUCT LEVEL)	SEE PAGE
Y	**7Y-2219**	1	ADJUSTER GP-BUCKET (B-FAMILY)	938
Y	*251-5548*	1	BUCKET AS-EXTREME EXCAVATION (B-FAMILY)	954
	2C-9259	2	PLATE-IDENTIFICATION (CAT)	
			(NAMEPLATE, ONE EACH ON RH & LH SIDES OF BUCKET)	
Y-SEPARATE ILLUSTRATION				

<END>

252-8926 BUCKET & ADJUSTER GP–EXCAVATION, B-FAMILY

S/N: WNE1-UP; ZMF1-UP; CWG1-UP
600-MM (23.7-IN) WIDE X 0.44-CU M (0.58-CU YD) CAPACITY.
K-80 ADAPTERS, QTY OF 3
AN ATTACHMENT

SMCS-6503, 6513 **i03652478**

NOTE	PART NUMBER	QTY	PART NAME 1 2 3 4 5 6 (PRODUCT LEVEL)	SEE PAGE
Y	**7Y-2219**	1	ADJUSTER GP-BUCKET (B-FAMILY)	938
Y	*252-8938*	1	BUCKET AS-EXCAVATION (B-FAMILY)	951
	2C-9259	2	PLATE-IDENTIFICATION (CAT)	
			(NAMEPLATE, ONE EACH ON RH & LH SIDES OF BUCKET)	
Y-SEPARATE ILLUSTRATION				

<END>

251-3922 BUCKET AS-EXCAVATION–B-FAMILY

S/N: WNE1-UP; ZMF1-UP; CWG1-UP
1000-MM (39.5-IN) WIDE X 0.86-CU M (1.1-CU YD) CAPACITY.
K-80 ADAPTERS, QTY OF 4
PART OF 251-3870 BUCKET & ADJUSTER GP
AN ATTACHMENT

SMCS-6523 **i03653172**

NOTE	REF NO	GRAPHIC REF	PART NUMBER	QTY	PART NAME 1 2 3 4 5 6 (PRODUCT LEVEL)	SEE PAGE
	1	1	**251-8662**	1	EDGE AS	
	1A	1	**220-9084**	2	ADAPTER-TIP (K-80, 2-STRAP, CENTER)	
	1B	1	**220-9085**	1	ADAPTER-TIP (K-80, 2-STRAP, RH)	
	1C	1	**220-9086**	1	ADAPTER-TIP (K-80, 2-STRAP, LH)	
	1D	1	**8P-9770**	1	PLATE	
	2	1	**251-8673**	6	PLATE-WEAR	
	3	1	**251-3523**	2	PLATE-WEAR	
	4	1	**251-8683**	1	PLATE AS-BOX	

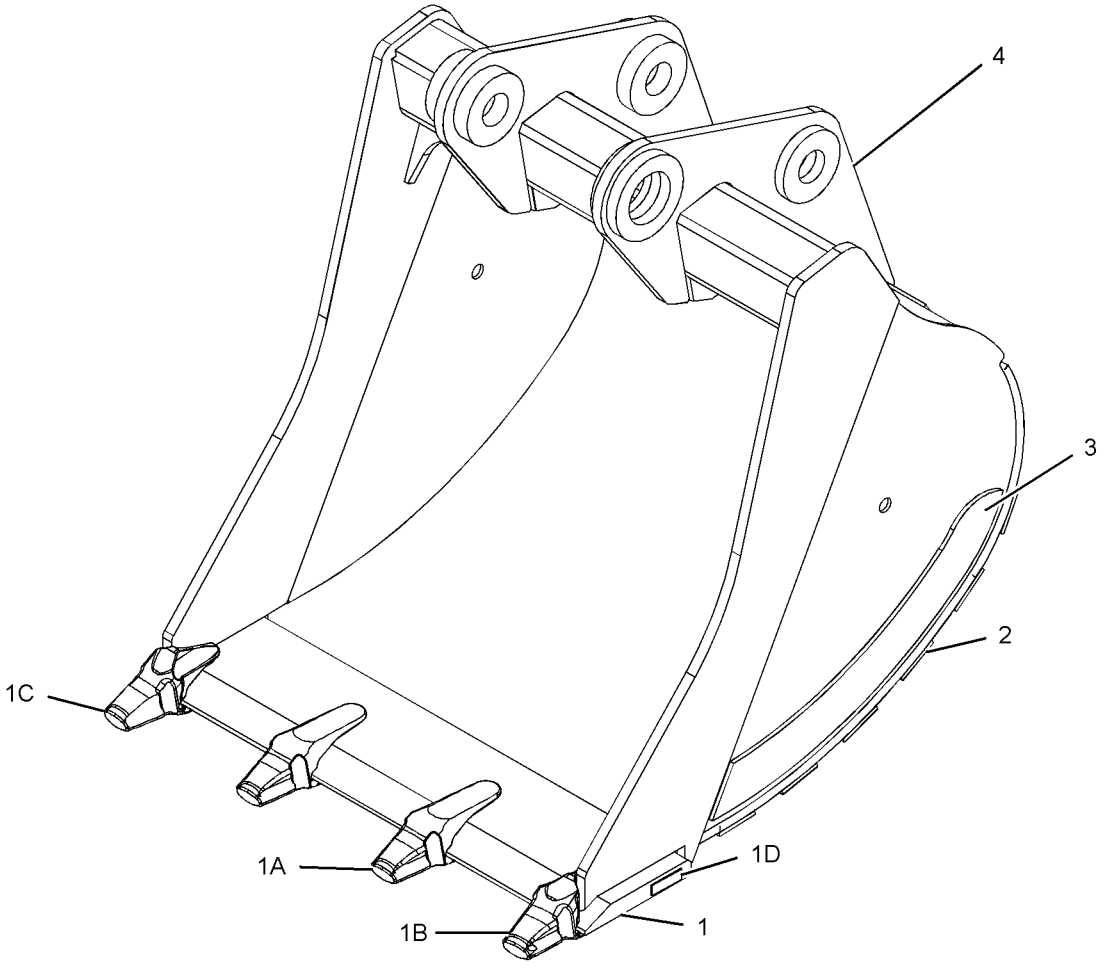

GRAPHIC #1 **<END>** g01940514

251-3923 BUCKET AS-EXCAVATION—B-FAMILY

S/N: WNE1-UP; ZMF1-UP; CWG1-UP
1200-MM (47.24-IN) WIDE X 1.08-CU M (1.41-CU YD) CAPACITY.
K-80 ADAPTERS, QTY OF 5
PART OF 251-3871 BUCKET & ADJUSTER GP
AN ATTACHMENT

SMCS-6523 **i03592222**

NOTE	REF NO	GRAPHIC REF	PART NUMBER	QTY	PART NAME 1 2 3 4 5 6 (PRODUCT LEVEL)	SEE PAGE
	1	1	**251-8684**	1	PLATE AS-BOX	
	2	1	**251-3523**	2	PLATE-WEAR	
	3	1	**251-8674**	6	PLATE-WEAR	
	4	1	**251-8663**	1	EDGE AS	
	4A	1	**220-9086**	1	ADAPTER-TIP (K-80, 2-STRAP, LH)	
	4B	1	**220-9084**	3	ADAPTER-TIP (K-80, 2-STRAP, CENTER)	
	4C	1	**220-9085**	1	ADAPTER-TIP (K-80, 2-STRAP, RH)	
	4D	1	**8P-9770**	1	PLATE	

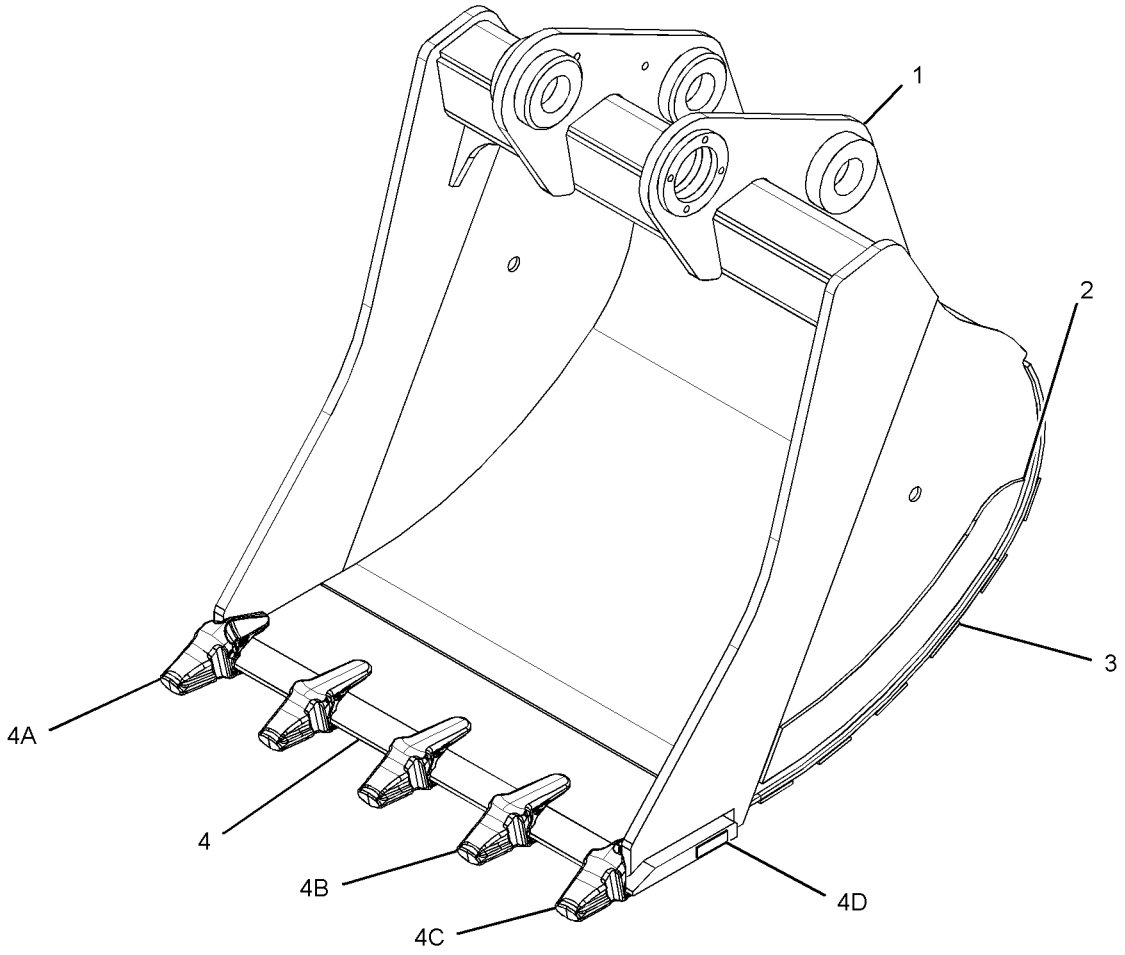

GRAPHIC #1 **<END>** g01928759

251-3924 BUCKET AS-EXCAVATION–B-FAMILY

S/N: WNE1-UP; ZMF1-UP; CWG1-UP
1250-MM (49.3-IN) WIDE X 1.13-CU M (1.48-CU YD) CAPACITY.
K-80 ADAPTERS, QTY OF 5
PART OF 251-3872 BUCKET & ADJUSTER GP
AN ATTACHMENT

SMCS-6523 **i03653294**

NOTE	REF NO	GRAPHIC REF	PART NUMBER	QTY	PART NAME 1 2 3 4 5 6 (PRODUCT LEVEL)	SEE PAGE
	1	1	**251-8664**	1	EDGE AS	
	1A	1	**220-9084**	3	ADAPTER-TIP (K-80, 2-STRAP, CENTER)	
	1B	1	**220-9085**	1	ADAPTER-TIP (K-80, 2-STRAP, RH)	
	1C	1	**220-9086**	1	ADAPTER-TIP (K-80, 2-STRAP, LH)	
	1D	1	**8P-9770**	1	PLATE	
	2	1	**251-8675**	6	PLATE-WEAR	
	3	1	**251-3523**	2	PLATE-WEAR	
	4	1	**251-8685**	1	PLATE AS-BOX	

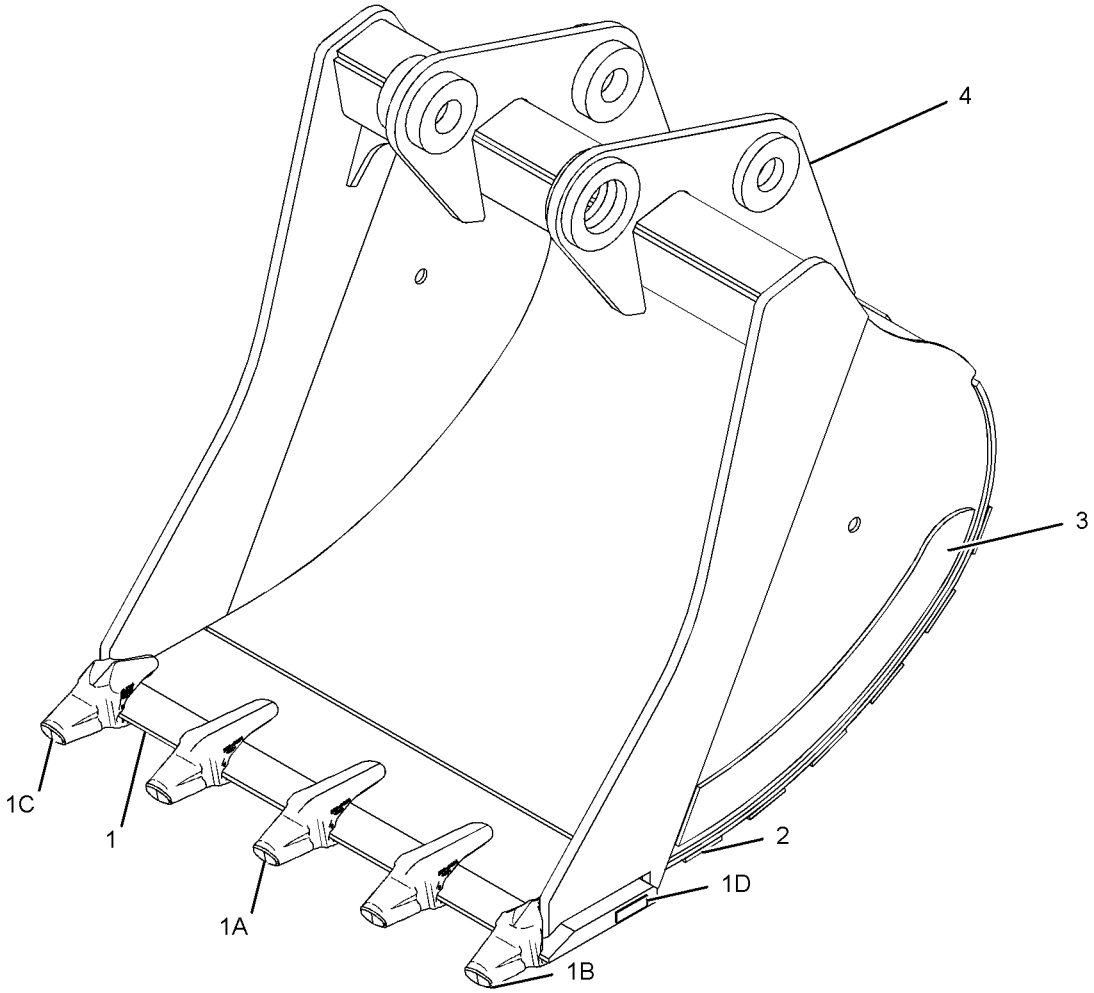

GRAPHIC #1 **<END>** g01940816

251-3925 BUCKET AS-EXCAVATION—B-FAMILY

S/N: WNE1-UP; ZMF1-UP; CWG1-UP
1300-MM (51.2-IN) WIDE X 1.19-CU M (1.56-CU YD) CAPACITY.
K-80 ADAPTERS, QTY OF 5
PART OF 251-3873 BUCKET & ADJUSTER GP
AN ATTACHMENT

SMCS-6523 **i03653273**

NOTE	REF NO	GRAPHIC REF	PART NUMBER	QTY	PART NAME 1 2 3 4 5 6 (PRODUCT LEVEL)	SEE PAGE
	1	1	**251-8665**	1	EDGE AS	
	1A	1	**220-9084**	3	ADAPTER-TIP (K-80, 2-STRAP, CENTER)	
	1B	1	**220-9085**	1	ADAPTER-TIP (K-80, 2-STRAP, RH)	
	1C	1	**220-9086**	1	ADAPTER-TIP (K-80, 2-STRAP, LH)	
	1D	1	**8P-9770**	1	PLATE	
	2	1	**251-8676**	6	PLATE-WEAR	
	3	1	**251-3523**	2	PLATE-WEAR	
	4	1	**251-8686**	1	PLATE AS-BOX	

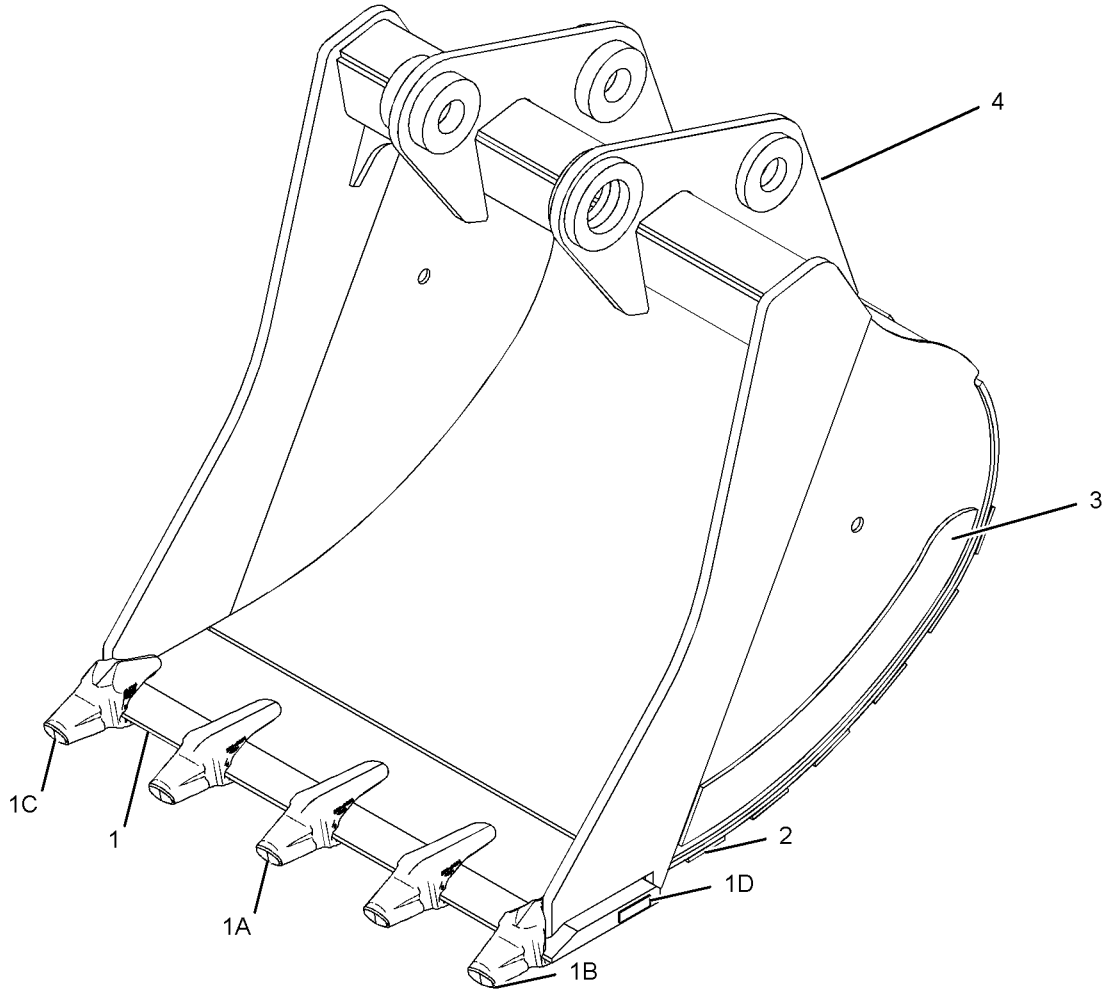

GRAPHIC #1 **<END>** g01940839

251-3926 BUCKET AS-EXCAVATION–B-FAMILY

S/N: WNE1-UP; ZMF1-UP; CWG1-UP
1400-MM (55.3-IN) WIDE X 1.3-CU M (1.7-CU YD) CAPACITY.
K-80 ADAPTERS, QTY OF 5
PART OF 251-3874 BUCKET & ADJUSTER GP
AN ATTACHMENT

SMCS-6523 **i03653094**

NOTE	REF NO	GRAPHIC REF	PART NUMBER	QTY	PART NAME 1 2 3 4 5 6 (PRODUCT LEVEL)	SEE PAGE
	1	1	**251-8666**	1	EDGE AS	
	1A	1	**220-9084**	3	ADAPTER-TIP (K-80, 2-STRAP, CENTER)	
	1B	1	**220-9085**	1	ADAPTER-TIP (K-80, 2-STRAP, RH)	
	1C	1	**220-9086**	1	ADAPTER-TIP (K-80, 2-STRAP, LH)	
	1D	1	**8P-9770**	1	PLATE	
	2	1	**251-8677**	6	PLATE-WEAR	
	3	1	**251-3523**	2	PLATE-WEAR	
	4	1	**251-8687**	1	PLATE AS-BOX	

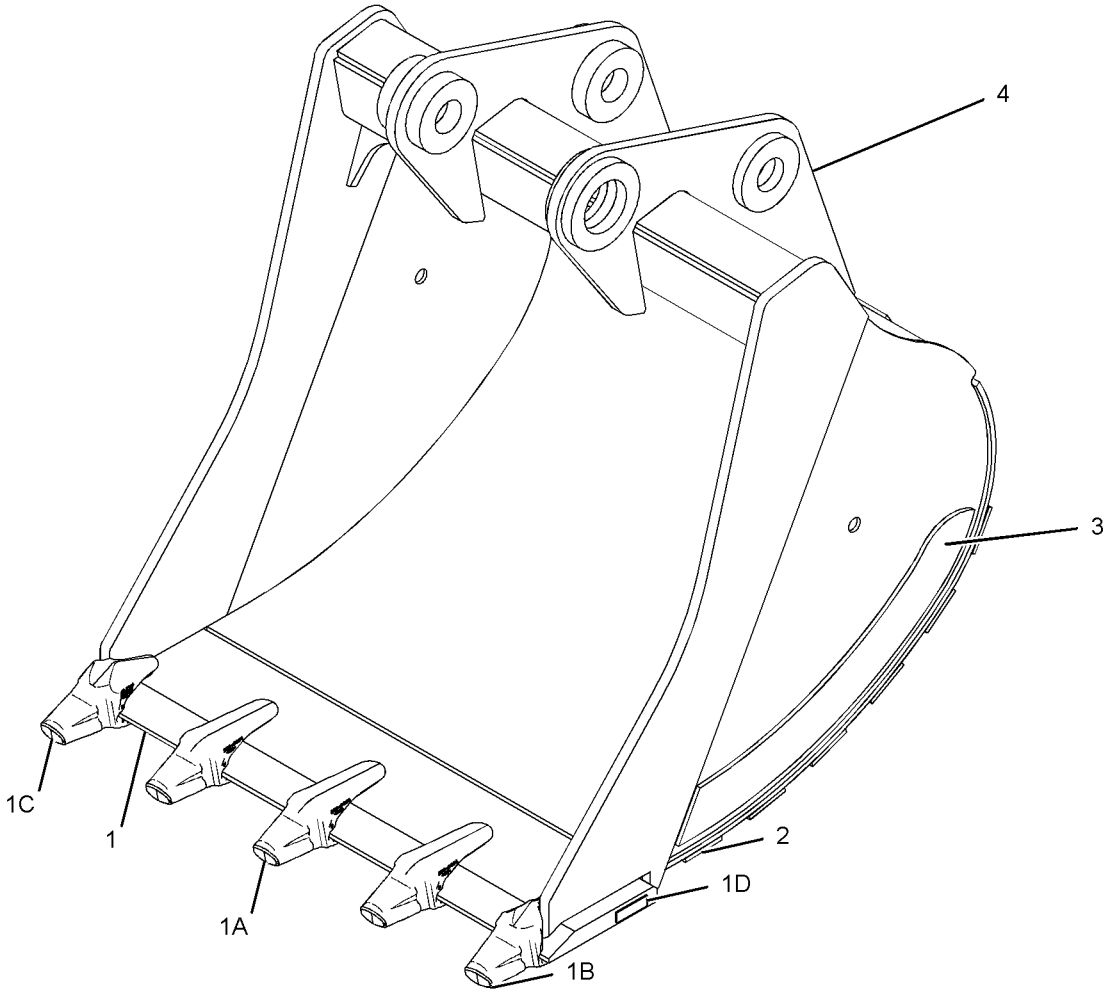

GRAPHIC #1 **<END>** g01940862

WORK TOOLS

251-3927 BUCKET AS-EXCAVATION—B-FAMILY

S/N: WNE1-UP; ZMF1-UP; CWG1-UP
1500-MM (59-IN) WIDE X 1.41-CU M (1.84-CU YD) CAPACITY.
K-80 ADAPTERS, QTY OF 5
PART OF 251-3875 BUCKET & ADJUSTER GP
AN ATTACHMENT

SMCS-6523 **i03652853**

NOTE	REF NO	GRAPHIC REF	PART NUMBER	QTY	PART NAME 1 2 3 4 5 6 (PRODUCT LEVEL)	SEE PAGE
	1	1	**251-8667**	1	EDGE AS	
	1A	1	**220-9084**	3	ADAPTER-TIP (K-80, 2-STRAP, CENTER)	
	1B	1	**220-9085**	1	ADAPTER-TIP (K-80, 2-STRAP, RH)	
	1C	1	**220-9086**	1	ADAPTER-TIP (K-80, 2-STRAP, LH)	
	1D	1	**8P-9770**	1	PLATE	
	2	1	**251-8678**	6	PLATE-WEAR	
	3	1	**251-3523**	2	PLATE-WEAR	
	4	1	**251-8688**	1	PLATE AS-BOX	

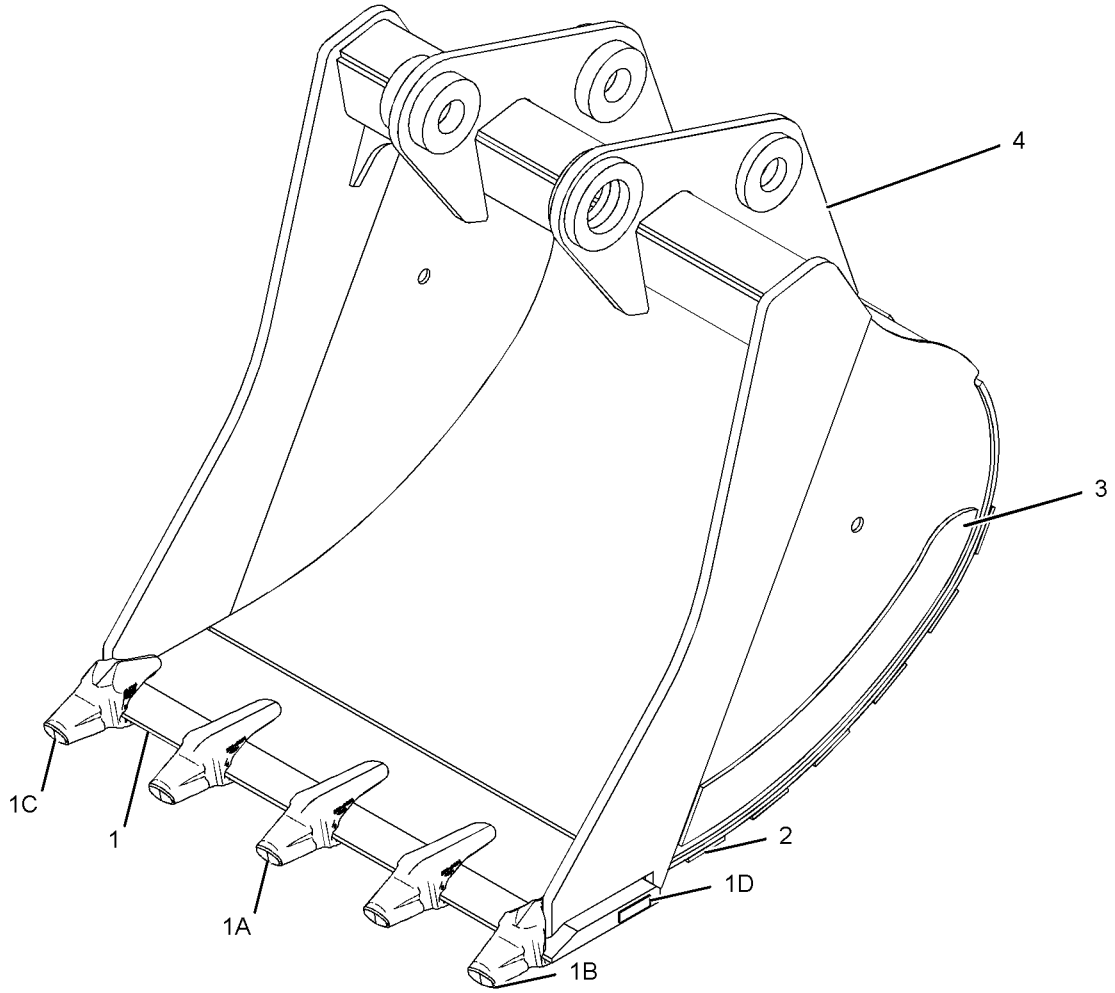

GRAPHIC #1 **<END>** g01940083

252-8938 BUCKET AS-EXCAVATION–B-FAMILY

S/N: WNE1-UP; ZMF1-UP; CWG1-UP
600-MM (23.7-IN) WIDE X 0.44-CU M (0.58-CU YD) CAPACITY.
K-80 ADAPTERS, QTY OF 3
PART OF 252-8926 BUCKET & ADJUSTER GP
AN ATTACHMENT

SMCS-6523 **i03652130**

NOTE	REF NO	GRAPHIC REF	PART NUMBER	QTY	PART NAME 1 2 3 4 5 6 (PRODUCT LEVEL)	SEE PAGE
	1	1	**252-5491**	1	EDGE AS	
	1A	1	**220-9084**	1	ADAPTER-TIP (K-80, 2-STRAP, CENTER)	
	1B	1	**220-9085**	1	ADAPTER-TIP (K-80, 2-STRAP, RH)	
	1C	1	**220-9086**	1	ADAPTER-TIP (K-80, 2-STRAP, LH)	
	1D	1	**8P-9770**	1	PLATE	
	2	1	**252-8950**	6	PLATE-WEAR	
	3	1	**251-3523**	2	PLATE-WEAR	
	4	1	**255-4575**	1	PLATE AS-BOX	

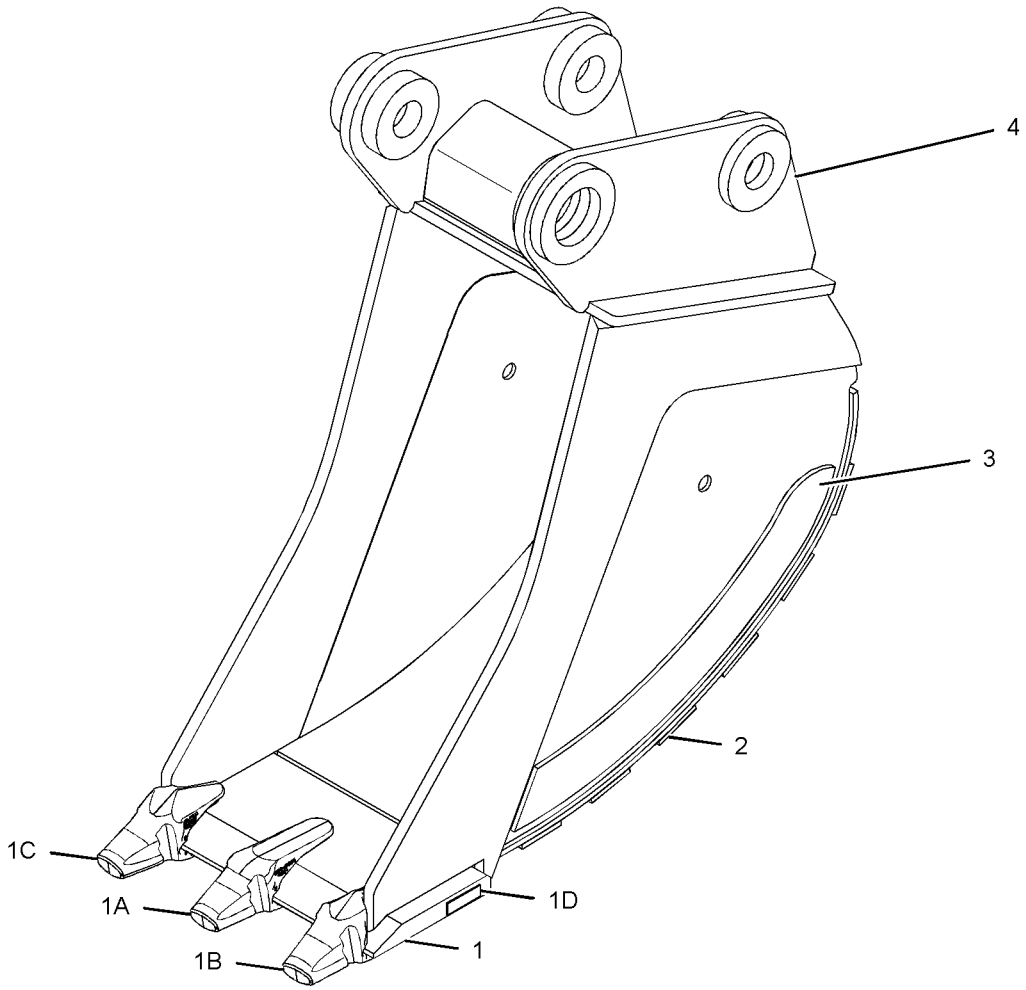

GRAPHIC #1 **<END>** g01940353

251-3929 BUCKET AS-EXTREME EXCAVATION–B-FAMILY

S/N: WNE1-UP; ZMF1-UP; CWG1-UP
1250-MM (49.3-IN) WIDE X 1.13-CU M (1.48-CU YD) CAPACITY.
K-90 ADAPTERS, QTY OF 4
PART OF 251-3877 BUCKET & ADJUSTER GP
AN ATTACHMENT

SMCS-6523, 6529 **i03652754**

NOTE	REF NO	GRAPHIC REF	PART NUMBER	QTY	PART NAME 1 2 3 4 5 6 (PRODUCT LEVEL)	SEE PAGE
	1	1	**251-8669**	1	EDGE AS	
	1A	1	**220-9094**	2	ADAPTER-TIP (K-90, 2-STRAP, CENTER)	
	1B	1	**220-9095**	1	ADAPTER-TIP (K-90, 2-STRAP, RH)	
	1C	1	**220-9096**	1	ADAPTER-TIP (K-90, 2-STRAP, LH)	
	1D	1	**8P-9770**	1	PLATE	
	2	1	**251-8680**	6	PLATE-WEAR	
	3	1	**251-3522**	2	PLATE-WEAR	
	4	1	**251-8685**	1	PLATE AS-BOX	

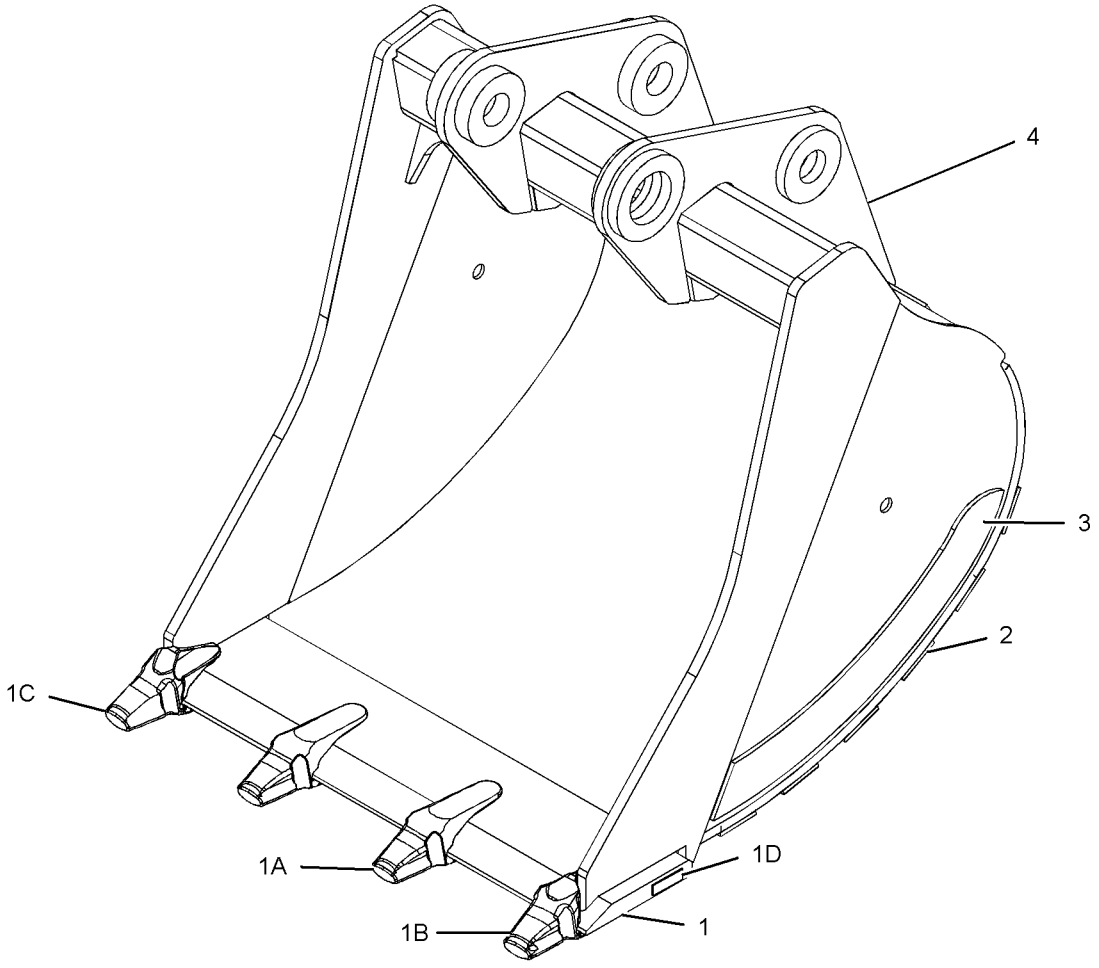

GRAPHIC #1 **<END>** g01940896

251-5547 BUCKET AS-EXTREME EXCAVATION–B-FAMILY

S/N: WNE1-UP; ZMF1-UP; CWG1-UP
1300-MM (51.2-IN) WIDE X 1.19-CU M (1.56-CU YD) CAPACITY.
K-90 ADAPTERS, QTY OF 5
PART OF 251-5545 BUCKET & ADJUSTER GP
AN ATTACHMENT

SMCS-6523, 6529 **i03652656**

NOTE	REF NO	GRAPHIC REF	PART NUMBER	QTY	PART NAME 1 2 3 4 5 6 (PRODUCT LEVEL)	SEE PAGE
	1	1	**251-8670**	1	EDGE AS	
	1A	1	**220-9094**	3	ADAPTER-TIP (K-90, 2-STRAP, CENTER)	
	1B	1	**220-9095**	1	ADAPTER-TIP (K-90, 2-STRAP, RH)	
	1C	1	**220-9096**	1	ADAPTER-TIP (K-90, 2-STRAP, LH)	
	1D	1	**8P-9770**	1	PLATE	
	2	1	**251-8681**	6	PLATE-WEAR	
	3	1	**251-3522**	2	PLATE-WEAR	
	4	1	**251-8686**	1	PLATE AS-BOX	

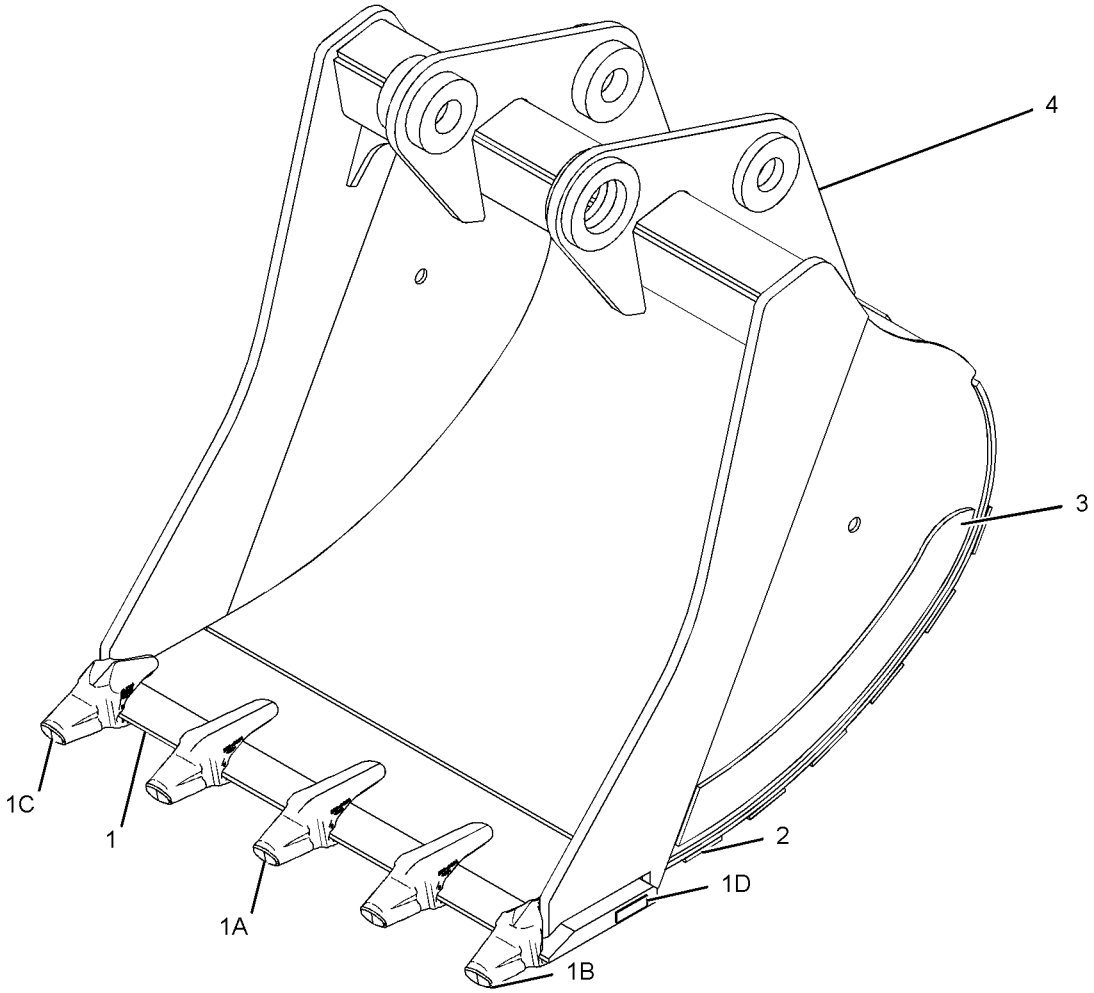

GRAPHIC #1 **<END>** g01940498

251-5548 BUCKET AS-EXTREME EXCAVATION—B-FAMILY

S/N: WNE1-UP; ZMF1-UP; CWG1-UP
1400-MM (55.2-IN) WIDE X 1.3-CU M (1.7-CU YD) CAPACITY.
K-90 ADAPTERS, QTY OF 5
PART OF 251-5546 BUCKET & ADJUSTER GP
AN ATTACHMENT

SMCS-6523, 6529 **i03652134**

NOTE	REF NO	GRAPHIC REF	PART NUMBER	QTY	PART NAME 1 2 3 4 5 6 (PRODUCT LEVEL)	SEE PAGE
	1	1	**251-8671**	1	EDGE AS	
	1A	1	**220-9094**	3	ADAPTER-TIP (K-90, 2-STRAP, CENTER)	
	1B	1	**220-9095**	1	ADAPTER-TIP (K-90, 2-STRAP, RH)	
	1C	1	**220-9096**	1	ADAPTER-TIP (K-90, 2-STRAP, LH)	
	1D	1	**8P-9770**	1	PLATE	
	2	1	**251-8682**	6	PLATE-WEAR	
	3	1	**251-3522**	2	PLATE-WEAR	
	4	1	**251-8687**	1	PLATE AS-BOX	

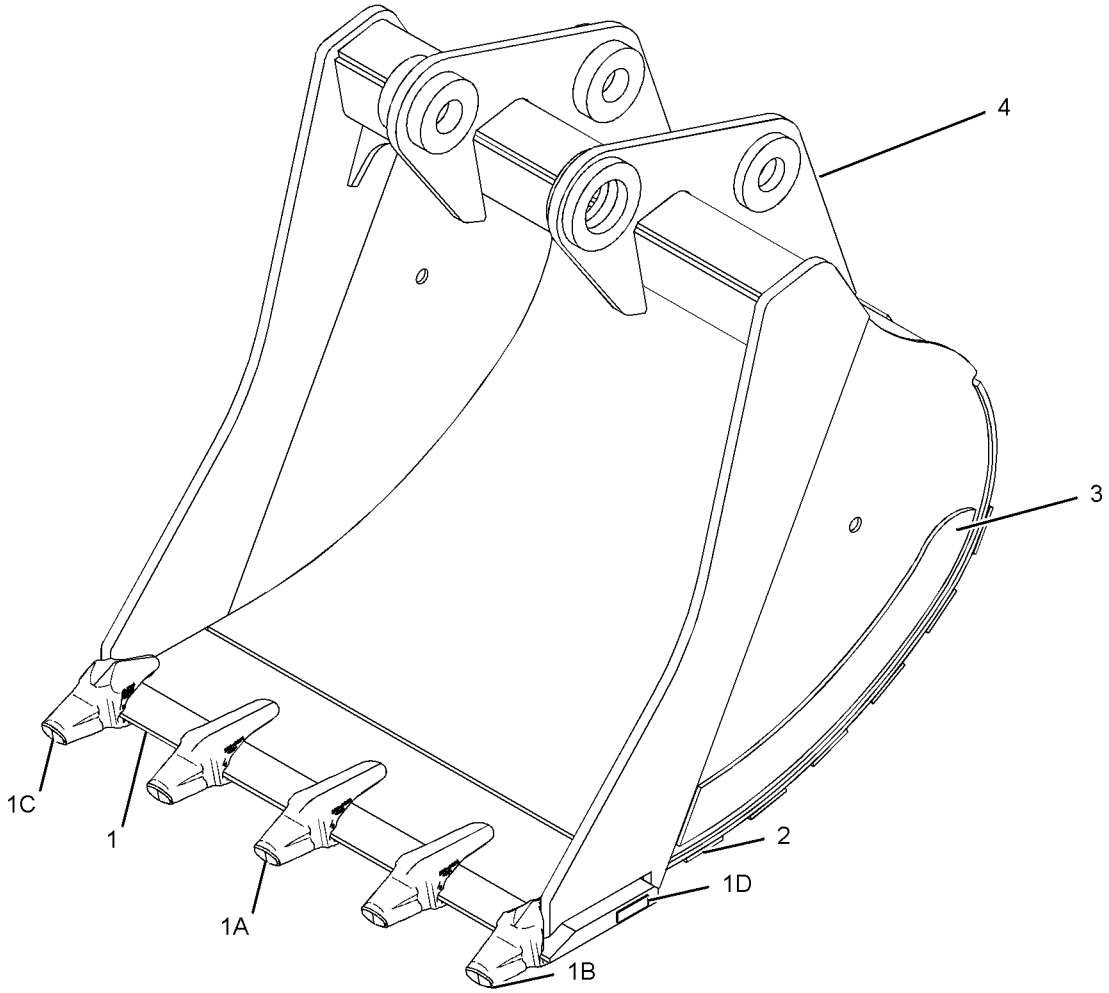

GRAPHIC #1 **<END>** g01940459

WORK TOOLS

7Y-0729 SIDECUTTER GP—B-FAMILY

S/N: CWG1-UP

AN ATTACHMENT

SMCS-6813 **i01471591**

NOTE	REF NO	GRAPHIC REF	PART NUMBER	QTY	PART NAME 1 2 3 4 5 6 (PRODUCT LEVEL)	SEE PAGE
	1	1	**096-4748**	1	SIDECUTTER-RH	
	2	1	**096-4747**	1	SIDECUTTER-LH	
M	3	1	**8T-0380**	8	BOLT (M24X3X60MM)	
M	4	1	**7X-0851**	8	NUT (M24X3.00 THD)	

M-METRIC PART

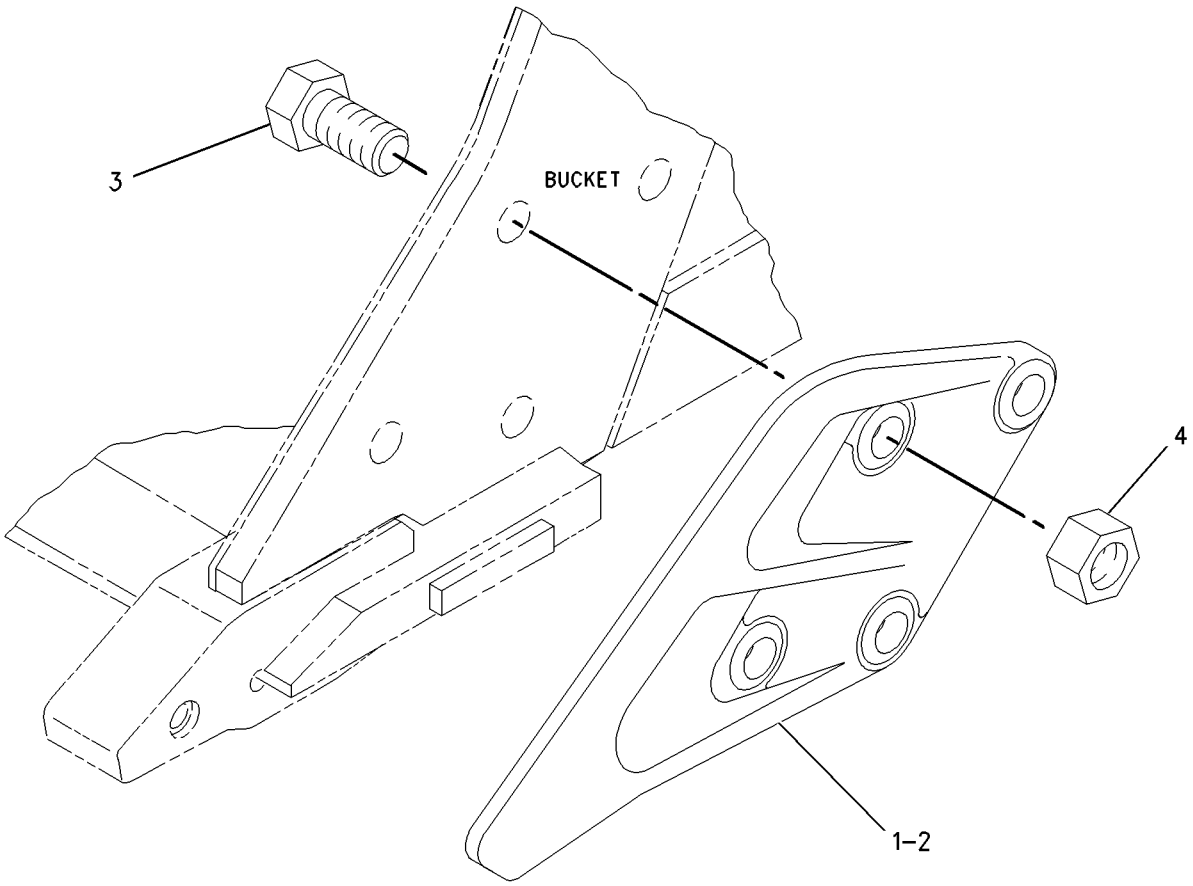

GRAPHIC #1 **<END>** g00767961

WORK TOOLS

217-4895 TIP GP-DOUBLE SPIKE–K-90

S/N: WNE1-UP; ZMF1-UP; CWG1-UP

AN ATTACHMENT

SMCS-6805 **i03013718**

NOTE	REF NO	GRAPHIC REF	PART NUMBER	QTY	PART NAME 1 2 3 4 5 6 (PRODUCT LEVEL)	SEE PAGE
	1	1	**220-9090**	1	RETAINER-G.E.T.	
	2	1	**309-1098**	1	TIP-DOUBLE SPIKE (K-90)	

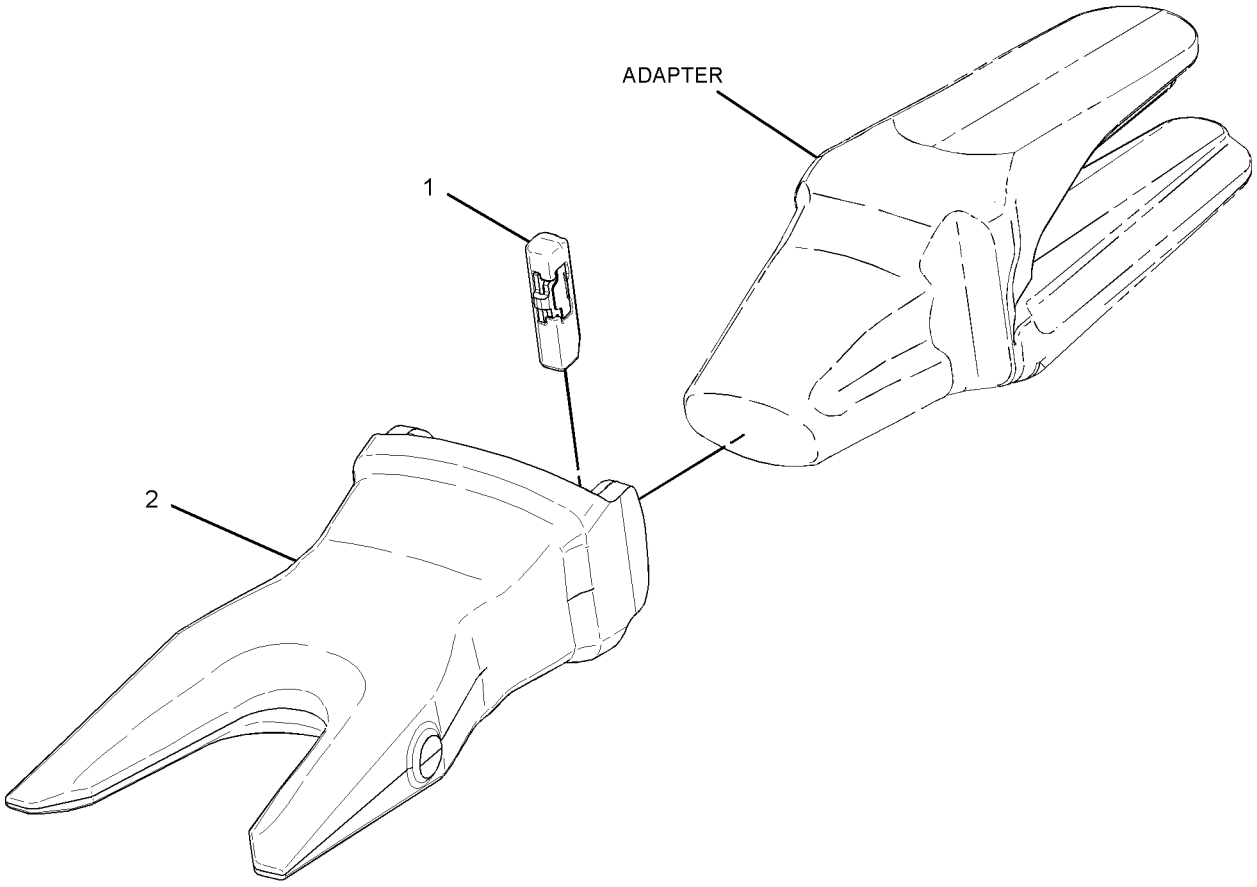

GRAPHIC #1 **<END>** g01506153

WORK TOOLS

217-4891 TIP GP-EXTRA-DUTY–K-90

S/N: WNE1-UP; ZMF1-UP; CWG1-UP

AN ATTACHMENT

SMCS-6805 **i02153726**

NOTE	REF NO	GRAPHIC REF	PART NUMBER	QTY	PART NAME 1 2 3 4 5 6 (PRODUCT LEVEL)	SEE PAGE
	1	1	**220-9090**	1	RETAINER-G.E.T.	
	2	1	**220-9091**	1	TIP-EXTRA-DUTY (K-90)	

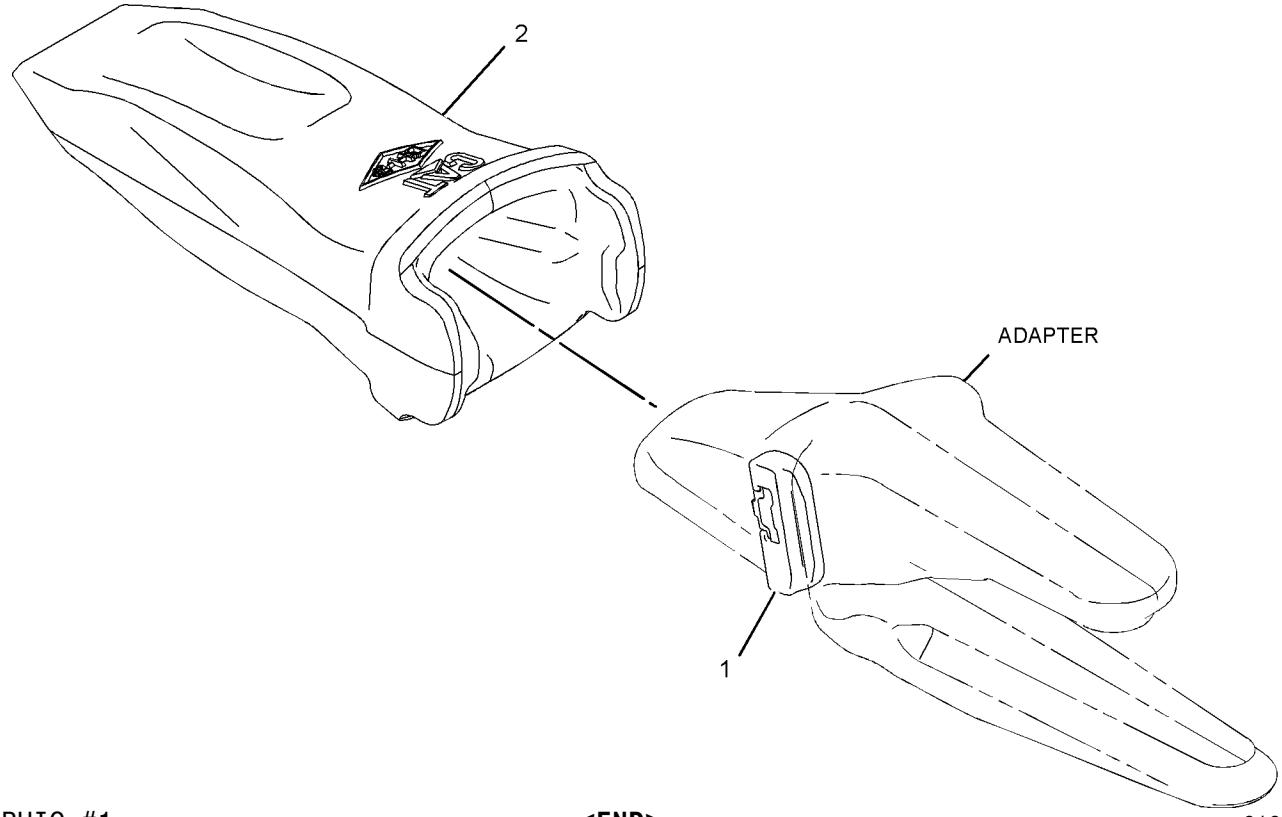

GRAPHIC #1 **<END>** g01074500

WORK TOOLS

217-4896 TIP GP-GENERAL PURPOSE–K-90

S/N: WNE1-UP; ZMF1-UP; CWG1-UP

AN ATTACHMENT

SMCS-6805 **i02467714**

NOTE	REF NO	GRAPHIC REF	PART NUMBER	QTY	PART NAME 1 2 3 4 5 6 (PRODUCT LEVEL)	SEE PAGE
	1	1	**220-9090**	1	RETAINER-G.E.T.	
	2	1	**220-9099**	1	TIP-GENERAL PURPOSE (K-90)	

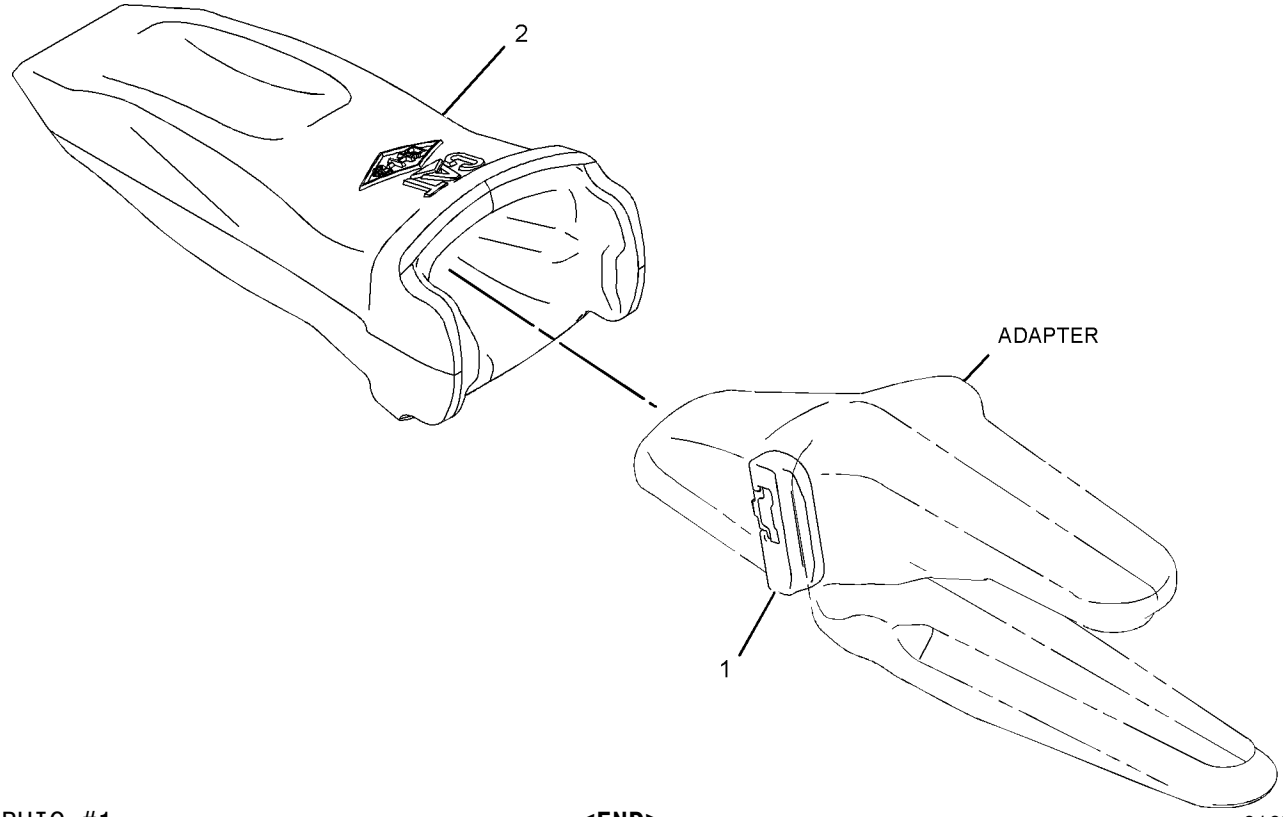

GRAPHIC #1 **<END>** g01074500

WORK TOOLS

217-4892 TIP GP-PENETRATION–K-90

S/N: WNE1-UP; ZMF1-UP; CWG1-UP

AN ATTACHMENT

SMCS-6805 **i02100092**

NOTE	REF NO	GRAPHIC REF	PART NUMBER	QTY	PART NAME 1 2 3 4 5 6 (PRODUCT LEVEL)	SEE PAGE
	1	1	**220-9090**	1	RETAINER-G.E.T.	
	2	1	**220-9092**	1	TIP-PENETRATION (K-90)	

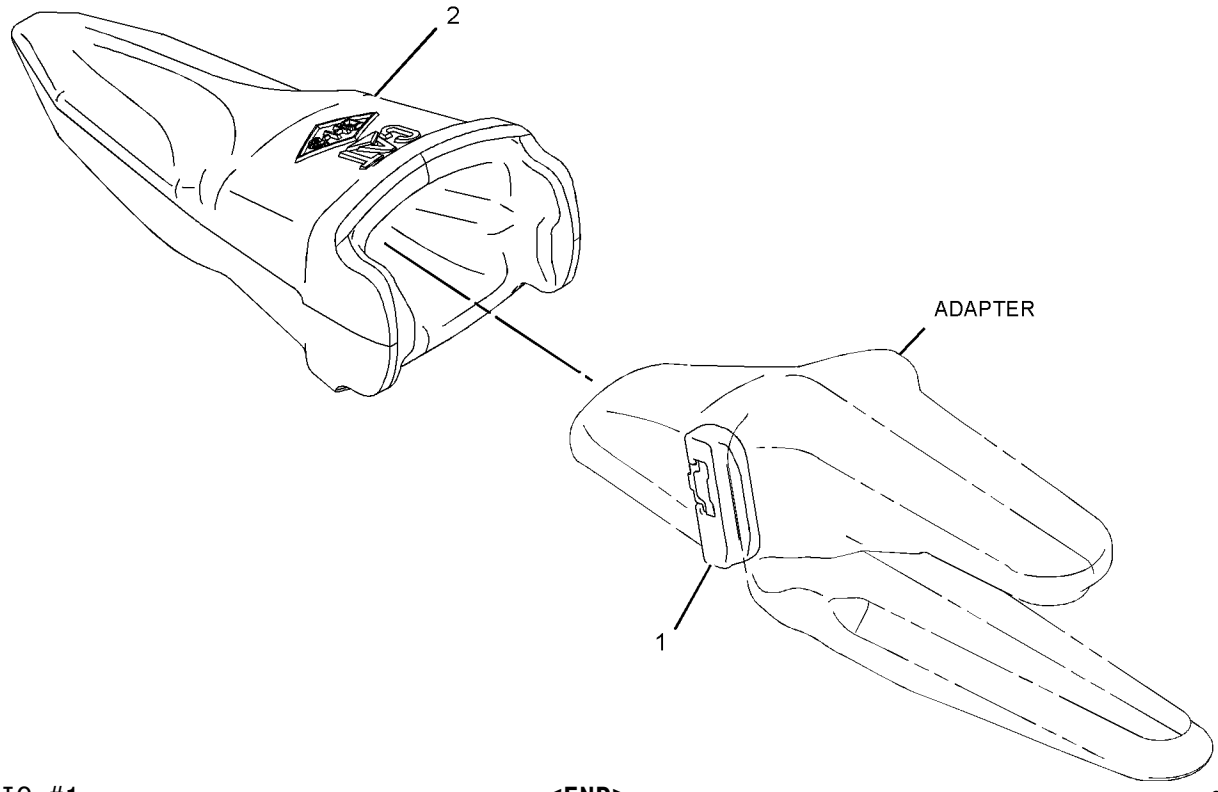

GRAPHIC #1 **<END>** g01074482

WORK TOOLS

217-4893 TIP GP-PENETRATION PLUS–K-90

S/N: WNE1-UP; ZMF1-UP; CWG1-UP
AN ATTACHMENT

SMCS-6805 **i02100266**

NOTE	REF NO	GRAPHIC REF	PART NUMBER	QTY	PART NAME 1 2 3 4 5 6 (PRODUCT LEVEL)	SEE PAGE
	1	1	**220-9090**	1	RETAINER-G.E.T.	
	2	1	**220-9093**	1	TIP-PENETRATION PLUS (K-90)	

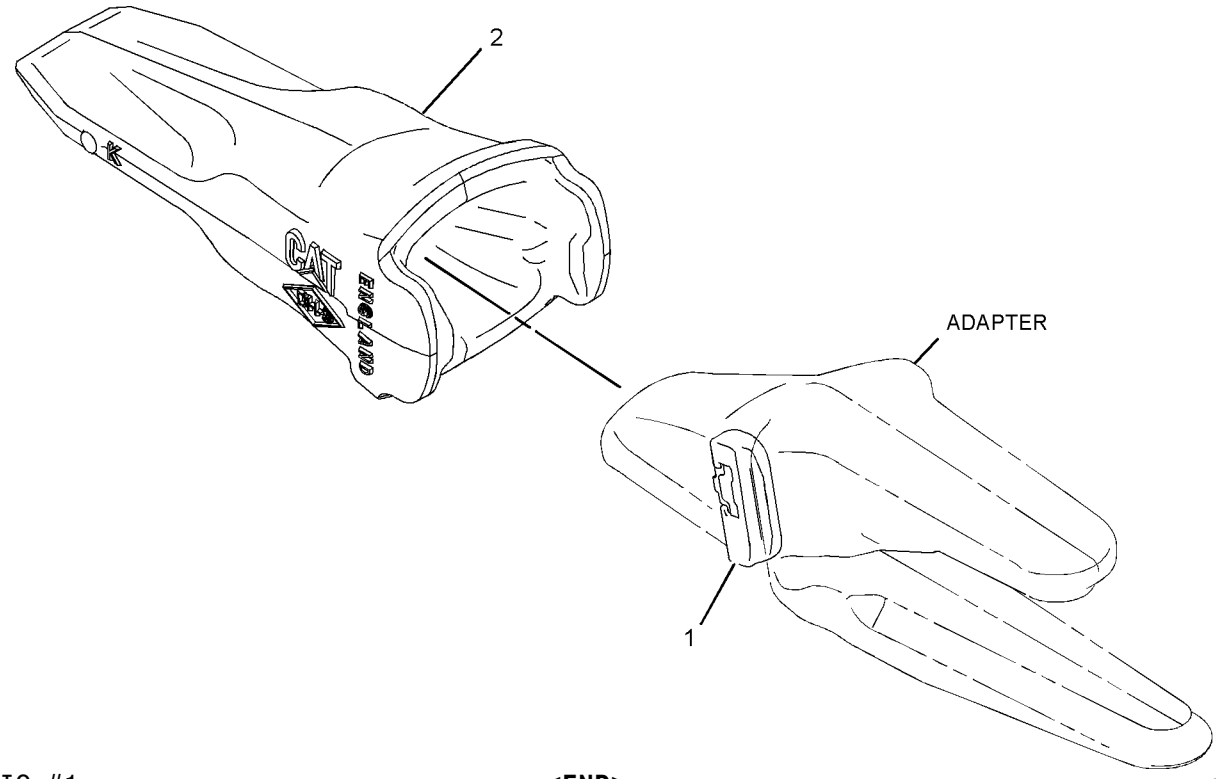

GRAPHIC #1 **<END>** g01074401

WORK TOOLS

229-6966 TIP GP-PENETRATION PLUS

S/N: WNE1-UP; ZMF1-UP; CWG1-UP

AN ATTACHMENT

SMCS-6805 **i03677041**

NOTE	REF NO	GRAPHIC REF	PART NUMBER	QTY	PART NAME 1 2 3 4 5 6 (PRODUCT LEVEL)	SEE PAGE
	1	1	**220-9090**	1	RETAINER-G.E.T.	
	2	1	**220-9083**	1	TIP-BUCKET (K-80)	

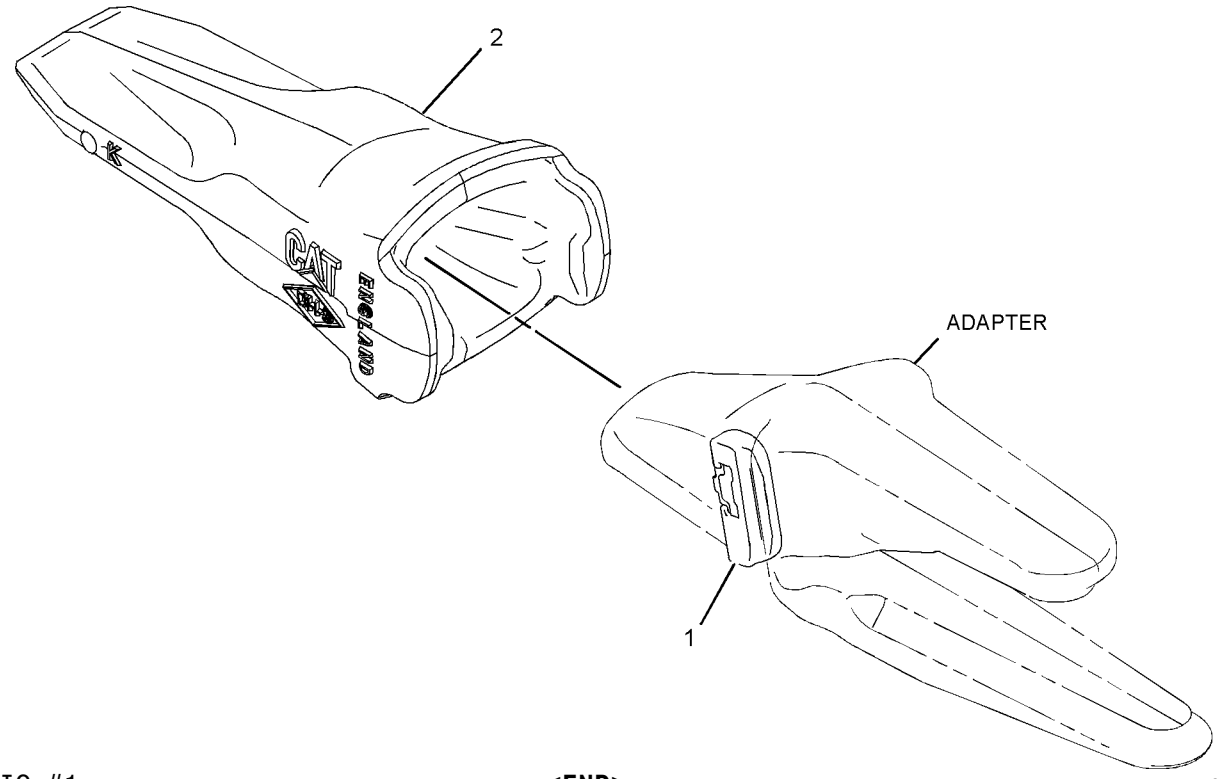

GRAPHIC #1 **<END>** g01074401

WORK TOOLS

217-4894 TIP GP-SPIKE–K-90

S/N: WNE1-UP; ZMF1-UP; CWG1-UP
AN ATTACHMENT

SMCS-6805 **i03246464**

NOTE	REF NO	GRAPHIC REF	PART NUMBER	QTY	PART NAME 1 2 3 4 5 6 (PRODUCT LEVEL)	SEE PAGE
	1	1	**220-9090**	1	RETAINER-G.E.T.	
	2	1	**220-9097**	1	TIP-SPIKE	

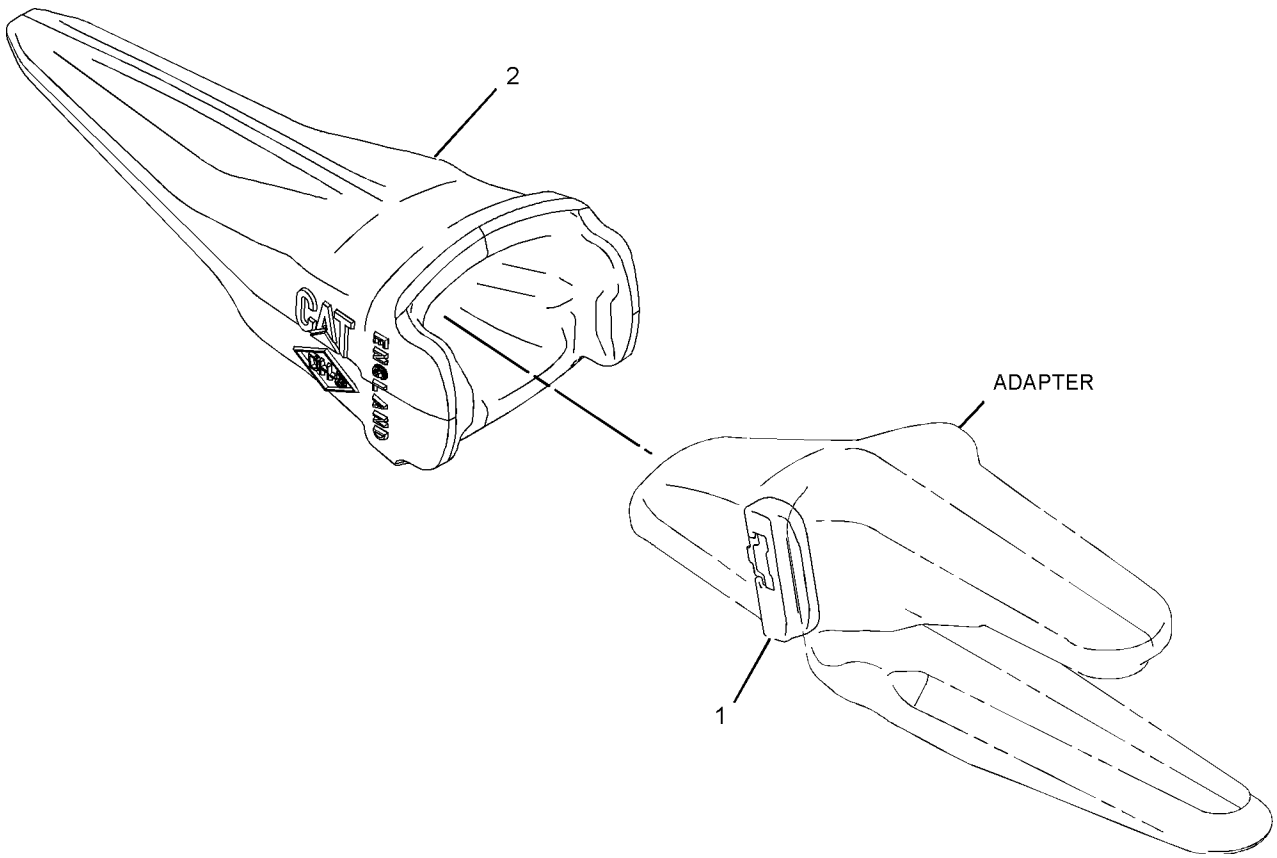

GRAPHIC #1 **<END>** g01074300

WORK TOOLS

217-4890 TIP GP-WIDE–K-90

S/N: WNE1-UP; ZMF1-UP; CWG1-UP

AN ATTACHMENT

SMCS-6805 **i02098260**

NOTE	REF NO	GRAPHIC REF	PART NUMBER	QTY	PART NAME 1 2 3 4 5 6 (PRODUCT LEVEL)	SEE PAGE
	1	1	**220-9090**	1	RETAINER-G.E.T.	
	2	1	**222-1090**	1	TIP-BUCKET (WIDE)	

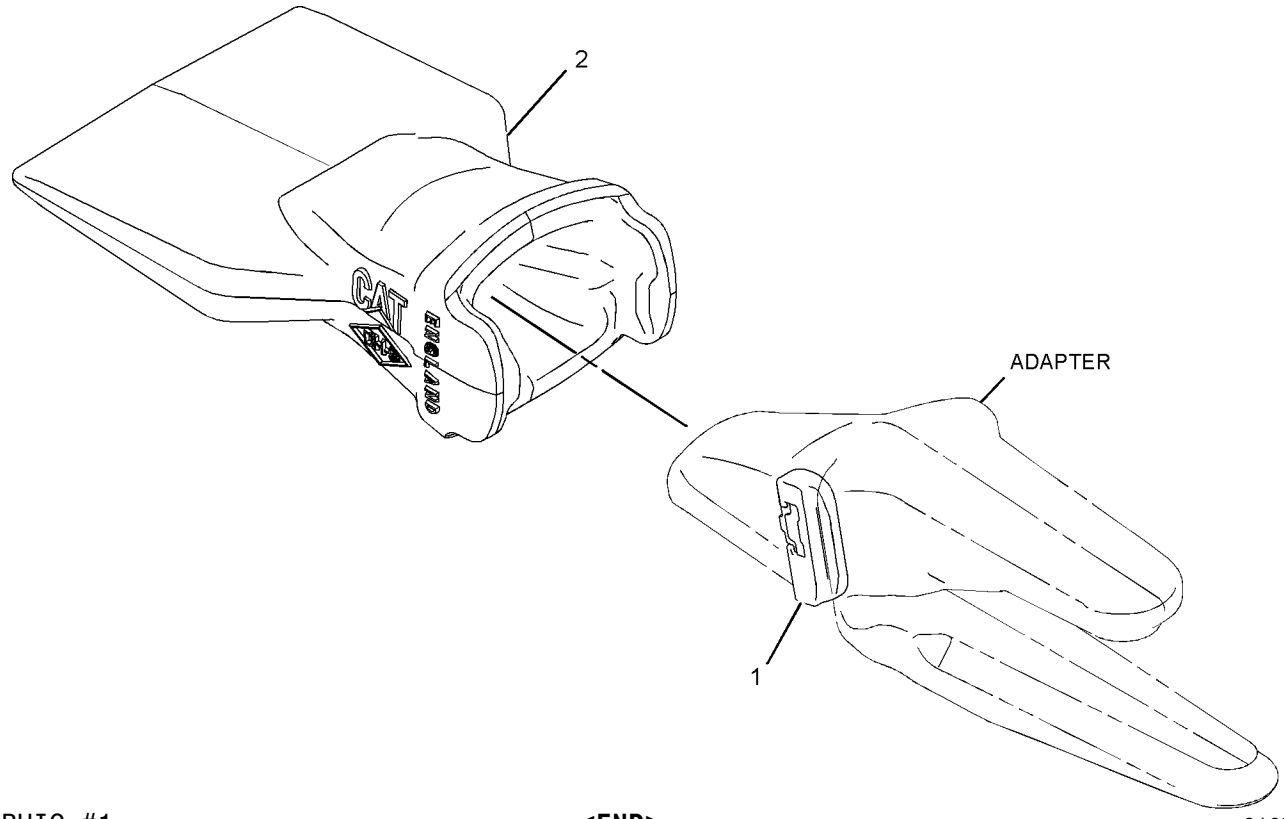

GRAPHIC #1 **<END>** g01074257

OPERATOR STATION

235-9004 AIR CONDITIONER & MOUNTING GP

S/N: WNE1-UP; ZMF1-UP; CWG1-UP
PART OF 340-6522 AIR CONDITIONER AR
AN ATTACHMENT

SMCS-7320 **i03296434**

NOTE	REF NO	GRAPHIC REF	PART NUMBER	QTY	PART NAME 1 2 3 4 5 6 (PRODUCT LEVEL)	SEE PAGE
	1	1	**293-1136**	1	PANEL AS-CONTROL	
	2	1	**235-8873**	1	HARNESS AS-HEATER & AIR COND (CONTROL PANEL SWITCHES)	
	3	1	**235-8874**	1	SENSOR-TEMPERATURE (AMBIENT AIR)	
	4	1	**235-8875**	1	BRACKET	
	5	1	**235-9005**	1	HARNESS AS-HEATER & AIR COND (AIR CONDITIONER, LOW SIDE)	
CY	6	1	**316-8916**	1	AIR CONDITIONER GP	967
	7	1	**9X-8256**	1	WASHER (6.6X12X2-MM THK)	
M	8	1	**099-2374**	2	BOLT-SOCKET HEAD (M5X0.8X12-MM)	
	9	1	**111-4836**	3	CLIP	
	10	1	**3S-2093**	2	STRAP-CABLE	
M	11	1	**5C-9553**	1	BOLT (M6X1X16-MM)	
	12	1	**7X-7729**	7	WASHER (11X25X3-MM THK)	
	13	1	**8T-0328**	2	WASHER-HARD (5.5X10X1-MM THK)	
	14	1	**8T-4121**	3	WASHER-HARD (11X21X2.5-MM THK)	
M	15	1	**8T-4136**	7	BOLT (M10X1.5X25-MM)	
M	16	1	**8T-4137**	3	BOLT (M10X1.5X20-MM)	

C-CHANGE FROM PREVIOUS TYPE
M-METRIC PART
Y-SEPARATE ILLUSTRATION

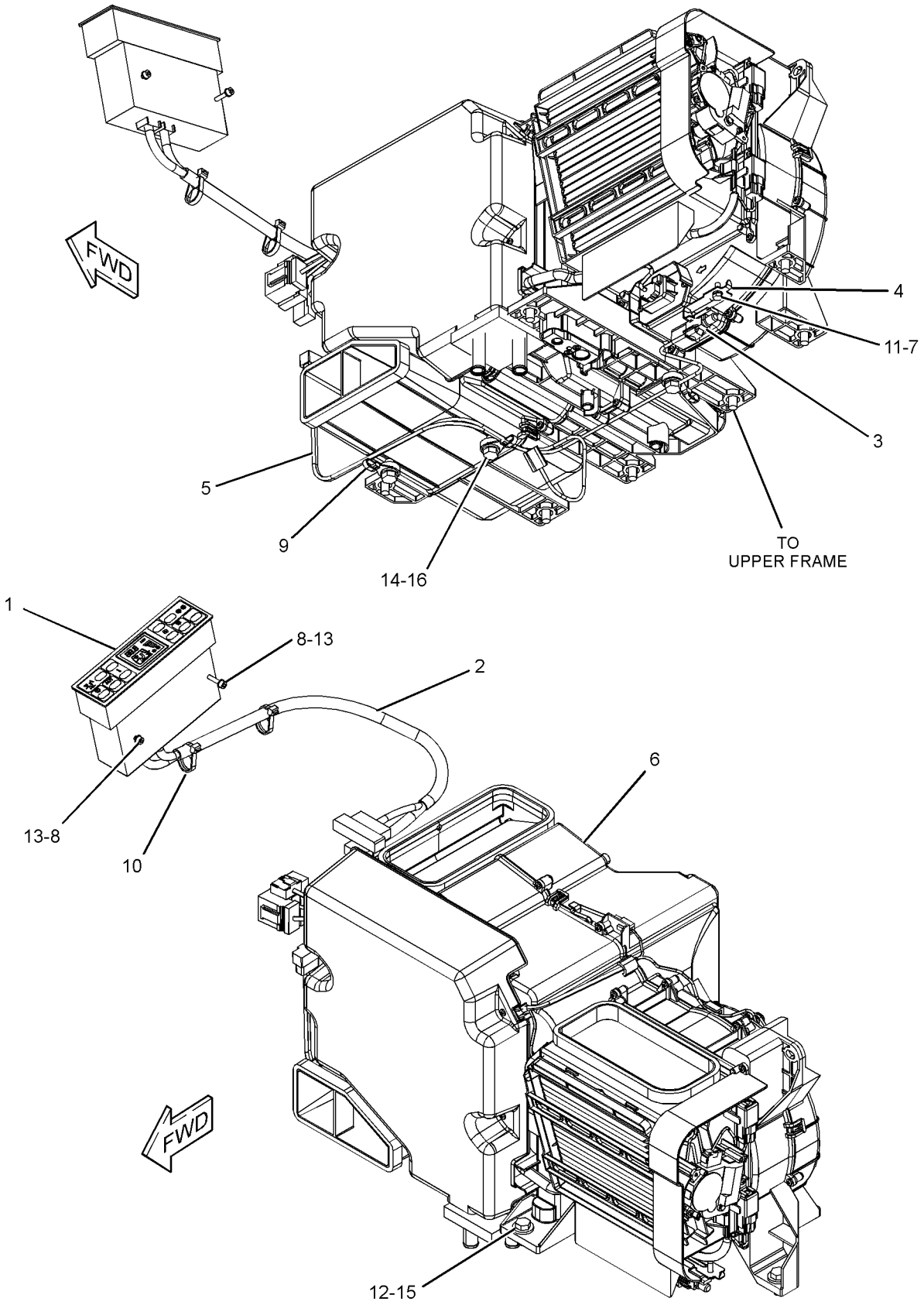

GRAPHIC #1 **<END>** g01397723

OPERATOR STATION

340-6522 AIR CONDITIONER AR

S/N: WNE1-UP; ZMF1-UP; CWG1-UP
PART OF 347-9907, 347-9908 OPTION AR-CAB
AN ATTACHMENT

SMCS-7320 **i03635984**

NOTE	PART NUMBER	QTY	PART NAME 1 2 3 4 5 6 (PRODUCT LEVEL)	SEE PAGE
Y	*235-9004*	1	AIR CONDITIONER & MOUNTING GP	964
Y	*340-6524*	1	AIR DUCT GP	1021

Y-SEPARATE ILLUSTRATION

<END>

340-6549 AIR CONDITIONER AR—CHASSIS

S/N: WNE1-UP; ZMF1-UP
AN ATTACHMENT

SMCS-7320 **i03648751**

NOTE	PART NUMBER	QTY	PART NAME 1 2 3 4 5 6 (PRODUCT LEVEL)	SEE PAGE
Y	*259-7184*	1	CONDENSER & MTG GP-REFRIGERANT	983
Y	*340-6539*	1	LINES GP-AIR CONDITIONER	1055

Y-SEPARATE ILLUSTRATION

<END>

OPERATOR STATION

316-8916 AIR CONDITIONER GP

S/N: WNE1-UP; ZMF1-UP; CWG1-UP

PART OF 235-9004 AIR CONDITIONER & MOUNTING GP, 229-9084 HEATER & MTG GP-CAB

AN ATTACHMENT

SMCS-7320 **i03675524**

NOTE	REF NO	GRAPHIC REF	PART NUMBER	QTY	PART NAME 1 2 3 4 5 6 (PRODUCT LEVEL)	SEE PAGE
	1	1	**185-8300**	35	SCREW-TAPPING	
	2	1	**185-8302**	3	SCREW AS-TAPPING	
	3	1	**245-7817**	2	MOTOR AS	
	4	1	**245-7818**	3	CLIP	
	5	1	**245-7819**	2	CLIP	
	6	1	**245-7820**	1	COVER-FRONT	
	7	1	**245-7825**	1	INSULATOR	
	8	1	**245-7826**	1	INSULATOR	
	9	1	**245-7827**	1	INSULATOR	
	10	1	**245-7828**	1	INSULATOR	
	11	1	**245-7829**	1	PACKING	
	12	1	**245-7830**	1	CLIP	
	13	1	**245-7831**	1	SENSOR AS-TEMPERATURE (COOLANT)	
	14	1	**245-7832**	1	CONTROL AS	
	15	1	**245-7833**	1	CORE AS-HEATER	
	16	1	**245-7834**	1	DAMPER AS	
	17	1	**245-7835**	1	SENSOR AS-TEMPERATURE (AMBIENT AIR TEMP)	
Y	18	1	**245-7836**	1	COIL GP-EVAPORATOR	978
	19	1	**245-7838**	1	PACKING	
	20	1	**245-7839**	1	MOTOR AS (WITH FAN)	
Y	21	1	**245-7846**	1	CONTROL GP-HEAT & AIR COND (AIR INLET)	1006
	22	1	**245-7847**	1	HARNESS AS-HEATER & AIR COND	
	23	1	**245-7856**	3	SCREW AS-TAPPING	
	24	1	**293-1137**	1	FILTER GP-AIR (AIR CONDITIONER)	
		1	**245-7823**	1	FILTER ELEMENT-CAB AIR	
		1	**245-7824**	1	PACKING	
	25	1	**316-8846**	1	PLATE	
	26	1	**316-8847**	2	ROD	
	27	1	**316-8849**	1	ROD	
	28	1	**316-8918**	1	PLATE	
	29	1	**316-8920**	1	ROD	
	30	1	**316-8921**	1	ROD	

Y-SEPARATE ILLUSTRATION

316-8916 AIR CONDITIONER GP *(contd.)* i03675524

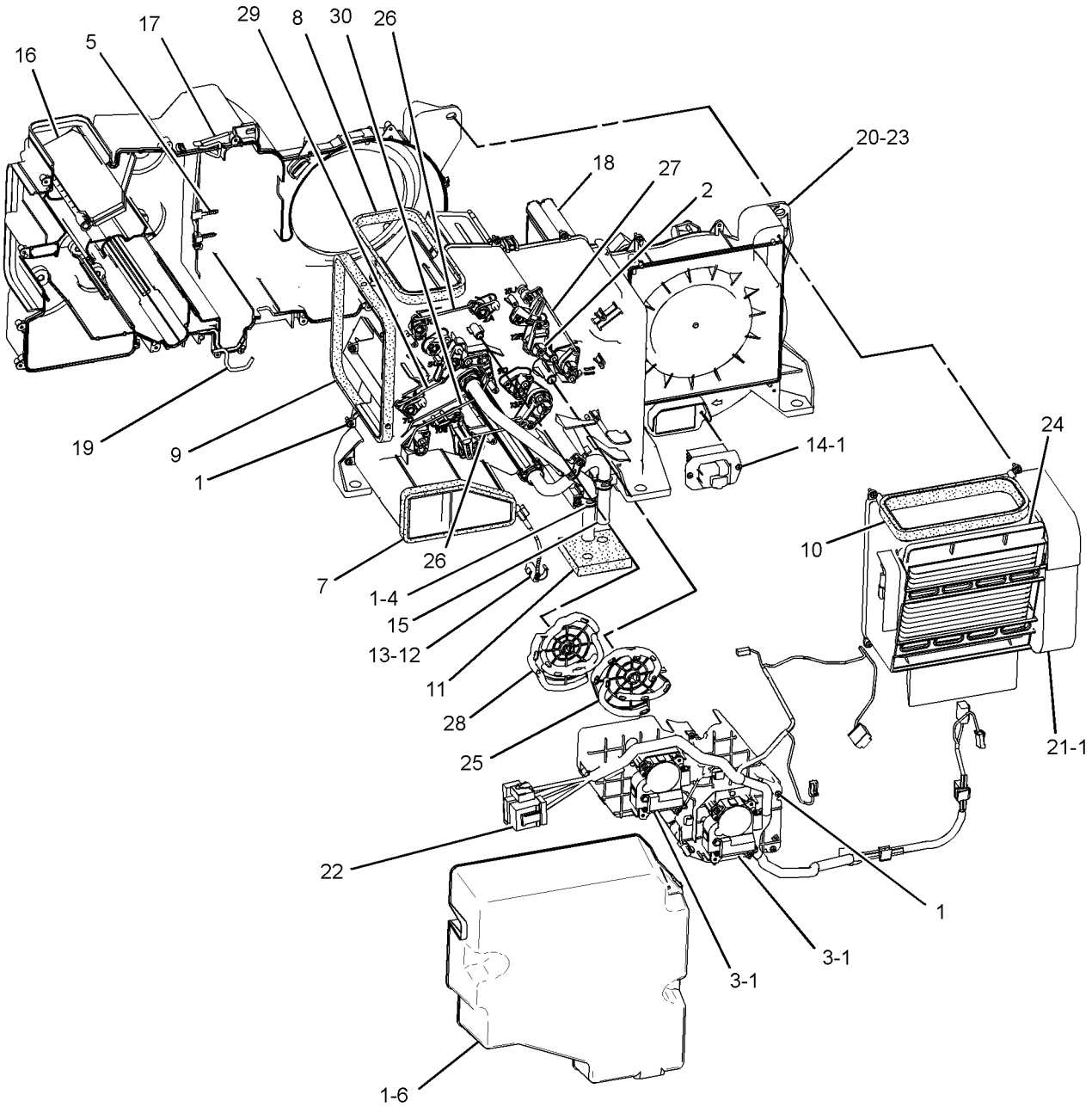

FRONT VIEW
(UPPER RIGHT)

GRAPHIC #1 **<END>** g01684274

OPERATOR STATION

259-7346 ARMREST GP–RH

S/N: WNE1-UP; ZMF1-UP; CWG1-UP

PART OF 259-7348 CONSOLE GP-OPERATOR

SMCS-7307 **i02488350**

NOTE	REF NO	GRAPHIC REF	PART NUMBER	QTY	PART NAME 1 2 3 4 5 6 (PRODUCT LEVEL)	SEE PAGE
M	1	1	**171-7325**	3	SCREW-TAPPING (M5X0.8-THD)	
M	2	1	**185-8286**	2	SCREW-MACHINE (M4X0.7X8-MM)	
	3	1	**235-8951**	1	SUPPORT AS	
	4	1	**235-8996**	1	COVER	
	5	1	**235-8997**	1	KNOB	
	6	1	**279-3161**	1	CUSHION	

M-METRIC PART

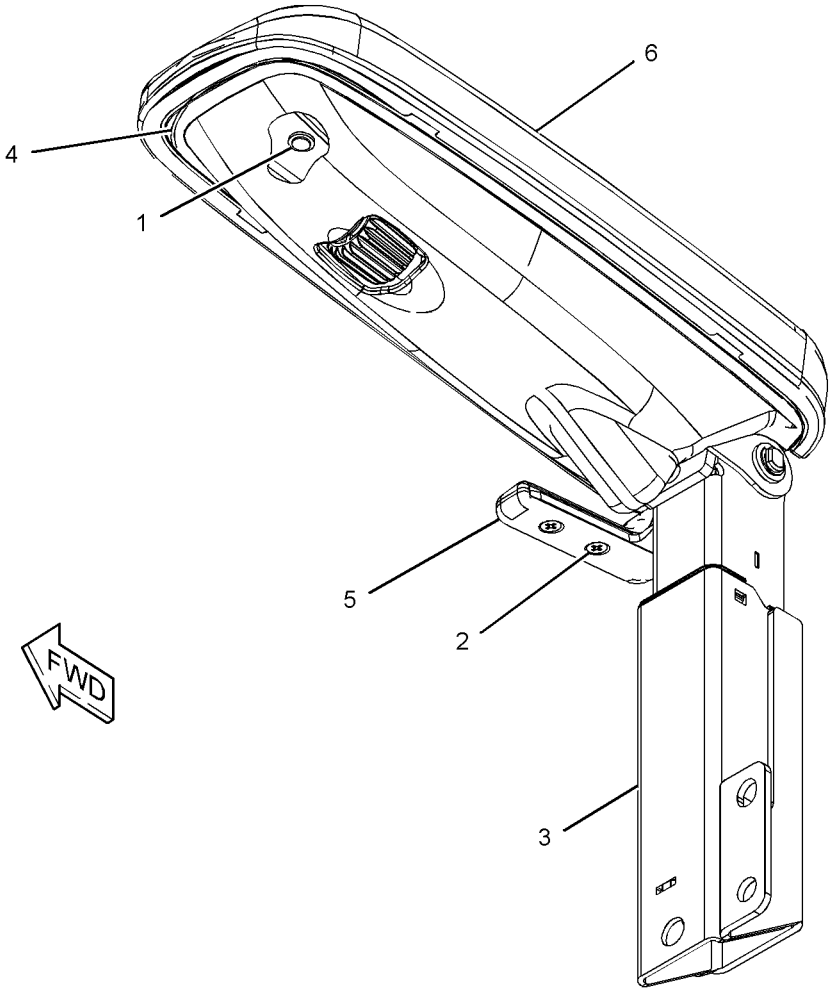

GRAPHIC #1 **<END>** g01217218

OPERATOR STATION

259-7347 ARMREST GP–LH

S/N: WNE1-UP; ZMF1-UP; CWG1-UP

PART OF 259-7349 CONSOLE GP-OPERATOR

SMCS-7307 **i02488397**

NOTE	REF NO	GRAPHIC REF	PART NUMBER	QTY	PART NAME 1 2 3 4 5 6 (PRODUCT LEVEL)	SEE PAGE
M	1	1	**171-7325**	3	SCREW-TAPPING (M5X0.8-THD)	
M	2	1	**185-8286**	2	SCREW-MACHINE (M4X0.7X8-MM)	
	3	1	**235-8952**	1	SUPPORT AS	
	4	1	**235-8996**	1	COVER	
	5	1	**235-8998**	1	KNOB	
	6	1	**259-7345**	1	CUSHION	

M-METRIC PART

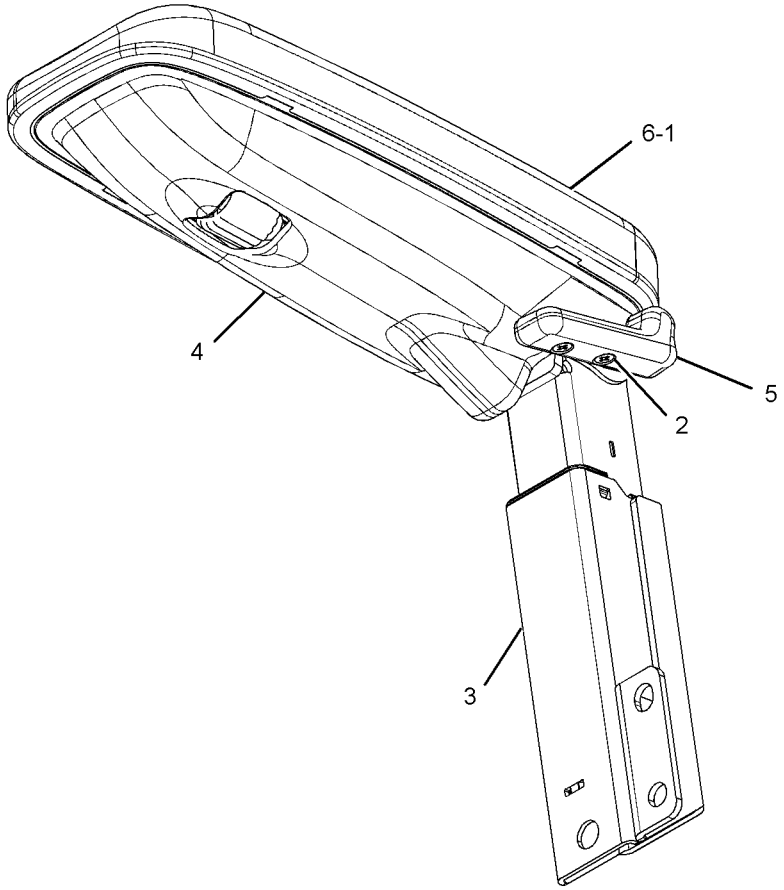

GRAPHIC #1 **<END>** g01210886

OPERATOR STATION

334-6541 CAB GP—EXTERIOR

S/N: WNE1-UP; ZMF1-UP; CWG1-UP
PART OF 340-6497 CAB GP
AN ATTACHMENT

SMCS-7301, 7325 **i03669804**

NOTE	REF NO	GRAPHIC REF	PART NUMBER	QTY	PART NAME 1 2 3 4 5 6 (PRODUCT LEVEL)	SEE PAGE
	1	1	**156-6599**	1	STRIKER	
	2	1	**164-0515**	1	JOINT	
	3	1	**167-7042**	2	SEAL	
	4	1	**178-5570**	2	GROMMET	
M	5	1	**189-2864**	2	SCREW-FLAT HEAD (M8X1.25X30-MM)	
	6	1	**4B-4278**	3	WASHER (10.2X20.5X1.6-MM THK)	
	7	1	**205-6295**	1	LATCH AS	
	8	1	**280-8618**	1	HAMMER	
Y	9	1	**327-6550**	1	MIRROR GP-REAR VIEW	1069
	10	1	**334-6542**	1	LEVER AS	
	11	1	**334-6546**	1	LEVER AS	
	12	1	**334-6549**	1	GUARD	
	13	1	**334-6550**	1	CABLE AS	
	14	1	**334-6551**	1	ROD	
Y	15	1	*334-6552*	1	LEVER GP-CAB DOOR	1050
Y	16	1	*334-6557*	1	LEVER GP-CAB DOOR	1051
	17	1	**334-6562**	1	BRACKET AS	
	18	1	**334-6564**	2	HOLDER	
	19	1	**334-6565**	1	BRACKET	
	20	1	**334-6566**	1	STOP	
	21	1	**334-6567**	1	COVER	
Y	22	1	**334-6568**	1	COVER GP-CAB	1017
	23	1	**340-6586**	1	CLIP	
	24	1	**340-6587**	1	GROMMET	
Y	25	1	**346-7375**	1	MOUNTING GP-MIRROR	1079
M	26	1	**096-2622**	2	SCREW-MACHINE (M4X0.7X8-MM)	
M	27	1	**099-0823**	3	SCREW-MACHINE (M6X1X6-MM)	
	28	1	**099-3607**	2	WASHER-HARD (10.2X30X3.2-MM THK)	
M	29	1	**127-0580**	2	SCREW-FLAT HEAD (M8X1.25X20-MM)	
M	30	1	**128-2135**	1	SCREW-TRUSS HEAD (M6X1X13-MM)	
	31	1	**176-1986**	1	LAMP AS-DOME	
		1	**201-4417**	1	LAMP (24-VOLT, 10-WATT)	
	32	1	**1R-5998**	4	LOCKWASHER	
M	33	1	**3E-8020**	6	SCREW-TRUSS HEAD (M6X1X25-MM)	
M	34	1	**095-0755**	2	SCREW-MACHINE (M4X0.7X12-MM)	
	35	1	**4I-1205**	2	BUMPER	
M	36	1	**8T-4137**	2	BOLT (M10X1.5X20-MM)	
	37	1	**4I-3144**	2	WASHER-HARD (10.2X22X3.2-MM THK)	
	38	1	**4I-4270**	1	HOLDER-GLASS	
	39	1	**5C-7793**	1	HOOK-COAT	
M	40	1	**8T-4133**	5	NUT (M10X1.5-THD)	
M	41	1	**8T-4779**	1	BOLT (M16X2X35-MM)	
M	42	1	**9X-2041**	2	SCREW-TRUSS HEAD (M10X1.5X20-MM)	
M	43	1	**9X-2042**	15	SCREW-TRUSS HEAD (M6X1X12-MM)	
	44	1	**9X-8257**	1	WASHER (17.5X30X3.5-MM THK)	

M-METRIC PART
Y-SEPARATE ILLUSTRATION

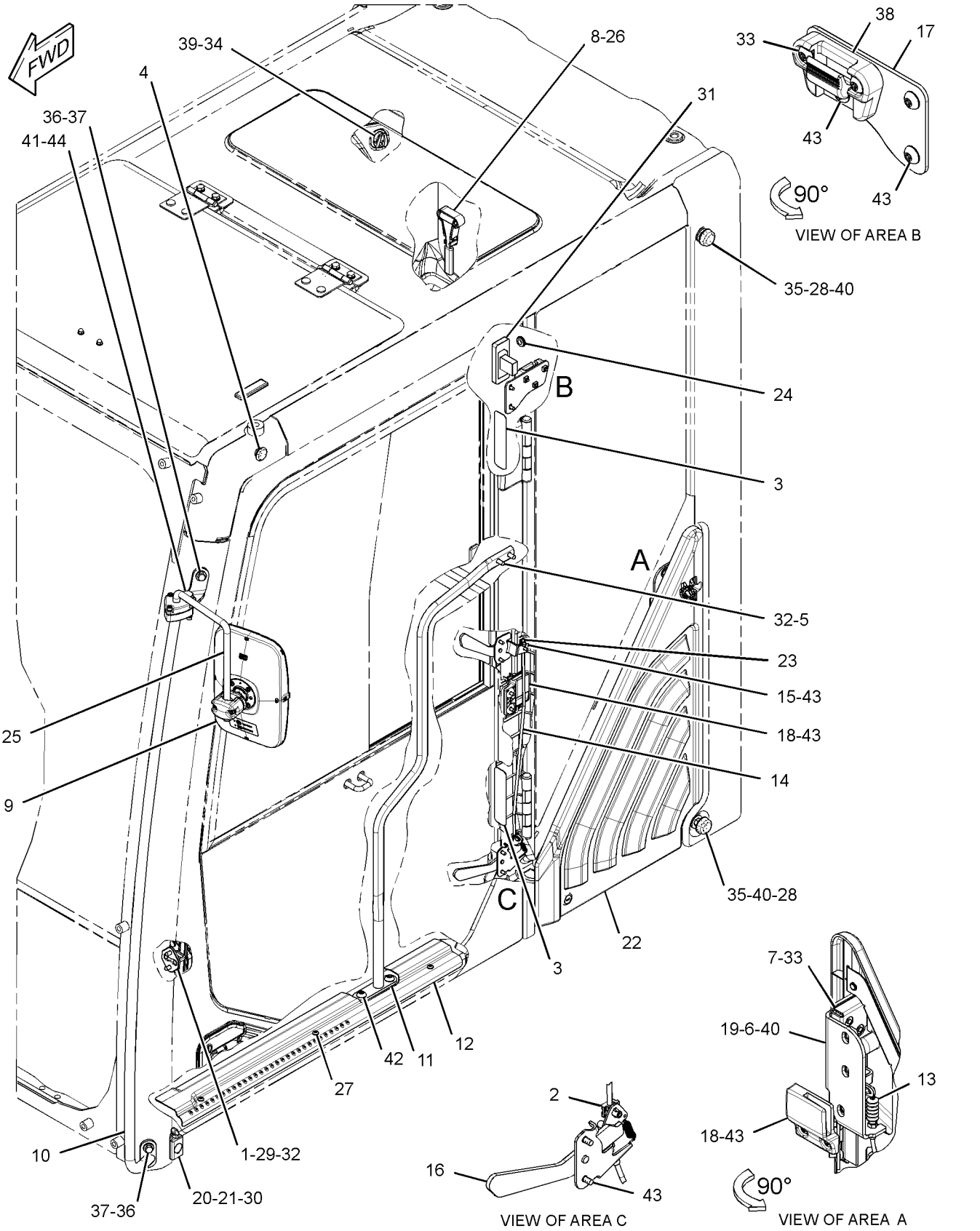

GRAPHIC #1 **<END>** g01961101

OPERATOR STATION

340-6496 CAB GP

S/N: WNE1-UP; ZMF1-UP; CWG1-UP
PART OF 347-9907, 347-9908 OPTION AR-CAB
AN ATTACHMENT

SMCS-7301, 7325 **i03645024**

NOTE	REF NO	GRAPHIC REF	PART NUMBER	QTY	PART NAME 1 2 3 4 5 6 (PRODUCT LEVEL)	SEE PAGE
M	1	1	**128-2135**	5	SCREW-TRUSS HEAD (M6X1X13-MM)	
	2	1	**164-8474**	2	LOUVER AS-VENT	
Y	3	1	**234-6501**	1	COVER GP-CAB (REAR)	1016
	4	1	**235-9001**	1	SUPPORT	
Y	5	1	**340-6497**	1	CAB GP	975
M	6	1	**8T-4190**	4	BOLT (M16X2X25-MM)	
M	7	1	**8T-4192**	7	BOLT (M12X1.75X25-MM)	
	8	1	**8T-4223**	12	WASHER-HARD (13.5X25.5X3-MM THK)	
M	9	1	**8T-4648**	5	BOLT (M12X1.75X70-MM)	
	10	1	**8Y-6967**	2	LOUVER AS-VENT	
	11	1	**9X-8257**	4	WASHER (17.5X30X3.5-MM THK)	

M-METRIC PART
Y-SEPARATE ILLUSTRATION

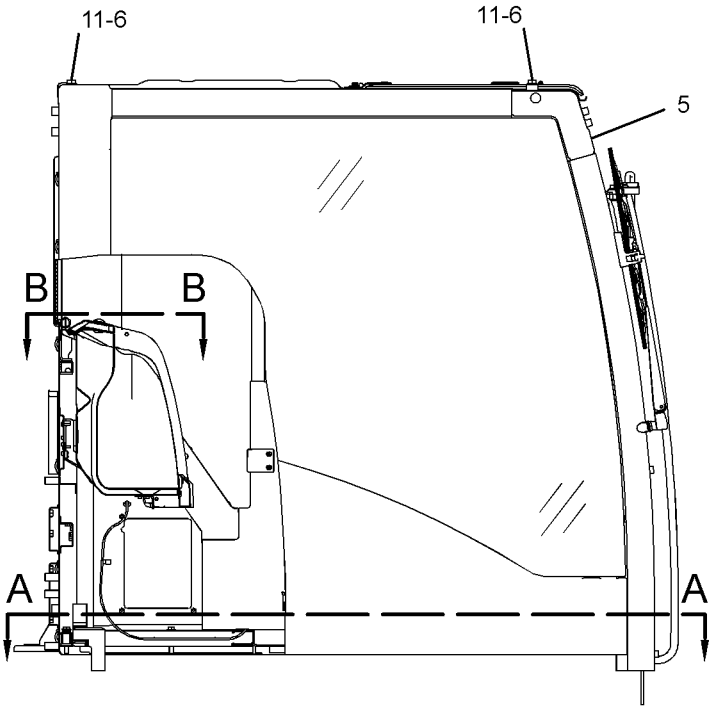

RIGHT SIDE VIEW

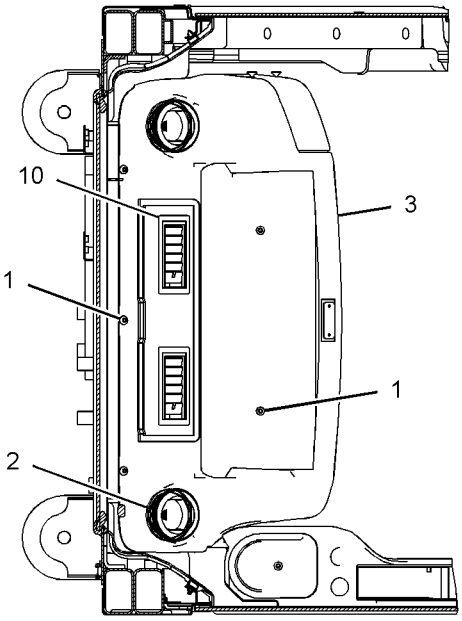

SECTION B-B

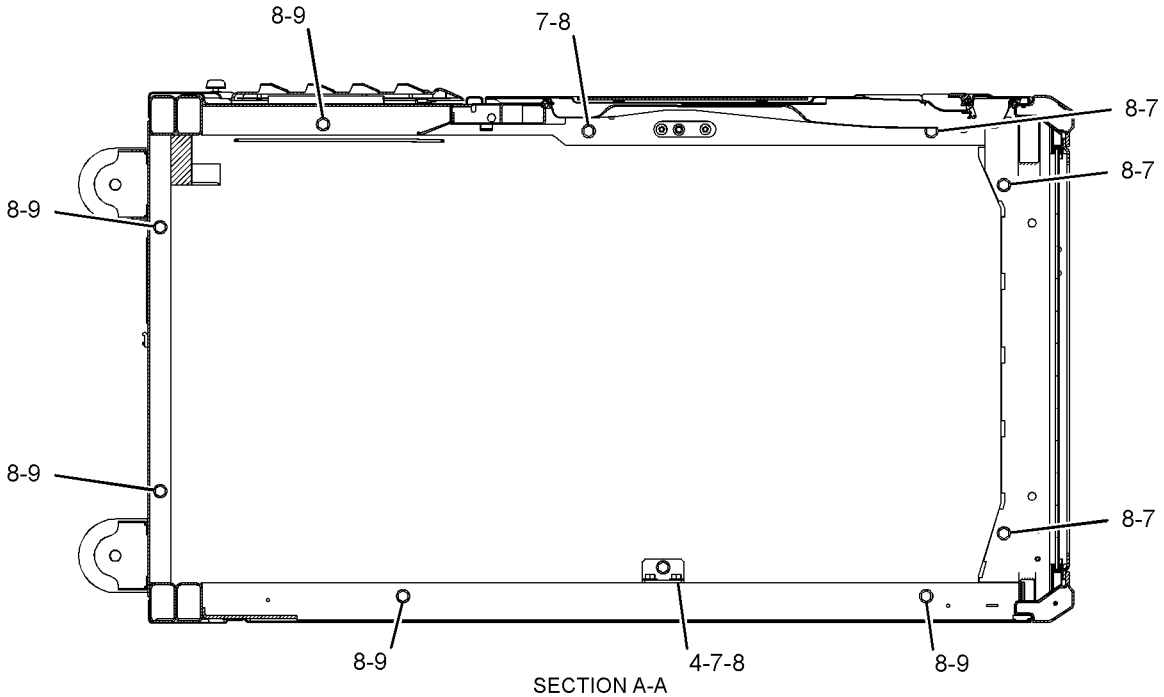

SECTION A-A

GRAPHIC #1 **<END>** g01960990

OPERATOR STATION

340-6497 CAB GP

S/N: WNE1-UP; ZMF1-UP; CWG1-UP
PART OF 340-6496 CAB GP
AN ATTACHMENT

SMCS-7301, 7325 **i03645035**

NOTE	REF NO	GRAPHIC REF	PART NUMBER	QTY	PART NAME 1 2 3 4 5 6 (PRODUCT LEVEL)	SEE PAGE
	1	1	**316-8854**	1	GLASS	
Y	2	1	*327-6551*	1	WIPER GP-WINDOW	1120
Y	3	1	*327-6625*	1	WINDOW GP-CAB	1111
Y	4	1	**334-6387**	1	DOOR GP-CAB	1019
Y	5	1	*334-6541*	1	CAB GP	971
Y	6	1	*340-6665*	1	HATCH GP-ROOF	1035
	7	1	*340-6680*	1	CAB AS	
M	7A	1	**185-8182**	6	BOLT (M10X1.5X20-MM)	
	7B	1	**185-8187**	6	WASHER (10.2X22X3.2-MM THK)	
M	7C	1	**9X-2041**	6	SCREW-TRUSS HEAD (M10X1.5X20-MM)	
	7D	1	**151-6777**	2	HINGE	
Y	8	1	*340-6693*	1	TRIM GP-CAB	1102
Y	9	1	*340-6695*	1	WINDOW GP-CAB	1113

M-METRIC PART
Y-SEPARATE ILLUSTRATION

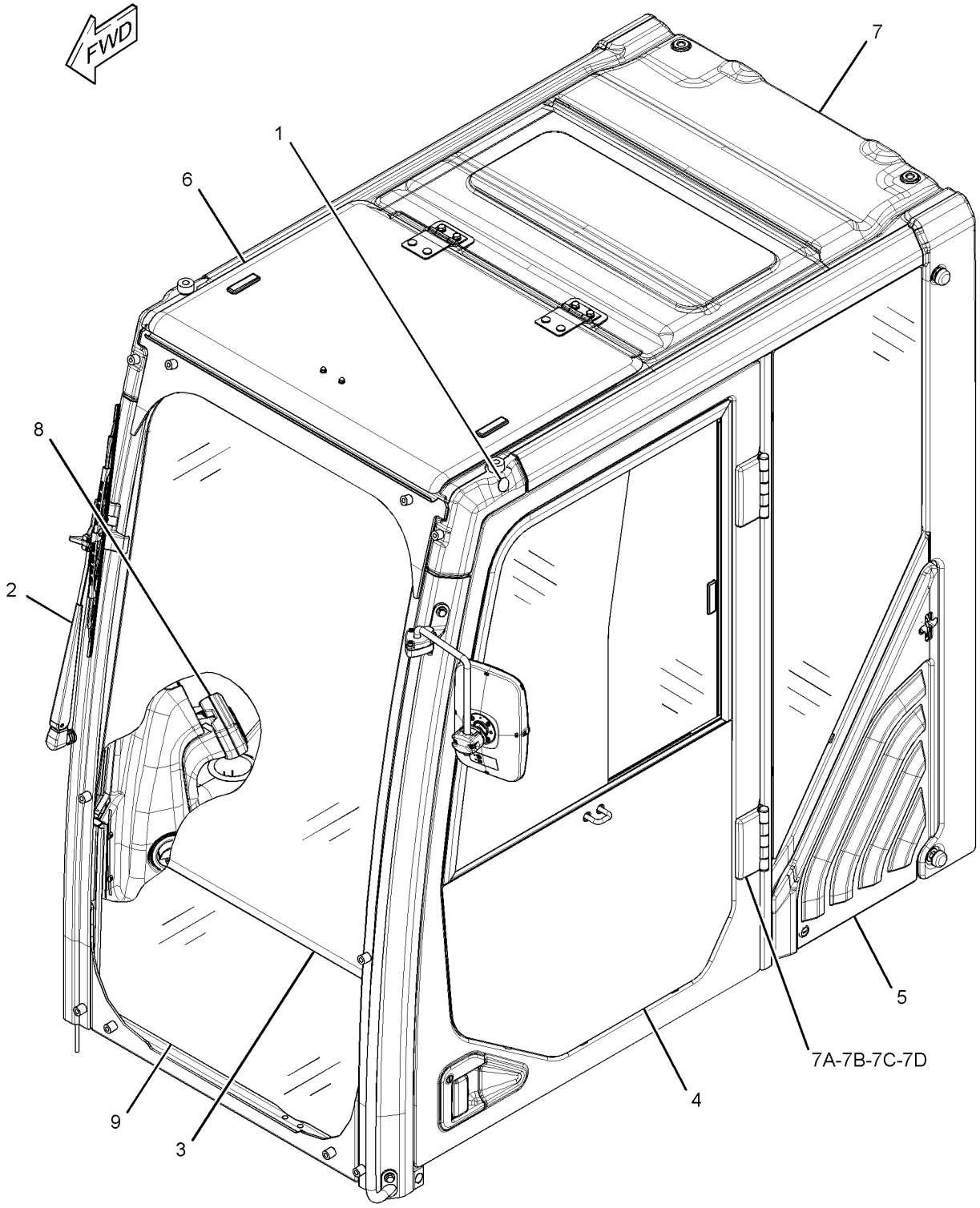

GRAPHIC #1 **<END>** g01961817

OPERATOR STATION

340-3845 CAMERA & MIRROR AR

S/N: CWG1-UP
PART OF 347-9903 OPTION AR-UNDERCARRIAGE
FOR USE WITH 327-6552–PAGE 1070, 327-6553–PAGE 1071
AN ATTACHMENT

SMCS-7319, 7348 **i03634372**

NOTE	PART NUMBER	QTY	PART NAME 1 2 3 4 5 6 (PRODUCT LEVEL)	SEE PAGE
Y	*340-3846*	1	CAMERA & WIRING GP	186
Y	*330-1574*	1	MIRROR AR-DOWN VIEW	1065
Y-SEPARATE ILLUSTRATION				

<END>

343-1181 CAMERA & MIRROR AR

S/N: WNE1-UP; ZMF1-UP
PART OF 347-9902, 347-9938 OPTION AR-UNDERCARRIAGE
FOR USE WITH 327-6553–PAGE 1071, 327-6552–PAGE 1070
AN ATTACHMENT

SMCS-7319, 7348 **i03648668**

NOTE	PART NUMBER	QTY	PART NAME 1 2 3 4 5 6 (PRODUCT LEVEL)	SEE PAGE
Y	*343-1193*	1	INSTALLATION AR (CAMERA)	1042
Y	*330-1353*	1	MIRROR AR-REAR VIEW	1065
Y-SEPARATE ILLUSTRATION				

<END>

OPERATOR STATION

245-7836 COIL GP-EVAPORATOR

S/N: WNE1-UP; ZMF1-UP; CWG1-UP
PART OF 316-8916 AIR CONDITIONER GP
AN ATTACHMENT

SMCS-7343 **i02218138**

NOTE	REF NO	GRAPHIC REF	PART NUMBER	QTY	PART NAME 1 2 3 4 5 6 (PRODUCT LEVEL)	SEE PAGE
	1	1	**245-7837**	1	VALVE AS-EXPANSION	
	2	1	**245-7905**	1	INSULATOR	
M	3	1	**8T-0266**	2	BOLT-SOCKET HEAD (M5X0.8X40-MM)	
	4	1	**121-7136**	1	SEAL-O-RING	
	5	1	**121-7138**	1	SEAL-O-RING	

M-METRIC PART

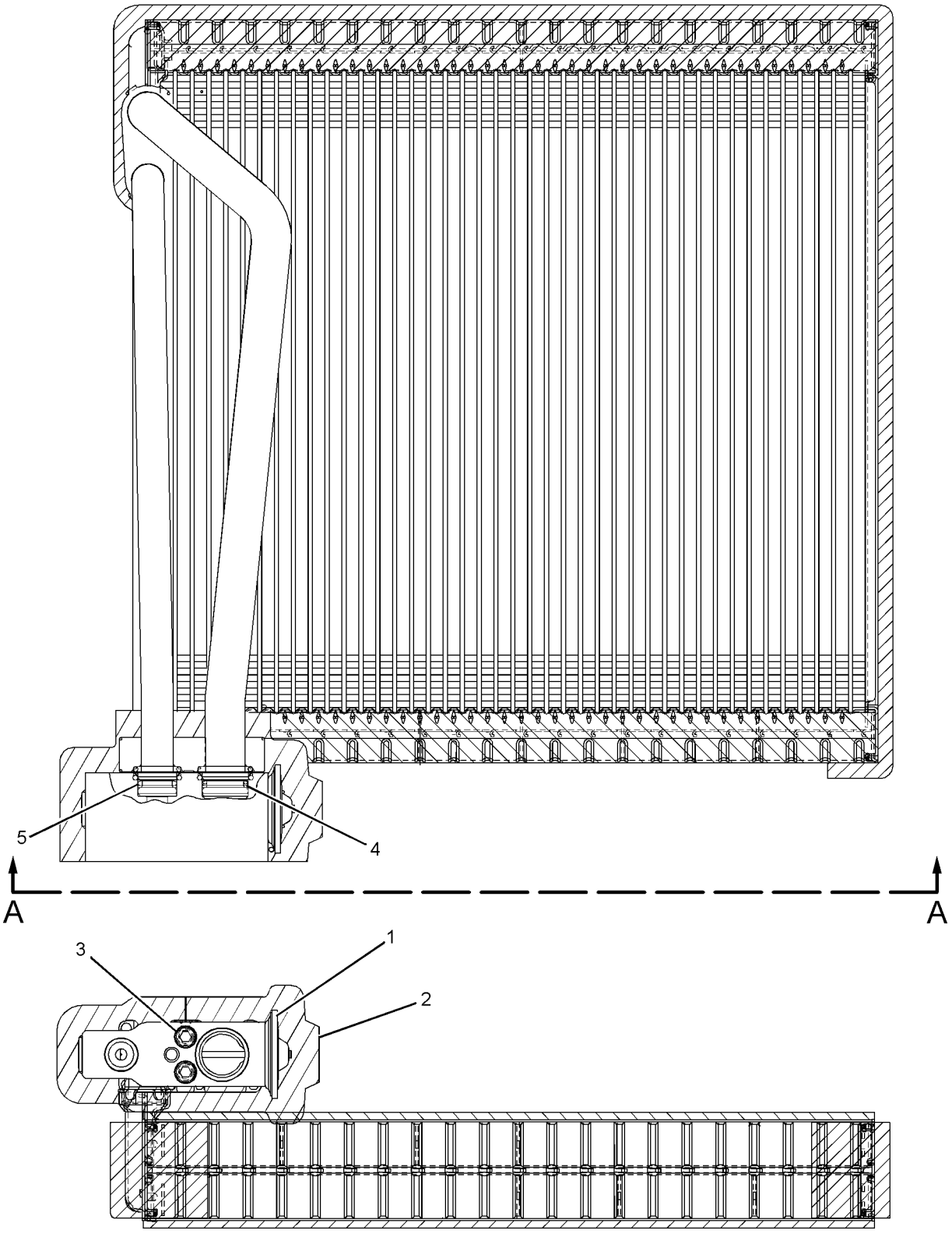

VIEW A-A

GRAPHIC #1 **<END>** g01134658

OPERATOR STATION

239-6507 COMPRESSOR GP-REFRIGERANT

S/N: WNE1-UP; ZMF1-UP; CWG1-UP

PART OF 324-4206, 324-4208 INSTALLATION AR-ENGINE

SMCS-1802 **i02475999**

NOTE	REF NO	GRAPHIC REF	PART NUMBER	QTY	PART NAME 1 2 3 4 5 6 (PRODUCT LEVEL)	SEE PAGE
	1	1	**118-9863**	1	PULLEY	
	2	1	**201-3888**	1	SPACER	
	3	1	**255-2927**	1	V-BELT (AIR CONDITIONER COMPRESSOR)	
Y	4	1	**255-3018**	1	PULLEY GP-IDLER	50
Y	5	1	**259-7244**	1	COMPRESSOR GP-REFRIGERANT	982
	6	1	**266-6207**	1	BRACKET AS	
M	7	1	**8T-3647**	4	BOLT (M8X1.25X80-MM)	
	8	1	**8T-4121**	7	WASHER-HARD (11X21X2.5-MM THK)	
M	9	1	**8T-4172**	3	BOLT (M10X1.5X80-MM)	
M	10	1	**8T-4184**	2	BOLT (M12X1.75X45-MM)	
	11	1	**8T-4223**	2	WASHER-HARD (13.5X25.5X3-MM THK)	
	12	1	**8T-4224**	4	WASHER-HARD (8.8X16X2-MM THK)	
M	13	1	**8T-6466**	4	BOLT (M10X1.5X60-MM)	
	14	1	**5P-4116**	1	WASHER-HARD (8.8X20.5X2-MM THK)	

M-METRIC PART
Y-SEPARATE ILLUSTRATION

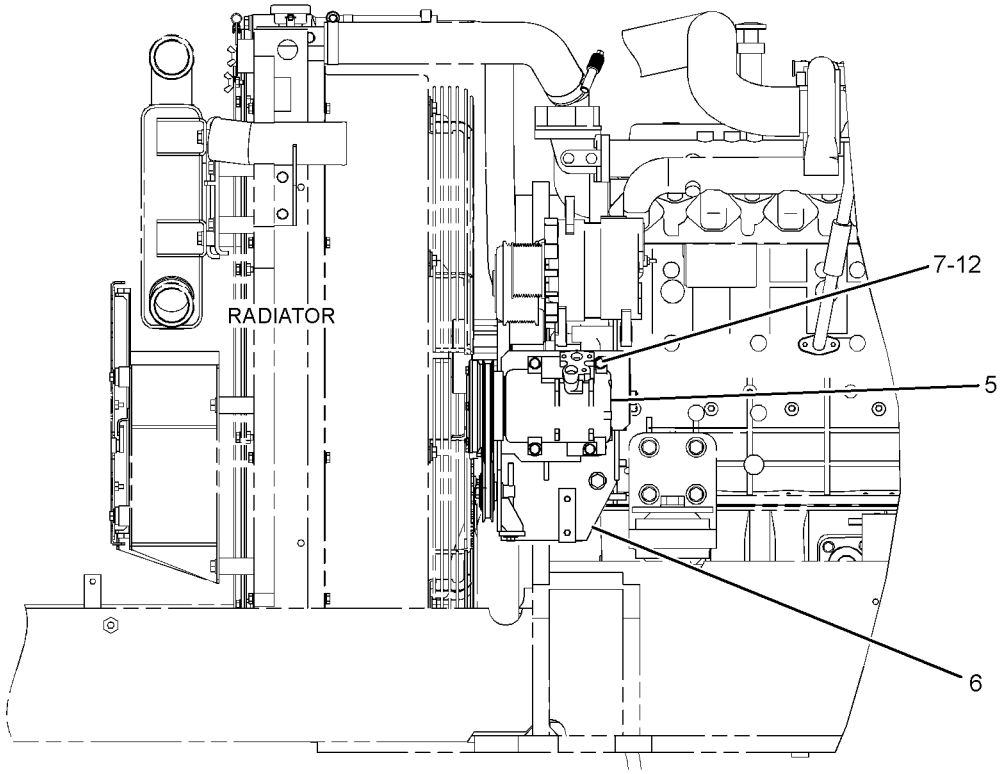

LEFT SIDE VIEW OF ENGINE

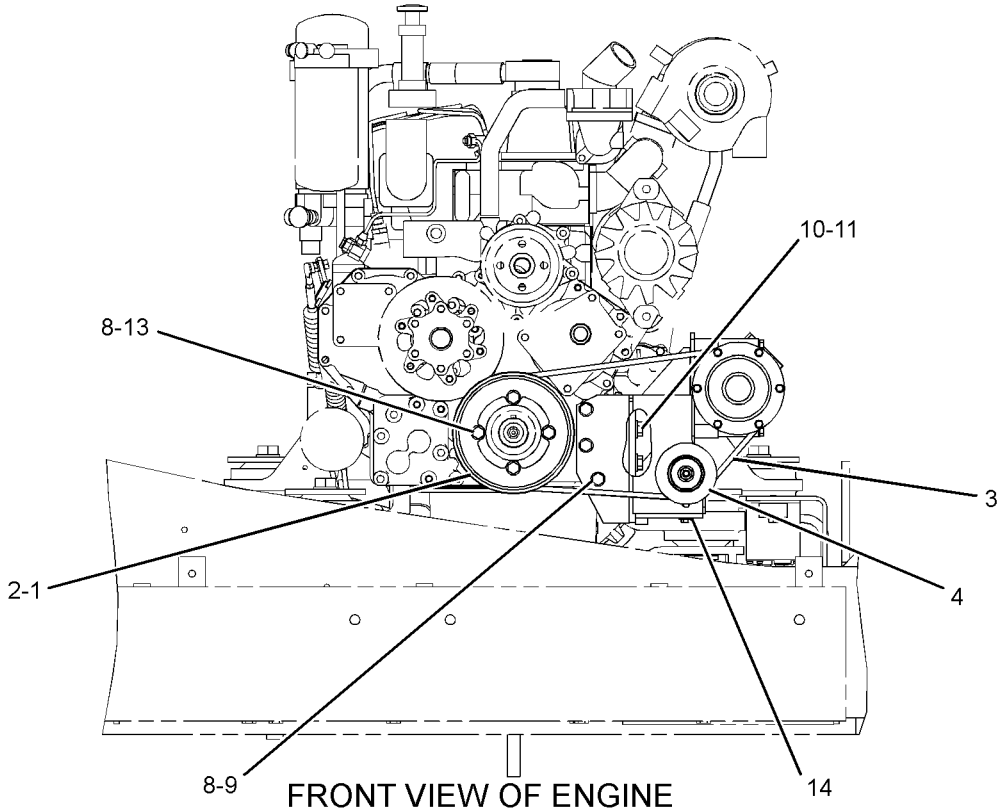

FRONT VIEW OF ENGINE

GRAPHIC #1

<END>

g01238479

OPERATOR STATION

259-7244 COMPRESSOR GP-REFRIGERANT

S/N: WNE1-UP; ZMF1-UP; CWG1-UP

PART OF 239-6507 COMPRESSOR GP-REFRIGERANT

SMCS-1802 **i02974093**

NOTE	REF NO	GRAPHIC REF	PART NUMBER	QTY	PART NAME 1 2 3 4 5 6 (PRODUCT LEVEL)	SEE PAGE
	1	1	**259-7286**	1	COIL AS (24-VOLT)	
		1	**8T-8729**	2	PIN-CONNECTOR	
		1	**243-4505**	1	RECEPTACLE AS-CONNECTOR (2-PIN)	
B	2	1	**264-9982**	1	WASHER (6.2X12.2X0.1-MM THK)	
B	3	1	**264-9983**	1	WASHER (6.2X12.2X0.3-MM THK)	
B	4	1	**264-9984**	1	WASHER (6.2X12.2X0.5-MM THK)	

B-USE AS REQUIRED

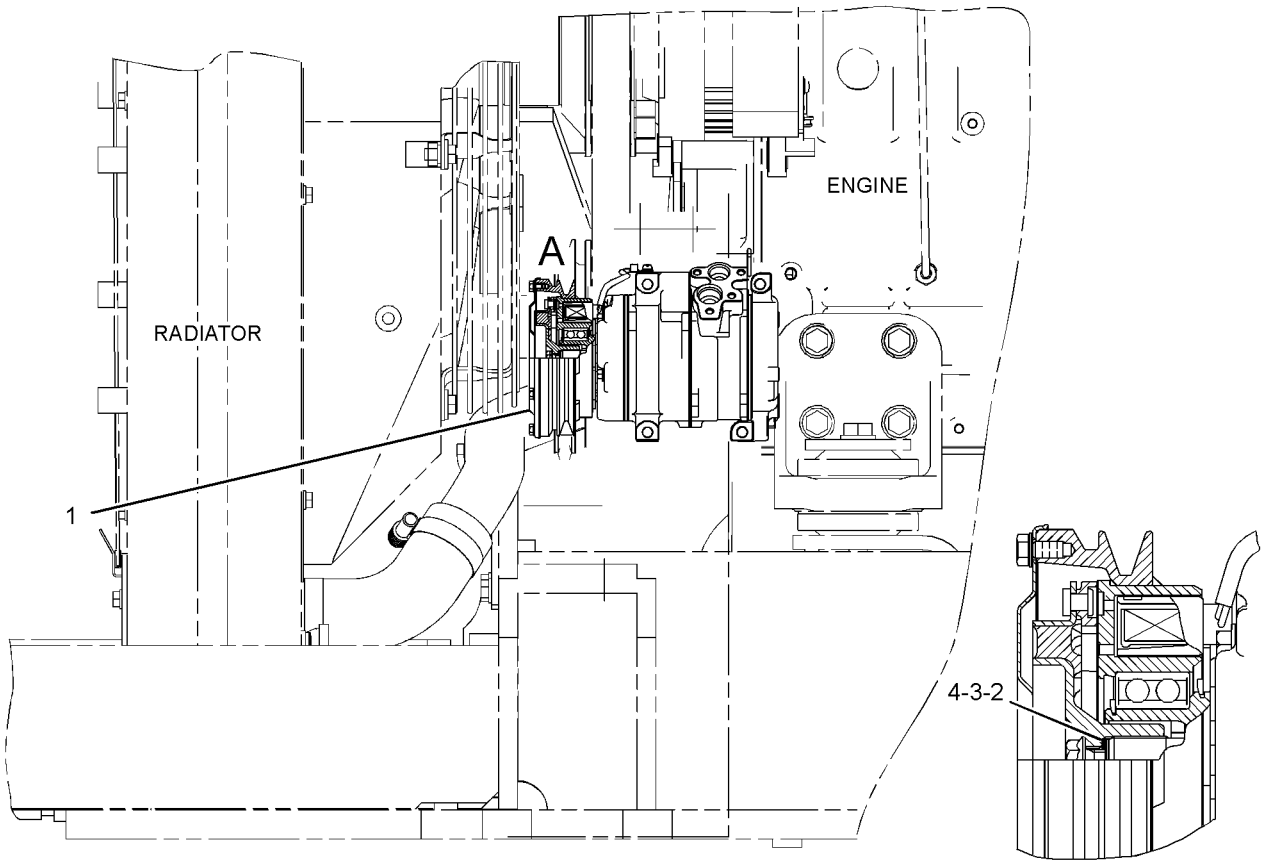

REAR VIEW

VIEW OF AREA A

GRAPHIC #1 **<END>** g01505958

OPERATOR STATION

259-7184 CONDENSER & MTG GP-REFRIGERANT

S/N: WNE1-UP; ZMF1-UP
PART OF 340-6549 AIR CONDITIONER AR
AN ATTACHMENT

SMCS-1805 **i03279620**

NOTE	REF NO	GRAPHIC REF	PART NUMBER	QTY	PART NAME 1 2 3 4 5 6 (PRODUCT LEVEL)	SEE PAGE
Y	1	1	**245-7749**	1	CONDENSER GP-REFRIGERANT	988
	2	1	**259-7207**	1	SUPPORT AS-CONDENSER	
M	3	1	**7X-2533**	4	BOLT (M6X1X35-MM)	
	4	1	**8T-4121**	4	WASHER-HARD (11X21X2.5-MM THK)	
M	5	1	**8T-4137**	4	BOLT (M10X1.5X20-MM)	
	6	1	**117-8929**	4	WASHER (6.6X22X2-MM THK)	

M-METRIC PART
Y-SEPARATE ILLUSTRATION

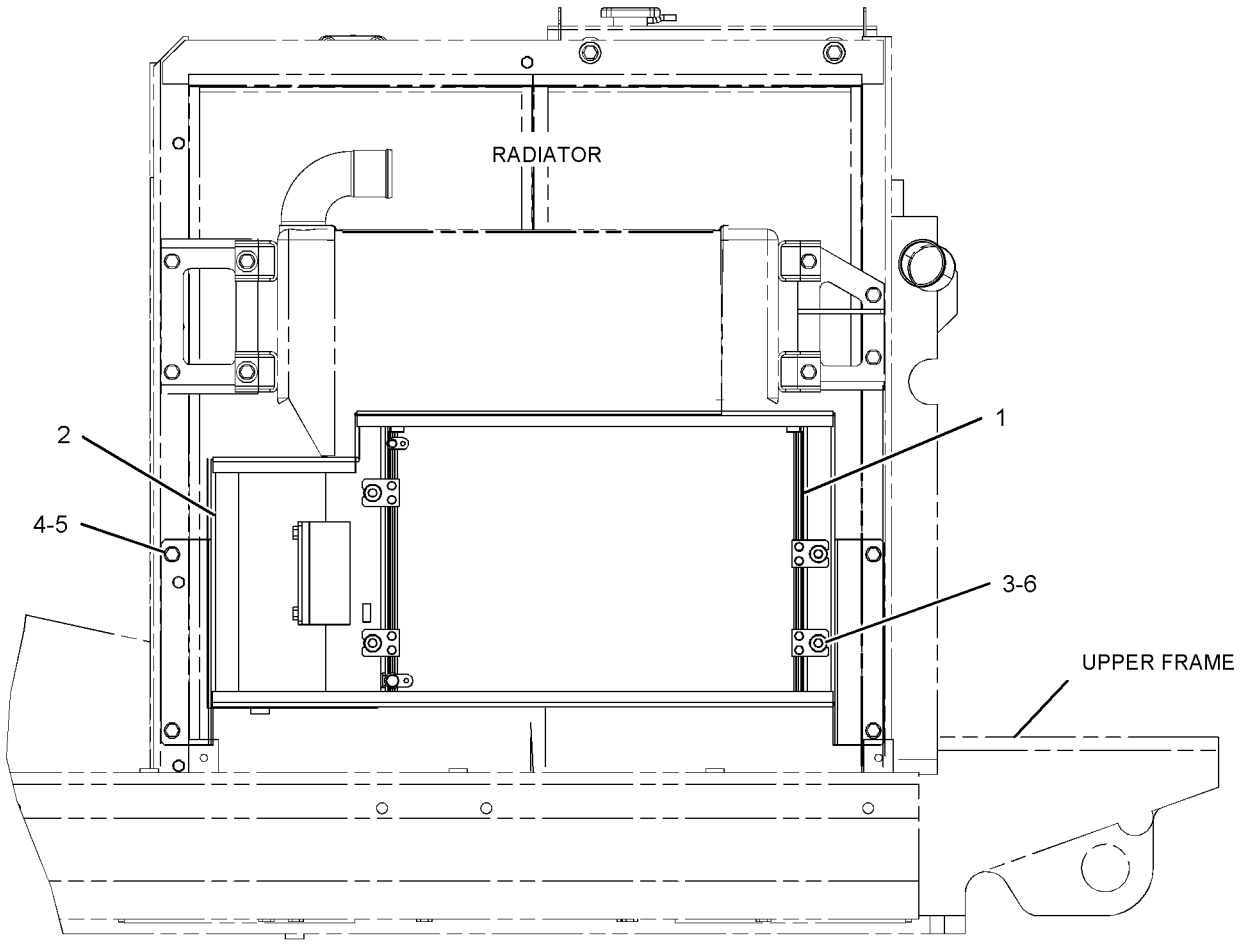

LEFT SIDE VIEW

GRAPHIC #1

<END>

g01230238

OPERATOR STATION

259-7185 CONDENSER & MTG GP-REFRIGERANT

S/N: CWG1-UP

PART OF 324-4208 INSTALLATION AR-ENGINE

SMCS-1805 **i03645194**

NOTE	REF NO	GRAPHIC REF	PART NUMBER	QTY	PART NAME 1 2 3 4 5 6 (PRODUCT LEVEL)	SEE PAGE
	1	1	**7Y-8561**	1	BUMPER	
	2	1	**193-2764**	1	HANDLE AS	
Y	3	1	**245-7749**	1	CONDENSER GP-REFRIGERANT	988
	4	1	**245-7753**	1	SUPPORT AS	
	5	1	**259-7233**	1	SUPPORT AS	
	6	1	**259-7287**	1	SUPPORT AS-CONDENSER	
		1	**099-7857**	2	HINGE	
	7	1	**193-2765**	2	SUPPORT AS	
	8	1	**5P-4116**	4	WASHER-HARD (8.8X20.5X2-MM THK)	
M	9	1	**7X-2533**	4	BOLT (M6X1X35-MM)	
	10	1	**8T-4121**	8	WASHER-HARD (11X21X2.5-MM THK)	
M	11	1	**8T-4133**	1	NUT (M10X1.5-THD)	
M	12	1	**8T-4137**	7	BOLT (M10X1.5X20-MM)	
M	13	1	**8T-4179**	4	BOLT (M12X1.75X20-MM)	
M	14	1	**8T-4189**	4	BOLT (M8X1.25X20-MM)	
	15	1	**8T-4223**	4	WASHER-HARD (13.5X25.5X3-MM THK)	
	16	1	**117-8929**	4	WASHER (6.6X22X2-MM THK)	
	17	1	**273-5399**	1	BRACKET AS	

M-METRIC PART
Y-SEPARATE ILLUSTRATION

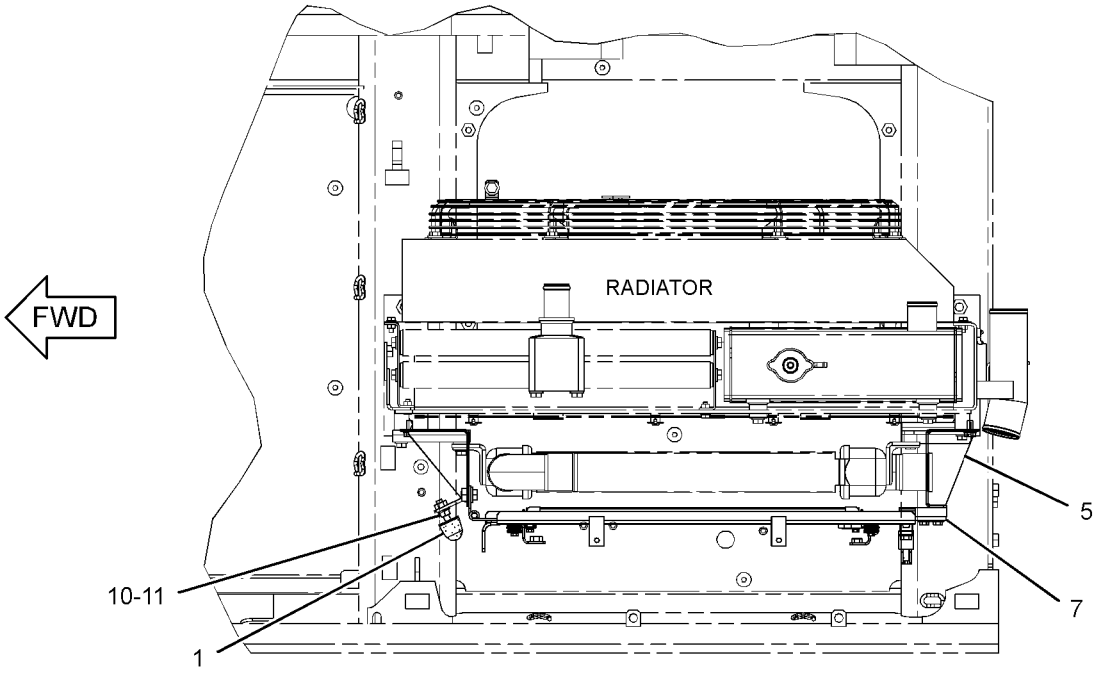

TOP VIEW

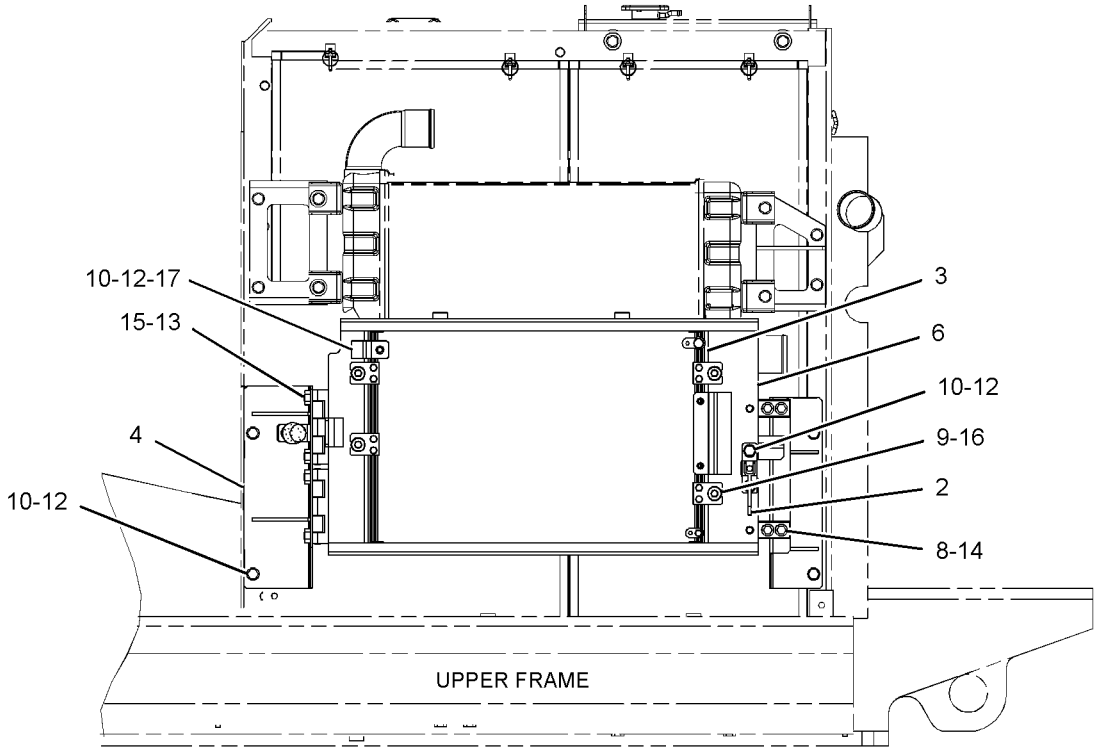

LEFT SIDE VIEW

GRAPHIC #1 **<END>** g01236534

OPERATOR STATION

273-5167 CONDENSER & MTG GP-REFRIGERANT

S/N: WNE1-UP; ZMF1-UP

PART OF 324-4206 INSTALLATION AR-ENGINE

SMCS-1805 **i03297857**

NOTE	REF NO	GRAPHIC REF	PART NUMBER	QTY	PART NAME 1 2 3 4 5 6 (PRODUCT LEVEL)	SEE PAGE
	1	1	**7Y-8561**	1	BUMPER	
	2	1	**193-2764**	1	HANDLE AS	
Y	3	1	**245-7749**	1	CONDENSER GP-REFRIGERANT	988
	4	1	**293-1121**	1	SUPPORT AS	
	5	1	**273-5399**	1	BRACKET AS	
	6	1	**293-1124**	1	SUPPORT AS	
	7	1	**293-1127**	1	SUPPORT AS-CONDENSER	
	8	1	**193-2765**	2	SUPPORT AS	
	9	1	**5P-4116**	4	WASHER-HARD (8.8X20.5X2-MM THK)	
M	10	1	**8T-4971**	4	BOLT (M6X1X30-MM)	
	11	1	**8T-4121**	8	WASHER-HARD (11X21X2.5-MM THK)	
M	12	1	**8T-4133**	1	NUT (M10X1.5-THD)	
M	13	1	**8T-4137**	7	BOLT (M10X1.5X20-MM)	
M	14	1	**8T-4179**	4	BOLT (M12X1.75X20-MM)	
M	15	1	**8T-4189**	4	BOLT (M8X1.25X20-MM)	
	16	1	**8T-4223**	4	WASHER-HARD (13.5X25.5X3-MM THK)	
	17	1	**117-8929**	4	WASHER (6.6X22X2-MM THK)	

M-METRIC PART
Y-SEPARATE ILLUSTRATION

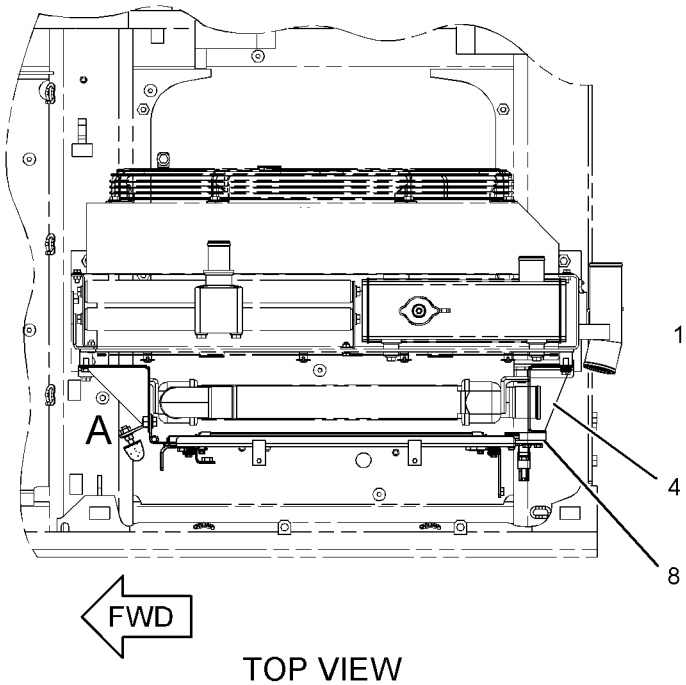

TOP VIEW

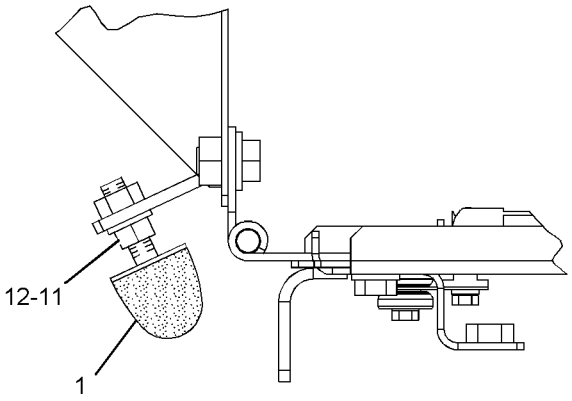

VIEW OF AREA A

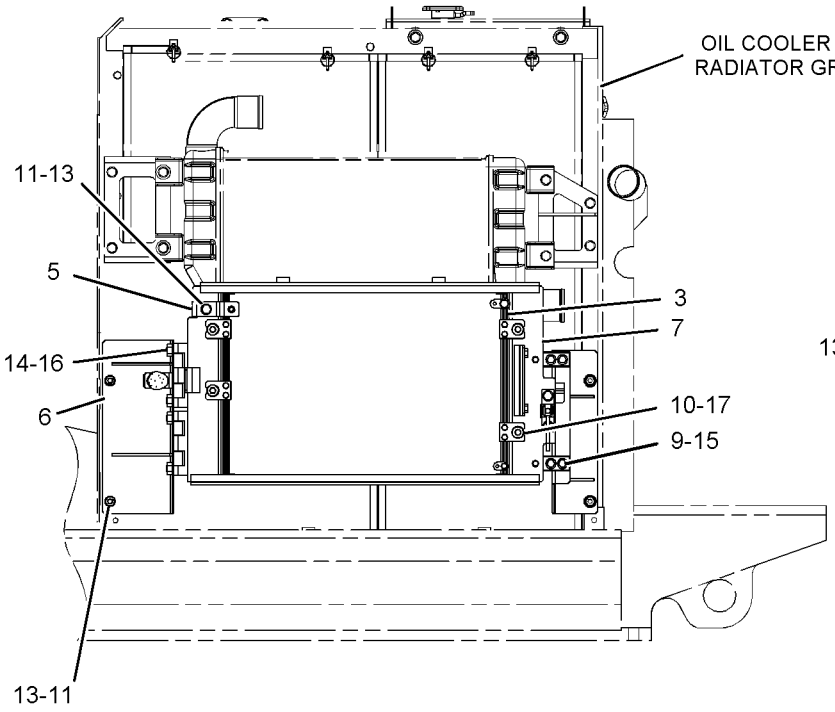

LEFT SIDE VIEW

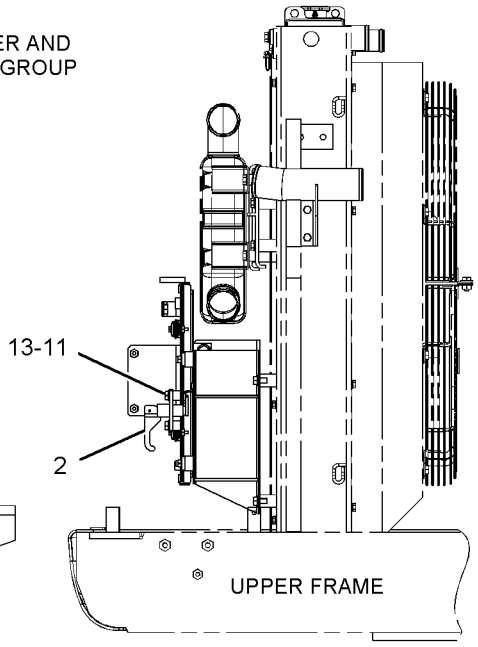

REAR VIEW

GRAPHIC #1 **<END>** g01290923

OPERATOR STATION

245-7749 CONDENSER GP-REFRIGERANT

S/N: WNE1-UP; ZMF1-UP; CWG1-UP
PART OF 259-7184, 259-7185, 273-5167 CONDENSER & MTG GP-REFRIGERANT
ALSO AN ATTACHMENT

SMCS-1805 **i02416857**

NOTE	REF NO	GRAPHIC REF	PART NUMBER	QTY	PART NAME 1 2 3 4 5 6 (PRODUCT LEVEL)	SEE PAGE
	1	1	**235-8880**	1	CONDENSER AS	
	2	1	**245-7750**	4	BUSHING-RUBBER	
	3	1	**245-7751**	4	BRACKET	
	4	1	**095-0827**	8	LOCKWASHER	
M	5	1	**8T-4171**	8	BOLT (M6X1X12-MM)	
	6	1	**9X-8256**	8	WASHER (6.6X12X2-MM THK)	

M-METRIC PART

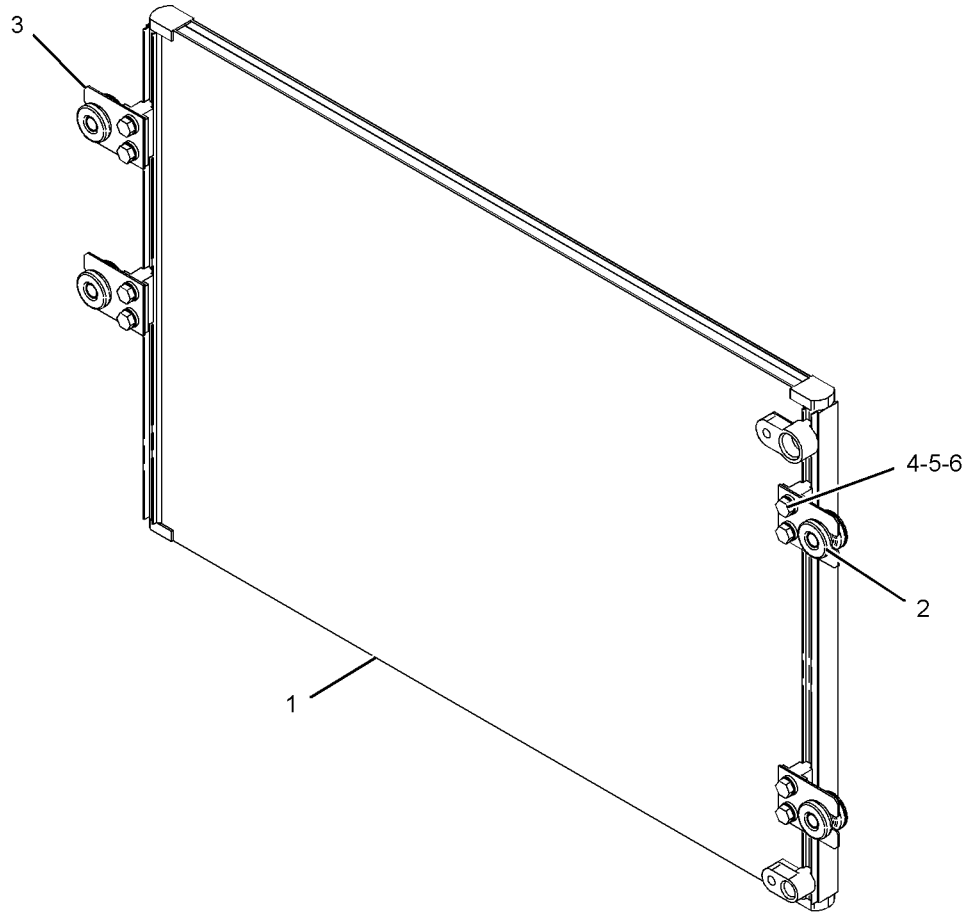

GRAPHIC #1 **<END>** g01086695

OPERATOR STATION

245-7922 CONSOLE GP-OPERATOR

S/N: WNE1-UP; ZMF1-UP; CWG1-UP
PART OF 342-3617 OPERATOR AR

SMCS-5258 **i03660761**

NOTE	REF NO	GRAPHIC REF	PART NUMBER	QTY	PART NAME 1 2 3 4 5 6 (PRODUCT LEVEL)	SEE PAGE
	1	1	**176-1916**	2	GROMMET	
	2	1	**178-5422**	2	GROMMET	
	3	1	**178-5423**	2	GROMMET	
	4	1	**185-8161**	2	INSULATOR	
	5	1	**235-8893**	2	SUPPORT	
	6	1	**235-8894**	2	SUPPORT	
Y	7	1	*259-7349*	1	CONSOLE GP-OPERATOR (LH)	993
Y	8	1	*259-7348*	1	CONSOLE GP-OPERATOR (RH)	991
	9	1	**8T-4121**	4	WASHER-HARD (11X21X2.5-MM THK)	
M	10	1	**8T-4195**	4	BOLT (M10X1.5X30-MM)	
M	11	1	**9X-2046**	8	SCREW-TRUSS HEAD (M6X1X35-MM)	
M	12	1	**9X-2045**	12	SCREW-TRUSS HEAD (M6X1X20-MM)	
	13	1	**7K-1181**	4	STRAP-CABLE	
	14	1	**122-9617**	2	GUARD	

M-METRIC PART
Y-SEPARATE ILLUSTRATION

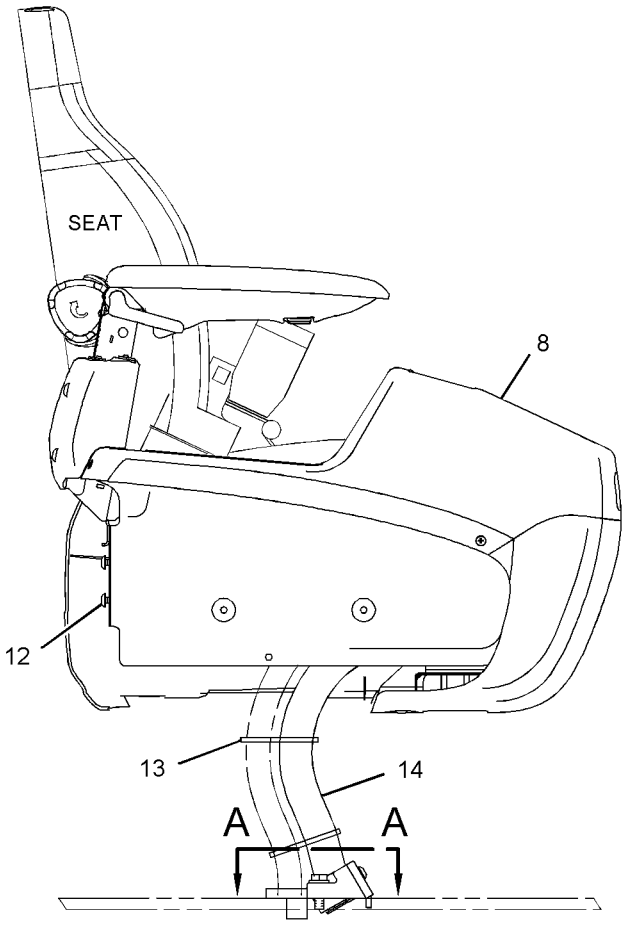

RIGHT SIDE VIEW

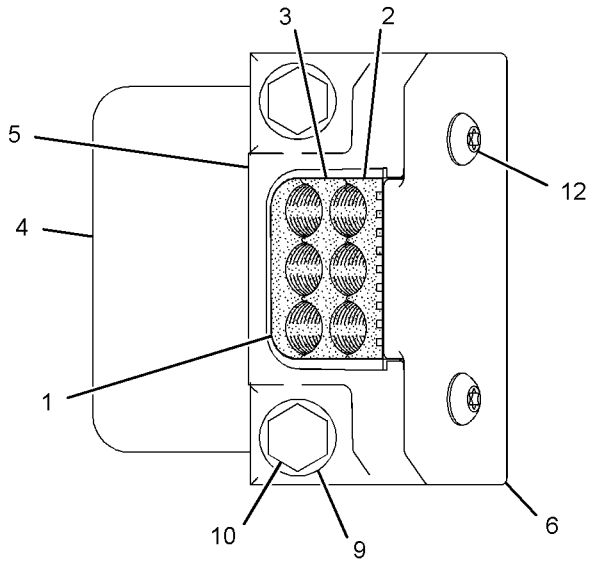

SECTION A-A

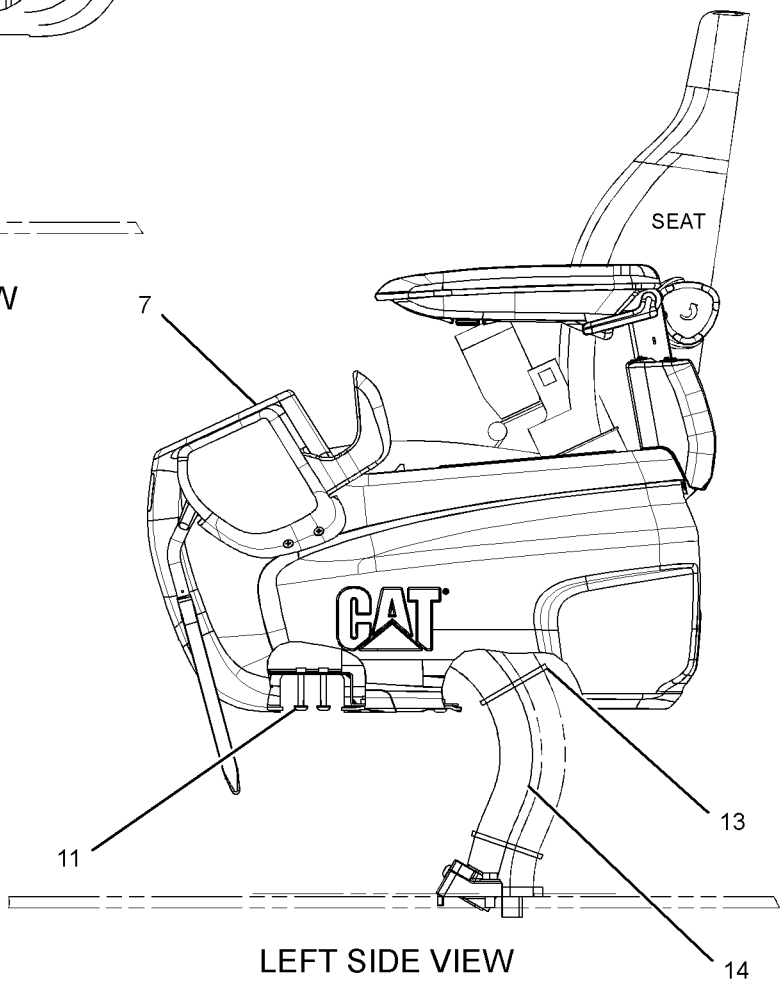

LEFT SIDE VIEW

GRAPHIC #1 **<END>** g01928259

OPERATOR STATION

259-7348 CONSOLE GP-OPERATOR—RH

S/N: WNE1-UP; ZMF1-UP; CWG1-UP

PART OF 245-7922 CONSOLE GP-OPERATOR

SMCS-5258 **i02488237**

NOTE	REF NO	GRAPHIC REF	PART NUMBER	QTY	PART NAME 1 2 3 4 5 6 (PRODUCT LEVEL)	SEE PAGE
M	1	1	**128-2135**	4	SCREW-TRUSS HEAD (M6X1X13-MM)	
	2	1	**185-8284**	1	COVER	
	3	1	**234-6579**	2	NUT-SPEED	
	4	1	**234-6580**	2	CAP	
	5	1	**234-6602**	1	COVER	
	6	1	**234-6604**	1	COVER	
	7	1	**234-6608**	1	COVER	
	8	1	**234-6609**	1	COVER	
	9	1	**234-6610**	1	COVER	
	10	1	**235-8914**	4	NUT-SPEED	
	11	1	**235-8966**	2	BASE-MOUNTING	
	12	1	**245-7790**	2	SCREW-TAPPING	
	13	1	**245-7926**	1	SUPPORT AS	
	14	1	**245-7948**	4	SCREW-TAPPING	
Y	15	1	**259-7346**	1	ARMREST GP (RH)	969
M	16	1	**9X-2041**	3	SCREW-TRUSS HEAD (M10X1.5X20-MM)	

M-METRIC PART
Y-SEPARATE ILLUSTRATION

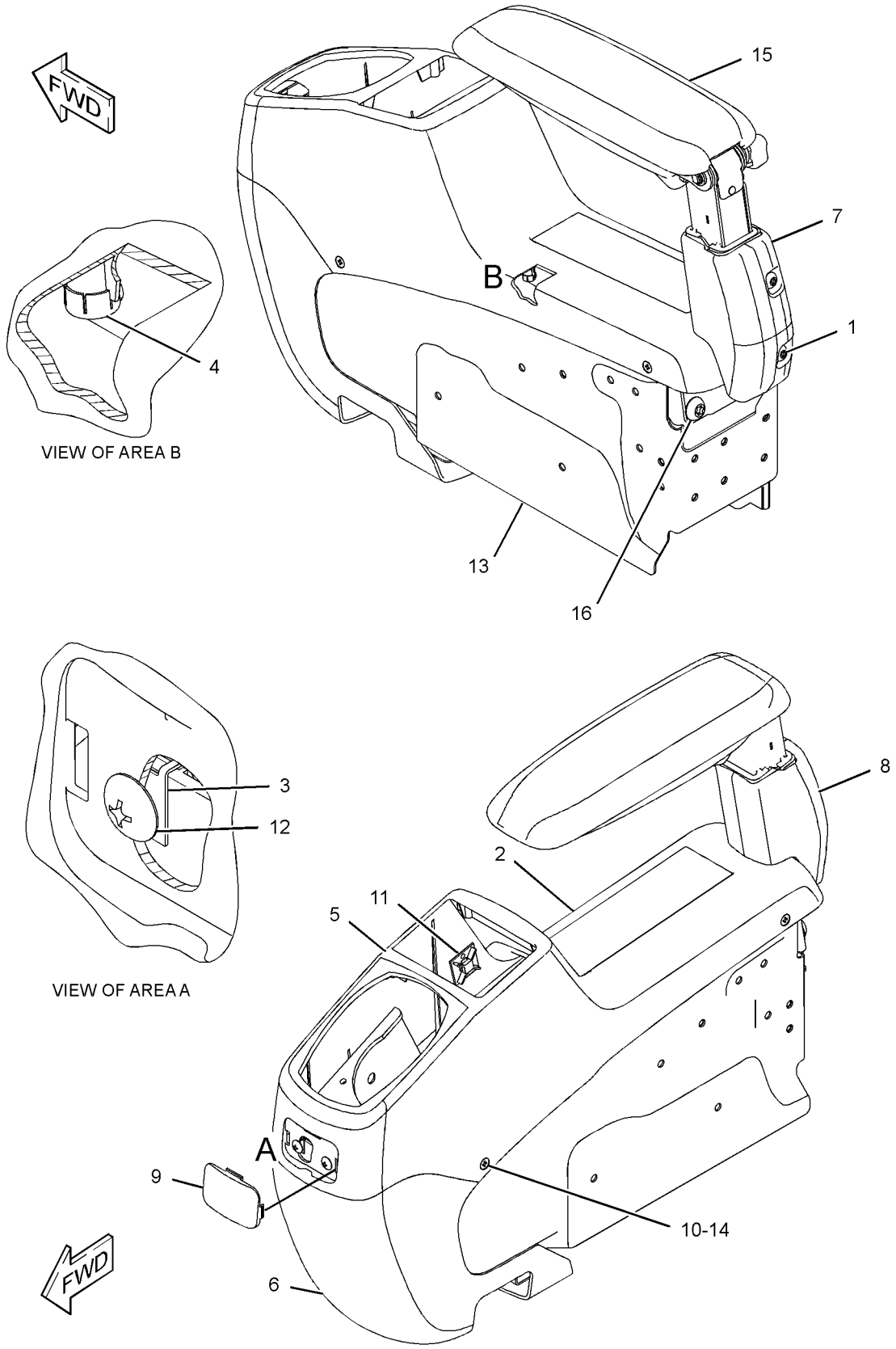

GRAPHIC #1 **<END>** g01217107

OPERATOR STATION

259-7349 CONSOLE GP-OPERATOR—LH

S/N: WNE1-UP; ZMF1-UP; CWG1-UP

PART OF 245-7922 CONSOLE GP-OPERATOR

SMCS-5258 **i02488329**

NOTE	REF NO	GRAPHIC REF	PART NUMBER	QTY	PART NAME 1 2 3 4 5 6 (PRODUCT LEVEL)	SEE PAGE
M	1	1	**128-2135**	5	SCREW-TRUSS HEAD (M6X1X13-MM)	
M	2	1	**171-7325**	3	SCREW-TAPPING (M5X0.8-THD)	
	3	1	**234-6579**	6	NUT-SPEED	
	4	1	**234-6580**	4	CAP	
	5	1	**234-6603**	1	COVER	
	6	1	**234-6605**	1	COVER	
	7	1	**234-6608**	1	COVER	
	8	1	**234-6609**	1	COVER	
	9	1	**234-6610**	1	COVER	
	10	1	**234-6611**	1	CASE	
	11	1	**234-6612**	1	COVER	
Y	12	1	**234-6613**	1	SWITCH GP-POSITION (HYDRAULIC LOCKOUT)	239
	13	1	**234-6614**	1	COVER	
	14	1	**235-8914**	4	NUT-SPEED	
	15	1	**235-8965**	1	GUARD	
	16	1	**245-7790**	3	SCREW-TAPPING	
	17	1	**245-7925**	1	SUPPORT AS	
	18	1	**245-7948**	7	SCREW-TAPPING	
	19	1	**259-7202**	1	ASHTRAY	
Y	20	1	**259-7347**	1	ARMREST GP (LH)	970
M	21	1	**9X-2041**	3	SCREW-TRUSS HEAD (M10X1.5X20-MM)	
M	22	1	**9X-2042**	2	SCREW-TRUSS HEAD (M6X1X12-MM)	

M-METRIC PART
Y-SEPARATE ILLUSTRATION

259-7349 **CONSOLE GP-OPERATOR** *(contd.)* **i02488329**

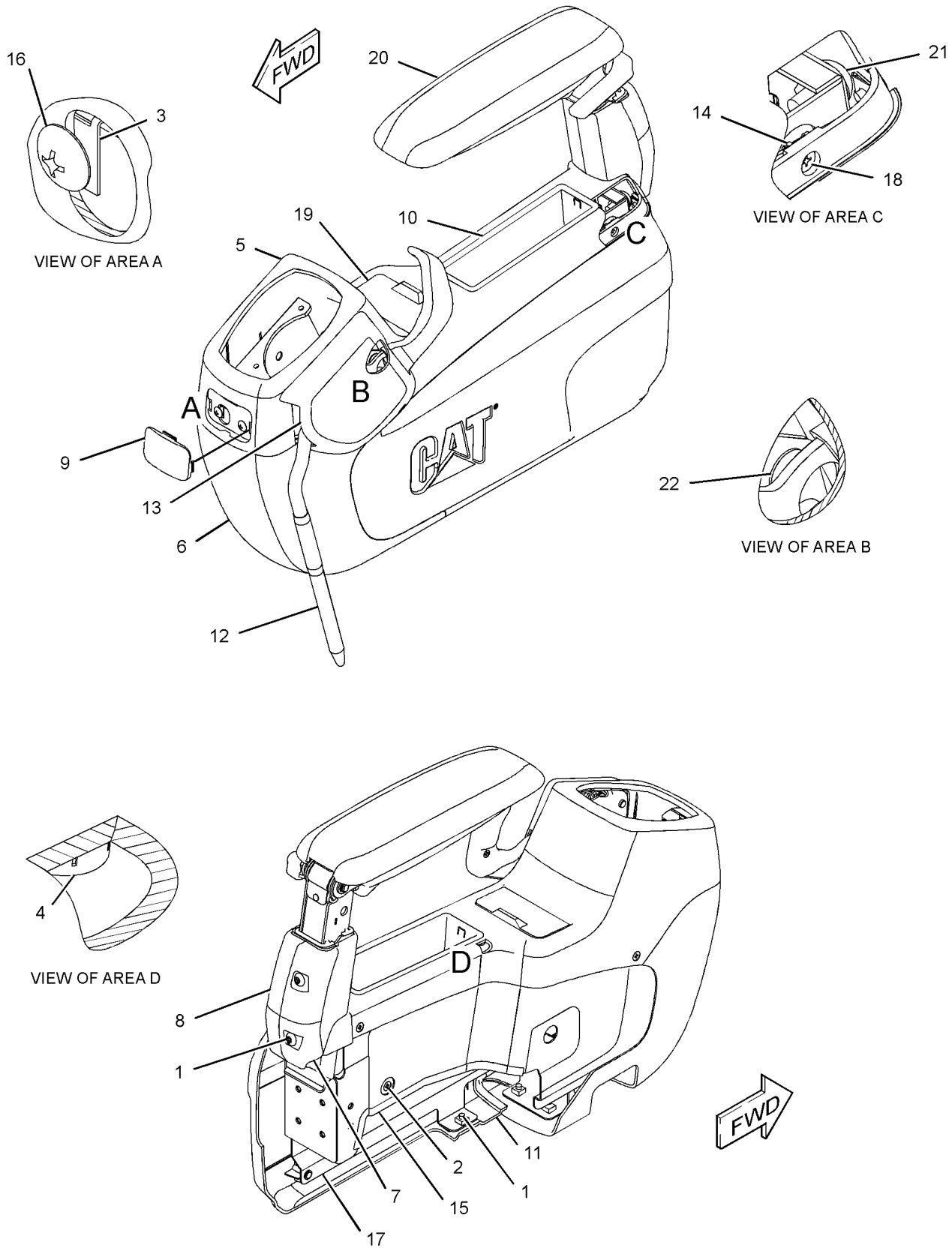

GRAPHIC #1 **<END>** g01217096

270-5687 CONTROL & MTG GP-JOYSTICK–

JOYSTICK, 2-BN, SLIDE, TRIG SW
S/N: WNE1-UP; ZMF1-UP; CWG1-UP
PART OF 314-3917, 347-9905 OPTION AR-CONTROL
AN ATTACHMENT

SMCS-5063, 5705 **i02426150**

NOTE	PART NUMBER	QTY	PART NAME 1 2 3 4 5 6 (PRODUCT LEVEL)	SEE PAGE
Y	*270-5689*	1	CONTROL & MTG GP-JOYSTICK (2-BUTTON, SLIDE, TRIGGER SW)	996
Y	*259-5295*	1	FASTENER GP-WIRING HARNESS (JOYSTICK)	198
Y	*247-7410*	1	FILM GP (OPERATOR CONTROLS, NOTICE)	1121

Y-SEPARATE ILLUSTRATION

<END>

270-5688 CONTROL & MTG GP-JOYSTICK–

JOYSTICK, 3-BUTTON, TRIGGER SW
S/N: WNE1-UP; ZMF1-UP; CWG1-UP
PART OF 347-9906 OPTION AR-CONTROL
AN ATTACHMENT

SMCS-5063, 5705 **i02425683**

NOTE	PART NUMBER	QTY	PART NAME 1 2 3 4 5 6 (PRODUCT LEVEL)	SEE PAGE
Y	*270-5690*	1	CONTROL & MTG GP-JOYSTICK (3-BUTTON, TRIGGER SWITCH)	997
Y	*259-5295*	1	FASTENER GP-WIRING HARNESS (JOYSTICK)	198
Y	*247-7411*	1	FILM GP (OPERATOR CONTROLS, NOTICE)	1123

Y-SEPARATE ILLUSTRATION

<END>

OPERATOR STATION

270-5689 CONTROL & MTG GP-JOYSTICK–
2-BUTTON, SLIDE, TRIGGER SW
S/N: WNE1-UP; ZMF1-UP; CWG1-UP
PART OF 270-5687 CONTROL & MTG GP-JOYSTICK
AN ATTACHMENT

SMCS-5063, 5705 **i03087561**

NOTE	REF NO	GRAPHIC REF	PART NUMBER	QTY	PART NAME 1 2 3 4 5 6 (PRODUCT LEVEL)	SEE PAGE
CY	1	1	**297-0539**	1	CONTROL GP-PILOT OPERATED HYD (LH)	1013
CY	2	1	**297-0538**	1	CONTROL GP-PILOT OPERATED HYD (RH)	1012
M	3	1	**6V-7357**	6	BOLT (M6X1X25-MM)	
	4	1	**9X-8256**	6	WASHER (6.6X12X2-MM THK)	

C-CHANGE FROM PREVIOUS TYPE
M-METRIC PART
Y-SEPARATE ILLUSTRATION

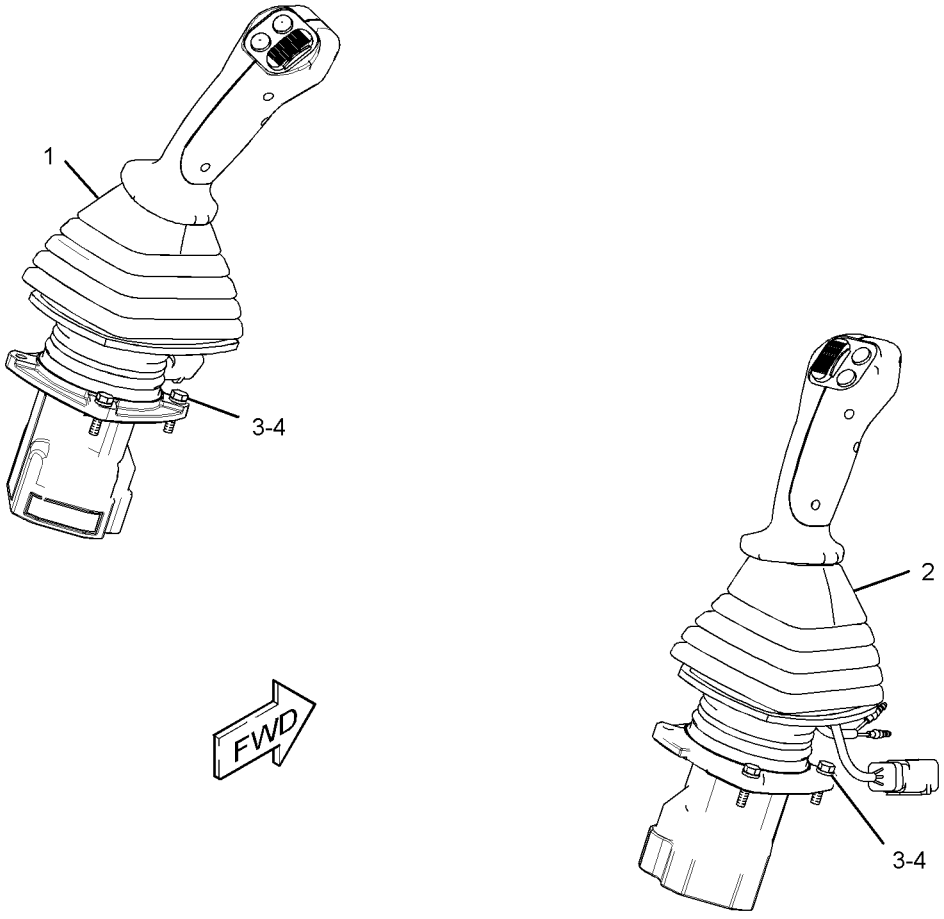

GRAPHIC #1 **<END>** g01619846

270-5690 CONTROL & MTG GP-JOYSTICK–
3-BUTTON, TRIGGER SWITCH
S/N: WNE1-UP; ZMF1-UP; CWG1-UP
PART OF 270-5688 CONTROL & MTG GP-JOYSTICK
AN ATTACHMENT

SMCS-5063, 5705 **i03087620**

NOTE	REF NO	GRAPHIC REF	PART NUMBER	QTY	PART NAME 1 2 3 4 5 6 (PRODUCT LEVEL)	SEE PAGE
CY	1	1	**297-0540**	1	CONTROL GP-PILOT OPERATED HYD (RH)	1014
CY	2	1	**297-0541**	1	CONTROL GP-PILOT OPERATED HYD (LH)	1015
M	3	1	**6V-7357**	6	BOLT (M6X1X25-MM)	
	4	1	**9X-8256**	6	WASHER (6.6X12X2-MM THK)	

C-CHANGE FROM PREVIOUS TYPE
M-METRIC PART
Y-SEPARATE ILLUSTRATION

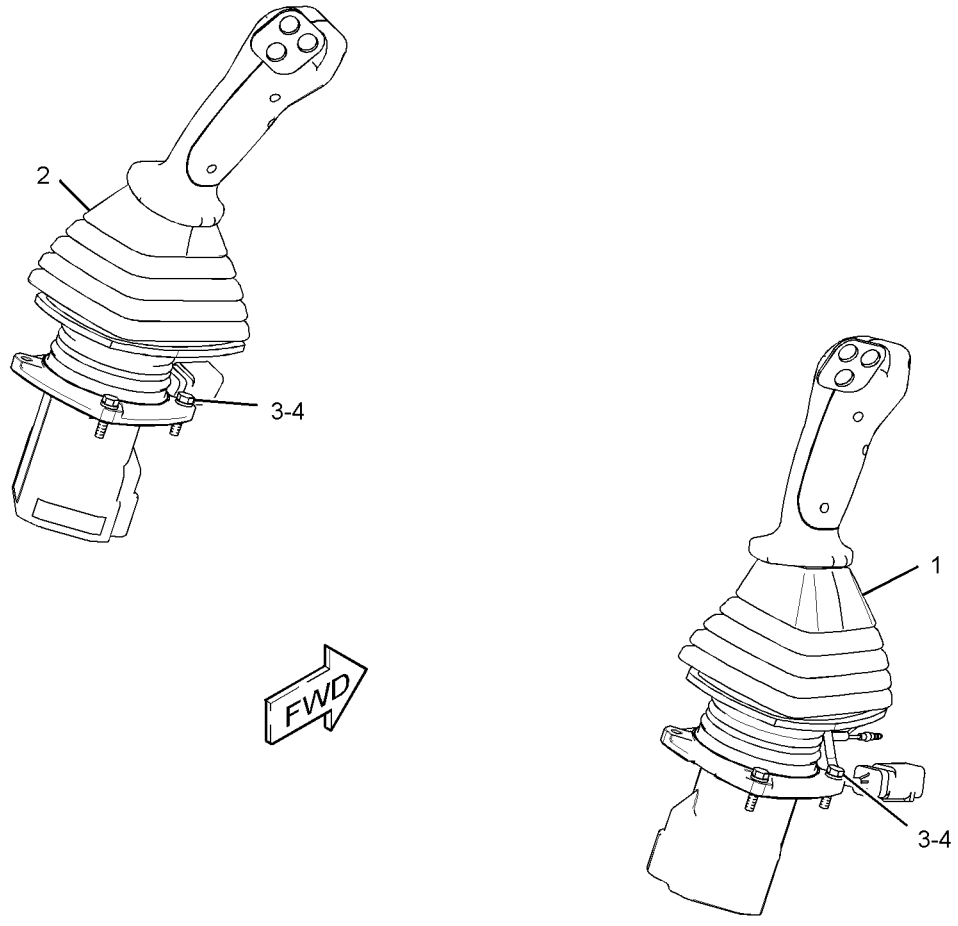

GRAPHIC #1 **<END>** g01620003

OPERATOR STATION

310-0078 CONTROL & MTG GP-JOYSTICK

S/N: WNE1-UP; ZMF1-UP

AN ATTACHMENT

SMCS-5063, 5705 **i03031921**

NOTE	REF NO	GRAPHIC REF	PART NUMBER	QTY	PART NAME 1 2 3 4 5 6 (PRODUCT LEVEL)	SEE PAGE
Y	1	1	**297-0532**	1	CONTROL GP-JOYSTICK (RH)	1009
Y	2	1	**297-0533**	1	CONTROL GP-JOYSTICK (LH)	1010
M	3	1	**6V-7357**	6	BOLT (M6X1X25-MM)	
	4	1	**9X-8256**	6	WASHER (6.6X12X2-MM THK)	

M-METRIC PART
Y-SEPARATE ILLUSTRATION

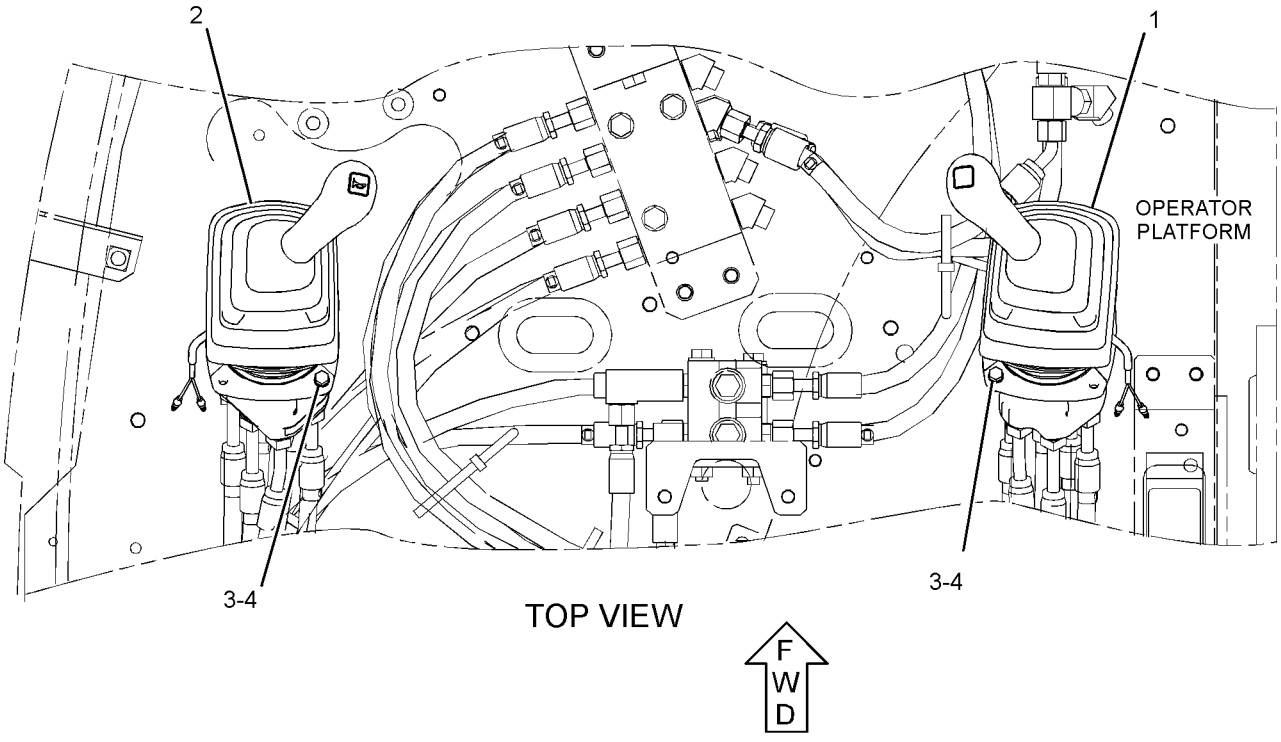

GRAPHIC #1 **<END>** g01442248

OPERATOR STATION

270-6107 CONTROL GP-FOOT—LEFT ON/OFF SWITCH

S/N: WNE1-UP; ZMF1-UP; CWG1-UP
PART OF 270-6106 CONTROL AR-AUXILIARY
AN ATTACHMENT

SMCS-1435 **i02490892**

NOTE	REF NO	GRAPHIC REF	PART NUMBER	QTY	PART NAME 1 2 3 4 5 6 (PRODUCT LEVEL)	SEE PAGE
	1	1	**093-2069**	1	GROMMET	
	2	1	**2Q-4703**	1	SWITCH AS-FOOT (WORK TOOL)	
		1	**205-1340**	1	HARNESS AS-OPERATOR CONTROLS	
		1	**155-2270**	1	KIT-CONNECTING PLUG (2-PIN)	
					(INCLUDES PLUG AS, WEDGE & INTERFACE SEAL)	
	3	1	**285-1332**	1	SUPPORT AS	
	4	1	**285-1333**	1	SUPPORT AS	
	5	1	**285-1337**	1	PLATE-STOP	
	6	1	**6V-7646**	1	WASHER-HARD (7.2X25X2-MM THK)	
M	7	1	**8C-8580**	2	BOLT-SOCKET HEAD (M5X0.8X16-MM)	
M	8	1	**8T-0269**	2	BOLT-SOCKET HEAD (M6X1X20-MM)	
	9	1	**8T-4121**	4	WASHER-HARD (11X21X2.5-MM THK)	
M	10	1	**8T-4137**	4	BOLT (M10X1.5X20-MM)	
	11	1	**9X-8256**	1	WASHER (6.6X12X2-MM THK)	

M-METRIC PART

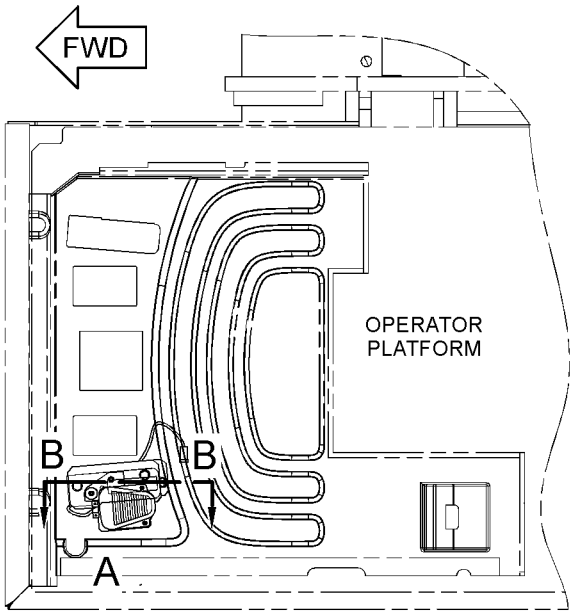

TOP VIEW

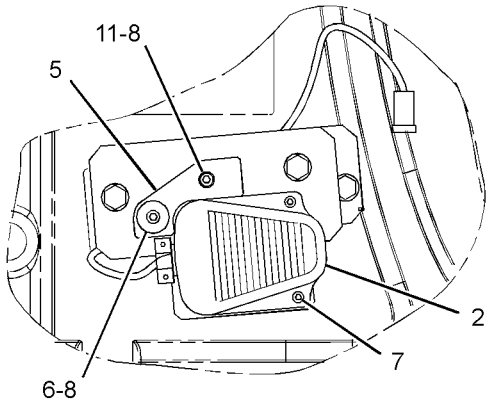

VIEW OF AREA A

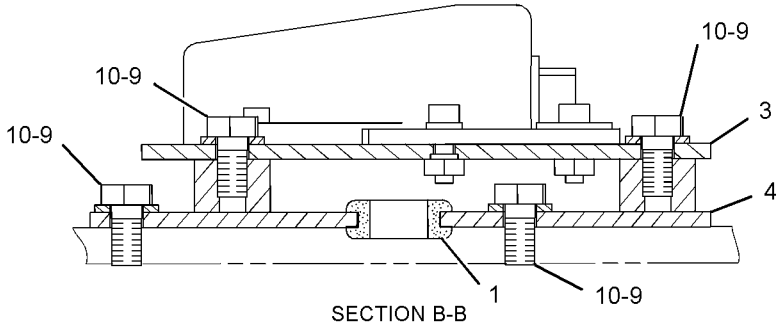

SECTION B-B

GRAPHIC #1 **<END>** g01252474

OPERATOR STATION

235-8969 CONTROL GP-HANDLE–JOYSTICK, LH

S/N: WNE1-UP; ZMF1-UP
PART OF 297-0533 CONTROL GP-JOYSTICK
AN ATTACHMENT

SMCS-5705 **i02923993**

NOTE	REF NO	GRAPHIC REF	PART NUMBER	QTY	PART NAME 1 2 3 4 5 6 (PRODUCT LEVEL)	SEE PAGE
	1	1	**124-4010**	1	LEVER	
	2	1	**235-8971**	1	BOOT	
	3	1	**245-7842**	1	KNOB AS	
M		1	**6I-5298**	1	SCREW-TAPPING	
		1	**124-4009**	1	SHAFT	
		1	**222-0225**	1	SWITCH AS-PUSH BUTTON (HORN)	
M	4	1	**096-2617**	2	SCREW-MACHINE (M5X0.8X6-MM)	

M-METRIC PART

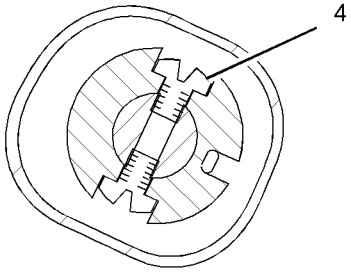

SECTION B-B

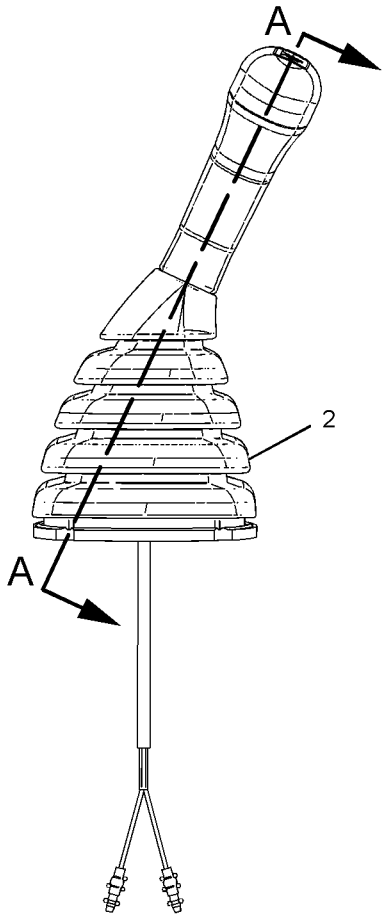

LEFT SIDE VIEW

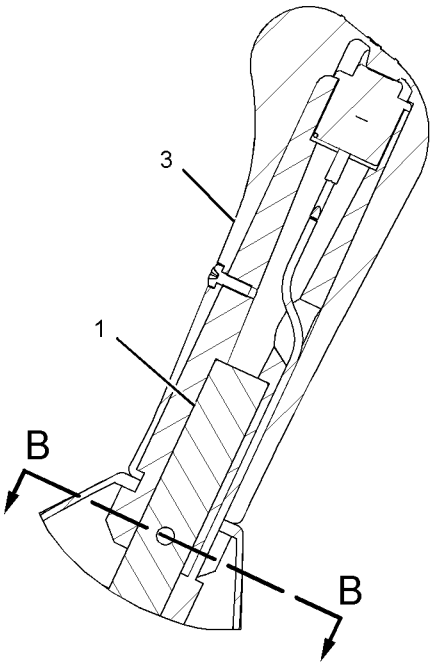

SECTION A-A

GRAPHIC #1 **<END>** g01082395

OPERATOR STATION

235-8970 CONTROL GP-HANDLE–JOYSTICK, RH

S/N: WNE1-UP; ZMF1-UP
PART OF 297-0532 CONTROL GP-JOYSTICK
AN ATTACHMENT

SMCS-5705 **i02924011**

NOTE	REF NO	GRAPHIC REF	PART NUMBER	QTY	PART NAME 1 2 3 4 5 6 (PRODUCT LEVEL)	SEE PAGE
	1	1	**124-4010**	1	LEVER	
	2	1	**235-8972**	1	BOOT	
	3	1	**245-7844**	1	KNOB AS	
M		1	**6I-5298**	1	SCREW-TAPPING	
		1	**124-4009**	1	SHAFT	
		1	**222-0225**	1	SWITCH AS-PUSH BUTTON (MANUAL LOW IDLE)	
M	4	1	**096-2617**	2	SCREW-MACHINE (M5X0.8X6-MM)	

M-METRIC PART

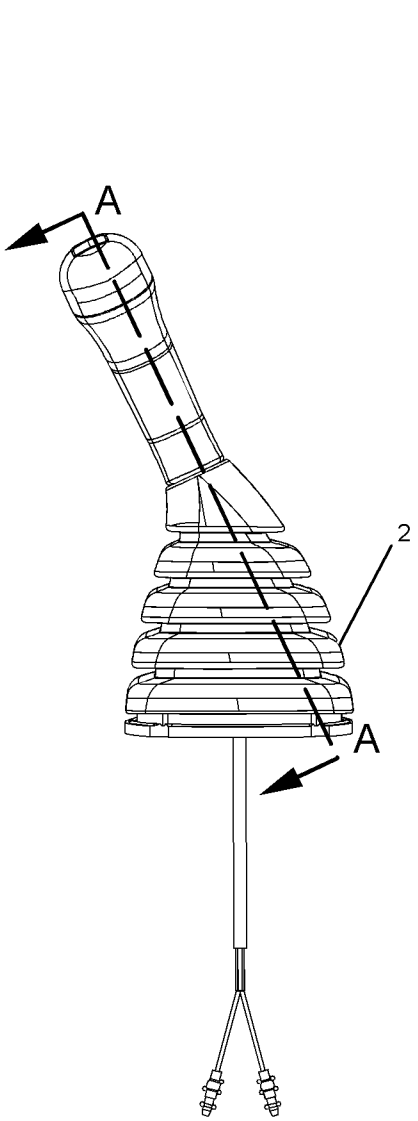

RIGHT SIDE VIEW

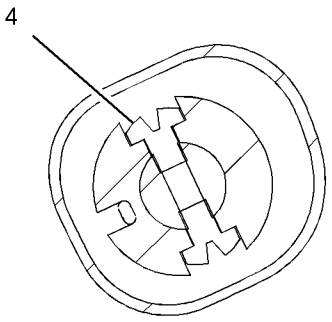

SECTION B-B

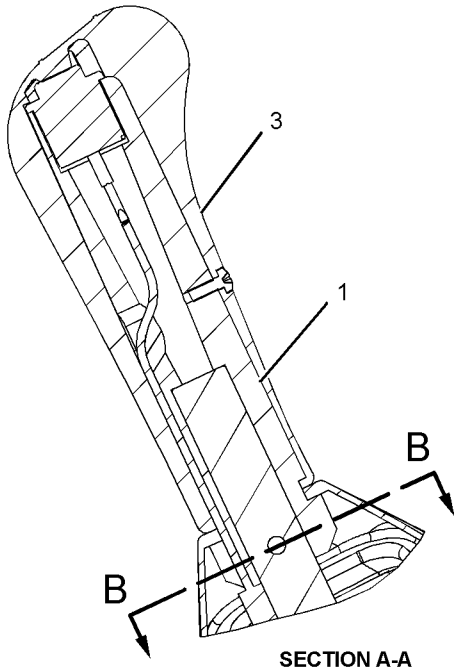

SECTION A-A

GRAPHIC #1 **<END>** g01082427

OPERATOR STATION

260-2109 CONTROL GP-HANDLE–JOYSTICK, RH

S/N: WNE1-UP; ZMF1-UP; CWG1-UP
2-BUTTON, SLIDE, TRIGGER SW
PART OF 297-0538 CONTROL GP-PILOT OPERATED HYD
AN ATTACHMENT

SMCS-5705 **i02865889**

NOTE	REF NO	GRAPHIC REF	PART NUMBER	QTY	PART NAME 1 2 3 4 5 6 (PRODUCT LEVEL)	SEE PAGE
M	1	1	**7Y-8463**	1	NUT (M14X2-THD)	
	2	1	**117-8683**	1	PIN-SPRING	
	3	1	**260-2111**	1	LEVER	
	4	1	**297-4589**	1	CONTROL GP-HANDLE (RH)	
		1	**247-2693**	1	RECEPTACLE AS-CONNECTOR (6-PIN)	
		1	**9X-3401**	6	PIN-CONNECTOR (16-GA TO 18-GA)	
					–OR–	
		1	**126-1767**	6	PIN-CONNECTOR (14-GA)	
	5	1	**305-0332**	1	BOOT	

M-METRIC PART

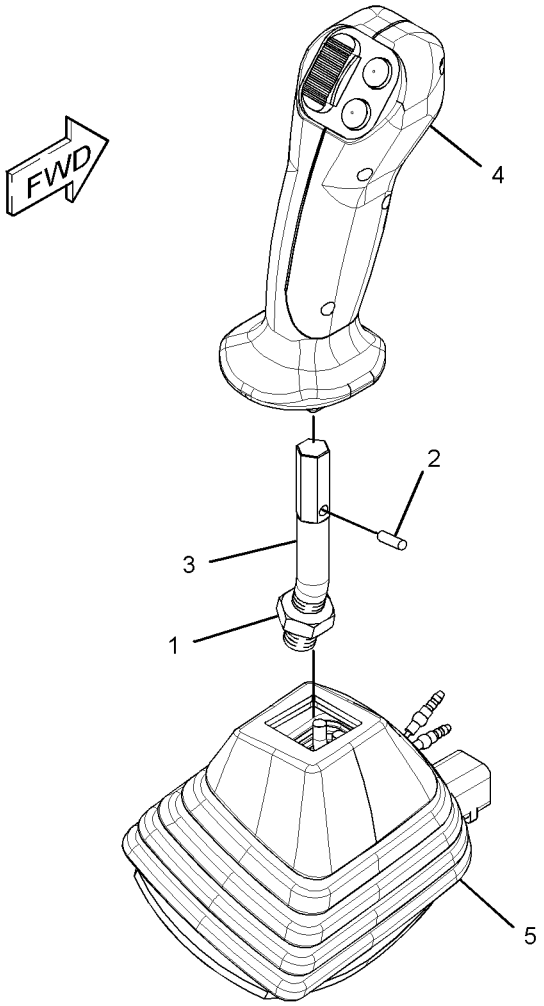

GRAPHIC #1 **<END>** g01436256

260-2110 CONTROL GP-HANDLE–JOYSTICK, LH

S/N: WNE1-UP; ZMF1-UP; CWG1-UP
2-BUTTON, SLIDE, TRIGGER SW
PART OF 297-0539 CONTROL GP-PILOT OPERATED HYD
AN ATTACHMENT

SMCS-5705 **i02865875**

NOTE	REF NO	GRAPHIC REF	PART NUMBER	QTY	PART NAME 1 2 3 4 5 6 (PRODUCT LEVEL)	SEE PAGE
M	1	1	**7Y-8463**	1	NUT (M14X2-THD)	
	2	1	**117-8683**	1	PIN-SPRING	
	3	1	**260-2111**	1	LEVER	
C	4	1	**297-4590**	1	CONTROL GP-HANDLE (LH)	
		1	**9X-3401**	6	PIN-CONNECTOR (16-GA TO 18-GA)	
					–OR–	
		1	**126-1767**	6	PIN-CONNECTOR (14-GA)	
		1	**247-2693**	1	RECEPTACLE AS-CONNECTOR (6-PIN)	
	5	1	**305-0331**	1	BOOT	

C-CHANGE FROM PREVIOUS TYPE
M-METRIC PART

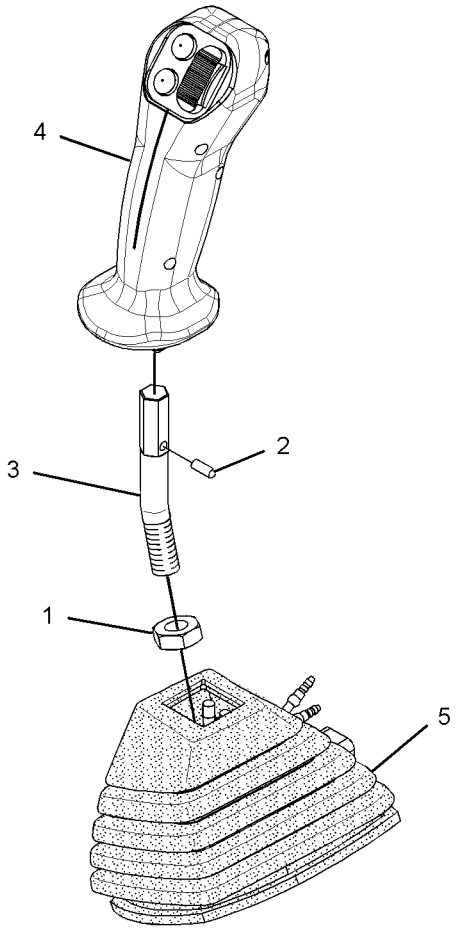

GRAPHIC #1 **<END>** g01428094

OPERATOR STATION

260-2127 CONTROL GP-HANDLE—JOYSTICK, RH

S/N: WNE1-UP; ZMF1-UP; CWG1-UP
3-BUTTON, TRIGGER SWITCH
PART OF 297-0540 CONTROL GP-PILOT OPERATED HYD
AN ATTACHMENT

SMCS-5705 **i03301340**

NOTE	REF NO	GRAPHIC REF	PART NUMBER	QTY	PART NAME 1 2 3 4 5 6 (PRODUCT LEVEL)	SEE PAGE
M	1	1	**7Y-8463**	1	NUT (M14X2-THD)	
	2	1	**117-8683**	1	PIN-SPRING	
	3	1	**260-2111**	1	LEVER	
	4	1	**297-4595**	1	CONTROL GP-HANDLE	
		1	**8T-8737**	2	PLUG-SEAL	
		1	**9X-3401**	4	PIN-CONNECTOR (16-GA TO 18-GA)	
					—OR—	
		1	**126-1767**	4	PIN-CONNECTOR (14-GA)	
		1	**247-2693**	1	RECEPTACLE AS-CONNECTOR (6-PIN)	
	5	1	**305-0332**	1	BOOT	

M-METRIC PART

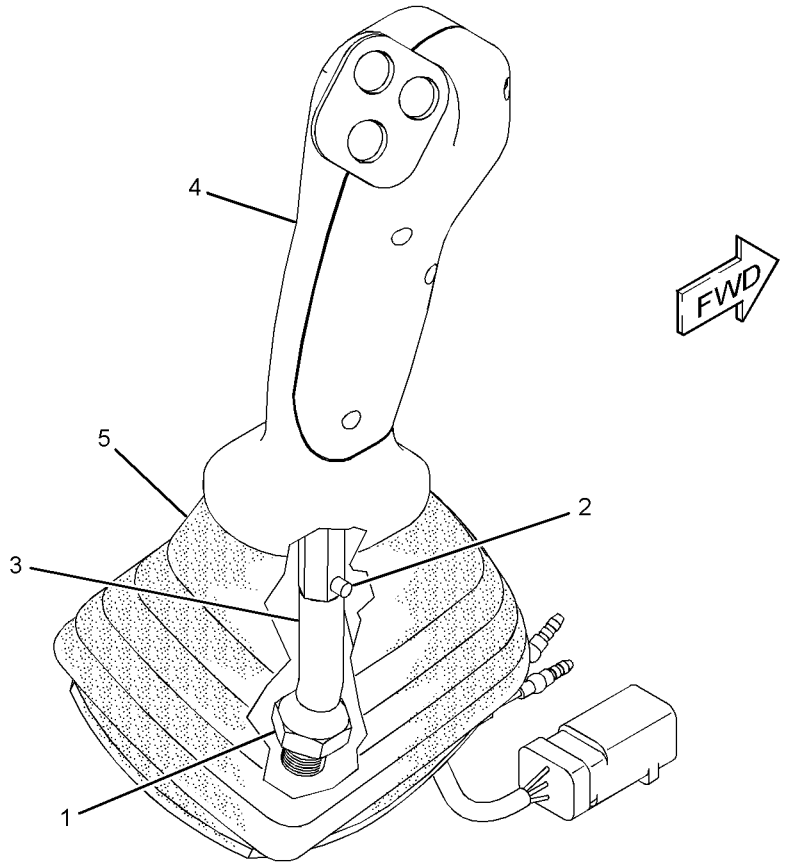

GRAPHIC #1 **<END>** g01430928

260-2128 CONTROL GP-HANDLE—JOYSTICK, LH

S/N: WNE1-UP; ZMF1-UP; CWG1-UP
3-BUTTON, TRIGGER SWITCH
PART OF 297-0541 CONTROL GP-PILOT OPERATED HYD
AN ATTACHMENT

SMCS-5705 **i03301360**

NOTE	REF NO	GRAPHIC REF	PART NUMBER	QTY	PART NAME 1 2 3 4 5 6 (PRODUCT LEVEL)	SEE PAGE
M	1	1	**7Y-8463**	1	NUT (M14X2-THD)	
	2	1	**117-8683**	1	PIN-SPRING	
	3	1	**305-0331**	1	BOOT	
	4	1	**297-4595**	1	CONTROL GP-HANDLE	
		1	**8T-8737**	2	PLUG-SEAL	
		1	**9X-3401**	4	PIN-CONNECTOR (16-GA TO 18-GA)	
					—OR—	
		1	**126-1767**	4	PIN-CONNECTOR (14-GA)	
		1	**247-2693**	1	RECEPTACLE AS-CONNECTOR (6-PIN)	
	5	1	**260-2111**	1	LEVER	

M-METRIC PART

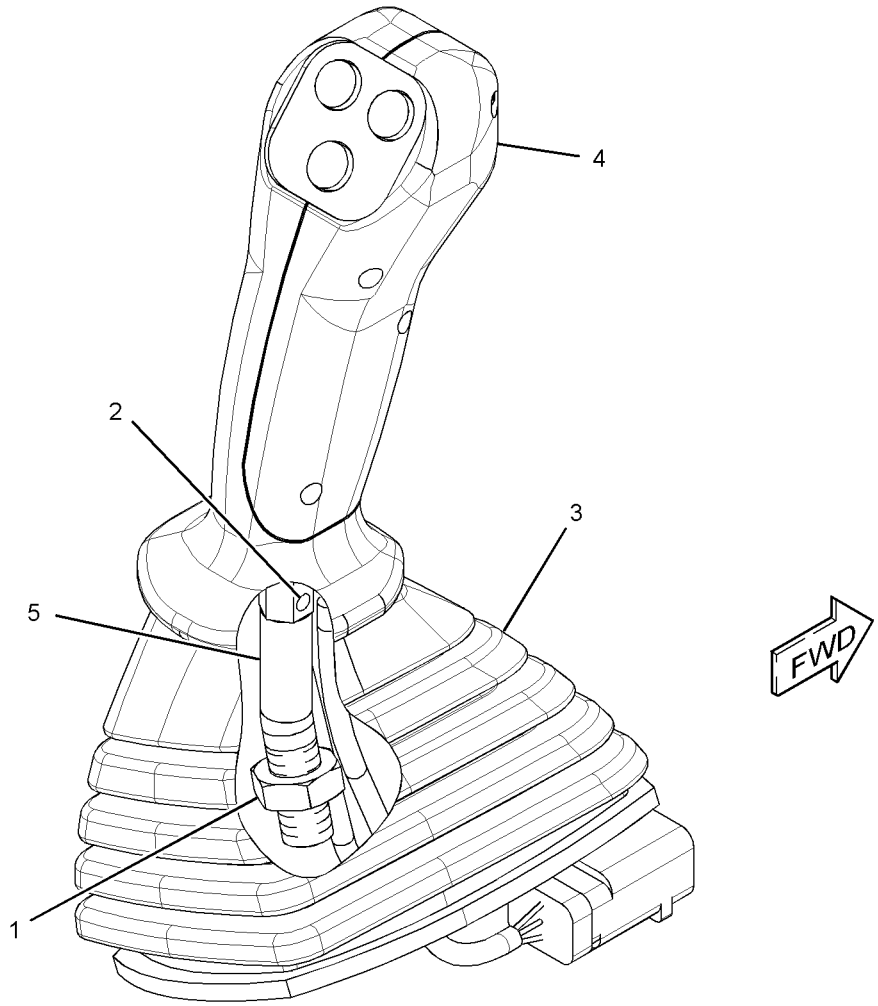

GRAPHIC #1 **<END>** g01436267

OPERATOR STATION

245-7846 CONTROL GP-HEAT & AIR COND—AIR INLET

S/N: WNE1-UP; ZMF1-UP; CWG1-UP
PART OF 316-8916 AIR CONDITIONER GP
AN ATTACHMENT

SMCS-7309 **i02547472**

NOTE	REF NO	GRAPHIC REF	PART NUMBER	QTY	PART NAME 1 2 3 4 5 6 (PRODUCT LEVEL)	SEE PAGE
	1	1	**185-8300**	4	SCREW-TAPPING	
	2	1	**196-1666**	1	RELAY (COMPRESSOR CLUTCH)	
	2A	1	**196-1666**	1	RELAY (BLOWER)	
	3	1	**245-7813**	1	MOTOR AS	
	4	1	**245-7814**	1	BRACKET	
	5	1	**245-7815**	1	SENSOR AS-TEMPERATURE (AIR)	
	6	1	**245-7816**	1	DAMPER AS	

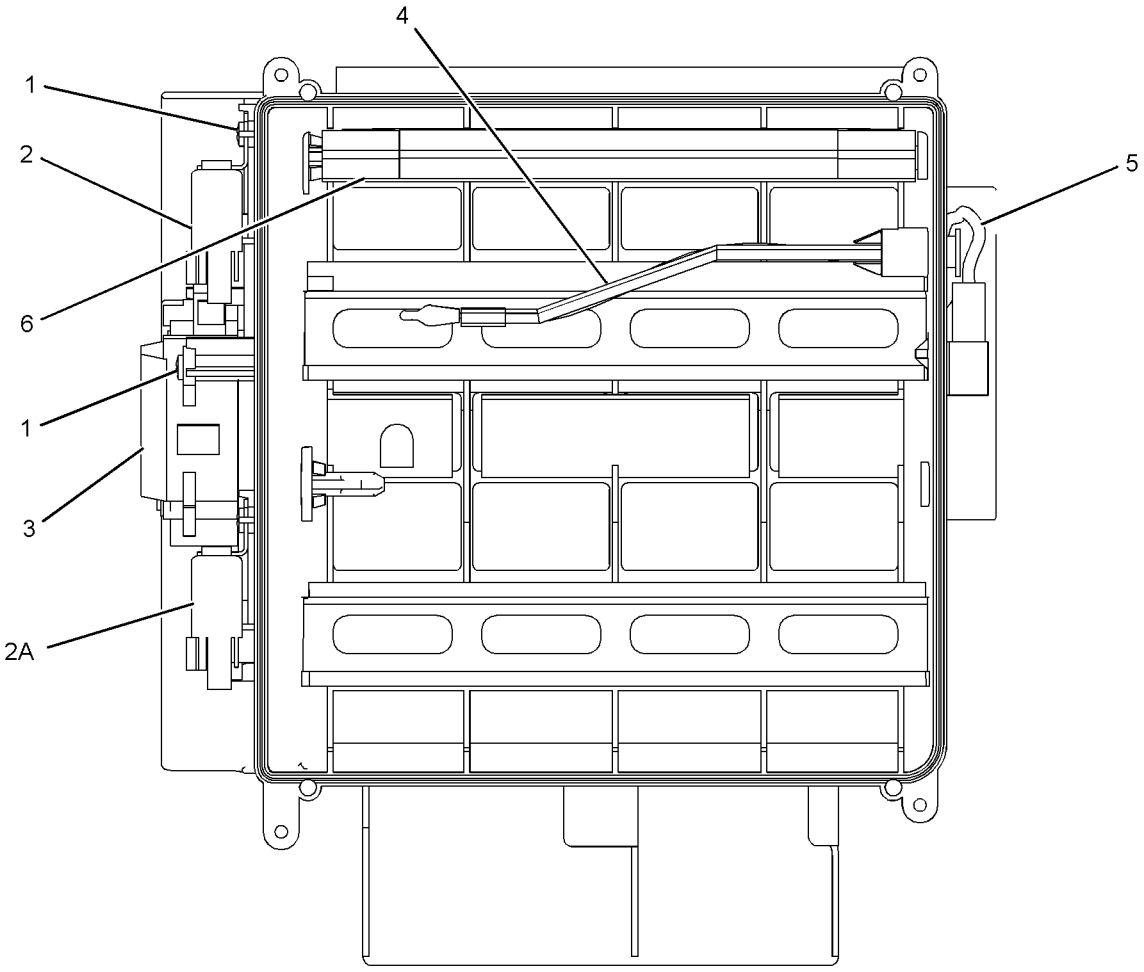

GRAPHIC #1 **<END>** g01245591

OPERATOR STATION

275-7648 CONTROL GP-HYDRAULIC PEDAL

S/N: CWG1-UP
PART OF 253-2824 CONTROL AR-MACHINE
AN ATTACHMENT

SMCS-5059, 5063 **i02946344**

NOTE	REF NO	GRAPHIC REF	PART NUMBER	QTY	PART NAME 1 2 3 4 5 6 (PRODUCT LEVEL)	SEE PAGE
	1	1	**5I-7090**	1	CHAIN AS	
	2	1	**121-1865**	1	PEDAL-RUBBER (LH)	
	3	1	**128-2173**	1	PIN	
	4	1	**153-8753**	1	PEDAL AS	
	5	1	**158-8280**	1	VALVE GP-PILOT	
	6	1	**179-5044**	1	SUPPORT AS	
M	7	1	**095-0735**	2	SCREW-MACHINE (M5X0.8X8-MM)	
M	8	1	**7X-2536**	2	BOLT (M8X1.25X14-MM)	
	9	1	**8T-0114**	1	PIN-SPRING	
	10	1	**8T-4121**	3	WASHER-HARD (11X21X2.5-MM THK)	
M	11	1	**8T-4136**	2	BOLT (M10X1.5X25-MM)	
M	12	1	**8T-4137**	1	BOLT (M10X1.5X20-MM)	
	13	1	**8T-4224**	2	WASHER-HARD (8.8X16X2-MM THK)	

M-METRIC PART

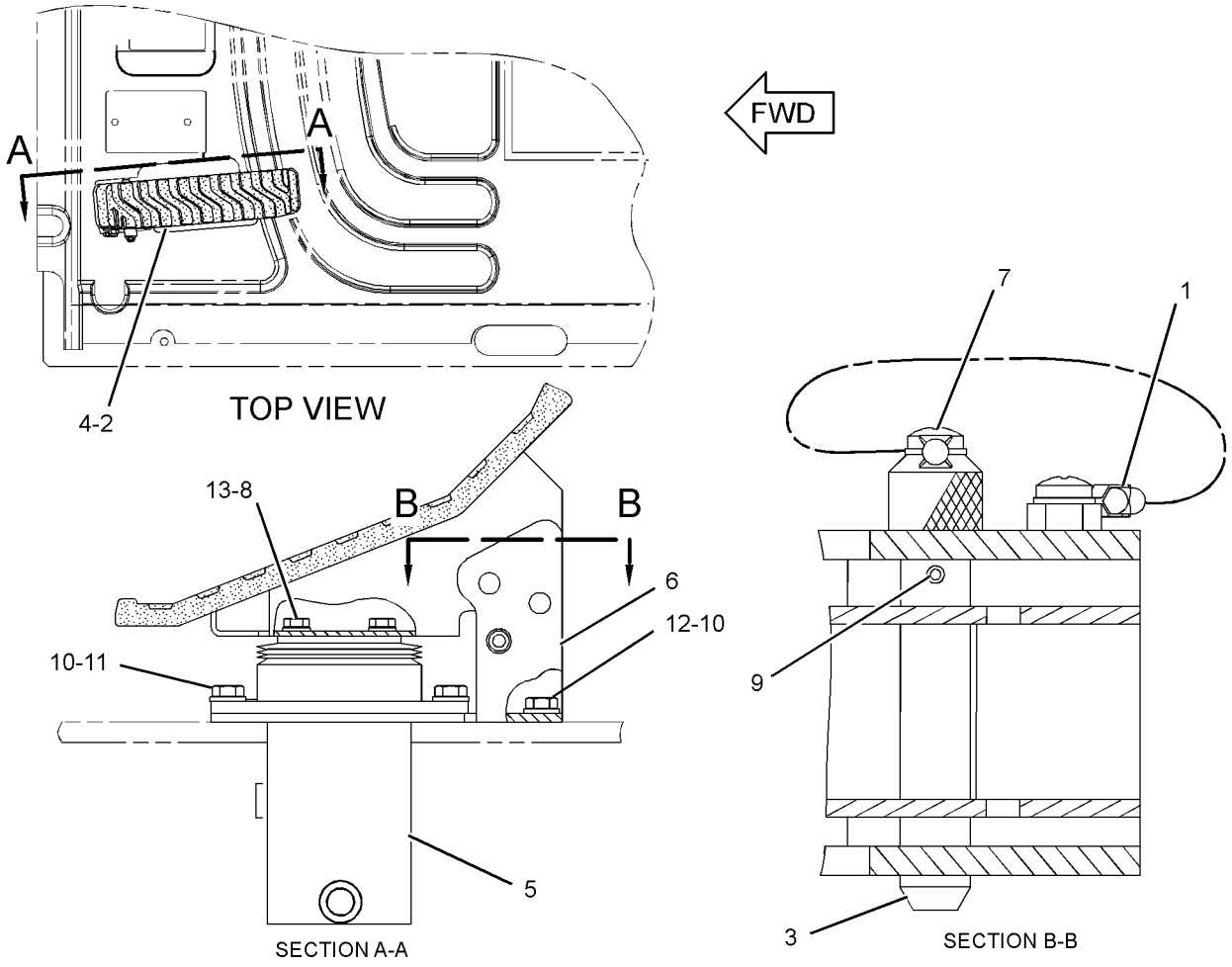

GRAPHIC #1 **<END>** g01226351

OPERATOR STATION

316-8842 CONTROL GP-HYDRAULIC PEDAL

S/N: WNE1-UP; ZMF1-UP; CWG1-UP
PART OF 342-3647, 342-3648 PEDAL AR-THIRD
AN ATTACHMENT

SMCS-5059, 5063 **i03634692**

NOTE	REF NO	GRAPHIC REF	PART NUMBER	QTY	PART NAME 1 2 3 4 5 6 (PRODUCT LEVEL)	SEE PAGE
	1	1	**5I-7090**	1	CHAIN AS	
	2	1	**128-2173**	1	PIN	
	3	1	**135-2274**	1	PEDAL-RUBBER	
Y	4	1	**206-3336**	1	VALVE GP-PILOT	852
	5	1	**327-6453**	1	PEDAL AS	
	6	1	**327-6457**	1	SUPPORT AS	
M	7	1	**095-0735**	2	SCREW-MACHINE (M5X0.8X8-MM)	
M	8	1	**7X-2536**	2	BOLT (M8X1.25X14-MM)	
	9	1	**8T-0114**	1	PIN-SPRING	
	10	1	**8T-4121**	3	WASHER-HARD (11X21X2.5-MM THK)	
M	11	1	**8T-4136**	2	BOLT (M10X1.5X25-MM)	
M	12	1	**8T-4191**	1	BOLT (M10X1.5X16-MM)	
	13	1	**8T-4224**	2	WASHER-HARD (8.8X16X2-MM THK)	

M-METRIC PART
Y-SEPARATE ILLUSTRATION

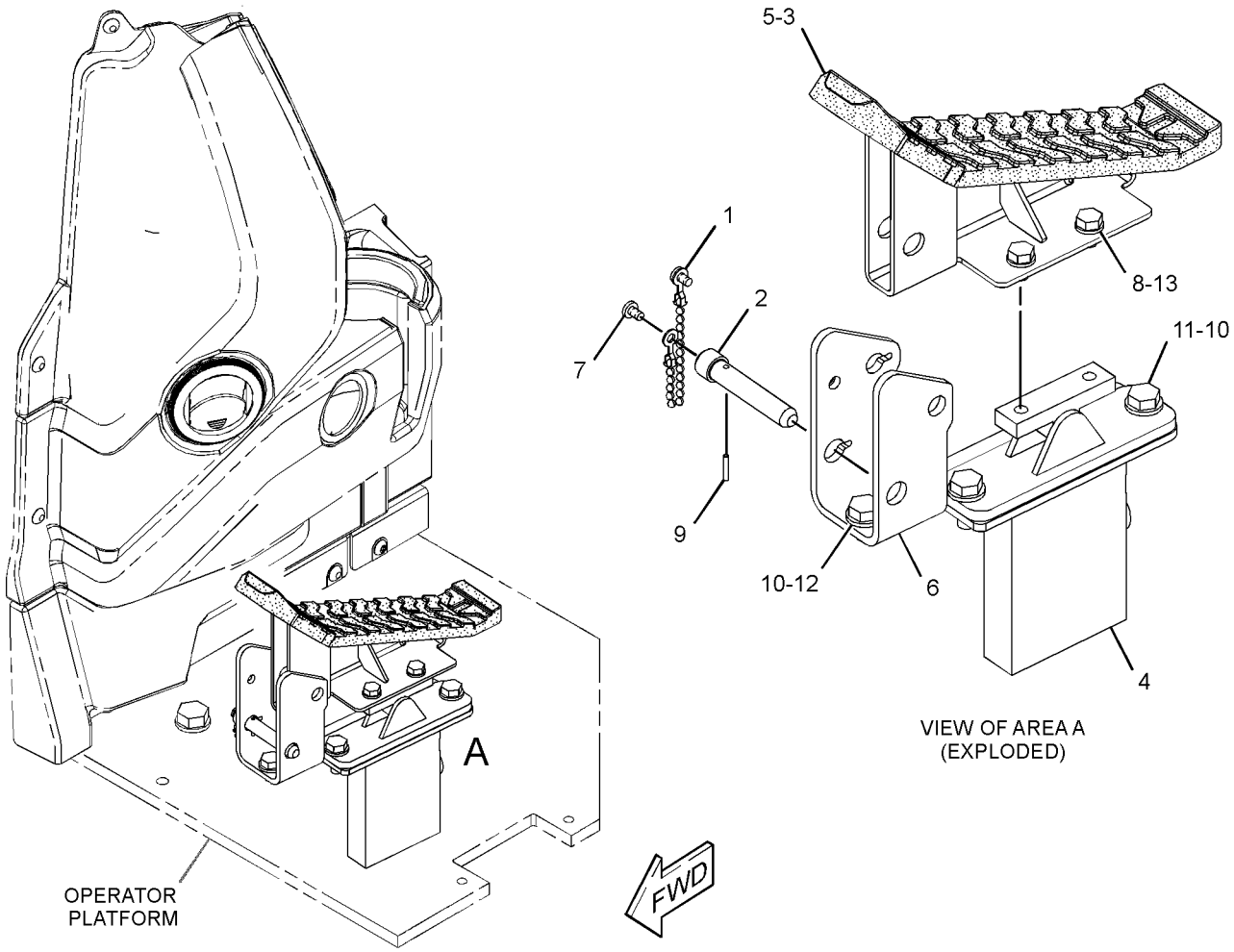

GRAPHIC #1 **<END>** g01954289

OPERATOR STATION

297-0532 CONTROL GP-JOYSTICK–RH

S/N: WNE1-UP; ZMF1-UP
PART OF 310-0078 CONTROL & MTG GP-JOYSTICK
AN ATTACHMENT

SMCS-5705 **i03302479**

NOTE	REF NO	GRAPHIC REF	PART NUMBER	QTY	PART NAME 1 2 3 4 5 6 (PRODUCT LEVEL)	SEE PAGE
M	1	1	**7Y-8463**	1	NUT (M14X2-THD)	
Y	2	1	**235-8970**	1	CONTROL GP-HANDLE (JOYSTICK, RH)	1001
Y	3	1	**297-0529**	1	VALVE GP-PILOT (JOYSTICK)	853
	4	1	**6K-0806**	1	STRAP-CABLE	

M-METRIC PART
Y-SEPARATE ILLUSTRATION

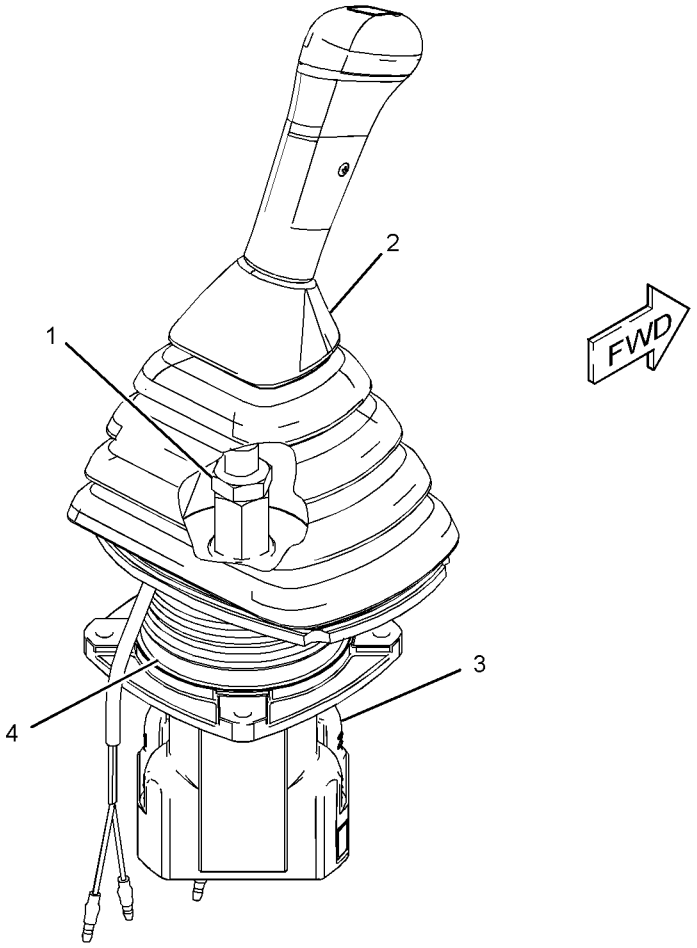

GRAPHIC #1 **<END>** g01452407

OPERATOR STATION

297-0533 CONTROL GP-JOYSTICK–LH

S/N: WNE1-UP; ZMF1-UP
PART OF 310-0078 CONTROL & MTG GP-JOYSTICK
AN ATTACHMENT

SMCS-5705 **i03302487**

NOTE	REF NO	GRAPHIC REF	PART NUMBER	QTY	PART NAME 1 2 3 4 5 6 (PRODUCT LEVEL)	SEE PAGE
M	1	1	**7Y-8463**	1	NUT (M14X2-THD)	
Y	2	1	**235-8969**	1	CONTROL GP-HANDLE (JOYSTICK, LH)	1000
Y	3	1	**297-0529**	1	VALVE GP-PILOT (JOYSTICK)	853
	4	1	**6K-0806**	1	STRAP-CABLE	

M-METRIC PART
Y-SEPARATE ILLUSTRATION

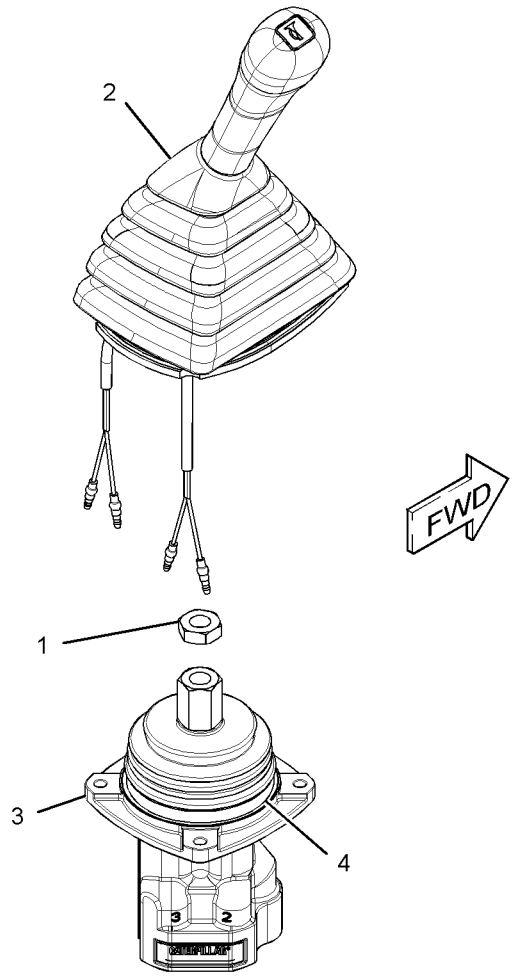

GRAPHIC #1 **<END>** g01452496

OPERATOR STATION

170-9497 CONTROL GP-PILOT OPERATED HYD–TRAVEL

S/N: WNE1-UP; ZMF1-UP; CWG1-UP
PART OF 342-3617 OPERATOR AR

SMCS-5059 **i03305845**

NOTE	REF NO	GRAPHIC REF	PART NUMBER	QTY	PART NAME 1 2 3 4 5 6 (PRODUCT LEVEL)	SEE PAGE
	1	1	**096-6166**	2	WASHER-HARD (4.5X9X1-MM THK)	
M	2	1	**095-0728**	2	SCREW-MACHINE (M4X0.7X12-MM)	
	3	1	**8T-4121**	12	WASHER-HARD (11X21X2.5-MM THK)	
M	4	1	**8T-4136**	4	BOLT (M10X1.5X25-MM)	
M	5	1	**8T-4191**	8	BOLT (M10X1.5X16-MM)	
	6	1	**142-5546**	2	KNOB	
	7	1	**117-6356**	2	STEP AS	
	8	1	**122-9610**	2	STEP	
	9	1	**170-9499**	1	LEVER AS (LH)	
	10	1	**170-9498**	1	LEVER AS (RH)	
	11	1	**122-9608**	1	PEDAL-RUBBER (RH)	
	12	1	**117-6350**	1	PEDAL AS (RH)	
	13	1	**122-9609**	1	PEDAL-RUBBER (LH)	
	14	1	**117-6349**	1	PEDAL AS (LH)	

M-METRIC PART

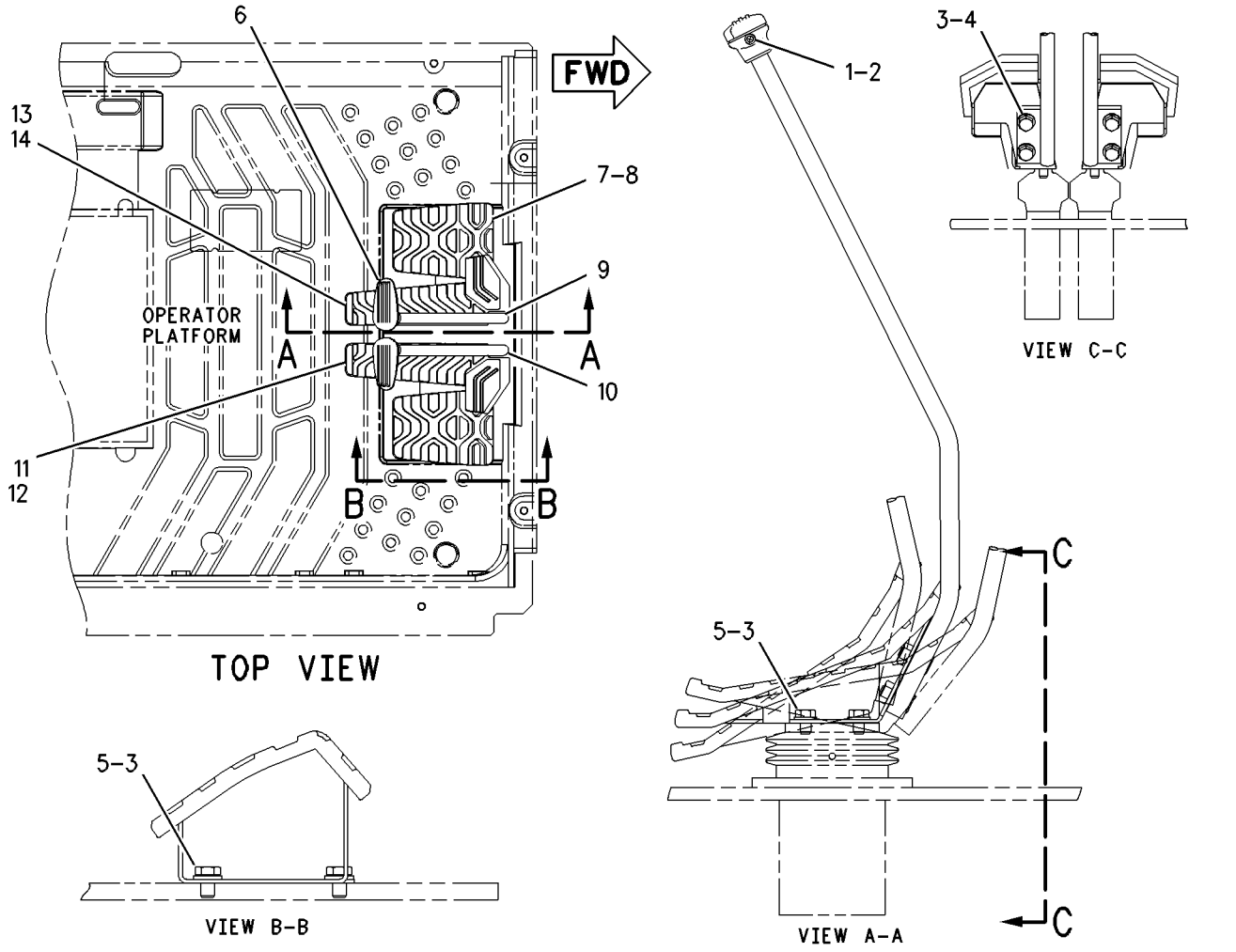

GRAPHIC #1 **<END>** g00672963

OPERATOR STATION

297-0538 CONTROL GP-PILOT OPERATED HYD–RH

S/N: WNE1-UP; ZMF1-UP; CWG1-UP
PART OF 270-5689 CONTROL & MTG GP-JOYSTICK
AN ATTACHMENT

SMCS-5059 **i03087541**

NOTE	REF NO	GRAPHIC REF	PART NUMBER	QTY	PART NAME 1 2 3 4 5 6 (PRODUCT LEVEL)	SEE PAGE
	1	1	**6K-0806**	1	STRAP-CABLE	
Y	2	1	**260-2109**	1	CONTROL GP-HANDLE (JOYSTICK, RH)	1002
Y	3	1	**297-0530**	1	VALVE GP-PILOT (JOYSTICK, RH)	855

Y-SEPARATE ILLUSTRATION

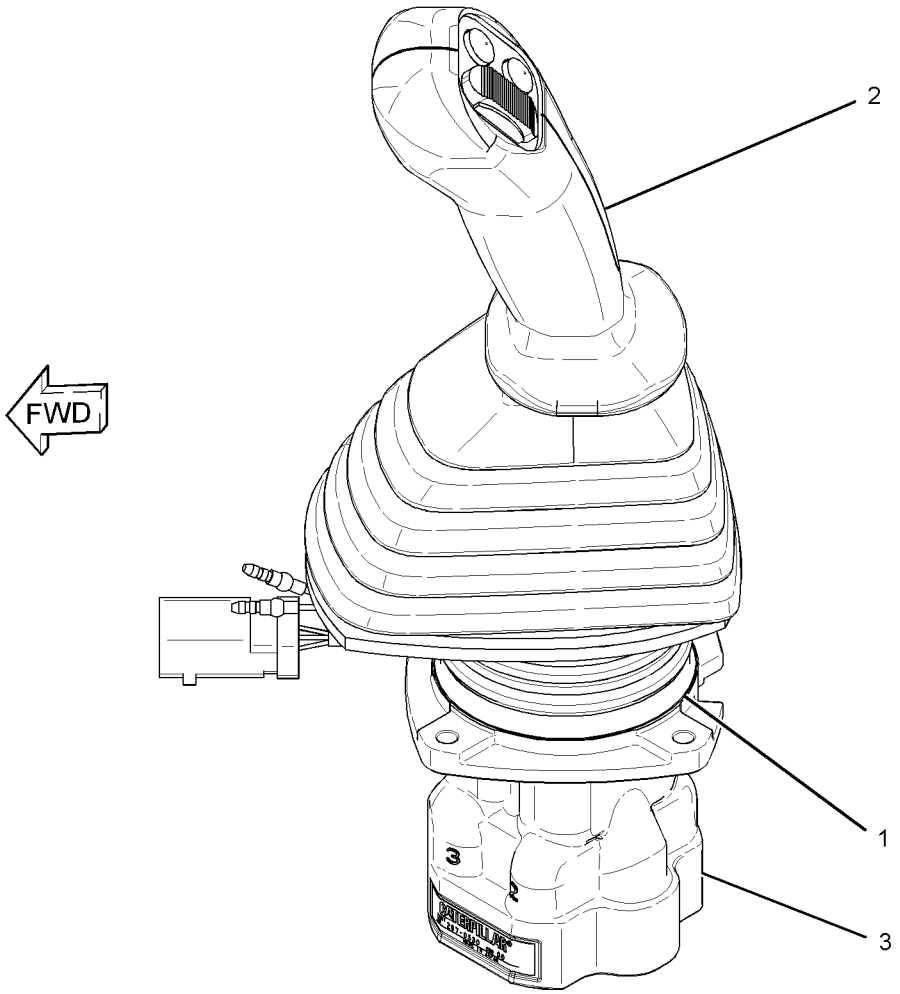

GRAPHIC #1 **<END>** g01620126

297-0539 CONTROL GP-PILOT OPERATED HYD–LH

S/N: WNE1-UP; ZMF1-UP; CWG1-UP
PART OF 270-5689 CONTROL & MTG GP-JOYSTICK
AN ATTACHMENT

SMCS-5059 **i03087520**

NOTE	REF NO	GRAPHIC REF	PART NUMBER	QTY	PART NAME 1 2 3 4 5 6 (PRODUCT LEVEL)	SEE PAGE
	1	1	**6K-0806**	1	STRAP-CABLE	
Y	2	1	**260-2110**	1	CONTROL GP-HANDLE (JOYSTICK, LH)	1003
Y	3	1	**297-0531**	1	VALVE GP-PILOT (JOYSTICK, LH)	857

Y-SEPARATE ILLUSTRATION

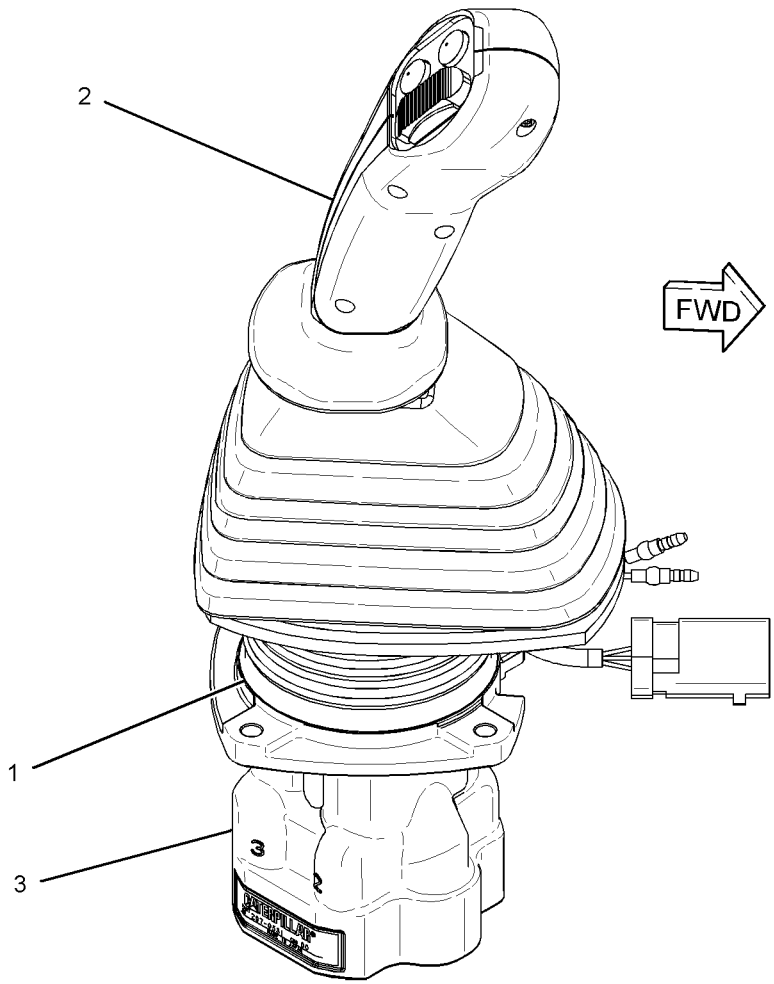

GRAPHIC #1 **<END>** g01620119

OPERATOR STATION

297-0540 CONTROL GP-PILOT OPERATED HYD–RH

S/N: WNE1-UP; ZMF1-UP; CWG1-UP
PART OF 270-5690 CONTROL & MTG GP-JOYSTICK
AN ATTACHMENT

SMCS-5059 **i03087603**

NOTE	REF NO	GRAPHIC REF	PART NUMBER	QTY	PART NAME 1 2 3 4 5 6 (PRODUCT LEVEL)	SEE PAGE
	1	1	**6K-0806**	1	STRAP-CABLE	
Y	2	1	**260-2127**	1	CONTROL GP-HANDLE (JOYSTICK, RH)	1004
Y	3	1	**297-0530**	1	VALVE GP-PILOT (JOYSTICK, RH)	855

Y-SEPARATE ILLUSTRATION

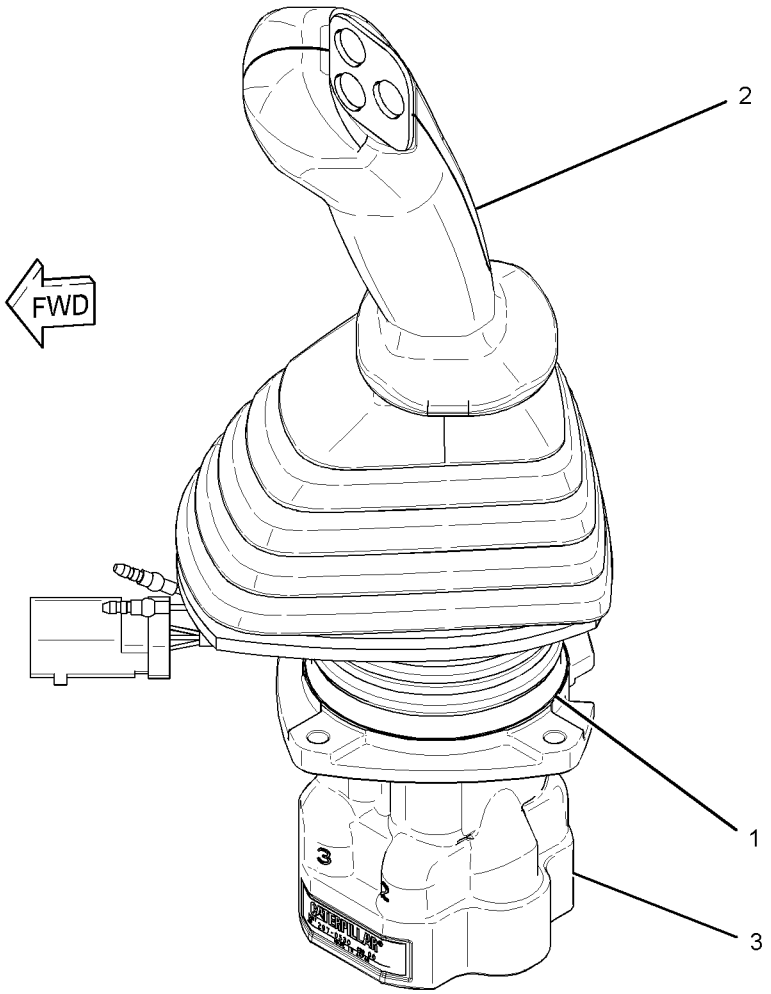

GRAPHIC #1 **<END>** g01620085

297-0541 CONTROL GP-PILOT OPERATED HYD–LH

S/N: WNE1-UP; ZMF1-UP; CWG1-UP
PART OF 270-5690 CONTROL & MTG GP-JOYSTICK
AN ATTACHMENT

SMCS-5059 **i03087605**

NOTE	REF NO	GRAPHIC REF	PART NUMBER	QTY	PART NAME 1 2 3 4 5 6 (PRODUCT LEVEL)	SEE PAGE
	1	1	**6K-0806**	1	STRAP-CABLE	
Y	2	1	**260-2128**	1	CONTROL GP-HANDLE (JOYSTICK, LH)	1005
Y	3	1	**297-0531**	1	VALVE GP-PILOT (JOYSTICK, LH)	857

Y-SEPARATE ILLUSTRATION

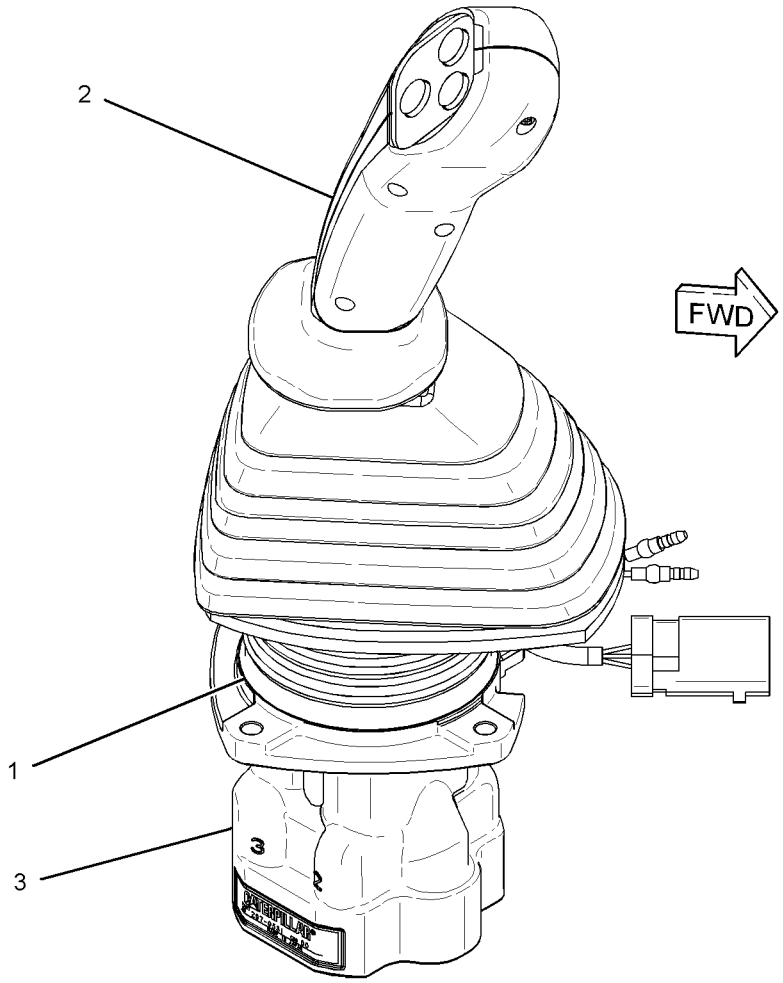

GRAPHIC #1 **<END>** g01620033

OPERATOR STATION

234-6501 COVER GP-CAB–REAR

S/N: WNE1-UP; ZMF1-UP; CWG1-UP
PART OF 340-6496 CAB GP
AN ATTACHMENT

SMCS-7301, 7308 **i03159185**

NOTE	REF NO	GRAPHIC REF	PART NUMBER	QTY	PART NAME 1 2 3 4 5 6 (PRODUCT LEVEL)	SEE PAGE
	1	1	**234-6499**	1	COVER AS	
	2	1	**234-6502**	1	COVER-ACCESS (FUSE-REAR PANEL)	
	3	1	**234-6593**	2	FASTENER	
					USE WITH COVER WITH A 9-MM DIAMETER UPPER MOUNTING HOLE	
					–OR–	
		1	**245-7929**	2	CLIP	
					USE WITH COVER WITH A 7.6-MM DIAMETER UPPER MOUNTING HOLE	

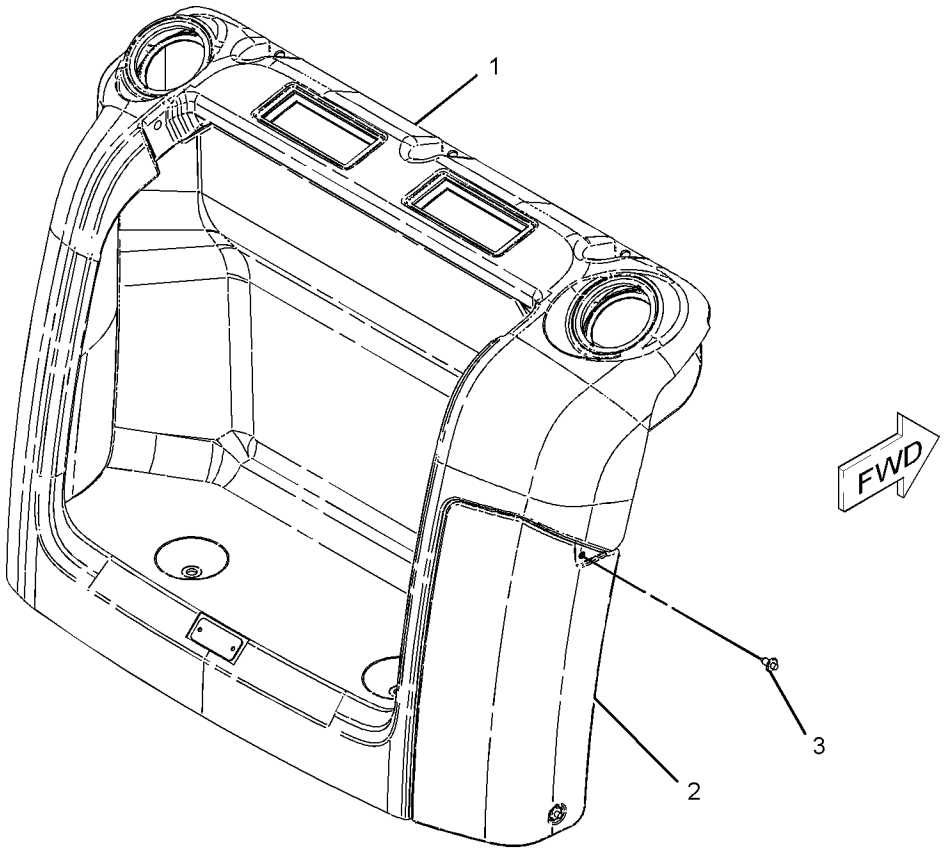

GRAPHIC #1 **<END>** g01101423

OPERATOR STATION

334-6568 COVER GP-CAB—EXTERIOR

S/N: WNE1-UP; ZMF1-UP; CWG1-UP
PART OF 334-6541 CAB GP
AN ATTACHMENT

SMCS-7301, 7308 **i03661312**

NOTE	REF NO	GRAPHIC REF	PART NUMBER	QTY	PART NAME 1 2 3 4 5 6 (PRODUCT LEVEL)	SEE PAGE
M	1	1	**171-7325**	11	SCREW-TAPPING (M5X0.8-THD)	
J	2	1	**267-7064**	1	LOCK AS	
	3	1	**340-6582**	2	HINGE	
	4	1	**340-6583**	1	COVER	
	5	1	**340-6584**	1	SEAL	
	6	1	**340-6585**	2	SEAL-RUBBER	

J-REQUIRES CORPORATE KEY
M-METRIC PART

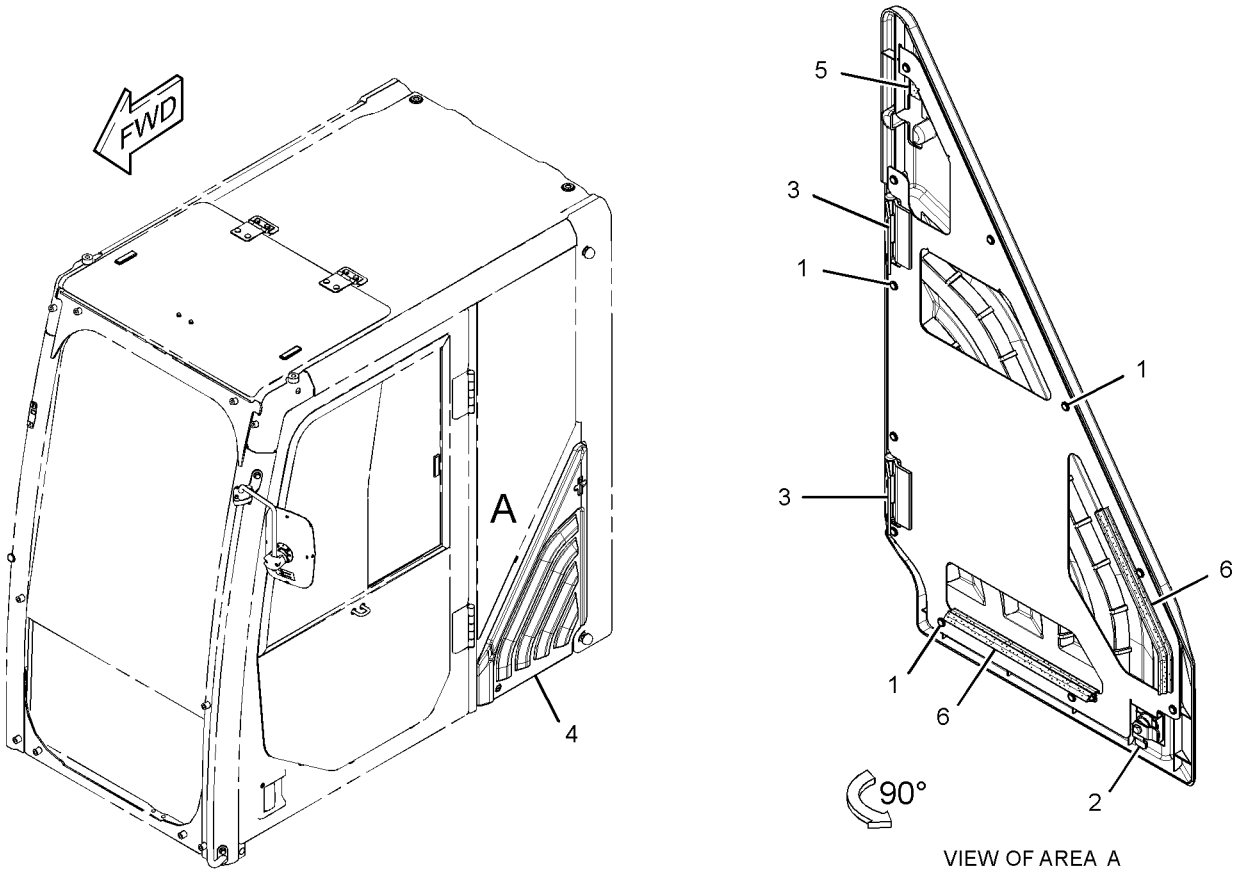

VIEW OF AREA A

GRAPHIC #1 **<END>** g01963875

OPERATOR STATION

234-6500 COVER GP-STORAGE

S/N: WNE1-UP; ZMF1-UP; CWG1-UP
USED ON STORAGE COMPARTMENT INSIDE CAB
PART OF 347-9907, 347-9908 OPTION AR-CAB
AN ATTACHMENT

SMCS-7268 **i02232841**

NOTE	REF NO	GRAPHIC REF	PART NUMBER	QTY	PART NAME 1 2 3 4 5 6 (PRODUCT LEVEL)	SEE PAGE
					(NO SERVICED PARTS)	

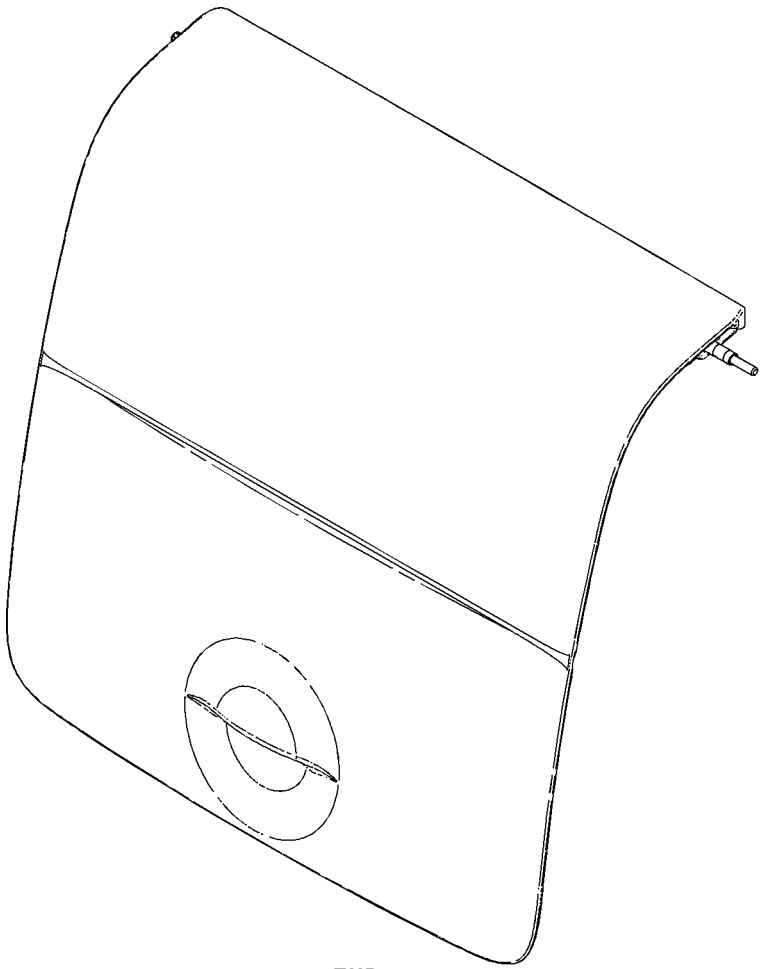

GRAPHIC #1 **<END>** g01092876

OPERATOR STATION

334-6387 DOOR GP-CAB

S/N: WNE1-UP; ZMF1-UP; CWG1-UP
PART OF 340-6497 CAB GP
AN ATTACHMENT

SMCS-7308 **i03671748**

NOTE	REF NO	GRAPHIC REF	PART NUMBER	QTY	PART NAME 1 2 3 4 5 6 (PRODUCT LEVEL)	SEE PAGE
	1	1	**151-6703**	1	HANDLE-PULL	
	2	1	**151-6704**	2	CAP (HANDLE)	
	3	1	**161-3639**	1	HANDLE AS	
	4	1	**164-0515**	1	JOINT	
	5	1	**167-7039**	1	GROMMET	
	6	1	**178-5574**	2	SPACER	
M	7	1	**185-8180**	3	SCREW (M6X1X16-MM)	
	8	1	**8T-4224**	2	WASHER-HARD (8.8X16X2-MM THK)	
	9	1	**259-7354**	1	COVER	
Y	10	1	**334-6513**	1	WINDOW GP-DOOR	1115
	11	1	**334-6526**	2	SPACER	
	12	1	**334-6527**	2	SPACER	
	13	1	**334-6528**	1	SEAL AS (DOOR)	
		1	**151-9497**	23	CLIP	
		1	**334-6530**	3	CLIP	
	14	1	**334-6531**	1	SEAL AS (DOOR)	
		1	**334-6530**	5	CLIP	
	15	1	**334-6533**	1	GLASS	
	16	1	**334-6534**	1	HOOK	
	17	1	**334-6535**	1	LATCH AS	
		1	**164-0514**	1	CLIP	
		1	**164-0519**	1	CLIP	
	18	1	**334-6536**	1	COVER	
	19	1	**334-6537**	1	HANDLE AS	
		1	**201-4391**	1	CLIP	
	20	1	**334-6538**	1	BUSHING-RUBBER	
M	21	1	**096-2622**	2	SCREW-MACHINE (M4X0.7X8-MM)	
M	22	1	**096-3884**	2	NUT-SPRING	
M	23	1	**101-8899**	2	SCREW AS (M6X1X16-MM)	
M	24	1	**101-8900**	2	SCREW AS (M6X1X20-MM)	
	25	1	**151-9461**	2	SPACER	
	26	1	**156-6644**	2	COVER	
	27	1	**178-5573**	4	SPACER	
	28	1	**189-2690**	1	HANDLE AS	
	29	1	**4I-4286**	1	KNOB (HANDLE)	
M	30	1	**9X-2042**	8	SCREW-TRUSS HEAD (M6X1X12-MM)	

M-METRIC PART
Y-SEPARATE ILLUSTRATION

334-6387 DOOR GP-CAB *(contd.)* **i03671748**

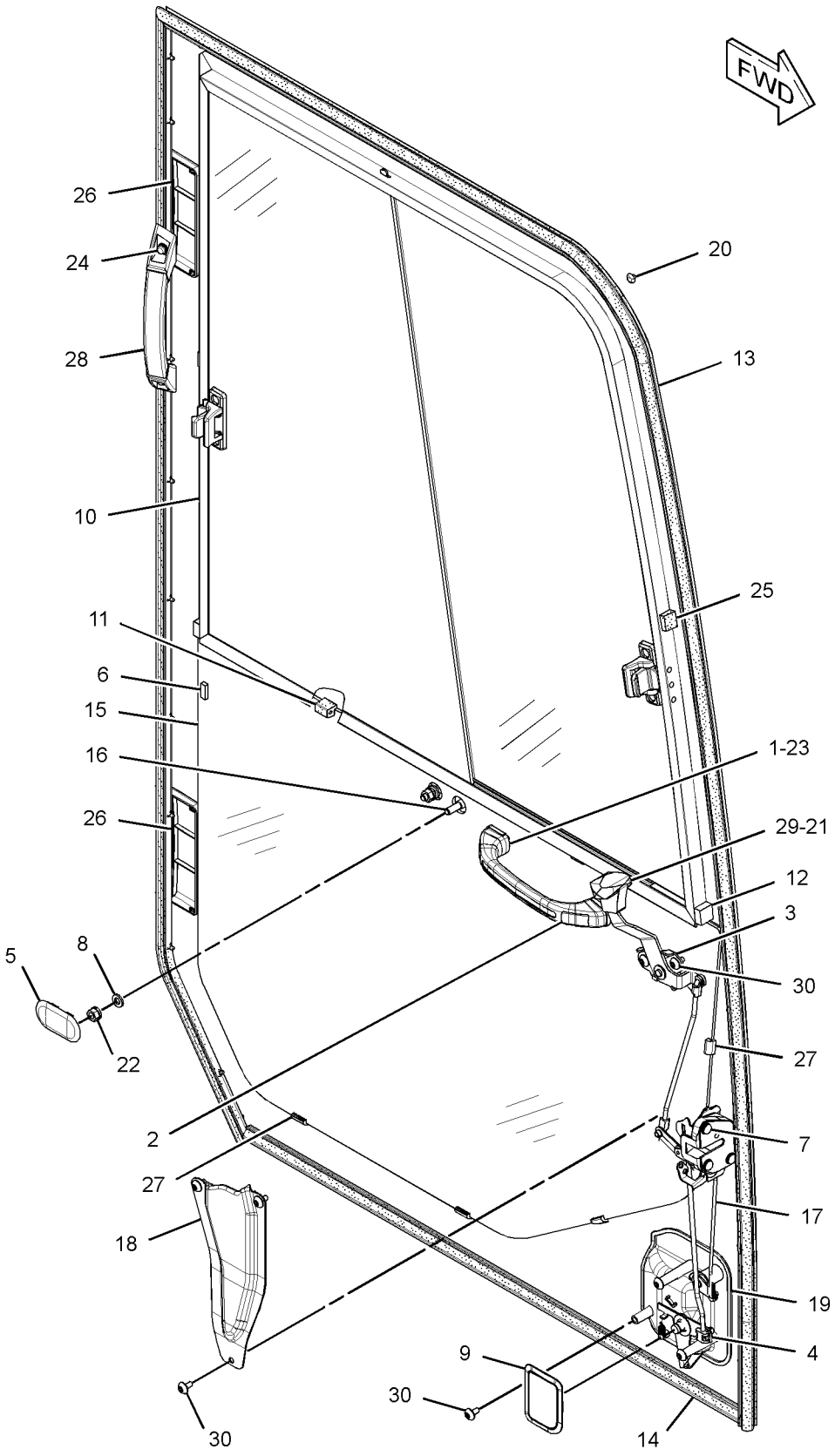

GRAPHIC #1 **<END>** g01961216

OPERATOR STATION

340-6524 DUCT GP-CAB AIR

S/N: WNE1-UP; ZMF1-UP; CWG1-UP
PART OF 340-6522 AIR CONDITIONER AR, 340-6560 HEATER AR-CAB
AN ATTACHMENT

SMCS-734D **i03653550**

NOTE	REF NO	GRAPHIC REF	PART NUMBER	QTY	PART NAME 1 2 3 4 5 6 (PRODUCT LEVEL)	SEE PAGE
M	1	1	**128-2135**	4	SCREW-TRUSS HEAD (M6X1X13-MM)	
	2	1	**235-8878**	1	DUCT AS (VENT, FRONT)	
		1	**245-7793**	1	INSULATOR	
	3	1	**235-8879**	1	DUCT AS (FLOOR)	
		1	**245-7873**	1	INSULATOR	
Y	4	1	**346-7437**	1	SUPPORT AS (FILTER)	1098
	5	1	**327-6618**	1	FILTER ELEMENT-CAB AIR (AIR INTAKE)	
	6	1	**342-3456**	1	DUCT AS-VENT	
		1	**342-3458**	1	INSULATOR	
	7	1	**342-3459**	1	DUCT-AIR	
	8	1	**176-1996**	3	CLIP	

M-METRIC PART
Y-SEPARATE ILLUSTRATION

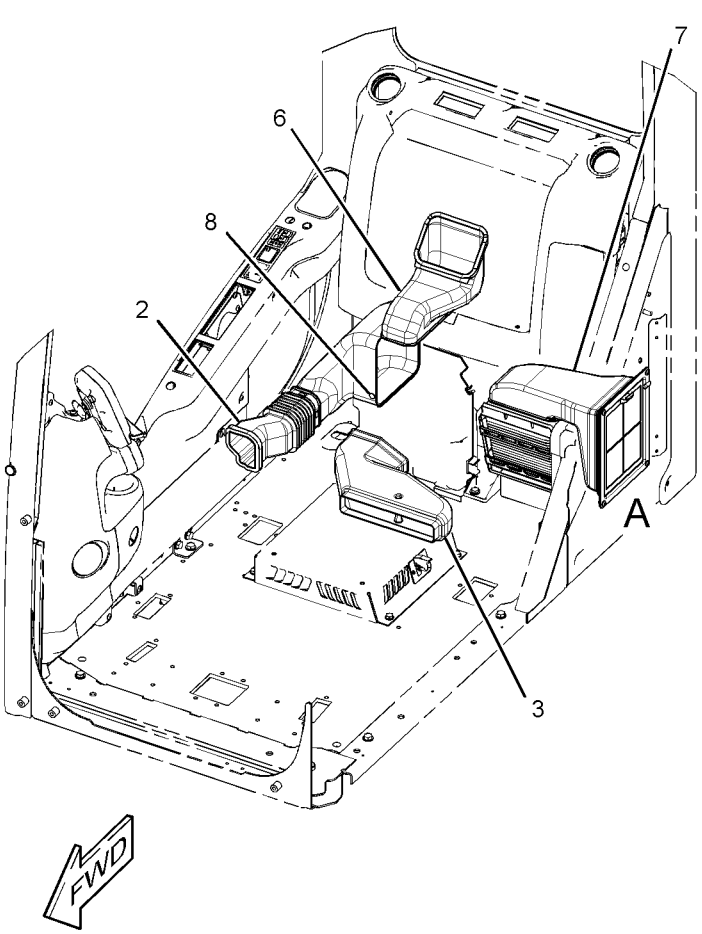

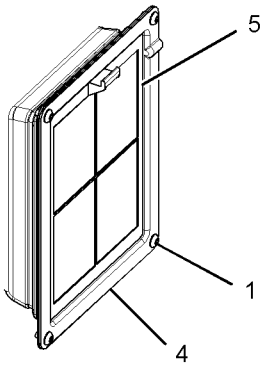

VIEW OF AREA A

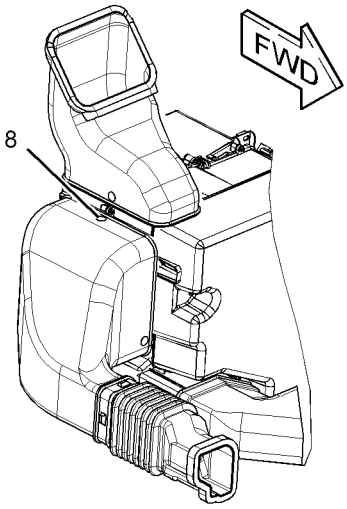

GRAPHIC #1 **<END>** g01952464

OPERATOR STATION

340-6488 FLOOR MAT

S/N: WNE1-UP; ZMF1-UP; CWG1-UP
PART OF 346-4628, 346-4629 DISTRIBUTION AR
FIELD REPLACEMENT FOR 340-6489—PAGE 1023: FOR 340-6490—PAGE 1024: FOR 340-6491—PAGE 1025: FOR 342-3536—PAGE 1027
AN ATTACHMENT

SMCS-726M **i03645203**

NOTE	REF NO	GRAPHIC REF	PART NUMBER	QTY	PART NAME 1 2 3 4 5 6 (PRODUCT LEVEL)	SEE PAGE
					(NO SERVICED PARTS)	

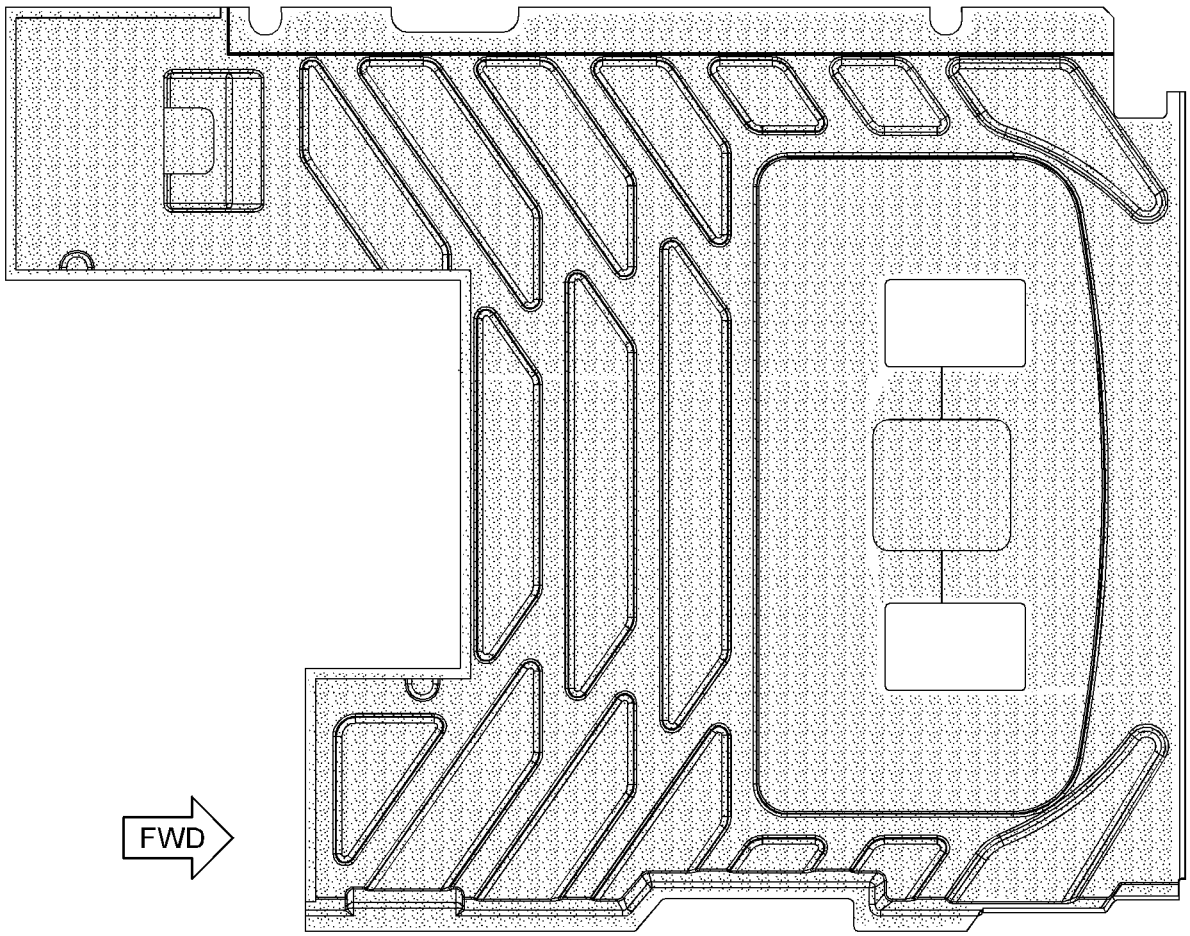

TOP VIEW

GRAPHIC #1 **<END>** g01961113

OPERATOR STATION

340-6489 FLOOR MAT–PEDAL, RH

S/N: WNE1-UP; ZMF1-UP; CWG1-UP
FIELD REPLACEMENT ORDER 340-6488–PAGE 1022
AN ATTACHMENT

SMCS-726M **i03645207**

NOTE	REF NO	GRAPHIC REF	PART NUMBER	QTY	PART NAME 1 2 3 4 5 6 (PRODUCT LEVEL)	SEE PAGE
					(NO SERVICED PARTS)	

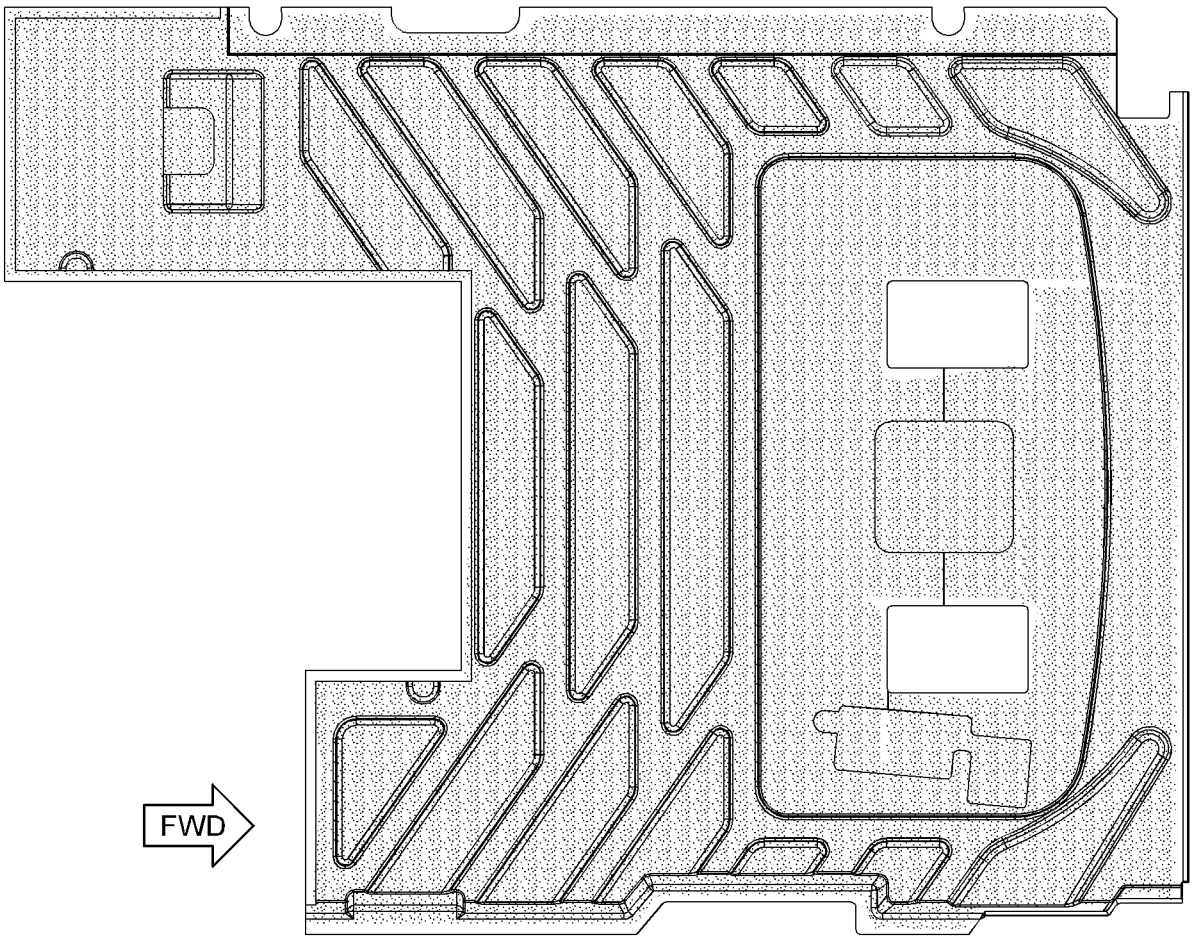

TOP VIEW

GRAPHIC #1 **<END>** g01961156

OPERATOR STATION

340-6490 FLOOR MAT

S/N: WNE1-UP; ZMF1-UP; CWG1-UP
FIELD REPLACEMENT ORDER 340-6488—PAGE 1022
AN ATTACHMENT

SMCS-726M **i03645209**

NOTE	REF NO	GRAPHIC REF	PART NUMBER	QTY	PART NAME 1 2 3 4 5 6 (PRODUCT LEVEL)	SEE PAGE
					(NO SERVICED PARTS)	

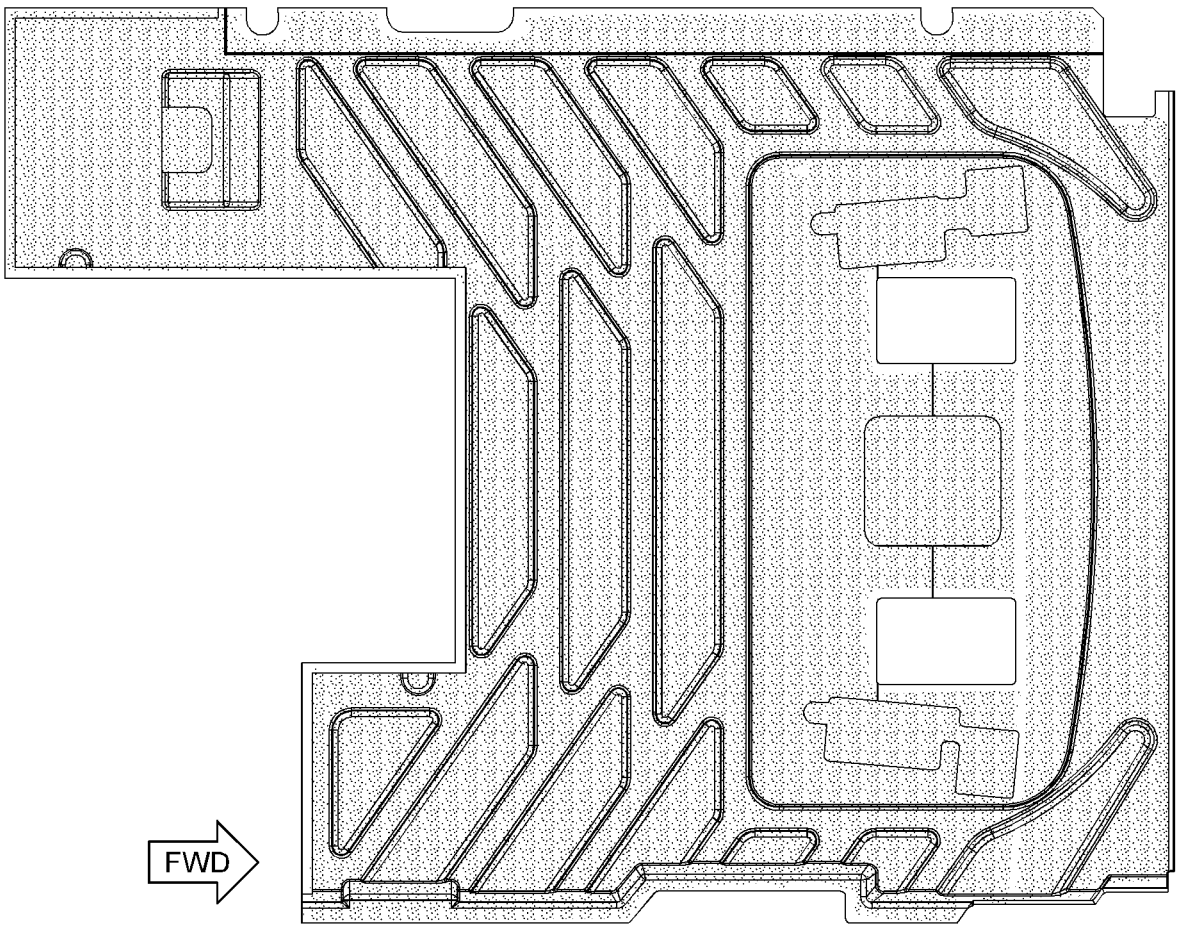

TOP VIEW

GRAPHIC #1 **<END>** g01960983

OPERATOR STATION

340-6491 FLOOR MAT–PEDAL, LH

S/N: WNE1-UP; ZMF1-UP; CWG1-UP
FIELD REPLACEMENT ORDER 340-6488–PAGE 1022
AN ATTACHMENT

SMCS-726M **i03645210**

NOTE	REF NO	GRAPHIC REF	PART NUMBER	QTY	PART NAME 1 2 3 4 5 6 (PRODUCT LEVEL)	SEE PAGE
					(NO SERVICED PARTS)	

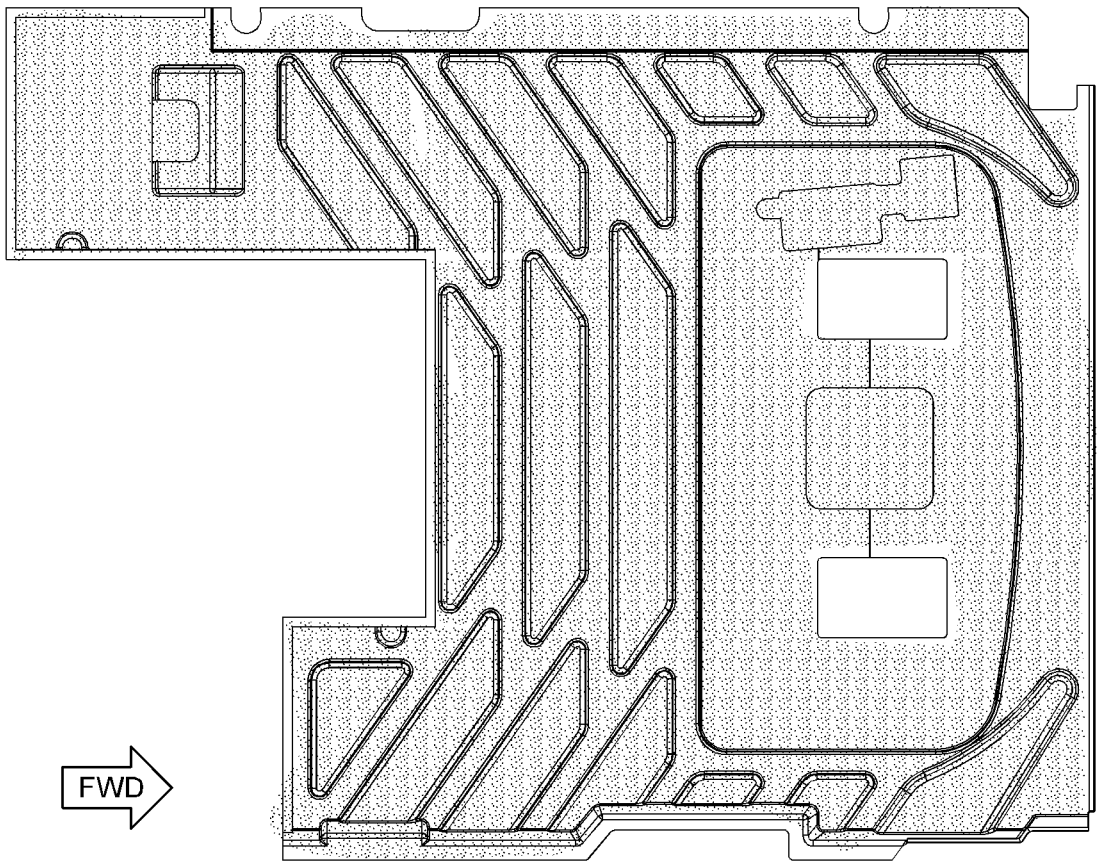

TOP VIEW

GRAPHIC #1 **<END>** g01960985

OPERATOR STATION

340-6492 FLOOR MAT

S/N: WNE1-UP; ZMF1-UP; CWG1-UP

AN ATTACHMENT

SMCS-726M **i03645212**

NOTE	PART NUMBER	QTY	PART NAME 1 2 3 4 5 6 (PRODUCT LEVEL)	SEE PAGE
			(NO SERVICED PARTS)	

<END>

340-6493 FLOOR MAT

S/N: WNE1-UP; ZMF1-UP; CWG1-UP

AN ATTACHMENT

SMCS-726M **i03645214**

NOTE	PART NUMBER	QTY	PART NAME 1 2 3 4 5 6 (PRODUCT LEVEL)	SEE PAGE
			(NO SERVICED PARTS)	

<END>

OPERATOR STATION

342-3536 FLOOR MAT–ACCUGRADE READY

S/N: WNE1-UP; ZMF1-UP; CWG1-UP
FIELD REPLACEMENT ORDER 340-6488–PAGE 1022
AN ATTACHMENT

SMCS-726M **i03645215**

NOTE	REF NO	GRAPHIC REF	PART NUMBER	QTY	PART NAME 1 2 3 4 5 6 (PRODUCT LEVEL)	SEE PAGE
					(NO SERVICED PARTS)	

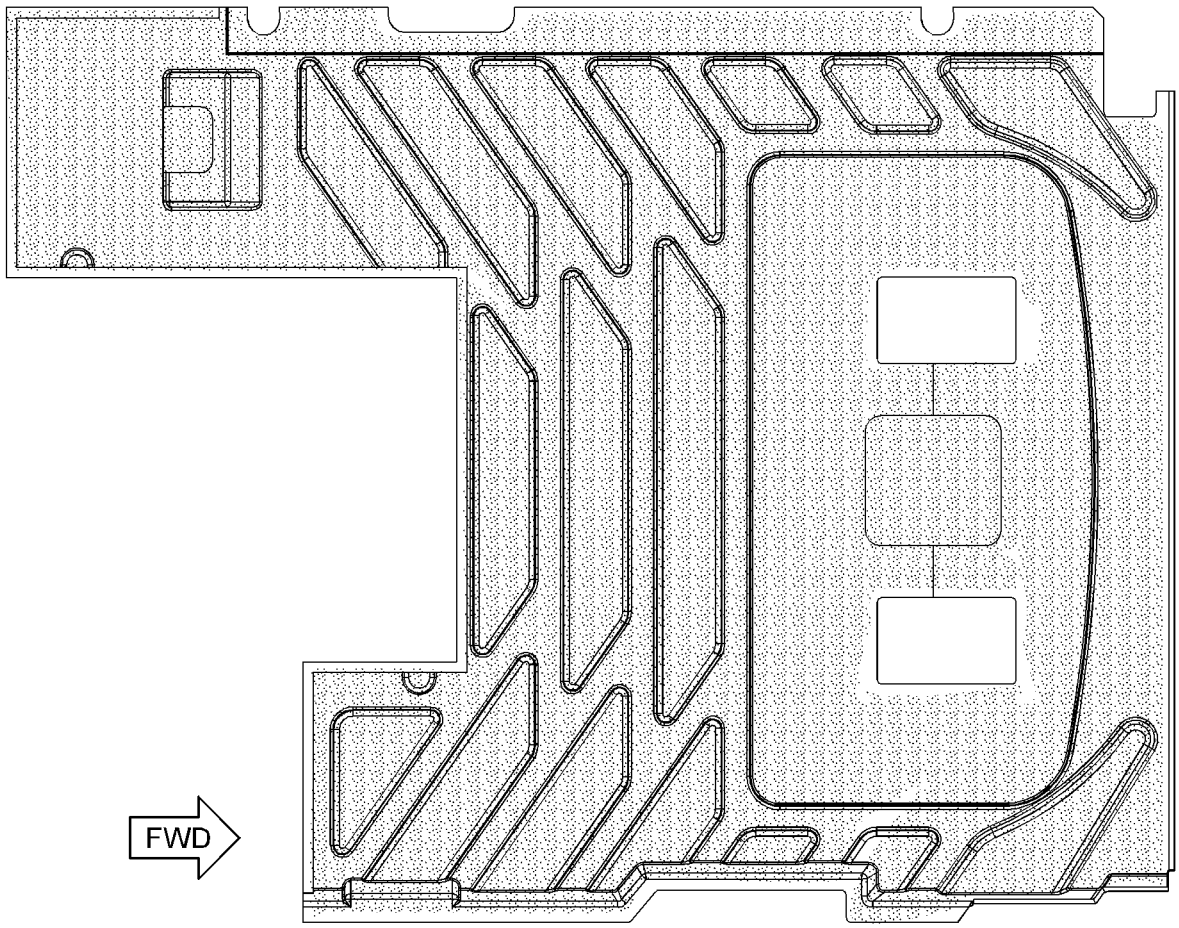

TOP VIEW

GRAPHIC #1 **<END>** g01960332

OPERATOR STATION

336-1196 GUARD GP-CAB

S/N: WNE1-UP; ZMF1-UP; CWG1-UP
PART OF 340-6486 GUARD AR
AN ATTACHMENT

SMCS-7158, 7301 **i03669813**

NOTE	REF NO	GRAPHIC REF	PART NUMBER	QTY	PART NAME 1 2 3 4 5 6 (PRODUCT LEVEL)	SEE PAGE
	1	1	**219-0305**	1	FILM-WARNING (NO WELD, NO DRILL, READ OMM)	
M	2	1	**8T-4137**	2	BOLT (M10X1.5X20-MM)	
	3	1	**9X-8257**	4	WASHER (17.5X30X3.5-MM THK)	
	4	1	**336-1197**	1	GUARD AS	
	5	1	**349-5364**	1	BRACKET AS	
M	6	1	**7X-2475**	4	BOLT (M16X2X130-MM)	
	7	1	**8T-4121**	2	WASHER-HARD (11X21X2.5-MM THK)	

M-METRIC PART

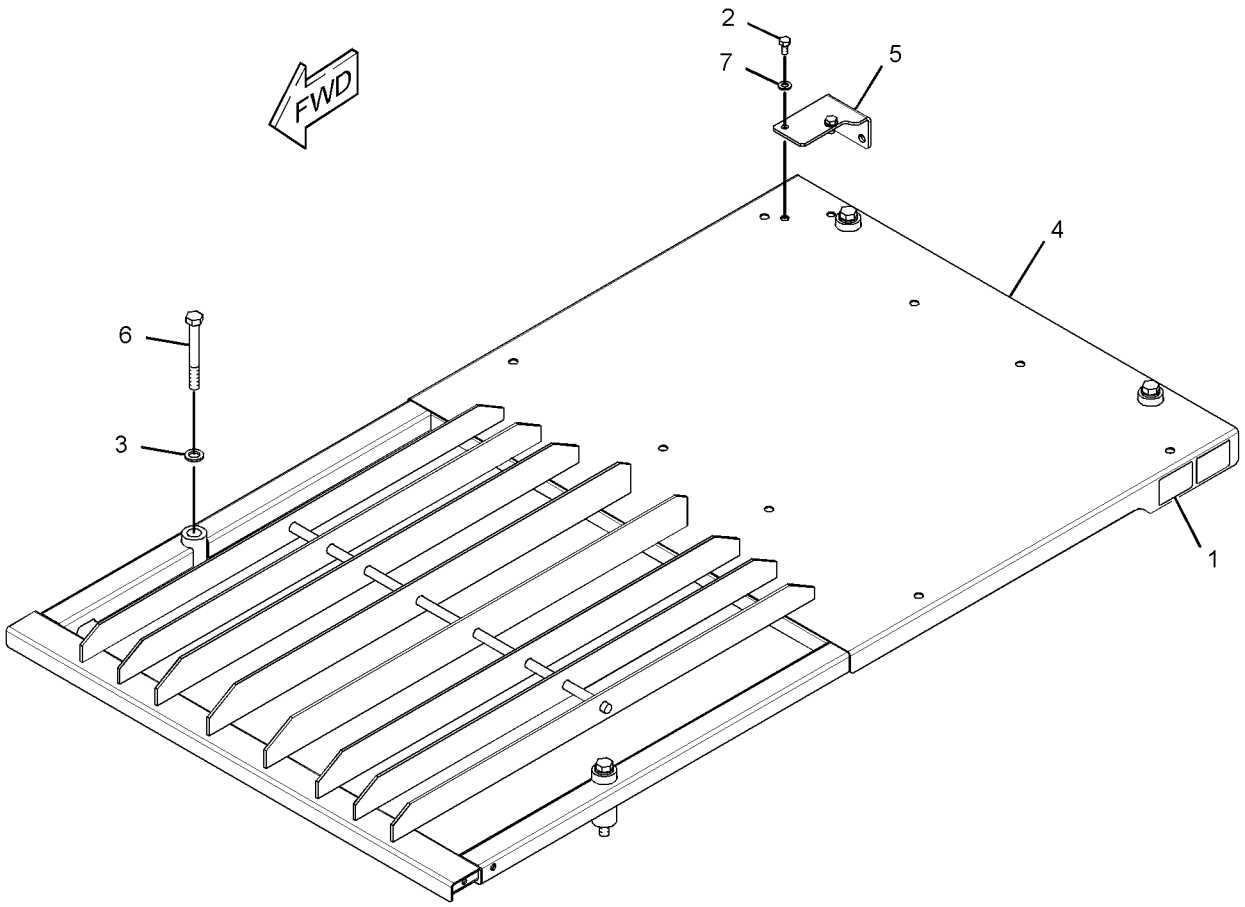

GRAPHIC #1 **<END>** g01971538

OPERATOR STATION

316-8831 GUARD GP-WINDOW

S/N: WNE1-UP; ZMF1-UP; CWG1-UP
INCLUDES GUARD STORAGE RACK
PART OF 340-6486 GUARD AR
AN ATTACHMENT

SMCS-7182, 7315 **i03649457**

NOTE	REF NO	GRAPHIC REF	PART NUMBER	QTY	PART NAME 1 2 3 4 5 6 (PRODUCT LEVEL)	SEE PAGE
	1	1	**5D-4822**	4	RING-RETAINING	
	2	1	**6I-5976**	4	SHIM (1-MM THK)	
	3	1	**7Y-8561**	2	BUMPER	
	4	1	**8Y-5745**	2	LATCH AS	
	5	1	**102-7688**	2	KNOB	
	7	1	**201-4534**	2	PIN	
	8	1	**336-1159**	1	SUPPORT AS	
	9	1	**336-1160**	1	SUPPORT AS	
	10	1	**336-1161**	1	GUARD AS	
	11	1	**336-1163**	2	BRACKET AS	
	12	1	**346-7367**	1	PEDAL AS	
	13	1	**346-7370**	1	PEDAL AS	
	14	1	**342-3715**	1	BRACKET AS	
	15	1	**342-3717**	1	BRACKET AS	
	16	1	**342-3723**	2	SPRING AS-GAS (WINDOW)	
M	17	1	**6V-7357**	8	BOLT (M6X1X25-MM)	
M	18	1	**7Y-0623**	2	LOCKNUT (M16X2-THD)	
	19	1	**8T-4121**	12	WASHER-HARD (11X21X2.5-MM THK)	
M	20	1	**8T-4133**	2	NUT (M10X1.5-THD)	
M	21	1	**8T-4136**	2	BOLT (M10X1.5X25-MM)	
M	22	1	**8T-4195**	8	BOLT (M10X1.5X30-MM)	
	23	1	**9X-6165**	2	WASHER (6.5X22X2.5-MM THK)	
	24	1	**9X-8256**	6	WASHER (6.6X12X2-MM THK)	
	25	1	**9X-8257**	2	WASHER (17.5X30X3.5-MM THK)	
	26	1	**298-4195**	1	FILM-CERTIFICATION (OPS GUARD, READ OMM, ENGLISH)	
					—OR—	
	27	1	**298-4254**	1	FILM-CERTIFICATION (OPS GUARD, READ OMM, JAPANESE)	
	28	1	**219-0305**	1	FILM-WARNING (NO WELD, NO DRILL, READ OMM)	

M-METRIC PART

316-8831 **GUARD GP-WINDOW** *(contd.)* **i03649457**

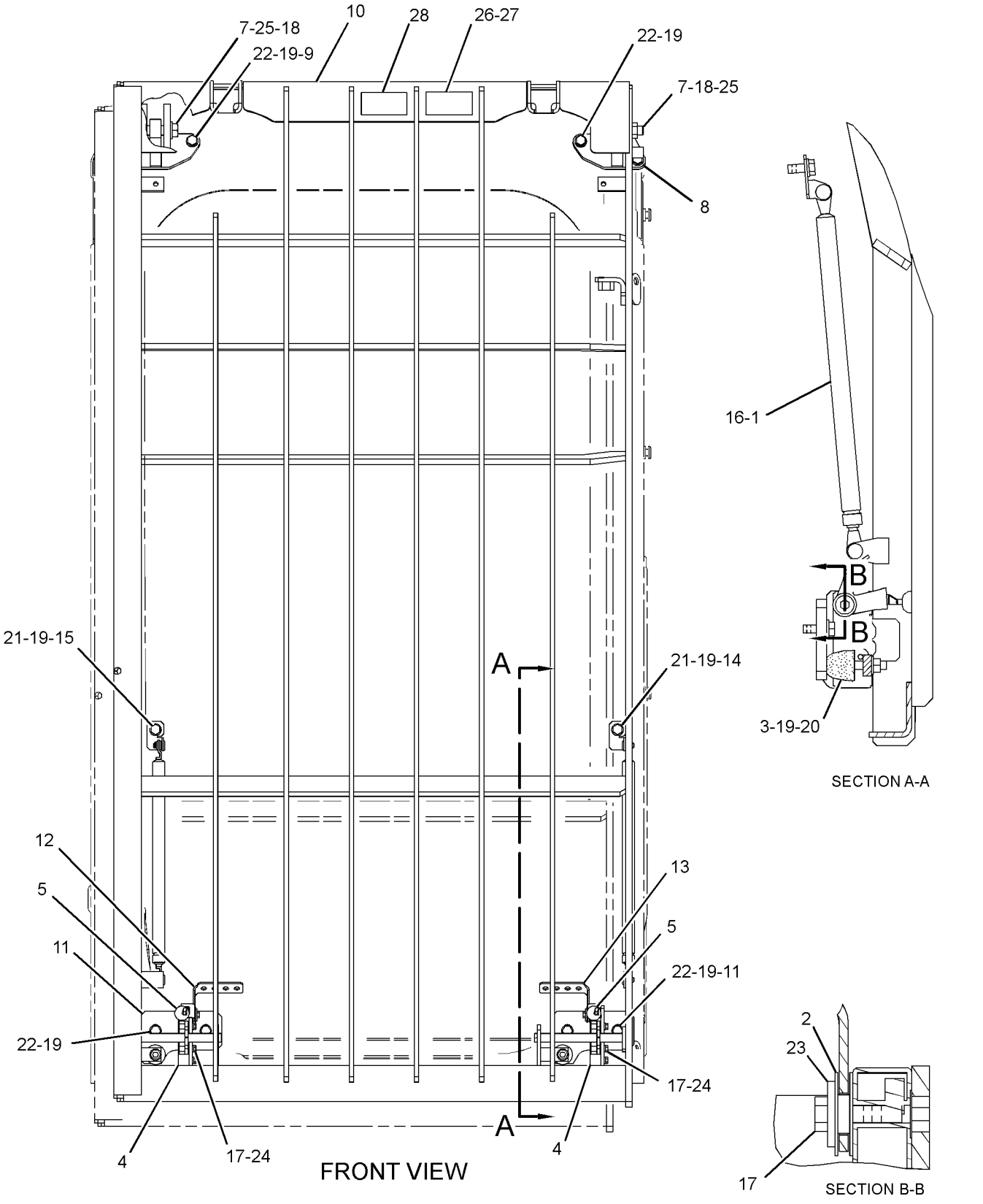

GRAPHIC #1 **<END>** g01959059

OPERATOR STATION

316-8836 GUARD GP-WINDOW

S/N: WNE1-UP; ZMF1-UP; CWG1-UP

AN ATTACHMENT

SMCS-7182, 7315 **i03635971**

NOTE	REF NO	GRAPHIC REF	PART NUMBER	QTY	PART NAME 1 2 3 4 5 6 (PRODUCT LEVEL)	SEE PAGE
	1	1	**342-3750**	1	GUARD AS	
	2	1	**8T-4121**	4	WASHER-HARD (11X21X2.5-MM THK)	
M	3	1	**8T-4136**	4	BOLT (M10X1.5X25-MM)	

M-METRIC PART

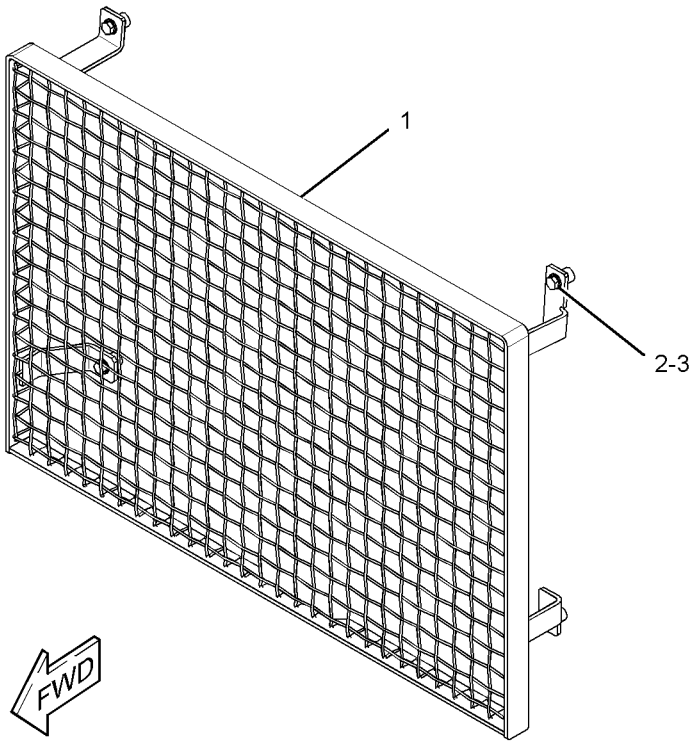

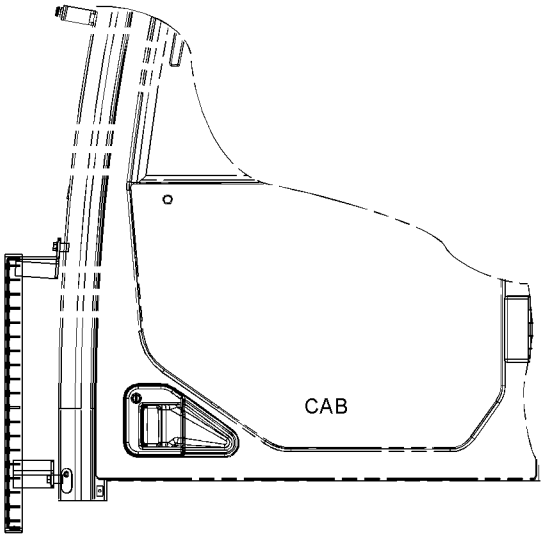

LEFT SIDE VIEW

GRAPHIC #1 **<END>** g01952771

OPERATOR STATION

316-8837 GUARD GP-WINDOW

S/N: WNE1-UP; ZMF1-UP; CWG1-UP

AN ATTACHMENT

SMCS-7182, 7315 **i03648002**

NOTE	REF NO	GRAPHIC REF	PART NUMBER	QTY	PART NAME 1 2 3 4 5 6 (PRODUCT LEVEL)	SEE PAGE
	1	1	**5D-4822**	4	RING-RETAINING	
	2	1	**6I-5976**	4	SHIM (1-MM THK)	
	3	1	**7Y-8561**	2	BUMPER	
	4	1	**8Y-5745**	2	LATCH AS	
	5	1	**102-7688**	2	KNOB	
	7	1	**201-4534**	2	PIN	
	8	1	**336-1159**	1	SUPPORT AS	
	9	1	**336-1160**	1	SUPPORT AS	
	10	1	**336-1163**	2	BRACKET AS	
	11	1	**340-6511**	1	GUARD AS	
	12	1	**342-3715**	1	BRACKET AS	
	13	1	**342-3717**	1	BRACKET AS	
	14	1	**342-3723**	2	SPRING AS-GAS	
	15	1	**346-7367**	1	PEDAL AS	
	16	1	**346-7370**	1	PEDAL AS	
M	17	1	**6V-7357**	8	BOLT (M6X1X25-MM)	
M	18	1	**7Y-0623**	2	LOCKNUT (M16X2-THD)	
	19	1	**8T-4121**	12	WASHER-HARD (11X21X2.5-MM THK)	
M	20	1	**8T-4133**	2	NUT (M10X1.5-THD)	
M	21	1	**8T-4136**	2	BOLT (M10X1.5X25-MM)	
M	22	1	**8T-4195**	8	BOLT (M10X1.5X30-MM)	
	23	1	**9X-6165**	2	WASHER (6.5X22X2.5-MM THK)	
	24	1	**9X-8256**	6	WASHER (6.6X12X2-MM THK)	
	25	1	**9X-8257**	2	WASHER (17.5X30X3.5-MM THK)	

M-METRIC PART

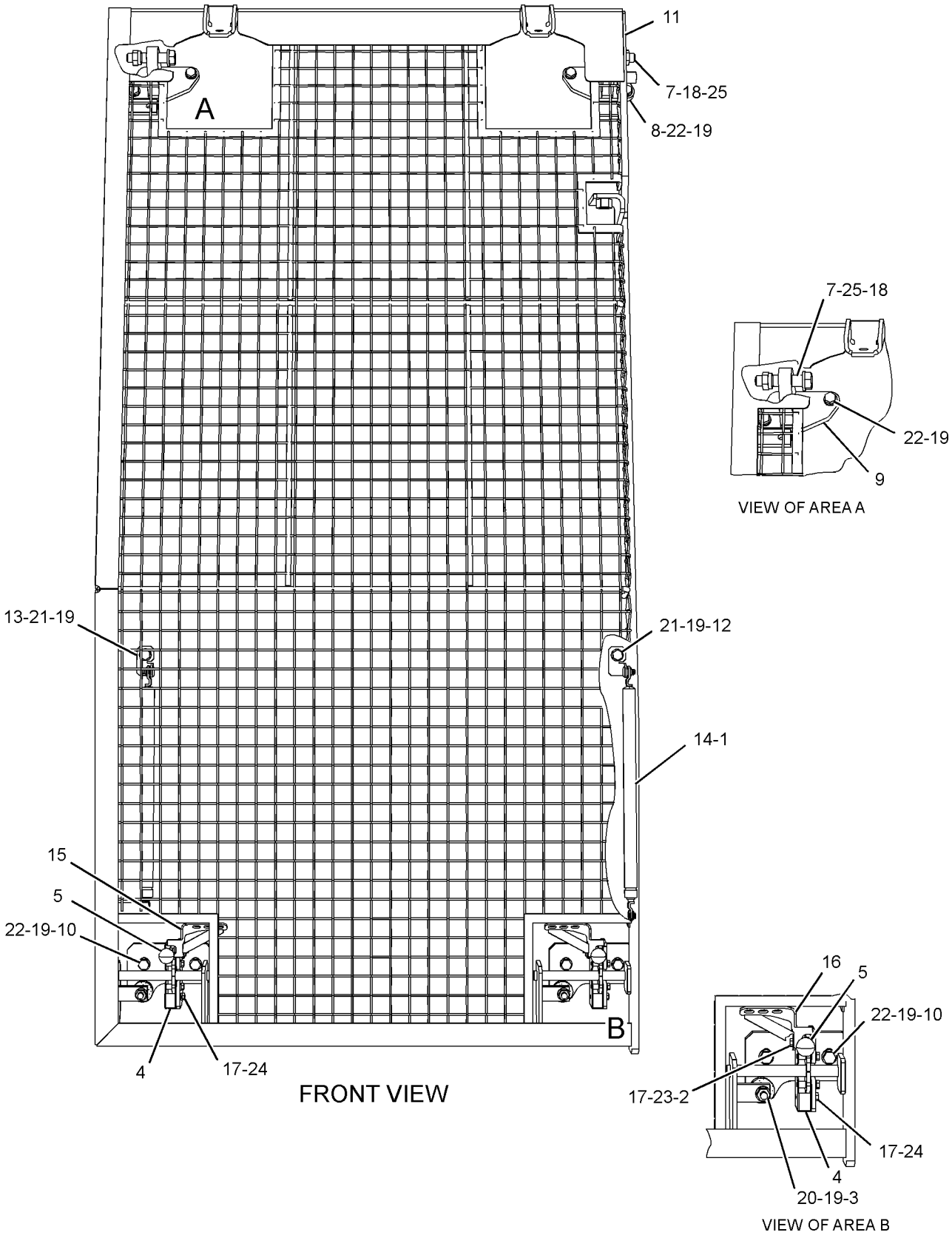

GRAPHIC #1 **<END>** g01960977

OPERATOR STATION

340-6589 HATCH GP-ROOF

S/N: WNE1-UP; ZMF1-UP; CWG1-UP
PART OF 340-6665 HATCH GP-ROOF
AN ATTACHMENT

SMCS-7303 **i03645170**

NOTE	REF NO	GRAPHIC REF	PART NUMBER	QTY	PART NAME 1 2 3 4 5 6 (PRODUCT LEVEL)	SEE PAGE
	1	1	**085-6449**	2	PACKING	
	2	1	**161-3694**	1	CATCH	
	3	1	**189-2693**	1	BRACKET AS (RH)	
	4	1	**189-2694**	1	BRACKET AS (LH)	
	6	1	**340-6592**	2	HINGE AS	
M	7	1	**100-2881**	4	SCREW-TRUSS HEAD (M5X0.8X10-MM)	
	8	1	**171-7477**	2	NUT	
	9	1	**4I-1260**	2	PACKING	
	10	1	**4I-4361**	2	RETAINER	
M	11	1	**6I-5342**	4	NUT (M8X1.25-THD)	
M	12	1	**9X-2045**	2	SCREW-TRUSS HEAD (M6X1X20-MM)	

M-METRIC PART

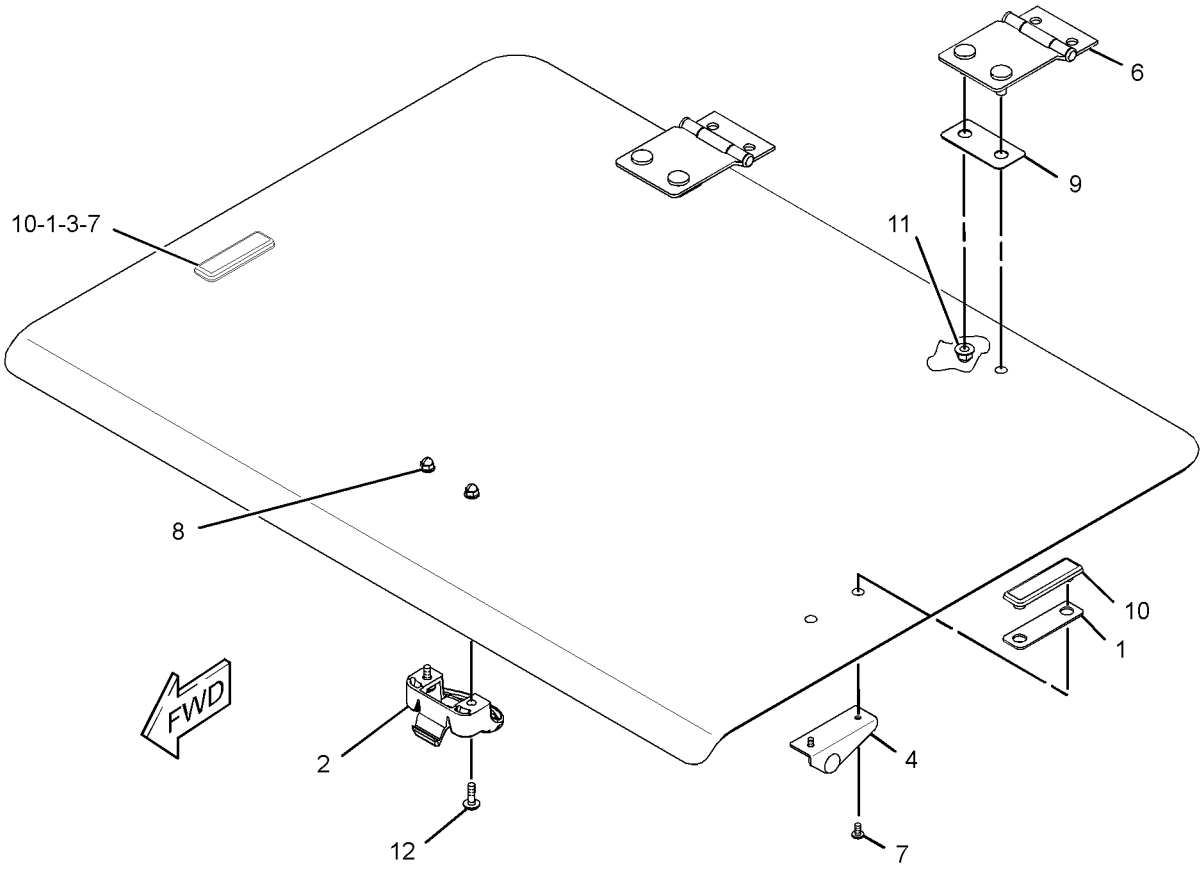

GRAPHIC #1 **<END>** g01957768

OPERATOR STATION

340-6665 HATCH GP-ROOF

S/N: WNE1-UP; ZMF1-UP; CWG1-UP
PART OF 340-6497 CAB GP
AN ATTACHMENT

SMCS-7303 **i03645048**

NOTE	REF NO	GRAPHIC REF	PART NUMBER	QTY	PART NAME 1 2 3 4 5 6 (PRODUCT LEVEL)	SEE PAGE
	1	1	**099-3506**	2	SPRING AS-GAS	
M	2	1	**128-2135**	8	SCREW-TRUSS HEAD (M6X1X13-MM)	
	3	1	**235-8929**	2	HANDLE	
	4	1	**327-6477**	1	RAIL	
	5	1	**327-6478**	1	RAIL	
	6	1	**327-6479**	1	VISOR	
Y	7	1	**340-6589**	1	HATCH GP-ROOF	1034
	8	1	**340-6593**	2	HOLDER AS	
	9	1	**340-6594**	1	SEAL	
	10	1	**340-6595**	1	STRIKER	
M	11	1	**105-2169**	4	BOLT AS (M8X1.25X16-MM)	
	12	1	**5D-4822**	2	RING-RETAINING	
M	13	1	**9X-2042**	2	SCREW-TRUSS HEAD (M6X1X12-MM)	

M-METRIC PART
Y-SEPARATE ILLUSTRATION

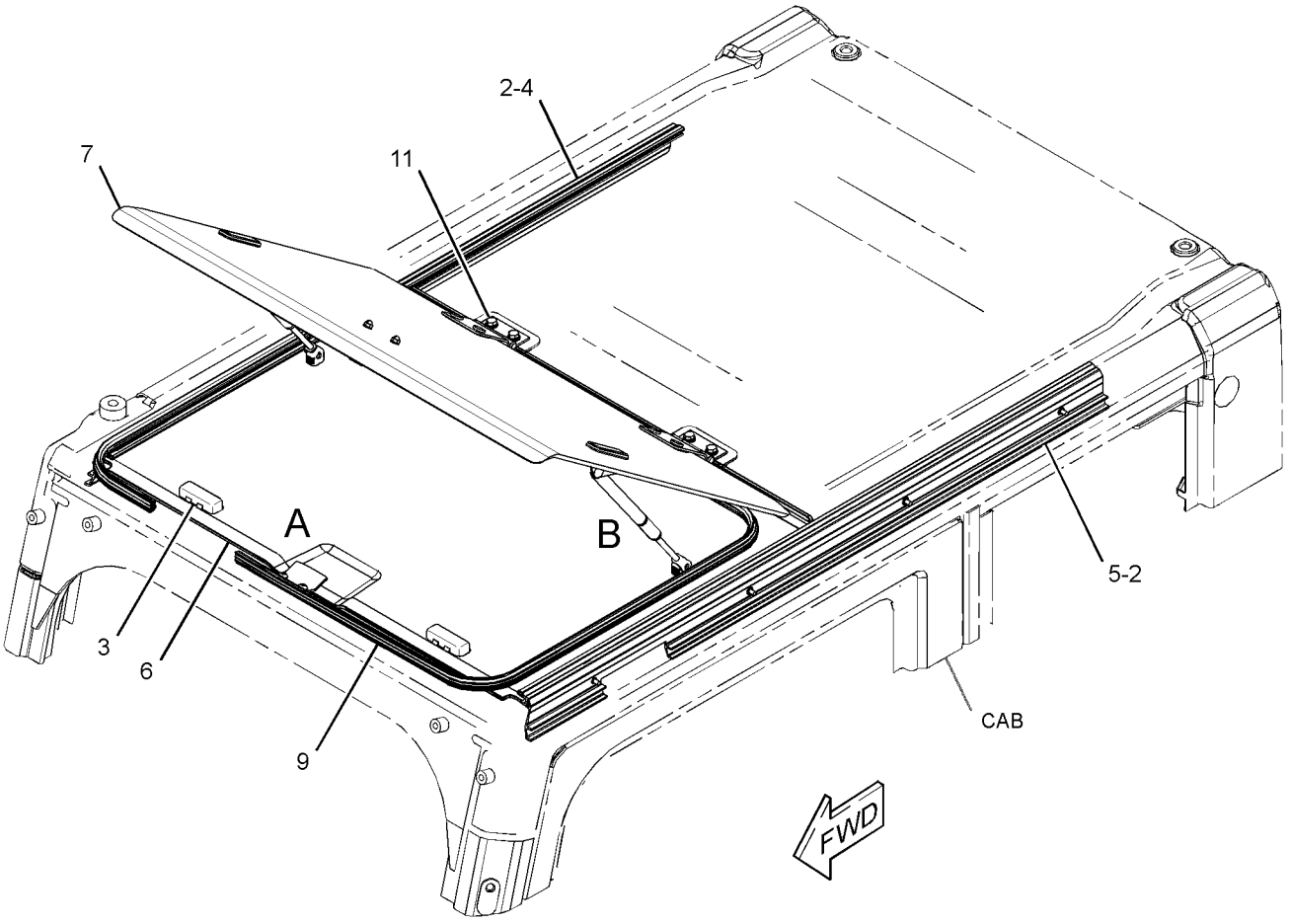

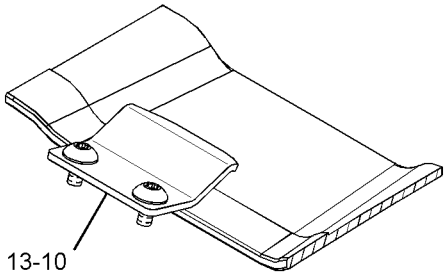

VIEW OF AREA A

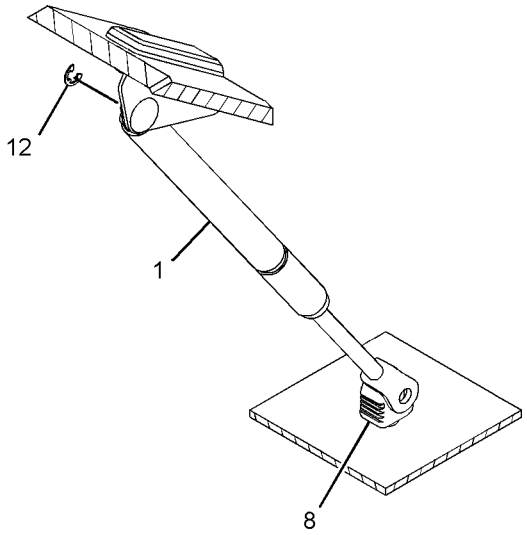

VIEW OF AREA B

GRAPHIC #1 **<END>** g01957896

OPERATOR STATION

229-9084 HEATER & MTG GP-CAB

S/N: WNE1-UP; ZMF1-UP
PART OF 340-6560 HEATER AR-CAB
AN ATTACHMENT

SMCS-7304 **i03296403**

NOTE	REF NO	GRAPHIC REF	PART NUMBER	QTY	PART NAME 1 2 3 4 5 6 (PRODUCT LEVEL)	SEE PAGE
	1	1	**235-8873**	1	HARNESS AS-HEATER & AIR COND (CONTROL PANEL SWITCHES)	
	2	1	**235-8874**	1	SENSOR-TEMPERATURE (AMBIENT AIR)	
	3	1	**235-8875**	1	BRACKET	
CY	4	1	**316-8916**	1	AIR CONDITIONER GP	967
	5	1	**293-1138**	1	PANEL AS-CONTROL	
	6	1	**245-7858**	1	HARNESS AS-HEATER	
M	8	1	**099-2374**	2	BOLT-SOCKET HEAD (M5X0.8X12-MM)	
	9	1	**111-4836**	3	CLIP	
	10	1	**3S-2093**	2	STRAP-CABLE	
M	11	1	**5C-9553**	1	BOLT (M6X1X16-MM)	
	12	1	**7X-7729**	7	WASHER (11X25X3-MM THK)	
	13	1	**8T-0328**	2	WASHER-HARD (5.5X10X1-MM THK)	
	14	1	**8T-4121**	3	WASHER-HARD (11X21X2.5-MM THK)	
M	15	1	**8T-4136**	7	BOLT (M10X1.5X25-MM)	
M	16	1	**8T-4137**	3	BOLT (M10X1.5X20-MM)	
	17	1	**9X-8256**	1	WASHER (6.6X12X2-MM THK)	

C-CHANGE FROM PREVIOUS TYPE
M-METRIC PART
Y-SEPARATE ILLUSTRATION

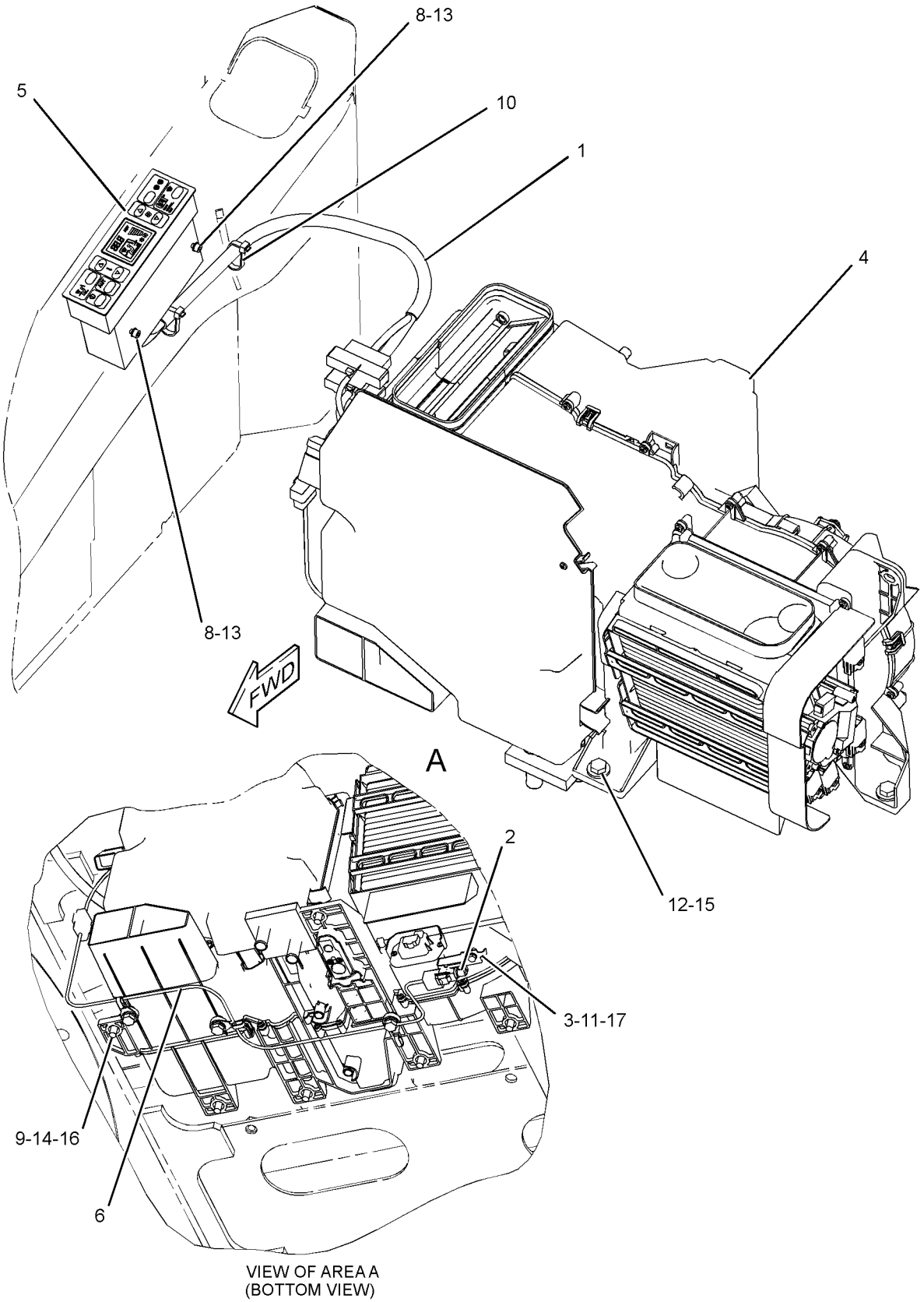

VIEW OF AREA A
(BOTTOM VIEW)

GRAPHIC #1 **<END>** g01405002

OPERATOR STATION

340-6560 HEATER AR-CAB

S/N: WNE1-UP; ZMF1-UP

AN ATTACHMENT

SMCS-7304 **i03648740**

NOTE	PART NUMBER	QTY	PART NAME 1 2 3 4 5 6 (PRODUCT LEVEL)	SEE PAGE
Y	*340-6524*	1	DUCT GP-CAB AIR	1021
Y	*229-9084*	1	HEATER & MTG GP-CAB	1037
Y	*273-5169*	1	LINES GP-HEATER	1062

Y-SEPARATE ILLUSTRATION

<END>

OPERATOR STATION

267-8071 HORN GP-ELECTRIC

S/N: WNE1-UP; ZMF1-UP; CWG1-UP

PART OF 339-2835, 343-1017, 343-1018 CHASSIS AR

SMCS-7402 **i02562505**

NOTE	REF NO	GRAPHIC REF	PART NUMBER	QTY	PART NAME 1 2 3 4 5 6 (PRODUCT LEVEL)	SEE PAGE
CY	1	1	*291-7559*	1	HORN GP-ELECTRIC	1041
	2	1	**8T-4121**	2	WASHER-HARD (11X21X2.5-MM THK)	
M	3	1	**8T-4195**	2	BOLT (M10X1.5X30-MM)	

C-CHANGE FROM PREVIOUS TYPE
M-METRIC PART
Y-SEPARATE ILLUSTRATION

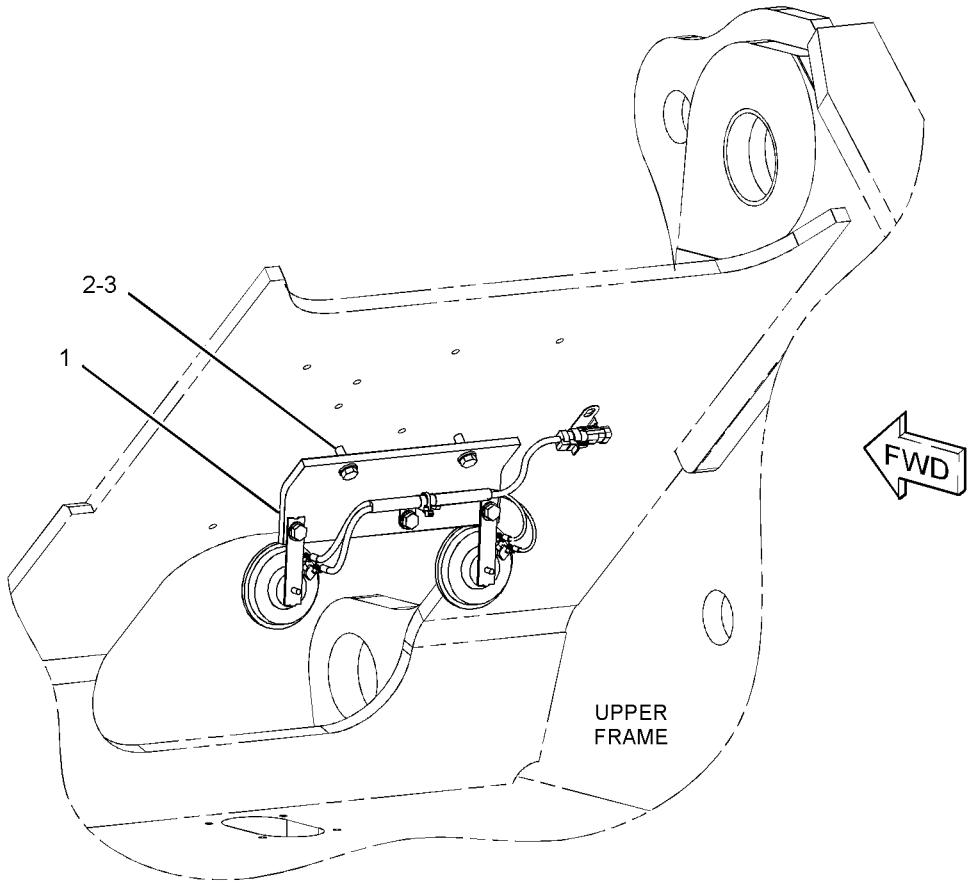

GRAPHIC #1 **<END>** g01289732

OPERATOR STATION

291-7559 HORN GP-ELECTRIC

S/N: WNE1-UP; ZMF1-UP; CWG1-UP
PART OF 267-8071 HORN GP-ELECTRIC

SMCS-7402 **i02725439**

NOTE	REF NO	GRAPHIC REF	PART NUMBER	QTY	PART NAME 1 2 3 4 5 6 (PRODUCT LEVEL)	SEE PAGE
	1	1	**3S-2093**	1	STRAP-CABLE	
	2	1	**7Y-3919**	1	HORN AS (24-VOLT)	
		1	**095-0826**	2	LOCKWASHER	
M		1	**095-7930**	2	SCREW-MACHINE (M4X0.07X6-MM)	
	3	1	**7Y-3920**	1	HORN AS (24-VOLT)	
		1	**095-0826**	2	LOCKWASHER	
M		1	**095-7930**	2	SCREW-MACHINE (M4X0.07X6-MM)	
	4	1	**291-7560**	1	HARNESS AS-CHASSIS (HORN)	
		1	**3S-2093**	1	STRAP-CABLE	
		1	**230-4011**	1	PLUG AS-CONNECTOR (2-PIN)	
	5	1	**291-7561**	1	BRACKET	
	6	1	**132-5789**	1	CLIP	
	7	1	**8T-4121**	3	WASHER-HARD (11X21X2.5-MM THK)	
M	8	1	**8T-4191**	3	BOLT (M10X1.5X16-MM)	

M-METRIC PART

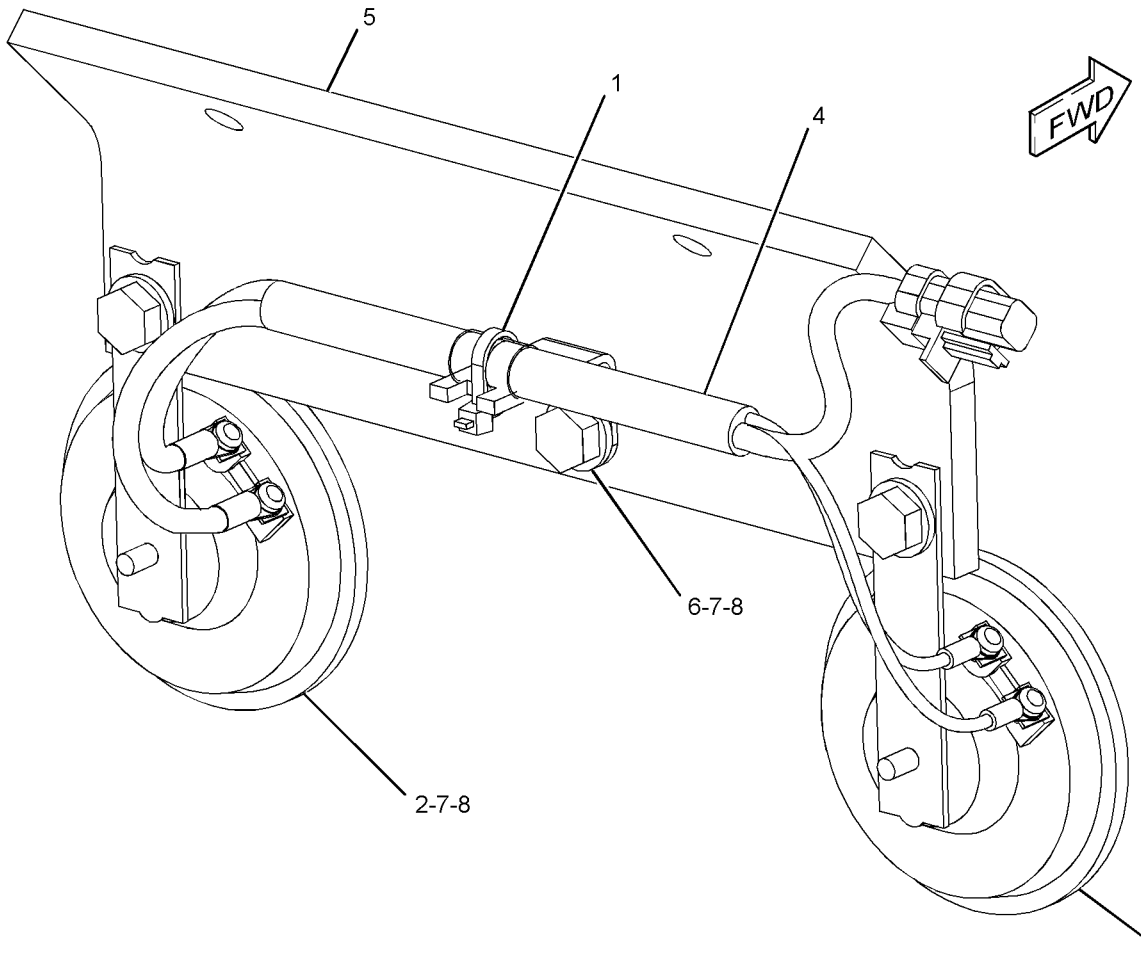

GRAPHIC #1 **<END>** g01302495

OPERATOR STATION

340-3844 INSTALLATION AR—ACCUGRADE

S/N: CWG1-UP

FOR USE WITH 275-3695—PAGE 905, 298-4310—PAGE 905, 275-3702—PAGE 928, 314-3729—PAGE 928, 275-3707—PAGE 922, 342-3536—PAGE 1027

AN ATTACHMENT

SMCS-1405, 1802, 1805, 1808, 7174, 7304, 7319, 7320, 7348, 734D **i03646807**

NOTE	PART NUMBER	QTY	PART NAME 1 2 3 4 5 6 (PRODUCT LEVEL)	SEE PAGE
Y	*303-9861*	1	HOOD GP-ENGINE (ACCUGRADE READY)	401
Y	*338-6937*	1	MOUNTING GP-ANTENNA (ACCUGRADE)	1077
Y	*306-8349*	1	WIRING GP-CAB (ACCUGRADE READY)	263
Y	*336-6262*	1	WIRING GP-CHASSIS (ACCUGRADE READY)	281

Y-SEPARATE ILLUSTRATION

<END>

340-6506 INSTALLATION AR—WIPER, LOWER

S/N: WNE1-UP; ZMF1-UP; CWG1-UP

PART OF 347-9907, 347-9908 OPTION AR-CAB

AN ATTACHMENT

SMCS-1405, 1802, 1805, 1808, 7174, 7304, 7319, 7320, 7348, 734D **i03645033**

NOTE	PART NUMBER	QTY	PART NAME 1 2 3 4 5 6 (PRODUCT LEVEL)	SEE PAGE
Y	*342-3592*	1	BUMPER GP-FRONT (WIPER, LOWER)	337
Y	*324-5768*	1	SWITCH GP-WIPER (LOWER)	247
Y	*340-6507*	1	WASHER GP-WINDOW (LOWER)	1109
Y	*327-6489*	1	WIPER & WASHER GP-WINDOW (LOWER)	1118
	327-6495	1	GLASS AS	

Y-SEPARATE ILLUSTRATION

<END>

343-1193 INSTALLATION AR—CAMERA

S/N: WNE1-UP; ZMF1-UP

PART OF 343-1181 CAMERA & MIRROR AR

AN ATTACHMENT

SMCS-1405, 1802, 1805, 1808, 7174, 7304, 7319, 7320, 7348, 734D **i03648702**

NOTE	PART NUMBER	QTY	PART NAME 1 2 3 4 5 6 (PRODUCT LEVEL)	SEE PAGE
Y	*327-3329*	1	CAMERA & MOUNTING GP (WORK AREA VISUAL SYSTEM, REAR)	185
Y	*303-2787*	1	FILM GP (WORK AREA VISUAL SYSTEM, REAR)	1132
Y	*336-6159*	1	WIRING GP-CAB (WORK AREA VISUAL SYSTEM, REAR)	274
Y	*336-6150*	1	WIRING GP-CAMERA (WORK AREA VISUAL SYSTEM, REAR)	276

Y-SEPARATE ILLUSTRATION

<END>

OPERATOR STATION

231-1768 INSTALLATION GP-RADIO

S/N: WNE1-UP; ZMF1-UP

CANNOT BE USED WITH 251-0538—PAGE 1084

AN ATTACHMENT

SMCS-7338 **i02574068**

NOTE	REF NO	GRAPHIC REF	PART NUMBER	QTY	PART NAME 1 2 3 4 5 6 (PRODUCT LEVEL)	SEE PAGE
	1	1	**3S-2093**	9	STRAP-CABLE	
	2	1	**7K-1181**	8	STRAP-CABLE	
	3	1	**283-2783**	1	CONVERTER-POWER (24-VOLT TO 12-VOLT)	
	4	1	**234-1124**	1	HARNESS AS-RADIO	
		1	**3S-2093**	15	STRAP-CABLE	
		1	**230-5010**	1	PLUG AS-CONNECTOR (6-PIN)	
		1	**231-2295**	2	PLUG AS-CONNECTOR (8-PIN)	
		1	**243-4505**	1	RECEPTACLE AS-CONNECTOR (2-PIN)	
		1	**243-4509**	1	RECEPTACLE AS-CONNECTOR (8-PIN)	
	5	1	**238-1463**	1	RECEPTACLE AS	
	6	1	**238-2216**	1	SWITCH AS-ROCKER (RADIO MUTE)	
		1	**167-3543**	5	TERMINAL (MALE)	
		1	**167-3542**	1	CONNECTOR-RECEPTACLE	
M	7	1	**8T-4171**	4	BOLT (M6X1X12-MM)	
	8	1	**9X-8256**	4	WASHER (6.6X12X2-MM THK)	

M-METRIC PART

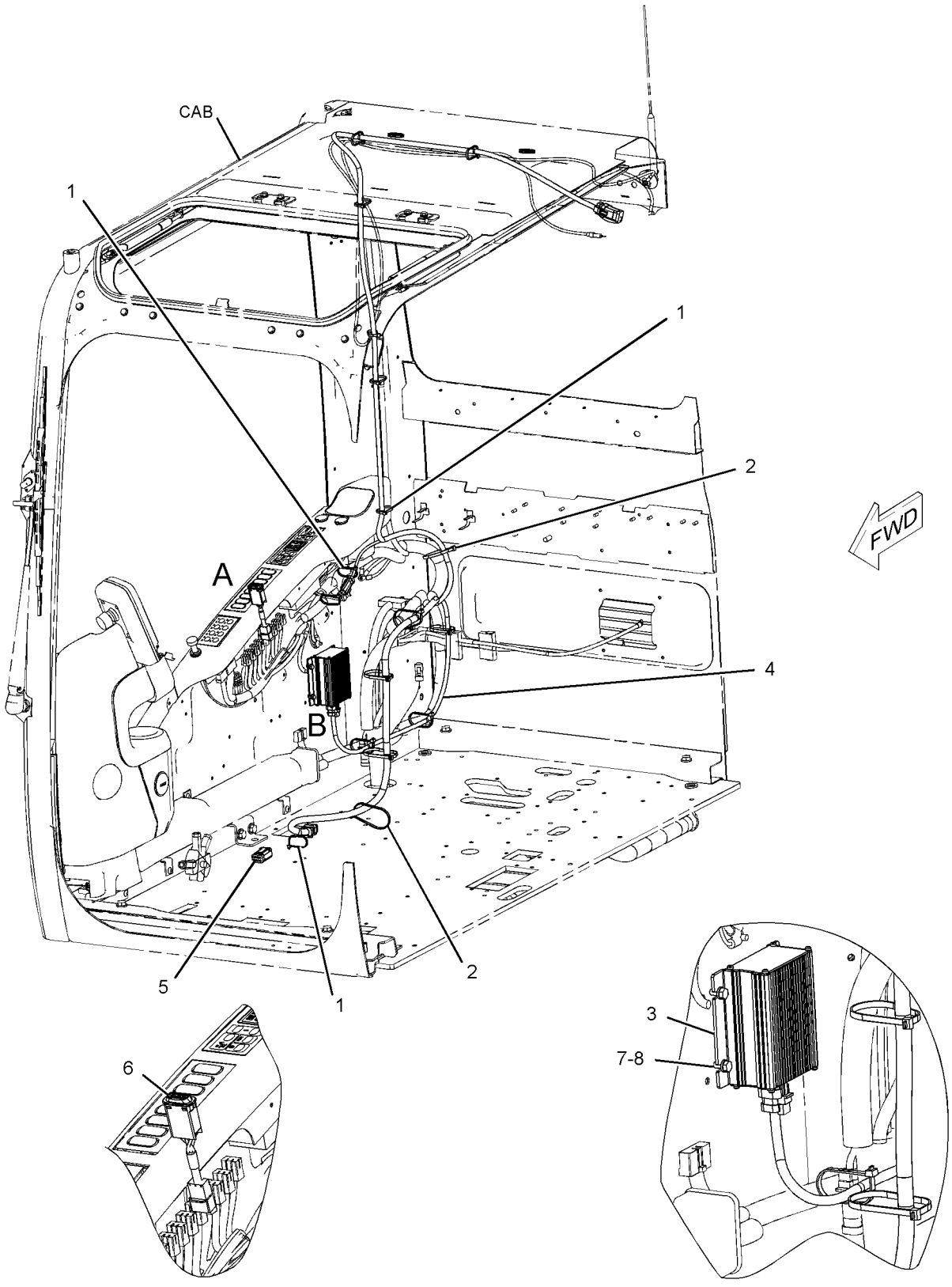

GRAPHIC #1 **<END>** g01199689

OPERATOR STATION

336-6139 INSTALLATION GP-RADIO

S/N: WNE1-UP; ZMF1-UP; CWG1-UP
PART OF 346-4628, 346-4629 DISTRIBUTION AR
CANNOT BE USED WITH 251-0538—PAGE 1084
AN ATTACHMENT

SMCS-7338 **i03665192**

NOTE	REF NO	GRAPHIC REF	PART NUMBER	QTY	PART NAME 1 2 3 4 5 6 (PRODUCT LEVEL)	SEE PAGE
	1	1	**3S-2093**	9	STRAP-CABLE	
	2	1	**7K-1181**	9	STRAP-CABLE	
	3	1	**238-1463**	1	RECEPTACLE AS (8-PIN)	
		1	**8T-8737**	8	PLUG-SEAL	
		1	**243-4509**	1	RECEPTACLE AS-CONNECTOR (8-PIN)	
	4	1	**238-2216**	1	SWITCH AS-ROCKER (RADIO MUTE)	
		1	**167-3542**	1	CONNECTOR-RECEPTACLE	
		1	**167-3543**	5	TERMINAL (MALE)	
	5	1	**328-0139**	1	HARNESS AS-RADIO	
		1	**8T-8729**	2	PIN-CONNECTOR (16-GA TO 18-GA)	
		1	**8T-8730**	18	SOCKET-CONNECTOR (16-GA TO 18-GA)	
		1	**3S-2093**	13	STRAP-CABLE	
		1	**8T-8737**	10	PLUG-SEAL	
		1	**9W-0844**	2	SOCKET-CONNECTOR (14-GA)	
		1	**230-5010**	1	PLUG AS-CONNECTOR (6-PIN)	
		1	**264-7032**	1	SEAL-CONNECTOR	
		1	**231-2295**	2	PLUG AS-CONNECTOR (8-PIN)	
					(EACH INCLUDES)	
		1	**264-7033**	1	SEAL-CONNECTOR	
		1	**243-4505**	1	RECEPTACLE AS-CONNECTOR (2-PIN)	
		1	**243-4509**	1	RECEPTACLE AS-CONNECTOR (8-PIN)	
	6	1	**283-2783**	1	CONVERTER-POWER (24-VOLT TO 12-VOLT)	
M	7	1	**8T-4171**	4	BOLT (M6X1X12-MM)	
	8	1	**9X-8256**	4	WASHER (6.6X12X2-MM THK)	

M-METRIC PART

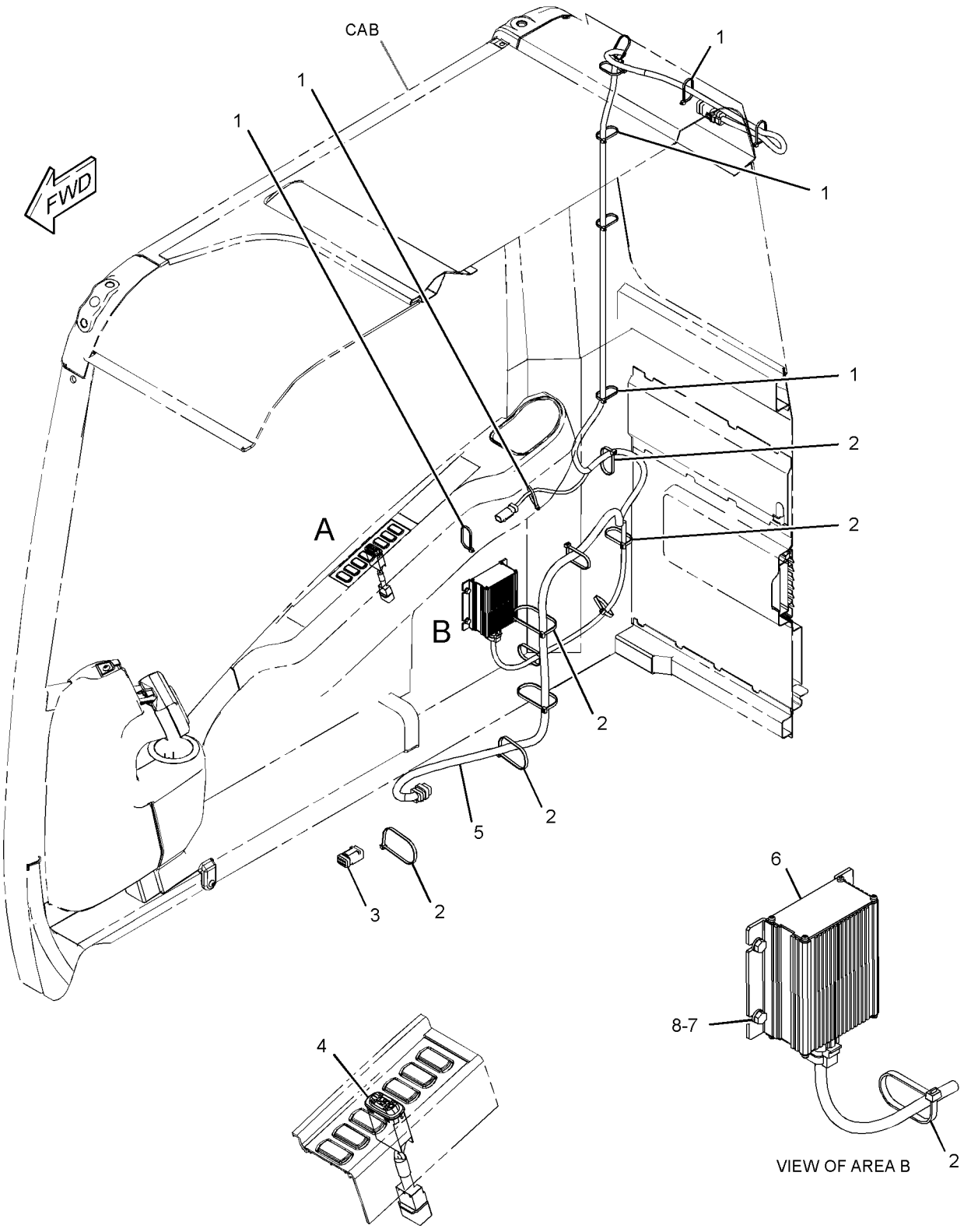

GRAPHIC #1 **<END>** g01955861

OPERATOR STATION

327-6645 KIT-SEAT SUSPENSION—MECHANICAL

S/N: WNE1-UP; ZMF1-UP; CWG1-UP
PART OF 327-6520 SUSPENSION GP-SEAT
AN ATTACHMENT

SMCS-7312 **i03607402**

NOTE	REF NO	GRAPHIC REF	PART NUMBER	QTY	PART NAME 1 2 3 4 5 6 (PRODUCT LEVEL)	SEE PAGE
	1	1	**327-6646**	1	KIT-CYLINDER (DAMPENER)	
J	2	1	**327-6647**	1	KIT-COVER (SUSPENSION SEAT)	
					(INCLUDES COVER & CLIP KIT)	
	3	1	**333-4180**	6	SCREW-BUTTON HEAD (M8X1.25X20-MM)	
	4	1	**333-4181**	1	KIT-HANDLE (SEAT HEIGHT)	
M	5	1	**7Y-7394**	4	SCREW-BUTTON HEAD (M8X1.25X25-MM)	
					PARTS SHOWN IN GRAPHIC(S) WITHOUT A REFERENCE NUMBER ARE NOT SERVICED SEPARATELY	
					AVAILABLE REPAIR KIT(S):	
J			**245-7895**	1	KIT-CLIP (SUSPENSION SEAT)	
					(INCLUDES 28 CLIPS)	

J-KIT MARKED J SERVICES PART(S) MARKED J
M-METRIC PART

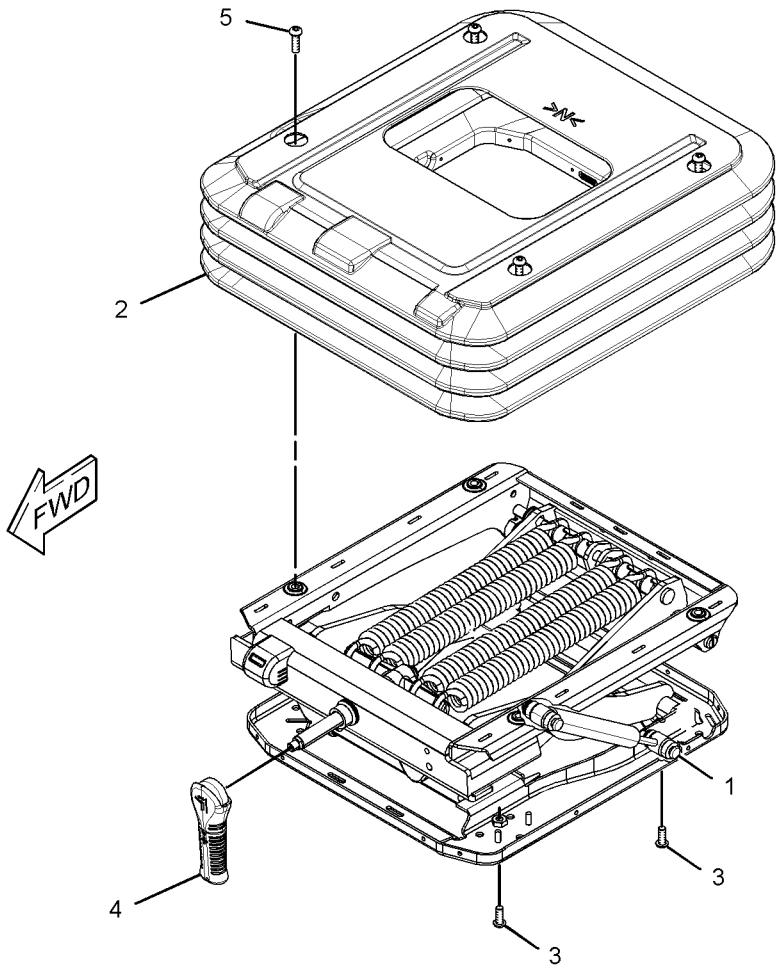

GRAPHIC #1 **<END>** g01689513

OPERATOR STATION

333-4157 KIT-SEAT SUSPENSION–AIR

S/N: WNE1-UP; ZMF1-UP; CWG1-UP
PART OF 327-6521 SUSPENSION GP-SEAT
AN ATTACHMENT

SMCS-7312 **i03607404**

NOTE	REF NO	GRAPHIC REF	PART NUMBER	QTY	PART NAME 1 2 3 4 5 6 (PRODUCT LEVEL)	SEE PAGE
	1	1	**327-6646**	1	KIT-CYLINDER (DAMPENER)	
J	2	1	**333-4158**	1	KIT-COVER (AIR SEAT)	
					(INCLUDES COVER & CLIP KIT)	
	3	1	**333-4159**	1	KIT-VALVE (AIR SEAT)	
		1	**333-4178**	1	NUT	
	4	1	**333-4180**	6	SCREW-BUTTON HEAD (M8X1.25X20-MM)	
M	5	1	**7Y-7394**	4	SCREW-BUTTON HEAD (M8X1.25X25-MM)	
					PARTS SHOWN IN GRAPHIC(S) WITHOUT A REFERENCE NUMBER ARE NOT SERVICED SEPARATELY	
					AVAILABLE REPAIR KIT(S):	
J			**245-7895**	1	KIT-CLIP (SUSPENSION SEAT)	
					(INCLUDES 28 CLIPS)	

J-MARKED J SERVICES PART(S) MARKED J
M-METRIC PART

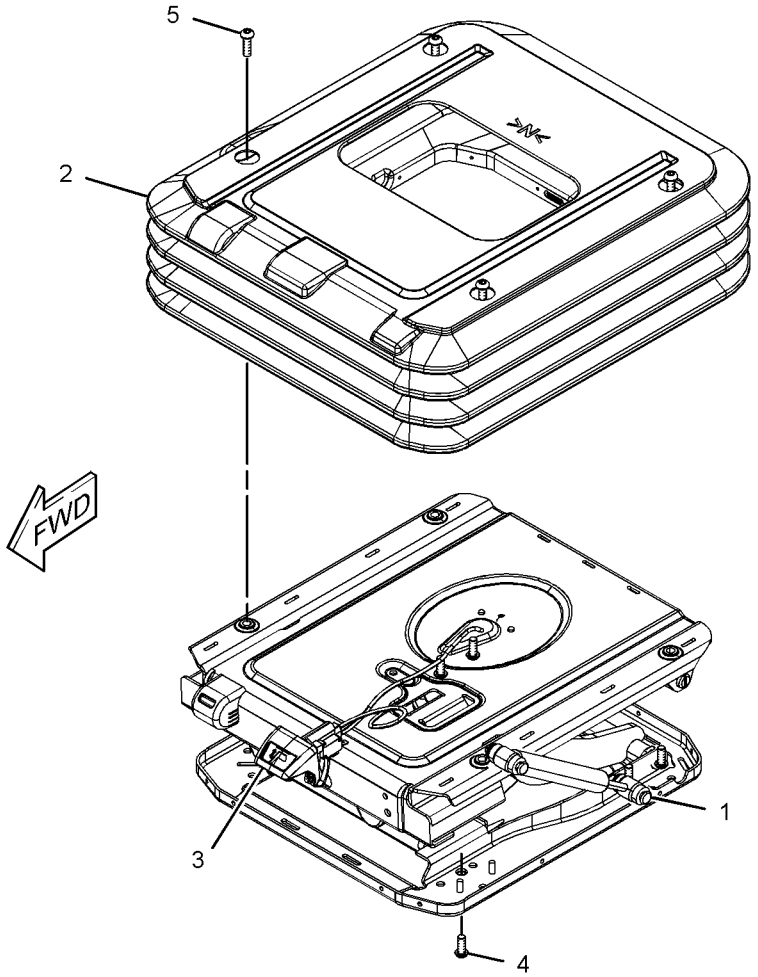

GRAPHIC #1 **<END>** g01689529

OPERATOR STATION

085-6444 LATCH GP-FRONT WINDOW

S/N: WNE1-UP; ZMF1-UP; CWG1-UP
PART OF 334-6513 WINDOW GP-DOOR
AN ATTACHMENT

SMCS-7340 **i03654671**

NOTE	REF NO	GRAPHIC REF	PART NUMBER	QTY	PART NAME 1 2 3 4 5 6 (PRODUCT LEVEL)	SEE PAGE
	1	1	**085-6445**	1	LOCK	
	2	1	**085-6446**	1	LOCK	
	3	1	**085-6447**	1	RETAINER	
M	4	1	**085-6448**	2	SCREW-TAPPING	
	5	1	**085-6449**	1	PACKING	

M-METRIC PART

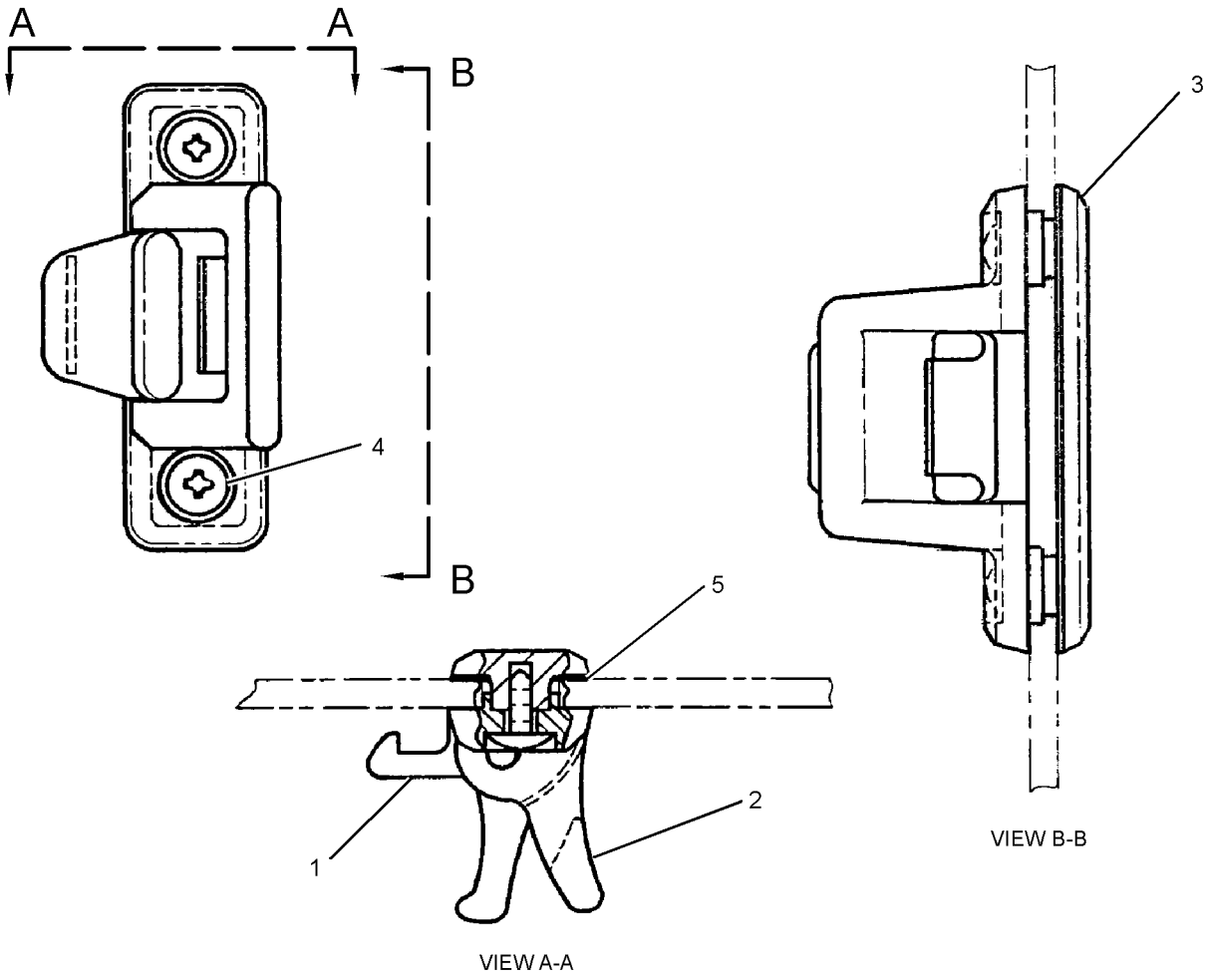

GRAPHIC #1 **<END>** g01164280

OPERATOR STATION

334-6552 LEVER GP-CAB DOOR

S/N: WNE1-UP; ZMF1-UP; CWG1-UP
PART OF 334-6541 CAB GP
AN ATTACHMENT

SMCS-7308 **i03645097**

NOTE	REF NO	GRAPHIC REF	PART NUMBER	QTY	PART NAME 1 2 3 4 5 6 (PRODUCT LEVEL)	SEE PAGE
	1	1	**176-1941**	1	PIN	
	2	1	**185-8280**	1	WASHER-WAVE (10.5X15X0.3-MM THK)	
	3	1	**334-6553**	1	BRACKET	
	4	1	**334-6554**	1	LEVER AS	

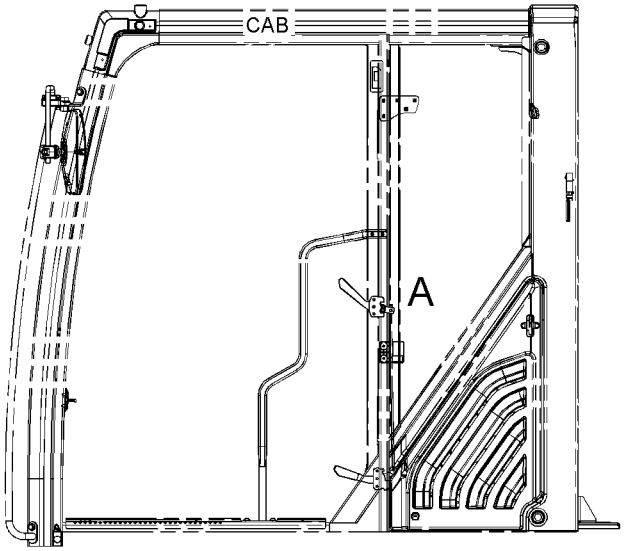

LEFT SIDE VIEW

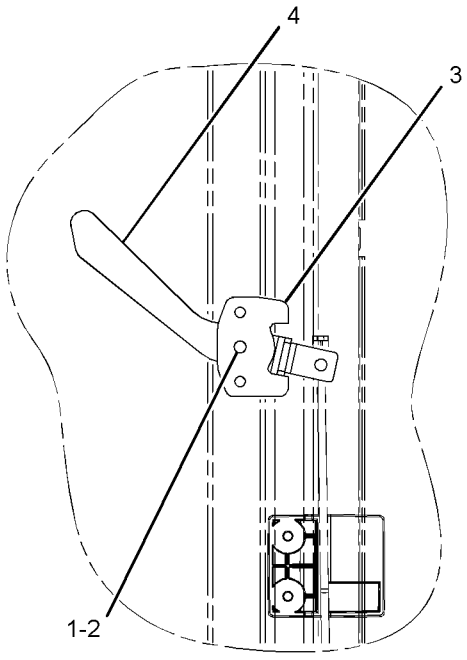

VIEW OF AREA A

GRAPHIC #1 **<END>** g01960673

OPERATOR STATION

334-6557 LEVER GP-CAB DOOR

S/N: WNE1-UP; ZMF1-UP; CWG1-UP
PART OF 334-6541 CAB GP
AN ATTACHMENT

SMCS-7308 **i03666360**

NOTE	REF NO	GRAPHIC REF	PART NUMBER	QTY	PART NAME 1 2 3 4 5 6 (PRODUCT LEVEL)	SEE PAGE
	1	1	**176-1941**	1	PIN	
	2	1	**185-8280**	1	WASHER-WAVE (10.5X15X0.3-MM THK)	
	3	1	**185-8281**	1	SPRING	
	4	1	**334-6558**	1	BRACKET	
	5	1	**334-6559**	1	LEVER AS	

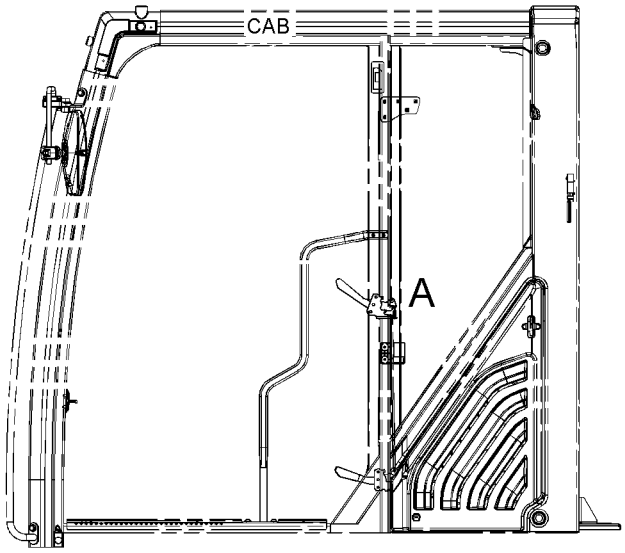

LEFT SIDE VIEW

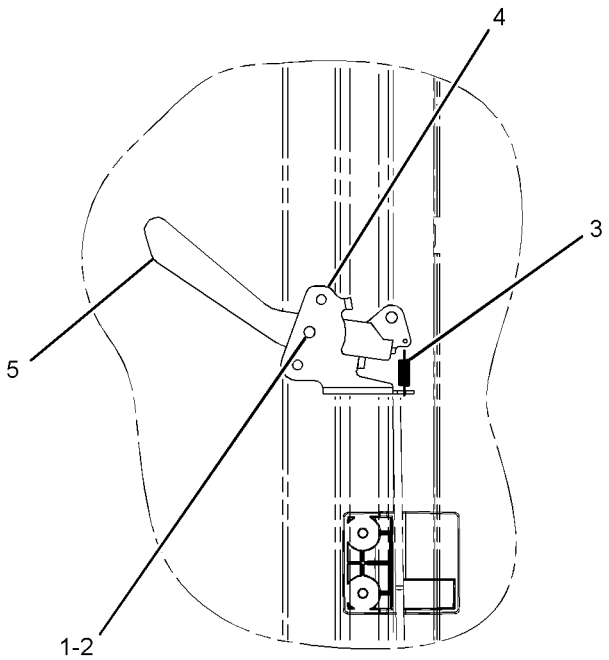

VIEW OF AREA A

GRAPHIC #1 **<END>** g01965076

OPERATOR STATION

340-6538 LINES GP-AIR CONDITIONER

S/N: WNE1-UP; ZMF1-UP

PART OF 343-1017, 343-1018 CHASSIS AR

SMCS-1808 **i03645868**

NOTE	REF NO	GRAPHIC REF	PART NUMBER	QTY	PART NAME 1 2 3 4 5 6 (PRODUCT LEVEL)	SEE PAGE
	1	2	**4I-4580**	1	FITTING	
	2	2	**6P-8855**	2	TUBE	
					—OR—	
	3	2	**122-9605**	2	TUBE	
	4	1,2	**7K-1181**	3	STRAP-CABLE	
	5	1	**7I-0375**	1	ELBOW	
	6	2	**122-9657**	2	CLAMP	
	7	2	**130-0252**	2	HOSE-DRAIN	
	8	1,2	**155-7024**	2	SPACER-SPECIAL	
	9	2	**176-1902**	1	RECEIVER-REFRIGERANT DRYER	
	10	1	**204-1611**	1	STRAP-CABLE	
	11	2	**235-8891**	1	PLATE	
	12	1,2	**235-9014**	8	CLAMP-SPRING	
					—OR—	
	13	1,2	**5D-1026**	8	CLAMP-BAND	
	14	2	**284-4552**	1	TUBE AS	
		2	**121-7137**	1	SEAL-O-RING	
	15	2	**293-1117**	1	HOSE AS	
		2	**121-7137**	2	SEAL-O-RING	
	16	2	**293-1118**	1	TUBE AS	
		2	**121-7138**	2	SEAL-O-RING	
	17	2	**293-1119**	1	TUBE AS	
		2	**121-7138**	1	SEAL-O-RING	
	18	2	**293-1230**	1	SUPPORT AS	
	19	2	**305-0441**	2	BAND-MARKER (HS)	
	20	1,2	**305-0442**	2	BAND-MARKER (HR)	
	21	2	**340-6561**	1	HOSE AS-AIR CONDITIONER	
		2	**121-7138**	2	SEAL-O-RING	
		2	**130-0270**	1	SWITCH AS-PRESSURE (REFRIGERANT)	
		2	**185-8293**	1	SEAL-O-RING	
	22	2	**340-6562**	1	HOSE AS	
		2	**121-7136**	2	SEAL-O-RING	
	23	1	**095-0913**	1	CLIP	
	24	1	**100-4336**	2	CLIP	
	25	2	**121-7098**	1	BRACKET AS	
M		2	**8T-4138**	2	BOLT (M6X1X20-MM)	
		2	**9X-8256**	2	WASHER (6.6X12X2-MM THK)	
	26	2	**132-5789**	1	CLIP	
	27	2	**4I-3503**	1	GROMMET	
	28	1,2	**4S-1962**	6	CLIP	
	29	2	**235-9015**	2	HOSE	
	30	2	**5K-3294**	3	CLIP	
	31	2	**5P-9085**	3	CLIP	
	32	1,2	**6D-1641**	12	CLIP	
	33	2	**6D-3479**	1	CLIP	
	34	2	**6V-3265**	1	CLIP	
	36	1	**6W-7293**	1	GROMMET	
M	37	1	**8T-3647**	1	BOLT (M8X1.25X80-MM)	
	38	1,2	**8T-4121**	25	WASHER-HARD (11X21X2.5-MM THK)	
M	39	2	**8T-4136**	5	BOLT (M10X1.5X25-MM)	
M	40	1,2	**8T-4137**	19	BOLT (M10X1.5X20-MM)	
M	41	2	**8T-4191**	1	BOLT (M10X1.5X16-MM)	
M	42	2	**8T-4200**	2	BOLT (M8X1.25X16-MM)	
	43	1,2	**8T-4224**	3	WASHER-HARD (8.8X16X2-MM THK)	
	45	2	**9X-8256**	7	WASHER (6.6X12X2-MM THK)	

340-6538 **LINES GP-AIR CONDITIONER** *(contd.)* **i03645868**

NOTE	REF NO	GRAPHIC REF	PART NUMBER	QTY	PART NAME 1 2 3 4 5 6 (PRODUCT LEVEL)	SEE PAGE
M	46	2	**8T-4971**	4	BOLT (M6X1X30-MM)	
					–OR–	
M	47	2	**6V-7357**	5	BOLT (M6X1X25-MM)	
E	48	1	**225-5707**		GUARD (30-CM EACH)	
E	48A	2	**225-5707**		GUARD (15-CM EACH)	
E	48B	2	**225-5707**		GUARD (22-CM)	
E	49	1	**225-5714**		GUARD (64-CM)	
E	49A	2	**225-5714**		GUARD (85-CM)	
E	50	1	**5P-0767**		HOSE (310-CM)	
E	50A	2	**5P-0767**		HOSE (380-CM)	

E-ORDER BY THE CENTIMETER
M-METRIC PART

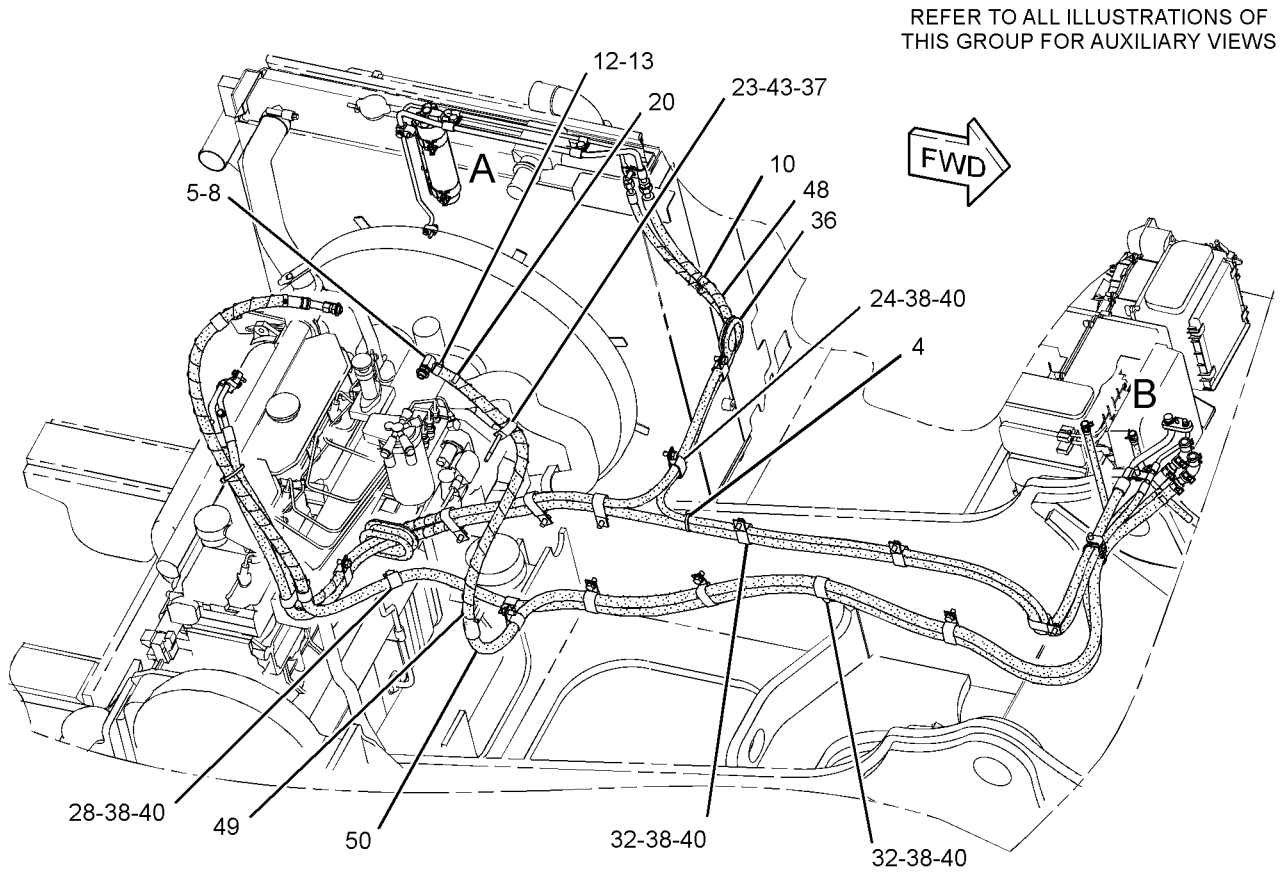

GRAPHIC #1 g01961174

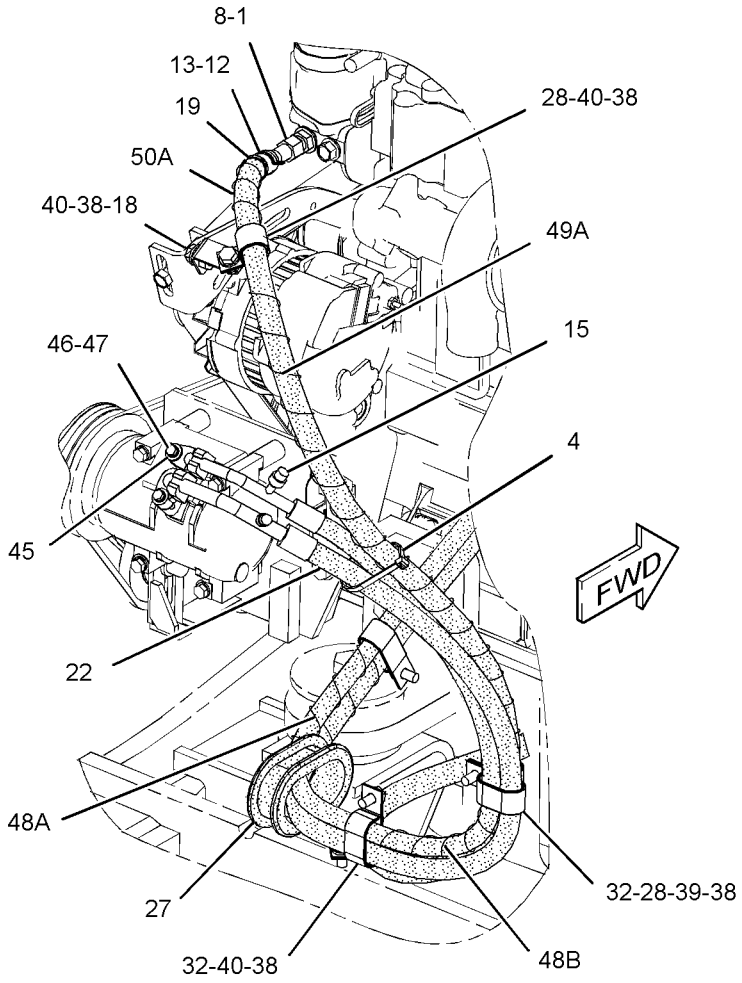

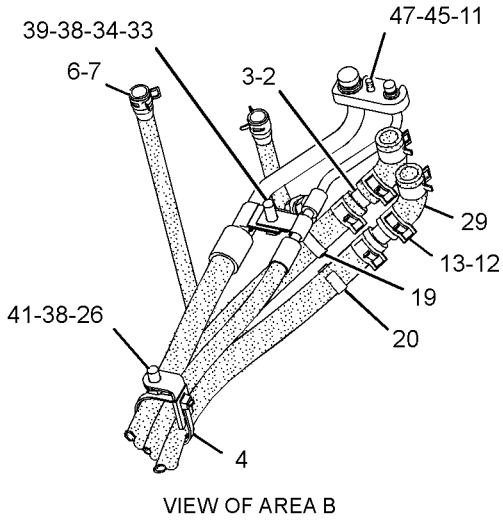

VIEW OF AREA B

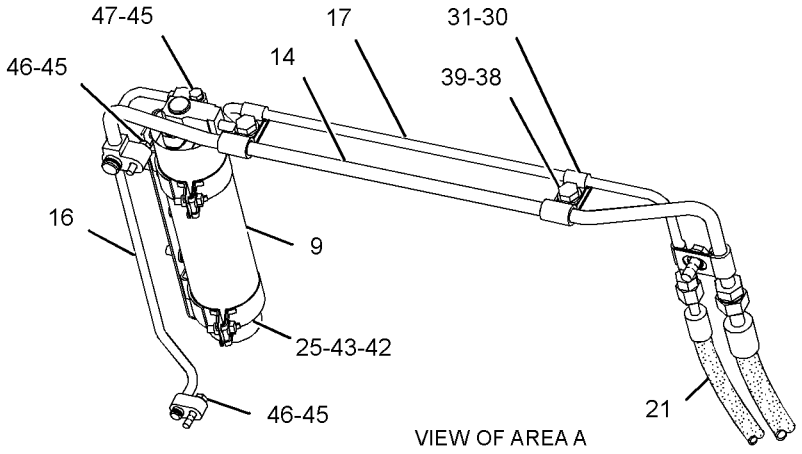

VIEW OF AREA A

GRAPHIC #2 **<END>** g01962549

OPERATOR STATION

340-6539 LINES GP-AIR CONDITIONER

S/N: WNE1-UP; ZMF1-UP
PART OF 340-6549 AIR CONDITIONER AR
AN ATTACHMENT

SMCS-1808 **i03641975**

NOTE	REF NO	GRAPHIC REF	PART NUMBER	QTY	PART NAME 1 2 3 4 5 6 (PRODUCT LEVEL)	SEE PAGE
	1	1	**4I-4580**	1	FITTING	
J	2	2	**6P-8855**	2	TUBE	
					—OR—	
J		2	**122-9605**	2	TUBE	
	3	1	**7I-0375**	1	ELBOW	
	4	1,2	**7K-1181**	3	STRAP-CABLE	
	6	2	**122-9657**	2	CLAMP	
	7	2	**130-0252**	2	HOSE-DRAIN	
	8	1	**155-7024**	2	SPACER-SPECIAL	
	9	2	**176-1902**	1	RECEIVER-REFRIGERANT DRYER	
	10	2	**235-8891**	1	PLATE	
L	11	1,2	**235-9014**	8	CLAMP-SPRING	
					—OR—	
L		1,2	**5D-1026**	8	CLAMP-BAND	
	12	2	**235-9015**	2	HOSE	
	13	2	**245-7756**	1	TUBE AS	
	14	1	**273-5400**	1	HOSE AS	
		1	**121-7137**	2	SEAL-O-RING	
		1	**245-7850**	1	PLUG	
	15	1	**293-1230**	1	SUPPORT AS	
	16	1,2	**305-0441**	2	BAND-MARKER (HS)	
	17	1,2	**305-0442**	2	BAND-MARKER (HR)	
	18	2	**340-6562**	1	HOSE AS	
		2	**121-7136**	2	SEAL-O-RING	
		2	**245-7851**	1	PLUG	
	19	2	**340-6563**	1	HOSE AS	
		2	**121-7138**	2	SEAL-O-RING	
		2	**130-0270**	1	SWITCH AS-PRESSURE (REFRIGERANT)	
		2	**185-8293**	1	SEAL-O-RING	
	20	1	**095-0913**	1	CLIP	
	21	2	**100-4336**	3	CLIP	
	22	2	**121-7098**	1	BRACKET AS	
M		2	**8T-4138**	2	BOLT (M6X1X20-MM)	
		2	**9X-8256**	2	WASHER (6.6X12X2-MM THK)	
	23	2	**132-5789**	1	CLIP	
	24	1	**4I-3503**	1	GROMMET	
	25	1	**4S-1962**	6	CLIP	
	27	1,2	**6D-1641**	12	CLIP	
	28	2	**6D-3479**	1	CLIP	
	29	2	**6V-3265**	1	CLIP	
M	30	2	**6V-7357**	5	BOLT (M6X1X25-MM)	
	31	2	**6W-7293**	1	GROMMET	
	32	2	**8M-2773**	1	CLIP	
M	33	1	**8T-3647**	1	BOLT (M8X1.25X80-MM)	
	34	1,2	**8T-4121**	24	WASHER-HARD (11X21X2.5-MM THK)	
M	35	1,2	**8T-4136**	2	BOLT (M10X1.5X25-MM)	
M	36	1,2	**8T-4137**	21	BOLT (M10X1.5X20-MM)	
M	37	2	**8T-4191**	1	BOLT (M10X1.5X16-MM)	
M	38	2	**8T-4200**	2	BOLT (M8X1.25X16-MM)	
	39	1,2	**8T-4224**	3	WASHER-HARD (8.8X16X2-MM THK)	
M	40	1,2	**8T-4971**	1	BOLT (M6X1X30-MM)	
	41	1,2	**9X-8256**	7	WASHER (6.6X12X2-MM THK)	
M	42	2	**7X-2533**	1	BOLT (M6X1X35-MM)	
					—OR—	
M		2	**8T-4971**	1	BOLT (M6X1X30-MM)	

OPERATOR STATION

340-6539 **LINES GP-AIR CONDITIONER** *(contd.)* **i03641975**

NOTE	REF NO	GRAPHIC REF	PART NUMBER	QTY	PART NAME 1 2 3 4 5 6 (PRODUCT LEVEL)	SEE PAGE
M	43	1,2	**6V-7357**	2	BOLT (M6X1X25-MM)	
					—OR—	
M		1,2	**8T-4971**	2	BOLT (M6X1X30-MM)	
E	46	1	**225-5707**		GUARD (15-CM EACH)	
E	46A	1	**225-5707**		GUARD (22-CM)	
E	47	1	**225-5714**		GUARD (70-CM)	
E	47A	1	**225-5714**		GUARD (15-CM EACH)	
E	47B	1	**225-5714**		GUARD (49-CM)	
E	48	1	**5P-0767**		HOSE (380-CM)	
E	48A	1	**5P-0767**		HOSE (310-CM)	

E-ORDER BY THE CENTIMETER
J-THESE PARTS ARE DIRECTLY INTERCHANGEABLE
L-THESE PARTS ARE DIRECTLY INTERCHANGEABLE
M-METRIC PART

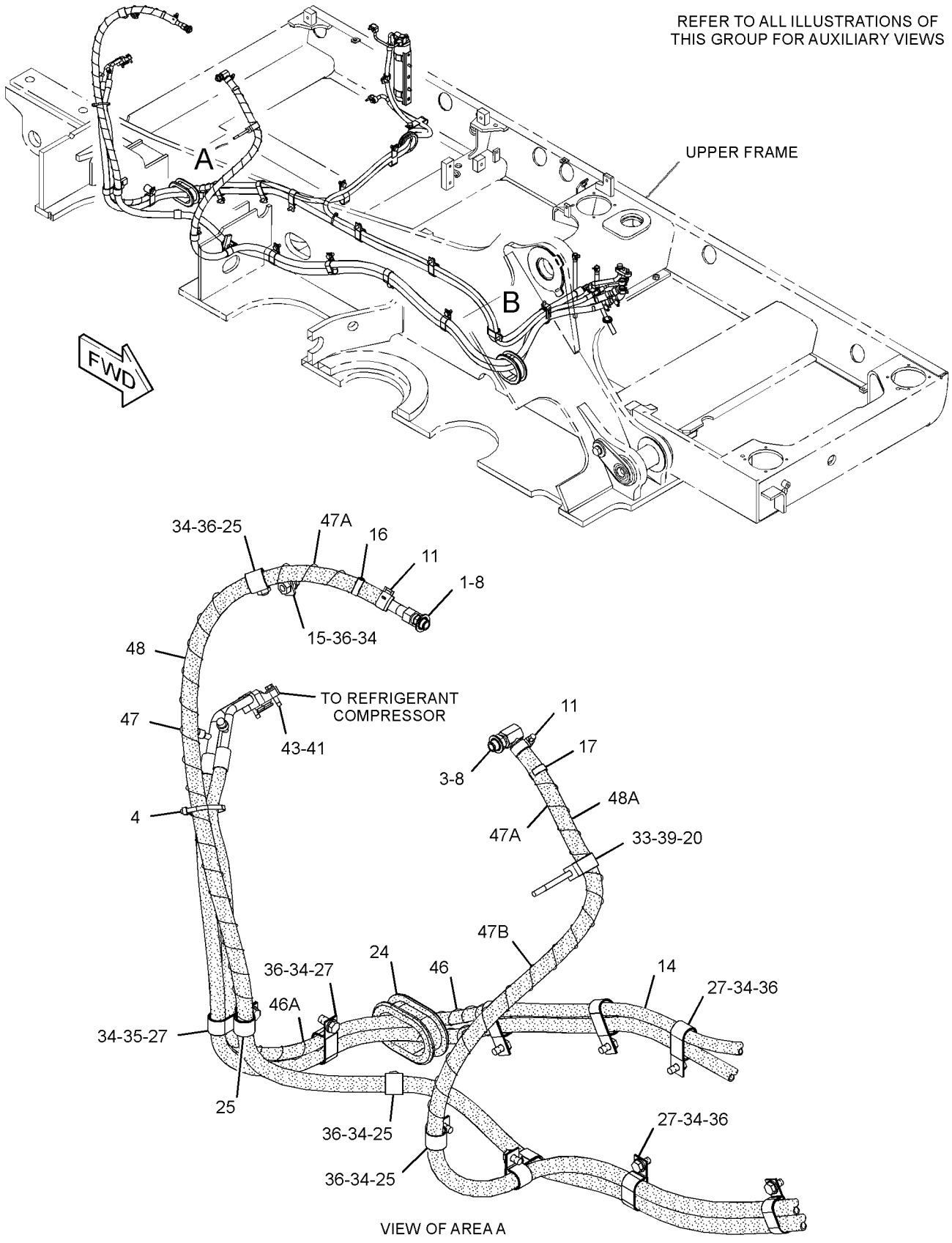

GRAPHIC #1

g01965069

340-6539 **LINES GP-AIR CONDITIONER** *(contd.)* **i03641975**

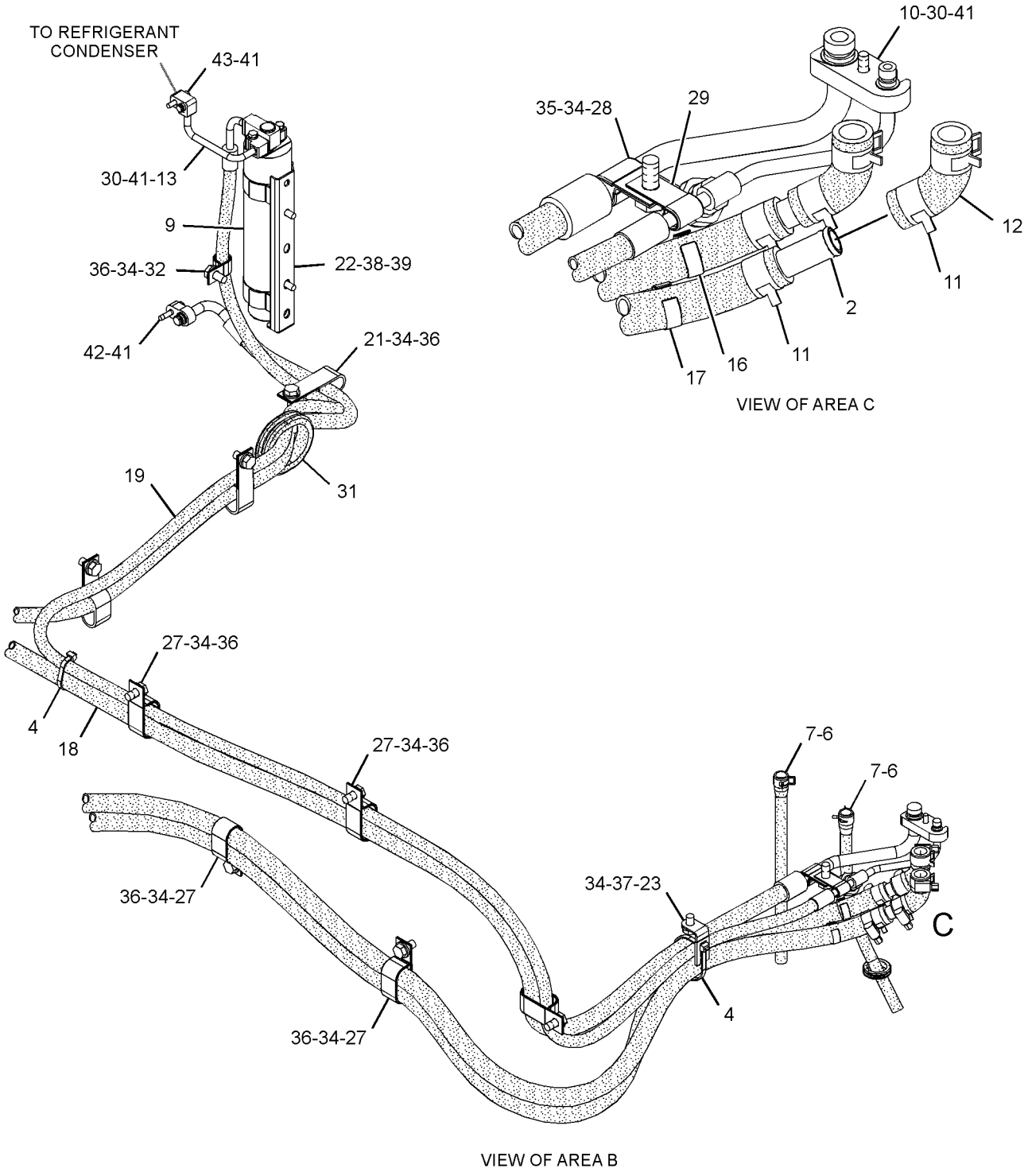

GRAPHIC #2 **<END>** g01965073

OPERATOR STATION

340-6540 LINES GP-AIR CONDITIONER

S/N: CWG1-UP

PART OF 339-2835 CHASSIS AR

SMCS-1808 **i03636068**

NOTE	REF NO	GRAPHIC REF	PART NUMBER	QTY	PART NAME 1 2 3 4 5 6 (PRODUCT LEVEL)	SEE PAGE
	1	1	**4I-3953**	1	GROMMET	
	2	1	**4I-4580**	1	FITTING	
	3	1	**6P-8855**	2	TUBE	
	4	1	**7I-0375**	1	ELBOW	
	5	1	**7K-1181**	2	STRAP-CABLE	
	6	1	**122-9605**	2	TUBE	
	7	1	**122-9657**	2	CLAMP	
	8	1	**130-0252**	2	HOSE-DRAIN	
	9	1	**155-7024**	2	SPACER-SPECIAL	
	10	1	**176-1902**	1	RECEIVER-REFRIGERANT DRYER	
	11	1	**204-1611**	1	STRAP-CABLE	
	12	1	**235-8891**	1	PLATE	
	13	1	**235-9014**	8	CLAMP-SPRING	
	14	1	**235-9015**	2	HOSE	
	15	1	**259-7237**	1	TUBE AS	
		1	**121-7138**	2	SEAL-O-RING	
	16	1	**284-4551**	1	HOSE AS	
		1	**121-7137**	2	SEAL-O-RING	
		1	**245-7850**	1	PLUG	
	17	1	**284-4552**	1	TUBE AS	
		1	**121-7137**	1	SEAL-O-RING	
	18	1	**284-4553**	1	TUBE AS	
		1	**121-7138**	1	SEAL-O-RING	
	19	1	**293-1230**	1	SUPPORT AS	
	20	1	**305-0441**	2	BAND-MARKER (HS)	
	21	1	**305-0442**	2	BAND-MARKER (HR)	
	22	1	**342-3604**	1	HOSE AS	
		1	**121-7138**	2	SEAL-O-RING	
		1	**130-0270**	1	SWITCH AS-PRESSURE (REFRIGERANT)	
		1	**185-8293**	1	SEAL-O-RING	
	23	1	**342-3605**	1	HOSE AS	
		1	**121-7136**	2	SEAL-O-RING	
		1	**245-7851**	1	PLUG	
	24	1	**095-0913**	1	CLIP	
	25	1	**100-4336**	2	CLIP	
	26	1	**121-7098**	1	BRACKET AS	
M		1	**8T-4138**	2	BOLT (M6X1X20-MM)	
		1	**9X-8256**	2	WASHER (6.6X12X2-MM THK)	
	27	1	**132-5789**	1	CLIP	
	28	1	**4I-4653**	1	GROMMET	
	29	1	**4S-1962**	4	CLIP	
	30	1	**5D-1026**	8	CLAMP-BAND	
	31	1	**5K-3294**	3	CLIP	
	32	1	**5P-4325**	2	CLIP	
	33	1	**5P-9085**	3	CLIP	
	34	1	**6D-1641**	8	CLIP	
	35	1	**6D-3479**	1	CLIP	
	36	1	**6V-2235**	1	CLIP	
	37	1	**6V-3265**	1	CLIP	
M	38	1	**6V-7357**	5	BOLT (M6X1X25-MM)	
M	39	1	**8T-3647**	1	BOLT (M8X1.25X80-MM)	
	40	1	**8T-4121**	20	WASHER-HARD (11X21X2.5-MM THK)	
M	41	1	**8T-4136**	7	BOLT (M10X1.5X25-MM)	
M	42	1	**8T-4137**	12	BOLT (M10X1.5X20-MM)	
M	43	1	**8T-4191**	1	BOLT (M10X1.5X16-MM)	
M	44	1	**8T-4200**	2	BOLT (M8X1.25X16-MM)	

OPERATOR STATION

340-6540 LINES GP-AIR CONDITIONER *(contd.)* i03636068

NOTE	REF NO	GRAPHIC REF	PART NUMBER	QTY	PART NAME 1 2 3 4 5 6 (PRODUCT LEVEL)	SEE PAGE
	45	1	**8T-4224**	3	WASHER-HARD (8.8X16X2-MM THK)	
M	46	1	**8T-4971**	2	BOLT (M6X1X30-MM)	
	47	1	**9X-8256**	7	WASHER (6.6X12X2-MM THK)	
E	48	1	**225-5707**		GUARD (30-CM EACH)	
E	49	1	**225-5714**		GUARD (75-CM)	
E	49A	1	**225-5714**		GUARD (10-CM)	
E	49B	1	**225-5714**		GUARD (30-CM)	
E	49C	1	**225-5714**		GUARD (10-CM)	
E	50	1	**5P-0767**		HOSE (400-CM)	
E	50A	1	**5P-0767**		HOSE (280-CM)	

E-ORDER BY THE CENTIMETER
M-METRIC PART

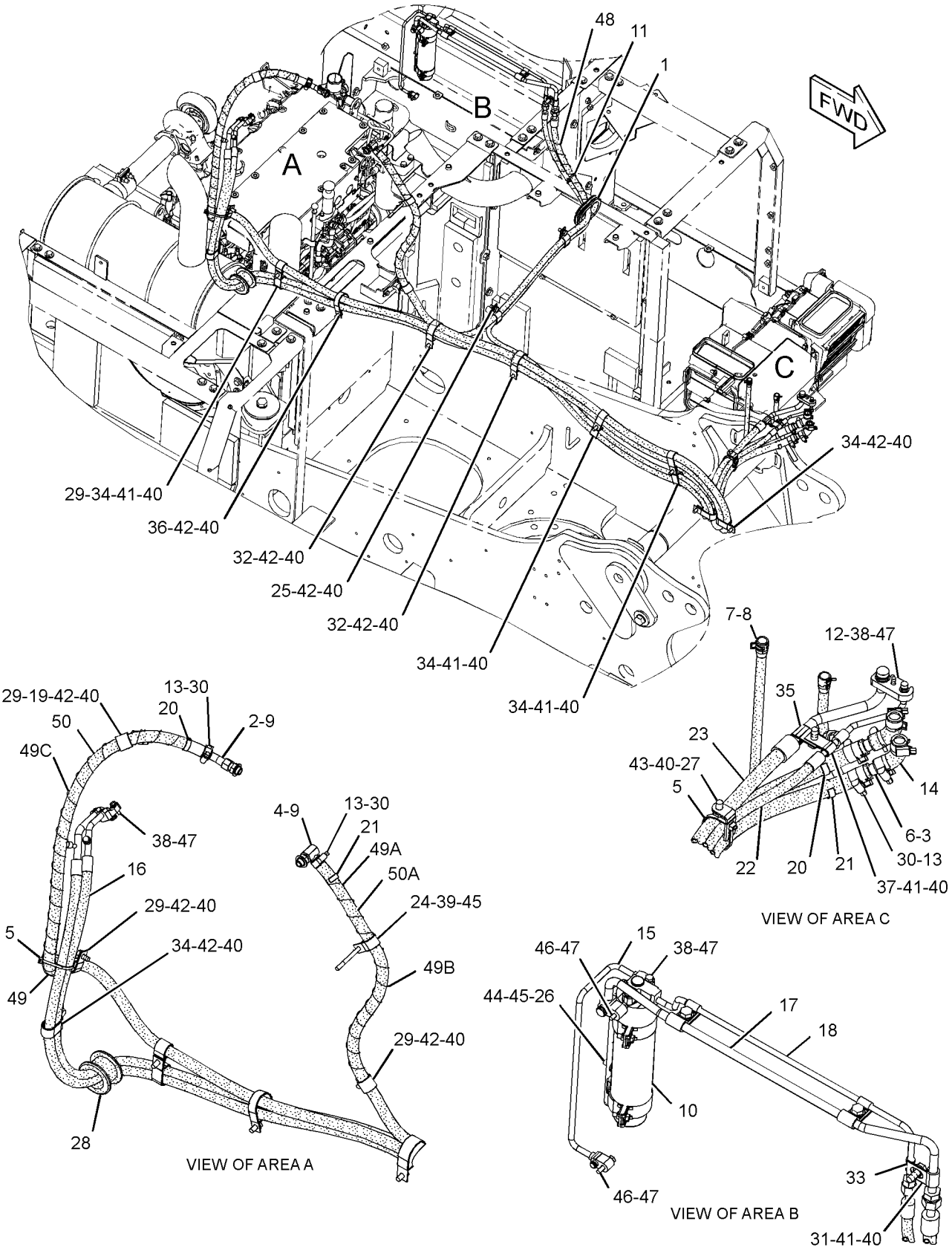

GRAPHIC #1 **<END>** g01952858

OPERATOR STATION

273-5169 LINES GP-HEATER

S/N: WNE1-UP; ZMF1-UP
PART OF 340-6560 HEATER AR-CAB
AN ATTACHMENT

SMCS-1812, 7304 **i02998166**

NOTE	REF NO	GRAPHIC REF	PART NUMBER	QTY	PART NAME 1 2 3 4 5 6 (PRODUCT LEVEL)	SEE PAGE
	1	2	**4I-4580**	1	FITTING	
	2	1	**7I-0375**	1	ELBOW	
	3	1	**7K-1181**	1	STRAP-CABLE	
	4	1	**122-9605**	2	TUBE	
	5	1,2	**155-7024**	2	SPACER-SPECIAL	
	6	1,2	**235-9014**	8	CLAMP-SPRING	
	7	1	**235-9015**	2	HOSE	
	8	2	**266-6207**	1	BRACKET AS	
	9	2	**283-2893**	1	RECEPTACLE AS	
		2	**8T-8737**	2	PLUG-SEAL	
		2	**243-4505**	1	RECEPTACLE AS-CONNECTOR (2-PIN)	
	10	2	**293-1230**	1	SUPPORT AS	
	11	1,2	**095-0913**	2	CLIP	
	12	1	**132-5789**	1	CLIP	
	13	1,2	**4S-1962**	6	CLIP	
	14	1	**6D-1641**	4	CLIP	
M	15	1	**8T-3647**	1	BOLT (M8X1.25X80-MM)	
	16	1,2	**8T-4121**	15	WASHER-HARD (11X21X2.5-MM THK)	
M	17	1,2	**8T-4137**	11	BOLT (M10X1.5X20-MM)	
M	18	2	**8T-4172**	3	BOLT (M10X1.5X80-MM)	
M	19	2	**8T-4184**	2	BOLT (M12X1.75X45-MM)	
M	20	1	**8T-4191**	1	BOLT (M10X1.5X16-MM)	
M	21	2	**8T-4200**	1	BOLT (M8X1.25X16-MM)	
	22	2	**8T-4223**	2	WASHER-HARD (13.5X25.5X3-MM THK)	
	23	1,2	**8T-4224**	2	WASHER-HARD (8.8X16X2-MM THK)	
E	24	2	**5P-0767**		HOSE (380-CM)	
E	24A	1	**5P-0767**		HOSE (310-CM)	
E	25	2	**225-5714**		GUARD (43-CM)	
E	25A	1	**225-5714**		GUARD (55-CM)	
	26	1,2	**305-0441**	2	BAND-MARKER (HS)	
	27	1	**305-0442**	2	BAND-MARKER (HR)	

E-ORDER BY THE CENTIMETER
M-METRIC PART

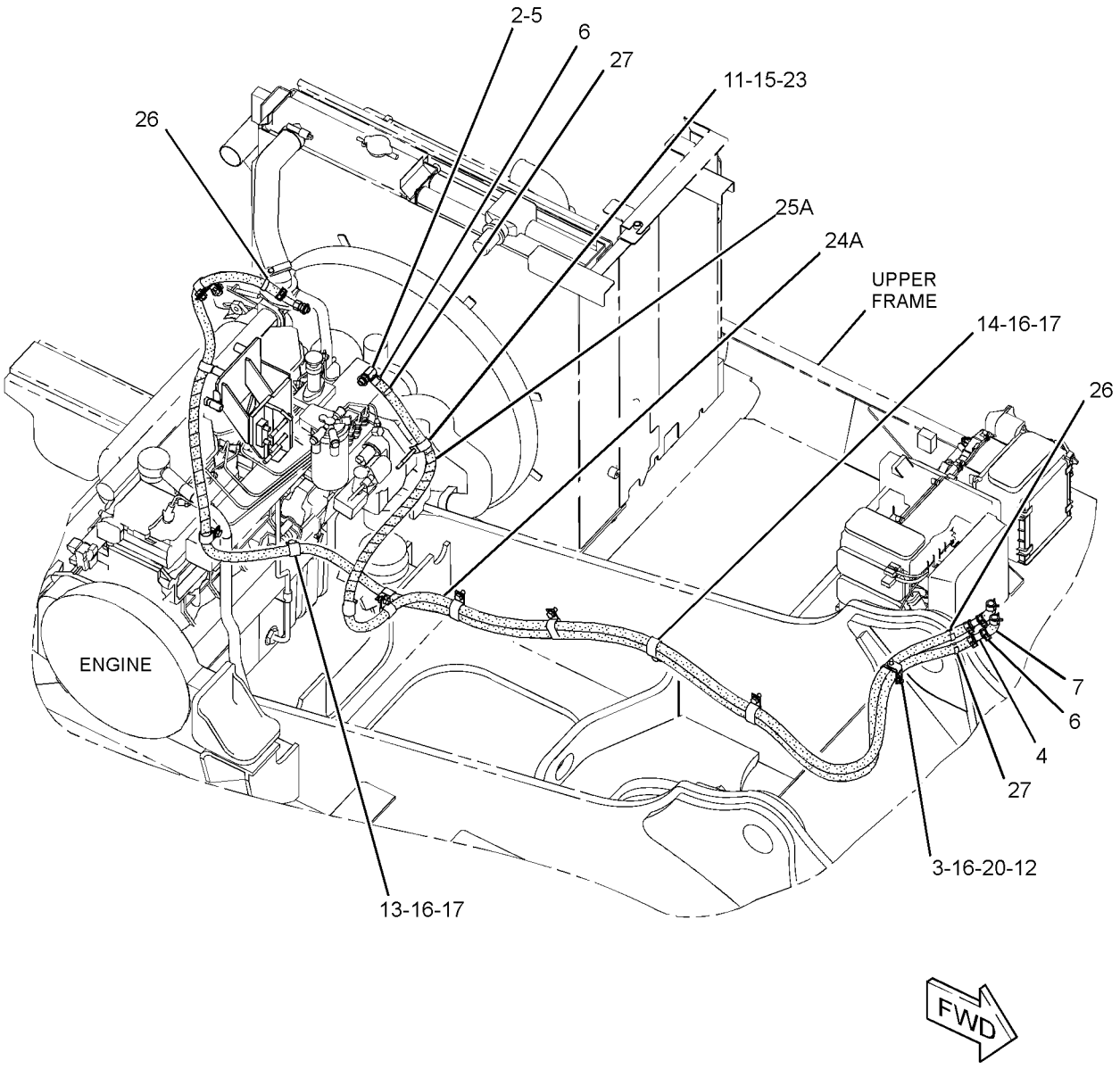

GRAPHIC #1 g01522417

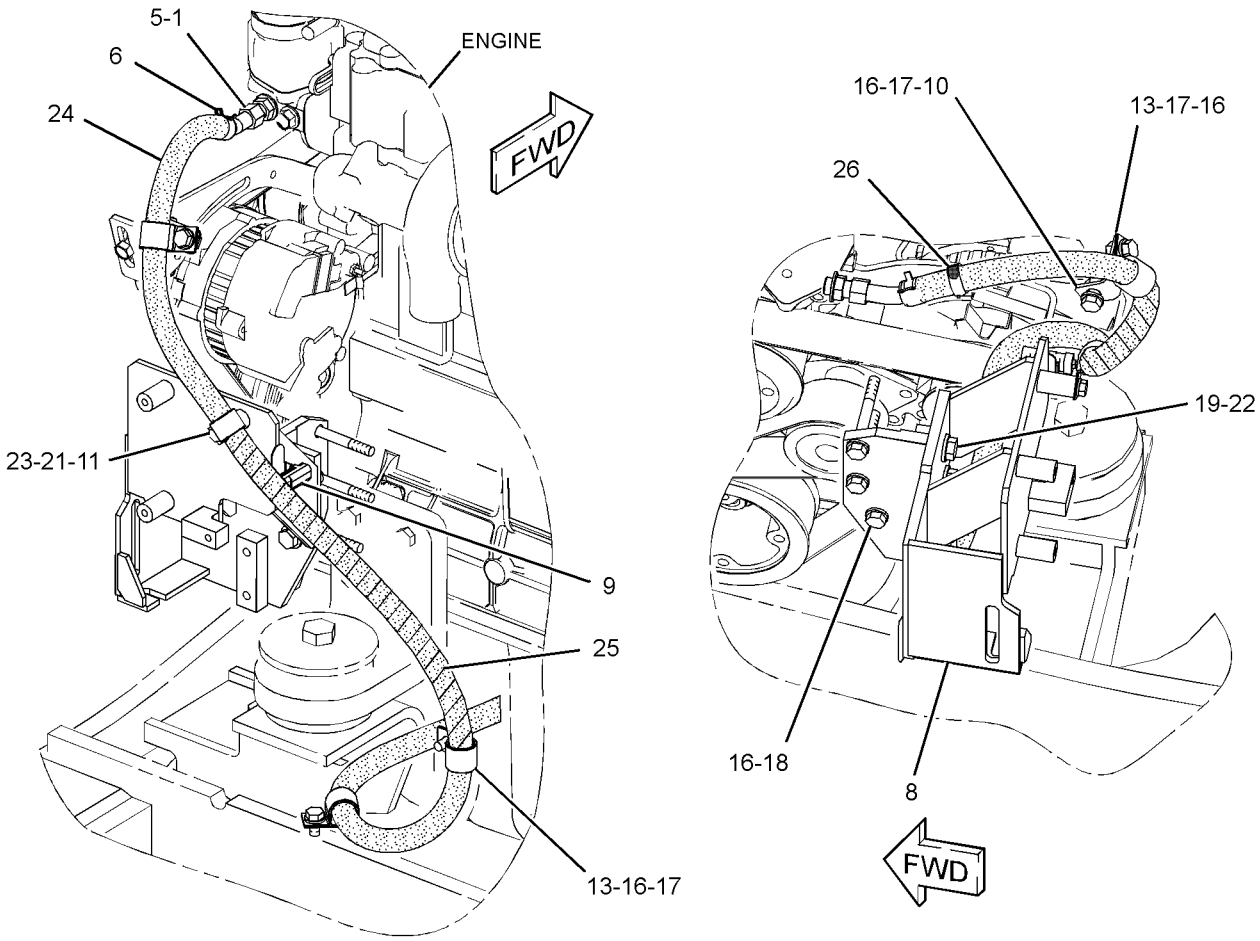

GRAPHIC #2 **<END>** g01522419

7Y-0059 LITERATURE GP

S/N: WNE1-UP; ZMF1-UP; CWG1-UP
PART OF 339-2835, 343-1017, 343-1018 CHASSIS AR

SMCS-7300 **i03376981**

NOTE	PART NUMBER	QTY	PART NAME 1 2 3 4 5 6 (PRODUCT LEVEL)	SEE PAGE
	099-3645	1	CABLE-LANYARD	
	5P-8500	2	KEY (LITERATURE COMPARTMENT)	
	5P-7958	2	SLEEVE-CABLE SPLICE	

<END>

330-1574 MIRROR AR-DOWN VIEW

S/N: CWG1-UP
PART OF 340-3845 CAMERA & MIRROR AR
AN ATTACHMENT

SMCS-7319 **i03148061**

NOTE	PART NUMBER	QTY	PART NAME 1 2 3 4 5 6 (PRODUCT LEVEL)	SEE PAGE
Y	*330-1163*	1	FENDER & COVER GP	365
Y	*330-1162*	1	MIRROR GP-DOWN VIEW (FUEL TANK, RH)	1066
Y-SEPARATE ILLUSTRATION				

<END>

330-1353 MIRROR AR-REAR VIEW

S/N: WNE1-UP; ZMF1-UP
PART OF 343-1181 CAMERA & MIRROR AR
AN ATTACHMENT

SMCS-7319 **i03127882**

NOTE	PART NUMBER	QTY	PART NAME 1 2 3 4 5 6 (PRODUCT LEVEL)	SEE PAGE
Y	*330-1166*	1	FENDER & COVER GP	366
Y	*330-1162*	1	MIRROR GP-DOWN VIEW (FUEL TANK, RH)	1066
Y-SEPARATE ILLUSTRATION				

<END>

OPERATOR STATION

330-1162 MIRROR GP-DOWN VIEW—FUEL TANK

S/N: WNE1-UP; ZMF1-UP; CWG1-UP
PART OF 330-1574 MIRROR AR-DOWN VIEW, 330-1353 MIRROR AR-REAR VIEW
AN ATTACHMENT

SMCS-7319 **i03117525**

NOTE	REF NO	GRAPHIC REF	PART NUMBER	QTY	PART NAME 1 2 3 4 5 6 (PRODUCT LEVEL)	SEE PAGE
M	1	1	**135-8575**	3	BOLT AS (M12X1.75X30-MM)	
	2	1	**320-5525**	1	TUBE AS	
	3	1	**327-3062**	1	MIRROR GP-DOWN VIEW	
M		1	**8T-0269**	2	BOLT-SOCKET HEAD (M6X1X20-MM)	
		1	**9X-8256**	2	WASHER (6.6X12X2-MM THK)	
	4	1	**327-3063**	1	MIRROR GP-DOWN VIEW	
M		1	**8T-0269**	2	BOLT-SOCKET HEAD (M6X1X20-MM)	
		1	**9X-8256**	2	WASHER (6.6X12X2-MM THK)	

M-METRIC PART

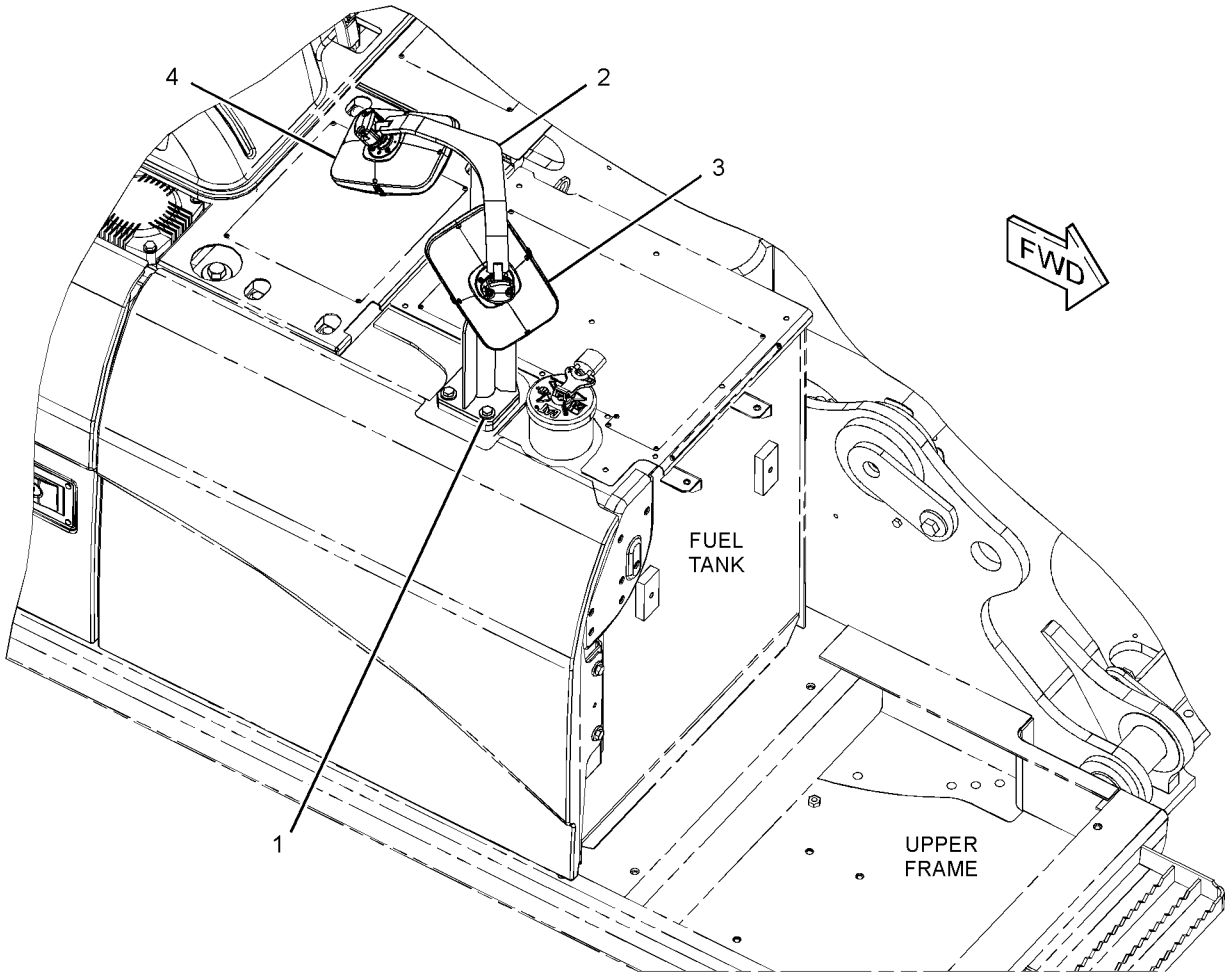

GRAPHIC #1 **<END>** g01619310

OPERATOR STATION

142-3836 MIRROR GP-REAR VIEW—FRONT, RH

S/N: WNE1-UP; ZMF1-UP

PART OF 343-1017, 343-1018 CHASSIS AR

SMCS-7319 **i01584884**

NOTE	REF NO	GRAPHIC REF	PART NUMBER	QTY	PART NAME 1 2 3 4 5 6 (PRODUCT LEVEL)	SEE PAGE
	1	1	**2M-0849**	4	WASHER-HARD (13.5X25.5X5-MM THK)	
	2	1	**137-2270**	1	MIRROR	
	3	1	**165-3065**	1	BRACKET-MIRROR	
	4	1	**177-6315**	4	PLUG	
M	5	1	**8T-4192**	4	BOLT (M12X1.75X25-MM)	

M-METRIC PART

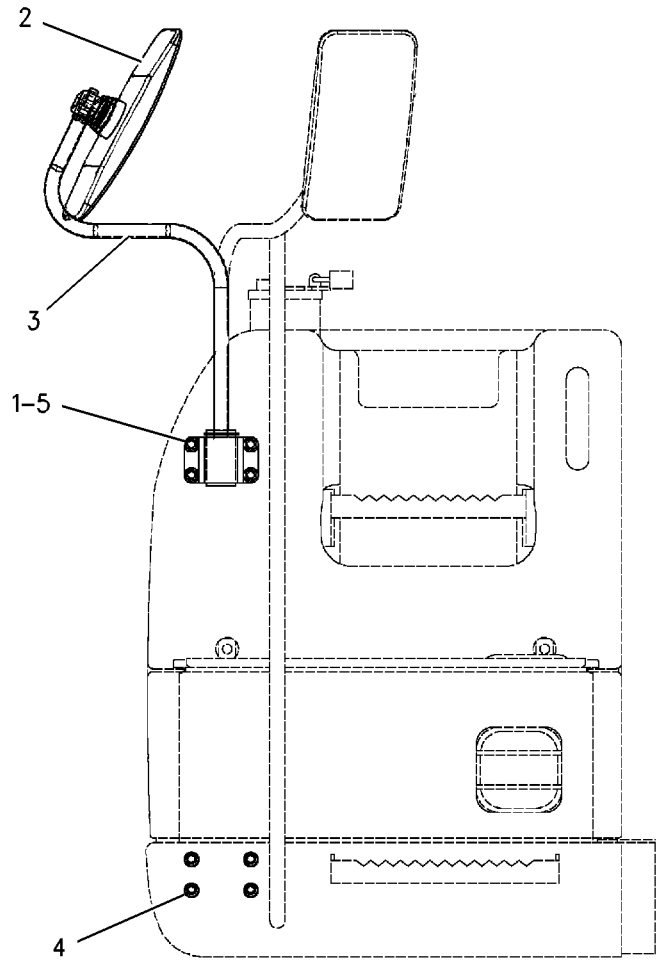

FRONT VIEW

GRAPHIC #1 **<END>** g00682738

OPERATOR STATION

313-7960 MIRROR GP-REAR VIEW—FRONT, RH

S/N: CWG1-UP

PART OF 339-2835 CHASSIS AR

SMCS-7319 **i02900098**

NOTE	REF NO	GRAPHIC REF	PART NUMBER	QTY	PART NAME 1 2 3 4 5 6 (PRODUCT LEVEL)	SEE PAGE
	1	1	**137-2270**	1	MIRROR	
	2	1	**165-3065**	1	BRACKET-MIRROR	
	3	1	**2M-0849**	4	WASHER-HARD (13.5X25.5X5-MM THK)	
M	4	1	**8T-4192**	4	BOLT (M12X1.75X25-MM)	

M-METRIC PART

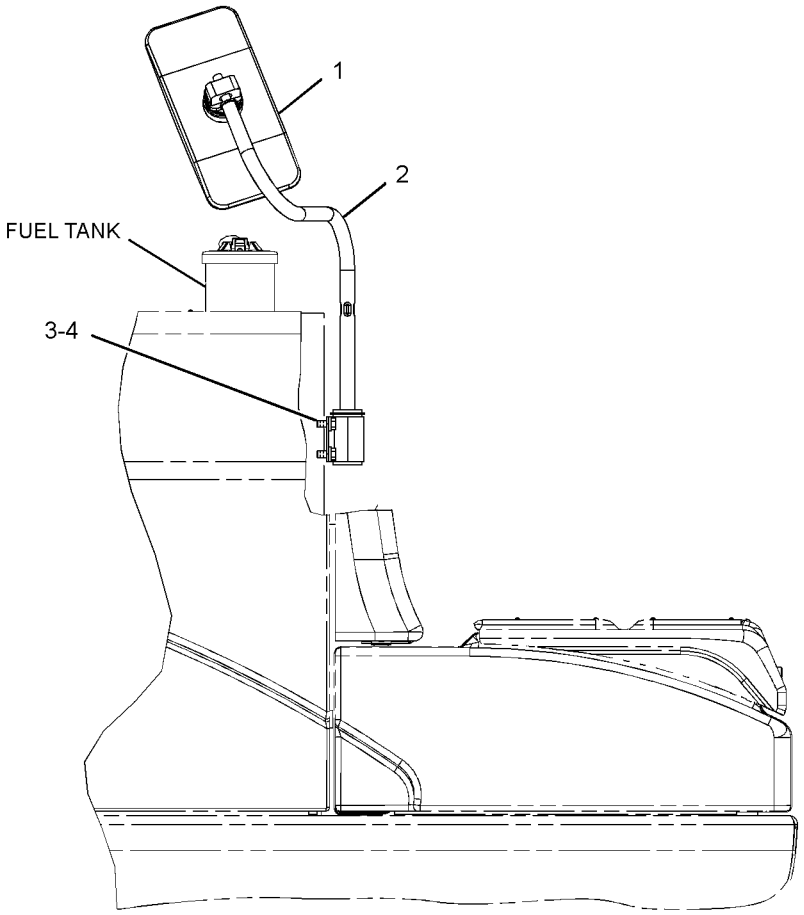

RIGHT SIDE VIEW

GRAPHIC #1 **<END>** g01450126

OPERATOR STATION

327-6550 MIRROR GP-REAR VIEW

S/N: WNE1-UP; ZMF1-UP; CWG1-UP
PART OF 334-6541 CAB GP, 327-6552, 327-6553 MIRROR GP-REAR VIEW
AN ATTACHMENT

SMCS-7319 **i03185260**

NOTE	REF NO	GRAPHIC REF	PART NUMBER	QTY	PART NAME 1 2 3 4 5 6 (PRODUCT LEVEL)	SEE PAGE
M	1	1	**8T-0269**	2	BOLT-SOCKET HEAD (M6X1X20-MM)	
	2	1	**9X-8256**	2	WASHER (6.6X12X2-MM THK)	

M-METRIC PART

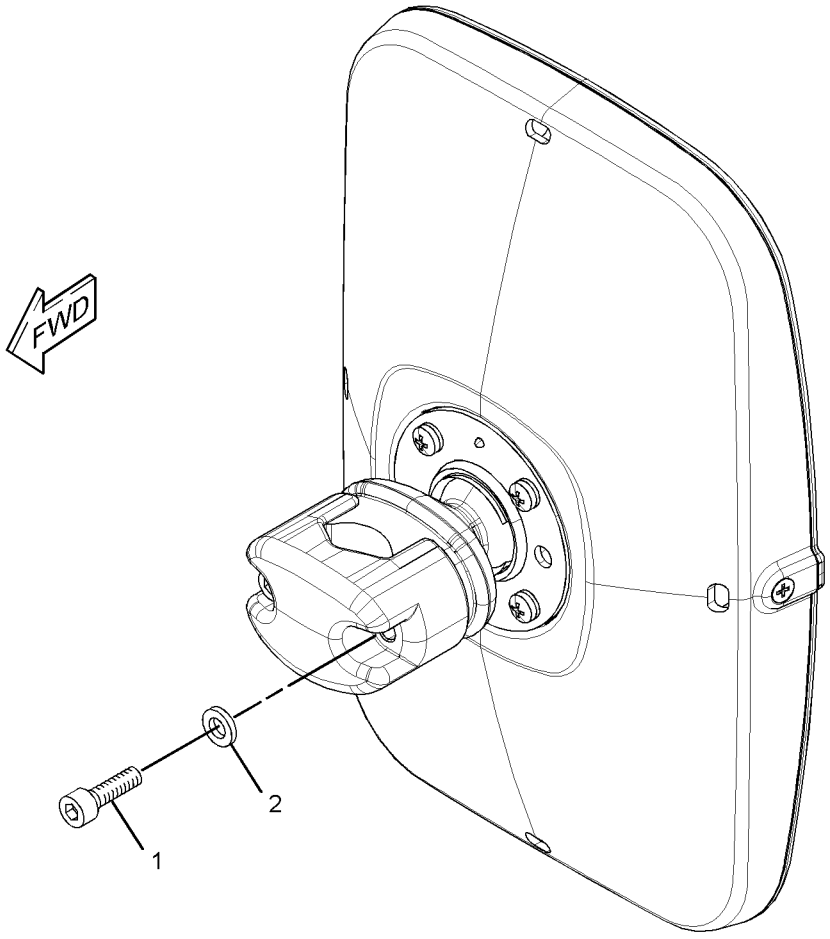

GRAPHIC #1 **<END>** g01615528

OPERATOR STATION

327-6552 MIRROR GP-REAR VIEW

S/N: WNE1-UP; ZMF1-UP; CWG1-UP
PART OF 346-4628, 346-4629 DISTRIBUTION AR
CANNOT BE USED WITH FALLING OBJECT GUARDS
AN ATTACHMENT

SMCS-7319 **i03250686**

NOTE	REF NO	GRAPHIC REF	PART NUMBER	QTY	PART NAME 1 2 3 4 5 6 (PRODUCT LEVEL)	SEE PAGE
Y	1	1	**327-6550**	1	MIRROR GP-REAR VIEW	1069
	2	1	**327-6576**	1	SUPPORT AS	
M	3	1	**8T-4175**	1	BOLT (M16X2X90-MM)	
	4	1	**9X-8257**	1	WASHER (17.5X30X3.5-MM THK)	

M-METRIC PART
Y-SEPARATE ILLUSTRATION

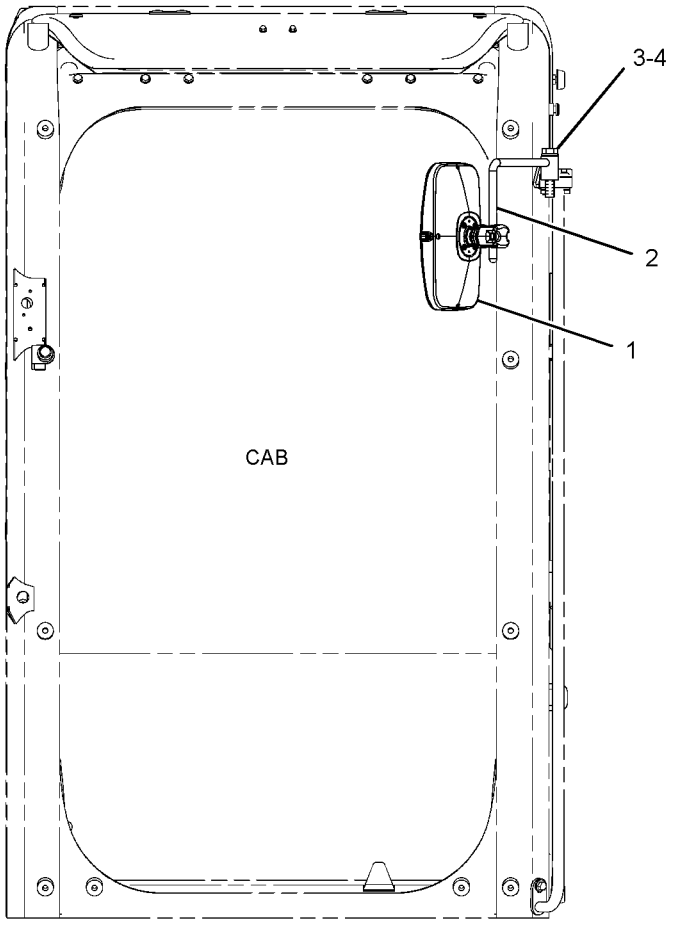

FRONT VIEW

GRAPHIC #1 **<END>** g01615557

OPERATOR STATION

327-6553 MIRROR GP-REAR VIEW

S/N: WNE1-UP; ZMF1-UP; CWG1-UP
PART OF 347-9921 OPTION AR-LIGHTING
FOR USE WITH WINDOW GUARD
AN ATTACHMENT

SMCS-7319 **i03082146**

NOTE	REF NO	GRAPHIC REF	PART NUMBER	QTY	PART NAME 1 2 3 4 5 6 (PRODUCT LEVEL)	SEE PAGE
	1	1	**316-8989**	1	SUPPORT AS	
Y	2	1	**327-6550**	1	MIRROR GP-REAR VIEW	1069
M	3	1	**8T-4193**	1	BOLT (M16X2X50-MM)	
	4	1	**9X-8257**	1	WASHER (17.5X30X3.5-MM THK)	

M-METRIC PART
Y-SEPARATE ILLUSTRATION

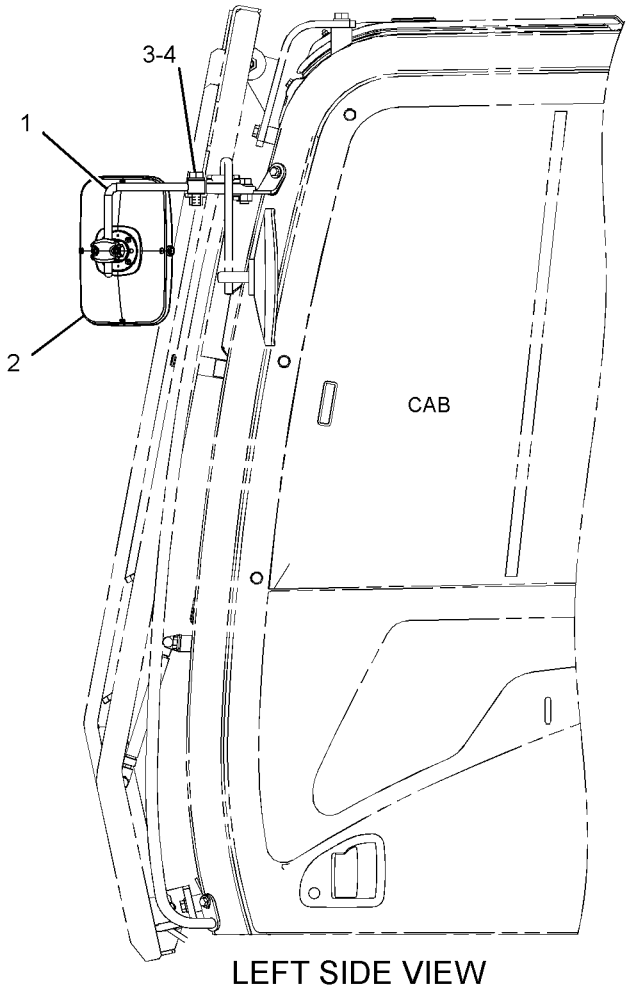

LEFT SIDE VIEW

GRAPHIC #1 **<END>** g01615542

OPERATOR STATION

221-8813 MONITOR & MTG GP-OPERATOR

S/N: WNE1-UP; ZMF1-UP; CWG1-UP
PART OF 342-3617 OPERATOR AR

SMCS-7490 **i03675640**

NOTE	REF NO	GRAPHIC REF	PART NUMBER	QTY	PART NAME 1 2 3 4 5 6 (PRODUCT LEVEL)	SEE PAGE
Y	1	1	**327-7482**	1	MONITOR GP-OPERATOR	1073
M	2	1	**9X-2046**	3	SCREW-TRUSS HEAD (M6X1X35-MM)	

M-METRIC PART
Y-SEPARATE ILLUSTRATION

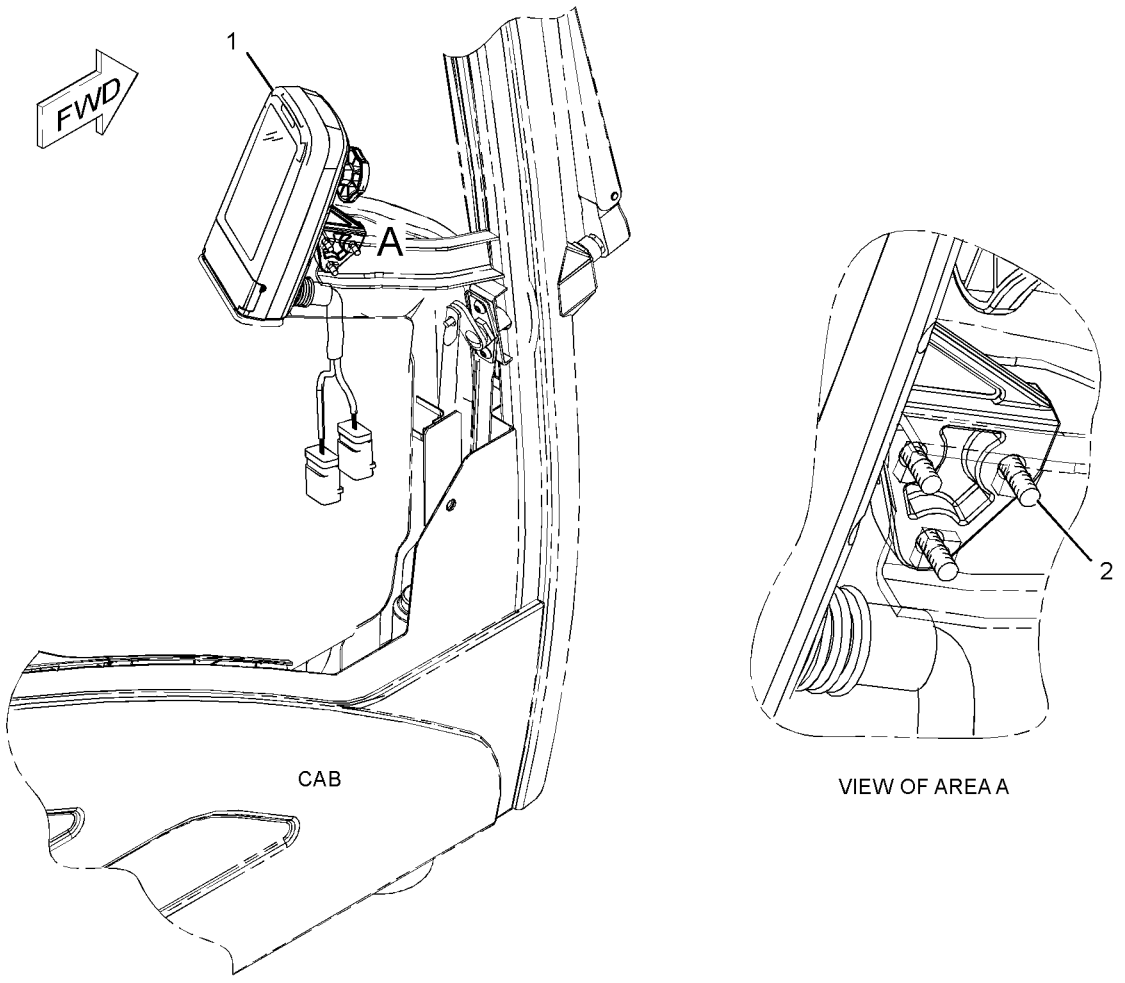

GRAPHIC #1 **<END>** g01231835

OPERATOR STATION

327-7482 MONITOR GP-OPERATOR

S/N: WNE1-UP; ZMF1-UP; CWG1-UP

PART OF 221-8813 MONITOR & MTG GP-OPERATOR

SMCS-7490 **i03359068**

NOTE	REF NO	GRAPHIC REF	PART NUMBER	QTY	PART NAME 1 2 3 4 5 6 (PRODUCT LEVEL)	SEE PAGE
	1	1	**247-2694**	1	RECEPTACLE AS-CONNECTOR (12-PIN)	
	2	1	**247-2695**	1	RECEPTACLE AS-CONNECTOR (12-PIN)	
	3	1	**144-1636**	17	PIN-CONNECTOR (14-GA TO 18-GA)	
	4	1	**8T-8737**	7	PLUG-SEAL	
	5	1	**327-7594**	1	COVER AS-MONITOR	

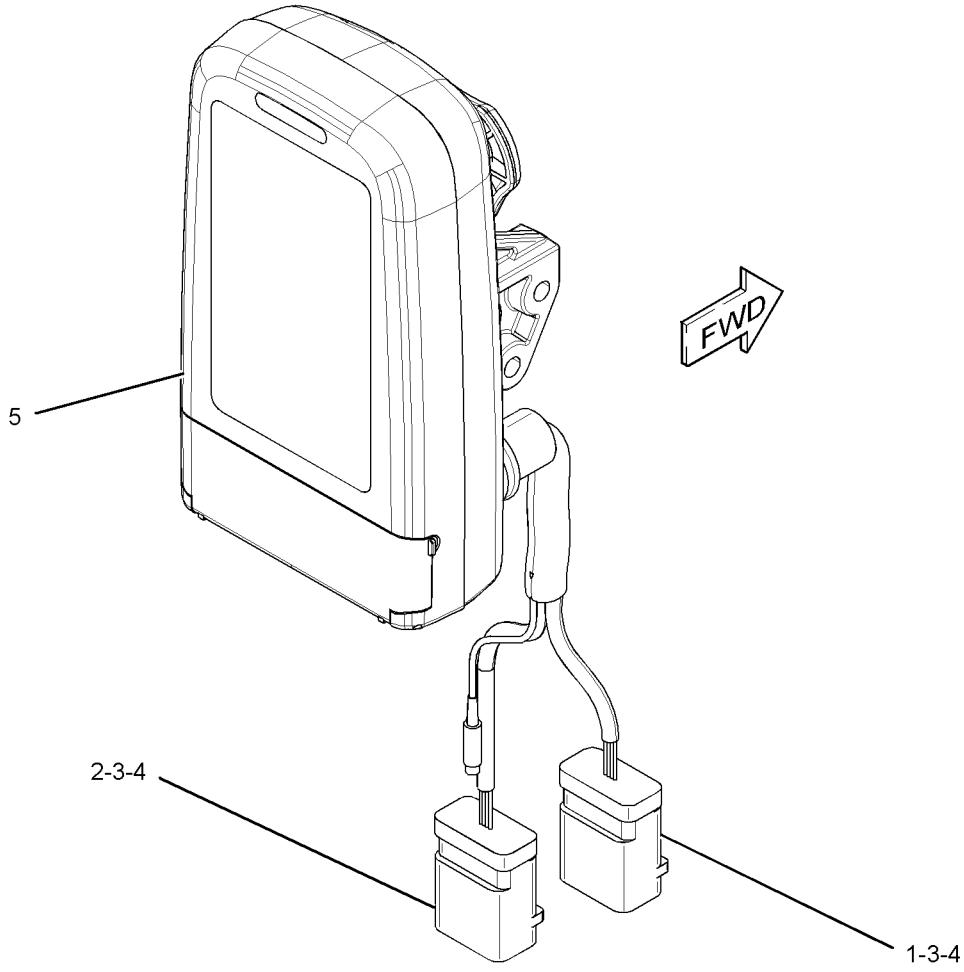

GRAPHIC #1 **<END>** g01733354

OPERATOR STATION

342-3546 MOTOR AS-WINDOW WIPER

S/N: WNE1-UP; ZMF1-UP; CWG1-UP
PART OF 327-6551 WIPER GP-WINDOW
AN ATTACHMENT

SMCS-7305 **i03645085**

NOTE	REF NO	GRAPHIC REF	PART NUMBER	QTY	PART NAME 1 2 3 4 5 6 (PRODUCT LEVEL)	SEE PAGE
	1	1	**7Y-3472**	1	CAP	
	2	1	**124-3952**	1	PACKING	
	3	1	**124-3953**	1	WASHER (20.5X30X2-MM THK)	
M	4	1	**6V-8231**	1	NUT (M10X1.25-THD)	
M	5	1	**7Y-3470**	1	NUT (M20X1-THD)	

M-METRIC PART

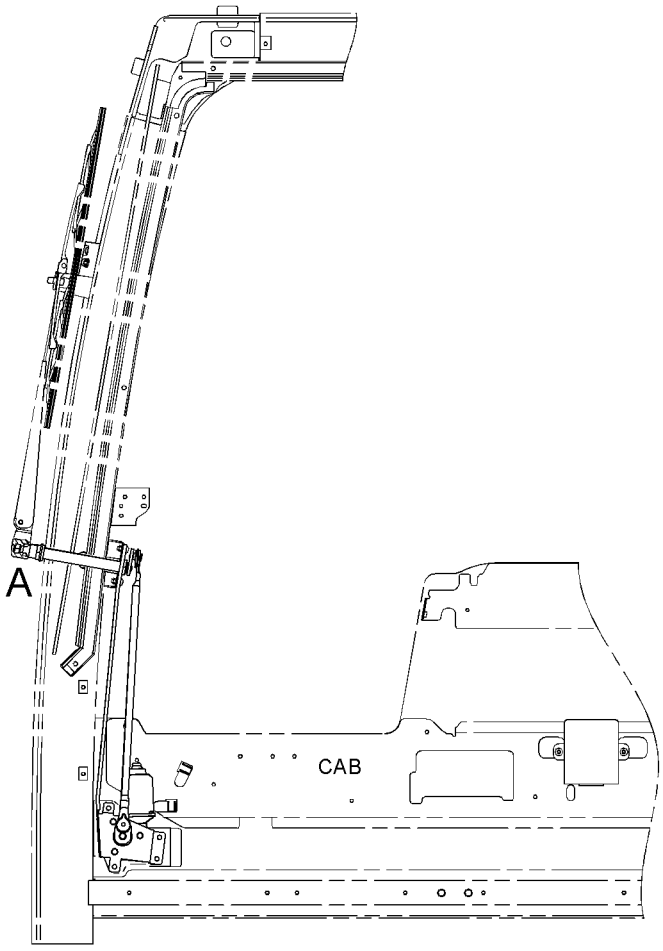

LEFT SIDE VIEW

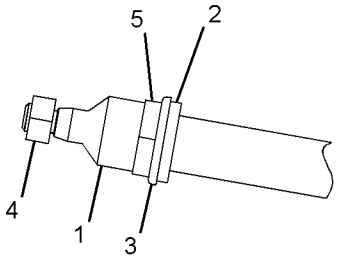

VIEW OF AREA A

GRAPHIC #1 **<END>** g01960694

OPERATOR STATION

338-6881 MOUNTING GP-ANTENNA—PRODUCT LINK

S/N: WNE1-UP; ZMF1-UP; CWG1-UP
PART OF 340-3770 INSTALLATION AR-COMMUNICATION, 340-3842 INSTALLATION GP-COMMUNICATION
AN ATTACHMENT

SMCS-7338, 7606 **i03671000**

NOTE	REF NO	GRAPHIC REF	PART NUMBER	QTY	PART NAME 1 2 3 4 5 6 (PRODUCT LEVEL)	SEE PAGE
	1	1	**3S-2093**	5	STRAP-CABLE	
	2	1	**7I-2673**	1	STRAP-CABLE	
	3	1	**284-8532**	1	ANTENNA AS	
		1	**301-0589**	1	ANTENNA (FLEXIBLE)	
	4	1	**349-5363**	1	BRACKET	
	5	1	**8T-4121**	2	WASHER-HARD (11X21X2.5-MM THK)	
M	6	1	**8T-4137**	2	BOLT (M10X1.5X20-MM)	

M-METRIC PART

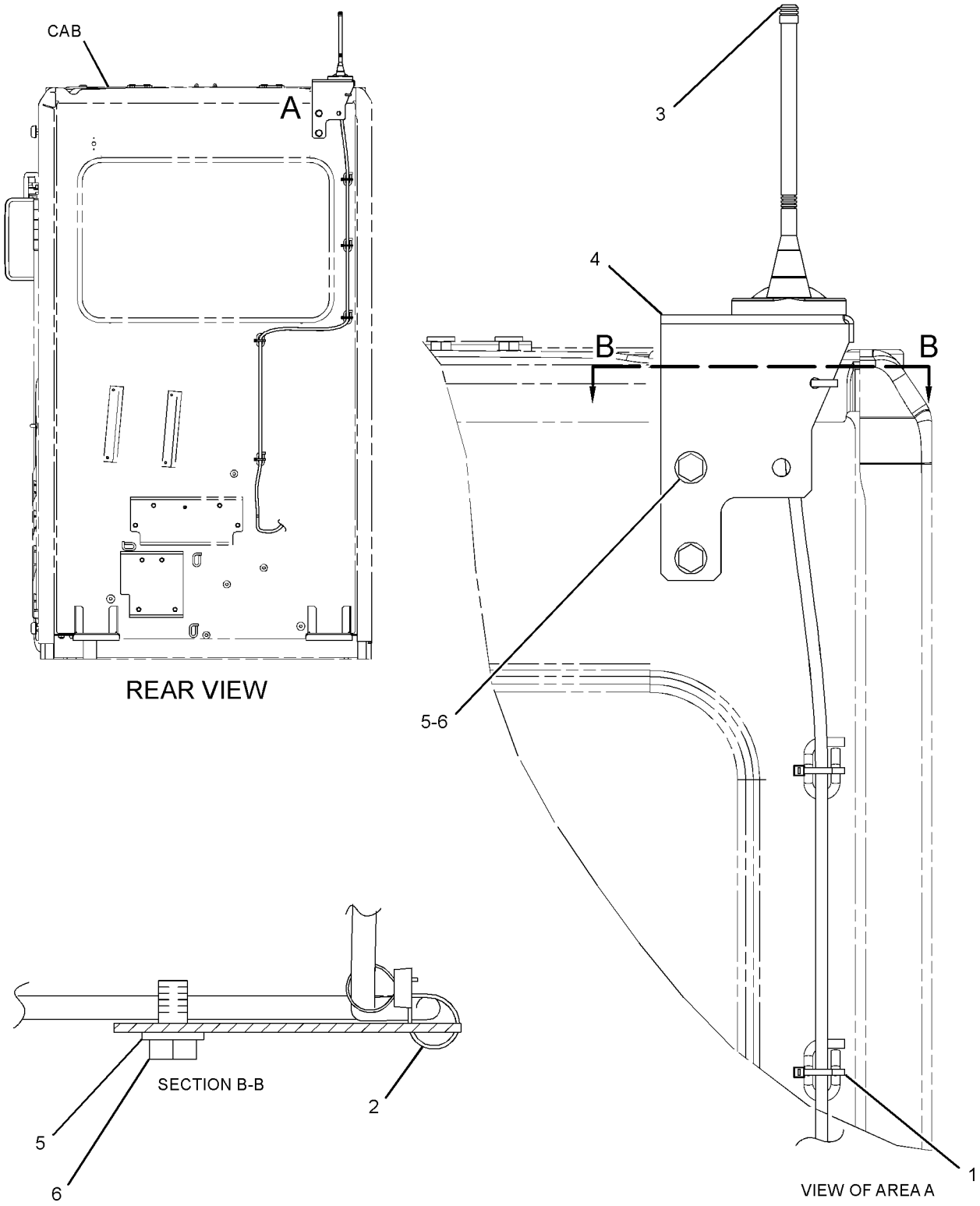

GRAPHIC #1 **<END>** g01968073

OPERATOR STATION

338-6937 MOUNTING GP-ANTENNA–ACCUGRADE

S/N: WNE1-UP; ZMF1-UP; CWG1-UP
PART OF 346-4596 GRADE CONTROL AR, 340-3844 INSTALLATION AR
AN ATTACHMENT

SMCS-7338, 7606 **i03669805**

NOTE	REF NO	GRAPHIC REF	PART NUMBER	QTY	PART NAME 1 2 3 4 5 6 (PRODUCT LEVEL)	SEE PAGE
	1	1	**349-5370**	1	BRACKET AS	
	2	1	**349-5373**	1	BRACKET AS	
	3	1	**349-5375**	1	BRACKET AS	
	4	1	**8T-4121**	4	WASHER-HARD (11X21X2.5-MM THK)	
M	5	1	**8T-4137**	4	BOLT (M10X1.5X20-MM)	
M	6	1	**8T-4190**	2	BOLT (M16X2X25-MM)	
	7	1	**9X-8257**	2	WASHER (17.5X30X3.5-MM THK)	

M-METRIC PART

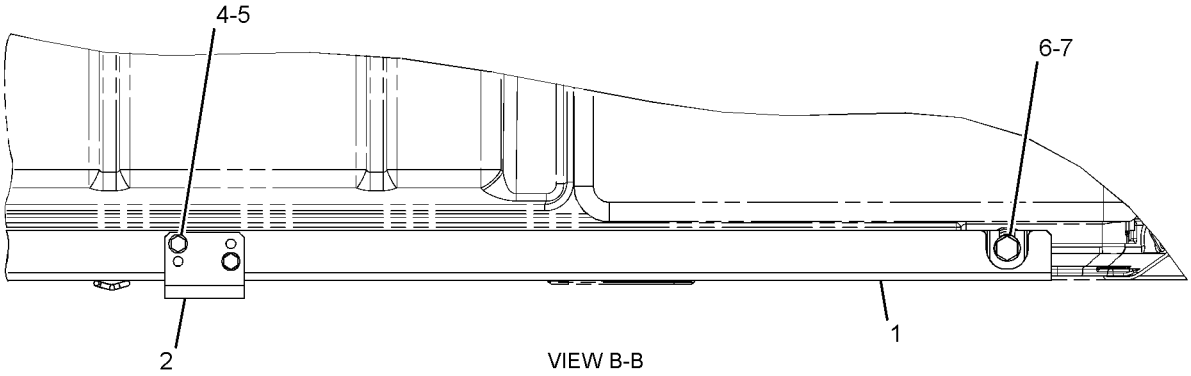

VIEW B-B

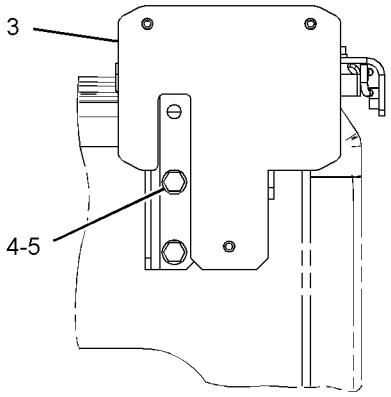

VIEW A-A

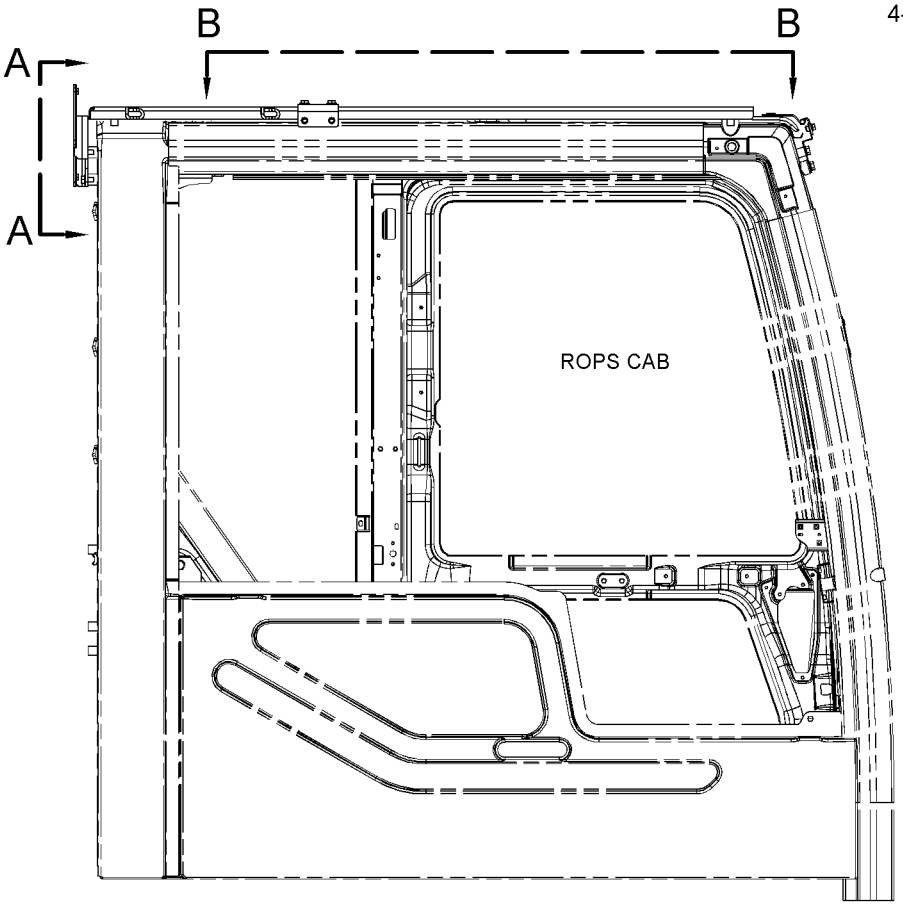

RIGHT SIDE VIEW

GRAPHIC #1 **<END>** g01971434

OPERATOR STATION

346-7375 MOUNTING GP-MIRROR

S/N: WNE1-UP; ZMF1-UP; CWG1-UP
PART OF 334-6541 CAB GP
AN ATTACHMENT

SMCS-7319 **i03645723**

NOTE	REF NO	GRAPHIC REF	PART NUMBER	QTY	PART NAME 1 2 3 4 5 6 (PRODUCT LEVEL)	SEE PAGE
	1	1	**2U-2552**	5	LOCKWASHER	
M	2	1	**6V-5683**	3	BOLT (M6X1X16-MM)	
M	3	1	**9X-6153**	2	BOLT (M6X1X10-MM)	
					PARTS SHOWN IN GRAPHIC(S) WITHOUT A REFERENCE NUMBER ARE NOT SERVICED SEPARATELY	

M-METRIC PART

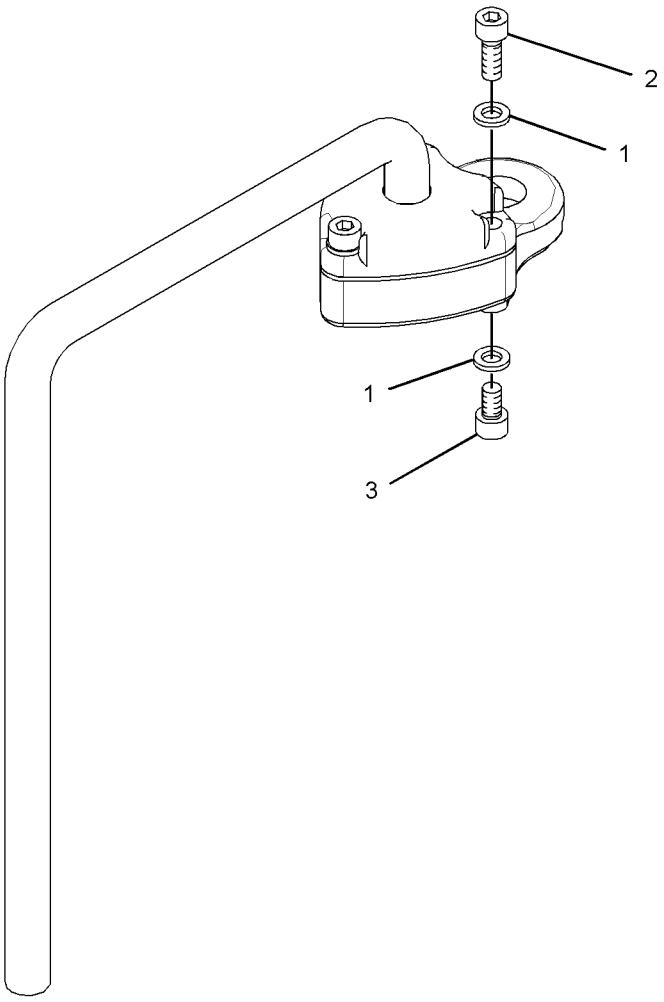

GRAPHIC #1 **<END>** g01962144

OPERATOR STATION

305-0446 MOUNTING GP-PLATFORM

S/N: WNE1-UP; ZMF1-UP; CWG1-UP

PART OF 339-2835, 343-1017, 343-1018 CHASSIS AR

SMCS-7253 **i03635552**

NOTE	REF NO	GRAPHIC REF	PART NUMBER	QTY	PART NAME 1 2 3 4 5 6 (PRODUCT LEVEL)	SEE PAGE
	1	1	**316-8922**	4	MOUNT AS	
	2	1	**8T-4121**	16	WASHER-HARD (11X21X2.5-MM THK)	
M	3	1	**8T-4195**	16	BOLT (M10X1.5X30-MM)	

M-METRIC PART

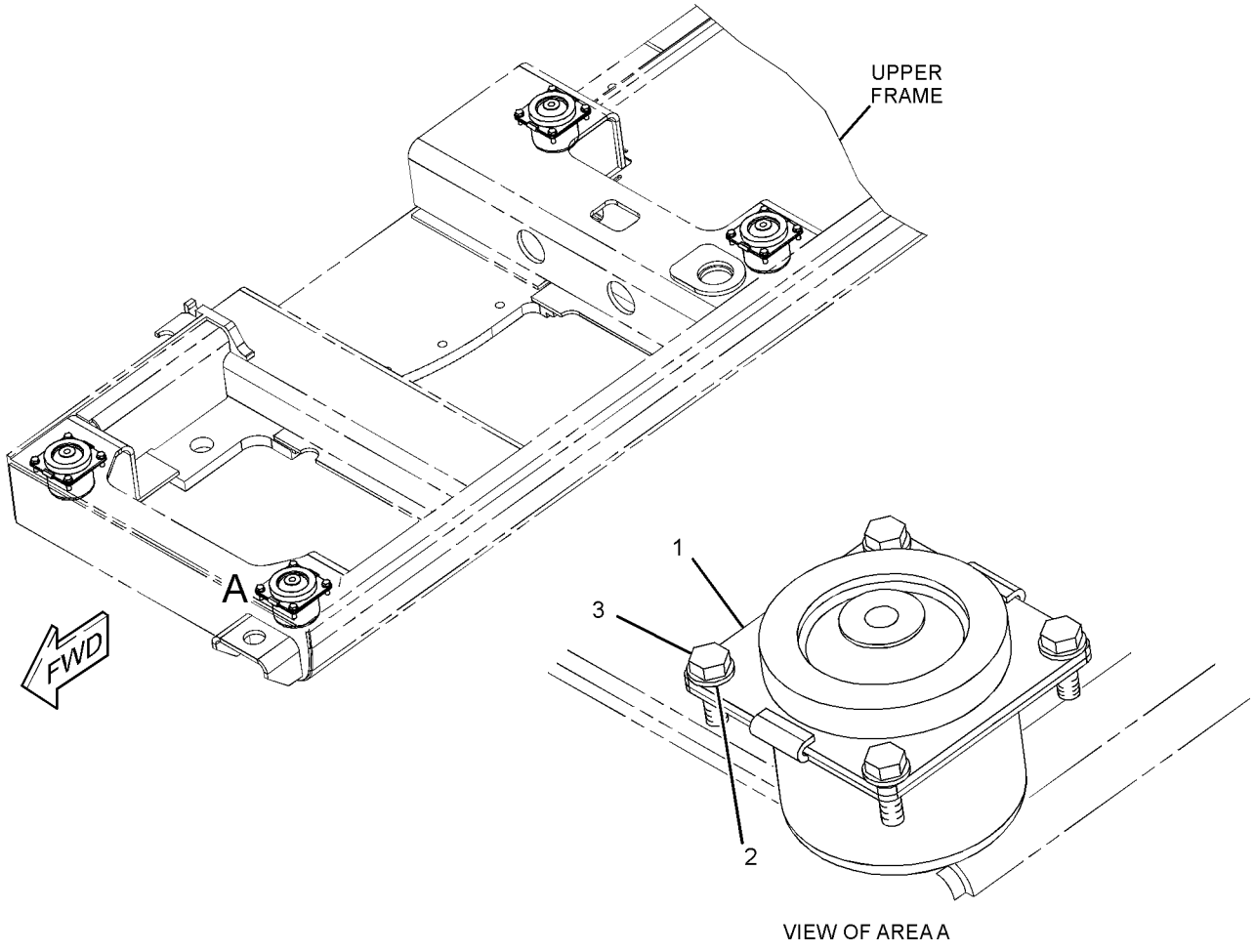

VIEW OF AREA A

GRAPHIC #1 **<END>** g01957238

OPERATOR STATION

342-3624 MOUNTING GP-ROPS

S/N: WNE1-UP; ZMF1-UP; CWG1-UP

PART OF 339-2835, 343-1017, 343-1018 CHASSIS AR

SMCS-7266 **i03635861**

NOTE	REF NO	GRAPHIC REF	PART NUMBER	QTY	PART NAME 1 2 3 4 5 6 (PRODUCT LEVEL)	SEE PAGE
	1	1	**316-8933**	1	STOP	
M	2	1	**7X-2576**	1	BOLT (M24X3X70-MM)	
	3	1	**8T-4167**	1	WASHER-HARD (26X44X4-MM THK)	

M-METRIC PART

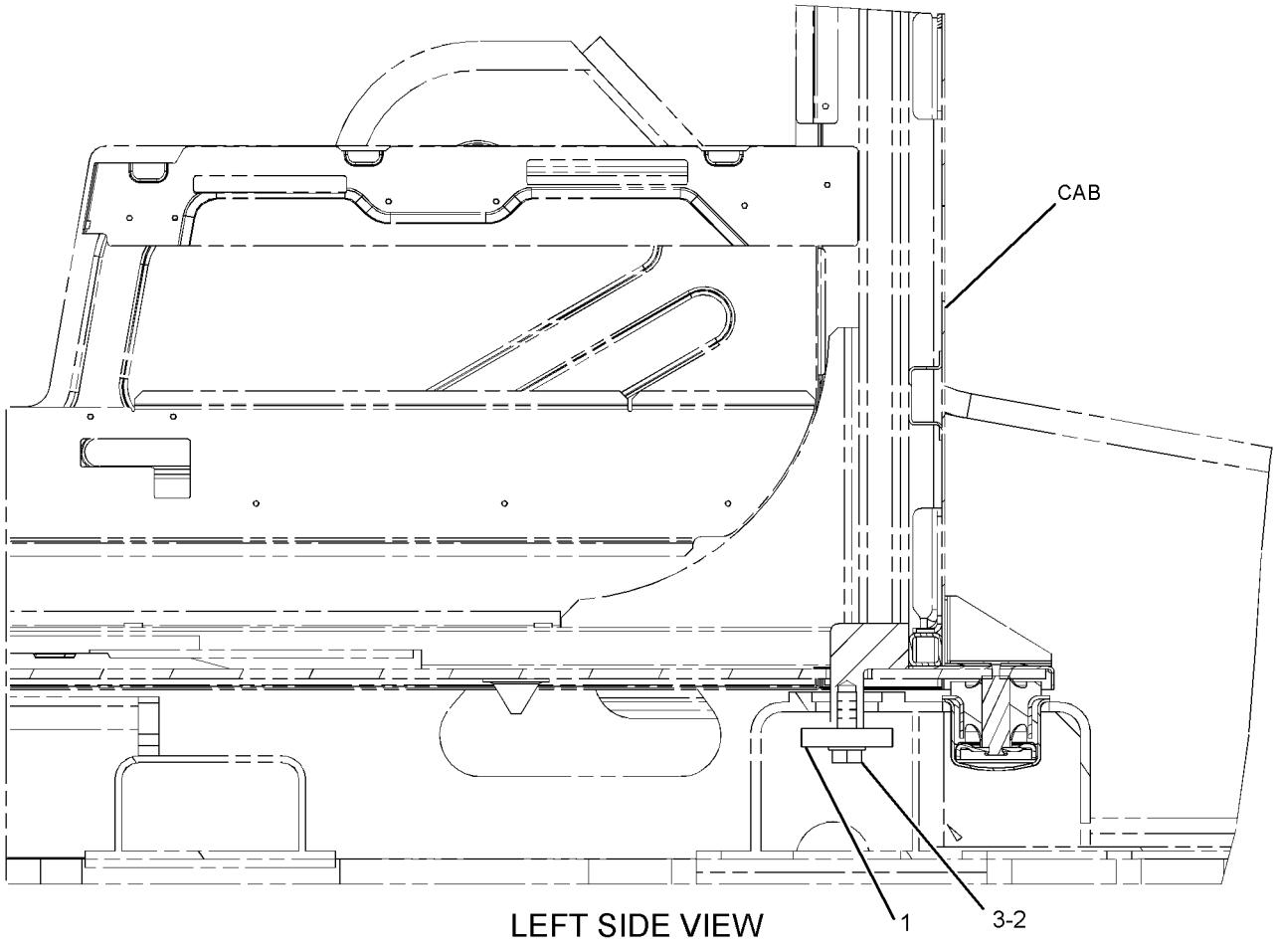

LEFT SIDE VIEW

GRAPHIC #1 **<END>** g01955100

OPERATOR STATION

342-3617 OPERATOR AR

S/N: WNE1-UP; ZMF1-UP; CWG1-UP
PART OF 339-2835, 343-1017, 343-1018 CHASSIS AR

SMCS-7301 **i03641978**

NOTE	PART NUMBER	QTY	PART NAME 1 2 3 4 5 6 (PRODUCT LEVEL)	SEE PAGE
Y	*245-7922*	1	CONSOLE GP-OPERATOR	989
Y	*221-8872*	1	CONTROL & MTG GP-MACHINE	192
Y	*170-9497*	1	CONTROL GP-PILOT OPERATED HYD (TRAVEL)	1011
Y	*221-8813*	1	MONITOR & MTG GP-OPERATOR	1072
Y	*336-6133*	1	PANEL & MTG GP-CIRCUIT BREAKER	220
Y	*342-3460*	1	PLATFORM GP-OPERATOR	1083
Y	*327-6523*	1	SUPPORT GP-SEAT	1099
Y	*336-6132*	1	WIRING GP-CAB	264
Y	*251-0433*	1	WIRING GP-CONSOLE	289
Y	*336-5981*	1	WIRING GP-PLATFORM	306

Y-SEPARATE ILLUSTRATION

<END>

342-3647 PEDAL AR-THIRD

S/N: WNE1-UP; ZMF1-UP
AN ATTACHMENT

SMCS-5059, 5462 **i03648735**

NOTE	PART NUMBER	QTY	PART NAME 1 2 3 4 5 6 (PRODUCT LEVEL)	SEE PAGE
Y	*316-8842*	1	CONTROL GP-HYDRAULIC PEDAL	1008
Y	*251-0526*	1	FASTENER GP-WIRING HARNESS (STRAIGHT TRAVEL)	195
Y	*255-1843*	1	LINES GP-PILOT (THIRD PEDAL, PILOT VALVE)	665
Y	*266-1015*	1	LINES GP-PILOT (THIRD PEDAL, STRAIGHT TRAVEL)	708
	260-6948	1	FILM-INSTRUCTION (OPERATOR CONTROLS, READ OMM)	
			INSIDE OF CAB ON LH WINDOW	

Y-SEPARATE ILLUSTRATION

<END>

342-3648 PEDAL AR-THIRD

S/N: CWG1-UP
AN ATTACHMENT

SMCS-5059, 5462 **i03634426**

NOTE	PART NUMBER	QTY	PART NAME 1 2 3 4 5 6 (PRODUCT LEVEL)	SEE PAGE
Y	*316-8842*	1	CONTROL GP-HYDRAULIC PEDAL	1008
Y	*251-0526*	1	FASTENER GP-WIRING HARNESS (STRAIGHT TRAVEL)	195
Y	*255-1843*	1	LINES GP-PILOT (THIRD PEDAL, PILOT VALVE)	665
Y	*266-0979*	1	LINES GP-PILOT (PEDAL CONTROLS)	707
	260-6948	1	FILM-INSTRUCTION (OPERATOR CONTROLS, READ OMM)	

Y-SEPARATE ILLUSTRATION

<END>

OPERATOR STATION

342-3460 PLATFORM GP-OPERATOR

S/N: WNE1-UP; ZMF1-UP; CWG1-UP
PART OF 342-3617 OPERATOR AR

SMCS-7253 **i03641506**

NOTE	REF NO	GRAPHIC REF	PART NUMBER	QTY	PART NAME 1 2 3 4 5 6 (PRODUCT LEVEL)	SEE PAGE
	1	1	**135-8965**	1	GROMMET	
	2	1	**135-8966**	1	GROMMET	
	3	1	**162-0349**	2	COVER	
	4	1	**342-3461**	1	PLATFORM AS	
	5	1	**342-3718**	1	COVER	
M	6	1	**7X-2553**	2	BOLT (M16X2X40-MM)	
	7	1	**8T-4121**	2	WASHER-HARD (11X21X2.5-MM THK)	
M	8	1	**8T-4191**	2	BOLT (M10X1.5X16-MM)	
M	9	1	**8T-4193**	2	BOLT (M16X2X50-MM)	
	10	1	**9X-8257**	4	WASHER (17.5X30X3.5-MM THK)	

M-METRIC PART

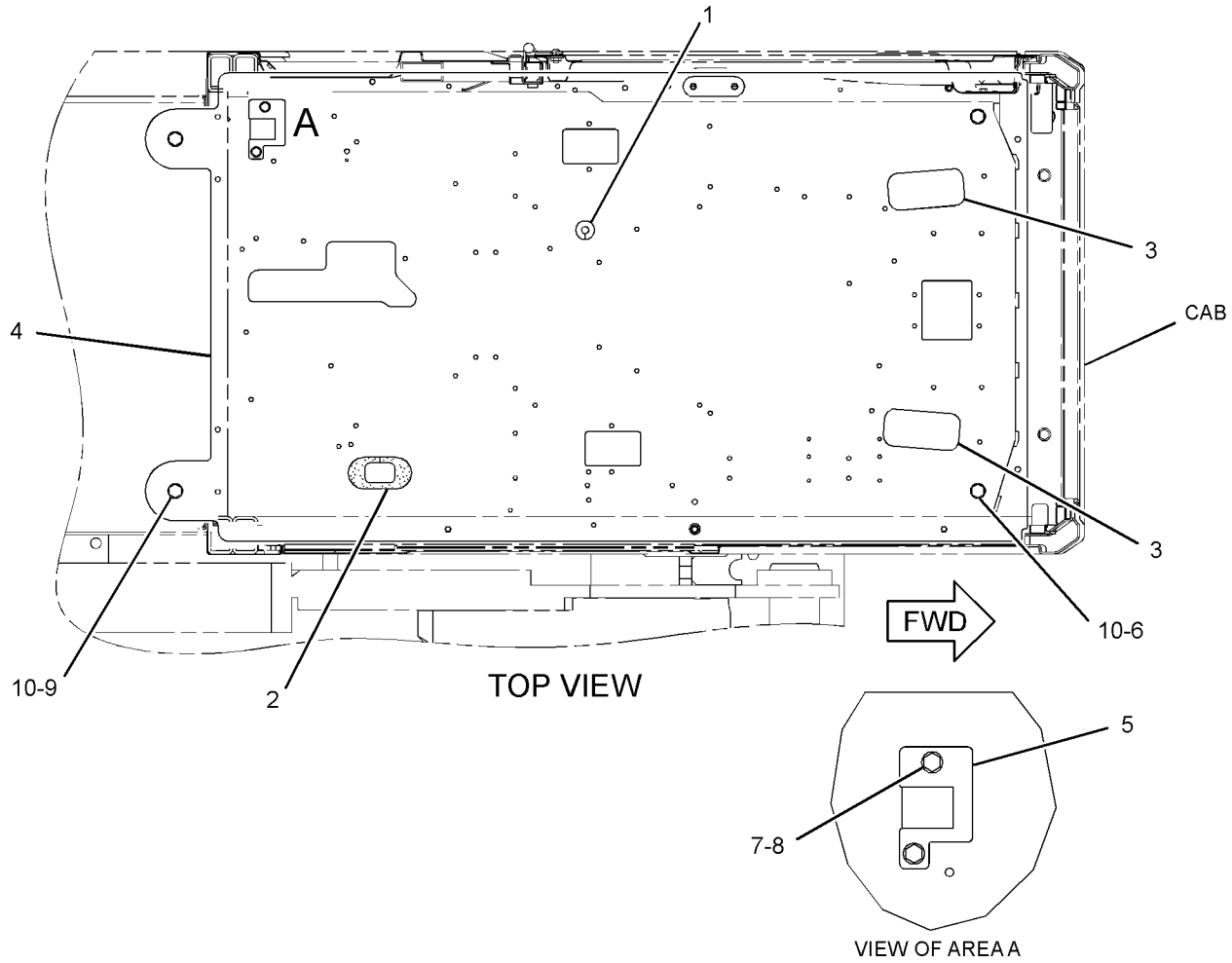

GRAPHIC #1 **<END>** g01956044

OPERATOR STATION

251-0538 RADIO GP

S/N: WNE1-UP; ZMF1-UP; CWG1-UP
AN ATTACHMENT

SMCS-7338, 733C **i02996046**

NOTE	REF NO	GRAPHIC REF	PART NUMBER	QTY	PART NAME 1 2 3 4 5 6 (PRODUCT LEVEL)	SEE PAGE
	1	1	**3S-2093**	2	STRAP-CABLE	
	2	1	**7K-1181**	2	STRAP-CABLE	
M	3	1	**095-0736**	2	SCREW-MACHINE (M5X0.8X10-MM)	
	4	1	**238-2260**	1	CABLE	
	5	1	**306-8802**	1	RADIO-AM/FM	
	6	1	**259-4914**	1	BRACKET AS	
	7	1	**119-5026**	2	SCREW-PAN HEAD (10-16X0.63-IN)	

M-METRIC PART

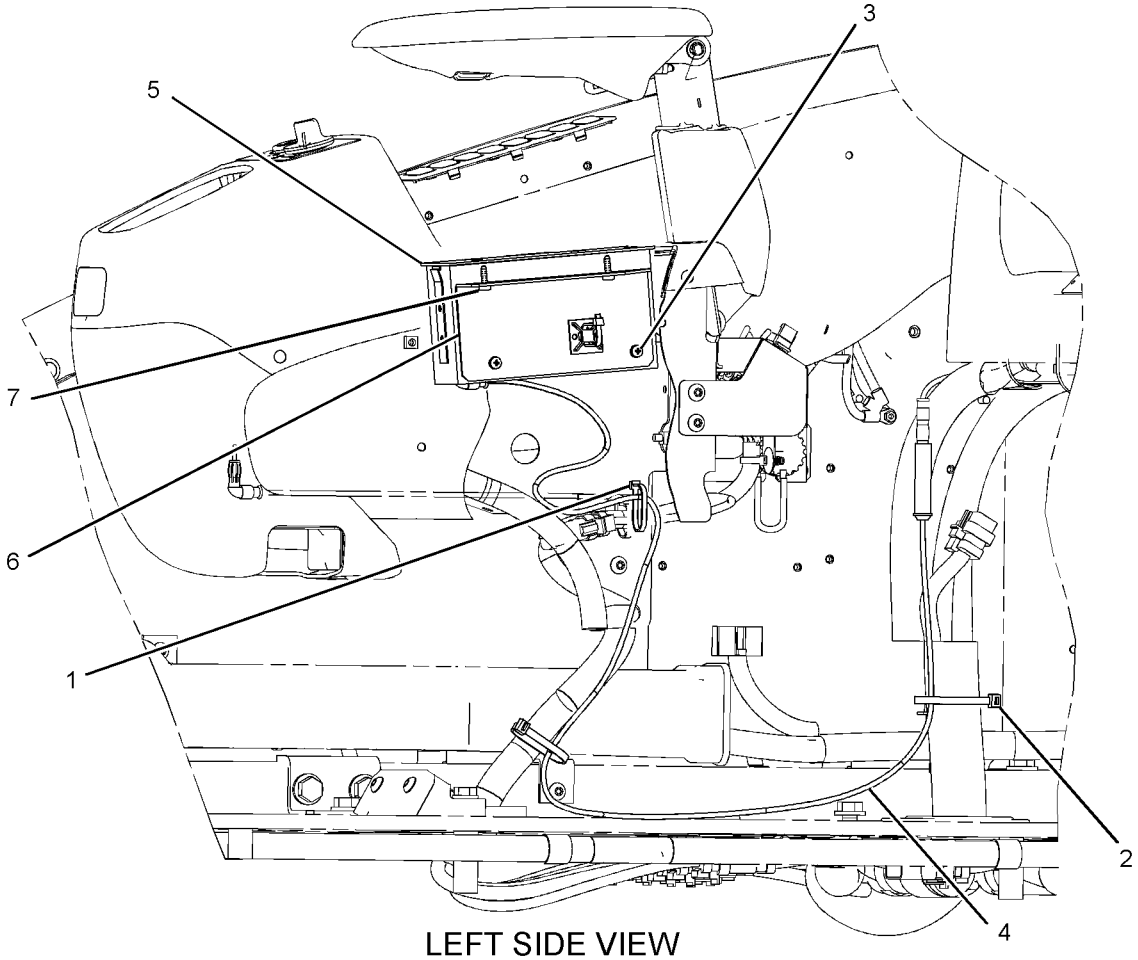

LEFT SIDE VIEW

GRAPHIC #1 **<END>** g01520813

OPERATOR STATION

263-9088 RADIO GP-COMMUNICATION–PRODUCT LINK 121SR

S/N: WNE1-UP; ZMF1-UP; CWG1-UP
PART OF 338-6887, 338-6889 CONTROL & MTG GP-COMMUNICATION
AN ATTACHMENT

SMCS-733T **i03135906**

NOTE	PART NUMBER	QTY	PART NAME 1 2 3 4 5 6 (PRODUCT LEVEL)	SEE PAGE
	330-3408	1	SOFTWARE GP-COMMUNICATION (PRODUCT LINK 121SR)	

<END>

OPERATOR STATION

336-1150 SCREEN GP-SUN

S/N: WNE1-UP; ZMF1-UP; CWG1-UP
PART OF 347-9907, 347-9908 OPTION AR-CAB
AN ATTACHMENT

SMCS-7165 **i03648178**

NOTE	REF NO	GRAPHIC REF	PART NUMBER	QTY	PART NAME 1 2 3 4 5 6 (PRODUCT LEVEL)	SEE PAGE
	1	1	**259-7214**	3	HOOK-RETAINER	
	2	1	**259-7215**	3	HOOK-RETAINER	
	3	1	**336-1151**	1	SCREEN AS (SUN)	
M	4	1	**099-0822**	6	BOLT-SOCKET HEAD (M5X0.8X10-MM)	

M-METRIC PART

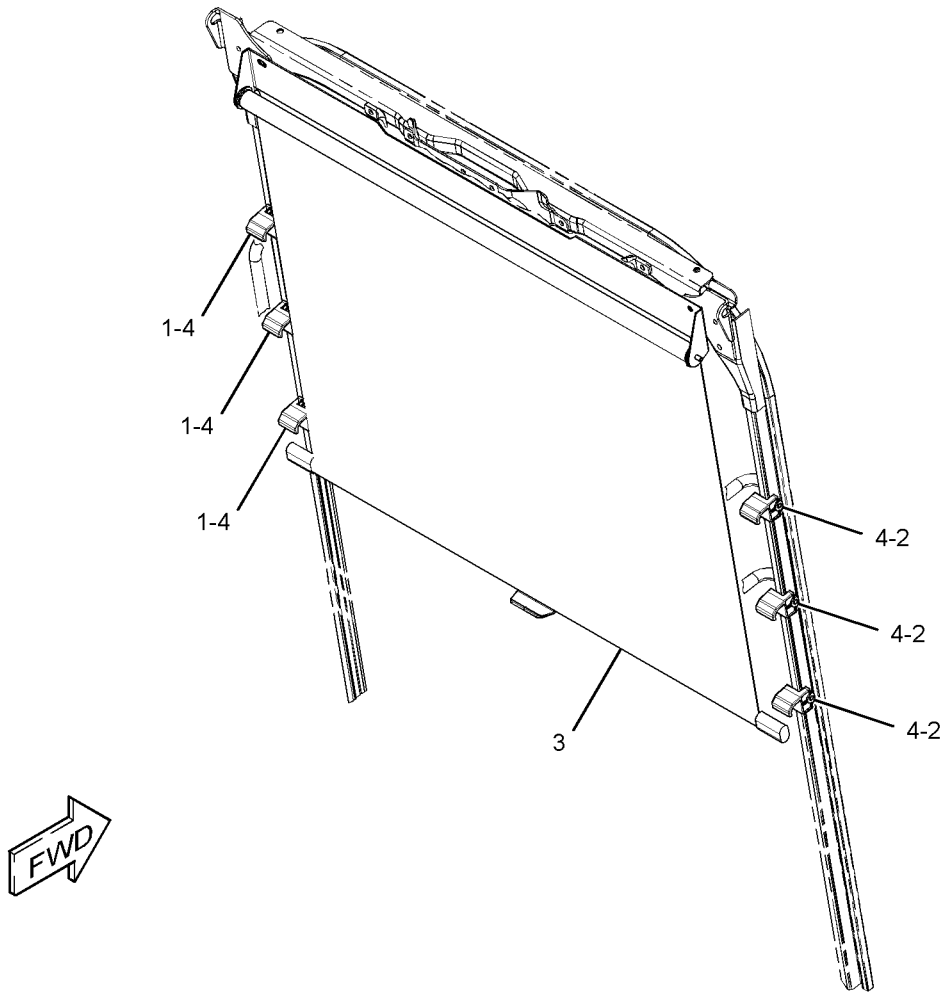

GRAPHIC #1 **<END>** g01950170

327-6501 SEAT & MOUNTING GP–HIGH BACK, TILT

S/N: WNE1-UP; ZMF1-UP; CWG1-UP
CLOTH
PART OF 347-9908 OPTION AR-CAB
AN ATTACHMENT

SMCS-7312 **i03429223**

NOTE	REF NO	GRAPHIC REF	PART NUMBER	QTY	PART NAME 1 2 3 4 5 6 (PRODUCT LEVEL)	SEE PAGE
Y	1	1	*327-6507*	1	SEAT GP-SUSPENSION (HIGH BACK, TILT)	1093
M	2	1	**6V-8202**	4	BOLT-SOCKET HEAD (M8X1.25X16-MM)	

M-METRIC PART
Y-SEPARATE ILLUSTRATION

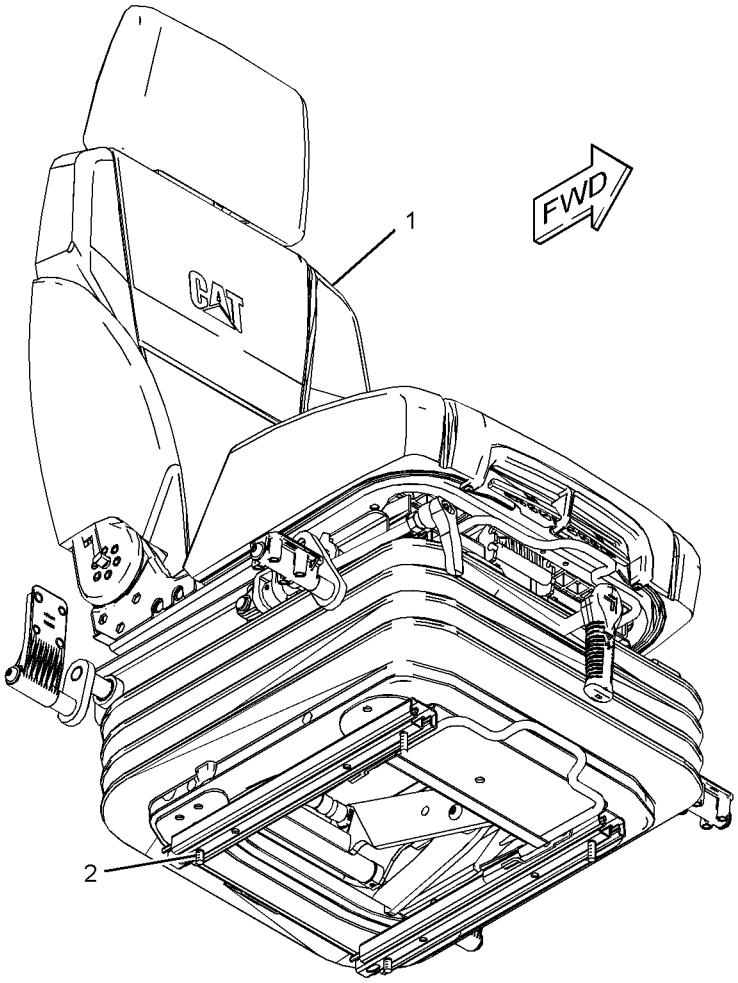

GRAPHIC #1 **<END>** g01803395

OPERATOR STATION

327-6502 SEAT & MOUNTING GP—HIGH BACK, TILT

S/N: CWG1-UP
AN ATTACHMENT

SMCS-7312 **i03647182**

NOTE	REF NO	GRAPHIC REF	PART NUMBER	QTY	PART NAME 1 2 3 4 5 6 (PRODUCT LEVEL)	SEE PAGE
Y	1	1	*327-6508*	1	SEAT GP-SUSPENSION (HIGH BACK, TILT)	1094
M	2	1	**6V-8202**	4	BOLT-SOCKET HEAD (M8X1.25X16-MM)	

M-METRIC PART
Y-SEPARATE ILLUSTRATION

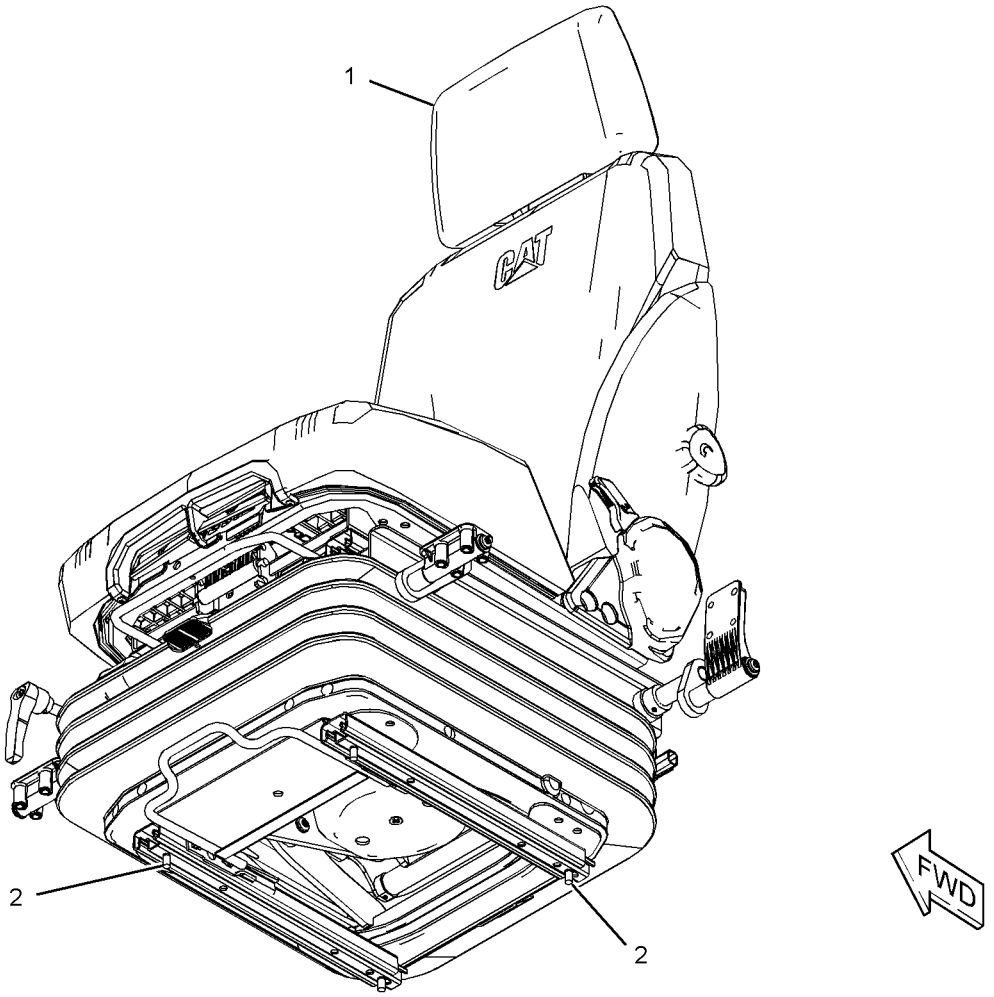

GRAPHIC #1 **<END>** g01958332

OPERATOR STATION

327-6503 SEAT & MOUNTING GP—HIGH BACK, WITH HEATER

S/N: WNE1-UP; ZMF1-UP; CWG1-UP
CLOTH
PART OF 347-9907 OPTION AR-CAB
AN ATTACHMENT

SMCS-7312 **i03429224**

NOTE	REF NO	GRAPHIC REF	PART NUMBER	QTY	PART NAME 1 2 3 4 5 6 (PRODUCT LEVEL)	SEE PAGE
	1	1	**238-2211**	1	SWITCH AS-ROCKER (HEATED SEAT)	
		1	**167-3542**	1	CONNECTOR-RECEPTACLE	
		1	**167-3543**	4	TERMINAL (MALE)	
Y	2	1	*327-6509*	1	SEAT GP-SUSPENSION (HIGH BACK, WITH HEATER)	1095
M	3	1	**6V-8202**	4	BOLT-SOCKET HEAD (M8X1.25X16-MM)	

M-METRIC PART
Y-SEPARATE ILLUSTRATION

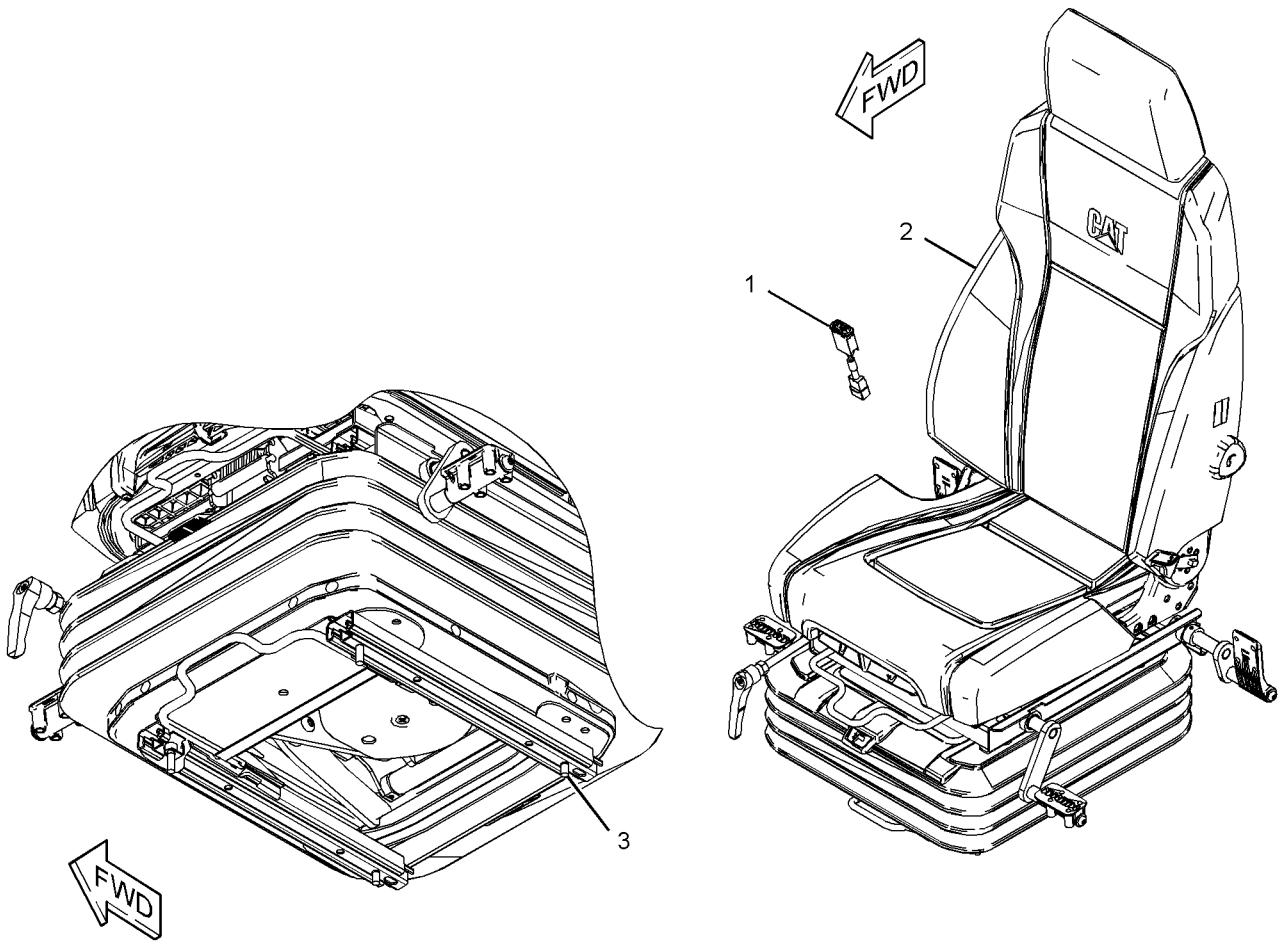

GRAPHIC #1 **<END>** g01796379

OPERATOR STATION

305-0467 SEAT BELT GP–RETRACTABLE

S/N: WNE1-UP; ZMF1-UP; CWG1-UP
PART OF 347-9907, 347-9908 OPTION AR-CAB
AN ATTACHMENT

SMCS-7327 **i03348104**

NOTE	REF NO	GRAPHIC REF	PART NUMBER	QTY	PART NAME 1 2 3 4 5 6 (PRODUCT LEVEL)	SEE PAGE
	1	1	**327-6541**	1	SEAT BELT GP	

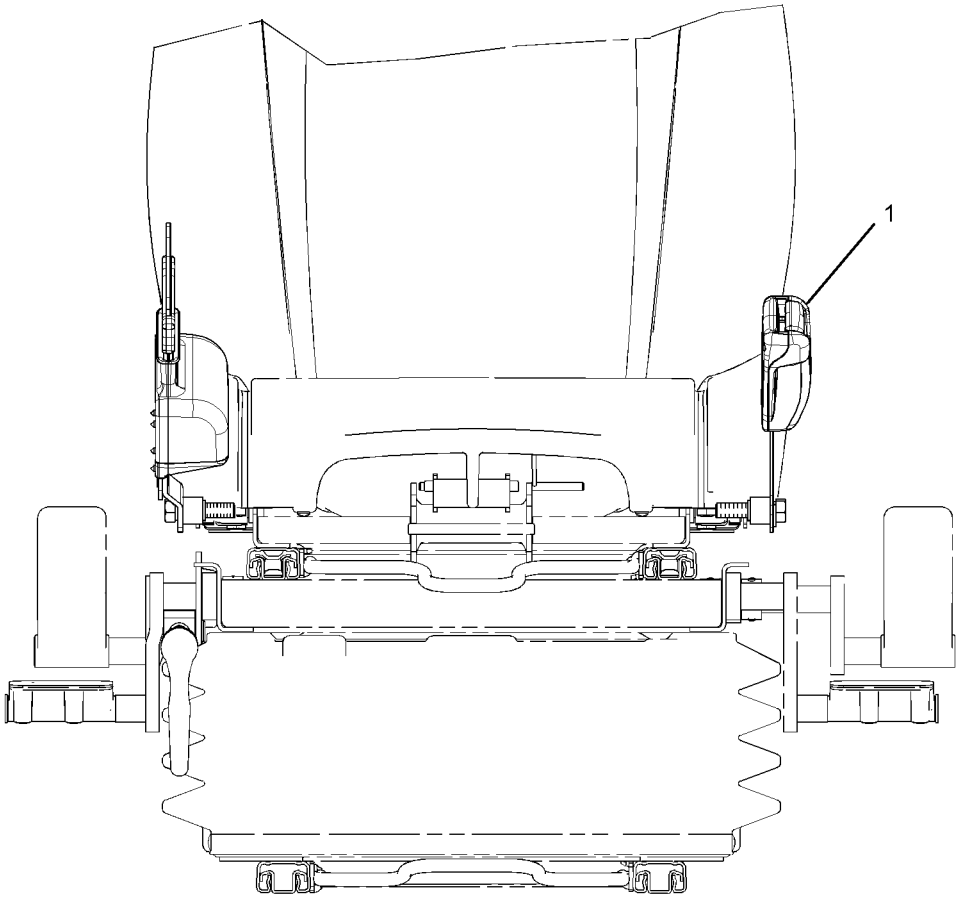

FRONT VIEW

GRAPHIC #1 **<END>** g01576478

OPERATOR STATION

327-6512 SEAT GP—HIGH BACK, TILT

S/N: WNE1-UP; ZMF1-UP; CWG1-UP
PART OF 327-6507, 327-6508 SEAT GP-SUSPENSION
AN ATTACHMENT

SMCS-7312 **i03675613**

NOTE	REF NO	GRAPHIC REF	PART NUMBER	QTY	PART NAME 1 2 3 4 5 6 (PRODUCT LEVEL)	SEE PAGE
	1	1	**327-6515**	1	HEADREST AS-SEAT	
	2	1	**327-6642**	1	KIT-SEAT ADJUSTER (SEAT TILT)	
M		1	**9X-2616**	4	SCREW-SOCKET (M8X1.25X16-MM)	
		1	**333-4179**	2	BOLT-SHOULDER (M10X1.5X26.2-MM)	
	3	1	**327-6643**	1	KIT-ADJUSTER (CUSHION POSITIONING)	
M		1	**9X-2616**	4	SCREW-SOCKET (M8X1.25X16-MM)	
		1	**316-8987**	2	BRACKET	
J	4	1	**333-4160**	1	KIT-SEAT (CLOTH, HIGH BACK)	
		1	**178-5659**	1	HANDLE (LUMBAR SUPPORT ADJUSTER)	
		1	**333-4179**	2	BOLT-SHOULDER (M10X1.5X26.2-MM)	
					AVAILABLE REPAIR KIT(S):	
J			**327-6640**	1	KIT-HANDLE (RECLINER)	

J-KIT MARKED J SERVICES PART(S) MARKED J
M-METRIC PART

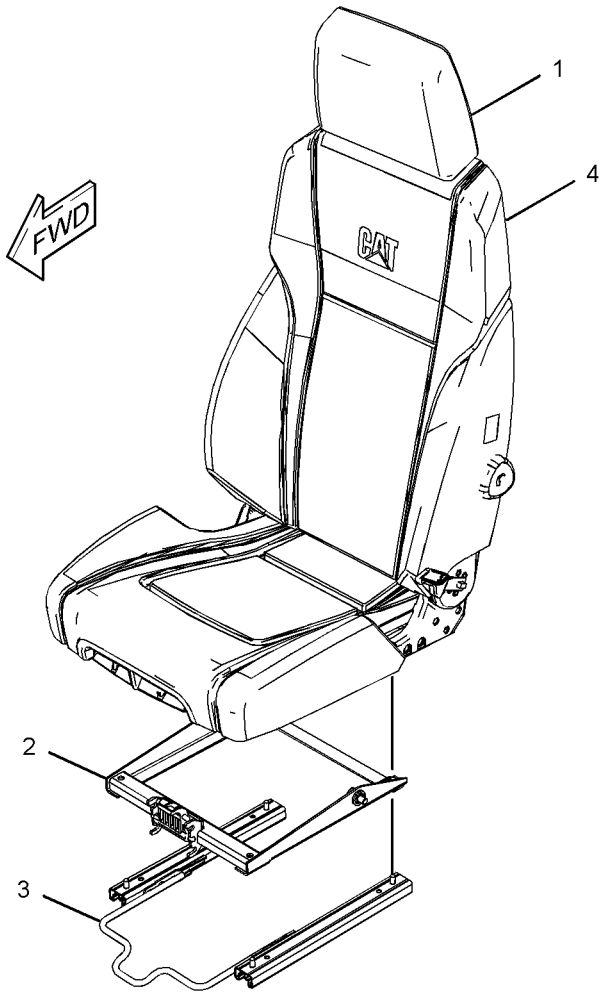

GRAPHIC #1 **<END>** g01641173

OPERATOR STATION

327-6513 SEAT GP—HIGH BACK, WITH HEATER

S/N: WNE1-UP; ZMF1-UP; CWG1-UP
PART OF 327-6509 SEAT GP-SUSPENSION
AN ATTACHMENT

SMCS-7312 **i03675616**

NOTE	REF NO	GRAPHIC REF	PART NUMBER	QTY	PART NAME 1 2 3 4 5 6 (PRODUCT LEVEL)	SEE PAGE
	1	1	**327-6515**	1	HEADREST AS-SEAT	
	2	1	**327-6642**	1	KIT-SEAT ADJUSTER (SEAT TILT)	
M		1	**9X-2616**	4	SCREW-SOCKET (M8X1.25X16-MM)	
		1	**333-4179**	2	BOLT-SHOULDER (M10X1.5X26.2-MM)	
	3	1	**327-6643**	1	KIT-ADJUSTER (CUSHION POSITIONING)	
		1	**333-4180**	4	SCREW-BUTTON HEAD (M8X1.25X20-MM)	
J	4	1	**327-6649**	1	KIT-SEAT (HIGH BACK, WITH HEATER)	
		1	**178-5659**	1	HANDLE (LUMBAR SUPPORT ADJUSTER)	
		1	**333-4179**	2	BOLT-SHOULDER (M10X1.5X26.2-MM)	
					AVAILABLE REPAIR KIT(S):	
J			**327-6640**	1	KIT-HANDLE (RECLINER)	

J-KIT MARKED J SERVICES PART(S) MARKED J
M-METRIC PART

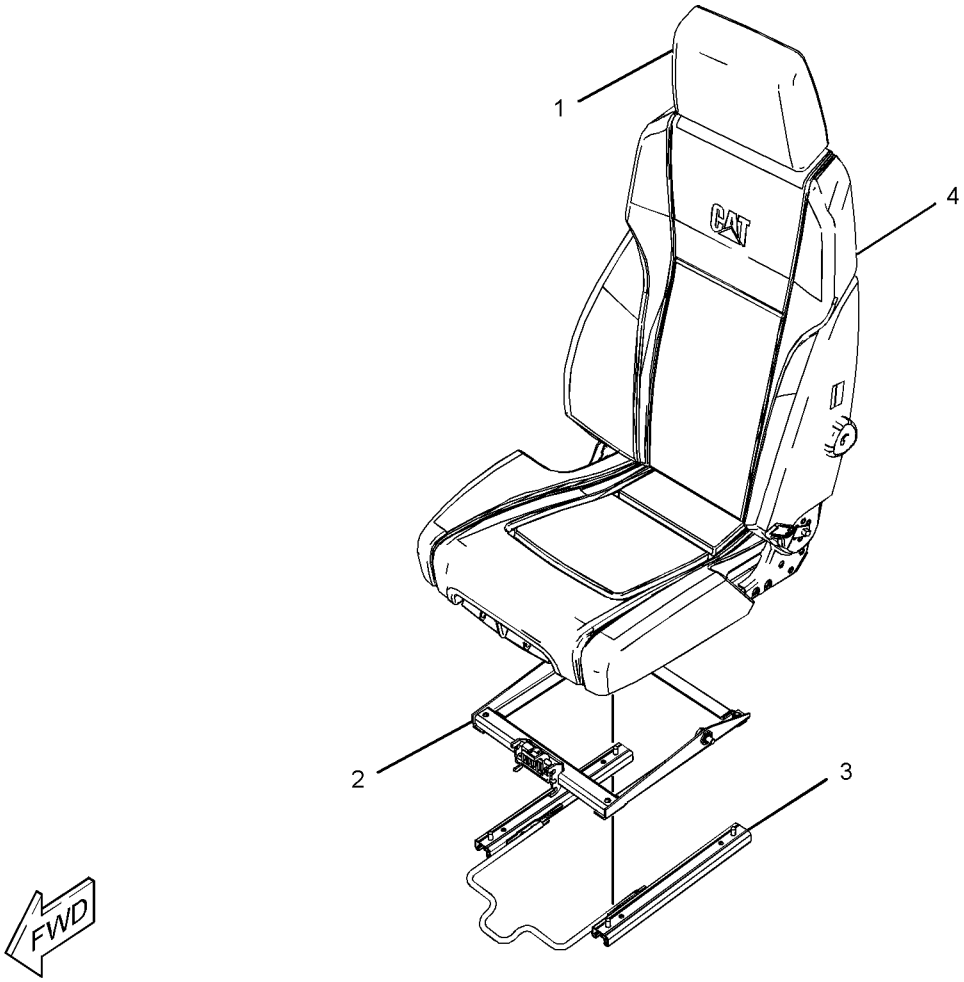

GRAPHIC #1 **<END>** g01641553

OPERATOR STATION

327-6507 SEAT GP-SUSPENSION—HIGH BACK, TILT

S/N: WNE1-UP; ZMF1-UP; CWG1-UP
PART OF 327-6501 SEAT & MOUNTING GP
AN ATTACHMENT

SMCS-7324, 7336 **i03303527**

NOTE	REF NO	GRAPHIC REF	PART NUMBER	QTY	PART NAME 1 2 3 4 5 6 (PRODUCT LEVEL)	SEE PAGE
	1	1	**316-8987**	2	BRACKET	
Y	2	1	**327-6512**	1	SEAT GP (HIGH BACK, TILT)	1091
Y	3	1	**327-6520**	1	SUSPENSION GP-SEAT (MECHANICAL)	1100
M	4	1	**5A-3604**	4	BOLT-SOCKET HEAD (M8X1.25X25-MM)	

M-METRIC PART
Y-SEPARATE ILLUSTRATION

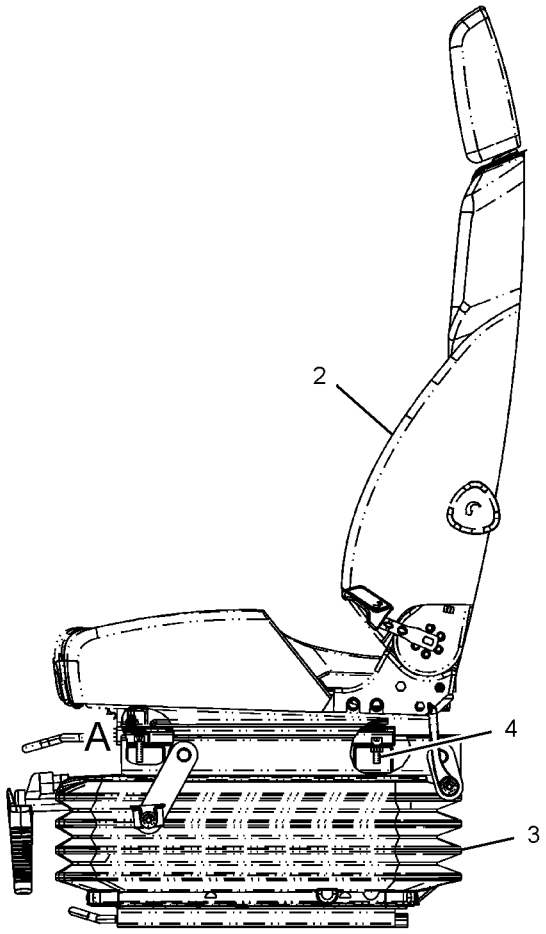

LEFT SIDE VIEW

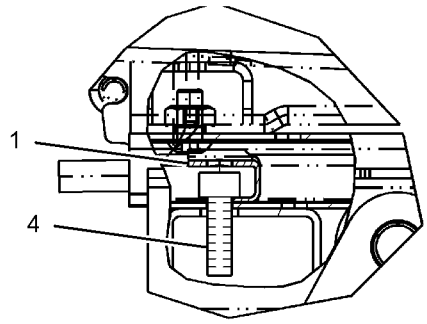

VIEW OF AREA A

GRAPHIC #1 **<END>** g01592076

OPERATOR STATION

327-6508 SEAT GP-SUSPENSION—HIGH BACK, TILT

S/N: CWG1-UP

PART OF 327-6502 SEAT & MOUNTING GP

AN ATTACHMENT

SMCS-7324, 7336 **i03213642**

NOTE	REF NO	GRAPHIC REF	PART NUMBER	QTY	PART NAME 1 2 3 4 5 6 (PRODUCT LEVEL)	SEE PAGE
	1	1	**316-8987**	2	BRACKET	
Y	2	1	**327-6512**	1	SEAT GP	1091
Y	3	1	**327-6521**	1	SUSPENSION GP-SEAT	1101
M	4	1	**5A-3604**	4	BOLT-SOCKET HEAD (M8X1.25X25-MM)	

M-METRIC PART
Y-SEPARATE ILLUSTRATION

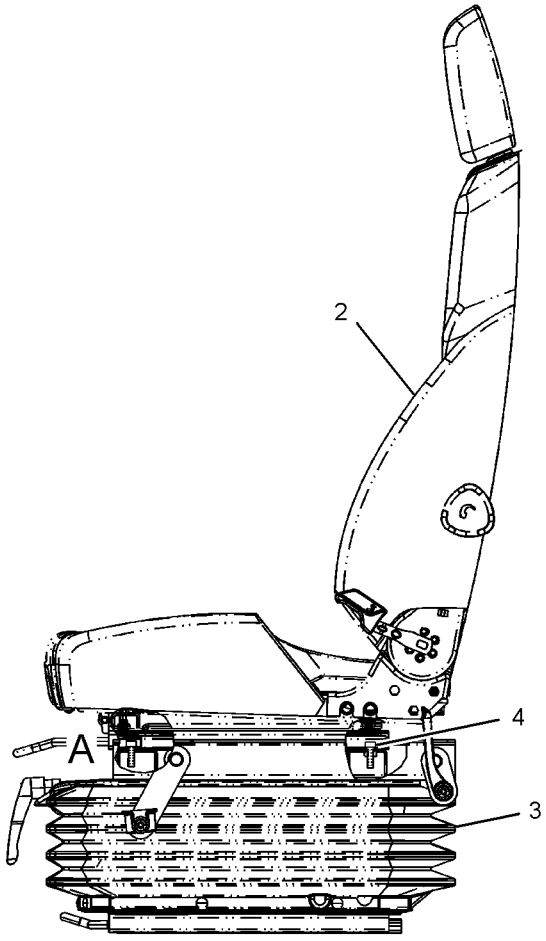

LEFT SIDE VIEW

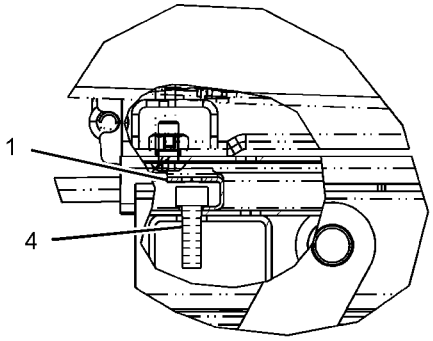

VIEW OF AREA A

GRAPHIC #1 **<END>** g01577953

OPERATOR STATION

327-6509 SEAT GP-SUSPENSION—HIGH BACK, WITH HEATER

S/N: WNE1-UP; ZMF1-UP; CWG1-UP
PART OF 327-6503 SEAT & MOUNTING GP
AN ATTACHMENT

SMCS-7324, 7336 **i03303529**

NOTE	REF NO	GRAPHIC REF	PART NUMBER	QTY	PART NAME 1 2 3 4 5 6 (PRODUCT LEVEL)	SEE PAGE
	1	1	**316-8987**	2	BRACKET	
Y	2	1	**327-6513**	1	SEAT GP (HIGH BACK, WITH HEATER)	1092
Y	3	1	**327-6521**	1	SUSPENSION GP-SEAT (AIR)	1101
M	4	1	**5A-3604**	4	BOLT-SOCKET HEAD (M8X1.25X25-MM)	
	5	1	**7I-2673**	1	STRAP-CABLE	

M-METRIC PART
Y-SEPARATE ILLUSTRATION

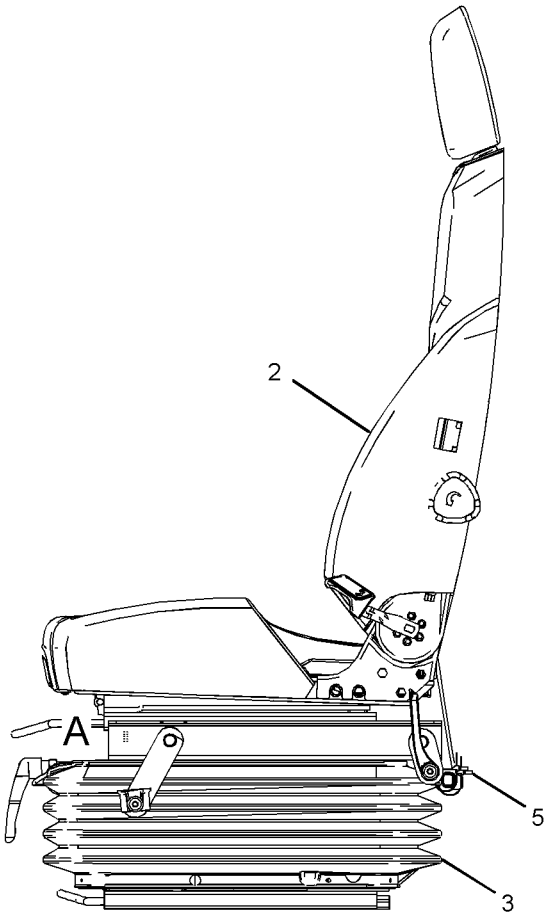

LEFT SIDE VIEW

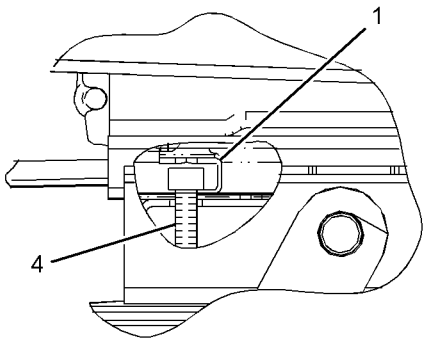

VIEW OF AREA A

GRAPHIC #1 **<END>** g01641377

OPERATOR STATION

334-6492 STRIKER GP-LATCH

S/N: WNE1-UP; ZMF1-UP; CWG1-UP
PART OF 327-6625 WINDOW GP-CAB
AN ATTACHMENT

SMCS-7301 **i03645087**

NOTE	REF NO	GRAPHIC REF	PART NUMBER	QTY	PART NAME 1 2 3 4 5 6 (PRODUCT LEVEL)	SEE PAGE
	1	1	**7Y-8561**	1	BUMPER	
	2	1	**178-5576**	1	STOP	
M	3	1	**185-8197**	2	NUT (M10X1.5-THD)	
	4	1	**334-6493**	1	SHEET AS	
	5	1	**334-6495**	2	STRIKER	
	6	1	**4I-3144**	2	WASHER-HARD (10.2X22X3.2-MM THK)	
M	7	1	**5C-2890**	4	NUT (M6X1-THD)	
	8	1	**9X-8256**	4	WASHER (6.6X12X2-MM THK)	

M-METRIC PART

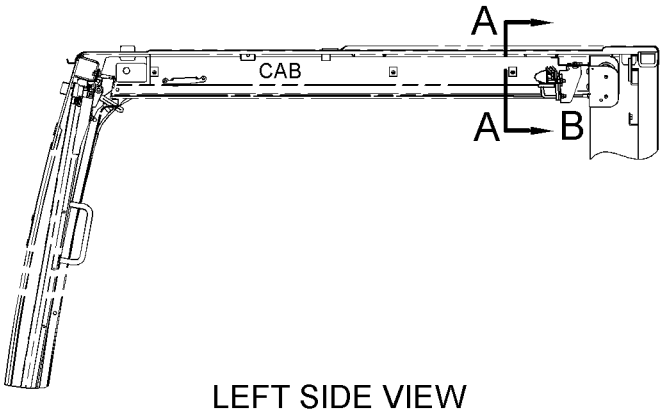

LEFT SIDE VIEW

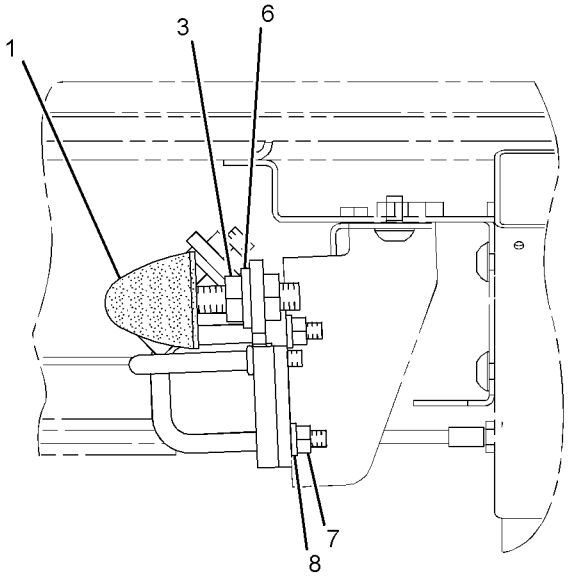

VIEW OF AREA B

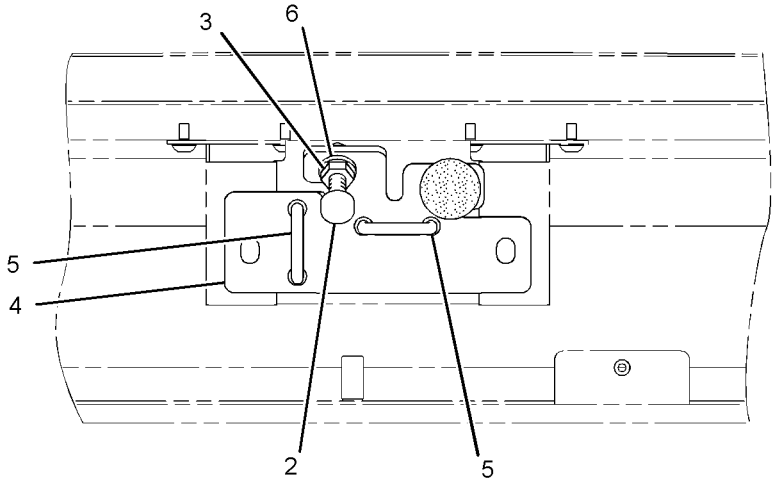

VIEW A-A

GRAPHIC #1 **<END>** g01958738

OPERATOR STATION

346-7437 SUPPORT AS–FILTER

S/N: WNE1-UP; ZMF1-UP; CWG1-UP
PART OF 340-6524 DUCT GP-CAB AIR
AN ATTACHMENT

SMCS-7320 **i03653662**

NOTE	REF NO	GRAPHIC REF	PART NUMBER	QTY	PART NAME 1 2 3 4 5 6 (PRODUCT LEVEL)	SEE PAGE
	1	1	**346-7427**	2	INSULATION	
	2	1	**346-7428**	2	INSULATION	
	3	1	**346-7429**	1	INSULATION	

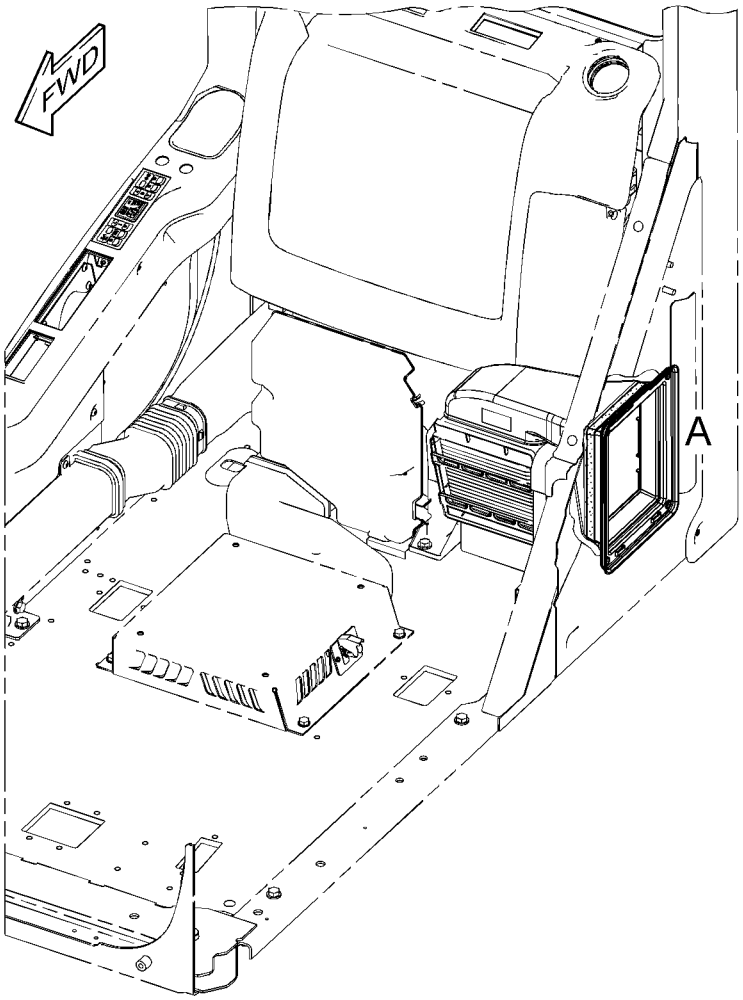

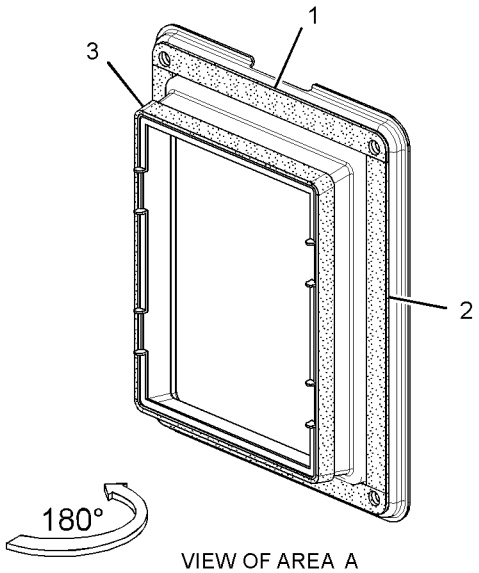

VIEW OF AREA A

GRAPHIC #1 **<END>** g01964853

OPERATOR STATION

327-6523 SUPPORT GP-SEAT

S/N: WNE1-UP; ZMF1-UP; CWG1-UP
PART OF 342-3617 OPERATOR AR

SMCS-7321 **i03467960**

NOTE	REF NO	GRAPHIC REF	PART NUMBER	QTY	PART NAME 1 2 3 4 5 6 (PRODUCT LEVEL)	SEE PAGE
	1	1	**327-6538**	1	SUPPORT AS-SEAT	
	2	1	**8T-4121**	4	WASHER-HARD (11X21X2.5-MM THK)	
M	3	1	**8T-4191**	4	BOLT (M10X1.5X16-MM)	

M-METRIC PART

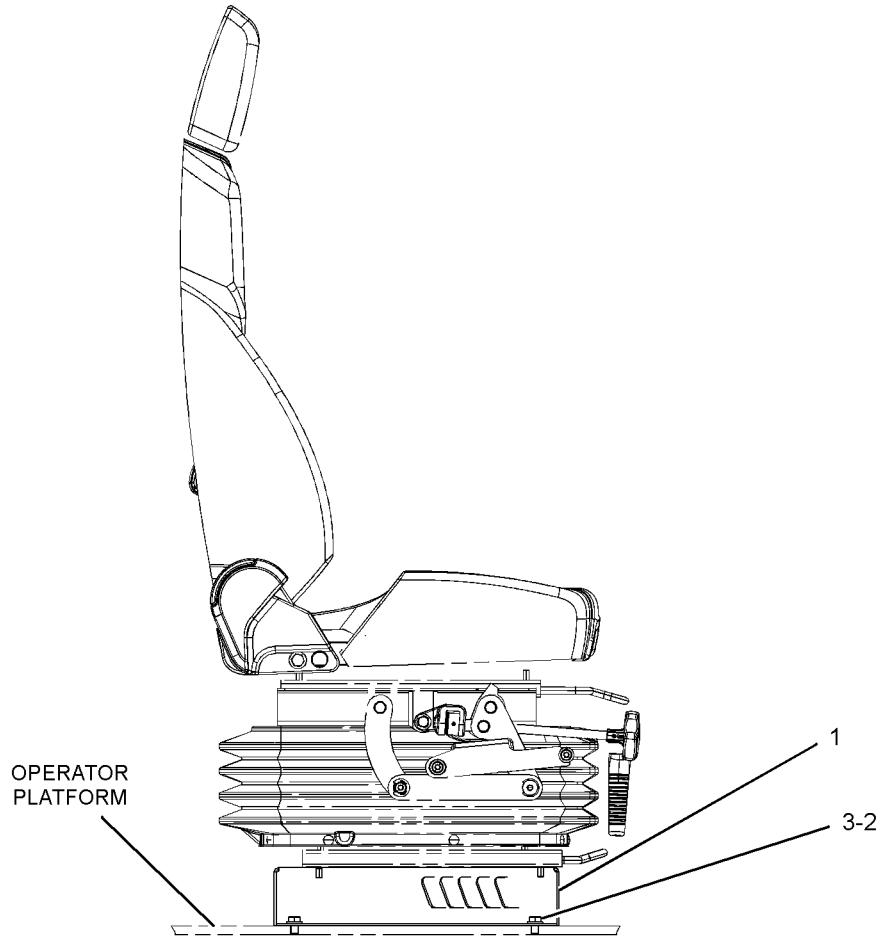

RIGHT SIDE VIEW

GRAPHIC #1 **<END>** g01809475

OPERATOR STATION

327-6520 SUSPENSION GP-SEAT—MECHANICAL

S/N: WNE1-UP; ZMF1-UP; CWG1-UP
PART OF 327-6507 SEAT GP-SUSPENSION
AN ATTACHMENT

SMCS-7324 **i03607485**

NOTE	REF NO	GRAPHIC REF	PART NUMBER	QTY	PART NAME 1 2 3 4 5 6 (PRODUCT LEVEL)	SEE PAGE
	1	1	**327-6644**	1	KIT-BRACKET (CONSOLE RAISE, LOWER)	
M		1	**7Y-7394**	4	SCREW-BUTTON HEAD (M8X1.25X25-MM)	
Y	2	1	**327-6645**	1	KIT-SEAT SUSPENSION (MECHANICAL)	1047
	3	1	**327-6648**	1	KIT-ADJUSTER (SEAT POSITION)	
		1	**333-4180**	6	SCREW-BUTTON HEAD (M8X1.25X20-MM)	

M-METRIC PART
Y-SEPARATE ILLUSTRATION

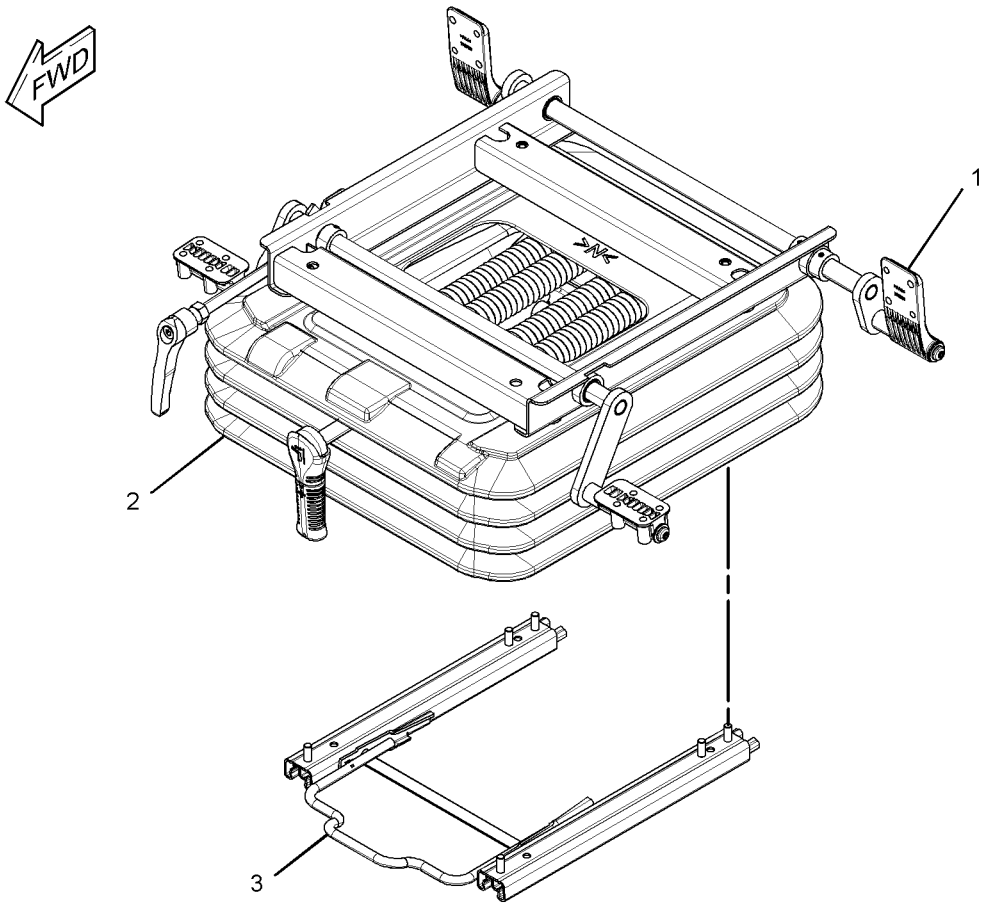

GRAPHIC #1 **<END>** g01637856

OPERATOR STATION

327-6521 SUSPENSION GP-SEAT–AIR

S/N: WNE1-UP; ZMF1-UP; CWG1-UP
PART OF 327-6508, 327-6509 SEAT GP-SUSPENSION
AN ATTACHMENT

SMCS-7324 **i03675617**

NOTE	REF NO	GRAPHIC REF	PART NUMBER	QTY	PART NAME 1 2 3 4 5 6 (PRODUCT LEVEL)	SEE PAGE
	1	1	**7I-2673**	1	STRAP-CABLE	
	2	1	**327-6644**	1	KIT-BRACKET (CONSOLE RAISE, LOWER)	
M		1	**7Y-7394**	4	SCREW-BUTTON HEAD (M8X1.25X25-MM)	
	3	1	**327-6648**	1	KIT-ADJUSTER (SEAT POSITION)	
		1	**316-8987**	2	BRACKET	
		1	**333-4180**	6	SCREW-BUTTON HEAD (M8X1.25X20-MM)	
Y	4	1	**333-4157**	1	KIT-SEAT SUSPENSION (AIR)	1048

M-METRIC PART
Y-SEPARATE ILLUSTRATION

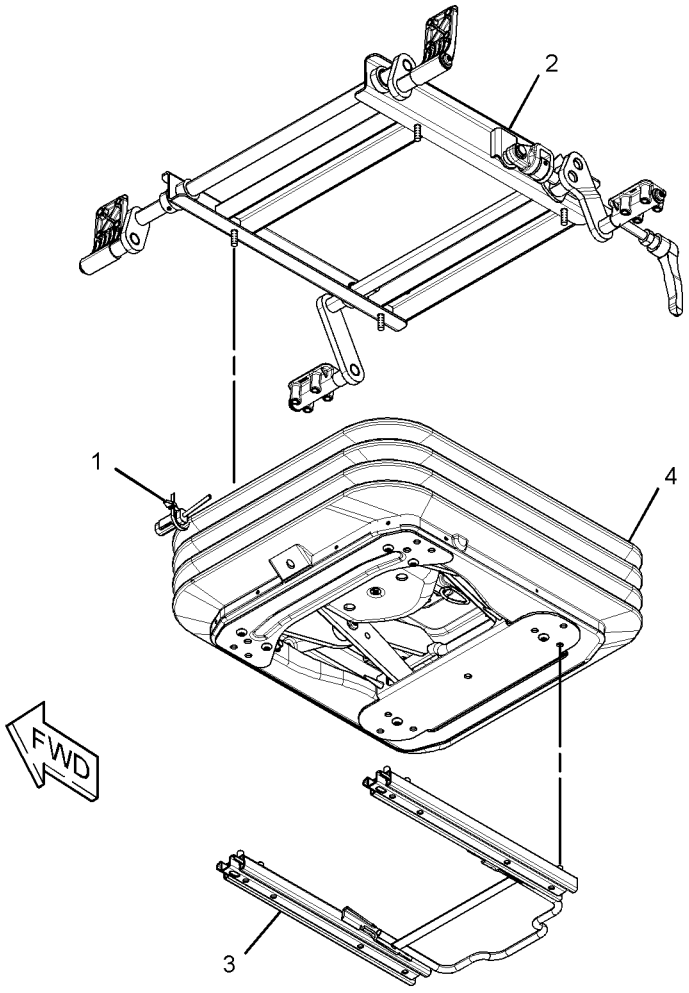

GRAPHIC #1 **<END>** g01637857

OPERATOR STATION

340-6693 TRIM GP-CAB—INTERIOR

S/N: WNE1-UP; ZMF1-UP; CWG1-UP
PART OF 340-6497 CAB GP
AN ATTACHMENT

SMCS-7301, 7329 **i03645065**

NOTE	REF NO	GRAPHIC REF	PART NUMBER	QTY	PART NAME 1 2 3 4 5 6 (PRODUCT LEVEL)	SEE PAGE
Y	1	1	*340-6729*	1	TRIM GP-CAB (INTERIOR, REAR)	1103
Y	2	1	*340-6731*	1	TRIM GP-CAB (INTERIOR, RH)	1104

Y-SEPARATE ILLUSTRATION

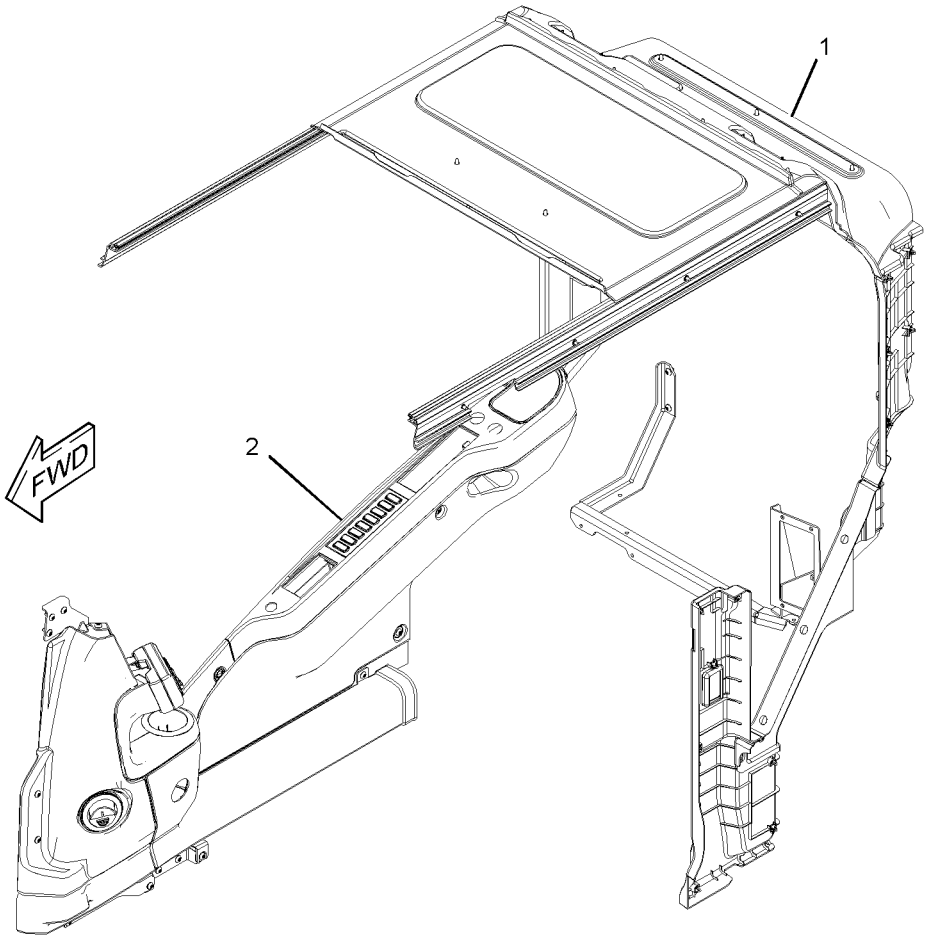

GRAPHIC #1 **<END>** g01957894

OPERATOR STATION

340-6729 TRIM GP-CAB—INTERIOR, REAR

S/N: WNE1-UP; ZMF1-UP; CWG1-UP
PART OF 340-6693 TRIM GP-CAB
AN ATTACHMENT

SMCS-7301, 7329 **i03645168**

NOTE	REF NO	GRAPHIC REF	PART NUMBER	QTY	PART NAME 1 2 3 4 5 6 (PRODUCT LEVEL)	SEE PAGE
M	1	1	**128-2135**	8	SCREW-TRUSS HEAD (M6X1X13-MM)	
M	2	1	**171-7325**	8	SCREW-TAPPING (M5X0.8-THD)	
	3	1	**185-8205**	17	CLIP	
	4	1	**234-6477**	1	BRACKET AS	
	5	1	**235-8914**	8	NUT-SPEED	
	6	1	**327-6476**	1	COVER	
	7	1	**327-6477**	1	RAIL	
	8	1	**327-6478**	1	RAIL	
	9	1	**327-6480**	1	COVER	
	10	1	**333-4353**	2	COVER	
	11	1	**340-6742**	1	COVER	
	12	1	**342-3745**	1	COVER AS	
		1	**170-9724**	5	CLIP	
	13	1	**342-3746**	1	COVER AS	
		1	**170-9724**	5	CLIP	
	14	1	**342-3747**	1	COVER AS	
		1	**170-9724**	7	CLIP	
M	15	1	**9X-2042**	4	SCREW-TRUSS HEAD (M6X1X12-MM)	

M-METRIC PART

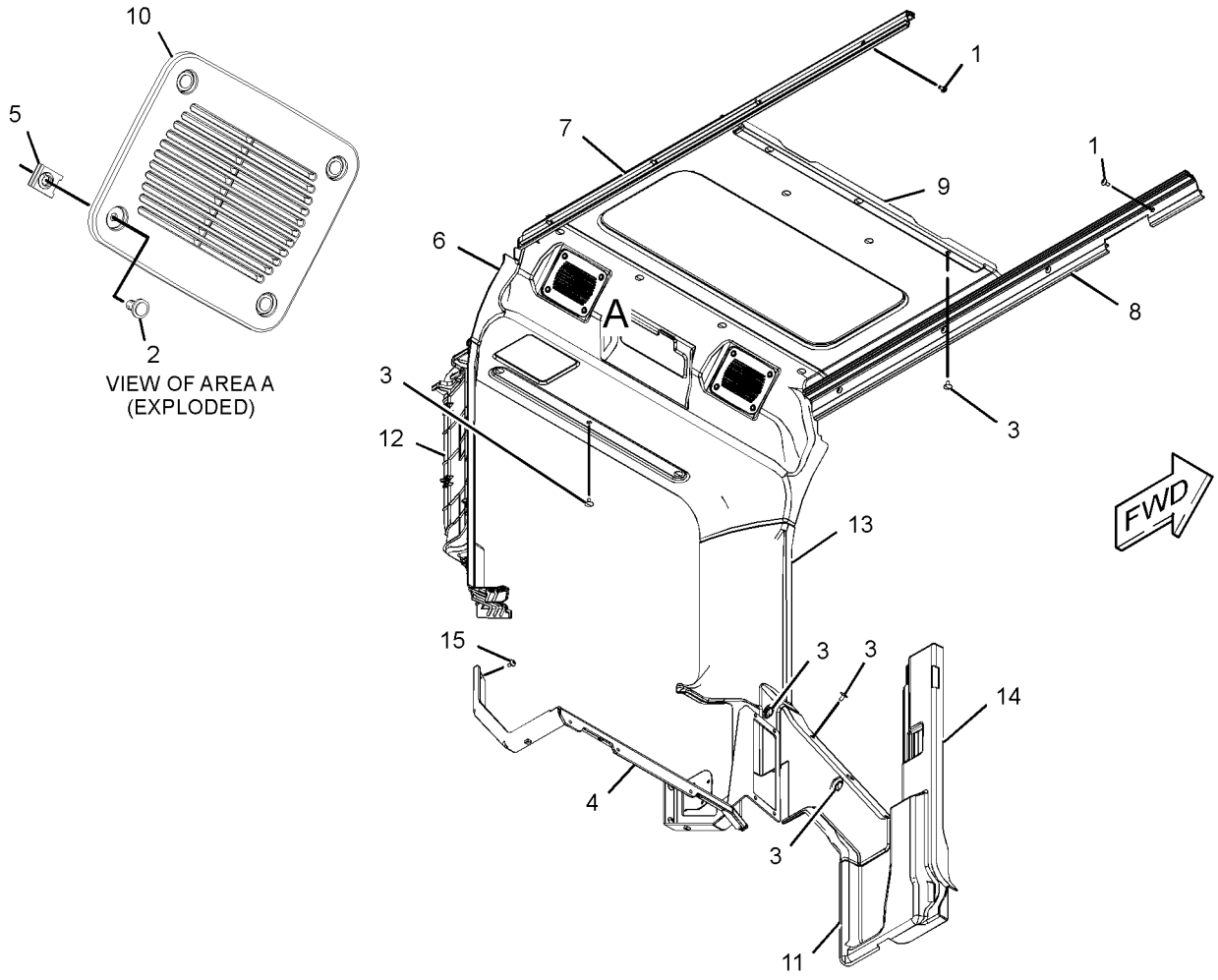

GRAPHIC #1 **<END>** g01958039

OPERATOR STATION

340-6731 TRIM GP-CAB—INTERIOR, RH

S/N: WNE1-UP; ZMF1-UP; CWG1-UP
PART OF 340-6693 TRIM GP-CAB
AN ATTACHMENT

SMCS-7301, 7329 **i03645169**

NOTE	REF NO	GRAPHIC REF	PART NUMBER	QTY	PART NAME 1 2 3 4 5 6 (PRODUCT LEVEL)	SEE PAGE
	1	1	**8Y-6352**	1	LOUVER AS	
	2	1	**164-0646**	1	CUP	
	3	1	**164-0655**	1	PANEL-SWITCH (OPERATOR CONSOLE)	
	4	1	**164-8474**	2	LOUVER AS-VENT	
	5	1	**234-6469**	1	COVER	
	6	1	**234-6470**	1	COVER-MONITOR	
	7	1	**234-6471**	1	COVER-DUCT	
	8	1	**234-6473**	1	COVER-FRONT (UPPER, RH)	
	9	1	**234-6474**	1	COVER (UPPER, RH)	
	10	1	**234-6476**	1	DUCT	
	11	1	**234-6480**	1	BRACKET AS	
	12	1	**234-6483**	1	BRACKET AS	
	13	1	**234-6485**	1	BRACKET AS	
	14	1	**234-6490**	1	CUP	
	15	1	**234-6497**	1	COVER	
	16	1	**234-6498**	3	RIVET	
	17	1	**234-6579**	2	NUT-SPEED	
	18	1	**235-8923**	2	CAP	
	19	1	**245-7790**	2	SCREW-TAPPING	
	20	1	**305-0330**	1	COVER (LOWER, RH)	
	21	1	**305-0333**	1	BRACKET	
	22	1	**340-6732**	1	BRACKET AS	
	23	1	**340-6734**	1	BRACKET AS	
	24	1	*340-6736*	1	COVER GP-CAB	
		1	**259-7353**	4	CLIP	
		1	**340-6737**	1	COVER AS (CAB)	
	25	1	**340-6738**	1	COVER	
	26	1	**340-6739**	1	COVER	
	27	1	**340-6740**	1	BRACKET AS	
M	28	1	**128-2135**	10	SCREW-TRUSS HEAD (M6X1X13-MM)	
M	29	1	**128-2136**	2	SCREW-TRUSS HEAD (M6X1X16-MM)	
M	30	1	**9X-2042**	20	SCREW-TRUSS HEAD (M6X1X12-MM)	
M	31	1	**9X-2044**	4	SCREW-TRUSS HEAD (M6X1X16-MM)	

M-METRIC PART

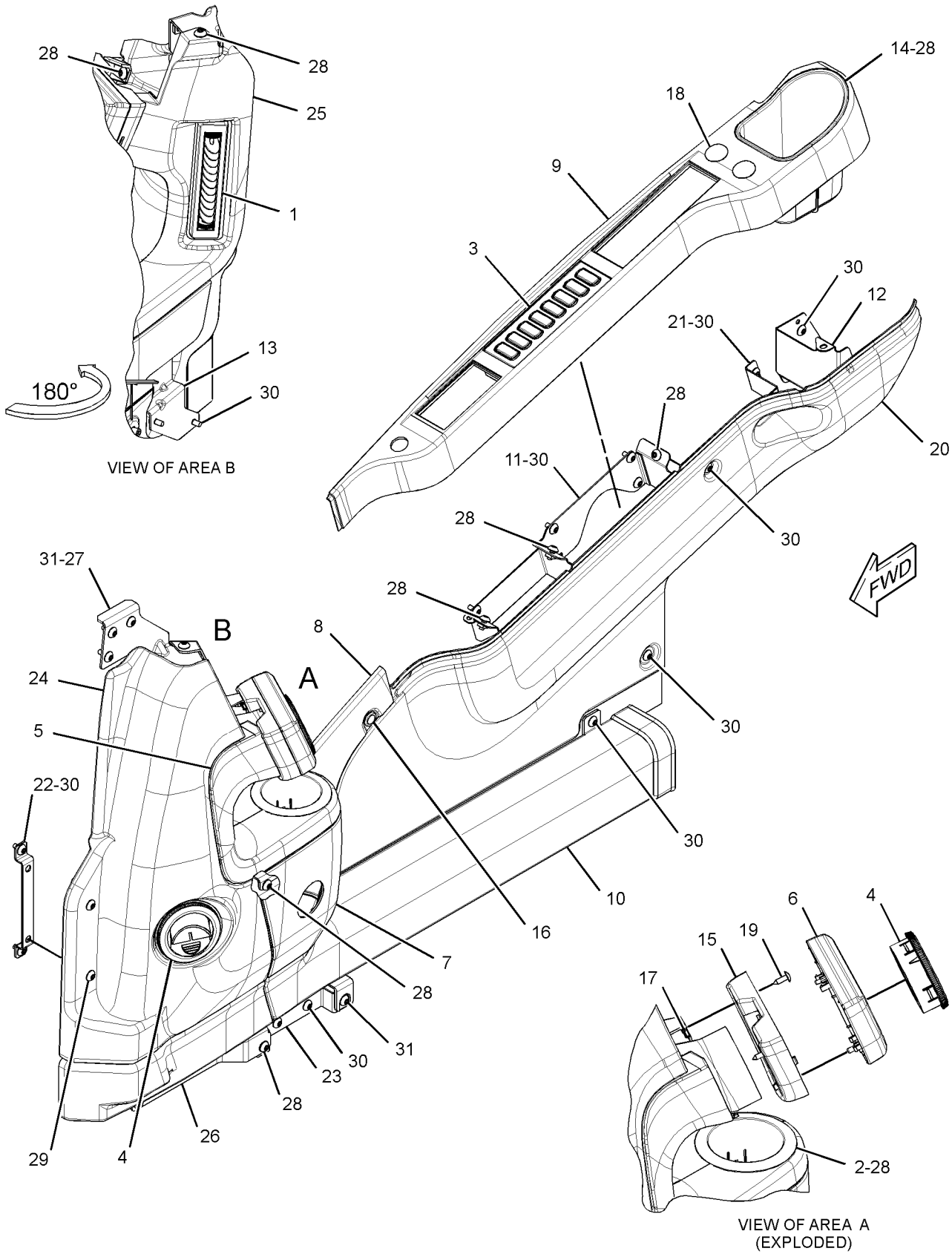

GRAPHIC #1 **<END>** g01958575

OPERATOR STATION

336-1140 VISOR GP-CAB—SUN

S/N: WNE1-UP; ZMF1-UP; CWG1-UP

AN ATTACHMENT

SMCS-7301 **i03646914**

NOTE	REF NO	GRAPHIC REF	PART NUMBER	QTY	PART NAME 1 2 3 4 5 6 (PRODUCT LEVEL)	SEE PAGE
	1	1	**210-5829**	2	BOLT	
	2	1	**210-5834**	1	BRACKET AS	
	3	1	**210-5837**	2	STRIP	
	4	1	**210-5838**	4	PACKING	
	5	1	**336-1141**	1	BRACKET AS	
	6	1	**336-1144**	1	PLATE	
	7	1	**336-1145**	1	PLATE	
	8	1	**336-1146**	1	VISOR	
M	9	1	**7X-2534**	2	BOLT (M6X1X50-MM)	
	10	1	**8H-3481**	2	LOCKWASHER	
M	11	1	**9X-2044**	8	SCREW-TRUSS HEAD (M6X1X16-MM)	
	12	1	**9X-8256**	4	WASHER (6.6X12X2-MM THK)	

M-METRIC PART

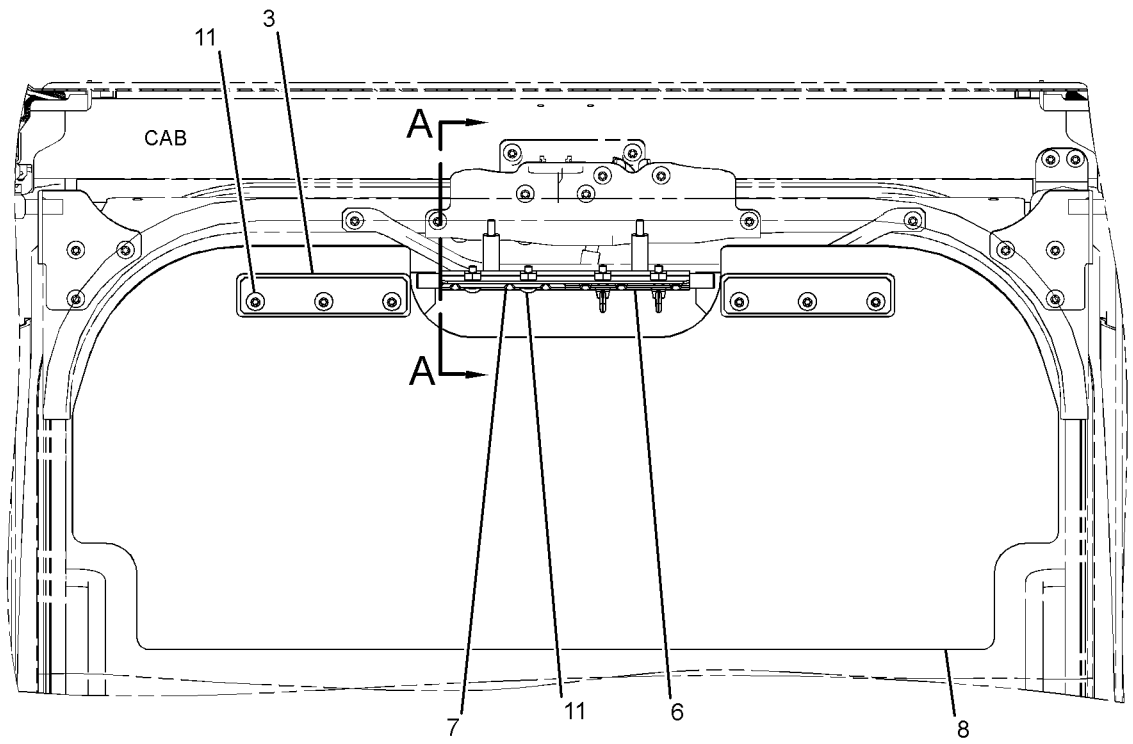

REAR VIEW

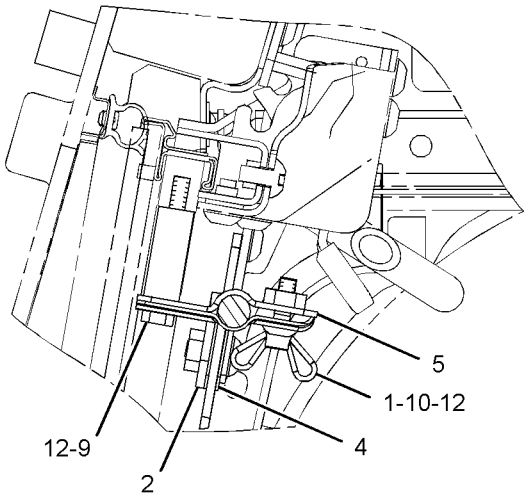

SECTION A-A

GRAPHIC #1 **<END>** g01959180

OPERATOR STATION

316-8838 VISOR GP-PROTECTION—RAIN

S/N: WNE1-UP; ZMF1-UP; CWG1-UP
CANNOT BE USED WITH FALLING OBJECT GUARDS
AN ATTACHMENT

SMCS-7340 **i03633358**

NOTE	REF NO	GRAPHIC REF	PART NUMBER	QTY	PART NAME 1 2 3 4 5 6 (PRODUCT LEVEL)	SEE PAGE
M	1	1	**4I-5049**	6	NUT-SPACER (M6X1-THD)	
	2	1	**327-6437**	1	VISOR	
	3	1	**327-6438**	1	BRACKET AS	
M	4	1	**6V-7357**	6	BOLT (M6X1X25-MM)	
	5	1	**8T-4121**	4	WASHER-HARD (11X21X2.5-MM THK)	
M	6	1	**8T-4191**	4	BOLT (M10X1.5X16-MM)	
	7	1	**9X-8256**	6	WASHER (6.6X12X2-MM THK)	
D	8	1	**5P-8309**	1	SEAL (1.4-M)	

D-ORDER BY THE METER
M-METRIC PART

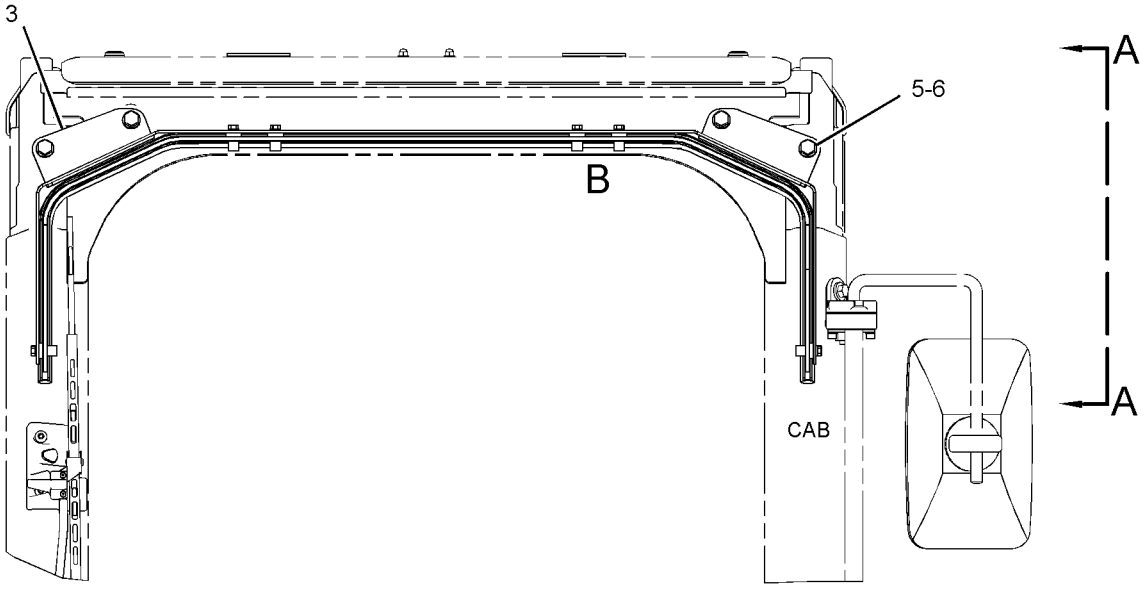

FRONT VIEW

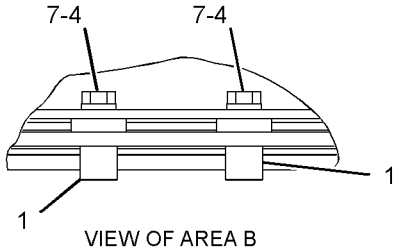

VIEW OF AREA B

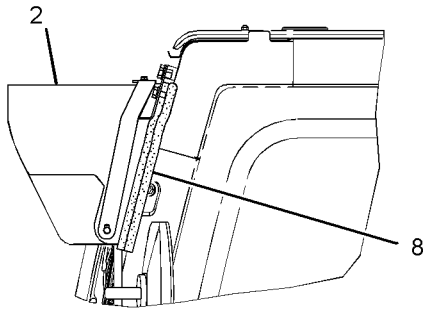

VIEW A-A

GRAPHIC #1 **<END>** g01950131

OPERATOR STATION

340-6507 WASHER GP-WINDOW—LOWER

S/N: WNE1-UP; ZMF1-UP; CWG1-UP
PART OF 340-6506 INSTALLATION AR
AN ATTACHMENT

SMCS-7306 **i03645179**

NOTE	REF NO	GRAPHIC REF	PART NUMBER	QTY	PART NAME 1 2 3 4 5 6 (PRODUCT LEVEL)	SEE PAGE
	1	1	**3S-2093**	4	STRAP-CABLE	
	2	1	**293-1256**	1	VALVE AS-CHECK	
	3	1	**340-6761**	1	TANK AS-WINDOW WASHER	
		1	**5C-8138**	2	GROMMET	
		1	**7T-8890**	2	PUMP AS-WASHER	
		1	**178-5431**	1	CAP AS (WINDOW WASHER)	
		1	**3W-6399**	1	PACKING	
	4	1	**342-3541**	1	BRACKET AS	
	5	1	**342-3544**	1	BRACKET AS	
M	6	1	**5C-9553**	2	BOLT (M6X1X16-MM)	
	7	1	**6V-3265**	1	CLIP	
	8	1	**7Y-3474**	1	VALVE AS-CHECK (WINDOW WASHER)	
	9	1	**8T-4121**	12	WASHER-HARD (11X21X2.5-MM THK)	
M	10	1	**8T-4191**	12	BOLT (M10X1.5X16-MM)	
	11	1	**9K-0700**	1	GROMMET	
	12	1	**9X-8256**	2	WASHER (6.6X12X2-MM THK)	
	13	1	**9X-8582**	7	CLIP	
E	14	1	**144-0195**		HOSE (545-CM)	

E-ORDER BY THE CENTIMETER
M-METRIC PART

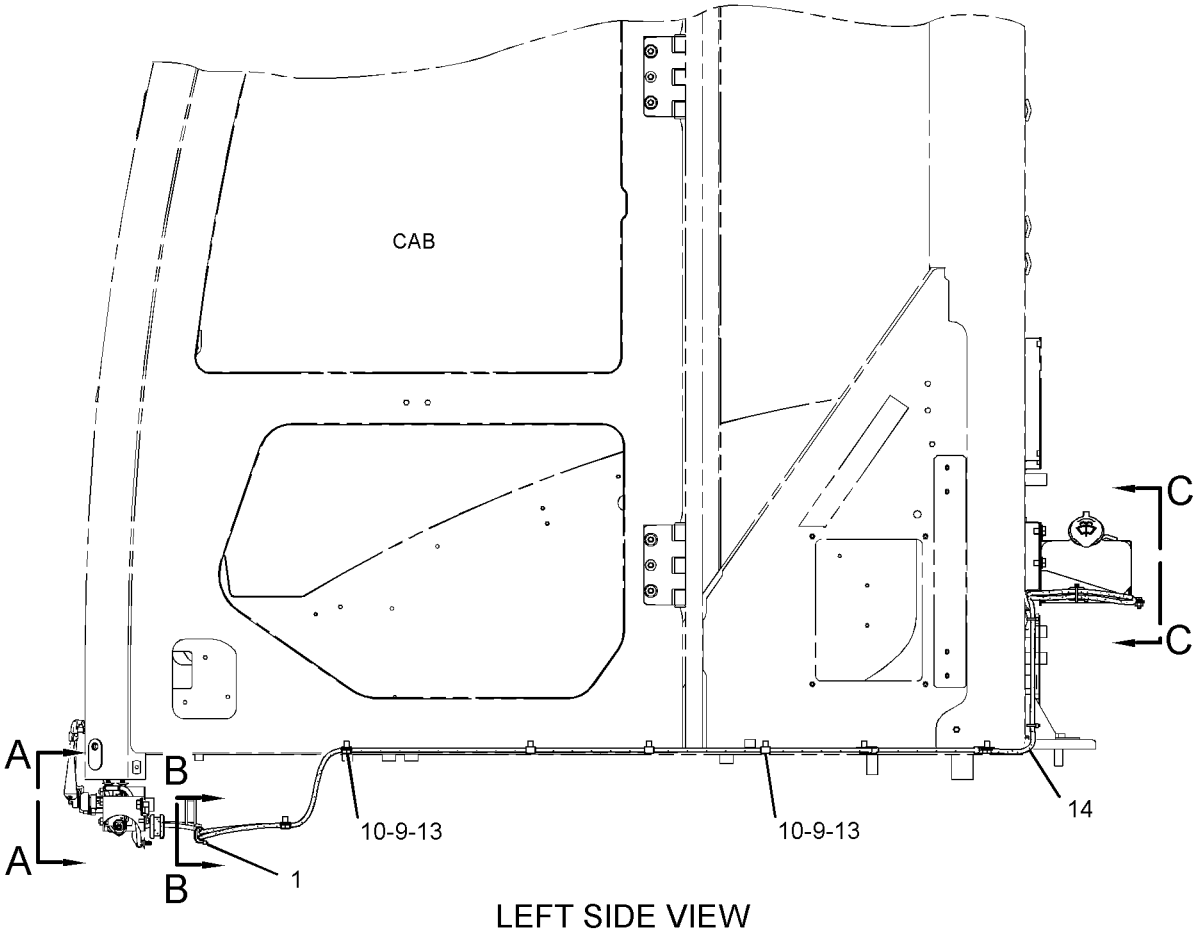

LEFT SIDE VIEW

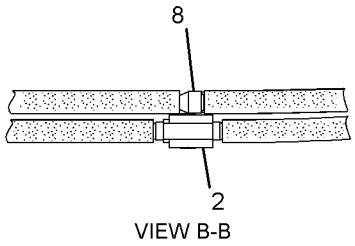

VIEW B-B

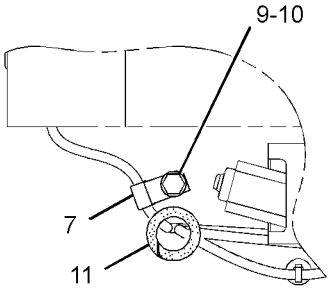

VIEW A-A

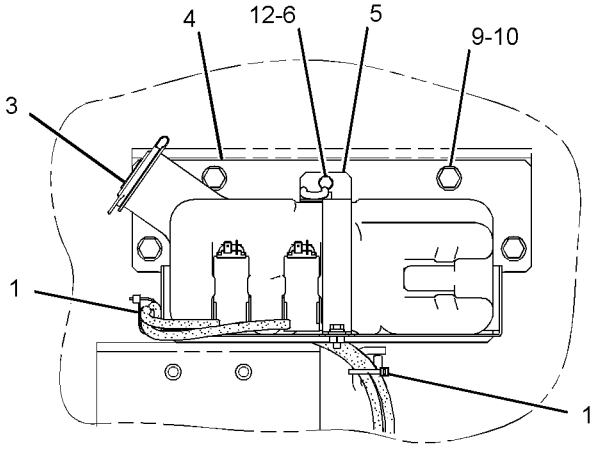

VIEW C-C

GRAPHIC #1 **<END>** g01959652

OPERATOR STATION

327-6625 WINDOW GP-CAB

S/N: WNE1-UP; ZMF1-UP; CWG1-UP
PART OF 340-6497 CAB GP
AN ATTACHMENT

SMCS-7310 **i03645044**

NOTE	REF NO	GRAPHIC REF	PART NUMBER	QTY	PART NAME 1 2 3 4 5 6 (PRODUCT LEVEL)	SEE PAGE
	1	1	**151-9557**	2	STOP-RUBBER	
M	2	1	**6V-5210**	2	SCREW-MACHINE (M4X0.7X10-MM)	
Y	3	1	**334-6388**	1	WINDOW GP-FRONT	1116
Y	4	1	*334-6492*	1	STRIKER GP-LATCH (WINDOW)	1096
	5	1	**334-6497**	1	SHEET AS	
	6	1	**334-6499**	1	BRACKET AS	
	7	1	**334-6501**	1	STRIKER AS	
	8	1	**334-6504**	1	SHIM	
	9	1	**334-6505**	1	BRACKET AS	
	10	1	**334-6507**	1	SEAL AS (WINDOW)	
	11	1	**334-6508**	1	CABLE AS	
	12	1	**334-6509**	1	GUIDE AS	
M	13	1	**099-2374**	1	BOLT-SOCKET HEAD (M5X0.8X12-MM)	
	14	1	**117-6306**	1	SWITCH (WINDOW POSITION)	
M	15	1	**9X-2041**	2	SCREW-TRUSS HEAD (M10X1.5X20-MM)	
M	16	1	**9X-2042**	12	SCREW-TRUSS HEAD (M6X1X12-MM)	

M-METRIC PART
Y-SEPARATE ILLUSTRATION

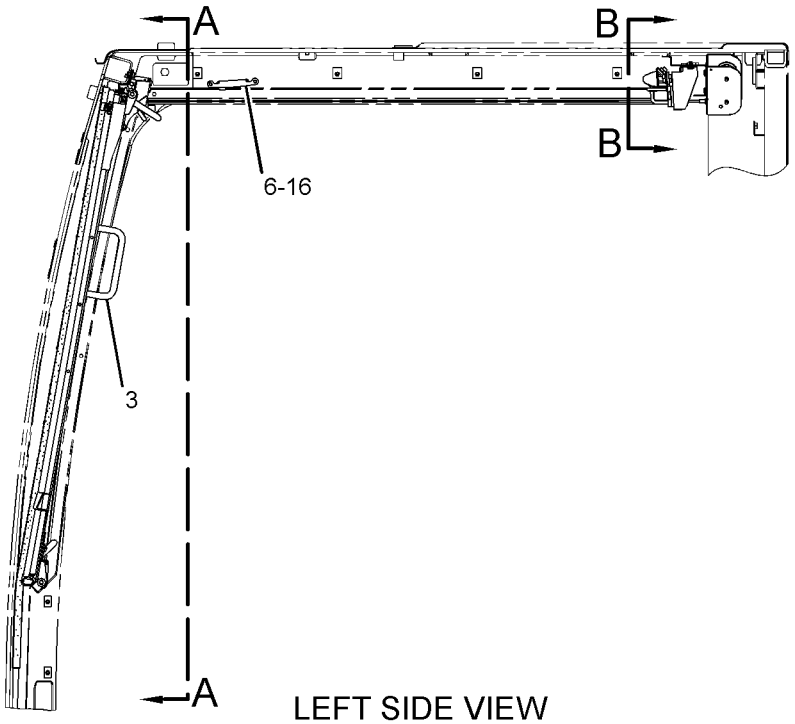

LEFT SIDE VIEW

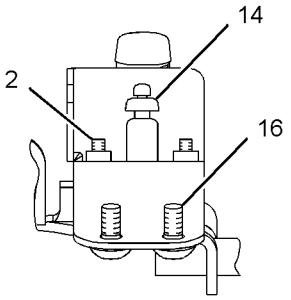

VIEW D-D

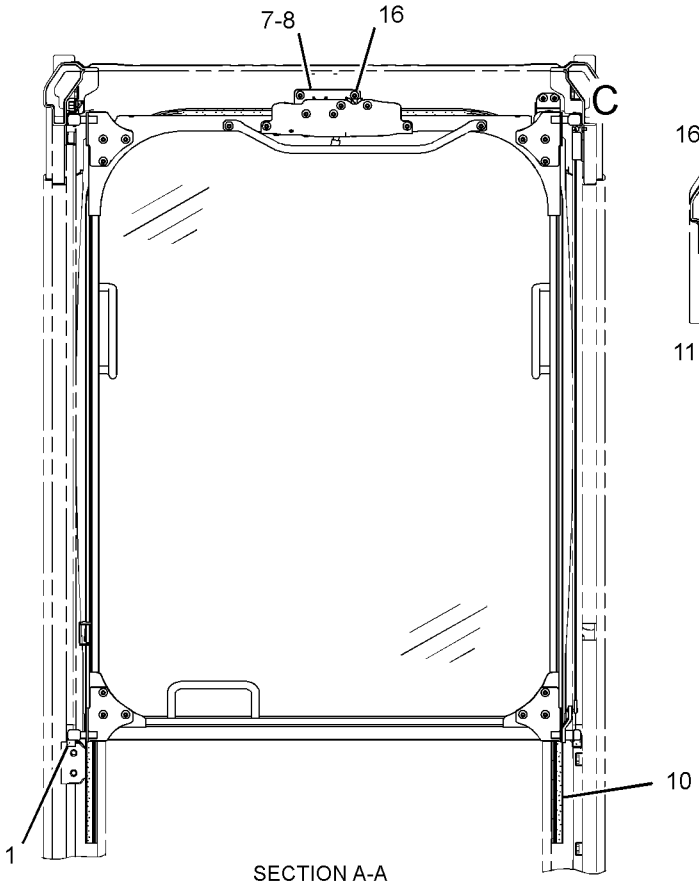

SECTION A-A

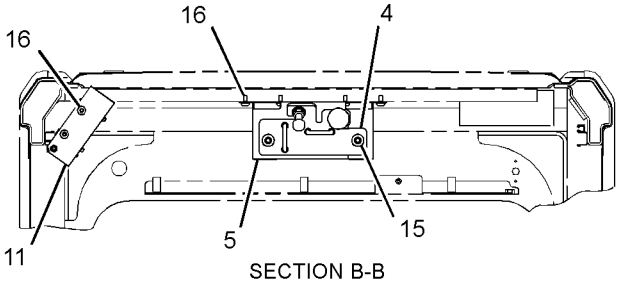

SECTION B-B

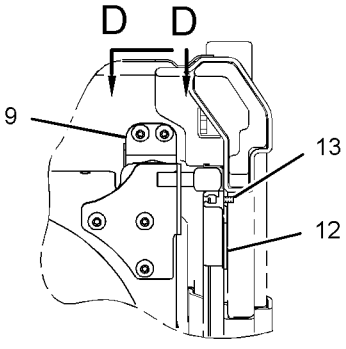

VIEW OF AREA C

GRAPHIC #1 **<END>** g01960896

OPERATOR STATION

340-6695 WINDOW GP-CAB

S/N: WNE1-UP; ZMF1-UP; CWG1-UP
PART OF 340-6497 CAB GP
AN ATTACHMENT

SMCS-7310 **i03645067**

NOTE	REF NO	GRAPHIC REF	PART NUMBER	QTY	PART NAME 1 2 3 4 5 6 (PRODUCT LEVEL)	SEE PAGE
	1	1	**139-7119**	2	PLUG	
	2	1	**156-6631**	2	STOP	
	3	1	**178-5572**	6	SPACER	
	4	1	**340-6624**	1	GLASS	
	5	1	**340-6625**	1	GLASS	
	6	1	**340-6626**	1	GLASS	
	7	1	**340-6627**	1	SEAL	
	8	1	**340-6727**	1	SEAL	
	9	1	**340-6728**	2	SEAL	
	10	1	**099-3629**	1	RING-KEY	
	11	1	**178-5574**	7	SPACER	

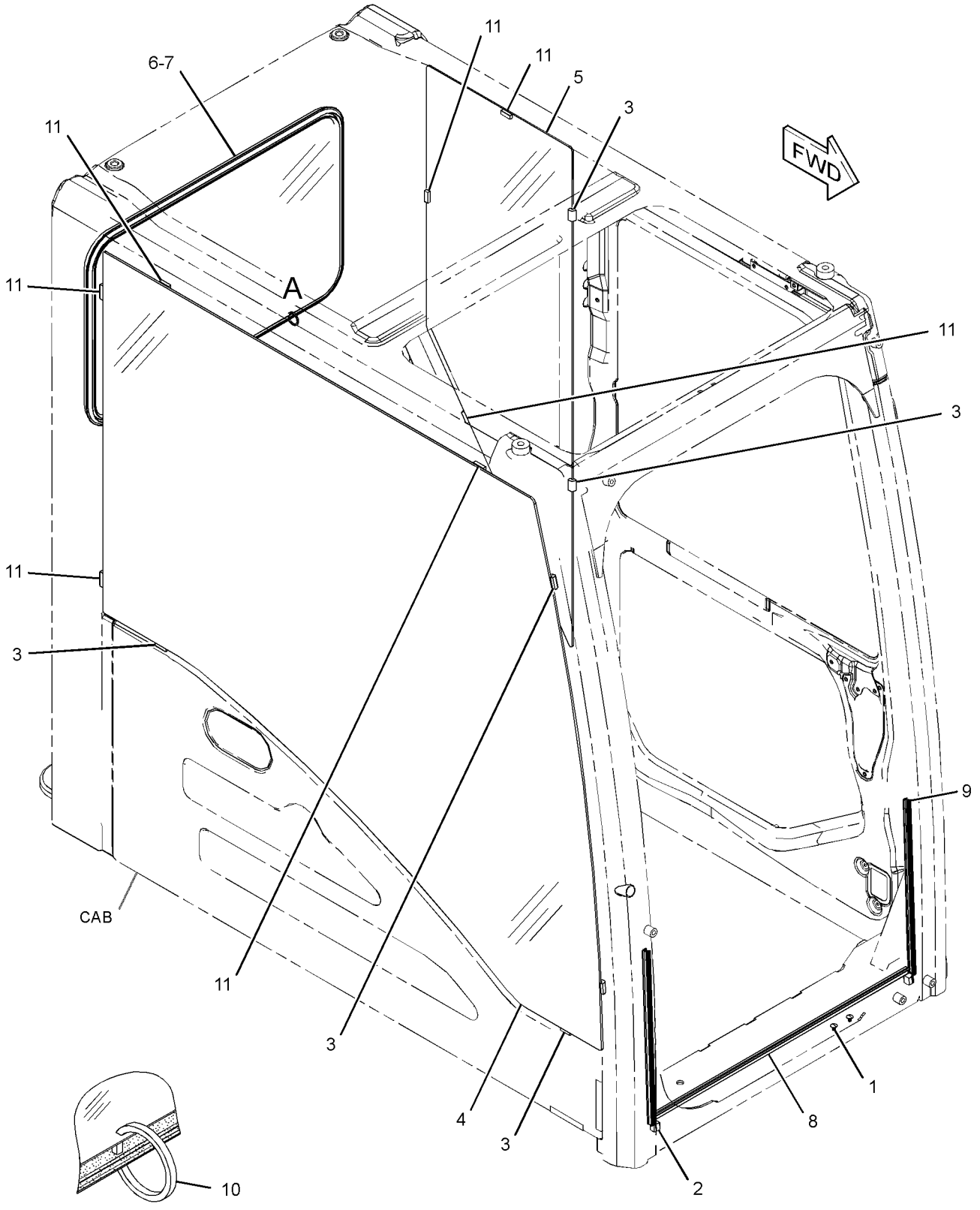

VIEW OF AREA A

GRAPHIC #1 **<END>** g01958284

OPERATOR STATION

334-6513 WINDOW GP-DOOR

S/N: WNE1-UP; ZMF1-UP; CWG1-UP
PART OF 334-6387 DOOR GP-CAB
AN ATTACHMENT

SMCS-7308, 7310 **i03645091**

NOTE	REF NO	GRAPHIC REF	PART NUMBER	QTY	PART NAME 1 2 3 4 5 6 (PRODUCT LEVEL)	SEE PAGE
	1	1	**164-0517**	1	RUBBER	
	2	1	**334-6514**	1	FRAME AS-WINDOW	
		1	**4I-4298**	1	STOPPER	
		1	**4I-4300**	1	CATCH	
		1	**099-0139**	3	RIVET	
	3	1	**334-6519**	1	SEAL	
	4	1	**334-6520**	1	SEAL	
	5	1	**334-6521**	1	SEAL	
	6	1	**334-6522**	1	SPACER-RUBBER (WINDOW)	
	7	1	**334-6523**	1	SPACER-RUBBER (WINDOW)	
	8	1	**334-6524**	1	GLASS	
	9	1	**334-6525**	1	GLASS	
Y	10	1	**085-6444**	2	LATCH GP-FRONT WINDOW	1049

Y-SEPARATE ILLUSTRATION

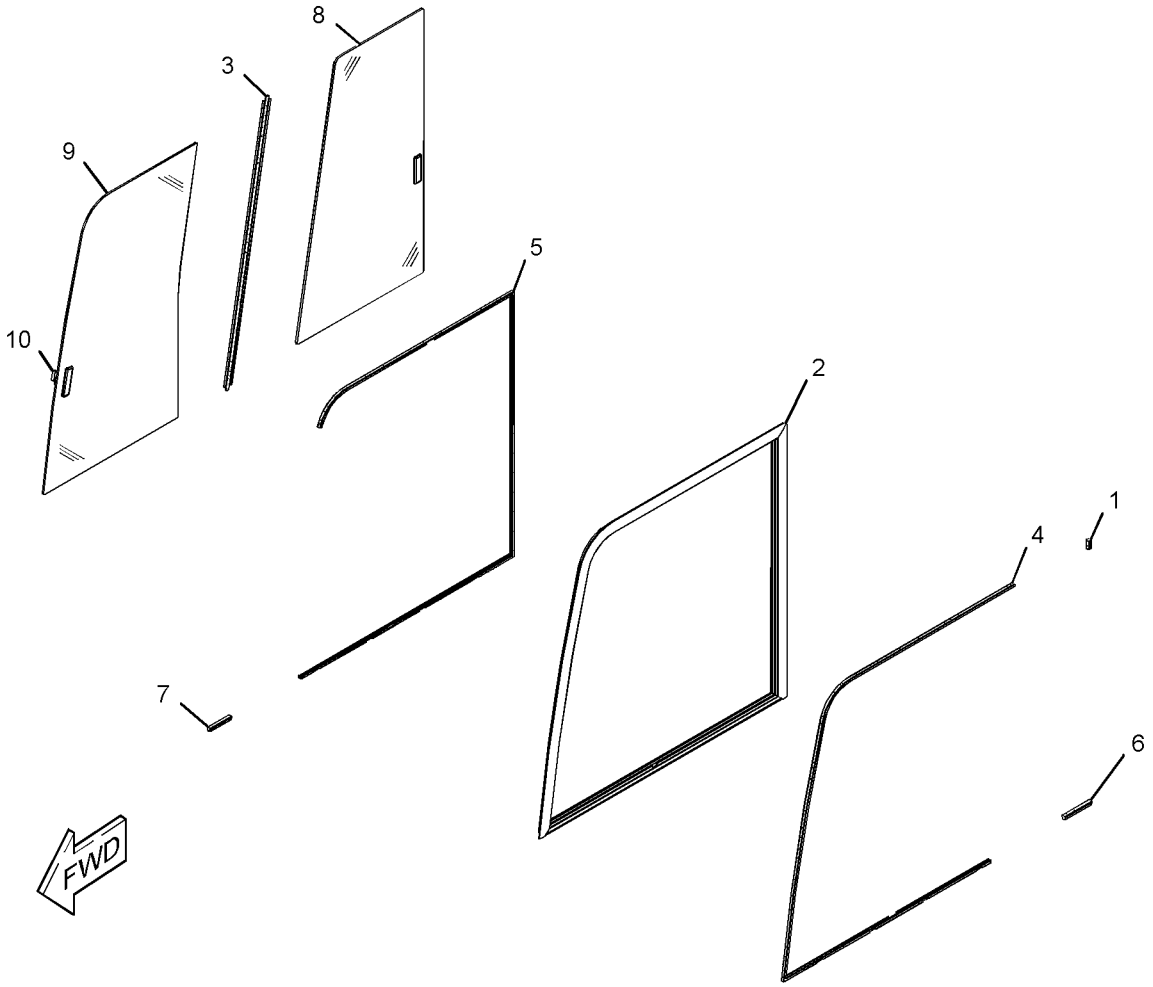

GRAPHIC #1 **<END>** g01960434

OPERATOR STATION

334-6388 WINDOW GP-FRONT

S/N: WNE1-UP; ZMF1-UP; CWG1-UP
PART OF 327-6625 WINDOW GP-CAB
AN ATTACHMENT

SMCS-7340 **i03645714**

NOTE	REF NO	GRAPHIC REF	PART NUMBER	QTY	PART NAME 1 2 3 4 5 6 (PRODUCT LEVEL)	SEE PAGE
	1	1	**151-6813**	1	BRACKET AS	
	2	1	**161-3698**	1	SEAL	
	3	1	**185-8221**	2	STOP	
	4	1	**334-6389**	1	FRAME AS-WINDOW	
	4A	1	**156-6470**	1	HANDLE	
	4B	1	**334-6469**	1	SEAL	
	4C	1	**334-6478**	2	HANDLE	
	5	1	**334-6479**	1	BRACKET AS	
	6	1	**334-6481**	2	BRACKET AS	
	7	1	**334-6482**	3	ROLLER	
	8	1	**334-6483**	1	GLASS	
	9	1	**334-6484**	1	SEAL	
	10	1	*334-6485*	1	LOCK AS-WINDOW	
M		1	**9X-2042**	7	SCREW-TRUSS HEAD (M6X1X12-MM)	
		1	**334-6486**	1	COVER AS	
		1	**334-6488**	1	LOCK AS	
		1	**334-6489**	1	LEVER AS	
	11	1	**334-6490**	1	HANDLE	
	12	1	**334-6491**	2	SEAL	
	13	1	**151-9576**	1	ROLLER	
M	14	1	**9X-2042**	16	SCREW-TRUSS HEAD (M6X1X12-MM)	
M	15	1	**9X-2044**	2	SCREW-TRUSS HEAD (M6X1X16-MM)	

M-METRIC PART

334-6388 WINDOW GP-FRONT *(contd.)* **i03645714**

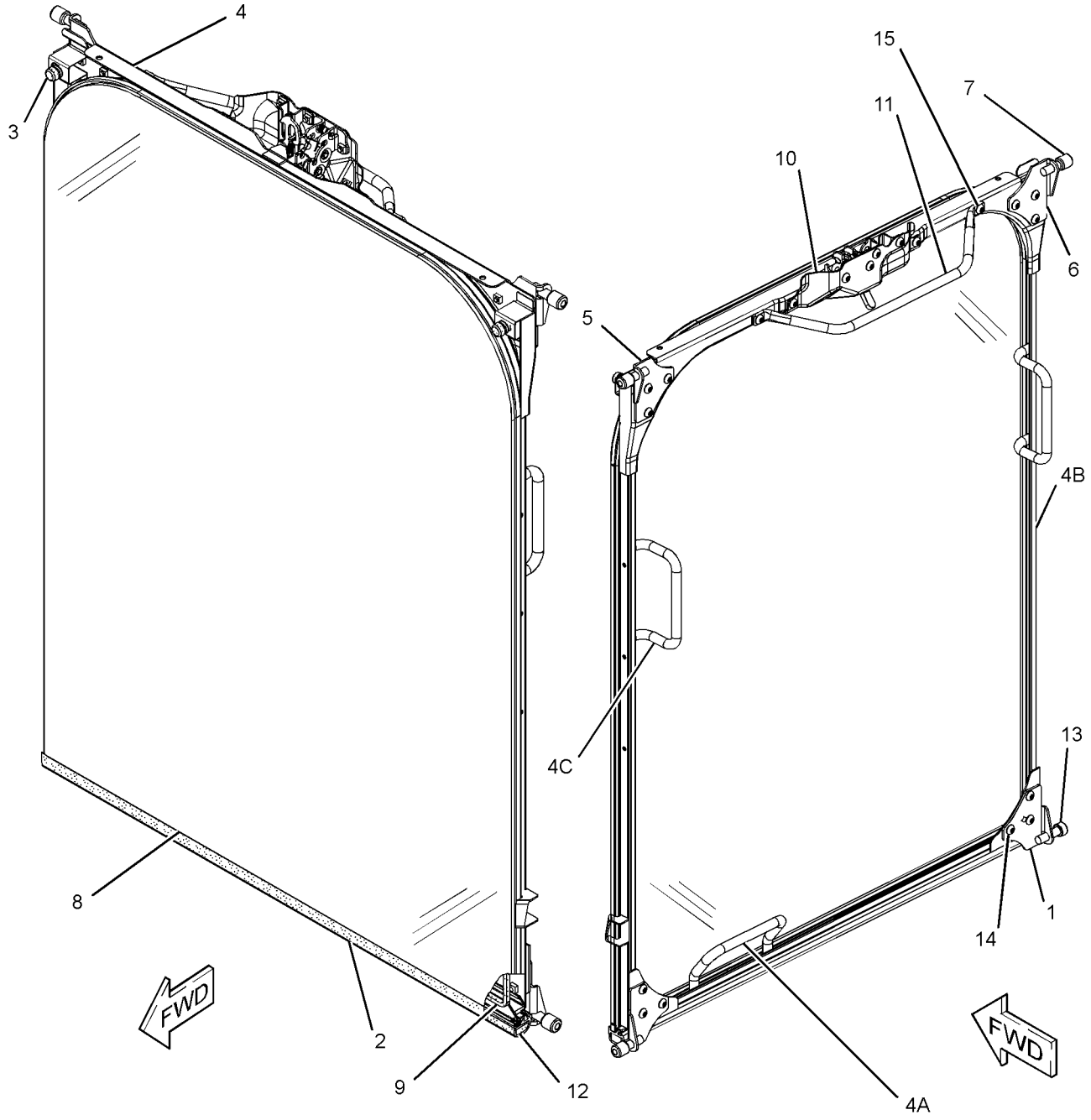

GRAPHIC #1 **<END>** g01965654

OPERATOR STATION

327-6489 WIPER & WASHER GP-WINDOW—LOWER

S/N: WNE1-UP; ZMF1-UP; CWG1-UP
PART OF 340-6506 INSTALLATION AR
AN ATTACHMENT

SMCS-7305, 7306 **i03645175**

NOTE	REF NO	GRAPHIC REF	PART NUMBER	QTY	PART NAME 1 2 3 4 5 6 (PRODUCT LEVEL)	SEE PAGE
	1	1	**4I-1163**	1	BRACKET	
	2	1	**163-6795**	3	STRAP-CABLE	
	3	1	**327-6491**	1	ARM AS-WINDOW WIPER (373-MM)	
	4	1	**327-6492**	1	BRACKET AS	
	5	1	**327-6592**	1	ELBOW AS	
	6	1	**336-1203**	1	BLADE AS-WIPER (300-MM)	
	7	1	**336-1204**	1	MOTOR AS-WINDOW WIPER	
	8	1	**5I-8307**	1	GROMMET	
M	9	1	**6V-7357**	2	BOLT (M6X1X25-MM)	
M	10	1	**8T-4970**	7	BOLT (M6X1X14-MM)	
	11	1	**9X-8256**	9	WASHER (6.6X12X2-MM THK)	
E	12	1	**144-0195**		HOSE (105-CM)	

E-ORDER BY THE CENTIMETER
M-METRIC PART

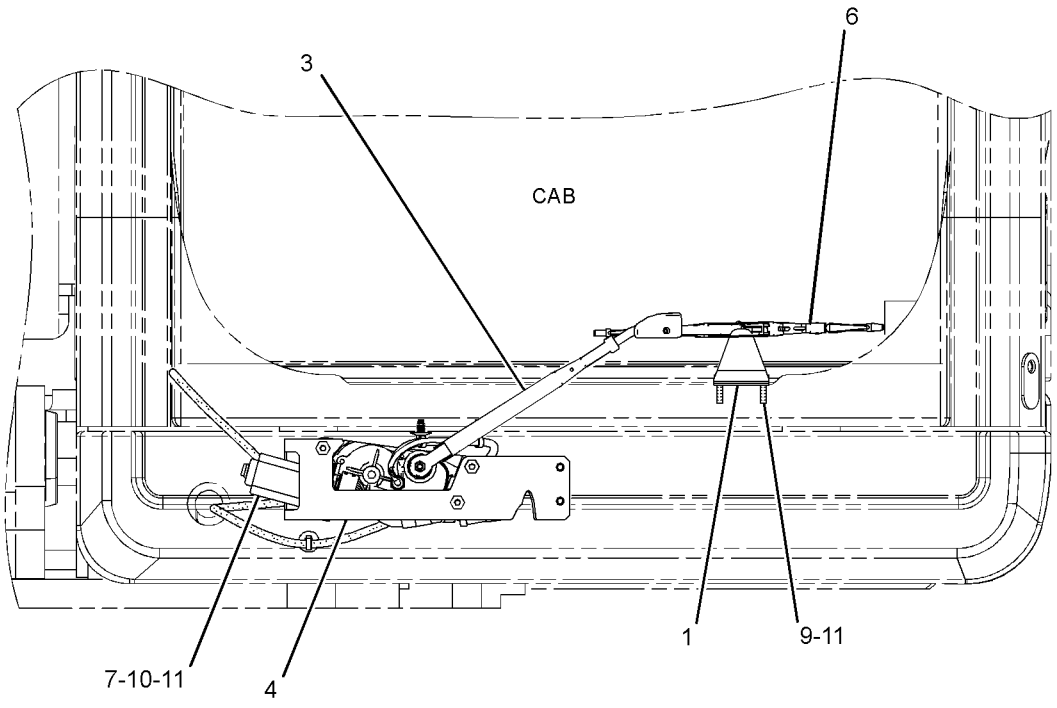

FRONT VIEW

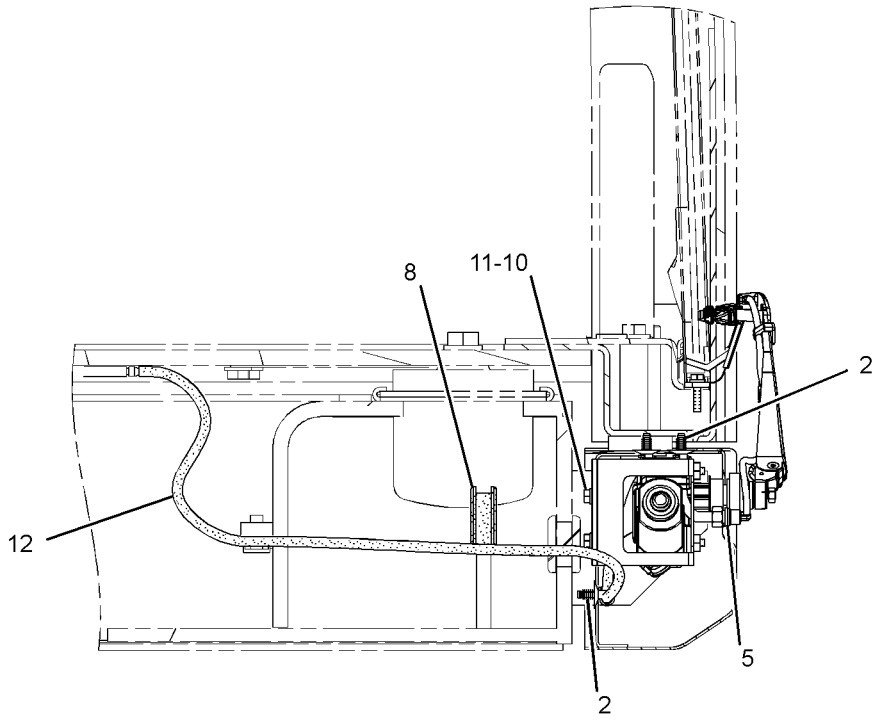

RIGHT SIDE VIEW

GRAPHIC #1 **<END>** g01958558

OPERATOR STATION

327-6551 WIPER GP-WINDOW

S/N: WNE1-UP; ZMF1-UP; CWG1-UP
PART OF 340-6497 CAB GP
AN ATTACHMENT

SMCS-7305 **i03645041**

NOTE	REF NO	GRAPHIC REF	PART NUMBER	QTY	PART NAME 1 2 3 4 5 6 (PRODUCT LEVEL)	SEE PAGE
Y	1	1	**342-3546**	1	MOTOR AS-WINDOW WIPER	1074
	2	1	**342-3547**	1	NOZZLE AS	
	3	1	**342-3548**	1	HOLDER	
	4	1	**155-7042**	1	RELAY AS (UPPER) (WIPER)	
	5	1	**161-3668**	1	ARM AS-WIPER	
		1	**161-3669**	1	GUIDE	
		1	**161-3670**	1	BLADE AS-WIPER (600-MM)	
		1	**161-3671**	1	ARM AS	
		1	**185-8290**	1	SCREW AS (M3.5X0.6X9-MM)	
M	6	1	**9X-2042**	6	SCREW-TRUSS HEAD (M6X1X12-MM)	
M	7	1	**9X-2044**	4	SCREW-TRUSS HEAD (M6X1X16-MM)	

M-METRIC PART
Y-SEPARATE ILLUSTRATION

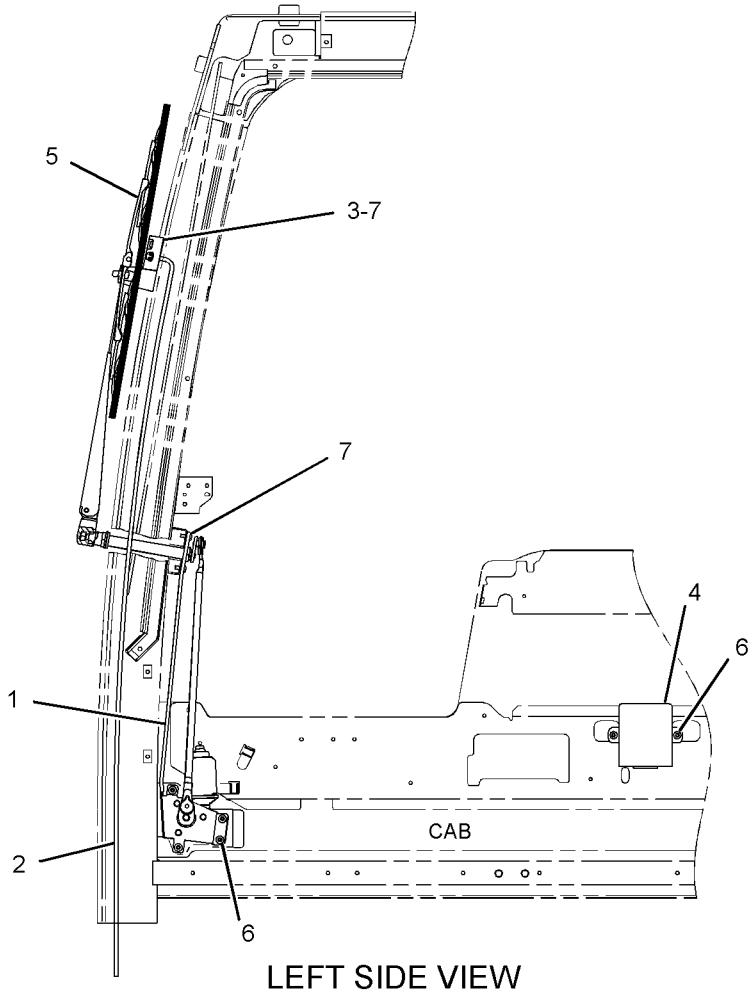

LEFT SIDE VIEW

GRAPHIC #1 **<END>** g01960862

SERVICE EQUIPMENT AND SUPPLIES

247-7410 FILM GP–OPERATOR CONTROLS, NOTICE

S/N: WNE1-UP; ZMF1-UP; CWG1-UP

PART OF 270-5687 CONTROL & MTG GP-JOYSTICK

AN ATTACHMENT

SMCS-7405, 7557 **i02426165**

NOTE	REF NO	GRAPHIC REF	PART NUMBER	QTY	PART NAME 1 2 3 4 5 6 (PRODUCT LEVEL)	SEE PAGE
	1	1	**250-8054**	1	FILM-NOTICE (HAMMER, READ OMM)	
	2	1	**260-6941**	1	FILM-INFORMATION (OPERATOR CONTROLS, READ OMM)	

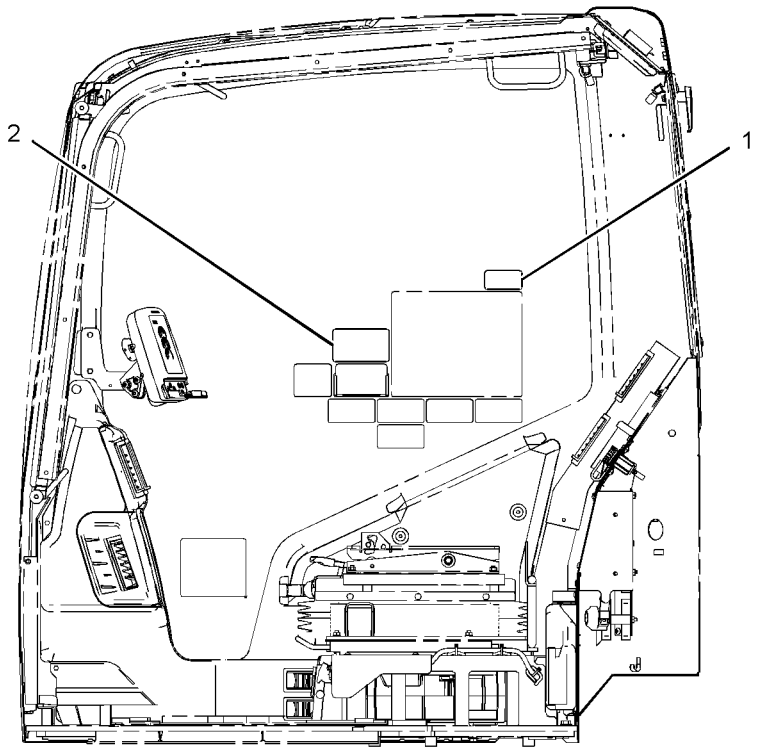

LEFT SIDE VIEW
(328D MODELS)

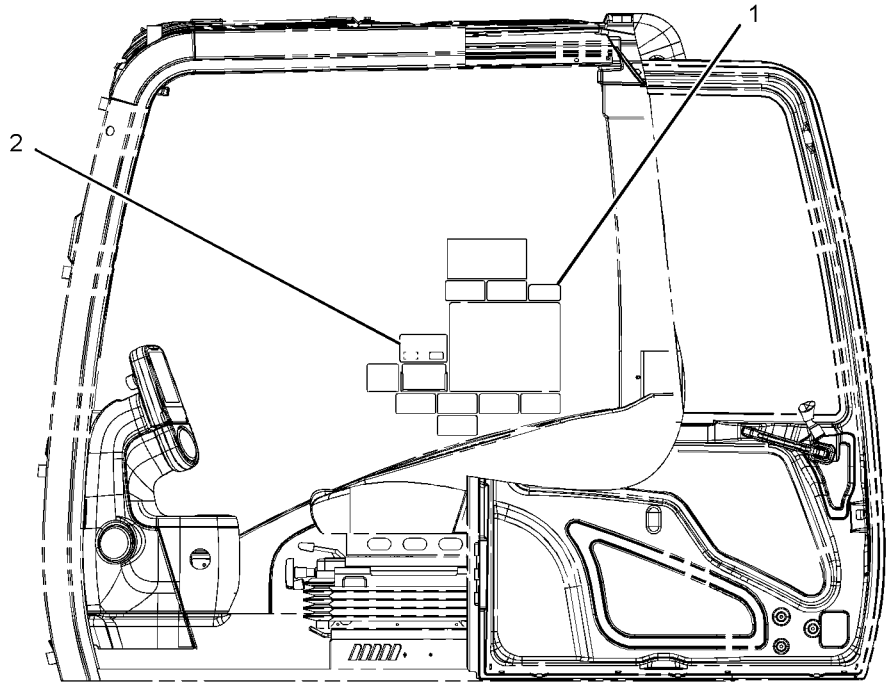

LEFT SIDE VIEW
(ALL OTHER MODELS)

GRAPHIC #1 **<END>** g01246655

SERVICE EQUIPMENT AND SUPPLIES

247-7411 FILM GP–OPERATOR CONTROLS, NOTICE

S/N: WNE1-UP; ZMF1-UP; CWG1-UP
PART OF 270-5688 CONTROL & MTG GP-JOYSTICK
AN ATTACHMENT

SMCS-7405, 7557 **i02433607**

NOTE	REF NO	GRAPHIC REF	PART NUMBER	QTY	PART NAME 1 2 3 4 5 6 (PRODUCT LEVEL)	SEE PAGE
	1	1	**260-6942**	1	FILM-INFORMATION (OPERATOR CONTROLS, READ OMM)	
	2	1	**250-8054**	1	FILM-NOTICE (HAMMER, READ OMM)	

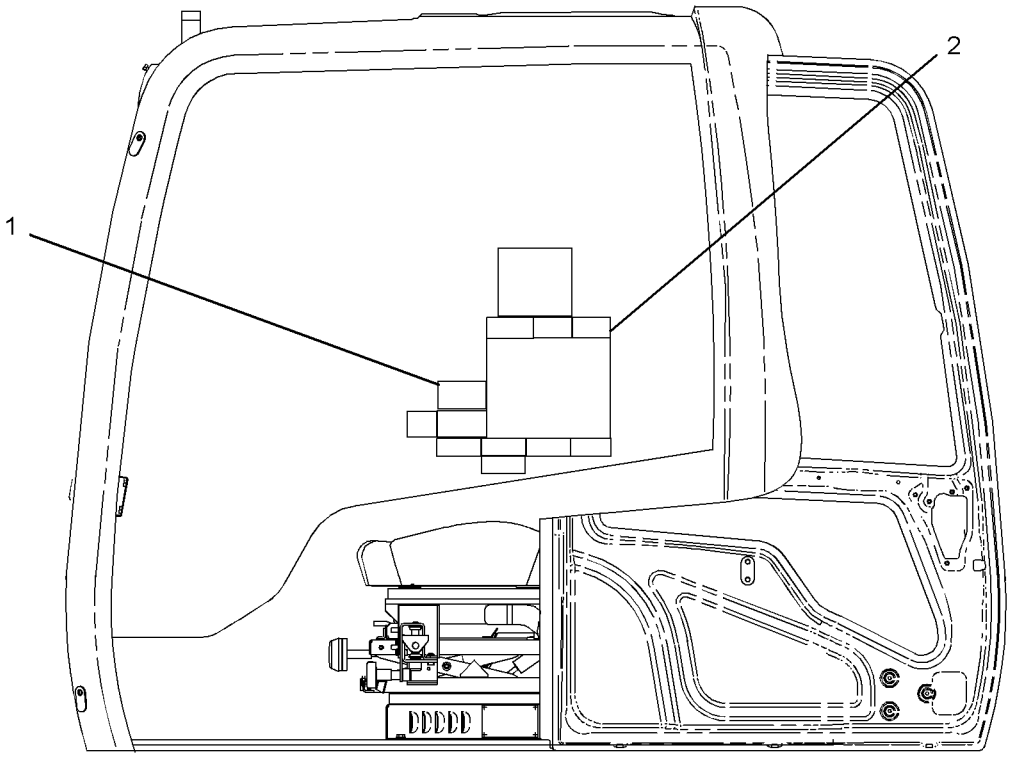

LEFT SIDE VIEW

GRAPHIC #1 **<END>** g01212938

SERVICE EQUIPMENT AND SUPPLIES

247-7465 FILM GP—HAMMER CONTROL, FOOT SWITCH

S/N: WNE1-UP; ZMF1-UP; CWG1-UP
PART OF 270-6106 CONTROL AR-AUXILIARY
AN ATTACHMENT

SMCS-7405, 7557 **i02424961**

NOTE	REF NO	GRAPHIC REF	PART NUMBER	QTY	PART NAME 1 2 3 4 5 6 (PRODUCT LEVEL)	SEE PAGE
	1	1	**176-2815**	1	FILM-INSTRUCTION (HAMMER CONTROL)	
	2	1	**250-8054**	1	FILM-NOTICE (HAMMER, READ OMM)	

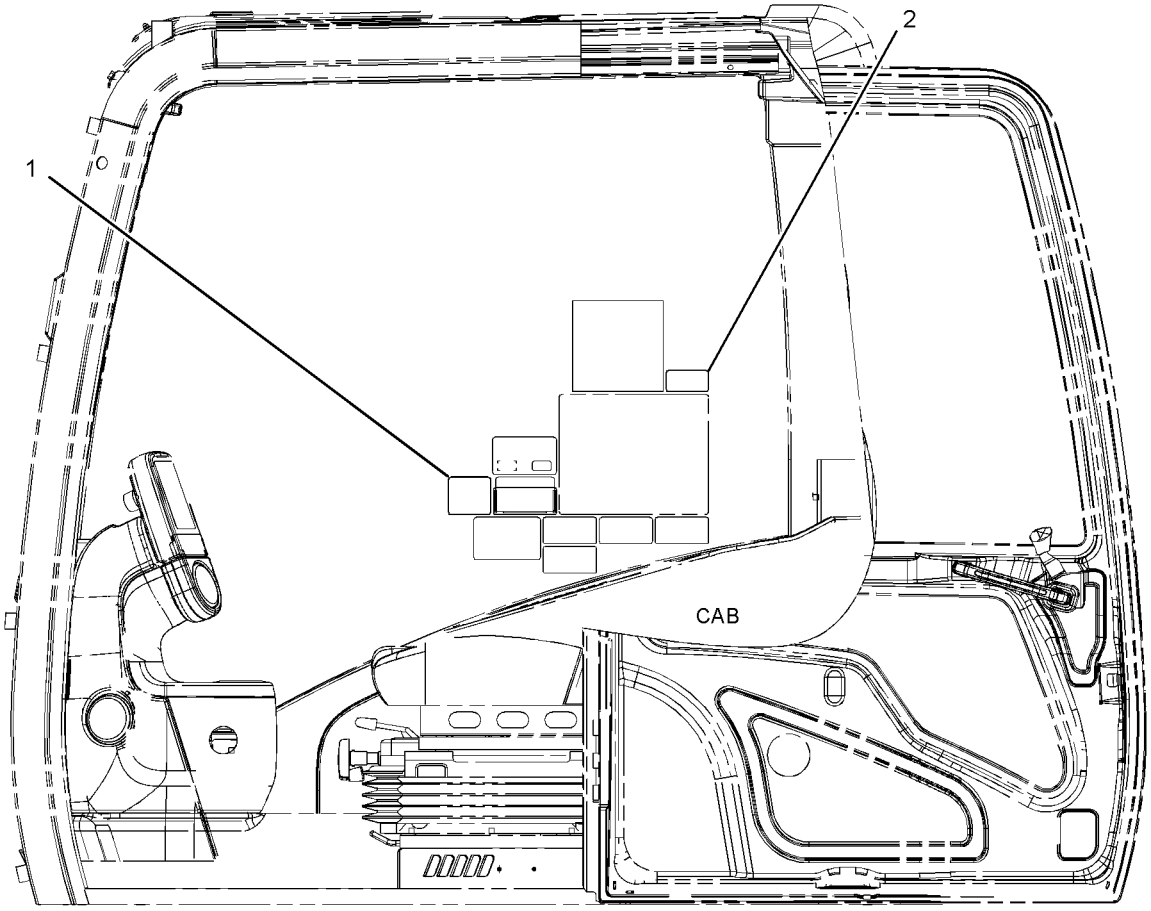

LEFT SIDE VIEW

GRAPHIC #1 **<END>** g01157047

SERVICE EQUIPMENT AND SUPPLIES

268-6816 FILM GP–QUICK COUPLER

S/N: WNE1-UP; ZMF1-UP; CWG1-UP
PART OF 339-0814, 342-5703 CONTROL AR-COUPLER
AN ATTACHMENT

SMCS-7405, 7557 **i02490845**

NOTE	REF NO	GRAPHIC REF	PART NUMBER	QTY	PART NAME 1 2 3 4 5 6 (PRODUCT LEVEL)	SEE PAGE
	1	1	**268-6817**	1	FILM-IDENTIFICATION (QUICK COUPLER)	

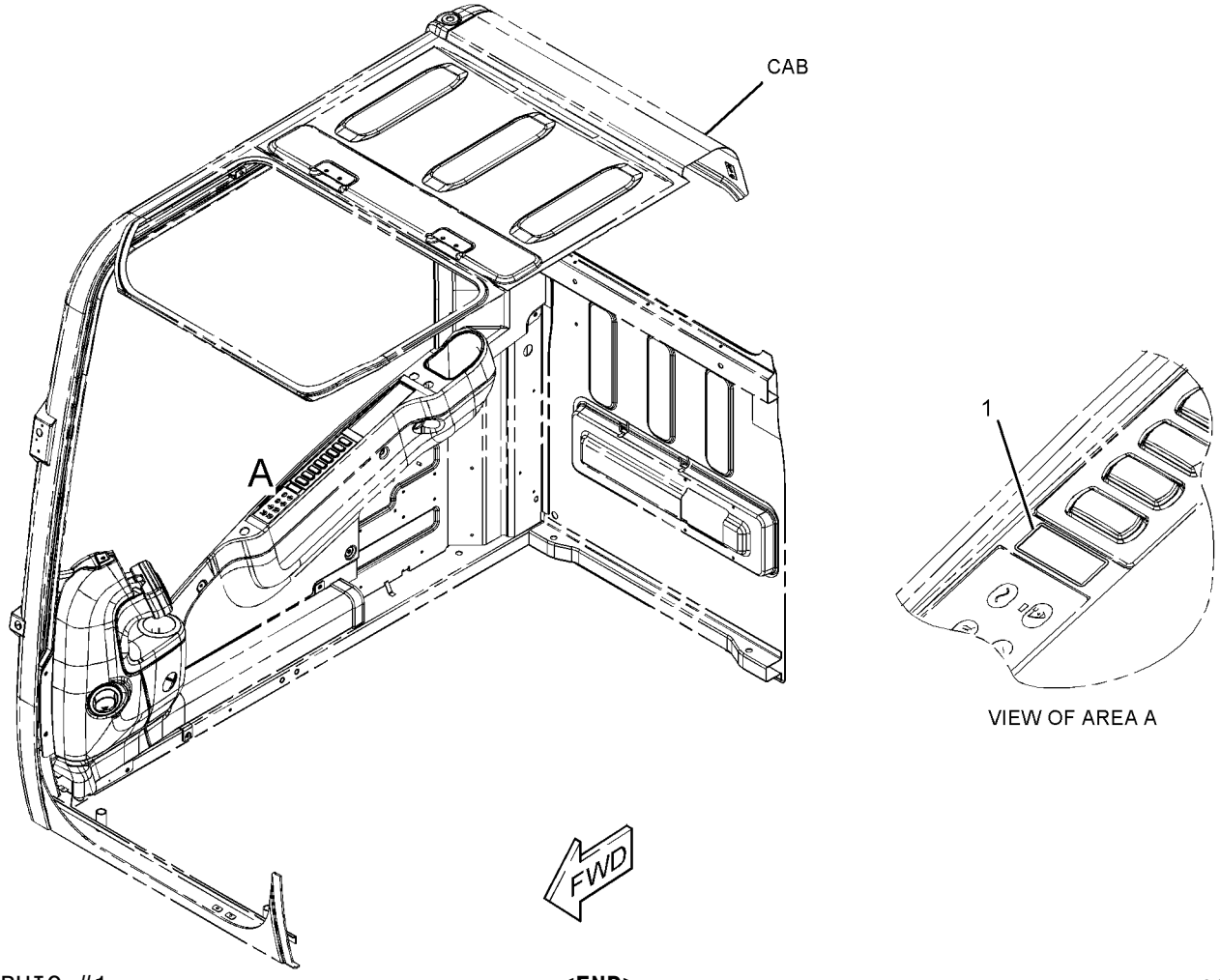

VIEW OF AREA A

GRAPHIC #1 **<END>** g01199575

SERVICE EQUIPMENT AND SUPPLIES

282-5705 FILM GP–QUICK COUPLER

S/N: WNE1-UP; ZMF1-UP
PART OF 339-0813 CONTROL AR-COUPLER
AN ATTACHMENT

SMCS-7405, 7557 **i02817497**

NOTE	REF NO	GRAPHIC REF	PART NUMBER	QTY	PART NAME 1 2 3 4 5 6 (PRODUCT LEVEL)	SEE PAGE
	1	1	**268-4530**	1	FILM-WARNING (CRUSH HAZARD, READ OMM, U.S.)	
					–OR–	
		1	**269-0120**	1	FILM-WARNING (CRUSH HAZARD, READ OMM, INTL)	
	2	1	**268-4531**	1	FILM-INSTRUCTION (COUPLER OPERATION)	
	3	1	**268-8872**	1	FILM-WARNING (CRUSH HAZARD, READ OMM, U.S.)	
					–OR–	
		1	**269-0121**	1	FILM-WARNING (CRUSH HAZARD, READ OMM, INTL)	

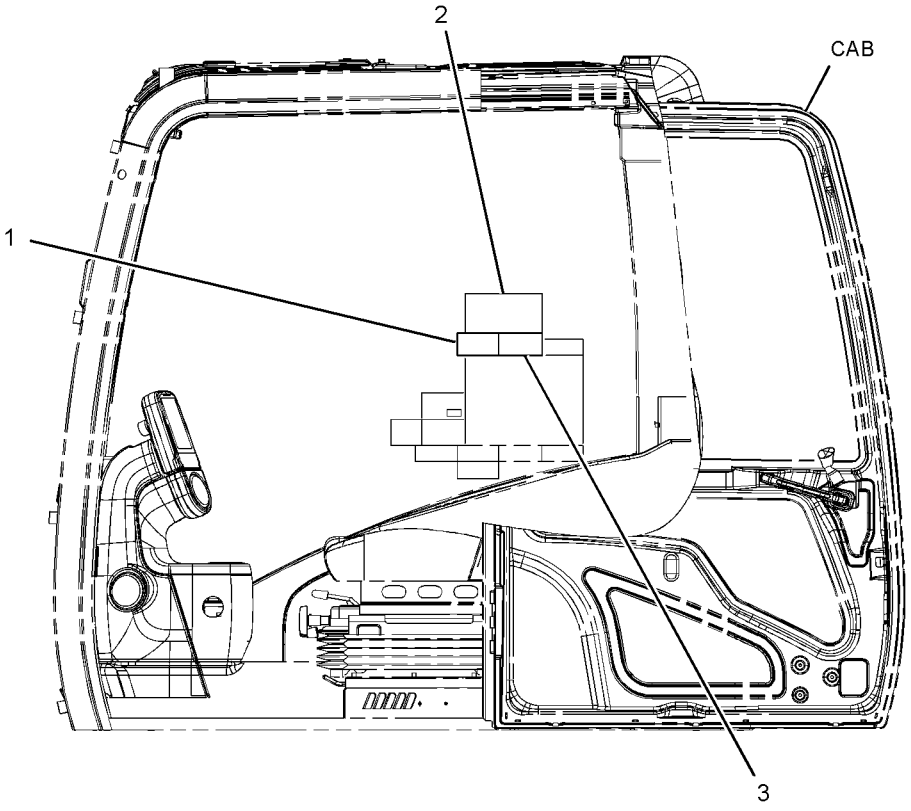

LEFT SIDE VIEW

GRAPHIC #1 **<END>** g01238116

SERVICE EQUIPMENT AND SUPPLIES

290-1851 FILM GP

S/N: WNE1-UP; ZMF1-UP
PART OF 338-9896 OPTION AR-LINKAGE
AN ATTACHMENT

SMCS-7405, 7557 **i02953429**

NOTE	REF NO	GRAPHIC REF	PART NUMBER	QTY	PART NAME 1 2 3 4 5 6 (PRODUCT LEVEL)	SEE PAGE
	1	1	**290-1747**	2	FILM-IDENTIFICATION (323D LME)	

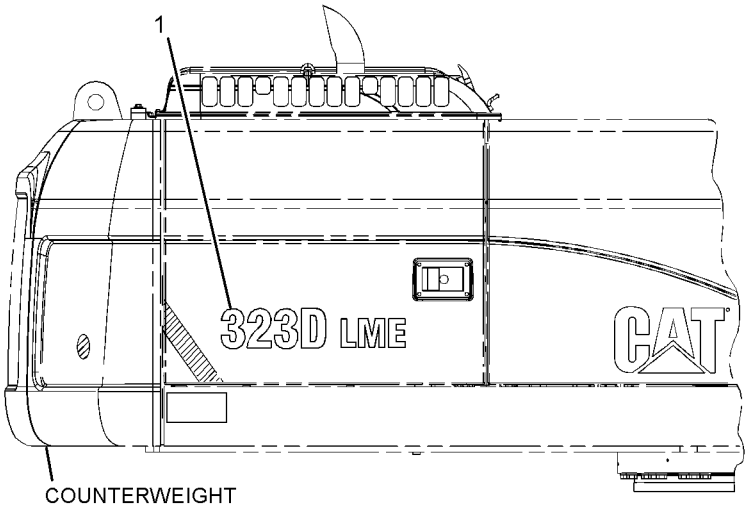

RIGHT SIDE VIEW

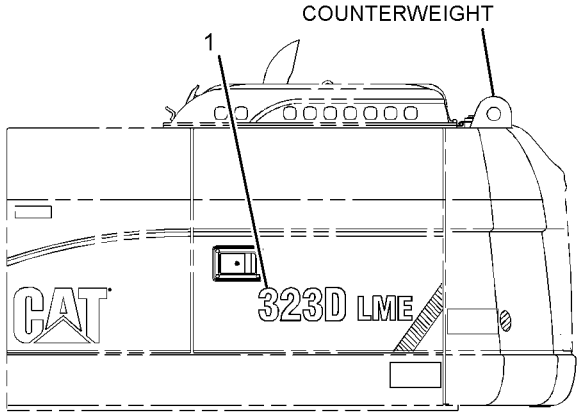

LEFT SIDE VIEW

GRAPHIC #1 **<END>** g01473244

SERVICE EQUIPMENT AND SUPPLIES

290-1852 FILM GP

S/N: CWG1-UP

AN ATTACHMENT

SMCS-7405, 7557 **i03648025**

NOTE	REF NO	GRAPHIC REF	PART NUMBER	QTY	PART NAME 1 2 3 4 5 6 (PRODUCT LEVEL)	SEE PAGE
	1	1	**290-1766**	2	FILM-IDENTIFICATION (323D LNME)	

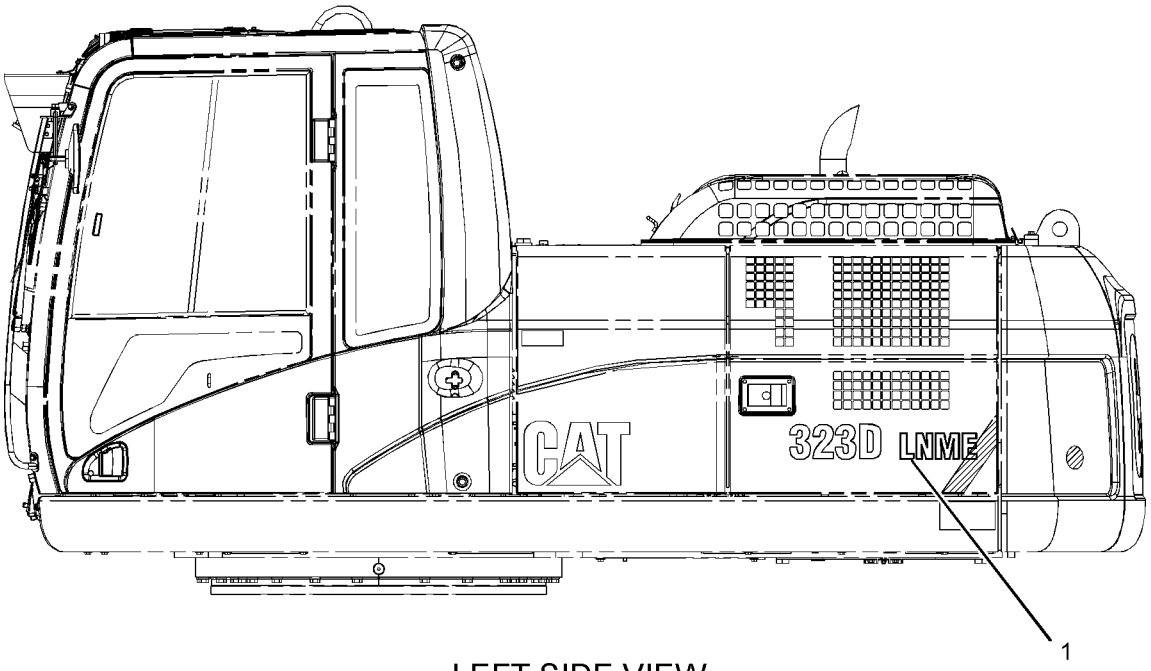

LEFT SIDE VIEW

GRAPHIC #1 **<END>** g01960188

SERVICE EQUIPMENT AND SUPPLIES

298-4258 FILM GP–FUEL TRANSFER PUMP

S/N: WNE1-UP; ZMF1-UP; CWG1-UP
PART OF 229-1784 PUMP AR-FUEL TRANSFER
AN ATTACHMENT

SMCS-7405, 7557 **i03023882**

NOTE	REF NO	GRAPHIC REF	PART NUMBER	QTY	PART NAME 1 2 3 4 5 6 (PRODUCT LEVEL)	SEE PAGE
	1	1	**309-3872**	1	FILM-WARNING (EXPLOSION HAZARD, READ OMM)	

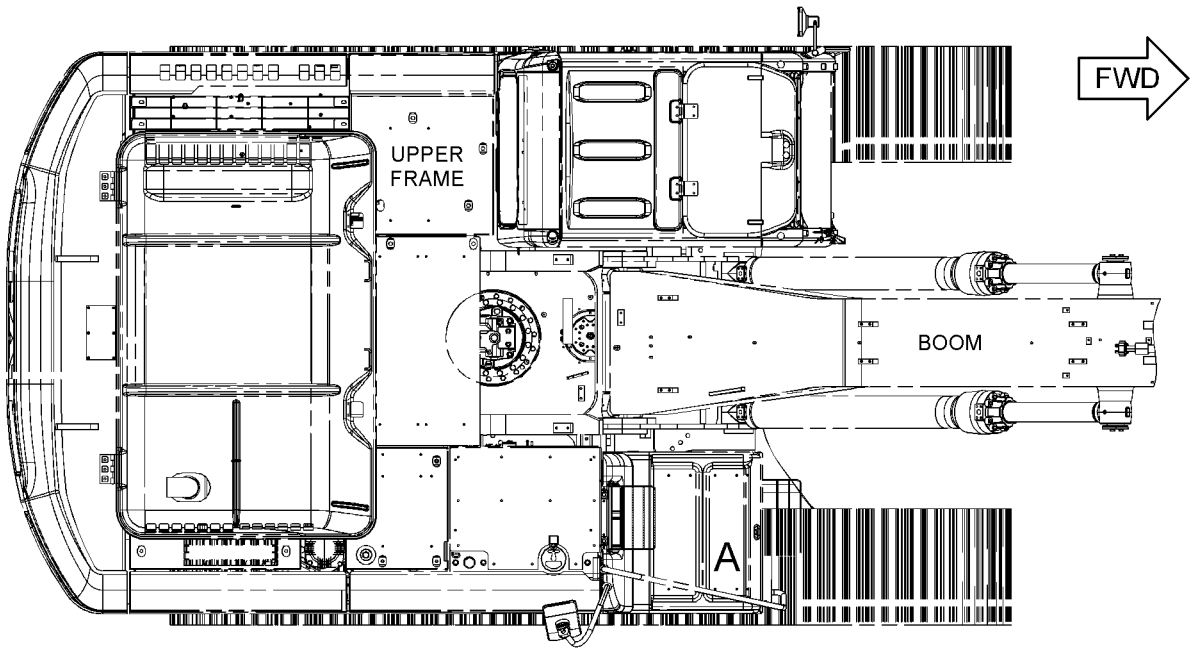

TOP VIEW

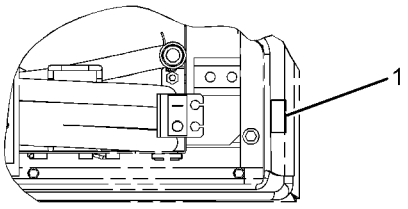

VIEW OF AREA A

GRAPHIC #1 **<END>** g01428719

SERVICE EQUIPMENT AND SUPPLIES

298-4341 FILM GP—SMARTBOOM

S/N: WNE1-UP; ZMF1-UP; CWG1-UP

PART OF 340-3819 CONTROL AR-AUXILIARY, 343-1177, 343-1178 CONTROL AR-BOOM

AN ATTACHMENT

SMCS-7405, 7557 **i03117421**

NOTE	REF NO	GRAPHIC REF	PART NUMBER	QTY	PART NAME 1 2 3 4 5 6 (PRODUCT LEVEL)	SEE PAGE
	1	1	**236-0563**	1	FILM-IDENTIFICATION (SMARTBOOM)	
	2	1	**260-6944**	1	FILM-WARNING (BOOM FLOAT)	
	3	1	**322-4582**	1	FILM-WARNING (TIPPING HAZARD, READ OMM)	

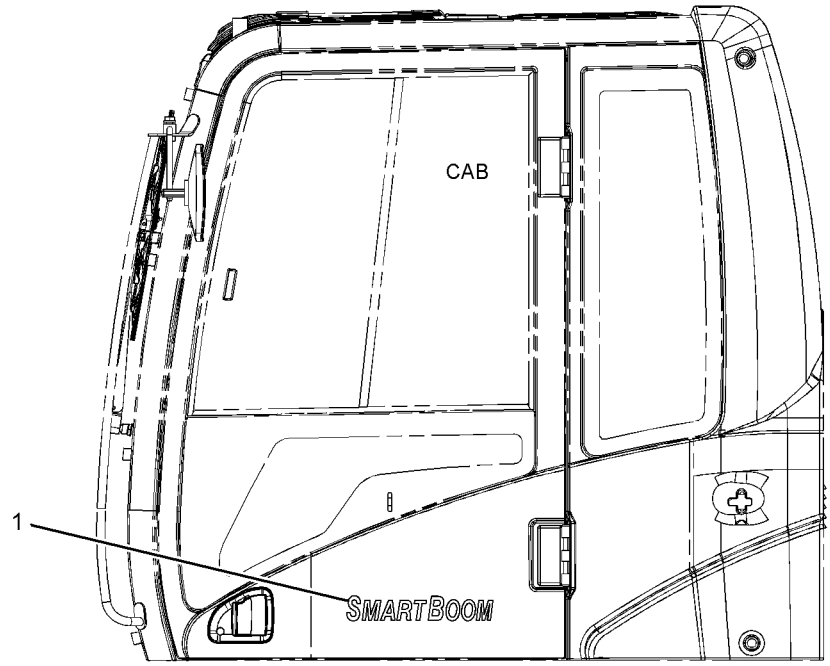

LEFT SIDE VIEW

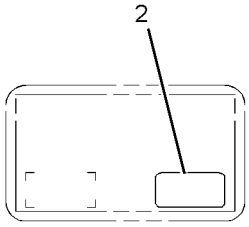

VIEW OF AREA A

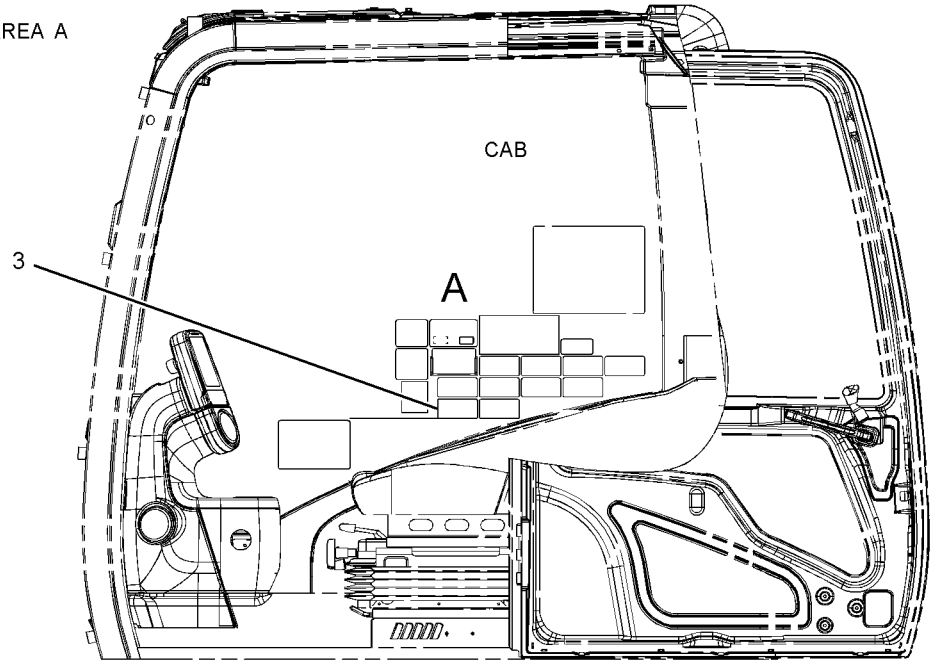

LEFT SIDE VIEW
(DOOR OPEN)

GRAPHIC #1 **<END>** g01621999

SERVICE EQUIPMENT AND SUPPLIES

303-2787 FILM GP—WORK AREA VISUAL SYSTEM, REAR

S/N: WNE1-UP; ZMF1-UP; CWG1-UP

PART OF 340-3846 CAMERA & WIRING GP, 343-1193 INSTALLATION AR

AN ATTACHMENT

SMCS-7405, 7557 **i03128324**

NOTE	REF NO	GRAPHIC REF	PART NUMBER	QTY	PART NAME 1 2 3 4 5 6 (PRODUCT LEVEL)	SEE PAGE
	1	1	**319-9152**	1	FILM-INSTRUCTION (BATTERY LIFE, CAMERA)	

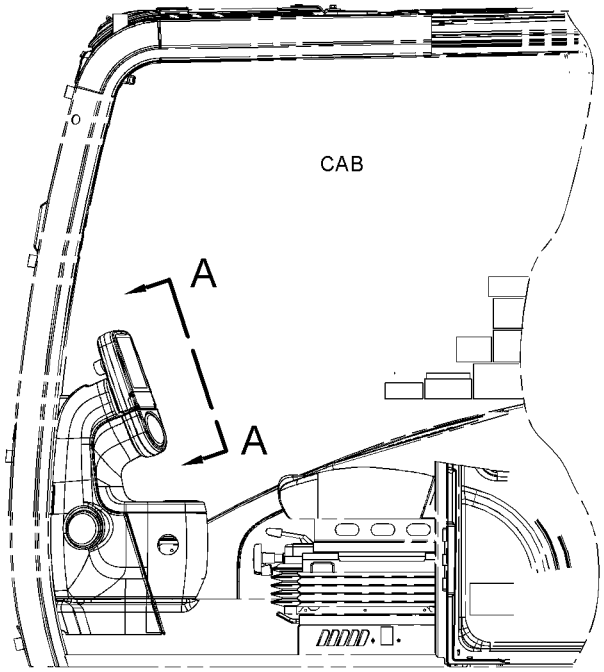

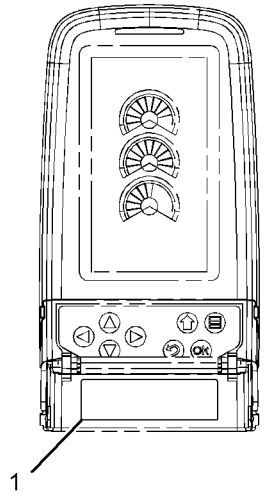

VIEW A-A

LEFT SIDE VIEW

GRAPHIC #1 **<END>** g01620358

SERVICE EQUIPMENT AND SUPPLIES

314-3768 FILM GP—OVERLOAD WARNING DEVICE

S/N: CWG1-UP

PART OF 314-3856 WARNING AR-OVERLOAD

AN ATTACHMENT

SMCS-7405, 7557 **i03113101**

NOTE	REF NO	GRAPHIC REF	PART NUMBER	QTY	PART NAME 1 2 3 4 5 6 (PRODUCT LEVEL)	SEE PAGE
	1	1	**322-4582**	1	FILM-WARNING (TIPPING HAZARD, READ OMM)	
					(LOCATE ON RIGHT SIDE CAB WINDOW)	

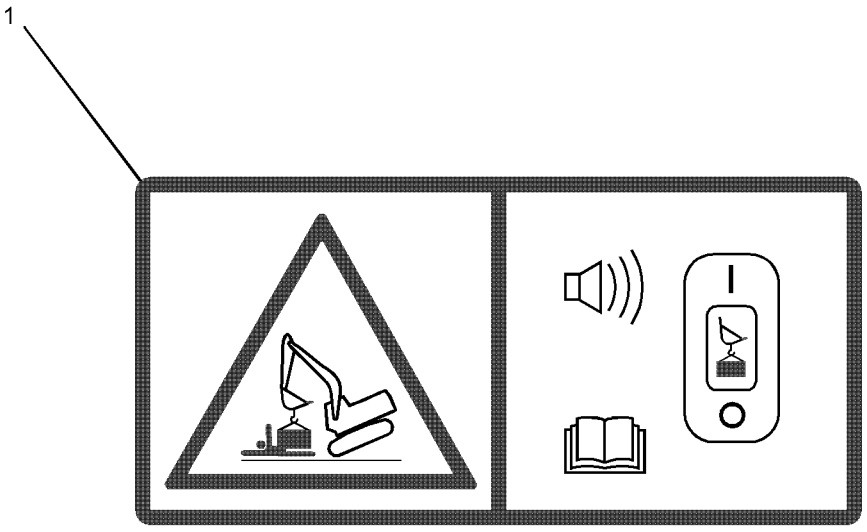

GRAPHIC #1 **<END>** g01622349

SERVICE EQUIPMENT AND SUPPLIES

264-8602 PLATE & FILM GP–BIODEGRADABLE HYDRAULIC OIL

S/N: WNE1-UP; ZMF1-UP
PART OF 264-8771 HYDRAULIC AR-BIODEGRADABLE OIL
AN ATTACHMENT

SMCS-7405, 7557 **i02469979**

NOTE	REF NO	GRAPHIC REF	PART NUMBER	QTY	PART NAME 1 2 3 4 5 6 (PRODUCT LEVEL)	SEE PAGE
	1	1	**169-3530**	1	FILM-IDENTIFICATION (BIODEGRADABLE HYDRAULIC OIL)	

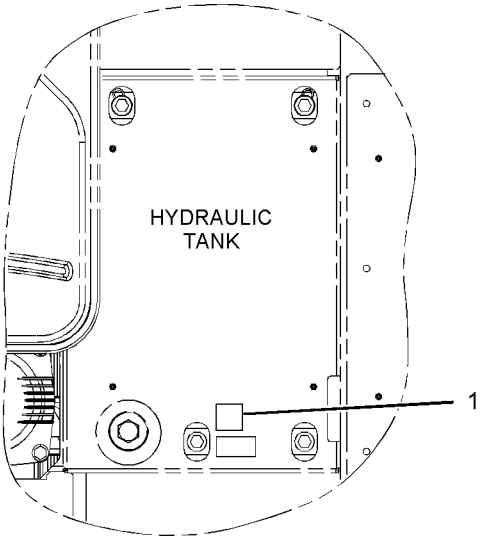

VIEW OF AREA A

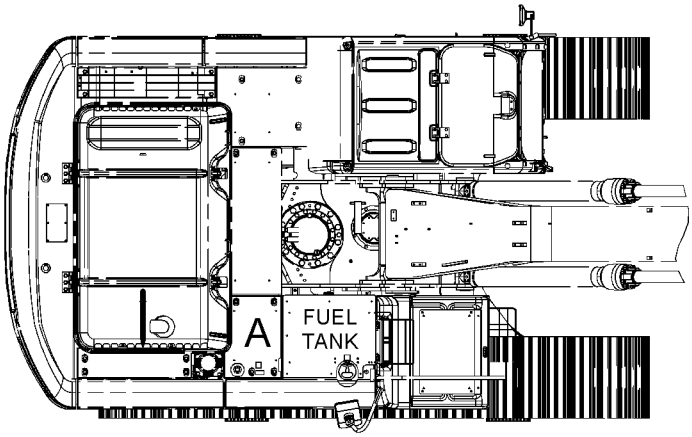

TOP VIEW

FWD

GRAPHIC #1 **<END>** g01230593

SERVICE EQUIPMENT AND SUPPLIES

264-8608 PLATE & FILM GP–BIODEGRADABLE HYDRAULIC OIL

S/N: CWG1-UP

PART OF 264-8607 HYDRAULIC AR-BIODEGRADABLE OIL

AN ATTACHMENT

SMCS-7405, 7557 **i03648030**

NOTE	REF NO	GRAPHIC REF	PART NUMBER	QTY	PART NAME 1 2 3 4 5 6 (PRODUCT LEVEL)	SEE PAGE
	1	1	**169-3530**	1	FILM-IDENTIFICATION (BIODEGRADABLE HYDRAULIC OIL)	

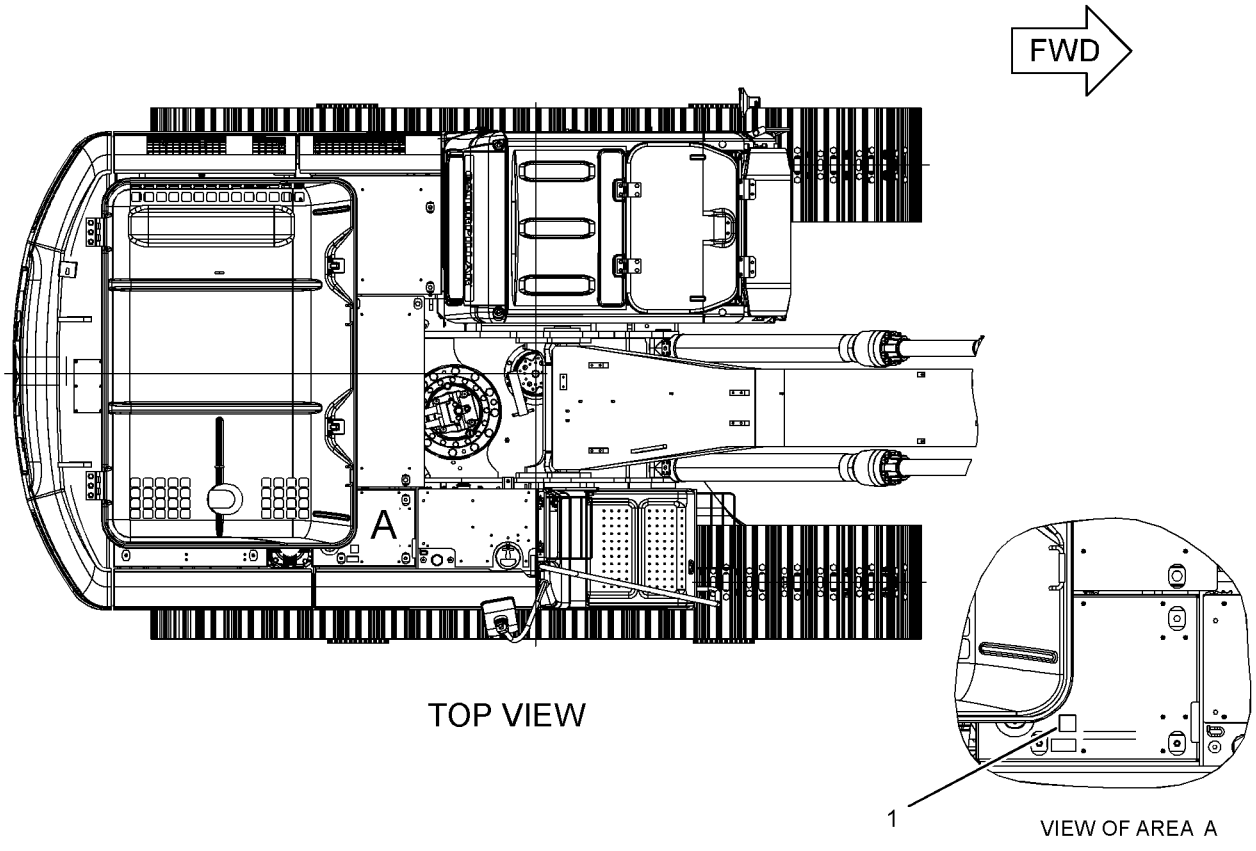

GRAPHIC #1 **<END>** g01231728

340-3787 PLATE & FILM GP

S/N: CWG1-UP

PART OF 339-2835 CHASSIS AR

SMCS-7405, 7557 **i03645486**

NOTE	PART NUMBER	QTY	PART NAME 1 2 3 4 5 6 (PRODUCT LEVEL)	SEE PAGE
Y	*350-3230*	1	PLATE & FILM GP	1137
Y-SEPARATE ILLUSTRATION				

<END>

343-1019 PLATE & FILM GP

S/N: WNE1-UP

PART OF 343-1017 CHASSIS AR

SMCS-7405, 7557 **i03645897**

NOTE	PART NUMBER	QTY	PART NAME 1 2 3 4 5 6 (PRODUCT LEVEL)	SEE PAGE
			(NO BREAKDOWN OF SERVICEABLE PARTS AVAILABLE AT TIME OF PUBLICATION)	

<END>

343-1020 PLATE & FILM GP

S/N: ZMF1-UP

PART OF 343-1018 CHASSIS AR

SMCS-7405, 7557 **i03645873**

NOTE	PART NUMBER	QTY	PART NAME 1 2 3 4 5 6 (PRODUCT LEVEL)	SEE PAGE
			(NO BREAKDOWN OF SERVICEABLE PARTS AVAILABLE AT TIME OF PUBLICATION)	

<END>

SERVICE EQUIPMENT AND SUPPLIES

350-3230 PLATE & FILM GP

S/N: CWG1-UP

PART OF 340-3787 PLATE & FILM GP

SMCS-7405, 7557 **i03648955**

NOTE	REF NO	GRAPHIC REF	PART NUMBER	QTY	PART NAME 1 2 3 4 5 6 (PRODUCT LEVEL)	SEE PAGE
	1	1	**1P-2807**	4	FILM-INFORMATION (LIFT EYE LOCATION)	
	2	1	**4I-8267**	1	CAP	
	3	1	**4I-8472**	1	FILM-INSTRUCTION (OPERATOR CONTROLS)	
	4	1	**7X-7644**	4	FILM-INFORMATION (TIE-DOWN)	
	5	1	**8T-6842**	1	FILM-INSTRUCTION (PULL RING, ALTERNATE EXIT)	
	6	1	**134-7258**	1	FILM-INFORMATION (EXTENDED LIFE COOLANT,READ OMM)	
	7	1	**144-9126**	1	FILM-INSTRUCTION (OIL)	
	8	1	**146-6747**	1	FILM-INFORMATION (24-VOLT)	
	9	1	**167-7270**	2	FILM-INSTRUCTION (NO STEP)	
	10	1	**187-0661**	1	FILM-INSTRUCTION (ALTERNATE EXIT)	
	11	1	**190-5386**	2	FILM-STRIPE (ROUND RED REFLECTIVE)	
	12	1	**214-7915**	1	FILM-INSTRUCTION (ENGINE SHUTOFF)	
	13	1	**219-0302**	1	FILM-WARNING (NO WELD, NO DRILL, READ OMM)	
	14	1	**221-8045**	1	FILM-WARNING (SEAT BELT, INTERNATIONAL)	
	15	1	**223-9818**	1	FILM-INSTRUCTION (WINDOW CLEANING, READ OMM)	
	16	1	**224-0554**	1	FILM-WARNING (UNIVERSAL, READ OMM, INTL)	
	17	1	**224-8946**	1	FILM-WARNING (NO ETHER SPRAY/AIR INTK, INTL)	
	18	1	**225-0312**	1	FILM-WARNING (JUMP START, READ OMM)	
	19	1	**225-4257**	2	FILM-WARNING (HOT FLUID UNDER PRESS, INTL)	
	20	1	**228-2781**	2	FILM-WARNING (MACHINE SWING, CRUSHING, INTL)	
	21	1	**228-7316**	2	FILM-WARNING (HOT SURFACE, HANDS CLEAR, INTL)	
	22	1	**228-9254**	1	FILM-WARNING (ELEC HAZARD, READ OMM, INTL)	
	23	1	**229-0887**	1	FILM-INFORMATION (AIR CLEANER)	
	24	1	**239-6986**	1	PLATE-IDENTIFICATION (MACHINE)	
	25	1	**242-1510**	1	FILM-INSTRUCTION (HYDRAULIC OIL CHECK)	
	26	1	**242-1588**	1	FILM-WARNING (FRONT WINDOW, READ OMM, INTL)	
	27	1	**242-6092**	1	FILM-WARNING (ACCUMULATOR PRESSURE)	
	28	1	**245-5457**	1	FILM-INSTRUCTION (BACKUP CONTROL)	
	29	1	**247-7436**	1	FILM-IDENTIFICATION (CAT)	
	30	1	**247-7437**	1	FILM-IDENTIFICATION (BATTERY CIRCUIT BREAKER)	
	31	1	**247-7438**	2	FILM-IDENTIFICATION (ELECTRICAL CIRCUIT BREAKER)	
	32	1	**253-0861**	2	FILM-INFORMATION (CAT POWER, ACERT TECHNOLOGY)	
	33	1	**257-4502**	1	FILM-IDENTIFICATION (CATERPILLAR)	
	34	1	**260-7135**	1	FILM-IDENTIFICATION (FUSE PANEL)	
	35	1	**266-5431**	1	FILM-WARNING (CRUSH HAZARD, READ OMM, INTL)	
	36	1	**290-1727**	1	FILM-IDENTIFICATION (CAT BOOM, RH)	
	37	1	**290-1728**	1	FILM-IDENTIFICATION (CAT BOOM, LH)	
	38	1	**290-1729**	2	FILM-IDENTIFICATION (CAT UPPER STRUCTURE)	
	39	1	**290-1765**	2	FILM-IDENTIFICATION (323D LN)	
E	40	1	**290-1906**		FILM-STRIPE (RED) (45-CM EACH)	
	41	1	**303-2668**	1	PLATE-INSTRUCTION (AIR CONDITIONER, READ OMM)	
	42	1	**310-6252**	1	FILM-INSTRUCTION (BACKUP CONTROL, READ OMM)	
	43	1	**334-4603**	1	FILM-INFORMATION (HYDO ADVANCED 10)	
	44	1	**347-9868**	1	FILM-CERTIFICATION (OPS, READ OMM)	

E-ORDER BY THE CENTIMETER

NO GRAPHIC AVAILABLE AT TIME OF PUBLICATION

GRAPHIC #1 **<END>** g01269539

PART NUMBER INDEX

Part	Page
1	
1D-5117	182
1H-3244	222
1H-3338	238
1J-9671	621
	628
1M-6119	158
	160
	162
	168
	170
	171
	179
1M-6120	158
	160
	162
	168
	170
	171
	179
1P-2807	1137
1P-3702	595
	596
	599
	600
	601
	611
	613
	617
	623
	633
	647
	809
	810
	811
	824
	837
	850
	866
1P-3703	540
	544
	547
	549
	553
	558
	564
	570
	573
	577
	578
	579
	583
	587
	590
	592
	595
	596
	599
	600
	601
	611
	613
	617
	623
	626
	630
	633
	647
	650
	737
	751
	754
	757
	761
	763
	765
	767
	770
1P-3704	547
	549
	553
	558
	564
	617
	647
	751
	754
	760
	761
	763
1P-3705	549
	553
1P-4578	613
	617
	647
	731
	735
	742
	745
1P-4579	731
	735
	740
	742
	745
1P-5765	595
	596
	601
1P-5767	547
	549
	553
	558
	564
	570
1R-0739	58
	60
1R-0751	117
	120
1R-5998	971
1R-6573	125
1R-9958	393
	398
	402
1S-0812	240
	241
1S-2342	306
1S-7251	160
	161
	162
	171
	296
	297
1S-7252	158
	161
	162
	168
	171
	179
1S-9593	643
1U-8846	319
	376
	378
	514
	516
	517
	519
	765
	767
	770
2	
2A-5222	66
2B-0858	802
	804
2C-9259	939
	940
	942
	943
	944
2D-0388	381
	383
2D-6642	778
	783
	841
	844
	878
2G-1830	296
	297
2G-8767	160
	170
2H-3814	75
2H-3922	235
2J-2668	740
2L-8049	161
	172
2L-8050	161
	171
	172
	306
2L-8052	161
	172
	306
2L-8057	161
	172
2L-8058	161
	171
	306
2L-8060	161
	306
2L-8065	265
2L-8067	265
2L-8069	161
	172
	258
	278
	281
	306
	310
	312
2L-8074	306
2L-8075	161
	172
	265
2L-8077	284
	286
2L-8078	222
2L-8079	161
	172
	256
	260
	309
2M-0849	1067
	1068
2M-9780	527
	583
	586
	589
	592
	621
	628
	747
	749
	765
	767
	770
	779
	783
	826
	831
2P-1293	601
2P-2537	58
2P-2975	296
2Q-4703	999
2R-1498	126
	130
2S-1647	278
	281
2S-2596	835
	841
	844
2S-3440	56
	57
	74
2S-4078	140
	145
	147
	150
	152
	613
	616
	617
	632
	647
	735
	745
	814
	815
2S-5926	461
2T-2991	58

► **PRIMARY REFERENCE**

PART NUMBER INDEX

Part	Page	Part	Page	Part	Page	Part	Page
	60		695		529		804
2U-2552	1079		731		532		822
2Y-5503	517		735		579		831
	519		742		583		841
			745		586		844
			747		587		846
3			749		589		848
			757		592		851
3B-0551	145		761		621		878
	147		763		626		879
	150		802		628		880
	152		804		635		904
3B-4501	202		871		636	3J-5390	96
	203		872		639	3J-7354	586
3B-4505	52		873		640		730
	67		875		643		740
	74		898		655		742
	104	3D-2891	490		656		745
	191		493		659		758
3B-4509	581		499		661		802
	582		501		663		804
3B-4618	389		529		665		841
	394		532		667		844
3B-8489	371	3D-6209	382		668		859
	373		384		671	3K-0360	476
	374	3D-9143	330		674		514
	376		332		675		560
	378	3E-2310	668		677		562
	490		674		678		566
	492		678		681		579
	493		697		683		587
	495		721		685		589
	497		726		688		592
	499	3E-2338	319		689		626
	501	3E-2345	731		690		630
	503		742		695		632
	505	3E-3217	455		697		636
	507		456		698		639
	508	3E-3371	661		701		647
	918		758		703		650
	920	3E-4297	524		705		655
	923	3E-5169	306		709		661
	925	3E-6910	776		711		667
	926		777		713		671
	929	3E-7389	241		714		683
	931	3E-8020	971		715		688
	932	3E-8320	222		719		689
	934	3F-9556	236		721		690
	935		237		722		695
	936	3G-5083	793		726		703
	937	3G-8054	698		727		705
3D-2824	579		727		731		713
	583	3G-8057	698		742		714
	586		727		745		721
	587	3H-0442	841		751		725
	589		844		754		737
	592	3J-1907	123		758		747
	613		126		761		749
	616		130		763		751
	617		145		765		754
	626		147		767		757
	632		150		770		758
	646		152		773		765
	647		154		787		767
	661		478		802		770

PART NUMBER INDEX

Part	Page	Part	Page	Part	Page	Part	Page
	773		303		726	4I-3621	581
	774		304	4I-0836	688		582
	779		305		713	4I-3627	503
	783		306	4I-0995	667		505
	794		309	4I-1022	794		508
	802		310	4I-1025	639	4I-3628	495
	804		312		667		497
	835		314		709		503
	846		316		721		505
	848		643	4I-1031	681		508
3K-0835	240		964	4I-1163	1118	4I-3631	503
	241		1037	4I-1205	971		505
3L-8187	270		1041	4I-1260	1034		508
3M-6018	265		1043	4I-1536	▶471	4I-3953	1059
3P-1896	27		1045		474	4I-3981	659
3P-9847	82		1075	4I-1539	471		667
	84		1084	4I-1631	659	4I-3988	674
3R-9965	278		1109		701		677
	281	3S-6050	158	4I-1671	674	4I-3994	659
3S-2093	68	3T-5760	160		697		685
	70		170	4I-1674	570	4I-4270	971
	82	3T-7528	524		573	4I-4286	1019
	84	3V-4791	173		577	4I-4298	1115
	96		277		578	4I-4300	1115
	133	3W-6399	1109		579	4I-4361	1034
	134	3Y-9267	859		583	4I-4543	918
	160				586		920
	161				589	4I-4544	918
	170	**4**			592		920
	171				626	4I-4580	1052
	183	4B-4158	458	4I-1676	570		1055
	195		459		573		1059
	198	4B-4276	222	4I-1678	601		1062
	209	4B-4278	971	4I-1694	667	4I-4641	170
	216	4B-7739	802		721	4I-4653	130
	218		804	4I-1704	665		1059
	222	4B-9783	879	4I-1739	688	4I-4809	907
	225		880		709		909
	227	4B-9880	495		713		911
	231		497	4I-1780	711		913
	232		503	4I-2187	330		915
	239		505		332		929
	245		508	4I-3038	239		931
	249		883	4I-3144	971		932
	251	4D-1836	307		1096		934
	253	4H-6112	516	4I-3308	907		935
	256	4I-0117	393		909		936
	258		398		911		937
	260		402		913	4I-4811	929
	264	4I-0118	388		915		932
	270		393	4I-3309	907		935
	272	4I-0232	388		909		936
	274		393		911		937
	276	4I-0378	145		913	4I-4812	367
	277		147		915		369
	278		150	4I-3503	1052	4I-4814	931
	281		152		1055		934
	284	4I-0379	126	4I-3510	873	4I-5049	1108
	286		130		875	4I-5409	1
	288	4I-0800	721	4I-3511	708		2
	290		725	4I-3569	831		3
	298	4I-0806	726	4I-3615	490		▶205
	299	4I-0818	688		493	4I-5795	683
	300		713		499		695
	302	4I-0833	721		501	4I-5862	471

▶ **PRIMARY REFERENCE**

PART NUMBER INDEX

Part	Page
4I-5900	688
	713
4I-5906	688
	713
4I-5933	713
	726
4I-6003	667
	721
	725
4I-6054	659
	674
	677
	685
	770
4I-6136	688
4I-6365	853
	855
	857
4I-6397	826
	831
4I-6464	751
4I-7714	873
4I-7745	579
	626
4I-7889	284
	286
	296
	297
	314
	665
4I-7924	397
	398
	402
	404
4I-8019	388
	393
4I-8267	472
	1137
4I-8472	1137
4I-8785	595
4I-8799	685
4I-8864	490
	493
4I-8869	503
	505
	508
4I-8965	846
	848
4I-9521	126
	130
	583
	587
	590
	593
	635
	640
	643
	655
	659
	674
	677
	685
	688
	697
	707
	708
	708
	711
	713
4I-9522	130
	583
	587
	590
	593
	635
	640
	643
	655
	659
	663
	674
	677
	685
	688
	697
	701
	705
	711
	713
	721
	726
4I-9523	130
	655
	659
	663
	671
	674
	677
	681
	685
	688
	697
	701
	705
	711
	713
	726
4I-9524	655
	659
	663
	674
	677
	685
	688
	697
	707
	708
	713
	726
4I-9525	130
	583
	587
	590
	593
	655
	659
	674
	677
	685
	688
	697
	707
	708
	711
	713
	726
4I-9526	583
	587
	590
	593
	630
	635
	640
	655
	659
	675
	677
	681
	683
	685
	701
	703
	707
	708
4I-9527	130
	635
	640
	655
	659
	667
	674
	677
	683
	685
	688
	697
	703
	711
	713
	721
	726
	747
	749
4I-9528	655
	659
	685
	688
	713
	721
4I-9537	721
4I-9664	27
	31
	32
4J-0519	850
4J-0520	539
	543
	826
4J-0522	613
	617
	647
	731
	735
	742
	745
4J-0523	737
4J-0524	613
	617
	650
	731
	735
	737
	740
	742
	745
	819
	820
4J-0527	633
	636
	647
	650
	737
	802
	804
4J-0528	737
4J-5267	611
	623
	630
	802
	804
	822
4J-5268	611
	623
	751
	754
	757
4J-5309	831
4J-5477	606
	607
	608
	635
	636
	639
	640
	643
	667
	719
	721
	761
	763
4J-7385	864
	865
4J-7386	864
	865
4J-7533	524
	773
	816
	831
	841
	844
	846
	848
	894
4J-8998	809
	810
	811
	824
	837
	866
4K-1388	601
	864
	865
4K-8864	158
	162
	168

PART NUMBER INDEX

Part	Page	Part	Page	Part	Page	Part	Page
	173	5C-7793	971	5I-5597	35	5I-7786	30
	296	5C-7883	163		39	5I-7787	30
	690		173		56	5I-7788	30
	715	5C-8138	1109		106	5I-7789	30
4L-7124	222	5C-9553	183	5I-6881	840	5I-7867	74
4N-9170	376		222	5I-7090	1007	5I-7985	157
	378		296		1008	5I-7987	157
4P-7428	162		297	5I-7505	27	5I-7997	157
	173		330		54	5I-8009	27
	258		332	5I-7523	27	5I-8021	106
	260		389	5I-7525	27		108
	278		394	5I-7528	27	5I-8023	106
	281		668	5I-7529	27		108
4P-7429	281		722	5I-7540	48	5I-8040	109
4P-7581	108		802	5I-7549	104	5I-8056	74
	128		804	5I-7550	104	5I-8058	66
	162		964	5I-7558	36		117
	173		1037	5I-7559	36		120
	213		1109	5I-7561	66	5I-8066	54
	214	5D-1026	517	5I-7587	113	5I-8067	42
	216		519	5I-7588	30		44
	218		1052	5I-7589	▶95	5I-8080	157
	256		1055		113	5I-8086	157
	266		1059	5I-7599	41	5I-8087	157
	281	5D-4822	1029	5I-7601	104	5I-8088	157
	298		1032	5I-7602	113	5I-8089	157
	310		1035	5I-7610	36	5I-8090	157
	656	5D-8159	77	5I-7623	66	5I-8094	157
4S-1962	1052		79	5I-7630	52	5I-8095	157
	1055		86	5I-7632	36	5I-8097	157
	1059	5F-9144	123	5I-7633	109	5I-8098	157
	1062	5G-2247	455		111	5I-8270	158
4T-0987	841	5H-5672	799		115		160
	844	5H-8624	730	5I-7642	62		168
4T-3148	831		740		63		170
4T-5074	831	5I-3878	163	5I-7645	56		179
		5I-4076	683		57	5I-8307	1118
			688	5I-7646	74	5I-8416	▶472
5			713	5I-7650	23		474
		5I-4111	864	5I-7654	30	5I-8417	787
5A-3604	139		865	5I-7655	74	5I-8426	787
	1093	5I-4174	595	5I-7656	36	5I-8510	558
	1094		596	5I-7660	35	5I-8511	846
	1095		599	5I-7666	42		848
5B-5947	54		600		44	5I-8623	787
5B-9304	113	5I-4376	635	5I-7667	46	5I-8625	787
5C-2874	163		639	5I-7677	106	5I-8670	521
	173		643		108	5I-8708	688
5C-2889	202		688	5I-7678	106		713
	203		713		108	5I-8715	596
5C-2890	117	5I-4393	571	5I-7679	109	5I-8825	725
	120	5I-4396	674		111	5I-8853	659
	128		688	5I-7683	36		667
	238		697	5I-7690	67		721
	266		713	5I-7691	67	5I-9368	160
	272	5I-4915	31	5I-7696	75		170
	1096	5I-4940	56	5I-7697	75	5K-3294	1052
5C-7261	67		57	5I-7724	27		1059
	158	5I-4983	35	5I-7725	56	5K-8451	126
	163	5I-4993	42		57		130
	168		44	5I-7735	74		636
	173	5I-5005	33	5I-7742	115		668
	179	5I-5038	62	5I-7750	39		681
	861		63	5I-7784	30		701
	884	5I-5181	30	5I-7785	30	5K-9090	527

▶ **PRIMARY REFERENCE**

PART NUMBER INDEX

Part	Page
	537
	540
	544
	579
	611
	613
	614
	616
	617
	623
	626
	630
	632
	633
	646
	647
	650
	735
	737
	745
	751
	754
	757
	763
5K-9243	376
	378
	918
	920
5L-3233	93
	94
5L-4758	478
5L-6326	75
5P-0372	388
5P-0743	64
	65
5P-0747	158
	296
	297
5P-0761	158
	160
	161
	168
	170
	179
	296
	297
5P-0767	517
	519
	1053
	1056
	1060
	1062
5P-1075	330
	332
	363
	364
5P-1076	385
	579
	626
5P-1296	730
	735
5P-1318	621
	628
5P-1442	126
	130
5P-2321	265
	270
5P-2369	640
5P-2568	904
5P-3108	864
	865
5P-3454	222
5P-3779	473
5P-4115	222
	296
	297
	389
	394
5P-4116	156
	163
	173
	310
	312
	330
	332
	980
	984
	986
5P-4325	1059
5P-4924	126
	130
	145
	147
	150
	152
5P-5148	160
	170
5P-5998	239
5P-7175	126
	130
5P-7462	690
	715
5P-7463	690
	715
5P-7464	747
	749
5P-7465	747
	749
5P-7468	630
	633
	650
	731
	735
	737
	742
	745
5P-7469	630
	633
	650
	731
	735
	737
	742
	745
5P-7470	613
	617
	647
5P-7471	614
	617
	647
5P-7854	643
5P-7958	1065
5P-8182	614
	617
	647
5P-8196	58
	60
5P-8309	417
	419
	1108
5P-8444	630
	633
	650
5P-8500	142
	143
	1065
5P-9085	1052
	1059
5P-9297	206
	209
	211
5P-9617	58
	60
	742
	745
5P-9909	82
	84
5Q-4212	571
	603
	604
	606
	607
	608
	609
5Q-4213	571
	603
	604
	761
	763
6C-6760	560
	562
	566
6D-0692	319
6D-1641	58
	60
	1052
	1055
	1059
	1062
6D-3479	179
	678
	1052
	1055
	1059
6D-4636	126
	130
6D-5257	278
	281
6D-9157	730
	802
	804
6E-2163	835
6E-2271	821
	829
	835
6E-2274	824
	826
	831
	837
6E-2313	822
6E-2745	790
6E-2746	790
6E-3653	831
6E-4793	790
6E-4816	►790
	826
	837
6E-5169	831
6E-5431	822
6E-5434	822
6E-5438	822
6E-5439	822
6E-5643	831
6E-5731	824
	826
	831
	837
6F-0253	240
	241
6F-4855	528
6F-7045	235
6F-7556	36
6F-7557	36
6G-2256	160
	170
6G-2263	160
	170
	179
6I-1418	191
6I-2501	94
6I-2502	94
6I-5298	1000
	1001
6I-5342	1034
6I-5976	1029
	1032
6I-6033	388
	393
6I-6583	319
6I-6585	319
6I-6795	873
	875
6I-6904	840
6I-6905	840
6I-6907	840
6J-2680	747
	749
	802
	804
6K-0806	1009
	1010
	1012
	1013
	1014
	1015
6K-8178	158

6

► PRIMARY REFERENCE

PART NUMBER INDEX

Part	Page	Part	Page	Part	Page	Part	Page
	163		745		837		659
	168		802	6V-5645	222		661
	179		804	6V-5683	1079		663
	678	6V-0974	698	6V-5782	621		665
	727		727		628		667
6L-3616	918	6V-1874	731	6V-7238	514		668
	920		742	6V-7357	996		671
6P-2215	404	6V-2235	1059		997		674
6P-2216	388	6V-2369	264		998		677
	393	6V-2722	158		1029		678
	397		168		1032		681
	398		171		1053		683
	402		179		1055		685
	404		181		1056		688
	414		182		1059		689
	415		296		1108		690
	416		297		1118		695
6P-8855	1052	6V-3265	1052	6V-7646	999		697
	1055		1055	6V-7658	448		698
	1059		1059		524		701
6T-3631	244		1109	6V-7661	454		703
	270	6V-3922	826	6V-8077	640		705
6T-3632	244		831	6V-8185	222		709
	270	6V-3965	621	6V-8186	236		711
6T-3633	244		628		237		713
	270		635	6V-8187	222		714
6T-9442	240		640	6V-8200	529		715
6V-0400	547		643		532		719
	549		661		759		721
	553		675	6V-8202	1087		722
	558		678		1088		725
	564		681		1089		726
	570		688	6V-8218	873		727
	573		695		875		747
	611		698	6V-8231	41		749
	623		701		109		758
	630		713		111		761
	650		727		1074		763
	730		731	6V-8236	36		765
	737		742	6V-8362	243		767
	740		745	6V-8374	270		770
	765		802	6V-8378	236		848
	767		804		237		881
	770	6V-4298	522	6V-8397	527	6V-8398	527
6V-0545	735	6V-5049	231		571		551
	745		232		575		556
6V-0683	690	6V-5200	775		579		560
	715	6V-5210	202		583		562
6V-0852	621		203		586		566
	628		1111		587		568
	635	6V-5215	23		589		571
	640		36		592		575
	643		63		606		579
	661		117		607		603
	675		120		608		604
	678	6V-5266	58		626		606
	681		60		630		607
	690	6V-5326	841		635		608
	695		844		636		609
	698	6V-5393	831		639		621
	701	6V-5556	831		640		626
	715		867		643		628
	727	6V-5597	824		644		630
	731		826		655		650
	742		831		656		655

► **PRIMARY REFERENCE**

PART NUMBER INDEX

Part	Page
	661
	671
	688
	689
	690
	695
	705
	713
	714
	737
	742
	745
	747
	749
	761
	763
	765
	767
	770
	884
	885
	886
	893
6V-8399	852
	882
6V-8400	613
	616
	647
	859
6V-8624	747
	749
6V-8625	579
	671
	688
	705
	713
	737
	765
	767
	770
6V-8626	583
	586
	589
	592
6V-8627	643
	761
	763
6V-8633	761
	763
6V-8635	527
	613
	616
	632
	646
	754
6V-8636	579
	583
	586
	589
	592
	626
	636
	639
	640
	643
	655
	661
	663
	665
	671
	674
	677
	681
	683
	689
	695
	697
	701
	703
	705
	709
	714
	719
	726
6V-8637	616
	646
	747
	749
6V-8639	661
	689
	695
	714
	749
6V-8641	635
6V-8713	58
	60
	583
	586
	589
	592
6V-8716	742
6V-8721	765
	767
	770
6V-8723	639
6V-8724	583
	586
	589
	592
	636
	639
	643
	655
	659
	661
	663
	665
	667
	674
	677
	681
	685
	689
	695
	697
	701
	703
	705
	709
	714
	719
	721
	727
	758
	765
	767
	770
6V-8754	840
6V-8774	636
	640
	668
	690
	715
	722
6V-8781	583
	587
	589
	592
	636
	659
	663
	667
	685
	688
	711
	713
6V-8782	630
6V-8784	617
	647
6V-8785	751
6V-8934	643
	667
	721
6V-8935	606
	607
	608
	636
	640
	643
6V-8936	527
	606
	607
	608
	630
6V-8978	873
	875
6V-8994	571
	575
6V-8995	575
	609
6V-9001	579
	626
	639
	655
	665
	689
	697
	709
	711
	714
	719
	726
6V-9002	650
	655
	689
	714
	747
	749
6V-9004	613
	617
	632
	647
	661
6V-9005	613
	617
6V-9007	613
	617
	632
	646
	661
	695
	747
	749
6V-9008	617
	630
	647
	650
	737
	751
	754
	757
6V-9009	647
6V-9168	571
	575
6V-9169	575
	609
6V-9175	583
	587
	590
	592
6V-9200	758
6V-9491	225
	227
	266
6V-9746	541
	570
	573
	577
	578
	579
	583
	587
	590
	592
	593
	601
	613
	616
	617
	623
	626
	630
	632
	646
	647
	661
	695
	731
	742
	747

► **PRIMARY REFERENCE**

PART NUMBER INDEX

Part	Page
	749
	751
	754
	757
	760
	761
	763
	898
6V-9829	671
	683
	703
	705
6V-9830	630
6V-9832	630
6V-9836	640
	667
	671
	674
	677
	683
	688
	697
	703
	705
	713
	721
	725
	727
6V-9837	579
	626
	630
6V-9840	632
	754
6V-9843	667
	671
	678
	705
	722
	727
6V-9844	765
	767
	770
6V-9850	579
	626
	636
	639
	643
	677
	689
	711
	714
	726
6V-9853	742
	751
	754
6V-9854	617
	745
6V-9872	586
6V-9875	745
6V-9876	636
	667
	721
	725
	747
	749
6W-6005	158
	160
	168
	170
	179
6W-7293	1052
	1055
6Y-0473	455
6Y-8186	449
	450
7	
7C-1493	58
	60
7F-0560	181
	182
7F-8268	455
	456
7G-5984	650
7G-5985	650
7G-5986	650
7H-3171	448
	454
7I-0375	1052
	1055
	1059
	1062
7I-0717	341
	343
	346
	347
	348
7I-0966	867
7I-0986	887
	889
7I-1026	809
	811
7I-1118	630
	754
	757
7I-1248	824
	826
	831
	837
7I-1418	388
7I-2272	529
	773
	774
	822
	832
7I-2673	82
	84
	93
	94
	160
	170
	196
	206
	208
	209
	211
	264
	281
	310
	312
	1075
	1095
	1101
7I-7131	800
7I-7403	887
	889
7I-7439	583
	586
	589
	711
7I-8084	883
	888
	896
7I-8102	887
7J-9108	551
	556
	583
	584
	586
	587
	589
	590
	592
	593
7J-9933	867
7K-1181	58
	60
	140
	160
	170
	189
	190
	213
	214
	216
	218
	249
	251
	253
	256
	258
	260
	263
	264
	270
	272
	274
	276
	277
	278
	281
	284
	286
	288
	290
	292
	298
	299
	300
	303
	304
	305
	306
	309
	310
	312
	314
	316
	571
	575
	583
	586
	589
	592
	609
	630
	635
	639
	643
	655
	659
	661
	663
	667
	671
	674
	677
	681
	683
	685
	688
	695
	697
	701
	703
	705
	707
	708
	709
	711
	713
	721
	725
	726
	735
	747
	749
	751
	754
	758
	765
	767
	770
	989
	1043
	1045
	1052
	1055
	1059
	1062
	1084
7M-7410	774
7M-8485	319
	527
	579
	613
	614
	616

► **PRIMARY REFERENCE**

PART NUMBER INDEX

Part	Page	Part	Page	Part	Page	Part	Page
	617		556	7Y-0225	319	7Y-3472	1074
	618		568	7Y-0252	514	7Y-3474	1109
	626		571	7Y-0463	484	7Y-3721	541
	630		575	7Y-0466	484		623
	632	7X-2550	336	7Y-0467	484	7Y-3729	617
	633		337	7Y-0468	484		647
	646		731		485	7Y-3730	611
	647		735	7Y-0623	1029		623
	650		742		1032		630
	731		745	7Y-0633	334	7Y-3731	544
	737	7X-2552	917		335		613
	742	7X-2553	424		367		616
	751		549		369		632
	754		553	7Y-0682	461		646
	757		730	7Y-0729	▶955	7Y-3820	161
	794		740	7Y-1426	319		171
	816		1083	7Y-1430	319	7Y-3821	161
	826	7X-2554	82	7Y-1431	319		171
	832		84	7Y-1432	319	7Y-3919	1041
	894	7X-2555	740	7Y-1433	319	7Y-3920	1041
7N-0719	222	7X-2557	794	7Y-1434	319	7Y-3950	245
	▶235	7X-2558	775		514		264
7N-2353	245	7X-2562	327	7Y-1558	319		270
7N-3718	208	7X-2563	517	7Y-1607	435	7Y-3951	264
	209		519		▶451	7Y-3952	225
7N-5274	158	7X-2565	451	7Y-1608	435		264
7T-6799	243		452		▶452	7Y-3953	245
7T-8890	1109		453	7Y-1647	376		270
7W-3556	42		457		378	7Y-3954	264
7W-9028	58	7X-2568	319	7Y-1648	376	7Y-3955	264
	60	7X-2576	517		378	7Y-3958	265
7X-0796	36		519	7Y-1650	376	7Y-3962	161
	41		1081		378		171
	54	7X-2583	338	7Y-1746	458		213
7X-0818	163		339		459		214
	173		340	7Y-1781	460		216
	719		344	7Y-1863	376		218
7X-0851	955		345		378		265
7X-0871	742	7X-2619	163	7Y-1924	160		272
	745		173		170		274
7X-2459	711		316	7Y-1976	77	7Y-3963	161
7X-2475	1028	7X-2621	163		79		171
7X-2532	40		173		82		213
7X-2533	163		195		84		214
	173		197		86		216
	200		307	7Y-2219	▶938		218
	983		832		939		265
	984	7X-3164	560		940		274
	1055		562		942		290
7X-2534	1106		566		943	7Y-3964	218
7X-2535	133	7X-6315	193		944		272
	134	7X-7644	1137	7Y-2292	341	7Y-3965	218
7X-2536	460	7X-7729	82		343		290
	1007		84		346	7Y-3967	290
	1008		133		347	7Y-3995	161
7X-2543	560		134		348		171
	562		650	7Y-2496	931	7Y-3996	161
	566		964		934		171
7X-2544	601		1037	7Y-2853	388	7Y-4173	685
	650	7X-7900	601		393	7Y-4193	659
	737	7Y-0059	1	7Y-2854	389	7Y-4199	677
7X-2548	369		2		394	7Y-4202	778
7X-2549	549		3	7Y-2916	389	7Y-4212	778
	551		▶1065	7Y-3110	917		782
	553	7Y-0223	319	7Y-3470	1074	7Y-4213	778

▶ **PRIMARY REFERENCE**

PART NUMBER INDEX

Part	Page
7Y-4215	778
	782
	794
7Y-4216	778
	782
7Y-4217	779
	783
7Y-4222	779
7Y-4224	778
	782
7Y-4234	778
7Y-4267	787
7Y-4268	787
7Y-4366	674
	677
7Y-4390	643
	659
	685
	767
7Y-4538	547
	549
	553
	558
7Y-4562	731
7Y-4631	495
	497
7Y-4817	800
7Y-4868	551
	556
	570
	573
	601
	760
7Y-5074	541
7Y-5116	510
7Y-5119	510
7Y-5215	512
7Y-5216	510
7Y-5219	832
7Y-5221	787
7Y-5226	841
	844
7Y-5247	650
	737
7Y-5272	478
7Y-5458	242
7Y-5464	242
7Y-5499	222
7Y-5505	264
7Y-7394	1047
	1048
	1100
	1101
7Y-8099	826
7Y-8165	163
	173
7Y-8167	126
	130
	163
7Y-8379	661
	667
	695
7Y-8436	870
7Y-8437	870
7Y-8463	1002
7Y-8484	635
7Y-8487	713
7Y-8561	984
	986
	1029
	1032
	1096
	1003
	1004
	1005
	1009
	1010
8C-0564	635
	639
8C-3206	539
	543
8C-3445	58
	60
8C-3446	58
	60
	742
	745
	802
	804
8C-3451	742
	745
	802
	804
8C-4082	745
8C-5607	200
8C-5608	188
	200
8C-5917	158
	160
	168
	171
	179
8C-5918	158
	160
	168
	170
	179
8C-6354	265
8C-6358	181
	182
8C-6965	859
8C-8400	731
	742
8C-8451	188
8C-8580	999
8C-8988	586
	589
	592
8C-8992	385
8E-4359	448
8E-5031	455
8E-5032	455
8E-5035	455
8E-5037	455
	456
8E-5599	455
	456
8E-5600	451
	452
	453
	▶454
	457
8E-5601	454
8E-5602	454
8E-5604	454
8E-5605	454
8E-5606	454
8E-5607	454
8E-5608	454
8E-6792	454
8E-6793	454
8E-8585	449
	450
8E-8586	449
	450
8E-9805	327
8F-0212	822
8F-1434	236
	237
8F-7219	123
8H-3481	1106
8H-5303	235
8H-5306	235
8H-9819	802
	804
8J-1256	163
	173
8J-4645	794
8J-6815	841
	844
8L-2779	139
8L-8413	158
	160
	162
	168
	179
	278
	281
8M-2770	163
	173
8M-2772	918
	920
8M-2773	1055
8N-0869	161
	171
8N-1546	306
8N-1547	161
	171
8P-9770	436
	945
	946
	947
	948
	949
	950
	951
	952
	953
	954
8S-2634	296
	297
8T-0075	663
	674
	677
	681
	683
	697
	701
	703
	726
8T-0078	617
	647
	731
	742
8T-0114	1007
	1008
8T-0151	639
8T-0164	640
	719
8T-0198	614
	618
	632
	646
8T-0266	978
8T-0267	802
	804
8T-0269	999
	1066
	1069
8T-0286	163
	173
8T-0288	888
	890
	891
	892
	896
	902
8T-0328	145
	147
	150
	152
	154
	163
	173
	223
	266
	316
	397
	398
	402
	404
	522
	964
	1037
8T-0337	266
	307
8T-0341	590
8T-0360	376
	378
8T-0362	376
	378
8T-0380	955
8T-1158	859
8T-1159	454
8T-1447	490
	493

8

▶ **PRIMARY REFERENCE**

PART NUMBER INDEX

Part	Page	Part	Page	Part	Page	Part	Page
	499		130		623		1062
	501		133		626		1075
8T-1686	626		134		630		1077
8T-1687	690		163		633		1080
	747		173		636		1083
8T-1779	665		185		640		1099
	688		195		644		1108
	713		197		647		1109
	765		206		650	8T-4123	40
	767		208		656		319
	770		209		663		367
8T-1889	163		211		668		369
	173		213		675		439
8T-1890	163		214		678		440
	173		216		681		441
8T-1905	643		218		683		442
	661		220		690		451
	665		231		698		452
	674		232		701		453
	678		249		703		457
	681		251		715		517
	690		253		719		519
	695		256		727		907
	697		258		731		909
	701		260		735		911
	709		277		737		913
	715		278		742		915
	727		281		745		923
8T-2525	737		284		749		929
	751		286		760		931
8T-2920	747		292		761		932
	749		293		763		934
8T-3008	816		296		765		935
	894		297		767		936
8T-3518	181		298		770		937
	182		299		792	8T-4127	266
8T-3519	181		302		800	8T-4131	529
	182		307		802		532
8T-3597	404		376		804		923
8T-3611	613		378		824	8T-4132	925
	616		389		826		926
8T-3612	404		394		832	8T-4133	126
8T-3647	980		547		837		130
	1052		551		918		133
	1055		556		920		134
	1059		558		964		158
	1062		560		980		163
8T-3653	581		562		983		168
	582		564		984		173
8T-4121	56		566		986		179
	57		577		989		206
	58		578		999		208
	60		579		1007		209
	68		584		1008		211
	70		587		1011		214
	75		590		1028		218
	77		593		1029		330
	79		595		1031		332
	82		596		1032		529
	84		599		1037		532
	86		600		1040		799
	88		601		1041		859
	97		611		1052		918
	100		614		1055		920
	126		617		1059		971

PART NUMBER INDEX

Part	Page	Part	Page	Part	Page	Part	Page
	984		964		971		763
	986		1007		983		794
	1029		1008		984		841
	1032		1011		986		844
8T-4136	58		1029		999	8T-4140	143
	60		1031		1007		446
	82		1032		1028		447
	84		1037		1037		794
	86		1052		1052		806
	97		1055		1055		807
	100		1059		1059		850
	126	8T-4137	36		1062	8T-4149	731
	130		57		1075	8T-4167	517
	163		58		1077		519
	173		60	8T-4138	189		1081
	214		68		190	8T-4171	223
	218		70		389		249
	284		77		394		251
	286		79		1052		253
	292		82		1055		256
	293		84		1059		292
	297		86	8T-4139	40		293
	302		88		82		314
	376		97		84		988
	378		100		90		1043
	529		126		92		1045
	532		130		547	8T-4172	36
	560		133		549		297
	562		134		551		980
	566		163		553		1062
	584		173		556	8T-4175	142
	587		185		558		795
	590		191		560		1070
	593		213		562	8T-4176	614
	614		216		566		617
	617		220		568		633
	633		231		570		647
	636		232		571		795
	640		253		573	8T-4177	675
	644		256		577		678
	647		258		578		698
	650		260		579		727
	656		277		601	8T-4178	579
	663		284		603		626
	675		296		604		630
	678		302		609		665
	681		307		617		690
	690		376		626		715
	698		378		630	8T-4179	130
	701		389		636		253
	715		394		640		256
	719		458		644		341
	727		459		647		343
	737		636		650		346
	749		656		668		347
	765		678		703		348
	767		681		715		460
	770		690		722		984
	791		701		737		986
	794		715		747	8T-4182	133
	800		727		749		134
	802		794		751		163
	804		802		754		173
	846		804		760		579
	848		964		761		595

► **PRIMARY REFERENCE**

PART NUMBER INDEX

Part	Page
	596
	599
	600
	601
	626
	751
	755
8T-4183	40
	334
	514
	547
	549
	553
	558
	560
	562
	575
	614
	617
	633
	647
	650
	690
	731
	735
	740
	743
	745
	802
	804
8T-4184	425
	547
	549
	551
	553
	556
	558
	564
	568
	570
	573
	603
	604
	609
	623
	630
	644
	683
	765
	767
	770
	980
	1062
8T-4185	54
	86
	163
	179
	551
	556
	560
	562
	566
	577
	578
	584
	587
	590
	593
	601
	644
8T-4186	58
	650
	678
	761
	763
8T-4189	68
	70
	77
	79
	86
	156
	310
	312
	394
	398
	402
	668
	690
	715
	722
	984
	986
8T-4190	206
	208
	209
	211
	213
	216
	340
	344
	973
	1077
8T-4191	27
	108
	130
	163
	173
	213
	214
	216
	218
	249
	251
	253
	256
	278
	282
	284
	286
	298
	299
	668
	918
	920
	1008
	1011
	1041
	1052
	1055
	1059
	1062
	1083
	1099
	1108
	1109
8T-4192	168
	179
	386
	387
	579
	584
	587
	590
	593
	626
	636
	644
	683
	690
	703
	715
	731
	743
	751
	755
	795
	973
	1067
	1068
8T-4193	850
	938
	1071
	1083
8T-4194	140
	522
	547
	549
	551
	553
	556
	558
	564
	568
	611
	644
	650
	730
	737
	740
8T-4195	58
	77
	79
	86
	126
	130
	163
	173
	363
	364
	792
	802
	804
	822
	824
	826
	832
	837
	989
	1029
	1032
	1040
	1080
8T-4196	60
	77
	79
	529
	532
	577
	578
	581
	582
	584
	587
	590
	593
	597
	598
	601
	614
	617
	633
	647
	731
	735
	743
	745
	759
	760
	761
	763
	795
8T-4197	58
	60
8T-4198	595
	596
	599
	600
	656
	683
	703
8T-4199	163
	173
	316
	376
	378
8T-4200	82
	84
	139
	330
	332
	389
	1052
	1055
	1059
	1062
8T-4205	222
8T-4223	39
	40
	82
	84

PART NUMBER INDEX

Part	Page	Part	Page	Part	Page	Part	Page
	90		614		330		932
	92		617		332		934
	130		621		389		935
	140		623		394		936
	168		626		398		937
	179		628		402	8T-4896	108
	202		630		621		581
	203		633		628		582
	253		636		668		597
	256		640		675		598
	279		644		678		759
	282		647		690	8T-4908	68
	294		650		698		70
	330		668		715		86
	332		683		719		394
	334		690		722		802
	335		703		727		804
	336		715		802	8T-4910	579
	337		722		804		597
	341		730		822		598
	343		731		980		626
	346		735		1007		636
	347		737		1008		759
	348		740		1019	8T-4944	779
	386		743		1052		782
	387		745		1055	8T-4956	547
	389		747		1060		558
	394		749		1062		584
	425		751	8T-4226	158		587
	514		755		163		590
	522		759		168		593
	529		760		173		606
	532		761		179		607
	547		763	8T-4244	140		608
	549		765		202		614
	551		767		203		617
	553		770		334		621
	556		802		335		628
	558		804		551		630
	560		819		556		633
	562		820		571		647
	564		907		603		650
	566		909		604		731
	568		911	8T-4648	279		737
	570		913		282		747
	571		915		549		749
	573		973		553		751
	575		980		579		755
	577		984		626		907
	578		986		731		909
	579		1062		743		911
	584	8T-4224	24		760		913
	587		58		761		915
	590		60		763	8T-4970	213
	593		68		973		216
	597		70	8T-4779	971		223
	598		77	8T-4780	367		663
	601		79		369		1118
	603		82		907	8T-4971	986
	604		84		909		1053
	606		86		911		1055
	607		133		913		1056
	608		134		915		1060
	609		191		929	8T-4984	82
	611		316		931		84

► **PRIMARY REFERENCE**

PART NUMBER INDEX

Part	Page
	97
	100
8T-4986	102
	103
8T-4987	90
	92
8T-5005	134
	284
	286
	296
	314
8T-5092	568
	575
	614
	617
	633
	647
8T-5412	609
8T-5460	439
	440
	441
	442
	923
8T-5878	451
	452
	453
	457
8T-6383	810
8T-6466	133
	134
	163
	173
	584
	587
	590
	593
	751
	755
	980
8T-6684	735
8T-6685	36
	547
	558
	564
	832
8T-6693	397
	398
	402
	404
	522
8T-6703	82
	84
	97
	100
	653
	654
8T-6759	774
	800
	822
	832
	841
	844
	859
	900
	902
8T-6842	1137
8T-6868	603
	604
	609
	614
	617
	647
	752
	755
	819
	820
8T-6870	675
	678
	681
	698
	701
	727
	822
8T-6912	163
	173
8T-7087	650
	737
8T-7338	423
	731
	735
8T-7547	58
	60
8T-7811	904
8T-7930	571
8T-7964	52
8T-7971	731
	743
	802
	804
8T-8729	161
	170
	171
	244
	249
	256
	258
	260
	264
	284
	286
	303
	306
	310
	312
	314
	754
	982
	1045
8T-8730	161
	171
	249
	256
	258
	260
	264
	270
	272
	284
	286
	303
	306
	309
	310
	312
	314
	1045
8T-8731	284
	286
8T-8732	284
	286
8T-8737	161
	170
	171
	222
	225
	242
	249
	256
	258
	265
	272
	278
	281
	284
	286
	298
	303
	306
	309
	314
	1004
	1005
	1045
	1062
	1073
8T-8748	240
	241
8T-8799	161
	171
8T-8874	404
8T-8887	643
8T-8899	731
	742
	754
8T-8987	632
8T-9403	579
	599
	600
	611
	623
	626
8T-9598	51
	75
8T-9756	158
	160
	168
	170
	179
8T-9757	162
	168
	171
8X-7933	601
8Y-5745	1029
	1032
8Y-6352	1104
8Y-6967	973
9B-7233	243
9F-2167	579
	626
9F-5644	235
9G-0002	158
	160
	168
	170
	179
9G-0003	162
	171
9G-0004	158
	160
	168
	171
	179
9G-0005	158
	160
	168
	170
	179
9G-4343	161
	172
	222
	264
9G-7641	225
	227
	►243
9G-8451	222
9G-8909	162
	171
9J-0705	790
9K-0700	1109
9L-9188	58
	60
9M-3786	731
	735
	740
9M-5590	852
9M-7958	140
9M-8406	126
	130
9S-4167	126
	130
9S-4180	524
	831
9S-4181	613
	617
	630
	633
	647
	737
9S-4182	730
	740
	742
	745
9S-4185	587
	589
	592
	632

9

► PRIMARY REFERENCE

PART NUMBER INDEX

Part	Page	Part	Page	Part	Page	Part	Page
	647		309	9X-2043	216		204
	683		310		218		214
	703		312	9X-2044	266		218
	737		314		1104	9X-3495	284
	747		1045		1106		286
	749	9W-0852	161		1116		316
	751		171		1120	9X-3592	510
	754		211	9X-2045	989	9X-3598	512
	757		222		1034	9X-4184	241
	779		284	9X-2046	989	9X-6032	581
	782		286		1072		582
	795		306	9X-2201	102		597
9S-4188	58		309		103		598
	60		310		730	9X-6153	1079
9S-4191	529		312		731	9X-6165	188
	586		314		735		200
	655	9W-1951	265		740		1029
	683	9W-2142	455	9X-2297	636		1032
	690	9W-2146	456	9X-2480	192	9X-6582	606
	703	9W-2201	448	9X-2616	1091		607
	709	9W-3137	449		1092		608
	714		450	9X-3401	42		635
	719	9W-3138	449		161		639
	822		450		170		643
	848	9W-3361	463		172	9X-8081	270
	851		464		229	9X-8256	117
9S-6130	145		465		242		120
	147		466		260		128
	150		467		265		133
	152		468		272		134
	814		470		278		163
	815	9W-3619	463		281		173
9S-8001	773		464		284		183
9S-8004	123		465		286		189
	126		466		290		190
	130		467		298		192
	636		468		306		213
	640		470		655		216
	773	9W-9352	467		661		223
	846	9W-9455	448		665		249
	904	9X-0196	161		667		251
9S-8005	773		171		695		253
	774	9X-1813	156		721		256
	846		229		802		265
	848	9X-2041	971		804		266
9S-8010	617		975		1002		272
	647		991		1003		292
9T-0835	794		993		1004		293
9T-0836	793		1111		1005		314
9T-1614	841	9X-2042	216	9X-3402	170		316
	844		218		172		330
9T-4506	790		246		225		332
9W-0335	264		266		258		389
9W-0625	240		270		272		394
9W-0742	160		290		278		663
	▶181		314		281		668
9W-0844	161		971		284		722
	171		993		286		802
	265		1019		298		804
	270		1035		306		964
	278		1103	9X-3404	158		988
	281		1104		168		996
	284		1111		179		997
	286		1116	9X-3463	202		998
	306		1120		203		999

▶ **PRIMARY REFERENCE**

PART NUMBER INDEX

Part	Page	Part	Page	Part	Page	Part	Page
	1029	033-8248	130		713		909
	1032		918	087-4575	473		911
	1037		920	087-4576	473		913
	1043	061-7539	117	087-4577	473		915
	1045		120	087-4683	239	093-0349	367
	1052	081-6344	281	087-4710	859		369
	1055	085-6444	▶1049	087-4742	778		907
	1059		1115	087-4743	778		909
	1060	085-6445	1049		782		911
	1066	085-6446	1049	087-4757	778		913
	1069	085-6447	1049	087-4786	778		915
	1096	085-6448	1049		782		923
	1106	085-6449	1034	087-5166	846		929
	1108		1049		848		931
	1109	085-7329	160	087-5303	659		932
	1118		170		685		934
9X-8257	206	085-7356	667	087-5431	512		935
	208		674	087-5434	512		936
	209		677	087-5436	512		937
	211		681	087-5507	510	093-0363	367
	213		695	087-5510	510		369
	216		697	087-5591	681		907
	423		701	087-5708	859		909
	424		721	087-5760	688		911
	549		726		713		913
	553	085-7538	898	087-5761	703		915
	730	085-8604	503	087-5762	665		929
	731		505		688		931
	735		508		713		932
	775	085-8605	503	087-5764	677		934
	789		505	087-5765	665		935
	810		508	087-5766	663		936
	850	085-9310	143		665		937
	938		806	087-5767	688	093-1291	551
	971		807		713		556
	973	085-9311	376	087-5771	667	093-1294	761
	1028	085-9429	157	087-5772	663		763
	1029	085-9513	26		688	093-1344	925
	1032	086-0255	490		713		926
	1070		493	087-5774	688	093-1345	923
	1071		499		713	093-1436	461
	1077		501	087-5777	667	093-1512	461
	1083	086-0321	938	087-5778	677	093-1572	512
9X-8582	1109	086-0322	938	087-5805	925	093-1729	514
9X-8600	116	087-3908	388		926	093-2064	130
9X-9896	188		393	087-5908	435	093-2069	999
		087-3909	388		▶439	093-5432	77
			393	087-6582	697		79
0		087-4402	655		701	093-7521	526
			663		726	094-0580	319
003-7764	126		665	087-6583	685	094-0584	514
	130		674	091-3474	52	094-0611	319
	145		677		104		514
	147		697	091-9035	160	094-0616	319
	150		709		677	094-0747	490
	152		726	093-0083	367		493
012-0380	238	087-4411	688		369		499
030-1706	162		713	093-0084	907		501
	171	087-4454	472		909	094-0876	853
033-5853	58		▶473		911		855
	60	087-4456	▶474		913		857
033-5879	790		476		915	094-1399	778
033-6036	790	087-4531	688	093-0115	367		782
033-6038	58		713		369	094-1509	514
	60	087-4534	688	093-0116	907	094-1516	514

▶ **PRIMARY REFERENCE**

PART NUMBER INDEX

Part	Page	Part	Page	Part	Page	Part	Page
094-1528	319		1055		831	095-1785	868
094-1542	319		1059		837		870
094-1875	529		1062		861	095-1786	873
	532	095-0929	512		870		875
	778	095-0946	794		873	095-1787	824
	782	095-1022	514		875		826
	794	095-1260	859	095-1594	841		831
094-1881	529	095-1270	319		844		837
	532	095-1386	126		846		870
094-1882	529		130		848	095-1788	529
	532	095-1388	64	095-1595	787		532
	778		65	095-1596	521	095-1789	841
	782	095-1519	528	095-1597	581		844
	794		887		582		846
094-1900	787		889		597		848
094-1920	581	095-1522	840		598	095-2005	27
	582	095-1543	77	095-1600	759	095-2038	117
094-1931	503		79	095-1601	816		120
	505	095-1547	814		870	095-2039	27
	508		815		894		128
094-2080	264	095-1572	778	095-1602	816	095-2927	461
094-4628	23		782		894	095-6639	799
	26	095-1575	778	095-1603	831	095-7378	778
094-7134	46		782	095-1608	802	095-7380	778
094-7154	46		831		804		782
094-7516	46		852	095-1625	800	095-7382	778
094-7583	109		859	095-1632	512	095-7383	778
094-7741	27		894	095-1657	816		782
094-9266	67	095-1576	900		894	095-7384	778
094-9267	67		902	095-1681	524	095-7386	778
094-9424	27	095-1578	852	095-1685	776		782
094-9525	52		871		777	095-7387	778
094-9725	117		872		778	095-7930	802
	120		883		782		804
094-9950	233		887	095-1698	867		1041
094-9980	233		889		900	095-8799	24
095-0085	233	095-1579	852		902		136
095-0410	233		873	095-1700	778	096-1519	778
095-0673	859		875		782		782
095-0707	776	095-1580	861		816	096-1521	778
	777	095-1582	840		894	096-1522	778
095-0723	266		861	095-1704	461	096-1523	778
095-0728	1011	095-1584	521	095-1716	800	096-1545	904
095-0735	1007		852	095-1717	490	096-1567	490
	1008		873		493		499
095-0736	145	095-1585	778		499	096-1568	490
	147		782		501		499
	150		816		510	096-1570	503
	152	095-1586	778	095-1720	495		505
	1084		782		497		508
095-0742	265		853	095-1721	503	096-1571	503
095-0755	971		855		505		505
095-0826	802		857		508		508
	804		868	095-1730	802	096-1628	853
	1041		870	095-1735	804		855
095-0827	988		884	095-1750	884		857
095-0843	330		885		885	096-1773	319
	332		886		886	096-1774	319
095-0863	449		893		893	096-1775	319
	450		895	095-1751	882	096-1776	319
095-0882	787	095-1587	873		884	096-1777	319
095-0886	514		875		885	096-1778	319
095-0891	319	095-1590	521		886	096-1779	319
	514		824		893	096-1780	319
095-0913	1052		826	095-1778	831	096-1781	319

► **PRIMARY REFERENCE**

PART NUMBER INDEX

Part	Page
096-2500	117
	120
096-2501	30
	33
	294
096-2591	316
096-2617	1000
	1001
096-2622	971
	1019
096-2665	512
096-3216	490
	493
	499
	501
096-3321	67
096-3741	27
	52
096-3780	330
	332
096-3785	778
096-3786	778
096-3787	778
096-3788	778
096-3884	1019
096-3944	794
096-3964	490
	493
	499
	501
096-3978	778
	782
096-3983	794
096-4003	778
	782
096-4035	77
	79
	82
	84
	86
096-4129	397
	398
	402
	404
096-4255	448
096-4376	778
	782
096-4377	778
	782
096-4378	778
	782
096-4402	490
	493
	499
	501
096-4412	598
096-4430	495
	497
096-4480	597
	598
	759
096-4747	955
096-4748	955
096-4755	517
	519
096-4883	650
	737
096-4902	376
	378
096-5625	503
	505
	508
096-5915	778
	782
096-5916	778
	782
096-5919	778
	782
096-5962	266
096-6166	225
	227
	266
	307
	1011
096-6210	495
	497
	503
	505
	508
096-7803	490
	493
	499
	501
096-8490	106
	108
096-8569	24
096-8619	74
096-9435	36
096-9528	36
096-9532	36
	74
099-0139	1115
099-0365	840
099-0822	887
	889
	1086
099-0823	971
099-1319	172
099-2374	964
	1037
	1111
099-2503	128
099-3506	1035
099-3607	971
099-3629	1113
099-3645	1065
099-3649	689
	714
099-3669	529
	532
099-3670	529
	532
099-3671	529
	532
099-3913	157
099-4420	27
099-4437	117
	120
	128
099-4460	294
099-4483	30
099-5041	117
	120
	128
099-6109	529
	532
099-6110	529
	532
099-6111	529
	532
099-6112	529
	532
099-6113	529
	532
099-6115	529
	532
099-6117	529
	532
099-6118	529
	532
099-6119	529
	532
099-6120	529
	532
099-6121	529
	532
099-6122	529
	532
099-6123	529
	532
099-6124	529
	532
099-6125	529
	532
099-6126	529
	532
099-6127	529
	532
099-6128	529
	532
099-6137	853
	855
	857
	859
099-6141	859
099-6144	859
099-6145	859
099-6418	358
	359
	361
	362
099-6607	84
099-7857	382
	384
	984
099-8232	613
	616
	632
	646
100-2881	1034
100-3866	789
100-4336	1052
	1055
	1059
101-2846	266
101-7397	611
	623
	632
101-7398	579
	626
101-7401	613
	616
	632
	646
101-7402	632
	635
	650
	737
101-7403	611
	623
101-7404	579
	611
	613
	616
	623
	626
	630
	632
	646
101-8899	1019
101-8900	1019
101-9848	397
	398
	402
	404
102-1174	592
102-6455	325
102-6457	325
102-7688	1029
	1032
102-7880	170
102-7964	265
	290
	306
102-7965	265
	270
	290
	306
102-8016	264
102-8802	42
	44
	145
	147
	150
	152
	155
	156
	161
	171
	216
	218
	225
	236
	237
	238
	306

PART NUMBER INDEX

Part	Page
	310
	312
	655
	665
	667
	721
	751
	754
	802
	804
102-8803	161
	170
	171
	216
	218
	239
	264
	278
	281
	300
102-8804	161
	171
	230
	306
102-8805	244
102-8806	290
103-2529	161
	171
103-8177	831
103-8252	871
	872
103-8253	871
	872
103-8254	871
	872
103-8255	871
	872
103-8378	512
103-8379	512
103-8380	512
104-6871	278
	281
104-7293	821
	829
	835
104-7294	829
	835
104-7296	829
	835
104-8777	725
104-8783	697
	726
104-8838	688
	713
104-8950	688
	713
104-8973	721
105-2169	1035
105-3477	611
	613
	616
	623
	632
	646
105-3478	737
	791
105-3483	611
	616
	623
	646
	737
105-3484	689
	714
105-3487	330
	332
	389
	394
105-3489	632
	646
105-5175	270
105-7781	731
	742
106-0210	242
106-6248	790
106-8715	731
	742
107-1567	751
	757
107-2724	751
	754
107-6370	864
	865
107-6371	864
	865
107-6479	852
	883
107-6540	873
107-6541	873
	898
107-6631	656
	665
	709
107-6954	778
	782
107-6955	778
	782
107-6969	778
	782
107-6970	782
107-6971	782
107-6972	782
107-6974	782
107-6976	782
107-6977	782
107-6978	782
107-6979	782
107-6980	782
107-6981	782
107-6986	782
107-6987	782
107-6988	783
107-7017	898
107-7018	898
107-8618	170
	300
108-1782	751
	754
	761
	763
108-4282	616
	646
108-7118	765
	767
	770
108-7203	707
108-7313	677
108-7354	579
108-7387	697
	726
108-7402	703
108-7516	665
	667
	721
108-7550	579
	626
	630
108-7572	726
109-2665	864
109-2667	▶864
	866
109-5152	826
	▶865
109-5153	865
109-7556	681
109-9313	21
	22
	▶88
109-9329	40
110-5496	688
	713
110-5525	787
110-7183	371
111-1065	711
111-4799	239
111-4816	265
111-4836	160
	170
	206
	208
	209
	211
	253
	256
	258
	260
	277
	278
	302
	306
	964
	1037
111-4837	160
	170
	206
	211
	284
	286
	297
	302
111-4838	160
	170
	306
111-4839	160
	170
	306
111-6752	765
111-9916	529
	▶885
	888
	891
	892
111-9959	826
111-9977	898
111-9985	898
111-9986	898
111-9998	861
112-0065	804
112-0083	665
	▶878
112-0085	878
112-0090	898
112-4550	170
	300
112-9717	93
113-2127	907
	909
	911
	913
	915
113-6479	540
	611
	623
113-8490	264
113-8491	263
	264
113-8492	264
113-8493	264
114-0489	898
114-0623	885
	886
	893
114-0756	510
114-0757	512
114-1398	516
114-1399	516
114-1497	319
114-1539	319
114-1581	514
114-6285	389
	394
114-6289	397
	398
	402
	404
115-2677	918
115-2678	918
115-3780	688
115-8634	527
115-8645	635
	659
	685
	689
	708
	714
	721
115-8902	486
	▶577
115-8903	486
	▶578
116-0118	68

▶ **PRIMARY REFERENCE**

PART NUMBER INDEX

Part	Page	Part	Page	Part	Page	Part	Page
	70	118-9784	40	121-1372	503		714
	133	118-9785	40	121-1459	870		▶879
	134	118-9863	980	121-1491	773	123-2431	719
	160	118-9930	40		774		879
	170	119-2320	577		822	123-2485	831
	195		578		831	123-2511	880
	197	119-2321	577		▶886	123-2516	898
	206		578		890	123-2549	639
	211		583	121-1549	503		▶880
	256	119-2324	760		505		881
	284	119-2325	760		508	123-2552	879
	286		761	121-1558	778		880
	298		763		783	123-4750	635
	299	119-2434	577	121-1611	490		639
	305	119-2435	577		499	124-1008	683
	306	119-2436	578	121-1865	1007		703
	314	119-2437	578	121-6303	663	124-1019	759
116-0126	161	119-2804	586		▶887	124-1020	759
	171		589	121-6304	887	124-1034	598
116-0128	137		592		889	124-1035	635
	161	119-2863	601	121-7098	1052		639
	171	119-3662	161		1055	124-1047	579
116-0255	161		171		1059		626
	171		265	121-7136	978	124-1062	579
	265		278		1052		626
	306		281		1055	124-1107	549
116-1628	388		306		1059		553
	393	119-5026	225	121-7137	1052	124-1108	549
116-1665	346		227		1055		553
	347		1084		1059	124-1212	747
116-2659	90	119-5259	898	121-7138	978		749
	92	119-5260	898		1052	124-3548	264
117-1385	139	119-5262	898		1055	124-3952	1074
117-5540	436	119-5388	859		1059	124-3953	1074
	437	119-5389	859	122-3979	388	124-4009	1000
	438	119-5391	859		393		1001
117-6306	1111	119-5398	873	122-3980	388	124-4010	1000
117-6349	1011	120-5114	140		393		1001
117-6350	1011	120-7165	▶440	122-4101	358	124-5815	173
117-6356	1011	120-7167	▶441		361		▶182
117-8683	1002	120-7168	▶442	122-4120	388	125-2947	75
	1003	120-7226	920		393	125-2968	42
	1004	120-9027	239	122-5114	778		44
	1005	121-0134	465		782	125-2970	67
117-8929	983		466	122-5318	787	125-2983	128
	984	121-0135	468	122-7797	841	125-4766	306
	986	121-0307	58		844	125-4840	265
118-4044	846		60	122-9605	1052	125-4841	265
	848	121-0987	292		1055		306
118-4057	778		293		1059	125-7484	134
	782	121-1022	265		1062	125-7874	161
	794	121-1038	137	122-9608	1011		172
118-4086	853		161	122-9609	1011		249
	855		171	122-9610	1011		256
	857	121-1039	137	122-9617	989		258
118-4087	853		161	122-9657	1052		260
	855		171		1055		265
	857		306		1059		270
118-5982	929	121-1168	225	123-1373	160		272
	931		265	123-2003	522		278
	932		306	123-2008	778		281
	934	121-1173	265		782		284
	935		270	123-2060	512		286
	936		306	123-2169	709		290
	937	121-1371	503	123-2430	689		303

▶ **PRIMARY REFERENCE**

PART NUMBER INDEX

Part	Page	Part	Page	Part	Page	Part	Page
	306	127-5940	233	132-1806	160	134-7258	1137
	310	127-5941	233		170	134-8875	13
	312	127-5943	233	132-1829	▶155		14
	314	127-5944	233		264		▶385
125-7875	161	127-5947	233	132-5789	68	134-8876	385
	172	127-5948	233		70	134-8878	385
	240	127-5949	233		133	134-8948	938
	241	127-5950	233		134	135-2274	1008
	256	127-5952	233		162	135-2346	95
	260	127-5953	233		173	135-2347	95
	265	127-6780	547		214	135-2348	95
	270	128-2135	971		218	135-2349	95
	274		973		249	135-2350	95
	278		991		251	135-2351	95
	281		993		253	135-2352	95
	284		1021		256		113
	286		1035		278	135-2354	95
	290		1103		284	135-2355	95
	306		1104		286	135-2356	95
	314	128-2136	1104		299	135-2358	95
125-7876	222	128-2173	1007		304	135-2359	95
126-1767	242		1008		310	135-2360	95
	265	128-2686	94		312	135-2366	233
	286	128-4411	145		1041	135-2369	41
	290		147		1052	135-2370	41
	655		150		1055	135-2381	157
	661		152		1059	135-3980	603
	665	128-8950	265		1062		604
	667	129-3399	341	133-2425	367	135-8572	126
	695		343		369		140
	721		348	133-5813	126		142
	804	129-5874	549		130	135-8573	140
	1002		553		655		363
	1003	129-7784	799		667		364
	1004	129-7854	794		671		387
	1005	129-7855	794		705		388
126-1768	161	129-7857	794		721		393
	172	129-7859	794		725		397
	260	129-7863	794	133-5828	579		398
	265	129-7921	794		626		402
	286	129-7925	794	133-6777	778		404
126-1774	284	129-7927	794		782	135-8575	133
	286	129-7978	530	133-6788	902		134
126-1865	859		533	133-6904	503		388
126-1866	859	129-7979	794	134-0685	93		393
126-1876	503	129-8034	522	134-2540	278		1066
	505	130-0252	1052		281	135-8576	381
	508		1055	134-3284	206		382
126-1935	490		1059		208		383
	493	130-0270	1052		209		384
126-2016	794		1055		211		443
126-2043	510		1059	134-3296	265		444
126-2055	787	130-3280	90		306	135-8577	328
126-5061	464		92	134-3297	161		329
126-5062	463	130-7596	26		172		388
126-6514	895	131-5818	859		265		393
126-6515	895	131-5915	853		306	135-8578	133
126-6516	895		855	134-3299	126		386
126-7574	193		857		173		387
127-0580	971	131-8821	93	134-3344	160		388
127-5483	161	131-8822	93		170		393
	172	131-8826	93	134-4126	193	135-8579	145
127-5484	306		94	134-6946	708		147
127-5937	233	131-8932	93	134-7089	90		150
127-5939	233	131-9424	737		92		152

▶ **PRIMARY REFERENCE**

PART NUMBER INDEX

Part	Page
135-8965	1083
135-8966	1083
136-0207	671
	705
137-0856	541
	623
137-2270	1067
	1068
137-3623	524
137-3624	524
137-3625	524
137-3626	478
	524
137-3628	478
	524
137-3631	478
137-3708	782
137-3709	581
	582
137-3723	782
137-5541	117
	120
138-5708	549
	553
139-7119	1113
139-7814	27
140-0674	863
140-0677	863
141-2759	222
	264
142-0038	735
	745
142-3835	2
	3
	▶386
142-3836	2
	3
	▶1067
142-5546	1011
142-6582	547
142-7764	544
142-7765	537
142-7768	579
142-7769	579
143-4254	688
	713
143-4308	635
	685
144-0195	1109
	1118
144-0367	102
	103
	650
	737
144-1636	758
	1073
144-3624	601
144-9126	1137
145-2237	635
	639
145-3031	461
145-3035	460
145-3042	326
	▶327
145-5106	474
	▶475
146-4936	397
	398
	402
	404
146-6747	1137
146-7089	695
147-4131	859
147-4184	846
147-5835	510
147-5860	778
	782
148-4632	514
148-4633	514
148-4634	514
148-4635	514
148-4636	514
148-4637	514
148-4638	514
148-4640	514
148-4642	514
148-4643	514
148-4644	▶514
	516
148-4679	326
	▶516
148-4685	373
	374
	378
148-4689	378
148-4691	▶371
	372
148-4697	376
148-4703	376
	378
148-4704	376
	378
148-4705	324
148-4708	324
148-4715	319
148-4732	514
148-4733	514
148-8305	742
	745
148-8310	639
148-8321	635
	639
148-8323	745
148-8325	635
148-8326	586
148-8327	616
	646
	747
	749
148-8328	761
	763
148-8330	614
	617
	632
	646
148-8334	613
	616
148-8335	527
	613
	616
148-8336	579
	583
	586
	589
	592
	626
	635
	639
	640
	643
	655
	661
	663
	665
	671
	674
	677
	681
	683
	689
	695
	697
	701
	703
	705
	709
	714
	719
	726
148-8338	663
	674
	677
	681
	683
	697
	701
	703
	726
148-8339	742
148-8340	661
	689
	695
	714
	749
148-8341	583
	586
	589
	592
148-8346	626
148-8347	613
	616
	632
	646
	661
	695
	747
	749
148-8352	617
	745
148-8353	579
	626
	639
	655
	689
	714
	747
	749
148-8354	650
	655
	689
	714
	747
148-8355	613
	617
148-8356	647
148-8357	617
	630
	647
	650
	737
	751
	754
	757
148-8358	747
	749
148-8361	758
148-8362	735
148-8363	636
	667
	721
	725
	747
	749
148-8364	579
	671
	688
	705
	713
	737
	765
	767
	770
148-8367	579
	626
	636
	639
	643
	677
	689
	711
	714
	726
148-8368	643
	761
	763
148-8371	586
	589
148-8372	765
	767
	770

▶ **PRIMARY REFERENCE**

PART NUMBER INDEX

Part	Page	Part	Page	Part	Page	Part	Page
148-8374	639		667		586	151-9461	1019
148-8378	583		721		589	151-9497	1019
	586	148-8415	606		592	151-9557	1111
	589		607	149-5050	270	151-9576	1116
	592		608		272	152-2938	58
	636		630		314		60
	639	148-8419	606		316	152-2939	58
	643		607	149-5051	270		60
	655		608		272	153-2521	▶202
	659		636		314		206
	661		640	149-5069	265		208
	663		643		270		209
	665	148-8428	630		272		211
	667	148-8429	632		314	153-2523	▶203
	674		754	149-5070	265		205
	677	148-8431	751		270	153-2541	225
	681	148-8433	640		272	153-2602	265
	685		667		314	153-2620	161
	689		671	149-5071	265		172
	695		674	149-5452	571		306
	697		677		575	153-2630	162
	701		683	150-3024	126		172
	709		688		130	153-2631	265
	714		697	150-3033	640	153-4906	58
	719		703		719		60
	721		705	150-3036	643	153-5223	859
	726		713		661	153-5239	866
	758		721		665	153-5276	821
	765		725		674		829
	767		727		677		835
	770	148-8434	667		681	153-5286	826
148-8390	583		671		690	153-5288	826
	586		678		695		831
	589		705		697	153-5289	826
	592		722		701		831
148-8391	632		727		709	153-5290	826
148-8392	742	148-8435	583		715		831
	751		587		727	153-5291	826
	754		589	150-4027	668		831
148-8395	846		592		674	153-5292	826
	848		636		678		831
148-8407	586		659		697	153-5293	826
	655		663		721		831
	683		667		726	153-5298	831
	689		685	150-4037	765	153-5299	831
	703		688		767	153-5306	831
	709		711		770	153-5309	831
	714		713	150-4044	665	153-5311	831
	719	148-8439	636		688	153-5313	850
	822		640		713		▶866
	848		668		765	153-6237	613
148-8411	587		690		767		617
	589		714		770		632
	592		722	150-4049	731		647
	632	148-8443	711	150-5782	794		661
	647	148-8444	579	150-5797	530		695
	683		626		533	153-6249	643
	703		630	150-5826	495	153-8623	530
	737	148-8457	575	150-5827	495		533
	747		609	150-5828	495	153-8753	1007
	749	149-1738	560	151-1846	570	153-8798	549
	751		562	151-6703	1019		553
	754		566	151-6704	1019	153-8839	603
	757		568	151-6777	975		604
148-8413	643		583	151-6813	1116	153-8867	551

▶ **PRIMARY REFERENCE**

PART NUMBER INDEX

Part	Page	Part	Page	Part	Page	Part	Page
	556		251	163-3755	443		742
	568		253	163-4143	451		745
154-0729	493		256		452		802
	501		266		▶455		804
154-0730	493	156-6470	1116	163-6637	162	164-5574	617
	501	156-6599	971		172		647
154-0731	493	156-6631	1113	163-6659	265	164-5578	583
	501	156-6644	1019	163-6699	265		587
154-0732	493	156-8845	635	163-6700	147		589
	501	157-0670	74	163-6704	216		592
154-0736	505	158-4380	449		218	164-5586	742
	508		450	163-6711	290		745
154-0737	505	158-4381	449	163-6758	264	164-5590	742
	508		450	163-6759	161		745
154-0738	505	158-8150	831		162		802
	508	158-8159	824		172		804
154-0739	505		826		306	164-5606	617
	508		831	163-6773	162		647
154-9024	74		837	163-6790	265		731
155-0576	191	158-8186	863	163-6795	213		742
155-2255	284	158-8206	831		216	164-5608	690
	286	158-8207	831		264		747
155-2260	162	158-8280	1007		288	164-5628	656
	172	158-8985	516		290		665
	258		▶775		1118		709
	260	158-8987	▶521	163-6803	265	164-5629	665
	265		802		270		667
	278		804	164-0514	1019		721
	281	158-9062	510	164-0515	971	164-6874	667
	288	158-9063	510		1019		674
	300	158-9064	512	164-0517	1115		677
155-2265	290	158-9065	512	164-0519	1019		681
155-2270	162	158-9085	▶900	164-0646	1104		695
	172		901	164-0655	1104		697
	225	159-4700	475	164-4180	613		701
	230	159-7782	800		617		721
	249	159-7784	522		630		726
	251	159-8049	162		633	164-6980	635
	256		171		647		709
	258	159-8050	162		737		711
	260		168	164-4858	▶116		▶881
	265		171		145	164-6981	▶476
	302		179		147		688
	303	159-9322	284		150		713
	306	160-7690	284		152	164-8474	973
	310		286	164-5547	667		1104
	312	161-3128	264		721	164-8977	688
	999	161-3639	1019	164-5552	579		713
155-2271	162	161-3668	1120		626	164-8983	688
	172	161-3669	1120	164-5567	621		713
	306	161-3670	1120		628	164-9640	635
155-2274	170	161-3671	1120		635		639
	299	161-3694	1034		640	164-9869	636
	314	161-3698	1116		643	165-2823	381
155-3624	730	162-0177	636		661		383
	740		640		675	165-2854	382
	742		846		678		384
	745	162-0349	1083		681	165-2976	356
155-7024	1052	162-2168	456		688		357
	1055	163-3729	334		695		358
	1059		335		698		359
	1062		367		701		361
155-7042	1120		369		713		362
156-3103	95	163-3754	435		727	165-3065	1067
156-6175	249		▶443		731		1068

▶ **PRIMARY REFERENCE**

PART NUMBER INDEX

Part	Page
165-3102	341
	343
	346
	347
	348
165-3103	346
	347
165-3120	341
	347
	348
165-3165	537
165-3173	540
165-3185	611
165-3190	611
165-3256	802
	804
165-3260	747
	749
165-4931	640
165-9286	510
165-9289	512
165-9431	853
	855
	857
165-9435	853
	855
	857
165-9436	853
	855
	857
165-9438	853
	855
	857
165-9442	853
	855
	857
165-9443	853
	855
	857
165-9444	853
	855
	857
165-9460	853
	855
	857
165-9463	859
165-9464	883
165-9513	841
	844
165-9514	841
	844
165-9552	859
165-9553	859
165-9554	859
166-1478	13
	14
	▶444
166-1479	444
166-1486	907
	909
	911
	913
	915
	925
	926
	929
	931
	932
	934
	935
	936
	937
166-1487	907
	909
	911
	913
	915
	923
166-1494	490
	492
	493
	499
	501
	503
	505
	507
	508
	925
	926
	929
	935
	936
	937
166-1495	495
	497
	907
	909
	911
	913
	915
	923
	929
	931
	932
	934
	935
	936
	937
166-1512	444
166-1579	918
	920
166-3152	918
	920
166-5495	601
167-3441	▶204
	213
	216
167-3487	265
	270
167-3542	247
	264
	270
	272
167-3543	247
	264
	272
	305
	1043
	1045
	1089
167-3593	264
167-3630	265
167-3631	265
167-7039	1019
167-7042	971
167-7270	1137
167-8987	278
	281
168-0765	867
168-1969	621
	628
168-6761	458
	459
168-8451	319
168-9523	540
168-9759	655
	683
	703
168-9760	536
168-9762	539
169-3530	1134
	1135
170-2512	▶244
	314
170-2901	126
	130
170-3015	349
	360
170-3016	388
	393
170-6888	264
170-6890	265
170-6891	265
170-6929	158
	160
	168
	170
	179
170-6993	202
	203
170-9324	225
170-9336	160
	170
170-9360	330
	332
170-9394	265
170-9417	202
	203
170-9418	202
	203
170-9497	▶1011
	1082
170-9498	1011
170-9499	1011
170-9724	1103
170-9844	510
170-9847	512
170-9860	510
171-0023	898
171-0034	873
	875
171-0035	875
171-0036	875
171-0037	873
	875
171-0087	853
	855
	857
171-0123	861
171-0124	861
	884
171-0126	861
171-0127	861
171-0128	861
171-0150	824
	837
171-0188	675
	678
	698
	726
	▶888
171-0198	▶882
	888
171-0596	661
	695
	758
171-2208	222
171-2210	222
171-3254	95
171-3369	82
	84
171-6723	731
	742
	754
171-7325	969
	970
	993
	1017
	1103
171-7477	1034
171-9077	82
171-9383	514
171-9464	378
171-9892	94
172-2939	906
	▶918
172-4432	822
173-3384	530
	533
173-3397	530
	533
173-3398	529
	532
173-3413	530
	533
173-3427	794
173-3428	794
173-3439	787
173-3440	787
173-3441	787
173-3442	787
173-3443	787
173-3444	787
173-3445	787
173-3447	787
173-3450	787

▶ **PRIMARY REFERENCE**

PART NUMBER INDEX

Part	Page
173-3451	787
173-3452	786
	▶867
173-3454	787
173-3473	794
173-3496	794
173-3498	794
173-3503	▶478
	522
173-3505	478
173-3506	478
173-3507	522
173-3510	522
173-3513	524
173-3515	524
173-3516	524
173-3517	524
173-3518	522
173-3529	524
173-3535	900
173-3536	▶868
	900
	902
173-4664	633
173-4672	737
	▶814
173-4816	650
	737
173-5072	623
173-5080	623
173-5089	767
173-7895	551
	556
	568
173-7916	547
	549
	553
	558
173-7995	549
	553
173-8073	58
174-0503	278
	281
174-3016	162
	172
	265
174-5415	90
	92
174-7791	202
	203
174-9570	▶123
	126
	130
176-1902	1052
	1055
	1059
176-1916	989
176-1941	1050
	1051
176-1986	971
176-1996	1021
176-2278	907
	909
	911
	913
	915
176-2815	1124
176-4412	740
176-4463	689
	714
176-4469	689
	714
176-4703	740
176-4708	659
176-4743	661
176-4755	689
	714
176-4770	747
	749
176-4979	44
176-9299	161
	172
177-1061	735
	745
177-2470	794
177-2471	794
177-2553	524
177-2584	787
177-2611	499
	501
177-2619	478
177-2653	613
	632
	▶869
177-2709	814
177-2713	814
	815
177-5739	349
	360
177-5758	362
177-5877	386
177-5879	386
	387
177-5880	386
	387
177-5987	142
177-6146	382
177-6315	1067
177-6395	361
177-7707	278
177-8572	560
177-9778	126
	130
178-2334	230
178-2335	230
178-2345	▶230
	231
	232
178-5422	989
178-5423	989
178-5431	1109
178-5570	971
178-5572	1113
178-5573	1019
178-5574	1019
	1113
178-5576	1096
178-5659	1091
	1092
178-6450	82
	84
178-6537	36
178-6538	36
178-6543	46
178-6544	46
178-6545	46
178-6552	104
178-6554	104
	109
	111
178-6563	62
178-6577	191
178-6598	39
178-6599	39
178-6600	39
178-6601	39
178-6633	75
178-6634	75
178-6635	75
178-6636	75
179-5005	553
179-5006	553
179-5030	571
179-5044	1007
179-5235	609
	763
179-5260	551
	556
179-7456	665
179-7467	760
179-7612	633
179-7863	650
179-7867	650
179-9667	512
179-9674	510
179-9763	794
179-9806	524
180-3861	202
	203
180-7521	334
	335
180-7525	334
	335
180-7529	334
	335
180-7533	334
	335
180-9286	731
	742
183-1035	214
	218
183-1049	160
183-5916	27
183-7262	617
	647
183-8176	42
183-8177	42
183-8224	117
	120
183-8264	63
184-3833	814
	815
184-3841	814
184-3983	93
184-8423	393
184-8580	402
	404
184-8722	346
	347
184-8862	359
	362
184-9253	570
184-9254	570
184-9256	570
184-9257	570
184-9336	655
184-9469	616
	646
184-9593	689
	714
184-9595	689
	714
185-0169	530
	533
185-0201	530
	532
185-0334	490
	493
185-0383	655
185-0407	882
185-0423	861
185-0462	655
	▶883
185-0463	883
185-0472	667
	721
	▶889
185-0473	889
185-0488	751
	754
185-2791	54
185-2793	54
185-8161	989
185-8180	1019
185-8182	975
185-8187	975
185-8197	1096
185-8205	1103
185-8221	1116
185-8280	1050
	1051
185-8281	1051
185-8284	991
185-8286	239
	969
	970
185-8290	1120
185-8293	1052
	1055
	1059
185-8300	967
	1006
185-8302	967
185-8328	57
185-9208	225
	227
186-3735	140
	145
	147
	150

▶ **PRIMARY REFERENCE**

PART NUMBER INDEX

Part	Page
	152
	155
	156
	216
	218
	230
	236
	237
	238
	239
	300
	643
	751
186-3736	230
186-5649	923
186-5662	923
187-0661	1137
187-5589	621
	628
187-5676	689
187-5693	▶595
	928
187-5853	613
	632
187-5870	754
187-5954	541
187-5975	▶596
	927
187-6058	599
	600
187-6974	613
	632
	646
187-7070	689
	714
187-7077	616
	646
187-9977	560
	562
	566
187-9978	560
	562
187-9981	560
	562
188-0055	566
188-0056	566
188-0184	877
188-0185	876
	877
188-0186	876
	877
188-2315	925
188-3064	449
	450
188-4140	▶522
	802
	804
188-4142	522
	▶524
188-4143	524
188-4181	503
	505
	508
189-2690	1019
189-2693	1034
189-2694	1034
189-2864	971
189-3925	923
189-9377	58
	60
189-9763	530
	532
	794
190-3523	449
	450
190-3524	449
	450
190-4896	794
190-5386	1137
190-5830	117
	120
190-6263	601
190-6880	393
190-7228	398
	402
190-7673	530
	532
190-7674	529
	532
190-7750	855
	857
190-7819	852
190-7826	814
	815
190-7865	848
190-9775	116
191-2578	514
191-3235	319
191-3236	319
191-5543	787
191-5707	529
	532
191-5709	794
192-0573	794
192-3039	341
	347
	348
193-1736	794
193-2764	984
	986
193-2765	984
	986
193-3515	158
193-5014	938
193-5015	938
193-6606	549
	553
194-0027	635
194-0174	▶536
	611
	623
194-0176	536
	▶537
194-0180	▶538
	611
	623
194-0181	538
	▶539
194-0182	538
	▶540
194-0289	708
194-1608	▶449
	463
	464
	466
	467
	468
	470
194-1609	▶450
	465
194-1910	3
	462
	▶463
194-1913	462
	▶464
194-1916	▶465
194-8359	503
	505
	508
194-9041	616
195-8212	27
195-8322	66
195-8351	62
195-8356	44
196-0711	789
196-0807	650
196-1666	1006
196-1794	▶466
196-1795	▶467
	469
196-3784	859
196-3967	▶468
196-8217	117
	120
196-8366	36
	42
	66
	67
197-0196	773
	774
197-0199	773
	774
197-0252	898
197-0273	773
	774
197-2150	609
197-2362	562
197-4385	162
	172
	306
199-1286	611
	623
199-1863	708
199-1913	711
199-1965	714
199-2002	667
	721
199-2004	667
	721
199-2012	751
	754
199-2019	740
199-2045	731
	735
199-2178	42
199-2187	52
199-2188	52
199-2189	52
199-2241	117
	120
199-4561	514
199-7394	650
199-7398	409
199-7403	650
	2
200-3244	529
	532
200-3245	529
	532
200-3246	529
	532
200-3255	529
	532
200-3327	791
200-3333	794
200-3334	794
200-3365	479
	480
	▶791
200-4105	601
201-3888	980
201-4391	1019
201-4417	971
201-4534	1029
	1032
201-9236	667
	721
	▶840
201-9263	831
201-9299	524
201-9329	614
	616
	▶815
	819
	820
201-9378	757
201-9379	671
	705
202-3855	573
202-3856	573
202-3857	573
202-3858	573
202-3911	742
	745
202-3915	551
	556
	568
	571
202-4004	659
	689
	714
202-6996	573
202-7127	549
	553
202-7128	549
	553
202-9002	751

▶ **PRIMARY REFERENCE**

PART NUMBER INDEX

Part	Page	Part	Page	Part	Page	Part	Page
	754		782		714		951
203-4889	393	209-5920	904		▶772	220-9090	956
203-4890	393	209-5957	495	215-9961	529		957
204-1611	253	209-5992	776		532		958
	256		▶778	215-9962	529		959
	258	209-5994	777		532		960
	260		▶782	215-9982	318		961
	1052	209-6000	799		▶776		962
	1059	209-6049	782	215-9983	322		963
204-1673	158	210-5829	1106		546	220-9091	957
	160	210-5834	1106		▶777	220-9092	959
	168	210-5837	1106	216-0005	512	220-9093	960
	170	210-5838	1106	216-4970	222	220-9094	952
	179	210-8012	97	216-6485	562		953
204-2281	715		100	216-6589	549		954
204-2755	▶870	210-8117	77		553	220-9095	952
	904		79	217-4890	▶963		953
204-2762	524	210-8128	77	217-4891	▶957		954
204-2763	478		79	217-4892	▶959	220-9096	952
204-2800	793	210-9935	608	217-4893	▶960		953
204-2819	776	210-9966	607	217-4894	▶962		954
	777	211-6208	701	217-4895	▶956	220-9097	962
	▶904	212-2838	367	217-4896	▶958	220-9099	958
204-3622	490		369	217-5469	64	221-4882	721
	499	212-5148	613	217-5589	67	221-4883	659
204-3623	503		632	218-0404	200		685
204-3663	409	212-5402	689	218-1058	742		707
204-3796	819		714		745	221-8045	1137
204-8393	616	212-8475	31	218-1125	751	221-8813	▶1072
205-0826	227	212-8489	104		754		1082
205-1340	999	212-8521	157	218-1126	751	221-8859	661
205-6295	971	212-8561	16		754		695
205-6788	33		39	218-1282	745		758
206-1265	453		▶157	218-1336	667	221-8861	4
	▶456	212-8571	36	218-5199	334		5
	457	212-8572	36		335		▶194
206-3336	▶852	212-8584	48	219-0302	1137	221-8872	▶192
	1008	212-8596	48	219-0305	1028		1082
206-5162	200		72		1029	221-8874	192
206-5208	227	212-8613	157	219-6314	200	222-0085	875
206-9211	456	213-0677	42	219-8468	440	222-0124	582
207-6222	632		44	219-8469	441	222-0126	581
207-6282	564		802		442	222-0225	1000
207-6403	802		804	220-8678	123		1001
	804	213-0772	264	220-9083	961	222-1090	963
207-6404	802		316	220-9084	945	222-4737	831
	804	213-3745	635		946	222-8234	44
207-6666	541		639		947	222-8235	44
207-6667	541	213-9100	156		948	222-8238	67
208-4289	356	213-9433	48		949	222-8292	36
	357		117		950	223-3040	2
	358		120		951		3
	361	214-4400	527	220-9085	945		▶328
208-4330	343	214-4401	527		946	223-3041	328
208-4331	341	214-4511	▶527		947		▶330
	343		611		948	223-3042	2
	348		623		949		3
209-3312	456	214-4512	▶527		950		▶363
209-3313	456		749		951	223-4453	106
209-5582	222	214-4518	527	220-9086	945		▶237
	▶236	214-4519	527		946	223-6649	754
	237	214-7568	742		947	223-6650	754
209-5894	778	214-7915	1137		948	223-6651	754
	782	215-4909	521		949	223-6652	754
209-5909	778	215-5037	689		950	223-9818	1137

▶ **PRIMARY REFERENCE**

PART NUMBER INDEX

Part	Page	Part	Page	Part	Page	Part	Page
224-0554	1137	225-4833	841		934		307
224-8946	1137		844	228-7092	58		314
225-0312	1137	225-4843	761		60		1043
225-4257	1137		763	228-7316	1137		1045
225-4543	794		▶844	228-9254	1137	231-1768	▶1043
225-4544	794	225-4844	844	229-0887	1137	231-1771	▶156
225-4548	800	225-5707	1053	229-1019	654	231-1836	▶288
225-4549	800		1056	229-1096	929		289
225-4590	▶487		1060		935	231-2295	162
	921	225-5714	1053		936		172
225-4591	487		1056		937		278
	▶495		1060	229-1784	3		281
225-4592	487		1062		4		290
	▶597	226-3065	553		▶138		314
225-4598	▶487	226-4664	575	229-1785	138		1043
	921	227-0265	653		▶140		1045
225-4599	487	227-0581	650	229-1857	140	231-6969	516
	▶497	227-0590	802	229-1859	▶137	232-4113	816
225-4607	529		804		140		894
	532	227-0620	▶528	229-1860	140	232-4114	816
225-4785	583		802	229-1861	140		894
	586		804	229-3218	117	233-1277	26
	589	227-6034	319		120	233-1279	233
	592	227-6071	373	229-6966	▶961	233-1280	233
	▶841		378	229-9084	▶1037	234-1097	264
225-4787	841	227-6082	▶372		1039	234-1122	306
	844		376	230-1340	189	234-1124	1043
225-4789	841	227-6083	372		190	234-1156	225
	844		▶373	230-1341	189		227
225-4790	841	227-6105	376		190	234-1158	225
	844		378	230-2979	17	234-3927	923
225-4791	841	227-6106	376		▶68	234-3928	923
	844		378	230-4009	162	234-3930	923
225-4792	841	227-6142	372		172	234-3931	923
	844		▶374		265	234-4440	765
225-4793	841	227-6153	▶376		278		767
	844		435		281		770
225-4796	841	227-6166	326		290		▶800
	844		▶517		307	234-4452	529
225-4797	841	227-6167	4	230-4011	162		532
	844		▶326		172	234-4453	529
225-4803	841	227-6168	326		265		532
	844		▶519		288	234-4492	579
225-4804	816	227-6215	516		290		626
	841	227-6221	516		302	234-4580	495
	844	227-6228	514		307		497
	846	227-6986	398		309	234-4581	495
	848		402		1041		497
	894	227-7575	264	230-4012	643	234-4582	495
225-4815	855	227-7581	▶200	230-4013	162		497
	857	227-8807	▶477		172	234-4583	495
225-4818	841	228-2781	1137		265		497
	844	228-5463	334		272	234-4584	495
	846		335	230-5008	270		497
	848	228-5614	931		272	234-4585	495
225-4820	841		932		290		497
	844		934	230-5010	162	234-4586	495
225-4821	841	228-5615	495		172		497
	844		497		225	234-4587	495
225-4830	841		911		258	234-4588	495
	844		913		284		497
225-4831	841		915		286	234-4589	495
	844		923		288		497
225-4832	841		931		290	234-4591	597
	844		932		300	234-4592	597

▶ **PRIMARY REFERENCE**

PART NUMBER INDEX

Part	Page
234-4796	62
	63
234-6469	1104
234-6470	1104
234-6471	1104
234-6473	1104
234-6474	1104
234-6476	1104
234-6477	1103
234-6480	1104
234-6483	1104
234-6485	1104
234-6490	1104
234-6497	1104
234-6498	1104
234-6499	1016
234-6500	5
	▶1018
234-6501	973
	▶1016
234-6502	1016
234-6579	991
	993
	1104
234-6580	991
	993
234-6593	1016
234-6602	991
234-6603	993
234-6604	991
234-6605	993
234-6608	991
	993
234-6609	991
	993
234-6610	991
	993
234-6611	993
234-6612	993
234-6613	▶239
	993
234-6614	993
234-6615	239
235-7520	436
	438
235-7679	495
	497
	499
	501
	929
	931
	932
	934
	935
	936
	937
235-7764	▶423
	462
235-7765	423
235-7769	495
	497
	499
	501
235-8873	964
	1037
235-8874	964
	1037
235-8875	964
	1037
235-8878	1021
235-8879	1021
235-8880	988
235-8891	1052
	1055
	1059
235-8893	989
235-8894	989
235-8914	991
	993
	1103
235-8923	1104
235-8929	1035
235-8951	969
235-8952	970
235-8965	993
235-8966	991
235-8969	▶1000
	1010
235-8970	▶1001
	1009
235-8971	1000
235-8972	1001
235-8996	969
	970
235-8997	969
235-8998	970
235-9001	973
235-9004	▶964
	966
235-9005	964
235-9014	1052
	1055
	1059
	1062
235-9015	1052
	1055
	1059
	1062
236-0563	1130
236-2843	655
236-2844	655
236-2848	655
236-3170	804
236-3200	643
236-3202	754
236-3212	▶541
	611
236-3213	▶541
	611
236-3214	▶541
236-3215	▶541
236-3257	528
236-3258	528
236-3259	528
236-3670	330
	332
236-3671	330
	332
236-3698	364
	364
236-3702	363
	364
236-3703	363
	364
236-3747	356
236-3748	356
	357
236-6341	737
236-6365	925
	926
236-6366	926
236-6419	824
	826
	831
	837
236-6421	826
	831
236-8341	435
	▶436
236-8342	435
	▶437
236-8357	436
236-8358	436
236-9435	330
236-9437	330
236-9438	330
	332
236-9440	330
	332
236-9570	363
237-0228	229
237-3184	8
	9
	10
	▶547
238-0112	229
238-0118	229
238-0120	139
	229
238-1463	1043
	1045
238-1570	138
	▶316
238-1579	316
238-1594	▶240
	316
238-1595	240
238-1596	▶241
	316
238-1597	241
238-2171	302
238-2209	247
238-2210	247
238-2211	1089
238-2212	264
238-2214	272
238-2216	1043
	1045
238-2260	1084
238-2279	222
238-2280	222
238-2319	265
238-2363	265
	307
238-2366	265
	307
238-2390	264
238-2391	264
238-2478	▶245
	246
238-2479	245
238-2485	▶246
	483
238-2501	158
	160
	168
	170
	179
238-2528	158
	160
	168
	170
	179
239-1699	545
	▶579
239-1710	545
	▶806
239-1711	▶802
	806
239-1714	545
	▶611
239-1716	545
	▶765
239-1717	545
	▶767
239-1732	▶570
	906
239-4341	435
	▶445
239-4350	460
239-4362	448
239-4378	460
239-4382	460
239-4383	460
239-4384	460
239-4385	445
	▶446
239-4386	445
	▶447
239-4387	446
	▶458
239-4388	447
	▶459
239-4389	458
	459
	▶460
239-4390	460
	▶461
239-4391	461
239-4392	461
239-4393	460
239-4394	461
239-6395	90
239-6507	21
	22
	▶980
239-6604	104
239-6626	50
239-6627	50
239-6630	50
239-6631	50

▶ **PRIMARY REFERENCE**

PART NUMBER INDEX

Part	Page	Part	Page	Part	Page	Part	Page
239-6632	50	241-7316	932		▶503		1045
239-6681	157	241-7327	927	242-6735	488		1062
239-6986	1137		▶934		489	243-4506	162
239-7352	288	241-7328	934		▶759		172
	290	241-7379	490	242-6736	▶486		260
	298		493		905		266
	307		510	242-6737	486	243-4507	258
239-7356	266	241-7380	490		487		260
	278		493		▶582		272
	281		510	242-6738	▶486		307
239-8677	3	241-7381	503		906		310
	▶813		505	242-6739	486		312
239-8697	772		508		▶492	243-4508	162
	▶773		512	242-6742	▶486		170
239-8998	772	241-7382	499		906		242
	▶774		501	242-6745	▶487		284
240-2912	925	242-1510	1137		906		286
	926	242-1588	1137	242-6746	487		288
240-2913	929	242-6092	1137		▶493		298
	935	242-6475	8	242-6747	▶488		299
	936		9		906		303
	937		10	242-6748	488		307
240-2978	349		11		▶505	243-4509	162
	360		12	242-6749	▶487		172
240-2979	349		13		906		249
	360		▶549	242-6753	▶489		251
240-2988	439	242-6476	9		906		256
240-2998	791		10	242-6754	489		300
	▶793		11		▶507		307
240-3834	▶906		12	242-6755	▶488		314
240-3843	▶927		13		921		1043
240-3846	12		▶551		922		1045
	▶927	242-6478	7	242-6756	488	243-4510	162
240-3850	▶927		▶603		▶499		172
240-3854	8	242-6479	▶553	242-6757	488		256
	9	242-6480	▶556		▶598		278
	10	242-6482	▶604	242-6758	▶488		281
	▶927	242-6487	11		921		290
240-3858	8		12	242-6759	488		307
	9		13		▶501	243-5362	278
	10		▶558	242-6762	▶489		281
	11	242-6488	11		906	244-4254	925
	▶921		12	242-6763	489	244-4255	925
240-3861	8		13		▶508		926
	9		▶560	242-6764	492	244-4277	907
	10	242-6490	7		▶510		909
	11		▶606	242-6766	507		929
	12	242-6492	9		▶512		931
	▶921		10	242-6801	794		932
240-3920	140		▶562	242-6803	794		934
240-3937	4	242-6494	7	242-6804	794		935
	▶435		▶607	243-4505	140		936
241-7286	905	242-6505	▶571		162		937
	906		812		172	244-4360	925
	▶920		813		206		926
241-7291	906	242-6730	▶486		211	244-6715	751
	▶907		905		222		754
241-7292	907	242-6731	486		266	244-7895	362
241-7309	927		▶490		288	244-7927	359
	▶929	242-6732	486		290	244-7928	359
241-7312	927		487		306	244-7929	358
	▶931		▶581		307	244-8039	1
241-7313	931	242-6733	▶488		309		▶329
241-7315	927		905		982	244-8040	329
	▶932	242-6734	488		1043		▶332

▶ **PRIMARY REFERENCE**

PART NUMBER INDEX

Part	Page
244-8041	1
	▶364
244-8194	338
	339
	340
	344
	345
244-8228	393
244-8234	393
244-8242	393
244-8255	393
244-8277	430
	431
244-8278	430
	431
244-8288	431
244-8400	▶821
	824
	837
244-8503	3
	4
	▶917
244-8504	917
245-1042	162
	172
245-1044	162
	172
245-1045	162
	172
245-1048	162
	172
245-2399	▶564
245-4980	695
245-5045	740
245-5079	655
245-5139	546
	▶807
245-5140	▶804
	807
245-5285	730
245-5287	730
245-5402	802
245-5416	767
245-5427	765
245-5457	1137
245-7749	983
	984
	986
	▶988
245-7750	988
245-7751	988
245-7753	984
245-7756	1055
245-7790	991
	993
	1104
245-7793	1021
245-7813	1006
245-7814	1006
245-7815	1006
245-7816	1006
245-7817	967
245-7818	967
245-7819	967
245-7820	967
245-7823	967
245-7824	967
245-7825	967
245-7826	967
245-7827	967
245-7828	967
245-7829	967
245-7830	967
245-7831	967
245-7832	967
245-7833	967
245-7834	967
245-7835	967
245-7836	967
	▶978
245-7837	978
245-7838	967
245-7839	967
245-7842	1000
245-7844	1001
245-7846	967
	▶1006
245-7847	967
245-7850	1055
	1059
245-7851	1055
	1059
245-7856	967
245-7858	1037
245-7873	1021
245-7895	1047
	1048
245-7905	978
245-7922	▶989
	1082
245-7925	993
245-7926	991
245-7929	1016
245-7948	991
	993
245-9178	82
245-9191	82
	84
245-9194	84
245-9205	82
	84
245-9212	77
	79
245-9216	77
	79
245-9217	77
	79
245-9218	77
	79
245-9276	77
	79
245-9344	68
	70
245-9349	82
	84
245-9352	82
246-2641	142
	143
246-5425	448
247-2693	288
	290
	307
	1002
	1003
	1004
	1005
247-2694	1073
247-2695	1073
247-6019	139
247-7331	▶921
247-7383	12
	▶921
247-7410	995
	▶1121
247-7411	995
	▶1123
247-7436	1137
247-7437	1137
247-7438	1137
247-7457	13
	14
	▶813
247-7465	481
	▶1124
247-7587	822
247-8739	510
247-8741	510
247-8747	512
247-8782	794
247-8789	510
247-8790	510
247-8791	512
247-8792	512
247-8793	512
247-8864	490
	493
247-8865	490
	493
	499
	501
247-8866	490
	493
247-8867	490
	493
247-8868	490
247-8869	581
247-8870	582
247-8873	503
	505
	508
247-8874	503
	505
	508
247-8876	503
	505
247-8877	503
	505
247-8878	503
247-8881	508
247-8882	508
247-8883	759
247-8885	499
	501
247-8886	499
	501
247-8887	499
	501
247-8888	499
247-8920	794
247-9030	549
247-9033	549
247-9034	549
247-9073	761
247-9074	761
247-9076	761
247-9078	761
247-9129	551
247-9132	551
247-9135	551
247-9138	551
247-9141	551
247-9144	551
247-9147	551
247-9164	603
247-9169	603
247-9173	603
247-9177	603
247-9181	603
247-9294	603
	604
	609
247-9298	551
	556
248-7143	446
	447
	▶448
248-7174	461
248-8930	351
248-8940	393
	▶426
248-8943	426
248-8944	426
248-8961	359
248-8993	383
248-8994	383
248-8995	383
248-9016	384
248-9018	384
248-9020	384
248-9061	346
	347
248-9126	433
248-9127	433
248-9138	434
248-9153	388
248-9157	388
248-9169	388
248-9180	388
248-9188	410
248-9197	412
248-9198	412
248-9205	422
248-9206	422
248-9211	415
248-9212	415
248-9213	415
248-9214	415
248-9215	415
248-9220	388
	▶406

▶ **PRIMARY REFERENCE**

PART NUMBER INDEX

Part	Page	Part	Page	Part	Page	Part	Page
248-9221	406		▶290	251-8670	953	255-1936	613
248-9222	406	251-0452	296	251-8671	954	255-2068	681
248-9223	406	251-0482	▶292	251-8673	945		701
248-9228	416	251-0483	292	251-8674	946	255-2904	67
248-9229	416		293	251-8675	947	255-2927	980
248-9230	416	251-0485	5	251-8676	948	255-2966	93
248-9231	416		▶293	251-8677	949		94
248-9236	421	251-0526	▶195	251-8678	950	255-3018	▶50
248-9249	352		1082	251-8680	952		980
	353	251-0538	▶1084	251-8681	953	255-3020	50
248-9250	352	251-0542	3	251-8682	954	255-3021	50
	353		4	251-8683	945	255-3022	50
248-9251	352		▶225	251-8684	946	255-3160	126
	353	251-0544	200	251-8685	947		130
248-9259	350		▶227		952	255-4575	951
248-9261	350	251-0580	288	251-8686	948	255-5594	831
248-9274	388	251-0602	290		953		863
248-9275	388	251-0637	264	251-8687	949	255-5661	824
248-9276	388	251-2597	921		954		826
248-9340	381		▶923	251-8688	950		831
248-9342	381	251-3522	952	252-5491	951		▶871
248-9428	765		953	252-8926	▶944	255-5662	841
248-9633	▶599		954	252-8938	944		844
	927	251-3523	945		▶951		846
248-9825	545		946	252-8950	951		848
	546		947	253-0861	1137		▶872
	▶655		948	253-1346	458	255-5680	611
248-9846	545		949		459		623
	▶650		950	253-2111	222		▶846
248-9847	545		951	253-2695	278	255-5683	611
	▶730	251-3870	▶939		281		623
248-9848	545	251-3871	▶940	253-2824	▶193		▶848
	▶653	251-3872	▶942	253-6445	558	255-5713	481
248-9850	545	251-3873	▶942	253-6453	558		▶809
	▶659	251-3874	▶942	253-6454	558	256-0093	▶529
248-9852	545	251-3875	▶943	253-6455	560		794
	▶661	251-3877	▶943	253-6548	606	256-0096	▶532
248-9853	▶747	251-3922	939	253-6551	606		794
	806		▶945	253-6591	▶566	256-1644	1
248-9925	489	251-3923	940	253-6592	▶608		▶387
	▶760		▶946	253-6685	562	257-4502	1137
250-1440	560	251-3924	942	253-6688	607	258-0332	689
	562		▶947	253-6691	607		714
	566	251-3925	942	253-6694	547	258-6749	635
250-2446	831		▶948	253-6697	547		639
250-2447	831	251-3926	942	254-2996	923		▶890
250-2503	795		▶949	254-3022	435	259-0647	597
250-5007	341	251-3927	943		▶438	259-0652	497
	343		▶950	254-3023	438	259-0653	497
	348	251-3929	943	254-3024	438	259-0654	497
250-5008	341		▶952	254-3052	925	259-0655	497
	343	251-4162	187		926	259-0656	497
	348	251-5545	▶943	254-3053	925	259-0680	813
250-5009	343	251-5546	▶944		926		▶901
250-5054	356	251-5547	943	254-3080	635	259-0775	505
	357		▶953		639		508
250-8054	1121	251-5548	944		▶822	259-0918	799
	1123		▶954	255-1659	545	259-0922	▶799
	1124	251-8662	945		546		802
251-0299	306	251-8663	946		▶663		804
251-0303	222	251-8664	947	255-1665	655	259-3543	363
251-0304	222	251-8665	948	255-1666	655	259-3687	393
251-0433	▶289	251-8666	949	255-1843	▶665		▶397
	1082	251-8667	950		1082	259-3688	397
251-0435	289	251-8669	952	255-1892	632	259-3891	332

▶ **PRIMARY REFERENCE**

PART NUMBER INDEX

Part	Page
259-3893	332
259-3903	364
259-4877	290
259-4884	246
	270
259-4887	284
	286
259-4914	1084
259-4940	284
	286
259-5043	▶206
	905
	906
259-5047	▶208
259-5048	▶209
259-5052	2
	3
	▶302
259-5097	160
259-5129	302
259-5237	▶196
	545
	546
259-5267	160
259-5274	222
	▶238
259-5281	▶249
	480
259-5283	▶303
	480
259-5290	264
259-5294	▶197
	481
259-5295	▶198
	995
259-5317	160
259-5326	206
259-5327	208
259-7180	246
259-7184	966
	▶983
259-7185	22
	▶984
259-7202	993
259-7207	983
259-7214	1086
259-7215	1086
259-7220	270
259-7233	984
259-7237	1059
259-7244	980
	▶982
259-7286	982
259-7287	984
259-7345	970
259-7346	▶969
	991
259-7347	▶970
	993
259-7348	989
	▶991
259-7349	989
	▶993
259-7353	1104
259-7354	1019
259-7378	809
	810
	▶824
259-7429	677
	726
	▶891
259-7430	674
	681
	697
	701
	▶892
259-7465	▶826
	850
259-7499	▶479
259-7501	6
	▶479
259-7502	▶479
259-7619	6
	▶480
259-7621	6
	▶480
259-7622	6
	▶480
259-7631	826
	▶829
259-7788	841
	844
259-7848	873
259-7849	873
259-7850	873
259-7851	873
259-7852	873
260-2042	188
260-2109	▶1002
	1012
260-2110	▶1003
	1013
260-2111	1002
	1003
	1004
	1005
260-2127	▶1004
	1014
260-2128	▶1005
	1015
260-2288	921
	▶925
260-2289	925
	926
260-3003	839
260-3883	643
260-6692	154
260-6941	1121
260-6942	1123
260-6944	1130
260-6948	1082
260-7135	1137
260-7868	545
	546
	▶789
260-7900	643
260-7904	789
260-7906	789
260-7910	▶542
	611
	623
260-7911	542
	▶543
260-7912	543
260-7913	542
	▶544
260-7914	544
260-7969	482
	▶667
260-7970	▶671
	813
260-7976	479
	▶674
260-7981	481
	▶677
260-7982	479
	▶681
260-7983	479
	▶731
260-7984	6
	▶683
260-7988	611
260-7992	611
260-7996	611
260-8000	611
260-8010	▶573
	905
	906
260-8011	▶600
	927
260-8013	479
	▶613
260-8014	481
	▶616
260-8015	479
	▶621
260-8016	479
	▶735
260-8043	613
	616
	632
	646
260-8145	719
260-8255	623
260-8259	623
260-8263	623
260-8267	623
260-8315	573
260-8316	573
260-8320	570
260-8321	570
262-1421	188
	▶193
262-2209	387
262-2309	413
262-2313	408
262-2315	361
262-2318	361
	362
262-2319	361
	362
262-2321	357
	362
262-2324	393
262-2333	418
262-2346	414
262-2347	417
262-2353	393
262-2363	393
262-2365	393
262-2405	346
	347
262-2406	346
	347
262-2417	346
	347
262-2420	397
	404
262-2427	397
	404
262-2428	397
	404
262-2429	397
	404
262-2430	397
	404
262-2432	397
	404
262-2484	384
262-3152	608
262-3155	608
262-3225	564
262-3228	566
262-3390	606
262-3471	▶761
	812
	813
262-3589	603
262-4781	448
263-9088	189
	190
	▶1085
264-1702	907
	909
	911
	913
	915
264-7029	162
	172
	307
	309
264-7030	162
	172
264-7032	162
	172
	225
	258
	284
	298
	300
	307
	314
	1045
264-7033	162
	172
	278
	281
	314
	1045
264-7034	162

▶ PRIMARY REFERENCE

PART NUMBER INDEX

Part	Page	Part	Page	Part	Page	Part	Page
	172	265-3673	84	266-1110	586	266-1392	697
	278	265-3679	100		589		726
	281	265-3680	100		592	266-1395	697
	307	265-3681	100	266-1111	586		726
264-8602	546	266-0136	229		589	266-3317	162
	▶1134	266-0902	646		592		172
264-8607	▶546	266-0906	632	266-1114	586	266-5431	1137
264-8608	546		646		589	266-6154	92
	▶1135	266-0908	621		592	266-6207	980
264-8771	▶546		628	266-1115	586		1062
264-9961	831	266-0912	613		589	266-6297	21
264-9967	689		616		592		22
	714	266-0913	613	266-1116	586		▶40
	▶896		616		589	266-6298	40
264-9982	982		632		592	266-6299	40
264-9983	982		646	266-1129	770	266-6300	40
264-9984	982	266-0916	632	266-1133	674	266-6301	40
265-0067	▶893	266-0924	711		677	266-6319	109
	896	266-0956	▶749	266-1146	770	266-6320	109
265-0069	▶884		807	266-1147	586	266-6321	109
	896	266-0957	546	266-1150	583		111
265-3503	18		▶623	266-1151	583	266-6326	48
	▶70	266-0958	546	266-1152	583	266-6332	48
265-3504	21		▶626	266-1153	583		72
	▶97	266-0959	546	266-1154	583	266-6333	72
265-3509	84		▶737	266-1156	583	266-6334	48
265-3576	22	266-0960	546	266-1160	685		72
	▶100		▶654	266-1165	626	266-6335	48
265-3581	97	266-0961	546	266-1166	626		72
	100		▶740	266-1179	674	266-6336	48
265-3585	97	266-0962	546		677		72
	100		▶685	266-1197	583	266-6337	48
265-3586	97	266-0963	546	266-1214	626		72
265-3587	97		▶688	266-1223	685	266-6338	48
265-3590	97	266-0964	546	266-1234	737		72
265-3591	97		▶695	266-1236	737	266-7379	222
	100	266-0965	480	266-1238	737	266-7891	493
265-3599	97		▶697	266-1240	737	266-7892	501
	100	266-0969	480	266-1243	737	267-4051	635
265-3602	82		▶628	266-1245	737	267-6767	4
265-3625	77	266-0970	480	266-1246	737		5
	79		▶701	266-1265	754		▶326
265-3629	77	266-0971	480	266-1266	616	267-6783	▶323
	79		▶742		646		326
265-3630	77	266-0972	6	266-1278	613	267-6801	▶378
	79		▶703		616		435
265-3631	77	266-0973	480		632	267-6802	378
	79		▶745		646	267-7064	1017
265-3632	77	266-0978	▶705	266-1279	613	267-7207	162
	79		812		616		172
265-3633	77	266-0979	▶707		632	267-7208	162
	79		1082		646		172
265-3634	77	266-0980	546	266-1283	703	267-7626	209
	79		▶770	266-1285	703	267-7627	▶211
265-3635	77	266-0982	689	266-1290	689		906
	79	266-1015	▶708	266-1293	689	267-7628	211
265-3637	77		1082	266-1303	613	267-7639	264
	79	266-1028	661		616	267-7671	270
265-3638	77		695		632	267-7672	270
	79	266-1037	650		646	267-7676	270
265-3639	77	266-1045	650	266-1315	616		314
265-3642	77	266-1057	623	266-1365	742	267-7695	314
	79	266-1061	623		745	267-7738	249
265-3643	77	266-1098	714	266-1389	697	267-7740	303
	79	266-1108	683		726	267-7742	158

▶ **PRIMARY REFERENCE**

PART NUMBER INDEX

Part	Page	Part	Page	Part	Page	Part	Page
267-7745	297	268-6989	556	270-5949	859	273-8317	529
267-7862	170	268-6992	556	270-5950	859		532
267-7888	286	268-6995	556	270-5953	853	273-8318	529
267-7976	225	268-6998	556	270-6106	▶481		532
267-7977	227	268-7001	556	270-6107	481	273-8319	529
267-8004	▶251	268-7004	556		▶999		532
	479	268-7007	556	270-6259	128	274-2547	598
267-8005	▶304	268-7010	556		191	274-4990	162
	479	268-7241	761	270-6338	74		172
267-8071	1		763	270-9677	382	274-6720	229
	2	268-8643	276	270-9682	382	274-6721	191
	3		277	270-9776	354		229
	▶1040	268-8872	1126	270-9818	158	275-1361	747
268-0466	341	269-0120	1126		▶407		749
	343	269-0121	1126	270-9820	407	275-1362	802
	348	269-9548	697	270-9821	407	275-1397	482
268-0467	341		726	272-4330	630		▶751
	343	269-9680	632	272-4362	480	275-1408	545
	348		646		▶632		▶713
268-0468	341	269-9684	646	272-4744	21	275-1409	483
	343	269-9826	193		▶102		▶635
	348		▶709	272-4772	13	275-1439	613
268-0469	343	269-9827	193		14		616
268-0470	341		▶711		▶231		632
	343	269-9850	740	272-4773	89		646
	348	269-9894	193		▶90	275-1440	616
268-0522	361		▶630	272-4774	16		646
268-0531	388	269-9919	663		41	275-1442	674
	▶398	269-9976	616		▶233		677
268-0532	398		646	272-4805	22		689
	402	269-9979	630		▶103		715
268-0533	398	269-9982	630	272-4806	14	275-1443	674
	402	269-9986	630		▶232		677
268-0534	398	269-9994	632	272-4807	89		689
	402		646		▶92		715
268-0535	398	270-0012	621	272-5000	278	275-1444	674
	402		628		281		677
268-0538	398	270-0013	621	272-6955	792		689
	402		628		▶794		715
268-0539	398	270-0014	621	273-5167	21	275-1468	635
	402		628		▶986	275-1495	482
268-0540	398	270-0015	621	273-5169	1039		▶719
	402		628		▶1062	275-1538	635
268-0542	398	270-0022	721	273-5399	984	275-1597	639
	402	270-0023	667		986	275-1648	583
268-0544	398		721	273-5400	1055		589
268-0551	388	270-0036	632	273-6906	334	275-1712	671
268-4530	1126	270-0040	737	273-7674	383	275-1713	671
268-4531	1126	270-5514	4	273-7675	384	275-1832	705
268-5145	616		5	273-7677	346	275-1834	705
268-6787	551		▶193		347	275-3686	5
268-6790	551	270-5677	193	273-7735	2		▶435
268-6816	483		▶810		3	275-3695	▶905
	▶1125	270-5687	6		▶126	275-3702	▶928
268-6817	1125		▶995	273-7774	355	275-3707	12
268-6850	571	270-5688	6	273-7847	351		13
268-6966	553		▶995	273-7848	351		▶922
268-6969	553	270-5689	995	273-7849	351	275-3714	▶469
268-6970	553		▶996	273-7964	330	275-6752	256
268-6971	604	270-5690	995		332	275-6803	300
268-6974	604		▶997	273-8314	794	275-6841	278
268-6977	604	270-5712	4	273-8315	791		281
268-6980	604		▶545		794	275-6842	278
268-6983	604	270-5713	5	273-8316	529		281
268-6986	604		▶545		532	275-6846	299

▶ **PRIMARY REFERENCE**

PART NUMBER INDEX

Part	Page	Part	Page	Part	Page	Part	Page
275-6916	170	278-6889	751	282-5741	609	285-2427	635
275-6979	284	278-6890	751	282-7055	731	285-2428	635
275-6993	316	278-6891	751	282-7079	671	285-2568	589
275-7198	251	278-6892	751	282-7098	705	285-2864	483
275-7202	304	278-6894	248	282-7138	630		▶639
275-7648	193		482	282-7141	630	285-2904	639
	▶1007		▶758	282-7513	697	285-2906	639
277-0786	549	278-6907	758		726	285-2909	639
	553	278-6912	731	282-7615	635	285-2910	639
277-0954	547		735	282-8567	42	285-4470	529
	558	278-9280	▶424		294		532
	564		469	283-2783	292	286-3683	191
	▶851	278-9281	424		293	286-4271	183
278-3581	330	279-3161	969		314		▶187
	332	279-7609	278		1043	286-5880	427
278-3709	2		281		1045		429
	3	279-7750	233	283-2893	1062	286-5881	427
	▶338	279-7783	21	283-2984	314		429
278-3818	364		22	283-3074	290	286-5885	388
	365		▶96	283-3892	1		▶410
	366	279-7865	▶15		▶142	286-5886	410
278-3836	393		20	283-3905	411	286-5887	410
	▶408	279-7869	545	283-3911	393	286-5894	422
278-3837	408		546	283-3913	354	286-5898	415
278-3842	393		▶792	283-3914	388	286-5899	415
	▶409	279-7870	▶485	283-3924	381	286-6186	126
278-3912	12		792	283-3926	382	286-6191	388
	13	279-7871	▶484	284-4551	1059	286-6220	393
	▶344		485	284-4552	1052	286-6256	388
278-3944	388	279-7907	102		1059	286-6257	1
278-3946	388	279-7909	90	284-4553	1059		▶345
278-3950	388	279-7911	21	284-7142	▶334	286-6276	393
278-3959	350		▶58	284-7325	929	286-6277	411
278-3965	432	280-2747	583	284-8532	1075	286-6281	383
278-4001	428		587	285-1323	545	286-6283	384
278-4002	428		593		546	286-6346	346
278-6428	616		613		▶850		347
278-6433	613		617	285-1332	999	286-6348	341
	616		632	285-1333	999		348
278-6435	613		646	285-1337	999	286-6349	341
278-6470	674	280-8618	971	285-1339	▶831		348
	677	281-3486	79		850	286-6350	341
278-6572	749	281-3488	77	285-1340	831		348
278-6587	583		79		▶835	286-6359	393
	586	281-3534	77	285-1356	4	286-6389	639
	589		79		▶546	286-6398	639
	592	281-3535	77	285-1375	811	286-6465	742
278-6593	583		79		▶837	286-6471	639
	586	281-3568	77	285-1376	479	286-6472	639
	589		79		480	286-6473	639
	592	281-3605	77		▶811	286-6475	639
278-6811	613	281-6335	601	285-1399	689	286-6495	▶586
	616	281-7035	601		714		812
278-6874	482	282-4533	905	285-1465	689	286-6720	586
	▶583		▶909		714		589
278-6875	583	282-4534	909	285-1514	▶812		592
	586	282-4536	928	285-1515	4	286-6721	586
	589		▶935		▶812		589
	592	282-4537	935	285-1531	621		592
278-6877	583	282-4539	922		628	286-6731	586
	586		▶926		▶839		592
	589	282-4540	926	285-1777	839	286-6760	714
	592	282-5567	571	285-2415	635	287-0041	103
278-6883	751	282-5705	483		643	287-0042	103
278-6886	751		▶1126	285-2423	635	287-0043	92

▶ **PRIMARY REFERENCE**

PART NUMBER INDEX

Part	Page
287-0047	485
287-0049	16
	▶113
	115
287-0062	22
	▶60
287-0120	▶16
	19
287-0121	134
287-0187	42
287-0188	42
287-0189	42
287-0190	42
287-0211	102
287-2352	822
288-7410	571
288-7502	549
	553
288-9297	117
	120
289-5396	482
	▶754
289-5397	482
	▶721
289-5398	▶757
	812
289-5399	▶725
	812
289-5416	483
	▶643
289-5475	674
	677
289-5486	630
289-5578	683
289-5607	643
289-5657	656
289-5672	611
289-5681	731
289-5700	735
289-5731	731
	735
289-6458	421
289-6459	421
289-6461	388
	▶427
289-6572	393
	▶411
289-6615	388
	▶412
289-6616	412
289-6617	412
289-6632	420
289-6699	393
	▶413
289-6700	413
289-6713	418
289-6911	▶358
	393
289-6912	358
289-6913	▶359
	393
289-6914	359
289-8194	▶526
	802
	804
289-8195	526
290-1720	14
	▶813
290-1727	1137
290-1728	1137
290-1729	1137
290-1747	1127
290-1765	1137
290-1766	1128
290-1851	12
	▶1127
290-1852	▶1128
290-1906	1137
290-9750	601
	▶876
290-9755	601
	▶877
290-9758	876
	877
291-7448	179
291-7461	1
	▶298
291-7463	▶299
	301
291-7559	1040
	▶1041
291-7560	1041
291-7561	1041
291-7592	168
291-7716	▶300
	301
291-7752	▶253
	481
292-3751	139
292-7153	747
292-7297	802
292-7450	804
292-7587	751
293-1117	1052
293-1118	1052
293-1119	1052
293-1121	986
293-1124	986
293-1127	986
293-1136	964
293-1137	967
293-1138	1037
293-1230	1052
	1055
	1059
	1062
293-1256	1109
293-6777	381
293-6778	382
293-6789	126
	130
293-6982	393
294-1678	31
294-1679	31
294-1680	31
294-1682	32
294-1683	32
294-1684	52
294-1685	52
294-1686	52
294-1687	52
294-1688	52
294-1689	52
294-1693	52
294-1698	52
294-1699	52
294-1700	24
	106
	108
294-1702	52
294-1703	24
294-1704	24
294-1705	24
294-1706	24
294-1707	24
294-1708	24
294-1709	24
294-1710	24
294-1711	24
294-1712	24
294-1713	24
294-1714	24
294-1716	23
294-1720	27
294-1721	27
294-1722	27
294-1724	30
294-1725	▶27
	30
294-1726	35
	36
	48
	54
	72
294-1727	36
294-1729	36
294-1731	36
294-1732	36
294-1733	36
294-1734	36
294-1735	36
294-1736	35
294-1737	35
294-1738	35
	67
	75
	106
294-1740	35
294-1741	42
	44
294-1742	42
294-1743	42
	44
294-1747	46
294-1748	46
294-1749	26
294-1751	26
294-1752	33
294-1753	34
294-1754	34
294-1755	34
294-1756	34
294-1757	34
294-1758	106
	108
294-1760	106
	108
294-1761	104
294-1763	113
294-1764	66
294-1765	66
294-1766	66
294-1767	62
	63
294-1768	44
	62
	63
294-1769	54
294-1770	54
294-1771	54
294-1772	54
294-1773	56
294-1774	56
	57
294-1775	56
	57
	191
294-1776	56
294-1777	74
294-1778	74
294-1780	74
294-1781	48
294-1784	51
294-1785	51
294-1786	51
	52
294-1787	128
294-1788	128
294-1789	128
294-1790	128
294-1791	128
294-1792	128
294-1793	128
294-1794	128
294-1795	128
294-1796	125
294-1800	125
294-1801	128
294-1802	128
294-1803	125
294-1804	117
	120
	128
	191
	229
294-1805	125
294-1806	128
294-1808	128
294-1809	128
294-1811	117
	120
	128
294-1812	128
294-1814	128
294-1815	128
294-1819	117
	120
294-1820	117
	120
294-1821	24

▶ **PRIMARY REFERENCE**

PART NUMBER INDEX

Part	Page
	117
	120
	136
294-1822	117
	120
294-1825	117
	120
294-1826	117
	120
294-1827	117
	120
294-1828	117
	120
294-1830	117
	120
294-1831	117
	120
	133
	134
294-1833	117
	120
294-1834	136
294-1836	136
294-1837	117
	120
294-1838	117
	120
294-1839	136
294-1841	136
294-1842	136
294-1843	136
294-1844	117
	120
294-1845	117
	120
294-1846	136
294-1848	117
	120
294-1849	117
	120
294-1850	41
294-1851	41
294-1853	106
294-1854	106
294-1855	233
294-1857	233
294-1858	233
294-1859	39
294-1860	39
294-1861	39
294-3794	551
	556
	568
294-3795	551
	556
	568
294-3796	551
	556
	568
294-3797	551
	556
	568
294-6306	609
294-6322	568
294-6534	616
294-7251	36
295-9130	16
	▶124
296-4617	294
296-4618	294
296-4619	294
296-4621	229
	294
296-4631	229
296-4632	191
296-4633	229
296-4635	191
296-4636	15
	16
	▶66
296-4637	15
	16
	▶41
296-4638	16
	▶56
296-4640	16
	▶42
296-4641	16
	▶62
296-4642	15
	16
	▶67
296-4643	15
	16
	▶35
296-4644	15
	16
	▶33
296-4645	15
	16
	▶32
296-4647	15
	16
	▶24
296-4648	15
	16
	▶30
296-4649	15
	16
	▶36
296-4650	15
	16
	▶26
296-4651	15
	16
	▶34
296-4652	15
	16
	▶106
296-4653	15
	16
	▶104
296-4654	15
	16
	▶54
296-4655	15
	16
	▶75
296-4656	15
	16
	▶128
296-4658	15
	16
	▶74
296-4659	15
	16
	▶46
296-4660	48
	▶72
296-4661	15
	16
	▶39
296-4662	15
296-4663	46
296-4664	15
	16
	▶191
296-4665	15
	16
	▶294
296-4666	15
	16
	▶229
296-4673	34
296-4733	74
296-4812	128
296-6298	▶318
	326
296-6299	318
	▶319
	322
296-6300	319
	▶326
296-6301	▶324
	326
296-6302	▶325
	326
296-7067	613
	616
296-7069	613
296-7075	632
296-7077	632
296-7229	635
296-7390	678
	726
296-7408	616
	646
296-7409	616
	646
296-7410	616
	646
296-7411	646
296-7413	646
297-0370	616
	646
	751
	754
	▶816
297-0371	751
	754
	▶894
297-0462	650
	▶818
297-0483	863
297-0491	6
	▶481
297-0497	6
	▶481
297-0503	818
	▶819
297-0504	818
	▶820
297-0529	▶853
	1009
	1010
297-0530	▶855
	1012
	1014
297-0531	▶857
	1013
	1015
297-0532	998
	▶1009
297-0533	998
	▶1010
297-0538	996
	▶1012
297-0539	996
	▶1013
297-0540	997
	▶1014
297-0541	997
	▶1015
297-4589	1002
297-4590	1003
297-4595	1004
	1005
297-7644	▶31
	32
297-7645	32
297-7646	36
297-7647	36
297-7648	46
297-7649	46
297-7650	46
297-7654	109
	111
297-7655	74
297-7656	128
297-7657	128
297-7658	128
297-7660	117
	120
297-7671	21
	▶133
297-7672	133
	134
297-7673	133
297-7674	133
297-7706	117
	120
297-7714	22
	▶134
297-7715	134
297-7723	4
	5
	▶17
297-7739	16
297-7745	16
	▶109

▶ **PRIMARY REFERENCE**

PART NUMBER INDEX

Part	Page
297-7791	109
297-7820	57
297-7822	117
	120
297-7826	57
297-9131	14
	▶453
297-9132	13
	14
	▶457
298-2942	358
	359
	361
	362
298-3033	393
	▶414
298-3037	414
298-3038	393
298-3041	393
298-3044	393
298-3147	126
	130
	▶154
298-3157	381
298-3257	154
298-3258	154
298-3319	382
298-3321	▶350
	388
298-3326	388
	▶428
298-3329	388
	▶415
298-3339	422
298-3349	434
298-4195	1029
298-4254	1029
298-4258	138
	▶1129
298-4303	4
	▶435
298-4308	8
	9
	10
	11
	▶905
298-4309	12
	▶906
298-4310	12
	13
	▶905
298-4341	482
	▶1130
298-4342	8
	9
	10
	11
	12
	▶906
299-2767	160
	170
299-2784	▶158
299-2798	160
299-2832	256
299-2853	253
299-3053	▶256
	481
300-8654	15
300-9715	529
300-9716	532
301-0091	160
	161
	162
	171
	297
301-0589	1075
301-6874	529
	532
301-7292	264
301-8294	529
	532
302-2852	635
302-2878	630
302-2879	630
302-2900	616
302-2903	616
302-3171	635
302-3196	820
302-3315	481
	▶646
302-3316	481
	▶726
302-9466	851
302-9730	575
303-2668	1137
303-2787	186
	1042
	▶1132
303-6261	106
	108
303-9860	199
	▶400
303-9861	▶401
	1042
303-9914	401
	▶429
303-9916	401
303-9917	401
303-9920	401
	▶402
303-9921	402
303-9933	145
	147
	150
	152
303-9937	145
	147
	150
	152
304-0016	400
	▶404
304-0017	404
304-0018	400
304-0019	400
304-0093	355
	▶430
305-0330	1104
305-0331	1003
	1005
305-0332	1002
	1004
305-0333	1104
305-0441	1052
	1055
	1059
	1062
305-0442	1052
	1055
	1059
	1062
305-0446	1
	2
	3
	▶1080
305-0467	5
	▶1090
305-4678	15
	▶136
305-4719	15
	▶44
305-4721	15
	▶117
305-4723	15
	▶57
305-4724	15
	▶63
305-4744	15
	16
	▶23
305-4745	16
	▶120
305-4746	52
305-4747	52
305-4750	52
305-4751	52
305-4756	23
305-4781	58
305-4887	117
	120
305-4889	120
305-4890	117
305-4893	294
305-4895	294
305-4896	294
305-4897	294
305-4898	294
305-4900	117
	120
305-4901	117
	120
305-4902	117
	120
305-4905	51
305-4906	51
305-4907	51
305-4908	48
	▶51
305-4910	15
	16
	▶52
305-4927	52
305-4928	52
305-4929	52
305-4930	52
305-4950	484
305-4951	484
305-4952	484
305-7642	79
305-7664	82
305-7669	82
	84
305-7671	68
	70
305-7673	68
	70
306-1611	549
306-1614	549
306-1615	549
306-8349	199
	▶263
	1042
306-8350	263
306-8401	161
306-8501	2
	3
	▶301
306-8526	161
	170
306-8590	274
306-8802	1084
307-0047	189
	190
307-4918	579
	626
307-4919	579
	626
307-4920	757
307-5034	573
307-5035	570
307-5079	630
	751
	754
307-5097	747
307-5098	747
307-5120	661
307-5121	584
	587
	589
307-5128	630
	751
	754
307-5129	735
307-5130	735
307-5161	635
	643
307-5298	623
307-5307	749
307-5311	751
307-7656	358
307-7662	393
	▶431
307-7700	393
307-7702	388
	393
307-7704	398
	402

3

▶ PRIMARY REFERENCE

PART NUMBER INDEX

Part	Page
307-7786	388
307-7803	126
307-7804	126
307-7872	130
307-7873	130
307-8031	388
	▶416
307-8032	416
307-8033	416
307-8035	421
308-8775	367
	369
308-8776	367
	369
308-8777	367
	369
309-1098	956
309-3872	1129
309-5769	655
	665
	667
	721
309-5842	▶188
	199
309-9941	839
310-0078	▶998
310-0210	689
	714
	▶861
310-0393	831
	▶873
310-0394	869
	▶875
310-0414	655
	▶859
310-0419	859
310-0420	859
310-0421	859
310-0422	859
310-6252	1137
310-9498	58
310-9500	58
310-9506	60
310-9507	60
310-9533	117
	120
	128
310-9534	117
	120
310-9536	117
	120
310-9537	128
310-9582	21
	▶64
310-9589	22
	▶65
310-9607	15
	▶125
310-9611	4
	▶18
310-9617	15
	▶115
310-9667	88
	▶93
310-9676	90
312-2645	140
312-8338	86
312-8339	86
312-8340	86
313-3762	86
313-3763	86
313-3764	86
313-3765	86
313-3766	86
313-3767	86
313-3769	86
313-3772	86
313-3773	86
313-3774	86
313-3776	86
313-3780	86
313-3782	86
313-7829	422
313-7833	▶183
	185
313-7849	362
313-7850	362
313-7960	1
	▶1068
314-3727	10
	11
	12
	▶928
314-3729	12
	13
	▶928
314-3768	248
	▶1133
314-3798	▶462
314-3856	▶248
314-3917	3
	▶6
314-3923	▶8
314-3924	▶8
314-3925	▶8
314-3926	▶9
314-3927	4
	▶9
314-3928	▶10
314-3929	▶10
314-3930	▶10
314-6504	86
314-6505	86
314-6506	86
314-6509	86
314-6510	86
314-8107	754
314-8110	754
314-8120	646
314-8121	646
314-8128	714
314-8142	646
314-8188	742
314-8212	646
314-8246	643
315-0800	367
	369
315-1049	905
	906
	▶911
315-1050	911
315-1064	905
	▶913
315-1065	913
315-1070	906
	▶915
315-1071	915
315-4412	▶895
	902
316-4058	▶601
316-8831	380
	▶1029
316-8836	▶1031
316-8837	▶1032
316-8838	▶1108
316-8842	▶1008
	1082
316-8846	967
316-8847	967
316-8849	967
316-8854	975
316-8916	964
	▶967
	1037
316-8918	967
316-8920	967
316-8921	967
316-8922	1080
316-8933	1081
316-8987	1091
	1093
	1094
	1095
	1101
316-8989	1071
317-4712	613
	616
317-4887	482
	▶589
318-2396	128
319-1248	253
319-1278	253
	256
319-1335	316
319-1342	222
319-4420	225
	227
	▶242
319-9152	1132
319-9888	650
319-9892	737
319-9991	735
319-9996	731
320-0013	586
	592
320-0048	721
320-0198	570
320-5392	183
320-5396	185
320-5525	1066
320-5651	388
320-5652	388
321-0240	601
321-0241	601
322-4582	1130
	1133
322-8716	579
	626
	▶902
323-0699	575
323-7558	616
	646
	▶897
323-7559	897
	▶898
323-7770	859
323-7772	898
323-7897	831
323-7898	831
	▶863
324-0123	68
	70
324-0966	928
	▶936
324-0968	936
324-0980	928
	▶937
324-0983	937
324-4002	17
	▶19
324-4006	18
	▶20
324-4052	48
324-4053	48
324-4060	23
324-4119	106
	108
324-4128	74
324-4131	35
324-4156	111
324-4158	111
324-4159	46
324-4160	46
324-4161	46
324-4165	111
324-4166	111
324-4167	111
324-4173	15
	▶111
324-4175	30
324-4194	15
	▶108
324-4195	35
324-4200	19
	20
	▶48
324-4206	4
	5
	▶21
324-4208	4
	▶22
324-5761	140
324-5768	▶247
	1042
324-5804	222
324-5805	222
324-5806	222
324-5808	222

▶ **PRIMARY REFERENCE**

PART NUMBER INDEX

Part	Page
325-8865	613
	616
326-1644	123
326-3870	77
	79
326-3947	▶77
	81
326-3949	▶79
	84
326-3951	77
326-3953	79
326-3956	▶81
	82
326-4635	136
	▶139
326-4700	125
326-8394	601
327-3062	1066
327-3063	1066
327-3198	2
	3
	▶143
327-3199	143
	▶144
327-3200	144
	▶145
327-3203	144
	▶147
327-3225	142
	▶149
327-3226	149
	▶150
327-3227	149
	▶152
327-3240	338
	▶346
327-3241	346
327-3276	344
	▶347
327-3277	347
327-3287	345
	▶348
327-3288	348
327-3329	▶185
	186
	1042
327-6437	1108
327-6438	1108
327-6453	1008
327-6457	1008
327-6476	1103
327-6477	1035
	1103
327-6478	1035
	1103
327-6479	1035
327-6480	1103
327-6489	1042
	▶1118
327-6491	1118
327-6492	1118
327-6495	1042
327-6501	5
	▶1087
327-6502	▶1088
327-6503	5
	▶1089
327-6507	1087
	▶1093
327-6508	1088
	▶1094
327-6509	1089
	▶1095
327-6512	▶1091
	1093
327-6513	1091
	1092
327-6515	1091
	1092
327-6520	1093
	▶1100
327-6521	1094
	1095
	▶1101
327-6523	1082
	▶1099
327-6538	1099
327-6541	1090
327-6550	971
	▶1069
	1070
	1071
327-6551	975
	▶1120
327-6552	3
	4
	▶1070
327-6553	8
	▶1071
327-6576	1070
327-6592	1118
327-6618	1021
327-6625	975
	▶1111
327-6640	1091
	1092
327-6642	1091
	1092
327-6643	1091
	1092
327-6644	1100
	1101
327-6645	▶1047
	1100
327-6646	1047
	1048
327-6647	1047
327-6648	1100
	1101
327-6649	1092
327-7482	1072
	▶1073
327-7523	193
327-7524	193
327-7594	1073
327-9998	274
328-0021	225
	227
328-0028	272
	305
328-0072	162
	172
328-0139	1045
328-0394	248
	▶305
328-0395	305
328-2035	643
330-1162	1065
	▶1066
330-1163	▶365
	1065
330-1164	365
330-1166	▶366
	1065
330-1167	366
330-1182	393
330-1184	393
330-1287	388
330-1288	388
330-1347	393
330-1348	▶349
	388
330-1353	977
	▶1065
330-1427	▶360
	393
330-1448	388
330-1574	977
	▶1065
330-2384	674
	677
330-3408	1085
330-3409	193
330-3410	193
332-8903	470
332-8908	462
	▶470
333-2983	▶322
	546
333-4157	▶1048
	1101
333-4158	1048
333-4159	1048
333-4160	1091
333-4178	1048
333-4179	1091
	1092
333-4180	1047
	1048
	1092
	1100
	1101
333-4181	1047
333-4353	1103
333-5219	332
334-2932	139
334-4603	1137
334-6387	975
	▶1019
334-6388	1111
	▶1116
334-6389	1116
334-6469	1116
334-6478	1116
334-6479	1116
334-6481	1116
334-6482	1116
334-6483	1116
334-6484	1116
334-6485	1116
334-6486	1116
334-6488	1116
334-6489	1116
334-6490	1116
334-6491	1116
334-6492	▶1096
	1111
334-6493	1096
334-6495	1096
334-6497	1111
334-6499	1111
334-6501	1111
334-6504	1111
334-6505	1111
334-6507	1111
334-6508	1111
334-6509	1111
334-6513	1019
	▶1115
334-6514	1115
334-6519	1115
334-6520	1115
334-6521	1115
334-6522	1115
334-6523	1115
334-6524	1115
334-6525	1115
334-6526	1019
334-6527	1019
334-6528	1019
334-6530	1019
334-6531	1019
334-6533	1019
334-6534	1019
334-6535	1019
334-6536	1019
334-6537	1019
334-6538	1019
334-6541	▶971
	975
334-6542	971
334-6546	971
334-6549	971
334-6550	971
334-6551	971
334-6552	971
	▶1050
334-6553	1050
334-6554	1050
334-6557	971
	▶1051
334-6558	1051
334-6559	1051
334-6562	971
334-6564	971
334-6565	971
334-6566	971
334-6567	971
334-6568	971

▶ **PRIMARY REFERENCE**

PART NUMBER INDEX

Part	Page	Part	Page	Part	Page	Part	Page
	▶1017	336-4574	393	336-6166	1		▶369
334-9940	904		▶417		▶170	337-1510	369
334-9968	775	336-4575	13	336-6204	▶260	337-1704	▶335
	▶786		14		482	337-1705	335
334-9976	786		▶384	336-6209	▶179	337-2301	763
	▶787	336-4585	86	336-6214	▶297	337-2302	763
334-9981	787	336-4586	86	336-6238	199	337-2303	763
335-0136	852	336-4587	86		▶286	337-2305	763
335-0138	852	336-4588	86	336-6251	186	337-2307	763
335-4977	▶568	336-4590	86		▶277	338-6881	199
335-4978	▶609	336-4591	86	336-6262	▶281		▶1075
335-4979	▶812	336-4593	86		1042	338-6887	▶189
335-4980	▶575	336-4597	86	336-6302	161		199
	812	336-5965	306	336-6303	162	338-6889	▶190
335-4981	▶763	336-5981	▶306	336-6304	162		199
	812		1082	336-6305	162	338-6920	194
335-5055	609	336-6071	▶213		170	338-6921	194
335-5056	609	336-6072	▶214	336-6307	162	338-6937	199
335-5057	609	336-6095	213		171		1042
335-5060	609		216	336-6309	162		▶1077
335-5063	609	336-6096	214		171	338-9838	▶11
335-5066	609		218	336-6328	168	338-9839	▶11
335-5112	568	336-6103	213		179	338-9840	3
335-5114	568		216	336-6354	309		▶11
335-5115	568	336-6105	213	336-6355	310	338-9841	▶12
335-5116	568		216	336-6356	270	338-9896	▶12
335-5117	568	336-6131	2	337-1047	417	339-0722	575
336-1140	▶1106		3	337-1055	394	339-0724	575
336-1141	1106		▶160	337-1064	394	339-0725	575
336-1144	1106	336-6132	▶264	337-1078	339	339-0813	▶483
336-1145	1106		1082		▶341	339-0814	7
336-1146	1106	336-6133	▶220	337-1079	341		▶483
336-1150	5		1082	337-1080	340	339-2832	▶4
	▶1086	336-6134	220		▶343	339-2835	▶1
336-1151	1086		▶222	337-1081	343		4
336-1159	1029	336-6135	▶309	337-1096	168	340-3768	3
	1032		483		▶418		▶89
336-1160	1029	336-6136	▶310	337-1102	394	340-3770	13
	1032		483	337-1104	388		14
336-1161	1029	336-6137	▶270		▶419		▶199
336-1163	1029		483	337-1106	419	340-3787	1
	1032	336-6139	3	337-1108	418		▶1136
336-1196	380		4	337-1123	388	340-3819	14
	▶1028		▶1045	337-1125	388		▶482
336-1197	1028	336-6141	▶314		▶432	340-3841	4
336-1203	1118	336-6143	▶168	337-1126	432		▶89
336-1204	1118	336-6145	▶296	337-1131	179	340-3842	14
336-4558	1	336-6148	199		▶420		▶199
	▶388		▶284	337-1133	420	340-3844	▶1042
336-4560	1	336-6150	▶276	337-1135	383	340-3845	14
	▶381		1042	337-1136	383		▶977
336-4563	14	336-6151	199	337-1137	388	340-3846	▶186
	▶382		▶278		▶433		977
336-4564	89	336-6153	3	337-1182	611	340-6486	8
	▶354		4	337-1205	659		▶380
336-4565	1		▶216		685	340-6488	3
	▶130	336-6154	8	337-1276	482		4
336-4569	▶339		▶218		▶592		▶1022
336-4570	▶340	336-6155	▶258	337-1468	437	340-6489	▶1023
336-4571	2		482	337-1469	437	340-6490	▶1024
	3	336-6156	▶272	337-1497	1	340-6491	▶1025
	▶393		482		▶367	340-6492	▶1026
336-4572	2	336-6159	186	337-1498	367	340-6493	▶1026
	3		▶274	337-1509	2	340-6496	5
	▶383		1042		3		▶973

▶ **PRIMARY REFERENCE**

PART NUMBER INDEX

Part	Page
340-6497	973
	▶975
340-6506	5
	▶1042
340-6507	1042
	▶1109
340-6511	1032
340-6522	5
	▶966
340-6524	966
	▶1021
	1039
340-6538	2
	3
	▶1052
340-6539	966
	▶1055
340-6540	1
	▶1059
340-6549	▶966
340-6560	▶1039
340-6561	1052
340-6562	1052
	1055
340-6563	1055
340-6582	1017
340-6583	1017
340-6584	1017
340-6585	1017
340-6586	971
340-6587	971
340-6589	▶1034
	1035
340-6592	1034
340-6593	1035
340-6594	1035
340-6595	1035
340-6624	1113
340-6625	1113
340-6626	1113
340-6627	1113
340-6665	975
	▶1035
340-6680	975
340-6693	975
	▶1102
340-6695	975
	▶1113
340-6727	1113
340-6728	1113
340-6729	1102
	▶1103
340-6731	1102
	▶1104
340-6732	1104
340-6734	1104
340-6736	1104
340-6737	1104
340-6738	1104
340-6739	1104
340-6740	1104
340-6742	1103
340-6761	1109
341-1842	145
	150
	152
341-2143	86
342-0802	384
342-0804	384
342-0839	417
342-0850	381
342-0852	381
342-0853	382
342-0856	382
342-0881	420
342-0893	394
342-0895	389
	▶434
342-0900	▶351
	355
342-0910	389
	▶421
342-0911	▶361
	389
342-0912	▶362
	389
342-0913	389
	▶422
342-0918	▶352
	389
342-0921	419
342-0922	419
342-0923	420
342-0987	89
	▶355
342-0992	▶353
	354
342-1110	330
	332
342-1861	791
342-2819	168
	179
342-2824	222
342-2826	222
342-2827	222
342-2855	264
342-2858	258
342-2859	272
342-2912	171
342-2913	171
342-2914	171
342-2915	171
342-2918	171
342-2921	216
	218
342-2924	802
	804
342-2959	▶312
	483
342-2962	314
342-3004	298
342-3017	278
342-3032	312
342-3066	281
342-3067	266
342-3094	260
342-3456	1021
342-3458	1021
342-3459	1021
342-3460	1082
	▶1083
342-3461	1083
342-3536	▶1027
342-3541	1109
342-3544	1109
342-3546	▶1074
	1120
342-3547	1120
342-3548	1120
342-3588	1
	2
	3
	▶336
342-3589	336
342-3592	▶337
	1042
342-3593	337
342-3601	266
342-3604	1059
342-3605	1059
342-3617	1
	2
	3
	▶1082
342-3624	1
	2
	3
	▶1081
342-3647	▶1082
342-3648	▶1082
342-3715	1029
	1032
342-3717	1029
	1032
342-3718	1083
342-3723	1029
	1032
342-3745	1103
342-3746	1103
342-3747	1103
342-3750	1031
342-5703	7
	▶483
343-1015	▶4
343-1016	▶5
343-1017	▶2
	4
343-1018	▶3
	5
343-1019	2
	▶1136
343-1020	3
	▶1136
343-1115	4
	▶462
343-1116	▶462
343-1177	▶482
343-1178	13
	14
	▶482
343-1181	13
	14
	▶977
343-1193	977
	▶1042
343-5527	123
344-0723	21
	▶82
344-0724	22
	▶84
344-0729	82
	84
344-6745	▶425
	462
344-6748	425
346-2777	▶356
	394
346-2778	▶357
	388
346-4596	12
	13
	▶199
346-4628	▶3
346-4629	▶4
346-7367	1029
	1032
346-7370	1029
	1032
346-7375	971
	▶1079
346-7427	1098
346-7428	1098
346-7429	1098
346-7437	1021
	▶1098
347-9292	81
	▶86
347-9293	86
347-9868	1137
347-9902	3
	▶13
347-9903	4
	▶14
347-9905	4
	▶6
347-9906	▶6
347-9907	3
	4
	▶5
347-9908	▶5
347-9909	▶7
347-9910	▶7
347-9911	▶7
347-9912	▶7
347-9921	▶8
347-9938	▶14
347-9939	▶12
347-9940	▶13
349-5363	1075
349-5364	1028
349-5370	1077
349-5373	1077
349-5375	1077
350-3230	1136
	▶1137

▶ **PRIMARY REFERENCE**



© 2009 CATERPILLAR
ALL RIGHTS
RESERVED

CAT, CATERPILLAR, THEIR RESPECTIVE LOGOS, “CATERPILLAR YELLOW” AND THE POWER EDGE TRADE DRESS, AS WELL AS CORPORATE AND PRODUCT IDENTITY USED HEREIN, ARE TRADEMARKS OF CATERPILLAR AND MAY NOT BE USED WITHOUT PERMISSION.

PRINTED IN
U.S.A.

SEBP5476
VOLUME II
Pages 471-1138

323D, 323D L & 323D LN Excavators

CWG1-Up
WNE1-Up
ZMF1-Up