SEBP6227
October 2013

RUTHZIL TRATOR COMERCIAL DE PEÇAS LTDA 11 97083-6812 ROLANDO CITRANGULO

Parts Manual

323D2 L Excavator

JEG1-Up (Machine)
BD41-Up (Engine)

Powered By C7.1 Engine

Product and Dealer Information

Note: For product identification plate locations, see the section “Product Identification Information” in the Operation and Maintenance Manual.

Delivery Date: _____

Product Information

Model: _____

Product Identification Number: _____

Engine Serial Number: _____

Transmission Serial Number: _____

Generator Serial Number: _____

Attachment Serial Numbers: _____

Attachment Information: _____

Customer Equipment Number: _____

Dealer Equipment Number: _____

Dealer Information

Name: _____ Branch: _____

Address: _____

_____

_____

	Dealer Contact	Phone Number	Hours
Sales:	_____	_____	_____
Parts:	_____	_____	_____
Service:	_____	_____	_____

MEMORANDA

TABLE OF CONTENTS

NAME	PAGE
GENERAL INFORMATION	**A5**
REPAIR ALTERNATIVES	**A8**
SUPPLEMENTAL COOLANT ADDITIVES	A9
MAINTENANCE PARTS	**A10**
INDEX	**A13**
MACHINE ARRANGEMENT	**1**
CHASSIS AR	1
GENERAL AR	1
OPTION AR-CAB	1
OPTION AR-HYDRAULIC	2
ENGINE ARRANGEMENT	**3**
ENGINE AR-PRIMARY	3
INSTALLATION AR-ENGINE	5
BASIC ENGINE	**6**
BELT TENSIONER GP	6
CAMSHAFT GP	7
COVER GP-VALVE MECHANISM	8
CRANKSHAFT GP	10
CYLINDER BLOCK AS	11
CYLINDER BLOCK GP	12
CYLINDER HEAD AS	13
CYLINDER HEAD GP	14
DRAIN GP-ENGINE OIL	15
DRIVE GP-FAN	16
FLYWHEEL GP	17
HOUSING GP-FLYWHEEL	18
HOUSING GP-FRONT	19
JET GP-PISTON COOLING	20
LIFTING GP-ENGINE	21
MOUNTING GP-ENGINE	22
PAN GP-OIL	24
PISTON & ROD GP	26
PLUG GP-CYLINDER BLOCK	27
PULLEY GP-AUXILIARY DRIVE	28
PULLEY GP-CRANKSHAFT	29
PULLEY GP-ENGINE	30
ROCKER ARM GP	31
LUBRICATION SYSTEM	**34**
BREATHER GP	34
COVER GP-OIL FILLER	35
FILTER & MTG GP-ENGINE OIL	36
FUMES DISPOSAL GP	38
GAUGE GP-OIL LEVEL (DIPSTICK)	39
LINES GP-ENGINE OIL DRAIN	40
PUMP GP-ENGINE OIL	41
COOLING SYSTEM	**42**
CONNECTION GP-HEATER	42
CONNECTION GP-WATER	43
COOLER GP-ENGINE OIL	44
FAN AR-VARIABLE	47
FAN GP-SUCTION	48
LINES GP-COOLING	49
PUMP GP-WATER	50
RADIATOR & HYD OIL COOLER GP	51
AIR INLET AND EXHAUST SYSTEM	**56**
AIR CLEANER & MOUNTING GP	56
AIR CLEANER AR	57
AIR CLEANER GP	58
LINES GP-AIR	62
LINES GP-TURBOCHARGER AIR	63
MANIFOLD GP-EXHAUST	64
MANIFOLD GP-INLET	65
MUFFLER GP	66
TURBOCHARGER GP	67
FUEL SYSTEM	**68**
FILTER GP-FUEL	68
INJECTOR GP-FUEL	71
LINES GP-FUEL	72
LINES GP-FUEL INJECTION	79
PUMP AR-FUEL TRANSFER	83
PUMP GP-FUEL INJECTION	84
PUMP GP-FUEL PRIMING	85
PUMP GP-FUEL PRM & PRIM FILTER	86
PUMP GP-FUEL TRANSFER	87
RAIL GP-FUEL	90
TANK & MTG GP-FUEL	91
TANK AR-FUEL	93
TANK GP-FUEL	94
ELECTRICAL AND STARTING SYSTEM	98
ALARM GP	98
ALARM GP-TRAVEL	99
ALTERNATOR GP-CHARGING	100
BATTERY & WIRING GP	101
BLOCK GP-JUNCTION	106
CONTROL & MTG GP-COMMUNICATION	107
CONTROL & MTG GP-ELECTRONIC	110
CONTROL GP-ENGINE ELECTRONIC	111
ELECTRONICS GP-COMMUNICATION	112
ELECTRONICS GP-MACHINE	112
FASTENER GP-WIRING HARNESS	113
HARNESS AS-CHASSIS	115
HARNESS AS-ENGINE	117
HARNESS AS-PLATFORM	118
HARNESS AS-WIRING	120

TABLE OF CONTENTS

NAME	PAGE
HEATER GP-JACKET WATER	121
INSTALLATION AR-COMMUNICATION	122
LAMP GP-FLOOD	123
LIGHTING GP-FLOOD	126
MOUNTING GP-ELECTRONIC CONTROL	135
PANEL GP-CIRCUIT BREAKER	136
PANEL GP-SWITCH	138
RADIO GP-COMMUNICATION	140
SENSOR GP-ENGINE	141
SENSOR GP-PRESSURE	142
STARTING AID AR-ETHER	143
STARTING AID GP	144
STARTING AID GP-ETHER	145
STARTING MOTOR GP-ELECTRIC	146
SWITCH GP-DISCONNECT	147
SWITCH GP-LIMIT	148
SWITCH GP-MAGNETIC	149
SWITCH GP-PUSH BUTTON	150
SWITCH GP-START	152
SWITCH GP-TOGGLE	153
SWITCH GP-WIPER	154
VALVE GP-ETHER STARTING	155
WIRING GP-CAB	156
WIRING GP-CHASSIS	167
WIRING GP-COMBINED FLOW	171
WIRING GP-COMMUNICATION	173
WIRING GP-CONSOLE	175
WIRING GP-CONVERTER	180
WIRING GP-ENGINE	182
WIRING GP-FINE SWING	185
WIRING GP-PANEL	186
WIRING GP-PLATFORM	187
WIRING GP-QUICK COUPLER	189
WIRING GP-REFUELING PUMP	190
POWER TRAIN	**192**
DRIVE GP-FINAL	192
GEAR GP-TRANSFER	198
POWER TRAIN AR	199
SPROCKET GP	200
FRAME AND BODY	**201**
BOX & MTG GP-STORAGE	201
BOX GP-STORAGE	202
BUMPER GP	204
COUNTERWEIGHT & MOUNTING GP	205
COUNTERWEIGHT AR	207
COUNTERWEIGHT GP	208
COVER AS-SOUND SUPPRESSION	210
COVER GP-HOOD	214
DOOR GP-ACCESS	215
FENDER & COVER GP	218
FRAME GP-UPPER	219
GEAR & BEARING GP-SWING	223
GUARD GP-BOTTOM	226
GUARD GP-SWIVEL	228
HANDRAIL GP	229
HOOD & GUARD GP	230
HOOD GP-ENGINE	235
SHEET AS-SOUND SUPPRESSION	236
STEP GP	242
SUPPORT AS-ENCLOSURE	243
SUPPORT AS-SOUND SUPPRESSION	244
UNDERCARRIAGE	**247**
FRAME AR-UNDERCARRIAGE	247
FRAME AS-UNDERCARRIAGE	248
GUARD GP-TRACK GUIDE	249
GUARD GP-TRAVEL MOTOR	251
IDLER GP-FRONT	253
LINK AS-TRACK	257
ROLLER AR-TRACK & CARRIER	258
ROLLER GP-TRACK CARRIER	260
ROLLER GP-TRACK-SINGLE FLANGE	261
TRACK ADJUSTER & RECOIL GP	265
TRACK AR	269
TRACK GP	269
HYDRAULIC SYSTEM	**271**
ACCUMULATOR GP-HYDRAULIC	271
BLOCK GP-HYDRAULIC	278
CONTROL AR-AUXILIARY	279
COUPLING GP-FLEXIBLE	280
COUPLING GP-PUMP	281
CYLINDER & LINES GP-BOOM	282
CYLINDER & LINES GP-BUCKET	282
CYLINDER & LINES GP-STICK	283
CYLINDER & SEAL GP-BOOM	284
CYLINDER & SEAL GP-BUCKET	286
CYLINDER & SEAL GP-STICK	292
CYLINDER GP-HYDRAULIC	296
DRIVE GP-SWING	297
FASTENER GP-SWING & FINAL DR	300
FILTER & VALVE GP-PILOT	302
FILTER GP-OIL	303
FITTING GP-HYDRAULIC	308
GAUGE GP-SIGHT	309
HEAD GP-PUMP	310
HOSE GP-HYDRAULIC	317
HYDRAULIC AR	328
HYDRAULIC AR-BIODEGRADABLE OIL	328
LINES GP-AUXILIARY HYDRAULIC	329
LINES GP-BOOM	338
LINES GP-BOOM CYLINDER	341
LINES GP-BUCKET CYLINDER	345
LINES GP-CONTROL	348

TABLE OF CONTENTS

NAME	PAGE
LINES GP-COUPLER	350
LINES GP-FRONT	357
LINES GP-HYDRAULIC OIL COOLER	366
LINES GP-PILOT	367
LINES GP-PUMP	396
LINES GP-QUICK COUPLER	397
LINES GP-RETURN	399
LINES GP-STICK	401
LINES GP-STICK CYLINDER	403
LINES GP-TRAVEL MOTOR	404
MANIFOLD GP-CONTROL	407
MOTOR & MTG GP-SWING	410
MOTOR & MTG GP-TRAVEL	411
MOTOR GP-SWING	413
MOTOR GP-TRAVEL	416
MOUNTING GP-MAIN CONTROL VALVE	423
PUMP & MTG GP-MAIN HYDRAULIC	424
PUMP GP-GEAR	425
PUMP GP-MAIN HYDRAULIC	426
SCREEN GP-HYDRAULIC	430
SWIVEL GP	431
TANK & FILTER GP-HYDRAULIC	433
TANK & MTG GP-HYDRAULIC	435
VALVE & MTG GP-CONTROL	436
VALVE GP-CHECK	437
VALVE GP-CONTROL	439
VALVE GP-LOAD CONTROL	453
VALVE GP-MAIN CONTROL	457
VALVE GP-MANUAL	458
VALVE GP-PILOT	459
VALVE GP-PRESSURE REDUCING	464
VALVE GP-PRIORITY	466
VALVE GP-RELIEF	467
VALVE GP-SHUTTLE	478
VALVE GP-SOLENOID	480
VALVE GP-SOLENOID & MANIFOLD	486
VALVE GP-SWING CUSHION	487
VALVE GP-TRAVEL COUNTERBALANCE	489
IMPLEMENTS	**491**
BOOM AR	491
BOOM AR-1 PIECE LONG	491
BOOM GP	492
LINES GP-GREASE	496
LINKAGE AR-BUCKET	501
LINKAGE GP-BUCKET	502
PIN GP	505
STICK AR	506
STICK AR-HOE	506
STICK GP-HOE	507
WORK TOOLS	**511**
ADJUSTER GP-BUCKET	511
BUCKET & ADJUSTER GP	513
BUCKET AS-HEAVY DUTY	514
BUCKET AS-HEAVY DUTY POWER	515
BUCKET GP-HEAVY DUTY SPADE	516
BUCKET GP-ROCK	517
CONTROL AR-QUICK COUPLER	518
COUPLER AR-QUICK	518
COUPLER GP-QUICK	519
PIN GP-COUPLER	520
PROTECTOR GP-SIDE BAR	521
SIDECUTTER GP	523
TIP GP-DOUBLE SPIKE	525
TIP GP-PENETRATION	526
TIP GP-PENETRATION PLUS	528
TIP GP-SHARP	530
TIP GP-SPIKE	531
OPERATOR STATION	**532**
AIR CONDITIONER & MOUNTING GP	532
AIR CONDITIONER AR	534
AIR CONDITIONER GP	535
ARMREST GP	537
CAB GP	539
COIL GP-EVAPORATOR	557
COMPRESSOR GP-REFRIGERANT	559
CONDENSER & MTG GP-REFRIGERANT	561
CONDENSER GP-REFRIGERANT	563
CONSOLE GP-OPERATOR	564
CONTROL & MTG GP-JOYSTICK	570
CONTROL GP-HANDLE	571
CONTROL GP-HEAT & AIR COND	573
CONTROL GP-HYDRAULIC PEDAL	574
CONTROL GP-JOYSTICK	576
CONTROL GP-PILOT OPERATED HYD	578
COVER GP-CAB	579
DOOR & MTG GP-CAB	580
DOOR GP-CAB	583
DUCT GP-CAB AIR	587
FLOOR MAT	588
GUARD AR-OVERHEAD	591
GUARD GP-FRONT WINDOW	592
GUARD GP-OVERHEAD	594
HATCH GP-ROOF	596
HORN GP-ELECTRIC	597
LEVER GP-CAB DOOR	601
LINES GP-AIR CONDITIONER	602
LITERATURE GP	605
MIRROR GP-REAR VIEW	606
MONITOR & MTG GP-OPERATOR	608
MONITOR GP-OPERATOR	609
MOUNTING GP-ANTENNA	610
MOUNTING GP-PLATFORM	611

TABLE OF CONTENTS

NAME	PAGE	NAME	PAGE
OPERATOR AR-ENCLOSED ROPS	613		
PLATFORM GP-OPERATOR	614		
RADIO GP	615		
SCREEN GP-SUN	616		
SEAT & MOUNTING GP	617		
SEAT BELT GP	619		
SEAT GP	620		
SEAT GP-SUSPENSION	622		
SUPPORT GP-SEAT	624		
SUSPENSION GP-SEAT	625		
VISOR GP-CAB	627		
WASHER GP-WINDOW	628		
WINDOW GP-CAB	631		
WINDOW GP-DOOR	644		
WIPER & WASHER GP-WINDOW	648		
WIPER AR-WINDOW	650		
WIPER GP-WINDOW	651		
SERVICE EQUIPMENT AND SUPPLIES	653		
FILM GP	653		
PLATE & FILM GP	663		
PART NUMBER INDEX	**B1**		

1. MACHINE IDENTIFICATION

Cat machines are identified by Product Identification Numbers (PIN). Some components included in a machine may be identified by Serial Numbers (S/N). Typical components that will be serialized include engines, transmissions, bulldozers, and rippers. The machine and engine are further identified by arrangement numbers and in some cases modification numbers. These numbers are shown on the product identification plate(s) and on the master plate in the operator's compartment.

Cat dealers need all of these numbers to determine accurate parts identification.

Effective First Quarter 2001 the Cat Product Identification Number (PIN) changed from 8 to 17 characters. In an effort to provide uniform equipment identification, Caterpillar and other construction equipment manufacturers are moving to comply with the latest version of the product identification numbering standard. Non-road machine PINs are defined by ISO 10261. The new PIN format will apply to all Cat machines and generator sets. The PIN plates and frame marking will display the 17 character PIN. The new format will look like the following:

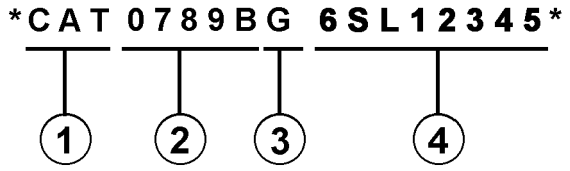

Where:

1. Caterpillar's World Manufacturing Code (characters 1-3)

2. Machine Descriptor (characters 4-8)

3. Check Character (character 9)

4. Machine Indicator Section (MIS) or Product Sequence Number (characters 10-17). These were previously referred to as the Serial Number.

Machines and generator sets produced before First Quarter 2001 will maintain their 8 character PIN format.

Components such as engines, transmissions, axles, etc. and work tools will continue to use an 8 character Serial Number (S/N).

2. ORDERING PARTS

⚠ WARNING

When replacement parts are required for this product Caterpillar recommends using Caterpillar replacement parts or parts with equivalent specifications including, but not limited to, physical dimensions, type, strength and material.

Failure to heed this warning can lead to premature failures, product damage, personal injury or death.

Quality Cat replacement parts are available from Cat dealers throughout the world. Their parts inventories are up to date and include all parts normally required to protect your investment in Cat machines. Dealers may offer repair kits or remanufactured parts to allow selection of the most effective repair alternative for a particular situation. When ordering parts, your order should specify the quantity, part number, part name, and the serial number/product identification number of the machine for which the parts are needed.

3. PARTS MANUAL ORGANIZATION

Product information in this manual is presented as "information elements" that represent all of the components for the specific model. Engine Arrangement and Seat Group are examples of information elements. The information elements are organized alphabetically by part name and secondarily by part number within each major section of the manual.

4. TABLE OF CONTENTS

A table of contents (TOC) is found at the beginning of the manual. The TOC lists each section of the manual with a complete list of all information elements organized as they appear in the manual. Page numbers are provided for quick reference to detailed parts identification illustrations and serviceable consist lists.

5. MAINTENANCE PARTS INDEX

The Maintenance Parts Index, located near the beginning of the manual, references most frequently used maintenance part numbers, providing description, quantity, usage and page number. This information is organized alphabetically by part description.

6. INDEX

The index located near the front of the manual is an alphabetical listing of all information elements included in the manual. Page numbers are provided for quick reference to detailed parts identification illustrations and serviceable consist lists.

7. PART NUMBER INDEX

A numerical index listing all part numbers and the corresponding page number(s) appears at the back of the manual.

8. CAPTIONS

Captions located at the beginning of each information element identify the part number and part name along with additional descriptive information. PIN and S/N information found in each caption should be used to select correct information for a specific machine. Field replacement options, identification of optional attachment components, and where used ("part of") information is also provided.

The first line of a caption is shown in larger type font to indicate the beginning of an information element. Captions for additional pages that may be required to illustrate an information element will be shown in standard type font and will include the term *(contd.)* .

9. NON-SERVICED PARTS

In some instances it is necessary to display non-serviced parts that are a link to a lower level serviceable consist lists. These non-serviced part numbers are shown in *italic* type indicating that they are not available.

10. PARTS LIST REFERENCE NUMBERS

Numbers shown in the Ref No column correspond to numbers used in the associated graphic(s). An alphabetic suffix may be added to a reference number to identify lower level consist items. Numbers shown in the Graphic Ref column refer to the graphic number identifier displayed in the lower left corner of each illustration. The Graphic Ref number may be used in combination with the item Ref No to determine the correct part number. There may be intentional omission of a Ref No in a consist list as information is updated to reflect the latest serviceable part numbers.

11. INDENTED PART NAMES

When a part name is indented in a parts list, it is part of (included in) the group or assembly under which it is indented.

12. ILLUSTRATION REFERENCE LETTERS

When necessary, illustrations contain reference letters (A, B, C etc.) that are intended to track lines and harnesses from one point to another. They are also used to show where to reconnect illustrations that have been separated.

13. ABBREVIATIONS AND SYMBOLS

O.D. – Outside Diameter
I.D. – Inside Diameter
A – Not Part Of This Group
B – Use As Required
C – Change From Previous Type
D – Order By The Meter
E – Order By The Centimeter
F – Not Shown
G – Order By The Inch
I – Refer To Hydraulic Information System
M – Metric Part
R – Remfg Part May Be Available
Y – Separate Illustration
Z – Not Serviced Separately

14. DESCRIPTION OF TYPE CHANGES

Type - A type is defined as any configuration change that requires an additional Information Element for an Arrangement, Group, or Assembly. If serial number breaks for types are not available, a type # (Type 1, Type 2, etc.) will be displayed in the caption. These "type" changes are identified with a "C" note (change from previous type) in the Parts List. Only the "types" that apply to this Parts Manual will be included. Additional types may exist causing "C" notes to appear on an Information Element when no other types are shown.

15.<END>

This symbol indicates the end of an information element.

NOTE:

Continuing improvement and advancement of product design may cause changes to your machine which may not be included in this publication. Whenever a question arises regarding your Cat product or this publication, please consult your Cat dealer for the latest available information.

FRAME AND BODY

8E-3299 PLATFORM GP-CAB

PIN 38K1-99999

SMCS-7283 100090751

NOTE	REF NO	GRAPHIC REF	PART NUMBER	QTY	PART NAME (1 2 3 4 5 6 PRODUCT LEVEL)	SEE PAGE
	1	1	3T-3963	1	PLATE AS	
	2	1	5H-3962	25	BOLT (3/8-16X.750IN)	
	3	1	6P-1075	41	WASHER-HARD (3MM THK)	
	4	1	9P-1444	2	SUPPORT AS-FOOT	
	5	1	5P-2229	19	BOLT (1/2-13X1IN)	
		1	9J-[illegible]	19	WASHER-HARD (4MM THK)	
	6	1	9E-8134	1	COVER AS-LH	
		1	9F-2979	6	NUT-WELD (3/8-16 THD)	
		1	1F-9189	1	CLIP	
	7	1	7S-2411	4	COVER	
	8		5J-0468	19	SCREW-HEAD (3/8-16X.87SIN)	
	9	1	[illegible]074	1	COVER	
		1	9E-8[illegible]	1	GASKET	
	10	1	9E-3248	1	[illegible]	
		1	9E-3250	1	GASKET	
	11	1	3T-3930	1	HANDHOLD	
	12	1	9E-8078	1	COVER AS	
		1	9F-2979	6	NUT-WELD (3/8-16 THD)	
		1	9E-8079	1	GASKET	
	13	1	7T-0131	1	FLOORPLATE AS	
		1	1F-0748	4	NUT-WELD (1/2-13 THD)	
	14	1	7V-8067	1	PLUG-BUTTON	
	15	1	7T-0136	1	PLATE AS	
		1	9F-2979	5	NUT-WELD (3/8-16 THD)	
	16	1	7T-5066	1	COVER	
		1	7T-0779	1	GASKET	
	17	1	3T-3951	1	PLATE AS	
	18	1	9T-9364	4	BOLT (1/4-20X.62SIN)	
M		1	9T-4236	4	WASHER-HARD (2MM THK)	
	19	1	6I-9464	1	FLOOR MAT	
	20	1	8E-8946	1	MODULE AS-OPERATOR	
	21	1	3T-3934	1	HANDHOLD	
	22	1	9P-8571	2	PLUG	
	23	2	9T-9364	4	BOLT (1/4-20X.62SIN)	
M		2	9T-4236	4	WASHER-HARD (2MM THK)	
	24	2	5H-3962	17	BOLT (3/8-16X.750IN)	
	25	2	6P-1078	21	WASHER-HARD (9MM THK)	
	26	2	7T-0136	1	SEAL	
	27	2	7X-0378	2	BOLT (3/4-10X5IN)	
		2	7X-0662	2	WASHER-HARD (6MM THK)	
	28	2	3T-3462	2	PLATE	
	29	2	3T-8290	1	PLATE AS	
		2	7S-4828	6	SPACER	
	30	2	3T-8281	1	SEAL	
	31	2	7S-8017	1	GASKET	
	32	2	7S-8016	1	COVER AS	
		2	2R-2376	2	WASHER	
		2	6P-0626	2	SCREW-KNURLED	
	33	2	9W-3429	1	COVER	
	34	2	8E-9697	1	COVER	
	35	2	9D-3091	8	SCREW-SOCKET HEAD	
	36	2	9W-3142	8	MOUNTING	
	37	2	9W-9527	2	PLATE	
	38	2	7X-0390	2	BOLT (7/8-9X6IN)	
		2	7X-0672	2	WASHER-HARD	
	39	2	4L-6454	4	BOLT (3/8-16X1.0IN)	
	40	2	3T-4788	1	COVER	

12 FRAME AND BODY 1 of 4 SELP4570-01

FRAME AND BODY

8E-3299 PLATFORM GP-CAB (contd.)

100090751

NOTE	REF NO	GRAPHIC REF	PART NUMBER	QTY	PART NAME (1 2 3 4 5 6 PRODUCT LEVEL)	SEE PAGE
	41	2	8E-2515	1	COVER	
	42	2	7T-0134	1	PLATE	
	43	2	7T-0128	1	GASKET	
	44	2	7S-8724	1	GASKET	
	45	2	7S-8723	1	COVER	
	46	2	6V-1960	2	PLUG-BUTTON	

M-METRIC PART

SELP4570-01 2 of 4 FRAME AND BODY 13

FRAME AND BODY

8E-3299 PLATFORM GP-CAB (contd.)

100090751

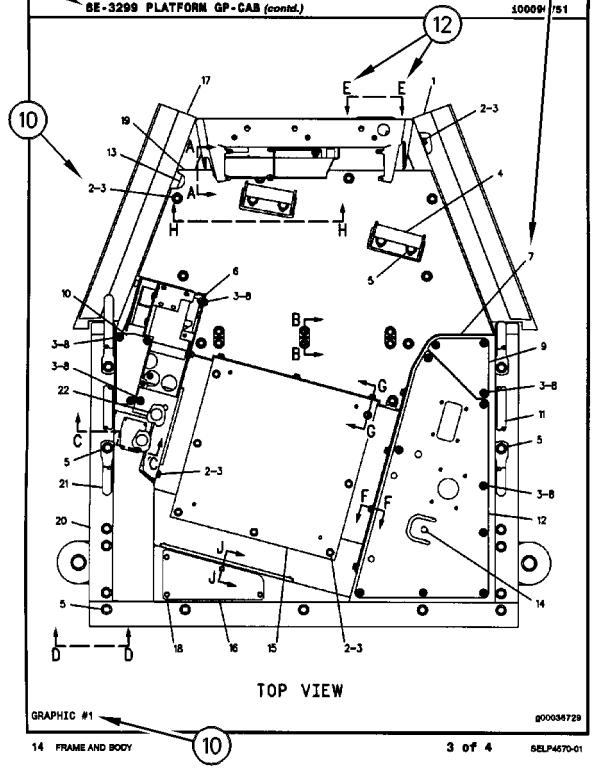

14 FRAME AND BODY 3 of 4 SELP4570-01

FRAME AND BODY

8E-3299 PLATFORM GP-CAB (contd.)

100090751

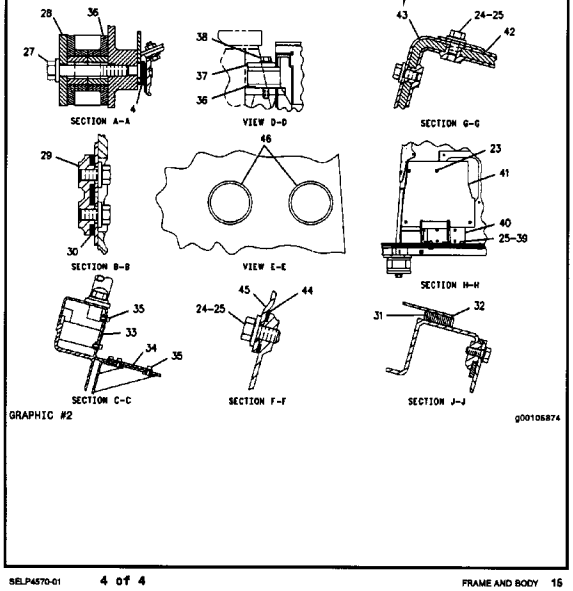

SELP4570-01 4 of 4 FRAME AND BODY 15

REMANUFACTURED COMPONENTS

As an option when making repairs consider Cat Remanufactured Components. Components that are available through the Cat Remanufactured Program are identified three ways in the parts book:

- with the letter R in the note field of the parts list
- with an R* at the beginning of the first line of the caption
- with an *R at the end of the first line of the caption

Typical components included in the Remanufacturing Program include:

ALTERNATORS
CONNECTING RODS
CRANKSHAFTS - UNDERSIZE
CRANKSHAFTS - UPGRADE TO NEW
CYLINDER HEADS
ELECTRONIC CONTROL MODULES (ECM)
ELECTRONIC SENSORS
FUEL INJECTORS
FUEL NOZZLES
FUEL PUMPS
GOVERNORS
OIL PUMPS
PISTONS
SHORT BLOCKS
STARTERS
TURBOCHARGERS - COMPLETE
TURBOCHARGER CARTRIDGES
WATER PUMPS

Cat Remanufactured engines for many engine arrangements are also available.

SUPPLEMENTAL COOLANT ADDITIVES

CUSTOMER BENEFITS:

Protects against cavitation, foam, erosion, corrosion, and scale buildup in cooling systems.

- Provides measured coolant conditioner.

DESCRIPTION:

Additives deplete from the coolant with normal operation. For this reason, Supplemental Coolant Additives (SCA) must be added to all heavy duty coolants at regular intervals. In addition, when not using a fully formulated, pre-charged antifreeze, like Cat DEAC, an initial charge of SCA must be added to the cooling system. The amount of SCA added to the system is dependent on the capacity of the system.

The SCA for initial fill is provided as a liquid. SCA's for maintenance intervals are available in liquid form and as a spin-on element. (No Spin-on available for 3600 Family of Engines)

NOTE:

The amount of SCA added at initial fill is not the same as the amount added at maintenance intervals.

The coolant additive elements can be used with any ethylene or propylene glycol type antifreeze which meets ASTM D4985 or ASTM D5345 Specifications.

NOTE:

For use with standard heavy duty coolant only, not for use with Extended Life Coolant.

PARTS NEEDED:

Cooling System Capacity		Liquid SCA at Initial Fill	Liquid SCA at Maintenance*	Spin-on SCA Maintenance Element*
Liters	Gallons			
22-30	(6-8)	3P-2044 (1)	6V-3542 (1)	111-2370 (1)
30-38	(8-10)	3P-2044 (1) 6V-3542 (1)	111-2372 (1)	111-2369 (1)
38-49	(10-13)	3P-2044 (1) 8T-1589 (1)	111-2372 (1)	111-2369 (1)
49-64	(13-17)	3P-2044 (2)	8T-1589 (1)	9N-3368 (1)
64-83	(17-22)	3P-2044 (2) 8T-1589 (1)	111-2372 (1) 6V-3542 (1)	111-2371 (1)
83-114	(22-30)	3P-2044 (3) 8T-1589 (1)	3P-2044 (1)	9N-3718 (1)
114-163	(30-43)	3P-2044 (5)	3P-2044 (1) 6V-3542 (1)	111-2371 (2)
163-242	(43-64)	3P-2044 (8)	3P-2044 (2)	9N-3718 (2)

** Normal maintenance period is 250 hrs. See your Operation and Maintenance Manual for complete coolant maintenance instructions.*

( ) Indicates quantity required.

MAINTENANCE PARTS

DESCRIPTION	PART NUMBER	QTY	WHERE USED	PAGE
AIR INLET AND EXHAUST SYSTEM				
FILTER ELEMENT AS-AIR (PRIMARY, STANDARD EFFICIENCY)	6I-2501	1	AIR CLEANER GP	61
FILTER ELEMENT AS-AIR (PRIMARY, ULTRA HIGH EFFICIENCY)	128-2686	1	AIR CLEANER GP	61
FILTER ELEMENT AS-AIR (PRIMARY)	131-8822	1	AIR CLEANER GP	60
FILTER ELEMENT AS-AIR (SECONDARY)	131-8821	1	AIR CLEANER GP	60
	6I-2502	1	AIR CLEANER GP	61
FILTER ELEMENT AS-AIR (ULTRA HIGH EFFICIENCY) (PRIMARY)	134-0685	1	AIR CLEANER GP	60
BASIC ENGINE				
BELT-SERPENTINE	350-8747	1	PULLEY GP-ENGINE	30
CAP AS-FILLER (ENGINE OIL)	359-1310	1	COVER GP-VALVE MECHANISM	8
CAP-BREATHER (VALVE MECHANISM)	380-9615	1	COVER GP-VALVE MECHANISM	8
GASKET-OIL PAN	351-4749	1	PAN GP-OIL	24
SEAL (VALVE COVER)	124-0506	1	COVER GP-VALVE MECHANISM	8
COOLING SYSTEM				
CAP AS (COOLANT RECOVERY)	171-3369	1	RADIATOR & HYD OIL COOLER GP	51
CAP-DUST	157-0670	1	RADIATOR & HYD OIL COOLER GP	53
CAP-RADIATOR	416-0965	1	RADIATOR & HYD OIL COOLER GP	53
CONNECTION AS (INCLUDES TEMPERATURE REGULATOR)	367-1817	1	CONNECTION GP-WATER	43
GASKET-WATER REGULATOR	281-8744	1	CONNECTION GP-WATER	43
HOSE-RADIATOR (LOWER)	423-4409	1	RADIATOR & HYD OIL COOLER GP	51
HOSE-RADIATOR (UPPER)	398-3276	1	RADIATOR & HYD OIL COOLER GP	51
PLUG-DRAIN (RADIATOR)	355-0468	1	RADIATOR & HYD OIL COOLER GP	53
ELECTRICAL AND STARTING SYSTEM				
BATTERY (12-VOLT, MAINTENANCE FREE, WET)	9X-3404	2	BATTERY & WIRING GP	103
BATTERY GP (12-VOLT, MAINTENANCE FREE)	263-9574	2	BATTERY & WIRING GP	101
CAP AS-FILLER (BATTERY)	123-1373	6	BATTERY & WIRING GP	103
CIRCUIT BREAKER AS (120-AMPERE) (ALTERNATOR)	216-4970	1	PANEL GP-CIRCUIT BREAKER	136
CIRCUIT BREAKER AS (60-AMPERE) (GLOW PLUG)	171-2208	1	PANEL GP-CIRCUIT BREAKER	136
CIRCUIT BREAKER AS (80-AMPERE) (MAIN)	171-2210	1	PANEL GP-CIRCUIT BREAKER	136
FILTER (ETHER START)	358-4889	1	VALVE GP-ETHER STARTING	155
FUSE (10-AMPERE)	113-8490	20	WIRING GP-CAB	160
FUSE (15-AMPERE)	113-8491	6	WIRING GP-CAB	160
FUSE (20-AMPERE)	113-8492	2	WIRING GP-CAB	160
FUSE (25-AMPERE)	113-8493	2	WIRING GP-CAB	160

MAINTENANCE PARTS

DESCRIPTION	PART NUMBER	QTY	WHERE USED	PAGE
FUSE (30-AMPERE)	124-3548	2	WIRING GP-CAB	160
FUSE (5-AMPERE)	141-2759	8	WIRING GP-CAB	160
GLOW PLUG (24-VOLT)	361-9875	6	STARTING AID GP	144
KEY (BATTERY DISCONNECT)	8H-5306	1	SWITCH GP-DISCONNECT	147
LAMP AS (24-VOLT, 3-WATT)	170-9324	1	PANEL GP-SWITCH	138
LAMP-HALOGEN (24-VOLT, 70-WATT)	351-9918	1	LAMP GP-FLOOD	123
	9X-3463	1	LAMP GP-FLOOD	124
		1	LAMP GP-FLOOD	125
FUEL SYSTEM				
CAP AS-FUEL (LOCKABLE, VENTED)	349-7059	1	TANK GP-FUEL	94
		1	TANK GP-FUEL	96
FILTER AS-WATER SEP & FUEL	438-5386	1	PUMP GP-FUEL PRM & PRIM FILTER	86
FILTER ELEMENT-FUEL	360-8960	1	FILTER GP-FUEL	68
STRAINER AS-FUEL (FLOAT GAUGE)	303-9933	1	TANK GP-FUEL	94
		1	TANK GP-FUEL	96
HYDRAULIC SYSTEM				
BREATHER (HYDRAULIC TANK)	227-0590	1	TANK & FILTER GP-HYDRAULIC	433
BREATHER (SWING DRIVE)	4H-6112	1	DRIVE GP-SWING	299
BREATHER AS (SWING DRIVE)	227-6221	1	DRIVE GP-SWING	299
FILTER ELEMENT AS-OIL (ADVANCED EFFICIENCY) (HYDRAULIC RETURN)	179-9806	1	FILTER GP-OIL	306
FILTER-OIL (ADVANCED EFFICIENCY) (HYDRAULIC, CASE DRAIN)	093-7521	1	FILTER GP-OIL	305
FILTER-OIL (ADVANCED EFFICIENCY) (HYDRAULIC, PILOT)	5I-8670	1	FILTER & VALVE GP-PILOT	302
PLUG-DRAIN (HYDRAULIC TANK)	321-8665	1	TANK & FILTER GP-HYDRAULIC	433
SCREEN AS (HYDRAULIC TANK)	209-6000	1	SCREEN GP-HYDRAULIC	430
LUBRICATION SYSTEM				
FILTER ELEMENT-ENGINE OIL	322-3155	1	FILTER & MTG GP-ENGINE OIL	36
OPERATOR STATION				
BLADE AS-WIPER (275-MM) (LOWER)	4I-5021	1	WIPER & WASHER GP-WINDOW	648
BLADE AS-WIPER (600-MM)	161-3670	1	WIPER GP-WINDOW	651
CAP AS (WINDOW WASHER)	178-5431	1	WASHER GP-WINDOW	628
DRYER-REFRIGERANT (RECEIVER)	176-1902	1	LINES GP-AIR CONDITIONER	602
FILTER ELEMENT-CAB AIR	245-7823	1	AIR CONDITIONER GP	535
	293-1184	1	CAB GP	555
		1	CAB GP	556
		1	DUCT GP-CAB AIR	587
LAMP (24-VOLT, 10-WATT)	201-4417	1	CAB GP	543
LAMP AS-DOME	176-1986	1	CAB GP	543
SEAT BELT GP (RETRACTABLE, 43-MM)	327-6541	1	SEAT BELT GP	619
SEAT BELT GP (RETRACTABLE)	305-0467	1	CAB GP	555

MAINTENANCE PARTS

DESCRIPTION	PART NUMBER	QTY	WHERE USED	PAGE
		1	CAB GP	556

INDEX

NAME PAGE

A

ACCUMULATOR GP-HYDRAULIC–CHARGED . . . 271
272
273
274
275
276
ACCUMULATOR GP-HYDRAULIC–UNCHARGED 277
ADJUSTER GP-BUCKET 511
ADJUSTER GP-BUCKET–CB-FAMILY 512
AIR CLEANER & MOUNTING GP 56
AIR CLEANER AR–PRECLEANER 57
AIR CLEANER GP 58
60
61
AIR CONDITIONER & MOUNTING GP 532
AIR CONDITIONER AR 534
AIR CONDITIONER GP 535
ALARM GP-TRAVEL–BACKUP 99
ALARM GP–FAULT 98
ALTERNATOR GP-CHARGING 100
ARM GP-WINDOW WIPER 651
ARMREST GP–LH 538
ARMREST GP–RH 537

B

BATTERY (12-VOLT, MAINTENANCE FREE, WET) 103
BATTERY & WIRING GP 103
BATTERY & WIRING GP–COLD WEATHER 101
BATTERY GP (12-VOLT, MAINTENANCE FREE, WET) 103
BATTERY GP (12-VOLT, MAINTENANCE FREE) 101
BELT TENSIONER GP 6
BELT-SERPENTINE 30
BLADE AS-WIPER (275-MM) (LOWER) 648
BLADE AS-WIPER (600-MM) 651
BLOCK GP-HYDRAULIC 278
BLOCK GP-JUNCTION–BATTERY 106
BOOM AR-1 PIECE LONG–AUXILIARY, HEAVY-DUTY 491
BOOM AR–1-PIECE SHORT, AUXILIARY 491
BOOM GP 492
494
BOX & MTG GP-STORAGE 201
BOX GP-STORAGE 202
BREATHER (HYDRAULIC TANK) 433
BREATHER (SWING DRIVE) 299
BREATHER AS (SWING DRIVE) 299
BREATHER GP 34
BUCKET & ADJUSTER GP–HEAVY-DUTY POWER, CB-FAMILY 513
BUCKET & ADJUSTER GP–HEAVY-DUTY SPADE, B-FAMILY 513
BUCKET & ADJUSTER GP–HEAVY-DUTY, B-FAMILY 513
BUCKET AS-HEAVY DUTY POWER–CB-FAMILY 515
BUCKET AS-HEAVY DUTY–B-FAMILY 514
BUCKET GP-HEAVY DUTY SPADE–B-FAMILY 516
BUCKET GP-ROCK–CB-FAMILY 517
BUMPER GP 204

C

CAB GP 539
541
549
551
CAB GP–COMFORT 555
CAB GP–DELUXE 556
CAB GP–EXTERIOR 543
CAB GP–INTERIOR 546
553
CAMSHAFT GP 7
CAP AS (COOLANT RECOVERY) 51
CAP AS (WINDOW WASHER) 628
CAP AS-FILLER (BATTERY) 103
CAP AS-FILLER (ENGINE OIL) 8
CAP AS-FUEL (LOCKABLE, VENTED) 94
96
CAP-BREATHER (VALVE MECHANISM) 8
CAP-DUST 53
CAP-RADIATOR 53
CHASSIS AR 1
CIRCUIT BREAKER AS (120-AMPERE) (ALTERNATOR) 136
CIRCUIT BREAKER AS (60-AMPERE) (GLOW PLUG) 136
CIRCUIT BREAKER AS (80-AMPERE) (MAIN) 136
COIL GP-EVAPORATOR 557
COMPRESSOR GP-REFRIGERANT 559
560
CONDENSER & MTG GP-REFRIGERANT 561
CONDENSER GP-REFRIGERANT 563
CONNECTING ROD GP 26
CONNECTION AS (INCLUDES TEMPERATURE REGULATOR) 43
CONNECTION GP-HEATER 42
CONNECTION GP-WATER 43
CONSOLE GP-OPERATOR 566
CONSOLE GP-OPERATOR–LH 568
CONSOLE GP-OPERATOR–RH 564
CONTROL & MTG GP-COMMUNICATION–PRODUCT LINK 121SR 107
CONTROL & MTG GP-COMMUNICATION–PRODUCT LINK 321SR 109
CONTROL & MTG GP-ELECTRONIC 110
CONTROL & MTG GP-JOYSTICK 570
CONTROL AR-AUXILIARY–SYSTEM 2, COMBINED FUNCTION 279

INDEX

NAME PAGE

CONTROL AR-AUXILIARY–SYSTEM 3 PRIME, 1-WAY, 2-PUMP 279
CONTROL AR-QUICK COUPLER–PIN GRABBER 518
CONTROL GP-ENGINE ELECTRONIC 111
CONTROL GP-HANDLE–JOYSTICK, LH 571
CONTROL GP-HANDLE–JOYSTICK, RH 572
CONTROL GP-HEAT & AIR COND–AIR INLET 573
CONTROL GP-HYDRAULIC PEDAL 574 575
CONTROL GP-JOYSTICK–LH 577
CONTROL GP-JOYSTICK–RH 576
CONTROL GP-PILOT OPERATED HYD–TRAVEL 578
COOLER GP-ENGINE OIL 44 46
CORE AS-FUEL COOLER 51
CORE AS-HEATER 535
CORE AS-OIL COOLER (HYDRAULIC) 53
CORE AS-RADIATOR 53
COUNTERWEIGHT & MOUNTING GP 205 206
COUNTERWEIGHT AR 207
COUNTERWEIGHT GP 208 209
COUPLER AR-QUICK–CB2-FAMILY 518
COUPLER GP-QUICK 519
COUPLING GP-FLEXIBLE 280
COUPLING GP-PUMP 281
COVER AS-SOUND SUPPRESSION 211
COVER AS-SOUND SUPPRESSION–FUEL, HYDRAULIC TANKS 210 212 213
COVER GP-CAB–REAR 579
COVER GP-HOOD–PRECLEANER 214
COVER GP-OIL FILLER 35
COVER GP-VALVE MECHANISM 8 9
CRANKSHAFT GP 10
CYLINDER & LINES GP-BOOM–LH 282
CYLINDER & LINES GP-BOOM–RH 282
CYLINDER & LINES GP-BUCKET 282 283
CYLINDER & LINES GP-STICK 283
CYLINDER & SEAL GP-BOOM 284
CYLINDER & SEAL GP-BUCKET 286 288 290
CYLINDER & SEAL GP-STICK 292 294
CYLINDER BLOCK AS 11
CYLINDER BLOCK GP 12
CYLINDER GP-HYDRAULIC 296
CYLINDER HEAD AS 13
CYLINDER HEAD GP 14

NAME PAGE

D

DOOR & MTG GP-CAB 580 581 582
DOOR GP-ACCESS–AIR CLEANER, BATTERY 215
DOOR GP-ACCESS–PUMP COMPARTMENT 217
DOOR GP-ACCESS–RADIATOR 216
DOOR GP-CAB 583 585
DRAIN GP-ENGINE OIL 15
DRIVE GP-FAN 16
DRIVE GP-FINAL 193 194
DRIVE GP-FINAL–WITH MOTOR 195
DRIVE GP-FINAL–WITH MOTOR, SPROCKET 192
DRIVE GP-FINAL–WITHOUT MOTOR 196
DRIVE GP-SWING–WITH MOTOR 299
DRIVE GP-SWING–WITHOUT MOTOR 297
DRYER-REFRIGERANT (RECEIVER) 602
DUCT GP-CAB AIR 587

E

ELECTRONICS GP-COMMUNICATION 112
ELECTRONICS GP-MACHINE–HIGH POWER 112
ENGINE AR-PRIMARY 3 4

F

FAN AR-VARIABLE 47
FAN GP-SUCTION 48
FASTENER GP-SWING & FINAL DR 300
FASTENER GP-WIRING HARNESS 114
FASTENER GP-WIRING HARNESS–HEAVY LIFT 113
FENDER & COVER GP 218
FILM GP–BRAZIL 661
FILM GP–COUNTERWEIGHT 662
FILM GP–ENGINE 659
FILM GP–FUEL TRANSFER PUMP 658
FILM GP–MASS EXCAVATOR 660
FILM GP–OPERATOR CONTROLS, NOTICE 653 654 656
FILM GP–QUICK COUPLER 657
FILM GP–TOOL CONTROL 655
FILM-CERTIFICATION (OPS GUARD, READ OMM, ENGLISH) 592
FILM-IDENTIFICATION (BIODEGRADABLE HYDRAULIC OIL) 663
FILM-IDENTIFICATION (CAT) 664
FILM-INFORMATION (24-VOLT) 664
FILM-INFORMATION (BELT ROUTING) 664
FILM-INFORMATION (EXTENDED LIFE COOLANT) 664

INDEX

NAME PAGE

FILM-INFORMATION (PRODUCT LINK, READ OMM). 107
FILM-INSTRUCTION (COUPLER OPERATION). 657
FILM-INSTRUCTION (ENGINE SHUTOFF) 664
FILM-INSTRUCTION (FUEL, READ OMM) 664
FILM-INSTRUCTION (HYDRAULIC OIL CHECK) 664
FILM-INSTRUCTION (HYDRAULIC OIL RETURN FILTER). 306
FILM-INSTRUCTION (NO STEP) 664
FILM-INSTRUCTION (REFUELING PUMP) 88
FILM-INSTRUCTION (TOP, AIR CLEANER COVER) 60
61
FILM-WARNING (ACCUMULATOR PRESSURE) 664
FILM-WARNING (CRUSH HAZARD, READ OMM, INTL) 657
FILM-WARNING (CRUSH HAZARD, READ OMM, U.S.). 657
FILM-WARNING (HIGH PRESSURE CYLINDER) 275
FILM-WARNING (PRODUCT LINK RADIO, INTL) 107
FILM-WARNING (PRODUCT LINK RADIO, U. S.). 107
FILTER (ETHER START). 155
FILTER & MTG GP-ENGINE OIL 36
FILTER & VALVE GP-PILOT–HYDRAULIC OIL 302
FILTER AS-WATER SEP & FUEL 86
FILTER ELEMENT AS-AIR (PRIMARY, STANDARD EFFICIENCY). 61
FILTER ELEMENT AS-AIR (PRIMARY, ULTRA HIGH EFFICIENCY). 61
FILTER ELEMENT AS-AIR (PRIMARY). 60
FILTER ELEMENT AS-AIR (SECONDARY) 60
61
FILTER ELEMENT AS-AIR (ULTRA HIGH EFFICIENCY) (PRIMARY) 60
FILTER ELEMENT AS-OIL (ADVANCED EFFICIENCY) (HYDRAULIC RETURN) 306
FILTER ELEMENT-CAB AIR. 535
555
556
587
FILTER ELEMENT-ENGINE OIL 36
FILTER ELEMENT-FUEL 68
FILTER GP-CAB AIR 555
556
587
FILTER GP-FUEL. 68
69
70
FILTER GP-OIL (ENGINE). 36
FILTER GP-OIL–HYDRAULIC RETURN. 303
306
FILTER GP-OIL–HYDRAULIC, CASE DRAIN. . . . 305

NAME PAGE

FILTER-OIL (ADVANCED EFFICIENCY) (HYDRAULIC, CASE DRAIN) 305
FILTER-OIL (ADVANCED EFFICIENCY) (HYDRAULIC, PILOT) 302
FINAL DRIVE GP 192
193
194
195
196
FITTING GP-HYDRAULIC–4-BOLT FLANGE 308
FLOOR MAT 2
588
589
590
FLYWHEEL GP 17
FRAME AR-UNDERCARRIAGE 247
FRAME AS-UNDERCARRIAGE 248
FRAME GP-UPPER. 219
221
FUMES DISPOSAL GP 38
FUSE (10-AMPERE) 160
FUSE (15-AMPERE) 160
FUSE (20-AMPERE) 160
FUSE (25-AMPERE) 160
FUSE (30-AMPERE) 160
FUSE (5-AMPERE) 160

G

GASKET-OIL PAN 24
GASKET-WATER REGULATOR. 43
GAUGE GP-OIL LEVEL (DIPSTICK) 39
GAUGE GP-SIGHT–HYDRAULIC OIL LEVEL . . . 309
GAUGE-OIL LEVEL (SWING DRIVE). 299
GEAR & BEARING GP-SWING. 223
224
GEAR GP-TRANSFER 198
GENERAL AR. 1
GLOW PLUG (24-VOLT) 144
GUARD AR-OVERHEAD 591
GUARD GP-BOTTOM. 226
GUARD GP-BOTTOM–HEAVY-DUTY 227
GUARD GP-FRONT WINDOW. 592
GUARD GP-OVERHEAD 594
GUARD GP-SWIVEL. 228
GUARD GP-TRACK GUIDE–CENTER 249
GUARD GP-TRACK GUIDE–FULL LENGTH 250
GUARD GP-TRAVEL MOTOR 252
GUARD GP-TRAVEL MOTOR–HEAVY-DUTY . . . 251

H

HANDRAIL GP 229
HARNESS AS-CAB 160
HARNESS AS-CHASSIS 115
167
171
HARNESS AS-CHASSIS (HORN) 598
599

INDEX

NAME	PAGE
HARNESS AS-CONSOLE	175, 178
HARNESS AS-CONTROL (PRODUCT LINK)	173
HARNESS AS-ENGINE	117
HARNESS AS-HEATER & AIR COND	535
HARNESS AS-HEATER & AIR COND (LOW SIDE)	532
HARNESS AS-LIGHTING (BOOM, LH)	127
HARNESS AS-LIGHTING (BOOM, RH)	129
HARNESS AS-LIGHTING (CAB FLOODLIGHT)	134
HARNESS AS-LIGHTING (SHORT BOOM, LH)	132
HARNESS AS-LIGHTING (SHORT BOOM, RH)	130
HARNESS AS-PANEL	138
HARNESS AS-PLATFORM	118, 187
HARNESS AS-PUMP (REFUELING)	190
HARNESS AS-SOLENOID	185
HARNESS AS-SOLENOID (1-WAY, 2-WAY FLOW)	156
HARNESS AS-SOLENOID (QUICK COUPLER)	189
HARNESS AS-STARTING AID	144
HARNESS AS-SWITCH (REFUELING PUMP, START)	150
HARNESS AS-SWITCH (REFUELING PUMP, STOP)	151
HARNESS AS-SWITCH (SECONDARY SHUTDOWN)	187
HARNESS AS-WIRING	120
HARNESS AS-WIRING (FUEL PUMP RELAY)	190
HARNESS AS-WIRING (QUICK COUPLER SWITCH)	153
HATCH GP-ROOF	596
HEAD GP-MOTOR	414
HEAD GP-PUMP–DRIVE	310
HEAD GP-PUMP–DRIVEN	313
HEATER GP-JACKET WATER	121
HOOD & GUARD GP	230
HOOD GP-ENGINE	235
HORN GP-ELECTRIC	597, 598, 599, 600
HOSE GP-HYDRAULIC	317, 319, 325, 326, 327
HOSE GP-HYDRAULIC–FRONT	318, 320, 321, 322, 323, 324
HOSE-RADIATOR (LOWER)	51
HOSE-RADIATOR (UPPER)	51
HOUSING GP-FLYWHEEL	18
HOUSING GP-FRONT	19
HYDRAULIC AR	328
HYDRAULIC AR-BIODEGRADABLE OIL	328

I

IDLER GP-FRONT	253, 256
IDLER GP-FRONT–LH	255
IDLER GP-FRONT–RH	254
INDICATOR AS (HYDRAULIC RETURN FILTER)	303
INDICATOR AS-AIR FILTER CHANGE (AIR RESTRICTION)	60, 61
INJECTOR GP-FUEL	71
INSTALLATION AR-COMMUNICATION–PRODUCT LINK 321SR	122
INSTALLATION AR-ENGINE	5

J

JET GP-PISTON COOLING	20

K

KEY (BATTERY DISCONNECT)	147

L

LAMP (24-VOLT, 10-WATT)	543
LAMP AS (24-VOLT, 3-WATT)	138
LAMP AS-DOME	543
LAMP GP-FLOOD	123, 124, 125
LAMP-HALOGEN (24-VOLT, 70-WATT)	123, 124, 125
LEVER GP-CAB DOOR	601
LIFTING GP-ENGINE	21
LIGHTING GP-FLOOD–BOOM, LH	127
LIGHTING GP-FLOOD–BOOM, RH	129
LIGHTING GP-FLOOD–CAB	134
LIGHTING GP-FLOOD–CHASSIS	126
LIGHTING GP-FLOOD–SHORT BOOM, LH	132
LIGHTING GP-FLOOD–SHORT BOOM, RH	130
LINES GP-AIR CONDITIONER	602
LINES GP-AIR–INTAKE	62
LINES GP-AUXILIARY HYDRAULIC–BOOM, HIGH PRESSURE	331
LINES GP-AUXILIARY HYDRAULIC–HIGH FLOW	329
LINES GP-AUXILIARY HYDRAULIC–MASS BOOM, HIGH PRESSURE	333
LINES GP-AUXILIARY HYDRAULIC–STICK, HIGH PRESSURE	336

INDEX

NAME PAGE

LINES GP-BOOM 338
339
LINES GP-BOOM CYLINDER 341
LINES GP-BOOM CYLINDER–LH 343
LINES GP-BOOM CYLINDER–RH 344
LINES GP-BUCKET CYLINDER 345
346
347
LINES GP-CONTROL 348
LINES GP-COOLING 49
LINES GP-COUPLER–MASS BOOM 353
LINES GP-COUPLER–PIN GRABBER 350
LINES GP-COUPLER–REACH BOOM 351
LINES GP-COUPLER–STICK 355
356
LINES GP-ENGINE OIL DRAIN 40
LINES GP-FRONT 357
LINES GP-FRONT–COMBINED FUNCTION 359
LINES GP-FRONT–SYSTEM 3, 1-WAY, 2-PUMP 363
LINES GP-FUEL 72
77
78
LINES GP-FUEL INJECTION 79
80
82
LINES GP-GREASE–BOOM 496
498
LINES GP-GREASE–STICK 499
LINES GP-HYDRAULIC OIL COOLER 366
LINES GP-PILOT–FILTER, PILOT PUMP 379
LINES GP-PILOT–HEAVY LIFT 371
LINES GP-PILOT–JOYSTICK, PEDALS 367
LINES GP-PILOT–MAIN CONTROL VALVE 377
383
LINES GP-PILOT–OIL PRESSURE 381
LINES GP-PILOT–PEDAL CONTROLS 375
LINES GP-PILOT–PEDAL, RH 373
LINES GP-PILOT–SYSTEM 2, COMBINED FUNCTION 389
LINES GP-PILOT–SYSTEM 3 PRIME, 1-WAY, 2-PUMP 393
LINES GP-PUMP–SUPPLY, MAIN PUMP 396
LINES GP-QUICK COUPLER 397
LINES GP-RETURN–HYDRAULIC TANK 399
LINES GP-STICK CYLINDER 403
LINES GP-STICK–BUCKET CYLINDER 401
402
LINES GP-TRAVEL MOTOR–LONG UNDERCARRIAGE 404
LINES GP-TURBOCHARGER AIR 63
LINK AS-TRACK–GREASE LUBRICATED TRACK 257
LINKAGE AR-BUCKET–B1-FAMILY, WITH LIFTING EYE 501
LINKAGE AR-BUCKET–CB2-FAMILY, WITH LIFTING EYE 501
LINKAGE GP-BUCKET–B1-FAMILY, WITH LIFTING EYE 504
LINKAGE GP-BUCKET–CB2-FAMILY 502

NAME PAGE

LITERATURE GP 1
605

M

MANIFOLD GP-CONTROL–PILOT OIL SUPPLY 407
408
409
MANIFOLD GP-EXHAUST 64
MANIFOLD GP-INLET 65
METER GP-SERVICE 160
MIRROR GP-REAR VIEW 606
607
MONITOR & MTG GP-OPERATOR 608
MONITOR GP-OPERATOR 609
MOTOR & MTG GP-SWING 410
MOTOR & MTG GP-TRAVEL 411
412
MOTOR AS-WINDOW WIPER 651
MOTOR GP-SWING 413
414
MOTOR GP-TRAVEL 416
MOTOR GP-TRAVEL–TRAVEL 419
MOUNTING GP-ANTENNA–PRODUCT LINK 610
MOUNTING GP-ELECTRONIC CONTROL 135
MOUNTING GP-ENGINE 22
23
MOUNTING GP-MAIN CONTROL VALVE 423
MOUNTING GP-PLATFORM 611
MUFFLER GP 66

O

OPERATOR AR-ENCLOSED ROPS 613
OPTION AR-CAB 1
2
OPTION AR-HYDRAULIC 2

P

PADLOCK GP 91
92
PAN GP-OIL 24
25
PANEL GP-CIRCUIT BREAKER 136
PANEL GP-SWITCH–CONSOLE 138
PIN GP-COUPLER 520
PIN GP–COUPLER 505
PISTON & ROD GP 26
PLATE & FILM GP 664
PLATE & FILM GP–BIODEGRADABLE HYDRAULIC OIL 663
PLATE-WARNING (HIGH PRESSURE CYLINDER) 265
266
PLATE-WARNING (STRUCTURE MODIFICATION) 594

INDEX

NAME PAGE

PLATFORM GP-OPERATOR. 614
PLUG GP-CYLINDER BLOCK 27
PLUG-DRAIN (HYDRAULIC TANK). 433
PLUG-DRAIN (RADIATOR) 53
POWER TRAIN AR. 199
PROTECTOR GP-SIDE BAR 521
522
PULLEY GP-AUXILIARY DRIVE 28
PULLEY GP-CRANKSHAFT 29
PULLEY GP-ENGINE 30
PUMP & MTG GP-MAIN HYDRAULIC. 424
PUMP AR-FUEL TRANSFER 83
PUMP GP-ENGINE OIL 41
PUMP GP-FUEL INJECTION 84
PUMP GP-FUEL PRIMING 85
PUMP GP-FUEL PRM & PRIM FILTER 86
PUMP GP-FUEL TRANSFER. 87
88
PUMP GP-GEAR–PILOT 425
PUMP GP-MAIN HYDRAULIC 426
PUMP GP-WATER. 50

R

RADIATOR & HYD OIL COOLER GP. 51
53
RADIO GP-COMMUNICATION–PRODUCT LINK 121SR 140
RADIO GP–AM, FM. 615
RAIL GP-FUEL 90
RELAY (24-VOLT) (1-WAY/2-WAY SOLENOID) 156
RELAY (24-VOLT) (BOOM FLOODLIGHT) 160
RELAY (24-VOLT) (CAB LIGHT). 160
RELAY (24-VOLT) (CHASSIS LIGHT) 160
RELAY (24-VOLT) (ELECTRIC PRIMING). 160
RELAY (24-VOLT) (ETHER START). 160
RELAY (24-VOLT) (HORN) 160
RELAY (24-VOLT) (NEUTRAL START) 160
RELAY (24-VOLT) (PUMP) 160
RELAY (24-VOLT) (REFUELING PUMP, START) 190
RELAY (24-VOLT) (REFUELING PUMP, STOP) 190
RELAY (BLOWER). 573
RELAY (COMPRESSOR CLUTCH). 573
RELAY AS (WIPER) 651
ROCKER ARM GP 31
33
ROLLER AR-TRACK & CARRIER. 258
259
ROLLER GP-TRACK CARRIER. 260
ROLLER GP-TRACK-SINGLE FLANGE. 261
262
263
264

NAME PAGE

S

SCREEN AS (HYDRAULIC TANK) 430
SCREEN GP-HYDRAULIC–TANK 430
SCREEN GP-SUN 616
SEAL (VALVE COVER) 8
SEAT & MOUNTING GP–HIGH BACK, TILT. . . . 617
SEAT & MOUNTING GP–HIGH BACK, WITH HEATER 618
SEAT BELT GP (RETRACTABLE, 43-MM) 619
SEAT BELT GP (RETRACTABLE) 555
556
SEAT BELT GP–RETRACTABLE 619
SEAT GP-SUSPENSION–HIGH BACK, TILT 622
SEAT GP-SUSPENSION–HIGH BACK, WITH HEATER 623
SEAT GP–HIGH BACK, TILT. 620
SEAT GP–HIGH BACK, WITH HEATER. 621
SENDER AS-FUEL LEVEL 94
96
SENDER AS-TEMPERATURE (HYDRAULIC OIL) 433
SENSOR AS-PRESSURE (DRIVE PUMP) 379
SENSOR AS-PRESSURE (DRIVEN PUMP). 379
SENSOR AS-TEMPERATURE (AIR). 573
SENSOR AS-TEMPERATURE (AMBIENT AIR TEMP) 535
SENSOR AS-TEMPERATURE (COOLANT) 535
SENSOR GP-ENGINE 141
SENSOR GP-LIQUID LEVEL 72
SENSOR GP-PRESSURE 72
142
SENSOR GP-PRESSURE (DRIVE PUMP) 383
SENSOR GP-PRESSURE (DRIVEN PUMP). 384
SENSOR GP-PRESSURE (INLET MANIFOLD AIR) 141
SENSOR GP-PRESSURE (NEGATIVE FLOW CONTROL). 390
393
SENSOR GP-SPEED (ENGINE) 141
SENSOR-PRESSURE (ENGINE OIL). 141
SENSOR-TEMPERATURE (AIR INLET MANIFOLD) 141
SENSOR-TEMPERATURE (AMBIENT AIR) 532
SENSOR-TEMPERATURE (COOLANT) 141
SENSOR-TEMPERATURE (FUEL). 167
SHEET AS-SOUND SUPPRESSION 236
237
238
239
240
241
SIDECUTTER GP 523
524
SOFTWARE GP-COMMUNICATION (PRODUCT LINK 121SR) 140
SOFTWARE GP-MACHINE 112
SOFTWARE GP-MONITOR 609
SOFTWARE GP-MONITOR (VIMS MAIN, PROGRAM) 112
SOLENOID. 65

INDEX

NAME PAGE

SPRING AS-GAS (ENGINE HOOD) 230
SPRING AS-GAS (FRONT WINDOW GUARD) 592
SPRING AS-GAS (HATCH) 596
SPROCKET GP 200
STARTING AID AR-ETHER 143
STARTING AID GP 144
STARTING AID GP-ETHER 145
STARTING MOTOR GP-ELECTRIC 146
STEP GP 242
STICK AR-HOE 506
STICK AR-HOE–REACH 506
STICK AR–MASS 506
STICK GP-HOE 509 510
STICK GP-HOE–REACH 507
STRAINER AS-FUEL (FLOAT GAUGE) 94 96
SUN VISOR 627
SUPPORT AS-ENCLOSURE 243
SUPPORT AS-SOUND SUPPRESSION 244 245 246
SUPPORT GP-SEAT 624
SUSPENSION GP-SEAT–AIR 626
SUSPENSION GP-SEAT–MECHANICAL 625
SWITCH (WINDOW LOWER LIMIT) 638
SWITCH AS-LIMIT (HYDRAULIC LOCKOUT) . . . 148
SWITCH AS-LIQUID LEVEL (ENGINE OIL) 25
SWITCH AS-LIQUID LEVEL (REFUELING) 88
SWITCH AS-MAGNETIC (24-VOLT) (MAIN RELAY) 160
SWITCH AS-MAGNETIC (24-VOLT) (REFUELING PUMP RELAY) 190
SWITCH AS-PRESSURE (ACTION INPUT, WORK TOOL) 373
SWITCH AS-PRESSURE (CONTROL VALVE, PILOT CONTROL) 389
SWITCH AS-PRESSURE (IMPLEMENT, SWING) 367
SWITCH AS-PRESSURE (PILOT, BOOM UP) . . 375
SWITCH AS-PRESSURE (TRAVEL, LH) 367
SWITCH AS-PRESSURE (TRAVEL, RH) 367
SWITCH AS-PUSH BUTTON (HORN) 571
SWITCH AS-PUSH BUTTON (MANUAL LOW IDLE) 572
SWITCH AS-PUSH BUTTON (REFUELING PUMP, START) 150
SWITCH AS-ROCKER (FINE SWING) 160
SWITCH AS-ROCKER (HEATED SEAT) 618
SWITCH AS-ROCKER (WASHER, LOWER) 154
SWITCH AS-ROCKER (WIPER, LOWER) 154
SWITCH AS-ROLLER (WIPER, LOWER) 648
SWITCH AS-TOGGLE (QUICK COUPLER) 153
SWITCH AS-TOGGLE (SECONDARY SHUTDOWN) 187
SWITCH GP-DISCONNECT–BATTERY 147
SWITCH GP-LIMIT–HYDRAULIC LOCKOUT 148
SWITCH GP-MAGNETIC–GLOW PLUG 149
SWITCH GP-PUSH BUTTON (REFUELING PUMP, START) 150
SWITCH GP-PUSH BUTTON (REFUELING PUMP, STOP) 151
SWITCH GP-PUSH BUTTON–REFUELING PUMP, START 150
SWITCH GP-PUSH BUTTON–REFUELING PUMP, STOP 151
SWITCH GP-START–ENGINE, KEY 152
SWITCH GP-TOGGLE–QUICK COUPLER 153
SWITCH GP-WIPER–LOWER 154
SWITCH-PUSH BUTTON (REFUELING PUMP, STOP) 151
SWIVEL GP 431

T

TANK & FILTER GP-HYDRAULIC 433
TANK & MTG GP-FUEL 91 92
TANK & MTG GP-HYDRAULIC 435
TANK AR-FUEL 93
TANK GP-FUEL 94 96
TIP GP-DOUBLE SPIKE 525
TIP GP-PENETRATION 526
TIP GP-PENETRATION PLUS 528
TIP GP-PENETRATION PLUS–K-100 529
TIP GP-PENETRATION–K-100 527
TIP GP-SHARP–K-100 530
TIP GP-SPIKE 531
TRACK ADJUSTER & RECOIL GP 267 268
TRACK ADJUSTER & RECOIL GP–LH 266
TRACK ADJUSTER & RECOIL GP–RH 265
TRACK AR–2-REQUIRED 269
TRACK GP–2-REQUIRED 269 270
TURBOCHARGER GP 67

V

VALVE & MTG GP-CONTROL–AUXILIARY 436
VALVE GP-CHECK 437
VALVE GP-CHECK (HYD CYLINDER, QUICK COUPLER) 296
VALVE GP-CONTROL 452
VALVE GP-CONTROL–AUXILIARY 440
VALVE GP-CONTROL–STK, BM, BKT, WKTL, TRVL RH 450
VALVE GP-CONTROL–TRAVEL, SWING, STICK, BOOM 444
VALVE GP-CONTROL–WITHOUT COVERS, HOUSINGS 439 442
VALVE GP-ETHER STARTING 155
VALVE GP-ETHER STARTING (24-VOLT) 145
VALVE GP-FLUID SAMPLING (HYDRAULIC OIL) 433

INDEX

NAME PAGE

VALVE GP-LOAD CONTROL–BOOM DRIFT RED, LINE RELIEF . . . 455
VALVE GP-LOAD CONTROL–STICK DRIFT RED, LINE RELIEF . . . 453
VALVE GP-MAIN CONTROL–HEAVY LIFT . . . 457
VALVE GP-MANUAL–AUXILIARY, SHUTOFF . . . 458
VALVE GP-PILOT . . . 459
VALVE GP-PILOT RELIEF (HYDRAULIC FILTER) . . . 302
VALVE GP-PILOT–JOYSTICK . . . 460
VALVE GP-PILOT–TRAVEL, SHUTTLE . . . 462
VALVE GP-PRESSURE REDUCING–BOOM, SWING PRIORITY . . . 464
VALVE GP-PRIORITY–SWING . . . 466
VALVE GP-RELIEF . . . 467
468
470
471
474
477
VALVE GP-RELIEF (LINE) . . . 440
450
VALVE GP-RELIEF (LINE) (STICK) . . . 444
VALVE GP-RELIEF–LINE . . . 472
475
476
VALVE GP-RELIEF–NEGATIVE FLOW CONTROL . . . 469
VALVE GP-RELIEF–PILOT OPERATED . . . 473
VALVE GP-SHUTTLE . . . 478
479
VALVE GP-SOLENOID . . . 310
480
481
482
483
484
VALVE GP-SOLENOID (24-VOLT) (QUICK COUPLER) . . . 486
VALVE GP-SOLENOID (AUXILIARY, COMBINED FUNCTION) . . . 389
VALVE GP-SOLENOID (HEAVY LIFT) . . . 371
VALVE GP-SOLENOID (HYDRAULIC LOCKOUT) . . . 408
409
VALVE GP-SOLENOID (NEGATIVE FLOW CONTROL) . . . 389
393
VALVE GP-SOLENOID (PUMP CONTROL) . . . 485
VALVE GP-SOLENOID (STRAIGHT TRAVEL) . . . 444
VALVE GP-SOLENOID (SWING BRAKE RELEASE) . . . 408
409
VALVE GP-SOLENOID (TRAVEL SPEED) . . . 408
409
VALVE GP-SOLENOID & MANIFOLD–QUICK COUPLER . . . 486
VALVE GP-SOLENOID–NEGATIVE FLOW CONTROL . . . 485
VALVE GP-SWING CUSHION–FINE SWING . . . 487
VALVE GP-TRAVEL COUNTERBALANCE . . . 489

NAME PAGE

VISOR GP-CAB–SUN . . . 627

W

WASHER GP-WINDOW . . . 628
WASHER GP-WINDOW–LOWER . . . 629
WINDOW GP-CAB–FRONT, LOWER . . . 631
636
WINDOW GP-CAB–FRONT, UPPER . . . 632
634
638
641
643
WINDOW GP-CAB–SIDE, REAR . . . 635
WINDOW GP-DOOR . . . 644
646
WIPER & WASHER GP-WINDOW–LOWER . . . 648
WIPER AR-WINDOW–LOWER . . . 650
WIPER GP-WINDOW–FRONT, UPPER . . . 651
WIRING GP-CAB . . . 156
160
WIRING GP-CAB–COUPLER . . . 166
WIRING GP-CHASSIS . . . 167
WIRING GP-COMBINED FLOW . . . 171
WIRING GP-COMMUNICATION–PRODUCT LINK 321SR . . . 173
WIRING GP-CONSOLE . . . 177
WIRING GP-CONSOLE–LH . . . 175
WIRING GP-CONSOLE–RH . . . 178
WIRING GP-CONVERTER–12-VOLT, 10-AMPERE . . . 180
WIRING GP-ENGINE . . . 184
WIRING GP-ENGINE–JUMP START . . . 182
WIRING GP-FINE SWING . . . 185
WIRING GP-PANEL–CIRCUIT BREAKER . . . 186
WIRING GP-PLATFORM . . . 187
WIRING GP-QUICK COUPLER . . . 189
WIRING GP-REFUELING PUMP . . . 190

MACHINE ARRANGEMENT

420-3127 CHASSIS AR

S/N: JEG1-UP

PART OF 419-5434 GENERAL AR

SMCS-7000 **i05455469**

NOTE	PART NUMBER	QTY	PART NAME 1 2 3 4 5 6 (PRODUCT LEVEL)	SEE PAGE
Y	*418-0743*	1	BATTERY & WIRING GP	103
Y	*444-6735*	1	BOX & MTG GP-STORAGE	201
Y	*379-7395*	1	COUNTERWEIGHT & MOUNTING GP	205
Y	*445-6262*	1	FENDER & COVER GP	218
Y	*374-4017*	1	GUARD GP-BOTTOM	226
Y	*142-3835*	1	HANDRAIL GP	229
Y	*379-7385*	1	HOOD & GUARD GP	230
Y	*267-8071*	1	HORN GP-ELECTRIC	597
Y	*4I-5409*	1	LIGHTING GP-FLOOD (CHASSIS)	126
Y	*372-9388*	1	LINES GP-AIR CONDITIONER	602
Y	*368-7668*	1	LINES GP-FUEL	72
Y	*7Y-0059*	1	LITERATURE GP	605
Y	*142-3836*	1	MIRROR GP-REAR VIEW	606
Y	*245-7811*	1	MOUNTING GP-PLATFORM	611
Y	*422-0645*	1	OPERATOR AR-ENCLOSED ROPS	613
Y	*415-7791*	1	PLATE & FILM GP	664
Y	*417-0270*	1	TANK & MTG GP-FUEL	91
Y	*398-7002*	1	WIRING GP-CHASSIS	167
Y	*259-5052*	1	WIRING GP-FINE SWING	185

Y - SEPARATE ILLUSTRATION

<END>

419-5434 GENERAL AR

S/N: JEG1-UP

SMCS-7000 **i05447453**

NOTE	PART NUMBER	QTY	PART NAME 1 2 3 4 5 6 (PRODUCT LEVEL)	SEE PAGE
Y	*420-3127*	1	CHASSIS AR	1
Y	*383-5313*	1	ELECTRONICS GP-MACHINE	112
Y	*368-7670*	1	ENGINE AR-PRIMARY	3
Y	*240-3822*	1	FRAME AR-UNDERCARRIAGE (LONG)	247
Y	*383-5083*	1	HYDRAULIC AR	328
Y	*374-6003*	1	INSTALLATION AR	5
Y	*267-6767*	1	POWER TRAIN AR	199

Y - SEPARATE ILLUSTRATION

<END>

442-4973 OPTION AR-CAB

S/N: JEG1-UP

AN ATTACHMENT

SMCS-7000 **i05497750**

NOTE	PART NUMBER	QTY	PART NAME 1 2 3 4 5 6 (PRODUCT LEVEL)	SEE PAGE
Y	*416-1794*	1	AIR CONDITIONER AR	534
Y	*416-9606*	1	CAB GP	549
Y	*434-3892*	1	CAB GP (COMFORT)	555
Y	*161-3751*	1	VISOR GP-CAB (SUN)	627
Y	*229-9070*	1	WASHER GP-WINDOW	628
Y	*350-8250*	1	WIRING GP-CONVERTER (12-VOLT, 10-AMPERE)	180

Y - SEPARATE ILLUSTRATION

<END>

MACHINE ARRANGEMENT

442-4974 OPTION AR-CAB

S/N: JEG1-UP

AN ATTACHMENT

SMCS-7000 **i05498063**

NOTE	PART NUMBER	QTY	PART NAME 1 2 3 4 5 6 (PRODUCT LEVEL)	SEE PAGE
Y	*416-1794*	1	AIR CONDITIONER AR	534
Y	*434-3893*	1	CAB GP (DELUXE)	556
Y	*416-9606*	1	CAB GP	549
Y	*245-7881*	1	SCREEN GP-SUN	616
Y	*229-9086*	1	WIPER AR-WINDOW (LOWER)	650
Y	*350-8250*	1	WIRING GP-CONVERTER (12-VOLT, 10-AMPERE)	180

Y - SEPARATE ILLUSTRATION

<END>

445-1377 OPTION AR-HYDRAULIC

S/N: JEG1-UP

AN ATTACHMENT

SMCS-7000 **i05498287**

NOTE	PART NUMBER	QTY	PART NAME 1 2 3 4 5 6 (PRODUCT LEVEL)	SEE PAGE
Y	*383-5306*	1	CONTROL AR-AUXILIARY	279
	240-5071	1	FLOOR MAT	

Y - SEPARATE ILLUSTRATION

<END>

445-1378 OPTION AR-HYDRAULIC

S/N: JEG1-UP

AN ATTACHMENT

SMCS-7000 **i05498317**

NOTE	PART NUMBER	QTY	PART NAME 1 2 3 4 5 6 (PRODUCT LEVEL)	SEE PAGE
Y	*383-5307*	1	CONTROL AR-AUXILIARY	279
	240-5071	1	FLOOR MAT	

Y - SEPARATE ILLUSTRATION

<END>

ENGINE ARRANGEMENT

368-7670 ENGINE AR-PRIMARY

S/N: JEG1-UP

PART OF 419-5434 GENERAL AR

SMCS-1000 **i05484171**

NOTE	PART NUMBER	QTY	PART NAME 1 2 3 4 5 6 (PRODUCT LEVEL)	SEE PAGE
Y	*450-8077*	1	ENGINE AR-PRIMARY	4
Y	*369-2255*	1	FAN AR-VARIABLE	47
Y	*368-7673*	1	MUFFLER GP	66

Y - SEPARATE ILLUSTRATION

<END>

ENGINE ARRANGEMENT

450-8077 ENGINE AR-PRIMARY

S/N: BD41-UP
118 BRAKE KW (158 BHP) AT 1800 RPM
PART OF 368-7670 ENGINE AR-PRIMARY

SMCS-1000 **i05489589**

NOTE	PART NUMBER	QTY	PART NAME 1 2 3 4 5 6 (PRODUCT LEVEL)	SEE PAGE
Y	*392-2026*	1	ALTERNATOR GP-CHARGING	100
Y	*375-4120*	1	BELT TENSIONER GP	6
Y	*392-0634*	1	BREATHER GP	34
Y	*376-6871*	1	CAMSHAFT GP	7
Y	*346-2911*	1	CONNECTION GP-HEATER	42
Y	*373-3606*	1	CONNECTION GP-WATER	43
Y	*371-2537*	1	CONTROL GP-ENGINE ELECTRONIC	111
Y	*371-2553*	1	COOLER GP-ENGINE OIL	46
Y	*374-0427*	1	COVER GP-OIL FILLER	35
Y	*389-3348*	1	COVER GP-VALVE MECHANISM	9
Y	*371-2477*	1	CRANKSHAFT GP	10
Y	*390-0854*	1	CYLINDER BLOCK GP	12
Y	*385-2572*	1	CYLINDER HEAD GP	14
Y	*394-7014*	1	DRAIN GP-ENGINE OIL	15
Y	*371-2542*	1	DRIVE GP-FAN	16
Y	*393-0367*	1	FILM GP	659
Y	*426-3296*	1	FILTER GP-FUEL	70
Y	*371-2539*	1	FLYWHEEL GP	17
Y	*375-8851*	1	GAUGE GP-OIL LEVEL (DIPSTICK)	39
Y	*371-2538*	1	HOUSING GP-FLYWHEEL	18
Y	*371-2716*	1	HOUSING GP-FRONT	19
Y	*371-2483*	1	INJECTOR GP-FUEL	71
Y	*371-2478*	1	JET GP-PISTON COOLING	20
Y	*371-2740*	1	LIFTING GP-ENGINE	21
Y	*390-6079*	1	LINES GP-FUEL INJECTION	80
Y	*393-7694*	1	MANIFOLD GP-EXHAUST	64
Y	*391-5523*	1	MANIFOLD GP-INLET	65
Y	*395-0112*	1	MOUNTING GP-ELECTRONIC CONTROL	135
Y	*375-5008*	1	MOUNTING GP-ENGINE	23
Y	*378-8260*	1	PAN GP-OIL	24
Y	*374-6301*	1	PISTON & ROD GP	26
Y	*374-9295*	1	PLUG GP-CYLINDER BLOCK	27
Y	*375-0098*	1	PULLEY GP-AUXILIARY DRIVE	28
Y	*374-6309*	1	PULLEY GP-CRANKSHAFT	29
Y	*346-0737*	1	PUMP GP-ENGINE OIL	41
Y	*391-4811*	1	PUMP GP-FUEL INJECTION	84
Y	*372-2297*	1	PUMP GP-WATER	50
Y	*394-9639*	1	RAIL GP-FUEL	90
Y	*371-2480*	1	ROCKER ARM GP	33
Y	*395-0110*	1	SENSOR GP-ENGINE	141
Y	*395-0114*	1	STARTING AID GP	144
Y	*385-8000*	1	STARTING MOTOR GP-ELECTRIC	146
Y	*374-0432*	1	TURBOCHARGER GP	67
Y	*395-0113*	1	WIRING GP-ENGINE	184
	447-7816	1	ELECTRONICS GP-ENGINE	
	376-6464	1	PLATE GP (SERIAL NUMBER)	

Y - SEPARATE ILLUSTRATION

<END>

ENGINE ARRANGEMENT

374-6003 INSTALLATION AR-ENGINE

S/N: JEG1-UP

PART OF 419-5434 GENERAL AR

SMCS-1000 **i05450449**

NOTE	PART NUMBER	QTY	PART NAME 1 2 3 4 5 6 (PRODUCT LEVEL)	SEE PAGE
Y	*109-9313*	1	AIR CLEANER & MOUNTING GP	56
Y	*379-4415*	1	COMPRESSOR GP-REFRIGERANT	560
Y	*273-5167*	1	CONDENSER & MTG GP-REFRIGERANT	561
Y	*424-5451*	1	FILTER & MTG GP-OIL	36
Y	*374-6002*	1	FUMES DISPOSAL GP	38
Y	*368-7676*	1	LINES GP-AIR	62
Y	*396-3549*	1	LINES GP-COOLING	49
Y	*374-6004*	1	LINES GP-ENGINE OIL DRAIN	40
Y	*351-3886*	1	MOUNTING GP-ENGINE	22
Y	*398-3274*	1	RADIATOR & HYD OIL COOLER GP	51

Y - SEPARATE ILLUSTRATION

<END>

375-4120 BELT TENSIONER GP

S/N: BD41-UP

PART OF 450-8077 ENGINE AR-PRIMARY

SMCS-1357, 1358, 1397 **i05496074**

NOTE	REF NO	GRAPHIC REF	PART NUMBER	QTY	PART NAME 1 2 3 4 5 6 (PRODUCT LEVEL)	SEE PAGE
	1	1	**329-5254**	1	PULLEY (12-GROOVE)	
	2	1	**344-1722**	1	TENSIONER-BELT	
	3	1	**100-4463**	1	BOLT (M10X1.5X80-MM)	

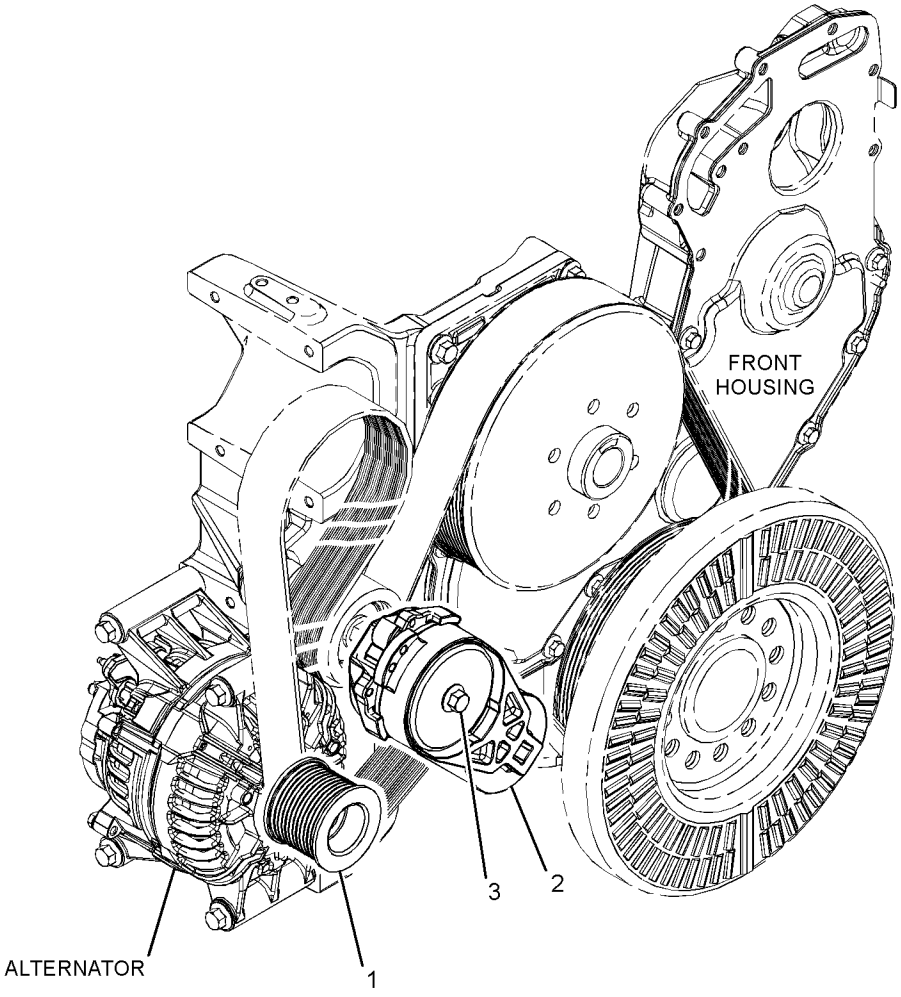

GRAPHIC #1 **<END>** g03484097

376-6871 CAMSHAFT GP

S/N: BD41-UP

PART OF 450-8077 ENGINE AR-PRIMARY

SMCS-1210 **i05496261**

NOTE	REF NO	GRAPHIC REF	PART NUMBER	QTY	PART NAME 1 2 3 4 5 6 (PRODUCT LEVEL)	SEE PAGE
	1	1	**278-5125**	12	TAPPET	
	2	1	*375-2013*	1	CAMSHAFT GP	
	2A	1	**067-6135**	1	KEY-WOODRUFF (CAMSHAFT)	
	3	1	**319-8426**	12	PUSHROD	

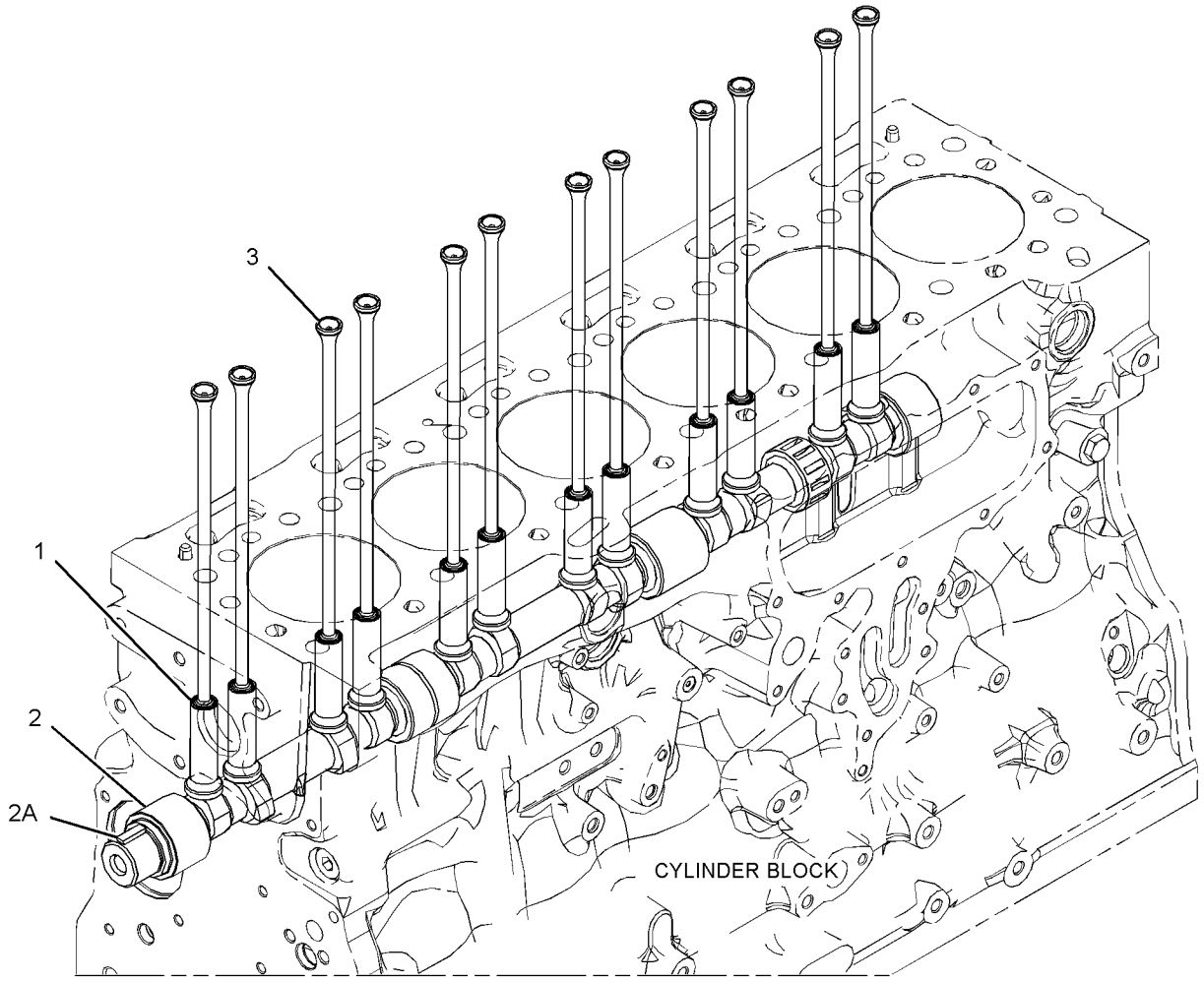

GRAPHIC #1 **<END>** g03109078

383-1386 COVER GP-VALVE MECHANISM

S/N: BD41-UP

PART OF 389-3348 COVER GP-VALVE MECHANISM

SMCS-1107 **i05498440**

NOTE	REF NO	GRAPHIC REF	PART NUMBER	QTY	PART NAME 1 2 3 4 5 6 (PRODUCT LEVEL)	SEE PAGE
	1	1	**359-1310**	1	CAP AS-FILLER (ENGINE OIL)	
	1A	1	**124-0506**	1	SEAL (VALVE COVER)	
	2	1	**376-4761**	1	SEAL	
	3	1	**380-9615**	1	CAP-BREATHER (VALVE MECHANISM)	
	4	1	**383-1387**	1	COVER-VALVE MECHANISM	
	5	1	**195-9245**	3	SCREW (M4X0.7X10-MM)	

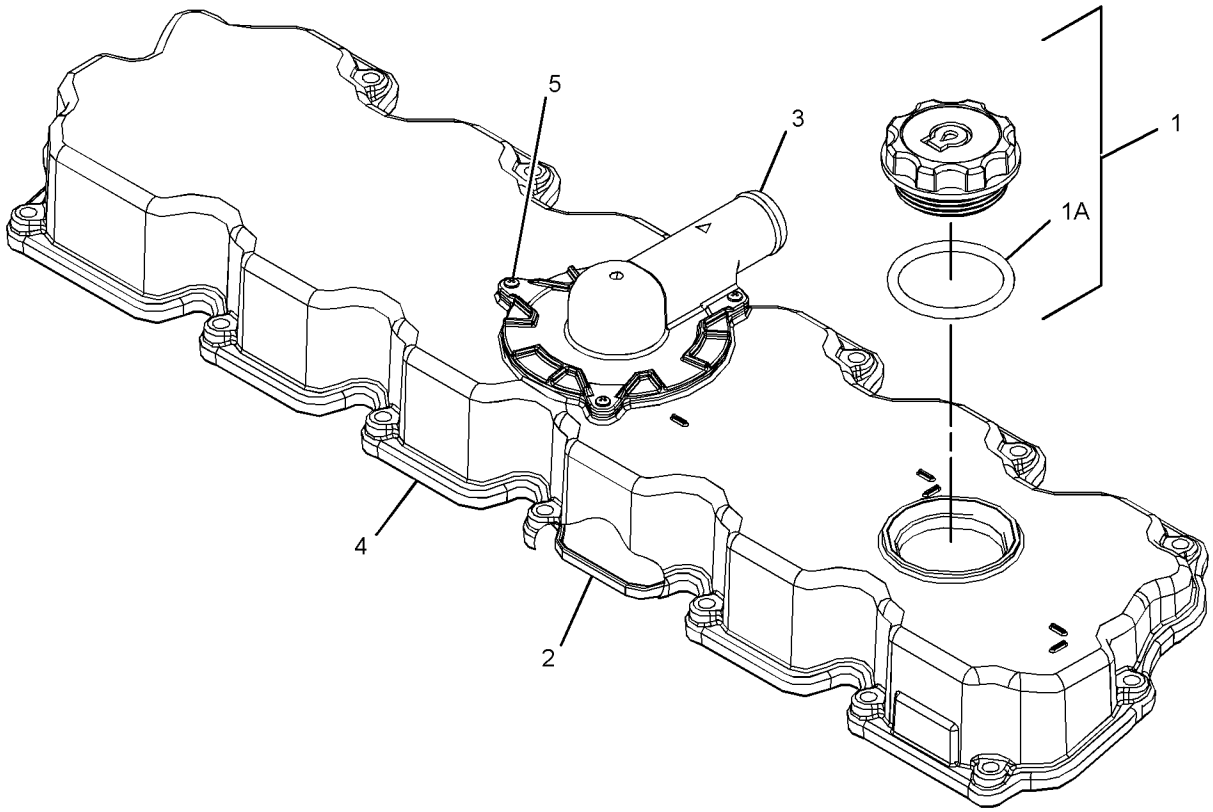

GRAPHIC #1 **<END>** g03481796

389-3348 COVER GP-VALVE MECHANISM

S/N: BD41-UP

PART OF 450-8077 ENGINE AR-PRIMARY

SMCS-1107 **i05496293**

NOTE	REF NO	GRAPHIC REF	PART NUMBER	QTY	PART NAME 1 2 3 4 5 6 (PRODUCT LEVEL)	SEE PAGE
M	1	1	**101-3895**	9	BOLT (M8X1.25X35-MM)	
	2	1	**103-5705**	6	BOLT (M8X1.25X110-MM)	
Y	3	1	**383-1386**	1	COVER GP-VALVE MECHANISM	8
	4	1	**383-1388**	1	COVER-BASE	
	5	1	**388-0536**	1	GASKET	
M	6	1	**6I-0217**	14	BOLT (M8X1.25X20-MM)	

M - METRIC PART
Y - SEPARATE ILLUSTRATION

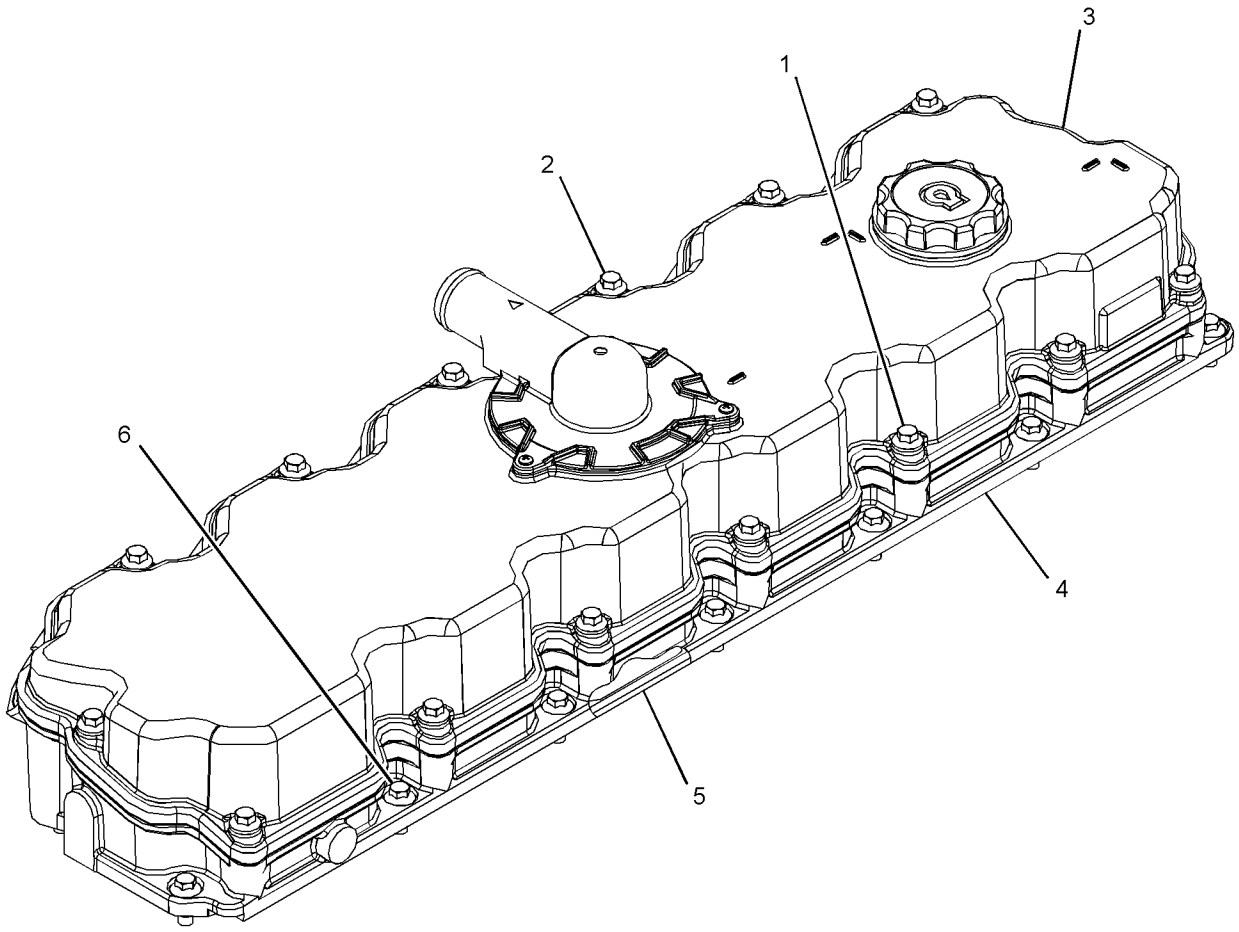

GRAPHIC #1 **<END>** g03481658

371-2477 CRANKSHAFT GP

S/N: BD41-UP

PART OF 450-8077 ENGINE AR-PRIMARY

SMCS-1202 **i05495974**

NOTE	REF NO	GRAPHIC REF	PART NUMBER	QTY	PART NAME 1 2 3 4 5 6 (PRODUCT LEVEL)	SEE PAGE
	1	1	**067-6135**	1	KEY-WOODRUFF	
L	2	1	*317-5485*	7	BEARING	
L	3	1	*317-5486*	7	BEARING	
	4	1	**339-8780**	1	DOWEL	
	5	1	**342-6508**	1	SHIM (0.1-MM THK)	
J	6	1	*363-0559*	2	WASHER-THRUST	
	7	1	**376-4074**	1	CRANKSHAFT	
	8	1	**376-4078**	1	DISC-TIMING	
	9	1	**276-7391**	1	GEAR (34-TEETH)	
	10	1	**276-7394**	3	BOLT	
					AVAILABLE REPAIR KIT(S):	
L			**360-1978**	1	KIT-BEARING (CRANKSHAFT)	
J			**364-5145**	1	KIT-WASHER (CRANKSHAFT)	

J - KIT MARKED J SERVICES PART MARKED J
L - KIT MARKED L SERVICES PART MARKED L

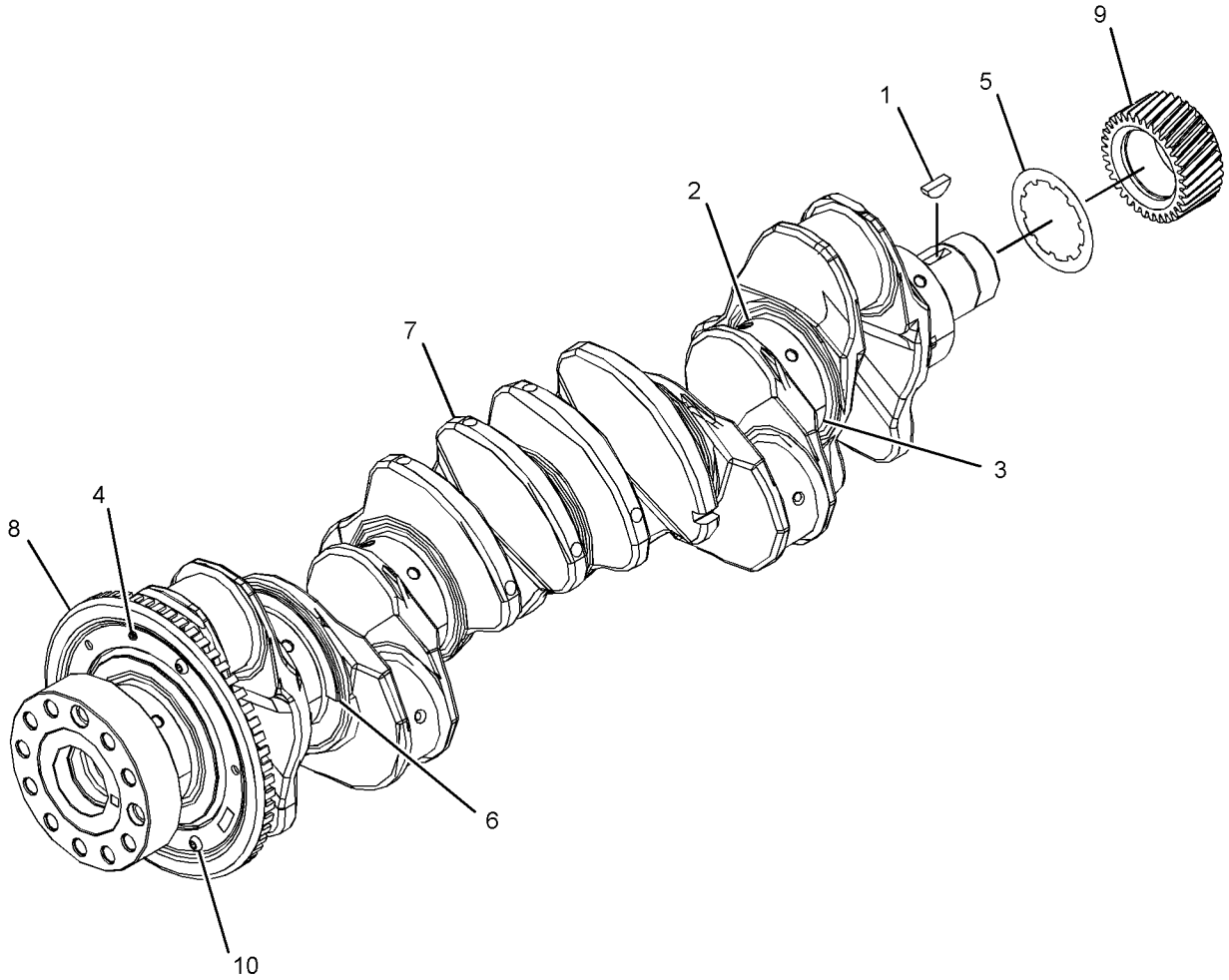

GRAPHIC #1 **<END>** g03482898

383-3581 CYLINDER BLOCK AS

S/N: BD41-UP

PART OF 390-0854 CYLINDER BLOCK GP

SMCS-1201 **i05342073**

NOTE	REF NO	GRAPHIC REF	PART NUMBER	QTY	PART NAME 1 2 3 4 5 6 (PRODUCT LEVEL)	SEE PAGE
	1	1	**232-7597**	4	PLUG	
	2	1	**276-5602**	2	PLUG-CORE	
	3	1	**232-7596**	1	PLUG	
	4	1	**067-6043**	7	PLUG-SIDE	
	5	1	**067-6823**	1	PLUG	
	6	1	**185-0884**	2	DOWEL	
	7	1	**225-8858**	2	PLUG	
	8	1	**232-7599**	2	PLUG	
	9	1	**276-5600**	14	BOLT-SPECIAL (BEARING CAP)	
	10	1	**331-6835**	2	PLUG-SEALING	

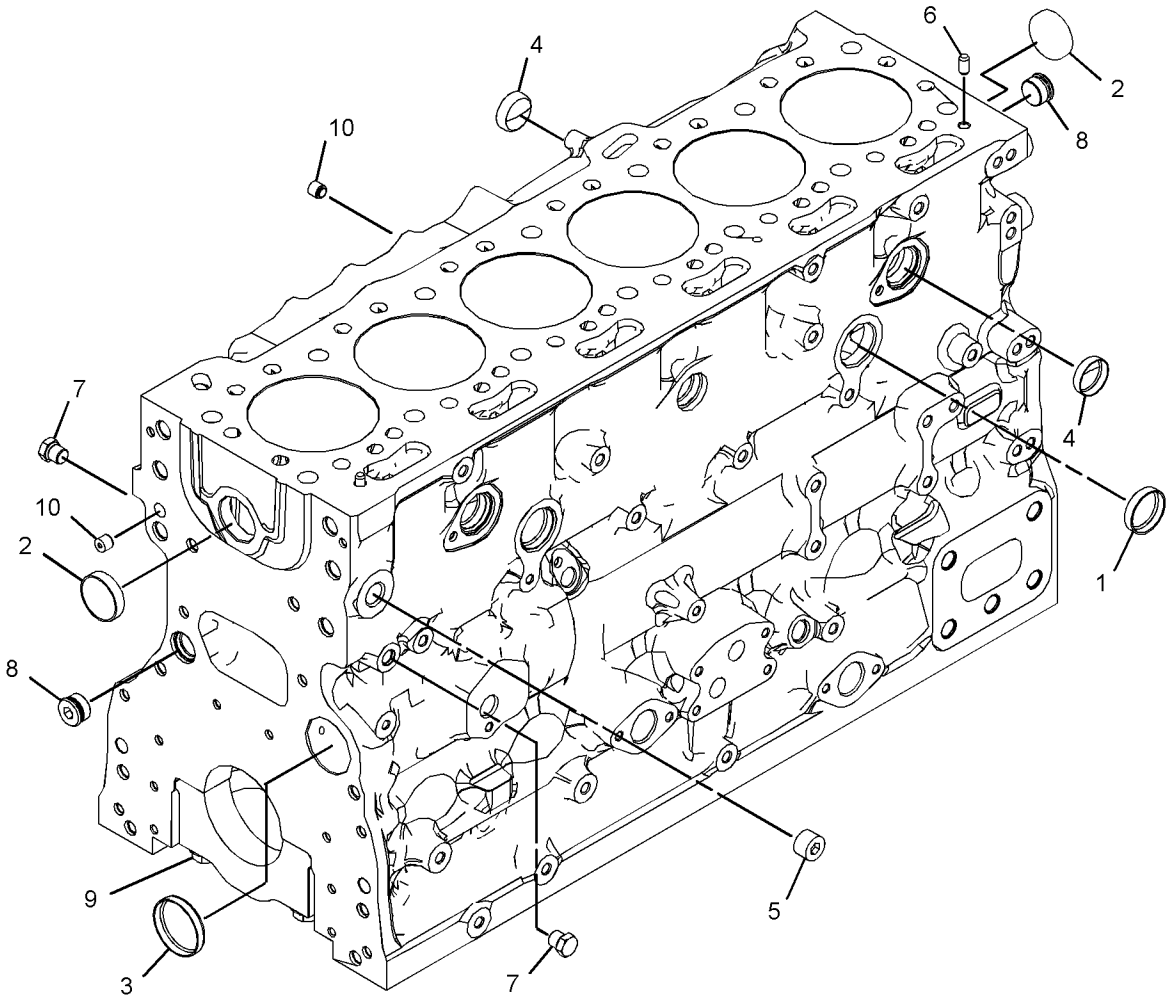

GRAPHIC #1 **<END>** g03351937

390-0854 CYLINDER BLOCK GP

S/N: BD41-UP

PART OF 450-8077 ENGINE AR-PRIMARY

SMCS-1201 **i05340224**

NOTE	REF NO	GRAPHIC REF	PART NUMBER	QTY	PART NAME 1 2 3 4 5 6 (PRODUCT LEVEL)	SEE PAGE
	1	1	**276-5603**	1	SEAL-O-RING	
Y	2	1	*383-3581*	1	CYLINDER BLOCK AS	11
M	3	1	**209-9219**	10	BOLT (M8X1.25X16-MM)	
	4	1	**232-7449**	1	HOUSING AS	
	5	1	**232-1322**	1	PLUG	

M - METRIC PART
Y - SEPARATE ILLUSTRATION

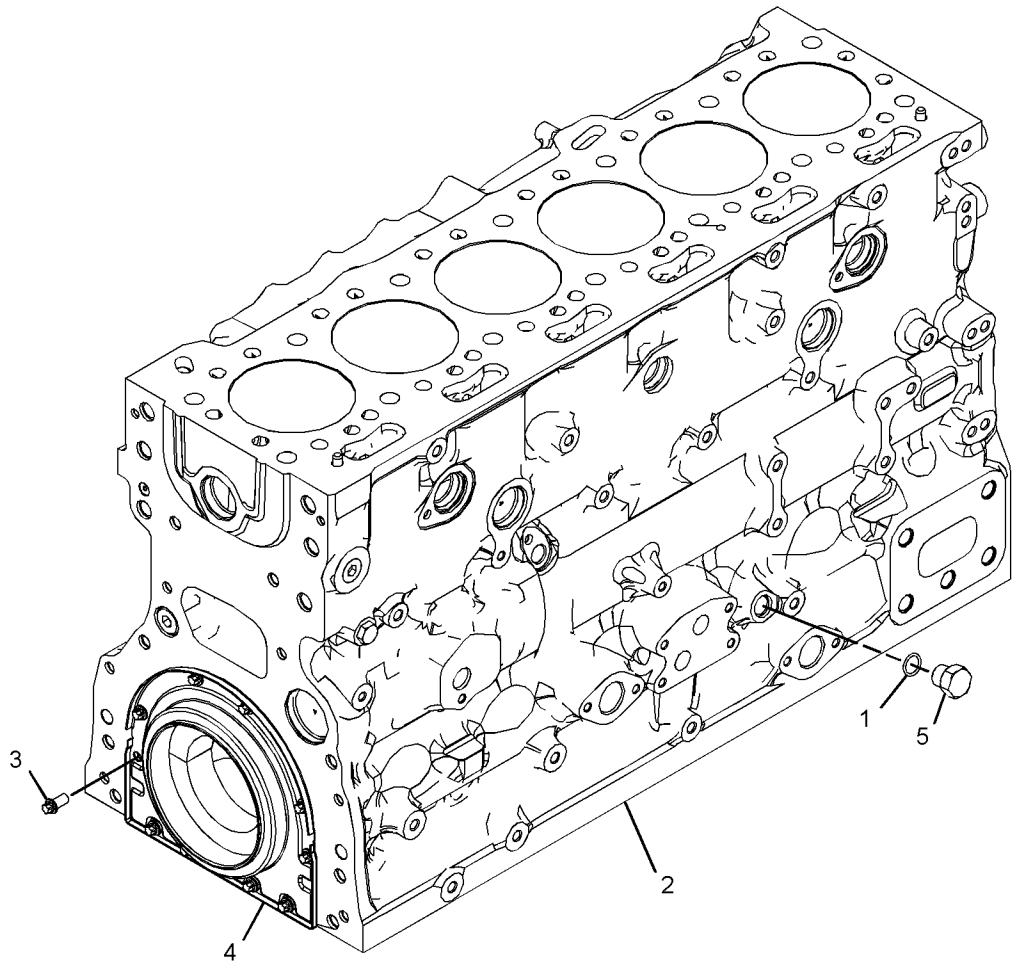

GRAPHIC #1 **<END>** g03384924

384-5313 CYLINDER HEAD AS

S/N: BD41-UP

PART OF 385-2572 CYLINDER HEAD GP

SMCS-1100 **i05330860**

NOTE	REF NO	GRAPHIC REF	PART NUMBER	QTY	PART NAME 1 2 3 4 5 6 (PRODUCT LEVEL)	SEE PAGE
	1	1	**276-8116**	6	PLUG-CORE	
	2	1	**377-0400**	12	INSERT-VALVE SEAT (EXHAUST)	
	3	1	**377-0399**	12	INSERT-VALVE SEAT (INTAKE)	
	4	1	**276-8117**	13	PLUG-CORE	

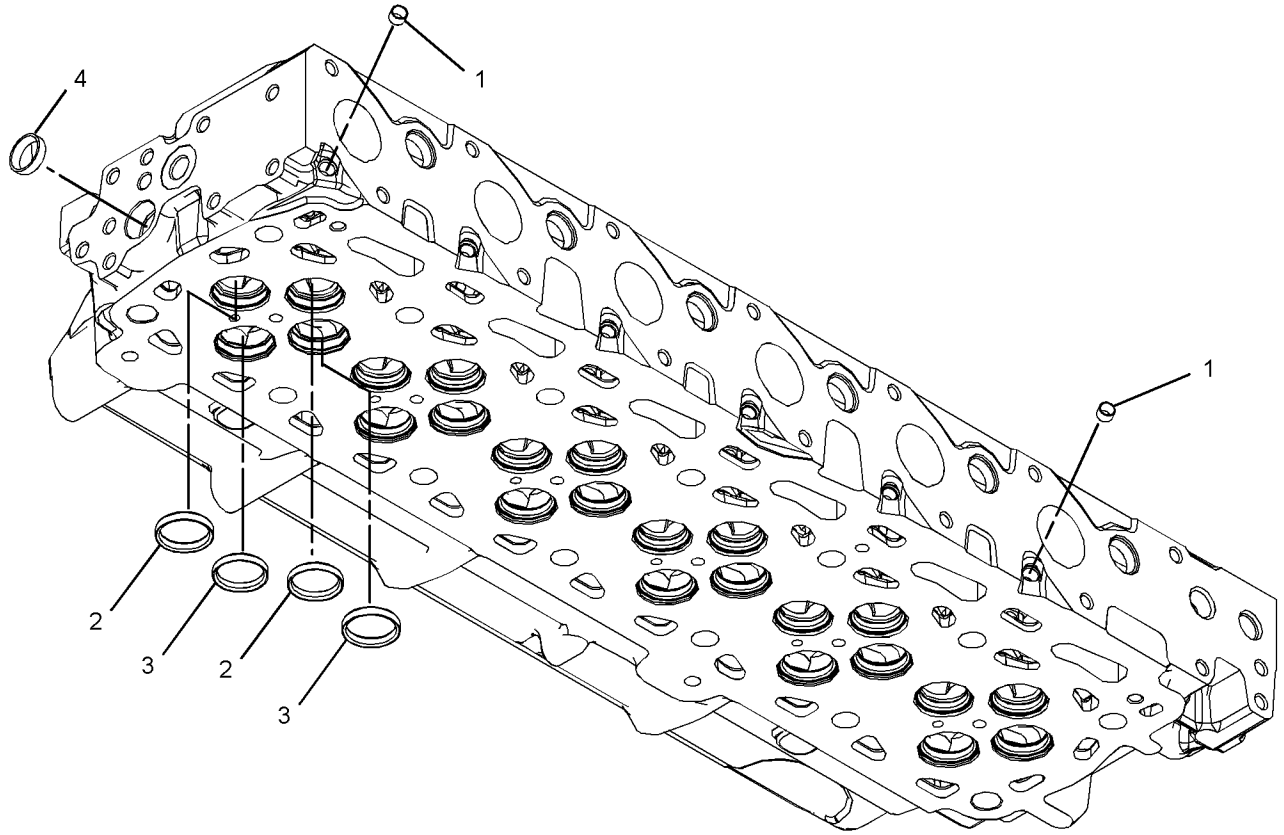

GRAPHIC #1 **<END>** g03379426

385-2572 CYLINDER HEAD GP

S/N: BD41-UP

PART OF 450-8077 ENGINE AR-PRIMARY

SMCS-1100 **i05330848**

NOTE	REF NO	GRAPHIC REF	PART NUMBER	QTY	PART NAME 1 2 3 4 5 6 (PRODUCT LEVEL)	SEE PAGE
	1	1	**199-9751**	1	SEAL-O-RING	
Y	2	1	**384-5313**	1	CYLINDER HEAD AS	13
	3	1	**388-4707**	1	GASKET-CYLINDER HEAD	
	4	1	**232-1322**	1	PLUG	
	5	1	**276-8134**	14	BOLT-SPECIAL (CYLINDER HEAD)	
	6	1	**277-4302**	2	DOWEL	
	7	1	**295-6661**	1	PLUG	

Y - SEPARATE ILLUSTRATION

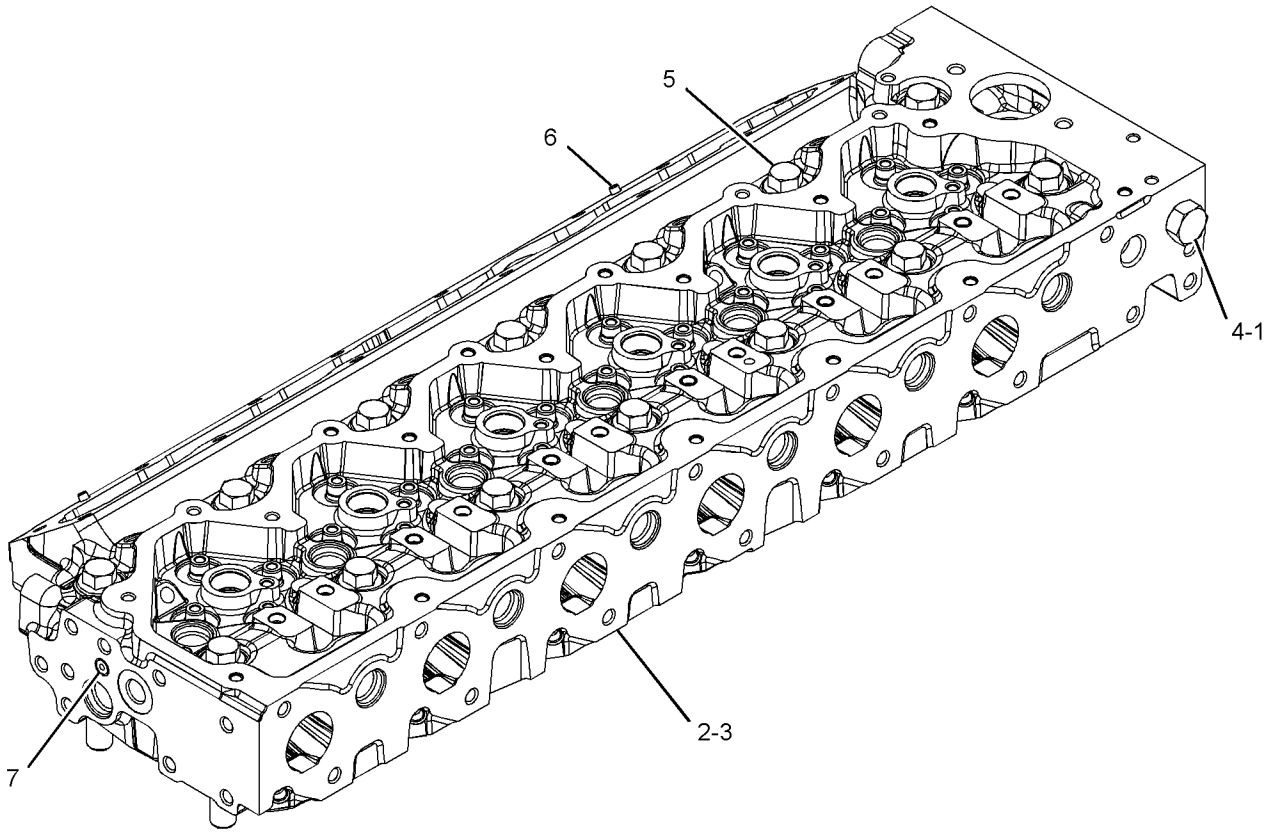

GRAPHIC #1 **<END>** g03379427

394-7014 DRAIN GP-ENGINE OIL

S/N: BD41-UP

PART OF 450-8077 ENGINE AR-PRIMARY

SMCS-1302 **i05281675**

NOTE	REF NO	GRAPHIC REF	PART NUMBER	QTY	PART NAME 1 2 3 4 5 6 (PRODUCT LEVEL)	SEE PAGE
	1	1	**3K-0360**	1	SEAL-O-RING	
	2	1	**6V-7238**	1	VALVE-SHUTOFF	

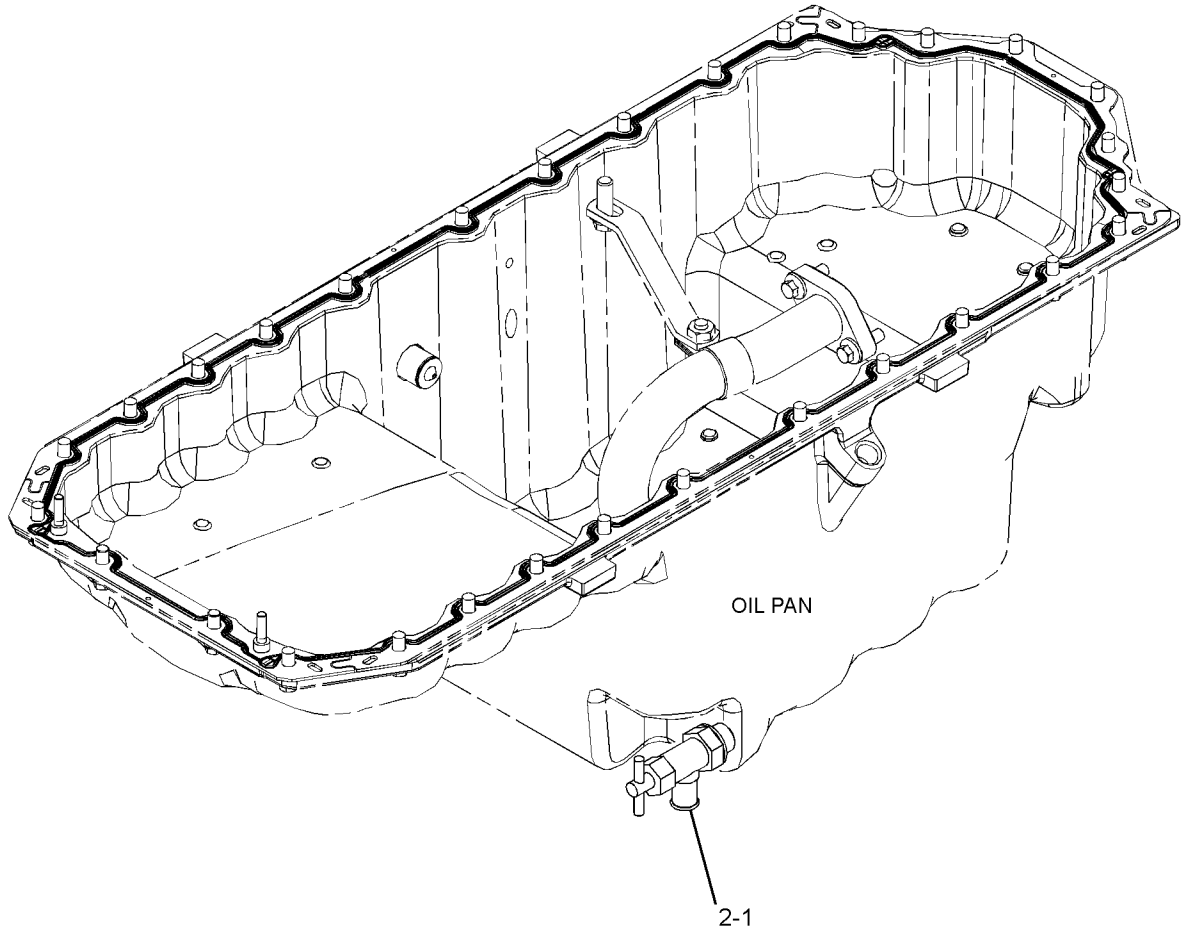

GRAPHIC #1 **<END>** g03317520

371-2542 DRIVE GP-FAN

S/N: BD41-UP

PART OF 450-8077 ENGINE AR-PRIMARY

SMCS-1359 **i05490034**

NOTE	REF NO	GRAPHIC REF	PART NUMBER	QTY	PART NAME 1 2 3 4 5 6 (PRODUCT LEVEL)	SEE PAGE
M	1	1	**6I-0593**	6	BOLT (M10X1.5X30-MM)	
	2	1	**101-7178**	3	BOLT (M10X1.5X55-MM)	
M	3	1	**140-8783**	3	BOLT (M10X1.5X45-MM)	
	4	1	**321-9994**	1	DRIVE AS-FAN	
	4A	1	**176-0773**	1	CLIP	
	5	1	**333-7240**	1	BRACKET	
	6	1	**348-5434**	1	IDLER AS	
	7	1	**372-6433**	1	BRACKET AS	
	7A	1	**332-9270**	3	BUSHING	

M - METRIC PART

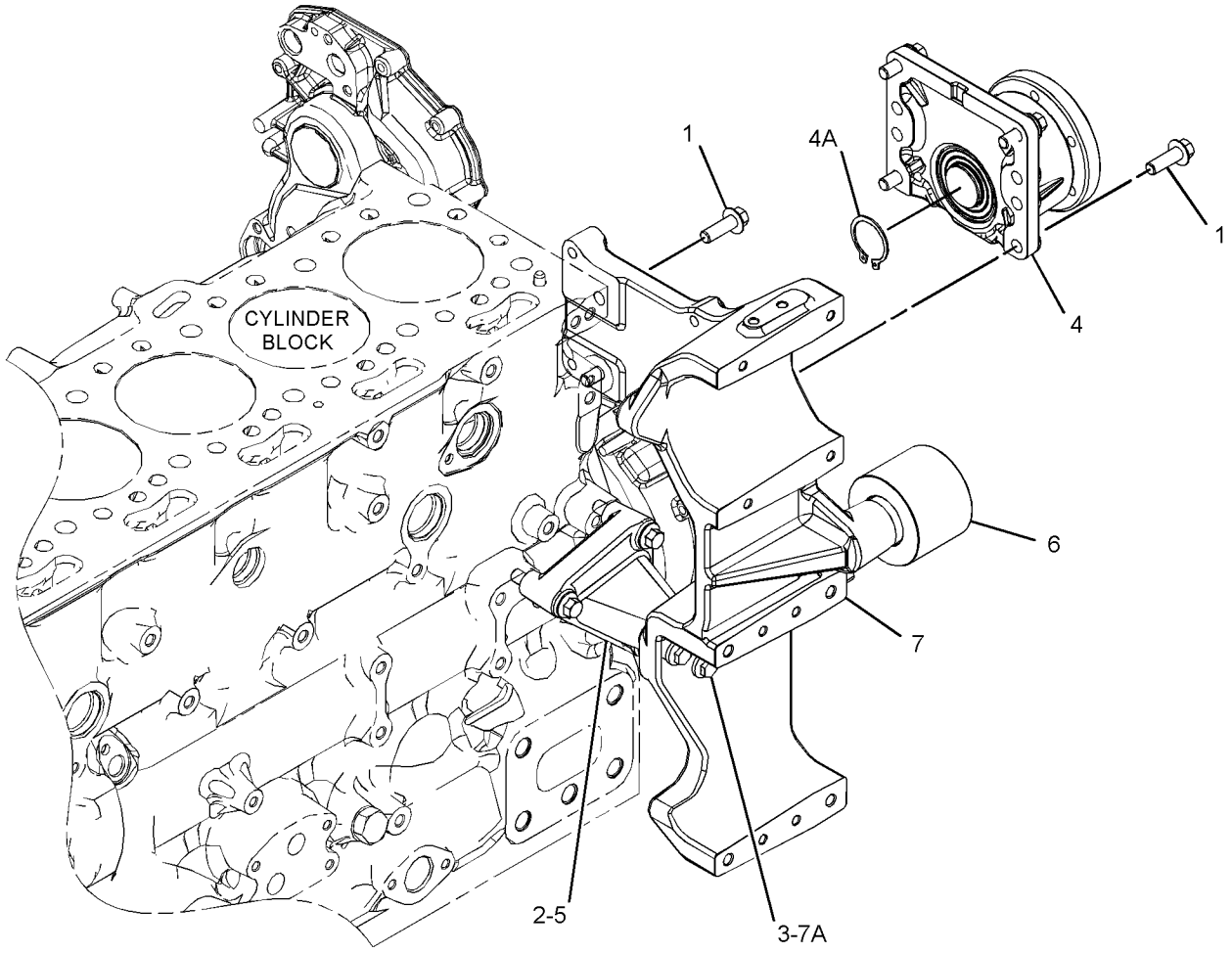

GRAPHIC #1 **<END>** g03478226

371-2539 FLYWHEEL GP

S/N: BD41-UP

PART OF 450-8077 ENGINE AR-PRIMARY

SMCS-1156 **i05281719**

NOTE	REF NO	GRAPHIC REF	PART NUMBER	QTY	PART NAME 1 2 3 4 5 6 (PRODUCT LEVEL)	SEE PAGE
	1	1	**145-4911**	12	WASHER	
	2	1	**378-4739**	1	FLYWHEEL AS	
		1	**277-0588**	1	GEAR-STARTING MOTOR RING (134-TEETH)	
	3	1	**0S-1603**	12	BOLT (1/2-20X1.5-IN)	

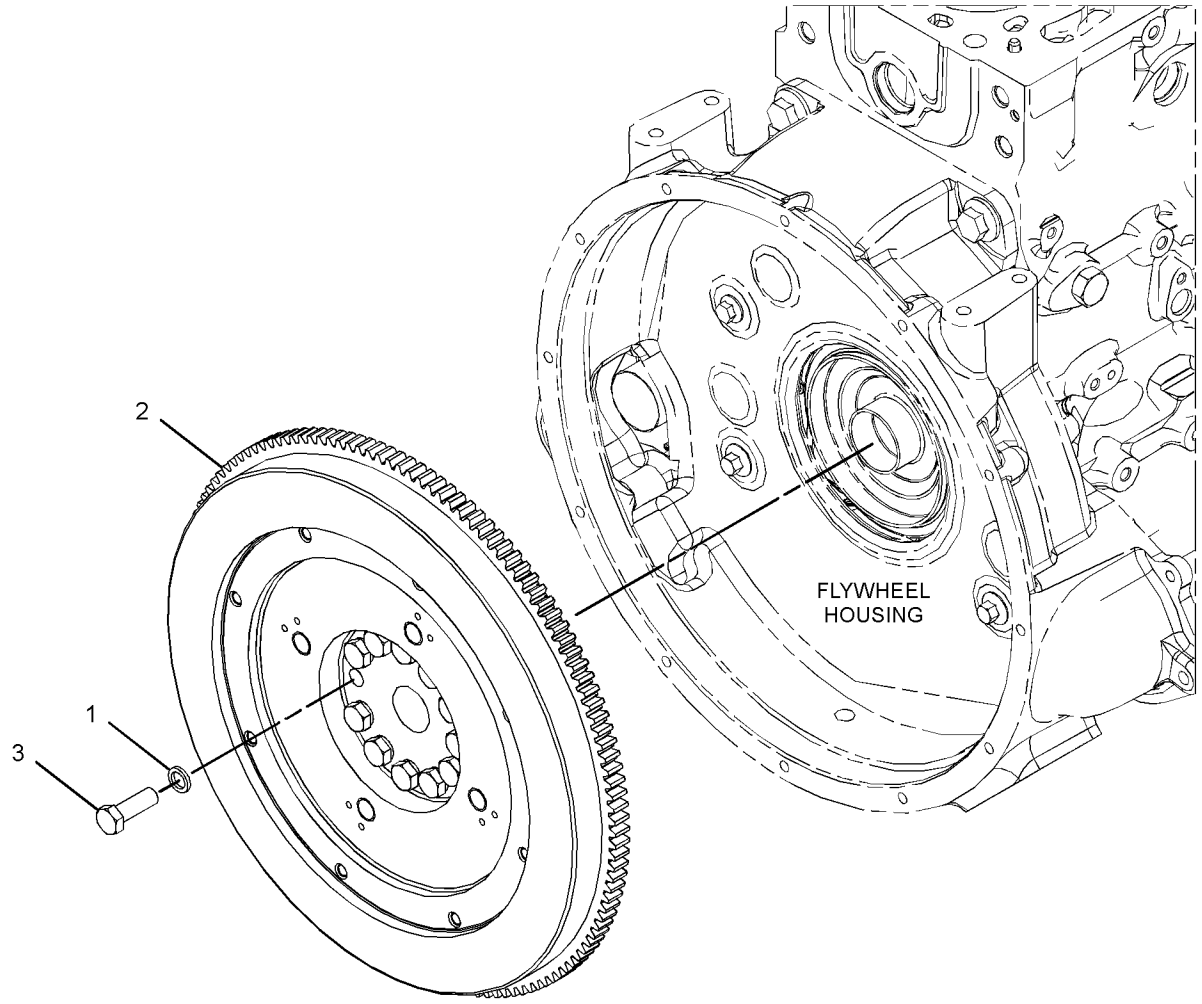

GRAPHIC #1 **<END>** g02629056

371-2538 HOUSING GP-FLYWHEEL

S/N: BD41-UP

PART OF 450-8077 ENGINE AR-PRIMARY

SMCS-1157 **i05496026**

NOTE	REF NO	GRAPHIC REF	PART NUMBER	QTY	PART NAME 1 2 3 4 5 6 (PRODUCT LEVEL)	SEE PAGE
	1	1	**6I-0917**	2	BOLT (M6X1X25-MM)	
	2	1	**277-0121**	1	PLUG	
	3	1	**283-4662**	2	BOLT-FLANGE HEAD	
	4	1	**287-8597**	2	DOWEL	
	5	1	**288-6974**	4	BOLT	
	6	1	**288-6975**	2	BOLT	
	7	1	**335-2092**	1	COVER-FLYWHEEL	
	8	1	**393-4006**	1	GASKET	
	9	1	**415-1418**	1	HOUSING-FLYWHEEL	

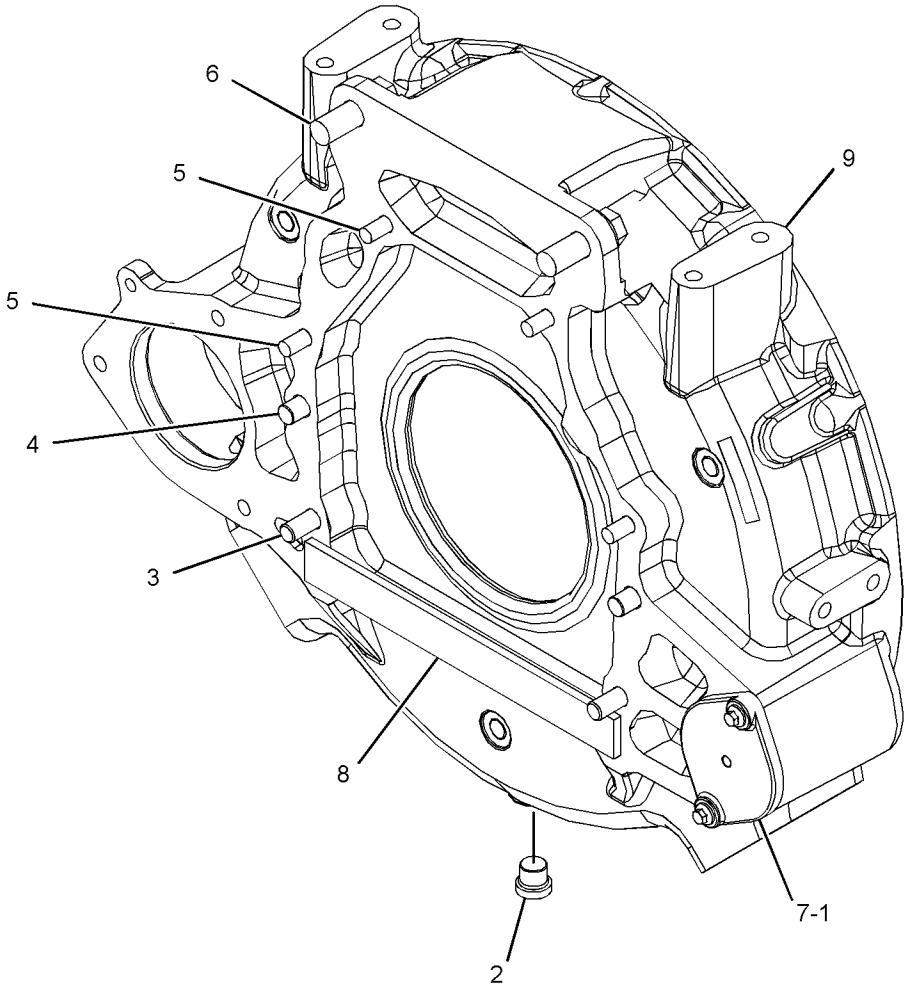

GRAPHIC #1 **<END>** g03482077

371-2716 HOUSING GP-FRONT

S/N: BD41-UP

PART OF 450-8077 ENGINE AR-PRIMARY

SMCS-1151, 1162, 1206 **i05490220**

NOTE	REF NO	GRAPHIC REF	PART NUMBER	QTY	PART NAME 1 2 3 4 5 6 (PRODUCT LEVEL)	SEE PAGE
M	1	1	**6I-0217**	6	BOLT (M8X1.25X20-MM)	
M	2	1	**6I-0645**	4	BOLT (M8X1.25X25-MM)	
M	3	1	**6I-0650**	3	BOLT (M10X1.5X65-MM)	
	4	1	**7C-4616**	1	BOLT (M12X1.75X45-MM)	
	5	1	**067-6179**	1	DOWEL	
M	6	1	**100-3751**	5	BOLT (M8X1.25X65-MM)	
M	7	1	**101-3895**	2	BOLT (M8X1.25X35-MM)	
M	8	1	**124-3815**	10	BOLT (M8X1.25X16-MM)	
	9	1	**133-1011**	1	WASHER	
	10	1	**216-8634**	1	GEAR-CAMSHAFT (68-TEETH)	
	11	1	**232-3657**	1	COVER AS-FRONT	
	11A	1	**225-8287**	1	GASKET	
	12	1	**232-3666**	1	WASHER-THRUST	
	13	1	**277-3012**	1	GASKET-COVER	
	14	1	**277-3013**	1	SEAL	
	15	1	**324-0444**	1	HUB-IDLER GEAR	
	16	1	**346-0407**	1	GEAR-IDLER	
	17	1	**346-0408**	1	PLATE	
	18	1	**386-2112**	1	CASE-GEAR	

M - METRIC PART

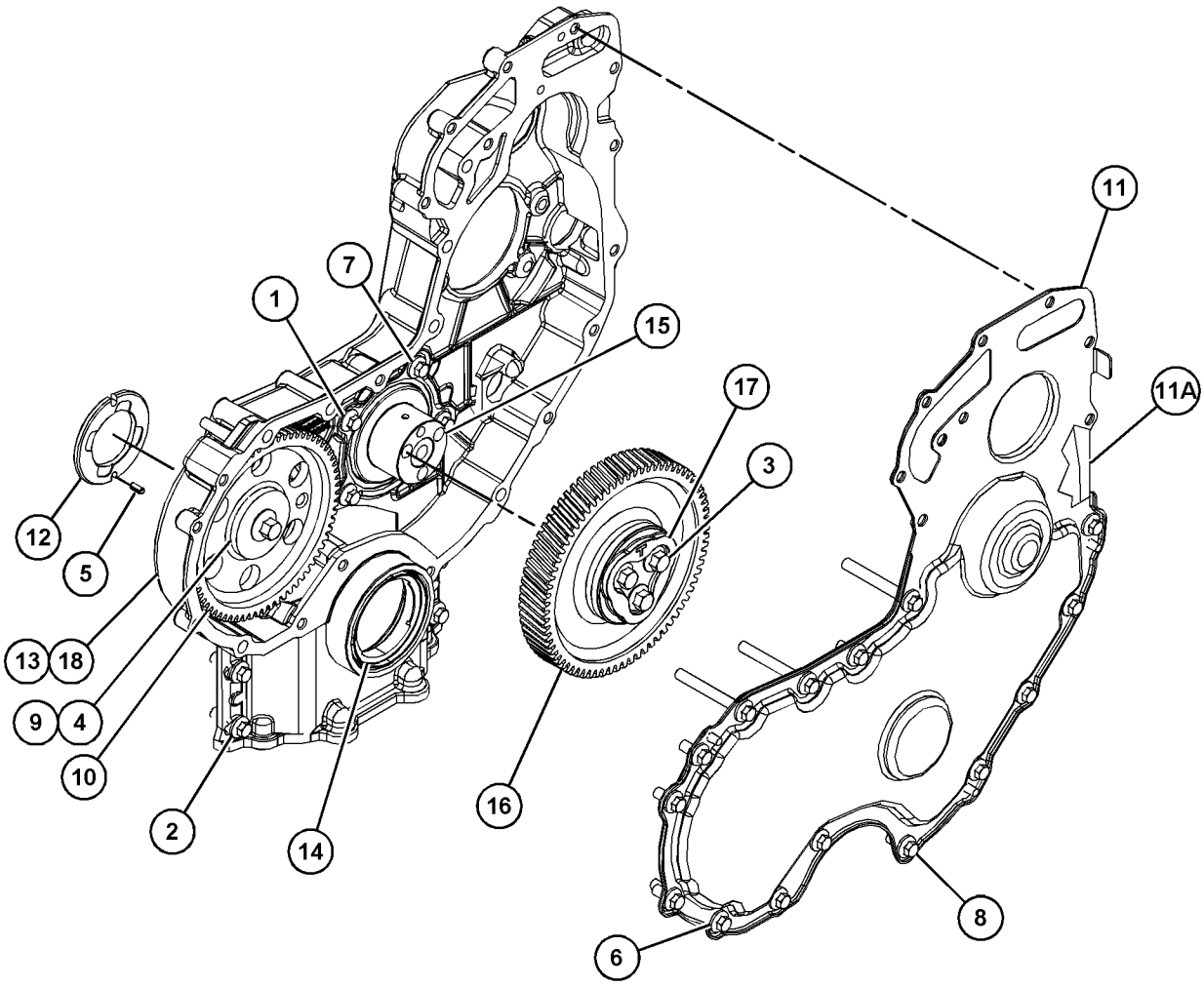

GRAPHIC #1 **<END>** g03483004

371-2478 JET GP-PISTON COOLING

S/N: BD41-UP

PART OF 450-8077 ENGINE AR-PRIMARY

SMCS-1331 **i05331889**

NOTE	REF NO	GRAPHIC REF	PART NUMBER	QTY	PART NAME 1 2 3 4 5 6 (PRODUCT LEVEL)	SEE PAGE
M	1	1	**100-4841**	6	BOLT (M6X1X10-MM)	
	2	1	**329-3796**	6	TUBE AS-OIL JET	

M - METRIC PART

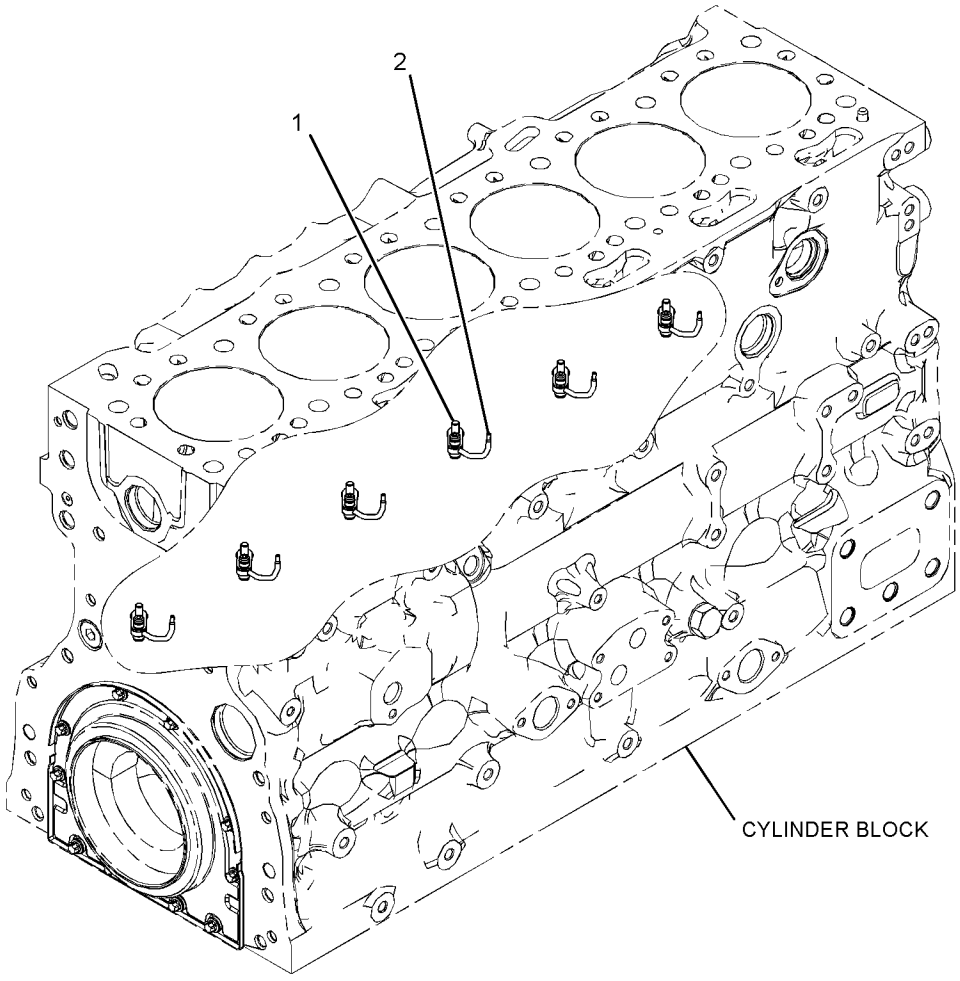

GRAPHIC #1 **<END>** g03378569

371-2740 LIFTING GP-ENGINE

S/N: BD41-UP

PART OF 450-8077 ENGINE AR-PRIMARY

SMCS-1122 **i05496035**

NOTE	REF NO	GRAPHIC REF	PART NUMBER	QTY	PART NAME 1 2 3 4 5 6 (PRODUCT LEVEL)	SEE PAGE
	1	1	**279-9651**	1	PLATE-LIFTING	
	2	1	**304-5062**	1	BRACKET	
M	3	1	**6I-0654**	2	BOLT (M10X1.5X25-MM)	
	4	1	**123-2899**	4	BOLT (M10X1.5X40-MM)	
	5	1	**415-1604**	1	BRACKET-LIFTING	

M - METRIC PART

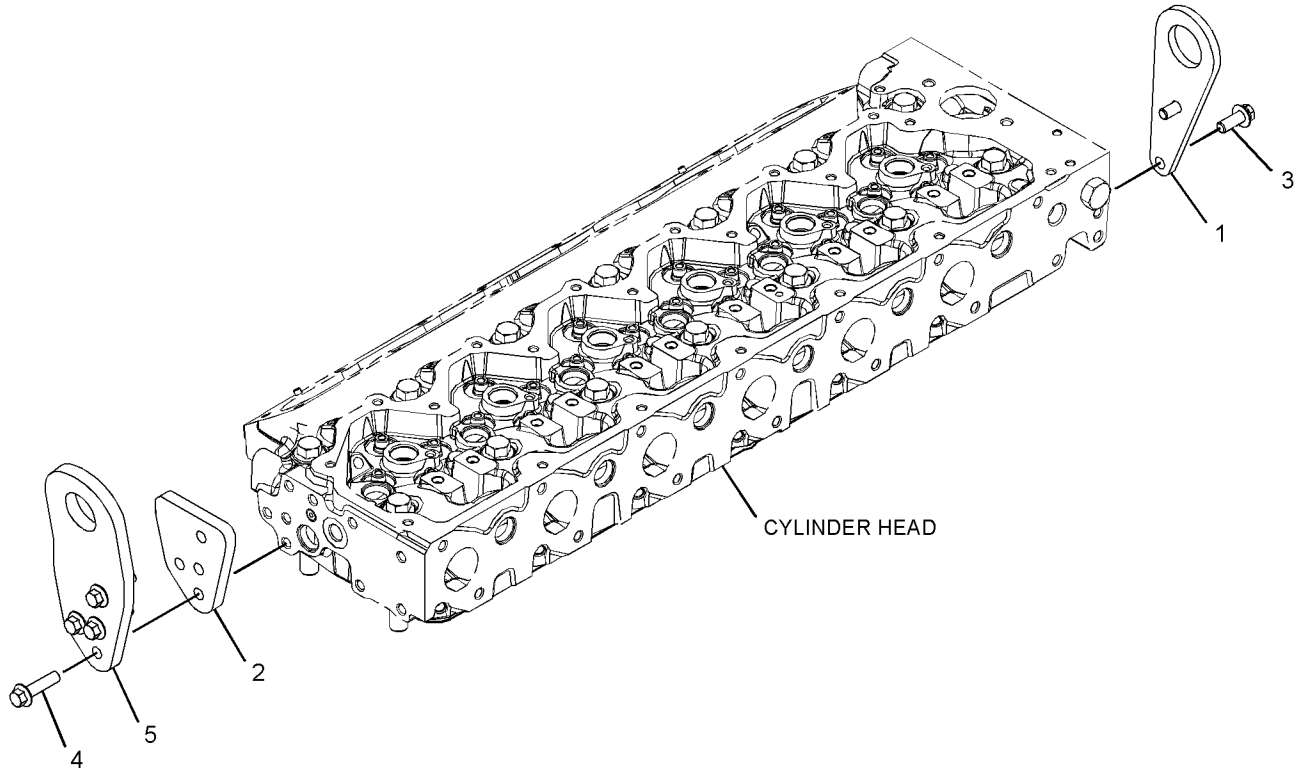

GRAPHIC #1 **<END>** g03456846

351-3886 MOUNTING GP-ENGINE

S/N: JEG1-UP

PART OF 374-6003 INSTALLATION AR-ENGINE

SMCS-1152 **i05450941**

NOTE	REF NO	GRAPHIC REF	PART NUMBER	QTY	PART NAME 1 2 3 4 5 6 (PRODUCT LEVEL)	SEE PAGE
	1	1	**118-9930**	4	SUPPORT AS	
M		1	**8T-4131**	1	NUT (M20X2.5-THD)	
	2	1	**324-4488**	4	MOUNT-RUBBER	
	3	1	**324-4489**	4	MOUNT-RUBBER	
	4	1	**390-2252**	2	BRACKET	
	5	1	**109-9329**	4	WASHER (21.5X120X8-MM THK)	
	6	1	**8T-4123**	8	WASHER (3.62X5.75X0.375-MM THK)	
	7	1	**8T-4223**	8	WASHER-HARD (13.5X25.5X3-MM THK)	
M	8	1	**8T-4910**	8	BOLT (M12X1.75X60-MM)	
M	9	1	**8T-6381**	4	BOLT (M20X2.5X120-MM)	

M - METRIC PART

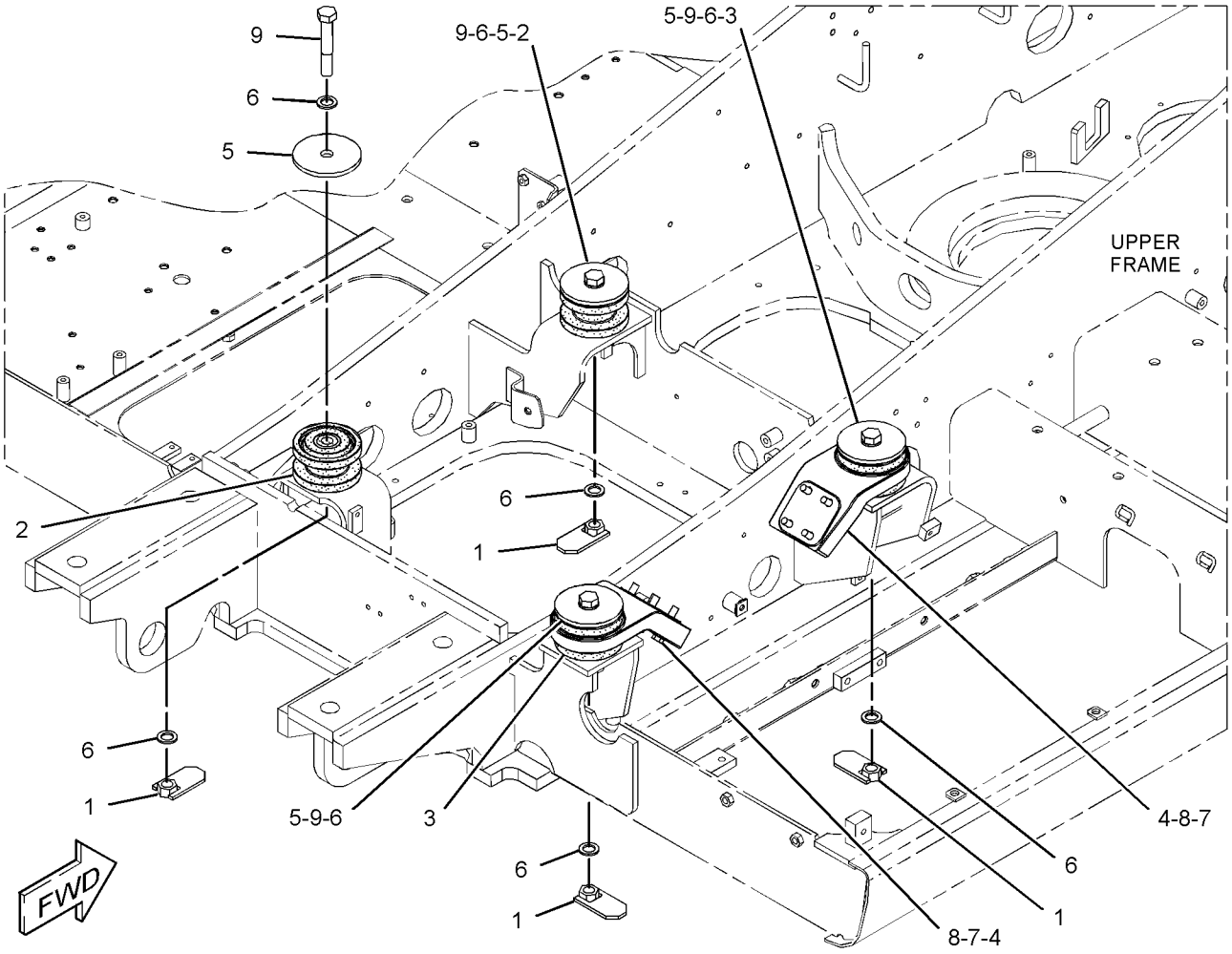

GRAPHIC #1 **<END>** g02644497

375-5008 MOUNTING GP-ENGINE

S/N: BD41-UP

PART OF 450-8077 ENGINE AR-PRIMARY

SMCS-1152 **i05281754**

NOTE	REF NO	GRAPHIC REF	PART NUMBER	QTY	PART NAME 1 2 3 4 5 6 (PRODUCT LEVEL)	SEE PAGE
	1	1	**283-8301**	3	BOLT	
	2	1	**376-0601**	1	BRACKET	
	3	1	**376-2384**	1	BRACKET	
	4	1	**283-8302**	6	BOLT	

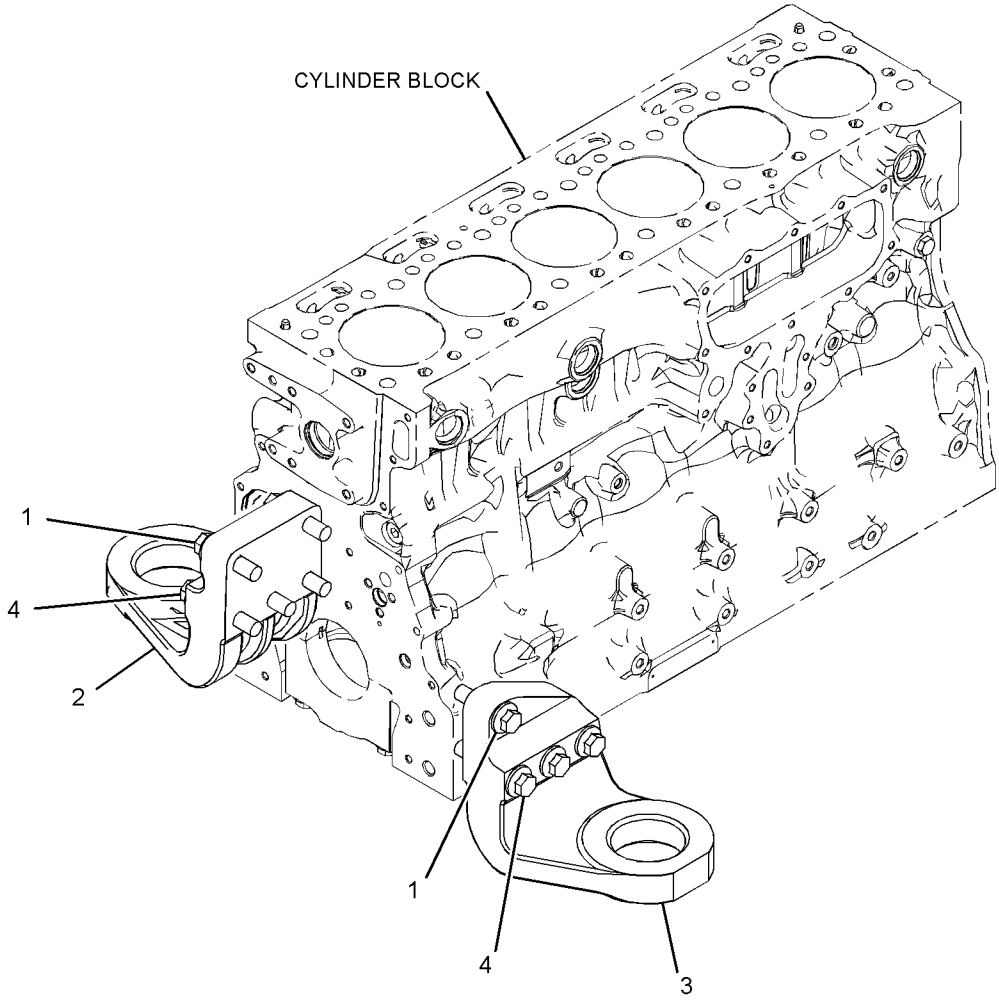

GRAPHIC #1 **<END>** g03317740

378-8260 PAN GP-OIL

S/N: BD41-UP

PART OF 450-8077 ENGINE AR-PRIMARY

SMCS-1302 **i05489722**

NOTE	REF NO	GRAPHIC REF	PART NUMBER	QTY	PART NAME 1 2 3 4 5 6 (PRODUCT LEVEL)	SEE PAGE
	1	1	**230-8094**	1	BRIDGE	
M	2	1	**6I-0217**	29	BOLT (M8X1.25X20-MM)	
M	3	1	**6I-0260**	2	BOLT (M8X1.25X25-MM)	
M	4	1	**6I-0363**	2	BOLT (M6X1X20-MM)	
	5	1	**6I-0572**	2	BOLT (M8X1.25X20-MM)	
	6	1	**351-4749**	1	GASKET-OIL PAN	
Y	7	1	*381-6824*	1	PAN GP-OIL	25
M	8	1	**6I-0654**	1	BOLT (M10X1.5X25-MM)	
	9	1	**275-9897**	1	BRACKET	
	10	1	**280-1384**	1	TUBE AS-OIL SUCTION	
	11	1	**6I-4681**	1	GASKET	

M - METRIC PART
Y - SEPARATE ILLUSTRATION

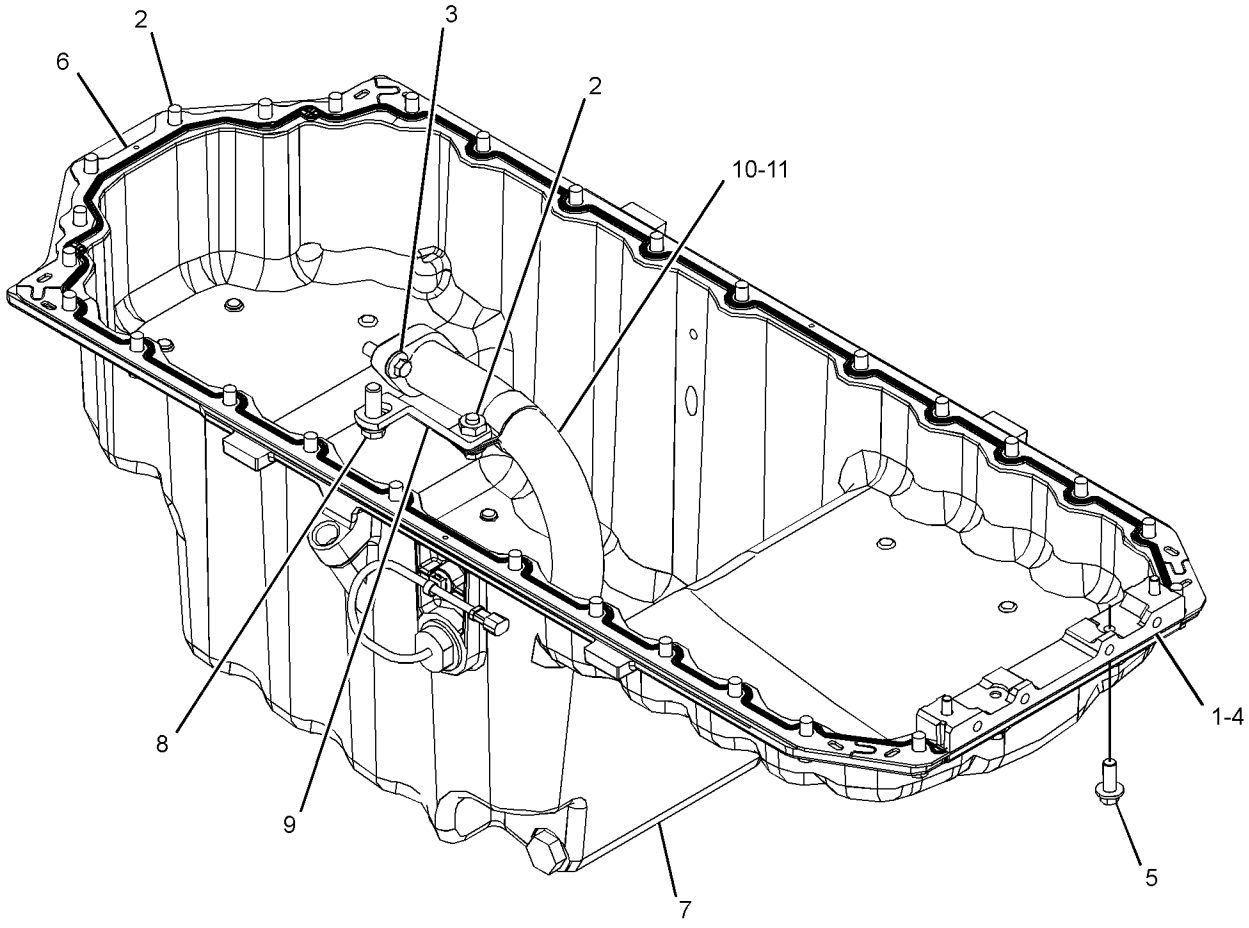

GRAPHIC #1 **<END>** g03480257

381-6824 PAN GP-OIL

S/N: BD41-UP

PART OF 378-8260 PAN GP-OIL

SMCS-1302 **i05536496**

NOTE	REF NO	GRAPHIC REF	PART NUMBER	QTY	PART NAME 1 2 3 4 5 6 (PRODUCT LEVEL)	SEE PAGE
	1	1	**381-6825**	1	PAN-OIL	
	2	1	**189-9377**	1	SEAL-O-RING	
	3	1	**213-0677**	2	SWITCH AS-LIQUID LEVEL (ENGINE OIL)	
					(EACH INCLUDES)	
		1	**102-8802**	1	KIT-RECEPTACLE (2-PIN)	
					(INCLUDES RECEPTACLE AS AND WEDGE)	
		1	**9X-3401**	1	PIN-CONNECTOR (16-GA TO 18-GA)	
					—OR—	
		1	**126-1767**	1	PIN-CONNECTOR (14-GA TO 16-GA)	
	4	1	**316-9351**	2	MOUNTING-CABLE TIE	
	5	1	**8L-2786**	2	SEAL-O-RING	
	6	1	**9S-4185**	2	PLUG-O-RING	

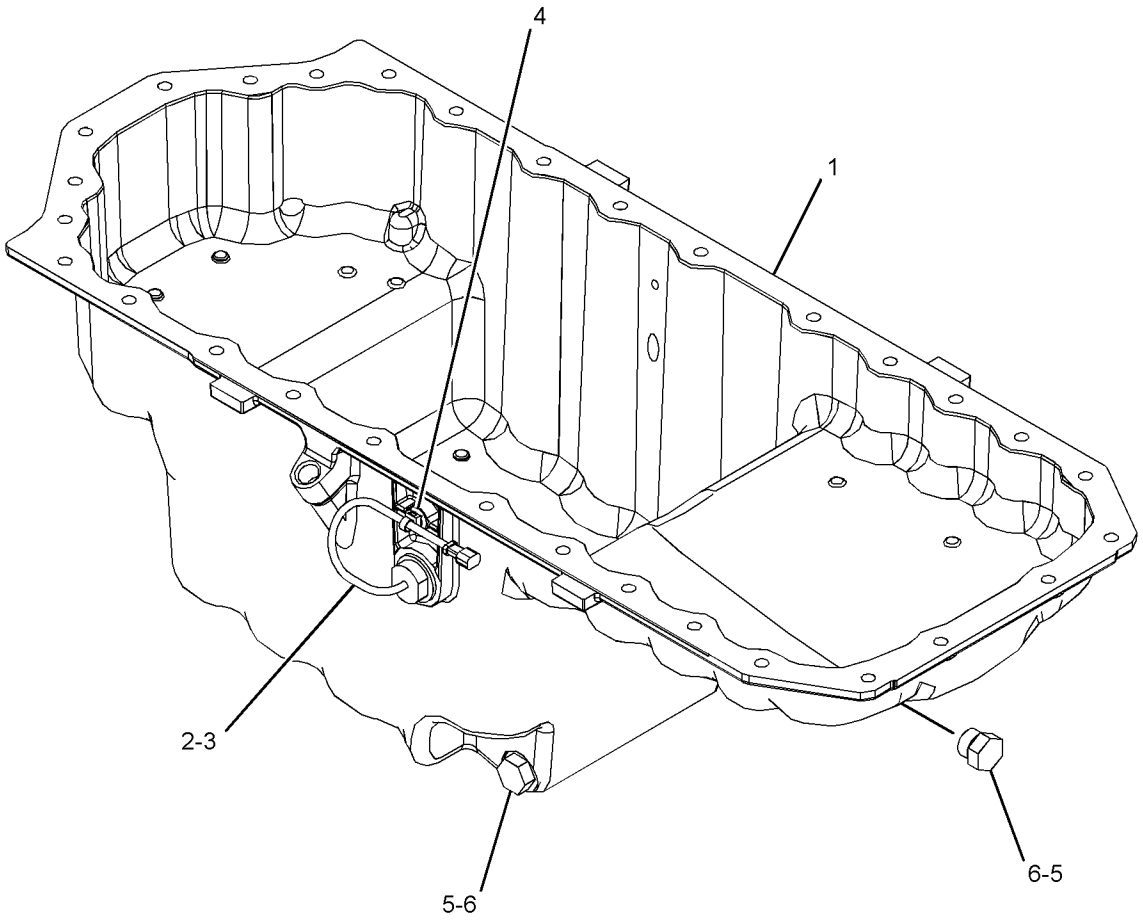

GRAPHIC #1 **<END>** g03378983

374-6301 PISTON & ROD GP

S/N: BD41-UP

PART OF 450-8077 ENGINE AR-PRIMARY

SMCS-1225 **i05332222**

NOTE	REF NO	GRAPHIC REF	PART NUMBER	QTY	PART NAME 1 2 3 4 5 6 (PRODUCT LEVEL)	SEE PAGE
	1	1	**331-0290**	6	CONNECTING ROD GP	
					(EACH INCLUDES)	
		1	**276-7478**	1	BUSHING	
		1	**323-9312**	2	BOLT (M10X1X50-MM)	
	2	1	**374-7393**	6	PISTON GP	
J	3	1	*317-5482*	6	BEARING	
J	4	1	*317-5483*	6	BEARING	
	5	1	**124-3536**	12	RING-RETAINING	
					AVAILABLE REPAIR KIT(S):	
J			**360-1564**	1	KIT-BEARING (PISTON)	
					(INCLUDES 6 UPPER HALF & 6 LOWER HALF BEARINGS)	

J - KIT MARKED J SERVICES PART(S) MARKED J

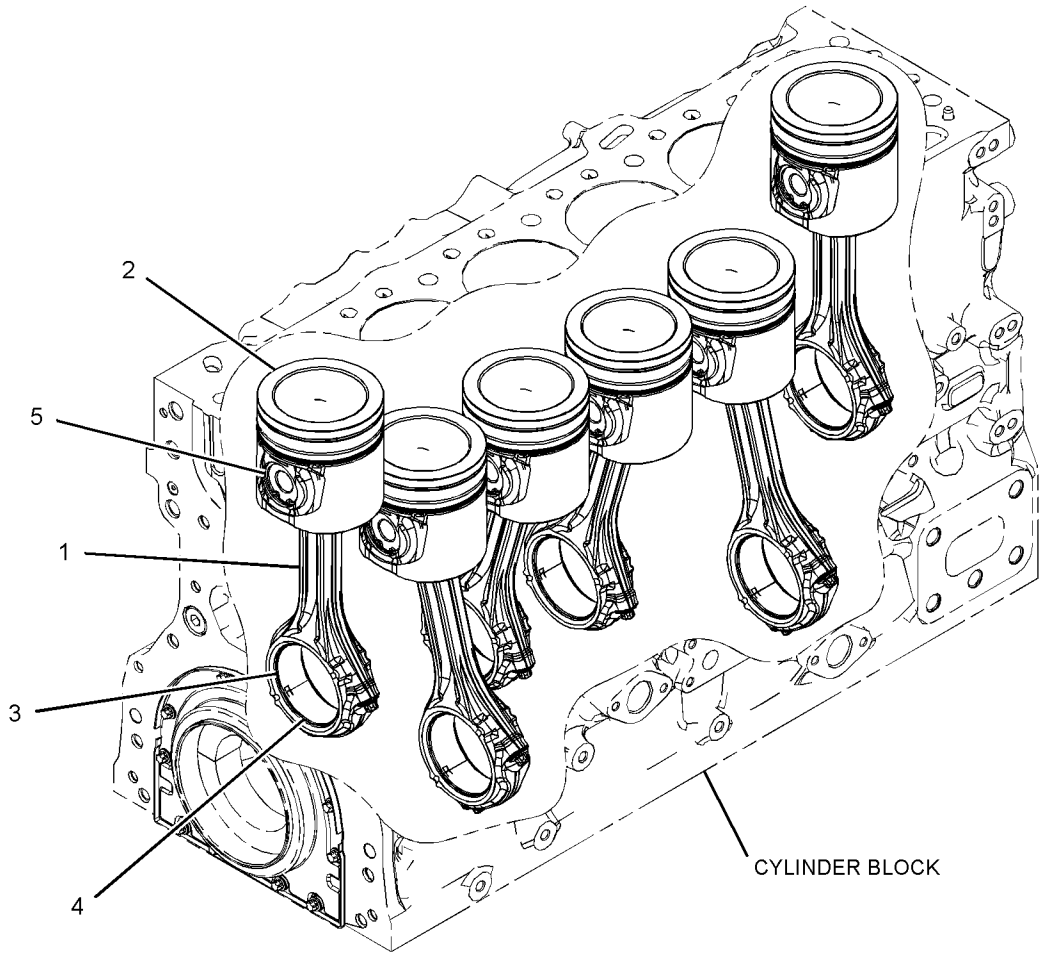

GRAPHIC #1 **<END>** g03383354

374-9295 PLUG GP-CYLINDER BLOCK

S/N: BD41-UP

PART OF 450-8077 ENGINE AR-PRIMARY

SMCS-1201 **i05498259**

NOTE	REF NO	GRAPHIC REF	PART NUMBER	QTY	PART NAME 1 2 3 4 5 6 (PRODUCT LEVEL)	SEE PAGE
	1	1	**277-4223**	1	PLUG	

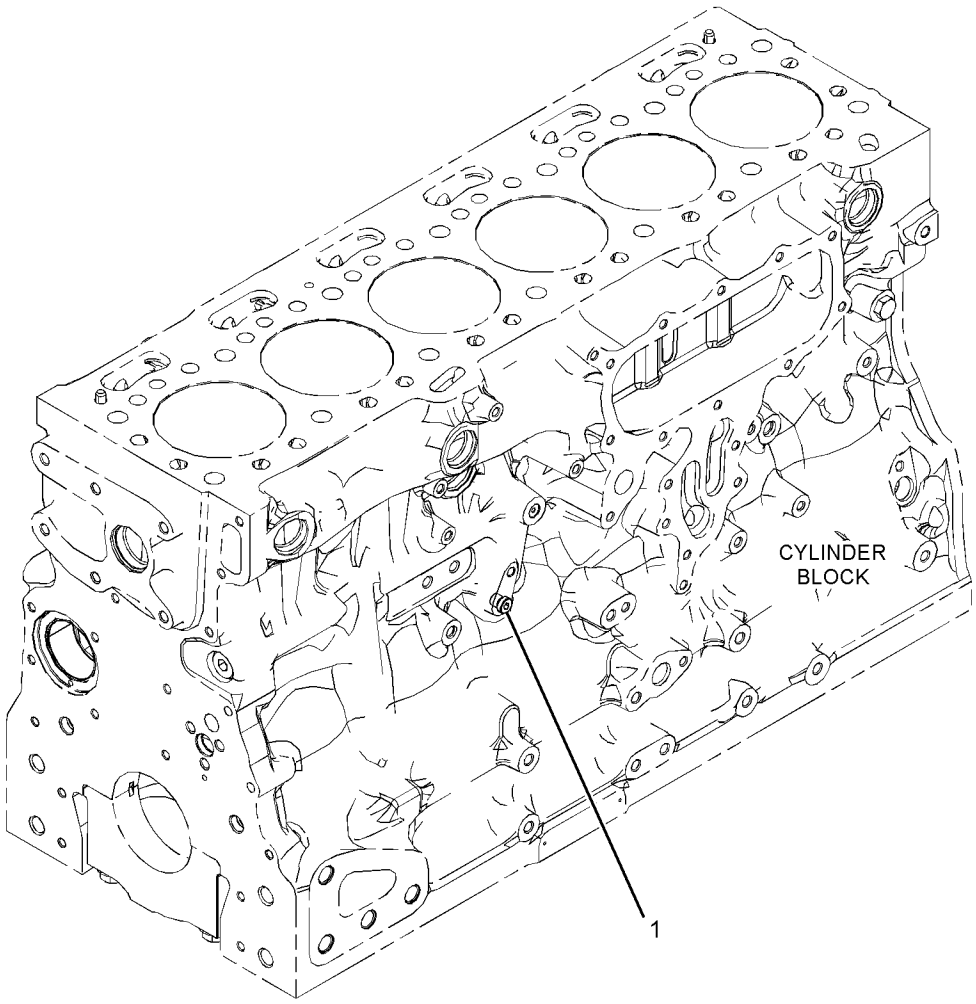

GRAPHIC #1 **<END>** g03483538

375-0098 PULLEY GP-AUXILIARY DRIVE

S/N: BD41-UP

PART OF 450-8077 ENGINE AR-PRIMARY

SMCS-1205 **i05332368**

NOTE	REF NO	GRAPHIC REF	PART NUMBER	QTY	PART NAME 1 2 3 4 5 6 (PRODUCT LEVEL)	SEE PAGE
	1	1	**274-1935**	6	BOLT	

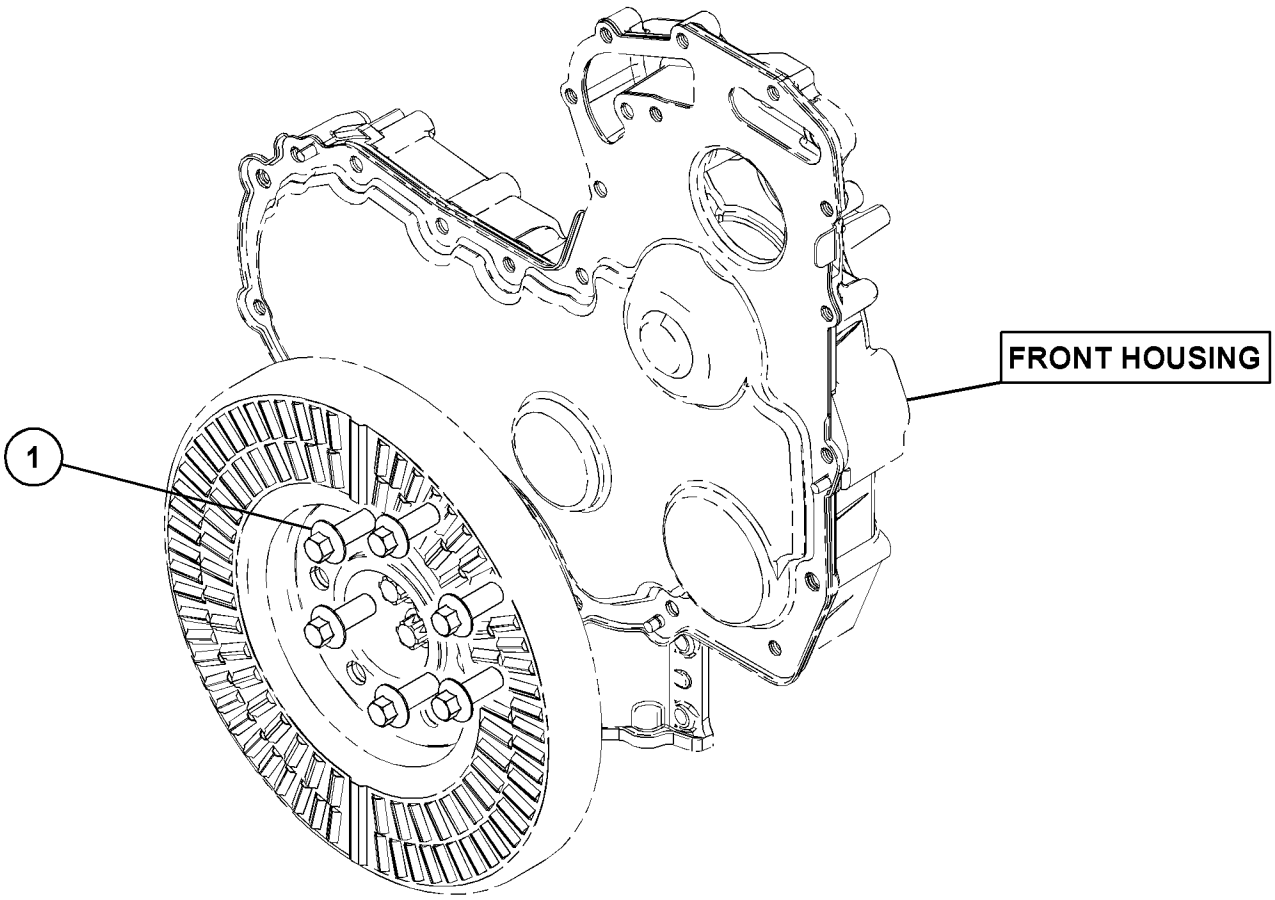

GRAPHIC #1 **<END>** g03172177

374-6309 PULLEY GP-CRANKSHAFT

S/N: BD41-UP

PART OF 450-8077 ENGINE AR-PRIMARY

SMCS-1205 **i05489720**

NOTE	REF NO	GRAPHIC REF	PART NUMBER	QTY	PART NAME 1 2 3 4 5 6 (PRODUCT LEVEL)	SEE PAGE
	1	1	**342-6507**	1	SHIM (0.1-MM THK)	
	2	1	**342-6510**	3	BOLT-TORX (M14X1.5X70-MM)	
	3	1	**344-7700**	1	ADAPTER	
	4	1	**345-2568**	1	PULLEY (12-GROOVE)	
	5	1	**351-1724**	1	DAMPER	

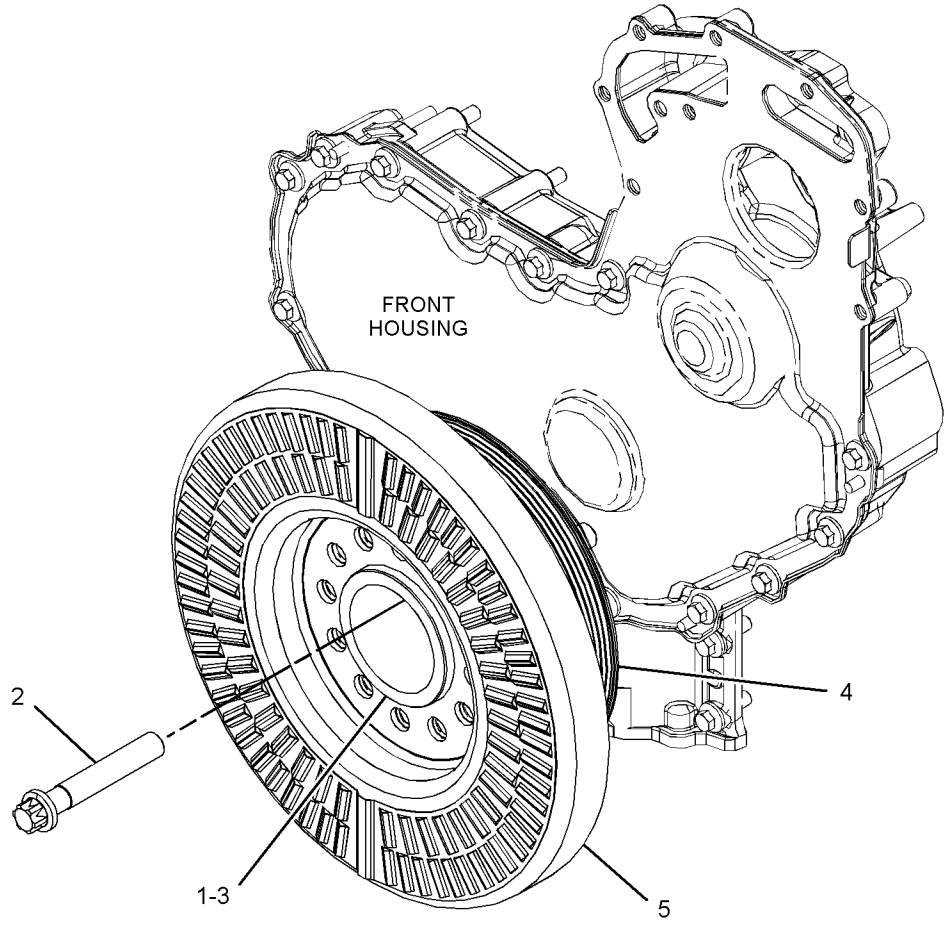

GRAPHIC #1 **<END>** g03479481

324-4550 PULLEY GP-ENGINE

S/N: JEG1-UP

PART OF 369-2255 FAN AR-VARIABLE

SMCS-1205, 1207, 1359, 1384, 1425 **i05449850**

NOTE	REF NO	GRAPHIC REF	PART NUMBER	QTY	PART NAME 1 2 3 4 5 6 (PRODUCT LEVEL)	SEE PAGE
	1	1	**329-5239**	1	PULLEY (FAN DRIVE)	
	2	1	**350-8747**	1	BELT-SERPENTINE	

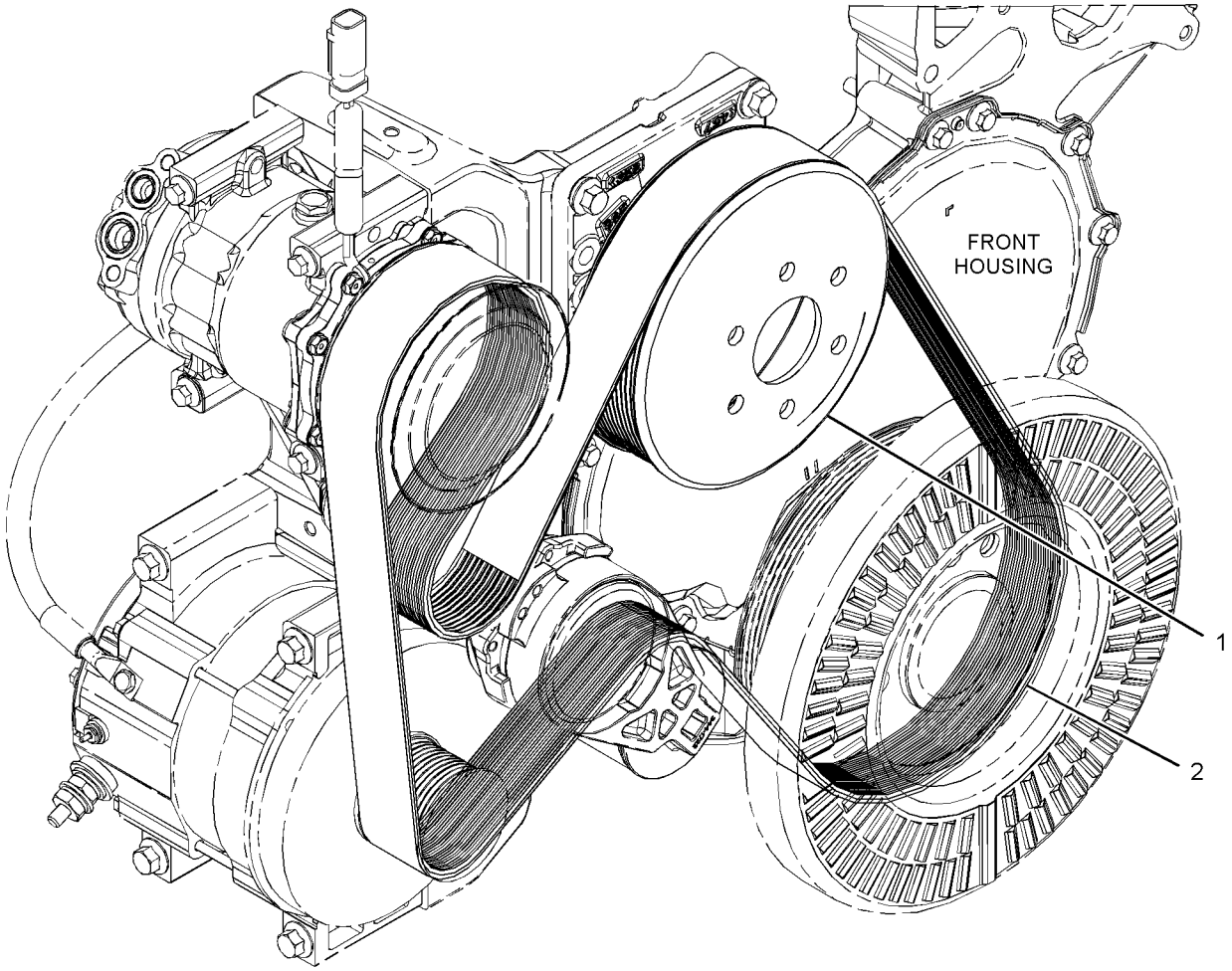

GRAPHIC #1 **<END>** g02498137

280-1911 ROCKER ARM GP

S/N: BD41-UP

PART OF 371-2480 ROCKER ARM GP

SMCS-1123 **i02752423**

NOTE	REF NO	GRAPHIC REF	PART NUMBER	QTY	PART NAME 1 2 3 4 5 6 (PRODUCT LEVEL)	SEE PAGE
	1	1	**276-9201**	1	CLIP	
	2	1	**276-9206**	5	SPRING-SHAFT	
	3	1	**276-9207**	1	SPRING-SHAFT	
	4	1	**277-5307**	1	SHAFT AS-ROCKER ARM	
	4A	1	**276-9200**	1	PLUG-SHAFT END	
	5	1	**278-5111**	6	ROCKER ARM AS	
					(EACH INCLUDES)	
	5A	1	**276-9230**	1	NUT	
	5B	1	**278-5113**	1	ADJUSTING SCREW (TORX)	
	6	1	**278-5112**	6	ROCKER ARM AS	
					(EACH INCLUDES)	
	6A	1	**276-9230**	1	NUT	
	6B	1	**278-5113**	1	ADJUSTING SCREW (TORX)	
	7	1	**280-1912**	6	BRACKET	
	8	1	**280-1913**	6	RETAINER	
	9	1	**280-1914**	12	BOLT (M8X1.25X55-MM)	

280-1911 **ROCKER ARM GP (*contd.*)** **i02752423**

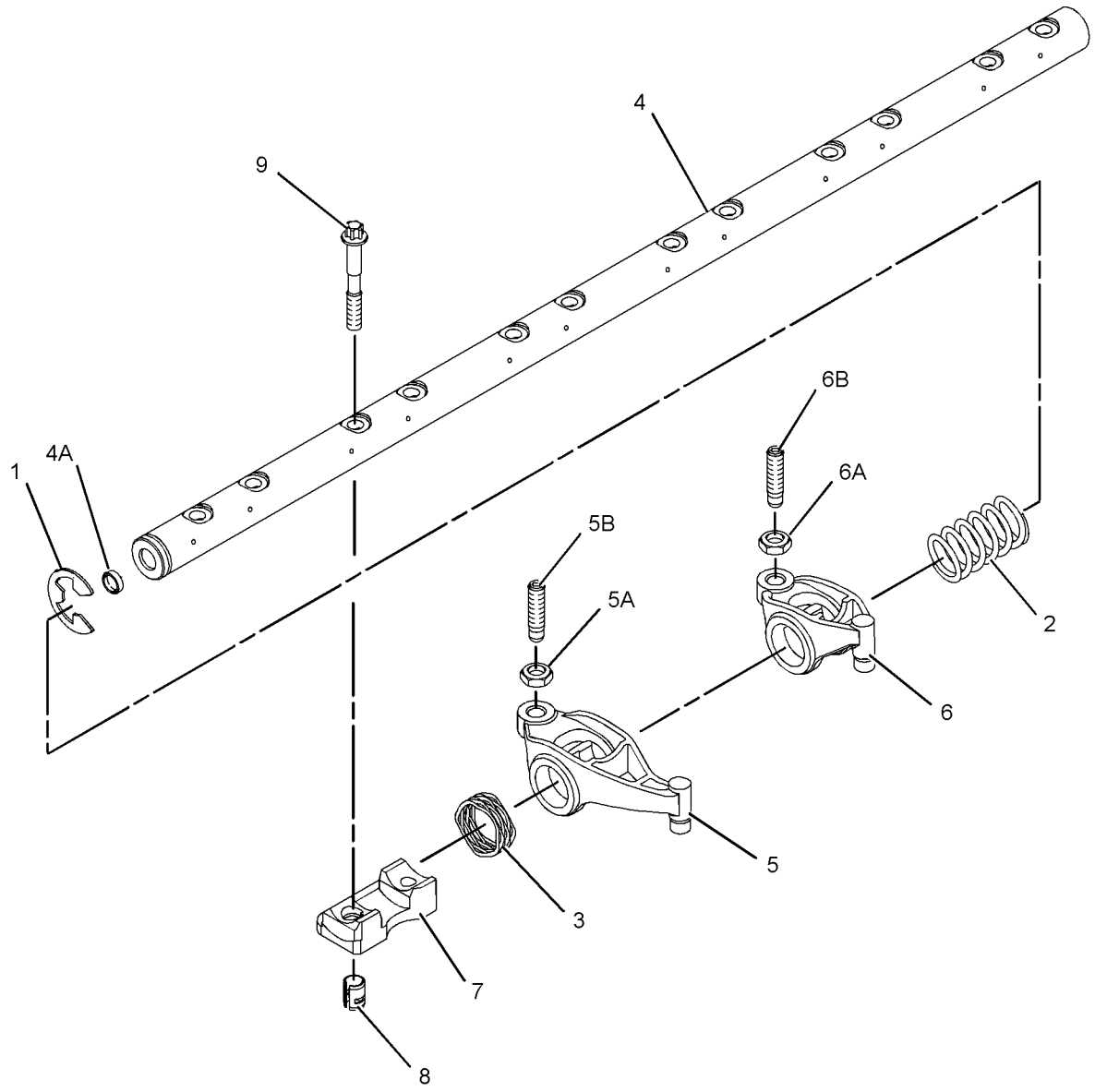

GRAPHIC #1 **<END>** g01235750

371-2480 ROCKER ARM GP

S/N: BD41-UP

PART OF 450-8077 ENGINE AR-PRIMARY

SMCS-1123 **i05332398**

NOTE	REF NO	GRAPHIC REF	PART NUMBER	QTY	PART NAME 1 2 3 4 5 6 (PRODUCT LEVEL)	SEE PAGE
	1	1	**276-8132**	24	SPRING-VALVE	
	2	1	**346-4709**	12	BRIDGE GP-VALVE	
	3	1	**276-8123**	48	RETAINER	
	4	1	**276-8133**	24	CAP-VALVE	
Y	5	1	**280-1911**	1	ROCKER ARM GP	31
	6	1	**299-5511**	24	SEAL-VALVE STEM	
	7	1	**309-6678**	12	VALVE-INLET	
	8	1	**339-9637**	12	VALVE-EXHAUST	

Y - SEPARATE ILLUSTRATION

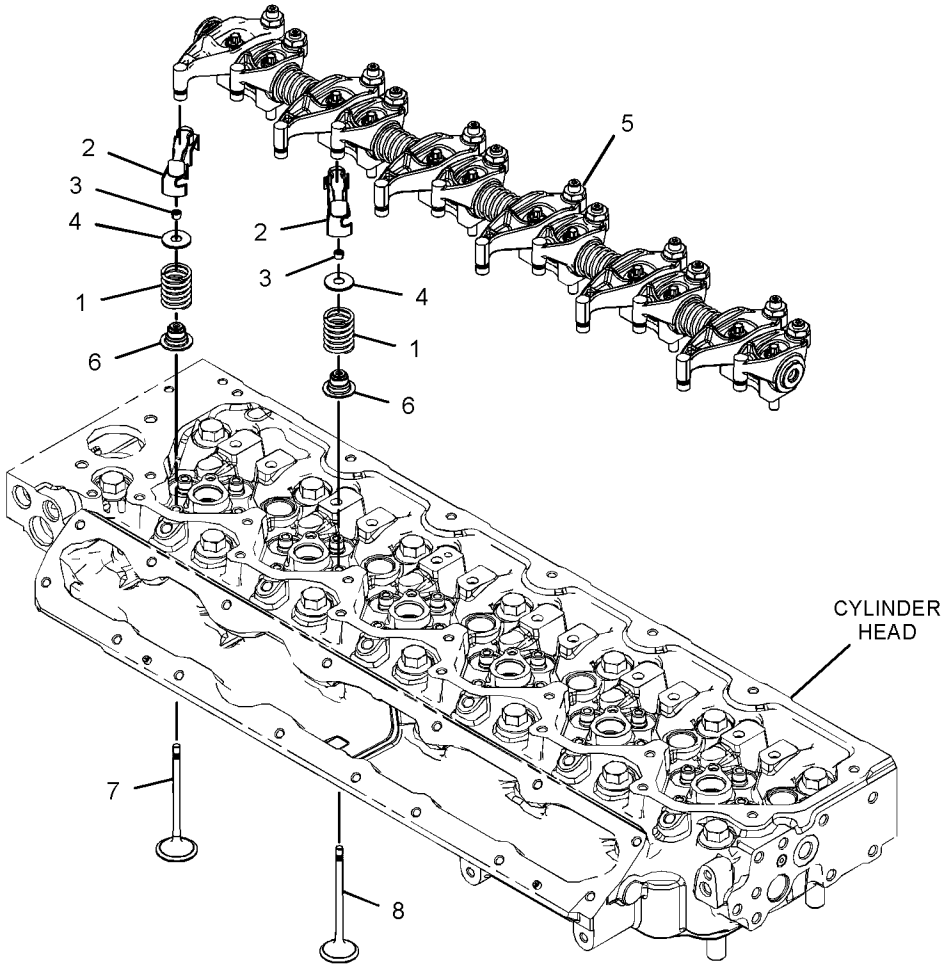

GRAPHIC #1 **<END>** g03103178

392-0634 BREATHER GP

S/N: BD41-UP

PART OF 450-8077 ENGINE AR-PRIMARY

SMCS-1317 **i05489718**

NOTE	REF NO	GRAPHIC REF	PART NUMBER	QTY	PART NAME 1 2 3 4 5 6 (PRODUCT LEVEL)	SEE PAGE
	1	1	**105-2740**	3	BOLT	
M	2	1	**124-3815**	3	BOLT (M8X1.25X16-MM)	
	3	1	**389-1995**	1	BRACKET AS	

M - METRIC PART

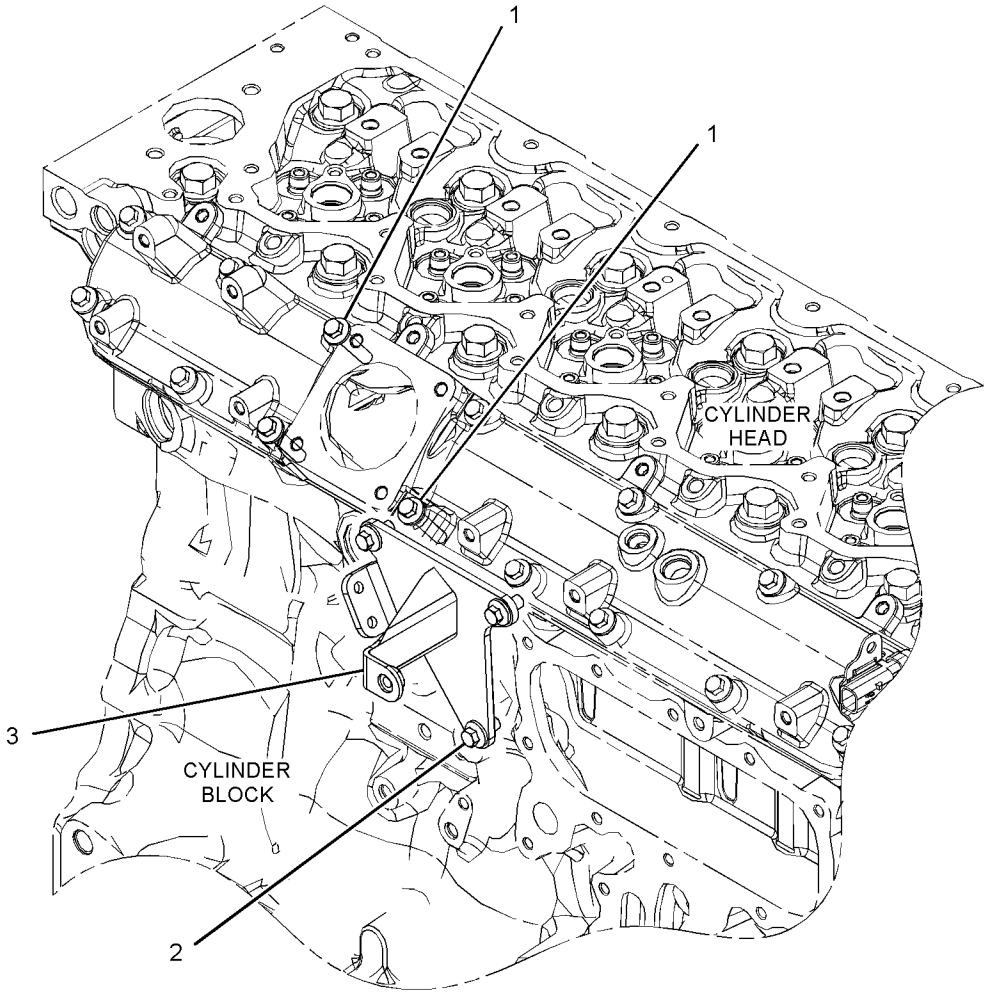

GRAPHIC #1 **<END>** g03479957

374-0427 COVER GP-OIL FILLER

S/N: BD41-UP

PART OF 450-8077 ENGINE AR-PRIMARY

SMCS-1316 **i05489727**

NOTE	REF NO	GRAPHIC REF	PART NUMBER	QTY	PART NAME 1 2 3 4 5 6 (PRODUCT LEVEL)	SEE PAGE
	1	1	**225-6522**	1	PLUG-CUP	
	2	1	**225-6524**	1	PLUG-CUP	
	3	1	**278-0017**	1	GASKET	
	4	1	**351-5583**	1	PLATE	
M	5	1	**6I-0217**	2	BOLT (M8X1.25X20-MM)	

M - METRIC PART

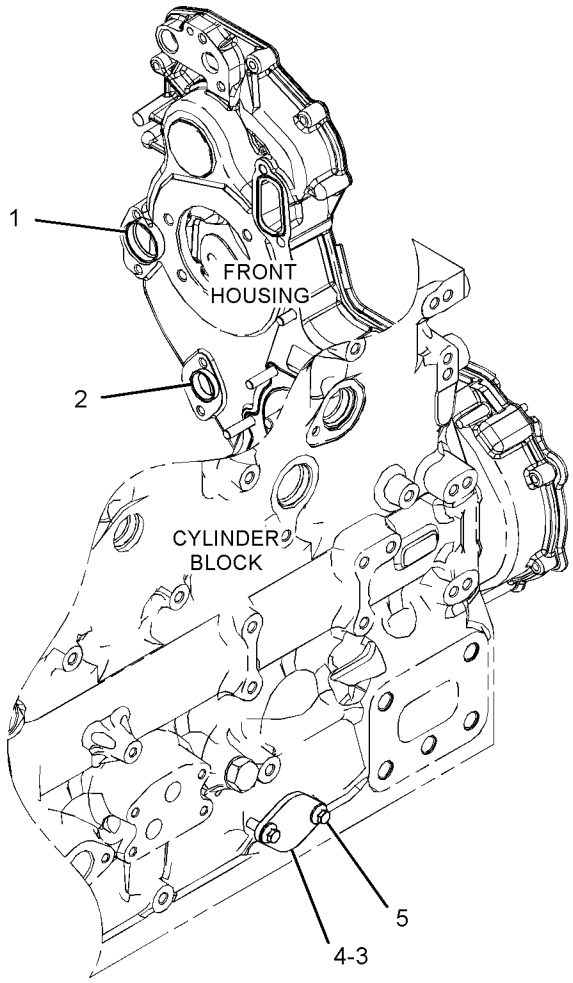

GRAPHIC #1 **<END>** g03478096

424-5451 FILTER & MTG GP-ENGINE OIL

S/N: JEG1-UP

PART OF 374-6003 INSTALLATION AR-ENGINE

SMCS-1306, 1308 **i05537154**

NOTE	REF NO	GRAPHIC REF	PART NUMBER	QTY	PART NAME 1 2 3 4 5 6 (PRODUCT LEVEL)	SEE PAGE
	1	1	**322-3154**	1	FILTER GP-OIL (ENGINE)	
		1	**322-3155**	1	FILTER ELEMENT-ENGINE OIL	
		1	**354-5833**	1	KIT-DRAIN	
					(INCLUDES DRAIN, KNOB & SEALS)	
	2	1	**346-3229**	1	BASE AS-FILTER	
		1	**232-7599**	1	PLUG	
	3	1	*377-9578*	1	CONNECTOR AS	
		1	**228-7093**	1	SEAL-O-RING	
		1	**238-5084**	1	SEAL-O-RING	
		1	**357-4600**	1	CONNECTOR	
I	4	1	**424-5452**	1	HOSE AS	
I	5	1	**424-5453**	1	HOSE AS	
	6	1	*309-5130*	2	PLUG AS	
					(EACH INCLUDES)	
		1	**9S-4182**	1	PLUG-O-RING	
		1	**214-7566**	1	SEAL-O-RING	
	7	1	*309-5137*	1	CONNECTOR AS	
		1	**6V-8635**	1	CONNECTOR	
		1	**228-7093**	1	SEAL-O-RING	
		1	**238-5084**	1	SEAL-O-RING	
	8	1	*319-6212*	1	CONNECTOR AS	
		1	**6V-8714**	1	CONNECTOR	
		1	**228-7093**	1	SEAL-O-RING	
		1	**238-5082**	1	SEAL-O-RING	
	9	1	*321-8649*	1	VALVE AS-FLUID SAMPLING	
		1	**8C-3446**	1	VALVE-FLUID SAMPLING	
		1	**214-7566**	1	SEAL-O-RING	
	10	1	*326-0319*	1	PLUG AS	
		1	**9S-4188**	1	PLUG	
		1	**238-5083**	1	SEAL-O-RING	
	11	1	*329-5534*	1	CONNECTOR AS	
		1	**8C-5723**	1	CONNECTOR	
		1	**228-7093**	1	SEAL-O-RING	
		1	**238-5084**	1	SEAL-O-RING	
	12	1	**8C-3445**	1	CAP-DUST	
	13	1	**8T-4224**	4	WASHER-HARD (8.8X16X2-MM THK)	
M	14	1	**8T-7547**	4	BOLT (M8X1.25X30-MM)	

I - REFER TO HYDRAULIC INFORMATION SYSTEM
M - METRIC PART

424-5451 **FILTER & MTG GP-ENGINE OIL (*contd.*)** **i05537154**

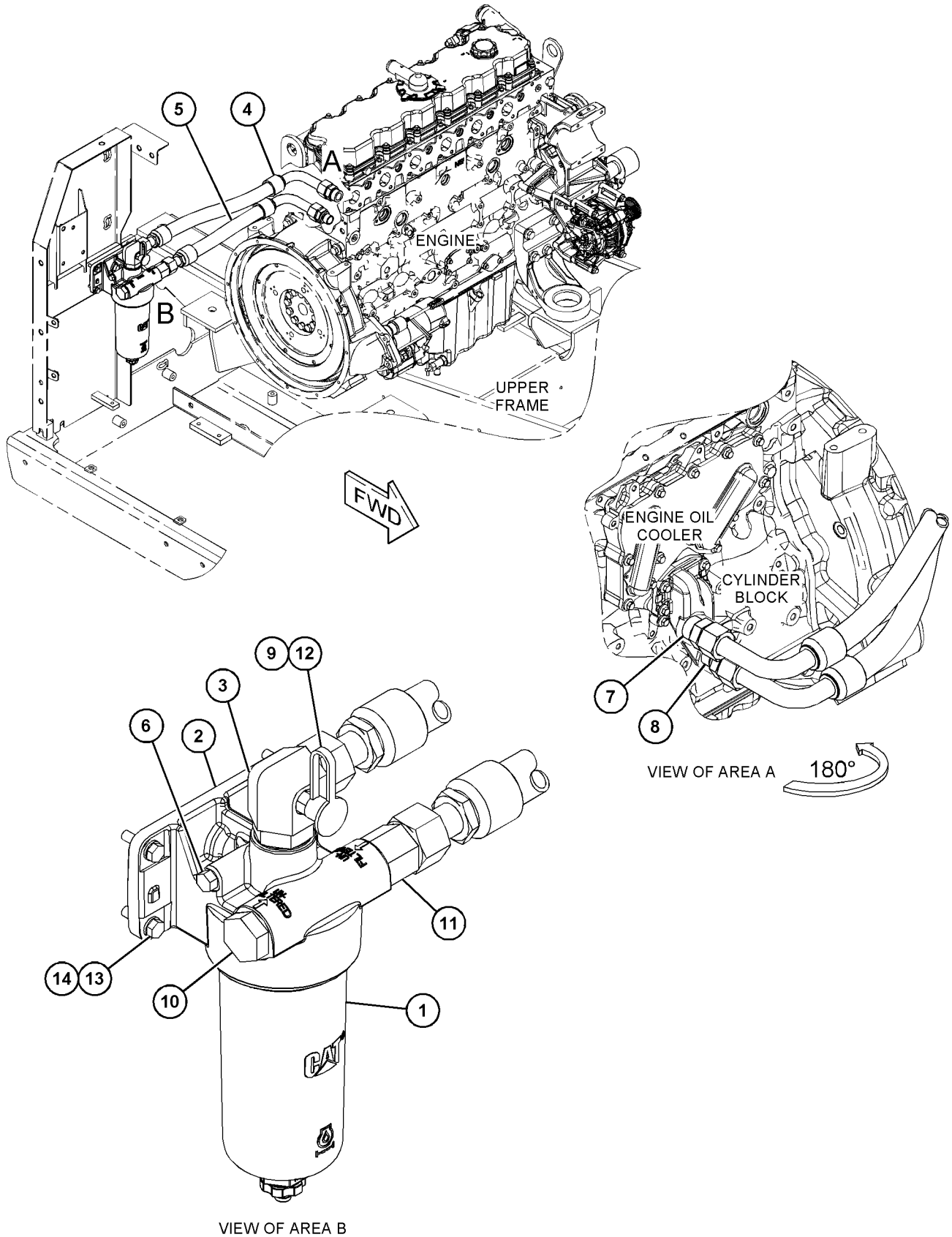

GRAPHIC #1 **<END>** g03449837

374-6002 FUMES DISPOSAL GP

S/N: JEG1-UP

PART OF 374-6003 INSTALLATION AR-ENGINE

SMCS-1317 **i05452813**

NOTE	REF NO	GRAPHIC REF	PART NUMBER	QTY	PART NAME 1 2 3 4 5 6 (PRODUCT LEVEL)	SEE PAGE
	1	1	**394-4793**	1	HOSE	
	2	1	**095-9785**	1	CLAMP-HOSE	
	3	1	**206-1345**	2	STRAP-CABLE	

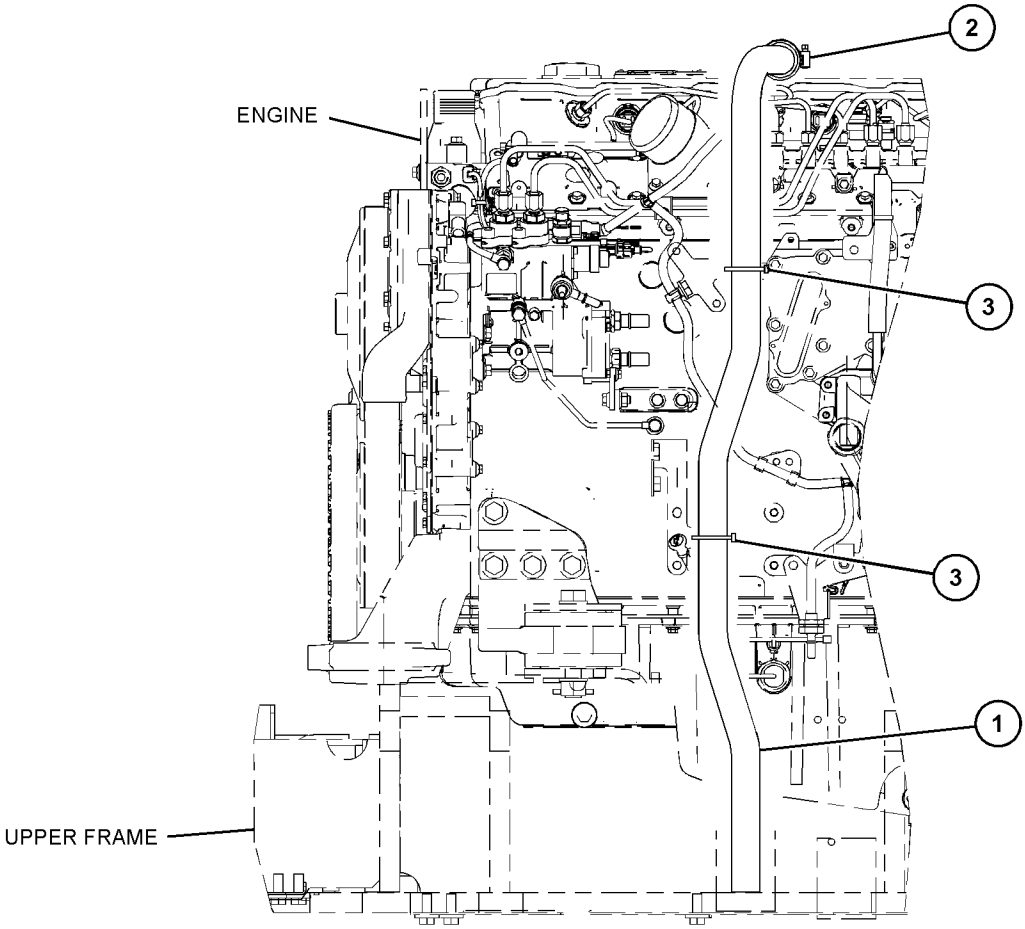

REAR VIEW

GRAPHIC #1 **<END>** g03450137

375-8851 GAUGE GP-OIL LEVEL (DIPSTICK)

S/N: BD41-UP

PART OF 450-8077 ENGINE AR-PRIMARY

SMCS-1326 **i05495895**

NOTE	REF NO	GRAPHIC REF	PART NUMBER	QTY	PART NAME 1 2 3 4 5 6 (PRODUCT LEVEL)	SEE PAGE
	1	1	**354-8322**	1	PLUG	
	2	1	**378-8587**	1	GAUGE GP-OIL LEVEL (DIPSTICK)	
	3	1	**317-6664**	1	BRACKET	
M	4	1	**124-3815**	1	BOLT (M8X1.25X16-MM)	
	5	1	**6I-4200**	2	BOLT (M10X1.5X16-MM)	

M - METRIC PART

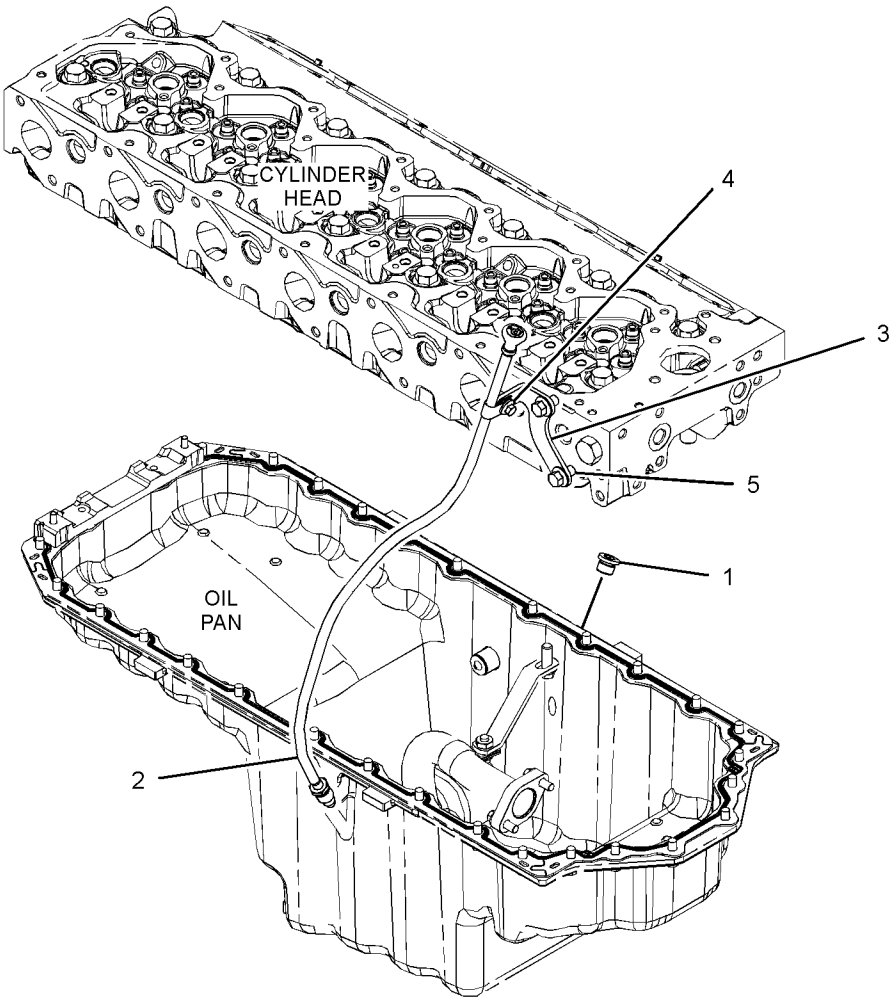

GRAPHIC #1 **<END>** g03483057

374-6004 LINES GP-ENGINE OIL DRAIN

S/N: JEG1-UP

PART OF 374-6003 INSTALLATION AR-ENGINE

SMCS-1307 **i05264769**

NOTE	REF NO	GRAPHIC REF	PART NUMBER	QTY	PART NAME 1 2 3 4 5 6 (PRODUCT LEVEL)	SEE PAGE
	1	1	**095-1388**	1	CLAMP-HOSE	
E	2	1	**5P-0743**		HOSE (23-CM)	

E - ORDER BY THE CENTIMETER

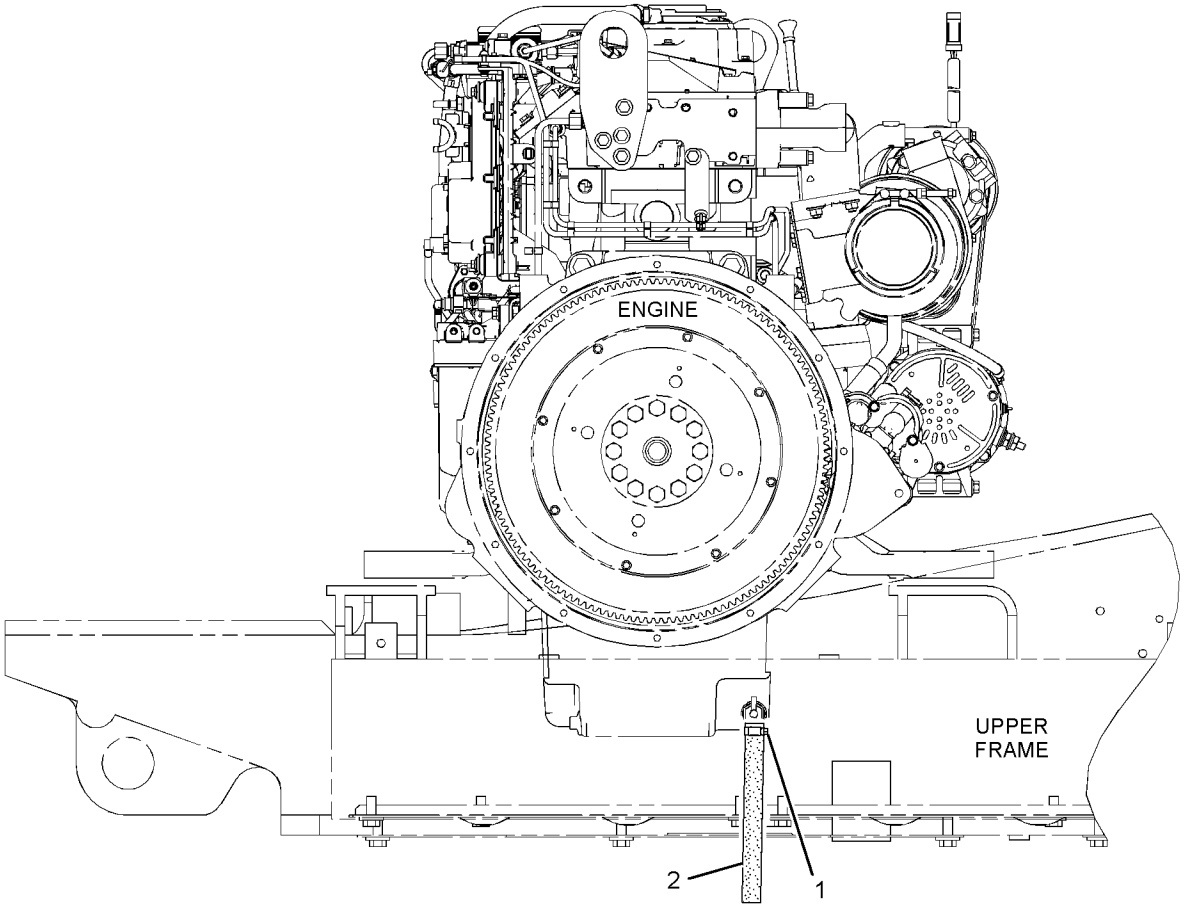

RIGHT SIDE VIEW

GRAPHIC #1

<END>

g02724625

346-0737 PUMP GP-ENGINE OIL

S/N: BD41-UP

PART OF 450-8077 ENGINE AR-PRIMARY

SMCS-1304, 1315 **i05281915**

NOTE	REF NO	GRAPHIC REF	PART NUMBER	QTY	PART NAME 1 2 3 4 5 6 (PRODUCT LEVEL)	SEE PAGE
	1	1	**373-8014**	1	PUMP-OIL	
	2	1	**6I-1090**	4	BOLT (M8X1.25X40-MM)	

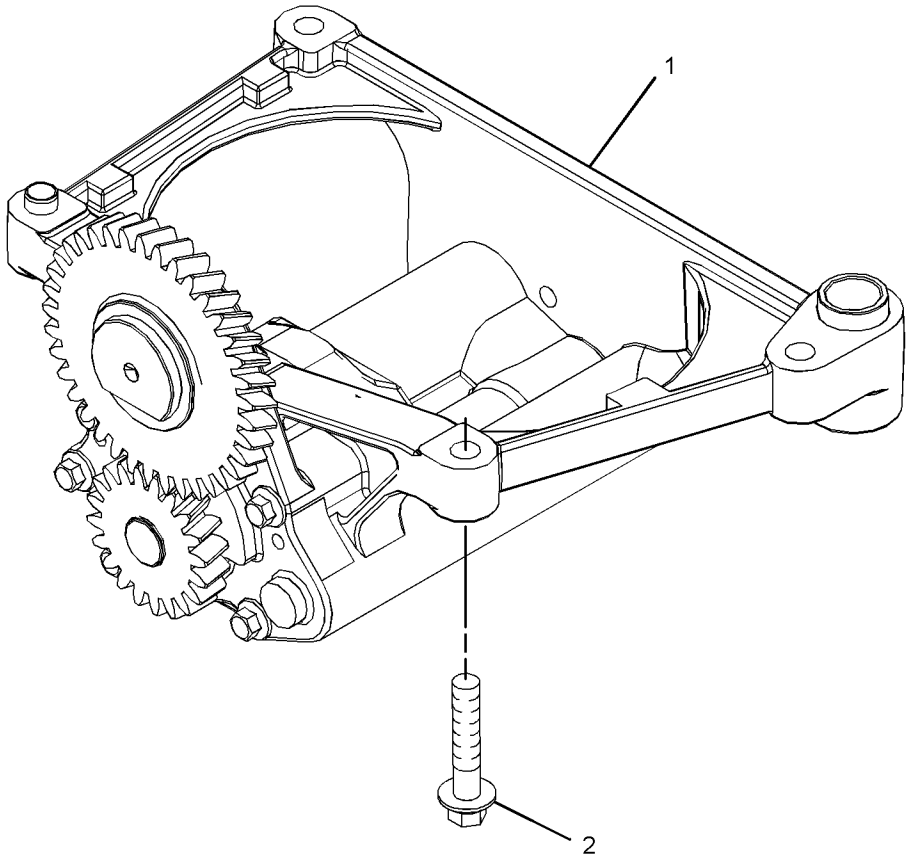

GRAPHIC #1 **<END>** g02815299

346-2911 CONNECTION GP-HEATER

S/N: BD41-UP

FOR USE WITH OPTIONAL CUSTOMER CONNECTION FOR CAB HEATER

PART OF 450-8077 ENGINE AR-PRIMARY

SMCS-1380, 1383 **i05303153**

NOTE	REF NO	GRAPHIC REF	PART NUMBER	QTY	PART NAME 1 2 3 4 5 6 (PRODUCT LEVEL)	SEE PAGE
	1	1	**067-6823**	1	PLUG	
	2	1	**9X-3959**	1	ELBOW	
	3	1	**7W-4669**	1	ADAPTER	

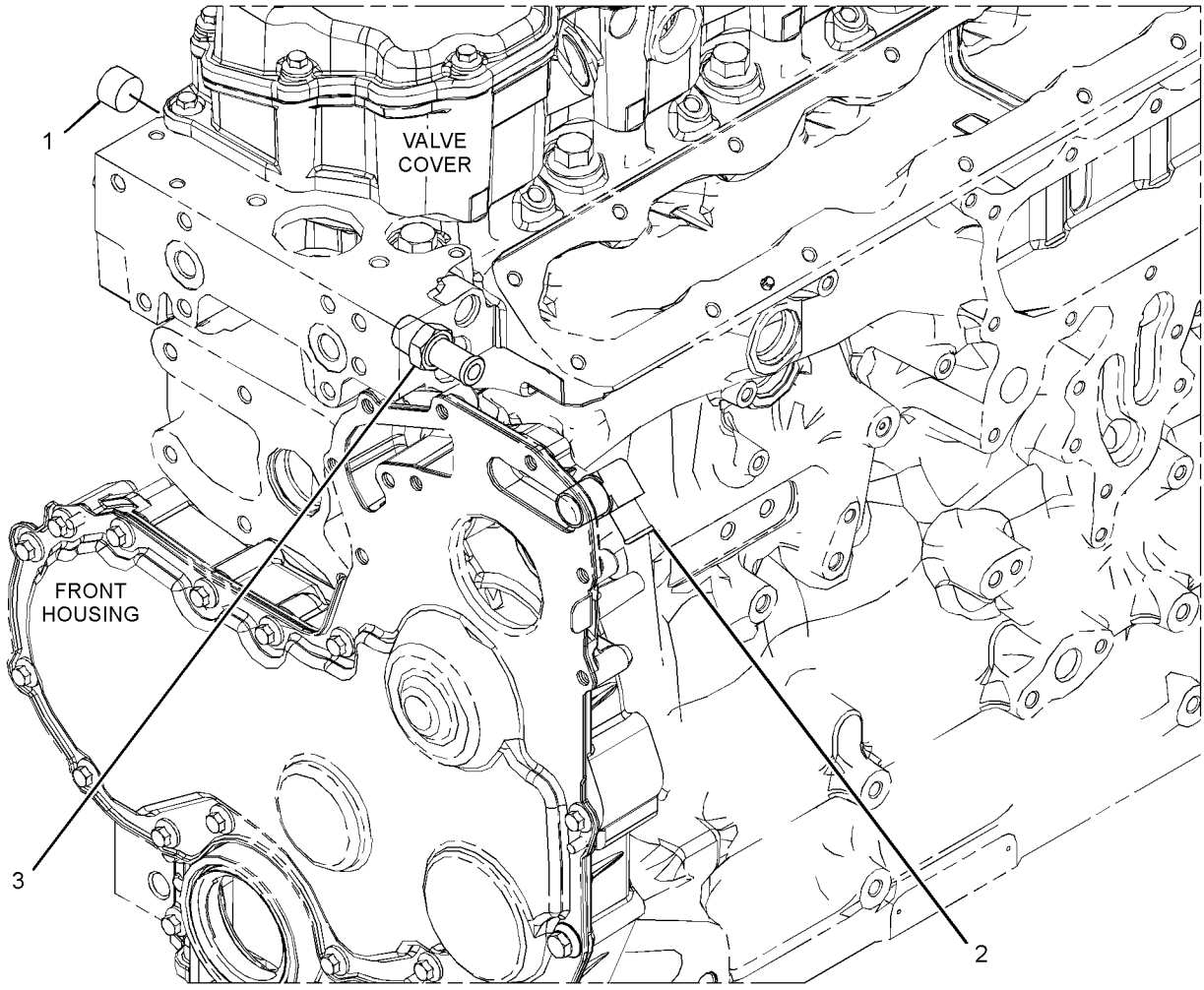

GRAPHIC #1 **<END>** g03105759

373-3606 CONNECTION GP-WATER

S/N: BD41-UP

PART OF 450-8077 ENGINE AR-PRIMARY

SMCS-1380 **i05536523**

NOTE	REF NO	GRAPHIC REF	PART NUMBER	QTY	PART NAME 1 2 3 4 5 6 (PRODUCT LEVEL)	SEE PAGE
	1	1	**123-2899**	1	BOLT (M10X1.5X40-MM)	
	2	1	**367-1817**	1	CONNECTION AS (INCLUDES TEMPERATURE REGULATOR)	
	2A	1	**367-8509**	1	SEAL-BONDED	
	2B	1	**367-8512**	1	PLUG	
M	3	1	**103-5687**	1	BOLT (M10X1.5X85-MM)	
	4	1	**281-8744**	1	GASKET-WATER REGULATOR	

M - METRIC PART

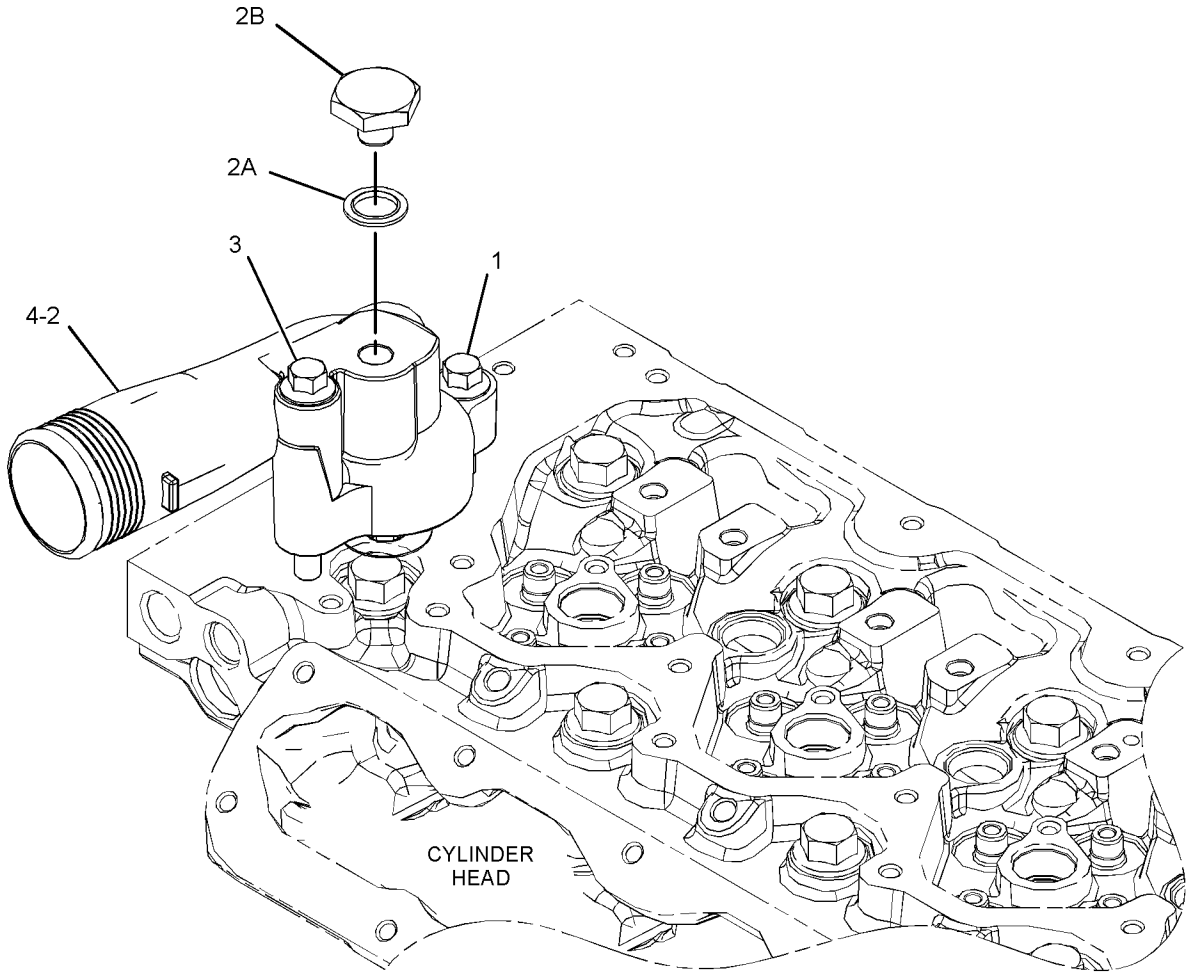

GRAPHIC #1 **<END>** g03483203

326-7401 COOLER GP-ENGINE OIL

S/N: BD41-UP

PART OF 371-2553 COOLER GP-ENGINE OIL

SMCS-1378 **i03246403**

NOTE	REF NO	GRAPHIC REF	PART NUMBER	QTY	PART NAME 1 2 3 4 5 6 (PRODUCT LEVEL)	SEE PAGE
M	1	1	**6I-0260**	1	BOLT (M8X1.25X25-MM)	
	2	1	**6I-4793**	6	BOLT (M8X1.25X50-MM)	
	3	1	**277-2500**	1	GASKET	
	4	1	**281-7039**	1	COOLER-OIL	
	5	1	**281-7040**	1	GASKET	

M - METRIC PART

326-7401 **COOLER GP-ENGINE OIL (*contd.*)** **i03246403**

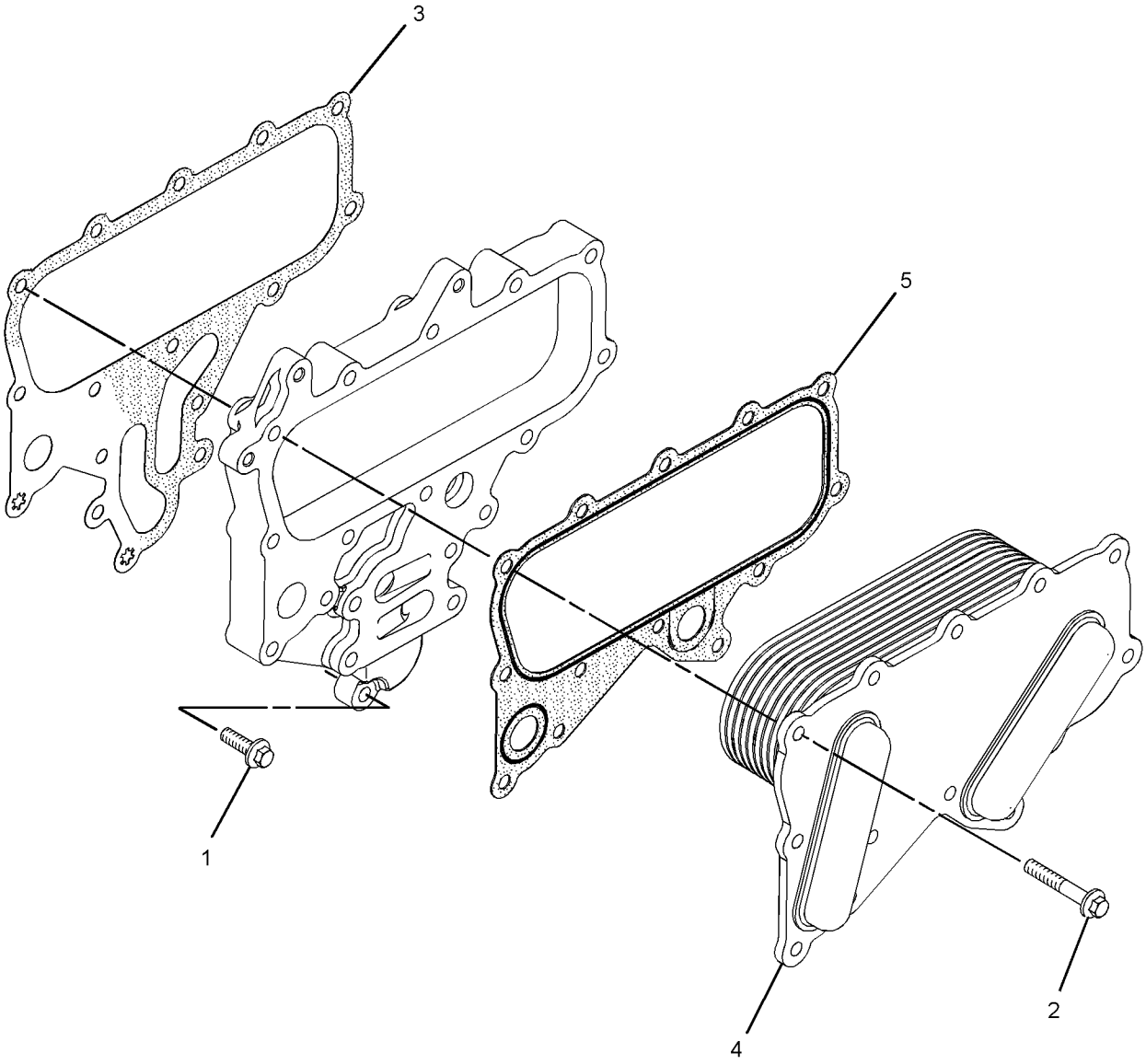

GRAPHIC #1 **<END>** g01508024

371-2553 COOLER GP-ENGINE OIL

S/N: BD41-UP

PART OF 450-8077 ENGINE AR-PRIMARY

SMCS-1378 **i05290824**

NOTE	REF NO	GRAPHIC REF	PART NUMBER	QTY	PART NAME 1 2 3 4 5 6 (PRODUCT LEVEL)	SEE PAGE
	1	1	**225-7944**	2	GASKET	
	2	1	**232-3751**	1	PLATE	
	3	1	**277-2537**	1	PLATE	
	4	1	**277-2538**	1	GASKET	
Y	5	1	**326-7401**	1	COOLER GP-ENGINE OIL	44
	6	1	**340-4212**	1	ADAPTER	
	7	1	**424-6858**	1	PLUG	
	8	1	**424-6859**	1	PLUG	
	9	1	**6I-0455**	4	BOLT (M8X1.25X55-MM)	
M	10	1	**6I-0217**	6	BOLT (M8X1.25X20-MM)	
	11	1	**6I-4793**	7	BOLT (M8X1.25X50-MM)	

M - METRIC PART
Y - SEPARATE ILLUSTRATION

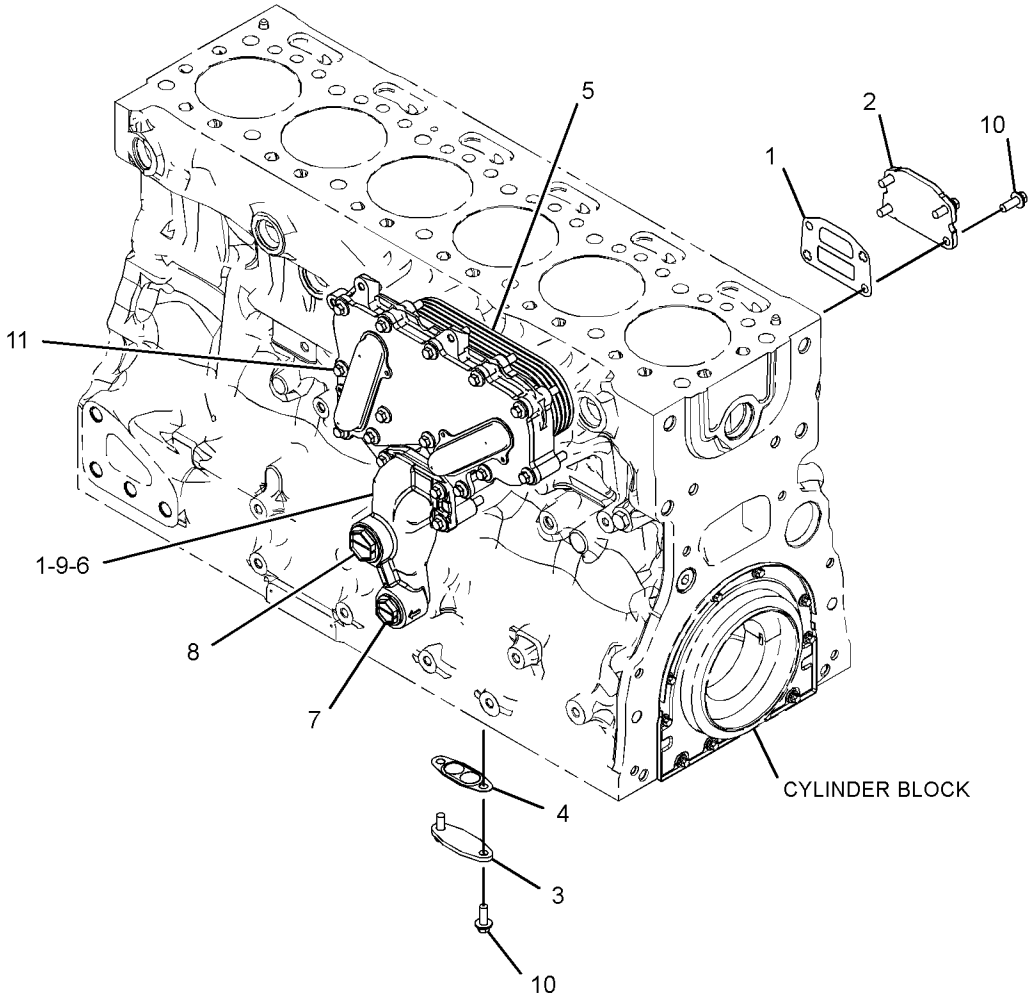

GRAPHIC #1 **<END>** g03354868

369-2255 FAN AR-VARIABLE

S/N: JEG1-UP

PART OF 368-7670 ENGINE AR-PRIMARY

SMCS-1356, 1360

i05449829

NOTE	PART NUMBER	QTY	PART NAME 1 2 3 4 5 6 (PRODUCT LEVEL)	SEE PAGE
Y	*369-2247*	1	FAN GP-SUCTION	48
Y	*324-4550*	1	PULLEY GP-ENGINE	30

Y - SEPARATE ILLUSTRATION

<END>

369-2247 FAN GP-SUCTION

S/N: JEG1-UP

PART OF 369-2255 FAN AR-VARIABLE

SMCS-1356 **i05450189**

NOTE	REF NO	GRAPHIC REF	PART NUMBER	QTY	PART NAME 1 2 3 4 5 6 (PRODUCT LEVEL)	SEE PAGE
	1	1	**350-7492**	1	FAN AS-SUCTION (9-BLADE)	
	2	1	**418-2229**	1	DRIVE AS-FAN	
	3	1	**7I-2673**	2	STRAP-CABLE	
	4	1	**8T-4121**	6	WASHER-HARD (11X21X2.5-MM THK)	
M	5	1	**8T-4185**	6	BOLT (M10X1.5X50-MM)	
M	6	1	**8T-4189**	6	BOLT (M8X1.25X20-MM)	
	7	1	**8T-4224**	6	WASHER-HARD (8.8X16X2-MM THK)	

M - METRIC PART

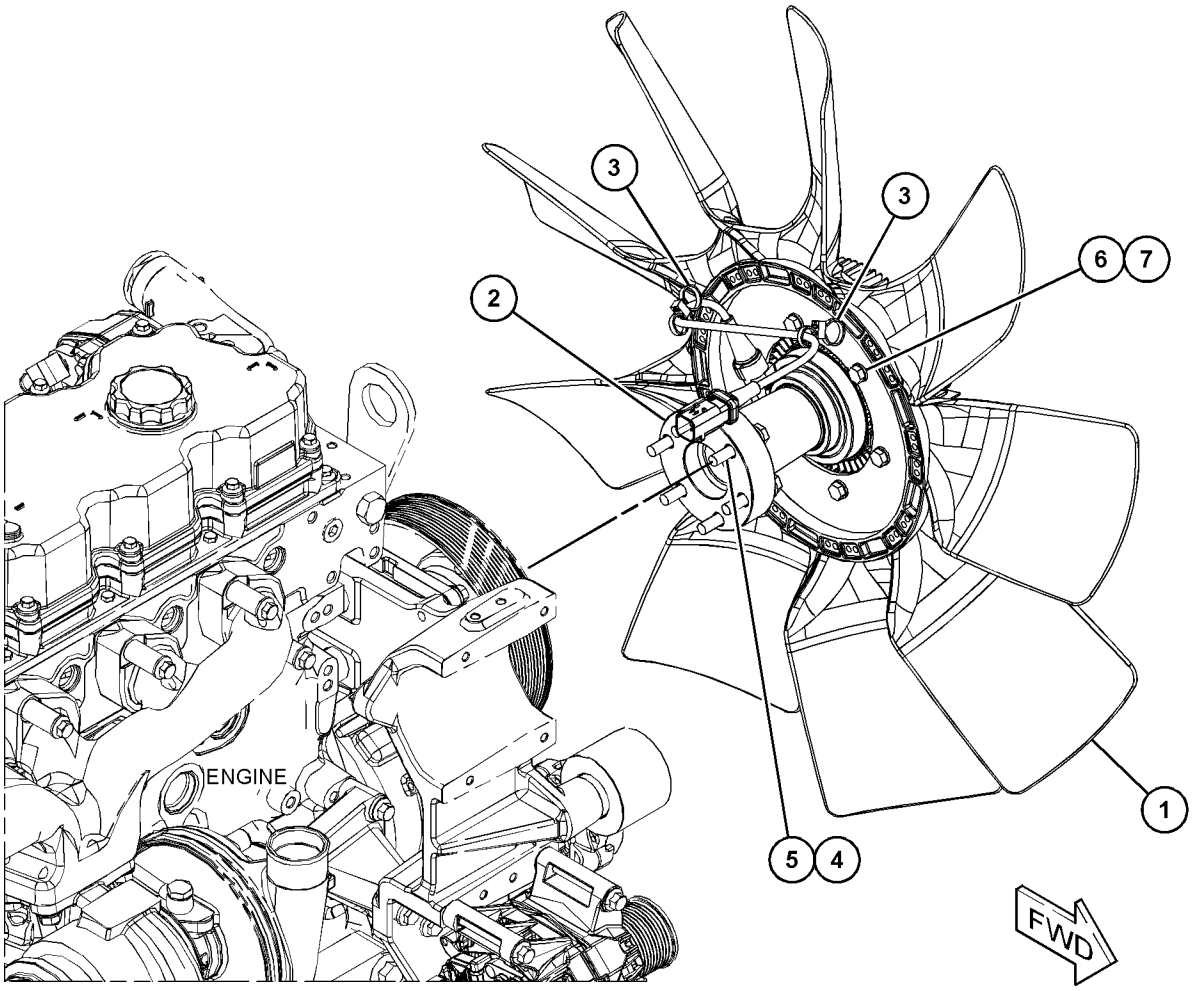

GRAPHIC #1 **<END>** g03450442

396-3549 LINES GP-COOLING

S/N: JEG1-UP

PART OF 374-6003 INSTALLATION AR-ENGINE

SMCS-1380, 5057 **i05452832**

NOTE	REF NO	GRAPHIC REF	PART NUMBER	QTY	PART NAME 1 2 3 4 5 6 (PRODUCT LEVEL)	SEE PAGE
	1	1	**369-2259**	1	HOSE	
	2	1	**369-2263**	1	HOSE	
	3	1	**369-2264**	1	HOSE	
	4	1	**369-2265**	1	PIPE AS	
	5	1	**369-2267**	1	HOSE (LOW TEMPERATURE AFTERCOOLER)	
	6	1	**415-8537**	1	PIPE AS	
	7	1	**144-0367**	8	CLAMP-HOSE	
	8	1	**5M-6213**	1	PLUG-PIPE	
	9	1	**5P-4116**	8	WASHER-HARD (8.8X20.5X2-MM THK)	
M	10	1	**8T-4200**	8	BOLT (M8X1.25X16-MM)	
	11	1	**8T-4985**	1	CLAMP-HOSE	
	12	1	**8T-6703**	1	CLAMP-HOSE	

M - METRIC PART

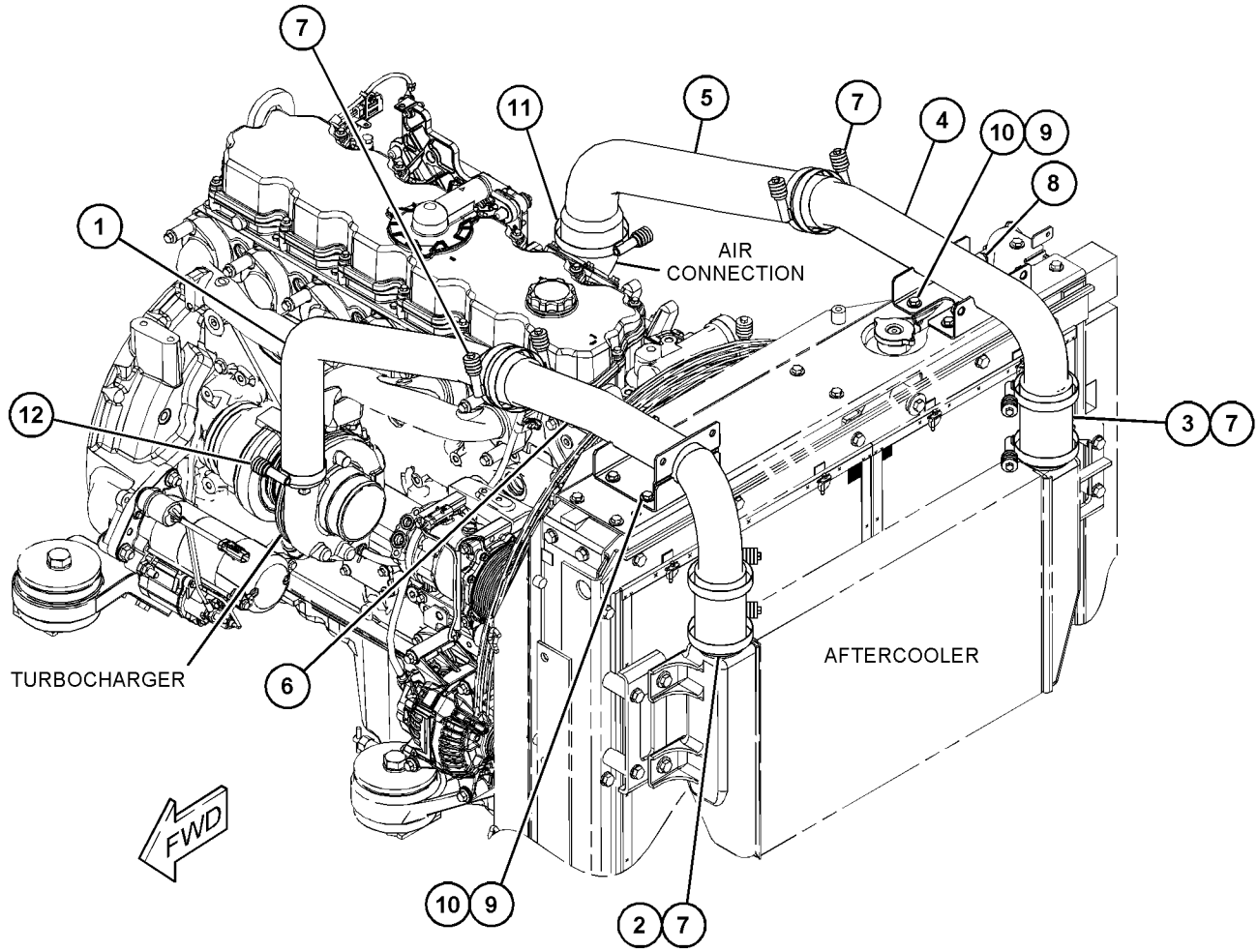

GRAPHIC #1 **<END>** g03450141

372-2297 PUMP GP-WATER

S/N: BD41-UP

PART OF 450-8077 ENGINE AR-PRIMARY

SMCS-1361 **i05454272**

NOTE	REF NO	GRAPHIC REF	PART NUMBER	QTY	PART NAME 1 2 3 4 5 6 (PRODUCT LEVEL)	SEE PAGE
M	1	1	**6I-0217**	2	BOLT (M8X1.25X20-MM)	
	2	1	**355-8710**	1	PUMP GP-WATER	
	3	1	**113-8129**	2	BOLT (M8X1.25X75-MM)	
	4	1	**225-8019**	1	GASKET	
	5	1	**277-2925**	1	CONNECTION AS	
	5A	1	**225-7738**	1	SEAL-O-RING	
	5B	1	**277-2923**	1	GASKET	
M	6	1	**6I-0254**	2	BOLT (M8X1.25X30-MM)	
	7	1	**6I-0839**	5	BOLT (M8X1.25X70-MM)	

M - METRIC PART

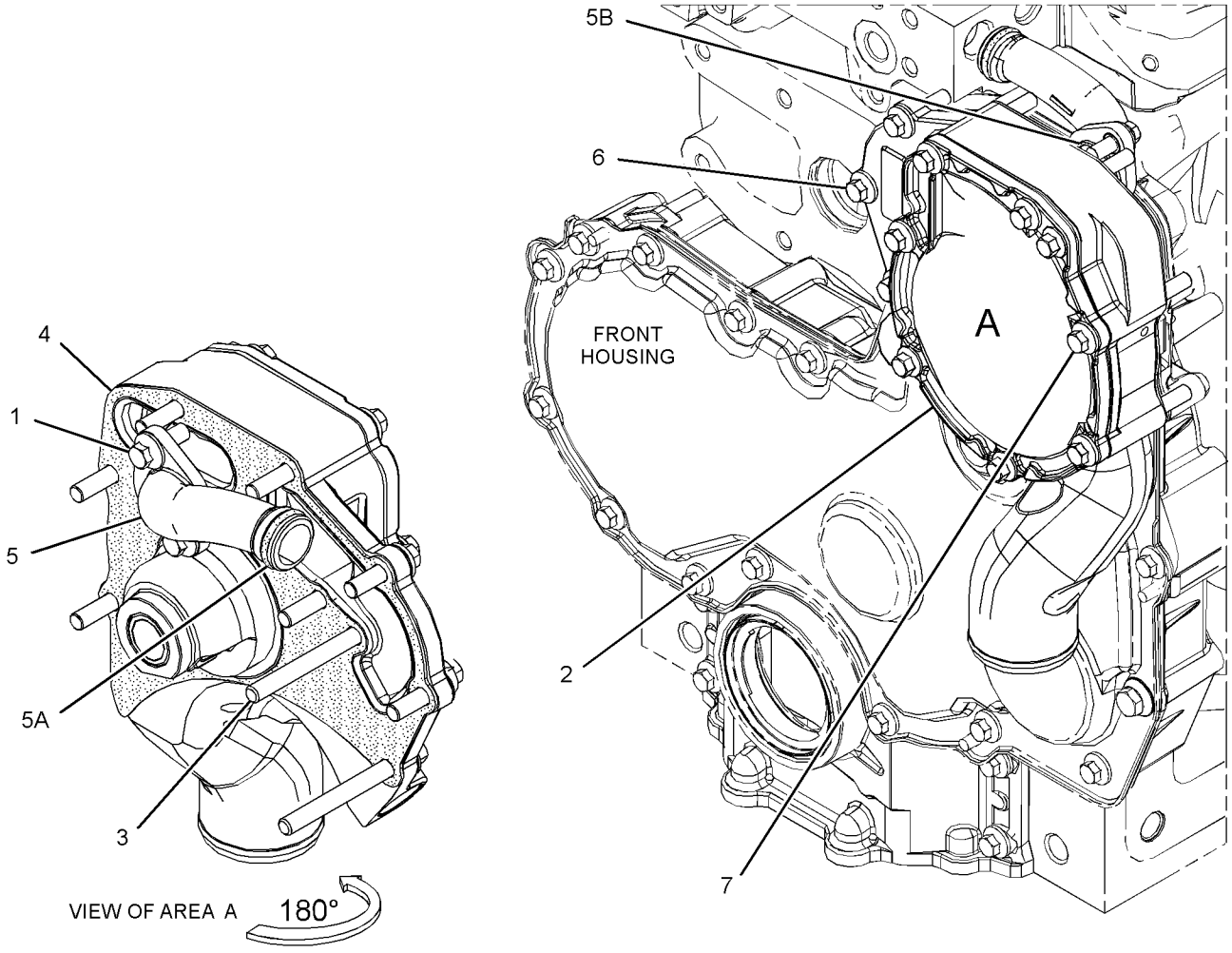

GRAPHIC #1 **<END>** g03387516

398-3274 RADIATOR & HYD OIL COOLER GP

S/N: JEG1-UP

PART OF 374-6003 INSTALLATION AR-ENGINE

SMCS-1351 **i05535961**

NOTE	REF NO	GRAPHIC REF	PART NUMBER	QTY	PART NAME 1 2 3 4 5 6 (PRODUCT LEVEL)	SEE PAGE
	1	1	**096-4035**	1	CLIP	
	2	1	**171-9077**	1	BAND	
	3	1	**305-7664**	1	BRACKET AS	
	4	1	**245-9191**	1	PLATE AS	
	5	1	**245-9205**	1	TANK AS-COOLANT (RECOVERY)	
		1	**171-3369**	1	CAP AS (COOLANT RECOVERY)	
	6	1	**338-7728**	1	CORE AS-FUEL COOLER	
	7	1	**369-2277**	1	BRACKET AS	
M		1	**8T-3490**	2	NUT-WELD (M10X1.5-THD)	
	8	1	**369-2278**	1	BRACKET AS	
M		1	**8T-3490**	2	NUT-WELD (M10X1.5-THD)	
	9	1	**398-3276**	1	HOSE-RADIATOR (UPPER)	
	10	1	**399-7534**	1	LINER	
	11	1	**417-9090**	1	GUARD AS	
	12	1	**423-4409**	1	HOSE-RADIATOR (LOWER)	
Y	13	1	**433-5163**	1	RADIATOR & HYD OIL COOLER GP	53
	14	1	**178-6450**	4	SPACER (17X35X30-MM THK)	
	15	1	**3P-9847**	1	CLIP	
	16	1	**3S-2093**	5	STRAP-CABLE	
	17	1	**7I-2673**	1	STRAP-CABLE	
M	18	1	**7X-2554**	4	BOLT (M16X2X70-MM)	
	19	1	**7X-7729**	14	WASHER (11X25X3-MM THK)	
	20	1	**8T-4121**	1	WASHER-HARD (11X21X2.5-MM THK)	
M	21	1	**8T-4136**	2	BOLT (M10X1.5X25-MM)	
M	22	1	**8T-4137**	13	BOLT (M10X1.5X20-MM)	
M	23	1	**8T-4139**	2	BOLT (M12X1.75X30-MM)	
M	24	1	**8T-4200**	2	BOLT (M8X1.25X16-MM)	
	25	1	**8T-4223**	2	WASHER-HARD (13.5X25.5X3-MM THK)	
	26	1	**8T-4224**	2	WASHER-HARD (8.8X16X2-MM THK)	
	27	1	**8T-6703**	4	CLAMP-HOSE	
E	28	1	**7Y-1976**		HOSE-WATER (38-CM)	
D	29	1	**5P-9909**		SEAL (0.2-M)	
D	30	1	**5P-5649**		SEAL-BULK (0.7-M)	

D - ORDER BY THE METER
E - ORDER BY THE CENTIMETER
M - METRIC PART
Y - SEPARATE ILLUSTRATION

398-3274 **RADIATOR & HYD OIL COOLER GP (*contd.*)** **i05535961**

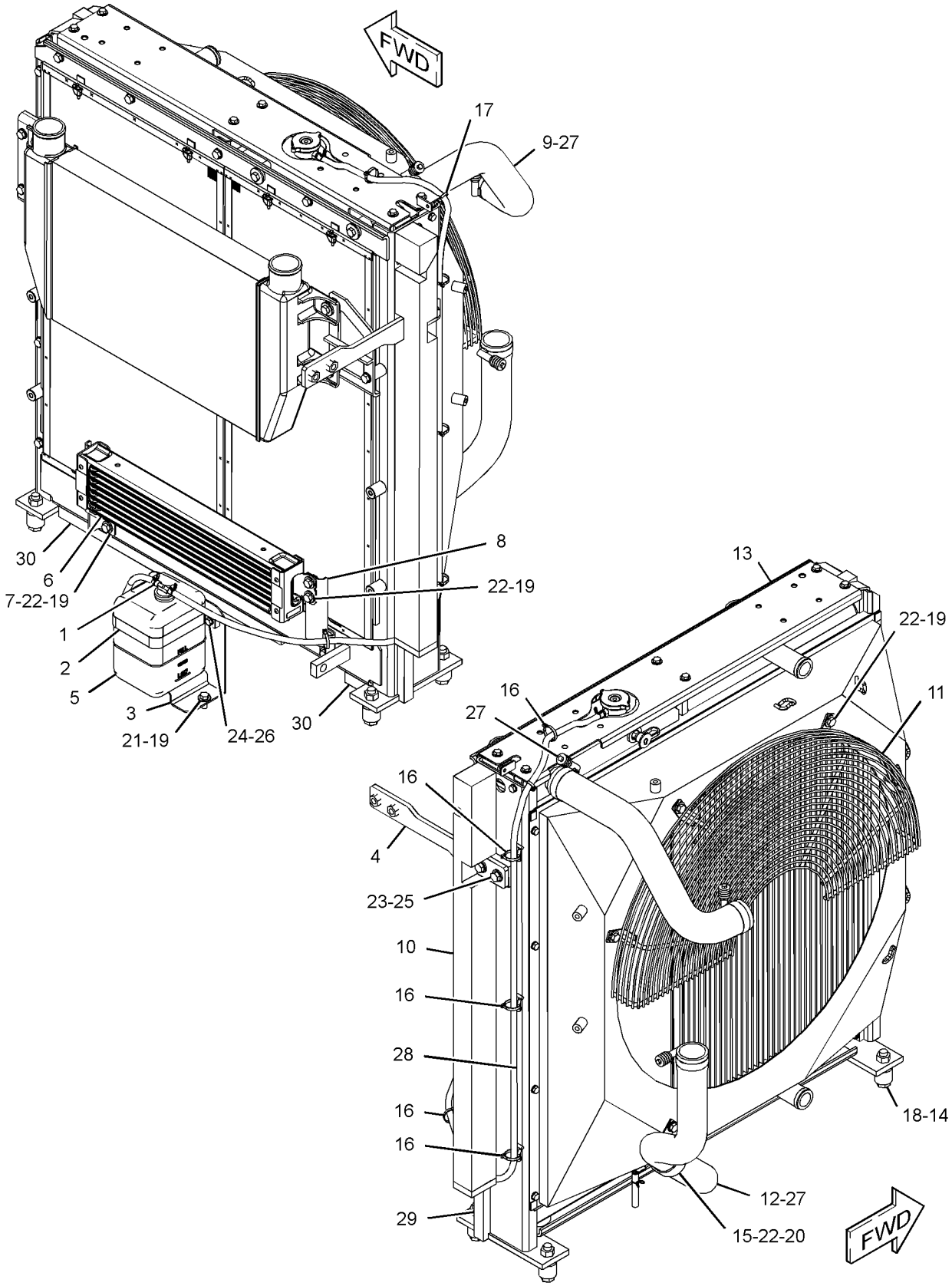

GRAPHIC #1 **<END>** g03451438

433-5163 RADIATOR & HYD OIL COOLER GP

S/N: JEG1-UP

PART OF 398-3274 RADIATOR & HYD OIL COOLER GP

SMCS-1351 **i05535966**

NOTE	REF NO	GRAPHIC REF	PART NUMBER	QTY	PART NAME 1 2 3 4 5 6 (PRODUCT LEVEL)	SEE PAGE
	1	1	**377-5000**	2	SEAL	
	2	1	**377-5001**	4	SEAL	
	3	2	**377-5002**	1	SEAL	
	4	1	**377-5003**	2	SEAL	
	5	2	**5D-8159**	4	PIN AS	
	6	1	**096-4035**	3	CLIP	
	7	1	**312-8338**	1	CORE AS-OIL COOLER (HYDRAULIC)	
	8	1	**313-3762**	2	CUSHION-RUBBER	
	9	2	**313-3763**	1	SCREEN AS (RADIATOR)	
	10	2	**313-3764**	1	SCREEN AS (OIL COOLER)	
	11	2	**313-3766**	2	SLEEVE	
	12	2	**313-3769**	2	CUSHION-RUBBER	
	13	2	**314-6506**	2	CUSHION-RUBBER	
	14	2	**314-6509**	2	WASHER-PLATE	
	15	2	**314-6510**	2	PIN	
	16	1	**336-4591**	1	BRACKET AS	
M		1	**5C-7261**	4	NUT (M8X1.25-THD)	
	17	1,2	**352-7775**	2	SEAL	
	18	2	**374-5000**	1	PLATE AS	
	19	2	**375-2985**	1	PLATE AS	
	20	2	**377-5004**	1	SEAL	
	21	2	**377-5005**	2	SEAL	
	22	1	**377-5006**	2	SEAL	
	23	2	**378-6177**	1	FRAME AS	
	24	2	**378-6179**	1	AFTERCOOLER AS	
	25	1	**378-6180**	1	SHROUD AS	
	26	1	**391-1497**	1	CORE AS-RADIATOR	
		1	**332-4192**	2	SEAL-O-RING	
		1	**355-0468**	1	PLUG-DRAIN (RADIATOR)	
	27	1	**391-1498**	1	PLATE AS	
	28	1	**416-0965**	1	CAP-RADIATOR	
	29	1	**433-5158**	1	SEAL-AIR	
	30	2	**433-5159**	1	SEAL-AIR	
	31	1	**154-9023**	1	VALVE-SAMPLING	
	32	1	**157-0670**	1	CAP-DUST	
	33	1	**5P-4116**	6	WASHER-HARD (8.8X20.5X2-MM THK)	
	34	1	**6V-9027**	1	SEAL-O-RING	
	35	2	**7X-7729**	2	WASHER (11X25X3-MM THK)	
	36	2	**8T-4121**	14	WASHER-HARD (11X21X2.5-MM THK)	
M	37	2	**8T-4136**	10	BOLT (M10X1.5X25-MM)	
M	38	2	**8T-4137**	4	BOLT (M10X1.5X20-MM)	
M	39	2	**8T-4185**	2	BOLT (M10X1.5X50-MM)	
M	40	1	**8T-4189**	16	BOLT (M8X1.25X20-MM)	
M	41	2	**8T-4195**	4	BOLT (M10X1.5X30-MM)	
	42	1	**8T-4224**	10	WASHER-HARD (8.8X16X2-MM THK)	
E	43	2	**7Y-1976**		HOSE-WATER (190-CM)	
E	43A	1	**7Y-1976**		HOSE-WATER (8-CM)	

E - ORDER BY THE CENTIMETER
M - METRIC PART

433-5163 **RADIATOR & HYD OIL COOLER GP (*contd.*)** **i05535966**

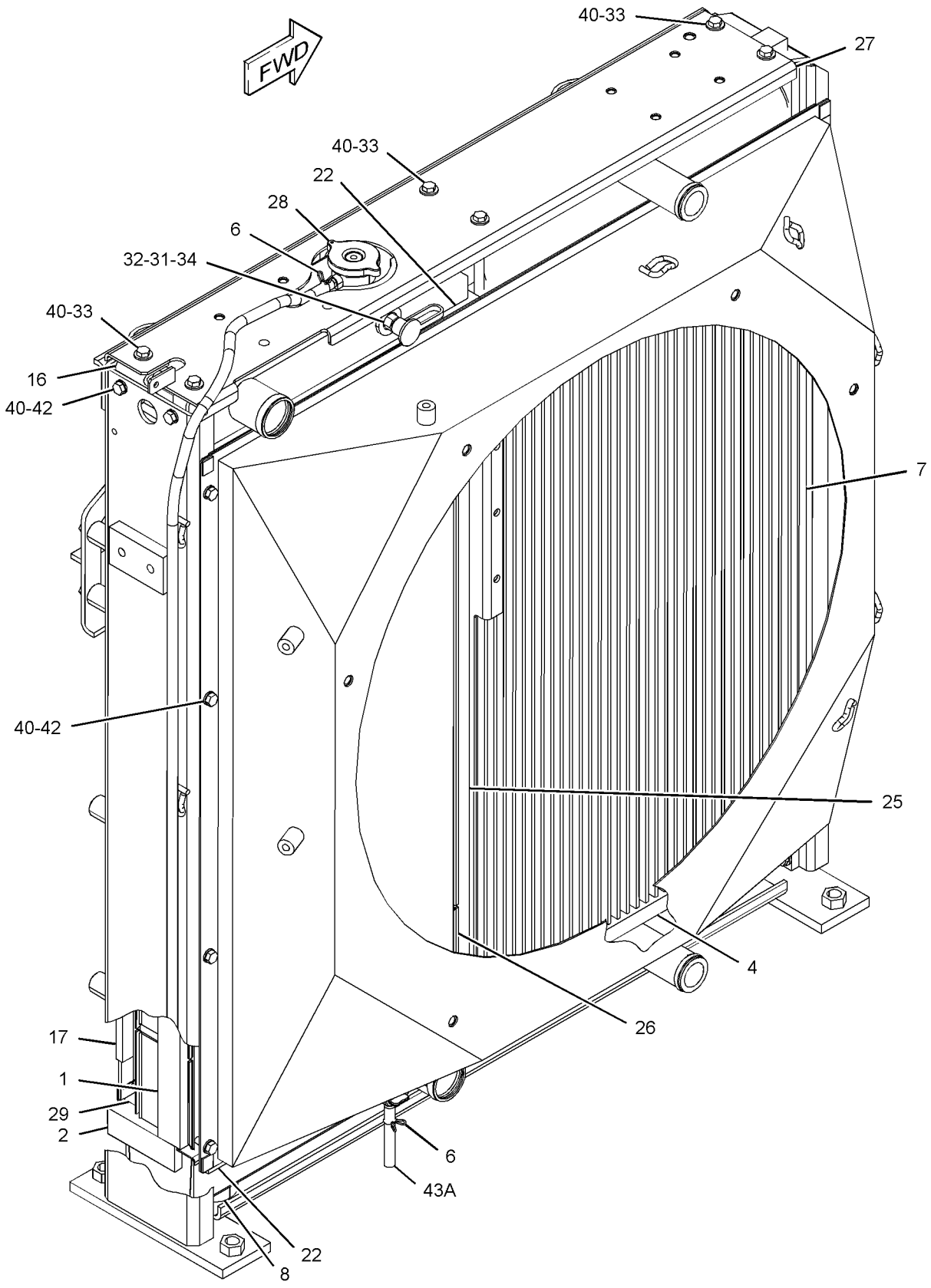

GRAPHIC #1 g03454981

433-5163 **RADIATOR & HYD OIL COOLER GP (*contd.*)** **i05535966**

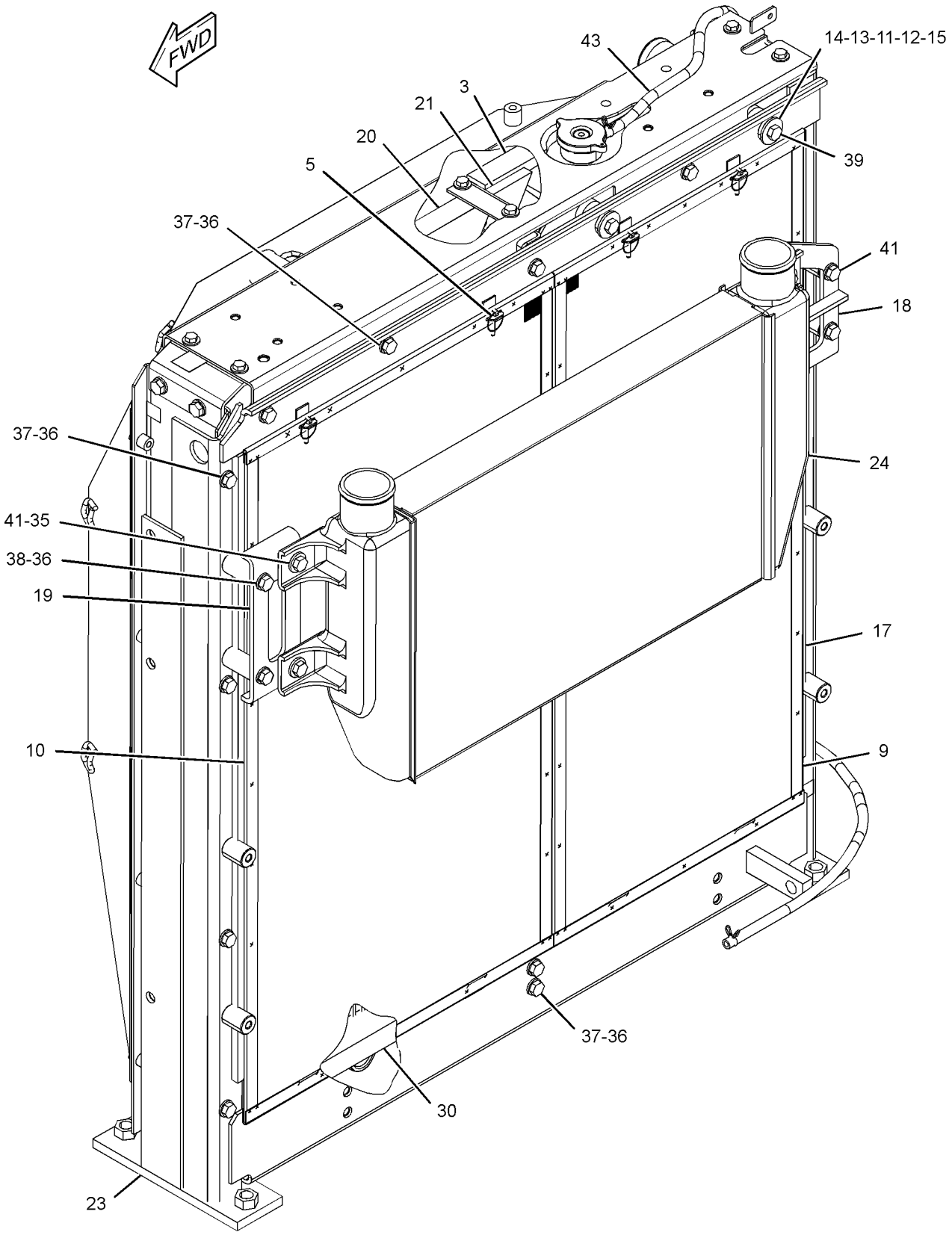

GRAPHIC #2 **<END>** g03455457

109-9313 AIR CLEANER & MOUNTING GP

S/N: JEG1-UP

PART OF 374-6003 INSTALLATION AR-ENGINE

SMCS-1051, 1054, 7452 **i03159787**

NOTE	REF NO	GRAPHIC REF	PART NUMBER	QTY	PART NAME 1 2 3 4 5 6 (PRODUCT LEVEL)	SEE PAGE
	1	1	**8T-4121**	4	WASHER-HARD (11X21X2.5-MM THK)	
M	2	1	**8T-4137**	4	BOLT (M10X1.5X20-MM)	
CY	3	1	**310-9667**	1	AIR CLEANER GP	60

C - CHANGE FROM PREVIOUS TYPE
M - METRIC PART
Y - SEPARATE ILLUSTRATION

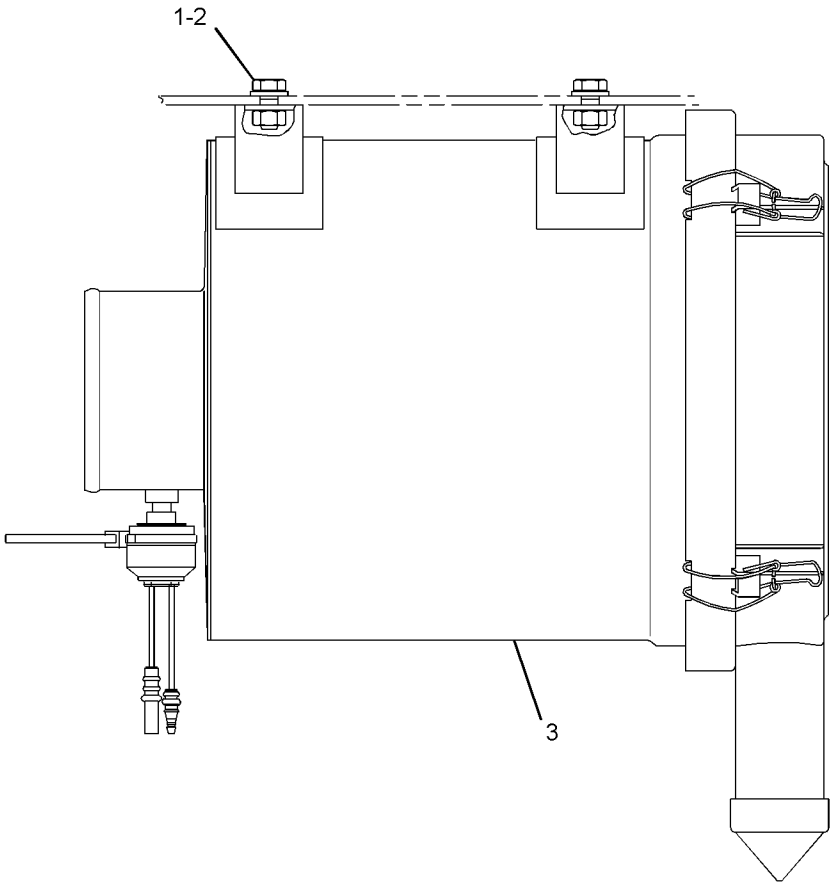

GRAPHIC #1 **<END>** g01528299

398-7980 AIR CLEANER AR–PRECLEANER

S/N: JEG1-UP

AN ATTACHMENT

SMCS-1051 **i05260860**

NOTE	PART NUMBER	QTY	PART NAME 1 2 3 4 5 6 (PRODUCT LEVEL)	SEE PAGE
Y	*272-4773*	1	AIR CLEANER GP	58
Y	*398-9736*	1	COVER GP-HOOD (PRECLEANER)	214

Y - SEPARATE ILLUSTRATION

<END>

272-4773 AIR CLEANER GP

S/N: JEG1-UP
PART OF 398-7980 AIR CLEANER AR
AN ATTACHMENT

SMCS-1051, 1054

i02942111

NOTE	REF NO	GRAPHIC REF	PART NUMBER	QTY	PART NAME 1 2 3 4 5 6 (PRODUCT LEVEL)	SEE PAGE
	1	1	**8T-4987**	1	CLAMP-HOSE	
	2	1	**116-2659**	1	DAMPER	
	3	1	**130-3280**	1	PRECLEANER AS	
		1	**174-5415**	1	CLAMP	
	4	1	**134-7089**	1	CLAMP	
	5	1	**239-6395**	1	TUBE AS	
Y	6	1	**310-9676**	1	AIR CLEANER GP	61
	7	1	**279-7909**	1	HOSE-AIR	
M	8	1	**8T-4139**	4	BOLT (M12X1.75X30-MM)	
	9	1	**8T-4223**	4	WASHER-HARD (13.5X25.5X3-MM THK)	

M - METRIC PART
Y - SEPARATE ILLUSTRATION

272-4773 **AIR CLEANER GP (*contd.*)** **i02942111**

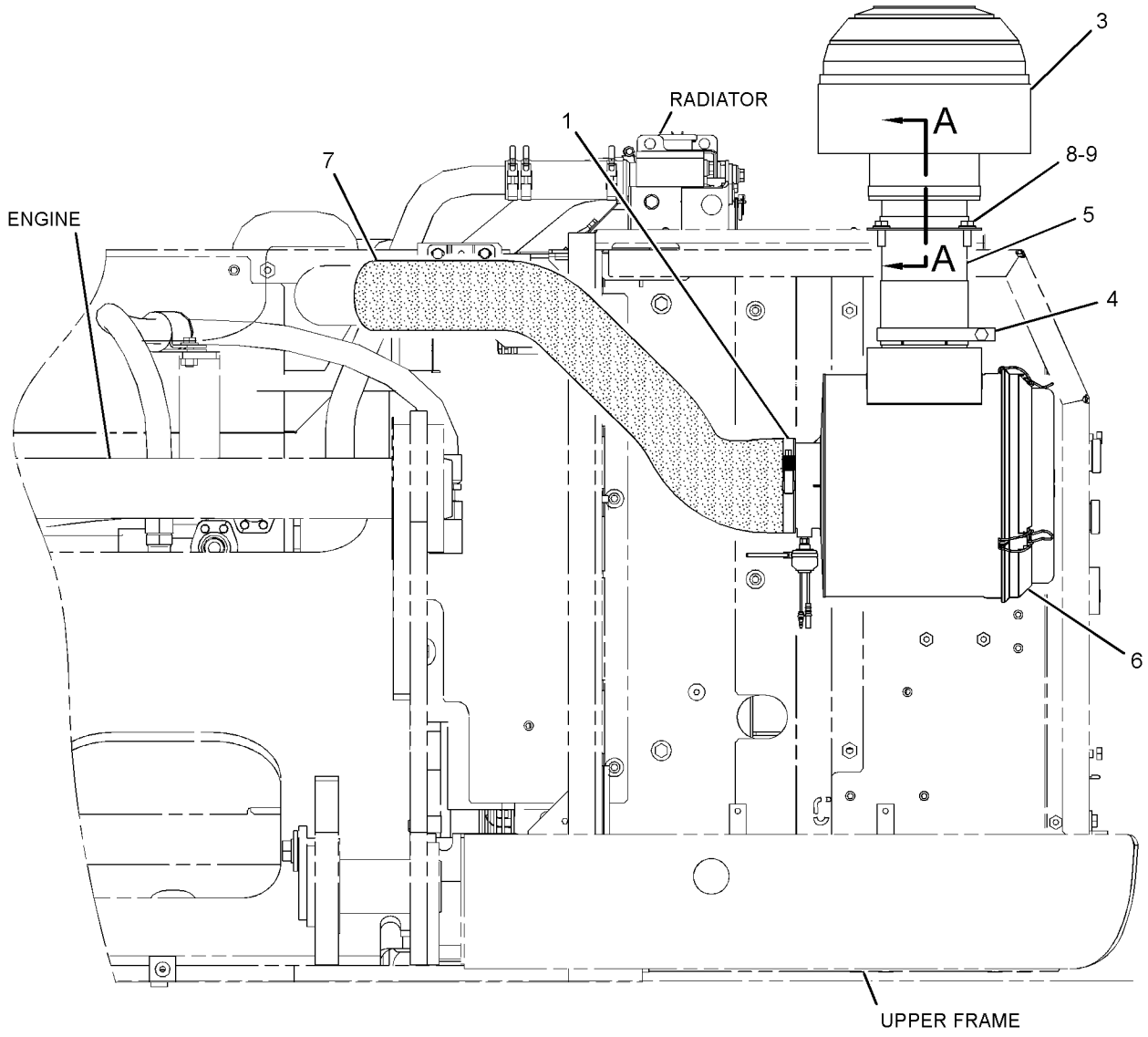

FRONT VIEW

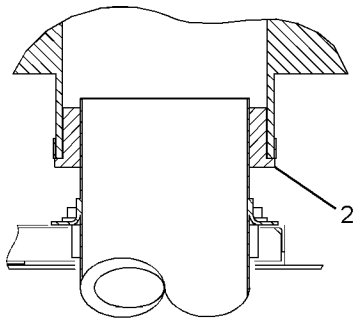

SECTION A-A

GRAPHIC #1 **<END>** g01502634

310-9667 AIR CLEANER GP

S/N: JEG1-UP

PART OF 109-9313 AIR CLEANER & MOUNTING GP

SMCS-1051, 1054 **i03065562**

NOTE	REF NO	GRAPHIC REF	PART NUMBER	QTY	PART NAME 1 2 3 4 5 6 (PRODUCT LEVEL)	SEE PAGE
	1	1	**5L-3233**	1	FITTING-CONNECTOR	
	2	1	**7I-2673**	1	STRAP-CABLE	
	3	1	**112-9717**	1	VALVE-DUST (AIR CLEANER)	
	4	1	**131-8821**	1	FILTER ELEMENT AS-AIR (SECONDARY)	
	5	1	**131-8822**	1	FILTER ELEMENT AS-AIR (PRIMARY)	
					—OR—	
		1	**134-0685**	1	FILTER ELEMENT AS-AIR (ULTRA HIGH EFFICIENCY) (PRIMARY)	
	6	1	**131-8826**	1	FILM-INSTRUCTION (TOP, AIR CLEANER COVER)	
	7	1	**131-8932**	4	LATCH	
	8	1	**184-3983**	1	COVER AS	
	9	1	**255-2966**	1	INDICATOR AS-AIR FILTER CHANGE (AIR RESTRICTION)	

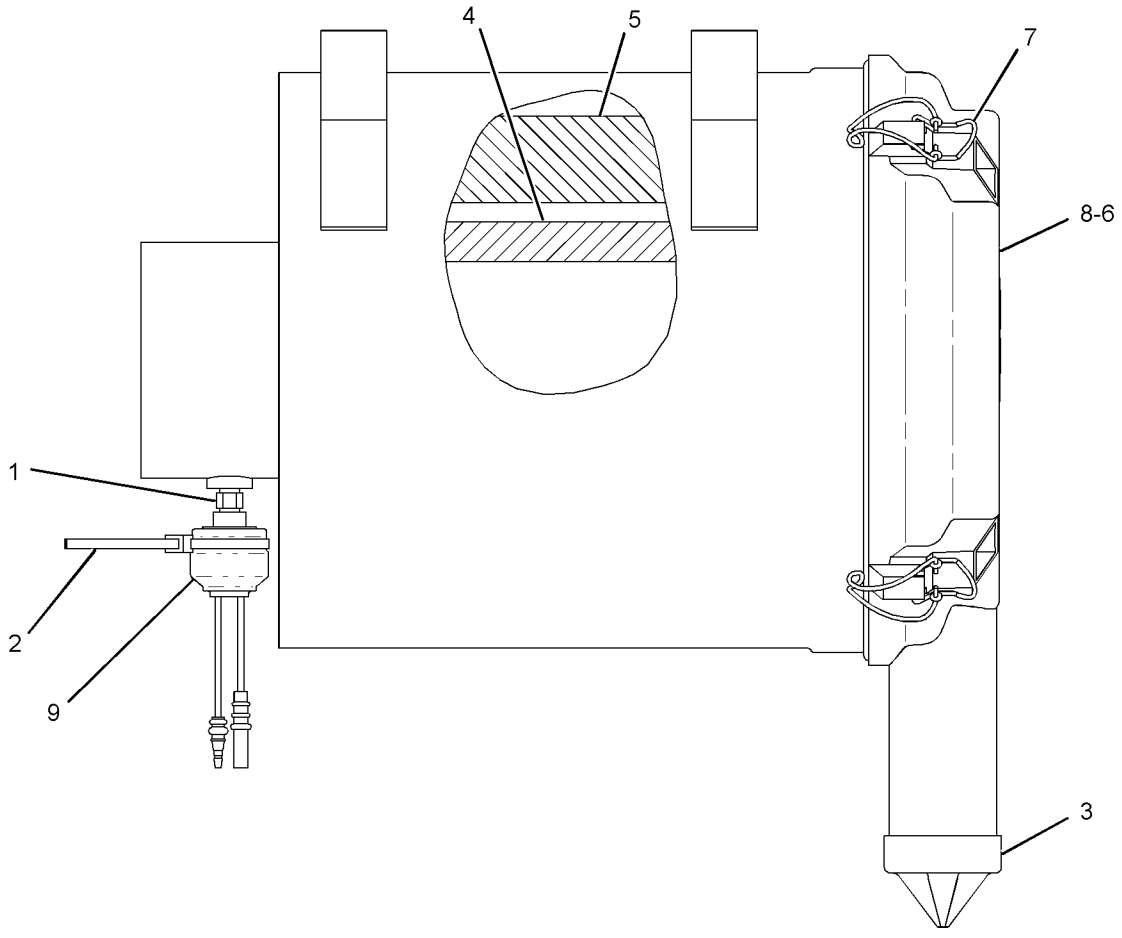

GRAPHIC #1 **<END>** g01504054

310-9676 AIR CLEANER GP

S/N: JEG1-UP
PART OF 272-4773 AIR CLEANER GP
AN ATTACHMENT

SMCS-1051, 1054

i03012015

NOTE	REF NO	GRAPHIC REF	PART NUMBER	QTY	PART NAME 1 2 3 4 5 6 (PRODUCT LEVEL)	SEE PAGE
	1	1	**5L-3233**	1	FITTING-CONNECTOR	
	2	1	**6I-2501**	1	FILTER ELEMENT AS-AIR (PRIMARY, STANDARD EFFICIENCY)	
					—OR—	
		1	**128-2686**	1	FILTER ELEMENT AS-AIR (PRIMARY, ULTRA HIGH EFFICIENCY)	
	3	1	**6I-2502**	1	FILTER ELEMENT AS-AIR (SECONDARY)	
	4	1	**7I-2673**	1	STRAP-CABLE	
	5	1	**131-8826**	1	FILM-INSTRUCTION (TOP, AIR CLEANER COVER)	
	6	1	**255-2966**	1	INDICATOR AS-AIR FILTER CHANGE (AIR RESTRICTION)	
	7	1	**171-9892**	1	COVER AS	

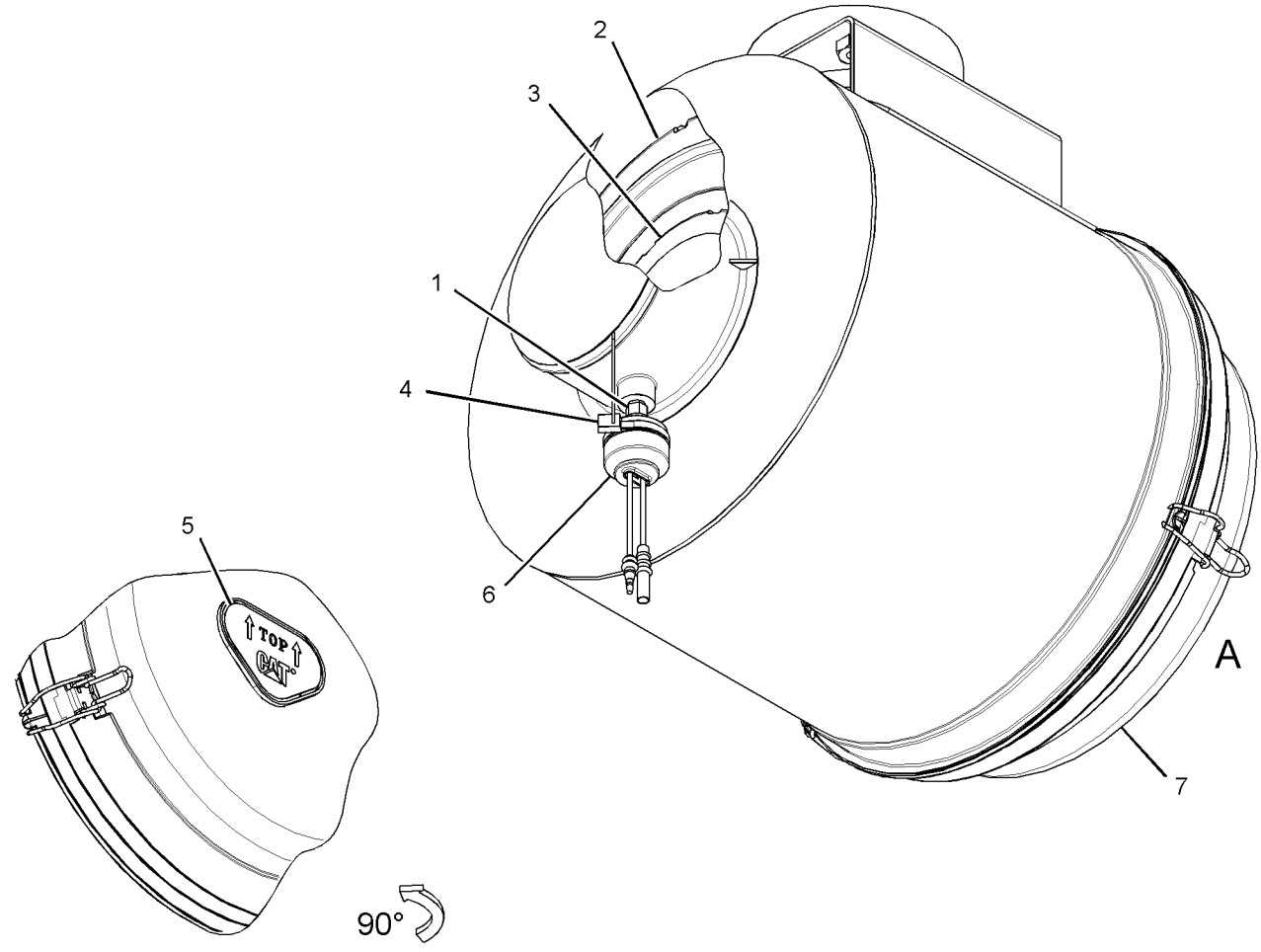

VIEW OF AREA A

GRAPHIC #1

<END>

g01506593

368-7676 LINES GP-AIR–INTAKE

S/N: JEG1-UP

PART OF 374-6003 INSTALLATION AR-ENGINE

SMCS-1071 **i05452801**

NOTE	REF NO	GRAPHIC REF	PART NUMBER	QTY	PART NAME 1 2 3 4 5 6 (PRODUCT LEVEL)	SEE PAGE
	1	1	**8T-4986**	1	CLAMP-HOSE	
	2	1	**9X-2201**	3	CLAMP-HOSE	
	3	1	**279-7907**	1	HOSE-AIR	
	4	1	**374-6012**	1	HOSE-AIR	

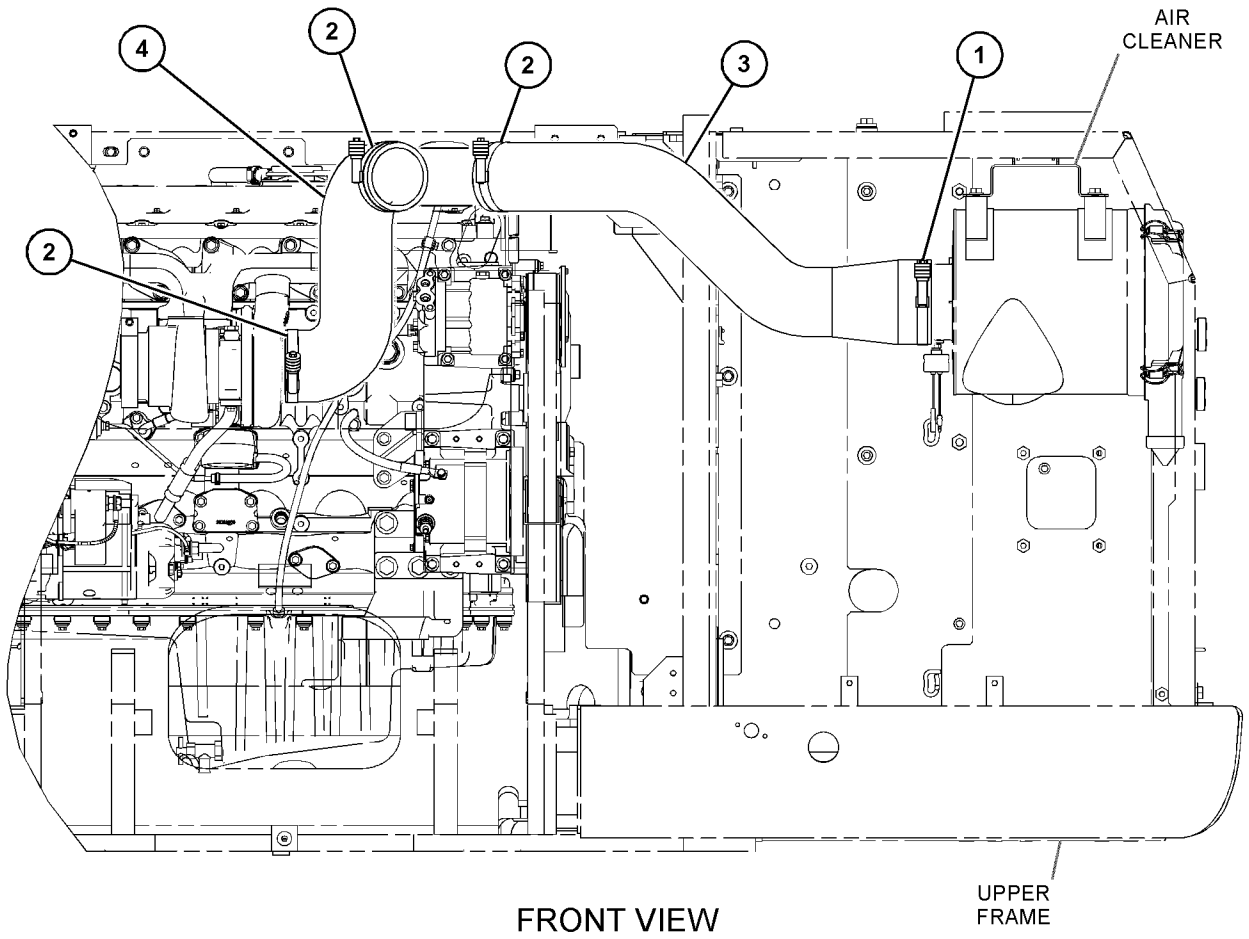

FRONT VIEW

GRAPHIC #1 **<END>** g03454006

377-2877 LINES GP-TURBOCHARGER AIR

S/N: BD41-UP

PART OF 374-0432 TURBOCHARGER GP

SMCS-1052, 1071 **i05333394**

NOTE	REF NO	GRAPHIC REF	PART NUMBER	QTY	PART NAME 1 2 3 4 5 6 (PRODUCT LEVEL)	SEE PAGE
	1	1	**225-8526**	2	WASHER (10.4X13.75X1.37-MM THK)	
	2	1	**133-9469**	1	CLIP	
	3	1	**225-8524**	1	BOLT-SPECIAL (BANJO)	
	4	1	**335-8611**	2	CLIP	
	5	1	**377-2876**	1	TUBE AS	
	6	1	**422-7715**	1	HOSE-TURBOCHARGER	
	7	1	**107-2348**	2	CLIP	

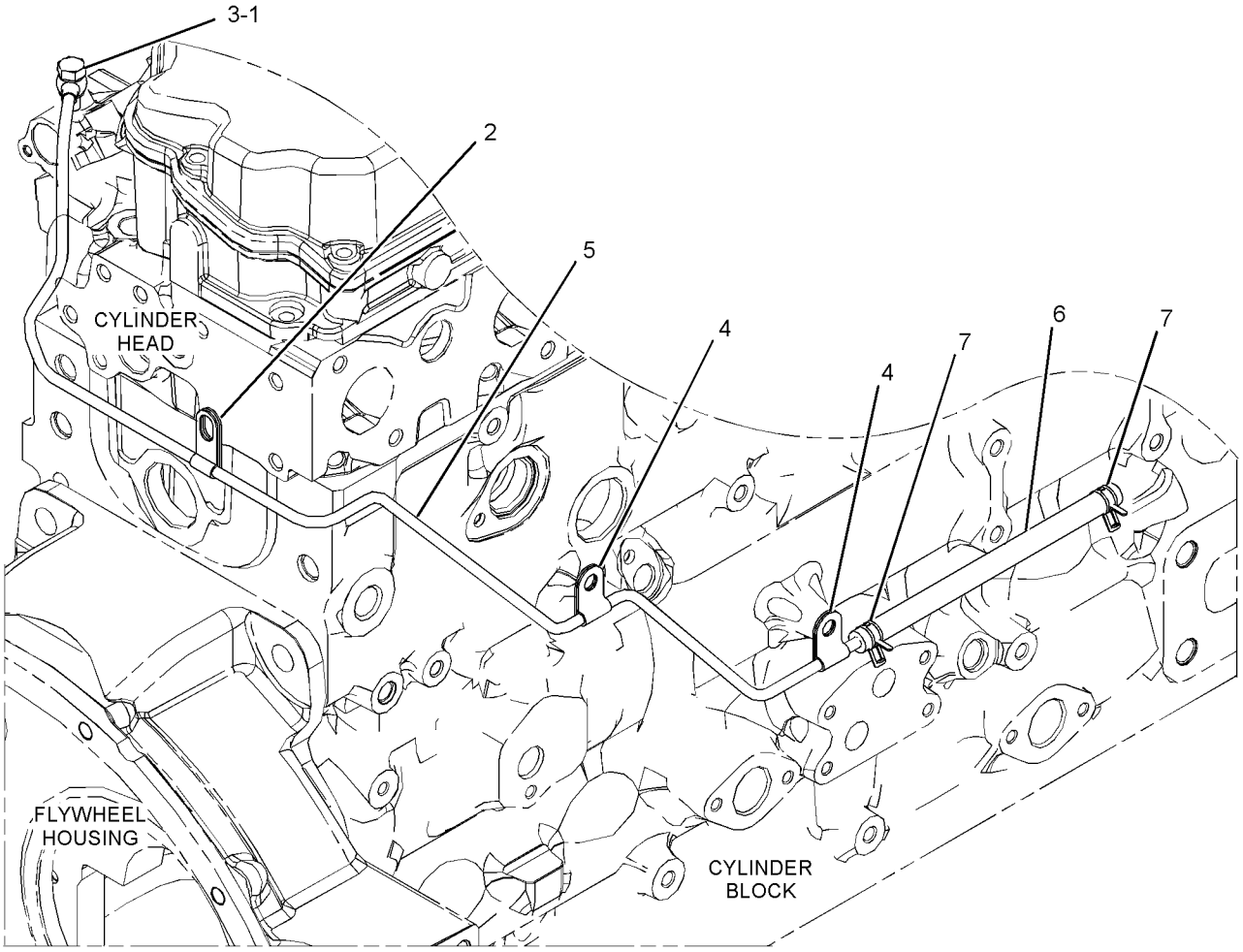

GRAPHIC #1 **<END>** g03380817

393-7694 MANIFOLD GP-EXHAUST

S/N: BD41-UP

PART OF 450-8077 ENGINE AR-PRIMARY

SMCS-1059 **i05331885**

NOTE	REF NO	GRAPHIC REF	PART NUMBER	QTY	PART NAME 1 2 3 4 5 6 (PRODUCT LEVEL)	SEE PAGE
	1	1	**238-8292**	12	BOLT-FLANGE HEAD	
	2	1	**286-7851**	12	SPACER	
	3	1	**367-3340**	4	STUD	
	4	1	**384-2286**	1	MANIFOLD	
	5	1	**416-7727**	2	GASKET	

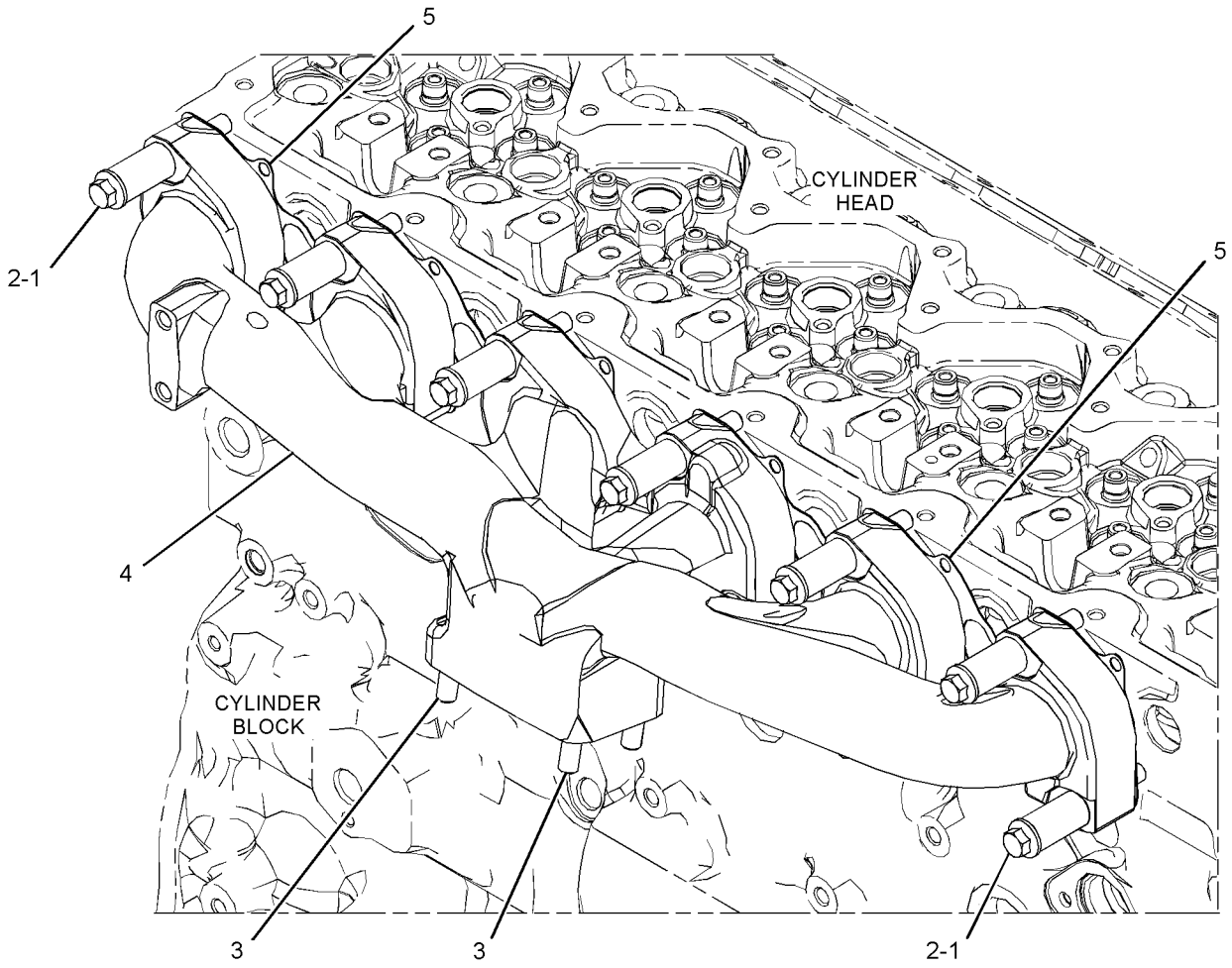

GRAPHIC #1 **<END>** g03379009

391-5523 MANIFOLD GP-INLET

S/N: BD41-UP

PART OF 450-8077 ENGINE AR-PRIMARY

SMCS-1058, 1090 **i05486918**

NOTE	REF NO	GRAPHIC REF	PART NUMBER	QTY	PART NAME 1 2 3 4 5 6 (PRODUCT LEVEL)	SEE PAGE
	1	1	**6I-0917**	2	BOLT (M6X1X25-MM)	
	2	1	**105-2740**	12	BOLT	
	3	1	**369-1658**	1	SOLENOID	
	4	1	**388-2314**	1	COVER-CYLINDER HEAD	
M	5	1	**6I-0260**	4	BOLT (M8X1.25X25-MM)	
	6	1	**390-7626**	1	CONNECTION GP-AIR	
		1	**238-8288**	1	GASKET-INLET	
		1	**292-3462**	1	PLUG-PIPE	

M - METRIC PART

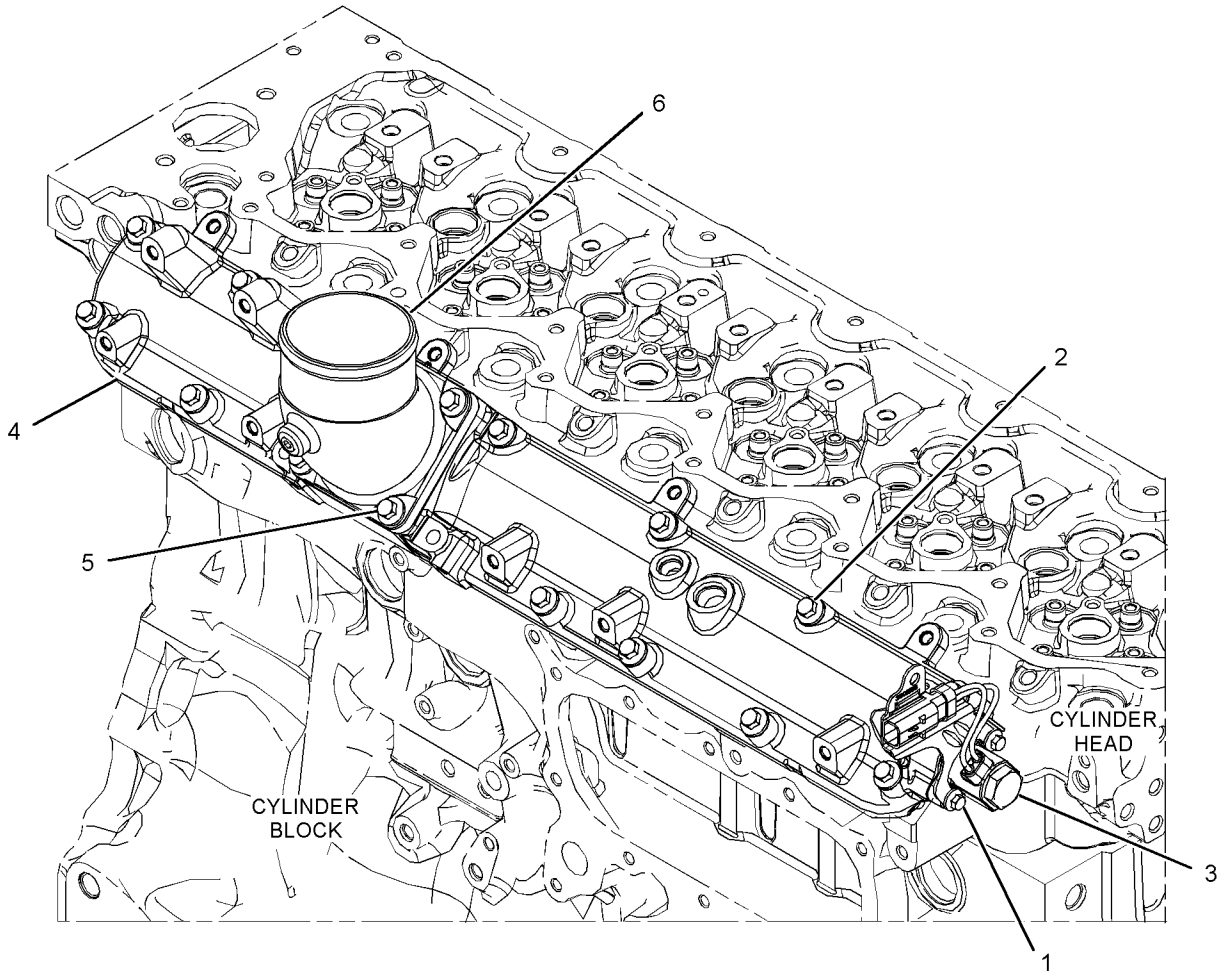

GRAPHIC #1 **<END>** g03476304

368-7673 MUFFLER GP

S/N: JEG1-UP

PART OF 368-7670 ENGINE AR-PRIMARY

SMCS-1062 **i05450249**

NOTE	REF NO	GRAPHIC REF	PART NUMBER	QTY	PART NAME 1 2 3 4 5 6 (PRODUCT LEVEL)	SEE PAGE
	1	1	**241-9264**	1	CLAMP-MUFFLER	
	2	1	**277-9463**	1	CLAMP	
	3	1	**291-5216**	2	STRAP	
	4	1	**374-5981**	1	PIPE AS-EXHAUST	
	5	1	**374-6013**	1	SUPPORT AS	
	6	1	**374-6038**	2	U-BOLT	
	7	1	**374-6040**	1	MUFFLER AS	
	8	1	**379-4430**	1	PIPE-TAIL	
	9	1	**416-2386**	1	SHEET	
	10	1	**5P-1076**	4	WASHER-HARD (13.5X30X4-MM THK)	
	11	1	**388-7014**	1	CLAMP-BENT BOLT	
	12	1	**8T-4121**	2	WASHER-HARD (11X21X2.5-MM THK)	
M	13	1	**8T-4133**	8	NUT (M10X1.5-THD)	
M	14	1	**8T-4136**	2	BOLT (M10X1.5X25-MM)	

M - METRIC PART

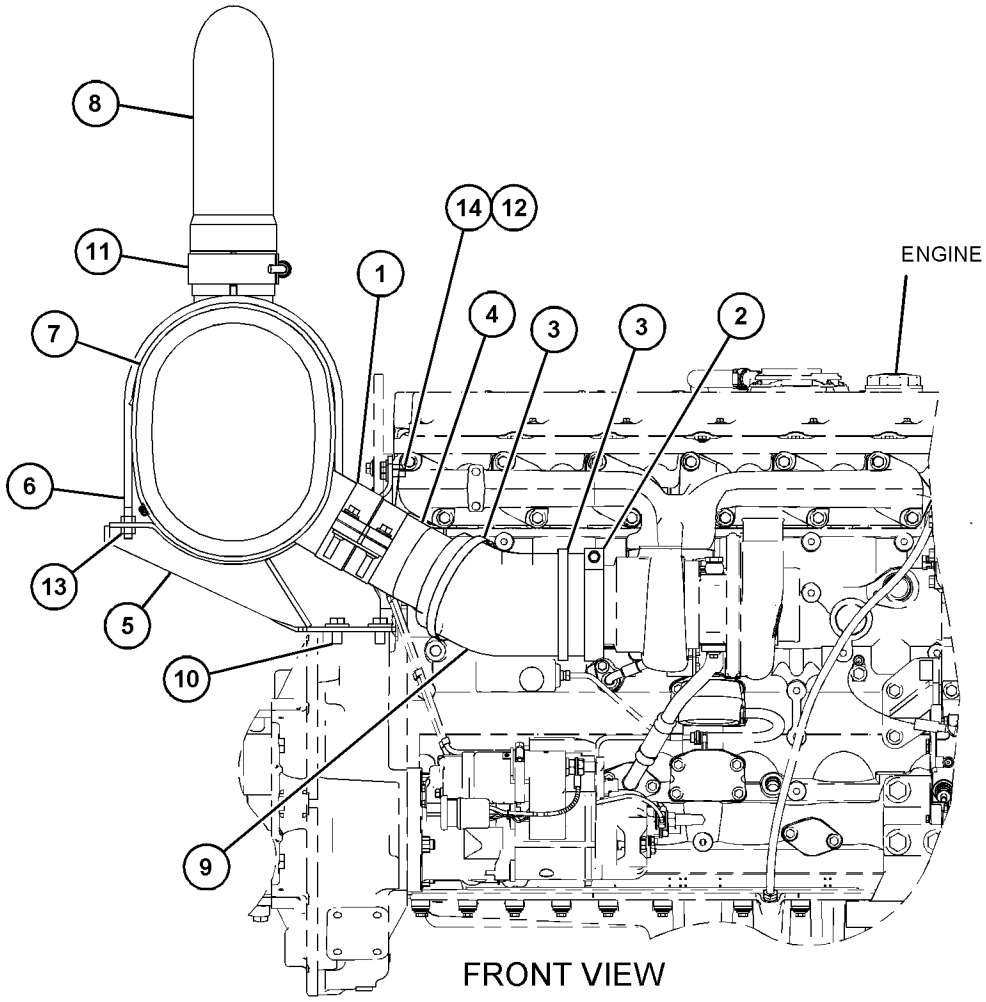

GRAPHIC #1 **<END>** g03450556

374-0432 TURBOCHARGER GP

S/N: BD41-UP

PART OF 450-8077 ENGINE AR-PRIMARY

SMCS-1052, 1053 **i05489869**

NOTE	REF NO	GRAPHIC REF	PART NUMBER	QTY	PART NAME 1 2 3 4 5 6 (PRODUCT LEVEL)	SEE PAGE
	1	1	**6I-0563**	4	NUT (M10X1.5-THD)	
M	2	1	**6I-0217**	5	BOLT (M8X1.25X20-MM)	
M	3	1	**100-4830**	1	BOLT (M10X1.5X20-MM)	
M	4	1	**124-3815**	2	BOLT (M8X1.25X16-MM)	
	5	1	**278-0015**	1	TUBE AS-TURBOCHARGER	
	6	1	**278-0016**	1	GASKET	
	7	1	**278-0017**	1	GASKET	
R	8	1	**315-9810**	1	TURBOCHARGER GP	
	8A	1	**277-9602**	1	CLAMP	
	8B	1	**277-9603**	1	CLAMP	
	9	1	**368-8559**	1	LINES GP-TURBOCHARGER OIL	
M	9A	1	**277-9938**	1	BOLT-SPECIAL (BANJO)	
	9B	1	**277-9940**	1	SEAL-O-RING	
Y	10	1	*377-2877*	1	LINES GP-TURBOCHARGER AIR	63

M - METRIC PART
R - REMFG PART MAY BE AVAILABLE
Y - SEPARATE ILLUSTRATION

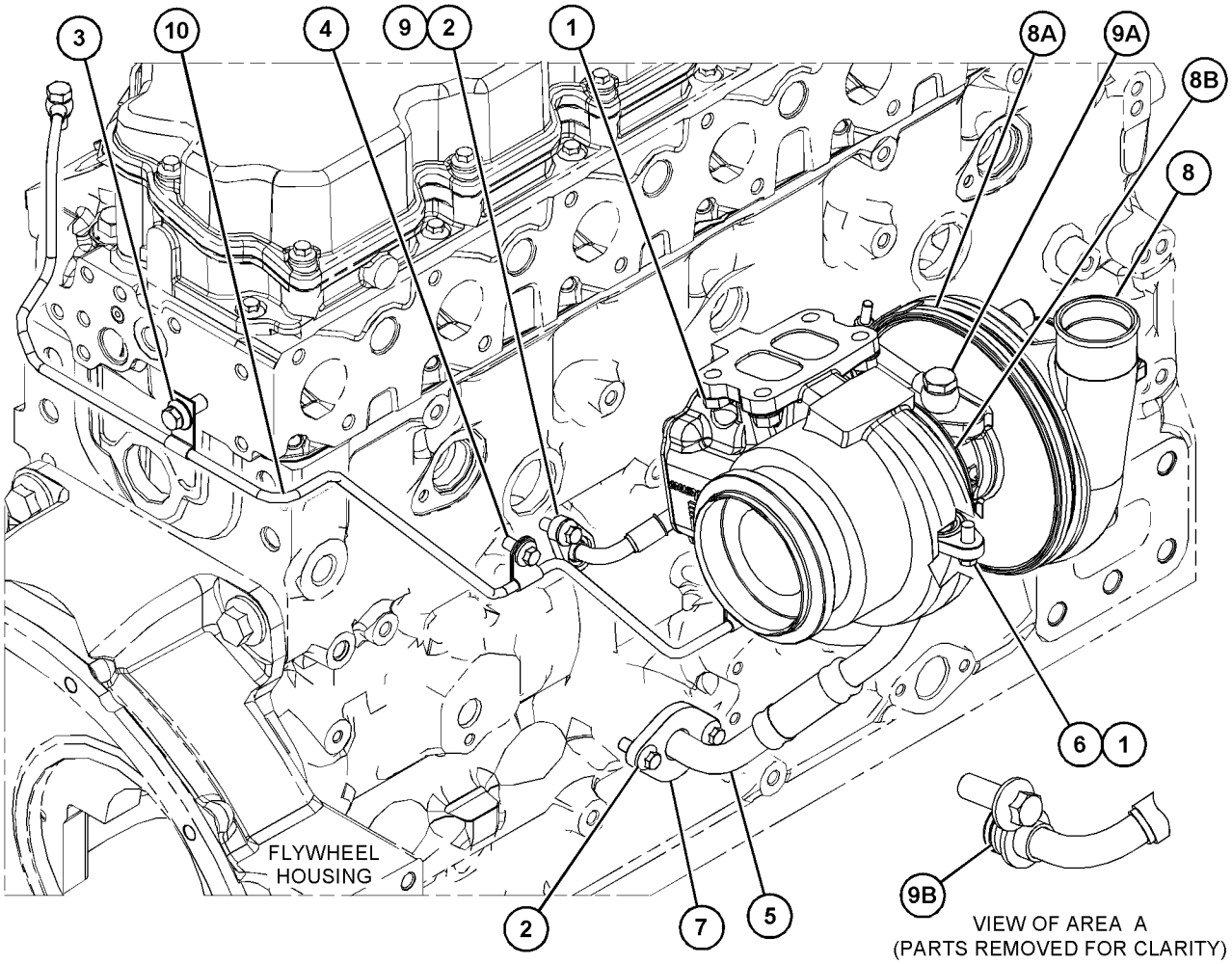

GRAPHIC #1 **<END>** g03483160

360-8958 FILTER GP-FUEL

S/N: BD41-UP

PART OF 421-5685 FILTER GP-FUEL

SMCS-1261 **i04994749**

NOTE	REF NO	GRAPHIC REF	PART NUMBER	QTY	PART NAME 1 2 3 4 5 6 (PRODUCT LEVEL)	SEE PAGE
	1	1	**360-8960**	1	FILTER ELEMENT-FUEL	
					AVAILABLE REPAIR KIT(S):	
			362-5412	1	KIT-DRAIN (FUEL FILTER)	
					(INCLUDES DRAIN, KNOB, & SEALS)	

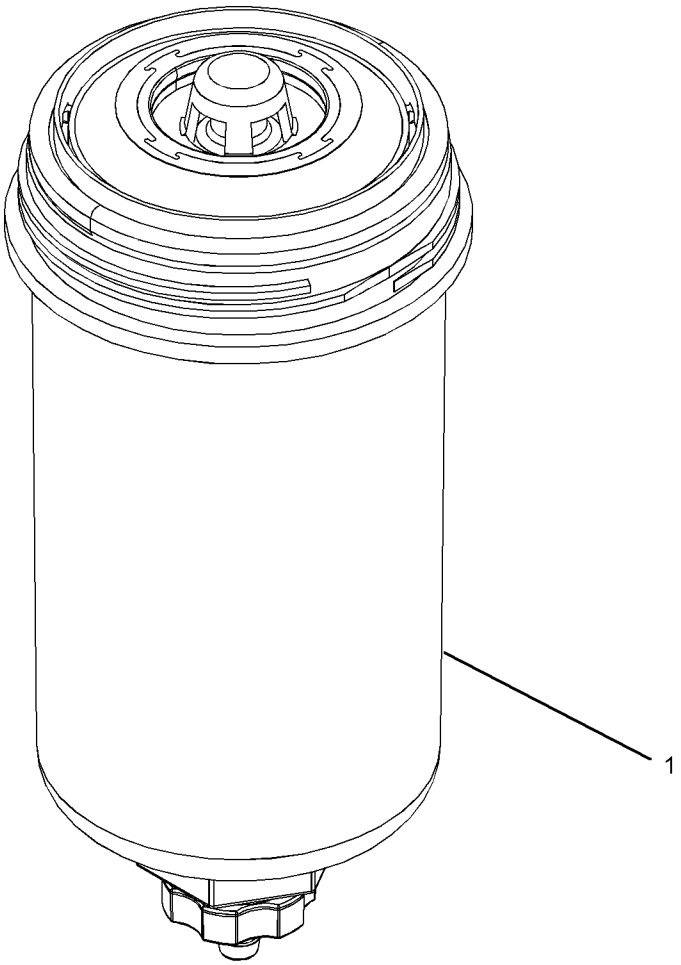

GRAPHIC #1

<END>

g03173178

421-5685 FILTER GP-FUEL

S/N: BD41-UP

PART OF 426-3296 FILTER GP-FUEL

SMCS-1261 **i05509049**

NOTE	REF NO	GRAPHIC REF	PART NUMBER	QTY	PART NAME 1 2 3 4 5 6 (PRODUCT LEVEL)	SEE PAGE
Y	1	1	**360-8958**	2	FILTER GP-FUEL	68
	2	1	**362-9689**	2	SCREW-SPECIAL	
					AVAILABLE REPAIR KIT(S):	
			362-5412	1	KIT-DRAIN	

Y - SEPARATE ILLUSTRATION

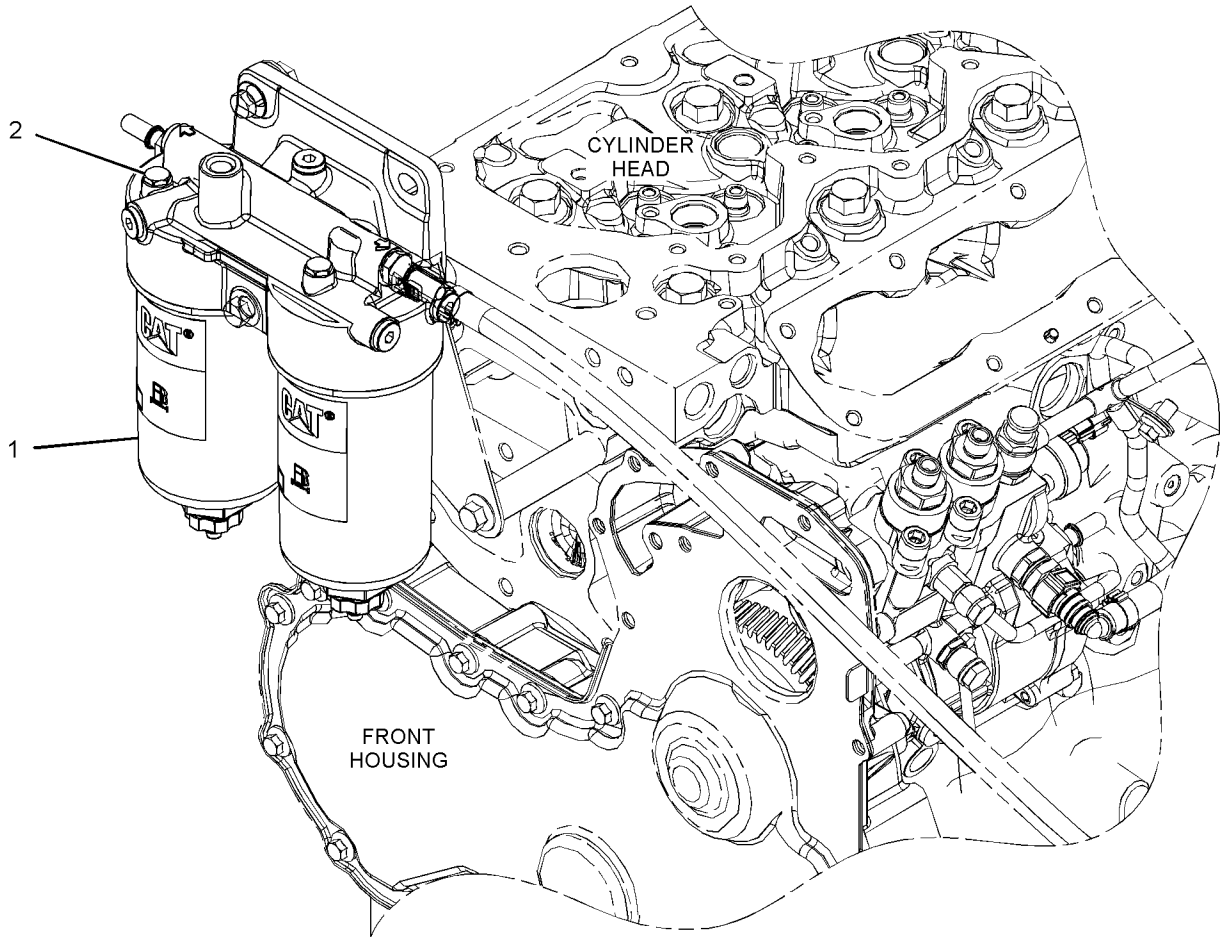

GRAPHIC #1 **<END>** g03489376

426-3296 FILTER GP-FUEL

S/N: BD41-UP

PART OF 450-8077 ENGINE AR-PRIMARY

SMCS-1261 **i05498777**

NOTE	REF NO	GRAPHIC REF	PART NUMBER	QTY	PART NAME 1 2 3 4 5 6 (PRODUCT LEVEL)	SEE PAGE
Y	1	1	*421-5685*	1	FILTER GP-FUEL	69

Y - SEPARATE ILLUSTRATION

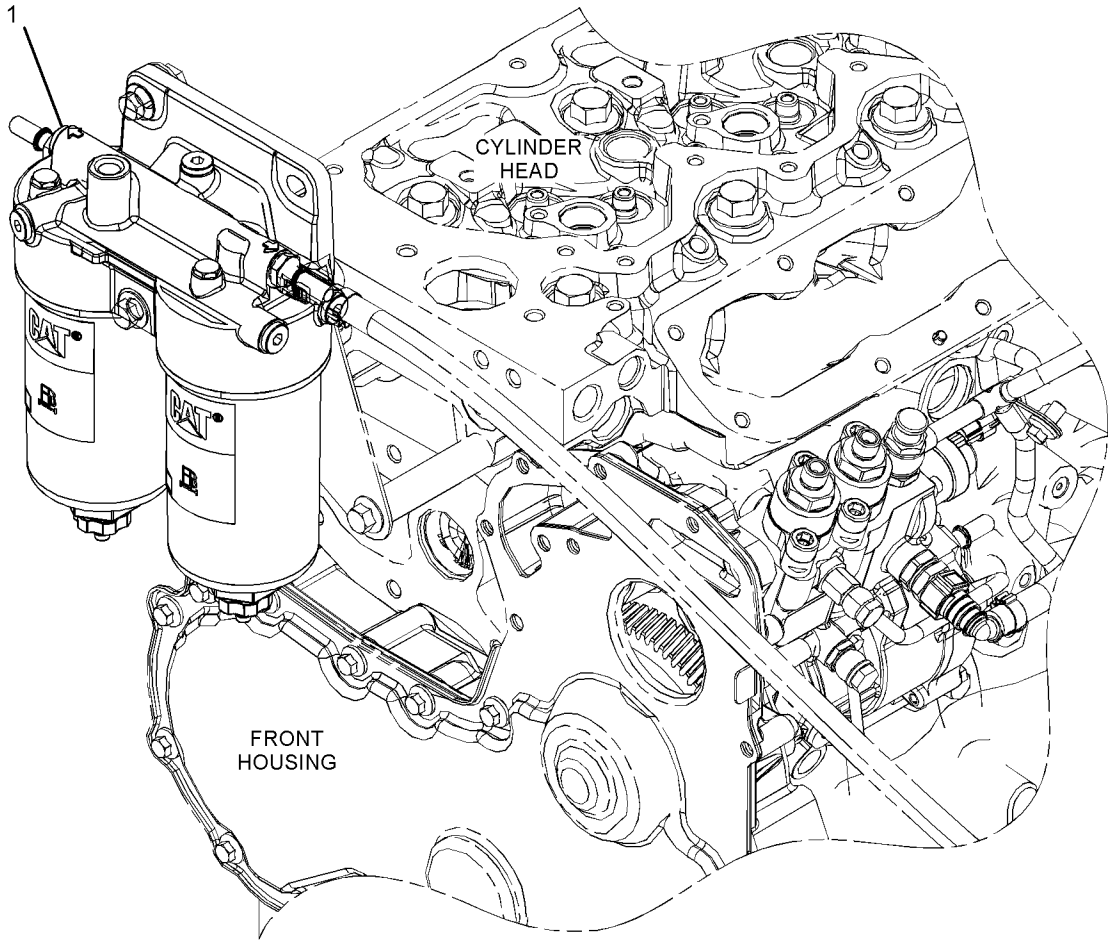

GRAPHIC #1 **<END>** g03487549

371-2483 INJECTOR GP-FUEL

S/N: BD41-UP

PART OF 450-8077 ENGINE AR-PRIMARY

SMCS-1251, 1254, 1290, 1713 **i05331880**

NOTE	REF NO	GRAPHIC REF	PART NUMBER	QTY	PART NAME 1 2 3 4 5 6 (PRODUCT LEVEL)	SEE PAGE
	1	1	**278-5170**	6	BOLT	
	2	1	**369-7799**	6	CLAMP-INJECTOR	
	3	1	**371-3974**	6	INJECTOR GP-FUEL	
					(EACH INCLUDES)	
		1	**376-6403**	1	WASHER-SEAL	
		1	**376-6405**	1	SEAL-O-RING	
	4	1	**277-5067**	6	SLEEVE	

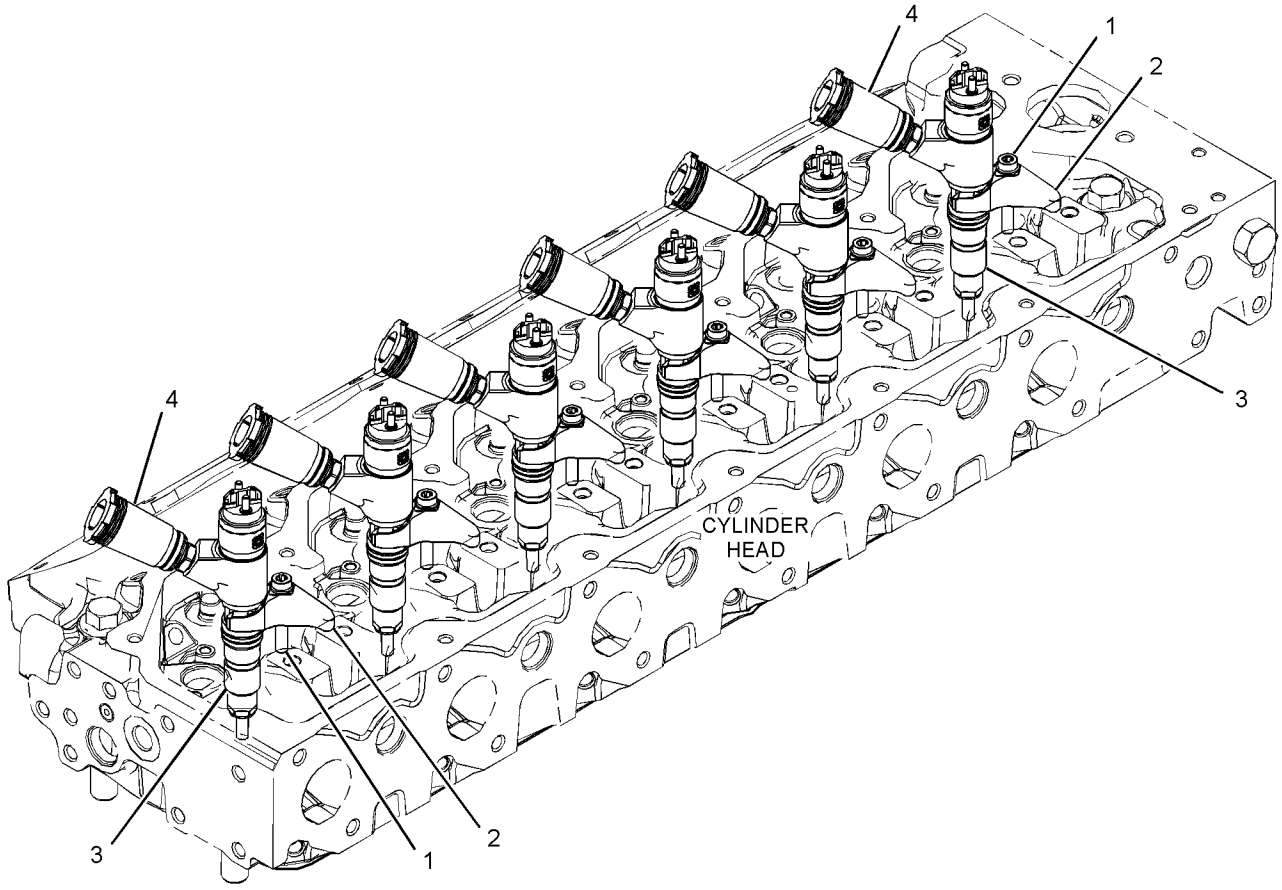

GRAPHIC #1 **<END>** g03378802

368-7668 LINES GP-FUEL

S/N: JEG1-UP

PART OF 420-3127 CHASSIS AR

SMCS-1274 **i05457971**

NOTE	REF NO	GRAPHIC REF	PART NUMBER	QTY	PART NAME 1 2 3 4 5 6 (PRODUCT LEVEL)	SEE PAGE
	1	2	**093-2065**	3	GROMMET	
	2	3	**165-2881**	1	VALVE-BALL (SEDIMENT, WATER)	
	3	3	**176-4746**	1	GROMMET	
	4	2	**191-1782**	1	SPACER (8.5X12.7X38.2-MM THK)	
	5	2	**191-1783**	2	SPACER (8.5X12.7X87.3-MM THK)	
	6	2	**305-6873**	1	SENSOR GP-PRESSURE	
	7	3	**306-8401**	1	GROMMET	
	8	3	**343-3918**	1	CONNECTION	
	9	2	*353-5142*	1	ADAPTER AS	
		2	**219-8136**	1	ADAPTER	
		2	**238-5081**	1	SEAL-O-RING	
	10	2	**368-6658**	1	VALVE	
	11	2	**379-4369**	1	ADAPTER	
	12	2	**379-4370**	2	ADAPTER-ELBOW	
	13	3	**379-4380**	1	LINER	
	14	3	**385-3821**	1	GROMMET	
	15	3	*385-5773*	1	CONNECTOR AS	
		3	**5P-1046**	1	CONNECTOR	
		3	**214-7568**	1	SEAL-O-RING	
Y	16	2	**390-6840**	1	PUMP GP-FUEL PRM & PRIM FILTER	86
	17	3	**416-2383**	1	PLATE AS	
M		3	**8T-3490**	1	NUT-WELD (M10X1.5-THD)	
	18	3	**417-0438**	1	HOSE AS	
	19	3	**417-0444**	1	PLATE AS	
M		3	**7Y-8763**	1	BOSS (M10X1.5X25-MM)	
M		3	**9T-6001**	1	BOSS (M10X1.5-THD)	
	20	2	*421-6175*	1	ADAPTER AS	
		2	**214-7568**	1	SEAL-O-RING	
		2	**426-4018**	1	ADAPTER	
	21	2	**423-6434**	1	SENSOR GP-LIQUID LEVEL	
		2	**214-7568**	1	SEAL-O-RING	
		2	**281-8805**	1	RECEPTACLE AS-CONNECTOR	
	22	1	**424-4752**	1	HOSE	
	23	3	**424-4753**	1	HOSE AS	
	24	3	**424-4755**	1	PLATE AS	
M		3	**8T-3490**	4	NUT-WELD (M10X1.5-THD)	
M		3	**9R-2821**	1	BOSS (M10X1.5X15-MM)	
		3	**087-5841**	1	PLATE	
	25	1	**425-7855**	1	HOSE	
	26	2	**446-7736**	1	HOSE AS	
	27	1	**446-7737**	1	HOSE	
	28	2	**446-7738**	1	HOSE	
	29	1	**447-2656**	1	HOSE AS	
	30	3	**142-4881**	2	CONNECTOR	
	31	2	**169-9763**	1	CONNECTOR	
	32	2,3	**214-7568**	4	SEAL-O-RING	
	33	2	**228-7089**	1	SEAL-O-RING	
	34	3	**228-7100**	1	SEAL-O-RING	
	35	2	**233-9821**	1	VALVE-CHECK	
		2	**033-6042**	1	SEAL-O-RING	
	36	2,3	**238-5081**	4	SEAL-O-RING	
	37	3	**275-1442**	1	CLIP (TAB)	
	38	3	**275-1443**	1	CLIP (SLOT)	
	39	2	*313-3492*	1	PLUG AS	
		2	**9S-4190**	1	PLUG-O-RING	
		2	**238-5081**	1	SEAL-O-RING	
	40	3	*319-6245*	1	ADAPTER AS	
		3	**8T-6663**	1	ADAPTER-PORT	
		3	**228-7089**	1	SEAL-O-RING	

368-7668 **LINES GP-FUEL (*contd.*)** **i05457971**

NOTE	REF NO	GRAPHIC REF	PART NUMBER	QTY	PART NAME 1 2 3 4 5 6 (PRODUCT LEVEL)	SEE PAGE
	41	2	*321-8657*	1	ELBOW AS	
		2	**6V-8076**	1	ELBOW	
		2	**214-7568**	1	SEAL-O-RING	
	42	3	*329-5458*	1	TEE AS	
		3	**8C-8431**	1	TEE	
		3	**214-7568**	1	SEAL-O-RING	
	43	2	*329-5459*	1	ADAPTER AS	
		2	**5P-1404**	1	ADAPTER	
		2	**238-5081**	1	SEAL-O-RING	
	44	2	**343-2387**	5	CLIP	
	45	2	**343-2388**	2	CLIP	
	46	2	**344-5360**	3	CLIP	
	47	1,2,3	**351-4318**	21	CLIP	
	48	3	**351-4319**	6	CLIP	
	49	2	**351-4321**	2	CLIP	
	50	2	*353-5112*	1	ADAPTER AS	
		2	**9X-0262**	1	ADAPTER	
		2	**214-7566**	1	SEAL-O-RING	
	51	3	**5G-3676**	2	GROMMET	
	52	3	**5P-4924**	1	ELBOW	
	53	2	**5V-9155**	5	CLAMP-HOSE	
	54	1,2,3	**6S-8620**	6	CLAMP-HOSE	
	55	3	**7V-6571**	1	GROMMET	
	56	2	**7X-0579**	3	WASHER-HARD (8.8X25.5X2-MM THK)	
M	57	2	**7X-2539**	2	BOLT (M8X1.25X110-MM)	
	58	3	**8T-1889**	3	CLIP (SLOT)	
	59	3	**8T-1890**	3	CLIP (TAB)	
	60	1,2,3	**8T-4121**	47	WASHER-HARD (11X21X2.5-MM THK)	
M	61	3	**8T-4136**	4	BOLT (M10X1.5X25-MM)	
M	62	1,2,3	**8T-4137**	39	BOLT (M10X1.5X20-MM)	
M	63	3	**8T-4195**	3	BOLT (M10X1.5X30-MM)	
M	64	3	**8T-4198**	1	BOLT (M10X1.5X100-MM)	
M	65	2	**8T-6869**	1	BOLT (M8X1.25X60-MM)	
	66	2	**8T-9655**	6	MOUNT-ISOLATION	
E	67	2	**347-8645**		HOSE (19-CM)	

E - ORDER BY THE CENTIMETER
M - METRIC PART
Y - SEPARATE ILLUSTRATION

368-7668 **LINES GP-FUEL (*contd.*)** **i05457971**

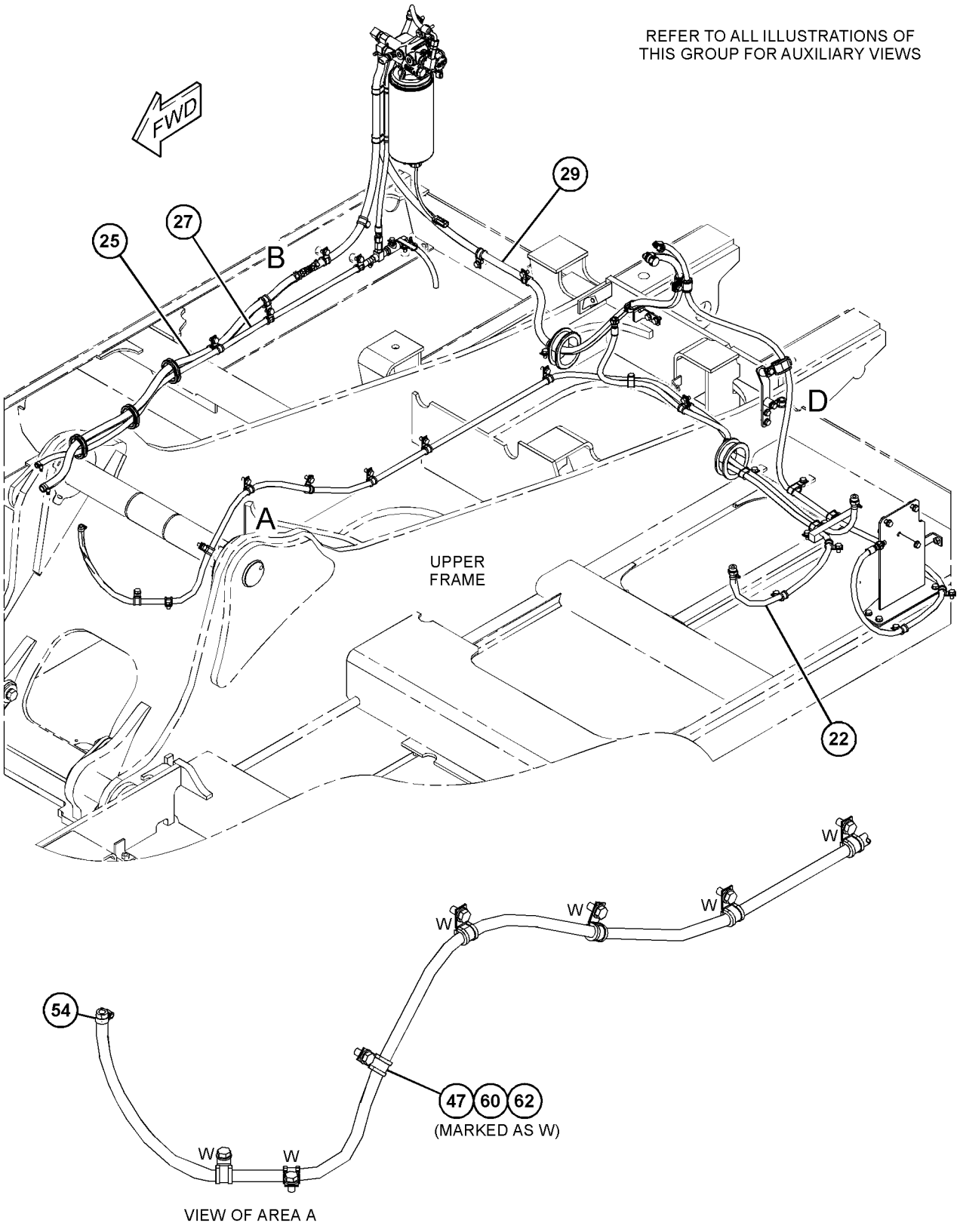

GRAPHIC #1 g03457196

368-7668 **LINES GP-FUEL (*contd.*)** **i05457971**

REFER TO ALL ILLUSTRATIONS OF
THIS GROUP FOR AUXILIARY VIEWS

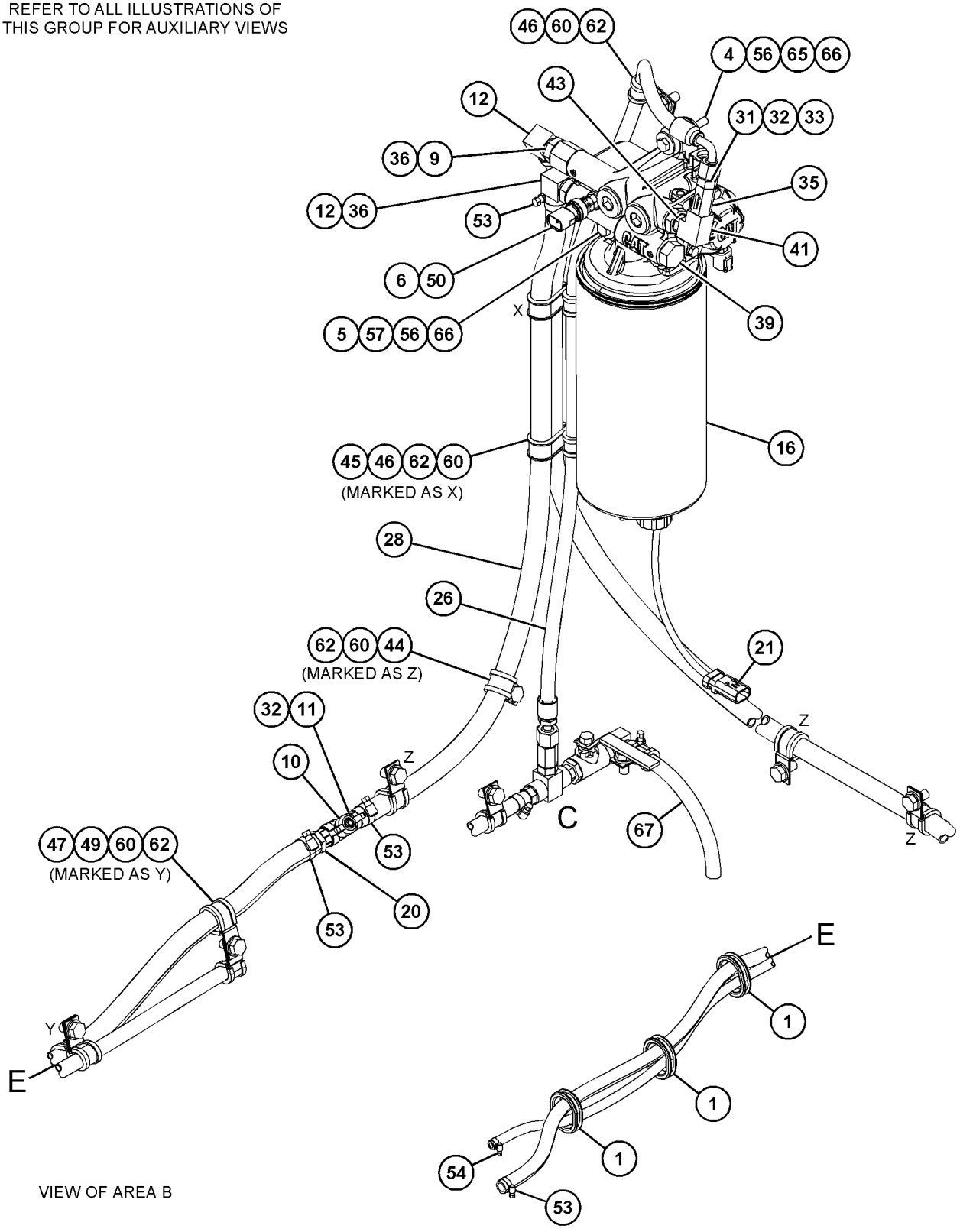

GRAPHIC #2 g03457197

368-7668 **LINES GP-FUEL (*contd.*)** **i05457971**

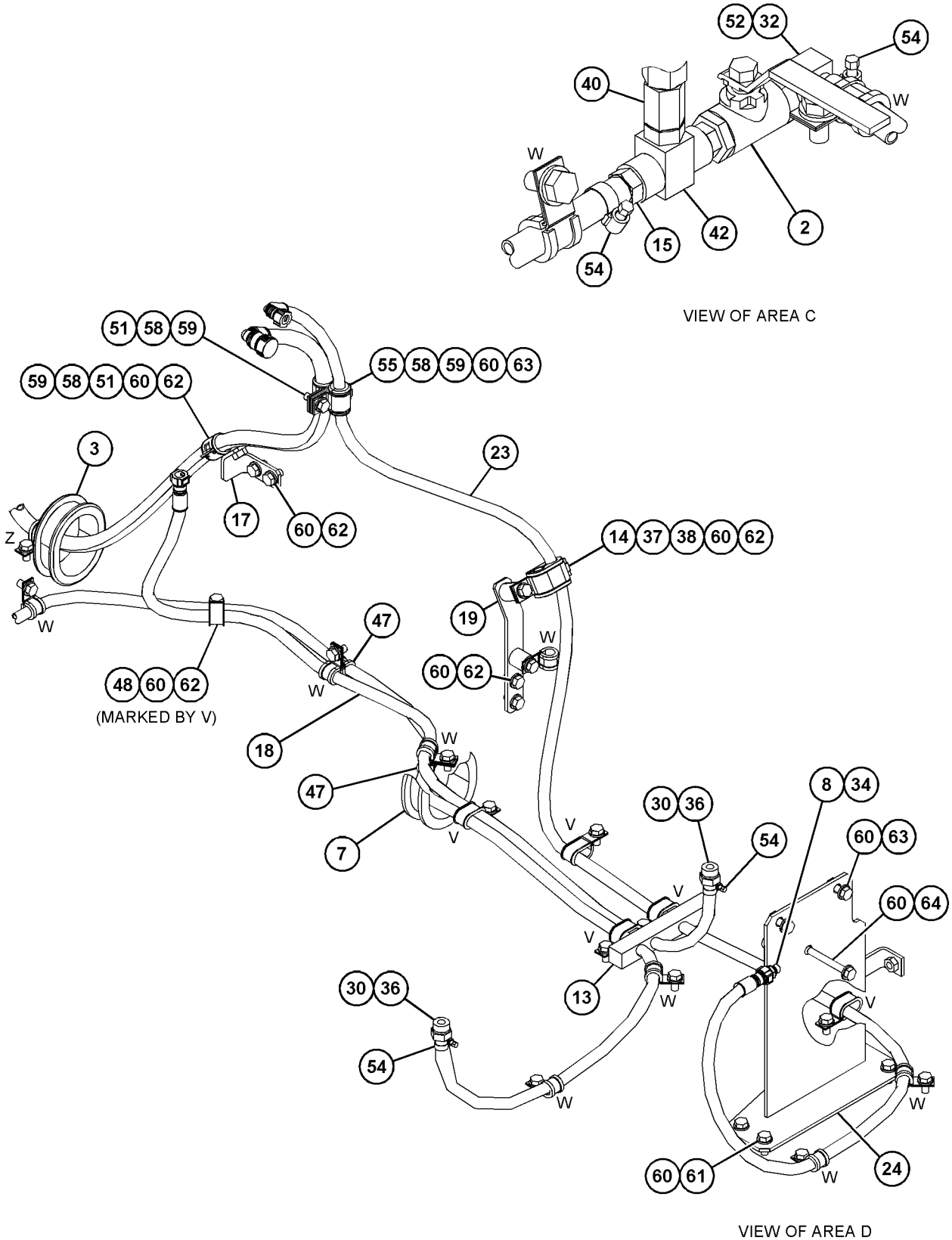

GRAPHIC #3 **<END>** g03457198

425-2178 LINES GP-FUEL

S/N: BD41-UP

PART OF 390-6079 LINES GP-FUEL INJECTION

SMCS-1274 **i05341893**

NOTE	REF NO	GRAPHIC REF	PART NUMBER	QTY	PART NAME 1 2 3 4 5 6 (PRODUCT LEVEL)	SEE PAGE
	1	1	**349-6847**	2	CLIP	
	2	1	**377-5988**	1	BOLT	
	3	1	**286-2890**	2	WASHER	
M	4	1	**161-7614**	1	NUT (M16X1.5-THD)	
	5	1	**277-4993**	1	SEAL-O-RING	

M - METRIC PART

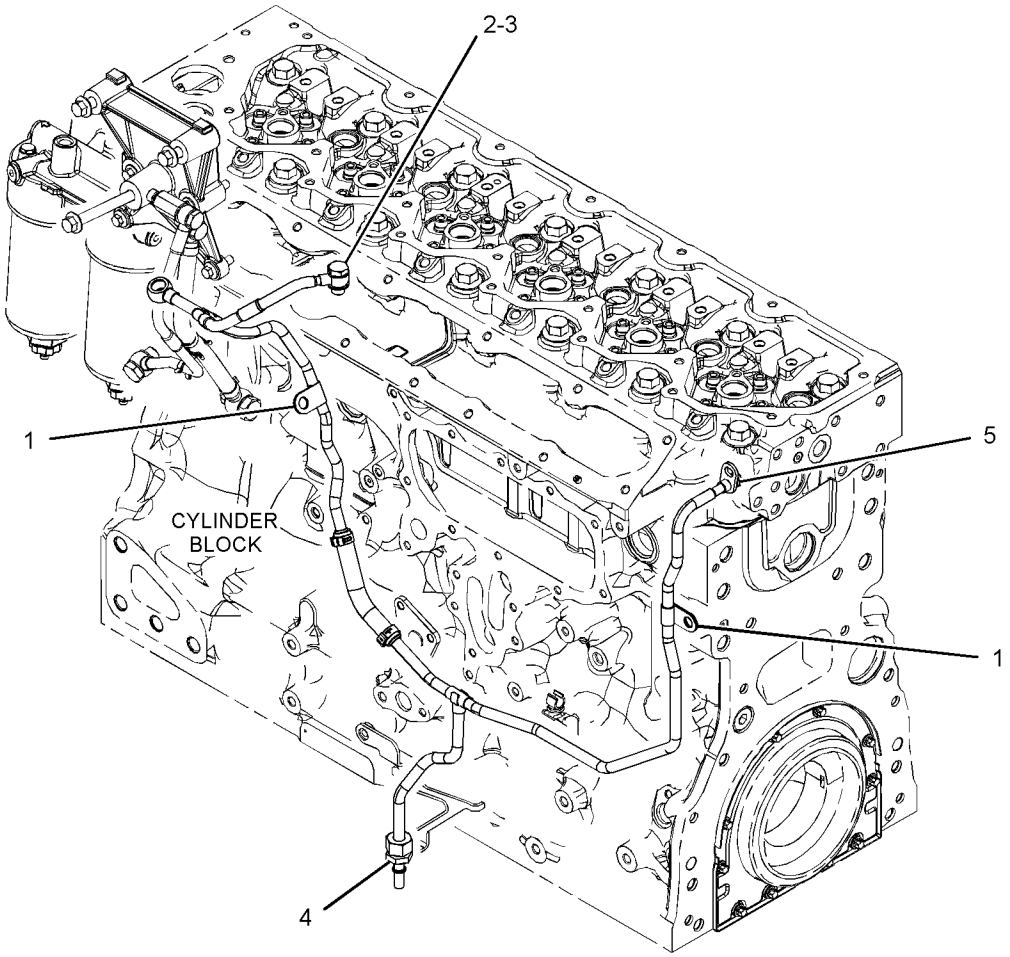

GRAPHIC #1 **<END>** g03384683

433-1316 LINES GP-FUEL

S/N: BD41-UP

PART OF 390-6079 LINES GP-FUEL INJECTION

SMCS-1274 **i05341897**

NOTE	REF NO	GRAPHIC REF	PART NUMBER	QTY	PART NAME 1 2 3 4 5 6 (PRODUCT LEVEL)	SEE PAGE
	1	1	**246-4361**	2	WASHER (10.5X14X1.5-MM THK)	
	2	1	**385-1398**	1	CONNECTION-FUEL	
	3	1	**386-1864**	1	BOLT-BANJO	
	4	1	**247-4928**	2	WASHER (16.5X20.5X1.6-MM THK)	

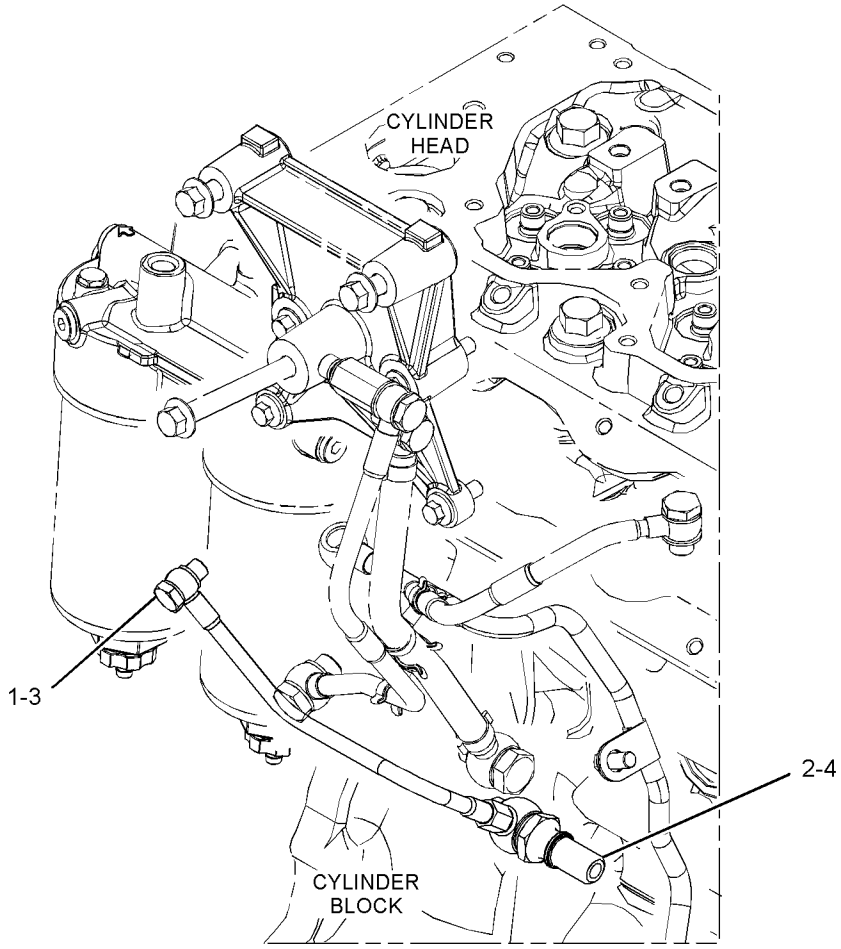

GRAPHIC #1 **<END>** g03384847

370-5520 LINES GP-FUEL INJECTION

S/N: BD41-UP

PART OF 394-9639 RAIL GP-FUEL

SMCS-1252, 1254

i05333502

NOTE	REF NO	GRAPHIC REF	PART NUMBER	QTY	PART NAME 1 2 3 4 5 6 (PRODUCT LEVEL)	SEE PAGE
	1	1	**395-1633**	1	BRACKET AS	
		1	**6I-0631**	1	BOLT (M6X1X12-MM)	
	2	1	**370-5516**	1	LINE AS-FUEL INJECTION	
	3	1	**370-5517**	1	LINE AS-FUEL INJECTION	
	4	1	**370-5518**	1	LINE AS-FUEL INJECTION	

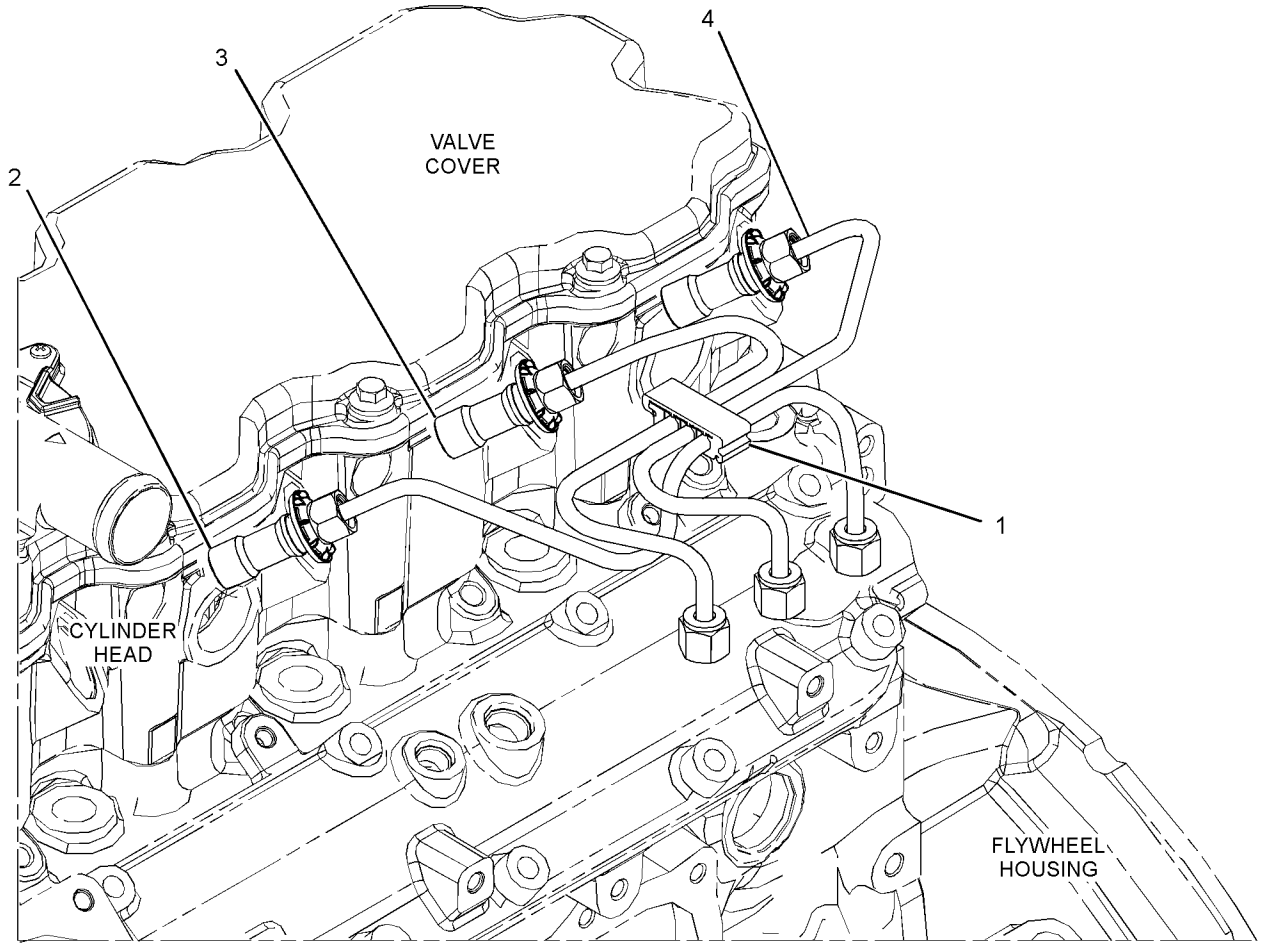

GRAPHIC #1

<END>

g03380791

390-6079 LINES GP-FUEL INJECTION

S/N: BD41-UP

PART OF 450-8077 ENGINE AR-PRIMARY

SMCS-1252, 1254 **i05497914**

NOTE	REF NO	GRAPHIC REF	PART NUMBER	QTY	PART NAME 1 2 3 4 5 6 (PRODUCT LEVEL)	SEE PAGE
	1	1	**247-4928**	1	WASHER (16.5X20.5X1.6-MM THK)	
	2	1	**348-0495**	1	WASHER	
	3	1	**390-8738**	1	SUPPORT GP-LINES	
	4	1	**391-1817**	1	SUPPORT GP-LINES	
Y	5	1	**425-2178**	1	LINES GP-FUEL	77
Y	6	1	**433-1316**	1	LINES GP-FUEL	78
	7	1	**379-8434**	1	LINE AS-FUEL	
E	7A	1	**347-8645**		HOSE (204-CM)	
	7B	1	**351-4318**	1	CLIP	
	7C	1	**355-0632**	1	CONNECTOR-SPECIAL	
	7D	1	**355-0633**	1	CONNECTOR-HOSE	
	8	1	**376-9967**	1	CONNECTION-FUEL	
	9	1	**391-2493**	1	CONNECTION-FUEL	
	10	1	**311-2732**	3	TIE-CABLE	
	11	1	**376-4068**	1	BRACKET AS	
M		1	**159-9541**	3	NUT-WELD (M10X1.5-THD)	
	12	1	**390-0755**	1	BRACKET AS	
	13	1	**389-5775**	1	BRACKET	
M	14	1	**6I-0654**	1	BOLT (M10X1.5X25-MM)	
	15	1	**6I-4200**	2	BOLT (M10X1.5X16-MM)	
	16	1	**100-4458**	1	BOLT (M8X1.25X14-MM)	
M	17	1	**103-5687**	1	BOLT (M10X1.5X85-MM)	
M	18	1	**124-3815**	1	BOLT (M8X1.25X16-MM)	
	19	1	**164-7468**	2	BOLT (M10X1.5X95-MM)	
M	20	1	**6I-0217**	1	BOLT (M8X1.25X20-MM)	
M	21	1	**6I-0260**	1	BOLT (M8X1.25X25-MM)	

E - ORDER BY THE CENTIMETER
M - METRIC PART
Y - SEPARATE ILLUSTRATION

390-6079 **LINES GP-FUEL INJECTION (*contd.*)** **i05497914**

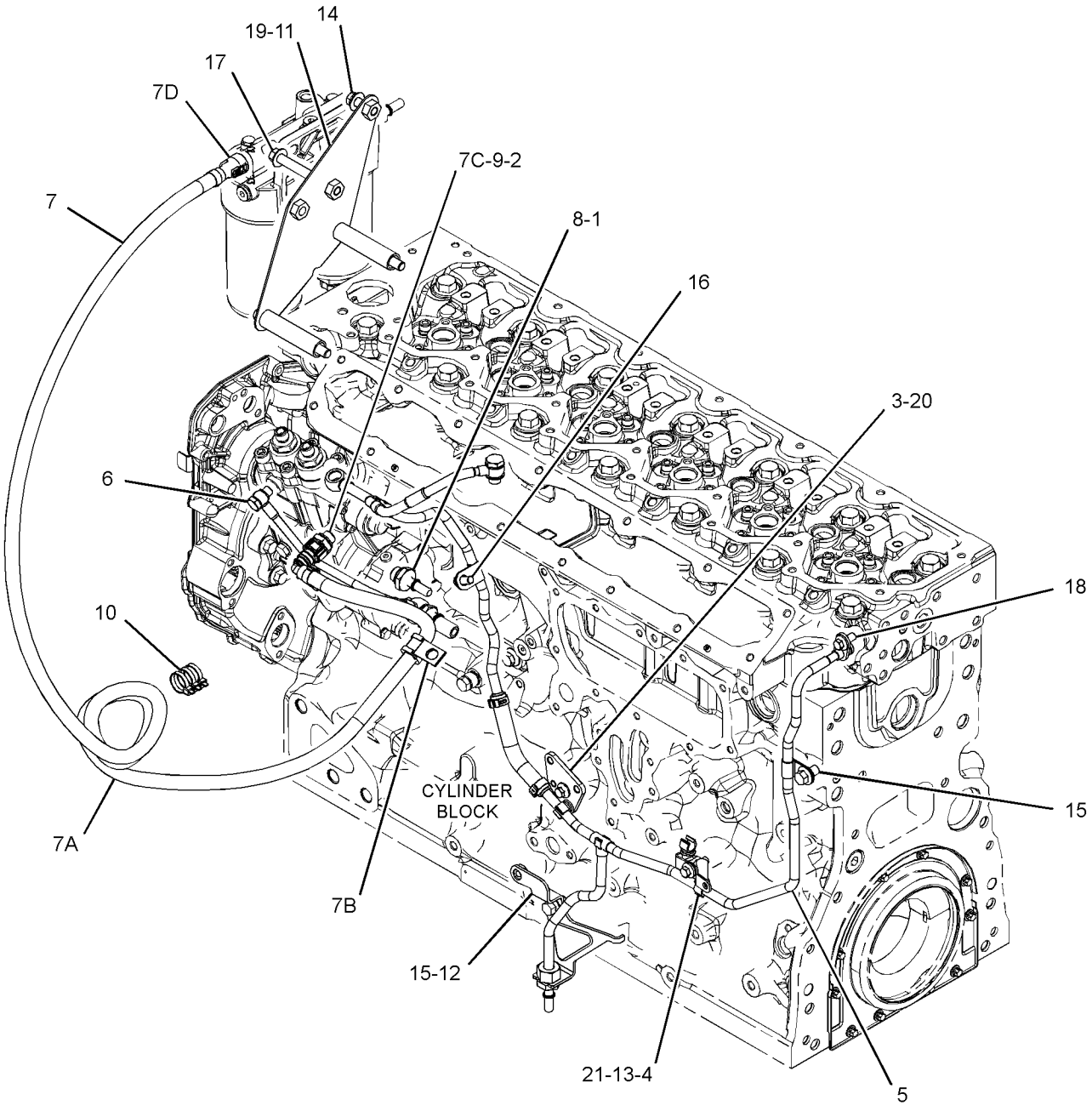

GRAPHIC #1 **<END>** g03487858

394-0525 LINES GP-FUEL INJECTION

S/N: BD41-UP

PART OF 394-9639 RAIL GP-FUEL

SMCS-1252, 1254

i05490216

NOTE	REF NO	GRAPHIC REF	PART NUMBER	QTY	PART NAME 1 2 3 4 5 6 (PRODUCT LEVEL)	SEE PAGE
	1	1	**395-1633**	1	BRACKET AS	
	1A	1	**6I-0631**	1	BOLT (M6X1X12-MM)	
	2	1	**370-5513**	1	LINE AS-FUEL	
	3	1	**393-5467**	1	LINE AS-FUEL	
	4	1	**393-5468**	1	LINE AS-FUEL	

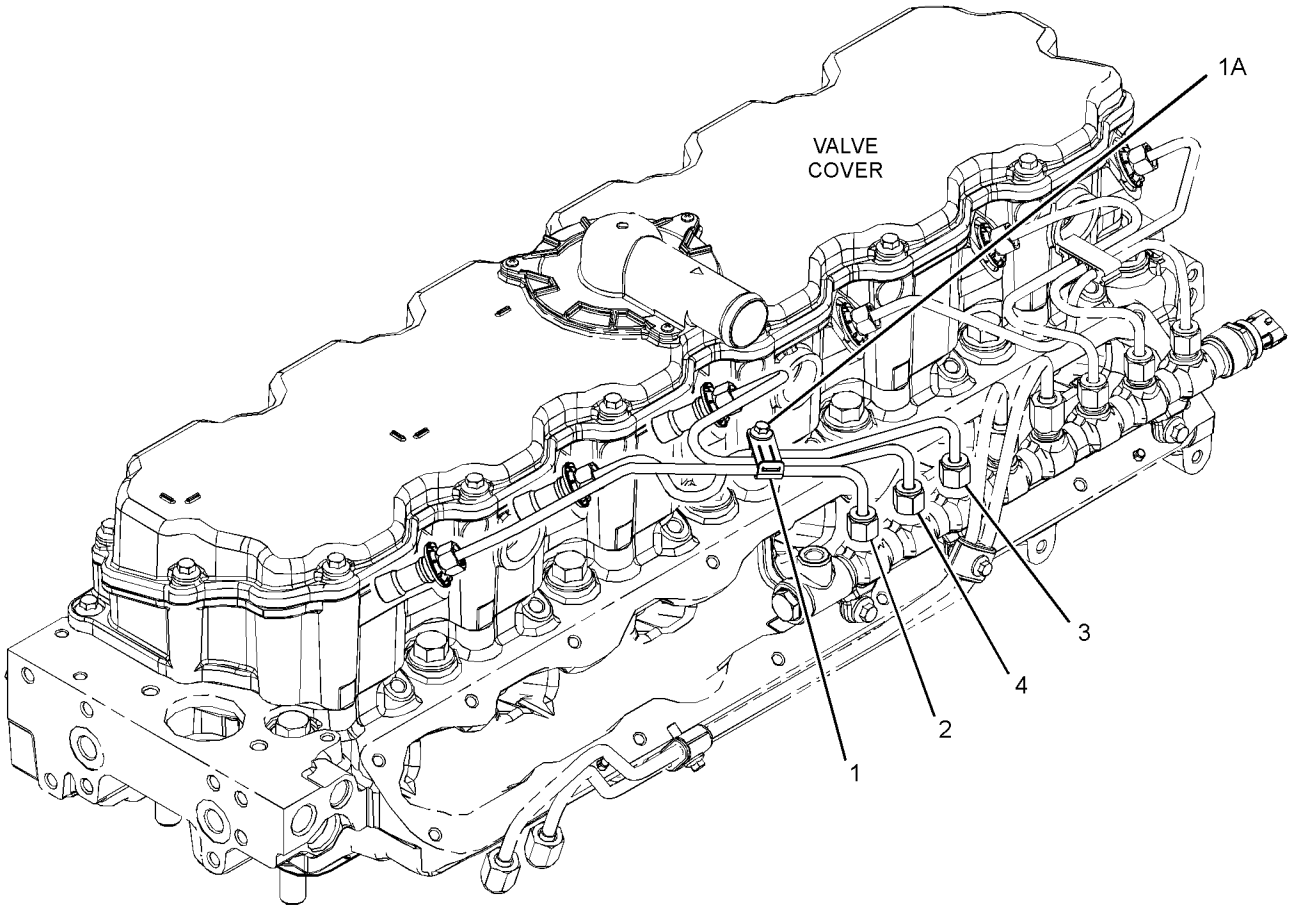

GRAPHIC #1

<END>

g03479680

419-8979 PUMP AR-FUEL TRANSFER

S/N: JEG1-UP

AN ATTACHMENT

SMCS-1256 **i05432747**

NOTE	PART NUMBER	QTY	PART NAME 1 2 3 4 5 6 (PRODUCT LEVEL)	SEE PAGE
Y	*298-4258*	1	FILM GP (FUEL TRANSFER PUMP)	658
Y	*419-8980*	1	PUMP GP-FUEL TRANSFER	88
Y	*238-1570*	1	WIRING GP-REFUELING PUMP	190

Y - SEPARATE ILLUSTRATION

<END>

391-4811 PUMP GP-FUEL INJECTION

S/N: BD41-UP

PART OF 450-8077 ENGINE AR-PRIMARY

SMCS-1251, 1290 **i05332379**

NOTE	REF NO	GRAPHIC REF	PART NUMBER	QTY	PART NAME 1 2 3 4 5 6 (PRODUCT LEVEL)	SEE PAGE
	1	1	**286-0123**	4	BOLT	
M	2	1	**6I-0654**	3	BOLT (M10X1.5X25-MM)	
	3	1	**371-2684**	1	BRACKET	
	4	1	**371-2691**	1	BRACKET	
	5	1	**371-7263**	1	LINE AS-FUEL	
	6	1	**375-2647**	1	PUMP GP-FUEL INJECTION	
		1	**375-8254**	1	VALVE	
		1	**376-6409**	1	SEAL	
		1	**376-6410**	1	RETAINER-WASHER	
		1	**376-6411**	1	NUT-SHAFT	
		1	**386-2971**	2	WASHER	
		1	**386-2976**	2	WASHER	
		1	**386-3819**	1	KEY-SHAFT	
	7	1	**387-8412**	1	GEAR-FUEL PUMP	
M	8	1	**6I-0217**	2	BOLT (M8X1.25X20-MM)	
	9	1	**346-0006**	1	BOLT-SPECIAL	
	10	1	**346-0007**	2	WASHER	
	11	1	**6I-0594**	1	NUT (M10X1.5-THD)	

M - METRIC PART

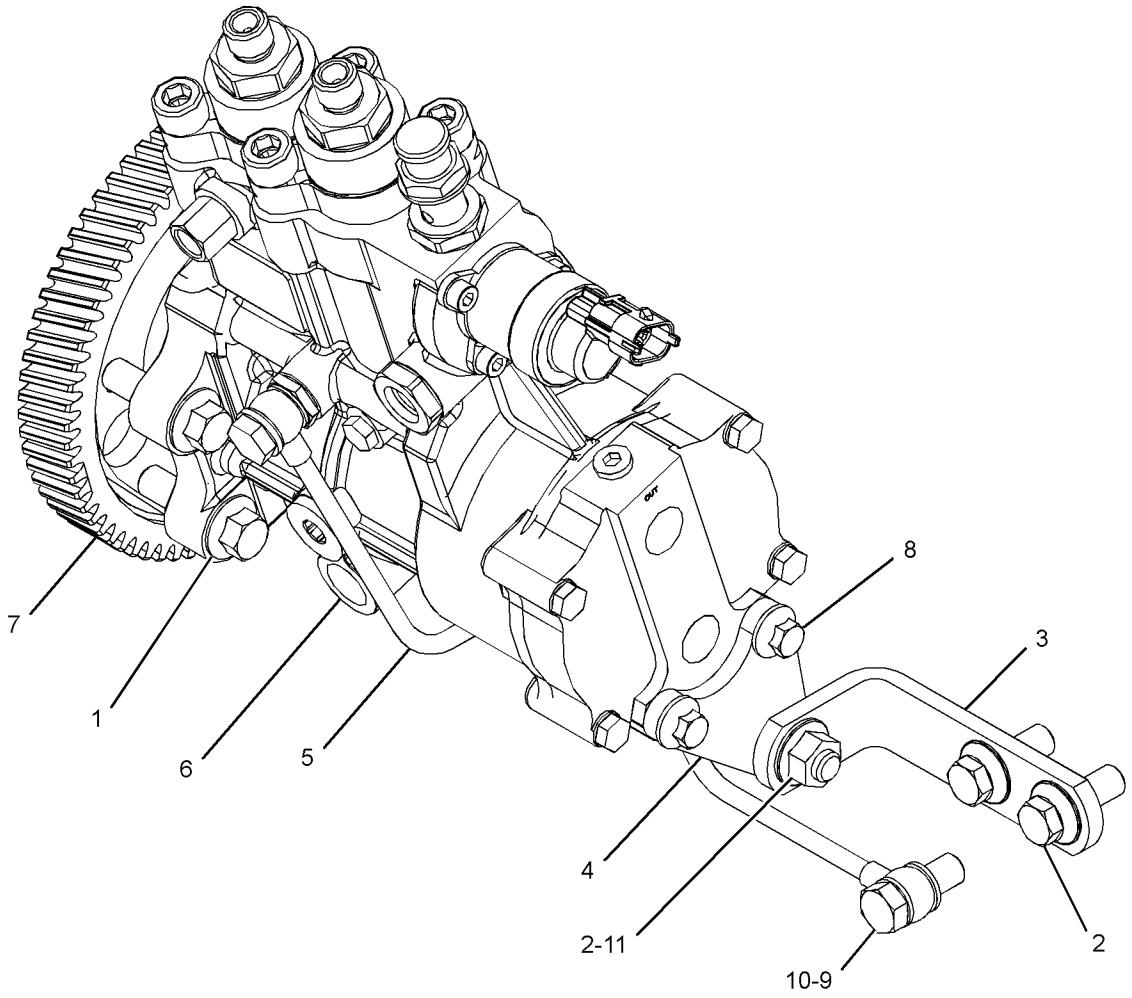

GRAPHIC #1 **<END>** g03378913

390-4679 PUMP GP-FUEL PRIMING

S/N: JEG1-UP

PART OF 390-6840 PUMP GP-FUEL PRM & PRIM FILTER

SMCS-1258 **i05518010**

NOTE	REF NO	GRAPHIC REF	PART NUMBER	QTY	PART NAME 1 2 3 4 5 6 (PRODUCT LEVEL)	SEE PAGE
	1	1	**162-2220**	2	VALVE-CHECK	
	2	1	**162-2222**	2	SPRING	
	3	1	**9X-8267**	3	WASHER (6.6X12X2-MM THK)	
	4	1	**9S-8002**	1	PLUG-O-RING	
M	5	1	**8T-4138**	3	BOLT (M6X1X20-MM)	
	6	1	**6V-4368**	1	SEAL-O-RING	
	7	1	**6D-5801**	2	LOCKNUT (8-32-THD)	
	8	1	**236-6717**	2	SEAL-O-RING	
	9	1	**188-7541**	1	SEAL	
	10	1	**188-7536**	1	SEAL	
	11	1	**173-1016**	2	RING-BACKUP	
	12	1	**179-7400**	2	SEAL (FUEL)	
					PARTS SHOWN IN GRAPHIC(S) WITHOUT A REFERENCE NUMBER ARE NOT SERVICED SEPARATELY	

M - METRIC PART

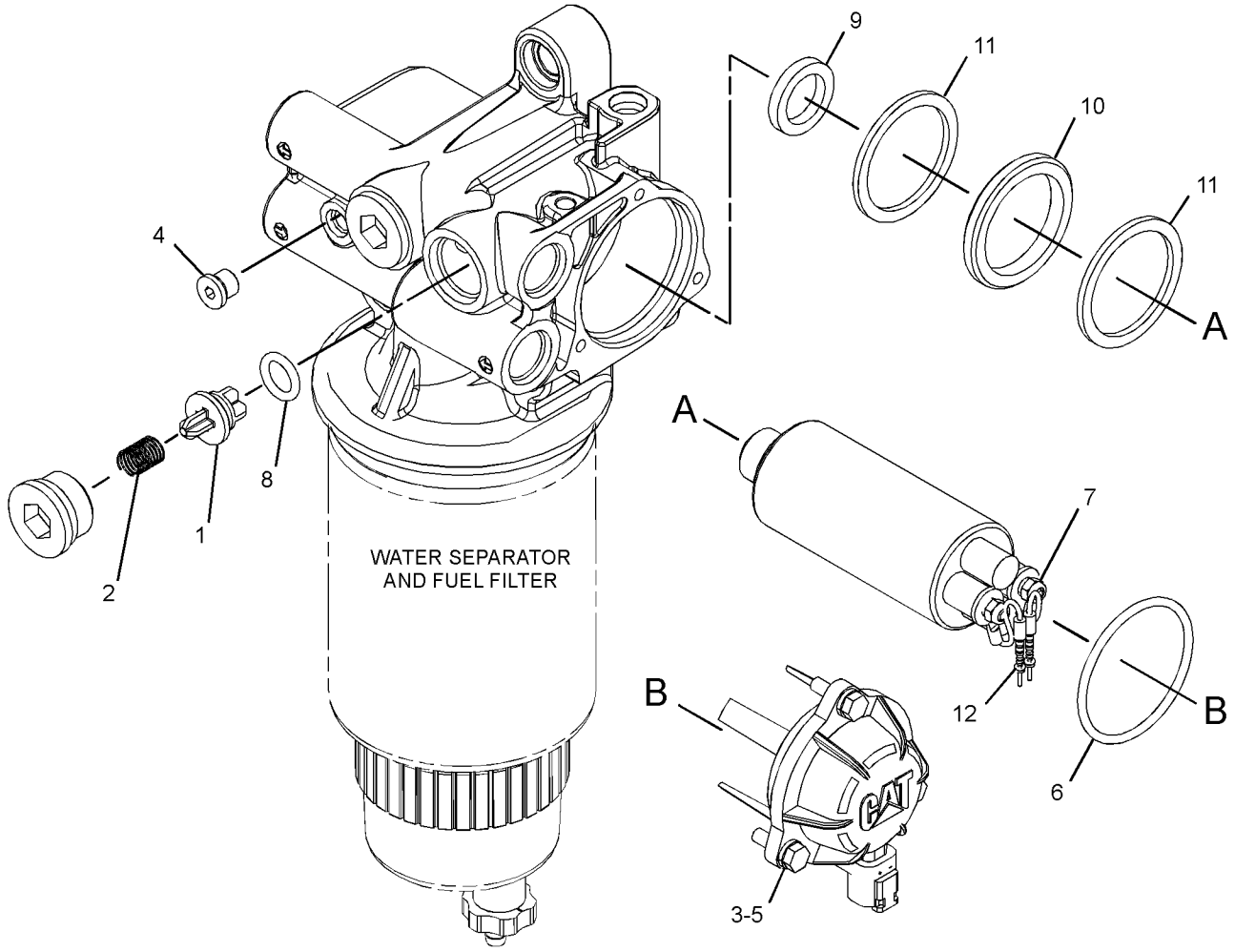

GRAPHIC #1 **<END>** g03336954

390-6840 PUMP GP-FUEL PRM & PRIM FILTER

S/N: JEG1-UP

PART OF 368-7668 LINES GP-FUEL

SMCS-1258 **i05457974**

NOTE	REF NO	GRAPHIC REF	PART NUMBER	QTY	PART NAME 1 2 3 4 5 6 (PRODUCT LEVEL)	SEE PAGE
Y	1	1	**390-4679**	1	PUMP GP-FUEL PRIMING	85
	2	1	**438-5386**	1	FILTER AS-WATER SEP & FUEL	

Y - SEPARATE ILLUSTRATION

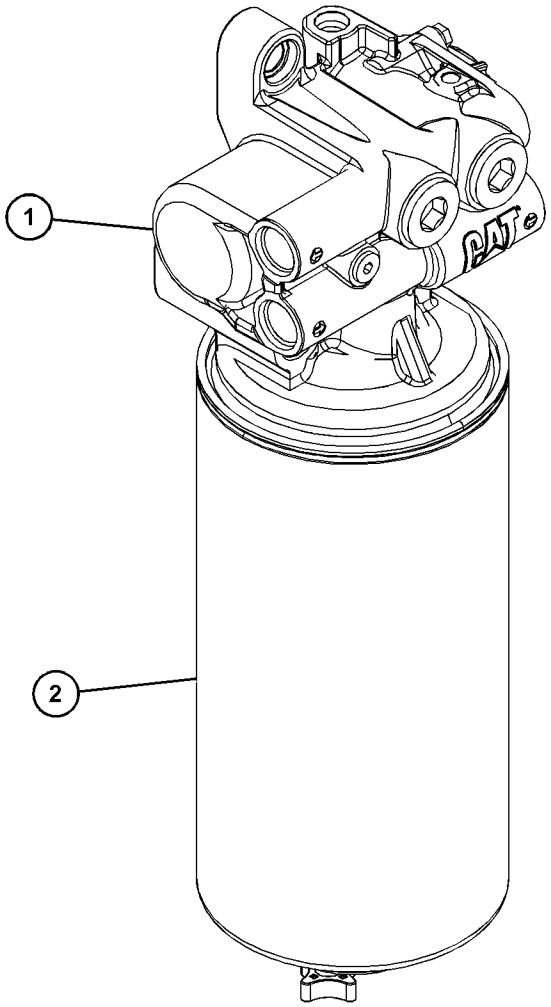

GRAPHIC #1 **<END>** g03454786

368-5216 PUMP GP-FUEL TRANSFER

S/N: JEG1-UP

PART OF 419-8980 PUMP GP-FUEL TRANSFER

AN ATTACHMENT

SMCS-1256 **i05534450**

NOTE	REF NO	GRAPHIC REF	PART NUMBER	QTY	PART NAME 1 2 3 4 5 6 (PRODUCT LEVEL)	SEE PAGE
					AVAILABLE REPAIR KIT(S):	
			450-1775	1	KIT-PUMP (CONNECTOR)	
					(INCLUDES CONNECTOR & WASHER)	
			450-1776	1	KIT-PUMP (VANE)	
					(INCLUDES VANE)	
			450-1777	1	KIT-PUMP (ROTOR)	
					(INCLUDES ROTOR, KEY, COVER & SEAL)	

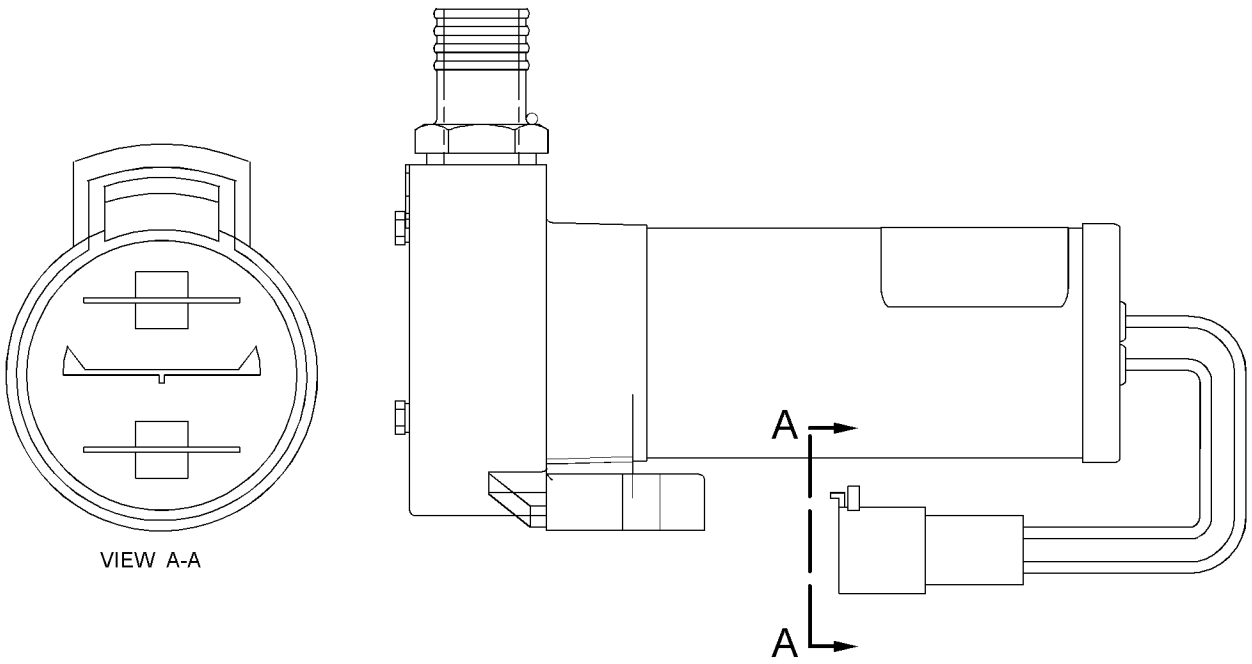

VIEW A-A

GRAPHIC #1 **<END>** g02642778

419-8980 PUMP GP-FUEL TRANSFER

S/N: JEG1-UP

PART OF 419-8979 PUMP AR-FUEL TRANSFER

AN ATTACHMENT

SMCS-1256 **i05432754**

NOTE	REF NO	GRAPHIC REF	PART NUMBER	QTY	PART NAME 1 2 3 4 5 6 (PRODUCT LEVEL)	SEE PAGE
	1	1	**7K-1181**	1	STRAP-CABLE	
	2	1	**120-5114**	1	FILM-INSTRUCTION (REFUELING PUMP)	
	3	1	**312-2645**	1	SWITCH AS-LIQUID LEVEL (REFUELING)	
		1	**2S-4078**	1	SEAL-O-RING	
		1	**8T-8729**	2	PIN-CONNECTOR (16-GA TO 18-GA)	
		1	**243-4505**	1	RECEPTACLE AS-CONNECTOR (2-PIN)	
	4	1	**324-5761**	1	COVER AS	
		1	**121-1029**	1	CLIP	
Y	5	1	**368-5216**	1	PUMP GP-FUEL TRANSFER	87
	6	1	**368-5217**	1	VALVE AS	
	7	1	**368-5219**	1	CONNECTOR-HOSE	
	8	1	**438-2674**	1	SUPPORT AS	
M	9	1	**135-8572**	2	BOLT AS	
M	10	1	**135-8573**	4	BOLT AS	
M	11	1	**8T-4194**	2	BOLT (M12X1.75X50-MM)	
	12	1	**8T-4223**	4	WASHER-HARD (13.5X25.5X3-MM THK)	
M	13	1	**8T-4244**	2	NUT (M12X1.75-THD)	
	14	1	**9M-7958**	4	CLAMP-HOSE	
E	15	1	**366-6495**		HOSE (468-CM)	

E - ORDER BY THE CENTIMETER
M - METRIC PART
Y - SEPARATE ILLUSTRATION

419-8980 **PUMP GP-FUEL TRANSFER (*contd.*)** **i05432754**

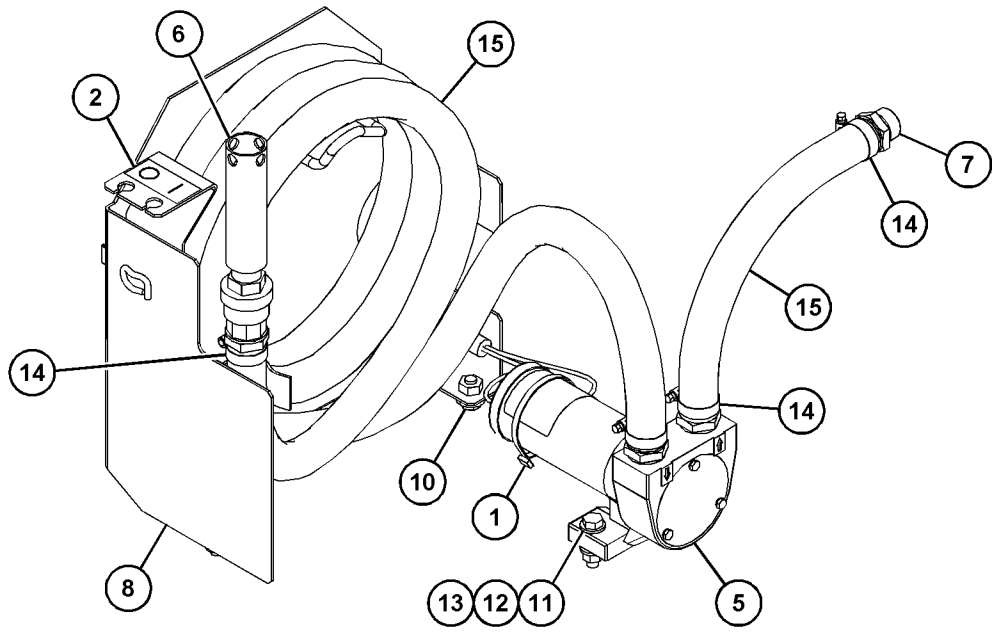

VIEW OF AREA A

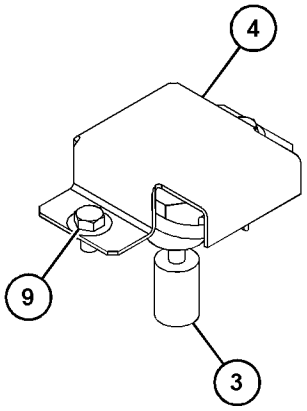

VIEW OF AREA B

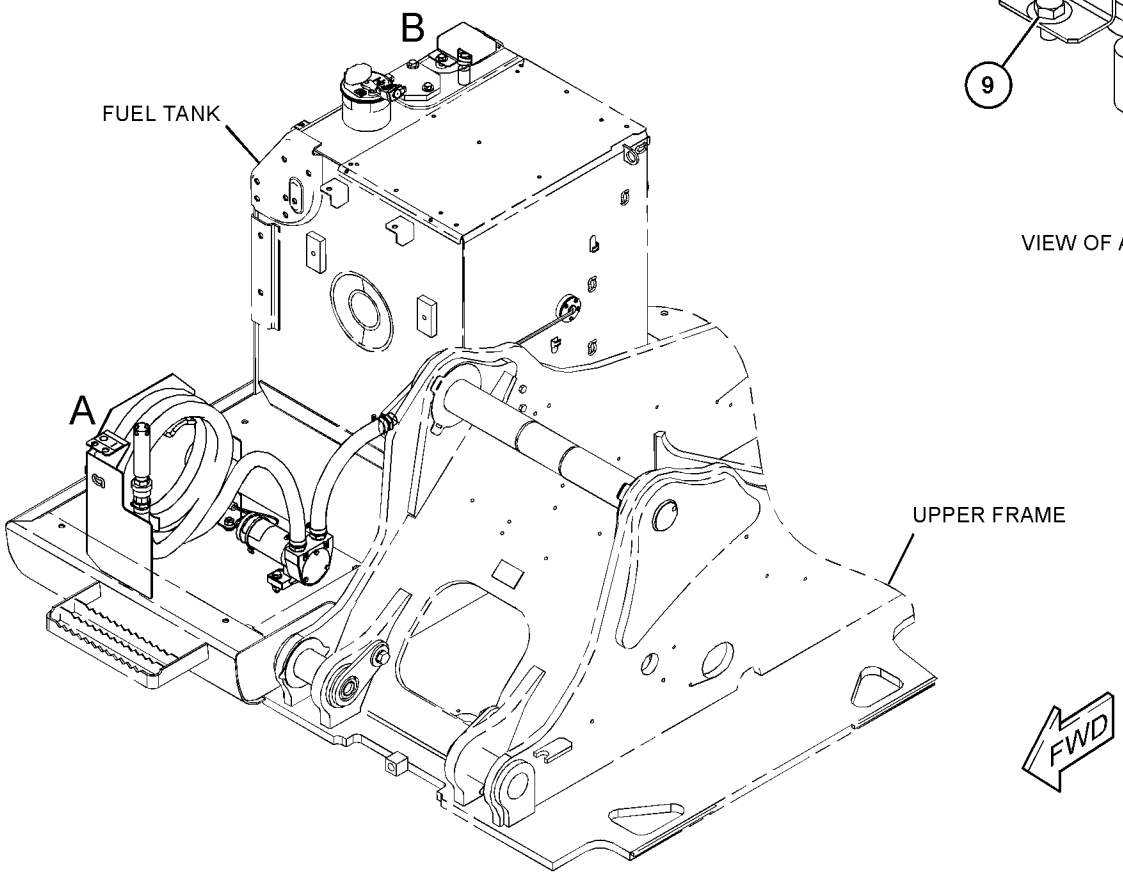

GRAPHIC #1 **<END>** g03430509

394-9639 RAIL GP-FUEL

S/N: BD41-UP

PART OF 450-8077 ENGINE AR-PRIMARY

SMCS-1288 **i05489964**

NOTE	REF NO	GRAPHIC REF	PART NUMBER	QTY	PART NAME 1 2 3 4 5 6 (PRODUCT LEVEL)	SEE PAGE
M	1	1	**6I-0260**	3	BOLT (M8X1.25X25-MM)	
M	2	1	**099-6418**	1	NUT (M6X1-THD)	
	3	1	**206-1826**	2	BOLT	
Y	4	1	*370-5520*	1	LINES GP-FUEL INJECTION	79
	5	1	**375-0482**	4	CLAMP-PIPE	
	6	1	**375-0483**	2	INSERT-CLAMP	
	7	1	**375-2649**	1	RAIL GP-FUEL	
		1	**375-6988**	1	SENSOR (FUEL RAIL PRESSURE)	
		1	**398-6226**	1	VALVE (FUEL RAIL PRESSURE)	
	8	1	**393-2034**	1	LINE AS-FUEL	
	9	1	**393-2035**	1	LINE AS-FUEL	
Y	10	1	**394-0525**	1	LINES GP-FUEL INJECTION	82

M - METRIC PART
Y - SEPARATE ILLUSTRATION

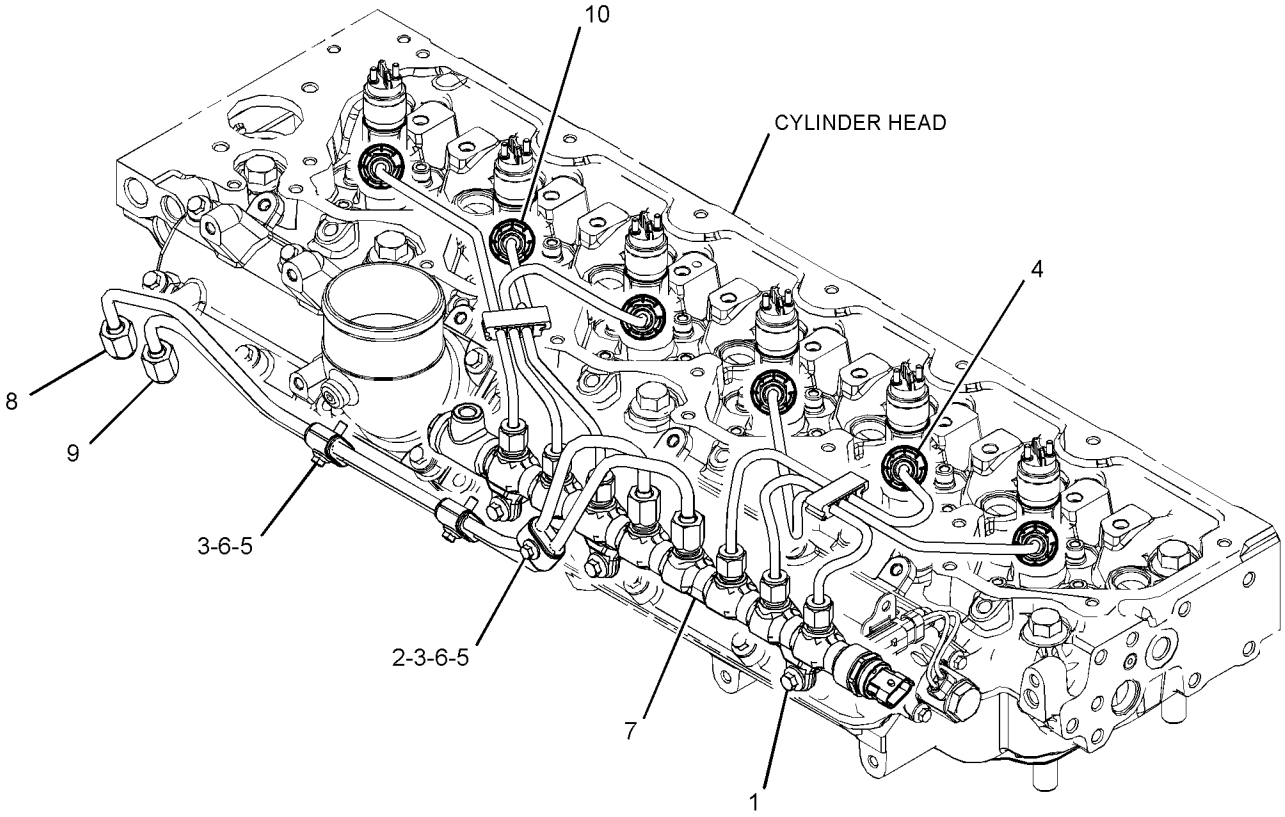

GRAPHIC #1 **<END>** g03380177

417-0270 TANK & MTG GP-FUEL

S/N: JEG1-UP

PART OF 420-3127 CHASSIS AR

SMCS-1273 **i05455657**

NOTE	REF NO	GRAPHIC REF	PART NUMBER	QTY	PART NAME 1 2 3 4 5 6 (PRODUCT LEVEL)	SEE PAGE
	1	1	**246-2641**	1	PADLOCK GP	
		1	**5P-8500**	1	KEY	
	2	1	**085-9310**	4	SPACER (16.6X32X26-MM THK)	
CY	3	1	**438-2505**	1	TANK GP-FUEL	94
M	4	1	**8T-4140**	4	BOLT (M16X2X60-MM)	

C - CHANGE FROM PREVIOUS TYPE
M - METRIC PART
Y - SEPARATE ILLUSTRATION

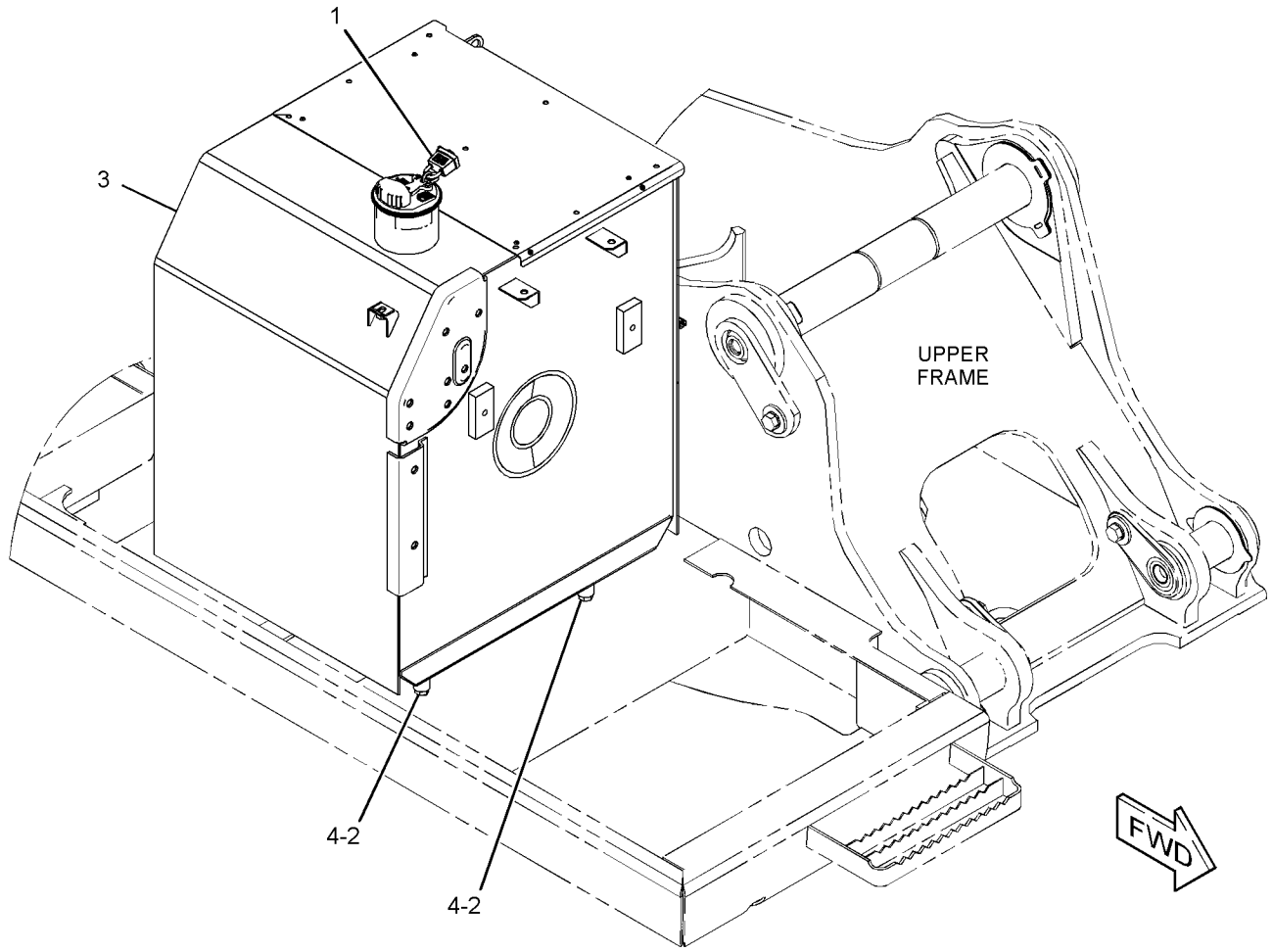

GRAPHIC #1 **<END>** g03468056

445-2221 TANK & MTG GP-FUEL

S/N: JEG1-UP
PART OF 445-2220 TANK AR-FUEL
AN ATTACHMENT

SMCS-1273 **i05431994**

NOTE	REF NO	GRAPHIC REF	PART NUMBER	QTY	PART NAME 1 2 3 4 5 6 (PRODUCT LEVEL)	SEE PAGE
	1	1	**246-2641**	1	PADLOCK GP	
		1	**5P-8500**	1	KEY	
	2	1	**085-9310**	4	SPACER (16.6X32X26-MM THK)	
Y	3	1	**438-2506**	1	TANK GP-FUEL	96
M	4	1	**135-8579**	3	BOLT AS	
M	5	1	**8T-4140**	4	BOLT (M16X2X60-MM)	

M - METRIC PART
Y - SEPARATE ILLUSTRATION

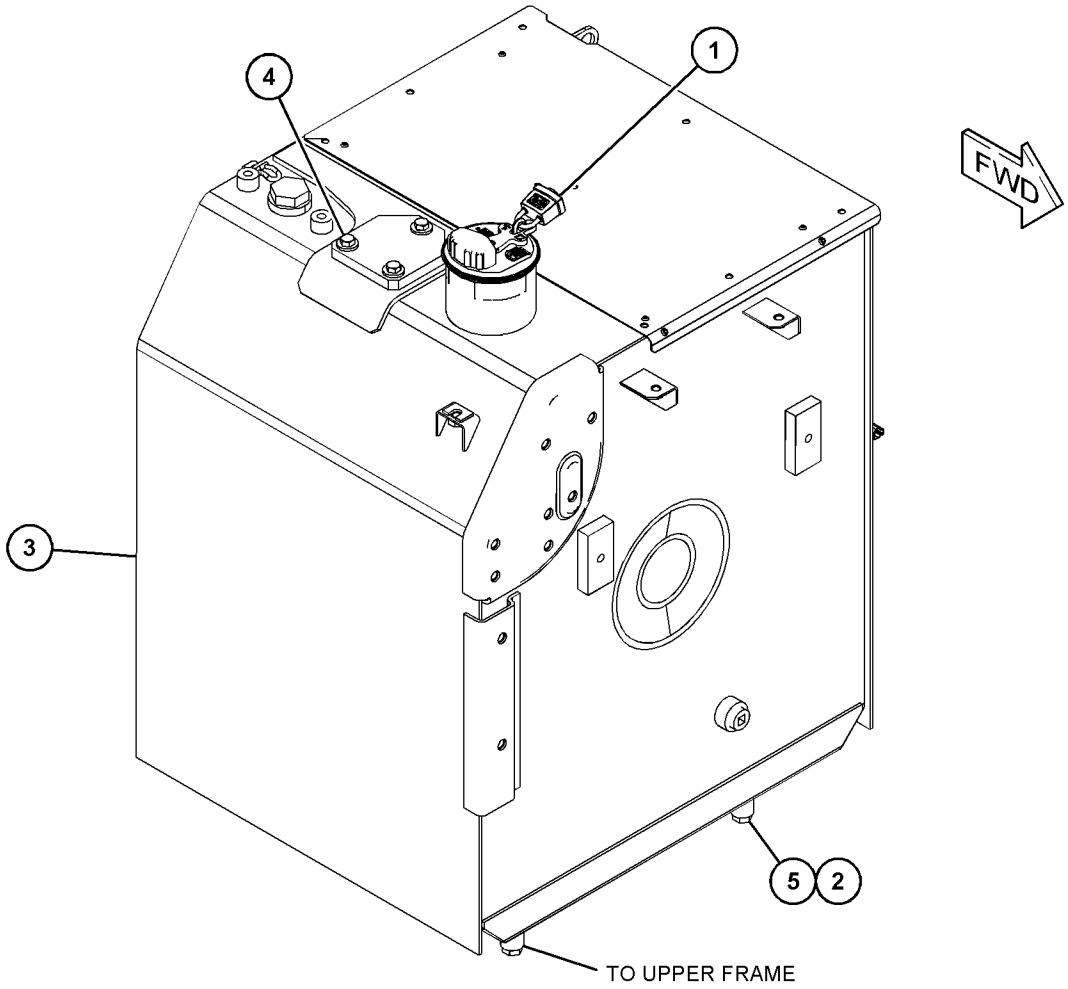

GRAPHIC #1 **<END>** g03429207

445-2220 TANK AR-FUEL

S/N: JEG1-UP

AN ATTACHMENT

SMCS-1273 **i05432012**

NOTE	PART NUMBER	QTY	PART NAME 1 2 3 4 5 6 (PRODUCT LEVEL)	SEE PAGE
Y	*399-2560*	1	COVER AS-SOUND SUPPRESSION (FUEL, HYDRAULIC TANKS)	213
Y	*445-2221*	1	TANK & MTG GP-FUEL	92

Y - SEPARATE ILLUSTRATION

<END>

438-2505 TANK GP-FUEL

S/N: JEG1-UP
390-L (103-US GAL)
PART OF 417-0270 TANK & MTG GP-FUEL

SMCS-1273 **i05455689**

NOTE	REF NO	GRAPHIC REF	PART NUMBER	QTY	PART NAME 1 2 3 4 5 6 (PRODUCT LEVEL)	SEE PAGE
J	1	1	**303-9933**	1	STRAINER AS-FUEL (FLOAT GAUGE)	
	2	1	**341-1842**	1	SENDER AS-FUEL LEVEL	
		1	**8T-8729**	2	PIN-CONNECTOR (16-GA TO 18-GA)	
		1	**102-8802**	1	KIT-RECEPTACLE (2-PIN)	
					(INCLUDES RECEPTACLE AS AND WEDGE)	
	3	1	**349-7059**	1	CAP AS-FUEL (LOCKABLE, VENTED)	
		1	**9X-8600**	1	SEAL-O-RING	
		1	**350-7735**	1	KIT-CAP FILTER (FUEL TANK)	
					(INCLUDES BODY, GASKET, SCREWS & WASHERS)	
	4	1	**359-8335**	1	PACKING	
	5	1	*385-5773*	1	CONNECTOR AS	
		1	**5P-1046**	1	CONNECTOR	
		1	**214-7568**	1	SEAL-O-RING	
	6	1	**8T-0328**	5	WASHER-HARD (5.5X10X1-MM THK)	
M	7	1	**095-0736**	5	SCREW-MACHINE (M5X0.8X10-MM)	
	8	1	**214-7568**	1	SEAL-O-RING	
	9	1	*353-5109*	1	ELBOW AS	
		1	**5P-4906**	1	ELBOW	
		1	**238-5080**	1	SEAL-O-RING	
	10	1	**5P-4924**	1	ELBOW	
					AVAILABLE REPAIR KIT(S):	
J			**303-9937**	1	KIT-GAUGE (FUEL STRAINER)	
					(INCLUDES STOPPER & GAUGE)	

J - KIT MARKED J SERVICES PART(S) MARKED J
M - METRIC PART

438-2505 **TANK GP-FUEL (*contd.*)** **i05455689**

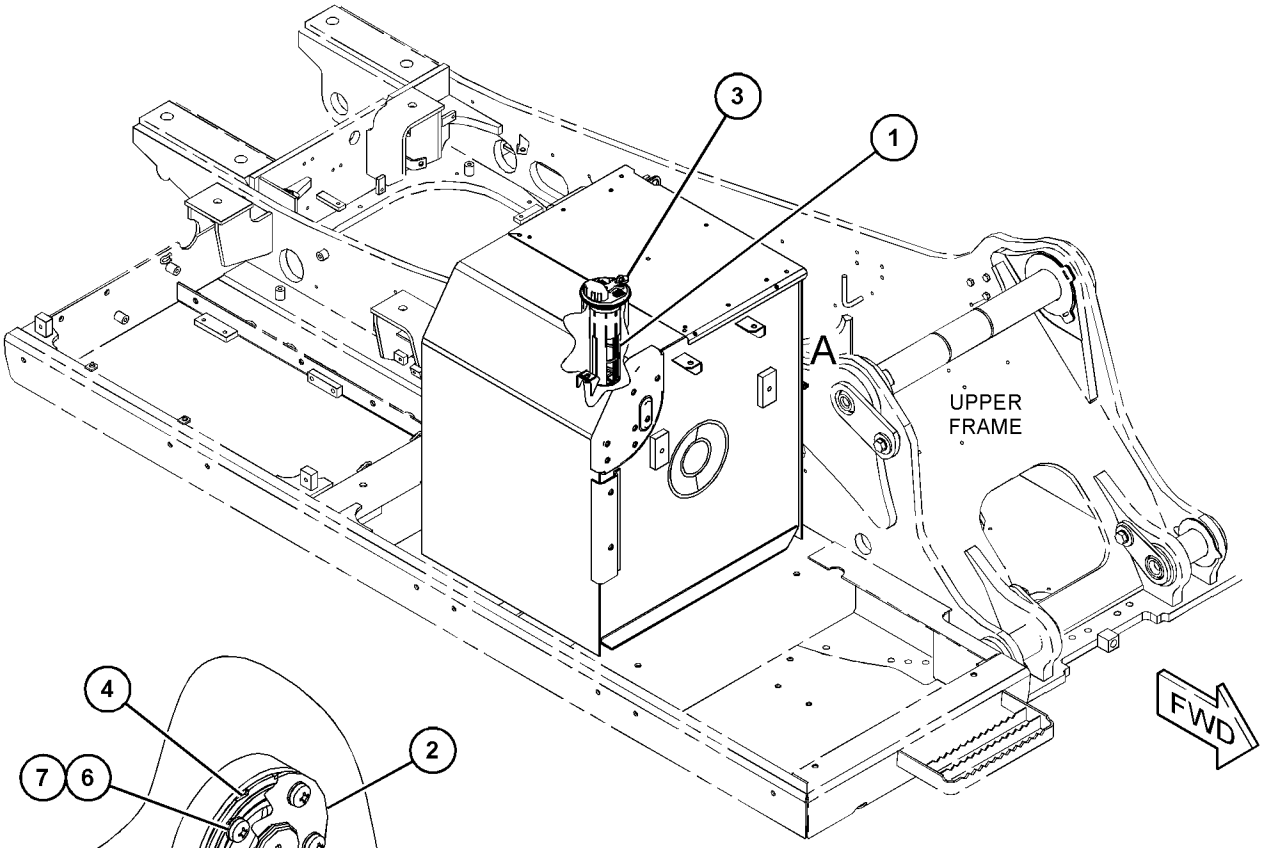

VIEW OF AREA A 90°

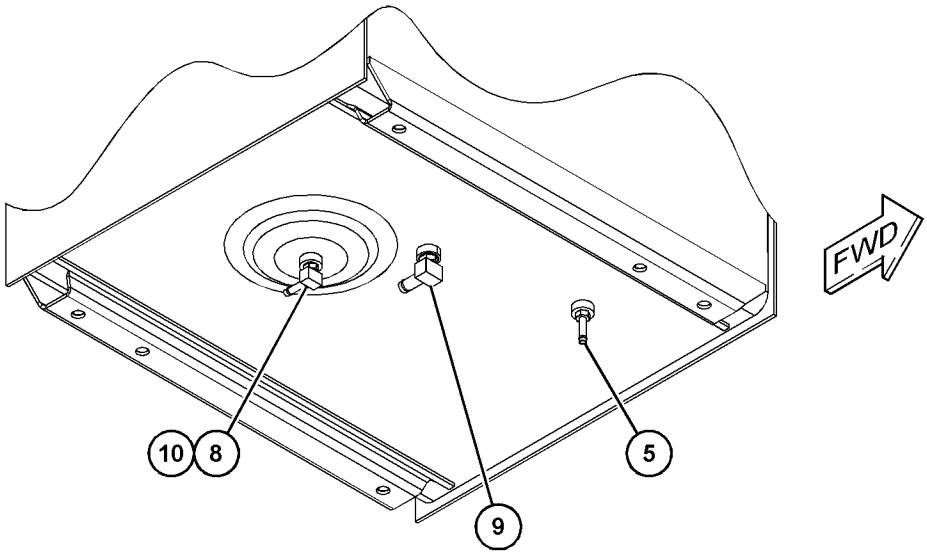

GRAPHIC #1 **<END>** g03498676

438-2506 TANK GP-FUEL

S/N: JEG1-UP
390-L (103-US GAL)
PART OF 445-2221 TANK & MTG GP-FUEL
AN ATTACHMENT

SMCS-1273 **i05432002**

NOTE	REF NO	GRAPHIC REF	PART NUMBER	QTY	PART NAME 1 2 3 4 5 6 (PRODUCT LEVEL)	SEE PAGE
J	1	1	**303-9933**	1	STRAINER AS-FUEL (FLOAT GAUGE)	
	2	1	**341-1842**	1	SENDER AS-FUEL LEVEL	
		1	**9X-3401**	2	PIN-CONNECTOR (16-GA TO 18-GA)	
		1	**102-8802**	1	KIT-RECEPTACLE (2-PIN)	
					(INCLUDES RECEPTACLE AS AND WEDGE)	
L	3	1	**349-7059**	1	CAP AS-FUEL (LOCKABLE, VENTED)	
		1	**9X-8600**	1	SEAL-O-RING	
	4	1	**359-8335**	1	PACKING	
	6	1	*385-5773*	1	CONNECTOR AS	
		1	**5P-1046**	1	CONNECTOR	
		1	**214-7568**	1	SEAL-O-RING	
M	7	1	**095-0736**	5	SCREW-MACHINE (M5X0.8X10-MM)	
	8	1	**214-7568**	1	SEAL-O-RING	
	9	1	*326-0316*	1	PLUG AS	
		1	**9S-6130**	1	PLUG	
		1	**228-7096**	1	SEAL-O-RING	
	10	1	*353-5109*	1	ELBOW AS	
		1	**5P-4906**	1	ELBOW	
		1	**238-5080**	1	SEAL-O-RING	
	11	1	**3B-0551**	1	PLUG-PIPE	
	12	1	**5P-4924**	1	ELBOW	
	13	1	**8T-0328**	5	WASHER-HARD (5.5X10X1-MM THK)	
					AVAILABLE REPAIR KIT(S):	
J			**303-9937**	1	KIT-GAUGE (FUEL STRAINER)	
					(INCLUDES STOPPER & GAUGE)	
L			**350-7735**	1	KIT-CAP FILTER (FUEL TANK)	
					(INCLUDES BREATHER BODY, BREATHER GASKET, MOUNTING SCREWS & NYLON WASHERS)	

J - KIT MARKED J SERVICES PART(S) MARKED J
L - KIT MARKED L SERVICES PART(S) MARKED L
M - METRIC PART

438-2506 **TANK GP-FUEL (*contd.*)** **i05432002**

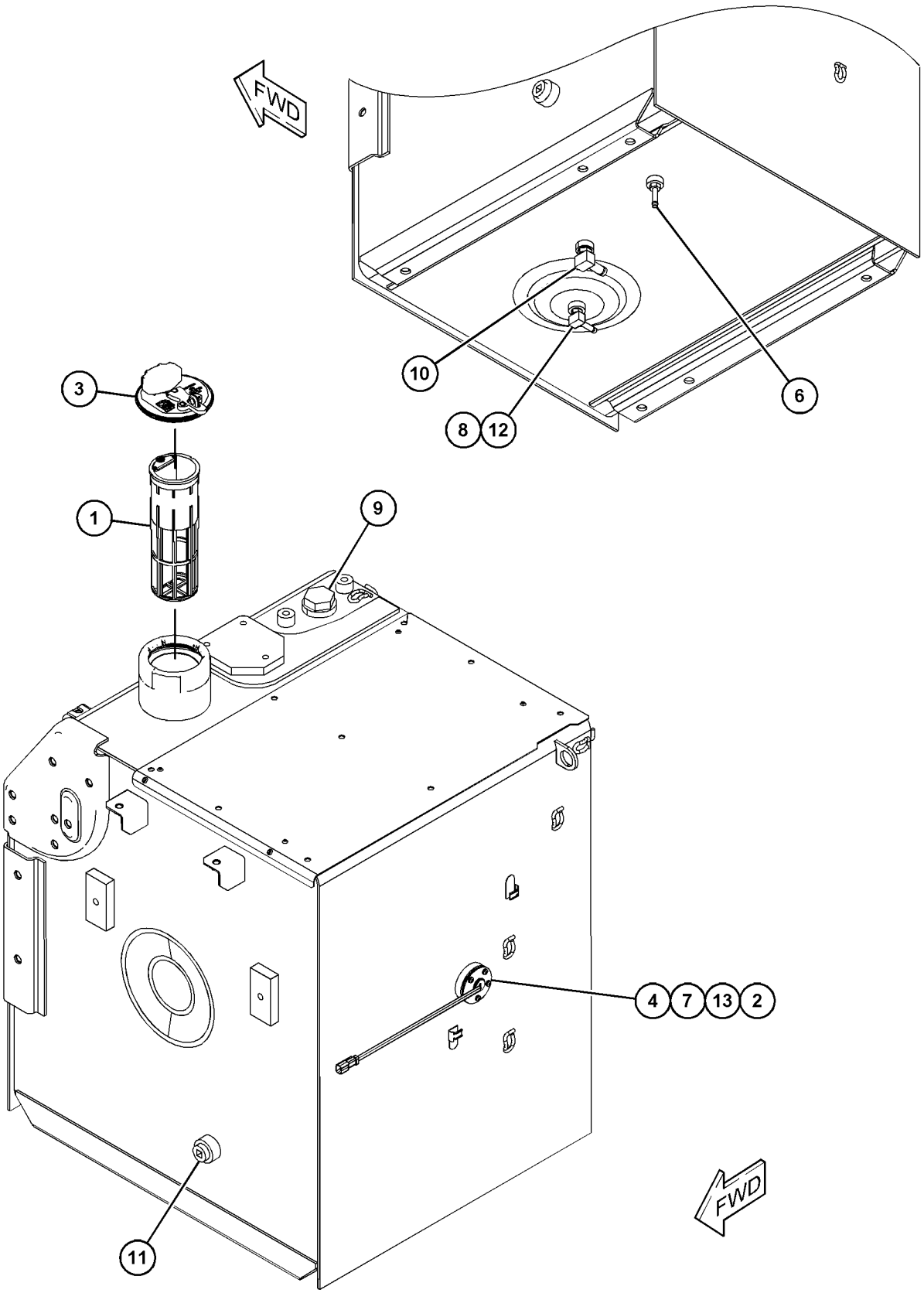

GRAPHIC #1 **<END>** g03429727

132-1829 ALARM GP–FAULT

S/N: JEG1-UP
24-VOLT
PART OF 398-7003 WIRING GP-CAB
ALSO AN ATTACHMENT

SMCS-7400, 7402, 7407 **i03601165**

NOTE	REF NO	GRAPHIC REF	PART NUMBER	QTY	PART NAME 1 2 3 4 5 6 (PRODUCT LEVEL)	SEE PAGE
	1	1	**102-8802**	1	KIT-RECEPTACLE (2-PIN)	
					(INCLUDES RECEPTACLE AS & WEDGE)	
	2	1	**186-3735**	2	PIN-CONNECTOR (16-GA TO 18-GA)	

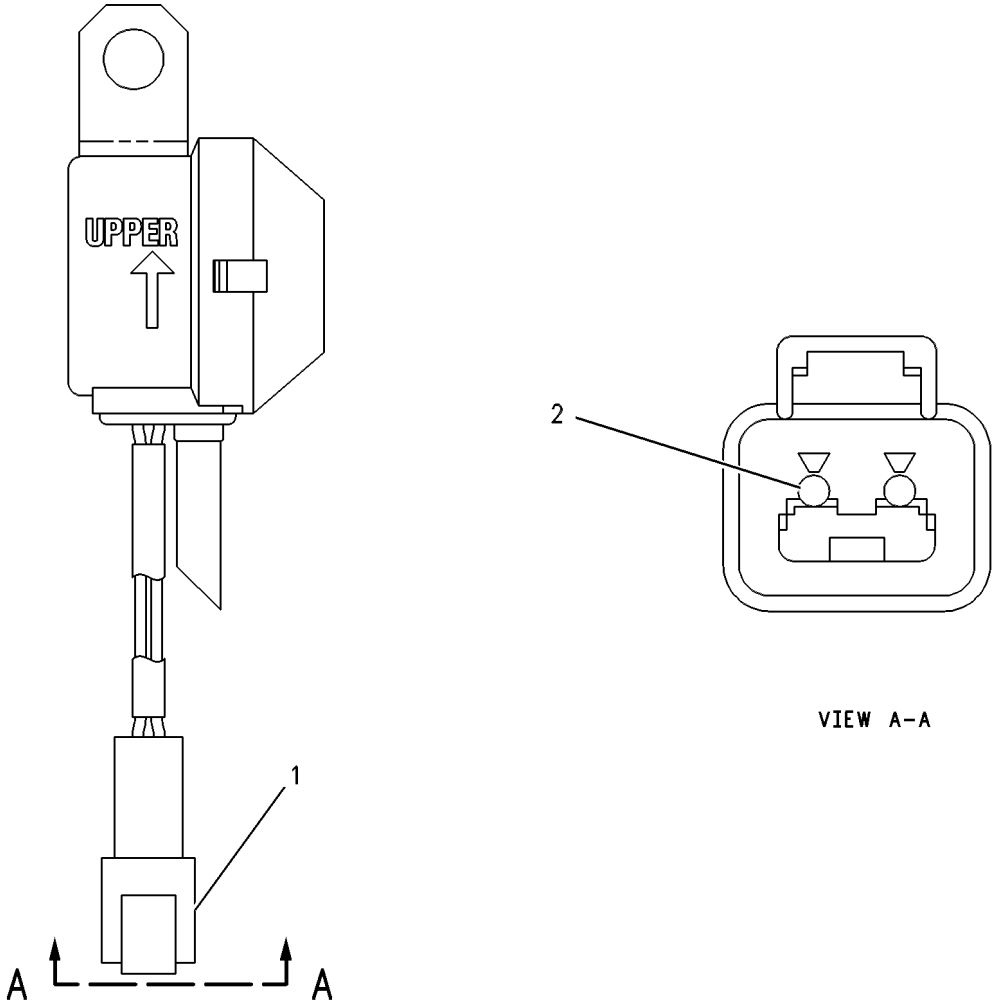

GRAPHIC #1 **<END>** g00272185

231-1771 ALARM GP-TRAVEL–BACKUP

S/N: JEG1-UP

AN ATTACHMENT

SMCS-7429 **i05518254**

NOTE	REF NO	GRAPHIC REF	PART NUMBER	QTY	PART NAME 1 2 3 4 5 6 (PRODUCT LEVEL)	SEE PAGE
	1	1	**213-9100**	1	ALARM AS	
		1	**102-8802**	1	KIT-RECEPTACLE (2-PIN)	
					(INCLUDES RECEPTACLE AS & WEDGE)	
		1	**186-3735**	1	PIN-CONNECTOR (16-GA TO 18-GA)	
E		1	**9X-1813**		SLEEVE (29-CM)	
M	2	1	**8T-4189**	2	BOLT (M8X1.25X20-MM)	
	3	1	**5P-4116**	2	WASHER-HARD (8.8X20.5X2-MM THK)	

E - ORDER BY THE CENTIMETER
M - METRIC PART

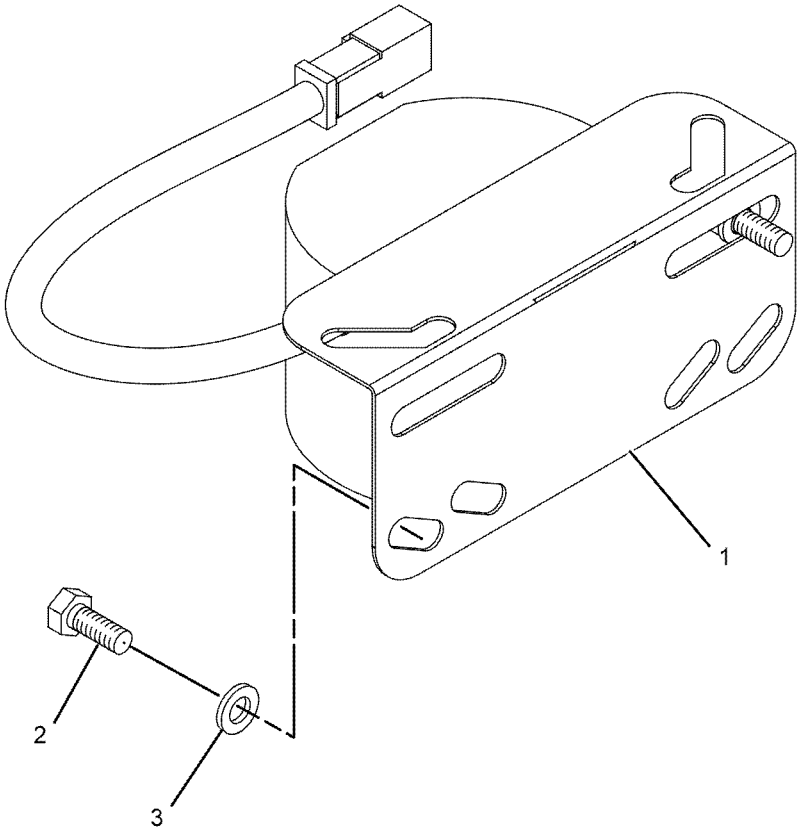

GRAPHIC #1 **<END>** g01071794

392-2026 ALTERNATOR GP-CHARGING

S/N: BD41-UP

PART OF 450-8077 ENGINE AR-PRIMARY

SMCS-1405 **i05498478**

NOTE	REF NO	GRAPHIC REF	PART NUMBER	QTY	PART NAME 1 2 3 4 5 6 (PRODUCT LEVEL)	SEE PAGE
	1	1	**164-7468**	4	BOLT (M10X1.5X95-MM)	
R	2	1	**344-5081**	1	ALTERNATOR GP-CHARGING	

R - REMFG PART MAY BE AVAILABLE

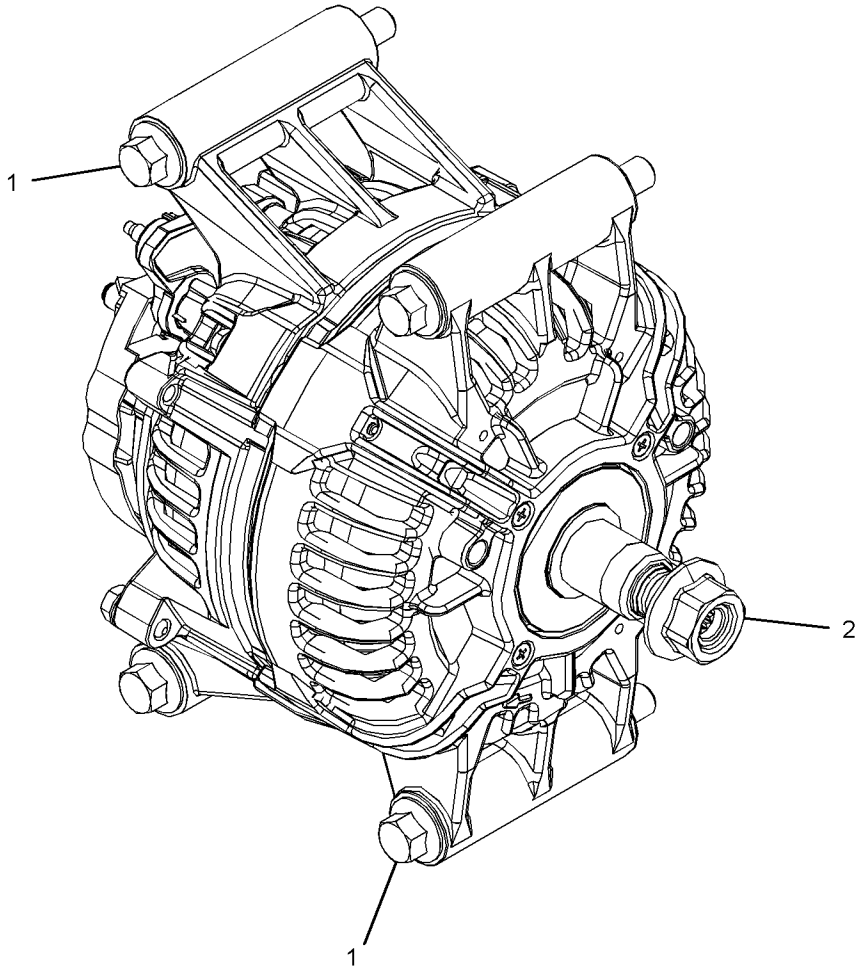

GRAPHIC #1 **<END>** g03481848

399-4265 BATTERY & WIRING GP–COLD WEATHER

S/N: JEG1-UP
PART OF 367-8852 STARTING AID AR-ETHER
AN ATTACHMENT

SMCS-1401, 1402, 1408 **i05439922**

NOTE	REF NO	GRAPHIC REF	PART NUMBER	QTY	PART NAME 1 2 3 4 5 6 (PRODUCT LEVEL)	SEE PAGE
	1	1	**5I-8270**	1	COVER-BATTERY	
	2	1	**6W-6005**	1	HOLD-DOWN-BATTERY	
	3	1	**263-9574**	2	BATTERY GP (12-VOLT, MAINTENANCE FREE)	
	4	1	**170-6929**	1	CABLE AS (JUMPER)	
E		1	**5P-0761**		CABLE (00-GA, RED) (31-CM)	
		1	**9G-0002**	1	COVER AS-TERMINAL (RED)	
		1	**8L-8413**	1	STRAP-CABLE	
		1	**9G-0005**	1	COVER AS-TERMINAL (BLACK)	
		1	**8L-8413**	1	STRAP-CABLE	
		1	**8C-5918**	1	TERMINAL AS (NEGATIVE) (RH)	
		1	**1M-6119**	1	BOLT (5/16-18X1.375-IN)	
		1	**1M-6120**	1	NUT (5/16-18-THD)	
		1	**8T-9756**	1	TERMINAL AS (POSITIVE) (LH)	
		1	**1M-6119**	1	BOLT (5/16-18X1.375-IN)	
		1	**1M-6120**	1	NUT (5/16-18-THD)	
	5	1	**204-1673**	1	STRAP-CABLE	
	6	1	**238-2501**	1	KNOB	
	7	1	**238-2528**	1	ROD	
	8	1	**259-5225**	1	SUPPORT AS	
	9	1	**259-5229**	1	CABLE AS (DISCONNECT)	
		1	**1S-7252**	1	TERMINAL-CABLE (00-GA, 3/8-IN SCREW)	
E		1	**5P-0747**		CABLE (00-GA, BLACK) (89-CM)	
		1	**9G-0003**	1	COVER AS-TERMINAL (BLACK)	
		1	**8L-8413**	1	STRAP-CABLE	
		1	**8T-9757**	1	TERMINAL AS-BATTERY (NEGATIVE)	
		1	**1M-6119**	1	BOLT (5/16-18X1.375-IN)	
		1	**1M-6120**	1	NUT (5/16-18-THD)	
Y	10	1	**379-7489**	1	SHEET AS-SOUND SUPPRESSION	238
	11	1	**388-6788**	1	CABLE AS (STARTER)	
		1	**1S-7252**	1	TERMINAL-CABLE (00-GA, 3/8-IN SCREW)	
		1	**9G-0004**	1	COVER AS-TERMINAL (RED)	
		1	**8L-8413**	1	STRAP-CABLE	
		1	**8C-5917**	1	TERMINAL AS-BATTERY (POSITIVE)	
		1	**1M-6119**	1	BOLT (5/16-18X1.375-IN)	
		1	**1M-6120**	1	NUT (5/16-18-THD)	
E		1	**159-8049**		CABLE (00-GA, RED) (194-CM)	
	12	1	**4K-8864**	2	CLIP	
M	13	1	**5C-7261**	1	NUT (M8X1.25-THD)	
	14	1	**6K-8178**	2	CLIP	
	15	1	**8T-4121**	1	WASHER-HARD (11X21X2.5-MM THK)	
M	16	1	**8T-4133**	1	NUT (M10X1.5-THD)	
M	17	1	**8T-4191**	1	BOLT (M10X1.5X16-MM)	
M	18	1	**8T-4192**	4	BOLT (M12X1.75X25-MM)	
	19	1	**8T-4223**	4	WASHER-HARD (13.5X25.5X3-MM THK)	
	20	1	**8T-4226**	1	WASHER-PLATED (10.5X45X3-MM THK)	

E - ORDER BY THE CENTIMETER
M - METRIC PART
Y - SEPARATE ILLUSTRATION

399-4265 **BATTERY & WIRING GP (*contd.*)** **i05439922**

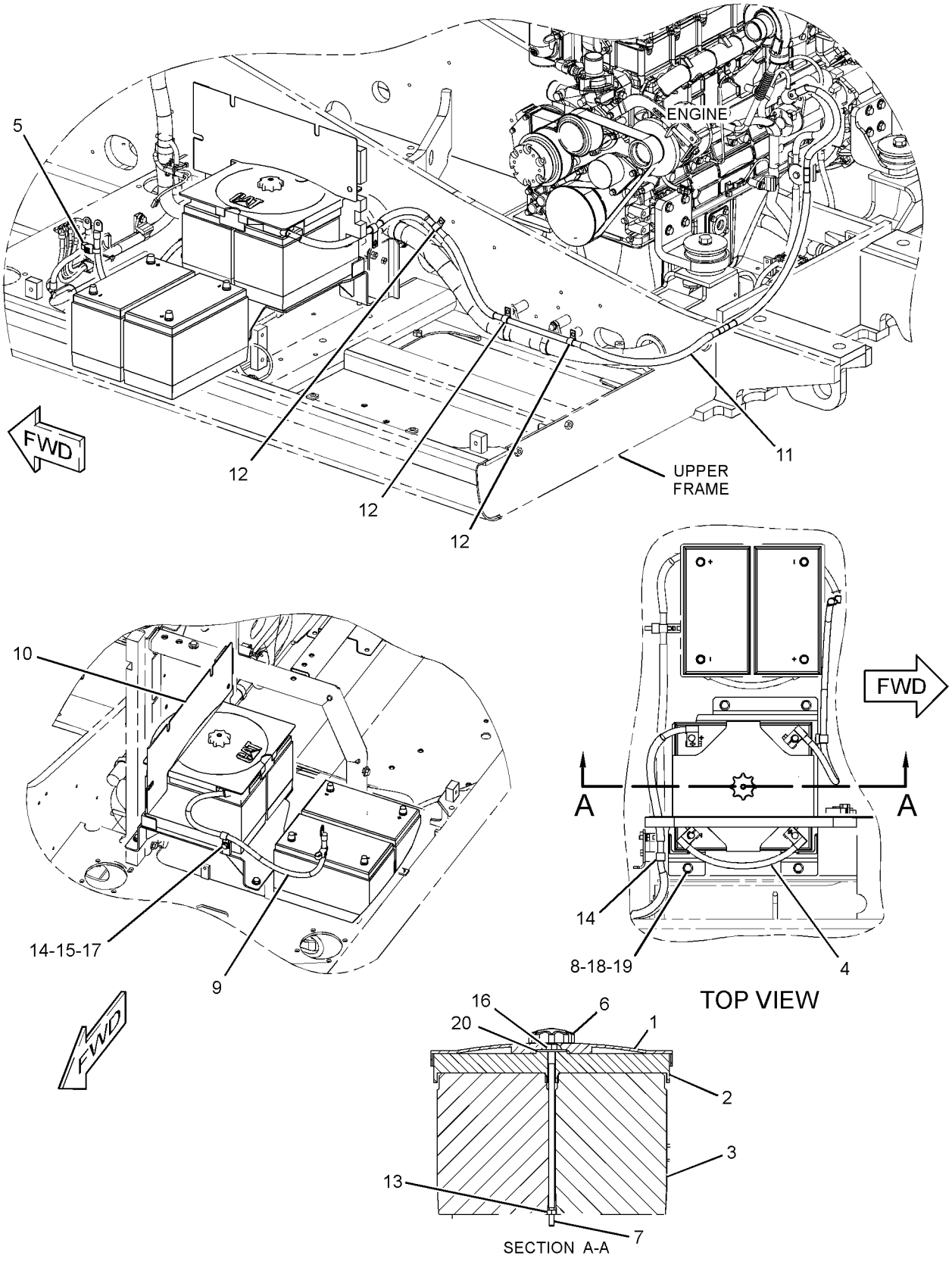

GRAPHIC #1 **<END>** g01506303

418-0743 BATTERY & WIRING GP

S/N: JEG1-UP

PART OF 420-3127 CHASSIS AR

SMCS-1401, 1402, 1408 **i05459791**

NOTE	REF NO	GRAPHIC REF	PART NUMBER	QTY	PART NAME 1 2 3 4 5 6 (PRODUCT LEVEL)	SEE PAGE
	1	1	**2G-8767**	3	WASHER (10.5X60X3-MM THK)	
	2	1	**5I-8270**	1	COVER-BATTERY	
	3	1	**6G-2256**	2	CLAMP	
	4	1	**6G-2263**	2	SPACER (10.5X19X28.5-MM THK)	
	5	1	**6W-6005**	1	HOLD-DOWN-BATTERY	
	6	1	**091-9035**	1	SPACER (11X25X20-MM THK)	
	7	1	**132-1805**	1	STRAP AS-GROUND	
	8	1	**134-3355**	2	STRAP AS	
	9	1	**170-6929**	1	CABLE AS	
E		1	**159-8049**		CABLE (00-GA, RED) (31-CM)	
		1	**9G-0002**	1	COVER AS-TERMINAL (RED)	
		1	**9G-0005**	1	COVER AS-TERMINAL (BLACK)	
					(EACH TERMINAL COVER AS INCLUDES)	
		1	**8L-8413**	1	STRAP-CABLE	
		1	**8C-5918**	1	TERMINAL AS (NEGATIVE)	
		1	**8T-9756**	1	TERMINAL AS (POSITIVE)	
					(EACH TERMINAL AS INCLUDES)	
		1	**1M-6119**	1	BOLT (5/16-18X1.375-IN)	
		1	**1M-6120**	1	NUT (5/16-18-THD)	
	10	1	**231-1827**	1	CABLE AS	
		1	**1S-7252**	1	TERMINAL-CABLE (00-GA, 3/8-IN SCREW)	
E		1	**159-8050**		CABLE (00-GA, BLACK) (23-CM)	
		1	**9G-0003**	1	COVER AS-TERMINAL (BLACK)	
		1	**8L-8413**	1	STRAP-CABLE	
		1	**9G-8909**	1	COVER-TERMINAL (BLACK)	
		1	**8T-9757**	1	TERMINAL AS-BATTERY (NEGATIVE)	
		1	**1M-6119**	1	BOLT (5/16-18X1.375-IN)	
		1	**1M-6120**	1	NUT (5/16-18-THD)	
	11	1	**238-2501**	1	KNOB	
	12	1	**238-2528**	1	ROD	
	13	1	**9X-3404**	2	BATTERY (12-VOLT, MAINTENANCE FREE, WET)	
					—OR—	
			115-2422	2	BATTERY GP (12-VOLT, MAINTENANCE FREE, WET)	
					(EACH INCLUDES)	
			123-1373	6	CAP AS-FILLER (BATTERY)	
	14	1	**388-6760**	1	CABLE AS	
		1	**1S-7252**	1	TERMINAL-CABLE (00-GA, 3/8-IN SCREW)	
D		1	**6V-2722**		TUBE-HEAT SHRINK (25.4-MM DIA) (0.1-M)	
		1	**8N-0869**	1	COVER-TERMINAL (RED)	
		1	**9G-0004**	1	COVER AS-TERMINAL (RED)	
		1	**8L-8413**	1	STRAP-CABLE	
		1	**8C-5917**	1	TERMINAL AS-BATTERY (POSITIVE)	
		1	**1M-6119**	1	BOLT (5/16-18X1.375-IN)	
		1	**1M-6120**	1	NUT (5/16-18-THD)	
E		1	**159-8049**		CABLE (00-GA, RED) (239-CM)	
	15	1	**418-0744**	1	BRACKET AS	
M		1	**7Y-8763**	1	BOSS (M10X1.5X25-MM)	
	16	1	**204-1673**	1	STRAP-CABLE	
	17	1	**4K-8864**	1	CLIP	
M	18	1	**5C-7261**	1	NUT (M8X1.25-THD)	
	19	1	**6K-8178**	3	CLIP	
M	20	1	**7X-2621**	1	BOLT (M10X1.5X12-MM)	
	21	1	**8T-4121**	11	WASHER-HARD (11X21X2.5-MM THK)	
M	22	1	**8T-4133**	1	NUT (M10X1.5-THD)	
M	23	1	**8T-4136**	3	BOLT (M10X1.5X25-MM)	
M	24	1	**8T-4137**	3	BOLT (M10X1.5X20-MM)	
M	25	1	**8T-4182**	1	BOLT (M10X1.5X45-MM)	

418-0743 **BATTERY & WIRING GP (*contd.*)** **i05459791**

NOTE	REF NO	GRAPHIC REF	PART NUMBER	QTY	PART NAME 1 2 3 4 5 6 (PRODUCT LEVEL)	SEE PAGE
M	26	1	**8T-4185**	1	BOLT (M10X1.5X50-MM)	
	27	1	**8T-4226**	1	WASHER-PLATED (10.5X45X3-MM THK)	
M	28	1	**8T-6466**	1	BOLT (M10X1.5X60-MM)	
M	29	1	**8T-9515**	2	BOLT-SOCKET HEAD (M10X1.5X40-MM)	

D - ORDER BY THE METER
E - ORDER BY THE CENTIMETER
M - METRIC PART

418-0743 **BATTERY & WIRING GP (*contd.*)** **i05459791**

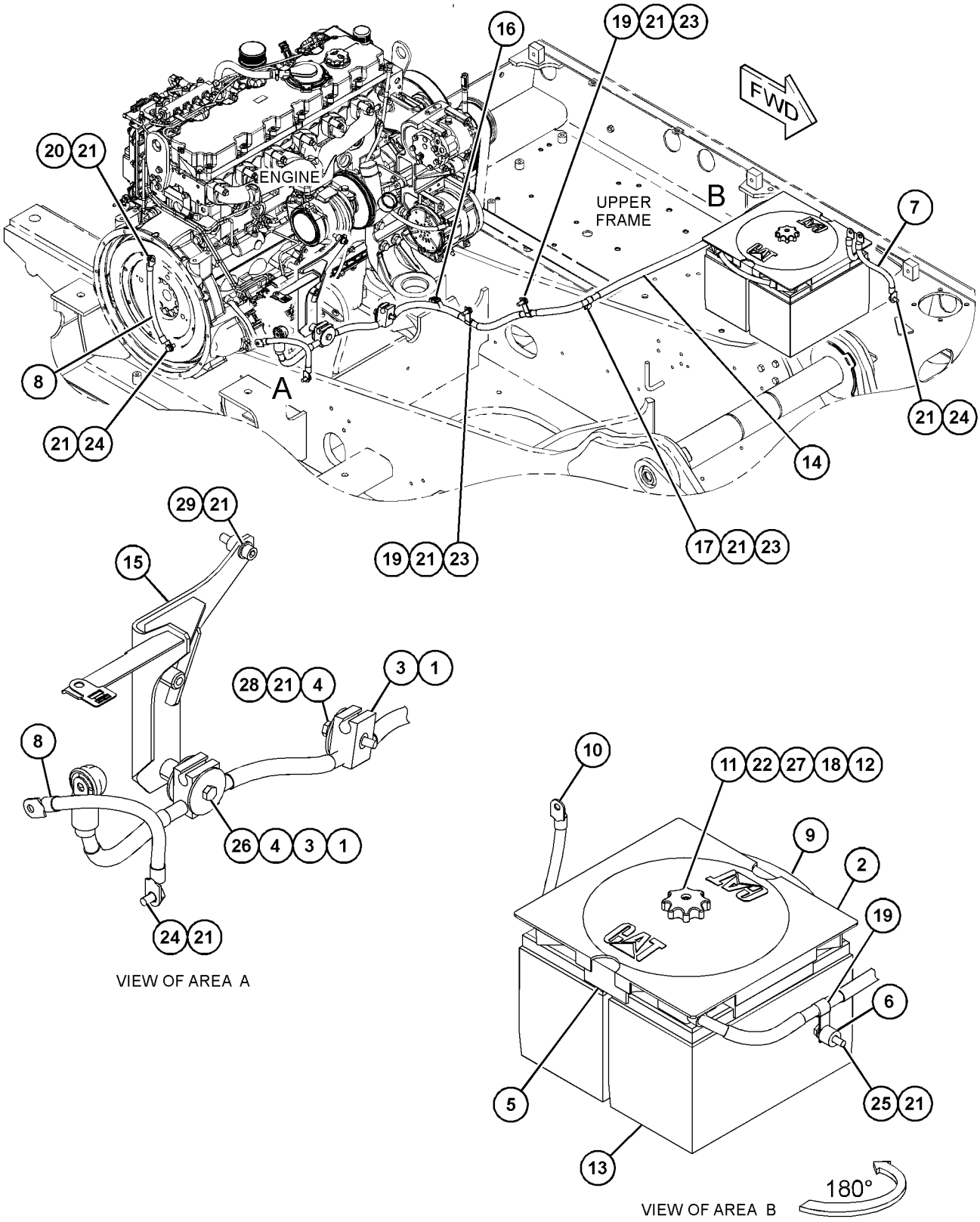

GRAPHIC #1 **<END>** g03466937

9W-0742 BLOCK GP-JUNCTION–BATTERY

S/N: JEG1-UP

PART OF 369-0249 WIRING GP-ENGINE

AN ATTACHMENT

SMCS-7426 **i05516250**

NOTE	REF NO	GRAPHIC REF	PART NUMBER	QTY	PART NAME 1 2 3 4 5 6 (PRODUCT LEVEL)	SEE PAGE
	1	1	**435-2848**	1	COVER-TERMINAL	
	2	1	**7F-0560**	6	WASHER (0.516X0.938X0.101-IN THK)	
	3	1	**8T-3518**	6	NUT-FULL (1/2-13-THD)	
	4	1	**8C-6358**	1	BLOCK AS-JUNCTION (BATTERY)	

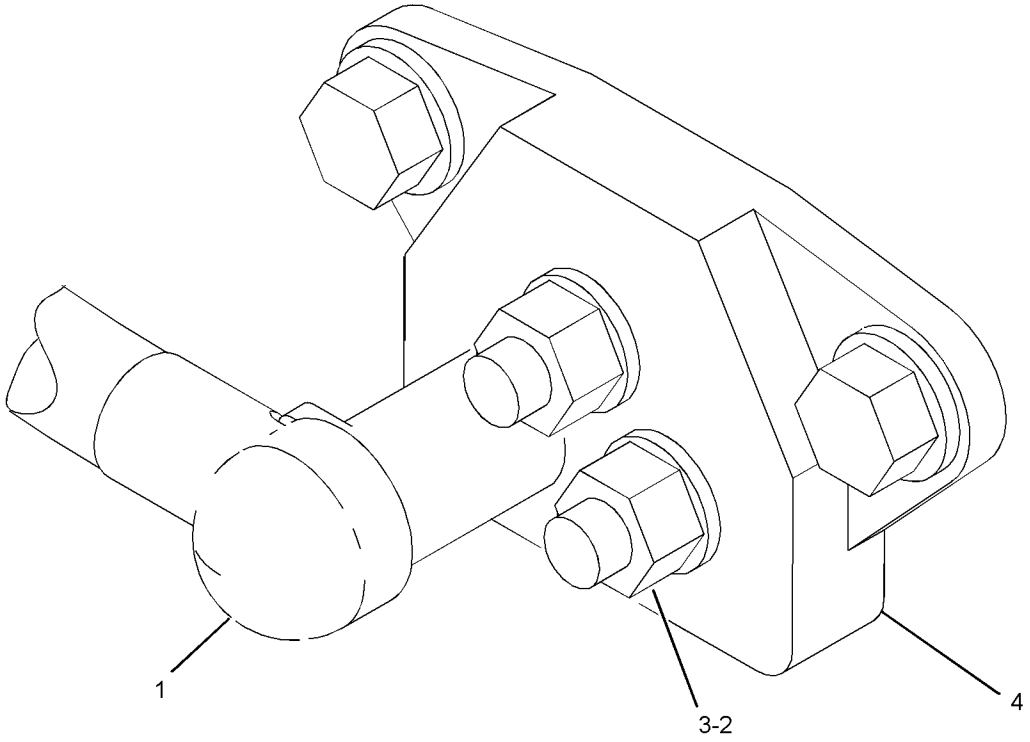

GRAPHIC #1 **<END>** g03490479

309-5881 CONTROL & MTG GP-COMMUNICATION—PRODUCT LINK

121SR

S/N: JEG1-UP

PART OF 383-5427 INSTALLATION AR-COMMUNICATION

AN ATTACHMENT

SMCS-7606 **i03483782**

NOTE	REF NO	GRAPHIC REF	PART NUMBER	QTY	PART NAME 1 2 3 4 5 6 (PRODUCT LEVEL)	SEE PAGE
	1	1	**3S-2093**	1	STRAP-CABLE	
	2	1	**7K-1181**	3	STRAP-CABLE	
Y	3	1	**263-9088**	1	RADIO GP-COMMUNICATION (PRODUCT LINK 121SR)	140
	4	1	**111-4836**	1	CLIP	
	5	1	**8T-4121**	1	WASHER-HARD (11X21X2.5-MM THK)	
M	6	1	**8T-4137**	1	BOLT (M10X1.5X20-MM)	
M	7	1	**8T-4138**	4	BOLT (M6X1X20-MM)	
	8	1	**9X-8256**	4	WASHER (6.6X12X2-MM THK)	
	9	1	**230-1340**	1	FILM-WARNING (PRODUCT LINK RADIO, U.S.)	
					—OR—	
		1	**230-1341**	1	FILM-WARNING (PRODUCT LINK RADIO, INTL)	
	10	1	**307-0047**	1	FILM-INFORMATION (PRODUCT LINK, READ OMM)	

M - METRIC PART
Y - SEPARATE ILLUSTRATION

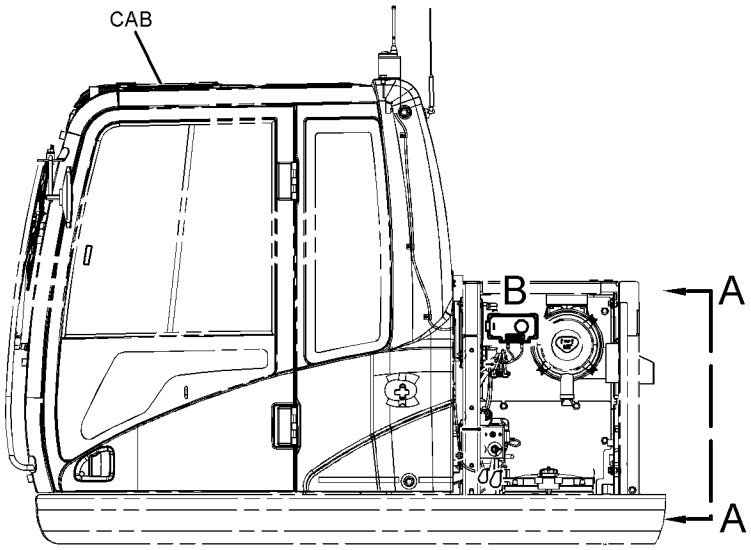

LEFT SIDE VIEW

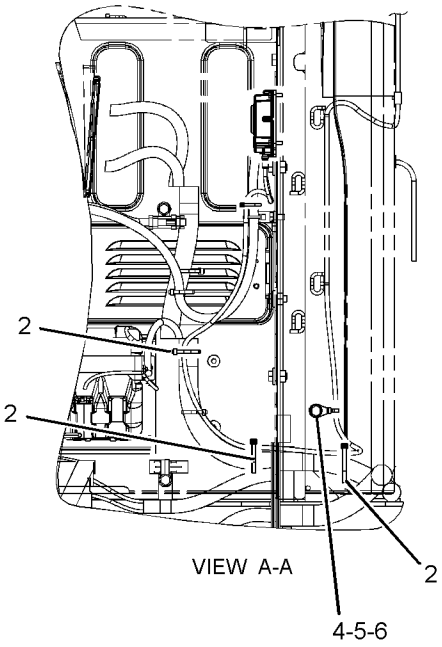

VIEW A-A

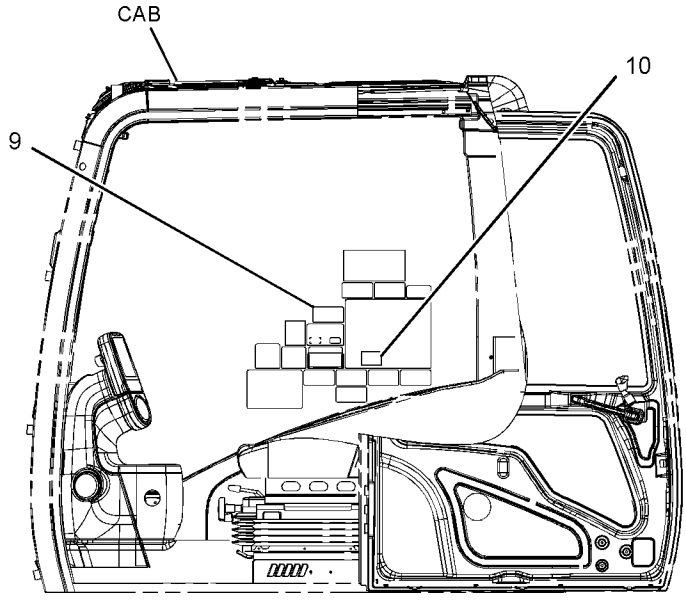

LEFT SIDE VIEW

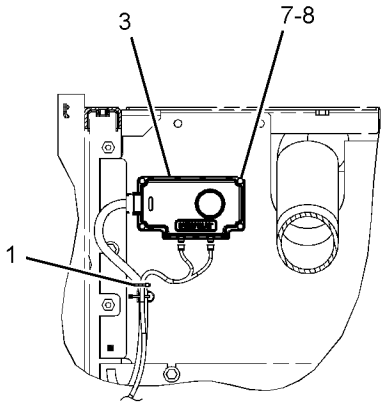

VIEW OF AREA B

GRAPHIC #1 **<END>** g01778333

418-1084 CONTROL & MTG GP-COMMUNICATION–PRODUCT LINK

321SR

S/N: JEG1-UP

PART OF 383-5427 INSTALLATION AR-COMMUNICATION

AN ATTACHMENT

SMCS-7606 **i05438943**

NOTE	REF NO	GRAPHIC REF	PART NUMBER	QTY	PART NAME 1 2 3 4 5 6 (PRODUCT LEVEL)	SEE PAGE
	1	1	**8C-5608**	4	SPACER (6.5X9.5X25.4-MM THK)	
	2	1	**9X-9896**	8	MOUNT (ISOLATION)	
Y	3	1	*428-7937*	1	ELECTRONICS GP-COMMUNICATION (PRODUCT LINK, VIMS)	112
M	4	1	**8C-8451**	4	BOLT (M6X1X40-MM)	
	5	1	**9X-6165**	4	WASHER (6.5X22X2.5-MM THK)	

M - METRIC PART
Y - SEPARATE ILLUSTRATION

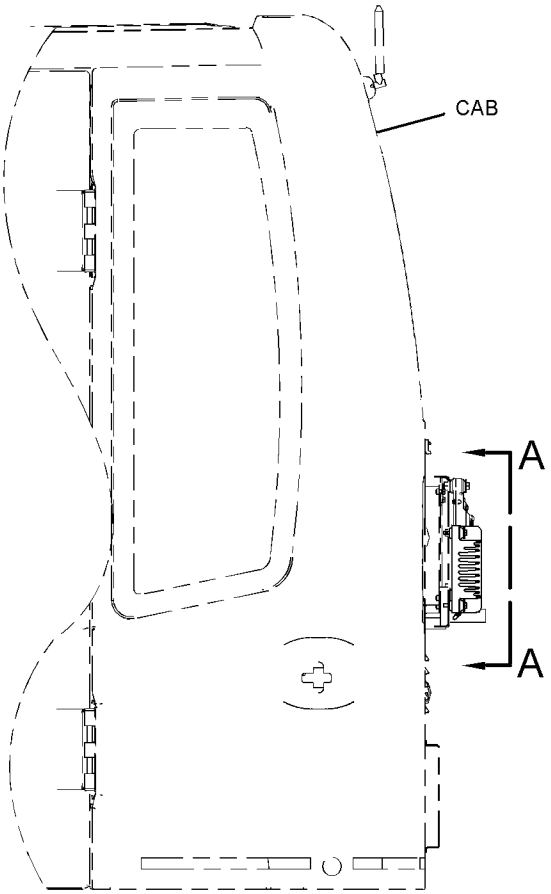

LEFT SIDE VIEW

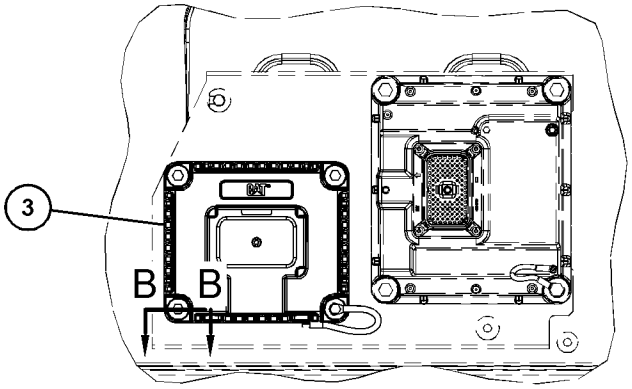

VIEW A-A

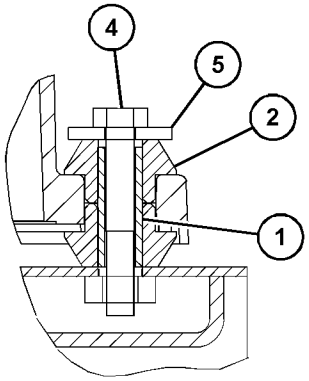

SECTION B-B

GRAPHIC #1 **<END>** g03444237

399-2618 CONTROL & MTG GP-ELECTRONIC

S/N: JEG1-UP

PART OF 422-0645 OPERATOR AR-ENCLOSED ROPS

SMCS-1901, 3168, 7490, 7610 **i05460590**

NOTE	REF NO	GRAPHIC REF	PART NUMBER	QTY	PART NAME 1 2 3 4 5 6 (PRODUCT LEVEL)	SEE PAGE
	1	1	**155-0576**	8	MOUNT-ISOLATION	
	2	1	**386-3444**	1	CONTROL GP-UNPROGRAMMED	
	3	1	**421-5857**	1	BRACKET AS	
	4	1	**6I-1418**	4	SPACER (8.2X12.7X28.7-MM THK)	
M	5	1	**7X-0818**	4	BOLT (M8X1.25X45-MM)	
	6	1	**8T-4224**	1	WASHER-HARD (8.8X16X2-MM THK)	
M	7	1	**8T-4970**	4	BOLT (M6X1X14-MM)	
	8	1	**9N-0869**	8	WASHER-HARD (8.8X25.5X2-MM THK)	
	9	1	**9X-8256**	4	WASHER (6.6X12X2-MM THK)	

M - METRIC PART

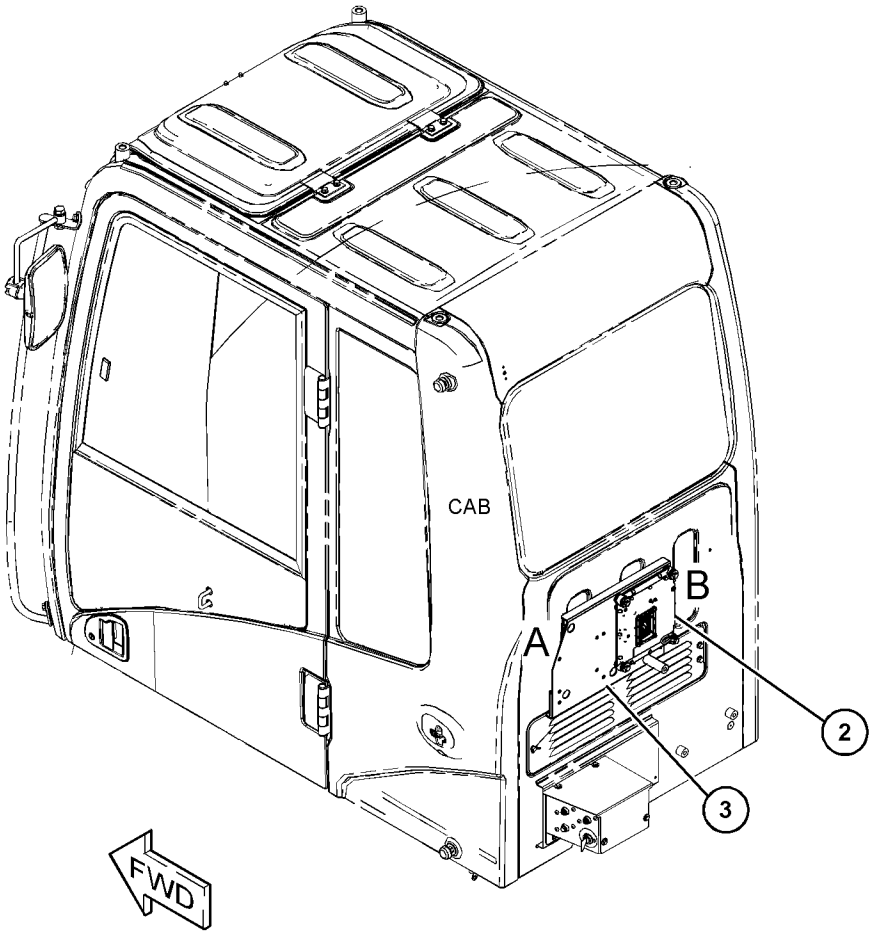

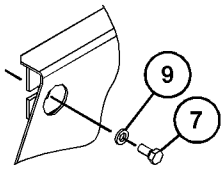

VIEW OF AREA A

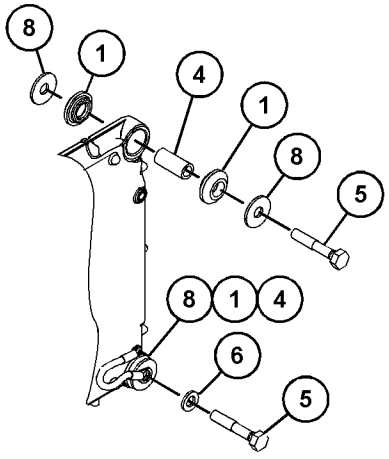

VIEW OF AREA B

GRAPHIC #1 **<END>** g03457163

371-2537 CONTROL GP-ENGINE ELECTRONIC

S/N: BD41-UP

PART OF 450-8077 ENGINE AR-PRIMARY

SMCS-1901 **i05416759**

NOTE	REF NO	GRAPHIC REF	PART NUMBER	QTY	PART NAME 1 2 3 4 5 6 (PRODUCT LEVEL)	SEE PAGE
	1	1	**7W-2632**	1	WASHER (8.5X16.8X1.6-MM THK)	
	2	1	**217-0099**	4	SPACER (8.2X25X2-MM THK)	
	3	1	**278-5203**	4	SPACER	
	4	1	**155-0576**	8	MOUNT-ISOLATION	
	5	1	**6I-0456**	4	BOLT (M8X1.25X45-MM)	

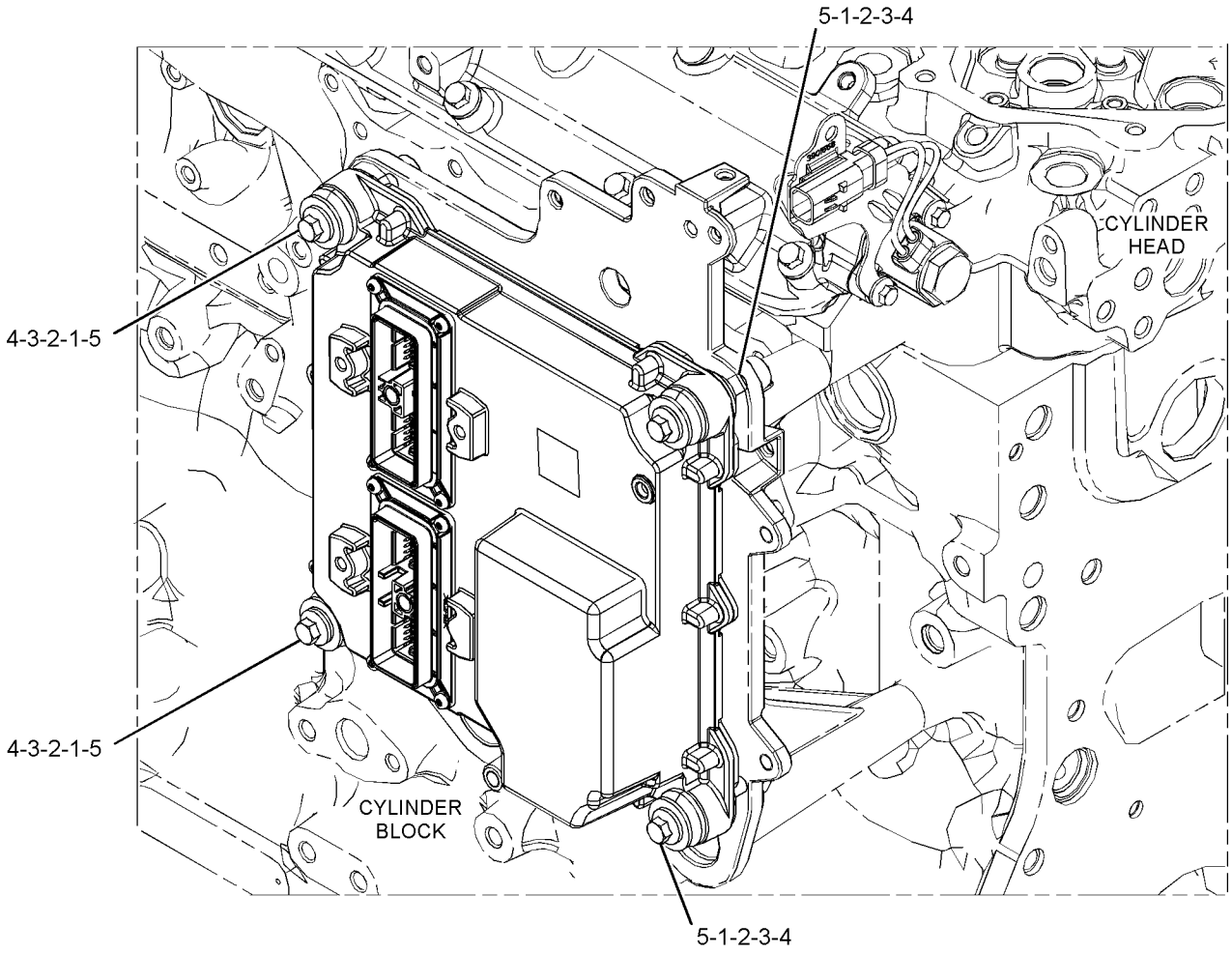

GRAPHIC #1 **<END>** g03379047

428-7937 ELECTRONICS GP-COMMUNICATION

S/N: JEG1-UP
PART OF 418-1084 CONTROL & MTG GP-COMMUNICATION
AN ATTACHMENT

SMCS-7606, 7610, 7620 **i05438945**

NOTE	PART NUMBER	QTY	PART NAME 1 2 3 4 5 6 (PRODUCT LEVEL)	SEE PAGE
	419-0120	1	SOFTWARE GP-MONITOR (VIMS MAIN, PROGRAM)	

<END>

383-5313 ELECTRONICS GP-MACHINE—HIGH POWER

S/N: JEG1-UP
PART OF 419-5434 GENERAL AR

SMCS-7610, 7620 **i05455230**

NOTE	PART NUMBER	QTY	PART NAME 1 2 3 4 5 6 (PRODUCT LEVEL)	SEE PAGE
	383-5314	1	SOFTWARE GP-MACHINE	

<END>

259-5237 FASTENER GP-WIRING HARNESS—HEAVY LIFT

S/N: JEG1-UP

PART OF 383-5083 HYDRAULIC AR

SMCS-1408, 7553 **i04007491**

NOTE	REF NO	GRAPHIC REF	PART NUMBER	QTY	PART NAME 1 2 3 4 5 6 (PRODUCT LEVEL)	SEE PAGE
	1	1	**7I-2673**	1	STRAP - CABLE	

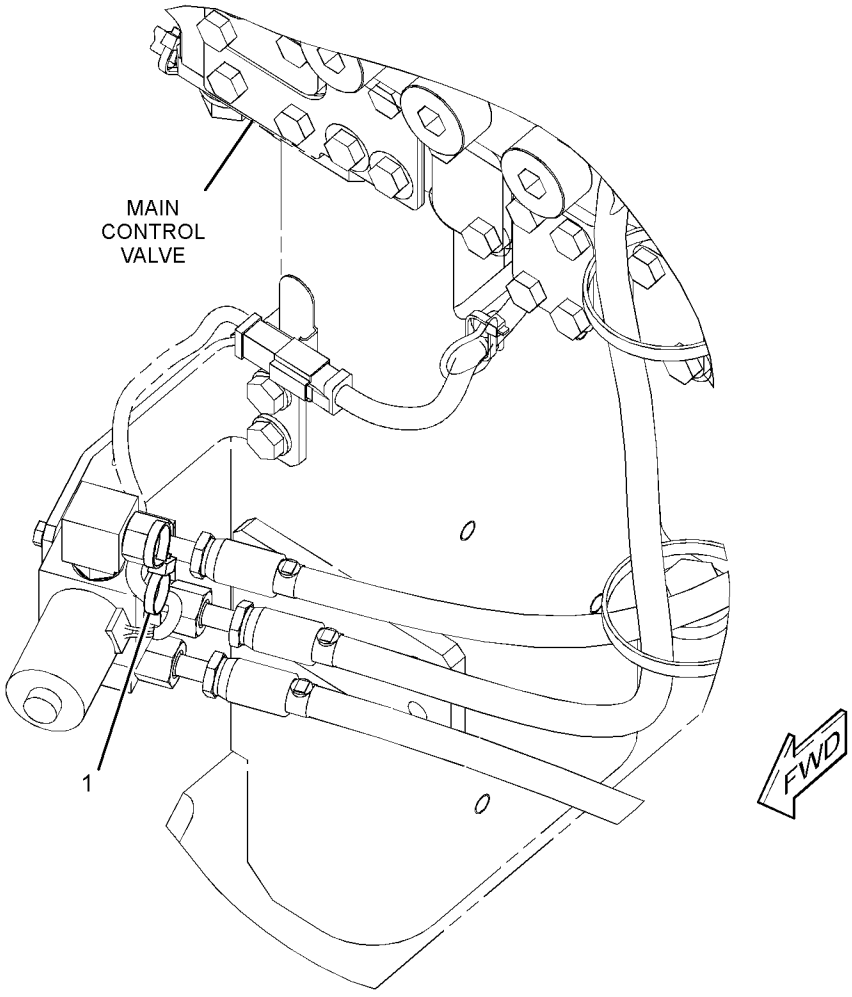

GRAPHIC #1 **<END>** g02155914

418-0749 FASTENER GP-WIRING HARNESS

S/N: JEG1-UP
PART OF 383-5307 CONTROL AR-AUXILIARY
AN ATTACHMENT

SMCS-1408, 7553

i05243967

NOTE	REF NO	GRAPHIC REF	PART NUMBER	QTY	PART NAME 1 2 3 4 5 6 (PRODUCT LEVEL)	SEE PAGE
	1	1	**116-0118**	1	CLIP	
	2	1	**3S-2093**	1	STRAP-CABLE	
M	3	1	**7X-2621**	1	BOLT (M10X1.5X12-MM)	
	4	1	**8T-4121**	1	WASHER-HARD (11X21X2.5-MM THK)	

M - METRIC PART

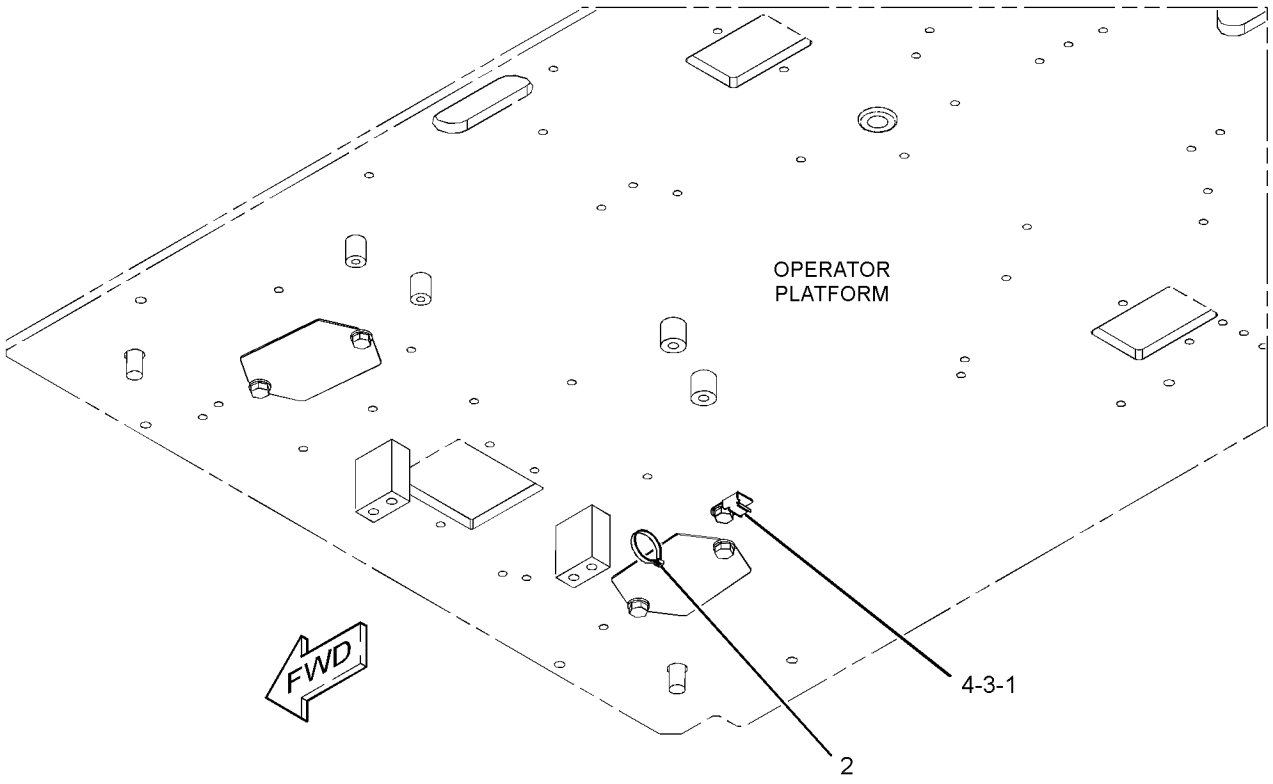

GRAPHIC #1

<END>

g03348776

437-2529 HARNESS AS-CHASSIS

S/N: JEG1-UP

PART OF 398-7002 WIRING GP-CHASSIS

SMCS-1408 **i05464389**

NOTE	PART NUMBER	QTY	PART NAME 1 2 3 4 5 6 (PRODUCT LEVEL)	SEE PAGE
	8T-8799	1	BOOT (RED)	
	8T-8827	1	BOOT (RED)	
E	**8C-3056**		CABLE (2-GA, RED) (590-CM)	
	342-2972	2	CAP-CONNECTOR (2-PIN)	
	342-2974	2	CAP-CONNECTOR (6-PIN)	
	342-2975	1	CAP-CONNECTOR (8-PIN)	
	342-2976	1	CAP-CONNECTOR (12-PIN)	
	245-1045	1	COVER	
E	**103-2529**		HOSE (80-CM)	
	116-0126	1	HOUSING-PLUG	
	121-1038	1	HOUSING-RECEPTACLE	
	155-2270	14	KIT-CONNECTING PLUG (2-PIN)	
	102-8802	5	KIT-RECEPTACLE (2-PIN)	
	102-8803	2	KIT-RECEPTACLE (3-PIN)	
	176-9299	2	KIT-RECEPTACLE (3-PIN)	
			(EACH RECEPTACLE KIT INCLUDES RECEPTACLE AS & WEDGE)	
	245-1044	2	LOCK-CONNECTOR	
	8T-8729	18	PIN-CONNECTOR (16-GA TO 18-GA)	
	9W-0852	14	PIN-CONNECTOR (14-GA TO 16-GA)	
	9X-3401	30	PIN-CONNECTOR (16-GA TO 18-GA)	
			—OR—	
	126-1767	30	PIN-CONNECTOR (14-GA TO 16-GA)	
	160-7689	1	PLUG AS-CONNECTOR (70-PIN)	
	159-9322	1	SEAL-O-RING	
	174-3016	2	PLUG AS-CONNECTOR (3-PIN)	
	230-4009	1	PLUG AS-CONNECTOR (12-PIN)	
	264-7034	1	SEAL-CONNECTOR	
	230-4011	10	PLUG AS-CONNECTOR (2-PIN)	
			(EACH INCLUDES)	
	264-7029	1	SEAL-CONNECTOR	
	230-4013	2	PLUG AS-CONNECTOR (3-PIN)	
			(EACH INCLUDES)	
	264-7030	1	SEAL-CONNECTOR	
	230-5010	2	PLUG AS-CONNECTOR (6-PIN)	
			(EACH INCLUDES)	
	264-7032	1	SEAL-CONNECTOR	
	231-2295	1	PLUG AS-CONNECTOR (8-PIN)	
	264-7033	1	SEAL-CONNECTOR	
	237-0227	2	PLUG AS-CONNECTOR (3-PIN)	
			(EACH INCLUDES)	
	264-7030	1	SEAL-CONNECTOR	
	239-7352	1	PLUG AS-CONNECTOR (6-PIN)	
	264-7032	1	SEAL-CONNECTOR	
	245-1042	1	PLUG AS-CONNECTOR (64-PIN)	
M	**267-7207**	1	BOLT-SPECIAL	
	267-7208	1	RING-RETAINING	
	274-4990	1	SEAL	
	281-8803	2	PLUG AS-CONNECTOR (3-PIN)	
			(EACH INCLUDES)	
	264-7030	1	SEAL-CONNECTOR	
	281-8804	2	PLUG AS-CONNECTOR (3-PIN)	
			(EACH INCLUDES)	
	264-7030	1	SEAL-CONNECTOR	
	245-1048	27	PLUG-CONNECTOR	
	8T-8737	71	PLUG-SEAL	
	163-6773	2	PLUG-SEAL	

437-2529 **HARNESS AS-CHASSIS (*contd.*)** **i05464389**

NOTE	PART NUMBER	QTY	PART NAME 1 2 3 4 5 6 (PRODUCT LEVEL)	SEE PAGE
	163-6637	1	RECEPTACLE AS-CONNECTOR (54-PIN, BLACK)	
	243-4505	4	RECEPTACLE AS-CONNECTOR (2-PIN)	
	243-4510	1	RECEPTACLE AS-CONNECTOR (12-PIN)	
	116-0128	2	SEAL	
	134-3297	1	SEAL	
	267-9572	37	SOCKET-CONNECTION (18-GA)	
	8T-8730	52	SOCKET-CONNECTOR (16-GA TO 18-GA)	
	9W-0844	8	SOCKET-CONNECTOR (14-GA TO 16-GA)	
	9X-3402	77	SOCKET-CONNECTOR (16-GA TO 18-GA)	
			—OR—	
	126-1768	77	SOCKET-CONNECTOR (14-GA TO 16-GA)	
	3S-2093	18	STRAP-CABLE	
	121-1039	1	TERMINAL (MALE)	
	9X-0196	2	TERMINAL AS	
	116-0255	2	TERMINAL-BLADE (10-GA TO 20-GA)	
	7Y-3962	1	TERMINAL-BULLET (MALE)	
	7Y-3963	1	TERMINAL-BULLET (FEMALE)	
	6T-5598	1	TERMINAL-RING (1-GA TO 2-GA, 5/16-IN SCREW)	
	115-1184	2	TERMINAL-RING (2-GA, 1/4-IN SCREW)	
	2L-8050	2	TERMINAL-RING (6-GA, 1/4-IN SCREW)	
			—OR—	
	2L-8058	2	TERMINAL-RING (8-GA, 1/4-IN SCREW)	
	2L-8069	8	TERMINAL-RING (2-GA TO 10-GA, 3/8-IN SCREW)	
	2L-8075	4	TERMINAL-RING (14-GA TO 16-GA, NO. 8 SCREW)	
	2L-8076	1	TERMINAL-RING (14-GA TO 16-GA, NO. 10 SCREW)	
	2L-8078	1	TERMINAL-RING (14-GA TO 16-GA, 5/16-IN SCREW)	
	2L-8079	2	TERMINAL-RING (14-GA TO 16-GA, 3/8-IN SCREW)	
	7Y-3964	1	TUBE (CONNECTOR TERMINAL)	
	7Y-3965	1	TUBE (RECEPTACLE TERMINAL)	
E	**119-3662**		TUBE-HEAT SHRINK (10.85-MM DIA) (20-CM)	
	125-7874		TUBE-HEAT SHRINK (5.72-MM DIA) (100-CM)	
E	**125-7875**		TUBE-HEAT SHRINK (7.44-MM DIA) (40-CM)	
E	**125-7876**		TUBE-HEAT SHRINK (17.78-MM DIA) (12-CM)	

E - ORDER BY THE CENTIMETER
M - METRIC PART

<END>

385-5997 HARNESS AS-ENGINE

S/N: BD41-UP

PART OF 395-0113 WIRING GP-ENGINE

SMCS-1408 **i05389415**

NOTE	PART NUMBER	QTY	PART NAME 1 2 3 4 5 6 (PRODUCT LEVEL)	SEE PAGE
	377-6932	1	COVER	
	155-2271	3	KIT-CONNECTING PLUG (4-PIN)	
			(INCLUDES PLUG AS, WEDGE & INTERFACE SEAL)	
	245-1044	2	LOCK-CONNECTOR	
	316-9351	6	MOUNTING-CABLE TIE	
	230-4011	2	PLUG AS-CONNECTOR (2-PIN)	
			(EACH INCLUDES)	
	264-7029	1	SEAL-CONNECTOR	
	238-8245	1	PLUG AS-CONNECTOR (2-PIN)	
	264-7029	1	SEAL-CONNECTOR	
	238-8247	2	PLUG AS-CONNECTOR (2-PIN)	
			(EACH INCLUDES)	
	264-7029	1	SEAL-CONNECTOR	
	245-1043	1	PLUG AS-CONNECTOR (64-PIN)	
M	**267-7207**	1	BOLT-SPECIAL	
	281-8804	2	PLUG AS-CONNECTOR (3-PIN)	
			(EACH INCLUDES)	
	264-7030	1	SEAL-CONNECTOR	
	245-1048	33	PLUG-CONNECTOR	
	185-1861	5	SEAL-WIRE	
	267-9572	31	SOCKET-CONNECTION (18-GA)	
	9X-3402	16	SOCKET-CONNECTOR (16-GA TO 18-GA)	
			—OR—	
	126-1768	16	SOCKET-CONNECTOR (14-GA TO 16-GA)	
	217-9039	6	STRAP-CABLE	
	356-1219	1	STRAP-CABLE	
	206-1345	15	STRAP-CABLE	
E	**125-7874**		TUBE-HEAT SHRINK (5.72-MM DIA) (10-CM)	
	194-5226	12	WIRE AS (16-GA)	
			—OR—	
	194-5227	12	WIRE AS (14-GA)	

E - ORDER BY THE CENTIMETER
M - METRIC PART

<END>

441-7659 HARNESS AS-PLATFORM

S/N: JEG1-UP

PART OF 398-7004 WIRING GP-PLATFORM

ALSO AN ATTACHMENT

SMCS-1408 **i05445589**

NOTE	PART NUMBER	QTY	PART NAME 1 2 3 4 5 6 (PRODUCT LEVEL)	SEE PAGE
	102-8802	5	KIT-RECEPTACLE (2-PIN)	
	102-8804	1	KIT-RECEPTACLE (4-PIN)	
			(EACH RECEPTACLE KIT INCLUDES RECEPTACLE AS & WEDGE)	
	8T-8729	7	PIN-CONNECTOR (16-GA TO 18-GA)	
	8T-8730	20	SOCKET-CONNECTOR (16-GA TO 18-GA)	
	3S-2093	21	STRAP-CABLE	
	8T-8737	34	PLUG-SEAL	
	102-7964	1	PLUG-CONNECTOR (16-PIN)	
	102-7965	14	TERMINAL (FEMALE)	
	9W-0852	7	PIN-CONNECTOR (14-GA TO 16-GA)	
	9W-0844	33	SOCKET-CONNECTOR (14-GA TO 16-GA)	
	116-0255	1	TERMINAL-BLADE (10-GA TO 20-GA)	
E	**119-3662**		TUBE-HEAT SHRINK (10.85-MM DIA) (7-CM)	
	121-1039	1	TERMINAL (MALE)	
	121-1168	2	CONNECTOR-RECEPTACLE	
	121-1173	35	TERMINAL (MALE)	
	125-4766	1	PLUG-CONNECTOR (17-PIN)	
	125-4841	1	WEDGE-PLUG LOCK (21-PIN)	
E	**125-7874**		TUBE-HEAT SHRINK (5.72-MM DIA) (25-CM)	
E	**125-7875**		TUBE-HEAT SHRINK (7.44-MM DIA) (35-CM)	
	9X-3402	56	SOCKET-CONNECTOR (16-GA TO 18-GA)	
			—OR—	
	126-1768	56	SOCKET-CONNECTOR (14-GA TO 16-GA)	
	2L-8050	2	TERMINAL-RING (6-GA, 1/4-IN SCREW)	
			—OR—	
	2L-8058	2	TERMINAL-RING (8-GA, 1/4-IN SCREW)	
	2L-8052	2	TERMINAL-RING (6-GA, 3/8-IN SCREW)	
			—OR—	
	2L-8060	2	TERMINAL-RING (8-GA, 3/8-IN SCREW)	
	2L-8069	2	TERMINAL-RING (2-GA TO 10-GA, 3/8-IN SCREW)	
	134-3296	1	HOUSING-PLUG	
	134-3297	2	SEAL	
	9X-3401	15	PIN-CONNECTOR (16-GA TO 18-GA)	
			—OR—	
	126-1767	15	PIN-CONNECTOR (14-GA TO 16-GA)	
	153-2620	1	PLUG AS-CONNECTOR (54-PIN, BLACK)	
	163-6759	1	SEAL	
	155-2270	8	KIT-CONNECTING PLUG (2-PIN)	
	155-2271	1	KIT-CONNECTING PLUG (4-PIN)	
			(EACH PLUG KIT INCLUDES PLUG AS, WEDGE & INTERFACE SEAL)	
	230-4009	2	PLUG AS-CONNECTOR (12-PIN)	
			(EACH INCLUDES)	
	264-7034	1	SEAL-CONNECTOR	
	230-4011	3	PLUG AS-CONNECTOR (2-PIN)	
			(EACH INCLUDES)	
	264-7029	1	SEAL-CONNECTOR	
	230-5010	2	PLUG AS-CONNECTOR (6-PIN)	
			(EACH INCLUDES)	
	264-7032	1	SEAL-CONNECTOR	
	238-2363	13	TERMINAL (FEMALE)	
	238-2366	6	TERMINAL (MALE)	
	239-7352	1	PLUG AS-CONNECTOR (6-PIN)	
	264-7032	1	SEAL-CONNECTOR	
	243-4507	1	RECEPTACLE AS-CONNECTOR (4-PIN)	

441-7659 **HARNESS AS-PLATFORM (*contd.*)** **i05445589**

NOTE	PART NUMBER	QTY	PART NAME 1 2 3 4 5 6 (PRODUCT LEVEL)	SEE PAGE
	243-4508	2	RECEPTACLE AS-CONNECTOR (6-PIN)	
	243-4509	1	RECEPTACLE AS-CONNECTOR (8-PIN)	
	243-4510	1	RECEPTACLE AS-CONNECTOR (12-PIN)	
	342-2972	1	CAP-CONNECTOR (2-PIN)	
	342-2974	2	CAP-CONNECTOR (6-PIN)	
E - ORDER BY THE CENTIMETER				

<END>

375-8407 HARNESS AS-WIRING

S/N: BD41-UP

PART OF 395-0113 WIRING GP-ENGINE

SMCS-1408 **i05333790**

NOTE	PART NUMBER	QTY	PART NAME 1 2 3 4 5 6 (PRODUCT LEVEL)	SEE PAGE
	102-8804	1	KIT-RECEPTACLE (4-PIN)	
			(INCLUDES RECEPTACLE AS & WEDGE)	
	113-4630	1	RECEPTACLE AS-CONNECTOR (4-PIN)	
	9X-3401	4	PIN-CONNECTOR (16-GA TO 18-GA)	
			—OR—	
	126-1767	4	PIN-CONNECTOR (14-GA TO 16-GA)	
	332-7865	1	TIE-CABLE	

<END>

265-7724 HEATER GP-JACKET WATER

S/N: JEG1-UP

AN ATTACHMENT

SMCS-1383 **i05426404**

NOTE	REF NO	GRAPHIC REF	PART NUMBER	QTY	PART NAME 1 2 3 4 5 6 (PRODUCT LEVEL)	SEE PAGE
	1	1	**6N-1604**	1	CAP AS-DUST	
	2	1	**7K-1181**	1	STRAP-CABLE	
	3	1	**260-1555**	1	ELEMENT AS-JACKET WATER HEATER (120-VOLT, 1000-WATT)	
		1	**4D-9986**	1	SEAL-O-RING	
	4	1	**260-1566**	1	CORD AS-HEATER	
M	5	1	**8T-4200**	1	BOLT (M8X1.25X16-MM)	
	6	1	**8T-4224**	1	WASHER-HARD (8.8X16X2-MM THK)	

M - METRIC PART

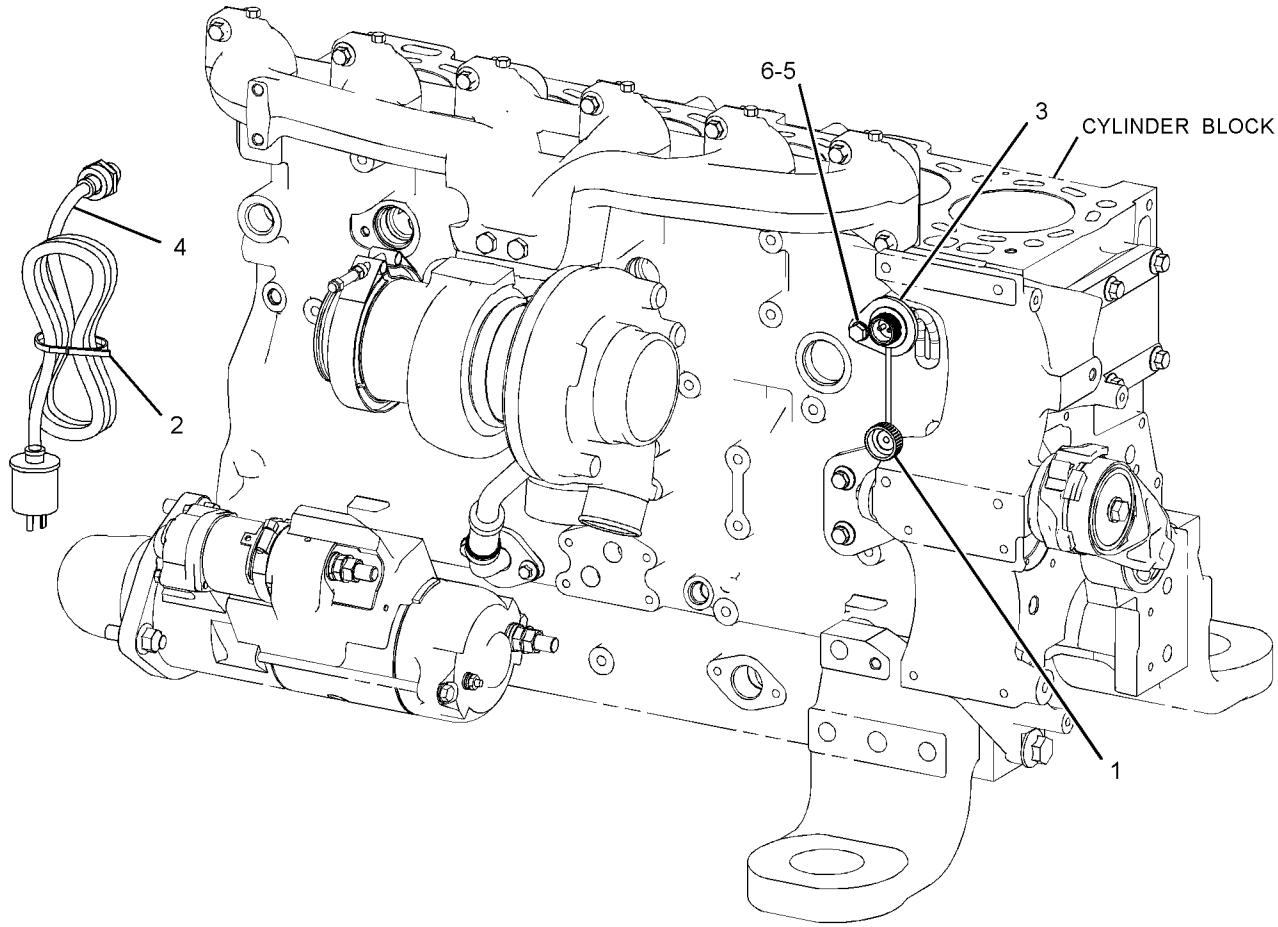

GRAPHIC #1 **<END>** g01343350

383-5427 INSTALLATION AR-COMMUNICATION—PRODUCT LINK

321SR

S/N: JEG1-UP

AN ATTACHMENT

SMCS-7606 **i05438875**

NOTE	PART NUMBER	QTY	PART NAME 1 2 3 4 5 6 (PRODUCT LEVEL)	SEE PAGE
Y	*309-5881*	1	CONTROL & MTG GP-COMMUNICATION (PRODUCT LINK 121SR)	107
Y	*418-1084*	1	MOUNTING GP (PRODUCT LINK 321SR)	109
Y	*309-5771*	1	MOUNTING GP-ANTENNA (PRODUCT LINK)	610
Y	*417-9821*	1	WIRING GP (PRODUCT LINK 321SR)	173

Y - SEPARATE ILLUSTRATION

<END>

153-2521 LAMP GP-FLOOD

S/N: JEG1-UP
24-VOLT
PART OF 259-5043, 259-5047, 259-5048, 267-7627 LIGHTING GP-FLOOD
AN ATTACHMENT

SMCS-1434 **i05300864**

NOTE	REF NO	GRAPHIC REF	PART NUMBER	QTY	PART NAME 1 2 3 4 5 6 (PRODUCT LEVEL)	SEE PAGE
M	1	1	**6V-5210**	2	SCREW-MACHINE (M4X0.7X10-MM)	
	2	1	**3B-4501**	2	LOCKWASHER	
	3	1	**351-9918**	1	LAMP-HALOGEN (24-VOLT, 70-WATT)	
	4	1	**8T-4223**	1	WASHER-HARD (13.5X25.5X3-MM THK)	
M	5	1	**8T-4244**	1	NUT (M12X1.75-THD)	
M	6	1	**174-7791**	1	SCREW-TAPPING	
	7	1	**9B-0453**	1	LOCKWASHER	
	8	1	**170-6993**	1	COVER	
M	9	1	**180-3861**	4	SCREW-TAPPING	
	10	1	**170-9417**	1	LENS AS	
	11	1	**170-9418**	1	BAND	

M - METRIC PART

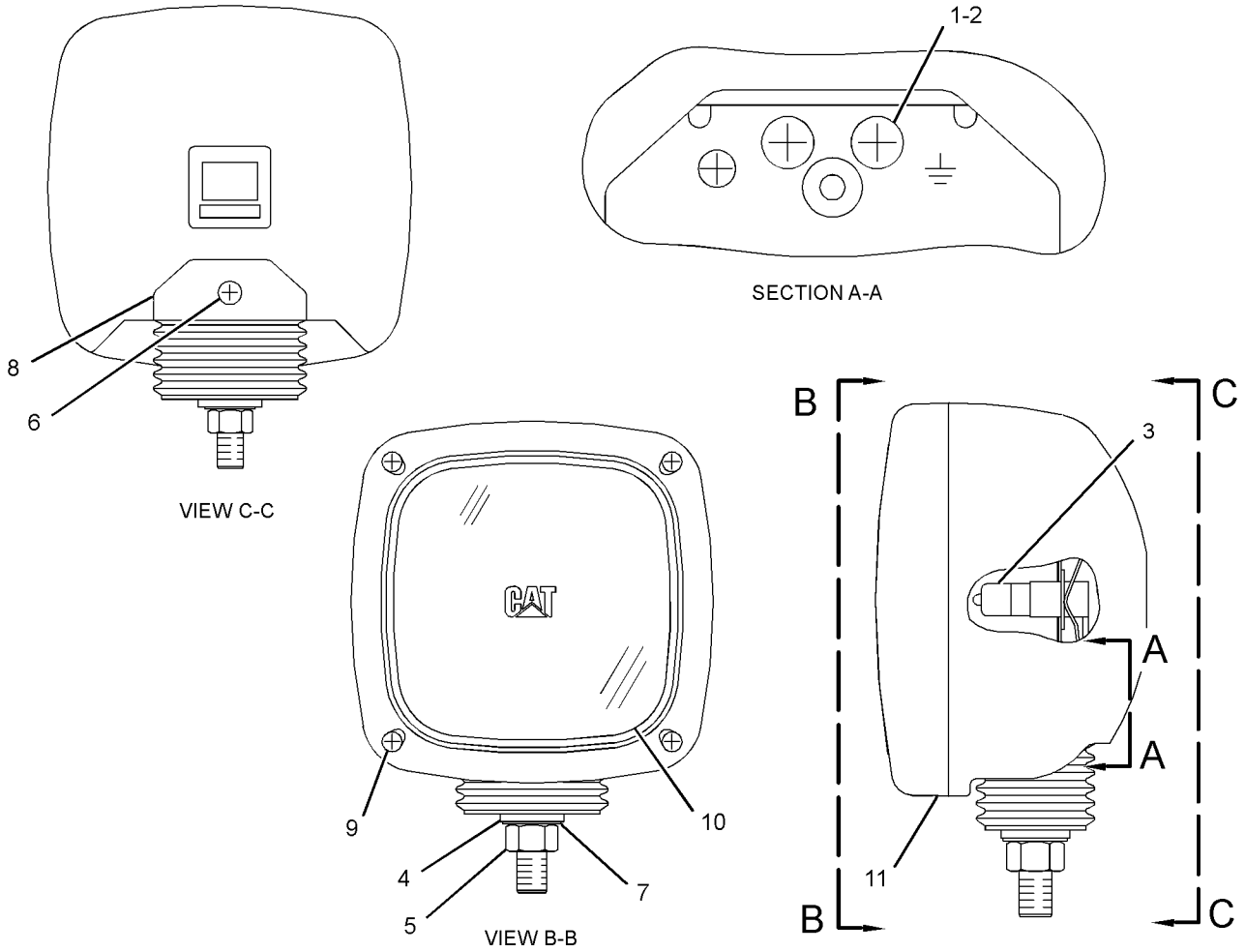

GRAPHIC #1 **<END>** g01528526

153-2523 LAMP GP-FLOOD

S/N: JEG1-UP
24-VOLT
PART OF 4I-5409 LIGHTING GP-FLOOD

SMCS-1434 **i03018480**

NOTE	REF NO	GRAPHIC REF	PART NUMBER	QTY	PART NAME 1 2 3 4 5 6 (PRODUCT LEVEL)	SEE PAGE
M	1	1	**6V-5210**	2	SCREW-MACHINE (M4X0.7X10-MM)	
	2	1	**3B-4501**	2	LOCKWASHER	
	3	1	**9X-3463**	1	LAMP-HALOGEN (24-VOLT, 70-WATT)	
	4	1	**8T-4223**	1	WASHER-HARD (13.5X25.5X3-MM THK)	
M	5	1	**8T-4244**	1	NUT (M12X1.75-THD)	
M	6	1	**174-7791**	1	SCREW-TAPPING	
	7	1	**5C-2889**	1	LOCKWASHER	
	8	1	**170-6993**	1	COVER	
	9	1	**170-9417**	1	LENS AS	
M	10	1	**180-3861**	4	SCREW-TAPPING	
	11	1	**170-9418**	1	BAND	

M - METRIC PART

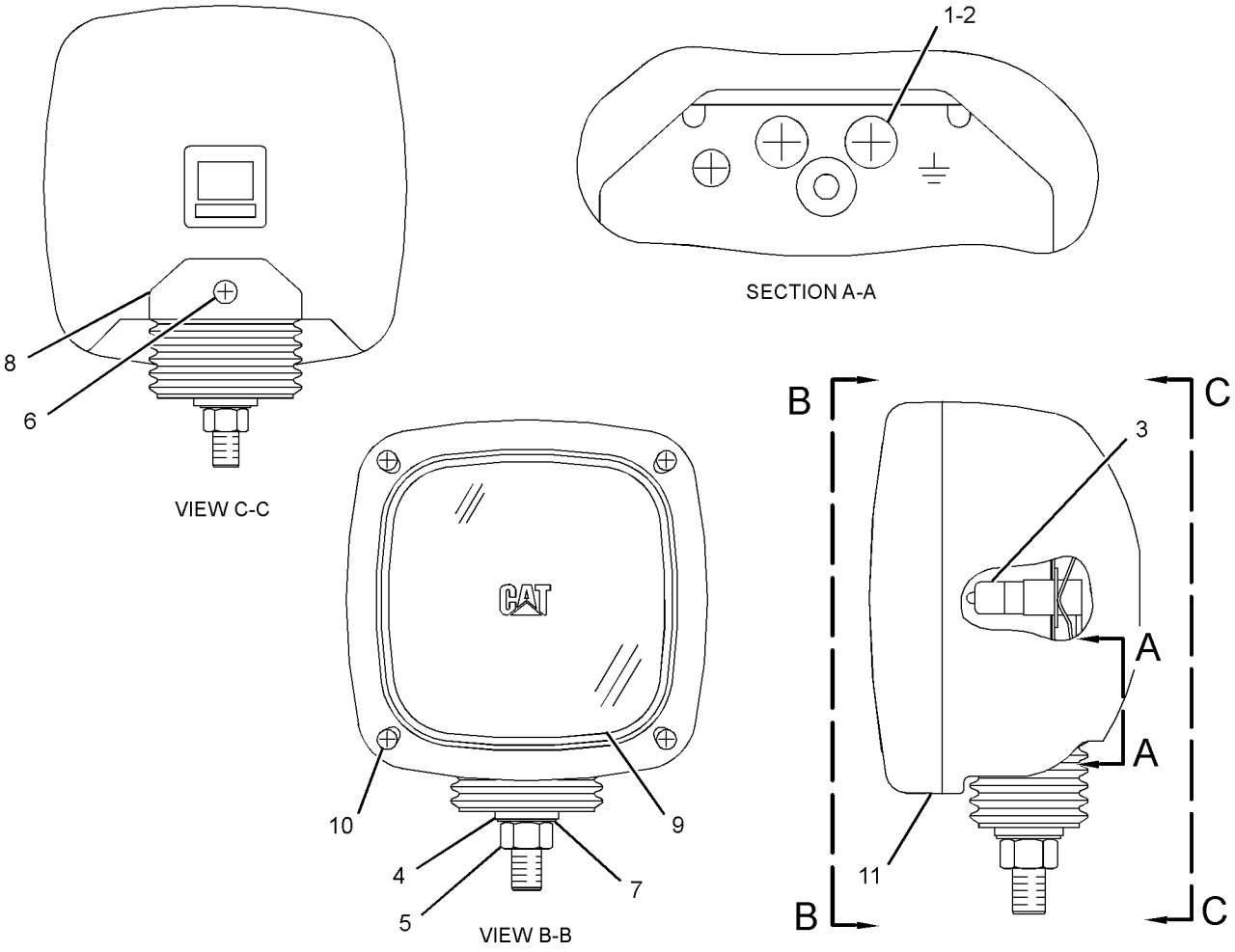

GRAPHIC #1 **<END>** g01528558

167-3441 LAMP GP-FLOOD

S/N: JEG1-UP
24-VOLT
PART OF 366-9343 LIGHTING GP-FLOOD
AN ATTACHMENT

SMCS-1434 **i05208451**

NOTE	REF NO	GRAPHIC REF	PART NUMBER	QTY	PART NAME 1 2 3 4 5 6 (PRODUCT LEVEL)	SEE PAGE
	1	1	**9X-3463**	1	LAMP-HALOGEN (24-VOLT, 70-WATT)	

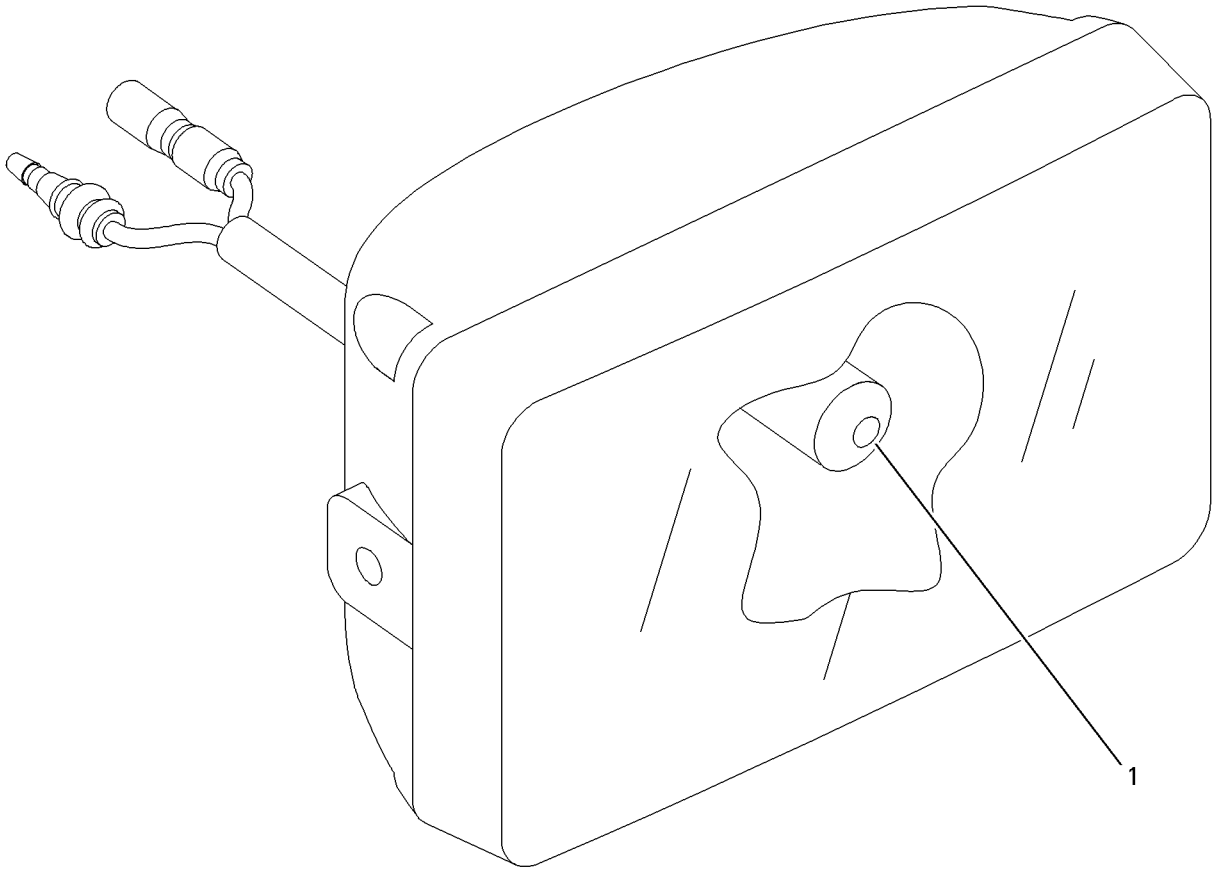

GRAPHIC #1 **<END>** g00692317

4I-5409 LIGHTING GP-FLOOD–CHASSIS

S/N: JEG1-UP

PART OF 420-3127 CHASSIS AR

SMCS-1434 **i05440551**

NOTE	REF NO	GRAPHIC REF	PART NUMBER	QTY	PART NAME 1 2 3 4 5 6 (PRODUCT LEVEL)	SEE PAGE
Y	1	1	**153-2523**	1	LAMP GP-FLOOD (24-VOLT)	124

Y - SEPARATE ILLUSTRATION

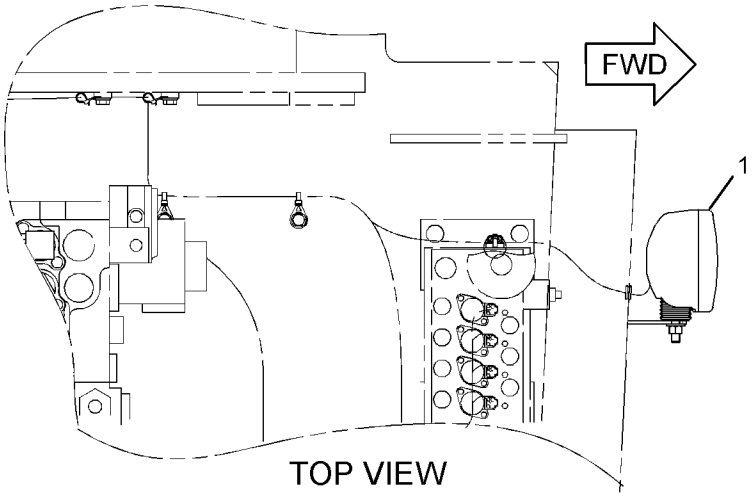

TOP VIEW

(FOR COMPACT RADIUS MACHINES)

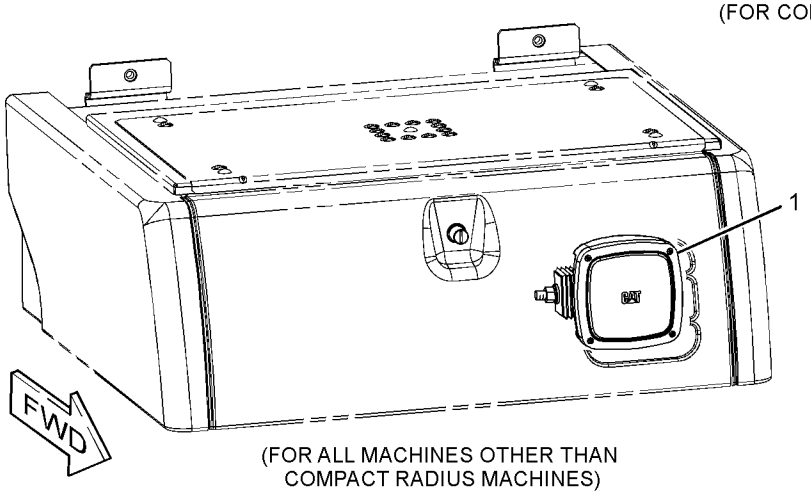

(FOR ALL MACHINES OTHER THAN COMPACT RADIUS MACHINES)

GRAPHIC #1 **<END>** g01620476

259-5043 LIGHTING GP-FLOOD–BOOM, LH

S/N: JEG1-UP
PART OF 415-8447 BOOM AR-1 PIECE LONG
AN ATTACHMENT

SMCS-1434 **i05262223**

NOTE	REF NO	GRAPHIC REF	PART NUMBER	QTY	PART NAME 1 2 3 4 5 6 (PRODUCT LEVEL)	SEE PAGE
	1	1	**7I-2673**	1	STRAP-CABLE	
	2	1	**111-4836**	4	CLIP	
	3	1	**116-0118**	1	CLIP	
Y	4	1	**153-2521**	1	LAMP GP-FLOOD (24-VOLT)	123
	5	1	**259-5326**	1	HARNESS AS-LIGHTING (BOOM, LH)	
		1	**243-4505**	1	RECEPTACLE AS-CONNECTOR (2-PIN)	
	6	1	**111-4837**	1	CLIP	
	7	1	**134-3284**	1	BRACKET	
	8	1	**5P-9297**	2	CLIP	
	9	1	**8T-4121**	5	WASHER-HARD (11X21X2.5-MM THK)	
M	10	1	**8T-4133**	5	NUT (M10X1.5-THD)	
M	11	1	**7X-2552**	1	BOLT (M16X2X30-MM)	
	12	1	**9X-8257**	1	WASHER (17.5X30X3.5-MM THK)	

M - METRIC PART
Y - SEPARATE ILLUSTRATION

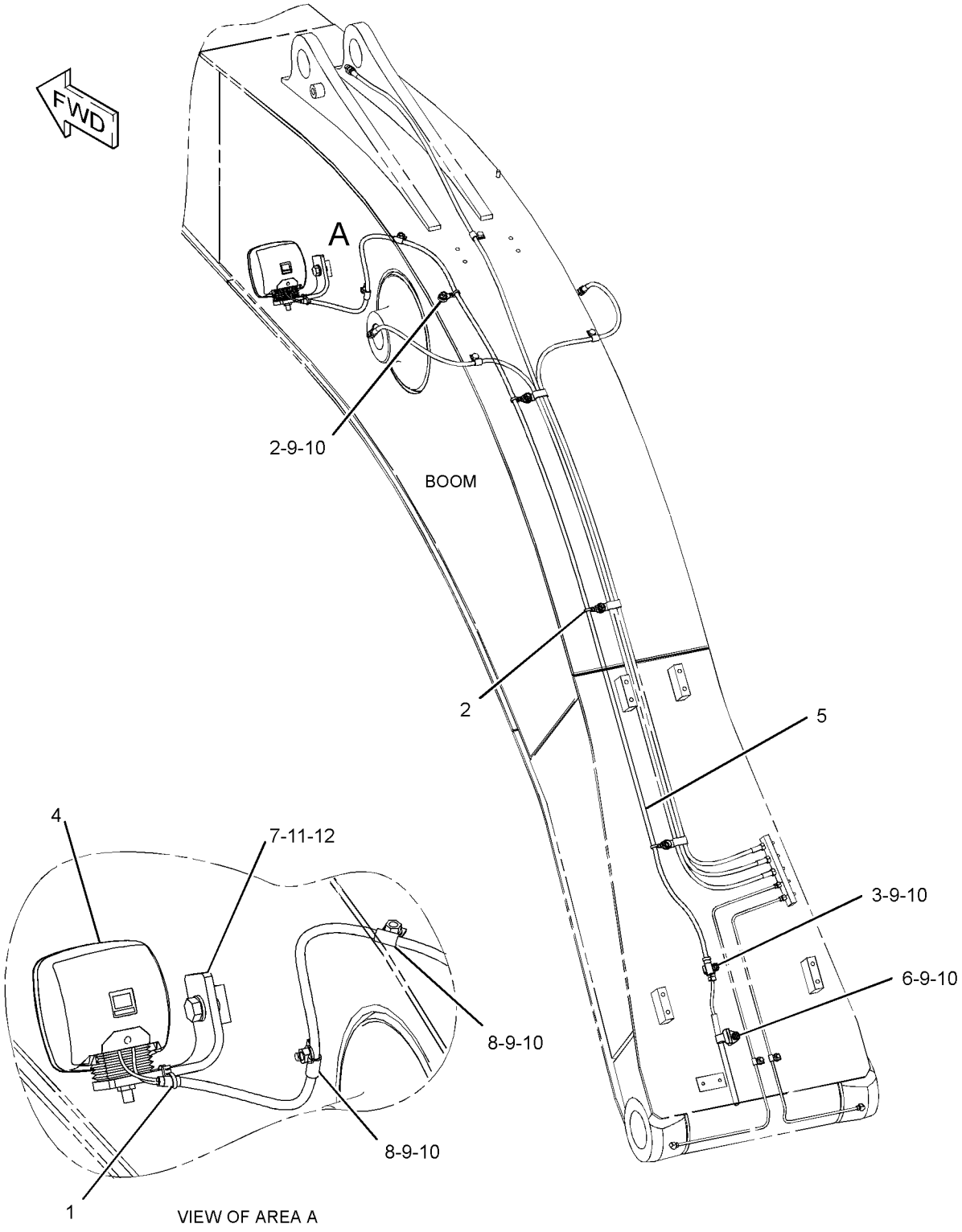

GRAPHIC #1 **<END>** g01226436

259-5047 LIGHTING GP-FLOOD—BOOM, RH

S/N: JEG1-UP

FOR USE WITH 259-5043—PAGE: 127

AN ATTACHMENT

SMCS-1434 **i05524401**

NOTE	REF NO	GRAPHIC REF	PART NUMBER	QTY	PART NAME 1 2 3 4 5 6 (PRODUCT LEVEL)	SEE PAGE
	1	1	**7I-2673**	2	STRAP-CABLE	
	2	1	**111-4836**	2	CLIP	
Y	3	1	**153-2521**	1	LAMP GP-FLOOD (24-VOLT)	123
	4	1	**259-5327**	1	HARNESS AS-LIGHTING (BOOM, RH)	
		1	**2L-8075**	4	TERMINAL-RING (14-GA TO 16-GA, NO. 8 SCREW)	
	5	1	**134-3284**	1	BRACKET	
	6	1	**7N-3718**	2	CLIP	
	7	1	**8T-4121**	2	WASHER-HARD (11X21X2.5-MM THK)	
M	8	1	**8T-4133**	2	NUT (M10X1.5-THD)	
M	9	1	**7X-2552**	1	BOLT (M16X2X30-MM)	
	10	1	**9X-8257**	1	WASHER (17.5X30X3.5-MM THK)	

M - METRIC PART
Y - SEPARATE ILLUSTRATION

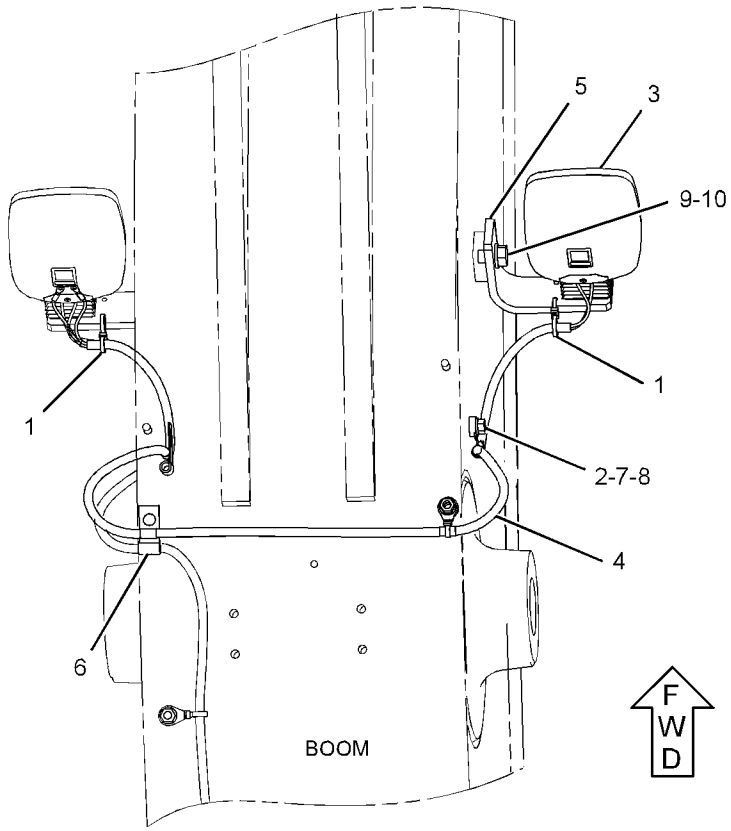

TOP VIEW

GRAPHIC #1 **<END>** g01223146

259-5048 LIGHTING GP-FLOOD—SHORT BOOM, RH

S/N: JEG1-UP

AN ATTACHMENT

SMCS-1434 **i05505870**

NOTE	REF NO	GRAPHIC REF	PART NUMBER	QTY	PART NAME 1 2 3 4 5 6 (PRODUCT LEVEL)	SEE PAGE
	1	1	**3S-2093**	1	STRAP-CABLE	
	2	1	**7I-2673**	1	STRAP-CABLE	
Y	3	1	**153-2521**	1	LAMP GP-FLOOD (24-VOLT)	123
	4	1	**267-7626**	1	HARNESS AS-LIGHTING (SHORT BOOM, RH)	
		1	**2L-8075**	4	TERMINAL-RING (14-GA TO 16-GA, NO. 8 SCREW)	
	5	1	**111-4836**	1	CLIP	
	6	1	**134-3284**	1	BRACKET	
	7	1	**5P-9297**	1	CLIP	
	8	1	**7N-3718**	2	CLIP	
	9	1	**8T-4121**	4	WASHER-HARD (11X21X2.5-MM THK)	
M	10	1	**8T-4133**	4	NUT (M10X1.5-THD)	
M	11	1	**7X-2552**	1	BOLT (M16X2X30-MM)	
	12	1	**9X-8257**	1	WASHER (17.5X30X3.5-MM THK)	

M - METRIC PART
Y - SEPARATE ILLUSTRATION

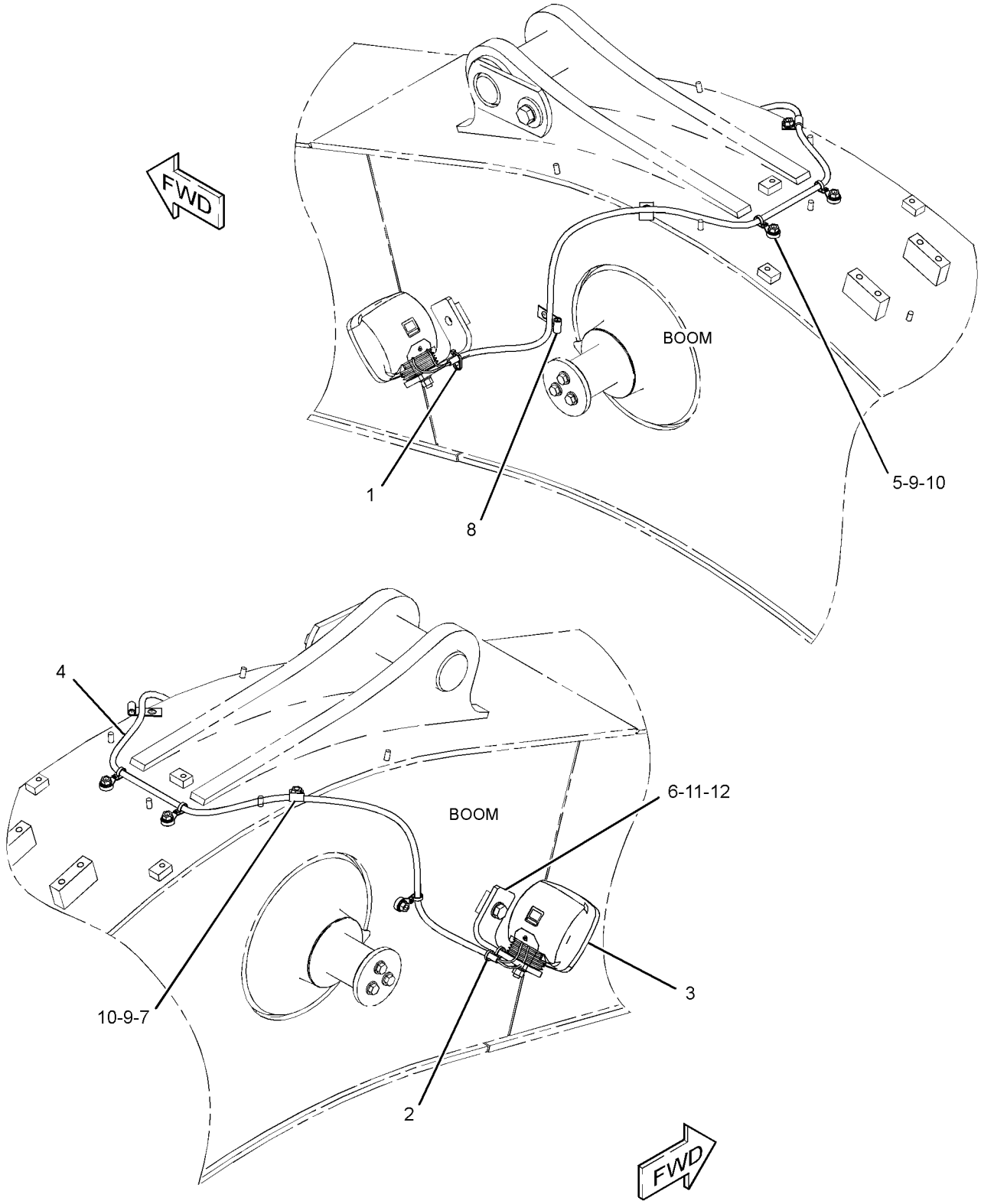

GRAPHIC #1 **<END>** g01230046

267-7627 LIGHTING GP-FLOOD—SHORT BOOM, LH

S/N: JEG1-UP
PART OF 415-1396 BOOM AR
AN ATTACHMENT

SMCS-1434 **i05291913**

NOTE	REF NO	GRAPHIC REF	PART NUMBER	QTY	PART NAME 1 2 3 4 5 6 (PRODUCT LEVEL)	SEE PAGE
	1	1	**7I-2673**	1	STRAP-CABLE	
	2	1	**111-4836**	4	CLIP	
	3	1	**116-0118**	1	CLIP	
Y	4	1	**153-2521**	1	LAMP GP-FLOOD (24-VOLT)	123
	5	1	**267-7628**	1	HARNESS AS-LIGHTING (SHORT BOOM, LH)	
		1	**9W-0852**	2	PIN-CONNECTOR (14-GA TO 16-GA)	
		1	**2L-8075**	2	TERMINAL-RING (14-GA TO 16-GA, NO. 8 SCREW)	
		1	**243-4505**	1	RECEPTACLE AS-CONNECTOR (2-PIN)	
	6	1	**111-4837**	1	CLIP	
	7	1	**134-3284**	1	BRACKET	
	8	1	**5P-9297**	2	CLIP	
	9	1	**8T-4121**	5	WASHER-HARD (11X21X2.5-MM THK)	
M	10	1	**8T-4133**	5	NUT (M10X1.5-THD)	
M	11	1	**7X-2552**	1	BOLT (M16X2X30-MM)	
	12	1	**9X-8257**	1	WASHER (17.5X30X3.5-MM THK)	

M - METRIC PART
Y - SEPARATE ILLUSTRATION

267-7627 **LIGHTING GP-FLOOD (*contd.*)** **i05291913**

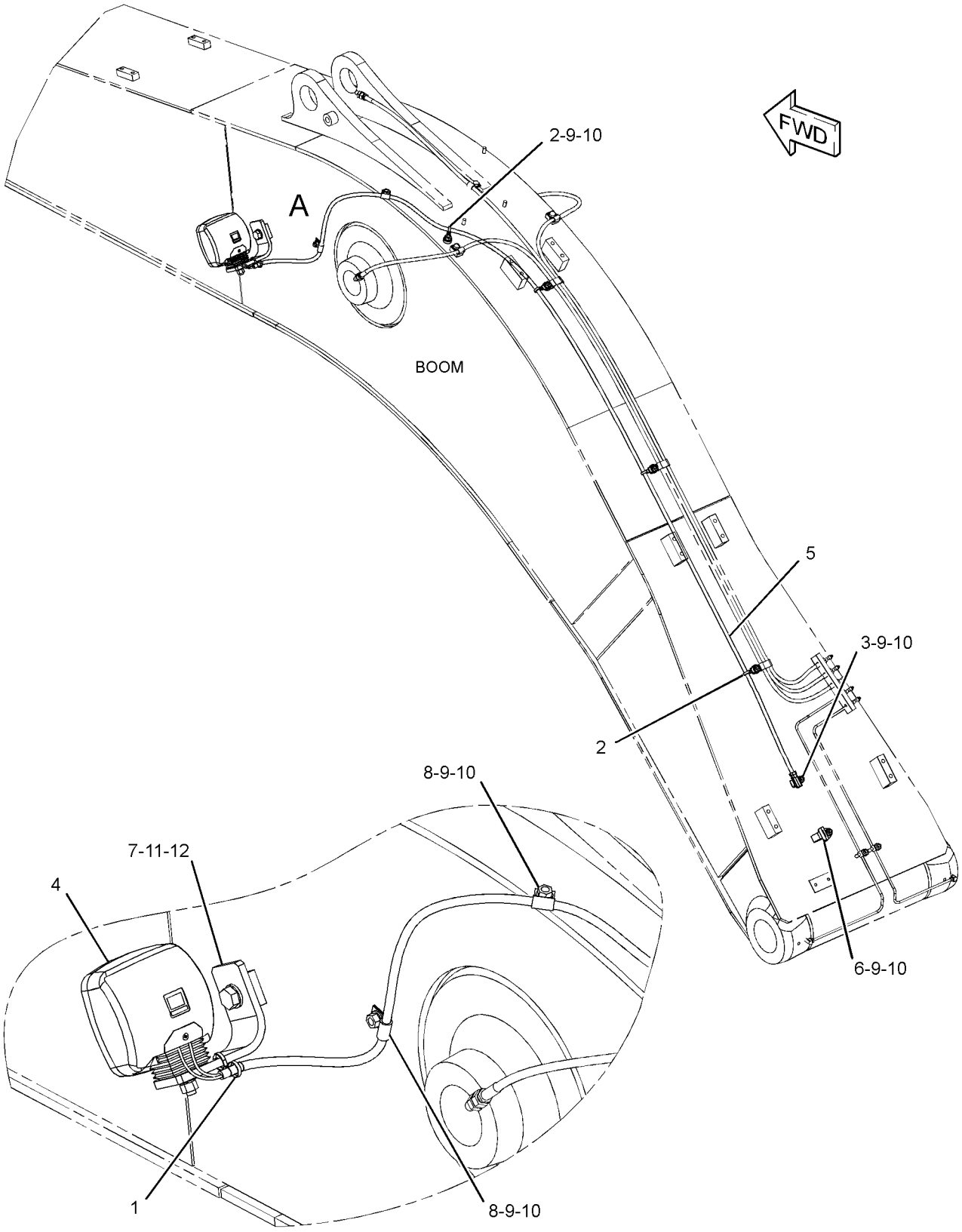

VIEW OF AREA A

GRAPHIC #1 **<END>** g01229074

366-9343 LIGHTING GP-FLOOD—CAB

S/N: JEG1-UP

PART OF 434-3892, 434-3893 CAB GP

AN ATTACHMENT

SMCS-1434 **i05208438**

NOTE	REF NO	GRAPHIC REF	PART NUMBER	QTY	PART NAME 1 2 3 4 5 6 (PRODUCT LEVEL)	SEE PAGE
	1	1	**163-6795**	2	STRAP-CABLE	
Y	2	1	**167-3441**	2	LAMP GP-FLOOD (24-VOLT)	125
	3	1	**167-3456**	2	HARNESS AS-LIGHTING (CAB FLOODLIGHT)	
					(EACH INCLUDES)	
		1	**7Y-3962**	2	TERMINAL-BULLET (MALE)	
		1	**7Y-3964**	2	TUBE (CONNECTOR TERMINAL)	
		1	**7Y-3963**	2	TERMINAL-BULLET (FEMALE)	
		1	**7Y-3965**	2	TUBE (RECEPTACLE TERMINAL)	
	4	1	**366-9344**	1	BRACKET-LIGHT (CAB, LH)	
	5	1	**366-9345**	1	BRACKET-LIGHT (CAB, RH)	
M	6	1	**8T-4200**	2	BOLT (M8X1.25X16-MM)	
	7	1	**8T-4224**	2	WASHER-HARD (8.8X16X2-MM THK)	
M	8	1	**8T-4970**	4	BOLT (M6X1X14-MM)	
	9	1	**9X-8256**	4	WASHER (6.6X12X2-MM THK)	

M - METRIC PART
Y - SEPARATE ILLUSTRATION

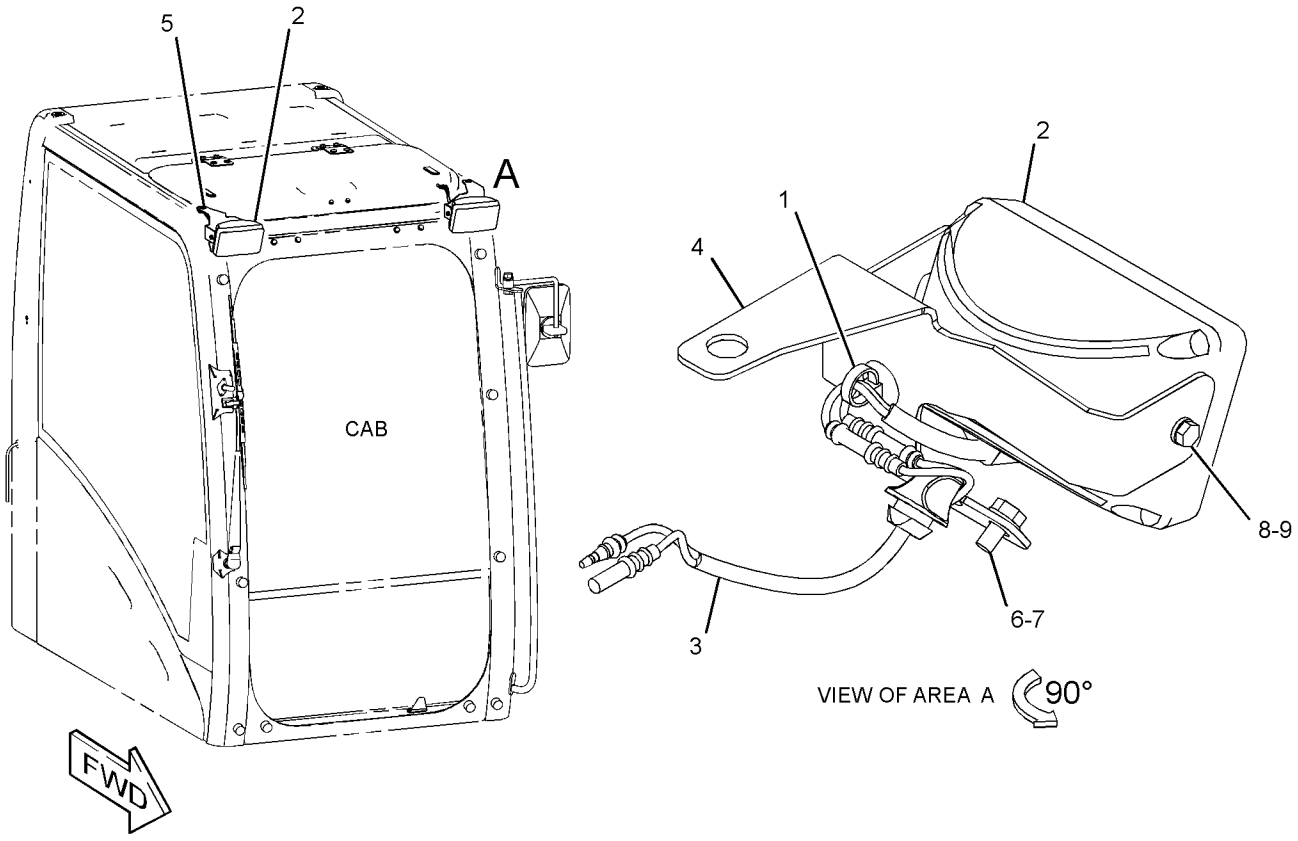

GRAPHIC #1 **<END>** g02768898

395-0112 MOUNTING GP-ELECTRONIC CONTROL

S/N: BD41-UP

PART OF 450-8077 ENGINE AR-PRIMARY

SMCS-1901 **i05535455**

NOTE	REF NO	GRAPHIC REF	PART NUMBER	QTY	PART NAME 1 2 3 4 5 6 (PRODUCT LEVEL)	SEE PAGE
	1	1	**446-1268**	1	BRACKET AS	
	2	1	**6I-0292**	2	BOLT (M8X1.25X140-MM)	
	3	1	**6I-0293**	2	BOLT (M8X1.25X80-MM)	

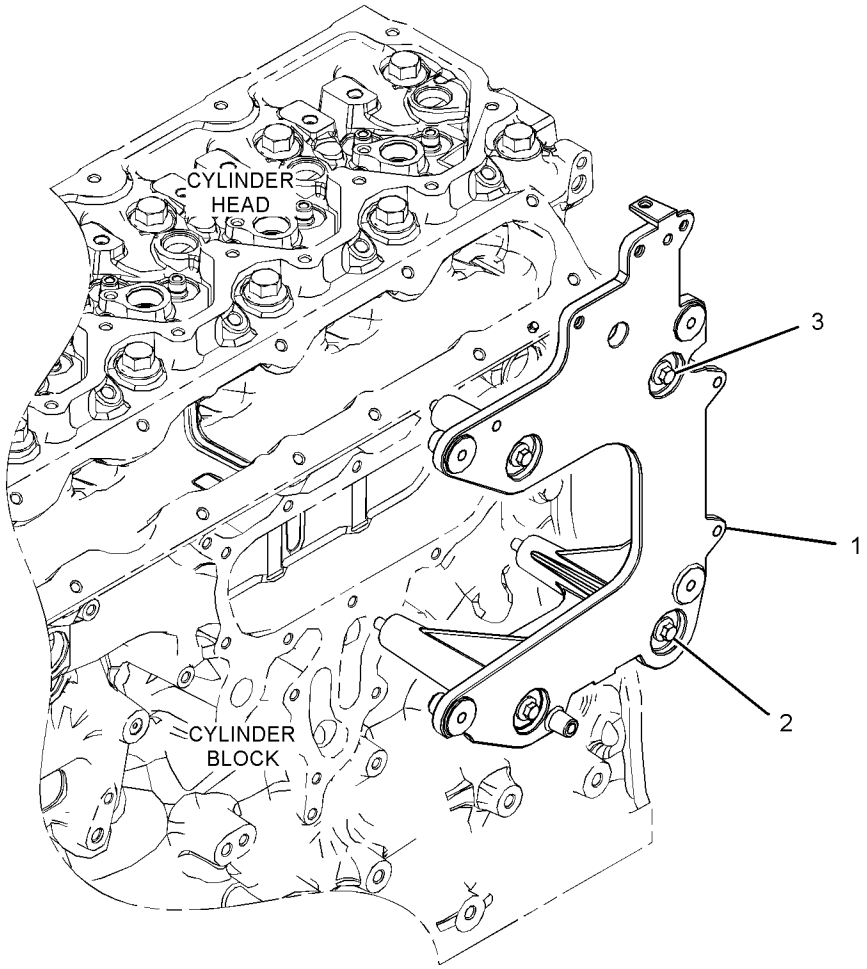

GRAPHIC #1 **<END>** g03378971

399-2649 PANEL GP-CIRCUIT BREAKER

S/N: JEG1-UP

PART OF 399-2648 WIRING GP-PANEL

SMCS-1417 **i05535964**

NOTE	REF NO	GRAPHIC REF	PART NUMBER	QTY	PART NAME 1 2 3 4 5 6 (PRODUCT LEVEL)	SEE PAGE
	1	1	**3E-8320**	1	PLATE-INSTRUCTION (BATTERY)	
Y	2	1	**7N-0719**	1	SWITCH GP-DISCONNECT	147
	3	1	**121-1023**	1	BLOCK-TERMINAL	
	4	1	**171-2208**	1	CIRCUIT BREAKER AS (60-AMPERE) (GLOW PLUG)	
	5	1	**171-2210**	1	CIRCUIT BREAKER AS (80-AMPERE) (MAIN)	
	6	1	**216-4970**	1	CIRCUIT BREAKER AS (120-AMPERE) (ALTERNATOR)	
					(EACH CIRCUIT BREAKER AS INCLUDES)	
		1	**4E-5724**	2	WASHER (7X12X1-MM THK)	
		1	**8T-0122**	2	NUT-FULL (1/4-28-THD)	
		1	**1H-3244**	2	LOCKWASHER	
	7	1	**238-1506**	1	COVER	
	8	1	**238-2279**	1	BAR-BUS	
	9	1	**238-2280**	1	WIRE AS	
		1	**2L-8050**	2	TERMINAL-RING (6-GA, 1/4-IN SCREW)	
					—OR—	
		1	**2L-8058**	2	TERMINAL-RING (8-GA, 1/4-IN SCREW)	
E		1	**119-3662**	4	TUBE-HEAT SHRINK (10.85-MM DIA) (4-CM)	
Y	10	1	**241-8368**	1	SWITCH GP-MAGNETIC (24-VOLT) (GLOW PLUG RELAY)	149
	11	1	**251-0303**	1	CABLE AS	
	12	1	**251-0304**	1	CABLE AS	
					(EACH CABLE AS INCLUDES)	
		1	**9G-4343**	2	TERMINAL-RING (4-GA, 1/4-IN SCREW)	
E		1	**125-7876**		TUBE-HEAT SHRINK (17.78-MM DIA) (4-CM)	
	13	1	**377-8041**	1	BRACKET AS	
	14	1	**377-8043**	1	WIRE AS	
	15	1	**377-8044**	1	WIRE AS	
					(EACH WIRE AS INCLUDES)	
		1	**2L-8058**	1	TERMINAL-RING (8-GA, 1/4-IN SCREW)	
					—OR—	
		1	**5P-3455**	1	TERMINAL-RING (8-GA, 5/16-IN SCREW)	
E		1	**119-3662**		TUBE-HEAT SHRINK (10.85-MM DIA) (4-CM)	
M	16	1	**5C-9553**	7	BOLT (M6X1X16-MM)	
	17	1	**5P-4115**	4	WASHER-HARD (7.2X19X2-MM THK)	
	18	1	**6V-5645**	6	SCREW-MACHINE (10-32X0.87-IN)	
	19	1	**8T-0328**	6	WASHER-HARD (5.5X10X1-MM THK)	
M	20	1	**8T-4171**	2	BOLT (M6X1X12-MM)	
M	21	1	**8T-4970**	4	BOLT (M6X1X14-MM)	
	22	1	**9X-8256**	9	WASHER (6.6X12X2-MM THK)	

E - ORDER BY THE CENTIMETER
M - METRIC PART
Y - SEPARATE ILLUSTRATION

399-2649 **PANEL GP-CIRCUIT BREAKER (*contd.*)** **i05535964**

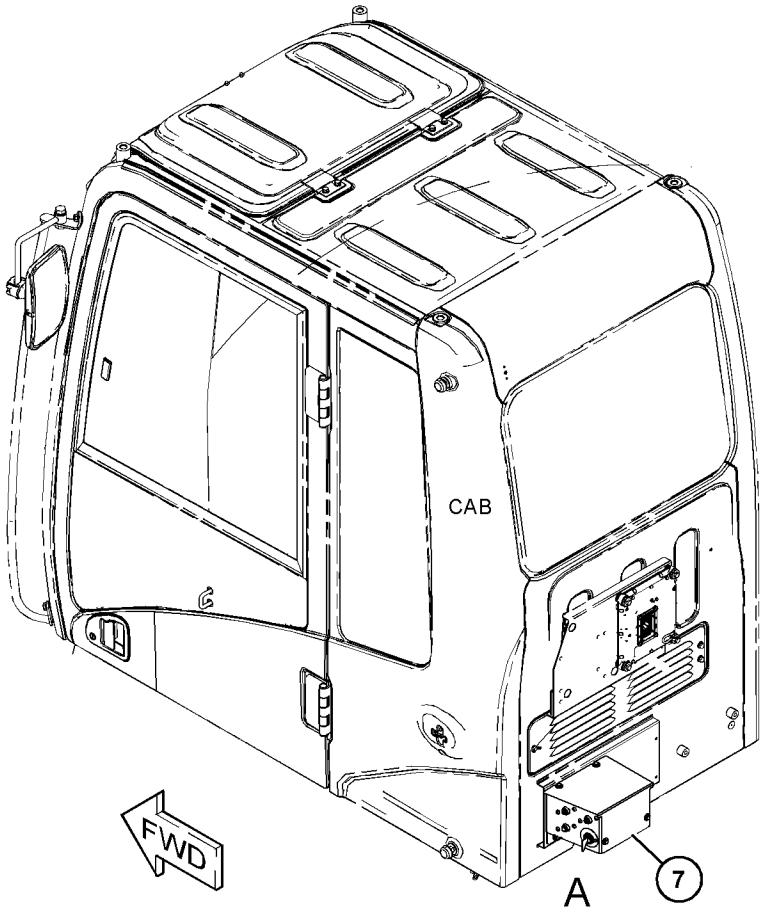

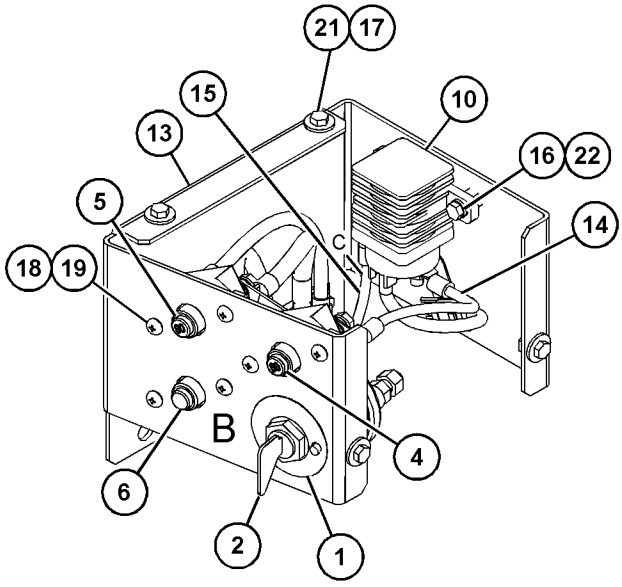

VIEW OF AREA A
(COVER REMOVED FOR CLARITY)

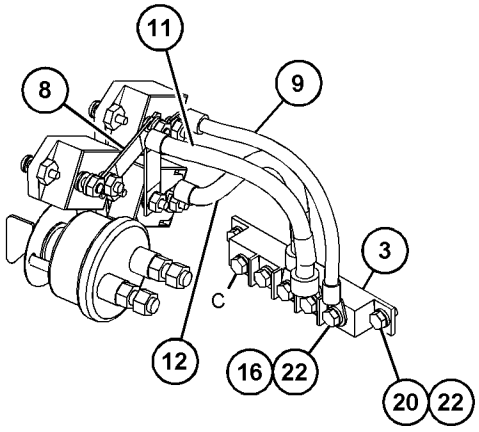

VIEW OF AREA B
(PARTS REMOVED FOR CLARITY) 90°

GRAPHIC #1 **<END>** g03458316

398-7007 PANEL GP-SWITCH—CONSOLE

S/N: JEG1-UP
PART OF 434-3892, 434-3893 CAB GP
AN ATTACHMENT

SMCS-1408, 1429, 7332, 7451 **i05432319**

NOTE	REF NO	GRAPHIC REF	PART NUMBER	QTY	PART NAME 1 2 3 4 5 6 (PRODUCT LEVEL)	SEE PAGE
	1	1	**3S-2093**	4	STRAP-CABLE	
	2	1	**170-9324**	1	LAMP AS (24-VOLT, 3-WATT)	
	3	1	**234-1158**	1	COVER	
Y	4	1	**255-2751**	1	SWITCH GP-START (ENGINE, KEY)	152
	5	1	**267-7976**	1	PANEL	
	6	1	**398-7013**	1	HARNESS AS-PANEL	
		1	**102-8802**	1	KIT-RECEPTACLE (2-PIN)	
					(INCLUDES RECEPTACLE AS AND WEDGE)	
		1	**3S-2093**	3	STRAP-CABLE	
		1	**7Y-3951**	2	TERMINAL-BLADE (14-GA)	
		1	**7Y-3952**	1	PLUG-CONNECTOR (2-PIN)	
		1	*7Y-3966*	1	TERMINAL AS	
		1	**7Y-3962**	1	TERMINAL-BULLET (MALE)	
		1	**7Y-3964**	1	TUBE (CONNECTOR TERMINAL)	
		1	*7Y-3967*	1	TERMINAL AS	
		1	**7Y-3963**	1	TERMINAL-BULLET (FEMALE)	
		1	**7Y-3965**	1	TUBE (RECEPTACLE TERMINAL)	
		1	**8T-8737**	2	PLUG-SEAL	
		1	**121-1168**	1	CONNECTOR-RECEPTACLE	
		1	**121-1173**	14	TERMINAL (MALE)	
		1	**9X-3402**	2	SOCKET-CONNECTOR (16-GA TO 18-GA)	
		1	**2L-8075**	4	TERMINAL-RING (14-GA TO 16-GA, NO. 8 SCREW)	
		1	**153-2540**	10	TERMINAL (FEMALE)	
		1	**153-2541**	1	PLUG-CONNECTOR (10-PIN)	
		1	**155-2270**	1	KIT-CONNECTING PLUG (2-PIN)	
					(INCLUDES PLUG AS, WEDGE & INTERFACE SEAL)	
		1	**238-2366**	2	TERMINAL (MALE)	
	7	1	**398-8931**	1	COVER	
	8	1	**096-6166**	4	WASHER-HARD (4.5X9X1-MM THK)	
	9	1	**119-5026**	4	SCREW-PAN HEAD (10-16X0.63-IN)	
M	10	1	**6V-9491**	4	SCREW-MACHINE (M4X0.7X20-MM)	

M - METRIC PART
Y - SEPARATE ILLUSTRATION

398-7007 **PANEL GP-SWITCH (*contd.*)** **i05432319**

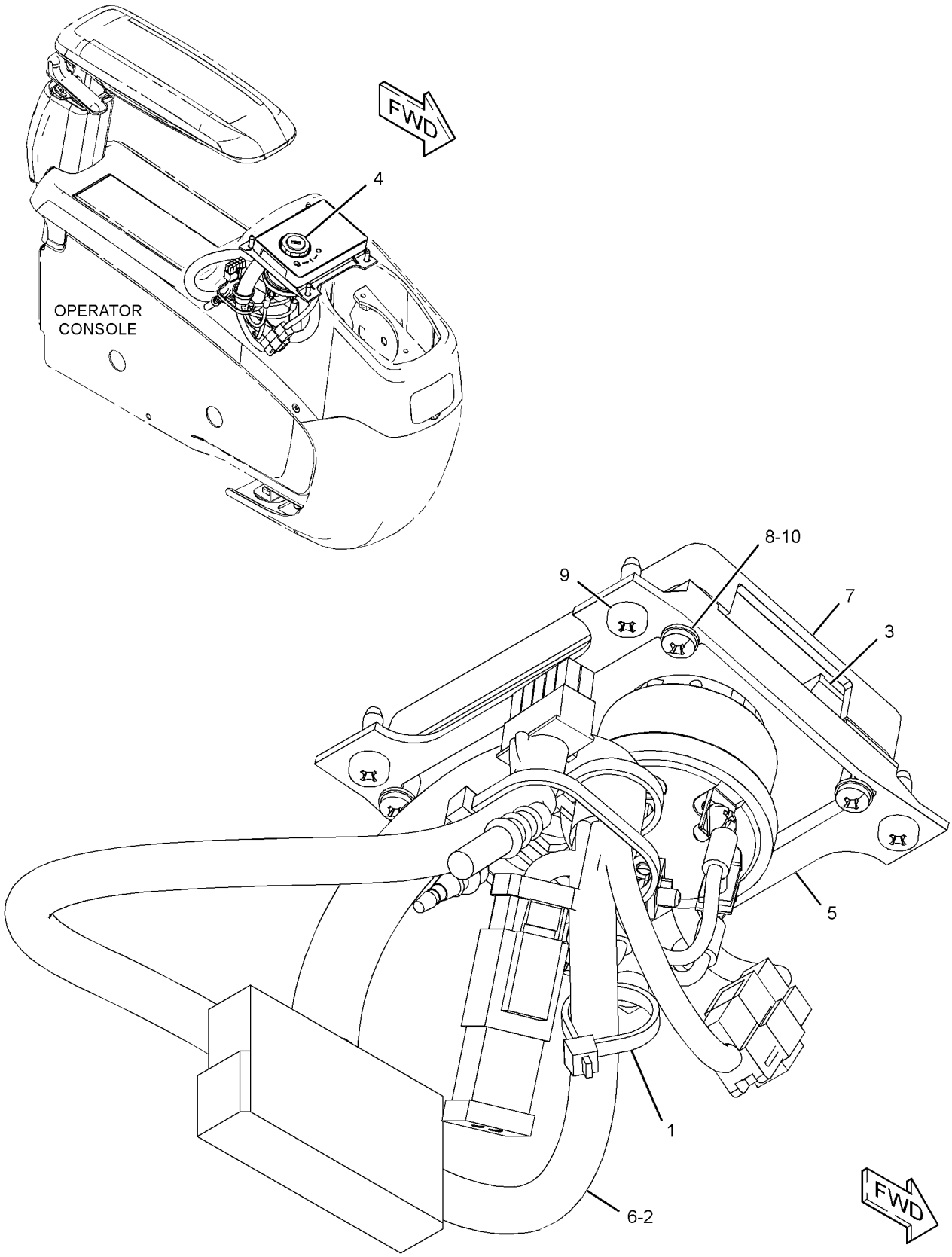

GRAPHIC #1 **<END>** g03445597

263-9088 RADIO GP-COMMUNICATION–PRODUCT LINK 121SR

S/N: JEG1-UP

PART OF 309-5881 CONTROL & MTG GP-COMMUNICATION

AN ATTACHMENT

SMCS-733T **i03954672**

NOTE	PART NUMBER	QTY	PART NAME 1 2 3 4 5 6 (PRODUCT LEVEL)	SEE PAGE
	336-3566	1	SOFTWARE GP-COMMUNICATION (PRODUCT LINK 121SR)	

<END>

395-0110 SENSOR GP-ENGINE

S/N: BD41-UP

PART OF 450-8077 ENGINE AR-PRIMARY

SMCS-1000, 1906, 1907, 1924, 7422 **i05332833**

NOTE	REF NO	GRAPHIC REF	PART NUMBER	QTY	PART NAME 1 2 3 4 5 6 (PRODUCT LEVEL)	SEE PAGE
M	1	1	**124-3815**	2	BOLT (M8X1.25X16-MM)	
	2	1	**199-9252**	1	SEAL-O-RING	
	3	1	**199-9267**	1	SEAL-O-RING	
	4	1	**199-9751**	1	SEAL-O-RING	
	5	1	**238-0120**	2	SENSOR GP-SPEED (ENGINE)	
	6	1	**256-6454**	1	SENSOR-TEMPERATURE (AIR INLET MANIFOLD)	
	6A	1	**256-6454**	1	SENSOR-TEMPERATURE (COOLANT)	
	7	1	**276-5603**	1	SEAL-O-RING	
	8	1	**320-3060**	1	SENSOR-PRESSURE (ENGINE OIL)	
	9	1	**320-3062**	1	SENSOR GP-PRESSURE (INLET MANIFOLD AIR)	
	10	1	**228-4947**	2	SEAL-O-RING	

M - METRIC PART

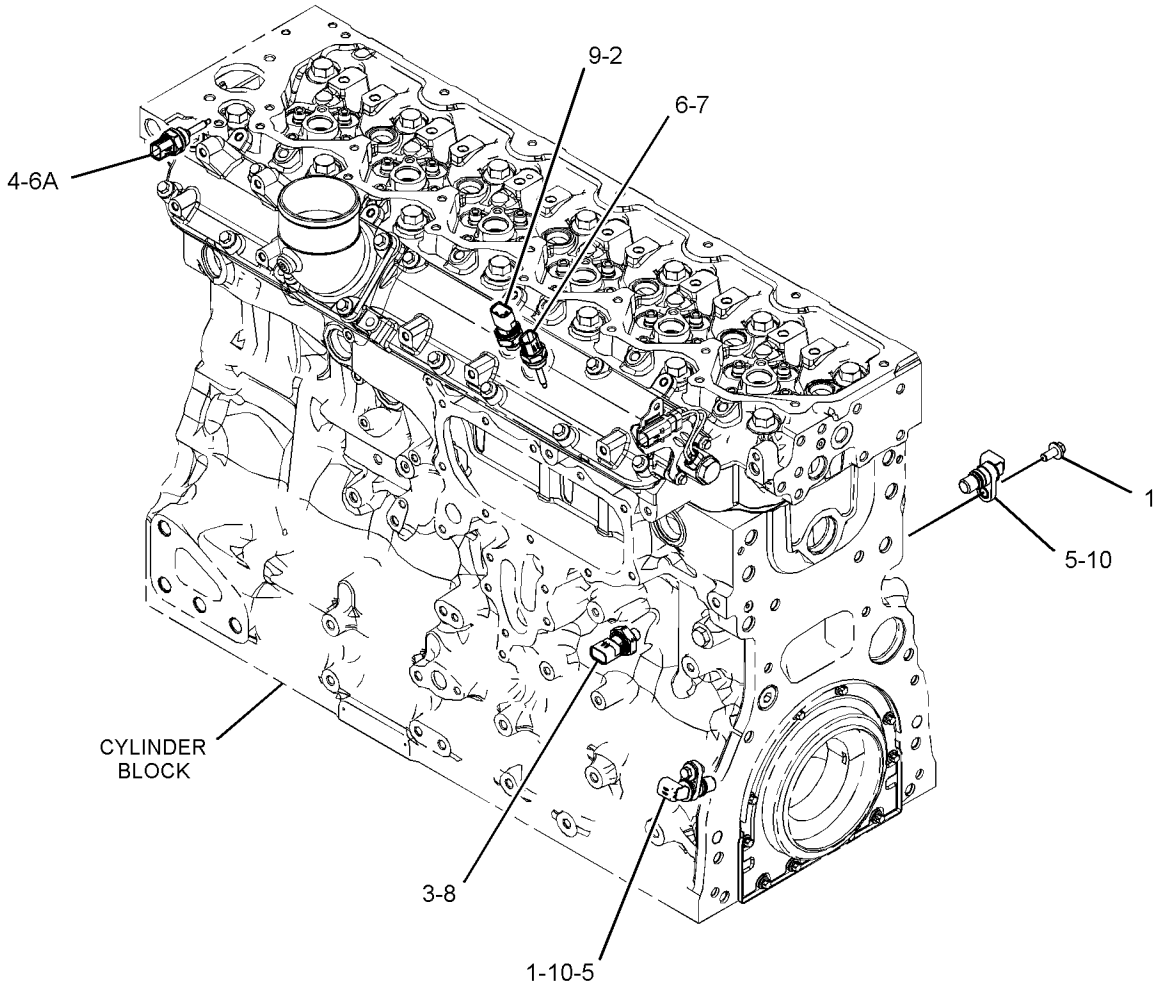

GRAPHIC #1

<END>

g03380662

338-6970 SENSOR GP-PRESSURE

S/N: JEG1-UP

PART OF 398-4602, 398-4603, 398-4604 LINES GP-PILOT

ALSO AN ATTACHMENT

SMCS-1439, 1916, 1917, 1923, 1924

i05432921

NOTE	REF NO	GRAPHIC REF	PART NUMBER	QTY	PART NAME 1 2 3 4 5 6 (PRODUCT LEVEL)	SEE PAGE
	1	1	**344-7390**	1	SENSOR GP-PRESSURE	
	2	1	**3J-1907**	1	SEAL-O-RING	

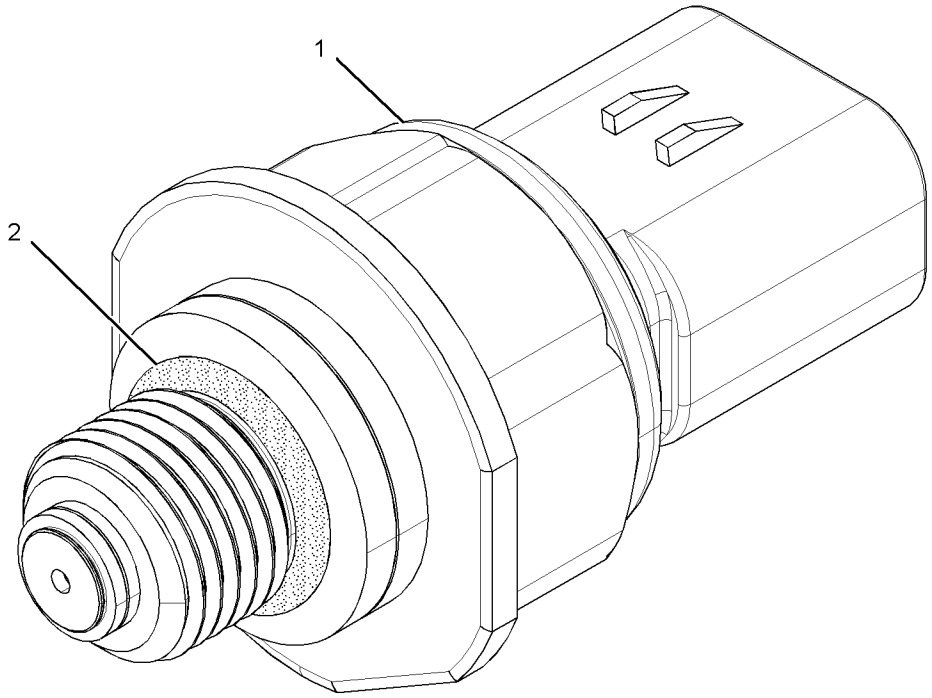

GRAPHIC #1

<END>

g02259275

367-8852 STARTING AID AR-ETHER

S/N: JEG1-UP

AN ATTACHMENT

SMCS-1456 **i05439763**

NOTE	PART NUMBER	QTY	PART NAME 1 2 3 4 5 6 (PRODUCT LEVEL)	SEE PAGE
Y	*399-4265*	1	BATTERY & WIRING GP (COLD WEATHER)	101
Y	*368-7679*	1	STARTING AID GP-ETHER	145

Y - SEPARATE ILLUSTRATION

<END>

395-0114 STARTING AID GP

S/N: BD41-UP

PART OF 450-8077 ENGINE AR-PRIMARY

SMCS-1090 **i05332682**

NOTE	REF NO	GRAPHIC REF	PART NUMBER	QTY	PART NAME 1 2 3 4 5 6 (PRODUCT LEVEL)	SEE PAGE
	1	1	**112-7704**	1	BOLT	
M	2	1	**5C-2890**	2	NUT (M6X1-THD)	
	3	1	**217-9039**	1	STRAP-CABLE	
	4	1	**361-9875**	6	GLOW PLUG (24-VOLT)	
	5	1	**368-3145**	1	BUS BAR AS	
	6	1	**384-7567**	1	HARNESS AS-STARTING AID	
		1	**2L-8050**	2	TERMINAL-RING (6-GA, 1/4-IN SCREW)	
					—OR—	
		1	**2L-8058**	2	TERMINAL-RING (8-GA, 1/4-IN SCREW)	
		1	**316-9351**	1	MOUNTING-CABLE TIE	
	7	1	**208-8469**	1	LOCKNUT (M6X1-THD)	
	8	1	**275-2428**	1	INSULATOR	
	9	1	**277-4409**	1	CAP	

M - METRIC PART

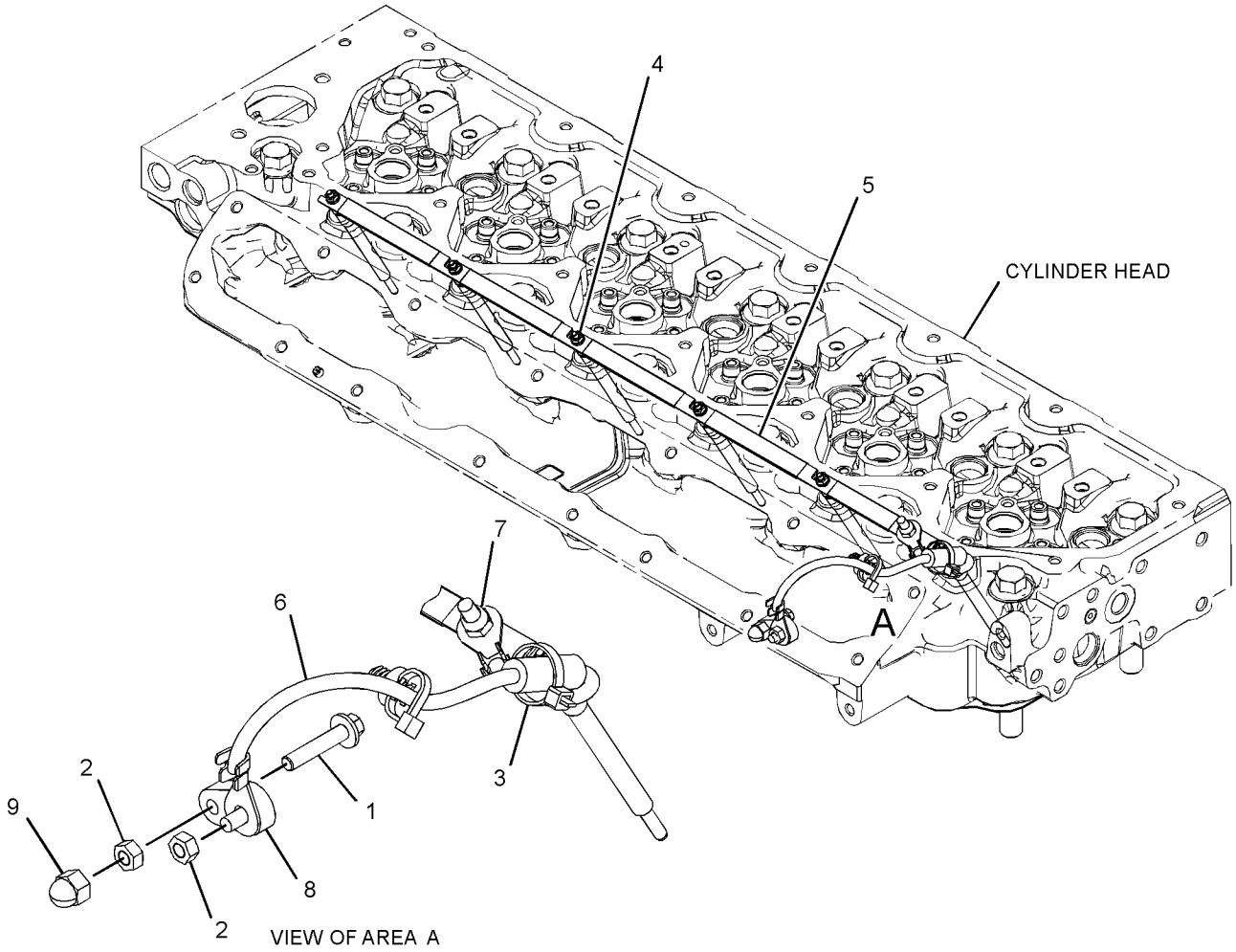

GRAPHIC #1 **<END>** g03379036

368-7679 STARTING AID GP-ETHER

S/N: JEG1-UP
PART OF 367-8852 STARTING AID AR-ETHER
AN ATTACHMENT

SMCS-1456 **i05439827**

NOTE	REF NO	GRAPHIC REF	PART NUMBER	QTY	PART NAME 1 2 3 4 5 6 (PRODUCT LEVEL)	SEE PAGE
Y	1	1	**239-1134**	1	VALVE GP-ETHER STARTING (24-VOLT)	155
	2	1	**241-4194**	1	FITTING AS (CONTROL)	
		1	**236-4545**	1	NUT-SLEEVE (5/16-24-THD)	
	3	1	**250-2177**	1	ATOMIZER AS	
	4	1	**339-6891**	5	STRAP-CABLE	
	5	1	**339-7043**	1	SUPPORT	
M	6	1	**8T-4192**	2	BOLT (M12X1.75X25-MM)	
M	7	1	**8T-4200**	2	BOLT (M8X1.25X16-MM)	
	8	1	**8T-4223**	2	WASHER-HARD (13.5X25.5X3-MM THK)	
	9	1	**8T-4224**	2	WASHER-HARD (8.8X16X2-MM THK)	
E	10	1	**174-9169**		TUBE (107-CM)	
AF			**7N-0296**	1	CYLINDER AS-ETHER	
					(MUST BE PROCURED LOCALLY FROM YOUR CAT DEALER)	

A - NOT PART OF THIS GROUP
E - ORDER BY THE CENTIMETER
F - NOT SHOWN
M - METRIC PART
Y - SEPARATE ILLUSTRATION

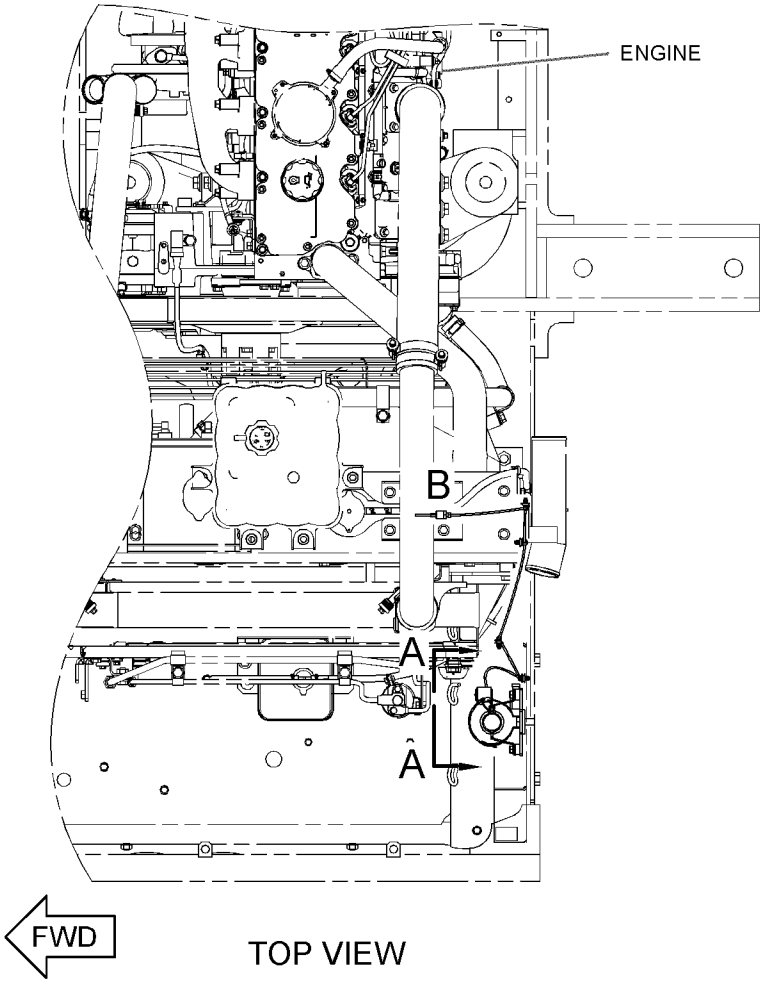

TOP VIEW

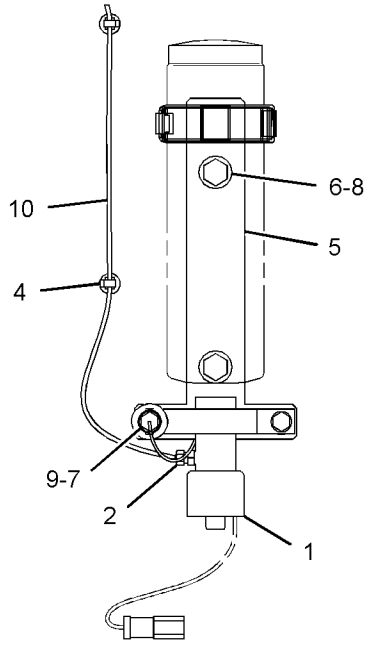

VIEW A-A



VIEW OF AREA B

GRAPHIC #1

<END>

g02730566

385-8000 STARTING MOTOR GP-ELECTRIC

S/N: BD41-UP

PART OF 450-8077 ENGINE AR-PRIMARY

SMCS-1453 **i05281974**

NOTE	REF NO	GRAPHIC REF	PART NUMBER	QTY	PART NAME 1 2 3 4 5 6 (PRODUCT LEVEL)	SEE PAGE
	1	1	**354-5671**	1	STARTING MOTOR GP-ELECTRIC	
	1A	1	**230-4012**	1	RECEPTACLE AS-CONNECTOR (2-PIN)	
	2	1	**183-1343**	3	STUD	
M	3	1	**6I-0233**	3	NUT (M12X1.75-THD)	

M - METRIC PART

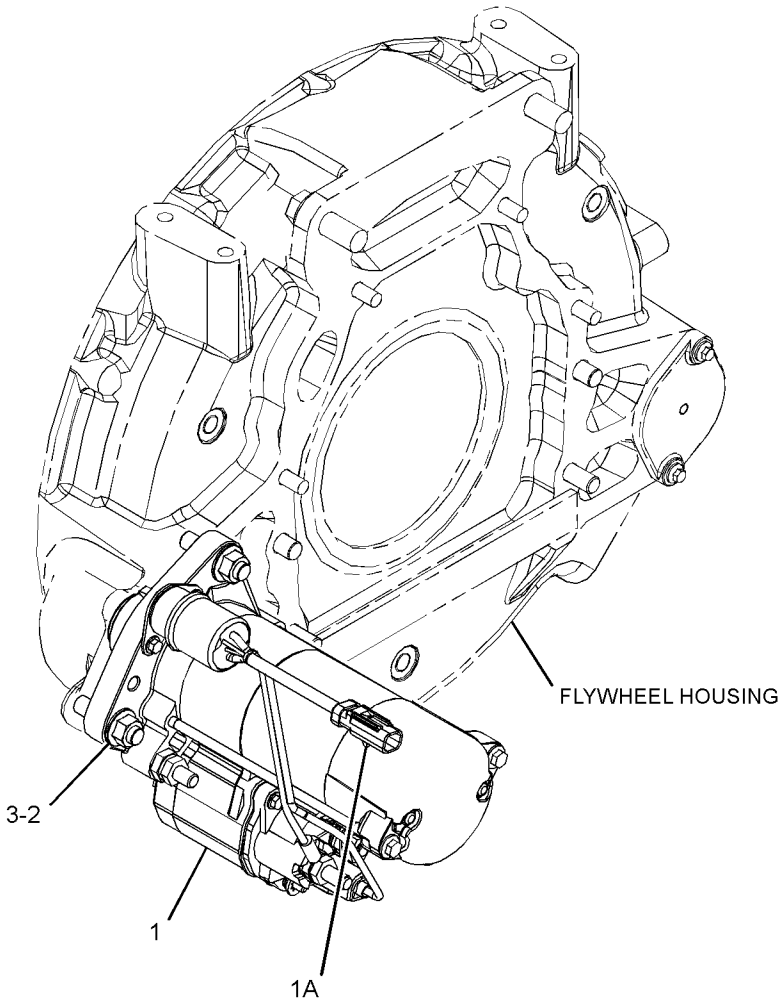

GRAPHIC #1 **<END>** g03317666

7N-0719 SWITCH GP-DISCONNECT–BATTERY

S/N: JEG1-UP

PART OF 399-2649 PANEL GP-CIRCUIT BREAKER

SMCS-1411 **i01087971**

NOTE	REF NO	GRAPHIC REF	PART NUMBER	QTY	PART NAME 1 2 3 4 5 6 (PRODUCT LEVEL)	SEE PAGE
	1	1	**8H-5306**	1	KEY (BATTERY DISCONNECT)	
	2	1	**8H-5303**	1	NUT (3/4-16-THD)	
	3	1	**2H-3922**	1	LOCKWASHER	
	4	1	**7F-7259**	4	LOCKWASHER	
	5	1	**6F-7045**	4	NUT-FULL (3/8-24-THD)	

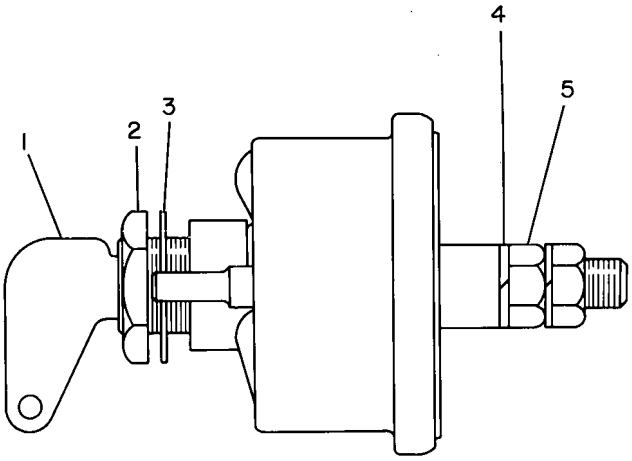

GRAPHIC #1 **<END>** g00136161

234-6613 SWITCH GP-LIMIT—HYDRAULIC LOCKOUT

S/N: JEG1-UP
PART OF 421-1434 CONSOLE GP-OPERATOR
ALSO AN ATTACHMENT

SMCS-1435 **i03903701**

NOTE	REF NO	GRAPHIC REF	PART NUMBER	QTY	PART NAME 1 2 3 4 5 6 (PRODUCT LEVEL)	SEE PAGE
	1	1	**3S-2093**	1	STRAP-CABLE	
	2	1	**4I-3038**	2	WASHER (3.3X8X0.5-MM THK)	
	3	1	**111-4799**	1	SWITCH AS-LIMIT (HYDRAULIC LOCKOUT)	
		1	**102-8803**	1	KIT-RECEPTACLE (3-PIN)	
					(INCLUDES RECEPTACLE AS & WEDGE)	
		1	**8T-8729**	3	PIN-CONNECTOR (16-GA TO 18-GA)	
D		1	**5P-5998**		TUBE (0.3-M)	
M	4	1	**185-8286**	2	SCREW-MACHINE (M4X0.7X8-MM)	
	5	1	**234-6615**	1	KNOB	
	6	1	**087-4683**	2	LOCKWASHER	
M	7	1	**120-9027**	2	SCREW-PAN HEAD (M3X0.5X16-MM)	

D - ORDER BY THE METER
M - METRIC PART

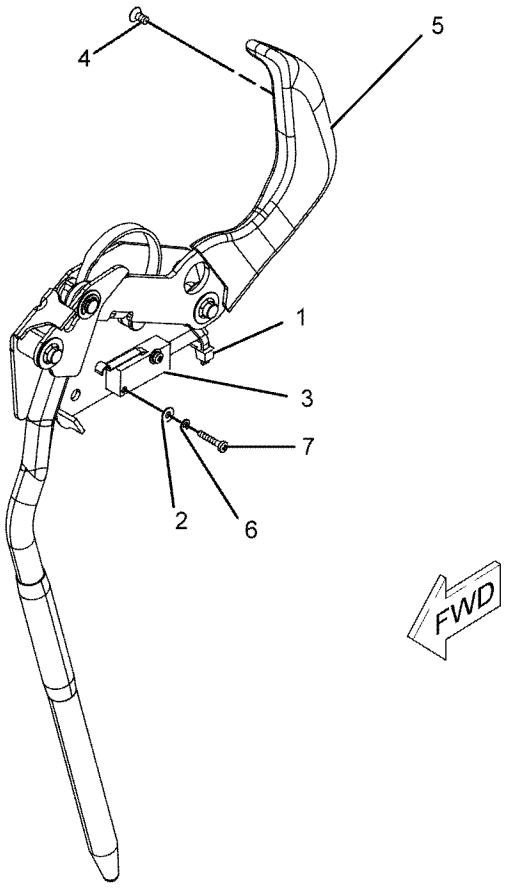

GRAPHIC #1 **<END>** g01096293

241-8368 SWITCH GP-MAGNETIC–GLOW PLUG

S/N: JEG1-UP

24-VOLT

PART OF 399-2649 PANEL GP-CIRCUIT BREAKER

SMCS-7499 **i05456664**

NOTE	REF NO	GRAPHIC REF	PART NUMBER	QTY	PART NAME 1 2 3 4 5 6 (PRODUCT LEVEL)	SEE PAGE
	1	1	**155-2270**	1	KIT-CONNECTING PLUG (2-PIN)	
					(INCLUDES PLUG AS, WEDGE & INTERFACE SEAL)	
	2	1	**4F-2294**	2	NUT-JAM (5/16-24-THD)	
	3	1	**8T-8730**	2	SOCKET-CONNECTOR (16-GA TO 18-GA)	

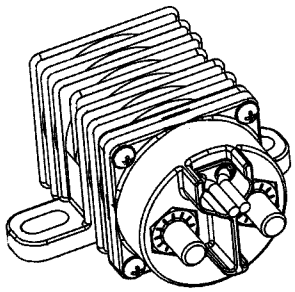

ISOMETRIC VIEW

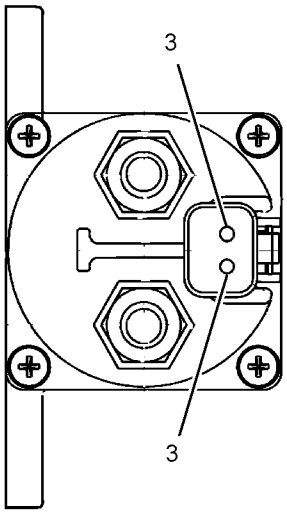

VIEW A-A

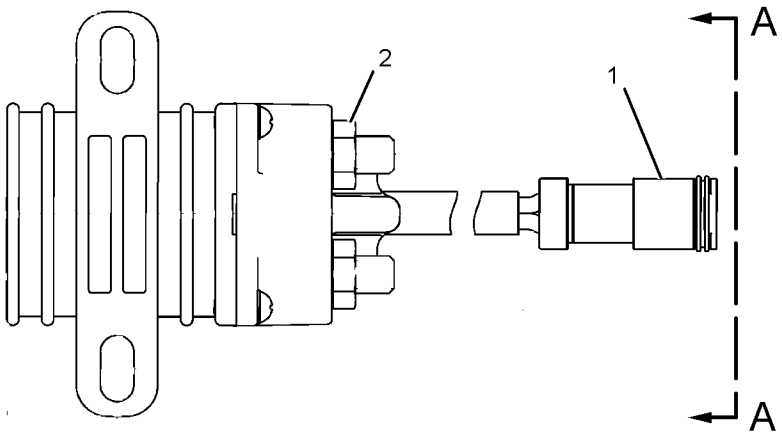

GRAPHIC #1 **<END>** g01077362

238-1594 SWITCH GP-PUSH BUTTON–REFUELING PUMP, START

S/N: JEG1-UP

PART OF 238-1570 WIRING GP-REFUELING PUMP

AN ATTACHMENT

SMCS-1435, 7332 **i05494640**

NOTE	REF NO	GRAPHIC REF	PART NUMBER	QTY	PART NAME 1 2 3 4 5 6 (PRODUCT LEVEL)	SEE PAGE
	1	1	**6T-9442**	1	SWITCH GP-PUSH BUTTON (REFUELING PUMP, START)	
		1	**1S-0812**	2	SCREW-TAPPING	
		1	**3K-0835**	1	NUT (5/8-24-THD)	
		1	**6F-0253**	1	LOCKWASHER	
		1	**8T-8748**	1	ADAPTER-MOUNT	
		1	**9W-0625**	1	SWITCH AS-PUSH BUTTON (REFUELING PUMP, START)	
	2	1	**238-1595**	1	HARNESS AS-SWITCH (REFUELING PUMP, START)	
		1	**8T-8729**	2	PIN-CONNECTOR (16-GA TO 18-GA)	
		1	**243-4505**	1	RECEPTACLE AS-CONNECTOR (2-PIN)	
E	3	1	**125-7875**		TUBE-HEAT SHRINK (7.44-MM DIA) (6-CM)	

E - ORDER BY THE CENTIMETER

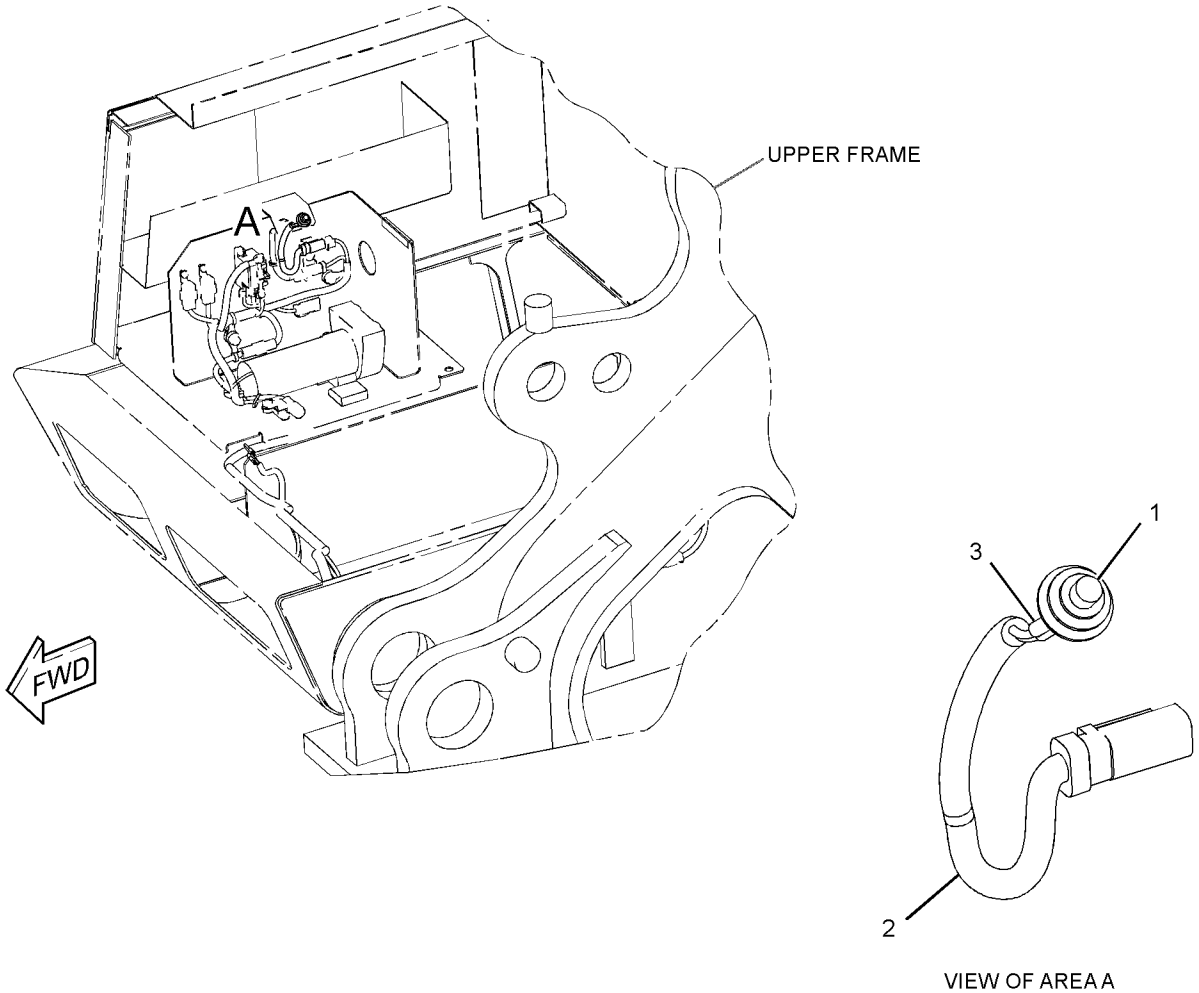

GRAPHIC #1 **<END>** g01560235

238-1596 SWITCH GP-PUSH BUTTON—REFUELING PUMP, STOP

S/N: JEG1-UP

PART OF 238-1570 WIRING GP-REFUELING PUMP

AN ATTACHMENT

SMCS-1435, 7332 **i05518410**

NOTE	REF NO	GRAPHIC REF	PART NUMBER	QTY	PART NAME 1 2 3 4 5 6 (PRODUCT LEVEL)	SEE PAGE
	1	1	*9X-4184*	1	SWITCH GP-PUSH BUTTON (REFUELING PUMP, STOP)	
		1	**3E-7389**	1	SWITCH-PUSH BUTTON (REFUELING PUMP, STOP)	
		1	**1S-0812**	2	SCREW-TAPPING	
		1	**3K-0835**	1	NUT (5/8-24-THD)	
		1	**6F-0253**	1	LOCKWASHER	
		1	**8T-8748**	1	ADAPTER-MOUNT	
	2	1	**238-1597**	1	HARNESS AS-SWITCH (REFUELING PUMP, STOP)	
		1	**8T-8730**	2	SOCKET-CONNECTOR (16-GA TO 18-GA)	
		1	**230-4011**	1	PLUG AS-CONNECTOR (2-PIN)	
		1	**264-7029**	1	SEAL-CONNECTOR	
E	3	1	**125-7875**		TUBE-HEAT SHRINK (7.44-MM DIA) (6-CM)	

E - ORDER BY THE CENTIMETER

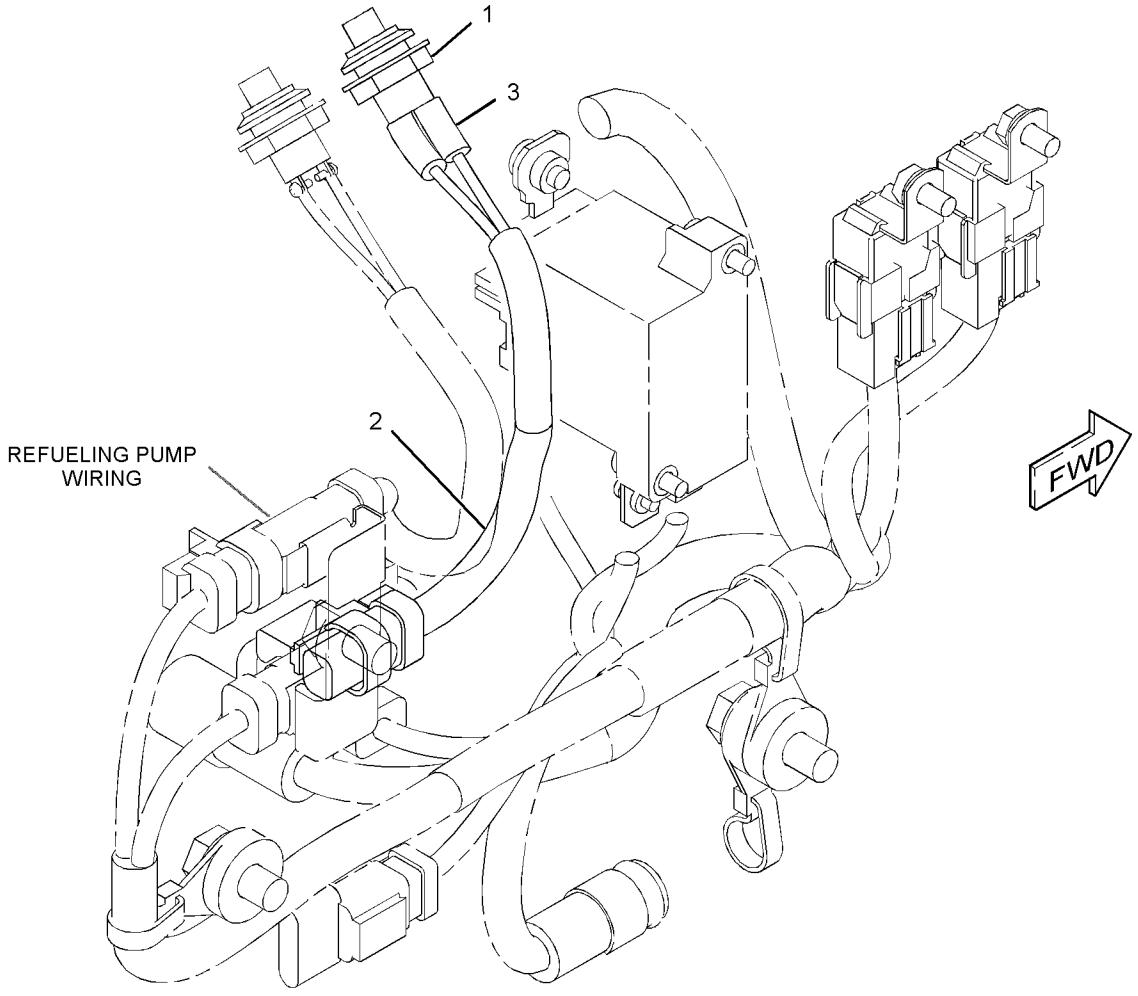

GRAPHIC #1 **<END>** g01560319

255-2751 SWITCH GP-START–ENGINE, KEY

S/N: JEG1-UP

PART OF 398-7007 PANEL GP-SWITCH

AN ATTACHMENT

SMCS-1416 **i04574543**

NOTE	REF NO	GRAPHIC REF	PART NUMBER	QTY	PART NAME 1 2 3 4 5 6 (PRODUCT LEVEL)	SEE PAGE
	1	1	**6V-8362**	4	SCREW-MACHINE (8-32X0.31-IN)	
	2	1	**9B-7233**	4	LOCKWASHER	
	3	1	**7T-6799**	1	NUT-MOUNTING (1-32-THD)	
AF			**5P-8500**	1	KEY (IGNITION)	

A - NOT PART OF THIS GROUP
F - NOT SHOWN

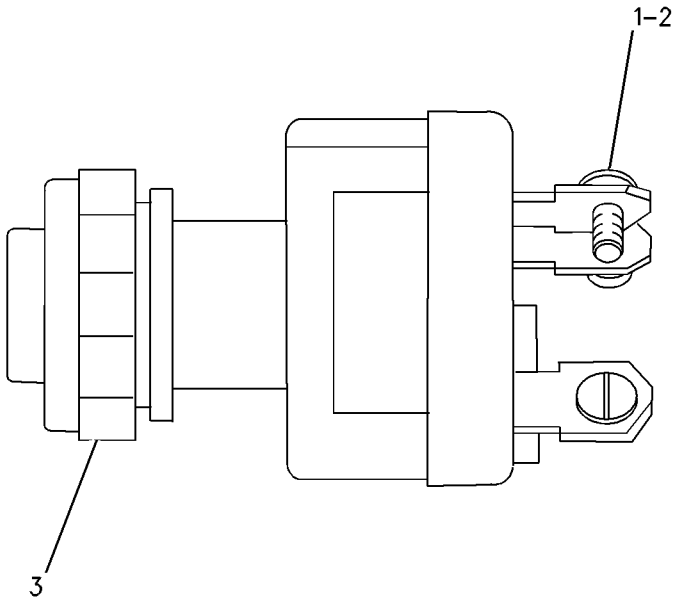

GRAPHIC #1 **<END>** g00699802

238-2478 SWITCH GP-TOGGLE–QUICK COUPLER

S/N: JEG1-UP
PART OF 417-9812 WIRING GP-CAB
AN ATTACHMENT

SMCS-7332 **i02515923**

NOTE	REF NO	GRAPHIC REF	PART NUMBER	QTY	PART NAME 1 2 3 4 5 6 (PRODUCT LEVEL)	SEE PAGE
	1	1	**7N-2353**	1	SWITCH AS-TOGGLE (QUICK COUPLER)	
	2	1	**238-2479**	1	HARNESS AS-WIRING (QUICK COUPLER SWITCH)	
		1	**7Y-3950**	2	TERMINAL-BLADE (14-GA TO 20-GA)	
		1	**7Y-3953**	1	CONNECTOR-RECEPTACLE	
		1	**3S-2093**	1	STRAP-CABLE	

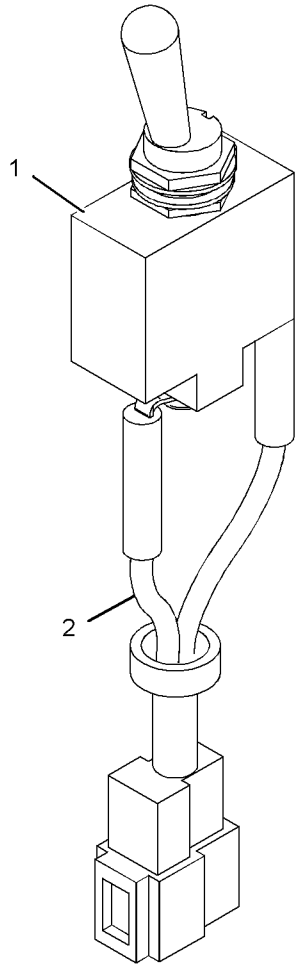

GRAPHIC #1 **<END>** g01125914

238-2208 SWITCH GP-WIPER–LOWER

S/N: JEG1-UP

PART OF 229-9086 WIPER AR-WINDOW

AN ATTACHMENT

SMCS-7305 **i05518411**

NOTE	REF NO	GRAPHIC REF	PART NUMBER	QTY	PART NAME 1 2 3 4 5 6 (PRODUCT LEVEL)	SEE PAGE
	1	1	**238-2209**	1	SWITCH AS-ROCKER (WIPER, LOWER)	
		1	**167-3542**	1	RECEPTACLE-CONNECTOR (5-PIN)	
		1	**167-3543**	5	TERMINAL (MALE)	
	2	1	**238-2210**	1	SWITCH AS-ROCKER (WASHER, LOWER)	
		1	**167-3542**	1	RECEPTACLE-CONNECTOR (5-PIN)	
		1	**167-3543**	4	TERMINAL (MALE)	

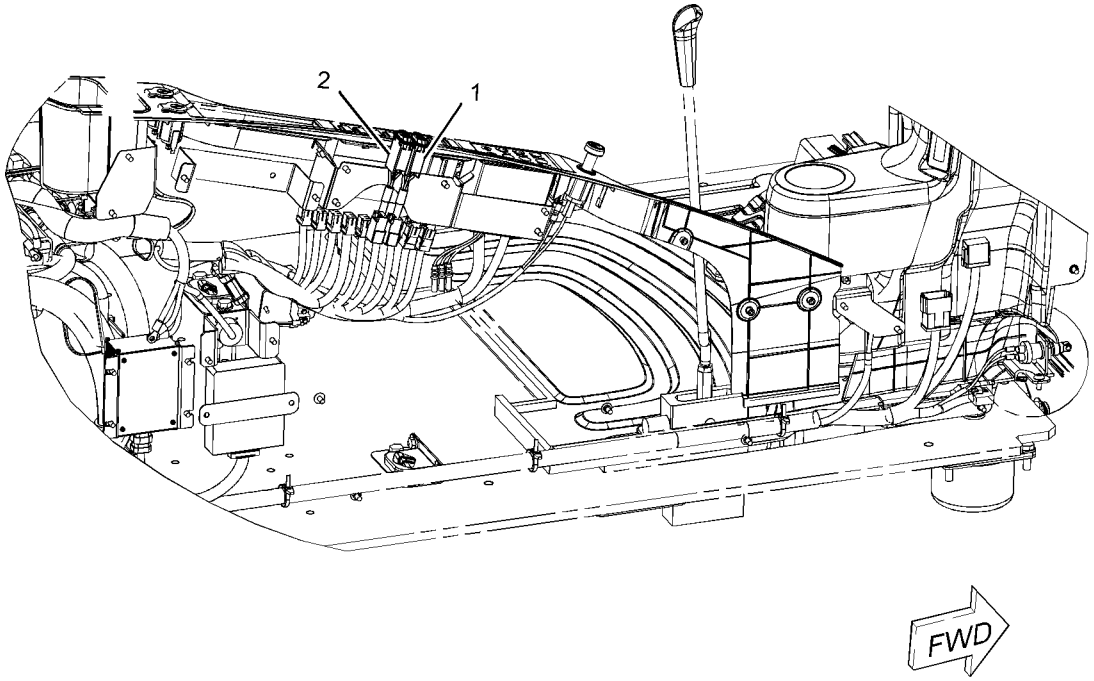

GRAPHIC #1 **<END>** g01098895

239-1134 VALVE GP-ETHER STARTING

S/N: JEG1-UP
24-VOLT
PART OF 368-7679 STARTING AID GP-ETHER
AN ATTACHMENT

SMCS-1456 **i03907816**

NOTE	REF NO	GRAPHIC REF	PART NUMBER	QTY	PART NAME 1 2 3 4 5 6 (PRODUCT LEVEL)	SEE PAGE
	1	1	**7N-9801**	1	GASKET	
	2	1	**102-8802**	1	KIT-RECEPTACLE (2-PIN)	
					(INCLUDES RECEPTACLE AS & WEDGE)	
	3	1	**8T-8729**	2	PIN-CONNECTOR (16-GA TO 18-GA)	
	4	1	**358-4889**	1	FILTER (ETHER START)	

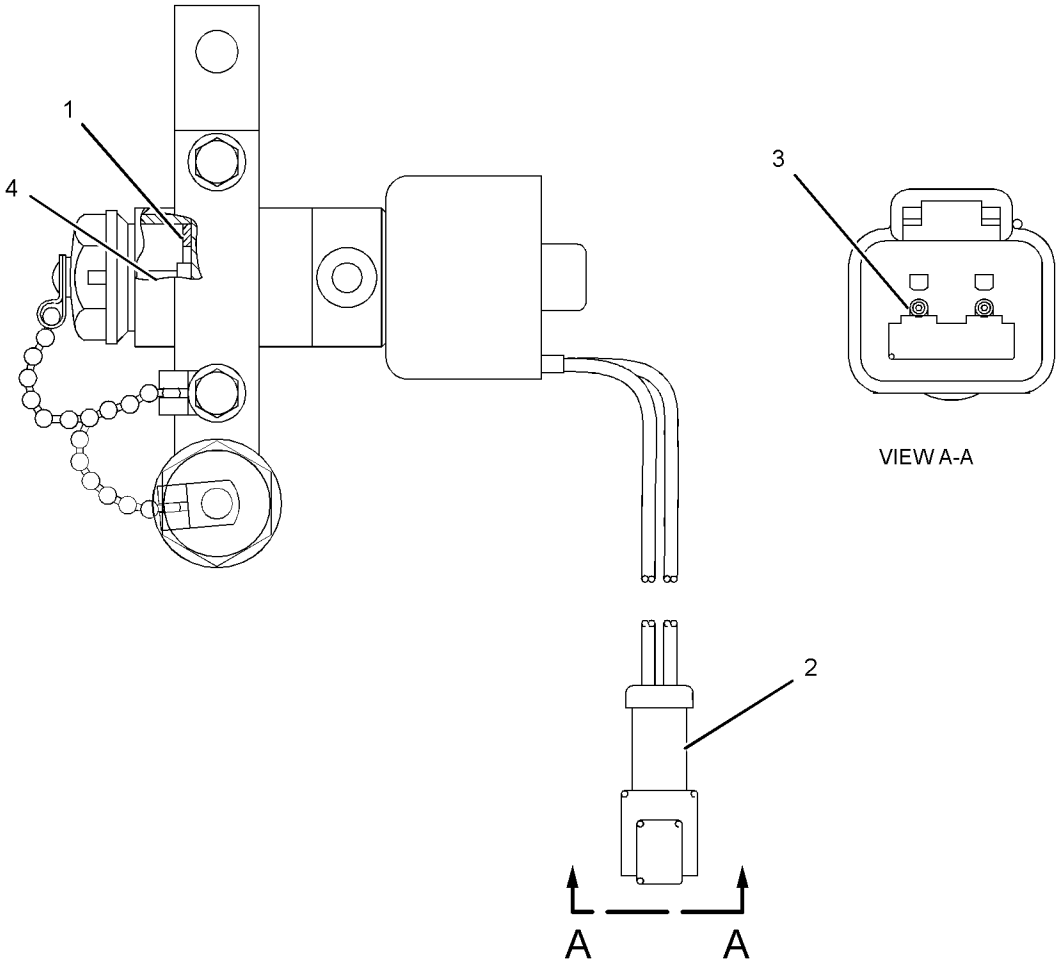

GRAPHIC #1 **<END>** g02138138

251-0529 WIRING GP-CAB

S/N: JEG1-UP

PART OF 383-5306 CONTROL AR-AUXILIARY

AN ATTACHMENT

SMCS-1408, 7301

i04606649

NOTE	REF NO	GRAPHIC REF	PART NUMBER	QTY	PART NAME 1 2 3 4 5 6 (PRODUCT LEVEL)	SEE PAGE
	1	1,3	**3S-2093**	4	STRAP-CABLE	
	2	1,2	**7K-1181**	8	STRAP-CABLE	
	3	3	**116-0118**	2	CLIP	
	4	1	**149-5050**	1	RELAY (24-VOLT) (1-WAY/2-WAY SOLENOID)	
	5	1	**251-0598**	1	HARNESS AS-SOLENOID (1-WAY, 2-WAY FLOW)	
		1	**3S-2093**	6	STRAP-CABLE	
		1	**8T-8737**	1	PLUG-SEAL	
		1	**243-4508**	1	RECEPTACLE AS-CONNECTOR (6-PIN)	
M	6	1	**5C-2890**	1	NUT (M6X1-THD)	
M	7	3	**7X-2621**	2	BOLT (M10X1.5X12-MM)	
	8	3	**8T-4121**	2	WASHER-HARD (11X21X2.5-MM THK)	
	9	1	**9X-8256**	1	WASHER (6.6X12X2-MM THK)	

M - METRIC PART

251-0529 **WIRING GP-CAB (*contd.*)** **i04606649**

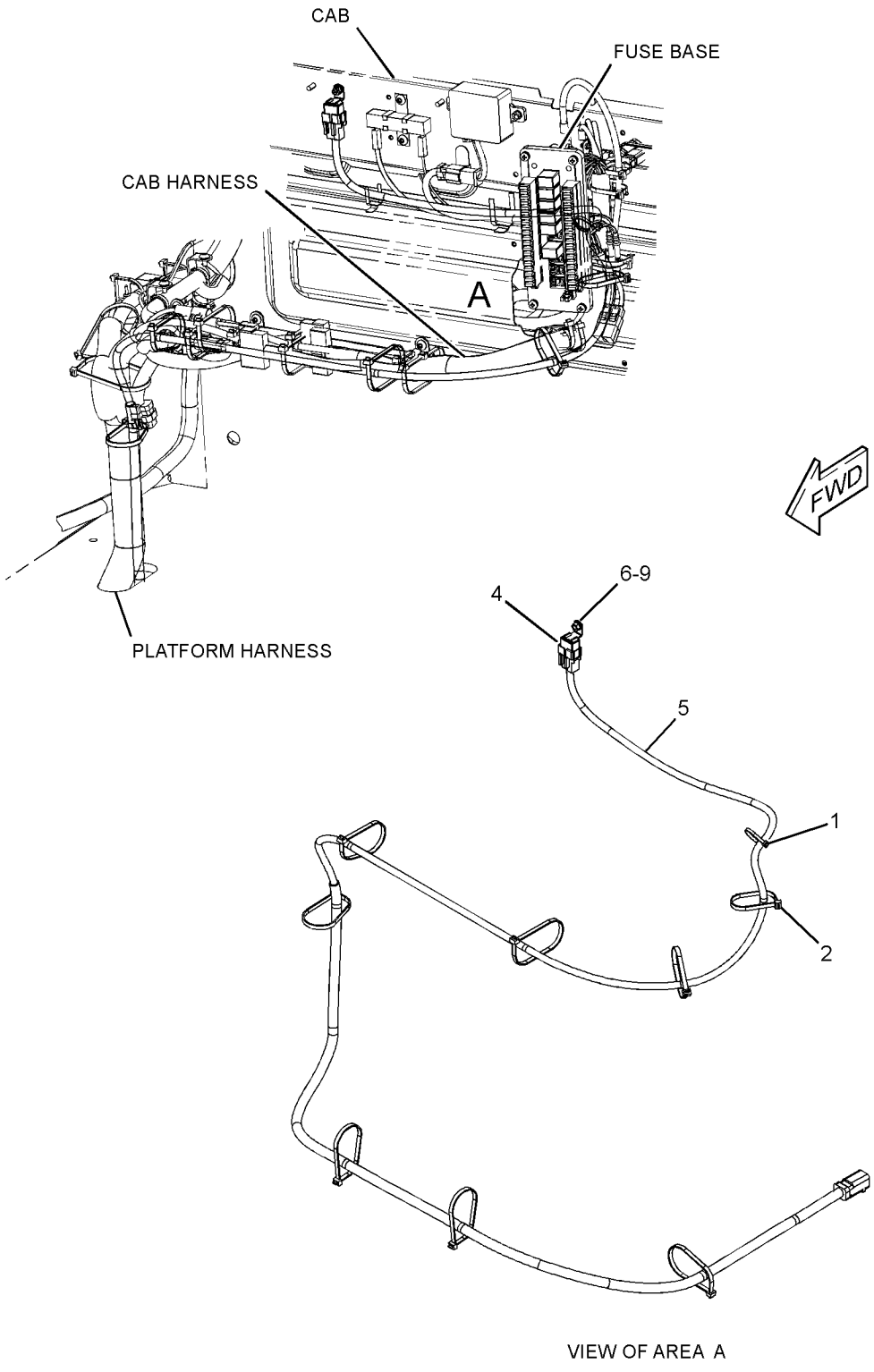

GRAPHIC #1 g02756436

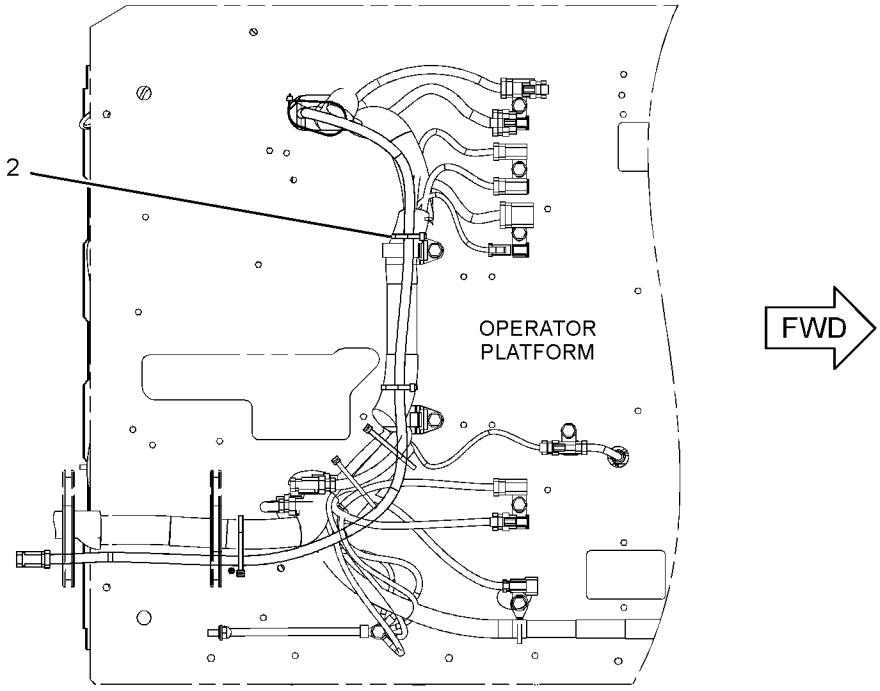

BOTTOM VIEW
(FOR CONFIG. 2,11)

GRAPHIC #2 g02756378

251-0529 **WIRING GP-CAB (*contd.*)** **i04606649**

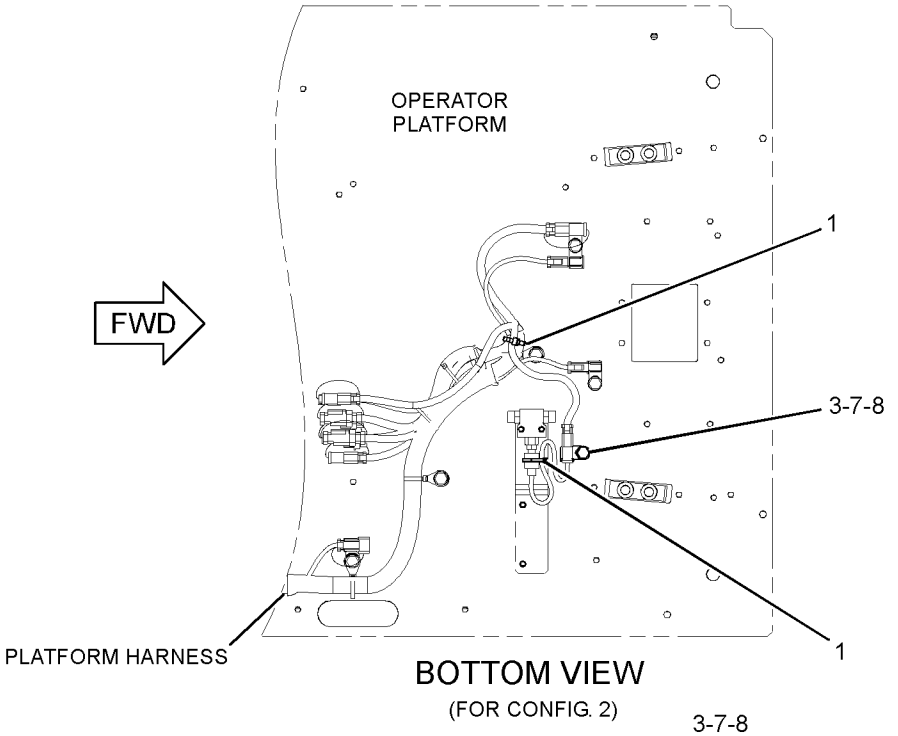

BOTTOM VIEW
(FOR CONFIG. 2)

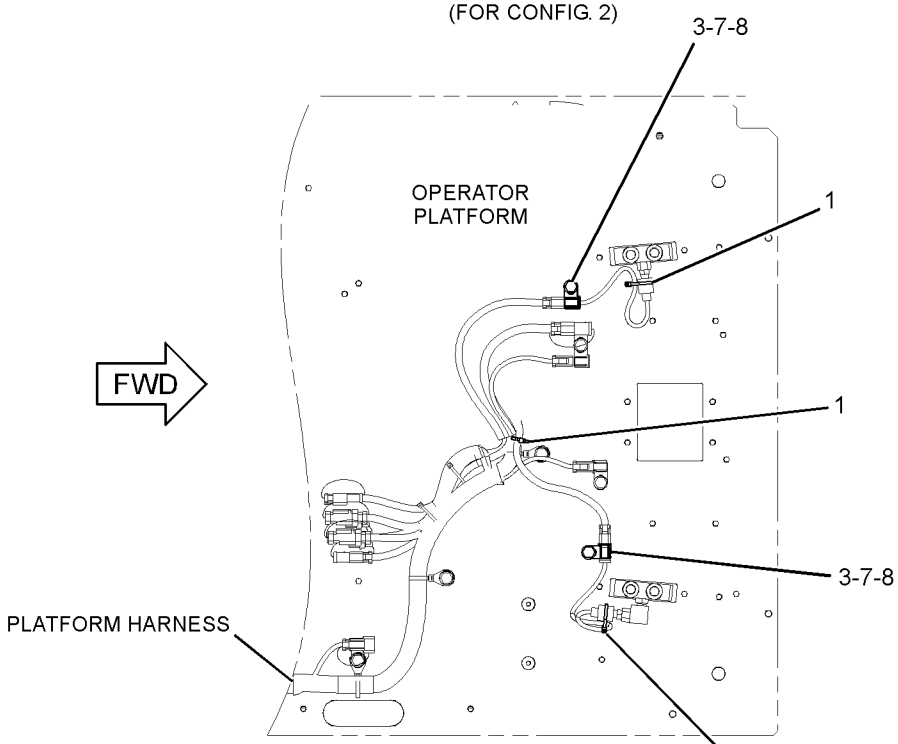

BOTTOM VIEW
(FOR CONFIG. 11)

GRAPHIC #3 **<END>** g02756438

398-7003 WIRING GP-CAB

S/N: JEG1-UP

PART OF 434-3892, 434-3893 CAB GP, 422-0645 OPERATOR AR-ENCLOSED ROPS

ALSO AN ATTACHMENT

SMCS-1408, 7301 **i05537098**

NOTE	REF NO	GRAPHIC REF	PART NUMBER	QTY	PART NAME 1 2 3 4 5 6 (PRODUCT LEVEL)	SEE PAGE
	1	2,3	**7K-1181**	7	STRAP-CABLE	
	2	2	**7Y-5505**	2	SPEAKER AS	
		2	**7Y-3951**	2	TERMINAL-BLADE (14-GA)	
		2	**7Y-3954**	1	CONNECTOR-PLUG (3-PIN)	
J	3	2	**9W-0335**	1	LIGHTER AS-CIGAR (24-VOLT)	
M	4	2	**099-7127**	8	SCREW-MACHINE (M4X0.7X12-MM)	
	5	3	**113-8490**	20	FUSE (10-AMPERE)	
	6	3	**113-8491**	6	FUSE (15-AMPERE)	
	7	3	**113-8492**	2	FUSE (20-AMPERE)	
	8	3	**113-8493**	2	FUSE (25-AMPERE)	
	9	2	**116-0210**	4	BRACKET AS	
	10	3	**124-3548**	2	FUSE (30-AMPERE)	
Y	11	2	**132-1829**	1	ALARM GP (24-VOLT) (FAULT)	98
	12	3	**141-2759**	8	FUSE (5-AMPERE)	
	13	3	**161-3128**	1	RELAY (24-VOLT) (BOOM FLOODLIGHT)	
	13A	3	**161-3128**	1	RELAY (24-VOLT) (CHASSIS LIGHT)	
	13B	3	**161-3128**	1	RELAY (24-VOLT) (CAB LIGHT)	
	13C	3	**161-3128**	1	RELAY (24-VOLT) (HORN)	
	13D	3	**161-3128**	1	RELAY (24-VOLT) (NEUTRAL START)	
	13E	3	**161-3128**	1	RELAY (24-VOLT) (ETHER START)	
	13F	3	**161-3128**	1	RELAY (24-VOLT) (ELECTRIC PRIMING)	
	13G	3	**161-3128**	1	RELAY (24-VOLT) (PUMP)	
	14	2	**163-6795**	15	STRAP-CABLE	
	15	2	**167-3593**	1	STRAP	
	16	3	**170-6888**	1	PULLER-FUSE	
	17	3	**213-0772**	1	SWITCH AS-MAGNETIC (24-VOLT) (MAIN RELAY)	
	18	2	**234-1097**	1	BRACKET	
	19	2	**238-2212**	1	SWITCH AS-ROCKER (FINE SWING)	
		2	**167-3542**	1	RECEPTACLE-CONNECTOR (5-PIN)	
		2	**167-3543**	5	TERMINAL (MALE)	
H	20	2	**238-2318**	1	LIGHTER AS-CIGAR (24-VOLT)	
	21	3	**238-2390**	1	CABLE AS (RED)	
	22	3	**238-2391**	1	CABLE AS (PURPLE)	
					(EACH CABLE AS INCLUDES)	
		3	**9G-4343**	2	TERMINAL-RING (4-GA, 1/4-IN SCREW)	
E		3	**125-7876**		TUBE-HEAT SHRINK (17.78-MM DIA) (4-CM)	
	23	2	**245-7760**	8	INSULATION	
	24	2	**251-0637**	1	INSULATION	
	25	1	**259-4883**	1	ANTENNA AS	
		1	**259-5081**	1	ROD	
		1	**259-5082**	1	CABLE AS	
	26	2	**327-7538**	1	PANEL AS-SWITCH	
		2	**356-7732**	1	KNOB (SWITCH PANEL)	
	27	2	**366-0367**	1	METER GP-SERVICE	
		2	**304-5303**	1	NUT-SPECIAL (SERVICE METER)	
		2	**366-4622**	1	KIT-SERVICE METER	
					(INCLUDES FILM & METER GP)	
	28	2	**441-7658**	1	HARNESS AS-CAB	
		2	**102-8803**	2	KIT-RECEPTACLE (3-PIN)	
					(INCLUDES RECEPTACLE AS AND WEDGE)	
		2	**8T-8730**	5	SOCKET-CONNECTOR (16-GA TO 18-GA)	
		2	**3S-2093**	109	STRAP-CABLE	
		2	**7Y-3950**	4	TERMINAL-BLADE (14-GA TO 20-GA)	
		2	**7Y-3951**	11	TERMINAL-BLADE (14-GA)	
		2	**7Y-3952**	3	PLUG-CONNECTOR (2-PIN)	

398-7003 **WIRING GP-CAB (*contd.*)** **i05537098**

NOTE	REF NO	GRAPHIC REF	PART NUMBER	QTY	PART NAME 1 2 3 4 5 6 (PRODUCT LEVEL)	SEE PAGE
		2	**7Y-3955**	2	CONNECTOR-RECEPTACLE	
		2	**7Y-3958**	1	CONNECTOR-PLUG (6-PIN)	
		2	*7Y-3966*	2	TERMINAL AS	
					(EACH INCLUDES)	
		2	**7Y-3962**	1	TERMINAL-BULLET (MALE)	
		2	**7Y-3964**	1	TUBE (CONNECTOR TERMINAL)	
		2	*7Y-3967*	6	TERMINAL AS	
					(EACH INCLUDES)	
		2	**7Y-3963**	1	TERMINAL-BULLET (FEMALE)	
		2	**7Y-3965**	1	TUBE (RECEPTACLE TERMINAL)	
		2	**8C-6354**	1	CAP-RECEPTACLE (ET CONNECTOR)	
		2	**8T-8737**	8	PLUG-SEAL	
		2	**5P-6271**	1	CONNECTOR AS	
		2	**9W-1951**	1	RECEPTACLE-CONNECTOR (9-PIN)	
		2	**102-7964**	2	PLUG-CONNECTOR (16-PIN)	
		2	**102-7965**	82	TERMINAL (FEMALE)	
		2	**9W-0844**	2	SOCKET-CONNECTOR (14-GA TO 16-GA)	
		2	**111-4816**	1	PLUG-CONNECTOR (13-PIN)	
		2	**116-0255**	1	TERMINAL-BLADE (10-GA TO 20-GA)	
E		2	**119-3662**		TUBE-HEAT SHRINK (10.85-MM DIA) (26-CM)	
		2	**121-1022**	1	DIODE	
		2	**121-1168**	1	CONNECTOR-RECEPTACLE	
		2	**121-1173**	19	TERMINAL (MALE)	
		2	**125-4784**	1	PLUG-CONNECTOR (12-PIN)	
		2	**125-4785**	30	TERMINAL (FEMALE)	
		2	**125-4840**	1	WEDGE-PLUG LOCK (13-PIN)	
		2	**125-4841**	2	WEDGE-PLUG LOCK (21-PIN)	
E		2	**125-7874**		TUBE-HEAT SHRINK (5.72-MM DIA) (35-CM)	
E		2	**125-7875**		TUBE-HEAT SHRINK (7.44-MM DIA) (55-CM)	
		2	**9X-3402**	6	SOCKET-CONNECTOR (16-GA TO 18-GA)	
					—OR—	
		2	**126-1768**	6	SOCKET-CONNECTOR (14-GA TO 16-GA)	
		2	**2L-8065**	3	TERMINAL-RING (10-GA TO 12-GA, NO. 8 SCREW)	
		2	**2L-8066**	2	TERMINAL-RING (10-GA TO 12-GA, NO. 10 SCREW)	
		2	**2L-8067**	6	TERMINAL-RING (10-GA TO 12-GA, 1/4-IN SCREW)	
		2	**2L-8075**	3	TERMINAL-RING (14-GA TO 16-GA, NO. 8 SCREW)	
		2	**2L-8076**	2	TERMINAL-RING (14-GA TO 16-GA, NO. 10 SCREW)	
		2	**128-8950**	1	CONNECTOR-RECEPTACLE	
		2	**5P-2321**	1	TERMINAL-FORK (14-GA TO 16-GA, NO. 6 SCREW)	
		2	**176-9299**	2	KIT-RECEPTACLE (3-PIN)	
					(INCLUDES RECEPTACLE AS & WEDGES)	
		2	**134-3296**	1	HOUSING-PLUG	
		2	**134-3297**	1	SEAL	
		2	**138-5184**	1	PLUG-CONNECTOR (20-PIN)	
		2	**9X-3401**	12	PIN-CONNECTOR (16-GA TO 18-GA)	
					—OR—	
		2	**126-1767**	12	PIN-CONNECTOR (14-GA TO 16-GA)	
		2	**149-5069**	9	TERMINAL-BLADE (14-GA TO 20-GA)	
		2	**149-5070**	18	TERMINAL-BLADE (16-GA TO 20-GA)	
		2	**149-5071**	9	TERMINAL-BLADE (12-GA TO 14-GA)	
		2	**153-2602**	3	RECEPTACLE-CONNECTOR (1-PIN)	
		2	**153-2631**	3	TERMINAL (FEMALE)	
		2	**155-2270**	1	KIT-CONNECTING PLUG (2-PIN)	
					(INCLUDES PLUG AS, WEDGE & INTERFACE SEAL)	
		2	**163-6803**	8	PLUG-CONNECTOR (5-PIN)	
		2	**167-3487**	8	WEDGE-PLUG LOCK (5-PIN)	
		2	**167-3630**	1	CONNECTOR-PLUG	
		2	**167-3631**	2	TERMINAL (FEMALE)	
		2	**170-6890**	6	TERMINAL-BLADE (14-GA)	
		2	**170-6891**	25	TERMINAL-BLADE (16-GA TO 18-GA)	

398-7003 **WIRING GP-CAB (*contd.*)** **i05537098**

NOTE	REF NO	GRAPHIC REF	PART NUMBER	QTY	PART NAME 1 2 3 4 5 6 (PRODUCT LEVEL)	SEE PAGE
		2	**174-3016**	2	PLUG AS-CONNECTOR (3-PIN)	
		2	**230-4009**	1	PLUG AS-CONNECTOR (12-PIN)	
		2	**264-7034**	1	SEAL-CONNECTOR	
		2	**230-4011**	1	PLUG AS-CONNECTOR (2-PIN)	
		2	**264-7029**	1	SEAL-CONNECTOR	
		2	**238-2319**	1	BASE AS (FUSE, RELAY PANEL)	
		2	**9X-8256**	2	WASHER (6.6X12X2-MM THK)	
M		2	**095-0742**	2	SCREW-MACHINE (M6X1X16-MM)	
		2	**170-9394**	40	TERMINAL	
		2	**238-2363**	6	TERMINAL (FEMALE)	
		2	**238-2366**	13	TERMINAL (MALE)	
		2	**243-4505**	1	RECEPTACLE AS-CONNECTOR (2-PIN)	
		2	**342-2972**	1	CAP-CONNECTOR (2-PIN)	
		2	**349-5084**	3	TERMINAL-BLADE	
		2	**349-5085**	3	RECEPTACLE AS-CONNECTOR	
M	29	2	**095-0723**	3	SCREW-SPECIAL	
	30	2	**096-5962**	3	WASHER-HARD (3.4X7X0.8-MM THK)	
	31	1,2	**096-6166**	6	WASHER-HARD (4.5X9X1-MM THK)	
	32	2,3	**132-5789**	6	CLIP	
	33	2	**3S-2093**	1	STRAP-CABLE	
	34	3	**4P-7581**	1	CLIP	
M	35	2	**5C-2890**	3	NUT (M6X1-THD)	
M	36	2	**6V-5210**	12	SCREW-MACHINE (M4X0.7X10-MM)	
M	37	1	**6V-9672**	2	SCREW-MACHINE (M4X0.7X16-MM)	
	38	2,3	**8T-0328**	3	WASHER-HARD (5.5X10X1-MM THK)	
M	39	3	**8T-4127**	2	SCREW-MACHINE (M5X0.8X20-MM)	
M	40	2	**8T-6693**	1	SCREW-MACHINE (M5X0.8X16-MM)	
M	41	2,3	**9X-2042**	8	SCREW-TRUSS HEAD (M6X1X12-MM)	
M	42	3	**9X-2044**	5	SCREW-TRUSS HEAD (M6X1X16-MM)	
	43	2	**9X-8256**	3	WASHER (6.6X12X2-MM THK)	
E	44	2	**101-2846**		GUARD (28-CM)	

E - ORDER BY THE CENTIMETER
H - FOR AKASHI PLANT
J - FOR OTHER THAN AKASHI PLANT
M - METRIC PART
Y - SEPARATE ILLUSTRATION

398-7003 **WIRING GP-CAB (*contd.*)** **i05537098**

REFER TO ALL ILLUSTRATIONS OF
THIS GROUP FOR AUXILIARY VIEWS

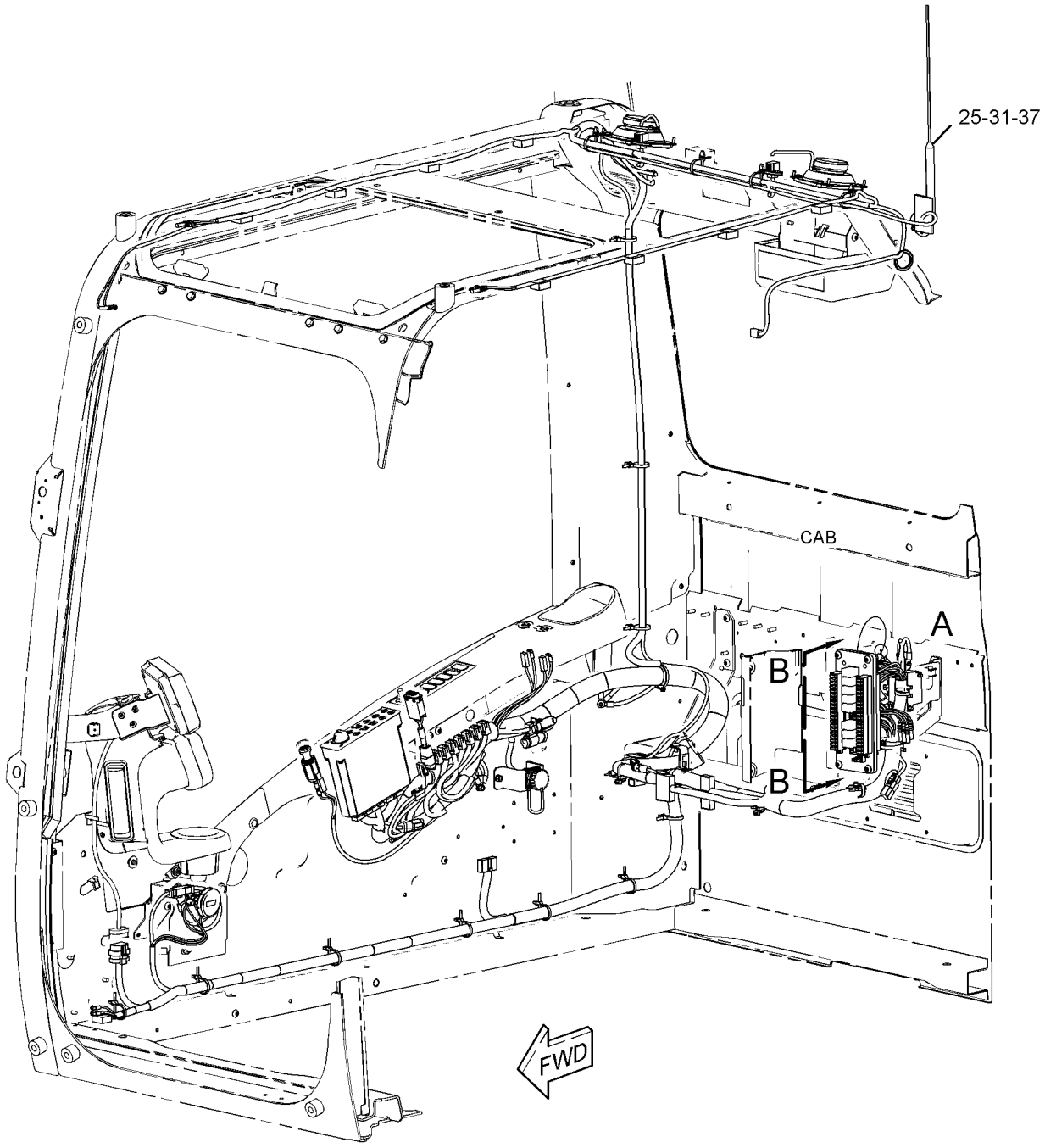

GRAPHIC #1 g03431114

398-7003 **WIRING GP-CAB (*contd.*)** **i05537098**

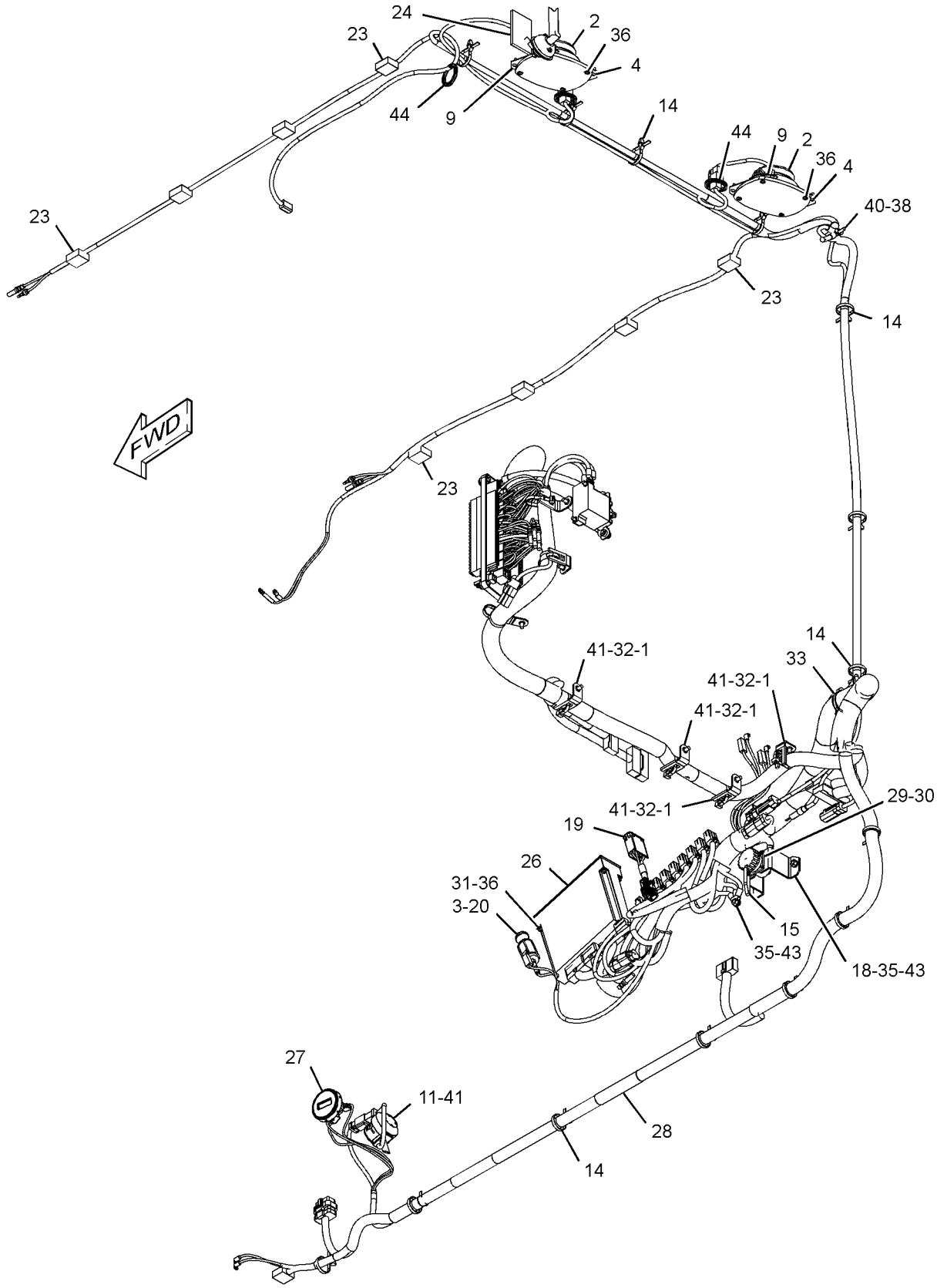

GRAPHIC #2 g03431211

398-7003 **WIRING GP-CAB (*contd.*)** **i05537098**

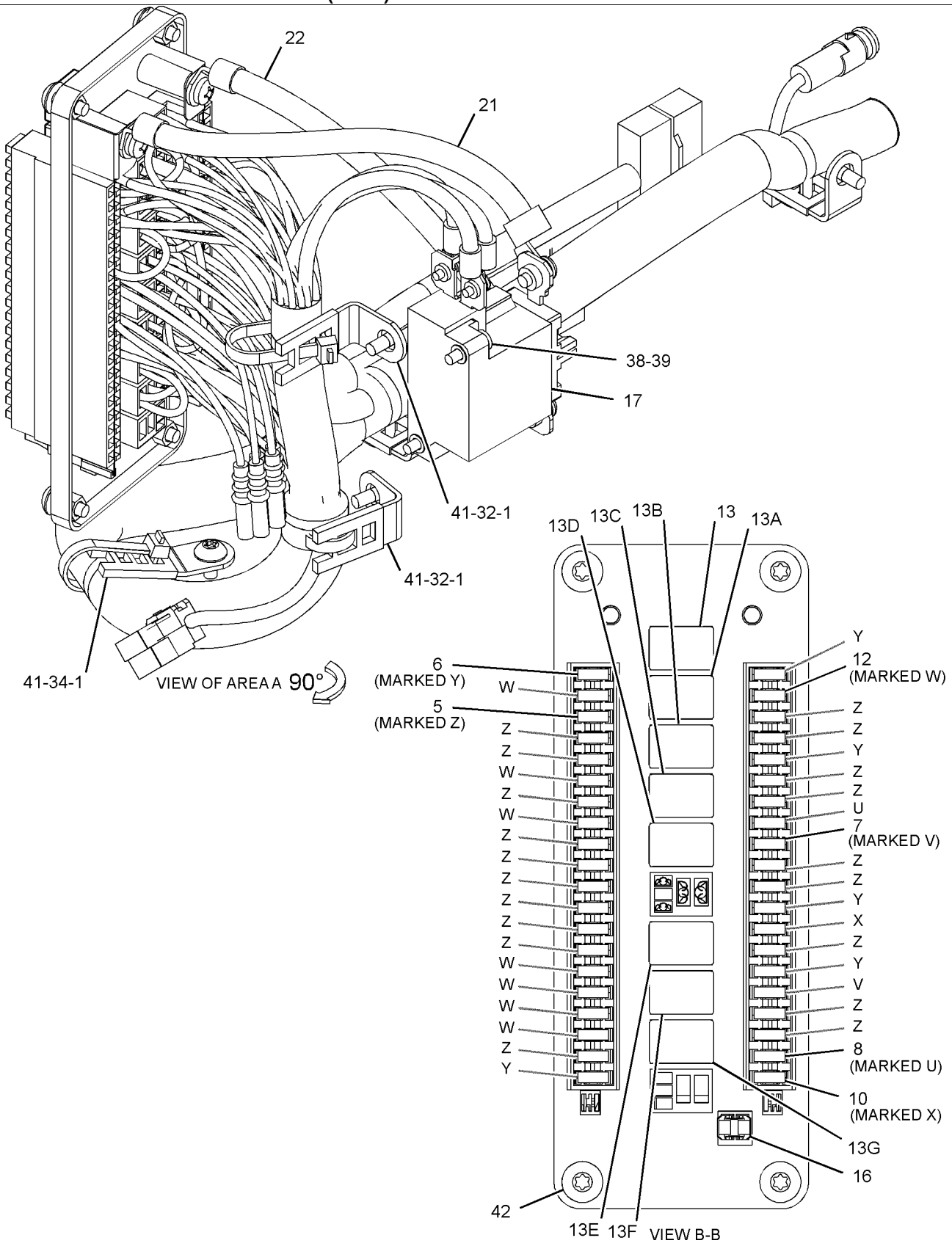

GRAPHIC #3 **<END>** g03431212

417-9812 WIRING GP-CAB—COUPLER

S/N: JEG1-UP

PART OF 383-5423 CONTROL AR-QUICK COUPLER

AN ATTACHMENT

SMCS-1408, 7301 **i05535965**

NOTE	REF NO	GRAPHIC REF	PART NUMBER	QTY	PART NAME 1 2 3 4 5 6 (PRODUCT LEVEL)	SEE PAGE
Y	1	1	*238-2478*	1	SWITCH GP-TOGGLE (QUICK COUPLER)	153
	2	1	**420-7262**	1	BRACKET AS	
	3	1	**259-7180**	1	COVER	
M	4	1	**9X-2042**	3	SCREW-TRUSS HEAD (M6X1X12-MM)	

M - METRIC PART
Y - SEPARATE ILLUSTRATION

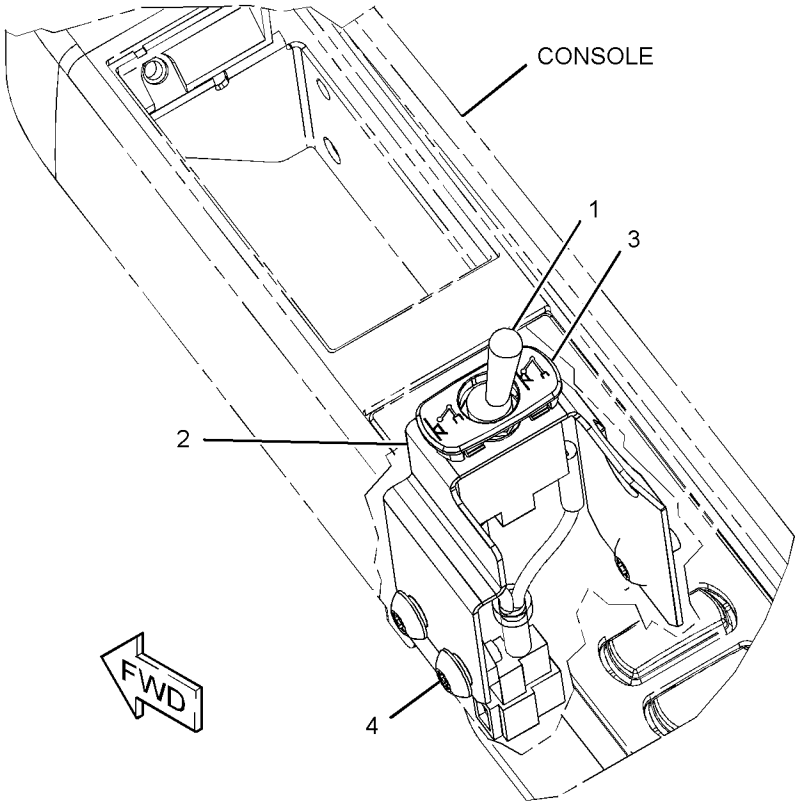

GRAPHIC #1 **<END>** g01259744

398-7002 WIRING GP-CHASSIS

S/N: JEG1-UP

PART OF 420-3127 CHASSIS AR

SMCS-1408 **i05459699**

NOTE	REF NO	GRAPHIC REF	PART NUMBER	QTY	PART NAME 1 2 3 4 5 6 (PRODUCT LEVEL)	SEE PAGE
	1	1,2,3	**3S-2093**	39	STRAP-CABLE	
	2	2,3	**4I-7889**	2	SPACER (11X25X45-MM THK)	
	3	2,3	**6G-2263**	4	SPACER (10.5X19X28.5-MM THK)	
	4	2,3	**7I-2673**	3	STRAP-CABLE	
	5	2,3	**7K-1181**	23	STRAP-CABLE	
	6	1,3	**7Y-5456**	2	GROMMET	
	7	3	**087-4587**	1	GROMMET	
	8	3	**091-9035**	1	SPACER (11X25X20-MM THK)	
M	9	2	**099-6418**	1	NUT (M6X1-THD)	
	10	2	**102-7886**	1	SLEEVE	
	11	1,2,3	**111-4836**	10	CLIP	
	12	2,3	**111-4837**	13	CLIP	
	13	2,3	**111-4838**	13	CLIP	
	14	2,3	**111-4839**	13	STRAP	
	15	1,2,3	**116-0118**	8	CLIP	
	16	2	**140-0864**	1	BRACKET AS	
	17	2,3	**204-1611**	6	STRAP-CABLE (DUAL)	
	18	3	**251-0467**	1	BRACKET AS	
	19	2	**256-6453**	1	SENSOR-TEMPERATURE (FUEL)	
	20	2	**259-5317**	1	BRACKET AS	
	21	3	**291-7593**	1	BRACKET AS	
	22	3	**306-8401**	1	GROMMET	
	23	2	**347-4734**	1	CLIP	
	24	2	**366-9331**	1	BRACKET AS-PUMP	
	25	3	**377-8051**	1	BRACKET AS (ENGINE)	
	26	3	**399-0797**	1	BRACKET AS (ENGINE)	
	27	3	**415-3687**	1	STRAP AS-GROUND	
	28	2	**426-3318**	1	PLATE AS	
Y	29	1	**437-2529**	1	HARNESS AS-CHASSIS	115
	30	2,3	**132-5789**	4	CLIP	
	31	3	**4P-7428**	1	CLIP	
	32	2,3	**4P-7581**	10	CLIP	
M	33	3	**5C-7261**	1	NUT (M8X1.25-THD)	
M	34	3	**5C-7883**	4	BOLT-SOCKET HEAD (M6X1X16-MM)	
	35	2	**5I-3878**	1	GROMMET	
M	36	2	**7X-2621**	1	BOLT (M10X1.5X12-MM)	
	37	2	**7Y-8165**	1	GROMMET	
	38	1	**7Y-8167**	1	GROMMET	
	39	3	**8M-2770**	1	CLIP	
	40	1,2,3	**8T-4121**	70	WASHER-HARD (11X21X2.5-MM THK)	
M	41	2,3	**8T-4136**	14	BOLT (M10X1.5X25-MM)	
M	42	1,2,3	**8T-4137**	36	BOLT (M10X1.5X20-MM)	
M	43	2,3	**8T-4182**	2	BOLT (M10X1.5X45-MM)	
M	44	2,3	**8T-4185**	3	BOLT (M10X1.5X50-MM)	
M	45	3	**8T-4189**	2	BOLT (M8X1.25X20-MM)	
M	46	2,3	**8T-4191**	5	BOLT (M10X1.5X16-MM)	
M	47	2	**8T-4192**	2	BOLT (M12X1.75X25-MM)	
M	48	1,2,3	**8T-4195**	5	BOLT (M10X1.5X30-MM)	
M	49	3	**8T-4196**	1	BOLT (M10X1.5X35-MM)	
M	50	2	**8T-4198**	1	BOLT (M10X1.5X100-MM)	
	51	2	**8T-4223**	2	WASHER-HARD (13.5X25.5X3-MM THK)	
	52	3	**8T-4224**	2	WASHER-HARD (8.8X16X2-MM THK)	
M	53	2	**8T-5005**	1	BOLT (M10X1.5X70-MM)	
M	54	3	**8T-6466**	1	BOLT (M10X1.5X60-MM)	
	55	3	**9X-8256**	4	WASHER (6.6X12X2-MM THK)	

M - METRIC PART
Y - SEPARATE ILLUSTRATION

398-7002 **WIRING GP-CHASSIS (*contd.*)** **i05459699**

REFER TO ALL ILLUSTRATIONS OF
THIS GROUP FOR AUXILIARY VIEWS

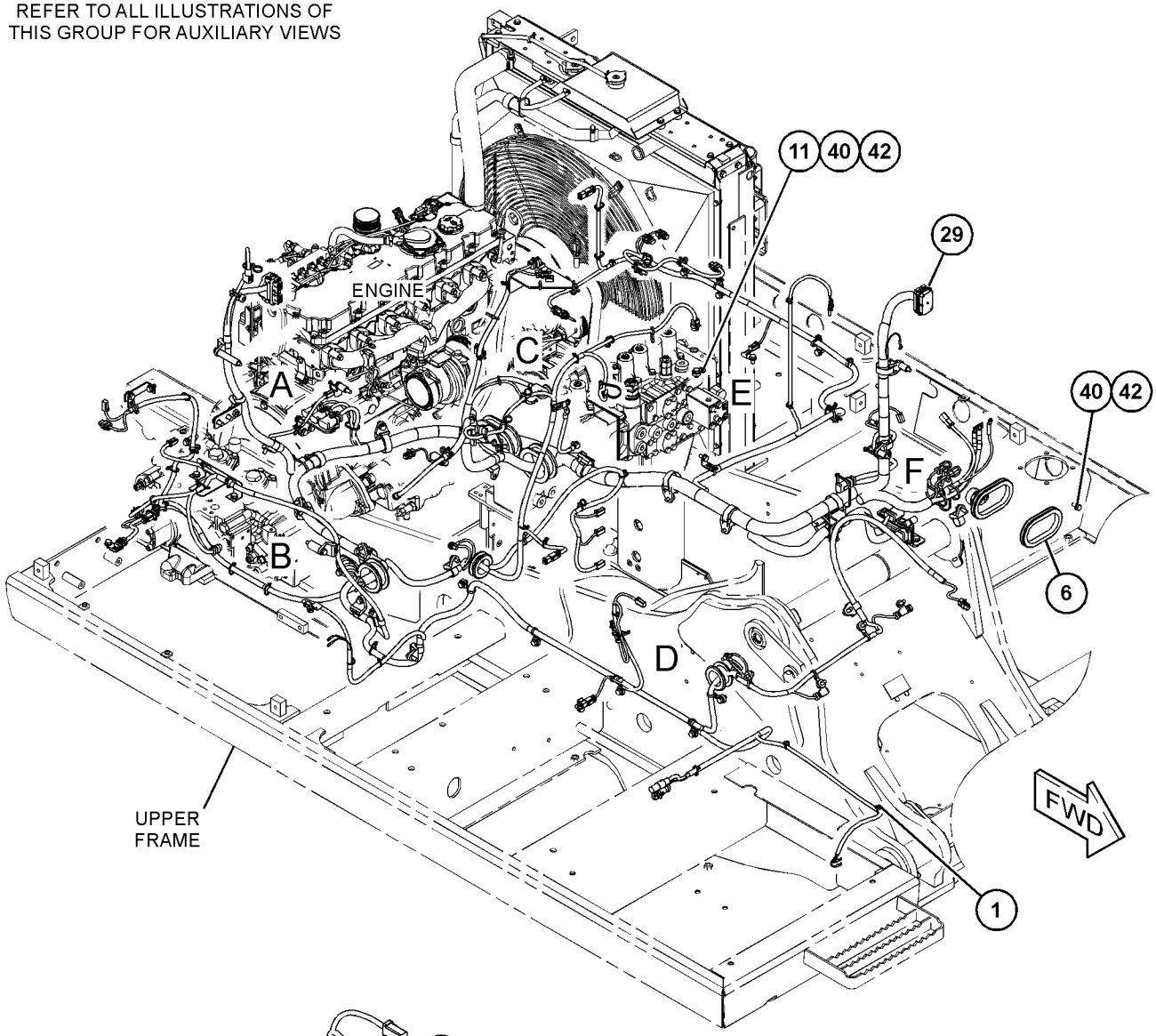

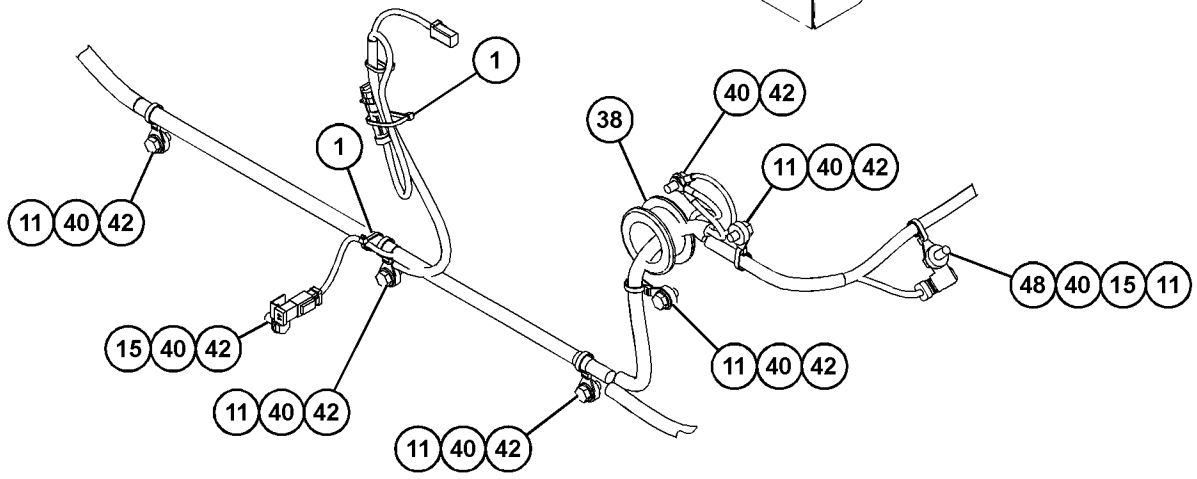

VIEW OF AREA D

GRAPHIC #1 g03470418

398-7002 **WIRING GP-CHASSIS (*contd.*)** **i05459699**

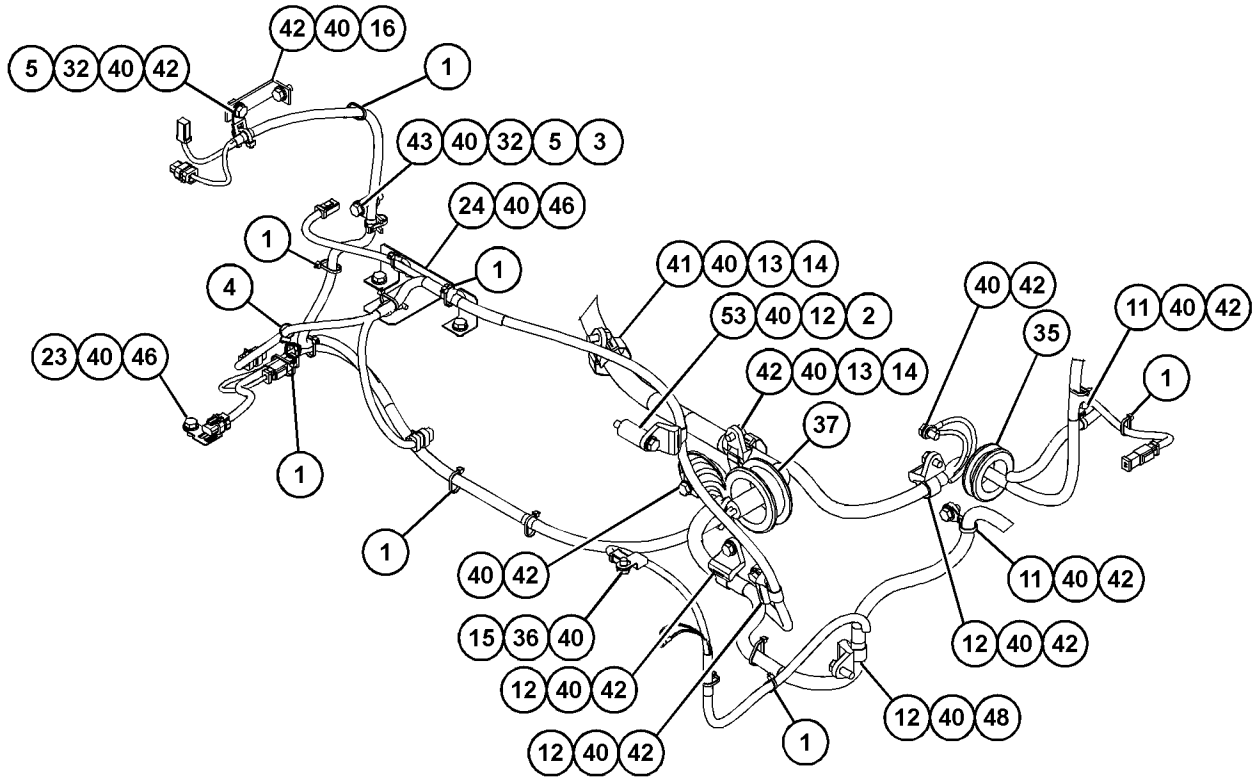

VIEW OF AREA B

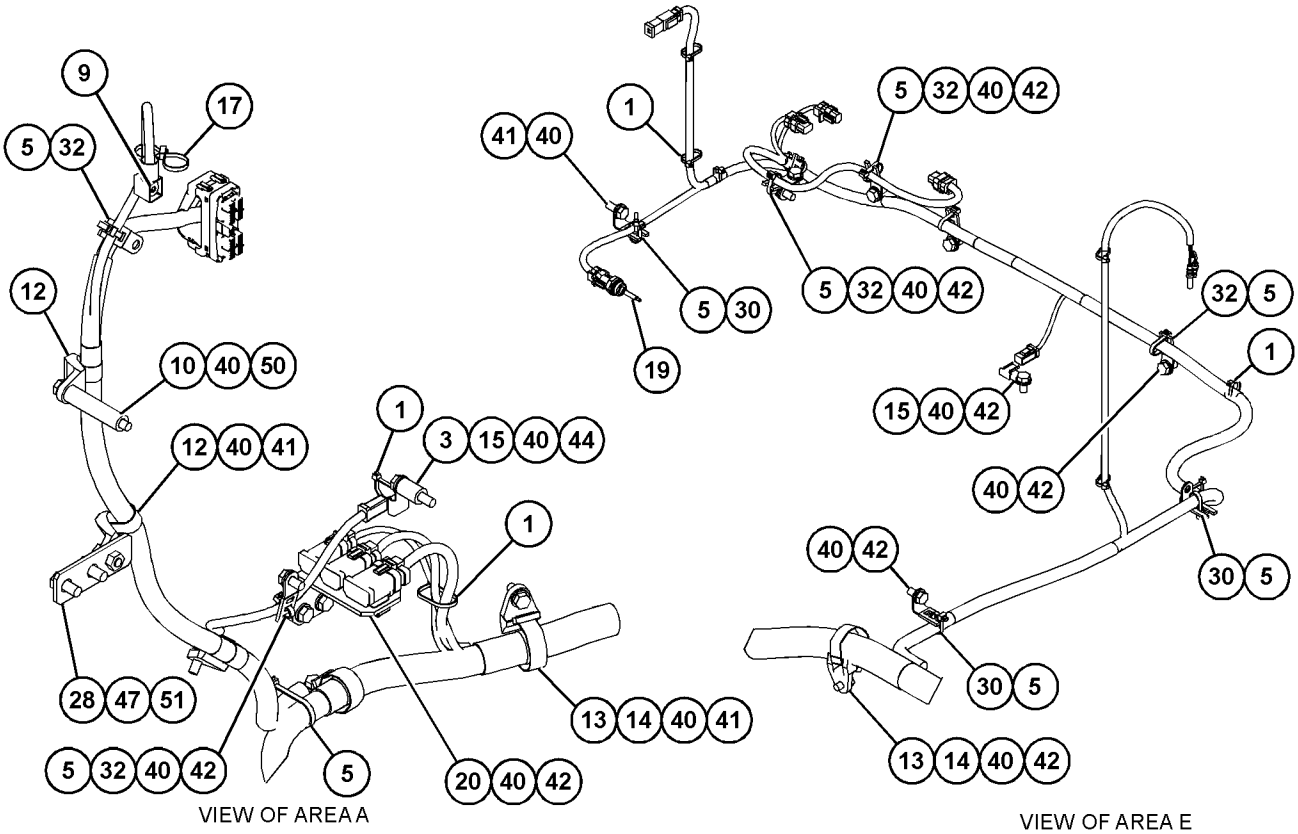

VIEW OF AREA A

VIEW OF AREA E

GRAPHIC #2 g03470419

398-7002 **WIRING GP-CHASSIS (*contd.*)** **i05459699**

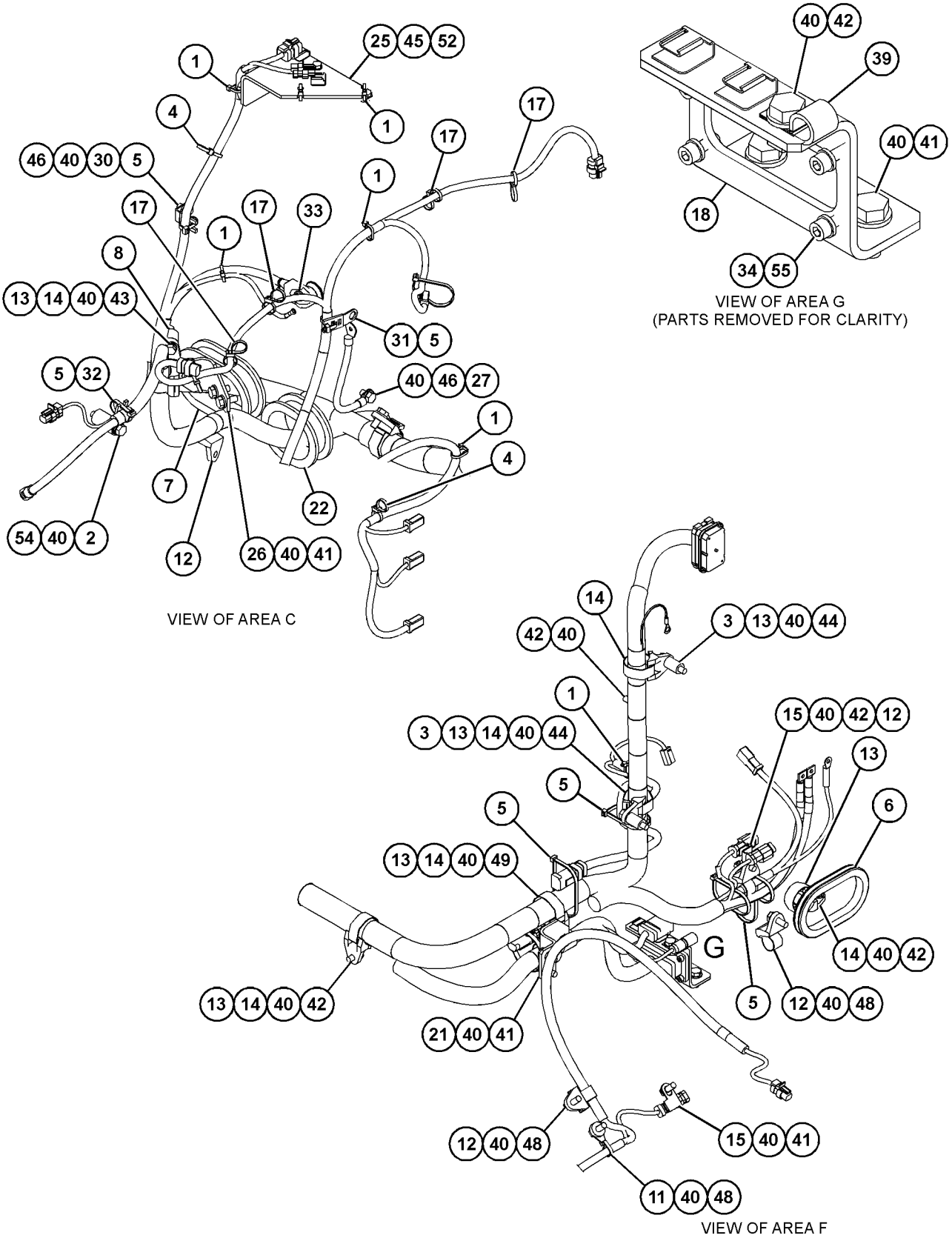

GRAPHIC #3 **<END>** g03470420

369-0239 WIRING GP-COMBINED FLOW

S/N: JEG1-UP
PART OF 383-5306 CONTROL AR-AUXILIARY
AN ATTACHMENT

SMCS-1408 **i05257482**

NOTE	REF NO	GRAPHIC REF	PART NUMBER	QTY	PART NAME 1 2 3 4 5 6 (PRODUCT LEVEL)	SEE PAGE
	1	1	**3S-2093**	22	STRAP-CABLE	
	2	1	**7K-1181**	13	STRAP-CABLE	
	3	1	**111-4836**	2	CLIP	
	4	1	**116-0118**	1	CLIP	
	5	1	**204-1611**	4	STRAP-CABLE (DUAL)	
	6	1	**419-6414**	1	HARNESS AS-CHASSIS	
		1	**8T-8729**	2	PIN-CONNECTOR (16-GA TO 18-GA)	
		1	**8T-8730**	14	SOCKET-CONNECTOR (16-GA TO 18-GA)	
		1	**3S-2093**	2	STRAP-CABLE	
		1	**8T-8737**	9	PLUG-SEAL	
		1	**9W-0852**	1	PIN-CONNECTOR (14-GA TO 16-GA)	
		1	**9W-0844**	1	SOCKET-CONNECTOR (14-GA TO 16-GA)	
E		1	**125-7874**		TUBE-HEAT SHRINK (5.72-MM DIA) (20-CM)	
		1	**9X-3402**	2	SOCKET-CONNECTOR (16-GA TO 18-GA)	
					—OR—	
		1	**126-1768**	2	SOCKET-CONNECTOR (14-GA TO 16-GA)	
		1	**2L-8079**	3	TERMINAL-RING (14-GA TO 16-GA, 3/8-IN SCREW)	
		1	**9X-3401**	1	PIN-CONNECTOR (16-GA TO 18-GA)	
					—OR—	
		1	**126-1767**	1	PIN-CONNECTOR (14-GA TO 16-GA)	
		1	**155-2270**	6	KIT-CONNECTING PLUG (2-PIN)	
					(EACH INCLUDES PLUG AS, WEDGE & INTERFACE SEAL)	
		1	**230-5010**	1	PLUG AS-CONNECTOR (6-PIN)	
		1	**264-7032**	1	SEAL-CONNECTOR	
		1	**243-4510**	1	RECEPTACLE AS-CONNECTOR (12-PIN)	
	7	1	**132-5789**	1	CLIP	
	8	1	**4P-7581**	1	CLIP	
	9	1	**8T-4121**	3	WASHER-HARD (11X21X2.5-MM THK)	
M	10	1	**8T-4137**	1	BOLT (M10X1.5X20-MM)	
M	11	1	**8T-4191**	2	BOLT (M10X1.5X16-MM)	
M	12	1	**8T-4195**	1	BOLT (M10X1.5X30-MM)	

E - ORDER BY THE CENTIMETER
M - METRIC PART

369-0239 **WIRING GP-COMBINED FLOW (*contd.*)** **i05257482**

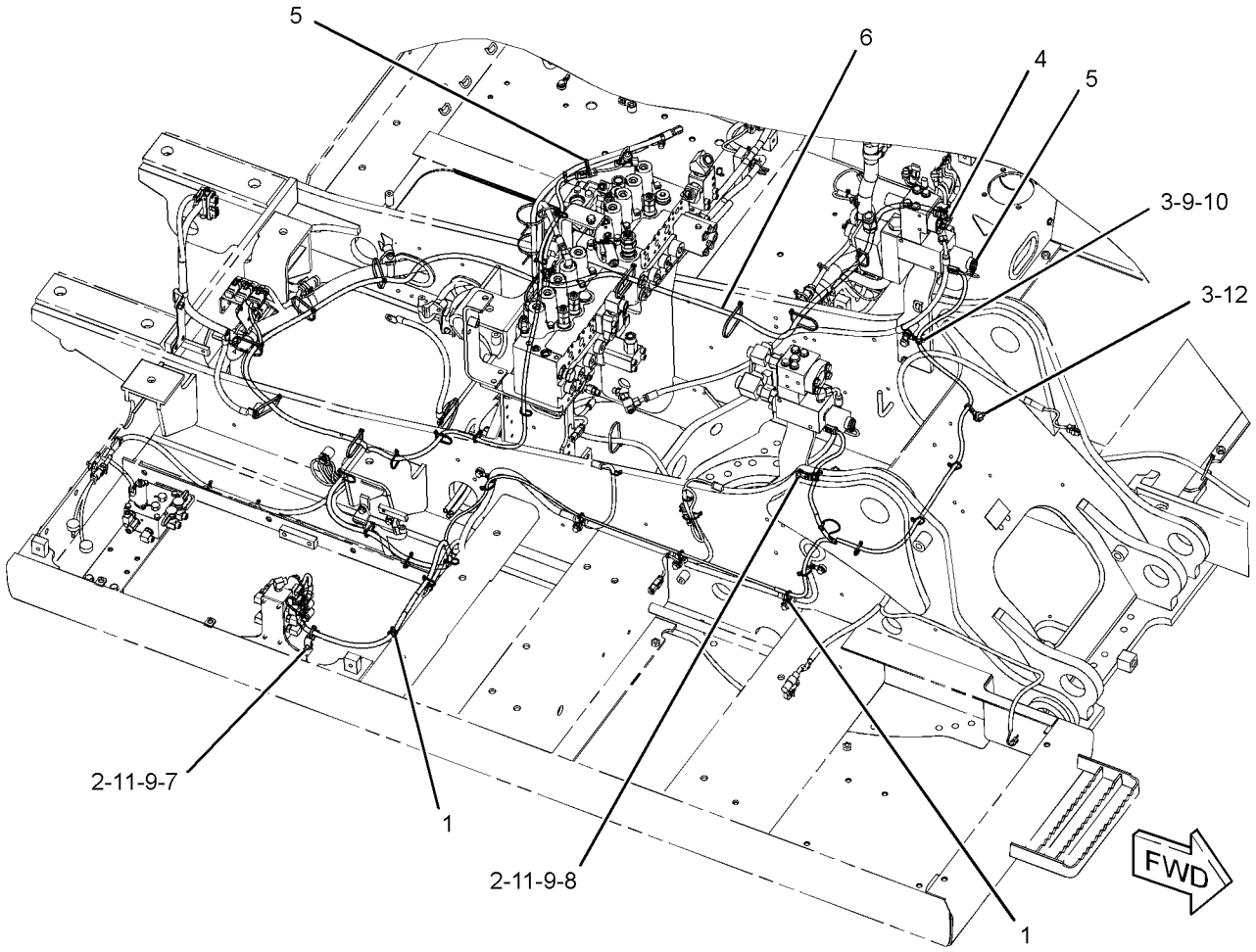

GRAPHIC #1 **<END>** g02735878

417-9821 WIRING GP-COMMUNICATION—PRODUCT LINK 321SR

S/N: JEG1-UP

PART OF 383-5427 INSTALLATION AR-COMMUNICATION

AN ATTACHMENT

SMCS-1408 **i05438934**

NOTE	REF NO	GRAPHIC REF	PART NUMBER	QTY	PART NAME 1 2 3 4 5 6 (PRODUCT LEVEL)	SEE PAGE
	1	1	**116-0118**	1	CLIP	
	2	1	**421-2864**	1	HARNESS AS-CONTROL (PRODUCT LINK)	
		1	**102-8803**	1	KIT-RECEPTACLE (3-PIN)	
		1	**176-9299**	1	KIT-RECEPTACLE (3-PIN)	
					(EACH RECEPTACLE KIT INCLUDES RECEPTACLE AS & WEDGE)	
		1	**8T-8729**	1	PIN-CONNECTOR (16-GA TO 18-GA)	
		1	**3S-2093**	3	STRAP-CABLE	
		1	**8T-8737**	62	PLUG-SEAL	
		1	**9W-0852**	1	PIN-CONNECTOR (14-GA TO 16-GA)	
E		1	**125-7874**		TUBE-HEAT SHRINK (5.72-MM DIA) (20-CM)	
E		1	**125-7875**		TUBE-HEAT SHRINK (7.44-MM DIA) (10-CM)	
		1	**9X-3402**	24	SOCKET-CONNECTOR (16-GA TO 18-GA)	
					—OR—	
		1	**126-1768**	24	SOCKET-CONNECTOR (14-GA TO 16-GA)	
		1	**126-1774**	1	COVER-CONNECTOR	
		1	**2L-8077**	1	TERMINAL-RING (14-GA TO 16-GA, 1/4-IN SCREW)	
		1	**9X-3401**	6	PIN-CONNECTOR (16-GA TO 18-GA)	
					—OR—	
		1	**126-1767**	6	PIN-CONNECTOR (14-GA TO 16-GA)	
		1	**155-2258**	1	WEDGE-PLUG LOCK (12-PIN)	
		1	**155-2255**	1	KIT-CONNECTING PLUG (12-PIN)	
		1	**174-0503**	1	KIT-CONNECTING PLUG (3-PIN)	
		1	**155-2260**	1	KIT-CONNECTING PLUG (3-PIN)	
					(EACH PLUG KIT INCLUDES PLUG AS,WEDGE & INTERFACE SEAL)	
		1	*160-7690*	1	PLUG AS-CONNECTOR (70-PIN)	
		1	**159-9322**	1	SEAL-O-RING	
		1	**243-4508**	1	RECEPTACLE AS-CONNECTOR (6-PIN)	
	3	1	**132-5789**	1	CLIP	
	4	1	**7K-1181**	7	STRAP-CABLE	
	5	1	**8T-4121**	2	WASHER-HARD (11X21X2.5-MM THK)	
M	6	1	**8T-4137**	1	BOLT (M10X1.5X20-MM)	
M	7	1	**8T-4191**	1	BOLT (M10X1.5X16-MM)	

E - ORDER BY THE CENTIMETER
M - METRIC PART

417-9821 **WIRING GP-COMMUNICATION (*contd.*)** **i05438934**

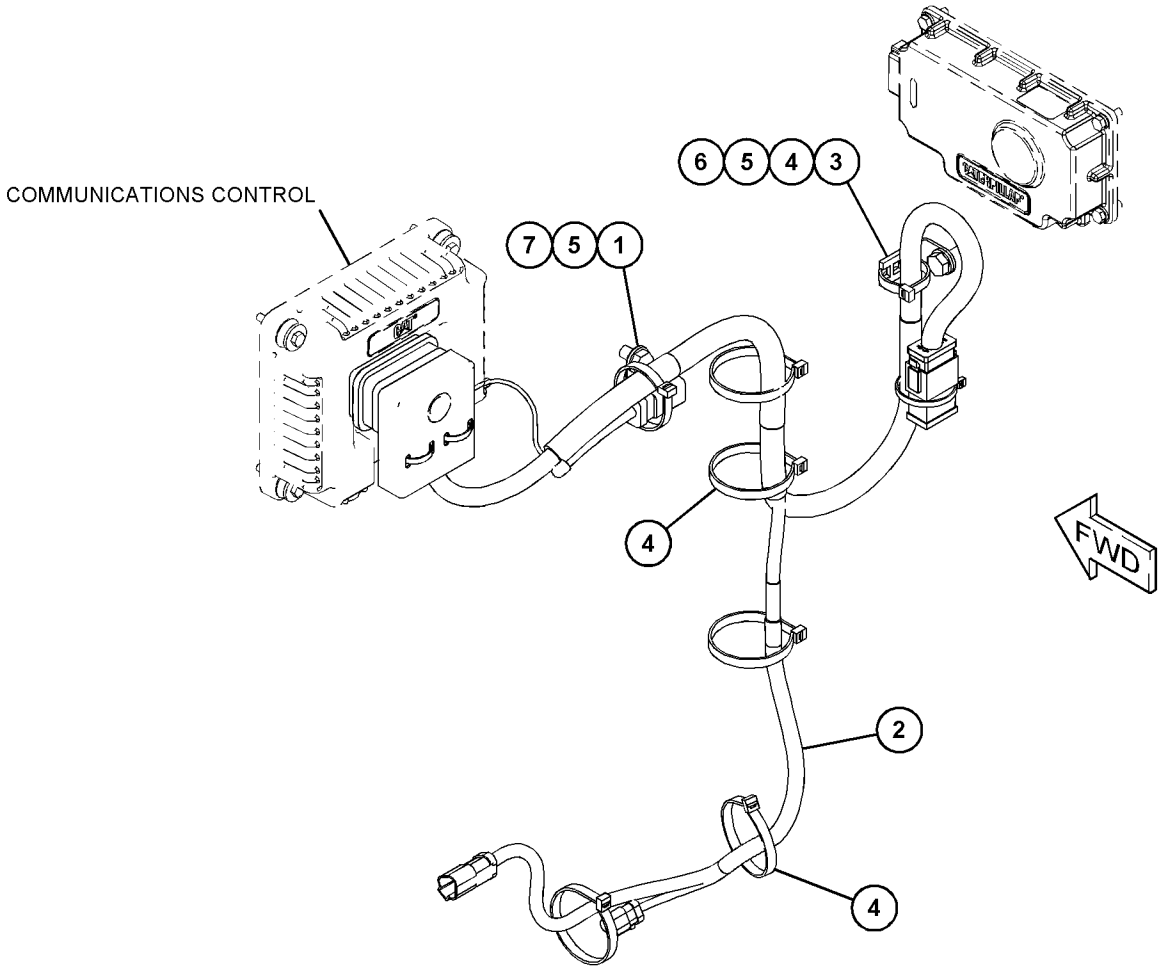

GRAPHIC #1 **<END>** g03445696

231-1836 WIRING GP-CONSOLE–LH

S/N: JEG1-UP
PART OF 398-7005 WIRING GP-CONSOLE
ALSO AN ATTACHMENT

SMCS-1408 **i04913382**

NOTE	REF NO	GRAPHIC REF	PART NUMBER	QTY	PART NAME 1 2 3 4 5 6 (PRODUCT LEVEL)	SEE PAGE
	1	1	**3S-2093**	2	STRAP-CABLE	
	2	1	**7K-1181**	1	STRAP-CABLE	
	3	1	**163-6795**	2	STRAP-CABLE	
	4	1	**251-0580**	1	HARNESS AS-CONSOLE	
		1	**8T-8729**	4	PIN-CONNECTOR (16-GA TO 18-GA)	
		1	**8T-8730**	3	SOCKET-CONNECTOR (16-GA TO 18-GA)	
		1	**3S-2093**	9	STRAP-CABLE	
D		1	**5P-5995**		TUBE (0.3-M)	
		1	**7Y-3963**	2	TERMINAL-BULLET (FEMALE)	
		1	**7Y-3965**	2	TUBE (RECEPTACLE TERMINAL)	
		1	**8T-8737**	9	PLUG-SEAL	
		1	**9W-0852**	2	PIN-CONNECTOR (14-GA TO 16-GA)	
		1	**9W-0844**	2	SOCKET-CONNECTOR (14-GA TO 16-GA)	
E		1	**125-7874**		TUBE-HEAT SHRINK (5.72-MM DIA) (5-CM)	
E		1	**125-7875**		TUBE-HEAT SHRINK (7.44-MM DIA) (5-CM)	
		1	**9X-3402**	11	SOCKET-CONNECTOR (16-GA TO 18-GA)	
					–OR–	
		1	**126-1768**	11	SOCKET-CONNECTOR (14-GA TO 16-GA)	
		1	**155-2260**	1	KIT-CONNECTING PLUG (3-PIN)	
					(INCLUDES PLUG AS, WEDGE & INTERFACE SEAL)	
		1	**230-4011**	1	PLUG AS-CONNECTOR (2-PIN)	
		1	**264-7029**	1	SEAL-CONNECTOR	
		1	**230-5010**	1	PLUG AS-CONNECTOR (6-PIN)	
		1	**264-7032**	1	SEAL-CONNECTOR	
		1	**239-7352**	1	PLUG AS-CONNECTOR (6-PIN)	
		1	**264-7032**	1	SEAL-CONNECTOR	
		1	**243-4505**	1	RECEPTACLE AS-CONNECTOR (2-PIN)	
		1	**243-4508**	1	RECEPTACLE AS-CONNECTOR (6-PIN)	
		1	**247-2693**	1	RECEPTACLE AS-CONNECTOR (6-PIN)	

D - ORDER BY THE METER
E - ORDER BY THE CENTIMETER

231-1836 **WIRING GP-CONSOLE (*contd.*)** **i04913382**

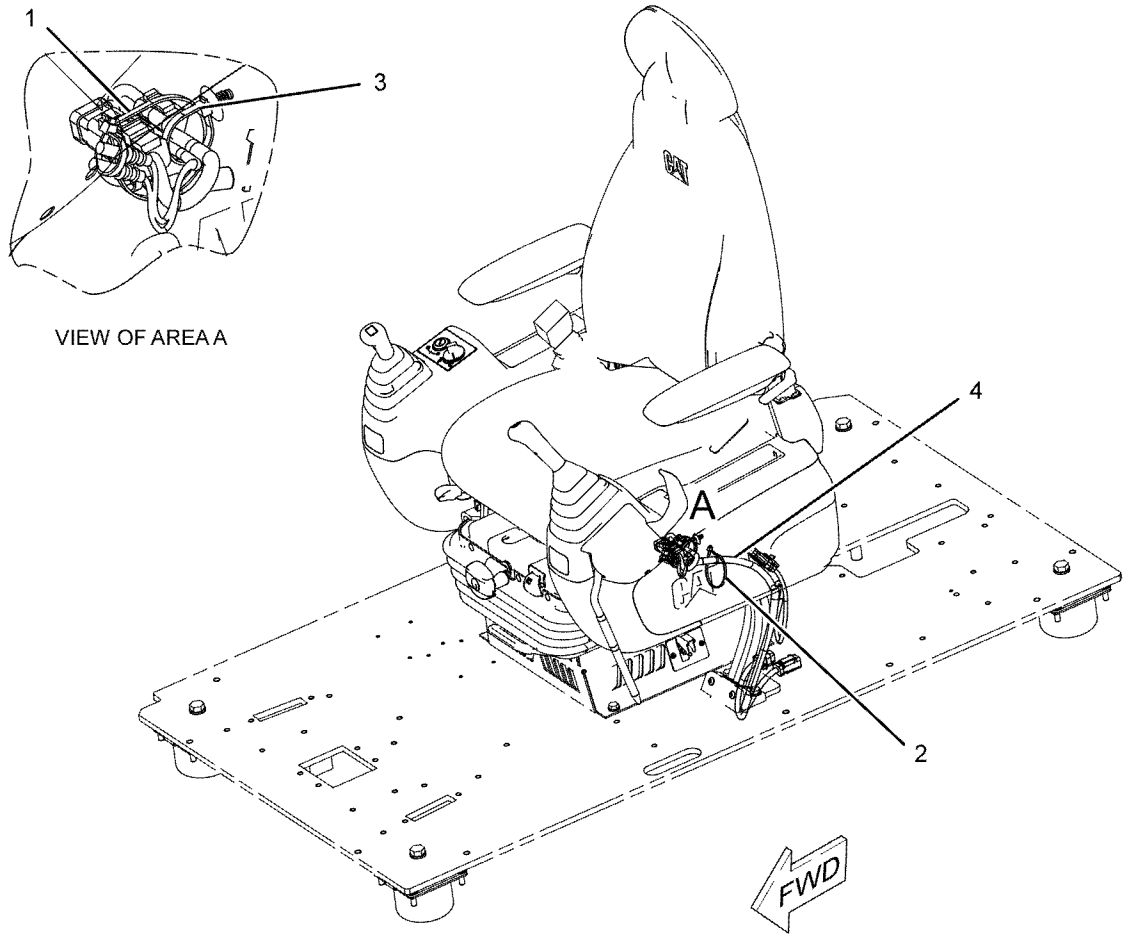

GRAPHIC #1 **<END>** g01150799

398-7005 WIRING GP-CONSOLE

S/N: JEG1-UP

PART OF 434-3892, 434-3893 CAB GP, 422-0645 OPERATOR AR-ENCLOSED ROPS

ALSO AN ATTACHMENT

SMCS-1408 **i05432265**

NOTE	PART NUMBER	QTY	PART NAME 1 2 3 4 5 6 (PRODUCT LEVEL)	SEE PAGE
Y	*231-1836*	1	WIRING GP-CONSOLE (LH)	175
Y	*398-7006*	1	WIRING GP-CONSOLE (RH)	178

Y - SEPARATE ILLUSTRATION

<END>

398-7006 WIRING GP-CONSOLE—RH

S/N: JEG1-UP

PART OF 398-7005 WIRING GP-CONSOLE

ALSO AN ATTACHMENT

SMCS-1408 **i05432267**

NOTE	REF NO	GRAPHIC REF	PART NUMBER	QTY	PART NAME 1 2 3 4 5 6 (PRODUCT LEVEL)	SEE PAGE
	1	1	**3S-2093**	4	STRAP-CABLE	
	2	1	**7K-1181**	2	STRAP-CABLE	
	3	1	**163-6795**	1	STRAP-CABLE	
	4	1	**398-7012**	1	HARNESS AS-CONSOLE	
		1	**102-8806**	1	KIT-RECEPTACLE (8-PIN)	
					(INCLUDES RECEPTACLE AS AND WEDGE)	
		1	**8T-8730**	9	SOCKET-CONNECTOR (16-GA TO 18-GA)	
		1	**3S-2093**	10	STRAP-CABLE	
		1	*7Y-3967*	2	TERMINAL AS	
					(EACH INCLUDES)	
		1	**7Y-3963**	1	TERMINAL-BULLET (FEMALE)	
		1	**7Y-3965**	1	TUBE (RECEPTACLE TERMINAL)	
		1	**8T-8737**	17	PLUG-SEAL	
		1	**102-7964**	1	PLUG-CONNECTOR (16-PIN)	
		1	**102-7965**	14	TERMINAL (FEMALE)	
		1	**9W-0844**	8	SOCKET-CONNECTOR (14-GA TO 16-GA)	
		1	**125-4841**	1	WEDGE-PLUG LOCK (21-PIN)	
E		1	**125-7875**		TUBE-HEAT SHRINK (7.44-MM DIA) (15-CM)	
		1	**9X-3402**	20	SOCKET-CONNECTOR (16-GA TO 18-GA)	
		1	**155-2259**	1	WEDGE-PLUG LOCK (8-PIN)	
		1	**155-2265**	1	KIT-CONNECTING PLUG (8-PIN)	
					(EACH PLUG KIT INCLUDES PLUG AS, WEDGE & INTERFACE SEAL)	
		1	**230-4009**	1	PLUG AS-CONNECTOR (12-PIN)	
		1	**264-7034**	1	SEAL-CONNECTOR	
		1	**230-4011**	1	PLUG AS-CONNECTOR (2-PIN)	
		1	**264-7029**	1	SEAL-CONNECTOR	
		1	**230-5008**	1	PLUG AS-CONNECTOR (4-PIN)	
		1	**264-7031**	1	SEAL-CONNECTOR	
		1	**230-5010**	1	PLUG AS-CONNECTOR (6-PIN)	
		1	**264-7032**	1	SEAL-CONNECTOR	
		1	**231-2295**	1	PLUG AS-CONNECTOR (8-PIN)	
		1	**264-7033**	1	SEAL-CONNECTOR	
		1	**238-2363**	2	TERMINAL (FEMALE)	
		1	**239-7352**	1	PLUG AS-CONNECTOR (6-PIN)	
		1	**264-7032**	1	SEAL-CONNECTOR	
		1	*251-0579*	1	HOSE	
		1	**342-2972**	1	CAP-CONNECTOR (2-PIN)	
		1	**342-2974**	1	CAP-CONNECTOR (6-PIN)	
	5	1	**3E-9375**		CONDUIT (10-CM)	

E - ORDER BY THE CENTIMETER

398-7006 **WIRING GP-CONSOLE (*contd.*)** **i05432267**

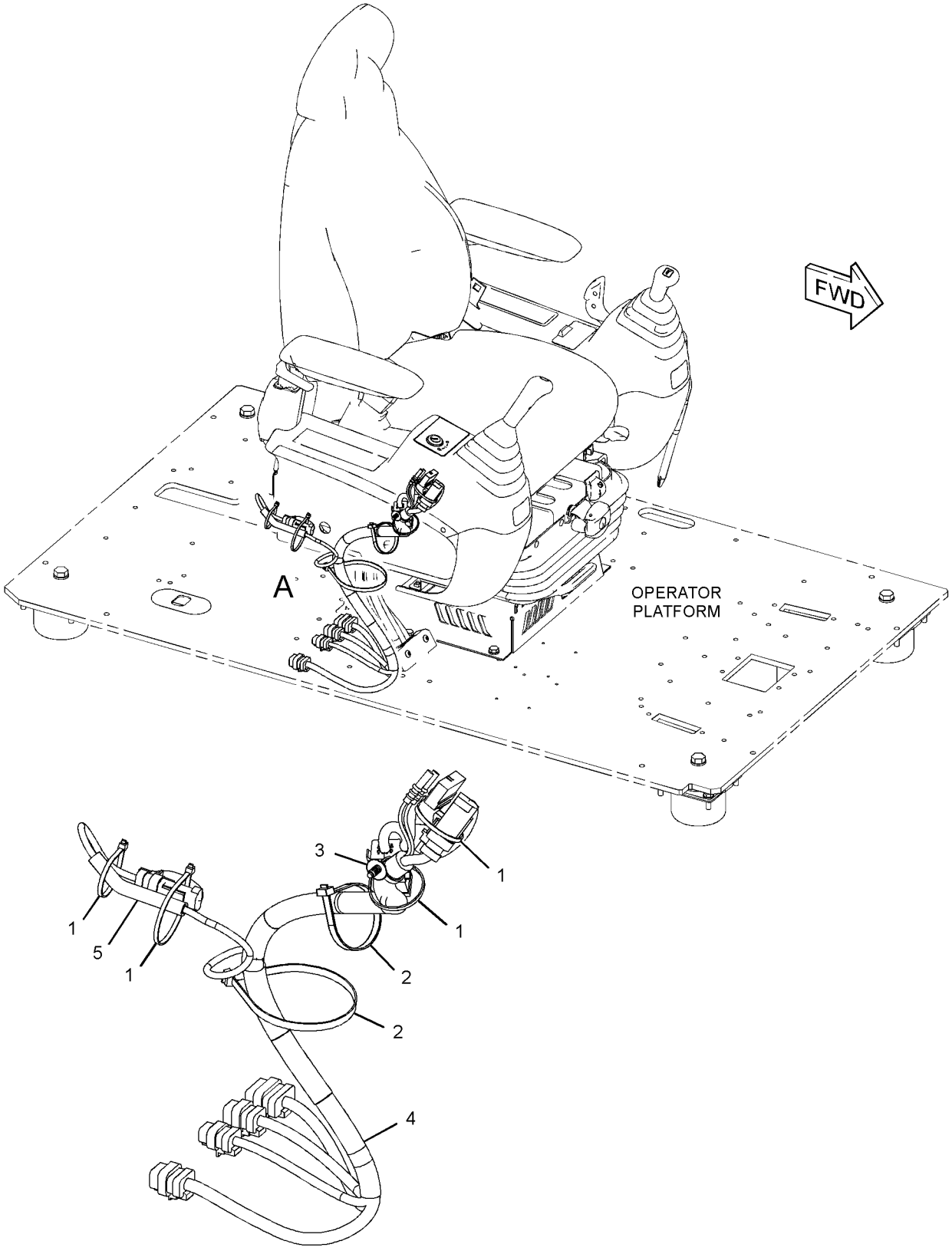

VIEW OF AREA A

GRAPHIC #1 **<END>** g03431459

350-8250 WIRING GP-CONVERTER—12-VOLT, 10-AMPERE

S/N: JEG1-UP

PART OF 442-4973, 442-4974 OPTION AR-CAB

AN ATTACHMENT

SMCS-1421 **i04206604**

NOTE	REF NO	GRAPHIC REF	PART NUMBER	QTY	PART NAME 1 2 3 4 5 6 (PRODUCT LEVEL)	SEE PAGE
	1	1	**251-0483**	1	BRACKET	
	2	1	**324-5770**	1	CONVERTER-POWER (24-VOLT TO 12-VOLT)	
	3	1	**324-5771**	2	SOCKET-AUXILIARY POWER (12-VOLT)	
	4	1	**8T-4121**	2	WASHER-HARD (11X21X2.5-MM THK)	
M	5	1	**8T-4136**	2	BOLT (M10X1.5X25-MM)	
M	6	1	**8T-4171**	4	BOLT (M6X1X12-MM)	
	7	1	**9X-8256**	4	WASHER (6.6X12X2-MM THK)	

M - METRIC PART

350-8250 **WIRING GP-CONVERTER (*contd.*)** **i04206604**

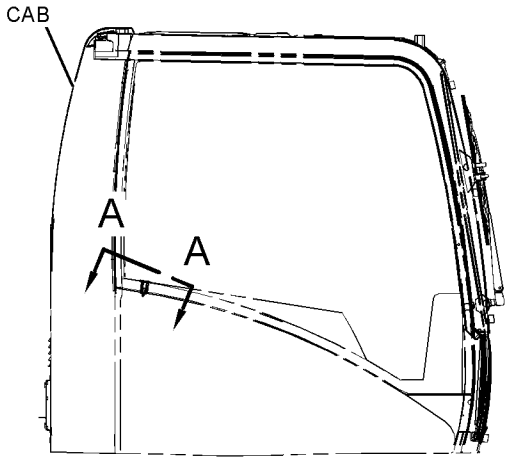

RIGHT SIDE VIEW

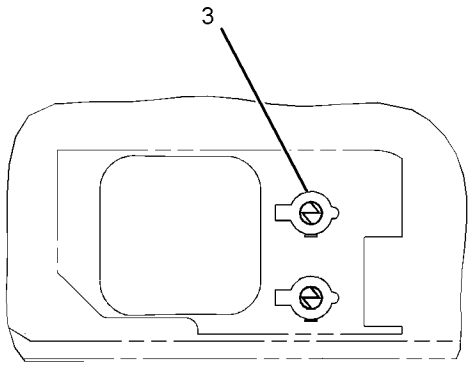

VIEW A-A

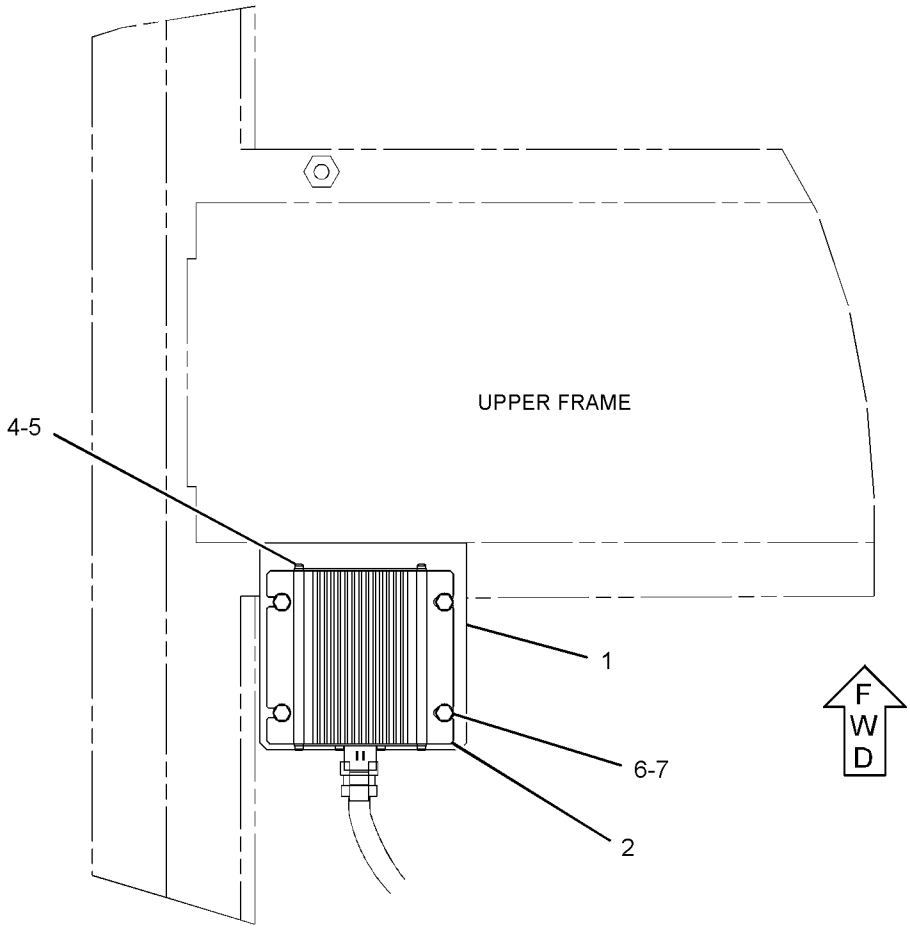

TOP VIEW

GRAPHIC #1 **<END>** g02143732

369-0249 WIRING GP-ENGINE–JUMP START

S/N: JEG1-UP

AN ATTACHMENT

SMCS-1408 **i05260167**

NOTE	REF NO	GRAPHIC REF	PART NUMBER	QTY	PART NAME 1 2 3 4 5 6 (PRODUCT LEVEL)	SEE PAGE
	1	1	**2G-1830**	1	RECEPTACLE AS (AUXILIARY START)	
		1	**1S-7251**	2	TERMINAL-CABLE (00-GA, 1/2-IN SCREW)	
E		1	**159-8050**		CABLE (00-GA, BLACK) (49-CM)	
E		1	**159-8049**		CABLE (00-GA, RED) (56-CM)	
D		1	**6V-2722**		TUBE-HEAT SHRINK (25.4-MM DIA) (0.1-M)	
	2	1	**8S-2634**	1	COVER AS	
Y	3	1	**9W-0742**	1	BLOCK GP-JUNCTION (BATTERY)	106
	4	1	**251-0452**	1	BRACKET	
	5	1	**259-5097**	1	CABLE AS	
		1	**1S-7251**	1	TERMINAL-CABLE (00-GA, 1/2-IN SCREW)	
E		1	**159-8049**		CABLE (00-GA, RED) (30-CM)	
		1	**9G-0004**	1	COVER AS-TERMINAL (RED) (BATTERY POSITIVE)	
		1	**8L-8413**	1	STRAP-CABLE	
		1	**8C-5917**	1	TERMINAL AS-BATTERY (POSITIVE)	
		1	**1M-6119**	1	BOLT (5/16-18X1.375-IN)	
		1	**1M-6120**	1	NUT (5/16-18-THD)	
		1	**301-0091**	1	COVER-TERMINAL (RED) (JUNCTION BLOCK)	
	6	1	**301-0091**	1	COVER-TERMINAL (RED)	
	7	1	**388-6867**	1	CABLE AS	
		1	**1S-7251**	1	TERMINAL-CABLE (00-GA, 1/2-IN SCREW)	
		1	**1S-7252**	1	TERMINAL-CABLE (00-GA, 3/8-IN SCREW)	
		1	**8N-0869**	1	COVER-TERMINAL (RED) (STARTING MOTOR)	
E		1	**159-8049**		CABLE (00-GA, RED) (207-CM)	
		1	**301-0091**	1	COVER-TERMINAL (RED) (JUNCTION BLOCK)	
	8	1	**4I-7889**	1	SPACER (11X25X45-MM THK)	
	9	1	**4K-8864**	1	CLIP	
M	10	1	**5C-9553**	4	BOLT (M6X1X16-MM)	
	11	1	**5P-4115**	4	WASHER-HARD (7.2X19X2-MM THK)	
	12	1	**8T-4121**	5	WASHER-HARD (11X21X2.5-MM THK)	
M	13	1	**8T-4136**	2	BOLT (M10X1.5X25-MM)	
M	14	1	**8T-4137**	2	BOLT (M10X1.5X20-MM)	
M	15	1	**8T-5005**	1	BOLT (M10X1.5X70-MM)	

D - ORDER BY THE METER
E - ORDER BY THE CENTIMETER
M - METRIC PART
Y - SEPARATE ILLUSTRATION

369-0249 **WIRING GP-ENGINE (*contd.*)** **i05260167**

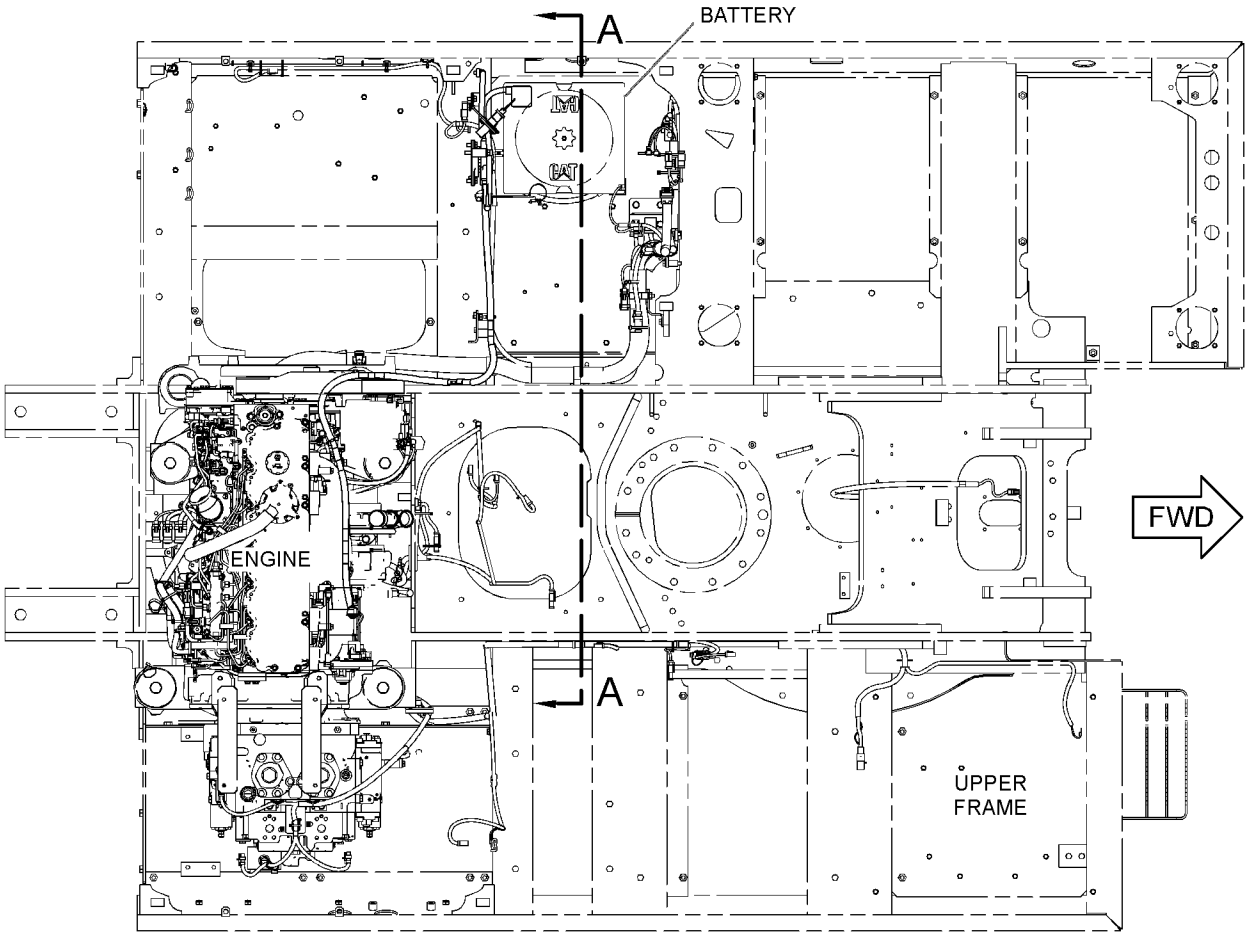

TOP VIEW

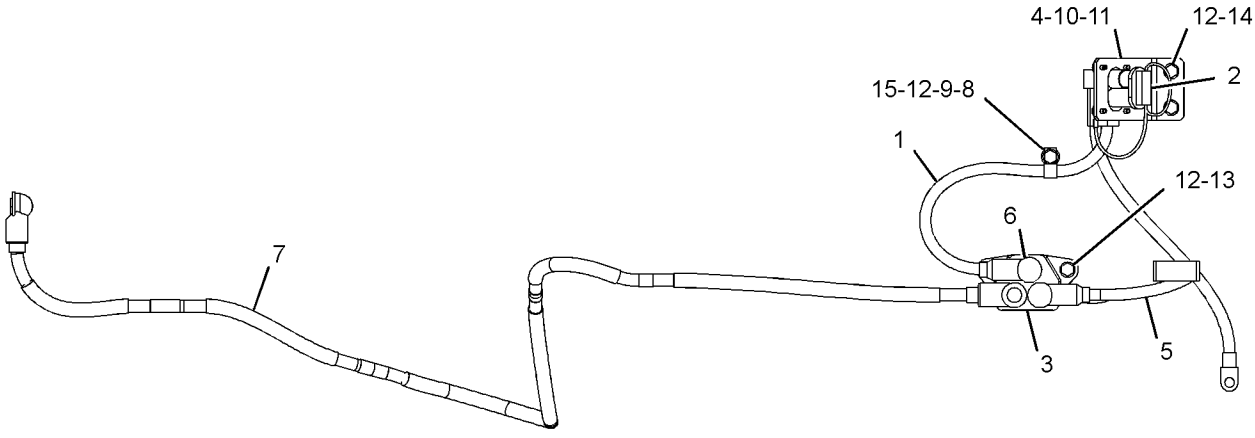

VIEW A-A

GRAPHIC #1 **<END>** g03313758

395-0113 WIRING GP-ENGINE

S/N: BD41-UP

PART OF 450-8077 ENGINE AR-PRIMARY

SMCS-1408 **i05332683**

NOTE	REF NO	GRAPHIC REF	PART NUMBER	QTY	PART NAME 1 2 3 4 5 6 (PRODUCT LEVEL)	SEE PAGE
	1	1	**277-5064**	3	SEAL-O-RING	
	2	1	**277-5065**	3	CLIP	
M	3	1	**124-3815**	4	BOLT (M8X1.25X16-MM)	
	4	1	**217-9039**	1	STRAP-CABLE	
	5	1	**348-4637**	1	BOLT	
Y	6	1	**375-8407**	3	HARNESS AS-WIRING	120
	7	1	**377-1293**	1	BRACKET	
Y	8	1	**385-5997**	1	HARNESS AS-ENGINE	117
	9	1	**389-3863**	1	BRACKET	
	10	1	**392-2780**	1	BRACKET	
	11	1	**132-5789**	1	CLIP	
M	12	1	**232-1693**	1	BOLT-FLANGE HEAD (M6X1X35-MM)	

M - METRIC PART
Y - SEPARATE ILLUSTRATION

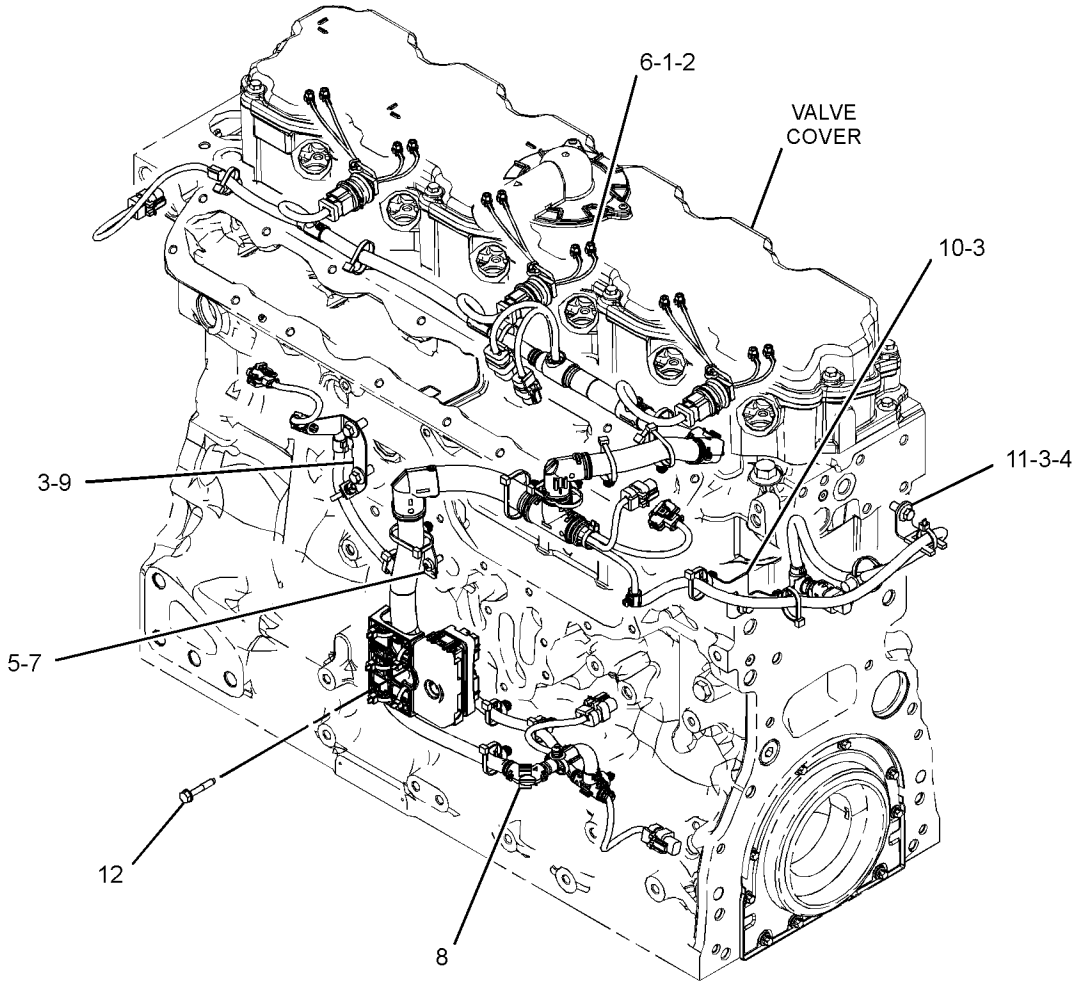

GRAPHIC #1 **<END>** g03380308

259-5052 WIRING GP-FINE SWING

S/N: JEG1-UP

PART OF 420-3127 CHASSIS AR

SMCS-1408 **i02770500**

NOTE	REF NO	GRAPHIC REF	PART NUMBER	QTY	PART NAME 1 2 3 4 5 6 (PRODUCT LEVEL)	SEE PAGE
	1	1	**111-4836**	1	CLIP	
	2	1	**111-4837**	3	CLIP	
	3	1	**238-2171**	1	BRACKET AS	
	4	1	**259-5129**	1	HARNESS AS-SOLENOID	
	5	1	**8T-4121**	4	WASHER-HARD (11X21X2.5-MM THK)	
M	6	1	**8T-4136**	1	BOLT (M10X1.5X25-MM)	
M	7	1	**8T-4137**	3	BOLT (M10X1.5X20-MM)	

M - METRIC PART

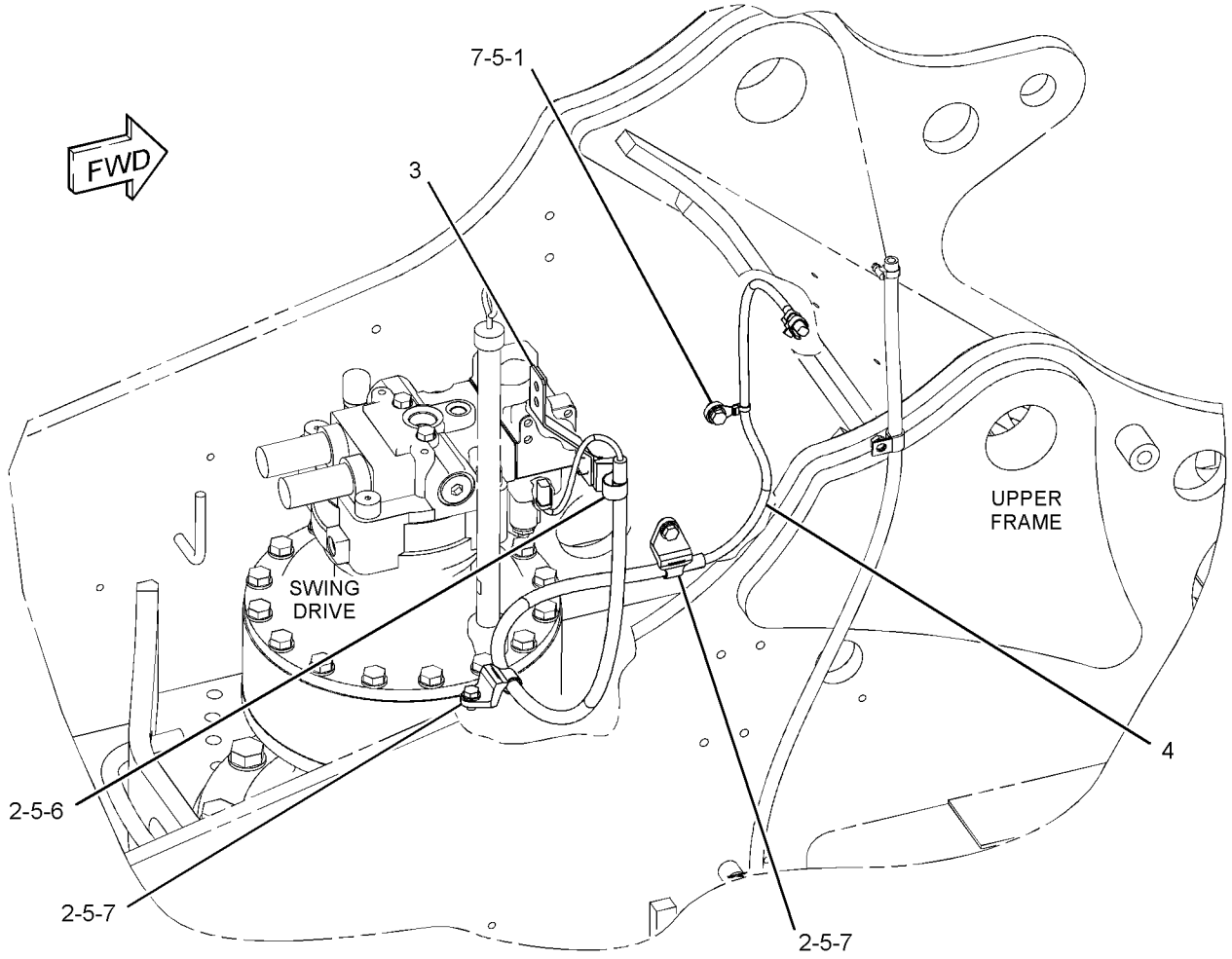

GRAPHIC #1 **<END>** g01392705

399-2648 WIRING GP-PANEL–CIRCUIT BREAKER

S/N: JEG1-UP

PART OF 422-0645 OPERATOR AR-ENCLOSED ROPS

SMCS-1408, 4459 **i05460672**

NOTE	REF NO	GRAPHIC REF	PART NUMBER	QTY	PART NAME 1 2 3 4 5 6 (PRODUCT LEVEL)	SEE PAGE
Y	1	1	*399-2649*	1	PANEL GP-CIRCUIT BREAKER	136
	2	1	**8T-4121**	4	WASHER-HARD (11X21X2.5-MM THK)	
M	3	1	**8T-4137**	4	BOLT (M10X1.5X20-MM)	

M - METRIC PART
Y - SEPARATE ILLUSTRATION

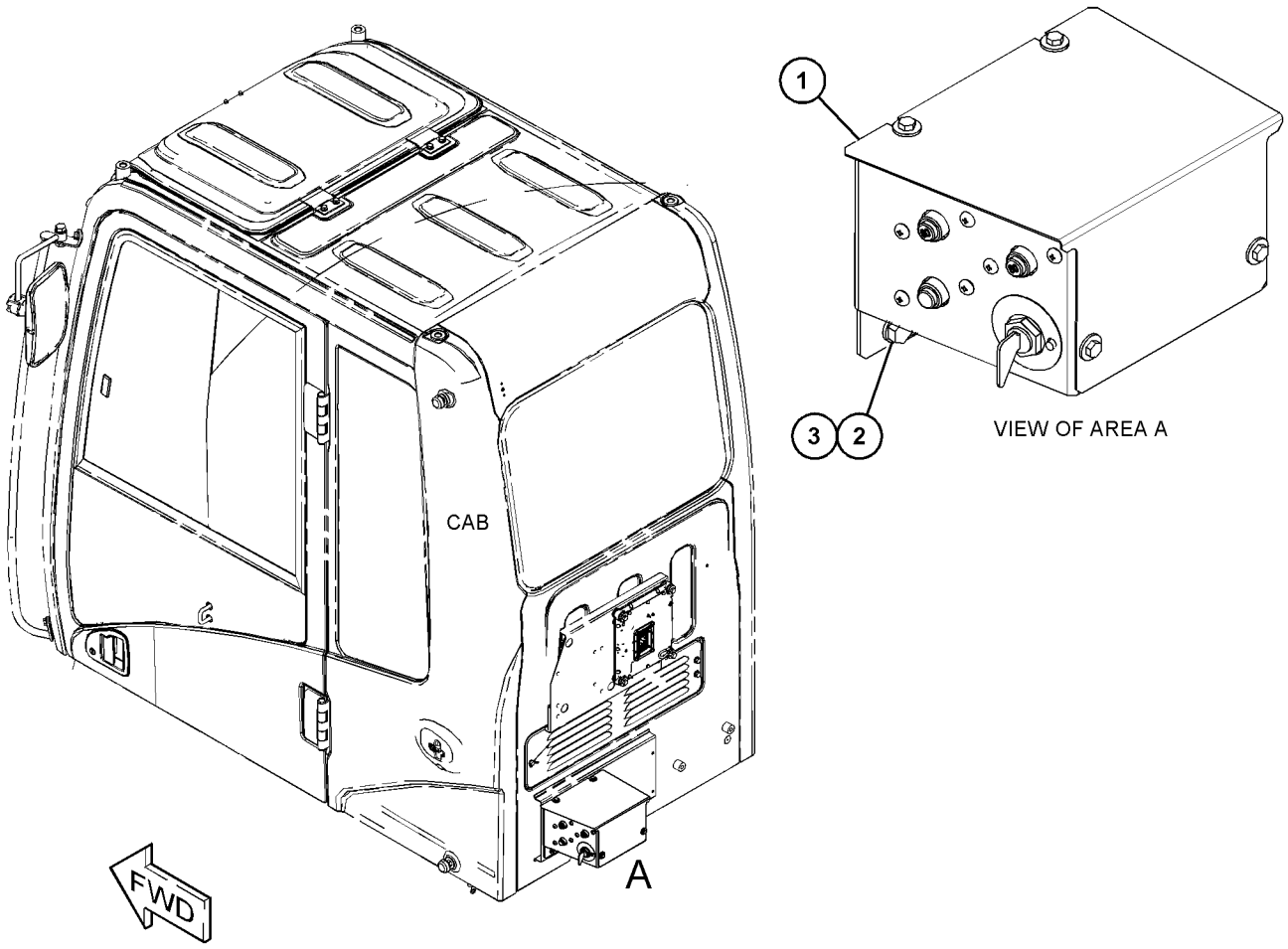

GRAPHIC #1 **<END>** g03456718

398-7004 WIRING GP-PLATFORM

S/N: JEG1-UP

PART OF 434-3892, 434-3893 CAB GP, 422-0645 OPERATOR AR-ENCLOSED ROPS

ALSO AN ATTACHMENT

SMCS-1408 **i05444569**

NOTE	REF NO	GRAPHIC REF	PART NUMBER	QTY	PART NAME 1 2 3 4 5 6 (PRODUCT LEVEL)	SEE PAGE
	1	1	**3E-5169**	1	GUARD-SWITCH	
	2	1	**3S-2093**	6	STRAP-CABLE	
	3	1	**7G-1060**	1	STRAP AS-GROUND	
	4	1	**7K-1181**	15	STRAP-CABLE	
	5	1	**111-4836**	4	CLIP	
	6	1	**111-4838**	2	CLIP	
	7	1	**111-4839**	2	STRAP	
	8	1	**116-0118**	11	CLIP	
	9	1	**234-1122**	1	COVER	
	10	1	**251-0299**	1	HARNESS AS-SWITCH (SECONDARY SHUTDOWN)	
		1	**2L-8074**	2	TERMINAL-RING (14-GA TO 16-GA, NO. 6 SCREW)	
		1	**9X-3401**	2	PIN-CONNECTOR (16-GA TO 18-GA)	
		1	**243-4505**	1	RECEPTACLE AS-CONNECTOR (2-PIN)	
Y	11	1	**441-7659**	1	HARNESS AS-PLATFORM	118
	12	1	**096-6166**	2	WASHER-HARD (4.5X9X1-MM THK)	
	13	1	**4D-1836**	1	SWITCH AS-TOGGLE (SECONDARY SHUTDOWN)	
M	14	1	**7X-2621**	7	BOLT (M10X1.5X12-MM)	
M	15	1	**8T-0337**	2	SCREW-MACHINE (M4X0.7X12-MM)	
	16	1	**8T-4121**	14	WASHER-HARD (11X21X2.5-MM THK)	
M	17	1	**8T-4137**	7	BOLT (M10X1.5X20-MM)	

M - METRIC PART
Y - SEPARATE ILLUSTRATION

398-7004 **WIRING GP-PLATFORM (*contd.*)** **i05444569**

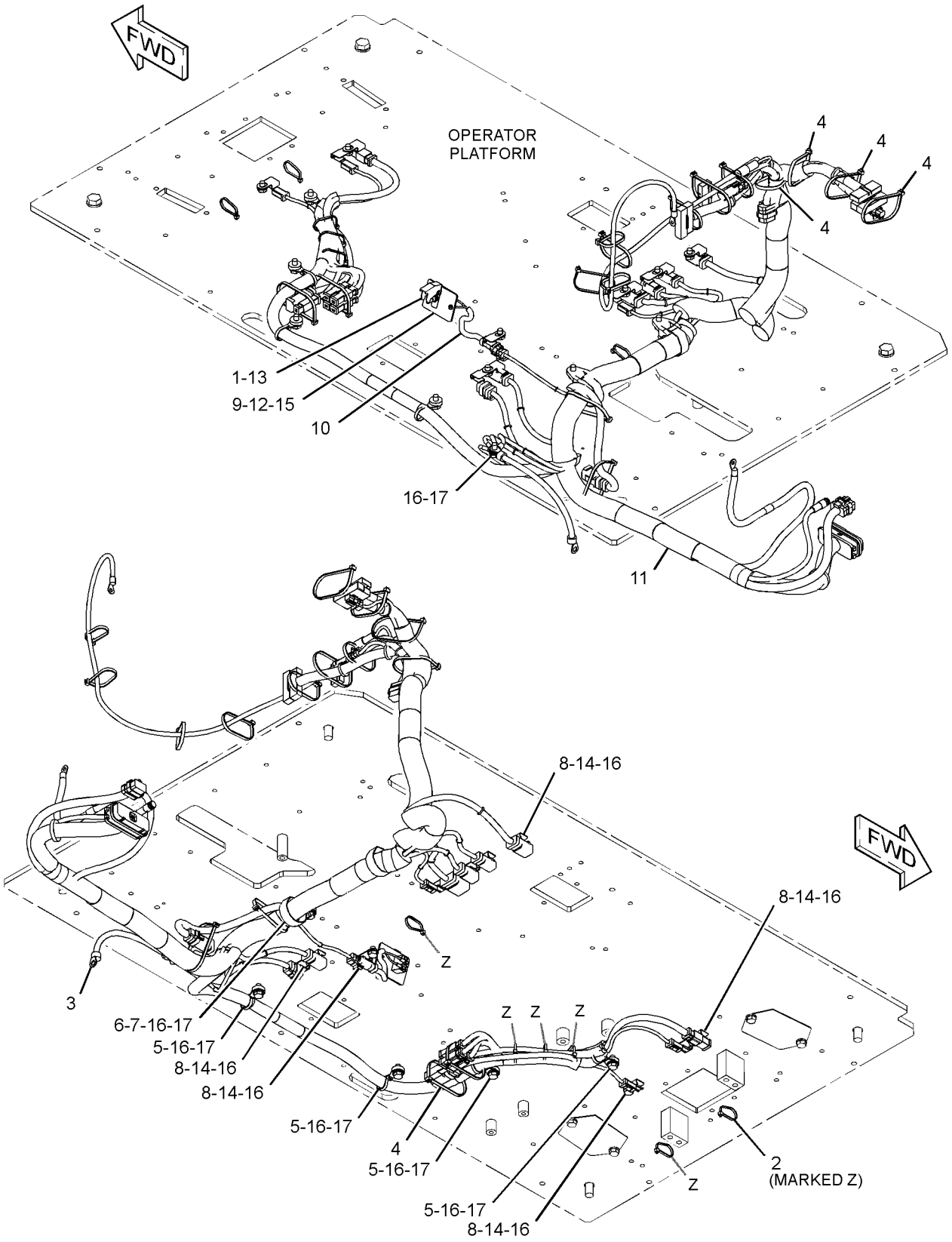

GRAPHIC #1 **<END>** g03431513

369-0245 WIRING GP-QUICK COUPLER

S/N: JEG1-UP
PART OF 383-5423 CONTROL AR-QUICK COUPLER
AN ATTACHMENT

SMCS-1408, 6129

i05407277

NOTE	REF NO	GRAPHIC REF	PART NUMBER	QTY	PART NAME 1 2 3 4 5 6 (PRODUCT LEVEL)	SEE PAGE
	1	1	**3S-2093**	9	STRAP-CABLE	
	2	1	**7K-1181**	9	STRAP-CABLE	
	3	1	**419-6412**	1	HARNESS AS-SOLENOID (QUICK COUPLER)	
		1	**8T-8730**	1	SOCKET-CONNECTOR (16-GA TO 18-GA)	
		1	**8T-8737**	1	PLUG-SEAL	
		1	**9W-0852**	1	PIN-CONNECTOR (14-GA TO 16-GA)	
		1	**9W-0844**	1	SOCKET-CONNECTOR (14-GA TO 16-GA)	
		1	**2L-8079**	1	TERMINAL-RING (14-GA TO 16-GA, 3/8-IN SCREW)	
		1	**230-4011**	1	PLUG AS-CONNECTOR (2-PIN)	
		1	**264-7029**	1	SEAL-CONNECTOR	
		1	**243-4505**	1	RECEPTACLE AS-CONNECTOR (2-PIN)	

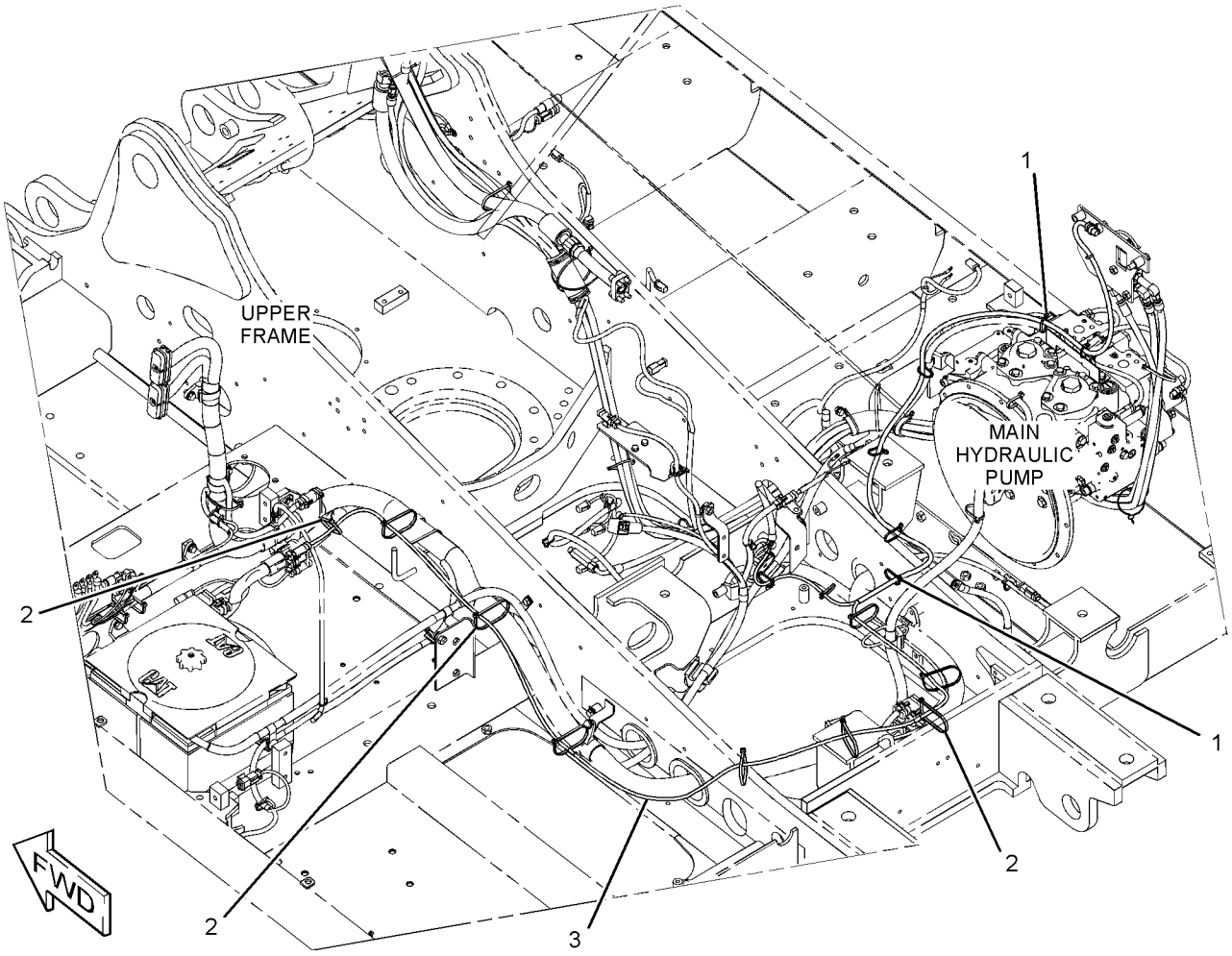

GRAPHIC #1

<END>

g03314978

238-1570 WIRING GP-REFUELING PUMP

S/N: JEG1-UP

PART OF 419-8979 PUMP AR-FUEL TRANSFER

AN ATTACHMENT

SMCS-1408 **i05518557**

NOTE	REF NO	GRAPHIC REF	PART NUMBER	QTY	PART NAME 1 2 3 4 5 6 (PRODUCT LEVEL)	SEE PAGE
	1	1	**3S-2093**	16	STRAP-CABLE	
	2	1	**9X-3495**	1	CLIP AS	
	3	1	**149-5050**	1	RELAY (24-VOLT) (REFUELING PUMP, STOP)	
	3A	1	**149-5050**	1	RELAY (24-VOLT) (REFUELING PUMP, START)	
	4	1	**213-0772**	1	SWITCH AS-MAGNETIC (24-VOLT) (REFUELING PUMP RELAY)	
	5	1	**238-1579**	1	HARNESS AS-PUMP (REFUELING)	
		1	**8T-8729**	2	PIN-CONNECTOR (16-GA TO 18-GA)	
		1	**8T-8730**	5	SOCKET-CONNECTOR (16-GA TO 18-GA)	
		1	**3S-2093**	3	STRAP-CABLE	
		1	**8T-8737**	1	PLUG-SEAL	
		1	**116-0126**	1	HOUSING-PLUG	
		1	**116-0128**	2	SEAL	
		1	**116-0255**	2	TERMINAL-BLADE (10-GA TO 20-GA)	
E		1	**119-3662**		TUBE-HEAT SHRINK (10.85-MM DIA) (7-CM)	
		1	**121-1038**	1	HOUSING-RECEPTACLE	
		1	**121-1039**	2	TERMINAL (MALE)	
E		1	**125-7875**		TUBE-HEAT SHRINK (7.44-MM DIA) (10-CM)	
		1	**2L-8065**	1	TERMINAL-RING (10-GA TO 12-GA, NO. 8 SCREW)	
		1	**2L-8067**	2	TERMINAL-RING (10-GA TO 12-GA, 1/4-IN SCREW)	
		1	**2L-8075**	1	TERMINAL-RING (14-GA TO 16-GA, NO. 8 SCREW)	
		1	**2L-8077**	1	TERMINAL-RING (14-GA TO 16-GA, 1/4-IN SCREW)	
		1	**149-5051**	2	CONNECTOR-RECEPTACLE	
		1	**149-5069**	4	TERMINAL-BLADE (14-GA TO 20-GA)	
		1	**149-5070**	4	TERMINAL-BLADE (16-GA TO 20-GA)	
		1	**155-2270**	1	KIT-CONNECTING PLUG (2-PIN)	
					(INCLUDES PLUG AS, WEDGE & INTERFACE SEAL)	
		1	**197-4385**	1	DIODE	
		1	**230-4011**	2	PLUG AS-CONNECTOR (2-PIN)	
					(EACH INCLUDES)	
		1	**264-7029**	1	SEAL-CONNECTOR	
		1	**243-4505**	1	RECEPTACLE AS-CONNECTOR (2-PIN)	
C	6	1	**319-1335**	1	HARNESS AS-WIRING (FUEL PUMP RELAY)	
		1	**8T-8730**	3	SOCKET-CONNECTOR (16-GA TO 18-GA)	
		1	**8T-8737**	1	PLUG-SEAL	
		1	**2L-8079**	1	TERMINAL-RING (14-GA TO 16-GA, 3/8-IN SCREW)	
		1	**230-4011**	2	PLUG AS-CONNECTOR (2-PIN)	
					(EACH INCLUDES)	
		1	**264-7029**	1	SEAL-CONNECTOR	
Y	7	1	**238-1594**	1	SWITCH GP-PUSH BUTTON (REFUELING PUMP, START)	150
Y	8	1	**238-1596**	1	SWITCH GP-PUSH BUTTON (REFUELING PUMP, STOP)	151
M	9	1	**096-2591**	2	SCREW-MACHINE (M5X0.8X35-MM)	
M	10	1	**7X-2619**	2	BOLT (M6X1X10-MM)	
C	11	1	**8T-0328**	2	WASHER-HARD (5.5X10X1-MM THK)	
M	12	1	**8T-4199**	1	BOLT (M8X1.25X12-MM)	
	13	1	**8T-4224**	1	WASHER-HARD (8.8X16X2-MM THK)	
	14	1	**9X-8256**	2	WASHER (6.6X12X2-MM THK)	
	15	1	**275-6993**	1	COVER	
C	16	1	**7K-1181**	11	STRAP-CABLE	

C - CHANGE FROM PREVIOUS TYPE
E - ORDER BY THE CENTIMETER
M - METRIC PART
Y - SEPARATE ILLUSTRATION

238-1570 **WIRING GP-REFUELING PUMP (*contd.*)** **i05518557**

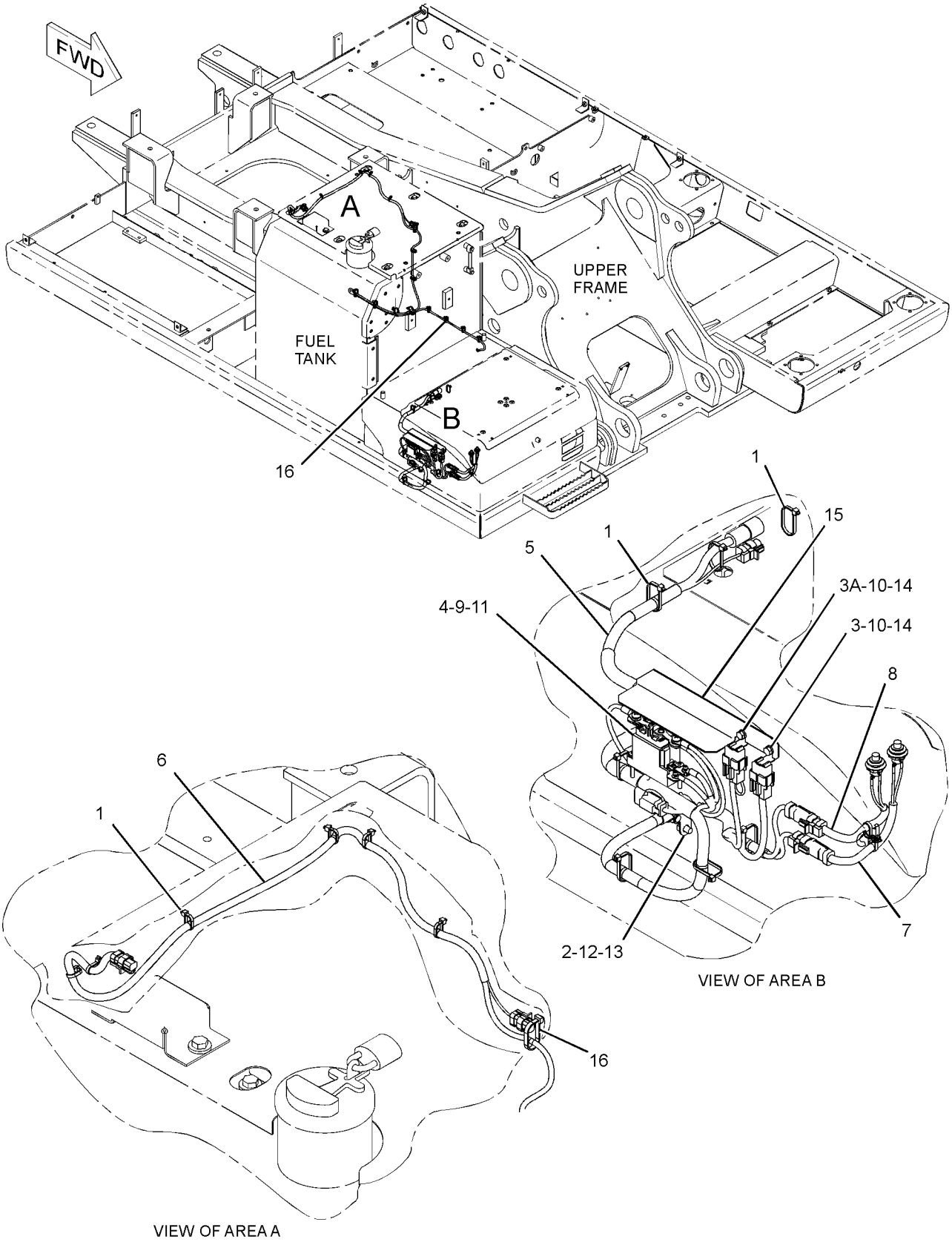

GRAPHIC #1 **<END>** g01620056

353-0545 DRIVE GP-FINAL—WITH MOTOR, SPROCKET

S/N: JEG1-UP

PART OF 267-6767 POWER TRAIN AR

SMCS-4050 **i04853211**

NOTE	REF NO	GRAPHIC REF	PART NUMBER	QTY	PART NAME 1 2 3 4 5 6 (PRODUCT LEVEL)	SEE PAGE
Y	1	1	*145-3042*	1	SPROCKET GP	200
Y	2	1	*353-0609*	1	DRIVE GP-FINAL (WITH MOTOR)	194

Y - SEPARATE ILLUSTRATION

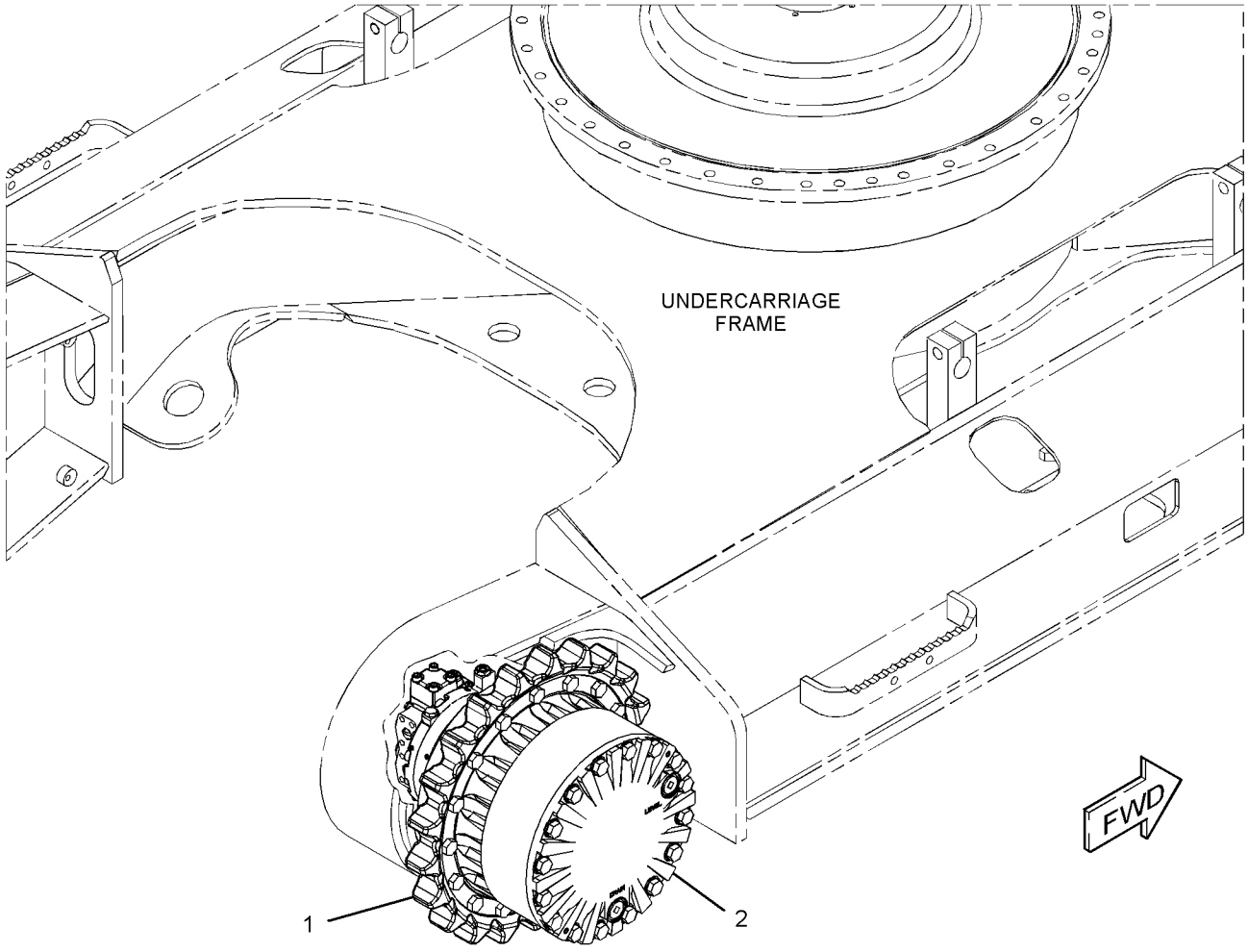

GRAPHIC #1 **<END>** g02813096

353-0546 DRIVE GP-FINAL

S/N: JEG1-UP
PART OF 264-8771 HYDRAULIC AR-BIODEGRADABLE OIL
AN ATTACHMENT

SMCS-4050 **i05305810**

NOTE	REF NO	GRAPHIC REF	PART NUMBER	QTY	PART NAME 1 2 3 4 5 6 (PRODUCT LEVEL)	SEE PAGE
Y	1	1	*145-3042*	1	SPROCKET GP (NON-SEGMENTED)	200
Y	2	1	*353-0610*	1	DRIVE GP-FINAL (WITH MOTOR) (WITH MOTOR)	195

Y - SEPARATE ILLUSTRATION

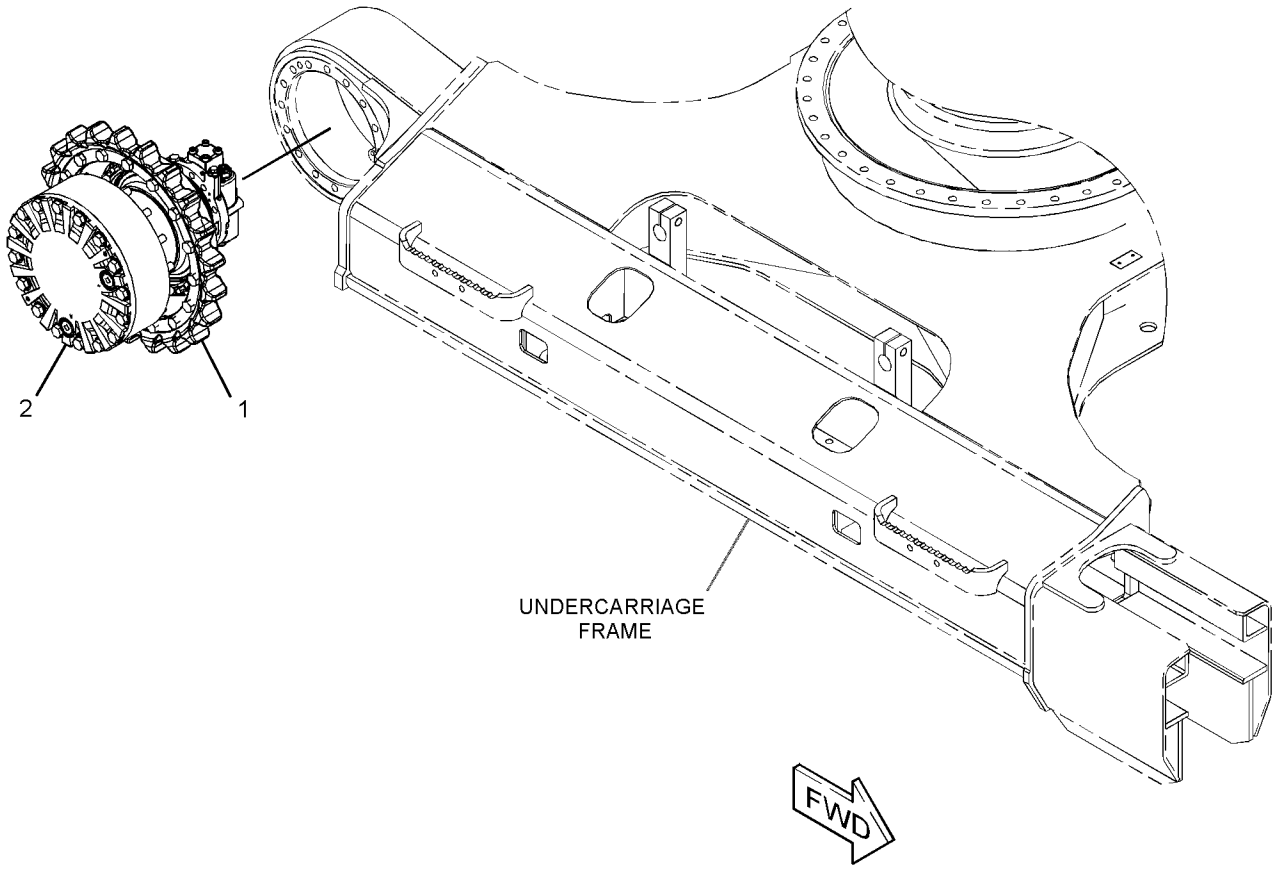

GRAPHIC #1 **<END>** g02761482

353-0609 DRIVE GP-FINAL

S/N: JEG1-UP

PART OF 353-0545 DRIVE GP-FINAL

SMCS-4050 **i04855055**

NOTE	REF NO	GRAPHIC REF	PART NUMBER	QTY	PART NAME 1 2 3 4 5 6 (PRODUCT LEVEL)	SEE PAGE
Y	1	1	*334-9986*	1	MOTOR & MTG GP-TRAVEL	411
Y	2	1	**353-0611**	1	DRIVE GP-FINAL (WITHOUT MOTOR)	196

Y - SEPARATE ILLUSTRATION

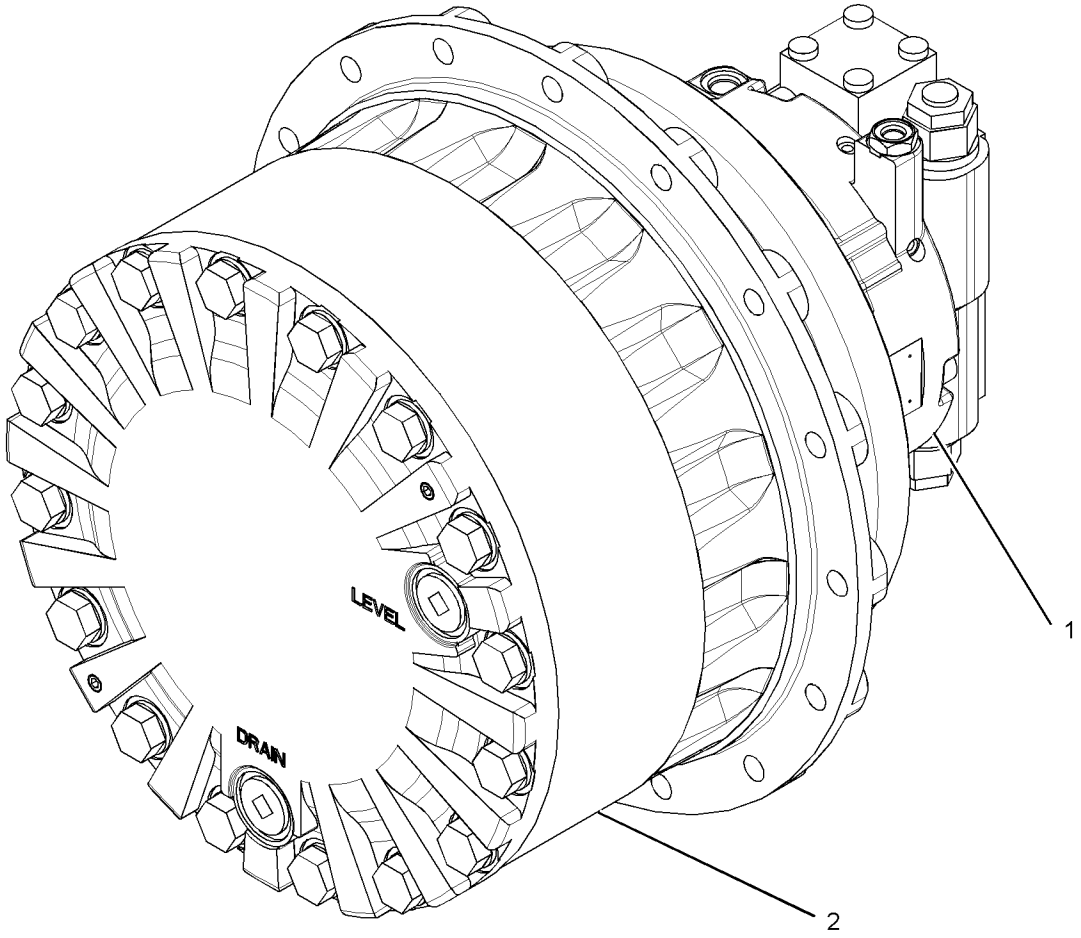

GRAPHIC #1 **<END>** g01522287

353-0610 DRIVE GP-FINAL–WITH MOTOR

S/N: JEG1-UP
PART OF 353-0546 DRIVE GP-FINAL
AN ATTACHMENT

SMCS-4050 **i05497610**

NOTE	REF NO	GRAPHIC REF	PART NUMBER	QTY	PART NAME 1 2 3 4 5 6 (PRODUCT LEVEL)	SEE PAGE
Y	1	1	*334-9987*	1	MOTOR & MTG GP-TRAVEL	412
Y	2	1	**353-0611**	1	DRIVE GP-FINAL (WITHOUT MOTOR)	196

Y - SEPARATE ILLUSTRATION

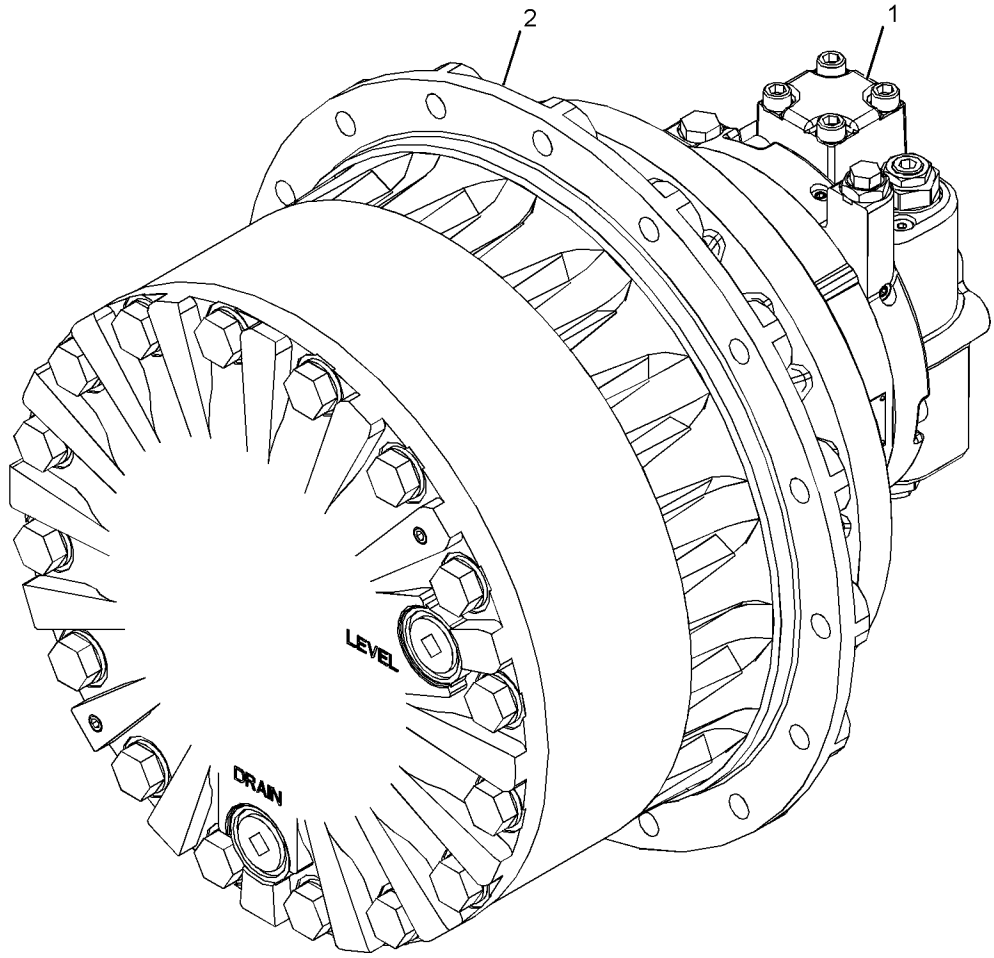

GRAPHIC #1 **<END>** g02754862

353-0611 DRIVE GP-FINAL—WITHOUT MOTOR

S/N: JEG1-UP

PART OF 353-0609, 353-0610 DRIVE GP-FINAL

ALSO AN ATTACHMENT

SMCS-4050 **i04722109**

NOTE	REF NO	GRAPHIC REF	PART NUMBER	QTY	PART NAME 1 2 3 4 5 6 (PRODUCT LEVEL)	SEE PAGE
	1	1	**6I-6583**	1	GEAR-SUN (13-TEETH)	
	2	1	**6I-6585**	3	GEAR-PLANETARY (44-TEETH)	
	3	1	**7Y-0223**	3	SHAFT-PLANETARY	
	4	1	**7Y-0225**	3	SHAFT-PLANETARY	
	5	1	**7Y-1426**	1	COVER	
	6	1	**7Y-1430**	1	GEAR-SUN (17-TEETH)	
	7	1	**7Y-1431**	3	GEAR-PLANETARY (30-TEETH)	
	8	1	**7Y-1432**	1	CARRIER	
	9	1	**7Y-1433**	1	CARRIER	
	10	1	**7Y-1558**	1	SPACER (90X119.6X7.5-MM THK)	
	11	1	**094-0580**	1	PLATE (10-MM THK)	
	12	1	**094-0611**	6	WASHER (47.3X76X1-MM THK)	
M	13	1	**094-1528**	6	WASHER (53X84X1-MM THK)	
	14	1	**095-0891**	6	PIN-SPRING	
B	15	1	**096-1773**	1	SHIM (0.15-MM THK)	
B			**096-1774**	1	SHIM (0.3-MM THK)	
B			**096-1775**	1	SHIM (0.4-MM THK)	
B			**096-1776**	1	SHIM (0.5-MM THK)	
B			**096-1777**	1	SHIM (0.6-MM THK)	
B			**096-1778**	1	SHIM (0.7-MM THK)	
B			**096-1779**	1	SHIM (0.8-MM THK)	
B			**096-1780**	1	SHIM (1-MM THK)	
B			**096-1781**	1	SHIM (1.6-MM THK)	
	24	1	**114-1539**	6	PIN-DOWEL	
	25	1	**148-4715**	1	GEAR-COUPLING (55-TEETH)	
	26	1	**174-4874**	1	SEAL GP-DUO-CONE	
	27	1	**191-3235**	1	HOUSING	
	28	1	**227-6034**	14	BOLT-FLANGE HEAD (M16X2X60-MM)	
	29	1	**296-6220**	2	BALL BEARING	
	30	1	**296-6268**	3	BEARING AS-ROLLER	
	31	1	**296-6269**	6	BEARING-ROLLER	
Y	32	1	**296-6300**	1	GEAR GP-TRANSFER	198
	33	1	**353-0612**	1	HOUSING-MOTOR	
M	34	1	**095-1270**	2	SETSCREW-SOCKET (M12X1.75X30-MM)	
	35	1	**3E-2338**	2	PLUG-PIPE	
	36	1	**6D-0692**	1	SEAL-O-RING	
	37	1	**7M-8485**	2	SEAL-O-RING	
M	38	1	**7X-2568**	16	BOLT (M20X2.5X180-MM)	
	39	1	**7Y-1434**	1	SPACER (40X69.5X6-MM THK)	
	40	1	**8T-4123**	16	WASHER (3.62X5.75X0.375-MM THK)	
B	41	1	**1U-8846**		SEALANT-GASKET	

B - USE AS REQUIRED
M - METRIC PART
Y - SEPARATE ILLUSTRATION

353-0611 **DRIVE GP-FINAL (*contd.*)** **i04722109**

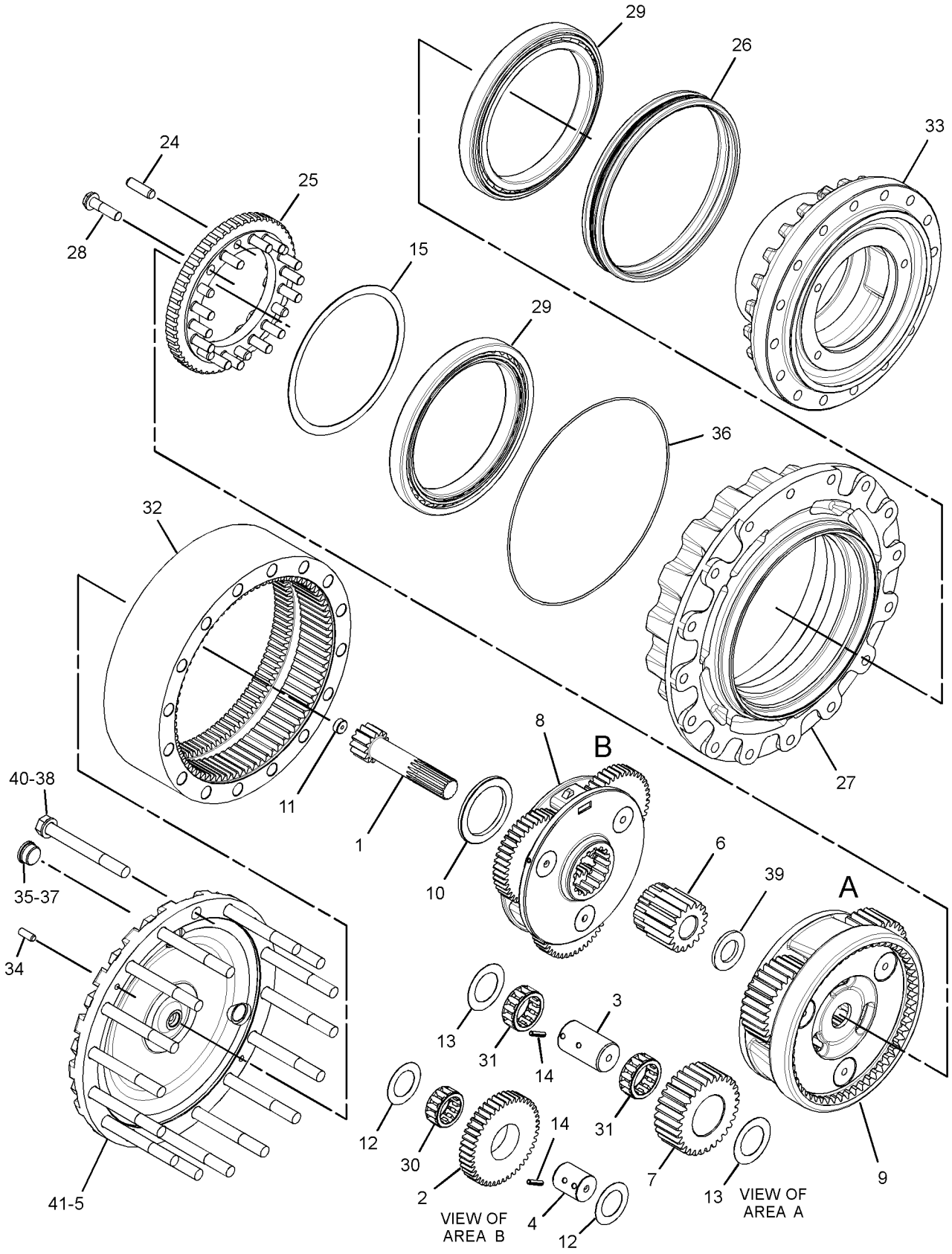

GRAPHIC #1

<END>

g02662318

296-6300 GEAR GP-TRANSFER

S/N: JEG1-UP
PART OF 353-0611 DRIVE GP-FINAL
ALSO AN ATTACHMENT

SMCS-1164, 3159 **i05448017**

NOTE	REF NO	GRAPHIC REF	PART NUMBER	QTY	PART NAME 1 2 3 4 5 6 (PRODUCT LEVEL)	SEE PAGE
					(NO SERVICED PARTS)	

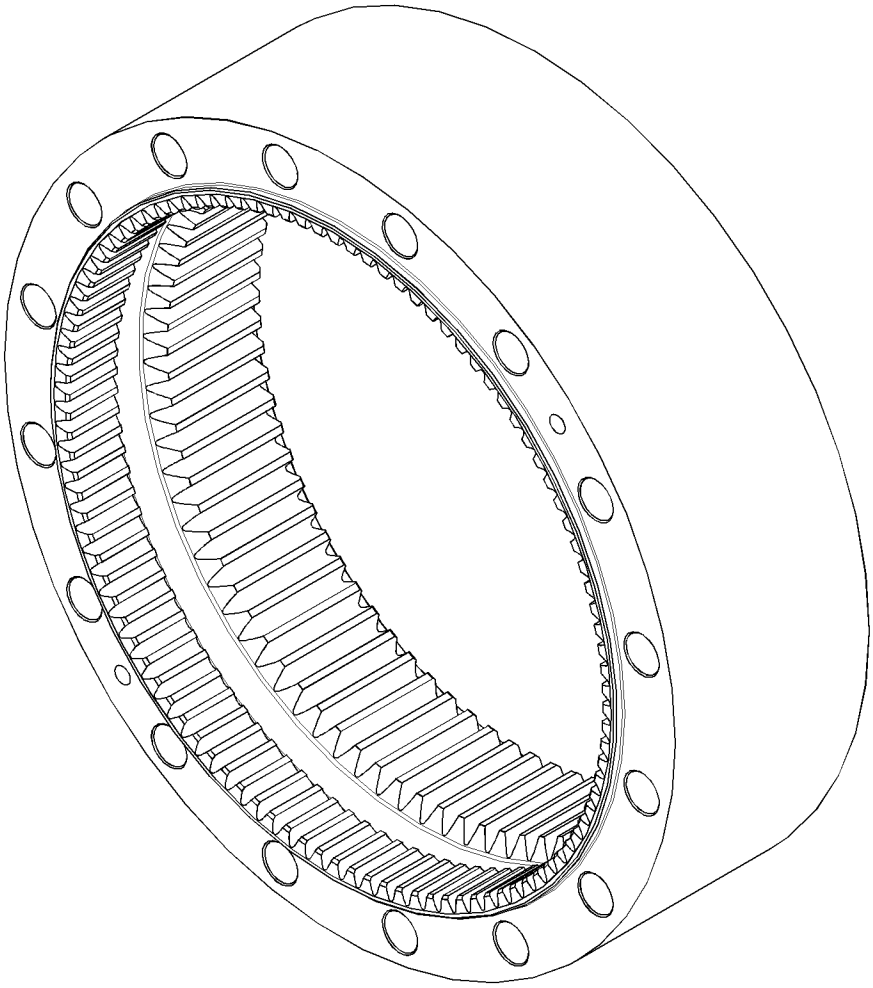

GRAPHIC #1 **<END>** g02114513

267-6767 POWER TRAIN AR

S/N: JEG1-UP

PART OF 419-5434 GENERAL AR

SMCS-3000, 4000

i04853158

NOTE	PART NUMBER	QTY	PART NAME 1 2 3 4 5 6 (PRODUCT LEVEL)	SEE PAGE
Y	*148-4679*	1	DRIVE GP-SWING (WITH MOTOR)	299
Y	*227-6166*	1	FASTENER GP-SWING & FINAL DR	300
Y	*353-0545*	2	DRIVE GP-FINAL (WITH MOTOR, SPROCKET)	192

Y - SEPARATE ILLUSTRATION

<END>

145-3042 SPROCKET GP

S/N: JEG1-UP

PART OF 353-0545, 353-0546 DRIVE GP-FINAL

ALSO AN ATTACHMENT

SMCS-4164 **i01891385**

NOTE	REF NO	GRAPHIC REF	PART NUMBER	QTY	PART NAME 1 2 3 4 5 6 (PRODUCT LEVEL)	SEE PAGE
	1	1	**8E-9805**	1	SPROCKET-TRACK (21-TEETH)	
M	2	1	**7X-2562**	16	BOLT (M20X2.5X45-MM)	

M - METRIC PART

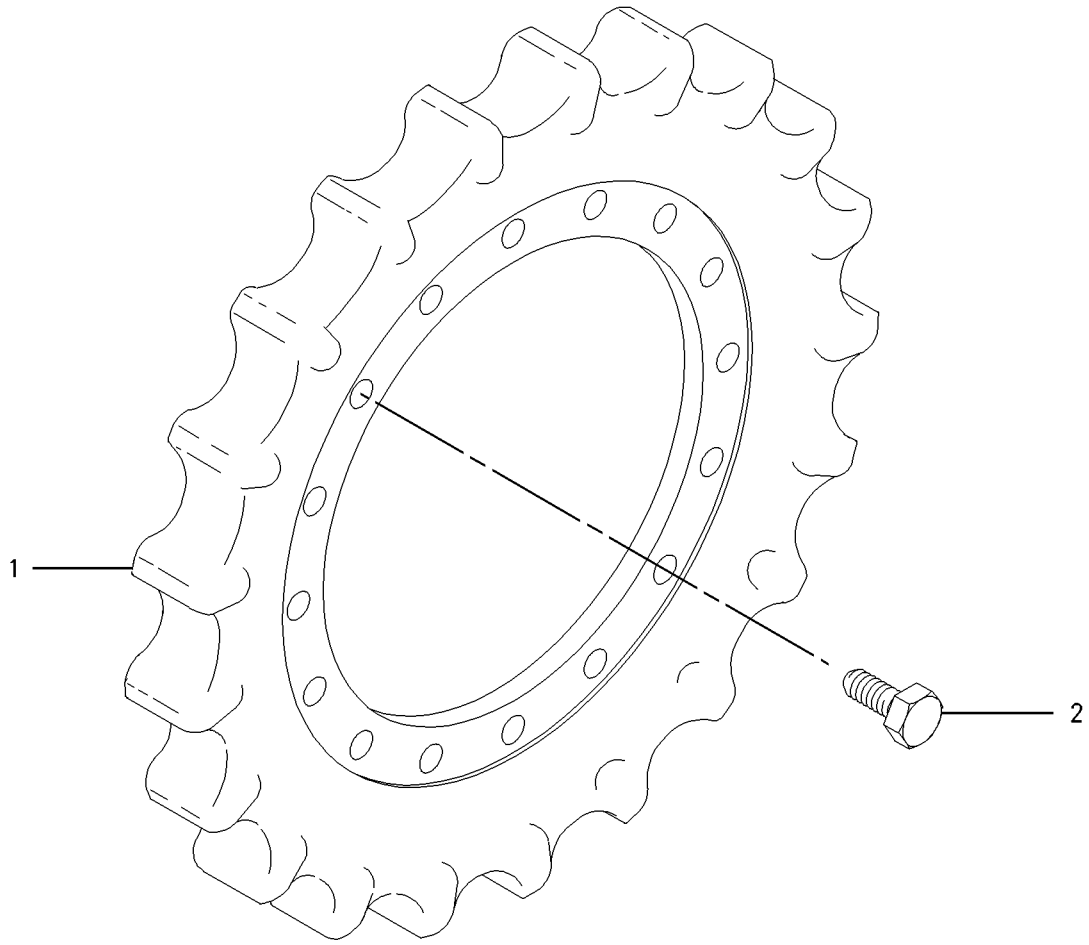

GRAPHIC #1 **<END>** g00935714

444-6735 BOX & MTG GP-STORAGE

S/N: JEG1-UP

PART OF 420-3127 CHASSIS AR

SMCS-7268 **i05434710**

NOTE	REF NO	GRAPHIC REF	PART NUMBER	QTY	PART NAME 1 2 3 4 5 6 (PRODUCT LEVEL)	SEE PAGE
Y	1	1	**444-6736**	1	BOX GP-STORAGE	202
M	2	1	**135-8577**	4	BOLT AS	

M - METRIC PART
Y - SEPARATE ILLUSTRATION

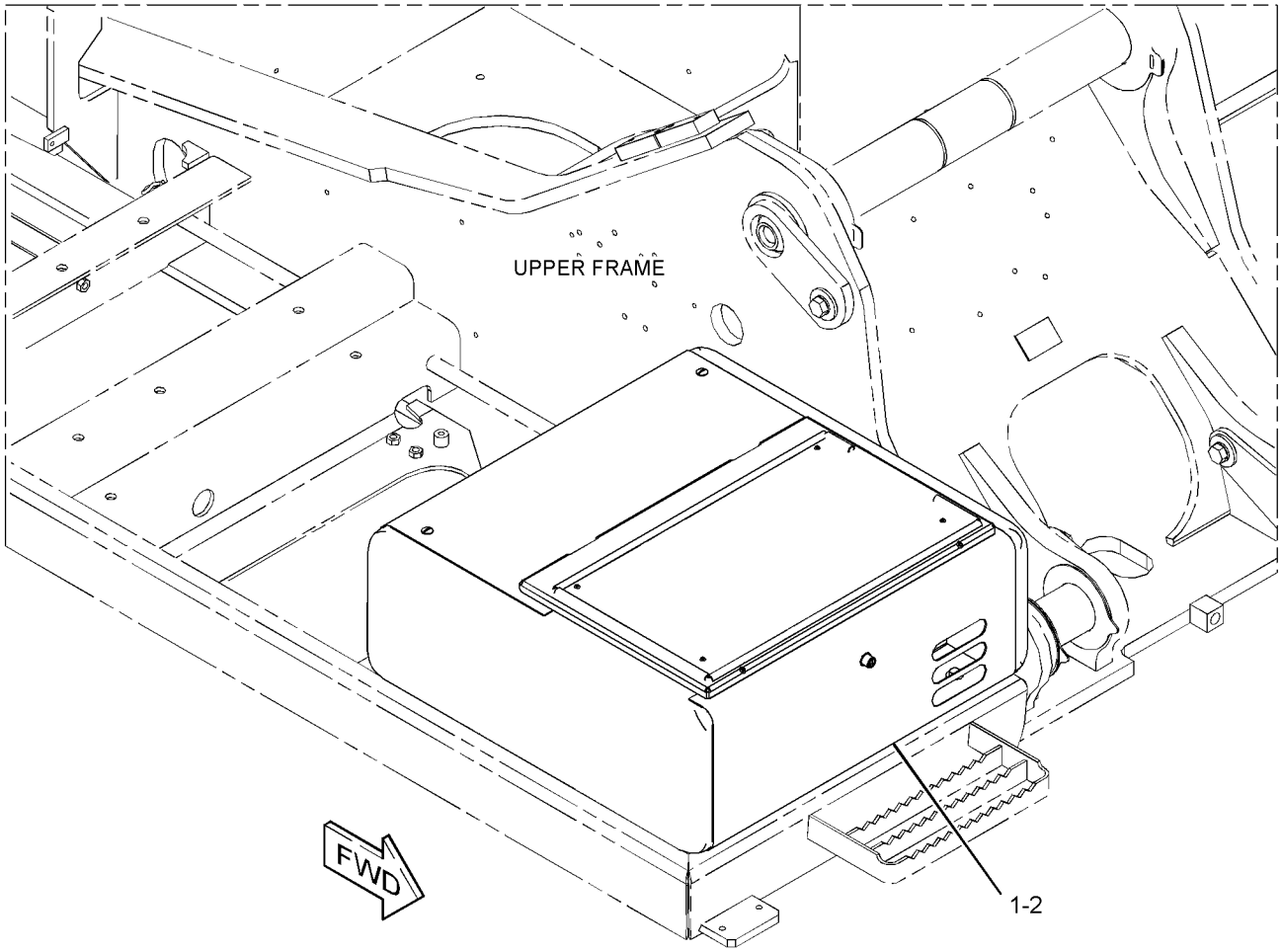

GRAPHIC #1 **<END>** g03320137

444-6736 BOX GP-STORAGE

S/N: JEG1-UP

PART OF 444-6735 BOX & MTG GP-STORAGE

SMCS-7268 **i05435769**

NOTE	REF NO	GRAPHIC REF	PART NUMBER	QTY	PART NAME 1 2 3 4 5 6 (PRODUCT LEVEL)	SEE PAGE
B	1	1	**6I-5976**	6	SHIM (1-MM THK)	
	2	1	**170-2755**	1	HOOK AS	
B	3	1	**184-8850**	2	SHIM (0.5-MM THK)	
	4	1	**273-7964**	2	MOUNT	
	5	1	**320-5737**	1	LOCK AS	
	6	1	**394-8010**	1	COVER AS	
	6A	1	**3D-9143**	2	HINGE-BUTT	
	7	1	**439-3322**	1	SUPPORT AS	
	8	1	*444-6737*	1	BOX AS-STORAGE	
J		1	**348-5409**		SEAL (19-DM)	
	9	1	**095-0843**	1	PIN-COTTER	
	10	1	**096-3780**	1	PIN-CLEVIS	
M	11	1	**105-3487**	4	BOLT-SOCKET HEAD (M6X1X20-MM)	
	12	1	**170-2983**	1	SEAL	
	13	1	**170-9360**	1	GROMMET	
	14	1	**293-1501**	4	NUT (M10X1.5-THD)	
	15	1	**4B-4278**	4	WASHER (10.2X20.5X1.6-MM THK)	
M	16	1	**5C-9553**	2	BOLT (M6X1X16-MM)	
	17	1	**5P-4116**	1	WASHER-HARD (8.8X20.5X2-MM THK)	
	18	1	**8T-4223**	2	WASHER-HARD (13.5X25.5X3-MM THK)	
	19	1	**9X-8256**	6	WASHER (6.6X12X2-MM THK)	

B - USE AS REQUIRED
J - ORDER BY THE DECIMETER
M - METRIC PART

444-6736 **BOX GP-STORAGE (*contd.*)** **i05435769**

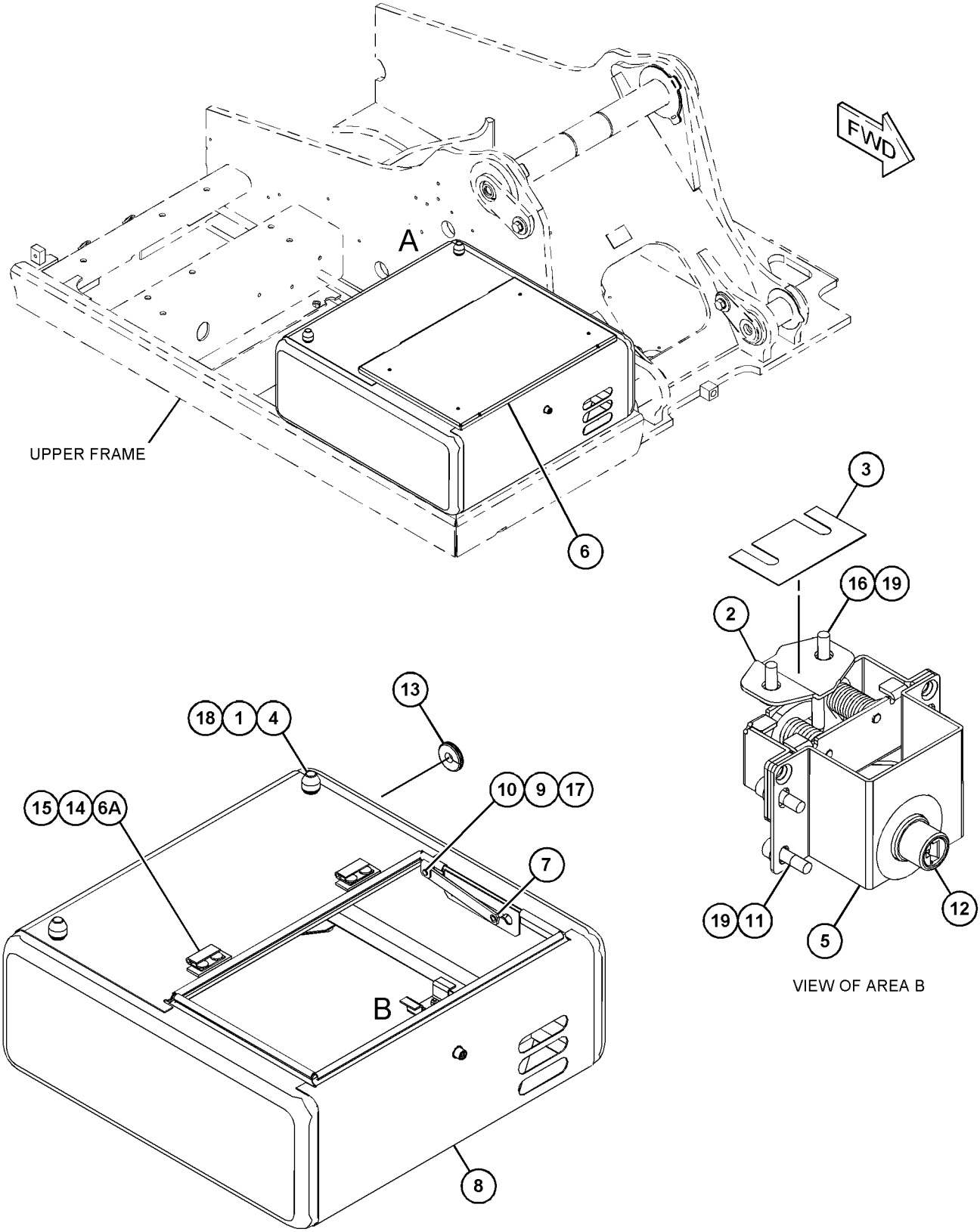

VIEW OF AREA B

VIEW OF AREA A
(COVER REMOVED FOR CLARITY)

GRAPHIC #1 **<END>** g03428049

394-5780 BUMPER GP

S/N: JEG1-UP

AN ATTACHMENT

SMCS-7156 **i05260663**

NOTE	REF NO	GRAPHIC REF	PART NUMBER	QTY	PART NAME 1 2 3 4 5 6 (PRODUCT LEVEL)	SEE PAGE
	1	1	**180-7521**	2	BUMPER AS	
	2	1	**180-7525**	1	BUMPER AS	
	3	1	**180-7529**	1	BUMPER AS	
	4	1	**180-7533**	1	BUMPER AS	
	5	1	**218-5199**	1	BUMPER AS	
	6	1	**228-5463**	1	BUMPER AS	
	7	1	**8T-4223**	14	WASHER-HARD (13.5X25.5X3-MM THK)	
M	8	1	**8T-4244**	14	NUT (M12X1.75-THD)	

M - METRIC PART

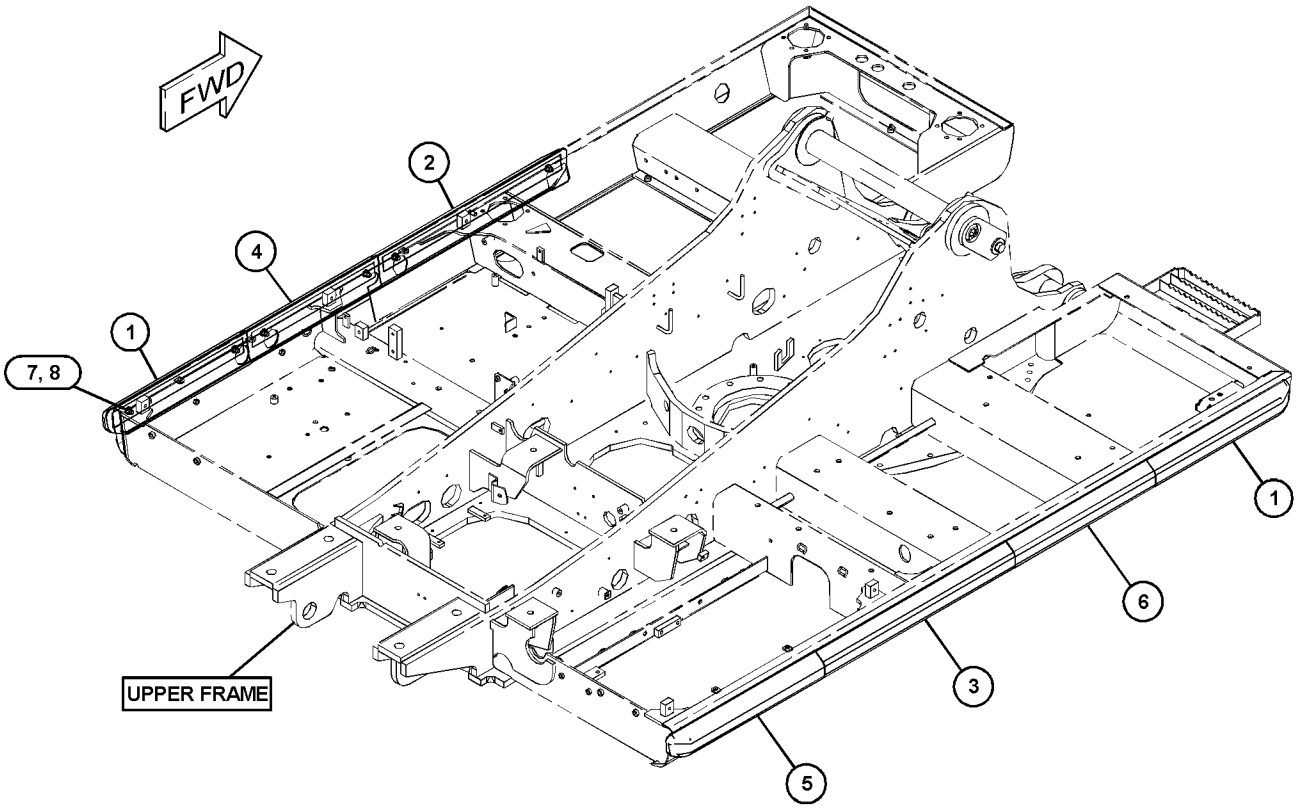

GRAPHIC #1 **<END>** g03317924

379-7395 COUNTERWEIGHT & MOUNTING GP

S/N: JEG1-UP

PART OF 420-3127 CHASSIS AR

SMCS-7056 **i05459398**

NOTE	REF NO	GRAPHIC REF	PART NUMBER	QTY	PART NAME 1 2 3 4 5 6 (PRODUCT LEVEL)	SEE PAGE
	1	1	**136-0139**	2	CAP	
	2	1	**244-8194**	4	SPACER (32X65X30-MM THK)	
Y	3	1	*379-7396*	1	COUNTERWEIGHT GP	208
M	4	1	**7X-2583**	4	BOLT (M30X3.5X120-MM)	

M - METRIC PART
Y - SEPARATE ILLUSTRATION

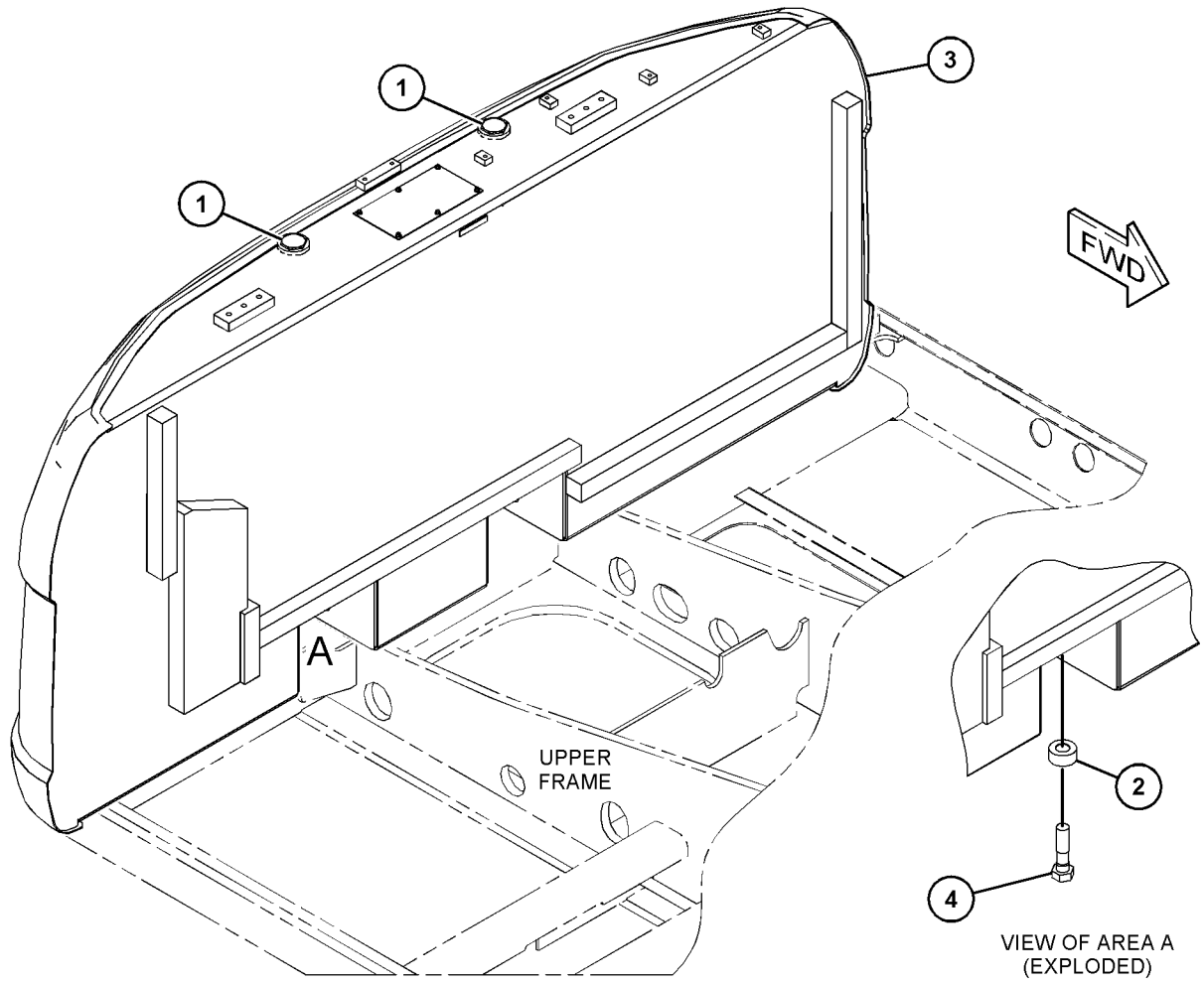

GRAPHIC #1 **<END>** g03454782

444-2733 COUNTERWEIGHT & MOUNTING GP

S/N: JEG1-UP
PART OF 444-7868 COUNTERWEIGHT AR
AN ATTACHMENT

SMCS-7056 **i05432048**

NOTE	REF NO	GRAPHIC REF	PART NUMBER	QTY	PART NAME 1 2 3 4 5 6 (PRODUCT LEVEL)	SEE PAGE
	1	1	**136-0139**	2	CAP	
	2	1	**244-8194**	4	SPACER (32X65X30-MM THK)	
Y	3	1	*444-2734*	1	COUNTERWEIGHT GP	209
M	4	1	**7X-2583**	4	BOLT (M30X3.5X120-MM)	

M - METRIC PART
Y - SEPARATE ILLUSTRATION

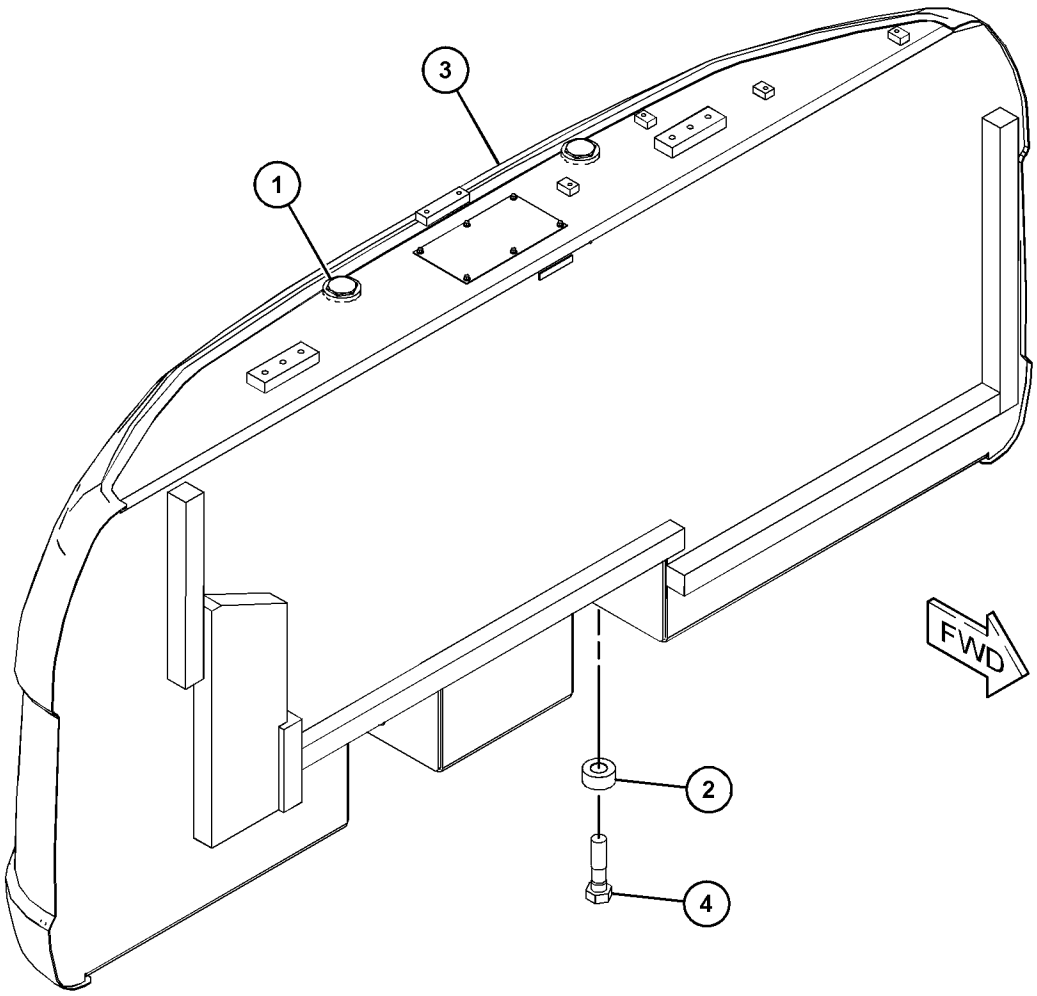

GRAPHIC #1 **<END>** g03430616

444-7868 COUNTERWEIGHT AR

S/N: JEG1-UP

AN ATTACHMENT

SMCS-7056 **i05432034**

NOTE	PART NUMBER	QTY	PART NAME 1 2 3 4 5 6 (PRODUCT LEVEL)	SEE PAGE
Y	*444-2733*	1	COUNTERWEIGHT & MOUNTING GP	206
Y	*422-8442*	1	FILM GP	662

Y - SEPARATE ILLUSTRATION

<END>

379-7396 COUNTERWEIGHT GP

S/N: JEG1-UP

4248-KG (9365-LB)

PART OF 379-7395 COUNTERWEIGHT & MOUNTING GP

SMCS-7056 **i05459396**

NOTE	REF NO	GRAPHIC REF	PART NUMBER	QTY	PART NAME 1 2 3 4 5 6 (PRODUCT LEVEL)	SEE PAGE
	1	1	**7I-0717**	1	LINER	
	2	1	**116-1665**	1	LINER	
	3	1	**165-3102**	1	LINER	
	4	1	**165-3103**	1	LINER	
	5	1	**184-8722**	1	LINER	
	6	1	**262-2406**	1	LINER	
	7	1	**273-7677**	1	LINER	
	8	1	**379-7397**	1	COUNTERWEIGHT AS	
	8A	1	**165-3120**	1	SHEET	
M	8B	1	**192-3039**	6	SCREW-HEX FLANGE (6.3X1.8X19-MM)	

M - METRIC PART

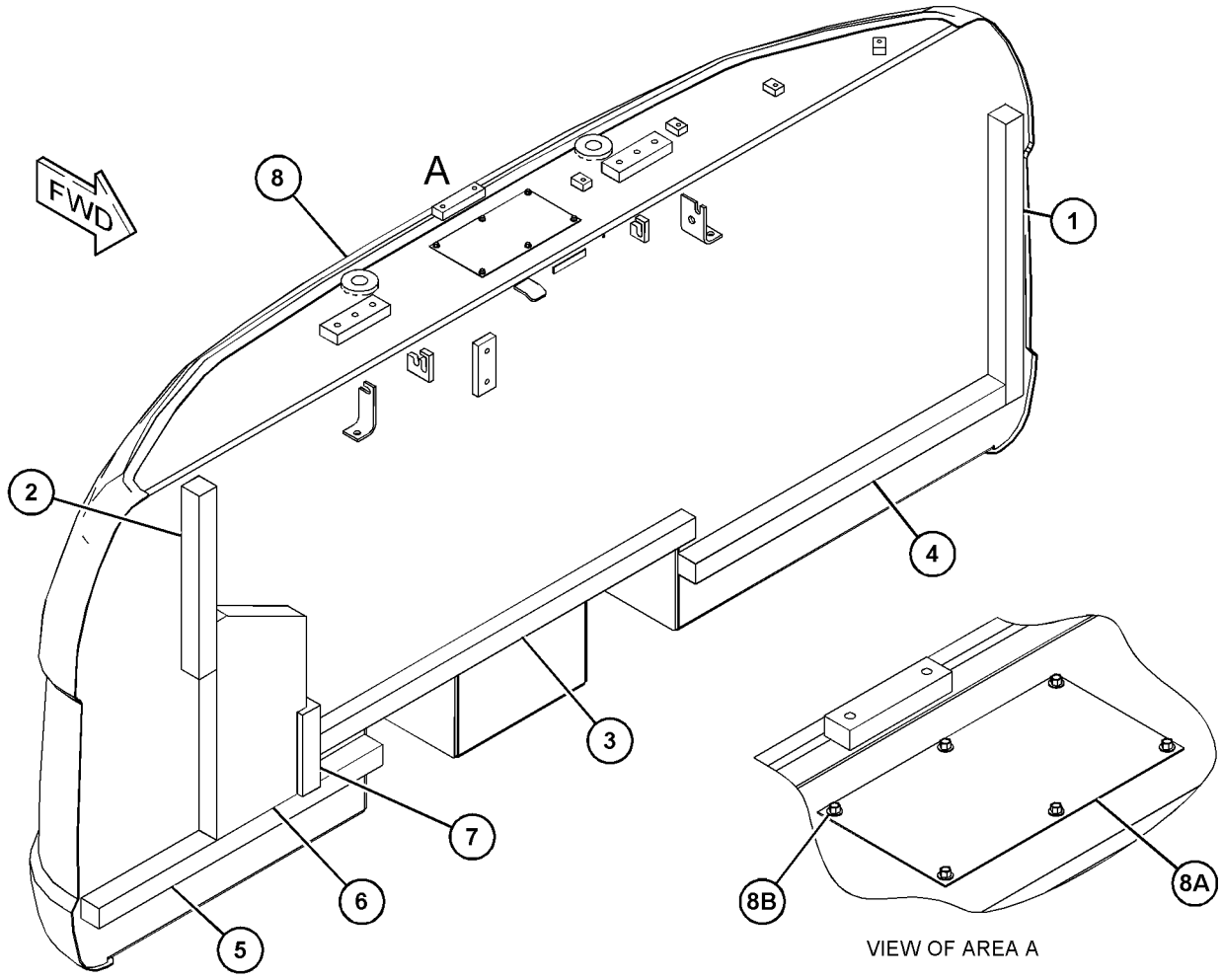

VIEW OF AREA A

GRAPHIC #1 **<END>** g03454685

444-2734 COUNTERWEIGHT GP

S/N: JEG1-UP
4251-KG (9372-LB)
PART OF 444-2733 COUNTERWEIGHT & MOUNTING GP
AN ATTACHMENT

SMCS-7056 **i05432053**

NOTE	REF NO	GRAPHIC REF	PART NUMBER	QTY	PART NAME 1 2 3 4 5 6 (PRODUCT LEVEL)	SEE PAGE
	1	1	**7I-0717**	1	LINER	
	2	1	**116-1665**	1	LINER	
	3	1	**165-3102**	1	LINER	
	4	1	**165-3103**	1	LINER	
	5	1	**273-7677**	1	LINER	
	6	1	**428-7524**	1	LINER	
	7	1	**444-2735**	1	COUNTERWEIGHT AS	
	7A	1	**165-3120**	1	SHEET	
M	7B	1	**192-3039**	6	SCREW-HEX FLANGE (6.3X1.8X19-MM)	

M - METRIC PART

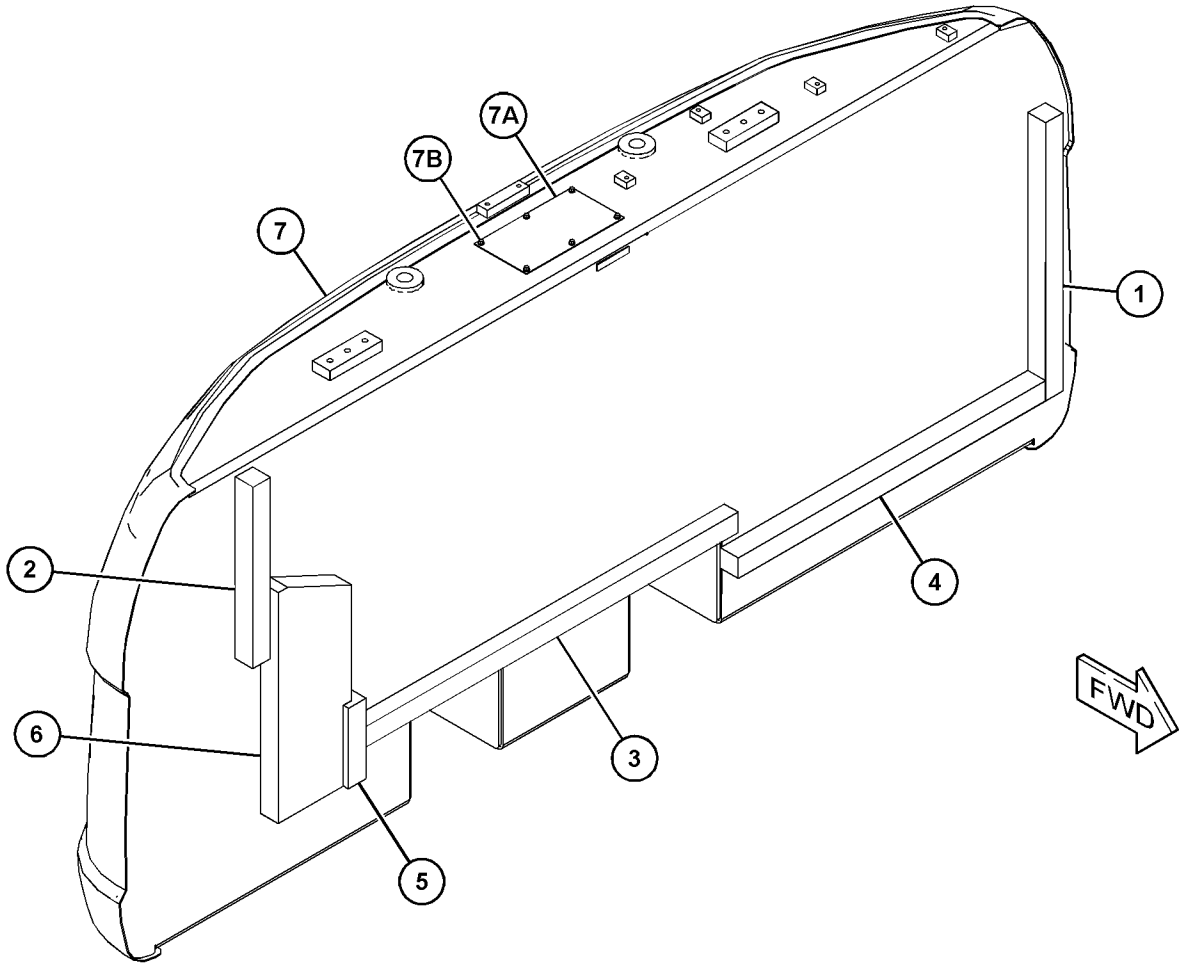

GRAPHIC #1 **<END>** g03429178

396-9388 COVER AS-SOUND SUPPRESSION–FUEL, HYDRAULIC TANKS

S/N: JEG1-UP

PART OF 379-7385 HOOD & GUARD GP

SMCS-7253, 7263, 7276, 795C

i05266171

NOTE	REF NO	GRAPHIC REF	PART NUMBER	QTY	PART NAME 1 2 3 4 5 6 (PRODUCT LEVEL)	SEE PAGE
	1	1	**170-3015**	1	BUMPER	
	2	1	**177-5739**	1	LINER	
	3	1	**240-2978**	2	LINER	
	4	1	**240-2979**	1	LINER	

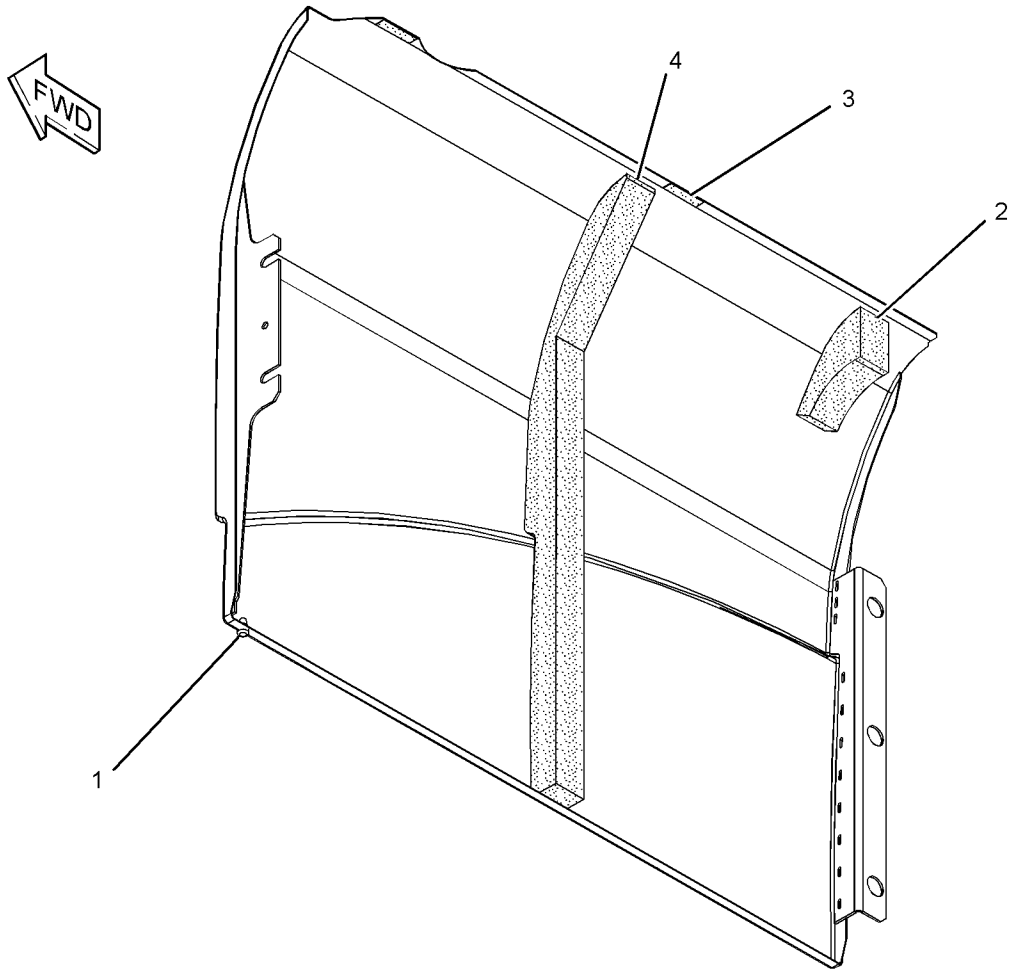

GRAPHIC #1

<END>

g01342289

398-9737 COVER AS-SOUND SUPPRESSION

S/N: JEG1-UP
PART OF 398-9736 COVER GP-HOOD
AN ATTACHMENT

SMCS-7253, 7263, 7276, 795C

i05260873

NOTE	REF NO	GRAPHIC REF	PART NUMBER	QTY	PART NAME 1 2 3 4 5 6 (PRODUCT LEVEL)	SEE PAGE
	1	1	**248-8930**	1	INSULATION	
	2	1	**273-7847**	1	INSULATION	
	3	1	**398-9731**	1	INSULATION	
	4	1	**398-9732**	1	INSULATION	

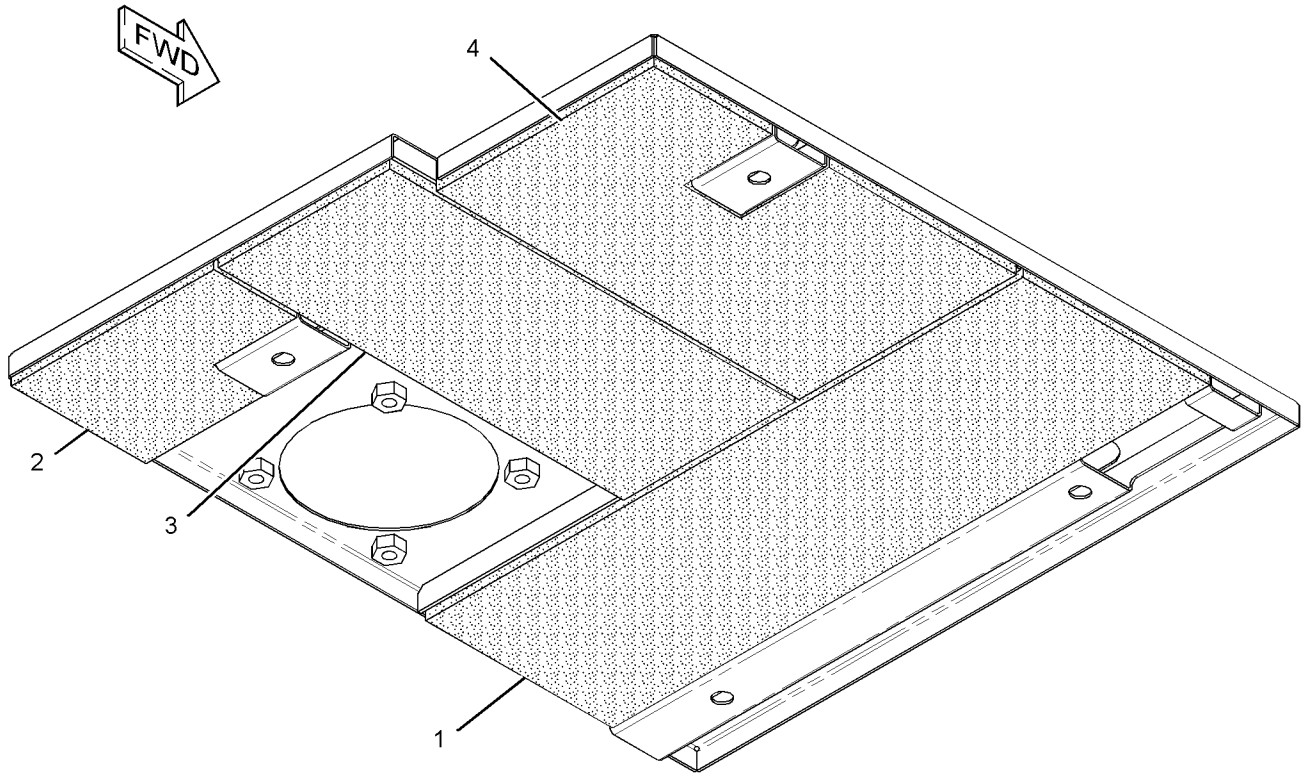

GRAPHIC #1

<END>

g02741216

399-0819 COVER AS-SOUND SUPPRESSION—FUEL, HYDRAULIC TANKS

S/N: JEG1-UP

PART OF 399-2560 COVER AS-SOUND SUPPRESSION

AN ATTACHMENT

SMCS-7253, 7263, 7276, 795C **i05535962**

NOTE	REF NO	GRAPHIC REF	PART NUMBER	QTY	PART NAME 1 2 3 4 5 6 (PRODUCT LEVEL)	SEE PAGE
	1	1	**170-3015**	1	BUMPER	
	2	1	**177-5739**	1	LINER	
	3	1	**240-2978**	3	LINER	
	4	1	**240-2979**	1	LINER	

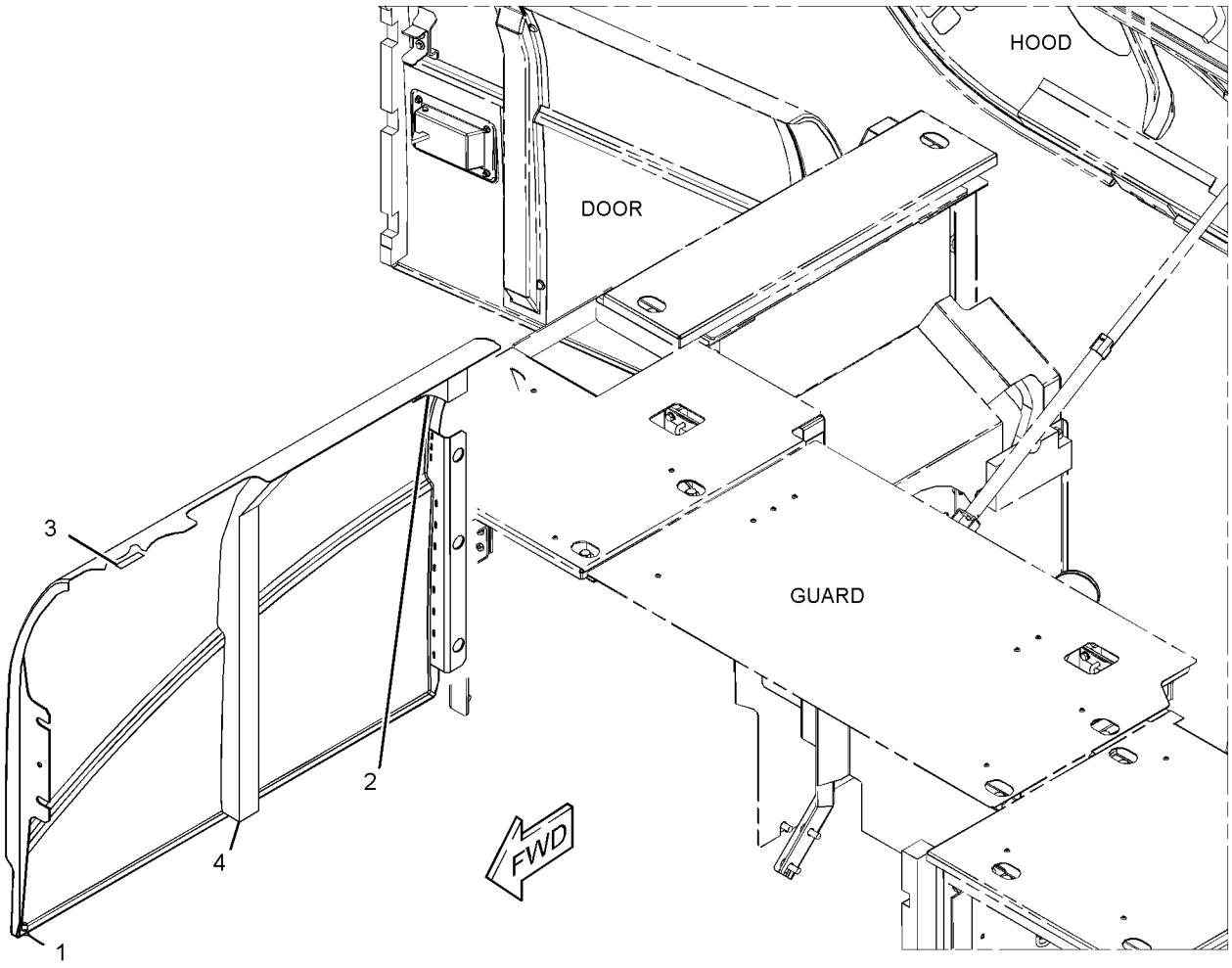

GRAPHIC #1 **<END>** g03362270

399-2560 COVER AS-SOUND SUPPRESSION—FUEL, HYDRAULIC TANKS

S/N: JEG1-UP
PART OF 445-2220 TANK AR-FUEL
AN ATTACHMENT

SMCS-7253, 7263, 7276, 795C

i05535963

NOTE	REF NO	GRAPHIC REF	PART NUMBER	QTY	PART NAME 1 2 3 4 5 6 (PRODUCT LEVEL)	SEE PAGE
Y	1	1	**399-0819**	1	COVER AS-SOUND SUPPRESSION (FUEL, HYDRAULIC TANKS)	212

Y - SEPARATE ILLUSTRATION

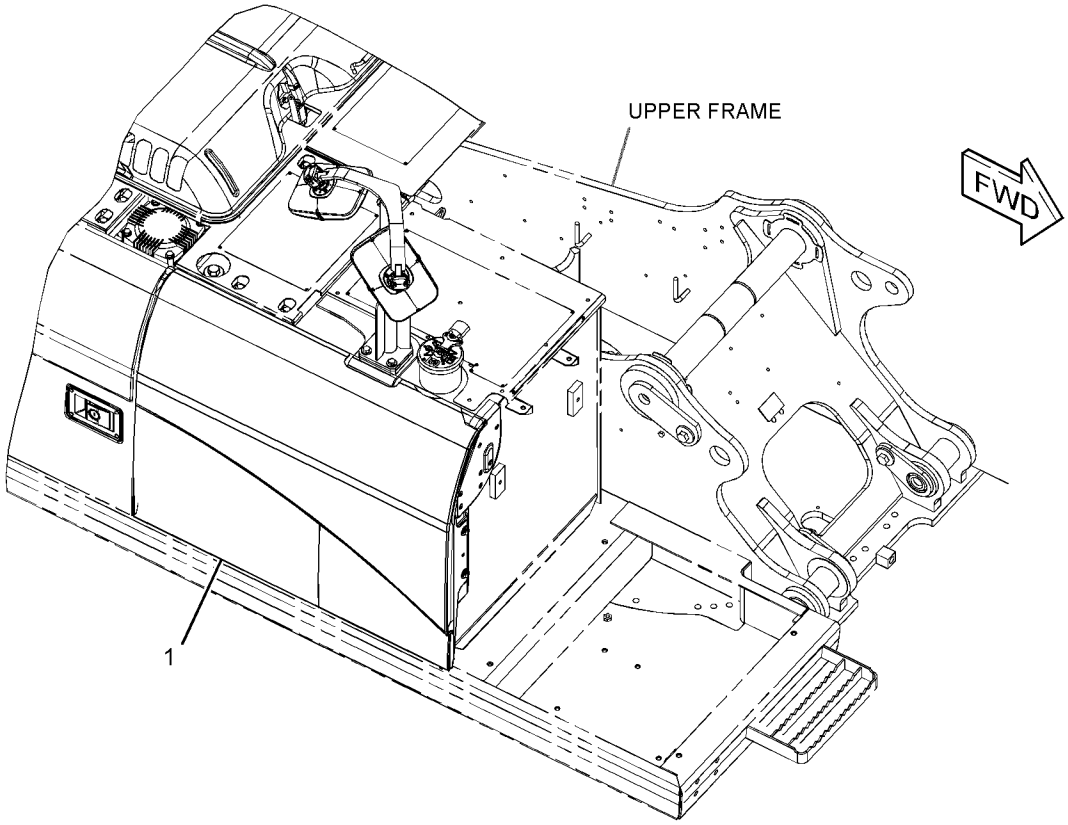

GRAPHIC #1

<END>

g03361513

398-9736 COVER GP-HOOD—PRECLEANER

S/N: JEG1-UP
PART OF 398-7980 AIR CLEANER AR
AN ATTACHMENT

SMCS-7251 **i05262462**

NOTE	REF NO	GRAPHIC REF	PART NUMBER	QTY	PART NAME 1 2 3 4 5 6 (PRODUCT LEVEL)	SEE PAGE
	1	1	**273-7774**	1	SUPPORT AS	
Y	2	1	**398-9727**	1	SUPPORT AS-SOUND SUPPRESSION	246
Y	3	1	**398-9737**	1	COVER AS-SOUND SUPPRESSION	211

Y - SEPARATE ILLUSTRATION

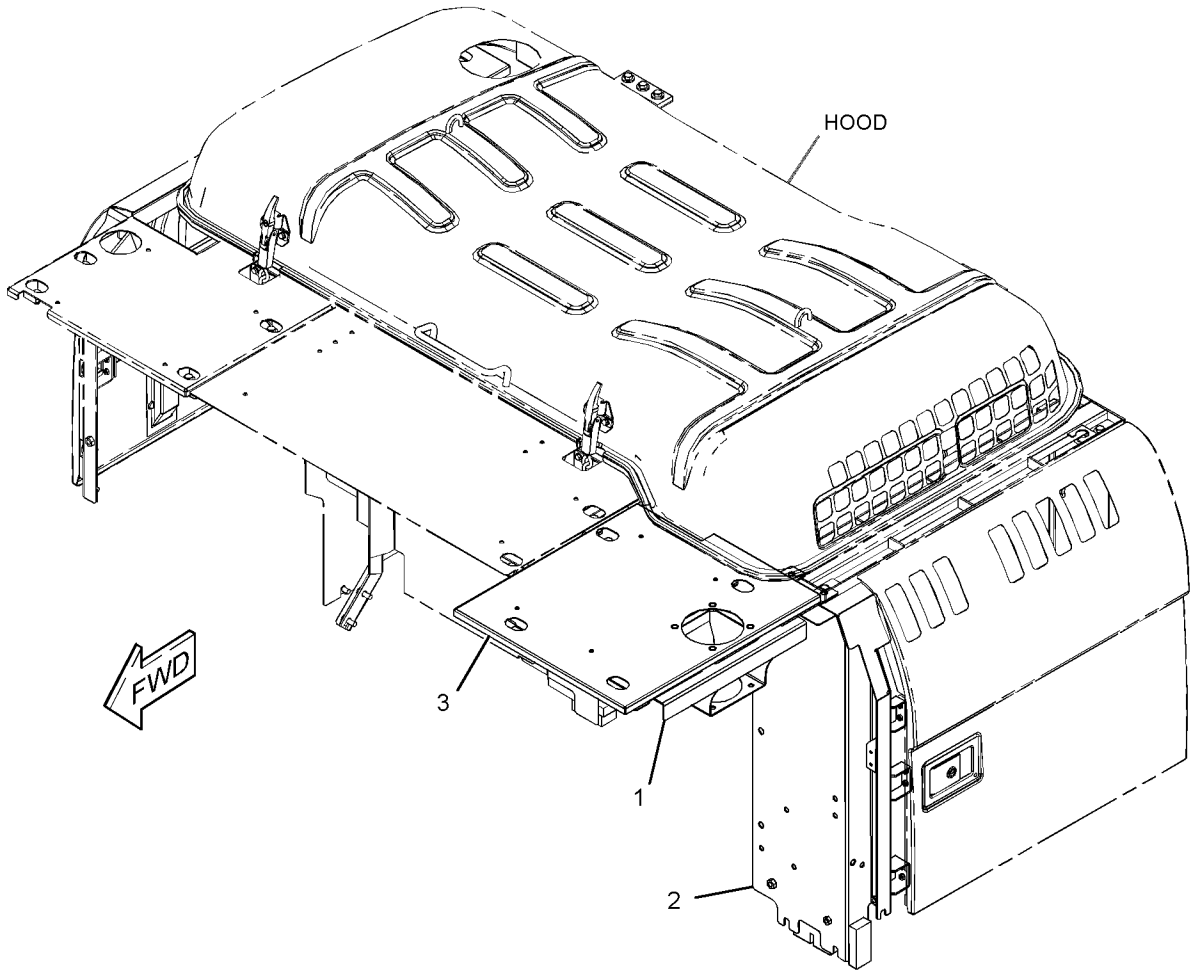

GRAPHIC #1 **<END>** g03350631

396-9393 DOOR GP-ACCESS—AIR CLEANER, BATTERY

S/N: JEG1-UP

PART OF 379-7385 HOOD & GUARD GP

SMCS-7273 **i05459050**

NOTE	REF NO	GRAPHIC REF	PART NUMBER	QTY	PART NAME 1 2 3 4 5 6 (PRODUCT LEVEL)	SEE PAGE
	1	1	**236-3747**	1	INSULATION	
	2	1	**236-3748**	1	INSULATION	
	3	1	**250-5054**	1	LINER	
	4	1	*396-9394*	1	DOOR AS-ACCESS	
	4A	1	**165-2976**	2	HINGE	
	5	1	**208-4289**	1	CUSHION	

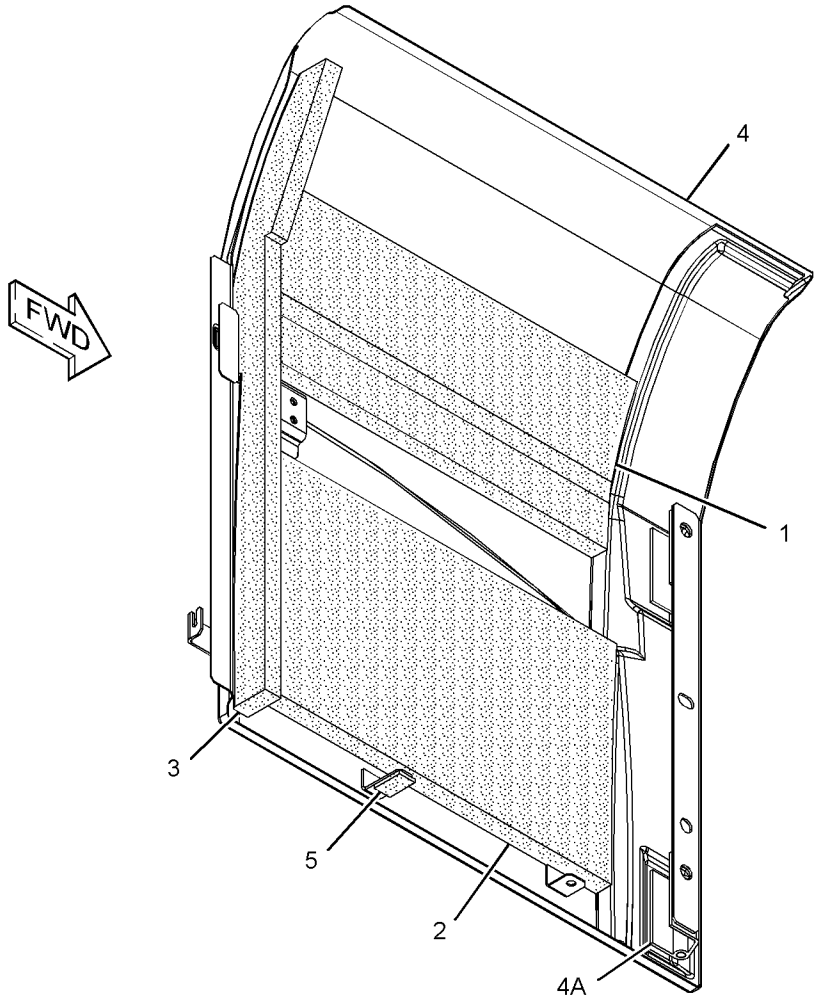

GRAPHIC #1 **<END>** g01390678

421-4416 DOOR GP-ACCESS–RADIATOR

S/N: JEG1-UP

PART OF 379-7385 HOOD & GUARD GP

SMCS-7273 **i05537150**

NOTE	REF NO	GRAPHIC REF	PART NUMBER	QTY	PART NAME 1 2 3 4 5 6 (PRODUCT LEVEL)	SEE PAGE
M	1	1	**099-6418**	4	NUT (M6X1-THD)	
	2	1	**122-4101**	1	RUBBER	
	3	1	**208-4289**	1	CUSHION	
	4	1	*396-9392*	1	DOOR AS-ACCESS	
	4A	1	**165-2976**	2	HINGE	
	5	1	**358-0921**	1	LATCH AS	
J		1	**385-3458**	1	LOCK AS	
	6	1	**307-7656**	1	LINER	

J - REQUIRES CORPORATE KEY
M - METRIC PART

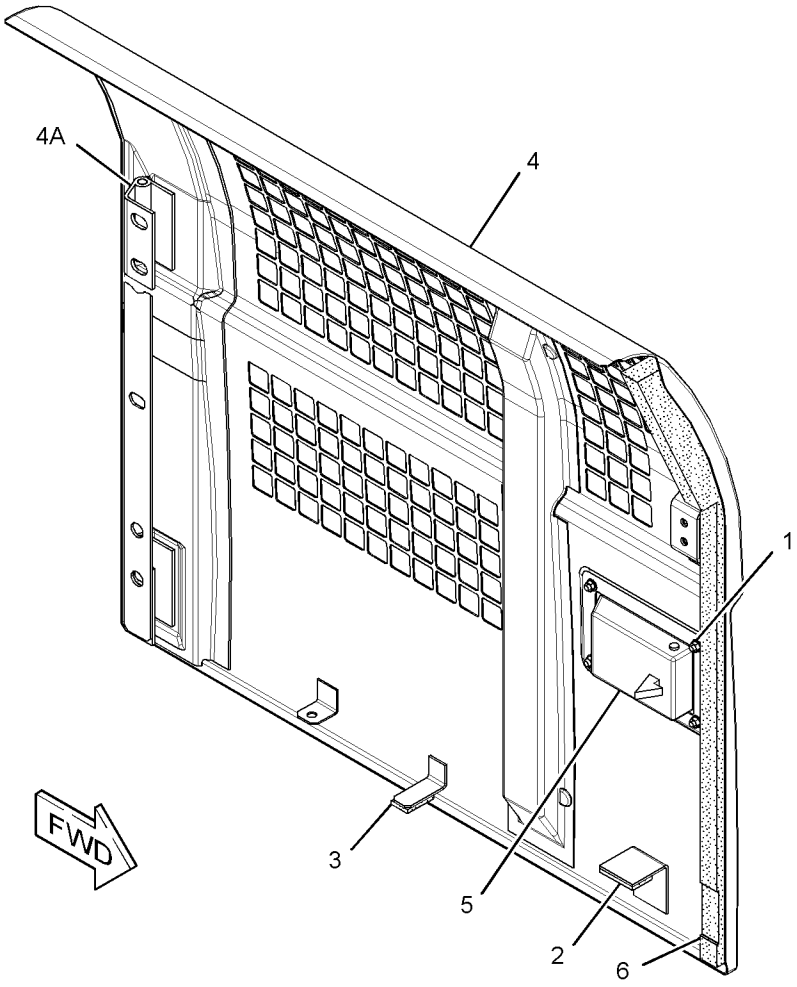

GRAPHIC #1 **<END>** g01481757

425-6092 DOOR GP-ACCESS–PUMP COMPARTMENT

S/N: JEG1-UP

PART OF 379-7385 HOOD & GUARD GP

SMCS-7273 **i05536135**

NOTE	REF NO	GRAPHIC REF	PART NUMBER	QTY	PART NAME 1 2 3 4 5 6 (PRODUCT LEVEL)	SEE PAGE
	1	1	**184-8862**	1	COVER	
	2	1	**244-7927**	1	INSULATION	
	3	1	**248-8961**	1	LINER	
	4	1	**358-0921**	1	LATCH AS	
J		1	**385-3458**	1	LOCK AS	
	5	1	**165-2976**	2	HINGE	
M	6	1	**099-6418**	4	NUT (M6X1-THD)	

J - REQUIRES CORPORATE KEY
M - METRIC PART

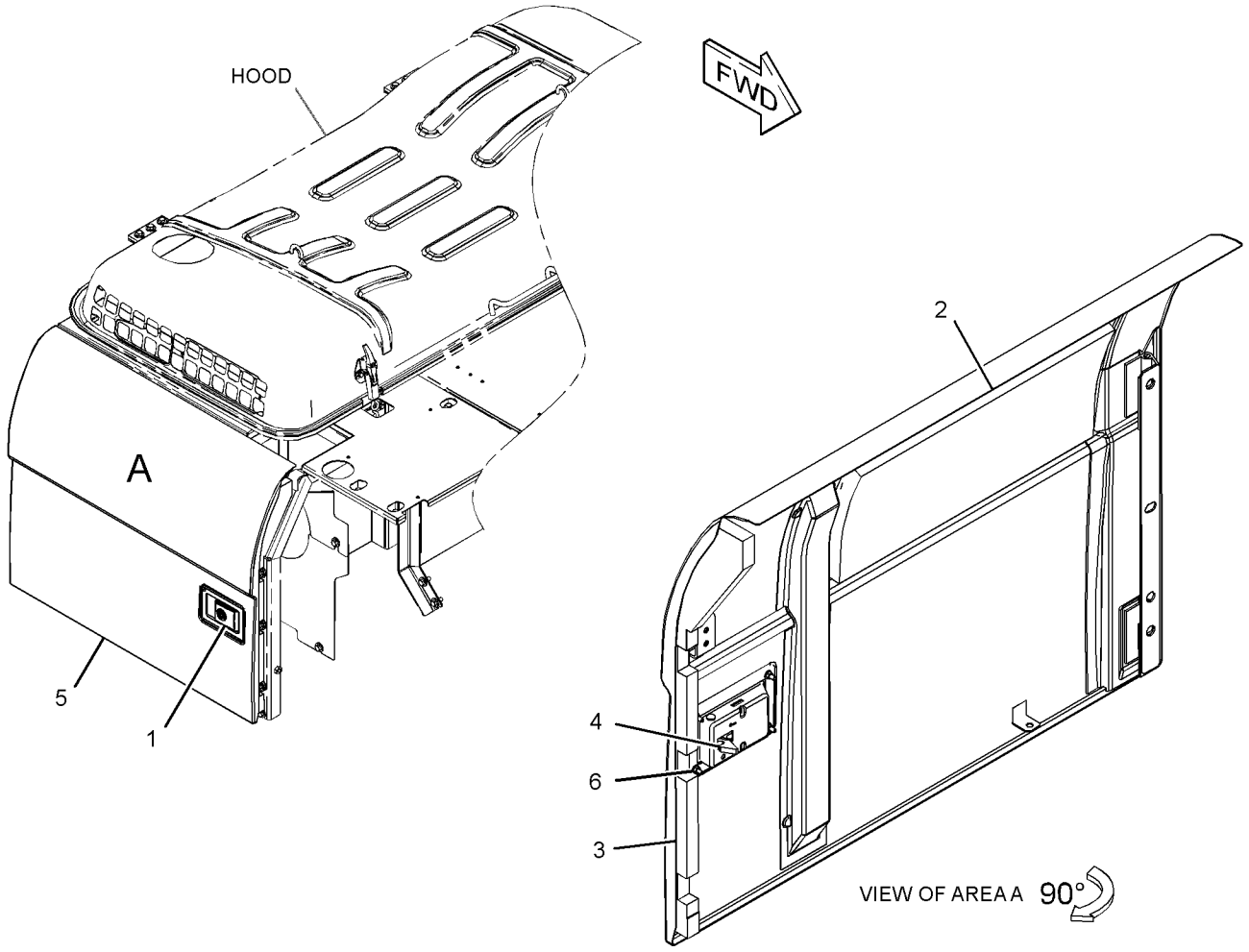

GRAPHIC #1

<END>

g03353282

445-6262 FENDER & COVER GP

S/N: JEG1-UP

PART OF 420-3127 CHASSIS AR

SMCS-7252 **i05459830**

NOTE	REF NO	GRAPHIC REF	PART NUMBER	QTY	PART NAME 1 2 3 4 5 6 (PRODUCT LEVEL)	SEE PAGE
M	1	1	**135-8573**	2	BOLT AS	
	2	1	**236-3702**	2	SPACER (15X35X11-MM THK)	
	3	1	**236-3703**	2	WASHER (25X35X4-MM THK)	
	4	1	**259-3543**	1	STEP AS	
	5	1	**445-6263**	1	COVER AS	
		1	**6C-3679**	8	RIVET-POP	
		1	**278-3818**	1	LINER	
	6	1	**5P-1075**	2	WASHER-HARD (10.2X22.5X3-MM THK)	
M	7	1	**8T-4195**	2	BOLT (M10X1.5X30-MM)	

M - METRIC PART

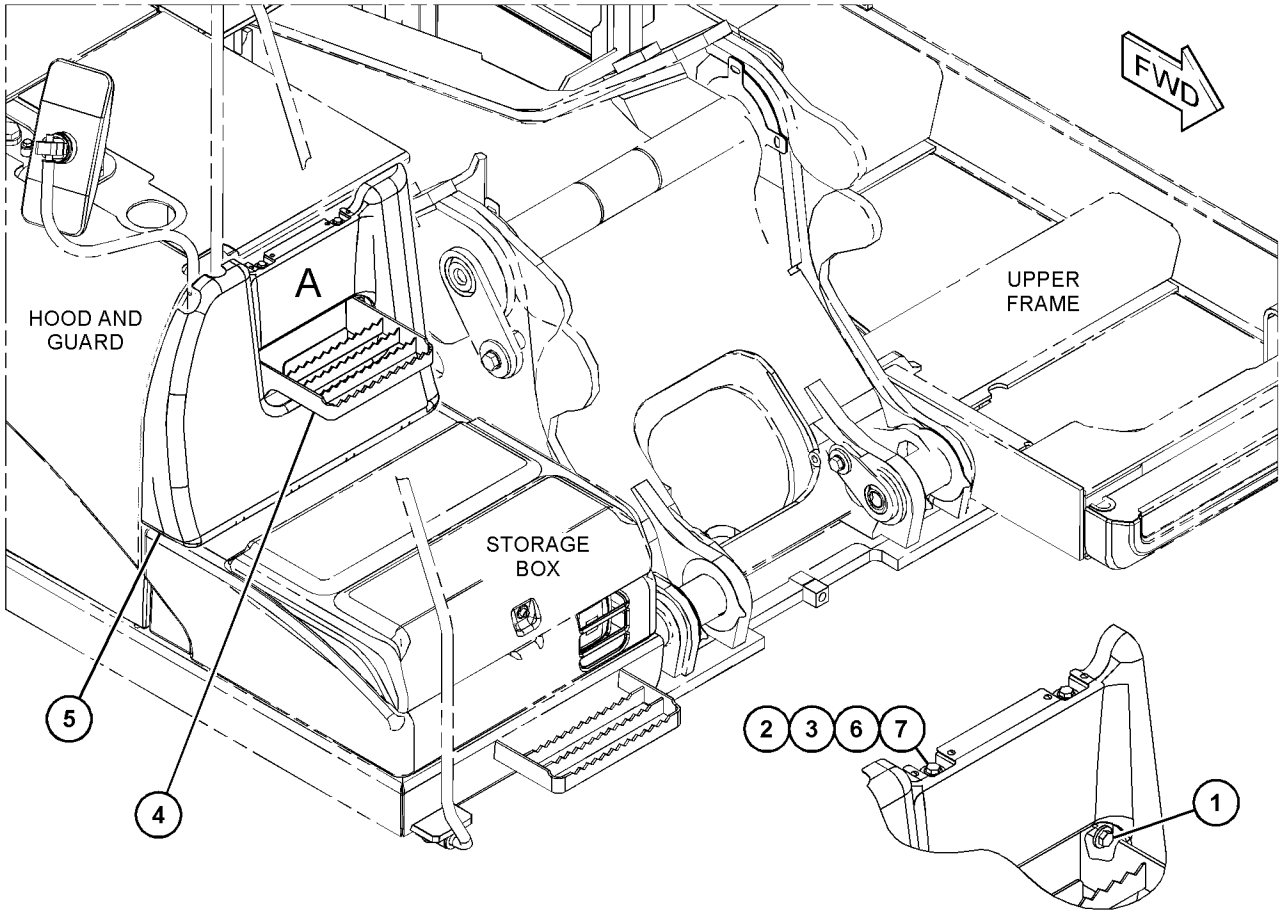

VIEW OF AREA A

GRAPHIC #1 **<END>** g03474746

387-3344 FRAME GP-UPPER

S/N: JEG1-UP

AN ATTACHMENT

SMCS-7051 **i05438852**

NOTE	REF NO	GRAPHIC REF	PART NUMBER	QTY	PART NAME 1 2 3 4 5 6 (PRODUCT LEVEL)	SEE PAGE
B	1	1	**093-0083**	4	SHIM (1-MM THK)	
B	2	1	**093-0115**	2	SHIM (2-MM THK)	
	3	1	**093-0349**	3	WASHER (22X60X6-MM THK)	
	4	1	**093-0363**	2	SPACER (83X120X12-MM THK)	
B	5	1	**133-2425**	2	SHIM (0.5-MM THK)	
	6	1	**4I-4812**	2	PIN AS	
	7	1	**212-2838**	2	SHIM (2-MM THK)	
J	8	1	**245-7900**	1	CAP	
J	9	1	**245-7901**	1	CAP	
B	10	1	**308-8775**	1	SHIM (0.5-MM THK)	
B	11	1	**308-8776**	2	SHIM (1-MM THK)	
B	12	1	**308-8777**	1	SHIM (2-MM THK)	
	13	1	**315-0800**	1	PIN AS	
	14	1	**387-3345**	1	FRAME AS-UPPER	
	14A	1	**7Y-0633**	1	BOSS	
	14B	1	**163-3729**	1	STEP AS	
M	15	1	**7X-2548**	5	BOLT (M12X1.75X16-MM)	
	16	1	**8T-4123**	3	WASHER (3.62X5.75X0.375-MM THK)	
M	17	1	**8T-4191**	2	BOLT (M10X1.5X16-MM)	
M	18	1	**8T-4780**	3	BOLT (M20X2.5X30-MM)	
					THE FOLLOWING REPAIR PARTS ARE AVAILABLE FOR REPAIR OF DAMAGED SHIRTS	
F			**178-0852**	1	PLATE-SKIRT (1100-MM)	
F			**184-5724**	1	PLATE-SKIRT (2000-MM)	

B - USE AS REQUIRED
F - NOT SHOWN
J - USE ONLY WITH MACHINE WITHOUT LOWER WIPER
M - METRIC PART

387-3344 **FRAME GP-UPPER (*contd.*)** **i05438852**

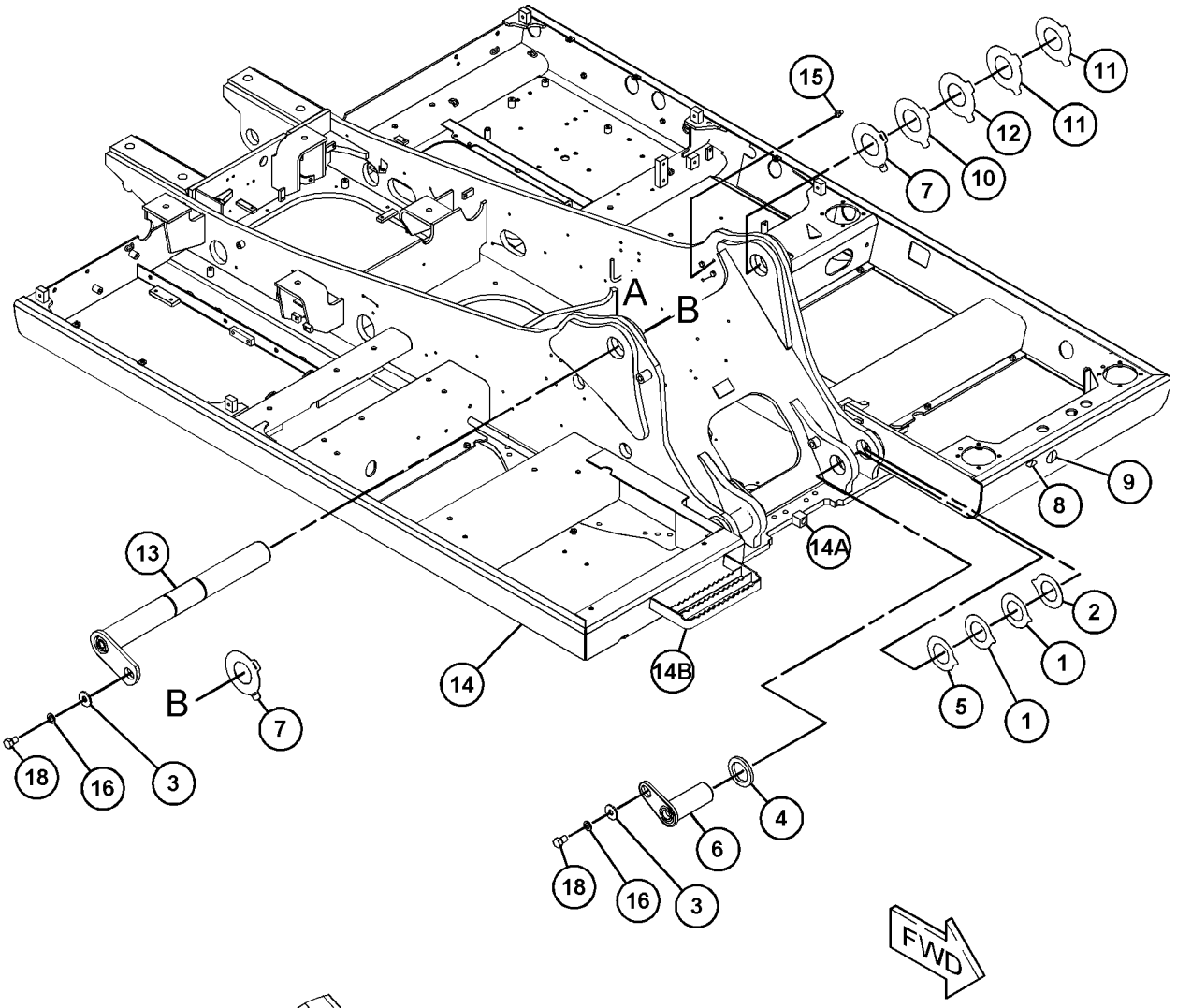

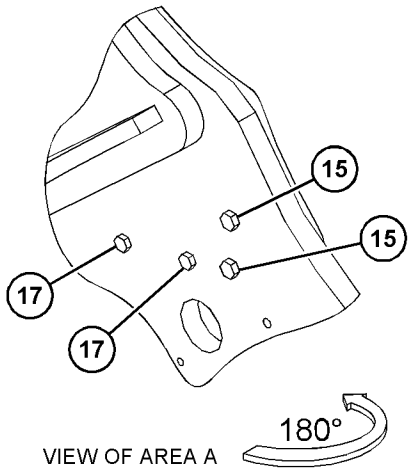

VIEW OF AREA A

GRAPHIC #1 **<END>** g03446359

394-6040 FRAME GP-UPPER

S/N: JEG1-UP

AN ATTACHMENT

SMCS-7051 **i05438850**

NOTE	REF NO	GRAPHIC REF	PART NUMBER	QTY	PART NAME 1 2 3 4 5 6 (PRODUCT LEVEL)	SEE PAGE
B	1	1	**093-0083**	4	SHIM (1-MM THK)	
B	2	1	**093-0115**	2	SHIM (2-MM THK)	
	3	1	**093-0349**	3	WASHER (22X60X6-MM THK)	
	4	1	**093-0363**	2	SPACER (83X120X12-MM THK)	
B	5	1	**133-2425**	2	SHIM (0.5-MM THK)	
	6	1	**4I-4812**	2	PIN AS	
	7	1	**212-2838**	2	SHIM (2-MM THK)	
J	8	1	**245-7900**	1	CAP	
J	9	1	**245-7901**	1	CAP	
B	10	1	**308-8775**	1	SHIM (0.5-MM THK)	
B	11	1	**308-8776**	2	SHIM (1-MM THK)	
B	12	1	**308-8777**	1	SHIM (2-MM THK)	
	13	1	**315-0800**	1	PIN AS	
	14	1	**394-6041**	1	FRAME AS-UPPER	
	14A	1	**7Y-0633**	1	BOSS	
	14B	1	**163-3729**	1	STEP AS	
M	15	1	**7X-2548**	5	BOLT (M12X1.75X16-MM)	
	16	1	**8T-4123**	3	WASHER (3.62X5.75X0.375-MM THK)	
M	17	1	**8T-4191**	2	BOLT (M10X1.5X16-MM)	
M	18	1	**8T-4780**	3	BOLT (M20X2.5X30-MM)	
					THE FOLLOWING REPAIR PARTS ARE AVAILABLE FOR REPAIR OF DAMAGED SHIRTS	
F			**178-0852**	1	PLATE-SKIRT (1100-MM)	
F			**184-5724**	1	PLATE-SKIRT (2000-MM)	

B - USE AS REQUIRED
F - NOT SHOWN
J - USE ONLY WITH MACHINE WITHOUT LOWER WIPER
M - METRIC PART

394-6040 **FRAME GP-UPPER (*contd.*)** **i05438850**

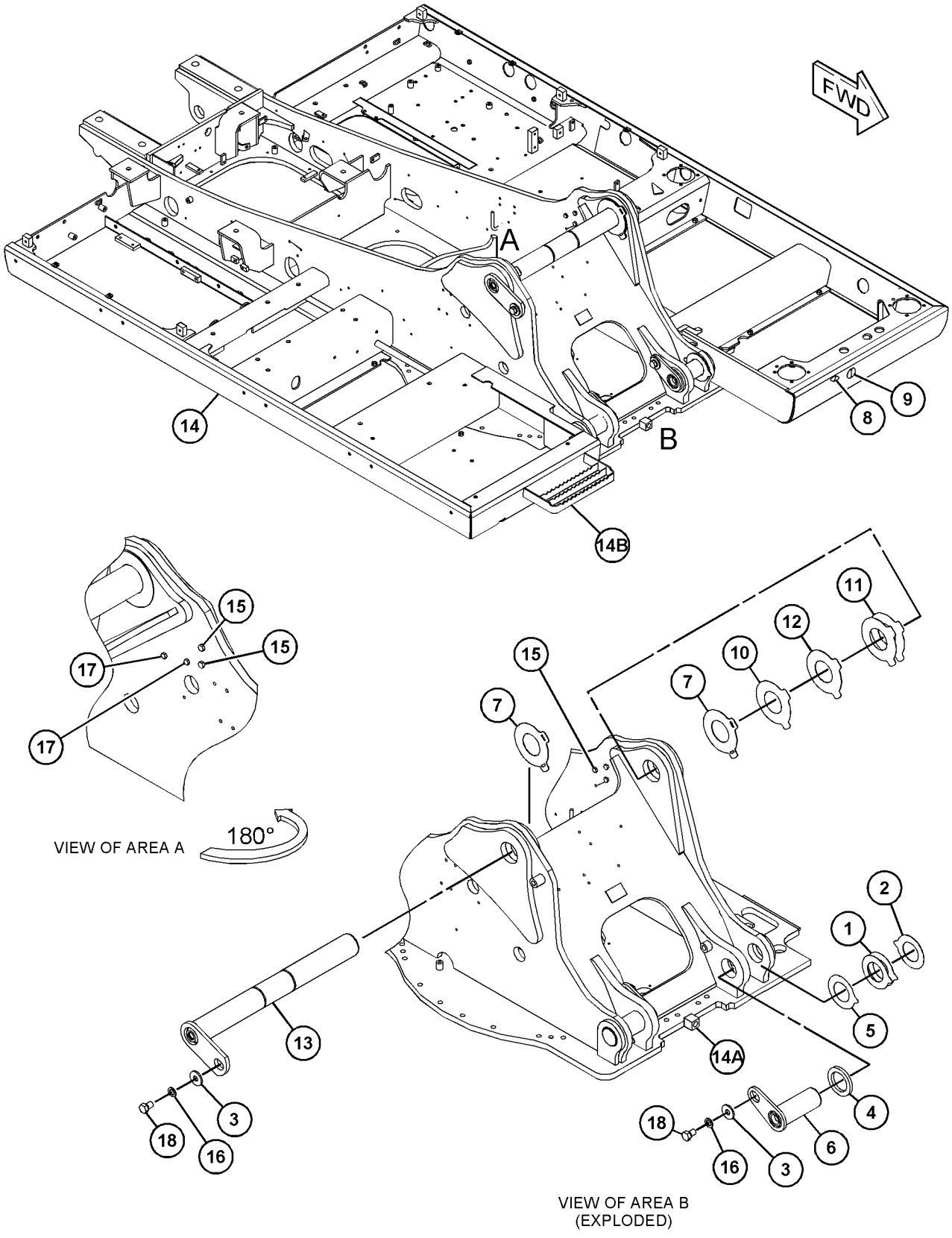

GRAPHIC #1 **<END>** g03447778

227-6081 GEAR & BEARING GP-SWING

S/N: JEG1-UP

PART OF 227-6147 GEAR & BEARING GP-SWING

SMCS-7063 **i05326599**

NOTE	REF NO	GRAPHIC REF	PART NUMBER	QTY	PART NAME 1 2 3 4 5 6 (PRODUCT LEVEL)	SEE PAGE
	1	1	**3B-8489**	1	FITTING-GREASE	
	2	1	**227-6071**	1	SEAL-DUST	
E	3	1	**148-4685**		SEAL (368-CM)	

E - ORDER BY THE CENTIMETER

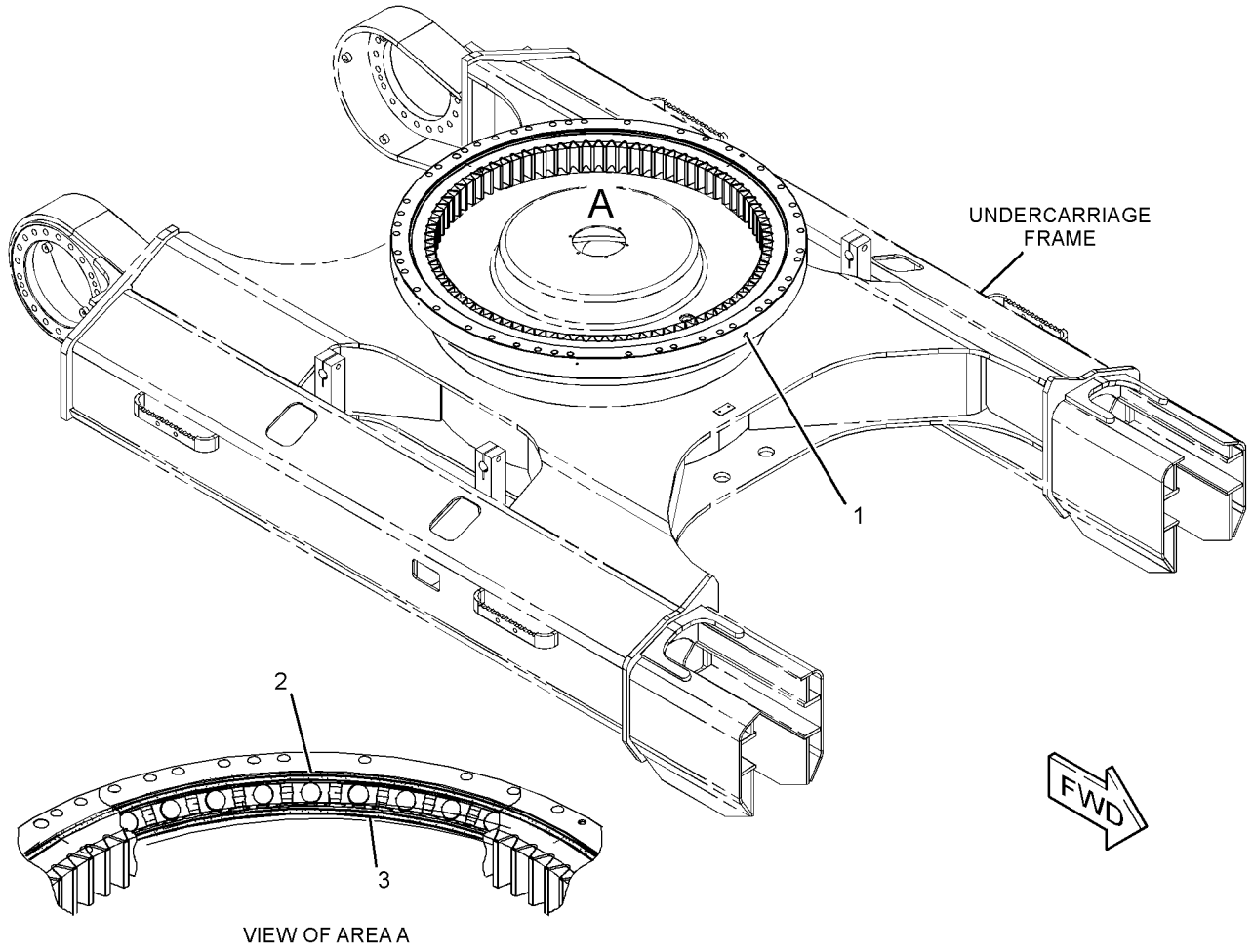

VIEW OF AREA A

GRAPHIC #1 **<END>** g01671618

227-6147 GEAR & BEARING GP-SWING

S/N: JEG1-UP

PART OF 240-3822 FRAME AR-UNDERCARRIAGE

SMCS-7063 **i05447651**

NOTE	REF NO	GRAPHIC REF	PART NUMBER	QTY	PART NAME 1 2 3 4 5 6 (PRODUCT LEVEL)	SEE PAGE
	1	1	**5K-9243**	2	ELBOW-FLARED	
	2	1	**7Y-1647**	1	GASKET	
	3	1	**7Y-1650**	1	CLAMP-HOSE	
	4	1	**7Y-1863**	40	SPACER (20.5X38X34-MM THK)	
	5	1	**148-4689**	1	TUBE AS	
	6	1	**171-9464**	37	SPACER (20.6X38X6-MM THK)	
Y	7	1	**227-6081**	1	GEAR & BEARING GP-SWING (118-BEARING)	223
	8	1	**227-6105**	1	BOOT	
	9	1	**227-6106**	1	RETAINER	
	10	1	**096-4902**	1	DOWEL	
	11	1	**148-4703**	1	COVER	
	12	1	**148-4704**	1	GASKET	
	13	1	**3B-8489**	1	FITTING-GREASE	
	14	1	**4N-9170**	2	CLIP	
	15	1	**7Y-1648**	1	STRIP	
M	16	1	**8T-0360**	40	BOLT (M20X2.5X90-MM)	
M	17	1	**8T-0362**	37	BOLT (M20X2.5X110-MM)	
	18	1	**8T-4121**	14	WASHER-HARD (11X21X2.5-MM THK)	
M	19	1	**8T-4137**	2	BOLT (M10X1.5X20-MM)	
M	20	1	**8T-4136**	12	BOLT (M10X1.5X25-MM)	
M	21	1	**8T-4199**	2	BOLT (M8X1.25X12-MM)	
BF			**1U-8846**		SEALANT-GASKET	

B - USE AS REQUIRED
F - NOT SHOWN
M - METRIC PART
Y - SEPARATE ILLUSTRATION

227-6147 **GEAR & BEARING GP-SWING (*contd.*)** **i05447651**

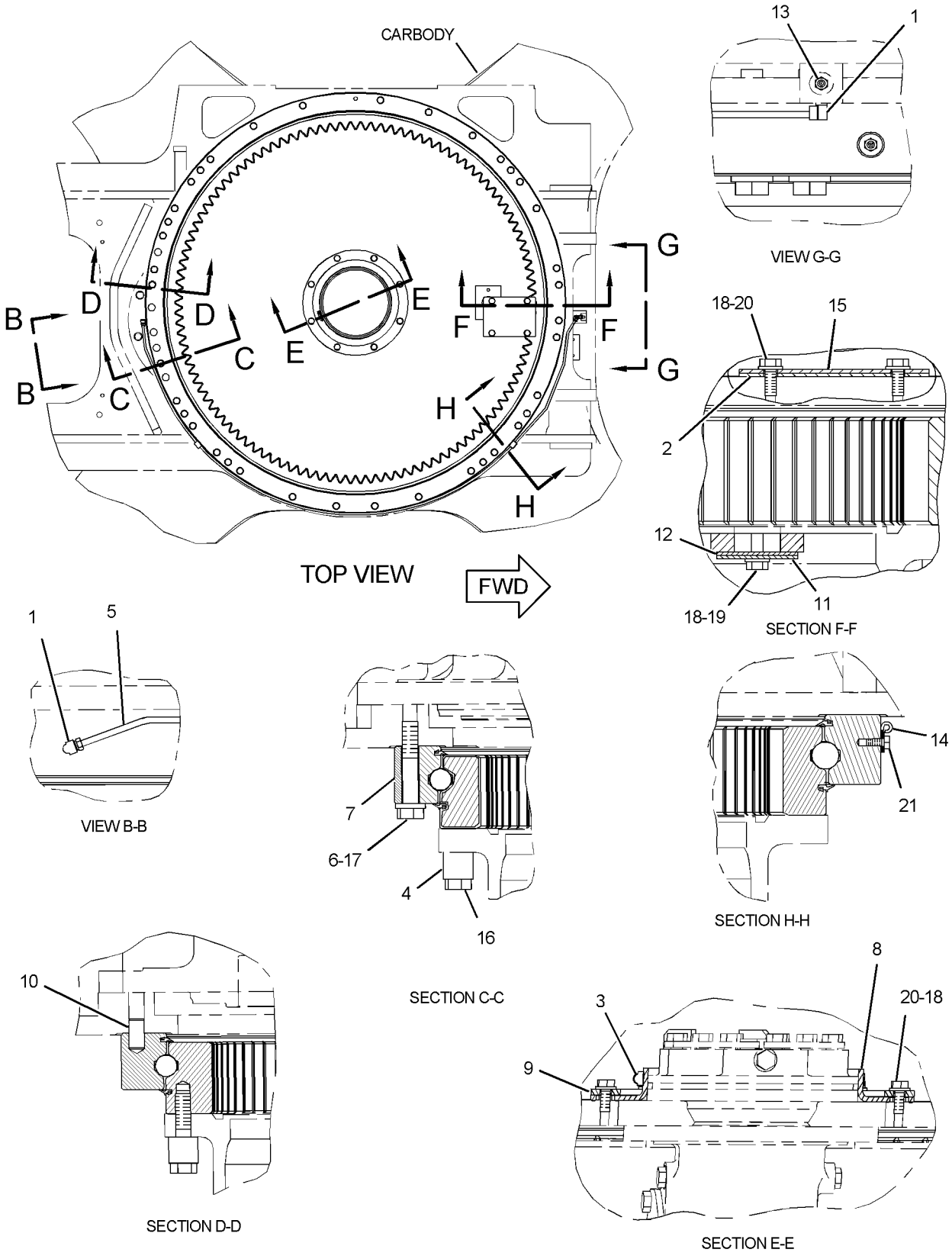

GRAPHIC #1 **<END>** g03473058

374-4017 GUARD GP-BOTTOM

S/N: JEG1-UP

PART OF 420-3127 CHASSIS AR

SMCS-7153 **i05353969**

NOTE	REF NO	GRAPHIC REF	PART NUMBER	QTY	PART NAME 1 2 3 4 5 6 (PRODUCT LEVEL)	SEE PAGE
M	1	1	**135-8576**	36	BOLT AS-LOCKING	
	2	1	**165-2823**	1	SHEET	
	3	1	**248-8992**	1	SHEET	
	4	1	**421-3762**	1	SHEET	
	5	1	**248-8994**	1	SHEET	
					–OR–	
J		1	**342-0932**	1	SHEET AS	
	6	1	**248-8995**	1	SHEET	
	7	1	**377-6715**	2	SHEET	
	8	1	**374-4161**	1	SHEET AS	
	9	1	**289-6603**	1	SHEET	
J	10	1	**342-0965**	1	PLATE AS	
JM	11	1	**8C-8992**	2	BOLT-LOCKING (M12X1.75X30-MM)	
J	12	1	**5P-1076**	2	WASHER-HARD (13.5X30X4-MM THK)	

J - OPTIONAL DESIGN FOR COLD WEATHER APPLICATIONS
M - METRIC PART

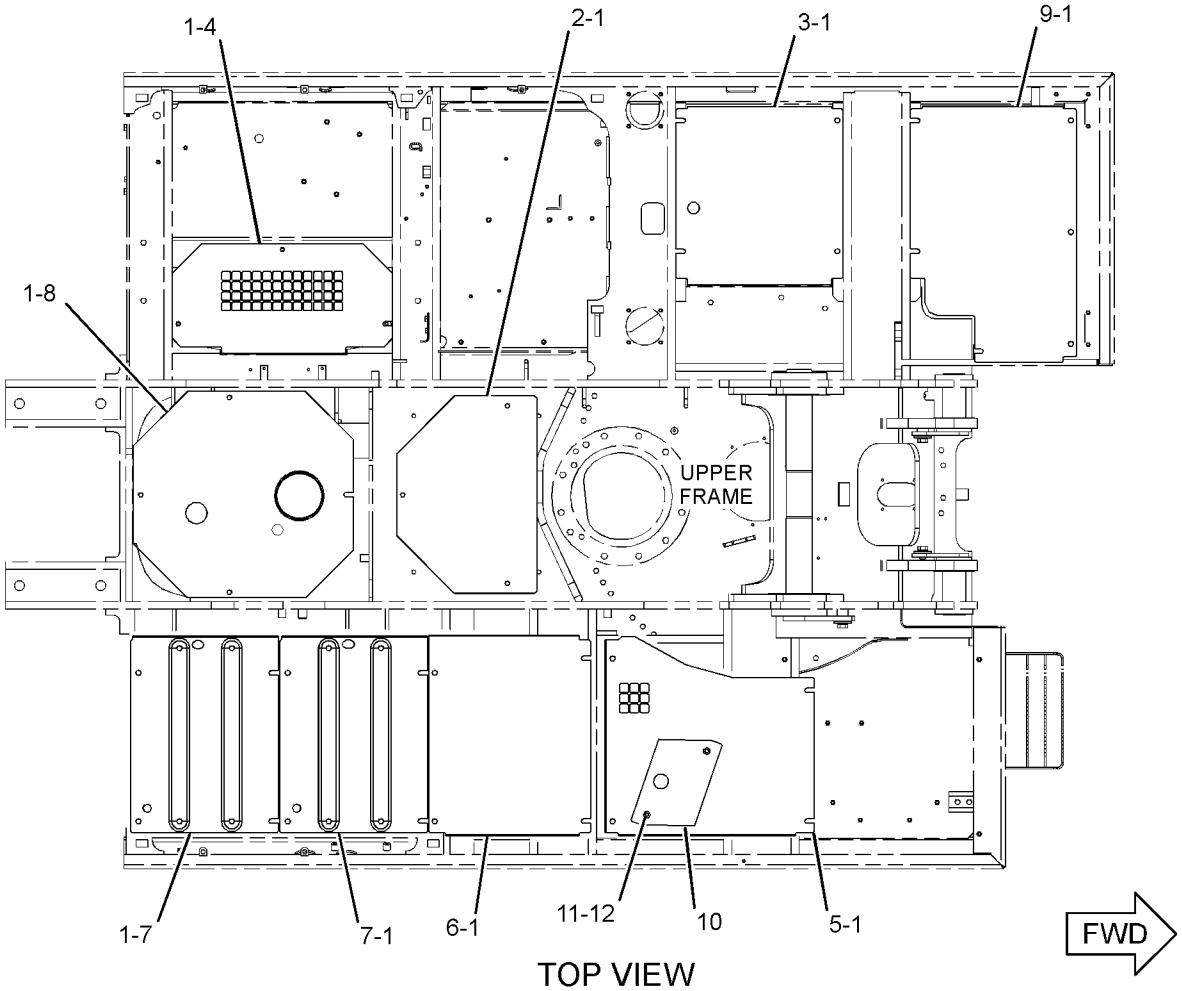

TOP VIEW

GRAPHIC #1 **<END>** g03305997

374-4019 GUARD GP-BOTTOM–HEAVY-DUTY

S/N: JEG1-UP

AN ATTACHMENT

SMCS-7153 **i05354138**

NOTE	REF NO	GRAPHIC REF	PART NUMBER	QTY	PART NAME 1 2 3 4 5 6 (PRODUCT LEVEL)	SEE PAGE
M	1	1	**135-8576**	2	BOLT AS-LOCKING	
	2	1	**355-8007**	1	SHEET AS	
	3	1	**355-8008**	1	SHEET AS	
C	4	1	**423-5186**	1	SHEET AS	
	5	1	**355-8010**	1	PLATE AS	
	6	1	**355-8013**	1	SHEET AS	
	7	1	**355-8014**	1	SHEET AS	
	8	1	**377-6679**	1	SHEET AS	
	9	1	**377-6681**	1	SHEET AS	
	10	1	**377-6716**	2	SHEET AS	

C - CHANGE FROM PREVIOUS TYPE
M - METRIC PART

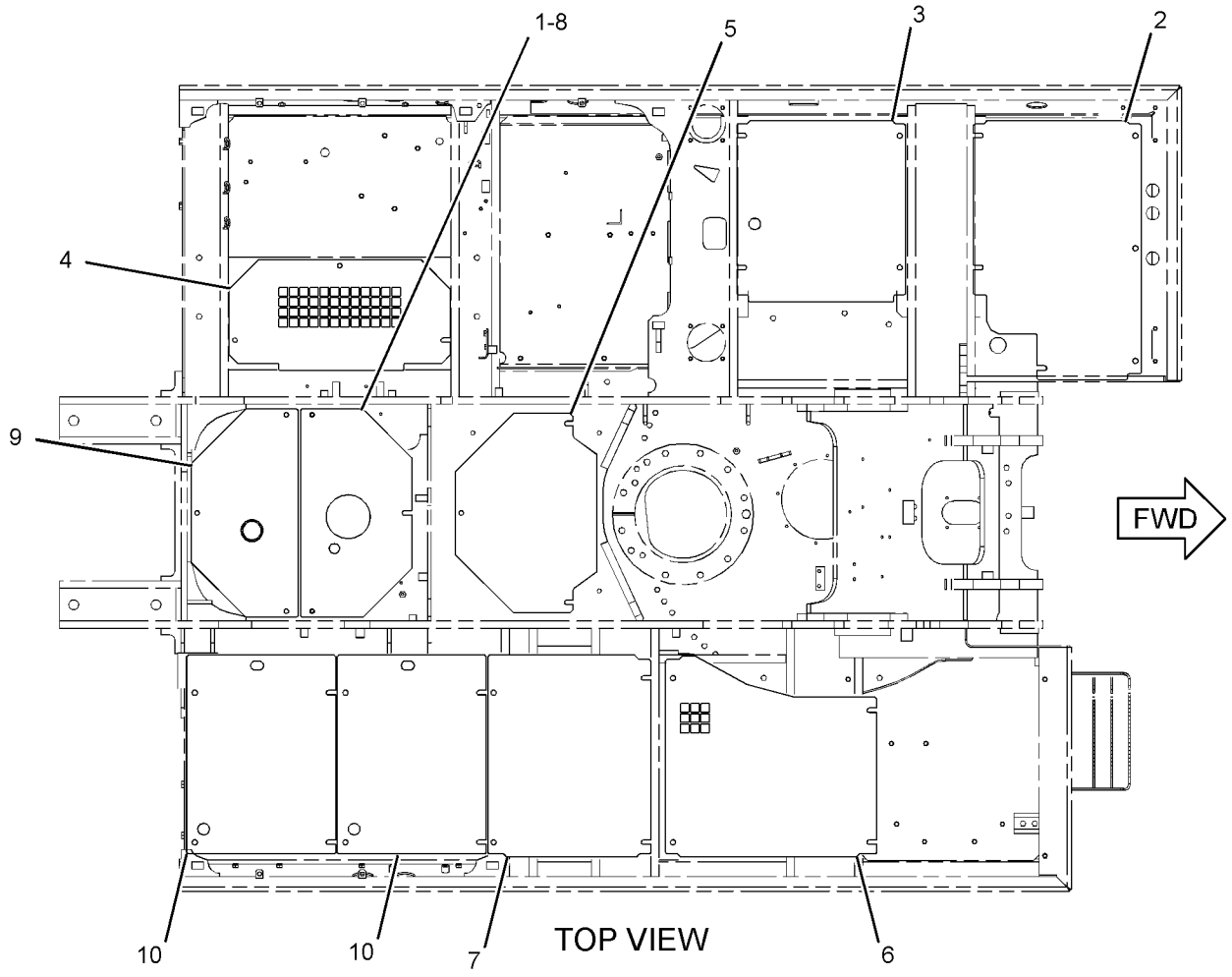

GRAPHIC #1 **<END>** g03358584

134-8875 GUARD GP-SWIVEL

S/N: JEG1-UP
AN ATTACHMENT

SMCS-7183 **i02943373**

NOTE	REF NO	GRAPHIC REF	PART NUMBER	QTY	PART NAME 1 2 3 4 5 6 (PRODUCT LEVEL)	SEE PAGE
	1	1	**134-8876**	1	PLATE AS	
	2	1	**134-8878**	1	PLATE AS	
M	3	1	**8C-8992**	5	BOLT-LOCKING (M12X1.75X30-MM)	
	4	1	**5P-1076**	5	WASHER-HARD (13.5X30X4-MM THK)	

M - METRIC PART

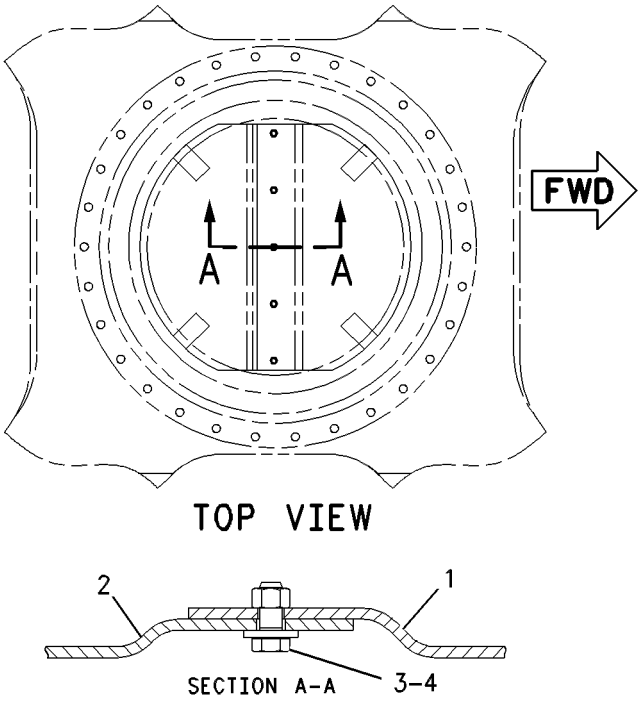

GRAPHIC #1 **<END>** g00390432

142-3835 HANDRAIL GP

S/N: JEG1-UP

PART OF 420-3127 CHASSIS AR

SMCS-7256 **i02770386**

NOTE	REF NO	GRAPHIC REF	PART NUMBER	QTY	PART NAME 1 2 3 4 5 6 (PRODUCT LEVEL)	SEE PAGE
	1	1	**8T-4223**	2	WASHER-HARD (13.5X25.5X3-MM THK)	
M	2	1	**8T-4192**	2	BOLT (M12X1.75X25-MM)	
	3	1	**177-5880**	2	SLEEVE	
	4	1	**177-5879**	1	CLAMP	
	5	1	**177-5877**	1	HANDHOLD AS	
M	6	1	**135-8578**	3	BOLT AS	

M - METRIC PART

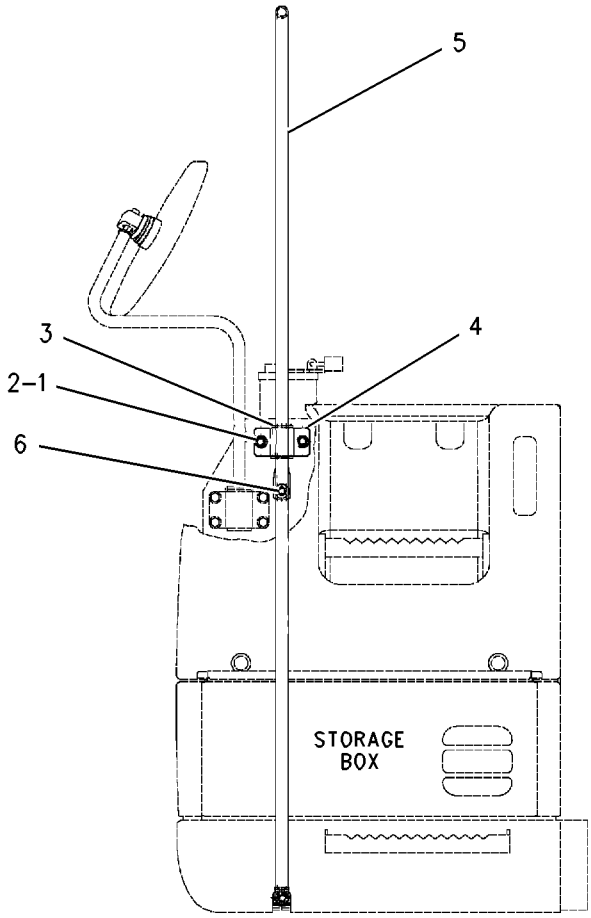

FRONT VIEW

GRAPHIC #1 **<END>** g00678707

379-7385 HOOD & GUARD GP

S/N: JEG1-UP

PART OF 420-3127 CHASSIS AR

SMCS-7251, 7276 **i05458453**

NOTE	REF NO	GRAPHIC REF	PART NUMBER	QTY	PART NAME 1 2 3 4 5 6 (PRODUCT LEVEL)	SEE PAGE
	1	2	**4I-0118**	2	HOOK AS	
	2	2,3	**4I-0232**	2	STRIKER	
	3	2,3	**4I-8019**	3	SUPPORT	
	4	2,3,4	**6I-6033**	3	STOP	
	5	2,3	**7Y-2853**	8	SPACER (13X38X5-MM THK)	
	6	3	**087-3908**	4	SHIM (1-MM THK)	
	7	3	**087-3909**	4	SHIM (2-MM THK)	
	8	3	**122-3979**	1	BAND	
	9	3	**122-3980**	1	ROD	
	10	2,3,4	**122-4120**	3	ROD	
	11	3	**170-3016**	15	SPACER (19X32X2-MM THK)	
	12	2,3,4	**190-6880**	3	SUPPORT AS	
	13	2	**244-8228**	1	SUPPORT AS	
	14	4	**244-8242**	1	SUPPORT AS	
	15	2	**244-8255**	1	SUPPORT AS	
	16	4	**262-2363**	1	SHEET AS-SOUND SUPPRESSION	
	17	3	**289-6698**	1	SUPPORT AS	
		3	**129-3400**	1	GUARD	
		3	**244-8198**	1	LINER	
	18	3	**289-6805**	1	SUPPORT AS-ENCLOSURE	
Y	19	2	**377-6667**	1	SHEET AS-SOUND SUPPRESSION	236
Y	20	3	**377-6698**	1	SUPPORT AS-ENCLOSURE	243
Y	21	2	**377-6708**	1	SHEET AS-SOUND SUPPRESSION	237
	22	4	**377-6786**	1	COVER AS	
	23	3	**377-6801**	1	SHEET AS-SOUND SUPPRESSION	
Y	24	4	**379-7425**	1	SUPPORT AS-SOUND SUPPRESSION	244
	25	3	**379-7436**	1	COVER AS	
	26	4	**379-7518**	1	SUPPORT AS	
	27	2	**391-4751**	1	COVER AS	
	28	2	**391-4752**	1	COVER AS	
	29	2	**391-9635**	1	SHEET AS-SOUND SUPPRESSION	
		2	**391-9637**	1	SHEET AS	
		2	**428-7522**	1	LINER	
	30	2	**391-9641**	1	SHEET AS	
		2	**428-7527**	1	LINER	
	31	2	**391-9643**	1	SUPPORT AS	
Y	32	2	**391-9646**	1	SHEET AS-SOUND SUPPRESSION	239
	33	2	**391-9651**	1	SHEET AS-SOUND SUPPRESSION	
	34	2	**391-9655**	1	SUPPORT AS	
	35	2	**391-9657**	1	SHEET AS	
	36	4	**392-1262**	1	SPRING AS-GAS (ENGINE HOOD)	
	37	3	**392-2667**	1	SUPPORT AS	
Y	38	4	**396-7674**	1	HOOD GP-ENGINE	235
	39	2	**396-7686**	1	SUPPORT AS	
	40	2	**396-7687**	1	COVER AS	
		2	**190-7081**	2	SHEET	
Y	41	2	**396-9388**	1	COVER AS-SOUND SUPPRESSION	210
Y	42	4	**396-9393**	1	DOOR GP-ACCESS (AIR CLEANER, BATTERY)	215
Y	43	2	**397-9009**	1	SUPPORT AS-SOUND SUPPRESSION	245
Y	44	2	**419-3368**	1	SHEET AS-SOUND SUPPRESSION	240
Y	45	3	**421-4416**	1	DOOR GP-HOOD	216
Y	46	2	**425-6092**	1	DOOR GP-ACCESS (PUMP COMPARTMENT)	217
Y	47	3	**428-5842**	1	SHEET AS-SOUND SUPPRESSION	241
M	48	3,4	**105-3487**	6	BOLT-SOCKET HEAD (M6X1X20-MM)	
	49	4	**114-6285**	2	BAR	
M	50	2,3,4	**135-8573**	67	BOLT AS	
M	51	2,3,4	**135-8575**	34	BOLT AS	
M	52	4	**135-8577**	4	BOLT AS	
M	53	4	**135-8578**	6	BOLT AS	

379-7385 **HOOD & GUARD GP (*contd.*)** **i05458453**

NOTE	REF NO	GRAPHIC REF	PART NUMBER	QTY	PART NAME 1 2 3 4 5 6 (PRODUCT LEVEL)	SEE PAGE
	54	2,3,4	**3B-4618**	3	PIN-COTTER	
M	55	4	**5C-7261**	1	NUT (M8X1.25-THD)	
M	56	2,3	**5C-9553**	8	BOLT (M6X1X16-MM)	
	57	4	**5P-0372**	1	LOCK PIN	
	58	2,3,4	**5P-4115**	16	WASHER-HARD (7.2X19X2-MM THK)	
	59	4	**7F-3708**	1	PIN	
	60	2,3	**7Y-2854**	8	SPACER (24X38X3-MM THK)	
	61	2,3,4	**8T-4121**	12	WASHER-HARD (11X21X2.5-MM THK)	
M	62	3,4	**8T-4137**	7	BOLT (M10X1.5X20-MM)	
M	63	3,4	**8T-4138**	10	BOLT (M6X1X20-MM)	
M	64	2	**8T-4189**	4	BOLT (M8X1.25X20-MM)	
	65	2,4	**8T-4224**	5	WASHER-HARD (8.8X16X2-MM THK)	
	66	3,4	**9X-8256**	8	WASHER (6.6X12X2-MM THK)	

M - METRIC PART
Y - SEPARATE ILLUSTRATION

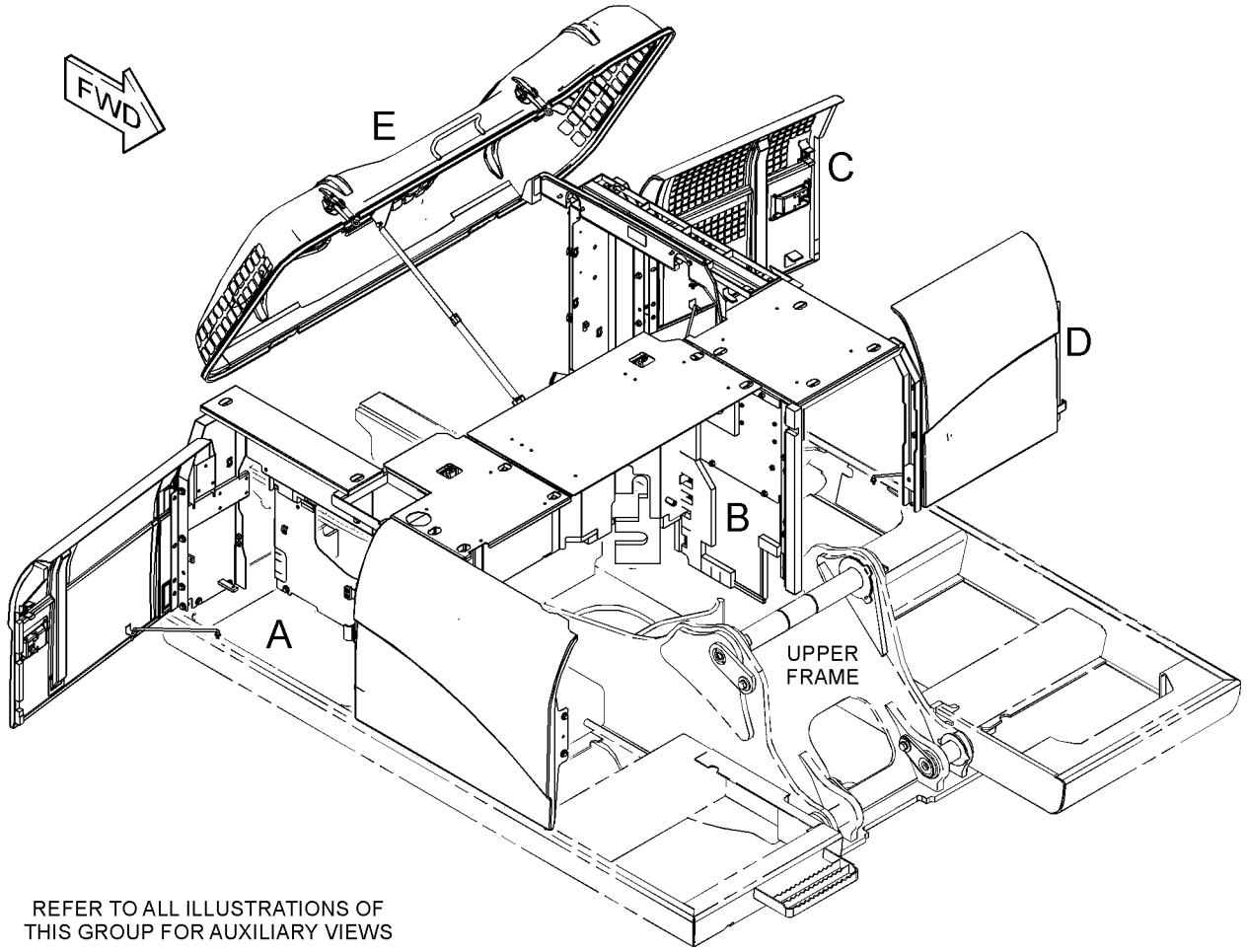

REFER TO ALL ILLUSTRATIONS OF
THIS GROUP FOR AUXILIARY VIEWS

GRAPHIC #1 g03473341

379-7385 **HOOD & GUARD GP** (*contd.*) **i05458453**

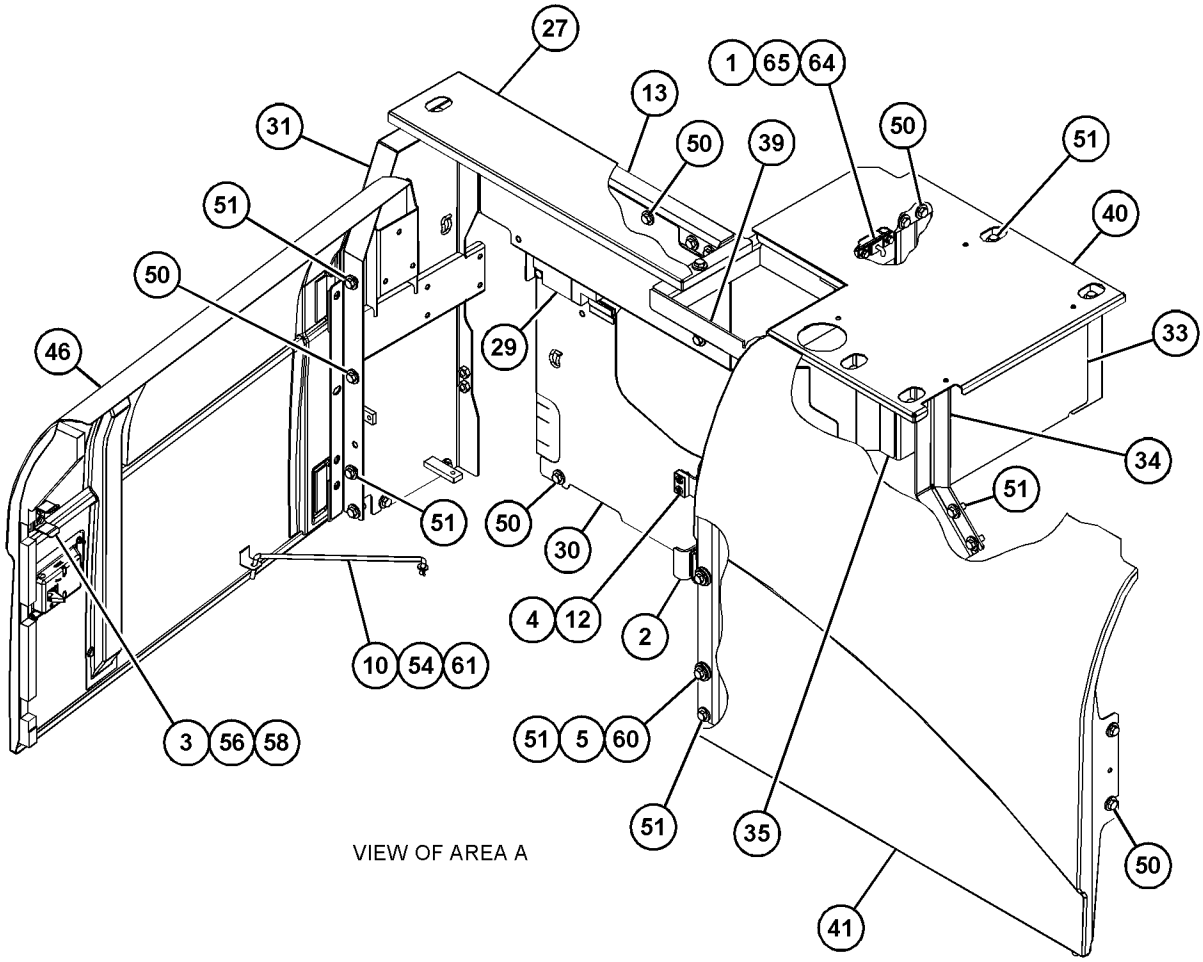

VIEW OF AREA A

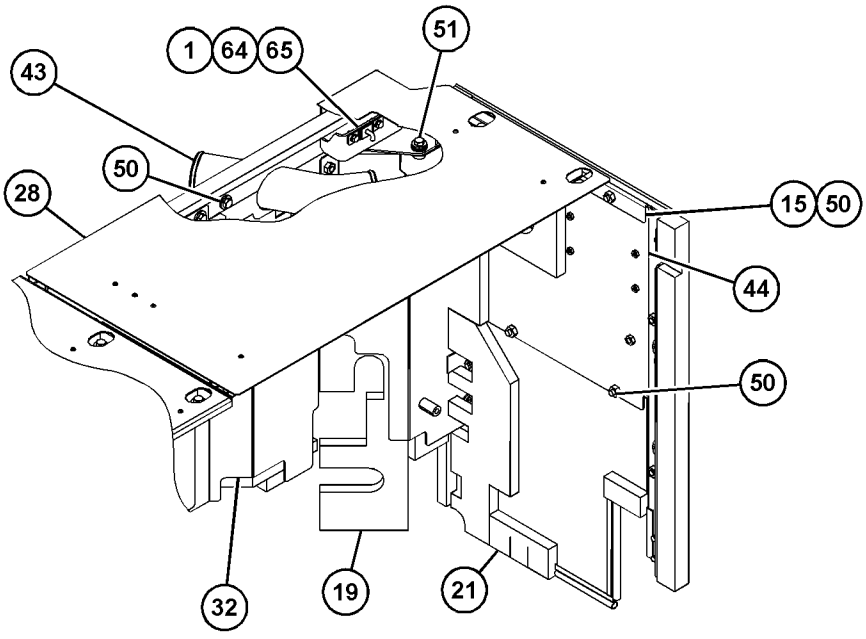

VIEW OF AREA B

GRAPHIC #2 g03473342

379-7385 **HOOD & GUARD GP** (*contd.*) **i05458453**

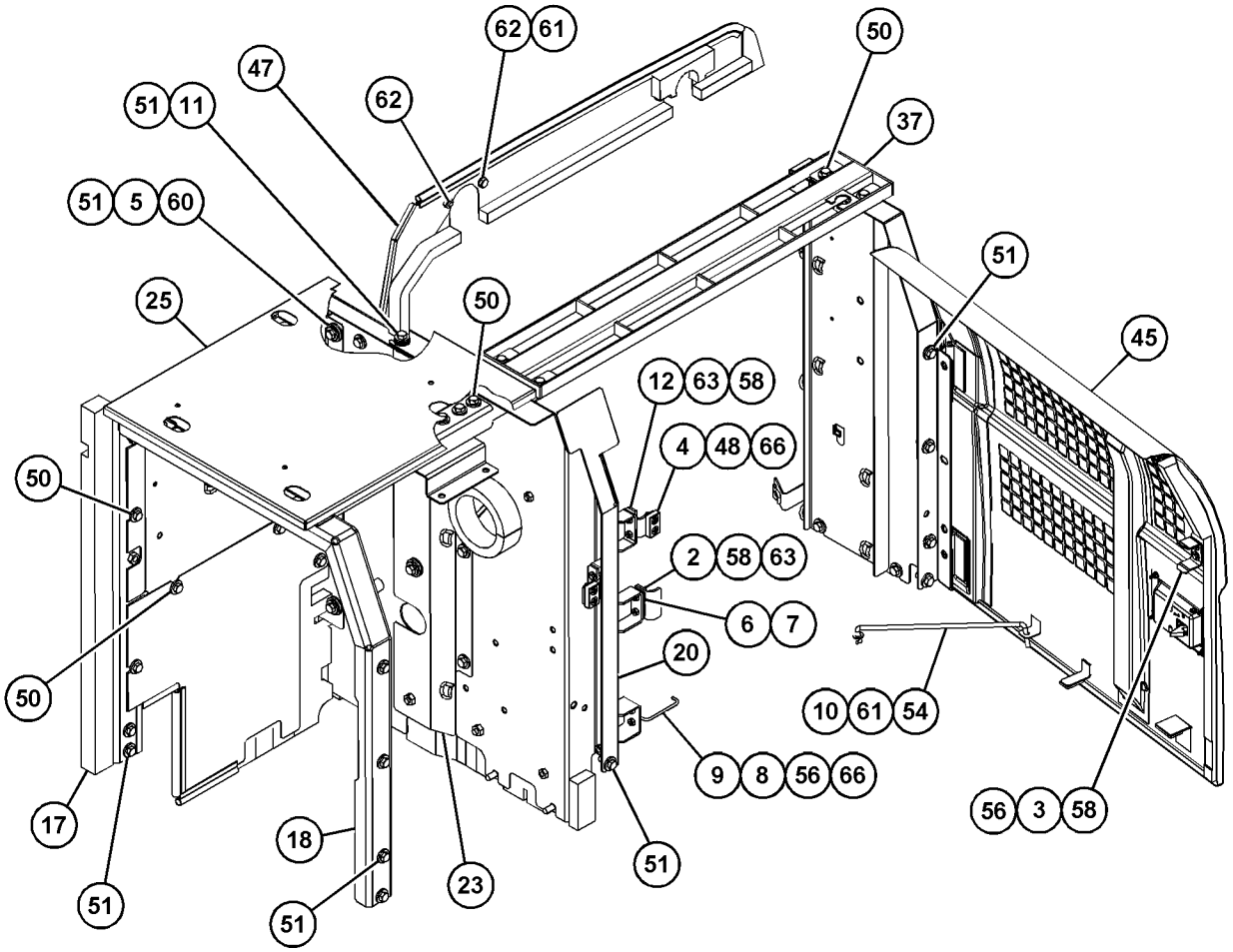

VIEW OF AREA C
(PARTS REMOVED FOR CLARITY) 90°

GRAPHIC #3 g03473343

379-7385 **HOOD & GUARD GP (*contd.*)** **i05458453**

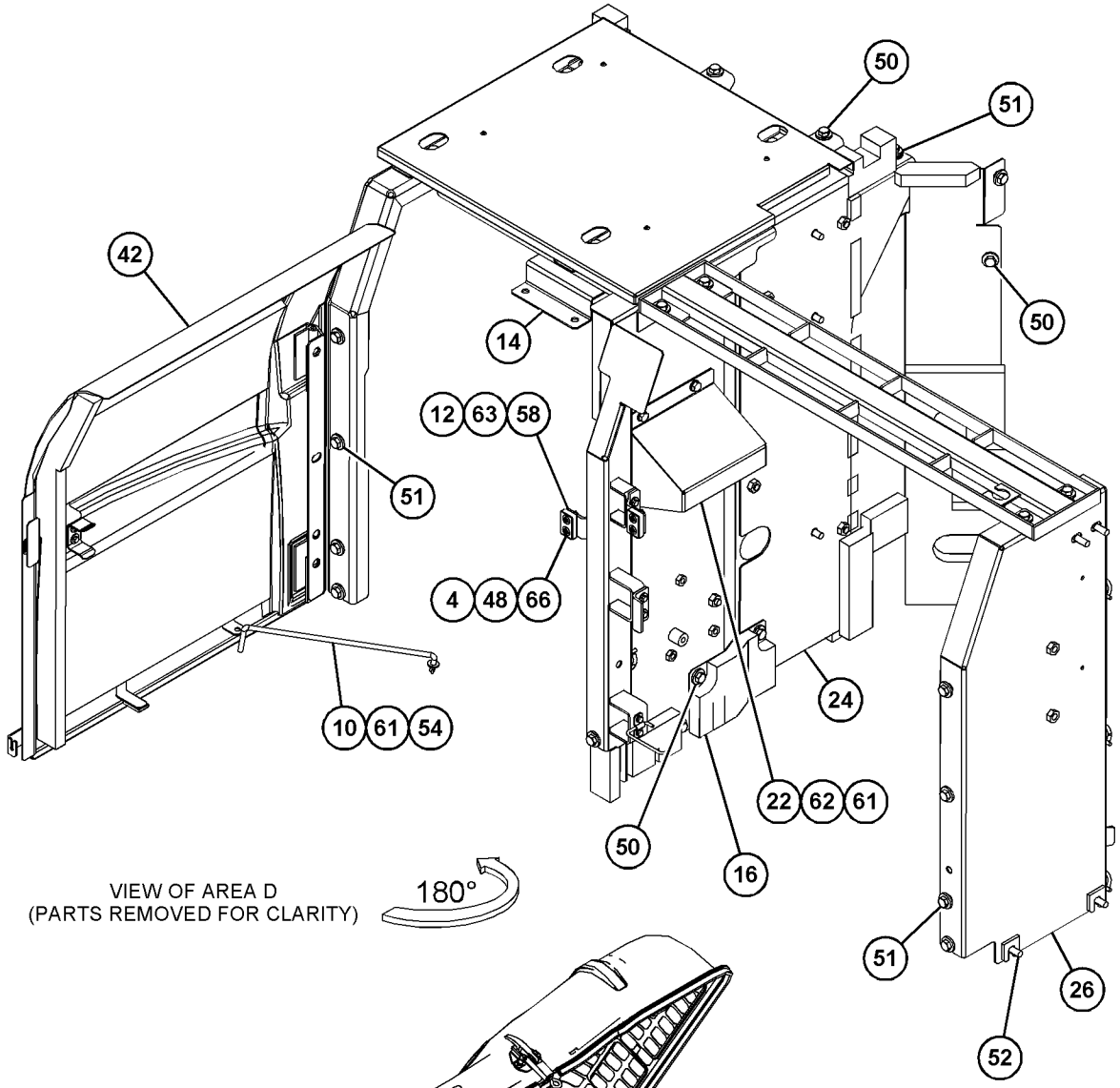

VIEW OF AREA D
(PARTS REMOVED FOR CLARITY)

180°

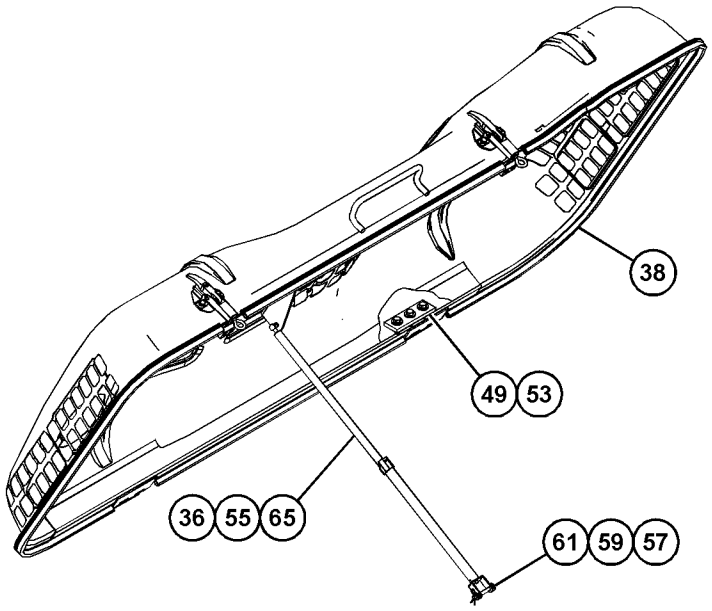

VIEW OF AREA E
(PARTS REMOVED FOR CLARITY)

GRAPHIC #4 **<END>** g03473344

396-7674 HOOD GP-ENGINE

S/N: JEG1-UP

PART OF 379-7385 HOOD & GUARD GP

SMCS-7251 **i05459052**

NOTE	REF NO	GRAPHIC REF	PART NUMBER	QTY	PART NAME 1 2 3 4 5 6 (PRODUCT LEVEL)	SEE PAGE
	1	1	**096-4129**	2	CUSHION	
J	2	1	**375-8749**	1	LATCH AS	
	3	1	**375-8750**	1	LATCH AS	
	4	1	*396-7688*	1	HOOD AS-ENGINE	
	4A	1	**114-6289**	2	HINGE	
	4B	1	**268-0720**	1	HANDLE	
	5	1	**396-7706**	1	LINER	
	6	1	**8T-0328**	4	WASHER-HARD (5.5X10X1-MM THK)	
M	7	1	**8T-4189**	4	BOLT (M8X1.25X20-MM)	
	8	1	**8T-4224**	4	WASHER-HARD (8.8X16X2-MM THK)	
M	9	1	**8T-6693**	4	SCREW-MACHINE (M5X0.8X16-MM)	
D	10	1	**101-9848**		SEAL (5.9-M)	

D - ORDER BY THE METER
J - REQUIRES CORPORATE KEY
M - METRIC PART

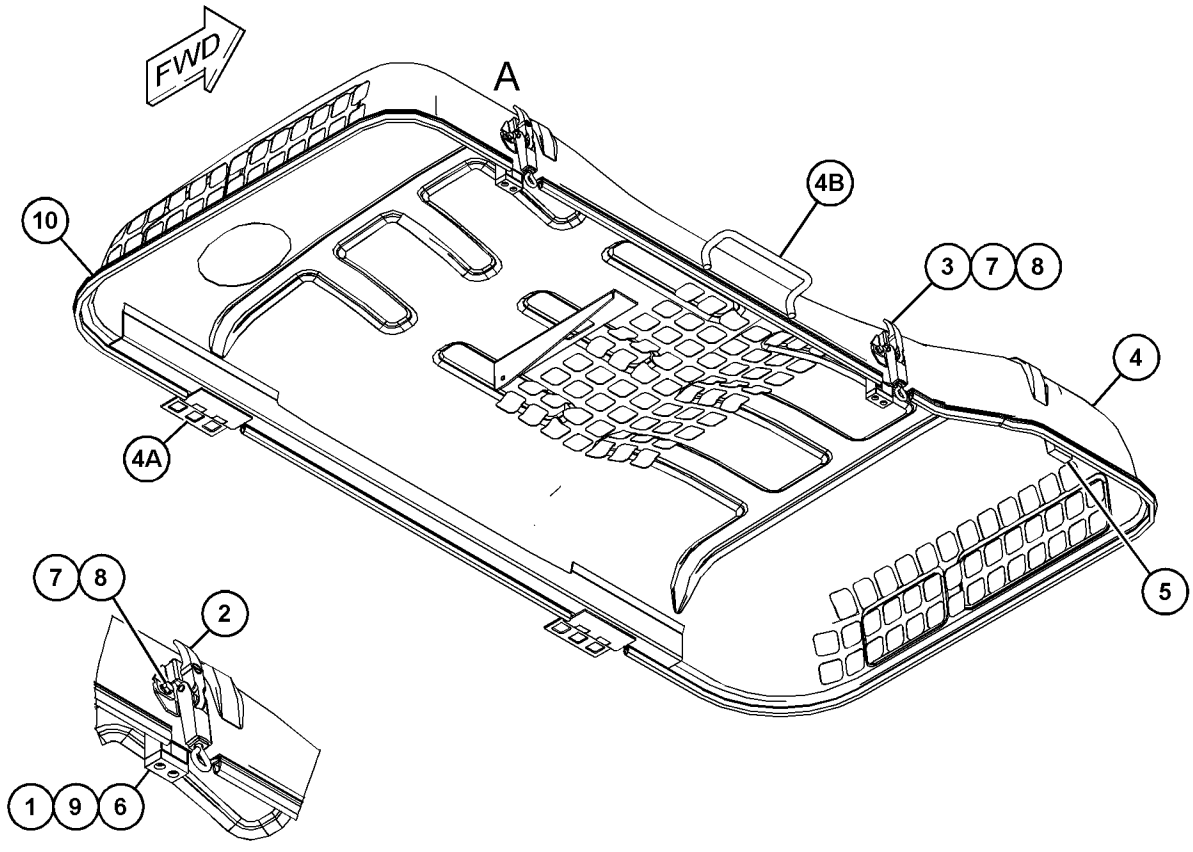

VIEW OF AREA A

GRAPHIC #1 **<END>** g03455644

377-6667 SHEET AS-SOUND SUPPRESSION

S/N: JEG1-UP

PART OF 379-7385 HOOD & GUARD GP

SMCS-1801, 7076, 7251, 7267 **i05430240**

NOTE	REF NO	GRAPHIC REF	PART NUMBER	QTY	PART NAME 1 2 3 4 5 6 (PRODUCT LEVEL)	SEE PAGE
	1	1	**289-6700**	1	LINER	
	2	1	**377-6743**	1	LINER	

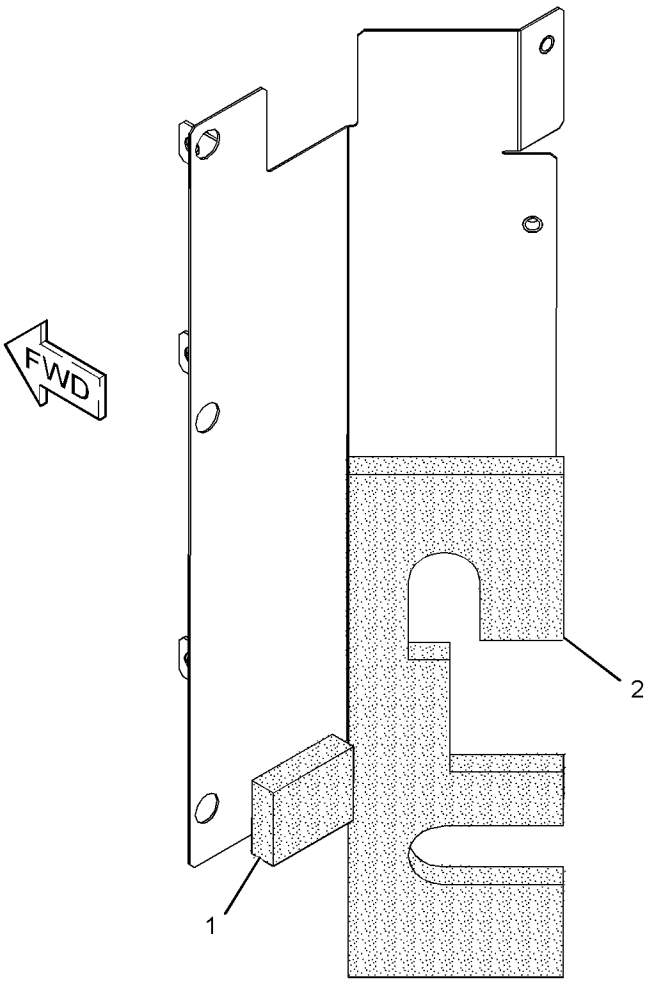

GRAPHIC #1 **<END>** g02732916

377-6708 SHEET AS-SOUND SUPPRESSION

S/N: JEG1-UP

PART OF 379-7385 HOOD & GUARD GP

SMCS-1801, 7076, 7251, 7267 **i05266134**

NOTE	REF NO	GRAPHIC REF	PART NUMBER	QTY	PART NAME 1 2 3 4 5 6 (PRODUCT LEVEL)	SEE PAGE
D	1	1	**5P-8309**		SEAL (0.2-M)	
D	1A	1	**5P-8309**		SEAL (0.3-M)	
	2	1	**377-6749**	1	LINER	
	3	1	**244-8284**	1	LINER	
	4	1	**262-2347**	1	LINER	

D - ORDER BY THE METER

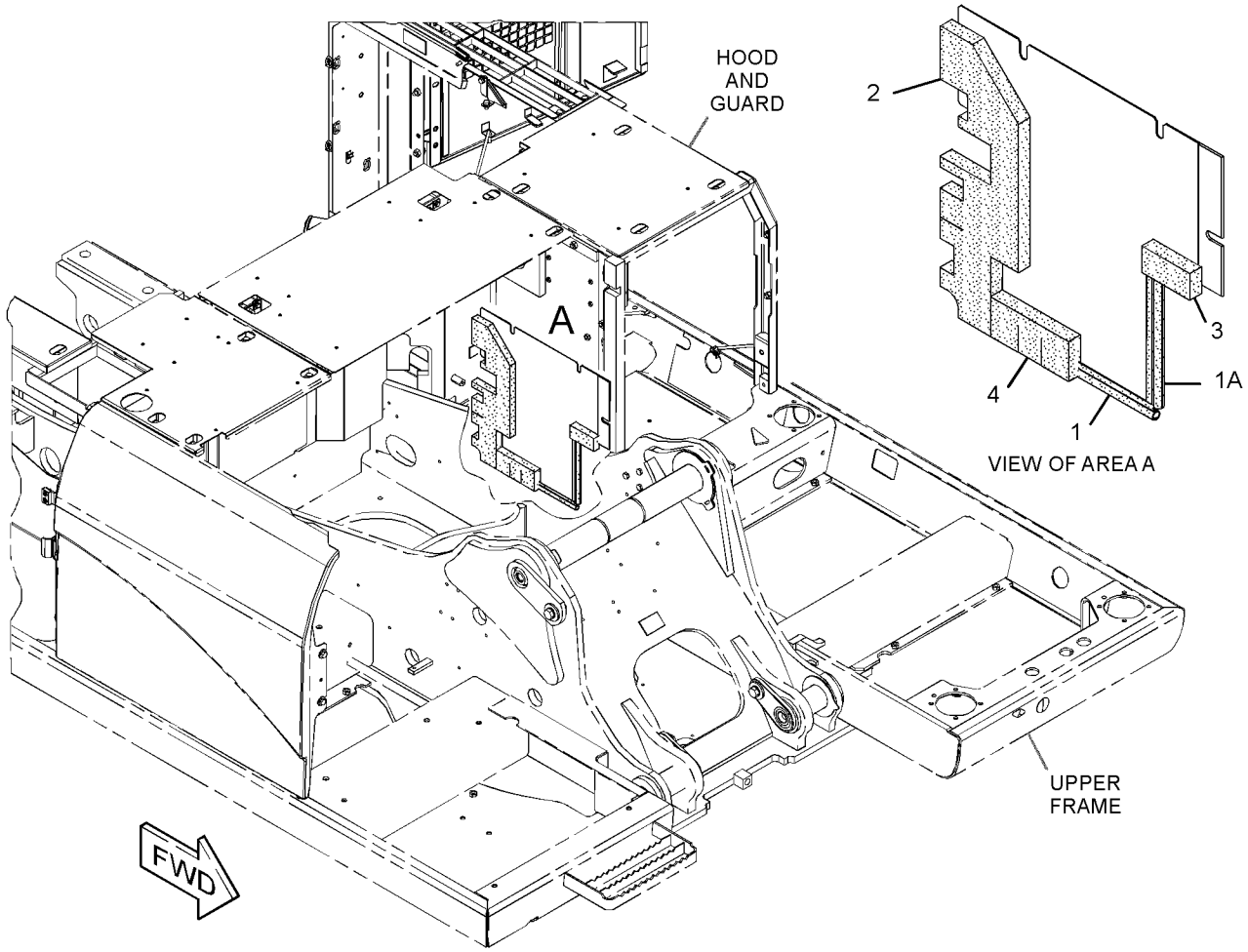

GRAPHIC #1 **<END>** g02732422

379-7489 SHEET AS-SOUND SUPPRESSION

S/N: JEG1-UP
PART OF 399-4265 BATTERY & WIRING GP
AN ATTACHMENT

SMCS-1801, 7076, 7251, 7267

i05260442

NOTE	REF NO	GRAPHIC REF	PART NUMBER	QTY	PART NAME 1 2 3 4 5 6 (PRODUCT LEVEL)	SEE PAGE
	1	1	**379-7490**	1	LINER	
	2	1	**262-2333**	1	LINER	
	3	1	**262-2335**	1	LINER	

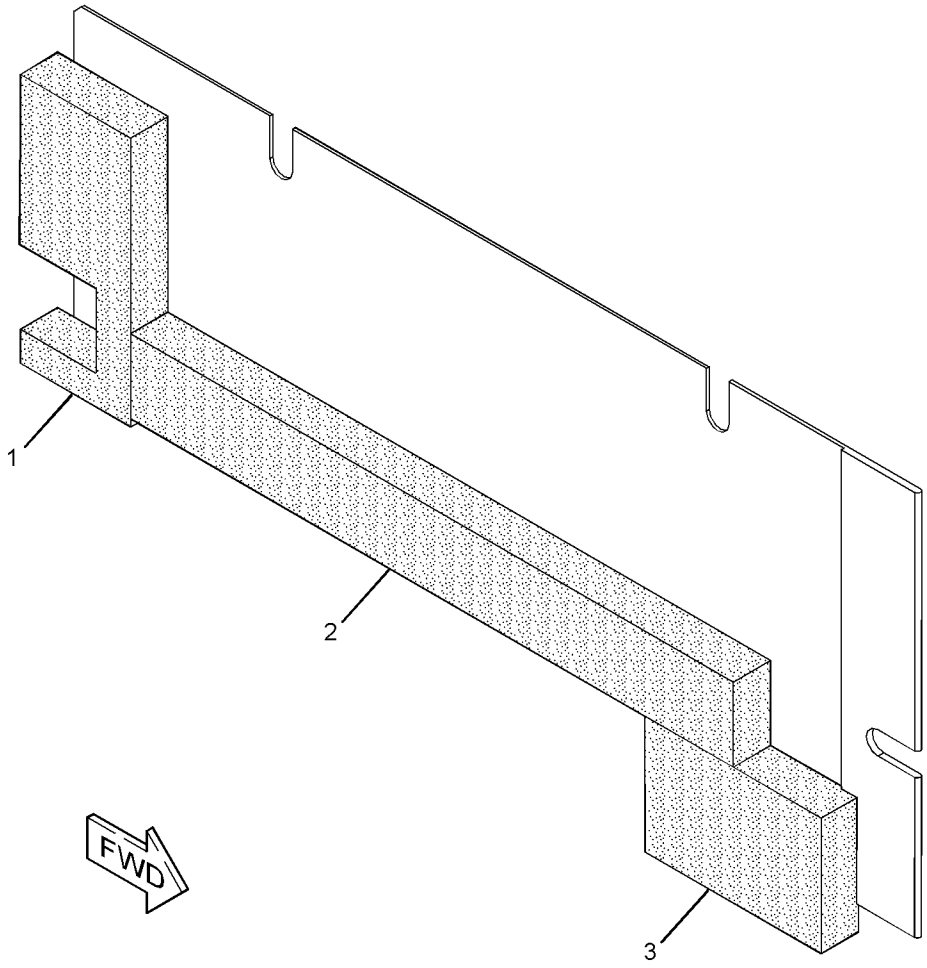

GRAPHIC #1

<END>

g02743256

391-9646 SHEET AS-SOUND SUPPRESSION

S/N: JEG1-UP

PART OF 379-7385 HOOD & GUARD GP

SMCS-1801, 7076, 7251, 7267 **i05349550**

NOTE	REF NO	GRAPHIC REF	PART NUMBER	QTY	PART NAME 1 2 3 4 5 6 (PRODUCT LEVEL)	SEE PAGE
	1	1	**377-6746**	1	LINER	
	2	1	**377-6727**	1	LINER	
	3	1	**394-7410**	1	LINER	

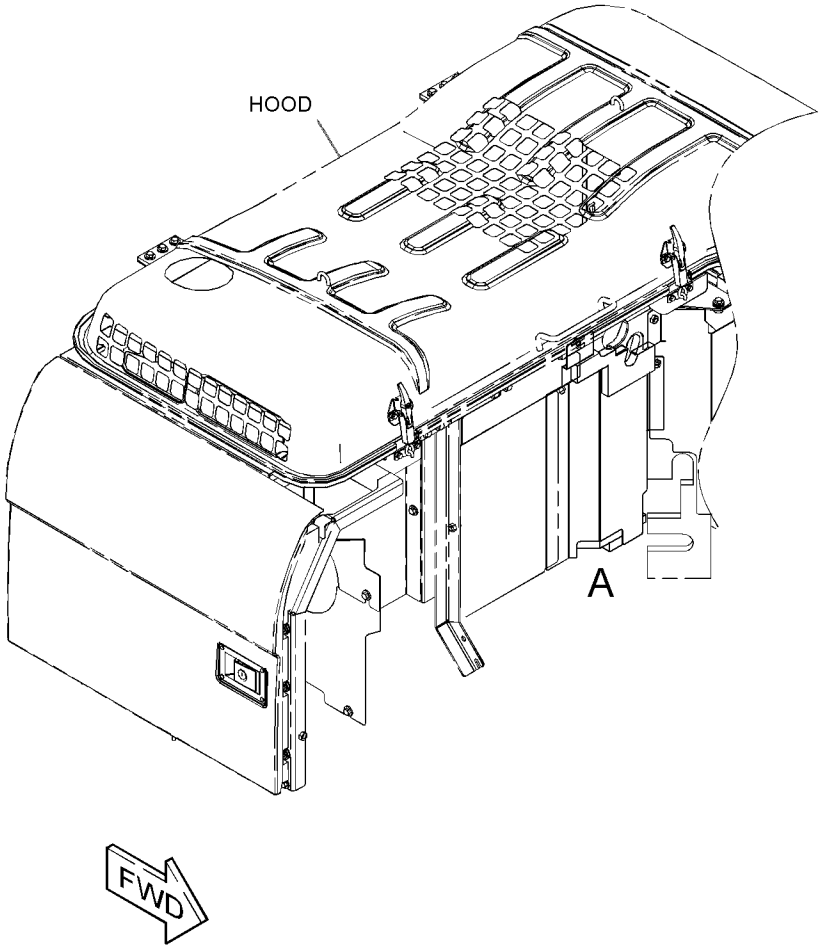

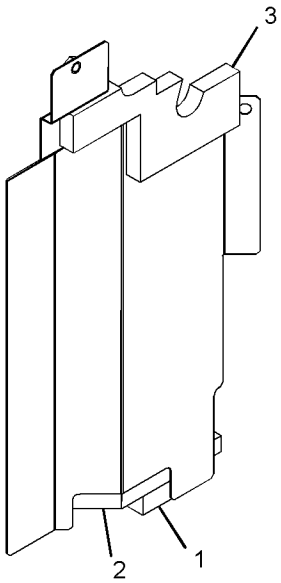

VIEW OF AREA A

GRAPHIC #1 **<END>** g03388626

419-3368 SHEET AS-SOUND SUPPRESSION

S/N: JEG1-UP

PART OF 379-7385 HOOD & GUARD GP

SMCS-1801, 7076, 7251, 7267 **i05266183**

NOTE	REF NO	GRAPHIC REF	PART NUMBER	QTY	PART NAME 1 2 3 4 5 6 (PRODUCT LEVEL)	SEE PAGE
	1	1	**262-2313**	1	LINER	
	2	1	**278-3837**	1	LINER	
	3	1	*419-3369*	1	SHEET AS	
M		1	**6V-9632**	4	NUT-WELD (M6X1-THD)	
		1	**7T-1099**	3	LINK	
M		1	**8T-3490**	1	NUT-WELD (M10X1.5-THD)	
M		1	**8T-3597**	2	NUT-WELD (M12X1.75-THD)	

M - METRIC PART

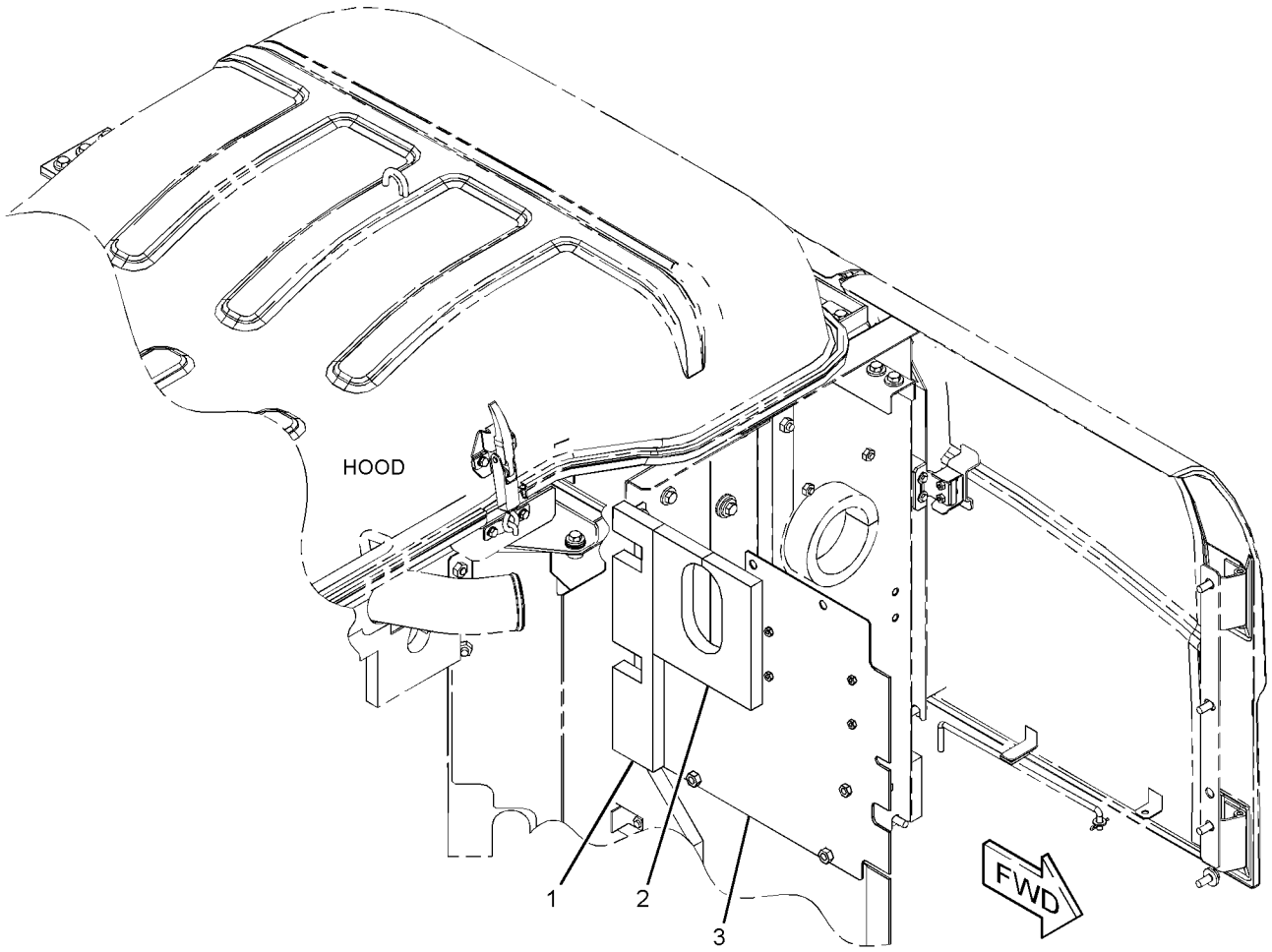

GRAPHIC #1 **<END>** g03310497

428-5842 SHEET AS-SOUND SUPPRESSION

S/N: JEG1-UP

PART OF 379-7385 HOOD & GUARD GP

SMCS-1801, 7076, 7251, 7267 **i05297845**

NOTE	REF NO	GRAPHIC REF	PART NUMBER	QTY	PART NAME 1 2 3 4 5 6 (PRODUCT LEVEL)	SEE PAGE
	1	1	**377-6760**	1	SHEET-RUBBER	
	2	1	**377-6782**	1	LINER	
	3	1	*428-5843*	1	SUPPORT AS	
M		1	**8T-3490**	2	NUT-WELD (M10X1.5-THD)	
	4	1	**396-7695**	1	LINER	
	5	1	**396-7696**	1	LINER	
	6	1	**396-7697**	1	LINER	
	7	1	**396-7698**	1	LINER	
J	8	1	**348-5409**		SEAL (10-DM)	

J - ORDER BY THE DECIMETER
M - METRIC PART

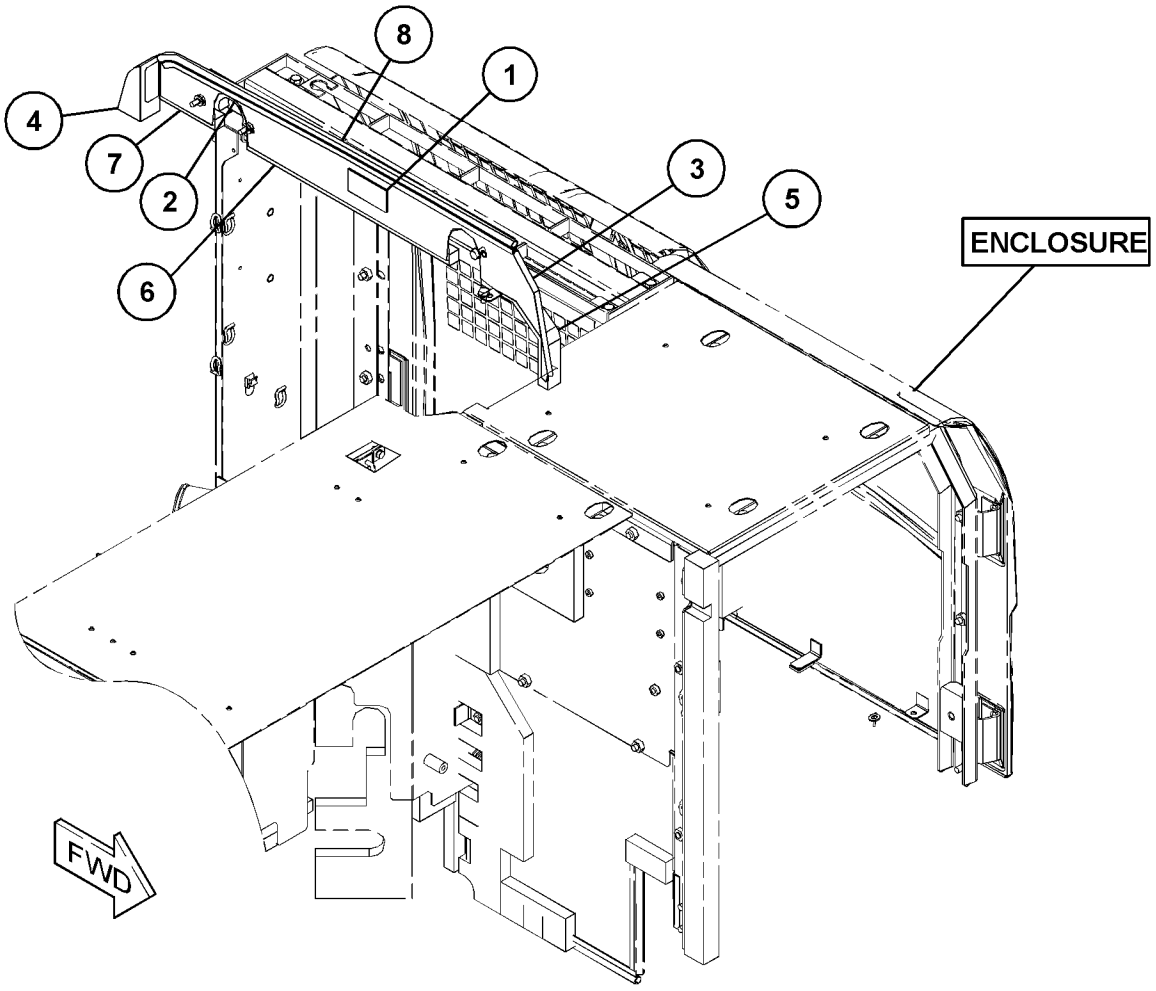

GRAPHIC #1 **<END>** g03301096

235-7764 STEP GP

S/N: JEG1-UP
FOR USE WITH TRACK SHOES UP TO 800-MM (32-IN) WIDE
PART OF 421-3660 TRACK AR
AN ATTACHMENT

SMCS-7254 **i04905613**

NOTE	REF NO	GRAPHIC REF	PART NUMBER	QTY	PART NAME 1 2 3 4 5 6 (PRODUCT LEVEL)	SEE PAGE
	1	1	**359-5808**	2	STEP	
M	2	1	**8T-7338**	4	BOLT (M16X2X45-MM)	
	3	1	**9X-8257**	4	WASHER (17.5X30X3.5-MM THK)	

M - METRIC PART

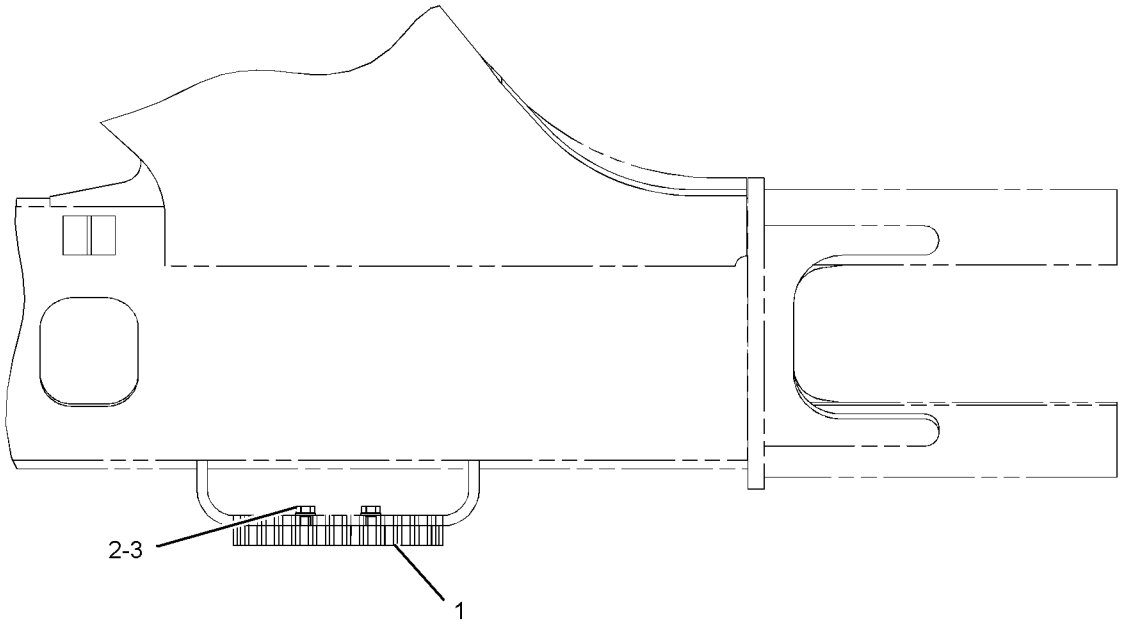

TOP VIEW

GRAPHIC #1 **<END>** g01150668

377-6698 SUPPORT AS-ENCLOSURE

S/N: JEG1-UP

PART OF 379-7385 HOOD & GUARD GP

SMCS-0635, 1801, 7076, 7251, 7263, 7267, 7272, 7276 **i05268416**

NOTE	REF NO	GRAPHIC REF	PART NUMBER	QTY	PART NAME 1 2 3 4 5 6 (PRODUCT LEVEL)	SEE PAGE
	1	1	**244-8277**	1	LINER	
	2	1	**244-8278**	1	LINER	
	3	1	**244-8288**	1	LINER	

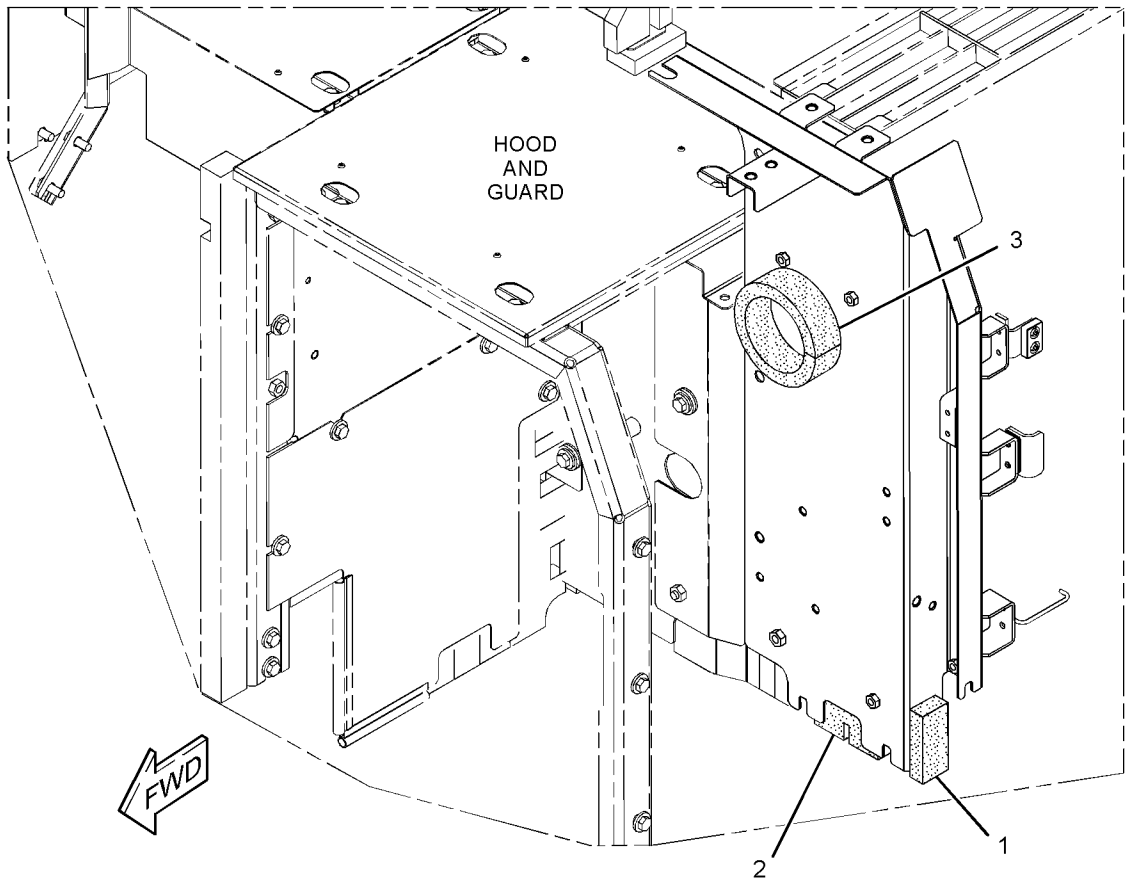

GRAPHIC #1 **<END>** g02733266

379-7425 SUPPORT AS-SOUND SUPPRESSION

S/N: JEG1-UP

PART OF 379-7385 HOOD & GUARD GP

SMCS-7276 **i05266141**

NOTE	REF NO	GRAPHIC REF	PART NUMBER	QTY	PART NAME 1 2 3 4 5 6 (PRODUCT LEVEL)	SEE PAGE
	1	1	*379-7426*	1	SUPPORT AS	
M		1	**8T-3597**	5	NUT-WELD (M12X1.75-THD)	
M		1	**9R-5271**	1	BOSS (M10X1.5X25-MM)	
	2	1	**248-8943**	1	LINER	
	3	1	**379-7509**	1	LINER	

M - METRIC PART

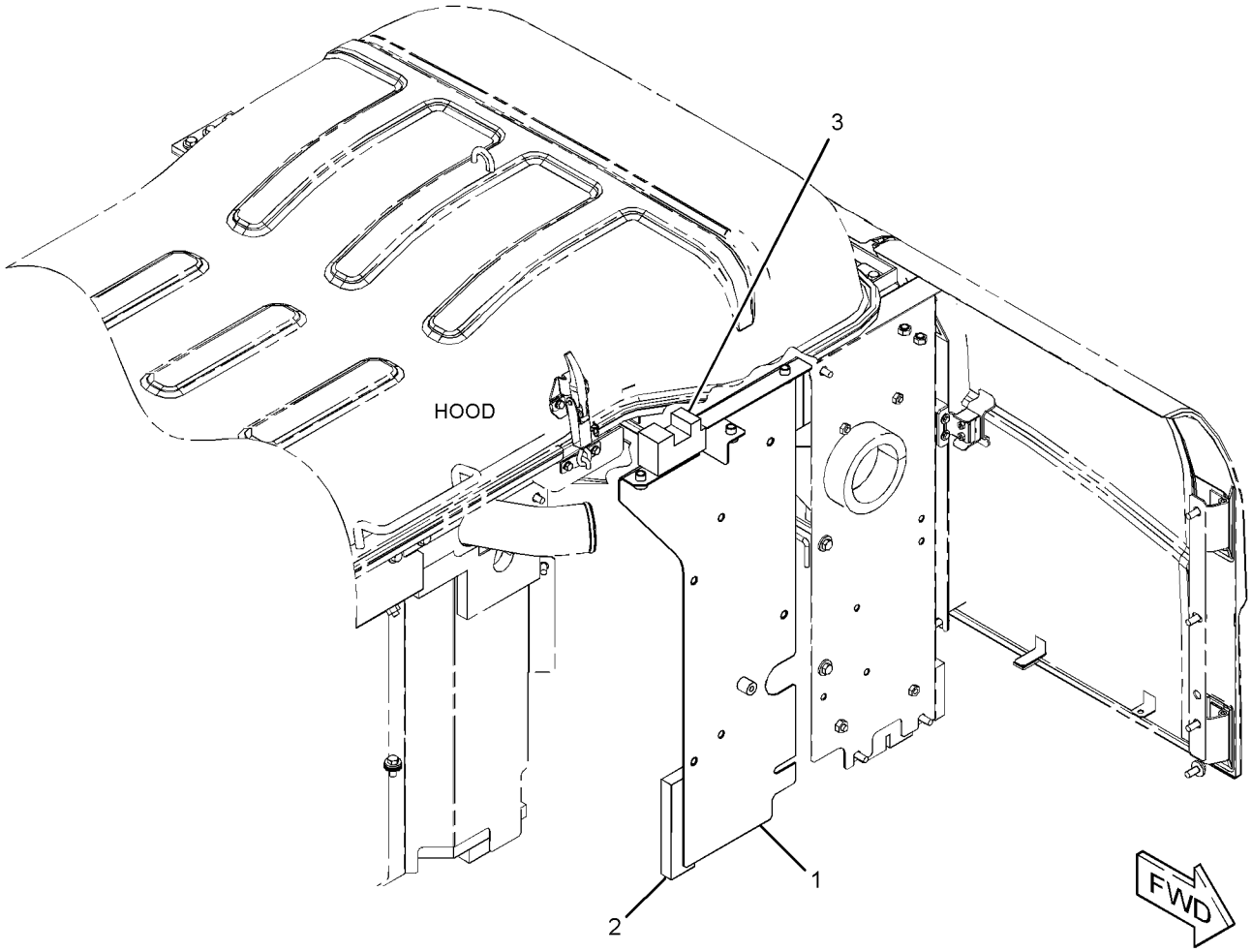

GRAPHIC #1 **<END>** g03310396

397-9009 SUPPORT AS-SOUND SUPPRESSION

S/N: JEG1-UP

PART OF 379-7385 HOOD & GUARD GP

SMCS-7276 **i05266177**

NOTE	REF NO	GRAPHIC REF	PART NUMBER	QTY	PART NAME 1 2 3 4 5 6 (PRODUCT LEVEL)	SEE PAGE
	1	1	**377-6767**	1	LINER	
	2	1	**377-6809**	1	LINER	
	3	1	*397-9010*	1	SUPPORT AS	
M		1	**8T-3597**	2	NUT-WELD (M12X1.75-THD)	
M		1	**8T-3612**	2	NUT-WELD (M8X1.25-THD)	

M - METRIC PART

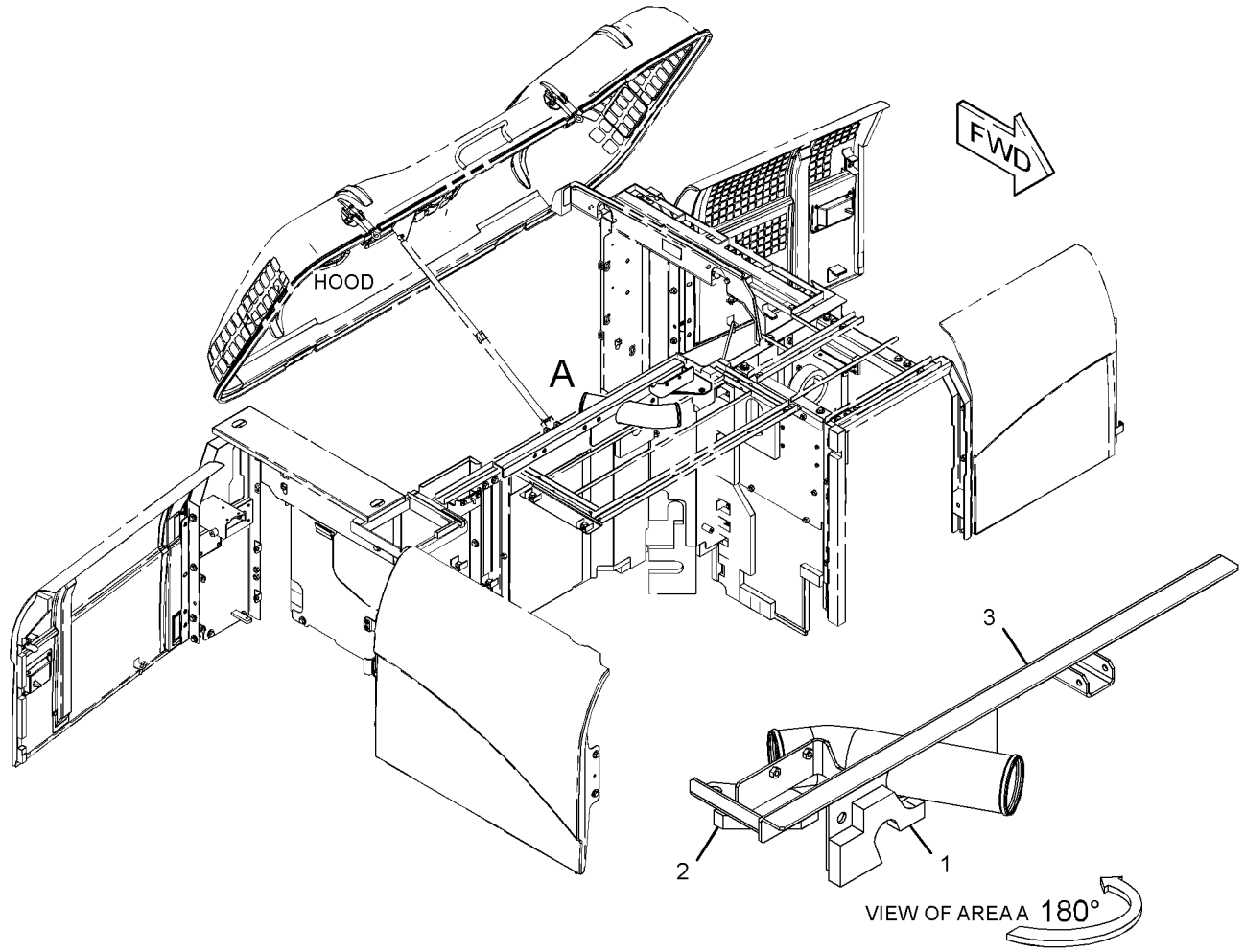

GRAPHIC #1 **<END>** g03303860

398-9727 SUPPORT AS-SOUND SUPPRESSION

S/N: JEG1-UP
PART OF 398-9736 COVER GP-HOOD
AN ATTACHMENT

SMCS-7276 **i05262460**

NOTE	REF NO	GRAPHIC REF	PART NUMBER	QTY	PART NAME 1 2 3 4 5 6 (PRODUCT LEVEL)	SEE PAGE
	1	1	**244-8277**	1	LINER	
	2	1	**244-8278**	1	LINER	

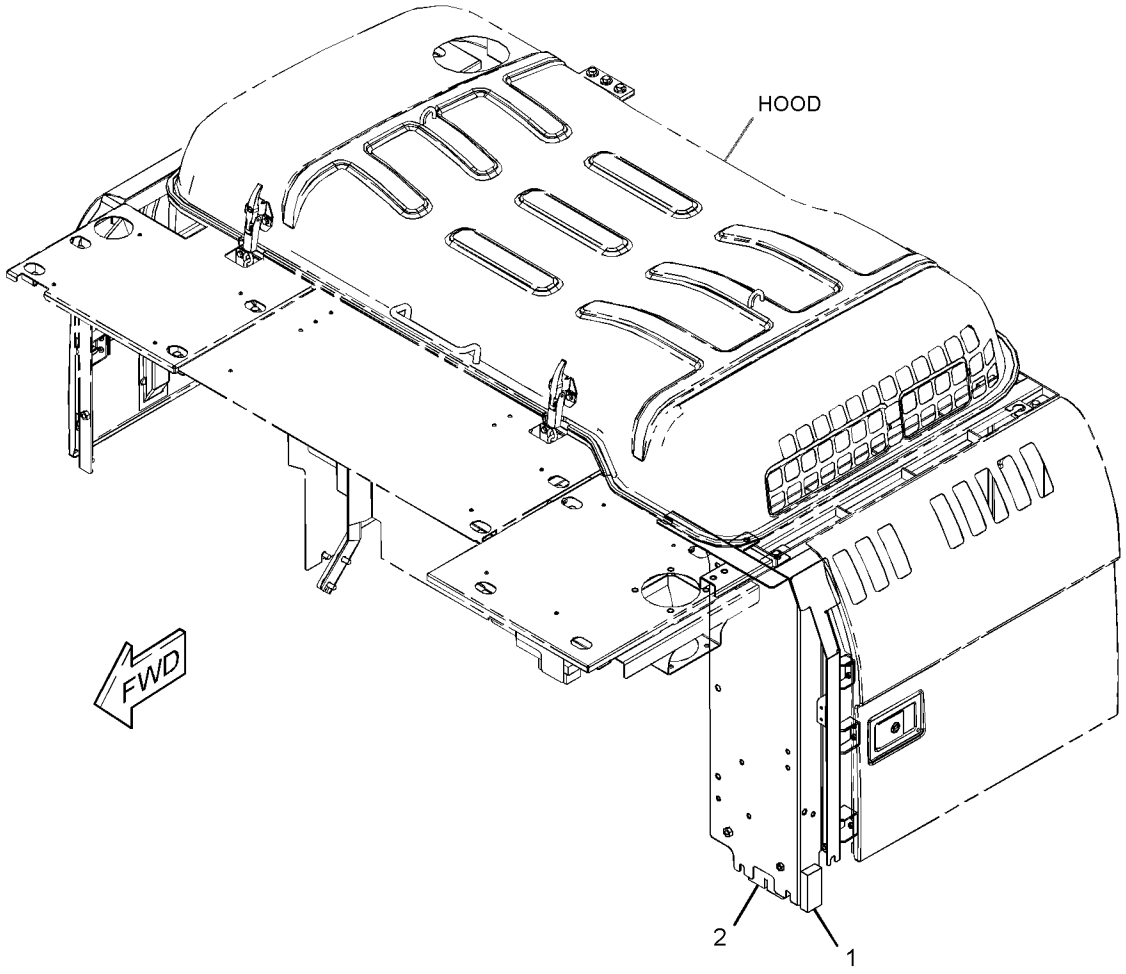

GRAPHIC #1 **<END>** g03350670

240-3822 FRAME AR-UNDERCARRIAGE

S/N: JEG1-UP

PART OF 419-5434 GENERAL AR

SMCS-4151 **i04865518**

NOTE	PART NUMBER	QTY	PART NAME 1 2 3 4 5 6 (PRODUCT LEVEL)	SEE PAGE
Y	**236-8341**	1	FRAME AS-UNDERCARRIAGE	248
Y	*227-6147*	1	GEAR & BEARING GP-SWING	224
Y	*087-5908*	2	GUARD GP-TRACK GUIDE (CENTER)	249
Y	*346-7204*	1	GUARD GP-TRAVEL MOTOR	252
Y	*239-4341*	1	IDLER GP-FRONT	253
Y	*297-9316*	1	ROLLER AR-TRACK & CARRIER	259

Y - SEPARATE ILLUSTRATION

<END>

236-8341 FRAME AS-UNDERCARRIAGE

S/N: JEG1-UP

PART OF 240-3822 FRAME AR-UNDERCARRIAGE

SMCS-4150, 7062 **i02956571**

NOTE	REF NO	GRAPHIC REF	PART NUMBER	QTY	PART NAME 1 2 3 4 5 6 (PRODUCT LEVEL)	SEE PAGE
B	1	1	**8P-9770**	1	PLATE	
	2	1	*236-8357*	1	FRAME AS-TRACK ROLLER (RH)	
	2A	1	**117-5540**	2	BRACKET	
	2B	1	**235-7520**	2	STEP	
	3	1	*236-8358*	1	FRAME AS-TRACK ROLLER (LH)	
	3A	1	**117-5540**	2	BRACKET	
	3B	1	**235-7520**	2	STEP	

B - USE AS REQUIRED

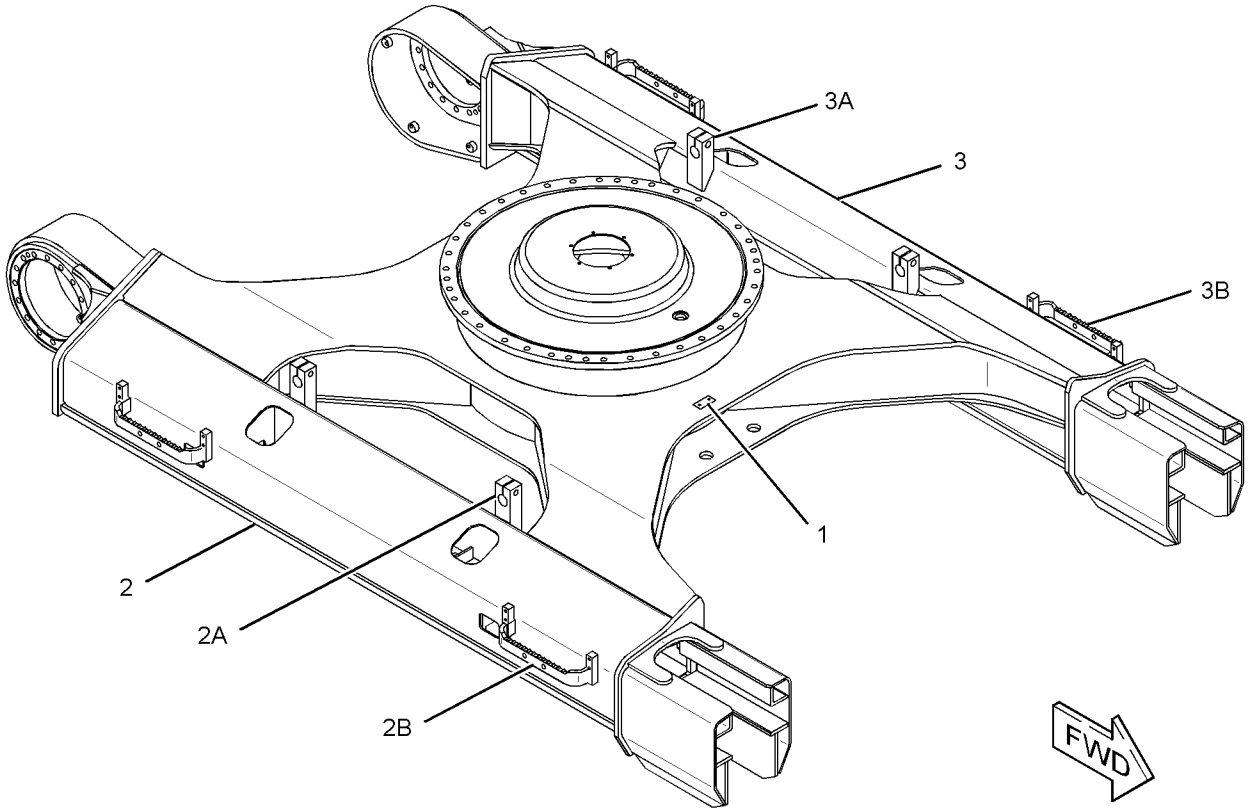

GRAPHIC #1 **<END>** g01502813

087-5908 GUARD GP-TRACK GUIDE–CENTER

S/N: JEG1-UP

PART OF 240-3822 FRAME AR-UNDERCARRIAGE

SMCS-4177 **i05535957**

NOTE	REF NO	GRAPHIC REF	PART NUMBER	QTY	PART NAME 1 2 3 4 5 6 (PRODUCT LEVEL)	SEE PAGE
	1	1	**240-2988**	1	GUARD AS-TRACK GUIDE	
M	2	1	**8T-5460**	4	BOLT (M20X2.5X40-MM)	
	3	1	**8T-4123**	4	WASHER (3.62X5.75X0.375-MM THK)	

M - METRIC PART

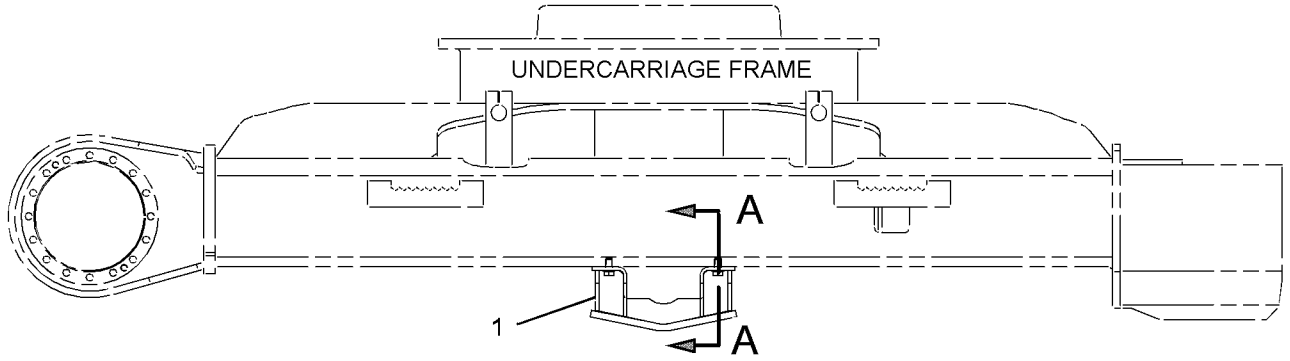

RIGHT SIDE VIEW

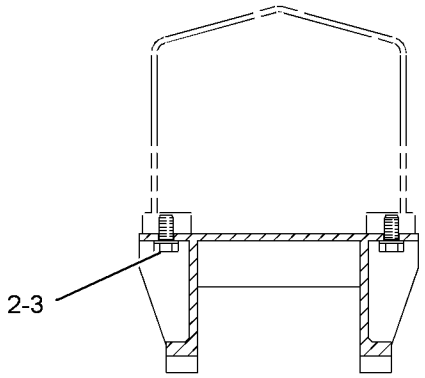

SECTION A-A

GRAPHIC #1 **<END>** g02758637

120-7168 GUARD GP-TRACK GUIDE–FULL LENGTH

S/N: JEG1-UP

AN ATTACHMENT

SMCS-4177 **i05535959**

NOTE	REF NO	GRAPHIC REF	PART NUMBER	QTY	PART NAME 1 2 3 4 5 6 (PRODUCT LEVEL)	SEE PAGE
	1	1	**219-8469**	4	GUARD AS-TRACK GUIDE	
M	2	1	**8T-5460**	32	BOLT (M20X2.5X40-MM)	
	3	1	**8T-4123**	32	WASHER (3.62X5.75X0.375-MM THK)	

M - METRIC PART

QUANTITIES SHOWN ARE THOSE REQUIRED FOR BOTH LH AND RH SIDES

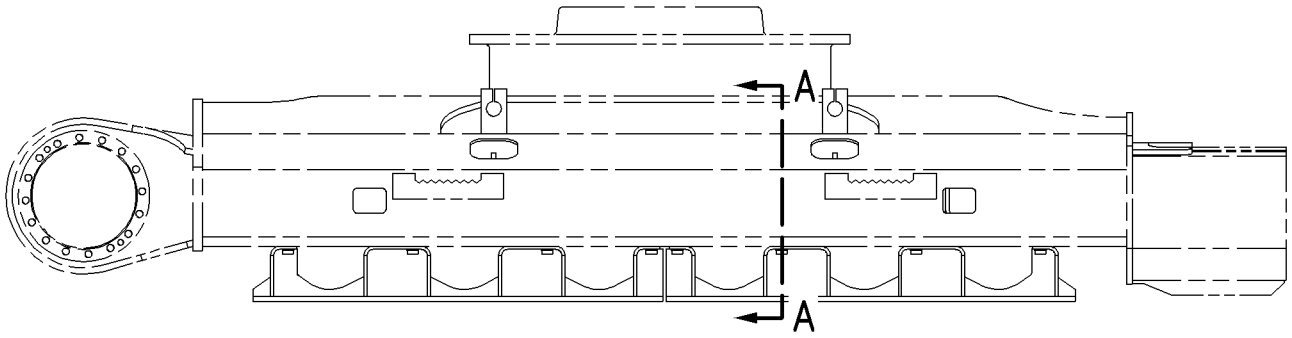

RIGHT SIDE VIEW

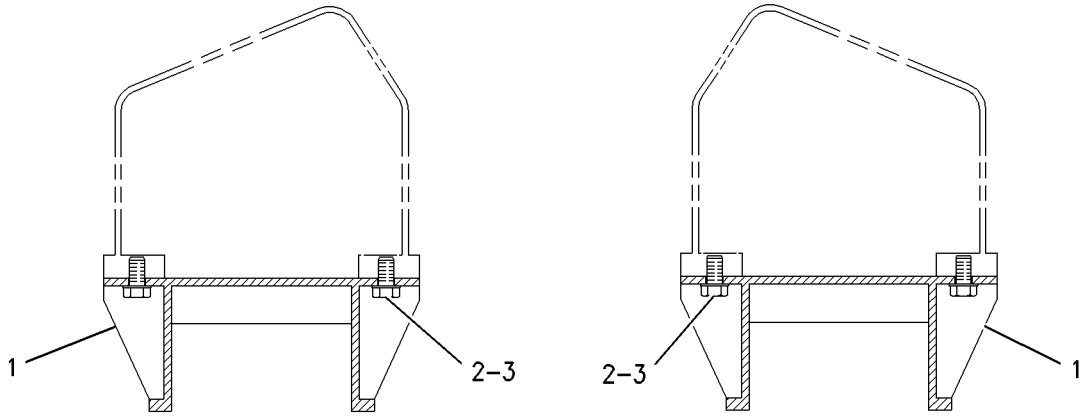

SECTION A-A

GRAPHIC #1 **<END>** g00736329

166-1478 GUARD GP-TRAVEL MOTOR–HEAVY-DUTY

S/N: JEG1-UP

AN ATTACHMENT

SMCS-7163 **i04440481**

NOTE	REF NO	GRAPHIC REF	PART NUMBER	QTY	PART NAME 1 2 3 4 5 6 (PRODUCT LEVEL)	SEE PAGE
M	1	1	**135-8576**	8	BOLT AS-LOCKING (M12X1.75X30-MM)	
C	2	1	**346-7233**	1	COVER AS	
C	3	1	**346-7232**	1	COVER AS	

C - CHANGE FROM PREVIOUS TYPE
M - METRIC PART

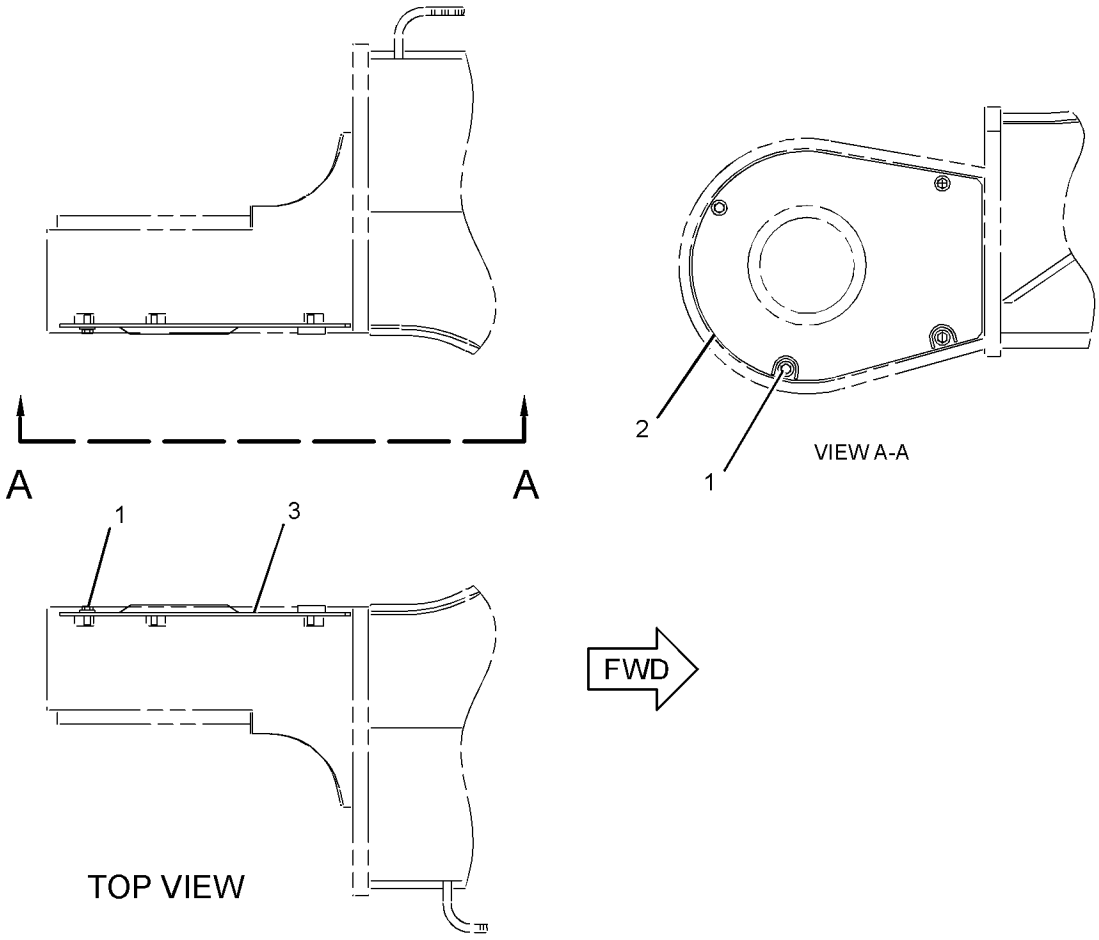

GRAPHIC #1 **<END>** g02626400

346-7204 GUARD GP-TRAVEL MOTOR

S/N: JEG1-UP

PART OF 240-3822 FRAME AR-UNDERCARRIAGE

SMCS-7163 **i04853722**

NOTE	REF NO	GRAPHIC REF	PART NUMBER	QTY	PART NAME 1 2 3 4 5 6 (PRODUCT LEVEL)	SEE PAGE
M	1	1	**135-8576**	8	BOLT AS-LOCKING	
	2	1	**346-7236**	1	COVER (RH)	
	3	1	**346-7237**	1	COVER (LH)	

M - METRIC PART

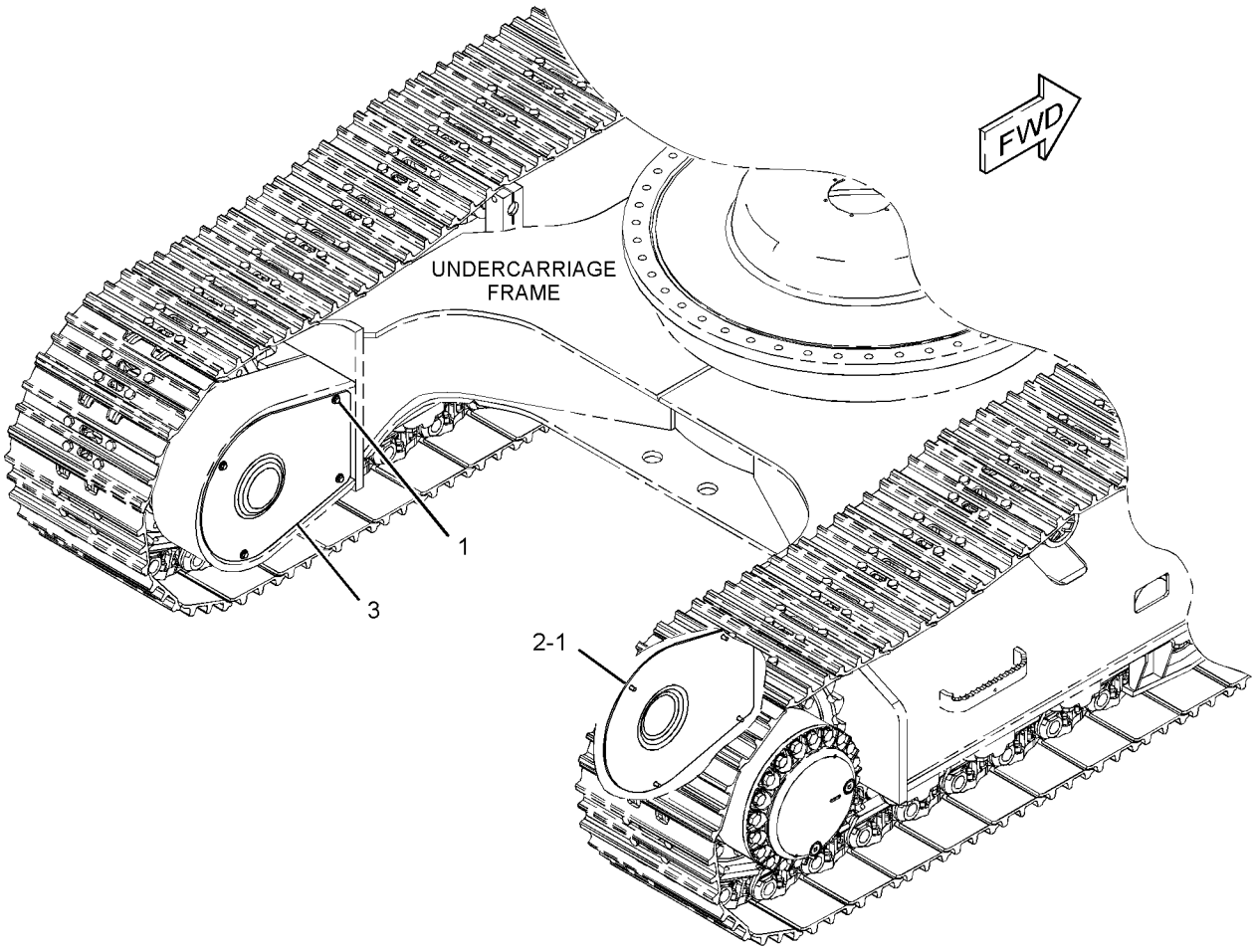

GRAPHIC #1 **<END>** g02723002

239-4341 IDLER GP-FRONT

S/N: JEG1-UP

PART OF 240-3822 FRAME AR-UNDERCARRIAGE

SMCS-4159 **i05277498**

NOTE	REF NO	GRAPHIC REF	PART NUMBER	QTY	PART NAME 1 2 3 4 5 6 (PRODUCT LEVEL)	SEE PAGE
Y	1	1	*239-4385*	1	IDLER GP-FRONT (RH)	254
Y	2	1	*239-4386*	1	IDLER GP-FRONT (LH)	255

Y - SEPARATE ILLUSTRATION

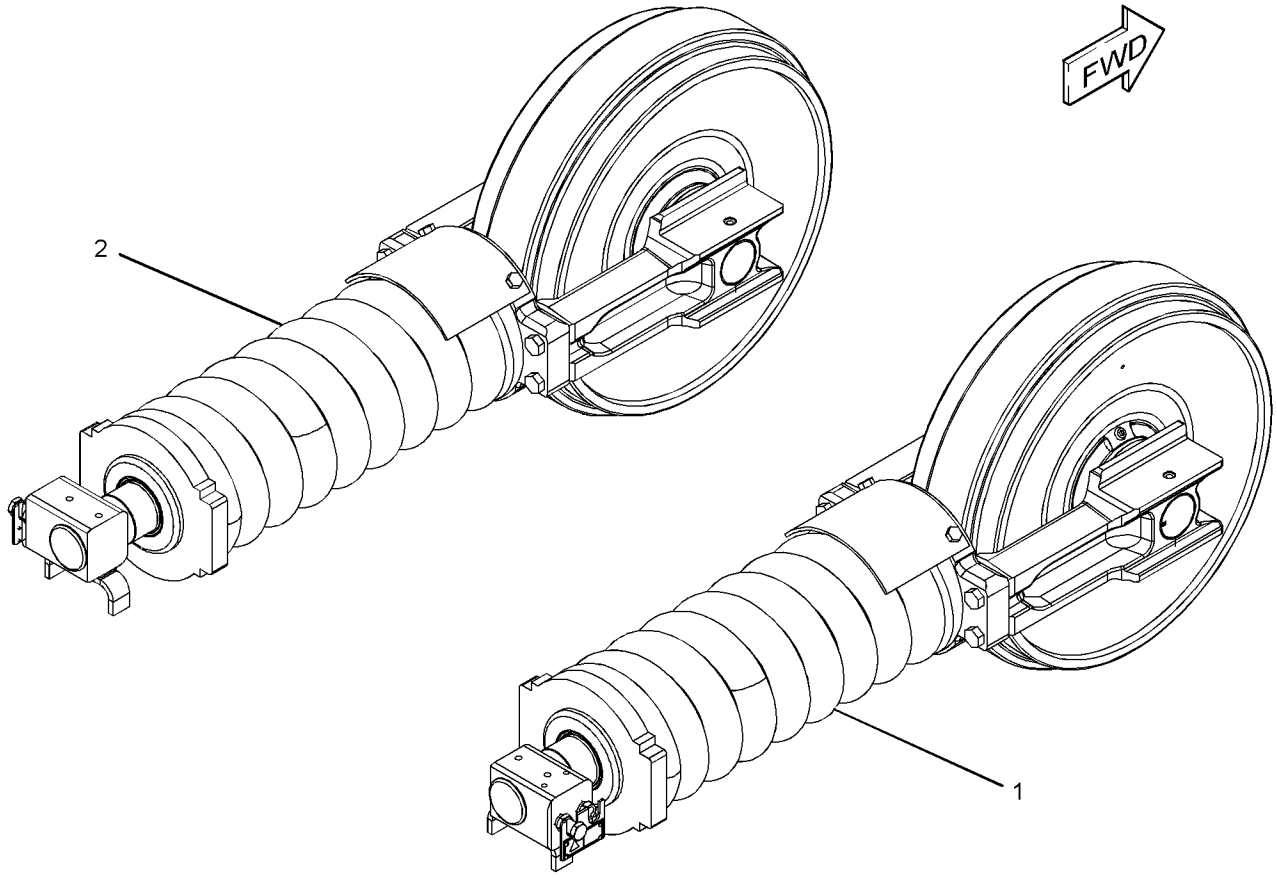

GRAPHIC #1 **<END>** g01217090

239-4385 IDLER GP-FRONT–RH

S/N: JEG1-UP

PART OF 239-4341 IDLER GP-FRONT

SMCS-4159 **i02769052**

NOTE	REF NO	GRAPHIC REF	PART NUMBER	QTY	PART NAME 1 2 3 4 5 6 (PRODUCT LEVEL)	SEE PAGE
Y	1	1	*239-4387*	1	TRACK ADJUSTER & RECOIL GP (RH)	265
Y	2	1	**248-7143**	1	IDLER GP-FRONT	256
M	3	1	**8T-4140**	4	BOLT (M16X2X60-MM)	

M - METRIC PART
Y - SEPARATE ILLUSTRATION

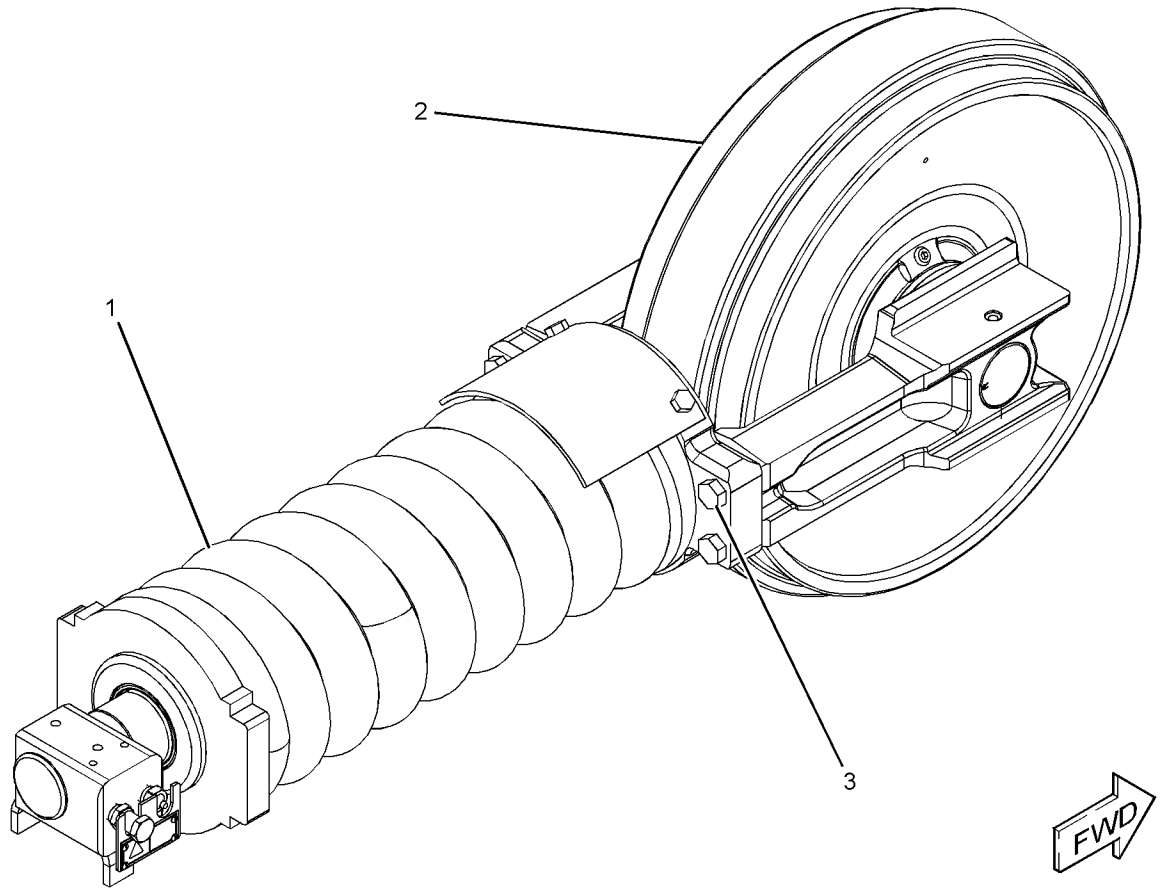

GRAPHIC #1 **<END>** g01217100

239-4386 IDLER GP-FRONT–LH

S/N: JEG1-UP

PART OF 239-4341 IDLER GP-FRONT

SMCS-4159 **i05333783**

NOTE	REF NO	GRAPHIC REF	PART NUMBER	QTY	PART NAME 1 2 3 4 5 6 (PRODUCT LEVEL)	SEE PAGE
Y	1	1	*239-4388*	1	TRACK ADJUSTER & RECOIL GP (LH)	266
Y	2	1	**248-7143**	1	IDLER GP-FRONT	256
M	3	1	**8T-4140**	4	BOLT (M16X2X60-MM)	

M - METRIC PART
Y - SEPARATE ILLUSTRATION

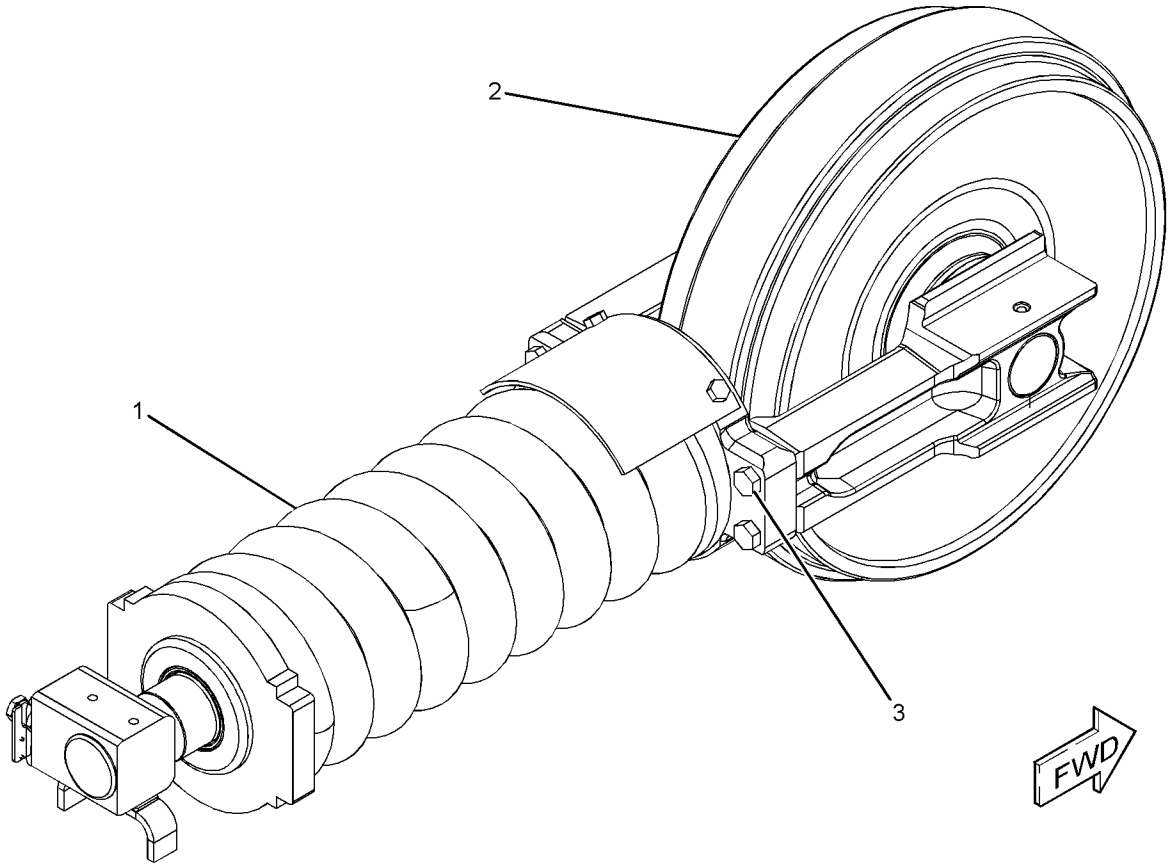

GRAPHIC #1 **<END>** g01217105

248-7143 IDLER GP-FRONT

S/N: JEG1-UP

PART OF 239-4385, 239-4386 IDLER GP-FRONT

SMCS-4159 **i02402541**

NOTE	REF NO	GRAPHIC REF	PART NUMBER	QTY	PART NAME 1 2 3 4 5 6 (PRODUCT LEVEL)	SEE PAGE
	1	1	**9W-2201**	2	SEAL GP-DUO-CONE	
					(EACH INCLUDES)	
		1	**096-4255**	2	RING	
	2	1	**239-4362**	2	BEARING (FRONT IDLER)	
	3	1	**246-5425**	1	SHAFT	
	4	1	**262-4781**	1	IDLER & BEARING AS	
		1	**8E-4359**	2	BEARING	
	5	1	**6V-7658**	2	SEAL-O-RING	
	6	1	**7H-3171**	1	PLUG-PIPE	
	7	1	**9W-9455**	2	PIN	

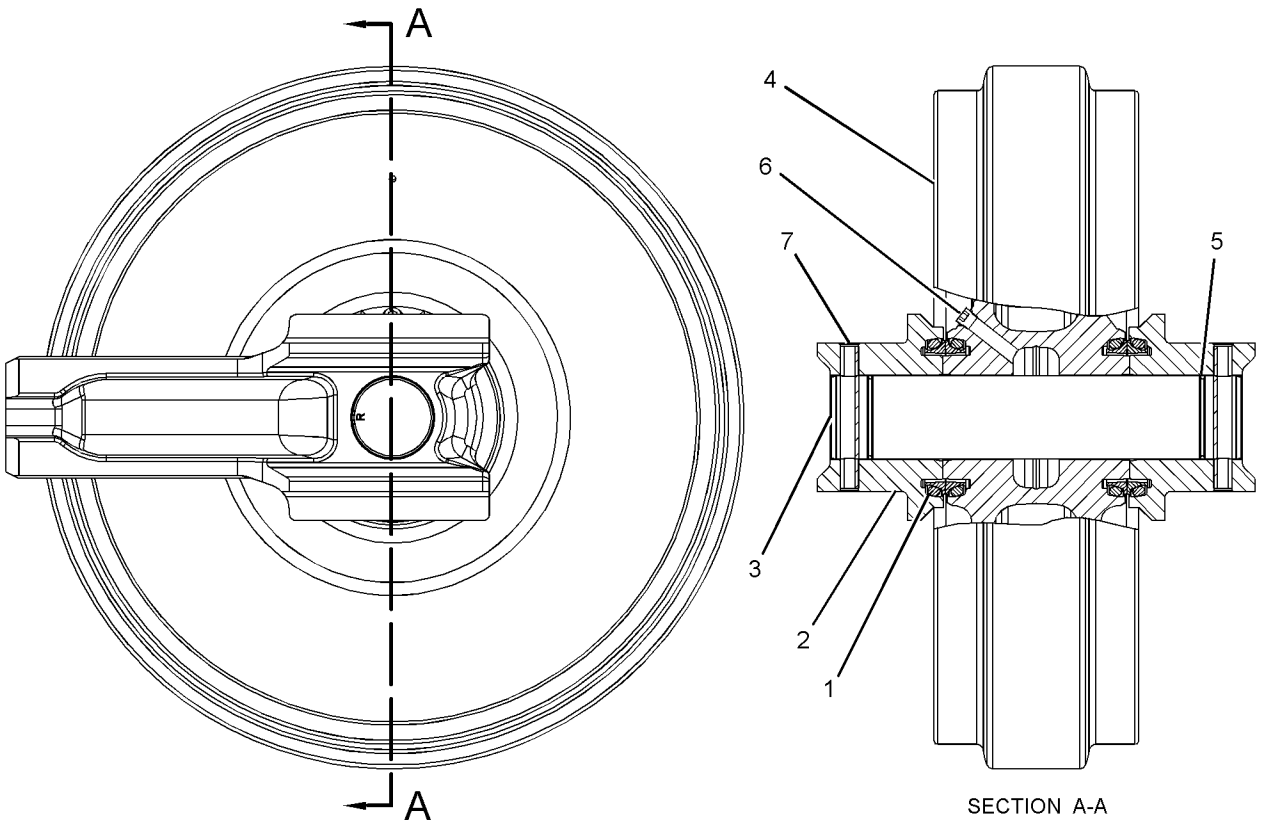

SECTION A-A

GRAPHIC #1 **<END>** g01206925

341-6797 LINK AS-TRACK—GREASE LUBRICATED TRACK

S/N: JEG1-UP

PART OF 341-6799, 359-3119, 397-8767, 415-5237, 415-5238 TRACK GP

AN ATTACHMENT

SMCS-4169, 4171

i04905580

NOTE	REF NO	GRAPHIC REF	PART NUMBER	QTY	PART NAME 1 2 3 4 5 6 (PRODUCT LEVEL)	SEE PAGE
	1	1	**190-3524**	1	BUSHING-TRACK MASTER	
	2	1	**190-3523**	48	BUSHING-TRACK	
	3	1	**9W-3137**	49	LINK-TRACK (RH)	
	4	1	**9W-3138**	49	LINK-TRACK (LH)	
	5	1	**6Y-8185**	1	PIN-TRACK MASTER	
	6	1	**6Y-8186**	48	PIN-TRACK	
	7	1	**158-4381**	2	SEAL-TRACK MASTER	
	8	1	**158-4380**	96	SEAL-TRACK	

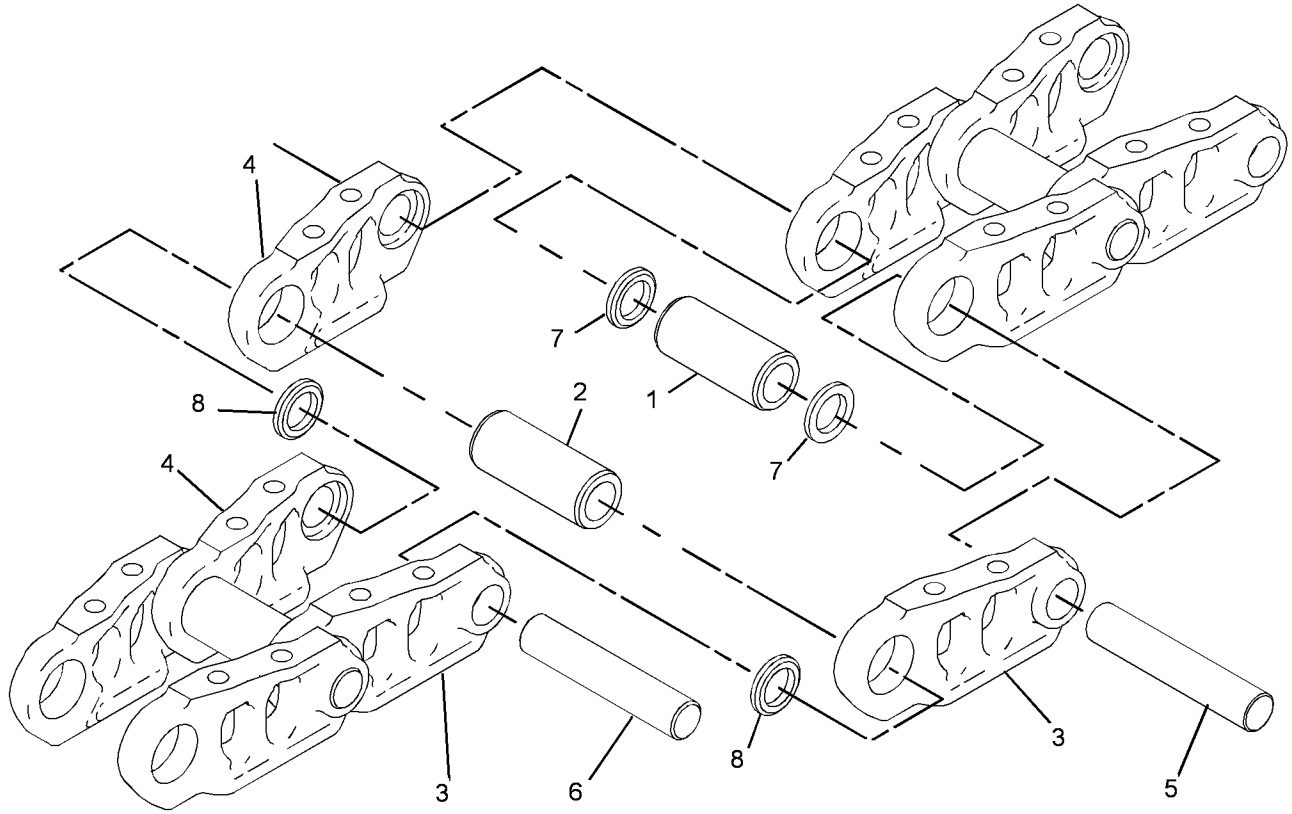

GRAPHIC #1

<END>

g02687036

297-9132 ROLLER AR-TRACK & CARRIER

S/N: JEG1-UP

AN ATTACHMENT

SMCS-4154, 4180 **i03261068**

NOTE	REF NO	GRAPHIC REF	PART NUMBER	QTY	PART NAME 1 2 3 4 5 6 (PRODUCT LEVEL)	SEE PAGE
Y	1	1	**8E-5600**	4	ROLLER GP-TRACK CARRIER	260
Y	2	1	**206-1265**	16	ROLLER GP-TRACK-SINGLE FLANGE	261
M	3	1	**7X-2565**	64	BOLT (M20X2.5X100-MM)	
	4	1	**8T-4123**	64	WASHER (3.62X5.75X0.375-MM THK)	
M	5	1	**8T-5878**	4	BOLT (M24X3X80-MM)	

M - METRIC PART
Y - SEPARATE ILLUSTRATION

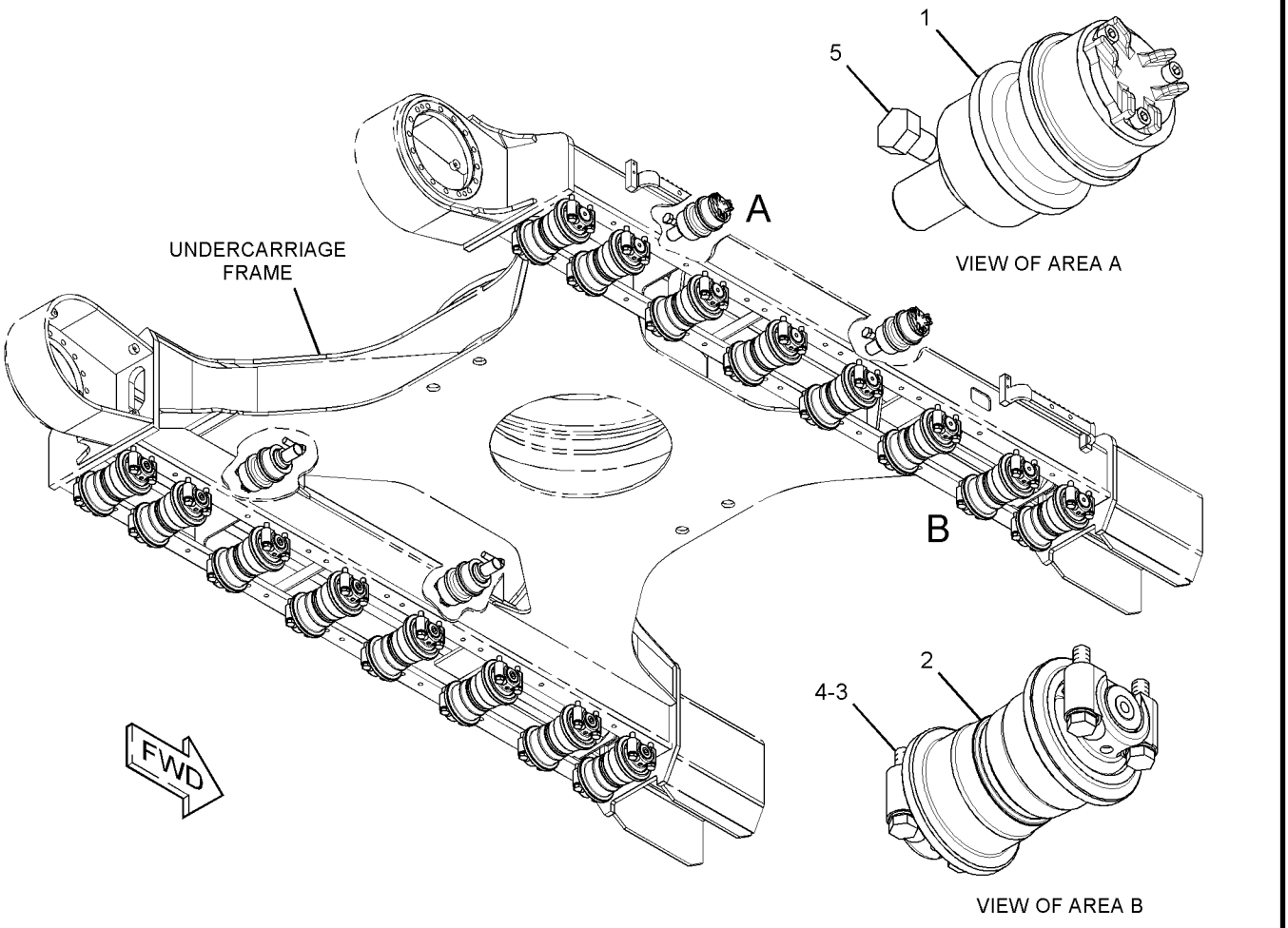

GRAPHIC #1 **<END>** g01360424

297-9316 ROLLER AR-TRACK & CARRIER

S/N: JEG1-UP

PART OF 240-3822 FRAME AR-UNDERCARRIAGE

SMCS-4154, 4180 **i05310572**

NOTE	REF NO	GRAPHIC REF	PART NUMBER	QTY	PART NAME 1 2 3 4 5 6 (PRODUCT LEVEL)	SEE PAGE
Y	1	1	**8E-5600**	4	ROLLER GP-TRACK CARRIER	260
Y	2	1	**348-1867**	16	ROLLER GP-TRACK-SINGLE FLANGE	262
M	3	1	**7X-2565**	64	BOLT (M20X2.5X100-MM)	
	4	1	**8T-4123**	64	WASHER (3.62X5.75X0.375-MM THK)	
M	5	1	**8T-5878**	4	BOLT (M24X3X80-MM)	

M - METRIC PART
Y - SEPARATE ILLUSTRATION
QUANTITIES SHOWN ARE THOSE REQUIRED FOR BOTH LH AND RH SIDES

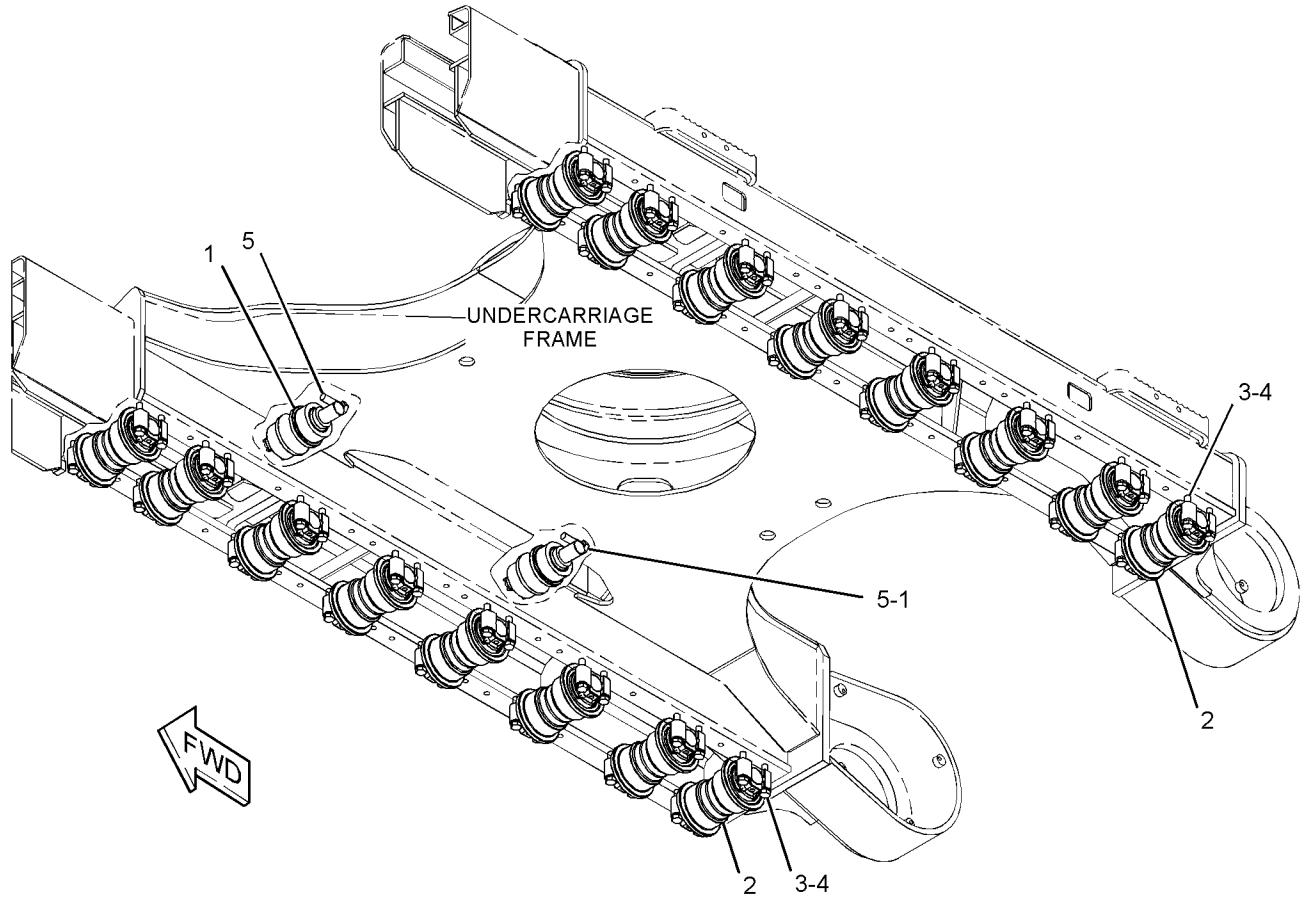

GRAPHIC #1 **<END>** g02723017

8E-5600 ROLLER GP-TRACK CARRIER

S/N: JEG1-UP

PART OF 297-9132, 297-9316 ROLLER AR-TRACK & CARRIER

ALSO AN ATTACHMENT

SMCS-4154 **i02752189**

NOTE	REF NO	GRAPHIC REF	PART NUMBER	QTY	PART NAME 1 2 3 4 5 6 (PRODUCT LEVEL)	SEE PAGE
	1	1	**8E-5601**	1	SHAFT AS-TRACK ROLLER	
		1	**8E-5604**	1	COLLAR-ROLLER END	
		1	**8E-5607**	1	SHAFT-TRACK ROLLER	
	2	1	**8E-5608**	1	SEAL GP-DUO-CONE	
	3	1	**8E-5602**	1	ROLLER & BEARING AS	
	3A	1	**8E-6792**	1	BEARING-TRACK ROLLER	
	3B	1	**8E-6793**	1	BEARING-TRACK ROLLER	
	4	1	**8E-5606**	1	RETAINER	
	5	1	**6V-7661**	1	SEAL-O-RING	
M	6	1	**8T-1159**	5	BOLT-SOCKET HEAD (M10X1.5X25-MM)	
	7	1	**8E-5605**	1	COVER-CARRIER ROLLER	
	8	1	**7H-3171**	1	PLUG-PIPE	

M - METRIC PART

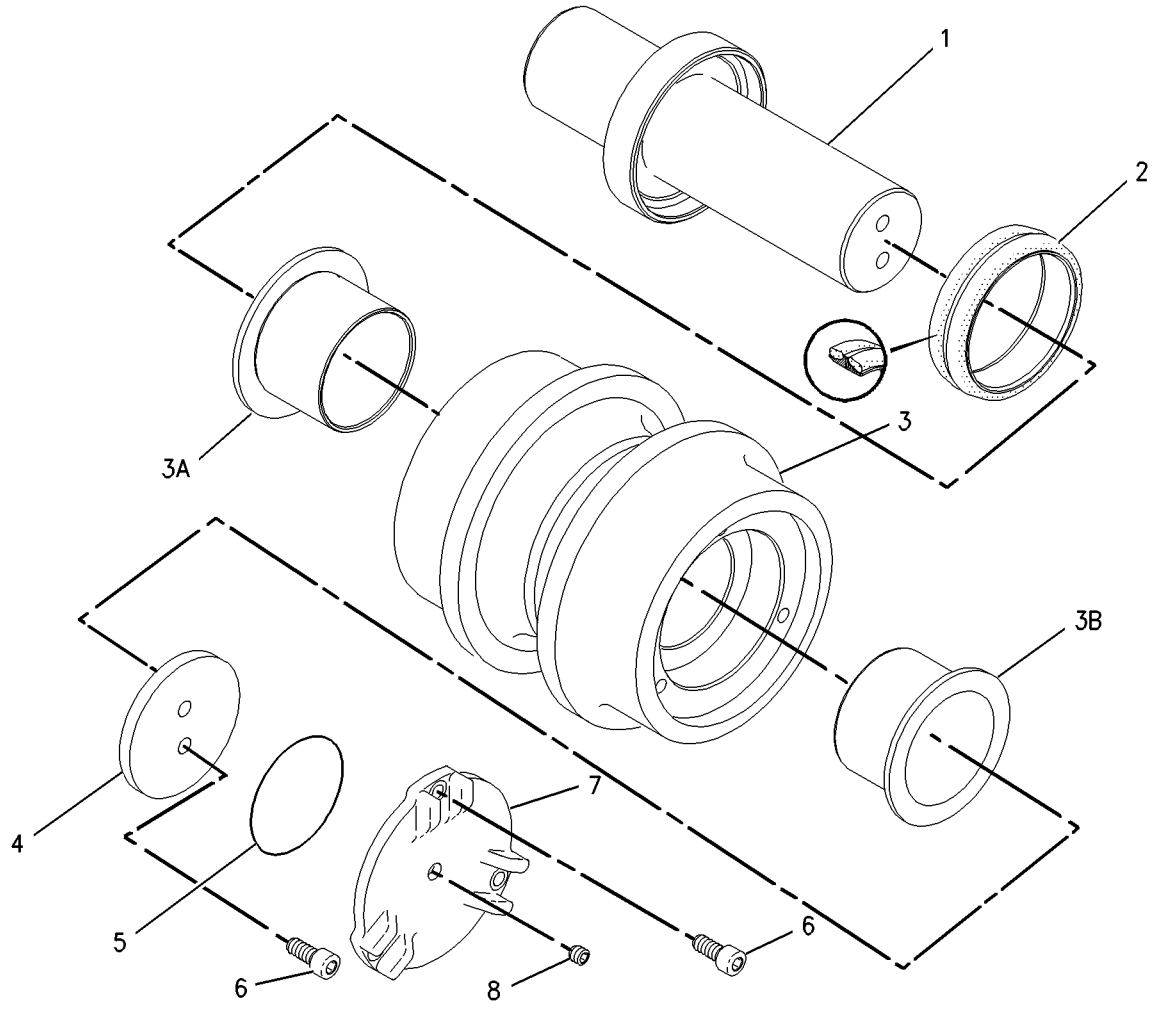

GRAPHIC #1 **<END>** g00715793

206-1265 ROLLER GP-TRACK-SINGLE FLANGE

S/N: JEG1-UP

PART OF 297-9132 ROLLER AR-TRACK & CARRIER

AN ATTACHMENT

SMCS-4180 **i02942857**

NOTE	REF NO	GRAPHIC REF	PART NUMBER	QTY	PART NAME 1 2 3 4 5 6 (PRODUCT LEVEL)	SEE PAGE
	1	1	**209-3313**	1	ROLLER & BEARING AS (SINGLE FLANGE)	
	1A	1	**8E-5599**	2	BEARING-TRACK ROLLER	
	2	1	**7F-8268**	2	SEAL-O-RING	
	3	1	**3E-3217**	2	DOWEL	
	4	1	**8E-5037**	2	COLLAR-TRACK ROLLER	
	5	1	**9W-2146**	1	PLUG	
	6	1	**206-9211**	2	SEAL GP-DUO-CONE	
					(EACH INCLUDES)	
		1	**162-2168**	2	RING-TORIC	
	7	1	**209-3312**	1	SHAFT-TRACK ROLLER	

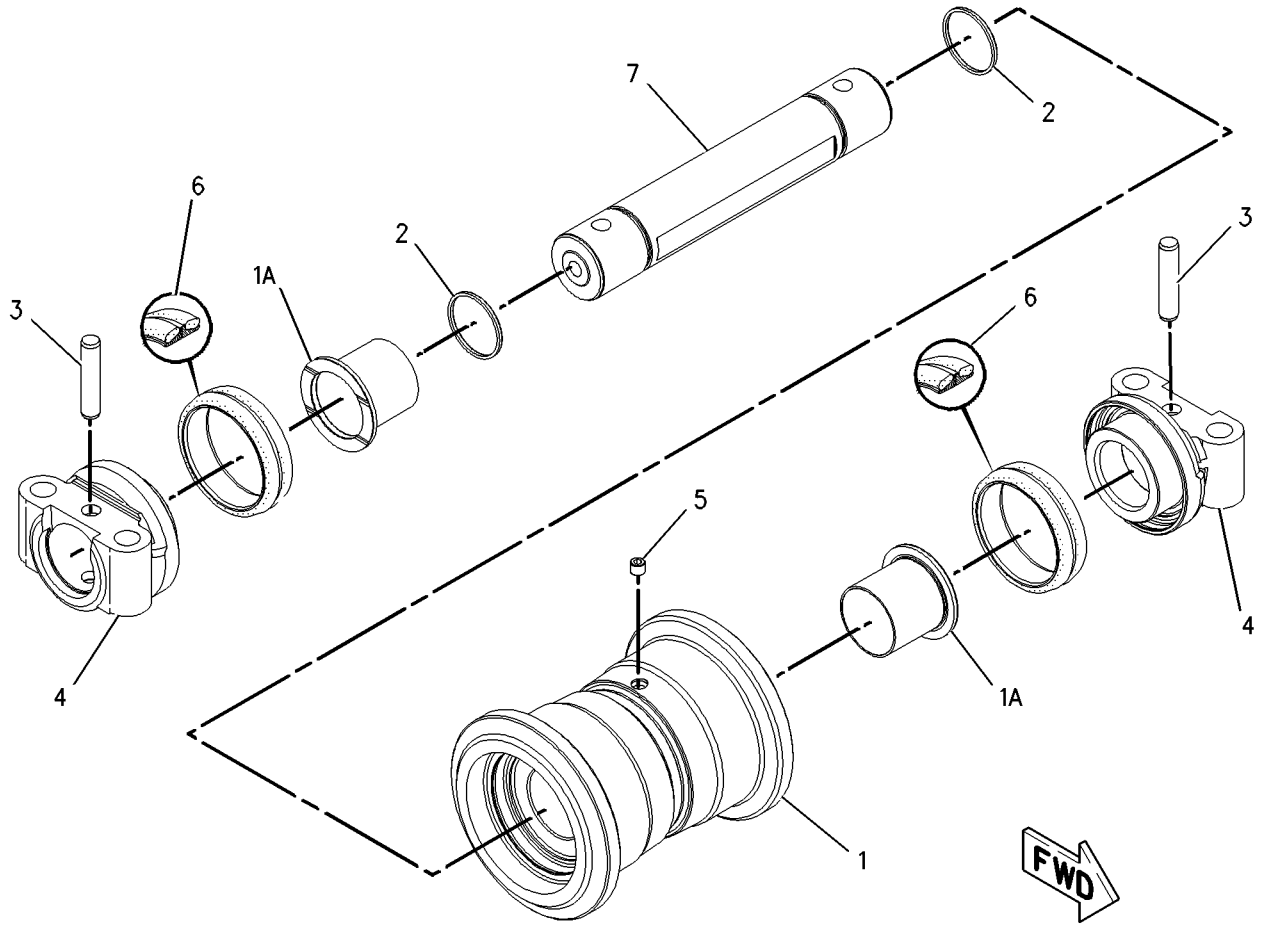

GRAPHIC #1 **<END>** g00989923

348-1867 ROLLER GP-TRACK-SINGLE FLANGE

S/N: JEG1-UP

PART OF 297-9316 ROLLER AR-TRACK & CARRIER

SMCS-4180 **i05344698**

NOTE	PART NUMBER	QTY	PART NAME 1 2 3 4 5 6 (PRODUCT LEVEL)	SEE PAGE
Y	*360-5863*	1	ROLLER GP-TRACK-SINGLE FLANGE	263
			(OIL HOLE IN RIM)	
			—OR—	
Y	*360-5864*	1	ROLLER GP-TRACK-SINGLE FLANGE	264
			(OIL HOLE IN COLLAR)	

Y - SEPARATE ILLUSTRATION

<END>

360-5863 ROLLER GP-TRACK-SINGLE FLANGE

S/N: JEG1-UP

PART OF 348-1867 ROLLER GP-TRACK-SINGLE FLANGE

SMCS-4180 **i04598669**

NOTE	REF NO	GRAPHIC REF	PART NUMBER	QTY	PART NAME 1 2 3 4 5 6 (PRODUCT LEVEL)	SEE PAGE
	1	1	**8E-5037**	2	COLLAR-TRACK ROLLER	
	2	1	**9W-2142**	2	SEAL GP-DUO-CONE	
					(EACH INCLUDES)	
		1	**096-4295**	2	RING-SEALING	
	3	1	**9W-2146**	1	PLUG	
	4	1	*360-5865*	1	ROLLER & BEARING AS	
	4A	1	**8E-5599**	2	BEARING-TRACK ROLLER	
	5	1	**7F-8268**	2	SEAL-O-RING	
	6	1	**3E-3217**	2	DOWEL	

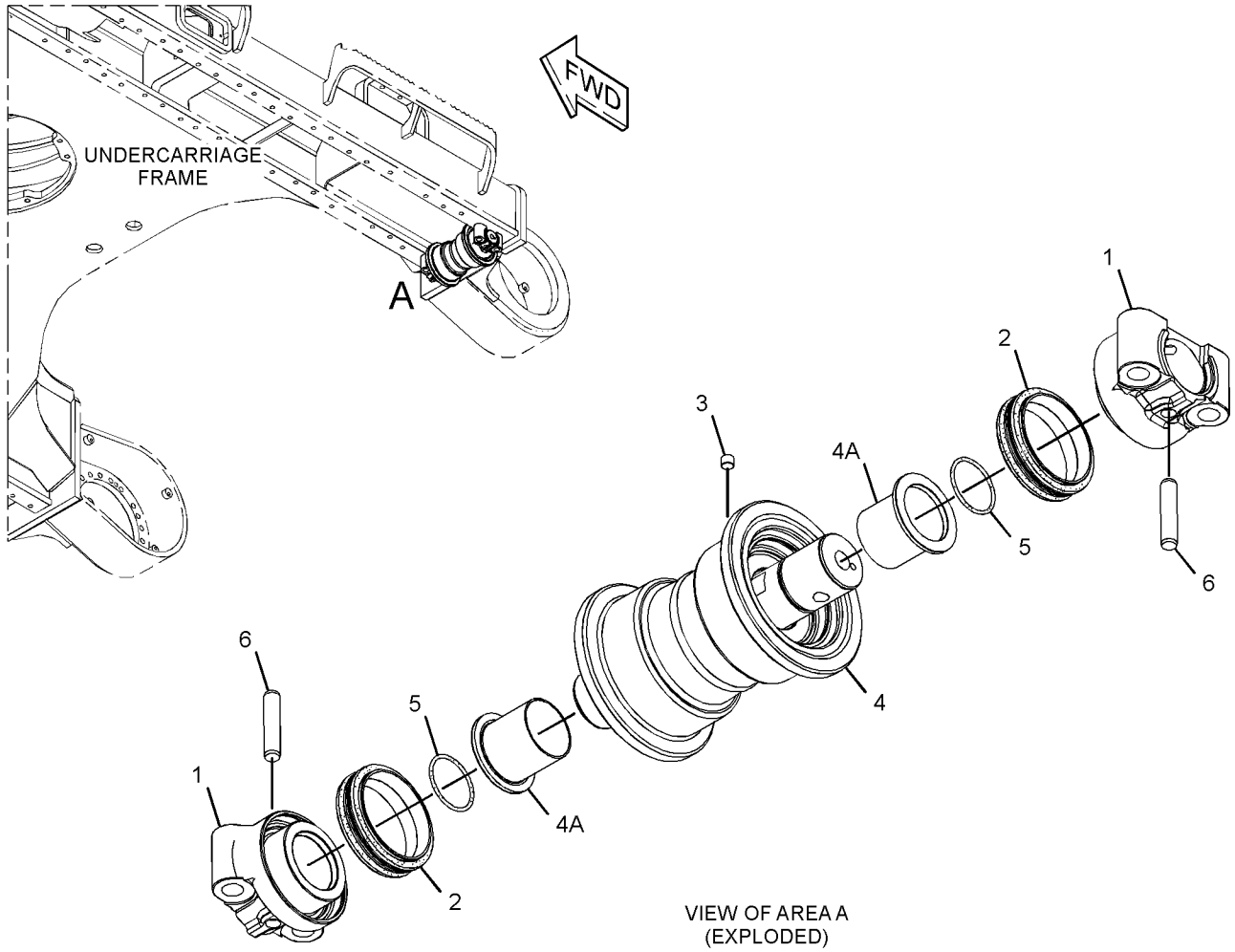

VIEW OF AREA A
(EXPLODED)

GRAPHIC #1 **<END>** g02723063

360-5864 ROLLER GP-TRACK-SINGLE FLANGE

S/N: JEG1-UP

PART OF 348-1867 ROLLER GP-TRACK-SINGLE FLANGE

SMCS-4180 **i04598730**

NOTE	REF NO	GRAPHIC REF	PART NUMBER	QTY	PART NAME 1 2 3 4 5 6 (PRODUCT LEVEL)	SEE PAGE
	1	1	**8E-5032**	1	ROLLER & BEARING AS	
	1A	1	**8E-5599**	2	BEARING-TRACK ROLLER	
	2	1	**9W-2142**	2	SEAL GP-DUO-CONE	
					(EACH INCLUDES)	
		1	**096-4295**	2	RING-SEALING	
	3	1	**348-1869**	1	COLLAR-TRACK ROLLER	
	4	1	**348-1870**	1	COLLAR-TRACK ROLLER	
	5	1	**348-1871**	1	SHAFT	
	6	1	**3E-3217**	2	DOWEL	
	7	1	**7F-8268**	2	SEAL-O-RING	
	8	1	**7H-3171**	1	PLUG-PIPE	

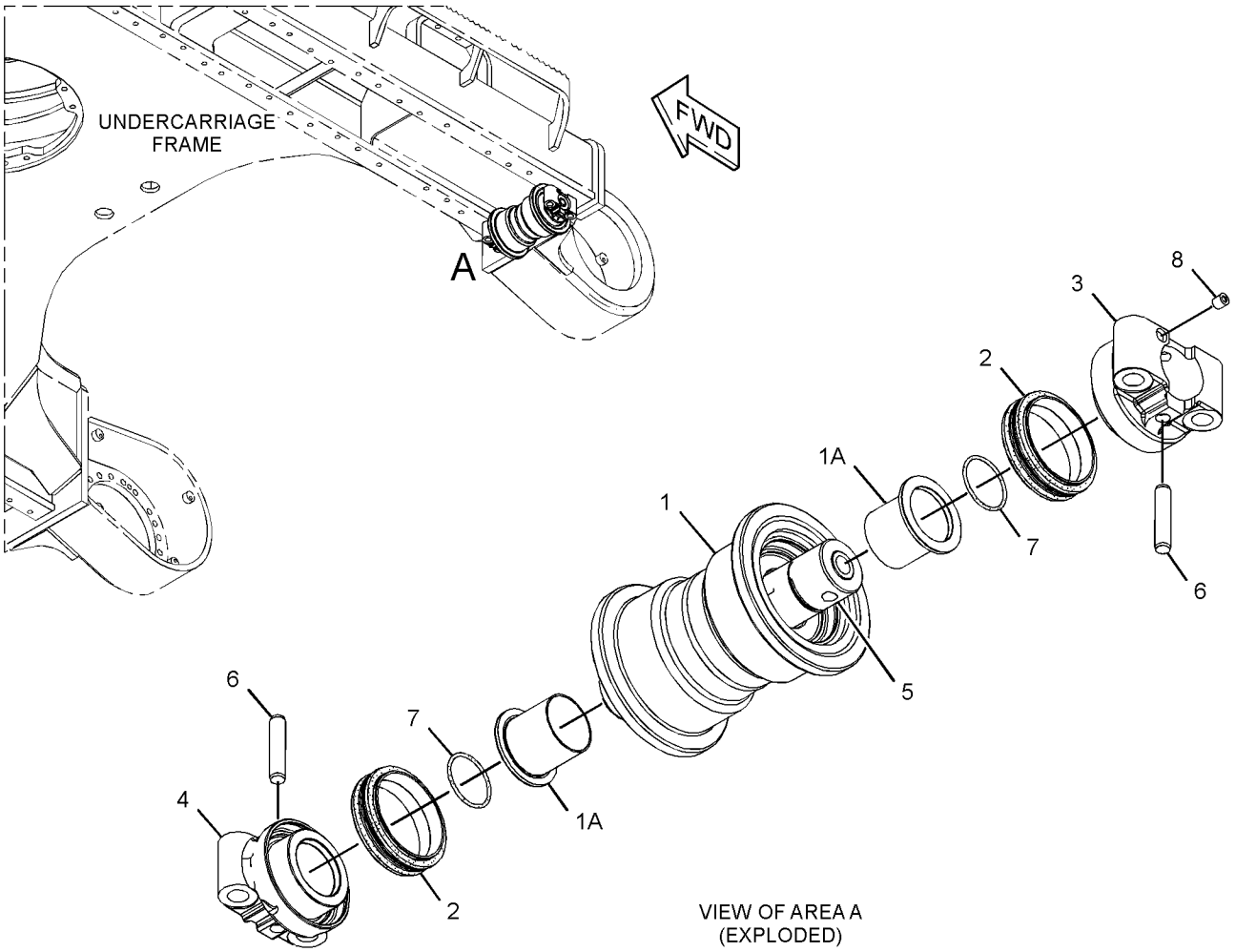

VIEW OF AREA A (EXPLODED)

GRAPHIC #1 **<END>** g02723066

239-4387 TRACK ADJUSTER & RECOIL GP–RH

S/N: JEG1-UP

PART OF 239-4385 IDLER GP-FRONT

SMCS-4157, 4158 **i02769449**

NOTE	REF NO	GRAPHIC REF	PART NUMBER	QTY	PART NAME 1 2 3 4 5 6 (PRODUCT LEVEL)	SEE PAGE
	1	1	**7Y-1746**	1	PLATE	
	2	1	**168-6761**	1	PLATE AS	
		1	**4B-4158**	4	SCREW-DRIVE (NO 4X0.25-IN)	
		1	**253-1346**	1	PLATE-WARNING (HIGH PRESSURE CYLINDER)	
Y	3	1	*239-4389*	1	TRACK ADJUSTER & RECOIL GP	267
M	4	1	**8T-4137**	2	BOLT (M10X1.5X20-MM)	

M - METRIC PART
Y - SEPARATE ILLUSTRATION

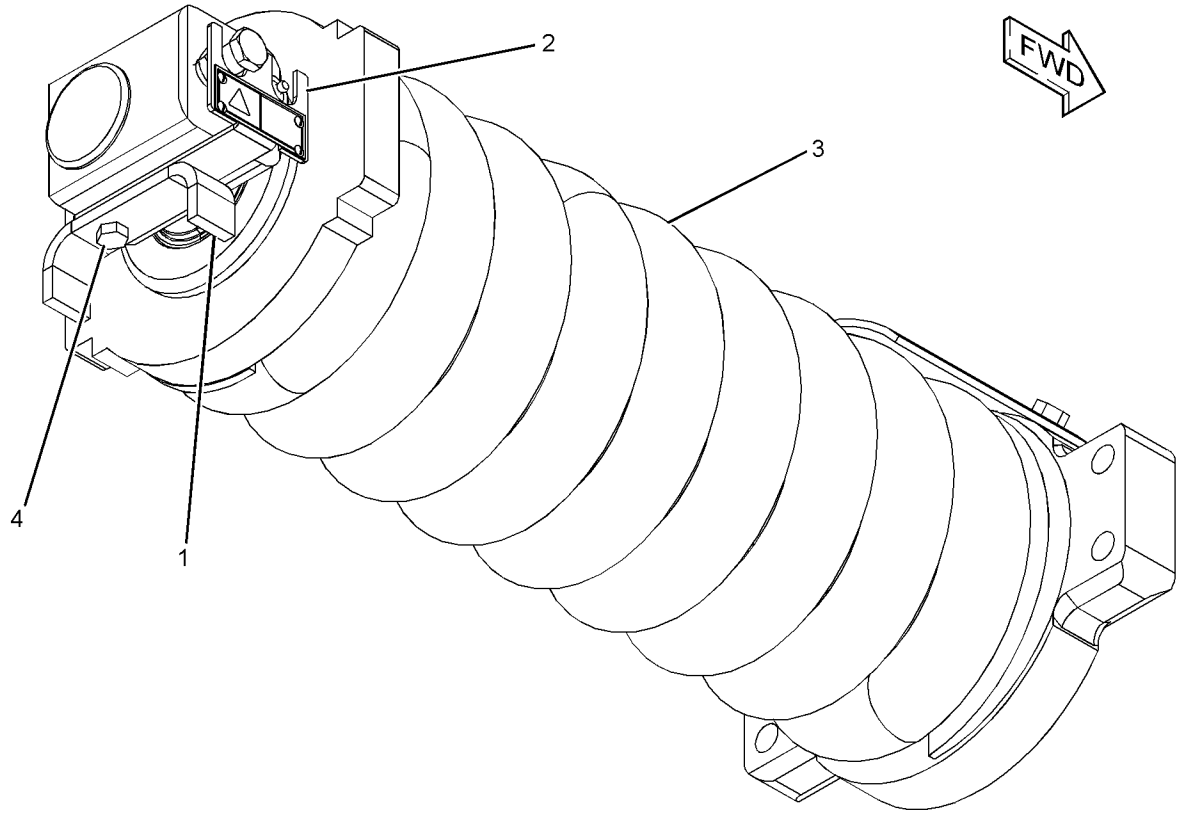

GRAPHIC #1 **<END>** g01217204

239-4388 TRACK ADJUSTER & RECOIL GP–LH

S/N: JEG1-UP

PART OF 239-4386 IDLER GP-FRONT

SMCS-4157, 4158 **i02769561**

NOTE	REF NO	GRAPHIC REF	PART NUMBER	QTY	PART NAME 1 2 3 4 5 6 (PRODUCT LEVEL)	SEE PAGE
	1	1	**7Y-1746**	1	PLATE	
	2	1	**168-6761**	1	PLATE AS	
		1	**4B-4158**	4	SCREW-DRIVE (NO 4X0.25-IN)	
		1	**253-1346**	1	PLATE-WARNING (HIGH PRESSURE CYLINDER)	
Y	3	1	*239-4389*	1	TRACK ADJUSTER & RECOIL GP	267
M	4	1	**8T-4137**	2	BOLT (M10X1.5X20-MM)	

M - METRIC PART
Y - SEPARATE ILLUSTRATION

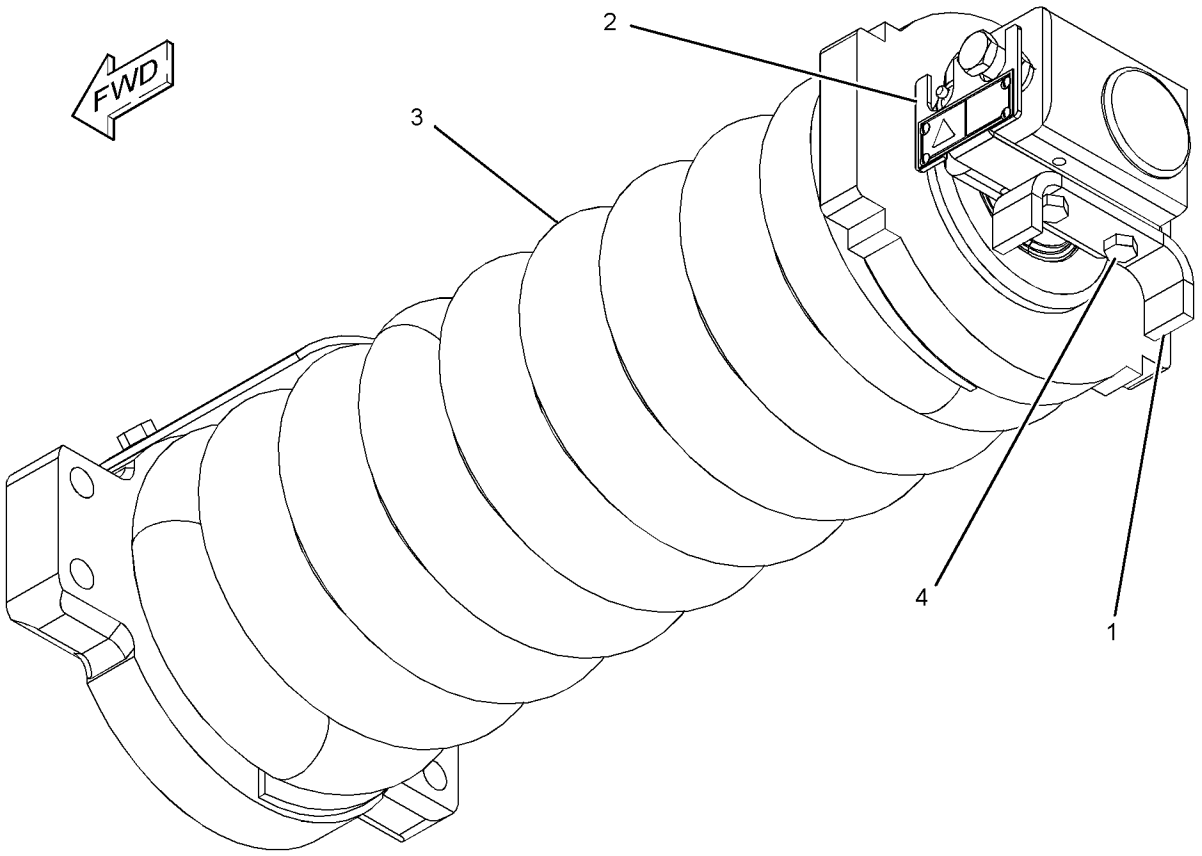

GRAPHIC #1 **<END>** g01217224

239-4389 TRACK ADJUSTER & RECOIL GP

S/N: JEG1-UP

PART OF 239-4387, 239-4388 TRACK ADJUSTER & RECOIL GP

SMCS-4157, 4158 **i04941437**

NOTE	REF NO	GRAPHIC REF	PART NUMBER	QTY	PART NAME 1 2 3 4 5 6 (PRODUCT LEVEL)	SEE PAGE
	1	1	**7Y-1781**	1	COVER	
	2	1	**145-3035**	1	PLATE	
	3	1	**340-8237**	1	SPRING	
	4	1	**239-4378**	1	SUPPORT	
	5	1	**239-4382**	1	NUT (M48X5-THD)	
	6	1	**239-4383**	1	STRIP	
	7	1	**239-4384**	1	SPACER (49X95X72-MM THK)	
Y	8	1	**239-4390**	1	TRACK ADJUSTER & RECOIL GP	268
	9	1	**239-4393**	1	WASHER (50X78X8-MM THK)	
M	10	1	**7X-2536**	2	BOLT (M8X1.25X14-MM)	
M	11	1	**8T-4179**	2	BOLT (M12X1.75X20-MM)	

M - METRIC PART
Y - SEPARATE ILLUSTRATION

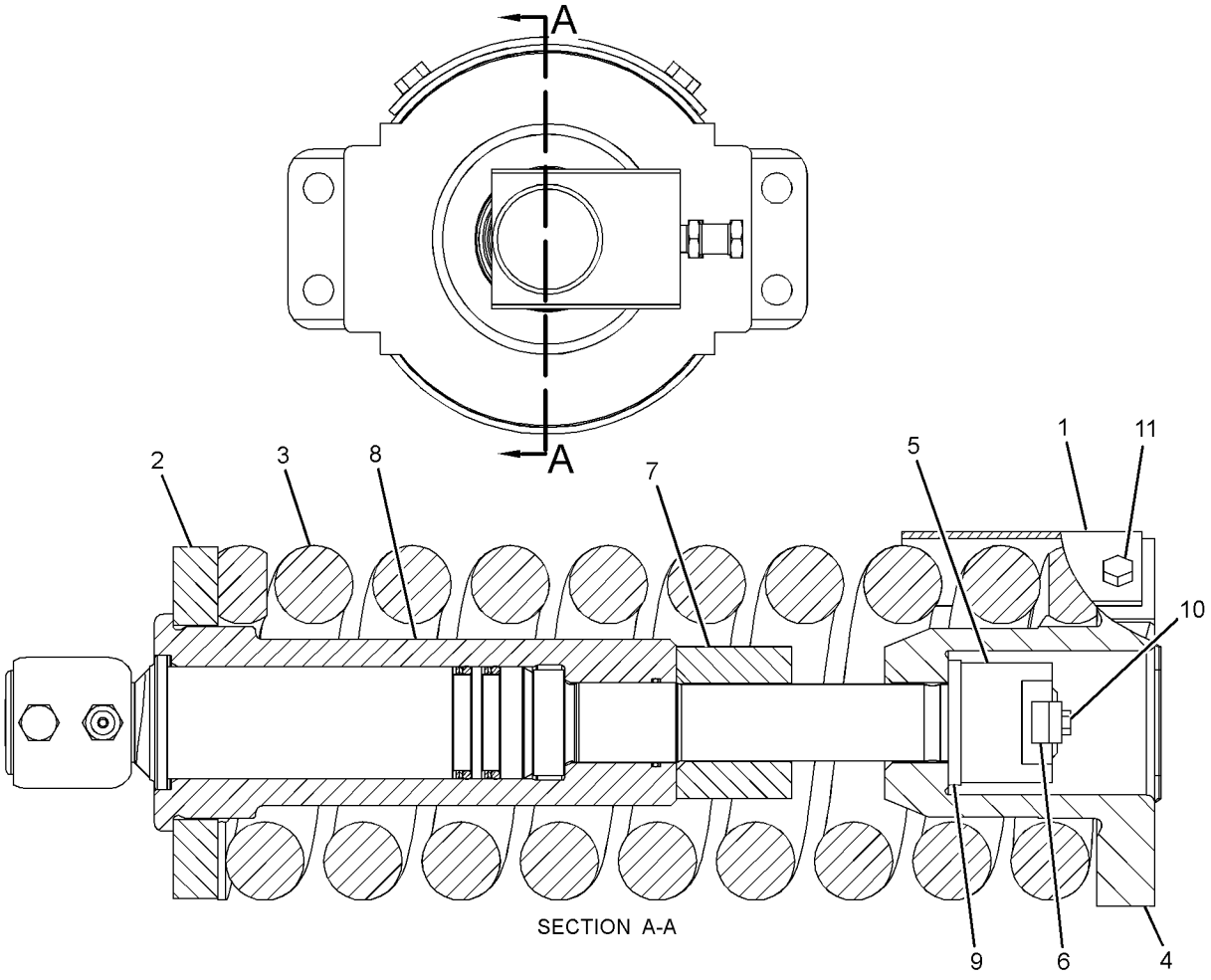

SECTION A-A

GRAPHIC #1 **<END>** g01217233

239-4390 TRACK ADJUSTER & RECOIL GP

S/N: JEG1-UP

PART OF 239-4389 TRACK ADJUSTER & RECOIL GP

SMCS-4157, 4158 **i04359438**

NOTE	REF NO	GRAPHIC REF	PART NUMBER	QTY	PART NAME 1 2 3 4 5 6 (PRODUCT LEVEL)	SEE PAGE
	1	1	**2S-5926**	1	VALVE-RELIEF	
	2	1	**7Y-0682**	2	RING	
	3	1	**093-1436**	1	SEAL-LIP TYPE	
	4	1	**093-1512**	2	RING	
	5	1	**095-2927**	1	VALVE-FILL	
	6	1	**145-3031**	1	PISTON AS	
	7	1	**239-4391**	1	ROD	
	8	1	**239-4392**	1	CYLINDER	
	9	1	**239-4394**	1	RING-BACKUP	
	10	1	**248-7174**	2	SEAL-O-RING	
	11	1	**095-1704**	1	SEAL-O-RING	

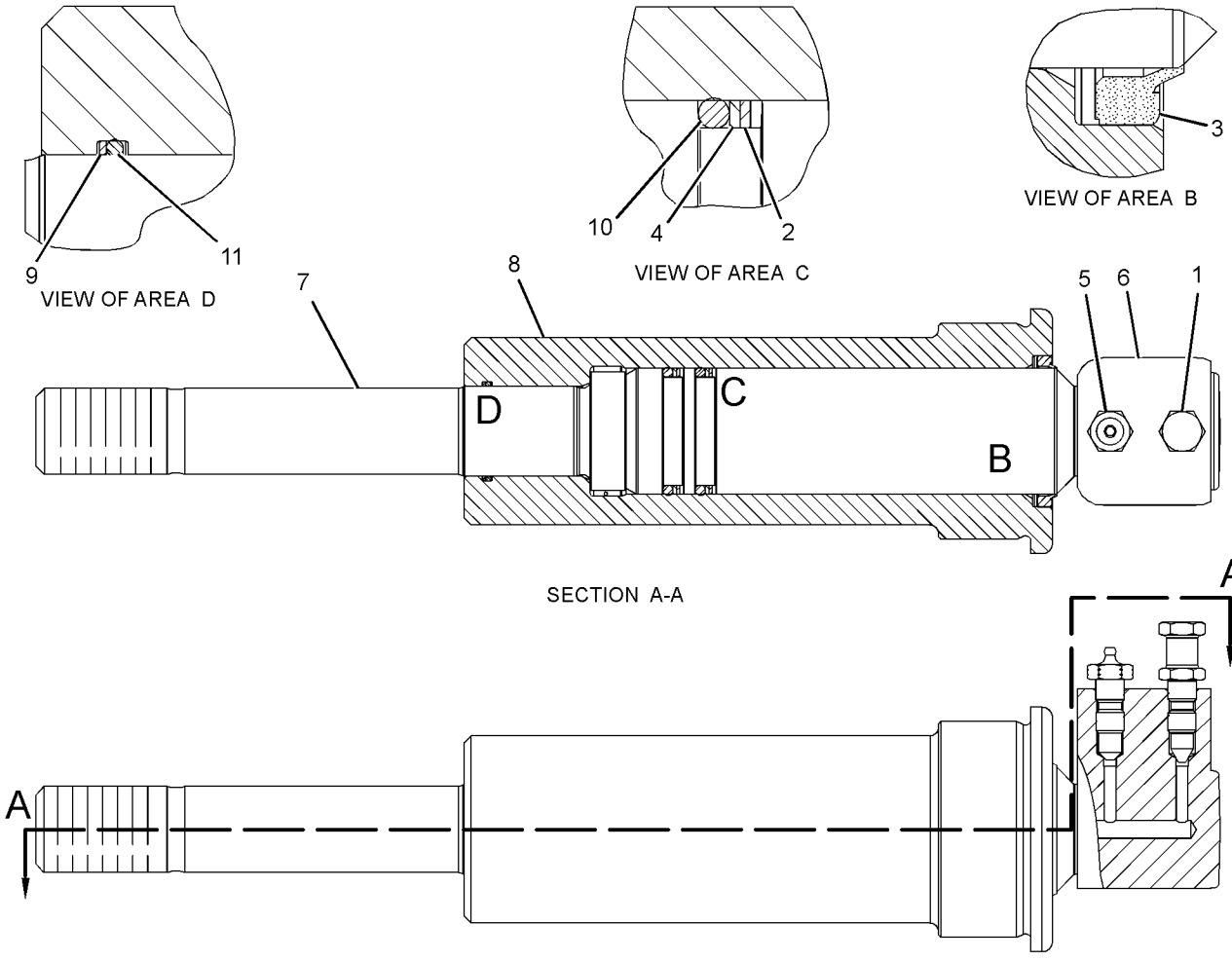

GRAPHIC #1 **<END>** g02512796

421-3660 TRACK AR–2-REQUIRED

S/N: JEG1-UP
790-MM (31.1-IN) TRIPLE GROUSER SHOE W/STEPS
AN ATTACHMENT

SMCS-4170 **i05536890**

NOTE	PART NUMBER	QTY	PART NAME 1 2 3 4 5 6 (PRODUCT LEVEL)	SEE PAGE
Y	*235-7764*	1	STEP GP	242
Y	*359-3119*	1	TRACK GP	269

Y - SEPARATE ILLUSTRATION

<END>

341-6799 TRACK GP–2-REQUIRED

S/N: JEG1-UP
600-MM (24-IN) TRIPLE GROUSER SHOE. GREASE LUBRICATED TRACK
AN ATTACHMENT

SMCS-4170 **i05439965**

NOTE	PART NUMBER	QTY	PART NAME 1 2 3 4 5 6 (PRODUCT LEVEL)	SEE PAGE
Y	**341-6797**	1	LINK AS-TRACK	257
M	**9W-3619**	196	BOLT-TRACK (M20X1.5X55-MM)	
M	**9W-3361**	196	NUT-TRACK (M20X1.5-THD)	
	126-5062	49	SHOE-TRACK	

M - METRIC PART
Y - SEPARATE ILLUSTRATION

<END>

359-3119 TRACK GP–2-REQUIRED

S/N: JEG1-UP
790-MM (31-IN) TRIPLE GROUSER SHOE. GREASE LUBRICATED TRACK
PART OF 421-3660 TRACK AR
AN ATTACHMENT

SMCS-4170 **i05432627**

NOTE	PART NUMBER	QTY	PART NAME 1 2 3 4 5 6 (PRODUCT LEVEL)	SEE PAGE
Y	**341-6797**	1	LINK AS-TRACK	257
M	**9W-3619**	196	BOLT-TRACK (M20X1.5X55-MM)	
M	**9W-3361**	196	NUT-TRACK (M20X1.5-THD)	
	332-8903	49	SHOE-TRACK	

M - METRIC PART
Y - SEPARATE ILLUSTRATION

<END>

397-8767 TRACK GP–2-REQUIRED

S/N: JEG1-UP

600-MM (23.6-IN) TRIPLE GROUSER SHOE, TRAPEZOID. GREASE LUBRICATED TRACK

AN ATTACHMENT

SMCS-4170 **i05433212**

NOTE	PART NUMBER	QTY	PART NAME 1 2 3 4 5 6 (PRODUCT LEVEL)	SEE PAGE
Y	**341-6797**	1	LINK AS-TRACK	257
M	**6Y-0846**	196	BOLT-TRACK (M20X1.5X63-MM)	
M	**9W-3361**	196	NUT-TRACK (M20X1.5-THD)	
	106-0615	49	SHOE-TRACK	

M - METRIC PART
Y - SEPARATE ILLUSTRATION

<END>

415-5237 TRACK GP–2-REQUIRED

S/N: JEG1-UP

700-MM (27.6-IN) TRIPLE GROUSER SHOE. GREASE LUBRICATED TRACK

AN ATTACHMENT

SMCS-4170 **i04905541**

NOTE	PART NUMBER	QTY	PART NAME 1 2 3 4 5 6 (PRODUCT LEVEL)	SEE PAGE
Y	**341-6797**	1	LINK AS-TRACK	257
M	**9W-3619**	196	BOLT-TRACK (M20X1.5X55-MM)	
M	**9W-3361**	196	NUT-TRACK (M20X1.5-THD)	
	6I-9454	49	SHOE-TRACK	

M - METRIC PART
Y - SEPARATE ILLUSTRATION

<END>

415-5238 TRACK GP–2-REQUIRED

S/N: JEG1-UP

700-MM (27.6-IN) DOUBLE GROUSER SHOE. GREASE LUBRICATED TRACK

AN ATTACHMENT

SMCS-4170 **i04905573**

NOTE	PART NUMBER	QTY	PART NAME 1 2 3 4 5 6 (PRODUCT LEVEL)	SEE PAGE
Y	**341-6797**	1	LINK AS-TRACK	257
M	**6Y-0846**	196	BOLT-TRACK (M20X1.5X63-MM)	
M	**9W-3361**	196	NUT-TRACK (M20X1.5-THD)	
	106-0616	49	SHOE-TRACK	

M - METRIC PART
Y - SEPARATE ILLUSTRATION

<END>

4I-1536 ACCUMULATOR GP-HYDRAULIC–CHARGED

S/N: JEG1-UP

PART OF 087-4456 ACCUMULATOR GP-HYDRAULIC

SMCS-5077 **i00823582**

NOTE	REF NO	GRAPHIC REF	PART NUMBER	QTY	PART NAME 1 2 3 4 5 6 (PRODUCT LEVEL)	SEE PAGE
	1	1	**4I-5862**	1	CAP	
	2	1	**4I-1539**	1	CORE	

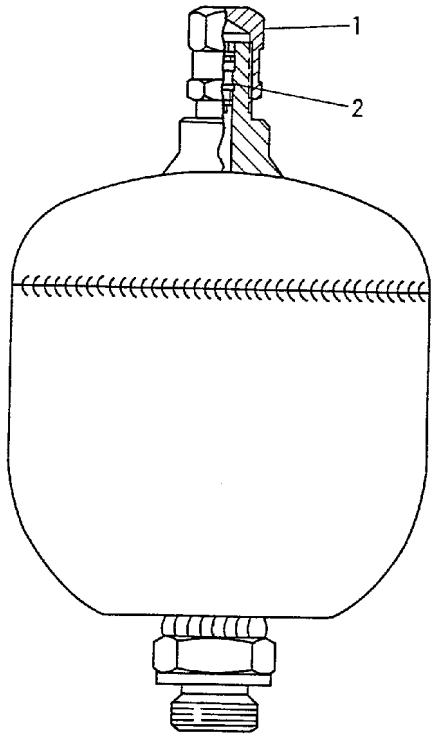

GRAPHIC #1 **<END>** g00222004

5I-8416 ACCUMULATOR GP-HYDRAULIC—CHARGED

S/N: JEG1-UP

PART OF 087-4456 ACCUMULATOR GP-HYDRAULIC

SMCS-5077 **i00823584**

NOTE	REF NO	GRAPHIC REF	PART NUMBER	QTY	PART NAME 1 2 3 4 5 6 (PRODUCT LEVEL)	SEE PAGE
	1	1	**4I-8267**	1	CAP	
Y	2	1	*087-4454*	1	ACCUMULATOR GP-HYDRAULIC (CHARGED)	273

Y - SEPARATE ILLUSTRATION

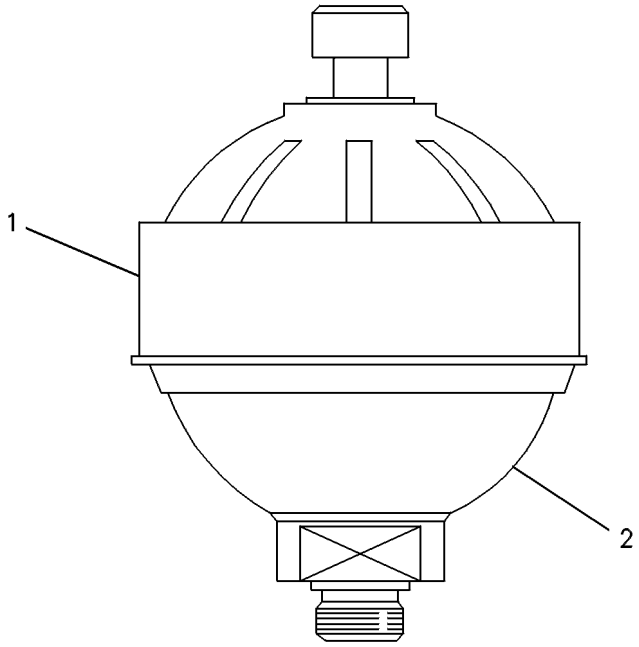

GRAPHIC #1 **<END>** g00237219

087-4454 ACCUMULATOR GP-HYDRAULIC—CHARGED

S/N: JEG1-UP

PART OF 5I-8416 ACCUMULATOR GP-HYDRAULIC

SMCS-5077 **i00827965**

NOTE	REF NO	GRAPHIC REF	PART NUMBER	QTY	PART NAME 1 2 3 4 5 6 (PRODUCT LEVEL)	SEE PAGE
	1	1	**087-4577**	1	SEAL	
	2	1	**087-4576**	1	CAP	
	3	1	**087-4575**	1	CORE	

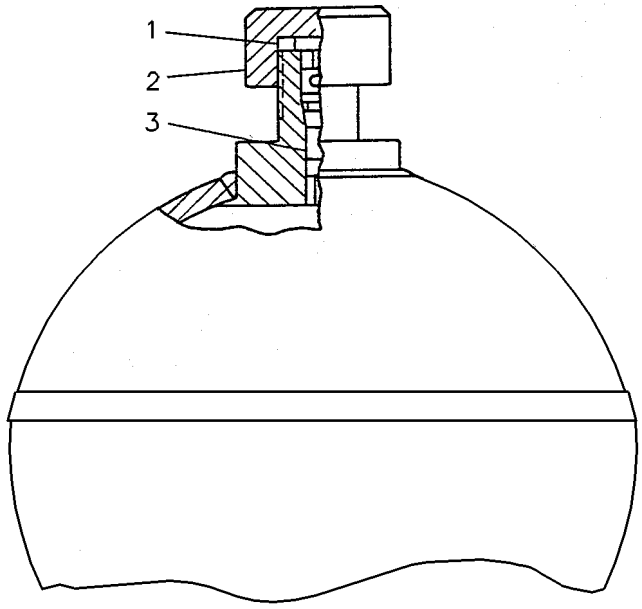

GRAPHIC #1 **<END>** g00221492

087-4456 ACCUMULATOR GP-HYDRAULIC—CHARGED

S/N: JEG1-UP

FIELD REPLACEMENT ORDER 227-8807—PAGE: 277

PART OF 164-6981 ACCUMULATOR GP-HYDRAULIC

SMCS-5077 **i02837812**

NOTE	PART NUMBER	QTY	PART NAME 1 2 3 4 5 6 (PRODUCT LEVEL)	SEE PAGE
Y	*4I-1536*	1	ACCUMULATOR GP-HYDRAULIC (CHARGED)	271
			-OR-	
Y	*5I-8416*	1	ACCUMULATOR GP-HYDRAULIC (CHARGED)	272
			-OR-	
Y	*145-5106*	1	ACCUMULATOR GP-HYDRAULIC (CHARGED)	275

Y - SEPARATE ILLUSTRATION

<END>

145-5106 ACCUMULATOR GP-HYDRAULIC–CHARGED

S/N: JEG1-UP

PART OF 087-4456 ACCUMULATOR GP-HYDRAULIC

SMCS-5077 **i02837951**

NOTE	REF NO	GRAPHIC REF	PART NUMBER	QTY	PART NAME 1 2 3 4 5 6 (PRODUCT LEVEL)	SEE PAGE
	1	1	**159-4700**	1	FILM-WARNING (HIGH PRESSURE CYLINDER)	

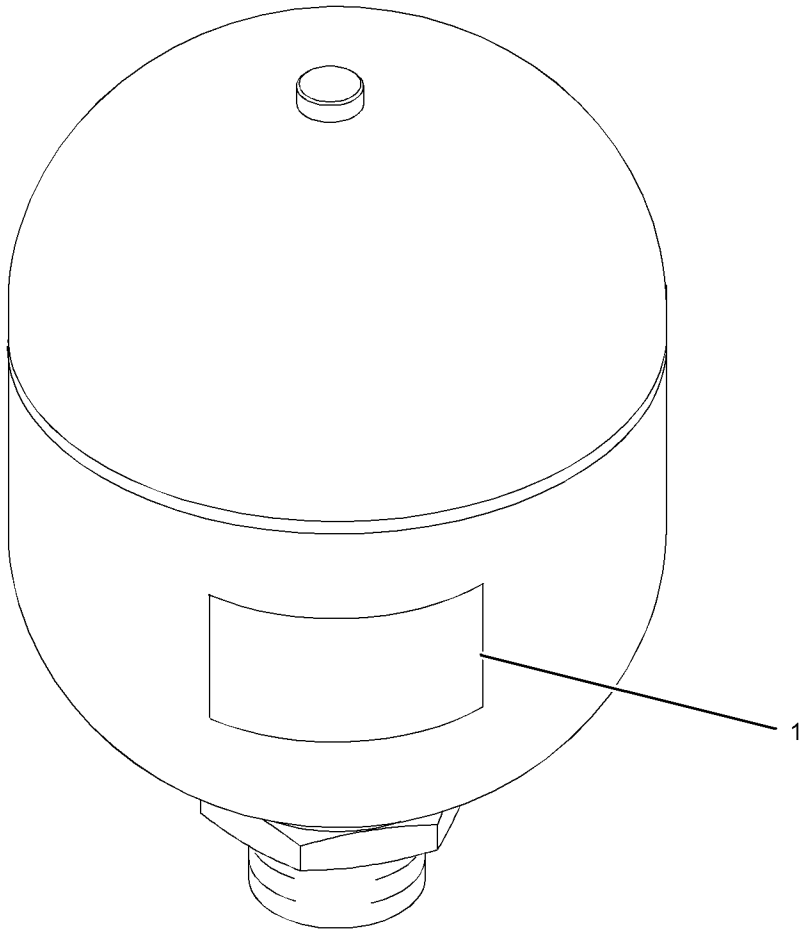

GRAPHIC #1 **<END>** g01288209

164-6981 ACCUMULATOR GP-HYDRAULIC—CHARGED

S/N: JEG1-UP

PART OF 398-4602 LINES GP-PILOT

SMCS-5077 **i03440920**

NOTE	PART NUMBER	QTY	PART NAME 1 2 3 4 5 6 (PRODUCT LEVEL)	SEE PAGE
Y	**087-4456**	1	ACCUMULATOR GP-HYDRAULIC (CHARGED)	274
	3K-0360	1	SEAL-O-RING	

Y - SEPARATE ILLUSTRATION

<END>

227-8807 ACCUMULATOR GP-HYDRAULIC—UNCHARGED

S/N: JEG1-UP

FIELD REPLACEMENT FOR 087-4456—PAGE: 274, 145-5106—PAGE: 275

SMCS-5077 **i04154209**

NOTE	REF NO	GRAPHIC REF	PART NUMBER	QTY	PART NAME 1 2 3 4 5 6 (PRODUCT LEVEL)	SEE PAGE
					(NO SERVICED PARTS)	

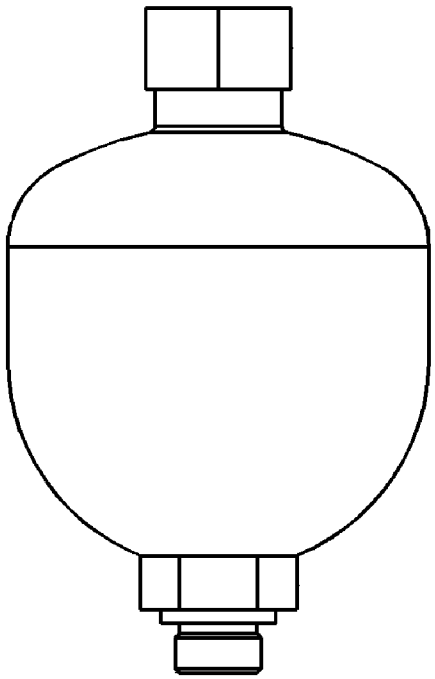

GRAPHIC #1

<END>

g01423820

173-3503 BLOCK GP-HYDRAULIC

S/N: JEG1-UP

PART OF 188-4140 FILTER GP-OIL

SMCS-5264 **i05342090**

NOTE	REF NO	GRAPHIC REF	PART NUMBER	QTY	PART NAME 1 2 3 4 5 6 (PRODUCT LEVEL)	SEE PAGE
	1	1	**204-2763**	1	BLOCK	
	2	1	**5L-4758**	1	SEAL-O-RING	
	3	1	**177-2619**	2	PACKING	
	4	1	**173-3505**	1	PLATE-SLIDE	
	5	1	**137-3631**	1	PACKING	
M	6	1	**137-3626**	1	BOLT-SPECIAL	
	7	1	**173-3506**	1	PLUG AS	
	8	1	**3J-1907**	1	SEAL-O-RING	
	9	1	**7Y-5272**	2	PIN-SPRING	
B	10	1	**137-3628**	1	SHIM (0.1-MM THK)	

B - USE AS REQUIRED
M - METRIC PART

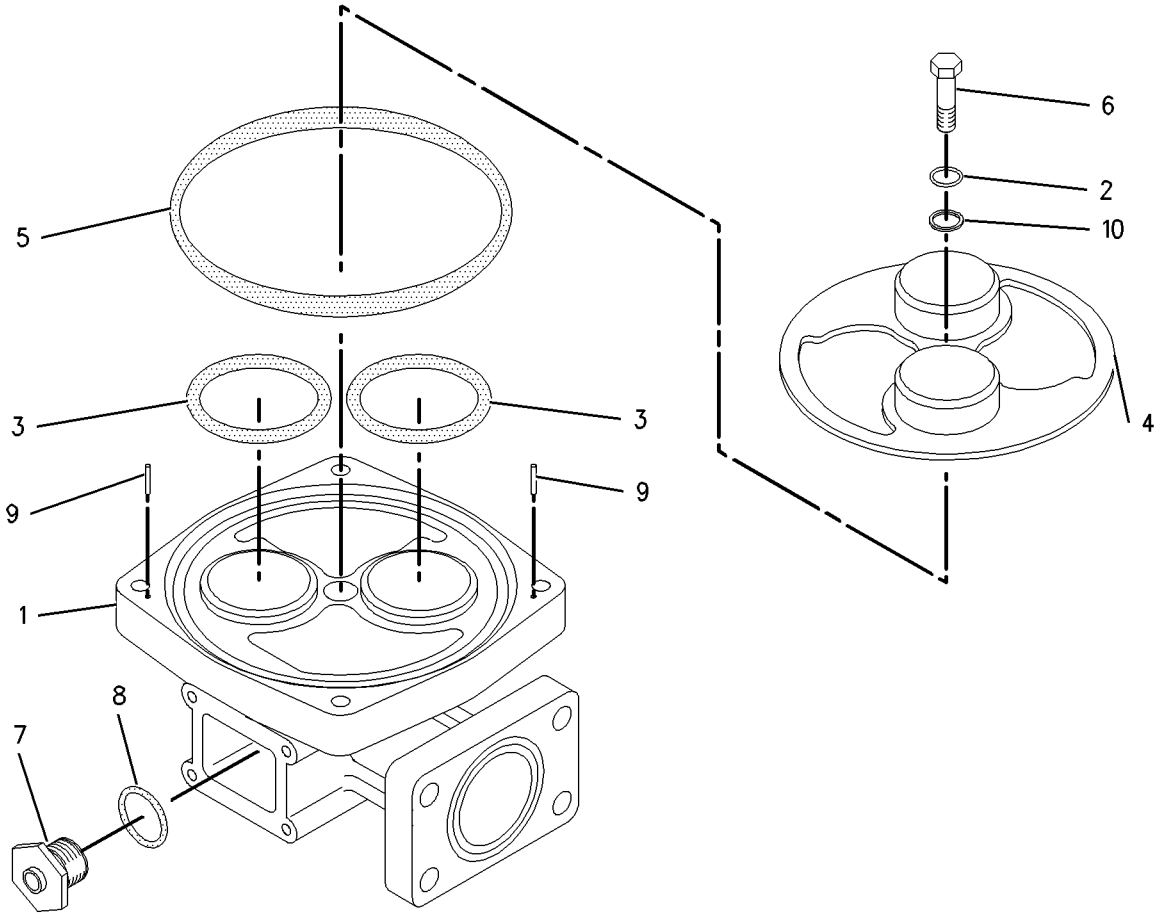

GRAPHIC #1 **<END>** g00731058

383-5306 CONTROL AR-AUXILIARY—SYSTEM 2, COMBINED FUNCTION

S/N: JEG1-UP
PART OF 445-1377 OPTION AR-HYDRAULIC
AN ATTACHMENT

SMCS-5051 **i05439377**

NOTE	PART NUMBER	QTY	PART NAME 1 2 3 4 5 6 (PRODUCT LEVEL)	SEE PAGE
Y	*239-8695*	1	CONTROL GP-HYDRAULIC PEDAL	575
Y	*247-7416*	1	FILM GP (OPERATOR CONTROLS, NOTICE) (JAPAN)	653
Y	*247-7424*	1	FILM GP (OPERATOR CONTROLS, NOTICE) (OUTSIDE JAPAN)	656
Y	*376-6317*	1	LINES GP-FRONT (COMBINED FUNCTION)	359
Y	*255-1802*	1	LINES GP-PILOT (PEDAL CONTROLS)	375
Y	*398-4603*	1	LINES GP-PILOT (SYSTEM 2, COMBINED FUNCTION)	389
Y	*255-5713*	1	VALVE & MTG GP-CONTROL (AUXILIARY)	436
Y	*251-0529*	1	WIRING GP-CAB (1-WAY, 2-WAY FLOW)	156
Y	*369-0239*	1	WIRING GP-COMBINED FLOW	171

Y - SEPARATE ILLUSTRATION

<END>

383-5307 CONTROL AR-AUXILIARY—SYSTEM 3 PRIME, 1-WAY, 2-PUMP

S/N: JEG1-UP
FOR USE WITH 240-5073—PAGE: 589
PART OF 445-1378 OPTION AR-HYDRAULIC
AN ATTACHMENT

SMCS-5051 **i05439384**

NOTE	PART NUMBER	QTY	PART NAME 1 2 3 4 5 6 (PRODUCT LEVEL)	SEE PAGE
Y	*239-8693*	1	CONTROL GP-HYDRAULIC PEDAL (RH)	574
Y	*418-0749*	1	FASTENER GP-WIRING HARNESS (COMBINED FUNCTION)	114
Y	*247-7420*	1	FILM GP (OPERATOR CONTROLS, NOTICE)	654
Y	*247-7423*	1	FILM GP (OPERATOR CONTROLS, NOTICE)	655
Y	*376-6319*	1	LINES GP-FRONT (SYSTEM 3, 1-WAY, 2-PUMP)	363
Y	*255-1800*	1	LINES GP-PILOT (PEDAL, RH)	373
Y	*398-4604*	1	LINES GP-PILOT (SYSTEM 3 PRIME, 1-WAY, 2-PUMP)	393
Y	*255-5713*	1	VALVE & MTG GP-CONTROL (AUXILIARY)	436

Y - SEPARATE ILLUSTRATION

<END>

339-6951 COUPLING GP-FLEXIBLE

S/N: JEG1-UP

PART OF 341-5368 COUPLING GP-PUMP

SMCS-3252 **i05453709**

NOTE	REF NO	GRAPHIC REF	PART NUMBER	QTY	PART NAME 1 2 3 4 5 6 (PRODUCT LEVEL)	SEE PAGE
M	1	1	**7Y-0466**	2	SETSCREW-SOCKET (M16X2X22-MM)	
M	2	1	**7Y-0467**	4	BOLT-SOCKET HEAD (M18X2.5X55-MM)	
	3	1	**339-6952**	1	HUB	
	4	1	**339-6953**	4	INSERT-COUPLING	
	5	1	**339-6954**	4	INSERT-COUPLING	
	6	1	**339-6955**	1	ELEMENT-COUPLING	
	7	1	**7Y-0468**	8	PIN-SPRING	

M - METRIC PART

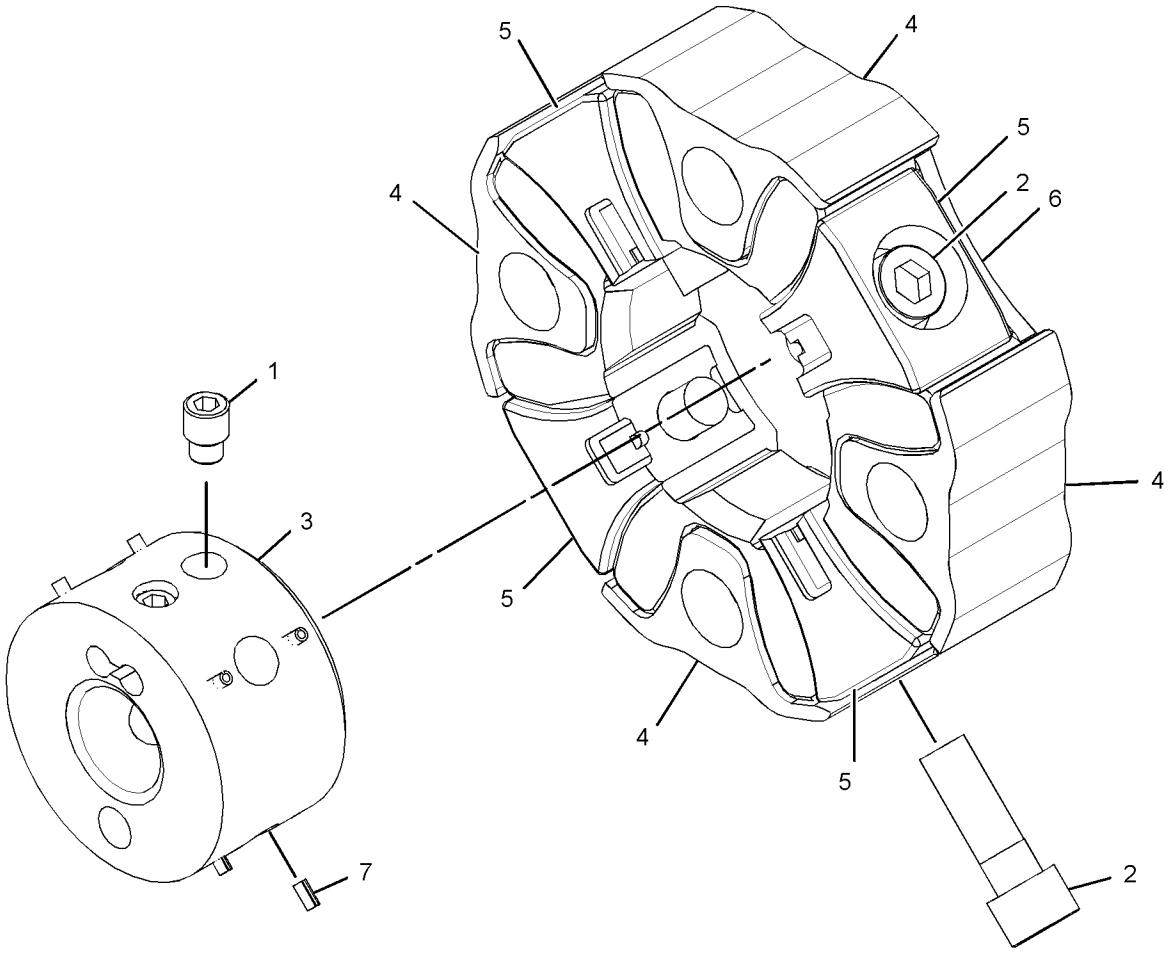

GRAPHIC #1 **<END>** g02635658

341-5368 COUPLING GP-PUMP

S/N: JEG1-UP

PART OF 387-2626 PUMP & MTG GP-MAIN HYDRAULIC

SMCS-5062 **i05453690**

NOTE	REF NO	GRAPHIC REF	PART NUMBER	QTY	PART NAME 1 2 3 4 5 6 (PRODUCT LEVEL)	SEE PAGE
M	1	1	**287-0047**	4	BOLT-SOCKET HEAD (M18X2.5X60-MM)	
Y	2	1	**339-6951**	1	COUPLING GP-FLEXIBLE	280
	3	1	**7Y-0468**	4	PIN-SPRING	

M - METRIC PART
Y - SEPARATE ILLUSTRATION

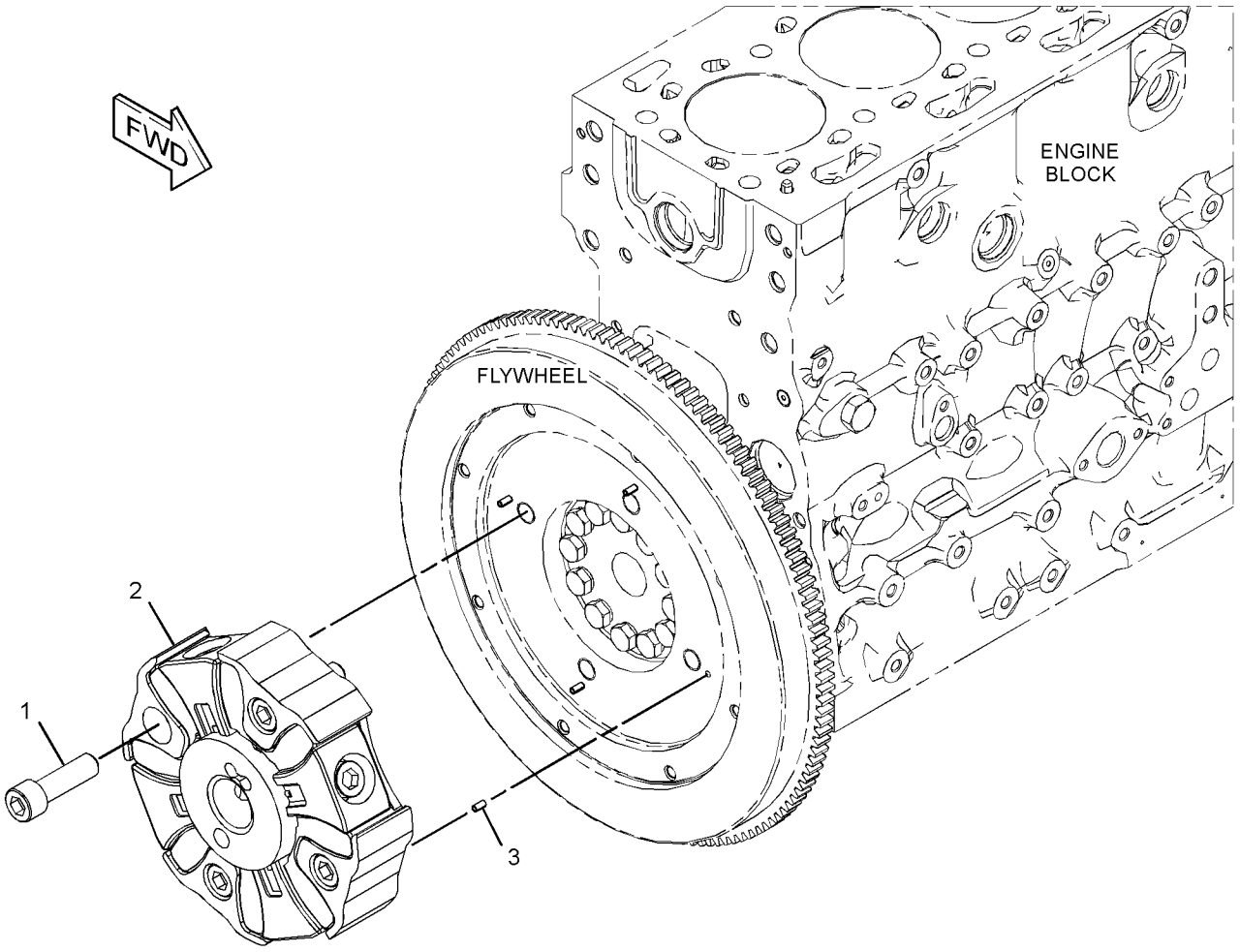

GRAPHIC #1 **<END>** g02601676

341-2788 CYLINDER & LINES GP-BOOM–LH

S/N: JEG1-UP
PART OF 415-1396 BOOM AR, 415-8447 BOOM AR-1 PIECE LONG
AN ATTACHMENT

SMCS-5456, 7562 **i05260936**

NOTE	PART NUMBER	QTY	PART NAME 1 2 3 4 5 6 (PRODUCT LEVEL)	SEE PAGE
Y	**341-2790**	1	CYLINDER & SEAL GP-BOOM	284
Y	*242-6732*	1	LINES GP-BOOM CYLINDER (LH)	343

Y - SEPARATE ILLUSTRATION

<END>

341-2789 CYLINDER & LINES GP-BOOM–RH

S/N: JEG1-UP
PART OF 415-1396 BOOM AR, 415-8447 BOOM AR-1 PIECE LONG
AN ATTACHMENT

SMCS-5456, 7562 **i05260938**

NOTE	PART NUMBER	QTY	PART NAME 1 2 3 4 5 6 (PRODUCT LEVEL)	SEE PAGE
Y	**341-2790**	1	CYLINDER & SEAL GP-BOOM	284
Y	*242-6737*	1	LINES GP-BOOM CYLINDER (RH)	344

Y - SEPARATE ILLUSTRATION

<END>

341-2181 CYLINDER & LINES GP-BUCKET

S/N: JEG1-UP
PART OF 416-1005 LINKAGE AR-BUCKET
AN ATTACHMENT

SMCS-5457 **i05433149**

NOTE	PART NUMBER	QTY	PART NAME 1 2 3 4 5 6 (PRODUCT LEVEL)	SEE PAGE
Y	**341-2182**	1	CYLINDER & SEAL GP-BUCKET	286
Y	*225-4592*	1	LINES GP-BUCKET CYLINDER	346

Y - SEPARATE ILLUSTRATION

<END>

341-2813 CYLINDER & LINES GP-BUCKET

S/N: JEG1-UP
PART OF 416-1009 LINKAGE AR-BUCKET
AN ATTACHMENT

SMCS-5457 **i05261225**

NOTE	PART NUMBER	QTY	PART NAME 1 2 3 4 5 6 (PRODUCT LEVEL)	SEE PAGE
Y	**341-2814**	1	CYLINDER & SEAL GP-BUCKET	288
Y	*369-9677*	1	LINES GP-BUCKET CYLINDER	347

Y - SEPARATE ILLUSTRATION

<END>

349-4151 CYLINDER & LINES GP-BUCKET

S/N: JEG1-UP
PART OF 247-7331 LINKAGE AR-BUCKET
AN ATTACHMENT

SMCS-5457 **i04314369**

NOTE	PART NUMBER	QTY	PART NAME 1 2 3 4 5 6 (PRODUCT LEVEL)	SEE PAGE
Y	**349-4152**	1	CYLINDER & SEAL GP	290
Y	*225-4592*	1	LINES GP-BUCKET CYLINDER	346
Y - SEPARATE ILLUSTRATION				

<END>

341-2806 CYLINDER & LINES GP-STICK

S/N: JEG1-UP
PART OF 415-8447 BOOM AR-1 PIECE LONG
AN ATTACHMENT

SMCS-5458 **i05260939**

NOTE	PART NUMBER	QTY	PART NAME 1 2 3 4 5 6 (PRODUCT LEVEL)	SEE PAGE
Y	**341-2807**	1	CYLINDER & SEAL GP-STICK	292
Y	*242-6735*	1	LINES GP-STICK CYLINDER	403
Y - SEPARATE ILLUSTRATION				

<END>

341-2808 CYLINDER & LINES GP-STICK

S/N: JEG1-UP
PART OF 415-1396 BOOM AR
AN ATTACHMENT

SMCS-5458 **i05433185**

NOTE	PART NUMBER	QTY	PART NAME 1 2 3 4 5 6 (PRODUCT LEVEL)	SEE PAGE
Y	**341-2809**	1	CYLINDER & SEAL GP-STICK	294
Y	*242-6735*	1	LINES GP-STICK CYLINDER	403
Y - SEPARATE ILLUSTRATION				

<END>

341-2790 CYLINDER & SEAL GP-BOOM

S/N: JEG1-UP
120-MM (4.7-IN) BORE X 1260-MM (49.6-IN) STROKE
PART OF 341-2788, 341-2789 CYLINDER & LINES GP-BOOM
AN ATTACHMENT

SMCS-5456 **i05279477**

NOTE	REF NO	GRAPHIC REF	PART NUMBER	QTY	PART NAME 1 2 3 4 5 6 (PRODUCT LEVEL)	SEE PAGE
	1	1	**352-1096**	1	CYLINDER AS-BOOM	
	1A	1	**357-5717**	1	BUSHING	
	2	1	**352-1102**	1	ROD AS	
	2A	1	**240-2913**	1	BUSHING	
	3	1	**185-0334**	1	HEAD	
J	4	1	**095-1717**	1	SEAL-O-RING	
J	5	1	**096-3964**	1	RING-BACKUP	
	6	1	**094-0747**	1	RING-RETAINING	
	7	1	**096-4402**	1	BUSHING	
J	8	1	**350-0952**	1	SEAL-BUFFER	
J	9	1	**350-0957**	1	SEAL-U-CUP	
J	10	1	**096-1568**	1	RING-BACKUP	
J	11	1	**121-1611**	1	SEAL-LIP TYPE	
J	12	1	**126-1935**	1	RING-SEAL	
	13	1	**4I-8864**	1	STOP	
	14	1	**247-8864**	1	PISTON	
J	15	1	**086-0255**	2	RING	
J	16	1	**247-8865**	2	RING	
J	17	1	**096-7803**	1	SEAL AS	
J	18	1	**4I-3615**	2	RING-BACKUP	
	19	1	**3D-2891**	1	BALL	
M	20	1	**096-3216**	1	SETSCREW-SOCKET (M12X1.75X12-MM)	
M	21	1	**8T-1447**	12	BOLT-SOCKET HEAD (M16X2X70-MM)	
	22	1	**166-1494**	4	SEAL-LIP TYPE	
	23	1	**3B-8489**	1	FITTING-GREASE	
					AVAILABLE REPAIR KIT(S):	
J			**350-0962**	1	KIT-SEAL (BOOM CYLINDER)	

J - KIT MARKED J SERVICES PART(S) MARKED J
M - METRIC PART

341-2790 **CYLINDER & SEAL GP-BOOM (*contd.*)** **i05279477**

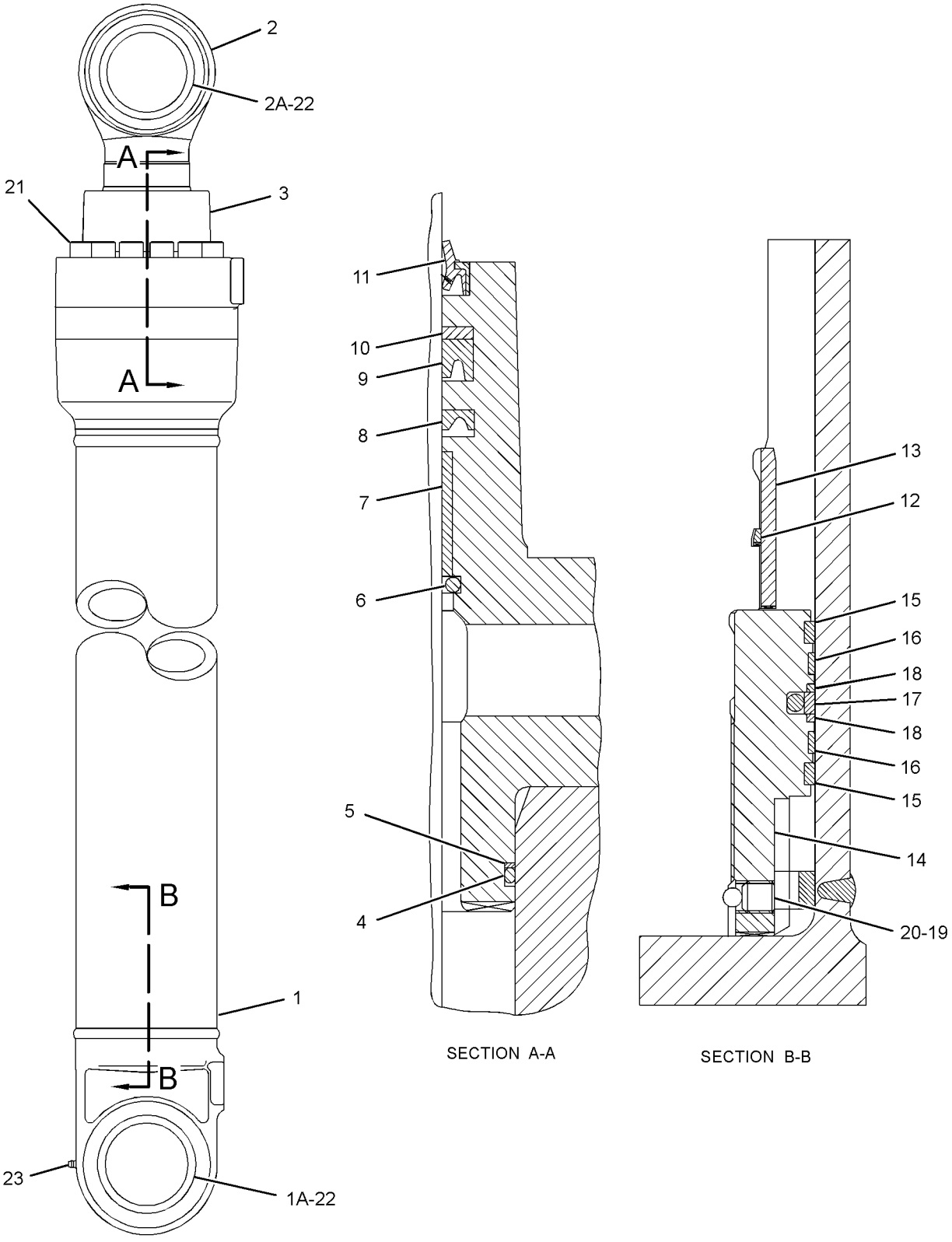

GRAPHIC #1 **<END>** g02657368

341-2182 CYLINDER & SEAL GP-BUCKET

S/N: JEG1-UP
135-MM (5.4-IN) BORE X 1156-MM (45.5-IN) STROKE
PART OF 341-2181 CYLINDER & LINES GP-BUCKET
AN ATTACHMENT

SMCS-5457 **i05433152**

NOTE	REF NO	GRAPHIC REF	PART NUMBER	QTY	PART NAME 1 2 3 4 5 6 (PRODUCT LEVEL)	SEE PAGE
J	1	1	**150-5828**	1	SEAL-LIP TYPE	
J	2	1	**150-5827**	1	RING-BACKUP	
J	3	1	**350-0959**	1	SEAL-U-CUP	
J	4	1	**350-0954**	1	SEAL-BUFFER	
	5	1	**096-4430**	1	BUSHING	
	6	1	**7Y-4631**	1	RING-RETAINING	
	7	1	**234-4580**	1	HEAD	
M	8	1	**4I-3628**	12	BOLT-SOCKET HEAD (M18X2.5X80-MM)	
J	9	1	**095-1720**	1	SEAL-O-RING	
J	10	1	**234-4581**	1	RING-BACKUP	
	11	1	**234-4589**	1	ROD AS	
	11A	1	**228-5615**	1	BUSHING	
	12	1	**360-0074**	1	CYLINDER AS	
	12A	1	**284-7313**	1	BUSHING	
J	13	1	**234-4583**	1	SEAL AS	
J	14	1	**234-4584**	2	RING-BACKUP	
J	15	1	**234-4585**	2	RING	
J	16	1	**234-4586**	2	RING	
	17	1	**234-4582**	1	PISTON	
M	18	1	**096-6210**	1	SETSCREW-SOCKET (M14X2X14-MM)	
	19	1	**4B-9880**	1	BALL	
	20	1	**166-1495**	2	SEAL-LIP TYPE	
	21	1	**235-7679**	2	SEAL-LIP TYPE	
	22	1	**3B-8489**	2	FITTING-GREASE	
					AVAILABLE REPAIR KIT(S):	
J			**350-0976**	1	KIT-SEAL (BUCKET CYLINDER)	

J - KIT MARKED J SERVICES PART(S) MARKED J
M - METRIC PART

341-2182 **CYLINDER & SEAL GP-BUCKET (*contd.*)** **i05433152**

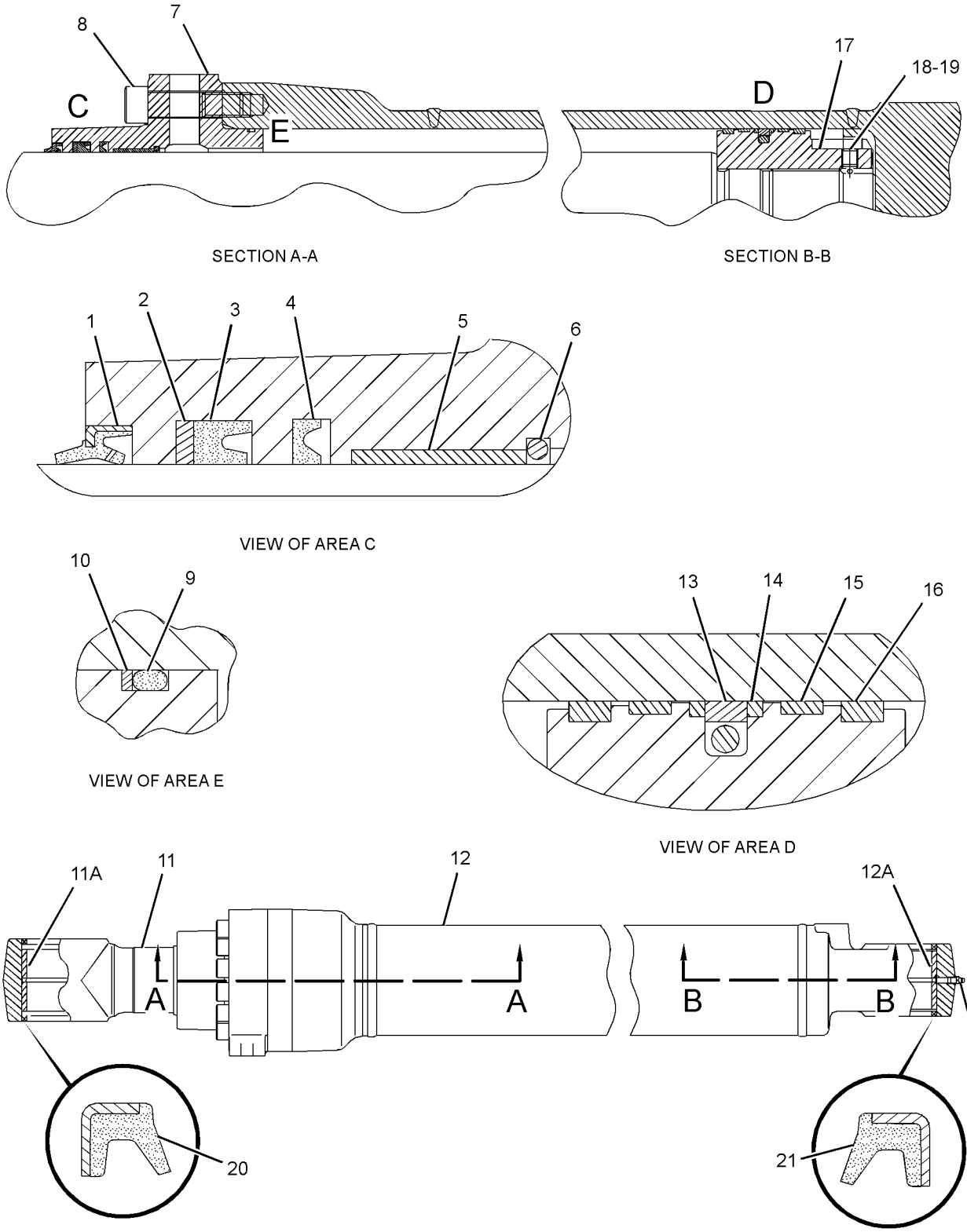

GRAPHIC #1 **<END>** g01191305

341-2814 CYLINDER & SEAL GP-BUCKET

S/N: JEG1-UP
120-MM (4.7-IN) BORE X 1104-MM (43.5-IN) STROKE
PART OF 341-2813 CYLINDER & LINES GP-BUCKET
AN ATTACHMENT

SMCS-5457 **i05261226**

NOTE	REF NO	GRAPHIC REF	PART NUMBER	QTY	PART NAME 1 2 3 4 5 6 (PRODUCT LEVEL)	SEE PAGE
	1	1	**352-1100**	1	CYLINDER AS-HYDRAULIC	
	1A	1	**357-5712**	1	BUSHING	
	2	1	**352-1106**	1	ROD AS-HYDRAULIC CYLINDER	
	2A	1	**241-7382**	1	BUSHING	
	3	1	**177-2611**	1	HEAD	
J	4	1	**095-1717**	1	SEAL-O-RING	
J	5	1	**096-3964**	1	RING-BACKUP	
	6	1	**096-4402**	1	BUSHING	
	7	1	**094-0747**	1	RING-RETAINING	
J	8	1	**350-0952**	1	SEAL-BUFFER	
J	9	1	**350-0957**	1	SEAL-U-CUP	
J	10	1	**096-1568**	1	RING-BACKUP	
J	11	1	**121-1611**	1	SEAL-LIP TYPE	
	12	1	**247-8885**	1	PISTON	
J	13	1	**086-0255**	2	RING	
J	14	1	**247-8865**	2	RING	
J	15	1	**096-7803**	1	SEAL AS	
J	16	1	**4I-3615**	2	RING-BACKUP	
M	17	1	**096-3216**	1	SETSCREW-SOCKET (M12X1.75X12-MM)	
	18	1	**3D-2891**	1	BALL	
M	19	1	**8T-1447**	12	BOLT-SOCKET HEAD (M16X2X70-MM)	
	20	1	**166-1494**	2	SEAL-LIP TYPE	
	21	1	**235-7679**	2	SEAL-LIP TYPE	
	22	1	**3B-8489**	2	FITTING-GREASE	
					AVAILABLE REPAIR KIT(S):	
J			**350-0967**	1	KIT-SEAL (BUCKET CYLINDER)	

J - KIT MARKED J SERVICES PART(S) MARKED J
M - METRIC PART

341-2814 **CYLINDER & SEAL GP-BUCKET (*contd.*)** **i05261226**

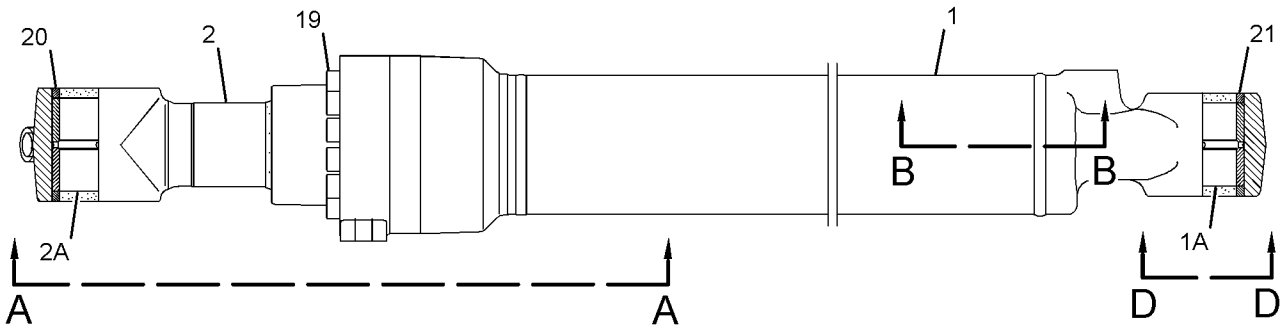

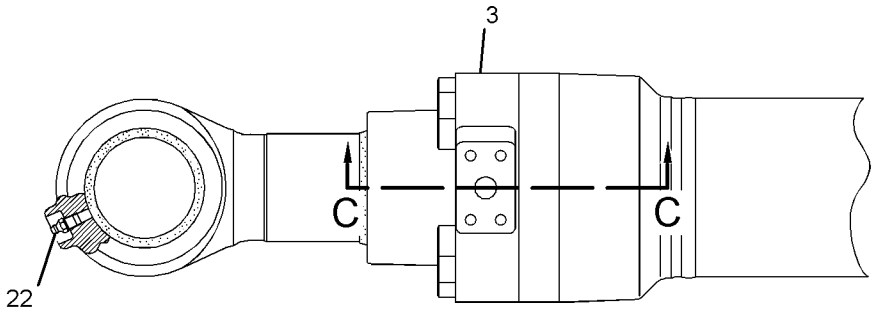

VIEW A-A

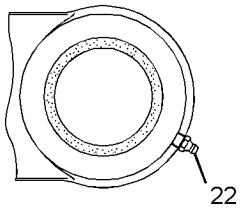

VIEW D-D

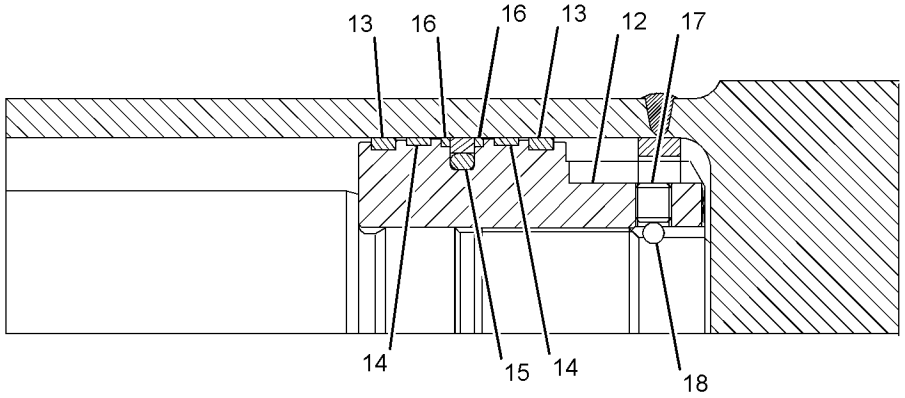

SECTION B-B

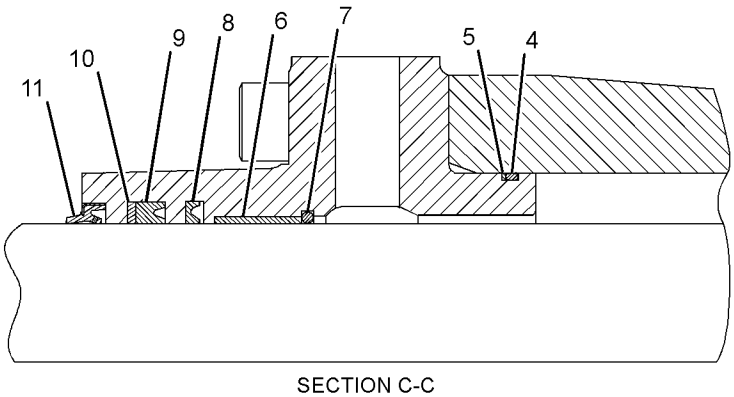

SECTION C-C

GRAPHIC #1 **<END>** g02644601

349-4152 CYLINDER & SEAL GP-BUCKET

S/N: JEG1-UP
135-MM (5.3-IN) BORE X 1156-MM (45.5-IN) STROKE
PART OF 349-4151 CYLINDER & LINES GP-BUCKET
AN ATTACHMENT

SMCS-5457 **i05349570**

NOTE	REF NO	GRAPHIC REF	PART NUMBER	QTY	PART NAME 1 2 3 4 5 6 (PRODUCT LEVEL)	SEE PAGE
J	1	1	**150-5828**	1	SEAL-LIP TYPE	
J	2	1	**150-5827**	1	RING-BACKUP	
J	3	1	**350-0959**	1	SEAL-U-CUP	
J	4	1	**350-0954**	1	SEAL-BUFFER	
	5	1	**096-4430**	1	BUSHING	
	6	1	**7Y-4631**	1	RING-RETAINING	
	7	1	**234-4580**	1	HEAD	
M	8	1	**4I-3628**	12	BOLT-SOCKET HEAD (M18X2.5X80-MM)	
J	9	1	**095-1720**	1	SEAL-O-RING	
J	10	1	**234-4581**	1	RING-BACKUP	
	11	1	**234-4589**	1	ROD AS	
	11A	1	**228-5615**	1	BUSHING	
	12	1	**234-4588**	1	CYLINDER AS	
	12A	1	**235-7769**	1	BUSHING	
J	13	1	**234-4583**	1	SEAL AS	
J	14	1	**234-4584**	2	RING-BACKUP	
J	15	1	**234-4585**	2	RING	
J	16	1	**234-4586**	2	RING	
	17	1	**234-4582**	1	PISTON	
M	18	1	**096-6210**	1	SETSCREW-SOCKET (M14X2X14-MM)	
	19	1	**4B-9880**	1	BALL	
	20	1	**166-1495**	2	SEAL-LIP TYPE	
	21	1	**235-7679**	2	SEAL-LIP TYPE	
	22	1	**3B-8489**	2	FITTING-GREASE	
					AVAILABLE REPAIR KIT(S):	
J			**350-0976**	1	KIT-SEAL (BUCKET CYLINDER)	

J - KIT MARKED J SERVICES PART(S) MARKED J
M - METRIC PART

349-4152 **CYLINDER & SEAL GP-BUCKET (*contd.*)** **i05349570**

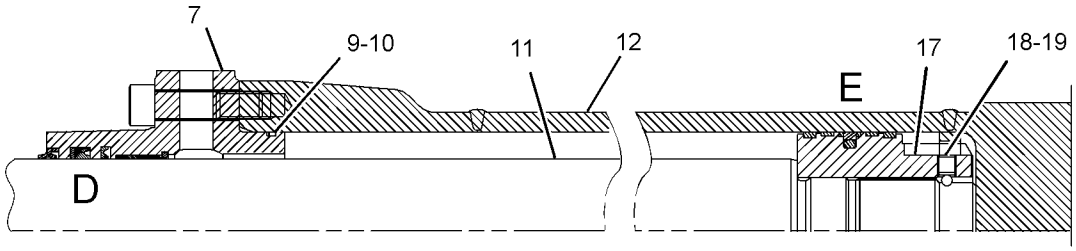

SECTION C-C

SECTION B-B

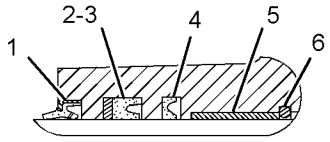

VIEW OF AREA D

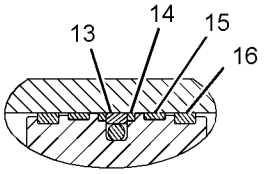

VIEW OF AREA E

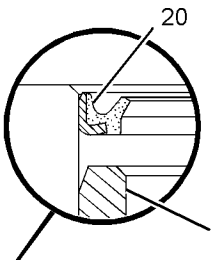

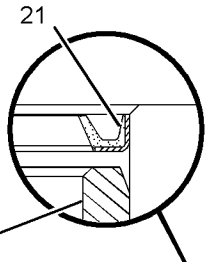

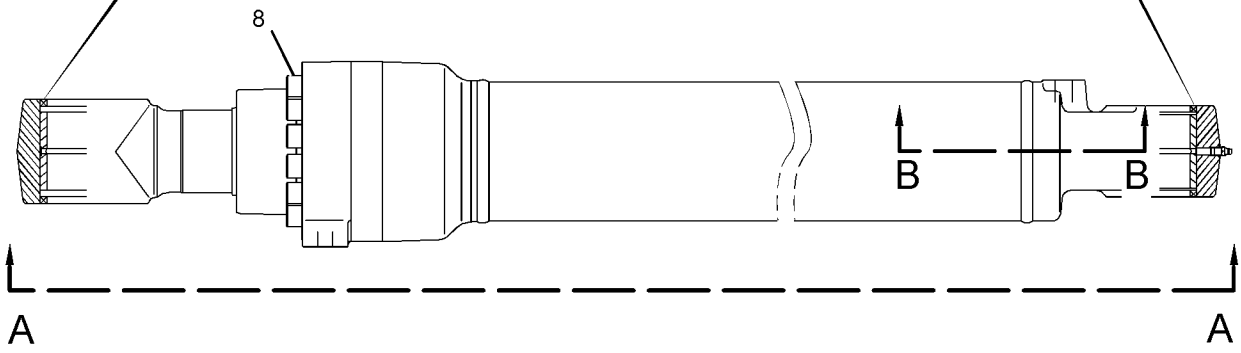

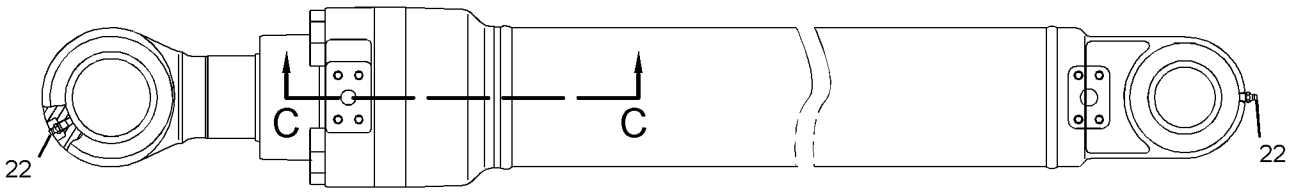

VIEW A-A

GRAPHIC #1 **<END>** g03388909

341-2807 CYLINDER & SEAL GP-STICK

S/N: JEG1-UP
140-MM (5.5-IN) BORE X 1504-MM (59.2-IN) STROKE
PART OF 341-2806 CYLINDER & LINES GP-STICK
AN ATTACHMENT

SMCS-5458 **i05536449**

NOTE	REF NO	GRAPHIC REF	PART NUMBER	QTY	PART NAME 1 2 3 4 5 6 (PRODUCT LEVEL)	SEE PAGE
	1	1	**352-1098**	1	CYLINDER AS-STICK	
	1A	1	**357-5711**	2	BUSHING	
	2	1	**352-1104**	1	ROD AS	
	2A	1	**240-2914**	1	BUSHING	
	3	1	**188-4181**	1	HEAD	
J	4	1	**095-1721**	1	SEAL-O-RING	
J	5	1	**4I-3627**	1	RING-BACKUP	
	6	1	**096-5625**	1	BUSHING	
	7	1	**094-1931**	1	RING-RETAINING	
J	8	1	**350-0955**	1	SEAL-BUFFER	
J	9	1	**350-0960**	1	SEAL-U-CUP	
J	10	1	**121-1372**	1	RING-BACKUP	
J	11	1	**133-6904**	1	SEAL-LIP TYPE	
J	12	1	**214-4501**	1	RING-SEAL	
	13	1	**378-1556**	1	STOP	
	14	1	**247-8873**	1	PISTON	
J	15	1	**096-1571**	2	RING	
J	16	1	**247-8874**	2	RING	
J	17	1	**096-1570**	1	SEAL AS	
J	18	1	**4I-3631**	2	RING-BACKUP	
	19	1	**4B-9880**	1	BALL	
M	20	1	**096-6210**	1	SETSCREW-SOCKET (M14X2X14-MM)	
	21	1	**085-8605**	1	RING-RETAINING	
J	22	1	**194-8359**	1	RING-SEAL	
	23	1	**085-8604**	2	RING-RETAINING	
	24	1	**121-1549**	1	STOP	
M	25	1	**4I-3628**	12	BOLT-SOCKET HEAD (M18X2.5X80-MM)	
	26	1	**166-1494**	4	SEAL-LIP TYPE	
	27	1	**3B-8489**	1	FITTING-GREASE	
					AVAILABLE REPAIR KIT(S):	
J			**350-0971**	1	KIT-SEAL (STICK CYLINDER)	

J - KIT MARKED J SERVICES PART(S) MARKED J
M - METRIC PART

341-2807 **CYLINDER & SEAL GP-STICK (*contd.*)** **i05536449**

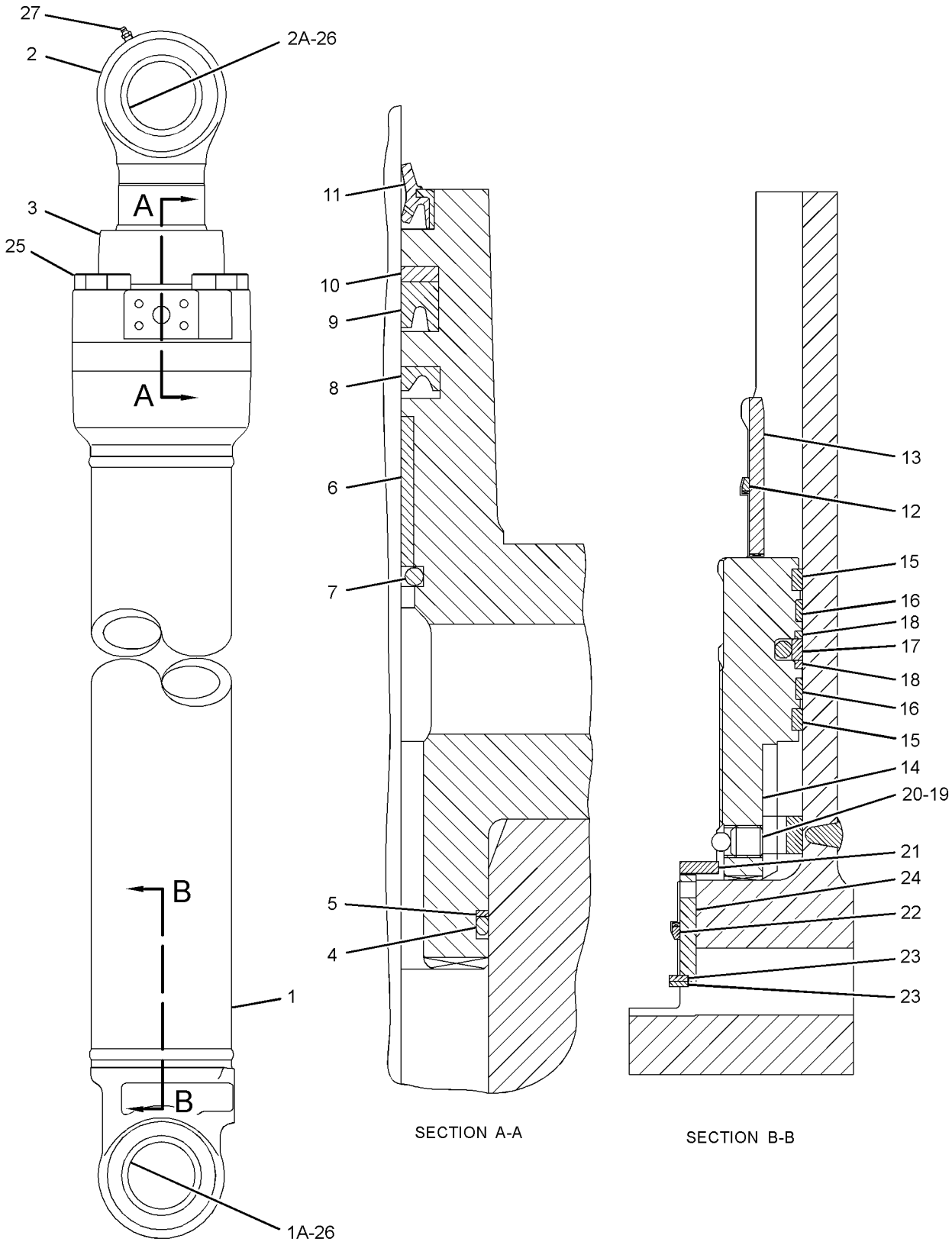

GRAPHIC #1 **<END>** g02657766

341-2809 CYLINDER & SEAL GP-STICK

S/N: JEG1-UP
140-MM (5.5-IN) BORE X 1518-MM (59.8-IN) STROKE
PART OF 341-2808 CYLINDER & LINES GP-STICK
AN ATTACHMENT

SMCS-5458 **i05433192**

NOTE	REF NO	GRAPHIC REF	PART NUMBER	QTY	PART NAME 1 2 3 4 5 6 (PRODUCT LEVEL)	SEE PAGE
	1	1	**352-1099**	1	CYLINDER AS-STICK	
	1A	1	**357-5711**	2	BUSHING	
	2	1	**352-1105**	1	ROD AS	
	2A	1	**240-2914**	1	BUSHING	
	3	1	**188-4181**	1	HEAD	
J	4	1	**095-1721**	1	SEAL-O-RING	
J	5	1	**4I-3627**	1	RING-BACKUP	
	6	1	**096-5625**	1	BUSHING	
	7	1	**094-1931**	1	RING-RETAINING	
J	8	1	**350-0955**	1	SEAL-BUFFER	
J	9	1	**350-0960**	1	SEAL-U-CUP	
J	10	1	**121-1372**	1	RING-BACKUP	
J	11	1	**133-6904**	1	SEAL-LIP TYPE	
J	12	1	**126-1876**	1	RING-SEAL	
	13	1	**378-1556**	1	STOP	
	14	1	**247-8873**	1	PISTON	
J	15	1	**096-1571**	2	RING	
J	16	1	**247-8874**	2	RING	
J	17	1	**096-1570**	1	SEAL AS	
J	18	1	**4I-3631**	2	RING-BACKUP	
	19	1	**4B-9880**	1	BALL	
M	20	1	**096-6210**	1	SETSCREW-SOCKET (M14X2X14-MM)	
	21	1	**085-8605**	1	RING-RETAINING	
J	22	1	**194-8359**	1	RING-SEAL	
	23	1	**085-8604**	2	RING-RETAINING	
	24	1	**121-1549**	1	STOP	
M	25	1	**4I-3628**	12	BOLT-SOCKET HEAD (M18X2.5X80-MM)	
	26	1	**166-1494**	4	SEAL-LIP TYPE	
	27	1	**3B-8489**	1	FITTING-GREASE	
					AVAILABLE REPAIR KIT(S):	
J			**350-0970**	1	KIT-SEAL (STICK CYLINDER)	

J - KIT MARKED J SERVICES PART(S) MARKED J
M - METRIC PART

341-2809 **CYLINDER & SEAL GP-STICK (*contd.*)** **i05433192**

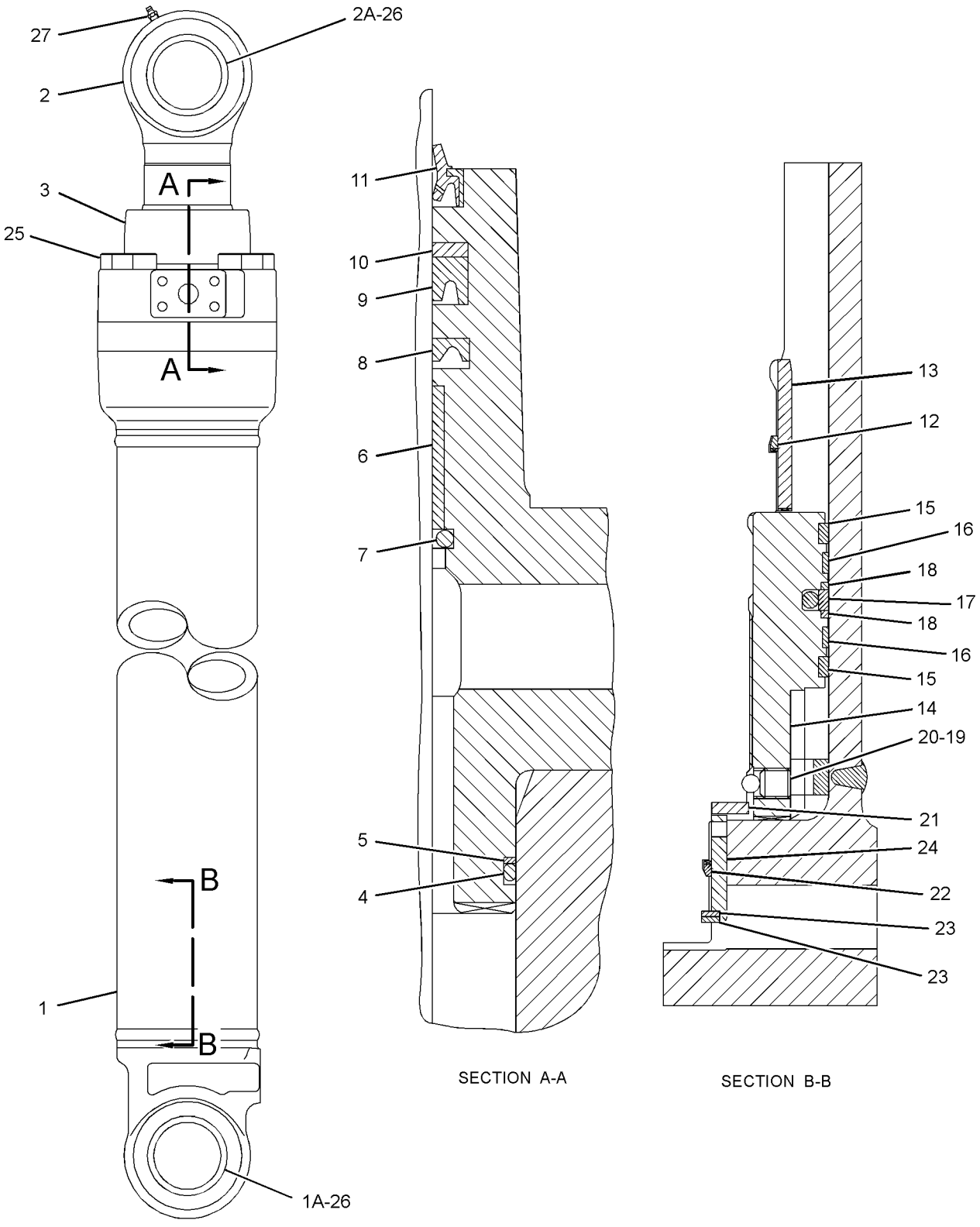

GRAPHIC #1 **<END>** g02658038

274-5997 CYLINDER GP-HYDRAULIC

S/N: JEG1-UP
PART OF 265-7513 COUPLER GP-QUICK
AN ATTACHMENT

SMCS-4303, 5102, 5105, 5116, 5138, 5149, 5362, 5576, 5816, 7201, 7562

i02958081

NOTE	REF NO	GRAPHIC REF	PART NUMBER	QTY	PART NAME 1 2 3 4 5 6 (PRODUCT LEVEL)	SEE PAGE
	1	1	**091-5928**	2	FITTING-GREASE	
	2	1	**172-8406**	1	VALVE GP-CHECK (HYD CYLINDER, QUICK COUPLER)	
		1	**2U-5338**	1	SEAL-O-RING	
		1	**9W-3340**	1	SEAL-O-RING	
		1	**107-7640**	1	SEAL-O-RING	
					AVAILABLE REPAIR KIT(S):	
			326-5051	1	KIT-SEAL (COUPLER CYLINDER)	

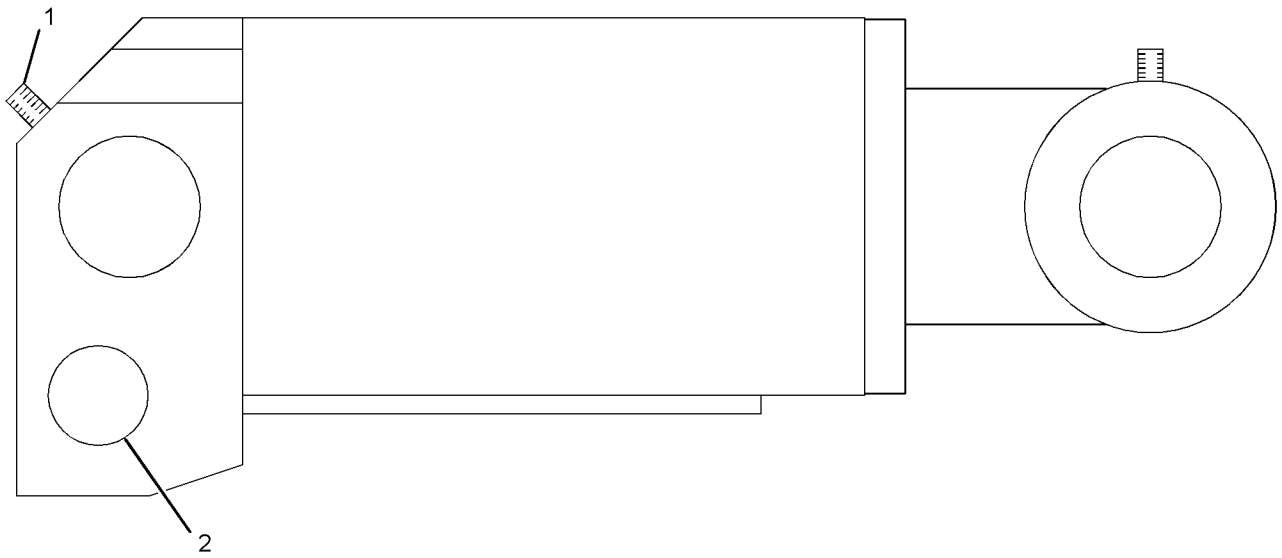

GRAPHIC #1

<END>

g01224301

148-4644 DRIVE GP-SWING—WITHOUT MOTOR

S/N: JEG1-UP

PART OF 148-4679 DRIVE GP-SWING

SMCS-5459 **i03145908**

NOTE	REF NO	GRAPHIC REF	PART NUMBER	QTY	PART NAME 1 2 3 4 5 6 (PRODUCT LEVEL)	SEE PAGE
	1	1	**094-0584**	6	WASHER (40.3X72X1-MM THK)	
	2	1	**094-1509**	3	SHAFT-PLANETARY	
	3	1	**148-4733**	3	GEAR-PLANETARY (26-TEETH)	
	4	1	**114-1581**	1	SPACER (57.5X74X6-MM THK)	
	5	1	**148-4732**	1	GEAR-SUN (20-TEETH)	
	6	1	**093-1729**	2	RING-RETAINING	
	7	1	**148-4632**	1	GEAR-SUN (23-TEETH)	
	8	1	**191-2578**	1	CARRIER-PLANETARY	
	9	1	**7Y-1434**	1	SPACER (40X69.5X6-MM THK)	
	10	1	**148-4637**	1	CARRIER-PLANETARY	
	11	1	**148-4640**	1	RING-RETAINING	
	12	1	**148-4643**	1	BEARING	
	13	1	**095-1022**	1	BEARING-ROLLER	
	14	1	**148-4642**	1	SEAL-O-RING	
	15	1	**227-6228**	1	CAGE	
M	16	1	**8T-4183**	6	BOLT (M12X1.75X40-MM)	
	17	1	**8T-4223**	6	WASHER-HARD (13.5X25.5X3-MM THK)	
	18	1	**199-4561**	2	SEAL-LIP TYPE	
	19	1	**148-4636**	1	SHAFT-PINION	
	20	1	**148-4638**	1	HOUSING	
	21	1	**3K-0360**	1	SEAL-O-RING	
	22	1	**6V-7238**	1	VALVE-SHUTOFF (SWING DRIVE)	
	23	1	**148-4634**	3	SHAFT-PLANETARY	
	24	1	**095-0891**	3	PIN-SPRING	
	25	1	**148-4635**	1	GEAR-RING (73-TEETH)	
	26	1	**148-4633**	3	GEAR-PLANETARY (25-TEETH)	
	27	1	**7Y-0252**	6	BEARING AS-ROLLER	
	28	1	**094-0611**	6	WASHER (47.3X76X1-MM THK)	
	29	1	**095-0886**	3	PIN-SPRING	
	30	1	**094-1516**	3	BEARING-ROLLER	
	31	1	**171-9383**	1	SPACER	
B	32	1	**1U-8846**		SEALANT-GASKET	

B - USE AS REQUIRED
M - METRIC PART

148-4644 **DRIVE GP-SWING (*contd.*)** **i03145908**

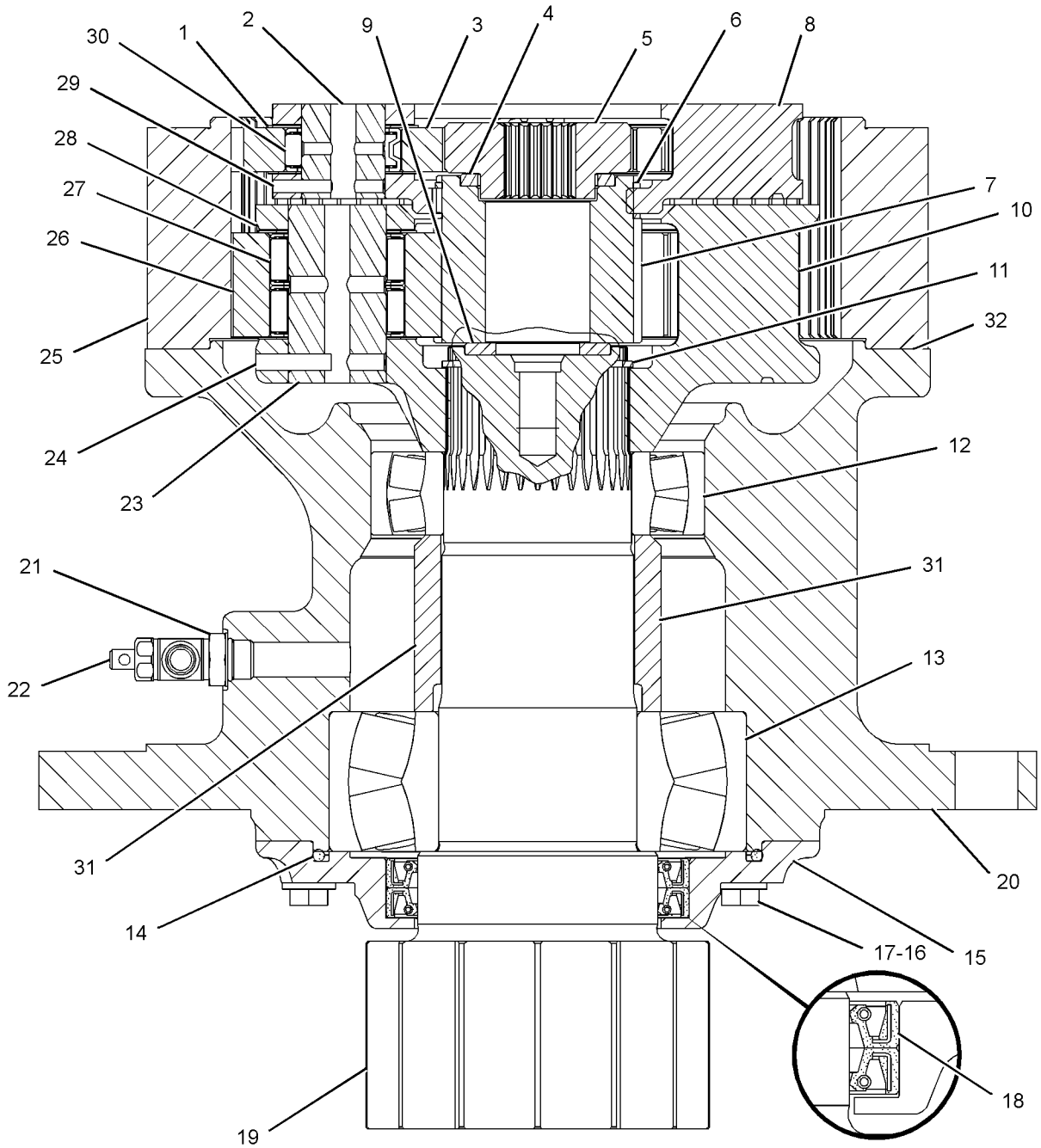

GRAPHIC #1 **<END>** g01619043

148-4679 DRIVE GP-SWING—WITH MOTOR

S/N: JEG1-UP

PART OF 267-6767 POWER TRAIN AR

SMCS-5459 **i04913825**

NOTE	REF NO	GRAPHIC REF	PART NUMBER	QTY	PART NAME 1 2 3 4 5 6 (PRODUCT LEVEL)	SEE PAGE
	1	1	**114-1398**	1	GAUGE-OIL LEVEL (SWING DRIVE)	
	2	1	**114-1399**	1	PIPE-GAUGE	
Y	3	1	**148-4644**	1	DRIVE GP-SWING (WITHOUT MOTOR)	297
Y	4	1	*158-8985*	1	MOTOR & MTG GP-SWING	410
	5	1	**227-6221**	1	BREATHER AS (SWING DRIVE)	
		1	**4H-6112**	1	BREATHER (SWING DRIVE)	
		1	**227-6215**	1	BOSS (1/4-18-THD)	
		1	**267-6785**	1	PIPE	
B	6	1	**1U-8846**		SEALANT-GASKET	

B - USE AS REQUIRED
Y - SEPARATE ILLUSTRATION

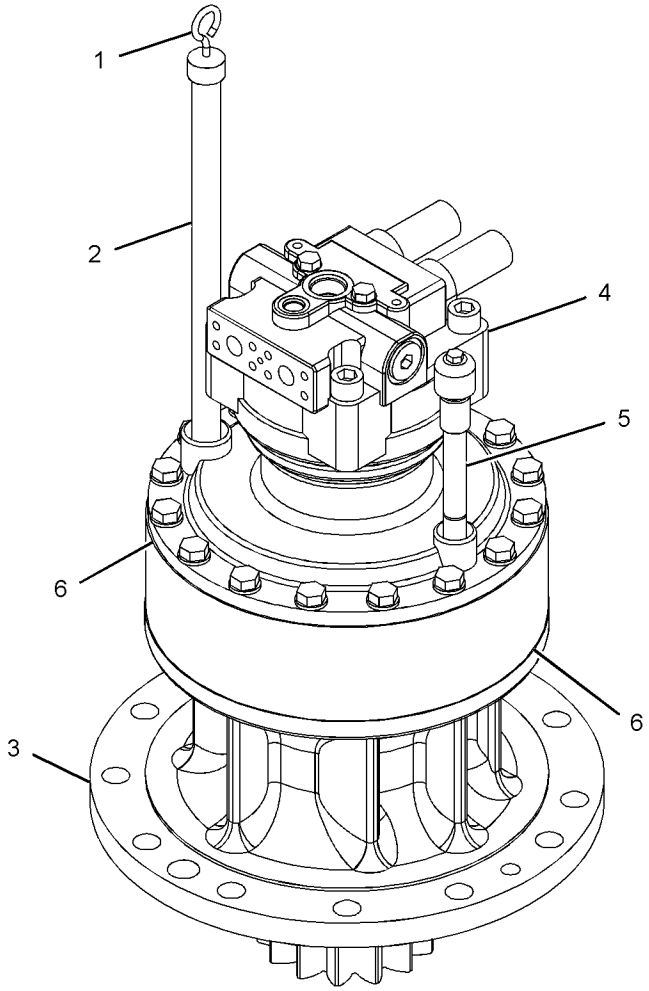

GRAPHIC #1

<END>

g02145113

227-6166 FASTENER GP-SWING & FINAL DR

S/N: JEG1-UP

PART OF 267-6767 POWER TRAIN AR

SMCS-4050, 5459 **i02776476**

NOTE	REF NO	GRAPHIC REF	PART NUMBER	QTY	PART NAME 1 2 3 4 5 6 (PRODUCT LEVEL)	SEE PAGE
	1	1	**2Y-5503**	2	CORK	
	2	1	**5D-1026**	1	CLAMP-BAND	
	3	1	**096-4755**	1	PIN	
M	4	1	**7X-2563**	32	BOLT (M20X2.5X60-MM)	
M	5	1	**7X-2576**	12	BOLT (M24X3X70-MM)	
	6	1	**8T-4123**	32	WASHER (3.62X5.75X0.375-MM THK)	
	7	1	**8T-4167**	12	WASHER-HARD (26X44X4-MM THK)	
E	8	1	**5P-0767**		HOSE (90-CM)	
B	9	1	**1U-8846**	1	SEALANT-GASKET	

B - USE AS REQUIRED
E - ORDER BY THE CENTIMETER
M - METRIC PART

227-6166 **FASTENER GP-SWING & FINAL DR (*contd.*)** **i02776476**

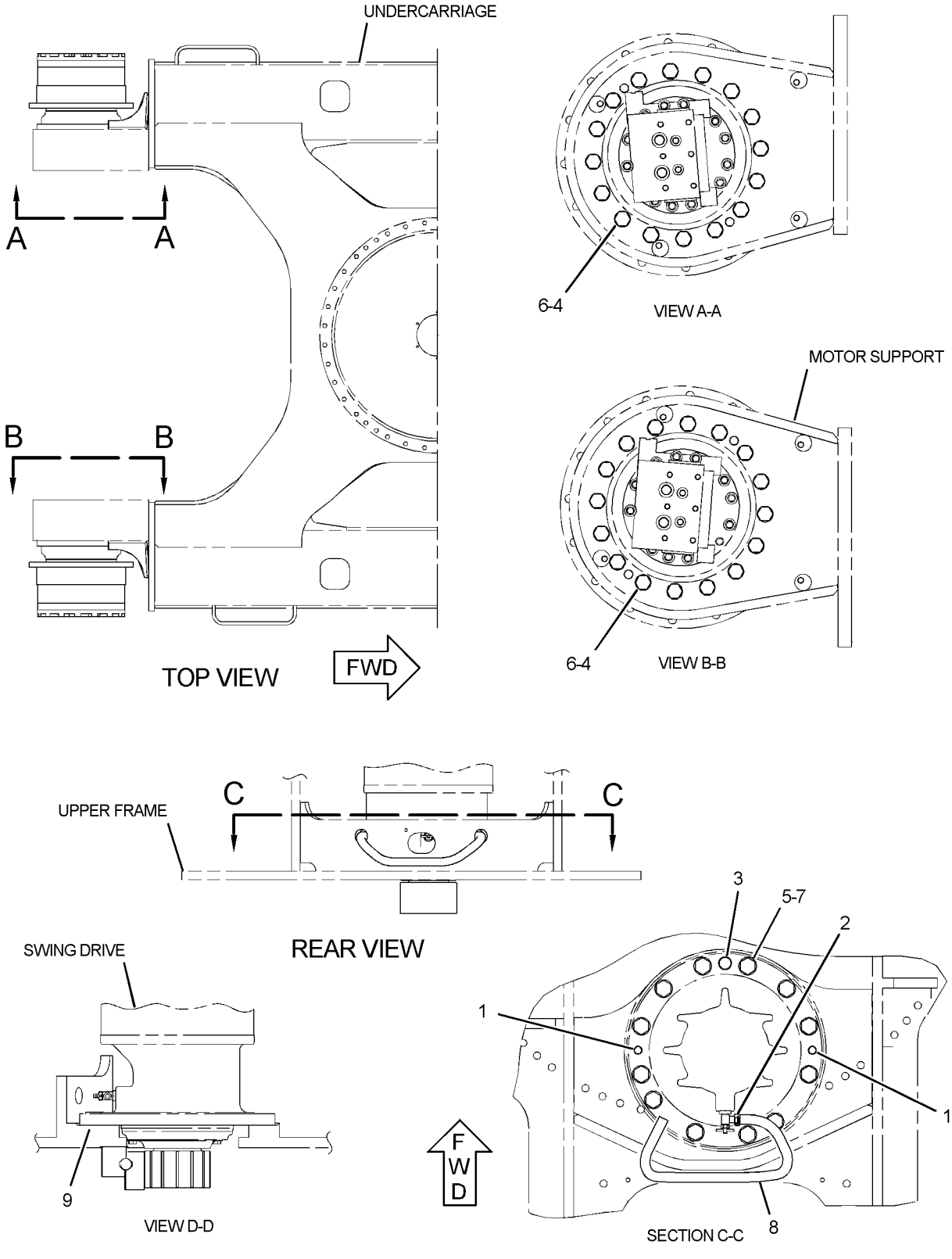

GRAPHIC #1 **<END>** g01224177

158-8987 FILTER & VALVE GP-PILOT–HYDRAULIC OIL

S/N: JEG1-UP

PART OF 395-3364 TANK & FILTER GP-HYDRAULIC

SMCS-5072, 5092 **i05495730**

NOTE	REF NO	GRAPHIC REF	PART NUMBER	QTY	PART NAME 1 2 3 4 5 6 (PRODUCT LEVEL)	SEE PAGE
	1	1	**5I-8670**	1	FILTER-OIL (ADVANCED EFFICIENCY) (HYDRAULIC, PILOT)	
	2	1	**215-4909**	1	VALVE GP-PILOT RELIEF (HYDRAULIC FILTER)	
	2A	1	**095-1584**	1	SEAL-O-RING	
	2B	1	**095-1590**	1	SEAL-O-RING	
	2C	1	**095-1596**	1	SEAL-O-RING	

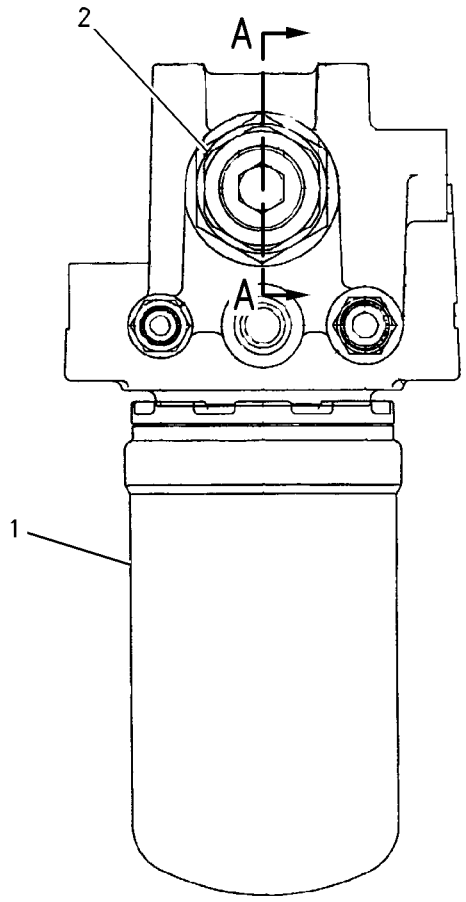

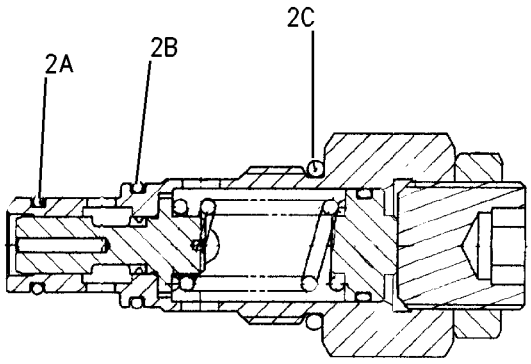

SECTION A–A

GRAPHIC #1 **<END>** g00842119

188-4140 FILTER GP-OIL–HYDRAULIC RETURN

S/N: JEG1-UP

PART OF 395-3364 TANK & FILTER GP-HYDRAULIC

SMCS-3004, 4295, 431F, 5068, 5091, 5092 **i05537184**

NOTE	REF NO	GRAPHIC REF	PART NUMBER	QTY	PART NAME 1 2 3 4 5 6 (PRODUCT LEVEL)	SEE PAGE
Y	1	1	**173-3503**	1	BLOCK GP-HYDRAULIC	278
	2	1	**129-8034**	1	VALVE AS-BYPASS	
	3	1	**123-2003**	2	SEAL-O-RING	
	4	1	**173-3507**	1	HOUSING AS	
M	5	1	**8T-4194**	8	BOLT (M12X1.75X50-MM)	
	6	1	**8T-4223**	8	WASHER-HARD (13.5X25.5X3-MM THK)	
CY	7	1	**419-8528**	1	FILTER GP-OIL (HYDRAULIC RETURN)	306
	8	1	**173-3510**	1	COVER	
	9	1	**173-3518**	1	INDICATOR AS (HYDRAULIC RETURN FILTER)	
	10	1	**159-7784**	1	SEAL-O-RING	
	12	1	**8T-0328**	4	WASHER-HARD (5.5X10X1-MM THK)	
M	13	1	**8T-6693**	4	SCREW-MACHINE (M5X0.8X16-MM)	

C - CHANGE FROM PREVIOUS TYPE
M - METRIC PART
Y - SEPARATE ILLUSTRATION

188-4140 **FILTER GP-OIL (*contd.*)** **i05537184**

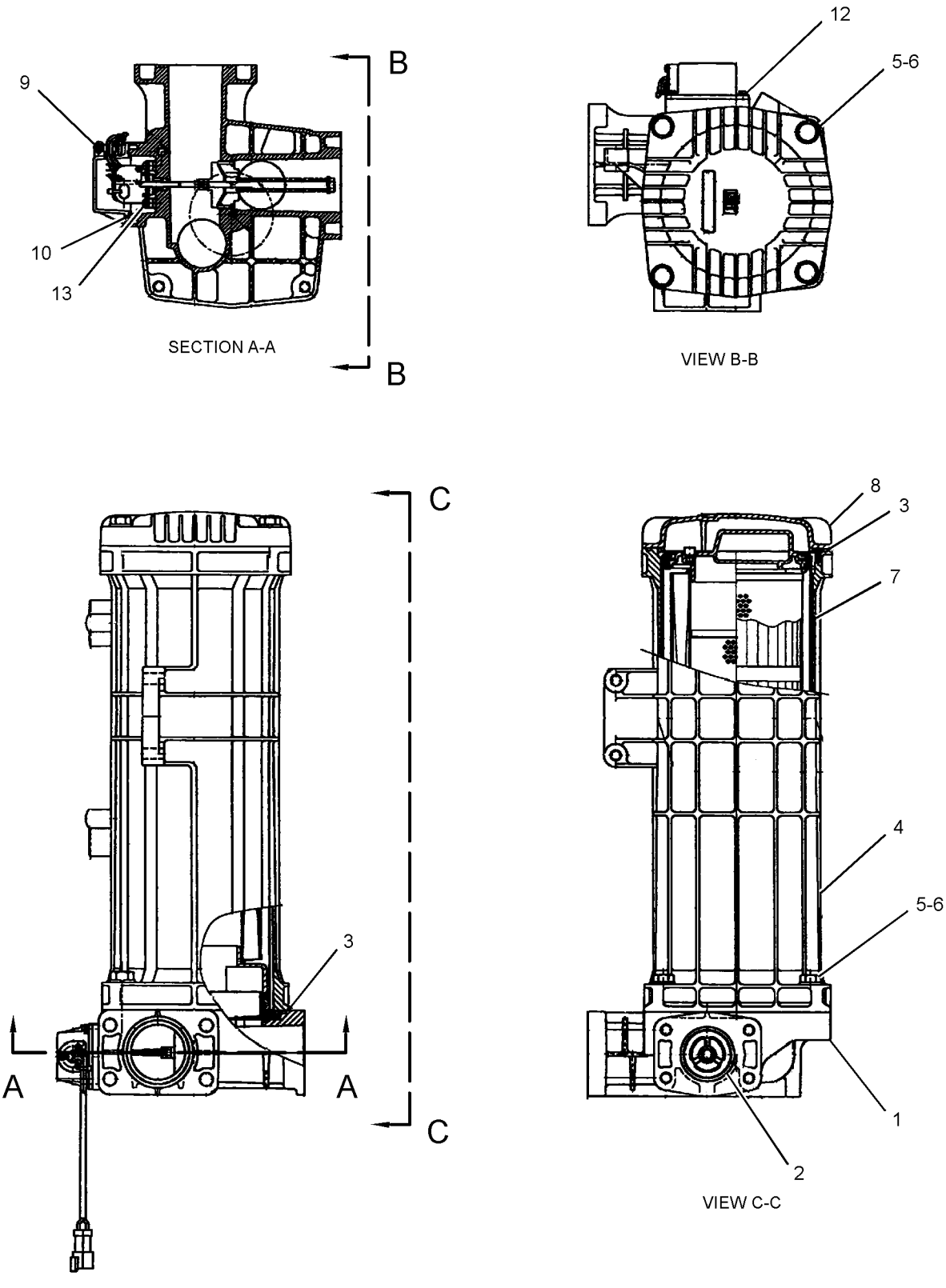

GRAPHIC #1 **<END>** g03327388

289-8194 FILTER GP-OIL—HYDRAULIC, CASE DRAIN

S/N: JEG1-UP

PART OF 395-3364 TANK & FILTER GP-HYDRAULIC

SMCS-3004, 4295, 431F, 5068, 5091, 5092

i03626800

NOTE	REF NO	GRAPHIC REF	PART NUMBER	QTY	PART NAME 1 2 3 4 5 6 (PRODUCT LEVEL)	SEE PAGE
	1	1	**093-7521**	1	FILTER-OIL (ADVANCED EFFICIENCY) (HYDRAULIC, CASE DRAIN)	
	2	1	**289-8195**	1	HEAD AS-FILTER	

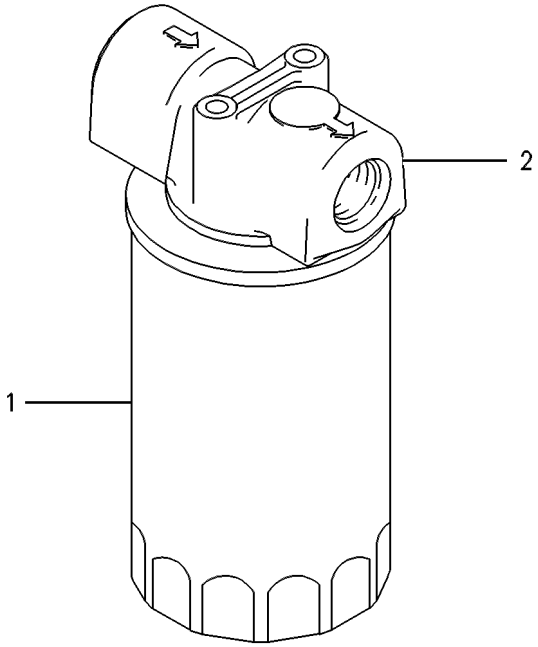

GRAPHIC #1

<END>

g00258224

419-8528 FILTER GP-OIL—HYDRAULIC RETURN

S/N: JEG1-UP

PART OF 188-4140 FILTER GP-OIL

SMCS-3004, 4295, 431F, 5068, 5091, 5092 **i05537234**

NOTE	REF NO	GRAPHIC REF	PART NUMBER	QTY	PART NAME 1 2 3 4 5 6 (PRODUCT LEVEL)	SEE PAGE
	1	1	**419-8531**	1	PLATE-SLIDE	
JM	2	1	**173-3529**	6	BOLT (M6X1X15-MM)	
J	3	1	**3T-7528**	6	SEAL-O-RING	
	4	1	**173-3513**	1	BASE	
J	5	1	**3E-4297**	2	SEAL-O-RING	
M	6	1	**137-3626**	1	BOLT-SPECIAL	
	8	1	**179-9806**	1	FILTER ELEMENT AS-OIL (ADVANCED EFFICIENCY) (HYDRAULIC RETURN)	
J	9	1	**137-3623**	4	SEAL-O-RING	
J	10	1	**6V-7658**	2	SEAL-O-RING	
J	11	1	**177-2553**	1	SEAL-O-RING	
J	12	1	**095-1681**	1	SEAL-O-RING	
	13	1	**173-3515**	1	RING-RETAINING	
	14	1	**173-3516**	1	HANDLE	
J	15	1	**4J-7533**	1	SEAL-O-RING	
J	16	1	**9S-4180**	1	PLUG	
JM	17	1	**137-3624**	8	SCREW (M3X0.5X5-MM)	
J	18	1	**137-3625**	2	PAD	
	19	1	**173-3517**	1	PLATE	
J	20	1	**137-3628**	1	SHIM (0.1-MM THK)	
	21	1	**419-8533**	1	FILM-INSTRUCTION (HYDRAULIC OIL RETURN FILTER)	
					PARTS SHOWN IN GRAPHIC(S) WITHOUT A REFERECE NUMBER ARE NOT SERVICED SEPARATELY	
					AVAILABLE REPAIR KIT(S):	
J			**201-9299**	1	KIT-SERVICE (HYDRAULIC RETURN FILTER)	

J - KIT MARKED J SERVICES PARTS MARKED J
M - METRIC PART

419-8528 **FILTER GP-OIL (*contd.*)** **i05537234**

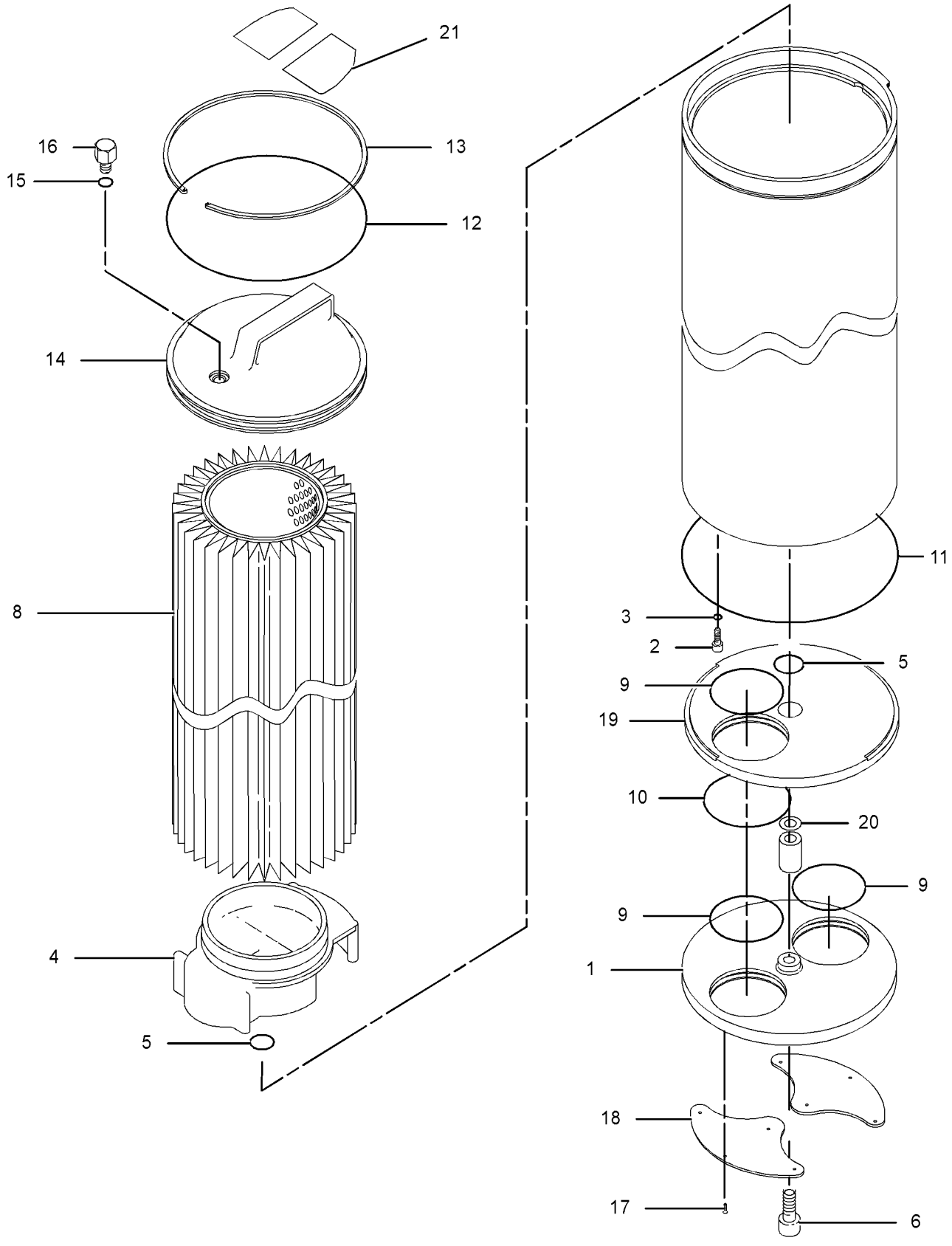

GRAPHIC #1 **<END>** g03323353

214-4511 FITTING GP-HYDRAULIC–4-BOLT FLANGE

S/N: JEG1-UP

PART OF 239-1714 LINES GP-FRONT

SMCS-5057, 7553 **i03933129**

NOTE	REF NO	GRAPHIC REF	PART NUMBER	QTY	PART NAME 1 2 3 4 5 6 (PRODUCT LEVEL)	SEE PAGE
	1	1	*214-4400*	1	FLANGE AS	
	1A	1	**5K-9090**	1	SEAL-O-RING	
					-OR-	
	2	1	*214-4518*	1	FLANGE AS	
	2A	1	**5K-9090**	1	SEAL-O-RING	
	2B	1	**6V-8635**	1	CONNECTOR	
	2C	1	**7M-8485**	1	SEAL-O-RING	

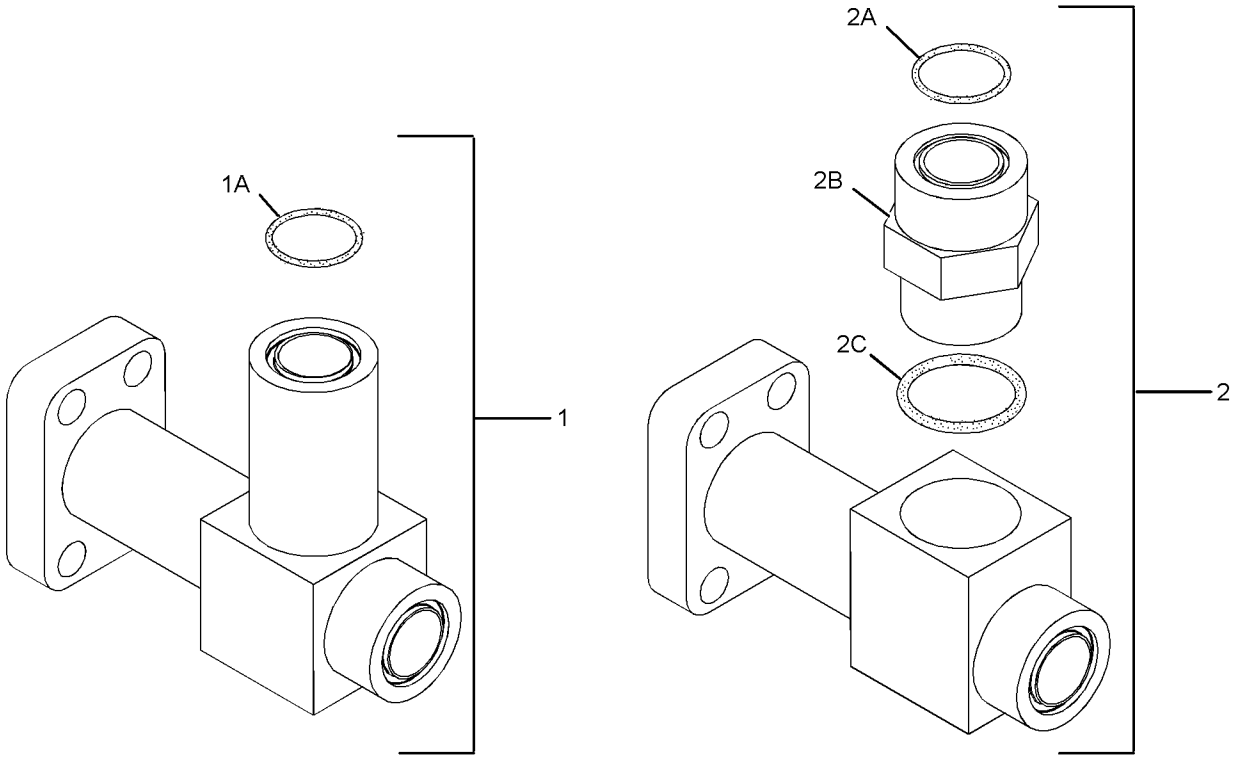

OPTIONAL DESIGN

GRAPHIC #1 **<END>** g02154439

347-6081 GAUGE GP-SIGHT–HYDRAULIC OIL LEVEL

S/N: JEG1-UP

PART OF 395-3364 TANK & FILTER GP-HYDRAULIC

SMCS-7479 **i04281574**

NOTE	REF NO	GRAPHIC REF	PART NUMBER	QTY	PART NAME 1 2 3 4 5 6 (PRODUCT LEVEL)	SEE PAGE
	1	1	**236-3257**	1	PIPE	
M	2	1	**236-3259**	2	BOLT-SPECIAL	
	3	1	**347-6082**	2	BLOCK	
	4	1	**6F-6672**	4	SEAL-O-RING	
	5	1	**6F-4855**	4	SEAL-O-RING	

M - METRIC PART

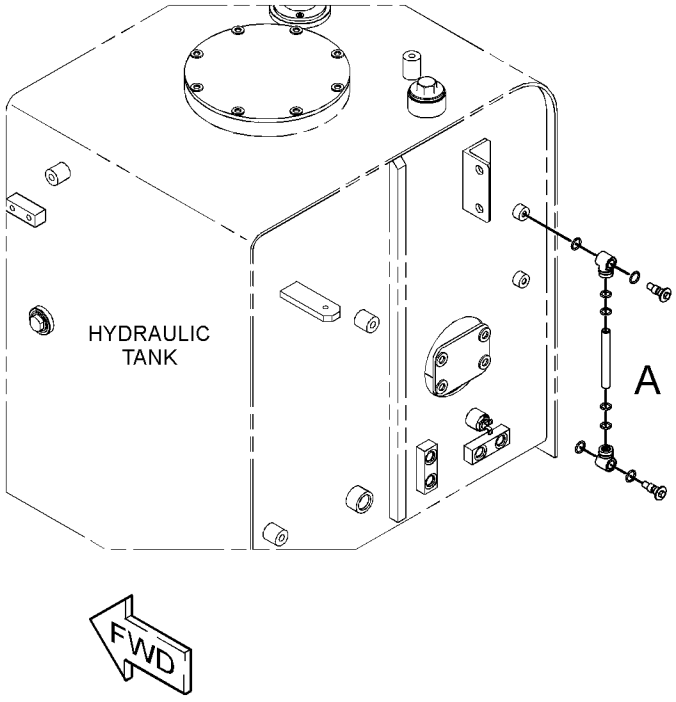

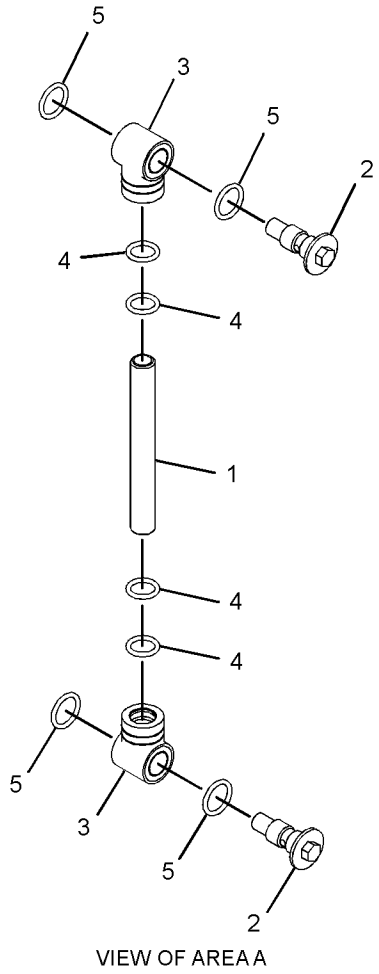

VIEW OF AREA A

GRAPHIC #1 **<END>** g02303838

344-5281 HEAD GP-PUMP–DRIVE

S/N: JEG1-UP

PART OF 436-6669 PUMP GP-MAIN HYDRAULIC

SMCS-3222, 5070, 5086 **i05453949**

NOTE	REF NO	GRAPHIC REF	PART NUMBER	QTY	PART NAME 1 2 3 4 5 6 (PRODUCT LEVEL)	SEE PAGE
B	1	1	**099-3669**	2	SHIM (1-MM THK)	
B		1	**099-3670**	2	SHIM (1.95-MM THK)	
B		1	**099-6109**	2	SHIM (1.05-MM THK)	
B		1	**099-6110**	2	SHIM (1.1-MM THK)	
B		1	**099-6111**	2	SHIM (1.15-MM THK)	
B		1	**099-6112**	2	SHIM (1.2-MM THK)	
B		1	**099-6113**	2	SHIM (1.25-MM THK)	
B		1	**099-6115**	2	SHIM (1.3-MM THK)	
B		1	**099-6117**	2	SHIM (1.35-MM THK)	
B		1	**099-6118**	2	SHIM (1.4-MM THK)	
B		1	**099-6119**	2	SHIM (1.45-MM THK)	
B		1	**099-6120**	2	SHIM (1.5-MM THK)	
B		1	**099-6121**	2	SHIM (1.55-MM THK)	
B		1	**099-6122**	2	SHIM (1.6-MM THK)	
B		1	**099-6123**	2	SHIM (1.65-MM THK)	
B		1	**099-6124**	2	SHIM (1.7-MM THK)	
B		1	**099-6125**	2	SHIM (1.75-MM THK)	
B		1	**099-6126**	2	SHIM (1.8-MM THK)	
B		1	**099-6127**	2	SHIM (1.85-MM THK)	
B		1	**099-6128**	2	SHIM (1.9-MM THK)	
	2	1	**9S-4191**	1	PLUG-O-RING	
	3	1	**8T-4223**	6	WASHER-HARD (13.5X25.5X3-MM THK)	
M	4	1	**8T-4196**	2	BOLT (M10X1.5X35-MM)	
M	5	1	**8T-4136**	2	BOLT (M10X1.5X25-MM)	
M	6	1	**8T-4133**	1	NUT (M10X1.5-THD)	
M	7	1	**7I-2272**	2	BOLT (M5X0.8X12-MM)	
Y	8	1	**111-9916**	1	VALVE GP-SOLENOID	480
	9	1	**173-3398**	1	COVER	
	10	1	**200-3244**	1	SPRING	
	11	1	**200-3245**	1	SPRING	
	12	1	**200-3246**	1	SPRING	
	13	1	**215-9961**	1	STOPPER	
	14	1	**215-9962**	1	STOPPER	
M	15	1	**225-4607**	2	SETSCREW (M20X2.5X45-MM)	
	16	1	**234-4452**	1	COVER	
	17	1	**234-4453**	1	COVER	
	18	1	**273-8316**	1	SEAL-O-RING	
	19	1	**273-8317**	1	SEAL-O-RING	
	20	1	**273-8318**	1	SEAL-O-RING	
	21	1	**273-8319**	1	SEAL-O-RING	
	22	1	**285-4470**	1	SEAL-O-RING	
	23	1	**300-9715**	1	BODY AS (DRIVE)	
	24	1	**301-6874**	1	RETAINER	
	25	1	**301-8294**	1	ADJUSTER	
	26	1	**094-1875**	1	DOWEL	
	27	1	**094-1881**	1	PLATE-SLIDE	
	28	1	**094-1882**	13	PLUG	
	29	1	**095-1788**	1	RING-BACKUP	
M	30	1	**8T-4131**	2	NUT (M20X2.5-THD)	
M	31	1	**6V-8200**	6	BOLT-SOCKET HEAD (M12X1.75X35-MM)	
	32	1	**099-3671**	1	SPRING	
	33	1	**3J-1907**	2	SEAL-O-RING	
	34	1	**3D-2891**	1	BALL	
	35	1	**251-9567**	1	NUT (M20X1.5-THD)	
	36	1	**191-5707**	1	SPOOL AS	
	37	1	**190-7674**	1	SEAL-O-RING	
	38	1	**190-7673**	1	SEAL-O-RING	

344-5281 **HEAD GP-PUMP (*contd.*)** **i05453949**

NOTE	REF NO	GRAPHIC REF	PART NUMBER	QTY	PART NAME 1 2 3 4 5 6 (PRODUCT LEVEL)	SEE PAGE
	39	1	**189-9763**	3	SEAL-O-RING	
	40	1	**185-0201**	1	PIN AS	
		1	**129-7978**	1	DOWEL	
	41	1	**185-0169**	1	GUIDE	
	42	1	**173-3413**	1	COVER	
	43	1	**173-3397**	1	LEVER	
	44	1	**173-3384**	1	PISTON	
	45	1	**150-5797**	1	PIN	
	46	1	**153-8623**	1	RING-BACKUP	

B - USE AS REQUIRED
M - METRIC PART
Y - SEPARATE ILLUSTRATION

344-5281 **HEAD GP-PUMP (*contd.*)** **i05453949**

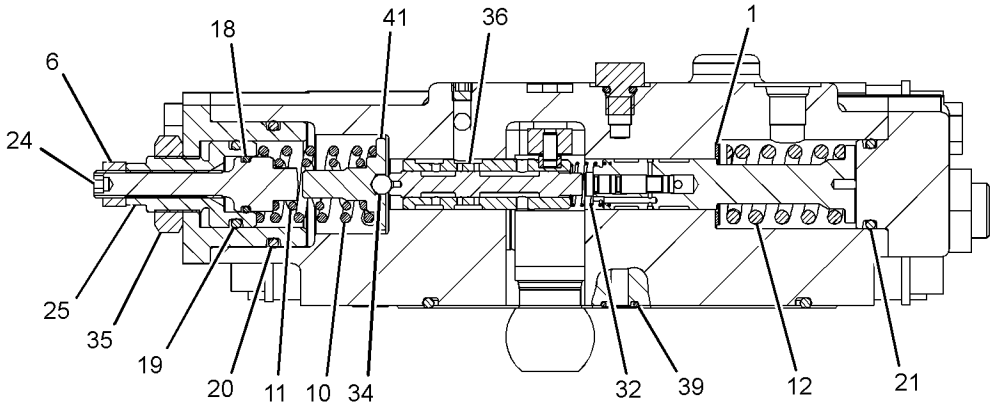

SECTION A-A

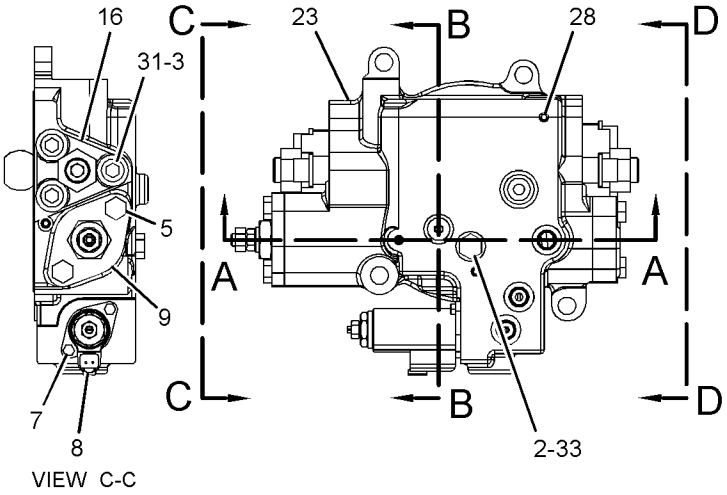

VIEW C-C

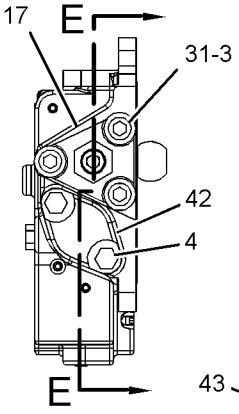

VIEW D-D

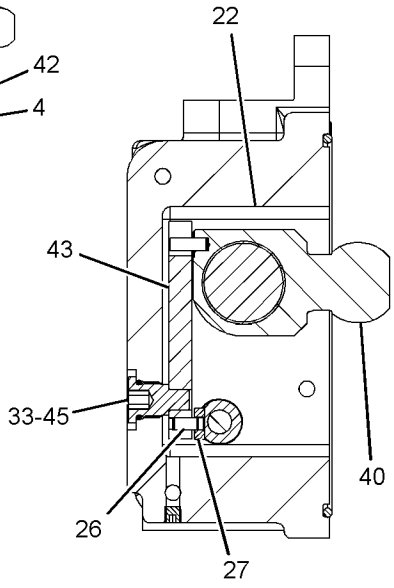

SECTION B-B

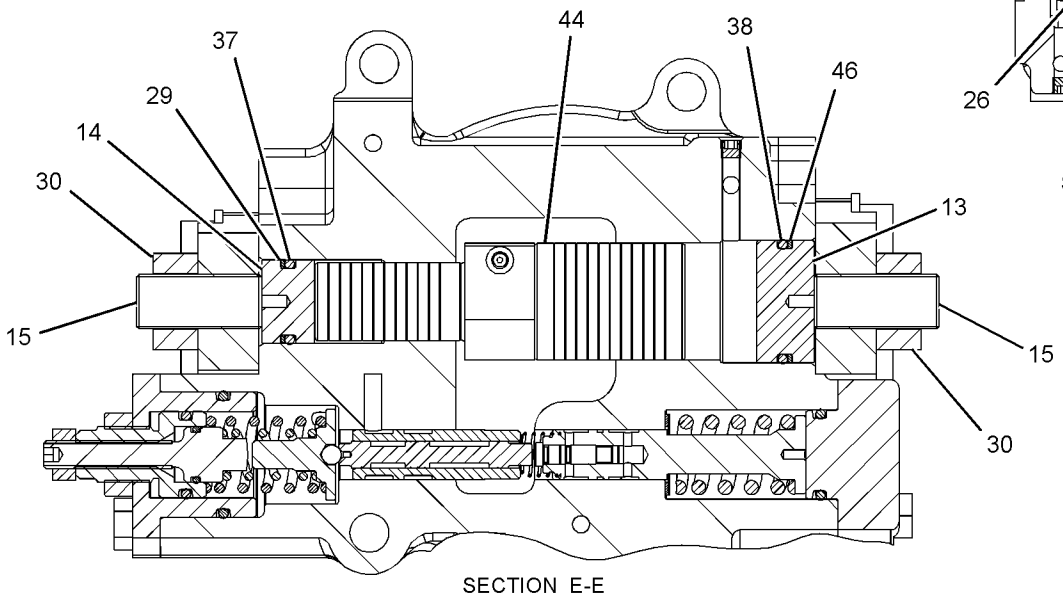

SECTION E-E

GRAPHIC #1 **<END>** g01392644

344-5282 HEAD GP-PUMP–DRIVEN

S/N: JEG1-UP

PART OF 436-6669 PUMP GP-MAIN HYDRAULIC

SMCS-3222, 5070, 5086

i05453952

NOTE	REF NO	GRAPHIC REF	PART NUMBER	QTY	PART NAME 1 2 3 4 5 6 (PRODUCT LEVEL)	SEE PAGE
B	1	2	**099-3669**	2	SHIM (1-MM THK)	
B		2	**099-3670**	2	SHIM (1.95-MM THK)	
B		2	**099-6109**	2	SHIM (1.05-MM THK)	
B		2	**099-6110**	2	SHIM (1.1-MM THK)	
B		2	**099-6111**	2	SHIM (1.15-MM THK)	
B		2	**099-6112**	2	SHIM (1.2-MM THK)	
B		2	**099-6113**	2	SHIM (1.25-MM THK)	
B		2	**099-6115**	2	SHIM (1.3-MM THK)	
B		2	**099-6117**	2	SHIM (1.35-MM THK)	
B		2	**099-6118**	2	SHIM (1.4-MM THK)	
B		2	**099-6119**	2	SHIM (1.45-MM THK)	
B		2	**099-6120**	2	SHIM (1.5-MM THK)	
B		2	**099-6121**	2	SHIM (1.55-MM THK)	
B		2	**099-6122**	2	SHIM (1.6-MM THK)	
B		2	**099-6123**	2	SHIM (1.65-MM THK)	
B		2	**099-6124**	2	SHIM (1.7-MM THK)	
B		2	**099-6125**	2	SHIM (1.75-MM THK)	
B		2	**099-6126**	2	SHIM (1.8-MM THK)	
B		2	**099-6127**	2	SHIM (1.85-MM THK)	
B		2	**099-6128**	2	SHIM (1.9-MM THK)	
	2	1,2	**8T-4223**	6	WASHER-HARD (13.5X25.5X3-MM THK)	
M	3	1	**8T-4196**	2	BOLT (M10X1.5X35-MM)	
M	4	2	**8T-4136**	2	BOLT (M10X1.5X25-MM)	
M	5	2	**8T-4133**	1	NUT (M10X1.5-THD)	
M	6	1,2	**6V-8200**	6	BOLT-SOCKET HEAD (M12X1.75X35-MM)	
	7	2	**3J-1907**	1	SEAL-O-RING	
	8	2	**391-0668**	1	COVER	
	9	2	**200-3244**	1	SPRING	
	10	2	**200-3245**	1	SPRING	
	11	2	**200-3246**	1	SPRING	
	12	1	**215-9961**	1	STOPPER	
	13	1	**215-9962**	1	STOPPER	
M	14	1	**225-4607**	2	SETSCREW (M20X2.5X45-MM)	
	15	2	**234-4452**	1	COVER	
	16	1	**234-4453**	1	COVER	
	17	2	**273-8316**	1	SEAL-O-RING	
	18	2	**273-8317**	1	SEAL-O-RING	
	19	2	**273-8318**	1	SEAL-O-RING	
	20	2	**273-8319**	1	SEAL-O-RING	
	21	2	**285-4470**	1	SEAL-O-RING	
	22	1	**391-0666**	1	BODY AS (DRIVEN)	
	23	2	**301-6874**	1	RETAINER	
	24	2	**301-8294**	1	ADJUSTER	
	25	2	**094-1875**	1	DOWEL	
	26	2	**094-1881**	1	PLATE-SLIDE	
	27	1	**094-1882**	9	PLUG	
	28	1	**095-1788**	1	RING-BACKUP	
M	29	1	**8T-4131**	2	NUT (M20X2.5-THD)	
	30	2	**3D-2891**	1	BALL	
	31	2	**099-3671**	1	SPRING	
	32	2	**251-9567**	1	NUT (M20X1.5-THD)	
	33	2	**191-5707**	1	SPOOL AS	
	34	1	**190-7674**	1	SEAL-O-RING	
	35	1	**190-7673**	1	SEAL-O-RING	
	36	2	**189-9763**	3	SEAL-O-RING	
	37	2	**185-0201**	1	PIN AS	
		2	**129-7978**	1	DOWEL	

344-5282 **HEAD GP-PUMP (*contd.*)** **i05453952**

NOTE	REF NO	GRAPHIC REF	PART NUMBER	QTY	PART NAME 1 2 3 4 5 6 (PRODUCT LEVEL)	SEE PAGE
	38	2	**185-0169**	1	GUIDE	
	39	1	**173-3413**	1	COVER	
	40	2	**173-3397**	1	LEVER	
	41	1	**173-3384**	1	PISTON	
	42	1	**153-8623**	1	RING-BACKUP	
	43	2	**150-5797**	1	PIN	

B - USE AS REQUIRED
M - METRIC PART

344-5282 **HEAD GP-PUMP (*contd.*)** **i05453952**

REFER TO ALL ILLUSTRATIONS OF
THIS GROUP FOR AUXILIARY VIEWS

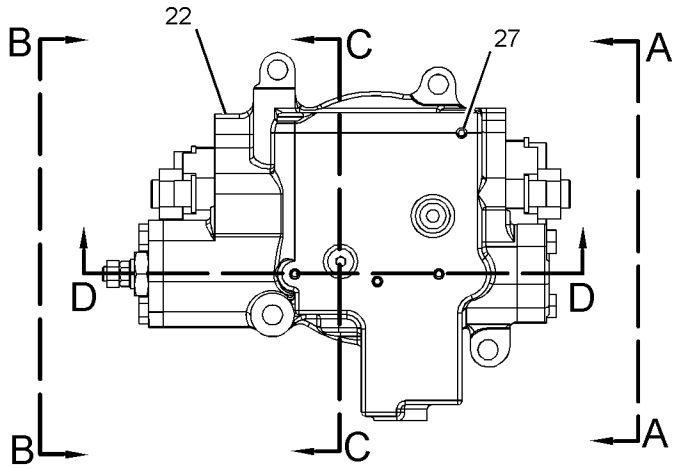

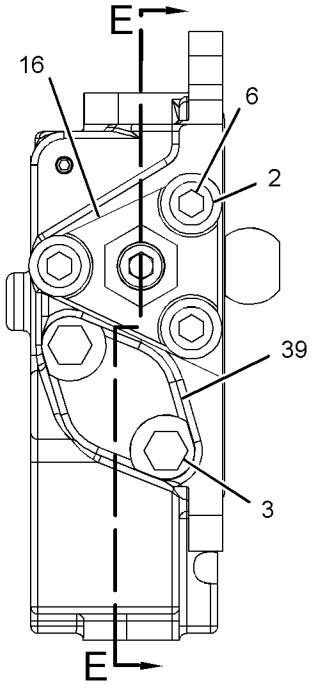

VIEW A-A

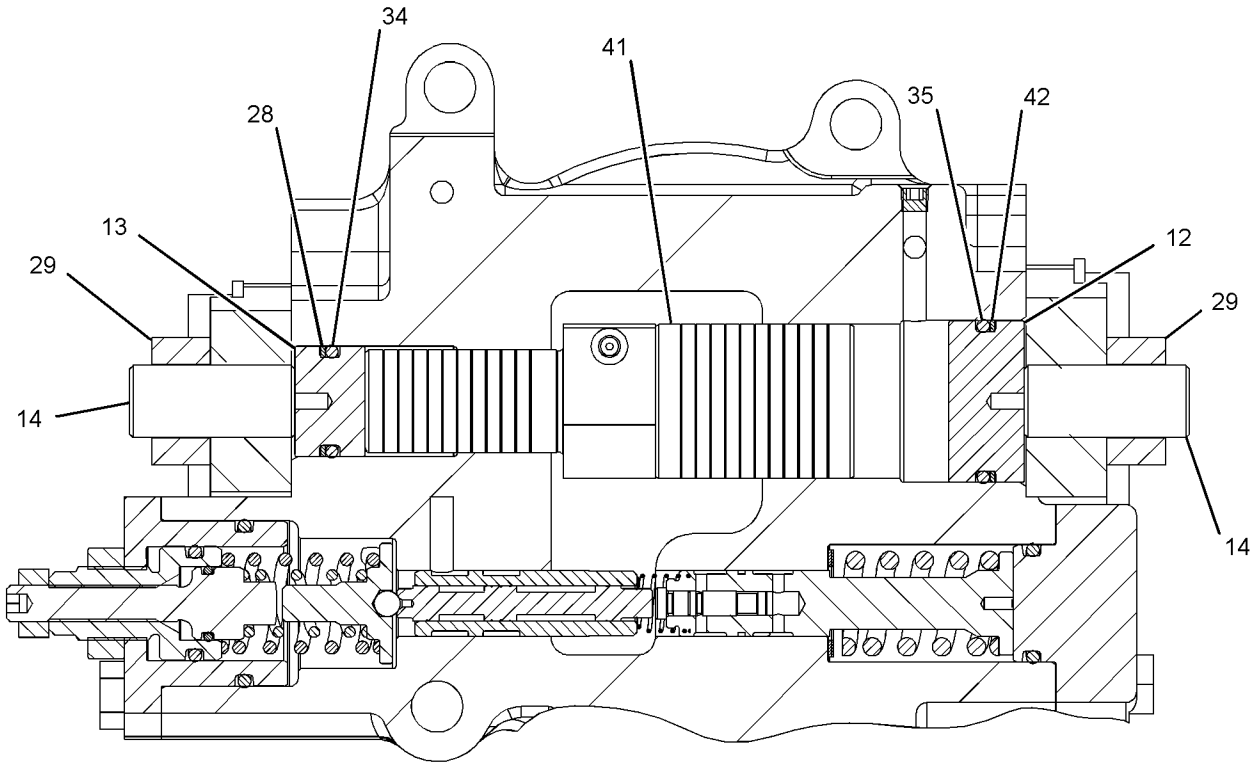

SECTION E-E

GRAPHIC #1 g01393331

344-5282 **HEAD GP-PUMP (*contd.*)** **i05453952**

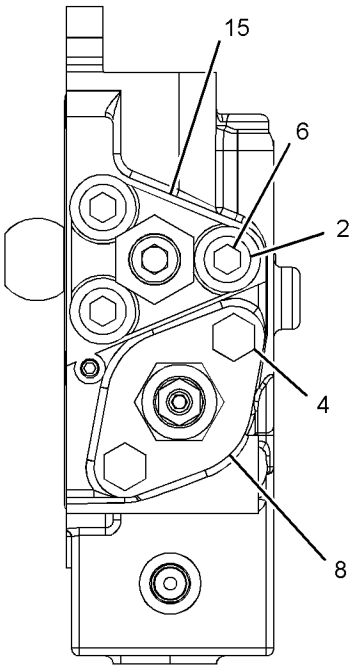

VIEW B-B

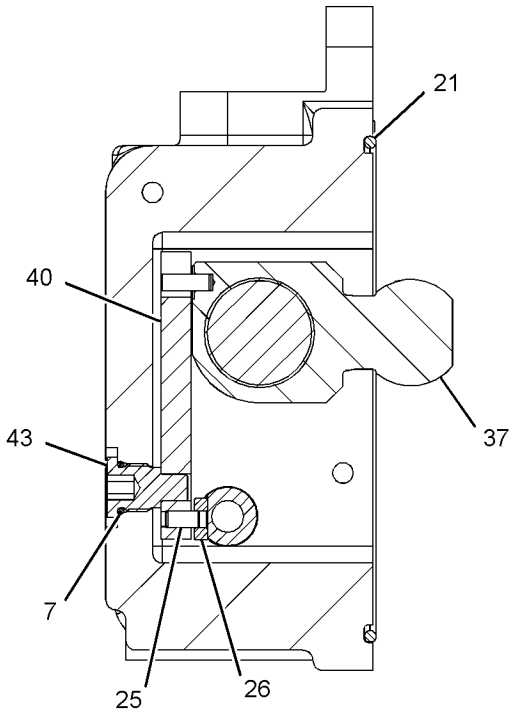

SECTION C-C

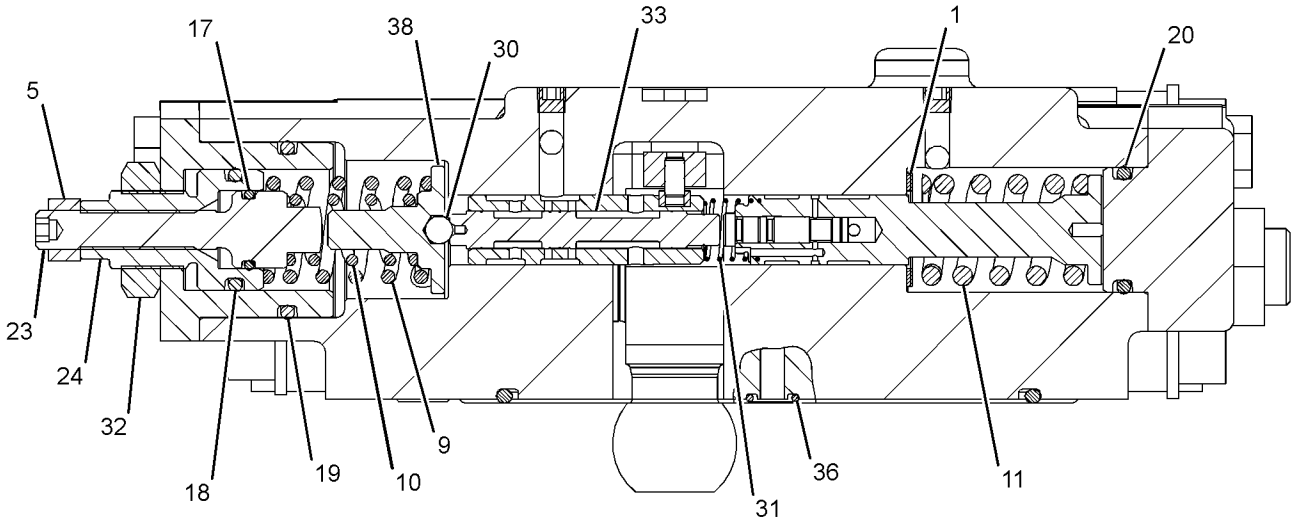

SECTION D-D

GRAPHIC #2 **<END>** g01393359

194-0174 HOSE GP-HYDRAULIC

S/N: JEG1-UP

PART OF 239-1714 LINES GP-FRONT

SMCS-5057 **i02378005**

NOTE	PART NUMBER	QTY	PART NAME 1 2 3 4 5 6 (PRODUCT LEVEL)	SEE PAGE
Y	*194-0176*	1	HOSE GP-HYDRAULIC	318
			-OR-	
	168-9760	1	HOSE AS	

Y - SEPARATE ILLUSTRATION

<END>

194-0176 HOSE GP-HYDRAULIC–FRONT

S/N: JEG1-UP

PART OF 194-0174 HOSE GP-HYDRAULIC

SMCS-5057 **i02378061**

NOTE	REF NO	GRAPHIC REF	PART NUMBER	QTY	PART NAME 1 2 3 4 5 6 (PRODUCT LEVEL)	SEE PAGE
	1	1	**142-7765**	1	TUBE AS	
	2	1	**5K-9090**	1	SEAL-O-RING	
I	3	1	**165-3165**	1	HOSE AS	

I - REFER TO HYDRAULIC INFORMATION SYSTEM

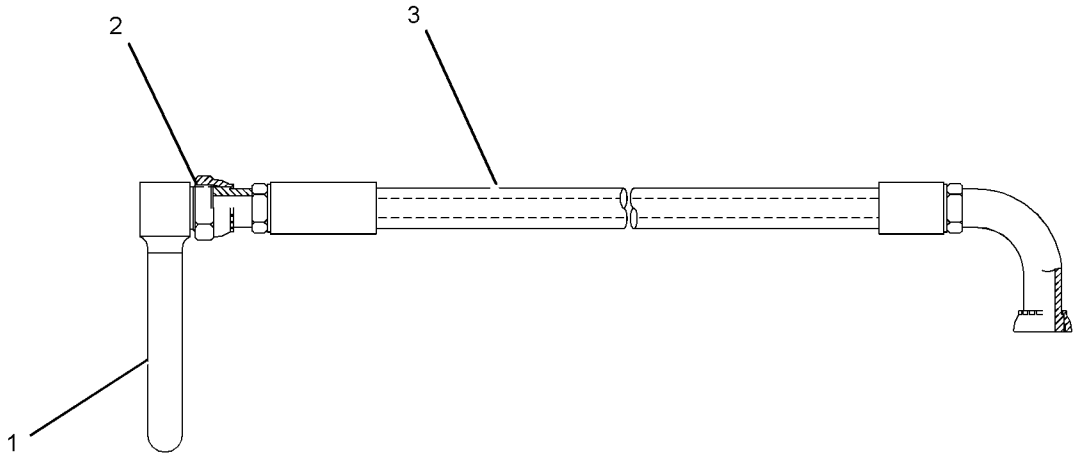

GRAPHIC #1 **<END>** g01041998

194-0180 HOSE GP-HYDRAULIC

S/N: JEG1-UP

PART OF 239-1714 LINES GP-FRONT

SMCS-5057 **i05345958**

NOTE	PART NUMBER	QTY	PART NAME 1 2 3 4 5 6 (PRODUCT LEVEL)	SEE PAGE
Y	*194-0181*	1	HOSE GP-HYDRAULIC	320
			—OR—	
Y	*194-0182*	1	HOSE GP-HYDRAULIC	321

Y - SEPARATE ILLUSTRATION

<END>

194-0181 HOSE GP-HYDRAULIC–FRONT

S/N: JEG1-UP

PART OF 194-0180 HOSE GP-HYDRAULIC

SMCS-5057 **i02662568**

NOTE	REF NO	GRAPHIC REF	PART NUMBER	QTY	PART NAME 1 2 3 4 5 6 (PRODUCT LEVEL)	SEE PAGE
	1	1	**168-9762**	1	HOSE AS	
	2	1	**8C-3206**	2	FLANGE-HALF	
	3	1	**4J-0520**	1	SEAL-O-RING	



GRAPHIC #1 **<END>** g01049500

194-0182 HOSE GP-HYDRAULIC–FRONT

S/N: JEG1-UP

PART OF 194-0180 HOSE GP-HYDRAULIC

SMCS-5057 **i02378159**

NOTE	REF NO	GRAPHIC REF	PART NUMBER	QTY	PART NAME 1 2 3 4 5 6 (PRODUCT LEVEL)	SEE PAGE
I	1	1	**165-3173**	1	HOSE AS	
	2	1	**168-9523**	1	TUBE AS	
	3	1	**113-6479**	1	FLANGE-SPECIAL	
	4	1	**5K-9090**	2	SEAL-O-RING	
	5	1	**1P-3703**	1	SEAL-RECTANGULAR	

I - REFER TO HYDRAULIC INFORMATION SYSTEM

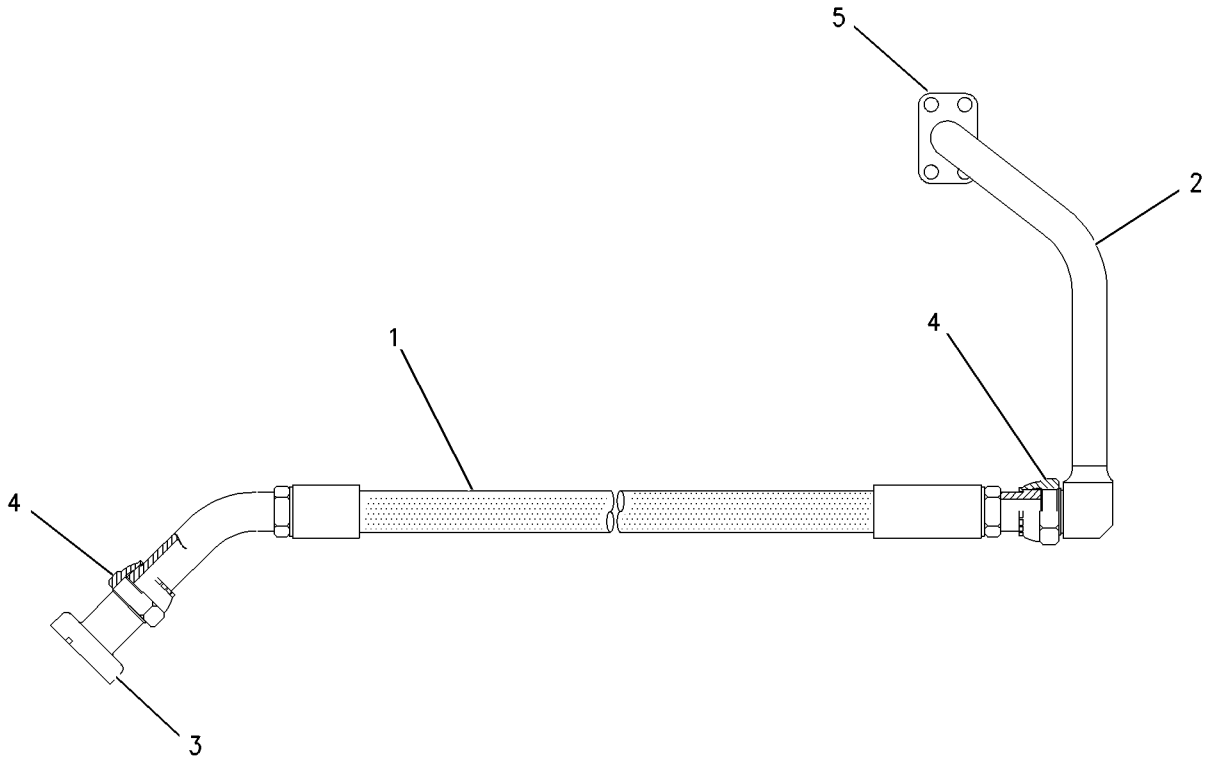

GRAPHIC #1 **<END>** g00834662

236-3212 HOSE GP-HYDRAULIC—FRONT

S/N: JEG1-UP

PART OF 239-1714 LINES GP-FRONT

SMCS-5057 **i03423332**

NOTE	PART NUMBER	QTY	PART NAME 1 2 3 4 5 6 (PRODUCT LEVEL)	SEE PAGE
Y	*236-3214*	1	HOSE GP-HYDRAULIC (FRONT)	323
			—OR—	
	207-6666	1	HOSE AS	
BE	**7Y-5074**		GUARD-HOSE	

B - USE AS REQUIRED
E - ORDER BY THE CENTIMETER
Y - SEPARATE ILLUSTRATION

<END>

236-3213 HOSE GP-HYDRAULIC—FRONT

S/N: JEG1-UP

PART OF 239-1714 LINES GP-FRONT

SMCS-5057 **i03423333**

NOTE	PART NUMBER	QTY	PART NAME 1 2 3 4 5 6 (PRODUCT LEVEL)	SEE PAGE
Y	*236-3215*	1	HOSE GP-HYDRAULIC (FRONT)	324
			—OR—	
	207-6667	1	HOSE AS	
BE	**7Y-5074**		GUARD-HOSE	

B - USE AS REQUIRED
E - ORDER BY THE CENTIMETER
Y - SEPARATE ILLUSTRATION

<END>

236-3214 HOSE GP-HYDRAULIC–FRONT

S/N: JEG1-UP

PART OF 236-3212 HOSE GP-HYDRAULIC

SMCS-5057 **i02302709**

NOTE	REF NO	GRAPHIC REF	PART NUMBER	QTY	PART NAME 1 2 3 4 5 6 (PRODUCT LEVEL)	SEE PAGE
	1	1	**7Y-3721**	1	TUBE AS	
I	2	1	**187-5954**	1	HOSE AS	
	3	1	**6V-9746**	1	SEAL-O-RING	

I - REFER TO HYDRAULIC INFORMATION SYSTEM

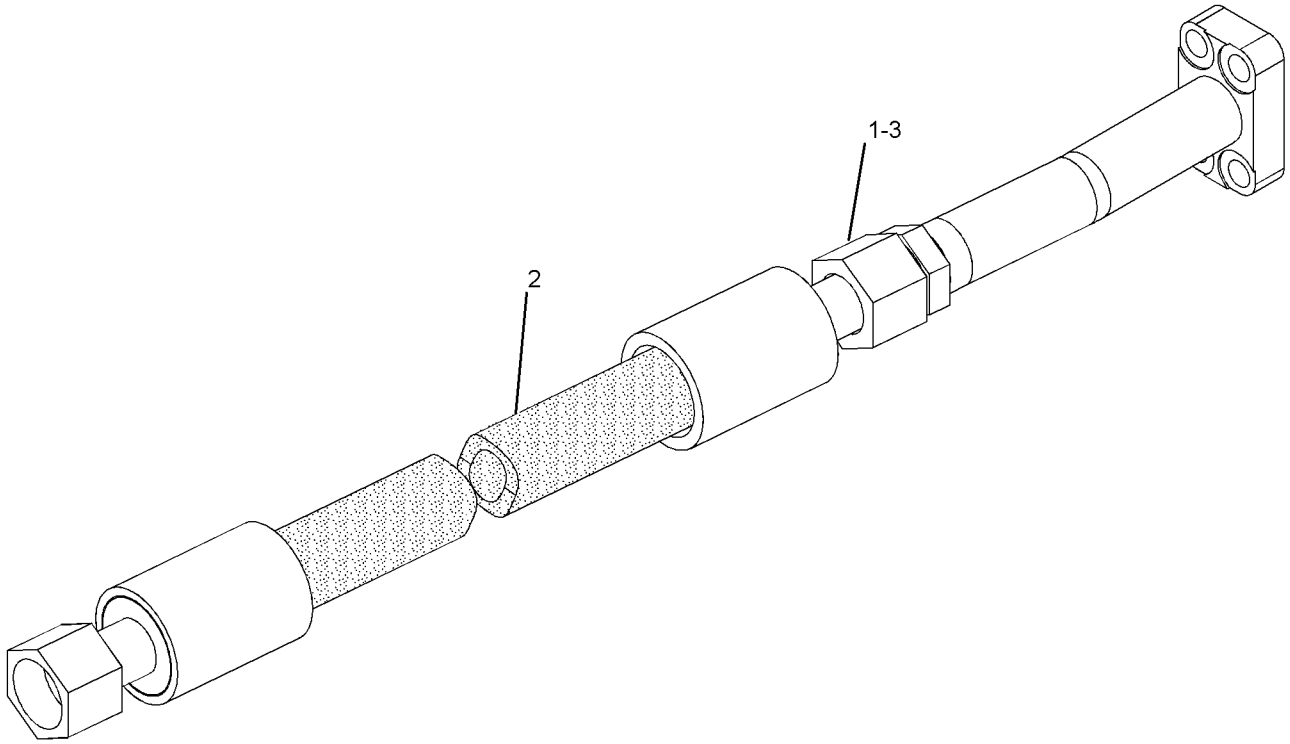

GRAPHIC #1 **<END>** g01133931

236-3215 HOSE GP-HYDRAULIC–FRONT

S/N: JEG1-UP

PART OF 236-3213 HOSE GP-HYDRAULIC

SMCS-5057 **i02302711**

NOTE	REF NO	GRAPHIC REF	PART NUMBER	QTY	PART NAME 1 2 3 4 5 6 (PRODUCT LEVEL)	SEE PAGE
	1	1	**137-0856**	1	TUBE AS	
I	2	1	**187-5954**	1	HOSE AS	
	3	1	**6V-9746**	1	SEAL-O-RING	

I - REFER TO HYDRAULIC INFORMATION SYSTEM

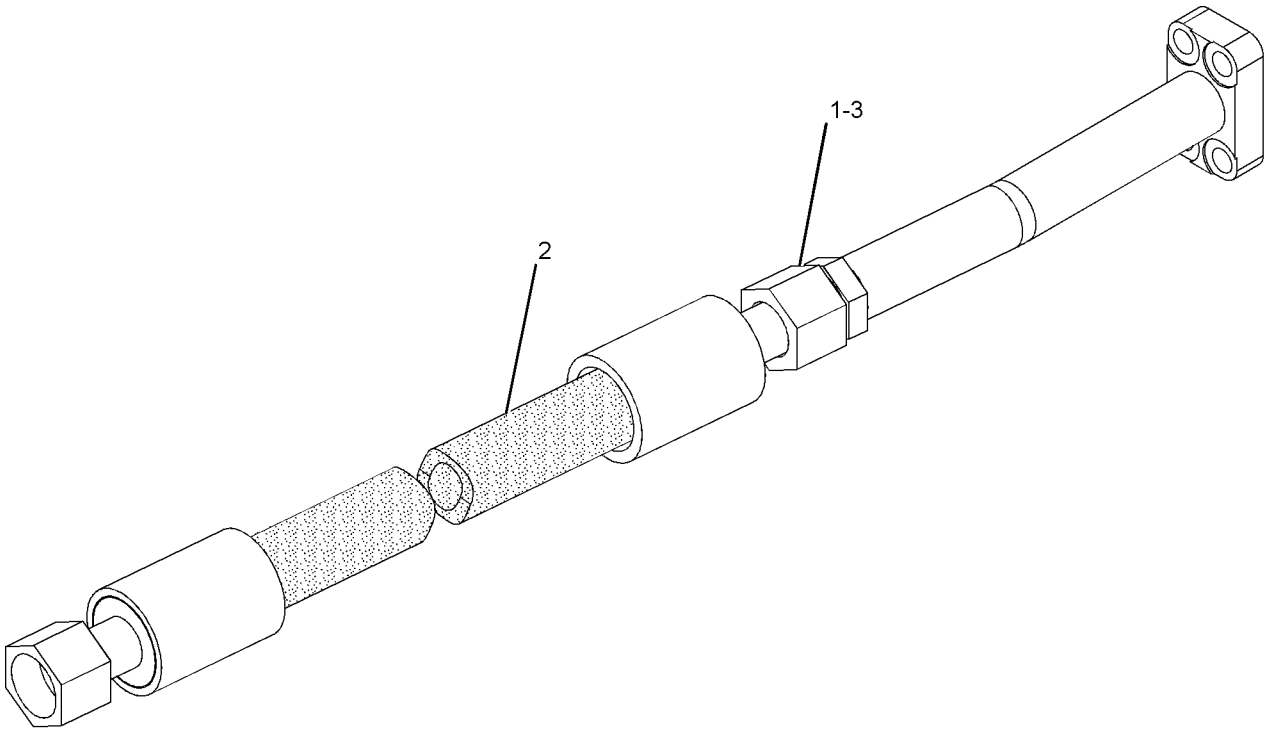

GRAPHIC #1 **<END>** g01133918

260-7910 HOSE GP-HYDRAULIC

S/N: JEG1-UP

PART OF 239-1714 LINES GP-FRONT

SMCS-5057 **i05334624**

NOTE	PART NUMBER	QTY	PART NAME 1 2 3 4 5 6 (PRODUCT LEVEL)	SEE PAGE
Y	*260-7911*	1	HOSE GP-HYDRAULIC	326
			—OR—	
Y	*260-7913*	1	HOSE GP-HYDRAULIC	327

Y - SEPARATE ILLUSTRATION

<END>

260-7911 HOSE GP-HYDRAULIC

S/N: JEG1-UP

PART OF 260-7910 HOSE GP-HYDRAULIC

SMCS-5057 **i02575396**

NOTE	REF NO	GRAPHIC REF	PART NUMBER	QTY	PART NAME 1 2 3 4 5 6 (PRODUCT LEVEL)	SEE PAGE
	1	1	**260-7912**	1	HOSE AS	
	2	1	**1P-4577**	2	FLANGE-HALF	
	3	1	**4J-0520**	1	SEAL-O-RING	

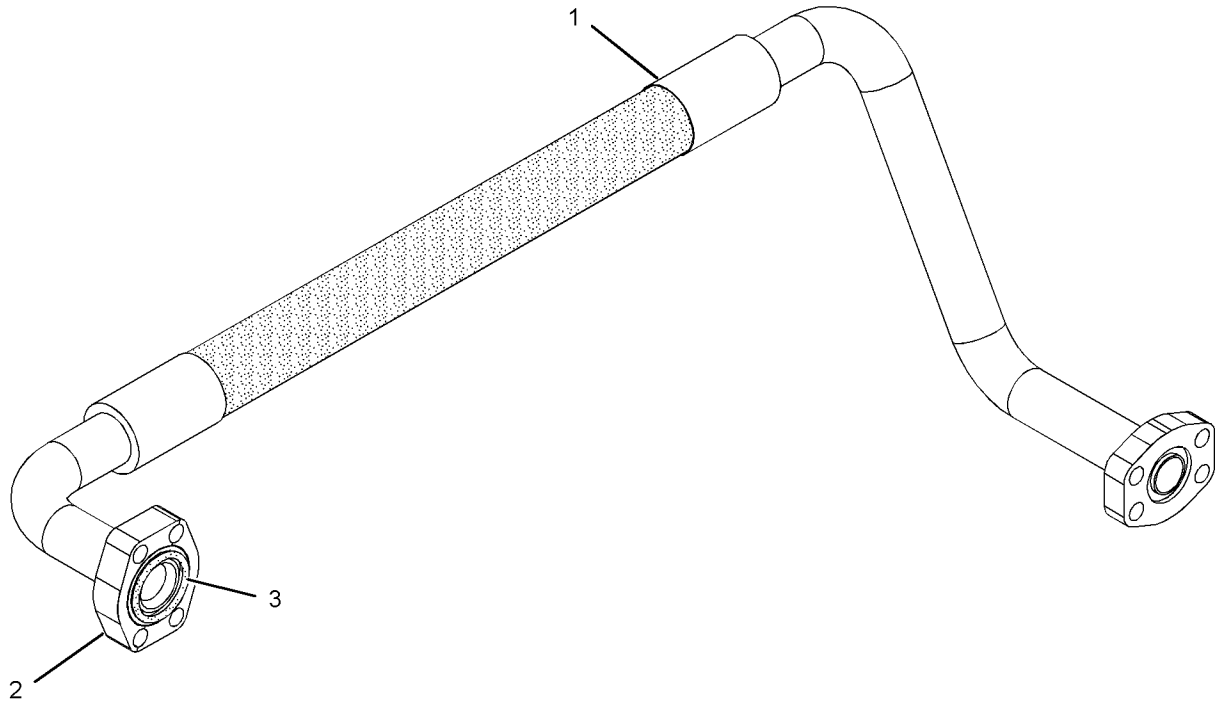

GRAPHIC #1 **<END>** g01277264

260-7913 HOSE GP-HYDRAULIC

S/N: JEG1-UP

PART OF 260-7910 HOSE GP-HYDRAULIC

SMCS-5057 **i02575397**

NOTE	REF NO	GRAPHIC REF	PART NUMBER	QTY	PART NAME 1 2 3 4 5 6 (PRODUCT LEVEL)	SEE PAGE
	1	1	**142-7764**	1	TUBE AS	
I	2	1	**260-7914**	1	HOSE AS	
	3	1	**1P-3703**	1	SEAL-RECTANGULAR	
	4	1	**5K-9090**	2	SEAL-O-RING	
	5	1	**7Y-3731**	1	FLANGE	

I - REFER TO HYDRAULIC INFORMATION SYSTEM

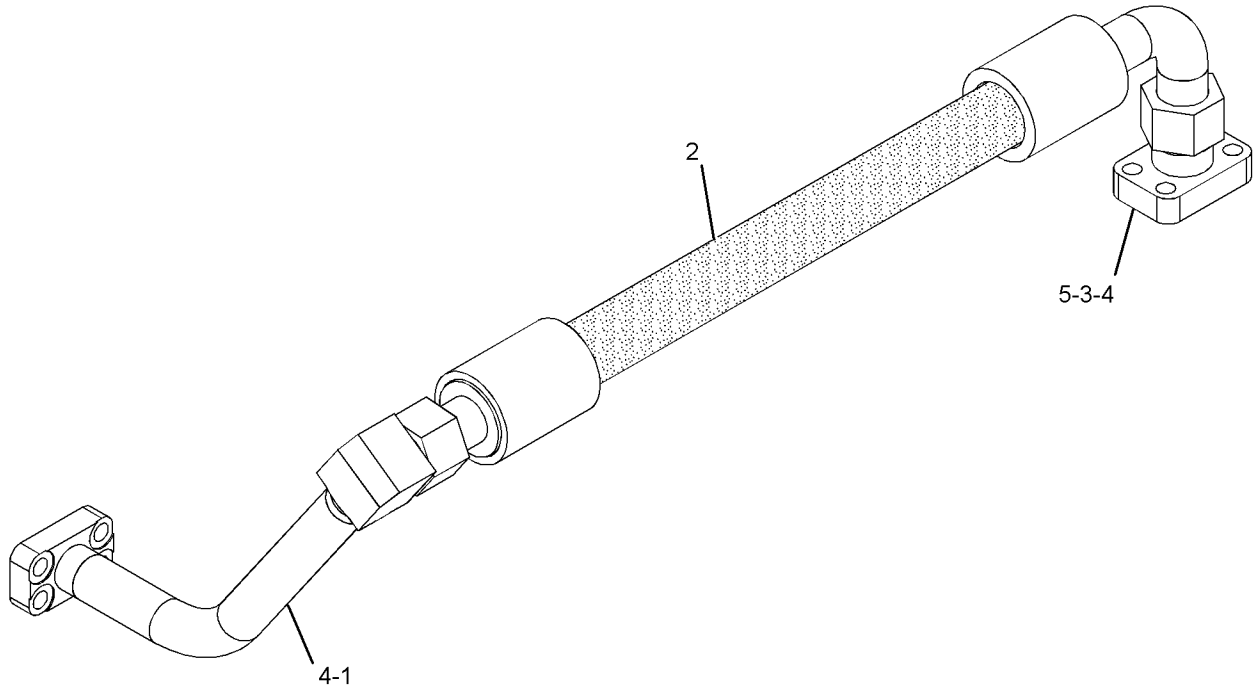

GRAPHIC #1 **<END>** g01277324

383-5083 HYDRAULIC AR

S/N: JEG1-UP

PART OF 419-5434 GENERAL AR

SMCS-5050 **i05537213**

NOTE	PART NUMBER	QTY	PART NAME 1 2 3 4 5 6 (PRODUCT LEVEL)	SEE PAGE
Y	*259-5237*	1	FASTENER GP-WIRING HARNESS (HEAVY LIFT)	113
Y	*239-1699*	1	LINES GP-BOOM CYLINDER	341
Y	*376-6308*	1	LINES GP-CONTROL	348
Y	*239-1714*	1	LINES GP-FRONT	357
Y	*376-6321*	1	LINES GP-HYDRAULIC OIL COOLER	366
Y	*248-9825*	1	LINES GP-PILOT (JOYSTICK, PEDALS)	367
Y	*255-1659*	1	LINES GP-PILOT (HEAVY LIFT)	371
Y	*376-6309*	1	LINES GP-PILOT (MAIN CONTROL VALVE)	377
Y	*398-4602*	1	LINES GP-PILOT (MAIN CONTROL VALVE) (CONTROL VALVE)	383
Y	*376-6311*	1	LINES GP-PILOT (FILTER, PILOT PUMP)	379
Y	*376-6313*	1	LINES GP-PUMP (SUPPLY, MAIN PUMP)	396
Y	*239-1717*	1	LINES GP-TRAVEL MOTOR (LONG UNDERCARRIAGE)	404
Y	*260-7868*	1	MOUNTING GP-MAIN CONTROL VALVE	423
Y	*387-2626*	1	PUMP & MTG GP-MAIN HYDRAULIC	424
Y	*415-7828*	1	TANK & MTG GP-HYDRAULIC	435
Y	*435-1482*	1	VALVE GP-MAIN CONTROL (HEAVY LIFT)	457

Y - SEPARATE ILLUSTRATION

<END>

264-8771 HYDRAULIC AR-BIODEGRADABLE OIL

S/N: JEG1-UP

AN ATTACHMENT

SMCS-5095 **i05440259**

NOTE	PART NUMBER	QTY	PART NAME 1 2 3 4 5 6 (PRODUCT LEVEL)	SEE PAGE
Y	*353-0610*	2	DRIVE GP-FINAL (WITH MOTOR)	195
			—OR—	
Y	*353-0546*	2	DRIVE GP-FINAL (WITH MOTOR, SPROCKET)	193
Y	*264-8602*	1	PLATE & FILM GP	663

Y - SEPARATE ILLUSTRATION

<END>

237-3184 LINES GP-AUXILIARY HYDRAULIC—HIGH FLOW

S/N: JEG1-UP

FOR USE WITH 2.4 TO 2.5-M (7.9 TO 8.2-FT) STICK

AN ATTACHMENT

SMCS-5057 **i05498182**

NOTE	REF NO	GRAPHIC REF	PART NUMBER	QTY	PART NAME 1 2 3 4 5 6 (PRODUCT LEVEL)	SEE PAGE
	1	1	**127-6780**	1	TUBE AS	
	2	1	**142-6582**	1	TUBE AS	
	3	1	**173-7916**	4	CLAMP-HALF	
I	4	1	**253-6694**	1	HOSE AS	
I	5	1	**253-6697**	1	HOSE AS	
CY	6	1	**389-2407**	2	VALVE GP-MANUAL (AUXILIARY, SHUTOFF)	458
	7	1	**1P-3703**	3	SEAL-RECTANGULAR	
	8	1	**1P-3704**	3	SEAL-RECTANGULAR	
	9	1	**1P-5767**	4	FLANGE-HALF	
	10	1	**6V-0400**	4	FLANGE-HALF	
	11	1	**7Y-4538**	4	CLAMP-HALF	
	12	1	**8T-4121**	4	WASHER-HARD (11X21X2.5-MM THK)	
M	13	1	**8T-4139**	12	BOLT (M12X1.75X30-MM)	
M	15	1	**8T-4184**	8	BOLT (M12X1.75X45-MM)	
M	16	1	**8T-4194**	8	BOLT (M12X1.75X50-MM)	
	17	1	**8T-4223**	24	WASHER-HARD (13.5X25.5X3-MM THK)	
M	18	1	**8T-4956**	4	BOLT (M12X1.75X35-MM)	
M	19	1	**8T-6685**	4	BOLT (M10X1.5X110-MM)	

C - CHANGE FROM PREVIOUS TYPE
I - REFER TO HYDRAULIC INFORMATION SYSTEM
M - METRIC PART
Y - SEPARATE ILLUSTRATION

237-3184 **LINES GP-AUXILIARY HYDRAULIC (*contd.*)** **i05498182**

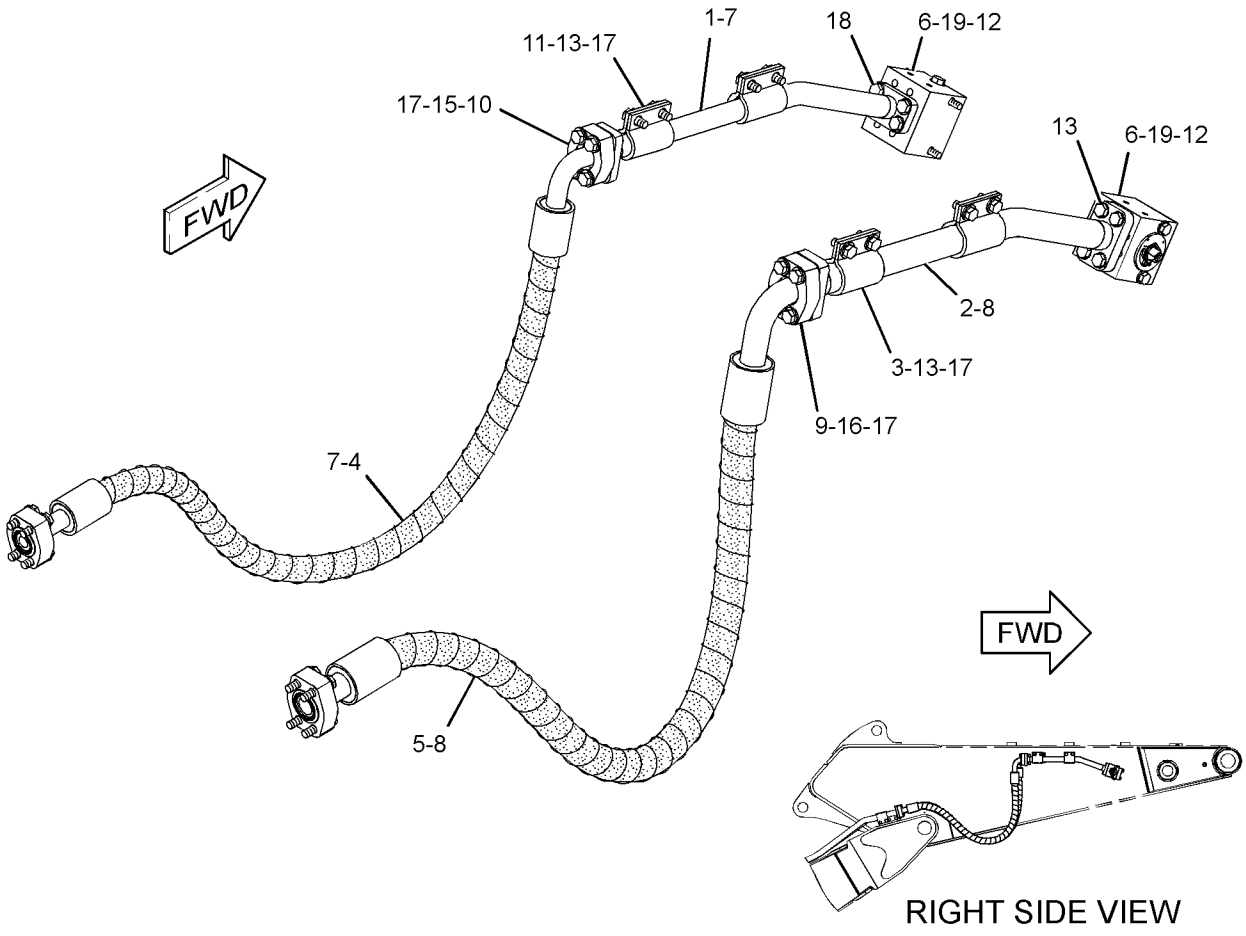

GRAPHIC #1 **<END>** g03358490

242-6475 LINES GP-AUXILIARY HYDRAULIC–BOOM, HIGH PRESSURE

S/N: JEG1-UP

AN ATTACHMENT

SMCS-5057 **i05345976**

NOTE	REF NO	GRAPHIC REF	PART NUMBER	QTY	PART NAME 1 2 3 4 5 6 (PRODUCT LEVEL)	SEE PAGE
	1	1	**124-1107**	1	GROMMET	
	2	1	**129-5874**	1	GROMMET	
	3	1	**138-5708**	2	CLIP-HALF	
	4	1	**153-8798**	2	PLATE	
	5	1	**173-7916**	6	CLAMP-HALF	
	6	1	**173-7995**	1	PLATE	
	7	1	**193-6606**	2	PLATE	
	8	1	**202-7127**	1	PLATE	
	9	1	**202-7128**	2	PLATE	
I	10	1	**216-6589**	1	HOSE AS	
J	11	1	**306-1611**	1	TUBE GP	
L	11A	1	**306-1614**	1	TUBE AS	
L	11B	1	**306-1615**	1	TUBE AS	
L	11C	1	**1P-3705**	1	SEAL-RECTANGULAR	
LM	11D	1	**8T-4183**	4	BOLT (M12X1.75X40-MM)	
J	12	1	**247-9030**	1	TUBE GP	
L	12A	1	**247-9033**	1	TUBE AS	
L	12B	1	**247-9034**	1	TUBE AS	
L	12C	1	**1P-3703**	1	SEAL-RECTANGULAR	
LM	12D	1	**8T-4139**	4	BOLT (M12X1.75X30-MM)	
	13	1	**277-0786**	1	SUPPORT AS	
I	14	1	**288-7502**	1	HOSE AS	
	15	1	**124-1108**	2	CLIP	
	16	1	**1P-3703**	2	SEAL-RECTANGULAR	
	17	1	**1P-3704**	2	SEAL-RECTANGULAR	
	18	1	**1P-5767**	4	FLANGE-HALF	
	19	1	**6V-0400**	4	FLANGE-HALF	
M	20	1	**7X-2549**	4	BOLT (M12X1.75X100-MM)	
M	21	1	**7X-2553**	2	BOLT (M16X2X40-MM)	
	22	1	**7Y-4538**	6	CLAMP-HALF	
M	23	1	**8T-4139**	10	BOLT (M12X1.75X30-MM)	
M	24	1	**8T-4184**	14	BOLT (M12X1.75X45-MM)	
M	25	1	**8T-4194**	10	BOLT (M12X1.75X50-MM)	
	26	1	**8T-4223**	42	WASHER-HARD (13.5X25.5X3-MM THK)	
M	27	1	**8T-4648**	4	BOLT (M12X1.75X70-MM)	
	28	1	**9X-8257**	2	WASHER (17.5X30X3.5-MM THK)	

I - REFER TO HYDRAULIC INFORMATION SYSTEM
J - TUBE MAY BE 1-PIECE OR 2-PIECE DESIGN (2-PIECE SHOWN)
L - PARTS REQUIRED ONLY WITH 2-PIECE TUBE DESIGN
M - METRIC PART

242-6475 **LINES GP-AUXILIARY HYDRAULIC (*contd.*)** **i05345976**

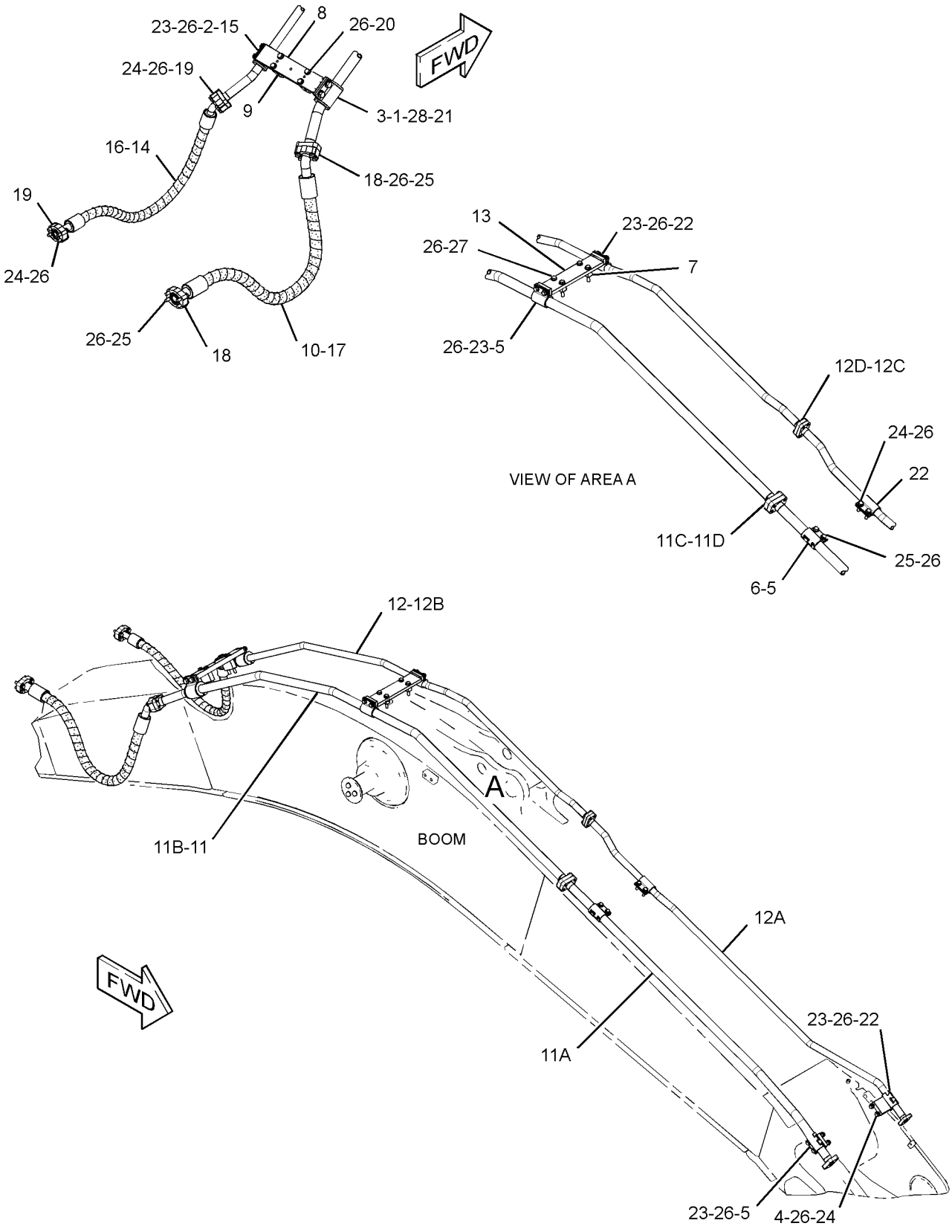

GRAPHIC #1 **<END>** g01426849

242-6479 LINES GP-AUXILIARY HYDRAULIC—MASS BOOM, HIGH PRESSURE

S/N: JEG1-UP

AN ATTACHMENT

SMCS-5057 **i02792870**

NOTE	REF NO	GRAPHIC REF	PART NUMBER	QTY	PART NAME 1 2 3 4 5 6 (PRODUCT LEVEL)	SEE PAGE
	1	2	**124-1107**	1	GROMMET	
	2	2	**129-5874**	1	GROMMET	
	3	2	**138-5708**	2	CLIP-HALF	
	4	2	**153-8798**	2	PLATE	
	5	2	**173-7916**	6	CLAMP-HALF	
	6	2	**173-7995**	1	PLATE	
	7	2	**193-6606**	2	PLATE	
	8	2	**202-7127**	1	PLATE	
	9	2	**202-7128**	2	PLATE	
I	10	1	**216-6589**	1	HOSE AS	
J	11	1	**226-3065**	1	TUBE GP	
L		1	**1P-3705**	1	SEAL-RECTANGULAR	
L	11A	1	**179-5005**	1	TUBE AS	
L	11B	1	**179-5006**	1	TUBE AS	
LM	11C	1	**8T-4183**	4	BOLT (M12X1.75X40-MM)	
I	12	1	**288-7502**	1	HOSE AS	
J	13	1	**268-6966**	1	TUBE GP	
L		1	**1P-3703**	1	SEAL-RECTANGULAR	
L	13A	1	**268-6969**	1	TUBE AS	
L	13B	1	**268-6970**	1	TUBE AS	
LM	13C	1	**8T-4139**	4	BOLT (M12X1.75X30-MM)	
	14	2	**277-0786**	1	SUPPORT AS	
	15	2	**124-1108**	2	CLIP	
	16	1	**1P-3703**	2	SEAL-RECTANGULAR	
	17	1	**1P-3704**	2	SEAL-RECTANGULAR	
	18	1	**1P-5767**	4	FLANGE-HALF	
	19	1	**6V-0400**	4	FLANGE-HALF	
M	20	2	**7X-2549**	4	BOLT (M12X1.75X100-MM)	
M	21	2	**7X-2553**	2	BOLT (M16X2X40-MM)	
	22	2	**7Y-4538**	6	CLAMP-HALF	
M	23	2	**8T-4139**	10	BOLT (M12X1.75X30-MM)	
M	24	1,2	**8T-4184**	14	BOLT (M12X1.75X45-MM)	
M	25	1,2	**8T-4194**	10	BOLT (M12X1.75X50-MM)	
	26	1,2	**8T-4223**	42	WASHER-HARD (13.5X25.5X3-MM THK)	
M	27	2	**8T-4648**	4	BOLT (M12X1.75X70-MM)	
	28	2	**9X-8257**	2	WASHER (17.5X30X3.5-MM THK)	

I - REFER TO HYDRAULIC INFORMATION SYSTEM
J - TUBE MAY BE 1-PIECE OR 2-PIECE DESIGN (2-PIECE SHOWN)
L - PARTS REQUIRED ONLY WITH 2-PIECE TUBE DESIGN
M - METRIC PART

242-6479 **LINES GP-AUXILIARY HYDRAULIC (*contd.*)** **i02792870**

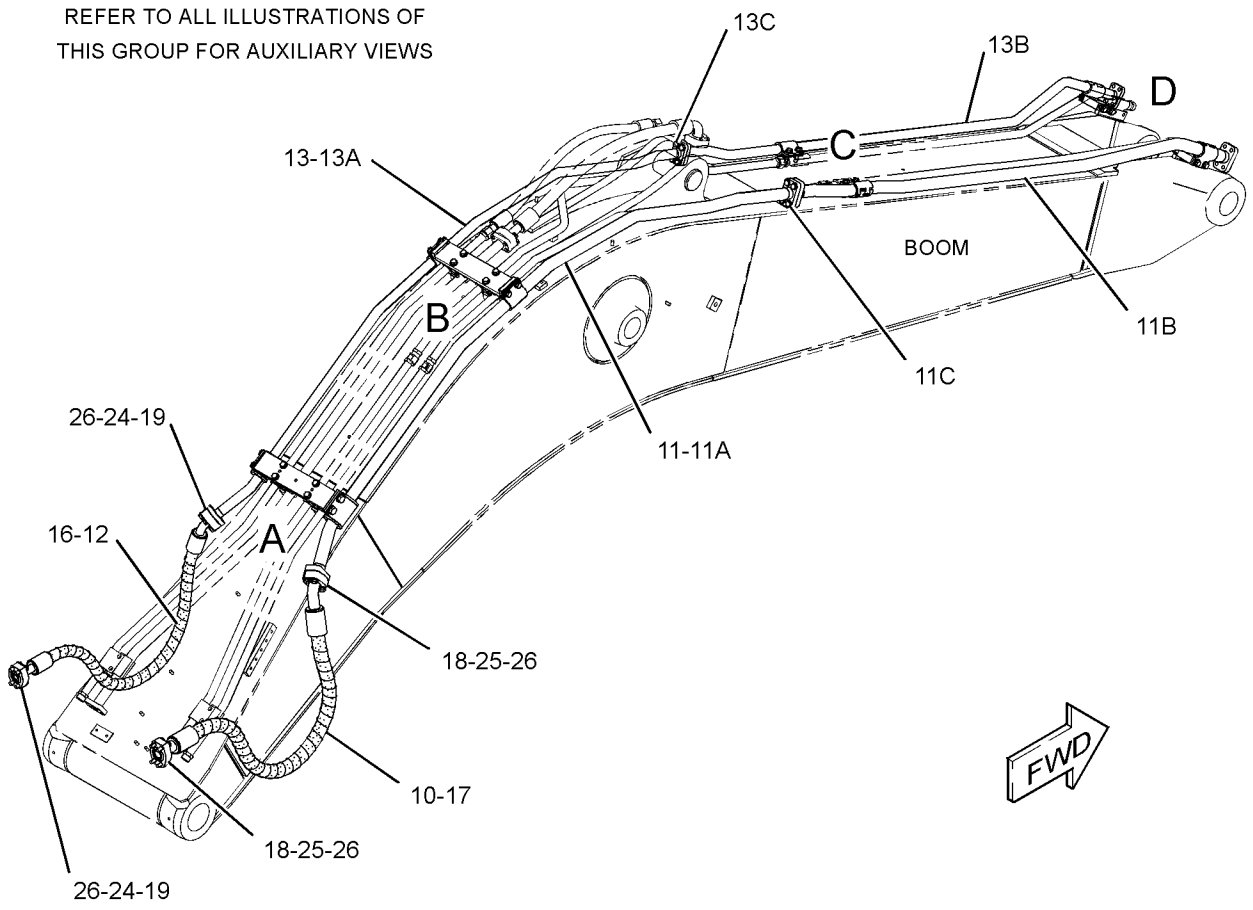

GRAPHIC #1 g01229180

242-6479 **LINES GP-AUXILIARY HYDRAULIC (*contd.*)** **i02792870**

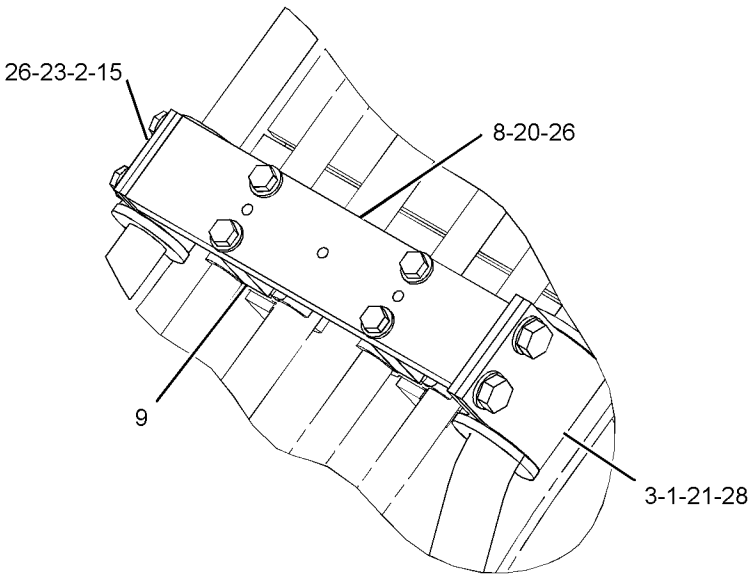

VIEW OF AREA A

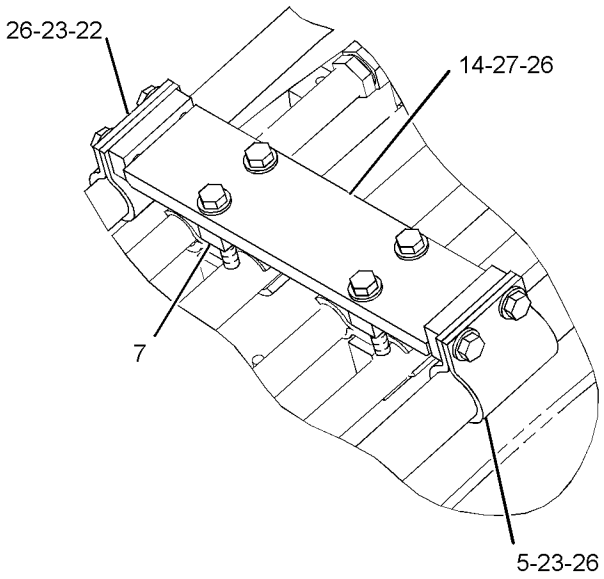

VIEW OF AREA B

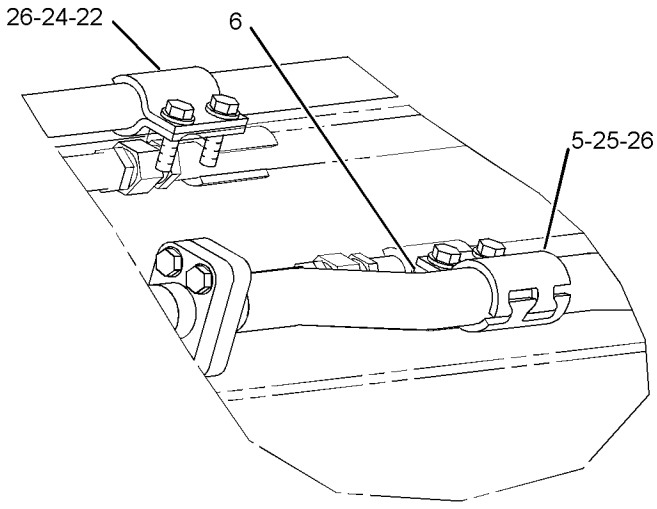

VIEW OF AREA C

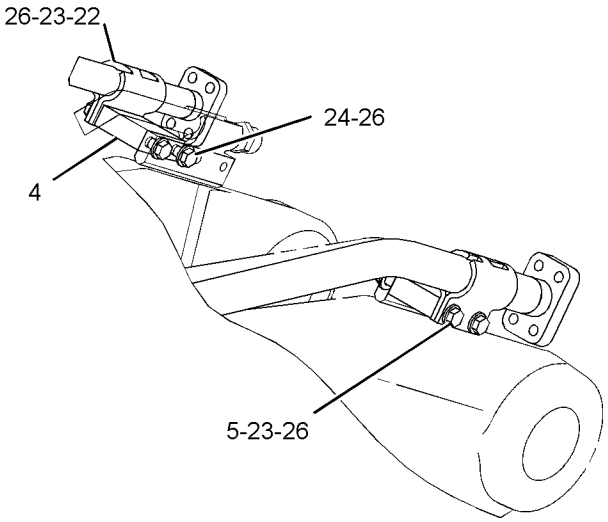

VIEW OF AREA D

GRAPHIC #2 **<END>** g01229181

245-2399 LINES GP-AUXILIARY HYDRAULIC—STICK, HIGH PRESSURE

S/N: JEG1-UP
1.9-2.0-M (6.2-6.6-FT)
AN ATTACHMENT

SMCS-5057 **i05032890**

NOTE	REF NO	GRAPHIC REF	PART NUMBER	QTY	PART NAME 1 2 3 4 5 6 (PRODUCT LEVEL)	SEE PAGE
I	1	1	**207-6282**	1	HOSE AS	
I	2	1	**262-3225**	1	HOSE AS	
CY	3	1	**389-2407**	2	VALVE GP-MANUAL (AUXILIARY, SHUTOFF)	458
	4	1	**1P-3703**	2	SEAL-RECTANGULAR	
	5	1	**1P-3704**	2	SEAL-RECTANGULAR	
	6	1	**1P-5767**	4	FLANGE-HALF	
	7	1	**6V-0400**	4	FLANGE-HALF	
	8	1	**8T-4121**	4	WASHER-HARD (11X21X2.5-MM THK)	
M	9	1	**8T-4184**	4	BOLT (M12X1.75X45-MM)	
M	10	1	**8T-4194**	12	BOLT (M12X1.75X50-MM)	
	11	1	**8T-4223**	16	WASHER-HARD (13.5X25.5X3-MM THK)	
M	12	1	**8T-6685**	4	BOLT (M10X1.5X110-MM)	

C - CHANGE FROM PREVIOUS TYPE
I - REFER TO HYDRAULIC INFORMATION SYSTEM
M - METRIC PART
Y - SEPARATE ILLUSTRATION

245-2399 **LINES GP-AUXILIARY HYDRAULIC (*contd.*)** **i05032890**

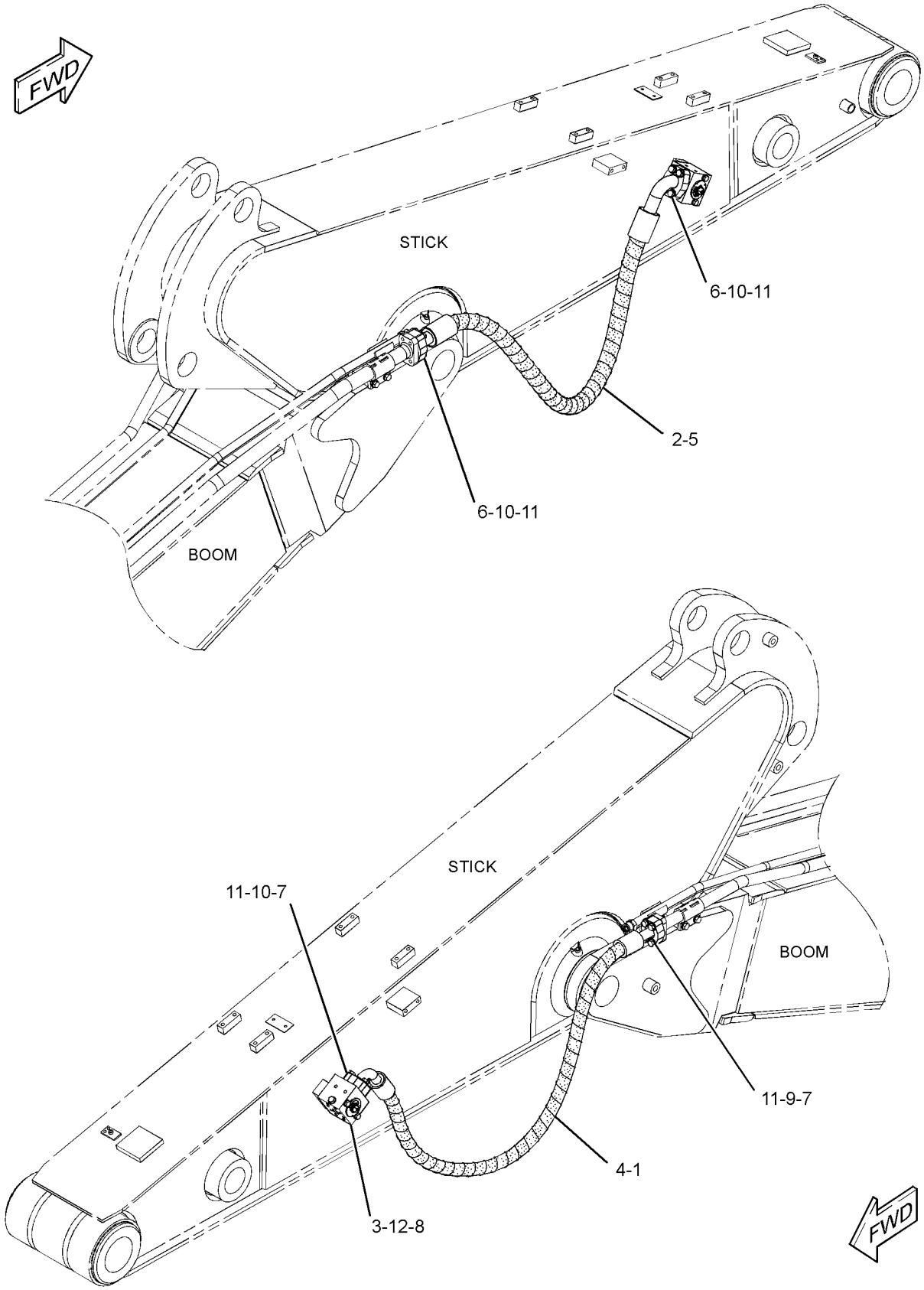

GRAPHIC #1 **<END>** g01239450

239-1732 LINES GP-BOOM

S/N: JEG1-UP
PART OF 415-1396 BOOM AR
AN ATTACHMENT

SMCS-5057 **i03013758**

NOTE	REF NO	GRAPHIC REF	PART NUMBER	QTY	PART NAME 1 2 3 4 5 6 (PRODUCT LEVEL)	SEE PAGE
	1	1	**4I-1674**	6	CLIP	
	2	1	**4I-1676**	6	CLIP	
	3	1	**7Y-4868**	8	CLIP	
I	4	1	**151-1846**	1	HOSE AS	
	5	1	**307-5035**	1	TUBE AS	
	6	1	**184-9253**	2	TUBE AS	
	7	1	**184-9254**	1	TUBE AS	
	8	1	**320-0198**	1	TUBE AS	
	9	1	**184-9256**	1	TUBE AS	
	10	1	**184-9257**	1	TUBE AS	
	11	1	**260-8320**	1	TUBE AS	
I	12	1	**260-8321**	1	HOSE AS	
	13	1	**1P-3703**	2	SEAL-RECTANGULAR	
	14	1	**6V-0400**	4	FLANGE-HALF	
	15	1	**6V-9746**	11	SEAL-O-RING	
M	16	1	**8T-4139**	20	BOLT (M12X1.75X30-MM)	
M	17	1	**8T-4184**	8	BOLT (M12X1.75X45-MM)	
	18	1	**8T-4223**	28	WASHER-HARD (13.5X25.5X3-MM THK)	

I - REFER TO HYDRAULIC INFORMATION SYSTEM
M - METRIC PART

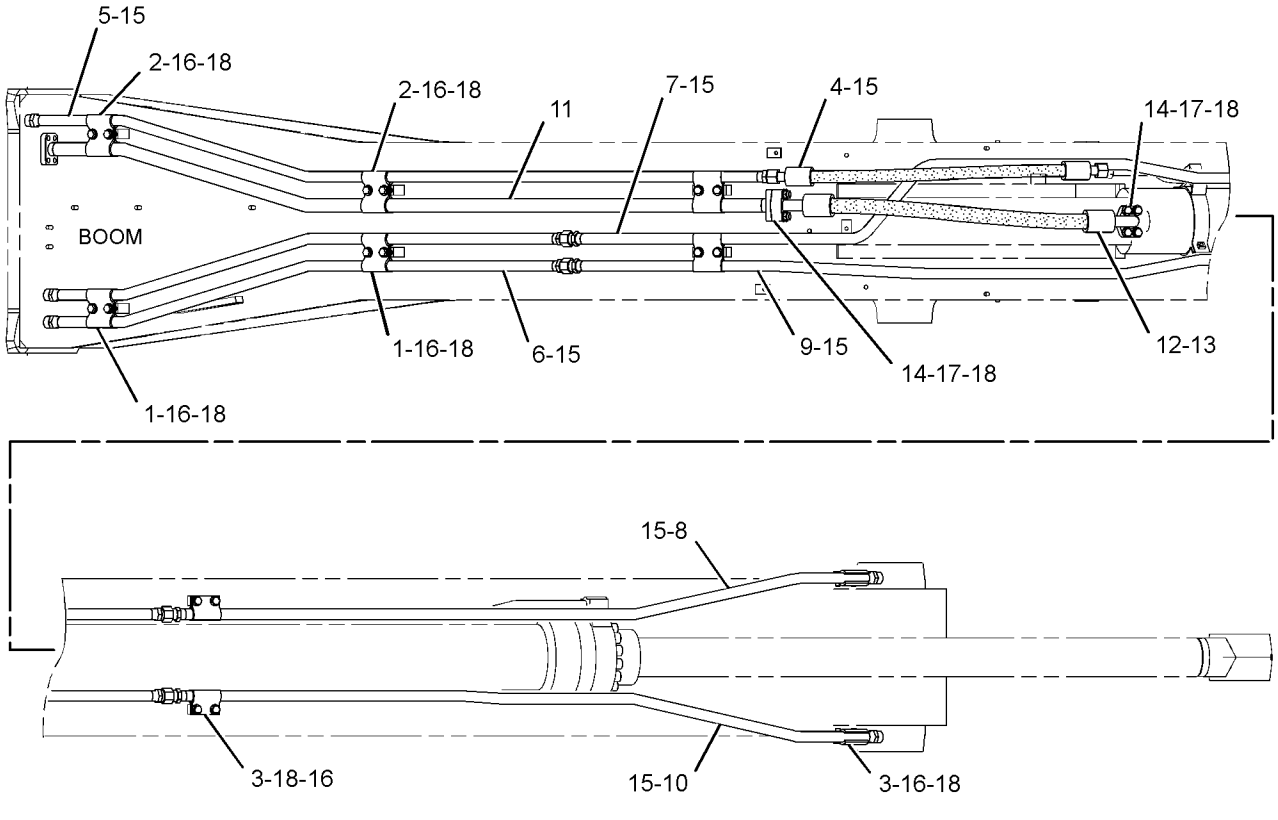

TOP VIEW

GRAPHIC #1 **<END>** g01473969

260-8010 LINES GP-BOOM

S/N: JEG1-UP
PART OF 415-8447 BOOM AR-1 PIECE LONG
AN ATTACHMENT

SMCS-5057 **i02793992**

NOTE	REF NO	GRAPHIC REF	PART NUMBER	QTY	PART NAME 1 2 3 4 5 6 (PRODUCT LEVEL)	SEE PAGE
	1	1	**4I-1674**	6	CLIP	
	2	1	**4I-1676**	6	CLIP	
	3	1	**7Y-4868**	8	CLIP	
	4	1	**307-5034**	1	TUBE AS	
	5	1	**202-3855**	1	TUBE AS	
	6	1	**202-3856**	1	TUBE AS	
	7	1	**202-3857**	1	TUBE AS	
	8	1	**202-3858**	1	TUBE AS	
I	9	1	**202-6996**	1	HOSE AS	
	10	1	**260-8315**	1	TUBE AS	
I	11	1	**260-8316**	1	HOSE AS	
	12	1	**1P-3703**	2	SEAL-RECTANGULAR	
	13	1	**6V-0400**	4	FLANGE-HALF	
	14	1	**6V-9746**	9	SEAL-O-RING	
M	15	1	**8T-4139**	20	BOLT (M12X1.75X30-MM)	
M	16	1	**8T-4184**	8	BOLT (M12X1.75X45-MM)	
	17	1	**8T-4223**	28	WASHER-HARD (13.5X25.5X3-MM THK)	

I - REFER TO HYDRAULIC INFORMATION SYSTEM
M - METRIC PART

260-8010 **LINES GP-BOOM (*contd.*)** **i02793992**

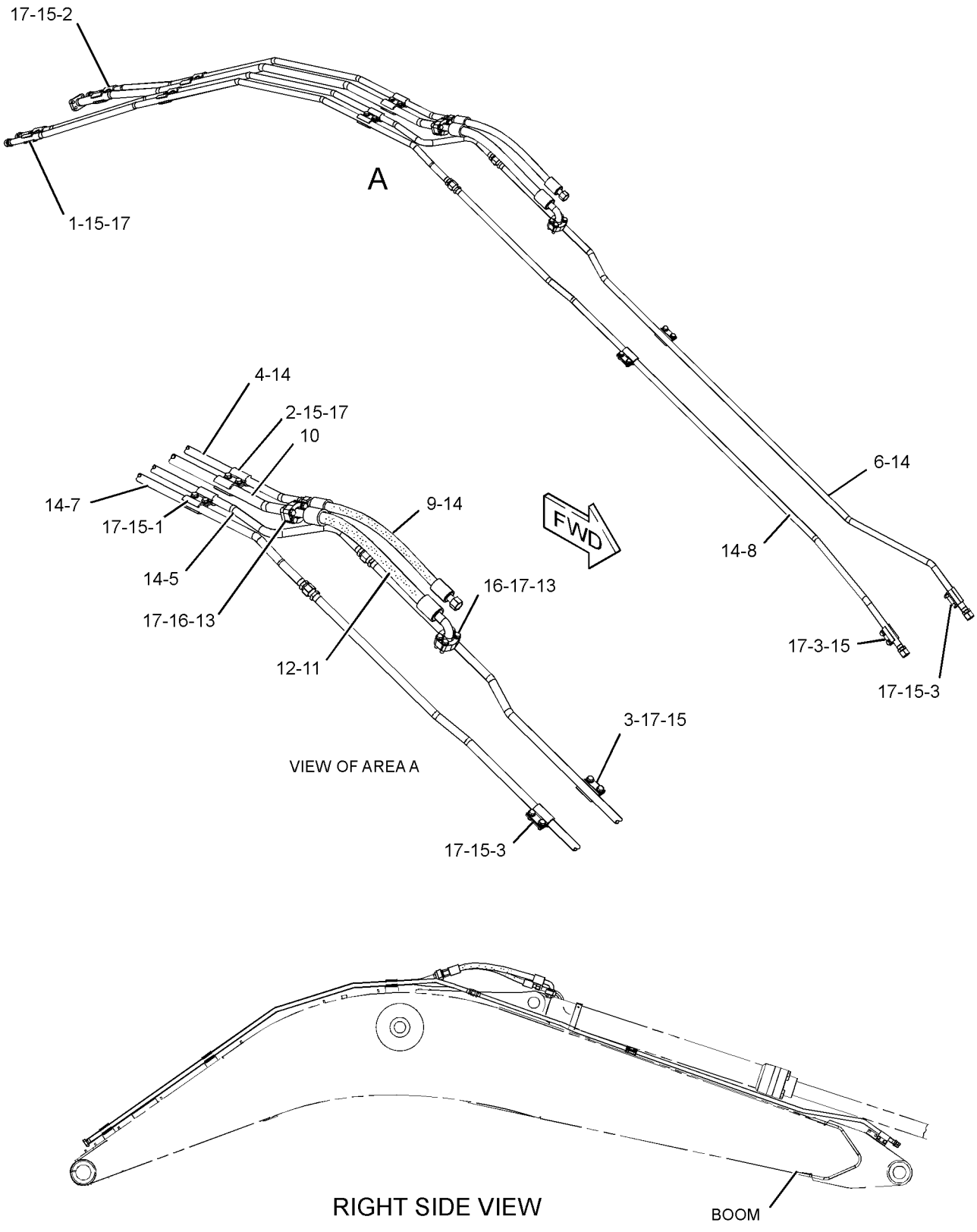

GRAPHIC #1 **<END>** g01366545

239-1699 LINES GP-BOOM CYLINDER

S/N: JEG1-UP

PART OF 383-5083 HYDRAULIC AR

SMCS-5057, 5456 **i05000141**

NOTE	REF NO	GRAPHIC REF	PART NUMBER	QTY	PART NAME 1 2 3 4 5 6 (PRODUCT LEVEL)	SEE PAGE
	1	1	**9F-2167**	1	SCREW-PURGE (3/8-24X1.164-IN)	
M	2	1	**101-7398**	4	BOLT-SOCKET HEAD (M10X1.5X40-MM)	
I	3	1	**108-7354**	1	HOSE AS	
I	4	1	**124-1047**	4	HOSE AS	
	5	1	**124-1062**	1	SUPPORT AS	
	6	1	**133-5828**	1	SUPPORT AS	
	7	1	**142-7768**	1	TUBE AS	
	8	1	**142-7769**	1	TUBE AS	
CY	9	1	**322-8716**	1	VALVE GP-SWING CUSHION (FINE SWING)	487
	10	1	*164-5552*	1	CONNECTOR AS	
		1	**3D-2824**	1	SEAL-O-RING	
		1	**4I-7745**	1	CONNECTOR	
		1	**6V-8398**	1	SEAL-O-RING	
	11	1	**234-4492**	1	SUPPORT	
	12	1	*307-4918*	1	CONNECTOR AS	
		1	**5K-9090**	1	SEAL-O-RING	
		1	**7M-8485**	1	SEAL-O-RING	
		1	**307-4919**	1	CONNECTOR	
M	13	1	**101-7404**	4	BOLT-SOCKET HEAD (M10X1.5X30-MM)	
	14	1	**108-7550**	1	CLIP	
	15	1	*148-8336*	1	CONNECTOR AS	
		1	**3J-1907**	1	SEAL-O-RING	
		1	**6V-8397**	1	SEAL-O-RING	
		1	**6V-8636**	1	CONNECTOR	
	16	1	*148-8353*	1	ELBOW AS	
		1	**3J-1907**	1	SEAL-O-RING	
		1	**6V-8397**	1	SEAL-O-RING	
		1	**6V-9001**	1	ELBOW	
	17	1	*148-8364*	1	ELBOW AS	
		1	**3K-0360**	1	SEAL-O-RING	
		1	**6V-8398**	1	SEAL-O-RING	
		1	**6V-8625**	1	ELBOW	
	18	1	*148-8367*	1	ELBOW AS	
		1	**6V-8397**	1	SEAL-O-RING	
		1	**6V-9850**	1	ELBOW	
	19	1	*148-8444*	1	TEE AS-SWIVEL	
		1	**6V-8398**	2	SEAL-O-RING	
		1	**6V-9837**	1	TEE-SWIVEL	
	20	1	**1P-3703**	2	SEAL-RECTANGULAR	
	21	1	**4I-1674**	2	CLIP	
	22	1	**5P-1076**	2	WASHER-HARD (13.5X30X4-MM THK)	
	23	1	**6V-9746**	4	SEAL-O-RING	
	24	1	**8T-4121**	8	WASHER-HARD (11X21X2.5-MM THK)	
M	25	1	**8T-4139**	2	BOLT (M12X1.75X30-MM)	
M	26	1	**8T-4178**	6	BOLT (M10X1.5X90-MM)	
M	27	1	**8T-4182**	8	BOLT (M10X1.5X45-MM)	
M	28	1	**8T-4192**	2	BOLT (M12X1.75X25-MM)	
	29	1	**8T-4223**	6	WASHER-HARD (13.5X25.5X3-MM THK)	
M	30	1	**8T-4648**	2	BOLT (M12X1.75X70-MM)	
M	31	1	**8T-4910**	2	BOLT (M12X1.75X60-MM)	
	32	1	**8T-9403**	4	FLANGE-HALF	
	33	1	**6H-3615**	1	PLUG-PROTECTION	

C - CHANGE FROM PREVIOUS TYPE
I - REFER TO HYDRAULIC INFORMATION SYSTEM
M - METRIC PART
Y - SEPARATE ILLUSTRATION

239-1699 **LINES GP-BOOM CYLINDER (*contd.*)** **i05000141**

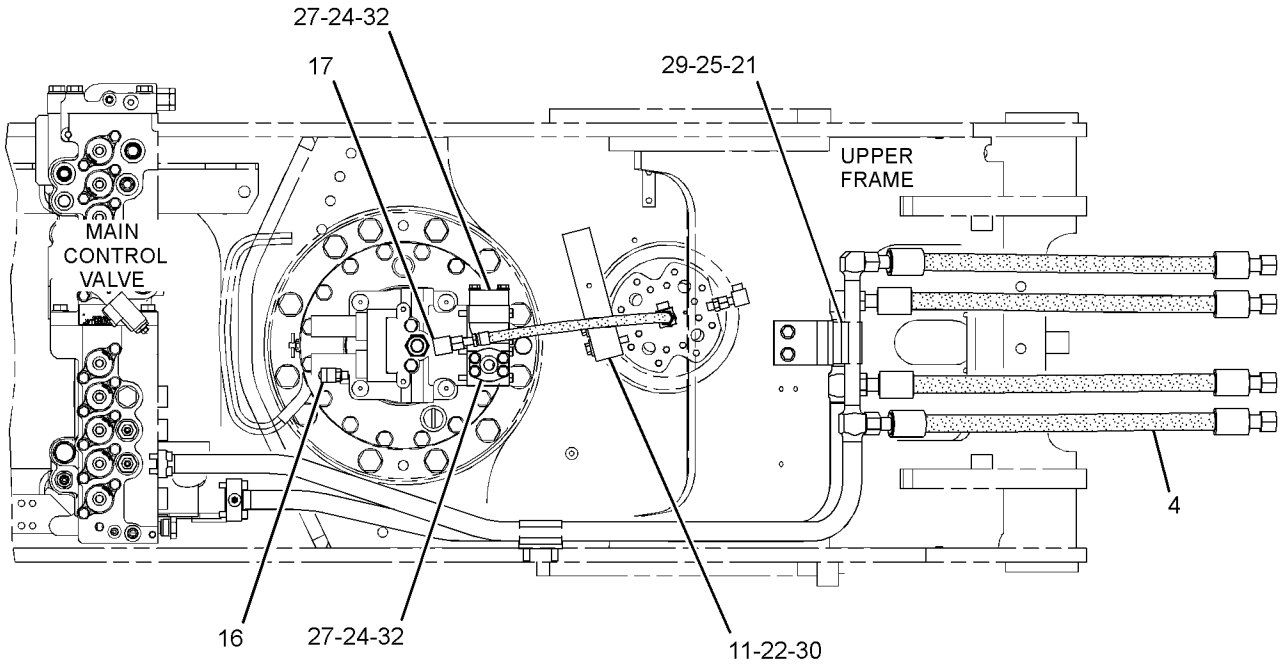

TOP VIEW

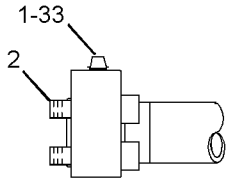

VIEW OF AREA A

FWD

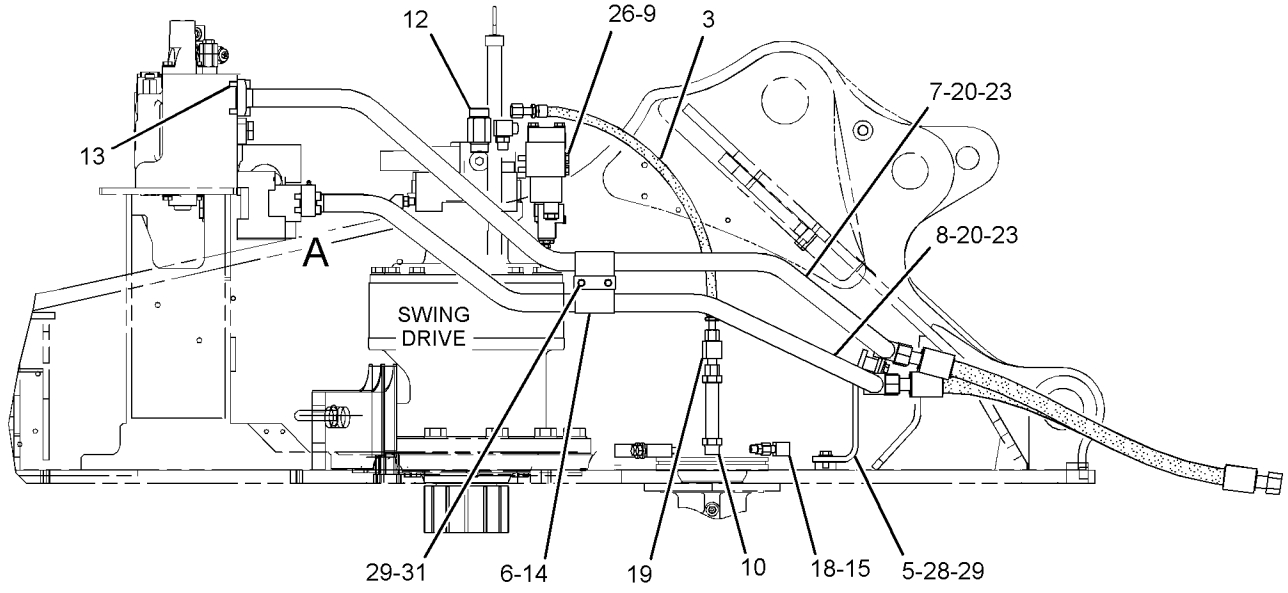

RIGHT SIDE VIEW

GRAPHIC #1 **<END>** g02917961

242-6732 LINES GP-BOOM CYLINDER–LH

S/N: JEG1-UP
PART OF 341-2788 CYLINDER & LINES GP-BOOM
AN ATTACHMENT

SMCS-5057, 5456

i02793746

NOTE	REF NO	GRAPHIC REF	PART NUMBER	QTY	PART NAME 1 2 3 4 5 6 (PRODUCT LEVEL)	SEE PAGE
	1	1	**247-8869**	1	TUBE AS	
	2	1	**222-0126**	1	TUBE AS	
	3	1	**095-1597**	2	SEAL-O-RING	
M	4	1	**9X-6032**	8	BOLT-SOCKET HEAD (M10X1.5X30-MM)	
	5	1	**137-3709**	1	SUPPORT AS	
	6	1	**4I-3621**	1	SUPPORT	
M	7	1	**8T-4196**	2	BOLT (M10X1.5X35-MM)	
	8	1	**8T-4896**	2	WASHER-HARD (10.2X18.5X2.5-MM THK)	
M	9	1	**8T-3653**	1	BOLT (M14X2X80-MM)	
	10	1	**3B-4509**	1	LOCKWASHER	
	11	1	**094-1920**	2	CLAMP	

M - METRIC PART

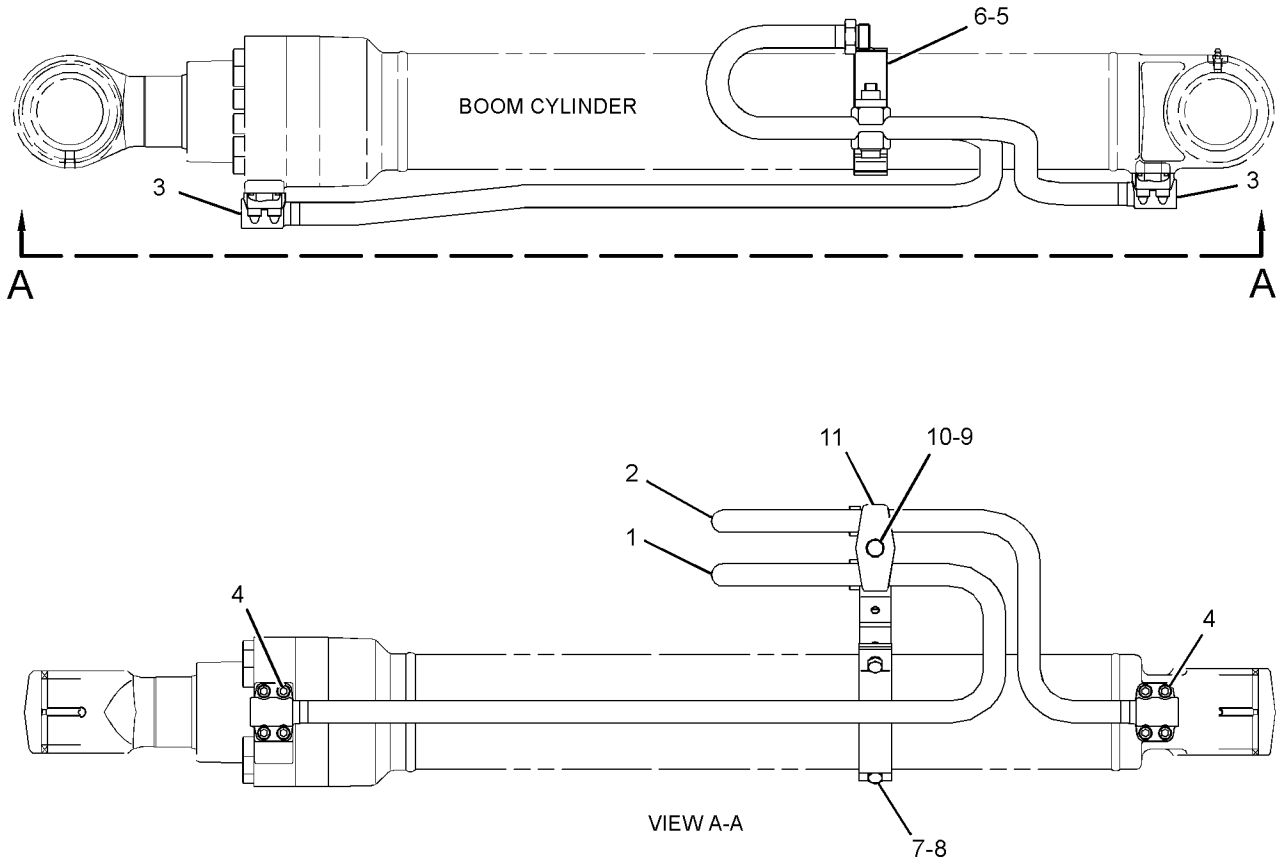

GRAPHIC #1

<END>

g01220547

242-6737 LINES GP-BOOM CYLINDER—RH

S/N: JEG1-UP

PART OF 341-2789 CYLINDER & LINES GP-BOOM

AN ATTACHMENT

SMCS-5057, 5456

i02793708

NOTE	REF NO	GRAPHIC REF	PART NUMBER	QTY	PART NAME 1 2 3 4 5 6 (PRODUCT LEVEL)	SEE PAGE
	1	1	**095-1597**	2	SEAL-O-RING	
M	2	1	**9X-6032**	8	BOLT-SOCKET HEAD (M10X1.5X30-MM)	
	3	1	**222-0124**	1	TUBE AS	
	4	1	**247-8870**	1	TUBE AS	
	5	1	**094-1920**	2	CLAMP	
M	6	1	**8T-3653**	1	BOLT (M14X2X80-MM)	
	7	1	**3B-4509**	1	LOCKWASHER	
M	8	1	**8T-4196**	2	BOLT (M10X1.5X35-MM)	
	9	1	**8T-4896**	2	WASHER-HARD (10.2X18.5X2.5-MM THK)	
	10	1	**4I-3621**	1	SUPPORT	
	11	1	**137-3709**	1	SUPPORT AS	

M - METRIC PART

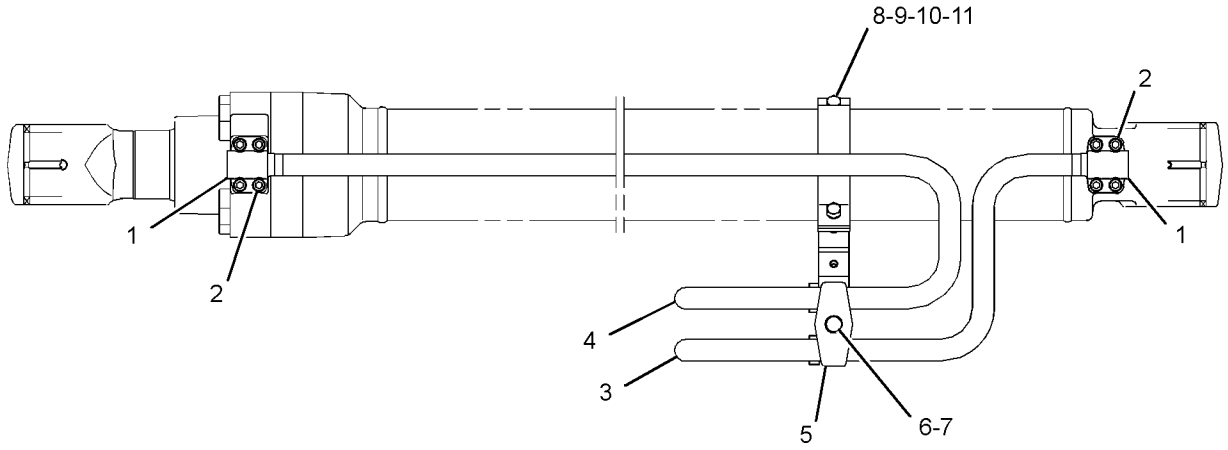

GRAPHIC #1

<END>

g01221624

187-5975 LINES GP-BUCKET CYLINDER

S/N: JEG1-UP
PART OF 290-1789 STICK AR
AN ATTACHMENT

SMCS-5457 **i02943061**

NOTE	REF NO	GRAPHIC REF	PART NUMBER	QTY	PART NAME 1 2 3 4 5 6 (PRODUCT LEVEL)	SEE PAGE
	1	1	**5I-4174**	1	BLOCK	
I	2	1	**5I-8715**	2	HOSE AS	
M	3	1	**8T-4198**	4	BOLT (M10X1.5X100-MM)	
	4	1	**8T-4121**	8	WASHER-HARD (11X21X2.5-MM THK)	
	5	1	**1P-3703**	1	SEAL-RECTANGULAR	
	6	1	**1P-5765**	4	FLANGE-HALF	
	7	1	**1P-3702**	2	SEAL-RECTANGULAR	
M	8	1	**8T-4182**	4	BOLT (M10X1.5X45-MM)	

I - REFER TO HYDRAULIC INFORMATION SYSTEM
M - METRIC PART

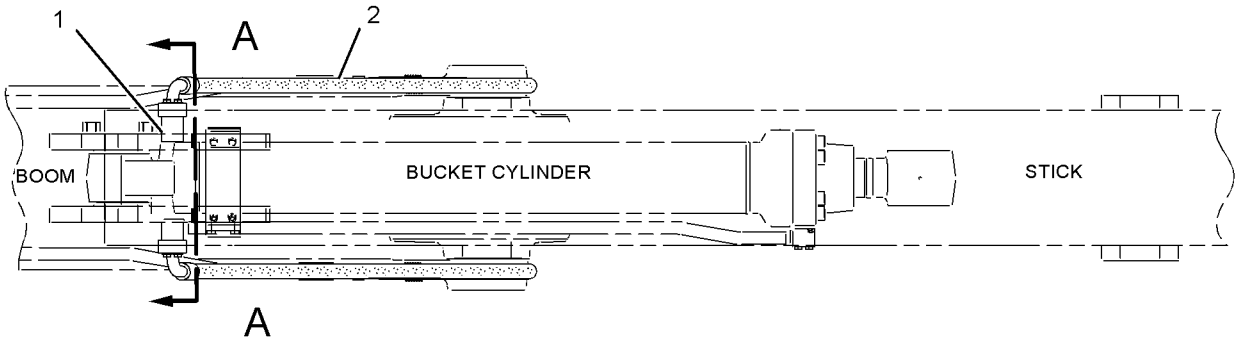

TOP VIEW

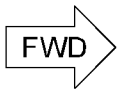

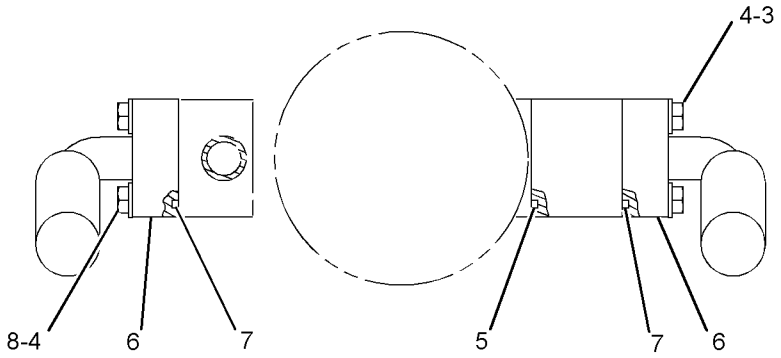

SECTION A-A

GRAPHIC #1 **<END>** g01138740

225-4592 LINES GP-BUCKET CYLINDER

S/N: JEG1-UP

PART OF 341-2181, 349-4151 CYLINDER & LINES GP-BUCKET AN ATTACHMENT

SMCS-5457 **i02791330**

NOTE	REF NO	GRAPHIC REF	PART NUMBER	QTY	PART NAME 1 2 3 4 5 6 (PRODUCT LEVEL)	SEE PAGE
	1	1	**8T-4223**	1	WASHER-HARD (13.5X25.5X3-MM THK)	
M	2	1	**8T-4910**	1	BOLT (M12X1.75X60-MM)	
	3	1	**096-4480**	1	CLAMP	
	4	1	**8T-4896**	2	WASHER-HARD (10.2X18.5X2.5-MM THK)	
M	5	1	**8T-4196**	2	BOLT (M10X1.5X35-MM)	
	6	1	**234-4592**	1	SUPPORT	
	7	1	**234-4591**	1	SUPPORT AS	
	8	1	**095-1597**	1	SEAL-O-RING	
M	9	1	**9X-6032**	4	BOLT-SOCKET HEAD (M10X1.5X30-MM)	
	10	1	**259-0647**	1	TUBE AS	

M - METRIC PART

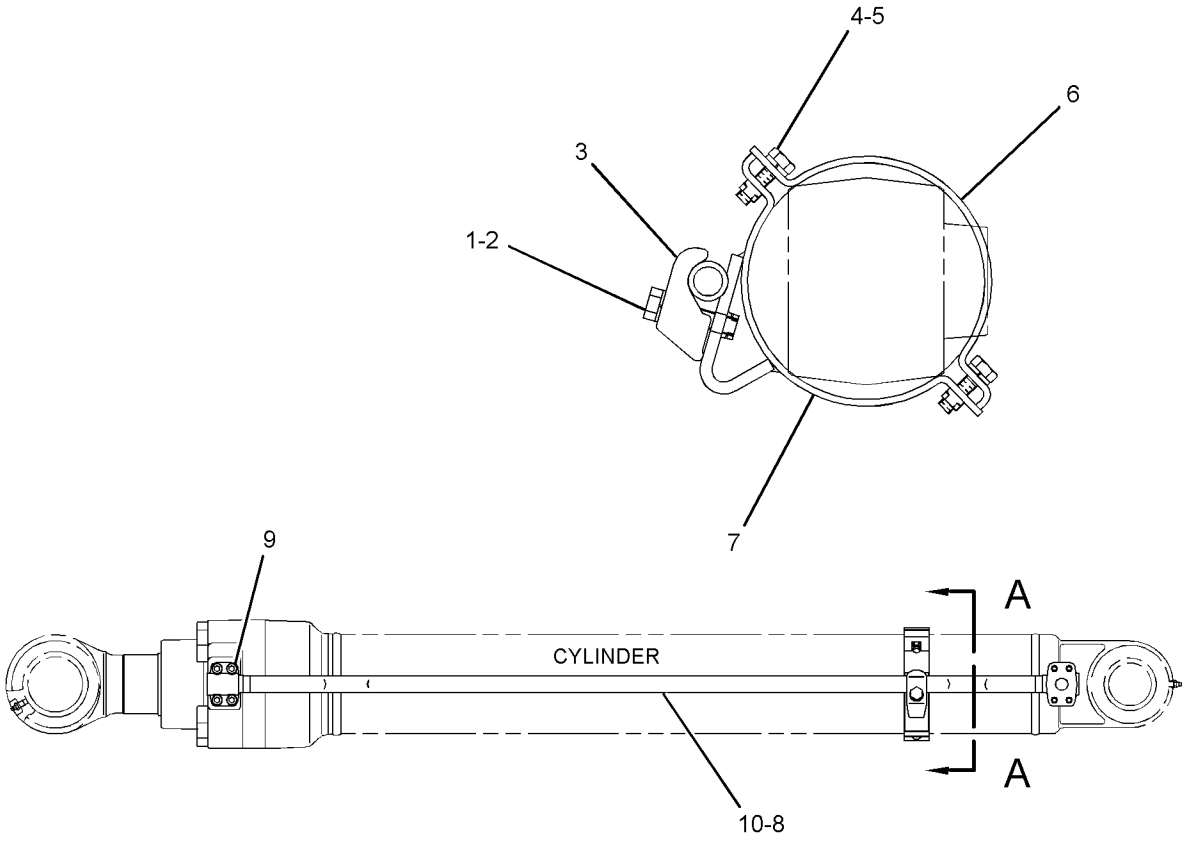

GRAPHIC #1 **<END>** g01188200

369-9677 LINES GP-BUCKET CYLINDER

S/N: JEG1-UP

PART OF 341-2813 CYLINDER & LINES GP-BUCKET AN ATTACHMENT

SMCS-5457 **i05261231**

NOTE	REF NO	GRAPHIC REF	PART NUMBER	QTY	PART NAME 1 2 3 4 5 6 (PRODUCT LEVEL)	SEE PAGE
M	1	1	**9X-6032**	4	BOLT-SOCKET HEAD (M10X1.5X30-MM)	
	2	1	**095-1597**	1	SEAL-O-RING	
	3	1	**274-2547**	1	TUBE AS	
	4	1	**096-4412**	1	SUPPORT	
M	5	1	**8T-4196**	2	BOLT (M10X1.5X35-MM)	
	6	1	**8T-4896**	2	WASHER-HARD (10.2X18.5X2.5-MM THK)	
	7	1	**369-9678**	1	SUPPORT AS	
	8	1	**096-4480**	1	CLAMP	
M	9	1	**8T-4910**	1	BOLT (M12X1.75X60-MM)	
	10	1	**8T-4223**	1	WASHER-HARD (13.5X25.5X3-MM THK)	

M - METRIC PART

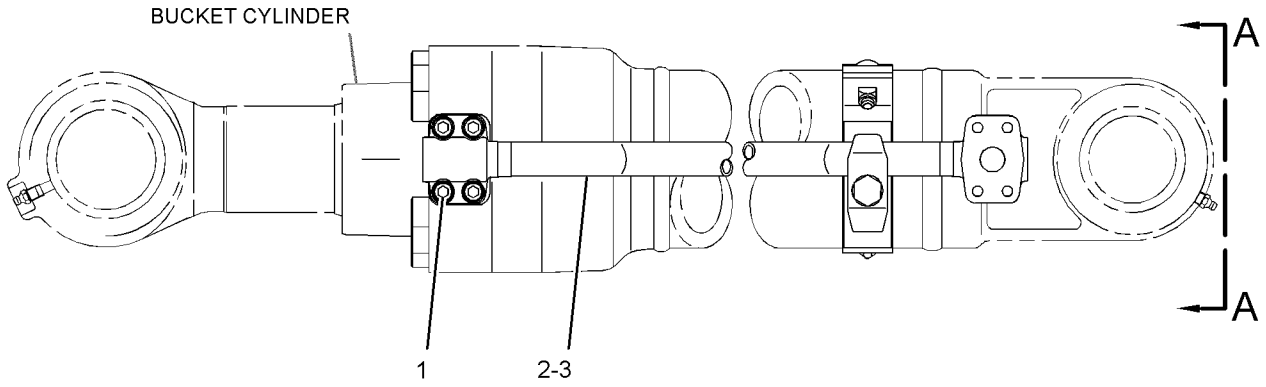

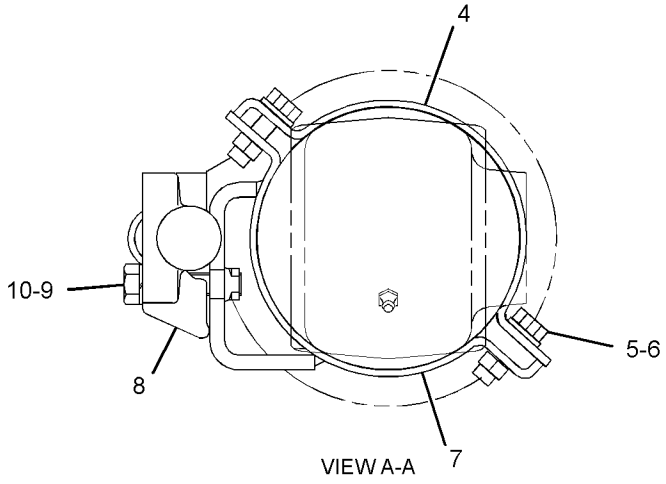

GRAPHIC #1 **<END>** g03338811

376-6308 LINES GP-CONTROL

S/N: JEG1-UP

PART OF 383-5083 HYDRAULIC AR

SMCS-5057 **i05347821**

NOTE	REF NO	GRAPHIC REF	PART NUMBER	QTY	PART NAME 1 2 3 4 5 6 (PRODUCT LEVEL)	SEE PAGE
	1	1	**144-0367**	2	CLAMP-HOSE	
	2	1	**173-4816**	1	SUPPORT AS	
	3	1	**196-0807**	1	PLATE	
	4	1	**199-7394**	1	PIPE AS	
I	5	1	**199-7403**	1	HOSE AS	
	6	1	**227-0581**	1	HOSE	
	7	1	**266-1045**	1	TUBE AS	
	8	1	**319-9888**	1	SUPPORT AS	
	9	1	**369-8420**	1	VALVE GP-CHECK	
		1	**2S-4078**	1	SEAL-O-RING	
		1	**9S-6130**	1	PLUG	
		1	**095-1547**	2	SEAL-O-RING	
		1	**190-7826**	2	PLUG	
I	10	1	**377-3328**	1	HOSE AS	
I	11	1	**377-3331**	1	HOSE AS	
M	12	1	**8T-4956**	7	BOLT (M12X1.75X35-MM)	
M	13	1	**096-4883**	2	LOCKNUT (M10X1.5-THD)	
M	14	1	**101-7402**	4	BOLT-SOCKET HEAD (M12X1.75X30-MM)	
	15	1	*148-8354*	1	ELBOW AS	
		1	**3K-0360**	1	SEAL-O-RING	
		1	**6V-8398**	1	SEAL-O-RING	
		1	**6V-9002**	1	ELBOW	
	16	1	*148-8357*	1	ELBOW AS	
		1	**5K-9090**	1	SEAL-O-RING	
		1	**6V-9008**	1	ELBOW	
		1	**7M-8485**	1	SEAL-O-RING	
	17	1	**1P-3703**	4	SEAL-RECTANGULAR	
	18	1	**4J-0524**	3	SEAL-O-RING	
	19	1	**4J-0527**	1	SEAL-O-RING	
	20	1	**5P-7468**	1	CLIP (SLOT)	
	21	1	**5P-7469**	1	CLIP (TAB)	
J	22	1	**5P-8444**	1	GROMMET (37-MM ID)	
					—OR—	
J			**8T-7087**	1	GROMMET (34-MM ID)	
	23	1	**6V-0400**	4	FLANGE-HALF	
	24	1	**7G-5984**	1	CLIP (TAB)	
	25	1	**7G-5985**	1	CLIP (SLOT)	
	26	1	**7G-5986**	1	GROMMET	
M	27	1	**7X-2544**	4	BOLT (M10X1.5X104-MM)	
	28	1	**7X-7729**	2	WASHER (11X25X3-MM THK)	
M	29	1	**7Y-5247**	1	U-BOLT	
	30	1	**8T-4121**	8	WASHER-HARD (11X21X2.5-MM THK)	
M	31	1	**8T-4136**	2	BOLT (M10X1.5X25-MM)	
M	32	1	**8T-4139**	4	BOLT (M12X1.75X30-MM)	
M	33	1	**8T-4186**	2	BOLT (M10X1.5X40-MM)	
M	34	1	**8T-4194**	8	BOLT (M12X1.75X50-MM)	
	35	1	**8T-4223**	13	WASHER-HARD (13.5X25.5X3-MM THK)	
	36	1	**383-9204**	1	PIPE AS	

I - REFER TO HYDRAULIC INFORMATION SYSTEM
J - SELECT CORRECT GROMMET SIZE TO MATCH HOSE O.D.
M - METRIC PART

376-6308 **LINES GP-CONTROL (*contd.*)** **i05347821**

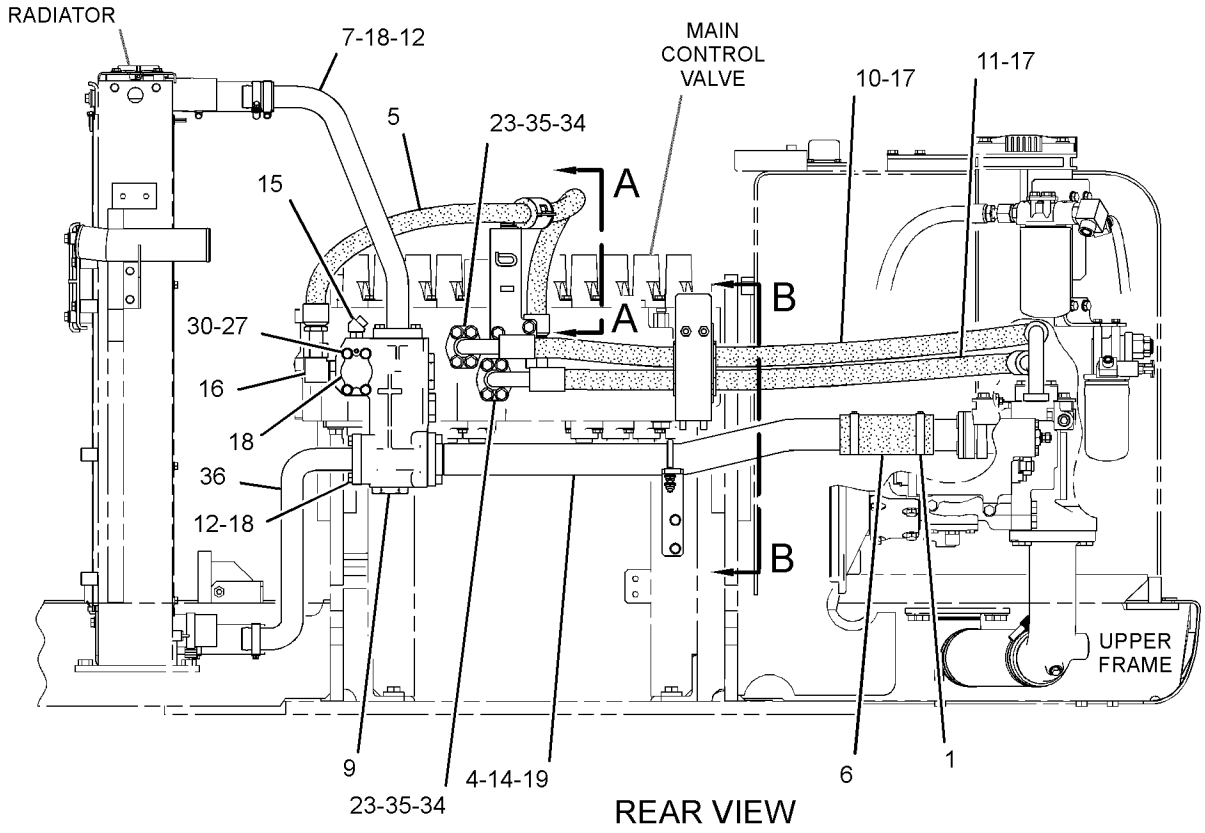

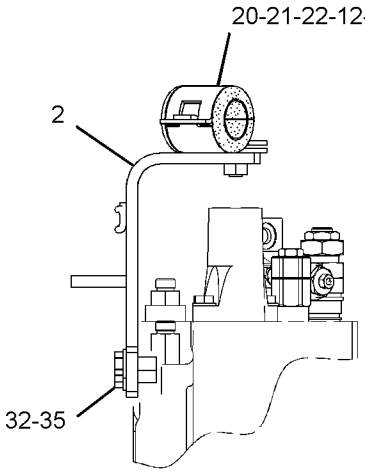

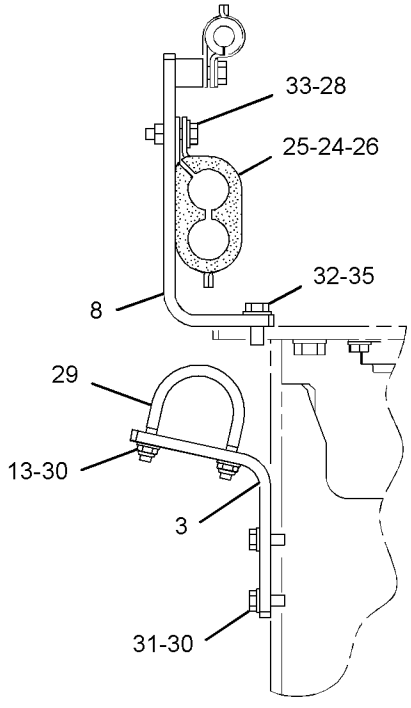

GRAPHIC #1 **<END>** g02732396

207-3590 LINES GP-COUPLER—PIN GRABBER

S/N: JEG1-UP
PART OF 302-9679 COUPLER AR-QUICK
AN ATTACHMENT

SMCS-5057, 5133 **i05536453**

NOTE	REF NO	GRAPHIC REF	PART NUMBER	QTY	PART NAME 1 2 3 4 5 6 (PRODUCT LEVEL)	SEE PAGE
	1	1	**7K-1181**	2	STRAP-CABLE	
I	2	1	**367-8609**	1	HOSE AS	
	3	1	**3V-0046**	1	PLATE	
	4	1	**6W-2464**	2	CLAMP	
	5	1	**8C-6561**	1	BOLT (5/16-18X1.375-IN)	
	6	1	**3J-7354**	1	SEAL-O-RING	
	7	1	**3J-1907**	1	SEAL-O-RING	
I	8	1	**367-8610**	1	HOSE AS	
	9	1	**4J-5477**	1	SEAL-O-RING	
	10	1	**6V-8397**	1	SEAL-O-RING	

I - REFER TO HYDRAULIC INFORMATION SYSTEM

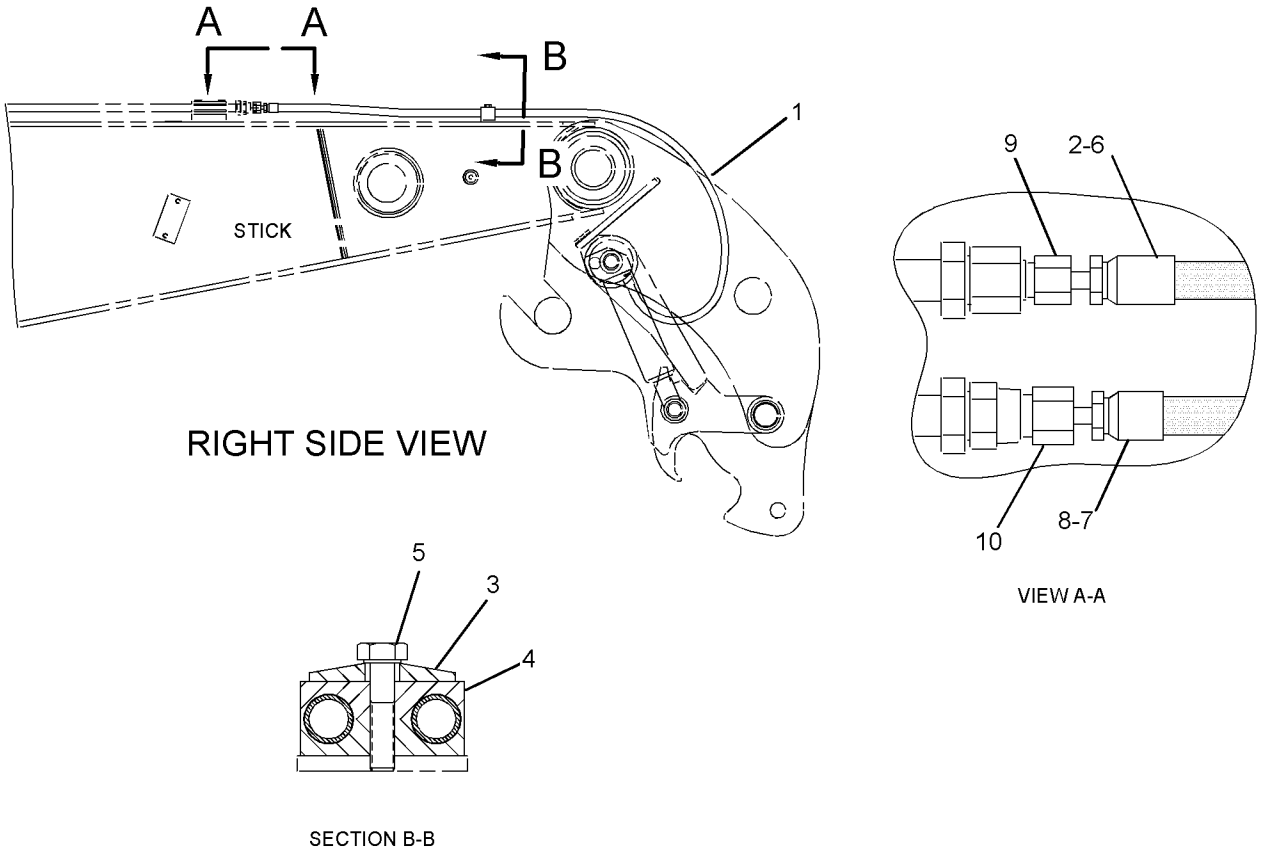

GRAPHIC #1 **<END>** g02622358

242-6478 LINES GP-COUPLER—REACH BOOM

S/N: JEG1-UP

AN ATTACHMENT

SMCS-5057, 5133 **i04335298**

NOTE	REF NO	GRAPHIC REF	PART NUMBER	QTY	PART NAME 1 2 3 4 5 6 (PRODUCT LEVEL)	SEE PAGE
	1	1	**5Q-4213**	14	CLIP	
	2	1	**3V-9744**	1	SPACER	
	3	1	**247-9164**	1	TUBE AS	
	4	1	**356-8174**	1	TUBE AS	
	5	1	**247-9173**	1	TUBE AS	
	6	1	**247-9177**	1	TUBE AS	
	7	1	**356-8177**	1	TUBE AS	
	8	1	**247-9294**	2	SUPPORT AS	
	9	1	**262-3589**	1	TUBE AS	
	10	1	**135-3980**	2	CLIP	
	11	1	**5Q-4212**	4	CLIP	
	12	1	**6V-8398**	8	SEAL-O-RING	
M	13	1	**8T-4139**	18	BOLT (M12X1.75X30-MM)	
M	14	1	**8T-4184**	4	BOLT (M12X1.75X45-MM)	
	15	1	**8T-4223**	24	WASHER-HARD (13.5X25.5X3-MM THK)	
M	16	1	**8T-4244**	18	NUT (M12X1.75-THD)	
M	17	1	**8T-6868**	2	BOLT (M12X1.75X80-MM)	

M - METRIC PART

242-6478 **LINES GP-COUPLER (*contd.*)** **i04335298**

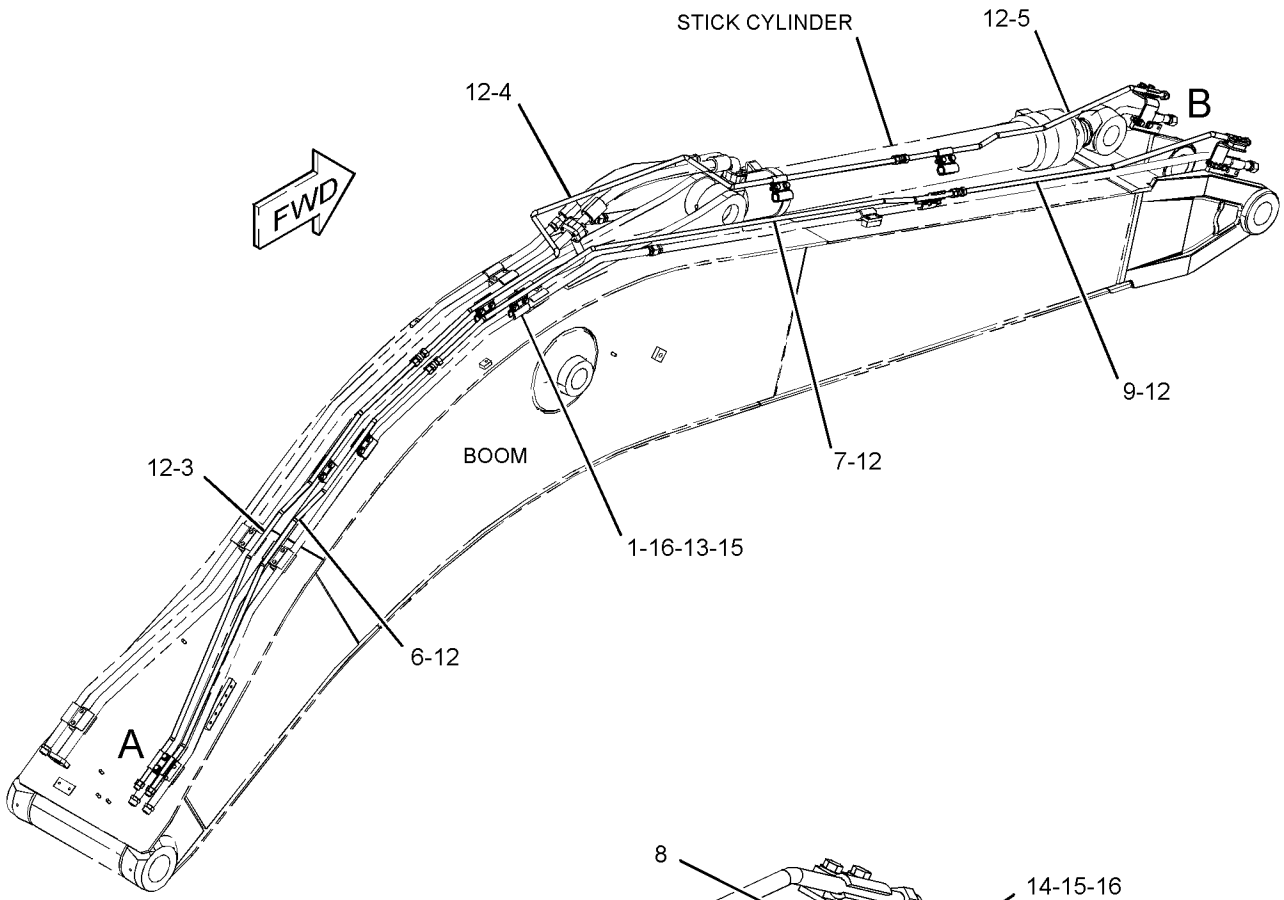

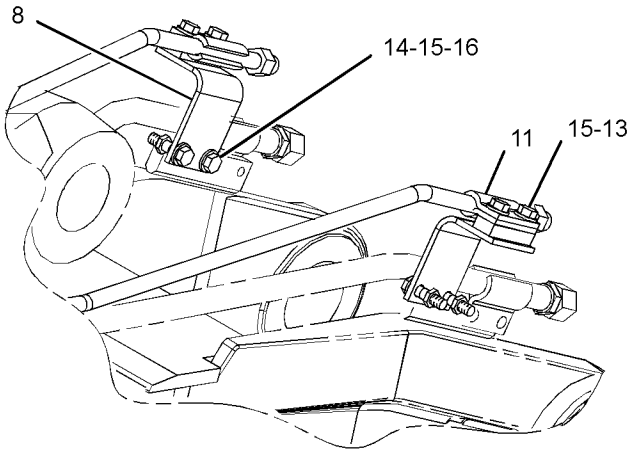

VIEW OF AREA B

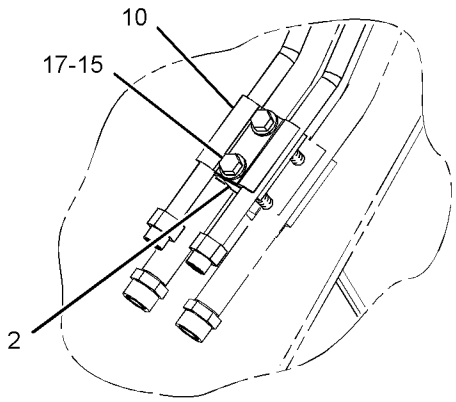

VIEW OF AREA A

GRAPHIC #1 **<END>** g01398275

242-6482 LINES GP-COUPLER—MASS BOOM

S/N: JEG1-UP

AN ATTACHMENT

SMCS-5057, 5133

i04335305

NOTE	REF NO	GRAPHIC REF	PART NUMBER	QTY	PART NAME 1 2 3 4 5 6 (PRODUCT LEVEL)	SEE PAGE
	1	1	**5Q-4213**	14	CLIP	
	2	1	**3V-9744**	1	SPACER	
	3	1	**247-9294**	2	SUPPORT AS	
	4	1	**268-6971**	1	TUBE AS	
	5	1	**268-6974**	1	TUBE AS	
	6	1	**268-6977**	1	TUBE AS	
	7	1	**268-6980**	1	TUBE AS	
	8	1	**268-6983**	1	TUBE AS	
	9	1	**268-6986**	1	TUBE AS	
	10	1	**135-3980**	2	CLIP	
	11	1	**5Q-4212**	4	CLIP	
	12	1	**6V-8398**	8	SEAL-O-RING	
M	13	1	**8T-4139**	18	BOLT (M12X1.75X30-MM)	
M	14	1	**8T-4184**	4	BOLT (M12X1.75X45-MM)	
	15	1	**8T-4223**	24	WASHER-HARD (13.5X25.5X3-MM THK)	
M	16	1	**8T-4244**	18	NUT (M12X1.75-THD)	
M	17	1	**8T-6868**	2	BOLT (M12X1.75X80-MM)	

M - METRIC PART

242-6482 **LINES GP-COUPLER (*contd.*)** **i04335305**

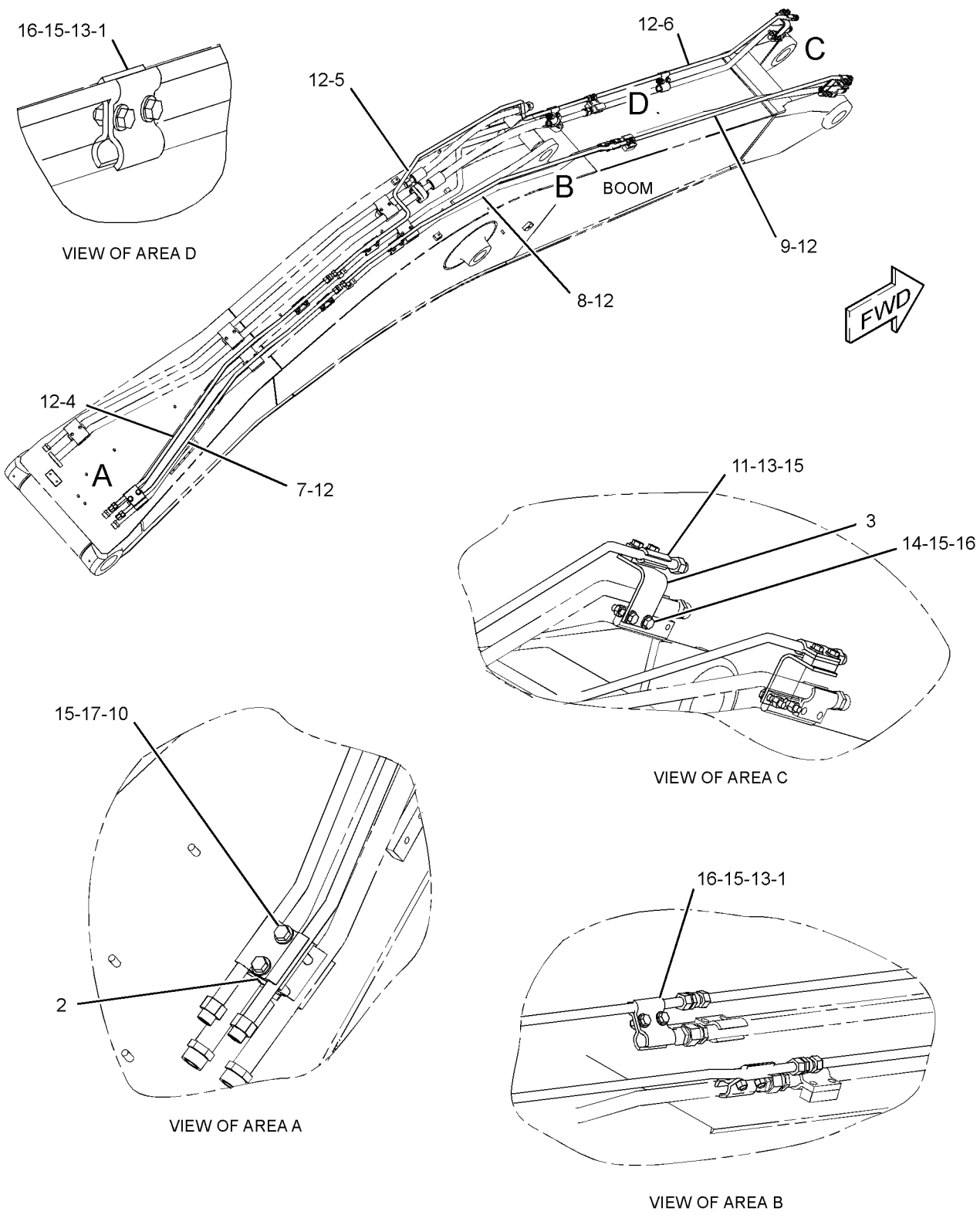

GRAPHIC #1 **<END>** g01230965

242-6494 LINES GP-COUPLER–STICK

S/N: JEG1-UP
FOR USE WITH 2.4 TO 2.5-M (7.9 TO 8.2-FT) STICK
AN ATTACHMENT

SMCS-5057, 5133

i05536452

NOTE	REF NO	GRAPHIC REF	PART NUMBER	QTY	PART NAME 1 2 3 4 5 6 (PRODUCT LEVEL)	SEE PAGE
	1	1	**9X-6582**	1	NUT (13/16-16-THD)	
I	2	1	**210-9966**	2	HOSE AS	
	3	1	**253-6688**	1	TUBE AS	
	4	1	**253-6691**	1	TUBE AS	
	5	1	*148-8415*	1	REDUCER AS	
		1	**6V-8397**	1	SEAL-O-RING	
		1	**6V-8936**	1	REDUCER	
	6	1	*148-8419*	1	REDUCER AS	
		1	**4J-5477**	1	SEAL-O-RING	
		1	**6V-8935**	1	REDUCER-O-RING	
	7	1	**5Q-4212**	12	CLIP	
	8	1	**6V-8398**	4	SEAL-O-RING	
	9	1	**8T-4223**	12	WASHER-HARD (13.5X25.5X3-MM THK)	
M	10	1	**8T-4956**	12	BOLT (M12X1.75X35-MM)	

I - REFER TO HYDRAULIC INFORMATION SYSTEM
M - METRIC PART

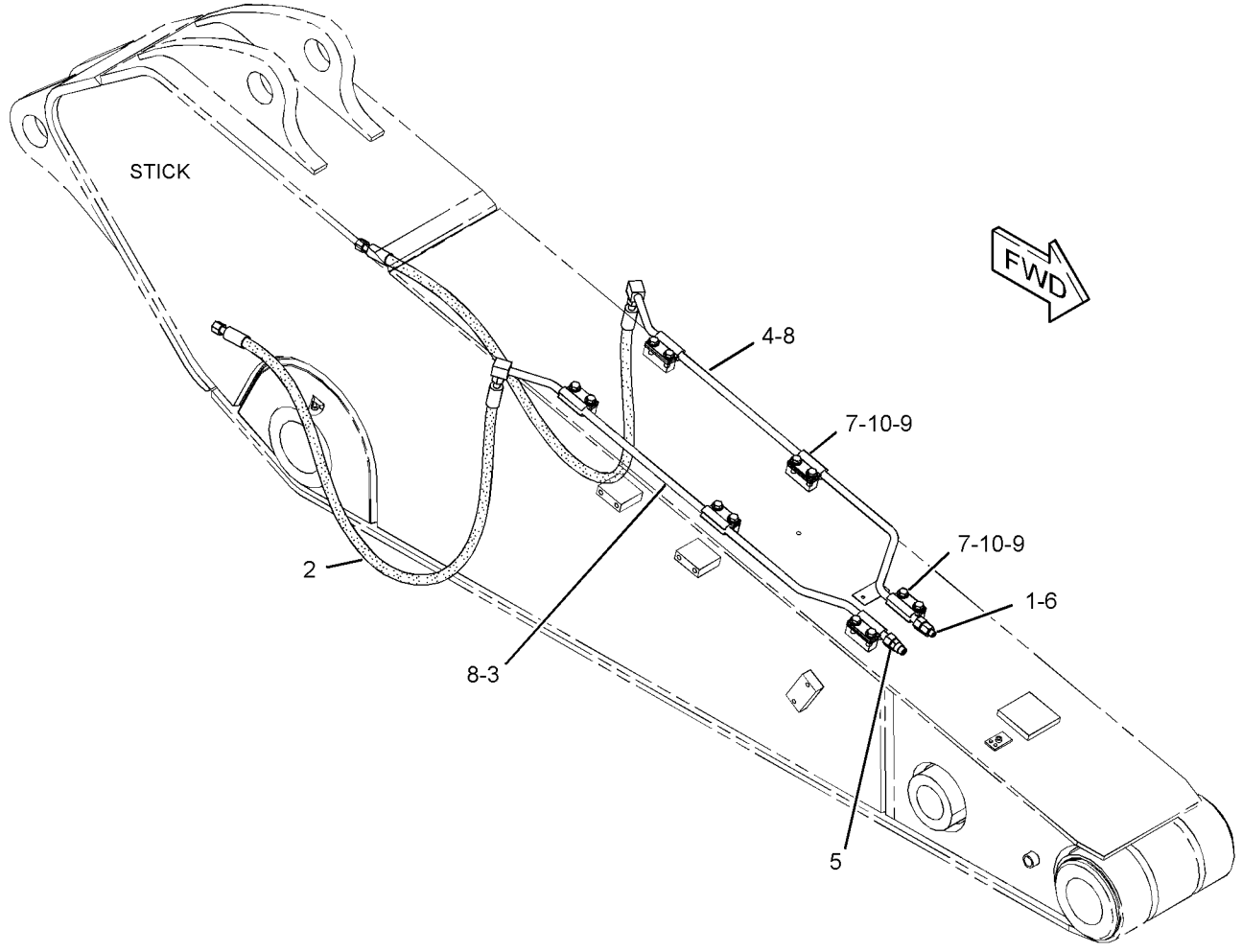

GRAPHIC #1

<END>

g01236506

253-6592 LINES GP-COUPLER—STICK

S/N: JEG1-UP
1.9 TO 2-M (6.2 TO 6.5-FT) STICK
AN ATTACHMENT

SMCS-5057, 5133 **i05536451**

NOTE	REF NO	GRAPHIC REF	PART NUMBER	QTY	PART NAME 1 2 3 4 5 6 (PRODUCT LEVEL)	SEE PAGE
	1	1	**9X-6582**	1	NUT (13/16-16-THD)	
I	2	1	**210-9935**	2	HOSE AS	
	3	1	**262-3152**	1	TUBE AS	
	4	1	**262-3155**	1	TUBE AS	
	5	1	*148-8415*	1	REDUCER AS	
		1	**6V-8397**	1	SEAL-O-RING	
		1	**6V-8936**	1	REDUCER	
	6	1	*148-8419*	1	REDUCER AS	
		1	**4J-5477**	1	SEAL-O-RING	
		1	**6V-8935**	1	REDUCER-O-RING	
	7	1	**5Q-4212**	8	CLIP	
	8	1	**6V-8398**	4	SEAL-O-RING	
	9	1	**8T-4223**	8	WASHER-HARD (13.5X25.5X3-MM THK)	
M	10	1	**8T-4956**	8	BOLT (M12X1.75X35-MM)	

I - REFER TO HYDRAULIC INFORMATION SYSTEM
M - METRIC PART

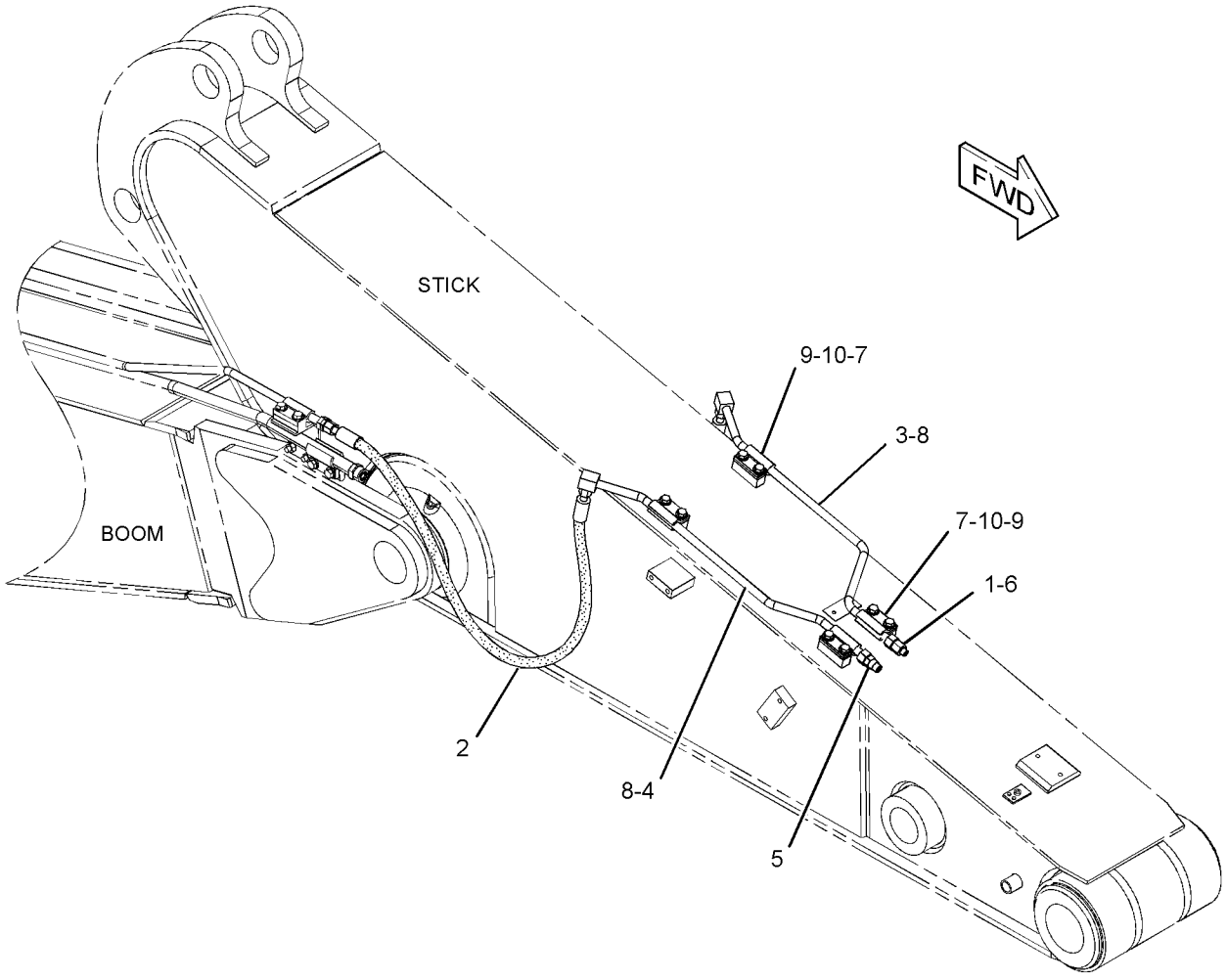

GRAPHIC #1 **<END>** g01206386

239-1714 LINES GP-FRONT

S/N: JEG1-UP

PART OF 383-5083 HYDRAULIC AR

SMCS-5057 **i05346401**

NOTE	REF NO	GRAPHIC REF	PART NUMBER	QTY	PART NAME 1 2 3 4 5 6 (PRODUCT LEVEL)	SEE PAGE
	1	1	**7Y-3730**	2	FLANGE-SPECIAL	
M	2	1	**101-7403**	2	BOLT-SOCKET HEAD (M10X1.5X80-MM)	
M	3	1	**105-3477**	8	BOLT-SOCKET HEAD (M10X1.5X45-MM)	
M	4	1	**105-3483**	2	BOLT-SOCKET HEAD (M10X1.5X70-MM)	
	5	1	**113-6479**	2	FLANGE-SPECIAL	
I	6	1	**165-3185**	1	HOSE AS	
I	7	1	**165-3190**	1	HOSE AS	
I	8	1	**337-1182**	1	HOSE AS	
Y	9	1	**194-0174**	1	HOSE GP-HYDRAULIC	317
Y	10	1	**194-0180**	1	HOSE GP-HYDRAULIC	319
Y	11	1	**214-4511**	1	FITTING GP-HYDRAULIC (4-BOLT FLANGE)	308
Y	12	1	**236-3212**	1	HOSE GP-HYDRAULIC (FRONT)	322
Y	13	1	**236-3213**	1	HOSE GP-HYDRAULIC (FRONT)	322
I	14	1	**289-5672**	1	HOSE AS	
Y	15	1	**255-5680**	1	VALVE GP-LOAD CONTROL (STICK DRIFT RED, LINE RELIEF)	453
Y	16	1	**255-5683**	1	VALVE GP-LOAD CONTROL (BOOM DRIFT RED, LINE RELIEF)	455
Y	17	1	**260-7910**	1	HOSE GP-HYDRAULIC	325
I	18	1	**260-7988**	1	HOSE AS	
I	19	1	**260-7992**	1	HOSE AS	
I	20	1	**260-7996**	1	HOSE AS	
I	21	1	**260-8000**	1	HOSE AS	
M	22	1	**101-7397**	4	BOLT-SOCKET HEAD (M12X1.75X50-MM)	
M	23	1	**101-7404**	42	BOLT-SOCKET HEAD (M10X1.5X30-MM)	
M	24	1	**199-1286**	6	BOLT-SOCKET HEAD (M10X1.5X150-MM)	
	25	1	**1P-3702**	4	SEAL-RECTANGULAR	
	26	1	**1P-3703**	9	SEAL-RECTANGULAR	
	27	1	**4J-5267**	10	SEAL-O-RING	
	28	1	**4J-5268**	1	SEAL-O-RING	
	29	1	**5K-9090**	5	SEAL-O-RING	
	30	1	**6V-0400**	4	FLANGE-HALF	
	31	1	**8T-4121**	8	WASHER-HARD (11X21X2.5-MM THK)	
M	32	1	**8T-4194**	4	BOLT (M12X1.75X50-MM)	
	33	1	**8T-4223**	8	WASHER-HARD (13.5X25.5X3-MM THK)	
	34	1	**8T-9403**	4	FLANGE-HALF	

I - REFER TO HYDRAULIC INFORMATION SYSTEM
M - METRIC PART
Y - SEPARATE ILLUSTRATION

239-1714 **LINES GP-FRONT (*contd.*)** **i05346401**

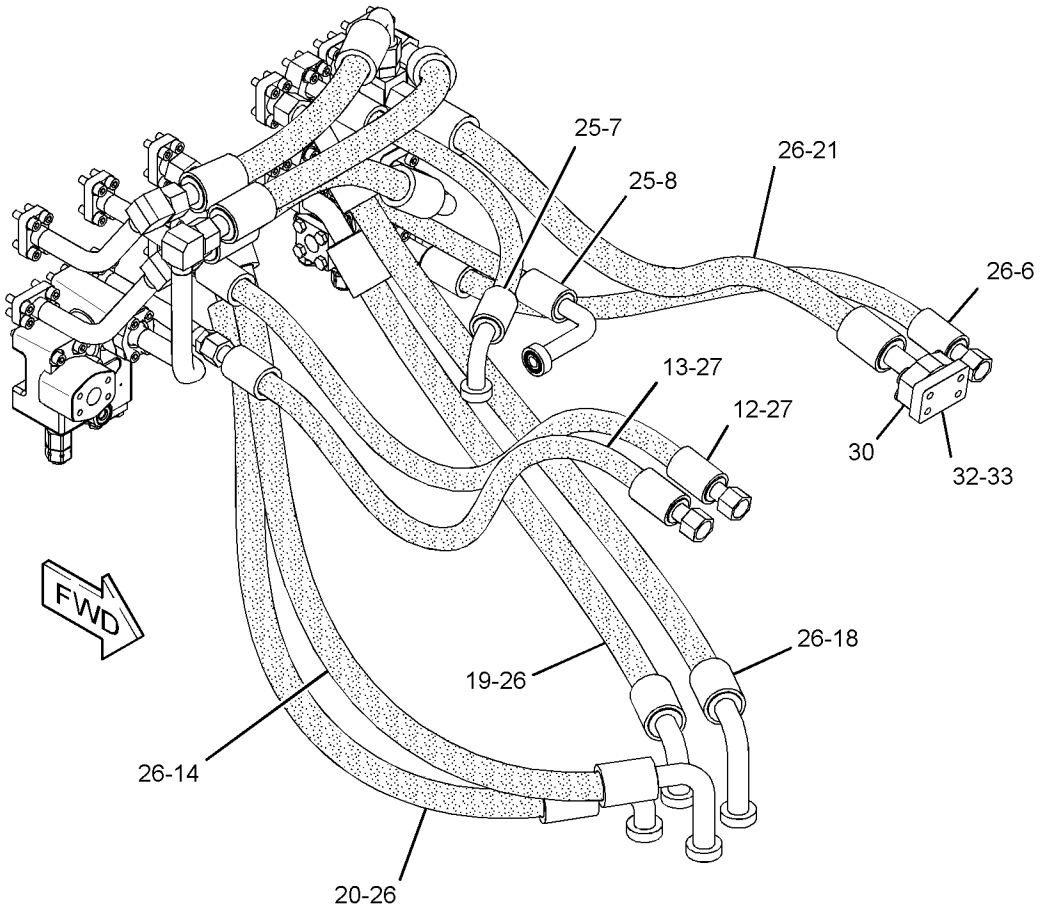

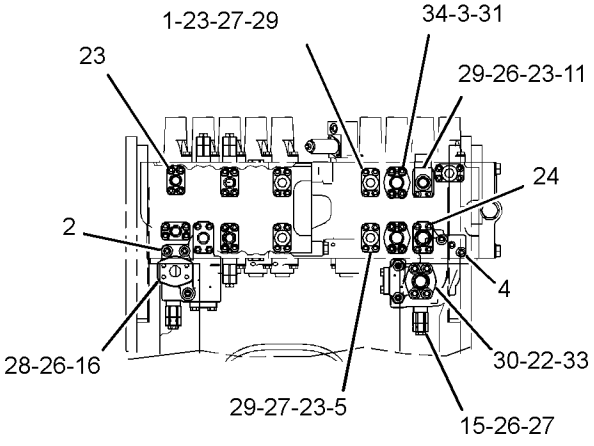

VIEW A-A
(HOSES REMOVED)

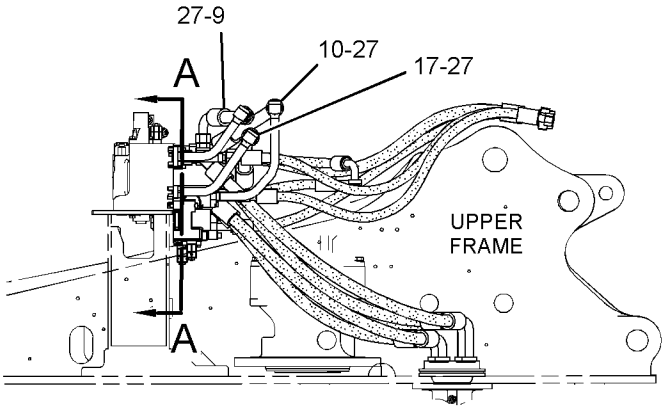

RIGHT SIDE VIEW

GRAPHIC #1 **<END>** g01806235

376-6317 LINES GP-FRONT—COMBINED FUNCTION

S/N: JEG1-UP
PART OF 383-5306 CONTROL AR-AUXILIARY
AN ATTACHMENT

SMCS-5057 **i05257484**

NOTE	REF NO	GRAPHIC REF	PART NUMBER	QTY	PART NAME 1 2 3 4 5 6 (PRODUCT LEVEL)	SEE PAGE
	1	2	**7Y-3729**	1	FLANGE-SPECIAL	
	2	2	**7Y-3731**	1	FLANGE	
I	3	2	**102-1248**	1	HOSE AS	
	4	1	**173-4664**	1	FLANGE	
	5	1	*177-1061*	1	ELBOW AS	
		1	**5K-9090**	1	SEAL-O-RING	
		1	**142-0038**	1	ELBOW	
Y	6	2	**177-2653**	1	VALVE GP-RELIEF (LINE)	472
	7	2	**207-6222**	1	BLOCK	
	8	2	**218-1139**	1	BLOCK	
	9	1	**260-7872**	1	SUPPORT AS	
	10	2	**260-8043**	1	BLOCK	
	11	2	**266-0912**	1	BRACKET	
	12	2	**266-0913**	1	SUPPORT AS	
	13	2	**266-1278**	1	BLOCK	
	14	2	**266-1279**	2	FLANGE	
I	15	1	**266-1303**	1	HOSE AS	
	16	2	**275-1439**	1	BLOCK	
	17	2	**275-1440**	1	BLOCK	
	18	2	**296-7067**	1	SUPPORT AS	
	19	2	**296-7069**	1	SUPPORT AS	
Y	20	2	**297-0370**	2	VALVE GP-CHECK	437
I	21	1	**314-8205**	1	HOSE AS	
I	22	1	**317-4712**	1	HOSE AS	
	23	1	**325-8865**	1	SUPPORT AS	
	24	1	**337-1424**	1	SUPPORT AS	
M		1	**8T-3490**	2	NUT-WELD (M10X1.5-THD)	
M		1	**8T-3597**	1	NUT-WELD (M12X1.75-THD)	
I	25	1	**337-1426**	1	HOSE AS	
JI	26	1	**377-3291**	1	HOSE AS	
	27	2	**099-8232**	2	SEAL-O-RING	
M	28	2	**101-7397**	4	BOLT-SOCKET HEAD (M12X1.75X50-MM)	
M	29	2	**101-7401**	8	BOLT-SOCKET HEAD (M10X1.5X20-MM)	
M	30	1	**101-7402**	4	BOLT-SOCKET HEAD (M12X1.75X30-MM)	
M	31	2	**101-7404**	8	BOLT-SOCKET HEAD (M10X1.5X30-MM)	
M	32	2	**105-3477**	4	BOLT-SOCKET HEAD (M10X1.5X45-MM)	
M	33	2	**108-4282**	4	BOLT-SOCKET HEAD (M10X1.5X100-MM)	
	34	1	*148-8323*	1	CONNECTOR AS	
		1	**2S-4078**	1	SEAL-O-RING	
		1	**5K-9090**	1	SEAL-O-RING	
		1	**6V-9875**	1	CONNECTOR	
	35	2	*148-8330*	1	CONNECTOR AS	
		2	**5K-9090**	1	SEAL-O-RING	
		2	**7M-8485**	1	SEAL-O-RING	
		2	**8T-0198**	1	CONNECTOR	
	36	2	*148-8339*	1	CONNECTOR AS	
		2	**6V-8716**	1	CONNECTOR (STRAIGHT)	
		2	**6V-9746**	1	SEAL-O-RING	
		2	**7M-8485**	1	SEAL-O-RING	
	37	1	*148-8347*	1	ELBOW AS	
		1	**3D-2824**	1	SEAL-O-RING	
		1	**6V-9007**	1	ELBOW	
		1	**6V-9746**	1	SEAL-O-RING	
	38	2	*148-8355*	1	ELBOW AS	
		2	**5K-9090**	1	SEAL-O-RING	
		2	**6V-9005**	1	ELBOW	
		2	**7M-8485**	1	SEAL-O-RING	
	39	1	*148-8411*	1	PLUG AS	

376-6317 **LINES GP-FRONT (*contd.*)** **i05257484**

NOTE	REF NO	GRAPHIC REF	PART NUMBER	QTY	PART NAME 1 2 3 4 5 6 (PRODUCT LEVEL)	SEE PAGE
		1	**3K-0360**	1	SEAL-O-RING	
		1	**9S-4185**	1	PLUG-O-RING	
	40	2	*148-8429*	1	TEE AS	
		2	**5K-9090**	2	SEAL-O-RING	
		2	**6V-9840**	1	TEE-SWIVEL	
	41	2	*148-8449*	1	TEE AS-SWIVEL	
		2	**6V-9746**	2	SEAL-O-RING	
		2	**6V-9839**	1	TEE-SWIVEL	
	42	1	*153-6237*	1	ELBOW AS	
		1	**3D-2824**	1	SEAL-O-RING	
		1	**6V-9004**	1	ELBOW	
		1	**6V-9746**	1	SEAL-O-RING	
	43	2	*164-4180*	1	PLUG AS	
		2	**7M-8485**	1	SEAL-O-RING	
		2	**9S-4181**	1	PLUG-O-RING	
	44	2	*164-5606*	1	CONNECTOR AS	
		2	**3D-2824**	1	SEAL-O-RING	
		2	**6V-9746**	1	SEAL-O-RING	
		2	**8T-0078**	1	CONNECTOR	
	45	2	**1P-3702**	6	SEAL-RECTANGULAR	
	46	1,2	**1P-3703**	4	SEAL-RECTANGULAR	
M	47	2	**280-2747**	4	BOLT-SOCKET HEAD (M10X1.5X60-MM)	
	48	1,2	**5K-9090**	2	SEAL-O-RING	
	49	1	**5P-7466**	1	CLIP (SLOT)	
	50	1	**5P-7467**	1	CLIP (TAB)	
	51	1	**5P-7468**	2	CLIP (SLOT)	
	52	1	**5P-7469**	2	CLIP (TAB)	
	53	1	**5P-8112**	1	GROMMET	
	54	1	**5P-8444**	2	GROMMET	
					—OR—	
			8T-7087	2	GROMMET	
	55	2	**6V-9746**	1	SEAL-O-RING	
	56	1,2	**8T-4121**	10	WASHER-HARD (11X21X2.5-MM THK)	
M	57	1,2	**8T-4136**	6	BOLT (M10X1.5X25-MM)	
M	58	2	**8T-4176**	4	BOLT (M12X1.75X90-MM)	
M	59	2	**8T-4183**	8	BOLT (M12X1.75X40-MM)	
M	60	1	**8T-4195**	2	BOLT (M10X1.5X30-MM)	
M	61	2	**8T-4196**	2	BOLT (M10X1.5X35-MM)	
	62	1,2	**8T-4223**	27	WASHER-HARD (13.5X25.5X3-MM THK)	
M	63	1,2	**8T-4956**	7	BOLT (M12X1.75X35-MM)	
M	64	2	**8T-5092**	8	BOLT (M12X1.75X150-MM)	

I - REFER TO HYDRAULIC INFORMATION SYSTEM
J - NOT REQUIRED WHEN USED WITH LINES GP-FRONT (HAMMER RETURN)
M - METRIC PART
Y - SEPARATE ILLUSTRATION

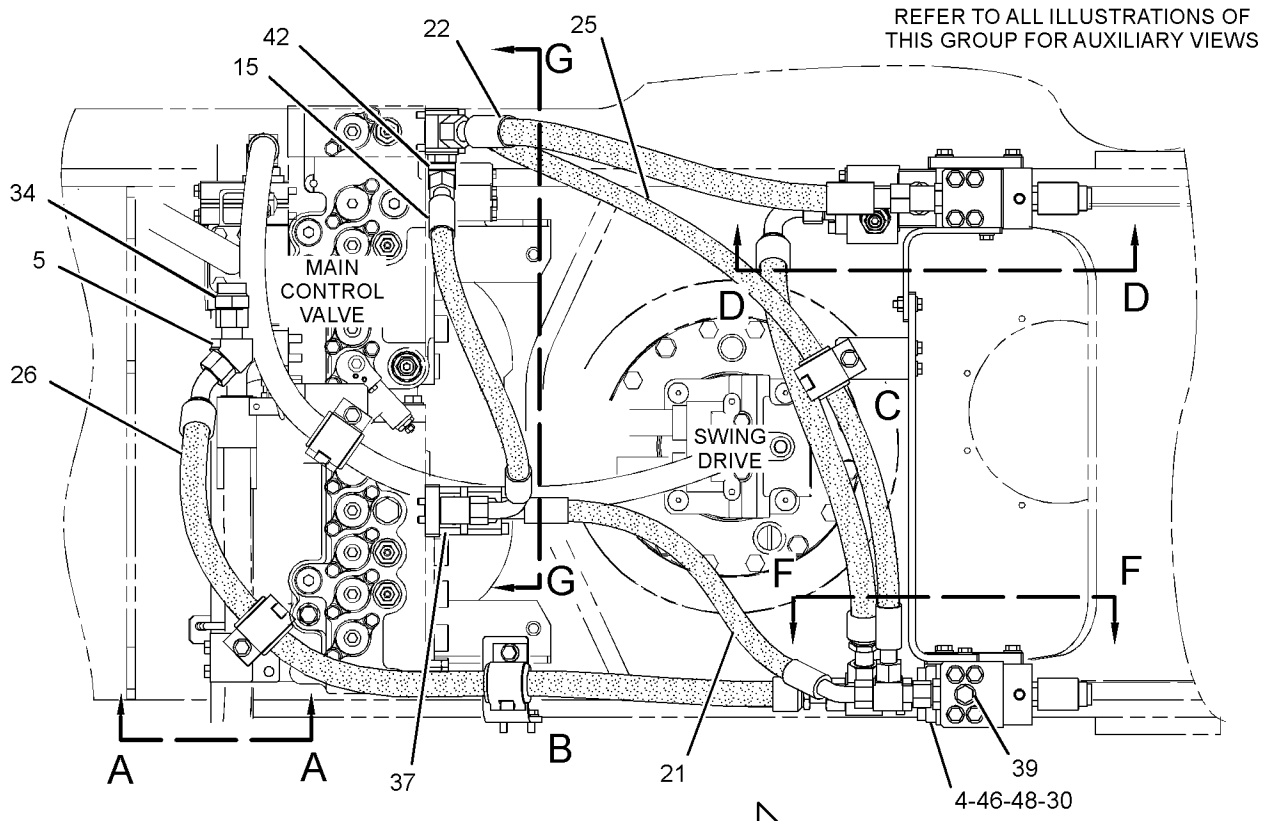

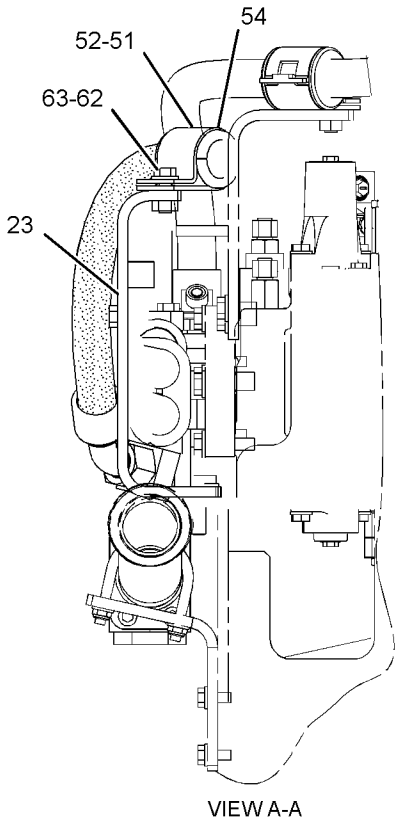

VIEW A-A

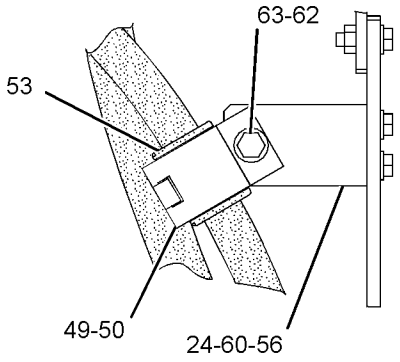

VIEW OF AREA C

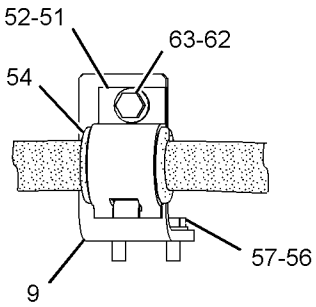

VIEW OF AREA B

GRAPHIC #1

g02743236

376-6317 **LINES GP-FRONT (*contd.*)** **i05257484**

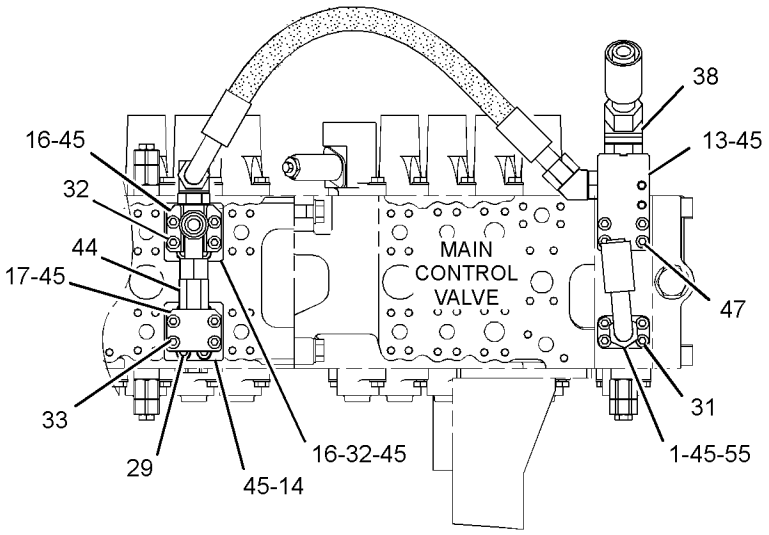

SECTION G-G

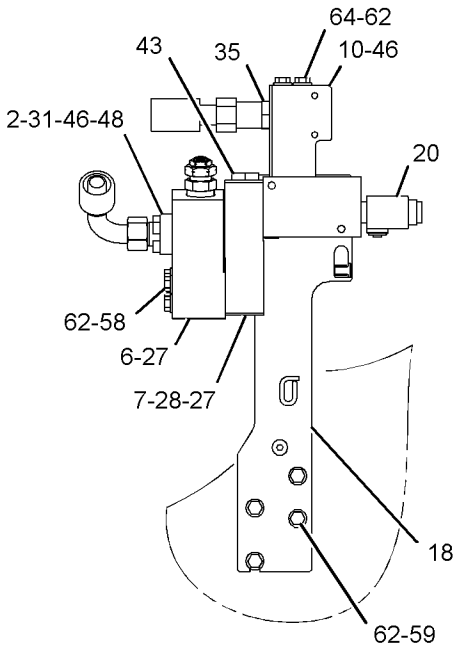

SECTION D-D

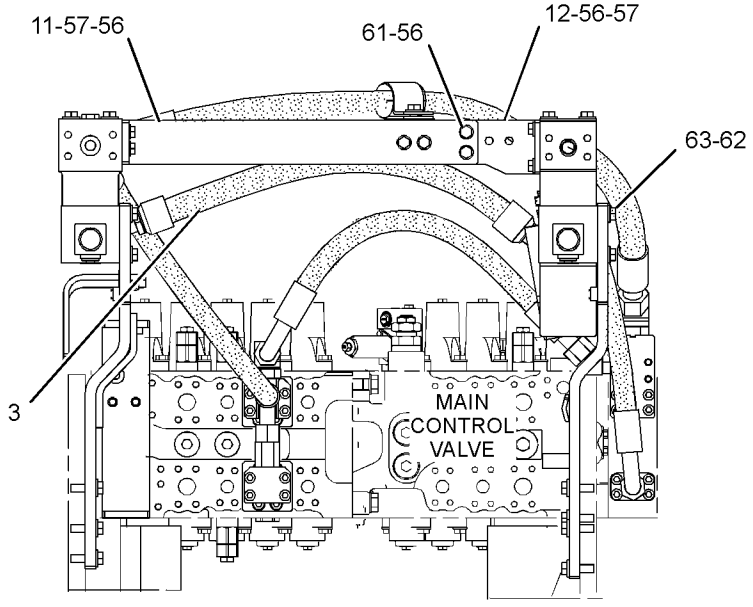

FRONT VIEW

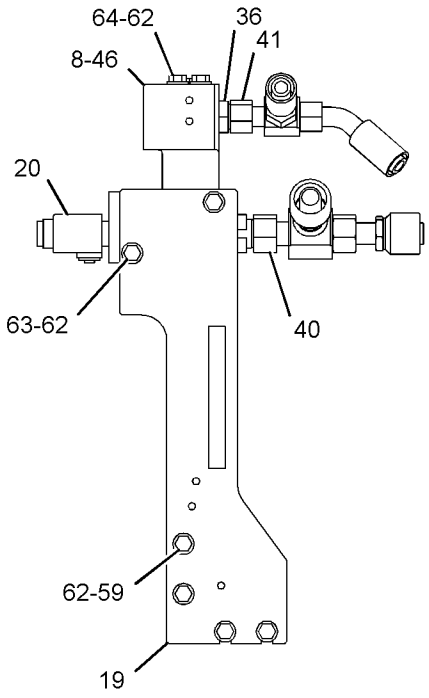

SECTION F-F

GRAPHIC #2 **<END>** g02743237

376-6319 LINES GP-FRONT–SYSTEM 3, 1-WAY, 2-PUMP

S/N: JEG1-UP

PART OF 383-5307 CONTROL AR-AUXILIARY

AN ATTACHMENT

SMCS-5057 **i05346533**

NOTE	REF NO	GRAPHIC REF	PART NUMBER	QTY	PART NAME 1 2 3 4 5 6 (PRODUCT LEVEL)	SEE PAGE
	1	2	**7Y-3731**	1	FLANGE	
I	2	1	**102-1248**	1	HOSE AS	
	3	1	**173-4664**	1	FLANGE	
	4	1	*177-1061*	1	ELBOW AS	
		1	**5K-9090**	1	SEAL-O-RING	
		1	**142-0038**	1	ELBOW	
Y	5	2	**177-2653**	1	VALVE GP-RELIEF (LINE)	472
	6	2	**207-6222**	1	BLOCK	
	7	1,2	**212-5148**	2	BLOCK	
	8	2	**218-1139**	1	BLOCK	
	9	1	**260-7872**	1	SUPPORT AS	
	10	2	**260-8043**	1	BLOCK	
	11	1	**266-0912**	1	BRACKET	
	12	1	**266-0913**	1	SUPPORT AS	
	13	2	**266-1278**	1	BLOCK	
	14	2	**266-1279**	1	FLANGE	
I	15	2	**266-1303**	1	HOSE AS	
	16	2	**275-1439**	1	BLOCK	
	17	2	**296-7067**	1	SUPPORT AS	
	18	2	**296-7069**	1	SUPPORT AS	
I	19	1	**317-4712**	1	HOSE AS	
	20	1	**325-8865**	1	SUPPORT AS	
JI	21	1	**377-3291**	1	HOSE AS	
	22	2	**099-8232**	2	SEAL-O-RING	
M	23	2	**101-7397**	4	BOLT-SOCKET HEAD (M12X1.75X50-MM)	
M	24	2	**101-7401**	4	BOLT-SOCKET HEAD (M10X1.5X20-MM)	
M	25	1	**101-7402**	4	BOLT-SOCKET HEAD (M12X1.75X30-MM)	
M	26	2	**101-7404**	4	BOLT-SOCKET HEAD (M10X1.5X30-MM)	
M	27	2	**105-3477**	4	BOLT-SOCKET HEAD (M10X1.5X45-MM)	
	28	1	*148-8323*	1	CONNECTOR AS	
		1	**2S-4078**	1	SEAL-O-RING	
		1	**5K-9090**	1	SEAL-O-RING	
		1	**6V-9875**	1	CONNECTOR	
	29	2	*148-8330*	1	CONNECTOR AS	
		2	**5K-9090**	1	SEAL-O-RING	
		2	**7M-8485**	1	SEAL-O-RING	
		2	**8T-0198**	1	CONNECTOR	
	30	1	*148-8347*	1	ELBOW AS	
		1	**3D-2824**	1	SEAL-O-RING	
		1	**6V-9007**	1	ELBOW	
		1	**6V-9746**	1	SEAL-O-RING	
	31	2	*148-8355*	1	ELBOW AS	
		2	**5K-9090**	1	SEAL-O-RING	
		2	**6V-9005**	1	ELBOW	
		2	**7M-8485**	1	SEAL-O-RING	
	32	1	*148-8411*	1	PLUG AS	
		1	**3K-0360**	1	SEAL-O-RING	
		1	**9S-4185**	1	PLUG-O-RING	
	33	2	*148-8429*	1	TEE AS	
		2	**5K-9090**	2	SEAL-O-RING	
		2	**6V-9840**	1	TEE-SWIVEL	
	34	2	*153-6237*	1	ELBOW AS	
		2	**3D-2824**	1	SEAL-O-RING	
		2	**6V-9004**	1	ELBOW	
		2	**6V-9746**	1	SEAL-O-RING	
	35	2	*164-4180*	2	PLUG AS	
					(EACH INCLUDES)	
		2	**7M-8485**	1	SEAL-O-RING	

376-6319 **LINES GP-FRONT (*contd.*)** **i05346533**

NOTE	REF NO	GRAPHIC REF	PART NUMBER	QTY	PART NAME 1 2 3 4 5 6 (PRODUCT LEVEL)	SEE PAGE
		2	**9S-4181**	1	PLUG-O-RING	
	36	2	**1P-3702**	3	SEAL-RECTANGULAR	
	37	1,2	**1P-3703**	4	SEAL-RECTANGULAR	
M	38	2	**280-2747**	4	BOLT-SOCKET HEAD (M10X1.5X60-MM)	
	39	1,2	**5K-9090**	2	SEAL-O-RING	
	40	1	**5P-7468**	2	CLIP (SLOT)	
	41	1	**5P-7469**	2	CLIP (TAB)	
L	42	1	**5P-8444**	2	GROMMET (37-MM ID)	
					—OR—	
L		1	**8T-7087**	2	GROMMET (34-MM ID)	
	43	1	**8T-4121**	8	WASHER-HARD (11X21X2.5-MM THK)	
M	44	1	**8T-4136**	6	BOLT (M10X1.5X25-MM)	
M	45	2	**8T-4176**	4	BOLT (M12X1.75X90-MM)	
M	46	2	**8T-4183**	8	BOLT (M12X1.75X40-MM)	
M	47	1	**8T-4196**	2	BOLT (M10X1.5X35-MM)	
	48	1,2	**8T-4223**	26	WASHER-HARD (13.5X25.5X3-MM THK)	
M	49	1,2	**8T-4956**	6	BOLT (M12X1.75X35-MM)	
M	50	2	**8T-5092**	8	BOLT (M12X1.75X150-MM)	

I - REFER TO HYDRAULIC INFORMATION SYSTEM
J - NOT REQUIRED WHEN USED WITH LINES GP-FRONT (HAMMER RETURN)
L - SELECT CORRECT GROMMET SIZE TO MATCH HOSE O.D.
M - METRIC PART
Y - SEPARATE ILLUSTRATION

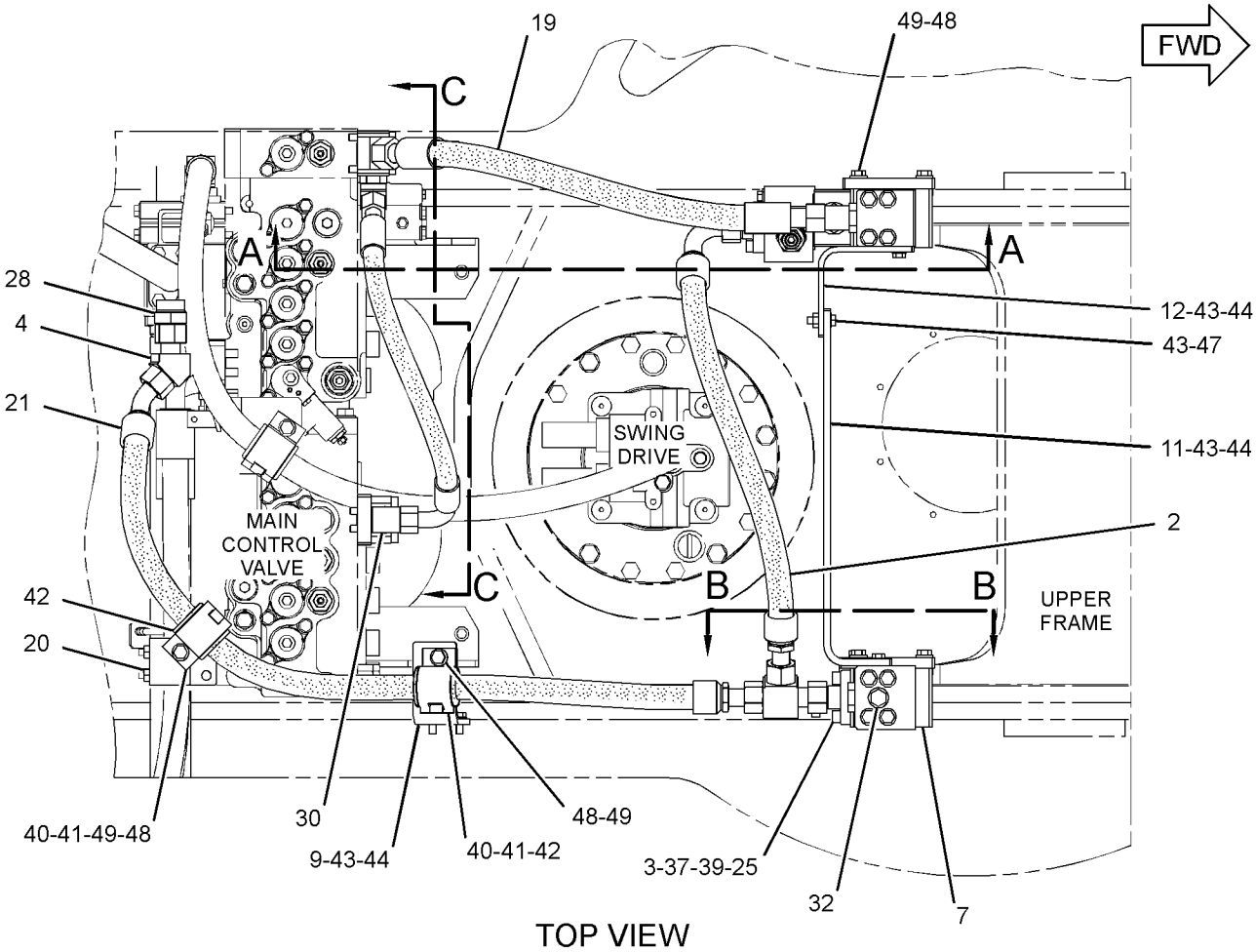

TOP VIEW

GRAPHIC #1 g02742858

376-6319 **LINES GP-FRONT (*contd.*)** **i05346533**

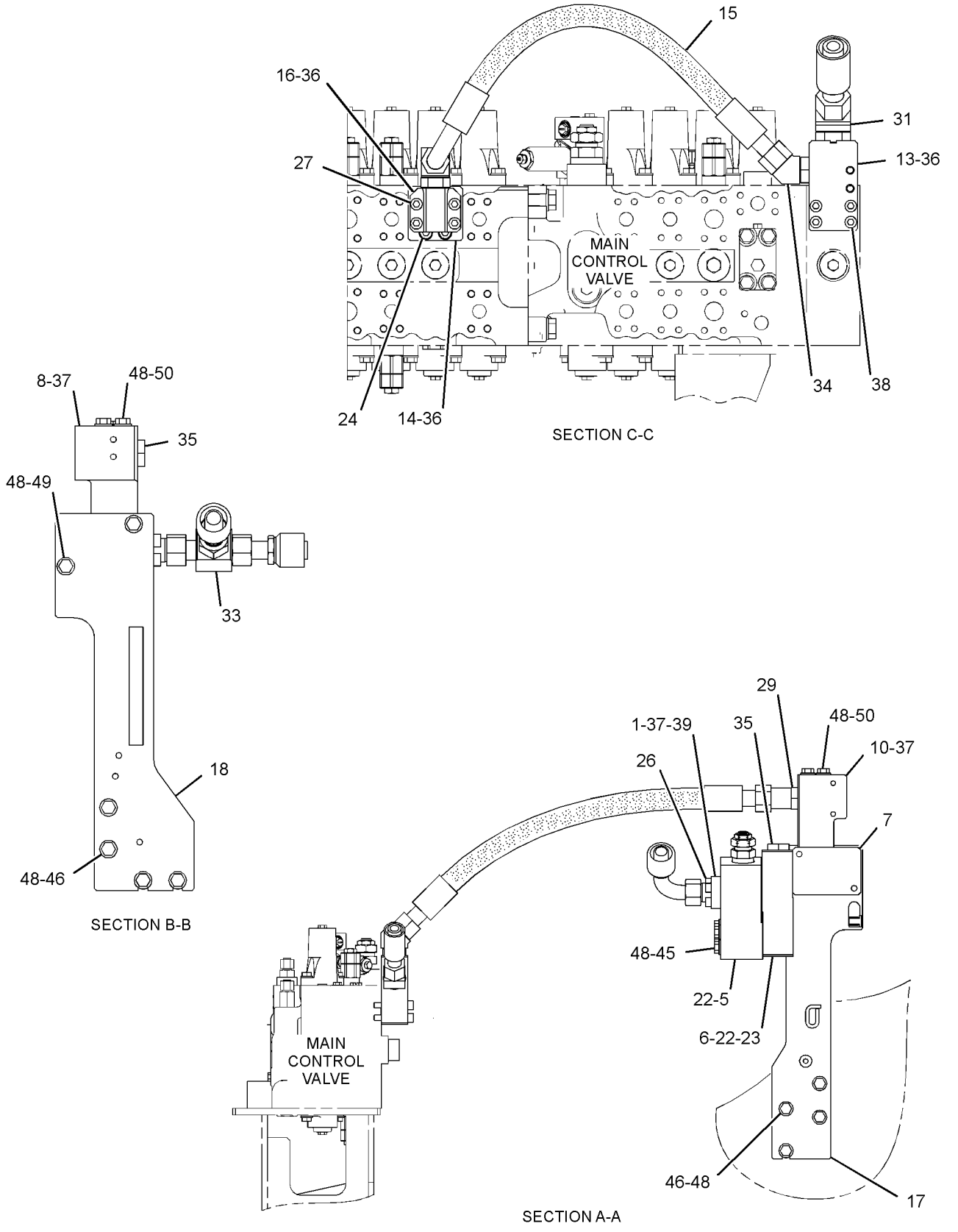

GRAPHIC #2 **<END>** g02743080

376-6321 LINES GP-HYDRAULIC OIL COOLER

S/N: JEG1-UP

PART OF 383-5083 HYDRAULIC AR

SMCS-1374 **i05263876**

NOTE	REF NO	GRAPHIC REF	PART NUMBER	QTY	PART NAME 1 2 3 4 5 6 (PRODUCT LEVEL)	SEE PAGE
	1	1	**227-0265**	2	HOSE	
	2	1	**8T-6703**	5	CLAMP-HOSE	

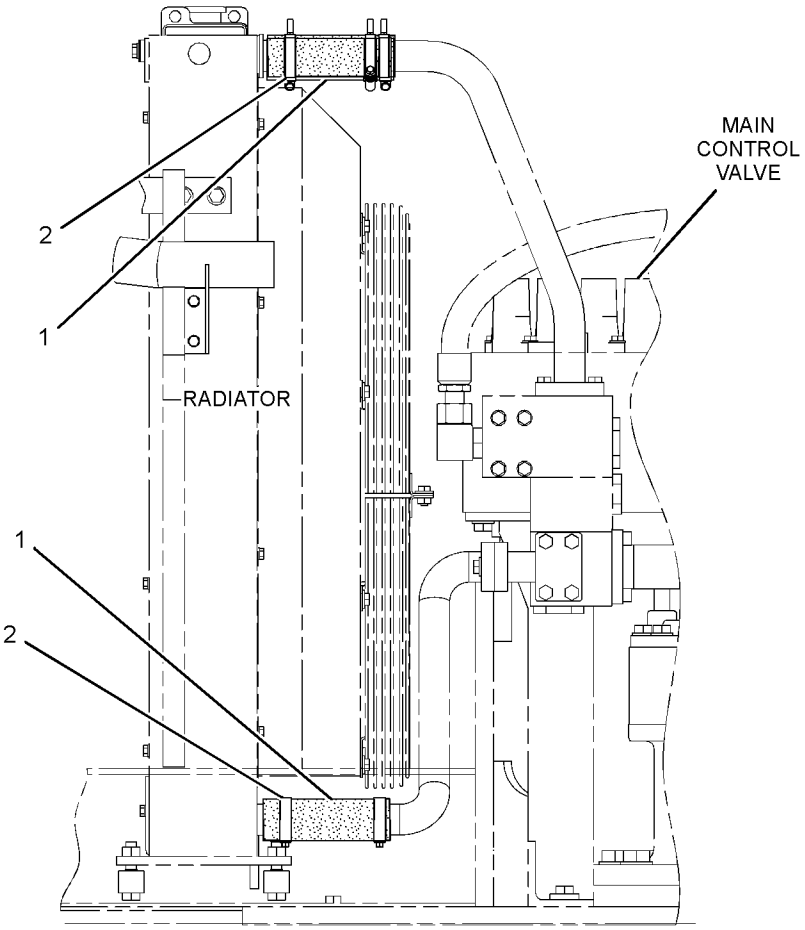

REAR VIEW

GRAPHIC #1 **<END>** g01276111

248-9825 LINES GP-PILOT—JOYSTICK, PEDALS

S/N: JEG1-UP

PART OF 434-3892, 434-3893 CAB GP, 383-5083 HYDRAULIC AR

ALSO AN ATTACHMENT

SMCS-5057, 5059 **i05428396**

NOTE	REF NO	GRAPHIC REF	PART NUMBER	QTY	PART NAME 1 2 3 4 5 6 (PRODUCT LEVEL)	SEE PAGE
	1	2	**4I-9521**	2	BAND-MARKER (RED, L1)	
	2	2	**4I-9522**	2	BAND-MARKER (YELLOW, L2)	
	3	2	**4I-9523**	2	BAND-MARKER (BLUE, L3)	
	4	2	**4I-9524**	2	BAND-MARKER (BROWN, L4)	
	5	2	**4I-9525**	2	BAND-MARKER (ORANGE, R1)	
	6	2	**4I-9526**	2	BAND-MARKER (WHITE, R2)	
	7	2	**4I-9527**	2	BAND-MARKER (GREEN, R3)	
	8	2	**4I-9528**	2	BAND-MARKER (PURPLE, R4)	
	9	1,2	**7K-1181**	5	STRAP-CABLE	
I	10	1	**087-4402**	2	HOSE AS	
	11	2	**133-5813**	4	BAND-MARKER (GRAY, P)	
	12	1	**309-5769**	1	SWITCH AS-PRESSURE (IMPLEMENT, SWING)	
	12A	1	**309-5769**	1	SWITCH AS-PRESSURE (TRAVEL, LH)	
	12B	2	**309-5769**	1	SWITCH AS-PRESSURE (TRAVEL, RH)	
					(EACH SWITCH AS INCLUDES)	
		2	**151-9272**	1	KIT-RECEPTACLE (2-PIN)	
					(INCLUDES RECEPTACLE AS & WEDGE)	
		2	**9X-3401**	2	PIN-CONNECTOR (16-GA TO 18-GA)	
					—OR—	
		2	**126-1767**	2	PIN-CONNECTOR (14-GA TO 16-GA)	
	13	2	**168-9759**	1	BLOCK	
C	14	1	**392-2185**	3	SUPPORT	
C	15	2	**387-3699**	1	BRACKET	
Y	16	2	**185-0462**	1	VALVE GP-SHUTTLE	479
	17	1	**323-7770**	2	ADAPTER	
	18	2	**236-2844**	3	HOSE AS	
	19	2	**236-2843**	4	HOSE AS	
	20	2	**245-5079**	1	HOSE AS	
	21	2	**255-1665**	1	HOSE AS	
	22	2	**255-1666**	1	HOSE AS	
Y	23	1	**369-8502**	1	VALVE GP-PILOT (TRAVEL, SHUTTLE)	462
	24	1,2	*148-8336*	23	CONNECTOR AS	
					(EACH INCLUDES)	
		1,2	**3J-1907**	1	SEAL-O-RING	
		1,2	**6V-8397**	1	SEAL-O-RING	
		1,2	**6V-8636**	1	CONNECTOR	
	25	2	*148-8353*	8	ELBOW AS	
					(EACH INCLUDES)	
		2	**3J-1907**	1	SEAL-O-RING	
		2	**6V-8397**	1	SEAL-O-RING	
		2	**6V-9001**	1	ELBOW	
	26	2	*148-8354*	2	ELBOW AS	
					(EACH INCLUDES)	
		2	**3K-0360**	1	SEAL-O-RING	
		2	**6V-8398**	1	SEAL-O-RING	
		2	**6V-9002**	1	ELBOW	
	27	1,2	*148-8378*	6	ELBOW AS	
					(EACH INCLUDES)	
		1,2	**3J-1907**	1	SEAL-O-RING	
		1,2	**6V-8397**	1	SEAL-O-RING	
		1,2	**6V-8724**	1	ELBOW	
	28	2	*148-8407*	4	PLUG AS	
					(EACH INCLUDES)	
		2	**3J-1907**	1	SEAL-O-RING	
		2	**9S-4191**	1	PLUG	
	29	1	*164-5628*	3	CONNECTOR AS	

248-9825 **LINES GP-PILOT (*contd.*)** **i05428396**

NOTE	REF NO	GRAPHIC REF	PART NUMBER	QTY	PART NAME 1 2 3 4 5 6 (PRODUCT LEVEL)	SEE PAGE
					(EACH INCLUDES)	
		1	**3J-1907**	1	SEAL-O-RING	
		1	**6V-8397**	1	SEAL-O-RING	
		1	**107-6631**	1	CONNECTOR-FILTER	
	30	1,2	**8T-4121**	18	WASHER-HARD (11X21X2.5-MM THK)	
	31	1	**3J-7354**	2	SEAL-O-RING	
CM	32	1,2	**8T-4137**	7	BOLT (M10X1.5X20-MM)	
M	33	2	**8T-4198**	2	BOLT (M10X1.5X100-MM)	
	34	2	**289-5657**	1	HOSE AS	
	35	2	**4P-7581**	1	CLIP	
CM	36	1,2	**8T-4191**	10	BOLT (M10X1.5X16-MM)	
	41	2	**236-2848**	1	HOSE AS	

C - CHANGE FROM PREVIOUS TYPE
I - REFER TO HYDRAULIC INFORMATION SYSTEM
M - METRIC PART
Y - SEPARATE ILLUSTRATION

248-9825 **LINES GP-PILOT (*contd.*)** **i05428396**

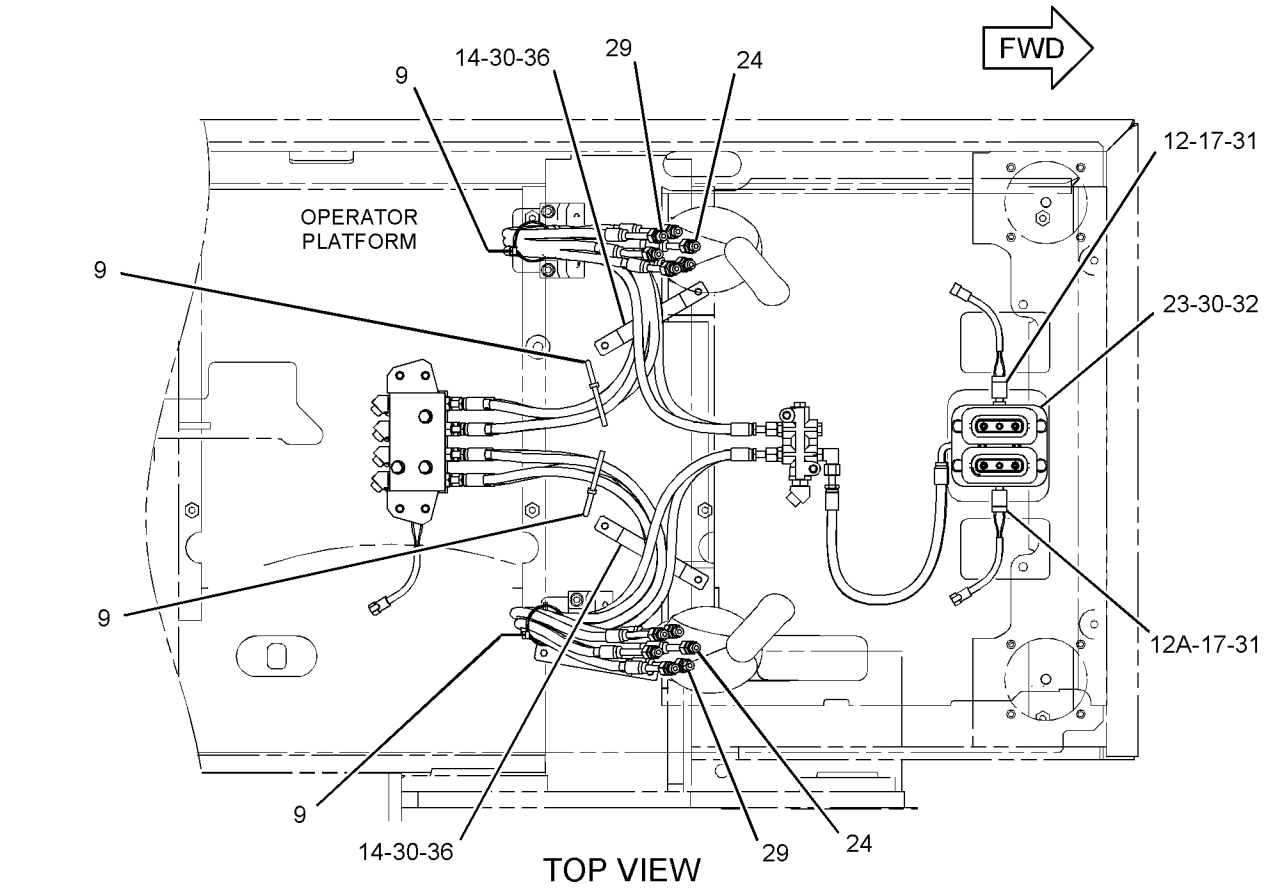

TOP VIEW

REFER TO ALL ILLUSTRATIONS OF
THIS GROUP FOR AUXILIARY VIEWS

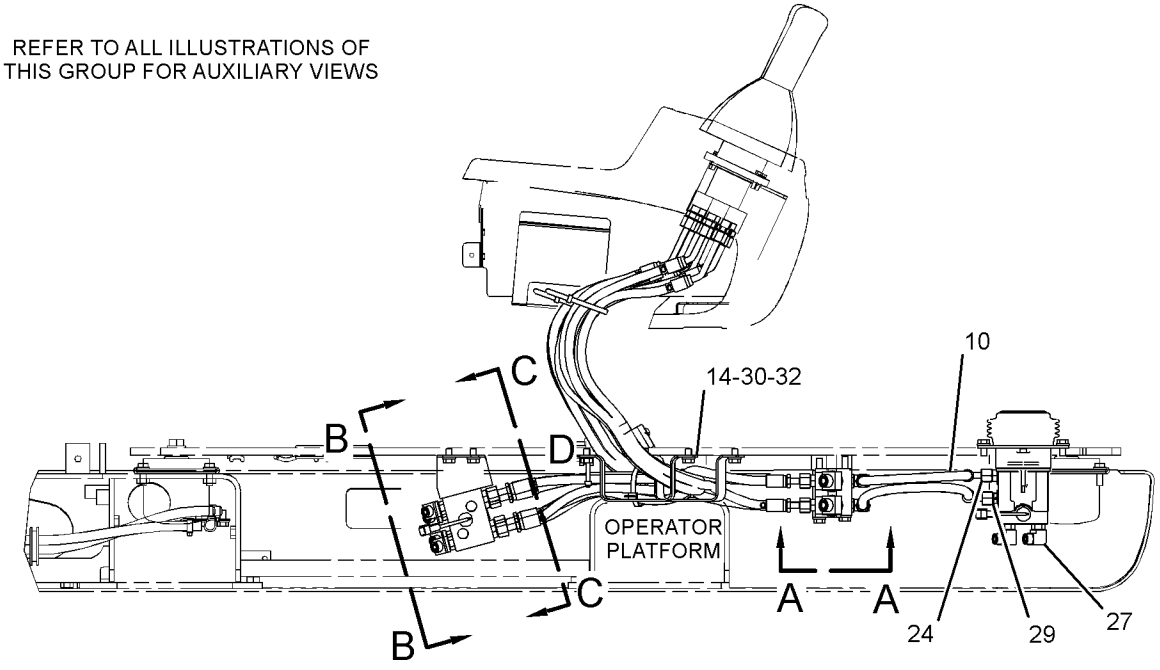

RIGHT SIDE VIEW

GRAPHIC #1 g03476172

248-9825 **LINES GP-PILOT (*contd.*)** **i05428396**

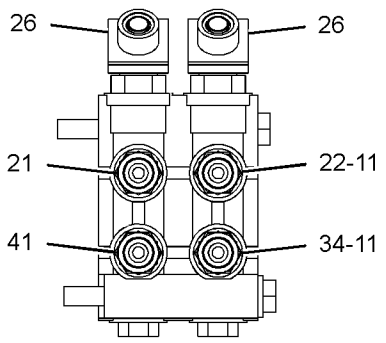

VIEWE-E

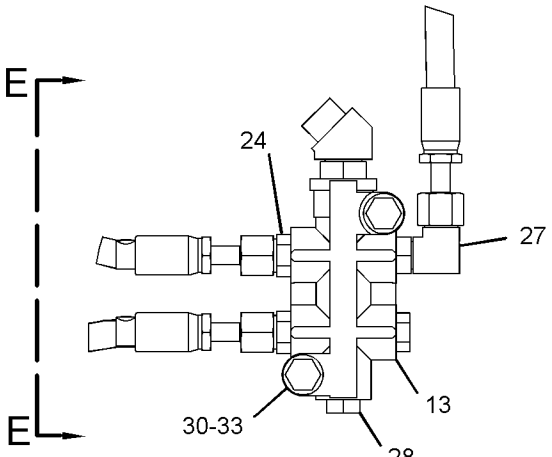

VIEW A-A

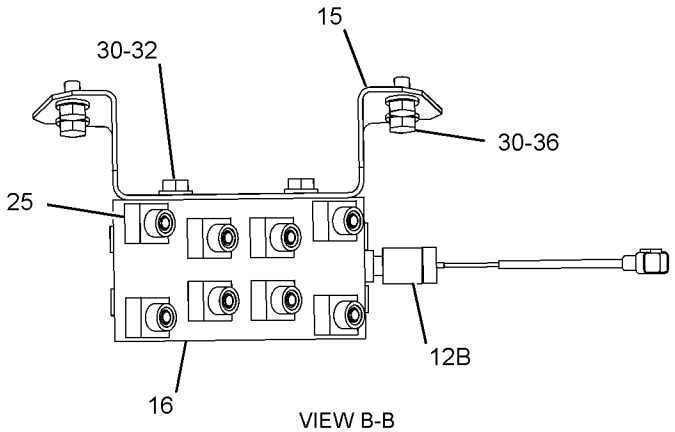

VIEW B-B

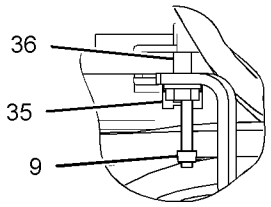

VIEW OF AREA D

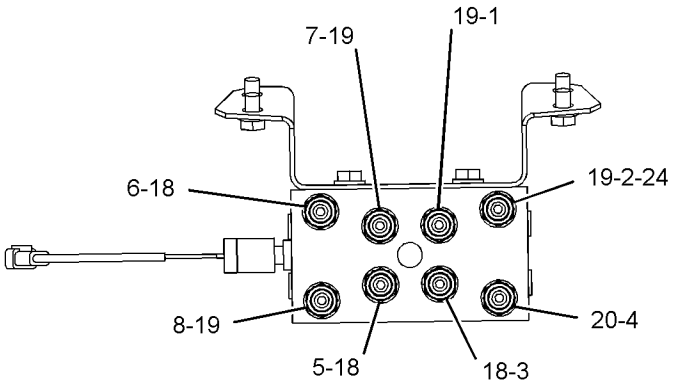

SECTION C-C

GRAPHIC #2 **<END>** g03476171

255-1659 LINES GP-PILOT–HEAVY LIFT

S/N: JEG1-UP

PART OF 383-5083 HYDRAULIC AR

SMCS-5057, 5059 **i04405918**

NOTE	REF NO	GRAPHIC REF	PART NUMBER	QTY	PART NAME 1 2 3 4 5 6 (PRODUCT LEVEL)	SEE PAGE
I	1	1	**087-4402**	1	HOSE AS	
I	2	1	**087-5772**	1	HOSE AS	
	3	1	**4I-9522**	2	BAND-MARKER (YELLOW, L2)	
	4	1	**4I-9523**	2	BAND-MARKER (BLUE, L3)	
	5	1	**4I-9524**	2	BAND-MARKER (BROWN, L4)	
	6	1	**7K-1181**	2	STRAP-CABLE	
I	7	1	**087-5766**	1	HOSE AS	
CY	8	1	**352-7176**	1	VALVE GP-SOLENOID (HEAVY LIFT)	484
	9	1	**269-9919**	1	PLATE	
	10	1	*148-8336*	2	CONNECTOR AS	
					(EACH INCLUDES)	
		1	**3J-1907**	1	SEAL-O-RING	
		1	**6V-8397**	1	SEAL-O-RING	
		1	**6V-8636**	1	CONNECTOR	
	11	1	*148-8338*	1	CONNECTOR AS	
		1	**3J-1907**	1	SEAL-O-RING	
		1	**6V-8397**	1	SEAL-O-RING	
		1	**8T-0075**	1	CONNECTOR	
	13	1	*148-8378*	2	ELBOW AS	
					(EACH INCLUDES)	
		1	**3J-1907**	1	SEAL-O-RING	
		1	**6V-8397**	1	SEAL-O-RING	
		1	**6V-8724**	1	ELBOW	
	14	1	*148-8435*	1	TEE AS	
		1	**3J-1907**	1	SEAL-O-RING	
		1	**6V-8397**	2	SEAL-O-RING	
		1	**6V-8781**	1	TEE	
	15	1	**8T-4121**	2	WASHER-HARD (11X21X2.5-MM THK)	
M	16	1	**8T-4136**	2	BOLT (M10X1.5X25-MM)	
M	17	1	**8T-4970**	2	BOLT (M6X1X14-MM)	
	18	1	**9X-8256**	2	WASHER (6.6X12X2-MM THK)	

C - CHANGE FROM PREVIOUS TYPE
I - REFER TO HYDRAULIC INFORMATION SYSTEM
M - METRIC PART
Y - SEPARATE ILLUSTRATION

255-1659 **LINES GP-PILOT (*contd.*)** **i04405918**

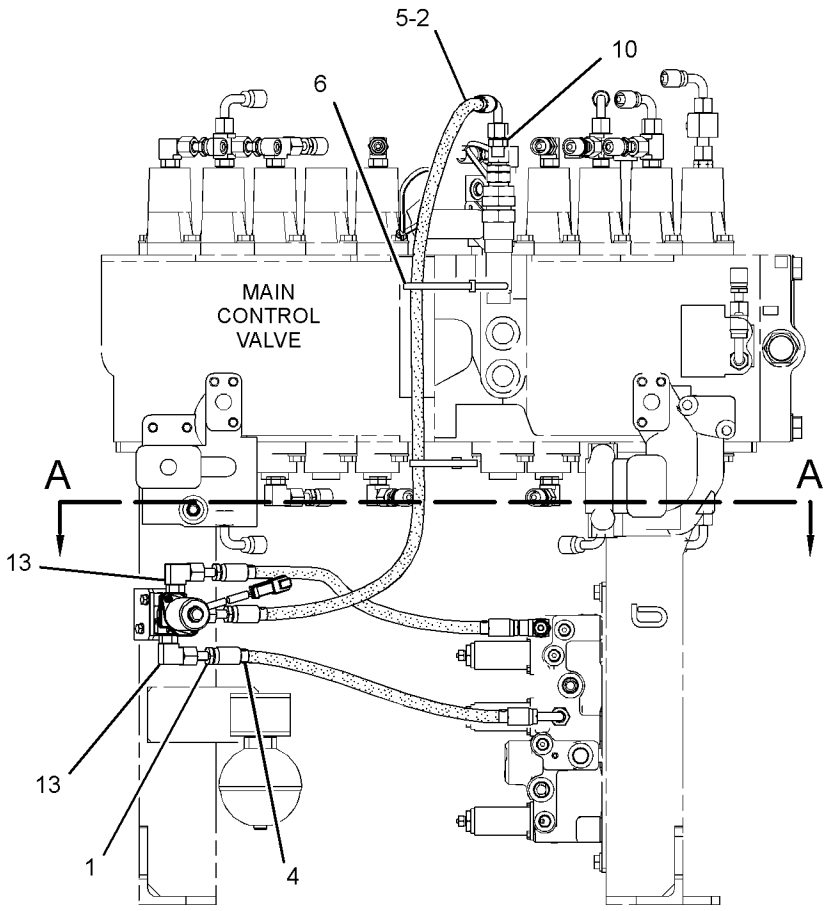

FRONT VIEW

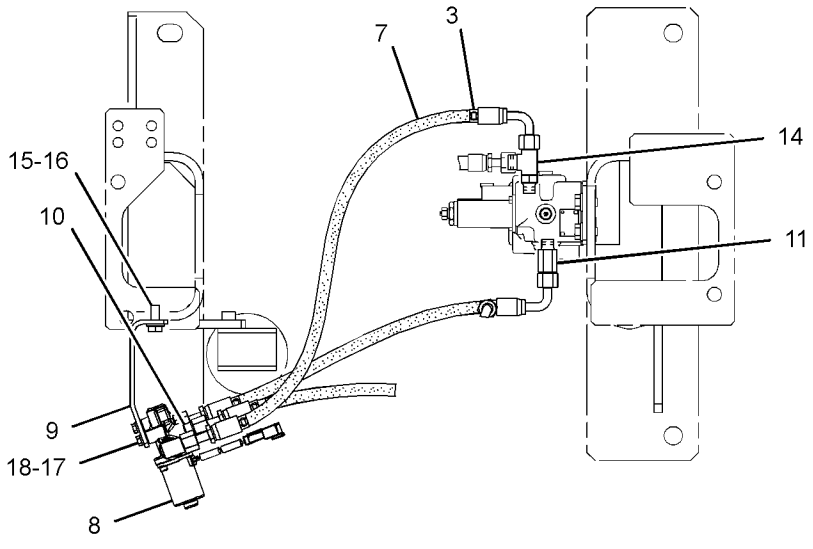

SECTION A-A

GRAPHIC #1 **<END>** g02317301

255-1800 LINES GP-PILOT—PEDAL, RH

S/N: JEG1-UP

PART OF 383-5307 CONTROL AR-AUXILIARY

AN ATTACHMENT

SMCS-5057, 5059

i02956686

NOTE	REF NO	GRAPHIC REF	PART NUMBER	QTY	PART NAME 1 2 3 4 5 6 (PRODUCT LEVEL)	SEE PAGE
I	1	1	**4I-1704**	1	HOSE AS	
I	2	1	**087-4402**	1	HOSE AS	
	3	1	*164-5629*	1	FITTING AS	
		1	**3J-1907**	1	SEAL-O-RING	
		1	**108-7516**	1	FITTING	
	4	1	**309-5769**	1	SWITCH AS-PRESSURE (ACTION INPUT, WORK TOOL)	
		1	**102-8802**	1	KIT-RECEPTACLE (2-PIN)	
					(INCLUDES RECEPTACLE AS & WEDGE)	
		1	**9X-3401**	2	PIN-CONNECTOR (16-GA TO 18-GA)	
					—OR—	
		1	**126-1767**	2	PIN-CONNECTOR (14-GA TO 16-GA)	
	5	1	*148-8336*	1	CONNECTOR AS	
		1	**3J-1907**	1	SEAL-O-RING	
		1	**6V-8397**	1	SEAL-O-RING	
		1	**6V-8636**	1	CONNECTOR	
	6	1	*148-8353*	2	ELBOW AS	
					(EACH INCLUDES)	
		1	**3J-1907**	1	SEAL-O-RING	
		1	**6V-8397**	1	SEAL-O-RING	
		1	**6V-9001**	1	ELBOW	
	7	1	*148-8378*	1	ELBOW AS	
		1	**3J-1907**	1	SEAL-O-RING	
		1	**6V-8397**	1	SEAL-O-RING	
		1	**6V-8724**	1	ELBOW	
	8	1	*148-8407*	1	PLUG AS	
		1	**3J-1907**	1	SEAL-O-RING	
		1	**9S-4191**	1	PLUG	
	9	1	*164-5628*	1	CONNECTOR AS	
		1	**3J-1907**	1	SEAL-O-RING	
		1	**6V-8397**	1	SEAL-O-RING	
		1	**107-6631**	1	CONNECTOR-FILTER	

I - REFER TO HYDRAULIC INFORMATION SYSTEM

255-1800 **LINES GP-PILOT (*contd.*)** **i02956686**

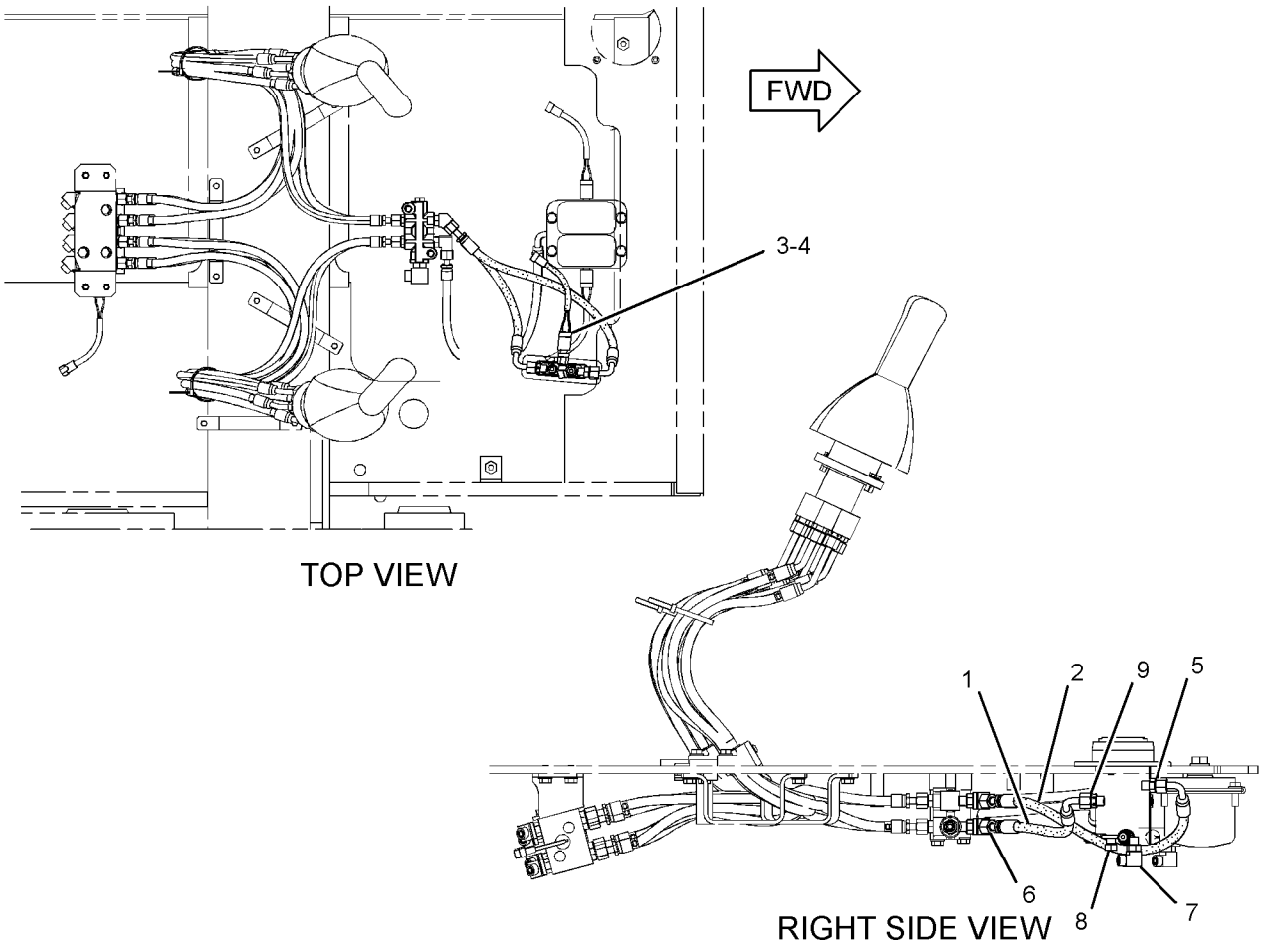

GRAPHIC #1 **<END>** g01389248

255-1802 LINES GP-PILOT—PEDAL CONTROLS

S/N: JEG1-UP
PART OF 383-5306 CONTROL AR-AUXILIARY
AN ATTACHMENT

SMCS-5057, 5059 **i05373770**

NOTE	REF NO	GRAPHIC REF	PART NUMBER	QTY	PART NAME 1 2 3 4 5 6 (PRODUCT LEVEL)	SEE PAGE
I	1	1	**4I-1025**	1	HOSE AS	
I	2	1	**4I-1704**	1	HOSE AS	
I	3	1	**5I-4396**	1	HOSE AS	
I	4	1	**087-4402**	2	HOSE AS	
C	5	1	**383-9558**	1	HOSE AS	
Y	6	1	**164-6979**	1	VALVE GP-SHUTTLE	478
	7	1	*164-5629*	1	FITTING AS	
		1	**3J-1907**	1	SEAL-O-RING	
		1	**108-7516**	1	FITTING	
	8	1	**309-5769**	1	SWITCH AS-PRESSURE (PILOT, BOOM UP)	
		1	**102-8802**	1	KIT-RECEPTACLE (2-PIN)	
		1	**151-9272**	1	KIT-RECEPTACLE (2-PIN)	
					(EACH RECEPTACLE KIT INCLUDES RECEPTACLE AS & WEDGE)	
		1	**9X-3401**	2	PIN-CONNECTOR (16-GA TO 18-GA)	
					—OR—	
		1	**126-1767**	2	PIN-CONNECTOR (14-GA TO 16-GA)	
	9	1	*148-8336*	2	CONNECTOR AS	
					(EACH INCLUDES)	
		1	**3J-1907**	1	SEAL-O-RING	
		1	**6V-8397**	1	SEAL-O-RING	
		1	**6V-8636**	1	CONNECTOR	
	10	1	*148-8353*	3	ELBOW AS	
					(EACH INCLUDES)	
		1	**3J-1907**	1	SEAL-O-RING	
		1	**6V-8397**	1	SEAL-O-RING	
		1	**6V-9001**	1	ELBOW	
	11	1	*148-8378*	5	ELBOW AS	
					(EACH INCLUDES)	
		1	**3J-1907**	1	SEAL-O-RING	
		1	**6V-8397**	1	SEAL-O-RING	
		1	**6V-8724**	1	ELBOW	
	12	1	*148-8407*	2	PLUG AS	
					(EACH INCLUDES)	
		1	**3J-1907**	1	SEAL-O-RING	
		1	**9S-4191**	1	PLUG	
	13	1	*164-5628*	2	CONNECTOR AS	
					(EACH INCLUDES)	
		1	**3J-1907**	1	SEAL-O-RING	
		1	**6V-8397**	1	SEAL-O-RING	
		1	**107-6631**	1	CONNECTOR-FILTER	
	14	1	**179-7578**	1	SUPPORT AS	
	15	1	**8T-4224**	4	WASHER-HARD (8.8X16X2-MM THK)	
M	16	1	**7X-0818**	2	BOLT (M8X1.25X45-MM)	
M	17	1	**8T-4189**	2	BOLT (M8X1.25X20-MM)	

C - CHANGE FROM PREVIOUS TYPE
I - REFER TO HYDRAULIC INFORMATION SYSTEM
M - METRIC PART
Y - SEPARATE ILLUSTRATION

255-1802 **LINES GP-PILOT (*contd.*)** **i05373770**

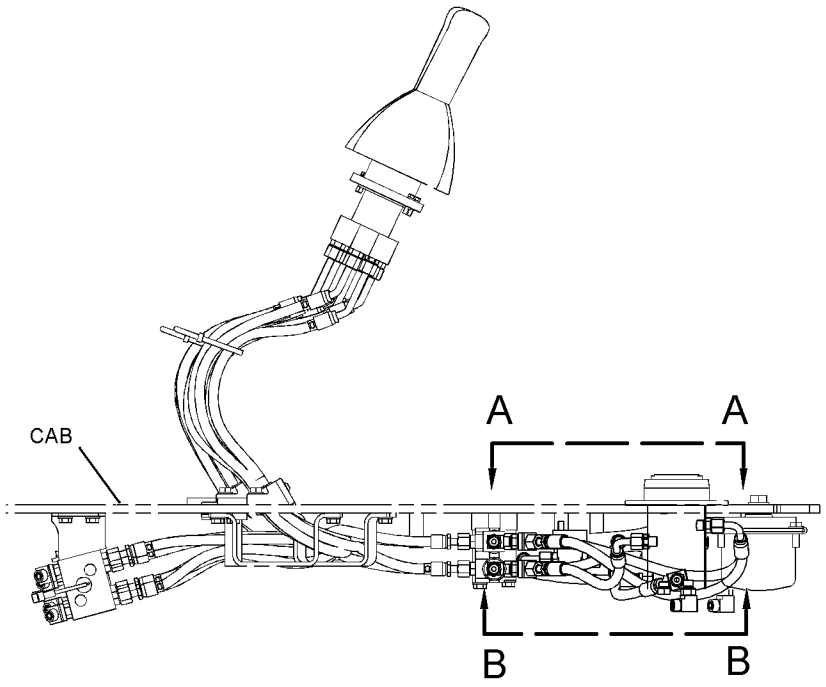

RIGHT SIDE VIEW

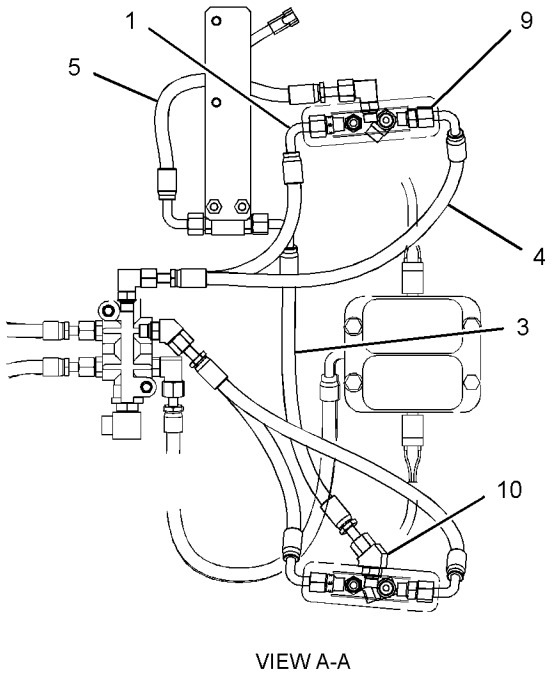

VIEW A-A

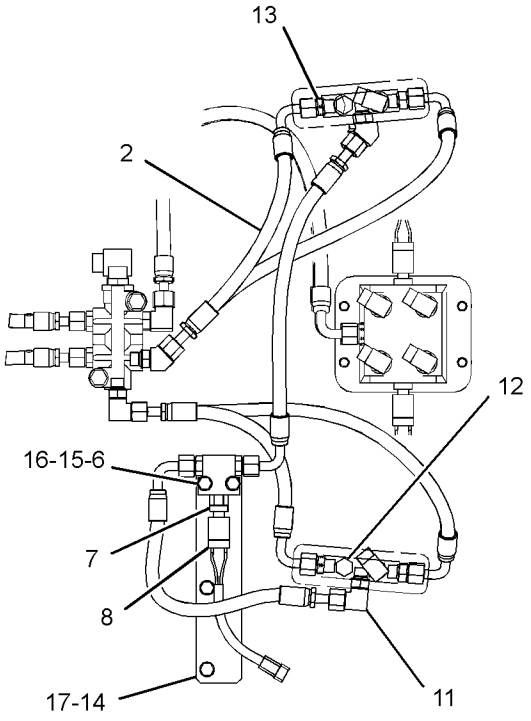

VIEW B-B

GRAPHIC #1 **<END>** g03405267

376-6309 LINES GP-PILOT—MAIN CONTROL VALVE

S/N: JEG1-UP

PART OF 383-5083 HYDRAULIC AR

SMCS-5057, 5059 **i05263556**

NOTE	REF NO	GRAPHIC REF	PART NUMBER	QTY	PART NAME 1 2 3 4 5 6 (PRODUCT LEVEL)	SEE PAGE
I	1	1	**4I-1631**	1	HOSE AS	
I	2	1	**4I-3981**	1	HOSE AS	
I	3	1	**4I-3994**	1	HOSE AS	
I	4	1	**4I-6054**	1	HOSE AS	
	5	1	**4I-9521**	6	BAND-MARKER (RED, L1)	
	6	1	**4I-9522**	6	BAND-MARKER (YELLOW, L2)	
	7	1	**4I-9523**	2	BAND-MARKER (BLUE, L3)	
	8	1	**4I-9524**	2	BAND-MARKER (BROWN, L4)	
	9	1	**4I-9525**	6	BAND-MARKER (ORANGE, R1)	
	10	1	**4I-9526**	6	BAND-MARKER (WHITE, R2)	
	11	1	**4I-9527**	2	BAND-MARKER (GREEN, R3)	
	12	1	**4I-9528**	2	BAND-MARKER (PURPLE, R4)	
I	13	1	**5I-8853**	1	HOSE AS	
	14	1	**7K-1181**	13	STRAP-CABLE	
I	15	1	**7Y-4193**	2	HOSE AS	
I	16	1	**7Y-4390**	1	HOSE AS	
I	17	1	**087-5303**	2	HOSE AS	
	18	1	**176-4708**	1	GROMMET	
I	19	1	**221-4883**	2	HOSE AS	
	20	1	**115-8645**	3	GUARD	
	21	1	*148-8378*	6	ELBOW AS	
					(EACH INCLUDES)	
		1	**3J-1907**	1	SEAL-O-RING	
		1	**6V-8397**	1	SEAL-O-RING	
		1	**6V-8724**	1	ELBOW	
	22	1	*148-8435*	6	TEE AS	
					(EACH INCLUDES)	
		1	**3J-1907**	1	SEAL-O-RING	
		1	**6V-8397**	2	SEAL-O-RING	
		1	**6V-8781**	1	TEE	
	23	1	**202-4004**	1	GROMMET	
	24	1	**337-1205**	2	GROMMET	
J	25	1	**337-1205**	1	GROMMET	

I - REFER TO HYDRAULIC INFORMATION SYSTEM
J - USED ONLY ON MODELS EQUIPPED WITH ROPS CAB

376-6309 **LINES GP-PILOT (*contd.*)** **i05263556**

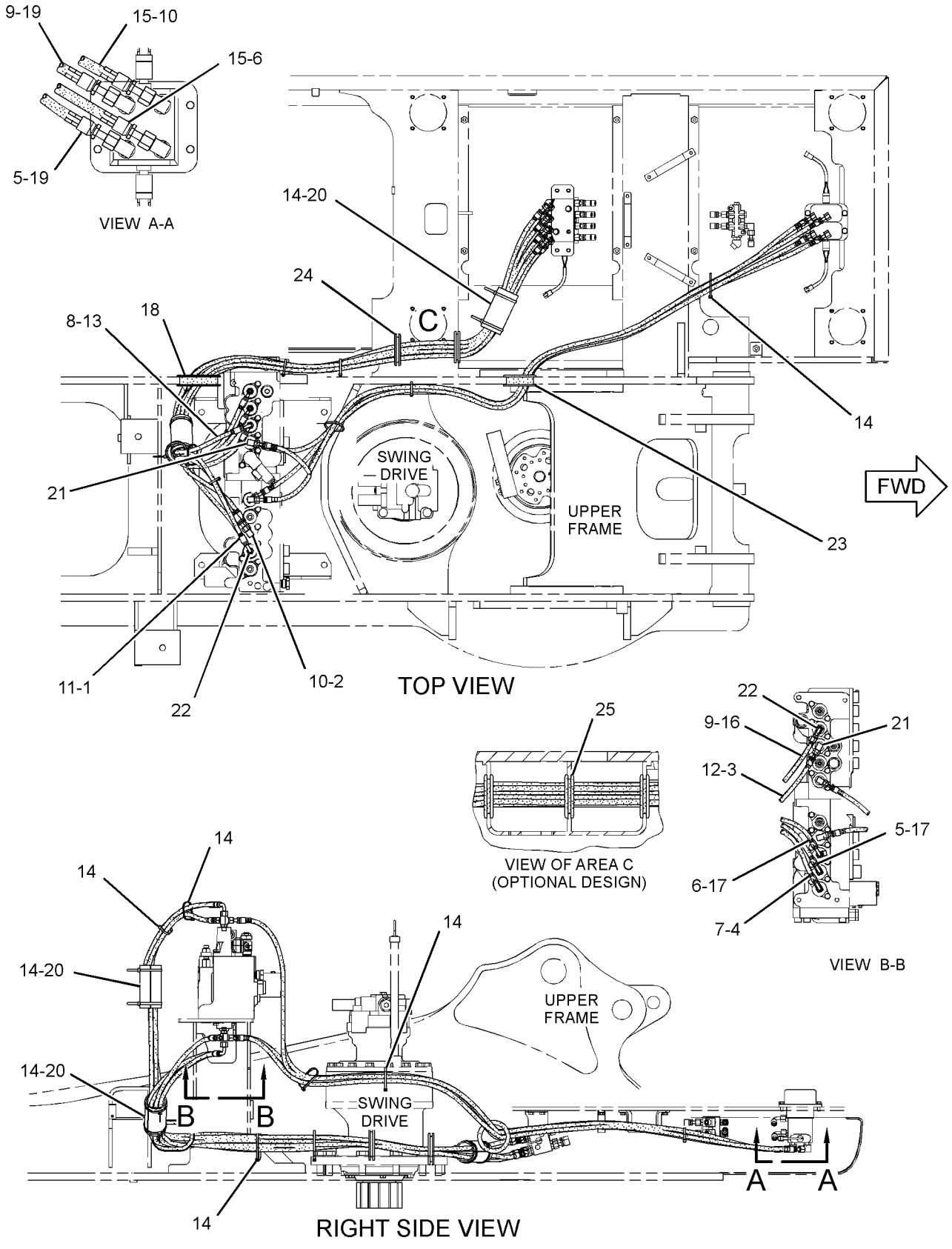

GRAPHIC #1 **<END>** g02728339

376-6311 LINES GP-PILOT—FILTER, PILOT PUMP

S/N: JEG1-UP

PART OF 383-5083 HYDRAULIC AR

SMCS-5057, 5059 **i05451573**

NOTE	REF NO	GRAPHIC REF	PART NUMBER	QTY	PART NAME 1 2 3 4 5 6 (PRODUCT LEVEL)	SEE PAGE
I	1	1	**5I-3121**	1	HOSE AS	
	2	1	**6V-0852**	5	CAP-DUST	
	3	1	**7K-1181**	3	STRAP-CABLE	
I	4	1	**087-5768**	1	HOSE AS	
I	5	1	**178-5955**	1	HOSE AS	
I	6	1	**307-5120**	1	HOSE AS	
I	7	1	**366-1059**	1	HOSE AS	
	8	1	**434-3436**	1	SENSOR AS-PRESSURE (DRIVE PUMP)	
	8A	1	**434-3436**	1	SENSOR AS-PRESSURE (DRIVEN PUMP)	
					(EACH SENSOR AS INCLUDES)	
		1	**3K-0360**	1	SEAL-O-RING	
	9	1	*148-8336*	2	CONNECTOR AS	
					(EACH INCLUDES)	
		1	**3J-1907**	1	SEAL-O-RING	
		1	**6V-8397**	1	SEAL-O-RING	
		1	**6V-8636**	1	CONNECTOR	
	10	1	*148-8347*	2	ELBOW AS	
					(EACH INCLUDES)	
		1	**3D-2824**	1	SEAL-O-RING	
		1	**6V-9007**	1	ELBOW	
		1	**6V-9746**	1	SEAL-O-RING	
	11	1	*148-8354*	1	ELBOW AS	
		1	**3K-0360**	1	SEAL-O-RING	
		1	**6V-8398**	1	SEAL-O-RING	
		1	**6V-9002**	1	ELBOW	
	12	1	*148-8378*	2	ELBOW AS	
					(EACH INCLUDES)	
		1	**3J-1907**	1	SEAL-O-RING	
		1	**6V-8397**	1	SEAL-O-RING	
		1	**6V-8724**	1	ELBOW	
	13	1	*150-3036*	1	ELBOW AS	
		1	**3J-1907**	1	SEAL-O-RING	
		1	**6V-8397**	1	SEAL-O-RING	
		1	**8T-1905**	1	ELBOW	
	14	1	*153-6237*	1	ELBOW AS	
		1	**3D-2824**	1	SEAL-O-RING	
		1	**6V-9004**	1	ELBOW	
		1	**6V-9746**	1	SEAL-O-RING	
	15	1	*164-5567*	5	COUPLER AS-QUICK DISCONNECT (MALE)	
					(EACH INCLUDES)	
		1	**6V-3965**	1	FITTING (QUICK DISCONNECT)	
		1	**214-7568**	1	SEAL-O-RING	

I - REFER TO HYDRAULIC INFORMATION SYSTEM

376-6311 **LINES GP-PILOT (*contd.*)** **i05451573**

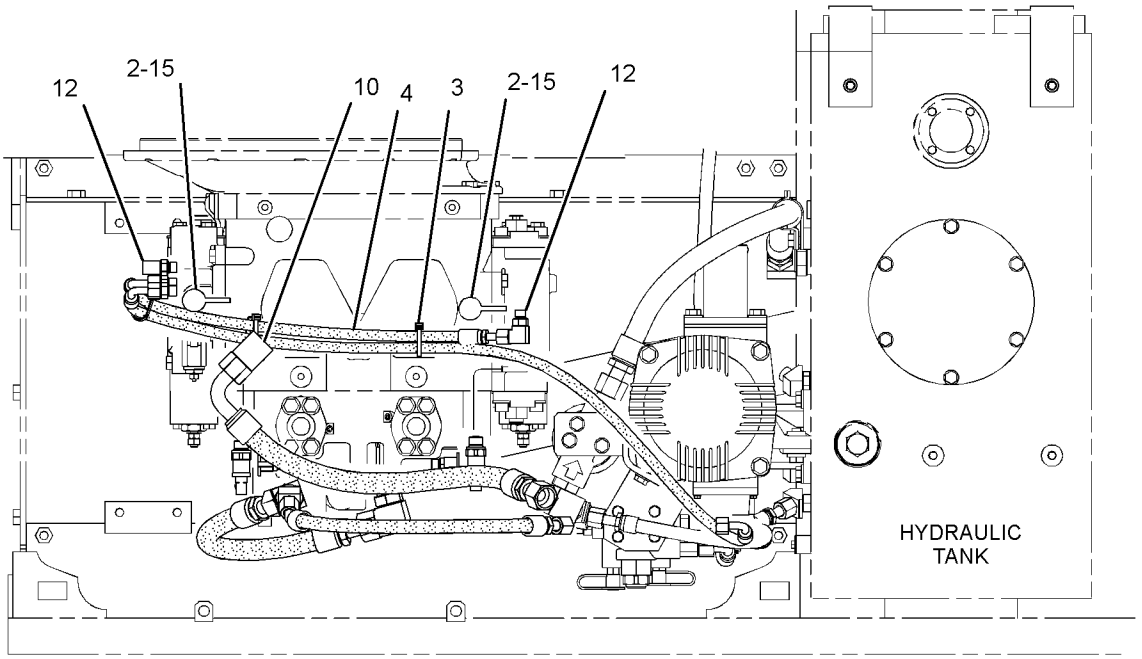

TOP VIEW FWD

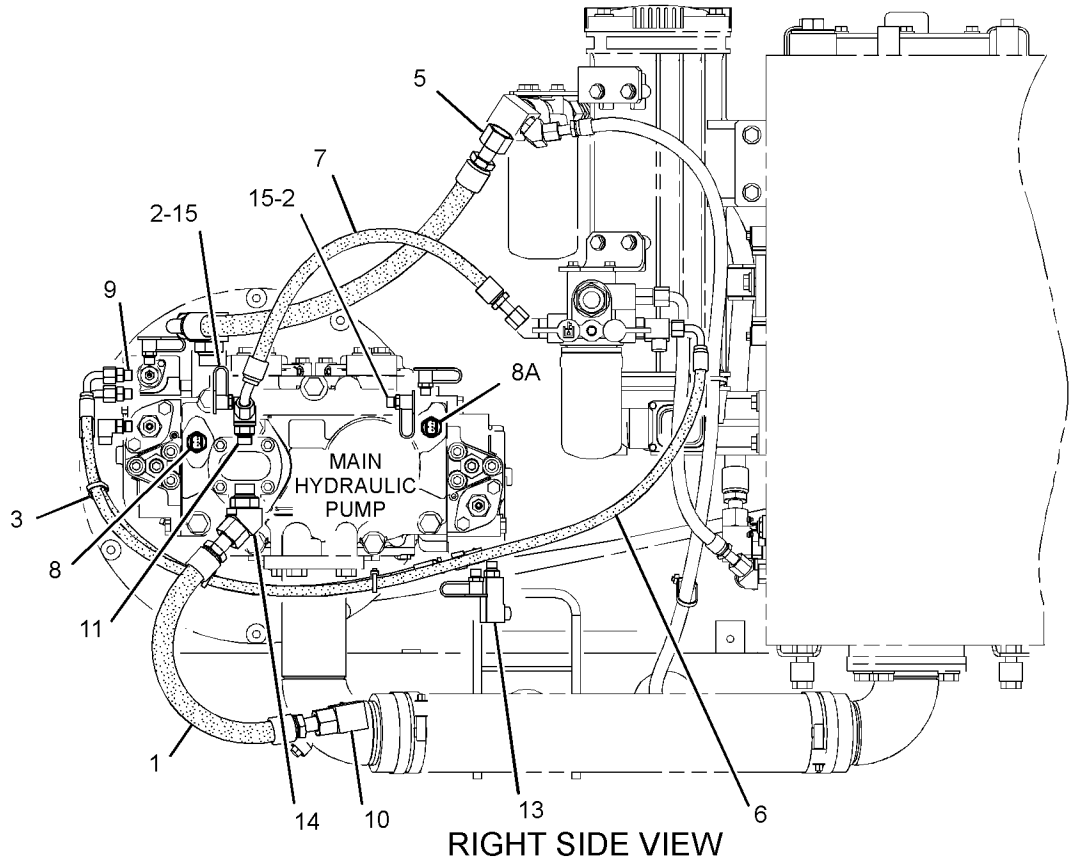

RIGHT SIDE VIEW

GRAPHIC #1 **<END>** g02732420

376-6336 LINES GP-PILOT—OIL PRESSURE

S/N: JEG1-UP

AN ATTACHMENT

SMCS-5057, 5059 **i05260240**

NOTE	REF NO	GRAPHIC REF	PART NUMBER	QTY	PART NAME 1 2 3 4 5 6 (PRODUCT LEVEL)	SEE PAGE
I	1	1	**4I-0836**	1	HOSE AS	
	2	1	**4I-9526**	2	BAND-MARKER (WHITE, R2)	
	3	1	**4I-9527**	2	BAND-MARKER (GREEN, R3)	
I	4	1	**5I-4076**	1	HOSE AS	
	5	1	**7K-1181**	4	STRAP-CABLE	
	6	1	**124-1008**	1	GUARD	
	7	1	**168-9759**	1	BLOCK	
	8	1	**266-1108**	1	SUPPORT AS	
	9	1	**377-3289**	1	SUPPORT AS	
	10	1	*148-8336*	3	CONNECTOR AS	
					(EACH INCLUDES)	
		1	**3J-1907**	1	SEAL-O-RING	
		1	**6V-8397**	1	SEAL-O-RING	
		1	**6V-8636**	1	CONNECTOR	
	11	1	*148-8338*	1	CONNECTOR AS	
		1	**3J-1907**	1	SEAL-O-RING	
		1	**6V-8397**	1	SEAL-O-RING	
		1	**8T-0075**	1	CONNECTOR	
	12	1	*148-8411*	2	PLUG AS	
					(EACH INCLUDES)	
		1	**3K-0360**	1	SEAL-O-RING	
		1	**9S-4185**	1	PLUG-O-RING	
	13	1	*148-8433*	2	TEE AS	
					(EACH INCLUDES)	
		1	**6V-8397**	2	SEAL-O-RING	
		1	**6V-9836**	1	TEE-SWIVEL	
	14	1	**8T-4121**	2	WASHER-HARD (11X21X2.5-MM THK)	
M	15	1	**8T-4184**	2	BOLT (M12X1.75X45-MM)	
M	16	1	**8T-4192**	4	BOLT (M12X1.75X25-MM)	
M	17	1	**8T-4198**	2	BOLT (M10X1.5X100-MM)	
	18	1	**8T-4223**	6	WASHER-HARD (13.5X25.5X3-MM THK)	
B	19	1	*148-8407*	8	PLUG AS	
					(EACH INCLUDES)	
		1	**3J-1907**	1	SEAL-O-RING	
		1	**9S-4191**	1	PLUG	
B	20	1	**6V-9829**	2	CAP AS	

B - USE AS REQUIRED
I - REFER TO HYDRAULIC INFORMATION SYSTEM
M - METRIC PART

376-6336 **LINES GP-PILOT (*contd.*)** **i05260240**

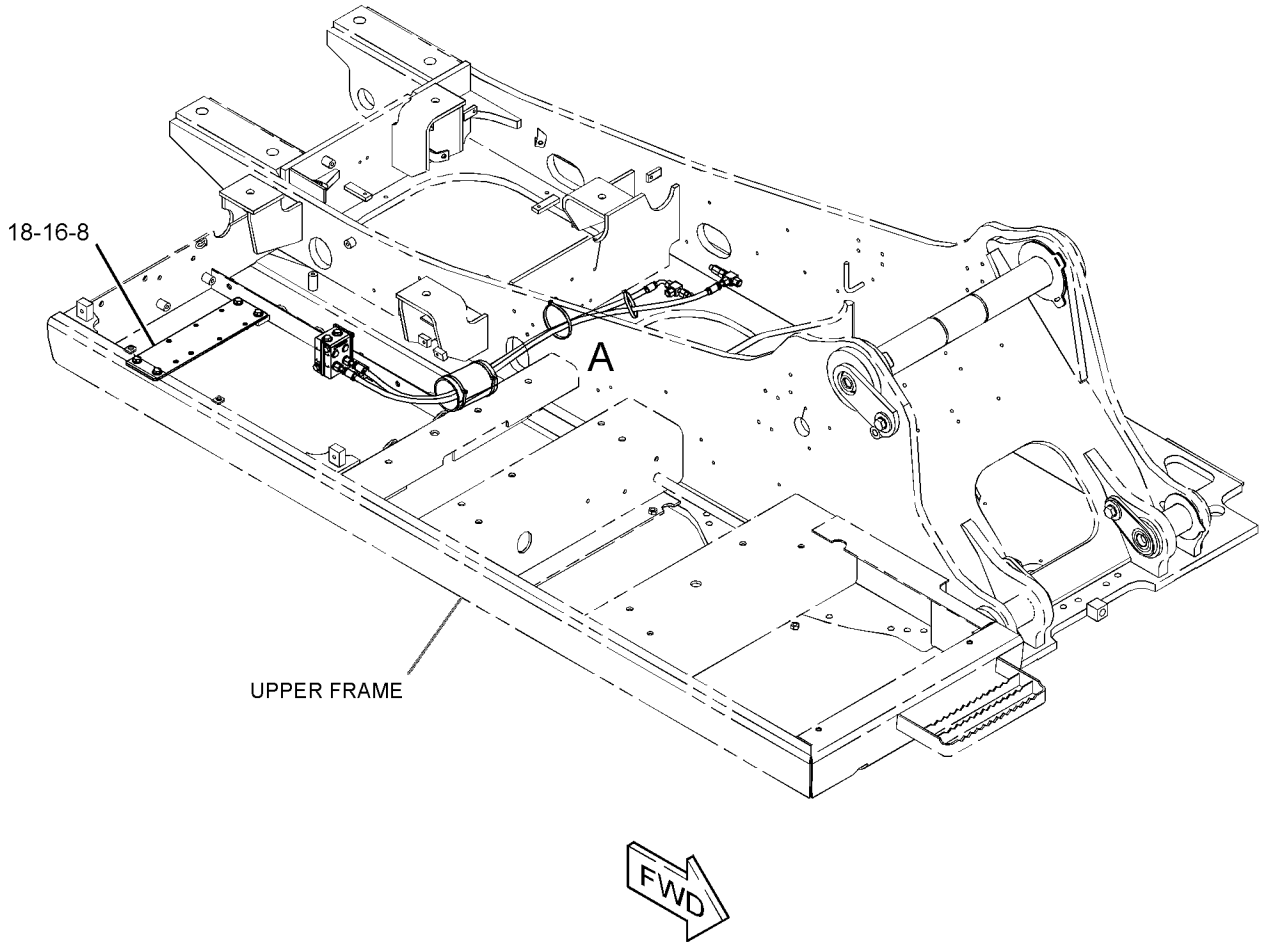

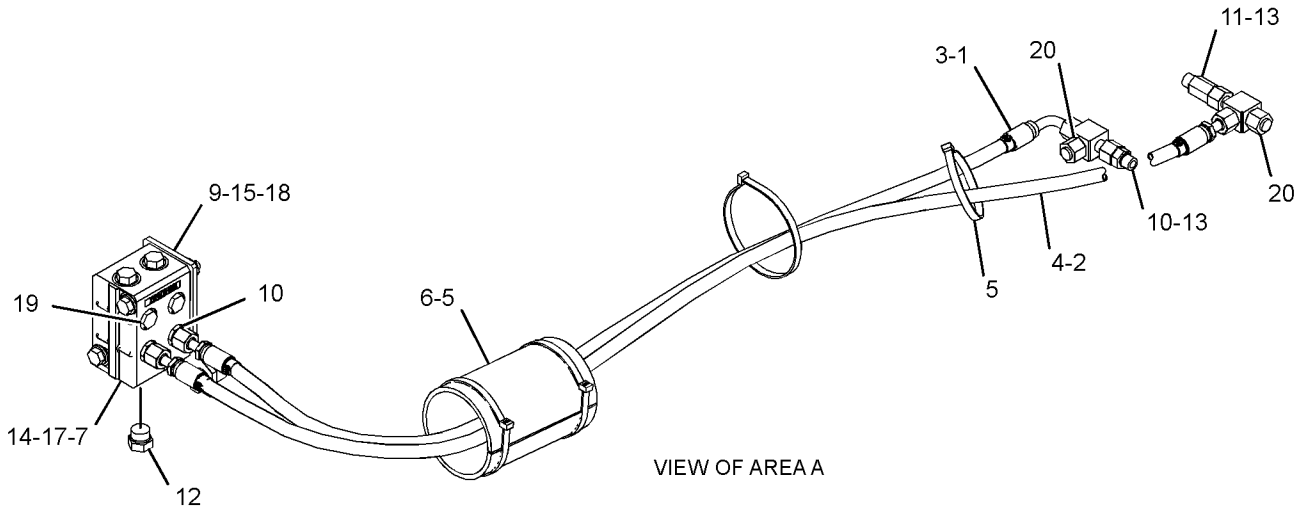

GRAPHIC #1 **<END>** g03311445

398-4602 LINES GP-PILOT—MAIN CONTROL VALVE

S/N: JEG1-UP

PART OF 383-5083 HYDRAULIC AR

SMCS-5057, 5059 **i05453975**

NOTE	REF NO	GRAPHIC REF	PART NUMBER	QTY	PART NAME 1 2 3 4 5 6 (PRODUCT LEVEL)	SEE PAGE
I	1	1	**4I-0818**	1	HOSE AS	
I	2	2	**4I-0836**	1	HOSE AS	
I	3	3	**4I-1037**	1	HOSE AS	
I	4	2	**4I-1739**	1	HOSE AS	
I	5	2	**4I-1780**	1	HOSE AS	
I	6	3	**4I-5906**	1	HOSE AS	
I	7	3	**4I-5933**	1	HOSE AS	
	8	2	**4I-9521**	2	BAND-MARKER (RED, L1)	
	9	1,3	**4I-9522**	6	BAND-MARKER (YELLOW, L2)	
	10	1,2	**4I-9523**	4	BAND-MARKER (BLUE, L3)	
	11	1,2	**4I-9524**	6	BAND-MARKER (BROWN, L4)	
	12	3	**4I-9525**	2	BAND-MARKER (ORANGE, R1)	
	13	2	**4I-9527**	4	BAND-MARKER (GREEN, R3)	
	14	3	**4I-9528**	4	BAND-MARKER (PURPLE, R4)	
I	15	1	**5I-4076**	1	HOSE AS	
I	16	3	**5I-4396**	1	HOSE AS	
I	17	2	**5I-8708**	1	HOSE AS	
	18	1,3	**7K-1181**	14	STRAP-CABLE	
I	19	3	**7Y-8487**	1	HOSE AS	
I	20	3	**087-4411**	1	HOSE AS	
I	21	2,3	**087-4531**	2	HOSE AS	
I	22	3	**087-4534**	1	HOSE AS	
I	23	2	**087-5760**	1	HOSE AS	
I	24	3	**087-5762**	1	HOSE AS	
I	25	3	**087-5772**	1	HOSE AS	
I	26	3	**087-5774**	1	HOSE AS	
I	27	2	**104-8838**	1	HOSE AS	
I	28	2	**110-5496**	1	HOSE AS	
I	29	2,3	**143-4254**	2	HOSE AS	
	30	2	*150-4044*	3	CONNECTOR AS	
					(EACH INCLUDES)	
		2	**3J-1907**	1	SEAL-O-RING	
		2	**6V-8397**	1	SEAL-O-RING	
		2	**8T-1779**	1	CONNECTOR	
	31	3	*164-5639*	1	ELBOW AS	
		3	**3K-0360**	1	SEAL-O-RING	
		3	**6V-8398**	1	SEAL-O-RING	
		3	**124-0988**	1	ELBOW-FILTER	
Y	32	3	**164-6979**	1	VALVE GP-SHUTTLE	478
Y	33	2	*164-6981*	1	ACCUMULATOR GP-HYDRAULIC (CHARGED)	276
I	34	2	**164-8977**	1	HOSE AS	
I	35	3	**164-8983**	2	HOSE AS	
	36	3	**176-4463**	1	PLATE	
	37	2	**176-4469**	1	BLOCK	
I	38	3	**176-4755**	1	HOSE AS	
I	39	1	**187-7070**	2	HOSE AS	
I	40	3	**199-1965**	1	HOSE AS	
	41	3	**202-4004**	1	GROMMET	
	42	1	**204-2281**	2	STRAP-CABLE	
Y	43	3	**215-5037**	1	MANIFOLD GP-CONTROL (PILOT OIL SUPPLY)	407
	44	3	**275-1442**	1	CLIP (TAB)	
			275-1443	1	CLIP (SLOT)	
J			**275-1444**	1	GROMMET (19-MM ID)	
					—OR—	
			275-1442	1	CLIP (TAB)	
			275-1443	1	CLIP (SLOT)	
J			**333-4609**	1	GROMMET (21-MM ID)	
Y	45	2	**338-6970**	1	SENSOR GP-PRESSURE (DRIVE PUMP)	142

398-4602 **LINES GP-PILOT (*contd.*)** **i05453975**

NOTE	REF NO	GRAPHIC REF	PART NUMBER	QTY	PART NAME 1 2 3 4 5 6 (PRODUCT LEVEL)	SEE PAGE
Y	45A	3	**338-6970**	1	SENSOR GP-PRESSURE (DRIVEN PUMP)	142
	46	2	*150-4027*	1	TEE AS	
		2	**3E-2310**	1	TEE	
		2	**3J-1907**	1	SEAL-O-RING	
		2	**6V-8397**	1	SEAL-O-RING	
I	47	2	**398-5528**	1	HOSE AS	
	48	3	*285-1399*	1	CONNECTOR AS	
		3	**3J-1907**	1	SEAL-O-RING	
		3	**6V-8397**	1	SEAL-O-RING	
		3	**285-1465**	1	CONNECTOR	
Y	49	2	**310-0210**	1	VALVE GP-PRESSURE REDUCING (BOOM, SWING PRIORITY)	464
I	50	2	**314-8128**	1	HOSE AS	
I	51	3	**330-2568**	1	HOSE AS	
	52	3	*351-0286*	1	CONNECTOR AS	
		3	**3J-1907**	1	SEAL-O-RING	
		3	**6V-8397**	1	SEAL-O-RING	
		3	**259-7733**	1	CONNECTOR	
I	53	2	**376-6342**	1	HOSE AS	
M	54	3	**099-3649**	2	BOLT (M8X1.25X40-MM)	
M	55	2	**105-3484**	2	BOLT-SOCKET HEAD (M10X1.5X25-MM)	
	56	2,3	*148-8336*	7	CONNECTOR AS	
					(EACH INCLUDES)	
		2,3	**3J-1907**	1	SEAL-O-RING	
		2,3	**6V-8397**	1	SEAL-O-RING	
		2,3	**6V-8636**	1	CONNECTOR	
	57	2,3	*148-8340*	4	CONNECTOR AS	
					(EACH INCLUDES)	
		2,3	**3K-0360**	1	SEAL-O-RING	
		2,3	**6V-8398**	1	SEAL-O-RING	
		2,3	**6V-8639**	1	CONNECTOR	
	58	3	*148-8353*	5	ELBOW AS	
					(EACH INCLUDES)	
		3	**3J-1907**	1	SEAL-O-RING	
		3	**6V-8397**	1	SEAL-O-RING	
		3	**6V-9001**	1	ELBOW	
	59	2	*148-8354*	1	ELBOW AS	
		2	**3K-0360**	1	SEAL-O-RING	
		2	**6V-8398**	1	SEAL-O-RING	
		2	**6V-9002**	1	ELBOW	
	60	3	*148-8364*	1	ELBOW AS	
		3	**3K-0360**	1	SEAL-O-RING	
		3	**6V-8398**	1	SEAL-O-RING	
		3	**6V-8625**	1	ELBOW	
	61	2,3	*148-8367*	2	ELBOW AS	
					(EACH INCLUDES)	
		2,3	**6V-8397**	1	SEAL-O-RING	
		2,3	**6V-9850**	1	ELBOW	
	62	2,3	*148-8378*	6	ELBOW AS	
					(EACH INCLUDES)	
		2,3	**3J-1907**	1	SEAL-O-RING	
		2,3	**6V-8397**	1	SEAL-O-RING	
		2,3	**6V-8724**	1	ELBOW	
	63	2,3	*148-8407*	6	PLUG AS	
					(EACH INCLUDES)	
		2,3	**3J-1907**	1	SEAL-O-RING	
		2,3	**9S-4191**	1	PLUG	
	64	3	*148-8433*	3	TEE AS	
					(EACH INCLUDES)	
		3	**6V-8397**	2	SEAL-O-RING	
		3	**6V-9836**	1	TEE-SWIVEL	
	65	2,3	*148-8435*	4	TEE AS	

398-4602 **LINES GP-PILOT (*contd.*)** **i05453975**

NOTE	REF NO	GRAPHIC REF	PART NUMBER	QTY	PART NAME 1 2 3 4 5 6 (PRODUCT LEVEL)	SEE PAGE
					(EACH INCLUDES)	
		2,3	**3J-1907**	1	SEAL-O-RING	
		2,3	**6V-8397**	2	SEAL-O-RING	
		2,3	**6V-8781**	1	TEE	
	66	3	*148-8439*	2	TEE AS	
					(EACH INCLUDES)	
		3	**3J-1907**	1	SEAL-O-RING	
		3	**6V-8397**	2	SEAL-O-RING	
		3	**6V-8774**	1	TEE	
	67	2	**4K-8864**	1	CLIP	
	68	2	**5P-7462**	2	CLIP (SLOT) (USE WITH 30-MM OD GROMMET)	
			5P-7463	2	CLIP (TAB) (USE WITH 30-MM OD GROMMET)	
J			**6V-0683**	2	GROMMET (19-MM ID) (30-MM OD)	
					—OR—	
			5P-7464	2	CLIP (SLOT) (USE WITH 37-MM OD GROMMET)	
			5P-7465	2	CLIP (TAB) (USE WITH 37-MM OD GROMMET)	
J			**6V-1249**	2	GROMMET (22-MM ID) (37-MM OD)	
	69	3	*168-1968*	1	TEE AS	
		3	**3J-1907**	1	SEAL-O-RING	
		3	**6V-8397**	1	SEAL-O-RING	
		3	**126-6872**	1	TEE	
	70	2	**164-6874**	2	FITTING AS-ELBOW (QUICK DISCONNECT, MALE)	
					(EACH INCLUDES)	
		2	**3J-1907**	1	SEAL-O-RING	
		2	**085-7356**	1	FITTING	
	71	3	**6V-8397**	2	SEAL-O-RING	
	72	2,3	**8T-4121**	8	WASHER-HARD (11X21X2.5-MM THK)	
M	73	2	**8T-4136**	1	BOLT (M10X1.5X25-MM)	
M	74	3	**8T-4137**	5	BOLT (M10X1.5X20-MM)	
M	75	2	**8T-4139**	1	BOLT (M12X1.75X30-MM)	
M	76	2	**8T-4172**	2	BOLT (M10X1.5X80-MM)	
M	77	3	**8T-4192**	3	BOLT (M12X1.75X25-MM)	
	78	2,3	**8T-4223**	4	WASHER-HARD (13.5X25.5X3-MM THK)	

I - REFER TO HYDRAULIC INFORMATION SYSTEM
J - SELECT CORRECT GROMMET SIZE TO MATCH HOSE OD
M - METRIC PART
Y - SEPARATE ILLUSTRATION

398-4602 **LINES GP-PILOT (*contd.*)** **i05453975**

REFER TO ALL ILLUSTRATIONS OF THIS GROUP FOR AUXILIARY VIEWS

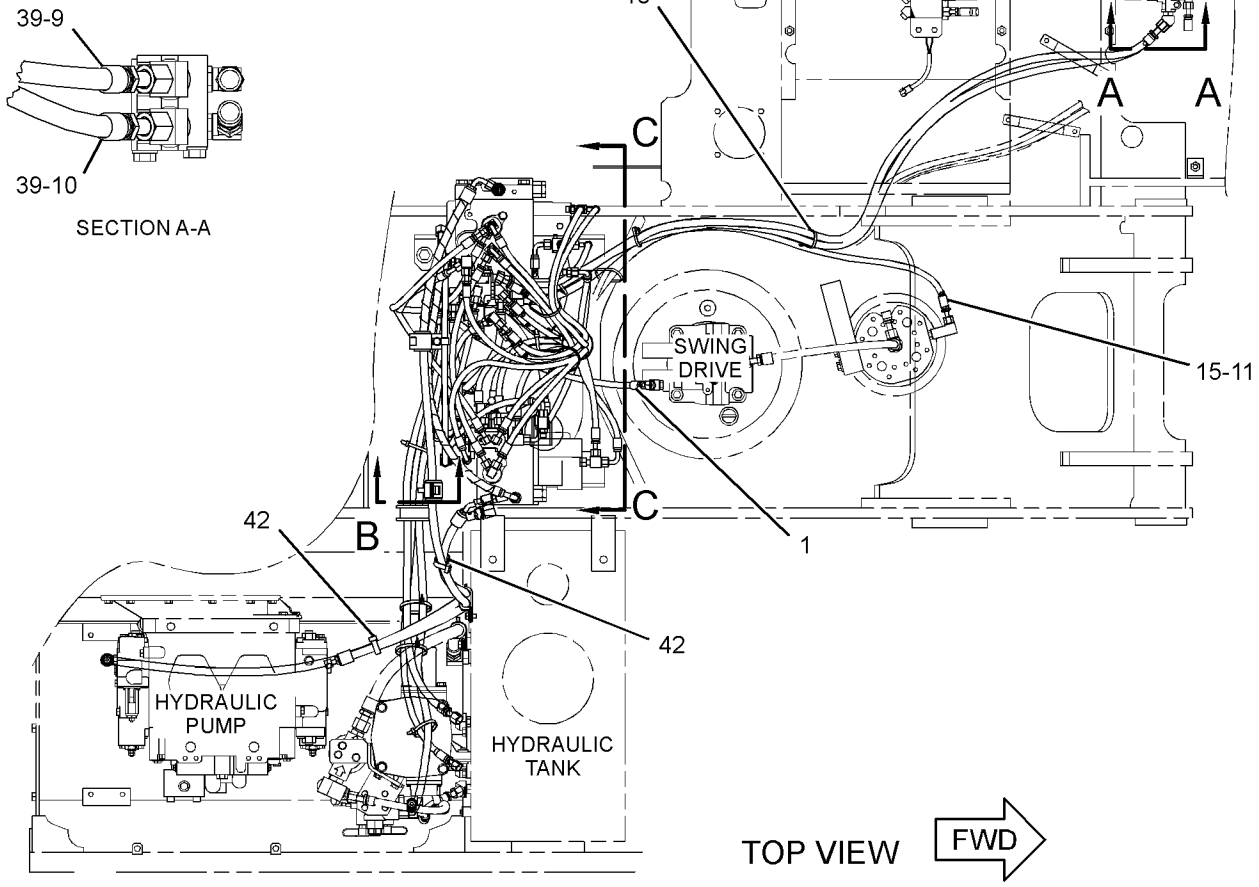

GRAPHIC #1 g03472896

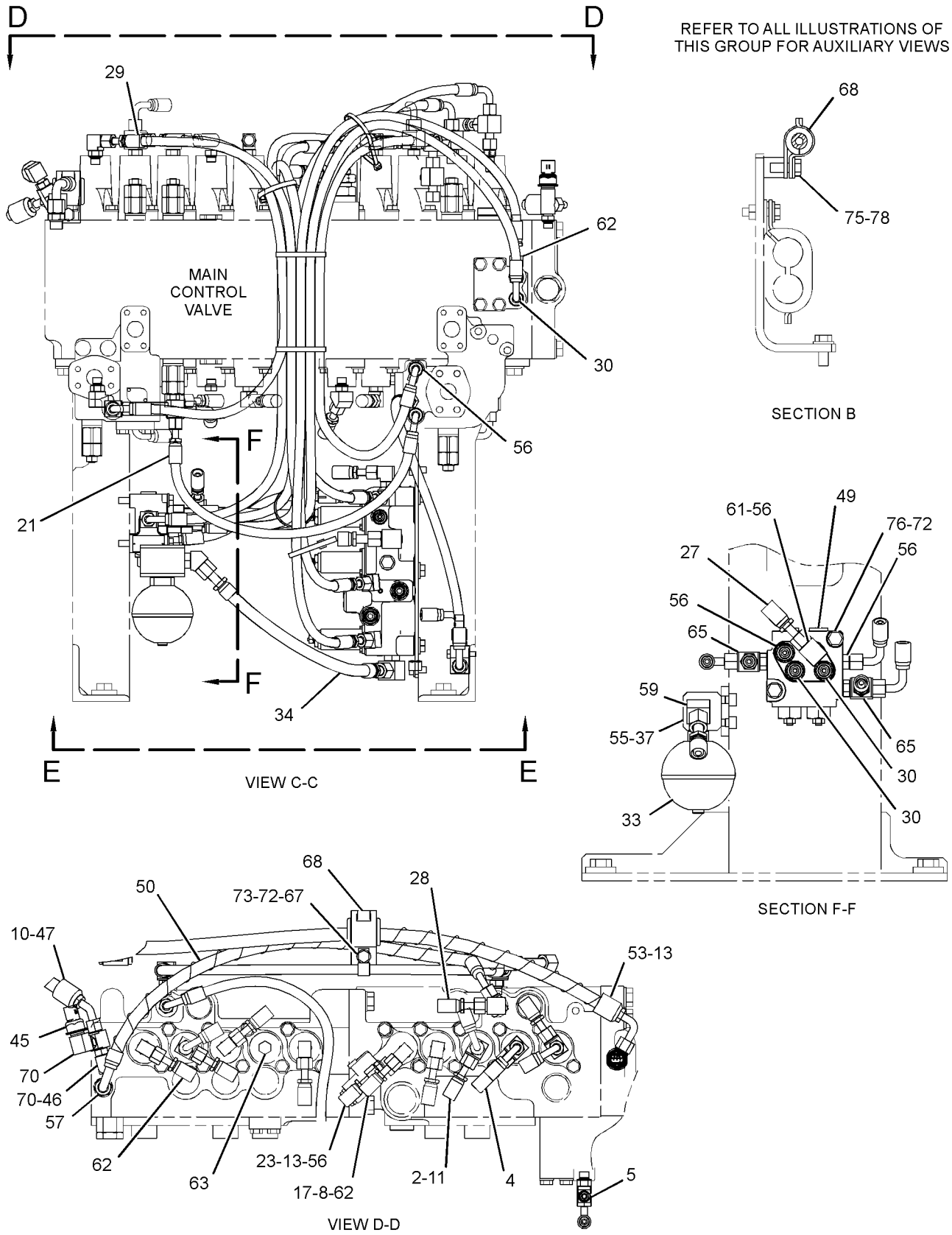

GRAPHIC #2 g03472897

398-4602 **LINES GP-PILOT (*contd.*)** **i05453975**

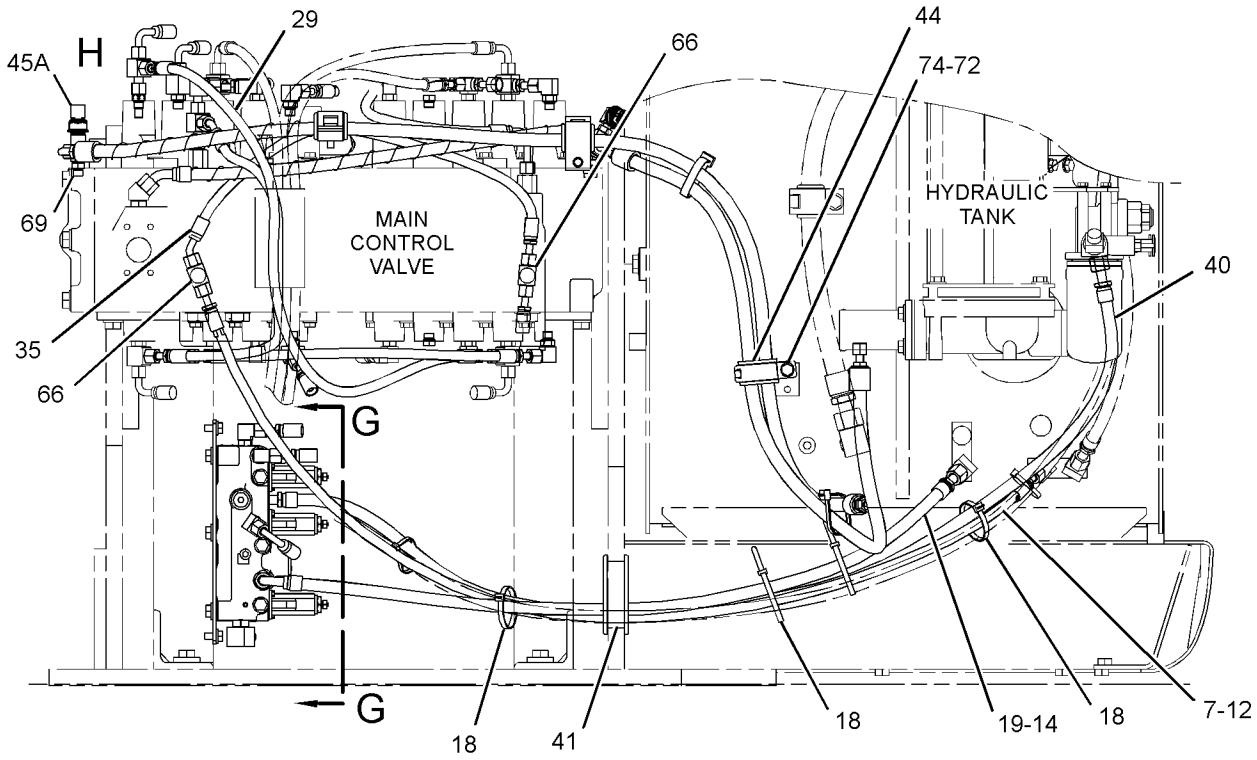

REAR VIEW

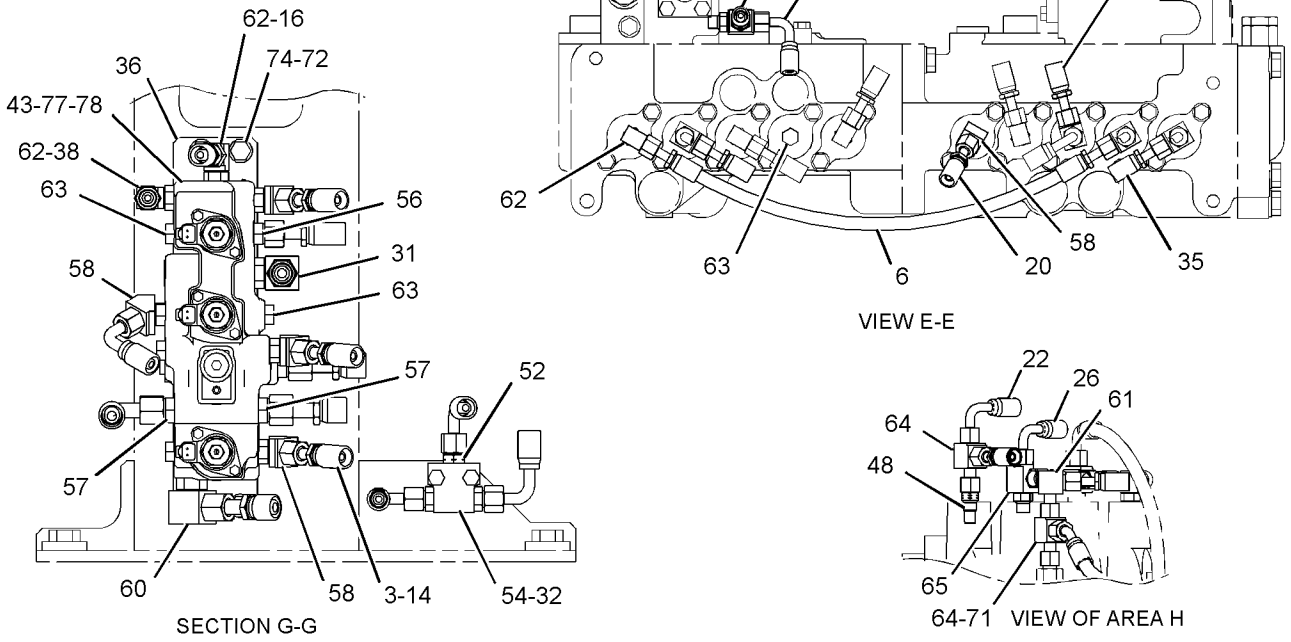

GRAPHIC #3 **<END>** g03472898

398-4603 LINES GP-PILOT—SYSTEM 2, COMBINED FUNCTION

S/N: JEG1-UP
PART OF 383-5306 CONTROL AR-AUXILIARY
AN ATTACHMENT

SMCS-5057, 5059 **i05439690**

NOTE	REF NO	GRAPHIC REF	PART NUMBER	QTY	PART NAME 1 2 3 4 5 6 (PRODUCT LEVEL)	SEE PAGE
I	1	1	**4I-1878**	1	HOSE AS	
	2	1	**4I-3941**	1	FITTING AS	
I	3	1	**4I-3988**	1	HOSE AS	
	4	1	**4I-9521**	2	BAND-MARKER (RED, L1)	
	5	1	**4I-9522**	2	BAND-MARKER (YELLOW, L2)	
	6	1,2	**4I-9523**	8	BAND-MARKER (BLUE, L3)	
	7	1	**4I-9524**	2	BAND-MARKER (BROWN, L4)	
	8	1	**4I-9525**	2	BAND-MARKER (ORANGE, R1)	
	9	1,2	**4I-9527**	8	BAND-MARKER (GREEN, R3)	
	10	1,2	**7K-1181**	19	STRAP-CABLE	
I	11	1	**7Y-4199**	1	HOSE AS	
I	12	1	**087-5764**	1	HOSE AS	
I	13	2	**087-5772**	1	HOSE AS	
I	14	1	**108-7313**	2	HOSE AS	
I	15	1	**111-0988**	1	HOSE AS	
	16	1	**118-9902**	1	SPACER (12X20X43-MM THK)	
	17	2	**124-1008**	1	GUARD	
Y	18	2	**165-9549**	1	VALVE GP-SOLENOID (AUXILIARY, COMBINED FUNCTION)	482
I	19	1	**179-7616**	1	HOSE AS	
	20	1,2	**204-2281**	2	STRAP-CABLE	
I	21	1	**212-5419**	1	HOSE AS	
I	22	1	**212-5423**	1	HOSE AS	
	23	2	**266-1108**	1	SUPPORT AS	
I	24	2	**272-4180**	1	HOSE AS	
I	25	2	**296-7229**	1	HOSE AS	
	26	1	**309-5769**	1	SWITCH AS-PRESSURE (CONTROL VALVE, PILOT CONTROL)	
		1	**102-8802**	1	KIT-RECEPTACLE (2-PIN)	
		1	**151-9272**	1	KIT-RECEPTACLE (2-PIN)	
					(EACH KIT INCLUDES RECEPTACLE AS & WEDGE)	
		1	**9X-3401**	1	PIN-CONNECTOR (16-GA TO 18-GA)	
					—OR—	
		1	**126-1767**	1	PIN-CONNECTOR (14-GA TO 16-GA)	
I	27	1	**398-5532**	1	HOSE AS	
	28	2	*363-6132*	1	CONNECTOR AS	
		2	**3J-1907**	1	SEAL-O-RING	
		2	**6V-8397**	1	SEAL-O-RING	
		2	**116-3412**	1	CONNECTOR-FILTER	
	29	2	*363-6133*	2	ADAPTER AS	
					(EACH INCLUDES)	
		2	**3J-1907**	1	SEAL-O-RING	
		2	**6V-8397**	1	SEAL-O-RING	
		2	**354-3863**	1	ADAPTER-FILTER	
I	30	1	**377-3294**	1	HOSE AS	
	31	2	**377-3449**	1	SUPPORT AS	
Y	32	2	**398-2282**	1	VALVE GP-SOLENOID (NEGATIVE FLOW CONTROL)	485
	33	1	*148-8336*	2	CONNECTOR AS	
					(EACH INCLUDES)	
		1	**3J-1907**	1	SEAL-O-RING	
		1	**6V-8397**	1	SEAL-O-RING	
		1	**6V-8636**	1	CONNECTOR	
	34	1	*148-8338*	1	CONNECTOR AS	
		1	**3J-1907**	1	SEAL-O-RING	
		1	**6V-8397**	1	SEAL-O-RING	
		1	**8T-0075**	1	CONNECTOR	
	35	1	*148-8353*	1	ELBOW AS	

398-4603 **LINES GP-PILOT (*contd.*)** **i05439690**

NOTE	REF NO	GRAPHIC REF	PART NUMBER	QTY	PART NAME 1 2 3 4 5 6 (PRODUCT LEVEL)	SEE PAGE
		1	**3J-1907**	1	SEAL-O-RING	
		1	**6V-8397**	1	SEAL-O-RING	
		1	**6V-9001**	1	ELBOW	
	36	1,2	*148-8378*	14	ELBOW AS	
					(EACH INCLUDES)	
		1,2	**3J-1907**	1	SEAL-O-RING	
		1,2	**6V-8397**	1	SEAL-O-RING	
		1,2	**6V-8724**	1	ELBOW	
	37	1	*148-8433*	3	TEE AS	
					(EACH INCLUDES)	
		1	**6V-8397**	2	SEAL-O-RING	
		1	**6V-9836**	1	TEE-SWIVEL	
	38	1	*148-8443*	1	TEE AS	
		1	**3J-1907**	1	SEAL-O-RING	
		1	**6V-8397**	1	SEAL-O-RING	
		1	**7X-2459**	1	TEE-O-RING	
	39	2	*150-3036*	1	ELBOW AS	
		2	**3J-1907**	1	SEAL-O-RING	
		2	**6V-8397**	1	SEAL-O-RING	
		2	**8T-1905**	1	ELBOW	
	40	2	*150-4027*	2	TEE AS	
					(EACH INCLUDES)	
		2	**3E-2310**	1	TEE	
		2	**3J-1907**	1	SEAL-O-RING	
		2	**6V-8397**	1	SEAL-O-RING	
	41	2	*164-5567*	2	COUPLER AS-QUICK DISCONNECT (MALE)	
					(EACH INCLUDES)	
		2	**6V-3965**	1	FITTING (QUICK DISCONNECT)	
		2	**214-7568**	1	SEAL-O-RING	
	42	1	**6D-3479**	2	CLIP	
	43	2	**6V-0852**	2	CAP-DUST	
B	44	1	**6V-9829**	1	CAP AS	
	45	1,2	**8T-4121**	4	WASHER-HARD (11X21X2.5-MM THK)	
M	46	2	**8T-4136**	2	BOLT (M10X1.5X25-MM)	
M	47	2	**8T-4177**	4	BOLT (M8X1.25X90-MM)	
M	48	1	**8T-4191**	1	BOLT (M10X1.5X16-MM)	
M	49	2	**8T-4192**	4	BOLT (M12X1.75X25-MM)	
	50	2	**8T-4223**	4	WASHER-HARD (13.5X25.5X3-MM THK)	
	51	2	**8T-4224**	4	WASHER-HARD (8.8X16X2-MM THK)	
M	52	1	**8T-6466**	1	BOLT (M10X1.5X60-MM)	
M	53	2	**8T-6870**	4	BOLT (M8X1.25X70-MM)	
Y	54	1	*338-6970*	1	SENSOR GP-PRESSURE (NEGATIVE FLOW CONTROL)	142
	55	1	*164-6874*	1	FITTING AS-ELBOW (QUICK DISCONNECT, MALE)	
		1	**085-7356**	1	FITTING	
		1	**3J-1907**	1	SEAL-O-RING	
	56	1	*168-1968*	1	TEE AS	
		1	**126-6872**	1	TEE	
		1	**3J-1907**	1	SEAL-O-RING	
		1	**6V-8397**	1	SEAL-O-RING	

B - USE AS REQUIRED
I - REFER TO HYDRAULIC INFORMATION SYSTEM
M - METRIC PART
Y - SEPARATE ILLUSTRATION

398-4603 **LINES GP-PILOT (*contd.*)** **i05439690**

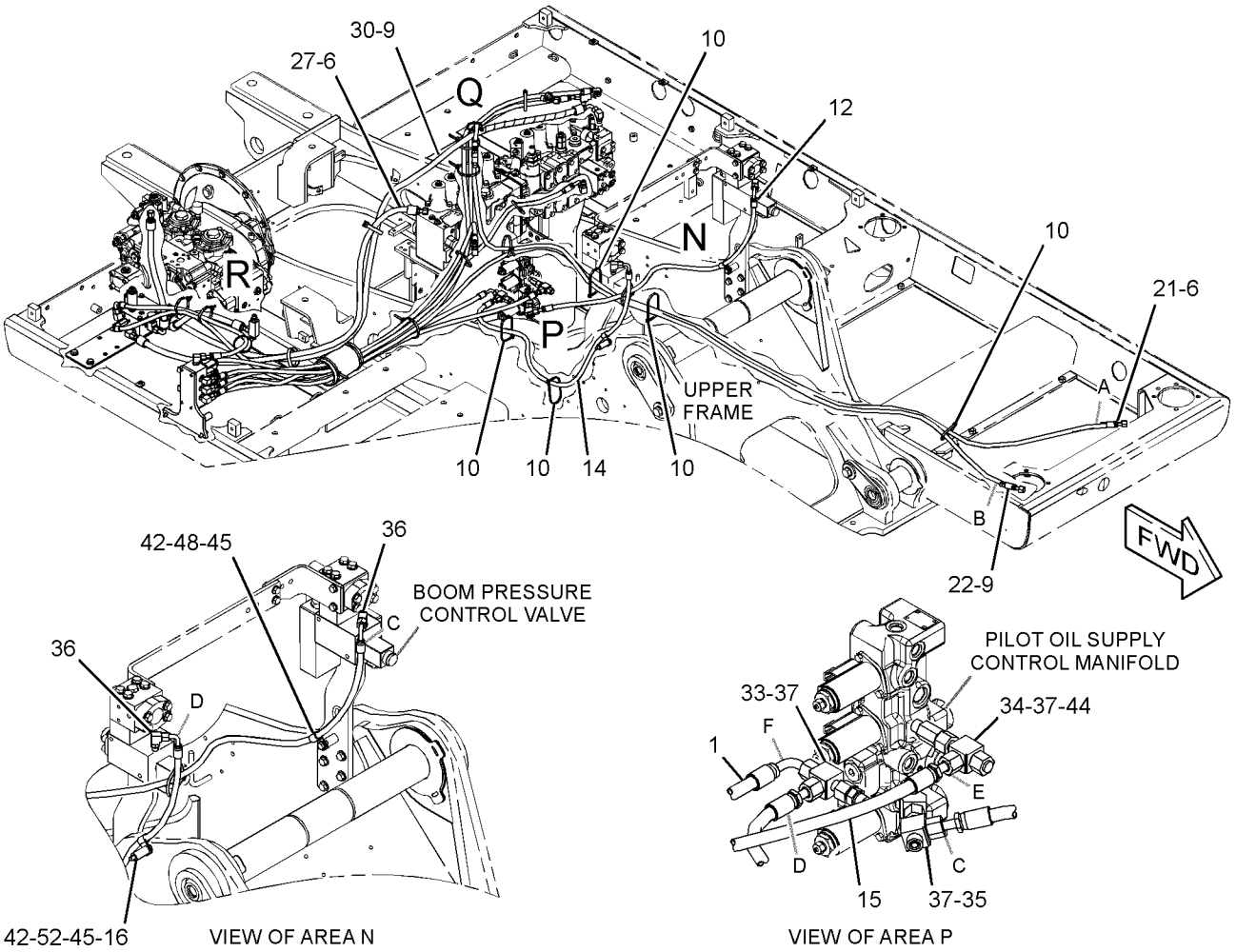

REFER TO ALL ILLUSTRATIONS OF THIS GROUP FOR AUXILIARY VIEWS

GRAPHIC #1

g03473300

398-4603 **LINES GP-PILOT (*contd.*)** **i05439690**

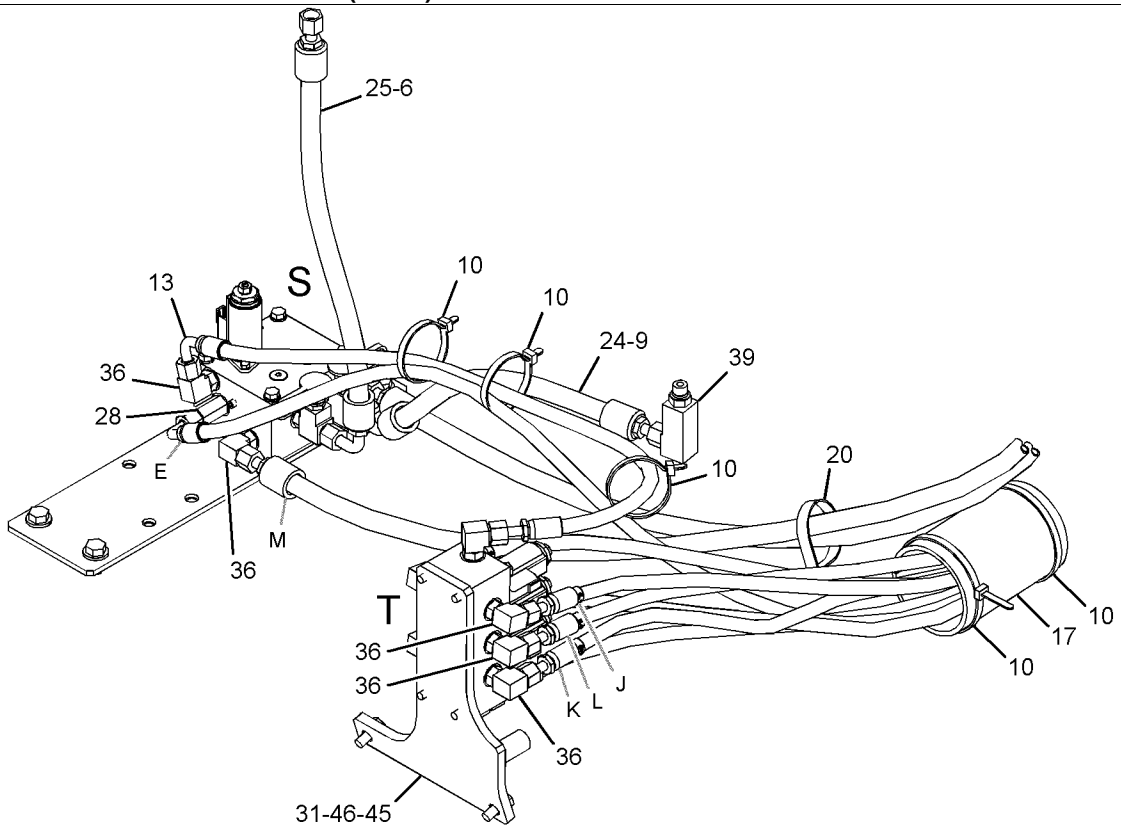

VIEW OF AREA R

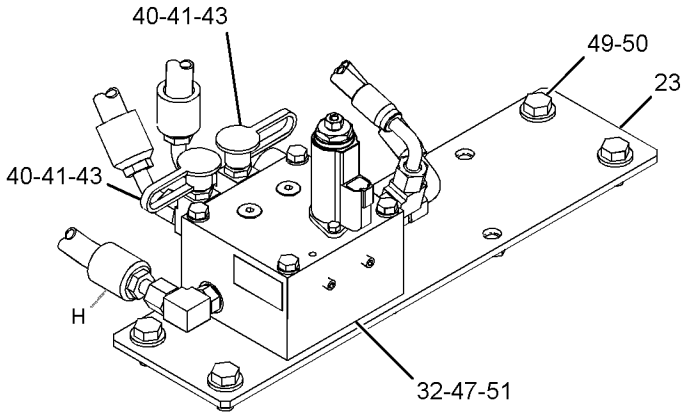

VIEW OF AREA S 180°

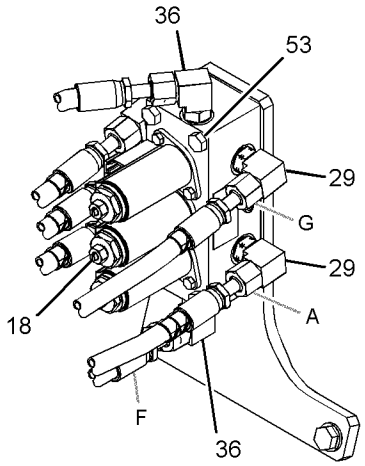

VIEW OF AREA T 180°

GRAPHIC #2 **<END>** g03349041

398-4604 LINES GP-PILOT–SYSTEM 3 PRIME, 1-WAY, 2-PUMP

S/N: JEG1-UP

PART OF 383-5307 CONTROL AR-AUXILIARY

AN ATTACHMENT

SMCS-5057, 5059 **i05439497**

NOTE	REF NO	GRAPHIC REF	PART NUMBER	QTY	PART NAME 1 2 3 4 5 6 (PRODUCT LEVEL)	SEE PAGE
I	1	2	**4I-1671**	1	HOSE AS	
	2	1	**4I-9523**	4	BAND-MARKER (BLUE, L3)	
	3	2	**4I-9524**	2	BAND-MARKER (BROWN, L4)	
	4	2	**4I-9525**	2	BAND-MARKER (ORANGE, R1)	
	5	1,2	**4I-9527**	8	BAND-MARKER (GREEN, R3)	
I	6	2	**5I-4396**	1	HOSE AS	
	7	1,2	**7K-1181**	13	STRAP-CABLE	
I	8	2	**087-5766**	1	HOSE AS	
I	9	2	**108-7375**	1	HOSE AS	
I	10	2	**111-0988**	1	HOSE AS	
	11	1	**124-1008**	1	GUARD	
	12	2	*148-8443*	1	TEE AS	
		2	**3J-1907**	1	SEAL-O-RING	
		2	**6V-8397**	1	SEAL-O-RING	
		2	**7X-2459**	1	TEE-O-RING	
	13	1,2	**204-2281**	2	STRAP-CABLE	
	14	2	**266-1108**	1	SUPPORT AS	
I	15	1	**268-6850**	1	HOSE AS	
I	16	1	**272-4180**	1	HOSE AS	
I	17	1	**296-7229**	1	HOSE AS	
Y	18	2	*338-6970*	1	SENSOR GP-PRESSURE (NEGATIVE FLOW CONTROL)	142
	19	1	*363-6132*	1	CONNECTOR AS	
		1	**3J-1907**	1	SEAL-O-RING	
		1	**6V-8397**	1	SEAL-O-RING	
		1	**116-3412**	1	CONNECTOR-FILTER	
I	20	2	**377-3294**	1	HOSE AS	
Y	21	2	**398-2282**	1	VALVE GP-SOLENOID (NEGATIVE FLOW CONTROL)	485
I	22	1	**398-5532**	1	HOSE AS	
	23	2	*148-8338*	2	CONNECTOR AS	
					(EACH INCLUDES)	
		2	**3J-1907**	1	SEAL-O-RING	
		2	**6V-8397**	1	SEAL-O-RING	
		2	**8T-0075**	1	CONNECTOR	
	24	1,2	*148-8378*	8	ELBOW AS	
					(EACH INCLUDES)	
		1,2	**3J-1907**	1	SEAL-O-RING	
		1,2	**6V-8397**	1	SEAL-O-RING	
		1,2	**6V-8724**	1	ELBOW	
	25	2	*148-8433*	2	TEE AS	
					(EACH INCLUDES)	
		2	**6V-8397**	2	SEAL-O-RING	
		2	**6V-9836**	1	TEE-SWIVEL	
	26	1	*150-3036*	1	ELBOW AS	
		1	**3J-1907**	1	SEAL-O-RING	
		1	**6V-8397**	1	SEAL-O-RING	
		1	**8T-1905**	1	ELBOW	
	27	2	*150-4027*	2	TEE AS	
					(EACH INCLUDES)	
		2	**3E-2310**	1	TEE	
		2	**3J-1907**	1	SEAL-O-RING	
		2	**6V-8397**	1	SEAL-O-RING	
	28	2	*164-5567*	2	COUPLER AS-QUICK DISCONNECT (MALE)	
					(EACH INCLUDES)	
		2	**6V-3965**	1	FITTING (QUICK DISCONNECT)	
		2	**214-7568**	1	SEAL-O-RING	
	29	2	*164-6874*	1	FITTING AS-ELBOW (QUICK DISCONNECT, MALE)	
		2	**3J-1907**	1	SEAL-O-RING	

398-4604 **LINES GP-PILOT (*contd.*)** **i05439497**

NOTE	REF NO	GRAPHIC REF	PART NUMBER	QTY	PART NAME 1 2 3 4 5 6 (PRODUCT LEVEL)	SEE PAGE
		2	**085-7356**	1	FITTING	
	30	2	*168-1968*	1	TEE AS	
		2	**3J-1907**	1	SEAL-O-RING	
		2	**6V-8397**	1	SEAL-O-RING	
		2	**126-6872**	1	TEE	
	31	2	**6V-0852**	2	CAP-DUST	
B	32	2	**6V-9829**	1	CAP AS	
M	33	2	**8T-4177**	4	BOLT (M8X1.25X90-MM)	
M	34	2	**8T-4192**	4	BOLT (M12X1.75X25-MM)	
	35	2	**8T-4223**	4	WASHER-HARD (13.5X25.5X3-MM THK)	
	36	2	**8T-4224**	4	WASHER-HARD (8.8X16X2-MM THK)	

B - USE AS REQUIRED
I - REFER TO HYDRAULIC INFORMATION SYSTEM
M - METRIC PART
Y - SEPARATE ILLUSTRATION

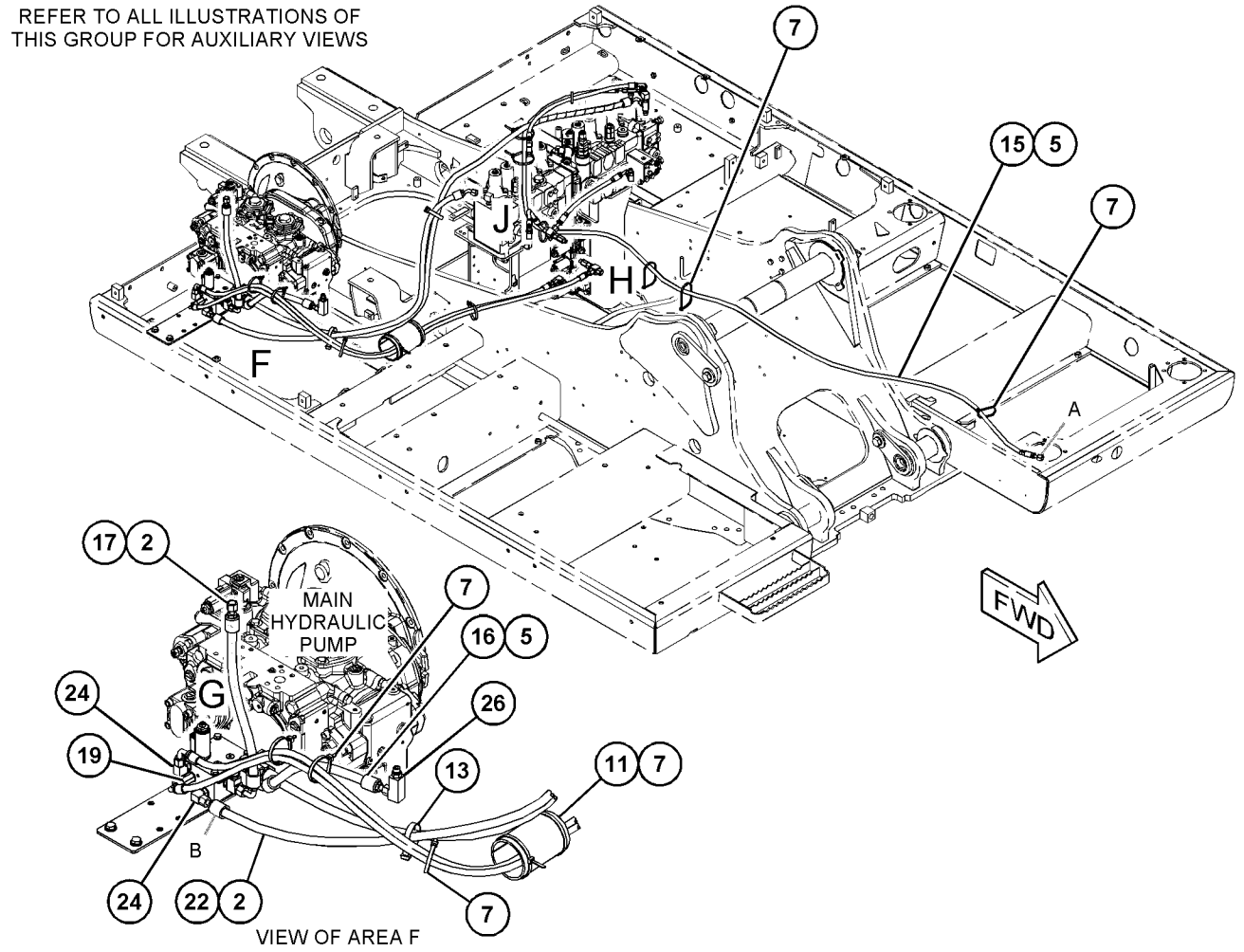

GRAPHIC #1 g03445779

398-4604 **LINES GP-PILOT (*contd.*)** **i05439497**

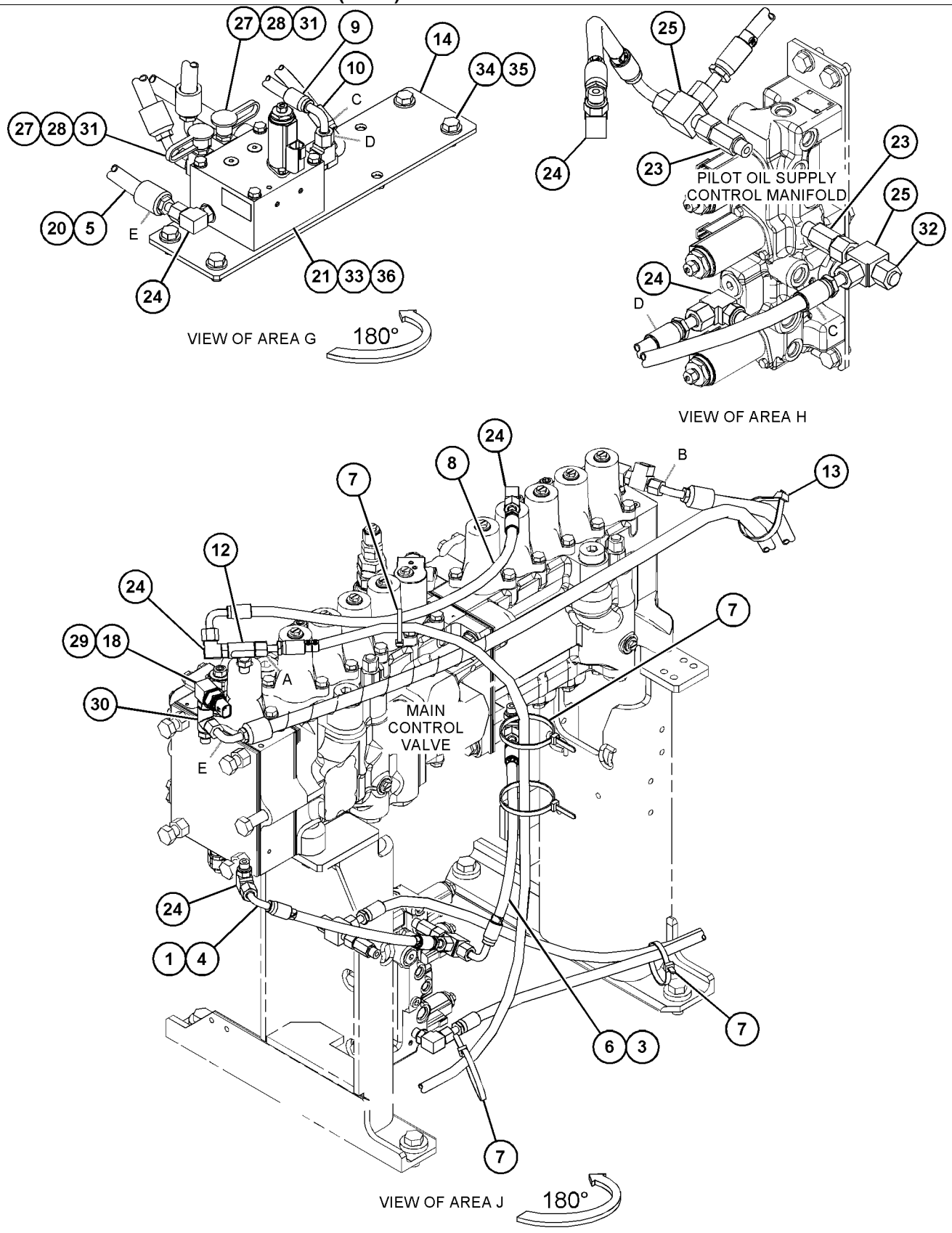

GRAPHIC #2 **<END>** g03445780

376-6313 LINES GP-PUMP–SUPPLY, MAIN PUMP

S/N: JEG1-UP

PART OF 383-5083 HYDRAULIC AR

SMCS-5057 **i05326918**

NOTE	REF NO	GRAPHIC REF	PART NUMBER	QTY	PART NAME 1 2 3 4 5 6 (PRODUCT LEVEL)	SEE PAGE
	1	1	**9X-8257**	8	WASHER (17.5X30X3.5-MM THK)	
	2	1	**347-2081**	1	HOSE	
	3	1	**9X-2201**	4	CLAMP-HOSE	
	4	1	**377-3298**	1	TUBE AS	
	5	1	**377-3297**	1	TUBE AS	
	6	1	*155-3624*	1	PLUG AS	
		1	**3J-7354**	1	SEAL-O-RING	
		1	**9S-4182**	1	PLUG-O-RING	
	7	1	**5H-8624**	1	SEAL-O-RING	
	8	1	**6D-9157**	1	SEAL-O-RING	
	9	1	**6V-0400**	4	FLANGE-HALF	
M	10	1	**7X-2553**	4	BOLT (M16X2X40-MM)	
M	11	1	**8T-4194**	8	BOLT (M12X1.75X50-MM)	
	12	1	**8T-4223**	8	WASHER-HARD (13.5X25.5X3-MM THK)	
M	13	1	**8T-7338**	4	BOLT (M16X2X45-MM)	

M - METRIC PART

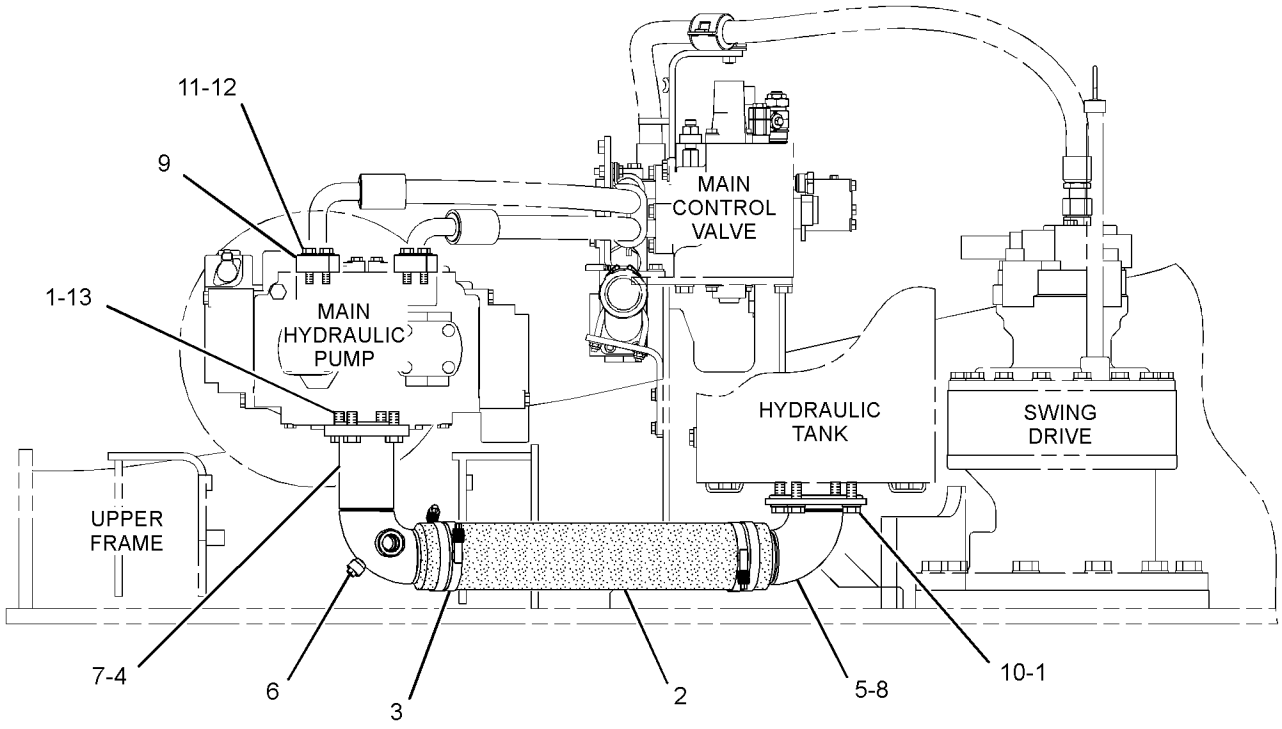

RIGHT SIDE VIEW

GRAPHIC #1 **<END>** g03327253

376-6331 LINES GP-QUICK COUPLER

S/N: JEG1-UP
PART OF 383-5423 CONTROL AR-QUICK COUPLER
AN ATTACHMENT

SMCS-5057, 6129 **i05536448**

NOTE	REF NO	GRAPHIC REF	PART NUMBER	QTY	PART NAME 1 2 3 4 5 6 (PRODUCT LEVEL)	SEE PAGE
	1	1	**3S-2093**	1	STRAP-CABLE	
	2	1	**4I-9521**	6	BAND-MARKER (RED, L1)	
	3	1	**4I-9522**	4	BAND-MARKER (YELLOW, L2)	
	4	1	**4I-9526**	2	BAND-MARKER (WHITE, R2)	
	5	1	**7K-1181**	14	STRAP-CABLE	
	6	1	**7Y-3721**	1	TUBE AS	
	7	1	**9X-6582**	2	NUT (13/16-16-THD)	
	8	1	*148-8430*	1	TEE AS	
		1	**6V-9746**	1	SEAL-O-RING	
		1	**7X-0873**	1	TEE	
	9	1	*164-6874*	1	FITTING AS-ELBOW (QUICK DISCONNECT, MALE)	
		1	**3J-1907**	1	SEAL-O-RING	
		1	**085-7356**	1	FITTING	
I	10	1	**184-9216**	1	HOSE AS	
	11	1	**236-3200**	1	SUPPORT AS	
	12	1	*285-2663*	1	FITTING AS (QUICK DISCONNECT, MALE)	
		1	**3J-1907**	1	SEAL-O-RING	
		1	**285-2664**	1	FITTING	
Y	13	1	**328-2035**	1	VALVE GP-SOLENOID & MANIFOLD (QUICK COUPLER)	486
	14	1	**337-2709**	1	GROMMET	
I	15	1	**377-3336**	3	HOSE AS	
I	16	1	**377-3445**	1	HOSE AS	
M	17	1	**101-7404**	4	BOLT-SOCKET HEAD (M10X1.5X30-MM)	
	18	1	*104-4980*	1	ELBOW AS	
		1	**3J-1907**	1	SEAL-O-RING	
		1	**4J-5477**	1	SEAL-O-RING	
		1	**153-6267**	1	ELBOW	
	19	1	*148-8353*	1	ELBOW AS	
		1	**3J-1907**	1	SEAL-O-RING	
		1	**6V-8397**	1	SEAL-O-RING	
		1	**6V-9001**	1	ELBOW	
	20	1	*148-8368*	2	ELBOW AS	
					(EACH INCLUDES)	
		1	**3J-1907**	1	SEAL-O-RING	
		1	**4J-5477**	1	SEAL-O-RING	
		1	**6V-8627**	1	ELBOW	
	21	1	*148-8419*	2	REDUCER AS	
					(EACH INCLUDES)	
		1	**4J-5477**	1	SEAL-O-RING	
		1	**6V-8935**	1	REDUCER-O-RING	
	22	1	*150-3033*	1	ELBOW AS	
		1	**3J-1907**	1	SEAL-O-RING	
		1	**4J-5477**	1	SEAL-O-RING	
		1	**8T-0164**	1	ELBOW	
	23	1	*153-6249*	1	CONNECTOR AS	
		1	**3J-1907**	1	SEAL-O-RING	
		1	**6V-8397**	1	SEAL-O-RING	
		1	**8T-8887**	1	CONNECTOR	
	24	1	**4J-5267**	1	SEAL-O-RING	
	25	1	**6V-9746**	1	SEAL-O-RING	
	26	1	**8T-4121**	2	WASHER-HARD (11X21X2.5-MM THK)	
M	27	1	**8T-4185**	2	BOLT (M10X1.5X50-MM)	
M	28	1	**8T-4194**	2	BOLT (M12X1.75X50-MM)	
	29	1	**8T-4223**	2	WASHER-HARD (13.5X25.5X3-MM THK)	

I - REFER TO HYDRAULIC INFORMATION SYSTEM
M - METRIC PART
Y - SEPARATE ILLUSTRATION

376-6331 **LINES GP-QUICK COUPLER (*contd.*)** **i05536448**

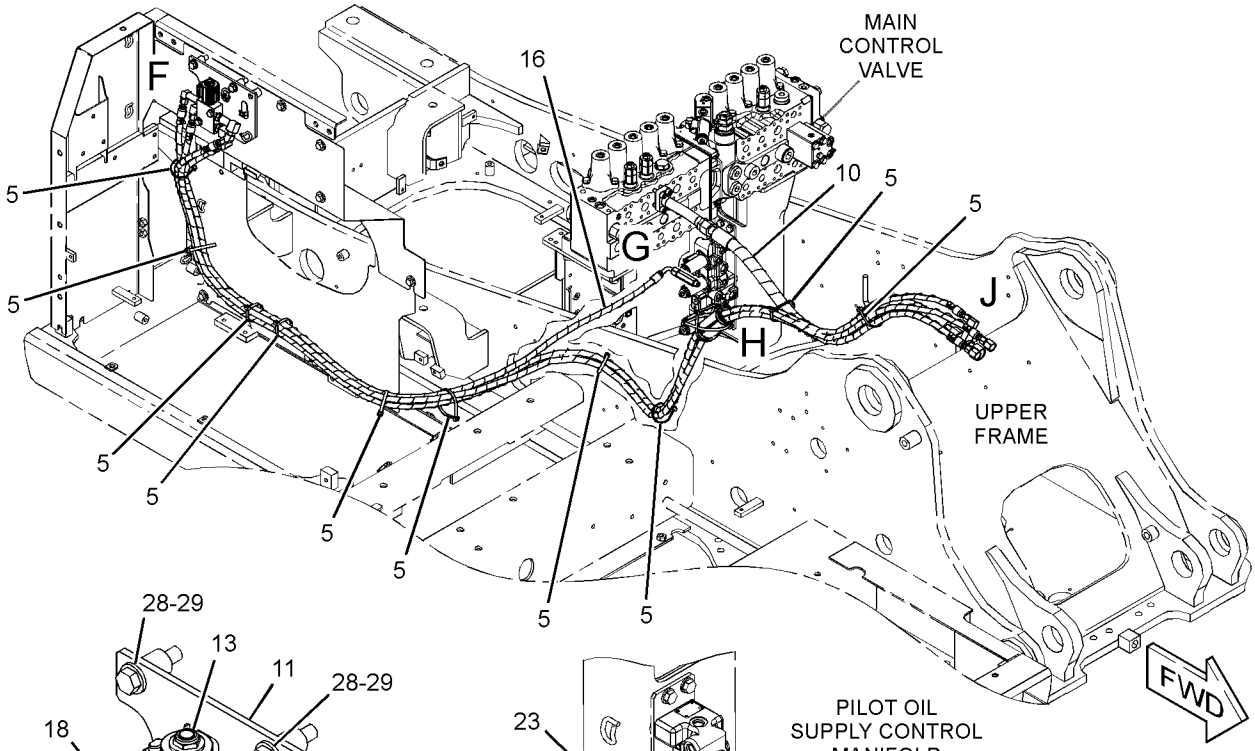

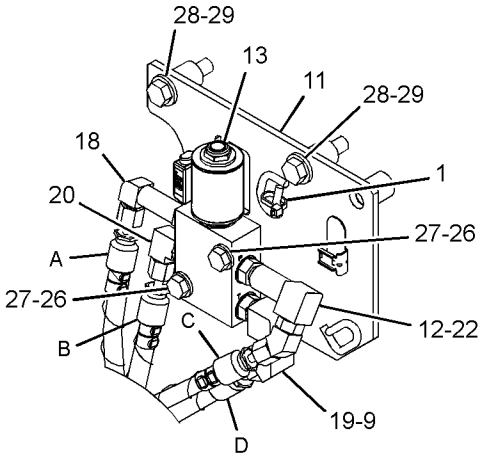

VIEW OF AREA F

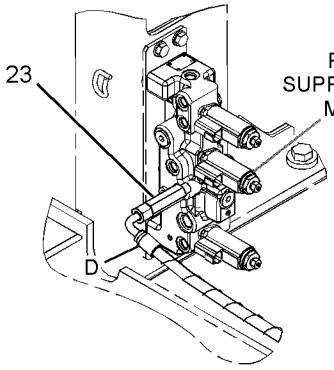

VIEW OF AREA G 90°

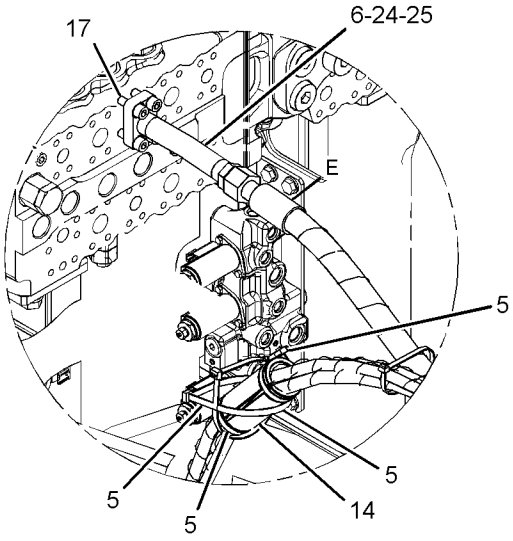

VIEW OF AREA H

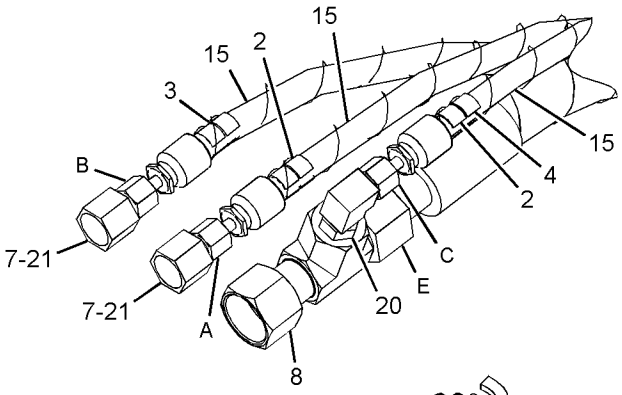

VIEW OF AREA J 90°

GRAPHIC #1 **<END>** g03313299

248-9853 LINES GP-RETURN—HYDRAULIC TANK

S/N: JEG1-UP

PART OF 415-7828 TANK & MTG GP-HYDRAULIC

SMCS-5057 **i03896329**

NOTE	REF NO	GRAPHIC REF	PART NUMBER	QTY	PART NAME 1 2 3 4 5 6 (PRODUCT LEVEL)	SEE PAGE
	1	1	**4I-9527**	2	BAND-MARKER (GREEN, R3)	
	2	1	**7K-1181**	2	STRAP-CABLE	
	3	1	*268-1621*	1	FITTING AS	
		1	**3D-2824**	1	SEAL-O-RING	
		1	**6V-9746**	1	SEAL-O-RING	
		1	**124-1212**	1	FITTING	
	4	1	**165-3260**	1	PIPE AS	
I	5	1	**176-4770**	1	HOSE AS	
	6	1	*307-5097*	1	TEE AS	
		1	**2M-9780**	1	SEAL-O-RING	
		1	**6V-8397**	1	SEAL-O-RING	
		1	**6V-8398**	1	SEAL-O-RING	
		1	**307-5098**	1	TEE-ORP TO ORFS	
I	7	1	**275-1361**	1	HOSE AS	
I	8	1	**292-7153**	1	HOSE AS	
	9	1	*148-8327*	1	CONNECTOR AS	
		1	**3D-2824**	1	SEAL-O-RING	
		1	**6V-8637**	1	CONNECTOR	
		1	**6V-9746**	1	SEAL-O-RING	
	10	1	*164-5608*	1	CONNECTOR AS	
		1	**3K-0360**	1	SEAL-O-RING	
		1	**6V-8398**	1	SEAL-O-RING	
		1	**8T-1687**	1	CONNECTOR	
	11	1	*148-8347*	1	ELBOW AS	
		1	**3D-2824**	1	SEAL-O-RING	
		1	**6V-9007**	1	ELBOW	
		1	**6V-9746**	1	SEAL-O-RING	
	12	1	*148-8354*	3	ELBOW AS	
					(EACH INCLUDES)	
		1	**3K-0360**	1	SEAL-O-RING	
		1	**6V-8398**	1	SEAL-O-RING	
		1	**6V-9002**	1	ELBOW	
	13	1	*148-8358*	1	ELBOW AS	
		1	**2M-9780**	1	SEAL-O-RING	
		1	**6V-8398**	1	SEAL-O-RING	
		1	**6V-8624**	1	ELBOW	
	14	1	*148-8363*	1	ELBOW AS	
		1	**3K-0360**	1	SEAL-O-RING	
		1	**6V-8397**	1	SEAL-O-RING	
		1	**6V-9876**	1	ELBOW	
	15	1	*148-8411*	1	PLUG AS	
		1	**3K-0360**	1	SEAL-O-RING	
		1	**9S-4185**	1	PLUG-O-RING	
	17	1	**5P-7464**	1	CLIP (SLOT)	
	18	1	**5P-7465**	1	CLIP (TAB)	
	19	1	**6J-2680**	1	SEAL-O-RING	
	21	1	**8T-2920**	1	GROMMET	
M	22	1	**8T-4139**	1	BOLT (M12X1.75X30-MM)	
	23	1	**8T-4223**	5	WASHER-HARD (13.5X25.5X3-MM THK)	
M	24	1	**8T-4956**	4	BOLT (M12X1.75X35-MM)	

I - REFER TO HYDRAULIC INFORMATION SYSTEM
M - METRIC PART

248-9853 **LINES GP-RETURN (*contd.*)** **i03896329**

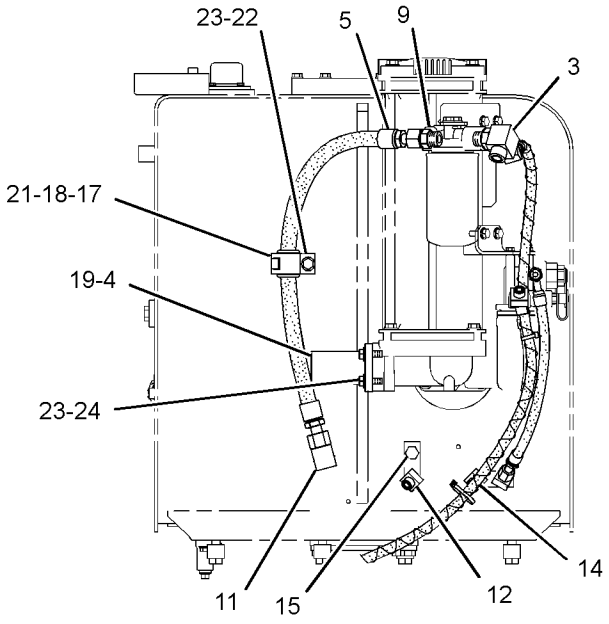

REAR VIEW

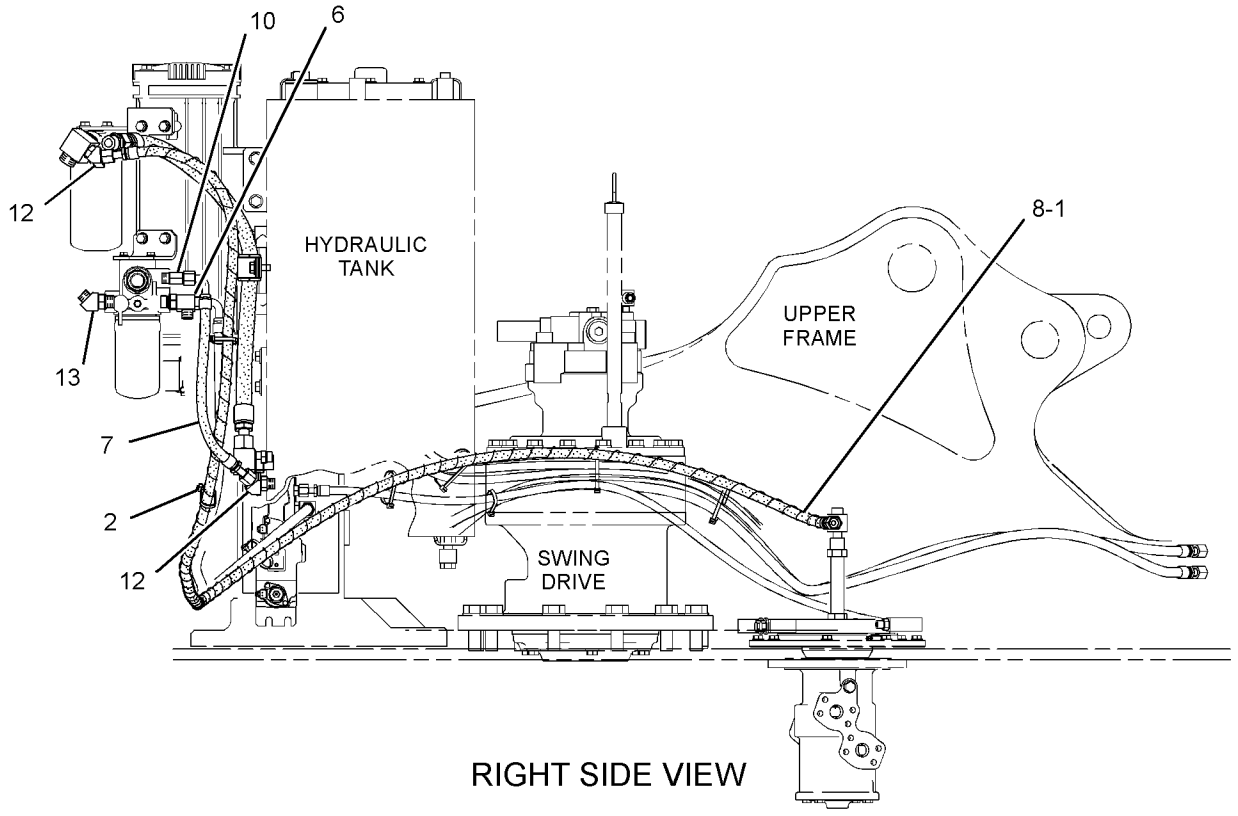

RIGHT SIDE VIEW

GRAPHIC #1 **<END>** g02140028

248-9633 LINES GP-STICK—BUCKET CYLINDER

S/N: JEG1-UP
FOR USE WITH 2.4-M (7.9-FT) STICK
PART OF 290-1788 STICK AR-HOE
AN ATTACHMENT

SMCS-5057, 5458 **i05536887**

NOTE	REF NO	GRAPHIC REF	PART NUMBER	QTY	PART NAME 1 2 3 4 5 6 (PRODUCT LEVEL)	SEE PAGE
	1	1	**5I-4174**	1	BLOCK	
I	2	1	**187-6058**	2	HOSE AS	
	3	1	**1P-3702**	2	SEAL-RECTANGULAR	
	4	1	**1P-3703**	1	SEAL-RECTANGULAR	
	5	1	**8T-4121**	8	WASHER-HARD (11X21X2.5-MM THK)	
M	6	1	**8T-4182**	4	BOLT (M10X1.5X45-MM)	
M	7	1	**8T-4198**	4	BOLT (M10X1.5X100-MM)	
	8	1	**8T-9403**	4	FLANGE-HALF	

I - REFER TO HYDRAULIC INFORMATION SYSTEM
M - METRIC PART

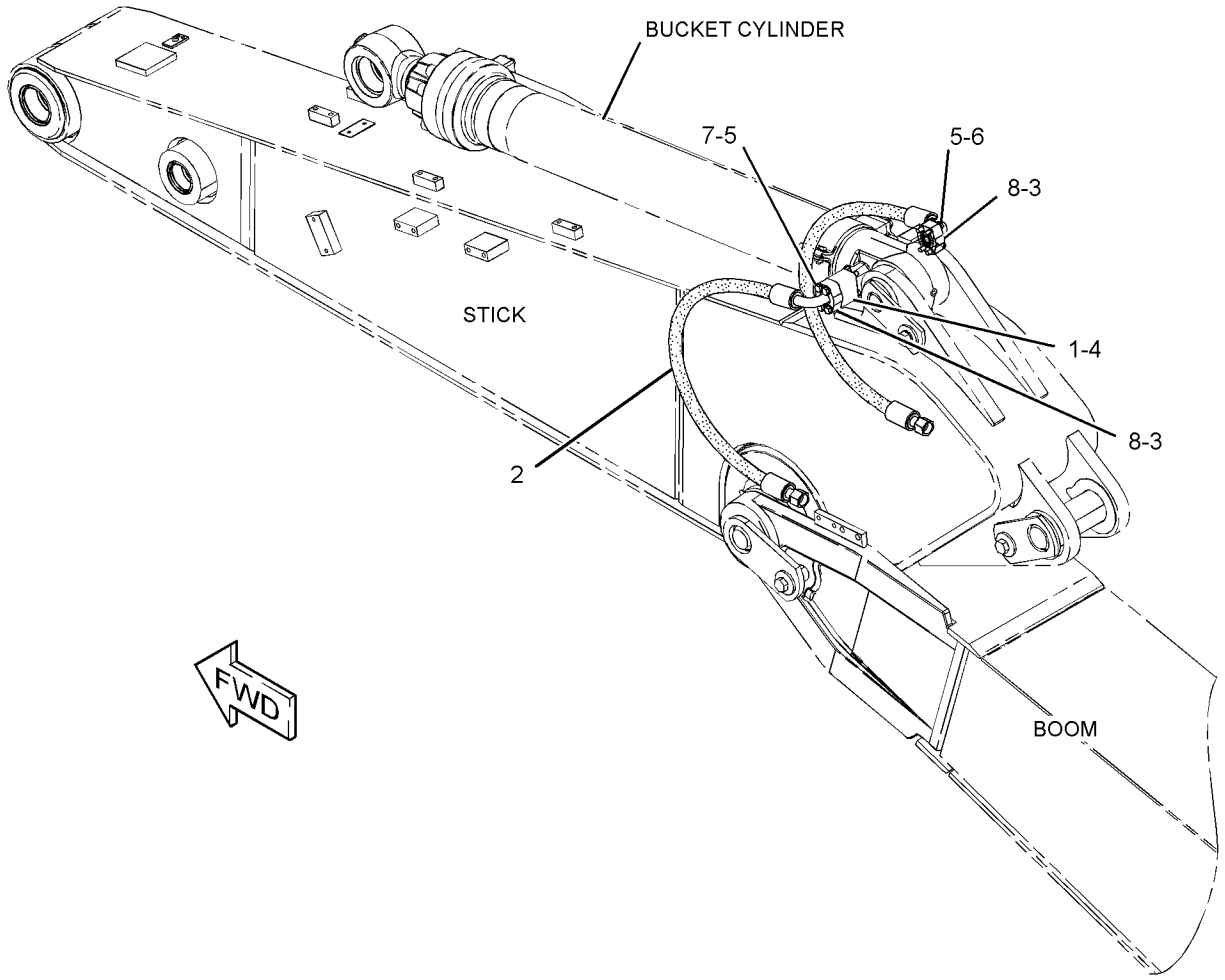

GRAPHIC #1 **<END>** g01227745

431-1642 LINES GP-STICK–BUCKET CYLINDER

S/N: JEG1-UP
FOR USE WITH 2.5-M (8.2-FT) STICK
PART OF 290-1837 STICK AR-HOE
AN ATTACHMENT

SMCS-5057, 5458 **i05536446**

NOTE	REF NO	GRAPHIC REF	PART NUMBER	QTY	PART NAME 1 2 3 4 5 6 (PRODUCT LEVEL)	SEE PAGE
I	1	1	**187-6058**	1	HOSE AS	
	2	1	**289-5690**	1	FLANGE-SPECIAL	
I	3	1	**431-1802**	1	HOSE AS	
	4	1	**1P-3702**	1	SEAL-RECTANGULAR	
	5	1	**1P-3703**	2	SEAL-RECTANGULAR	
	6	1	**6V-0400**	2	FLANGE-HALF	
M	7	1	**7X-2549**	4	BOLT (M12X1.75X100-MM)	
	8	1	**8T-4121**	4	WASHER-HARD (11X21X2.5-MM THK)	
M	9	1	**8T-4182**	4	BOLT (M10X1.5X45-MM)	
	10	1	**8T-4223**	4	WASHER-HARD (13.5X25.5X3-MM THK)	
	11	1	**8T-9403**	2	FLANGE-HALF	

I - REFER TO HYDRAULIC INFORMATION SYSTEM
M - METRIC PART

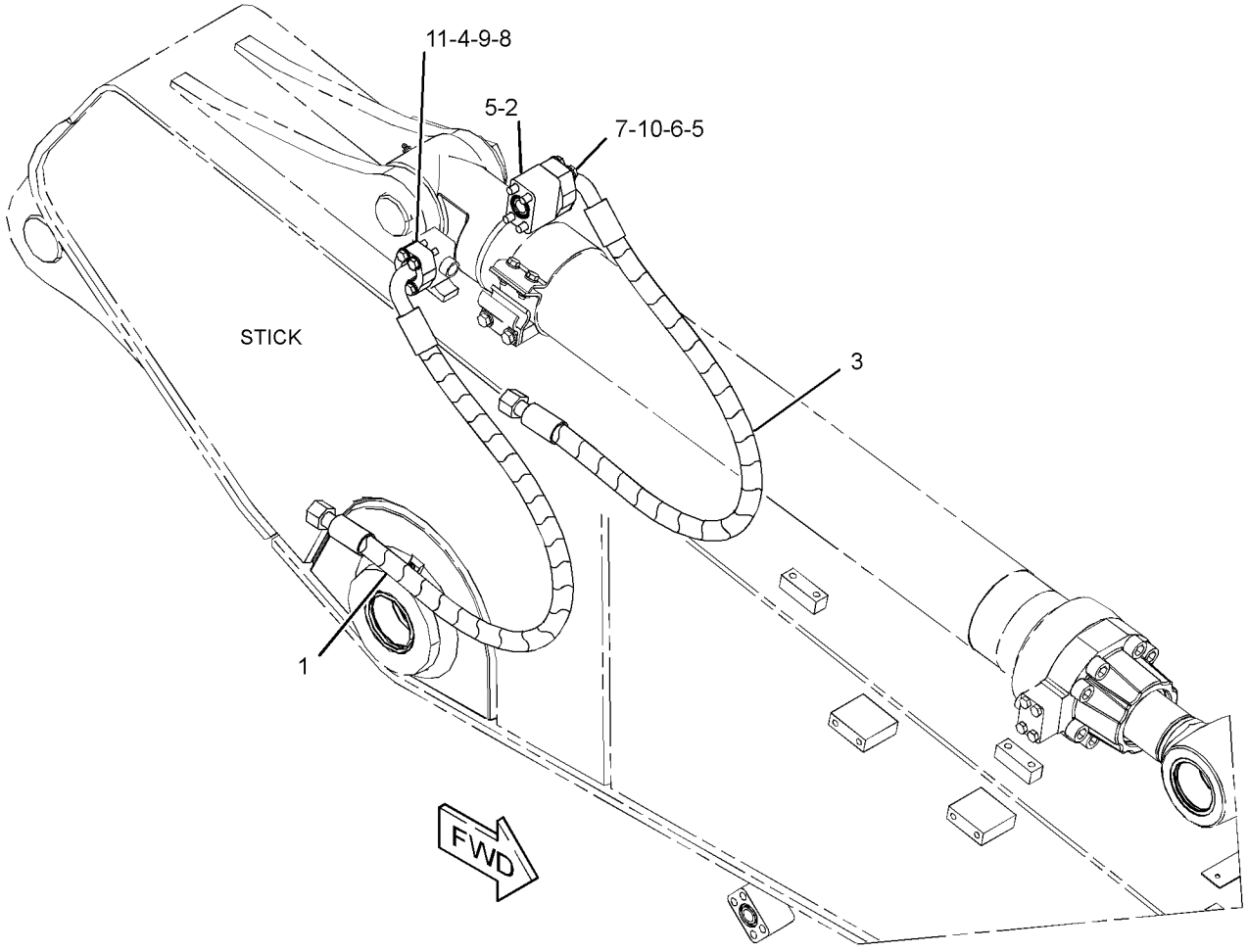

GRAPHIC #1 **<END>** g03322929

242-6735 LINES GP-STICK CYLINDER

S/N: JEG1-UP

PART OF 341-2806, 341-2808 CYLINDER & LINES GP-STICK

AN ATTACHMENT

SMCS-5458 **i02793759**

NOTE	REF NO	GRAPHIC REF	PART NUMBER	QTY	PART NAME 1 2 3 4 5 6 (PRODUCT LEVEL)	SEE PAGE
M	1	1	**6V-8200**	4	BOLT-SOCKET HEAD (M12X1.75X35-MM)	
	2	1	**095-1600**	1	SEAL-O-RING	
	3	1	**247-8883**	1	TUBE AS	
M	4	1	**8T-4196**	2	BOLT (M10X1.5X35-MM)	
	5	1	**8T-4896**	2	WASHER-HARD (10.2X18.5X2.5-MM THK)	
	6	1	**124-1020**	1	SUPPORT	
	7	1	**124-1019**	1	SUPPORT AS	
	8	1	**096-4480**	1	CLAMP	
M	9	1	**8T-4910**	1	BOLT (M12X1.75X60-MM)	
	10	1	**8T-4223**	1	WASHER-HARD (13.5X25.5X3-MM THK)	

M - METRIC PART

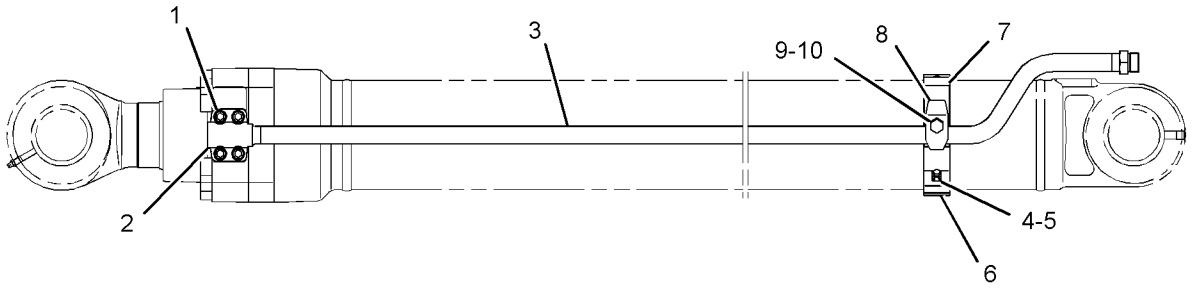

GRAPHIC #1 **<END>** g01220097

239-1717 LINES GP-TRAVEL MOTOR—LONG UNDERCARRIAGE

S/N: JEG1-UP

PART OF 383-5083 HYDRAULIC AR

SMCS-5057, 5058 **i04751149**

NOTE	REF NO	GRAPHIC REF	PART NUMBER	QTY	PART NAME 1 2 3 4 5 6 (PRODUCT LEVEL)	SEE PAGE
	1	1	**7K-1181**	4	STRAP-CABLE	
I	2	2	**7Y-4390**	2	HOSE AS	
	3	1	**108-7118**	4	GROMMET	
CI	4	2	**124-1266**	2	HOSE AS	
Y	5	2	**234-4440**	1	SWIVEL GP	431
I	6	1	**245-5416**	4	HOSE AS	
	7	2	*148-8364*	2	ELBOW AS	
					(EACH INCLUDES)	
		2	**3K-0360**	1	SEAL-O-RING	
		2	**6V-8398**	1	SEAL-O-RING	
		2	**6V-8625**	1	ELBOW	
C	8	2	*164-6872*	1	TEE AS	
		2	**2M-9780**	1	SEAL-O-RING	
		2	**6V-8398**	1	SEAL-O-RING	
		2	**115-8634**	1	TEE-O-RING	
	9	2	*148-8378*	2	ELBOW AS	
					(EACH INCLUDES)	
		2	**3J-1907**	1	SEAL-O-RING	
		2	**6V-8397**	1	SEAL-O-RING	
		2	**6V-8724**	1	ELBOW	
	11	2	*150-4044*	2	CONNECTOR AS	
					(EACH INCLUDES)	
		2	**3J-1907**	1	SEAL-O-RING	
		2	**6V-8397**	1	SEAL-O-RING	
		2	**8T-1779**	1	CONNECTOR	
	12	1	**1P-3703**	8	SEAL-RECTANGULAR	
	13	2	**6V-0400**	24	FLANGE-HALF	
	14	2	**8T-4121**	6	WASHER-HARD (11X21X2.5-MM THK)	
M	15	2	**8T-4136**	6	BOLT (M10X1.5X25-MM)	
M	16	2	**8T-4184**	48	BOLT (M12X1.75X45-MM)	
	17	2	**8T-4223**	48	WASHER-HARD (13.5X25.5X3-MM THK)	
	18	2	**1U-8846**	1	SEALANT-GASKET	

C - CHANGE FROM PREVIOUS TYPE
I - REFER TO HYDRAULIC INFORMATION SYSTEM
M - METRIC PART
Y - SEPARATE ILLUSTRATION

239-1717 **LINES GP-TRAVEL MOTOR (*contd.*)** **i04751149**

REFER TO ALL ILLUSTRATIONS OF
THIS GROUP FOR AUXILIARY VIEWS

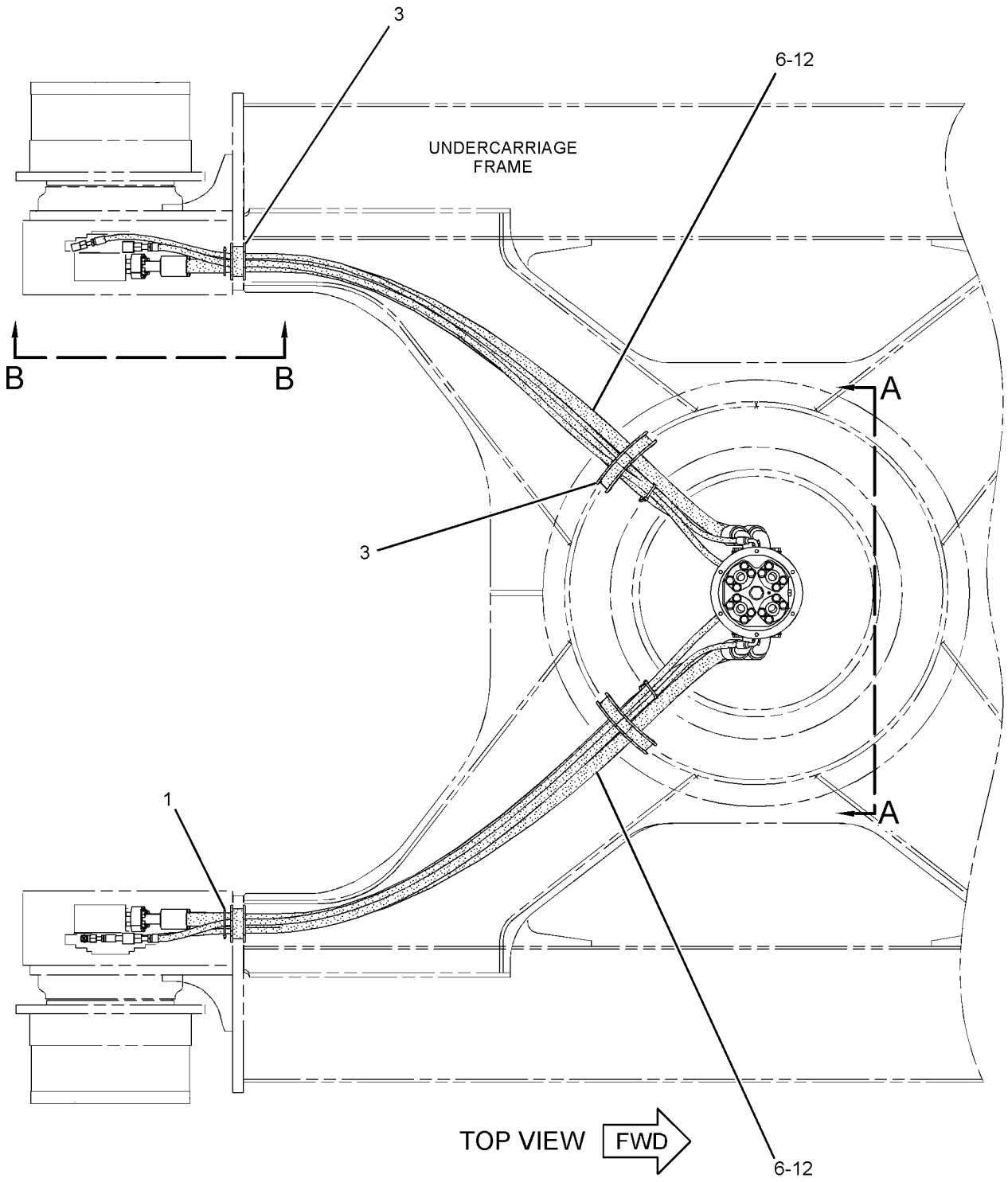

GRAPHIC #1 g02734650

239-1717 **LINES GP-TRAVEL MOTOR (*contd.*)** **i04751149**

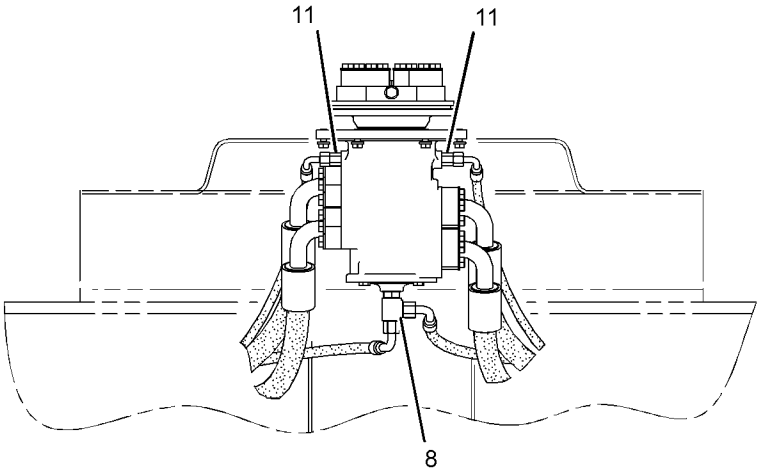

VIEW A-A

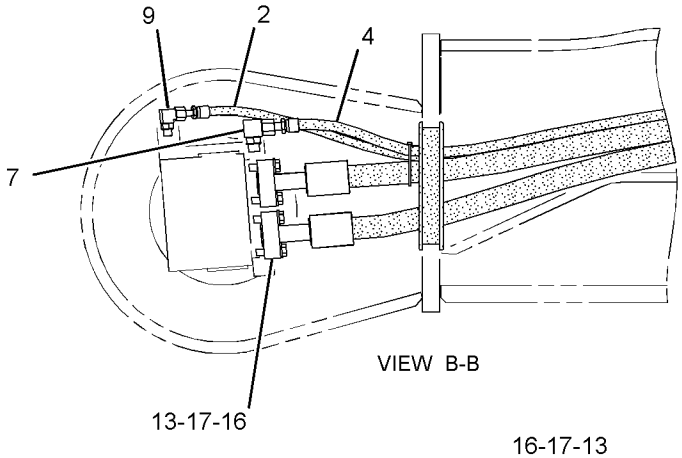

VIEW B-B

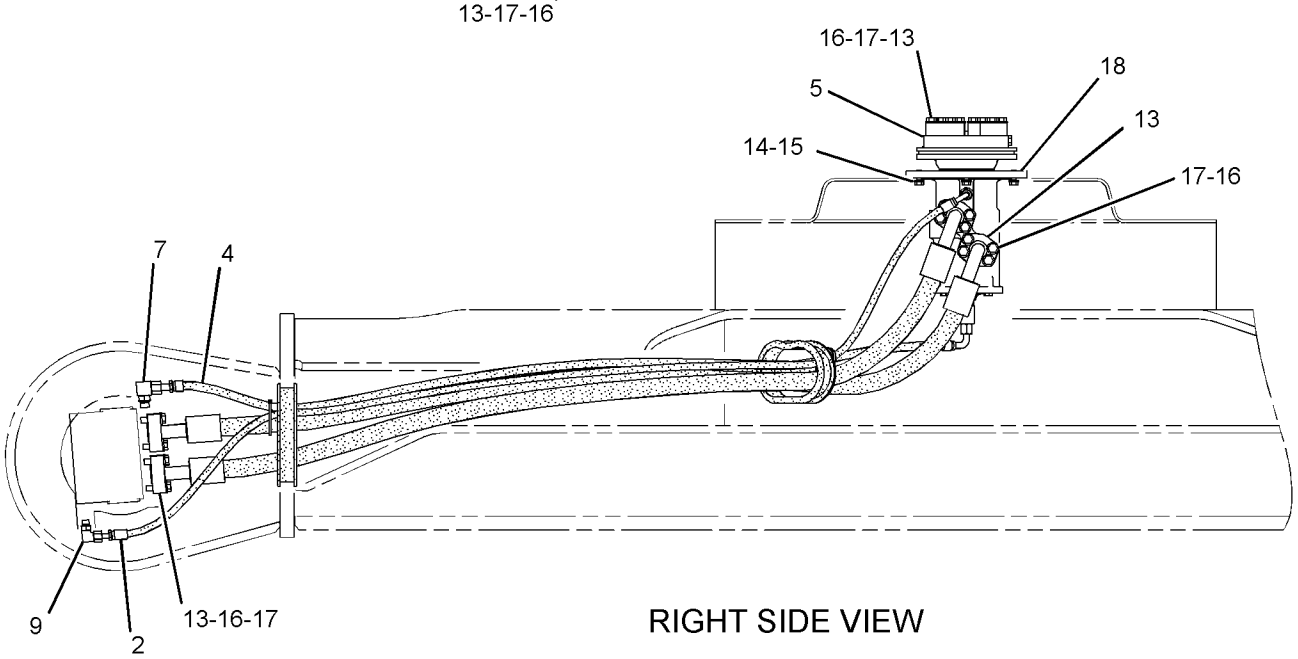

RIGHT SIDE VIEW

GRAPHIC #2 **<END>** g02734651

215-5037 MANIFOLD GP-CONTROL—PILOT OIL SUPPLY

S/N: JEG1-UP

PART OF 398-4602 LINES GP-PILOT

SMCS-5264 **i02571595**

NOTE	PART NUMBER	QTY	PART NAME 1 2 3 4 5 6 (PRODUCT LEVEL)	SEE PAGE
Y	*239-8998*	1	MANIFOLD GP-CONTROL (PILOT OIL SUPPLY) (STEEL BODY)	409
			-OR-	
Y	*239-8697*	1	MANIFOLD GP-CONTROL (PILOT OIL SUPPLY) (ALUMINUM BODY)	408

Y - SEPARATE ILLUSTRATION

<END>

239-8697 MANIFOLD GP-CONTROL—PILOT OIL SUPPLY

S/N: JEG1-UP
ALUMINUM BODY
PART OF 215-5037 MANIFOLD GP-CONTROL

SMCS-5264 **i03902794**

NOTE	REF NO	GRAPHIC REF	PART NUMBER	QTY	PART NAME 1 2 3 4 5 6 (PRODUCT LEVEL)	SEE PAGE
Y	1	1	**121-1491**	1	VALVE GP-SOLENOID (SWING BRAKE RELEASE)	481
Y	2	1	**121-1491**	1	VALVE GP-SOLENOID (HYDRAULIC LOCKOUT)	481
Y	3	1	**121-1491**	1	VALVE GP-SOLENOID (TRAVEL SPEED)	481
	4	1	**197-0196**	1	VALVE-CHECK	
	5	1	**197-0199**	1	SPRING	
	6	1	**197-0273**	1	SPRING	
	7	1	**9S-8005**	4	PLUG-O-RING	
	8	1	**3J-1907**	1	SEAL-O-RING	
	9	1	**3K-0360**	4	SEAL-O-RING	
	10	1	**4J-7533**	6	SEAL-O-RING	
M	11	1	**7I-2272**	6	BOLT (M5X0.8X12-MM)	
	12	1	**9S-8001**	6	PLUG-O-RING	
	13	1	**9S-8004**	1	PLUG-O-RING	

M - METRIC PART
Y - SEPARATE ILLUSTRATION

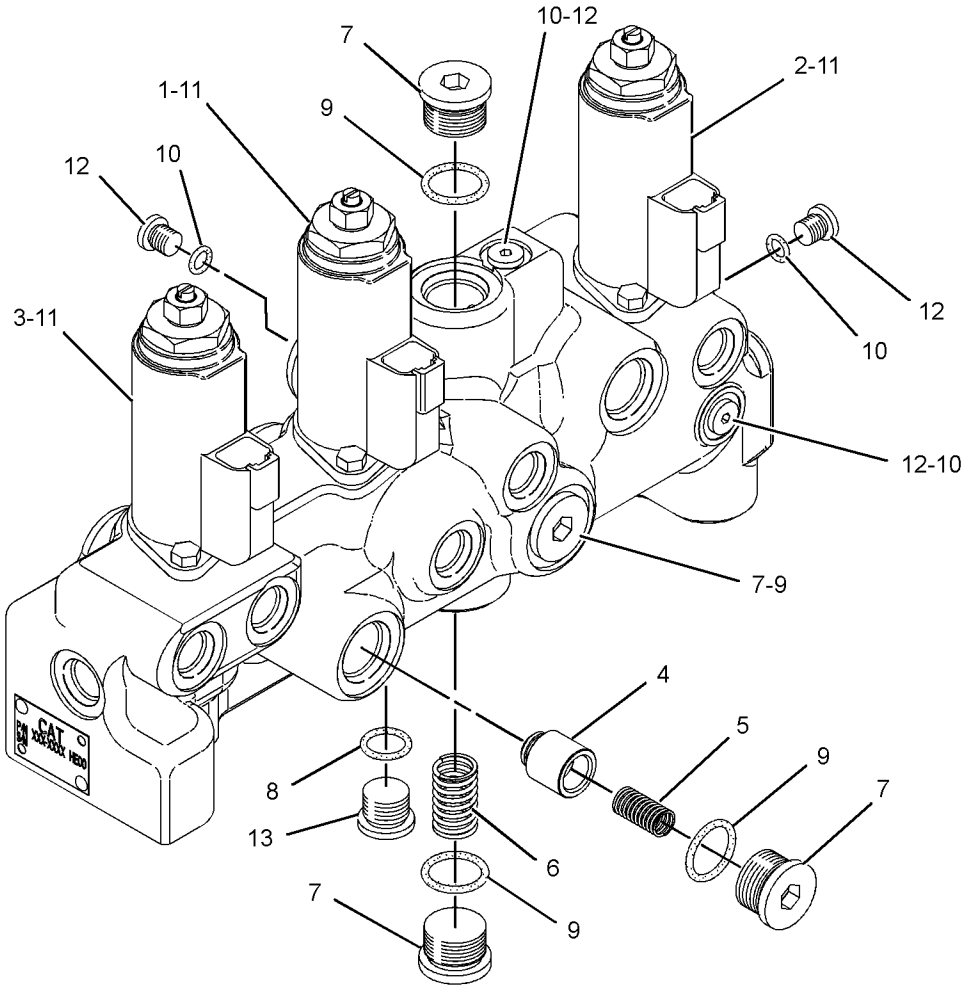

GRAPHIC #1 **<END>** g02145061

239-8998 MANIFOLD GP-CONTROL—PILOT OIL SUPPLY

S/N: JEG1-UP
STEEL BODY
PART OF 215-5037 MANIFOLD GP-CONTROL

SMCS-5264 **i04922917**

NOTE	REF NO	GRAPHIC REF	PART NUMBER	QTY	PART NAME 1 2 3 4 5 6 (PRODUCT LEVEL)	SEE PAGE
Y	1	1	**121-1491**	1	VALVE GP-SOLENOID (SWING BRAKE RELEASE)	481
Y	1A	1	**121-1491**	1	VALVE GP-SOLENOID (HYDRAULIC LOCKOUT)	481
Y	1B	1	**121-1491**	1	VALVE GP-SOLENOID (TRAVEL SPEED)	481
	2	1	**7M-7410**	2	PLUG-PIPE	
	3	1	**8T-6759**	6	PLUG-PIPE	
	4	1	**197-0196**	1	VALVE-CHECK	
	5	1	**9S-8005**	3	PLUG-O-RING	
	6	1	**197-0199**	1	SPRING	
	7	1	**197-0273**	1	SPRING	
	8	1	**3K-0360**	3	SEAL-O-RING	
M	9	1	**7I-2272**	6	BOLT (M5X0.8X12-MM)	

M - METRIC PART
Y - SEPARATE ILLUSTRATION

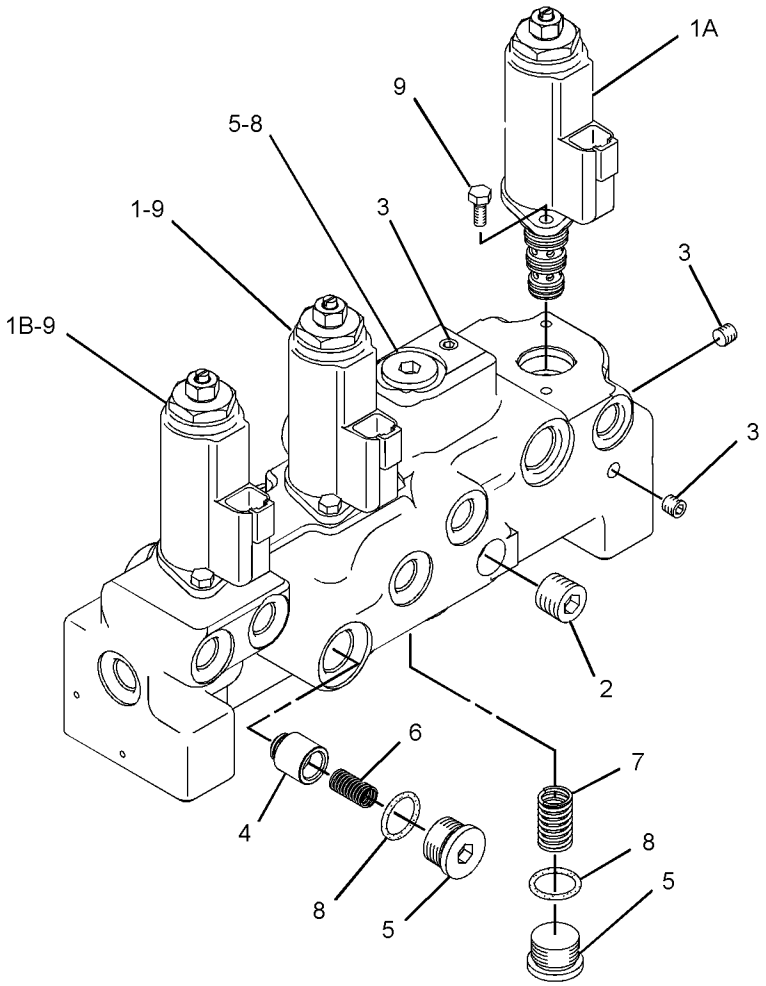

GRAPHIC #1 **<END>** g03089517

158-8985 MOTOR & MTG GP-SWING

S/N: JEG1-UP

PART OF 148-4679 DRIVE GP-SWING

SMCS-5058 **i04238917**

NOTE	REF NO	GRAPHIC REF	PART NUMBER	QTY	PART NAME 1 2 3 4 5 6 (PRODUCT LEVEL)	SEE PAGE
CYR	1	1	**334-9968**	1	MOTOR GP-SWING	413
	2	1	**6V-5200**	1	RING-RETAINING	
M	3	1	**7X-2558**	16	BOLT (M16X2X150-MM)	
	4	1	**9X-8257**	16	WASHER (17.5X30X3.5-MM THK)	
	5	1	**352-7063**	2	CAP	

C - CHANGE FROM PREVIOUS TYPE
M - METRIC PART
R - REMFG PART MAY BE AVAILABLE
Y - SEPARATE ILLUSTRATION

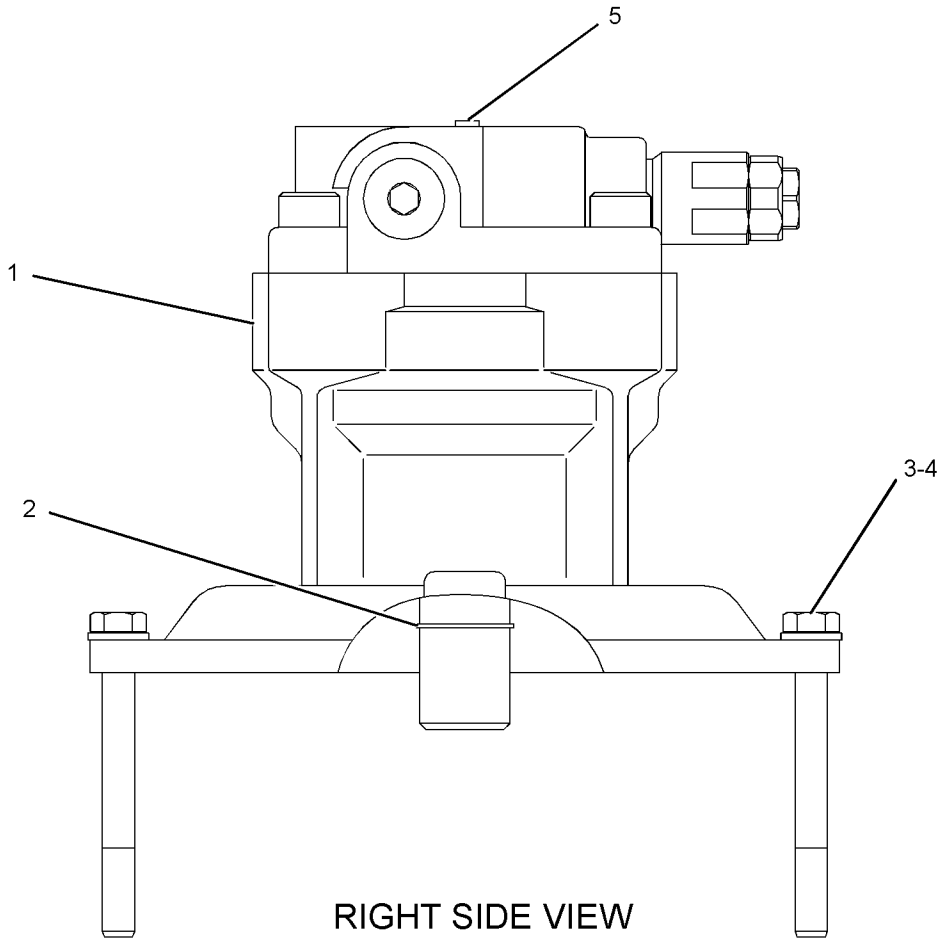

RIGHT SIDE VIEW

GRAPHIC #1 **<END>** g02521782

334-9986 MOTOR & MTG GP-TRAVEL

S/N: JEG1-UP

PART OF 353-0609 DRIVE GP-FINAL

SMCS-4351 **i04854850**

NOTE	REF NO	GRAPHIC REF	PART NUMBER	QTY	PART NAME 1 2 3 4 5 6 (PRODUCT LEVEL)	SEE PAGE
YR	1	1	**209-5992**	1	MOTOR GP-TRAVEL	416
Y	2	1	**322-8714**	1	VALVE GP-TRAVEL COUNTERBALANCE	489
M	3	1	**095-0707**	3	BOLT (M16X2X120-MM)	
	4	1	**095-1685**	1	SEAL-O-RING	
M	5	1	**8C-8729**	6	BOLT-SOCKET HEAD (M12X1.75X80-MM)	

M - METRIC PART
R - REMFG PART MAY BE AVAILABLE
Y - SEPARATE ILLUSTRATION

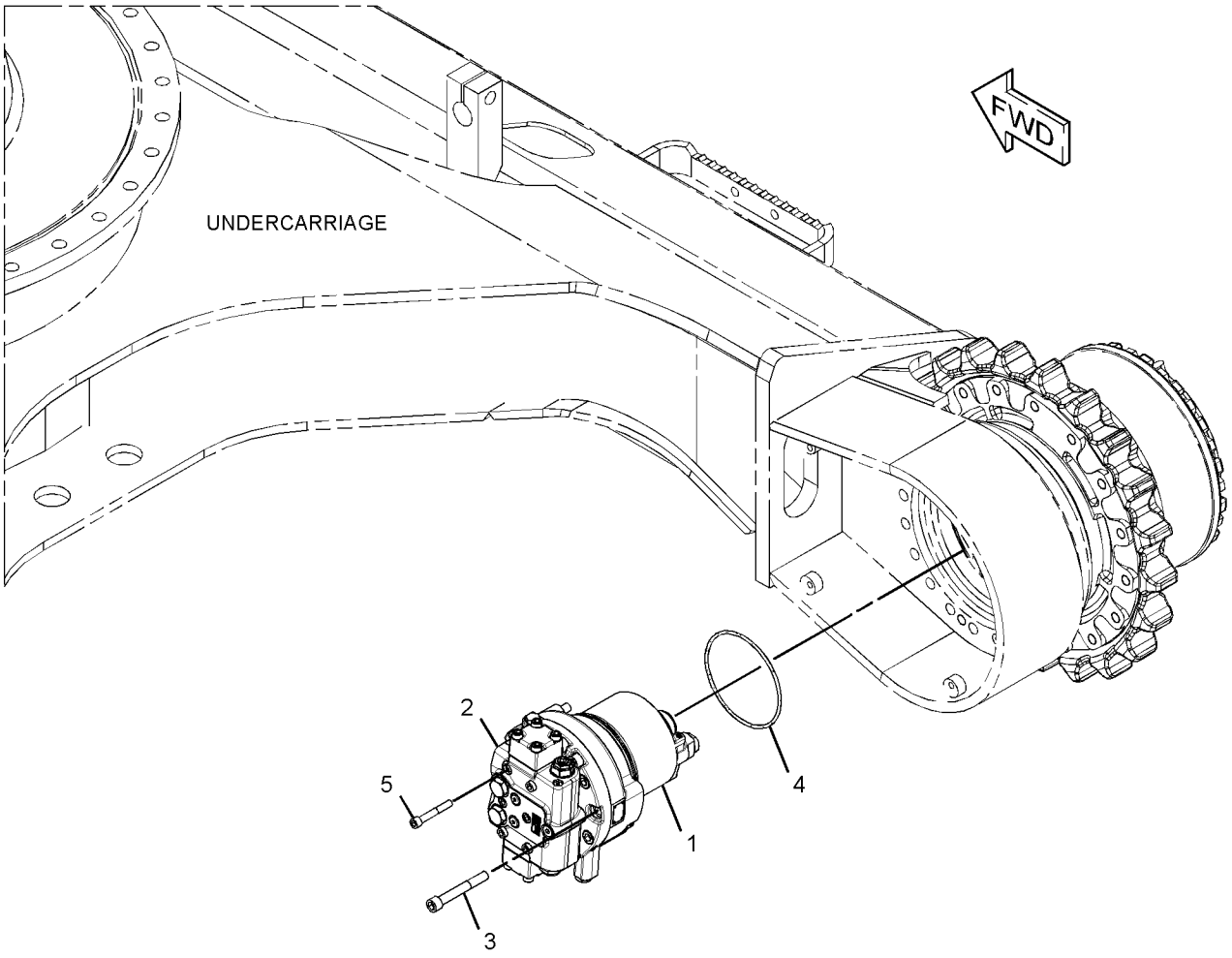

GRAPHIC #1 **<END>** g02466056

334-9987 MOTOR & MTG GP-TRAVEL

S/N: JEG1-UP
PART OF 353-0610 DRIVE GP-FINAL
AN ATTACHMENT

SMCS-4351 **i04928709**

NOTE	REF NO	GRAPHIC REF	PART NUMBER	QTY	PART NAME 1 2 3 4 5 6 (PRODUCT LEVEL)	SEE PAGE
Y	1	1	**209-5994**	1	MOTOR GP-PISTON (TRAVEL)	419
Y	2	1	**322-8714**	1	VALVE GP-TRAVEL COUNTERBALANCE	489
M	3	1	**095-0707**	3	BOLT (M16X2X120-MM)	
M	4	1	**8C-8729**	6	BOLT-SOCKET HEAD (M12X1.75X80-MM)	
	5	1	**095-1685**	1	SEAL-O-RING	

M - METRIC PART
Y - SEPARATE ILLUSTRATION

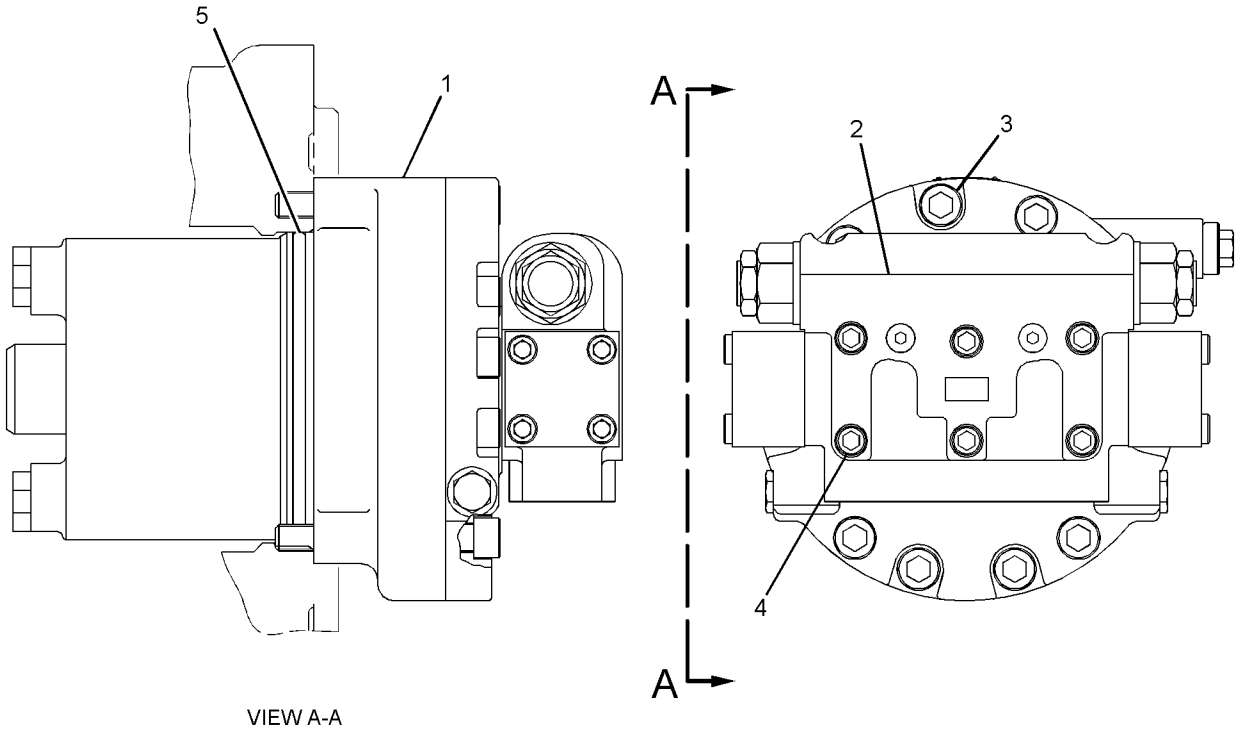

VIEW A-A

GRAPHIC #1 **<END>** g01894535

334-9968 MOTOR GP-SWING

S/N: JEG1-UP

PART OF 158-8985 MOTOR & MTG GP-SWING

SMCS-5058 **i03789773**

NOTE	REF NO	GRAPHIC REF	PART NUMBER	QTY	PART NAME 1 2 3 4 5 6 (PRODUCT LEVEL)	SEE PAGE
Y	1	1	**173-3452**	2	VALVE GP-RELIEF (SWING MOTOR)	470
Y	2	1	**334-9976**	1	MOTOR GP-SWING	414

Y - SEPARATE ILLUSTRATION

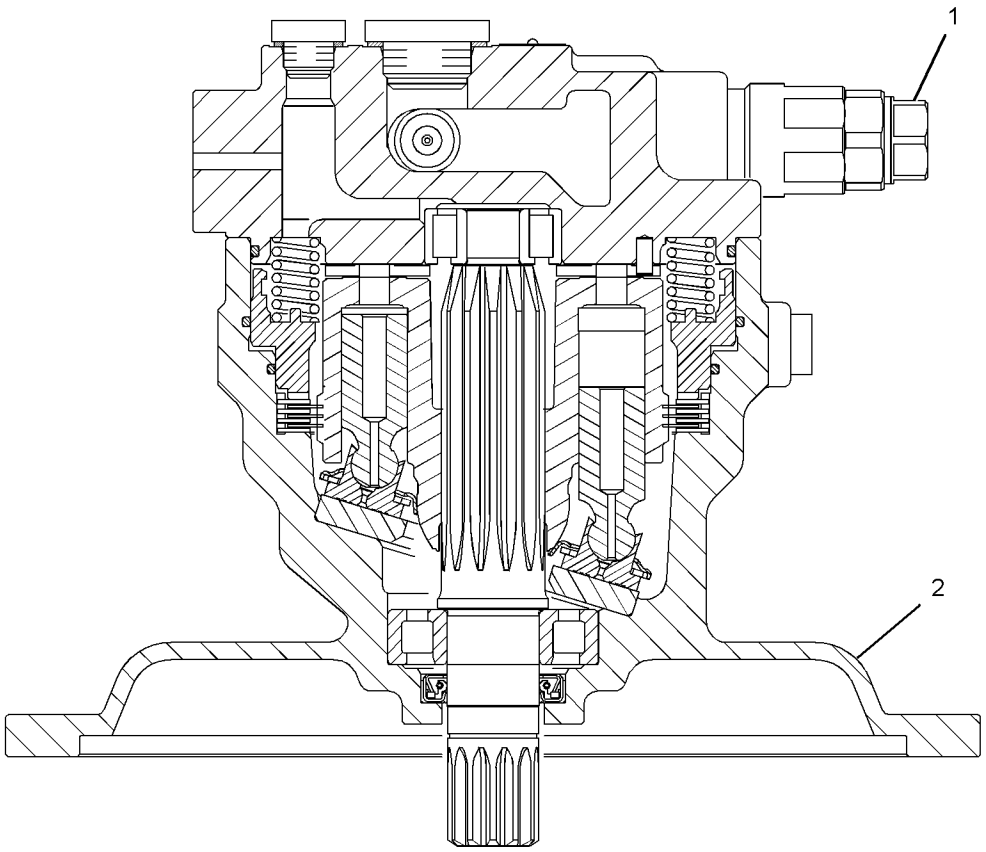

GRAPHIC #1 **<END>** g01793555

334-9976 MOTOR GP-SWING

S/N: JEG1-UP

PART OF 334-9968 MOTOR GP-SWING

SMCS-5058 **i03789799**

NOTE	REF NO	GRAPHIC REF	PART NUMBER	QTY	PART NAME 1 2 3 4 5 6 (PRODUCT LEVEL)	SEE PAGE
	1	1	**122-5318**	1	BEARING	
	2	1	**173-3444**	1	PLATE	
	3	1	**334-9981**	1	PISTON AS-PUMP	
	4	1	**173-3443**	1	PLATE	
	5	1	**173-3441**	1	BARREL	
J	6	1	**5I-8426**	1	SEAL-O-RING	
J	7	1	**5I-8417**	1	SEAL-O-RING	
	8	1	**177-2584**	1	PISTON-BRAKE	
J	9	1	**5I-8623**	1	SEAL-O-RING	
	10	1	**126-2055**	20	SPRING	
	11	1	**173-3439**	1	HEAD GP-MOTOR	
		1	**095-0882**	2	PIN-SPRING	
	12	1	**173-3445**	1	PLATE-VALVE	
	13	1	**110-5525**	2	PLUG	
J	14	1	**3J-1907**	2	SEAL-O-RING	
	15	1	**5I-8625**	1	BEARING	
	16	1	**173-3451**	4	PLATE-SEPARATOR	
	17	1	**173-3450**	3	PLATE-FRICTION	
	18	1	**173-3442**	1	SPRING	
	19	1	**191-5543**	1	BODY	
	20	1	**173-3440**	1	SHAFT	
J	21	1	**173-3447**	1	SEAL-OIL	
	22	1	**094-1900**	2	PLUG	
J	23	1	**095-1595**	2	SEAL-O-RING	
	24	1	**7Y-4268**	2	SPRING	
	25	1	**7Y-4267**	2	VALVE	
M	26	1	**7Y-5221**	4	BOLT-SOCKET HEAD (M20X2.5X45-MM)	
					AVAILABLE REPAIR KIT(S):	
J			**173-3454**	1	KIT-SEAL (SWING MOTOR)	

J - KIT MARKED J SERVICES PART(S) MARKED J
M - METRIC PART

334-9976 **MOTOR GP-SWING (*contd.*)** **i03789799**

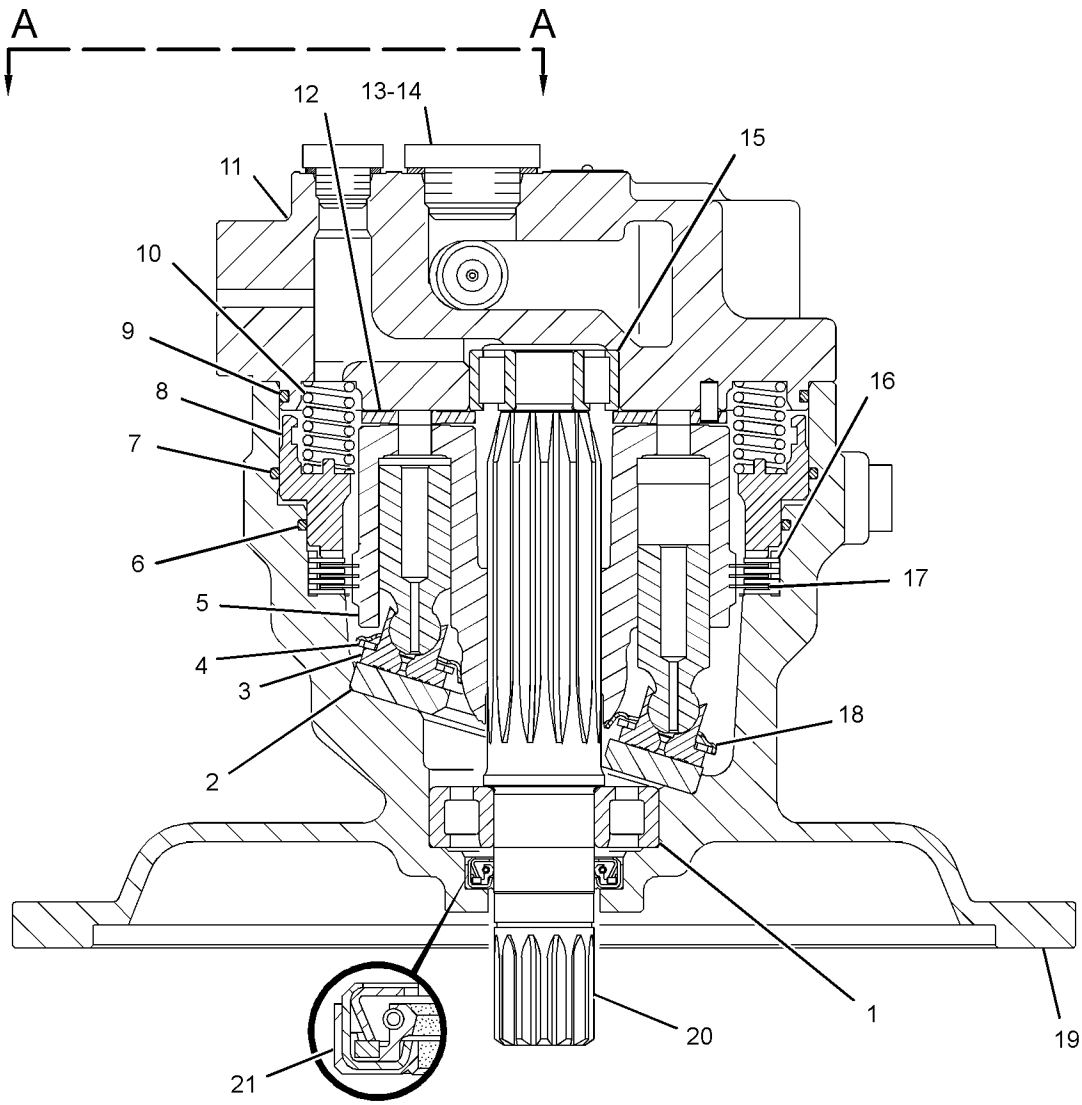

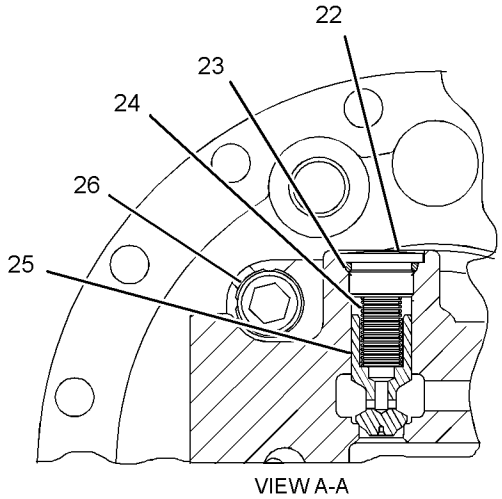

VIEW A-A

GRAPHIC #1 **<END>** g01793353

209-5992 MOTOR GP-TRAVEL*R

S/N: JEG1-UP

PART OF 334-9986 MOTOR & MTG GP-TRAVEL

SMCS-4351, 5058 **i04303450**

NOTE	REF NO	GRAPHIC REF	PART NUMBER	QTY	PART NAME 1 2 3 4 5 6 (PRODUCT LEVEL)	SEE PAGE
	1	1	**209-5894**	1	SHAFT	
	2	1	**087-4743**	2	STOP	
	3	1	**094-1399**	1	RING-RETAINING	
	4	1	**7Y-4212**	1	BEARING	
	5	1	**087-4757**	2	PISTON	
	6	1	**107-6969**	1	BODY	
	7	1	**122-5114**	1	GUIDE-BALL	
	8	1	**209-5909**	1	PLATE-CAM	
	9	1	**147-5860**	1	PISTON AS	
	10	1	**133-6777**	1	BARREL AS	
	11	1	**107-6954**	4	PLATE-FRICTION	
	12	1	**107-6955**	5	PLATE-SEPARATOR	
	13	1	**096-1523**	1	GUIDE-PISTON	
	14	1	**7Y-4213**	1	PISTON-BRAKE	
	15	1	**7Y-4202**	1	HEAD	
M	16	1	**8T-4944**	10	BOLT-SOCKET HEAD (M16X2X40-MM)	
B	17	1	**096-1521**	1	SHIM (1-MM THK)	
B	18	1	**096-3785**	1	SHIM (1.2-MM THK)	
B	19	1	**096-3786**	1	SHIM (1.4-MM THK)	
B	20	1	**096-3787**	1	SHIM (1.6-MM THK)	
B	21	1	**096-1522**	1	SHIM (2-MM THK)	
B	22	1	**096-3788**	1	SHIM (1.8-MM THK)	
	23	1	**096-5916**	2	SEAT	
	24	1	**2D-6642**	2	BALL	
J	25	1	**095-1572**	2	SEAL-O-RING	
J	26	1	**096-5919**	2	RING-BACKUP	
	27	1	**096-5915**	2	RETAINER	
	28	1	**096-4003**	1	SET-BEARING	
		1	**7Y-4234**	1	RACE-NEEDLE ROLLER	
J	29	1	**095-1585**	1	SEAL-O-RING	
	30	1	**087-4742**	1	VALVE	
	31	1	**096-1519**	1	SEAT	
	32	1	**095-7380**	1	SPRING	
	33	1	**095-7382**	1	RETAINER	
	34	1	**094-1875**	1	DOWEL	
	35	1	**095-7378**	1	WASHER SET	
	36	1	**8T-6759**	10	PLUG-PIPE	
J	37	1	**095-1575**	3	SEAL-O-RING	
J	38	1	**096-4378**	1	RING-BACKUP	
J	39	1	**096-4377**	2	SEAL-O-RING	
	40	1	**8T-6759**	1	PLUG-PIPE	
J	41	1	**095-7384**	1	SEAL-O-RING	
J	42	1	**095-7383**	1	SEAL-O-RING	
J	43	1	**095-7386**	1	RING-BACKUP	
J	44	1	**095-7387**	1	RING	
J	45	1	**095-1685**	1	SEAL-O-RING	
	46	1	**118-4057**	9	SPRING	
	47	1	**7Y-4215**	1	SPACER	
J	48	1	**095-1586**	2	SEAL-O-RING	
J	49	1	**7Y-4217**	2	RING-BACKUP	
J	50	1	**096-4376**	1	SEAL-LIP TYPE	
	51	1	**123-2008**	2	KEY	
J	54	1	**3K-0360**	1	SEAL-O-RING	
	55	1	**9S-4185**	1	PLUG-O-RING	
J	56	1	**095-1700**	2	SEAL-O-RING	
	57	1	**7Y-4224**	2	ORIFICE	
	58	1	**096-3978**	1	SPRING	
	59	1	**7Y-4216**	1	SPOOL	
J	60	1	**2M-9780**	1	SEAL-O-RING	

209-5992 **MOTOR GP-TRAVEL (*contd.*)** **i04303450**

NOTE	REF NO	GRAPHIC REF	PART NUMBER	QTY	PART NAME 1 2 3 4 5 6 (PRODUCT LEVEL)	SEE PAGE
	61	1	**087-4786**	1	ADAPTER	
	62	1	**121-1558**	2	PIN	
B	64	1	**094-1882**	11	PLUG	
					AVAILABLE REPAIR KIT(S):	
J			**7Y-4222**	1	KIT-SEAL (TRAVEL MOTOR)	

B - USE AS REQUIRED
J - KIT MARKED J SERVICES PARTS MARKED J
M - METRIC PART

209-5992 **MOTOR GP-TRAVEL (*contd.*)** **i04303450**

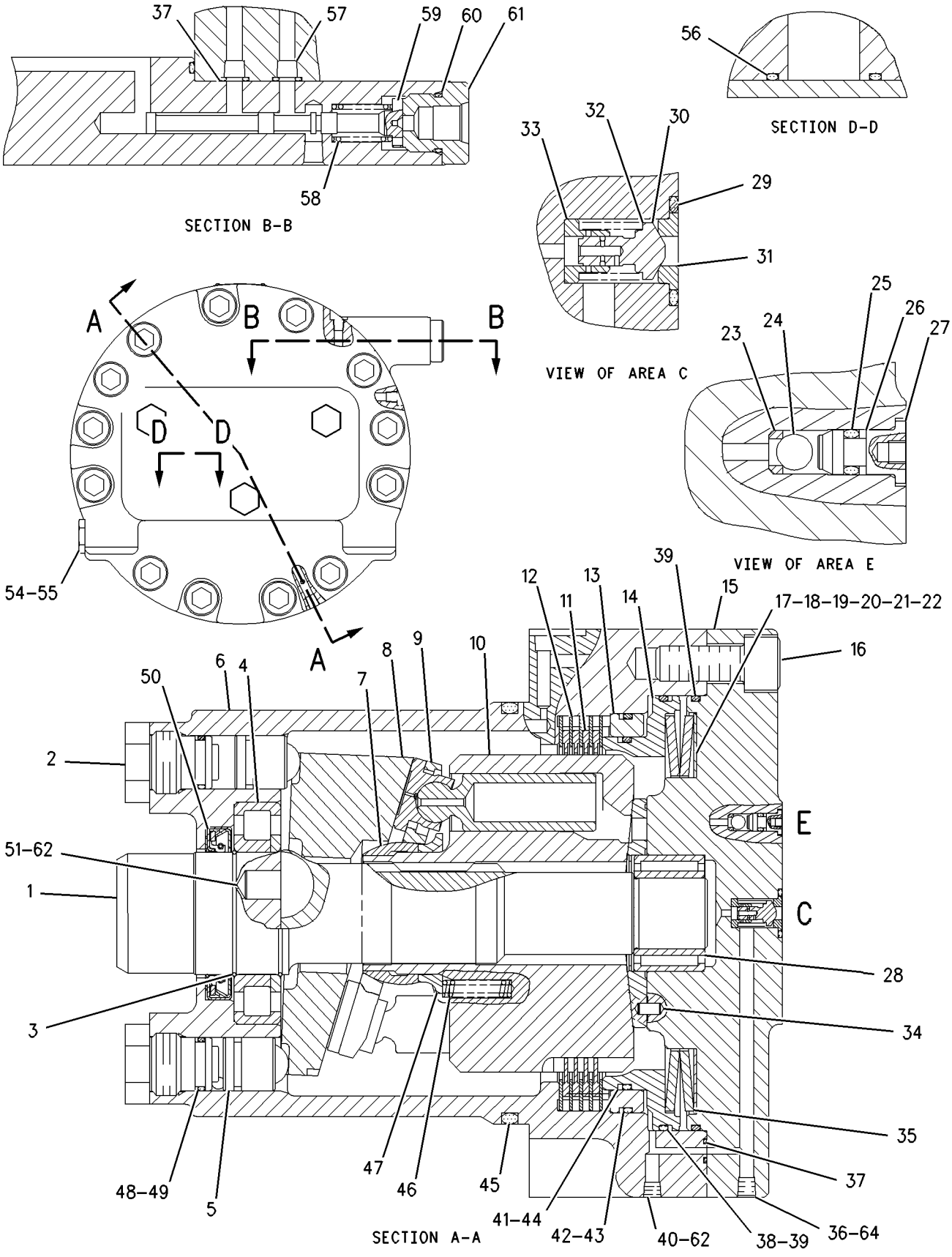

GRAPHIC #1 **<END>** g00879895

209-5994 MOTOR GP-TRAVEL–TRAVEL

S/N: JEG1-UP

PART OF 334-9987 MOTOR & MTG GP-TRAVEL

AN ATTACHMENT

SMCS-4351, 5058

i03053715

NOTE	REF NO	GRAPHIC REF	PART NUMBER	QTY	PART NAME 1 2 3 4 5 6 (PRODUCT LEVEL)	SEE PAGE
	1	2	**7Y-4212**	1	BEARING	
	2	1	**7Y-4215**	1	SPACER	
	3	2	**7Y-4216**	1	SPOOL	
	4	2	**7Y-4224**	2	ORIFICE	
	5	1	**087-4743**	2	STOP	
	6	2	**087-4786**	1	ADAPTER	
	7	2	**094-1399**	1	RING-RETAINING	
L	8	2	**094-1882**	1	PLUG	
	9	2	**095-7380**	1	SPRING	
	10	2	**096-1519**	1	SEAT	
	11	2	**096-3978**	1	SPRING	
	12	1	**096-4003**	1	SET-BEARING	
J	13	2	**096-4376**	1	SEAL-LIP TYPE	
	14	2	**096-5915**	2	RETAINER	
	15	2	**107-6954**	4	PLATE-FRICTION	
	16	2	**107-6955**	5	PLATE-SEPARATOR	
	17	1	**107-6969**	1	BODY	
	18	1	**107-6970**	1	HEAD	
	19	2	**107-6971**	1	PISTON-BRAKE	
	20	2	**107-6972**	1	GUIDE-PISTON	
	21	1	**107-6974**	1	WASHER-SPRING	
B	22	1	**107-6976**	1	SHIM (1.2-MM THK)	
B	23	1	**107-6977**	1	SHIM (1.4-MM THK)	
B	24	1	**107-6978**	1	SHIM (1.6-MM THK)	
B	25	1	**107-6979**	1	SHIM (1.8-MM THK)	
B	26	1	**107-6980**	1	SHIM (1-MM THK)	
B	27	1	**107-6981**	1	SHIM (0.8-MM THK)	
J	28	2	**107-6986**	1	SEAL-O-RING	
	29	1	**118-4057**	9	SPRING	
	30	1	**122-5114**	1	GUIDE-BALL	
	31	2	**123-2008**	2	KEY	
	32	1	**133-6777**	1	BARREL AS	
	33	2	**137-3708**	1	RETAINER	
	34	2	**137-3723**	1	VALVE	
	35	1	**147-5860**	1	PISTON AS	
	36	1	**209-5894**	1	SHAFT	
	37	1	**209-5909**	1	PLATE-CAM	
	38	1	**9S-4185**	1	PLUG-O-RING	
	39	1	**209-6049**	2	PISTON	
	40	1	**094-1875**	1	DOWEL	
	41	2	**094-1882**	10	PLUG	
J	42	2	**095-1572**	2	SEAL-O-RING	
J	43	2	**095-1575**	3	SEAL-O-RING	
J	44	2	**095-1585**	1	SEAL-O-RING	
J	45	1	**095-1586**	2	SEAL-O-RING	
J	46	1	**095-1685**	1	SEAL-O-RING	
J	47	2	**095-1700**	2	SEAL-O-RING	
J	48	2	**095-7383**	1	SEAL-O-RING	
J	49	2	**095-7386**	1	RING-BACKUP	
M	50	1	**8T-4944**	10	BOLT-SOCKET HEAD (M16X2X40-MM)	
J	51	2	**096-4377**	2	SEAL-O-RING	
J	52	2	**096-4378**	1	RING-BACKUP	
	53	2	**096-5916**	2	SEAT	
J	54	2	**096-5919**	2	RING-BACKUP	
J	55	2	**107-6987**	1	RING-BACKUP	
	56	2	**121-1558**	2	PIN	
	57	2	**2D-6642**	2	BALL	
J	58	2	**2M-9780**	1	SEAL-O-RING	

209-5994 **MOTOR GP-TRAVEL (*contd.*)** **i03053715**

NOTE	REF NO	GRAPHIC REF	PART NUMBER	QTY	PART NAME 1 2 3 4 5 6 (PRODUCT LEVEL)	SEE PAGE
J	59	1	**3K-0360**	1	SEAL-O-RING	
J	60	1	**7Y-4217**	2	RING-BACKUP	
					AVAILABLE REPAIR KIT(S):	
J			**107-6988**	1	KIT-SEAL (TRAVEL MOTOR)	

B - USE AS REQUIRED
J - KIT MARKED J SERVICES PARTS MARKED J
L - NOT REQUIRED FOR OPTIONAL BODY DESIGN
M - METRIC PART

209-5994 **MOTOR GP-TRAVEL (*contd.*)** **i03053715**

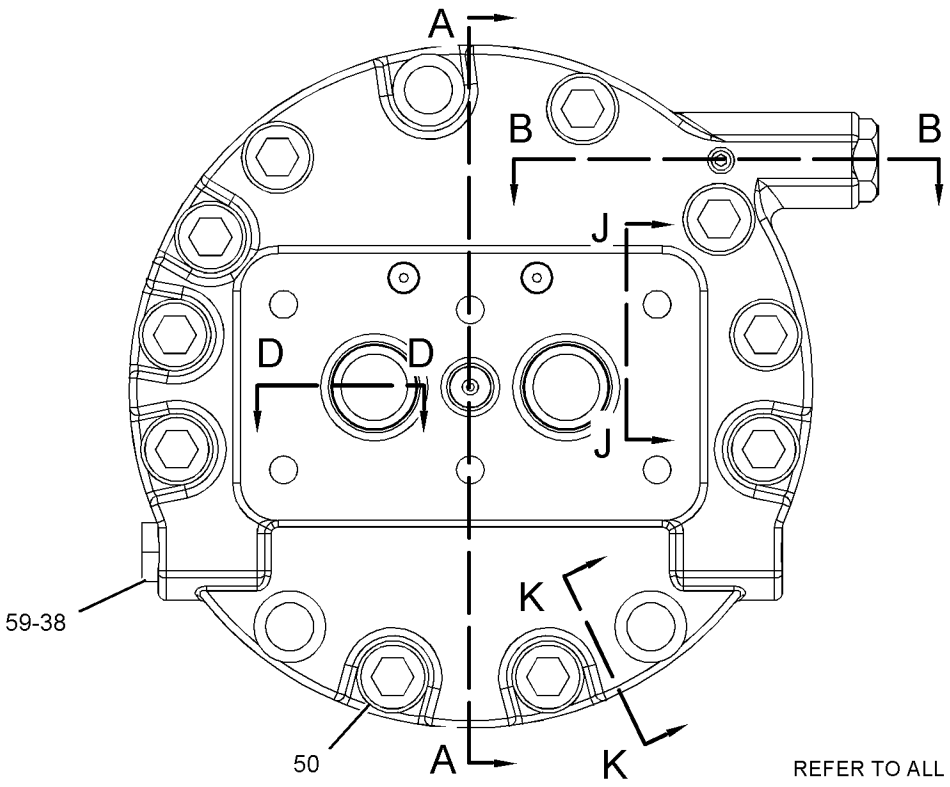

REFER TO ALL ILLUSTRATIONS OF
THIS GROUP FOR AUXILIARY VIEWS

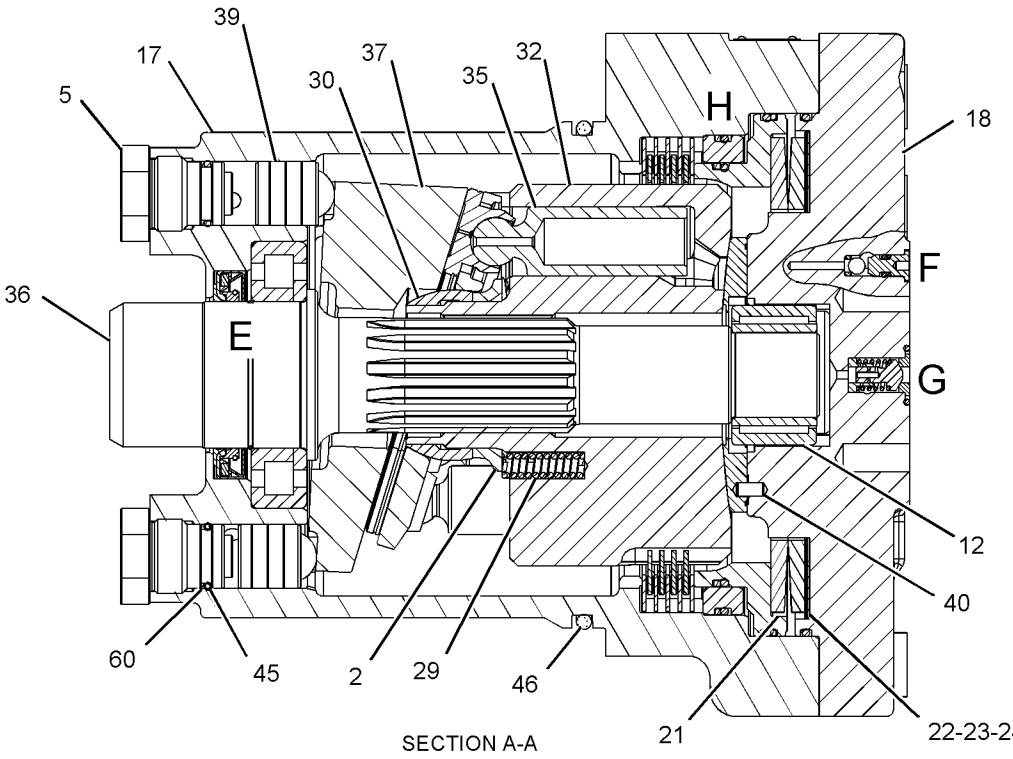

SECTION A-A

GRAPHIC #1

g01232176

209-5994 **MOTOR GP-TRAVEL (*contd.*)** **i03053715**

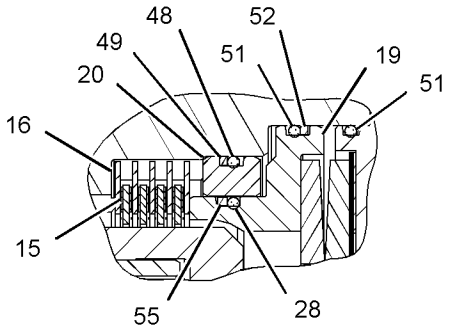

VIEW OF AREA H

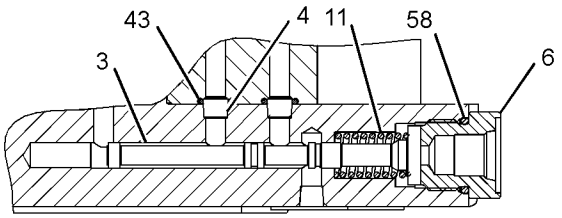

SECTION B-B

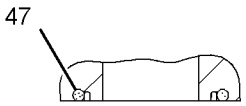

SECTION D-D

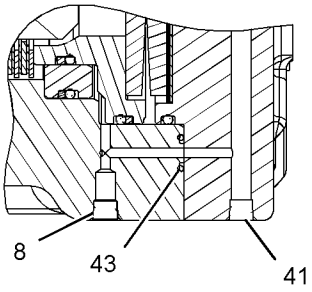

SECTION K-K

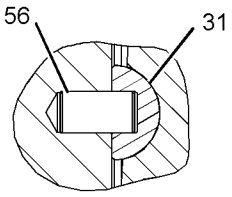

SECTION J-J

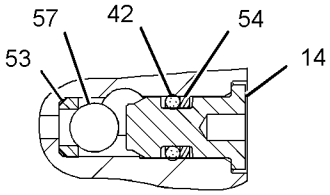

VIEW OF AREA F

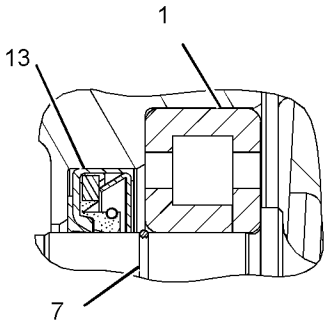

VIEW OF AREA E

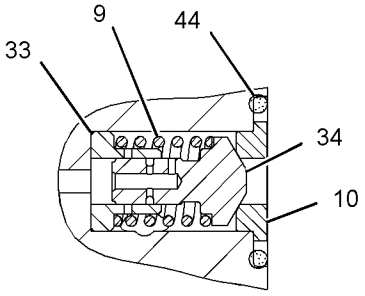

VIEW OF AREA G

GRAPHIC #2 **<END>** g01232177

260-7868 MOUNTING GP-MAIN CONTROL VALVE

S/N: JEG1-UP

PART OF 383-5083 HYDRAULIC AR

SMCS-5051 **i02499414**

NOTE	REF NO	GRAPHIC REF	PART NUMBER	QTY	PART NAME 1 2 3 4 5 6 (PRODUCT LEVEL)	SEE PAGE
	1	1	**260-7904**	1	SUPPORT AS	
	2	1	**260-7906**	1	SUPPORT AS	
M	3	1	**100-3866**	8	BOLT-SELF-LOCKING (M16X2X40-MM)	
	4	1	**9X-8257**	4	WASHER (17.5X30X3.5-MM THK)	
	5	1	**196-0711**	4	WASHER (17X40X8-MM THK)	

M - METRIC PART

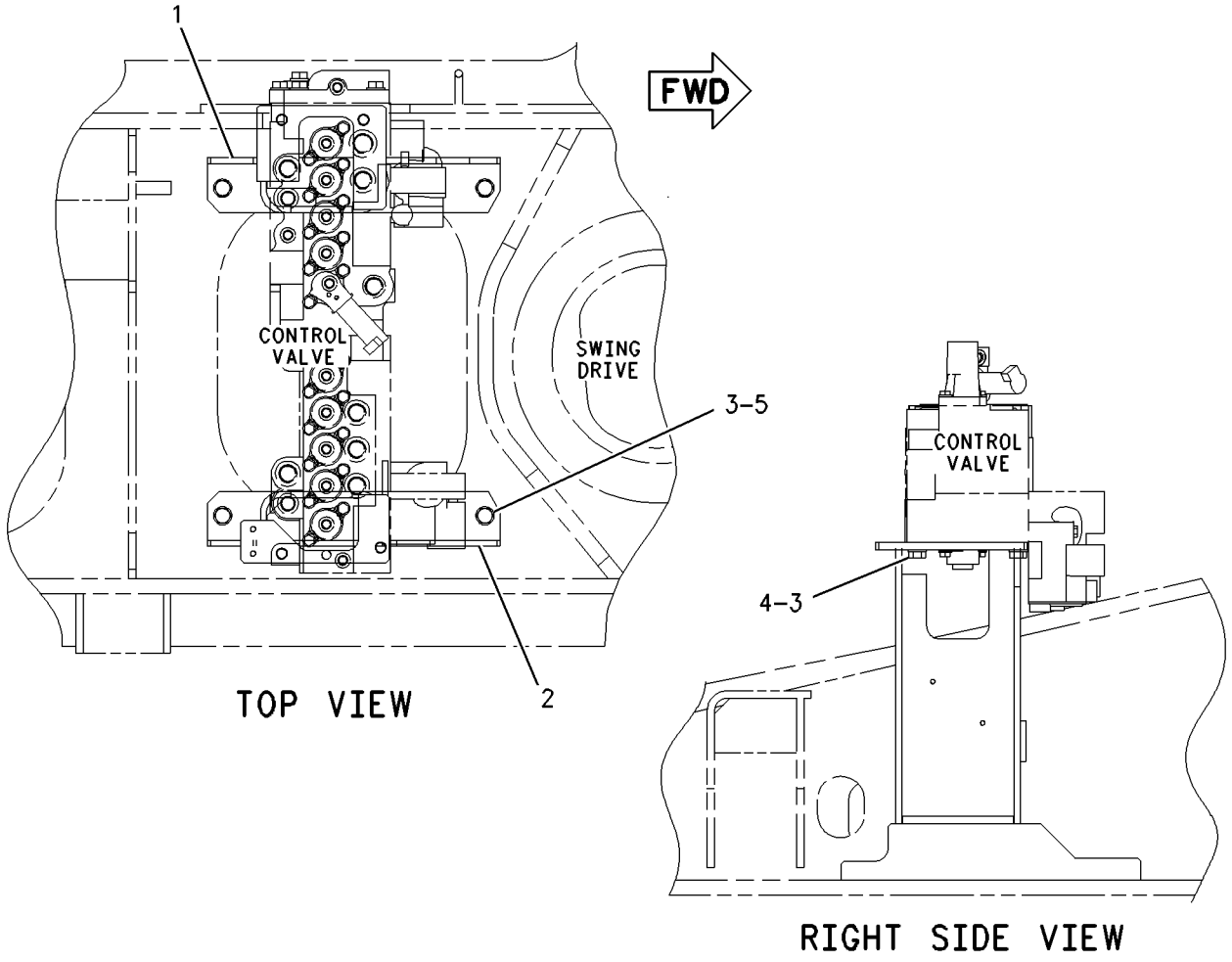

GRAPHIC #1 **<END>** g00676425

387-2626 PUMP & MTG GP-MAIN HYDRAULIC

S/N: JEG1-UP

PART OF 383-5083 HYDRAULIC AR

SMCS-5070 **i05536888**

NOTE	REF NO	GRAPHIC REF	PART NUMBER	QTY	PART NAME 1 2 3 4 5 6 (PRODUCT LEVEL)	SEE PAGE
Y	1	1	*341-5368*	1	COUPLING GP-PUMP	281
Y	2	1	**436-6669**	1	PUMP GP-MAIN HYDRAULIC	426
	3	1	**7X-7729**	12	WASHER (11X25X3-MM THK)	
M	4	1	**8T-4195**	12	BOLT (M10X1.5X30-MM)	

M - METRIC PART
Y - SEPARATE ILLUSTRATION

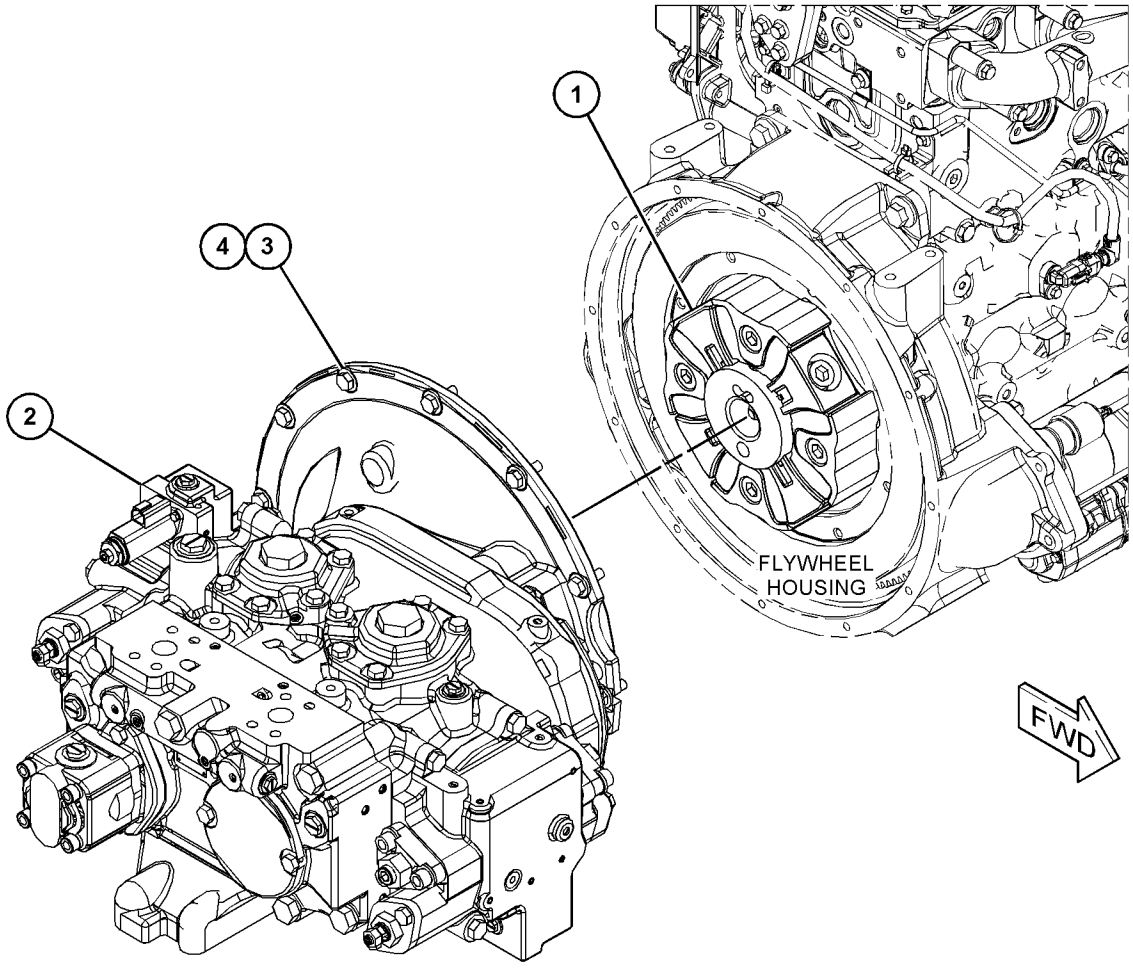

GRAPHIC #1 **<END>** g03450776

341-2860 PUMP GP-GEAR–PILOT

S/N: JEG1-UP

PART OF 436-6669 PUMP GP-MAIN HYDRAULIC

SMCS-5073 **i05263929**

NOTE	REF NO	GRAPHIC REF	PART NUMBER	QTY	PART NAME 1 2 3 4 5 6 (PRODUCT LEVEL)	SEE PAGE
					AVAILABLE REPAIR KIT(S):	
			327-8740	1	KIT-SEAL (GEAR PUMP)	
					(KIT INCLUDES GASKETS, LIP TYPE SEAL, SEAL & RETAINING RING)	

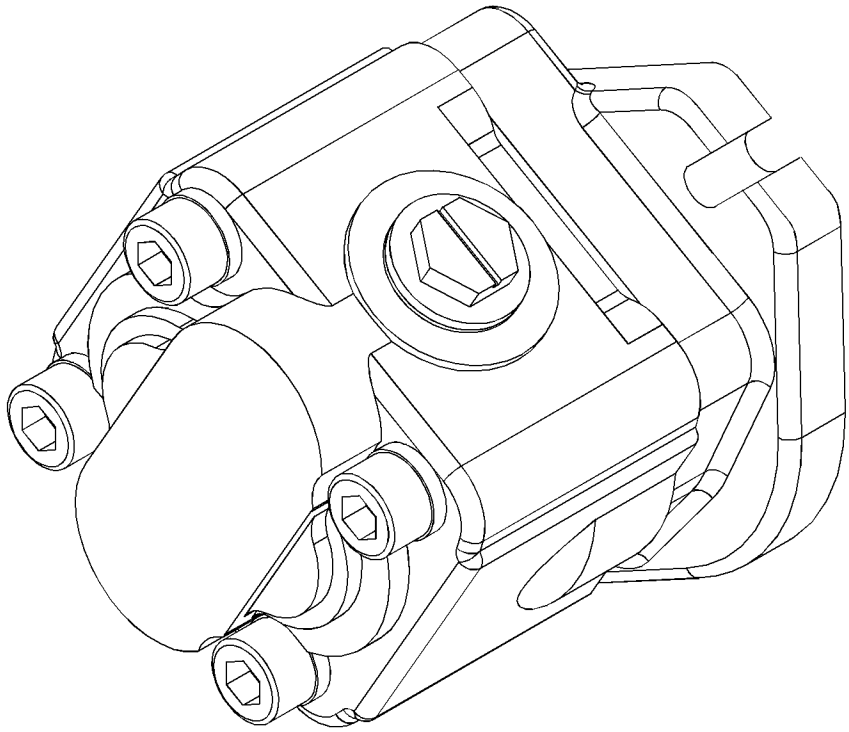

GRAPHIC #1 **<END>** g02484156

436-6669 PUMP GP-MAIN HYDRAULIC

S/N: JEG1-UP

PART OF 387-2626 PUMP & MTG GP-MAIN HYDRAULIC

SMCS-5070 **i05536891**

NOTE	REF NO	GRAPHIC REF	PART NUMBER	QTY	PART NAME 1 2 3 4 5 6 (PRODUCT LEVEL)	SEE PAGE
	1	3	**4I-1022**	2	ORIFICE	
	2	3	**096-3983**	1	RING-RETAINING	
	3	2	**129-7853**	2	PLATE-CREEP	
	4	2	**129-7855**	1	GASKET	
	5	2	**129-7857**	1	GASKET	
	6	2	**129-7859**	2	SET-BEARING	
	7	2	**129-7863**	1	COVER	
	8	2	**129-7921**	2	RING-RETAINING	
	9	2	**129-7927**	2	BEARING	
	10	2	**129-7979**	4	DOWEL	
	11	2	**150-5782**	2	COVER	
	12	1	**177-2470**	1	COVER	
	13	1	**177-2471**	1	COVER	
	14	1	**190-4896**	2	PLUG	
	15	2	**192-0573**	4	PIN-DOWEL	
	16	2	**200-3334**	1	COVER	
	17	1	**247-8920**	2	ORIFICE	
	18	2	**273-8314**	1	SEAL-O-RING	
	19	2,3	**273-8315**	2	SEAL-O-RING	
	20	3	**341-2831**	1	SHAFT-DRIVE	
	21	2	**341-2834**	1	SHAFT-DRIVEN	
	22	2	**341-2839**	2	GEAR (50-TEETH)	
	23	3	**341-2840**	1	CASE	
	24	2	**341-2841**	1	FLANGE	
	25	2	**341-2842**	1	BODY	
	26	2	**341-2852**	2	PISTON AS	
	27	2	**341-2857**	2	GUIDE-BALL	
	28	2	**341-2858**	2	SPACER	
Y	29	3	**341-2860**	1	PUMP GP-GEAR (PILOT)	425
	30	3	**341-2862**	1	SEAL-LIP TYPE	
	31	2	**341-2872**	18	SPRING	
Y	32	1	**344-5281**	1	HEAD GP-PUMP (DRIVE)	310
Y	33	1	**344-5282**	1	HEAD GP-PUMP (DRIVEN)	313
	34	2	**373-9516**	2	SWASHPLATE AS	
					(EACH INCLUDES)	
		2	**094-1875**	1	DOWEL	
		2	**173-3428**	1	BUSHING	
		2	**242-6803**	2	PIN-DOWEL	
	35	2	**373-9518**	4	BEARING	
	37	3	**433-8677**	1	BARREL AS-DRIVE	
	38	2	**433-8678**	1	BARREL AS-DRIVEN	
	40	3	**094-1875**	8	DOWEL	
	41	1,3	**094-1882**	18	PLUG	
	42	2	**095-0929**	2	RING-RETAINING	
	43	2	**095-0946**	2	RING-RETAINING	
	45	3	**096-3944**	1	SEAL-O-RING	
	46	2,3	**189-9763**	8	SEAL-O-RING	
	47	2	**193-1736**	4	SEAL-O-RING	
	48	2	**3K-0360**	2	SEAL-O-RING	
	49	3	**7M-8485**	2	SEAL-O-RING	
M	50	1	**7X-2557**	1	BOLT (M16X2X140-MM)	
	51	3	**8J-4645**	2	PLUG (STRAIGHT THREAD O-RING)	
M	52	2,3	**8T-4136**	20	BOLT (M10X1.5X25-MM)	
M	53	1,2	**8T-4139**	10	BOLT (M12X1.75X30-MM)	
M	54	1	**8T-4140**	4	BOLT (M16X2X60-MM)	
M	55	1	**8T-4175**	2	BOLT (M16X2X90-MM)	
M	56	1,2	**8T-4176**	2	BOLT (M12X1.75X90-MM)	
M	57	3	**8T-4192**	10	BOLT (M12X1.75X25-MM)	

436-6669 **PUMP GP-MAIN HYDRAULIC (*contd.*)** **i05536891**

NOTE	REF NO	GRAPHIC REF	PART NUMBER	QTY	PART NAME 1 2 3 4 5 6 (PRODUCT LEVEL)	SEE PAGE
M	58	3	**8T-4196**	2	BOLT (M10X1.5X35-MM)	
	59	2	**9S-4185**	2	PLUG-O-RING	

M - METRIC PART
Y - SEPARATE ILLUSTRATION

REFER TO ALL ILLUSTRATIONS OF THIS GROUP FOR AUXILIARY VIEWS

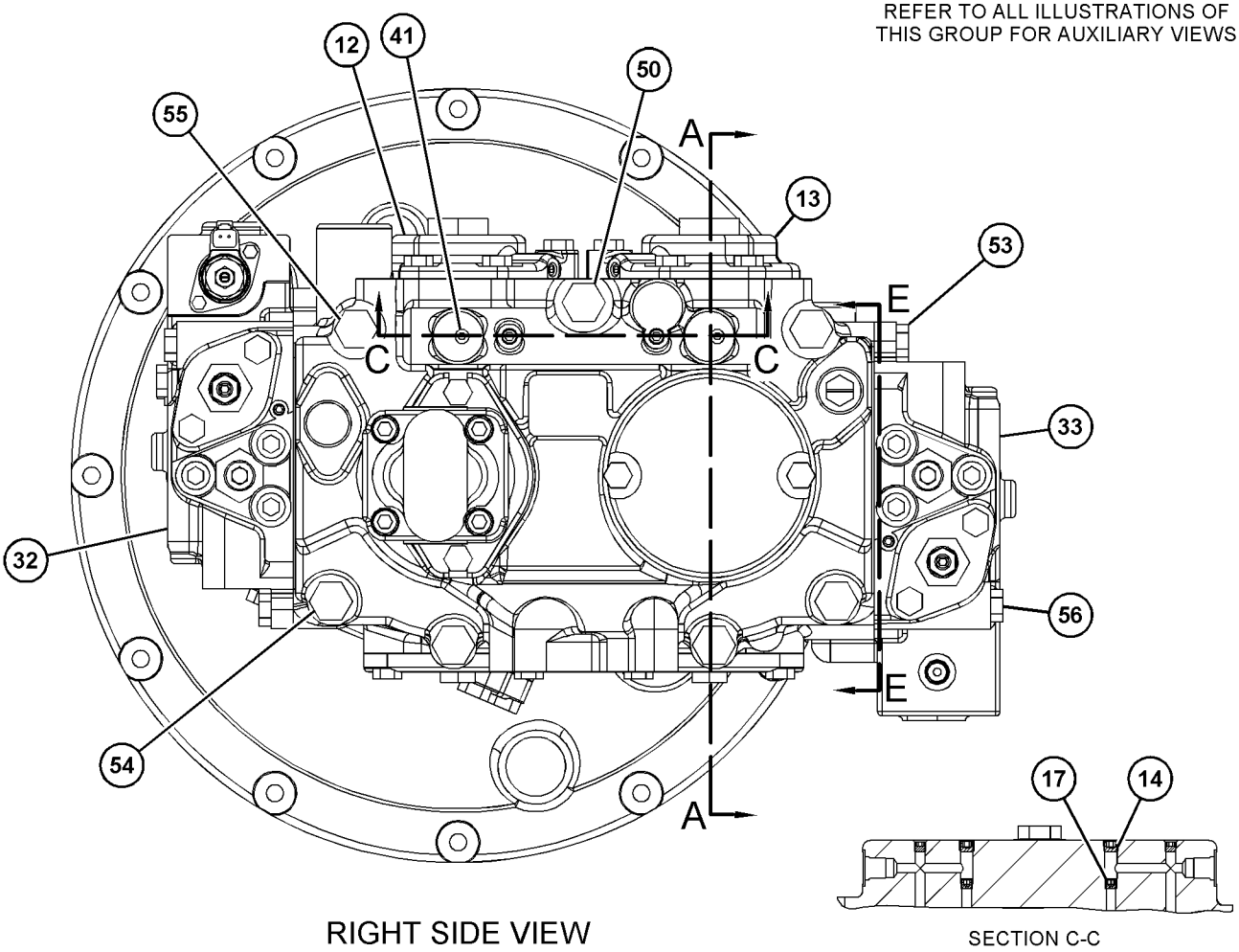

RIGHT SIDE VIEW

SECTION C-C

GRAPHIC #1

g03452399

436-6669 **PUMP GP-MAIN HYDRAULIC** (*contd.*) **i05536891**

REFER TO ALL ILLUSTRATIONS OF
THIS GROUP FOR AUXILIARY VIEWS

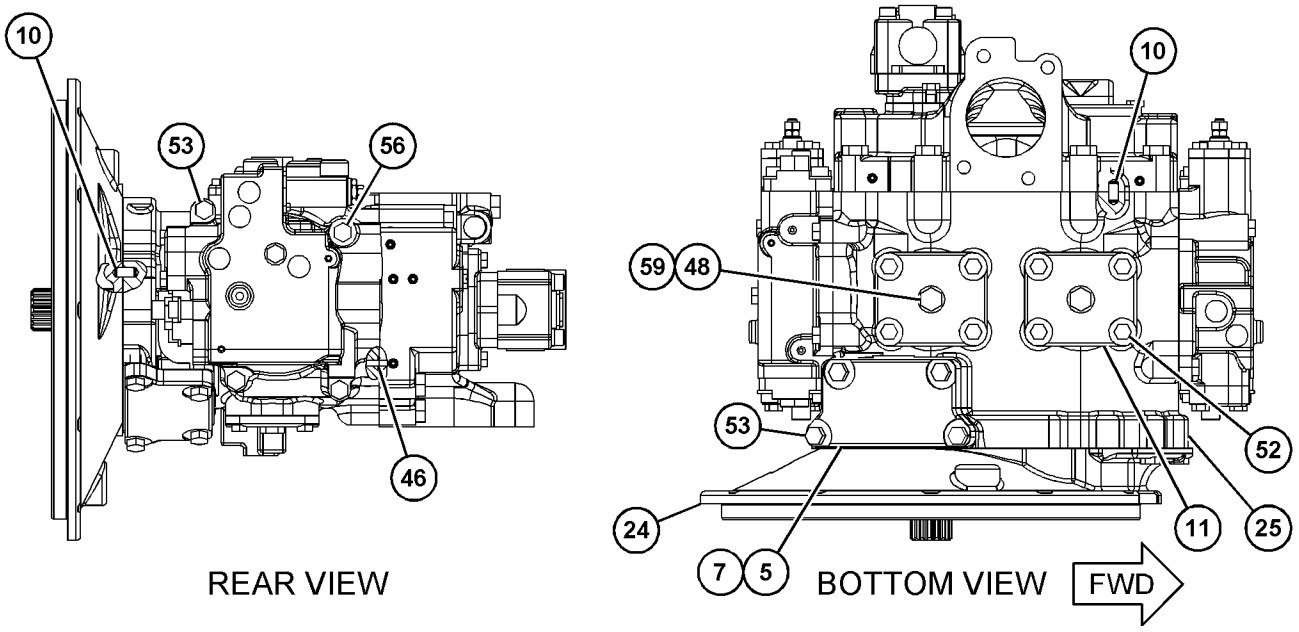

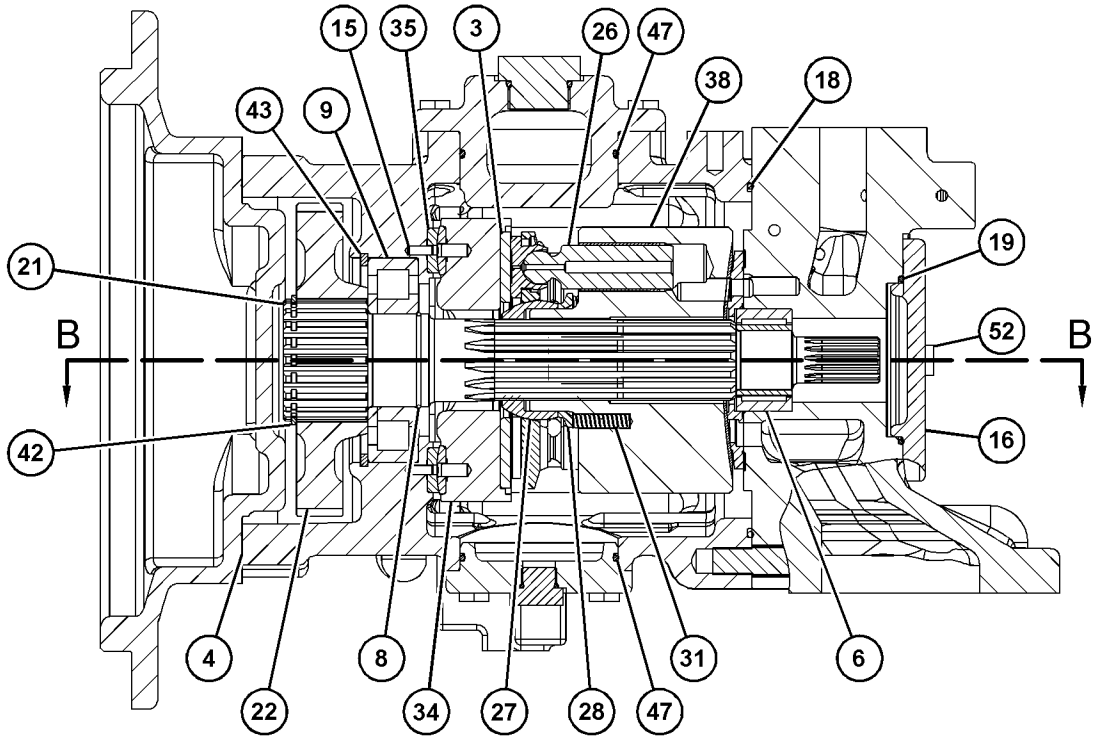

SECTION A-A

GRAPHIC #2 g03452400

436-6669 **PUMP GP-MAIN HYDRAULIC (*contd.*)** **i05536891**

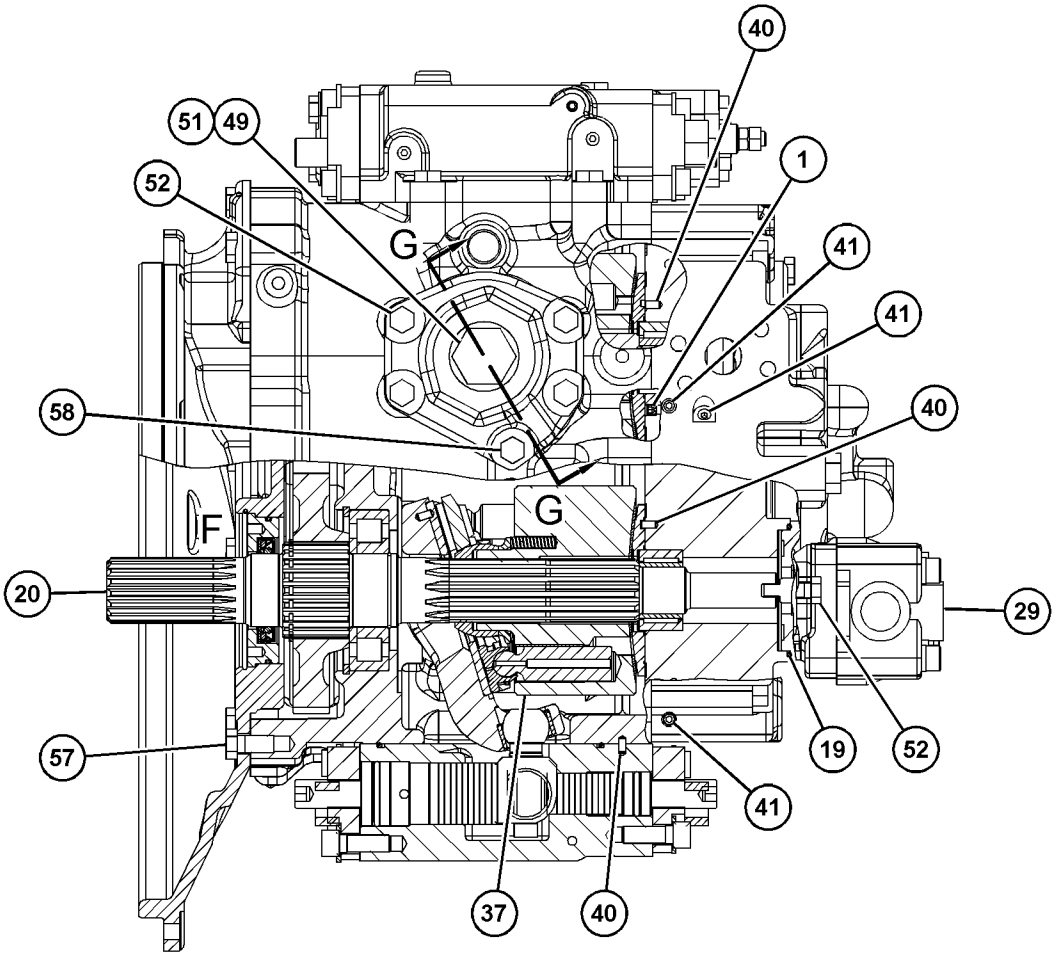

SECTION B-B

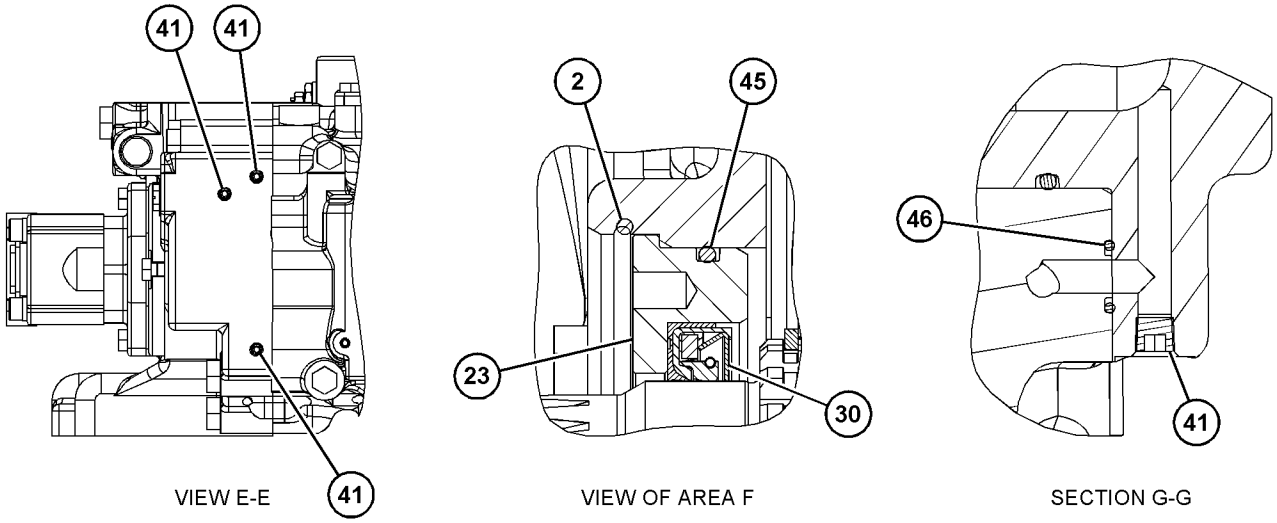

VIEW E-E

VIEW OF AREA F

SECTION G-G

GRAPHIC #3

<END>

g03452401

387-3783 SCREEN GP-HYDRAULIC–TANK

S/N: JEG1-UP

PART OF 395-3364 TANK & FILTER GP-HYDRAULIC

SMCS-5068 **i05518598**

NOTE	REF NO	GRAPHIC REF	PART NUMBER	QTY	PART NAME 1 2 3 4 5 6 (PRODUCT LEVEL)	SEE PAGE
	1	1	**129-7784**	1	ROD	
	2	1	**209-6000**	1	SCREEN AS (HYDRAULIC TANK)	
	3	1	**259-0918**	1	GUIDE	
	4	1	**095-6639**	1	SPRING	
	5	1	**5H-5672**	1	SEAL-O-RING	
M	6	1	**8T-4133**	2	NUT (M10X1.5-THD)	

M - METRIC PART

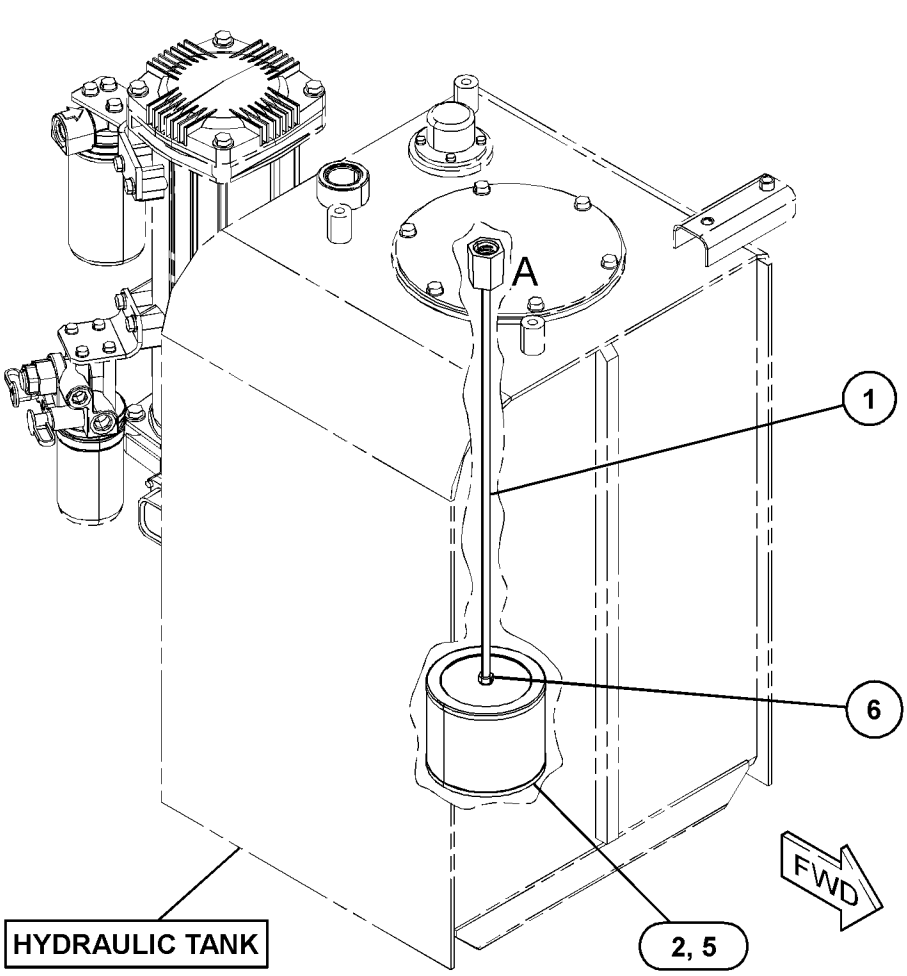

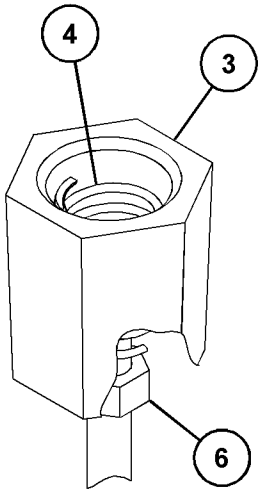

VIEW OF AREA A

GRAPHIC #1 **<END>** g03271036

234-4440 SWIVEL GP

S/N: JEG1-UP

PART OF 239-1717 LINES GP-TRAVEL MOTOR

SMCS-5060 **i02497047**

NOTE	REF NO	GRAPHIC REF	PART NUMBER	QTY	PART NAME 1 2 3 4 5 6 (PRODUCT LEVEL)	SEE PAGE
	1	1	**7I-7131**	1	RETAINER	
	2	1	**7Y-4817**	1	COVER	
	3	1	**159-7782**	5	SEAL	
	4	1	**225-4548**	1	HOUSING	
	5	1	**225-4549**	1	ROTOR	
	6	1	**095-1625**	3	SEAL-O-RING	
	7	1	**095-1716**	1	SEAL-O-RING	
	8	1	**8T-4121**	2	WASHER-HARD (11X21X2.5-MM THK)	
M	9	1	**8T-4136**	6	BOLT (M10X1.5X25-MM)	
	10	1	**8T-6759**	1	PLUG-PIPE	

M - METRIC PART

234-4440 **SWIVEL GP (*contd.*)** **i02497047**

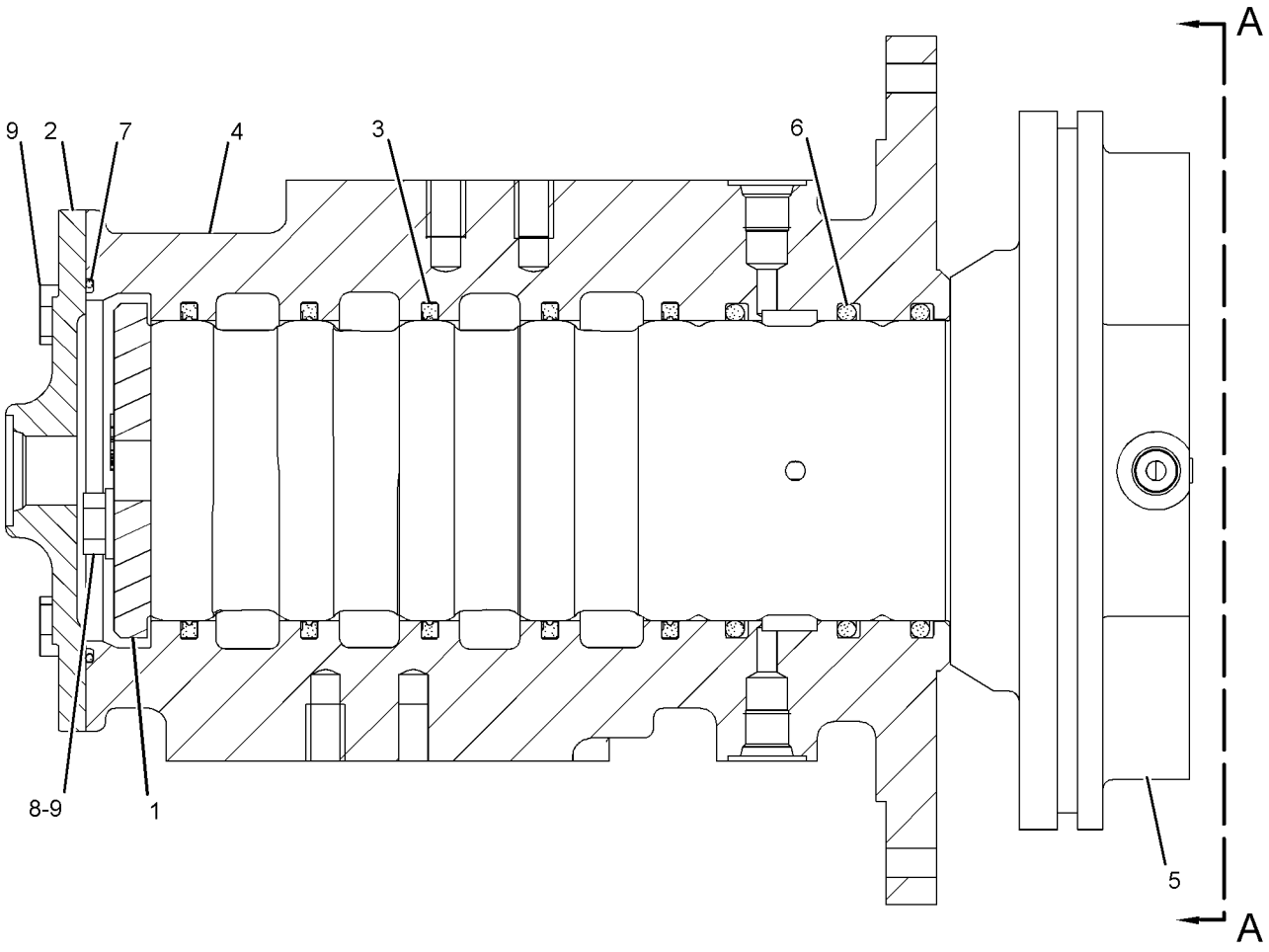

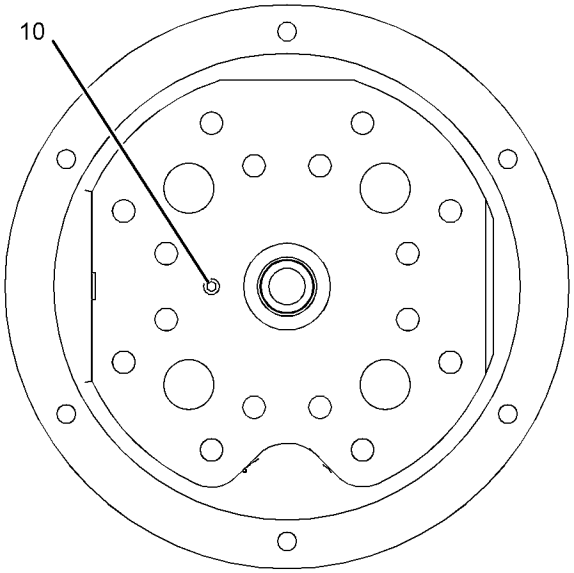

VIEW A-A

GRAPHIC #1

<END>

g01153614

395-3364 TANK & FILTER GP-HYDRAULIC

S/N: JEG1-UP
210-L (55.5-US GAL)
PART OF 415-7828 TANK & MTG GP-HYDRAULIC

SMCS-5056, 5068 **i05536447**

NOTE	REF NO	GRAPHIC REF	PART NUMBER	QTY	PART NAME 1 2 3 4 5 6 (PRODUCT LEVEL)	SEE PAGE
C	1	1	**2B-0858**	1	PLUG-PIPE	
	2	1	**6D-9157**	1	SEAL-O-RING	
	3	1	**6J-2680**	1	SEAL-O-RING	
	4	1	**6V-0852**	1	CAP-DUST	
C	5	1	**4J-5267**	1	SEAL-O-RING	
C	6	1	*321-8667*	1	ADAPTER GP-PLUG	
		1	**6V-1322**	1	BOLT (1/4-20X0.375-IN)	
		1	**109-9549**	1	SPACER (0.13-MM THK)	
		1	**321-8665**	1	PLUG-DRAIN (HYDRAULIC TANK)	
		1	**321-8666**	1	ADAPTER	
	8	1	**095-1608**	1	SEAL-O-RING	
Y	9	1	**158-8987**	1	FILTER & VALVE GP-PILOT (HYDRAULIC OIL)	302
	10	1	**165-3256**	1	PIPE AS	
	11	1	**207-6403**	1	PLUG	
	12	1	**227-0590**	1	BREATHER (HYDRAULIC TANK)	
	13	1	**275-1362**	1	BRACKET	
Y	14	1	**289-8194**	1	FILTER GP-OIL (HYDRAULIC, CASE DRAIN)	305
	15	1	**292-7297**	1	SUPPORT AS	
	16	1	**342-2924**	1	SENDER AS-TEMPERATURE (HYDRAULIC OIL)	
M		1	**095-7930**	2	SCREW-MACHINE (M4X0.7X6-MM)	
		1	**1H-4393**	2	LOCKWASHER	
Y	17	1	**347-6081**	1	GAUGE GP-SIGHT (HYDRAULIC OIL LEVEL)	309
Y	18	1	*387-3783*	1	SCREEN GP-HYDRAULIC (TANK)	430
	19	1	**395-0021**	1	COVER AS	
	21	1	**207-6404**	1	WASHER (49.5X60.5X1.5-MM THK)	
	22	1	**095-1730**	1	SEAL-O-RING	
	23	1	*164-5567*	1	COUPLER AS-QUICK DISCONNECT (MALE)	
		1	**214-7568**	1	SEAL-O-RING	
		1	**6V-3965**	1	FITTING (QUICK DISCONNECT)	
	24	1	*164-5590*	1	VALVE GP-FLUID SAMPLING (HYDRAULIC OIL)	
		1	**3J-7354**	1	SEAL-O-RING	
		1	**8C-3446**	1	VALVE-FLUID SAMPLING (HYDRAULIC OIL)	
Y	25	1	*188-4140*	1	FILTER GP-OIL (HYDRAULIC RETURN)	303
	26	1	**3K-0360**	1	SEAL-O-RING	
	27	1	**4J-0527**	1	SEAL-O-RING	
M	28	1	**5C-9553**	4	BOLT (M6X1X16-MM)	
	32	1	**8C-3451**	1	CAP-DUST	
M	33	1	**8T-0267**	2	BOLT-SOCKET HEAD (M6X1X12-MM)	
C	35	1	**8T-4121**	15	WASHER-HARD (11X21X2.5-MM THK)	
CM	36	1	**8T-4136**	11	BOLT (M10X1.5X25-MM)	
M	37	1	**8T-4183**	6	BOLT (M12X1.75X40-MM)	
M	38	1	**8T-4195**	4	BOLT (M10X1.5X30-MM)	
	40	1	**8T-4223**	4	WASHER-HARD (13.5X25.5X3-MM THK)	
	41	1	**8T-4224**	4	WASHER-HARD (8.8X16X2-MM THK)	
M	42	1	**8T-4908**	4	BOLT (M8X1.25X25-MM)	
	43	1	**8T-7971**	2	WASHER-HARD (13.5X25.5X5-MM THK)	
	44	1	**9X-8256**	4	WASHER (6.6X12X2-MM THK)	
					PARTS SHOWN IN GRAPHIC(S) WITHOUT A REFERENCE NUMBER ARE NOT SERVICED SEPARATELY	

C - CHANGE FROM PREVIOUS TYPE
M - METRIC PART
Y - SEPARATE ILLUSTRATION

395-3364 **TANK & FILTER GP-HYDRAULIC (*contd.*)** **i05536447**

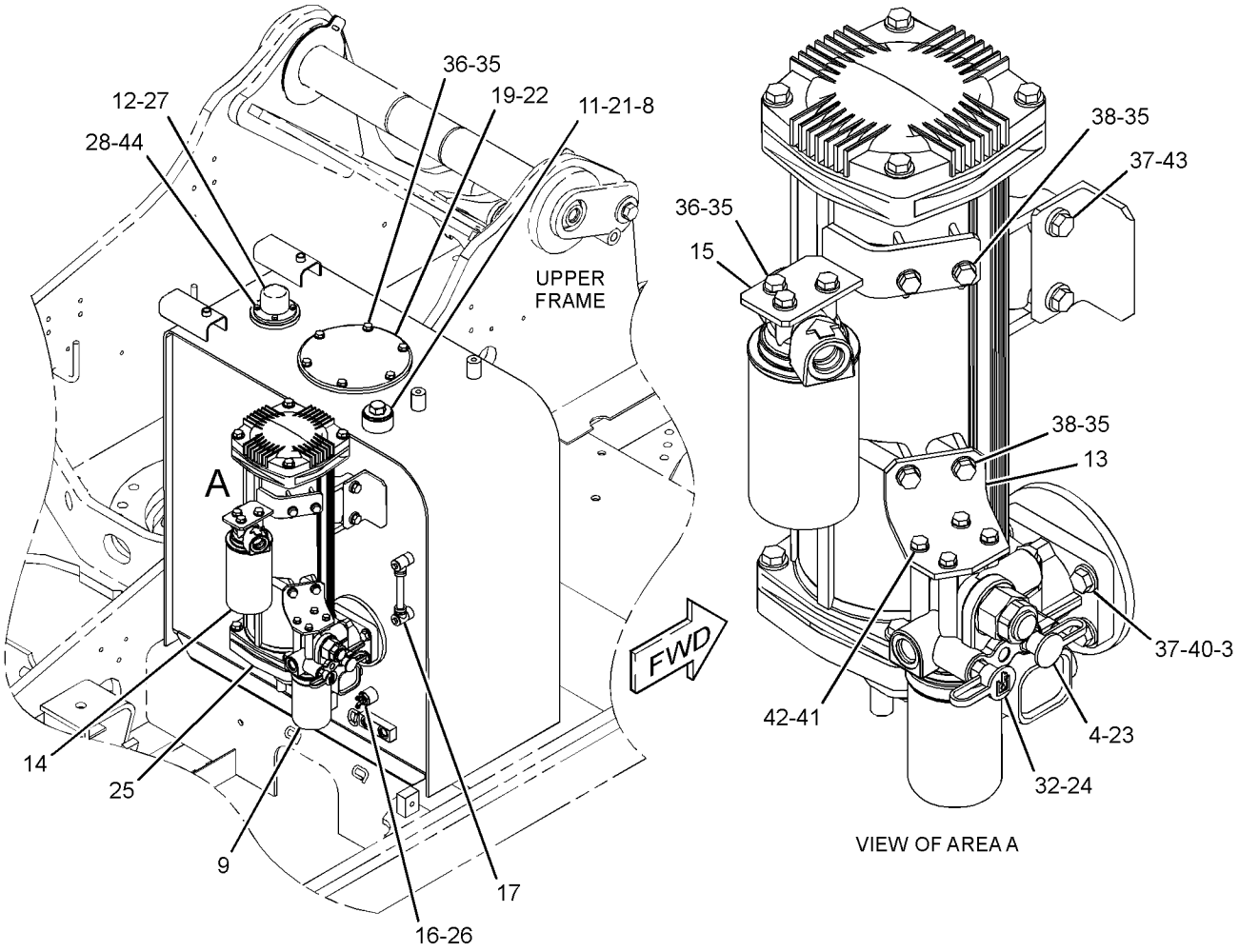

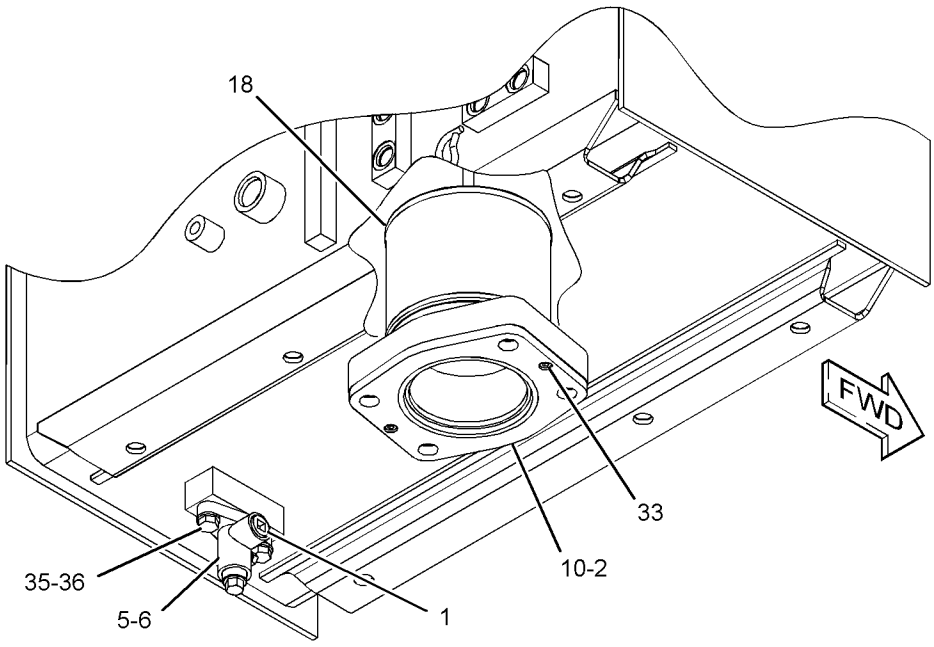

GRAPHIC #1 **<END>** g03497042

415-7828 TANK & MTG GP-HYDRAULIC

S/N: JEG1-UP

PART OF 383-5083 HYDRAULIC AR

SMCS-5056 **i05263957**

NOTE	REF NO	GRAPHIC REF	PART NUMBER	QTY	PART NAME 1 2 3 4 5 6 (PRODUCT LEVEL)	SEE PAGE
	1	1	**085-9310**	6	SPACER (16.6X32X26-MM THK)	
Y	2	1	*248-9853*	1	LINES GP-RETURN	399
Y	3	1	**395-3364**	1	TANK & FILTER GP-HYDRAULIC	433
M	4	1	**8T-4140**	6	BOLT (M16X2X60-MM)	

M - METRIC PART
Y - SEPARATE ILLUSTRATION

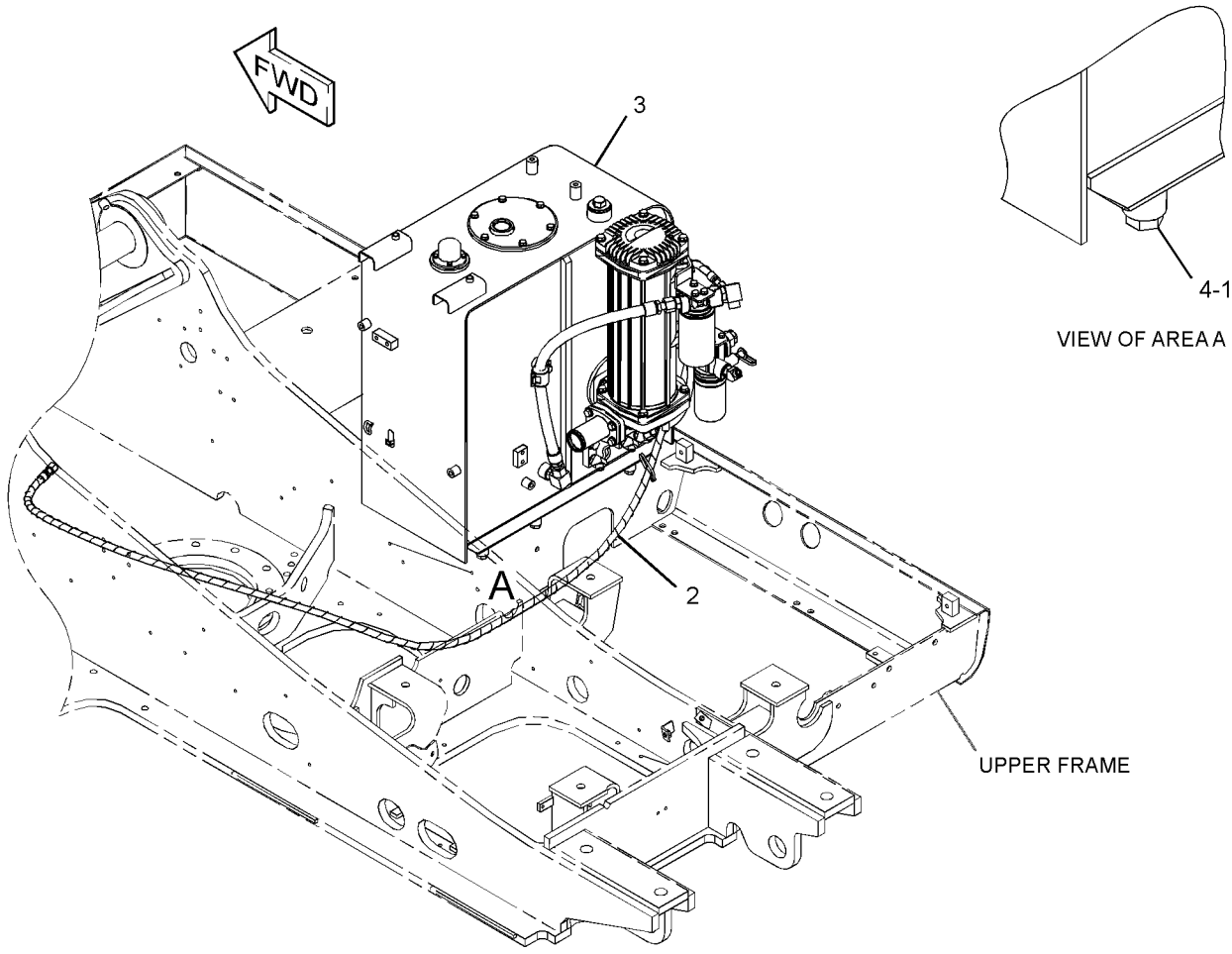

GRAPHIC #1 **<END>** g03303259

255-5713 VALVE & MTG GP-CONTROL–AUXILIARY

S/N: JEG1-UP
PART OF 383-5306, 383-5307 CONTROL AR-AUXILIARY
AN ATTACHMENT

SMCS-5051 **i04040949**

NOTE	REF NO	GRAPHIC REF	PART NUMBER	QTY	PART NAME 1 2 3 4 5 6 (PRODUCT LEVEL)	SEE PAGE
Y	1	1	**259-7378**	1	VALVE GP-CONTROL (AUXILIARY)	440
M	2	1	**7X-2475**	5	BOLT (M16X2X130-MM)	
	3	1	**4J-8998**	2	SEAL-O-RING	
	4	1	**1P-3702**	2	SEAL-RECTANGULAR	

M - METRIC PART
Y - SEPARATE ILLUSTRATION

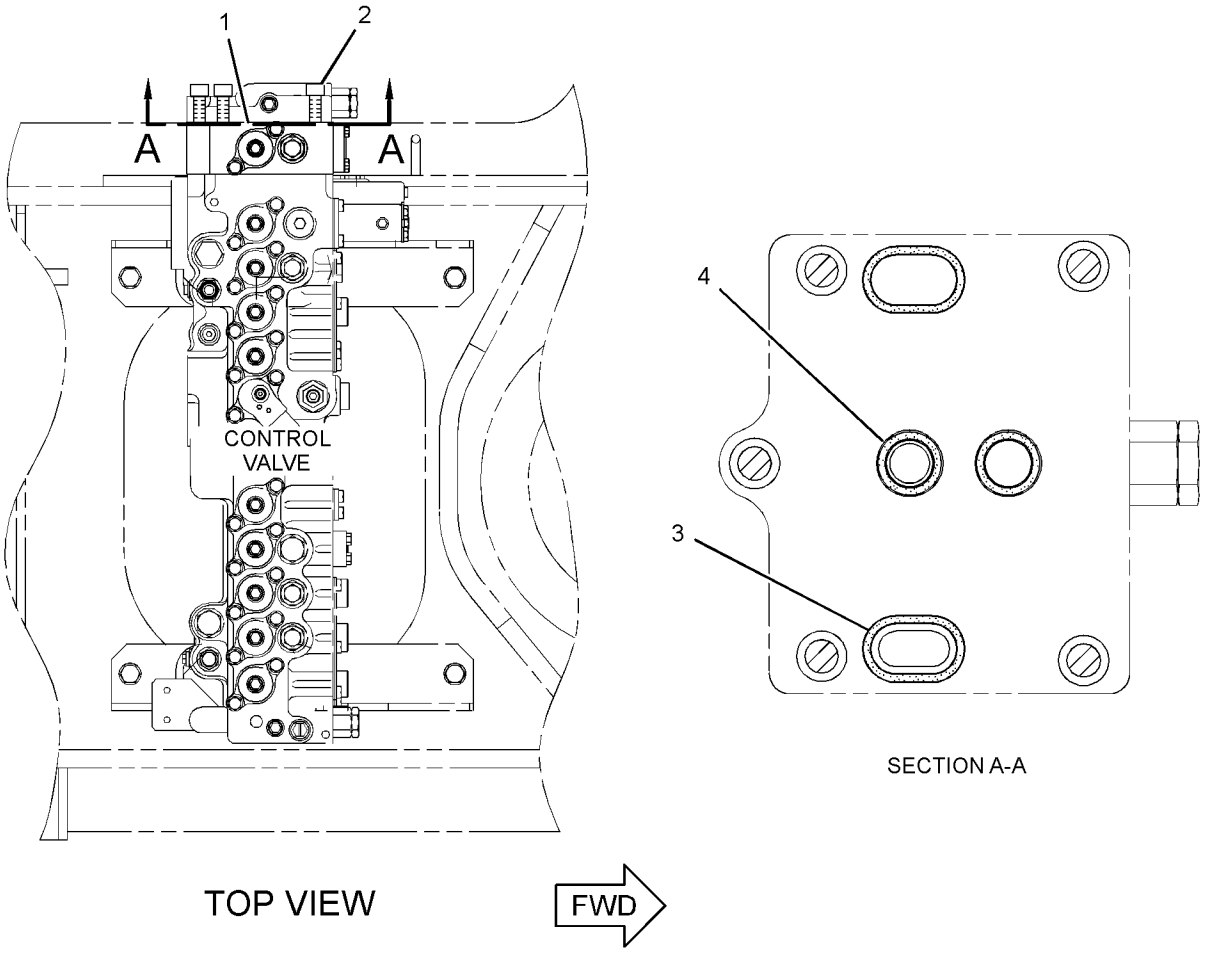

GRAPHIC #1 **<END>** g01214142

297-0370 VALVE GP-CHECK

S/N: JEG1-UP
PART OF 376-6317 LINES GP-FRONT
AN ATTACHMENT

SMCS-5067 **i02787572**

NOTE	REF NO	GRAPHIC REF	PART NUMBER	QTY	PART NAME 1 2 3 4 5 6 (PRODUCT LEVEL)	SEE PAGE
	1	1	**095-1585**	1	SEAL-O-RING	
	2	1	**225-4804**	3	PLUG	
	3	1	**4J-7533**	3	SEAL-O-RING	
	4	1	**095-1602**	1	SEAL-O-RING	
	5	1	**232-4113**	1	RING	
	6	1	**095-1601**	1	SEAL-O-RING	
	7	1	**8T-3008**	1	RING-BACKUP	
	8	1	**095-1700**	1	SEAL-O-RING	
	9	1	**7M-8485**	1	SEAL-O-RING	
	10	1	**095-1657**	1	SEAL-O-RING	
	11	1	**232-4114**	2	RING	

297-0370 **VALVE GP-CHECK (*contd.*)** **i02787572**

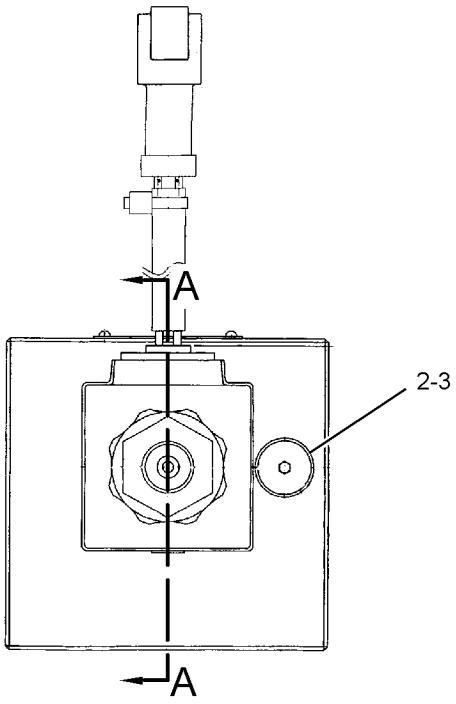

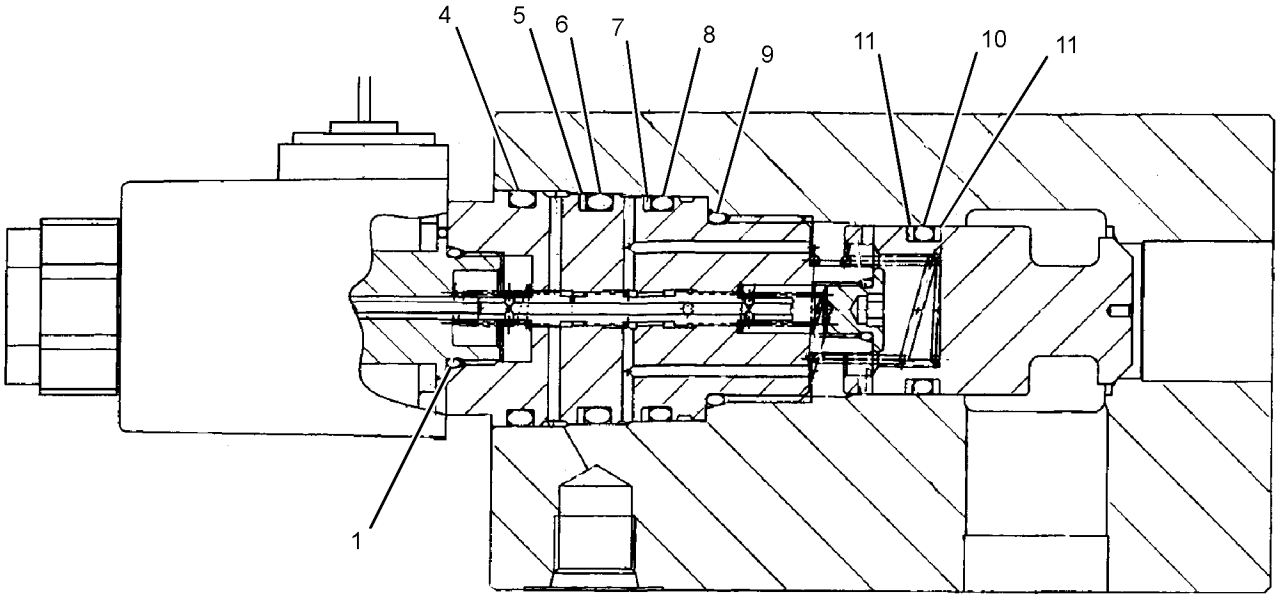

SECTION A-A

GRAPHIC #1 **<END>** g01382946

244-8400 VALVE GP-CONTROL—WITHOUT COVERS, HOUSINGS

S/N: JEG1-UP

PART OF 259-7378 VALVE GP-CONTROL

AN ATTACHMENT

SMCS-5051 **i03902086**

NOTE	REF NO	GRAPHIC REF	PART NUMBER	QTY	PART NAME 1 2 3 4 5 6 (PRODUCT LEVEL)	SEE PAGE
	1	1	**104-7293**	1	SPRING	
M	2	1	**153-5276**	1	BOLT-SPECIAL	
	3	1	**6E-2271**	2	RETAINER	

M - METRIC PART

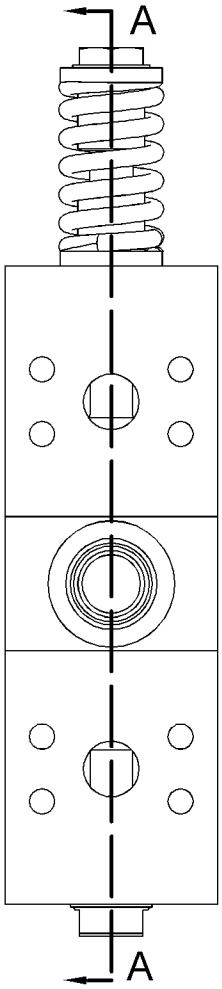

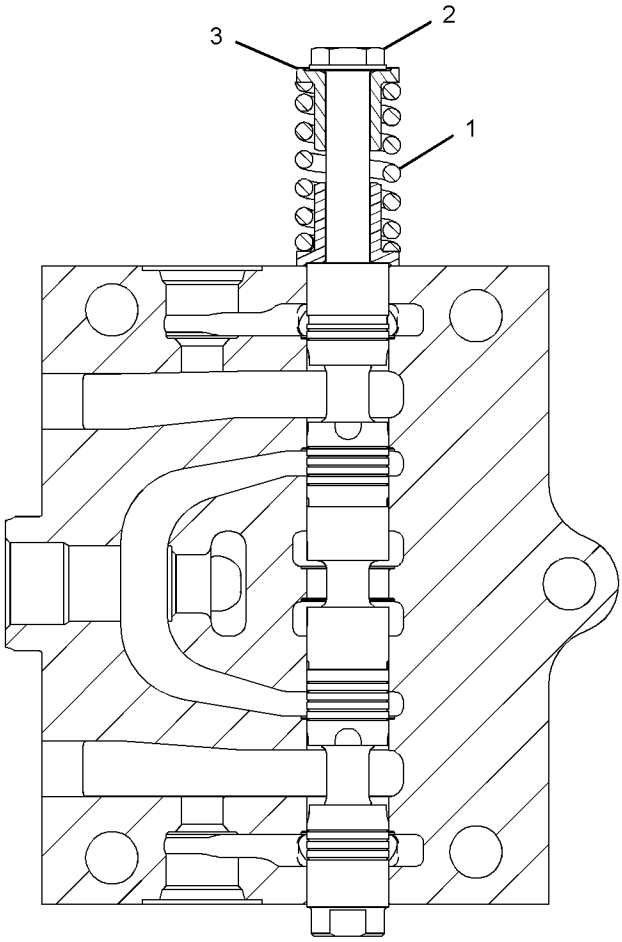

SECTION A-A

GRAPHIC #1

<END>

g02144638

259-7378 VALVE GP-CONTROL–AUXILIARY

S/N: JEG1-UP

PART OF 255-5713 VALVE & MTG GP-CONTROL

AN ATTACHMENT

SMCS-5051 **i05311331**

NOTE	REF NO	GRAPHIC REF	PART NUMBER	QTY	PART NAME 1 2 3 4 5 6 (PRODUCT LEVEL)	SEE PAGE
M	1	1	**8T-4195**	12	BOLT (M10X1.5X30-MM)	
	2	1	**4J-8998**	2	SEAL-O-RING	
	3	1	**6E-5731**	1	VALVE (LOAD CHECK)	
	4	1	**7I-1248**	1	SPRING	
	5	1	**171-0150**	2	COVER	
	6	1	**236-6419**	1	PLUG	
Y	7	1	*244-8400*	1	VALVE GP-CONTROL (WITHOUT COVERS, HOUSINGS)	439
CY	8	1	**352-7122**	2	VALVE GP-RELIEF (LINE)	475
	9	1	**8T-4121**	4	WASHER-HARD (11X21X2.5-MM THK)	
	10	1	**095-1590**	1	SEAL-O-RING	
	11	1	**095-1787**	1	RING-BACKUP	
	12	1	**158-8159**	1	HOUSING	
	13	1	**1P-3702**	4	SEAL-RECTANGULAR	
	14	1	**6E-2274**	1	COVER	
	15	1	**6V-5597**	2	SEAL-O-RING	

C - CHANGE FROM PREVIOUS TYPE
M - METRIC PART
Y - SEPARATE ILLUSTRATION

259-7378 **VALVE GP-CONTROL (*contd.*)** **i05311331**

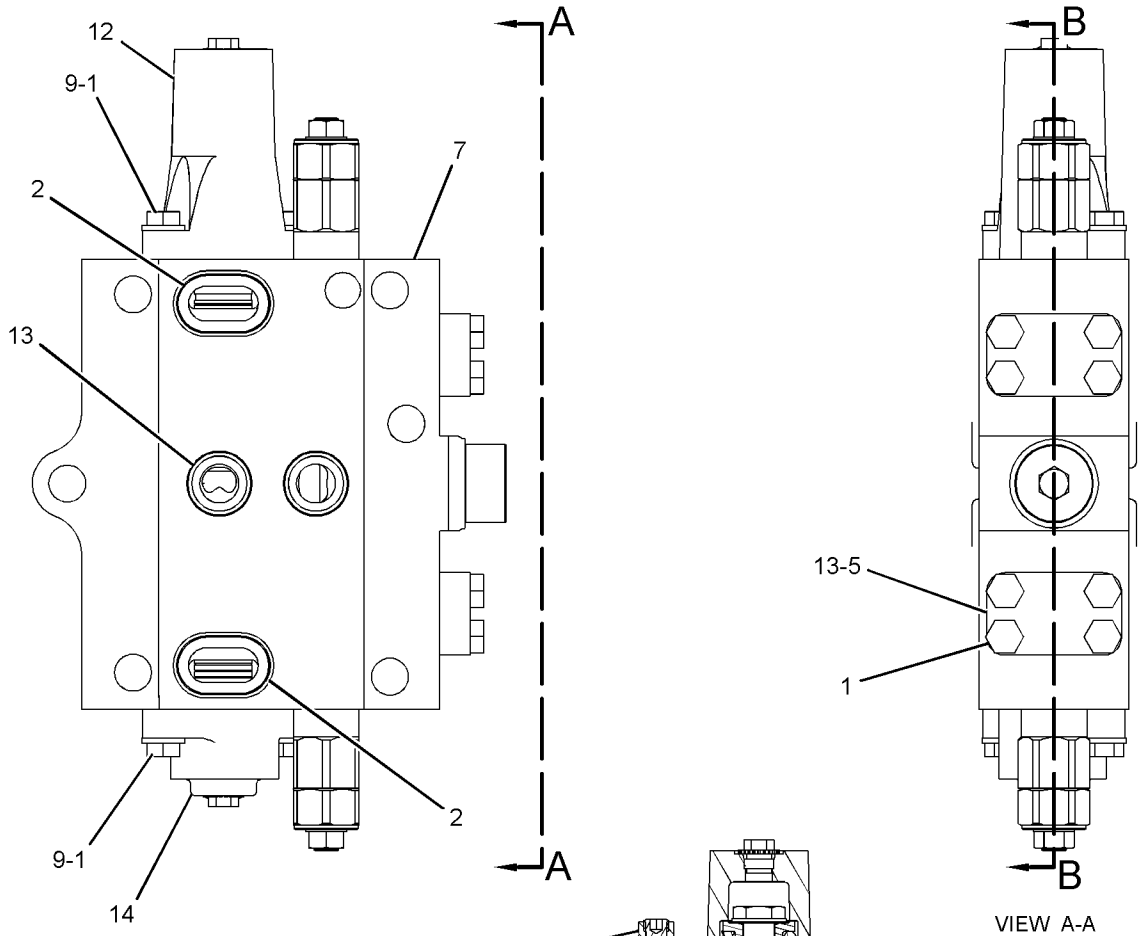

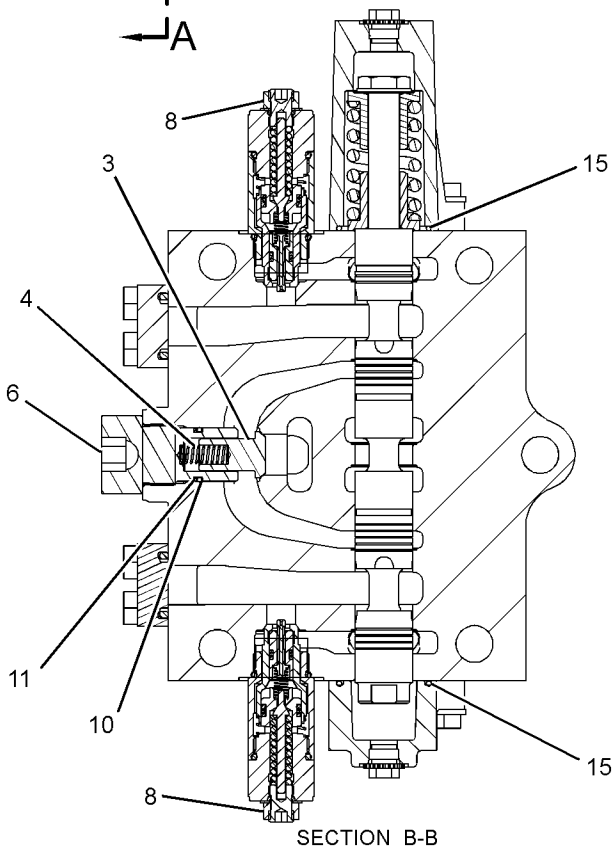

GRAPHIC #1 **<END>** g01219416

285-1340 VALVE GP-CONTROL—WITHOUT COVERS, HOUSINGS

S/N: JEG1-UP

PART OF 352-7132 VALVE GP-CONTROL

SMCS-5051 **i02940690**

NOTE	REF NO	GRAPHIC REF	PART NUMBER	QTY	PART NAME 1 2 3 4 5 6 (PRODUCT LEVEL)	SEE PAGE
	1	1	**2S-2596**	1	SPRING	
	2	1	**6E-2163**	1	VALVE-CHECK	
	3	1	**6E-2271**	8	RETAINER	
	4	1	**104-7293**	2	SPRING	
	5	1	**104-7294**	1	SPRING	
	6	1	**104-7296**	1	SPRING	
Z	7	1		1	STEM-TRAVEL	
Z	8	1		1	STEM-STRAIGHT TRAVEL	
Z	9	1		1	PISTON	
Z	10	1		1	GUIDE	
Z	11	1		1	VALVE AS	
Z	12	1		1	BODY-VALVE	
Z	13	1		1	STEM-STICK	
Z	14	1		1	STEM	
Z	15	1		1	STEM-BOOM 2	
M	16	1	**153-5276**	4	BOLT-SPECIAL	
Z	17	1			STEM-SWING	
	18	1	**3K-0360**	1	SEAL-O-RING	

M - METRIC PART
Z - NOT SERVICED SEPARATELY

285-1340 **VALVE GP-CONTROL (*contd.*)** **i02940690**

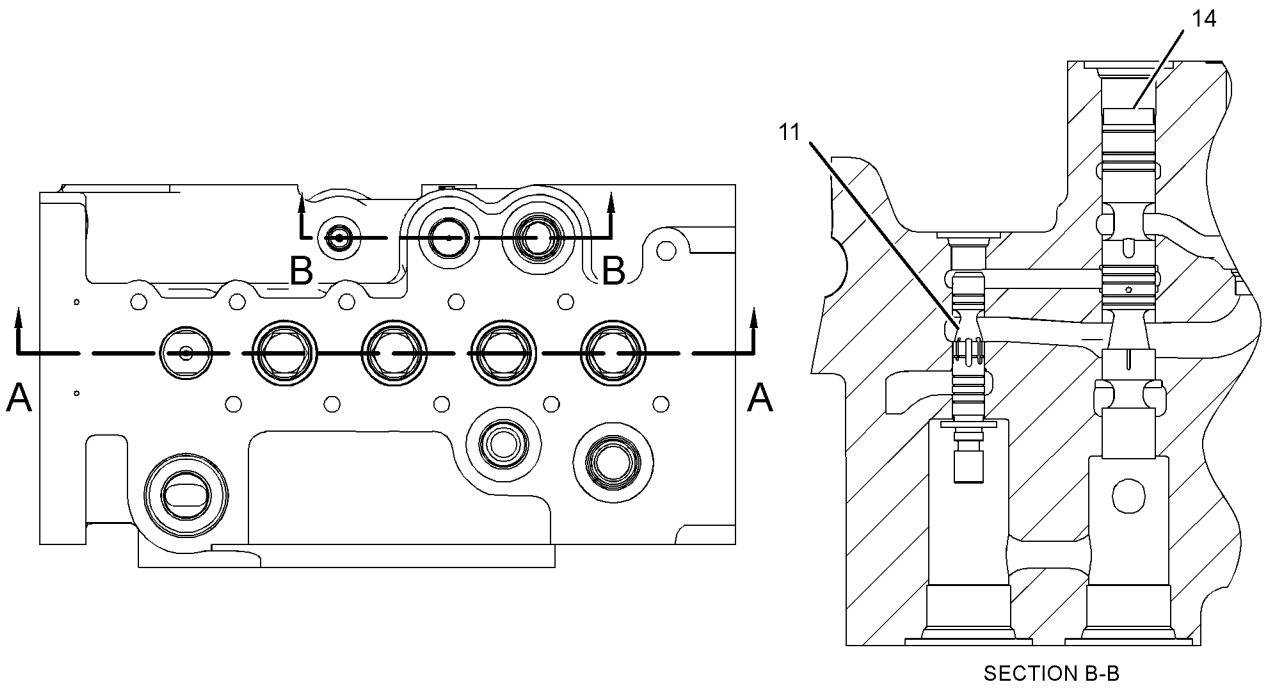

GRAPHIC #1

<END>

g01223911

352-7132 VALVE GP-CONTROL—TRAVEL, SWING, STICK, BOOM

S/N: JEG1-UP

HEAVY LIFT

PART OF 435-1482 VALVE GP-MAIN CONTROL

SMCS-5051 **i05536503**

NOTE	REF NO	GRAPHIC REF	PART NUMBER	QTY	PART NAME 1 2 3 4 5 6 (PRODUCT LEVEL)	SEE PAGE
	1	1	**4I-3569**	1	RING-BACKUP	
	2	3,4	**4T-3148**	3	SPRING	
	3	1	**6E-2274**	5	COVER	
	4	1	**6E-3653**	1	PLUG	
	5	4	**6E-5169**	1	SPRING	
	6	3,4	**6E-5643**	3	VALVE (LOAD CHECK) (BOOM)	
	7	2	**6E-5731**	1	VALVE (LOAD CHECK) (SWING)	
	8	2	**7I-1248**	1	SPRING	
	9	4	**103-8177**	1	ADAPTER	
Y	10	2	**121-1491**	1	VALVE GP-SOLENOID (STRAIGHT TRAVEL)	481
	11	2	**153-5288**	1	SPRING	
	12	2	**153-5289**	1	GUIDE	
	13	2	**153-5290**	2	PLUG	
	14	2	**153-5291**	1	CONNECTOR	
	15	2	**153-5292**	1	VALVE-CHECK (LOAD)	
	16	2	**153-5293**	1	SPRING	
	17	3	**153-5298**	1	SLEEVE	
	18	3	**153-5299**	1	VALVE (LOAD CHECK)	
	19	3	**153-5306**	1	SPRING	
	20	4	**153-5309**	1	SLEEVE	
	21	2	**153-5311**	1	SPRING	
	22	2	**158-8150**	1	VALVE GP-UNLOADING (STICK CYLINDER)	
	23	2	**158-8159**	4	HOUSING	
	24	2	**158-8206**	1	HOUSING	
	25	4	**158-8207**	1	STOPPER	
	26	4	**201-9263**	2	PLUG	
	27	2,3	*225-4818*	3	PLUG AS	
					(EACH INCLUDES)	
		2,3	**4J-7533**	1	SEAL-O-RING	
		2,3	**225-4804**	1	PLUG	
	28	2	**236-6419**	1	PLUG	
	29	2	**236-6421**	1	PLUG	
	30	3	**250-2446**	1	PLUG	
	31	4	**250-2447**	1	PLUG	
	32	3	**255-5594**	1	SEAL-O-RING	
	33	3	**264-9961**	1	PLUG	
Y	34	1	*285-1340*	1	VALVE GP-CONTROL (WITHOUT COVERS, HOUSINGS)	442
	35	3	**323-7897**	1	COVER	
Y	36	3	**323-7898**	1	VALVE GP-PRIORITY	466
Y	37	4	**352-7113**	1	VALVE GP-RELIEF (PILOT OPERATED)	473
Y	38	3	**352-7122**	1	VALVE GP-RELIEF (LINE) (STICK)	475
	39	2	**095-1575**	1	SEAL-O-RING	
	40	2,3,4	**095-1590**	3	SEAL-O-RING	
	41	4	**095-1603**	1	SEAL-O-RING	
	42	2	**095-1778**	1	RING-BACKUP	
	43	2,3,4	**095-1787**	3	RING-BACKUP	
	44	1	**111-9959**	1	PLUG-PIPE	
	45	2	**123-2485**	1	PLUG	
	46	2	**2M-9780**	1	SEAL-O-RING	
	47	2	**3J-1907**	1	SEAL-O-RING	
	48	2,4	**4I-6397**	3	RING-BACKUP	
	49	3	**4J-5309**	1	SEAL-O-RING	
	50	3	**4T-5074**	1	RING-BACKUP	
	51	2,4	**6V-3922**	3	SEAL-O-RING	
	52	4	**6V-5393**	1	SEAL-O-RING	
	53	3	**6V-5556**	1	SEAL-O-RING	
	54	2,3,4	**6V-5597**	9	SEAL-O-RING	

352-7132 **VALVE GP-CONTROL (*contd.*)** **i05536503**

NOTE	REF NO	GRAPHIC REF	PART NUMBER	QTY	PART NAME 1 2 3 4 5 6 (PRODUCT LEVEL)	SEE PAGE
M	55	2	**7I-2272**	2	BOLT (M5X0.8X12-MM)	
	56	2	**7M-8485**	2	SEAL-O-RING	
M	57	3	**7X-2621**	1	BOLT (M10X1.5X12-MM)	
	58	1	**7Y-5219**	1	SEAL-O-RING	
	59	1,2,3	**8T-4121**	24	WASHER-HARD (11X21X2.5-MM THK)	
M	60	1,2	**8T-4195**	20	BOLT (M10X1.5X30-MM)	
M	61	3	**8T-6685**	4	BOLT (M10X1.5X110-MM)	
	62	2	**8T-6759**	2	PLUG-PIPE	

M - METRIC PART
Y - SEPARATE ILLUSTRATION

352-7132 **VALVE GP-CONTROL (*contd.*)** **i05536503**

REFER TO ALL ILLUSTRATIONS OF THIS GROUP FOR AUXILIARY VIEWS

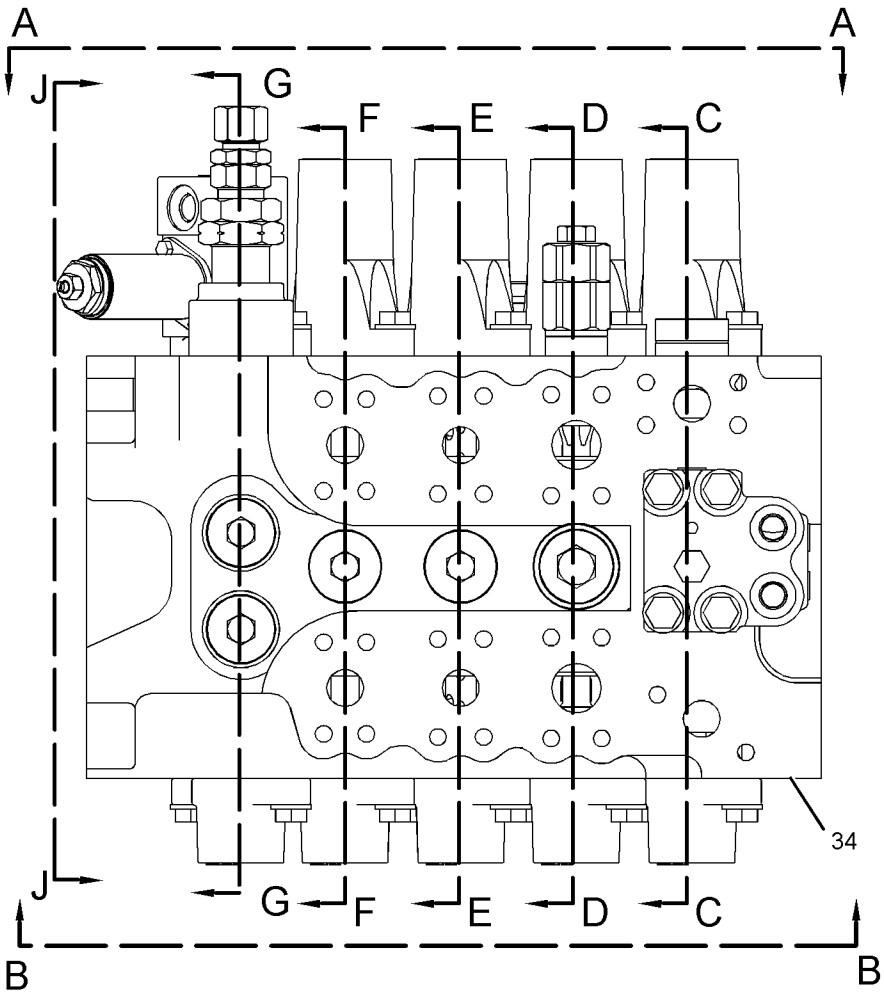

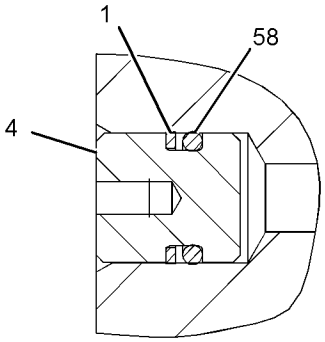

SECTION H-H

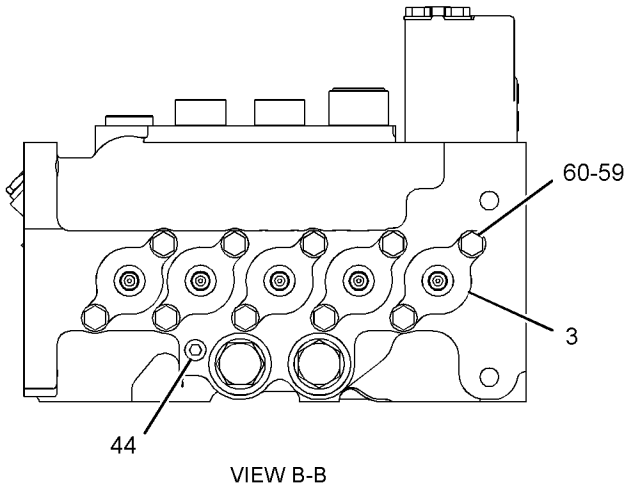

VIEW B-B

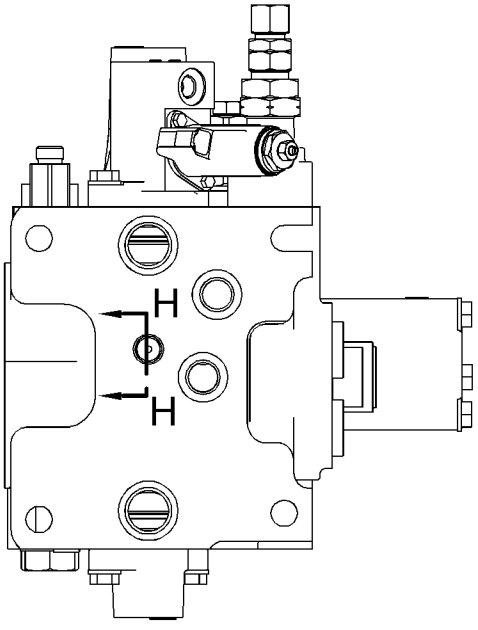

VIEW J-J

GRAPHIC #1 g02324075

352-7132 **VALVE GP-CONTROL (*contd.*)** **i05536503**

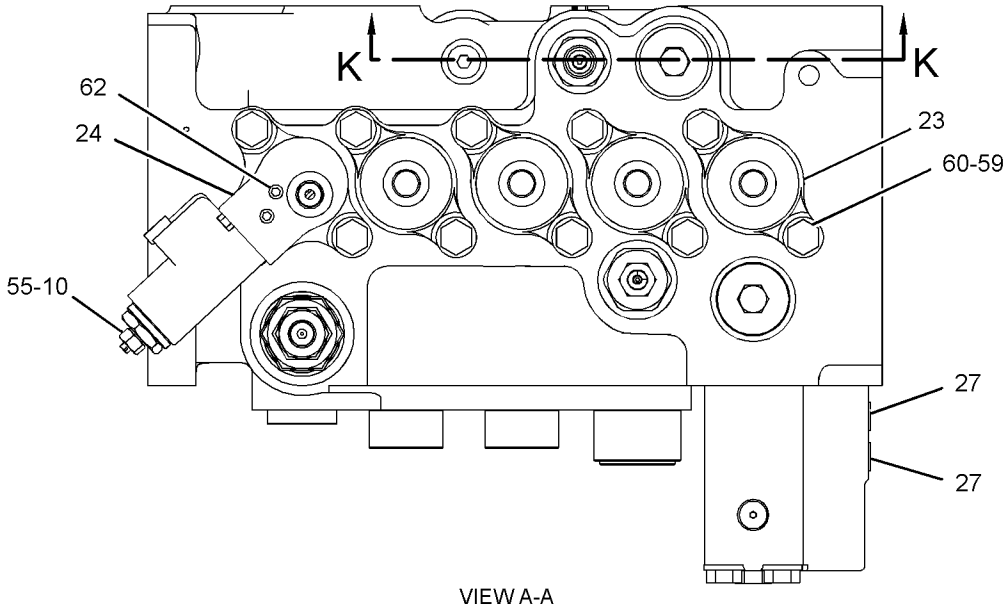

VIEW A-A

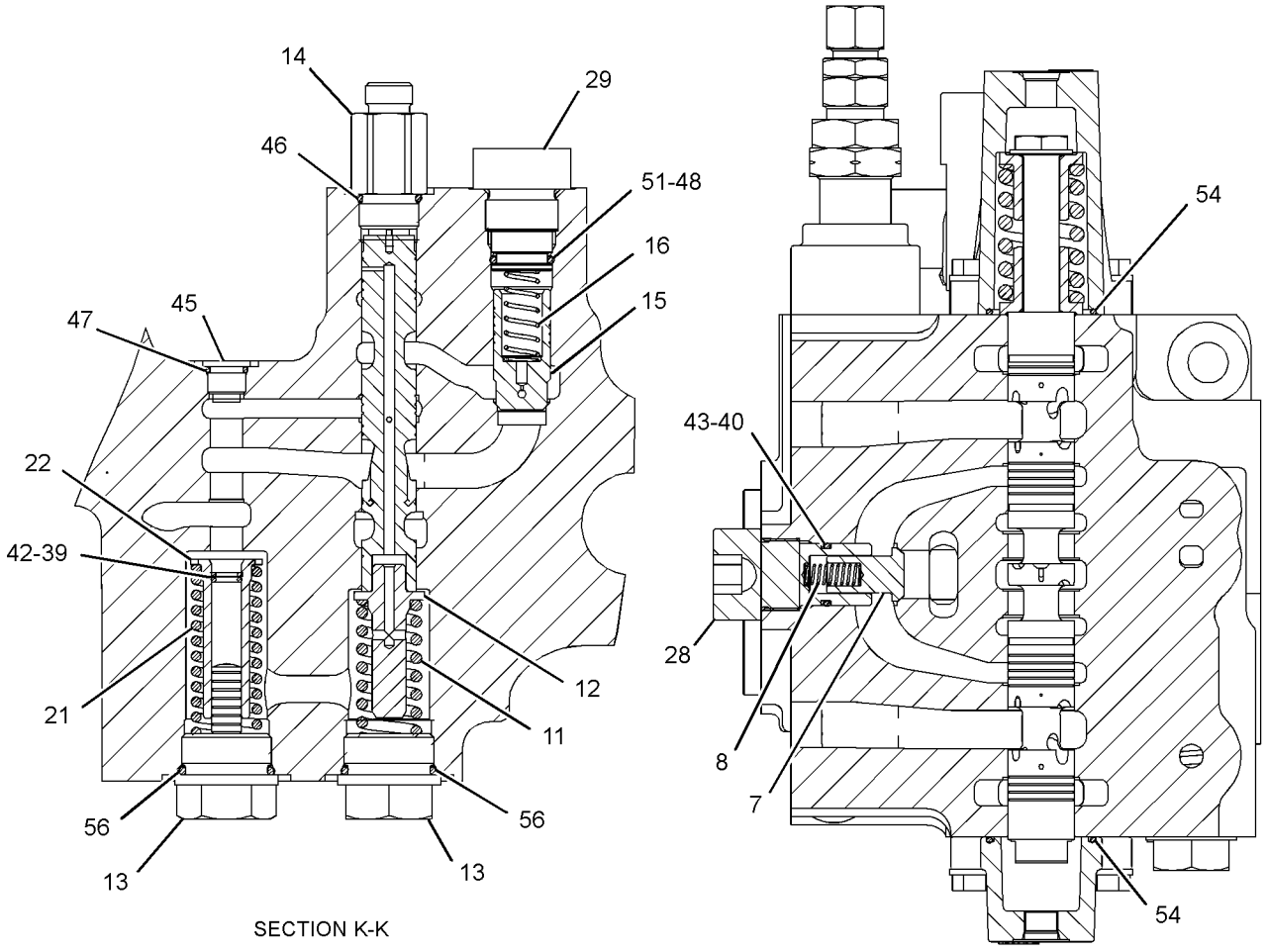

SECTION K-K

SECTION E-E

GRAPHIC #2

g02324076

352-7132 **VALVE GP-CONTROL (*contd.*)** **i05536503**

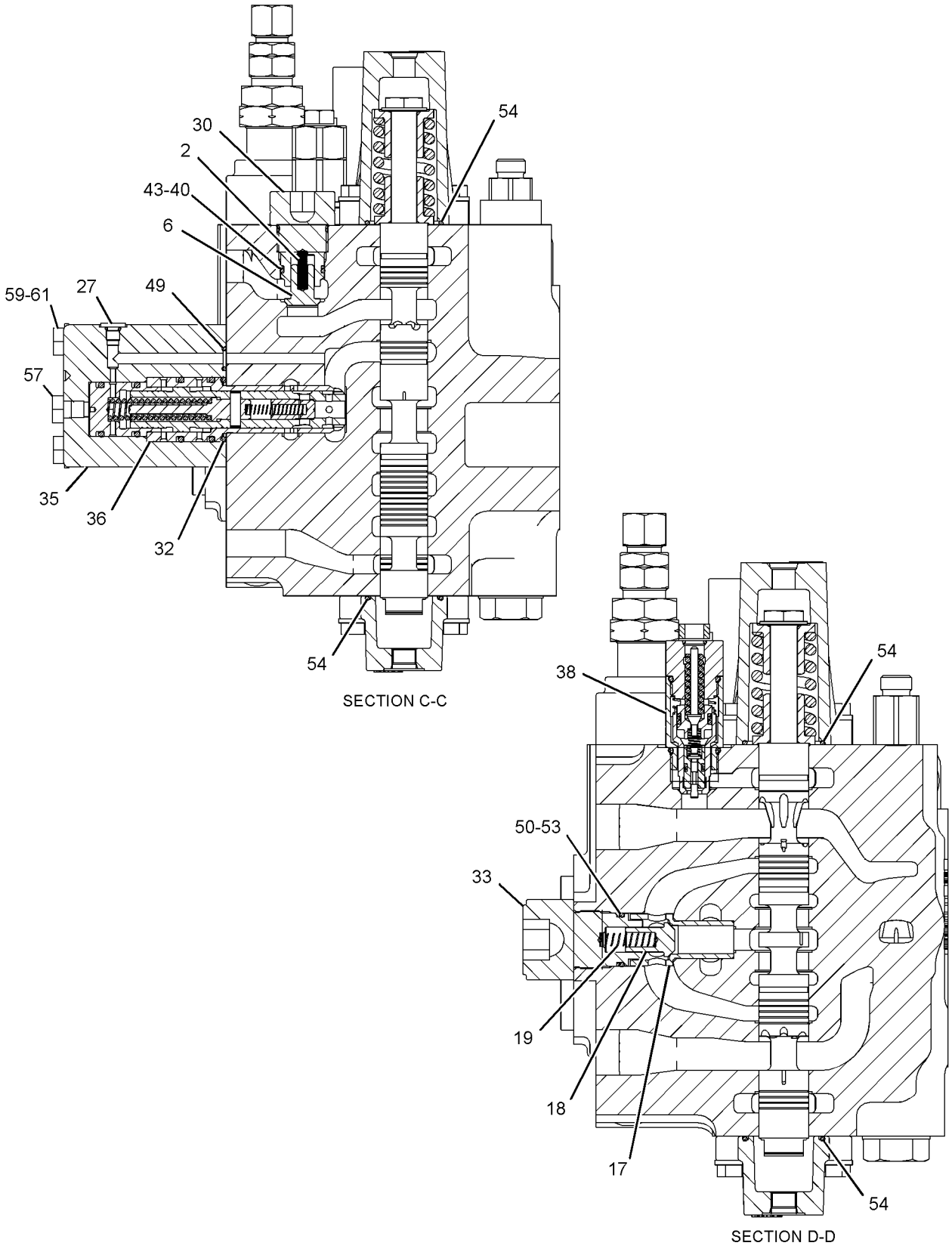

GRAPHIC #3

g02324077

352-7132 **VALVE GP-CONTROL (*contd.*)** **i05536503**

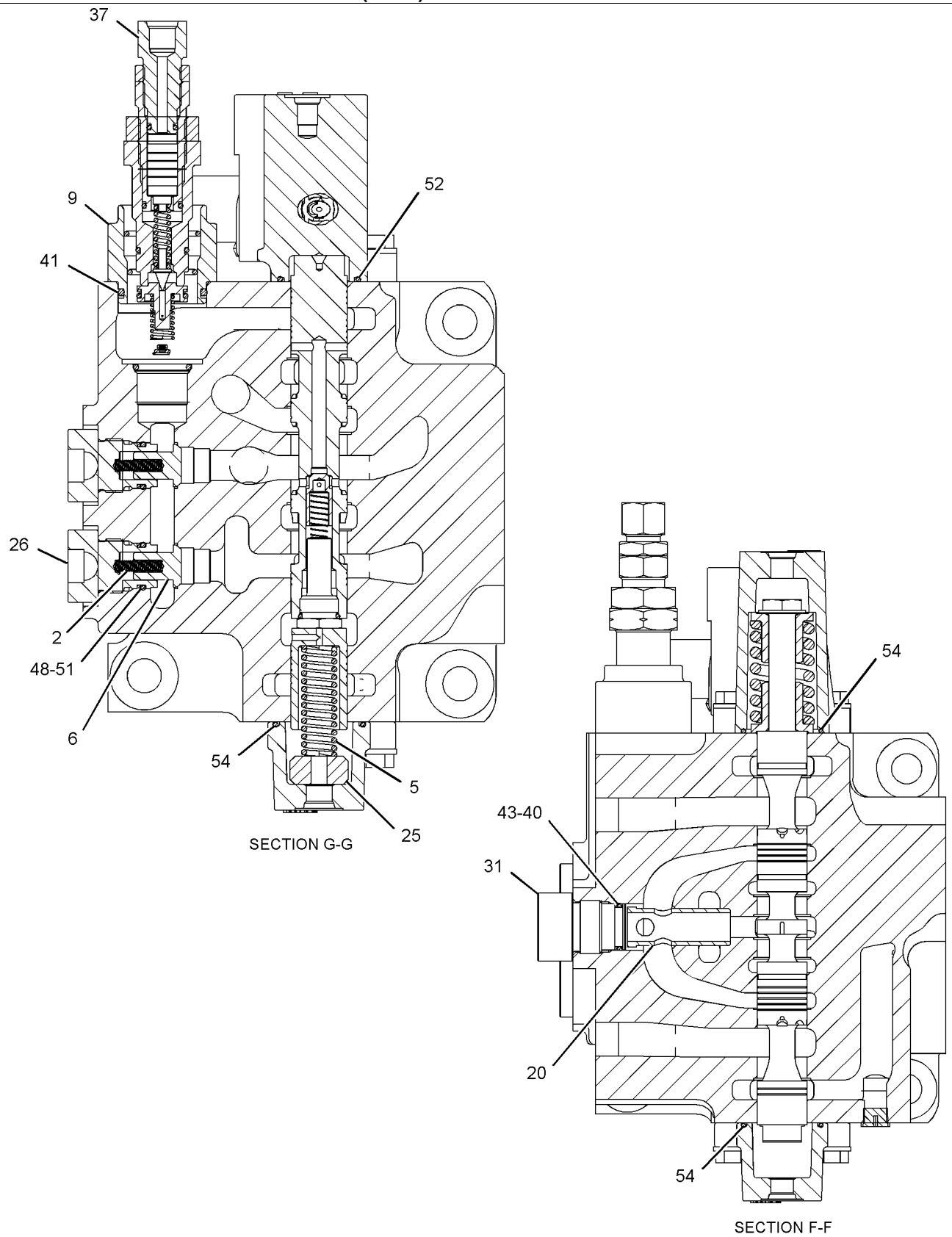

GRAPHIC #4 **<END>** g02324078

435-1484 VALVE GP-CONTROL–STK, BM, BKT, WKTL, TRVL RH

S/N: JEG1-UP

PART OF 435-1482 VALVE GP-MAIN CONTROL

SMCS-5051 **i05454249**

NOTE	REF NO	GRAPHIC REF	PART NUMBER	QTY	PART NAME 1 2 3 4 5 6 (PRODUCT LEVEL)	SEE PAGE
	1	1	**6E-2274**	5	COVER	
	2	1	**6E-5731**	4	VALVE (LOAD CHECK)	
	3	1	**7I-1248**	5	SPRING	
	4	1	**7Y-8099**	2	COVER	
	5	1	**153-5286**	1	VALVE (LOAD CHECK)	
	6	1	**153-5288**	1	SPRING	
	7	1	**153-5289**	1	GUIDE	
	8	1	**153-5290**	1	PLUG	
	9	1	**153-5291**	1	CONNECTOR	
	10	1	**153-5292**	1	VALVE-CHECK	
	11	1	**153-5293**	1	SPRING	
	12	1	**158-8159**	5	HOUSING	
	13	1	**236-6419**	5	PLUG	
	14	1	**236-6421**	1	PLUG	
	15	1	*310-0404*	2	PLUG GP-CONTROL VALVE	
					(EACH INCLUDES)	
		1	**3D-2824**	1	SEAL-O-RING	
		1	**6M-5062**	1	SEAL-O-RING	
		1	**9J-0705**	1	RING-BACKUP	
		1	**310-0405**	1	PLUG	
Y	16	1	**352-7122**	3	VALVE GP-RELIEF (LINE)	475
Y	17	1	*435-1485*	1	VALVE GP-CONTROL	452
	18	1	**095-1590**	5	SEAL-O-RING	
	19	1	**095-1787**	5	RING-BACKUP	
Y	20	1	**109-5152**	1	VALVE GP-RELIEF (NEGATIVE FLOW CONTROL)	468
	21	1	**111-9959**	2	PLUG-PIPE	
	22	1	**2M-9780**	1	SEAL-O-RING	
	23	1	**4I-6397**	1	RING-BACKUP	
	24	1	**4J-0520**	2	SEAL-O-RING	
	25	1	**6V-3922**	1	SEAL-O-RING	
	26	1	**6V-5597**	10	SEAL-O-RING	
	27	1	**7M-8485**	1	SEAL-O-RING	
	28	1	**8T-4121**	20	WASHER-HARD (11X21X2.5-MM THK)	
M	29	1	**8T-4195**	28	BOLT (M10X1.5X30-MM)	

M - METRIC PART
Y - SEPARATE ILLUSTRATION

435-1484 **VALVE GP-CONTROL (*contd.*)** **i05454249**

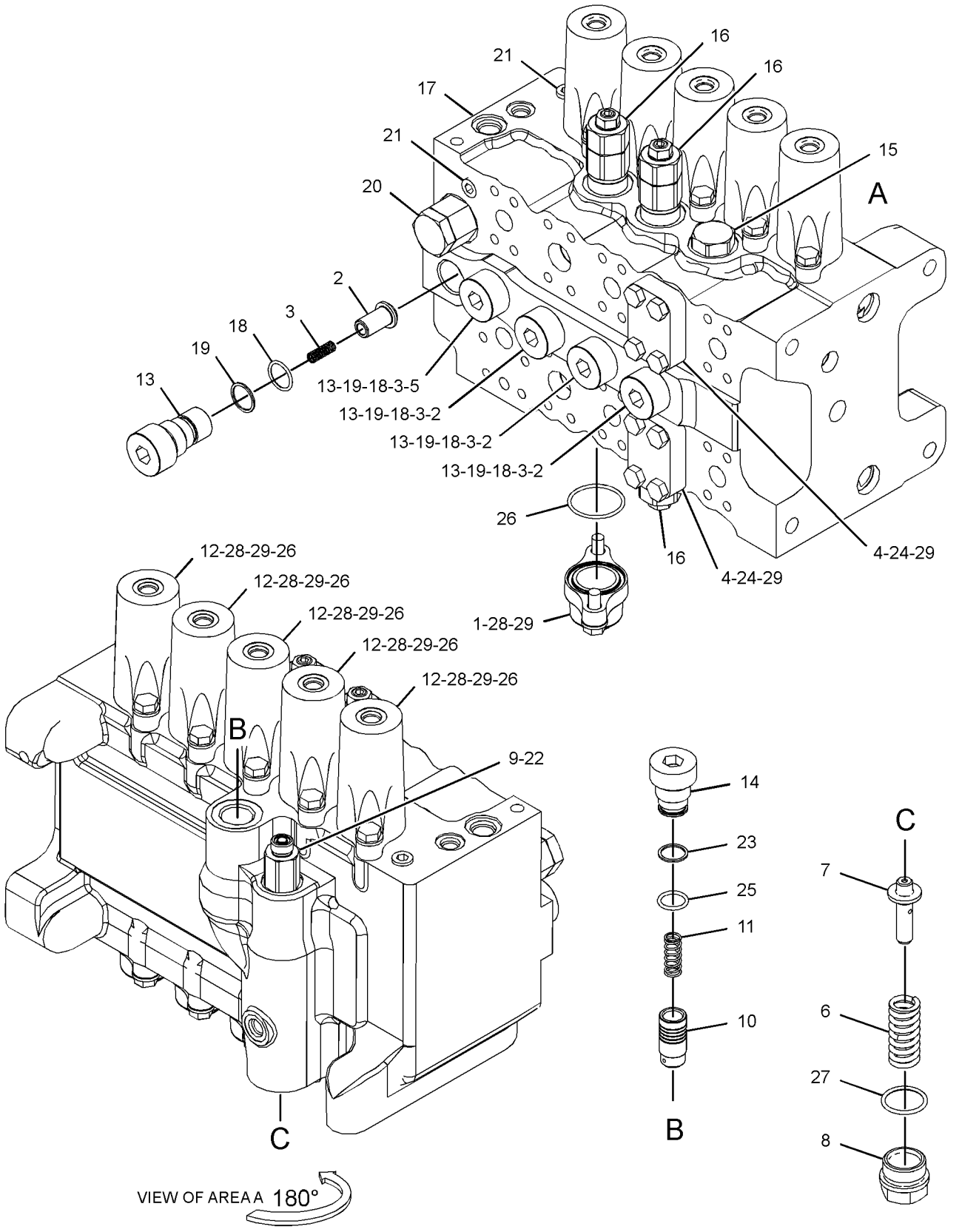

GRAPHIC #1 **<END>** g03450537

435-1485 VALVE GP-CONTROL

S/N: JEG1-UP

PART OF 435-1484 VALVE GP-CONTROL

SMCS-5051 **i05454256**

NOTE	REF NO	GRAPHIC REF	PART NUMBER	QTY	PART NAME 1 2 3 4 5 6 (PRODUCT LEVEL)	SEE PAGE
	1	1	**6E-2271**	10	RETAINER	
	2	1	**352-7059**	1	SPRING-RETURN	
	3	1	**352-7058**	1	SPRING-RETURN	
M	4	1	**153-5276**	5	BOLT-SPECIAL	
	5	1	**352-7057**	3	SPRING-RETURN	

M - METRIC PART

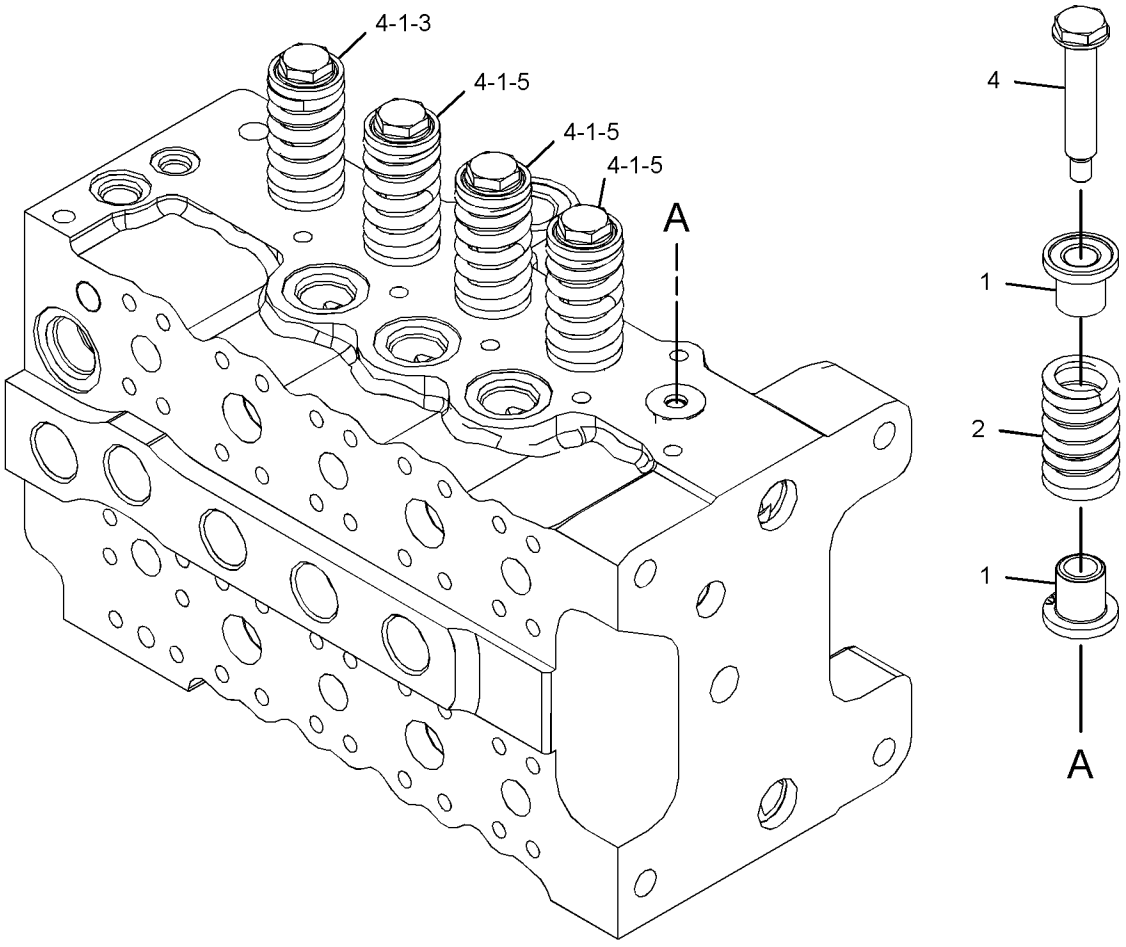

GRAPHIC #1 **<END>** g03448962

255-5680 VALVE GP-LOAD CONTROL—STICK DRIFT RED, LINE RELIEF

S/N: JEG1-UP

PART OF 239-1714 LINES GP-FRONT

SMCS-5067, 5117, 5147, 5811 **i05282292**

NOTE	REF NO	GRAPHIC REF	PART NUMBER	QTY	PART NAME 1 2 3 4 5 6 (PRODUCT LEVEL)	SEE PAGE
M	1	1	**8T-4136**	4	BOLT (M10X1.5X25-MM)	
	2	1	**4I-8965**	1	GUIDE	
	3	1	**5I-8511**	1	SPRING	
	4	1	**087-5166**	1	SPRING	
	5	1	**118-4044**	1	COVER	
	7	1	**147-4184**	1	PLUG	
	8	1	*225-4818*	2	PLUG AS	
					(EACH INCLUDES)	
		1	**4J-7533**	1	SEAL-O-RING	
		1	**225-4804**	1	PLUG	
CY	9	1	**352-7123**	1	VALVE GP-RELIEF (LINE)	476
	11	1	**095-1594**	1	SEAL-O-RING	
	12	1	**095-1789**	1	RING	
	13	1	*148-8395*	1	PLUG AS	
		1	**3K-0360**	1	SEAL-O-RING	
		1	**9S-8005**	1	PLUG-O-RING	
	14	1	*162-0177*	1	PLUG AS	
		1	**3J-1907**	1	SEAL-O-RING	
		1	**9S-8004**	1	PLUG-O-RING	

C - CHANGE FROM PREVIOUS TYPE
M - METRIC PART
Y - SEPARATE ILLUSTRATION

255-5680 **VALVE GP-LOAD CONTROL (*contd.*)** **i05282292**

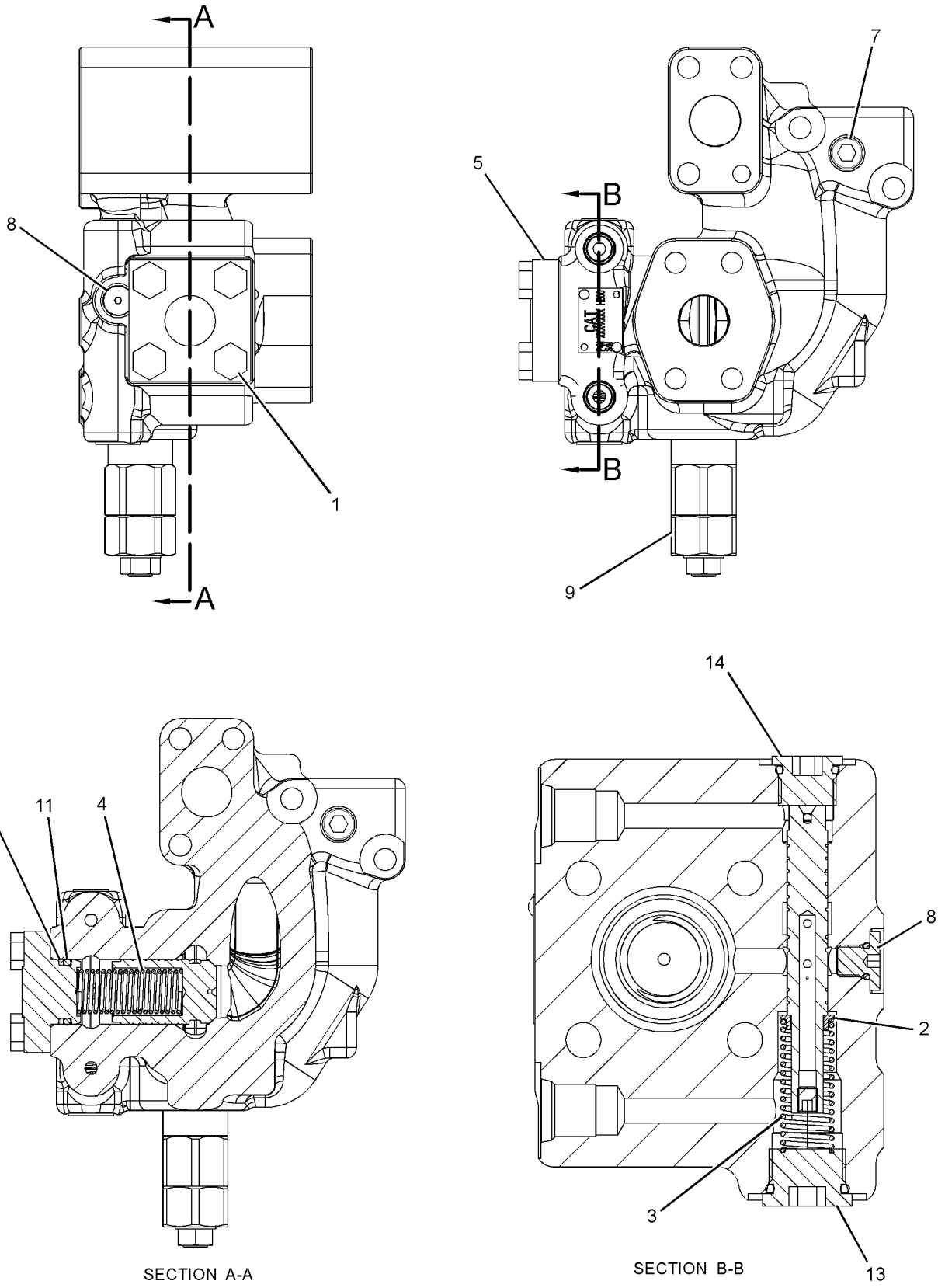

GRAPHIC #1 **<END>** g02320560

255-5683 VALVE GP-LOAD CONTROL—BOOM DRIFT RED, LINE RELIEF

S/N: JEG1-UP

PART OF 239-1714 LINES GP-FRONT

SMCS-5067, 5117, 5147, 5811 **i05282304**

NOTE	REF NO	GRAPHIC REF	PART NUMBER	QTY	PART NAME 1 2 3 4 5 6 (PRODUCT LEVEL)	SEE PAGE
M	1	1	**8T-4136**	4	BOLT (M10X1.5X25-MM)	
	2	1	**4I-8965**	1	GUIDE	
	3	1	**5I-8511**	1	SPRING	
	4	1	**087-5166**	1	SPRING	
	5	1	**118-4044**	1	COVER	
	7	1	*225-4818*	2	PLUG AS	
					(EACH INCLUDES)	
		1	**225-4804**	1	PLUG	
	7A	1	**4J-7533**	1	SEAL-O-RING	
CY	8	1	**352-7123**	1	VALVE GP-RELIEF (LINE) (BOOM CYLINDER)	476
	10	1	**095-1594**	1	SEAL-O-RING	
	11	1	**095-1789**	1	RING	
	12	1	*148-8395*	1	PLUG AS	
		1	**9S-8005**	1	PLUG-O-RING	
	12A	1	**3K-0360**	1	SEAL-O-RING	
	13	1	*148-8407*	1	PLUG AS	
		1	**9S-4191**	1	PLUG	
	13A	1	**3J-1907**	1	SEAL-O-RING	
	14	1	**190-7865**	1	CONNECTOR	
	15	1	**3J-1907**	1	SEAL-O-RING	
	16	1	**6V-8397**	1	SEAL-O-RING	

C - CHANGE FROM PREVIOUS TYPE
M - METRIC PART
Y - SEPARATE ILLUSTRATION

255-5683 **VALVE GP-LOAD CONTROL (*contd.*)** **i05282304**

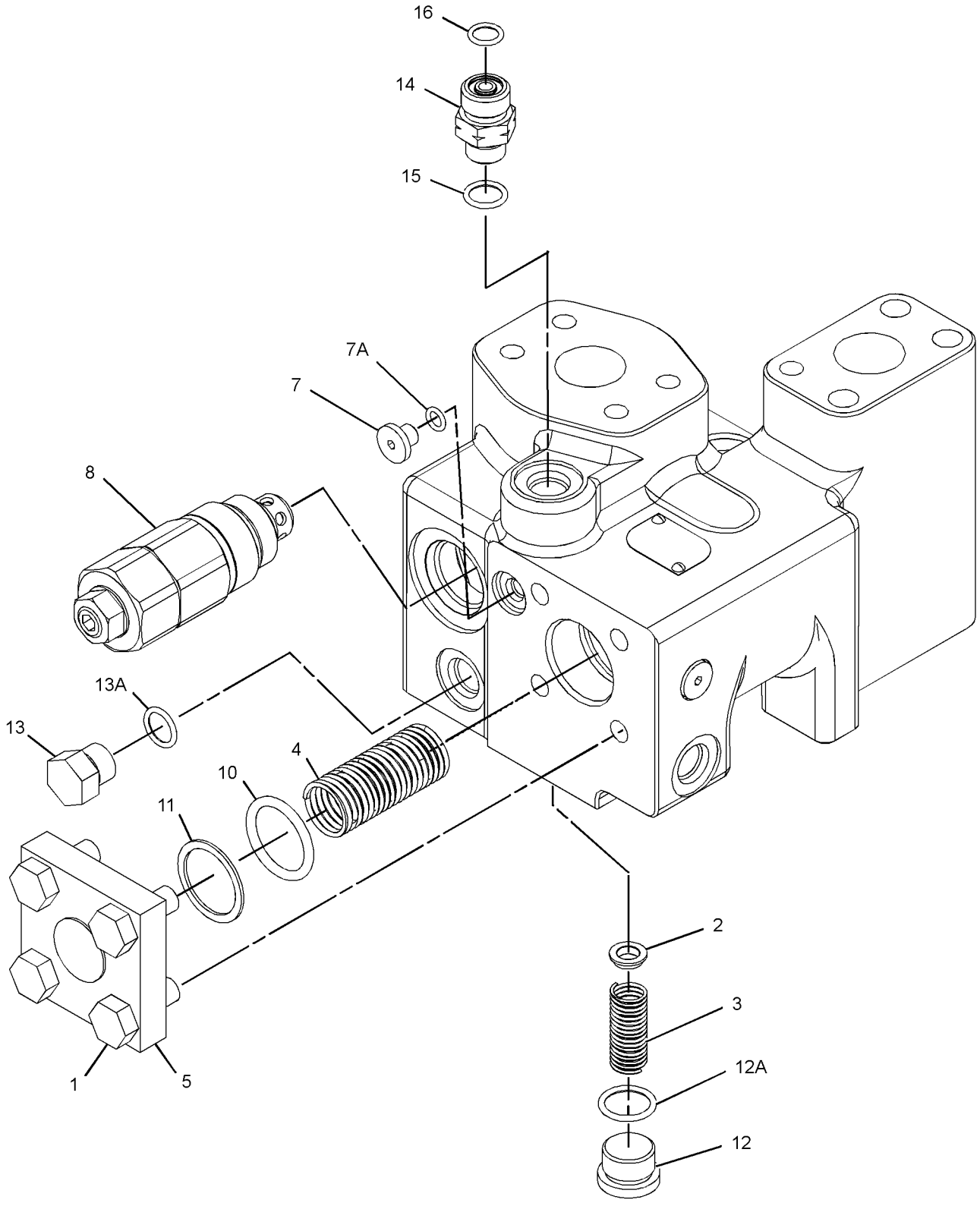

GRAPHIC #1 **<END>** g03358446

435-1482 VALVE GP-MAIN CONTROL–HEAVY LIFT

S/N: JEG1-UP

PART OF 383-5083 HYDRAULIC AR

SMCS-5051 **i05536445**

NOTE	REF NO	GRAPHIC REF	PART NUMBER	QTY	PART NAME 1 2 3 4 5 6 (PRODUCT LEVEL)	SEE PAGE
Y	1	1	*153-5313*	1	VALVE GP-RELIEF (NEGATIVE FLOW CONTROL)	469
Y	2	1	**352-7132**	1	VALVE GP-CONTROL (TRAVEL, SWING, STICK, BOOM)	444
	3	1	**9X-8257**	9	WASHER (17.5X30X3.5-MM THK)	
Y	4	1	*435-1484*	1	VALVE GP-CONTROL (STK, BM, BKT, WKTL, TRVL RH)	450
	5	1	**1P-3702**	2	SEAL-RECTANGULAR	
M	6	1	**8T-4193**	4	BOLT (M16X2X50-MM)	
	7	1	**4J-0519**	2	SEAL-O-RING	
M	8	1	**8T-4140**	5	BOLT (M16X2X60-MM)	

M - METRIC PART
Y - SEPARATE ILLUSTRATION

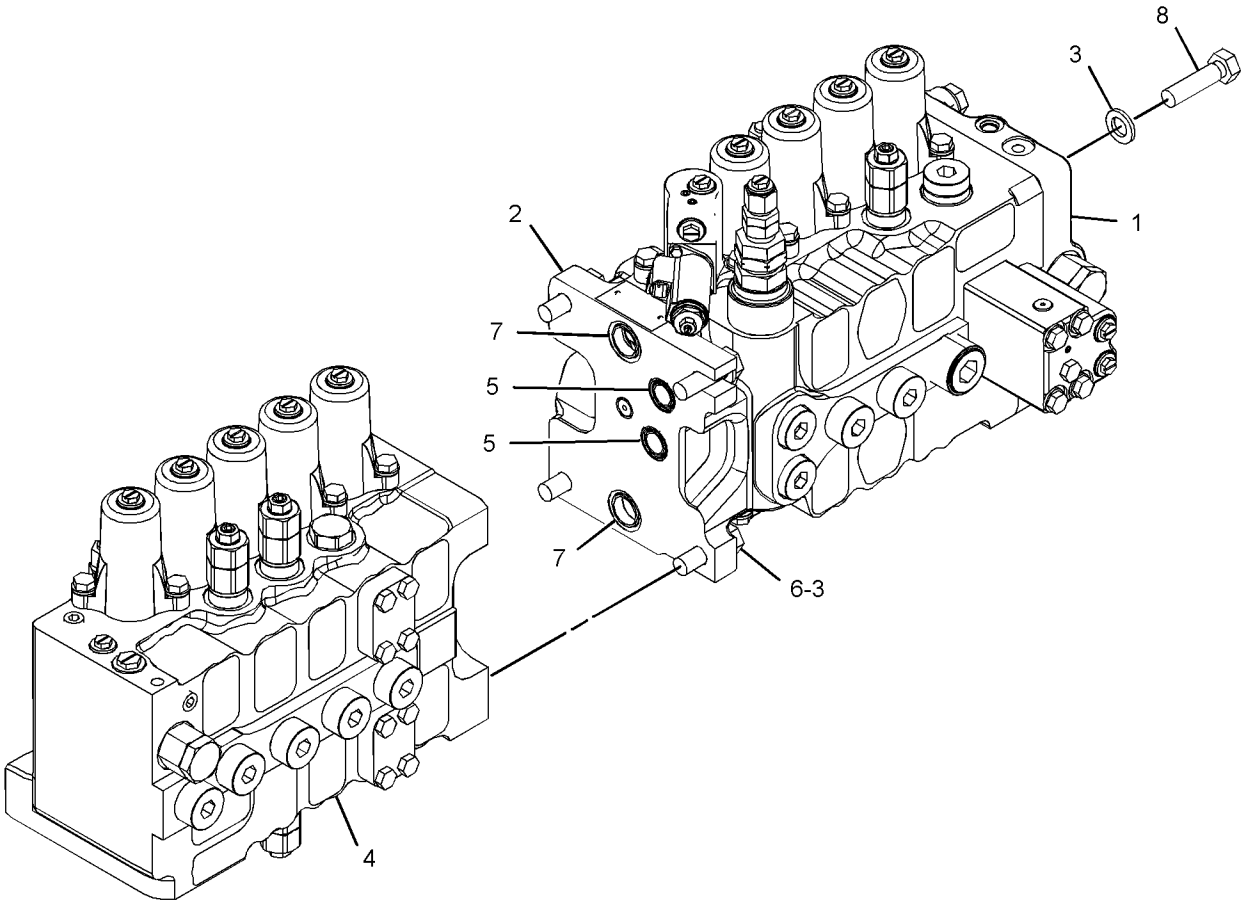

GRAPHIC #1 **<END>** g03448878

389-2407 VALVE GP-MANUAL–AUXILIARY, SHUTOFF

S/N: JEG1-UP

PART OF 237-3184, 245-2399 LINES GP-AUXILIARY HYDRAULIC

AN ATTACHMENT

SMCS-1329, 5001, 5130 **i05001609**

NOTE	REF NO	GRAPHIC REF	PART NUMBER	QTY	PART NAME 1 2 3 4 5 6 (PRODUCT LEVEL)	SEE PAGE
	1	1	**302-9466**	1	HANDLE	
	2	1	**3J-1907**	1	SEAL-O-RING	
	3	1	**9S-8004**	1	PLUG-O-RING	

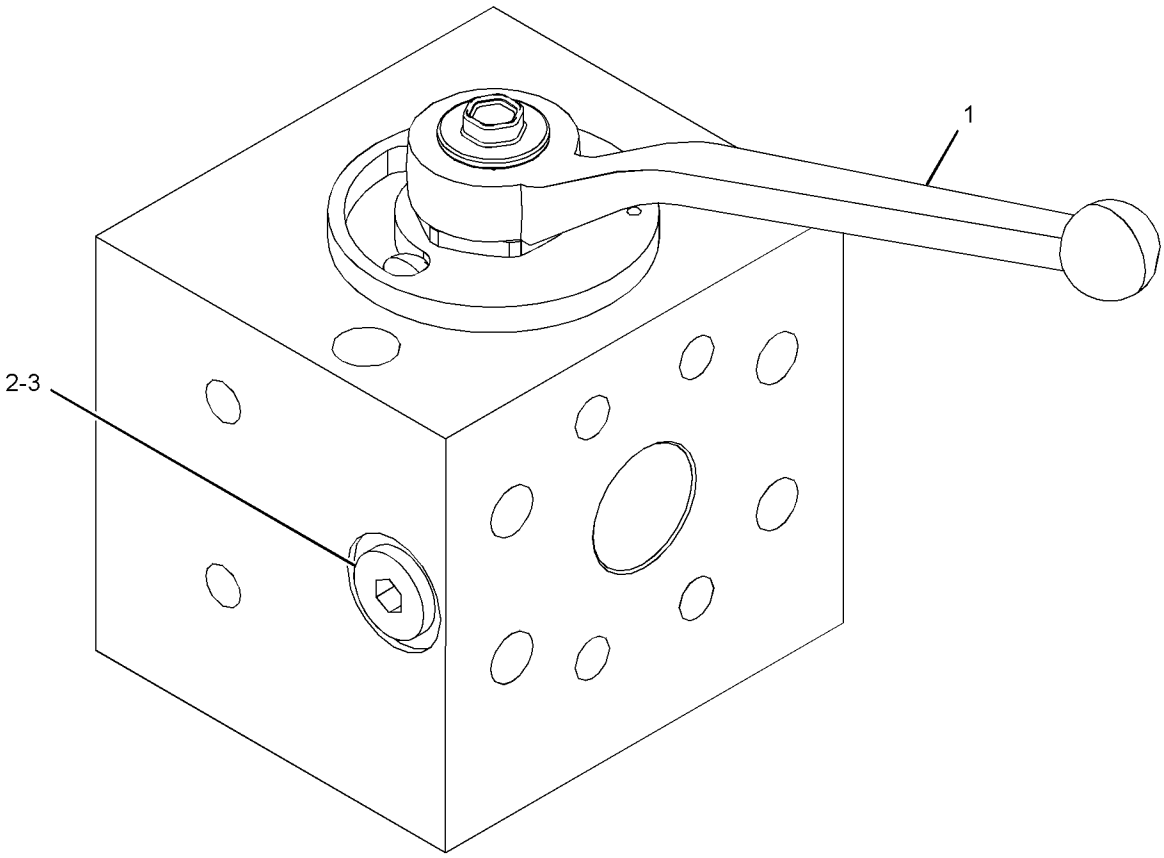

GRAPHIC #1 **<END>** g02933216

206-3336 VALVE GP-PILOT

S/N: JEG1-UP
PART OF 239-8693, 239-8695 CONTROL GP-HYDRAULIC PEDAL
AN ATTACHMENT

SMCS-5059 **i05495910**

NOTE	REF NO	GRAPHIC REF	PART NUMBER	QTY	PART NAME 1 2 3 4 5 6 (PRODUCT LEVEL)	SEE PAGE
	1	1	**107-6479**	1	PLUG	
	2	1	**438-4965**	2	SPRING (STANDARD)	
					—OR—	
		1	**190-7819**	2	SPRING (OPTIONAL)	
					(REDUCES OPERATING FORCE BY 40%)	
	3	1	**335-0136**	1	BELLOWS	
	4	1	**335-0138**	2	PACKING	
	5	1	**095-1575**	1	SEAL-O-RING	
	6	1	**095-1578**	2	SEAL-O-RING	
	7	1	**095-1579**	1	SEAL-O-RING	
	8	1	**095-1584**	1	SEAL-O-RING	
	9	1	**6V-8399**	2	SEAL-O-RING	
	10	1	**9M-5590**	1	BALL	

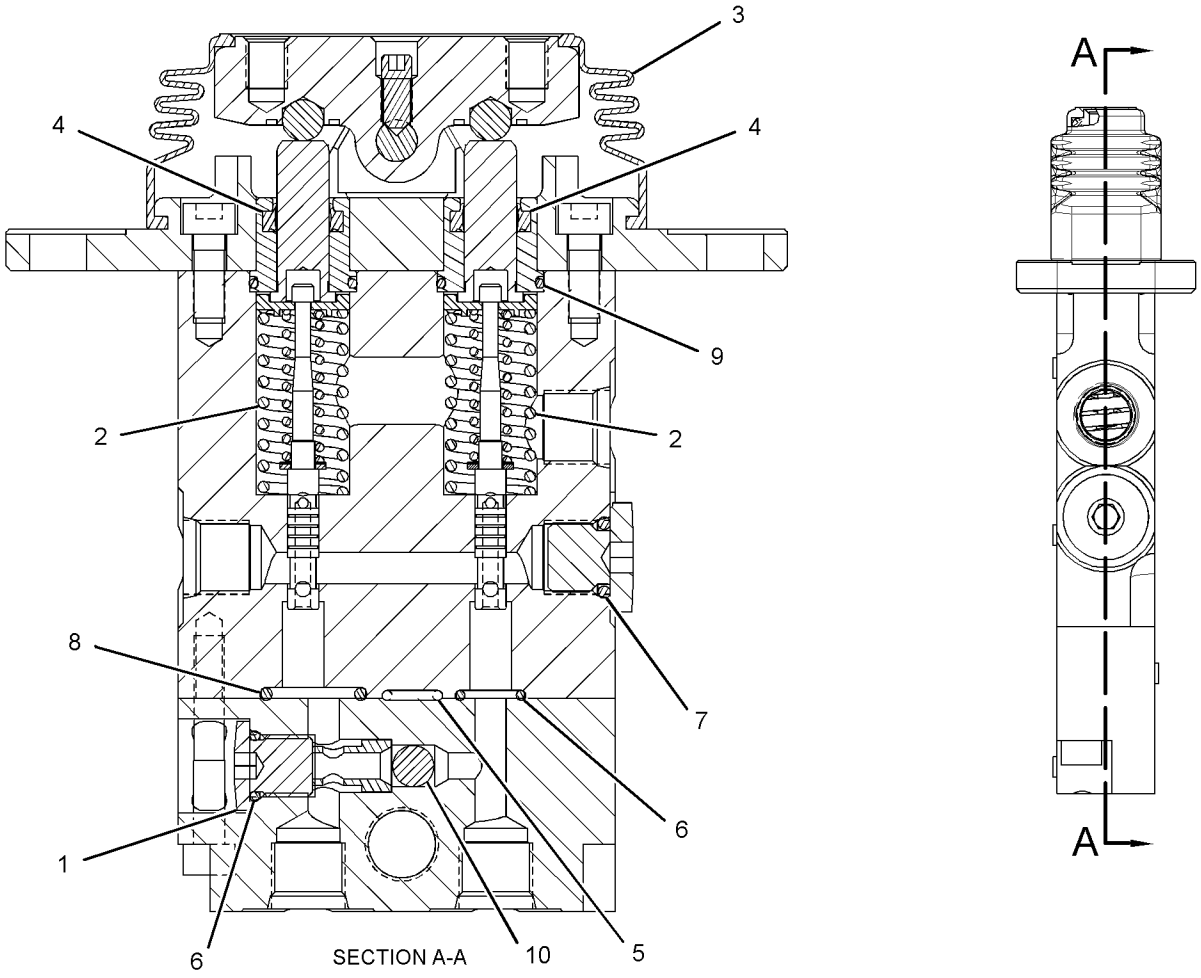

SECTION A-A

GRAPHIC #1 **<END>** g03371302

297-0529 VALVE GP-PILOT–JOYSTICK

S/N: JEG1-UP

PART OF 297-0532, 297-0533 CONTROL GP-JOYSTICK

AN ATTACHMENT

SMCS-5059 **i03257559**

NOTE	REF NO	GRAPHIC REF	PART NUMBER	QTY	PART NAME 1 2 3 4 5 6 (PRODUCT LEVEL)	SEE PAGE
	1	1	**270-5953**	4	SPRING	
	2	1	**095-1586**	4	SEAL-O-RING	
	3	1	**4I-6365**	1	JOINT	
	4	1	**094-0876**	4	SEAL	
	5	1	**096-1628**	4	PLUG	
B	6	1	**099-6137**	4	WASHER (6.1X9X0.2-MM THK)	
	7	1	**118-4086**	4	ROD	
	8	1	**118-4087**	4	SPRING	
M	9	1	**131-5915**	1	NUT-SPECIAL	
	10	1	**165-9431**	1	PLATE	
	11	1	**165-9435**	2	SEAT	
	12	1	**165-9436**	2	SEAT	
	13	1	**165-9438**	1	PLATE	
	14	1	**165-9442**	2	SPRING	
	15	1	**165-9443**	2	SEAT-SPRING	
	16	1	**165-9444**	2	SEAT-SPRING	
	17	1	**165-9460**	2	SPRING	
	18	1	**171-0087**	1	BELLOWS	

PARTS SHOWN IN GRAPHIC(S) WITHOUT A REFERENCE NUMBER ARE NOT SERVICED SEPARATELY

B - USE AS REQUIRED
M - METRIC PART

297-0529 **VALVE GP-PILOT (*contd.*)** **i03257559**

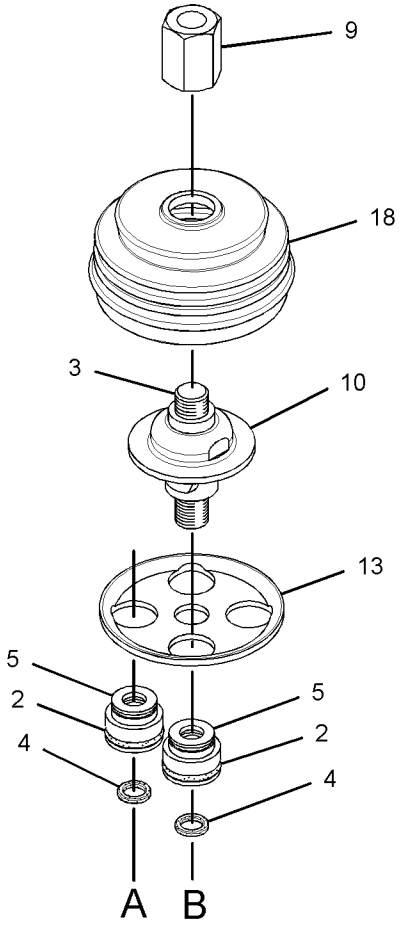

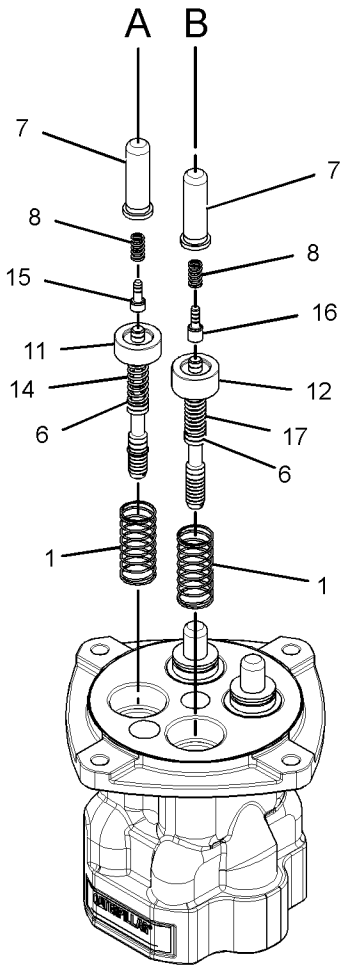

GRAPHIC #1 **<END>** g01528724

369-8502 VALVE GP-PILOT–TRAVEL, SHUTTLE

S/N: JEG1-UP

PART OF 248-9825 LINES GP-PILOT

ALSO AN ATTACHMENT

SMCS-5059 **i05311381**

NOTE	REF NO	GRAPHIC REF	PART NUMBER	QTY	PART NAME 1 2 3 4 5 6 (PRODUCT LEVEL)	SEE PAGE
	1	1	**087-5708**	2	PEDAL	
	2	1	**099-6137**	4	WASHER (6.1X9X0.2-MM THK)	
	3	1	**099-6141**	4	WASHER (6.1X11X1.5-MM THK)	
	4	1	**099-6144**	4	BUSHING-TERMINAL	
	5	1	**099-6145**	2	CAMSHAFT	
	6	1	**119-5388**	4	CAP	
	7	1	**119-5389**	4	PACKING	
	8	1	**119-5391**	4	SEAT	
	9	1	**126-1865**	4	SPRING	
	10	1	**126-1866**	4	SPRING	
	11	1	**131-5818**	4	SPRING	
	12	1	**153-5223**	12	BALL	
	13	1	**165-9552**	4	PUSHROD	
	14	1	**165-9554**	4	PLUG	
	15	1	**270-5949**	4	PISTON	
	16	1	**270-5950**	4	SPRING	
	17	1	**310-0419**	4	SEAT	
	18	1	**310-0420**	4	SEAL-O-RING	
	19	1	**369-8507**	2	PLUG-O-RING	
	20	1	**369-8508**	2	SEAT	
	21	1	**369-8509**	2	COVER	
	22	1	**369-8510**	1	COVER	
	23	1	**369-8568**	2	BOLT-SOCKET HEAD (M10X1.5X65-MM)	
	24	1	**369-8569**	2	BELLOWS	
M	25	1	**087-4710**	4	SETSCREW (M10X21-MM)	
M	26	1	**095-1260**	2	SETSCREW-SOCKET (M6X1X6-MM)	
	27	1	**095-1575**	4	SEAL-O-RING	
	28	1	**3Y-9267**	2	BALL	
M	29	1	**6V-8202**	2	BOLT-SOCKET HEAD (M8X1.25X16-MM)	
	30	1	**6V-8400**	4	SEAL-O-RING	
M	31	1	**8C-6965**	2	BOLT-SOCKET HEAD (M6X1X45-MM)	
M	32	1	**8T-4133**	4	NUT (M10X1.5-THD)	
	33	1	**8T-6759**	1	PLUG-PIPE	

M - METRIC PART

369-8502 **VALVE GP-PILOT (*contd.*)** **i05311381**

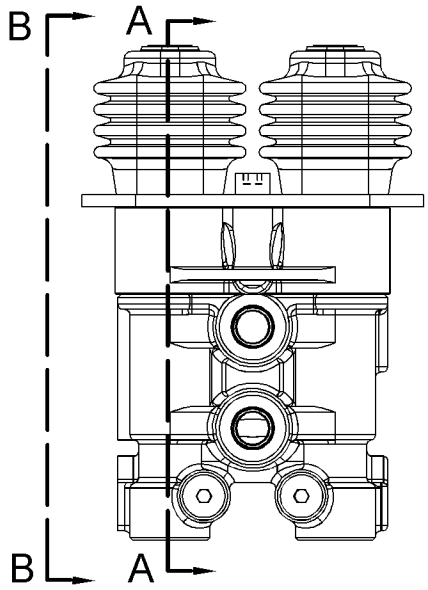

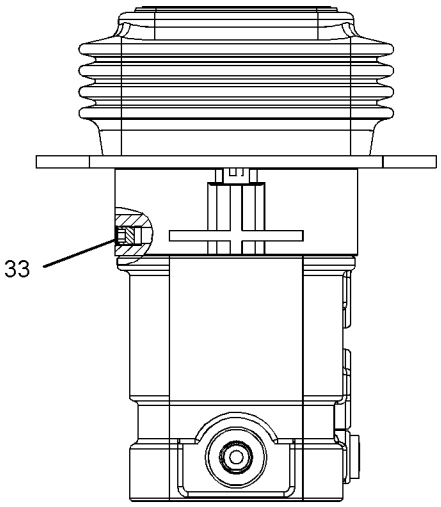

VIEW B-B

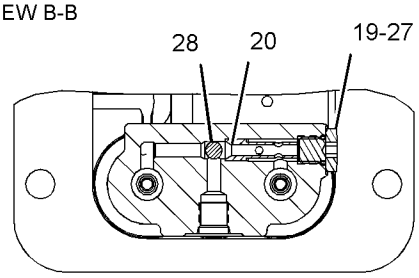

SECTION D-D

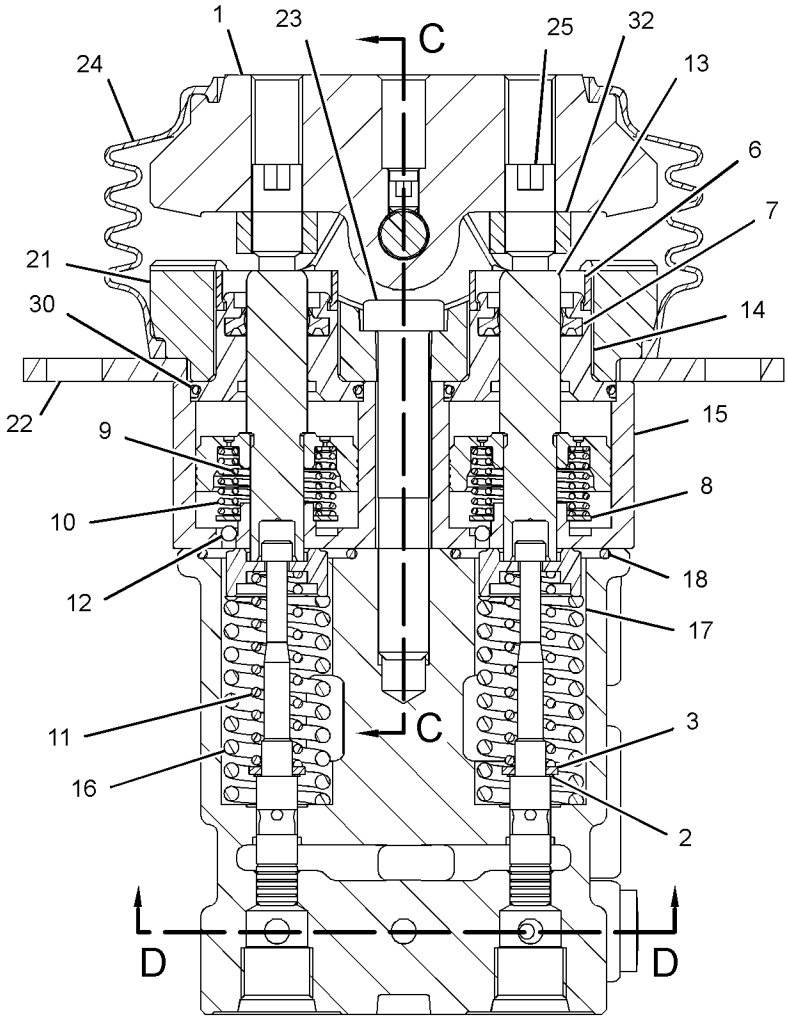

SECTION A-A

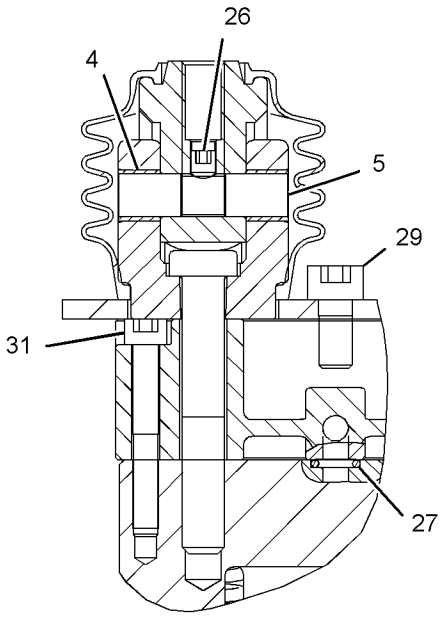

SECTION C-C

GRAPHIC #1 **<END>** g02835743

310-0210 VALVE GP-PRESSURE REDUCING—BOOM, SWING PRIORITY

S/N: JEG1-UP

PART OF 398-4602 LINES GP-PILOT

SMCS-5117 **i03177861**

NOTE	REF NO	GRAPHIC REF	PART NUMBER	QTY	PART NAME 1 2 3 4 5 6 (PRODUCT LEVEL)	SEE PAGE
	1	1	**111-9998**	2	PLUG	
	2	1	**171-0123**	2	PLUG	
M	3	1	**171-0124**	2	SETSCREW (M8X1.25X18-MM)	
	4	1	**171-0126**	2	SEAT-SPRING	
	5	1	**171-0127**	2	SEAT-SPRING	
	6	1	**171-0128**	2	SPRING	
	7	1	**185-0423**	2	STOP	
	8	1	**095-1580**	2	SEAL-O-RING	
	9	1	**095-1582**	2	SEAL-O-RING	
	10	1	**095-1590**	2	SEAL-O-RING	
M	11	1	**5C-7261**	2	NUT (M8X1.25-THD)	

M - METRIC PART

310-0210 **VALVE GP-PRESSURE REDUCING (*contd.*)** **i03177861**

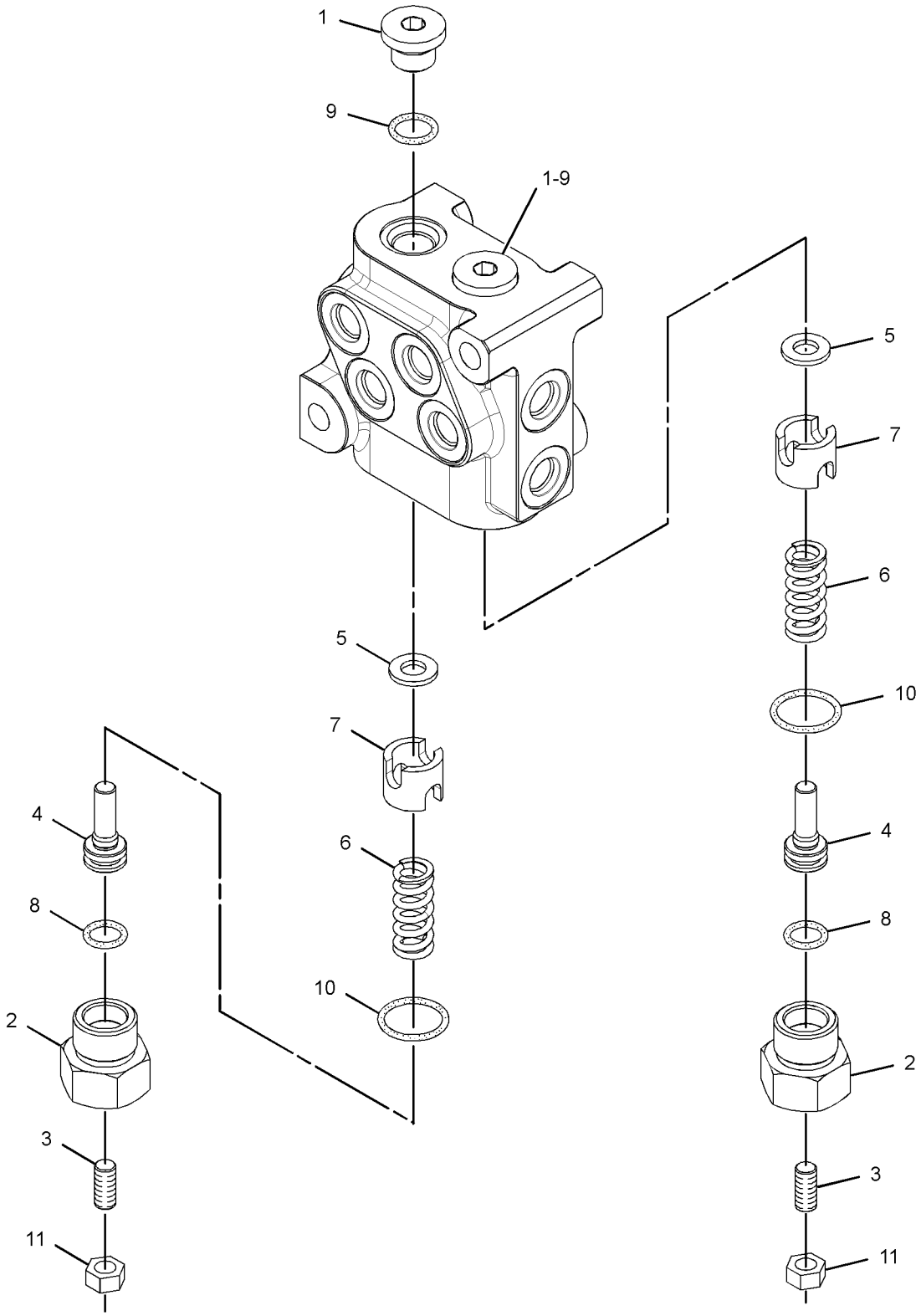

GRAPHIC #1 **<END>** g01506435

323-7898 VALVE GP-PRIORITY–SWING

S/N: JEG1-UP

PART OF 352-7132 VALVE GP-CONTROL

SMCS-506P **i04000284**

NOTE	REF NO	GRAPHIC REF	PART NUMBER	QTY	PART NAME 1 2 3 4 5 6 (PRODUCT LEVEL)	SEE PAGE
	1	1	**140-0674**	1	VALVE	
	2	1	**158-8186**	1	SPRING	
	3	1	**255-5594**	2	SEAL-O-RING	
	4	1	**297-0483**	2	SEAL-O-RING	
	5	1	**140-0677**	1	PIN	
					PARTS SHOWN IN GRAPHIC(S) WITHOUT A REFERENCE NUMBER ARE NOT SERVICED SEPARATELY	

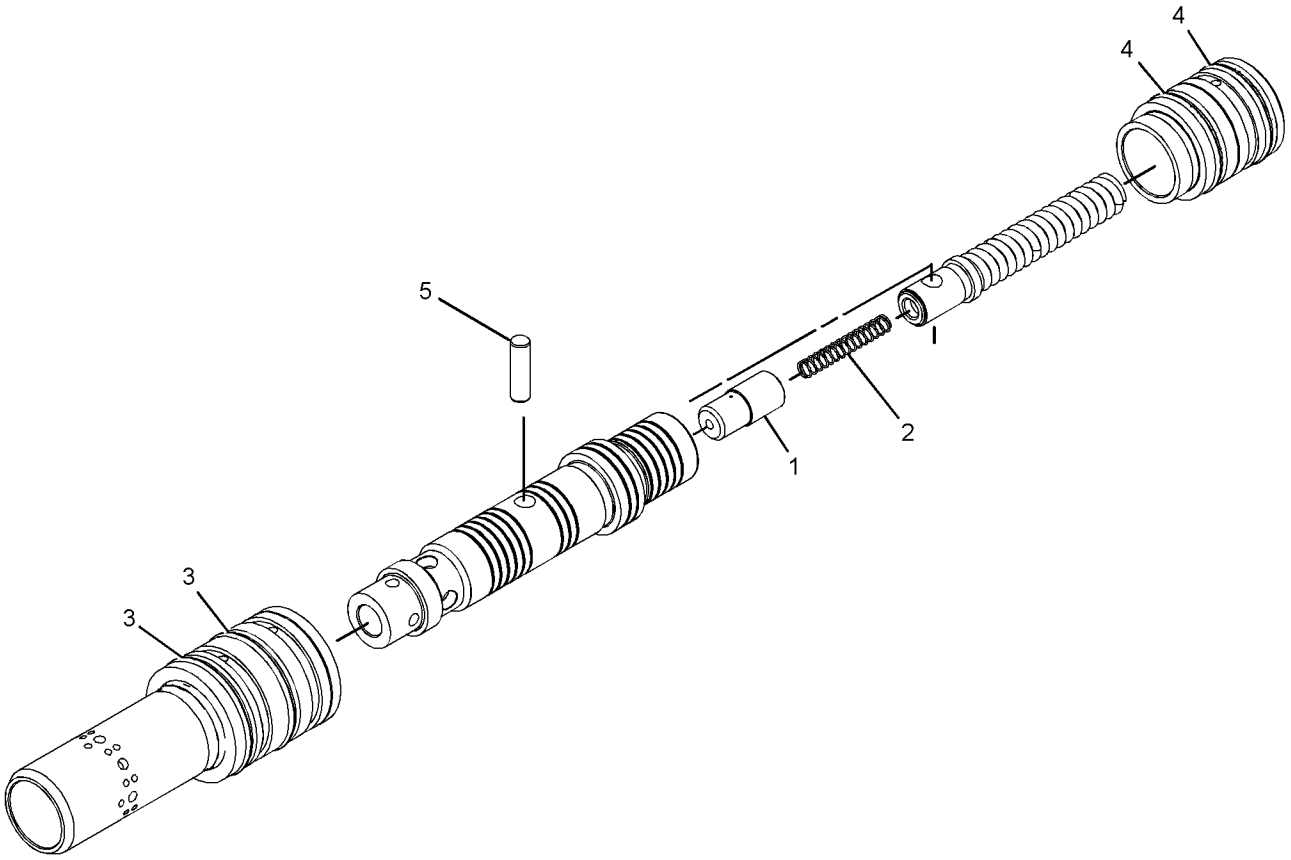

GRAPHIC #1 **<END>** g02144637

109-2667 VALVE GP-RELIEF

S/N: JEG1-UP

PART OF 153-5313 VALVE GP-RELIEF

SMCS-5069, 5117 **i01401638**

NOTE	REF NO	GRAPHIC REF	PART NUMBER	QTY	PART NAME 1 2 3 4 5 6 (PRODUCT LEVEL)	SEE PAGE
	1	1	**5I-4111**	1	PLUG	
	2	1	**109-2665**	1	BODY-VALVE	
	3	1	**107-6370**	1	SPRING	
	4	1	**107-6371**	1	VALVE	
	5	1	**4K-1388**	2	SEAL-O-RING	
B	6	1	**4J-7385**	1	SHIM (0.048-IN THK)	
B	7	1	**4J-7386**	5	SHIM (0.01-IN THK)	
	8	1	**5P-3108**	1	SEAL-O-RING	

B - USE AS REQUIRED

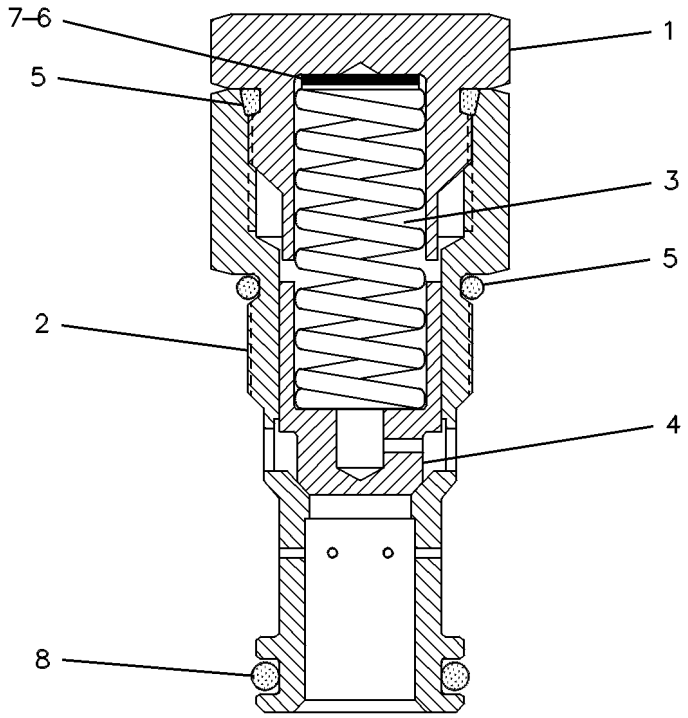

GRAPHIC #1 **<END>** g00242585

109-5152 VALVE GP-RELIEF

S/N: JEG1-UP

PART OF 435-1484 VALVE GP-CONTROL

SMCS-5069, 5117 **i00831419**

NOTE	REF NO	GRAPHIC REF	PART NUMBER	QTY	PART NAME 1 2 3 4 5 6 (PRODUCT LEVEL)	SEE PAGE
	1	1	**5I-4111**	1	PLUG	
	2	1	**5P-3108**	1	SEAL-O-RING	
	3	1	**107-6370**	1	SPRING	
	4	1	**4K-1388**	2	SEAL-O-RING	
	5	1	**107-6371**	1	VALVE	
B	6	1	**4J-7386**	1	SHIM (0.01-IN THK)	
B	7	1	**4J-7385**	1	SHIM (0.048-IN THK)	

B - USE AS REQUIRED

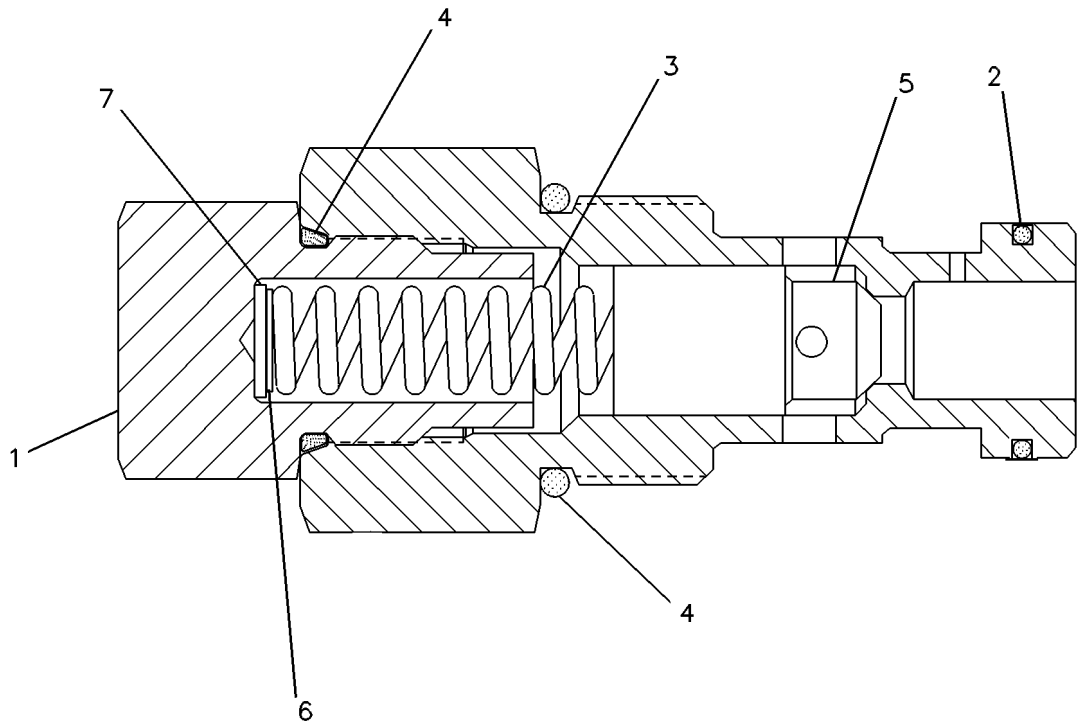

GRAPHIC #1 **<END>** g00243325

153-5313 VALVE GP-RELIEF—NEGATIVE FLOW CONTROL

S/N: JEG1-UP

PART OF 435-1482 VALVE GP-MAIN CONTROL

SMCS-5069, 5117 **i03945994**

NOTE	REF NO	GRAPHIC REF	PART NUMBER	QTY	PART NAME 1 2 3 4 5 6 (PRODUCT LEVEL)	SEE PAGE
	1	1	*153-5239*	1	COVER	
Y	2	1	**109-2667**	1	VALVE GP-RELIEF	467
	3	1	**4J-8998**	2	SEAL-O-RING	
	4	1	**1P-3702**	2	SEAL-RECTANGULAR	

Y - SEPARATE ILLUSTRATION

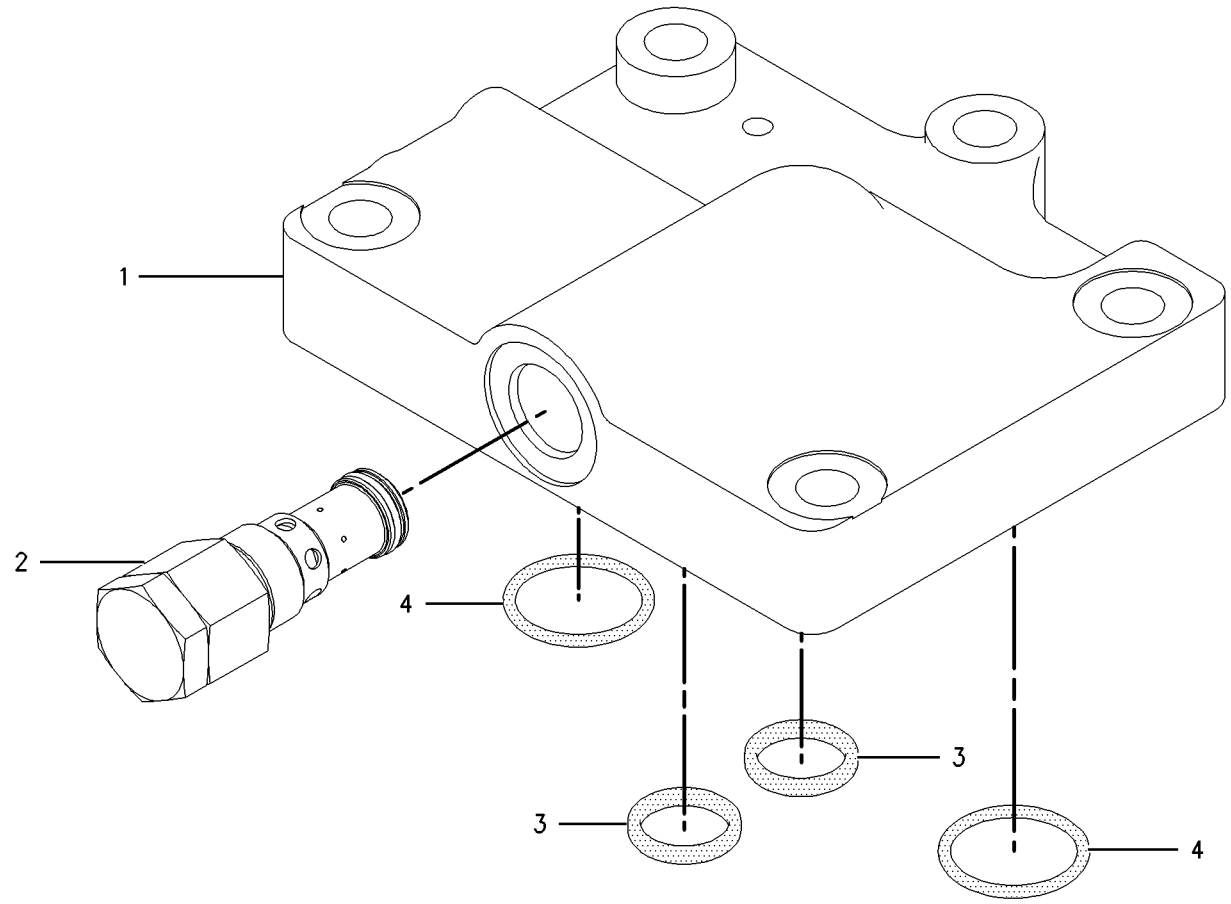

GRAPHIC #1 **<END>** g00672555

173-3452 VALVE GP-RELIEF

S/N: JEG1-UP

PART OF 334-9968 MOTOR GP-SWING

SMCS-5069, 5117

i01375454

NOTE	REF NO	GRAPHIC REF	PART NUMBER	QTY	PART NAME 1 2 3 4 5 6 (PRODUCT LEVEL)	SEE PAGE
	1	1	**168-0765**	1	RING-BACKUP	
	2	1	**7J-9933**	1	SEAL-O-RING	
	3	1	**7I-0966**	1	RING-BACKUP	
	4	1	**6V-5556**	1	SEAL-O-RING	
	5	1	**095-1698**	1	SEAL-O-RING	

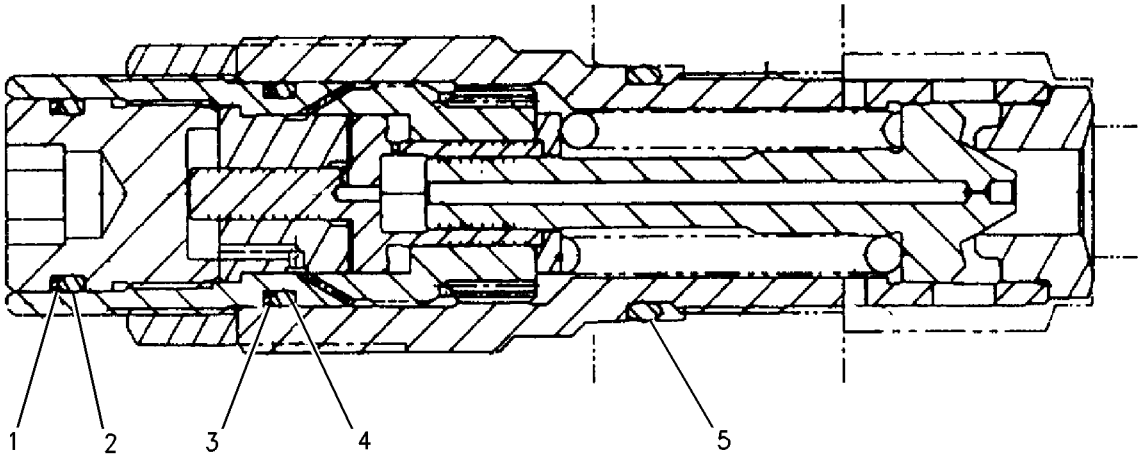

GRAPHIC #1

<END>

g00671043

173-3536 VALVE GP-RELIEF

S/N: JEG1-UP

PART OF 322-8716 VALVE GP-SWING CUSHION

SMCS-5069, 5117

i02444489

NOTE	REF NO	GRAPHIC REF	PART NUMBER	QTY	PART NAME 1 2 3 4 5 6 (PRODUCT LEVEL)	SEE PAGE
	1	1	**095-1785**	1	RING-BACKUP	
	2	1	**095-1586**	1	SEAL-O-RING	

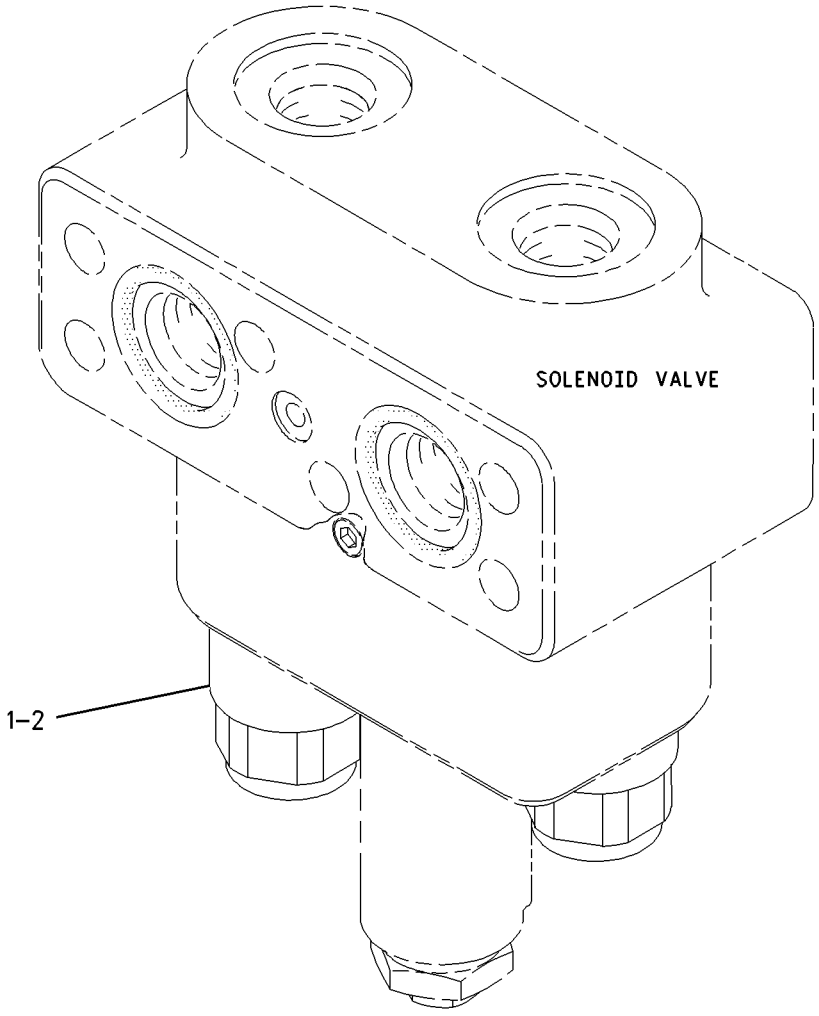

GRAPHIC #1

<END>

g00672771

177-2653 VALVE GP-RELIEF–LINE

S/N: JEG1-UP
PART OF 376-6317, 376-6319 LINES GP-FRONT
AN ATTACHMENT

SMCS-5069, 5117 **i04393465**

NOTE	REF NO	GRAPHIC REF	PART NUMBER	QTY	PART NAME 1 2 3 4 5 6 (PRODUCT LEVEL)	SEE PAGE
CY	1	1	**352-7117**	1	VALVE GP-RELIEF (PILOT OPERATED)	474

C - CHANGE FROM PREVIOUS TYPE
Y - SEPARATE ILLUSTRATION

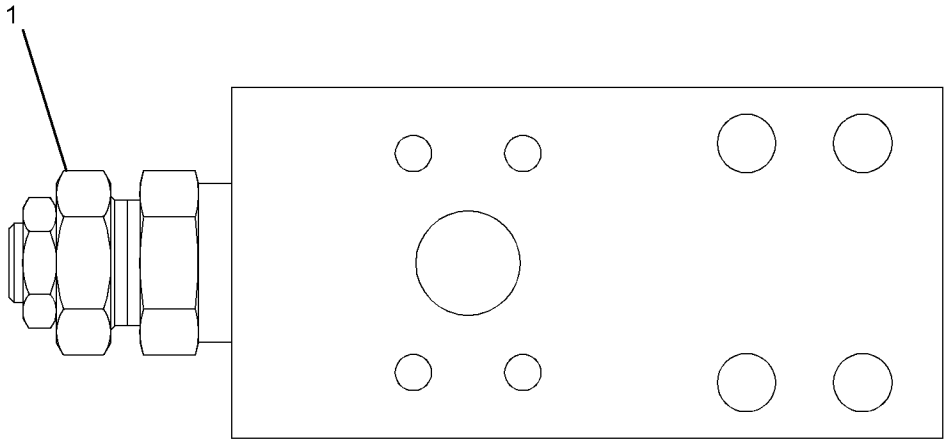

GRAPHIC #1 **<END>** g02320914

352-7113 VALVE GP-RELIEF–PILOT OPERATED

S/N: JEG1-UP

PART OF 352-7132 VALVE GP-CONTROL

SMCS-5069, 5117 **i04145352**

NOTE	REF NO	GRAPHIC REF	PART NUMBER	QTY	PART NAME 1 2 3 4 5 6 (PRODUCT LEVEL)	SEE PAGE
	1	1	**4I-3510**	1	SPRING	
	2	1	**4I-7714**	1	NUT (3/4-16-THD)	
	3	1	**6I-6795**	1	SPRING	
	4	1	**095-1786**	1	RING-BACKUP	
	5	1	**107-6540**	1	COLLAR	
	6	1	**107-6541**	1	RING-RETAINING	
	7	1	**119-5398**	1	SCREEN-FILTER	
	8	1	**171-0037**	1	VALVE	
	9	1	**259-7848**	1	SLEEVE	
	10	1	**259-7849**	1	PISTON	
	11	1	**259-7850**	1	SLEEVE	
	12	1	**259-7851**	1	ADJUSTER	
M	13	1	**287-2499**	1	NUT (M24X2-THD)	
	14	1	**352-6864**	1	SEAT-VALVE	
	16	1	**095-1579**	1	SEAL-O-RING	
	17	1	**095-1584**	1	SEAL-O-RING	
	18	1	**095-1587**	1	SEAL-O-RING	
	19	1	**095-1590**	1	SEAL-O-RING	
	20	1	**3D-2824**	1	SEAL-O-RING	
	21	1	**6V-8218**	1	SEAL-O-RING	
	22	1	**6V-8978**	1	SEAL-O-RING	

M - METRIC PART

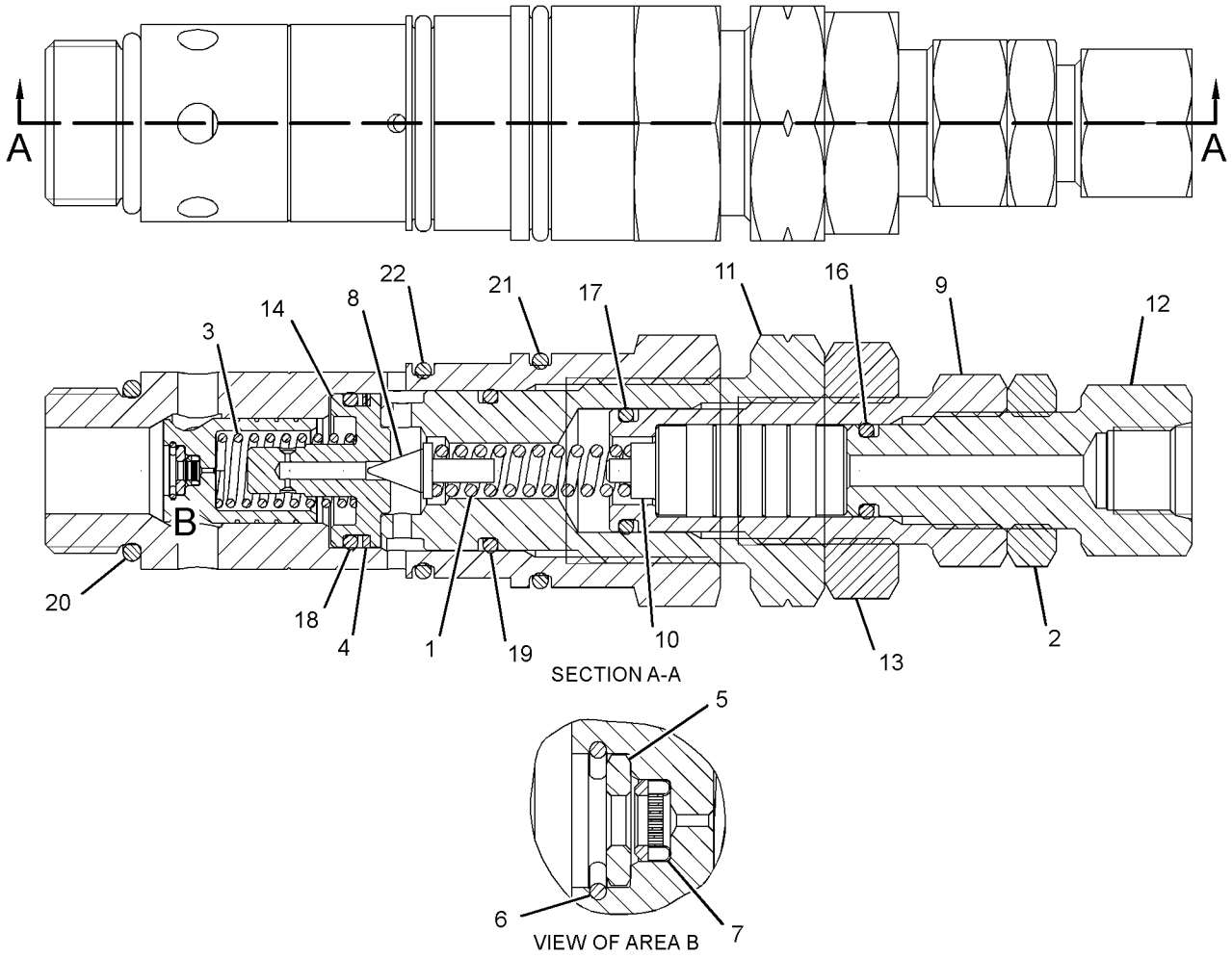

GRAPHIC #1

<END>

g02274093

352-7117 VALVE GP-RELIEF

S/N: JEG1-UP
PART OF 177-2653 VALVE GP-RELIEF
AN ATTACHMENT

SMCS-5069, 5117 **i04393475**

NOTE	REF NO	GRAPHIC REF	PART NUMBER	QTY	PART NAME 1 2 3 4 5 6 (PRODUCT LEVEL)	SEE PAGE
	1	1	**4I-3510**	1	SPRING	
	2	1	**6I-6795**	1	SPRING	
	3	1	**095-1786**	1	RING-BACKUP	
	4	1	**352-6864**	1	SEAT-VALVE	
	5	1	**171-0035**	1	HOLDER	
	6	1	**171-0036**	1	ADJUSTER	
	7	1	**171-0037**	1	VALVE	
	8	1	**222-0085**	1	NUT (3/4-16-THD)	
	9	1	**6V-8978**	1	SEAL-O-RING	
	10	1	**095-1579**	1	SEAL-O-RING	
	11	1	**095-1587**	1	SEAL-O-RING	
	12	1	**095-1590**	1	SEAL-O-RING	
	13	1	**3D-2824**	1	SEAL-O-RING	
	14	1	**6V-8218**	1	SEAL-O-RING	

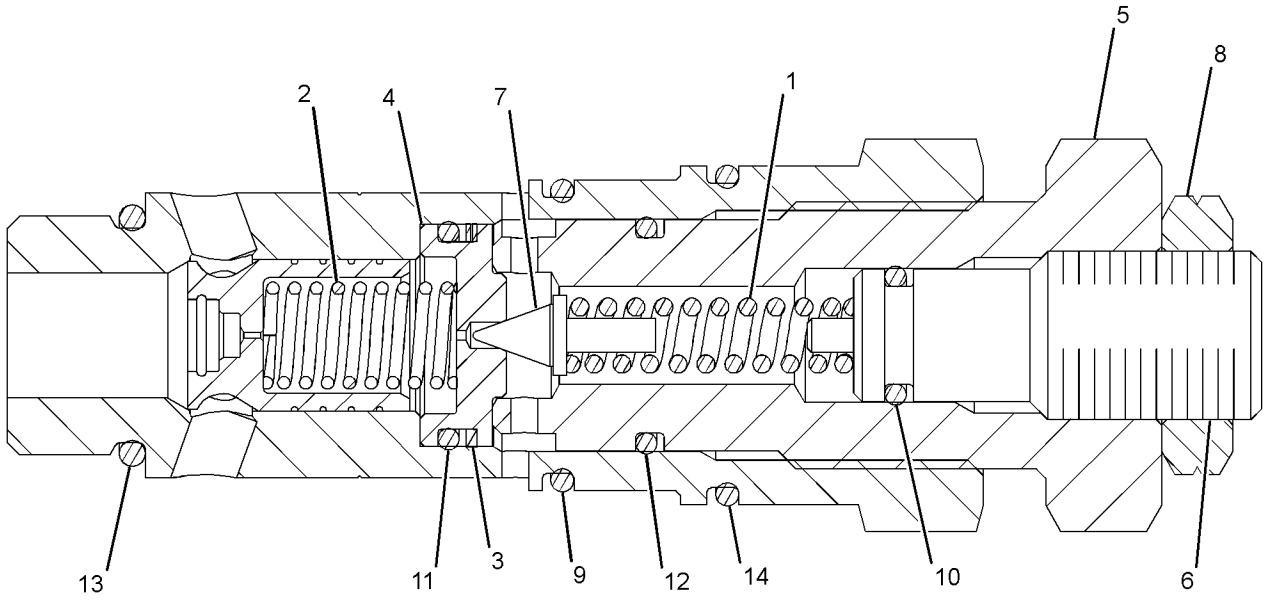

GRAPHIC #1 **<END>** g01513501

352-7122 VALVE GP-RELIEF–LINE

S/N: JEG1-UP

PART OF 259-7378, 352-7132, 435-1484 VALVE GP-CONTROL

ALSO AN ATTACHMENT

SMCS-5069, 5117

i05452793

NOTE	REF NO	GRAPHIC REF	PART NUMBER	QTY	PART NAME 1 2 3 4 5 6 (PRODUCT LEVEL)	SEE PAGE
	1	1	**095-1578**	1	SEAL-O-RING	
	2	1	**103-8252**	2	RING	
	3	1	**103-8253**	2	RING	
	4	1	**103-8254**	1	SEAL-O-RING	
	5	1	**103-8255**	1	SEAL-O-RING	
	6	1	**3D-2824**	2	SEAL-O-RING	

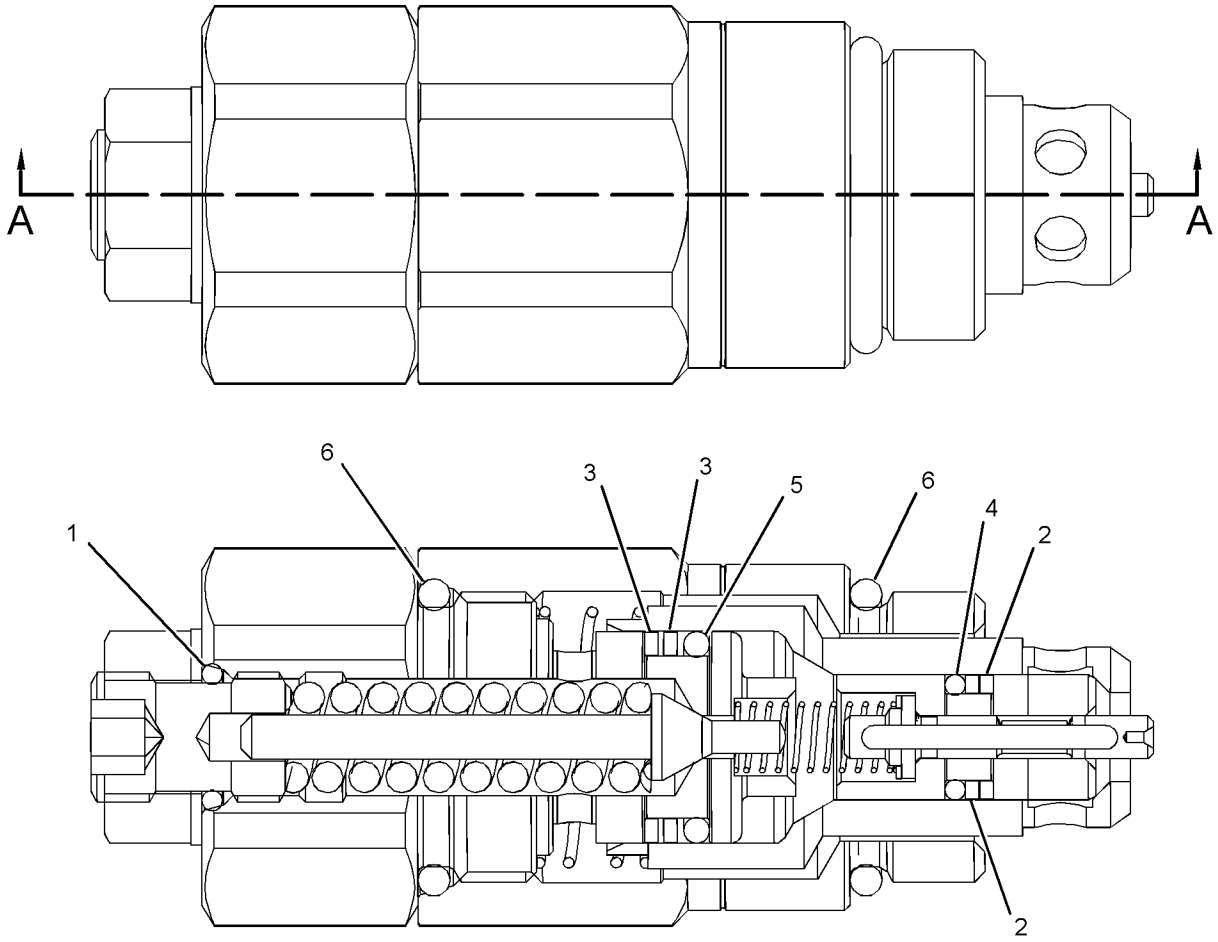

SECTION A-A

GRAPHIC #1

<END>

g02270493

352-7123 VALVE GP-RELIEF–LINE

S/N: JEG1-UP

PART OF 255-5680, 255-5683 VALVE GP-LOAD CONTROL

SMCS-5069, 5117

i04485273

NOTE	REF NO	GRAPHIC REF	PART NUMBER	QTY	PART NAME 1 2 3 4 5 6 (PRODUCT LEVEL)	SEE PAGE
	1	1	**095-1578**	1	SEAL-O-RING	
	2	1	**103-8252**	2	RING	
	3	1	**103-8253**	2	RING	
	4	1	**103-8254**	1	SEAL-O-RING	
	5	1	**103-8255**	1	SEAL-O-RING	
	6	1	**3D-2824**	2	SEAL-O-RING	
					PARTS SHOWN IN GRAPHIC(S) WITHOUT A REFERENCE NUMBER ARE NOT SERVICED SEPARATELY	

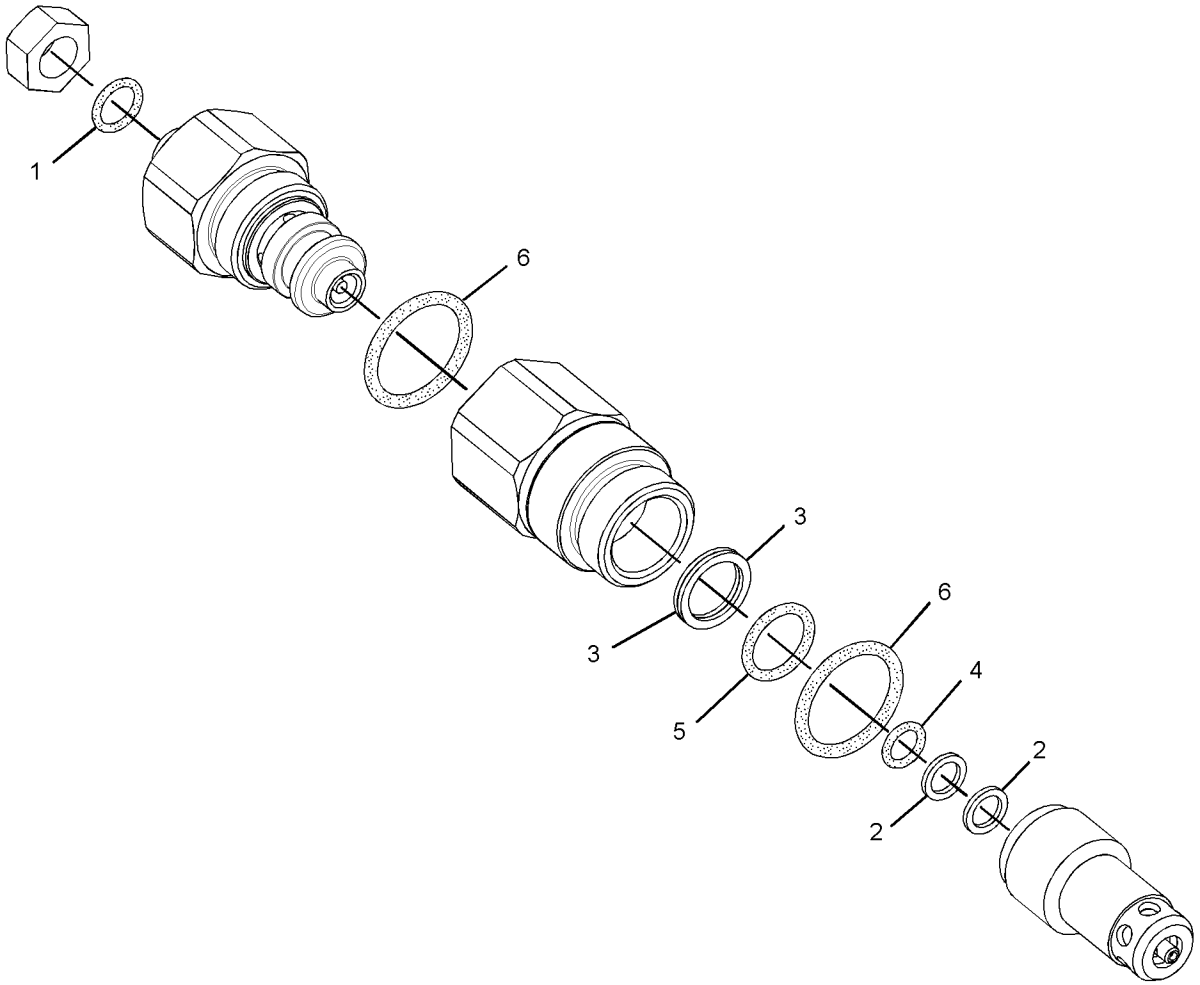

GRAPHIC #1 **<END>** g02217774

360-4588 VALVE GP-RELIEF

S/N: JEG1-UP
PART OF 322-8714 VALVE GP-TRAVEL COUNTERBALANCE
ALSO AN ATTACHMENT

SMCS-5069, 5117

i04855195

NOTE	REF NO	GRAPHIC REF	PART NUMBER	QTY	PART NAME 1 2 3 4 5 6 (PRODUCT LEVEL)	SEE PAGE
	1	1	**095-1583**	1	SEAL-O-RING	
	2	1	**095-1590**	1	SEAL-O-RING	
	3	1	**7E-4846**	1	SEAL-O-RING	
	4	1	**099-8232**	1	SEAL-O-RING	
	5	1	**364-1975**	1	RING-BACKUP	
	6	1	**364-1976**	2	RING-BACKUP	
	7	1	**364-1977**	2	RING-BACKUP	
	8	1	**364-1978**	1	RING-BACKUP	

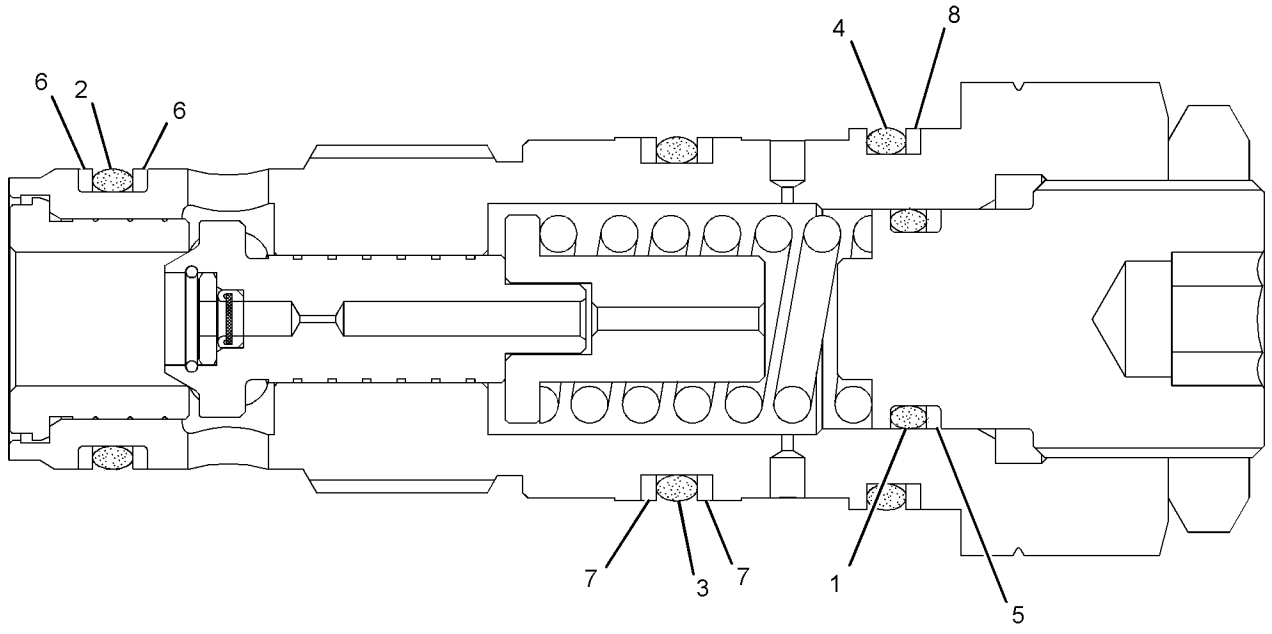

GRAPHIC #1

<END>

g02267093

164-6979 VALVE GP-SHUTTLE

S/N: JEG1-UP

PART OF 255-1802, 398-4602 LINES GP-PILOT

ALSO AN ATTACHMENT

SMCS-5079 **i03815390**

NOTE	REF NO	GRAPHIC REF	PART NUMBER	QTY	PART NAME 1 2 3 4 5 6 (PRODUCT LEVEL)	SEE PAGE
	1	1	**123-2431**	1	BODY-VALVE	
	2	1	**4B-9783**	1	BALL	
	3	1	*175-4430*	2	CONNECTOR AS	
					(EACH INCLUDES)	
		1	**3J-1907**	1	SEAL-O-RING	
		1	**6V-8397**	1	SEAL-O-RING	
		1	**123-2552**	1	CONNECTOR	

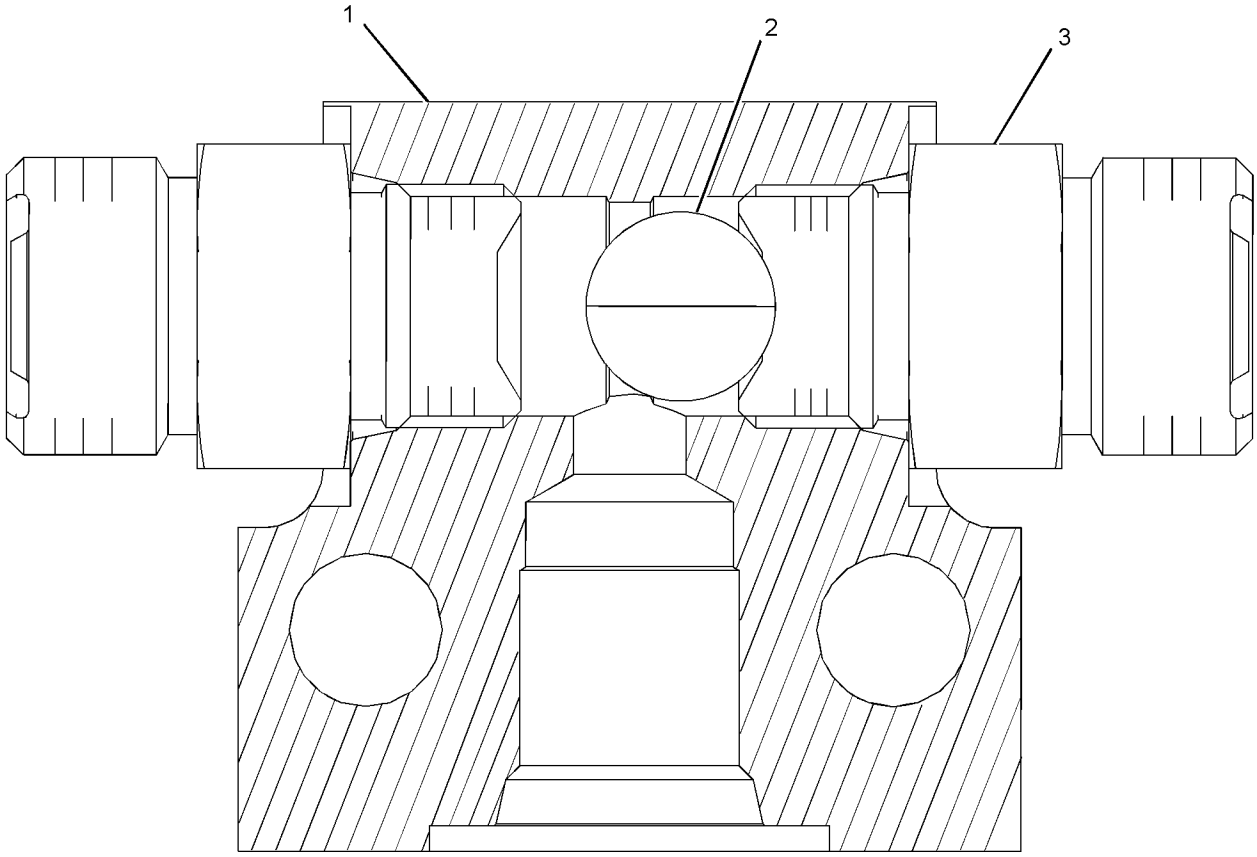

GRAPHIC #1 **<END>** g01955237

185-0462 VALVE GP-SHUTTLE

S/N: JEG1-UP
PART OF 248-9825 LINES GP-PILOT
ALSO AN ATTACHMENT

SMCS-5079 **i01375688**

NOTE	REF NO	GRAPHIC REF	PART NUMBER	QTY	PART NAME 1 2 3 4 5 6 (PRODUCT LEVEL)	SEE PAGE
	1	1	**7I-8084**	4	PLUG	
	2	1	**185-0463**	1	SEAT	
	3	1	**4B-9880**	7	BALL	
	4	1	**165-9464**	6	SEAT	
	5	1	**095-1578**	7	SEAL-O-RING	
	6	1	**107-6479**	7	PLUG	

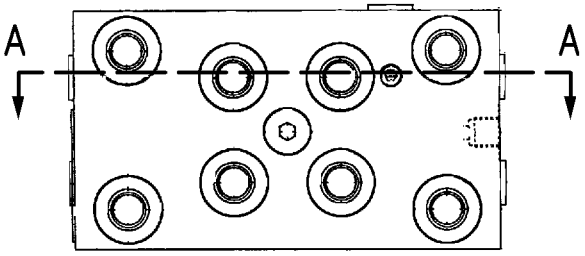

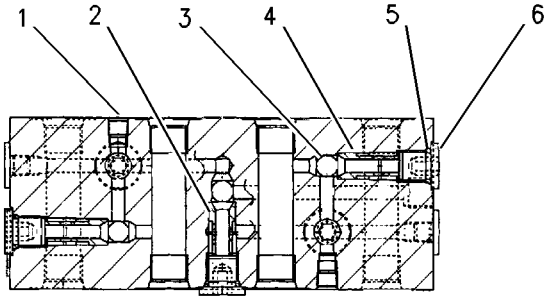

SECTION A-A

GRAPHIC #1 **<END>** g00699270

111-9916 VALVE GP-SOLENOID

S/N: JEG1-UP

PART OF 344-5281 HEAD GP-PUMP, 398-2282 VALVE GP-SOLENOID

ALSO AN ATTACHMENT

SMCS-5479 **i02840105**

NOTE	REF NO	GRAPHIC REF	PART NUMBER	QTY	PART NAME 1 2 3 4 5 6 (PRODUCT LEVEL)	SEE PAGE
	1	1	**095-1750**	1	SEAL-O-RING	
	2	1	**6V-8398**	1	SEAL-O-RING	
	3	1	**095-1751**	1	SEAL-O-RING	
	4	1	**095-1586**	1	SEAL-O-RING	
M	5	1	**114-0623**	1	NUT AS (M6X1-THD)	

M - METRIC PART

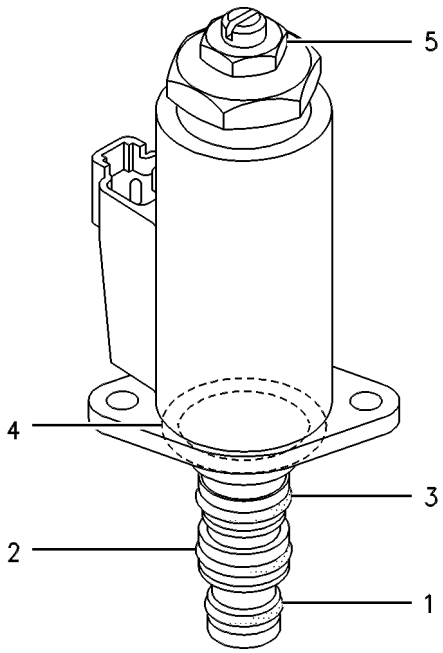

GRAPHIC #1 **<END>** g00258219

121-1491 VALVE GP-SOLENOID

S/N: JEG1-UP

PART OF 239-8697, 239-8998 MANIFOLD GP-CONTROL, 352-7132 VALVE GP-CONTROL, 165-9549 VALVE GP-SOLENOID

ALSO AN ATTACHMENT

SMCS-5479 **i02198057**

NOTE	REF NO	GRAPHIC REF	PART NUMBER	QTY	PART NAME 1 2 3 4 5 6 (PRODUCT LEVEL)	SEE PAGE
	1	1	**095-1750**	1	SEAL-O-RING	
	2	1	**6V-8398**	1	SEAL-O-RING	
	3	1	**095-1751**	1	SEAL-O-RING	
	4	1	**095-1586**	1	SEAL-O-RING	
M	5	1	**114-0623**	1	NUT AS (M6X1-THD)	

M - METRIC PART

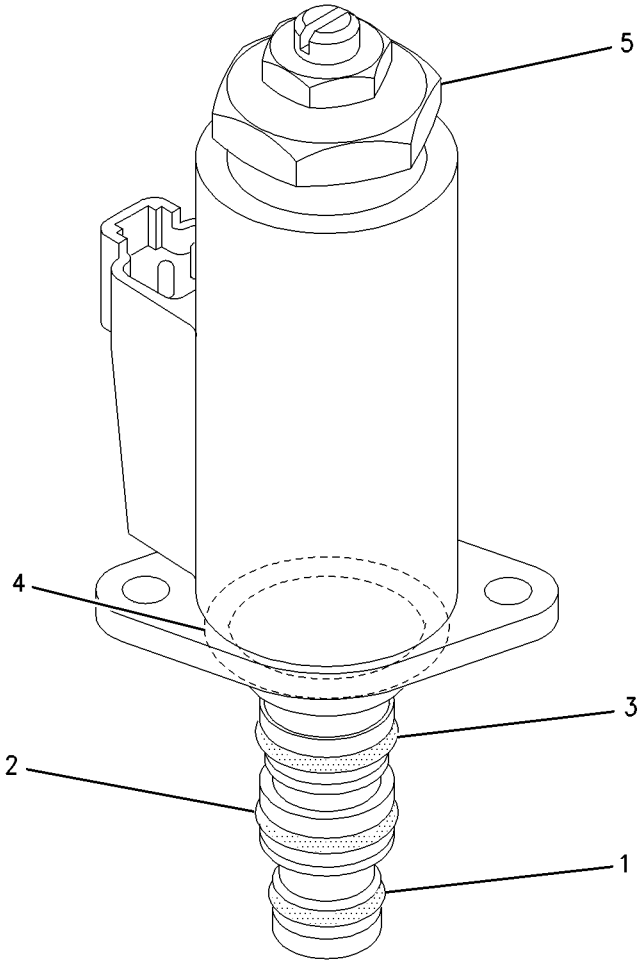

GRAPHIC #1 **<END>** g00928680

165-9549 VALVE GP-SOLENOID

S/N: JEG1-UP
PART OF 398-4603 LINES GP-PILOT
AN ATTACHMENT

SMCS-5479 **i05391553**

NOTE	REF NO	GRAPHIC REF	PART NUMBER	QTY	PART NAME 1 2 3 4 5 6 (PRODUCT LEVEL)	SEE PAGE
	1	1	**7I-8084**	4	PLUG	
Y	2	1	**121-1491**	3	VALVE GP-SOLENOID	481
M	3	1	**7I-2272**	6	BOLT (M5X0.8X12-MM)	

M - METRIC PART
Y - SEPARATE ILLUSTRATION

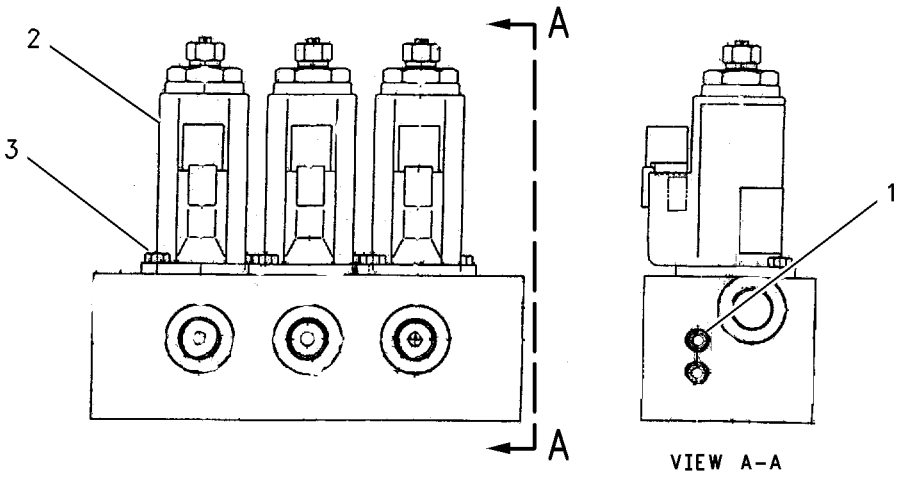

GRAPHIC #1 **<END>** g00754979

315-4412 VALVE GP-SOLENOID

S/N: JEG1-UP

PART OF 322-8716 VALVE GP-SWING CUSHION

SMCS-5479 **i03146249**

NOTE	REF NO	GRAPHIC REF	PART NUMBER	QTY	PART NAME 1 2 3 4 5 6 (PRODUCT LEVEL)	SEE PAGE
	1	1	**126-6514**	1	SEAL-O-RING	
	2	1	**126-6515**	1	SEAL-O-RING	
	3	1	**126-6516**	1	SEAL-O-RING	
	4	1	**095-1586**	1	SEAL-O-RING	

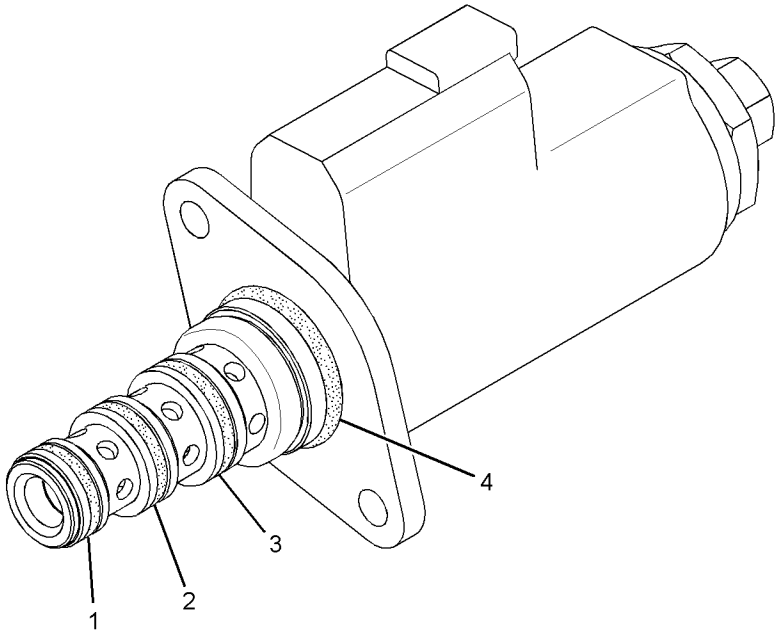

GRAPHIC #1 **<END>** g01456627

352-7176 VALVE GP-SOLENOID

S/N: JEG1-UP

PART OF 255-1659 LINES GP-PILOT

SMCS-5479 **i04365031**

NOTE	REF NO	GRAPHIC REF	PART NUMBER	QTY	PART NAME 1 2 3 4 5 6 (PRODUCT LEVEL)	SEE PAGE
	1	1	**102-8802**	1	KIT-RECEPTACLE (2-PIN)	
					(INCLUDES RECEPTACLE AS & WEDGE)	
	2	1	**8T-8729**	2	PIN-CONNECTOR (16-GA TO 18-GA)	
	3	1	**095-1519**	1	SEAL-O-RING	
	4	1	**095-1579**	1	SEAL-O-RING	
					PARTS SHOWN IN GRAPHIC(S) WITHOUT A REFERENCE NUMBER ARE NOT SERVICED SEPARATELY	

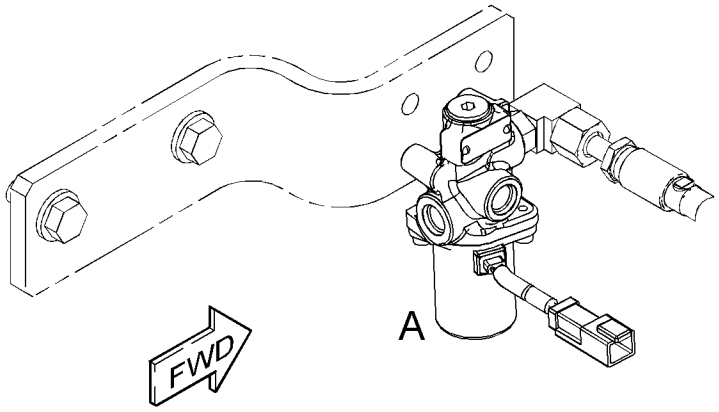

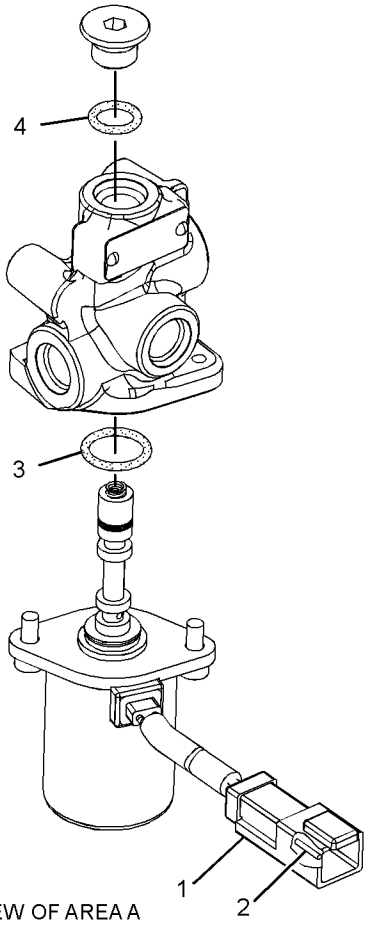

VIEW OF AREA A

GRAPHIC #1 **<END>** g02317033

398-2282 VALVE GP-SOLENOID—NEGATIVE FLOW CONTROL

S/N: JEG1-UP
PART OF 398-4603, 398-4604 LINES GP-PILOT
AN ATTACHMENT

SMCS-5479 **i05164782**

NOTE	REF NO	GRAPHIC REF	PART NUMBER	QTY	PART NAME 1 2 3 4 5 6 (PRODUCT LEVEL)	SEE PAGE
	1	1	**7I-8084**	3	PLUG	
	2	1	**107-6479**	2	PLUG	
Y	3	1	**111-9916**	1	VALVE GP-SOLENOID (PUMP CONTROL)	480
	4	1	**185-0463**	2	SEAT	
	5	1	**095-1578**	2	SEAL-O-RING	
M	6	1	**7I-2272**	2	BOLT (M5X0.8X12-MM)	
	7	1	**9M-5590**	2	BALL	

M - METRIC PART
Y - SEPARATE ILLUSTRATION

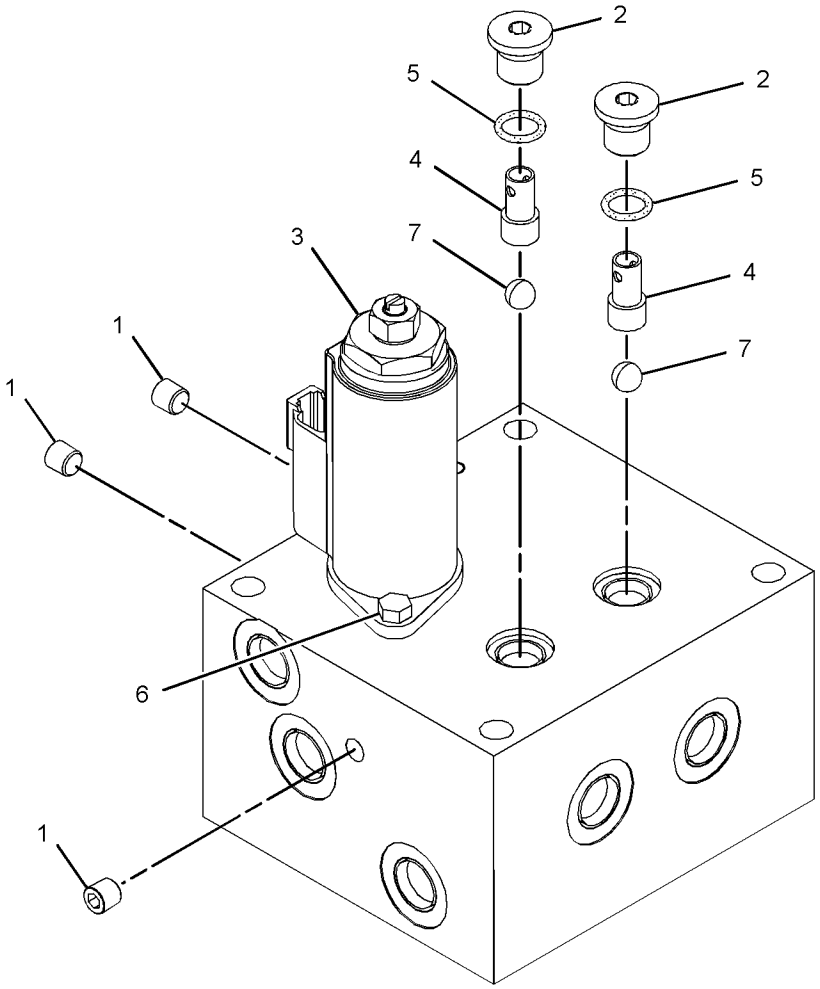

GRAPHIC #1 **<END>** g03149637

328-2035 VALVE GP-SOLENOID & MANIFOLD—QUICK COUPLER

S/N: JEG1-UP
24-VOLT
PART OF 376-6331 LINES GP-QUICK COUPLER
AN ATTACHMENT

SMCS-5264, 5479 **i05454235**

NOTE	REF NO	GRAPHIC REF	PART NUMBER	QTY	PART NAME 1 2 3 4 5 6 (PRODUCT LEVEL)	SEE PAGE
J	1	1	**368-8651**	1	VALVE GP-SOLENOID (24-VOLT) (QUICK COUPLER)	
		1	**260-3883**	1	COIL AS-SOLENOID (24-VOLT)	
		1	**1S-9593**	2	STRAP-CABLE	
		1	**186-3735**	2	PIN-CONNECTOR (16-GA TO 18-GA)	
		1	**230-4012**	1	RECEPTACLE AS-CONNECTOR (2-PIN)	
	1A	1	**156-5970**	1	NUT (1/2-20-THD)	
					AVAILABLE REPAIR KIT(S):	
J			**268-8209**	1	KIT-SEAL (SOLENOID VALVE) (QUICK COUPLER SOLENOID)	
					(INCLUDES 4 O-RING SEALS & 3 RINGS)	

J - KIT MARKED J SERVICES PART(S) MARKED J

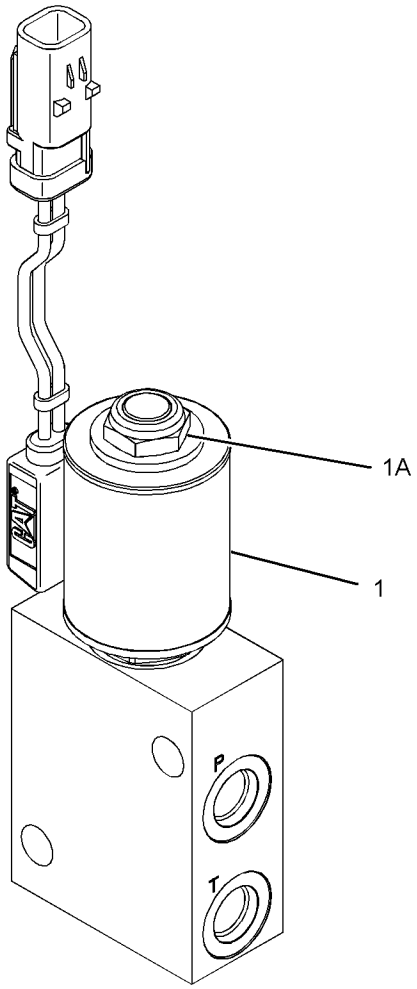

GRAPHIC #1 **<END>** g02452258

322-8716 VALVE GP-SWING CUSHION—FINE SWING

S/N: JEG1-UP

PART OF 239-1699 LINES GP-BOOM CYLINDER

SMCS-5480 **i03631235**

NOTE	REF NO	GRAPHIC REF	PART NUMBER	QTY	PART NAME 1 2 3 4 5 6 (PRODUCT LEVEL)	SEE PAGE
Y	1	1	**315-4412**	1	VALVE GP-SOLENOID (FINE SWING)	483
Y	2	1	**173-3536**	2	VALVE GP-RELIEF	471
	3	1	**095-1698**	2	SEAL-O-RING	
M	4	1	**8T-0288**	2	BOLT (M5X0.8X12-MM)	
	5	1	**133-6788**	2	ORIFICE	
	6	1	**8T-6759**	6	PLUG-PIPE	
	7	1	**095-1576**	1	SEAL-O-RING	

M - METRIC PART
Y - SEPARATE ILLUSTRATION

322-8716 **VALVE GP-SWING CUSHION (*contd.*)** **i03631235**

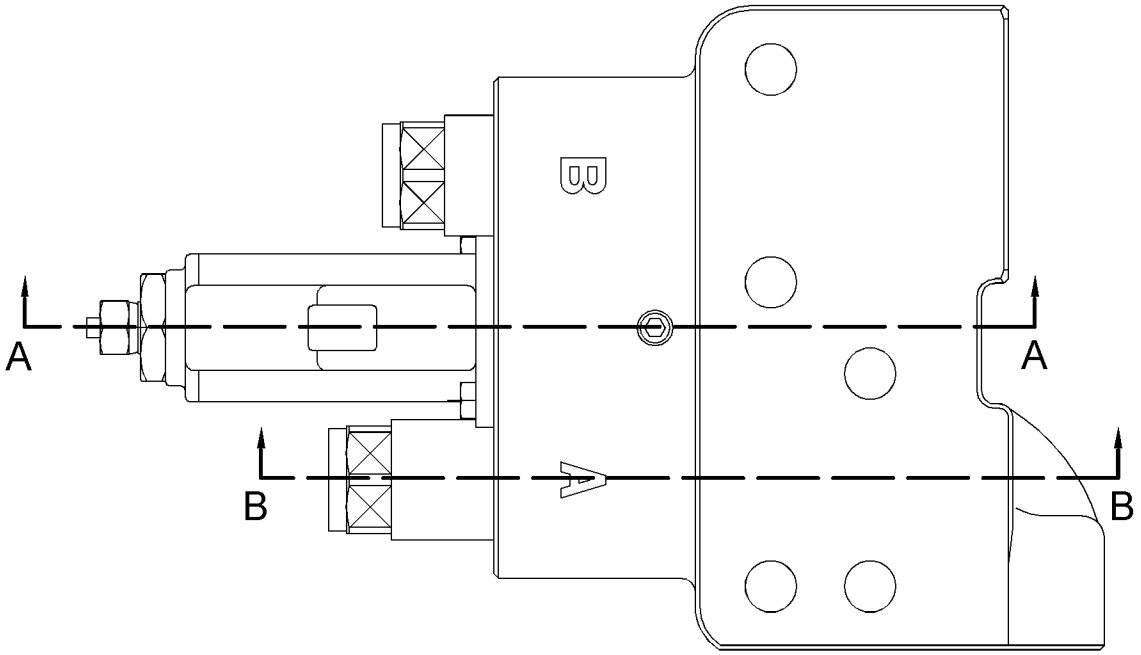

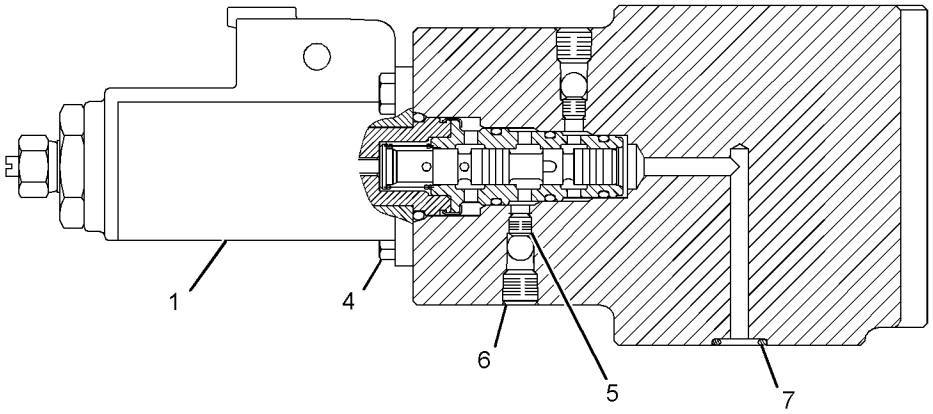

SECTION A-A

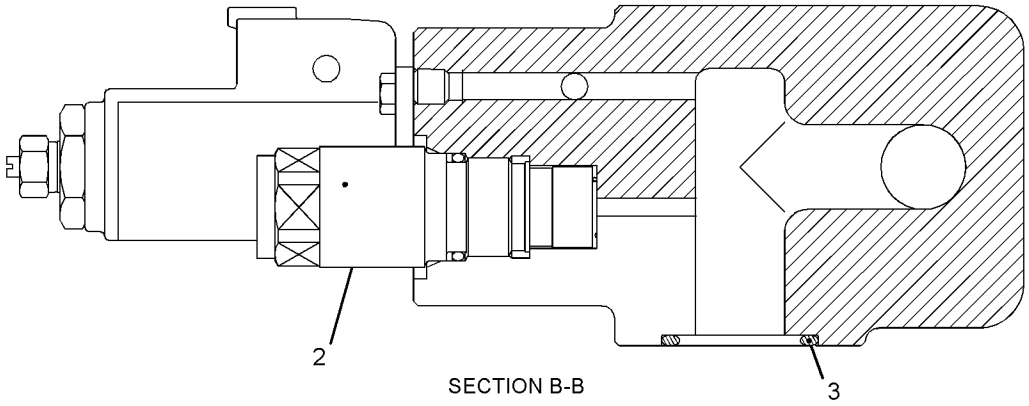

SECTION B-B

GRAPHIC #1 **<END>** g01572033

322-8714 VALVE GP-TRAVEL COUNTERBALANCE

S/N: JEG1-UP
PART OF 334-9986, 334-9987 MOTOR & MTG GP-TRAVEL
ALSO AN ATTACHMENT

SMCS-5811 **i04855134**

NOTE	REF NO	GRAPHIC REF	PART NUMBER	QTY	PART NAME 1 2 3 4 5 6 (PRODUCT LEVEL)	SEE PAGE
	1	2	**096-2902**	2	ORIFICE	
	2	2	**102-0818**	2	PLUG	
	3	2	**334-9940**	2	COVER	
	4	2	**360-4583**	2	SPRING	
	5	2	**360-4584**	2	GUIDE	
	6	2	**360-4585**	2	PLUG	
	7	2	**360-4586**	2	VALVE	
	8	2	**360-4587**	2	SPRING	
	9	2	**225-4821**	2	PLUG	
	10	2	**096-4514**	2	PLUG	
M	11	2	**8T-7811**	8	BOLT-SOCKET HEAD (M12X1.75X50-MM)	
	12	2	**095-1582**	2	SEAL-O-RING	
	13	2	**095-1587**	2	SEAL-O-RING	
	14	2	**5P-2568**	2	SEAL-O-RING	
	15	2	**3J-7354**	2	SEAL-O-RING	
	16	2	**3J-1907**	2	SEAL-O-RING	
Y	17	2	**360-4588**	2	VALVE GP-RELIEF	477

M - METRIC PART
Y - SEPARATE ILLUSTRATION

REFER TO ALL ILLUSTRATIONS OF THIS GROUP FOR AUXILIARY VIEWS

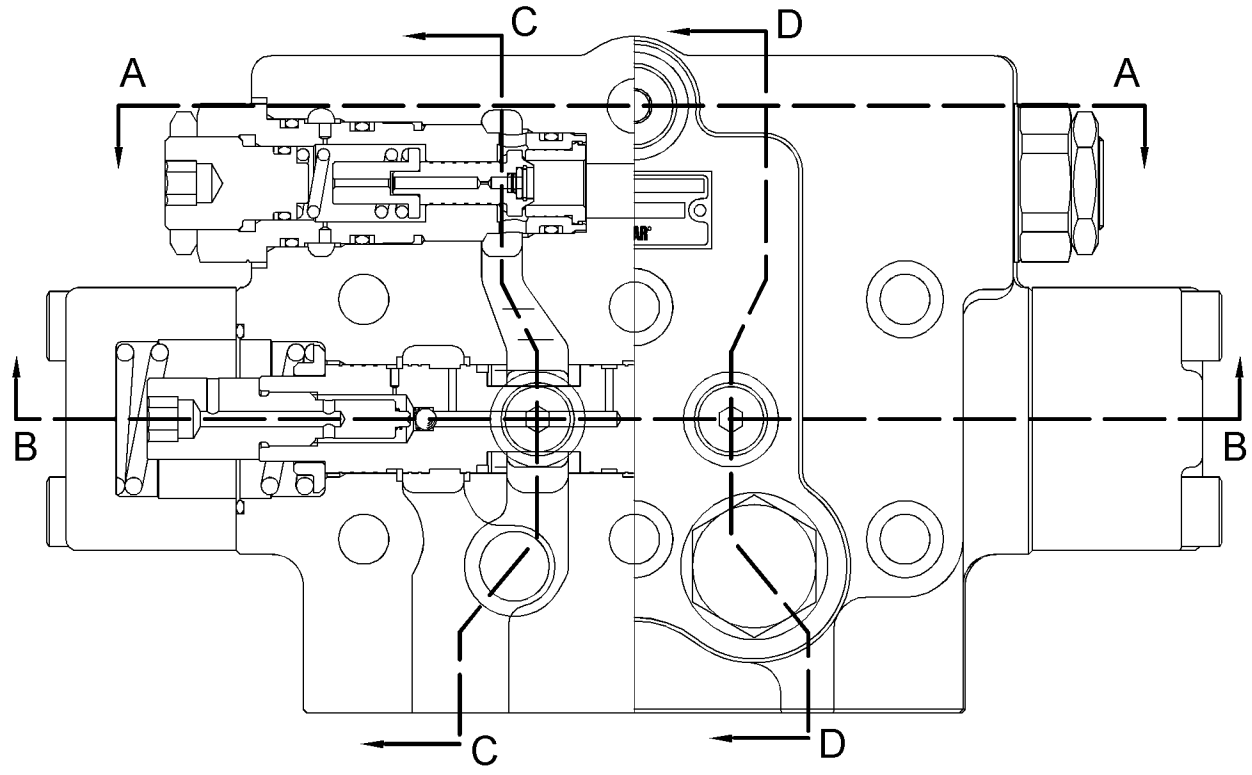

GRAPHIC #1 g02262520

322-8714 **VALVE GP-TRAVEL COUNTERBALANCE (*contd.*)** **i04855134**

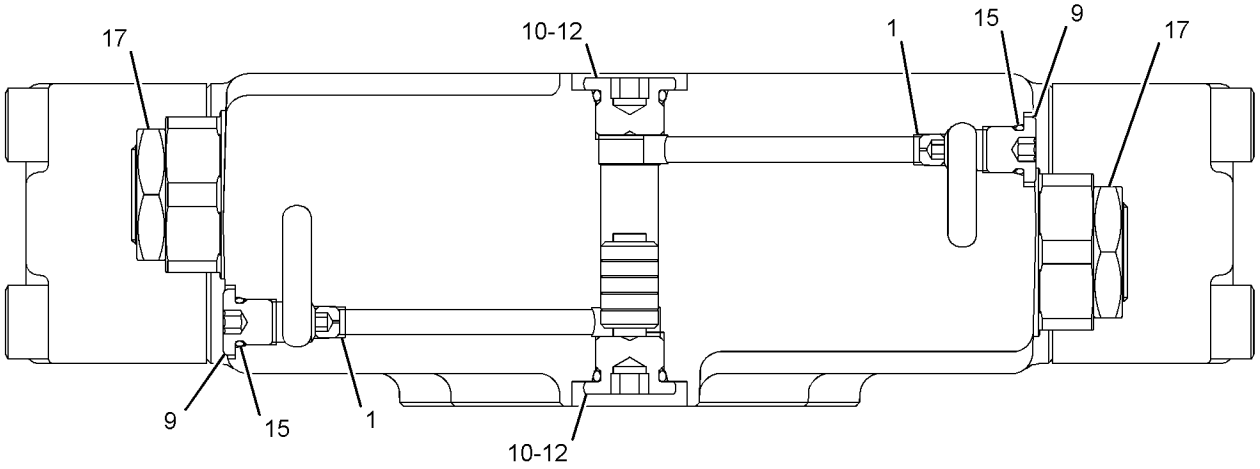

SECTION A-A

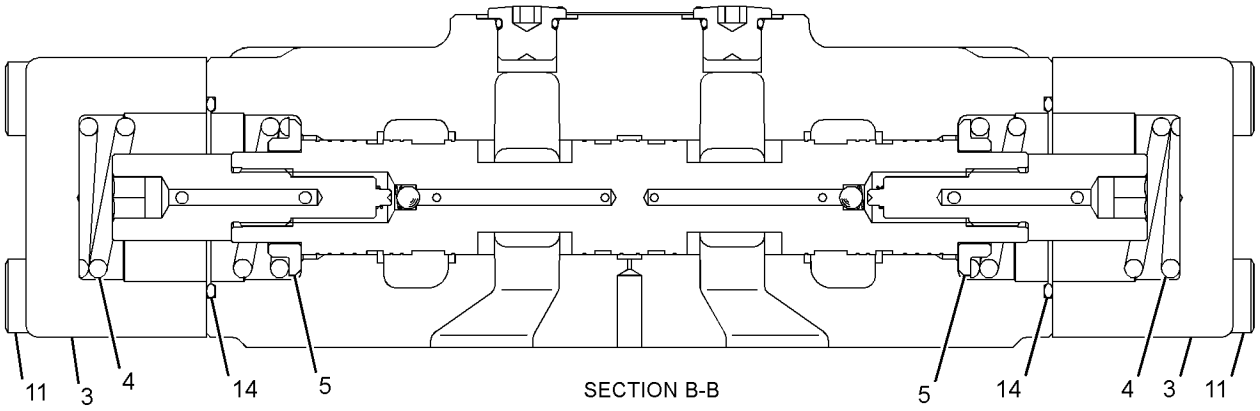

SECTION B-B

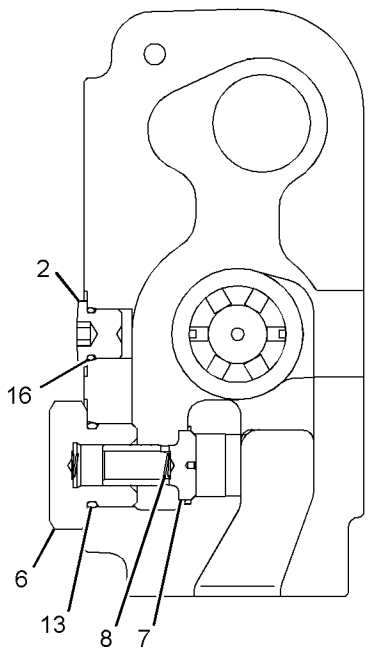

SECTION C-C

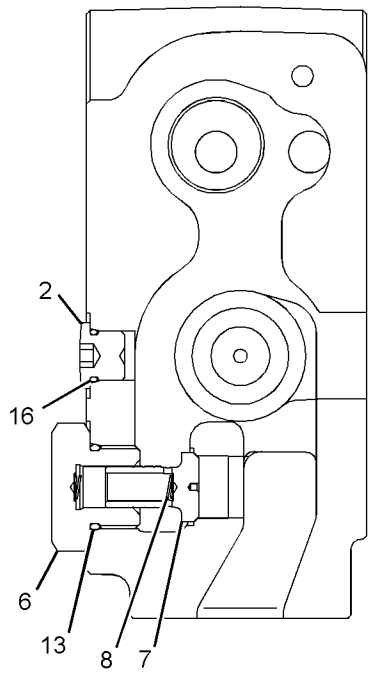

SECTION D-D

GRAPHIC #2 **<END>** g02262521

415-1396 BOOM AR—1-PIECE SHORT, AUXILIARY

S/N: JEG1-UP
5.2-M (17.1-FT)
AN ATTACHMENT

SMCS-6000 **i05433159**

NOTE	PART NUMBER	QTY	PART NAME 1 2 3 4 5 6 (PRODUCT LEVEL)	SEE PAGE
Y	*290-9198*	1	BOOM GP (SHORT REACH)	494
Y	*341-2788*	1	CYLINDER & LINES GP-BOOM (LH)	282
Y	*341-2789*	1	CYLINDER & LINES GP-BOOM (RH)	282
Y	*341-2808*	1	CYLINDER & LINES GP-STICK	283
Y	*267-7627*	1	LIGHTING GP-FLOOD (SHORT BOOM, LH)	132
Y	*239-1732*	1	LINES GP-BOOM (1-PIECE SHORT)	338
Y	*172-2939*	1	LINES GP-GREASE (BOOM)	496

Y - SEPARATE ILLUSTRATION

<END>

415-8447 BOOM AR-1 PIECE LONG—AUXILIARY, HEAVY-DUTY

S/N: JEG1-UP
AN ATTACHMENT

SMCS-6501 **i05260905**

NOTE	PART NUMBER	QTY	PART NAME 1 2 3 4 5 6 (PRODUCT LEVEL)	SEE PAGE
Y	*290-9195*	1	BOOM GP	492
Y	*341-2788*	1	CYLINDER & LINES GP-BOOM (LH)	282
Y	*341-2789*	1	CYLINDER & LINES GP-BOOM (RH)	282
Y	*341-2806*	1	CYLINDER & LINES GP-STICK	283
Y	*259-5043*	1	LIGHTING GP-FLOOD (BOOM, LH)	127
Y	*260-8010*	1	LINES GP-BOOM (1-PIECE LONG)	339
Y	*241-7286*	1	LINES GP-GREASE (BOOM)	498

Y - SEPARATE ILLUSTRATION

<END>

290-9195 BOOM GP

S/N: JEG1-UP
5.7-M (18.7-FT)
PART OF 415-8447 BOOM AR-1 PIECE LONG
AN ATTACHMENT

SMCS-6301, 6302, 6460, 6501, 6516, 6521, 6535, 6536 **i05260915**

NOTE	REF NO	GRAPHIC REF	PART NUMBER	QTY	PART NAME 1 2 3 4 5 6 (PRODUCT LEVEL)	SEE PAGE
	1	1	**4I-3308**	2	PLATE	
	2	1	**4I-3309**	2	SPACER (82X110X3-MM THK)	
B	3	1	**093-0084**	2	SHIM (1-MM THK)	
B	4	1	**093-0116**	2	SHIM (2-MM THK)	
	5	1	**093-0349**	2	WASHER (22X60X6-MM THK)	
	6	1	**093-0363**	1	SPACER (83X120X12-MM THK)	
B	7	1	**113-2127**	1	SHIM (0.5-MM THK)	
	8	1	**166-1486**	2	SHIM (2-MM THK)	
	9	1	**176-2278**	1	PIN	
	10	1	**264-1702**	1	PIN AS	
	11	1	**290-9196**	1	BOOM & BEARING AS	
	11A	1	**244-4277**	2	BUSHING	
	12	1	**166-1487**	2	SHIM (2-MM THK)	
	13	1	**166-1495**	2	SEAL-LIP TYPE	
	14	1	**4I-4809**	1	PIN AS	
	15	1	**8T-4123**	2	WASHER (3.62X5.75X0.375-MM THK)	
	16	1	**8T-4223**	6	WASHER-HARD (13.5X25.5X3-MM THK)	
M	17	1	**8T-4780**	2	BOLT (M20X2.5X30-MM)	
M	18	1	**8T-4956**	6	BOLT (M12X1.75X35-MM)	

B - USE AS REQUIRED
M - METRIC PART

290-9195 **BOOM GP (*contd.*)** **i05260915**

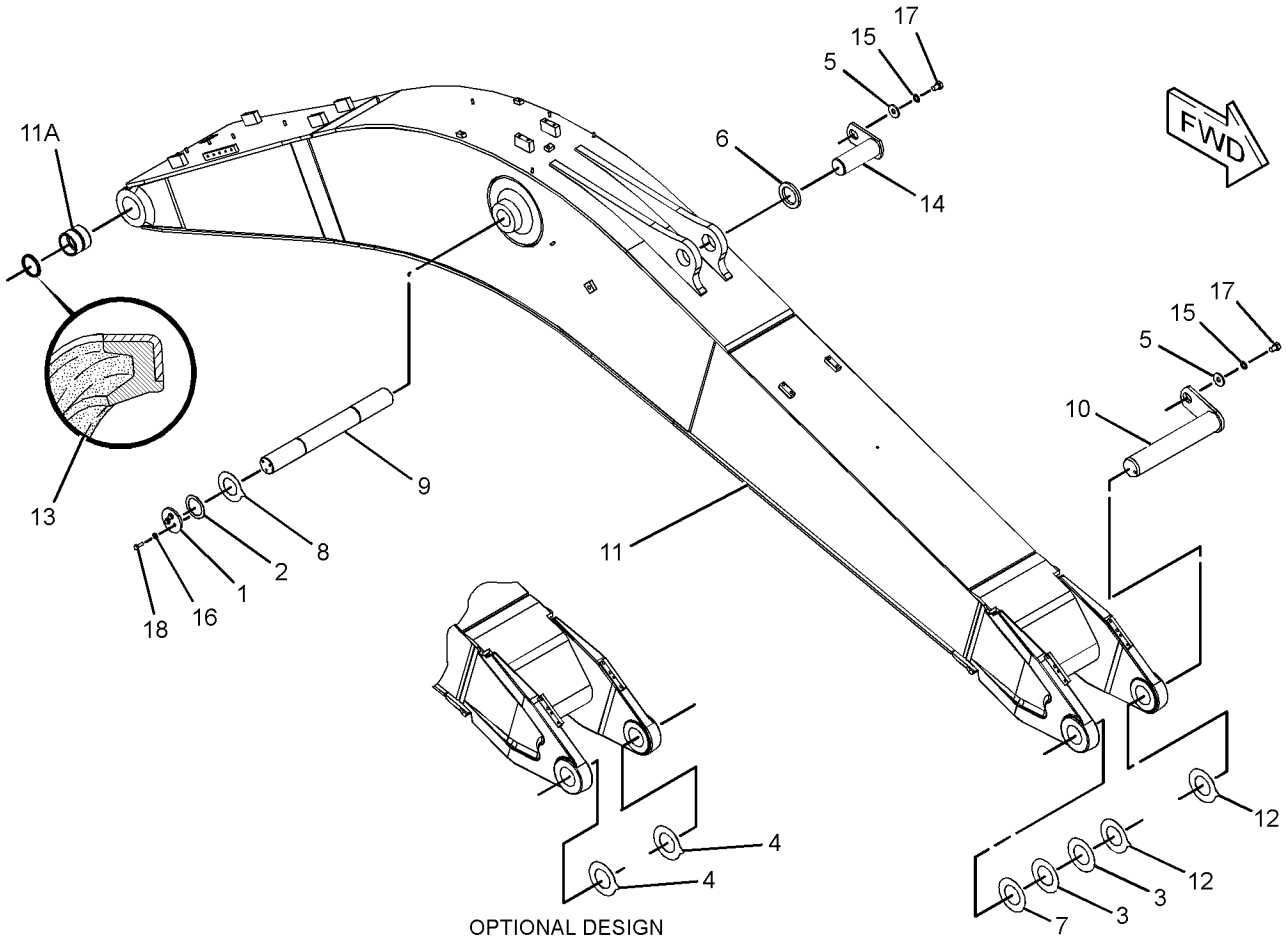

GRAPHIC #1 **<END>** g01473774

290-9198 BOOM GP

S/N: JEG1-UP
5.2-M (17.1-FT)
PART OF 415-1396 BOOM AR
AN ATTACHMENT

SMCS-6301, 6302, 6460, 6501, 6516, 6521, 6535, 6536 **i05433186**

NOTE	REF NO	GRAPHIC REF	PART NUMBER	QTY	PART NAME 1 2 3 4 5 6 (PRODUCT LEVEL)	SEE PAGE
	1	1	**4I-3308**	2	PLATE	
	2	1	**4I-3309**	2	SPACER (82X110X3-MM THK)	
B	3	1	**093-0084**	2	SHIM (1-MM THK)	
B	4	1	**093-0116**	2	SHIM (2-MM THK)	
	5	1	**093-0349**	2	WASHER (22X60X6-MM THK)	
	6	1	**093-0363**	1	SPACER (83X120X12-MM THK)	
B	7	1	**113-2127**	1	SHIM (0.5-MM THK)	
	8	1	**166-1486**	2	SHIM (2-MM THK)	
	9	1	**166-1495**	2	SEAL-LIP TYPE	
	10	1	**176-2278**	1	PIN	
	11	1	**264-1702**	1	PIN AS	
	12	1	**290-9199**	1	BOOM & BEARING AS	
	12A	1	**244-4277**	2	BUSHING	
	13	1	**166-1487**	2	SHIM (2-MM THK)	
	14	1	**4I-4809**	1	PIN AS	
	15	1	**8T-4123**	2	WASHER (3.62X5.75X0.375-MM THK)	
	16	1	**8T-4223**	6	WASHER-HARD (13.5X25.5X3-MM THK)	
M	17	1	**8T-4780**	2	BOLT (M20X2.5X30-MM)	
M	18	1	**8T-4956**	6	BOLT (M12X1.75X35-MM)	

B - USE AS REQUIRED
M - METRIC PART

290-9198 **BOOM GP** (*contd.*) **i05433186**

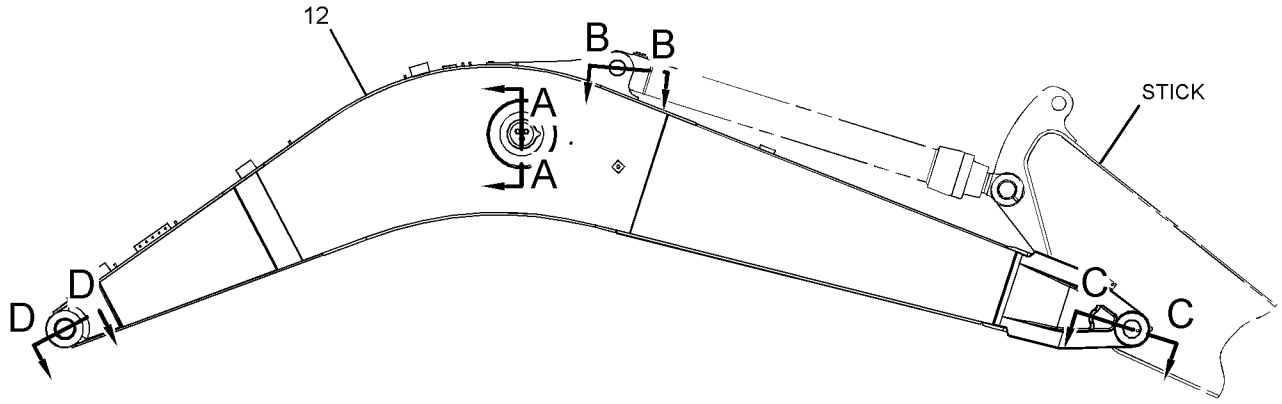

RIGHT SIDE VIEW

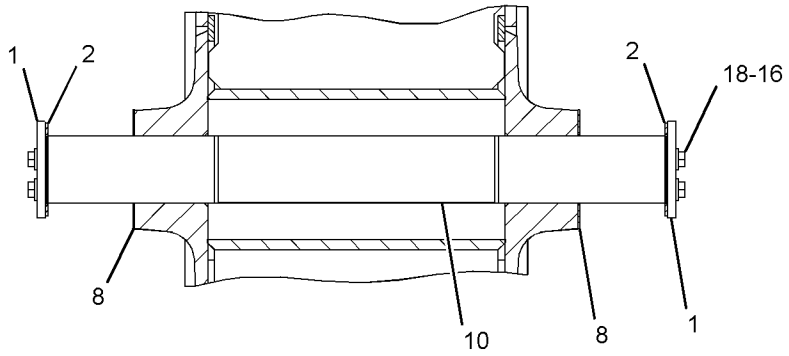

SECTION A-A

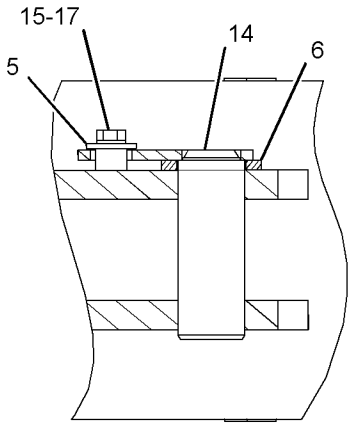

SECTION B-B

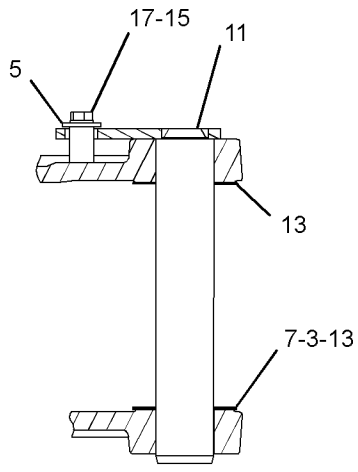

SECTION C-C

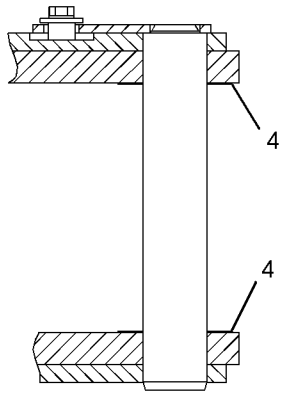

SECTION C-C
(OPTIONAL DESIGN)

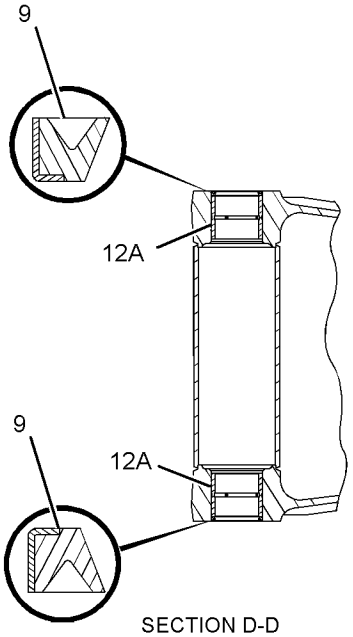

SECTION D-D

GRAPHIC #1 **<END>** g01343417

172-2939 LINES GP-GREASE–BOOM

S/N: JEG1-UP
PART OF 415-1396 BOOM AR
AN ATTACHMENT

SMCS-7510 **i05411795**

NOTE	REF NO	GRAPHIC REF	PART NUMBER	QTY	PART NAME 1 2 3 4 5 6 (PRODUCT LEVEL)	SEE PAGE
	1	1	**8M-2772**	2	CLIP	
M	2	1	**8T-4133**	5	NUT (M10X1.5-THD)	
	3	1	**8T-4121**	8	WASHER-HARD (11X21X2.5-MM THK)	
	4	1	**166-1579**	3	CLIP	
	5	1	**033-8248**	3	CLIP	
M	6	1	**8T-4191**	3	BOLT (M10X1.5X16-MM)	
	7	1	**166-3152**	1	HOSE AS	
I	8	1	**115-2678**	1	HOSE AS	
					(EACH HOSE AS INCLUDES)	
		1	**105-6431**	1	CONNECTOR	
	9	1	**3B-8489**	5	FITTING-GREASE	
	10	1	**6L-3616**	2	CONNECTOR	
	11	1	**5K-9243**	2	ELBOW-FLARED	
	12	1	**4I-4544**	1	TUBE AS	
	13	1	**4I-4543**	1	TUBE AS	
I	14	1	**115-2677**	1	HOSE AS	
		1	**105-6431**	1	CONNECTOR	

I - REFER TO HYDRAULIC INFORMATION SYSTEM
M - METRIC PART

172-2939 **LINES GP-GREASE (*contd.*)** **i05411795**

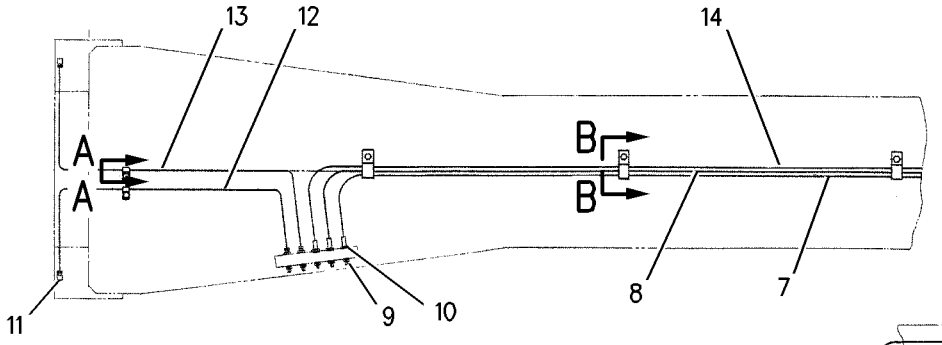

VIEW D-D

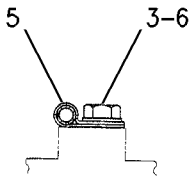

SECTION C-C

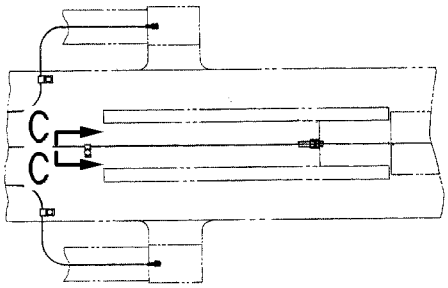

VIEW E-E

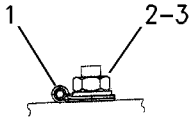

SECTION A-A

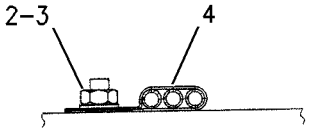

SECTION B-B

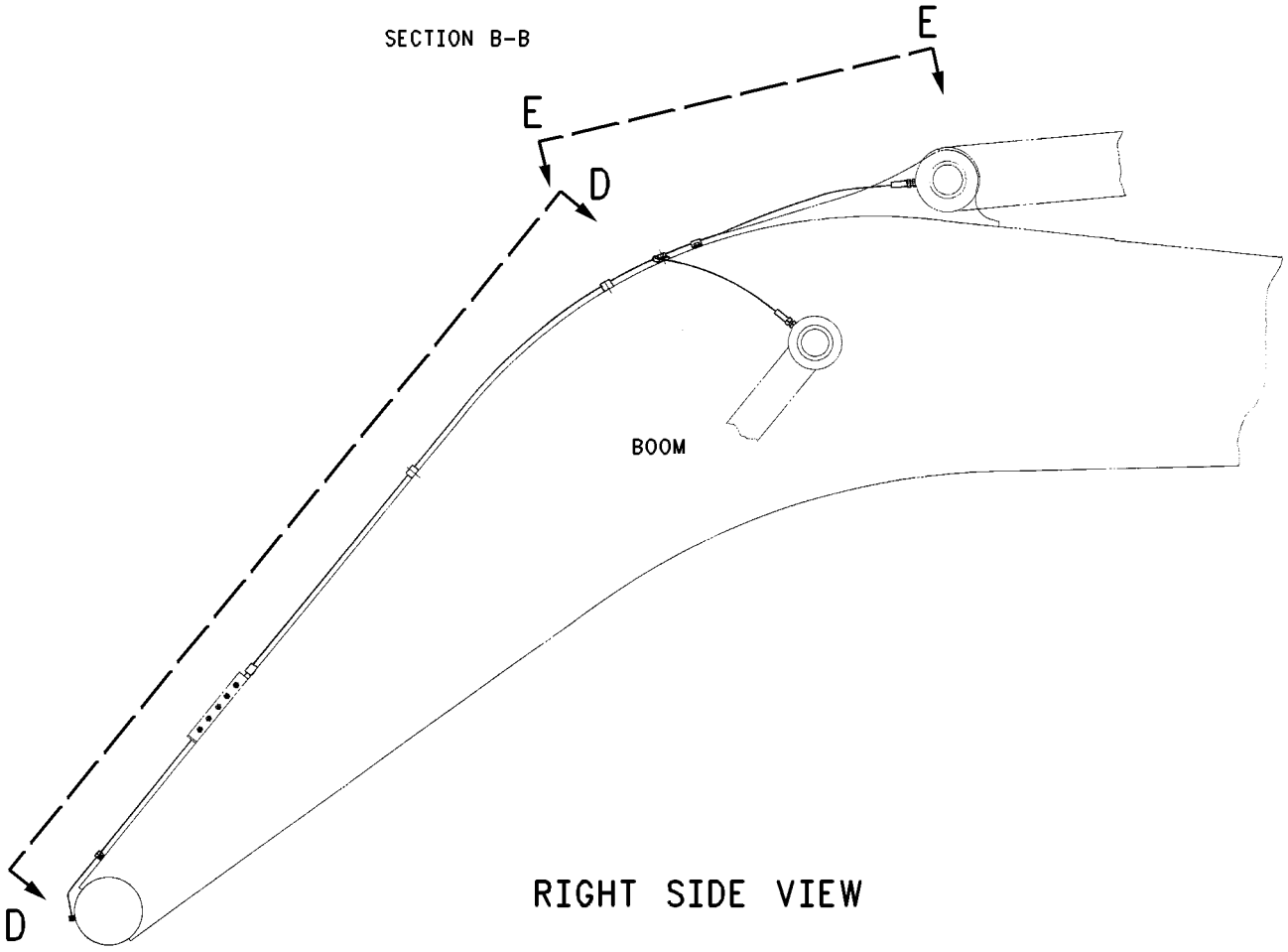

RIGHT SIDE VIEW

GRAPHIC #1 **<END>** g00675837

241-7286 LINES GP-GREASE–BOOM

S/N: JEG1-UP
PART OF 415-8447 BOOM AR-1 PIECE LONG
AN ATTACHMENT

SMCS-7510 **i05411715**

NOTE	REF NO	GRAPHIC REF	PART NUMBER	QTY	PART NAME 1 2 3 4 5 6 (PRODUCT LEVEL)	SEE PAGE
	1	1	**8M-2772**	2	CLIP	
M	2	1	**8T-4133**	5	NUT (M10X1.5-THD)	
	3	1	**8T-4121**	8	WASHER-HARD (11X21X2.5-MM THK)	
	4	1	**166-1579**	3	CLIP	
	5	1	**033-8248**	3	CLIP	
M	6	1	**8T-4191**	3	BOLT (M10X1.5X16-MM)	
	8	1	**134-9137**	1	HOSE AS	
		1	**105-6431**	1	CONNECTOR	
	9	1	**3B-8489**	5	FITTING-GREASE	
	10	1	**6L-3616**	2	CONNECTOR	
	11	1	**5K-9243**	2	ELBOW-FLARED	
	12	1	**4I-4544**	1	TUBE AS	
	13	1	**4I-4543**	1	TUBE AS	
	14	1	**216-6682**	2	HOSE AS	
					(EACH INCLUDES)	
		1	**105-6431**	1	CONNECTOR	

M - METRIC PART

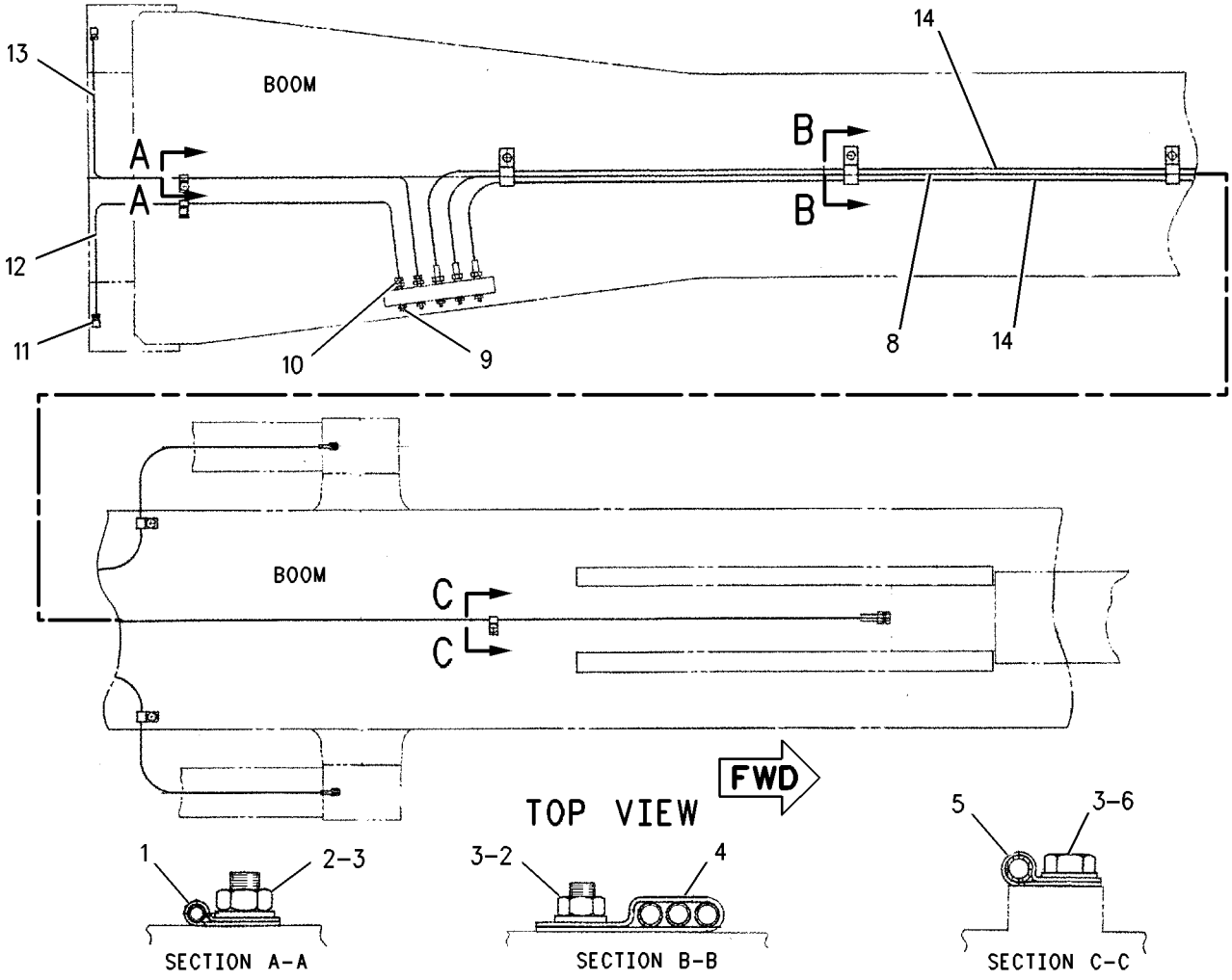

GRAPHIC #1 **<END>** g00781541

267-0138 LINES GP-GREASE–STICK

S/N: JEG1-UP
PART OF 290-1788 STICK AR-HOE
AN ATTACHMENT

SMCS-7510 **i05536450**

NOTE	REF NO	GRAPHIC REF	PART NUMBER	QTY	PART NAME 1 2 3 4 5 6 (PRODUCT LEVEL)	SEE PAGE
	1	1	**3B-8489**	3	FITTING-GREASE	
	2	1	**5K-9242**	3	UNION-FLARED	
	3	1	**6I-5134**	1	TUBE AS	
	4	1	**6I-5135**	1	TUBE AS	
	5	1	**6I-5136**	1	TUBE AS	
	6	1	**6V-3342**	1	ELBOW-PIPE	
I	7	1	**7Y-2670**	1	HOSE AS	
		1	**105-6431**	1	CONNECTOR	
	8	1	**087-5838**	2	PLATE	
	9	1	**267-0139**	1	TUBE AS	
	10	1	**267-0140**	1	TUBE AS	
	11	1	**267-0141**	1	TUBE AS	
	12	1	**5K-2298**	1	CLIP	
	13	1	**6L-3616**	6	CONNECTOR	
	14	1	**8M-2772**	3	CLIP	
	15	1	**8T-4121**	8	WASHER-HARD (11X21X2.5-MM THK)	
M	16	1	**8T-4133**	8	NUT (M10X1.5-THD)	

I - REFER TO HYDRAULIC INFORMATION SYSTEM
M - METRIC PART

267-0138 **LINES GP-GREASE (*contd.*)** **i05536450**

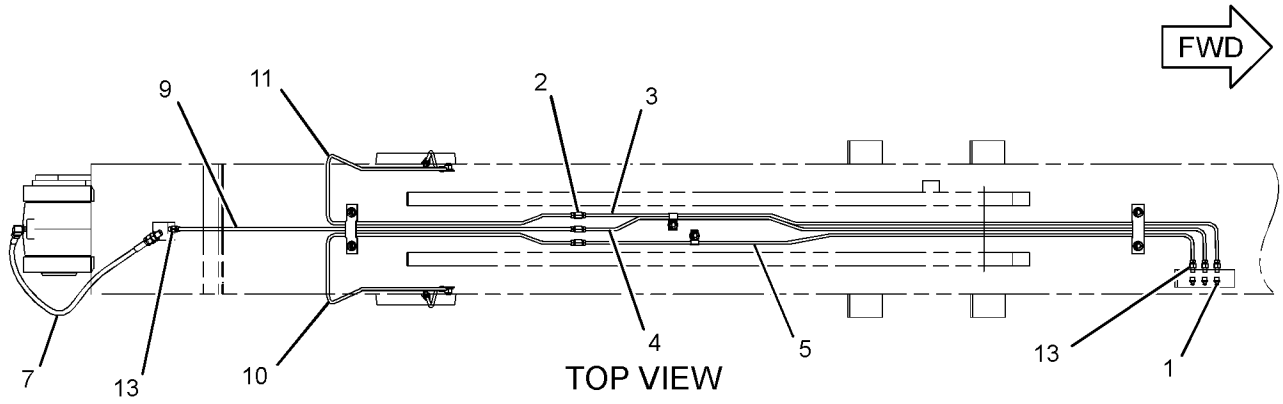

TOP VIEW

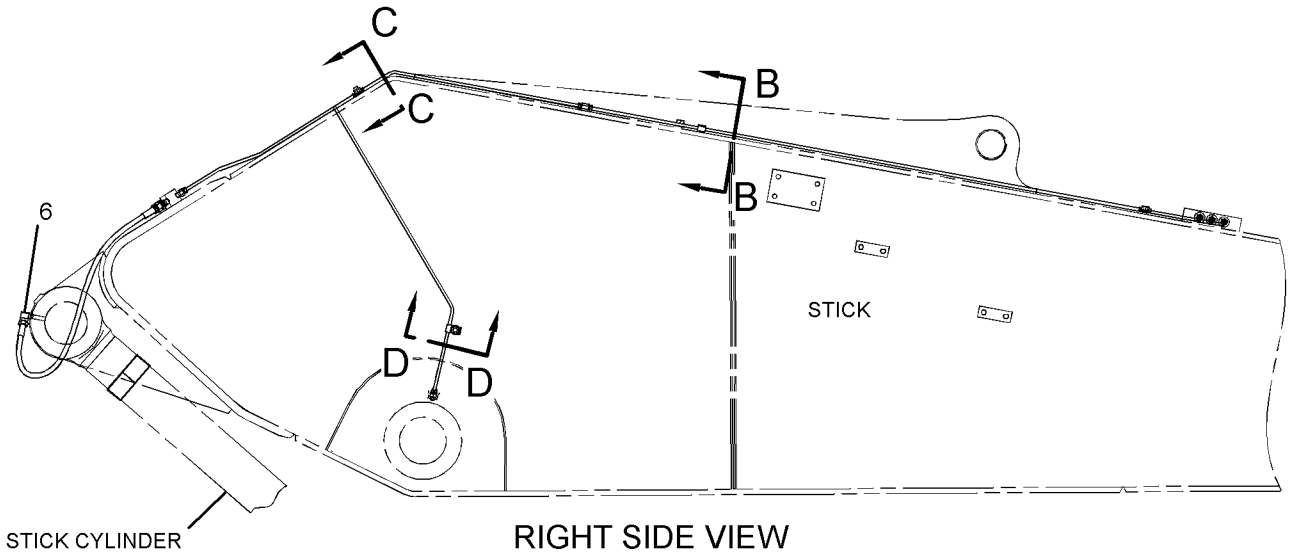

RIGHT SIDE VIEW

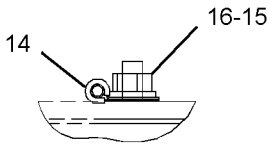

SECTION D-D

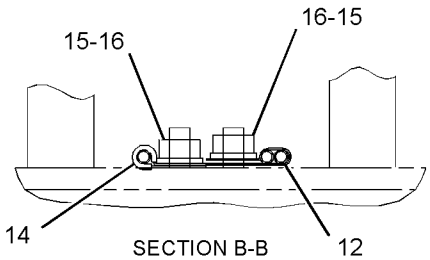

SECTION B-B

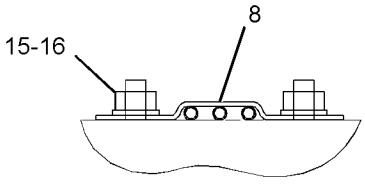

SECTION C-C

GRAPHIC #1 **<END>** g01229386

247-7331 LINKAGE AR-BUCKET—CB2-FAMILY, WITH LIFTING EYE

S/N: JEG1-UP
PART OF 302-9679 COUPLER AR-QUICK
AN ATTACHMENT

SMCS-6513 **i04314251**

NOTE	PART NUMBER	QTY	PART NAME 1 2 3 4 5 6 (PRODUCT LEVEL)	SEE PAGE
Y	*349-4151*	1	CYLINDER & LINES GP-BUCKET	283
Y	*251-2597*	1	LINKAGE GP-BUCKET (CB2-FAMILY)	502

Y - SEPARATE ILLUSTRATION

<END>

416-1005 LINKAGE AR-BUCKET—CB2-FAMILY, WITH LIFTING EYE

S/N: JEG1-UP
AN ATTACHMENT

SMCS-6513 **i05433151**

NOTE	PART NUMBER	QTY	PART NAME 1 2 3 4 5 6 (PRODUCT LEVEL)	SEE PAGE
Y	*341-2181*	1	CYLINDER & LINES GP-BUCKET	282
Y	*251-2597*	1	LINKAGE GP-BUCKET (CB2-FAMILY)	502

Y - SEPARATE ILLUSTRATION

<END>

416-1009 LINKAGE AR-BUCKET—B1-FAMILY, WITH LIFTING EYE

S/N: JEG1-UP
AN ATTACHMENT

SMCS-6513 **i05261193**

NOTE	PART NUMBER	QTY	PART NAME 1 2 3 4 5 6 (PRODUCT LEVEL)	SEE PAGE
Y	*341-2813*	1	CYLINDER & LINES GP-BUCKET	282
Y	*260-2288*	1	LINKAGE GP-BUCKET (B1-FAMILY, WITH LIFTING EYE)	504

Y - SEPARATE ILLUSTRATION

<END>

251-2597 LINKAGE GP-BUCKET—CB2-FAMILY

S/N: JEG1-UP

PART OF 247-7331, 416-1005 LINKAGE AR-BUCKET

AN ATTACHMENT

SMCS-6513 **i04363070**

NOTE	REF NO	GRAPHIC REF	PART NUMBER	QTY	PART NAME 1 2 3 4 5 6 (PRODUCT LEVEL)	SEE PAGE
	1	1	**3B-8489**	5	FITTING-GREASE	
M	2	1	**8T-4131**	4	NUT (M20X2.5-THD)	
	3	1	**093-0349**	2	WASHER (22X60X6-MM THK)	
	4	1	**186-5662**	1	PIN	
	5	1	**234-3927**	1	LINK AS	
	6	1	**234-3928**	1	LINK	
	7	1	**234-3930**	1	PIN	
	8	1	**234-3931**	2	PIN AS	
	9	1	**254-2996**	1	LINK & BEARING AS	
	9A	1	**228-5615**	4	BUSHING	
	10	1	**367-8468**	4	SEAL-O-RING	
	11	1	**166-1487**	2	SHIM (2-MM THK)	
	12	1	**166-1495**	6	SEAL-LIP TYPE	
M	13	1	**186-5649**	1	BOLT (M20X2.5X160-MM)	
M	14	1	**189-3925**	1	BOLT (M20X2.5X170-MM)	
	15	1	**8T-4123**	2	WASHER (3.62X5.75X0.375-MM THK)	
M	16	1	**8T-5460**	2	BOLT (M20X2.5X40-MM)	

M - METRIC PART

251-2597 **LINKAGE GP-BUCKET (*contd.*)** **i04363070**

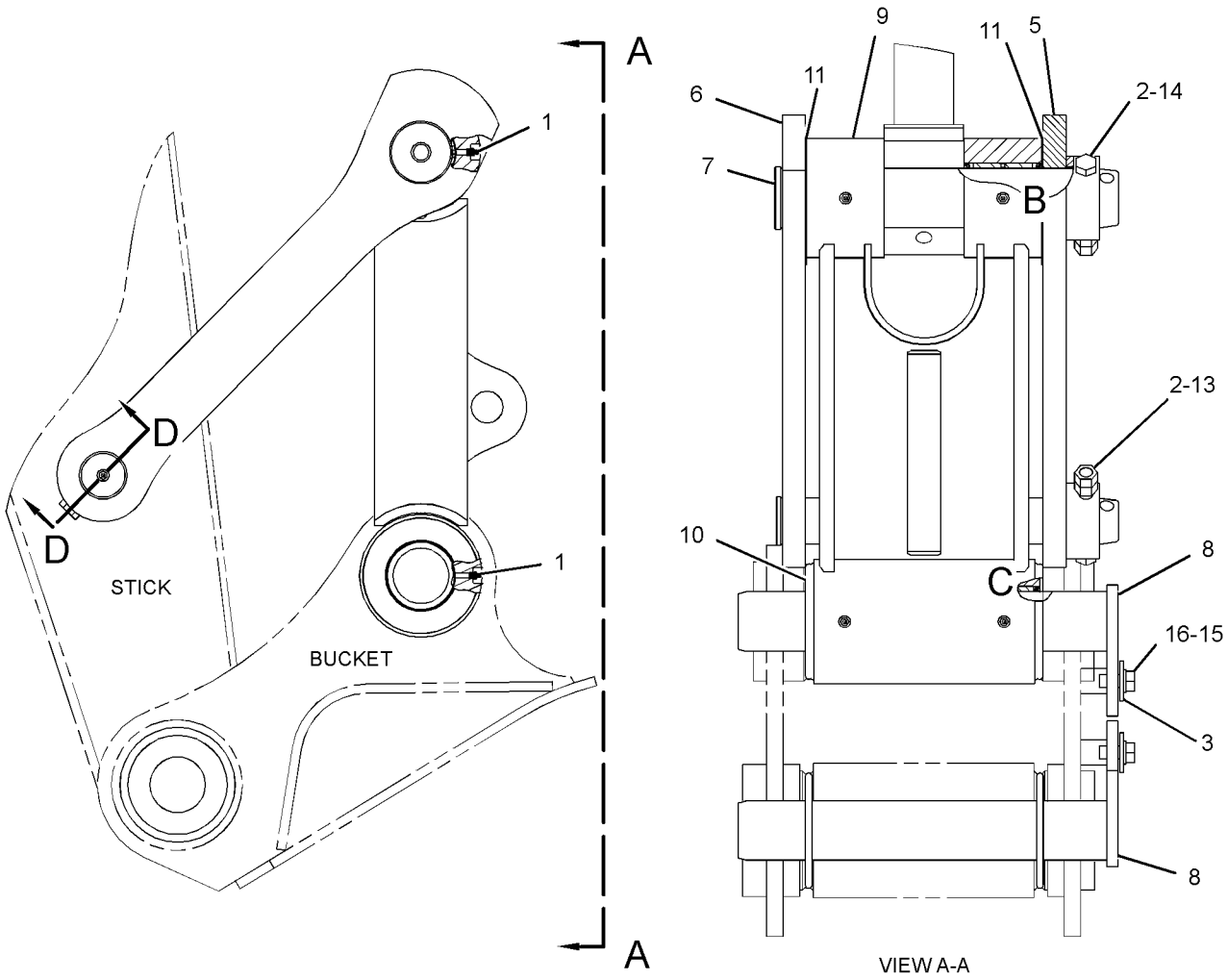

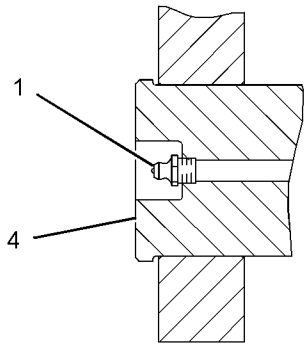

SECTION D-D

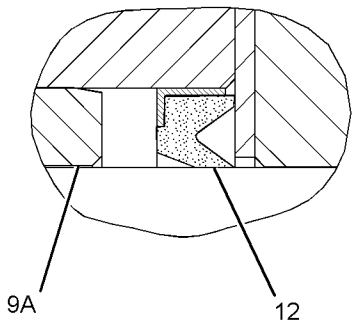

VIEW OF AREA B

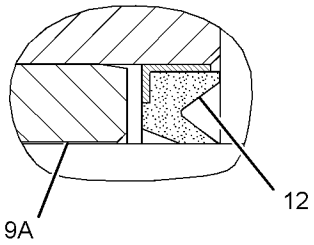

VIEW OF AREA C

GRAPHIC #1 **<END>** g01397602

260-2288 LINKAGE GP-BUCKET—B1-FAMILY, WITH LIFTING EYE

S/N: JEG1-UP
PART OF 416-1009 LINKAGE AR-BUCKET
AN ATTACHMENT

SMCS-6513 **i05403906**

NOTE	REF NO	GRAPHIC REF	PART NUMBER	QTY	PART NAME 1 2 3 4 5 6 (PRODUCT LEVEL)	SEE PAGE
	1	1	**3B-8489**	5	FITTING-GREASE	
	2	1	**087-5805**	2	PIN	
	3	1	**166-1486**	2	SHIM (2-MM THK)	
	4	1	**244-4254**	1	LINK AS	
	5	1	**244-4255**	1	LINK	
	6	1	**254-3052**	1	PIN	
	7	1	**254-3053**	1	PIN	
	8	1	**260-2289**	1	LINK & BEARING AS	
	8A	1	**244-4360**	2	BUSHING	
	8B	1	**240-2912**	2	BUSHING	
	9	1	**367-8467**	4	SEAL-O-RING	
	10	1	**166-1494**	6	SEAL-LIP TYPE	
M	11	1	**236-6365**	2	BOLT (M16X2X150-MM)	
M	12	1	**188-2315**	2	BOLT (M16X2X195-MM)	
M	13	1	**8T-4132**	8	NUT (M16X2-THD)	

M - METRIC PART

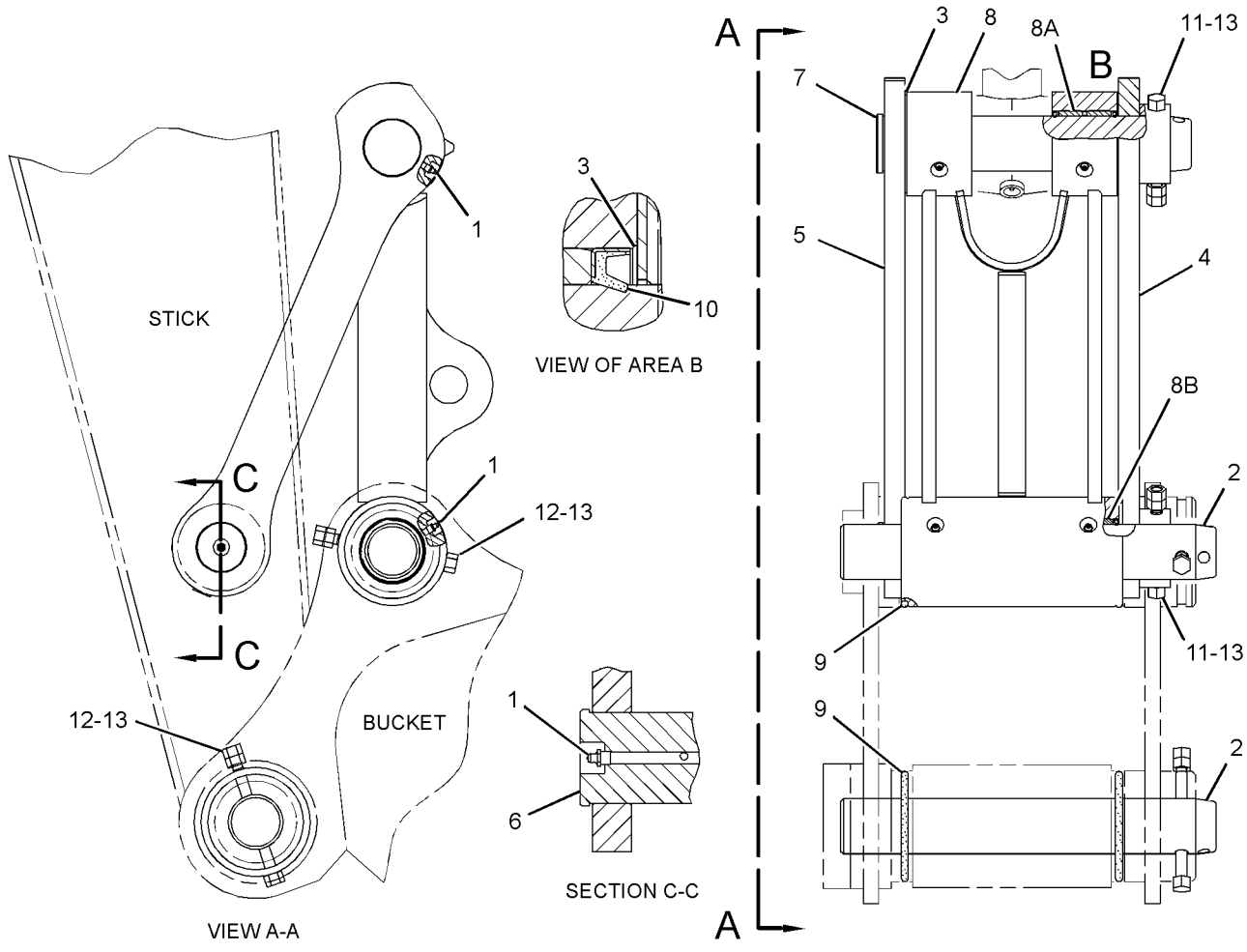

GRAPHIC #1 **<END>** g03414224

177-8628 PIN GP–COUPLER

S/N: JEG1-UP

AN ATTACHMENT

SMCS-6108, 6501, 6502 **i02940900**

NOTE	REF NO	GRAPHIC REF	PART NUMBER	QTY	PART NAME 1 2 3 4 5 6 (PRODUCT LEVEL)	SEE PAGE
	1	1	**087-5805**	2	PIN	
M	2	1	**8T-4132**	4	NUT (M16X2-THD)	
M	3	1	**236-6366**	2	BOLT (M16X2X195-MM)	

M - METRIC PART

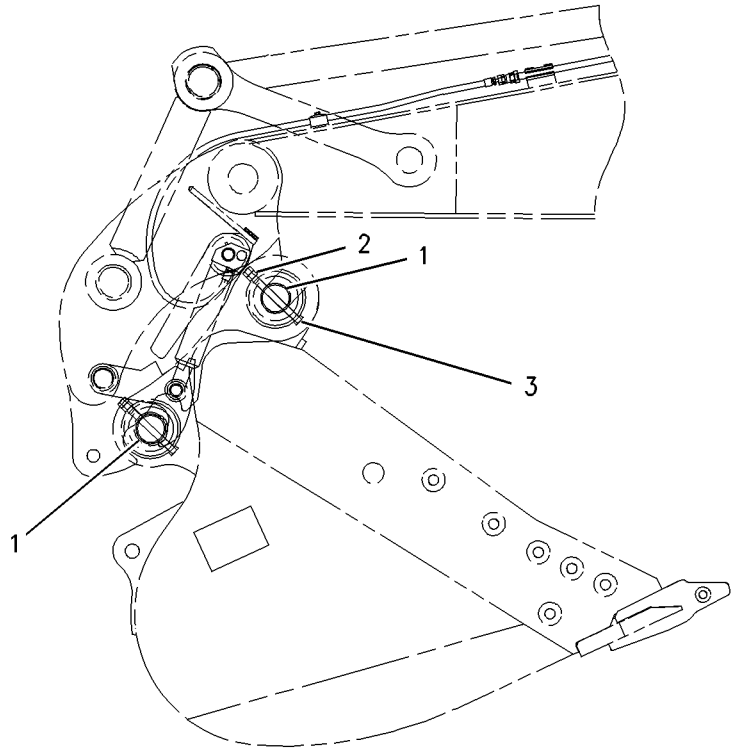

LEFT SIDE VIEW

GRAPHIC #1 **<END>** g00808848

290-1789 STICK AR–MASS

S/N: JEG1-UP
1.9-M (6.2-FT)
AN ATTACHMENT

SMCS-6502 **i02943051**

NOTE	PART NUMBER	QTY	PART NAME 1 2 3 4 5 6 (PRODUCT LEVEL)	SEE PAGE
Y	*187-5975*	1	LINES GP-BUCKET CYLINDER	345
Y	*290-9225*	1	STICK GP-HOE	510

Y - SEPARATE ILLUSTRATION

<END>

290-1788 STICK AR-HOE

S/N: JEG1-UP
2.4-M (7.9-FT). CB2-FAMILY
AN ATTACHMENT

SMCS-6502 **i05440140**

NOTE	PART NUMBER	QTY	PART NAME 1 2 3 4 5 6 (PRODUCT LEVEL)	SEE PAGE
Y	*248-9633*	1	LINES GP-BUCKET CYLINDER	401
Y	*267-0138*	1	LINES GP-GREASE (STICK)	499
Y	*290-9222*	1	STICK GP-HOE	509

Y - SEPARATE ILLUSTRATION

<END>

290-1837 STICK AR-HOE–REACH

S/N: JEG1-UP
2.5-M (8.2-FT). B1-FAMILY, HEAVY-DUTY
AN ATTACHMENT

SMCS-6502 **i05353836**

NOTE	PART NUMBER	QTY	PART NAME 1 2 3 4 5 6 (PRODUCT LEVEL)	SEE PAGE
Y	*431-1642*	1	LINES GP-STICK	402
Y	*290-9216*	1	STICK GP-HOE (HEAVY-DUTY, REACH)	507

Y - SEPARATE ILLUSTRATION

<END>

290-9216 STICK GP-HOE—REACH

S/N: JEG1-UP
2.5-M (8.2-FT). B1-FAMILY, HEAVY-DUTY
PART OF 290-1837 STICK AR-HOE
AN ATTACHMENT

SMCS-6502 **i05259235**

NOTE	REF NO	GRAPHIC REF	PART NUMBER	QTY	PART NAME 1 2 3 4 5 6 (PRODUCT LEVEL)	SEE PAGE
	1	1	**3B-8489**	3	FITTING-GREASE	
	2	1	**4I-4811**	1	PIN AS	
	3	1	**093-0349**	2	WASHER (22X60X6-MM THK)	
	4	1	**093-0363**	1	SPACER (83X120X12-MM THK)	
	5	1	**118-5982**	1	SPACER (73X105X14-MM THK)	
	6	1	**166-1486**	2	SHIM (2-MM THK)	
	7	1	**235-7679**	2	SEAL-LIP TYPE	
C	8	1	**364-5047**	1	STICK & BEARING AS	
	8A	1	**229-1096**	2	BUSHING	
	8B	1	**240-2913**	2	BUSHING	
	8C	1	**244-4277**	2	BUSHING	
	9	1	**166-1494**	2	SEAL-LIP TYPE	
	10	1	**166-1495**	2	SEAL-LIP TYPE	
	11	1	**4I-4809**	1	PIN AS	
	12	1	**8T-4123**	2	WASHER (22X35X3.5-MM THK)	
M	13	1	**8T-4780**	2	BOLT (M20X2.5X30-MM)	

C - CHANGE FROM PREVIOUS TYPE
M - METRIC PART

290-9216 **STICK GP-HOE (*contd.*)** **i05259235**

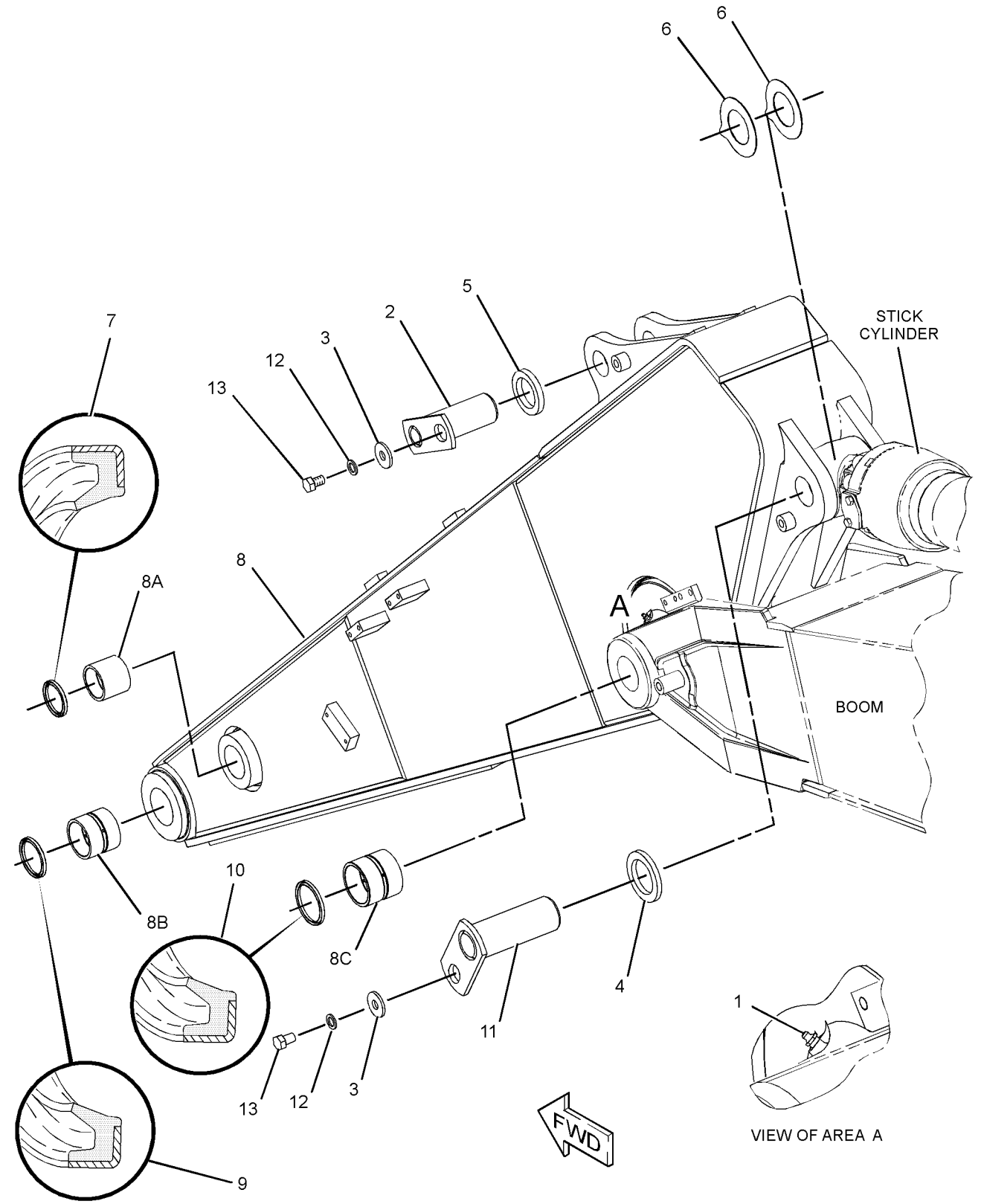

GRAPHIC #1

<END>

g01231476

290-9222 STICK GP-HOE

S/N: JEG1-UP
2.4-M (7.9-FT)
PART OF 290-1788 STICK AR-HOE
AN ATTACHMENT

SMCS-6502 **i05440164**

NOTE	REF NO	GRAPHIC REF	PART NUMBER	QTY	PART NAME 1 2 3 4 5 6 (PRODUCT LEVEL)	SEE PAGE
	1	1	**3B-8489**	3	FITTING-GREASE	
	2	1	**4I-4811**	1	PIN AS	
	3	1	**093-0349**	2	WASHER (22X60X6-MM THK)	
	4	1	**093-0363**	1	SPACER (83X120X12-MM THK)	
	5	1	**118-5982**	1	SPACER (73X105X14-MM THK)	
	6	1	**166-1486**	2	SHIM (2-MM THK)	
	7	1	**166-1495**	4	SEAL-LIP TYPE	
	8	1	**235-7679**	2	SEAL-LIP TYPE	
	9	1	**290-9223**	1	STICK & BEARING AS	
	9A	1	**228-5614**	2	BUSHING	
	9B	1	**228-5615**	2	BUSHING	
	9C	1	**244-4277**	2	BUSHING (1000 SERVICE HOURS)	
					—OR—	
		1	**357-5709**	2	BUSHING (500 SERVICE HOURS)	
	10	1	**4I-4809**	1	PIN AS	
	11	1	**8T-4123**	2	WASHER (3.62X5.75X0.375-MM THK)	
M	12	1	**8T-4780**	2	BOLT (M20X2.5X30-MM)	

M - METRIC PART

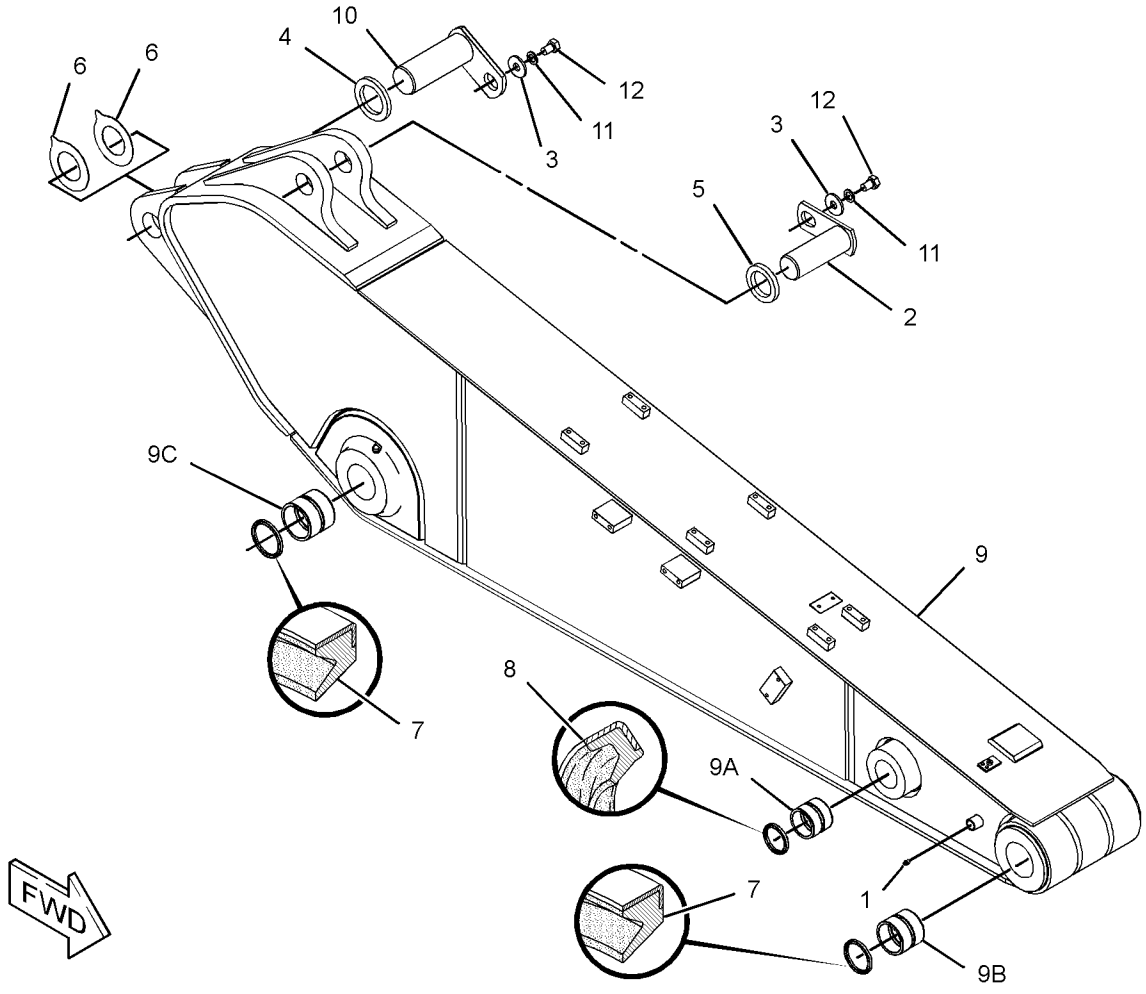

GRAPHIC #1 **<END>** g01475336

290-9225 STICK GP-HOE

S/N: JEG1-UP
1.9-M (6.2-FT)
PART OF 290-1789 STICK AR
AN ATTACHMENT

SMCS-6502 **i02943064**

NOTE	REF NO	GRAPHIC REF	PART NUMBER	QTY	PART NAME 1 2 3 4 5 6 (PRODUCT LEVEL)	SEE PAGE
	1	1	**3B-8489**	3	FITTING-GREASE	
	2	1	**4I-4814**	1	PIN AS	
	3	1	**7Y-2496**	2	SHIM (1.6-MM THK)	
	4	1	**093-0349**	2	WASHER (22X60X6-MM THK)	
	5	1	**093-0363**	1	SPACER (83X120X12-MM THK)	
	6	1	**118-5982**	1	SPACER (73X105X14-MM THK)	
	7	1	**166-1486**	2	SHIM (2-MM THK)	
	8	1	**166-1495**	4	SEAL-LIP TYPE	
	9	1	**235-7679**	2	SEAL-LIP TYPE	
	10	1	**290-9226**	1	STICK & BEARING AS	
	10A	1	**228-5614**	2	BUSHING	
	10B	1	**228-5615**	2	BUSHING	
	10C	1	**244-4277**	2	BUSHING	
	11	1	**4I-4809**	1	PIN AS	
	12	1	**8T-4123**	2	WASHER (3.62X5.75X0.375-MM THK)	
M	13	1	**8T-4780**	2	BOLT (M20X2.5X30-MM)	

M - METRIC PART

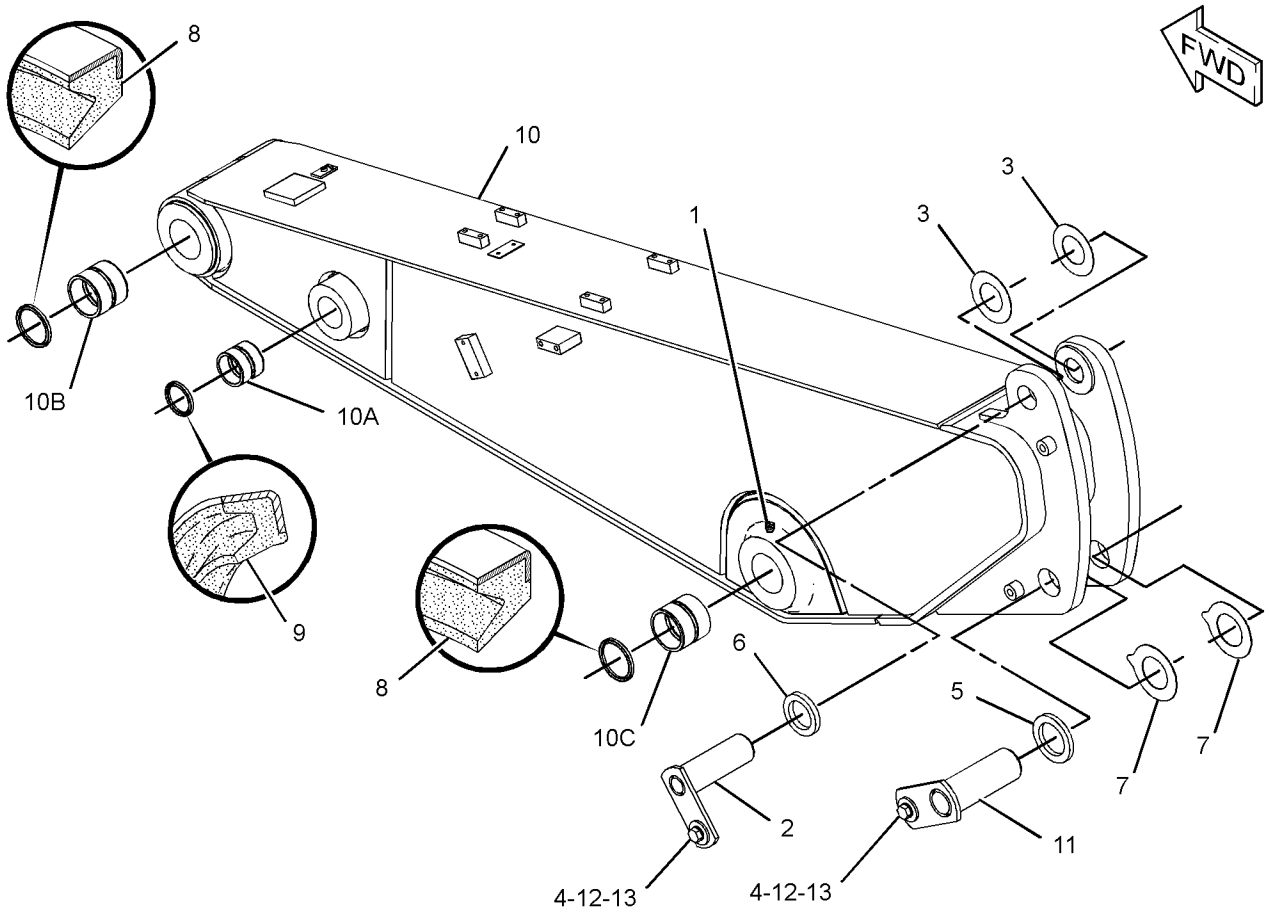

GRAPHIC #1 **<END>** g01231354

7Y-2219 ADJUSTER GP-BUCKET

S/N: JEG1-UP
B-FAMILY
PART OF 347-6852, 347-6853 BUCKET & ADJUSTER GP
AN ATTACHMENT

SMCS-6513, 6700 **i04707433**

NOTE	REF NO	GRAPHIC REF	PART NUMBER	QTY	PART NAME 1 2 3 4 5 6 (PRODUCT LEVEL)	SEE PAGE
B	1	1	**086-0322**	6	SHIM (1-MM THK)	
B	2	1	**086-0321**	4	SHIM (0.5-MM THK)	
	3	1	**193-5014**	1	PIN	
	4	1	**134-8948**	1	PLATE	
M	5	1	**8T-4193**	4	BOLT (M16X2X50-MM)	
	6	1	**9X-8257**	4	WASHER (17.5X30X3.5-MM THK)	
	7	1	**193-5015**	1	FLANGE	

B - USE AS REQUIRED
M - METRIC PART

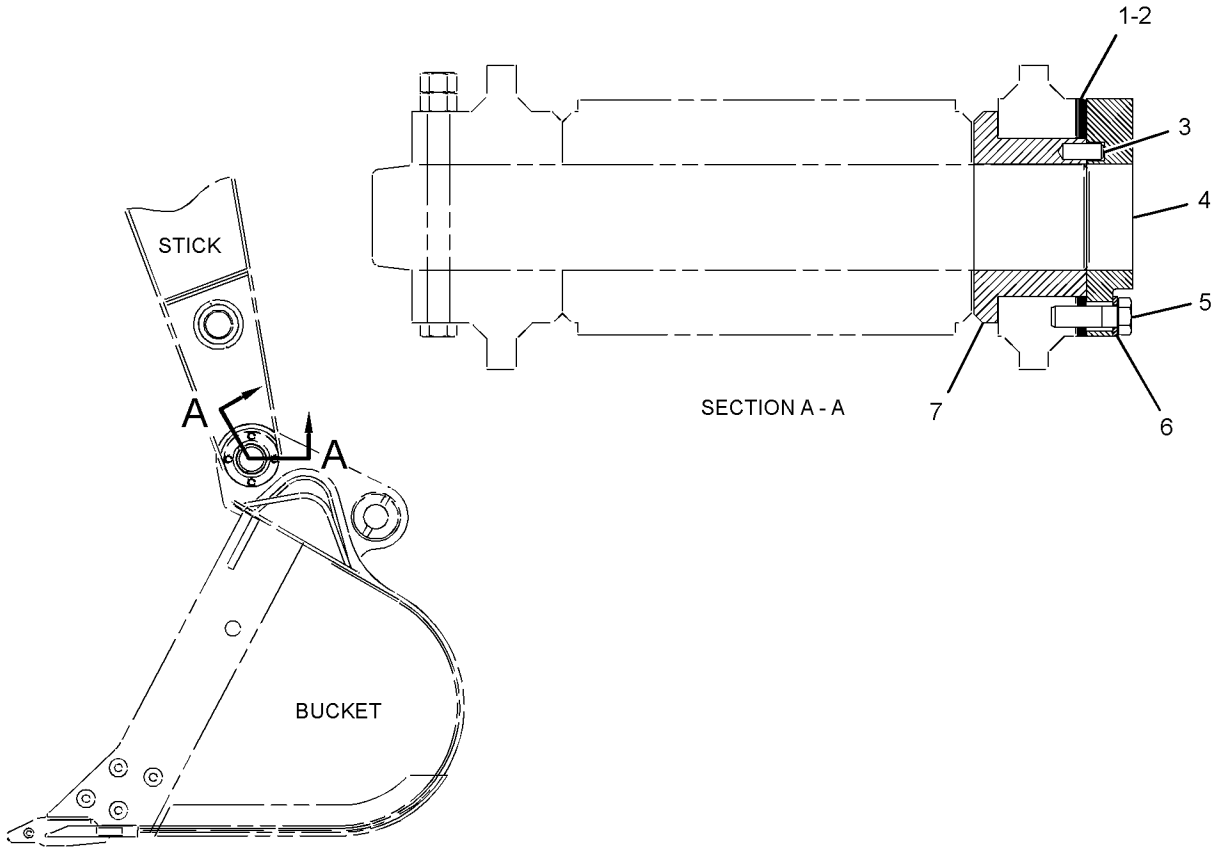

RIGHT SIDE VIEW

GRAPHIC #1 **<END>** g02812617

250-6418 ADJUSTER GP-BUCKET—CB-FAMILY

S/N: JEG1-UP

PART OF 389-3166 BUCKET & ADJUSTER GP

AN ATTACHMENT

SMCS-6513, 6700

i02783574

NOTE	REF NO	GRAPHIC REF	PART NUMBER	QTY	PART NAME 1 2 3 4 5 6 (PRODUCT LEVEL)	SEE PAGE
	1	1	**087-5974**	1	PIN	
B	2	1	**087-5975**	4	SHIM (0.5-MM THK)	
B	3	1	**087-5976**	6	SHIM (1-MM THK)	
	4	1	**134-8950**	1	PLATE	
	5	1	**250-6417**	1	FLANGE	
M	6	1	**8T-4193**	6	BOLT (M16X2X50-MM)	
	7	1	**9X-8257**	6	WASHER (17.5X30X3.5-MM THK)	

B - USE AS REQUIRED
M - METRIC PART

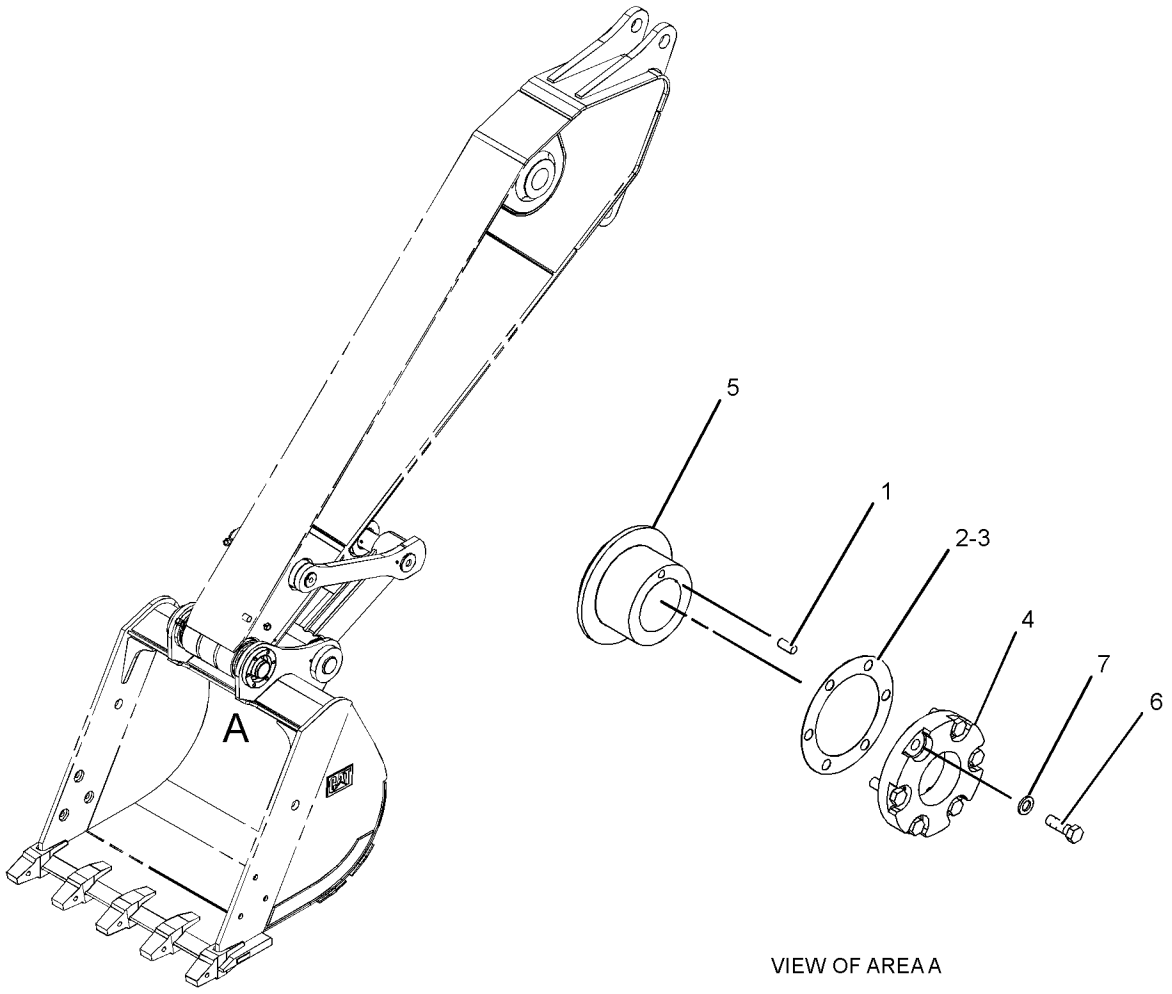

VIEW OF AREA A

GRAPHIC #1

<END>

g01218311

347-6852 BUCKET & ADJUSTER GP—HEAVY-DUTY, B-FAMILY

S/N: JEG1-UP

1200-MM (48-IN) WID X 1.19-CU M (1.56-CU YD) CAPACITY. K-90 ADAPTERS, QTY OF 4

AN ATTACHMENT

SMCS-6503, 6513 **i05164624**

NOTE	PART NUMBER	QTY	PART NAME 1 2 3 4 5 6 (PRODUCT LEVEL)	SEE PAGE
Y	**7Y-2219**	1	ADJUSTER GP-BUCKET (B-FAMILY)	511
Y	*371-9085*	1	BUCKET AS-HEAVY DUTY (B-FAMILY)	514
	2C-9259	2	PLATE-IDENTIFICATION (CAT)	
			(ON LH & RH SIDES OF BUCKET)	
	312-5694	1	SETSCREW (1/4-20X0.25-IN)	
			(USE TO MOUNT BUCKET INFORMATION PLATE)	
Y - SEPARATE ILLUSTRATION				

<END>

347-6853 BUCKET & ADJUSTER GP—HEAVY-DUTY SPADE, B-FAMILY

S/N: JEG1-UP

1350-MM (54-IN) WIDE X 1.4-CU M (1.83-CU YD) CAPACITY. K-90 ADAPTERS, QTY OF 5

AN ATTACHMENT

SMCS-6503, 6513 **i05195044**

NOTE	PART NUMBER	QTY	PART NAME 1 2 3 4 5 6 (PRODUCT LEVEL)	SEE PAGE
Y	**7Y-2219**	1	ADJUSTER GP-BUCKET (B-FAMILY)	511
Y	*371-9086*	1	BUCKET AS-HEAVY DUTY SPADE (B-FAMILY)	516
	2C-9259	2	PLATE-IDENTIFICATION (CAT)	
			(ON LH & RH SIDES OF BUCKET)	
	312-5694	1	SETSCREW (1/4-20X0.25-IN)	
			(USE TO MOUNT BUCKET INFORMATION PLATE)	
Y - SEPARATE ILLUSTRATION				

<END>

389-3166 BUCKET & ADJUSTER GP—HEAVY-DUTY POWER, CB-FAMILY

S/N: JEG1-UP

1350-MM (54-IN) WIDE X 1.56-CU M (2.04-CU YD) CAPACITY. K-100 ADAPTERS, QTY OF 4

AN ATTACHMENT

SMCS-6503, 6513 **i05181721**

NOTE	PART NUMBER	QTY	PART NAME 1 2 3 4 5 6 (PRODUCT LEVEL)	SEE PAGE
Y	**250-6418**	1	ADJUSTER GP-BUCKET (CB-FAMILY)	512
Y	*389-3167*	1	BUCKET AS-HEAVY DUTY POWER (CB-FAMILY)	515
	2C-9259	2	PLATE-IDENTIFICATION (CAT)	
			(ON LH & RH SIDES OF BUCKET)	
	312-5694	1	SETSCREW (1/4-20X0.25-IN)	
			(USE TO MOUNT BUCKET INFORMATION PLATE)	
Y - SEPARATE ILLUSTRATION				

<END>

371-9085 BUCKET AS-HEAVY DUTY–B-FAMILY

S/N: JEG1-UP

1200-MM (48-IN) WIDE X 1.19-CU M (1.56-CU YD) CAPACITY. K-90 ADAPTERS, QTY OF 4

PART OF 347-6852 BUCKET & ADJUSTER GP

AN ATTACHMENT

SMCS-6531 **i05164627**

NOTE	REF NO	GRAPHIC REF	PART NUMBER	QTY	PART NAME 1 2 3 4 5 6 (PRODUCT LEVEL)	SEE PAGE
	1	1	**348-3184**	1	PLATE AS-HINGE	
	2	1	**331-1924**	4	PLATE-WEAR	
	3	1	**331-1926**	1	PLATE-WEAR	
	4	1	**347-7545**	1	PLATE-WEAR	
	5	1	**347-7574**	2	PLATE-WEAR	
	6	1	**347-7572**	1	PLATE (RH)	
	7	1	**347-7571**	1	PLATE (LH)	
	8	1	**348-3094**	1	EDGE AS	
	8A	1	**8P-9770**	1	PLATE	
	8B	1	**220-9094**	2	ADAPTER-TIP (K-90, 2-STRAP, CENTER)	
	8C	1	**232-2095**	1	ADAPTER-TIP (K-90, 2-STRAP, RH)	
	8D	1	**232-2096**	1	ADAPTER-TIP (K-90, 2-STRAP, LH)	

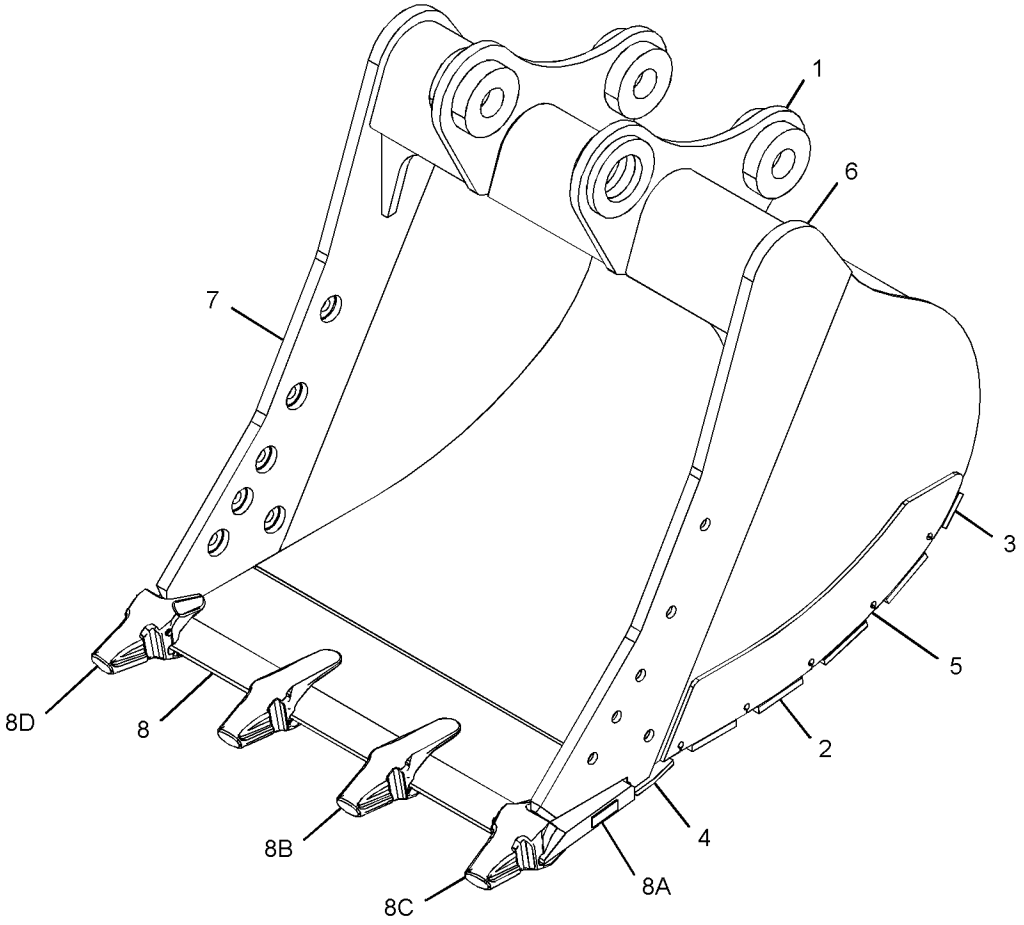

GRAPHIC #1 **<END>** g03345877

389-3167 BUCKET AS-HEAVY DUTY POWER–CB-FAMILY

S/N: JEG1-UP
K-100 ADAPTERS, QTY OF 4. 1350-MM (54-IN) WIDE X 1.56-CU M (2.04-CU YD) CAPACITY
PART OF 389-3166 BUCKET & ADJUSTER GP
AN ATTACHMENT

SMCS-6531 **i05181723**

NOTE	REF NO	GRAPHIC REF	PART NUMBER	QTY	PART NAME 1 2 3 4 5 6 (PRODUCT LEVEL)	SEE PAGE
	1	1	**356-4345**	1	EDGE AS	
	1A	1	**220-9104**	2	ADAPTER-TIP (K-100, 2-STRAP, CENTER)	
	1B	1	**232-2105**	1	ADAPTER-TIP (K-100, 2-STRAP, RH)	
	1C	1	**232-2106**	1	ADAPTER-TIP (K-100, 2-STRAP, LH)	
	1D	1	**8P-9770**	1	PLATE	
	2	1	**369-0689**	1	PLATE (LH)	
	3	1	**273-3453**	1	PLATE AS-BOX	
	4	1	**369-0690**	1	PLATE (RH)	
	5	1	**347-7547**	1	PLATE-WEAR	
	6	1	**356-4311**	5	PLATE-WEAR	
	7	1	**356-4317**	1	PLATE-WEAR	
	8	1	**389-3174**	2	PLATE-WEAR	

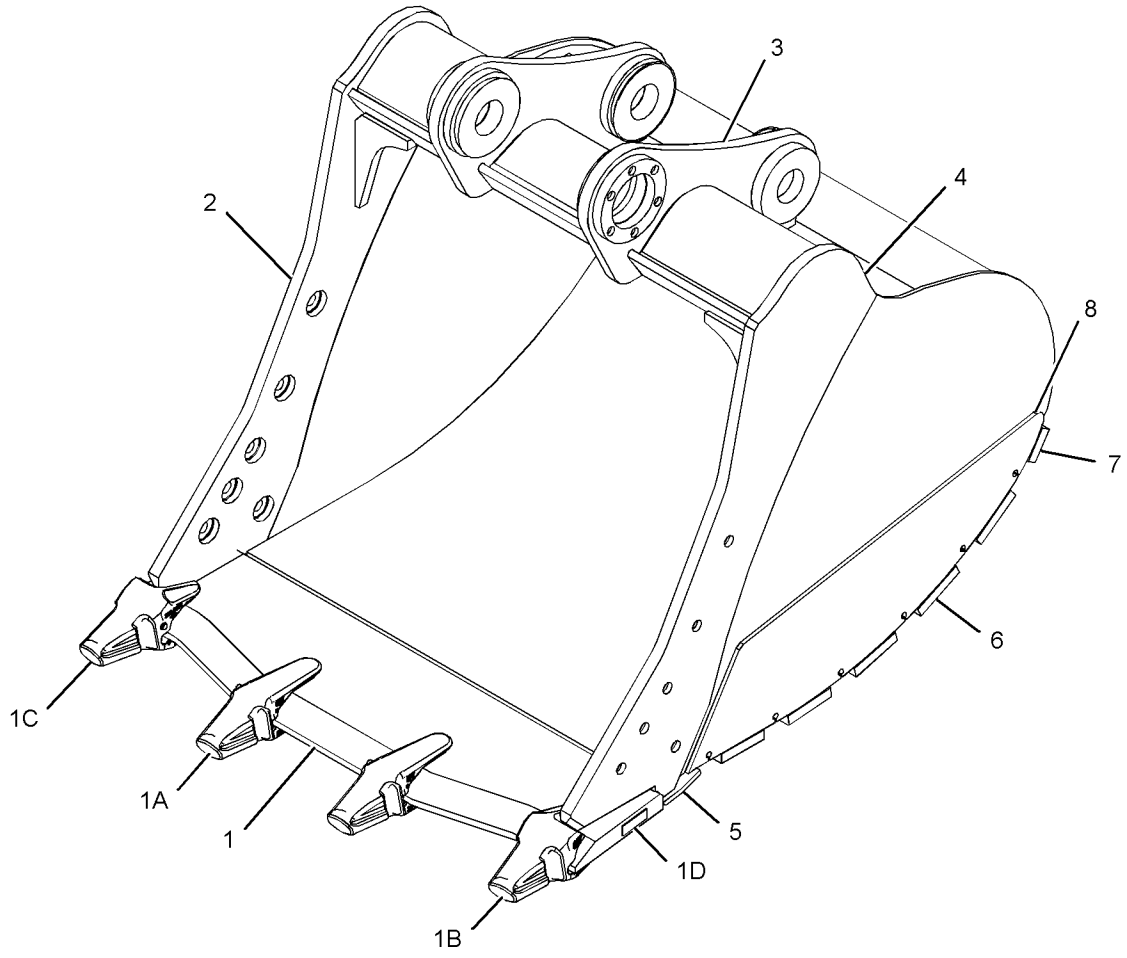

GRAPHIC #1 **<END>** g03327505

371-9086 BUCKET GP-HEAVY DUTY SPADE—B-FAMILY

S/N: JEG1-UP

1350-MM (54-IN) WIDE X 1.4-CU M (1.83-CU YD) CAPACITY. K-90 ADAPTERS, QTY OF 5

PART OF 347-6853 BUCKET & ADJUSTER GP

AN ATTACHMENT

SMCS-6001 **i05164679**

NOTE	REF NO	GRAPHIC REF	PART NUMBER	QTY	PART NAME 1 2 3 4 5 6 (PRODUCT LEVEL)	SEE PAGE
	1	1	**348-3185**	1	PLATE AS-HINGE	
	2	1	**331-1925**	4	PLATE-WEAR	
	3	1	**331-1927**	1	PLATE-WEAR	
	4	1	**347-7547**	1	PLATE-WEAR	
	5	1	**347-7571**	1	PLATE (LH)	
	6	1	**347-7572**	1	PLATE (RH)	
	7	1	**347-7574**	2	PLATE-WEAR	
	8	1	**371-9146**	1	EDGE AS	
	8A	1	**220-9094**	3	ADAPTER-TIP (K-90, 2-STRAP, CENTER)	
	8B	1	**232-2095**	1	ADAPTER-TIP (K-90, 2-STRAP, RH)	
	8C	1	**232-2096**	1	ADAPTER-TIP (K-90, 2-STRAP, LH)	
	8D	1	**8P-9770**	1	PLATE	

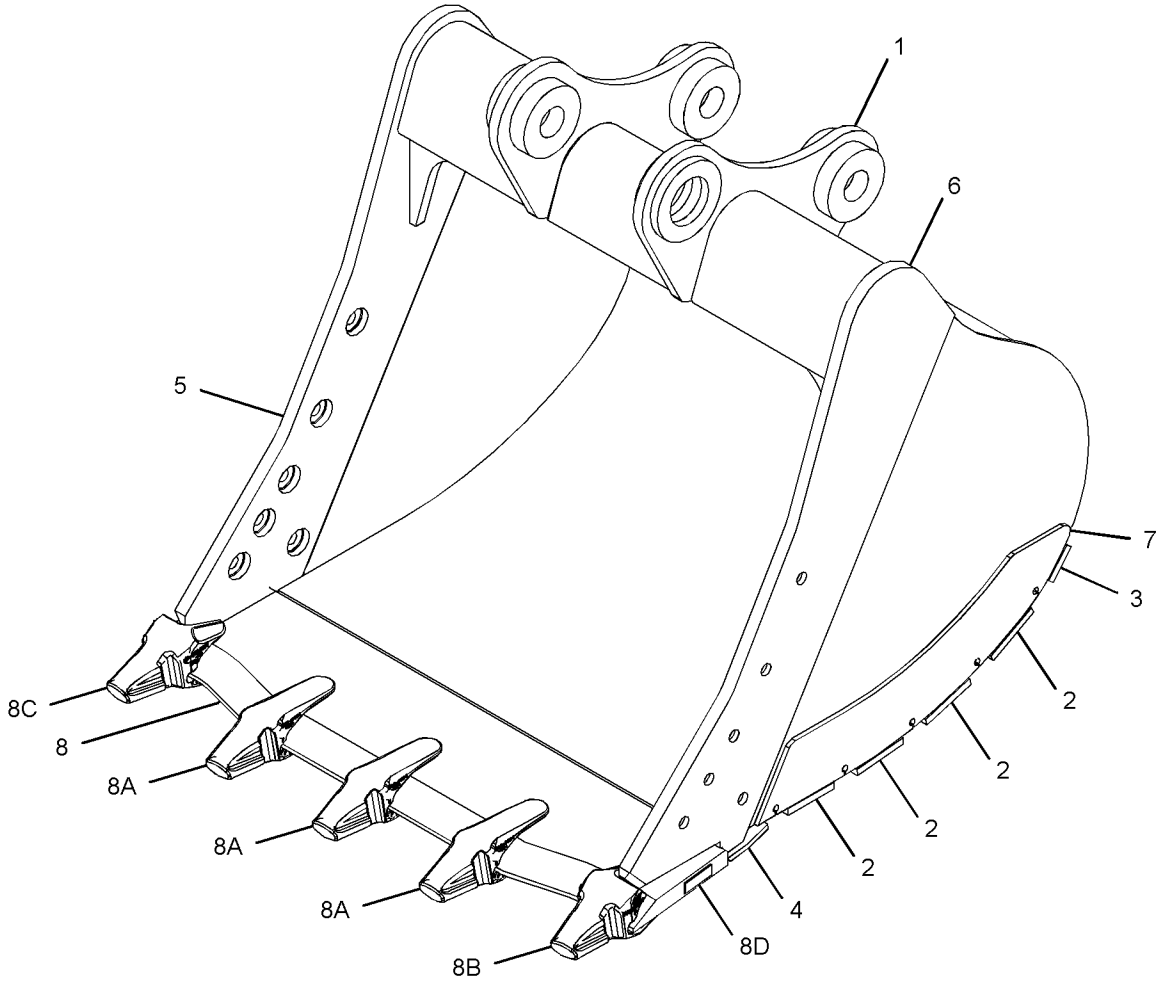

GRAPHIC #1 **<END>** g03317879

378-0398 BUCKET GP-ROCK—CB-FAMILY

S/N: JEG1-UP

1350-MM (54-IN) WIDE X 1.56-CU M (2.04-CU YD) CAPACITY. K-100 ADAPTERS, QTY OF 4 AN ATTACHMENT

SMCS-6102 **i05195258**

NOTE	REF NO	GRAPHIC REF	PART NUMBER	QTY	PART NAME 1 2 3 4 5 6 (PRODUCT LEVEL)	SEE PAGE
	1	1	**2C-9259**	2	PLATE-IDENTIFICATION (CAT)	
	2	1	**312-5694**	1	SETSCREW (1/4-20X0.25-IN)	
	3	1	*378-0399*	1	BUCKET AS-ROCK	
	4	1	**347-7547**	1	PLATE-WEAR	
	5	1	**369-0590**	1	PLATE AS-HINGE	
	6	1	**356-4311**	4	PLATE-WEAR	
	7	1	**356-4317**	2	PLATE-WEAR	
	8	1	**356-4345**	1	EDGE AS	
	8A	1	**220-9104**	2	ADAPTER-TIP (K-100, 2-STRAP, CENTER)	
	8B	1	**232-2105**	1	ADAPTER-TIP (K-100, 2-STRAP, RH)	
	8C	1	**232-2106**	1	ADAPTER-TIP (K-100, 2-STRAP, LH)	
	8D	1	**8P-9770**	1	PLATE	
	9	1	**369-0683**	1	PLATE (RH)	
	10	1	**369-0682**	1	PLATE (LH)	
	11	1	**356-4321**	2	PLATE-WEAR	

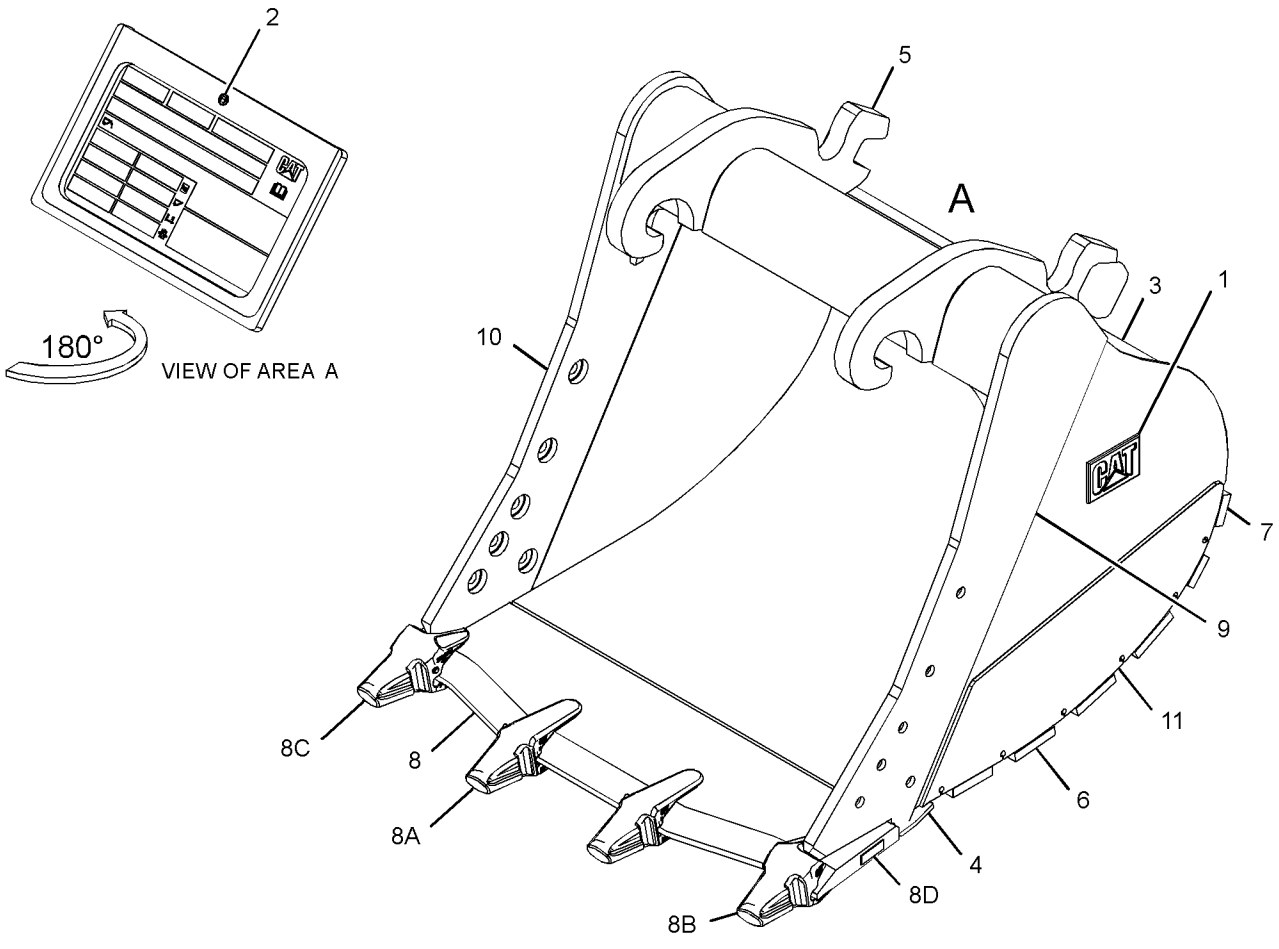

GRAPHIC #1 **<END>** g03344169

383-5423 CONTROL AR-QUICK COUPLER—PIN GRABBER

S/N: JEG1-UP

AN ATTACHMENT

SMCS-6129 **i05438976**

NOTE	PART NUMBER	QTY	PART NAME 1 2 3 4 5 6 (PRODUCT LEVEL)	SEE PAGE
Y	*282-5705*	1	FILM GP (QUICK COUPLER)	657
Y	*376-6331*	1	LINES GP-QUICK COUPLER	397
Y	*417-9812*	1	WIRING GP-CAB (COUPLER)	166
Y	*369-0245*	1	WIRING GP-QUICK COUPLER	189

Y - SEPARATE ILLUSTRATION

<END>

302-9679 COUPLER AR-QUICK—CB2-FAMILY

S/N: JEG1-UP

FOR USE WITH LINES BOOM-QUICK COUPLER, LINES STICK-QUICK COUPLER, CONTROL AR-QUICK COUPLER

AN ATTACHMENT

SMCS-1408, 5057, 6129 **i05537155**

NOTE	PART NUMBER	QTY	PART NAME 1 2 3 4 5 6 (PRODUCT LEVEL)	SEE PAGE
Y	*265-7513*	1	COUPLER GP-QUICK	519
Y	*207-3590*	1	LINES GP-COUPLER (QUICK, PIN GRABBER)	350
Y	*247-7331*	1	LINKAGE AR-BUCKET (CB2-FAMILY, WITH LIFTING EYE)	501
Y	*268-4450*	1	PIN GP-COUPLER (CB-LINKAGE)	520

Y - SEPARATE ILLUSTRATION

<END>

265-7513 COUPLER GP-QUICK

S/N: JEG1-UP
PART OF 302-9679 COUPLER AR-QUICK
AN ATTACHMENT

SMCS-1408, 5057, 6129 **i04394925**

NOTE	REF NO	GRAPHIC REF	PART NUMBER	QTY	PART NAME 1 2 3 4 5 6 (PRODUCT LEVEL)	SEE PAGE
Y	1	1	**274-5997**	1	CYLINDER GP-HYDRAULIC	296
	2	1	**274-5995**	1	HOOK	
	3	1	**274-5992**	1	PIN	
	4	1	**274-5993**	1	PIN	
	5	1	**274-5994**	1	PIN	
	6	1	**091-5928**	4	FITTING-GREASE	
	7	1	**275-0497**	1	SPRING (INCLUDES BOLTS AND WASHERS)	
	8	1	**171-5956**	1	BEARING	
	9	1	**274-5999**	1	BAR	
	10	1	**274-5998**	1	BAR	
	11	1	**250-2940**	2	RETAINER-PIN	
	12	1	**274-6001**	4	CLIP	
	13	1	**273-4159**	1	PLATE-RETAINING	
M	14	1	**118-4140**	3	SCREW (M5X0.8X19-MM)	

M - METRIC PART
Y - SEPARATE ILLUSTRATION

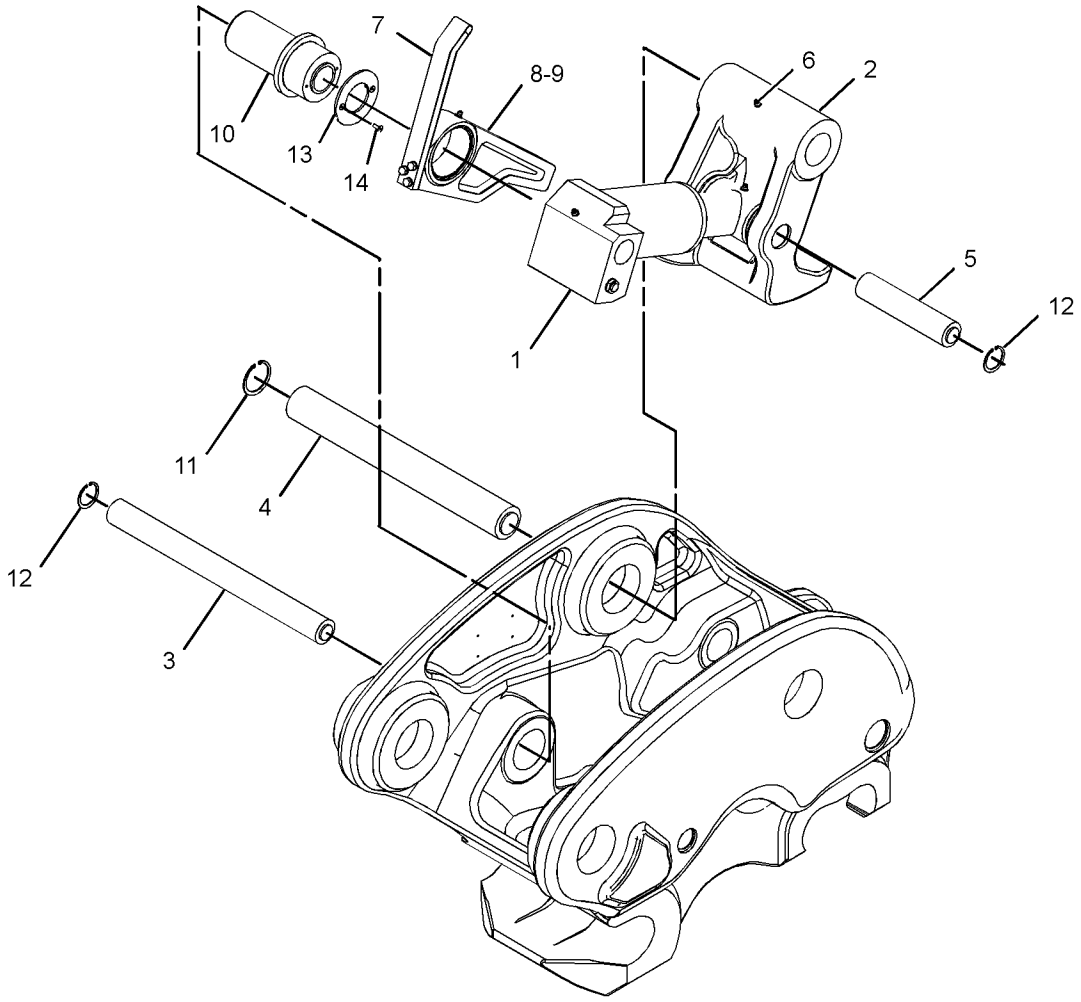

GRAPHIC #1 **<END>** g02570837

268-4450 PIN GP-COUPLER

S/N: JEG1-UP
FOR USE WITH "CB" LINKAGE
PART OF 302-9679 COUPLER AR-QUICK
AN ATTACHMENT

SMCS-6129 **i05536531**

NOTE	PART NUMBER	QTY	PART NAME 1 2 3 4 5 6 (PRODUCT LEVEL)	SEE PAGE
M	**8T-5460**	2	BOLT (M20X2.5X40-MM)	
	234-3931	2	PIN AS	
	093-0349	2	WASHER (22X60X6-MM THK)	
	8T-4123	2	WASHER (3.62X5.75X0.375-MM THK)	

M - METRIC PART

<END>

112-2482 PROTECTOR GP-SIDE BAR

S/N: JEG1-UP

AN ATTACHMENT

SMCS-6817 **i05536528**

NOTE	REF NO	GRAPHIC REF	PART NUMBER	QTY	PART NAME 1 2 3 4 5 6 (PRODUCT LEVEL)	SEE PAGE
	1	1	**329-5958**	2	PROTECTOR-SIDE BAR	
	2	1	**275-5982**	4	PIN	
	3	1	**132-0999**	4	RETAINER AS	

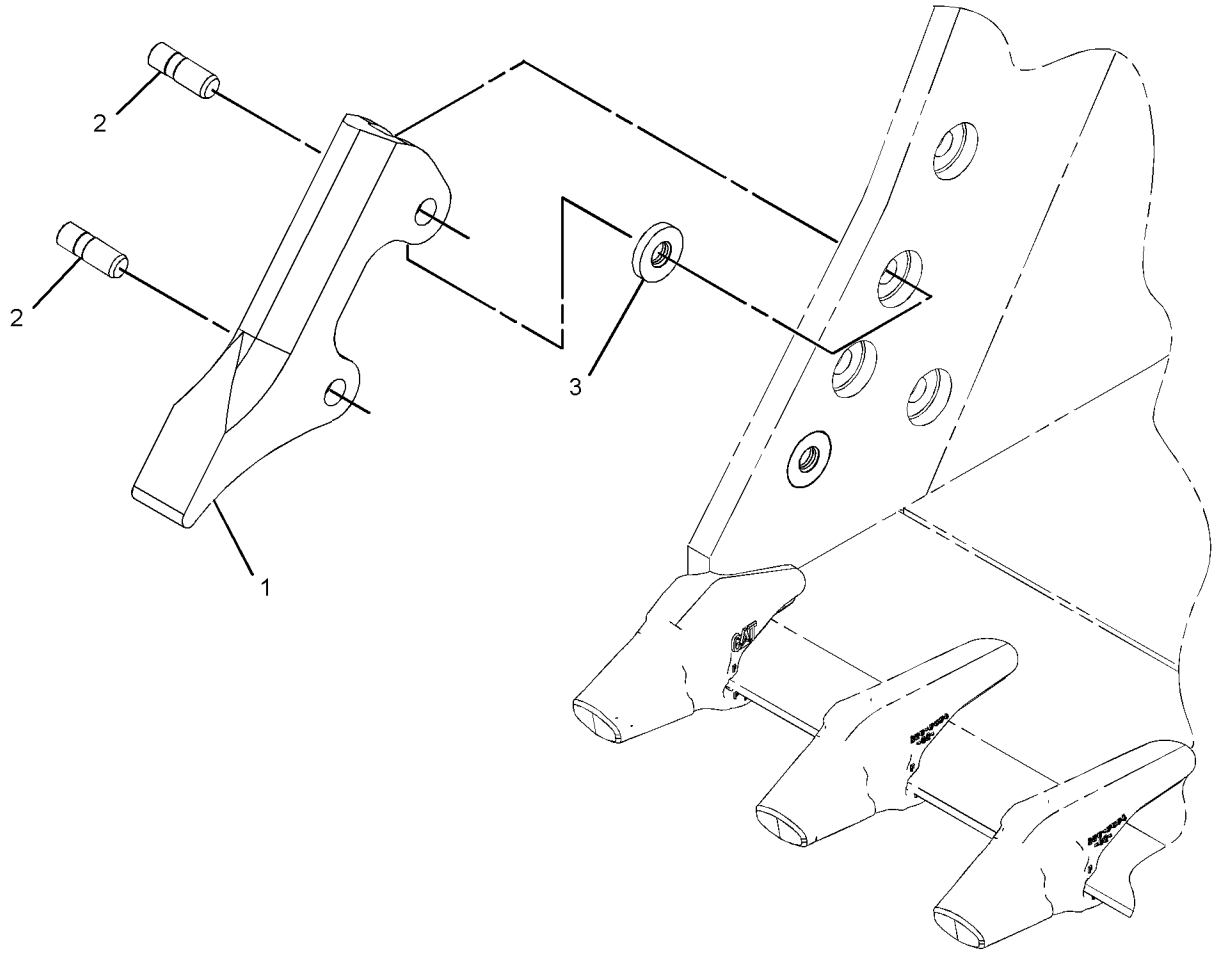

GRAPHIC #1 **<END>** g02206434

195-7216 PROTECTOR GP-SIDE BAR

S/N: JEG1-UP

AN ATTACHMENT

SMCS-6817 **i05536529**

NOTE	REF NO	GRAPHIC REF	PART NUMBER	QTY	PART NAME 1 2 3 4 5 6 (PRODUCT LEVEL)	SEE PAGE
	1	1	**329-5958**	4	PROTECTOR-SIDE BAR	
	2	1	**275-5982**	8	PIN	
	3	1	**132-0999**	8	RETAINER AS	

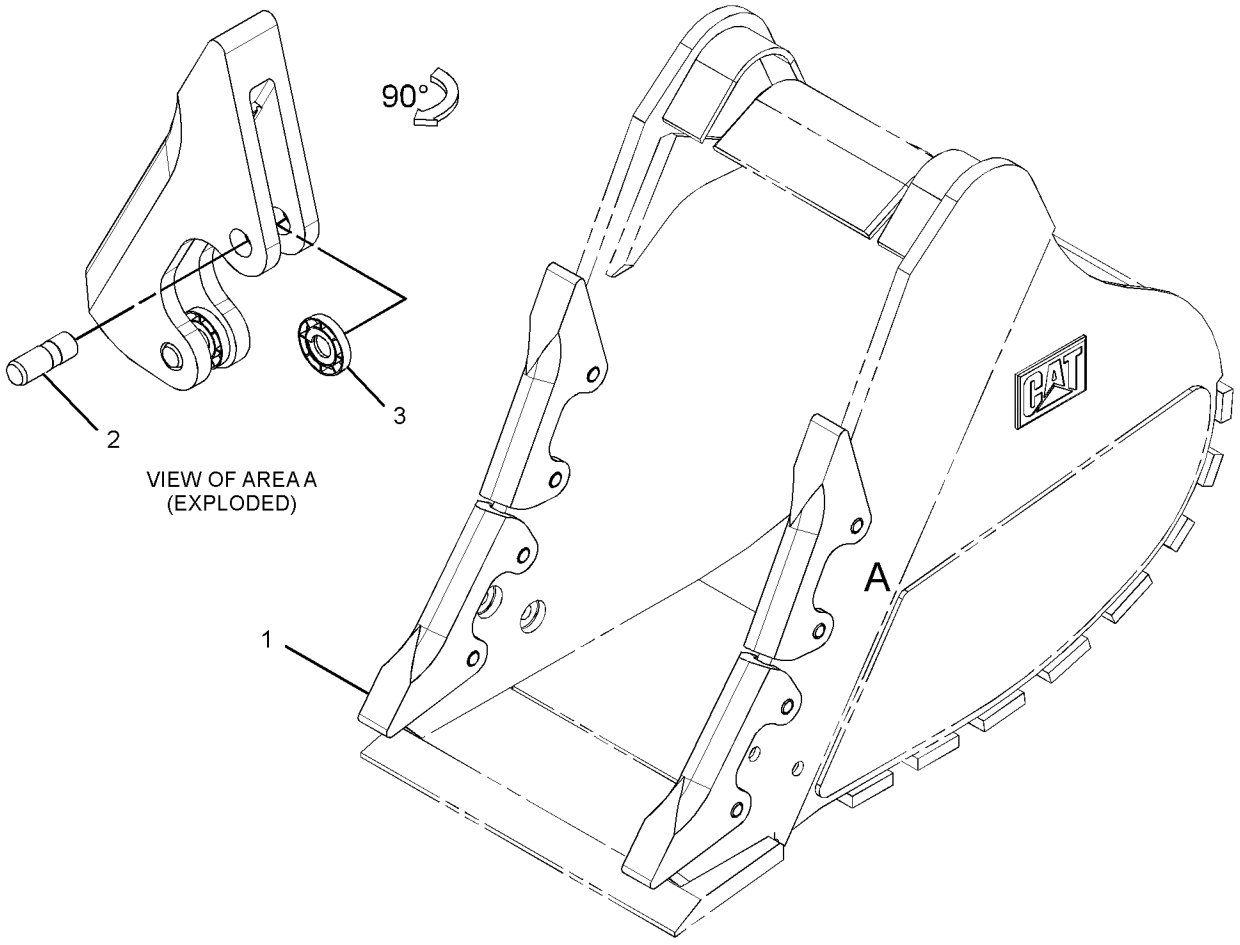

GRAPHIC #1 **<END>** g01407074

195-7215 SIDECUTTER GP

S/N: JEG1-UP

AN ATTACHMENT

SMCS-6813 **i04560454**

NOTE	REF NO	GRAPHIC REF	PART NUMBER	QTY	PART NAME 1 2 3 4 5 6 (PRODUCT LEVEL)	SEE PAGE
	1	1	**368-2853**	2	SIDECUTTER (RH)	
	2	1	**368-2852**	2	SIDECUTTER (LH)	
	3	1	**1D-4635**	10	BOLT (1-8X2.5-IN)	
	4	1	**2J-3507**	10	NUT-FULL (1-8-THD)	
	5	1	**3K-5234**	10	WASHER-HARD (28X49X6-MM THK)	

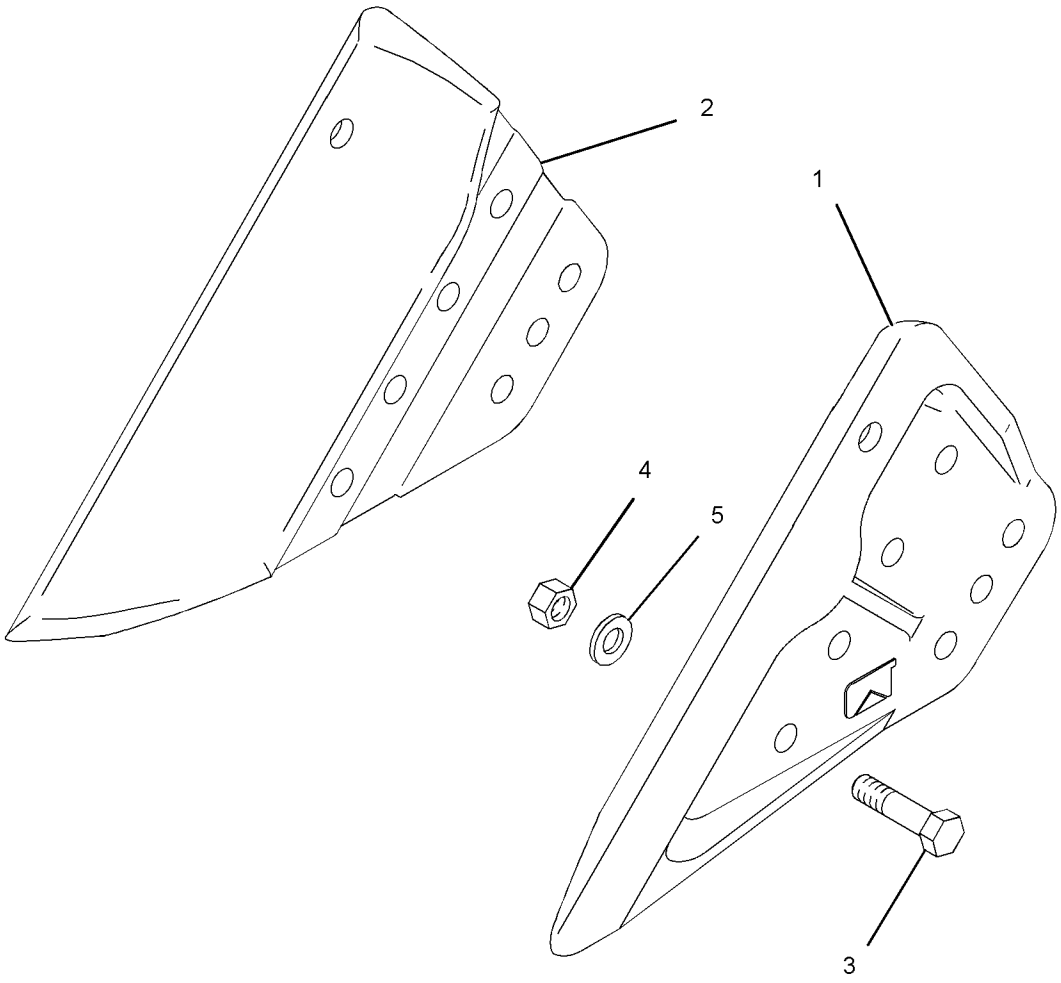

GRAPHIC #1 **<END>** g01289586

283-3326 SIDECUTTER GP

S/N: JEG1-UP

AN ATTACHMENT

SMCS-6813 **i04125094**

NOTE	REF NO	GRAPHIC REF	PART NUMBER	QTY	PART NAME 1 2 3 4 5 6 (PRODUCT LEVEL)	SEE PAGE
	1	1	**357-2696**	1	SIDECUTTER (RH)	
	2	1	**357-2697**	1	SIDECUTTER (LH)	
	3	1	**1D-4635**	8	BOLT (1-8X2.5-IN)	
	4	1	**2J-3507**	8	NUT-FULL (1-8-THD)	
	5	1	**3K-5234**	8	WASHER-HARD (28X49X6-MM THK)	

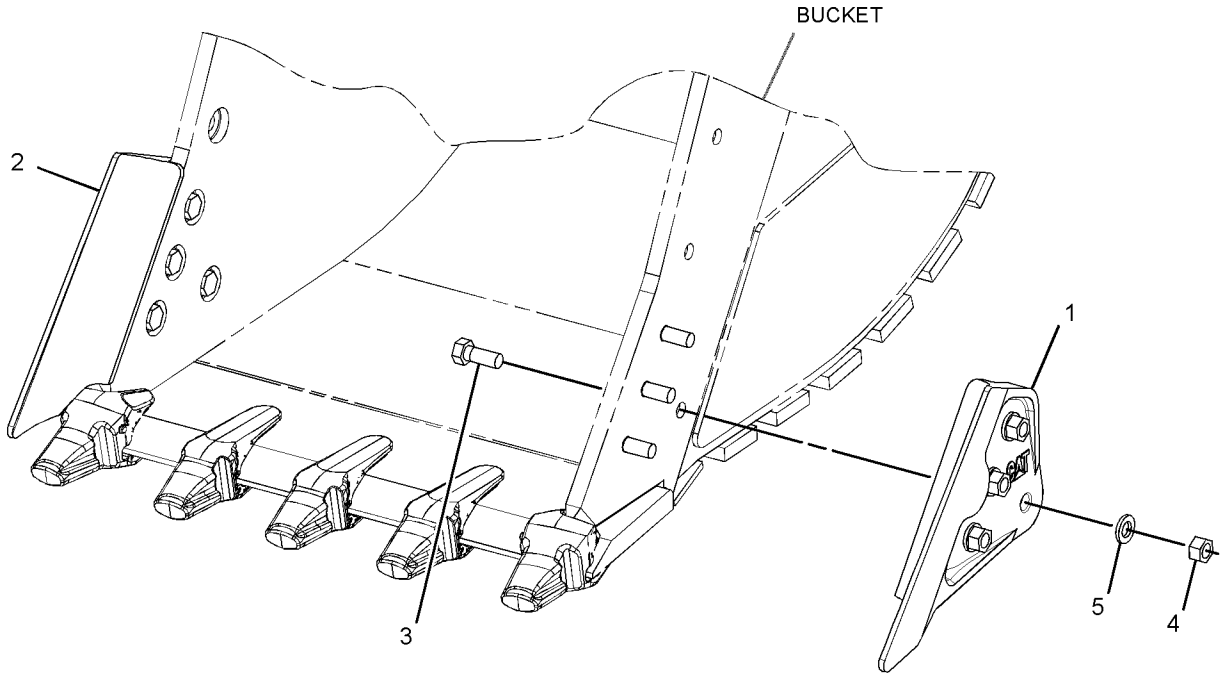

GRAPHIC #1 **<END>** g02348717

217-4895 TIP GP-DOUBLE SPIKE

S/N: JEG1-UP
K-90
AN ATTACHMENT

SMCS-6805 **i02956688**

NOTE	REF NO	GRAPHIC REF	PART NUMBER	QTY	PART NAME 1 2 3 4 5 6 (PRODUCT LEVEL)	SEE PAGE
	1	1	**220-9090**	1	RETAINER-G.E.T. (K-80, K-90, K-100)	
	2	1	**309-1098**	1	TIP-DOUBLE SPIKE (K-90)	

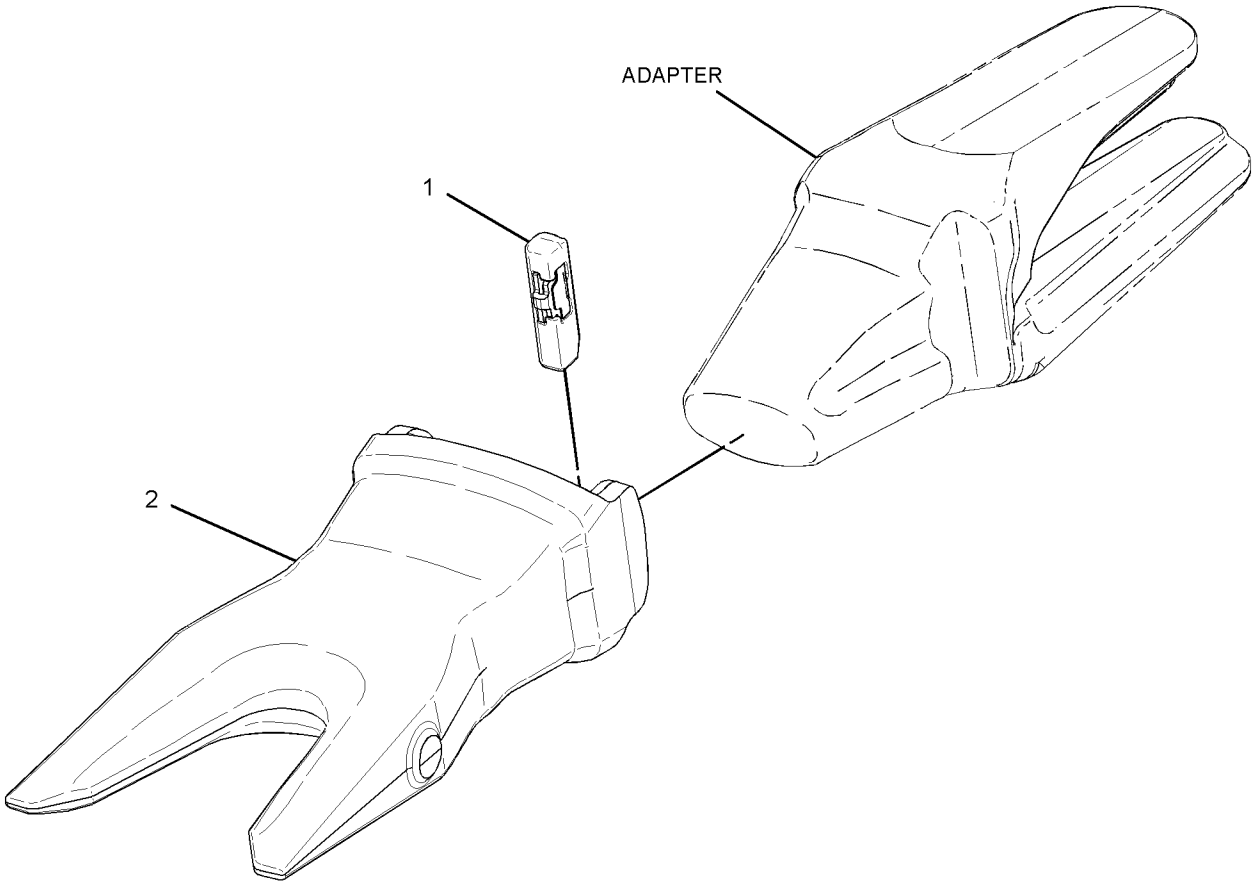

GRAPHIC #1 **<END>** g01506153

217-4892 TIP GP-PENETRATION

S/N: JEG1-UP
K-90
AN ATTACHMENT

SMCS-6805 **i05311616**

NOTE	REF NO	GRAPHIC REF	PART NUMBER	QTY	PART NAME 1 2 3 4 5 6 (PRODUCT LEVEL)	SEE PAGE
	1	1	**220-9090**	1	RETAINER-G.E.T. (K-80, K-90, K-100)	
	2	1	**220-9092**	1	TIP-PENETRATION (K-90)	

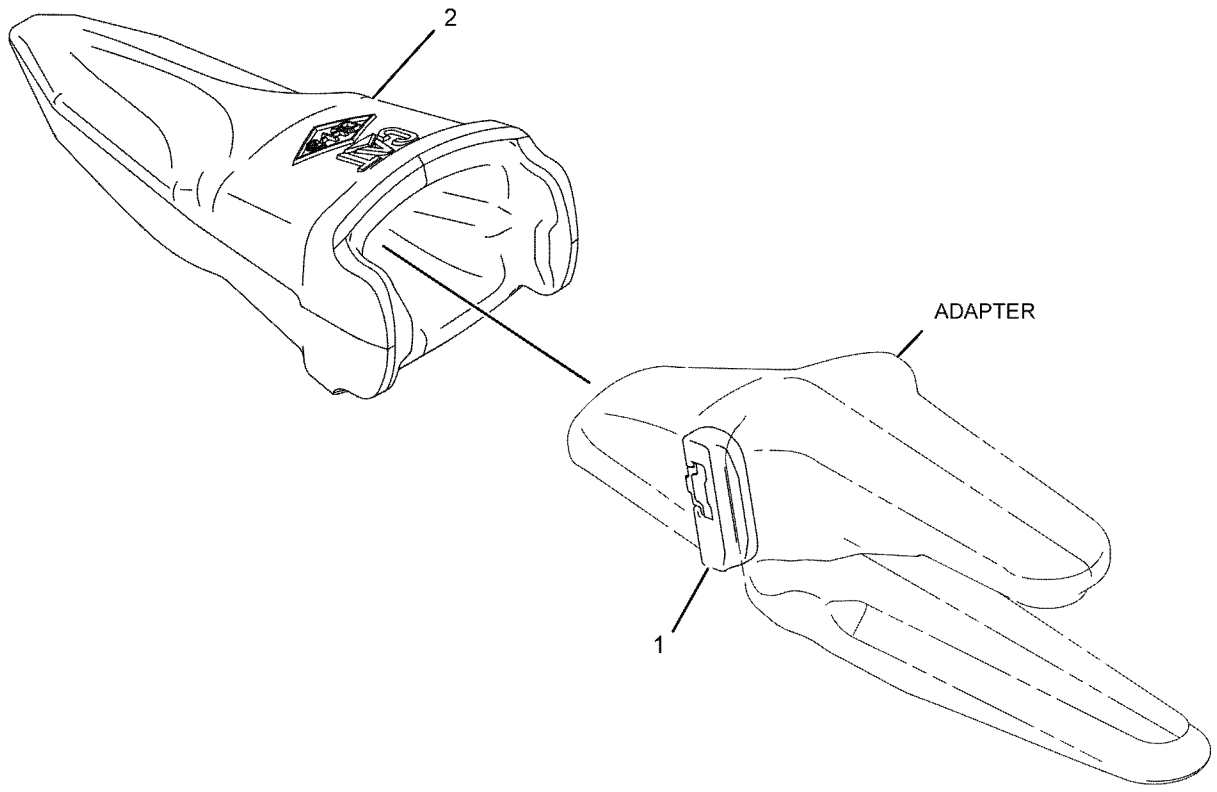

GRAPHIC #1 **<END>** g01074482

229-6974 TIP GP-PENETRATION–K-100

S/N: JEG1-UP

AN ATTACHMENT

SMCS-6805 **i03631945**

NOTE	REF NO	GRAPHIC REF	PART NUMBER	QTY	PART NAME 1 2 3 4 5 6 (PRODUCT LEVEL)	SEE PAGE
	1	1	**220-9090**	1	RETAINER-G.E.T. (K-80, K-90, K-100)	
	2	1	**220-9102**	1	TIP-PENETRATION (K-100, QTY OF 5)	

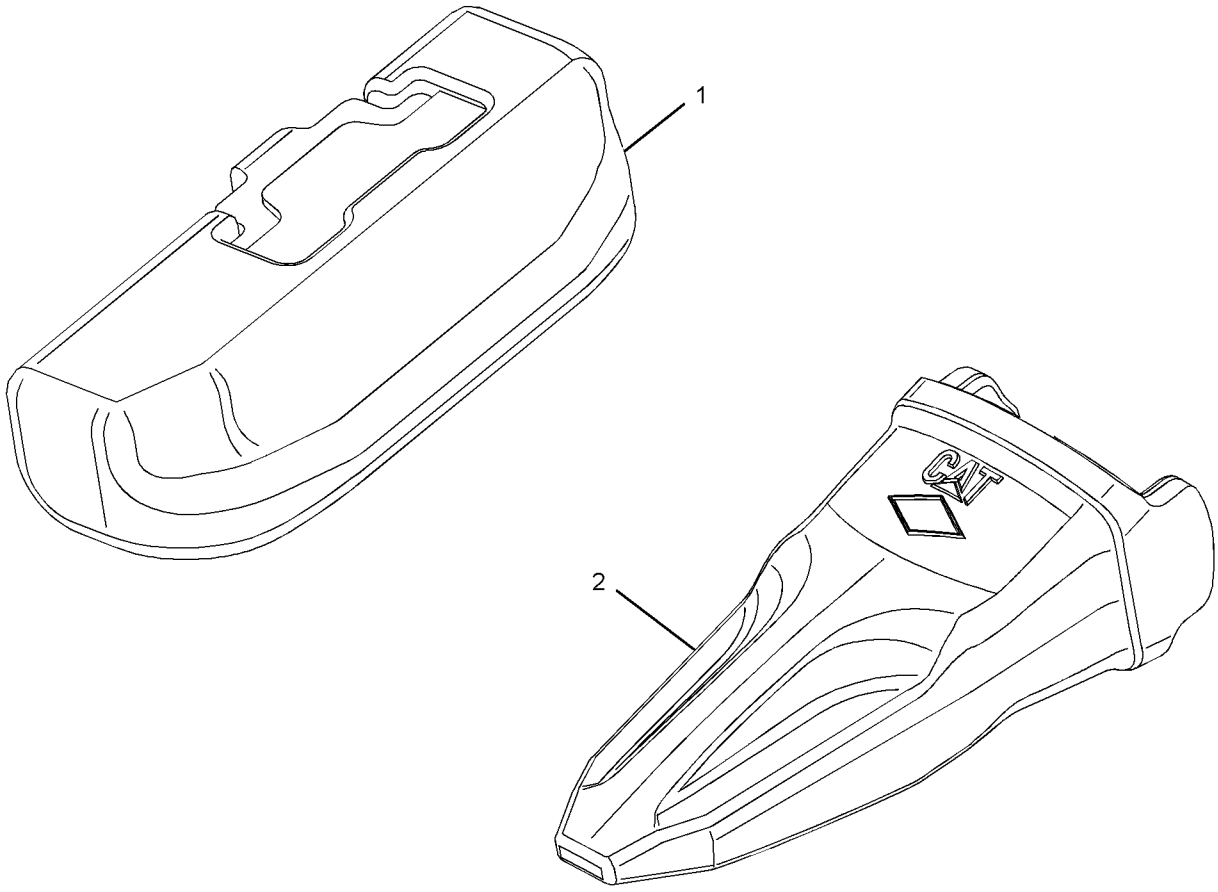

GRAPHIC #1 **<END>** g01144259

217-4893 TIP GP-PENETRATION PLUS

S/N: JEG1-UP
K-90
AN ATTACHMENT

SMCS-6805 **i05311693**

NOTE	REF NO	GRAPHIC REF	PART NUMBER	QTY	PART NAME 1 2 3 4 5 6 (PRODUCT LEVEL)	SEE PAGE
	1	1	**220-9090**	1	RETAINER-G.E.T. (K-80, K-90, K-100)	
	2	1	**220-9093**	1	TIP-PENETRATION PLUS (K-90)	

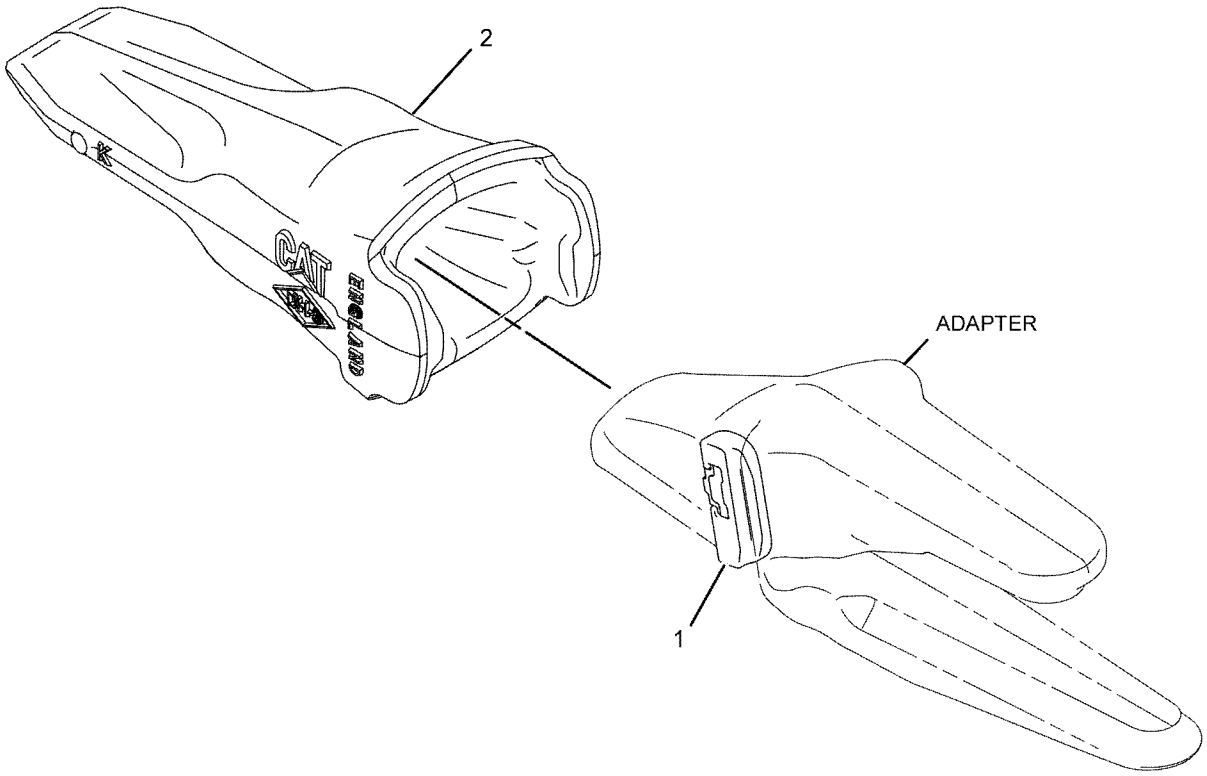

GRAPHIC #1 **<END>** g01074401

229-6975 TIP GP-PENETRATION PLUS–K-100

S/N: JEG1-UP

AN ATTACHMENT

SMCS-6805 **i03631960**

NOTE	PART NUMBER	QTY	PART NAME 1 2 3 4 5 6 (PRODUCT LEVEL)	SEE PAGE
	220-9090	1	RETAINER-G.E.T. (K-80, K-90, K-100)	
	220-9103	1	TIP-PENETRATION PLUS (K-100)	

<END>

229-6976 TIP GP-SHARP–K-100

S/N: JEG1-UP

AN ATTACHMENT

SMCS-6805 **i02568430**

NOTE	REF NO	GRAPHIC REF	PART NUMBER	QTY	PART NAME 1 2 3 4 5 6 (PRODUCT LEVEL)	SEE PAGE
	1	1	**220-9090**	1	RETAINER-G.E.T. (K-80, K-90, K-100)	
	2	1	**220-9107**	1	TIP-SPIKE	

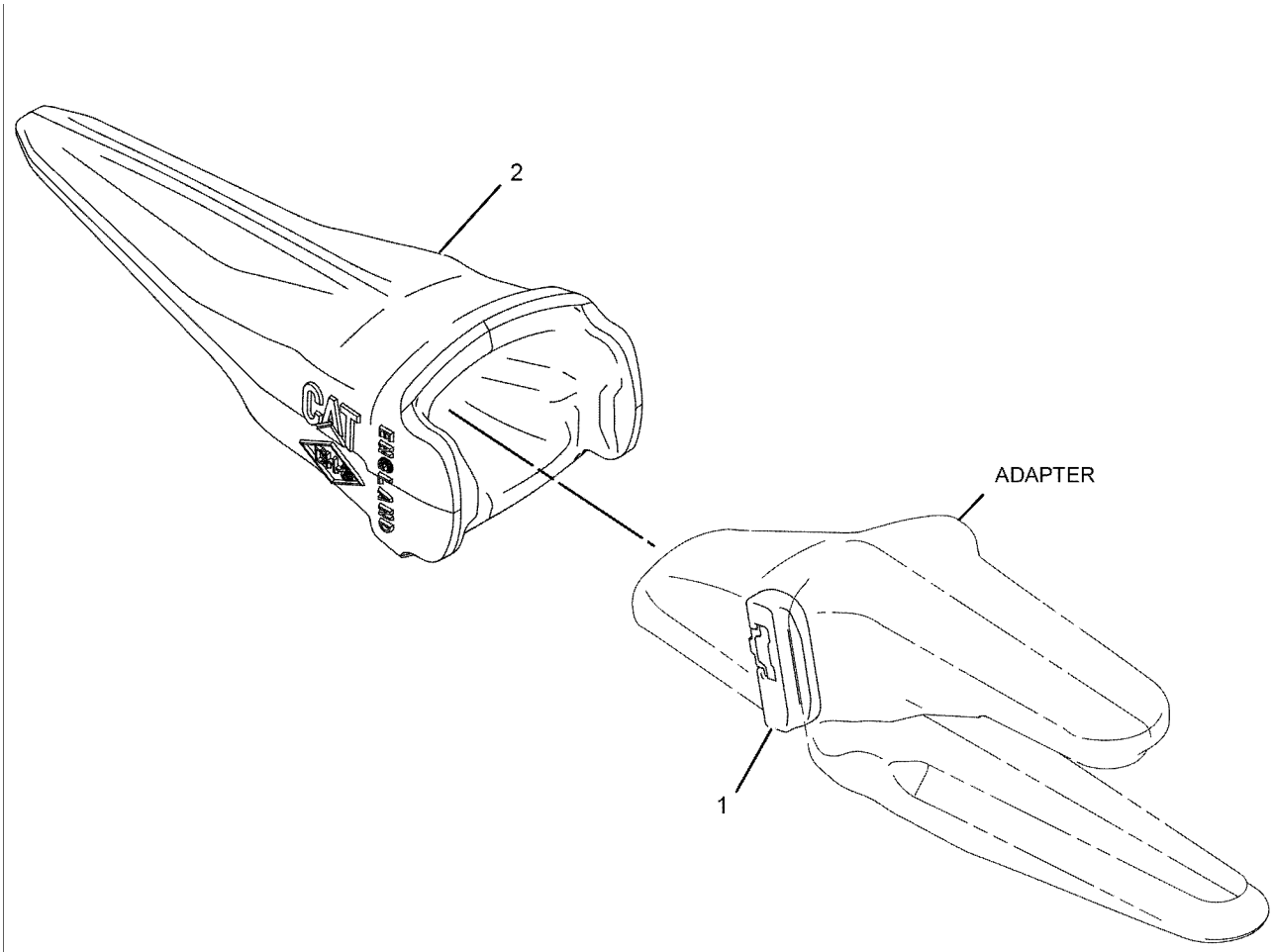

GRAPHIC #1 **<END>** g01074300

217-4894 TIP GP-SPIKE

S/N: JEG1-UP
K-90
AN ATTACHMENT

SMCS-6805 **i05311715**

NOTE	REF NO	GRAPHIC REF	PART NUMBER	QTY	PART NAME 1 2 3 4 5 6 (PRODUCT LEVEL)	SEE PAGE
	1	1	**220-9090**	1	RETAINER-G.E.T. (K-80, K-90, K-100)	
	2	1	**220-9097**	1	TIP-SPIKE (K-90)	

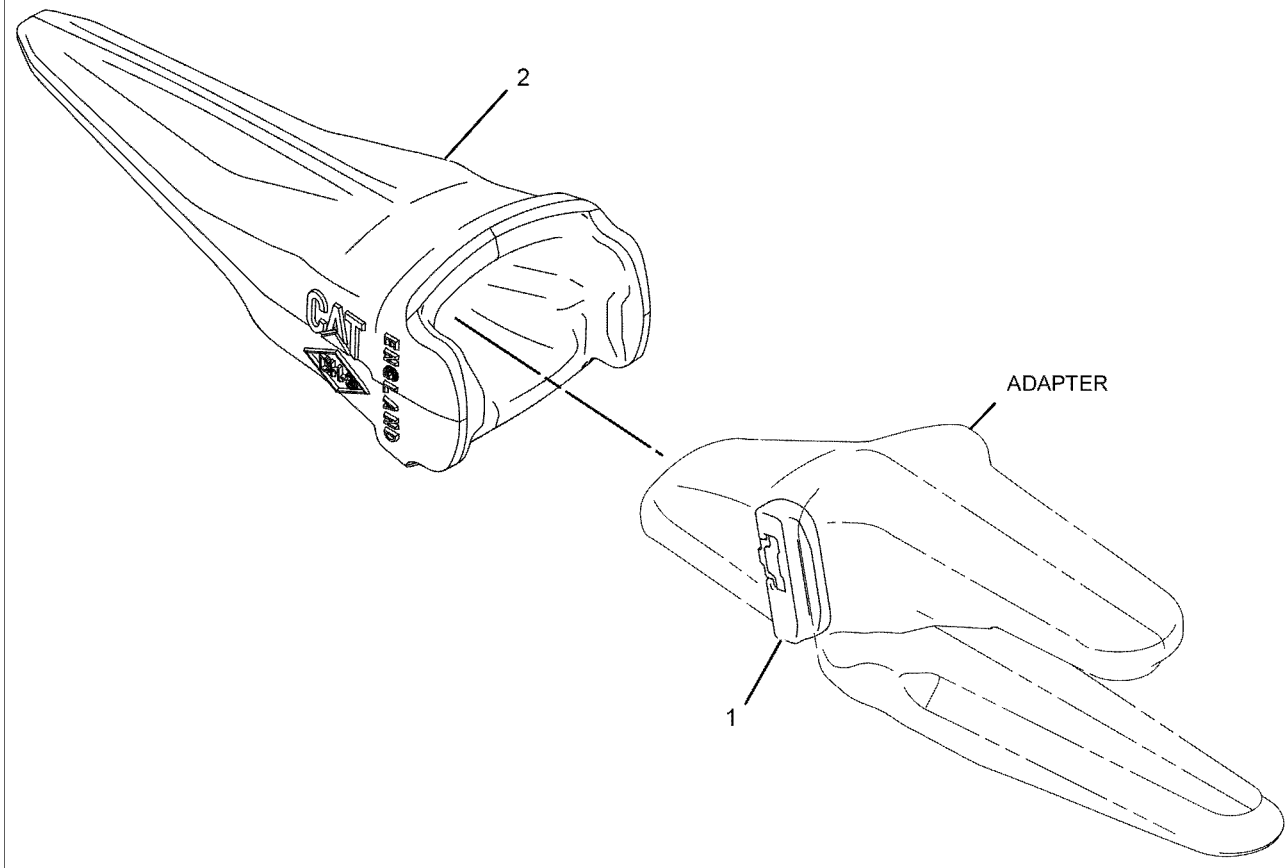

GRAPHIC #1 **<END>** g01074300

416-1798 AIR CONDITIONER & MOUNTING GP

S/N: JEG1-UP

PART OF 416-1794 AIR CONDITIONER AR, 434-3892, 434-3893 CAB GP

AN ATTACHMENT

SMCS-7320 **i05333179**

NOTE	REF NO	GRAPHIC REF	PART NUMBER	QTY	PART NAME 1 2 3 4 5 6 (PRODUCT LEVEL)	SEE PAGE
	1	1	**111-4836**	3	CLIP	
	2	1	**235-8874**	1	SENSOR-TEMPERATURE (AMBIENT AIR)	
	3	1	**235-8875**	1	BRACKET	
	4	1	**235-9005**	1	HARNESS AS-HEATER & AIR COND (LOW SIDE)	
Y	5	1	**316-8916**	1	AIR CONDITIONER GP	535
	6	1	**396-6895**	1	PANEL AS-CONTROL	
	7	1	**416-1802**	1	HARNESS AS-HEATER & AIR COND (HIGH SIDE)	
	8	1	**119-5026**	4	SCREW-PAN HEAD (10-16X0.63-IN)	
	9	1	**3S-2093**	1	STRAP-CABLE	
	10	1	**4P-7581**	1	CLIP	
M	11	1	**5C-9553**	1	BOLT (M6X1X16-MM)	
	12	1	**7X-7729**	7	WASHER (11X25X3-MM THK)	
	13	1	**8T-4121**	3	WASHER-HARD (11X21X2.5-MM THK)	
M	14	1	**8T-4136**	7	BOLT (M10X1.5X25-MM)	
M	15	1	**8T-4137**	3	BOLT (M10X1.5X20-MM)	
	16	1	**9X-8256**	1	WASHER (6.6X12X2-MM THK)	

M - METRIC PART
Y - SEPARATE ILLUSTRATION

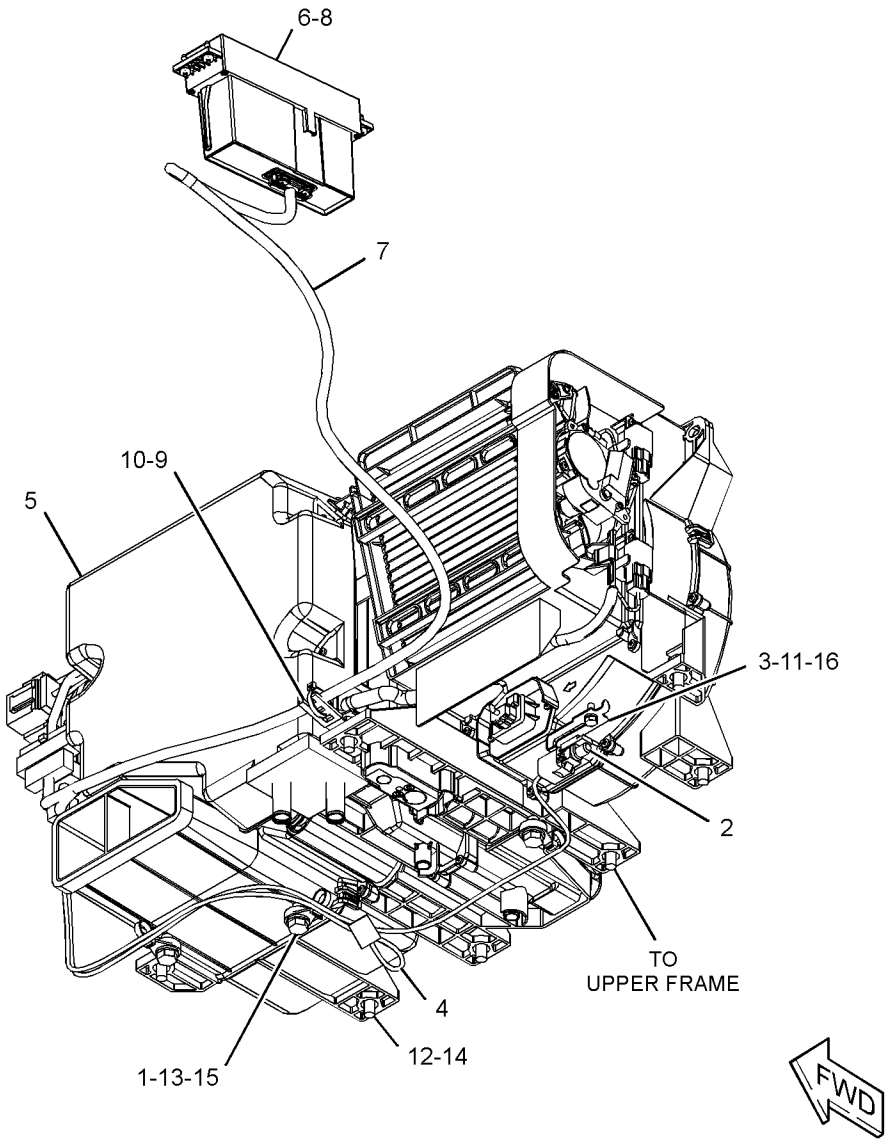

GRAPHIC #1 **<END>** g03312776

OPERATOR STATION

416-1794 AIR CONDITIONER AR

S/N: JEG1-UP

PART OF 442-4973, 442-4974 OPTION AR-CAB

AN ATTACHMENT

SMCS-7320 **i05432907**

NOTE	PART NUMBER	QTY	PART NAME 1 2 3 4 5 6 (PRODUCT LEVEL)	SEE PAGE
Y	*416-1798*	1	AIR CONDITIONER & MOUNTING GP	532
Y	*229-9082*	1	DUCT GP-CAB AIR	587

Y - SEPARATE ILLUSTRATION

<END>

316-8916 AIR CONDITIONER GP

S/N: JEG1-UP

PART OF 416-1798 AIR CONDITIONER & MOUNTING GP

AN ATTACHMENT

SMCS-7320 **i03423324**

NOTE	REF NO	GRAPHIC REF	PART NUMBER	QTY	PART NAME 1 2 3 4 5 6 (PRODUCT LEVEL)	SEE PAGE
	1	1	**185-8300**	35	SCREW-TAPPING	
	2	1	**185-8302**	3	SCREW AS-TAPPING	
	3	1	**245-7817**	2	MOTOR AS	
	4	1	**245-7818**	3	CLIP	
	5	1	**245-7819**	2	CLIP	
	6	1	**245-7820**	1	COVER-FRONT	
	7	1	**245-7825**	1	INSULATOR	
	8	1	**245-7826**	1	INSULATOR	
	9	1	**245-7827**	1	INSULATOR	
	10	1	**245-7828**	1	INSULATOR	
	11	1	**245-7829**	1	PACKING	
	12	1	**245-7830**	1	CLIP	
	13	1	**245-7831**	1	SENSOR AS-TEMPERATURE (COOLANT)	
	14	1	**245-7832**	1	CONTROL AS	
	15	1	**245-7833**	1	CORE AS-HEATER	
	16	1	**245-7834**	1	DAMPER AS	
	17	1	**245-7835**	1	SENSOR AS-TEMPERATURE (AMBIENT AIR TEMP)	
Y	18	1	**245-7836**	1	COIL GP-EVAPORATOR	557
	19	1	**245-7838**	1	PACKING	
	20	1	**245-7839**	1	MOTOR AS (WITH FAN)	
Y	21	1	**245-7846**	1	CONTROL GP-HEAT & AIR COND (AIR INLET)	573
	22	1	**245-7847**	1	HARNESS AS-HEATER & AIR COND	
	23	1	**245-7856**	3	SCREW AS-TAPPING	
	24	1	**293-1137**	1	FILTER GP-AIR (AIR CONDITIONER)	
		1	**245-7823**	1	FILTER ELEMENT-CAB AIR	
		1	**245-7824**	1	PACKING	
	25	1	**316-8846**	1	PLATE	
	26	1	**316-8847**	2	ROD	
	27	1	**316-8849**	1	ROD	
	28	1	**316-8918**	1	PLATE	
	29	1	**316-8920**	1	ROD	
	30	1	**316-8921**	1	ROD	

Y - SEPARATE ILLUSTRATION

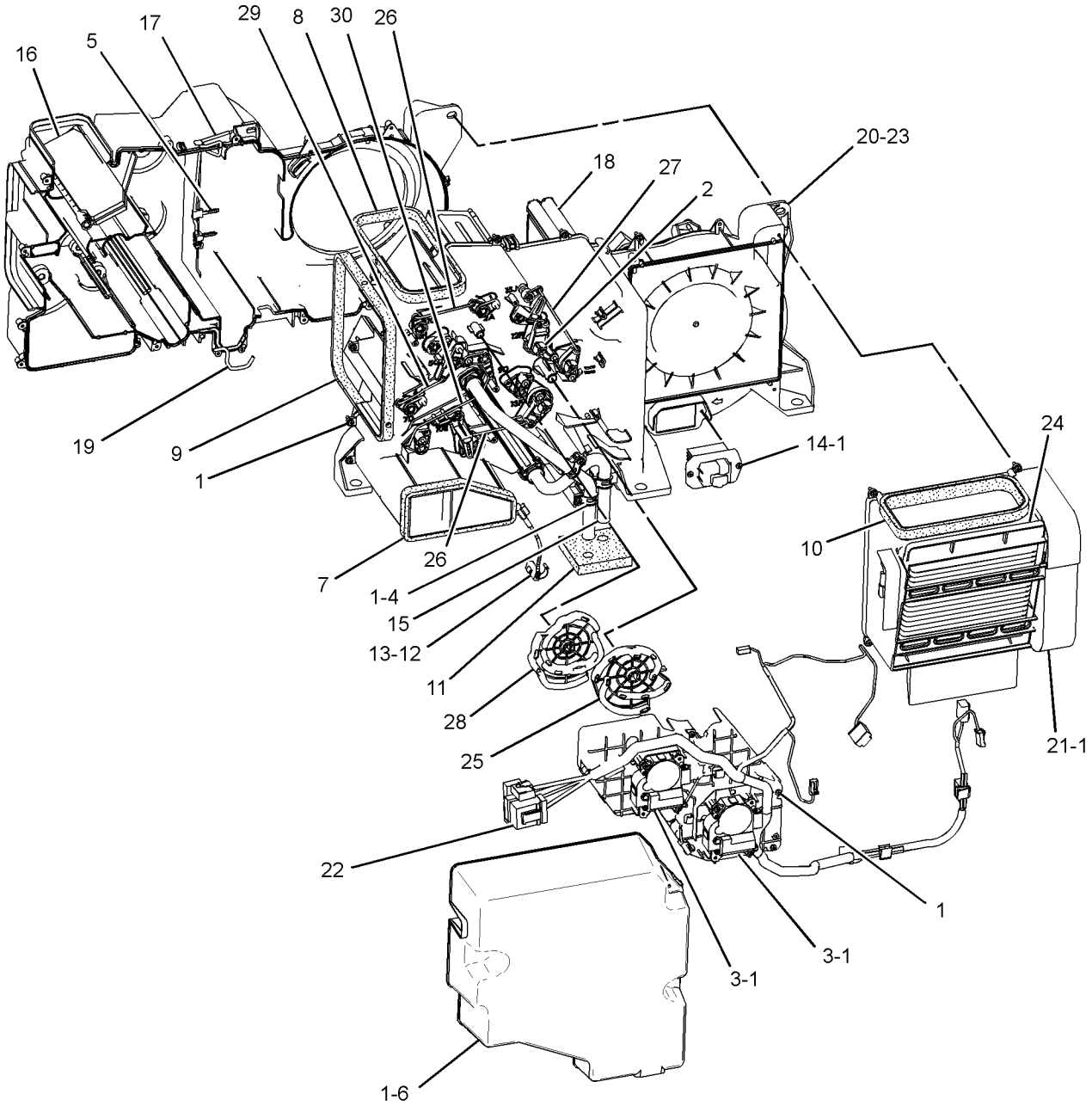

FRONT VIEW
(UPPER RIGHT)

GRAPHIC #1 **<END>** g01684274

259-7346 ARMREST GP–RH

S/N: JEG1-UP
PART OF 259-7348 CONSOLE GP-OPERATOR
ALSO AN ATTACHMENT

SMCS-7307 **i05509636**

NOTE	REF NO	GRAPHIC REF	PART NUMBER	QTY	PART NAME 1 2 3 4 5 6 (PRODUCT LEVEL)	SEE PAGE
M	1	1	**171-7325**	3	SCREW-TAPPING (M5X0.8-THD)	
M	2	1	**185-8286**	2	SCREW-MACHINE (M4X0.7X8-MM)	
	3	1	**235-8951**	1	SUPPORT AS	
	4	1	**235-8996**	1	COVER	
	5	1	**235-8997**	1	KNOB	
	6	1	**259-7345**	1	CUSHION	

M - METRIC PART

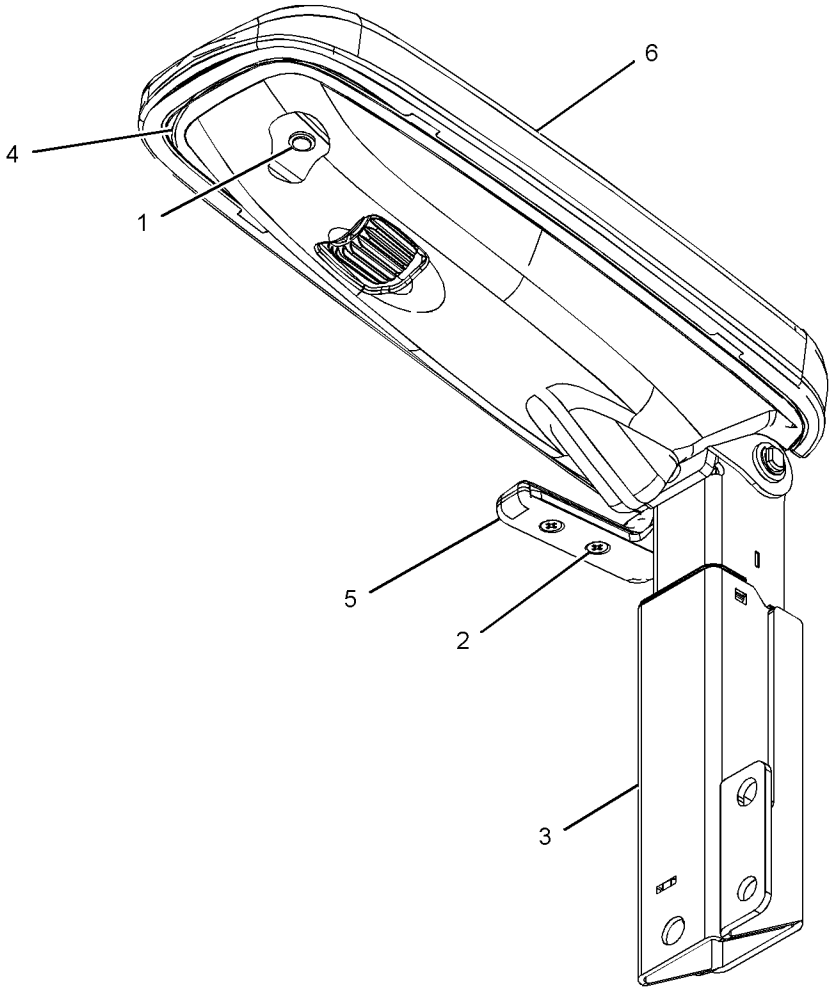

GRAPHIC #1 **<END>** g03482800

259-7347 ARMREST GP–LH

S/N: JEG1-UP
PART OF 421-1434 CONSOLE GP-OPERATOR
ALSO AN ATTACHMENT

SMCS-7307 **i02604406**

NOTE	REF NO	GRAPHIC REF	PART NUMBER	QTY	PART NAME 1 2 3 4 5 6 (PRODUCT LEVEL)	SEE PAGE
M	1	1	**171-7325**	3	SCREW-TAPPING (M5X0.8-THD)	
M	2	1	**185-8286**	2	SCREW-MACHINE (M4X0.7X8-MM)	
	3	1	**235-8952**	1	SUPPORT AS	
	4	1	**235-8996**	1	COVER	
	5	1	**235-8998**	1	KNOB	
	6	1	**259-7345**	1	CUSHION	

M - METRIC PART

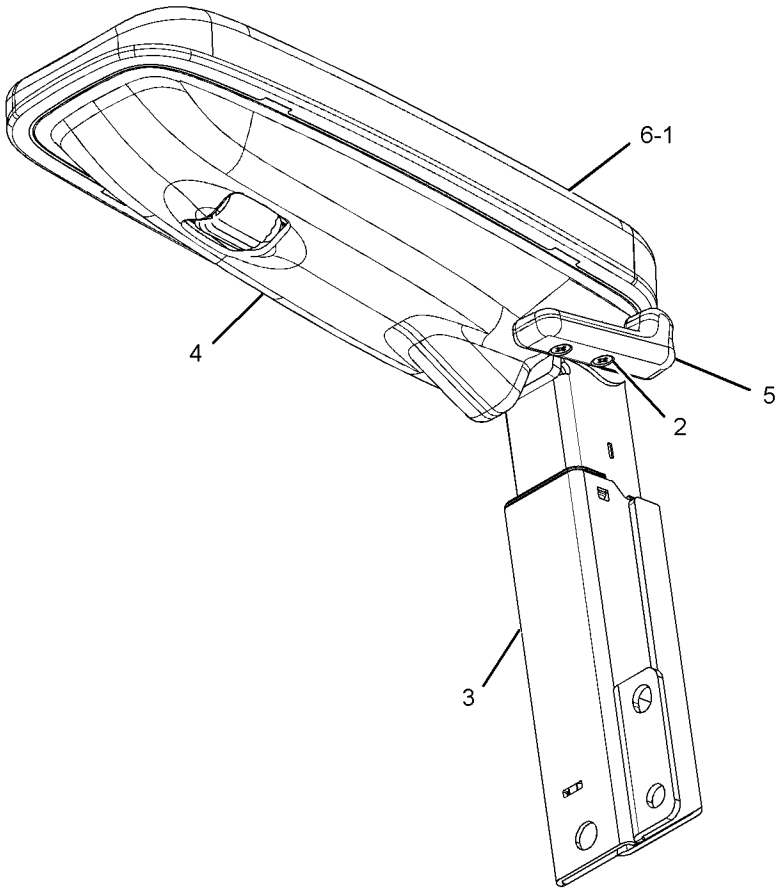

GRAPHIC #1 **<END>** g01210886

OPERATOR STATION

388-0026 CAB GP

S/N: JEG1-UP

AN ATTACHMENT

SMCS-7301, 7325 **i05207863**

NOTE	REF NO	GRAPHIC REF	PART NUMBER	QTY	PART NAME 1 2 3 4 5 6 (PRODUCT LEVEL)	SEE PAGE
M	1	2	**128-2135**	5	SCREW-TRUSS HEAD (M6X1X13-MM)	
	2	2	**164-8474**	2	LOUVER AS-VENT	
Y	3	1	**388-0065**	1	CAB GP	541
Y	4	2	**234-6501**	1	COVER GP-CAB (REAR)	579
	5	2	**235-9001**	1	SUPPORT	
M	6	2	**8T-4179**	5	BOLT (M12X1.75X20-MM)	
M	7	1	**8T-4190**	4	BOLT (M16X2X25-MM)	
	8	2	**8T-4223**	13	WASHER-HARD (13.5X25.5X3-MM THK)	
M	9	2	**8T-4910**	6	BOLT (M12X1.75X60-MM)	
M	10	2	**8T-6868**	2	BOLT (M12X1.75X80-MM)	
	11	2	**8Y-6967**	2	LOUVER AS-VENT	
	12	1	**9X-8257**	6	WASHER (17.5X30X3.5-MM THK)	

M - METRIC PART
Y - SEPARATE ILLUSTRATION

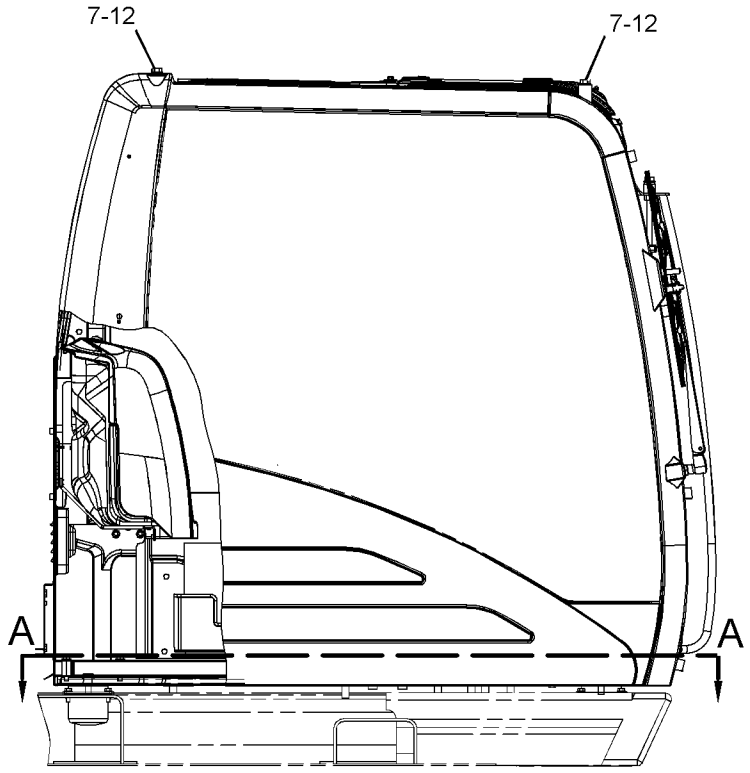

RIGHT SIDE VIEW

REFER TO ALL ILLUSTRATIONS OF THIS GROUP FOR AUXILIARY VIEWS

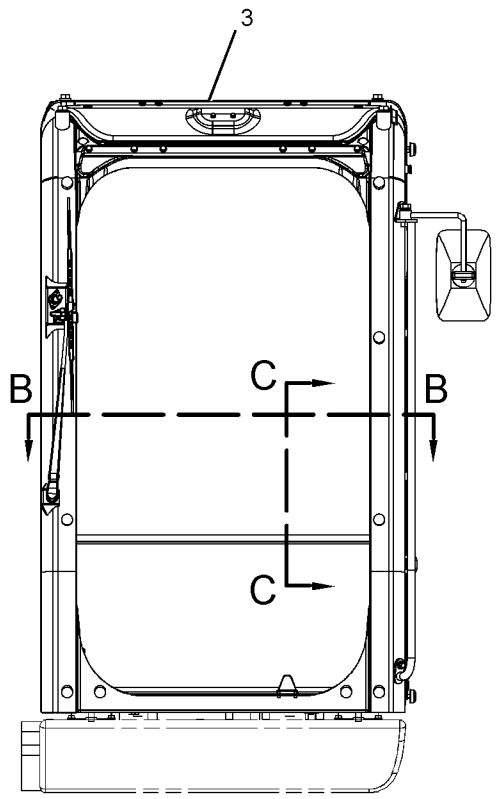

FRONT VIEW

GRAPHIC #1 g02773478

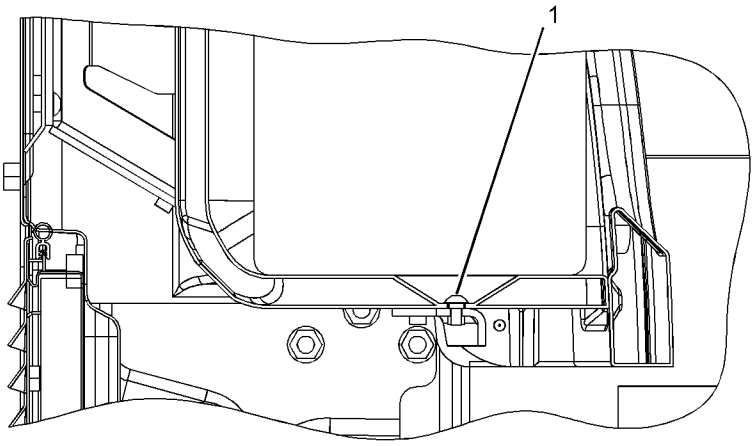

SECTION C-C

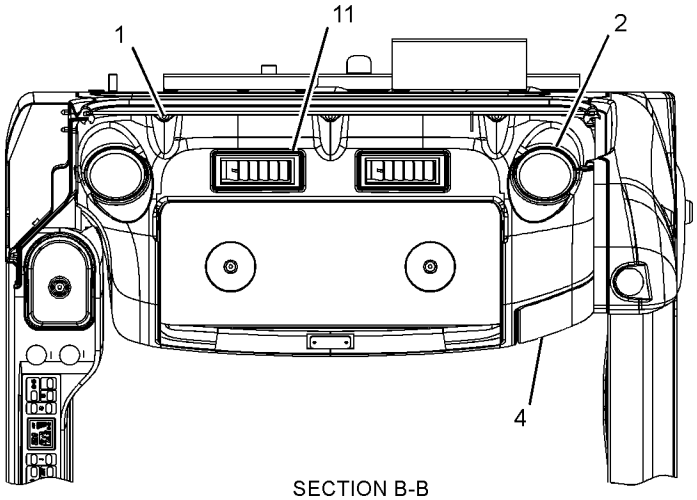

SECTION B-B

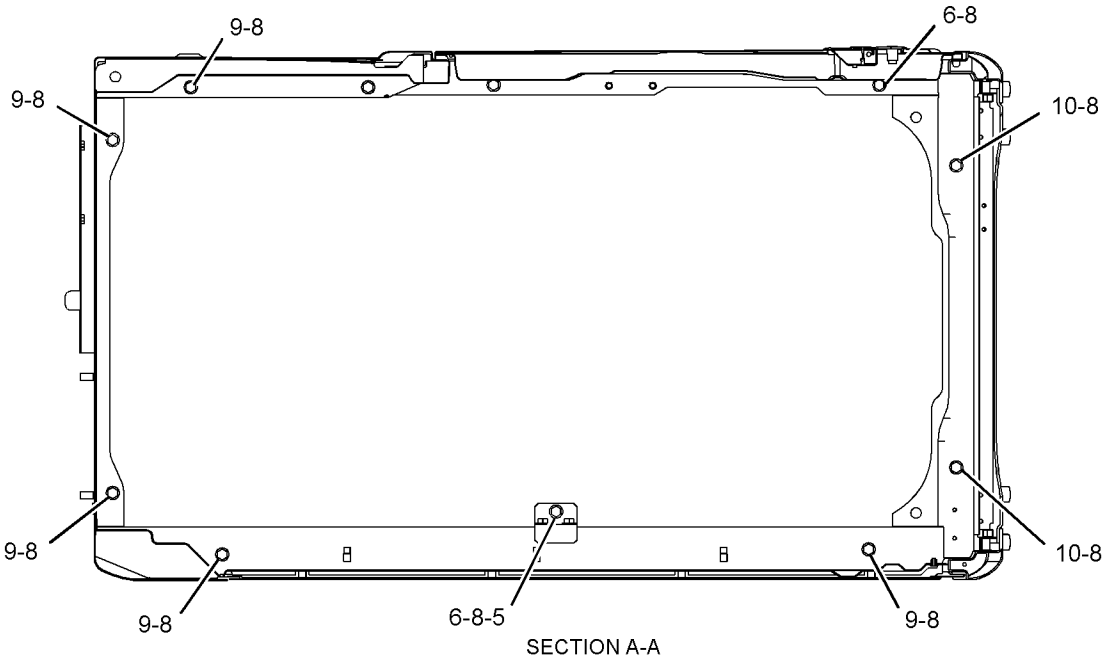

SECTION A-A

GRAPHIC #2 **<END>** g02773484

388-0065 CAB GP

S/N: JEG1-UP
PART OF 388-0026 CAB GP
AN ATTACHMENT

SMCS-7301, 7325 **i05405167**

NOTE	REF NO	GRAPHIC REF	PART NUMBER	QTY	PART NAME 1 2 3 4 5 6 (PRODUCT LEVEL)	SEE PAGE
	1	1	*235-8916*	1	CAB AS	
M	1A	1	**9X-2041**	6	SCREW-TRUSS HEAD (M10X1.5X20-MM)	
	1B	1	**151-6777**	2	HINGE	
M	1C	1	**185-8182**	6	BOLT (M10X1.5X20-MM)	
	1D	1	**185-8187**	6	WASHER (10.2X22X3.2-MM THK)	
CY	2	1	*388-9102*	1	CAB GP (EXTERIOR)	543
CY	3	1	*388-9104*	1	CAB GP (INTERIOR)	546
Y	4	1	*388-9107*	1	WINDOW GP-CAB (SIDE, REAR)	635
Y	5	1	*234-6594*	1	WIPER GP-WINDOW (FRONT, UPPER)	651
HY	6	1	*388-9105*	1	DOOR GP-CAB (INTERIOR)	585
JY	7	1	*388-9109*	1	WINDOW GP-CAB (FRONT, UPPER)	638
Y	8	1	*388-9108*	1	WINDOW GP-CAB (FRONT, LOWER)	636
Y	9	1	*259-7350*	1	HATCH GP-ROOF	596
FJY			**171-7503**	1	WINDOW GP-CAB (FRONT, UPPER)	632
FJY			**207-0144**	1	WINDOW GP-CAB (FRONT, UPPER)	634
FHY			**316-6166**	1	DOOR & MTG GP-CAB	580

C - CHANGE FROM PREVIOUS TYPE
F - NOT SHOWN
H - ITEM MARKED H AVAILABLE FOR SERVICE REPAIR OF DOOR GP MARKED H
J - ITEMS MARKED J AVAILABLE FOR SERVICE REPAIR OF WINDOW GP MARKED J
M - METRIC PART
Y - SEPARATE ILLUSTRATION

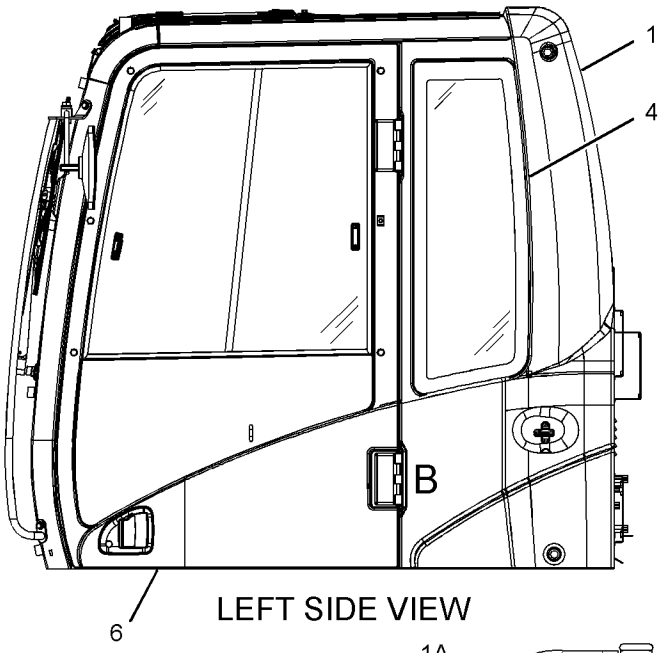

LEFT SIDE VIEW

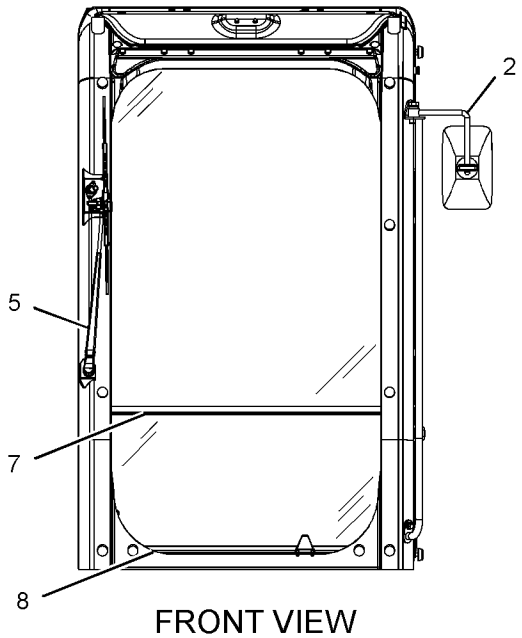

FRONT VIEW

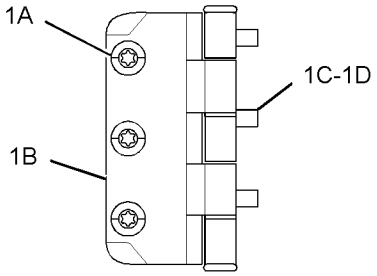

VIEW OF AREA B
(HINGE COVER REMOVED)

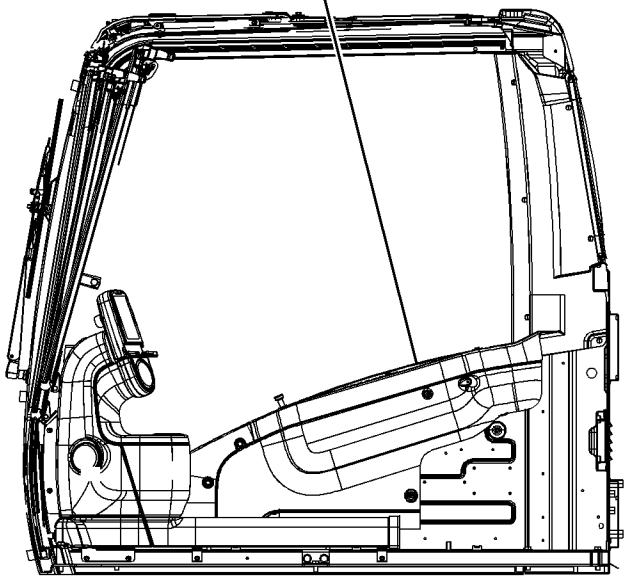

SECTION A-A

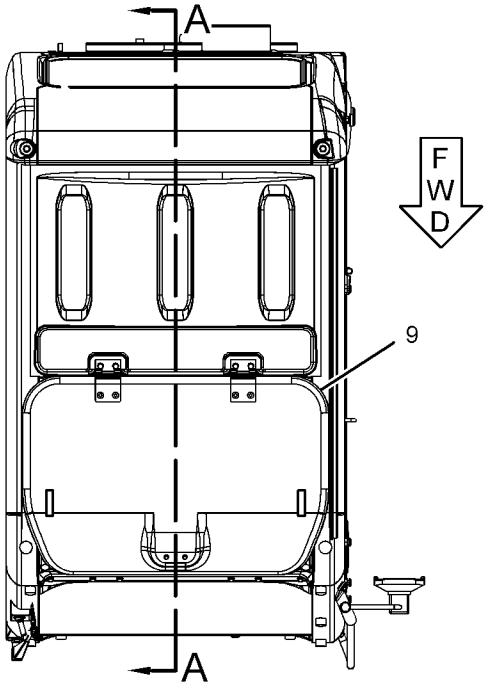

TOP VIEW

GRAPHIC #1 **<END>** g02793335

388-9102 CAB GP–EXTERIOR

S/N: JEG1-UP
PART OF 388-0065, 416-9607 CAB GP
AN ATTACHMENT

SMCS-7301, 7325 **i05260587**

NOTE	REF NO	GRAPHIC REF	PART NUMBER	QTY	PART NAME 1 2 3 4 5 6 (PRODUCT LEVEL)	SEE PAGE
	1	1	**139-7126**	1	HOLDER	
	2	1	**139-7127**	1	HOLDER	
	3	1	**156-6599**	1	STRIKER	
	4	1	**161-3685**	1	ROD	
	5	1	**161-3697**	1	GUARD	
	6	1	**164-0523**	1	LEVER AS	
	7	1	**164-0527**	1	ROD	
Y	8	1	*164-0528*	1	LEVER GP-CAB DOOR	601
	9	1	**167-7018**	1	COVER AS	
	10	1	**167-7042**	2	SEAL	
	11	1	**171-7426**	1	CABLE AS	
	12	1	*176-1939*	1	LEVER AS	
M		1	**9X-2044**	1	SCREW-TRUSS HEAD (M6X1X16-MM)	
		1	**176-1937**	1	BRACKET AS	
		1	**176-1938**	1	LEVER	
	13	1	**178-5570**	2	GROMMET	
	14	1	**185-8196**	1	GROMMET	
	15	1	**189-2704**	1	SEAL	
M	16	1	**189-2864**	2	SCREW-FLAT HEAD (M8X1.25X30-MM)	
	17	1	**4B-4278**	3	WASHER (10.2X20.5X1.6-MM THK)	
	18	1	**201-4530**	1	BRACKET AS	
	19	1	**205-6295**	1	LATCH AS	
	20	1	**210-5808**	1	SEAL	
	21	1	**235-8912**	1	HANDLE AS	
	22	1	**235-8933**	1	HANDLE AS	
M	23	1	**284-4426**	1	BOLT-WING (M8X1.25X15-MM)	
	24	1	**315-5313**	1	COVER	
Y	25	1	**327-6550**	1	MIRROR GP-REAR VIEW	607
	26	1	**156-6618**	1	SUPPORT AS	
	27	1	**9X-8257**	1	WASHER (17.5X30X3.5-MM THK)	
M	28	1	**099-0823**	3	SCREW-MACHINE (M6X1X6-MM)	
	29	1	**3B-4510**	1	LOCKWASHER	
M	30	1	**105-2169**	2	BOLT AS	
M	31	1	**127-0580**	2	SCREW-FLAT HEAD (M8X1.25X20-MM)	
	32	1	**133-8016**	1	PACKING	
	33	1	**176-1986**	1	LAMP AS-DOME	
		1	**201-4417**	1	LAMP (24-VOLT, 10-WATT)	
	34	1	**1R-5998**	4	LOCKWASHER	
M	35	1	**3E-8020**	6	SCREW-TRUSS HEAD (M6X1X25-MM)	
M	36	1	**095-0755**	2	SCREW-MACHINE (M4X0.7X12-MM)	
	37	1	**4I-1205**	2	BUMPER	
	38	1	**4I-1206**	2	GUIDE	
	39	1	**4I-3063**	1	SPRING	
	40	1	**4I-3090**	4	SEAL	
M	41	1	**6V-6317**	2	BOLT (M10X1.5X20-MM)	
	42	1	**4I-3144**	2	WASHER-HARD (10.2X22X3.2-MM THK)	
	43	1	**4I-4270**	1	HOLDER-GLASS	
	44	1	**4I-4392**	3	CLIP	
	45	1	**5C-7793**	1	HOOK-COAT	
	46	1	**6V-7636**	4	PIN AS-SPRING	
	47	1	**7X-0578**	2	WASHER-HARD (10.2X32X2.5-MM THK)	
M	48	1	**8T-4133**	5	NUT (M10X1.5-THD)	
M	49	1	**8T-4193**	1	BOLT (M16X2X50-MM)	
M	50	1	**9X-2041**	3	SCREW-TRUSS HEAD (M10X1.5X20-MM)	
M	51	1	**9X-2042**	5	SCREW-TRUSS HEAD (M6X1X12-MM)	
M	52	1	**9X-2044**	5	SCREW-TRUSS HEAD (M6X1X16-MM)	

388-9102 **CAB GP (*contd.*)** **i05260587**

NOTE	REF NO	GRAPHIC REF	PART NUMBER	QTY	PART NAME 1 2 3 4 5 6 (PRODUCT LEVEL)	SEE PAGE
M	53	1	**9X-2045**	2	SCREW-TRUSS HEAD (M6X1X20-MM)	
E	54	1	**6I-5470**		SEAL (150-CM)	

E - ORDER BY THE CENTIMETER
M - METRIC PART
Y - SEPARATE ILLUSTRATION

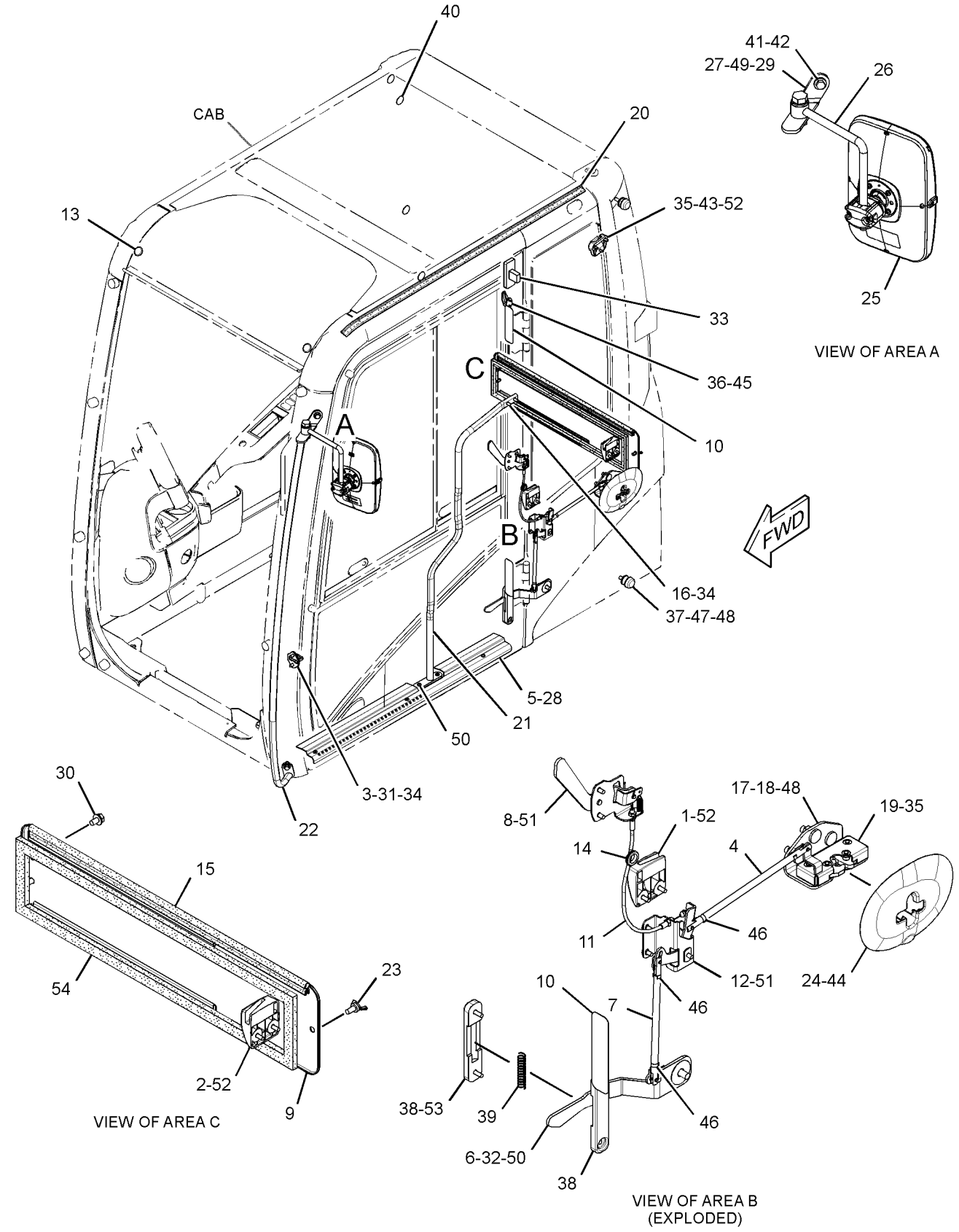

GRAPHIC #1 **<END>** g03179316

388-9104 CAB GP–INTERIOR

S/N: JEG1-UP
PART OF 388-0065 CAB GP
AN ATTACHMENT

SMCS-7301, 7325 **i05260595**

NOTE	REF NO	GRAPHIC REF	PART NUMBER	QTY	PART NAME 1 2 3 4 5 6 (PRODUCT LEVEL)	SEE PAGE
	1	2	**8Y-6352**	1	LOUVER AS	
	2	2	**164-0646**	1	CUP	
	3	1	**164-0655**	1	PANEL-SWITCH	
	4	1,2	**164-8474**	2	LOUVER AS-VENT	
	5	2	**170-9724**	5	CLIP	
	6	1	**171-7420**	6	CLIP	
	7	1	**176-1972**	1	COVER	
	8	1	**185-8205**	7	CLIP	
	9	1	**189-2678**	3	SPACER	
	10	1	**189-2853**	1	COVER	
	11	1	**189-2854**	1	COVER	
	12	1	**234-6468**	1	COVER AS	
		1	**259-7353**	4	CLIP	
	13	2	**234-6470**	1	COVER-MONITOR	
	14	2	**234-6471**	1	COVER-DUCT	
	15	1	**234-6472**	1	COVER	
	16	1	**234-6473**	1	COVER-FRONT (UPPER, RH)	
	17	1	**234-6474**	1	COVER-CONSOLE (UPPER, RH)	
	18	1	**234-6476**	1	DUCT	
	19	1	**234-6477**	1	BRACKET AS	
	20	2	**234-6480**	1	BRACKET AS	
	21	2	**234-6483**	1	BRACKET AS	
	22	2	**234-6485**	1	BRACKET AS	
	23	1	**234-6490**	1	CUP	
	24	2	**234-6491**	1	COVER	
	25	2	**234-6497**	1	COVER	
	26	1	**234-6498**	3	RIVET	
	27	2	**234-6521**	1	COVER	
	28	2	**234-6579**	2	NUT-SPEED	
	29	1	**235-8923**	2	CAP	
	30	1	**235-8930**	1	LINER	
	31	1,2	**235-8950**	10	CLIP	
	32	2	**245-7790**	2	SCREW-TAPPING	
	33	1	**305-0330**	1	COVER (LOWER, RH)	
	34	2	**305-0333**	1	BRACKET	
	35	1	**388-9091**	1	COVER	
	36	2	**388-9094**	1	COVER	
	37	2	**388-9095**	1	COVER	
M	38	1	**128-2135**	13	SCREW-TRUSS HEAD (M6X1X13-MM)	
M	39	1	**128-2136**	1	SCREW-TRUSS HEAD (M6X1X16-MM)	
	40	1	**234-6469**	1	COVER	
M	41	1	**9X-2042**	17	SCREW-TRUSS HEAD (M6X1X12-MM)	

M - METRIC PART

388-9104 **CAB GP (*contd.*)** **i05260595**

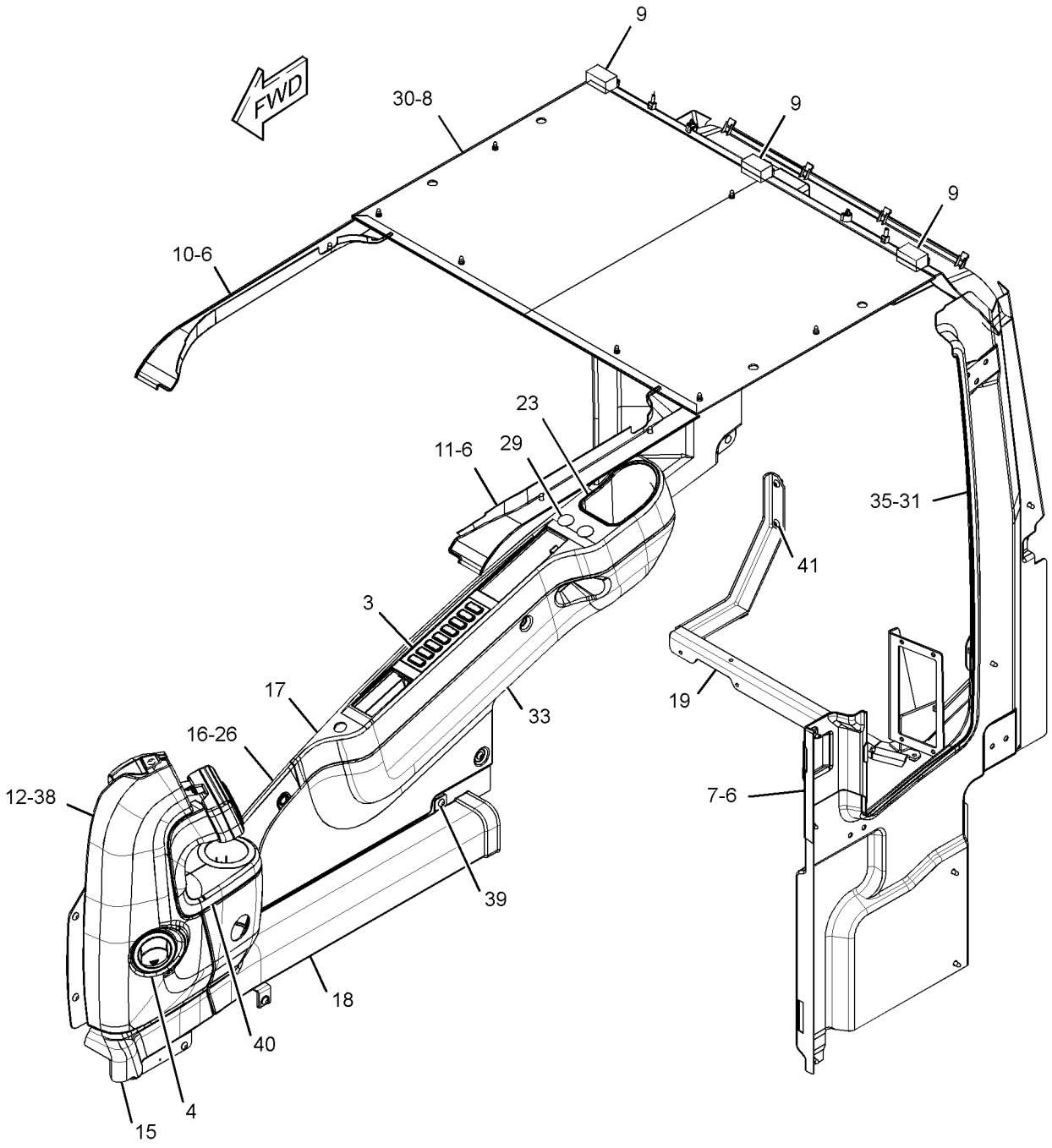

GRAPHIC #1 g02797327

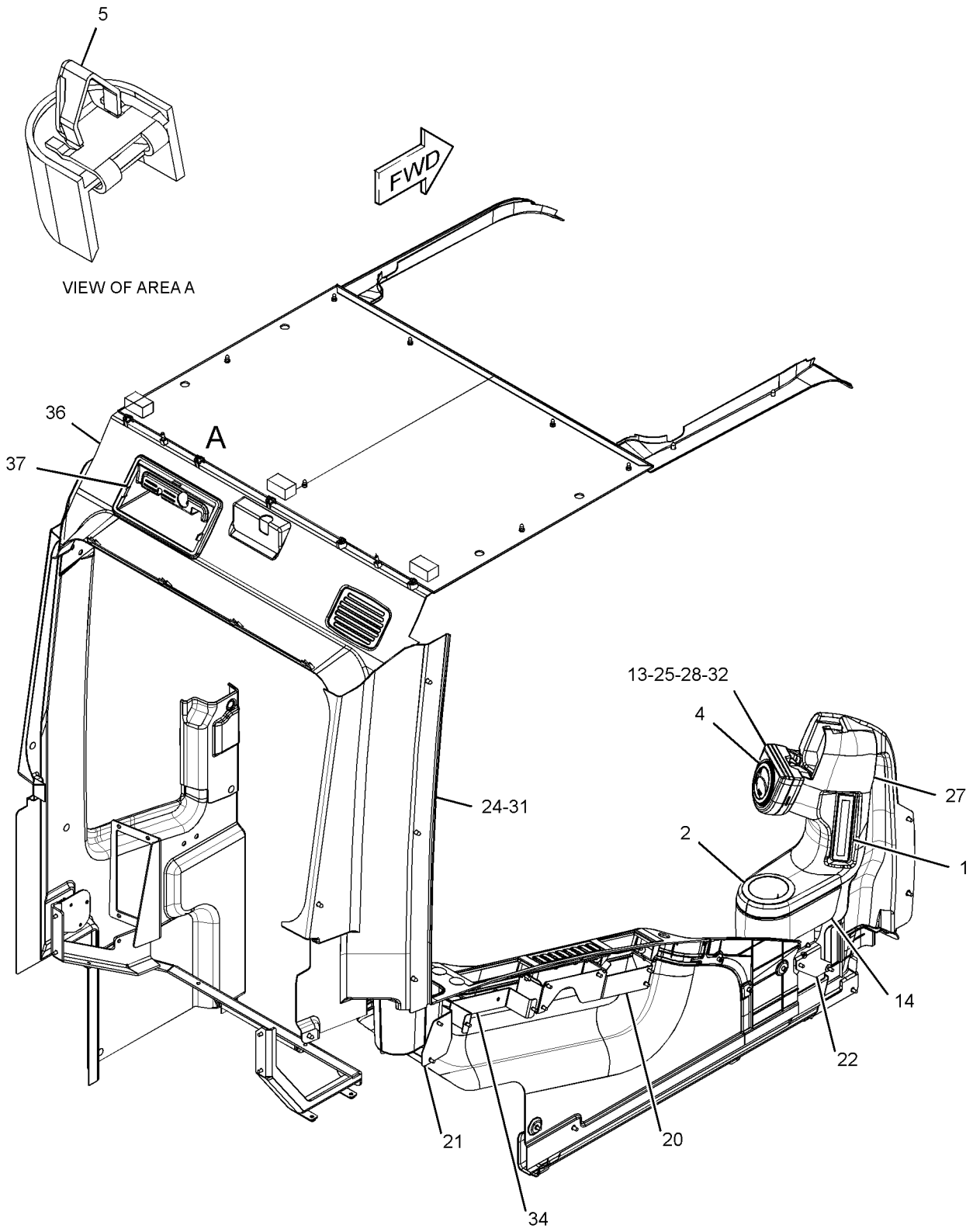

GRAPHIC #2 **<END>** g02797328

416-9606 CAB GP

S/N: JEG1-UP
PART OF 442-4973, 442-4974 OPTION AR-CAB
AN ATTACHMENT

SMCS-7301, 7325

i05432891

NOTE	REF NO	GRAPHIC REF	PART NUMBER	QTY	PART NAME 1 2 3 4 5 6 (PRODUCT LEVEL)	SEE PAGE
M	1	1	**128-2135**	5	SCREW-TRUSS HEAD (M6X1X13-MM)	
	2	1	**164-8474**	2	LOUVER AS-VENT	
Y	3	1	*416-9607*	1	CAB GP	551
Y	4	1	**234-6501**	1	COVER GP-CAB (REAR)	579
	5	1	**235-9001**	1	SUPPORT	
M	6	1	**8T-4179**	5	BOLT (M12X1.75X20-MM)	
M	7	1	**8T-4190**	4	BOLT (M16X2X25-MM)	
	8	1	**8T-4223**	13	WASHER-HARD (13.5X25.5X3-MM THK)	
M	9	1	**8T-4910**	6	BOLT (M12X1.75X60-MM)	
M	10	1	**8T-6868**	2	BOLT (M12X1.75X80-MM)	
	11	1	**8Y-6967**	2	LOUVER AS-VENT	
	12	1	**9X-8257**	6	WASHER (17.5X30X3.5-MM THK)	

M - METRIC PART
Y - SEPARATE ILLUSTRATION

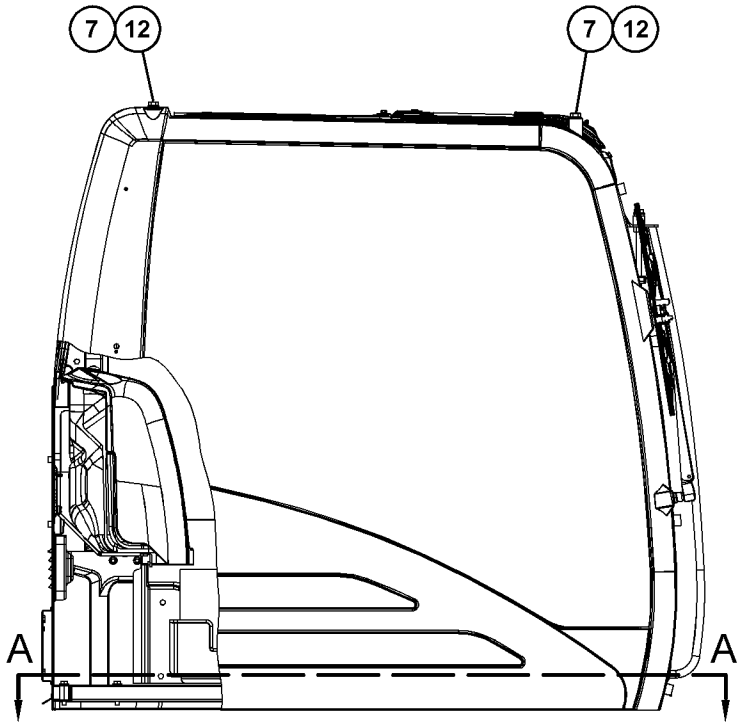

RIGHT SIDE VIEW

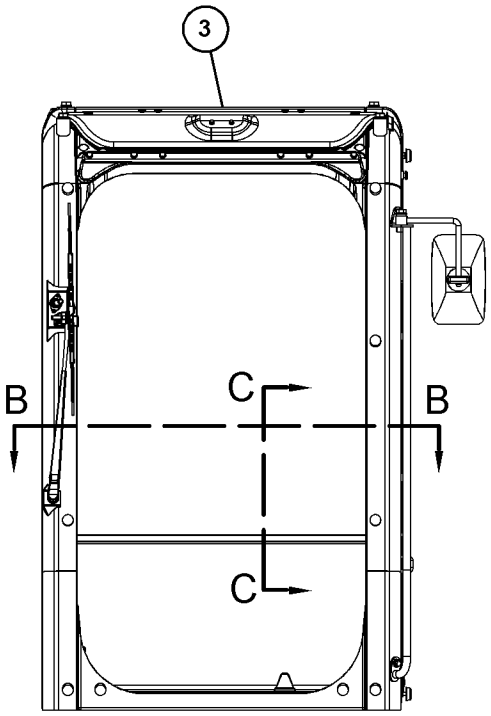

FRONT VIEW

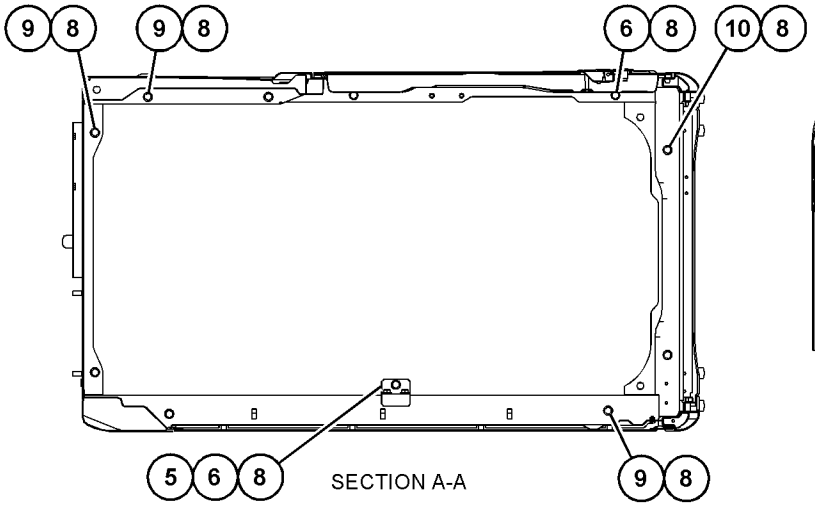

SECTION A-A

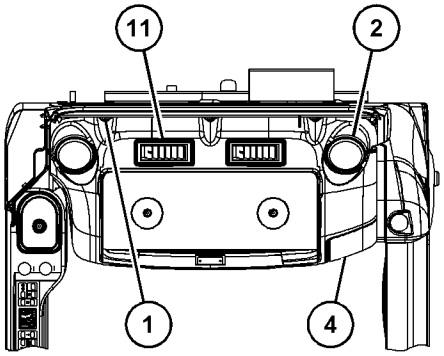

VIEW B-B

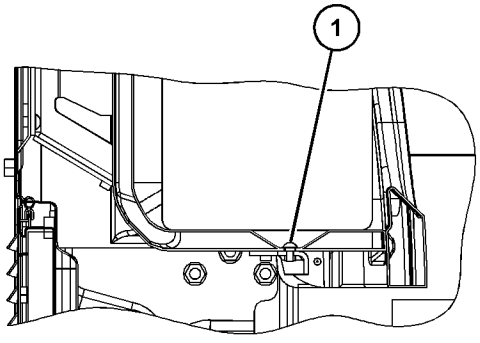

SECTION C-C

GRAPHIC #1 **<END>** g03431201

416-9607 CAB GP

S/N: JEG1-UP

PART OF 416-9606, 434-3892, 434-3893 CAB GP

AN ATTACHMENT

SMCS-7301, 7325

i05432339

NOTE	REF NO	GRAPHIC REF	PART NUMBER	QTY	PART NAME 1 2 3 4 5 6 (PRODUCT LEVEL)	SEE PAGE
	1	1	*235-8916*	1	CAB AS	
	1A	1	**436-1901**	2	HINGE	
M		1	**185-8182**	6	BOLT (M10X1.5X20-MM)	
		1	**5P-1075**	6	WASHER-HARD (10.2X22.5X3-MM THK)	
Y	2	1	*388-9102*	1	CAB GP (EXTERIOR)	543
Y	3	1	*416-9608*	1	CAB GP	553
Y	4	1	*388-9107*	1	WINDOW GP-CAB (SIDE, REAR)	635
Y	5	1	*234-6594*	1	WIPER GP-WINDOW (FRONT, UPPER)	651
HY	6	1	*388-9105*	1	DOOR GP-CAB (INTERIOR)	585
JY	7	1	*388-9109*	1	WINDOW GP-CAB (FRONT, UPPER)	638
Y	8	1	*388-9108*	1	WINDOW GP-CAB (FRONT, LOWER)	636
Y	9	1	*259-7350*	1	HATCH GP-ROOF	596
FHY			*388-9115*	1	DOOR & MTG GP-CAB	581
FJY			*388-9116*	1	WINDOW GP-FRONT (UPPER)	641
FJY			*388-9117*	1	WINDOW GP-CAB (UPPER)	643

F - NOT SHOWN
H - ITEM MARKED H AVAILABLE FOR SERVICE REPAIR OF DOOR GP MARKED H
J - ITEMS MARKED J AVAILABLE FOR SERVICE REPAIR OF WINDOW GP MARKED J
M - METRIC PART
Y - SEPARATE ILLUSTRATION

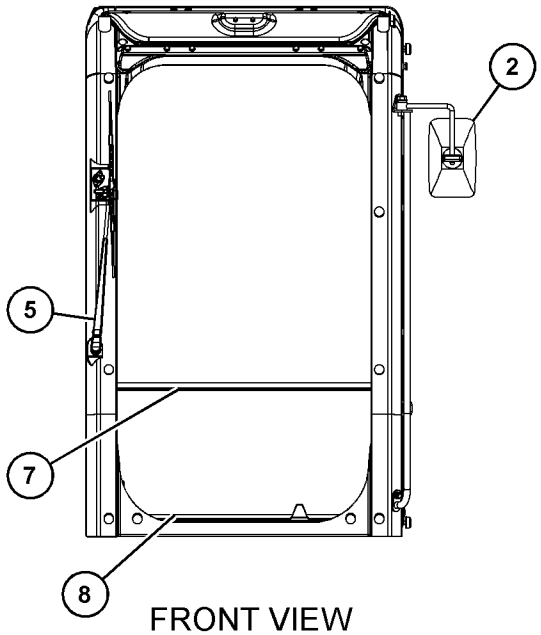

FRONT VIEW

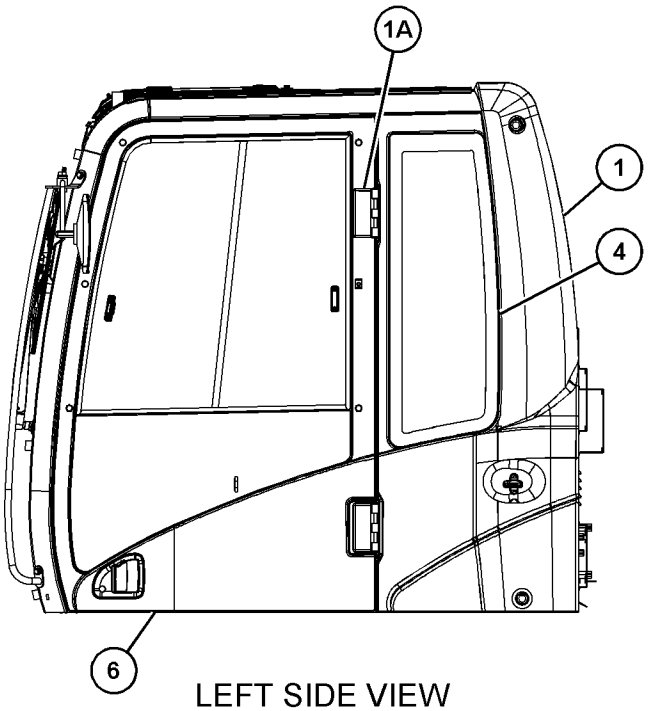

LEFT SIDE VIEW

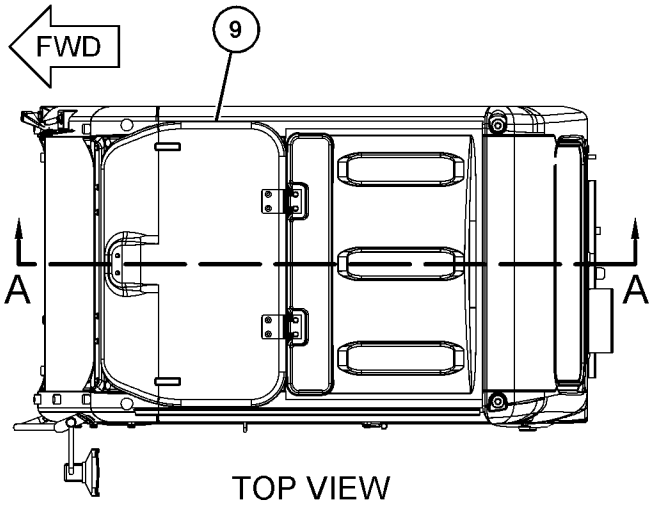

TOP VIEW

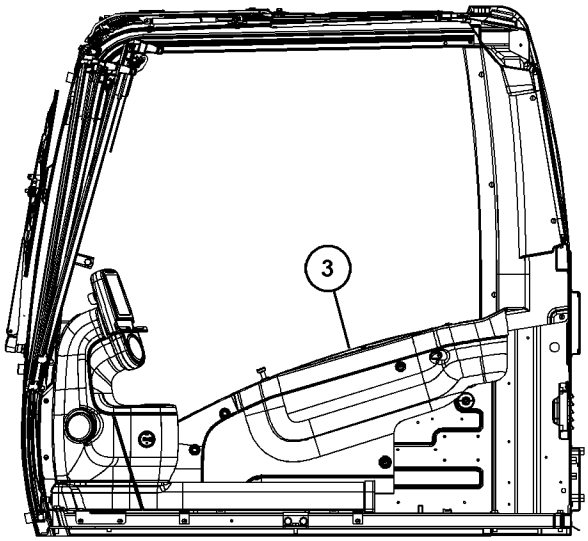

SECTION A-A

GRAPHIC #1 **<END>** g03431203

416-9608 CAB GP—INTERIOR

S/N: JEG1-UP
PART OF 416-9607 CAB GP
AN ATTACHMENT

SMCS-7301, 7325 **i05432483**

NOTE	REF NO	GRAPHIC REF	PART NUMBER	QTY	PART NAME 1 2 3 4 5 6 (PRODUCT LEVEL)	SEE PAGE
	1	1	**164-0646**	1	CUP	
	2	1	**164-0655**	1	PANEL-SWITCH	
	3	1	**170-9724**	5	CLIP	
	4	1	**171-7420**	6	CLIP	
	5	1	**176-1972**	1	COVER	
	6	1	**185-8205**	7	CLIP	
	7	1	**189-2678**	3	SPACER	
	8	1	**189-2853**	1	COVER	
	9	1	**189-2854**	1	COVER	
	10	1	**234-6468**	1	COVER AS	
		1	**259-7353**	4	CLIP	
	11	1	**234-6470**	1	COVER-MONITOR	
	12	1	**234-6471**	1	COVER-DUCT	
	13	1	**234-6472**	1	COVER	
	14	1	**234-6473**	1	COVER-FRONT (UPPER, RH)	
	15	1	**234-6476**	1	DUCT	
	16	1	**234-6477**	1	BRACKET AS	
	17	1	**234-6483**	1	BRACKET AS	
	18	1	**234-6485**	1	BRACKET AS	
	19	1	**234-6490**	1	CUP	
	20	1	**234-6491**	1	COVER	
	21	1	**234-6497**	1	COVER	
	22	1	**234-6498**	3	RIVET	
	23	1	**234-6579**	2	NUT-SPEED	
	24	1	**235-8923**	2	CAP	
	25	1	**235-8930**	1	LINER	
	26	1	**235-8950**	12	CLIP	
	27	1	**245-7790**	2	SCREW-TAPPING	
	28	1	**305-0330**	1	COVER (LOWER, RH)	
	29	1	**383-5767**	1	COVER	
	30	1	**388-9091**	1	COVER	
	31	1	**388-9094**	1	COVER	
	32	1	**388-9095**	1	COVER	
	33	1	**396-2351**	1	LOUVER AS	
	34	1	**396-2352**	2	LOUVER AS	
	35	1	**399-0061**	1	BRACKET AS	
	36	1	**399-0062**	1	COVER	
	37	1	**399-0065**	1	BRACKET	
M	38	1	**128-2135**	10	SCREW-TRUSS HEAD (M6X1X13-MM)	
M	39	1	**128-2136**	1	SCREW-TRUSS HEAD (M6X1X16-MM)	
	40	1	**234-6469**	1	COVER	
M	41	1	**9X-2042**	11	SCREW-TRUSS HEAD (M6X1X12-MM)	

M - METRIC PART

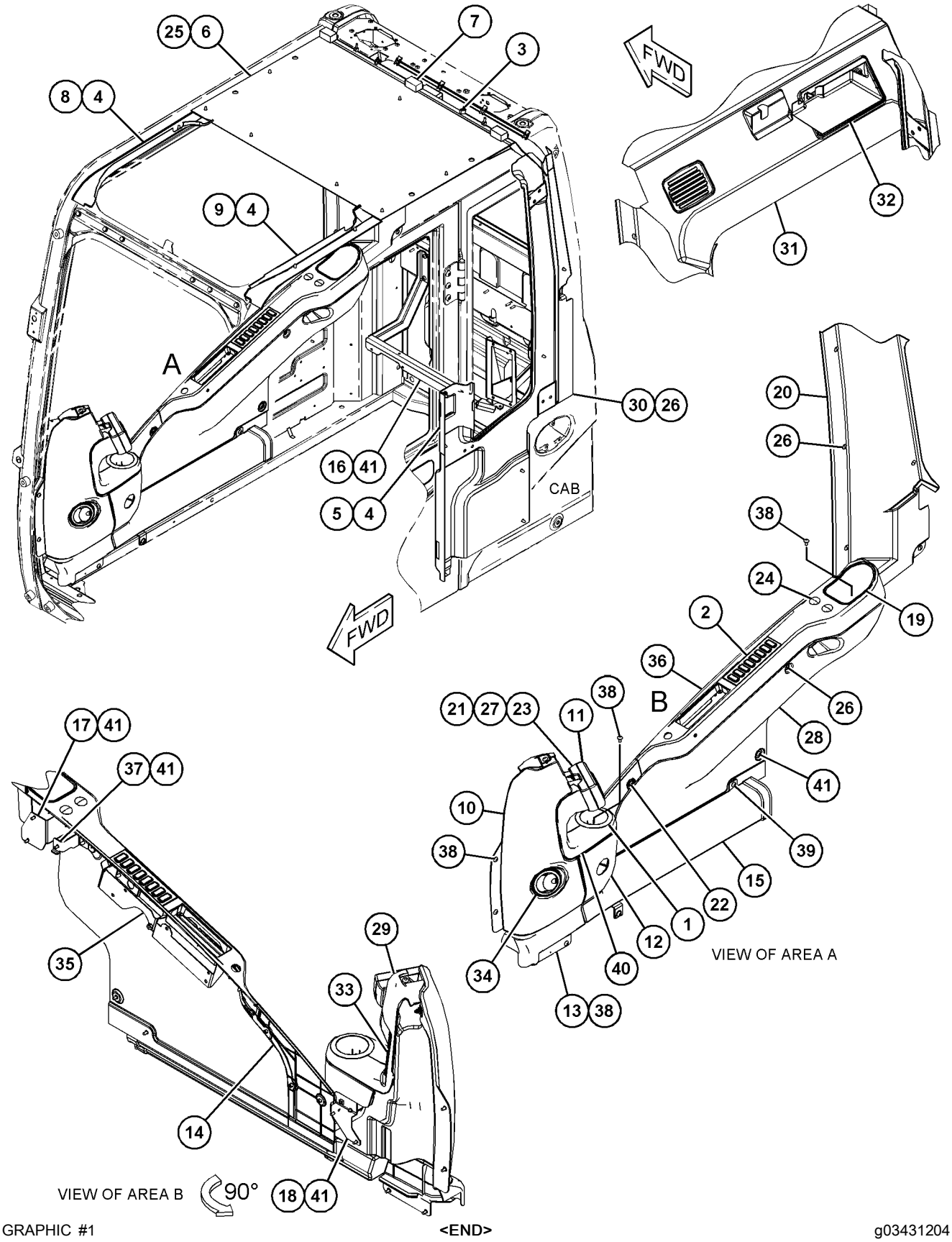

GRAPHIC #1 **<END>** g03431204

434-3892 CAB GP–COMFORT

S/N: JEG1-UP
PART OF 442-4973 OPTION AR-CAB
AN ATTACHMENT

SMCS-7301, 7325

i05432593

NOTE	PART NUMBER	QTY	PART NAME 1 2 3 4 5 6 (PRODUCT LEVEL)	SEE PAGE
Y	*416-1798*	1	AIR CONDITIONER & MOUNTING GP	532
Y	**416-9607**	1	CAB GP	551
Y	*421-1431*	1	CONSOLE GP-OPERATOR	566
Y	*310-0078*	1	CONTROL & MTG GP-JOYSTICK	570
Y	*170-9497*	1	CONTROL GP-PILOT OPERATED HYD (TRAVEL)	578
Y	*366-9343*	1	LIGHTING GP-FLOOD (CAB)	134
Y	*248-9825*	1	LINES GP-PILOT (JOYSTICK, PEDALS)	367
Y	*420-4514*	1	MONITOR & MTG GP-OPERATOR	608
Y	*398-7007*	1	PANEL GP-SWITCH	138
Y	*251-0538*	1	RADIO GP (AM/FM)	615
Y	*327-6501*	1	SEAT & MOUNTING GP (HIGH BACK, TILT)	617
Y	*305-0467*	1	SEAT BELT GP (RETRACTABLE)	619
Y	*327-6523*	1	SUPPORT GP-SEAT	624
Y	*398-7003*	1	WIRING GP-CAB	160
Y	*398-7005*	1	WIRING GP-CONSOLE	177
Y	*398-7004*	1	WIRING GP-PLATFORM	187
M	**8T-4179**	5	BOLT (M12X1.75X20-MM)	
M	**8T-4190**	4	BOLT (M16X2X25-MM)	
M	**8T-4191**	4	BOLT (M10X1.5X16-MM)	
M	**8T-4910**	6	BOLT (M12X1.75X60-MM)	
M	**8T-6868**	2	BOLT (M12X1.75X80-MM)	
	122-9657	2	CLAMP	
	235-8879	1	DUCT AS (FLOOR)	
	245-7873	1	INSULATOR	
	293-1183	1	FILTER GP-CAB AIR	
	293-1184	1	FILTER ELEMENT-CAB AIR	
	135-8965	1	GROMMET	
	135-8966	1	GROMMET	
	130-0252	2	HOSE-DRAIN	
	245-7916	1	PLATFORM AS	
	324-5771	2	SOCKET-AUXILIARY POWER (12-VOLT)	
	4I-3266	1	STRIP	
	161-3717	1	STRIP	
	235-9001	1	SUPPORT	
	9X-8257	6	WASHER (17.5X30X3.5-MM THK)	
	8T-4121	4	WASHER-HARD (11X21X2.5-MM THK)	
	8T-4223	13	WASHER-HARD (13.5X25.5X3-MM THK)	

M - METRIC PART
Y - SEPARATE ILLUSTRATION

<END>

OPERATOR STATION

434-3893 CAB GP–DELUXE

S/N: JEG1-UP
PART OF 442-4974 OPTION AR-CAB
AN ATTACHMENT

SMCS-7301, 7325 **i05432116**

NOTE	PART NUMBER	QTY	PART NAME 1 2 3 4 5 6 (PRODUCT LEVEL)	SEE PAGE
Y	*416-1798*	1	AIR CONDITIONER & MOUNTING GP	532
Y	**416-9607**	1	CAB GP	551
Y	*421-1431*	1	CONSOLE GP-OPERATOR	566
Y	*310-0078*	1	CONTROL & MTG GP-JOYSTICK	570
Y	*170-9497*	1	CONTROL GP-PILOT OPERATED HYD (TRAVEL)	578
Y	*366-9343*	1	LIGHTING GP-FLOOD (CAB)	134
Y	*248-9825*	1	LINES GP-PILOT (JOYSTICK, PEDALS)	367
Y	*420-4514*	1	MONITOR & MTG GP-OPERATOR	608
Y	*398-7007*	1	PANEL GP-SWITCH	138
Y	*251-0538*	1	RADIO GP (AM/FM)	615
Y	*327-6503*	1	SEAT & MOUNTING GP (HIGH BACK, WITH HEATER)	618
Y	*305-0467*	1	SEAT BELT GP (RETRACTABLE)	619
Y	*327-6523*	1	SUPPORT GP-SEAT	624
Y	*398-7003*	1	WIRING GP-CAB	160
Y	*398-7005*	1	WIRING GP-CONSOLE	177
Y	*398-7004*	1	WIRING GP-PLATFORM	187
M	**8T-4179**	5	BOLT (M12X1.75X20-MM)	
M	**8T-4190**	4	BOLT (M16X2X25-MM)	
M	**8T-4191**	4	BOLT (M10X1.5X16-MM)	
M	**8T-4910**	6	BOLT (M12X1.75X60-MM)	
M	**8T-6868**	2	BOLT (M12X1.75X80-MM)	
	122-9657	2	CLAMP	
	235-8879	1	DUCT AS (FLOOR)	
	245-7873	1	INSULATOR	
	293-1183	1	FILTER GP-CAB AIR	
	293-1184	1	FILTER ELEMENT-CAB AIR	
	135-8965	1	GROMMET	
	135-8966	1	GROMMET	
	130-0252	2	HOSE-DRAIN	
	245-7916	1	PLATFORM AS	
	324-5771	2	SOCKET-AUXILIARY POWER (12-VOLT)	
	4I-3266	1	STRIP	
	161-3717	1	STRIP	
	235-9001	1	SUPPORT	
	9X-8257	6	WASHER (17.5X30X3.5-MM THK)	
	8T-4121	4	WASHER-HARD (11X21X2.5-MM THK)	
	8T-4223	13	WASHER-HARD (13.5X25.5X3-MM THK)	

M - METRIC PART
Y - SEPARATE ILLUSTRATION

<END>

245-7836 COIL GP-EVAPORATOR

S/N: JEG1-UP
PART OF 316-8916 AIR CONDITIONER GP
AN ATTACHMENT

SMCS-7343 **i05412515**

NOTE	REF NO	GRAPHIC REF	PART NUMBER	QTY	PART NAME 1 2 3 4 5 6 (PRODUCT LEVEL)	SEE PAGE
	1	1	**245-7837**	1	VALVE AS-EXPANSION	
	2	1	**245-7905**	1	INSULATOR	
	3	1	**281-0791**	2	BOLT-SOCKET HEAD (M5X0.8X40-MM)	
	4	1	**121-7136**	1	SEAL-O-RING	
	5	1	**121-7137**	1	SEAL-O-RING	

245-7836 **COIL GP-EVAPORATOR (*contd.*)** **i05412515**

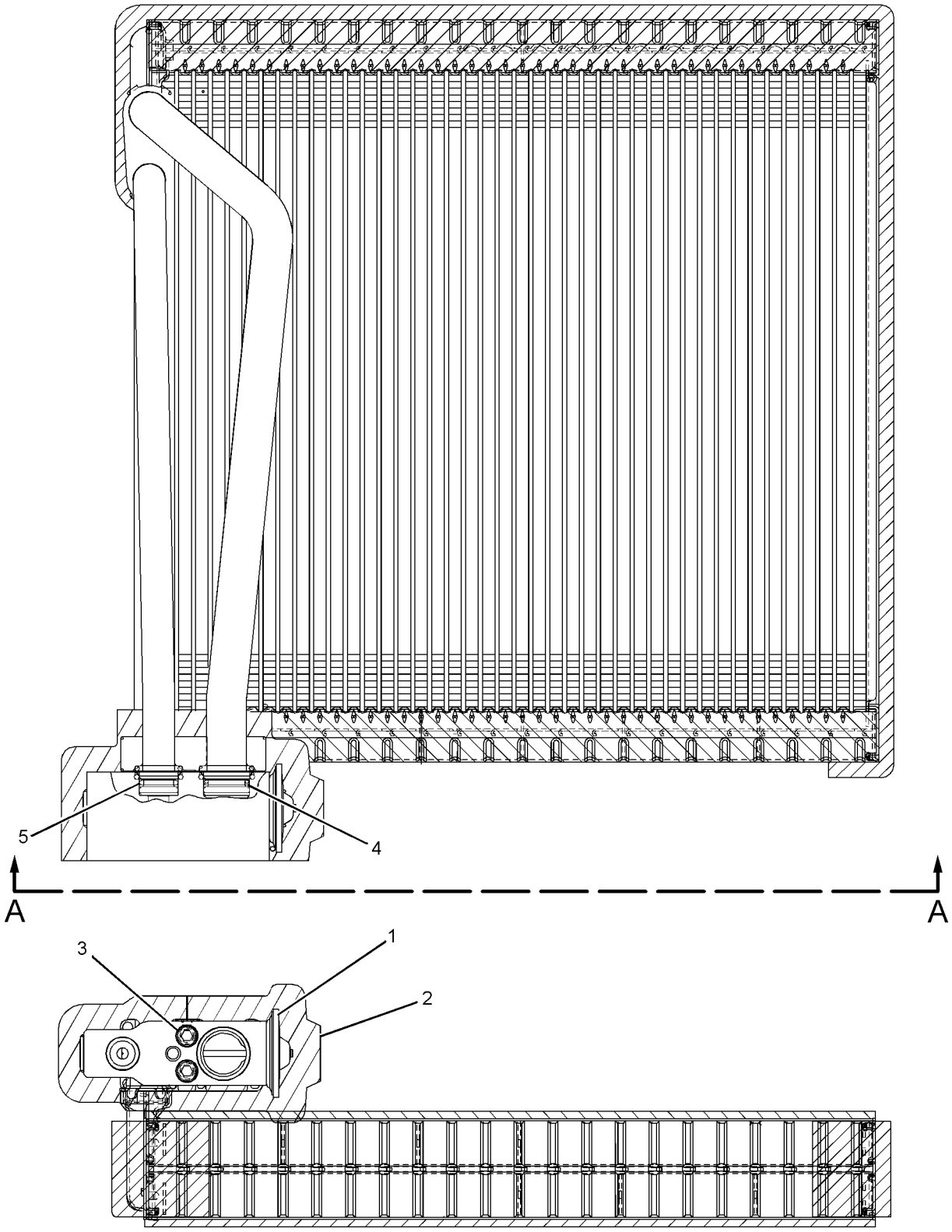

VIEW A-A

GRAPHIC #1 **<END>** g01134658

372-9295 COMPRESSOR GP-REFRIGERANT

S/N: JEG1-UP
24-VOLT
PART OF 379-4415 COMPRESSOR GP-REFRIGERANT

SMCS-1802 **i05264270**

NOTE	REF NO	GRAPHIC REF	PART NUMBER	QTY	PART NAME 1 2 3 4 5 6 (PRODUCT LEVEL)	SEE PAGE
	1	1	**9W-0852**	2	PIN-CONNECTOR (14-GA TO 16-GA)	
	2	1	**243-4505**	1	RECEPTACLE AS-CONNECTOR (2-PIN)	
	3	1	**327-6593**	1	SEAL-O-RING	
	4	1	**327-6594**	1	SEAL-O-RING	

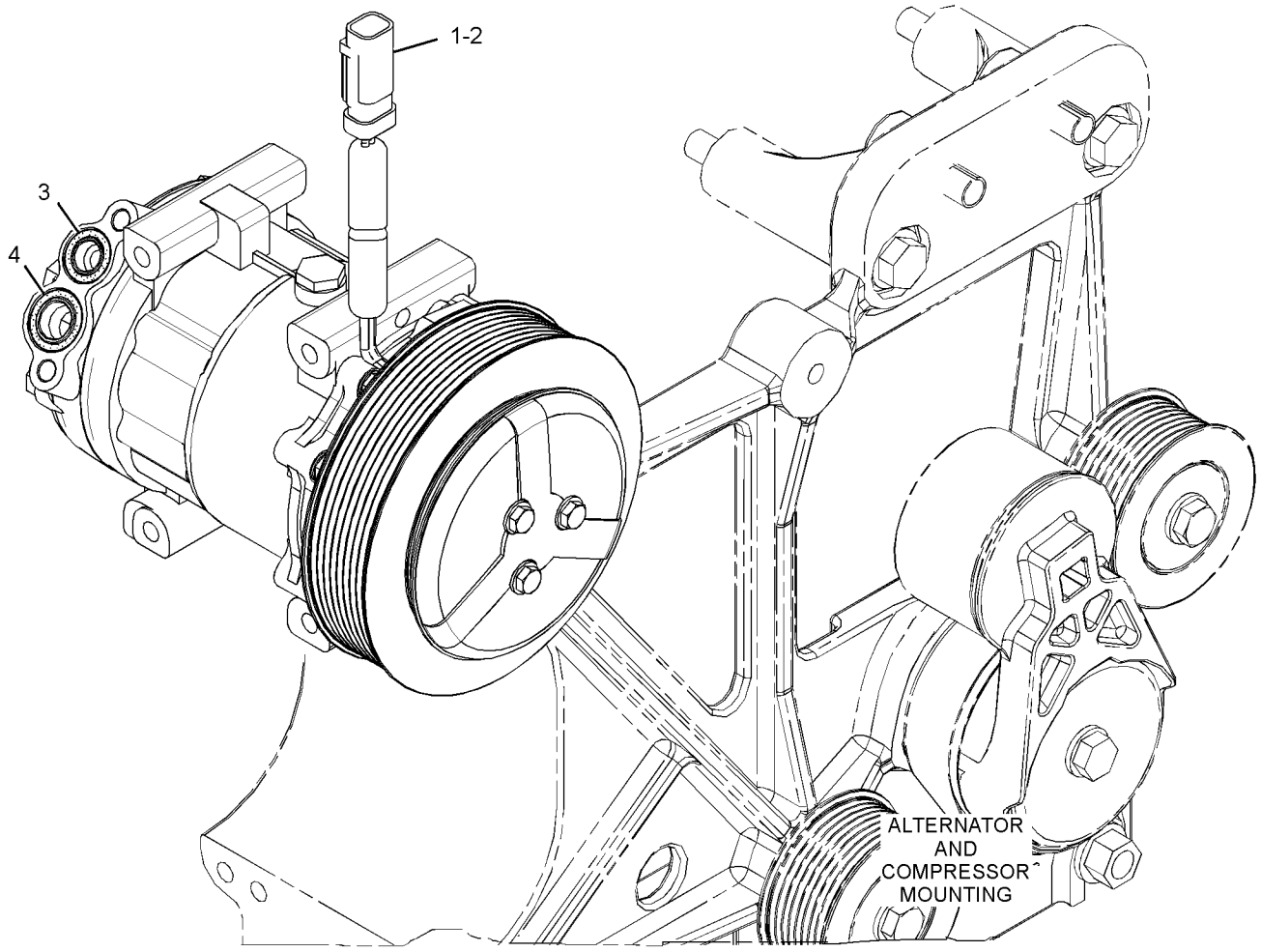

GRAPHIC #1 **<END>** g02149988

379-4415 COMPRESSOR GP-REFRIGERANT

S/N: JEG1-UP

PART OF 374-6003 INSTALLATION AR-ENGINE

SMCS-1802 **i05338527**

NOTE	REF NO	GRAPHIC REF	PART NUMBER	QTY	PART NAME 1 2 3 4 5 6 (PRODUCT LEVEL)	SEE PAGE
	1	1	**364-1614**	4	BOLT-FLANGE HEAD (M8X1.25X95-MM)	
Y	2	1	**372-9295**	1	COMPRESSOR GP-REFRIGERANT	559
	3	1	**383-5626**	1	BRACKET AS	

Y - SEPARATE ILLUSTRATION

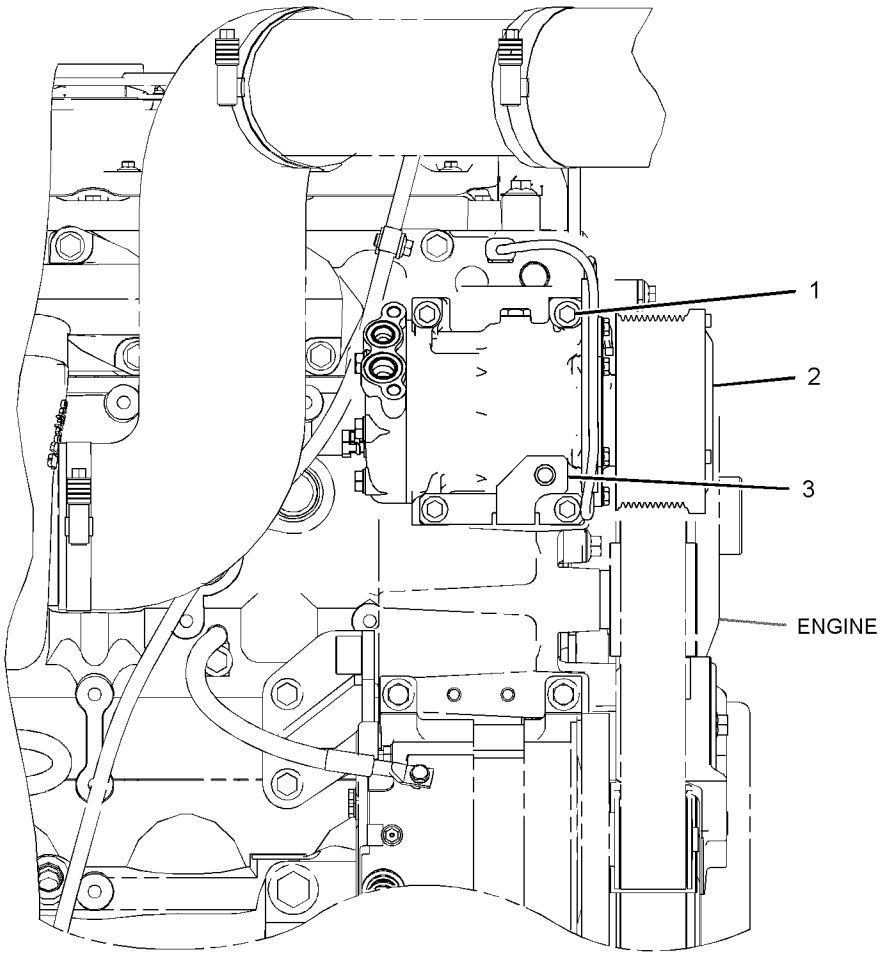

FRONT VIEW

GRAPHIC #1 **<END>** g03381542

273-5167 CONDENSER & MTG GP-REFRIGERANT

S/N: JEG1-UP

PART OF 374-6003 INSTALLATION AR-ENGINE

SMCS-1805 **i05291915**

NOTE	REF NO	GRAPHIC REF	PART NUMBER	QTY	PART NAME 1 2 3 4 5 6 (PRODUCT LEVEL)	SEE PAGE
	1	1	**7Y-8561**	1	BUMPER	
C	2	1	**357-4101**	1	HANDLE AS	
Y	3	1	**245-7749**	1	CONDENSER GP-REFRIGERANT	563
	4	1	**346-8012**	1	SUPPORT AS	
	5	1	**273-5399**	1	BRACKET AS	
C	6	1	**363-9545**	1	BRACKET AS	
C	7	1	**363-9548**	1	SUPPORT AS-CONDENSER	
	7A	1	**099-7857**	2	HINGE	
	8	1	**372-9551**	2	SUPPORT AS	
	9	1	**5P-4116**	4	WASHER-HARD (8.8X20.5X2-MM THK)	
M	10	1	**8T-4971**	4	BOLT (M6X1X30-MM)	
	11	1	**8T-4121**	8	WASHER-HARD (11X21X2.5-MM THK)	
M	12	1	**8T-4133**	1	NUT (M10X1.5-THD)	
M	13	1	**8T-4137**	7	BOLT (M10X1.5X20-MM)	
M	14	1	**8T-4179**	4	BOLT (M12X1.75X20-MM)	
M	15	1	**8T-4189**	4	BOLT (M8X1.25X20-MM)	
	16	1	**8T-4223**	4	WASHER-HARD (13.5X25.5X3-MM THK)	
	17	1	**117-8929**	4	WASHER (6.6X22X2-MM THK)	
C	18	1	**5P-8523**	1	GROMMET	
C	19	1	**363-9550**	1	PLATE AS	

C - CHANGE FROM PREVIOUS TYPE
M - METRIC PART
Y - SEPARATE ILLUSTRATION

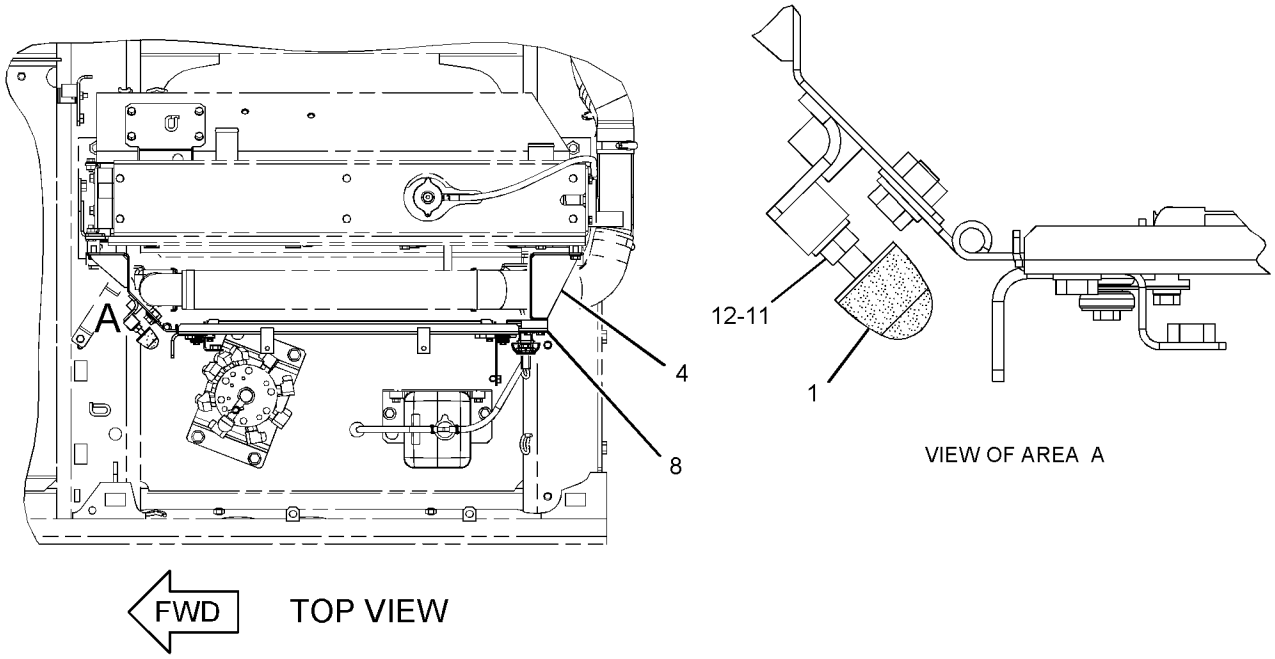

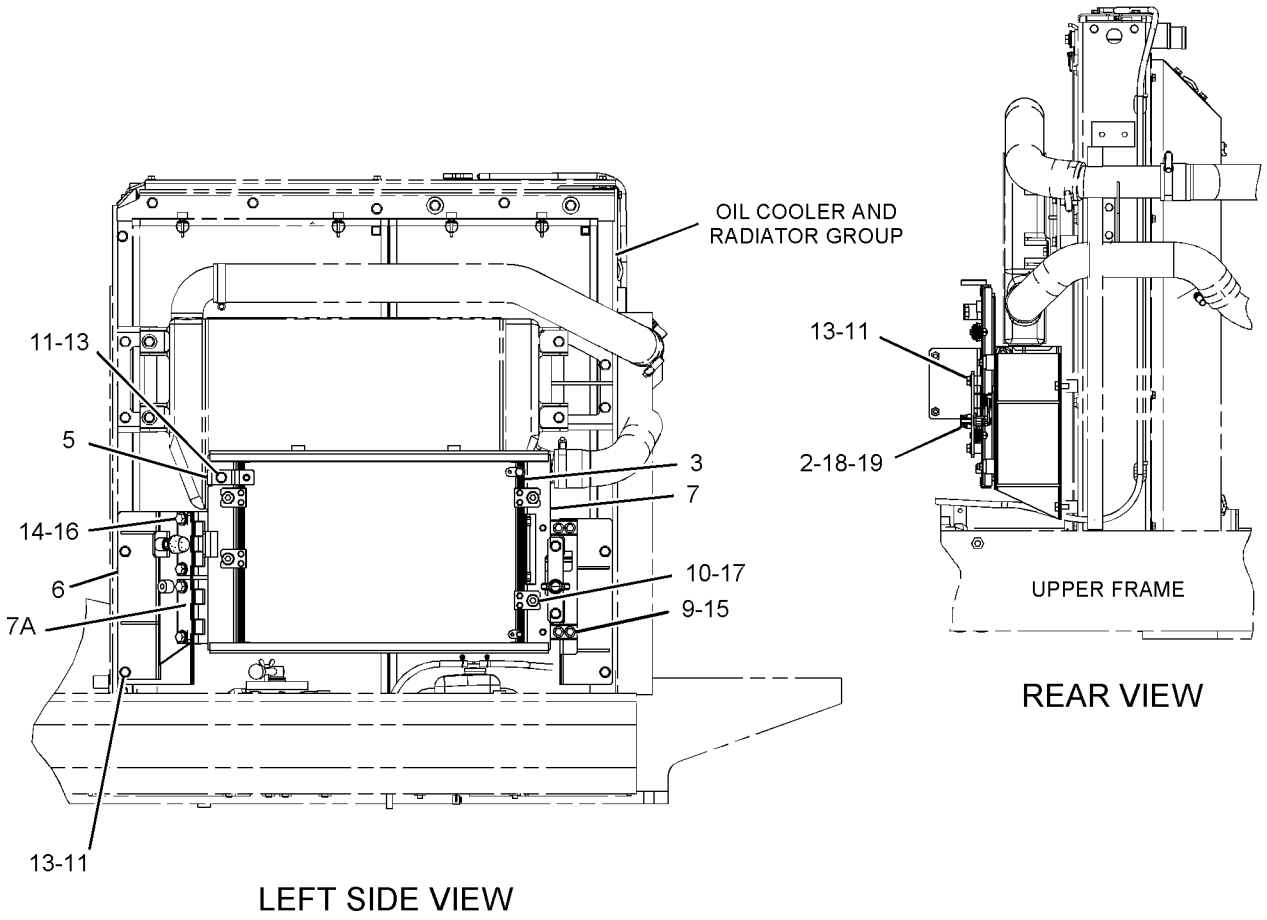

GRAPHIC #1 **<END>** g02725234

245-7749 CONDENSER GP-REFRIGERANT

S/N: JEG1-UP

PART OF 273-5167 CONDENSER & MTG GP-REFRIGERANT

SMCS-1805 **i02778309**

NOTE	REF NO	GRAPHIC REF	PART NUMBER	QTY	PART NAME 1 2 3 4 5 6 (PRODUCT LEVEL)	SEE PAGE
	1	1	**235-8880**	1	CONDENSER AS	
	2	1	**245-7750**	4	BUSHING-RUBBER	
	3	1	**245-7751**	4	BRACKET	
	4	1	**095-0827**	8	LOCKWASHER	
M	5	1	**8T-4171**	8	BOLT (M6X1X12-MM)	
	6	1	**9X-8256**	8	WASHER (6.6X12X2-MM THK)	

M - METRIC PART

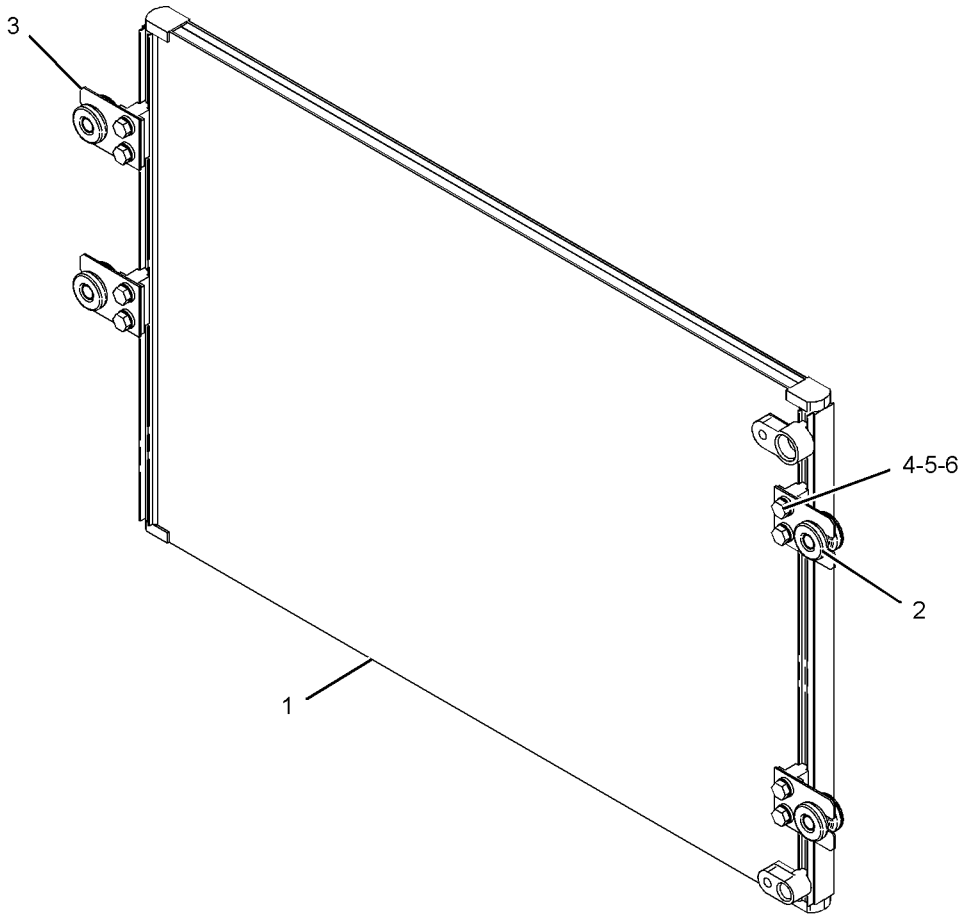

GRAPHIC #1 **<END>** g01086695

259-7348 CONSOLE GP-OPERATOR–RH

S/N: JEG1-UP

PART OF 421-1431 CONSOLE GP-OPERATOR

ALSO AN ATTACHMENT

SMCS-5258 **i02604394**

NOTE	REF NO	GRAPHIC REF	PART NUMBER	QTY	PART NAME 1 2 3 4 5 6 (PRODUCT LEVEL)	SEE PAGE
M	1	1	**128-2135**	4	SCREW-TRUSS HEAD (M6X1X13-MM)	
	2	1	**185-8284**	1	COVER	
	3	1	**234-6579**	2	NUT-SPEED	
	4	1	**234-6580**	2	CAP	
	5	1	**234-6602**	1	COVER	
	6	1	**234-6604**	1	COVER	
	7	1	**234-6608**	1	COVER	
	8	1	**234-6609**	1	COVER	
	9	1	**234-6610**	1	COVER	
	10	1	**235-8914**	4	NUT-SPEED	
	11	1	**235-8966**	2	BASE-MOUNTING	
	12	1	**245-7790**	2	SCREW-TAPPING	
	13	1	**245-7926**	1	SUPPORT AS	
	14	1	**245-7948**	4	SCREW-TAPPING	
Y	15	1	**259-7346**	1	ARMREST GP (RH)	537
M	16	1	**9X-2041**	3	SCREW-TRUSS HEAD (M10X1.5X20-MM)	

M - METRIC PART
Y - SEPARATE ILLUSTRATION

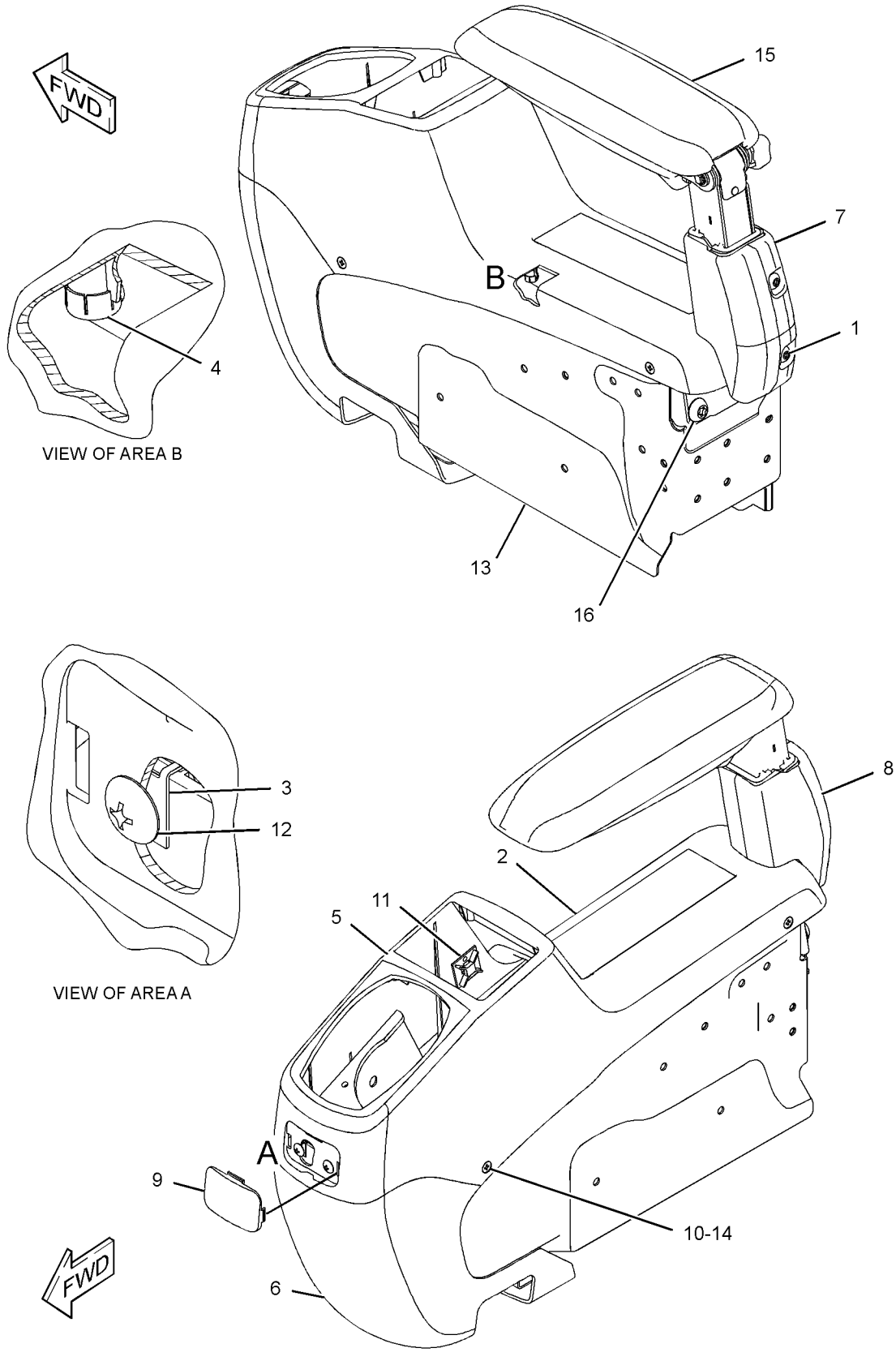

GRAPHIC #1 **<END>** g01217107

421-1431 CONSOLE GP-OPERATOR

S/N: JEG1-UP

PART OF 434-3892, 434-3893 CAB GP, 422-0645 OPERATOR AR-ENCLOSED ROPS

ALSO AN ATTACHMENT

SMCS-5258 **i05432102**

NOTE	REF NO	GRAPHIC REF	PART NUMBER	QTY	PART NAME 1 2 3 4 5 6 (PRODUCT LEVEL)	SEE PAGE
	1	1	**176-1916**	2	GROMMET	
	2	1	**178-5422**	2	GROMMET	
	3	1	**178-5423**	2	GROMMET	
	4	1	**185-8161**	2	INSULATOR	
	5	1	**235-8893**	2	SUPPORT	
	6	1	**235-8894**	2	SUPPORT	
Y	7	1	*421-1434*	1	CONSOLE GP-OPERATOR (LH)	568
Y	8	1	*259-7348*	1	CONSOLE GP-OPERATOR (RH)	564
	9	1	**8T-4121**	4	WASHER-HARD (11X21X2.5-MM THK)	
M	10	1	**8T-4195**	4	BOLT (M10X1.5X30-MM)	
M	11	1	**9X-2046**	8	SCREW-TRUSS HEAD (M6X1X35-MM)	
M	12	1	**9X-2045**	12	SCREW-TRUSS HEAD (M6X1X20-MM)	
	13	1	**7K-1181**	4	STRAP-CABLE	
	14	1	**122-9617**	2	GUARD	

M - METRIC PART
Y - SEPARATE ILLUSTRATION

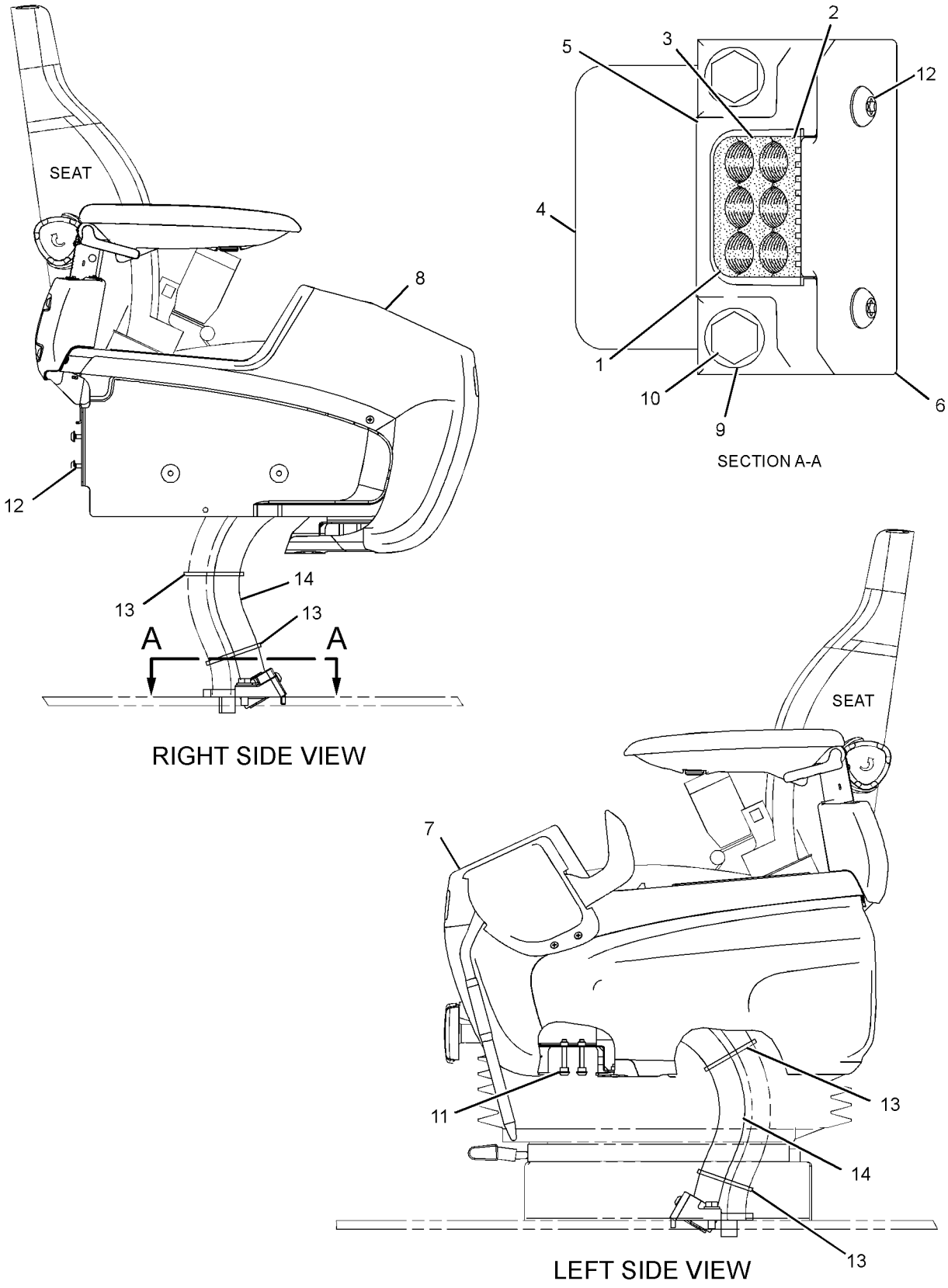

GRAPHIC #1 **<END>** g01844714

421-1434 CONSOLE GP-OPERATOR–LH

S/N: JEG1-UP

PART OF 421-1431 CONSOLE GP-OPERATOR

ALSO AN ATTACHMENT

SMCS-5258 **i05432119**

NOTE	REF NO	GRAPHIC REF	PART NUMBER	QTY	PART NAME 1 2 3 4 5 6 (PRODUCT LEVEL)	SEE PAGE
M	1	1	**128-2135**	5	SCREW-TRUSS HEAD (M6X1X13-MM)	
M	2	1	**171-7325**	3	SCREW-TAPPING (M5X0.8-THD)	
	3	1	**234-6579**	6	NUT-SPEED	
	4	1	**234-6580**	4	CAP	
	5	1	**234-6603**	1	COVER	
	6	1	**234-6605**	1	COVER	
	7	1	**234-6608**	1	COVER	
	8	1	**234-6609**	1	COVER	
	9	1	**234-6610**	1	COVER	
	11	1	**234-6612**	1	COVER	
Y	12	1	**234-6613**	1	SWITCH GP-LIMIT (HYDRAULIC LOCKOUT)	148
	13	1	**234-6614**	1	COVER	
	14	1	**235-8914**	4	NUT-SPEED	
	15	1	**235-8965**	1	GUARD	
	16	1	**245-7790**	3	SCREW-TAPPING	
	17	1	**245-7925**	1	SUPPORT AS	
	18	1	**245-7948**	7	SCREW-TAPPING	
	19	1	**259-7202**	1	ASHTRAY	
Y	20	1	**259-7347**	1	ARMREST GP (LH)	538
M	21	1	**9X-2041**	3	SCREW-TRUSS HEAD (M10X1.5X20-MM)	
M	22	1	**9X-2042**	2	SCREW-TRUSS HEAD (M6X1X12-MM)	

M - METRIC PART
Y - SEPARATE ILLUSTRATION

421-1434 **CONSOLE GP-OPERATOR (*contd.*)** **i05432119**

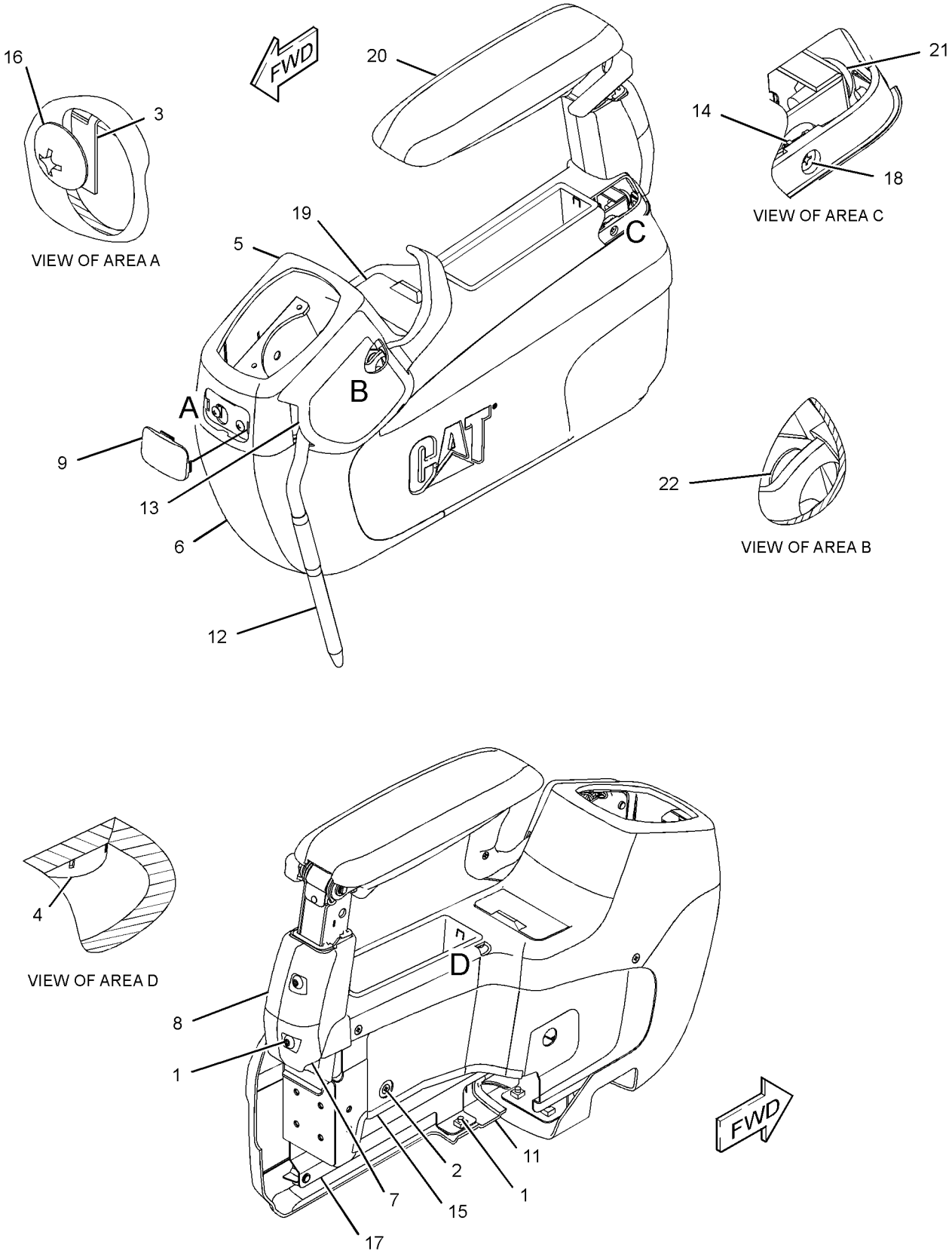

GRAPHIC #1 **<END>** g03401396

310-0078 CONTROL & MTG GP-JOYSTICK

S/N: JEG1-UP
PART OF 434-3892, 434-3893 CAB GP
AN ATTACHMENT

SMCS-5063, 5705

i03247145

NOTE	REF NO	GRAPHIC REF	PART NUMBER	QTY	PART NAME 1 2 3 4 5 6 (PRODUCT LEVEL)	SEE PAGE
Y	1	1	**297-0532**	1	CONTROL GP-JOYSTICK (RH)	576
Y	2	1	**297-0533**	1	CONTROL GP-JOYSTICK (LH)	577
M	3	1	**6V-7357**	6	BOLT (M6X1X25-MM)	
	4	1	**9X-8256**	6	WASHER (6.6X12X2-MM THK)	

M - METRIC PART
Y - SEPARATE ILLUSTRATION

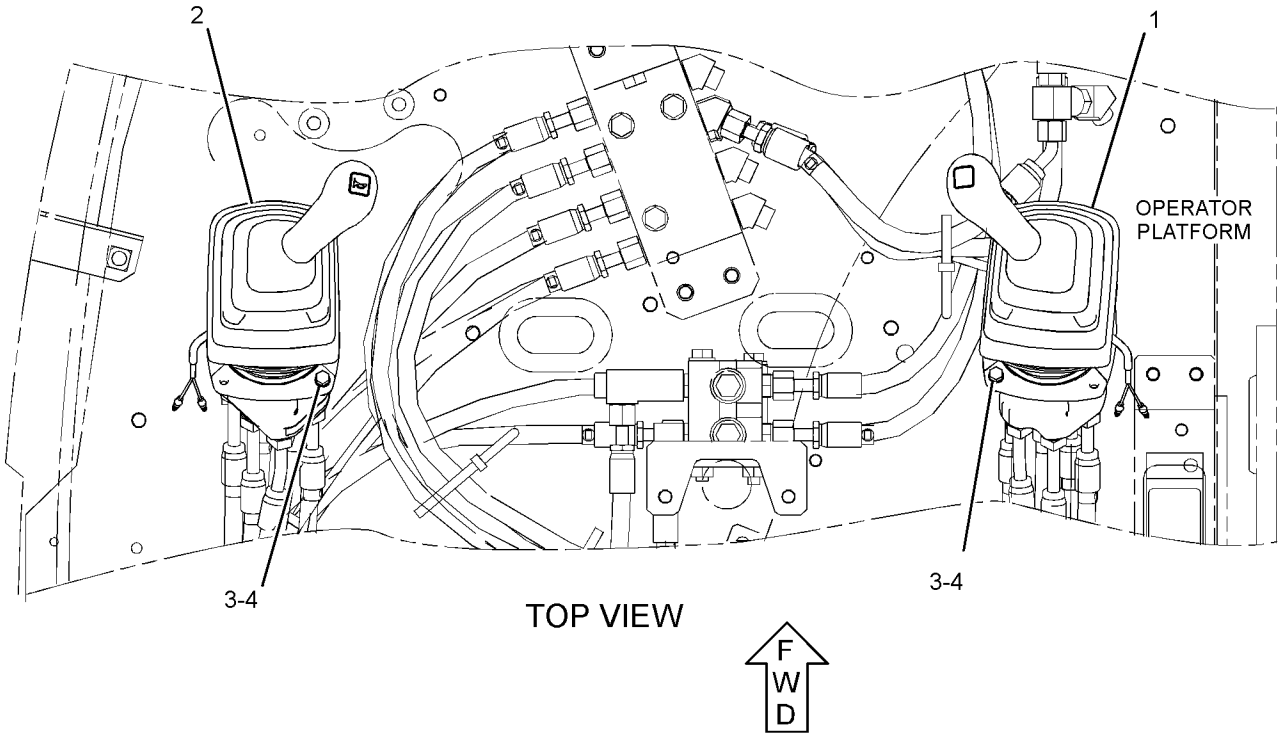

GRAPHIC #1

<END>

g01442248

235-8969 CONTROL GP-HANDLE–JOYSTICK, LH

S/N: JEG1-UP

PART OF 297-0533 CONTROL GP-JOYSTICK

AN ATTACHMENT

SMCS-5705 **i02924513**

NOTE	REF NO	GRAPHIC REF	PART NUMBER	QTY	PART NAME 1 2 3 4 5 6 (PRODUCT LEVEL)	SEE PAGE
	1	1	**124-4010**	1	LEVER	
	2	1	**235-8971**	1	BOOT	
	3	1	**245-7842**	1	KNOB AS	
M		1	**6I-5298**	1	SCREW-TAPPING	
		1	**124-4009**	1	SHAFT	
		1	**222-0225**	1	SWITCH AS-PUSH BUTTON (HORN)	
M	4	1	**096-2617**	2	SCREW-MACHINE (M5X0.8X6-MM)	

M - METRIC PART

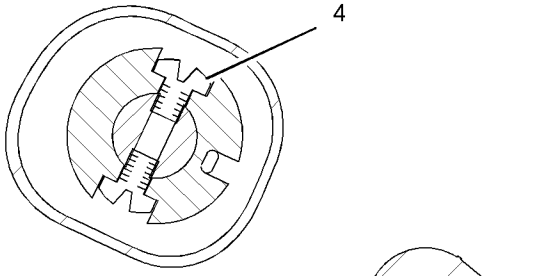

SECTION B-B

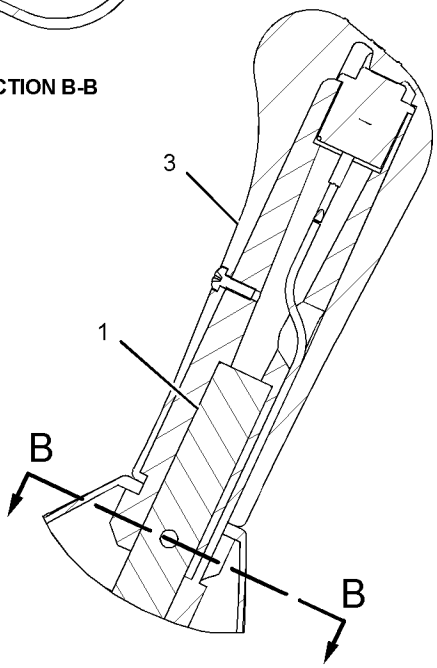

SECTION A-A

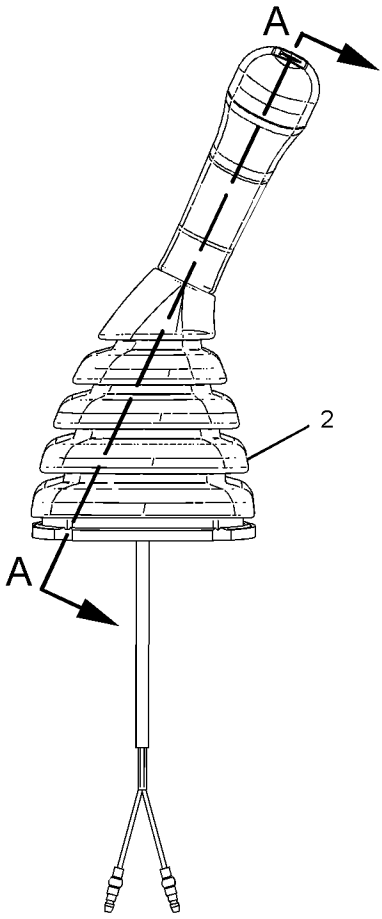

LEFT SIDE VIEW

GRAPHIC #1 **<END>** g01253539

235-8970 CONTROL GP-HANDLE–JOYSTICK, RH

S/N: JEG1-UP

PART OF 297-0532 CONTROL GP-JOYSTICK

AN ATTACHMENT

SMCS-5705 **i02923994**

NOTE	REF NO	GRAPHIC REF	PART NUMBER	QTY	PART NAME 1 2 3 4 5 6 (PRODUCT LEVEL)	SEE PAGE
	1	1	**124-4010**	1	LEVER	
	2	1	**235-8972**	1	BOOT	
	3	1	**245-7844**	1	KNOB AS	
M		1	**6I-5298**	1	SCREW-TAPPING	
		1	**124-4009**	1	SHAFT	
		1	**222-0225**	1	SWITCH AS-PUSH BUTTON (MANUAL LOW IDLE)	
M	4	1	**096-2617**	2	SCREW-MACHINE (M5X0.8X6-MM)	

M - METRIC PART

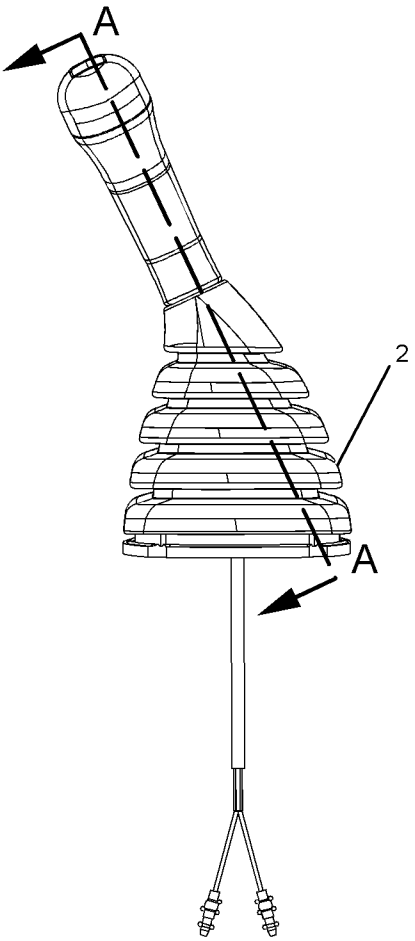

RIGHT SIDE VIEW

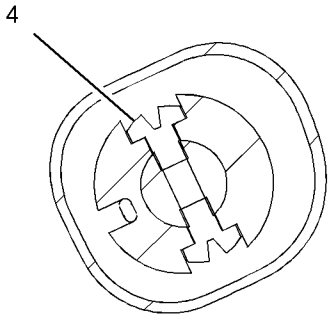

SECTION B-B

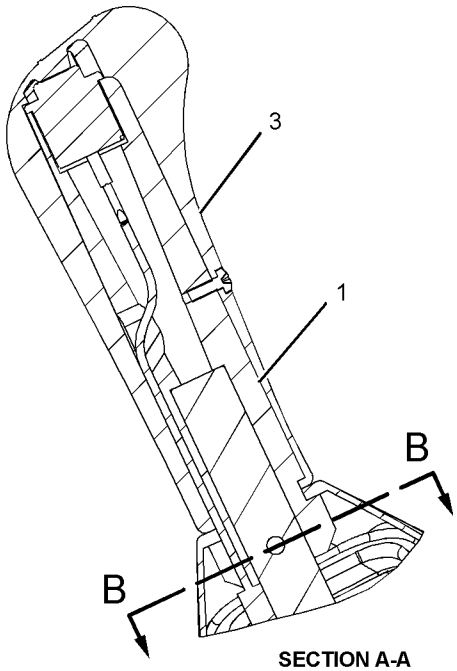

SECTION A-A

GRAPHIC #1 **<END>** g01082427

245-7846 CONTROL GP-HEAT & AIR COND–AIR INLET

S/N: JEG1-UP
PART OF 316-8916 AIR CONDITIONER GP
AN ATTACHMENT

SMCS-7309 **i05343327**

NOTE	REF NO	GRAPHIC REF	PART NUMBER	QTY	PART NAME 1 2 3 4 5 6 (PRODUCT LEVEL)	SEE PAGE
	1	1	**185-8300**	4	SCREW-TAPPING	
	2	1	**196-1666**	1	RELAY (COMPRESSOR CLUTCH)	
	2A	1	**196-1666**	1	RELAY (BLOWER)	
	3	1	**245-7813**	1	MOTOR AS	
	4	1	**245-7814**	1	BRACKET	
	5	1	**245-7815**	1	SENSOR AS-TEMPERATURE (AIR)	
	6	1	**245-7816**	1	DAMPER AS	

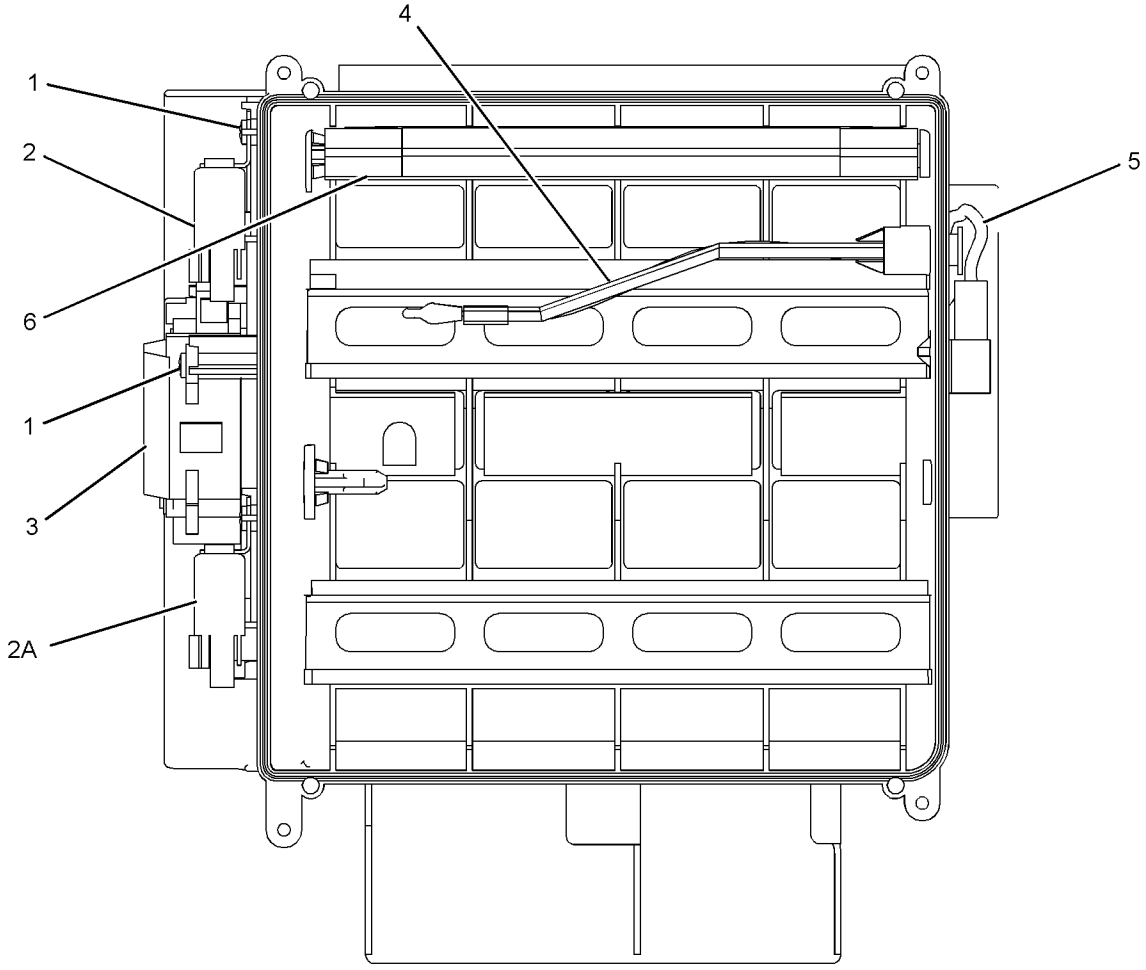

GRAPHIC #1 **<END>** g01245591

239-8693 CONTROL GP-HYDRAULIC PEDAL

S/N: JEG1-UP
PART OF 383-5307 CONTROL AR-AUXILIARY
AN ATTACHMENT

SMCS-5059, 5063 **i05536530**

NOTE	REF NO	GRAPHIC REF	PART NUMBER	QTY	PART NAME 1 2 3 4 5 6 (PRODUCT LEVEL)	SEE PAGE
	1	1	**233-5260**	1	LANYARD	
	2	1	**122-9611**	1	PEDAL-RUBBER (RH)	
	3	1	**357-3877**	1	PIN	
	4	1	**153-8762**	1	PEDAL AS	
	5	1	**153-8763**	1	SUPPORT AS	
Y	6	1	**206-3336**	1	VALVE GP-PILOT	459
M	7	1	**095-0735**	2	SCREW-MACHINE (M5X0.8X8-MM)	
M	8	1	**7X-2536**	2	BOLT (M8X1.25X14-MM)	
	9	1	**8T-0114**	1	PIN-SPRING	
	10	1	**8T-4121**	3	WASHER-HARD (11X21X2.5-MM THK)	
M	11	1	**8T-4136**	2	BOLT (M10X1.5X25-MM)	
M	12	1	**8T-4137**	1	BOLT (M10X1.5X20-MM)	
	13	1	**8T-4224**	2	WASHER-HARD (8.8X16X2-MM THK)	

M - METRIC PART
Y - SEPARATE ILLUSTRATION

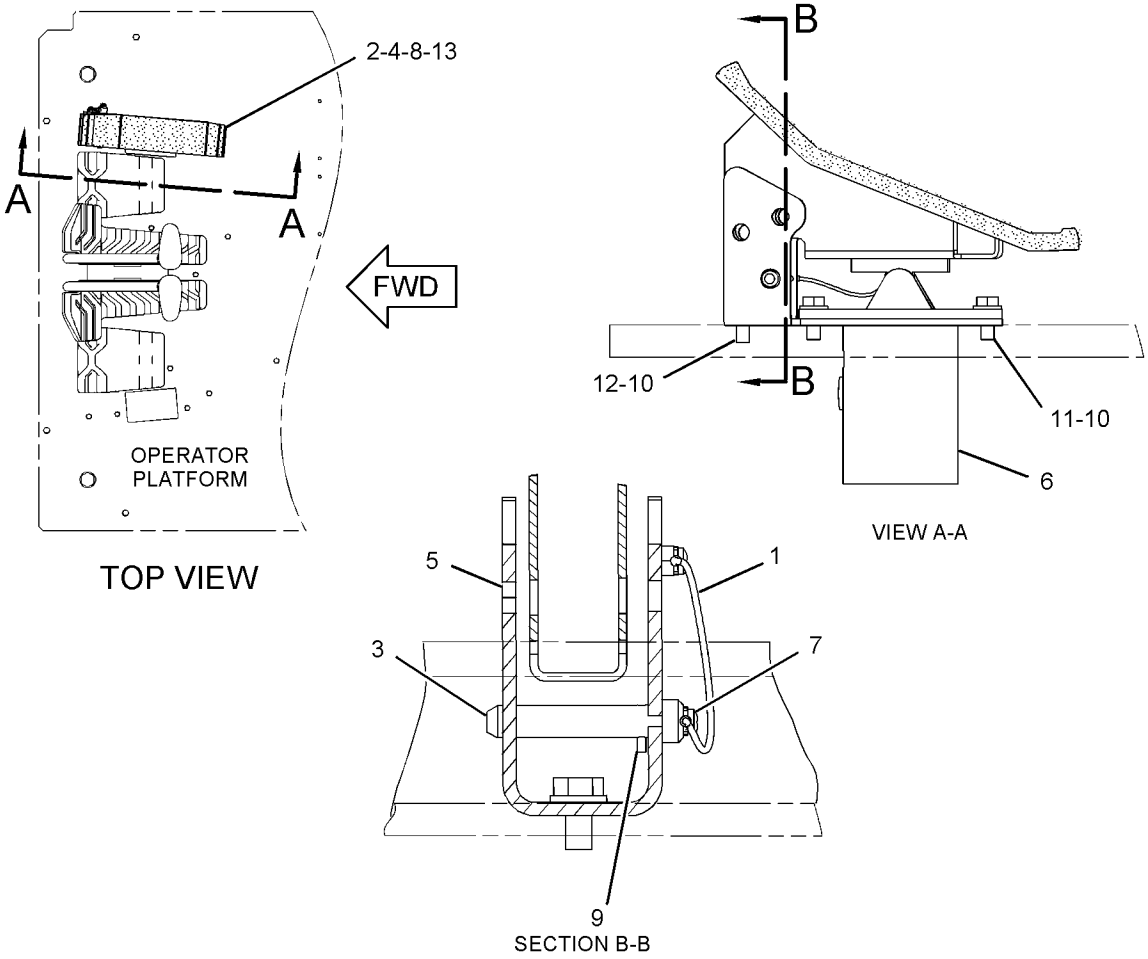

GRAPHIC #1 **<END>** g02360561

239-8695 CONTROL GP-HYDRAULIC PEDAL

S/N: JEG1-UP
PART OF 383-5306 CONTROL AR-AUXILIARY
AN ATTACHMENT

SMCS-5059, 5063

i03947309

NOTE	REF NO	GRAPHIC REF	PART NUMBER	QTY	PART NAME 1 2 3 4 5 6 (PRODUCT LEVEL)	SEE PAGE
	1	1	**233-5260**	2	LANYARD	
	2	1	**121-1865**	1	PEDAL-RUBBER (LH)	
	3	1	**122-9611**	1	PEDAL-RUBBER (RH)	
	4	1	**357-3877**	2	PIN	
	5	1	**153-8753**	1	PEDAL AS	
	6	1	**153-8762**	1	PEDAL AS	
	7	1	**153-8763**	1	SUPPORT AS	
Y	8	1	**206-3336**	2	VALVE GP-PILOT	459
	9	1	**259-7877**	1	SUPPORT AS	
M	10	1	**095-0735**	4	SCREW-MACHINE (M5X0.8X8-MM)	
M	11	1	**7X-2536**	4	BOLT (M8X1.25X14-MM)	
	12	1	**8T-0114**	2	PIN-SPRING	
	13	1	**8T-4121**	6	WASHER-HARD (11X21X2.5-MM THK)	
M	14	1	**8T-4136**	4	BOLT (M10X1.5X25-MM)	
M	15	1	**8T-4137**	2	BOLT (M10X1.5X20-MM)	
	16	1	**8T-4224**	4	WASHER-HARD (8.8X16X2-MM THK)	

M - METRIC PART
Y - SEPARATE ILLUSTRATION

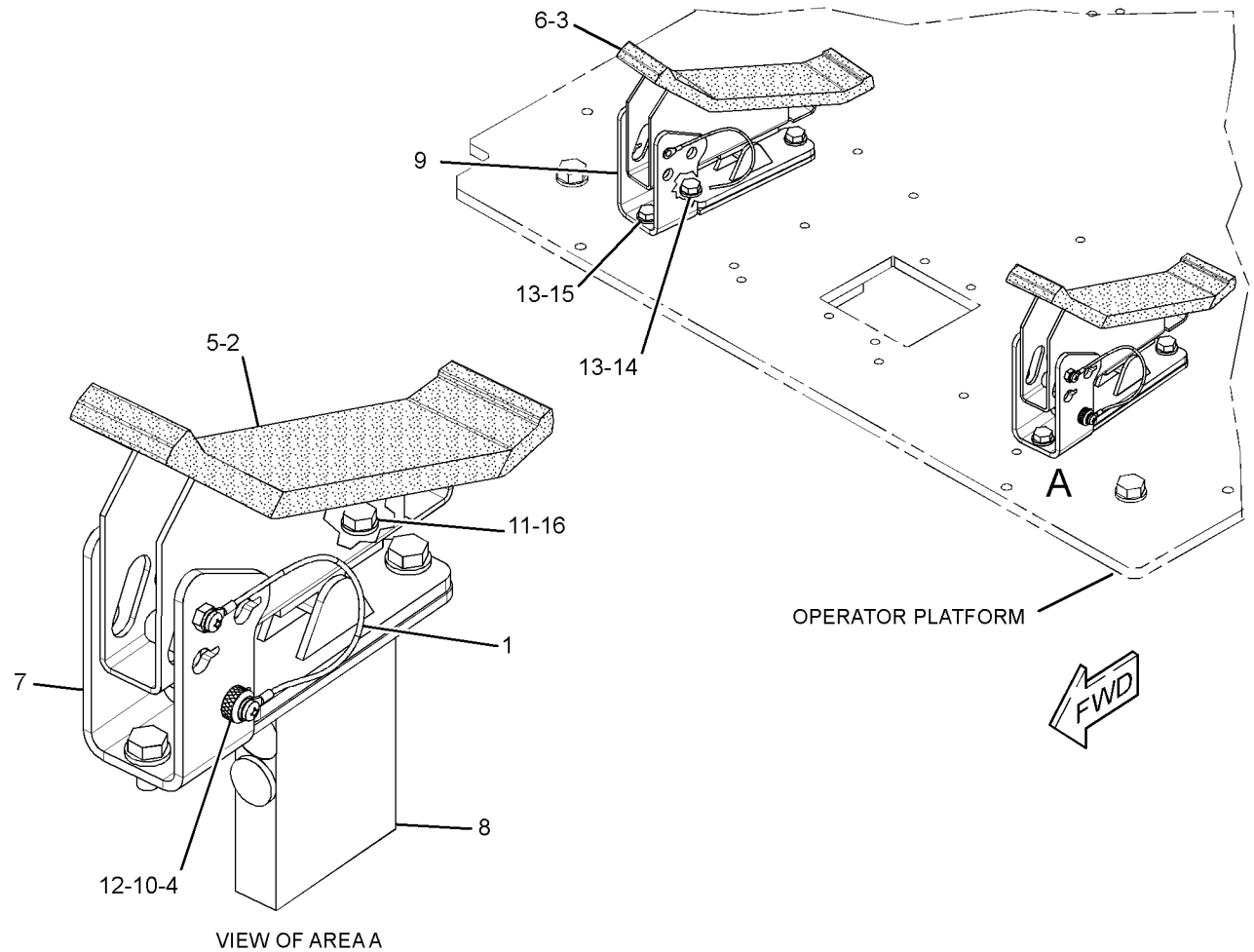

VIEW OF AREA A

GRAPHIC #1

<END>

g02183973

297-0532 CONTROL GP-JOYSTICK–RH

S/N: JEG1-UP

PART OF 310-0078 CONTROL & MTG GP-JOYSTICK

AN ATTACHMENT

SMCS-5705 **i05349608**

NOTE	REF NO	GRAPHIC REF	PART NUMBER	QTY	PART NAME 1 2 3 4 5 6 (PRODUCT LEVEL)	SEE PAGE
M	1	1	**271-7843**	1	NUT (M14X2-THD)	
Y	2	1	**235-8970**	1	CONTROL GP-HANDLE (JOYSTICK, RH)	572
Y	3	1	**297-0529**	1	VALVE GP-PILOT (JOYSTICK)	460
	4	1	**6K-0806**	1	STRAP-CABLE	

M - METRIC PART
Y - SEPARATE ILLUSTRATION

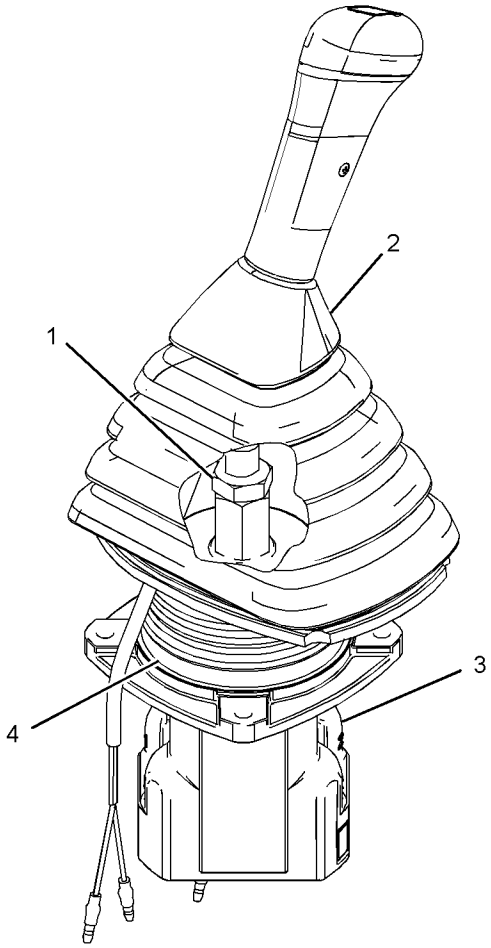

GRAPHIC #1 **<END>** g03057522

297-0533 CONTROL GP-JOYSTICK–LH

S/N: JEG1-UP
PART OF 310-0078 CONTROL & MTG GP-JOYSTICK
AN ATTACHMENT

SMCS-5705 **i05349639**

NOTE	REF NO	GRAPHIC REF	PART NUMBER	QTY	PART NAME 1 2 3 4 5 6 (PRODUCT LEVEL)	SEE PAGE
M	1	1	**271-7843**	1	NUT (M14X2-THD)	
Y	2	1	**235-8969**	1	CONTROL GP-HANDLE (JOYSTICK, LH)	571
Y	3	1	**297-0529**	1	VALVE GP-PILOT (JOYSTICK)	460
	4	1	**6K-0806**	1	STRAP-CABLE	

M - METRIC PART
Y - SEPARATE ILLUSTRATION

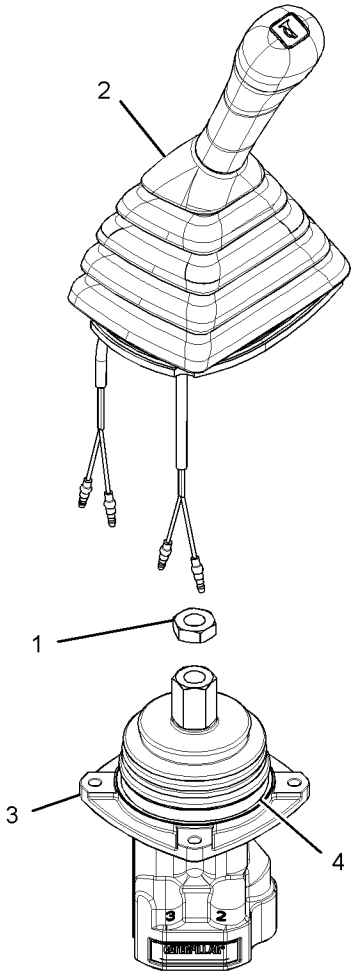

GRAPHIC #1 **<END>** g03057536

170-9497 CONTROL GP-PILOT OPERATED HYD–TRAVEL

S/N: JEG1-UP

PART OF 434-3892, 434-3893 CAB GP, 422-0645 OPERATOR AR-ENCLOSED ROPS

ALSO AN ATTACHMENT

SMCS-5059 **i01364060**

NOTE	REF NO	GRAPHIC REF	PART NUMBER	QTY	PART NAME 1 2 3 4 5 6 (PRODUCT LEVEL)	SEE PAGE
	1	1	**096-6166**	1	WASHER-HARD (4.5X9X1-MM THK)	
M	2	1	**095-0728**	2	SCREW-MACHINE (M4X0.7X12-MM)	
	3	1	**8T-4121**	12	WASHER-HARD (11X21X2.5-MM THK)	
M	4	1	**8T-4136**	4	BOLT (M10X1.5X25-MM)	
M	5	1	**8T-4191**	8	BOLT (M10X1.5X16-MM)	
	6	1	**142-5546**	2	KNOB	
	7	1	**117-6356**	2	STEP AS	
	8	1	**122-9610**	2	STEP	
	9	1	**170-9499**	1	LEVER AS (LH)	
	10	1	**170-9498**	1	LEVER AS (RH)	
	11	1	**122-9608**	1	PEDAL-RUBBER (RH)	
	12	1	**117-6350**	1	PEDAL AS (RH)	
M		1	**8T-3490**	2	NUT-WELD (M10X1.5-THD)	
	13	1	**122-9609**	1	PEDAL-RUBBER (LH)	
	14	1	**117-6349**	1	PEDAL AS (LH)	
M		1	**8T-3490**	2	NUT-WELD (M10X1.5-THD)	

M - METRIC PART

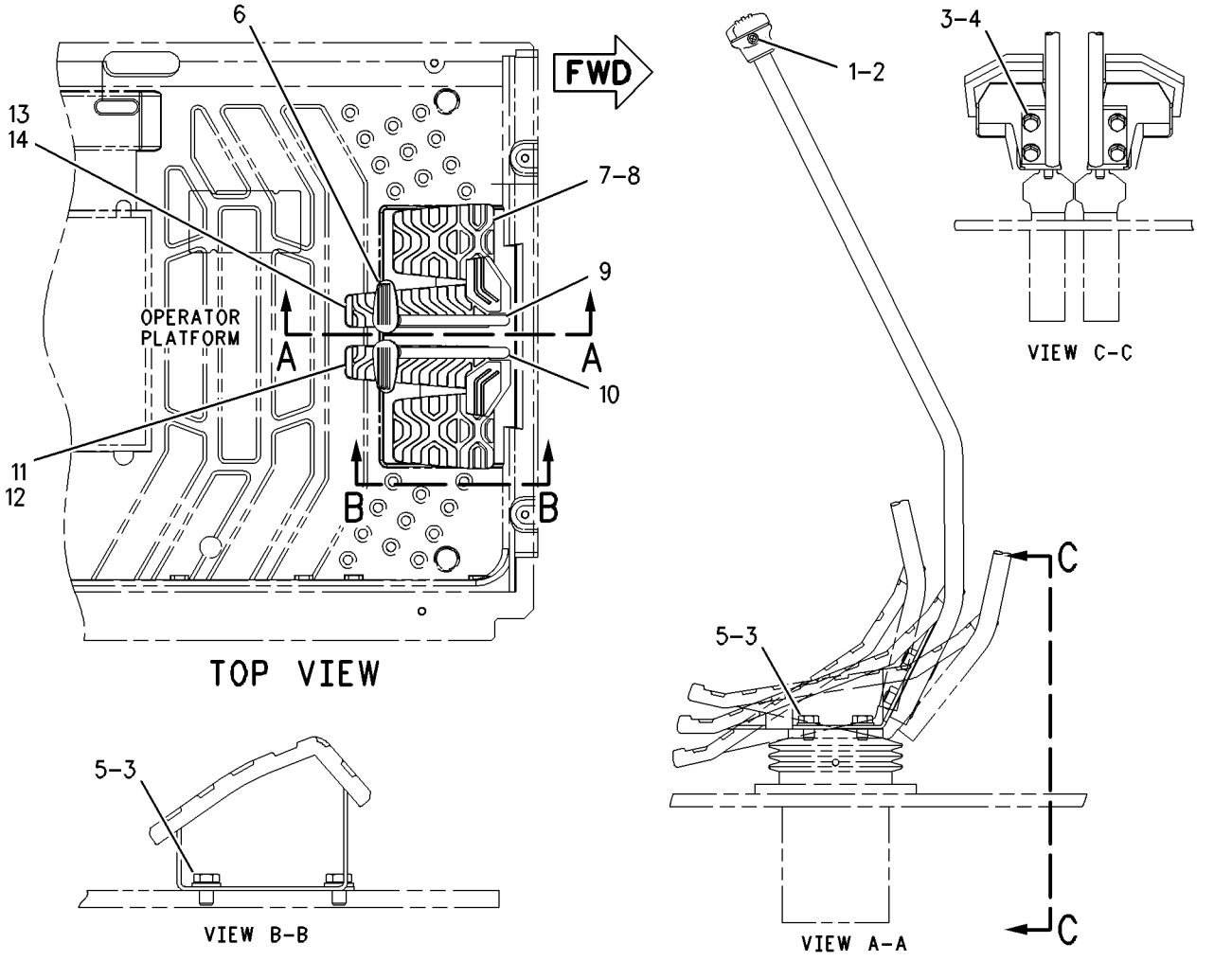

GRAPHIC #1 **<END>** g00672963

234-6501 COVER GP-CAB–REAR

S/N: JEG1-UP
PART OF 388-0026, 416-9606 CAB GP
AN ATTACHMENT

SMCS-7301, 7308

i05349676

NOTE	REF NO	GRAPHIC REF	PART NUMBER	QTY	PART NAME 1 2 3 4 5 6 (PRODUCT LEVEL)	SEE PAGE
	1	1	**234-6499**	1	COVER AS	
	2	1	**234-6502**	1	COVER-ACCESS (FUSE-REAR PANEL)	
	3	1	**234-6593**	2	FASTENER	
					USE WITH COVER WITH A 9-MM DIAMETER UPPER MOUNTING HOLE	
					–OR–	
		1	**245-7929**	2	CLIP	
					USE WITH COVER WITH A 7.6-MM DIAMETER UPPER MOUNTING HOLE	

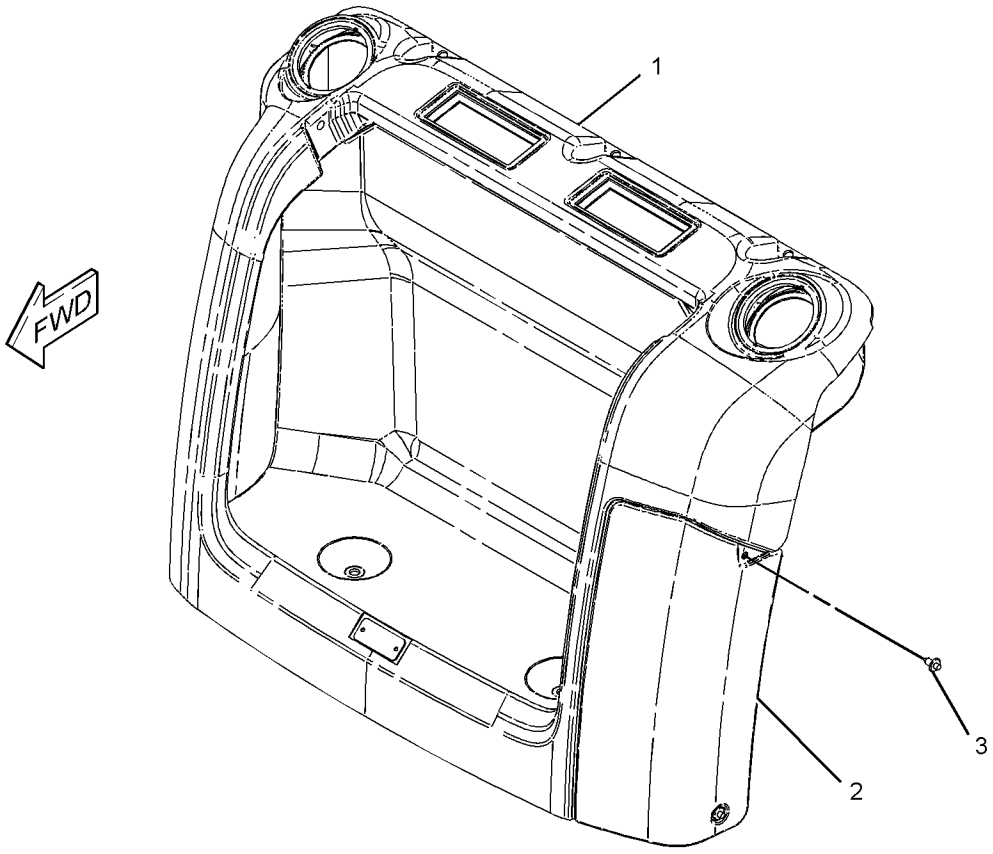

GRAPHIC #1

<END>

g03389225

316-6166 DOOR & MTG GP-CAB

S/N: JEG1-UP

PART OF 388-0065 CAB GP, 388-9115 DOOR & MTG GP-CAB

AN ATTACHMENT

SMCS-7308 **i03990951**

NOTE	REF NO	GRAPHIC REF	PART NUMBER	QTY	PART NAME 1 2 3 4 5 6 (PRODUCT LEVEL)	SEE PAGE
Y	1	1	**307-1818**	1	DOOR GP-CAB	583
	2	1	*151-6767*	1	DOOR AS	
M		1	**9X-2041**	6	SCREW-TRUSS HEAD (M10X1.5X20-MM)	
		1	**151-6777**	2	HINGE	

M - METRIC PART
Y - SEPARATE ILLUSTRATION

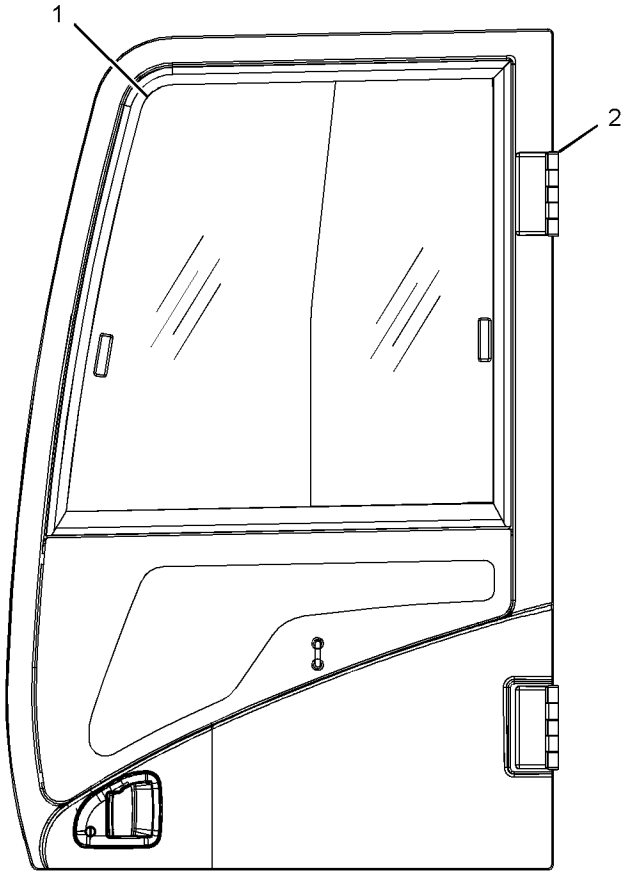

LEFT SIDE VIEW

GRAPHIC #1 **<END>** g01889494

388-9115 DOOR & MTG GP-CAB

S/N: JEG1-UP
PART OF 416-9607 CAB GP
AN ATTACHMENT

SMCS-7308 **i05432374**

NOTE	REF NO	GRAPHIC REF	PART NUMBER	QTY	PART NAME 1 2 3 4 5 6 (PRODUCT LEVEL)	SEE PAGE
Y	1	1	**316-6166**	1	DOOR & MTG GP-CAB	580
Y	2	1	*420-3151*	1	DOOR & MTG GP-CAB	582

Y - SEPARATE ILLUSTRATION

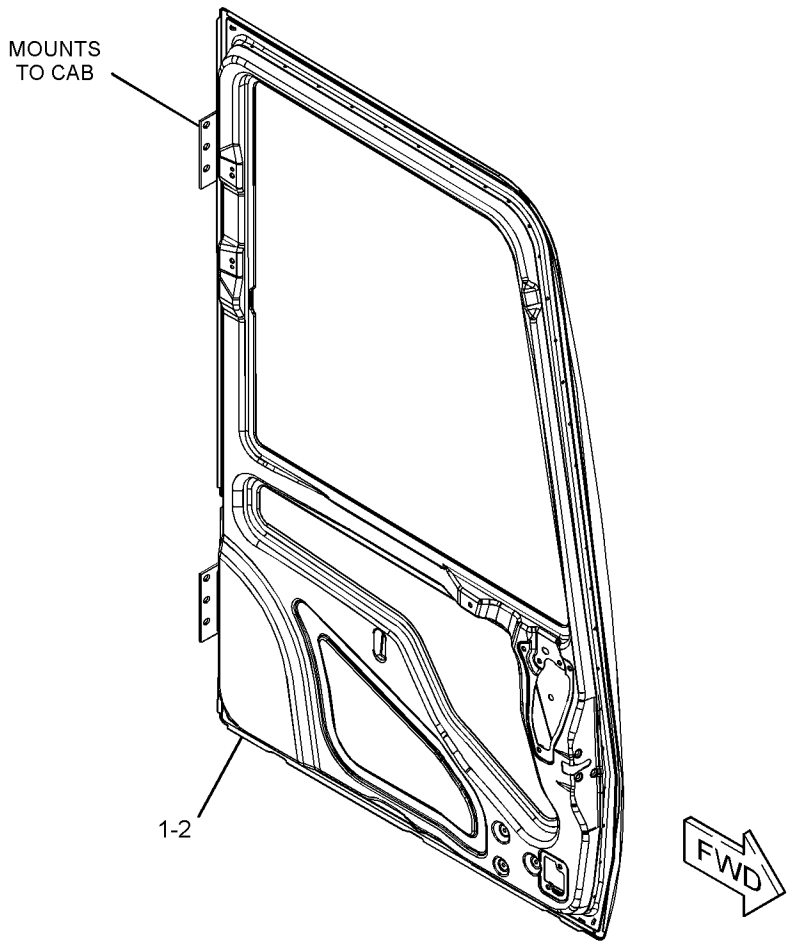

GRAPHIC #1 **<END>** g03440825

420-3151 DOOR & MTG GP-CAB

S/N: JEG1-UP
PART OF 388-9115 DOOR & MTG GP-CAB
AN ATTACHMENT

SMCS-7308 **i05432401**

NOTE	REF NO	GRAPHIC REF	PART NUMBER	QTY	PART NAME 1 2 3 4 5 6 (PRODUCT LEVEL)	SEE PAGE
	1	1	**436-1901**	2	HINGE	
	2	1	**425-7079**	1	PANEL AS-DOOR	
M	3	1	**9X-2041**	6	SCREW-TRUSS HEAD (M10X1.5X20-MM)	

M - METRIC PART

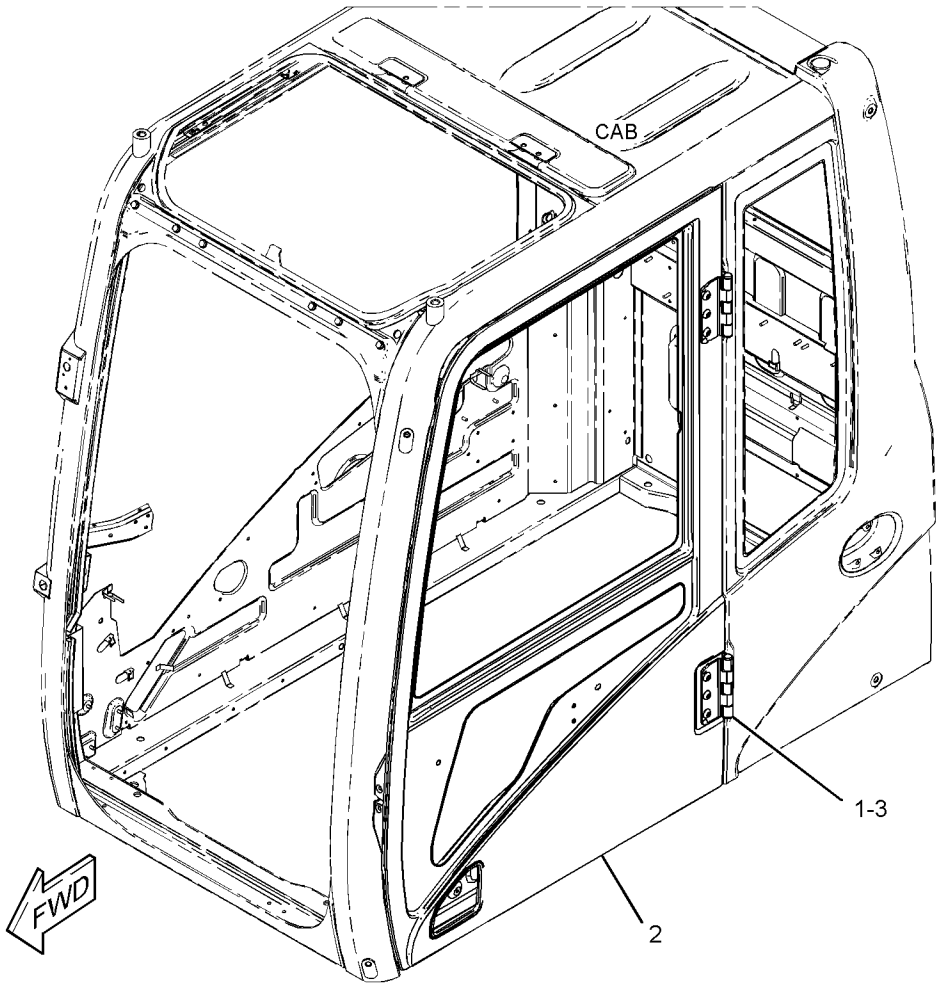

GRAPHIC #1 **<END>** g03440163

307-1818 DOOR GP-CAB

S/N: JEG1-UP
PART OF 316-6166 DOOR & MTG GP-CAB
AN ATTACHMENT

SMCS-7308 **i05343740**

NOTE	REF NO	GRAPHIC REF	PART NUMBER	QTY	PART NAME 1 2 3 4 5 6 (PRODUCT LEVEL)	SEE PAGE
	1	1	**151-6703**	1	HANDLE-PULL	
	2	1	**151-6704**	2	CAP	
Y	3	1	**151-6792**	1	WINDOW GP-DOOR	644
	4	1	**156-6471**	1	GLASS	
	5	1	**156-6598**	1	HOOK	
	6	1	**156-6600**	1	LOCK AS	
		1	**164-0514**	1	CLIP	
	6A	1	**164-0519**	1	CLIP	
	7	1	**156-6643**	2	COVER	
	8	1	**156-6645**	1	HANDLE AS	
		1	**201-4391**	1	CLIP	
	9	1	**161-3639**	1	HANDLE AS	
	10	1	**161-3650**	1	COVER AS	
	11	1	**161-3663**	1	SEAL AS	
		1	**151-9497**	45	CLIP	
	12	1	**161-3665**	1	SEAL	
	13	1	**164-0515**	1	JOINT	
	14	1	**167-7039**	1	GROMMET	
M	15	1	**185-8180**	3	SCREW (M6X1X16-MM)	
	16	1	**8T-4224**	2	WASHER-HARD (8.8X16X2-MM THK)	
	17	1	**259-7354**	1	COVER	
M	18	1	**096-2622**	2	SCREW-MACHINE (M4X0.7X8-MM)	
M	19	1	**096-3884**	2	NUT-SPRING (M8X1.25-THD)	
M	20	1	**101-8899**	2	SCREW AS (M6X1.0X16-MM)	
M	21	1	**101-8900**	2	SCREW AS (M6X1X20-MM)	
	22	1	**151-9461**	4	SPACER	
	23	1	**178-5573**	4	SPACER	
	24	1	**178-5574**	2	SPACER	
	25	1	**189-2690**	1	HANDLE	
	26	1	**4I-4286**	1	KNOB	
M	27	1	**9X-2042**	8	SCREW-TRUSS HEAD (M6X1X12-MM)	

M - METRIC PART
Y - SEPARATE ILLUSTRATION

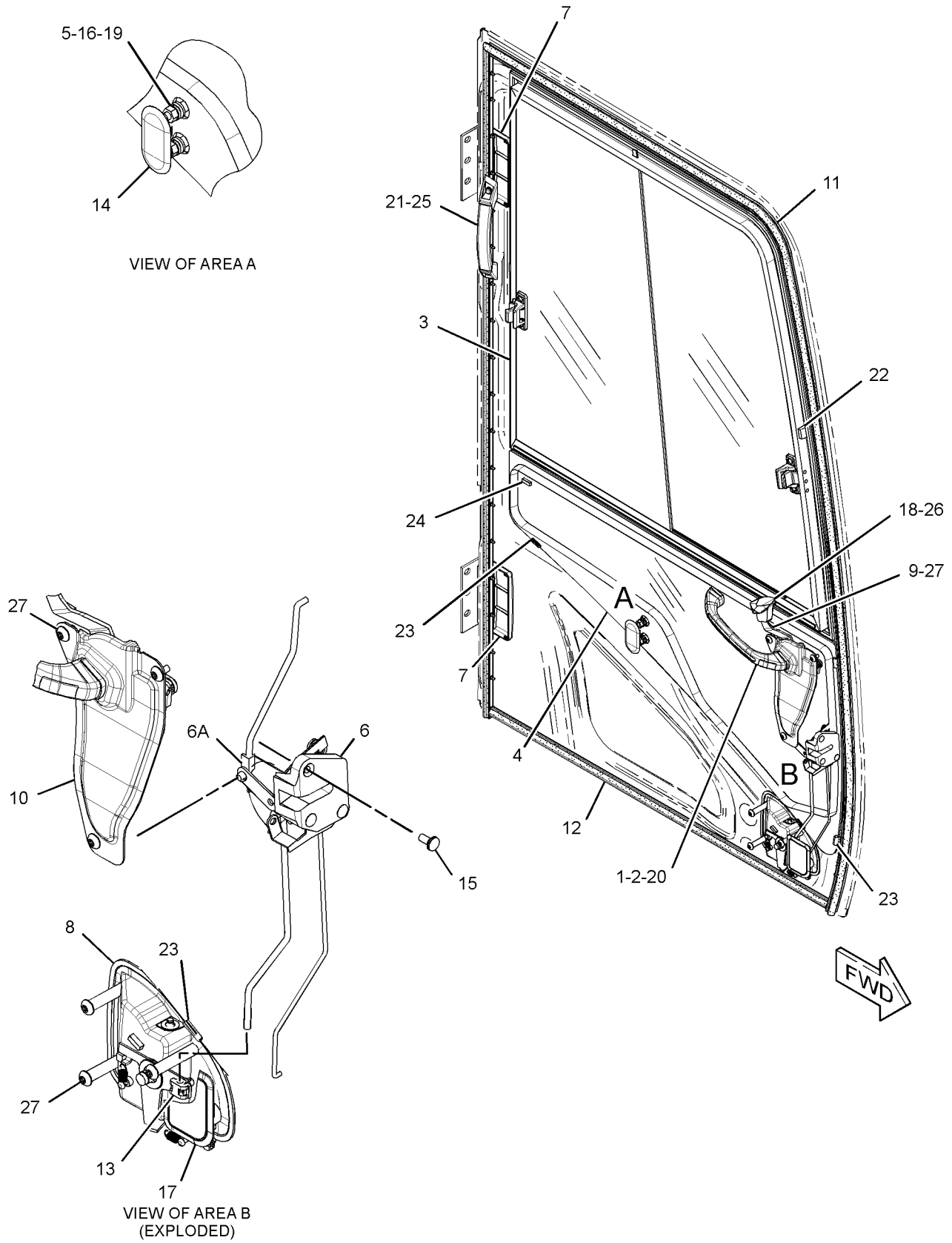

GRAPHIC #1 **<END>** g02178270

388-9105 DOOR GP-CAB

S/N: JEG1-UP
PART OF 388-0065, 416-9607 CAB GP
AN ATTACHMENT

SMCS-7308 **i05437230**

NOTE	REF NO	GRAPHIC REF	PART NUMBER	QTY	PART NAME 1 2 3 4 5 6 (PRODUCT LEVEL)	SEE PAGE
	1	1	**151-6703**	1	HANDLE-PULL	
	2	1	**151-6704**	2	CAP	
Y	3	1	**384-6533**	1	WINDOW GP-DOOR	646
	4	1	**383-6933**	1	GLASS	
	5	1	**156-6598**	1	HOOK	
	6	1	**398-7107**	1	LOCK AS	
	6A	1	**398-7105**	1	CLIP	
		1	**398-7105**	1	CLIP	
	7	1	**156-6643**	2	COVER	
	8	1	**398-7111**	1	HANDLE AS	
		1	**398-7106**	1	CLIP	
	9	1	**161-3639**	1	HANDLE AS	
	10	1	**161-3650**	1	COVER AS	
	11	1	**161-3663**	1	SEAL AS	
		1	**151-9497**	45	CLIP	
	12	1	**161-3665**	1	SEAL	
	13	1	**164-0515**	1	JOINT	
	14	1	**167-7039**	1	GROMMET	
M	15	1	**185-8180**	3	SCREW (M6X1X16-MM)	
	16	1	**8T-4224**	2	WASHER-HARD (8.8X16X2-MM THK)	
	17	1	**259-7354**	1	COVER	
M	18	1	**096-2622**	2	SCREW-MACHINE (M4X0.7X8-MM)	
M	19	1	**096-3884**	2	NUT-SPRING (M8X1.25-THD)	
M	20	1	**101-8899**	2	SCREW AS (M6X1.0X16-MM)	
M	21	1	**101-8900**	2	SCREW AS (M6X1X20-MM)	
	22	1	**151-9461**	4	SPACER	
	23	1	**178-5573**	4	SPACER	
	24	1	**178-5574**	3	SPACER	
	25	1	**189-2690**	1	HANDLE	
	26	1	**4I-4286**	1	KNOB (HANDLE)	
M	27	1	**9X-2042**	8	SCREW-TRUSS HEAD (M6X1X12-MM)	

M - METRIC PART
Y - SEPARATE ILLUSTRATION

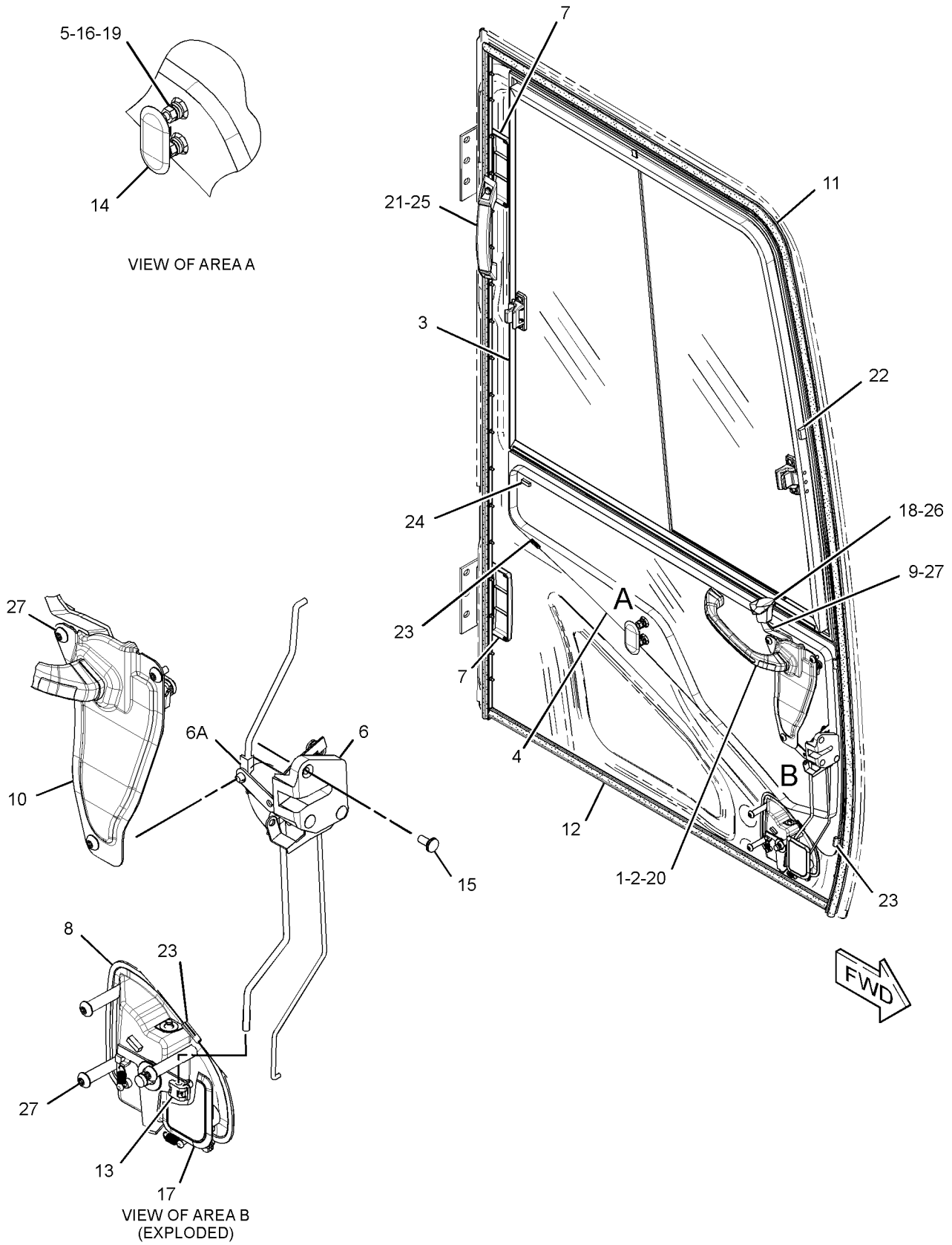

GRAPHIC #1 **<END>** g02178270

229-9082 DUCT GP-CAB AIR

S/N: JEG1-UP
PART OF 416-1794 AIR CONDITIONER AR
AN ATTACHMENT

SMCS-734D **i04823037**

NOTE	REF NO	GRAPHIC REF	PART NUMBER	QTY	PART NAME 1 2 3 4 5 6 (PRODUCT LEVEL)	SEE PAGE
	1	1	**293-1183**	1	FILTER GP-CAB AIR	
		1	**293-1184**	1	FILTER ELEMENT-CAB AIR	
	2	1	**235-8876**	1	DUCT AS (FRESH AIR, UPPER)	
		1	**245-7872**	1	INSULATOR	
	3	1	**235-8877**	1	DUCT AS (VENT, REAR)	
		1	**245-7792**	1	INSULATOR	
	4	1	**235-8878**	1	DUCT AS (VENT, FRONT)	
		1	**245-7793**	1	INSULATOR	
	5	1	**235-8879**	1	DUCT AS (FLOOR)	
		1	**245-7873**	1	INSULATOR	
	6	1	**240-5074**	1	DUCT AS (FRESH AIR, LOWER)	
		1	**245-7791**	1	INSULATOR	
M	7	1	**101-8899**	2	SCREW AS (M6X1.0X16-MM)	
	8	1	**176-1996**	5	CLIP	

M - METRIC PART

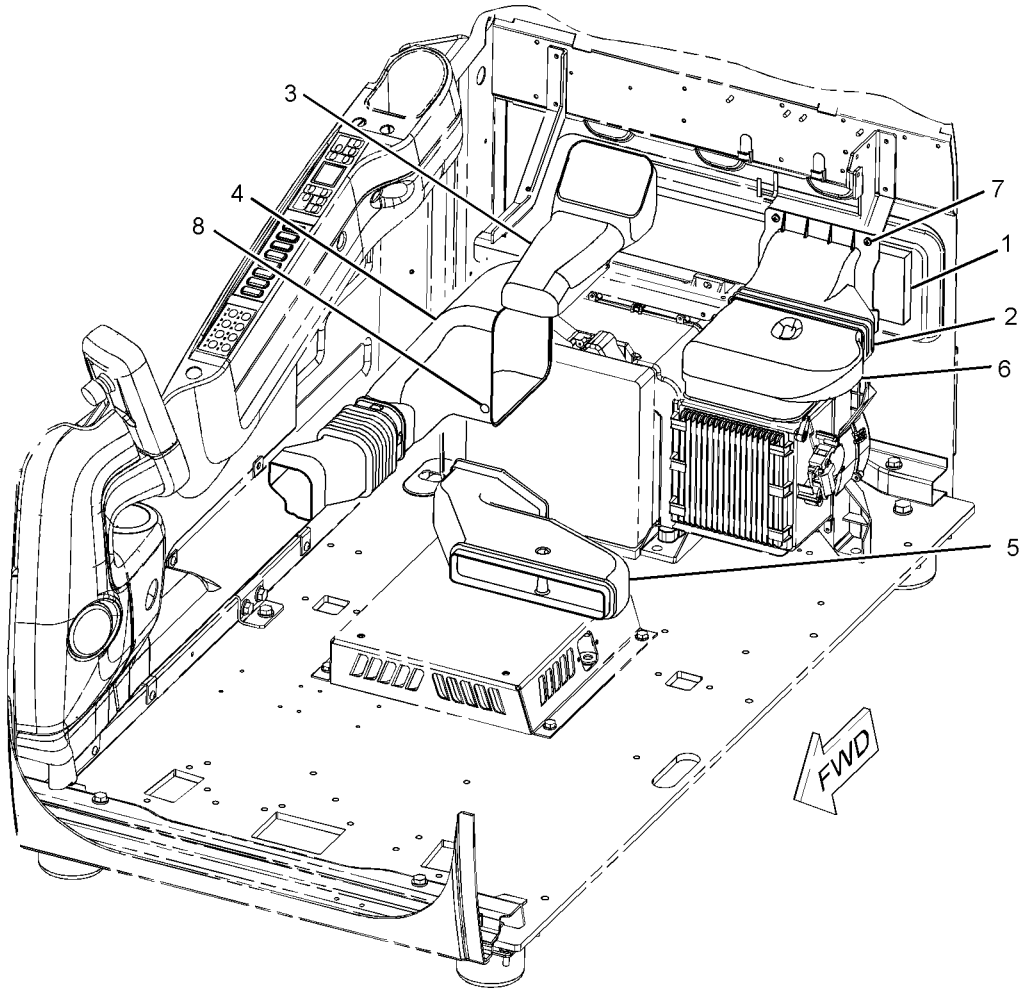

GRAPHIC #1 **<END>** g01126665

OPERATOR STATION

240-5071 FLOOR MAT

S/N: JEG1-UP

AN ATTACHMENT

SMCS-726M **i02605554**

NOTE	REF NO	GRAPHIC REF	PART NUMBER	QTY	PART NAME 1 2 3 4 5 6 (PRODUCT LEVEL)	SEE PAGE
					(NO SERVICED PARTS)	

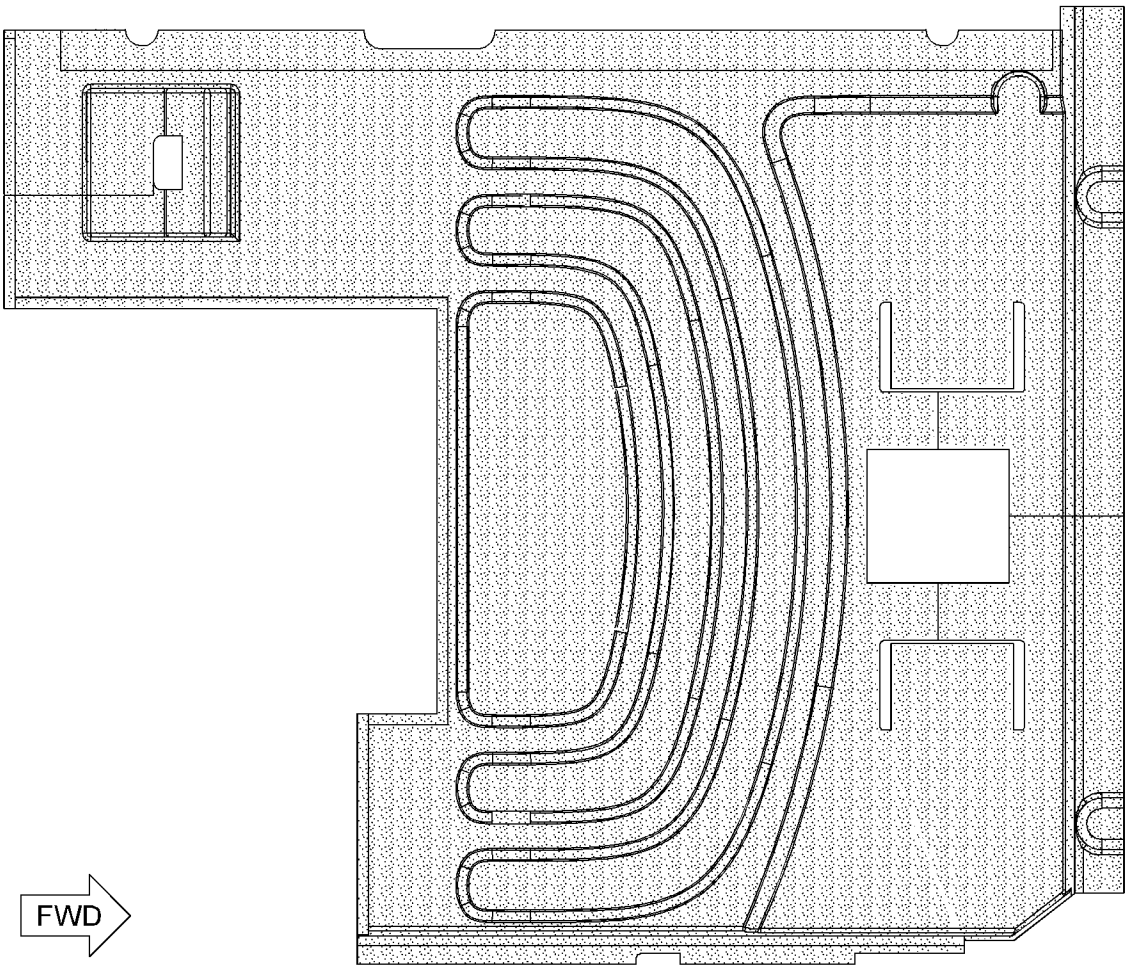

GRAPHIC #1 **<END>** g01305327

OPERATOR STATION

240-5073 FLOOR MAT

S/N: JEG1-UP

AN ATTACHMENT

SMCS-726M **i02963440**

NOTE	REF NO	GRAPHIC REF	PART NUMBER	QTY	PART NAME 1 2 3 4 5 6 (PRODUCT LEVEL)	SEE PAGE
					(NO SERVICED PARTS)	

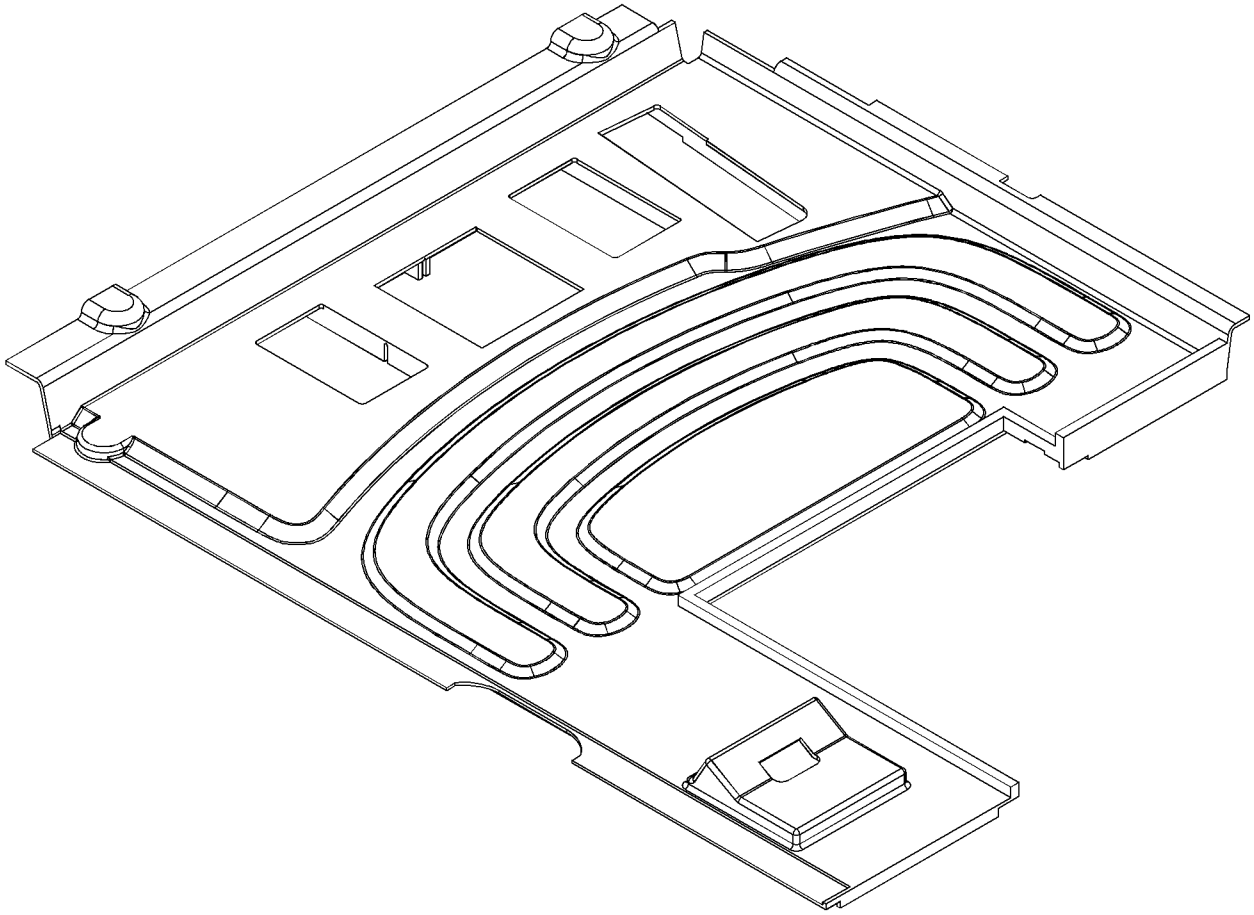

GRAPHIC #1 **<END>** g01124624

305-0326 FLOOR MAT

S/N: JEG1-UP

FIELD REPLACEMENT ORDER 240-5071—PAGE: 588

AN ATTACHMENT

SMCS-726M **i02896155**

NOTE	REF NO	GRAPHIC REF	PART NUMBER	QTY	PART NAME 1 2 3 4 5 6 (PRODUCT LEVEL)	SEE PAGE
					(NO SERVICED PARTS)	

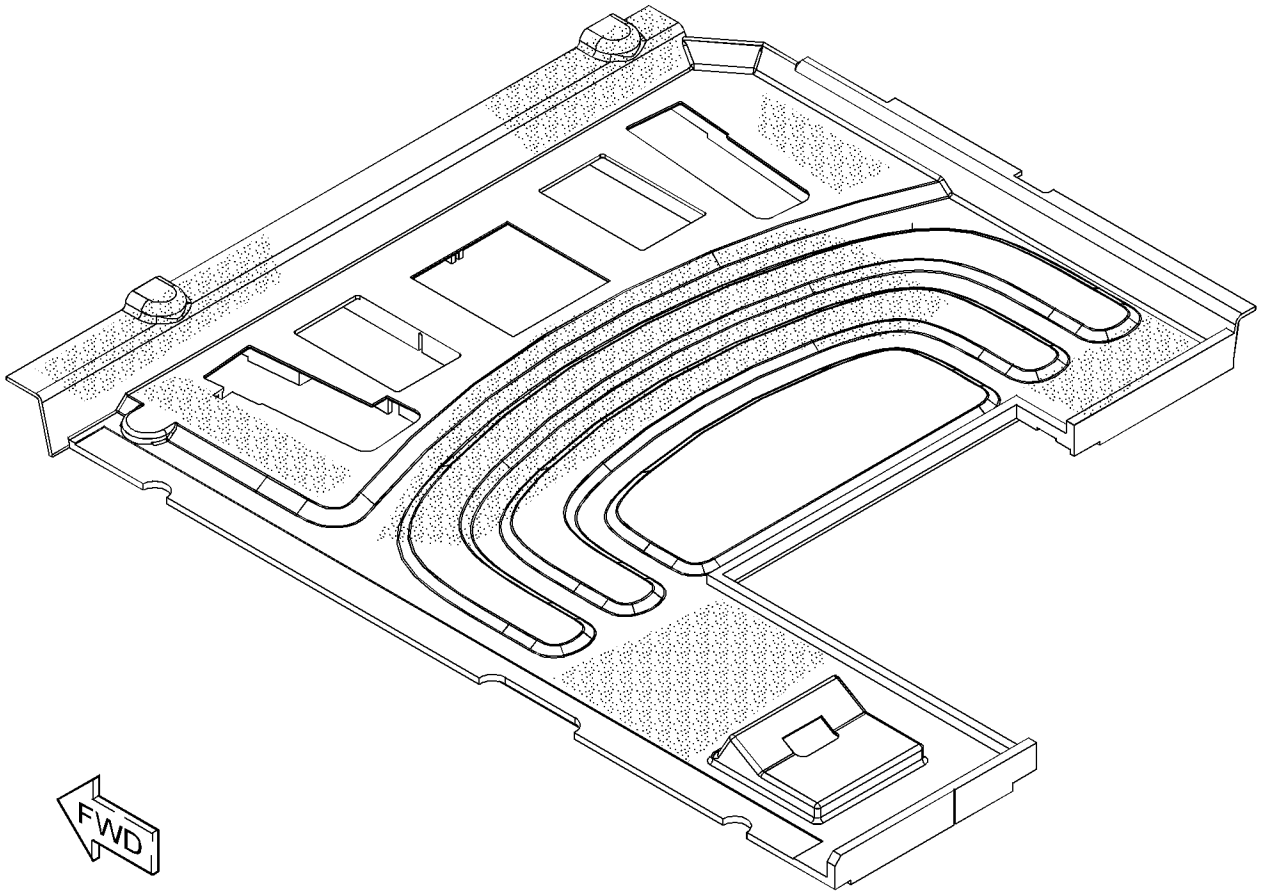

GRAPHIC #1 **<END>** g01374693

178-5549 GUARD AR-OVERHEAD

S/N: JEG1-UP

CANNOT BE USED WITH GUARD AR-VANDAL, GUARD GP-WINDOW AN ATTACHMENT

SMCS-7159 **i01677826**

NOTE	PART NUMBER	QTY	PART NAME 1 2 3 4 5 6 (PRODUCT LEVEL)	SEE PAGE
Y	*171-7485*	1	GUARD GP-FRONT WINDOW	592
Y	*164-0497*	1	GUARD GP-OVERHEAD	594

Y - SEPARATE ILLUSTRATION

<END>

171-7485 GUARD GP-FRONT WINDOW

S/N: JEG1-UP
PART OF 178-5549 GUARD AR-OVERHEAD
AN ATTACHMENT

SMCS-7182, 7315 **i05400662**

NOTE	REF NO	GRAPHIC REF	PART NUMBER	QTY	PART NAME 1 2 3 4 5 6 (PRODUCT LEVEL)	SEE PAGE
	1	1	**5D-4822**	4	RING-RETAINING	
	2	1	**6C-8382**	2	SPRING-LATCH	
	4	1	**316-8908**	1	GUARD AS-WINDOW	
	5	1	**176-1925**	2	SPRING AS-GAS (FRONT WINDOW GUARD)	
	6	1	**176-1928**	2	BRACKET AS	
	7	1	**196-1569**	1	SUPPORT AS	
	8	1	**196-1571**	1	SUPPORT AS	
	9	1	**196-1572**	2	LATCH AS	
	10	1	**258-0330**	2	BRACKET AS	
	11	1	**201-4534**	2	BOLT (M16X2X26-MM)	
	12	1	**201-4535**	2	PIN	
M	13	1	**096-4882**	2	LOCKNUT (M8X1.25-THD)	
B	15	1	**4I-6602**	8	BOSS (M12X1.75X20-MM)	
M	16	1	**7X-2553**	2	BOLT (M16X2X40-MM)	
M	17	1	**7Y-0623**	2	LOCKNUT (M16X2-THD)	
M	18	1	**8T-4139**	6	BOLT (M12X1.75X30-MM)	
M	19	1	**8T-4192**	2	BOLT (M12X1.75X25-MM)	
	20	1	**8T-4223**	8	WASHER-HARD (13.5X25.5X3-MM THK)	
	21	1	**8T-4224**	4	WASHER-HARD (8.8X16X2-MM THK)	
	22	1	**9X-8257**	4	WASHER (17.5X30X3.5-MM THK)	
	23	1	**298-4195**	1	FILM-CERTIFICATION (OPS GUARD, READ OMM, ENGLISH)	
	25	1	**219-0305**	1	FILM-WARNING (NO WELD, NO DRILL, READ OMM)	

B - USE AS REQUIRED
M - METRIC PART

171-7485 **GUARD GP-FRONT WINDOW (*contd.*)** **i05400662**

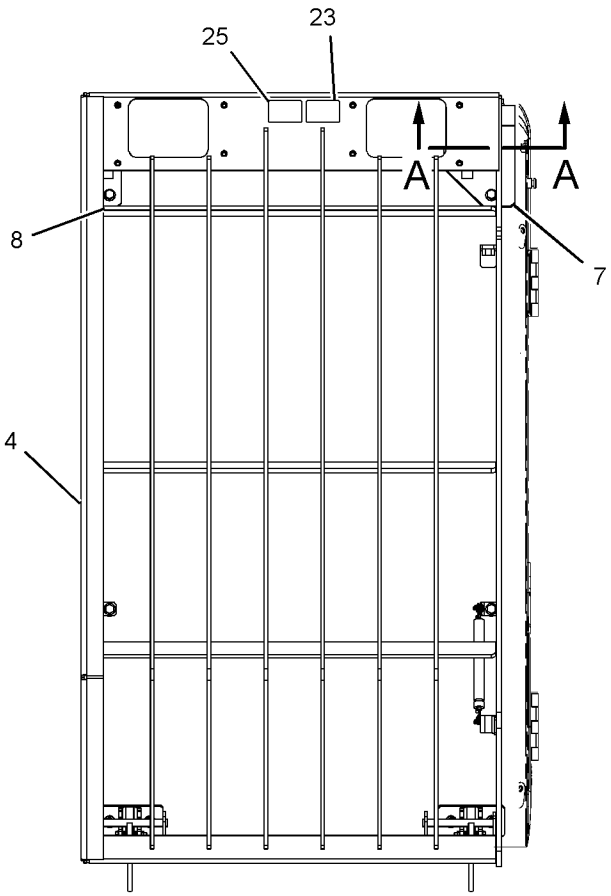

FRONT VIEW

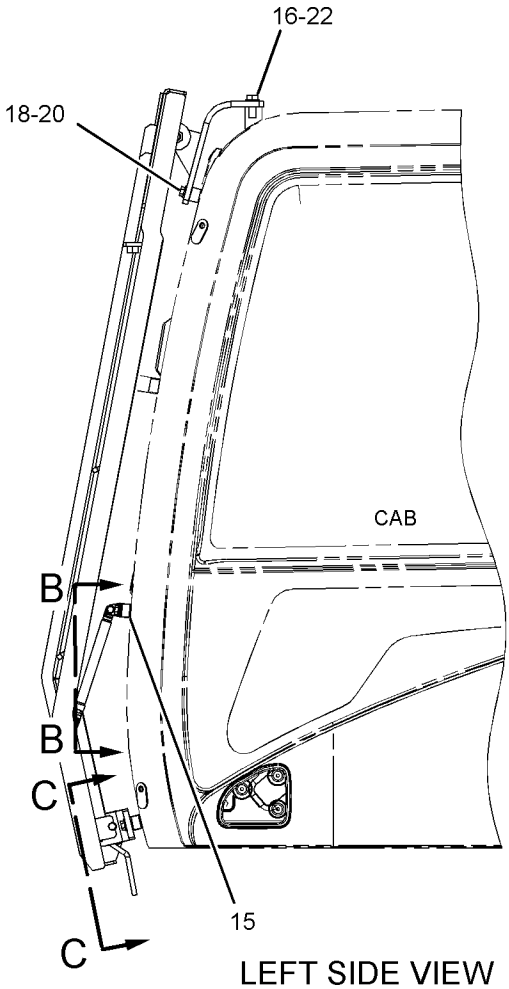

LEFT SIDE VIEW

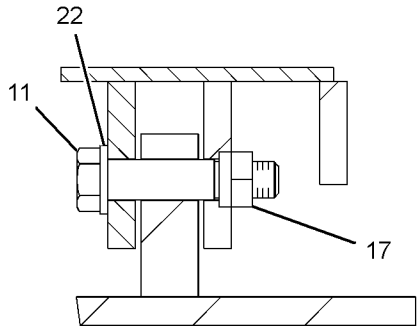

SECTION A-A

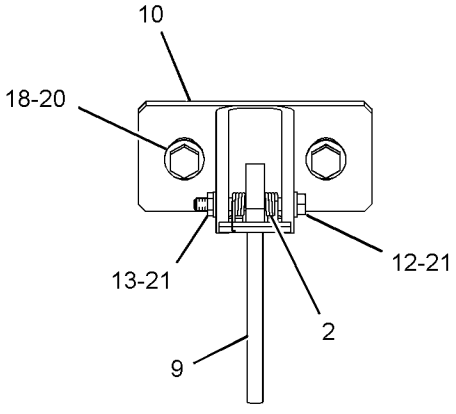

SECTION C-C

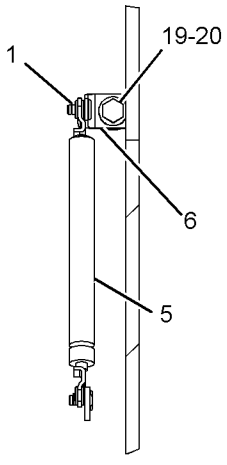

SECTION B-B

GRAPHIC #1

<END>

g01620958

164-0497 GUARD GP-OVERHEAD

S/N: JEG1-UP

PART OF 178-5549 GUARD AR-OVERHEAD

AN ATTACHMENT

SMCS-7159 **i01682709**

NOTE	REF NO	GRAPHIC REF	PART NUMBER	QTY	PART NAME 1 2 3 4 5 6 (PRODUCT LEVEL)	SEE PAGE
	1	1	**167-7141**	1	GUARD AS	
M	2	1	**8T-4174**	2	BOLT (M16X2X120-MM)	
	3	1	**9X-8257**	4	WASHER (17.5X30.0X3.5-MM THK)	
M	4	1	**7X-2559**	2	BOLT (M16X2X160-MM)	
	5	1	**090-8865**	2	SPACER (17X40X3-MM THK)	
	6	1	**116-1517**	1	PLATE-WARNING (STRUCTURE MODIFICATION)	
	7	1	**4B-4158**	4	SCREW-DRIVE (NO 4X0.25-IN)	
	8	1	**8V-1715**	1	SPACER (20.5X35X12-MM THK)	

M - METRIC PART

164-0497 **GUARD GP-OVERHEAD (*contd.*)** **i01682709**

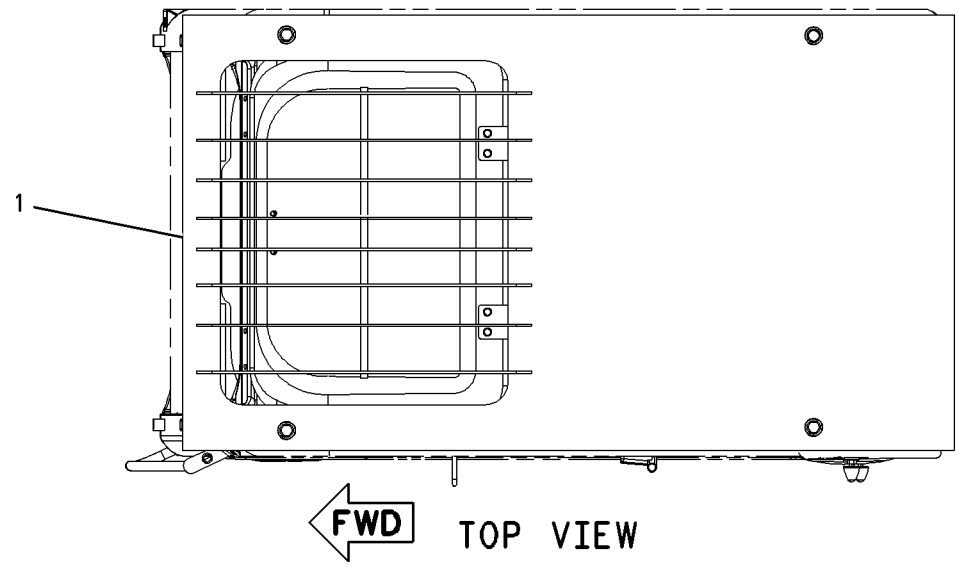

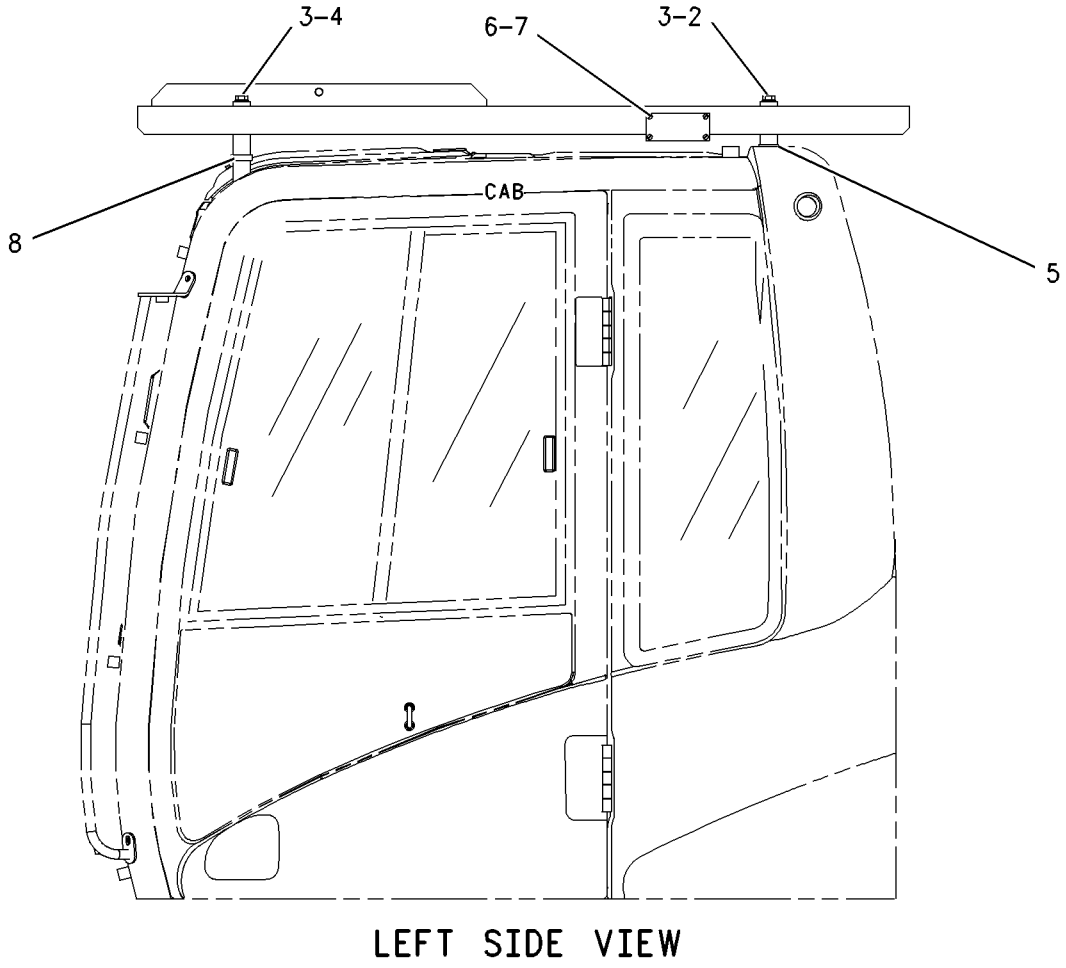

GRAPHIC #1 **<END>** g00867851

259-7350 HATCH GP-ROOF

S/N: JEG1-UP

PART OF 388-0065, 416-9607 CAB GP

AN ATTACHMENT

SMCS-7303 **i05425653**

NOTE	REF NO	GRAPHIC REF	PART NUMBER	QTY	PART NAME 1 2 3 4 5 6 (PRODUCT LEVEL)	SEE PAGE
	1	1	**259-7352**	1	CATCH	
	2	1	**189-2847**	1	SEAL	
	3	1	**259-7351**	1	HATCH AS	
	3A	1	**176-1949**	2	BRACKET AS	
	3B	1	**189-2717**	2	HINGE AS	
	4	1	**099-3506**	2	SPRING AS-GAS (HATCH)	
M	5	1	**105-2169**	4	BOLT AS	
	6	1	**5D-4822**	4	RING-RETAINING	
M	7	1	**9X-2042**	2	SCREW-TRUSS HEAD (M6X1X12-MM)	

M - METRIC PART

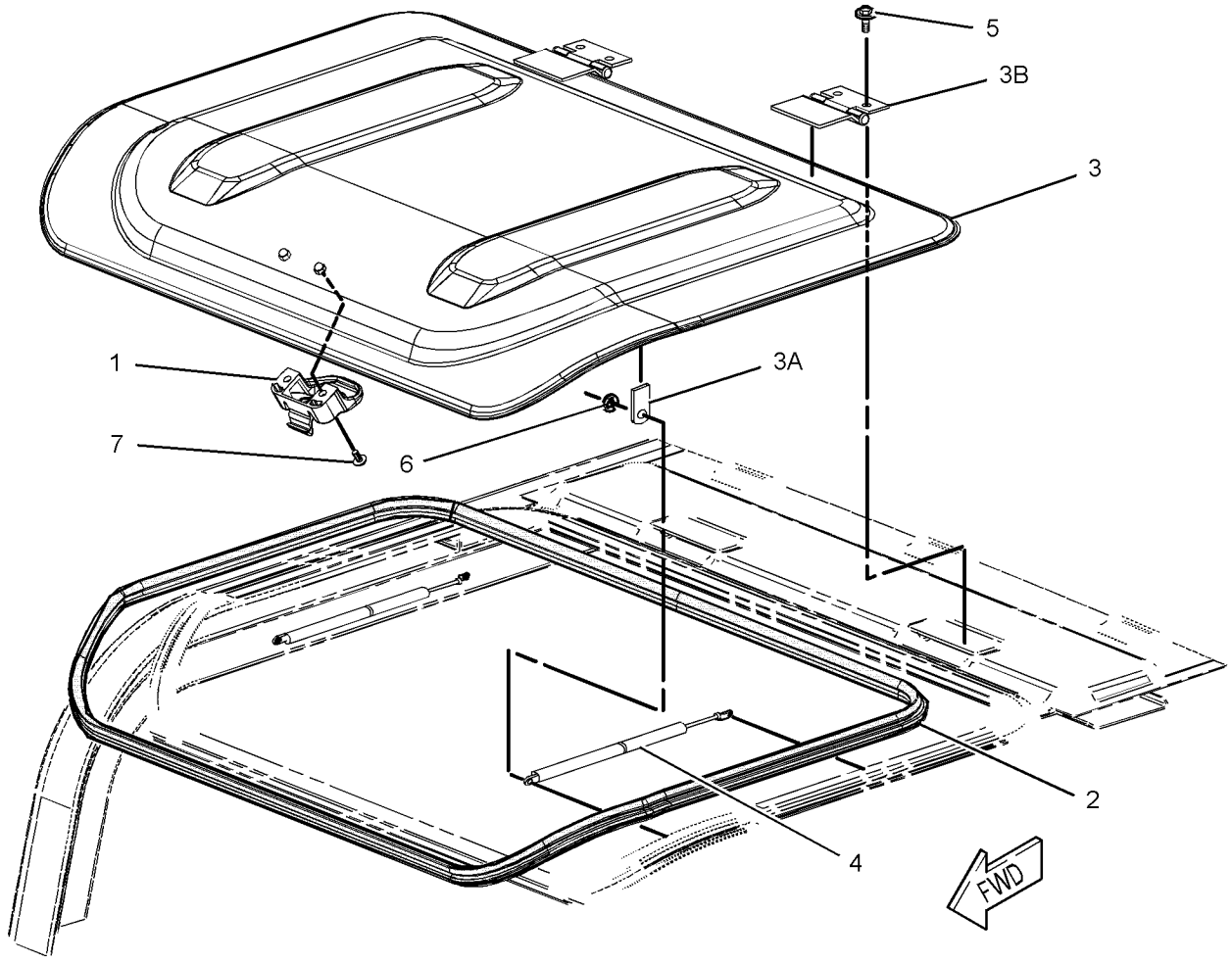

GRAPHIC #1 **<END>** g01242907

267-8071 HORN GP-ELECTRIC

S/N: JEG1-UP

PART OF 420-3127 CHASSIS AR

SMCS-7402 **i04909251**

NOTE	REF NO	GRAPHIC REF	PART NUMBER	QTY	PART NAME 1 2 3 4 5 6 (PRODUCT LEVEL)	SEE PAGE
CY	1	1	*381-7416*	1	HORN GP-ELECTRIC	600
	2	1	**8T-4121**	2	WASHER-HARD (11X21X2.5-MM THK)	
M	3	1	**8T-4195**	2	BOLT (M10X1.5X30-MM)	

C - CHANGE FROM PREVIOUS TYPE
M - METRIC PART
Y - SEPARATE ILLUSTRATION

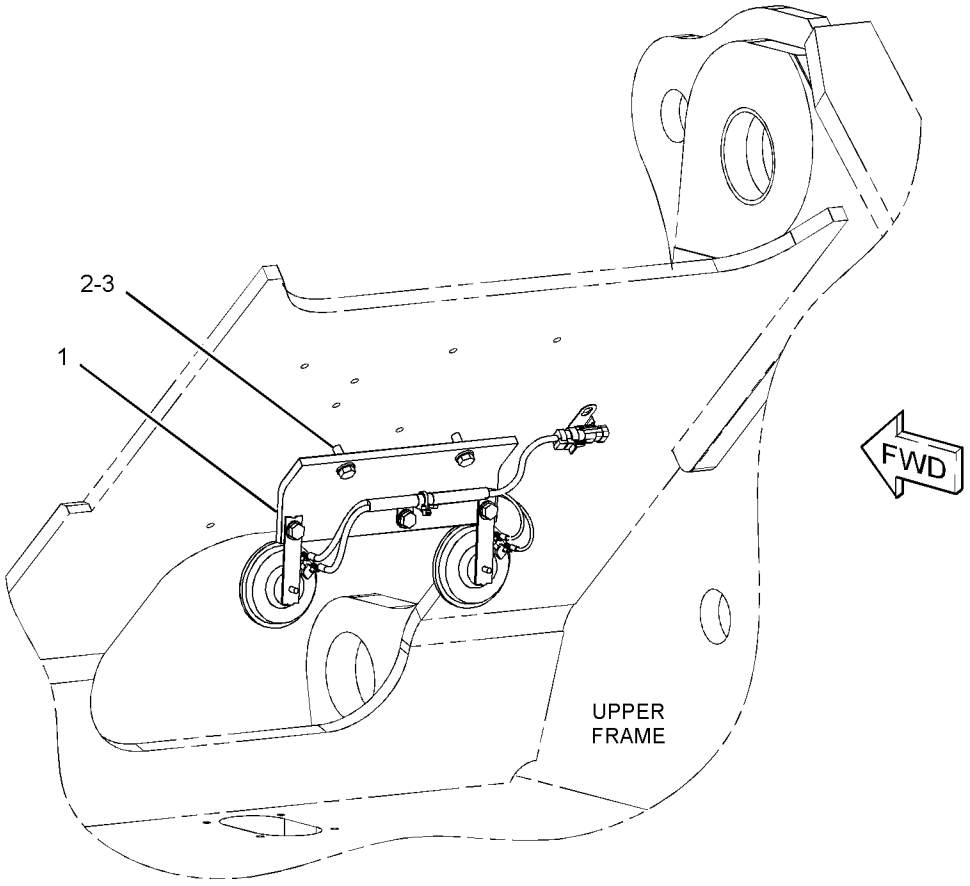

GRAPHIC #1 **<END>** g01289732

291-7559 HORN GP-ELECTRIC

S/N: JEG1-UP

PART OF 381-7416 HORN GP-ELECTRIC

SMCS-7402 **i05349702**

NOTE	REF NO	GRAPHIC REF	PART NUMBER	QTY	PART NAME 1 2 3 4 5 6 (PRODUCT LEVEL)	SEE PAGE
	1	1	**3S-2093**	1	STRAP-CABLE	
	2	1	**7Y-3919**	1	HORN AS (24-VOLT, LOW TONE)	
	3	1	**7Y-3920**	1	HORN AS (24-VOLT, HIGH TONE)	
					(EACH HORN AS INCLUDES)	
		1	**095-0826**	2	LOCKWASHER	
M		1	**095-7930**	2	SCREW-MACHINE (M4X0.7X6-MM)	
	4	1	**291-7560**	1	HARNESS AS-CHASSIS (HORN)	
	5	1	**291-7561**	1	BRACKET	
	6	1	**132-5789**	1	CLIP	
	7	1	**8T-4121**	3	WASHER-HARD (11X21X2.5-MM THK)	
M	8	1	**8T-4191**	3	BOLT (M10X1.5X16-MM)	

M - METRIC PART

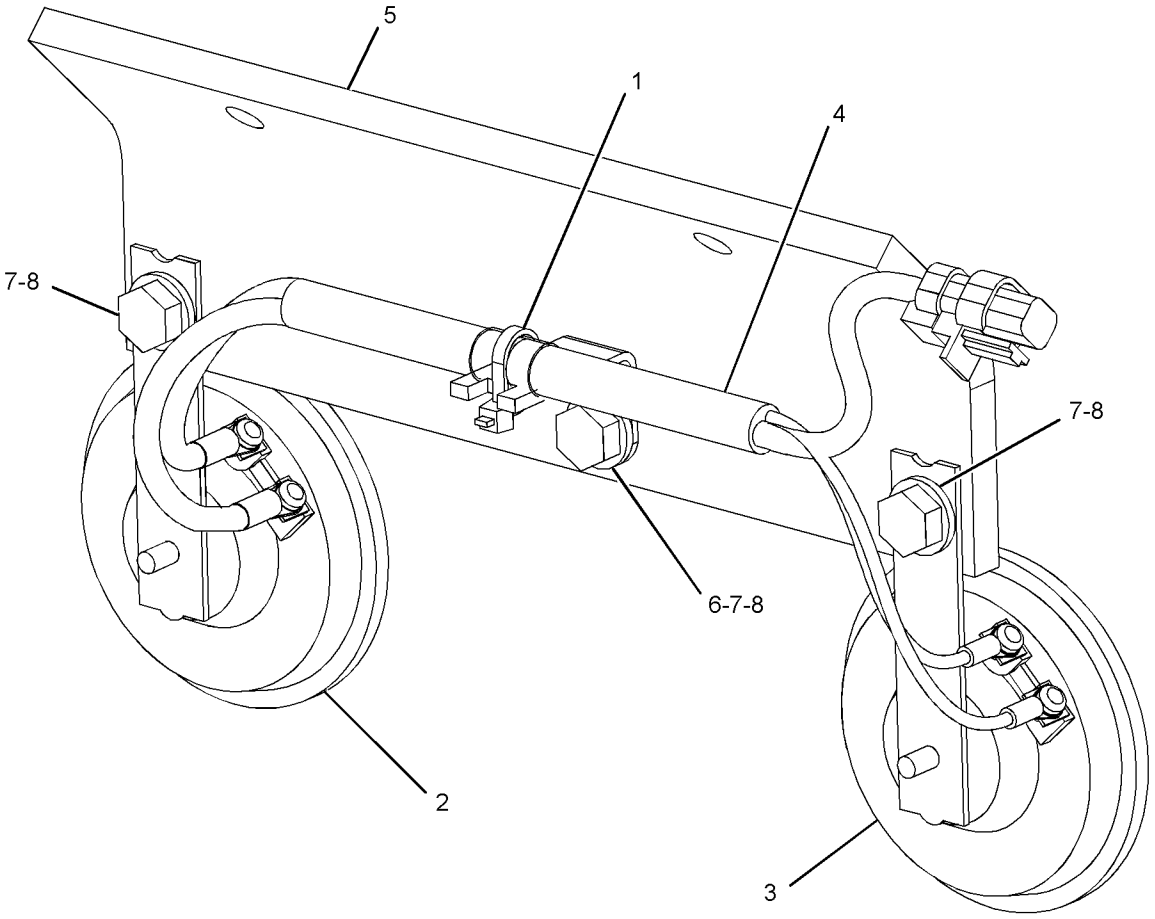

GRAPHIC #1 **<END>** g03389246

377-6536 HORN GP-ELECTRIC

S/N: JEG1-UP
24-VOLT
PART OF 381-7416 HORN GP-ELECTRIC

SMCS-7402 **i05518599**

NOTE	REF NO	GRAPHIC REF	PART NUMBER	QTY	PART NAME 1 2 3 4 5 6 (PRODUCT LEVEL)	SEE PAGE
	1	1	**3S-2093**	1	STRAP-CABLE	
	2	1	**7Y-3919**	1	HORN AS (24-VOLT, LOW TONE)	
	3	1	**7Y-3920**	1	HORN AS (24-VOLT, HIGH TONE)	
					(EACH HORN AS INCLUDES)	
		1	**1H-4393**	2	LOCKWASHER	
M		1	**095-7930**	2	SCREW-MACHINE (M4X0.7X6-MM)	
	4	1	**291-7560**	1	HARNESS AS-CHASSIS (HORN)	
		1	**3S-2093**	1	STRAP-CABLE	
		1	**9W-0844**	2	SOCKET-CONNECTOR (14-GA TO 16-GA)	
		1	**2L-8065**	2	TERMINAL-RING (10-GA TO 12-GA, NO. 8 SCREW)	
		1	**2L-8075**	2	TERMINAL-RING (14-GA TO 16-GA, NO. 8 SCREW)	
		1	**230-4011**	1	PLUG AS-CONNECTOR (2-PIN)	
		1	**264-7029**	1	SEAL-CONNECTOR	
	5	1	**377-5887**	1	BRACKET AS	
	6	1	**8T-4121**	2	WASHER-HARD (11X21X2.5-MM THK)	
M	7	1	**8T-4137**	2	BOLT (M10X1.5X20-MM)	

M - METRIC PART

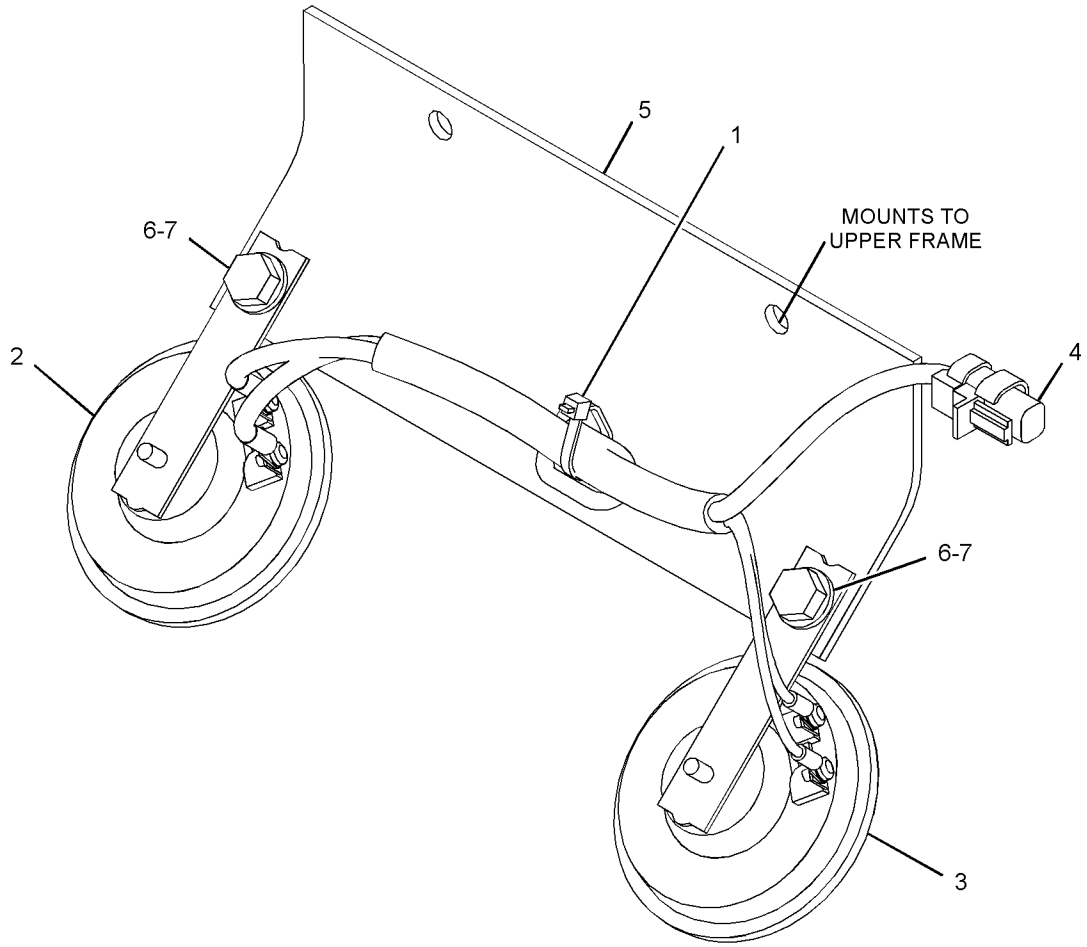

GRAPHIC #1 **<END>** g03097697

381-7416 HORN GP-ELECTRIC

S/N: JEG1-UP

PART OF 267-8071 HORN GP-ELECTRIC

SMCS-7402 **i04944022**

NOTE	PART NUMBER	QTY	PART NAME 1 2 3 4 5 6 (PRODUCT LEVEL)	SEE PAGE
Y	*291-7559*	1	HORN GP-ELECTRIC	598
			—OR—	
Y	*377-6536*	1	HORN GP-ELECTRIC	599

Y - SEPARATE ILLUSTRATION

<END>

164-0528 LEVER GP-CAB DOOR

S/N: JEG1-UP
PART OF 388-9102 CAB GP
AN ATTACHMENT

SMCS-7308 **i03990635**

NOTE	REF NO	GRAPHIC REF	PART NUMBER	QTY	PART NAME 1 2 3 4 5 6 (PRODUCT LEVEL)	SEE PAGE
	1	1	**156-6642**	1	LEVER AS	
	2	1	**164-0664**	1	BRACKET	
	3	1	**176-1941**	1	PIN	
	4	1	**185-8280**	1	WASHER-WAVE (10.5X15X0.3-MM THK)	
	5	1	**185-8281**	1	SPRING	

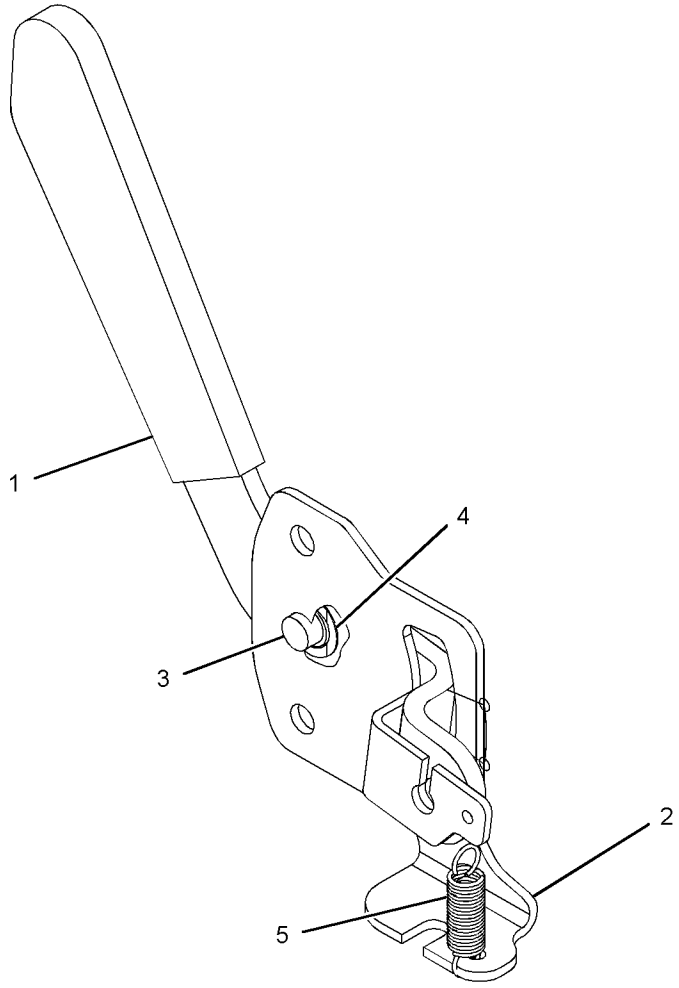

GRAPHIC #1 **<END>** g01217036

372-9388 LINES GP-AIR CONDITIONER

S/N: JEG1-UP

PART OF 420-3127 CHASSIS AR

SMCS-1808 **i05458575**

NOTE	REF NO	GRAPHIC REF	PART NUMBER	QTY	PART NAME 1 2 3 4 5 6 (PRODUCT LEVEL)	SEE PAGE
	1	1	**122-9605**	2	TUBE	
	2	2	**122-9657**	2	CLAMP	
	3	2	**130-0252**	2	HOSE-DRAIN	
	4	2	**176-1902**	1	DRYER-REFRIGERANT (RECEIVER)	
	5	2	**235-8891**	1	PLATE	
	6	1	**235-9014**	8	CLAMP-SPRING	
	7	1	**235-9015**	2	HOSE	
	8	2	**284-4552**	1	TUBE AS	
	9	2	**293-1118**	1	TUBE AS	
	10	2	**293-1119**	1	TUBE AS	
	11	2	**293-1120**	1	HOSE AS	
	12	1	**305-0441**	2	BAND-MARKER (HS)	
	13	1	**305-0442**	2	BAND-MARKER (HR)	
	14	2	**372-9409**	1	HOSE AS-REFRIGERANT	
		2	**121-7136**	1	SEAL-O-RING	
		2	**245-7851**	1	CAP	
	15	2	**372-9410**	1	HOSE AS-REFRIGERANT	
		2	**121-7137**	1	SEAL-O-RING	
		2	**245-7850**	1	CAP	
	16	1,2	**383-5709**	1	BRACKET AS	
	17	2	**418-5090**	1	BRACKET AS	
M		2	**8T-3490**	1	NUT-WELD (M10X1.5-THD)	
	18	2	**100-4336**	3	CLIP	
	19	2	**121-7098**	1	BRACKET AS	
M		2	**8T-4138**	2	BOLT (M6X1X20-MM)	
		2	**9X-8256**	2	WASHER (6.6X12X2-MM THK)	
	20	2	**132-5789**	1	CLIP	
	21	2	**5K-3294**	3	CLIP	
	22	2	**5P-9085**	3	CLIP	
	23	1,2	**6D-1641**	13	CLIP	
	24	2	**6D-3479**	2	CLIP	
	26	2	**6V-3265**	1	CLIP	
M	27	2	**6V-7357**	3	BOLT (M6X1X25-MM)	
	28	2	**6W-7293**	1	GROMMET	
	29	2	**7K-1181**	1	STRAP-CABLE	
	30	2	**8M-2770**	1	CLIP	
	32	1,2	**8T-4121**	22	WASHER-HARD (11X21X2.5-MM THK)	
M	33	2	**8T-4136**	4	BOLT (M10X1.5X25-MM)	
M	34	1,2	**8T-4137**	17	BOLT (M10X1.5X20-MM)	
M	35	1,2	**8T-4189**	3	BOLT (M8X1.25X20-MM)	
M	36	2	**8T-4191**	1	BOLT (M10X1.5X16-MM)	
M	37	1,2	**8T-4200**	2	BOLT (M8X1.25X16-MM)	
	38	1,2	**8T-4224**	7	WASHER-HARD (8.8X16X2-MM THK)	
M	39	2	**8T-4908**	2	BOLT (M8X1.25X25-MM)	
M	40	2	**8T-4971**	2	BOLT (M6X1X30-MM)	
	41	2	**9X-8256**	5	WASHER (6.6X12X2-MM THK)	
E	42	1	**5P-0767**		HOSE (370-CM)	
E	42A	1	**5P-0767**		HOSE (350-CM)	

E - ORDER BY THE CENTIMETER
M - METRIC PART

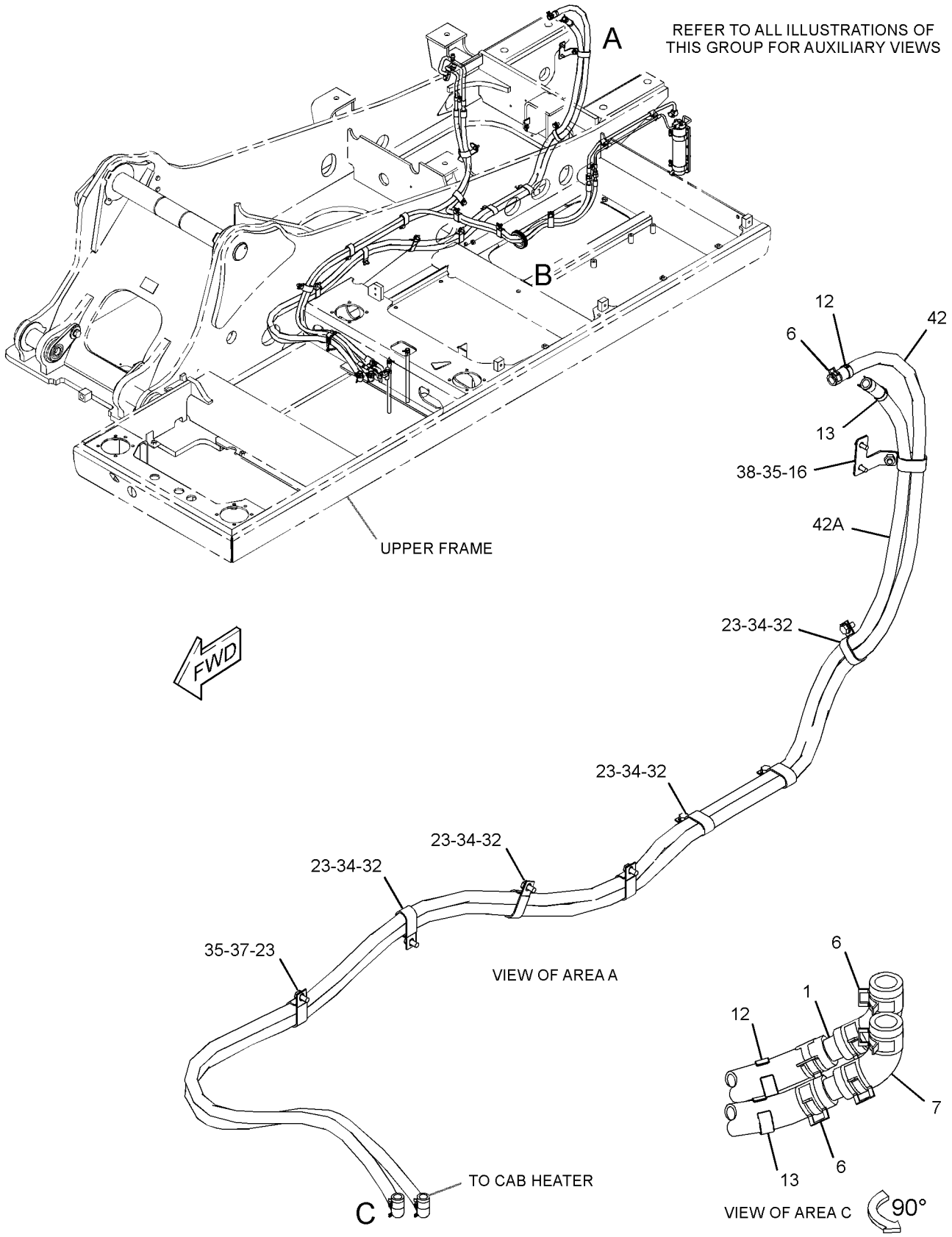

GRAPHIC #1

g03368295

372-9388 **LINES GP-AIR CONDITIONER (*contd.*)** **i05458575**

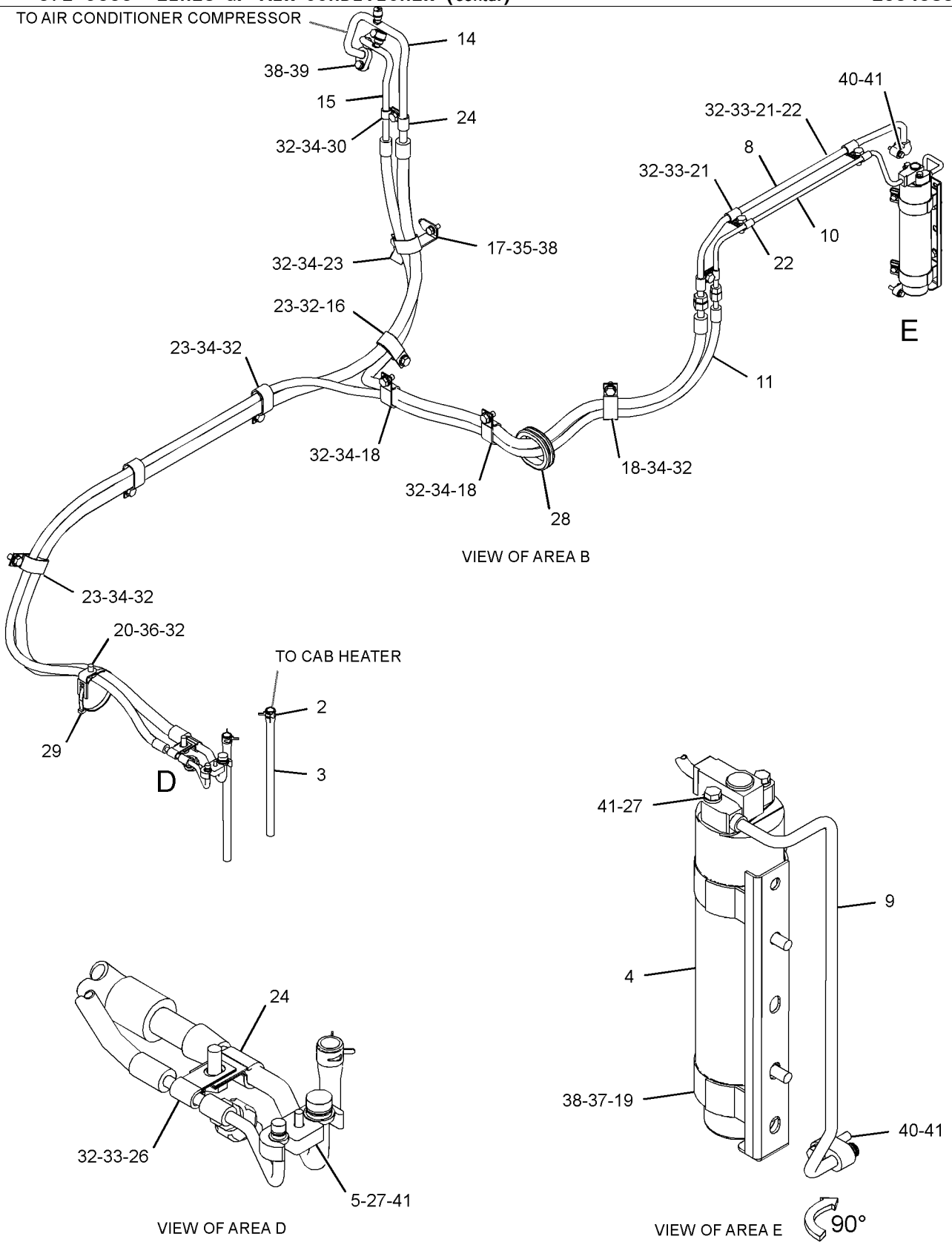

GRAPHIC #2 **<END>** g03368296

7Y-0059 LITERATURE GP

S/N: JEG1-UP

PART OF 420-3127 CHASSIS AR

SMCS-7300 **i00831590**

NOTE	PART NUMBER	QTY	PART NAME 1 2 3 4 5 6 (PRODUCT LEVEL)	SEE PAGE
	099-3645	1	CABLE-LANYARD	
	5P-8500	2	KEY	
	5P-7958	2	SLEEVE-CABLE SPLICE	

<END>

OPERATOR STATION

142-3836 MIRROR GP-REAR VIEW

S/N: JEG1-UP

PART OF 420-3127 CHASSIS AR

SMCS-7319 **i05253855**

NOTE	REF NO	GRAPHIC REF	PART NUMBER	QTY	PART NAME 1 2 3 4 5 6 (PRODUCT LEVEL)	SEE PAGE
	1	1	**8T-7971**	4	WASHER-HARD (13.5X25.5X5-MM THK)	
	2	1	**137-2270**	1	MIRROR	
	3	1	**165-3065**	1	BRACKET-MIRROR	
M	4	1	**8T-4192**	4	BOLT (M12X1.75X25-MM)	

M - METRIC PART

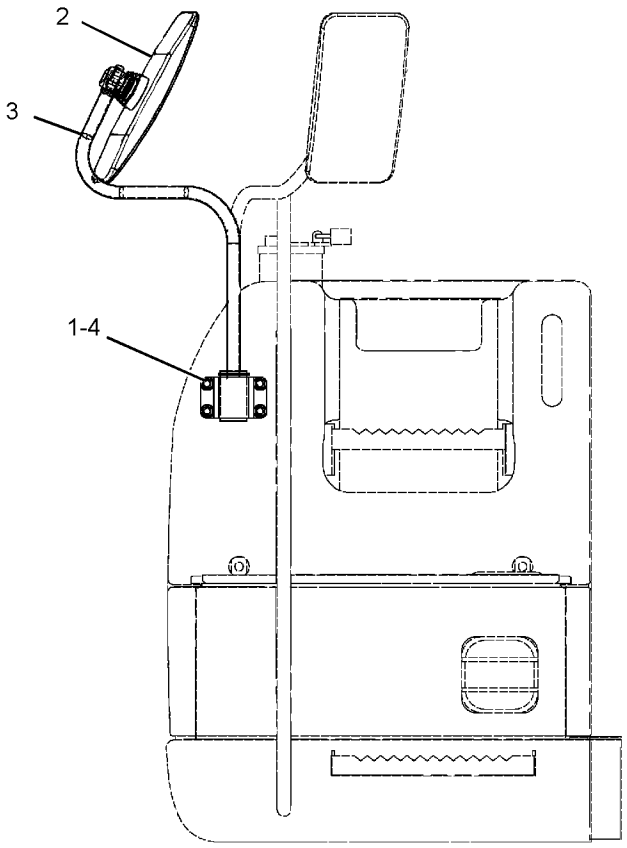

FRONT VIEW

GRAPHIC #1 **<END>** g02089313

327-6550 MIRROR GP-REAR VIEW

S/N: JEG1-UP
PART OF 388-9102 CAB GP
AN ATTACHMENT

SMCS-7319 **i03678553**

NOTE	REF NO	GRAPHIC REF	PART NUMBER	QTY	PART NAME 1 2 3 4 5 6 (PRODUCT LEVEL)	SEE PAGE
M	1	1	**8T-0269**	2	BOLT-SOCKET HEAD (M6X1X20-MM)	
	2	1	**9X-8256**	2	WASHER (6.6X12X2-MM THK)	

M - METRIC PART

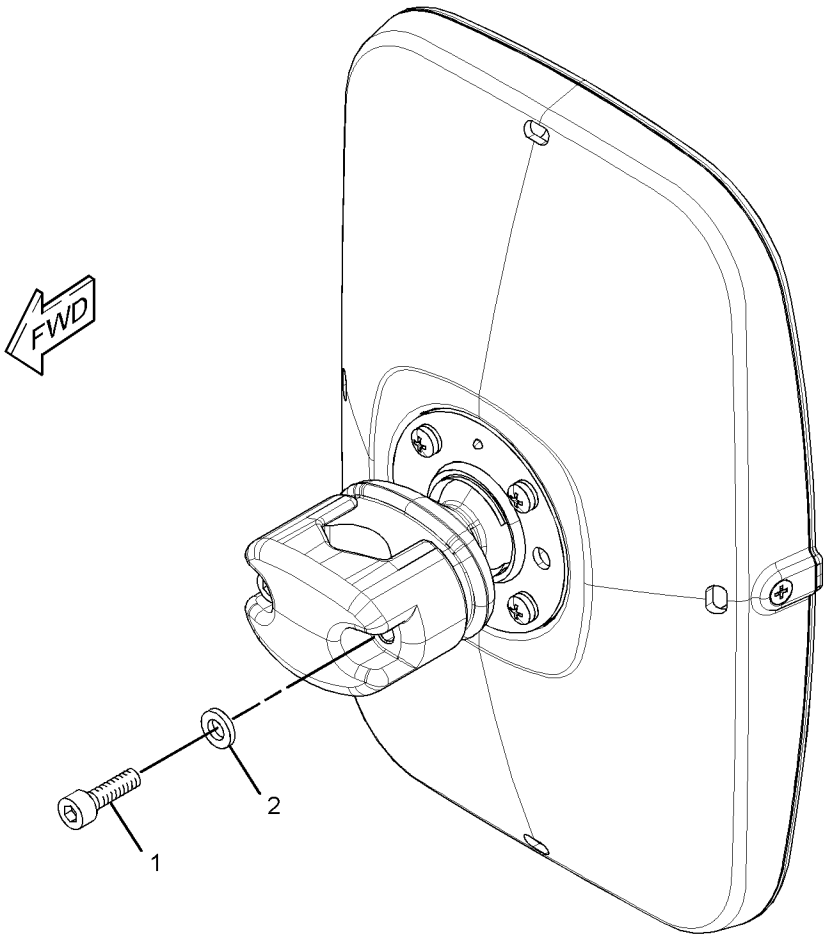

GRAPHIC #1 **<END>** g01615528

420-4514 MONITOR & MTG GP-OPERATOR

S/N: JEG1-UP

PART OF 434-3892, 434-3893 CAB GP, 422-0645 OPERATOR AR-ENCLOSED ROPS

ALSO AN ATTACHMENT

SMCS-7490 **i05536532**

NOTE	REF NO	GRAPHIC REF	PART NUMBER	QTY	PART NAME 1 2 3 4 5 6 (PRODUCT LEVEL)	SEE PAGE
	1	1	**422-0265**	1	BRACKET AS	
	2	1	**422-0268**	1	BRACKET	
Y	3	1	**433-4526**	1	MONITOR GP-OPERATOR	609
	4	1	**163-6795**	1	STRAP-CABLE	
	5	1	**3S-2093**	3	STRAP-CABLE	
M	6	1	**9X-2042**	5	SCREW-TRUSS HEAD (M6X1X12-MM)	
M	7	1	**9X-2044**	3	SCREW-TRUSS HEAD (M6X1X16-MM)	

M - METRIC PART
Y - SEPARATE ILLUSTRATION

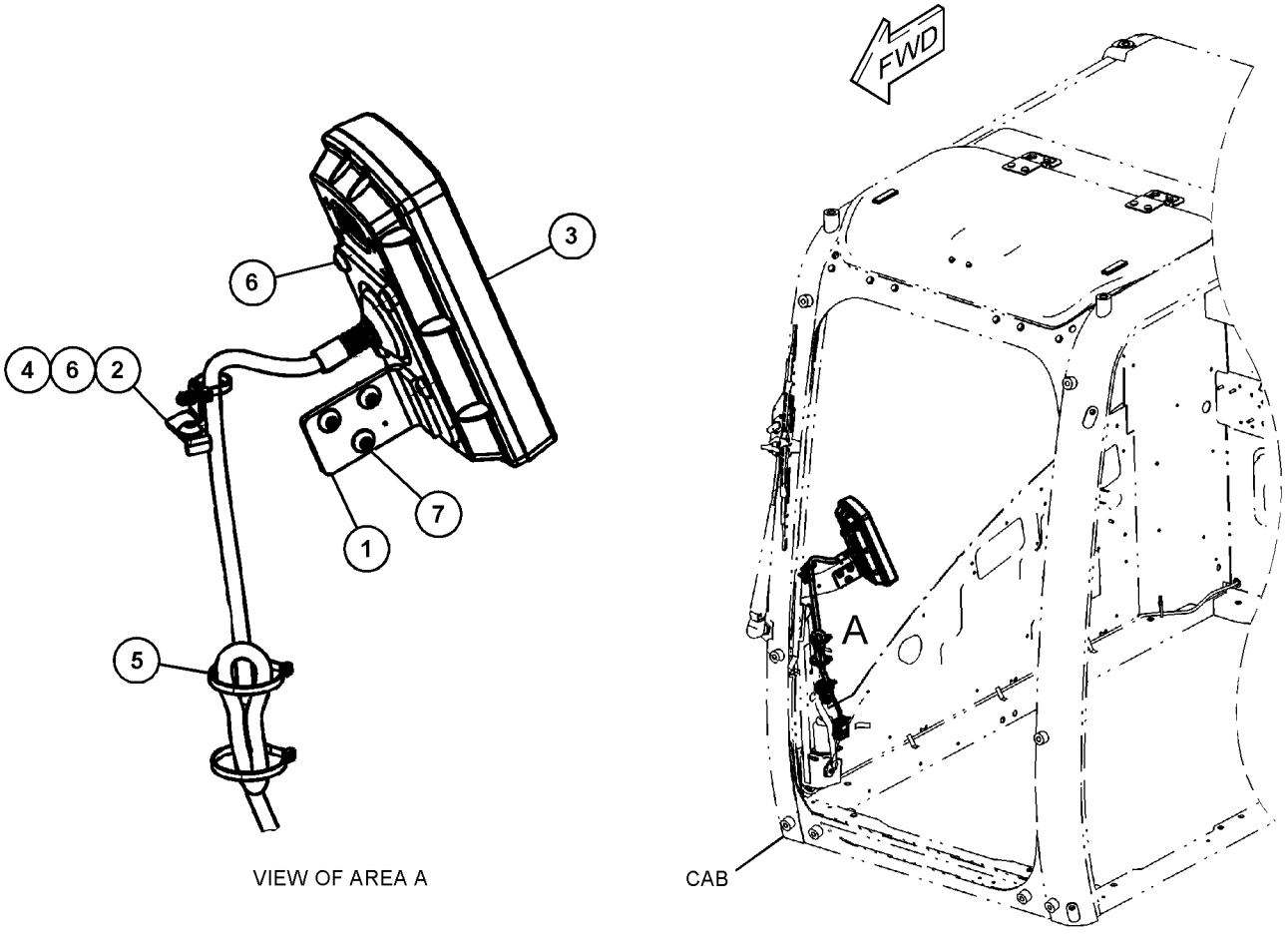

VIEW OF AREA A

GRAPHIC #1 **<END>** g03443737

433-4526 MONITOR GP-OPERATOR

S/N: JEG1-UP
PART OF 420-4514 MONITOR & MTG GP-OPERATOR
ALSO AN ATTACHMENT

SMCS-7490 **i05432500**

NOTE	REF NO	GRAPHIC REF	PART NUMBER	QTY	PART NAME 1 2 3 4 5 6 (PRODUCT LEVEL)	SEE PAGE
	1	1	**309-5711**	1	MONITOR GP-OPERATOR	
		1	**9X-3401**	18	PIN-CONNECTOR (16-GA TO 18-GA)	
					—OR—	
		1	**126-1767**	18	PIN-CONNECTOR (14-GA TO 16-GA)	
		1	**230-4010**	1	RECEPTACLE AS-CONNECTOR (12-PIN)	
		1	**243-4508**	1	RECEPTACLE AS-CONNECTOR (6-PIN)	
	2	1	**433-4527**	1	SOFTWARE GP-MONITOR	

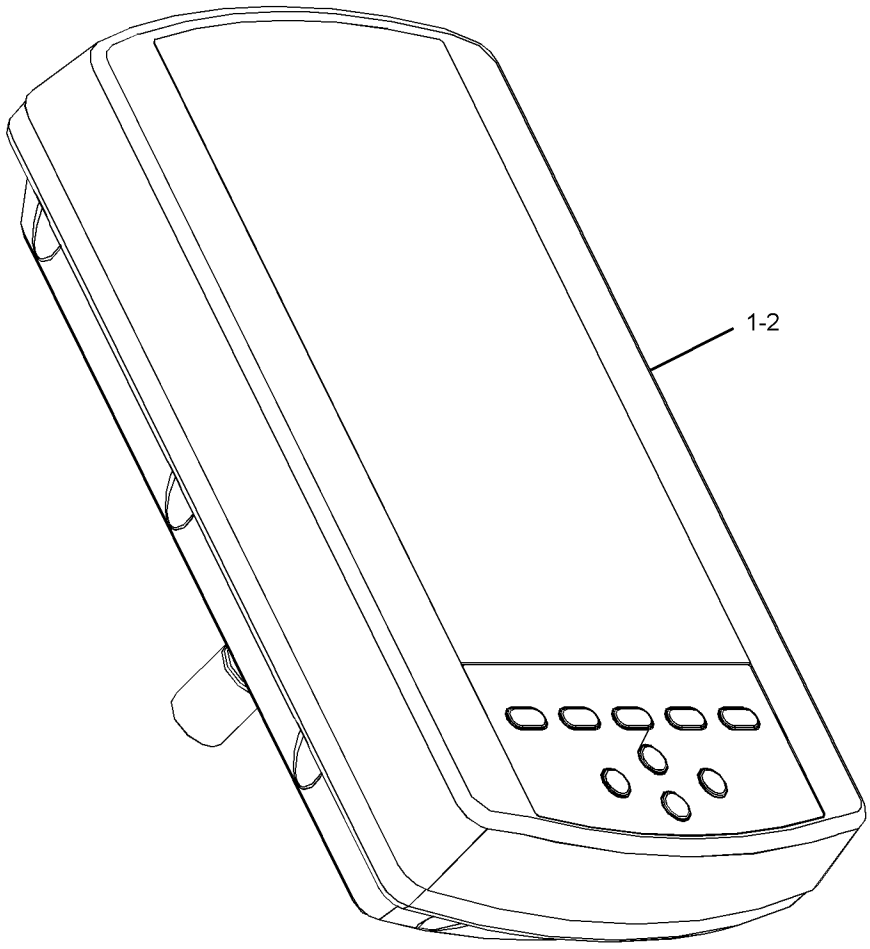

GRAPHIC #1 **<END>** g02240734

309-5771 MOUNTING GP-ANTENNA—PRODUCT LINK

S/N: JEG1-UP

PART OF 383-5427 INSTALLATION AR-COMMUNICATION

AN ATTACHMENT

SMCS-7338, 7606

i04328372

NOTE	REF NO	GRAPHIC REF	PART NUMBER	QTY	PART NAME 1 2 3 4 5 6 (PRODUCT LEVEL)	SEE PAGE
	1	1	**3S-2093**	2	STRAP-CABLE	
C	2	1	**141-6519**	1	SPACER (6.6X19X10-MM THK)	
M	3	1	**143-9397**	3	SCREW-PAN HEAD (M4X0.7X12-MM)	
	4	1	**284-8532**	1	ANTENNA AS (ROOF)	
		1	**301-0589**	1	ANTENNA (FLEXIBLE)	
		1	**355-0598**	1	NUT-SPECIAL	
C	5	1	**349-5413**	1	BRACKET	
C	6	1	**349-5414**	1	BRACKET AS	
M		1	**8T-3490**	2	NUT-WELD (M10X1.5-THD)	
	7	1	**095-0910**	4	CLIP	
	8	1	**161-6987**	3	WASHER-HARD (5.2X16X1.5-MM THK)	
CM	9	1	**6V-7357**	1	BOLT (M6X1X25-MM)	
C	10	1	**8T-4121**	2	WASHER-HARD (11X21X2.5-MM THK)	
CM	11	1	**8T-4137**	2	BOLT (M10X1.5X20-MM)	
M	12	1	**8T-4190**	1	BOLT (M16X2X25-MM)	
	13	1	**9X-2026**	1	WASHER (6.5X17X1-MM THK)	
	14	1	**9X-6165**	1	WASHER (6.5X22X2.5-MM THK)	
	15	1	**120-5737**	1	WASHER (17.5X40X4-MM THK)	

C - CHANGE FROM PREVIOUS TYPE
M - METRIC PART

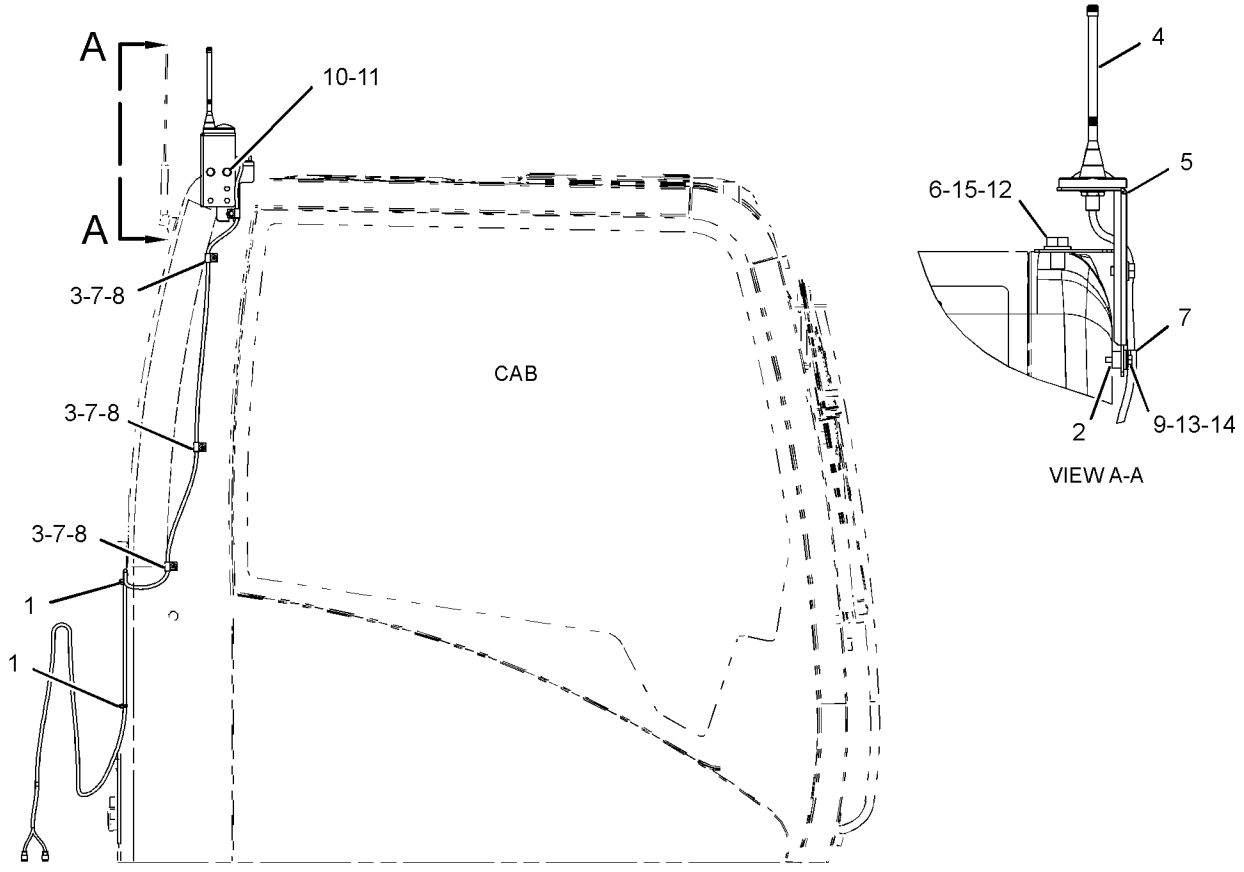

RIGHT SIDE VIEW

GRAPHIC #1

<END>

g02148772

245-7811 MOUNTING GP-PLATFORM

S/N: JEG1-UP

PART OF 420-3127 CHASSIS AR

SMCS-7253 **i02495888**

NOTE	REF NO	GRAPHIC REF	PART NUMBER	QTY	PART NAME 1 2 3 4 5 6 (PRODUCT LEVEL)	SEE PAGE
	1	1	**235-8862**	4	MOUNT AS	
	2	1	**8T-4121**	16	WASHER-HARD (11X21X2.5-MM THK)	
M	3	1	**8T-4195**	16	BOLT (M10X1.5X30-MM)	

M - METRIC PART

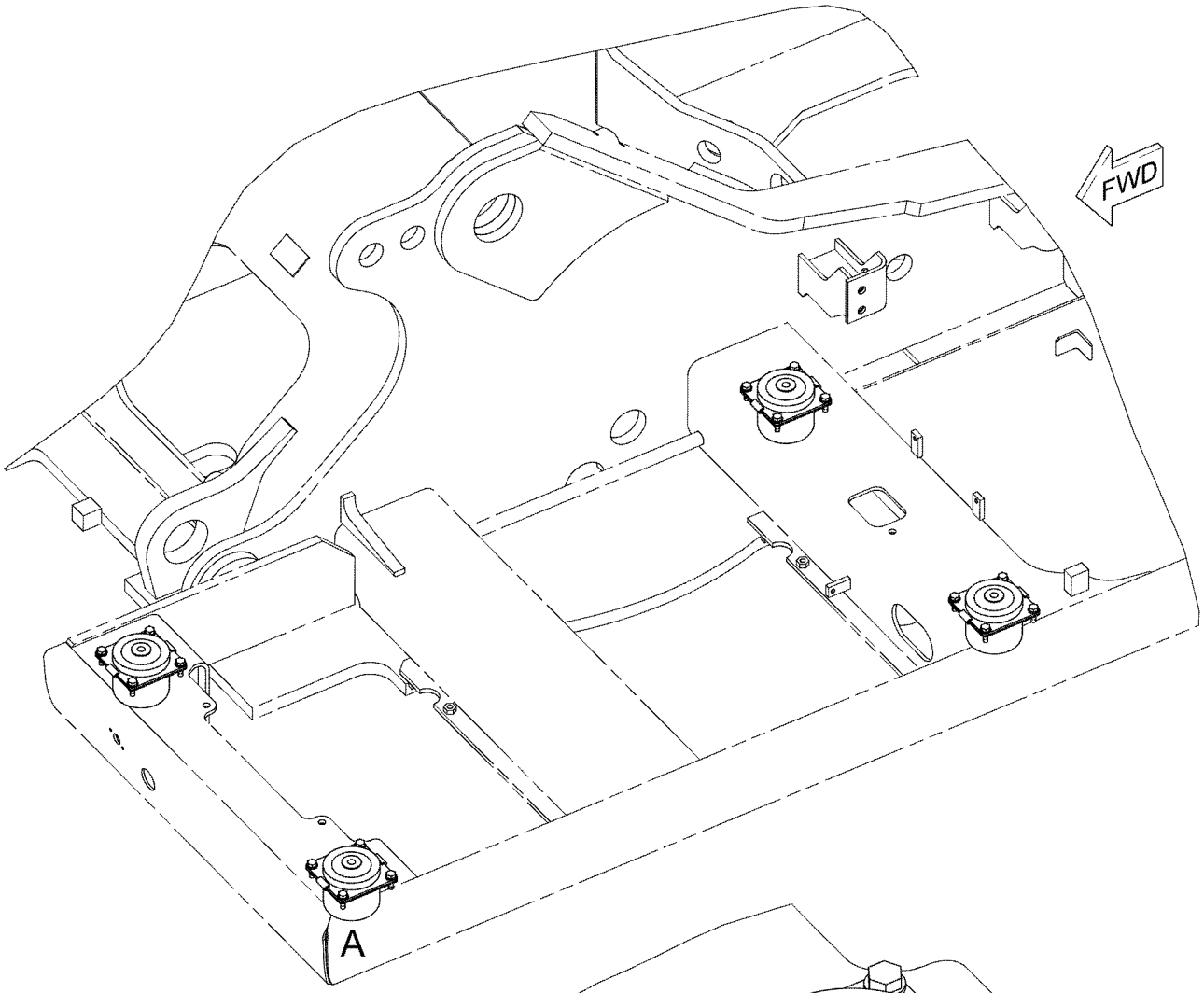

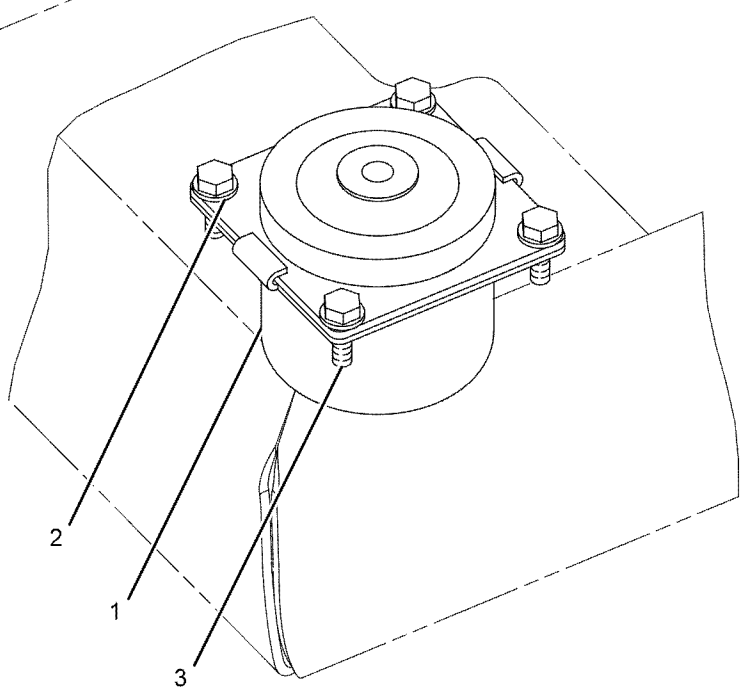

VIEW OF AREA A

GRAPHIC #1 **<END>** g01101486

422-0645 OPERATOR AR-ENCLOSED ROPS

S/N: JEG1-UP

PART OF 420-3127 CHASSIS AR

SMCS-7300, 7301 **i05459832**

NOTE	PART NUMBER	QTY	PART NAME 1 2 3 4 5 6 (PRODUCT LEVEL)	SEE PAGE
Y	*421-1431*	1	CONSOLE GP-OPERATOR	566
Y	*399-2618*	1	CONTROL & MTG GP-ELECTRONIC	110
Y	*170-9497*	1	CONTROL GP-PILOT OPERATED HYD (TRAVEL)	578
Y	*420-4514*	1	MONITOR & MTG GP-OPERATOR	608
Y	*229-9078*	1	PLATFORM GP-OPERATOR	614
Y	*327-6523*	1	SUPPORT GP-SEAT	624
Y	*398-7003*	1	WIRING GP-CAB	160
Y	*398-7005*	1	WIRING GP-CONSOLE	177
Y	*399-2648*	1	WIRING GP-PANEL	186
Y	*398-7004*	1	WIRING GP-PLATFORM	187

Y - SEPARATE ILLUSTRATION

<END>

229-9078 PLATFORM GP-OPERATOR

S/N: JEG1-UP

PART OF 422-0645 OPERATOR AR-ENCLOSED ROPS

SMCS-7253 **i02489588**

NOTE	REF NO	GRAPHIC REF	PART NUMBER	QTY	PART NAME 1 2 3 4 5 6 (PRODUCT LEVEL)	SEE PAGE
	1	1	**135-8965**	1	GROMMET	
	2	1	**135-8966**	1	GROMMET	
	3	1	**245-7916**	1	PLATFORM AS	
	4	1	**161-3717**	1	STRIP	
	5	1	**4I-3266**	1	STRIP	
M	6	1	**7X-2553**	4	BOLT (M16X2X40-MM)	
	7	1	**8T-4121**	4	WASHER-HARD (11X21X2.5-MM THK)	
M	8	1	**8T-4191**	4	BOLT (M10X1.5X16-MM)	
	9	1	**9X-8257**	4	WASHER (17.5X30X3.5-MM THK)	

M - METRIC PART

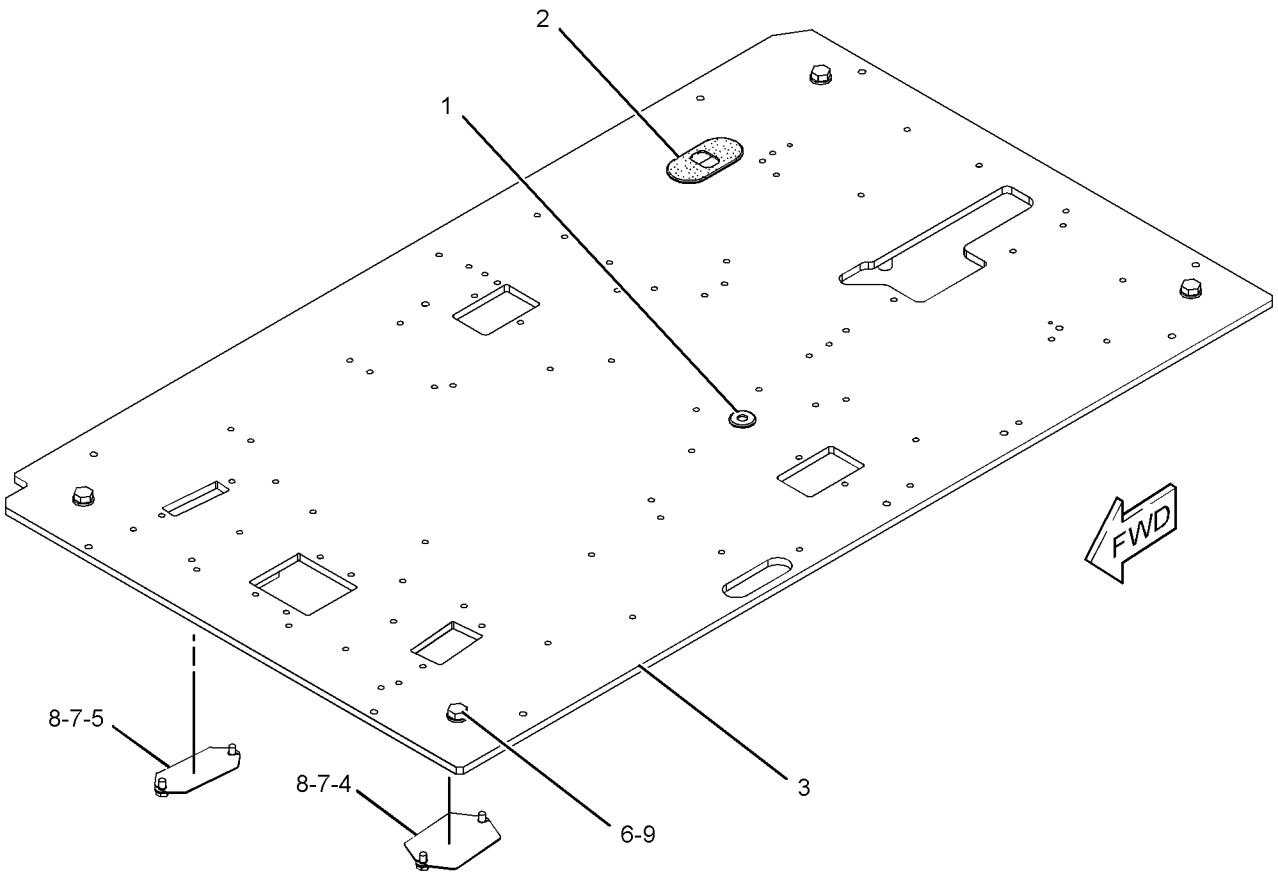

GRAPHIC #1 **<END>** g01188224

251-0538 RADIO GP–AM, FM

S/N: JEG1-UP
PART OF 434-3892, 434-3893 CAB GP
AN ATTACHMENT

SMCS-7338, 733C

i03024521

NOTE	REF NO	GRAPHIC REF	PART NUMBER	QTY	PART NAME 1 2 3 4 5 6 (PRODUCT LEVEL)	SEE PAGE
	1	1	**3S-2093**	2	STRAP-CABLE	
	2	1	**7K-1181**	2	STRAP-CABLE	
	3	1	**106-2704**	2	SCREW AS (M5X0.8X10-MM)	
	4	1	**238-2260**	1	CABLE	
	5	1	**306-8802**	1	RADIO-AM/FM	
	6	1	**259-4914**	1	BRACKET AS	
	7	1	**119-5026**	2	SCREW-PAN HEAD (10-16X0.63-IN)	

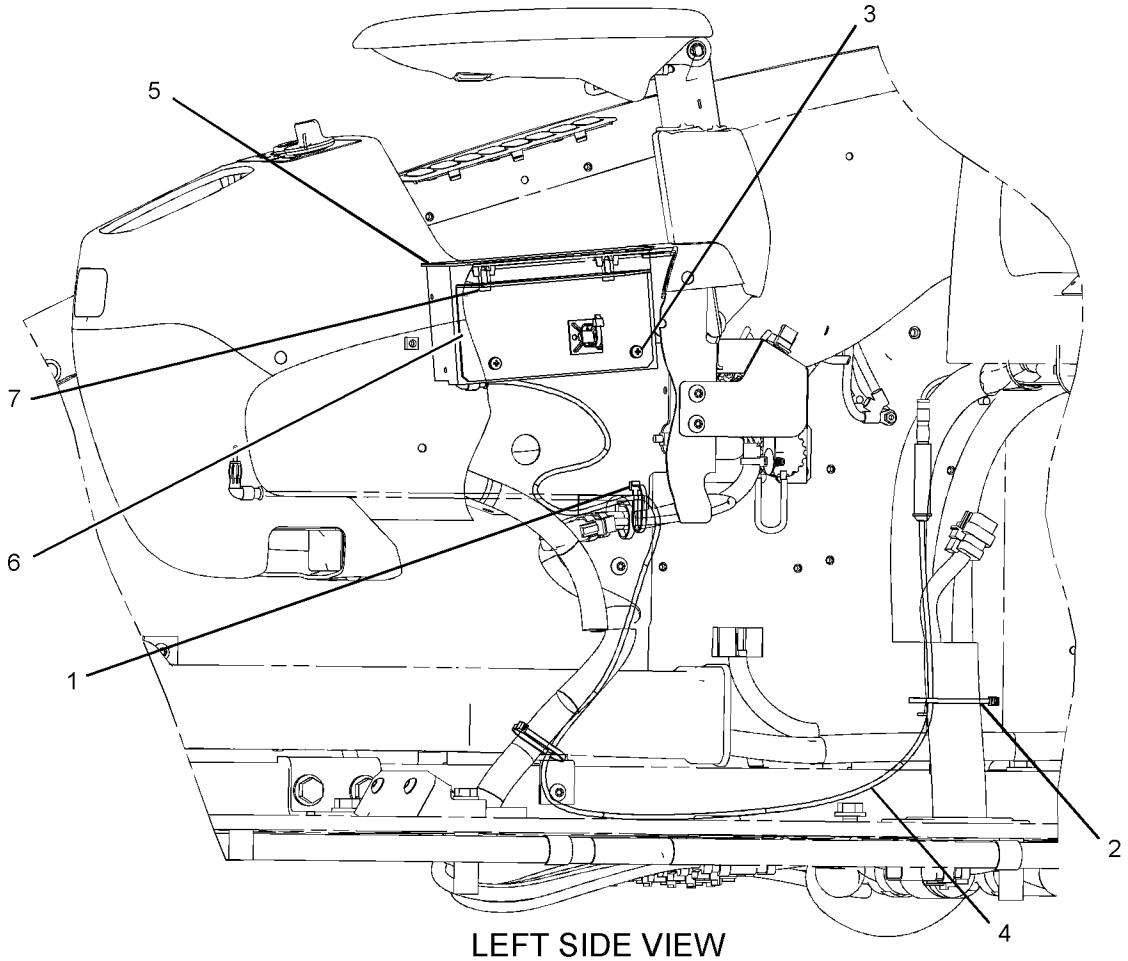

LEFT SIDE VIEW

GRAPHIC #1

<END>

g01225602

OPERATOR STATION

245-7881 SCREEN GP-SUN

S/N: JEG1-UP
PART OF 442-4974 OPTION AR-CAB
AN ATTACHMENT

SMCS-7165 **i04083250**

NOTE	REF NO	GRAPHIC REF	PART NUMBER	QTY	PART NAME 1 2 3 4 5 6 (PRODUCT LEVEL)	SEE PAGE
	1	1	**255-4410**	1	SCREEN AS (CAB)	
	2	1	**259-7214**	3	HOOK-RETAINER	
	3	1	**259-7215**	3	HOOK-RETAINER	
M	4	1	**153-3568**	6	BOLT-SOCKET HEAD (M5X0.8X10-MM)	

M - METRIC PART

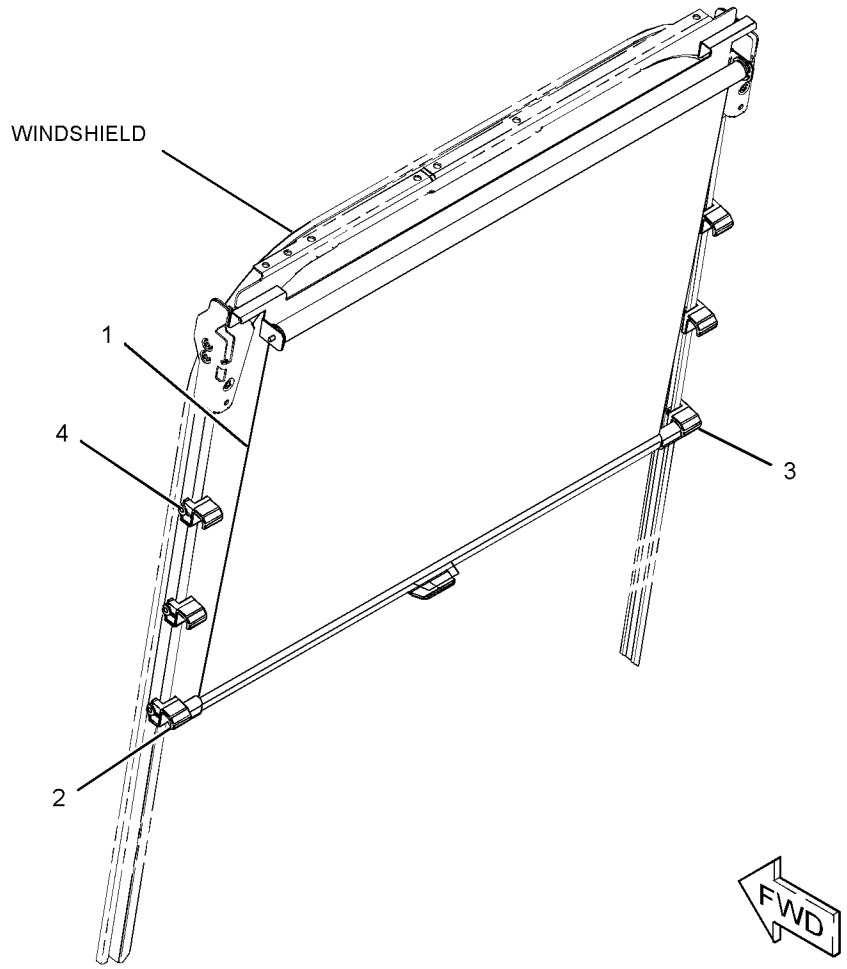

GRAPHIC #1 **<END>** g01177458

327-6501 SEAT & MOUNTING GP–HIGH BACK, TILT

S/N: JEG1-UP
CLOTH
PART OF 434-3892 CAB GP
AN ATTACHMENT

SMCS-7312 **i03485870**

NOTE	REF NO	GRAPHIC REF	PART NUMBER	QTY	PART NAME 1 2 3 4 5 6 (PRODUCT LEVEL)	SEE PAGE
Y	1	1	*327-6507*	1	SEAT GP-SUSPENSION (HIGH BACK, TILT)	622
M	2	1	**6V-8202**	4	BOLT-SOCKET HEAD (M8X1.25X16-MM)	

M - METRIC PART
Y - SEPARATE ILLUSTRATION

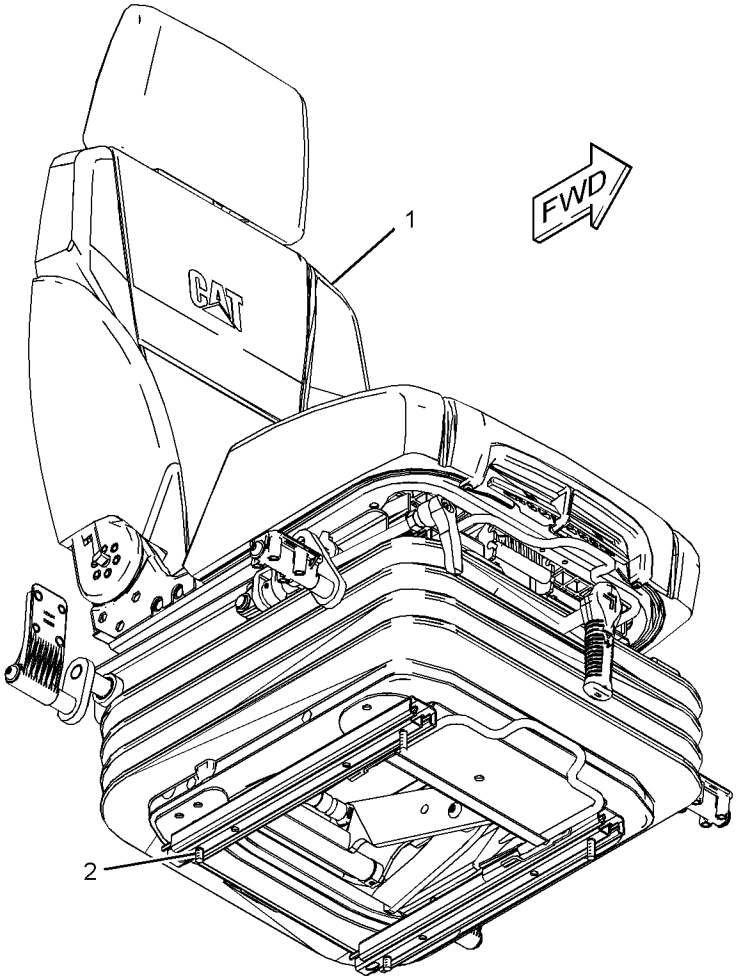

GRAPHIC #1 **<END>** g01803395

327-6503 SEAT & MOUNTING GP–HIGH BACK, WITH HEATER

S/N: JEG1-UP
CLOTH
PART OF 434-3893 CAB GP
AN ATTACHMENT

SMCS-7312 **i05311910**

NOTE	REF NO	GRAPHIC REF	PART NUMBER	QTY	PART NAME 1 2 3 4 5 6 (PRODUCT LEVEL)	SEE PAGE
	1	1	**238-2211**	1	SWITCH AS-ROCKER (HEATED SEAT)	
		1	**167-3542**	1	RECEPTACLE-CONNECTOR (5-PIN)	
		1	**167-3543**	4	TERMINAL (MALE)	
Y	2	1	*327-6509*	1	SEAT GP-SUSPENSION (HIGH BACK, WITH HEATER)	623
M	3	1	**6V-8202**	4	BOLT-SOCKET HEAD (M8X1.25X16-MM)	

M - METRIC PART
Y - SEPARATE ILLUSTRATION

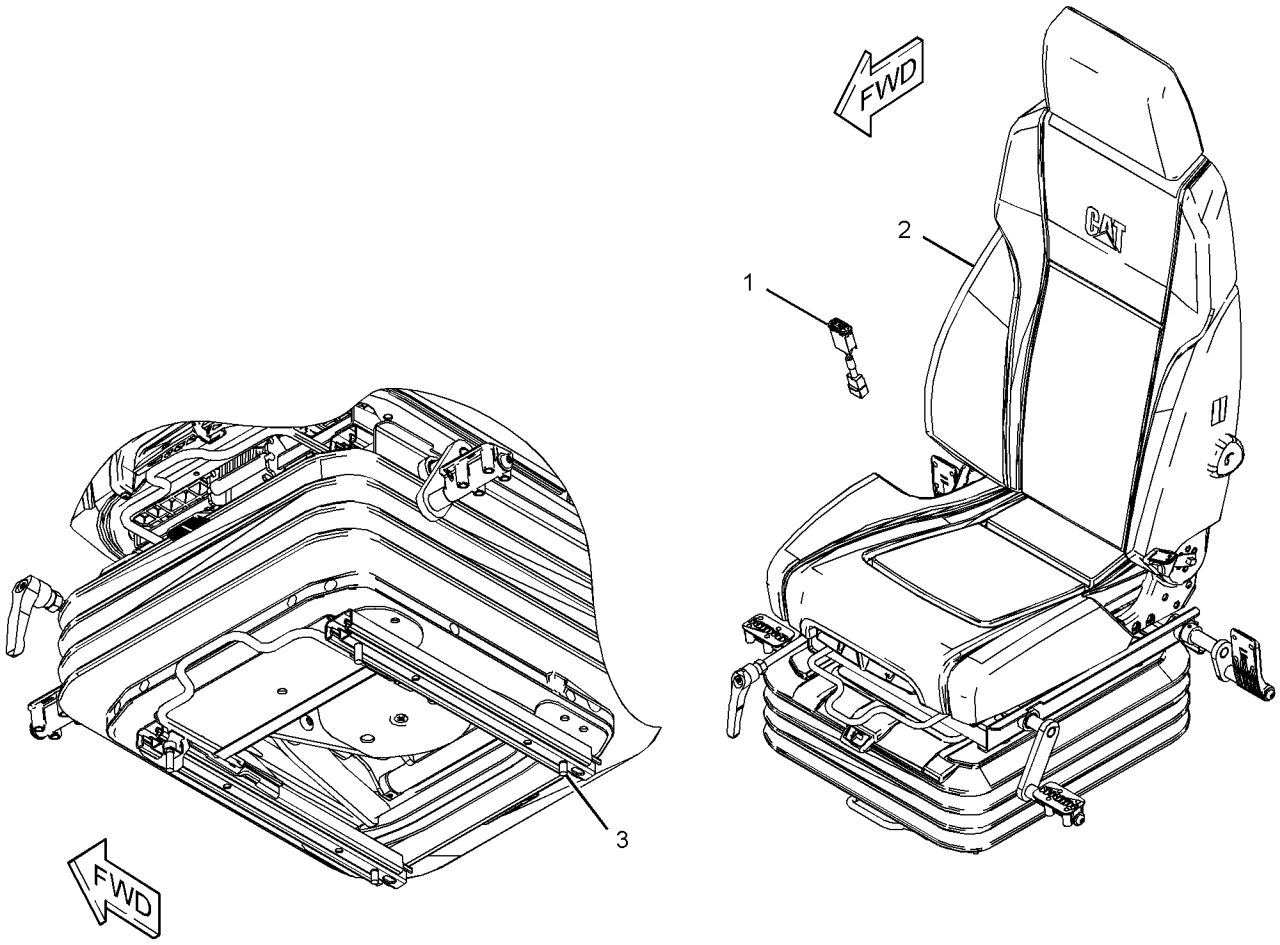

GRAPHIC #1 **<END>** g01796379

305-0467 SEAT BELT GP–RETRACTABLE

S/N: JEG1-UP
PART OF 434-3892, 434-3893 CAB GP
AN ATTACHMENT

SMCS-7327 **i05518832**

NOTE	REF NO	GRAPHIC REF	PART NUMBER	QTY	PART NAME 1 2 3 4 5 6 (PRODUCT LEVEL)	SEE PAGE
C	1	1	**327-6541**	1	SEAT BELT GP (RETRACTABLE, 43-MM)	

C - CHANGE FROM PREVIOUS TYPE

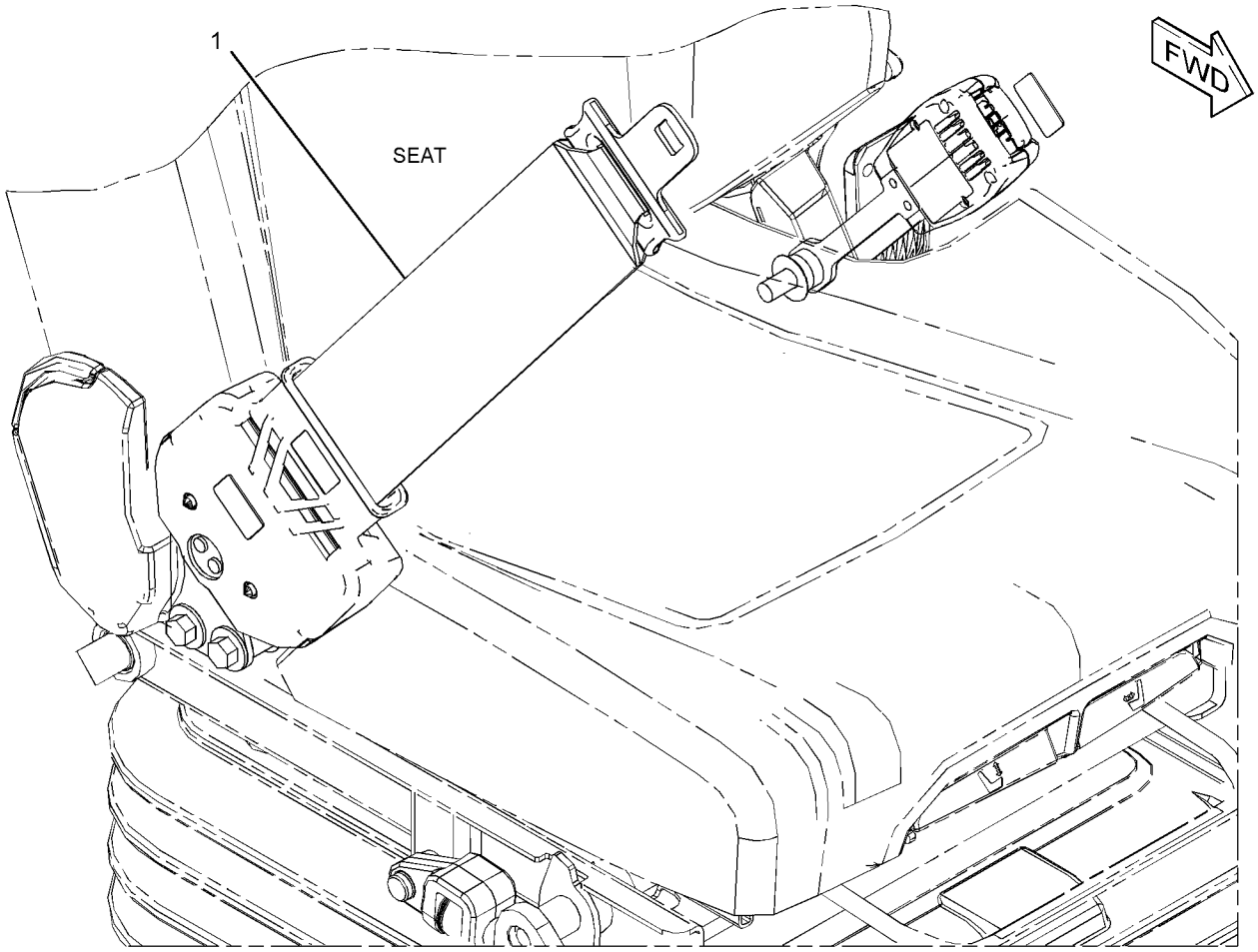

GRAPHIC #1 **<END>** g03442416

327-6512 SEAT GP–HIGH BACK, TILT

S/N: JEG1-UP

PART OF 327-6507 SEAT GP-SUSPENSION

AN ATTACHMENT

SMCS-7312 **i05425598**

NOTE	REF NO	GRAPHIC REF	PART NUMBER	QTY	PART NAME 1 2 3 4 5 6 (PRODUCT LEVEL)	SEE PAGE
	1	1	**178-5659**	1	HANDLE (LUMBAR SUPPORT ADJUSTER)	
	2	1	**316-8987**	2	BRACKET	
	3	1	**327-6515**	1	HEADREST AS-SEAT (CLOTH)	
	4	1	**327-6640**	1	KIT-HANDLE (RECLINER)	
	5	1	**327-6642**	1	KIT-SEAT TILT (ADJUSTER)	
	6	1	**327-6643**	1	KIT-ADJUSTER (CUSHION POSITIONING)	
	7	1	**440-5587**	1	KIT-SEAT (HIGH BACK, TILT)	
		1	**332-0195**	1	CLIP	
		1	**383-5647**	1	SPRING	
		1	**440-5584**	1	LEVER	
		1	**440-5585**	1	PIN	
	8	1	**333-4179**	2	BOLT-SPECIAL	
M	9	1	**9X-2616**	4	SCREW-SOCKET (M8X1.25X16-MM)	

M - METRIC PART

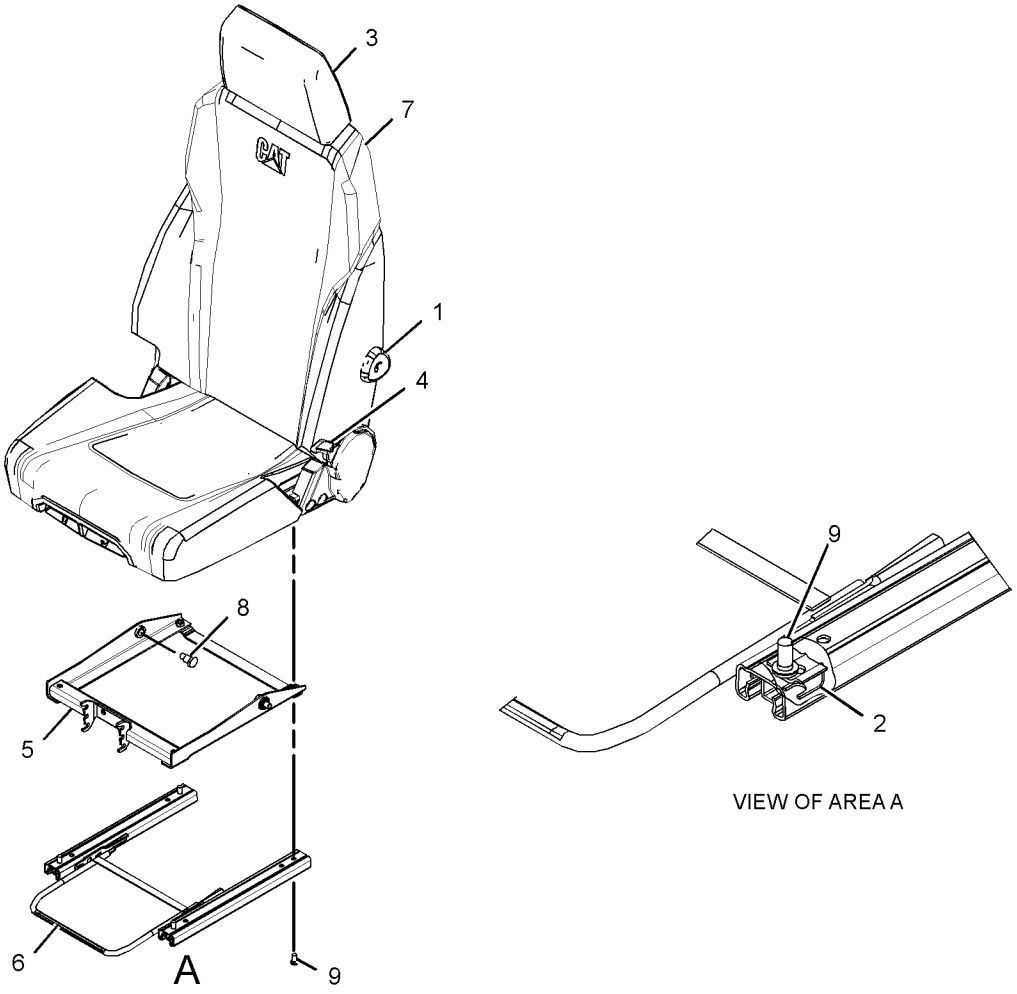

VIEW OF AREA A

GRAPHIC #1 **<END>** g03058636

327-6513 SEAT GP–HIGH BACK, WITH HEATER

S/N: JEG1-UP

PART OF 327-6509 SEAT GP-SUSPENSION

AN ATTACHMENT

SMCS-7312 **i05262316**

NOTE	REF NO	GRAPHIC REF	PART NUMBER	QTY	PART NAME 1 2 3 4 5 6 (PRODUCT LEVEL)	SEE PAGE
	1	1	**178-5659**	1	HANDLE (LUMBAR SUPPORT ADJUSTER)	
	2	1	**316-8987**	2	BRACKET	
	3	1	**327-6515**	1	HEADREST AS-SEAT (CLOTH)	
	4	1	**327-6640**	1	KIT-HANDLE (RECLINER)	
	5	1	**327-6642**	1	KIT-SEAT TILT (ADJUSTER)	
	6	1	**327-6643**	1	KIT-ADJUSTER (CUSHION POSITIONING)	
	7	1	**423-6161**	1	KIT-SEAT (HIGH BACK, WITH HEATER)	
	8	1	**333-4179**	2	BOLT-SPECIAL	
M	9	1	**9X-2616**	4	SCREW-SOCKET (M8X1.25X16-MM)	

M - METRIC PART

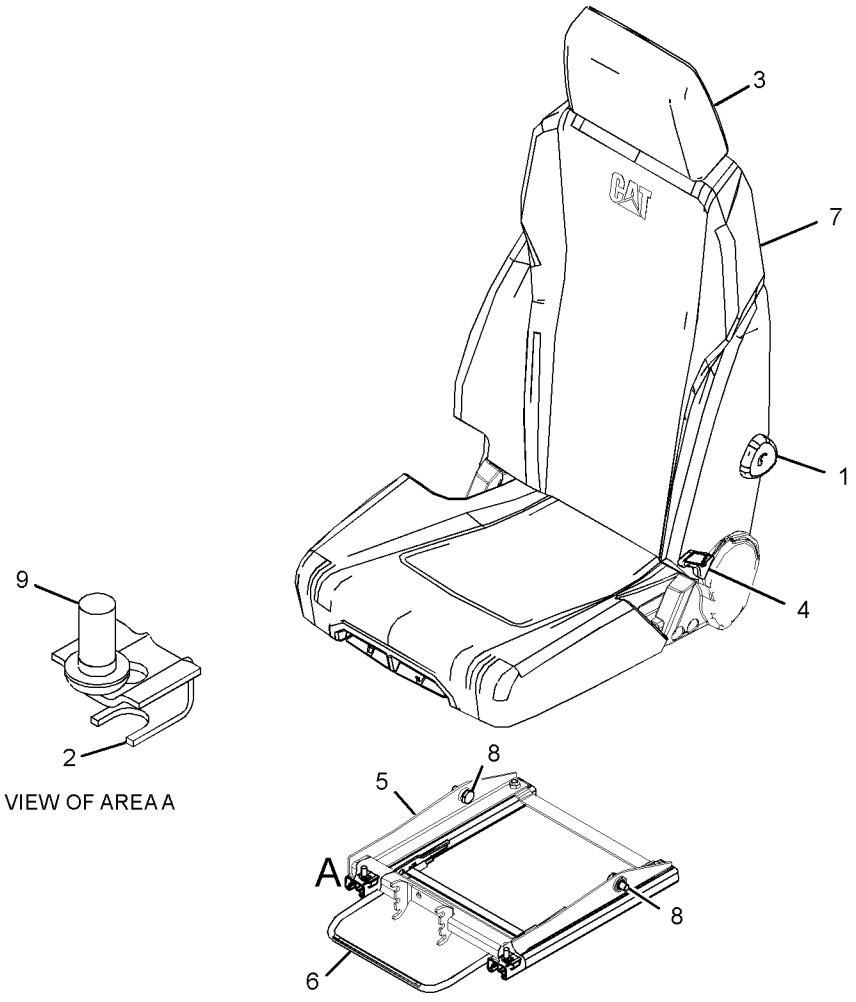

GRAPHIC #1 **<END>** g03058639

327-6507 SEAT GP-SUSPENSION—HIGH BACK, TILT

S/N: JEG1-UP

PART OF 327-6501 SEAT & MOUNTING GP

AN ATTACHMENT

SMCS-7324, 7336 **i05439945**

NOTE	REF NO	GRAPHIC REF	PART NUMBER	QTY	PART NAME 1 2 3 4 5 6 (PRODUCT LEVEL)	SEE PAGE
	1	1	**316-8987**	2	BRACKET	
Y	2	1	**327-6512**	1	SEAT GP (HIGH BACK, TILT)	620
Y	3	1	**327-6520**	1	SUSPENSION GP-SEAT (MECHANICAL)	625
M	4	1	**5A-3604**	4	BOLT-SOCKET HEAD (M8X1.25X25-MM)	

M - METRIC PART
Y - SEPARATE ILLUSTRATION

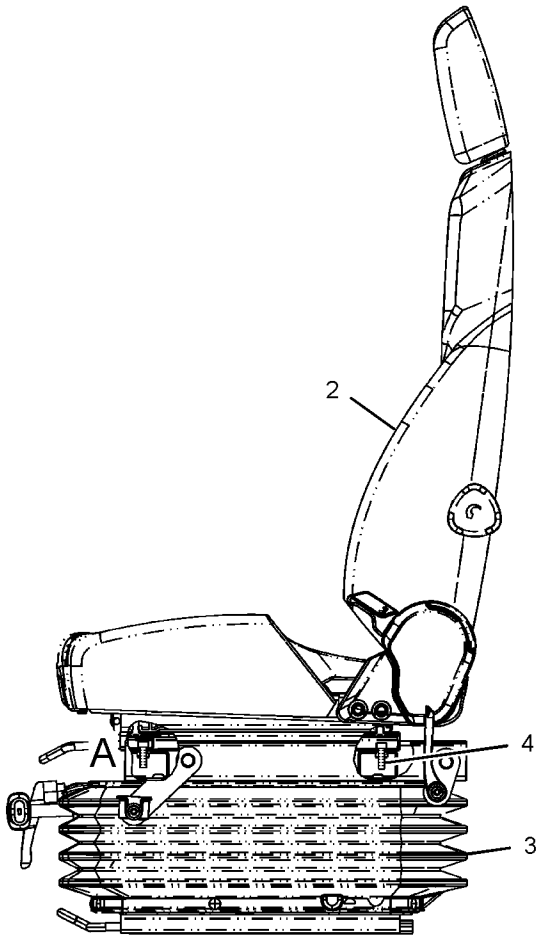

LEFT SIDE VIEW

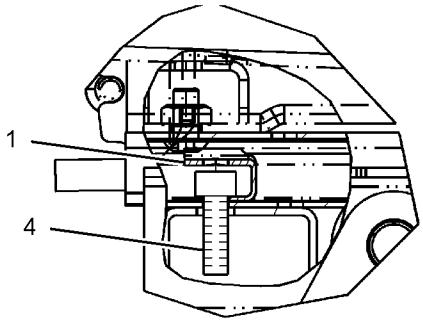

VIEW OF AREA A

GRAPHIC #1 **<END>** g01794435

327-6509 SEAT GP-SUSPENSION—HIGH BACK, WITH HEATER

S/N: JEG1-UP
PART OF 327-6503 SEAT & MOUNTING GP
AN ATTACHMENT

SMCS-7324, 7336

i05536562

NOTE	REF NO	GRAPHIC REF	PART NUMBER	QTY	PART NAME 1 2 3 4 5 6 (PRODUCT LEVEL)	SEE PAGE
	1	1	**7I-2673**	1	STRAP-CABLE	
	2	1	**316-8987**	2	BRACKET	
Y	3	1	**327-6513**	1	SEAT GP (HIGH BACK, WITH HEATER)	621
Y	4	1	**327-6521**	1	SUSPENSION GP-SEAT (AIR)	626
M	5	1	**5A-3604**	4	BOLT-SOCKET HEAD (M8X1.25X25-MM)	

M - METRIC PART
Y - SEPARATE ILLUSTRATION

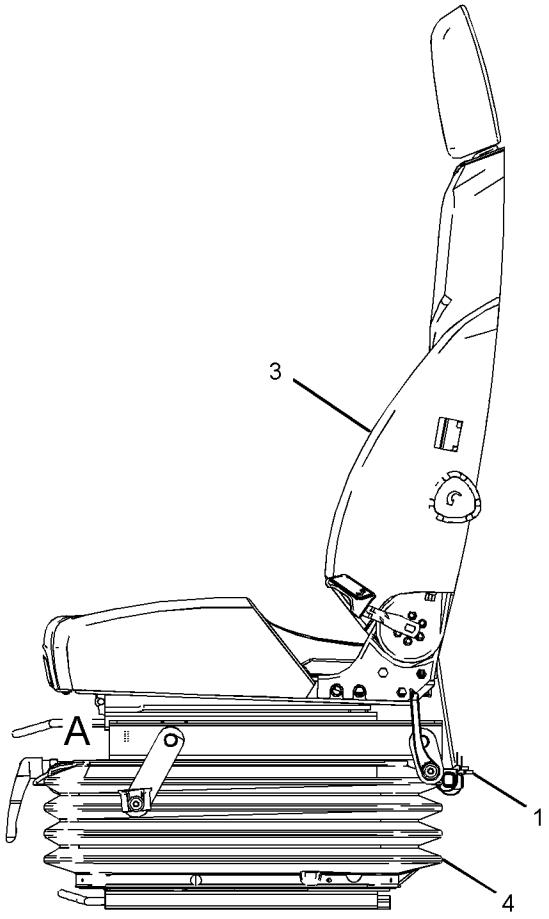

LEFT SIDE VIEW

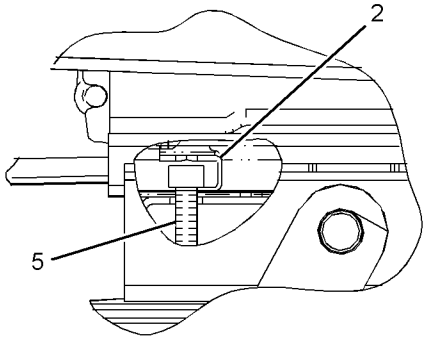

VIEW OF AREA A

GRAPHIC #1

<END>

g01810781

327-6523 SUPPORT GP-SEAT

S/N: JEG1-UP

PART OF 434-3892, 434-3893 CAB GP, 422-0645 OPERATOR AR-ENCLOSED ROPS

ALSO AN ATTACHMENT

SMCS-7321 **i03722760**

NOTE	REF NO	GRAPHIC REF	PART NUMBER	QTY	PART NAME 1 2 3 4 5 6 (PRODUCT LEVEL)	SEE PAGE
	1	1	**327-6538**	1	SUPPORT AS-SEAT	
	2	1	**8T-4121**	4	WASHER-HARD (11X21X2.5-MM THK)	
M	3	1	**8T-4191**	4	BOLT (M10X1.5X16-MM)	

M - METRIC PART

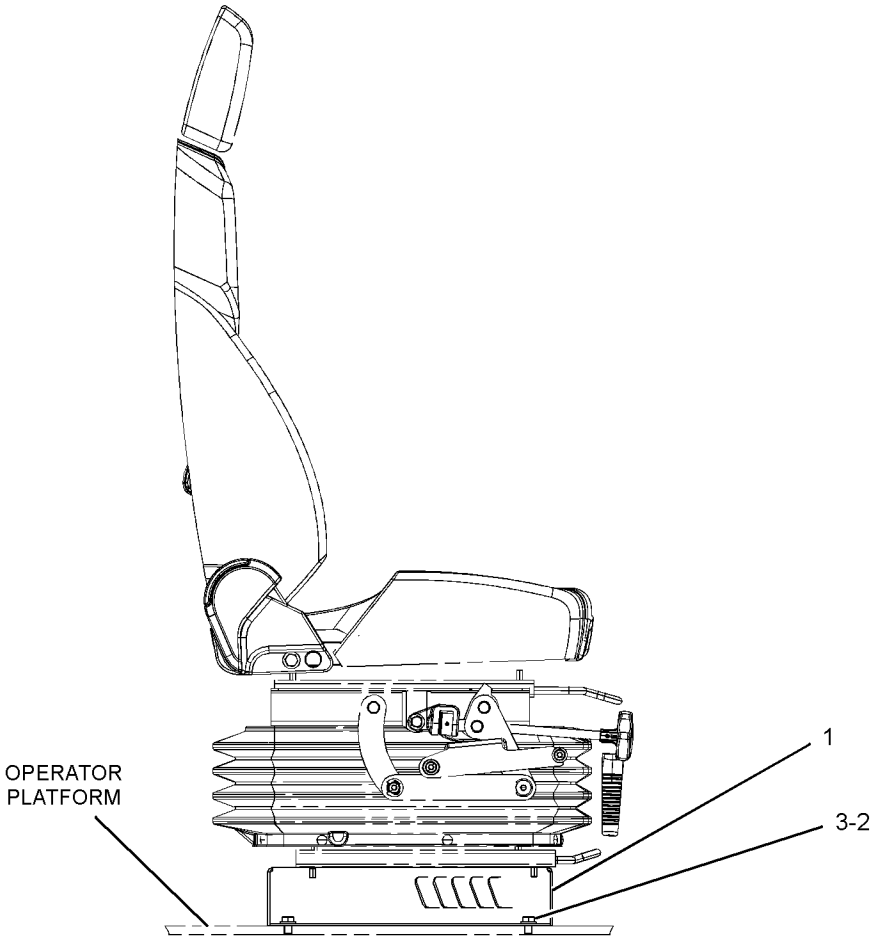

RIGHT SIDE VIEW

GRAPHIC #1 **<END>** g01809475

327-6520 SUSPENSION GP-SEAT—MECHANICAL

S/N: JEG1-UP

PART OF 327-6507 SEAT GP-SUSPENSION

AN ATTACHMENT

SMCS-7324 **i05439962**

NOTE	REF NO	GRAPHIC REF	PART NUMBER	QTY	PART NAME 1 2 3 4 5 6 (PRODUCT LEVEL)	SEE PAGE
	1	1	**327-6644**	1	KIT-BRACKET (CONSOLE RAISE, LOWER)	
	1A	1	**372-9306**	16	SPACER (16.5X28.5X0.1-MM THK)	
	2	1	**327-6645**	1	KIT-SEAT SUSPENSION (MECHANICAL)	
	3	1	**327-6648**	1	KIT-ADJUSTER (SEAT POSITION)	
M	4	1	**198-3899**	4	SCREW-BUTTON HEAD (M8X1.25X20-MM)	
	5	1	**245-7895**	1	KIT-CLIP (SEAT)	
					(INCLUDES 28 CLIPS)	
	6	1	**327-6646**	1	KIT-CYLINDER (DAMPENER)	
	7	1	**327-6647**	1	KIT-COVER (SUSPENSION)	
	8	1	**333-4180**	6	SCREW-BUTTON HEAD (M8X1.25X20-MM)	
	9	1	**333-4181**	1	KIT-HANDLE (SEAT HEIGHT) (SEAT HEIGHT)	

M - METRIC PART

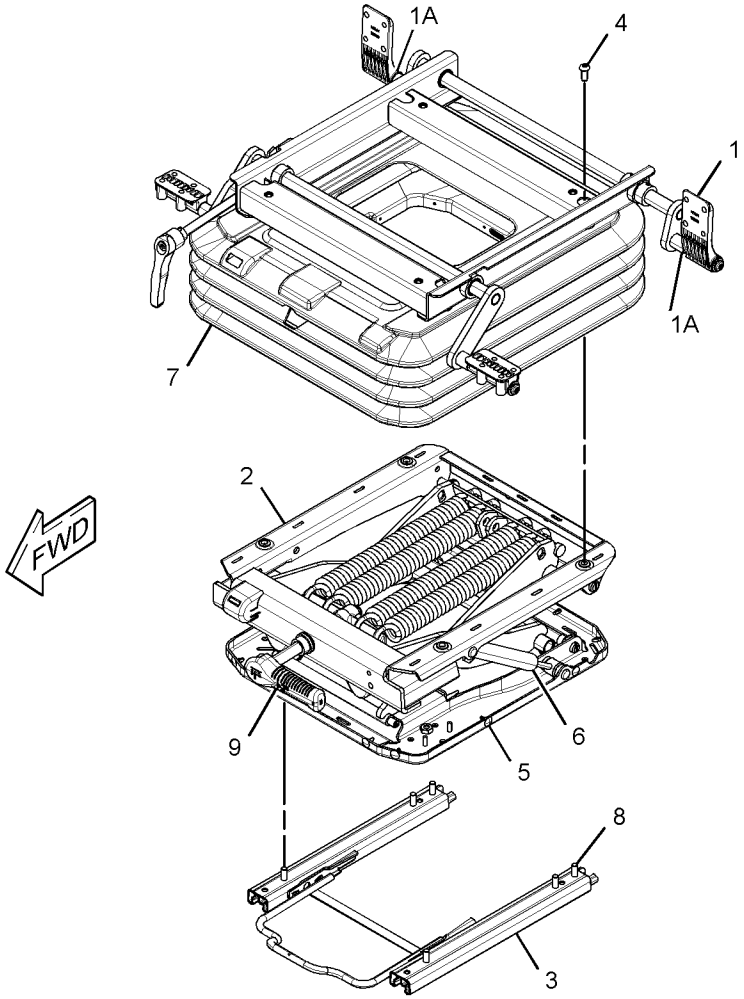

GRAPHIC #1 **<END>** g02809057

327-6521 SUSPENSION GP-SEAT–AIR

S/N: JEG1-UP

PART OF 327-6509 SEAT GP-SUSPENSION

AN ATTACHMENT

SMCS-7324 **i05536563**

NOTE	REF NO	GRAPHIC REF	PART NUMBER	QTY	PART NAME 1 2 3 4 5 6 (PRODUCT LEVEL)	SEE PAGE
	1	1	**7I-2673**	1	STRAP-CABLE	
M	2	1	**198-3899**	4	SCREW-BUTTON HEAD (M8X1.25X20-MM)	
	3	1	**245-7895**	1	KIT-CLIP	
					(INCLUDES 28 CLIPS)	
	4	1	**327-6644**	1	KIT-BRACKET (CONSOLE RAISE, LOWER)	
	4A	1	**372-9306**	16	SPACER (16.5X28.5X0.1-MM THK)	
	5	1	**327-6646**	1	KIT-CYLINDER (DAMPENER)	
	6	1	**327-6648**	1	KIT-ADJUSTER (SEAT POSITION)	
	7	1	**333-4157**	1	KIT-SEAT SUSPENSION (AIR)	
	8	1	**333-4158**	1	KIT-COVER (SUSPENSION)	
	9	1	**333-4159**	1	KIT-VALVE (AIR SEAT)	
	10	1	**333-4178**	1	NUT-SPECIAL	
	11	1	**333-4180**	6	SCREW-BUTTON HEAD (M8X1.25X20-MM)	

M - METRIC PART

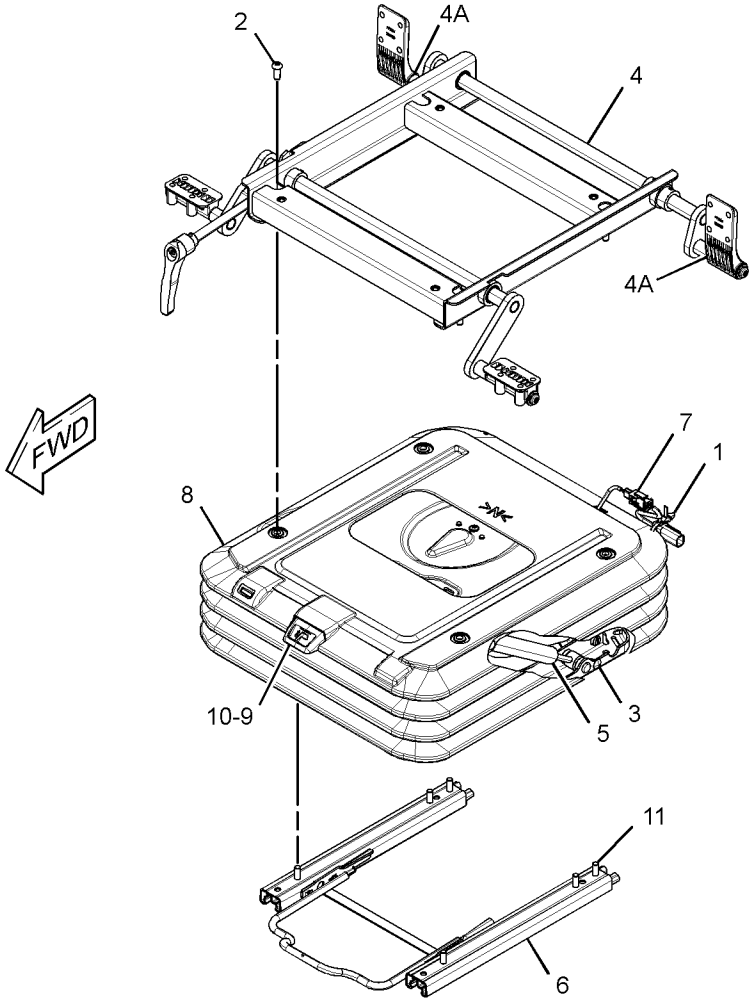

GRAPHIC #1 **<END>** g02809079

161-3751 VISOR GP-CAB–SUN

S/N: JEG1-UP
PART OF 442-4973 OPTION AR-CAB
AN ATTACHMENT

SMCS-7301 **i02912370**

NOTE	REF NO	GRAPHIC REF	PART NUMBER	QTY	PART NAME 1 2 3 4 5 6 (PRODUCT LEVEL)	SEE PAGE
	1	1	**164-0639**	1	BRACKET AS	
	2	1	**210-5827**	1	PLATE	
	3	1	**210-5828**	1	PLATE	
	4	1	**210-5829**	2	BOLT	
	5	1	**210-5834**	1	BRACKET AS	
	6	1	**210-5836**	1	VISOR	
	7	1	**210-5837**	2	STRIP	
	8	1	**210-5838**	4	PACKING	
	9	1	**8H-3481**	2	LOCKWASHER	
M	10	1	**9X-2044**	8	SCREW-TRUSS HEAD (M6X1X16-MM)	
M	11	1	**9X-2046**	2	SCREW-TRUSS HEAD (M6X1X35-MM)	
	12	1	**9X-8256**	2	WASHER (6.6X12X2-MM THK)	

M - METRIC PART

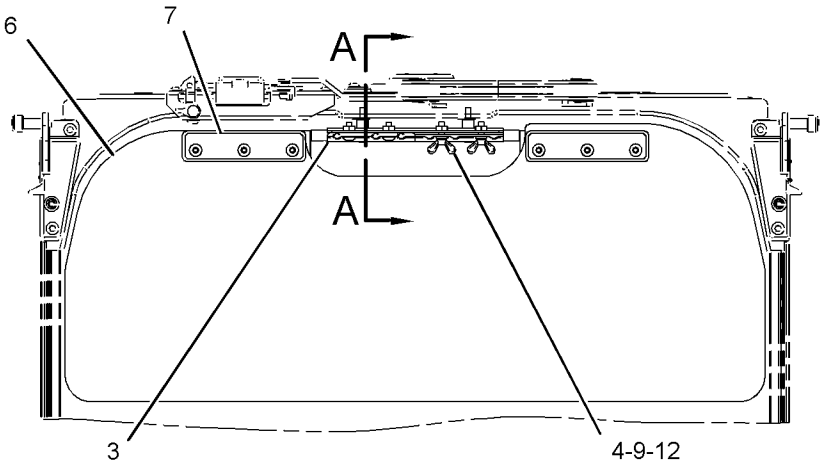

FRONT VIEW

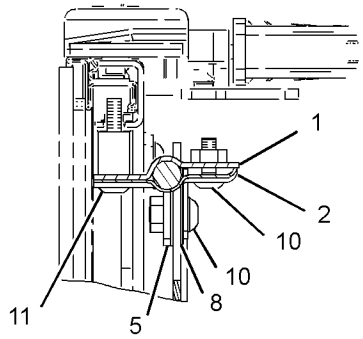

SECTION A-A

GRAPHIC #1 **<END>** g01447299

229-9070 WASHER GP-WINDOW

S/N: JEG1-UP
CANNOT BE USED WITH 229-9086—PAGE: 650
PART OF 442-4973 OPTION AR-CAB
AN ATTACHMENT

SMCS-7306 **i02593861**

NOTE	REF NO	GRAPHIC REF	PART NUMBER	QTY	PART NAME 1 2 3 4 5 6 (PRODUCT LEVEL)	SEE PAGE
	1	1	**7Y-3474**	1	VALVE AS-CHECK (WINDOW WASHER)	
	2	1	**163-6795**	2	STRAP-CABLE	
	3	1	**176-1931**	1	TANK AS-WINDOW WASHER	
		1	**5C-8138**	1	GROMMET	
		1	**7T-8890**	1	PUMP AS-WASHER (24-VOLT)	
		1	**178-5431**	1	CAP AS (WINDOW WASHER)	
		1	**3W-6399**		PACKING	
	4	1	**235-9012**	1	SUPPORT AS	
M	5	1	**8T-4970**	2	BOLT (M6X1X14-MM)	
	6	1	**9X-8256**	2	WASHER (6.6X12X2-MM THK)	
CE	7	1	**144-0195**		HOSE (13-CM)	
	8	1	**3S-2093**	1	STRAP-CABLE	

C - CHANGE FROM PREVIOUS TYPE
E - ORDER BY THE CENTIMETER
M - METRIC PART

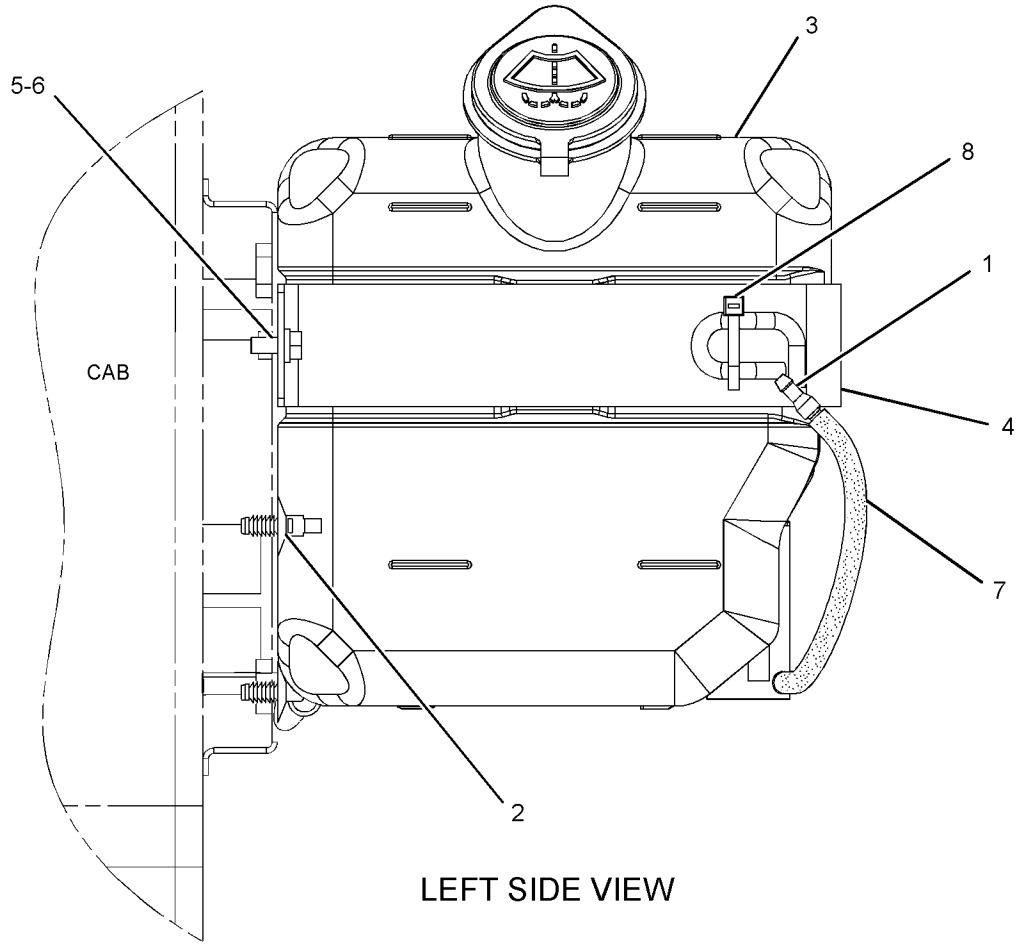

LEFT SIDE VIEW

GRAPHIC #1 **<END>** g01307642

229-9088 WASHER GP-WINDOW—LOWER

S/N: JEG1-UP

PART OF 229-9086 WIPER AR-WINDOW

AN ATTACHMENT

SMCS-7306 **i02818914**

NOTE	REF NO	GRAPHIC REF	PART NUMBER	QTY	PART NAME 1 2 3 4 5 6 (PRODUCT LEVEL)	SEE PAGE
	1	1	**3S-2093**	2	STRAP-CABLE	
	2	1	**7Y-3474**	1	VALVE AS-CHECK (WINDOW WASHER)	
	3	1	**163-6795**	2	STRAP-CABLE	
	4	1	**170-9492**	1	PLATE	
E	5	1	**144-0195**		HOSE (290-CM)	
E	5A	1	**144-0195**		HOSE (30-CM)	
E	5B	1	**144-0195**		HOSE (13-CM)	
	6	1	**235-9012**	1	SUPPORT AS	
	7	1	**176-1932**	1	TANK AS-WINDOW WASHER	
	8	1	**178-5500**	1	NOZZLE AS	
		1	**085-8037**	1	NOZZLE	
		1	**105-9526**	1	ADAPTER	
		1	**105-9527**	1	GASKET	
M	9	1	**3E-9872**	2	SCREW AS (M4X0.7X12-MM)	
	10	1	**6V-3265**	10	CLIP	
	11	1	**8T-4121**	10	WASHER-HARD (11X21X2.5-MM THK)	
M	12	1	**8T-4191**	10	BOLT (M10X1.5X16-MM)	
M	13	1	**8T-4970**	2	BOLT (M6X1X14-MM)	
	14	1	**9X-8256**	2	WASHER (6.6X12X2-MM THK)	
	15	1	**293-1256**	1	VALVE AS-CHECK	

E - ORDER BY THE CENTIMETER
M - METRIC PART

229-9088 **WASHER GP-WINDOW (*contd.*)** **i02818914**

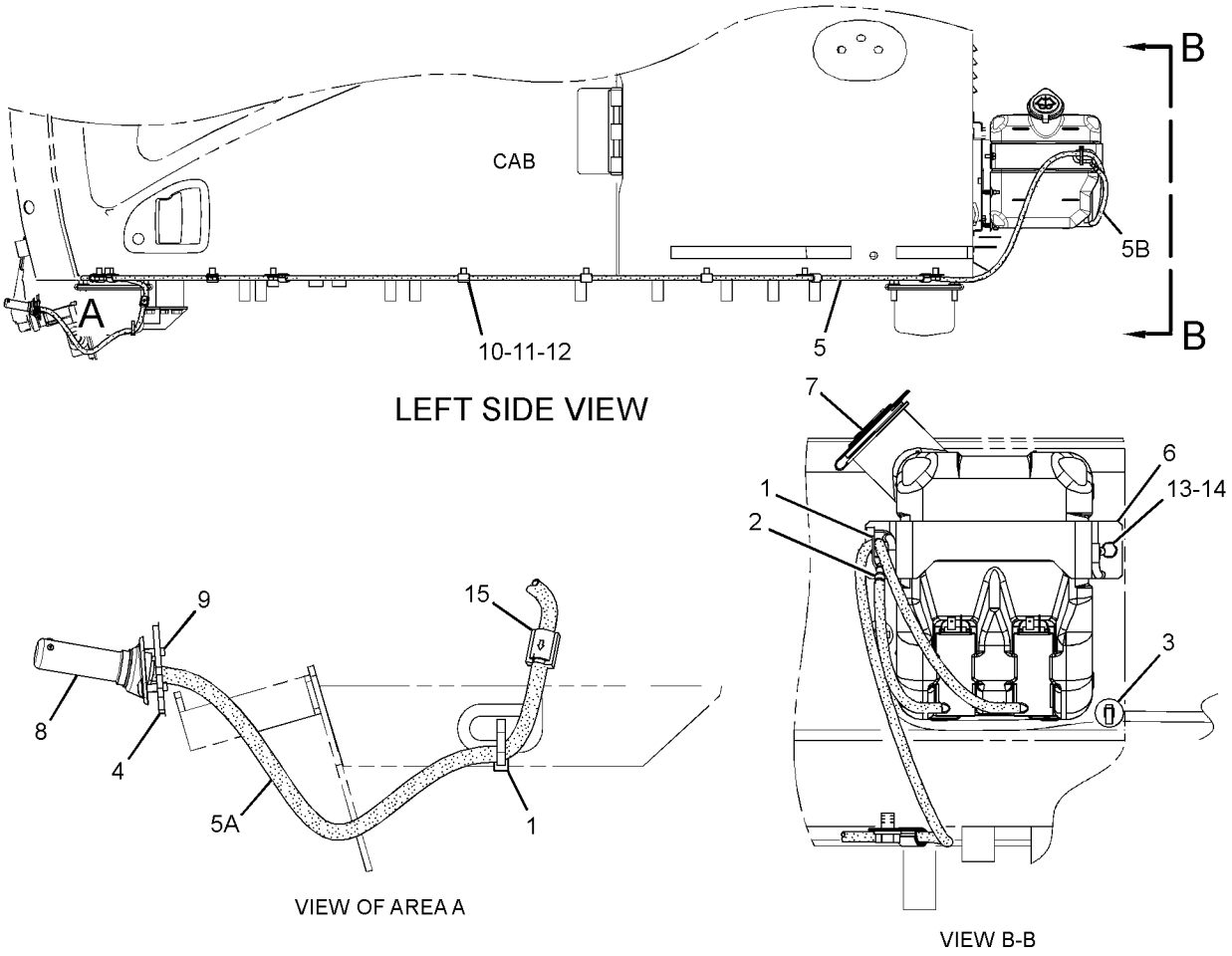

GRAPHIC #1 **<END>** g01416170

156-6647 WINDOW GP-CAB–FRONT, LOWER

S/N: JEG1-UP

PART OF 229-9087 WIPER & WASHER GP-WINDOW

AN ATTACHMENT

SMCS-7310 **i05458957**

NOTE	REF NO	GRAPHIC REF	PART NUMBER	QTY	PART NAME 1 2 3 4 5 6 (PRODUCT LEVEL)	SEE PAGE
	1	1	*156-6648*	1	GLASS	
M	2	1	**9X-2042**	2	SCREW-TRUSS HEAD (M6X1X12-MM)	
	3	1	**151-6705**	1	PACKING	
	4	1	**124-3966**	1	STOP	
	5	1	**144-9692**	2	RETAINER	
	6	1	**144-9691**	2	PACKING	

M - METRIC PART

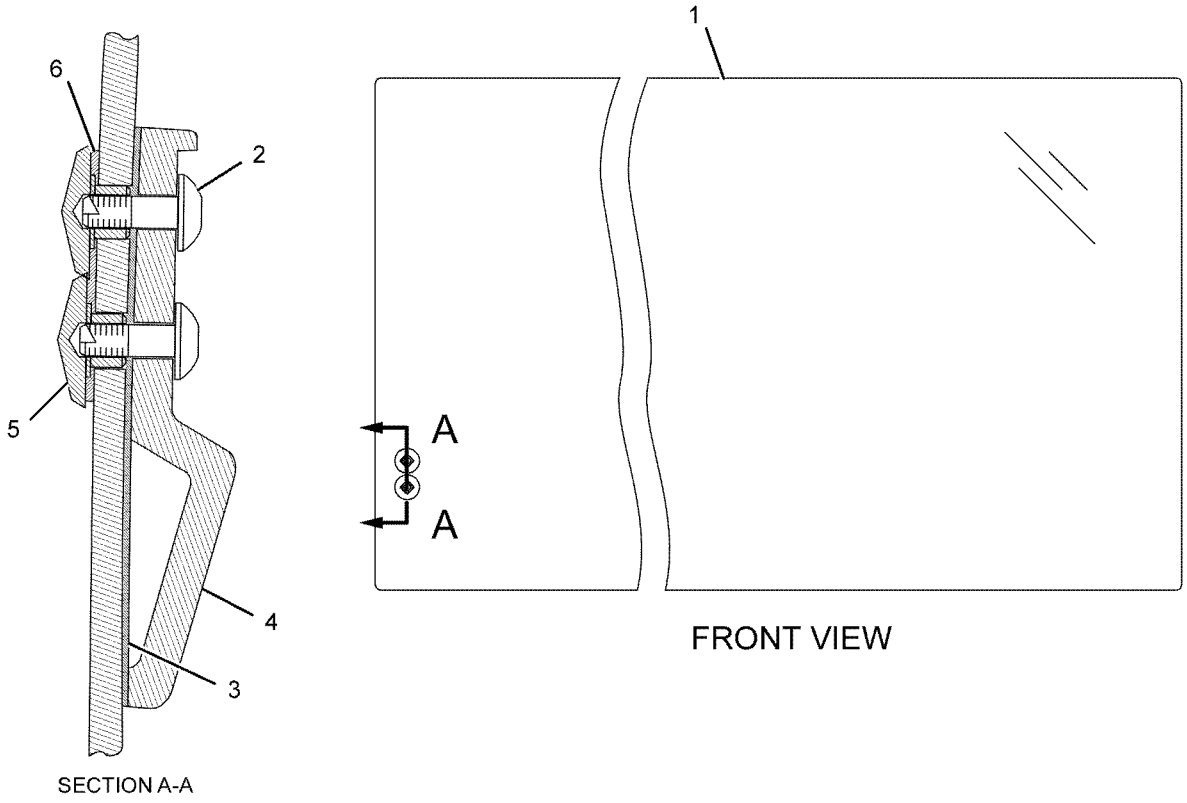

GRAPHIC #1 **<END>** g01131367

171-7503 WINDOW GP-CAB—FRONT, UPPER

S/N: JEG1-UP
FOR SERVICE REPAIR OF 139-7101 WINDOW
PART OF 388-0065 CAB GP
AN ATTACHMENT

SMCS-7310 **i05406998**

NOTE	REF NO	GRAPHIC REF	PART NUMBER	QTY	PART NAME 1 2 3 4 5 6 (PRODUCT LEVEL)	SEE PAGE
	1	1	**161-3698**	1	SEAL	
M	2	1	**101-8900**	2	SCREW AS (M6X1X20-MM)	
	3	1	**151-6703**	1	HANDLE-PULL	
	4	1	**151-6704**	2	CAP	
	5	1	**151-6778**	1	FRAME AS	
	5A	1	**156-6470**	1	HANDLE	
	6	1	**151-6813**	1	BRACKET AS	
	7	1	**151-6815**	1	BRACKET AS	
	8	1	**273-5345**	1	LINK AS	
	9	1	**273-5346**	1	LINK AS	
	10	1	**151-6831**	1	LOCK AS	
	11	1	**151-6832**	1	LEVER AS	
	12	1	**156-6472**	1	GLASS	
	13	1	**170-9722**	1	CUSHION	
	14	1	**151-9576**	4	ROLLER	
M	15	1	**9X-2042**	15	SCREW-TRUSS HEAD (M6X1X12-MM)	

M - METRIC PART

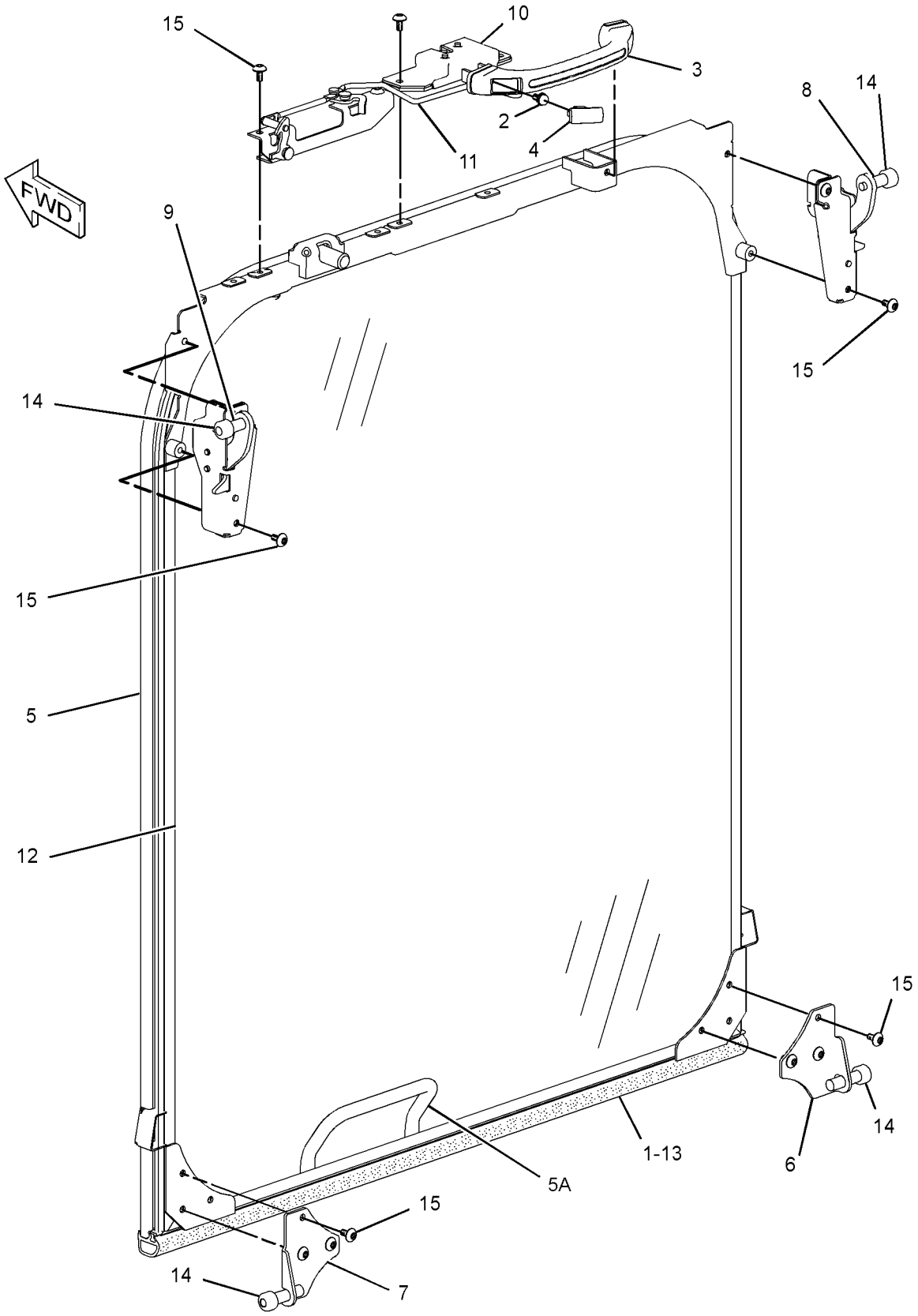

GRAPHIC #1 **<END>** g01935199

207-0144 WINDOW GP-CAB—FRONT, UPPER

S/N: JEG1-UP
PART OF 388-0065 CAB GP
AN ATTACHMENT

SMCS-7310 **i05518576**

NOTE	REF NO	GRAPHIC REF	PART NUMBER	QTY	PART NAME 1 2 3 4 5 6 (PRODUCT LEVEL)	SEE PAGE
	1	1	**170-9722**	1	CUSHION	
	2	1	**156-6472**	1	GLASS	
	3	1	**161-3698**	1	SEAL	
	4	1	**4I-0420**	1	STRIP	
	5	1	**156-6470**	1	HANDLE	

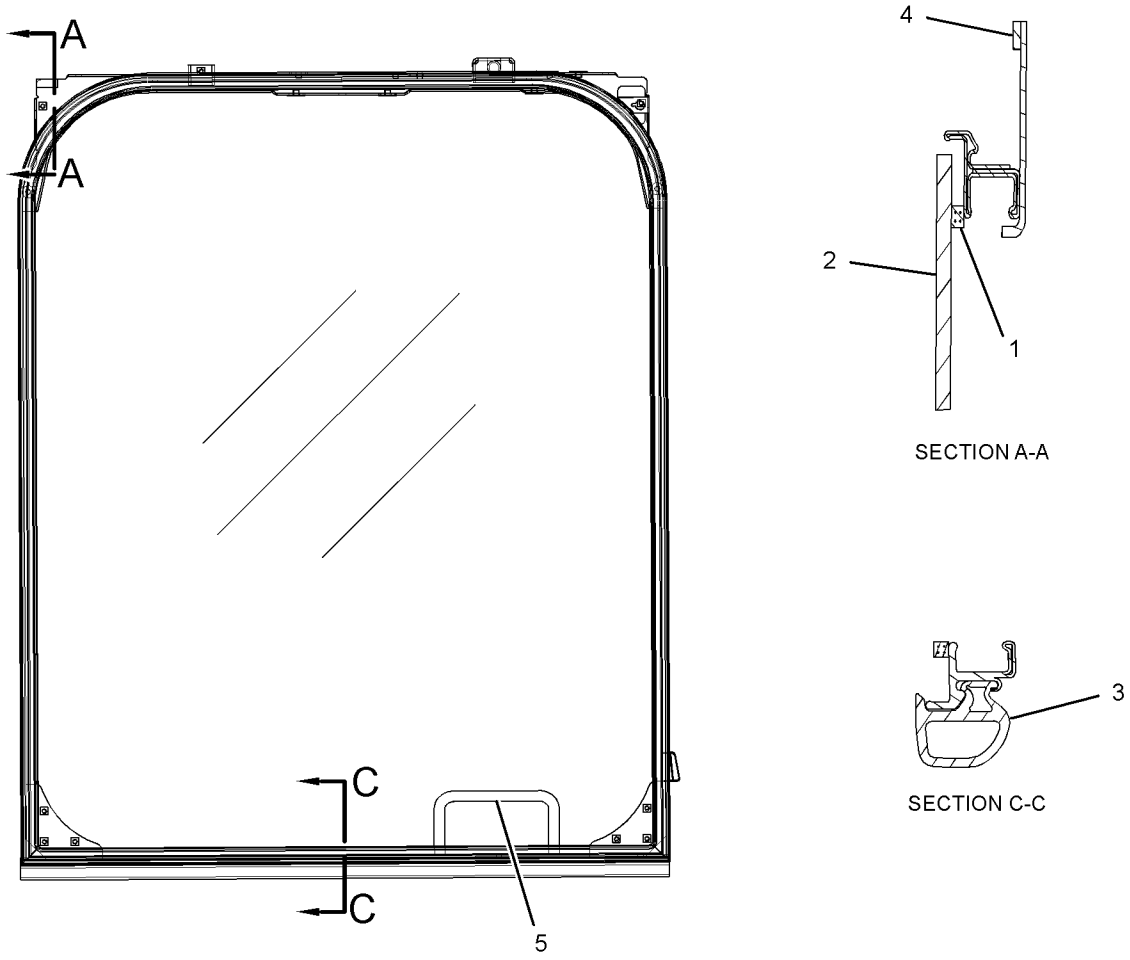

GRAPHIC #1 **<END>** g01935314

388-9107 WINDOW GP-CAB—SIDE, REAR

S/N: JEG1-UP
PART OF 388-0065, 416-9607 CAB GP
AN ATTACHMENT

SMCS-7310 **i05503869**

NOTE	REF NO	GRAPHIC REF	PART NUMBER	QTY	PART NAME 1 2 3 4 5 6 (PRODUCT LEVEL)	SEE PAGE
	1	1	**383-6931**	1	GLASS (LH)	
	2	1	**383-6929**	1	GLASS (REAR)	
	3	1	**164-0666**	1	SEAL	
	4	1	**178-5572**	4	SPACER-SPECIAL (WINDOW)	
	5	1	**383-6932**	1	GLASS (RH)	
	6	1	**099-3629**	1	RING-KEY	
	7	1	**178-5573**	4	SPACER	
	8	1	**178-5574**	10	SPACER	

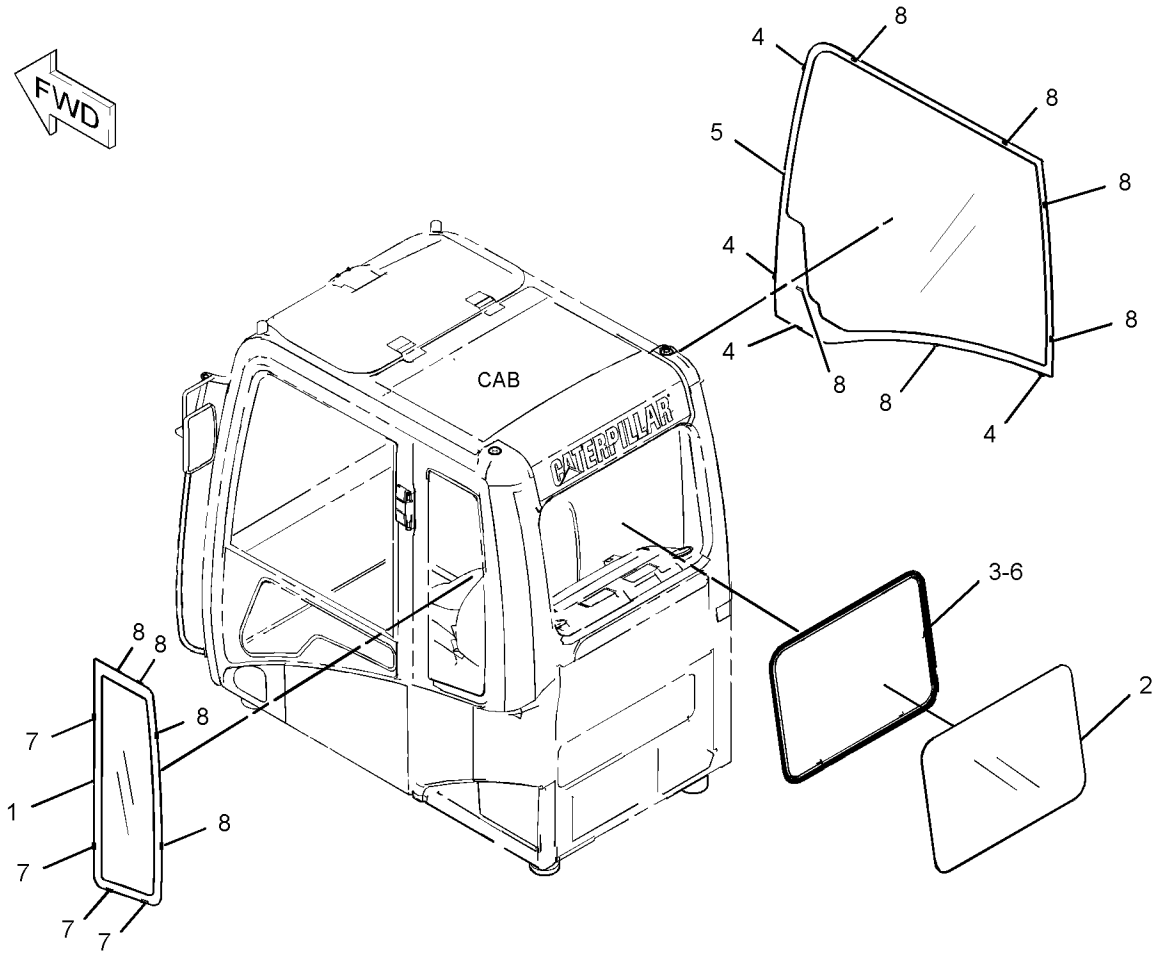

GRAPHIC #1 **<END>** g03499618

388-9108 WINDOW GP-CAB—FRONT, LOWER

S/N: JEG1-UP

PART OF 388-0065, 416-9607 CAB GP

AN ATTACHMENT

SMCS-7310 **i05208414**

NOTE	REF NO	GRAPHIC REF	PART NUMBER	QTY	PART NAME 1 2 3 4 5 6 (PRODUCT LEVEL)	SEE PAGE
	1	1	**383-6930**	1	GLASS (FRONT, LOWER)	
	2	1	**156-6631**	2	STOP	
	3	1	**305-0361**	1	SEAL	
	4	1	**178-5569**	2	SEAL	
	5	1	**189-2702**	2	SEAL	
	6	1	**139-7119**	2	PLUG	

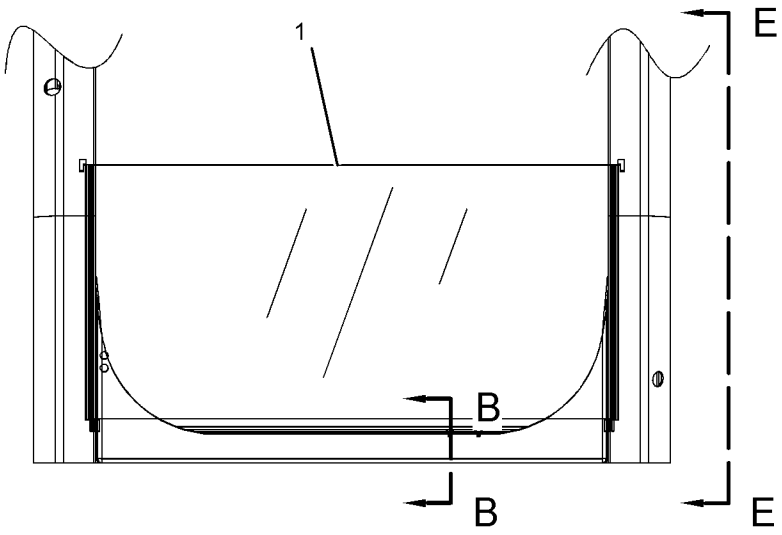

FRONT VIEW

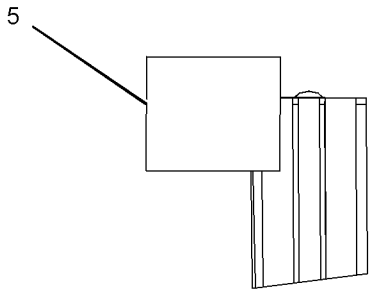

VIEW OF AREA D

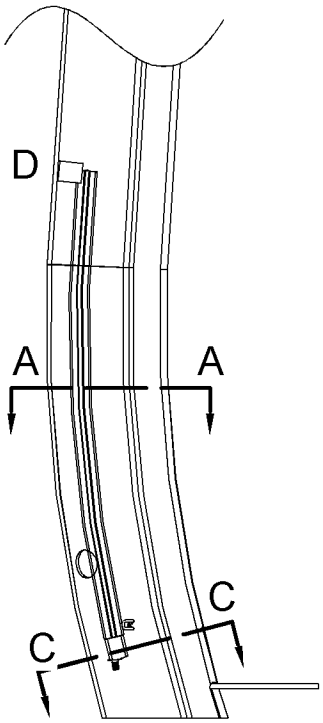

VIEW E-E

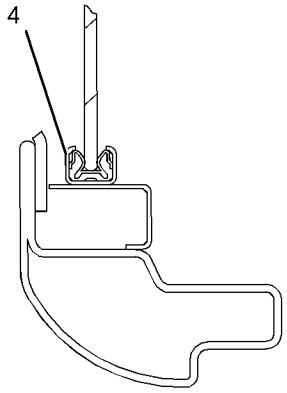

SECTION A-A

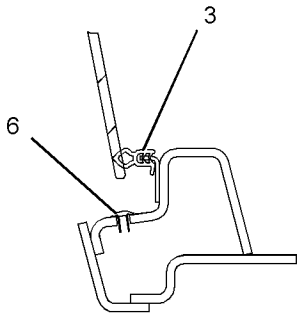

SECTION B-B

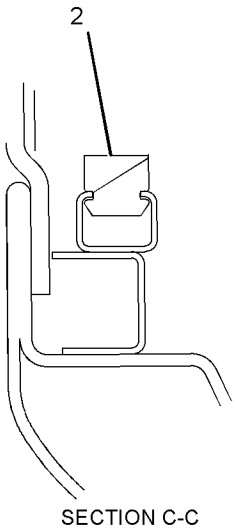

SECTION C-C

GRAPHIC #1 **<END>** g01398601

388-9109 WINDOW GP-CAB—FRONT, UPPER

S/N: JEG1-UP

PART OF 388-0065, 416-9607 CAB GP

AN ATTACHMENT

SMCS-7310 **i05437801**

NOTE	REF NO	GRAPHIC REF	PART NUMBER	QTY	PART NAME 1 2 3 4 5 6 (PRODUCT LEVEL)	SEE PAGE
	1	2	**170-9722**	1	CUSHION	
	2	1	**151-6703**	1	HANDLE-PULL	
	3	1	**151-6704**	2	CAP	
	4	2	**151-6778**	1	FRAME AS	
	4A	2	**156-6470**	1	HANDLE	
	5	1	**417-1143**	1	BRACKET AS	
	6	1	**151-6813**	1	BRACKET AS	
	7	1	**151-6815**	1	BRACKET AS	
	8	1	**273-5345**	1	LINK AS	
	9	1	**273-5346**	1	LINK AS	
	10	1	**398-7109**	1	LOCK AS	
	11	1	**151-6832**	1	LEVER AS	
	12	2	**388-9097**	1	COVER	
	13	1	**151-9557**	2	STOP-RUBBER	
	14	2	**383-8541**	1	GLASS	
	15	2	**156-6554**	1	CABLE AS	
	16	1	**398-7110**	1	STRIKER AS	
	17	2	**156-6562**	1	BRACKET	
	18	2	**156-6563**	1	CATCH AS	
					(TWO JAW)	
					—OR—	
			273-5274	1	CATCH AS	
					(ONE JAW)	
	19	2	**156-6579**	1	STOP	
	20	2	**418-8379**	1	SEAL AS	
	21	2	**156-6627**	1	STOP AS	
	22	1	**161-3684**	2	STOP	
	23	1	**161-3698**	1	SEAL	
	24	2	**164-0648**	1	BRACKET AS	
	25	1	**178-5576**	1	STOP	
M	26	2	**138-8454**	2	SCREW-TRUSS HEAD (M4X0.7X10-MM)	
M	27	2	**185-8182**	4	BOLT (M10X1.5X20-MM)	
M	28	2	**5C-8312**	1	NUT (M4X0.7-THD)	
	29	1	**5P-1075**	4	WASHER-HARD (10.2X22.5X3-MM THK)	
M	30	1	**142-0485**	1	NUT (M10X1.5-THD)	
	31	1	**185-8221**	1	STOP	
M	32	1	**099-0823**	2	SCREW-MACHINE (M6X1X6-MM)	
M	33	1	**101-8900**	2	SCREW AS (M6X1X20-MM)	
	34	1	**117-6306**	1	SWITCH (WINDOW LOWER LIMIT)	
	35	1	**151-9576**	4	ROLLER	
	36	1	**4I-0420**	1	STRIP	
	37	1	**7X-0578**	1	WASHER-HARD (10.2X32X2.5-MM THK)	
M	38	2	**9X-2042**	20	SCREW-TRUSS HEAD (M6X1X12-MM)	
M	39	1,2	**9X-2044**	5	SCREW-TRUSS HEAD (M6X1X16-MM)	
M	40	2	**9X-2045**	3	SCREW-TRUSS HEAD (M6X1X20-MM)	
	41	2	**9X-8256**	2	WASHER (6.6X12X2-MM THK)	

M - METRIC PART

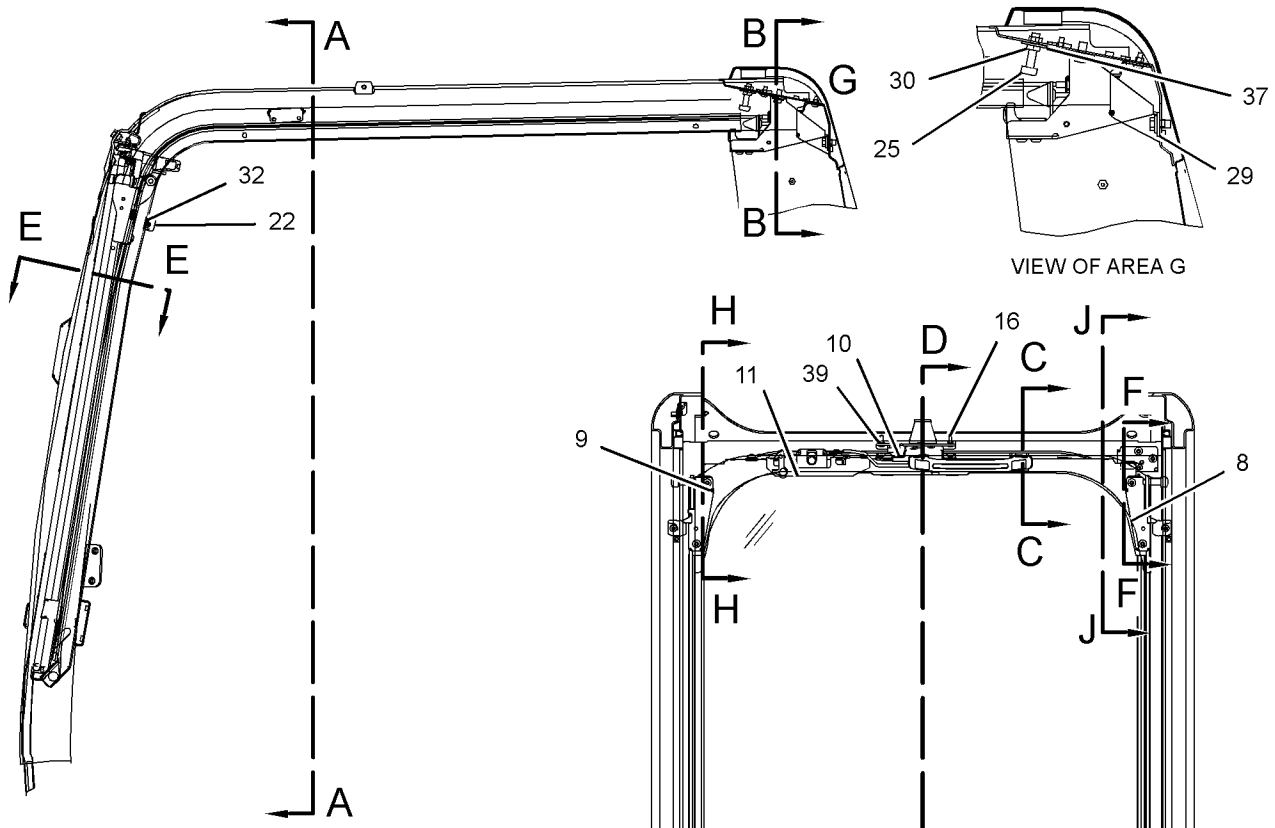

LEFT SIDE VIEW

SECTION A-A

REFER TO ALL ILLUSTRATIONS OF THIS GROUP FOR AUXILIARY VIEWS

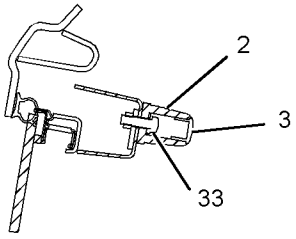

SECTION C-C

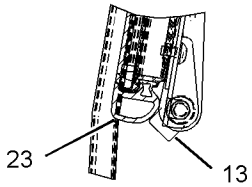

SECTION D-D

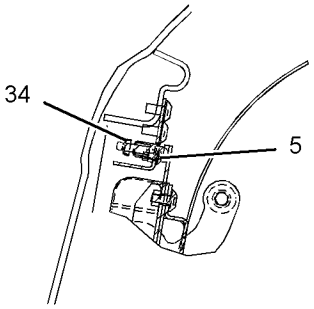

SECTION F-F

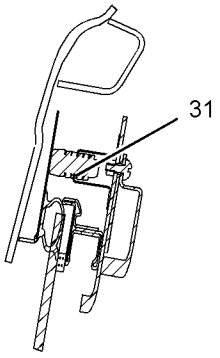

SECTION H-H

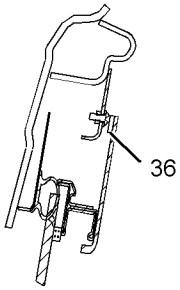

SECTION J-J

GRAPHIC #1 g03445379

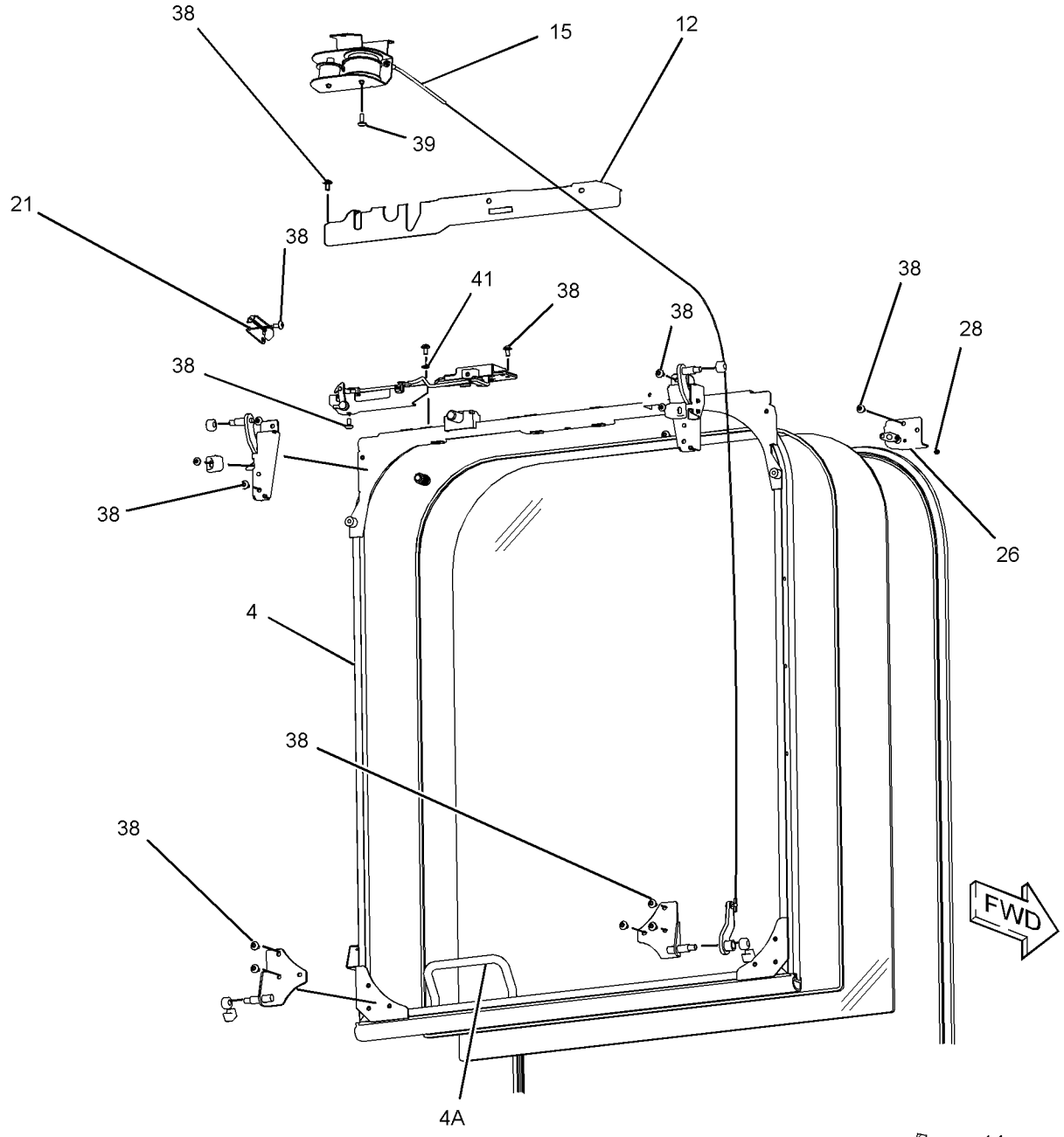

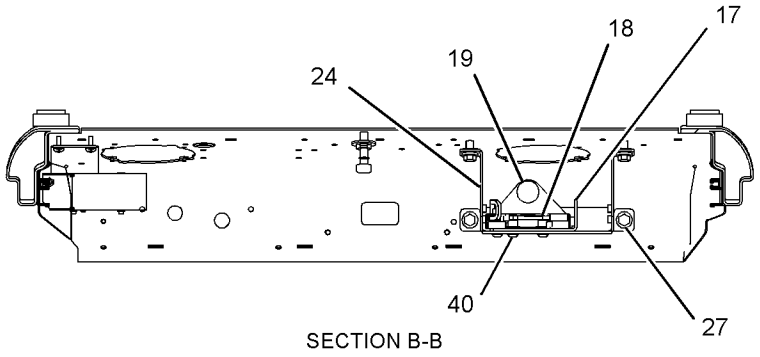

SECTION B-B

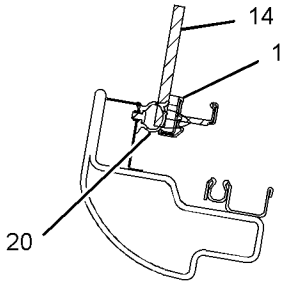

SECTION E-E

GRAPHIC #2 **<END>** g03445380

388-9116 WINDOW GP-CAB—FRONT, UPPER

S/N: JEG1-UP
PART OF 416-9607 CAB GP
AN ATTACHMENT

SMCS-7310 **i05536889**

NOTE	REF NO	GRAPHIC REF	PART NUMBER	QTY	PART NAME 1 2 3 4 5 6 (PRODUCT LEVEL)	SEE PAGE
	1	1	**161-3698**	1	SEAL	
M	2	1	**101-8900**	2	SCREW AS (M6X1X20-MM)	
	3	1	**151-6703**	1	HANDLE-PULL	
	4	1	**151-6704**	2	CAP	
	5	1	**151-6778**	1	FRAME AS	
	5A	1	**156-6470**	1	HANDLE	
	6	1	**151-6813**	1	BRACKET AS	
	7	1	**151-6815**	1	BRACKET AS	
	8	1	**273-5345**	1	LINK AS	
	9	1	**273-5346**	1	LINK AS	
	10	1	**151-6831**	1	LOCK AS	
	11	1	**151-6832**	1	LEVER AS	
	12	1	**383-8541**	1	GLASS	
	13	1	**170-9722**	1	CUSHION	
	14	1	**151-9576**	4	ROLLER	
M	15	1	**9X-2042**	15	SCREW-TRUSS HEAD (M6X1X12-MM)	

M - METRIC PART

388-9116 **WINDOW GP-CAB (*contd.*)** **i05536889**

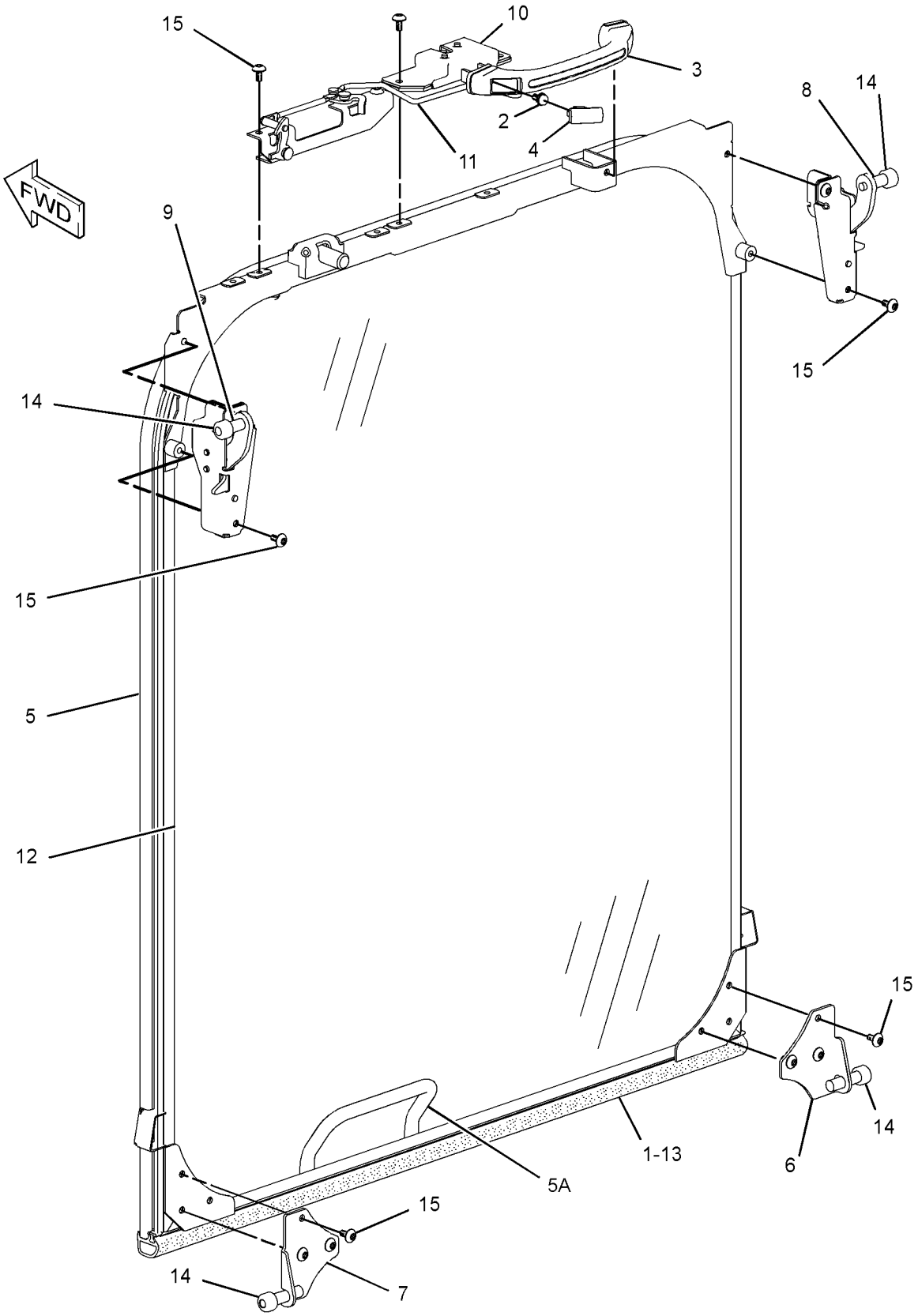

GRAPHIC #1 **<END>** g01935199

388-9117 WINDOW GP-CAB—FRONT, UPPER

S/N: JEG1-UP
PART OF 416-9607 CAB GP
AN ATTACHMENT

SMCS-7310 **i05458912**

NOTE	REF NO	GRAPHIC REF	PART NUMBER	QTY	PART NAME 1 2 3 4 5 6 (PRODUCT LEVEL)	SEE PAGE
	1	1	**170-9722**	1	CUSHION	
	2	1	**151-6778**	1	FRAME AS	
	2A	1	**156-6470**	1	HANDLE	
	3	1	**161-3698**	1	SEAL	
	4	1	**383-8541**	1	GLASS	
	5	1	**4I-0420**	1	STRIP	

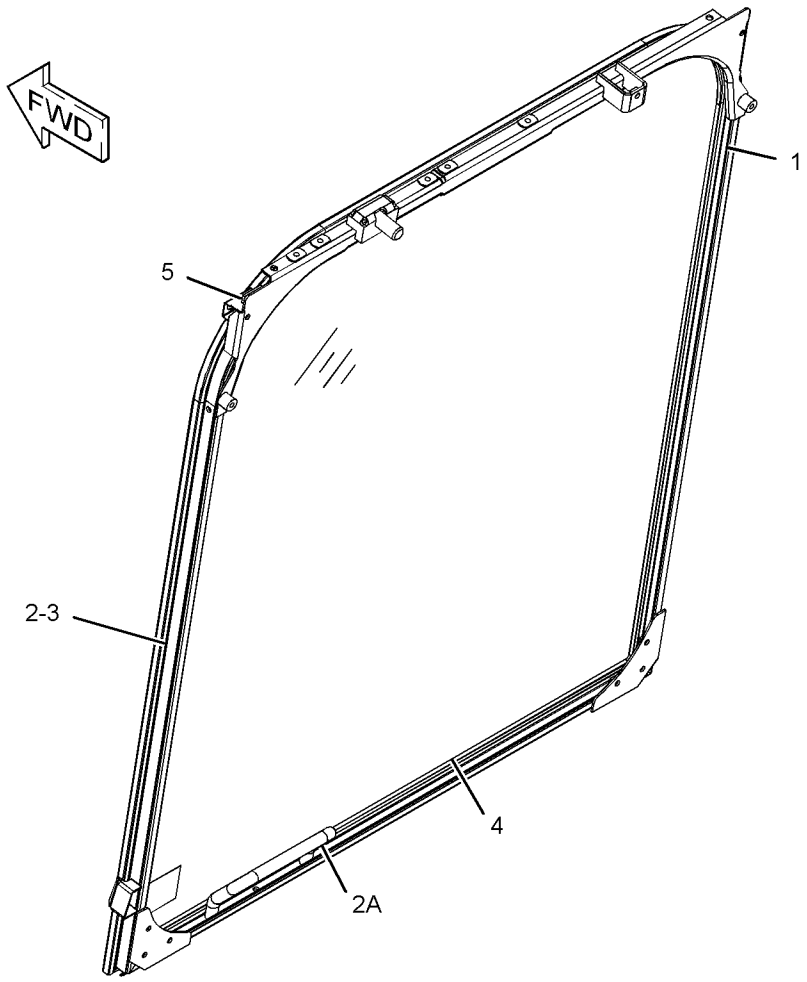

GRAPHIC #1 **<END>** g03443317

OPERATOR STATION

151-6792 WINDOW GP-DOOR

S/N: JEG1-UP
PART OF 307-1818 DOOR GP-CAB
AN ATTACHMENT

SMCS-7308, 7310 **i03632584**

NOTE	REF NO	GRAPHIC REF	PART NUMBER	QTY	PART NAME 1 2 3 4 5 6 (PRODUCT LEVEL)	SEE PAGE
	1	1	**085-6444**	2	LATCH GP-WINDOW	
					(EACH INCLUDES)	
		1	**085-6447**	1	RETAINER	
M		1	**085-6448**	2	SCREW-TAPPING	
		1	**085-6449**	1	PACKING	
	2	1	**151-6793**	1	FRAME AS	
		1	**4I-4298**	1	STOPPER	
		1	**4I-4300**	1	CATCH	
		1	**099-0139**	3	RIVET	
	3	1	**151-6841**	1	SEAL	
	4	1	**156-6474**	1	GLASS	
	5	1	**156-6475**	1	GLASS	
	6	1	**161-3695**	1	SEAL	
	7	1	**161-3705**	1	SEAL	
	8	1	**164-0516**	1	RUBBER	
	9	1	**164-0517**	1	RUBBER	
	10	1	**164-0518**	1	RUBBER	
	11	1	**171-7413**	1	SPACER	
	12	1	**171-7414**	1	SPACER	
	13	1	**176-1951**	1	SPACER	
	14	1	**176-1952**	1	SPACER	
	15	1	**176-1953**	1	STOP	
	16	1	**176-1954**	1	SEAL	
	17	1	**176-1955**	1	SEAL	
	18	1	**176-1956**	1	SEAL	
	19	1	**176-1957**	1	SEAL	

M - METRIC PART

151-6792 **WINDOW GP-DOOR (*contd.*)** **i03632584**

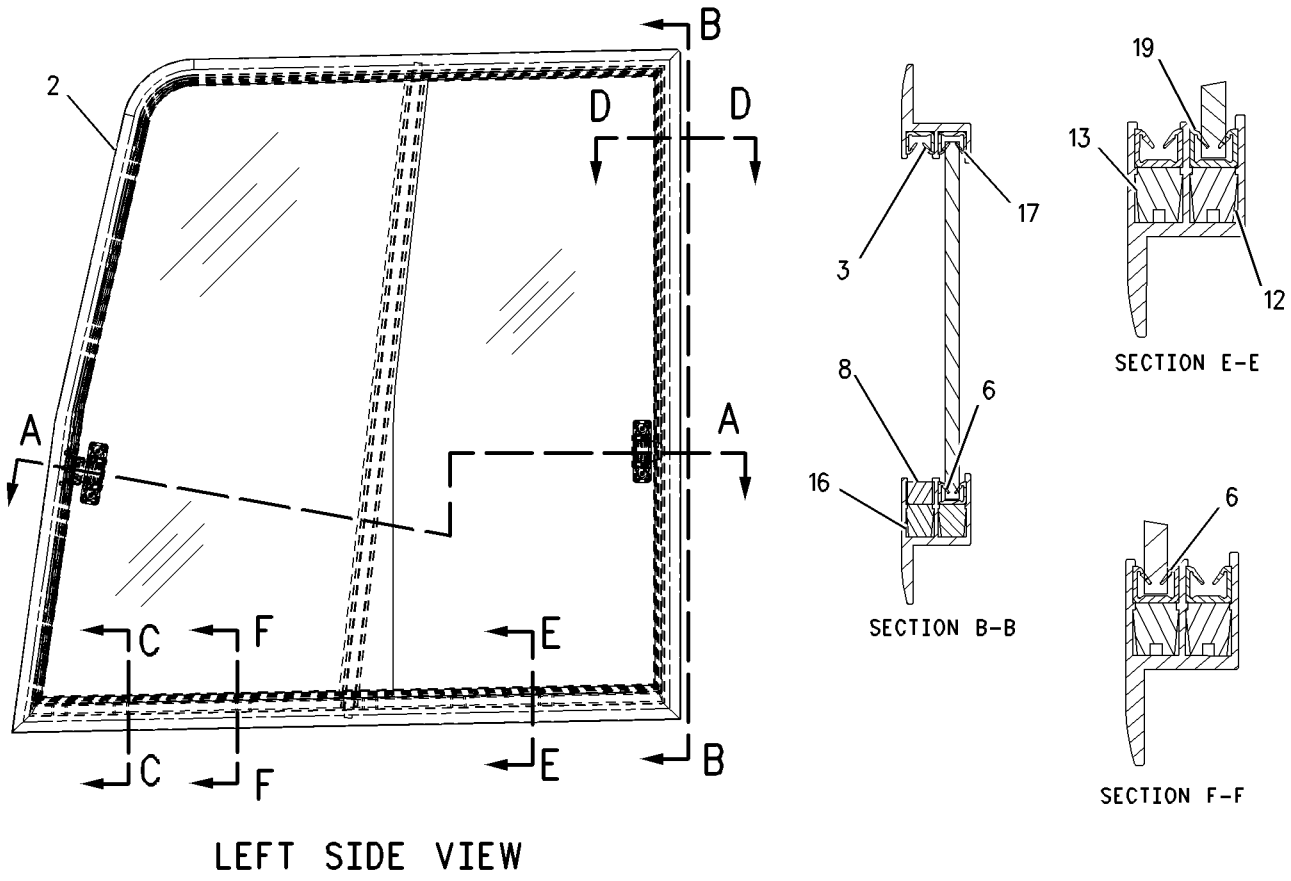

GRAPHIC #1

<END>

g00722948

384-6533 WINDOW GP-DOOR

S/N: JEG1-UP
PART OF 388-9105 DOOR GP-CAB
AN ATTACHMENT

SMCS-7308, 7310 **i05440251**

NOTE	REF NO	GRAPHIC REF	PART NUMBER	QTY	PART NAME 1 2 3 4 5 6 (PRODUCT LEVEL)	SEE PAGE
	1	1	**385-8757**	2	CATCH AS	
	2	1	**387-2846**	1	GLASS	
	3	1	**387-2847**	1	GLASS	
	4	1	**387-2848**	1	PILLAR	
	5	1	**387-2849**	1	HOOK	
	6	1	**438-4951**	1	SEAL	
	7	1	**438-4952**	1	SEAL	
	8	1	**438-4953**	1	SEAL	
	9	1	**438-4954**	1	SEAL	
	10	1	**438-4955**	1	SEAL	
	11	1	**438-4956**	1	SEAL	
	12	1	**438-4957**	1	SEAL	
	13	1	**438-4958**	1	SEAL	
E	14	1	**430-4119**		RUBBER (10-CM)	
E	14A	1	**430-4119**		RUBBER (5.2-CM EACH)	

E - ORDER BY THE CENTIMETER

384-6533 **WINDOW GP-DOOR (*contd.*)** **i05440251**

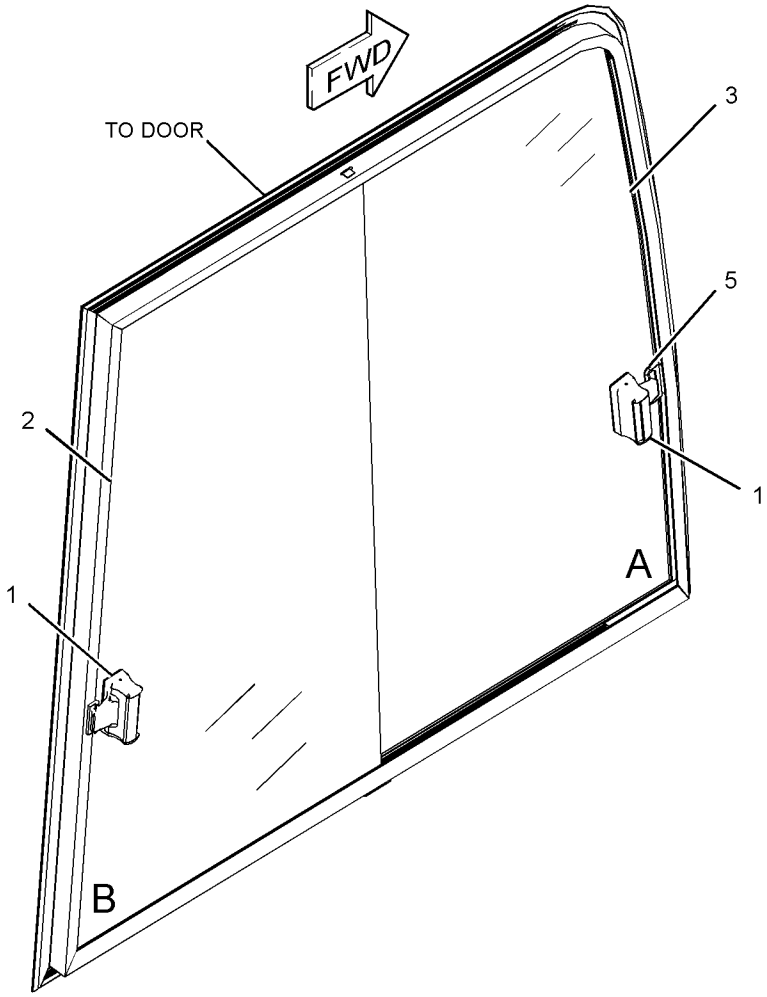

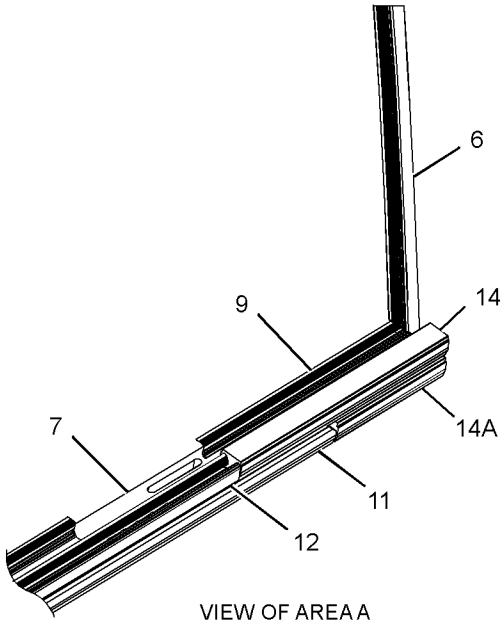

VIEW OF AREA A
(PARTS REMOVED FOR CLARITY)

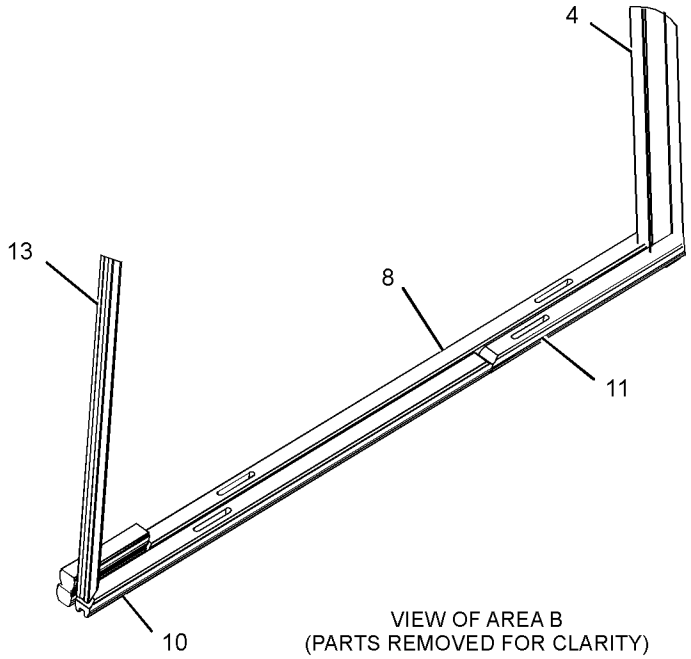

VIEW OF AREA B
(PARTS REMOVED FOR CLARITY)

GRAPHIC #1 **<END>** g03405579

229-9087 WIPER & WASHER GP-WINDOW—LOWER

S/N: JEG1-UP
PART OF 229-9086 WIPER AR-WINDOW
AN ATTACHMENT

SMCS-7305, 7306 **i03021171**

NOTE	REF NO	GRAPHIC REF	PART NUMBER	QTY	PART NAME 1 2 3 4 5 6 (PRODUCT LEVEL)	SEE PAGE
	1	1	**4I-5021**	1	BLADE AS-WIPER (275-MM) (LOWER)	
	2	1	**235-8974**	1	BRACKET AS	
C	3	1	**293-1140**	1	MOTOR AS-WINDOW WIPER (LOWER)	
	4	1	**3S-2093**	1	STRAP-CABLE	
	5	1	**9X-8256**	5	WASHER (6.6X12X2-MM THK)	
M	6	1	**5C-2890**	3	NUT (M6X1-THD)	
M	7	1	**9X-2044**	2	SCREW-TRUSS HEAD (M6X1X16-MM)	
	8	1	**156-6646**	1	BRACKET	
	9	1	**8T-4121**	4	WASHER-HARD (11X21X2.5-MM THK)	
	10	1	**4I-5020**	1	ARM AS-WIPER	
M	11	1	**8T-4191**	4	BOLT (M10X1.5X16-MM)	
	12	1	**4I-1163**	1	BRACKET	
M	13	1	**5C-9553**	2	BOLT (M6X1X16-MM)	
Y	14	1	**156-6647**	1	WINDOW GP-CAB (FRONT, LOWER)	631
	15	1	**129-6466**	1	SWITCH AS-ROLLER (WIPER, LOWER)	
	15A	1	**9X-0199**	1	BOOT-SWITCH	
	15B	1	**6V-8370**	1	NUT-HEX (3/4-32-THD)	
		1	**2H-3922**	1	LOCKWASHER	
	15C	1	**6V-8363**	2	SCREW (10-32X0.312-IN)	
		1	**8F-1434**	2	LOCKWASHER	

C - CHANGE FROM PREVIOUS TYPE
M - METRIC PART
Y - SEPARATE ILLUSTRATION

229-9087 **WIPER & WASHER GP-WINDOW (*contd.*)** **i03021171**

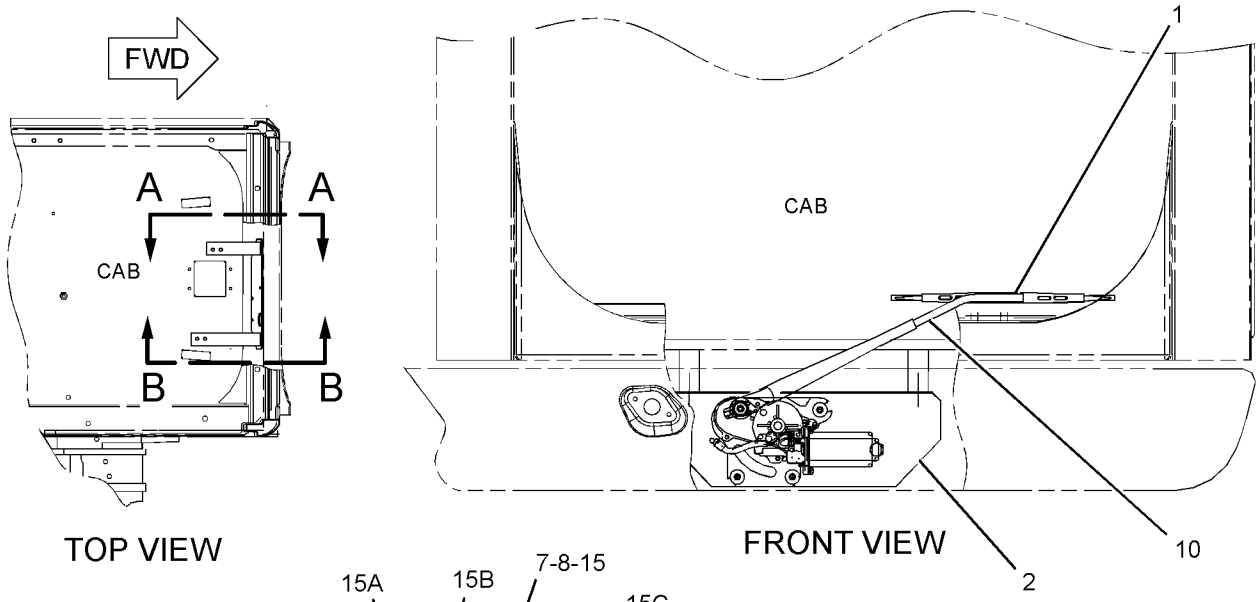

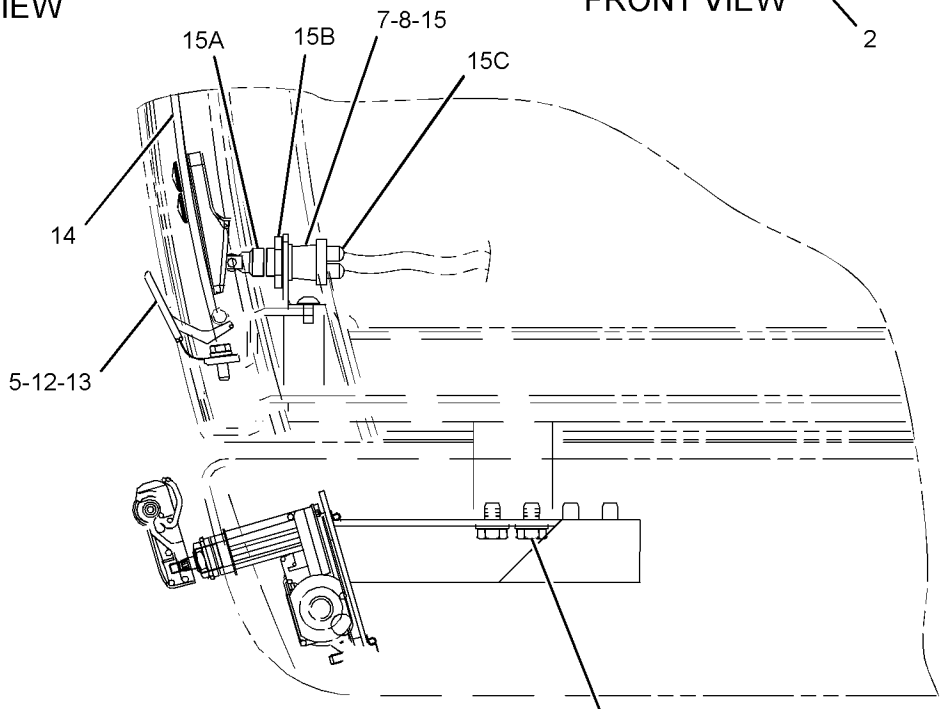

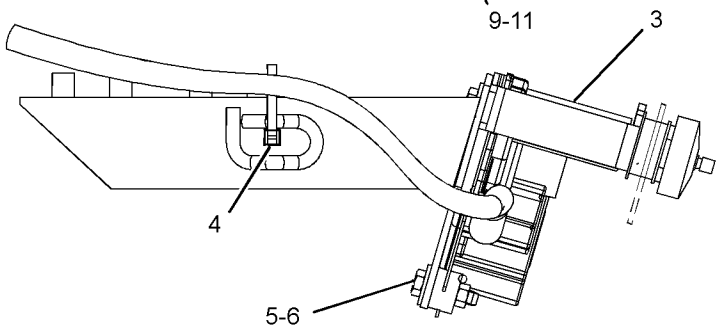

GRAPHIC #1 **<END>** g01527310

229-9086 WIPER AR-WINDOW—LOWER

S/N: JEG1-UP

PART OF 442-4974 OPTION AR-CAB

AN ATTACHMENT

SMCS-7305 **i02500689**

NOTE	PART NUMBER	QTY	PART NAME 1 2 3 4 5 6 (PRODUCT LEVEL)	SEE PAGE
Y	*229-9088*	1	WASHER GP-WINDOW (LOWER)	629
Y	*229-9087*	1	WIPER & WASHER GP-WINDOW (LOWER)	648
Y	*238-2208*	1	SWITCH GP-WIPER (LOWER)	154

Y - SEPARATE ILLUSTRATION

<END>

234-6594 WIPER GP-WINDOW—FRONT, UPPER

S/N: JEG1-UP

PART OF 388-0065, 416-9607 CAB GP

AN ATTACHMENT

SMCS-7305 **i05412542**

NOTE	REF NO	GRAPHIC REF	PART NUMBER	QTY	PART NAME 1 2 3 4 5 6 (PRODUCT LEVEL)	SEE PAGE
	1	1	**161-3677**	1	HOLDER	
	2	1	**245-7931**	1	MOTOR AS-WINDOW WIPER	
M		1	**6V-8231**	1	NUT (M10X1.25-THD)	
M		1	**7Y-3470**	1	NUT (M20X1-THD)	
		1	**7Y-3472**	1	CAP	
		1	**124-3953**	1	WASHER (20.5X30X2-MM THK)	
	3	1	**235-8932**	1	NOZZLE AS	
	4	1	**155-7042**	1	RELAY AS (WIPER)	
	5	1	**372-9334**	1	ARM GP-WINDOW WIPER	
		1	**161-3669**	1	GUIDE	
		1	**161-3670**	1	BLADE AS-WIPER (600-MM)	
		1	**185-8290**	1	SCREW AS (M3.5X0.6X9-MM)	
		1	**372-9285**	1	ARM AS-WIPER	
	6	1	**163-6795**	1	STRAP-CABLE	
M	7	1	**3E-9872**	2	SCREW AS (M4X0.7X12-MM)	
	8	1	**4I-3090**	1	SEAL	
	9	1	**7Y-7364**	1	GROMMET	
M	10	1	**5C-2890**	4	NUT (M6X1-THD)	
M	11	1	**9X-2042**	2	SCREW-TRUSS HEAD (M6X1X12-MM)	
M	12	1	**9X-2044**	3	SCREW-TRUSS HEAD (M6X1X16-MM)	

M - METRIC PART

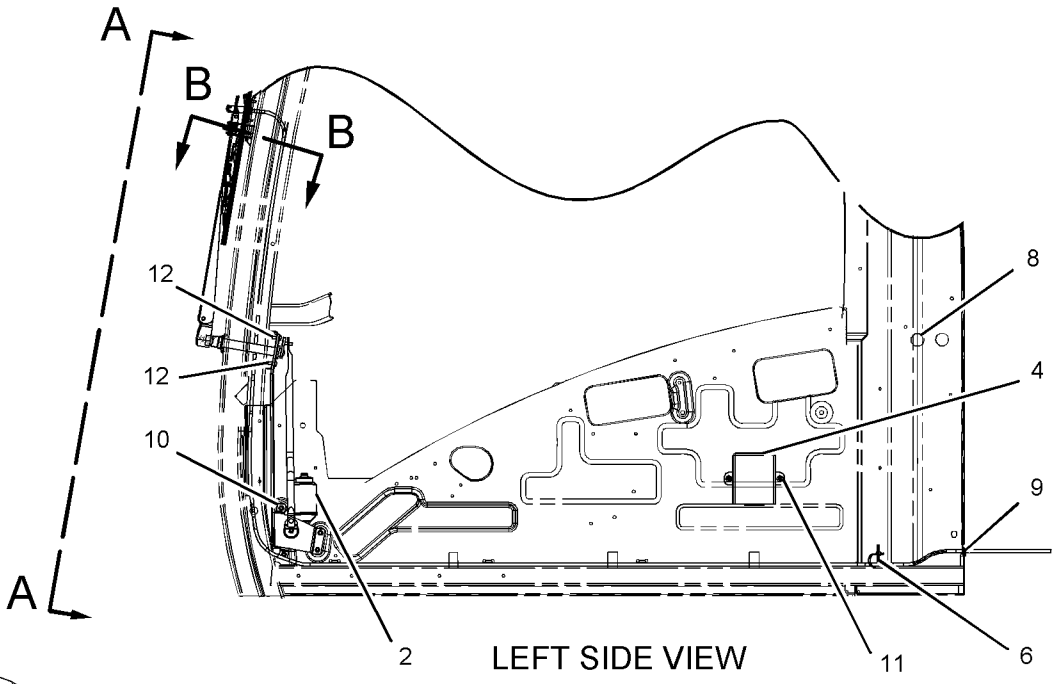

LEFT SIDE VIEW

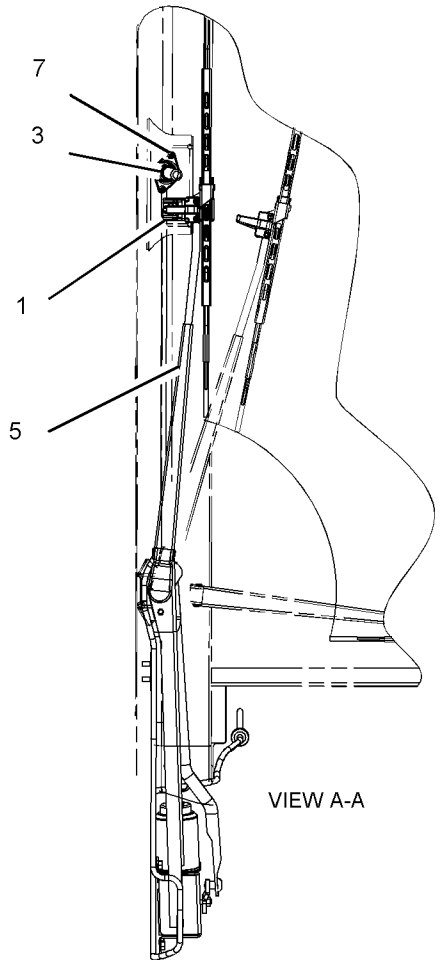

VIEW A-A

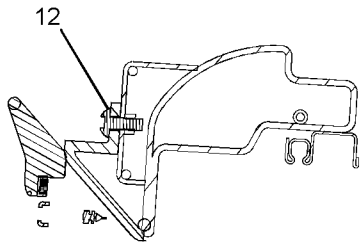

SECTION B-B

GRAPHIC #1 **<END>** g01098021

247-7416 FILM GP–OPERATOR CONTROLS, NOTICE

S/N: JEG1-UP
PART OF 383-5306 CONTROL AR-AUXILIARY
AN ATTACHMENT

SMCS-7405, 7557

i02832220

NOTE	REF NO	GRAPHIC REF	PART NUMBER	QTY	PART NAME 1 2 3 4 5 6 (PRODUCT LEVEL)	SEE PAGE
	1	1	**118-6054**	1	FILM-NOTICE (HYDRAULIC HAMMER OPERATION)	
	2	1	**260-6946**	1	FILM-INSTRUCTION (OPERATOR CONTROL PEDALS)	

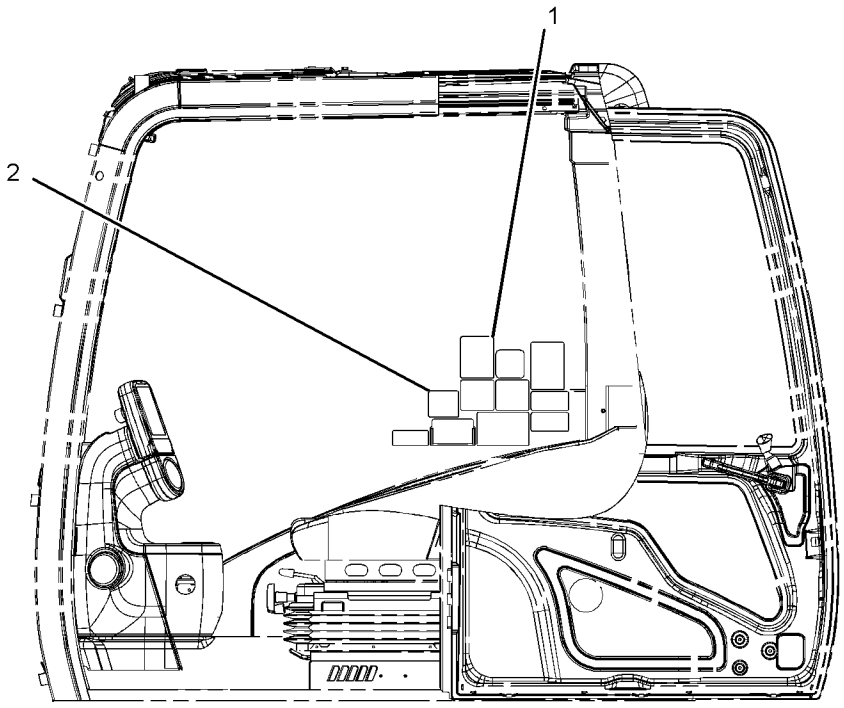

LEFT SIDE VIEW

GRAPHIC #1

<END>

g01220073

247-7420 FILM GP–OPERATOR CONTROLS, NOTICE

S/N: JEG1-UP

PART OF 383-5307 CONTROL AR-AUXILIARY

AN ATTACHMENT

SMCS-7405, 7557

i02832304

NOTE	REF NO	GRAPHIC REF	PART NUMBER	QTY	PART NAME 1 2 3 4 5 6 (PRODUCT LEVEL)	SEE PAGE
	1	1	**118-6054**	1	FILM-NOTICE (HYDRAULIC HAMMER OPERATION)	
	2	1	**260-6945**	1	FILM-INSTRUCTION (OPERATOR CONTROL PEDALS)	

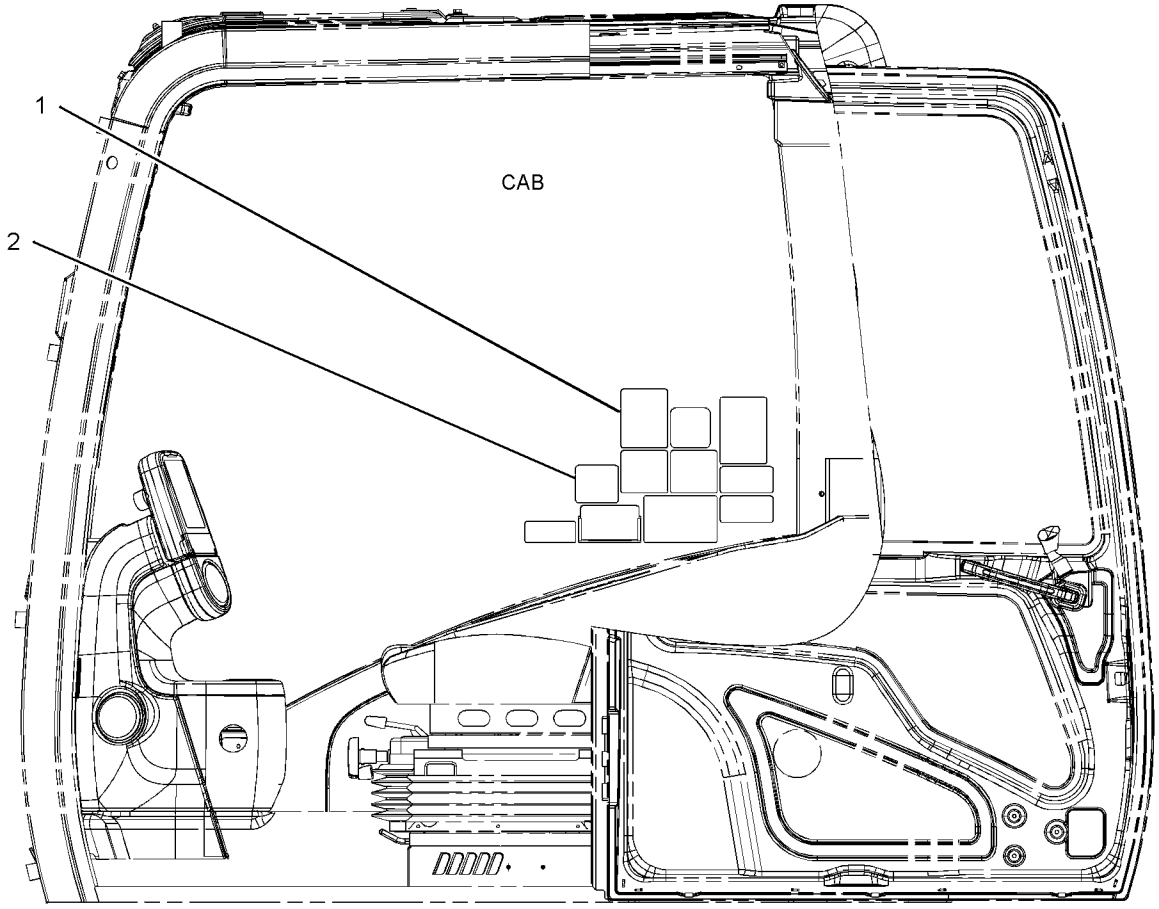

LEFT SIDE VIEW

GRAPHIC #1

<END>

g01226748

247-7423 FILM GP–TOOL CONTROL

S/N: JEG1-UP
PART OF 383-5307 CONTROL AR-AUXILIARY
AN ATTACHMENT

SMCS-7405, 7557

i05521509

NOTE	REF NO	GRAPHIC REF	PART NUMBER	QTY	PART NAME 1 2 3 4 5 6 (PRODUCT LEVEL)	SEE PAGE
	1	1	**260-6945**	1	FILM-INSTRUCTION (OPERATOR CONTROL PEDALS)	
	2	1	**250-8054**	1	FILM-NOTICE (HAMMER, READ OMM)	

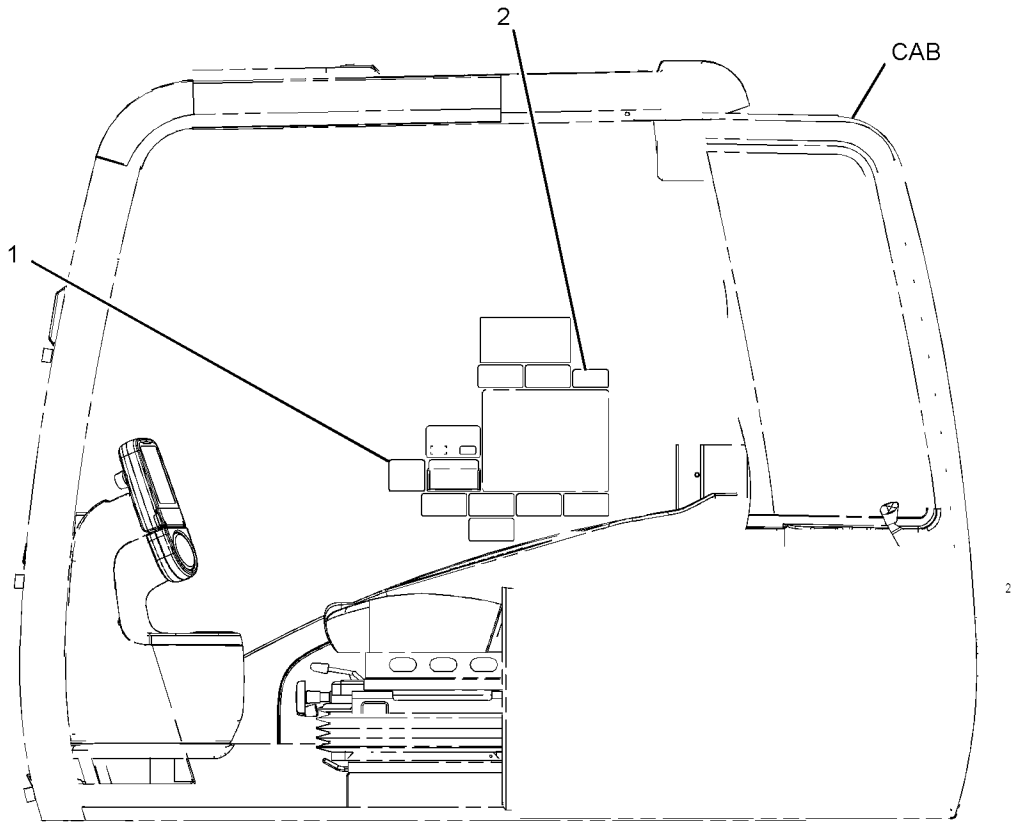

LEFT SIDE VIEW

GRAPHIC #1

<END>

g01231531

247-7424 FILM GP–OPERATOR CONTROLS, NOTICE

S/N: JEG1-UP

PART OF 383-5306 CONTROL AR-AUXILIARY

AN ATTACHMENT

SMCS-7405, 7557

i02790509

NOTE	REF NO	GRAPHIC REF	PART NUMBER	QTY	PART NAME 1 2 3 4 5 6 (PRODUCT LEVEL)	SEE PAGE
	1	1	**260-6946**	1	FILM-INSTRUCTION (OPERATOR CONTROL PEDALS)	
	2	1	**250-8054**	1	FILM-NOTICE (HAMMER, READ OMM)	

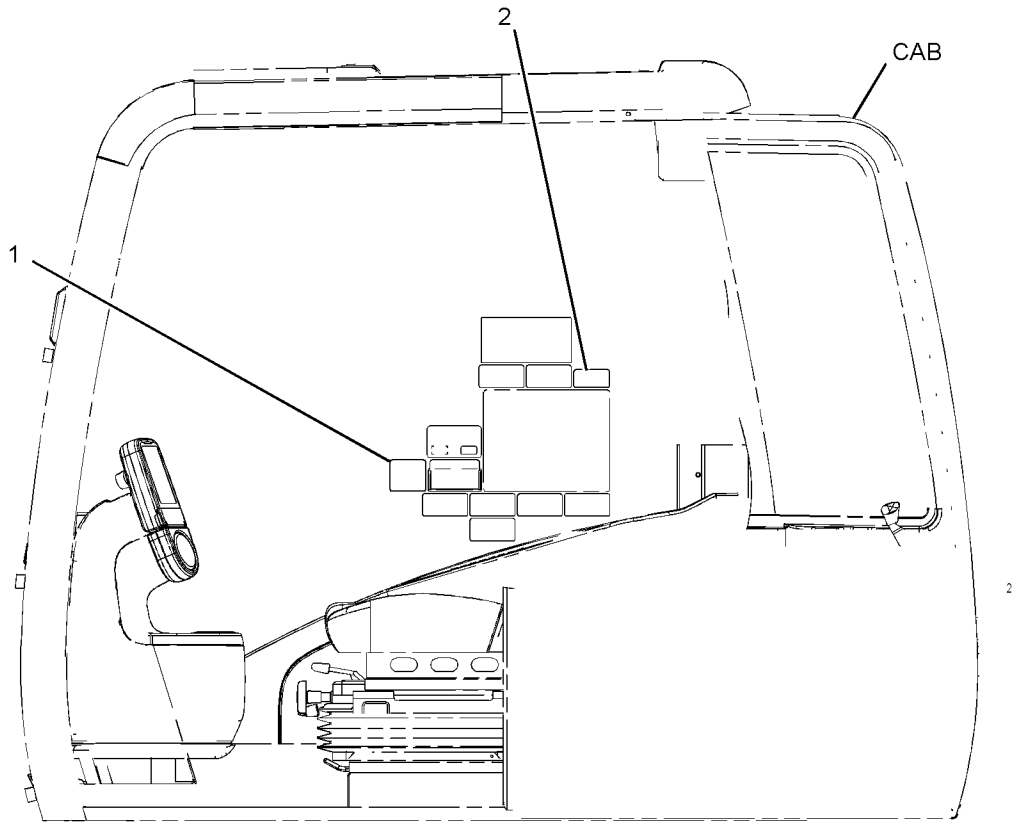

LEFT SIDE VIEW

GRAPHIC #1 **<END>** g01231531

282-5705 FILM GP–QUICK COUPLER

S/N: JEG1-UP
PART OF 383-5423 CONTROL AR-QUICK COUPLER
AN ATTACHMENT

SMCS-7405, 7557

i02956553

NOTE	REF NO	GRAPHIC REF	PART NUMBER	QTY	PART NAME 1 2 3 4 5 6 (PRODUCT LEVEL)	SEE PAGE
	1	1	**268-4530**	1	FILM-WARNING (CRUSH HAZARD, READ OMM, U.S.)	
					–OR–	
		1	**269-0120**	1	FILM-WARNING (CRUSH HAZARD, READ OMM, INTL)	
	2	1	**268-4531**	1	FILM-INSTRUCTION (COUPLER OPERATION)	
	3	1	**268-8872**	1	FILM-WARNING (CRUSH HAZARD, READ OMM, U.S.)	
					–OR–	
		1	**269-0121**	1	FILM-WARNING (CRUSH HAZARD, READ OMM, INTL)	

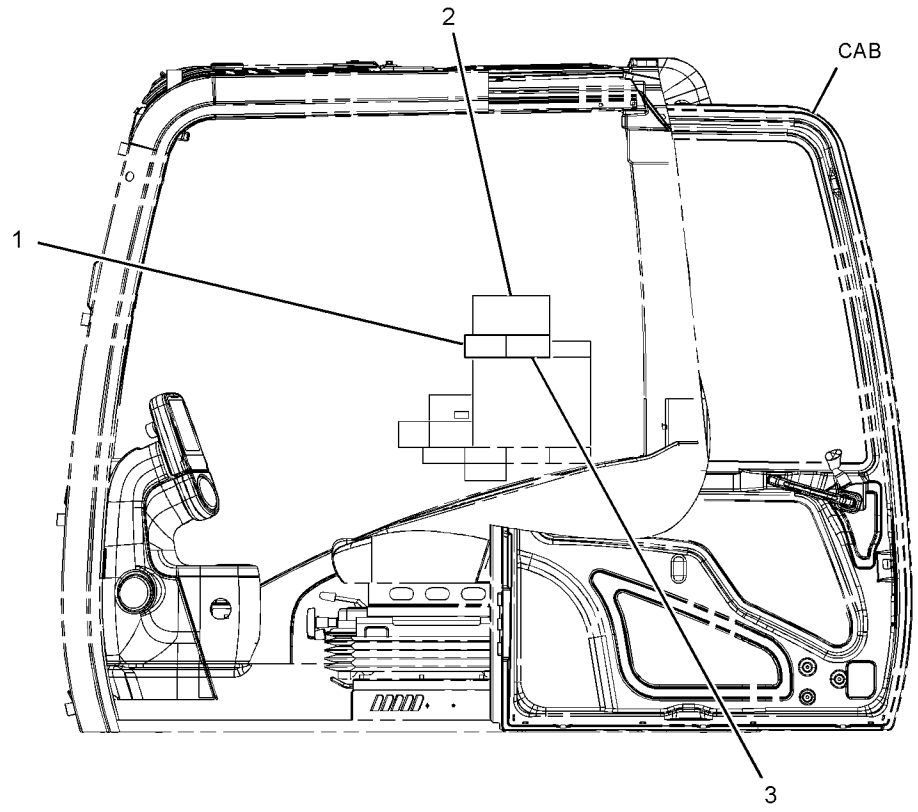

LEFT SIDE VIEW

GRAPHIC #1 **<END>** g01238116

SERVICE EQUIPMENT AND SUPPLIES

298-4258 FILM GP–FUEL TRANSFER PUMP

S/N: JEG1-UP

PART OF 419-8979 PUMP AR-FUEL TRANSFER

AN ATTACHMENT

SMCS-7405, 7557 **i02861636**

NOTE	REF NO	GRAPHIC REF	PART NUMBER	QTY	PART NAME 1 2 3 4 5 6 (PRODUCT LEVEL)	SEE PAGE
	1	1	**309-3872**	1	FILM-WARNING (EXPLOSION HAZARD, READ OMM)	

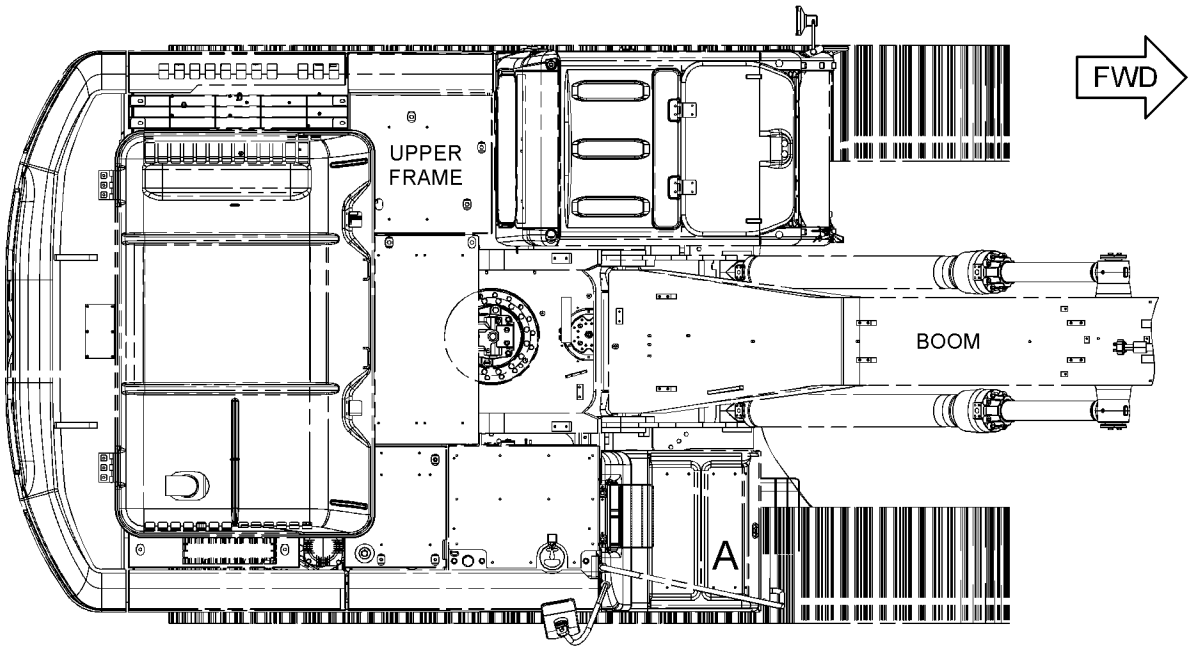

TOP VIEW

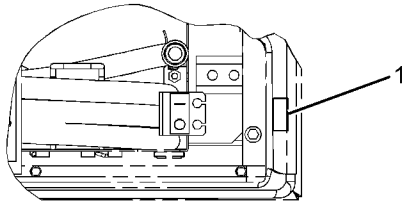

VIEW OF AREA A

GRAPHIC #1 **<END>** g01428719

393-0367 FILM GP–ENGINE

S/N: BD41-UP

PART OF 450-8077 ENGINE AR-PRIMARY

SMCS-7405, 7557 **i05536564**

NOTE	REF NO	GRAPHIC REF	PART NUMBER	QTY	PART NAME 1 2 3 4 5 6 (PRODUCT LEVEL)	SEE PAGE
	1	1	**392-8477**	1	PLATE-IDENTIFICATION (CAT)	
	2	1	**326-9053**	1	FILM-WARNING (DO NOT SPRAY, READ OMM)	
	3	1	**346-8219**	2	FILM-WARNING (UNIVERSAL WARNING)	
	4	1	**355-3486**	1	STRIP-ADHESIVE	

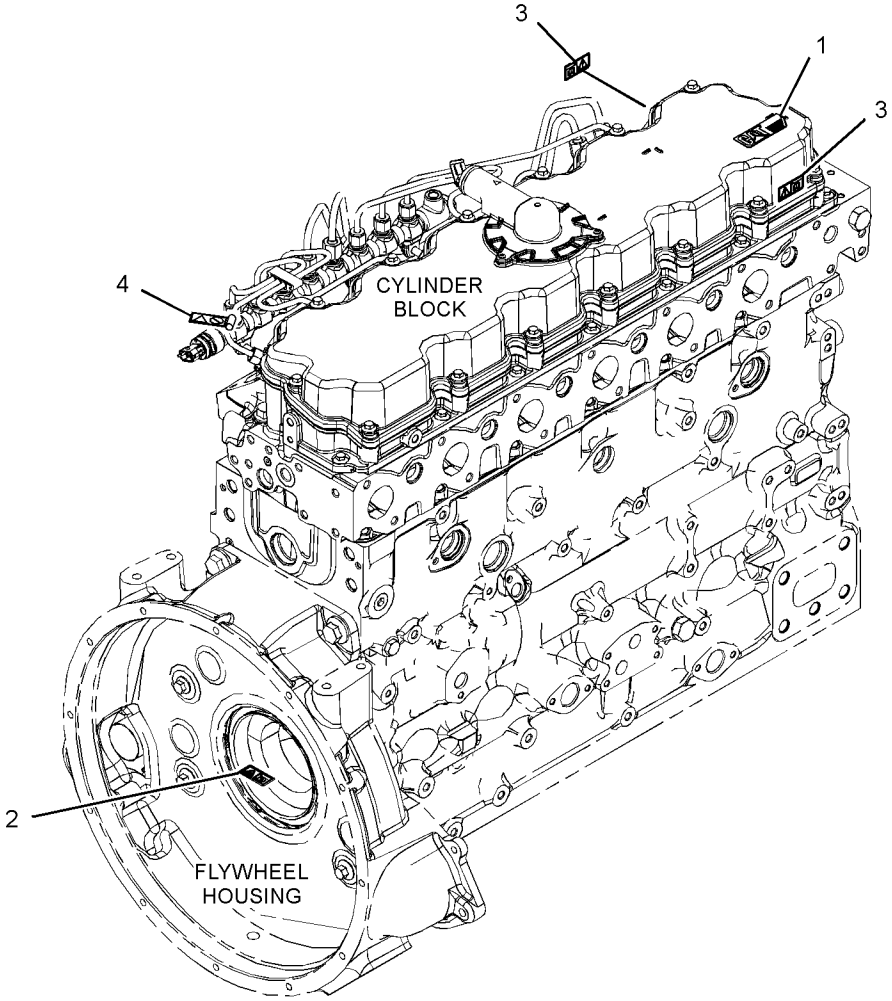

GRAPHIC #1 **<END>** g03479825

417-9077 FILM GP–MASS EXCAVATOR

S/N: JEG1-UP

AN ATTACHMENT

SMCS-7405, 7557 **i05518594**

NOTE	REF NO	GRAPHIC REF	PART NUMBER	QTY	PART NAME 1 2 3 4 5 6 (PRODUCT LEVEL)	SEE PAGE
	1	1	**385-4171**	2	FILM-IDENTIFICATION (ME)	

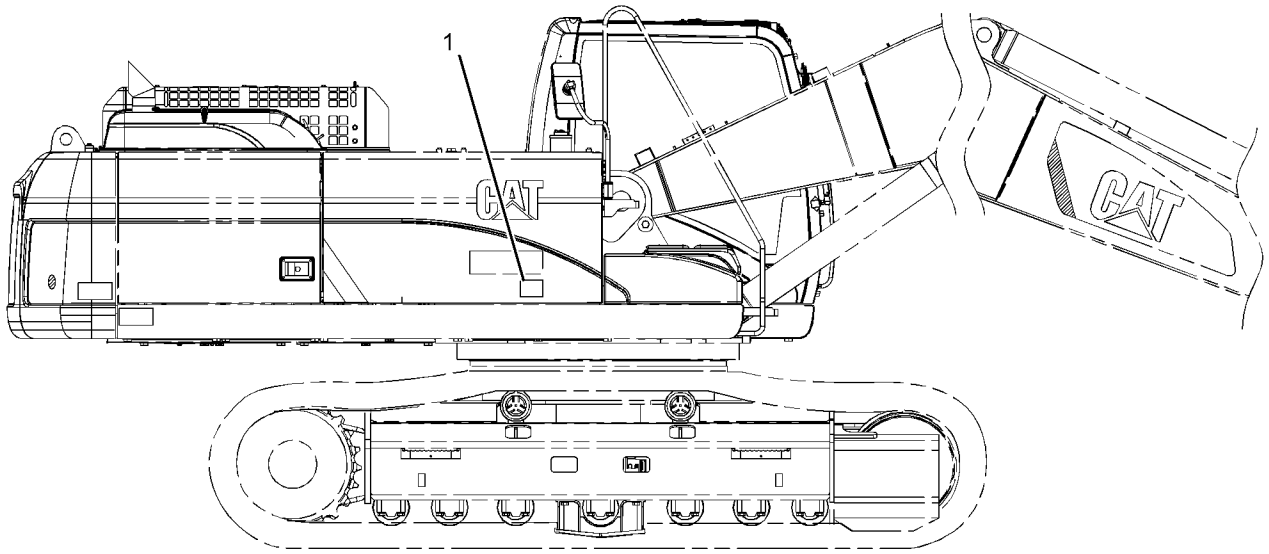

RIGHT SIDE VIEW

GRAPHIC #1 **<END>** g03443518

420-5793 FILM GP–BRAZIL

S/N: JEG1-UP

AN ATTACHMENT

SMCS-7405, 7557 **i05262186**

NOTE	REF NO	GRAPHIC REF	PART NUMBER	QTY	PART NAME 1 2 3 4 5 6 (PRODUCT LEVEL)	SEE PAGE
	1	1	**202-9824**	1	FILM-INFORMATION (BRAZIL)	

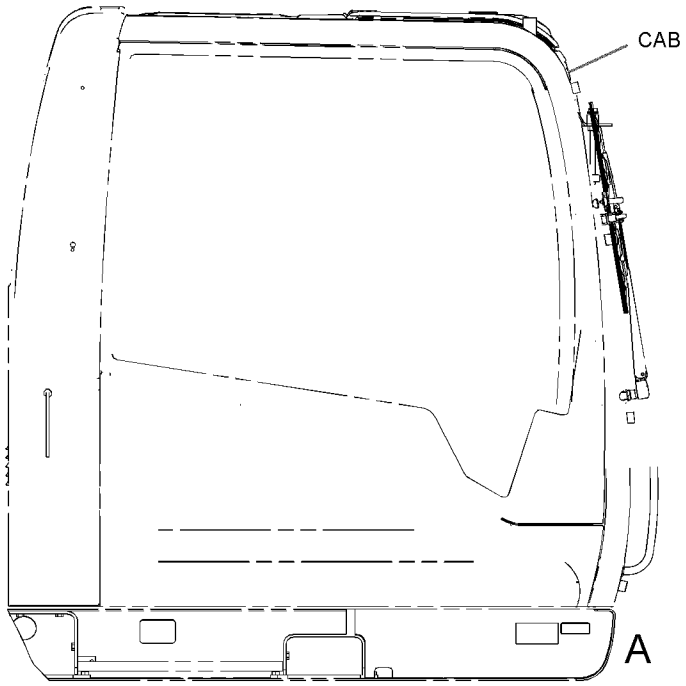

RIGHT SIDE VIEW

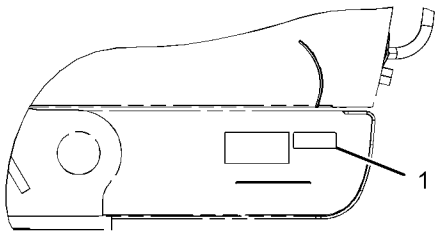

VIEW OF AREA A

GRAPHIC #1 **<END>** g03350586

422-8442 FILM GP–COUNTERWEIGHT

S/N: JEG1-UP
PART OF 444-7868 COUNTERWEIGHT AR
AN ATTACHMENT

SMCS-7405, 7557 **i05536565**

NOTE	REF NO	GRAPHIC REF	PART NUMBER	QTY	PART NAME 1 2 3 4 5 6 (PRODUCT LEVEL)	SEE PAGE
	1	1	**361-6533**	1	FILM-IDENTIFICATION (CAT)	

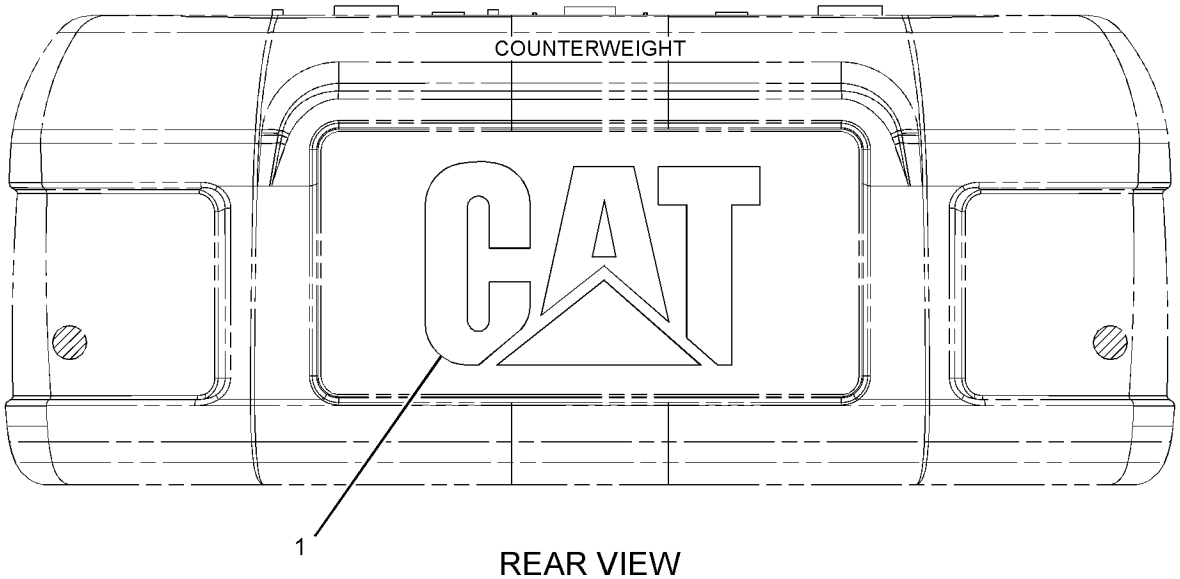

REAR VIEW

GRAPHIC #1 **<END>** g03317216

264-8602 PLATE & FILM GP–BIODEGRADABLE HYDRAULIC OIL

S/N: JEG1-UP

PART OF 264-8771 HYDRAULIC AR-BIODEGRADABLE OIL

AN ATTACHMENT

SMCS-7405, 7557

i05440253

NOTE	REF NO	GRAPHIC REF	PART NUMBER	QTY	PART NAME 1 2 3 4 5 6 (PRODUCT LEVEL)	SEE PAGE
	1	1	**169-3530**	1	FILM-IDENTIFICATION (BIODEGRADABLE HYDRAULIC OIL)	

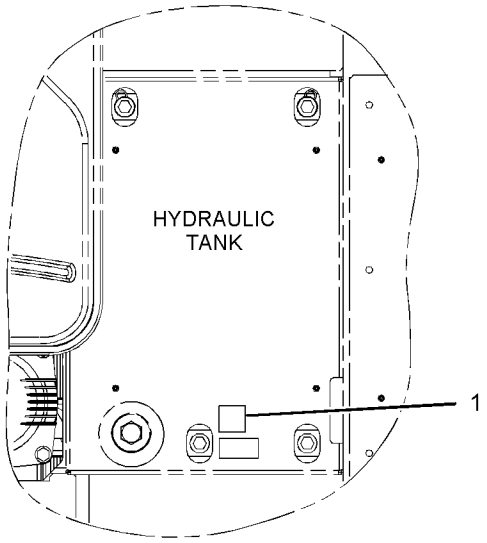

VIEW OF AREA A

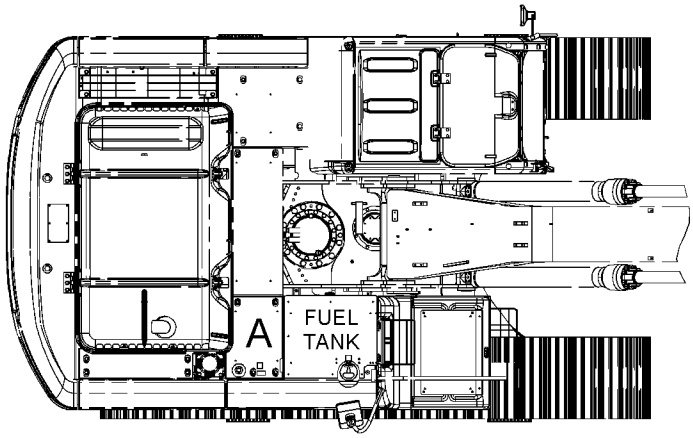

TOP VIEW

FWD

GRAPHIC #1

<END>

g01230593

415-7791 PLATE & FILM GP

S/N: JEG1-UP

PART OF 420-3127 CHASSIS AR

SMCS-7405, 7557 **i05459773**

NOTE	REF NO	GRAPHIC REF	PART NUMBER	QTY	PART NAME 1 2 3 4 5 6 (PRODUCT LEVEL)	SEE PAGE
	1	1,2	**1P-2807**	4	FILM-IDENTIFICATION (LIFT EYE LOCATION)	
	2	3	**4I-8472**	1	FILM-INSTRUCTION (OPERATOR CONTROLS)	
	3	1,2	**7X-7644**	4	FILM-IDENTIFICATION (TIE-DOWN)	
	4	3	**8T-6842**	1	FILM-INSTRUCTION (PULL RING, ALTERNATE EXIT)	
	5	3	**110-6393**	1	PLATE-INSTRUCTION (AIR CONDITIONER)	
	6	1	**134-7258**	1	FILM-INFORMATION (EXTENDED LIFE COOLANT)	
	7	2	**146-6747**	1	FILM-INFORMATION (24-VOLT)	
	8	1	**167-7270**	2	FILM-INSTRUCTION (NO STEP)	
	9	3	**187-0661**	1	FILM-INSTRUCTION (ALTERNATE EXIT)	
	10	2	**190-5386**	2	FILM-STRIPE (ROUND RED REFLECTIVE)	
	11	3	**214-7915**	1	FILM-INSTRUCTION (ENGINE SHUTOFF)	
	12	3	**221-8045**	1	FILM-WARNING (SEAT BELT, INTERNATIONAL)	
	13	3	**223-9818**	1	FILM-INSTRUCTION (WINDOW CLEANING, READ OMM)	
	14	3	**224-0554**	1	FILM-WARNING (UNIVERSAL, READ OMM)	
	15	2	**224-8946**	1	FILM-WARNING (NO ETHER SPRAY/AIR INTK, INTL)	
	16	2	**225-0312**	1	FILM-WARNING (JUMP START, READ OMM, INTL)	
	17	1	**225-4257**	2	FILM-WARNING (HOT FLUID UNDER PRESS)	
	18	2	**228-2781**	2	FILM-WARNING (MACHINE SWING, CRUSHING, INTL)	
	19	1	**228-7316**	2	FILM-WARNING (HOT SURFACE, HANDS CLEAR, INTL)	
	20	3	**228-9254**	1	FILM-WARNING (ELEC HAZARD, READ OMM, INTL)	
	21	2	**229-0887**	1	FILM-INFORMATION (AIR CLEANER)	
	22	1	**242-1510**	1	FILM-INSTRUCTION (HYDRAULIC OIL CHECK)	
	23	3	**242-1588**	1	FILM-WARNING (FRONT WINDOW, READ OMM, INTL)	
	24	1	**242-6092**	1	FILM-WARNING (ACCUMULATOR PRESSURE)	
	25	2	**247-7436**	1	FILM-IDENTIFICATION (CAT)	
	26	2	**247-7437**	1	FILM-IDENTIFICATION (BATTERY CIRCUIT BREAKER)	
	27	3	**266-5431**	1	FILM-WARNING (CRUSH HAZARD, READ OMM, INTL)	
	28	1,2	**290-1729**	2	FILM-IDENTIFICATION (CAT)	
	29	1	**290-1893**	1	FILM-NOTICE (SHIPPING, LIFTING, TIE-DOWN)	
	30	2	**298-4282**	2	FILM-WARNING (CRUSH HAZARD, STAY BACK, INTL)	
	31	1	**331-7972**	1	FILM-IDENTIFICATION (CAT, RH)	
	32	2	**331-7973**	1	FILM-IDENTIFICATION (CAT, LH)	
J	33	1	**334-4603**	1	FILM-INFORMATION (HYDO ADVANCED 10)	
	34	2	**358-6390**	1	FILM-STRIPE (LH)	
	35	1	**367-0844**	1	FILM-INSTRUCTION (FUEL, READ OMM)	
	36	1	**369-4243**	1	FILM-INFORMATION (BELT ROUTING)	
	37	2	**381-1373**	1	FILM-IDENTIFICATION (CIRCUIT BREAKER)	
	38	1	**385-4093**	1	FILM-STRIPE (RH)	
	39	1,2	**385-4169**	2	FILM-IDENTIFICATION (L)	
	40	1,2	**415-9628**	2	FILM-IDENTIFICATION (323D2)	
	41	3	**423-4436**	1	FILM-IDENTIFICATION (FUSE PANEL)	
	42	1	**443-5690**	2	FILM-WARNING (LIFTING EYE, READ OMM)	
	43	2	**247-7438**	1	FILM-IDENTIFICATION (ELECTRICAL CIRCUIT BREAKER)	

J - REQUIRED WHEN HYDRAULIC TANK IS FILLED WITH HYDO ADVANCED 10 OIL

415-7791 **PLATE & FILM GP (*contd.*)** **i05459773**

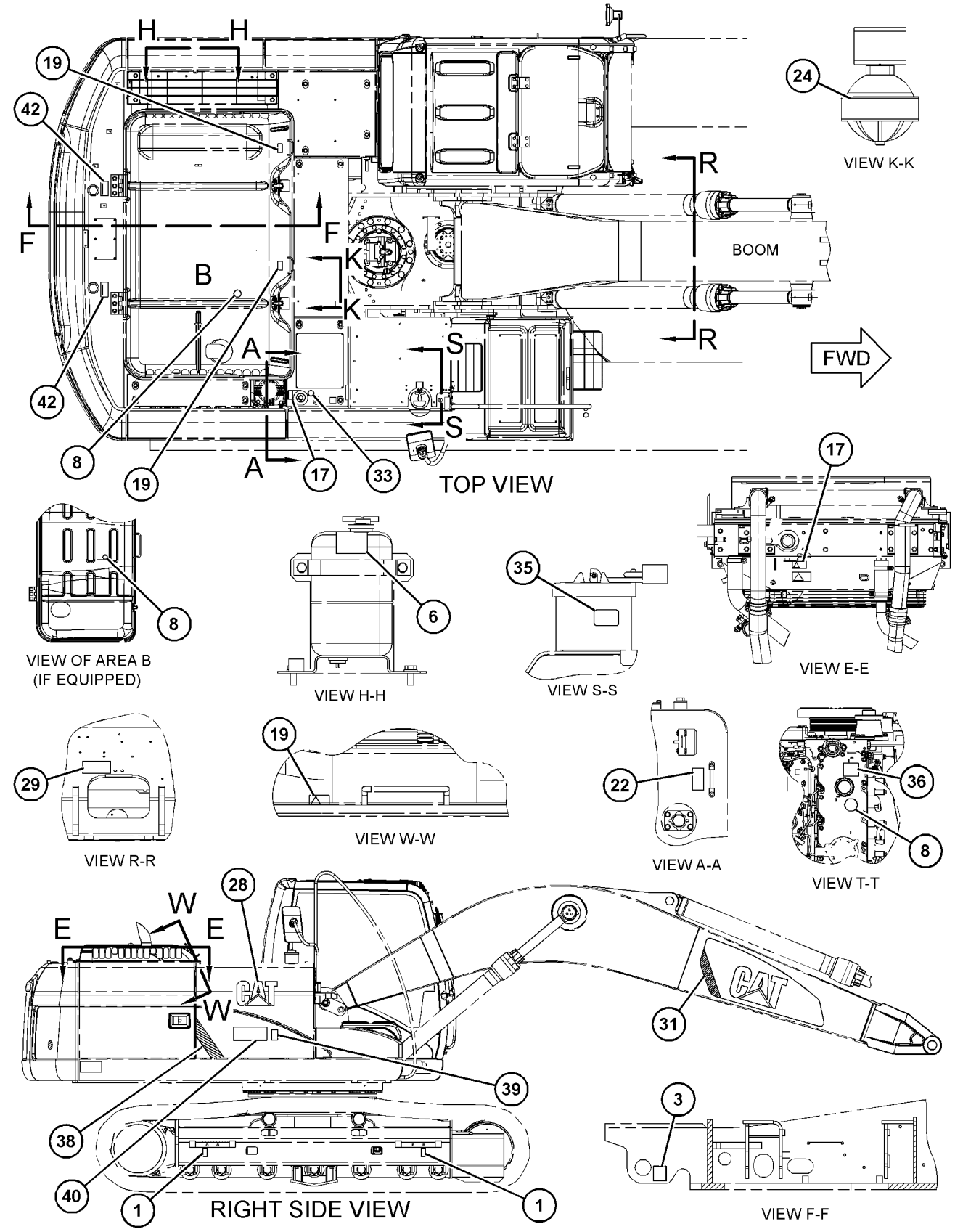

GRAPHIC #1 g03478517

415-7791 **PLATE & FILM GP (*contd.*)** **i05459773**

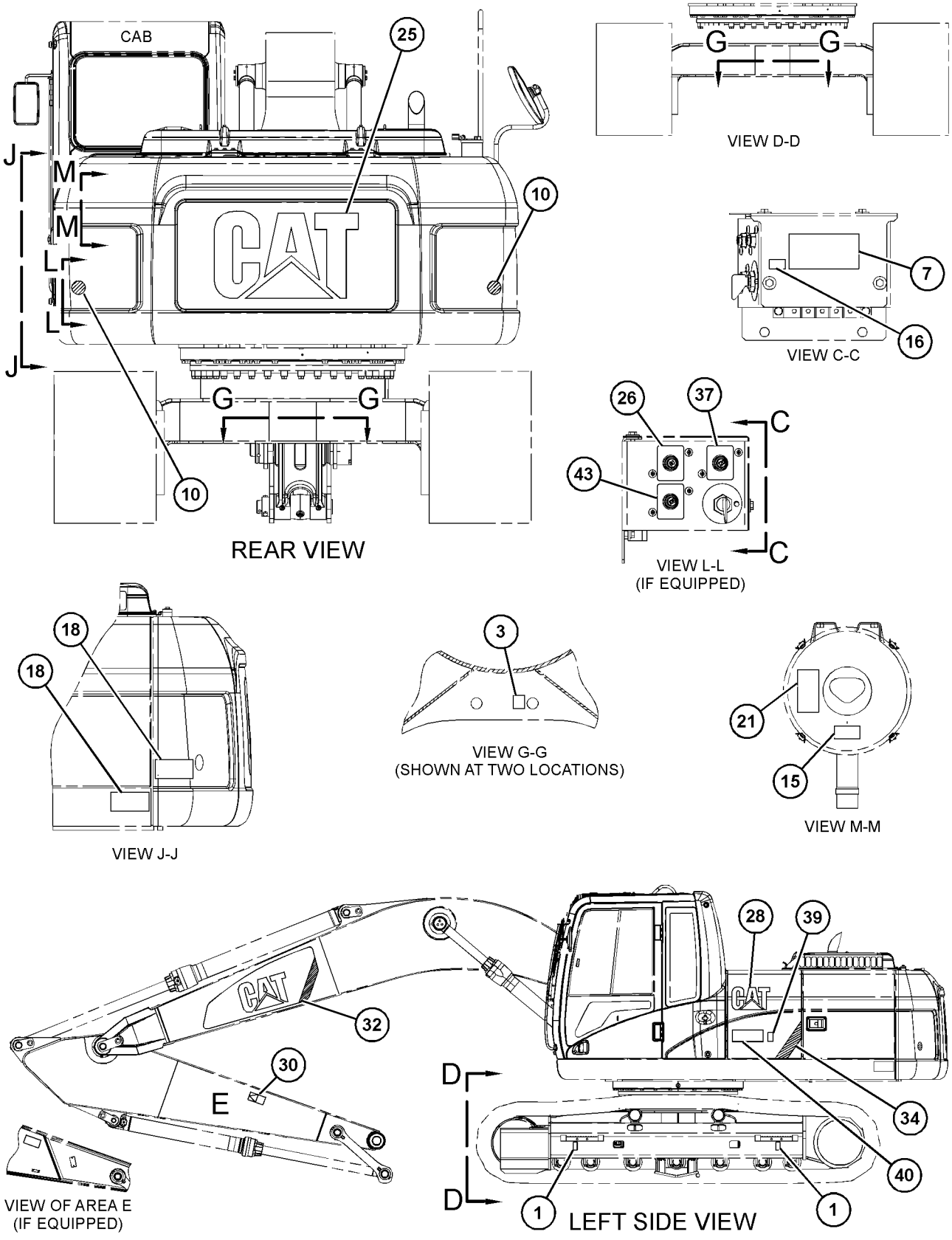

GRAPHIC #2

g03478523

415-7791 **PLATE & FILM GP (*contd.*)** **i05459773**

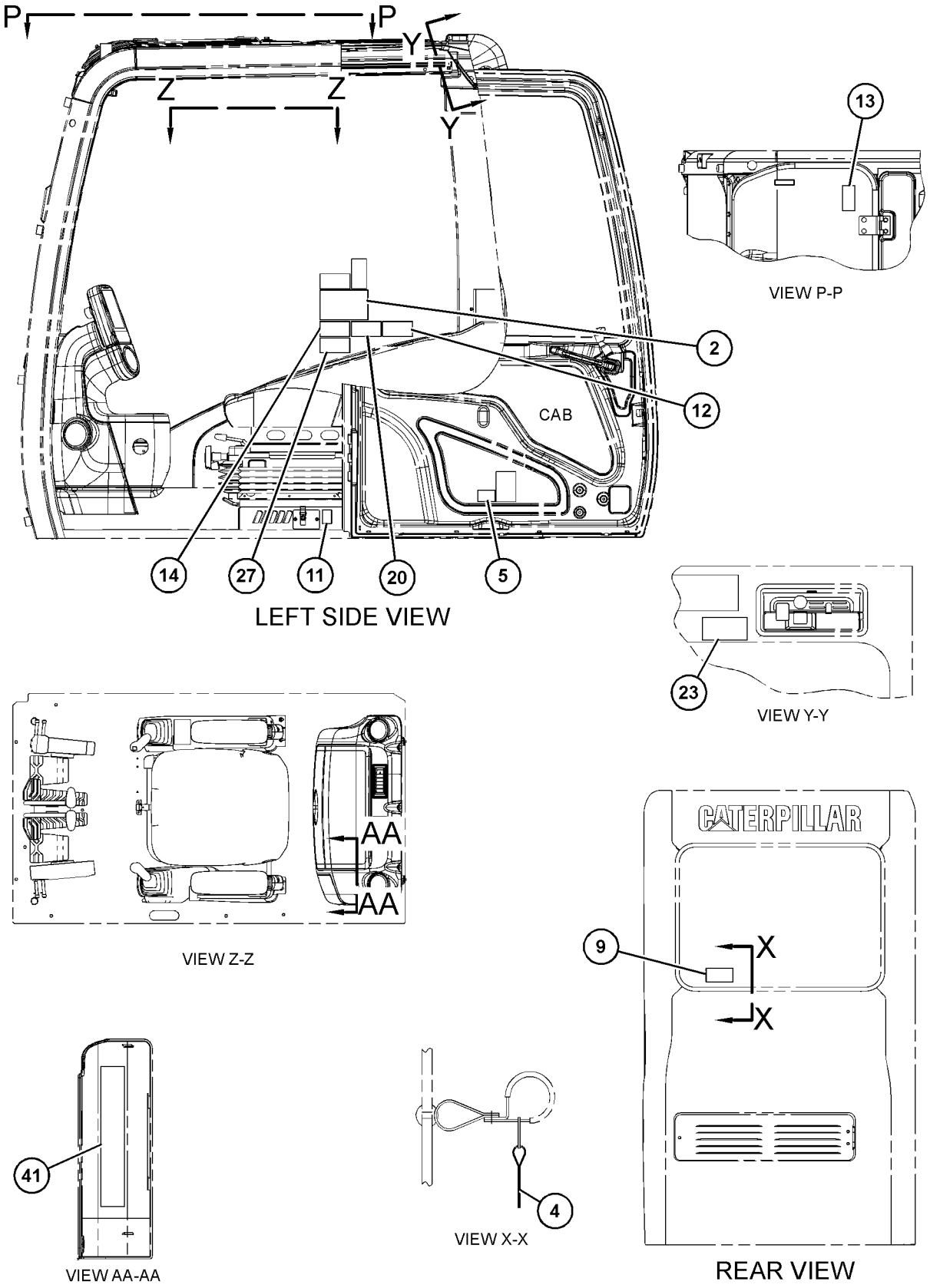

GRAPHIC #3 **<END>** g03478578

PART NUMBER INDEX

Part	Page
0	
0S-1603	17
1	
1D-4635	523
	524
1H-3244	136
1H-4393	433
	599
1M-6119	101
	103
	182
1M-6120	101
	103
	182
1P-2807	664
1P-3702	345
	357
	360
	364
	401
	402
	436
	440
	457
	469
1P-3703	321
	327
	329
	331
	333
	336
	338
	339
	341
	345
	348
	357
	360
	364
	401
	402
	404
1P-3704	329
	331
	333
	336
1P-3705	331
	333
1P-4577	326
1P-5765	345
1P-5767	329
	331
	333
	336
1R-5998	543
1S-0812	150
	151
1S-7251	182
1S-7252	101
	103
	182
1S-9593	486
1U-8846	196
	224
	297
	299
	300
	404
2	
2B-0858	433
2C-9259	513
	517
2D-6642	416
	419
2G-1830	182
2G-8767	103
2H-3922	147
	648
2J-3507	523
	524
2L-8050	116
	118
	136
	144
2L-8052	118
2L-8058	116
	118
	136
	144
2L-8060	118
2L-8065	161
	190
	599
2L-8066	161
2L-8067	161
	190
2L-8069	116
	118
2L-8074	187
2L-8075	116
	129
	130
	132
	138
	161
	190
	599
2L-8076	116
	161
2L-8077	173
	190
2L-8078	116
2L-8079	116
	171
	189
	190
2M-9780	399
	404
	416
	419
	444
	450
2S-2596	442
2S-4078	88
	348
	359
	363
2S-5926	268
2U-5338	296
2Y-5503	300
3	
3B-0551	96
3B-4501	123
	124
3B-4509	343
	344
3B-4510	543
3B-4618	231
3B-8489	223
	224
	284
	286
	288
	290
	292
	294
	496
	498
	499
	502
	504
	507
	509
	510
3D-2824	341
	359
	360
	363
	379
	399
	450
	473
	474
	475
	476
3D-2891	284
	288
	310
	313
3D-9143	202
3E-2310	384
	390
	393
3E-2338	196
3E-3217	261
	263
	264
3E-4297	306
3E-5169	187
3E-7389	151
3E-8020	543
3E-8320	136
3E-9375	178
3E-9872	629
	651
3J-1907	142
	278
	310
	313
	341
	350
	367
	368
	371
	373
	375
	377
	379
	381
	383
	384
	385
	389
	390
	393
	394
	397
	404
	408
	414
	444
	453
	455
	458
	478
	489
3J-7354	350
	368
	396
	433
	489
3K-0360	15
	276
	297
	341
	348
	360
	363
	367
	379
	381
	383
	384
	399
	404
	408
	409
	416
	420
	426
	433
	442
	453
	455
3K-0835	150
	151
3K-5234	523
	524
3P-9847	51
3S-2093	51
	107
	114
	116
	118
	130
	138
	148
	153
	156
	160
	162
	167
	171
	173
	175
	178
	187
	189
	190
	397
	532
	598
	599
	608
	610
	615
	628
	629
	648
3T-7528	306
3V-0046	350
3V-9744	351
	353
3W-6399	628
3Y-9267	462

► **PRIMARY REFERENCE**

PART NUMBER INDEX

Part	Page
4	
4B-4158	265
	266
	594
4B-4278	202
	543
4B-9783	478
4B-9880	286
	290
	292
	294
	479
4D-1836	187
4D-9986	121
4E-5724	136
4F-2294	149
4H-6112	299
4I-0118	230
4I-0232	230
4I-0420	634
	638
	643
4I-0818	383
4I-0836	381
	383
4I-1022	426
4I-1025	375
4I-1037	383
4I-1163	648
4I-1205	543
4I-1206	543
4I-1536	►271
	274
4I-1539	271
4I-1631	377
4I-1671	393
4I-1674	338
	339
	341
4I-1676	338
	339
4I-1704	373
	375
4I-1739	383
4I-1780	383
4I-1878	389
4I-3038	148
4I-3063	543
4I-3090	543
	651
4I-3144	543
4I-3266	555
	556
	614
4I-3308	492
	494
4I-3309	492
	494
4I-3510	473
	474
4I-3569	444
4I-3615	284
	288
4I-3621	343
	344
4I-3627	292
	294
4I-3628	286
	290
	292
	294
4I-3631	292
	294
4I-3941	389
4I-3981	377
4I-3988	389
4I-3994	377
4I-4270	543
4I-4286	583
	585
4I-4298	644
4I-4300	644
4I-4392	543
4I-4543	496
	498
4I-4544	496
	498
4I-4809	492
	494
	507
	509
	510
4I-4811	507
	509
4I-4812	219
	221
4I-4814	510
4I-5020	648
4I-5021	648
4I-5409	1
	126
4I-5862	271
4I-5906	383
4I-5933	383
4I-6054	377
4I-6365	460
4I-6397	444
	450
4I-6602	592
4I-7714	473
4I-7745	341
4I-7889	167
	182
4I-8019	230
4I-8267	272
4I-8472	664
4I-8864	284
4I-8965	453
	455
4I-9521	367
	377
	383
	389
	397
4I-9522	367
	371
	377
	383
	389
	397
4I-9523	367
	371
	377
	383
	389
	393
4I-9524	367
	371
	377
	383
	389
	393
4I-9525	367
	377
	383
	389
	393
4I-9526	367
	377
	381
	397
4I-9527	367
	377
	381
	383
	389
	393
	399
4I-9528	367
	377
	383
4J-0519	457
4J-0520	320
	326
	450
4J-0524	348
4J-0527	348
	433
4J-5267	357
	397
	433
4J-5268	357
4J-5309	444
4J-5477	350
	355
	356
	397
4J-7385	467
	468
4J-7386	467
	468
4J-7533	306
	408
	437
	444
	453
	455
4J-8998	436
	440
	469
4K-1388	467
	468
4K-8864	101
	103
	182
	385
4N-9170	224
4P-7428	167
4P-7581	162
	167
	171
	368
	532
4T-3148	444
4T-5074	444
5	
5A-3604	622
	623
5C-2889	124
5C-2890	144
	156
	162
	648
	651
5C-7261	53
	101
	103
	167
	231
	464
5C-7793	543
5C-7883	167
5C-8138	628
5C-8312	638
5C-9553	136
	182
	202
	231
	433
	532
	648
5D-1026	300
5D-4822	592
	596
5D-8159	53
5G-3676	73
5H-5672	430
5H-8624	396
5I-3121	379
5I-3878	167
5I-4076	381
	383
5I-4111	467
	468
5I-4174	345
	401
5I-4396	375
	383
	393
5I-8270	101
	103
5I-8416	►272
	274
5I-8417	414
5I-8426	414
5I-8511	453
	455
5I-8623	414
5I-8625	414
5I-8670	302
5I-8708	383
5I-8715	345
5I-8853	377
5K-2298	499
5K-3294	602
5K-9090	308
	318
	321
	327
	341
	348
	357
	359
	360
	363
	364
5K-9242	499
5K-9243	224
	496
	498
5L-3233	60
	61
5L-4758	278
5M-6213	49
5P-0372	231
5P-0743	40
5P-0747	101
5P-0761	101
5P-0767	300
	602
5P-1046	72

► **PRIMARY REFERENCE**

PART NUMBER INDEX

Part	Page
	94
	96
5P-1075	218
	551
	638
5P-1076	66
	226
	228
	341
5P-1404	73
5P-2321	161
5P-2568	489
5P-3108	467
	468
5P-3455	136
5P-4115	136
	182
	231
5P-4116	49
	53
	99
	202
	561
5P-4906	94
	96
5P-4924	73
	94
	96
5P-5649	51
5P-5995	175
5P-5998	148
5P-6271	161
5P-7462	385
5P-7463	385
5P-7464	385
	399
5P-7465	385
	399
5P-7466	360
5P-7467	360
5P-7468	348
	360
	364
5P-7469	348
	360
	364
5P-7958	605
5P-8112	360
5P-8309	237
5P-8444	348
	360
	364
5P-8500	91
	92
	152
	605
5P-8523	561
5P-9085	602
5P-9297	127
	130
	132
5P-9909	51
5Q-4212	351
	353
	355
	356
5Q-4213	351
	353
5V-9155	73

6

Part	Page
6C-3679	218
6C-8382	592
6D-0692	196
6D-1641	602
6D-3479	390
	602
6D-5801	85
6D-9157	396
	433
6E-2163	442
6E-2271	439
	442
	452
6E-2274	440
	444
	450
6E-3653	444
6E-5169	444
6E-5643	444
6E-5731	440
	444
	450
6F-0253	150
	151
6F-4855	309
6F-6672	309
6F-7045	147
6G-2256	103
6G-2263	103
	167
6H-3615	341
6I-0217	9
	19
	24
	35
	46
	50
	67
	80
	84
6I-0233	146
6I-0254	50
6I-0260	24
	44
	65
	80
	90
6I-0292	135
6I-0293	135
6I-0363	24
6I-0455	46
6I-0456	111
6I-0563	67
6I-0572	24
6I-0593	16
6I-0594	84
6I-0631	79
	82
6I-0645	19
6I-0650	19
6I-0654	21
	24
	80
	84
6I-0839	50
6I-0917	18
	65
6I-1090	41
6I-1418	110
6I-2501	61
6I-2502	61
6I-4200	39
	80
6I-4681	24
6I-4793	44
	46
6I-5134	499
6I-5135	499
6I-5136	499
6I-5298	571
	572
6I-5470	544
6I-5976	202
6I-6033	230
6I-6583	196
6I-6585	196
6I-6795	473
	474
6I-9454	270
6J-2680	399
	433
6K-0806	576
	577
6K-8178	101
	103
6L-3616	496
	498
	499
6M-5062	450
6N-1604	121
6S-8620	73
6T-5598	116
6T-9442	150
6V-0400	329
	331
	333
	336
	338
	339
	348
	357
	396
	402
	404
6V-0683	385
6V-0852	379
	390
	394
	433
6V-1249	385
6V-1322	433
6V-2722	103
	182
6V-3265	602
	629
6V-3342	499
6V-3922	444
	450
6V-3965	379
	390
	393
	433
6V-4368	85
6V-5200	410
6V-5210	123
	124
	162
6V-5393	444
6V-5556	444
	470
6V-5597	440
	444
	450
6V-5645	136
6V-6317	543
6V-7238	15
	297
6V-7357	570
	602
	610
6V-7636	543
6V-7658	256
	306
6V-7661	260
6V-8076	73
6V-8200	310
	313
	403
6V-8202	462
	617
	618
6V-8218	473
	474
6V-8231	651
6V-8362	152
6V-8363	648
6V-8370	648
6V-8397	341
	350
	355
	356
	367
	368
	371
	373
	375
	377
	379
	381
	383
	384
	385
	389
	390
	393
	394
	397
	399
	404
	455
	478
6V-8398	341
	348
	351
	353
	355
	356
	367
	379
	383
	384
	399
	404
	480
	481
6V-8399	459
6V-8400	462
6V-8624	399
6V-8625	341
	384
	404
6V-8627	397
6V-8635	36
	308
6V-8636	341
	367
	371
	373
	375
	379

► **PRIMARY REFERENCE**

PART NUMBER INDEX

Part	Page
	381
	384
	389
6V-8637	399
6V-8639	384
6V-8714	36
6V-8716	359
6V-8724	367
	371
	373
	375
	377
	379
	384
	390
	393
	404
6V-8774	385
6V-8781	371
	377
	385
6V-8935	355
	356
	397
6V-8936	355
	356
6V-8978	473
	474
6V-9001	341
	367
	373
	375
	384
	390
	397
6V-9002	348
	367
	379
	384
	399
6V-9004	360
	363
	379
6V-9005	359
	363
6V-9007	359
	363
	379
	399
6V-9008	348
6V-9027	53
6V-9491	138
6V-9632	240
6V-9672	162
6V-9746	323
	324
	338
	339
	341
	359
	360
	363
	379
	397
	399
6V-9829	381
	390
	394
6V-9836	381
	384
	390
	393
6V-9837	341
6V-9839	360
6V-9840	360
	363
6V-9850	341
	384
6V-9875	359
	363
6V-9876	399
6W-2464	350
6W-6005	101
	103
6W-7293	602
6Y-0846	270
6Y-8185	257
6Y-8186	257

7

Part	Page
7C-4616	19
7E-4846	477
7F-0560	106
7F-3708	231
7F-7259	147
7F-8268	261
	263
	264
7G-1060	187
7G-5984	348
7G-5985	348
7G-5986	348
7H-3171	256
	260
	264
7I-0717	208
	209
7I-0966	470
7I-1248	440
	444
	450
7I-2272	310
	408
	409
	445
	482
	485
7I-2673	48
	51
	60
	61
	113
	127
	129
	130
	132
	167
	623
	626
7I-7131	431
7I-8084	479
	482
	485
7J-9933	470
7K-1181	88
	107
	121
	156
	160
	167
	171
	173
	175
	178
	187
	189
	190
	350
	367
	371
	377
	379
	381
	383
	389
	393
	397
	399
	404
	566
	602
	615
7M-7410	409
7M-8485	196
	308
	341
	348
	359
	360
	363
	426
	437
	445
	450
7N-0296	145
7N-0719	136
	147
7N-2353	153
7N-3718	129
	130
7N-9801	155
7T-1099	240
7T-6799	152
7T-8890	628
7V-6571	73
7W-2632	111
7W-4669	42
7X-0578	543
	638
7X-0579	73
7X-0818	110
	375
7X-0873	397
7X-2459	390
	393
7X-2475	436
7X-2536	267
	574
	575
7X-2539	73
7X-2544	348
7X-2548	219
	221
7X-2549	331
	333
	402
7X-2552	127
	129
	130
	132
7X-2553	331
	333
	396
	592
	614
7X-2554	51
7X-2557	426
7X-2558	410
7X-2559	594
7X-2562	200
7X-2563	300
7X-2565	258
	259
7X-2568	196
7X-2576	300
7X-2583	205
	206
7X-2619	190
7X-2621	103
	114
	156
	167
	187
	445
7X-7644	664
7X-7729	51
	53
	348
	424
	532
7Y-0059	1
	605
7Y-0223	196
7Y-0225	196
7Y-0252	297
7Y-0466	280
7Y-0467	280
7Y-0468	280
	281
7Y-0623	592
7Y-0633	219
	221
7Y-0682	268
7Y-1426	196
7Y-1430	196
7Y-1431	196
7Y-1432	196
7Y-1433	196
7Y-1434	196
	297
7Y-1558	196
7Y-1647	224
7Y-1648	224
7Y-1650	224
7Y-1746	265
	266
7Y-1781	267
7Y-1863	224
7Y-1976	51
	53
7Y-2219	►511
	513
7Y-2496	510
7Y-2670	499
7Y-2853	230
7Y-2854	231
7Y-3470	651
7Y-3472	651
7Y-3474	628
	629
7Y-3721	323
	397
7Y-3729	359
7Y-3730	357
7Y-3731	327
	359
	363
7Y-3919	598
	599
7Y-3920	598
	599
7Y-3950	153
	160

► PRIMARY REFERENCE

PART NUMBER INDEX

Part	Page
7Y-3951	138
	160
7Y-3952	138
	160
7Y-3953	153
7Y-3954	160
7Y-3955	161
7Y-3958	161
7Y-3962	116
	134
	138
	161
7Y-3963	116
	134
	138
	161
	175
	178
7Y-3964	116
	134
	138
	161
7Y-3965	116
	134
	138
	161
	175
	178
7Y-3966	138
	161
7Y-3967	138
	161
	178
7Y-4193	377
7Y-4199	389
7Y-4202	416
7Y-4212	416
	419
7Y-4213	416
7Y-4215	416
	419
7Y-4216	416
	419
7Y-4217	416
	420
7Y-4222	417
7Y-4224	416
	419
7Y-4234	416
7Y-4267	414
7Y-4268	414
7Y-4390	377
	404
7Y-4538	329
	331
	333
7Y-4631	286
	290
7Y-4817	431
7Y-4868	338
	339
7Y-5074	322
7Y-5219	445
7Y-5221	414
7Y-5247	348
7Y-5272	278
7Y-5456	167
7Y-5505	160
7Y-7364	651
7Y-8099	450
7Y-8165	167
7Y-8167	167
7Y-8487	383
7Y-8561	561
7Y-8763	72
	103
8	
8C-3056	115
8C-3206	320
8C-3445	36
8C-3446	36
	433
8C-3451	433
8C-5608	109
8C-5723	36
8C-5917	101
	103
	182
8C-5918	101
	103
8C-6354	161
8C-6358	106
8C-6561	350
8C-6965	462
8C-8431	73
8C-8451	109
8C-8729	411
	412
8C-8992	226
	228
8E-4359	256
8E-5032	264
8E-5037	261
	263
8E-5599	261
	263
	264
8E-5600	258
	259
	260
8E-5601	260
8E-5602	260
8E-5604	260
8E-5605	260
8E-5606	260
8E-5607	260
8E-5608	260
8E-6792	260
8E-6793	260
8E-9805	200
8F-1434	648
8H-3481	627
8H-5303	147
8H-5306	147
8J-4645	426
8L-2786	25
8L-8413	101
	103
	182
8M-2770	167
	602
8M-2772	496
	498
	499
8N-0869	103
	182
8P-9770	248
	514
	515
	516
	517
8S-2634	182
8T-0075	371
	381
	389
	393
8T-0078	360
8T-0114	574
	575
8T-0122	136
8T-0164	397
8T-0198	359
	363
8T-0267	433
8T-0269	607
8T-0288	487
8T-0328	94
	96
	136
	162
	190
	235
	303
8T-0337	187
8T-0360	224
8T-0362	224
8T-1159	260
8T-1447	284
	288
8T-1687	399
8T-1779	383
	404
8T-1889	73
8T-1890	73
8T-1905	379
	390
	393
8T-2920	399
8T-3008	437
8T-3490	51
	72
	240
	241
	359
	578
	602
	610
8T-3518	106
8T-3597	240
	244
	245
	359
8T-3612	245
8T-3653	343
	344
8T-4121	48
	51
	53
	56
	66
	73
	101
	103
	107
	114
	127
	129
	130
	132
	156
	167
	171
	173
	180
	182
	185
	186
	187
	224
	231
	329
	336
	341
	345
	348
	357
	360
	364
	368
	371
	381
	385
	390
	397
	401
	402
	404
	431
	433
	440
	445
	450
	496
	498
	499
	532
	555
	556
	561
	566
	574
	575
	578
	597
	598
	599
	602
	610
	611
	614
	624
	629
	648
8T-4123	22
	196
	219
	221
	249
	250
	258
	259
	300
	492
	494
	502
	507
	509
	510
	520
8T-4127	162
8T-4131	22
	310
	313
	502
8T-4132	504
	505
8T-4133	66
	101
	103
	127
	129
	130

► **PRIMARY REFERENCE**

PART NUMBER INDEX

Part	Page
	132
	310
	313
	430
	462
	496
	498
	499
	543
	561
8T-4136	51
	53
	66
	73
	103
	167
	180
	182
	185
	224
	310
	313
	348
	360
	364
	371
	385
	390
	404
	426
	431
	433
	453
	455
	532
	574
	575
	578
	602
8T-4137	51
	53
	56
	73
	103
	107
	167
	171
	173
	182
	185
	186
	187
	224
	231
	265
	266
	368
	385
	532
	561
	574
	575
	599
	602
	610
8T-4138	85
	107
	231
	602
8T-4139	51
	58
	329
	331
	333
	338
	339
	341
	348
	351
	353
	385
	399
	426
	592
8T-4140	91
	92
	254
	255
	426
	435
	457
8T-4167	300
8T-4171	136
	180
	563
8T-4172	385
8T-4174	594
8T-4175	426
8T-4176	360
	364
	426
8T-4177	390
	394
8T-4178	341
8T-4179	267
	539
	549
	555
	556
	561
8T-4182	103
	167
	341
	345
	401
	402
8T-4183	297
	331
	333
	360
	364
	433
8T-4184	329
	331
	333
	336
	338
	339
	351
	353
	381
	404
8T-4185	48
	53
	104
	167
	397
8T-4186	348
8T-4189	48
	53
	99
	167
	231
	235
	375
	561
	602
8T-4190	539
	549
	555
	556
	610
8T-4191	101
	167
	171
	173
	219
	221
	368
	390
	496
	498
	555
	556
	578
	598
	602
	614
	624
	629
	648
8T-4192	101
	145
	167
	229
	341
	381
	385
	390
	394
	426
	592
	606
8T-4193	457
	511
	512
	543
8T-4194	88
	303
	329
	331
	333
	336
	348
	357
	396
	397
8T-4195	53
	73
	167
	171
	218
	360
	424
	433
	440
	445
	450
	566
	597
	611
8T-4196	167
	310
	313
	343
	344
	346
	347
	360
	364
	403
	427
8T-4198	73
	167
	345
	368
	381
	401
8T-4199	190
	224
8T-4200	49
	51
	121
	134
	145
	602
8T-4223	22
	51
	58
	88
	101
	123
	124
	145
	167
	202
	204
	229
	297
	303
	310
	313
	329
	331
	333
	336
	338
	339
	341
	346
	347
	348
	351
	353
	355
	356
	357
	360
	364
	381
	385
	390
	394
	396
	397
	399
	402
	403
	404
	433
	492
	494
	539
	549
	555
	556
	561
	592
8T-4224	36
	48
	51
	53
	110
	121
	134
	145

PART NUMBER INDEX

Part	Page
	167
	190
	231
	235
	375
	390
	394
	433
	574
	575
	583
	585
	592
	602
8T-4226	101
	104
8T-4244	88
	123
	124
	204
	351
	353
8T-4648	331
	333
	341
8T-4780	219
	221
	492
	494
	507
	509
	510
8T-4896	343
	344
	346
	347
	403
8T-4908	433
	602
8T-4910	22
	341
	346
	347
	403
	539
	549
	555
	556
8T-4944	416
	419
8T-4956	329
	348
	355
	356
	360
	364
	399
	492
	494
8T-4970	110
	134
	136
	371
	628
	629
8T-4971	561
	602
8T-4985	49
8T-4986	62
8T-4987	58
8T-5005	167
	182
8T-5092	360
	364
8T-5460	249
	250
	502
	520
8T-5878	258
	259
8T-6381	22
8T-6466	104
	167
	390
8T-6663	72
8T-6685	329
	336
	445
8T-6693	162
	235
	303
8T-6703	49
	51
	366
8T-6759	409
	416
	431
	445
	462
	487
8T-6842	664
8T-6868	351
	353
	539
	549
	555
	556
8T-6869	73
8T-6870	390
8T-7087	348
	360
	364
8T-7338	242
	396
8T-7547	36
8T-7811	489
8T-7971	433
	606
8T-8729	88
	94
	115
	118
	148
	150
	155
	171
	173
	175
	190
	484
8T-8730	116
	118
	149
	151
	160
	171
	175
	178
	189
	190
8T-8737	115
	118
	138
	156
	161
	171
	173
	175
	178
	189
	190
8T-8748	150
	151
8T-8799	115
8T-8827	115
8T-8887	397
8T-9403	341
	357
	401
	402
8T-9515	104
8T-9655	73
8T-9756	101
	103
8T-9757	101
	103
8V-1715	594
8Y-6352	546
8Y-6967	539
	549
9	
9B-0453	123
9B-7233	152
9F-2167	341
9G-0002	101
	103
9G-0003	101
	103
9G-0004	101
	103
	182
9G-0005	101
	103
9G-4343	136
	160
9G-8909	103
9J-0705	450
9M-5590	459
	485
9M-7958	88
9N-0869	110
9R-2821	72
9R-5271	244
9S-4180	306
9S-4181	360
	364
9S-4182	36
	396
9S-4185	25
	360
	363
	381
	399
	416
	419
	427
9S-4188	36
9S-4190	72
9S-4191	310
	367
	373
	375
	381
	384
	455
9S-6130	96
	348
9S-8001	408
9S-8002	85
9S-8004	408
	453
	458
9S-8005	408
	409
	453
	455
9T-6001	72
9W-0335	160
9W-0625	150
9W-0742	▶106
	182
9W-0844	116
	118
	161
	171
	175
	178
	189
	599
9W-0852	115
	118
	132
	171
	173
	175
	189
	559
9W-1951	161
9W-2142	263
	264
9W-2146	261
	263
9W-2201	256
9W-3137	257
9W-3138	257
9W-3340	296
9W-3361	269
	270
9W-3619	269
	270
9W-9455	256
9X-0196	116
9X-0199	648
9X-0262	73
9X-1813	99
9X-2026	610
9X-2041	541
	543
	564
	568
	580
	582
9X-2042	162
	166
	543
	546
	553
	568
	583
	585
	596
	608
	631
	632
	638
	641
	651
9X-2044	162
	543
	608
	627
	638

► **PRIMARY REFERENCE**

PART NUMBER INDEX

Part	Page
	648
	651
9X-2045	544
	566
	638
9X-2046	566
	627
9X-2201	62
	396
9X-2616	620
	621
9X-3401	25
	96
	115
	118
	120
	161
	171
	173
	187
	367
	373
	375
	389
	609
9X-3402	116
	117
	118
	138
	161
	171
	173
	175
	178
9X-3404	103
9X-3463	124
	125
9X-3495	190
9X-3959	42
9X-4184	151
9X-6032	343
	344
	346
	347
9X-6165	109
	610
9X-6582	355
	356
	397
9X-8256	107
	110
	134
	136
	156
	162
	167
	180
	190
	202
	231
	371
	433
	532
	563
	570
	602
	607
	627
	628
	629
	638
	648
9X-8257	127
	129
	130
	132
	242
	331
	333
	396
	410
	423
	457
	511
	512
	539
	543
	549
	555
	556
	592
	594
	614
9X-8267	85
9X-8600	94
	96
9X-9896	109

0

Part	Page
033-6042	72
033-8248	496
	498
067-6043	11
067-6135	7
	10
067-6179	19
067-6823	11
	42
085-6444	644
085-6447	644
085-6448	644
085-6449	644
085-7356	385
	390
	394
	397
085-8037	629
085-8604	292
	294
085-8605	292
	294
085-9310	91
	92
	435
086-0255	284
	288
086-0321	511
086-0322	511
087-3908	230
087-3909	230
087-4402	367
	371
	373
	375
087-4411	383
087-4454	272
	►273
087-4456	►274
	276
087-4531	383
087-4534	383
087-4575	273
087-4576	273
087-4577	273
087-4587	167
087-4683	148
087-4710	462
087-4742	416
087-4743	416
	419
087-4757	416
087-4786	417
	419
087-5166	453
	455
087-5303	377
087-5708	462
087-5760	383
087-5762	383
087-5764	389
087-5766	371
	393
087-5768	379
087-5772	371
	383
	389
087-5774	383
087-5805	504
	505
087-5838	499
087-5841	72
087-5908	247
	►249
087-5974	512
087-5975	512
087-5976	512
090-8865	594
091-5928	296
	519
091-9035	103
	167
093-0083	219
	221
093-0084	492
	494
093-0115	219
	221
093-0116	492
	494
093-0349	219
	221
	492
	494
	502
	507
	509
	510
	520
093-0363	219
	221
	492
	494
	507
	509
	510
093-1436	268
093-1512	268
093-1729	297
093-2065	72
093-7521	305
094-0580	196
094-0584	297
094-0611	196
	297
094-0747	284
	288
094-0876	460
094-1399	416
	419
094-1509	297
094-1516	297
094-1528	196
094-1875	310
	313
	416
	419
	426
094-1881	310
	313
094-1882	310
	313
	417
	419
	426
094-1900	414
094-1920	343
	344
094-1931	292
	294
095-0707	411
	412
095-0723	162
095-0728	578
095-0735	574
	575
095-0736	94
	96
095-0742	162
095-0755	543
095-0826	598
095-0827	563
095-0843	202
095-0882	414
095-0886	297
095-0891	196
	297
095-0910	610
095-0929	426
095-0946	426
095-1022	297
095-1260	462
095-1270	196
095-1388	40
095-1519	484
095-1547	348
095-1572	416
	419
095-1575	416
	419
	444
	459
	462
095-1576	487
095-1578	459
	475
	476
	479
	485
095-1579	459
	473
	474
	484
095-1580	464
095-1582	464
	489
095-1583	477
095-1584	302
	459
	473
095-1585	416
	419
	437
095-1586	416

PART NUMBER INDEX

Part	Page
	419
	460
	471
	480
	481
	483
095-1587	473
	474
	489
095-1590	302
	440
	444
	450
	464
	473
	474
	477
095-1594	453
	455
095-1595	414
095-1596	302
095-1597	343
	344
	346
	347
095-1600	403
095-1601	437
095-1602	437
095-1603	444
095-1608	433
095-1625	431
095-1657	437
095-1681	306
095-1685	411
	412
	416
	419
095-1698	470
	487
095-1700	416
	419
	437
095-1704	268
095-1716	431
095-1717	284
	288
095-1720	286
	290
095-1721	292
	294
095-1730	433
095-1750	480
	481
095-1751	480
	481
095-1778	444
095-1785	471
095-1786	473
	474
095-1787	440
	444
	450
095-1788	310
	313
095-1789	453
	455
095-2927	268
095-6639	430
095-7378	416
095-7380	416
	419
095-7382	416
095-7383	416
	419
095-7384	416
095-7386	416
	419
095-7387	416
095-7930	433
	598
	599
095-9785	38
096-1519	416
	419
096-1521	416
096-1522	416
096-1523	416
096-1568	284
	288
096-1570	292
	294
096-1571	292
	294
096-1628	460
096-1773	196
096-1774	196
096-1775	196
096-1776	196
096-1777	196
096-1778	196
096-1779	196
096-1780	196
096-1781	196
096-2591	190
096-2617	571
	572
096-2622	583
	585
096-2902	489
096-3216	284
	288
096-3780	202
096-3785	416
096-3786	416
096-3787	416
096-3788	416
096-3884	583
	585
096-3944	426
096-3964	284
	288
096-3978	416
	419
096-3983	426
096-4003	416
	419
096-4035	51
	53
096-4129	235
096-4255	256
096-4295	263
	264
096-4376	416
	419
096-4377	416
	419
096-4378	416
	419
096-4402	284
	288
096-4412	347
096-4430	286
	290
096-4480	346
	347
	403
096-4514	489
096-4755	300
096-4882	592
096-4883	348
096-4902	224
096-5625	292
	294
096-5915	416
	419
096-5916	416
	419
096-5919	416
	419
096-5962	162
096-6166	138
	162
	187
	578
096-6210	286
	290
	292
	294
096-7803	284
	288
099-0139	644
099-0823	543
	638
099-3506	596
099-3629	635
099-3645	605
099-3649	384
099-3669	310
	313
099-3670	310
	313
099-3671	310
	313
099-6109	310
	313
099-6110	310
	313
099-6111	310
	313
099-6112	310
	313
099-6113	310
	313
099-6115	310
	313
099-6117	310
	313
099-6118	310
	313
099-6119	310
	313
099-6120	310
	313
099-6121	310
	313
099-6122	310
	313
099-6123	310
	313
099-6124	310
	313
099-6125	310
	313
099-6126	310
	313
099-6127	310
	313
099-6128	310
	313
099-6137	460
	462
099-6141	462
099-6144	462
099-6145	462
099-6418	90
	167
	216
	217
099-7127	160
099-7857	561
099-8232	359
	363
	477
1	
100-3751	19
100-3866	423
100-4336	602
100-4458	80
100-4463	6
100-4830	67
100-4841	20
101-2846	162
101-3895	9
	19
101-7178	16
101-7397	357
	359
	363
101-7398	341
101-7401	359
	363
101-7402	348
	359
	363
101-7403	357
101-7404	341
	357
	359
	363
	397
101-8899	583
	585
	587
101-8900	583
	585
	632
	638
	641
101-9848	235
102-0818	489
102-1248	359
	363
102-7886	167
102-7964	118
	161
	178
102-7965	118
	161
	178
102-8802	25
	94
	96
	98
	99
	115
	118
	138
	155
	373
	375
	389
	484

► **PRIMARY REFERENCE**

PART NUMBER INDEX

Part	Page
102-8803	115
	148
	160
	173
102-8804	118
	120
102-8806	178
103-2529	115
103-5687	43
	80
103-5705	9
103-8177	444
103-8252	475
	476
103-8253	475
	476
103-8254	475
	476
103-8255	475
	476
104-4980	397
104-7293	439
	442
104-7294	442
104-7296	442
104-8838	383
105-2169	543
	596
105-2740	34
	65
105-3477	357
	359
	363
105-3483	357
105-3484	384
105-3487	202
	230
105-6431	496
	498
	499
105-9526	629
105-9527	629
106-0615	270
106-0616	270
106-2704	615
107-2348	63
107-6370	467
	468
107-6371	467
	468
107-6479	459
	479
	485
107-6540	473
107-6541	473
107-6631	368
	373
	375
107-6954	416
	419
107-6955	416
	419
107-6969	416
	419
107-6970	419
107-6971	419
107-6972	419
107-6974	419
107-6976	419
107-6977	419
107-6978	419
107-6979	419
107-6980	419
107-6981	419
107-6986	419
107-6987	419
107-6988	420
107-7640	296
108-4282	359
108-7118	404
108-7313	389
108-7354	341
108-7375	393
108-7516	373
	375
108-7550	341
109-2665	467
109-2667	▶467
	469
109-5152	450
	▶468
109-9313	5
	▶56
109-9329	22
109-9549	433
110-5496	383
110-5525	414
110-6393	664
111-0988	389
	393
111-4799	148
111-4816	161
111-4836	107
	127
	129
	130
	132
	167
	171
	185
	187
	532
111-4837	127
	132
	167
	185
111-4838	167
	187
111-4839	167
	187
111-9916	310
	▶480
	485
111-9959	444
	450
111-9998	464
112-2482	▶521
112-7704	144
112-9717	60
113-2127	492
	494
113-4630	120
113-6479	321
	357
113-8129	50
113-8490	160
113-8491	160
113-8492	160
113-8493	160
114-0623	480
	481
114-1398	299
114-1399	299
114-1539	196
114-1581	297
114-6285	230
114-6289	235
115-1184	116
115-2422	103
115-2677	496
115-2678	496
115-8634	404
115-8645	377
116-0118	114
	127
	132
	156
	167
	171
	173
	187
116-0126	115
	190
116-0128	116
	190
116-0210	160
116-0255	116
	118
	161
	190
116-1517	594
116-1665	208
	209
116-2659	58
116-3412	389
	393
117-5540	248
117-6306	638
117-6349	578
117-6350	578
117-6356	578
117-8929	561
118-4044	453
	455
118-4057	416
	419
118-4086	460
118-4087	460
118-4140	519
118-5982	507
	509
	510
118-6054	653
	654
118-9902	389
118-9930	22
119-3662	116
	118
	136
	161
	190
119-5026	138
	532
	615
119-5388	462
119-5389	462
119-5391	462
119-5398	473
120-5114	88
120-5737	610
120-7168	▶250
120-9027	148
121-1022	161
121-1023	136
121-1029	88
121-1038	115
	190
121-1039	116
	118
	190
121-1168	118
	138
	161
121-1173	118
	138
	161
121-1372	292
	294
121-1491	408
	409
	444
	▶481
	482
121-1549	292
	294
121-1558	417
	419
121-1611	284
	288
121-1865	575
121-7098	602
121-7136	557
	602
121-7137	557
	602
122-3979	230
122-3980	230
122-4101	216
122-4120	230
122-5114	416
	419
122-5318	414
122-9605	602
122-9608	578
122-9609	578
122-9610	578
122-9611	574
	575
122-9617	566
122-9657	555
	556
	602
123-1373	103
123-2003	303
123-2008	416
	419
123-2431	478
123-2485	444
123-2552	478
123-2899	21
	43
124-0506	8
124-0988	383
124-1008	381
	389
	393
124-1019	403
124-1020	403
124-1047	341
124-1062	341
124-1107	331
	333
124-1108	331
	333
124-1212	399
124-1266	404
124-3536	26
124-3548	160
124-3815	19
	34
	39
	67
	80
	141
	184
124-3953	651

PART NUMBER INDEX

Part	Page
124-3966	631
124-4009	571
	572
124-4010	571
	572
125-4766	118
125-4784	161
125-4785	161
125-4840	161
125-4841	118
	161
	178
125-7874	116
	117
	118
	161
	171
	173
	175
125-7875	116
	118
	150
	151
	161
	173
	175
	178
	190
125-7876	116
	136
	160
126-1767	25
	115
	118
	120
	161
	171
	173
	367
	373
	375
	389
	609
126-1768	116
	117
	118
	161
	171
	173
	175
126-1774	173
126-1865	462
126-1866	462
126-1876	294
126-1935	284
126-2055	414
126-5062	269
126-6514	483
126-6515	483
126-6516	483
126-6872	385
	390
	394
127-0580	543
127-6780	329
128-2135	539
	546
	549
	553
	564
	568
128-2136	546
	553
128-2686	61
128-8950	161
129-3400	230
129-5874	331
	333
129-6466	648
129-7784	430
129-7853	426
129-7855	426
129-7857	426
129-7859	426
129-7863	426
129-7921	426
129-7927	426
129-7978	311
	313
129-7979	426
129-8034	303
130-0252	555
	556
	602
130-3280	58
131-5818	462
131-5915	460
131-8821	60
131-8822	60
131-8826	60
	61
131-8932	60
132-0999	521
	522
132-1805	103
132-1829	►98
	160
132-5789	162
	167
	171
	173
	184
	598
	602
133-1011	19
133-2425	219
	221
133-5813	367
133-5828	341
133-6777	416
	419
133-6788	487
133-6904	292
	294
133-8016	543
133-9469	63
134-0685	60
134-3284	127
	129
	130
	132
134-3296	118
	161
134-3297	116
	118
	161
134-3355	103
134-7089	58
134-7258	664
134-8875	►228
134-8876	228
134-8878	228
134-8948	511
134-8950	512
134-9137	498
135-3980	351
	353
135-8572	88
135-8573	88
	218
	230
135-8575	230
135-8576	226
	227
	251
	252
135-8577	201
	230
135-8578	229
	230
135-8579	92
135-8965	555
	556
	614
135-8966	555
	556
	614
136-0139	205
	206
137-0856	324
137-2270	606
137-3623	306
137-3624	306
137-3625	306
137-3626	278
	306
137-3628	278
	306
137-3631	278
137-3708	419
137-3709	343
	344
137-3723	419
138-5184	161
138-5708	331
	333
138-8454	638
139-7119	636
139-7126	543
139-7127	543
140-0674	466
140-0677	466
140-0864	167
140-8783	16
141-2759	160
141-6519	610
142-0038	359
	363
142-0485	638
142-3835	1
	►229
142-3836	1
	►606
142-4881	72
142-5546	578
142-6582	329
142-7764	327
142-7765	318
142-7768	341
142-7769	341
143-4254	383
143-9397	610
144-0195	628
	629
144-0367	49
	348
144-9691	631
144-9692	631
145-3031	268
145-3035	267
145-3042	192
	193
	►200
145-4911	17
145-5106	274
	►275
146-6747	664
147-4184	453
147-5860	416
	419
148-4632	297
148-4633	297
148-4634	297
148-4635	297
148-4636	297
148-4637	297
148-4638	297
148-4640	297
148-4642	297
148-4643	297
148-4644	►297
	299
148-4679	199
	►299
148-4685	223
148-4689	224
148-4703	224
148-4704	224
148-4715	196
148-4732	297
148-4733	297
148-8323	359
	363
148-8327	399
148-8330	359
	363
148-8336	341
	367
	371
	373
	375
	379
	381
	384
	389
148-8338	371
	381
	389
	393
148-8339	359
148-8340	384
148-8347	359
	363
	379
	399
148-8353	341
	367
	373
	375
	384
	389
	397
148-8354	348
	367
	379
	384
	399
148-8355	359
	363
148-8357	348
148-8358	399
148-8363	399
148-8364	341
	384
	404
148-8367	341

► **PRIMARY REFERENCE**

PART NUMBER INDEX

Part	Page
	384
148-8368	397
148-8378	367
	371
	373
	375
	377
	379
	384
	390
	393
	404
148-8395	453
	455
148-8407	367
	373
	375
	381
	384
	455
148-8411	359
	363
	381
	399
148-8415	355
	356
148-8419	355
	356
	397
148-8429	360
	363
148-8430	397
148-8433	381
	384
	390
	393
148-8435	371
	377
	384
148-8439	385
148-8443	390
	393
148-8444	341
148-8449	360
149-5050	156
	190
149-5051	190
149-5069	161
	190
149-5070	161
	190
149-5071	161
150-3033	397
150-3036	379
	390
	393
150-4027	384
	390
	393
150-4044	383
	404
150-5782	426
150-5797	311
	314
150-5827	286
	290
150-5828	286
	290
151-1846	338
151-6703	583
	585
	632
	638
	641
151-6704	583
	585
	632
	638
	641
151-6705	631
151-6767	580
151-6777	541
	580
151-6778	632
	638
	641
	643
151-6792	583
	▶644
151-6793	644
151-6813	632
	638
	641
151-6815	632
	638
	641
151-6831	632
	641
151-6832	632
	638
	641
151-6841	644
151-9272	367
	375
	389
151-9461	583
	585
151-9497	583
	585
151-9557	638
151-9576	632
	638
	641
153-2521	▶123
	127
	129
	130
	132
153-2523	▶124
	126
153-2540	138
153-2541	138
153-2602	161
153-2620	118
153-2631	161
153-3568	616
153-5223	462
153-5239	469
153-5276	439
	442
	452
153-5286	450
153-5288	444
	450
153-5289	444
	450
153-5290	444
	450
153-5291	444
	450
153-5292	444
	450
153-5293	444
	450
153-5298	444
153-5299	444
153-5306	444
153-5309	444
153-5311	444
153-5313	457
	▶469
153-6237	360
	363
	379
153-6249	397
153-6267	397
153-8623	311
	314
153-8753	575
153-8762	574
	575
153-8763	574
	575
153-8798	331
	333
154-9023	53
155-0576	110
	111
155-2255	173
155-2258	173
155-2259	178
155-2260	173
	175
155-2265	178
155-2270	115
	118
	138
	149
	161
	171
	190
155-2271	117
	118
155-3624	396
155-7042	651
156-5970	486
156-6470	632
	634
	638
	641
	643
156-6471	583
156-6472	632
	634
156-6474	644
156-6475	644
156-6554	638
156-6562	638
156-6563	638
156-6579	638
156-6598	583
	585
156-6599	543
156-6600	583
156-6618	543
156-6627	638
156-6631	636
156-6642	601
156-6643	583
	585
156-6645	583
156-6646	648
156-6647	▶631
	648
156-6648	631
157-0670	53
158-4380	257
158-4381	257
158-8150	444
158-8159	440
	444
	450
158-8186	466
158-8206	444
158-8207	444
158-8985	299
	▶410
158-8987	▶302
	433
159-4700	275
159-7782	431
159-7784	303
159-8049	101
	103
	182
159-8050	103
	182
159-9322	115
	173
159-9541	80
160-7689	115
160-7690	173
161-3128	160
161-3639	583
	585
161-3650	583
	585
161-3663	583
	585
161-3665	583
	585
161-3669	651
161-3670	651
161-3677	651
161-3684	638
161-3685	543
161-3695	644
161-3697	543
161-3698	632
	634
	638
	641
	643
161-3705	644
161-3717	555
	556
	614
161-3751	1
	▶627
161-6987	610
161-7614	77
162-0177	453
162-2168	261
162-2220	85
162-2222	85
163-3729	219
	221
163-6637	116
163-6759	118
163-6773	115
163-6795	134
	160
	175
	178
	608
	628
	629
	651
163-6803	161
164-0497	591
	▶594
164-0514	583
164-0515	583
	585
164-0516	644
164-0517	644

PART NUMBER INDEX

Part	Page
164-0518	644
164-0519	583
164-0523	543
164-0527	543
164-0528	543
	▶601
164-0639	627
164-0646	546
	553
164-0648	638
164-0655	546
	553
164-0664	601
164-0666	635
164-4180	360
	363
164-5552	341
164-5567	379
	390
	393
	433
164-5590	433
164-5606	360
164-5608	399
164-5628	367
	373
	375
164-5629	373
	375
164-5639	383
164-6872	404
164-6874	385
	390
	393
	397
164-6979	375
	383
	▶478
164-6981	▶276
	383
164-7468	80
	100
164-8474	539
	546
	549
164-8977	383
164-8983	383
165-2823	226
165-2881	72
165-2976	215
	216
	217
165-3065	606
165-3102	208
	209
165-3103	208
	209
165-3120	208
	209
165-3165	318
165-3173	321
165-3185	357
165-3190	357
165-3256	433
165-3260	399
165-9431	460
165-9435	460
165-9436	460
165-9438	460
165-9442	460
165-9443	460
165-9444	460
165-9460	460
165-9464	479
165-9549	389
	▶482
165-9552	462
165-9554	462
166-1478	▶251
166-1486	492
	494
	504
	507
	509
	510
166-1487	492
	494
	502
166-1494	284
	288
	292
	294
	504
	507
166-1495	286
	290
	492
	494
	502
	507
	509
	510
166-1579	496
	498
166-3152	496
167-3441	▶125
	134
167-3456	134
167-3487	161
167-3542	154
	160
	618
167-3543	154
	160
	618
167-3593	160
167-3630	161
167-3631	161
167-7018	543
167-7039	583
	585
167-7042	543
167-7141	594
167-7270	664
168-0765	470
168-1968	385
	390
	394
168-6761	265
	266
168-9523	321
168-9759	367
	381
168-9760	317
168-9762	320
169-3530	663
169-9763	72
170-2755	202
170-2983	202
170-3015	210
	212
170-3016	230
170-6888	160
170-6890	161
170-6891	161
170-6929	101
	103
170-6993	123
	124
170-9324	138
170-9360	202
170-9394	162
170-9417	123
	124
170-9418	123
	124
170-9492	629
170-9497	555
	556
	▶578
	613
170-9498	578
170-9499	578
170-9722	632
	634
	638
	641
	643
170-9724	546
	553
171-0035	474
171-0036	474
171-0037	473
	474
171-0087	460
171-0123	464
171-0124	464
171-0126	464
171-0127	464
171-0128	464
171-0150	440
171-2208	136
171-2210	136
171-3369	51
171-5956	519
171-7325	537
	538
	568
171-7413	644
171-7414	644
171-7420	546
	553
171-7426	543
171-7485	591
	▶592
171-7503	541
	▶632
171-9077	51
171-9383	297
171-9464	224
171-9892	61
172-2939	491
	▶496
172-8406	296
173-1016	85
173-3384	311
	314
173-3397	311
	314
173-3398	310
173-3413	311
	314
173-3428	426
173-3439	414
173-3440	414
173-3441	414
173-3442	414
173-3443	414
173-3444	414
173-3445	414
173-3447	414
173-3450	414
173-3451	414
173-3452	413
	▶470
173-3454	414
173-3503	▶278
	303
173-3505	278
173-3506	278
173-3507	303
173-3510	303
173-3513	306
173-3515	306
173-3516	306
173-3517	306
173-3518	303
173-3529	306
173-3536	▶471
	487
173-4664	359
	363
173-4816	348
173-7916	329
	331
	333
173-7995	331
	333
174-0503	173
174-3016	115
	162
174-4874	196
174-5415	58
174-7791	123
	124
174-9169	145
175-4430	478
176-0773	16
176-1902	602
176-1916	566
176-1925	592
176-1928	592
176-1931	628
176-1932	629
176-1937	543
176-1938	543
176-1939	543
176-1941	601
176-1949	596
176-1951	644
176-1952	644
176-1953	644
176-1954	644
176-1955	644
176-1956	644
176-1957	644
176-1972	546
	553
176-1986	543
176-1996	587
176-2278	492
	494
176-4463	383
176-4469	383
176-4708	377
176-4746	72
176-4755	383
176-4770	399
176-9299	115
	161
	173
177-1061	359
	363
177-2470	426
177-2471	426
177-2553	306

▶ **PRIMARY REFERENCE**

PART NUMBER INDEX

Part	Page
177-2584	414
177-2611	288
177-2619	278
177-2653	359
	363
	▶472
177-5739	210
	212
177-5877	229
177-5879	229
177-5880	229
177-8628	▶505
178-0852	219
	221
178-5422	566
178-5423	566
178-5431	628
178-5500	629
178-5549	▶591
178-5569	636
178-5570	543
178-5572	635
178-5573	583
	585
	635
178-5574	583
	585
	635
178-5576	638
178-5659	620
	621
178-5955	379
178-6450	51
179-5005	333
179-5006	333
179-7400	85
179-7578	375
179-7616	389
179-9806	306
180-3861	123
	124
180-7521	204
180-7525	204
180-7529	204
180-7533	204
183-1343	146
184-3983	60
184-5724	219
	221
184-8722	208
184-8850	202
184-8862	217
184-9216	397
184-9253	338
184-9254	338
184-9256	338
184-9257	338
185-0169	311
	314
185-0201	311
	313
185-0334	284
185-0423	464
185-0462	367
	▶479
185-0463	479
	485
185-0884	11
185-1861	117
185-8161	566
185-8180	583
	585
185-8182	541
	551
	638
185-8187	541
185-8196	543
185-8205	546
	553
185-8221	638
185-8280	601
185-8281	601
185-8284	564
185-8286	148
	537
	538
185-8290	651
185-8300	535
	573
185-8302	535
186-3735	98
	99
	486
186-5649	502
186-5662	502
187-0661	664
187-5954	323
	324
187-5975	▶345
	506
187-6058	401
	402
187-7070	383
188-2315	504
188-4140	▶303
	433
188-4181	292
	294
188-7536	85
188-7541	85
189-2678	546
	553
189-2690	583
	585
189-2702	636
189-2704	543
189-2717	596
189-2847	596
189-2853	546
	553
189-2854	546
	553
189-2864	543
189-3925	502
189-9377	25
189-9763	311
	313
	426
190-3523	257
190-3524	257
190-4896	426
190-5386	664
190-6880	230
190-7081	230
190-7673	310
	313
190-7674	310
	313
190-7819	459
190-7826	348
190-7865	455
191-1782	72
191-1783	72
191-2578	297
191-3235	196
191-5543	414
191-5707	310
	313
192-0573	426
192-3039	208
	209
193-1736	426
193-5014	511
193-5015	511
193-6606	331
	333
194-0174	▶317
	357
194-0176	317
	▶318
194-0180	▶319
	357
194-0181	319
	▶320
194-0182	319
	▶321
194-5226	117
194-5227	117
194-8359	292
	294
195-7215	▶523
195-7216	▶522
195-9245	8
196-0711	423
196-0807	348
196-1569	592
196-1571	592
196-1572	592
196-1666	573
197-0196	408
	409
197-0199	408
	409
197-0273	408
	409
197-4385	190
198-3899	625
	626
199-1286	357
199-1965	383
199-4561	297
199-7394	348
199-7403	348
199-9252	141
199-9267	141
199-9751	14
	141
	2
200-3244	310
	313
200-3245	310
	313
200-3246	310
	313
200-3334	426
201-4391	583
201-4417	543
201-4530	543
201-4534	592
201-4535	592
201-9263	444
201-9299	306
202-3855	339
202-3856	339
202-3857	339
202-3858	339
202-4004	377
	383
202-6996	339
202-7127	331
	333
202-7128	331
	333
202-9824	661
204-1611	167
	171
204-1673	101
	103
204-2281	383
	389
	393
204-2763	278
205-6295	543
206-1265	258
	▶261
206-1345	38
	117
206-1826	90
206-3336	▶459
	574
	575
206-9211	261
207-0144	541
	▶634
207-3590	▶350
	518
207-6222	359
	363
207-6282	336
207-6403	433
207-6404	433
207-6666	322
207-6667	322
208-4289	215
	216
208-8469	144
209-3312	261
209-3313	261
209-5894	416
	419
209-5909	416
	419
209-5992	411
	▶416
209-5994	412
	▶419
209-6000	430
209-6049	419
209-9219	12
210-5808	543
210-5827	627
210-5828	627
210-5829	627
210-5834	627
210-5836	627
210-5837	627
210-5838	627
210-9935	356
210-9966	355
212-2838	219
	221
212-5148	363
212-5419	389
212-5423	389
213-0677	25
213-0772	160
	190
213-9100	99
214-4400	308
214-4501	292
214-4511	▶308
	357

PART NUMBER INDEX

Part	Page
214-4518	308
214-7566	36
	73
214-7568	72
	73
	94
	96
	379
	390
	393
	433
214-7915	664
215-4909	302
215-5037	383
	▶407
215-9961	310
	313
215-9962	310
	313
216-4970	136
216-6589	331
	333
216-6682	498
216-8634	19
217-0099	111
217-4892	▶526
217-4893	▶528
217-4894	▶531
217-4895	▶525
217-9039	117
	144
	184
218-1139	359
	363
218-5199	204
219-0305	592
219-8136	72
219-8469	250
220-9090	525
	526
	527
	528
	529
	530
	531
220-9092	526
220-9093	528
220-9094	514
	516
220-9097	531
220-9102	527
220-9103	529
220-9104	515
	517
220-9107	530
221-4883	377
221-8045	664
222-0085	474
222-0124	344
222-0126	343
222-0225	571
	572
223-9818	664
224-0554	664
224-8946	664
225-0312	664
225-4257	664
225-4548	431
225-4549	431
225-4592	282
	283
	▶346
225-4607	310
	313
225-4804	437
	444
	453
	455
225-4818	444
	453
	455
225-4821	489
225-6522	35
225-6524	35
225-7738	50
225-7944	46
225-8019	50
225-8287	19
225-8524	63
225-8526	63
225-8858	11
226-3065	333
227-0265	366
227-0581	348
227-0590	433
227-6034	196
227-6071	223
227-6081	▶223
	224
227-6105	224
227-6106	224
227-6147	▶224
	247
227-6166	199
	▶300
227-6215	299
227-6221	299
227-6228	297
227-8807	▶277
228-2781	664
228-4947	141
228-5463	204
228-5614	509
	510
228-5615	286
	290
	502
	509
	510
228-7089	72
228-7093	36
228-7096	96
228-7100	72
228-7316	664
228-9254	664
229-0887	664
229-1096	507
229-6974	▶527
229-6975	▶529
229-6976	▶530
229-9070	1
	▶628
229-9078	613
	▶614
229-9082	534
	▶587
229-9086	2
	▶650
229-9087	▶648
	650
229-9088	▶629
	650
230-1340	107
230-1341	107
230-4009	115
	118
	162
	178
230-4010	609
230-4011	115
	117
	118
	151
	162
	175
	178
	189
	190
	599
230-4012	146
	486
230-4013	115
230-5008	178
230-5010	115
	118
	171
	175
	178
230-8094	24
231-1771	▶99
231-1827	103
231-1836	▶175
	177
231-2295	115
	178
232-1322	12
	14
232-1693	184
232-2095	514
	516
232-2096	514
	516
232-2105	515
	517
232-2106	515
	517
232-3657	19
232-3666	19
232-3751	46
232-4113	437
232-4114	437
232-7449	12
232-7596	11
232-7597	11
232-7599	11
	36
233-5260	574
	575
233-9821	72
234-1097	160
234-1122	187
234-1158	138
234-3927	502
234-3928	502
234-3930	502
234-3931	502
	520
234-4440	404
	▶431
234-4452	310
	313
234-4453	310
	313
234-4492	341
234-4580	286
	290
234-4581	286
	290
234-4582	286
	290
234-4583	286
	290
234-4584	286
	290
234-4585	286
	290
234-4586	286
	290
234-4588	290
234-4589	286
	290
234-4591	346
234-4592	346
234-6468	546
	553
234-6469	546
	553
234-6470	546
	553
234-6471	546
	553
234-6472	546
	553
234-6473	546
	553
234-6474	546
234-6476	546
	553
234-6477	546
	553
234-6480	546
234-6483	546
	553
234-6485	546
	553
234-6490	546
	553
234-6491	546
	553
234-6497	546
	553
234-6498	546
	553
234-6499	579
234-6501	539
	549
	▶579
234-6502	579
234-6521	546
234-6579	546
	553
	564
	568
234-6580	564
	568
234-6593	579
234-6594	541
	551
	▶651
234-6602	564
234-6603	568
234-6604	564
234-6605	568
234-6608	564
	568
234-6609	564
	568
234-6610	564
	568
234-6612	568
234-6613	▶148
	568
234-6614	568
234-6615	148
235-7520	248
235-7679	286

▶ **PRIMARY REFERENCE**

PART NUMBER INDEX

Part	Page
	288
	290
	507
	509
	510
235-7764	▶242
	269
235-7769	290
235-8862	611
235-8874	532
235-8875	532
235-8876	587
235-8877	587
235-8878	587
235-8879	555
	556
	587
235-8880	563
235-8891	602
235-8893	566
235-8894	566
235-8912	543
235-8914	564
	568
235-8916	541
	551
235-8923	546
	553
235-8930	546
	553
235-8932	651
235-8933	543
235-8950	546
	553
235-8951	537
235-8952	538
235-8965	568
235-8966	564
235-8969	▶571
	577
235-8970	▶572
	576
235-8971	571
235-8972	572
235-8974	648
235-8996	537
	538
235-8997	537
235-8998	538
235-9001	539
	549
	555
	556
235-9005	532
235-9012	628
	629
235-9014	602
235-9015	602
236-2843	367
236-2844	367
236-2848	368
236-3200	397
236-3212	▶322
	357
236-3213	▶322
	357
236-3214	322
	▶323
236-3215	322
	▶324
236-3257	309
236-3259	309
236-3702	218
236-3703	218
236-3747	215
236-3748	215
236-4545	145
236-6365	504
236-6366	505
236-6419	440
	444
	450
236-6421	444
	450
236-6717	85
236-8341	247
	▶248
236-8357	248
236-8358	248
237-0227	115
237-3184	▶329
238-0120	141
238-1506	136
238-1570	83
	▶190
238-1579	190
238-1594	▶150
	190
238-1595	150
238-1596	▶151
	190
238-1597	151
238-2171	185
238-2208	▶154
	650
238-2209	154
238-2210	154
238-2211	618
238-2212	160
238-2260	615
238-2279	136
238-2280	136
238-2318	160
238-2319	162
238-2363	118
	162
	178
238-2366	118
	138
	162
238-2390	160
238-2391	160
238-2478	▶153
	166
238-2479	153
238-2501	101
	103
238-2528	101
	103
238-5080	94
	96
238-5081	72
	73
238-5082	36
238-5083	36
238-5084	36
238-8245	117
238-8247	117
238-8288	65
238-8292	64
239-1134	145
	▶155
239-1699	328
	▶341
239-1714	328
	▶357
239-1717	328
	▶404
239-1732	▶338
	491
239-4341	247
	▶253
239-4362	256
239-4378	267
239-4382	267
239-4383	267
239-4384	267
239-4385	253
	▶254
239-4386	253
	▶255
239-4387	254
	▶265
239-4388	255
	▶266
239-4389	265
	266
	▶267
239-4390	267
	▶268
239-4391	268
239-4392	268
239-4393	267
239-4394	268
239-6395	58
239-7352	115
	118
	175
	178
239-8693	279
	▶574
239-8695	279
	▶575
239-8697	407
	▶408
239-8998	407
	▶409
240-2912	504
240-2913	284
	507
240-2914	292
	294
240-2978	210
	212
240-2979	210
	212
240-2988	249
240-3822	1
	▶247
240-5071	2
	▶588
240-5073	▶589
240-5074	587
241-4194	145
241-7286	491
	▶498
241-7382	288
241-8368	136
	▶149
241-9264	66
242-1510	664
242-1588	664
242-6092	664
242-6475	▶331
242-6478	▶351
242-6479	▶333
242-6482	▶353
242-6494	▶355
242-6732	282
	▶343
242-6735	283
	▶403
242-6737	282
	▶344
242-6803	426
243-4505	88
	116
	127
	132
	150
	162
	175
	187
	189
	190
	559
243-4507	118
243-4508	119
	156
	173
	175
	609
243-4509	119
243-4510	116
	119
	171
244-4254	504
244-4255	504
244-4277	492
	494
	507
	509
	510
244-4360	504
244-7927	217
244-8194	205
	206
244-8198	230
244-8228	230
244-8242	230
244-8255	230
244-8277	243
	246
244-8278	243
	246
244-8284	237
244-8288	243
244-8400	▶439
	440
245-1042	115
245-1043	117
245-1044	115
	117
245-1045	115
245-1048	115
	117
245-2399	▶336
245-5079	367
245-5416	404
245-7749	561
	▶563
245-7750	563
245-7751	563
245-7760	160
245-7790	546
	553
	564
	568
245-7791	587
245-7792	587
245-7793	587
245-7811	1
	▶611
245-7813	573
245-7814	573
245-7815	573

PART NUMBER INDEX

Part	Page
245-7816	573
245-7817	535
245-7818	535
245-7819	535
245-7820	535
245-7823	535
245-7824	535
245-7825	535
245-7826	535
245-7827	535
245-7828	535
245-7829	535
245-7830	535
245-7831	535
245-7832	535
245-7833	535
245-7834	535
245-7835	535
245-7836	535
	▶557
245-7837	557
245-7838	535
245-7839	535
245-7842	571
245-7844	572
245-7846	535
	▶573
245-7847	535
245-7850	602
245-7851	602
245-7856	535
245-7872	587
245-7873	555
	556
	587
245-7881	2
	▶616
245-7895	625
	626
245-7900	219
	221
245-7901	219
	221
245-7905	557
245-7916	555
	556
	614
245-7925	568
245-7926	564
245-7929	579
245-7931	651
245-7948	564
	568
245-9191	51
245-9205	51
246-2641	91
	92
246-4361	78
246-5425	256
247-2693	175
247-4928	78
	80
247-7331	▶501
	518
247-7416	279
	▶653
247-7420	279
	▶654
247-7423	279
	▶655
247-7424	279
	▶656
247-7436	664
247-7437	664
247-7438	664
247-8864	284
247-8865	284
	288
247-8869	343
247-8870	344
247-8873	292
	294
247-8874	292
	294
247-8883	403
247-8885	288
247-8920	426
247-9030	331
247-9033	331
247-9034	331
247-9164	351
247-9173	351
247-9177	351
247-9294	351
	353
248-7143	254
	255
	▶256
248-7174	268
248-8930	211
248-8943	244
248-8961	217
248-8992	226
248-8994	226
248-8995	226
248-9633	▶401
	506
248-9825	328
	▶367
	555
	556
248-9853	▶399
	435
250-2177	145
250-2446	444
250-2447	444
250-2940	519
250-5054	215
250-6417	512
250-6418	▶512
	513
250-8054	655
	656
251-0299	187
251-0303	136
251-0304	136
251-0452	182
251-0467	167
251-0483	180
251-0529	▶156
	279
251-0538	555
	556
	▶615
251-0579	178
251-0580	175
251-0598	156
251-0637	160
251-2597	501
	▶502
251-9567	310
	313
253-1346	265
	266
253-6592	▶356
253-6688	355
253-6691	355
253-6694	329
253-6697	329
254-2996	502
254-3052	504
254-3053	504
255-1659	328
	▶371
255-1665	367
255-1666	367
255-1800	279
	▶373
255-1802	279
	▶375
255-2751	138
	▶152
255-2966	60
	61
255-4410	616
255-5594	444
	466
255-5680	357
	▶453
255-5683	357
	▶455
255-5713	279
	▶436
256-6453	167
256-6454	141
258-0330	592
259-0647	346
259-0918	430
259-3543	218
259-4883	160
259-4914	615
259-5043	▶127
	491
259-5047	▶129
259-5048	▶130
259-5052	1
	▶185
259-5081	160
259-5082	160
259-5097	182
259-5129	185
259-5225	101
259-5229	101
259-5237	▶113
	328
259-5317	167
259-5326	127
259-5327	129
259-7180	166
259-7202	568
259-7214	616
259-7215	616
259-7345	537
	538
259-7346	▶537
	564
259-7347	▶538
	568
259-7348	▶564
	566
259-7350	541
	551
	▶596
259-7351	596
259-7352	596
259-7353	546
	553
259-7354	583
	585
259-7378	436
	▶440
259-7733	384
259-7848	473
259-7849	473
259-7850	473
259-7851	473
259-7877	575
260-1555	121
260-1566	121
260-2288	501
	▶504
260-2289	504
260-3883	486
260-6945	654
	655
260-6946	653
	656
260-7868	328
	▶423
260-7872	359
	363
260-7904	423
260-7906	423
260-7910	▶325
	357
260-7911	325
	▶326
260-7912	326
260-7913	325
	▶327
260-7914	327
260-7988	357
260-7992	357
260-7996	357
260-8000	357
260-8010	▶339
	491
260-8043	359
	363
260-8315	339
260-8316	339
260-8320	338
260-8321	338
262-2313	240
262-2333	238
262-2335	238
262-2347	237
262-2363	230
262-2406	208
262-3152	356
262-3155	356
262-3225	336
262-3589	351
262-4781	256
263-9088	107
	▶140
263-9574	101
264-1702	492
	494
264-7029	115
	117
	118
	151
	162
	175
	178
	189
	190
	599
264-7030	115
	117
264-7031	178
264-7032	115
	118
	171
	175

▶ **PRIMARY REFERENCE**

PART NUMBER INDEX

Part	Page
	178
264-7033	115
	178
264-7034	115
	118
	162
	178
264-8602	328
	▶663
264-8771	▶328
264-9961	444
265-7513	518
	▶519
265-7724	▶121
266-0912	359
	363
266-0913	359
	363
266-1045	348
266-1108	381
	389
	393
266-1278	359
	363
266-1279	359
	363
266-1303	359
	363
266-5431	664
267-0138	▶499
	506
267-0139	499
267-0140	499
267-0141	499
267-6767	1
	▶199
267-6785	299
267-7207	115
	117
267-7208	115
267-7626	130
267-7627	▶132
	491
267-7628	132
267-7976	138
267-8071	1
	▶597
267-9572	116
	117
268-0720	235
268-1621	399
268-4450	518
	▶520
268-4530	657
268-4531	657
268-6850	393
268-6966	333
268-6969	333
268-6970	333
268-6971	353
268-6974	353
268-6977	353
268-6980	353
268-6983	353
268-6986	353
268-8209	486
268-8872	657
269-0120	657
269-0121	657
269-9919	371
270-5949	462
270-5950	462
270-5953	460
271-7843	576
	577
272-4180	389
	393
272-4773	57
	▶58
273-3453	515
273-4159	519
273-5167	5
	▶561
273-5274	638
273-5345	632
	638
	641
273-5346	632
	638
	641
273-5399	561
273-7677	208
	209
273-7774	214
273-7847	211
273-7964	202
273-8314	426
273-8315	426
273-8316	310
	313
273-8317	310
	313
273-8318	310
	313
273-8319	310
	313
274-1935	28
274-2547	347
274-4990	115
274-5992	519
274-5993	519
274-5994	519
274-5995	519
274-5997	▶296
	519
274-5998	519
274-5999	519
274-6001	519
275-0497	519
275-1361	399
275-1362	433
275-1439	359
	363
275-1440	359
275-1442	72
	383
275-1443	72
	383
275-1444	383
275-2428	144
275-5982	521
	522
275-6993	190
275-9897	24
276-5600	11
276-5602	11
276-5603	12
	141
276-7391	10
276-7394	10
276-7478	26
276-8116	13
276-8117	13
276-8123	33
276-8132	33
276-8133	33
276-8134	14
276-9200	31
276-9201	31
276-9206	31
276-9207	31
276-9230	31
277-0121	18
277-0588	17
277-0786	331
	333
277-2500	44
277-2537	46
277-2538	46
277-2923	50
277-2925	50
277-3012	19
277-3013	19
277-4223	27
277-4302	14
277-4409	144
277-4993	77
277-5064	184
277-5065	184
277-5067	71
277-5307	31
277-9463	66
277-9602	67
277-9603	67
277-9938	67
277-9940	67
278-0015	67
278-0016	67
278-0017	35
	67
278-3818	218
278-3837	240
278-5111	31
278-5112	31
278-5113	31
278-5125	7
278-5170	71
278-5203	111
279-7907	62
279-7909	58
279-9651	21
280-1384	24
280-1911	▶31
	33
280-1912	31
280-1913	31
280-1914	31
280-2747	360
	364
281-0791	557
281-7039	44
281-7040	44
281-8744	43
281-8803	115
281-8804	115
	117
281-8805	72
282-5705	518
	▶657
283-3326	▶524
283-4662	18
283-8301	23
283-8302	23
284-4426	543
284-4552	602
284-7313	286
284-8532	610
285-1340	▶442
	444
285-1399	384
285-1465	384
285-2663	397
285-2664	397
285-4470	310
	313
286-0123	84
286-2890	77
286-7851	64
287-0047	281
287-2499	473
287-8597	18
288-6974	18
288-6975	18
288-7502	331
	333
289-5657	368
289-5672	357
289-5690	402
289-6603	226
289-6698	230
289-6700	236
289-6805	230
289-8194	▶305
	433
289-8195	305
290-1729	664
290-1788	▶506
290-1789	▶506
290-1837	▶506
290-1893	664
290-9195	491
	▶492
290-9196	492
290-9198	491
	▶494
290-9199	494
290-9216	506
	▶507
290-9222	506
	▶509
290-9223	509
290-9225	506
	▶510
290-9226	510
291-5216	66
291-7559	▶598
	600
291-7560	598
	599
291-7561	598
291-7593	167
292-3462	65
292-7153	399
292-7297	433
293-1118	602
293-1119	602
293-1120	602
293-1137	535
293-1140	648
293-1183	555
	556
	587
293-1184	555
	556
	587
293-1256	629
293-1501	202
295-6661	14
296-6220	196
296-6268	196
296-6269	196
296-6300	196
	▶198
296-7067	359
	363
296-7069	359

PART NUMBER INDEX

Part	Page
	363
296-7229	389
	393
297-0370	359
	▶437
297-0483	466
297-0529	▶460
	576
	577
297-0532	570
	▶576
297-0533	570
	▶577
297-9132	▶258
297-9316	247
	▶259
298-4195	592
298-4258	83
	▶658
298-4282	664
299-5511	33
3	
300-9715	310
301-0091	182
301-0589	610
301-6874	310
	313
301-8294	310
	313
302-9466	458
302-9679	▶518
303-9933	94
	96
303-9937	94
	96
304-5062	21
304-5303	160
305-0326	▶590
305-0330	546
	553
305-0333	546
305-0361	636
305-0441	602
305-0442	602
305-0467	555
	556
	▶619
305-6873	72
305-7664	51
306-1611	331
306-1614	331
306-1615	331
306-8401	72
	167
306-8802	615
307-0047	107
307-1818	580
	▶583
307-4918	341
307-4919	341
307-5034	339
307-5035	338
307-5097	399
307-5098	399
307-5120	379
307-7656	216
308-8775	219
	221
308-8776	219
	221
308-8777	219
	221
309-1098	525
309-3872	658
309-5130	36
309-5137	36
309-5711	609
309-5769	367
	373
	375
	389
309-5771	122
	▶610
309-5881	▶107
	122
309-6678	33
310-0078	555
	556
	▶570
310-0210	384
	▶464
310-0404	450
310-0405	450
310-0419	462
310-0420	462
310-9667	56
	▶60
310-9676	58
	▶61
311-2732	80
312-2645	88
312-5694	513
	517
312-8338	53
313-3492	72
313-3762	53
313-3763	53
313-3764	53
313-3766	53
313-3769	53
314-6506	53
314-6509	53
314-6510	53
314-8128	384
314-8205	359
315-0800	219
	221
315-4412	▶483
	487
315-5313	543
315-9810	67
316-6166	541
	▶580
	581
316-8846	535
316-8847	535
316-8849	535
316-8908	592
316-8916	532
	▶535
316-8918	535
316-8920	535
316-8921	535
316-8987	620
	621
	622
	623
316-9351	25
	117
	144
317-4712	359
	363
317-5482	26
317-5483	26
317-5485	10
317-5486	10
317-6664	39
319-1335	190
319-6212	36
319-6245	72
319-8426	7
319-9888	348
320-0198	338
320-3060	141
320-3062	141
320-5737	202
321-8649	36
321-8657	73
321-8665	433
321-8666	433
321-8667	433
321-9994	16
322-3154	36
322-3155	36
322-8714	411
	412
	▶489
322-8716	341
	▶487
323-7770	367
323-7897	444
323-7898	444
	▶466
323-9312	26
324-0444	19
324-4488	22
324-4489	22
324-4550	▶30
	47
324-5761	88
324-5770	180
324-5771	180
	555
	556
325-8865	359
	363
326-0316	96
326-0319	36
326-5051	296
326-7401	▶44
	46
326-9053	659
327-6501	555
	▶617
327-6503	556
	▶618
327-6507	617
	▶622
327-6509	618
	▶623
327-6512	▶620
	622
327-6513	▶621
	623
327-6515	620
	621
327-6520	622
	▶625
327-6521	623
	▶626
327-6523	555
	556
	613
	▶624
327-6538	624
327-6541	619
327-6550	543
	▶607
327-6593	559
327-6594	559
327-6640	620
	621
327-6642	620
	621
327-6643	620
	621
327-6644	625
	626
327-6645	625
327-6646	625
	626
327-6647	625
327-6648	625
	626
327-7538	160
327-8740	425
328-2035	397
	▶486
329-3796	20
329-5239	30
329-5254	6
329-5458	73
329-5459	73
329-5534	36
329-5958	521
	522
330-2568	384
331-0290	26
331-1924	514
331-1925	516
331-1926	514
331-1927	516
331-6835	11
331-7972	664
331-7973	664
332-0195	620
332-4192	53
332-7865	120
332-8903	269
332-9270	16
333-4157	626
333-4158	626
333-4159	626
333-4178	626
333-4179	620
	621
333-4180	625
	626
333-4181	625
333-4609	383
333-7240	16
334-4603	664
334-9940	489
334-9968	410
	▶413
334-9976	413
	▶414
334-9981	414
334-9986	194
	▶411
334-9987	195
	▶412
335-0136	459
335-0138	459
335-2092	18
335-8611	63
336-3566	140
336-4591	53
337-1182	357
337-1205	377
337-1424	359
337-1426	359

▶ **PRIMARY REFERENCE**

PART NUMBER INDEX

Part	Page
337-2709	397
338-6970	▶142
	383
	384
	390
	393
338-7728	51
339-6891	145
339-6951	▶280
	281
339-6952	280
339-6953	280
339-6954	280
339-6955	280
339-7043	145
339-8780	10
339-9637	33
340-4212	46
340-8237	267
341-1842	94
	96
341-2181	▶282
	501
341-2182	282
	▶286
341-2788	▶282
	491
341-2789	▶282
	491
341-2790	282
	▶284
341-2806	▶283
	491
341-2807	283
	▶292
341-2808	▶283
	491
341-2809	283
	▶294
341-2813	▶282
	501
341-2814	282
	▶288
341-2831	426
341-2834	426
341-2839	426
341-2840	426
341-2841	426
341-2842	426
341-2852	426
341-2857	426
341-2858	426
341-2860	▶425
	426
341-2862	426
341-2872	426
341-5368	▶281
	424
341-6797	▶257
	269
	270
341-6799	▶269
342-0932	226
342-0965	226
342-2924	433
342-2972	115
	119
	162
	178
342-2974	115
	119
	178
342-2975	115
342-2976	115
342-6507	29
342-6508	10
342-6510	29
343-2387	73
343-2388	73
343-3918	72
344-1722	6
344-5081	100
344-5281	▶310
	426
344-5282	▶313
	426
344-5360	73
344-7390	142
344-7700	29
345-2568	29
346-0006	84
346-0007	84
346-0407	19
346-0408	19
346-0737	4
	▶41
346-2911	4
	▶42
346-3229	36
346-4709	33
346-7204	247
	▶252
346-7232	251
346-7233	251
346-7236	252
346-7237	252
346-8012	561
346-8219	659
347-2081	396
347-4734	167
347-6081	▶309
	433
347-6082	309
347-6852	▶513
347-6853	▶513
347-7545	514
347-7547	515
	516
	517
347-7571	514
	516
347-7572	514
	516
347-7574	514
	516
347-8645	73
	80
348-0495	80
348-1867	259
	▶262
348-1869	264
348-1870	264
348-1871	264
348-3094	514
348-3184	514
348-3185	516
348-4637	184
348-5409	202
	241
348-5434	16
349-4151	▶283
	501
349-4152	283
	▶290
349-5084	162
349-5085	162
349-5413	610
349-5414	610
349-6847	77
349-7059	94
	96
350-0952	284
	288
350-0954	286
	290
350-0955	292
	294
350-0957	284
	288
350-0959	286
	290
350-0960	292
	294
350-0962	284
350-0967	288
350-0970	294
350-0971	292
350-0976	286
	290
350-7492	48
350-7735	94
	96
350-8250	1
	2
	▶180
350-8747	30
351-0286	384
351-1724	29
351-3886	5
	▶22
351-4318	73
	80
351-4319	73
351-4321	73
351-4749	24
351-5583	35
351-9918	123
352-1096	284
352-1098	292
352-1099	294
352-1100	288
352-1102	284
352-1104	292
352-1105	294
352-1106	288
352-6864	473
	474
352-7057	452
352-7058	452
352-7059	452
352-7063	410
352-7113	444
	▶473
352-7117	472
	▶474
352-7122	440
	444
	450
	▶475
352-7123	453
	455
	▶476
352-7132	▶444
	457
352-7176	371
	▶484
352-7775	53
353-0545	▶192
	199
353-0546	▶193
	328
353-0609	192
	▶194
353-0610	193
	▶195
	328
353-0611	194
	195
	▶196
353-0612	196
353-5109	94
	96
353-5112	73
353-5142	72
354-3863	389
354-5671	146
354-5833	36
354-8322	39
355-0468	53
355-0598	610
355-0632	80
355-0633	80
355-3486	659
355-8007	227
355-8008	227
355-8010	227
355-8013	227
355-8014	227
355-8710	50
356-1219	117
356-4311	515
	517
356-4317	515
	517
356-4321	517
356-4345	515
	517
356-7732	160
356-8174	351
356-8177	351
357-2696	524
357-2697	524
357-3877	574
	575
357-4101	561
357-4600	36
357-5709	509
357-5711	292
	294
357-5712	288
357-5717	284
358-0921	216
	217
358-4889	155
358-6390	664
359-1310	8
359-3119	▶269
359-5808	242
359-8335	94
	96
360-0074	286
360-1564	26
360-1978	10
360-4583	489
360-4584	489
360-4585	489
360-4586	489
360-4587	489
360-4588	▶477
	489
360-5863	262
	▶263
360-5864	262
	▶264
360-5865	263

PART NUMBER INDEX

Part	Page
360-8958	▶68
	69
360-8960	68
361-6533	662
361-9875	144
362-5412	68
	69
362-9689	69
363-0559	10
363-6132	389
	393
363-6133	389
363-9545	561
363-9548	561
363-9550	561
364-1614	560
364-1975	477
364-1976	477
364-1977	477
364-1978	477
364-5047	507
364-5145	10
366-0367	160
366-1059	379
366-4622	160
366-6495	88
366-9331	167
366-9343	▶134
	555
	556
366-9344	134
366-9345	134
367-0844	664
367-1817	43
367-3340	64
367-8467	504
367-8468	502
367-8509	43
367-8512	43
367-8609	350
367-8610	350
367-8852	▶143
368-2852	523
368-2853	523
368-3145	144
368-5216	▶87
	88
368-5217	88
368-5219	88
368-6658	72
368-7668	1
	▶72
368-7670	1
	▶3
368-7673	3
	▶66
368-7676	5
	▶62
368-7679	143
	▶145
368-8559	67
368-8651	486
369-0239	▶171
	279
369-0245	▶189
	518
369-0249	▶182
369-0590	517
369-0682	517
369-0683	517
369-0689	515
369-0690	515
369-1658	65
369-2247	47
	▶48
369-2255	3
	▶47
369-2259	49
369-2263	49
369-2264	49
369-2265	49
369-2267	49
369-2277	51
369-2278	51
369-4243	664
369-7799	71
369-8420	348
369-8502	367
	▶462
369-8507	462
369-8508	462
369-8509	462
369-8510	462
369-8568	462
369-8569	462
369-9677	282
	▶347
369-9678	347
370-5513	82
370-5516	79
370-5517	79
370-5518	79
370-5520	▶79
	90
371-2477	4
	▶10
371-2478	4
	▶20
371-2480	4
	▶33
371-2483	4
	▶71
371-2537	4
	▶111
371-2538	4
	▶18
371-2539	4
	▶17
371-2542	4
	▶16
371-2553	4
	▶46
371-2684	84
371-2691	84
371-2716	4
	▶19
371-2740	4
	▶21
371-3974	71
371-7263	84
371-9085	513
	▶514
371-9086	513
	▶516
371-9146	516
372-2297	4
	▶50
372-6433	16
372-9285	651
372-9295	▶559
	560
372-9306	625
	626
372-9334	651
372-9388	1
	▶602
372-9409	602
372-9410	602
372-9551	561
373-3606	4
	▶43
373-8014	41
373-9516	426
373-9518	426
374-0427	4
	▶35
374-0432	4
	▶67
374-4017	1
	▶226
374-4019	▶227
374-4161	226
374-5000	53
374-5981	66
374-6002	5
	▶38
374-6003	1
	▶5
374-6004	5
	▶40
374-6012	62
374-6013	66
374-6038	66
374-6040	66
374-6301	4
	▶26
374-6309	4
	▶29
374-7393	26
374-9295	4
	▶27
375-0098	4
	▶28
375-0482	90
375-0483	90
375-2013	7
375-2647	84
375-2649	90
375-2985	53
375-4120	4
	▶6
375-5008	4
	▶23
375-6988	90
375-8254	84
375-8407	▶120
	184
375-8749	235
375-8750	235
375-8851	4
	▶39
376-0601	23
376-2384	23
376-4068	80
376-4074	10
376-4078	10
376-4761	8
376-6308	328
	▶348
376-6309	328
	▶377
376-6311	328
	▶379
376-6313	328
	▶396
376-6317	279
	▶359
376-6319	279
	▶363
376-6321	328
	▶366
376-6331	▶397
	518
376-6336	▶381
376-6342	384
376-6403	71
376-6405	71
376-6409	84
376-6410	84
376-6411	84
376-6464	4
376-6871	4
	▶7
376-9967	80
377-0399	13
377-0400	13
377-1293	184
377-2876	63
377-2877	▶63
	67
377-3289	381
377-3291	359
	363
377-3294	389
	393
377-3297	396
377-3298	396
377-3328	348
377-3331	348
377-3336	397
377-3445	397
377-3449	389
377-5000	53
377-5001	53
377-5002	53
377-5003	53
377-5004	53
377-5005	53
377-5006	53
377-5887	599
377-5988	77
377-6536	▶599
	600
377-6667	230
	▶236
377-6679	227
377-6681	227
377-6698	230
	▶243
377-6708	230
	▶237
377-6715	226
377-6716	227
377-6727	239
377-6743	236
377-6746	239
377-6749	237
377-6760	241
377-6767	245
377-6782	241
377-6786	230
377-6801	230
377-6809	245
377-6932	117
377-8041	136
377-8043	136
377-8044	136
377-8051	167
377-9578	36
378-0398	▶517
378-0399	517
378-1556	292
	294
378-4739	17
378-6177	53
378-6179	53

▶ **PRIMARY REFERENCE**

PART NUMBER INDEX

Part	Page
378-6180	53
378-8260	4
	▶24
378-8587	39
379-4369	72
379-4370	72
379-4380	72
379-4415	5
	▶560
379-4430	66
379-7385	1
	▶230
379-7395	1
	▶205
379-7396	205
	▶208
379-7397	208
379-7425	230
	▶244
379-7426	244
379-7436	230
379-7489	101
	▶238
379-7490	238
379-7509	244
379-7518	230
379-8434	80
380-9615	8
381-1373	664
381-6824	24
	▶25
381-6825	25
381-7416	597
	▶600
383-1386	▶8
	9
383-1387	8
383-1388	9
383-3581	▶11
	12
383-5083	1
	▶328
383-5306	2
	▶279
383-5307	2
	▶279
383-5313	1
	▶112
383-5314	112
383-5423	▶518
383-5427	▶122
383-5626	560
383-5647	620
383-5709	602
383-5767	553
383-6929	635
383-6930	636
383-6931	635
383-6932	635
383-6933	585
383-8541	638
	641
	643
383-9204	348
383-9558	375
384-2286	64
384-5313	▶13
	14
384-6533	585
	▶646
384-7567	144
385-1398	78
385-2572	4
	▶14
385-3458	216
	217
385-3821	72
385-4093	664
385-4169	664
385-4171	660
385-5773	72
	94
	96
385-5997	▶117
	184
385-8000	4
	▶146
385-8757	646
386-1864	78
386-2112	19
386-2971	84
386-2976	84
386-3444	110
386-3819	84
387-2626	328
	▶424
387-2846	646
387-2847	646
387-2848	646
387-2849	646
387-3344	▶219
387-3345	219
387-3699	367
387-3783	▶430
	433
387-8412	84
388-0026	▶539
388-0065	539
	▶541
388-0536	9
388-2314	65
388-4707	14
388-6760	103
388-6788	101
388-6867	182
388-7014	66
388-9091	546
	553
388-9094	546
	553
388-9095	546
	553
388-9097	638
388-9102	541
	▶543
	551
388-9104	541
	▶546
388-9105	541
	551
	▶585
388-9107	541
	551
	▶635
388-9108	541
	551
	▶636
388-9109	541
	551
	▶638
388-9115	551
	▶581
388-9116	551
	▶641
388-9117	551
	▶643
389-1995	34
389-2407	329
	336
	▶458
389-3166	▶513
389-3167	513
	▶515
389-3174	515
389-3348	4
	▶9
389-3863	184
389-5775	80
390-0755	80
390-0854	4
	▶12
390-2252	22
390-4679	▶85
	86
390-6079	4
	▶80
390-6840	72
	▶86
390-7626	65
390-8738	80
391-0666	313
391-0668	313
391-1497	53
391-1498	53
391-1817	80
391-2493	80
391-4751	230
391-4752	230
391-4811	4
	▶84
391-5523	4
	▶65
391-9635	230
391-9637	230
391-9641	230
391-9643	230
391-9646	230
	▶239
391-9651	230
391-9655	230
391-9657	230
392-0634	4
	▶34
392-1262	230
392-2026	4
	▶100
392-2185	367
392-2667	230
392-2780	184
392-8477	659
393-0367	4
	▶659
393-2034	90
393-2035	90
393-4006	18
393-5467	82
393-5468	82
393-7694	4
	▶64
394-0525	▶82
	90
394-4793	38
394-5780	▶204
394-6040	▶221
394-6041	221
394-7014	4
	▶15
394-7410	239
394-8010	202
394-9639	4
	▶90
395-0021	433
395-0110	4
	▶141
395-0112	4
	▶135
395-0113	4
	▶184
395-0114	4
	▶144
395-1633	79
	82
395-3364	▶433
	435
396-2351	553
396-2352	553
396-3549	5
	▶49
396-6895	532
396-7674	230
	▶235
396-7686	230
396-7687	230
396-7688	235
396-7695	241
396-7696	241
396-7697	241
396-7698	241
396-7706	235
396-9388	▶210
	230
396-9392	216
396-9393	▶215
	230
396-9394	215
397-8767	▶270
397-9009	230
	▶245
397-9010	245
398-2282	389
	393
	▶485
398-3274	5
	▶51
398-3276	51
398-4602	328
	▶383
398-4603	279
	▶389
398-4604	279
	▶393
398-5528	384
398-5532	389
	393
398-6226	90
398-7002	1
	▶167
398-7003	▶160
	555
	556
	613
398-7004	▶187
	555
	556
	613
398-7005	▶177
	555
	556
	613
398-7006	177
	▶178
398-7007	▶138
	555
	556
398-7012	178
398-7013	138

▶ PRIMARY REFERENCE

PART NUMBER INDEX

Part	Page
398-7105	585
398-7106	585
398-7107	585
398-7109	638
398-7110	638
398-7111	585
398-7980	▶57
398-8931	138
398-9727	214
	▶246
398-9731	211
398-9732	211
398-9736	57
	▶214
398-9737	▶211
	214
399-0061	553
399-0062	553
399-0065	553
399-0797	167
399-0819	▶212
	213
399-2560	93
	▶213
399-2618	▶110
	613
399-2648	▶186
	613
399-2649	▶136
	186
399-4265	▶101
	143
399-7534	51

4

Part	Page
415-1396	▶491
415-1418	18
415-1604	21
415-3687	167
415-5237	▶270
415-5238	▶270
415-7791	1
	▶664
415-7828	328
	▶435
415-8447	▶491
415-8537	49
415-9628	664
416-0965	53
416-1005	▶501
416-1009	▶501
416-1794	1
	2
	▶534
416-1798	▶532
	534
	555
	556
416-1802	532
416-2383	72
416-2386	66
416-7727	64
416-9606	1
	2
	▶549
416-9607	549
	▶551
	555
	556
416-9608	551
	▶553
417-0270	1
	▶91
417-0438	72
417-0444	72
417-1143	638
417-9077	▶660
417-9090	51
417-9812	▶166
	518
417-9821	122
	▶173
418-0743	1
	▶103
418-0744	103
418-0749	▶114
	279
418-1084	▶109
	122
418-2229	48
418-5090	602
418-8379	638
419-0120	112
419-3368	230
	▶240
419-3369	240
419-5434	▶1
419-6412	189
419-6414	171
419-8528	303
	▶306
419-8531	306
419-8533	306
419-8979	▶83
419-8980	83
	▶88
420-3127	▶1
420-3151	581
	▶582
420-4514	555
	556
	▶608
	613
420-5793	▶661
420-7262	166
421-1431	555
	556
	▶566
	613
421-1434	566
	▶568
421-2864	173
421-3660	▶269
421-3762	226
421-4416	▶216
	230
421-5685	▶69
	70
421-5857	110
421-6175	72
422-0265	608
422-0268	608
422-0645	1
	▶613
422-7715	63
422-8442	207
	▶662
423-4409	51
423-4436	664
423-5186	227
423-6161	621
423-6434	72
424-4752	72
424-4753	72
424-4755	72
424-5451	5
	▶36
424-5452	36
424-5453	36
424-6858	46
424-6859	46
425-2178	▶77
	80
425-6092	▶217
	230
425-7079	582
425-7855	72
426-3296	4
	▶70
426-3318	167
426-4018	72
428-5842	230
	▶241
428-5843	241
428-7522	230
428-7524	209
428-7527	230
428-7937	109
	▶112
430-4119	646
431-1642	▶402
	506
431-1802	402
433-1316	▶78
	80
433-4526	608
	▶609
433-4527	609
433-5158	53
433-5159	53
433-5163	51
	▶53
433-8677	426
433-8678	426
434-3436	379
434-3892	1
	▶555
434-3893	2
	▶556
435-1482	328
	▶457
435-1484	▶450
	457
435-1485	450
	▶452
435-2848	106
436-1901	551
	582
436-6669	424
	▶426
437-2529	▶115
	167
438-2505	91
	▶94
438-2506	92
	▶96
438-2674	88
438-4951	646
438-4952	646
438-4953	646
438-4954	646
438-4955	646
438-4956	646
438-4957	646
438-4958	646
438-4965	459
438-5386	86
439-3322	202
440-5584	620
440-5585	620
440-5587	620
441-7658	160
441-7659	▶118
	187
442-4973	▶1
442-4974	▶2
443-5690	664
444-2733	▶206
	207
444-2734	206
	▶209
444-2735	209
444-6735	1
	▶201
444-6736	201
	▶202
444-6737	202
444-7868	▶207
445-1377	▶2
445-1378	▶2
445-2220	▶93
445-2221	▶92
	93
445-6262	1
	▶218
445-6263	218
446-1268	135
446-7736	72
446-7737	72
446-7738	72
447-2656	72
447-7816	4
450-1775	87
450-1776	87
450-1777	87
450-8077	3
	▶4

▶ **PRIMARY REFERENCE**

MEMORANDA



©2013 Caterpillar
All Rights Reserved

CAT, CATERPILLAR, their respective logos, “Caterpillar Yellow”, and the POWER EDGE trade dress as well as corporate and product identity used herein, are trademarks of Caterpillar and may not be used without permission.