M0093401-05 (en-us)
February 2019

RUTHZIL TRATOR COMERCIAL DE PEÇAS LTDA 11 97083-6812 ROLANDO

# Parts Manual

## 323D3 Excavator

FEY1-UP (Machine)
H761-UP (Engine)

Powered By C7.1 Engine

# Product and Dealer Information

Note: For product identification plate locations, see the section “Product Identification Information” in the Operation and Maintenance Manual.

Delivery Date: _____

## Product Information

Model: _____

Product Identification Number: _____

Engine Serial Number: _____

Transmission Serial Number: _____

Generator Serial Number: _____

Attachment Serial Numbers: _____

Attachment Information: _____

Customer Equipment Number: _____

Dealer Equipment Number: _____

## Dealer Information

Name: _____ Branch: _____

Address: _____

_____

_____

| | Dealer Contact | Phone Number | Hours |
|---|---|---|---|
| Sales: | _____ | _____ | _____ |
| Parts: | _____ | _____ | _____ |
| Service: | _____ | _____ | _____ |

# MEMORANDA

# TABLE OF CONTENTS


| NAME | PAGE |
|---|---|
| GENERAL INFORMATION | A4 |
| REPAIR ALTERNATIVES | A7 |
| SUPPLEMENTAL COOLANT ADDITIVES | A8 |
| MAINTENANCE PARTS | A9 |
| INDEX | A11 |
| MACHINE ARRANGEMENT | 1 |
| CHASSIS AR | 1 |
| CONFIGURATION AR | 1 |
| DISTRIBUTION AR | 2 |
| GENERAL AR | 2 |
| OPTION AR-HYDRAULIC | 2 |
| ENGINE ARRANGEMENT | 3 |
| ENGINE AR-COMPLETE | 3 |
| ENGINE AR-PRIMARY | 4 |
| INSTALLATION AR-ENGINE | 5 |
| BASIC ENGINE | 6 |
| CAMSHAFT GP | 6 |
| CONTACTOR GP-ALARM | 7 |
| COVER GP-VALVE MECHANISM | 8 |
| CRANKSHAFT GP | 10 |
| CYLINDER BLOCK AS | 12 |
| CYLINDER BLOCK GP | 13 |
| CYLINDER BLOCK GP-SHORT | 14 |
| CYLINDER HEAD GP | 15 |
| DRAIN GP-OIL | 18 |
| DRIVE GP-FAN | 19 |
| FLYWHEEL GP | 21 |
| HOUSING GP-FLYWHEEL | 22 |
| HOUSING GP-FRONT | 23 |
| JET GP-PISTON COOLING | 25 |
| LIFTING GP-ENGINE | 26 |
| MOUNTING GP-ENGINE | 27 |
| PAN GP-OIL | 29 |
| PISTON & ROD GP | 32 |
| PLUG GP-CYLINDER HEAD | 36 |
| PULLEY GP-CRANKSHAFT | 37 |
| PULLEY GP-ENGINE | 38 |
| ROCKER ARM GP | 39 |
| VALVE MECHANISM GP | 41 |
| LUBRICATION SYSTEM | 42 |
| FILLER GP-ENGINE OIL | 42 |
| FILTER & MTG GP-ENGINE OIL | 43 |
| FILTER GP-ENGINE OIL | 45 |
| FUMES DISPOSAL GP | 46 |
| LINES GP-ENGINE OIL DRAIN | 47 |
| PUMP GP-ENGINE OIL | 48 |
| COOLING SYSTEM | 49 |
| CONNECTION GP-HEATER | 49 |
| COOLER GP-ENGINE OIL | 50 |
| FAN AR-VARIABLE | 53 |
| FAN GP-SUCTION | 54 |
| LINES GP-COOLING | 55 |
| PUMP GP-WATER | 57 |
| RADIATOR & HYD OIL COOLER GP | 59 |
| AIR INLET AND EXHAUST SYSTEM | 63 |
| AIR CLEANER & MOUNTING GP | 63 |
| AIR CLEANER GP | 64 |
| LINES GP-AIR | 65 |
| MANIFOLD GP-INLET | 66 |
| MUFFLER & MOUNTING GP | 67 |
| TURBOCHARGER GP | 69 |
| FUEL SYSTEM | 70 |
| CONTROL GP-GOVERNOR | 70 |
| FILTER GP-FUEL | 72 |
| LINES GP-FUEL | 73 |
| LINES GP-FUEL FILTER | 78 |
| LINES GP-FUEL INJECTION | 79 |
| PUMP GP-FUEL INJECTION | 80 |
| TANK & MTG GP-FUEL | 82 |
| TANK GP-FUEL | 83 |
| ELECTRICAL AND STARTING SYSTEM | 85 |
| ALARM GP | 85 |
| ALTERNATOR GP-CHARGING | 86 |
| BATTERY & WIRING GP | 87 |
| CONTROL & MTG GP-COMMUNICATION | 89 |
| CONTROL & MTG GP-ELECTRONIC | 90 |
| CONTROL GP-UNPROGRAMMED | 92 |
| ELECTRONICS GP-MACHINE | 93 |
| ELECTRONICS GP-MONITOR | 93 |
| FASTENER GP-WIRING HARNESS | 94 |
| HARNESS AS-CAB | 95 |
| HARNESS AS-CHASSIS | 95 |
| HARNESS AS-CONSOLE | 99 |
| HARNESS AS-CONTROL | 100 |
| HARNESS AS-PANEL | 100 |
| HARNESS AS-PLATFORM | 101 |
| HARNESS AS-SWITCH | 102 |
| HOLDER AS-FUSE | 103 |
| INSTALLATION AR-COMMUNICATION | 104 |
| LAMP GP-FLOOD | 105 |
| LIGHTING GP-FLOOD | 108 |
| PANEL GP-SWITCH | 113 |
| SENSOR GP-LIQUID LEVEL | 114 |
| SENSOR GP-PRESSURE | 115 |
| SENSOR GP-SPEED | 117 |
| SENSOR GP-TEMP & PRESS | 118 |
| STARTING AID GP | 119 |

# TABLE OF CONTENTS


| NAME | PAGE |
|---|---|
| STARTING MOTOR GP-ELECTRIC | 120 |
| SWITCH GP-DISCONNECT | 121 |
| SWITCH GP-START | 122 |
| WIRING GP | 123 |
| WIRING GP-CAB | 124 |
| WIRING GP-CHASSIS | 129 |
| WIRING GP-COMMUNICATION | 134 |
| WIRING GP-CONSOLE | 138 |
| WIRING GP-CONVERTER | 141 |
| WIRING GP-PLATFORM | 143 |
| POWER TRAIN | 144 |
| DRIVE GP-FINAL | 144 |
| POWER TRAIN AR | 148 |
| FRAME AND BODY | 149 |
| BOX & MTG GP-STORAGE | 149 |
| BOX GP-STORAGE | 150 |
| COUNTERWEIGHT & MOUNTING GP | 153 |
| COUNTERWEIGHT GP | 154 |
| COVER AS-SOUND SUPPRESSION | 155 |
| DOOR AS-ACCESS | 156 |
| DOOR GP-ACCESS | 157 |
| FENDER & COVER GP | 159 |
| FRAME GP-UPPER | 160 |
| GEAR & BEARING GP-SWING | 162 |
| GUARD GP-BOTTOM | 165 |
| HANDRAIL GP | 166 |
| HOOD & GUARD GP | 167 |
| HOOD GP-ENGINE | 172 |
| SHEET AS-SOUND SUPPRESSION | 173 |
| SUPPORT AS | 178 |
| SUPPORT AS-SOUND SUPPRESSION | 180 |
| UNDERCARRIAGE | 181 |
| FRAME AR-UNDERCARRIAGE | 181 |
| FRAME AS-UNDERCARRIAGE | 182 |
| GUARD GP-TRACK GUIDE | 183 |
| GUARD GP-TRAVEL MOTOR | 185 |
| IDLER GP-FRONT | 186 |
| LINK AS-TRACK | 189 |
| ROLLER AR-TRACK | 190 |
| ROLLER AR-TRACK & CARRIER | 191 |
| ROLLER GP-TRACK CARRIER | 192 |
| ROLLER GP-TRACK-SINGLE FLANGE | 193 |
| TRACK ADJUSTER & RECOIL GP | 195 |
| TRACK GP | 199 |
| HYDRAULIC SYSTEM | 200 |
| ACCUMULATOR GP-HYDRAULIC | 200 |
| BLOCK GP-HYDRAULIC | 207 |
| CLAMP GP-HYDRAULIC LINES | 208 |
| CONTROL AR-AUXILIARY | 214 |
| COUPLING GP-FLEXIBLE | 215 |
| COUPLING GP-PUMP | 216 |
| CYLINDER & LINES GP-BOOM | 217 |
| CYLINDER & LINES GP-BUCKET | 217 |
| CYLINDER & LINES GP-STICK | 217 |
| CYLINDER & SEAL GP-BOOM | 218 |
| CYLINDER & SEAL GP-BUCKET | 220 |
| CYLINDER & SEAL GP-STICK | 222 |
| DRIVE GP-SWING | 224 |
| FASTENER GP-SWING & FINAL DR | 227 |
| FILTER & VALVE GP-PILOT | 229 |
| FILTER GP-OIL | 230 |
| FITTING GP-HYDRAULIC | 235 |
| GAUGE GP-SIGHT | 236 |
| HEAD GP-PUMP | 237 |
| HOSE GP-HYDRAULIC | 241 |
| HYDRAULIC AR | 252 |
| LEVER GP-CONTROL | 253 |
| LINES GP-ATTACHMENT | 254 |
| LINES GP-AUXILIARY HYDRAULIC | 255 |
| LINES GP-BOOM | 259 |
| LINES GP-BOOM CYLINDER | 263 |
| LINES GP-BUCKET CYLINDER | 267 |
| LINES GP-CONTROL | 268 |
| LINES GP-FRONT | 270 |
| LINES GP-HYDRAULIC | 276 |
| LINES GP-PILOT | 280 |
| LINES GP-PUMP | 301 |
| LINES GP-STICK | 303 |
| LINES GP-STICK CYLINDER | 304 |
| LINES GP-TRAVEL MOTOR | 305 |
| MANIFOLD GP-CONTROL | 307 |
| MOTOR & MTG GP-TRAVEL | 310 |
| MOTOR GP-SWING | 311 |
| MOUNTING GP-MAIN CONTROL VALVE | 314 |
| PLUG GP-CONTROL VALVE | 315 |
| PUMP & MTG GP-MAIN HYDRAULIC | 316 |
| PUMP GP-GEAR | 317 |
| PUMP GP-MAIN HYDRAULIC | 319 |
| SCREEN GP-HYDRAULIC | 323 |
| SWIVEL GP | 324 |
| TANK & FILTER GP-HYDRAULIC | 326 |
| TANK & MTG GP-HYDRAULIC | 329 |
| VALVE & MTG GP-CONTROL | 330 |
| VALVE GP-CONTROL | 331 |
| VALVE GP-LOAD CONTROL | 344 |
| VALVE GP-MAIN CONTROL | 348 |
| VALVE GP-MANUAL | 349 |
| VALVE GP-PILOT | 352 |
| VALVE GP-PRESSURE REDUCING | 357 |
| VALVE GP-PRIORITY | 359 |
| VALVE GP-RELIEF | 360 |
| VALVE GP-SHUTTLE | 372 |

# TABLE OF CONTENTS


| NAME | PAGE |
|---|---|
| VALVE GP-SOLENOID | 374 |
| VALVE GP-SWING CUSHION | 378 |
| IMPLEMENTS | 379 |
| BOOM AR-1 PIECE LONG | 379 |
| BOOM GP | 380 |
| LINES GP-GREASE | 382 |
| LINKAGE AR-BUCKET | 383 |
| LINKAGE GP-BUCKET | 384 |
| STICK AR-HOE | 385 |
| STICK GP-HOE | 386 |
| WORK TOOLS | 388 |
| ADJUSTER GP-BUCKET | 388 |
| BUCKET & ADJUSTER GP | 390 |
| BUCKET AR-GENERAL PURPOSE | 391 |
| BUCKET AR-HEAVY DUTY | 391 |
| BUCKET AR-SEVERE SERVICE ROCK | 391 |
| BUCKET AS-GENERAL PURPOSE | 392 |
| BUCKET AS-HEAVY DUTY | 393 |
| BUCKET AS-SEVERE SERVICE ROCK | 394 |
| KIT-BUCKET TIP | 396 |
| SIDECUTTER GP | 397 |
| TIP GP-LONG | 399 |
| TIP GP-PENETRATION PLUS | 400 |
| OPERATOR STATION | 401 |
| AIR CONDITIONER & MOUNTING GP | 401 |
| AIR CONDITIONER AR | 403 |
| AIR CONDITIONER GP | 404 |
| ARMREST GP | 406 |
| CAB AR | 408 |
| CAB GP | 409 |
| COIL GP-EVAPORATOR | 419 |
| COMPRESSOR & MTG GP-REFRIG | 423 |
| COMPRESSOR GP-REFRIGERANT | 424 |
| CONDENSER & MTG GP-REFRIGERANT | 425 |
| CONDENSER GP-REFRIGERANT | 426 |
| CONSOLE GP-OPERATOR | 427 |
| CONTROL & MTG GP-JOYSTICK | 434 |
| CONTROL GP-HANDLE | 435 |
| CONTROL GP-HEAT & AIR COND | 438 |
| CONTROL GP-HYDRAULIC PEDAL | 439 |
| CONTROL GP-JOYSTICK | 440 |
| CONTROL GP-PILOT OPERATED HYD | 442 |
| COVER GP-CAB | 443 |
| DOOR & MTG GP-CAB | 444 |
| DUCT GP-CAB AIR | 445 |
| FLOOR MAT | 446 |
| HATCH GP-ROOF | 448 |
| HORN GP-ELECTRIC | 449 |
| LEVER GP-CAB DOOR | 453 |
| LINES GP-AIR CONDITIONER | 454 |
| LITERATURE GP | 458 |
| MIRROR GP-REAR VIEW | 459 |
| MONITOR & MTG GP-OPERATOR | 460 |
| MONITOR GP-OPERATOR | 461 |
| MOUNTING GP-ANTENNA | 462 |
| MOUNTING GP-PLATFORM | 463 |
| OPERATOR AR | 465 |
| PAN GP-SEAT | 466 |
| PARTS GP-DOOR | 467 |
| PLATFORM GP-OPERATOR | 469 |
| SEAT BELT GP | 470 |
| SEAT GP | 471 |
| SEAT GP-SUSPENSION | 476 |
| SUPPORT GP-SEAT | 481 |
| SUSPENSION GP-SEAT | 482 |
| WASHER GP-WINDOW | 487 |
| WINDOW GP-CAB | 488 |
| WINDOW GP-DOOR | 494 |
| WIPER GP-WINDOW | 496 |
| SERVICE EQUIPMENT AND SUPPLIES | 498 |
| FILM GP | 498 |
| PLATE & FILM GP | 501 |
| PART NUMBER INDEX | B1 |

1. MACHINE IDENTIFICATION

Cat machines are identified by Product Identification Numbers (PIN). Some components included in a machine may be identified by Serial Numbers (S/N). Typical components that will be serialized include engines, transmissions, bulldozers, and rippers. The machine and engine are further identified by arrangement numbers and in some cases modification numbers. These numbers are shown on the product identification plate(s) and on the master plate in the operator's compartment.

Cat dealers need all of these numbers to determine accurate parts identification.

Effective First Quarter 2001 the Cat Product Identification Number (PIN) changed from 8 to 17 characters. In an effort to provide uniform equipment identification, Caterpillar and other construction equipment manufacturers are moving to comply with the latest version of the product identification numbering standard. Non-road machine PINs are defined by ISO 10261. The new PIN format will apply to all Cat machines and generator sets. The PIN plates and frame marking will display the 17 character PIN. The new format will look like the following:

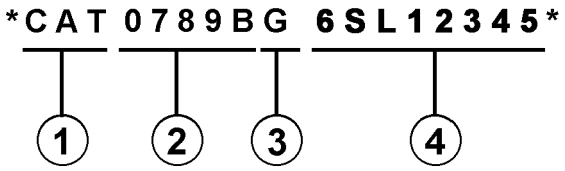


Where:

1. Caterpillar's World Manufacturing Code (characters 1-3)

2. Machine Descriptor (characters 4-8)

3. Check Character (character 9)

4. Machine Indicator Section (MIS) or Product Sequence Number (characters 10-17). These were previously referred to as the Serial Number.

Machines and generator sets produced before First Quarter 2001 will maintain their 8 character PIN format.

Components such as engines, transmissions, axles, etc. and work tools will continue to use an 8 character Serial Number (S/N).

2. ORDERING PARTS

**⚠ WARNING**

**When replacement parts are required for this product Caterpillar recommends using Caterpillar replacement parts or parts with equivalent specifications including, but not limited to, physical dimensions, type, strength and material.**

**Failure to heed this warning can lead to premature failures, product damage, personal injury or death.**

Quality Cat replacement parts are available from Cat dealers throughout the world. Their parts inventories are up to date and include all parts normally required to protect your investment in Cat machines. Dealers may offer repair kits or remanufactured parts to allow selection of the most effective repair alternative for a particular situation. When ordering parts, your order should specify the quantity, part number, part name, and the serial number/product identification number of the machine for which the parts are needed.

3. PARTS MANUAL ORGANIZATION

Product information in this manual is presented as "information elements" that represent all of the components for the specific model. Engine Arrangement and Seat Group are examples of information elements. The information elements are organized alphabetically by part name and secondarily by part number within each major section of the manual.

4. TABLE OF CONTENTS

A table of contents (TOC) is found at the beginning of the manual. The TOC lists each section of the manual with a complete list of all information elements organized as they appear in the manual. Page numbers are provided for quick reference to detailed parts identification illustrations and serviceable consist lists.

5. MAINTENANCE PARTS INDEX

The Maintenance Parts Index, located near the beginning of the manual, references most frequently used maintenance part numbers, providing description, quantity, usage and page number. This information is organized alphabetically by part description.

6. INDEX

The index located near the front of the manual is an alphabetical listing of all information elements included in the manual. Page numbers are provided for quick reference to detailed parts identification illustrations and serviceable consist lists.

7. PART NUMBER INDEX

A numerical index listing all part numbers and the corresponding page number(s) appears at the back of the manual.

8. CAPTIONS

Captions located at the beginning of each information element identify the part number and part name along with additional descriptive information. PIN and S/N information found in each caption should be used to select correct information for a specific machine. Field replacement options, identification of optional attachment components, and where used ("part of") information is also provided.

The first line of a caption is shown in larger type font to indicate the beginning of an information element. Captions for additional pages that may be required to illustrate an information element will be shown in standard type font and will include the term (contd.).

9. NON-SERVICED PARTS

In some instances it is necessary to display non-serviced parts that are a link to a lower level serviceable consist lists. These non-serviced part numbers are shown in italic type indicating that they are not available.

10. PARTS LIST REFERENCE NUMBERS

Numbers shown in the Ref No column correspond to numbers used in the associated graphic(s). An alphabetic suffix may be added to a reference number to identify lower level consist items. Numbers shown in the Graphic Ref column refer to the graphic number identifier displayed in the lower left corner of each illustration. The Graphic Ref number may be used in combination with the item Ref No to determine the correct part number. There may be intentional omission of a Ref No in a consist list as information is updated to reflect the latest serviceable part numbers.

11. INDENTED PART NAMES

When a part name is indented in a parts list, it is part of (included in) the group or assembly under which it is indented.

12. ILLUSTRATION REFERENCE LETTERS

When necessary, illustrations contain reference letters (A, B, C etc.) that are intended to track lines and harnesses from one point to another. They are also used to show where to reconnect illustrations that have been separated.

13. ABBREVIATIONS AND SYMBOLS

O.D. – Outside Diameter
I.D. – Inside Diameter
A – Not Part Of This Group
B – Use As Required
C – Change From Previous Type
D – Order By The Meter
E – Order By The Centimeter
F – Not Shown
G – Order By The Inch
I – Refer To Hydraulic Information System
M – Metric Part
R – Remfg Part May Be Available
Y – Separate Illustration
Z – Not Serviced Separately

14. DESCRIPTION OF TYPE CHANGES

Type - A type is defined as any configuration change that requires an additional Information Element for an Arrangement, Group, or Assembly. If serial number breaks for types are not available, a type # ( Type 1, Type 2, etc.) will be displayed in the caption. These "type" changes are identified with a "C" note (change from previous type) in the Parts List. Only the "types" that apply to this Parts Manual will be included. Additional types may exist causing "C" notes to appear on an Information Element when no other types are shown.

15.<END>

This symbol indicates the end of an information element.

NOTE:

Continuing improvement and advancement of product design may cause changes to your machine which may not be included in this publication. Whenever a question arises regarding your Cat product or this publication, please consult your Cat dealer for the latest available information.

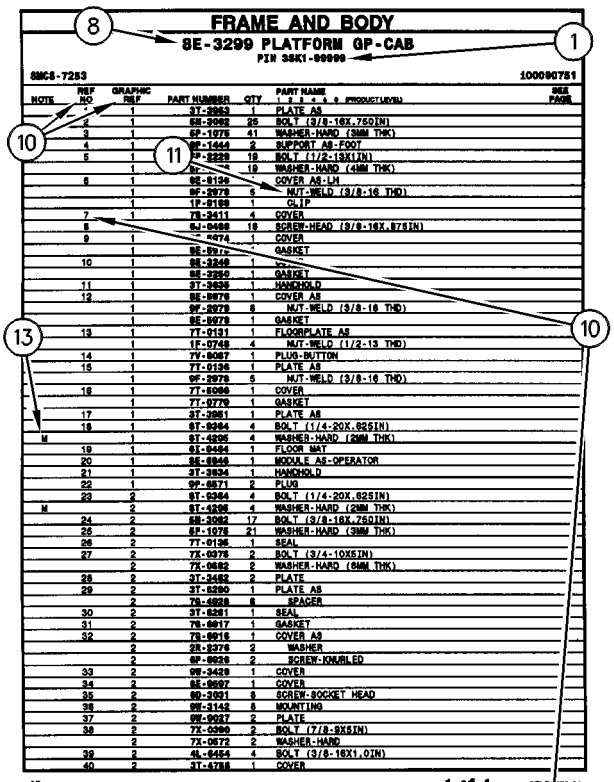

## FRAME AND BODY

### 8E-3299 PLATFORM GP-CAB

PIN 38K1-00999

SMCS-7283 100090751

| NOTE | REF NO | GRAPHIC REF | PART NUMBER | QTY | PART NAME 1 2 3 4 5 6 (PRODUCT LEVEL) | SEE PAGE |
|---|---|---|---|---|---|---|
| | 1 | 1 | 3T-3963 | 1 | PLATE AS | |
| | 2 | 1 | 6M-3062 | 25 | BOLT (3/8-16X.75DIN) | |
| | 3 | 1 | 5P-1078 | 41 | WASHER-HARD (3MM THK) | |
| | 4 | 1 | 9F-1444 | 2 | SUPPORT AS-FOOT | |
| | 5 | 1 | 7P-2229 | 18 | BOLT (1/2-13X1IN) | |
| | | 1 | 5P-[illegible] | 18 | WASHER-HARD (4MM THK) | |
| | 6 | 1 | 8E-8136 | 1 | COVER AS-LH | |
| | | 1 | 9F-2979 | 6 | NUT-WELD (3/8-16 THD) | |
| | | 1 | 1F-8188 | 1 | CLIP | |
| | 7 | 1 | 7S-3411 | 4 | COVER | |
| | 8 | | 6J-0488 | 18 | SCREW-HEAD (3/8-16X.875IN) | |
| | 9 | 1 | [illegible]-0474 | 1 | COVER | |
| | | 1 | 8E-8976 | 1 | GASKET | |
| | 10 | 1 | 8E-3249 | 1 | [illegible] | |
| | | 1 | 8E-3250 | 1 | GASKET | |
| | 11 | 1 | 3T-3935 | 1 | HANDHOLD | |
| | 12 | 1 | 8E-8978 | 1 | COVER AS | |
| | | 1 | 9F-2979 | 6 | NUT-WELD (3/8-16 THD) | |
| | | 1 | 8E-8979 | 1 | GASKET | |
| | 13 | 1 | 7T-0131 | 1 | FLOORPLATE AS | |
| | | 1 | 1F-0748 | 4 | NUT-WELD (1/2-13 THD) | |
| | 14 | 1 | 7V-8067 | 1 | PLUG-BUTTON | |
| | 15 | 1 | 7T-0136 | 1 | PLATE AS | |
| | | 1 | 9F-2979 | 5 | NUT-WELD (3/8-16 THD) | |
| | 16 | 1 | 7T-8066 | 1 | COVER | |
| | | 1 | 7T-0779 | 1 | GASKET | |
| | 17 | 1 | 3T-3961 | 1 | PLATE AS | |
| | 18 | 1 | 6T-9364 | 4 | BOLT (1/4-20X.625IN) | |
| M | | 1 | 6T-4236 | 4 | WASHER-HARD (2MM THK) | |
| | 19 | 1 | 6T-8464 | 1 | FLOOR MAT | |
| | 20 | 1 | 8E-8946 | 1 | MODULE AS-OPERATOR | |
| | 21 | 1 | 3T-3934 | 1 | HANDHOLD | |
| | 22 | 1 | 9F-8571 | 2 | PLUG | |
| | 23 | 2 | 6T-9364 | 4 | BOLT (1/4-20X.625IN) | |
| M | | 2 | 6T-4236 | 4 | WASHER-HARD (2MM THK) | |
| | 24 | 2 | 6M-3062 | 17 | BOLT (3/8-16X.75DIN) | |
| | 25 | 2 | 5P-1078 | 21 | WASHER-HARD (3MM THK) | |
| | 26 | 2 | 7T-0136 | 1 | SEAL | |
| | 27 | 2 | 7X-0378 | 2 | BOLT (3/4-10X5IN) | |
| | | 2 | 7X-0682 | 2 | WASHER-HARD (6MM THK) | |
| | 28 | 2 | 3T-3462 | 2 | PLATE | |
| | 29 | 2 | 3T-8280 | 1 | PLATE AS | |
| | | 2 | 7S-4828 | 6 | SPACER | |
| | 30 | 2 | 3T-8281 | 1 | SEAL | |
| | 31 | 2 | 7S-8817 | 1 | GASKET | |
| | 32 | 2 | 7S-8816 | 1 | COVER AS | |
| | | 2 | 2S-2376 | 2 | WASHER | |
| | | 2 | 6F-8628 | 2 | SCREW-KNURLED | |
| | 33 | 2 | 9W-3429 | 1 | COVER | |
| | 34 | 2 | 8E-8697 | 1 | COVER | |
| | 35 | 2 | 9D-3931 | 8 | SCREW-SOCKET HEAD | |
| | 36 | 2 | 9W-3142 | 8 | MOUNTING | |
| | 37 | 2 | 9W-8927 | 2 | PLATE | |
| | 38 | 2 | 7X-0290 | 2 | BOLT (7/8-9X5IN) | |
| | | 2 | 7X-0672 | 2 | WASHER-HARD | |
| | 39 | 2 | 4L-6454 | 4 | BOLT (3/8-16X1.0IN) | |
| | 40 | 2 | 3T-4788 | 1 | COVER | |

12 FRAME AND BODY 1 of 4 SELP4570-01

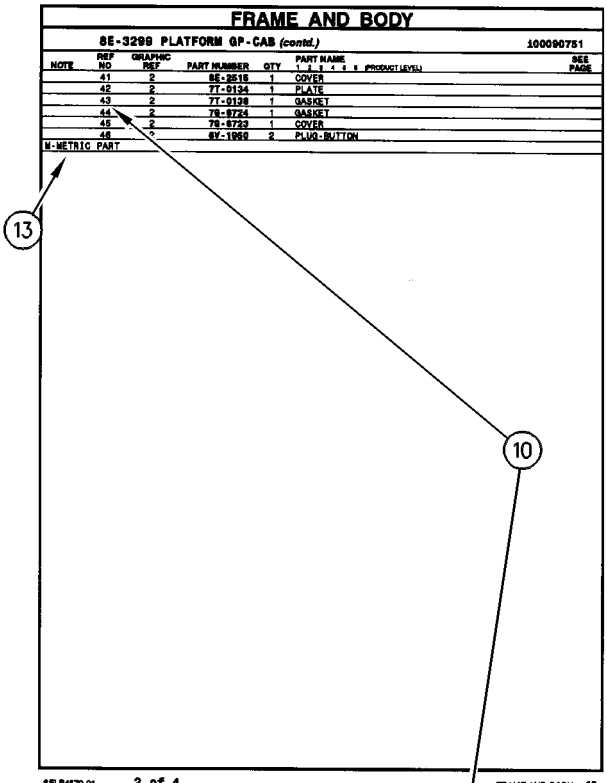

## FRAME AND BODY

### 8E-3299 PLATFORM GP-CAB (contd.)

100090751

| NOTE | REF NO | GRAPHIC REF | PART NUMBER | QTY | PART NAME 1 2 3 4 5 6 (PRODUCT LEVEL) | SEE PAGE |
|---|---|---|---|---|---|---|
| | 41 | 2 | 8E-2516 | 1 | COVER | |
| | 42 | 2 | 7T-0134 | 1 | PLATE | |
| | 43 | 2 | 7T-0138 | 1 | GASKET | |
| | 44 | 2 | 7S-8724 | 1 | GASKET | |
| | 45 | 2 | 7S-8723 | 1 | COVER | |
| | 46 | 2 | 6V-1960 | 2 | PLUG-BUTTON | |

M-METRIC PART

SELP4570-01 2 of 4 FRAME AND BODY 13

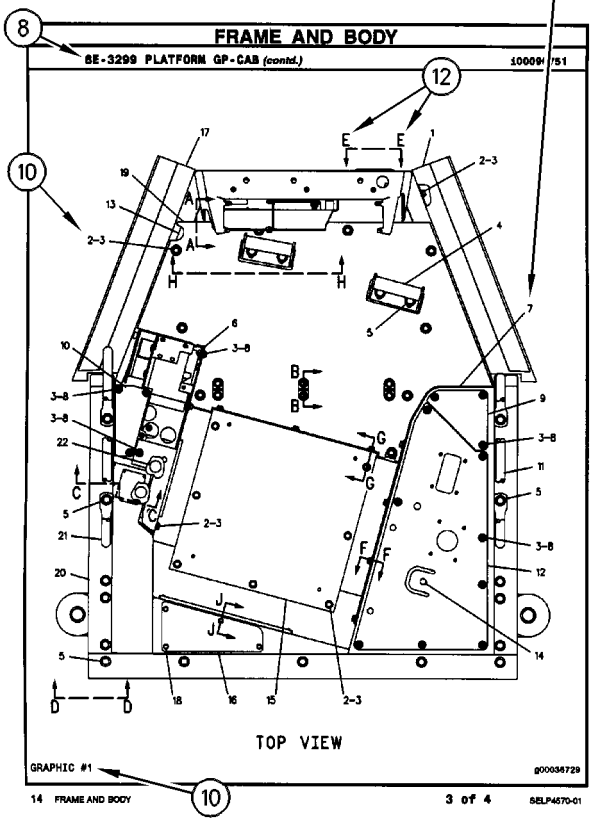

## FRAME AND BODY

### 8E-3299 PLATFORM GP-CAB (contd.)

100090751

TOP VIEW

GRAPHIC #1 g00036729

14 FRAME AND BODY 3 of 4 SELP4570-01

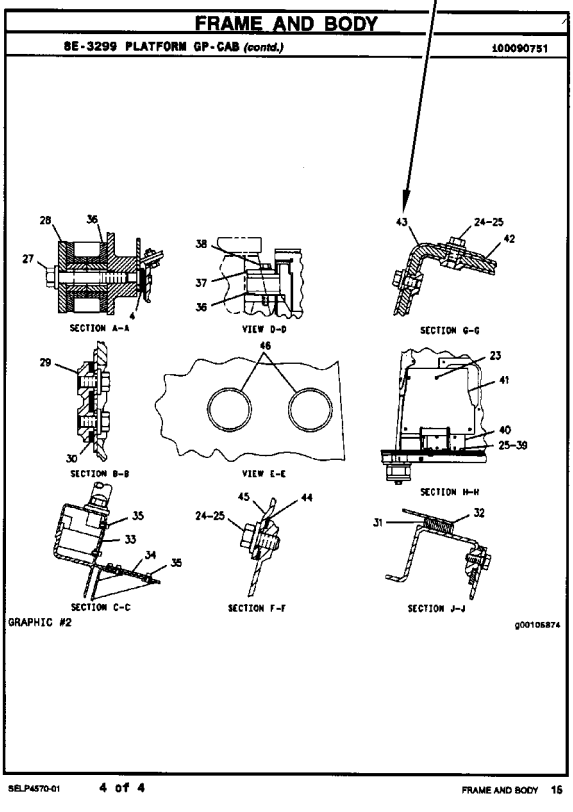

## FRAME AND BODY

### 8E-3299 PLATFORM GP-CAB (contd.)

100090751

SECTION A-A VIEW D-D SECTION G-G

SECTION B-B VIEW E-E SECTION H-H

SECTION C-C SECTION F-F SECTION J-J

GRAPHIC #2 g00105874

SELP4570-01 4 of 4 FRAME AND BODY 15

REMANUFACTURED COMPONENTS

As an option when making repairs consider Cat Remanufactured Components. Components that are available through the Cat Remanufactured Program are identified three ways in the parts book:

- with the letter R in the note field of the parts list
- with an R* at the beginning of the first line of the caption
- with an *R at the end of the first line of the caption

Typical components included in the Remanufacturing Program include:

ALTERNATORS
CONNECTING RODS
CRANKSHAFTS - UNDERSIZE
CRANKSHAFTS - UPGRADE TO NEW
CYLINDER HEADS
ELECTRONIC CONTROL MODULES (ECM)
ELECTRONIC SENSORS
FUEL INJECTORS
FUEL NOZZLES
FUEL PUMPS
GOVERNORS
OIL PUMPS
PISTONS
SHORT BLOCKS
STARTERS
TURBOCHARGERS - COMPLETE
TURBOCHARGER CARTRIDGES
WATER PUMPS

Cat Remanufactured engines for many engine arrangements are also available.

# SUPPLEMENTAL COOLANT ADDITIVES

CUSTOMER BENEFITS:

Protects against cavitation, foam, erosion, corrosion, and scale buildup in cooling systems.

- Provides measured coolant conditioner.

DESCRIPTION:

Additives deplete from the coolant with normal operation. For this reason, Supplemental Coolant Additives (SCA) must be added to all heavy duty coolants at regular intervals. In addition, when not using a fully formulated, pre-charged antifreeze, like Cat DEAC, an initial charge of SCA must be added to the cooling system. The amount of SCA added to the system is dependent on the capacity of the system.

The SCA for initial fill is provided as a liquid. SCA's for maintenance intervals are available in liquid form and as a spin-on element. (No Spin-on available for 3600 Family of Engines)

NOTE:

The amount of SCA added at initial fill is not the same as the amount added at maintenance intervals.

The coolant additive elements can be used with any ethylene or propylene glycol type antifreeze which meets ASTM D4985 or ASTM D5345 Specifications.

NOTE:

For use with standard heavy duty coolant only, not for use with Extended Life Coolant.

PARTS NEEDED:

| Cooling System Capacity | | Liquid SCA at Initial Fill | Liquid SCA at Maintenance* | Spin-on SCA Maintenance Element* |
|---|---|---|---|---|
| Liters | Gallons | | | |
| 22-30 | (6-8) | 3P-2044 (1) | 6V-3542 (1) | 111-2370 (1) |
| 30-38 | (8-10) | 3P-2044 (1)<br>6V-3542 (1) | 111-2372 (1) | 111-2369 (1) |
| 38-49 | (10-13) | 3P-2044 (1)<br>8T-1589 (1) | 111-2372 (1) | 111-2369 (1) |
| 49-64 | (13-17) | 3P-2044 (2) | 8T-1589 (1) | 9N-3368 (1) |
| 64-83 | (17-22) | 3P-2044 (2)<br>8T-1589 (1) | 111-2372 (1)<br>6V-3542 (1) | 111-2371 (1) |
| 83-114 | (22-30) | 3P-2044 (3)<br>8T-1589 (1) | 3P-2044 (1) | 9N-3718 (1) |
| 114-163 | (30-43) | 3P-2044 (5) | 3P-2044 (1)<br>6V-3542 (1) | 111-2371 (2) |
| 163-242 | (43-64) | 3P-2044 (8) | 3P-2044 (2) | 9N-3718 (2) |

* Normal maintenance period is 250 hrs. See your Operation and Maintenance Manual for complete coolant maintenance instructions.

( ) Indicates quantity required.

# MAINTENANCE PARTS

| DESCRIPTION | PART NUMBER | QTY | WHERE USED | PAGE |
|---|---|---|---|---|
| AIR INLET AND EXHAUST SYSTEM | | | | |
| FILTER ELEMENT AS-AIR (PRIMARY) | 131-8822 | 1 | AIR CLEANER GP | 64 |
| FILTER ELEMENT AS-AIR (SECONDARY) | 131-8821 | 1 | AIR CLEANER GP | 64 |
| FILTER ELEMENT AS-AIR (ULTRA HIGH EFFICIENCY) (PRIMARY) | 134-0685 | 1 | AIR CLEANER GP | 64 |
| BASIC ENGINE | | | | |
| BELT | 546-5810 | 1 | PULLEY GP-ENGINE | 38 |
| CAP AS-ENGINE OIL FILLER | 369-3869 | 1 | COVER GP-VALVE MECHANISM | 8 |
| SEAL-VALVE COVER | 256-7704 | 1 | COVER GP-VALVE MECHANISM | 8 |
| COOLING SYSTEM | | | | |
| CAP AS (COOLANT RECOVERY) | 171-3369 | 1 | RADIATOR & HYD OIL COOLER GP | 59 |
| GASKET-WATER REGULATOR | 281-8744 | 1 | PUMP GP-WATER | 57 |
| HOSE-RADIATOR (LOWER) | 548-0131 | 1 | RADIATOR & HYD OIL COOLER GP | 59 |
| HOSE-UPPER RADIATOR | 548-0130 | 1 | RADIATOR & HYD OIL COOLER GP | 59 |
| REGULATOR AS-WATER TEMPERATURE (INCLUDES CONNECTOR) | 417-7782 | 1 | PUMP GP-WATER | 57 |
| ELECTRICAL AND STARTING SYSTEM | | | | |
| BATTERY GP (12-VOLT, 750-CCA) (MAINTENANCE FREE) | 3T-5760 | 2 | BATTERY & WIRING GP | 87 |
| CAP AS-FILLER (7/8-9-THD) | 123-1373 | 6 | BATTERY & WIRING GP | 87 |
| FUSE (10-AMPERE) | 113-8490 | 18 | WIRING GP-CAB | 124 |
| FUSE (100-AMPERE) | 378-1012 | 2 | HOLDER AS-FUSE | 103 |
| FUSE (15-AMPERE) | 113-8491 | 4 | WIRING GP-CAB | 124 |
| FUSE (20-AMPERE) | 113-8492 | 2 | WIRING GP-CAB | 124 |
| FUSE (25-AMPERE) | 113-8493 | 3 | WIRING GP-CAB | 124 |
| FUSE (30-AMPERE) | 124-3548 | 1 | WIRING GP-CAB | 124 |
| FUSE (5-AMPERE) | 141-2759 | 8 | WIRING GP-CAB | 124 |
| FUSE (80-AMPERE) | 525-4303 | 2 | HOLDER AS-FUSE | 103 |
| KEY (BATTERY DISCONNECT) | 8H-5306 | 1 | SWITCH GP-DISCONNECT | 121 |
| KEY (IGNITION) | 5P-8500 | 1 | SWITCH GP-START | 122 |
| LAMP AS-INDICATOR (24-VOLT, 3-WATT) | 170-9324 | 1 | PANEL GP-SWITCH | 113 |
| LAMP-HALOGEN (24-VOLT, 70-WATT) | 351-9918 | 1 | LAMP GP-FLOOD | 105 |
| | 9X-3463 | 1 | LAMP GP-FLOOD | 106 |
| LAMP-HALOGEN (24-VOLT, 70-WATT) (FLOODLIGHT) | 351-9918 | 1 | LAMP GP-FLOOD | 107 |
| FUEL SYSTEM | | | | |
| CAP AS-FUEL (LOCKABLE, VENTED) | 349-7059 | 1 | TANK GP-FUEL | 83 |
| FILTER AS-WATER SEP & FUEL (ULTRA HIGH EFFICIENCY) | 438-5386 | 1 | LINES GP-FUEL | 74 |
| FILTER ELEMENT-WTR SEP & FUEL | 1R-1804 | 1 | FILTER GP-FUEL | 72 |
| KEY | 5P-8500 | | TANK & MTG GP-FUEL | 82 |

# MAINTENANCE PARTS

| DESCRIPTION | PART NUMBER | QTY | WHERE USED | PAGE |
|---|---|---|---|---|
| STRAINER (FUEL FILTER) | 387-6403 | 1 | FILTER GP-FUEL | 72 |
| STRAINER AS-FUEL (FLOAT GAUGE) | 303-9933 | 1 | TANK GP-FUEL | 83 |
| HYDRAULIC SYSTEM | | | | |
| BREATHER (HYDRAULIC TANK) | 227-0590 | 1 | TANK & FILTER GP-HYDRAULIC | 326 |
| BREATHER AS (SWING DRIVE) | 550-5506 | 1 | DRIVE GP-SWING | 225 |
| FILTER ELEMENT AS-OIL (ADVANCED EFFICIENCY) (HYDRAULIC RETURN) | 179-9806 | 1 | FILTER GP-OIL | 233 |
| FILTER-OIL (ADVANCED EFFICIENCY) (HYDRAULIC, CASE DRAIN) | 093-7521 | 1 | FILTER GP-OIL | 232 |
| FILTER-OIL (ADVANCED EFFICIENCY) (HYDRAULIC, PILOT) | 5I-8670 | 1 | FILTER & VALVE GP-PILOT | 229 |
| PLUG-DRAIN | 9J-7031 | 1 | TANK & FILTER GP-HYDRAULIC | 326 |
| SCREEN AS (HYDRAULIC TANK) | 209-6000 | 1 | SCREEN GP-HYDRAULIC | 323 |
| SCREEN-FILTER | 119-5398 | 1 | VALVE GP-RELIEF | 363 |
| SCREEN-FILTER (RELIEF VALVE) | 119-5398 | 1 | VALVE GP-RELIEF | 369 |
| LUBRICATION SYSTEM | | | | |
| FILTER ELEMENT-ENGINE OIL | 322-3155 | 1 | FILTER GP-ENGINE OIL | 45 |
| OPERATOR STATION | | | | |
| BLADE AS-WIPER (600-MM) | 424-0336 | 1 | WIPER GP-WINDOW | 496 |
| CAP AS-FILLER (WINDOW WASHER) | 178-5431 | 1 | WASHER GP-WINDOW | 487 |
| DRYER AS-REFRIGERANT (RECEIVER) | 176-1902 | 1 | LINES GP-AIR CONDITIONER | 454 |
| FILTER AS-AIR (AIR CONDITIONER) | 293-1137 | 1 | AIR CONDITIONER GP | 404 |
| FILTER ELEMENT-CAB AIR | 245-7823 | 1 | AIR CONDITIONER GP | 404 |
| | 293-1184 | 1 | CAB GP | 417 |
| | | 1 | DUCT GP-CAB AIR | 445 |
| KEY | 5P-8500 | 2 | LITERATURE GP | 458 |
| LAMP (24-VOLT, 10-WATT) | 201-4417 | 1 | CAB GP | 411 |
| LAMP AS-DOME | 176-1986 | 1 | CAB GP | 411 |
| SEAT BELT GP (RETRACTABLE) | 490-5979 | 1 | SEAT GP-SUSPENSION | 477 |
| | | 1 | SEAT GP-SUSPENSION | 480 |

# INDEX


NAME PAGE

## A

ACCUMULATOR GP-HYDRAULIC–CHARGED. . . 200
201
202
203
205
206
ACCUMULATOR GP-HYDRAULIC–UNCHARGED . . . . . 204
ADJUSTER GP-BUCKET . . . . . 388
ADJUSTER GP-BUCKET–B-FAMILY. . . . . 389
AIR CLEANER & MOUNTING GP . . . . . 63
AIR CLEANER GP . . . . . 64
AIR CONDITIONER & MOUNTING GP. . . . . 401
AIR CONDITIONER AR . . . . . 403
AIR CONDITIONER GP . . . . . 404
ALARM GP . . . . . 85
ALTERNATOR GP-CHARGING . . . . . 86
ARM GP-WINDOW WIPER (FRONT, UPPER). . . . . 496
ARMREST GP–LH . . . . . 407
ARMREST GP–RH. . . . . 406

## B

BATTERY & WIRING GP . . . . . 87
BATTERY GP (12-VOLT, 750-CCA) (MAINTENANCE FREE) . . . . . 87
BELT . . . . . 38
BLADE AS-WIPER (600-MM) . . . . . 496
BLOCK GP-HYDRAULIC . . . . . 207
BOOM AR-1 PIECE LONG–HEAVY-DUTY . . . . . 379
BOOM GP–HEAVY-DUTY . . . . . 380
BOX & MTG GP-STORAGE. . . . . 149
BOX GP-STORAGE. . . . . 150
BREATHER (HYDRAULIC TANK) . . . . . 326
BREATHER AS (SWING DRIVE) . . . . . 225
BUCKET & ADJUSTER GP–B-FAMILY, HEAVY-DUTY. . . . . 390
BUCKET & ADJUSTER GP–GENERAL PURPOSE, B-FAMILY . . . . . 390
BUCKET & ADJUSTER GP–SEVERE SERVICE ROCK . . . . . 390
BUCKET AR-GENERAL PURPOSE–B-FAMILY . . . . . 391
BUCKET AR-HEAVY DUTY–B-FAMILY . . . . . 391
BUCKET AR-SEVERE SERVICE ROCK–B-FAMILY . . . . . 391
BUCKET AS-GENERAL PURPOSE–B-FAMILY . . . . . 392
BUCKET AS-HEAVY DUTY–B-FAMILY . . . . . 393
BUCKET AS-SEVERE SERVICE ROCK–B-FAMILY . . . . . 394

## C

CAB AR . . . . . 408
CAB GP . . . . . 411
415
416
417
418
CAB GP–INTERIOR. . . . . 409
CAMSHAFT GP . . . . . 6
CAP AS (COOLANT RECOVERY) . . . . . 59
CAP AS-ENGINE OIL FILLER . . . . . 8
CAP AS-FILLER (7/8-9-THD) . . . . . 87
CAP AS-FILLER (WINDOW WASHER) . . . . . 487
CAP AS-FUEL (LOCKABLE, VENTED) . . . . . 83
CHASSIS AR. . . . . 1
CLAMP GP-HYDRAULIC LINES . . . . . 208
209
210
211
212
213
COIL GP-EVAPORATOR . . . . . 419
421
COMPRESSOR & MTG GP-REFRIG. . . . . 423
COMPRESSOR GP-REFRIGERANT. . . . . 424
CONDENSER & MTG GP-REFRIGERANT. . . . . 425
CONDENSER GP-REFRIGERANT . . . . . 426
CONFIGURATION AR. . . . . 1
CONNECTING ROD GP . . . . . 32
34
CONNECTION GP-HEATER . . . . . 49
CONSOLE GP-OPERATOR. . . . . 428
CONSOLE GP-OPERATOR–LH . . . . . 430
CONSOLE GP-OPERATOR–RH. . . . . 427
432
CONTACTOR GP-ALARM . . . . . 7
CONTROL & MTG GP-COMMUNICATION–PRODUCT LINK CELLULAR . . . . . 89
CONTROL & MTG GP-ELECTRONIC . . . . . 90
91
CONTROL & MTG GP-JOYSTICK . . . . . 434
CONTROL AR-AUXILIARY–SYSTEM 3 PRIME, 1-WAY, 2-PUMP . . . . . 214
CONTROL GP-ELECTRONIC (ECM) . . . . . 91
CONTROL GP-GOVERNOR . . . . . 70
CONTROL GP-HANDLE–JOYSTICK, LH. . . . . 435
CONTROL GP-HANDLE–JOYSTICK, RH . . . . . 437
CONTROL GP-HEAT & AIR COND–AIR INLET . . . . . 438
CONTROL GP-HYDRAULIC PEDAL–RH. . . . . 439
CONTROL GP-JOYSTICK–LH . . . . . 441
CONTROL GP-JOYSTICK–RH . . . . . 440
CONTROL GP-PILOT OPERATED HYD–TRAVEL . . . . . 442
CONTROL GP-UNPROGRAMMED–PL641E CELLULAR. . . . . 92
COOLER GP-ENGINE OIL . . . . . 50
52
CORE AS-HEATER . . . . . 404
COUNTERWEIGHT & MOUNTING GP . . . . . 153
COUNTERWEIGHT GP . . . . . 154
COUPLING GP-FLEXIBLE. . . . . 215
COUPLING GP-PUMP . . . . . 216

# INDEX


NAME PAGE

COVER AS-SOUND SUPPRESSION–FUEL, HYDRAULIC TANKS . . . . . 155
COVER GP-CAB–REAR . . . . . 443
COVER GP-VALVE MECHANISM–CRANKCASE . . 9
COVER GP-VALVE MECHANISM–CYLINDER HEAD . . . . . 8
CRANKSHAFT GP . . . . . 10
CYLINDER & LINES GP-BOOM–LH . . . . . 217
CYLINDER & LINES GP-BOOM–RH . . . . . 217
CYLINDER & LINES GP-BUCKET . . . . . 217
CYLINDER & LINES GP-STICK . . . . . 217
CYLINDER & SEAL GP-BOOM . . . . . 218
CYLINDER & SEAL GP-BUCKET . . . . . 220
CYLINDER & SEAL GP-STICK . . . . . 222
CYLINDER BLOCK AS . . . . . 12
CYLINDER BLOCK GP . . . . . 13
CYLINDER BLOCK GP-SHORT . . . . . 14
CYLINDER HEAD GP . . . . . 15
16
17

## D

DISTRIBUTION AR . . . . . 2
DOOR & MTG GP-CAB . . . . . 444
DOOR AS-ACCESS–AIR CLEANER, BATTERY . . . . . 156
DOOR GP-ACCESS–PUMP COMPARTMENT . . . 158
DOOR GP-ACCESS–RADIATOR . . . . . 157
DRAIN GP-OIL . . . . . 18
DRIVE GP-FAN . . . . . 19
DRIVE GP-FINAL–WITH MOTOR . . . . . 144
146
DRIVE GP-FINAL–WITH MOTOR, SPROCKET . . . . . 145
DRIVE GP-SWING–WITH MOTOR . . . . . 224
DRIVE GP-SWING–WITHOUT MOTOR . . . . . 225
DRYER AS-REFRIGERANT (RECEIVER) . . . . . 454
DUCT GP-CAB AIR . . . . . 445

## E

ELECTRONICS GP-MACHINE . . . . . 93
ELECTRONICS GP-MONITOR . . . . . 93
ENGINE AR-COMPLETE . . . . . 3
ENGINE AR-PRIMARY . . . . . 4

## F

FAN AR-VARIABLE . . . . . 53
FAN GP-SUCTION . . . . . 54
FASTENER GP-SWING & FINAL DR . . . . . 227
FASTENER GP-WIRING HARNESS . . . . . 94
FENDER & COVER GP . . . . . 159
FILLER GP-ENGINE OIL . . . . . 42
FILM GP . . . . . 499
FILM GP–PRODUCT LINK RADIO, INTL . . . . . 500
FILM GP–TOOL CONTROL . . . . . 498

NAME PAGE

FILM-IDENTIFICATION (323D) . . . . . 502
FILM-IDENTIFICATION (BATTERY CIRCUIT BREAKER) . . . . . 502
FILM-IDENTIFICATION (CAT, LH) . . . . . 502
FILM-IDENTIFICATION (CAT, RH) . . . . . 502
FILM-IDENTIFICATION (CAT) . . . . . 499
502
FILM-IDENTIFICATION (CATERPILLAR, REAR) . . . . . 502
FILM-IDENTIFICATION (CIRCUIT BREAKER) . . . 502
FILM-IDENTIFICATION (ELECTRICAL CIRCUIT BREAKER) . . . . . 502
FILM-IDENTIFICATION (ENGINE SERIAL NUMBER) . . . . . 501
FILM-IDENTIFICATION (FUSE, RELAY PANEL) . . . . . 502
FILM-IDENTIFICATION (HYDRAULIC ACCUMULATOR) . . . . . 204
FILM-IDENTIFICATION (LIFT EYE LOCATION) . . . . . 502
FILM-IDENTIFICATION (OIL FILL, READ OMM) . . 8
FILM-IDENTIFICATION (ROUND RED REFLECTIVE) . . . . . 502
FILM-IDENTIFICATION (STRIPE, LH) . . . . . 502
FILM-IDENTIFICATION (STRIPE, RH) . . . . . 502
FILM-IDENTIFICATION (TIE-DOWN) . . . . . 502
FILM-INFORMATION (24-VOLT) . . . . . 502
FILM-INFORMATION (AIR CLEANER) . . . . . 502
FILM-INFORMATION (BELT ROUTING) . . . . . 502
FILM-INFORMATION (EXTENDED LIFE COOLANT) . . . . . 502
FILM-INFORMATION (HYDO ADVANCED 10) . . 502
FILM-INFORMATION (PRODUCT LINK 641 CELLULAR) . . . . . 92
FILM-INFORMATION (PRODUCT LINK, READ OMM) . . . . . 500
FILM-INSTRUCTION (ALTERNATE EXIT) . . . . . 502
FILM-INSTRUCTION (ENGINE SHUTOFF) . . . . . 502
FILM-INSTRUCTION (FUEL, READ OMM) . . . . . 502
FILM-INSTRUCTION (HYDRAULIC OIL CHECK) . . . . . 502
FILM-INSTRUCTION (HYDRAULIC OIL RETURN FILTER) . . . . . 233
FILM-INSTRUCTION (NO STEP) . . . . . 502
FILM-INSTRUCTION (OPERATOR CONTROL PEDALS) . . . . . 498
FILM-INSTRUCTION (OPERATOR CONTROLS) . . . . . 502
FILM-INSTRUCTION (PULL RING, ALTERNATE EXIT) . . . . . 502
FILM-INSTRUCTION (TOP, AIR CLEANER COVER) . . . . . 64
FILM-NOTICE (HAMMER, READ OMM) . . . . . 498
FILM-WARNING (ACCUMULATOR PRESSURE) . . . . . 502
FILM-WARNING (CRUSH HAZARD, READ OMM, INTL) . . . . . 502
FILM-WARNING (CRUSH HAZARD, STAY BACK, INTL) . . . . . 502

NAME PAGE

FILM-WARNING (DO NOT SPRAY, READ OMM). . . . . 501
FILM-WARNING (ELEC HAZARD, READ OMM, INTL) . . . . . 502
FILM-WARNING (FRONT WINDOW, READ OMM, INTL) . . . . . 502
FILM-WARNING (HIGH PRESSURE CYLINDER) . . . . . 202
FILM-WARNING (HOT FLUID UNDER PRESS). . . . . 502
FILM-WARNING (HOT SURFACE, HANDS CLEAR, INTL) . . . . . 502
FILM-WARNING (JUMP START, READ OMM, INTL) . . . . . 502
FILM-WARNING (LIFTING EYE, READ OMM). . . . . 502
FILM-WARNING (MACHINE SWING, CRUSHING, INTL) . . . . . 502
FILM-WARNING (NO ETHER SPRAY/AIR INTK, INTL) . . . . . 502
FILM-WARNING (PRODUCT LINK RADIO, INTL) . . . . . 500
FILM-WARNING (SEAT BELT, INTERNATIONAL) . . . . . 502
FILM-WARNING (UNIVERSAL WARNING) . . . . . 501
FILM-WARNING (UNIVERSAL, READ OMM). . . . 502
FILTER & MTG GP-ENGINE OIL . . . . . 43
FILTER & VALVE GP-PILOT–HYDRAULIC OIL . . . . . 229
FILTER AS-AIR (AIR CONDITIONER) . . . . . 404
FILTER AS-WATER SEP & FUEL (ULTRA HIGH EFFICIENCY). . . . . 74
FILTER ELEMENT AS-AIR (PRIMARY). . . . . 64
FILTER ELEMENT AS-AIR (SECONDARY) . . . . . 64
FILTER ELEMENT AS-AIR (ULTRA HIGH EFFICIENCY) (PRIMARY) . . . . . 64
FILTER ELEMENT AS-OIL (ADVANCED EFFICIENCY) (HYDRAULIC RETURN) . . . . . 233
FILTER ELEMENT-CAB AIR. . . . . 404 417 445
FILTER ELEMENT-ENGINE OIL . . . . . 45
FILTER ELEMENT-WTR SEP & FUEL . . . . . 72
FILTER GP-CAB AIR . . . . . 417 445
FILTER GP-ENGINE OIL. . . . . 45
FILTER GP-FUEL–24-VOLT, LONG BOWL . . . . . 72
FILTER GP-OIL–HYDRAULIC RETURN. . . . . 230 233
FILTER GP-OIL–HYDRAULIC, CASE DRAIN. . . . 232
FILTER-OIL (ADVANCED EFFICIENCY) (HYDRAULIC, CASE DRAIN) . . . . . 232
FILTER-OIL (ADVANCED EFFICIENCY) (HYDRAULIC, PILOT). . . . . 229
FITTING GP-HYDRAULIC–4-BOLT FLANGE . . . . 235
FLOOR MAT . . . . . 2 446 447
FLYWHEEL GP . . . . . 21
FRAME AR-UNDERCARRIAGE . . . . . 181
FRAME AS-UNDERCARRIAGE–LONG UNDERCARRIAGE. . . . . 182
FRAME GP-UPPER. . . . . 160
FUMES DISPOSAL GP . . . . . 46
FUSE (10-AMPERE) . . . . . 124
FUSE (100-AMPERE) . . . . . 103
FUSE (15-AMPERE) . . . . . 124
FUSE (20-AMPERE) . . . . . 124
FUSE (25-AMPERE) . . . . . 124
FUSE (30-AMPERE) . . . . . 124
FUSE (5-AMPERE) . . . . . 124
FUSE (80-AMPERE) . . . . . 103

## G

GASKET-WATER REGULATOR. . . . . 57
GAUGE GP-OIL LEVEL (DIPSTICK) . . . . . 29
GAUGE GP-SIGHT–HYDRAULIC OIL LEVEL . . . 236
GAUGE-OIL LEVEL (SWING DRIVE). . . . . 225
GEAR & BEARING GP-SWING. . . . . 162 163
GENERAL AR. . . . . 2
GUARD GP-BOTTOM. . . . . 165
GUARD GP-TRACK GUIDE . . . . . 183 184
GUARD GP-TRAVEL MOTOR . . . . . 185

## H

HANDRAIL GP . . . . . 166
HARNESS AS-CAB–MONITOR. . . . . 95
HARNESS AS-CHASSIS . . . . . 97 451
HARNESS AS-CHASSIS (HORN) . . . . . 450
HARNESS AS-CHASSIS–AIR CLEANER. . . . . 96
HARNESS AS-CHASSIS–PRODUCT LINK 641/631. . . . . 95
HARNESS AS-CONSOLE . . . . . 99
HARNESS AS-CONTROL–PRODUCT LINK . . . . . 100
HARNESS AS-HEATER & AIR COND . . . . . 404
HARNESS AS-HEATER & AIR COND (HIGH SIDE). . . . . 401
HARNESS AS-HEATER & AIR COND (LOW SIDE). . . . . 401
HARNESS AS-LIGHTING (BOOM, LH) . . . . . 108
HARNESS AS-LIGHTING (CAB LIGHT) . . . . . 110
HARNESS AS-PANEL–CONSOLE. . . . . 100
HARNESS AS-PLATFORM . . . . . 101
HARNESS AS-SWITCH . . . . . 102
HARNESS AS-SWITCH (SECONDARY SHUTDOWN). . . . . 143
HATCH GP-ROOF . . . . . 448
HEAD GP-MOTOR. . . . . 312
HEAD GP-PUMP . . . . . 237
HOLDER AS-FUSE . . . . . 103
HOOD & GUARD GP. . . . . 167
HOOD GP-ENGINE . . . . . 172

# INDEX


NAME PAGE

HORN GP-ELECTRIC . . . . . 449
450
451
452
HOSE GP-HYDRAULIC . . . . . 241
242
243
244
245
247
248
249
250
251
HOSE GP-HYDRAULIC–FRONT . . . . . 246
HOSE-RADIATOR (LOWER) . . . . . 59
HOSE-UPPER RADIATOR . . . . . 59
HOUSING GP-FLYWHEEL . . . . . 22
HOUSING GP-FRONT . . . . . 23
HYDRAULIC AR . . . . . 252

## I

IDLER GP-FRONT . . . . . 186
IDLER GP-FRONT–LH . . . . . 188
IDLER GP-FRONT–RH . . . . . 187
INDICATOR AS (HYDRAULIC RETURN FILTER) . . . . . 230
INDICATOR AS (SEAT ADJUSTMENT) . . . . . 482
INDICATOR AS-AIR FILTER CHANGE (AIR RESTRICTION) . . . . . 64
INDICATOR-FUEL FILTER CHANGE . . . . . 73
INSTALLATION AR-COMMUNICATION . . . . . 104
INSTALLATION AR-COMMUNICATION–PRODUCT LINK 641 . . . . . 104
INSTALLATION AR-ENGINE . . . . . 5

## J

JET GP-PISTON COOLING . . . . . 25

## K

KEY . . . . . 82
458
KEY (BATTERY DISCONNECT) . . . . . 121
KEY (IGNITION) . . . . . 122
KIT-BUCKET TIP . . . . . 396

## L

LAMP (24-VOLT, 10-WATT) . . . . . 411
LAMP AS-DOME . . . . . 411
LAMP AS-INDICATOR (24-VOLT, 3-WATT) . . . . . 113
LAMP GP-FLOOD . . . . . 105
106
107

NAME PAGE

LAMP-HALOGEN (24-VOLT, 70-WATT) . . . . . 105
106
LAMP-HALOGEN (24-VOLT, 70-WATT) (FLOODLIGHT) . . . . . 107
LEVER GP-CAB DOOR . . . . . 453
LEVER GP-CONTROL–HYDRAULIC LOCKOUT . . . . . 253
LIFTING GP-ENGINE . . . . . 26
LIGHTING GP-FLOOD–BOOM, LH . . . . . 108
LIGHTING GP-FLOOD–CAB . . . . . 110
LIGHTING GP-FLOOD–CHASSIS . . . . . 112
LINES GP-AIR . . . . . 65
LINES GP-AIR CONDITIONER . . . . . 454
LINES GP-ATTACHMENT–CONNECTING . . . . . 254
LINES GP-AUXILIARY HYDRAULIC–BOOM, HIGH PRESSURE . . . . . 257
LINES GP-AUXILIARY HYDRAULIC–STICK, HIGH PRESSURE . . . . . 255
LINES GP-BOOM . . . . . 259
LINES GP-BOOM CYLINDER–BOOM . . . . . 265
LINES GP-BOOM CYLINDER–LH . . . . . 263
LINES GP-BOOM CYLINDER–RH . . . . . 264
LINES GP-BOOM–1-PIECE . . . . . 261
LINES GP-BUCKET CYLINDER . . . . . 267
LINES GP-CONTROL . . . . . 268
LINES GP-COOLING . . . . . 55
LINES GP-ENGINE OIL DRAIN . . . . . 47
LINES GP-FRONT . . . . . 270
LINES GP-FRONT–SYSTEM 3 PRIME, 1-WAY, 2-PUMP . . . . . 272
LINES GP-FUEL . . . . . 73
LINES GP-FUEL FILTER . . . . . 78
LINES GP-FUEL INJECTION . . . . . 79
LINES GP-GREASE . . . . . 382
LINES GP-HYDRAULIC . . . . . 276
277
LINES GP-PILOT . . . . . 283
289
299
LINES GP-PILOT–JOYSTICK, PEDALS . . . . . 280
295
LINES GP-PILOT–MAIN CONTROL VALVE . . . . . 293
LINES GP-PILOT–SYSTEM 3 PRIME, 1-WAY, 2-PUMP . . . . . 291
LINES GP-PUMP . . . . . 301
LINES GP-STICK . . . . . 303
LINES GP-STICK CYLINDER . . . . . 304
LINES GP-TRAVEL MOTOR . . . . . 305
LINK AS-TRACK . . . . . 189
LINKAGE AR-BUCKET–B1-FAMILY, WITHOUT LIFTING EYE . . . . . 383
LINKAGE GP-BUCKET–B1-FAMILY, WITHOUT LIFTING EYE . . . . . 384
LITERATURE GP . . . . . 458

# INDEX


NAME PAGE

## M

MANIFOLD GP-CONTROL–PILOT OIL SUPPLY . . . . . 307 308 309
MANIFOLD GP-INLET . . . . . 66
MIRROR GP-REAR VIEW . . . . . 459
MONITOR & MTG GP-OPERATOR . . . . . 460
MONITOR GP-OPERATOR . . . . . 461
MOTOR & MTG GP-TRAVEL . . . . . 310
MOTOR GP-SWING . . . . . 311 312
MOUNTING GP-ANTENNA . . . . . 462
MOUNTING GP-ENGINE . . . . . 27 28
MOUNTING GP-MAIN CONTROL VALVE . . . . . 314
MOUNTING GP-PLATFORM . . . . . 463
MUFFLER & MOUNTING GP . . . . . 67

## O

OPERATOR AR . . . . . 465
OPTION AR-HYDRAULIC . . . . . 2

## P

PADLOCK GP . . . . . 82
PAN GP-OIL . . . . . 29 31
PAN GP-SEAT . . . . . 466
PANEL GP-SWITCH–CONSOLE . . . . . 113
PANEL-SWITCH . . . . . 409
PARTS GP-DOOR . . . . . 467
PISTON & ROD GP . . . . . 32 34
PISTON GP . . . . . 32 34
PLATE & FILM GP . . . . . 501 502
PLATFORM GP-OPERATOR . . . . . 469
PLUG GP-CONTROL VALVE . . . . . 315
PLUG GP-CYLINDER HEAD . . . . . 36
PLUG-DRAIN . . . . . 326
POWER TRAIN AR . . . . . 148
PULLER-FUSE . . . . . 126
PULLEY GP-CRANKSHAFT . . . . . 37
PULLEY GP-ENGINE . . . . . 38
PUMP & MTG GP-MAIN HYDRAULIC . . . . . 316
PUMP GP-ENGINE OIL . . . . . 48
PUMP GP-FUEL INJECTION . . . . . 80
PUMP GP-GEAR . . . . . 317
PUMP GP-MAIN HYDRAULIC . . . . . 319
PUMP GP-WATER . . . . . 57

NAME PAGE

## R

RADIATOR & HYD OIL COOLER GP . . . . . 59 62
REGULATOR AS-WATER TEMPERATURE (INCLUDES CONNECTOR) . . . . . 57
RELAY (24-VOLT) (BOOM LAMP) . . . . . 125
RELAY (24-VOLT) (CAB LIGHT) . . . . . 125
RELAY (24-VOLT) (CHASSIS LIGHT) . . . . . 125
RELAY (24-VOLT) (ELECTRIC LIFT PUMP) . . . . 125
RELAY (24-VOLT) (ENGINE SHUTOFF) . . . . . 125
RELAY (24-VOLT) (HORN) . . . . . 125
RELAY (24-VOLT) (NEUTRAL START) . . . . . 125
RELAY (BLOWER) . . . . . 438
RELAY (COMPRESSOR CLUTCH) . . . . . 438
RELAY AS (WIPER) . . . . . 496
ROCKER ARM GP . . . . . 39 40
ROLLER AR-TRACK . . . . . 190
ROLLER AR-TRACK & CARRIER . . . . . 191
ROLLER GP-TRACK CARRIER . . . . . 192
ROLLER GP-TRACK-SINGLE FLANGE . . . . . 193 194

## S

SCREEN AS (HYDRAULIC TANK) . . . . . 323
SCREEN GP-HYDRAULIC–TANK . . . . . 323
SCREEN-FILTER . . . . . 363
SCREEN-FILTER (RELIEF VALVE) . . . . . 369
SEAL GP-DUO-CONE . . . . . 192 193 194
SEAL-VALVE COVER . . . . . 8
SEAT BELT GP (RETRACTABLE) . . . . . 477 480
SEAT BELT GP–RETRACTABLE . . . . . 470
SEAT GP-SUSPENSION–HIGH BACK, CLOTH, SUSPENSION . . . . . 478
SEAT GP-SUSPENSION–HIGH BACK, TILT . . . . 476
SEAT GP-SUSPENSION–MECH SUSP SEAT . . . 477 480
SEAT GP–CLOTH . . . . . 474
SEAT GP–DELUXE, CLOTH . . . . . 471 473
SEAT GP–FABRIC . . . . . 475
SENDER AS-FUEL LEVEL (FUEL TANK) . . . . . 83
SENSOR AS-PRESSURE (MAIN HYDRAULIC PUMP) . . . . . 289
SENSOR AS-TEMPERATURE (AIR) . . . . . 438
SENSOR AS-TEMPERATURE (AMBIENT AIR TEMP) . . . . . 404
SENSOR AS-TEMPERATURE (COOLANT) . . . . . 404
SENSOR GP-LIQUID LEVEL . . . . . 114
SENSOR GP-LIQUID LEVEL (WATER IN FUEL) . . . . . 74
SENSOR GP-PRESSURE . . . . . 115 116
SENSOR GP-PRESSURE (ATMOSPHERIC AIR) . . . . . 73

NAME PAGE

SENSOR GP-PRESSURE (BUCKET)..... 280 295
SENSOR GP-PRESSURE (ENGINE OIL)..... 115 118
SENSOR GP-PRESSURE (FUEL)..... 73
SENSOR GP-PRESSURE (TRAVEL LEFT)..... 280 295
SENSOR GP-PRESSURE (TRAVEL RIGHT)..... 280 295
SENSOR GP-PRESSURE (WORK TOOL CONTROL, PEDAL, LH)..... 299
SENSOR GP-SPEED..... 117
SENSOR GP-SPEED (MAGNETIC)..... 129
SENSOR GP-TEMP & PRESS..... 118
SENSOR-TEMPERATURE (2-PIN) (ENGINE COOLANT)..... 118
SENSOR-TEMPERATURE (AMBIENT AIR)..... 401
SENSOR-TEMPERATURE (HYDRAULIC OIL)..... 326
SHEET AS-SOUND SUPPRESSION..... 173 174 175 176 177
SIDECUTTER GP..... 397 398
SOFTWARE GP-COMMUNICATION (PL641 CELLULAR) (TELEMATICS CONFIGURATION)..... 92
SOFTWARE GP-MACHINE..... 93
SOFTWARE GP-MONITOR..... 93
SOLENOID-SHUTOFF (24-VOLT)..... 80
SPRING AS-GAS (ENGINE HOOD)..... 167
SPRING AS-GAS (HATCH)..... 448
SPROCKET GP (NON-SEGMENTED)..... 145
STARTING AID GP..... 119
STARTING MOTOR GP-ELECTRIC..... 120
STICK AR-HOE–REACH..... 385
STICK GP-HOE–REACH..... 386
STRAINER (FUEL FILTER)..... 72
STRAINER AS-FUEL (FLOAT GAUGE)..... 83
SUPPORT AS..... 178 179
SUPPORT AS-SOUND SUPPRESSION..... 180
SUPPORT GP-SEAT..... 481
SUSPENSION GP-SEAT–MECHANICAL..... 482 485
SWITCH..... 491
SWITCH AS-LIMIT (HYDRAULIC LOCKOUT)..... 253
SWITCH AS-MAGNETIC (MAIN RELAY)..... 124
SWITCH AS-PRESSURE (REFRIGERANT)..... 454
SWITCH AS-PUSH BUTTON (HORN)..... 435
SWITCH AS-PUSH BUTTON (MANUAL LOW IDLE)..... 437
SWITCH GP-DISCONNECT–BATTERY..... 121
SWITCH GP-START–ENGINE, KEY..... 122
SWITCH-TEMPERATURE..... 80
SWITCH-TOGGLE (SECONDARY SHUTDOWN)..... 143
SWIVEL GP..... 324

# T

TANK & FILTER GP-HYDRAULIC..... 326
TANK & MTG GP-FUEL..... 82
TANK & MTG GP-HYDRAULIC..... 329
TANK GP-FUEL..... 83
TIP GP-LONG–J-350..... 399
TIP GP-PENETRATION PLUS–J-350..... 400
TRACK ADJUSTER & RECOIL GP..... 195 197
TRACK ADJUSTER & RECOIL GP–LH..... 198
TRACK ADJUSTER & RECOIL GP–RH..... 196
TRACK GP–2-REQUIRED..... 199
TURBOCHARGER GP..... 69

# V

VALVE & MTG GP-CONTROL–AUXILIARY..... 330
VALVE AS-RELIEF..... 310
VALVE GP-CHECK (RETURN OIL)..... 268
VALVE GP-CONTROL–AUXILIARY..... 332
VALVE GP-CONTROL–BOOM, STICK, SWING, TRAVEL..... 336
VALVE GP-CONTROL–STK, BM, BKT, WKTL, TRVL RH..... 341
VALVE GP-CONTROL–WITHOUT COVERS, HOUSINGS..... 331 334 343
VALVE GP-LOAD CONTROL–BOOM DRIFT RED, LINE RELIEF..... 346
VALVE GP-LOAD CONTROL–STICK DRIFT RED, LINE RELIEF..... 344
VALVE GP-MAIN CONTROL..... 348
VALVE GP-MANUAL..... 350 351
VALVE GP-MANUAL–AUXILIARY, SHUTOFF..... 349
VALVE GP-PILOT..... 352
VALVE GP-PILOT RELIEF (HYDRAULIC FILTER)..... 229
VALVE GP-PILOT–JOYSTICK..... 353
VALVE GP-PILOT–TRAVEL, SHUTTLE..... 355
VALVE GP-PRESSURE REDUCING–BOOM, SWING PRIORITY..... 357
VALVE GP-PRIORITY–SWING..... 359
VALVE GP-RELIEF..... 360 363 365 366 370 378
VALVE GP-RELIEF–LINE..... 367 368 371
VALVE GP-RELIEF–NEGATIVE FLOW CONTROL..... 361 362
VALVE GP-RELIEF–PILOT OPERATED..... 369
VALVE GP-SHUTTLE..... 372 373

NAME PAGE

VALVE GP-SOLENOID . . . . . 374
375
377
VALVE GP-SOLENOID (HYDRAULIC LOCKOUT) . . . . . 308
309
VALVE GP-SOLENOID (MAIN HYDRAULIC PUMP) . . . . . 319
VALVE GP-SOLENOID (NEGATIVE FLOW CONTROL) . . . . . 292
VALVE GP-SOLENOID (PRESSURE REDUCING) (PUMP CONTROL) . . . . . 376
VALVE GP-SOLENOID (STRAIGHT TRAVEL) . . . 336
VALVE GP-SOLENOID (SWING BRAKE RELEASE) . . . . . 308
309
VALVE GP-SOLENOID (TRAVEL SPEED) . . . . . 308
309
VALVE GP-SOLENOID–NEGATIVE FLOW CONTROL . . . . . 376
VALVE GP-SWING CUSHION–CROSSOVER RELIEF . . . . . 378
VALVE MECHANISM GP . . . . . 41

## W

WASHER GP-WINDOW . . . . . 487
WINDOW GP-CAB . . . . . 491
WINDOW GP-CAB–FRONT, LOWER . . . . . 489
WINDOW GP-CAB–SIDE, REAR . . . . . 488
WINDOW GP-DOOR . . . . . 494
WIPER GP-WINDOW–FRONT, UPPER . . . . . 496
WIRING GP-CAB . . . . . 124
WIRING GP-CHASSIS . . . . . 129
WIRING GP-COMMUNICATION–PRODUCT LINK . . . . . 134
WIRING GP-COMMUNICATION–PRODUCT LINK 631, 641 . . . . . 136
WIRING GP-CONSOLE . . . . . 138
139
140
WIRING GP-CONVERTER . . . . . 141
WIRING GP-PLATFORM . . . . . 143
WIRING GP–AIR CLEANER . . . . . 123

# MEMORANDA

# MACHINE ARRANGEMENT

## *556-6447* CHASSIS AR

**S/N: FEY1-UP**

**PART OF 556-6434 GENERAL AR**

**SMCS-7000** **i07398166**

| NOTE | PART NUMBER | QTY | PART NAME 1 2 3 4 5 6 (PRODUCT LEVEL) | SEE PAGE |
|---|---|---|---|---|
| Y | *539-2881* | 1 | BATTERY & WIRING GP | 87 |
| Y | *524-2918* | 1 | BOX & MTG GP-STORAGE | 149 |
| Y | *467-7466* | 1 | CONTROL GP-GOVERNOR | 70 |
| Y | *557-1174* | 1 | COUNTERWEIGHT & MOUNTING GP | 153 |
| Y | *445-6262* | 1 | FENDER & COVER GP (WITH STEP) | 159 |
| Y | *556-6564* | 1 | FRAME GP-UPPER | 160 |
| Y | *433-6299* | 1 | GUARD GP-BOTTOM | 165 |
| Y | *142-3835* | 1 | HANDRAIL GP | 166 |
| Y | *556-6573* | 1 | HOOD & GUARD GP | 167 |
| Y | *267-8071* | 1 | HORN GP-ELECTRIC | 449 |
| Y | *4I-5409* | 1 | LIGHTING GP-FLOOD (CHASSIS) | 112 |
| Y | *556-6548* | 1 | LINES GP-AIR CONDITIONER | 454 |
| Y | *556-6577* | 1 | LINES GP-FUEL | 73 |
| Y | *7Y-0059* | 1 | LITERATURE GP | 458 |
| Y | *142-3836* | 1 | MIRROR GP-REAR VIEW | 459 |
| Y | *245-7811* | 1 | MOUNTING GP-PLATFORM | 463 |
| Y | *539-2879* | 1 | OPERATOR AR | 465 |
| Y | *554-6935* | 1 | PLATE & FILM GP | 502 |
| Y | *524-3350* | 1 | TANK & MTG GP-FUEL | 82 |
| Y | *556-7952* | 1 | WIRING GP-CHASSIS | 129 |

Y - SEPARATE ILLUSTRATION

<END>

## *565-5300* CONFIGURATION AR

**S/N: H761-UP**

**PART OF 556-6443 ENGINE AR-COMPLETE**

**SMCS-0645, 1433, 7000, 7405, 7431, 7557, 7559** **i07672562**

| NOTE | PART NUMBER | QTY | PART NAME 1 2 3 4 5 6 (PRODUCT LEVEL) | SEE PAGE |
|---|---|---|---|---|
| Y | *476-6625* | 1 | CYLINDER BLOCK GP-SHORT | 14 |
| Y | *476-6624* | 1 | CYLINDER HEAD GP | 17 |
| Y | **565-0288** | 1 | ENGINE AR-PRIMARY | 4 |

Y - SEPARATE ILLUSTRATION

<END>

# MACHINE ARRANGEMENT

## *556-6432* DISTRIBUTION AR

**S/N: FEY1-UP**

**SMCS-7000** **i07395806**

| NOTE | PART NUMBER | QTY | PART NAME 1 2 3 4 5 6 (PRODUCT LEVEL) | SEE PAGE |
|---|---|---|---|---|
| Y | *376-1084* | 1 | BOOM AR-1 PIECE LONG (HEAVY-DUTY) | 379 |
| Y | *557-8297* | 1 | CAB AR | 408 |
| Y | *556-6434* | 1 | GENERAL AR | 2 |
| Y | *453-8143* | 1 | LINKAGE AR-BUCKET | 383 |
| Y | *375-6281* | 1 | STICK AR-HOE | 385 |
| | **555-5076** | | FLOOR MAT | |

Y - SEPARATE ILLUSTRATION

<END>

## *556-6434* GENERAL AR

**S/N: FEY1-UP**

**SMCS-7000** **i07397566**

| NOTE | PART NUMBER | QTY | PART NAME 1 2 3 4 5 6 (PRODUCT LEVEL) | SEE PAGE |
|---|---|---|---|---|
| Y | *556-6447* | 1 | CHASSIS AR | 1 |
| Y | *550-3547* | 1 | ELECTRONICS GP-MACHINE | 93 |
| Y | *556-6443* | 1 | ENGINE AR-COMPLETE | 3 |
| Y | *432-5008* | 1 | FRAME AR-UNDERCARRIAGE | 181 |
| Y | *556-6437* | 1 | HYDRAULIC AR | 252 |
| Y | *556-6438* | 1 | INSTALLATION AR-ENGINE | 5 |
| Y | *543-0244* | 1 | POWER TRAIN AR | 148 |

Y - SEPARATE ILLUSTRATION

<END>

## *559-5102* OPTION AR-HYDRAULIC

**S/N: FEY1-UP**

**SMCS-7000** **i07620789**

| NOTE | PART NUMBER | QTY | PART NAME 1 2 3 4 5 6 (PRODUCT LEVEL) | SEE PAGE |
|---|---|---|---|---|
| Y | *237-3184* | 1 | LINES GP-AUXILIARY HYDRAULIC (STICK, HIGH PRESSURE) | 255 |
| Y | *242-6475* | 1 | LINES GP-AUXILIARY HYDRAULIC (BOOM, HIGH PRESSURE) | 257 |
| Y | *559-6090* | 1 | OPTION AR-HYDRAULIC | 2 |

Y - SEPARATE ILLUSTRATION

<END>

## *559-6090* OPTION AR-HYDRAULIC

**S/N: FEY1-UP**

**PART OF 559-5102 OPTION AR-HYDRAULIC**

**SMCS-7000** **i07620795**

| NOTE | PART NUMBER | QTY | PART NAME 1 2 3 4 5 6 (PRODUCT LEVEL) | SEE PAGE |
|---|---|---|---|---|
| Y | *310-0078* | 1 | CONTROL & MTG GP-JOYSTICK | 434 |
| Y | *559-6091* | 1 | CONTROL AR-AUXILIARY (SYSTEM 3 PRIME, 1-WAY, 2-PUMP) | 214 |
| Y | *554-3508* | 1 | FLOOR MAT | 446 |

Y - SEPARATE ILLUSTRATION

<END>

# *556-6443* ENGINE AR-COMPLETE

**S/N: FEY1-UP**

**PART OF 556-6434 GENERAL AR**

**SMCS-1000** **i07669753**

| NOTE | PART NUMBER | QTY | PART NAME 1 2 3 4 5 6 (PRODUCT LEVEL) | SEE PAGE |
|---|---|---|---|---|
| Y | **565-5300** | 1 | CONFIGURATION AR | 1 |
| Y | *557-7208* | 1 | FAN AR-VARIABLE | 53 |
| Y | *394-7470* | 1 | MUFFLER & MOUNTING GP | 67 |

Y - SEPARATE ILLUSTRATION

<END>

# 565-0288 ENGINE AR-PRIMARY

**S/N: H761-UP**
**112 BRAKE KW ( 150 BHP) AT 1800 RPM**
**OPTIONAL FIELD REPLACEMENT ORDER 425-3316—PAGE: 16, 425-0779—PAGE: 14**
**PART OF 565-5300 CONFIGURATION AR**

**SMCS-1000** **i07672585**

| NOTE | PART NUMBER | QTY | PART NAME 1 2 3 4 5 6 (PRODUCT LEVEL) | SEE PAGE |
|---|---|---|---|---|
| Y | *550-7698* | 1 | ALTERNATOR GP-CHARGING | 86 |
| Y | *343-0701* | 1 | CAMSHAFT GP | 6 |
| Y | *346-2911* | 1 | CONNECTION GP-HEATER | 49 |
| Y | *417-7185* | 1 | CONTACTOR GP-ALARM | 7 |
| Y | *371-2553* | 1 | COOLER GP-ENGINE OIL | 52 |
| Y | *426-1498* | 1 | COVER GP-VALVE MECHANISM | 9 |
| Y | *348-3285* | 1 | CRANKSHAFT GP | 10 |
| Y | *348-3283* | 1 | CYLINDER BLOCK GP | 13 |
| Y | *391-3193* | 1 | CYLINDER HEAD GP | 15 |
| Y | *509-8503* | 1 | DRAIN GP-OIL | 18 |
| Y | *396-6979* | 1 | DRIVE GP-FAN | 19 |
| Y | *417-5871* | 1 | FILLER GP-ENGINE OIL | 42 |
| Y | *346-0466* | 1 | FILM GP | 499 |
| Y | *371-2539* | 1 | FLYWHEEL GP | 21 |
| Y | *396-6954* | 1 | HOUSING GP-FLYWHEEL | 22 |
| Y | *346-0495* | 1 | HOUSING GP-FRONT | 23 |
| Y | *348-3503* | 1 | JET GP-PISTON COOLING | 25 |
| Y | *415-4600* | 1 | LIFTING GP-ENGINE | 26 |
| Y | *396-6969* | 1 | LINES GP-FUEL FILTER | 78 |
| Y | *559-3000* | 1 | MANIFOLD GP-INLET | 66 |
| Y | *375-5008* | 1 | MOUNTING GP-ENGINE | 28 |
| Y | *345-9694* | 1 | PAN GP-OIL | 29 |
| Y | *348-3296* | 1 | PISTON & ROD GP | 32 |
| Y | *461-5994* | 1 | PLATE & FILM GP | 501 |
| Y | *346-1841* | 1 | PLUG GP-CYLINDER HEAD | 36 |
| Y | *417-7187* | 1 | PULLEY GP-CRANKSHAFT | 37 |
| Y | *462-6685* | 1 | PUMP GP-ENGINE OIL | 48 |
| Y | *396-4502* | 1 | PUMP GP-FUEL INJECTION | 80 |
| Y | *346-0411* | 1 | PUMP GP-WATER | 57 |
| Y | *391-3197* | 1 | ROCKER ARM GP | 39 |
| Y | *346-0798* | 1 | STARTING AID GP | 119 |
| Y | *445-4703* | 1 | STARTING MOTOR GP-ELECTRIC | 120 |
| Y | *396-6322* | 1 | TURBOCHARGER GP | 69 |
| | *549-6012* | 1 | PLATE GP-SERIAL NUMBER | |

Y - SEPARATE ILLUSTRATION

<END>

# *556-6438* INSTALLATION AR-ENGINE

**S/N: FEY1-UP**

**PART OF 556-6434 GENERAL AR**

**SMCS-1000** **i07398070**

| NOTE | PART NUMBER | QTY | PART NAME 1 2 3 4 5 6 (PRODUCT LEVEL) | SEE PAGE |
|---|---|---|---|---|
| Y | *109-9313* | 1 | AIR CLEANER & MOUNTING GP | 63 |
| Y | *379-4415* | 1 | COMPRESSOR & MTG GP-REFRIG | 423 |
| Y | *556-6525* | 1 | CONDENSER & MTG GP-REFRIGERANT | 425 |
| Y | *556-6526* | 1 | FILTER & MTG GP-ENGINE OIL | 43 |
| Y | *394-7474* | 1 | FUMES DISPOSAL GP | 46 |
| Y | *556-6542* | 1 | LINES GP-AIR | 65 |
| Y | *556-6529* | 1 | LINES GP-COOLING | 55 |
| Y | *374-6004* | 1 | LINES GP-ENGINE OIL DRAIN | 47 |
| Y | *351-3886* | 1 | MOUNTING GP-ENGINE | 27 |
| Y | *556-6534* | 1 | RADIATOR & HYD OIL COOLER GP | 59 |
| Y | *416-4969* | 1 | SENSOR GP-TEMP & PRESS | 118 |
| Y | *518-8343* | 1 | WIRING GP (AIR CLEANER) | 123 |

Y - SEPARATE ILLUSTRATION

<END>

# *343-0701* CAMSHAFT GP

**S/N: H761-UP**

**PART OF 565-0288 ENGINE AR-PRIMARY**

**SMCS-1210** **i06230203**

| NOTE | REF NO | GRAPHIC REF | PART NUMBER | QTY | PART NAME 1 2 3 4 5 6 (PRODUCT LEVEL) | SEE PAGE |
|---|---|---|---|---|---|---|
| | 1 | 1 | **464-6253** | 12 | LIFTER-VALVE | |
| | 2 | 1 | **350-0637** | 1 | CAMSHAFT GP | |
| | | 1 | **067-6135** | 1 | KEY-WOODRUFF | |
| | 3 | 1 | **067-6095** | 12 | ROD | |

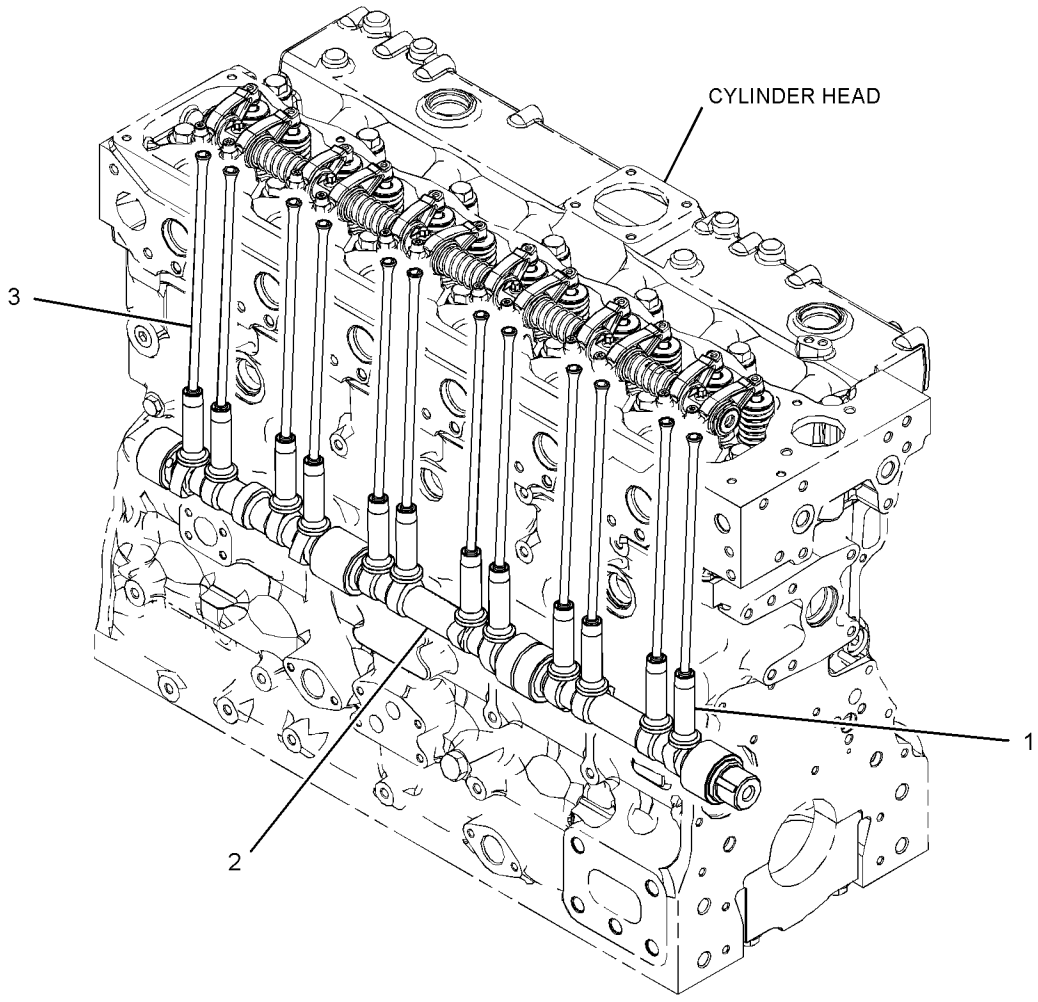


GRAPHIC #1 <END> g03320144

# *417-7185* CONTACTOR GP-ALARM

**S/N: H761-UP**

**PART OF 565-0288 ENGINE AR-PRIMARY**

**SMCS-0663** **i05245841**

| NOTE | REF NO | GRAPHIC REF | PART NUMBER | QTY | PART NAME 1 2 3 4 5 6 (PRODUCT LEVEL) | SEE PAGE |
|---|---|---|---|---|---|---|
| | 1 | 1 | **199-9267** | 1 | SEAL-O-RING | |
| | 2 | 1 | **232-3861** | 1 | PLUG (BLANKING) | |

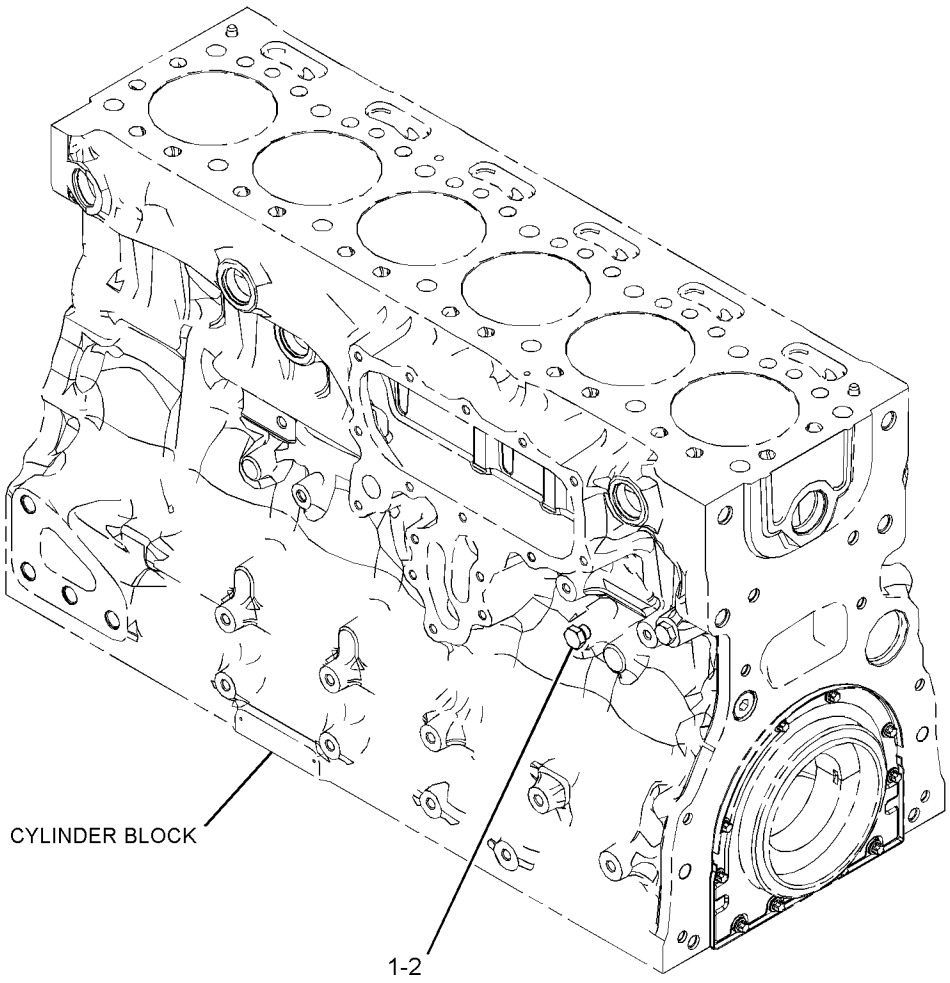


GRAPHIC #1 <END> g03317252

# 335-6883 COVER GP-VALVE MECHANISM—CYLINDER HEAD

**S/N: H761-UP**

**PART OF 426-1498 COVER GP-VALVE MECHANISM**

**SMCS-1107** **i07330996**

| NOTE | REF NO | GRAPHIC REF | PART NUMBER | QTY | PART NAME 1 2 3 4 5 6 (PRODUCT LEVEL) | SEE PAGE |
|---|---|---|---|---|---|---|
| | 1 | 1 | **326-7289** | 1 | SEAL-O-RING | |
| | 2 | 1 | **369-3869** | 1 | CAP AS-ENGINE OIL FILLER | |
| | 2A | 1 | **357-0147** | 1 | FILM-IDENTIFICATION (OIL FILL, READ OMM) | |
| | 3 | 1 | **256-7704** | 1 | SEAL-VALVE COVER | |
| M | 4 | 1 | **8T-0337** | 4 | SCREW-MACHINE (M4X0.7X12-MM) | |

M - METRIC PART

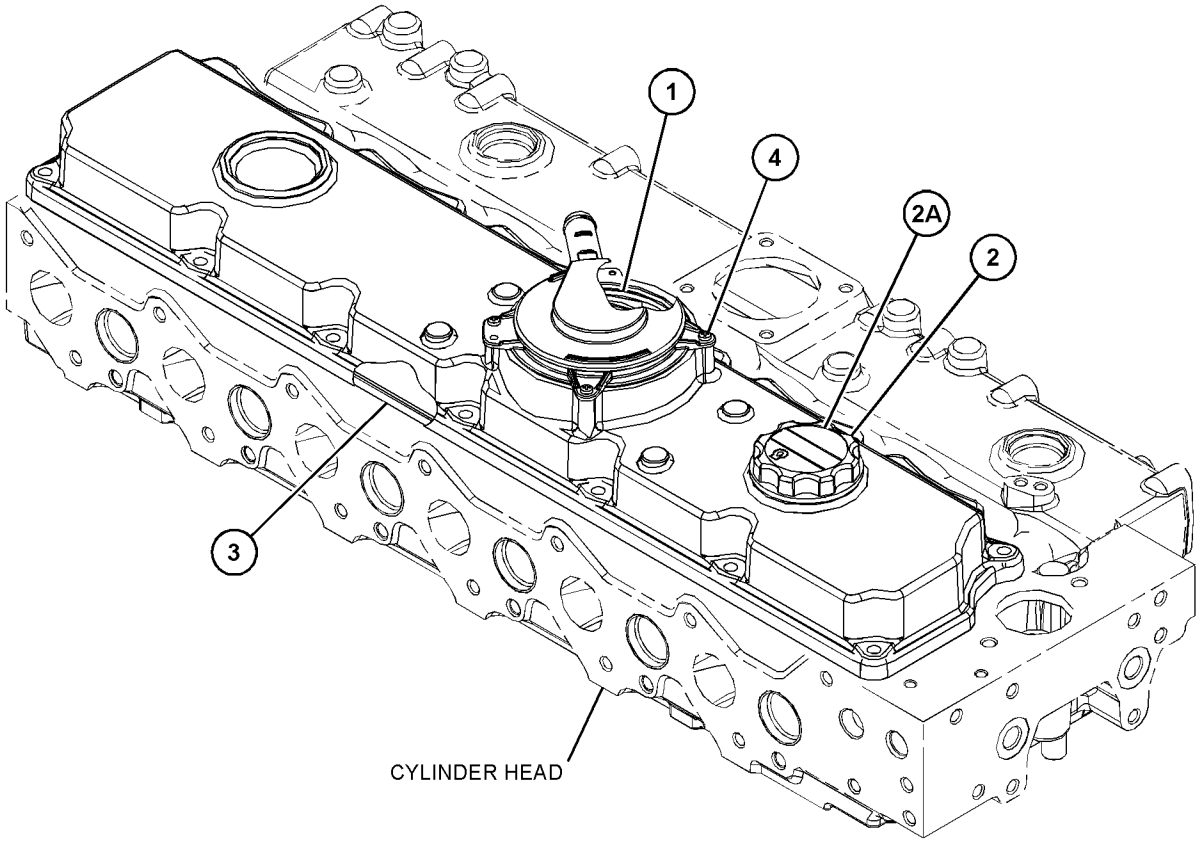


GRAPHIC #1 <END> g06286768

# *426-1498* COVER GP-VALVE MECHANISM–CRANKCASE

**S/N: H761-UP**

**PART OF 565-0288 ENGINE AR-PRIMARY**

**SMCS-1107** **i05372619**

| NOTE | REF NO | GRAPHIC REF | PART NUMBER | QTY | PART NAME 1 2 3 4 5 6 (PRODUCT LEVEL) | SEE PAGE |
|---|---|---|---|---|---|---|
| Y | 1 | 1 | **335-6883** | 1 | COVER GP-VALVE MECHANISM | 8 |
| M | 2 | 1 | **6I-0254** | 14 | BOLT (M8X1.25X30-MM) | |

M - METRIC PART
Y - SEPARATE ILLUSTRATION

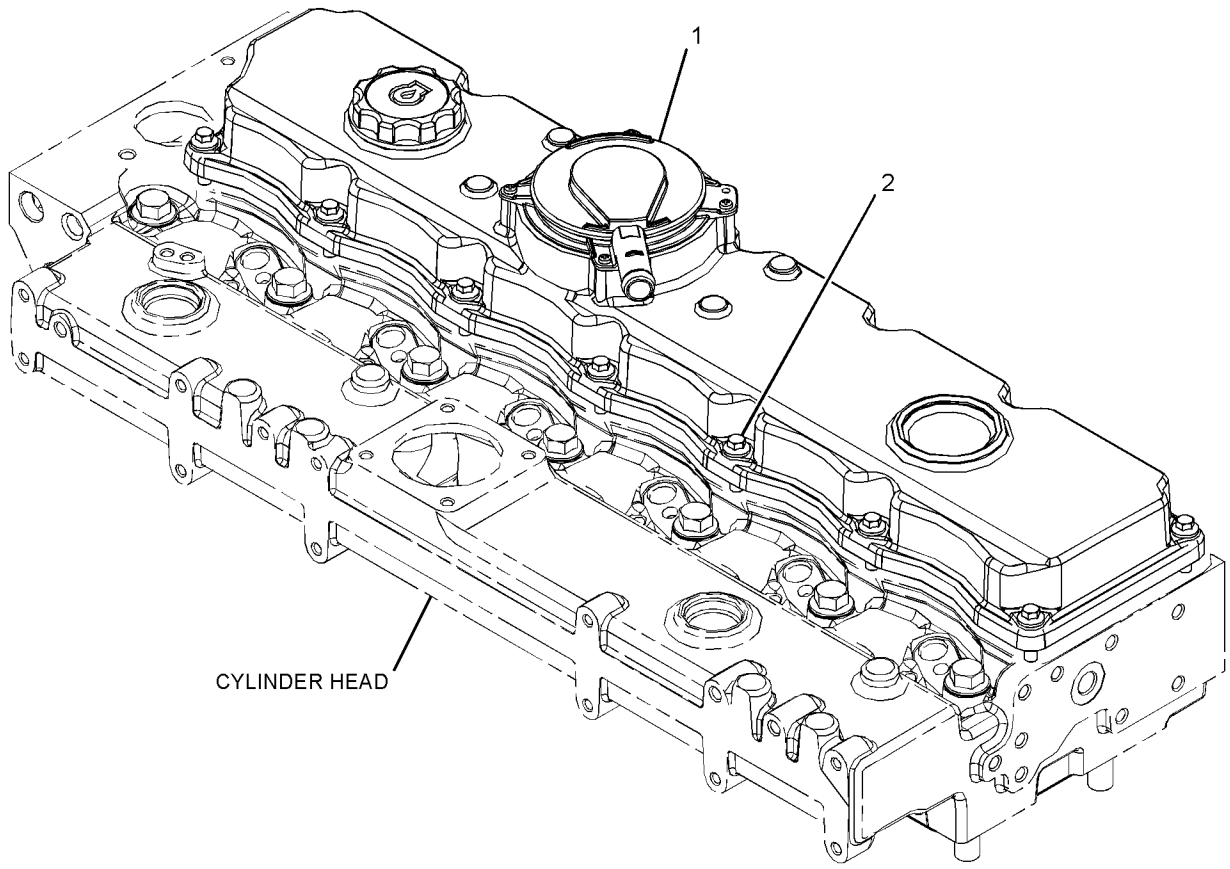


GRAPHIC #1 <END> g03403678

# *348-3285* CRANKSHAFT GP

**S/N: H761-UP**

**PART OF 425-0779 CYLINDER BLOCK GP-SHORT, 565-0288 ENGINE AR-PRIMARY**

**SMCS-1202** **i06960759**

| NOTE | REF NO | GRAPHIC REF | PART NUMBER | QTY | PART NAME 1 2 3 4 5 6 (PRODUCT LEVEL) | SEE PAGE |
|---|---|---|---|---|---|---|
| L | 1 | 1 | *470-8101* | 7 | BEARING-CRANKSHAFT (STANDARD-UPPER) | |
| L | 2 | 1 | *470-8171* | 7 | BEARING-CRANKSHAFT (STANDARD-LOWER) | |
| J | 3 | 1 | **363-0559** | 2 | WASHER-THRUST | |
| | 4 | 1 | **376-4074** | 1 | CRANKSHAFT | |
| | 5 | 1 | **067-6135** | 1 | KEY-WOODRUFF | |
| | 6 | 1 | **276-7391** | 1 | GEAR (34-TEETH) | |
| | | | | | AVAILABLE REPAIR KIT(S): | |
| L | | | **448-4217** | 1 | KIT-BEARING (STANDARD) (CRANKSHAFT) | |
| | | | | | (INCLUDES BEARINGS) | |
| AB | | | **454-3745** | 1 | KIT-BEARING (0.254-MM US) | |
| | | | | | (INCLUDES BEARINGS) | |
| AB | | | **454-3931** | 1 | KIT-BEARING (0.508-MM US) | |
| | | | | | (INCLUDES BEARINGS) | |
| AB | | | **454-3935** | 1 | KIT-BEARING (0.762-MM US) | |
| | | | | | (INCLUDES BEARINGS) | |
| J | | | **364-5145** | 1 | KIT-WASHER (STANDARD) (CRANKSHAFT) | |
| | | | | | (INCLUDES WASHERS) | |
| AB | | | **448-4227** | 1 | KIT-WASHER (0.20-MM US) | |
| | | | | | (INCLUDES WASHERS) | |

A - NOT PART OF THIS GROUP
B - USE AS REQUIRED
J - KIT MARKED J SERVICES PART(S) MARKED J
L - KIT MARKED L SERVICES PART(S) MARKED L

*348-3285* **CRANKSHAFT GP (**contd.**)** **i06960759**

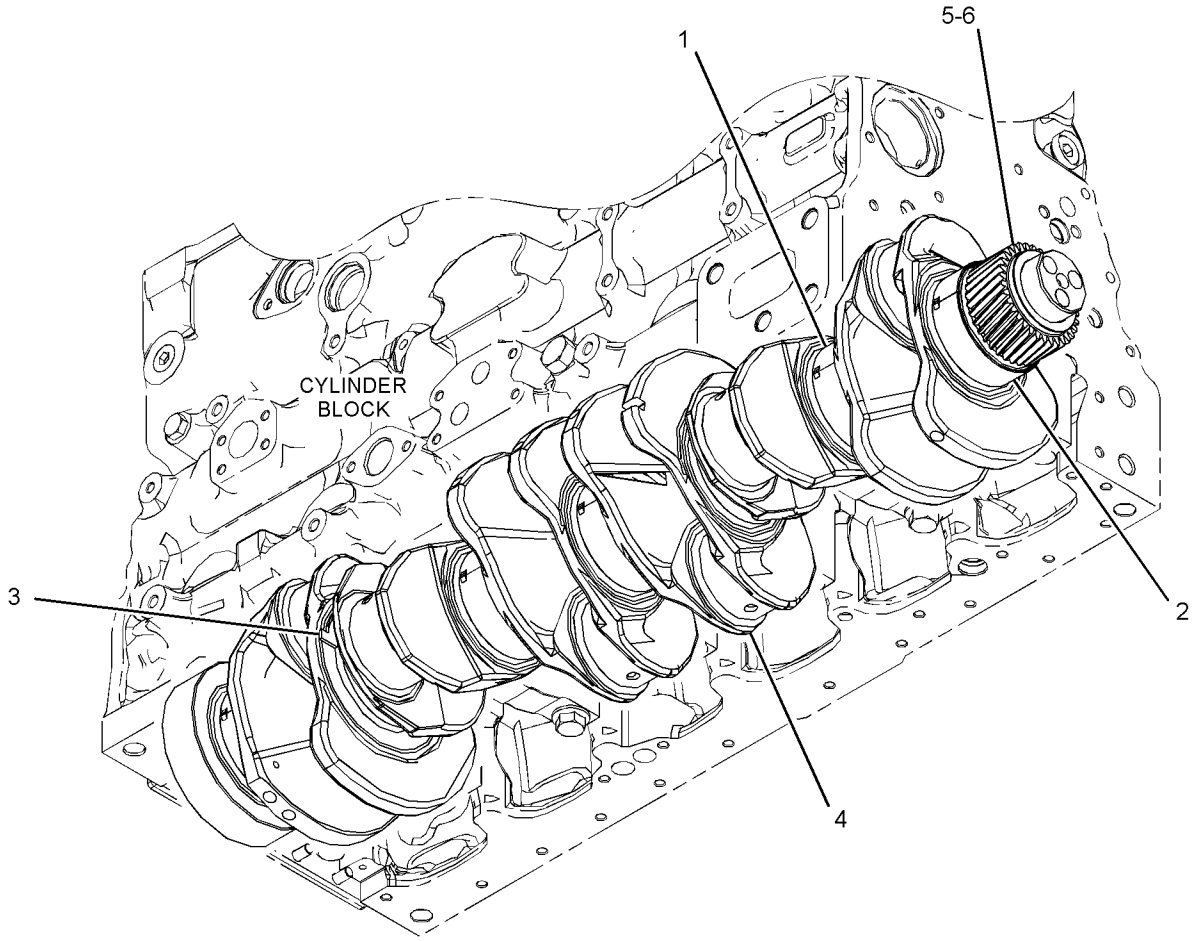


GRAPHIC #1 <END> g03320275

# *331-1682* CYLINDER BLOCK AS

**S/N: H761-UP**

**PART OF 348-3283 CYLINDER BLOCK GP**

**SMCS-1201** **i06914659**

| NOTE | REF NO | GRAPHIC REF | PART NUMBER | QTY | PART NAME 1 2 3 4 5 6 (PRODUCT LEVEL) | SEE PAGE |
|---|---|---|---|---|---|---|
| | 1 | 1 | **067-6043** | 7 | PLUG-SIDE | |
| | 2 | 1 | **185-0884** | 2 | DOWEL | |
| | 3 | 1 | **225-8858** | 2 | PLUG | |
| | 4 | 1 | **232-7597** | 2 | PLUG | |
| | 5 | 1 | **232-7599** | 2 | PLUG | |
| | 6 | 1 | **276-5602** | 2 | PLUG-CORE | |
| | 7 | 1 | **232-7596** | 1 | PLUG | |
| | 8 | 1 | **067-6823** | 1 | PLUG | |
| | 9 | 1 | **276-5600** | 14 | BOLT-SPECIAL (BEARING CAP) | |
| | 10 | 1 | **370-6545** | 1 | BUSHING-CAMSHAFT | |

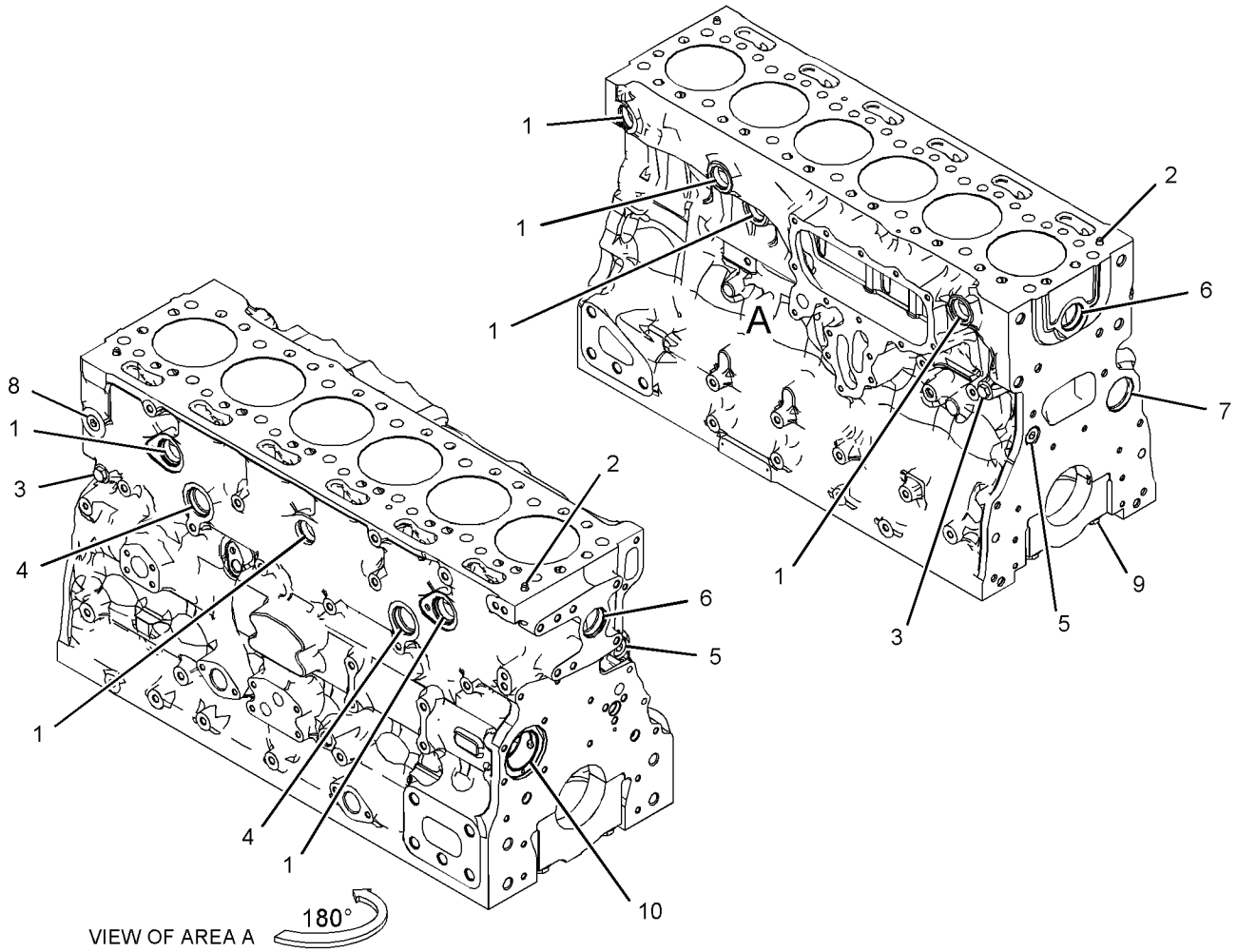


VIEW OF AREA A

GRAPHIC #1 <END> g06004757

# *348-3283* CYLINDER BLOCK GP

**S/N: H761-UP**

**PART OF 425-0779 CYLINDER BLOCK GP-SHORT, 565-0288 ENGINE AR-PRIMARY**

**SMCS-1201** **i05245790**

| NOTE | REF NO | GRAPHIC REF | PART NUMBER | QTY | PART NAME 1 2 3 4 5 6 (PRODUCT LEVEL) | SEE PAGE |
|---|---|---|---|---|---|---|
| M | 1 | 1 | **209-9219** | 10 | BOLT (M8X1.25X16-MM) | |
| | 2 | 1 | **232-1322** | 1 | PLUG | |
| | 3 | 1 | **276-5603** | 1 | SEAL-O-RING | |
| Y | 4 | 1 | *331-1682* | 1 | CYLINDER BLOCK AS | 12 |
| | 5 | 1 | **232-7449** | 1 | HOUSING AS | |

M - METRIC PART
Y - SEPARATE ILLUSTRATION

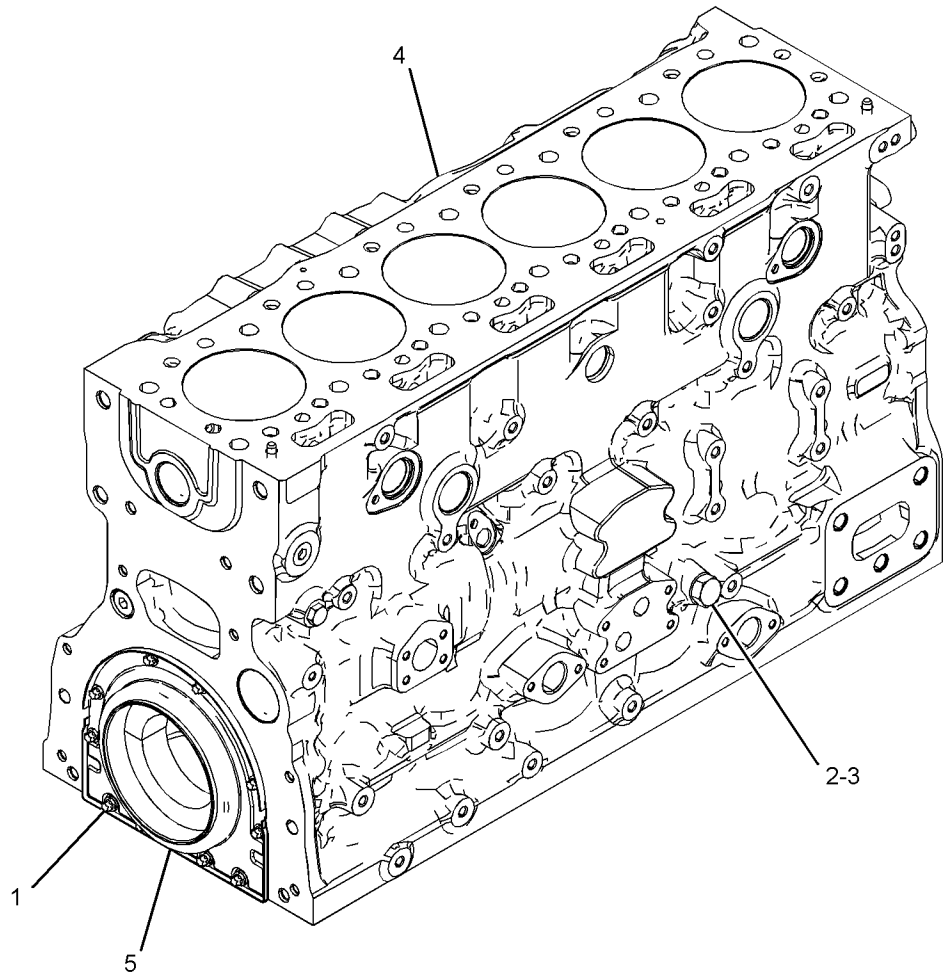


GRAPHIC #1 <END> g03318997

## 425-0779 CYLINDER BLOCK GP-SHORT

**S/N: H761-UP**

**PART OF 476-6625 CYLINDER BLOCK GP-SHORT**

**SMCS-1200** **i07405439**

| NOTE | PART NUMBER | QTY | PART NAME 1 2 3 4 5 6 (PRODUCT LEVEL) | SEE PAGE |
|---|---|---|---|---|
| Y | *348-3285* | 1 | CRANKSHAFT GP | 10 |
| Y | *348-3283* | 1 | CYLINDER BLOCK GP | 13 |
| Y | *348-3503* | 1 | JET GP-PISTON COOLING | 25 |
| Y | *348-3300* | 1 | PISTON & ROD GP | 34 |

Y - SEPARATE ILLUSTRATION

<END>

## *476-6625* CYLINDER BLOCK GP-SHORT

**S/N: H761-UP**

**PART OF 565-5300 CONFIGURATION AR**

**SMCS-1200** **i07407188**

| NOTE | PART NUMBER | QTY | PART NAME 1 2 3 4 5 6 (PRODUCT LEVEL) | SEE PAGE |
|---|---|---|---|---|
| Y | **425-0779** | 1 | CYLINDER BLOCK GP-SHORT | 14 |

Y - SEPARATE ILLUSTRATION

<END>

# *391-3193* CYLINDER HEAD GP

**S/N: H761-UP**

**PART OF 425-3316 CYLINDER HEAD GP, 565-0288 ENGINE AR-PRIMARY**

**SMCS-1100** **i07647971**

| NOTE | REF NO | GRAPHIC REF | PART NUMBER | QTY | PART NAME 1 2 3 4 5 6 (PRODUCT LEVEL) | SEE PAGE |
|---|---|---|---|---|---|---|
| | 1 | 1 | **335-7055** | 14 | BOLT | |
| | 2 | 1 | **359-6616** | 1 | GASKET (CYLINDER HEAD) | |
| | 3 | 1 | **450-9263** | 1 | CYLINDER HEAD GP | |
| | | 1 | **067-6006** | 6 | PLUG | |
| | | 1 | **335-6264** | 12 | GUIDE-VALVE | |
| | | 1 | **542-1363** | 8 | PLUG-CUP | |
| | | 1 | **335-6266** | 6 | INSERT-VALVE SEAT | |
| | | 1 | **381-6236** | 6 | INSERT-VALVE SEAT | |

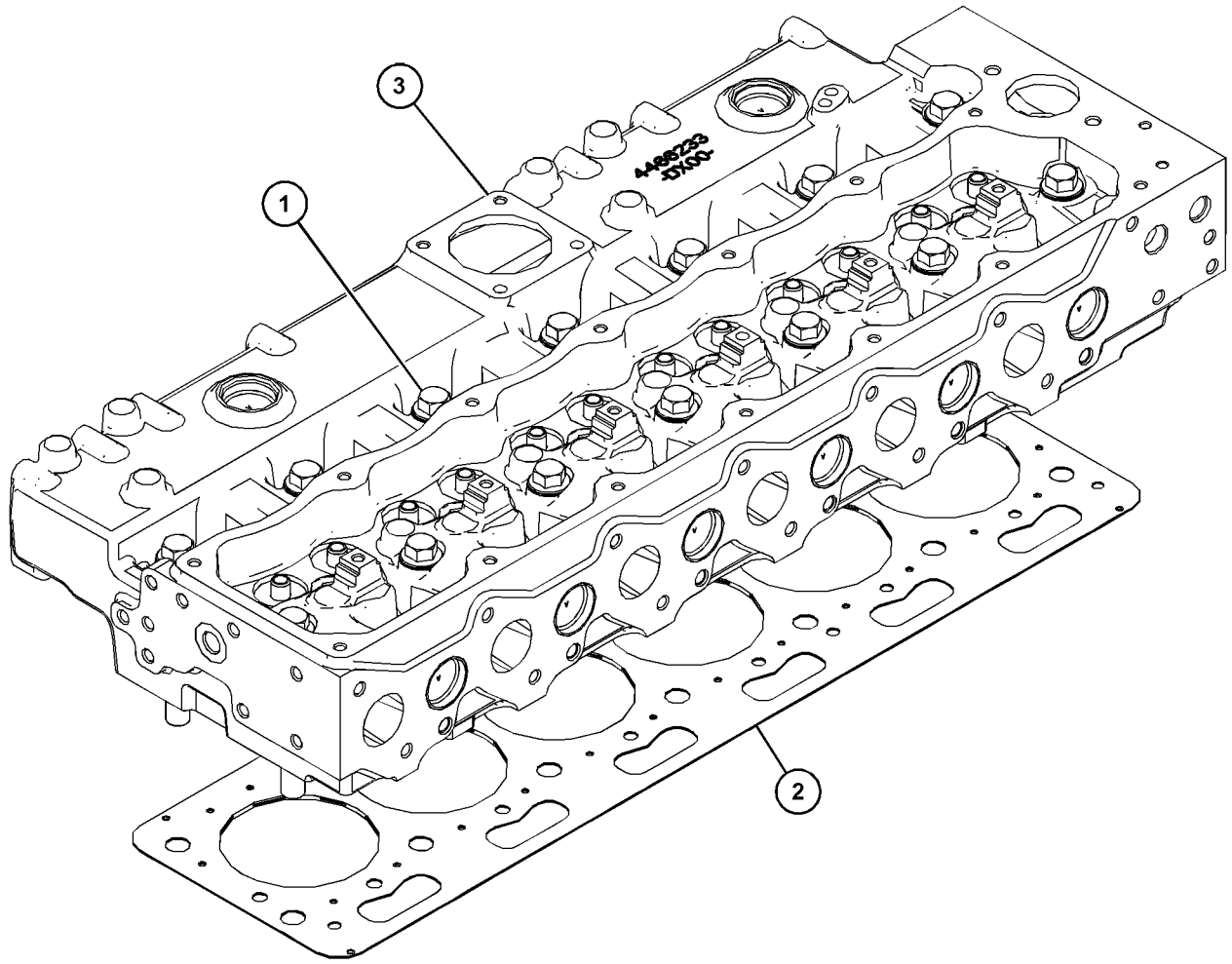


GRAPHIC #1 <END> g06149931

# 425-3316 CYLINDER HEAD GP

**S/N: H761-UP**

**PART OF 476-6624 CYLINDER HEAD GP**

**SMCS-1100** **i07405438**

| NOTE | REF NO | GRAPHIC REF | PART NUMBER | QTY | PART NAME 1 2 3 4 5 6 (PRODUCT LEVEL) | SEE PAGE |
|---|---|---|---|---|---|---|
| Y | 1 | 1 | *391-3193* | 1 | CYLINDER HEAD GP | 15 |
| Y | 2 | 1 | *438-3180* | 1 | ROCKER ARM GP | 40 |

Y - SEPARATE ILLUSTRATION

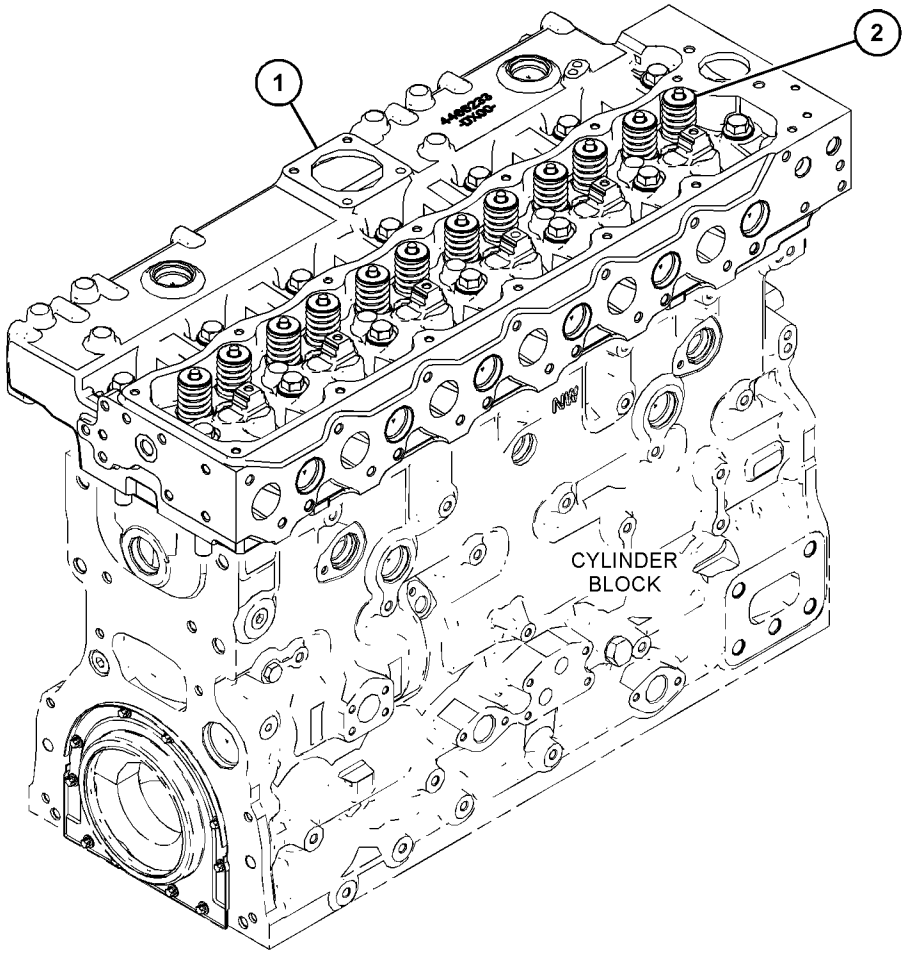


GRAPHIC #1 <END> g06198264

# *476-6624* CYLINDER HEAD GP

**S/N: H761-UP**

**PART OF 565-5300 CONFIGURATION AR**

**SMCS-1100** **i07407190**

| NOTE | PART NUMBER | QTY | PART NAME 1 2 3 4 5 6 (PRODUCT LEVEL) | SEE PAGE |
|---|---|---|---|---|
| Y | **425-3316** | 1 | CYLINDER HEAD GP (SHORT) | 16 |

Y - SEPARATE ILLUSTRATION

<END>

# *509-8503* DRAIN GP-OIL

**S/N: H761-UP**

**PART OF 565-0288 ENGINE AR-PRIMARY**

**SMCS-1302** **i07406094**

| NOTE | REF NO | GRAPHIC REF | PART NUMBER | QTY | PART NAME 1 2 3 4 5 6 (PRODUCT LEVEL) | SEE PAGE |
|---|---|---|---|---|---|---|
| | 1 | 1 | **6V-7238** | 1 | VALVE-SHUTOFF | |
| | 2 | 1 | **3K-0360** | 1 | SEAL-O-RING | |

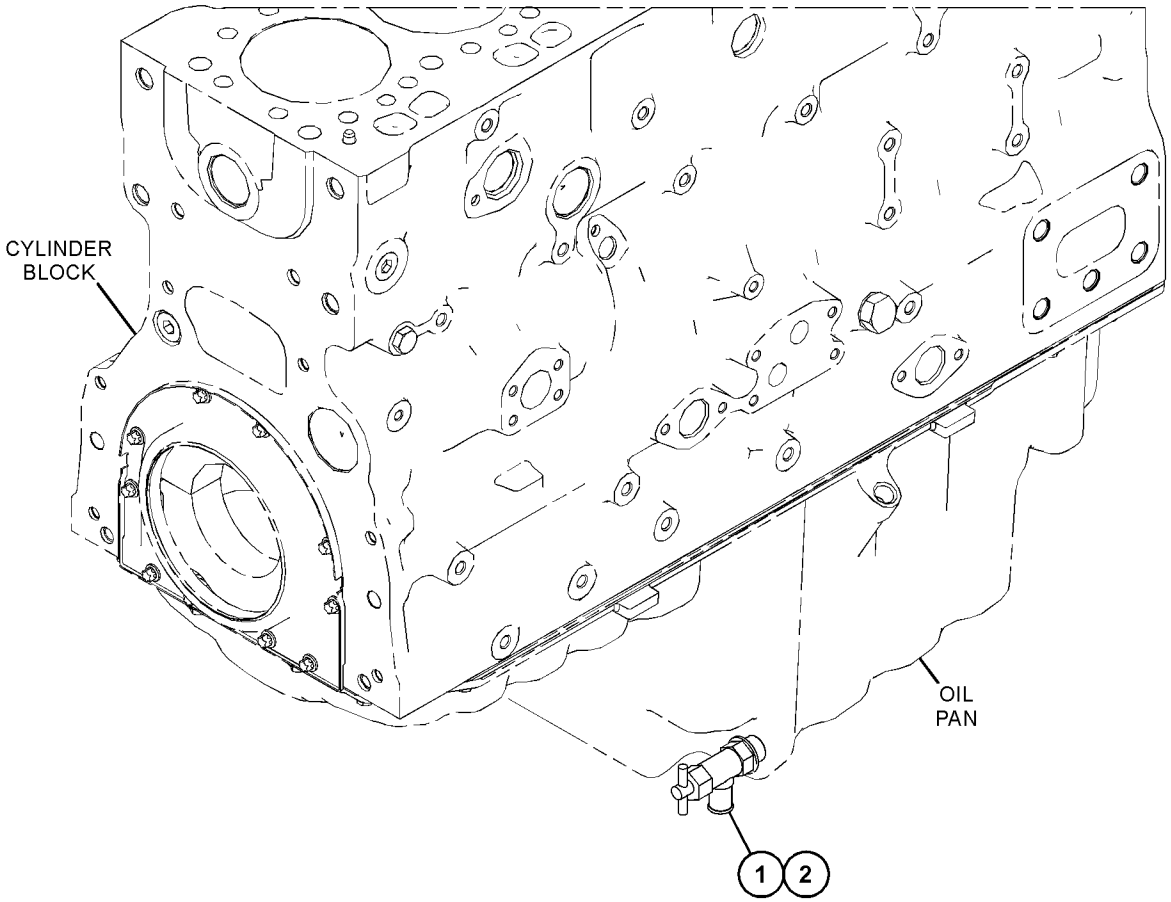


GRAPHIC #1 <END> g06314799

# *396-6979* DRIVE GP-FAN

**S/N: H761-UP**

**PART OF 565-0288 ENGINE AR-PRIMARY**

**SMCS-1359** **i05245916**

| NOTE | REF NO | GRAPHIC REF | PART NUMBER | QTY | PART NAME 1 2 3 4 5 6 (PRODUCT LEVEL) | SEE PAGE |
|---|---|---|---|---|---|---|
| M | 1 | 1 | **6I-0593** | 10 | BOLT (M10X1.5X30-MM) | |
| | 2 | 1 | **321-9994** | 1 | DRIVE AS-FAN | |
| | 2A | 1 | **176-0773** | 1 | CLIP | |
| | 3 | 1 | **348-5434** | 1 | IDLER AS | |
| | 4 | 1 | **379-2023** | 1 | BRACKET | |
| | 5 | 1 | **388-1869** | 1 | BRACKET AS | |
| | 5A | 1 | **339-8780** | 1 | DOWEL | |
| | 5B | 1 | **379-2022** | 1 | BRACKET | |
| M | 6 | 1 | **6I-0654** | 3 | BOLT (M10X1.5X25-MM) | |
| M | 7 | 1 | **273-9292** | 2 | BOLT (M16X2X65-MM) | |
| | 8 | 1 | **277-6078** | 1 | BRACKET | |

M - METRIC PART

*396-6979* **DRIVE GP-FAN (**contd.**)** **i05245916**

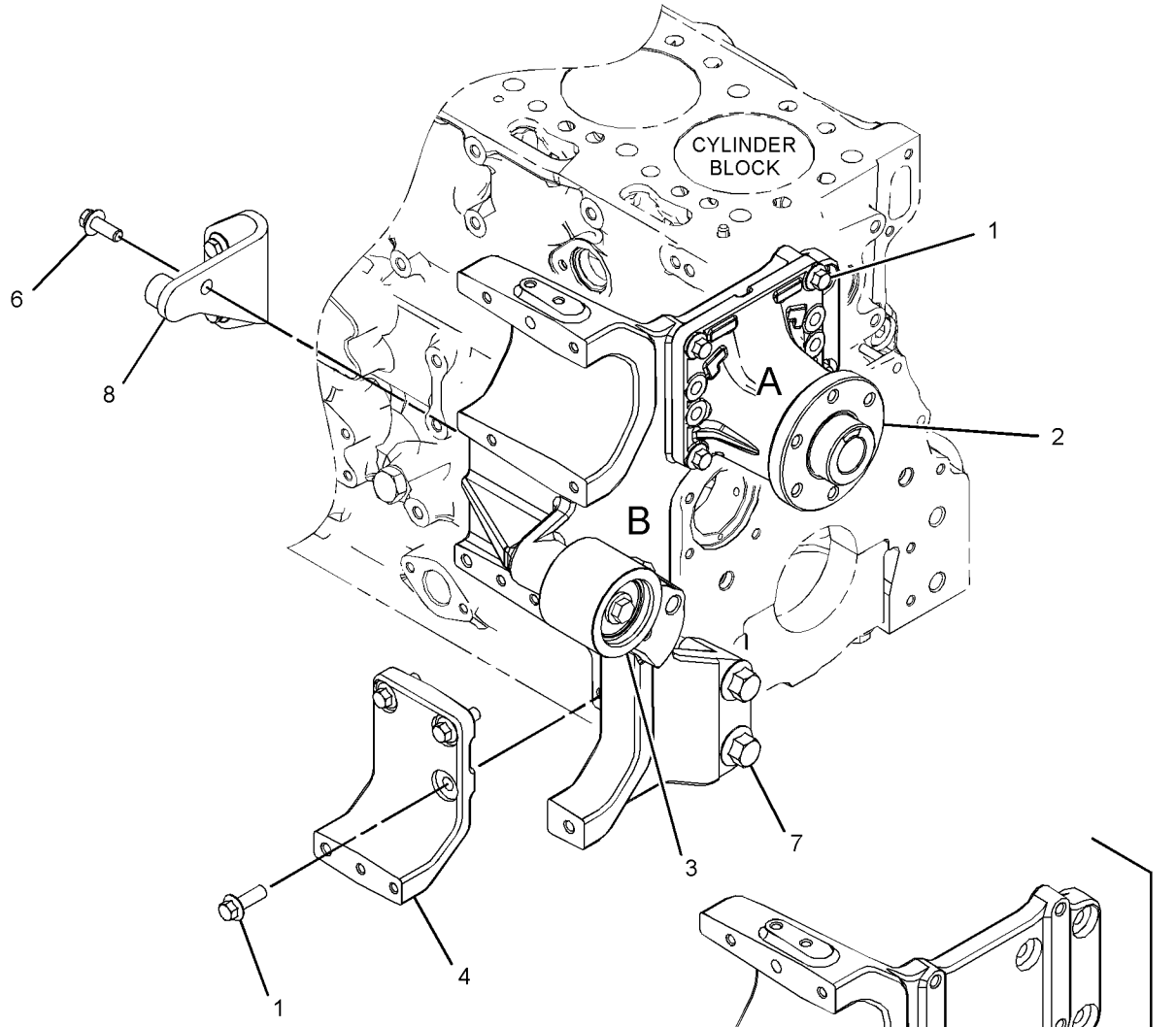


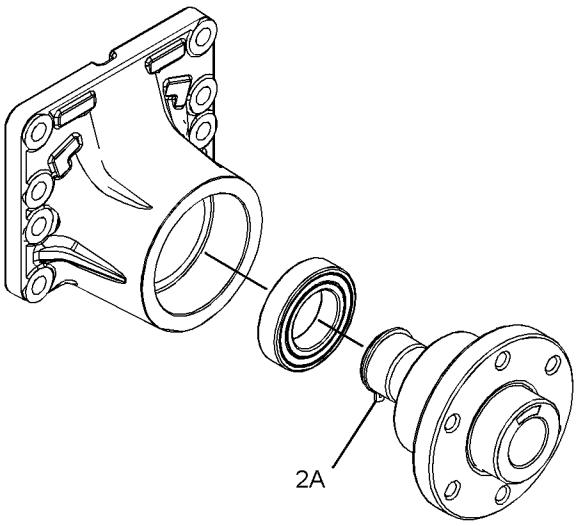


VIEW OF AREA A
(PARTS REMOVED FOR CLARITY)

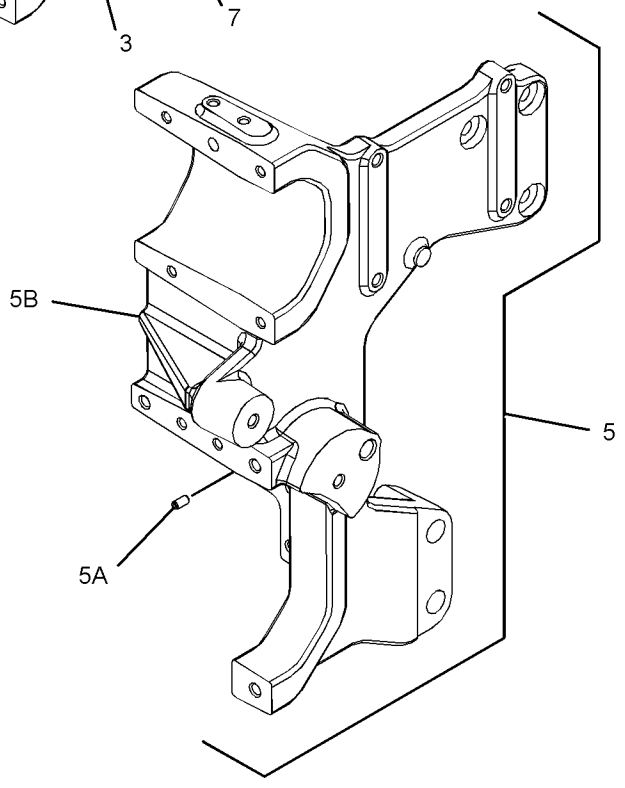


VIEW OF AREA B
(PARTS REMOVED FOR CLARITY)

GRAPHIC #1 <END> g03319707

# *371-2539* FLYWHEEL GP

**S/N: H761-UP**

**PART OF 565-0288 ENGINE AR-PRIMARY**

**SMCS-1156** **i05245808**

| NOTE | REF NO | GRAPHIC REF | PART NUMBER | QTY | PART NAME 1 2 3 4 5 6 (PRODUCT LEVEL) | SEE PAGE |
|---|---|---|---|---|---|---|
| | 1 | 1 | **145-4911** | 12 | WASHER | |
| | 2 | 1 | **378-4739** | 1 | FLYWHEEL AS | |
| | | 1 | **277-0588** | 1 | GEAR-STARTING MOTOR RING (134-TEETH) | |
| | 3 | 1 | **0S-1603** | 12 | BOLT (1/2-20X1.5-IN) | |

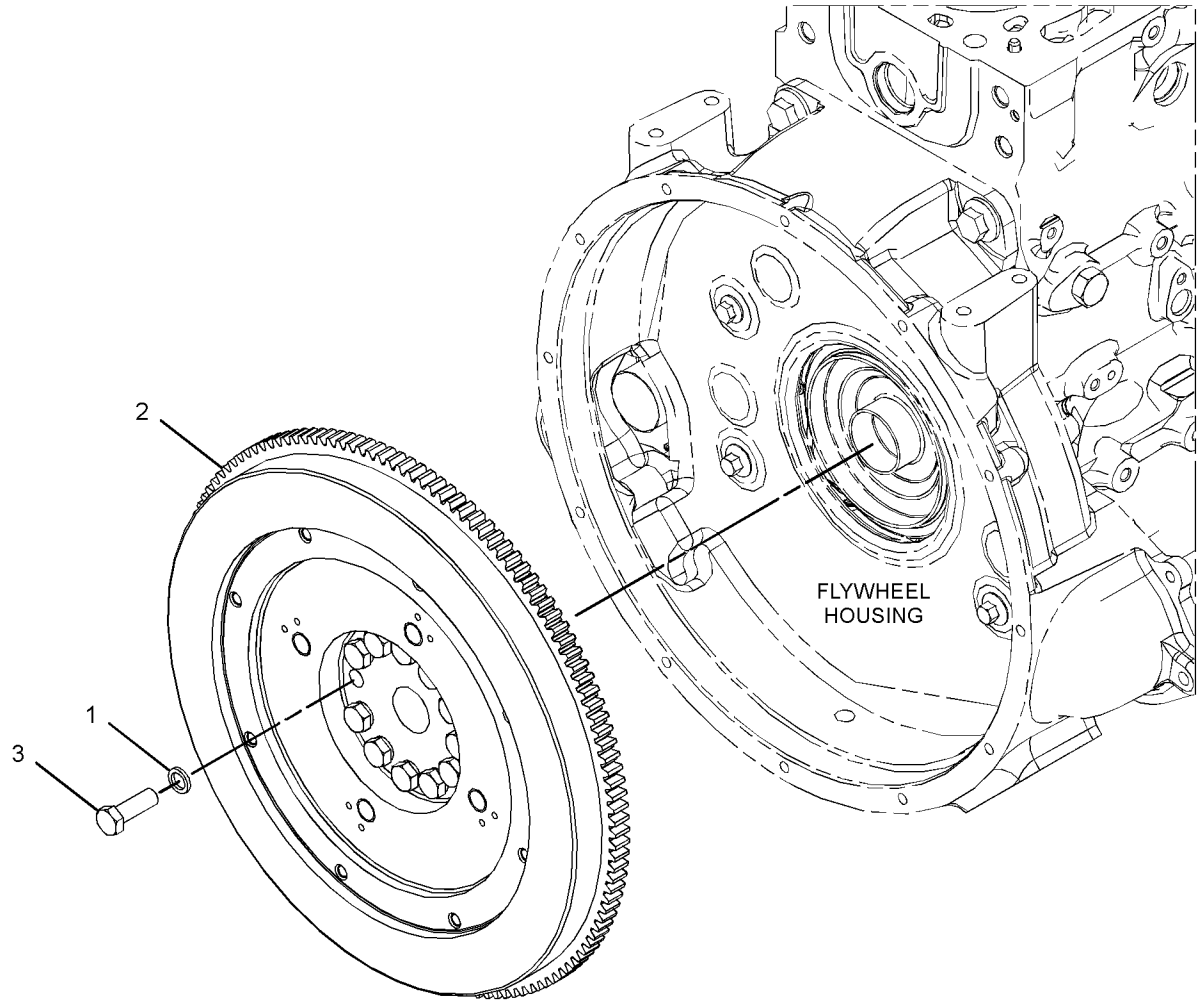


GRAPHIC #1 <END> g02629056

# *396-6954* HOUSING GP-FLYWHEEL

**S/N: H761-UP**

**PART OF 565-0288 ENGINE AR-PRIMARY**

**SMCS-1157** **i06189340**

| NOTE | REF NO | GRAPHIC REF | PART NUMBER | QTY | PART NAME 1 2 3 4 5 6 (PRODUCT LEVEL) | SEE PAGE |
|---|---|---|---|---|---|---|
| M | 1 | 1 | **6I-0917** | 2 | BOLT (M6X1X25-MM) | |
| | 2 | 1 | **354-8322** | 1 | PLUG | |
| M | 3 | 1 | **283-4662** | 2 | BOLT-FLANGE HEAD | |
| | 4 | 1 | **287-8597** | 2 | DOWEL | |
| M | 5 | 1 | **288-6974** | 4 | BOLT (M10X1.5X50-MM) | |
| | 6 | 1 | **335-2092** | 1 | COVER-FLYWHEEL | |
| | 7 | 1 | **393-4006** | 1 | GASKET | |
| | 8 | 1 | **394-5874** | 1 | HOUSING-FLYWHEEL | |
| M | 9 | 1 | **288-6975** | 2 | BOLT (M16X2X40-MM) | |

M - METRIC PART

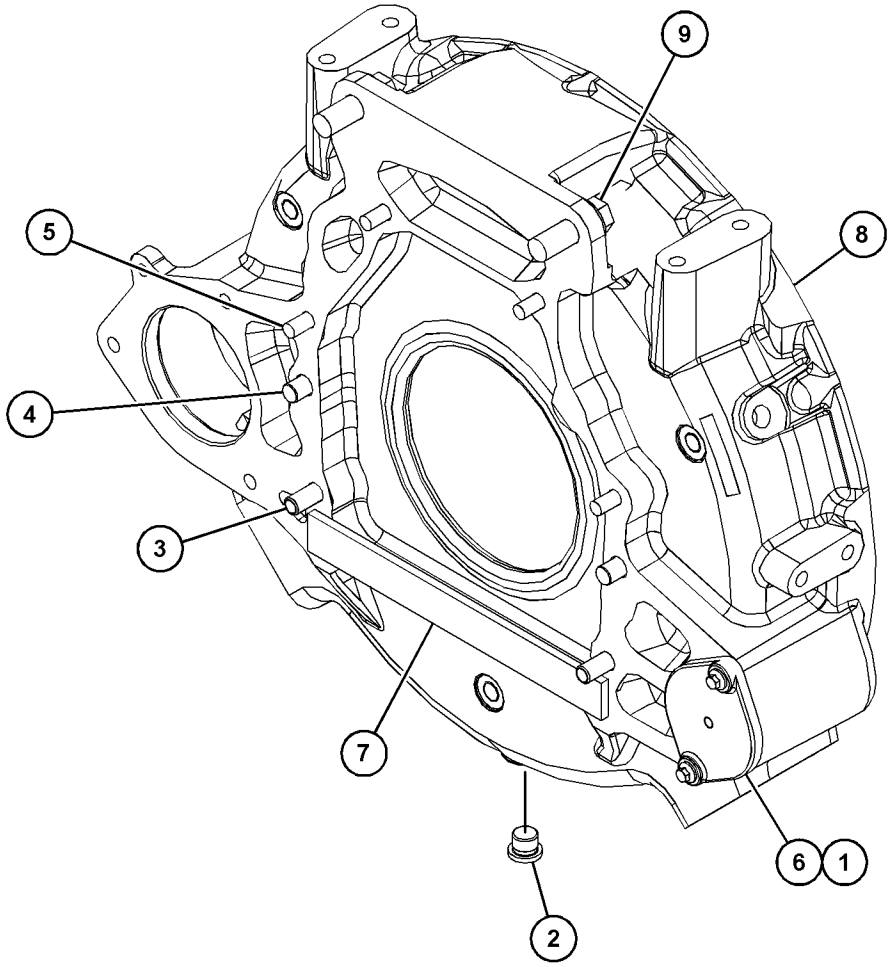


GRAPHIC #1 <END> g03851693

# *346-0495* HOUSING GP-FRONT

**S/N: H761-UP**

**PART OF 565-0288 ENGINE AR-PRIMARY**

**SMCS-1151, 1162, 1206** **i05906025**

| NOTE | REF NO | GRAPHIC REF | PART NUMBER | QTY | PART NAME 1 2 3 4 5 6 (PRODUCT LEVEL) | SEE PAGE |
|---|---|---|---|---|---|---|
| M | 1 | 1 | **6I-0217** | 6 | BOLT (M8X1.25X20-MM) | |
| M | 2 | 1 | **6I-0645** | 4 | BOLT (M8X1.25X25-MM) | |
| M | 3 | 1 | **6I-0650** | 3 | BOLT (M10X1.5X65-MM) | |
| M | 4 | 1 | **7C-4616** | 1 | BOLT (M12X1.75X45-MM) | |
| | 5 | 1 | **067-6179** | 1 | DOWEL | |
| M | 6 | 1 | **100-3751** | 5 | BOLT (M8X1.25X65-MM) | |
| M | 7 | 1 | **101-3895** | 2 | BOLT (M8X1.25X35-MM) | |
| M | 8 | 1 | **124-3815** | 10 | BOLT (M8X1.25X16-MM) | |
| | 9 | 1 | **133-1011** | 1 | WASHER | |
| | 10 | 1 | **216-8634** | 1 | GEAR-CAMSHAFT (68-TEETH) | |
| | 11 | 1 | **277-3012** | 1 | GASKET-COVER | |
| | 12 | 1 | **277-3013** | 1 | SEAL | |
| | 13 | 1 | **277-4223** | 1 | PLUG | |
| | 14 | 1 | **294-0286** | 1 | KIT-COVER | |
| | 15 | 1 | **346-0408** | 1 | PLATE | |
| | 16 | 1 | **232-3657** | 1 | COVER AS-FRONT | |
| | 16A | 1 | **225-8287** | 1 | GASKET | |
| | 17 | 1 | **232-3666** | 1 | WASHER-THRUST | |
| | 18 | 1 | **324-0444** | 1 | HUB-IDLER GEAR | |
| | 19 | 1 | **346-0407** | 1 | GEAR-IDLER | |

M - METRIC PART

*346-0495* **HOUSING GP-FRONT (**contd.**)** **i05906025**

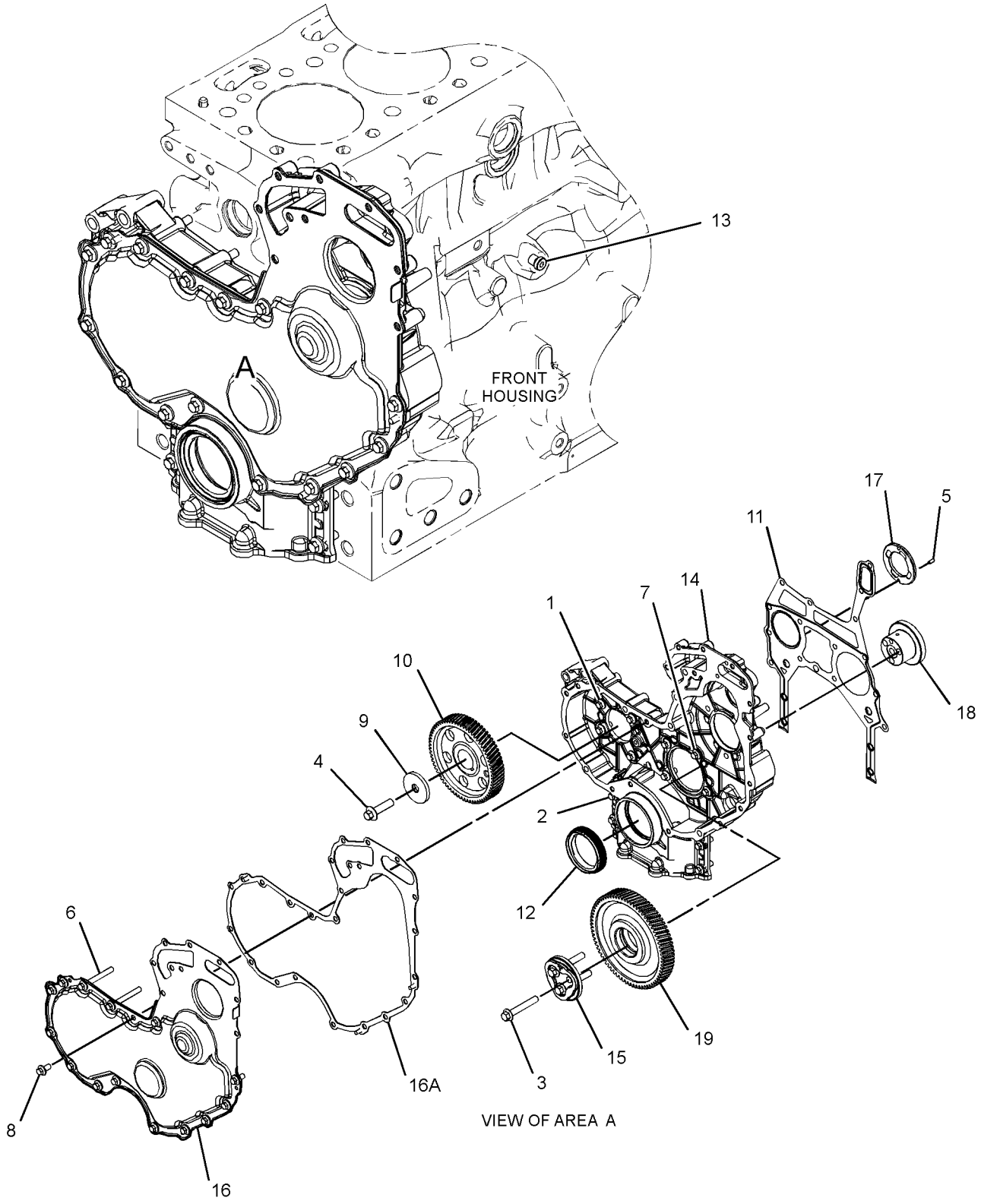


GRAPHIC #1 <END> g03316774

# *348-3503* JET GP-PISTON COOLING

**S/N: H761-UP**

**PART OF 425-0779 CYLINDER BLOCK GP-SHORT, 565-0288 ENGINE AR-PRIMARY**

**SMCS-1331** **i05245805**

| NOTE | REF NO | GRAPHIC REF | PART NUMBER | QTY | PART NAME 1 2 3 4 5 6 (PRODUCT LEVEL) | SEE PAGE |
|---|---|---|---|---|---|---|
| M | 1 | 1 | **100-4841** | 6 | BOLT (M6X1X10-MM) | |
| | 2 | 1 | **329-3796** | 6 | TUBE AS-OIL JET | |

M - METRIC PART

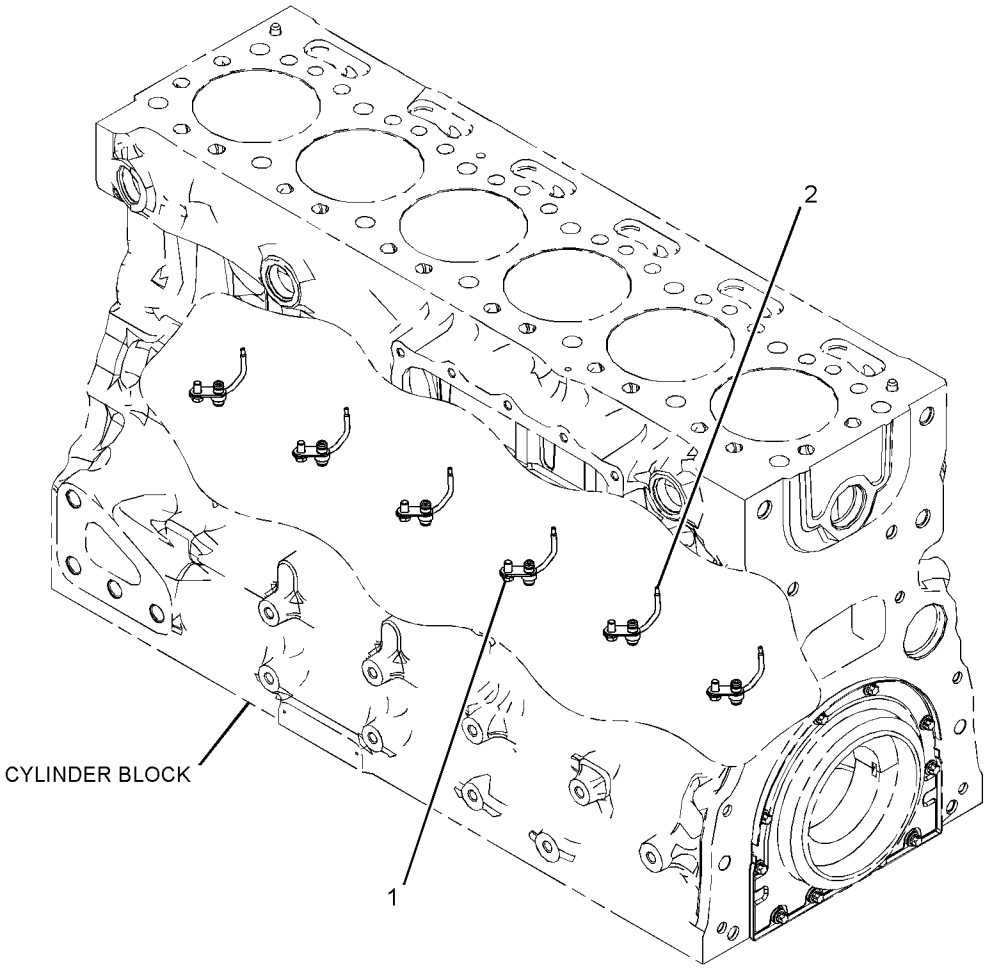


GRAPHIC #1 <END> g03316934

# *415-4600* LIFTING GP-ENGINE

**S/N: H761-UP**

**PART OF 565-0288 ENGINE AR-PRIMARY**

**SMCS-1122** **i05245926**

| NOTE | REF NO | GRAPHIC REF | PART NUMBER | QTY | PART NAME 1 2 3 4 5 6 (PRODUCT LEVEL) | SEE PAGE |
|---|---|---|---|---|---|---|
| M | 1 | 1 | **123-2899** | 4 | BOLT (M10X1.5X40-MM) | |
| M | 2 | 1 | **6I-0654** | 2 | BOLT (M10X1.5X25-MM) | |
| | 3 | 1 | **279-9651** | 1 | PLATE-LIFTING | |
| | 4 | 1 | **304-5062** | 1 | BRACKET | |
| | 5 | 1 | **304-5063** | 1 | BRACKET | |

M - METRIC PART

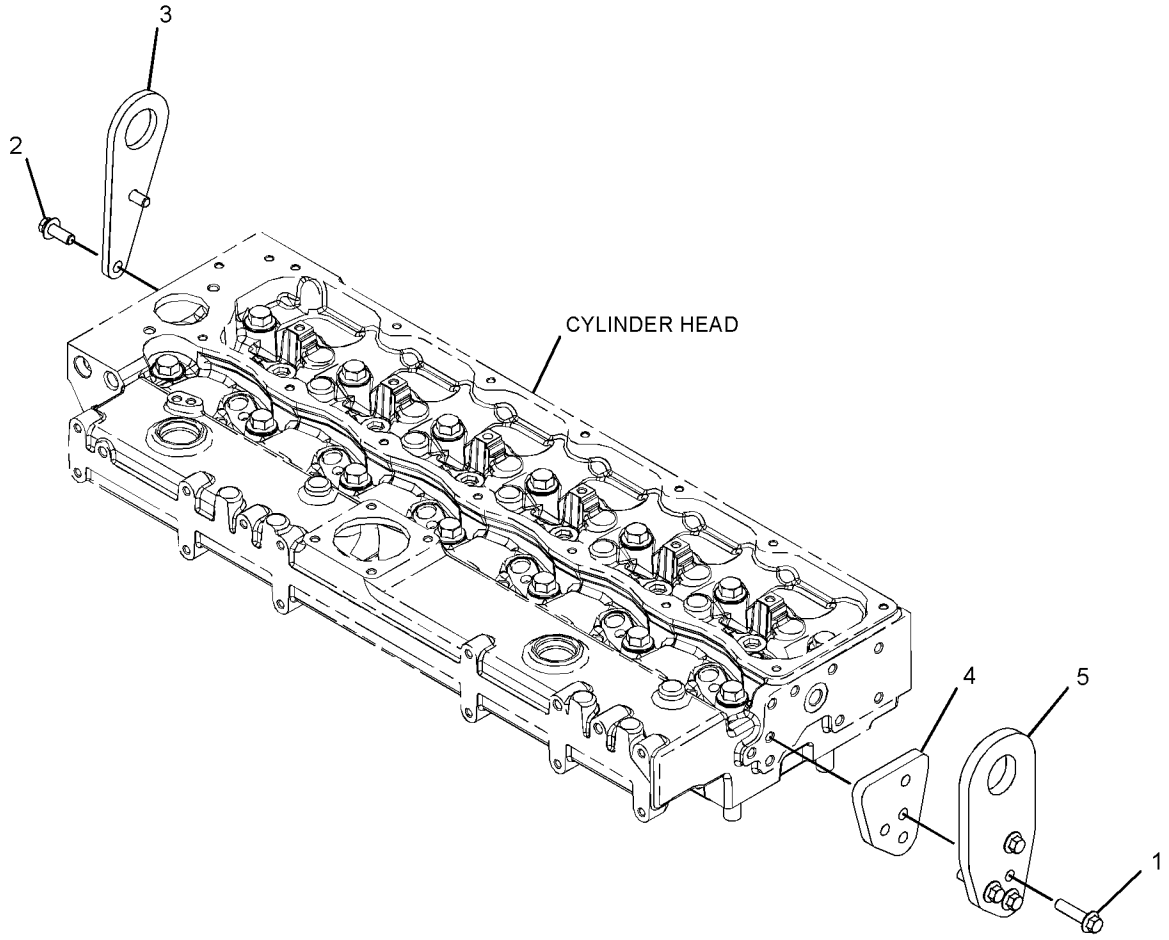


GRAPHIC #1 <END> g03317260

# *351-3886* MOUNTING GP-ENGINE

**S/N: FEY1-UP**

**PART OF 556-6438 INSTALLATION AR-ENGINE**

**SMCS-1152** **i05881710**

| NOTE | REF NO | GRAPHIC REF | PART NUMBER | QTY | PART NAME 1 2 3 4 5 6 (PRODUCT LEVEL) | SEE PAGE |
|---|---|---|---|---|---|---|
| | 1 | 1 | **118-9930** | 4 | SUPPORT AS | |
| M | | 1 | **8T-4131** | 1 | NUT (M20X2.5-THD) | |
| | 2 | 1 | **324-4488** | 4 | MOUNT-RUBBER | |
| | 3 | 1 | **324-4489** | 4 | MOUNT-RUBBER | |
| | 4 | 1 | **390-2252** | 2 | BRACKET | |
| | 5 | 1 | **109-9329** | 4 | WASHER (21.5X120X8-MM THK) | |
| | 6 | 1 | **451-2176** | 8 | WASHER-HARD (22X35X3.5-MM THK) | |
| | 7 | 1 | **451-2182** | 8 | WASHER-HARD (13.5X25.5X3-MM THK) | |
| M | 8 | 1 | **453-3450** | 8 | BOLT (M12X1.75X60-MM) | |
| M | 9 | 1 | **447-1715** | 4 | BOLT (M20X2.5X120-MM) | |

M - METRIC PART

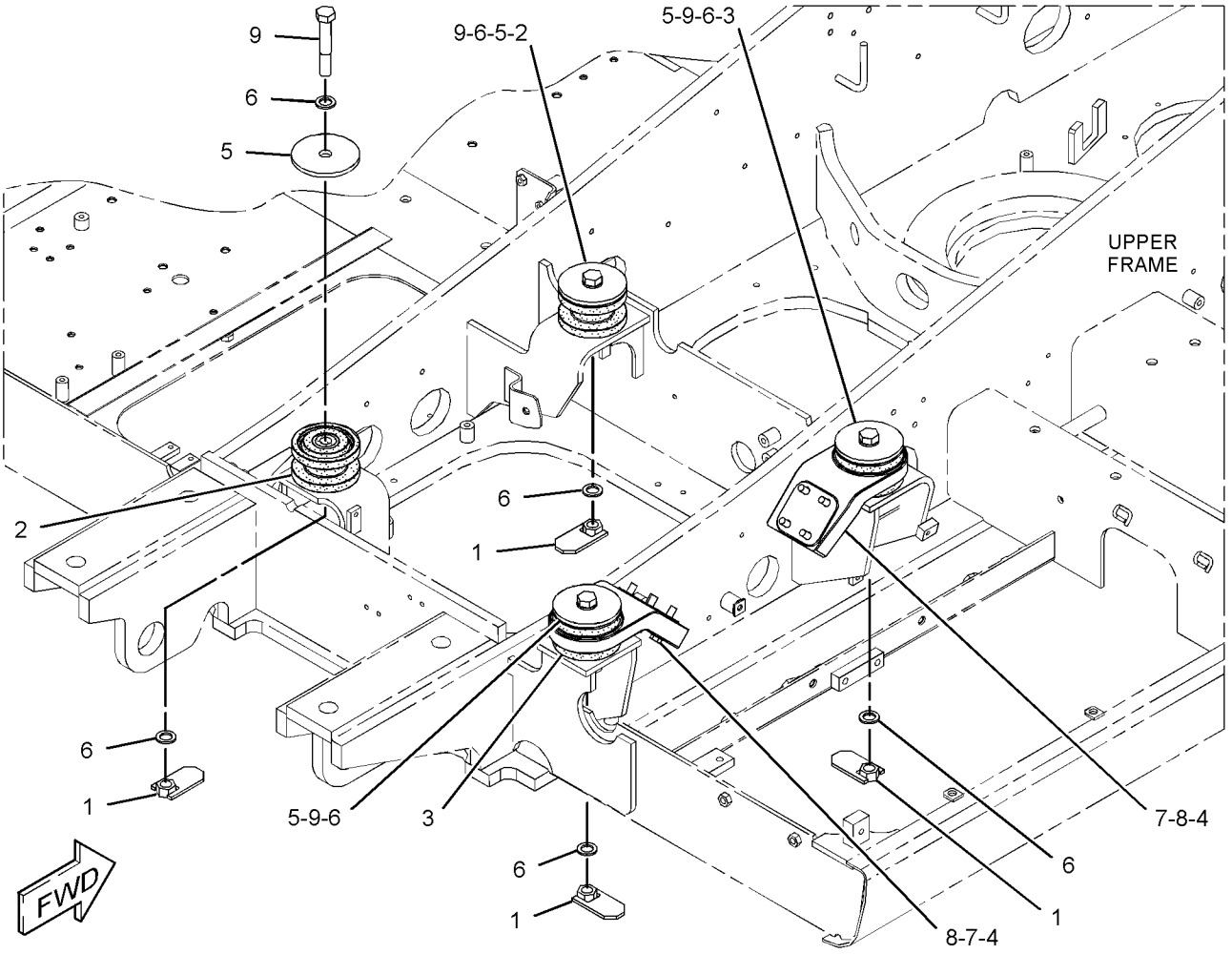


GRAPHIC #1 <END> g03103136

# *375-5008* MOUNTING GP-ENGINE

**S/N: H761-UP**

**PART OF 565-0288 ENGINE AR-PRIMARY**

**SMCS-1152** **i06944097**

| NOTE | REF NO | GRAPHIC REF | PART NUMBER | QTY | PART NAME 1 2 3 4 5 6 (PRODUCT LEVEL) | SEE PAGE |
|---|---|---|---|---|---|---|
| M | 1 | 1 | **283-8301** | 3 | BOLT (M16X2X60-MM) | |
| | 2 | 1 | **376-0601** | 1 | BRACKET | |
| | 3 | 1 | **515-1893** | 1 | BRACKET-FRONT | |
| M | 4 | 1 | **283-8302** | 6 | BOLT (M16X2X80-MM) | |

M - METRIC PART

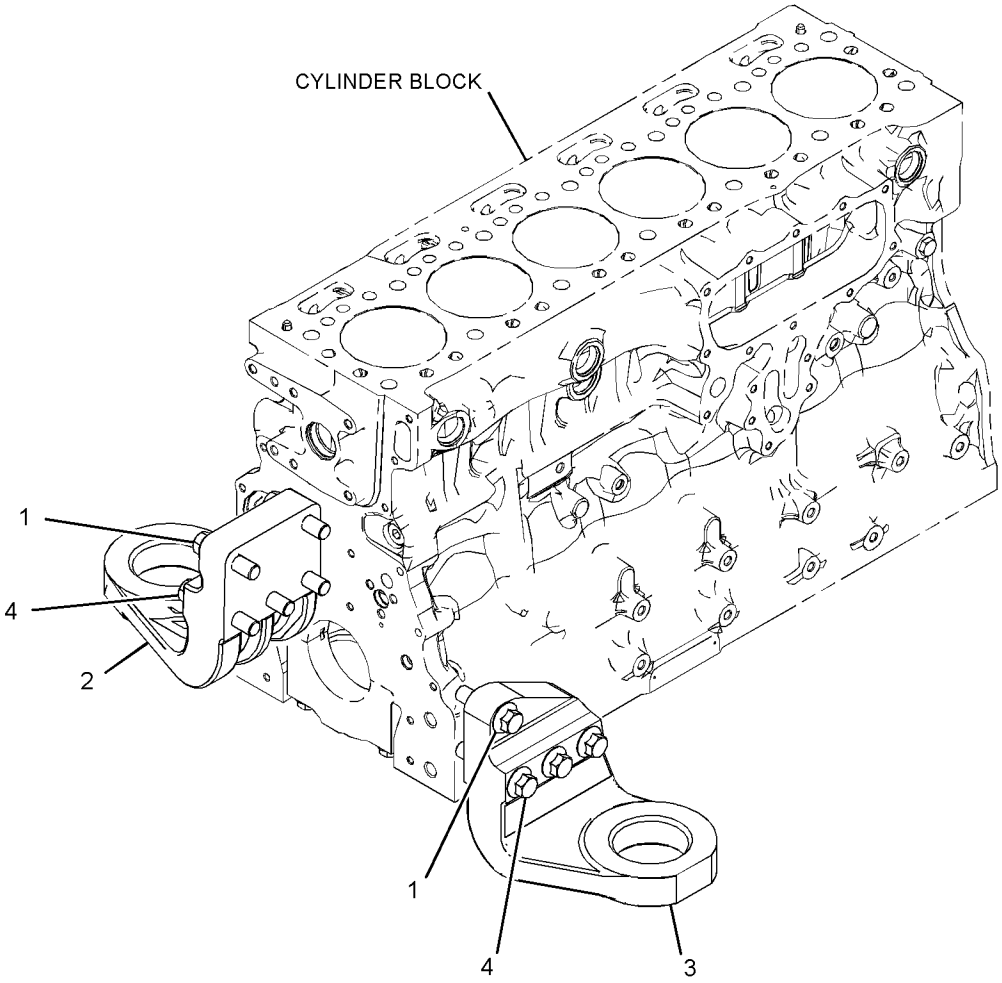


GRAPHIC #1 <END> g06187323

# *345-9694* PAN GP-OIL

**S/N: H761-UP**
**WITHOUT OIL LEVEL SENSOR**
**PART OF 565-0288 ENGINE AR-PRIMARY**

**SMCS-1302** **i07602428**

| NOTE | REF NO | GRAPHIC REF | PART NUMBER | QTY | PART NAME 1 2 3 4 5 6 (PRODUCT LEVEL) | SEE PAGE |
|---|---|---|---|---|---|---|
| M | 1 | 1 | **8T-0269** | 2 | BOLT-SOCKET HEAD (M6X1X20-MM) | |
| M | 2 | 1 | **6I-0654** | 1 | BOLT (M10X1.5X25-MM) | |
| M | 3 | 1 | **6I-4200** | 2 | BOLT (M10X1.5X16-MM) | |
| M | 4 | 1 | **124-3815** | 1 | BOLT (M8X1.25X16-MM) | |
| | 5 | 1 | **230-8094** | 1 | BRIDGE | |
| | 6 | 1 | **351-4749** | 1 | GASKET-OIL PAN | |
| | 7 | 1 | **6I-0289** | 1 | PLUG (M16X1.5-THD) | |
| Y | 8 | 1 | **377-4718** | 1 | PAN GP-OIL | 31 |
| | 9 | 1 | **378-8587** | 1 | GAUGE GP-OIL LEVEL (DIPSTICK) | |
| | | 1 | **317-6665** | 1 | TUBE-OIL GAUGE | |
| | | 1 | **275-9891** | 2 | SEAL-O-RING | |
| | 10 | 1 | **396-2395** | 1 | BRACKET AS | |
| M | 11 | 1 | **6I-0217** | 29 | BOLT (M8X1.25X20-MM) | |
| M | 12 | 1 | **6I-0260** | 2 | BOLT (M8X1.25X25-MM) | |
| M | 13 | 1 | **6I-0572** | 2 | BOLT (M8X1.25X20-MM) | |
| | 14 | 1 | **275-9897** | 1 | BRACKET | |
| | 15 | 1 | **280-1384** | 1 | TUBE AS-OIL SUCTION | |
| | | 1 | **236-5511** | 1 | CLIP-PIPE | |
| | 16 | 1 | **6I-4681** | 1 | GASKET | |

M - METRIC PART
Y - SEPARATE ILLUSTRATION

*345-9694* **PAN GP-OIL (**contd.**)** **i07602428**

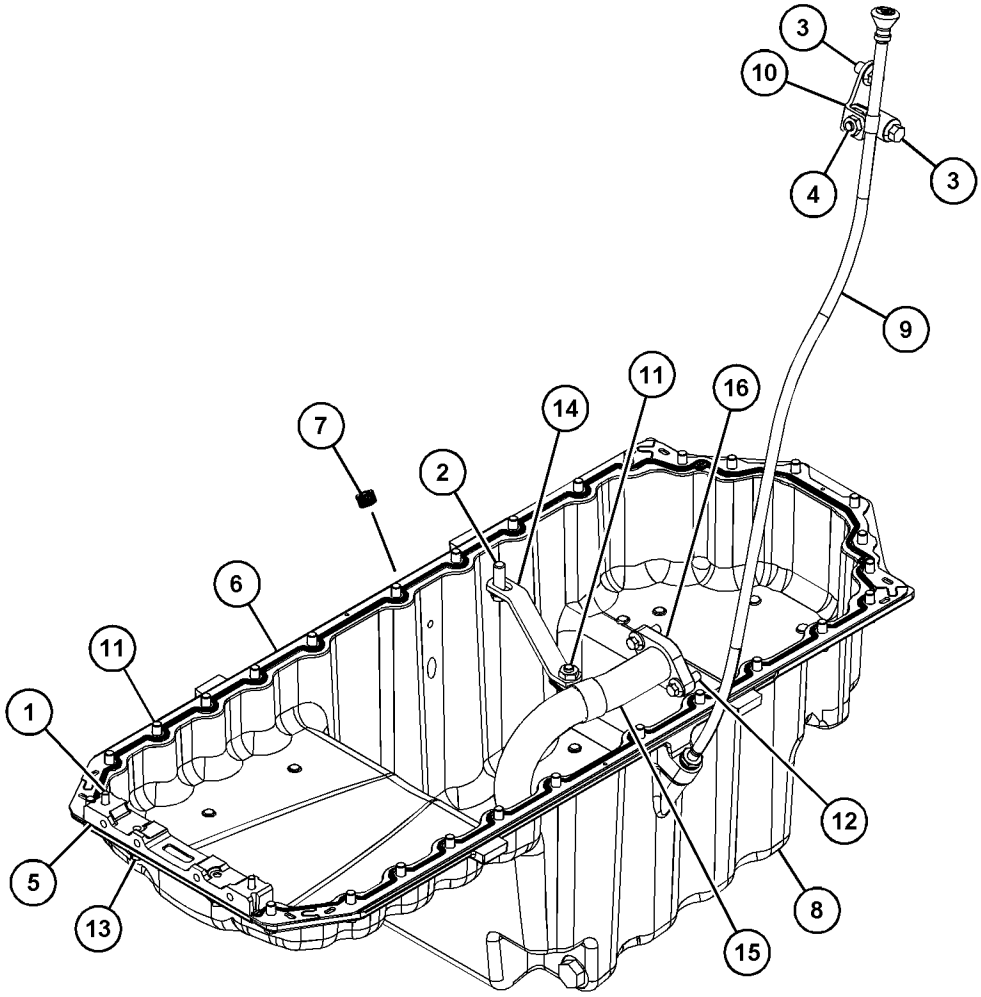


GRAPHIC #1 <END> g06391667

# 377-4718 PAN GP-OIL

**S/N: H761-UP**

**PART OF 345-9694 PAN GP-OIL**

**SMCS-1302** **i07407210**

| NOTE | REF NO | GRAPHIC REF | PART NUMBER | QTY | PART NAME 1 2 3 4 5 6 (PRODUCT LEVEL) | SEE PAGE |
|---|---|---|---|---|---|---|
| | 1 | 1 | **8L-2786** | 2 | SEAL-O-RING | |
| | 2 | 1 | **9S-4185** | 2 | PLUG (3/4-16-THD) | |

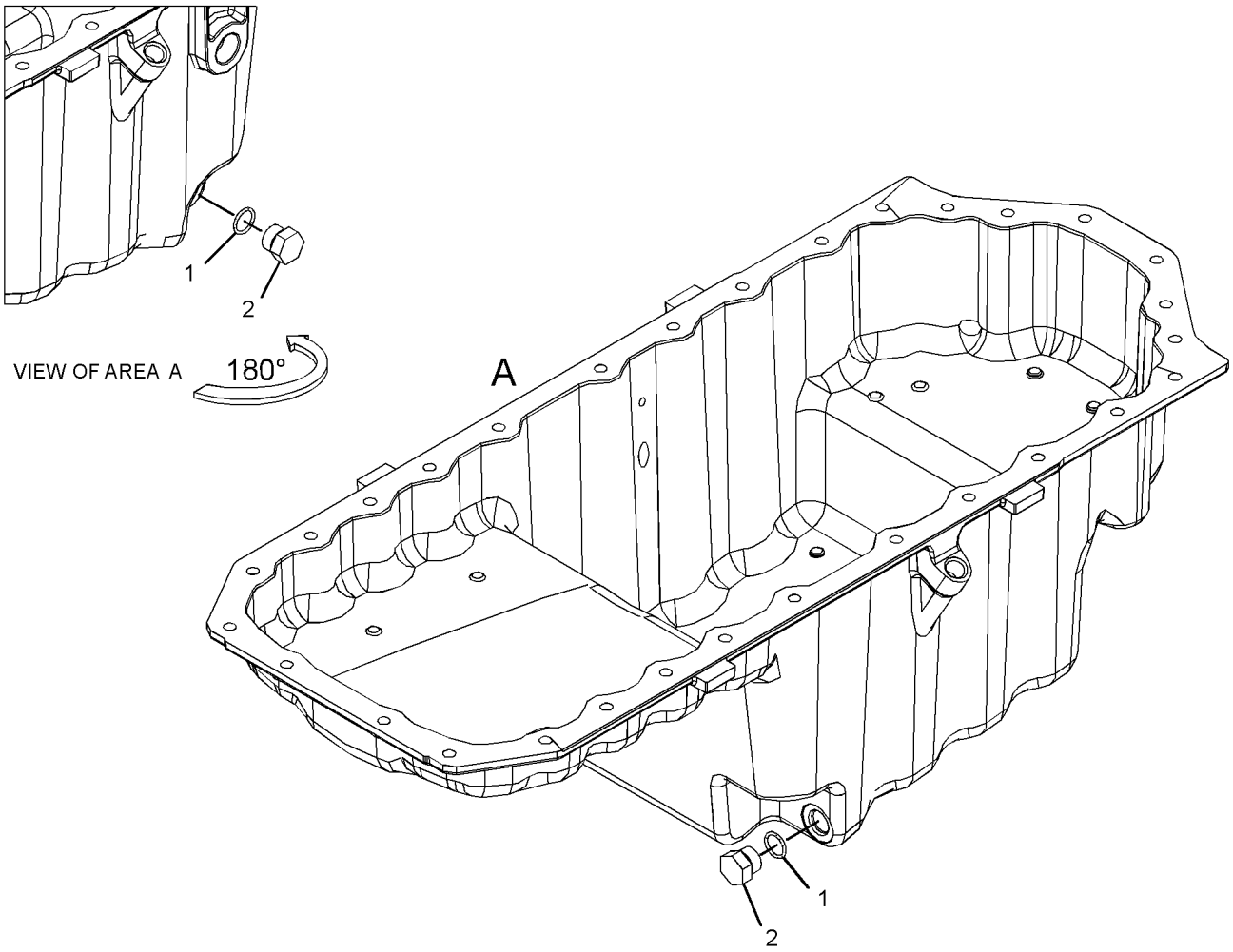


GRAPHIC #1 <END> g03371776

# *348-3296* PISTON & ROD GP

**S/N: H761-UP**

**PART OF 565-0288 ENGINE AR-PRIMARY**

**SMCS-1225** **i07406319**

| NOTE | REF NO | GRAPHIC REF | PART NUMBER | QTY | PART NAME 1 2 3 4 5 6 (PRODUCT LEVEL) | SEE PAGE |
|---|---|---|---|---|---|---|
| | 1 | 1 | **331-0290** | 6 | CONNECTING ROD GP | |
| | | | | | (EACH INCLUDES) | |
| | 1A | 1 | **276-7478** | 1 | BUSHING | |
| M | 1B | 1 | **323-9312** | 2 | BOLT (M10X1X50-MM) | |
| N | 2 | 1 | *370-7998* | 6 | PISTON GP | |
| | 3 | 1 | *317-5482* | 6 | BEARING | |
| CL | 4 | 1 | *470-8038* | 6 | BEARING | |
| N | 5 | 1 | **124-3536** | 12 | RING-RETAINING | |
| | | | | | AVAILABLE REPAIR KIT(S): | |
| L | | | **436-7781** | 1 | KIT-BEARING (CONNECTING ROD) (PISTON) | |
| | | | | | (INCLUDES BEARINGS) | |
| AB | | | **480-4489** | | KIT-BEARING (0.254-MM US) | |
| | | | | | (INCLUDES CONNECTING ROD BEARINGS) | |
| AB | | | **480-4490** | | KIT-BEARING (0.51-MM US) | |
| | | | | | (INCLUDES CONNECTING ROD BEARINGS) | |
| AB | | | **480-4491** | | KIT-BEARING (0.762-MM US) | |
| | | | | | (INCLUDES CONNECTING ROD BEARINGS) | |
| BC | | | **276-7476** | 1 | KIT-PISTON RING | |
| | | | | | (INCLUDES PISTON RINGS) | |
| AB | | | **380-2065** | | KIT-PISTON RING (0.5-MM OS) | |
| | | | | | (INCLUDES PISTON RINGS) | |
| AB | | | **466-4849** | | KIT-PISTON RING (1-MM OS) | |
| | | | | | (INCLUDES PISTON RINGS) | |
| N | | | **415-4315** | 1 | KIT-PISTON (STANDARD) | |
| | | | | | (INCLUDES PISTON RINGS, CLIPS, PIN, & PISTON) | |
| ABN | | | **380-4848** | | KIT-PISTON | |
| | | | | | (INCLUDES RETAINING RINGS, PISTON RINGS, PISTON, & PIN) | |
| ABN | | | **380-5077** | | KIT-PISTON | |
| | | | | | (INCLUDES RETAINING RINGS, PISTON RINGS, PISTON, & PIN) | |

A - NOT PART OF THIS GROUP
B - USE AS REQUIRED
C - CHANGE FROM PREVIOUS TYPE
L - KIT MARKED L SERVICES PART(S) MARKED L
M - METRIC PART
N - KIT MARKED N SERVICES PART(S) MARKED N

*348-3296* **PISTON & ROD GP** (contd.) **i07406319**

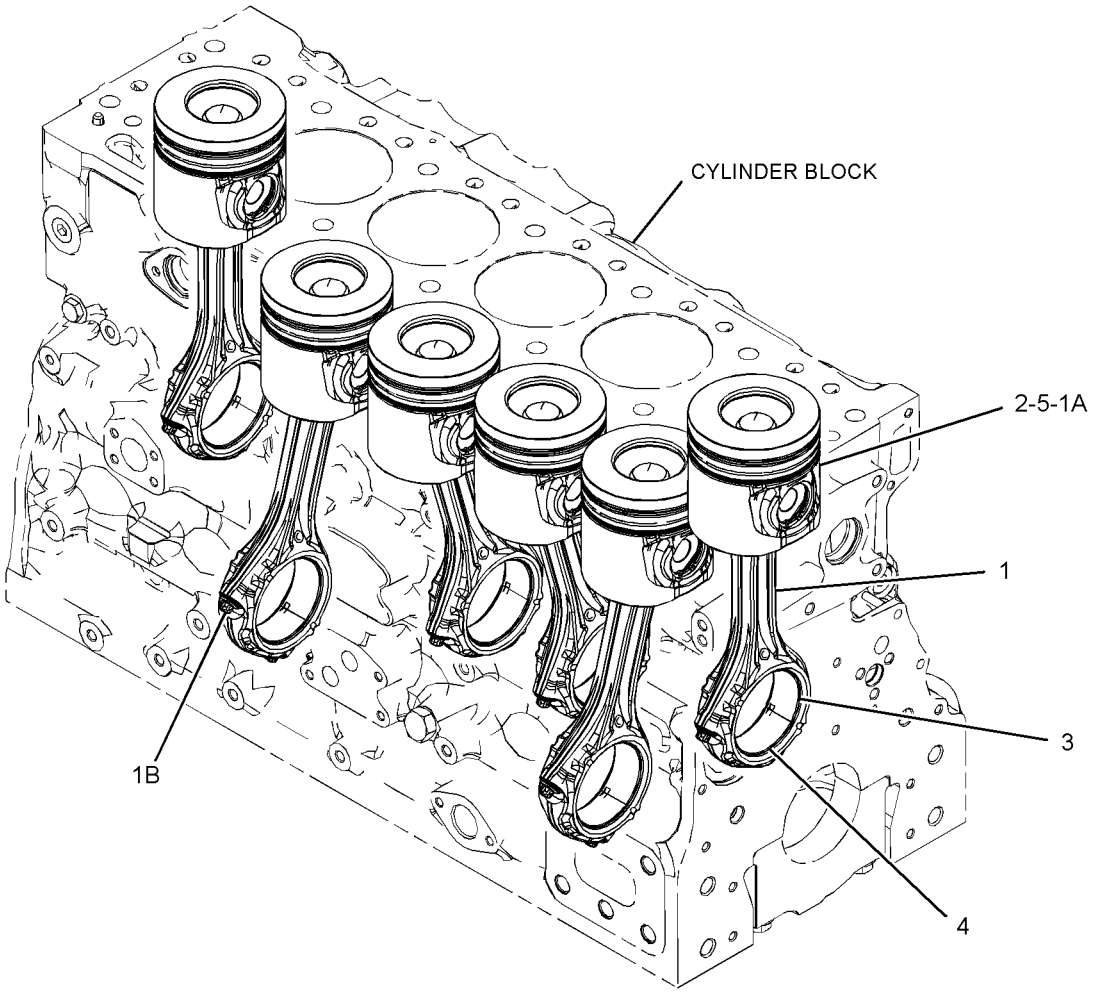


GRAPHIC #1 <END> g06312057

# *348-3300* PISTON & ROD GP

**S/N: H761-UP**

**PART OF 425-0779 CYLINDER BLOCK GP-SHORT**

**SMCS-1225** **i07651667**

| NOTE | REF NO | GRAPHIC REF | PART NUMBER | QTY | PART NAME 1 2 3 4 5 6 (PRODUCT LEVEL) | SEE PAGE |
|---|---|---|---|---|---|---|
| | 1 | 1 | **331-0290** | 6 | CONNECTING ROD GP | |
| | | | | | (EACH INCLUDES) | |
| | | 1 | **276-7478** | 1 | BUSHING | |
| M | 1A | 1 | **323-9312** | 2 | BOLT (M10X1X50-MM) | |
| N | 2 | 1 | *366-0149* | 6 | PISTON GP | |
| L | 3 | 1 | *317-5482* | 6 | BEARING | |
| C | 4 | 1 | *470-8038* | 6 | BEARING | |
| N | 5 | 1 | **124-3536** | 12 | RING-RETAINING | |
| | | | | | AVAILABLE REPAIR KIT(S): | |
| L | | | **436-7781** | 1 | KIT-BEARING (CONNECTING ROD) (PISTON) | |
| | | | | | (INCLUDES BEARINGS) | |
| AB | | | **480-4489** | | KIT-BEARING (0.254-MM US) | |
| | | | | | (INCLUDES CONNECTING ROD BEARINGS) | |
| AB | | | **480-4490** | | KIT-BEARING (0.51-MM US) | |
| | | | | | (INCLUDES CONNECTING ROD BEARINGS) | |
| AB | | | **480-4491** | | KIT-BEARING (0.762-MM US) | |
| | | | | | (INCLUDES CONNECTING ROD BEARINGS) | |
| C | | | **276-7476** | 1 | KIT-PISTON RING (STANDARD) | |
| | | | | | (INCLUDES RINGS) | |
| AB | | | **380-2065** | | KIT-PISTON RING (0.5-MM OS) | |
| | | | | | (INCLUDES RINGS) | |
| AB | | | **466-4849** | | KIT-PISTON RING (1-MM OS) | |
| | | | | | (INCLUDES RINGS) | |
| N | | | **389-5891** | 1 | KIT-PISTON (STANDARD) | |
| | | | | | (INCLUDES RETAINING RING, PISTON RINGS, PISTON, & PIN) | |
| ABN | | | **380-4849** | | KIT-PISTON (0.5-MM OS) | |
| | | | | | (INCLUDES RETAINING RINGS, PISTON RINGS, PISTON, & PIN) | |
| ABN | | | **380-5078** | | KIT-PISTON (1-MM OS) | |
| | | | | | (INCLUDES RETAINING RINGS, PISTON RINGS, PISTON, & PIN) | |

A - NOT PART OF THIS GROUP
B - USE AS REQUIRED
C - CHANGE FROM PREVIOUS TYPE
L - KIT MARKED L SERVICES PART(S) MARKED L
M - METRIC PART
N - KIT MARKED N SERVICES PART(S) MARKED N

*348-3300* **PISTON & ROD GP (**contd.**)** **i07651667**

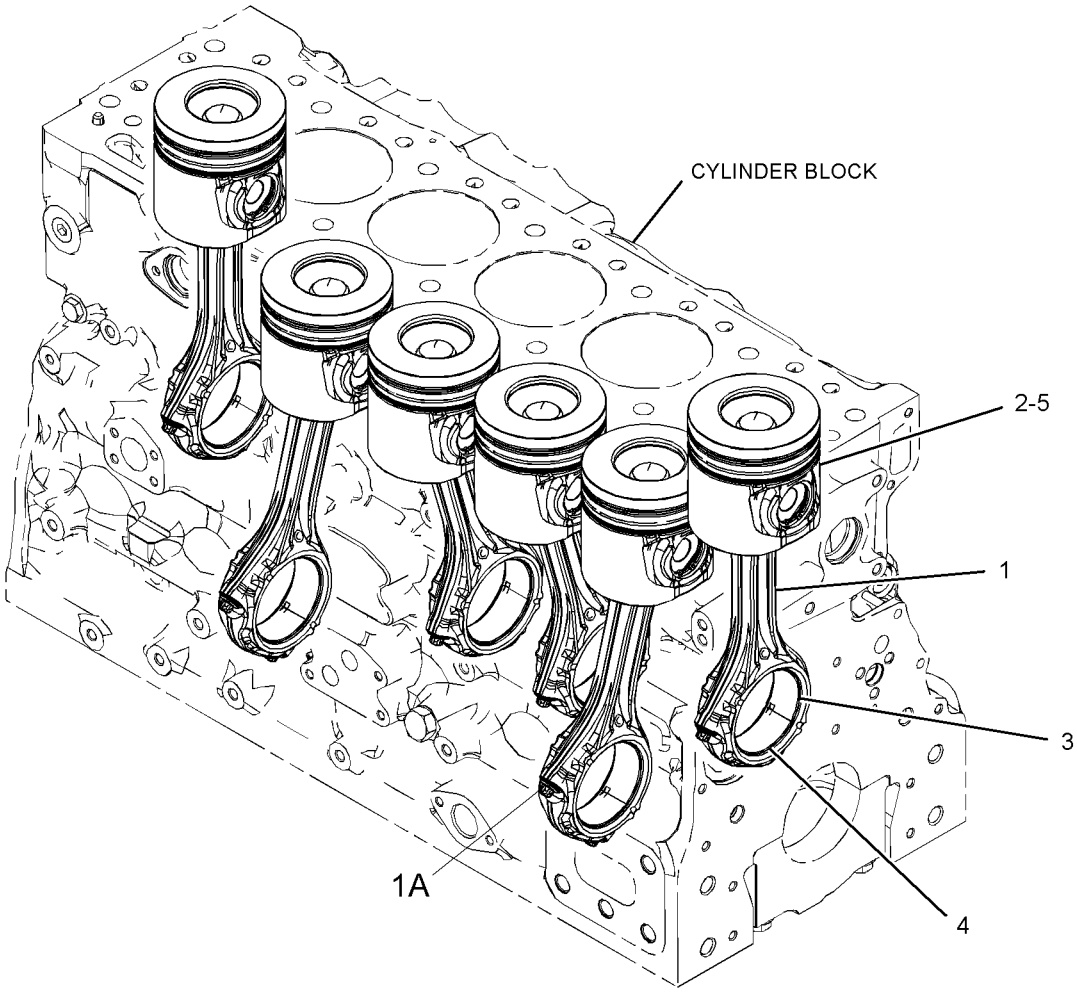


GRAPHIC #1 <END> g06208163

# *346-1841* PLUG GP-CYLINDER HEAD

**S/N: H761-UP**

**PART OF 565-0288 ENGINE AR-PRIMARY**

**SMCS-1100** **i07041817**

| NOTE | REF NO | GRAPHIC REF | PART NUMBER | QTY | PART NAME 1 2 3 4 5 6 (PRODUCT LEVEL) | SEE PAGE |
|---|---|---|---|---|---|---|
| C | 1 | 1 | **470-4925** | 1 | PLUG | |

C - CHANGE FROM PREVIOUS TYPE

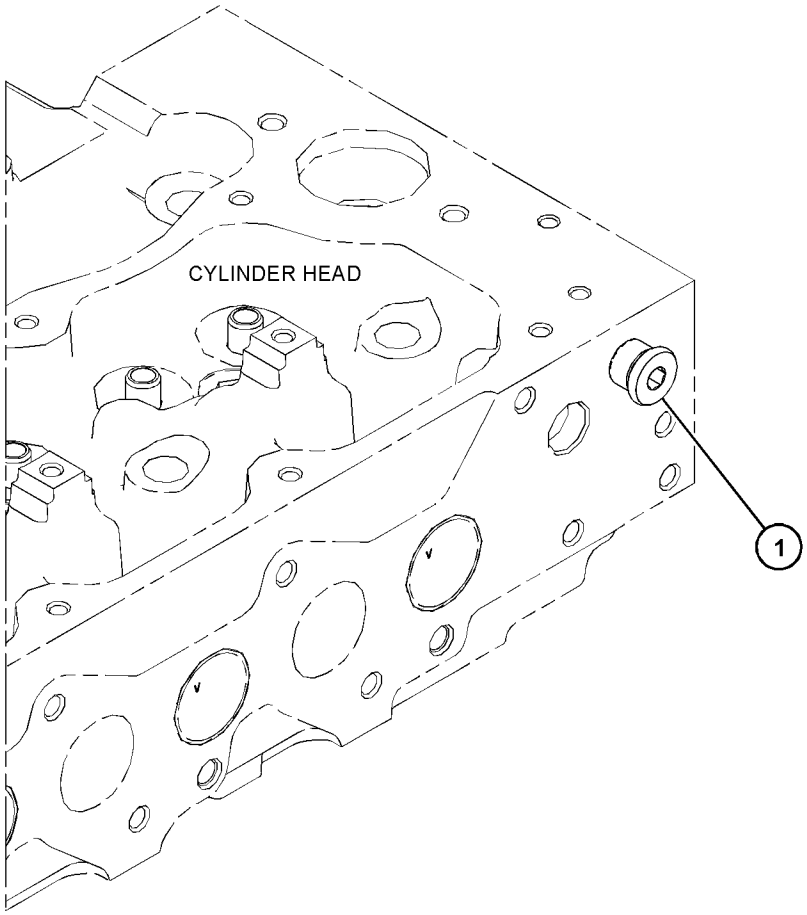


GRAPHIC #1 <END> g06199498

# *417-7187* PULLEY GP-CRANKSHAFT

**S/N: H761-UP**

**PART OF 565-0288 ENGINE AR-PRIMARY**

**SMCS-1205** **i05245929**

| NOTE | REF NO | GRAPHIC REF | PART NUMBER | QTY | PART NAME 1 2 3 4 5 6 (PRODUCT LEVEL) | SEE PAGE |
|---|---|---|---|---|---|---|
| M | 1 | 1 | **274-1935** | 6 | BOLT (M12X1.75X30-MM) | |
| M | 2 | 1 | **342-6510** | 3 | BOLT-TORX (M14X1.5X70-MM) | |
| | 3 | 1 | **344-7700** | 1 | ADAPTER | |
| | 4 | 1 | **345-2568** | 1 | PULLEY (12-GROOVE) | |
| | 5 | 1 | **351-1724** | 1 | DAMPER | |

M - METRIC PART

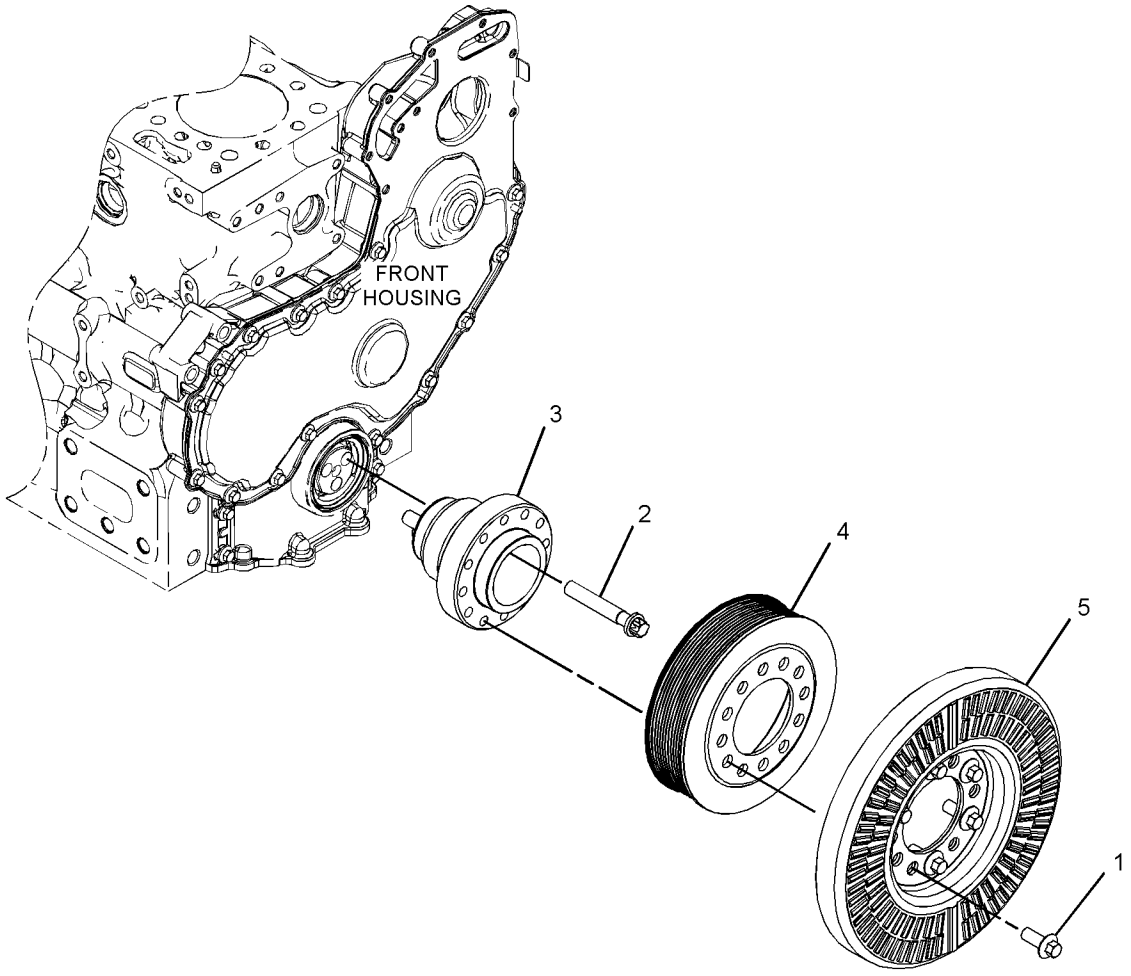


GRAPHIC #1 <END> g03317087

# *556-6558* PULLEY GP-ENGINE

**S/N: FEY1-UP**

**PART OF 557-7208 FAN AR-VARIABLE**

**SMCS-1205, 1207, 1359, 1384, 1425** **i07398152**

| NOTE | REF NO | GRAPHIC REF | PART NUMBER | QTY | PART NAME 1 2 3 4 5 6 (PRODUCT LEVEL) | SEE PAGE |
|---|---|---|---|---|---|---|
| | 1 | 1 | **329-5255** | 1 | PULLEY (FAN DRIVE) | |
| | 2 | 1 | **546-5810** | 1 | BELT | |

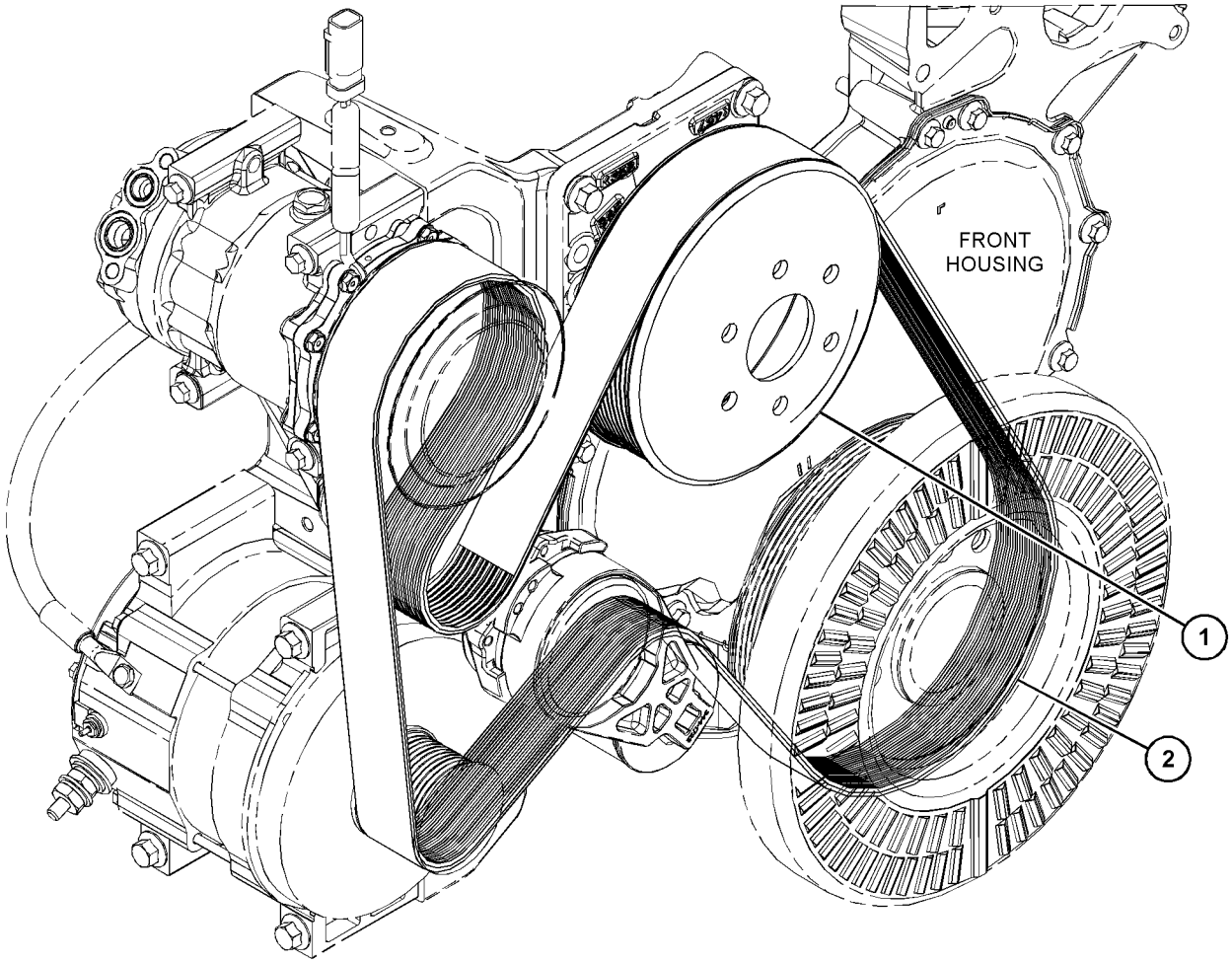


GRAPHIC #1 <END> g06313665

# *391-3197* ROCKER ARM GP

**S/N: H761-UP**

**PART OF 565-0288 ENGINE AR-PRIMARY**

**SMCS-1123** **i06831187**

| NOTE | REF NO | GRAPHIC REF | PART NUMBER | QTY | PART NAME 1 2 3 4 5 6 (PRODUCT LEVEL) | SEE PAGE |
|---|---|---|---|---|---|---|
| | 1 | 1 | **252-6438** | 6 | SEAL-INLET VALVE | |
| | 2 | 1 | **254-3954** | 6 | SEAL | |
| | 3 | 1 | **315-3393** | 24 | COLLET | |
| | 4 | 1 | **315-3394** | 6 | VALVE-EXHAUST | |
| Y | 5 | 1 | **335-5602** | 1 | VALVE MECHANISM GP | 41 |
| | 6 | 1 | **436-0520** | 12 | SPRING-VALVE | |
| | 7 | 1 | **335-5607** | 12 | RETAINER-SPRING | |
| | 8 | 1 | **497-1111** | 6 | VALVE-INLET | |

Y - SEPARATE ILLUSTRATION

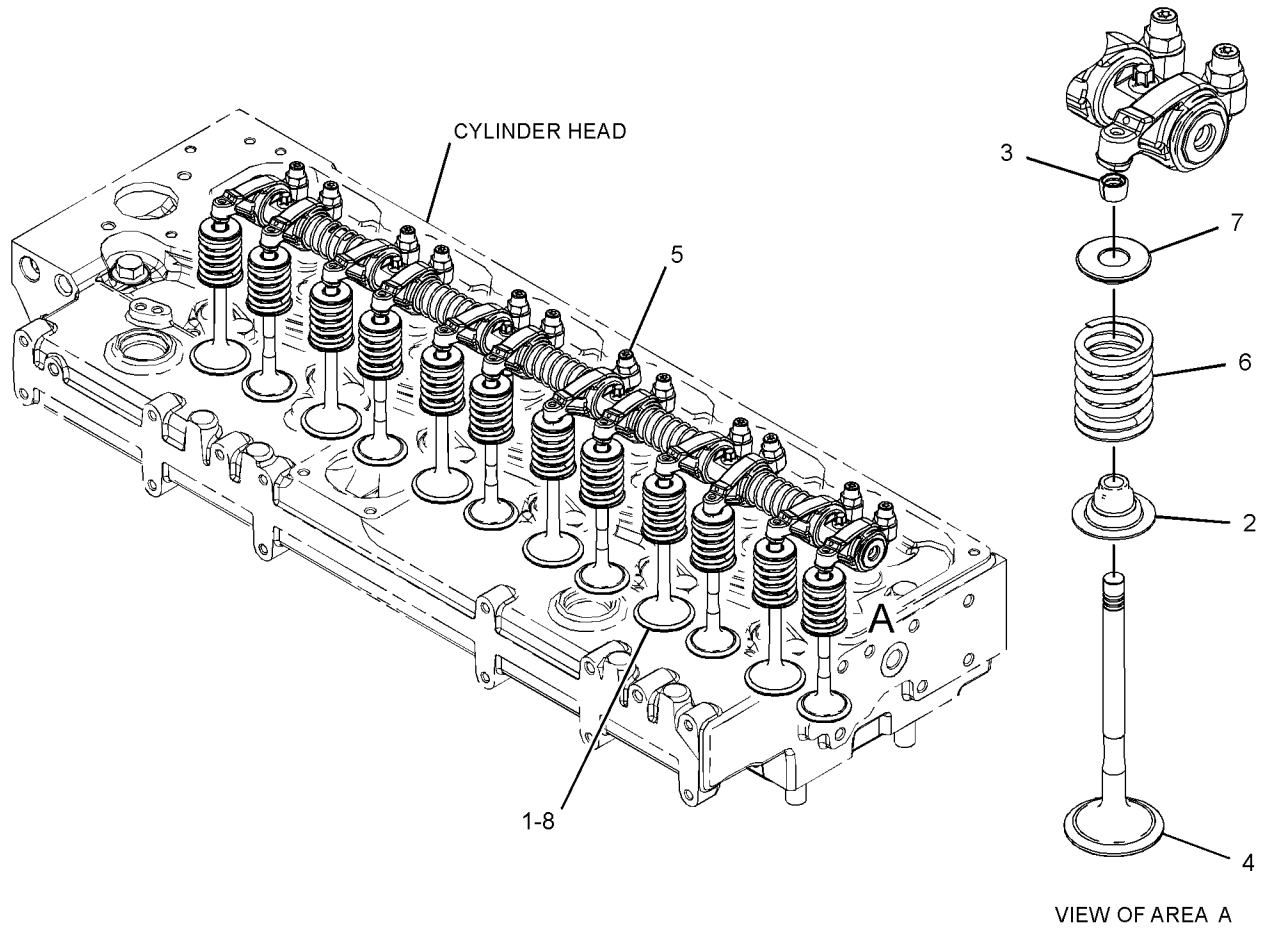


GRAPHIC #1 <END> g03317583

# *438-3180* ROCKER ARM GP

**S/N: H761-UP**

**PART OF 425-3316 CYLINDER HEAD GP**

**SMCS-1123** **i06917208**

| NOTE | REF NO | GRAPHIC REF | PART NUMBER | QTY | PART NAME 1 2 3 4 5 6 (PRODUCT LEVEL) | SEE PAGE |
|---|---|---|---|---|---|---|
| | 1 | 1 | **436-0520** | 12 | SPRING-VALVE | |
| | 2 | 1 | **335-5607** | 12 | RETAINER-SPRING | |
| | 3 | 1 | **497-1111** | 6 | VALVE-INLET | |
| | 4 | 1 | **252-6438** | 6 | SEAL-INLET VALVE | |
| | 5 | 1 | **254-3954** | 6 | SEAL | |
| | 6 | 1 | **315-3393** | 24 | COLLET | |
| | 7 | 1 | **315-3394** | 6 | VALVE-EXHAUST | |

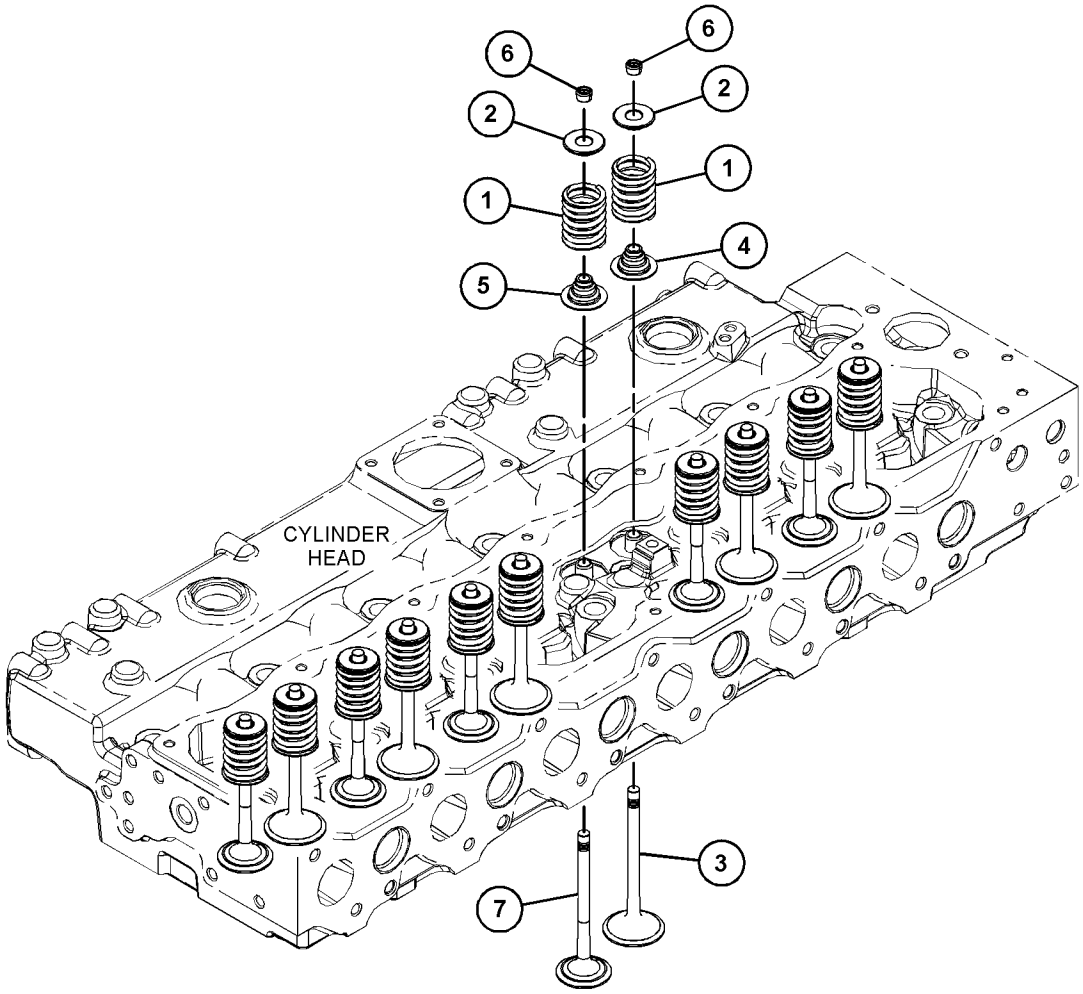


GRAPHIC #1 <END> g03646317

# 335-5602 VALVE MECHANISM GP

**S/N: H761-UP**

**PART OF 391-3197 ROCKER ARM GP**

**SMCS-1209** **i05907408**

| NOTE | REF NO | GRAPHIC REF | PART NUMBER | QTY | PART NAME 1 2 3 4 5 6 (PRODUCT LEVEL) | SEE PAGE |
|---|---|---|---|---|---|---|
| | 1 | 1 | **335-5604** | 1 | SHAFT AS-ROCKER ARM | |
| | | 1 | **276-9200** | 2 | PLUG-SHAFT END | |
| | | 1 | **335-5605** | 1 | SHAFT-ROCKER ARM | |
| | 2 | 1 | **225-5961** | 2 | WASHER (26.7X34.32X0.38-MM THK) | |
| M | 3 | 1 | **8T-9535** | 1 | BOLT-SOCKET HEAD (M8X1.25X60-MM) | |
| | 4 | 1 | **225-5962** | 5 | BOLT (M8X1.25X30-MM) | |
| | 5 | 1 | **225-5959** | 2 | CLIP | |
| | 6 | 1 | **225-5638** | 5 | SPRING | |
| | 7 | 1 | **225-5625** | 6 | LEVER AS | |
| | | | | | (EACH INCLUDES) | |
| | | 1 | **5B-9079** | 1 | NUT-JAM (3/8-24-THD) | |
| | | 1 | **185-1546** | 1 | SCREW | |
| | 8 | 1 | **225-5640** | 6 | LEVER AS | |
| | | | | | (EACH INCLUDES) | |
| | | 1 | **5B-9079** | 1 | NUT-JAM (3/8-24-THD) | |
| | | 1 | **185-1546** | 1 | SCREW | |

M - METRIC PART

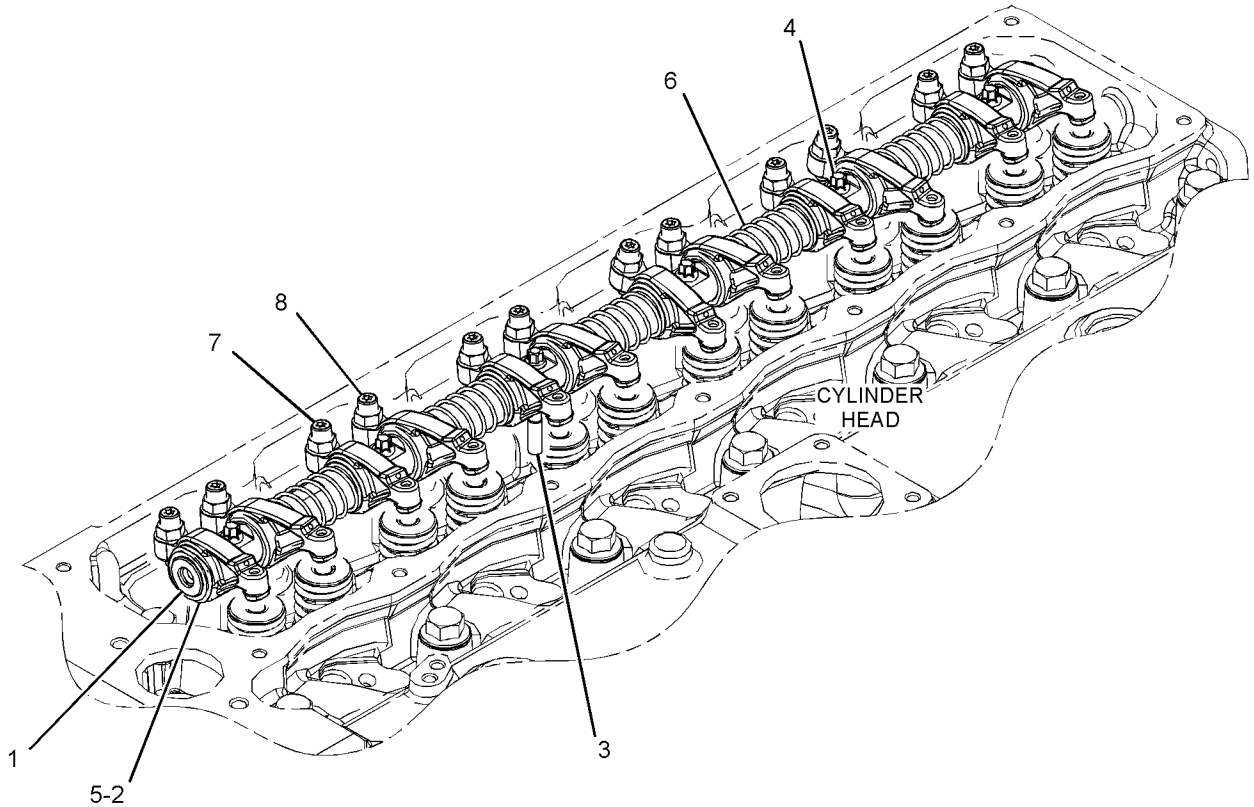


GRAPHIC #1 <END> g03319968

# *417-5871* FILLER GP-ENGINE OIL

**S/N: H761-UP**

**PART OF 565-0288 ENGINE AR-PRIMARY**

**SMCS-1316** **i05245928**

| NOTE | REF NO | GRAPHIC REF | PART NUMBER | QTY | PART NAME 1 2 3 4 5 6 (PRODUCT LEVEL) | SEE PAGE |
|---|---|---|---|---|---|---|
| M | 1 | 1 | **6I-0217** | 2 | BOLT (M8X1.25X20-MM) | |
| | 2 | 1 | **225-6522** | 1 | PLUG-CUP | |
| | 3 | 1 | **225-6524** | 1 | PLUG-CUP | |
| | 4 | 1 | **277-1974** | 1 | PLATE AS | |
| | 4A | 1 | **277-1975** | 1 | SEAL-O-RING | |

M - METRIC PART

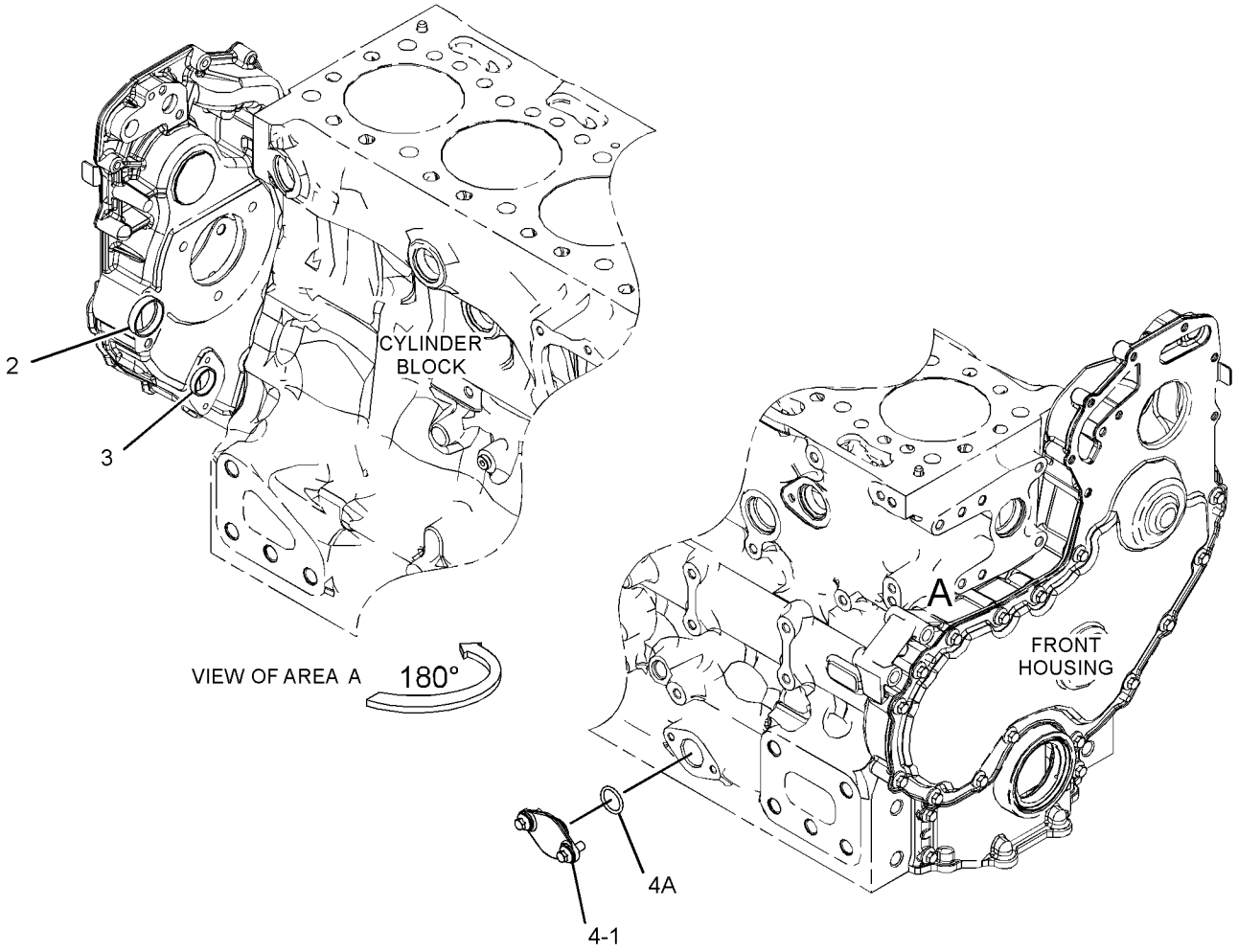


GRAPHIC #1

<END>

g03316695

# *556-6526* FILTER & MTG GP-ENGINE OIL

**S/N: FEY1-UP**

**PART OF 556-6438 INSTALLATION AR-ENGINE**

**SMCS-1306, 1308** **i07455014**

| NOTE | REF NO | GRAPHIC REF | PART NUMBER | QTY | PART NAME 1 2 3 4 5 6 (PRODUCT LEVEL) | SEE PAGE |
|---|---|---|---|---|---|---|
| M | 1 | 1 | **8T-4192** | 3 | BOLT (M12X1.75X25-MM) | |
| | 2 | 1 | **8T-4223** | 3 | WASHER-HARD (13.5X25.5X3-MM THK) | |
| | 3 | 1 | **8T-4224** | 4 | WASHER-HARD (8.8X16X2-MM THK) | |
| M | 4 | 1 | **8T-7547** | 4 | BOLT (M8X1.25X30-MM) | |
| | 5 | 1 | *309-5137* | 1 | CONNECTOR AS | |
| | | 1 | **6V-8635** | 1 | CONNECTOR | |
| | | 1 | **228-7093** | 1 | SEAL-O-RING | |
| | | 1 | **238-5084** | 1 | SEAL-O-RING | |
| | 6 | 1 | *319-6212* | 1 | CONNECTOR AS | |
| | | 1 | **6V-8714** | 1 | CONNECTOR | |
| | | 1 | **228-7093** | 1 | SEAL-O-RING | |
| | | 1 | **238-5082** | 1 | SEAL-O-RING | |
| | 7 | 1 | *319-6220* | 1 | ELBOW AS | |
| | | 1 | **6V-9008** | 1 | ELBOW | |
| | | 1 | **228-7093** | 1 | SEAL-O-RING | |
| | | 1 | **238-5084** | 1 | SEAL-O-RING | |
| Y | 8 | 1 | **322-3154** | 1 | FILTER GP-ENGINE OIL | 45 |
| | 9 | 1 | **346-3229** | 1 | BASE AS-FILTER | |
| | | 1 | **232-7599** | 1 | PLUG | |
| | 10 | 1 | **477-9886** | 1 | CLIP (LOOP) | |
| | 11 | 1 | *309-5130* | 1 | PLUG AS | |
| | | 1 | **9S-4182** | 1 | PLUG (7/16-20-THD) | |
| | | 1 | **214-7566** | 1 | SEAL-O-RING | |
| | 12 | 1 | *321-8649* | 1 | VALVE AS-FLUID SAMPLING (ENGINE OIL) | |
| | | 1 | **8C-3446** | 1 | VALVE-SAMPLING (ENGINE OIL) | |
| | | 1 | **214-7566** | 1 | SEAL-O-RING | |
| | 13 | 1 | *326-0319* | 1 | PLUG AS | |
| | | 1 | **9S-4188** | 1 | PLUG | |
| | | 1 | **238-5083** | 1 | SEAL-O-RING | |
| | 14 | 1 | *329-5534* | 1 | CONNECTOR AS | |
| | | 1 | **8C-5723** | 1 | CONNECTOR | |
| | | 1 | **228-7093** | 1 | SEAL-O-RING | |
| | | 1 | **238-5084** | 1 | SEAL-O-RING | |
| I | 15 | 1 | **480-9457** | 1 | HOSE AS | |
| I | 16 | 1 | **480-9458** | 1 | HOSE AS | |
| | 17 | 1 | **563-7846** | 1 | PLATE AS | |
| M | | 1 | **9R-2060** | 1 | BOSS (M10X1.5X21-MM) | |
| M | | 1 | **9R-3845** | 1 | BOSS (M12X1.75X38-MM) | |
| | 18 | 1 | **8C-3445** | 1 | CAP-DUST | |
| E | 19 | 1 | **7Y-5074** | | GUARD-HOSE (28-CM) | |

E - ORDER BY THE CENTIMETER
I - REFER TO HYDRAULIC INFORMATION SYSTEM
M - METRIC PART
Y - SEPARATE ILLUSTRATION

*556-6526* **FILTER & MTG GP-ENGINE OIL (**contd.**)** **i07455014**

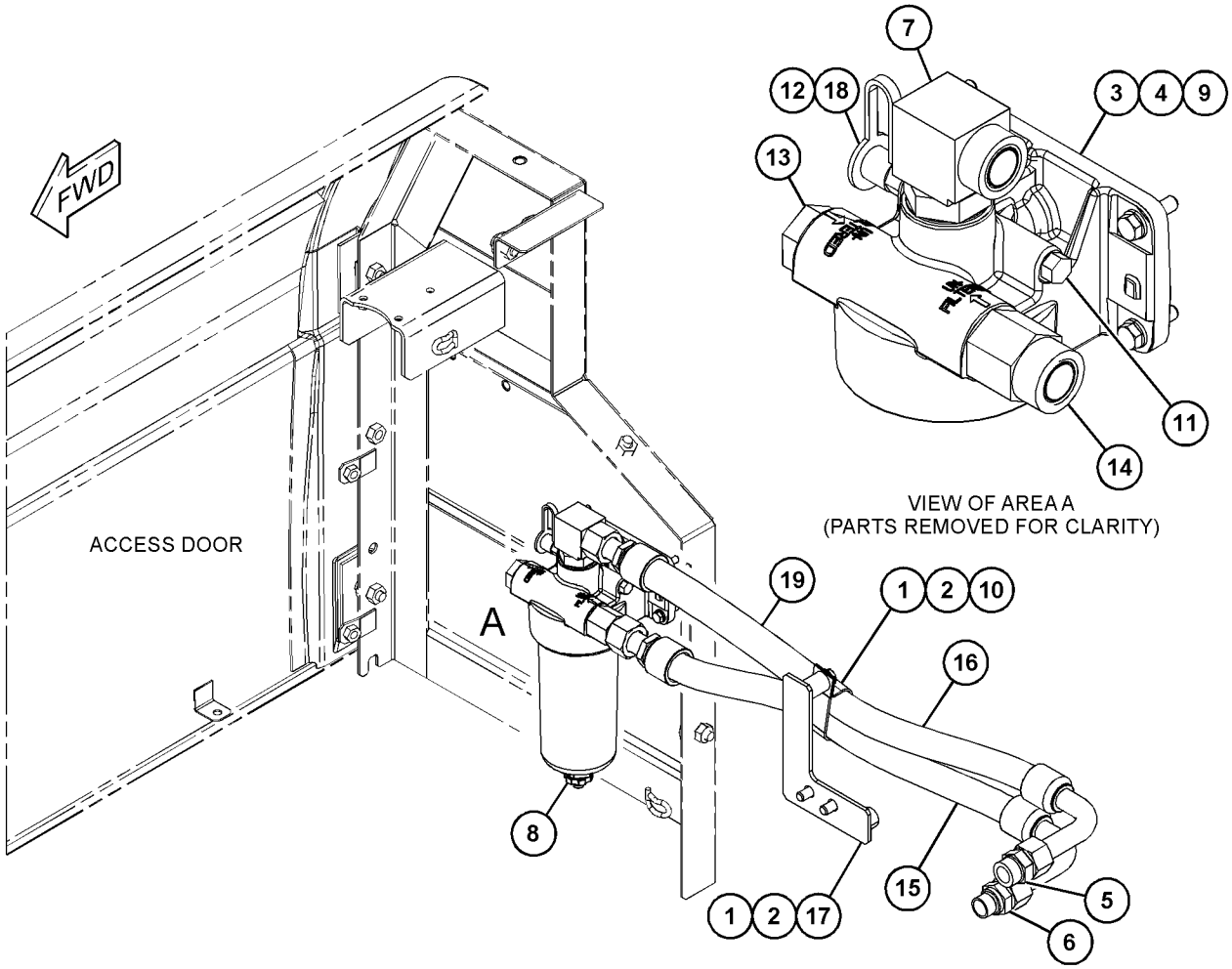


GRAPHIC #1 <END> g06387563

# 322-3154 FILTER GP-ENGINE OIL

**S/N: FEY1-UP**

**PART OF 556-6526 FILTER & MTG GP-ENGINE OIL**

**SMCS-1308** **i06921552**

| NOTE | REF NO | GRAPHIC REF | PART NUMBER | QTY | PART NAME 1 2 3 4 5 6 (PRODUCT LEVEL) | SEE PAGE |
|---|---|---|---|---|---|---|
| | 1 | 1 | **322-3155** | 1 | FILTER ELEMENT-ENGINE OIL | |
| | 2 | 1 | **354-5833** | 1 | KIT-DRAIN | |
| | | | | | (INCLUDES DRAIN, KNOB & SEAL) | |

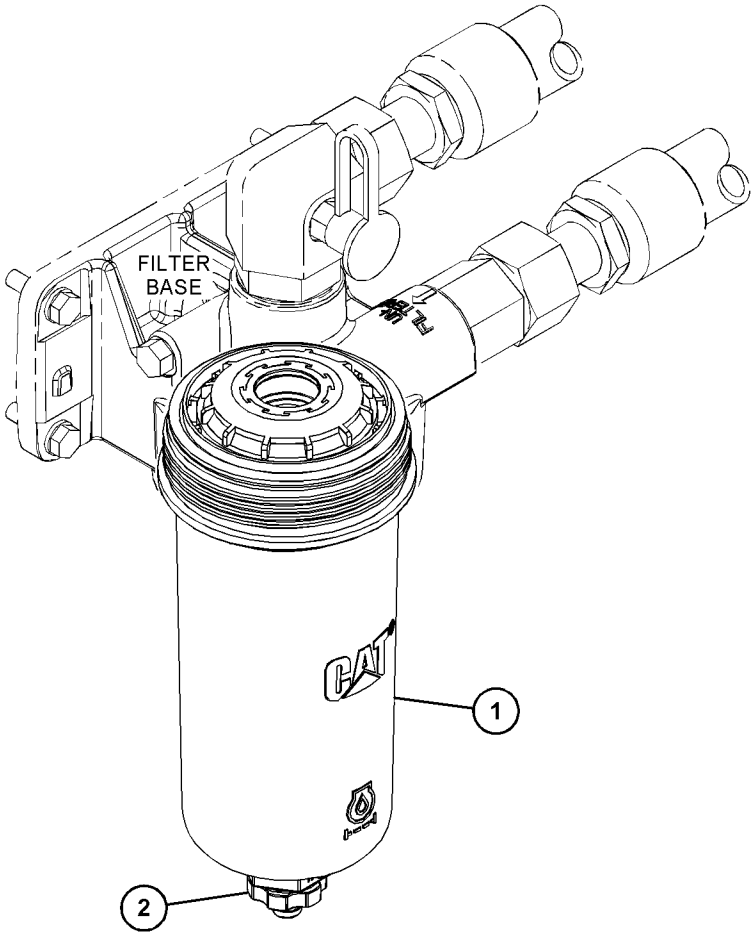


GRAPHIC #1 <END> g03449839

# *394-7474* FUMES DISPOSAL GP

**S/N: FEY1-UP**

**PART OF 556-6438 INSTALLATION AR-ENGINE**

**SMCS-1317** **i06916500**

| NOTE | REF NO | GRAPHIC REF | PART NUMBER | QTY | PART NAME 1 2 3 4 5 6 (PRODUCT LEVEL) | SEE PAGE |
|---|---|---|---|---|---|---|
| M | 1 | 1 | **8T-6870** | 1 | BOLT (M8X1.25X70-MM) | |
| | 2 | 1 | **394-7970** | 1 | HOSE-FUMES DISPOSAL | |
| | 3 | 1 | **395-1699** | 1 | PLATE | |
| | 4 | 1 | **067-3045** | 1 | CLIP (LOOP) | |
| | 5 | 1 | **206-1345** | 1 | STRAP-CABLE | |
| | 6 | 1 | **5V-9155** | 1 | CLAMP-HOSE | |
| | 7 | 1 | **8T-4121** | 2 | WASHER-HARD (11X21X2.5-MM THK) | |
| M | 8 | 1 | **8T-4137** | 2 | BOLT (M10X1.5X20-MM) | |
| | 9 | 1 | **8T-4224** | 1 | WASHER-HARD (8.8X16X2-MM THK) | |

M - METRIC PART

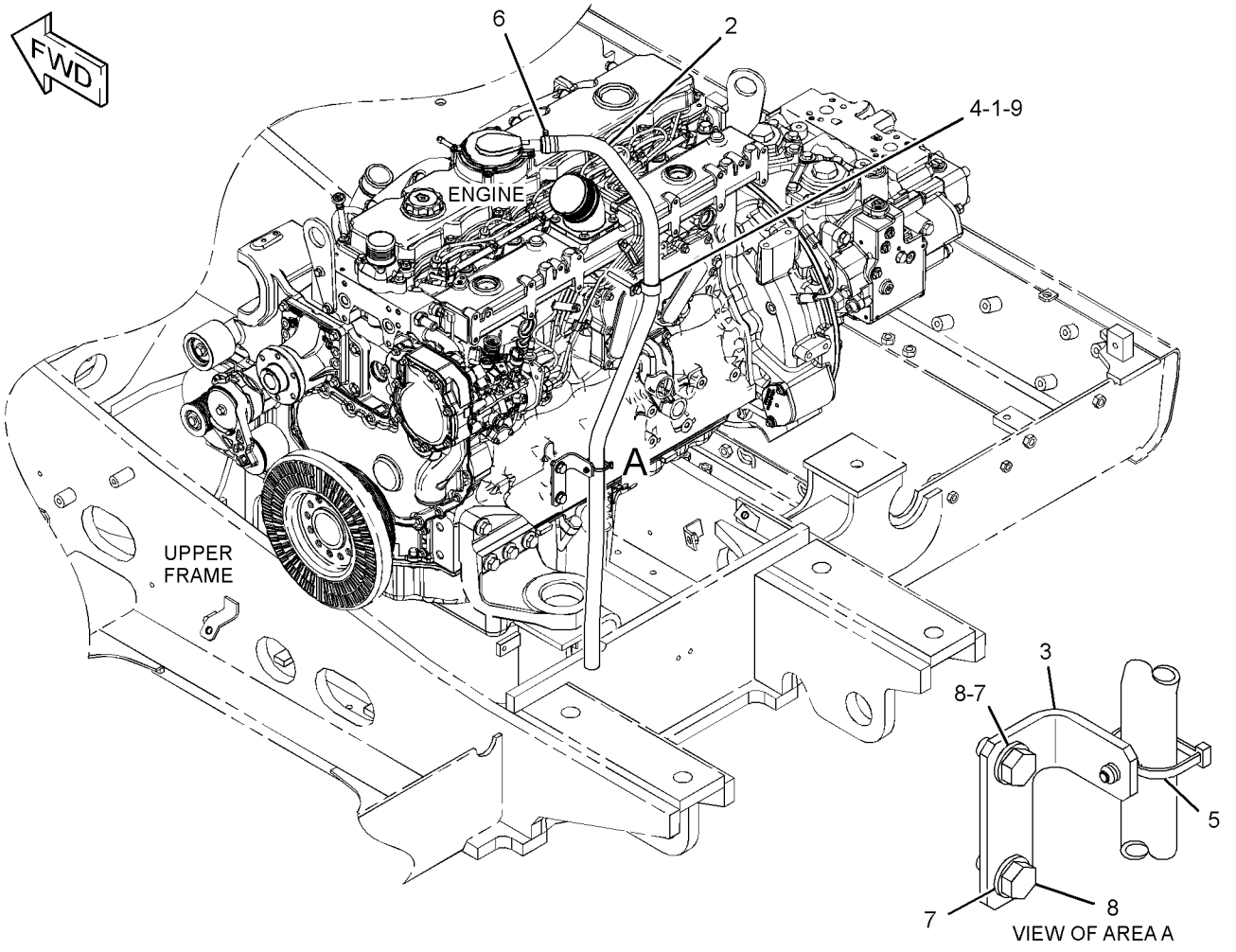


GRAPHIC #1 <END> g03358502

# *374-6004* LINES GP-ENGINE OIL DRAIN

**S/N: FEY1-UP**

**PART OF 556-6438 INSTALLATION AR-ENGINE**

**SMCS-1307** **i05259462**

| NOTE | REF NO | GRAPHIC REF | PART NUMBER | QTY | PART NAME 1 2 3 4 5 6 (PRODUCT LEVEL) | SEE PAGE |
|---|---|---|---|---|---|---|
| | 1 | 1 | **095-1388** | 1 | CLAMP-HOSE | |
| E | 2 | 1 | **5P-0743** | | HOSE (23-CM) | |

E - ORDER BY THE CENTIMETER

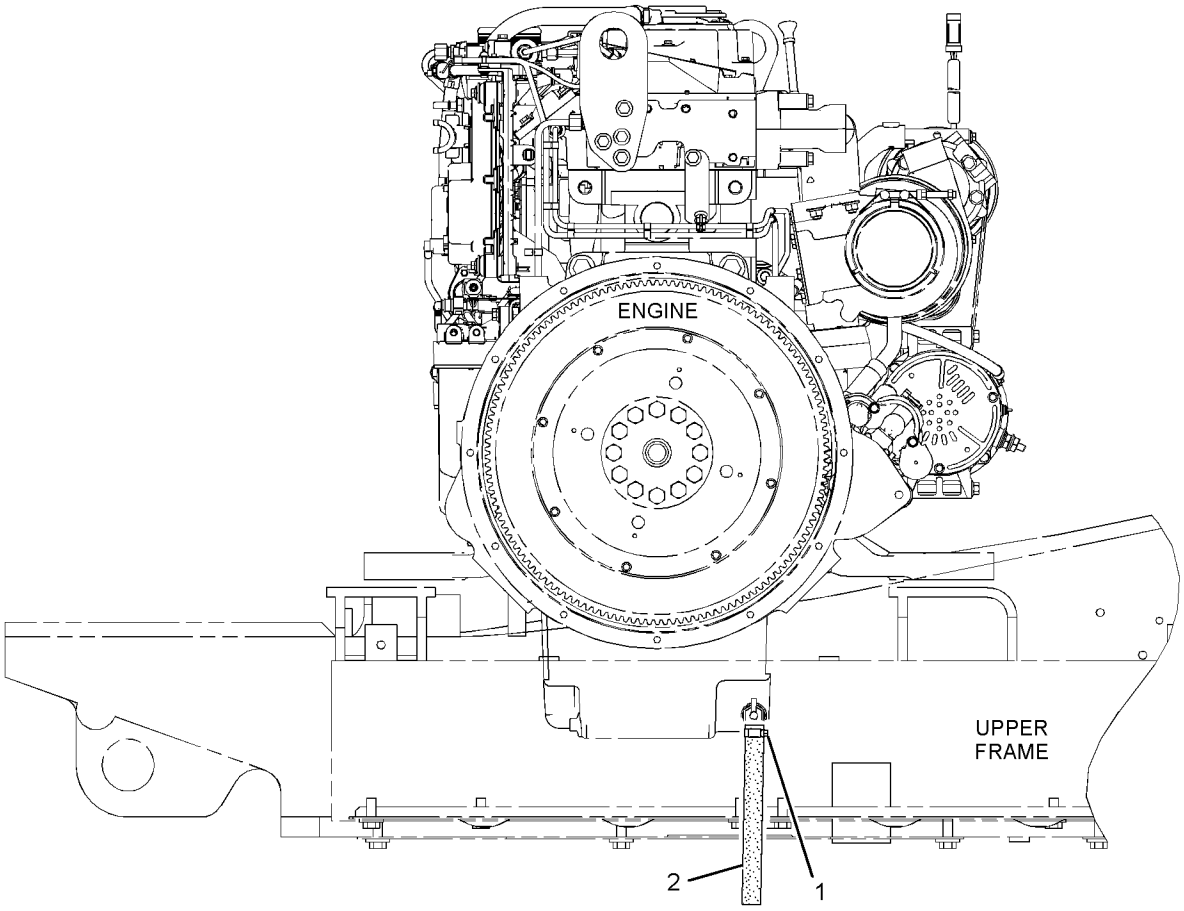


RIGHT SIDE VIEW

GRAPHIC #1 <END> g02724625

# *462-6685* PUMP GP-ENGINE OIL

**S/N: H761-UP**

**PART OF 565-0288 ENGINE AR-PRIMARY**

**SMCS-1304, 1315** **i07025311**

| NOTE | REF NO | GRAPHIC REF | PART NUMBER | QTY | PART NAME 1 2 3 4 5 6 (PRODUCT LEVEL) | SEE PAGE |
|---|---|---|---|---|---|---|
| | 1 | 1 | **420-0454** | 1 | PUMP AS-OIL | |
| M | 2 | 1 | **6I-1090** | 4 | BOLT (M8X1.25X40-MM) | |

M - METRIC PART

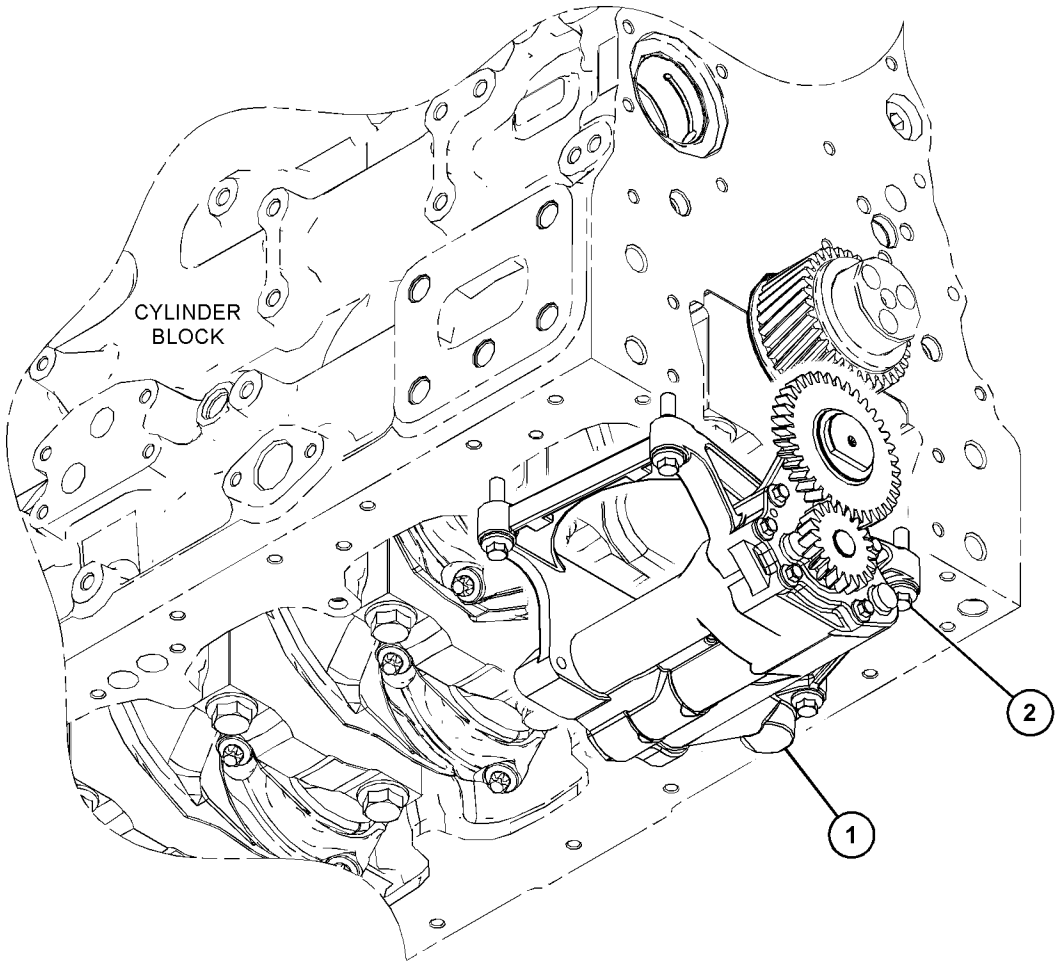


GRAPHIC #1 <END> g03797853

# *346-2911* CONNECTION GP-HEATER

**S/N: H761-UP**

**FOR USE WITH OPTIONAL CUSTOMER CONNECTION FOR CAB HEATER**

**PART OF 565-0288 ENGINE AR-PRIMARY**

**SMCS-1380, 1383** **i05303138**

| NOTE | REF NO | GRAPHIC REF | PART NUMBER | QTY | PART NAME 1 2 3 4 5 6 (PRODUCT LEVEL) | SEE PAGE |
|---|---|---|---|---|---|---|
| | 1 | 1 | **067-6823** | 1 | PLUG | |
| | 2 | 1 | **9X-3959** | 1 | ELBOW | |
| | 3 | 1 | **7W-4669** | 1 | ADAPTER | |

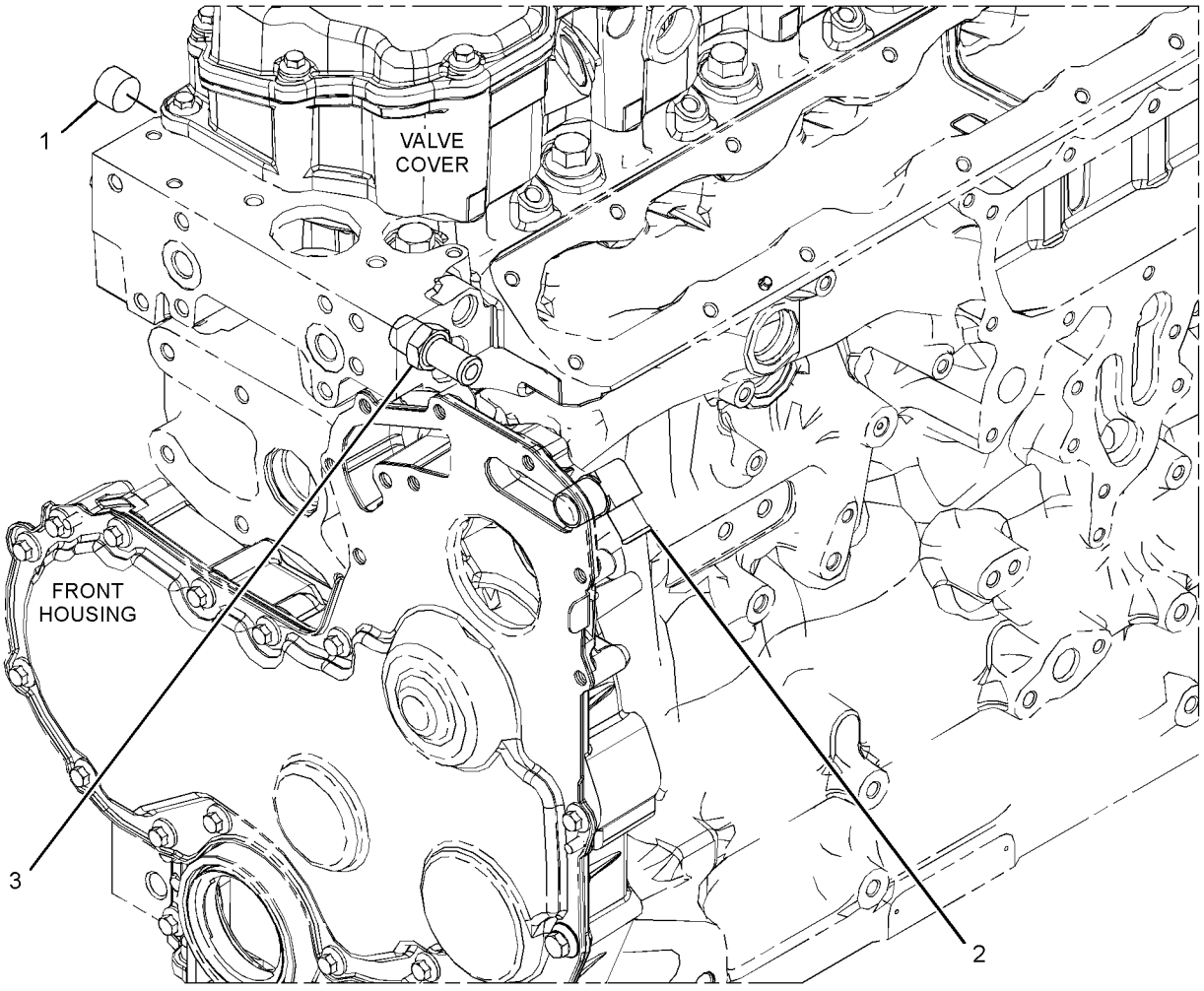


GRAPHIC #1 <END> g03105759

# *326-7401* COOLER GP-ENGINE OIL

**S/N: H761-UP**

**PART OF 371-2553 COOLER GP-ENGINE OIL**

**SMCS-1378** **i05294157**

| NOTE | REF NO | GRAPHIC REF | PART NUMBER | QTY | PART NAME 1 2 3 4 5 6 (PRODUCT LEVEL) | SEE PAGE |
|---|---|---|---|---|---|---|
| M | 1 | 1 | **6I-0260** | 1 | BOLT (M8X1.25X25-MM) | |
| M | 2 | 1 | **6I-4793** | 6 | BOLT (M8X1.25X50-MM) | |
| | 3 | 1 | **277-2500** | 1 | GASKET | |
| | 4 | 1 | **281-7039** | 1 | COOLER-OIL (ENGINE) | |
| | 5 | 1 | **281-7040** | 1 | GASKET | |

M - METRIC PART

*326-7401* **COOLER GP-ENGINE OIL (**contd.**)** **i05294157**

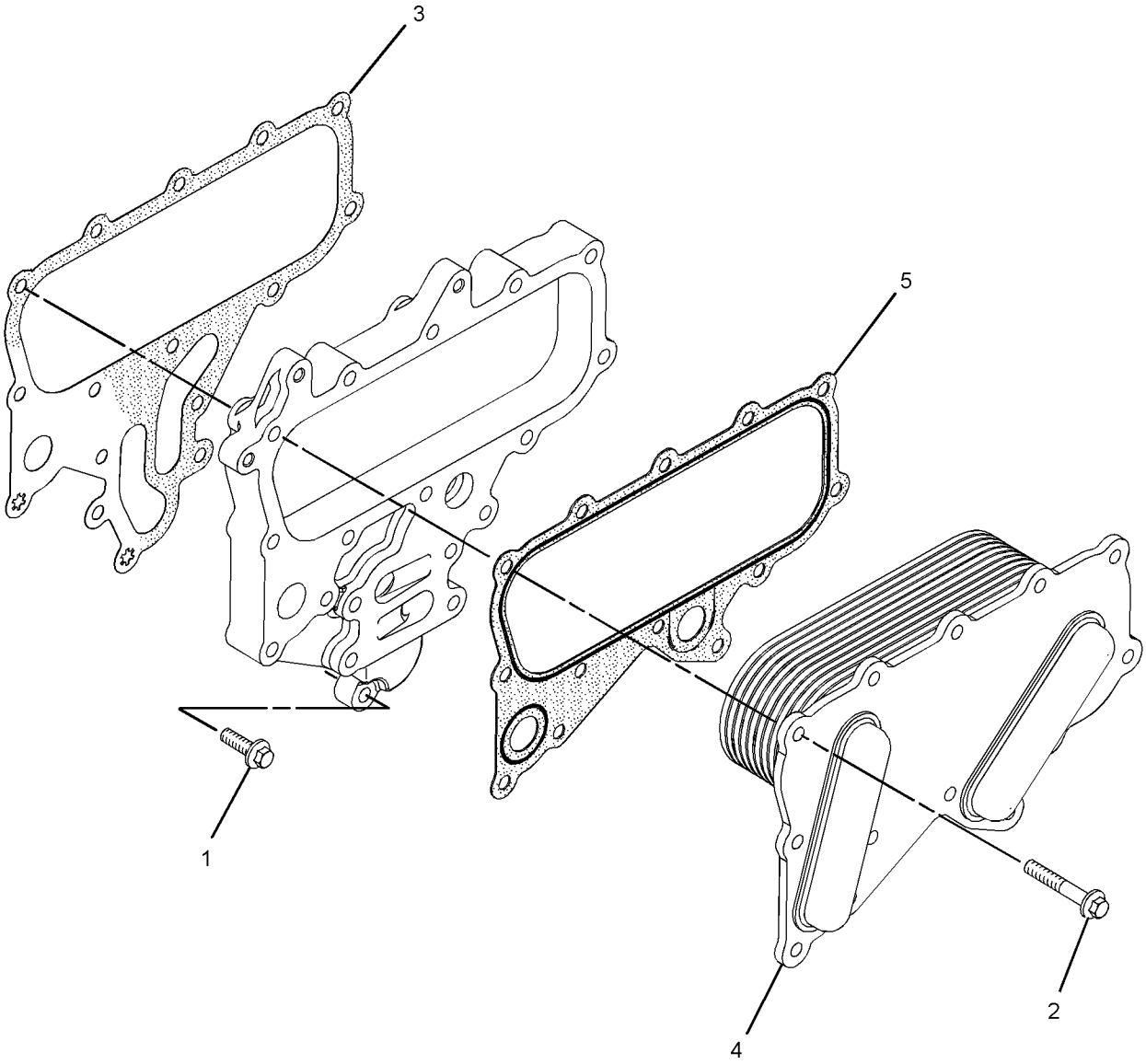


GRAPHIC #1 <END> g01508024

# *371-2553* COOLER GP-ENGINE OIL

**S/N: H761-UP**

**PART OF 565-0288 ENGINE AR-PRIMARY**

**SMCS-1378** **i05917973**

| NOTE | REF NO | GRAPHIC REF | PART NUMBER | QTY | PART NAME 1 2 3 4 5 6 (PRODUCT LEVEL) | SEE PAGE |
|---|---|---|---|---|---|---|
| | 1 | 1 | **225-7944** | 2 | GASKET | |
| | 2 | 1 | **232-3751** | 1 | PLATE | |
| | 3 | 1 | **277-2537** | 1 | PLATE | |
| M | 4 | 1 | **6I-4793** | 7 | BOLT (M8X1.25X50-MM) | |
| Y | 5 | 1 | **326-7401** | 1 | COOLER GP-ENGINE OIL | 50 |
| | 6 | 1 | **340-4212** | 1 | ADAPTER | |
| M | 9 | 1 | **6I-0455** | 4 | BOLT (M8X1.25X55-MM) | |
| M | 10 | 1 | **6I-0217** | 6 | BOLT (M8X1.25X20-MM) | |

M - METRIC PART
Y - SEPARATE ILLUSTRATION

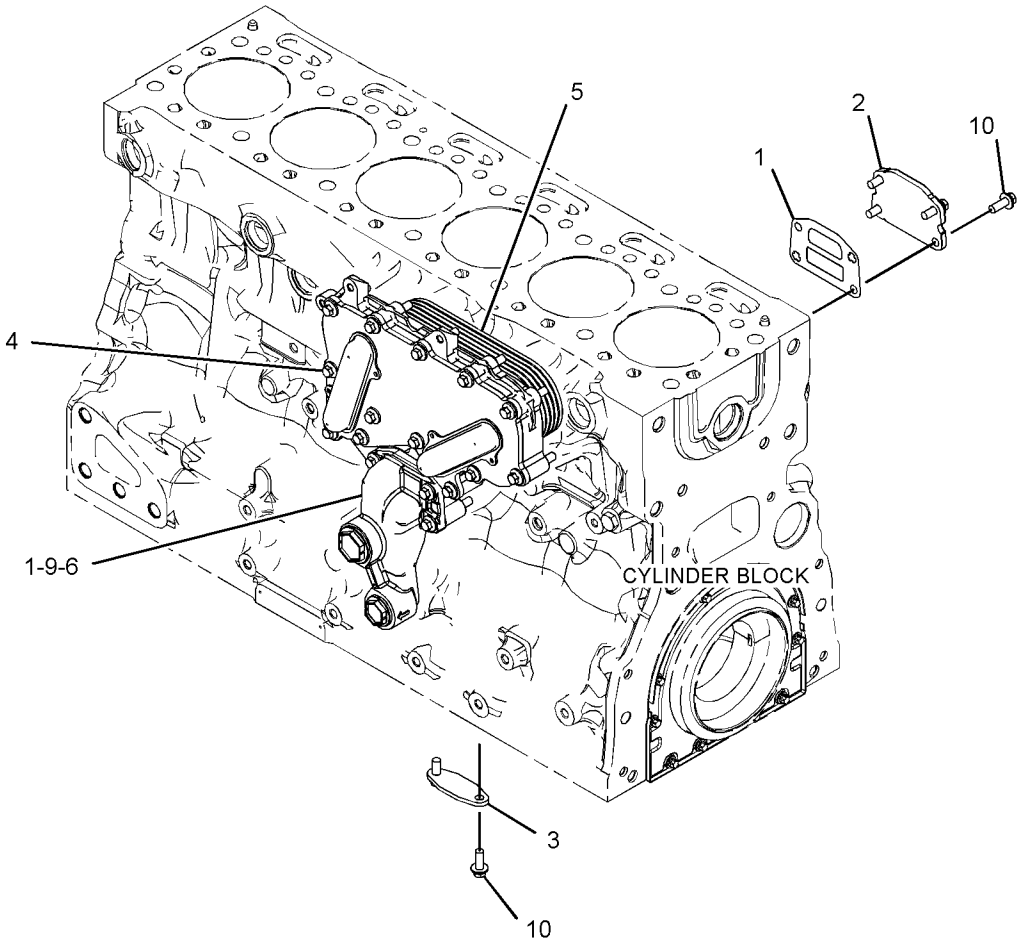


GRAPHIC #1 <END> g03731645

# *557-7208* FAN AR-VARIABLE

**S/N: FEY1-UP**

**PART OF 556-6443 ENGINE AR-COMPLETE**

**SMCS-1356, 1360**

**i07398134**

| NOTE | PART NUMBER | QTY | PART NAME 1 2 3 4 5 6 (PRODUCT LEVEL) | SEE PAGE |
|---|---|---|---|---|
| Y | *556-6568* | 1 | FAN GP-SUCTION (DIRECT DRIVE) | 54 |
| Y | *556-6558* | 1 | PULLEY GP-ENGINE | 38 |

Y - SEPARATE ILLUSTRATION

<END>

# *556-6568* FAN GP-SUCTION

**S/N: FEY1-UP**
**DIRECT DRIVE**
**PART OF 557-7208 FAN AR-VARIABLE**

**SMCS-1356** **i07398154**

| NOTE | REF NO | GRAPHIC REF | PART NUMBER | QTY | PART NAME 1 2 3 4 5 6 (PRODUCT LEVEL) | SEE PAGE |
|---|---|---|---|---|---|---|
| M | 1 | 1 | **453-3432** | 6 | BOLT (M8X1.25X20-MM) | |
| M | 2 | 1 | **453-3441** | 6 | BOLT (M10X1.5X50-MM) | |
| | 3 | 1 | **453-3451** | 6 | WASHER-HARD (8.8X16X2-MM THK) | |
| | 4 | 1 | **453-3454** | 6 | WASHER-HARD (11X21X2.5-MM THK) | |
| | 5 | 1 | **551-1869** | 1 | SPIDER AS-FAN (9-BLADE) | |
| | 6 | 1 | **554-1656** | 1 | SPACER-FAN | |

M - METRIC PART

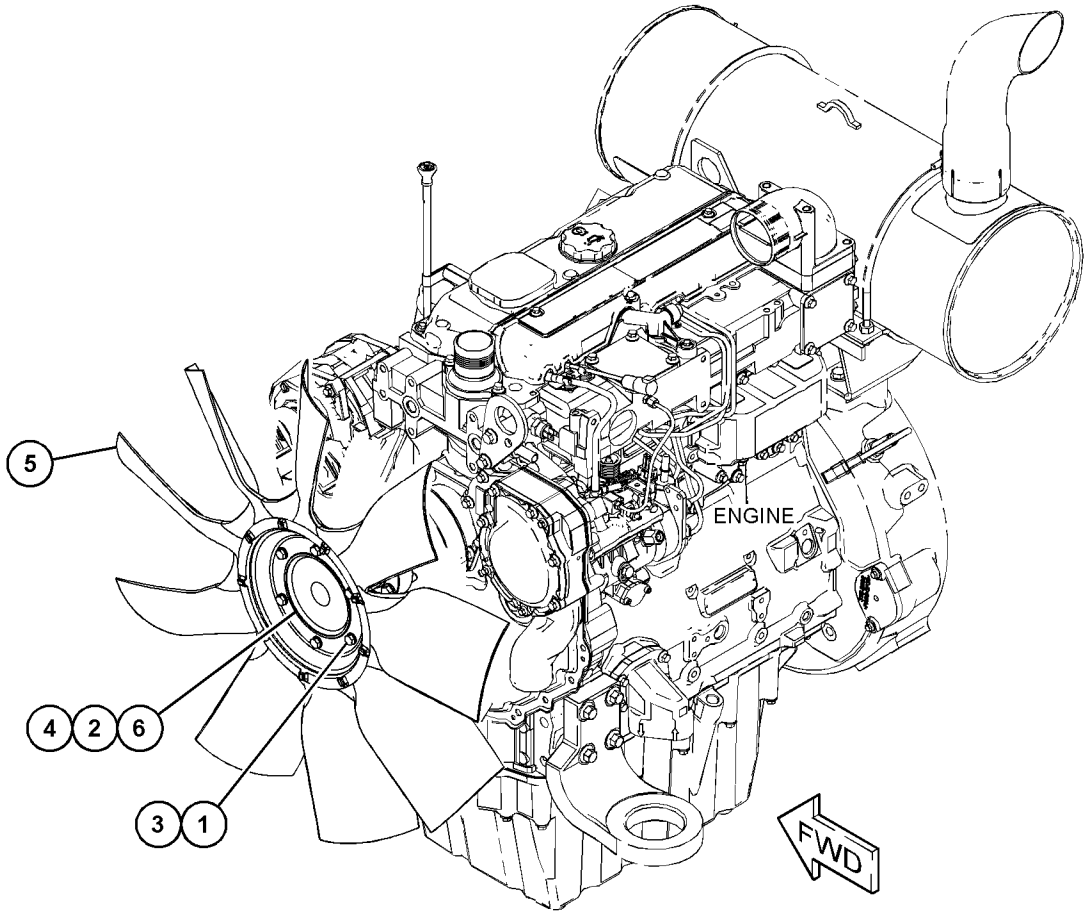


GRAPHIC #1 <END> g06313431

# *556-6529* LINES GP-COOLING

**S/N: FEY1-UP**

**PART OF 556-6438 INSTALLATION AR-ENGINE**

**SMCS-1380, 5057** **i07517946**

| NOTE | REF NO | GRAPHIC REF | PART NUMBER | QTY | PART NAME 1 2 3 4 5 6 (PRODUCT LEVEL) | SEE PAGE |
|---|---|---|---|---|---|---|
| M | 1 | 1 | **8T-4195** | 2 | BOLT (M10X1.5X30-MM) | |
| M | 2 | 1 | **8T-4196** | 1 | BOLT (M10X1.5X35-MM) | |
| M | 3 | 1 | **8T-4189** | 3 | BOLT (M8X1.25X20-MM) | |
| M | 4 | 1 | **8T-4908** | 1 | BOLT (M8X1.25X25-MM) | |
| | 5 | 1 | **122-3606** | 1 | CLIP (LOOP) | |
| | 6 | 1 | **144-0367** | 2 | CLAMP-HOSE | |
| | 7 | 1 | **198-4766** | 1 | WASHER-HARD (11X25X10-MM THK) | |
| | 8 | 1 | **362-3147** | 1 | CLIP (LOOP) | |
| | 9 | 1 | **548-0132** | 1 | HOSE-AFTERCOOLER (HIGH TEMPERATURE) | |
| | 10 | 1 | **548-0133** | 1 | HOSE-AFTERCOOLER (LOW TEMPERATURE) | |
| | 11 | 1 | **553-5747** | 1 | BRACKET AS | |
| M | | 1 | **8T-3597** | 1 | NUT-WELD (M12X1.75-THD) | |
| M | | 1 | **8T-3612** | 1 | NUT-WELD (M8X1.25-THD) | |
| | 12 | 1 | **553-5749** | 1 | BRACKET AS | |
| | 13 | 1 | **5P-4116** | 1 | WASHER-HARD (8.8X20.5X2-MM THK) | |
| | 14 | 1 | **8T-4121** | 3 | WASHER-HARD (11X21X2.5-MM THK) | |
| M | 15 | 1 | **8T-4139** | 1 | BOLT (M12X1.75X30-MM) | |
| | 16 | 1 | **8T-4223** | 2 | WASHER-HARD (13.5X25.5X3-MM THK) | |
| | 17 | 1 | **8T-4224** | 3 | WASHER-HARD (8.8X16X2-MM THK) | |
| | 18 | 1 | **8T-4985** | 1 | CLAMP-HOSE | |
| | 19 | 1 | **8T-6703** | 1 | CLAMP-HOSE | |

M - METRIC PART

*556-6529* **LINES GP-COOLING (**contd.**)** **i07517946**

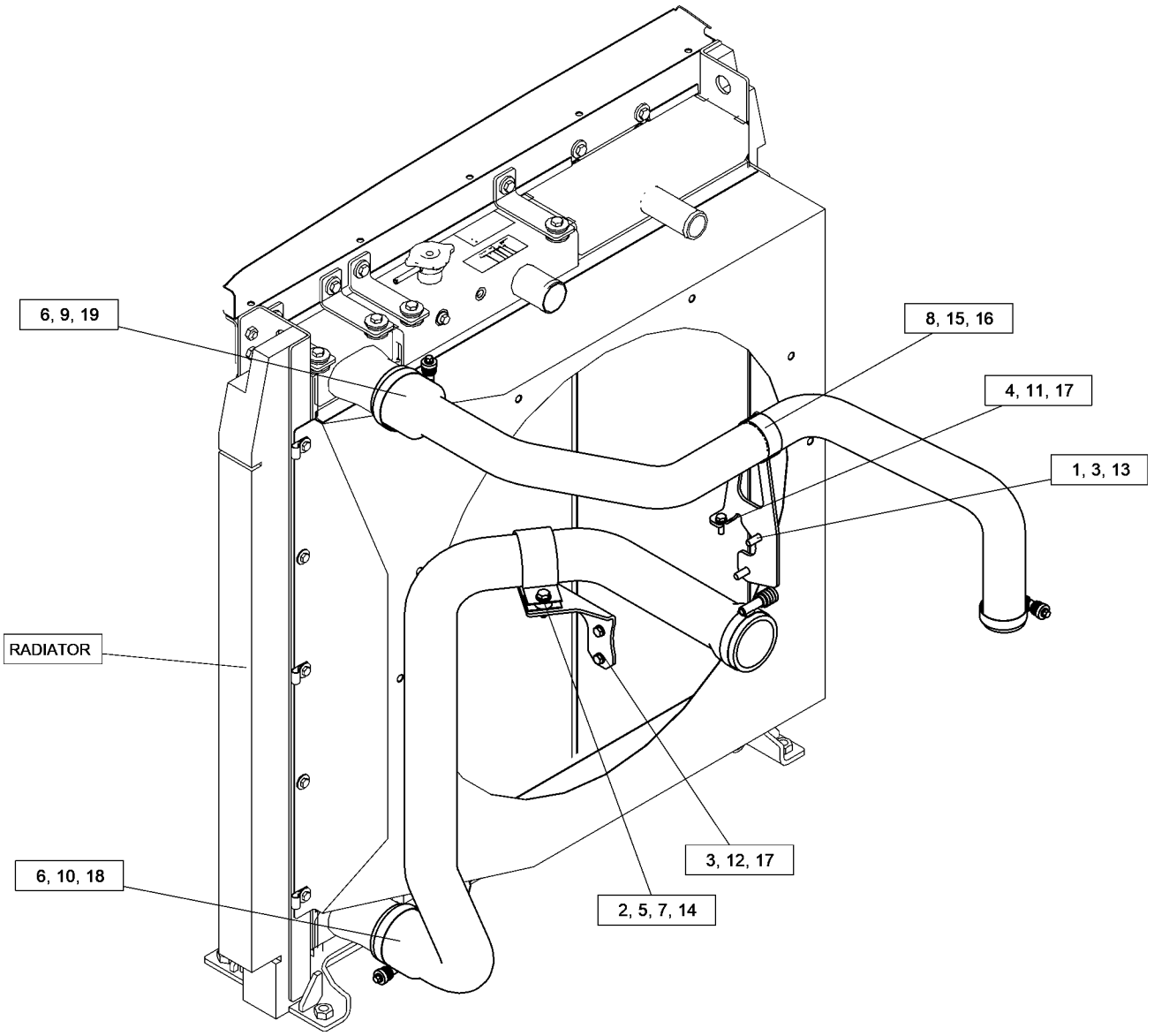


GRAPHIC #1 <END> g06392008

# *346-0411* PUMP GP-WATER

**S/N: H761-UP**

**PART OF 565-0288 ENGINE AR-PRIMARY**

**SMCS-1361** **i07043974**

| NOTE | REF NO | GRAPHIC REF | PART NUMBER | QTY | PART NAME 1 2 3 4 5 6 (PRODUCT LEVEL) | SEE PAGE |
|---|---|---|---|---|---|---|
| M | 1 | 1 | **113-8129** | 2 | BOLT (M8X1.25X75-MM) | |
| M | 2 | 1 | **123-2899** | 2 | BOLT (M10X1.5X40-MM) | |
| | 3 | 1 | **225-8019** | 1 | GASKET | |
| | 4 | 1 | **277-2925** | 1 | CONNECTION AS | |
| | | 1 | **225-7738** | 1 | SEAL-O-RING | |
| | | 1 | **277-2923** | 1 | GASKET | |
| | 5 | 1 | **281-8744** | 1 | GASKET-WATER REGULATOR | |
| CJ | 6 | 1 | *485-4894* | 1 | PUMP GP-WATER | |
| | | 1 | **278-3242** | 3 | BOLT-FLANGE HEAD (M8X1.25X18-MM) | |
| | | 1 | **374-4419** | 1 | GASKET | |
| | 7 | 1 | **417-7782** | 1 | REGULATOR AS-WATER TEMPERATURE (INCLUDES CONNECTOR) | |
| M | 8 | 1 | **6I-0217** | 2 | BOLT (M8X1.25X20-MM) | |
| M | 9 | 1 | **6I-0254** | 2 | BOLT (M8X1.25X30-MM) | |
| M | 10 | 1 | **6I-0839** | 5 | BOLT (M8X1.25X70-MM) | |
| | | | | | | |
| BFJ | | | **485-4895** | 1 | PUMP GP-WATER | |
| | | | | | (INCLUDES PUMP GP, BOLTS & GASKET) | |

B - USE AS REQUIRED
C - CHANGE FROM PREVIOUS TYPE
F - NOT SHOWN
J - PARTS MARKED J SERVICE PARTS MARKED J
M - METRIC PART

*346-0411* **PUMP GP-WATER (**contd.**)** **i07043974**

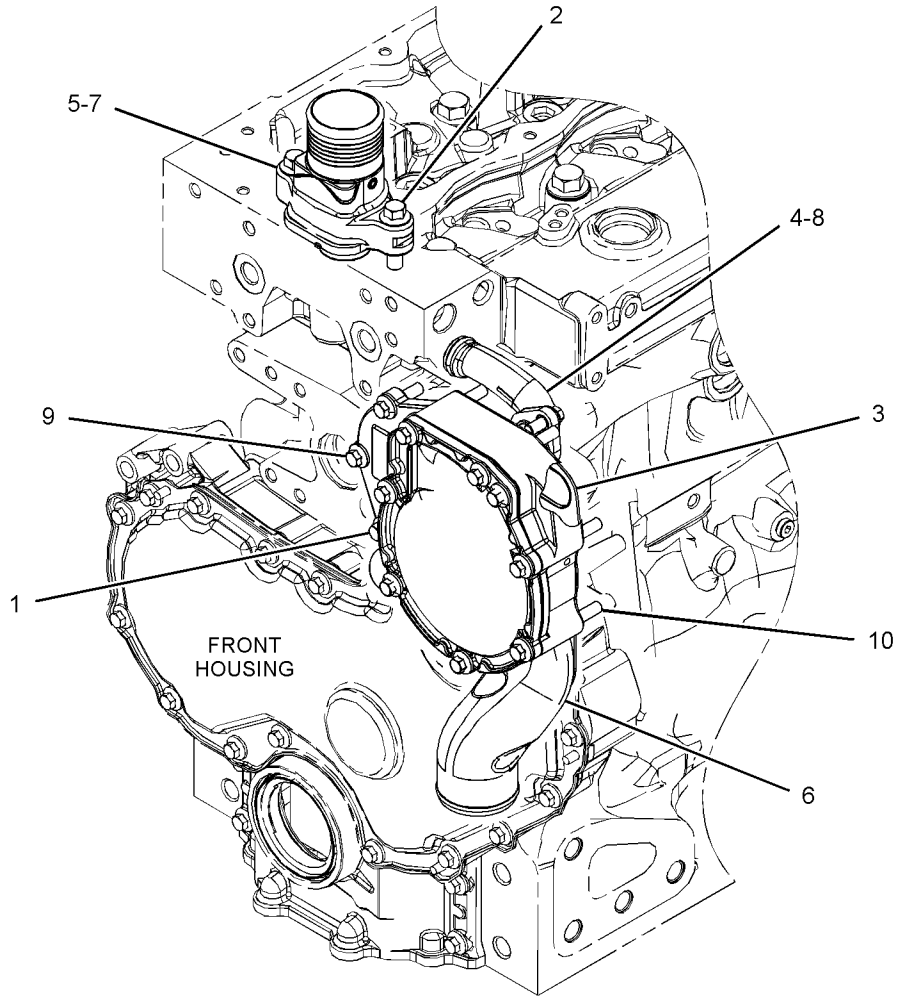


GRAPHIC #1 <END> g06204229

# *556-6534* RADIATOR & HYD OIL COOLER GP

**S/N: FEY1-UP**

**PART OF 556-6438 INSTALLATION AR-ENGINE**

**SMCS-1351, 1374** **i07434605**

| NOTE | REF NO | GRAPHIC REF | PART NUMBER | QTY | PART NAME 1 2 3 4 5 6 (PRODUCT LEVEL) | SEE PAGE |
|---|---|---|---|---|---|---|
| M | 1 | 1 | **8T-4195** | 2 | BOLT (M10X1.5X30-MM) | |
| M | 2 | 1 | **8T-4200** | 12 | BOLT (M8X1.25X16-MM) | |
| M | 3 | 2 | **8T-4908** | 4 | BOLT (M8X1.25X25-MM) | |
| | 4 | 1 | **3S-2093** | 1 | STRAP-CABLE | |
| | 5 | 1 | **5P-4116** | 10 | WASHER-HARD (8.8X20.5X2-MM THK) | |
| | 6 | 1,2 | **7X-7729** | 10 | WASHER (11X25X3-MM THK) | |
| | 7 | 2 | **8T-4121** | 1 | WASHER-HARD (11X21X2.5-MM THK) | |
| M | 8 | 1,2 | **8T-4136** | 3 | BOLT (M10X1.5X25-MM) | |
| M | 9 | 2 | **8T-4137** | 6 | BOLT (M10X1.5X20-MM) | |
| | 10 | 1,2 | **8T-4224** | 6 | WASHER-HARD (8.8X16X2-MM THK) | |
| | 11 | 1 | **8T-6703** | 4 | CLAMP-HOSE | |
| | 12 | 1 | **096-4035** | 3 | CLIP | |
| | 13 | 1 | **096-5819** | 1 | TANK AS-COOLANT (RECOVERY) | |
| | | 1 | **171-3369** | 1 | CAP AS (COOLANT RECOVERY) | |
| | 14 | 1 | **171-9077** | 1 | BAND | |
| | 15 | 1 | **305-7664** | 1 | BRACKET AS | |
| M | 16 | 1 | **522-0896** | 4 | BOLT-HEAD (M16X2X100-MM) | |
| | 17 | 1 | **178-6450** | 4 | SPACER (17X35X30-MM THK) | |
| | 18 | 2 | **362-3147** | 1 | CLIP (LOOP) (LOOP) | |
| | 19 | 2 | **524-9955** | 1 | GUARD AS | |
| | 20 | 1 | **548-0129** | 1 | PLATE AS | |
| M | | 1 | **8T-3597** | 4 | NUT-WELD (M12X1.75-THD) | |
| | 21 | 1 | **548-0130** | 1 | HOSE-UPPER RADIATOR | |
| | 22 | 2 | **548-0131** | 1 | HOSE-RADIATOR (LOWER) | |
| | 23 | 1 | **548-5561** | 1 | BAFFLE AS | |
| | 24 | 2 | **553-5748** | 1 | BRACKET AS | |
| M | | 2 | **8T-3490** | 2 | NUT-WELD (M10X1.5-THD) | |
| | 25 | 1 | **557-0253** | 1 | BAFFLE AS | |
| | 26 | 1 | **557-3514** | 1 | LINER | |
| | 27 | 1 | **557-3515** | 1 | LINER | |
| | 28 | 1 | **557-3613** | 1 | LINER-BOTTOM | |
| Y | 29 | 1 | **557-3772** | 1 | RADIATOR & HYD OIL COOLER GP | 62 |
| | 30 | 1 | **557-3806** | 1 | LINER | |
| E | 31 | 1 | **7Y-1976** | | HOSE-WATER (201-CM) | |
| E | 31A | 1 | **7Y-1976** | | HOSE-WATER (38-CM) | |
| D | 32 | 2 | **5P-9909** | | SEAL (0.01-M) | |
| D | 33 | 1 | **5P-5649** | | SEAL-BULK (0.02-M) | |
| L | 34 | 1 | **348-5409** | | SEAL (10-DM) | |
| | 35 | 2 | **157-0670** | 1 | CAP-DUST | |
| | 36 | 2 | **154-9023** | 1 | VALVE-SAMPLING | |
| | 37 | 2 | **6V-9027** | 1 | SEAL-O-RING | |

D - ORDER BY THE METER
E - ORDER BY THE CENTIMETER
L - ORDER BY THE DECIMETER
M - METRIC PART
Y - SEPARATE ILLUSTRATION

*556-6534* **RADIATOR & HYD OIL COOLER GP (**contd.**)** **i07434605**

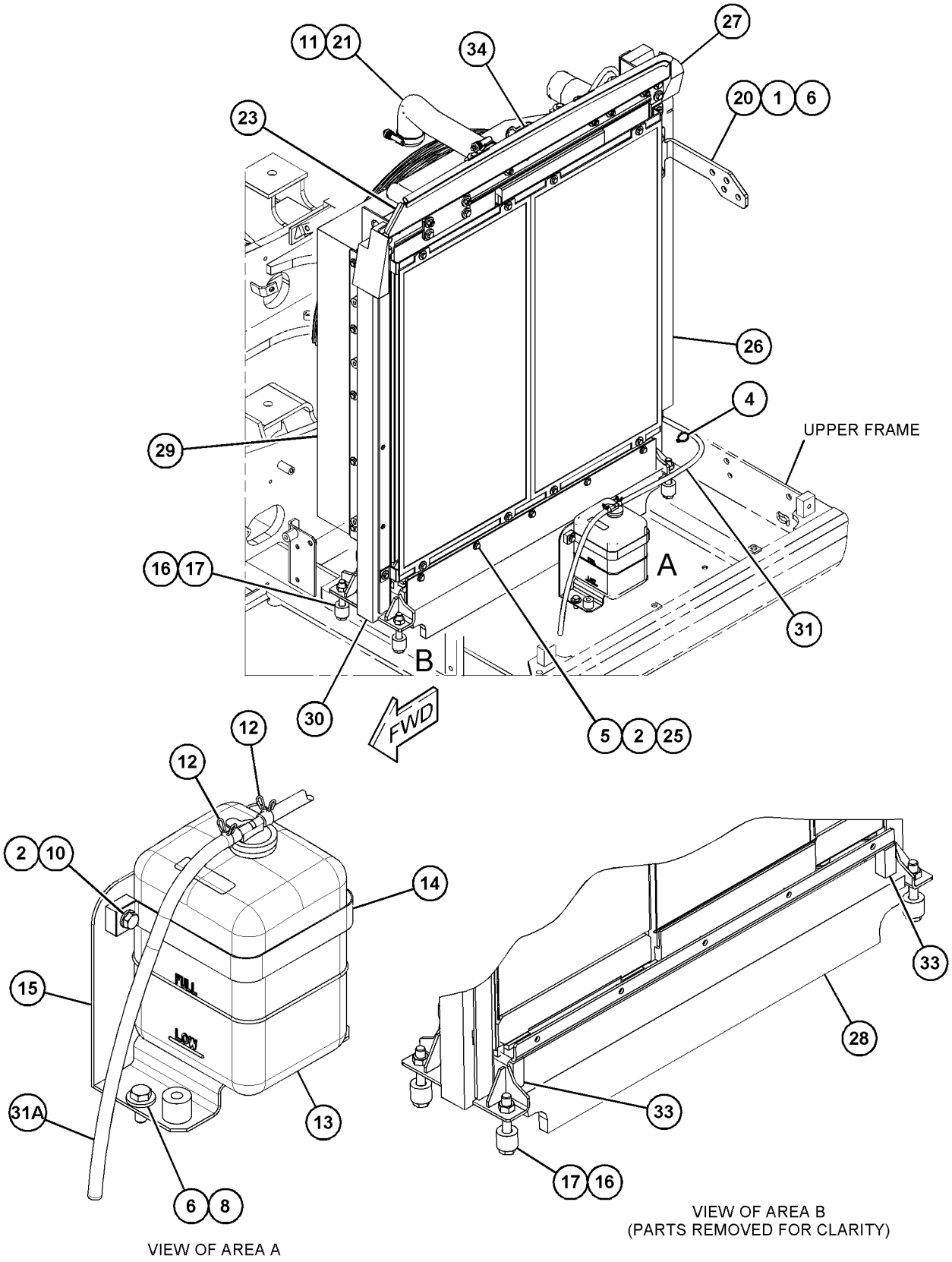


GRAPHIC #1 g06316071

*556-6534* **RADIATOR & HYD OIL COOLER GP (**contd.**)** **i07434605**

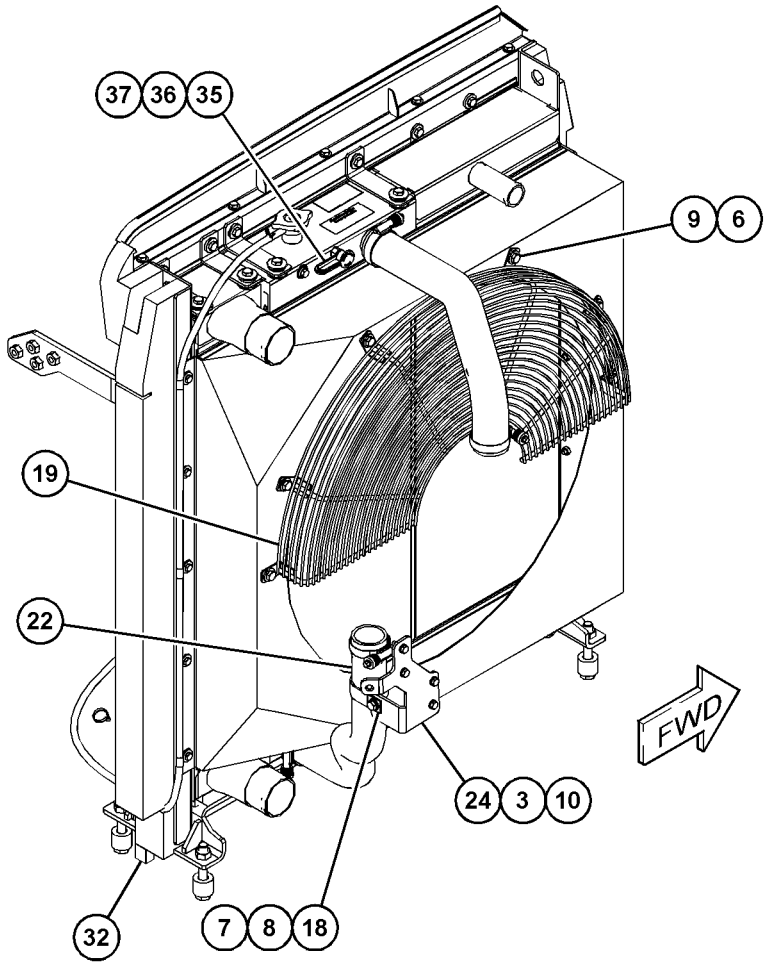


GRAPHIC #2 <END> g06316072

# *557-3772* RADIATOR & HYD OIL COOLER GP

**S/N: FEY1-UP**

**PART OF 556-6534 RADIATOR & HYD OIL COOLER GP**

**SMCS-1351, 1374**

**i07432443**

| NOTE | PART NUMBER | QTY | PART NAME 1 2 3 4 5 6 (PRODUCT LEVEL) | SEE PAGE |
|---|---|---|---|---|
| | **565-3168** | 1 | ADAPTER | |
| | **565-3169** | 1 | BRACKET | |
| | **565-3170** | 1 | BRACKET | |
| | **565-3177** | 1 | BRACKET | |
| | **565-3171** | 1 | BRACKET AS | |
| | **565-3172** | 1 | BRACKET AS | |
| | **565-3173** | 1 | BRACKET AS | |
| | **565-3174** | 1 | BRACKET AS | |
| | **565-3175** | 1 | BRACKET AS | |
| | **565-3176** | 1 | BRACKET AS | |
| | **565-3178** | 1 | CLAMP | |
| | **565-1438** | 1 | CORE AS (AIR-TO-AIR AFTERCOOLER) | |
| | **565-1436** | 1 | CORE AS-OIL COOLER | |
| | **565-1443** | 1 | CORE AS-RADIATOR | |
| | **565-1446** | 2 | MESH | |
| | **565-3466** | 1 | PIN | |
| | **565-3465** | 1 | RING | |
| | **565-1445** | 1 | SHROUD AS-FAN | |

<END>

# *109-9313* AIR CLEANER & MOUNTING GP

**S/N: FEY1-UP**

**PART OF 556-6438 INSTALLATION AR-ENGINE**

**SMCS-1051, 1054, 7452** **i04913217**

| NOTE | REF NO | GRAPHIC REF | PART NUMBER | QTY | PART NAME 1 2 3 4 5 6 (PRODUCT LEVEL) | SEE PAGE |
|---|---|---|---|---|---|---|
| | 1 | 1 | **8T-4121** | 4 | WASHER-HARD (11X21X2.5-MM THK) | |
| M | 2 | 1 | **8T-4137** | 4 | BOLT (M10X1.5X20-MM) | |
| Y | 3 | 1 | **310-9667** | 1 | AIR CLEANER GP | 64 |

M - METRIC PART
Y - SEPARATE ILLUSTRATION

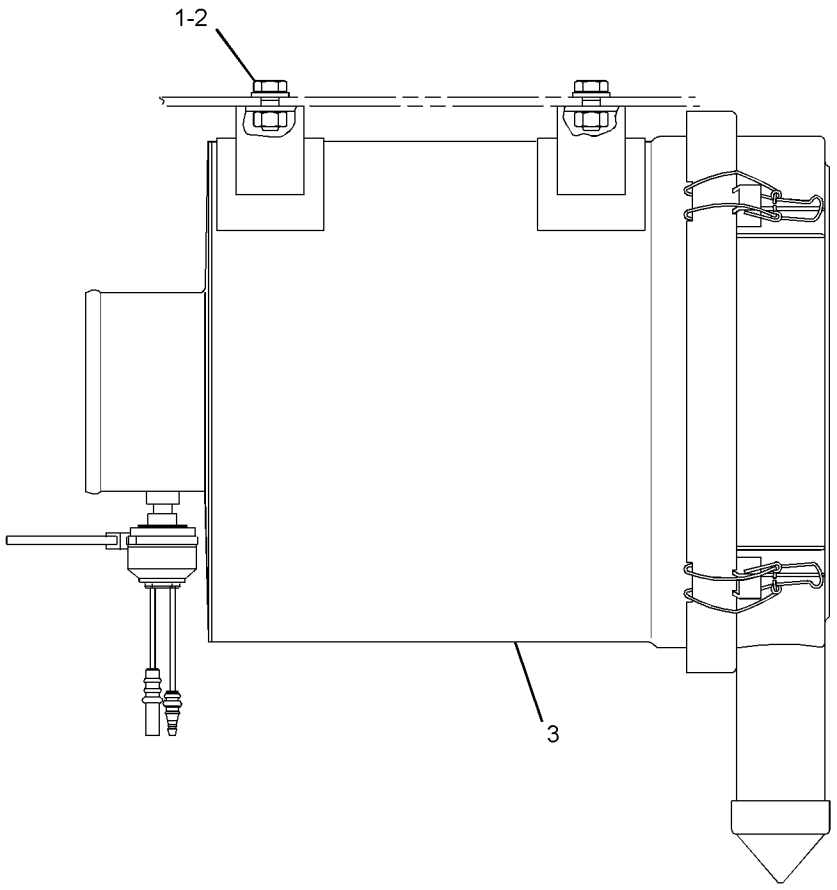


GRAPHIC #1 <END> g01528299

# 310-9667 AIR CLEANER GP

**S/N: FEY1-UP**

**PART OF 109-9313 AIR CLEANER & MOUNTING GP**

**SMCS-1051, 1054**

**i05654455**

| NOTE | REF NO | GRAPHIC REF | PART NUMBER | QTY | PART NAME 1 2 3 4 5 6 (PRODUCT LEVEL) | SEE PAGE |
|---|---|---|---|---|---|---|
| | 1 | 1 | **5L-3233** | 1 | FITTING-CONNECTOR | |
| | 2 | 1 | **7I-2673** | 1 | STRAP-CABLE | |
| | 3 | 1 | **112-9717** | 1 | VALVE-DUST (AIR CLEANER) | |
| | 4 | 1 | **131-8821** | 1 | FILTER ELEMENT AS-AIR (SECONDARY) | |
| | 5 | 1 | **131-8822** | 1 | FILTER ELEMENT AS-AIR (PRIMARY) | |
| | | | | | –OR– | |
| | | 1 | **134-0685** | 1 | FILTER ELEMENT AS-AIR (ULTRA HIGH EFFICIENCY) (PRIMARY) | |
| | 6 | 1 | **131-8826** | 1 | FILM-INSTRUCTION (TOP, AIR CLEANER COVER) | |
| | 7 | 1 | **131-8932** | 4 | LATCH | |
| | 8 | 1 | **184-3983** | 1 | COVER AS | |
| | 9 | 1 | **255-2966** | 1 | INDICATOR AS-AIR FILTER CHANGE (AIR RESTRICTION) | |

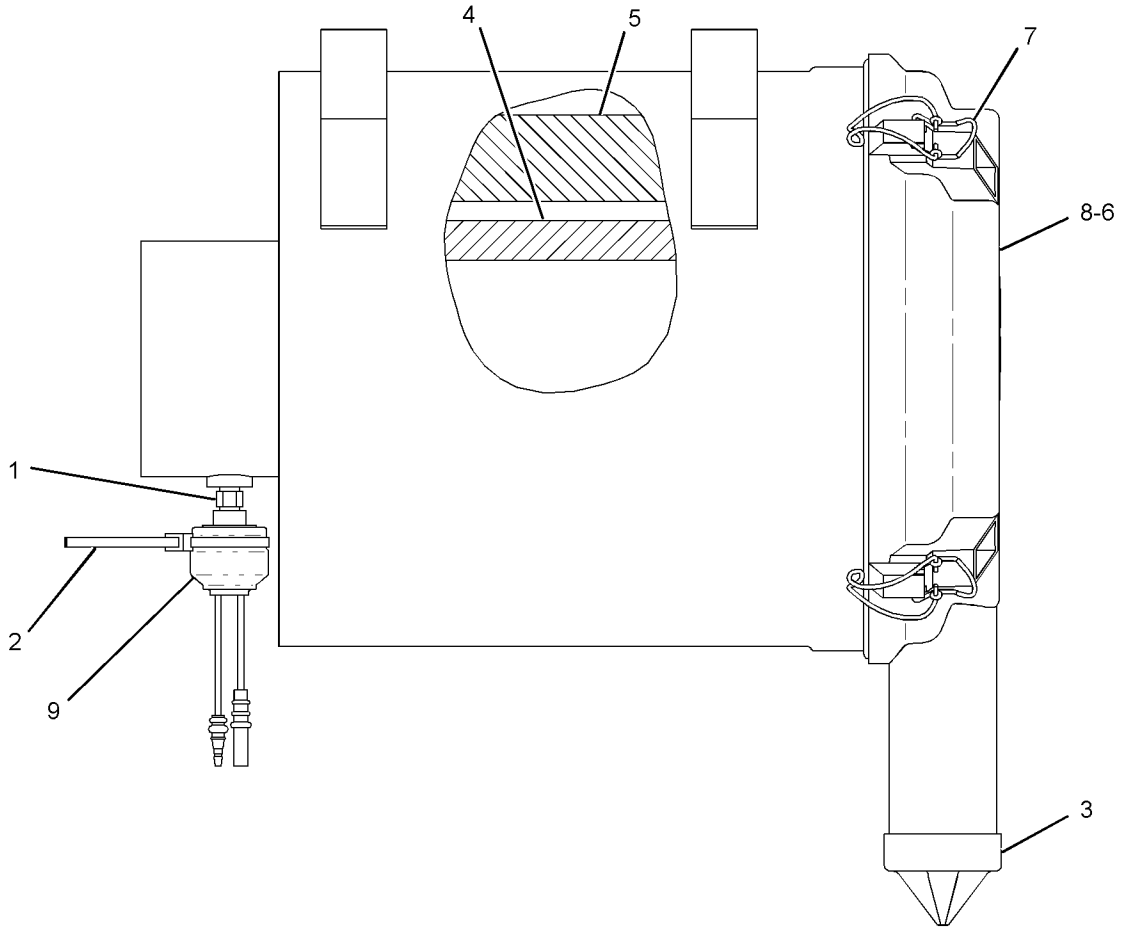


GRAPHIC #1 <END> g01504054

# *556-6542* LINES GP-AIR

**S/N: FEY1-UP**

**PART OF 556-6438 INSTALLATION AR-ENGINE**

**SMCS-1071** **i07398092**

| NOTE | REF NO | GRAPHIC REF | PART NUMBER | QTY | PART NAME 1 2 3 4 5 6 (PRODUCT LEVEL) | SEE PAGE |
|---|---|---|---|---|---|---|
| | 1 | 1 | **8T-4986** | 1 | CLAMP-HOSE | |
| | 2 | 1 | **279-7907** | 1 | HOSE-AIR | |
| | 3 | 1 | **548-0134** | 1 | HOSE-AIR | |
| | 4 | 1 | **9X-2201** | 3 | CLAMP-HOSE | |

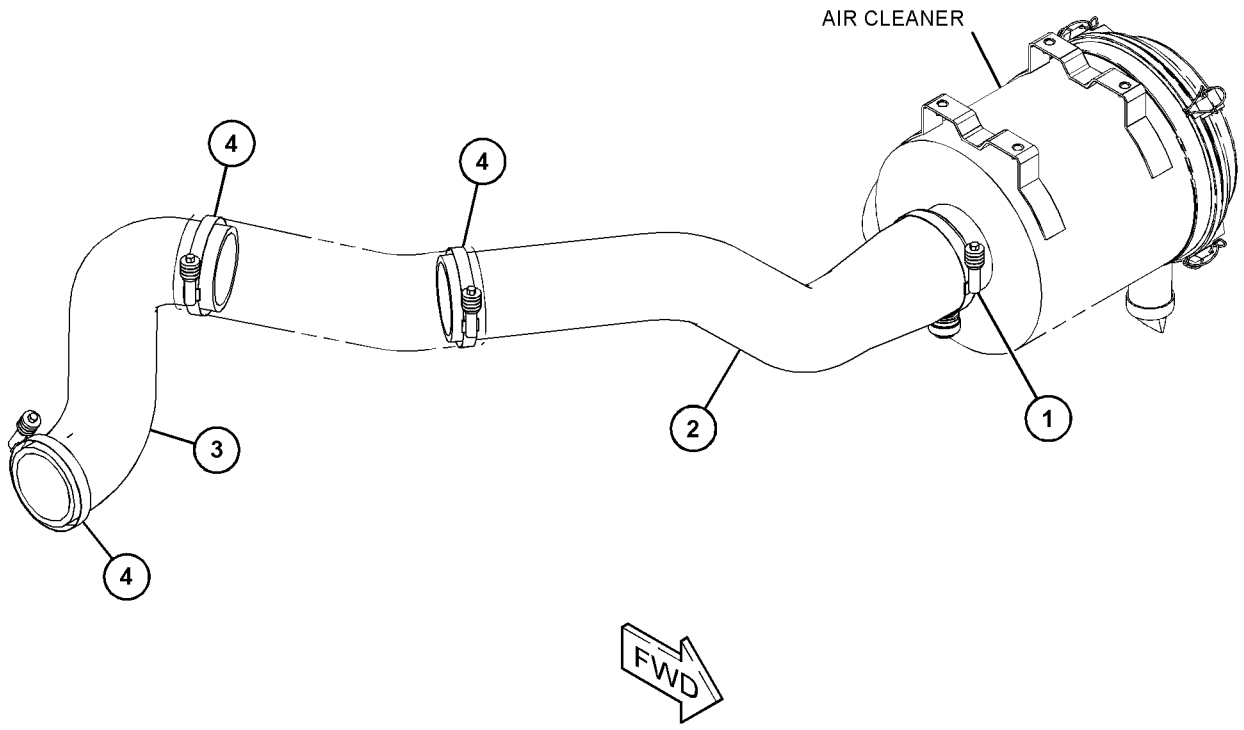


GRAPHIC #1 <END> g06315242

# *559-3000* MANIFOLD GP-INLET

**S/N: H761-UP**

**PART OF 565-0288 ENGINE AR-PRIMARY**

**SMCS-1058, 1090** **i07406100**

| NOTE | REF NO | GRAPHIC REF | PART NUMBER | QTY | PART NAME 1 2 3 4 5 6 (PRODUCT LEVEL) | SEE PAGE |
|---|---|---|---|---|---|---|
| M | 1 | 1 | **6I-0645** | 2 | BOLT (M8X1.25X25-MM) | |
| | 2 | 1 | **233-7489** | 2 | BOLT (M8X1.25-THD) | |
| | 3 | 1 | **256-4447** | 1 | ELBOW AS-AIR INLET | |
| | | 1 | **238-8288** | 1 | GASKET-INLET | |

M - METRIC PART

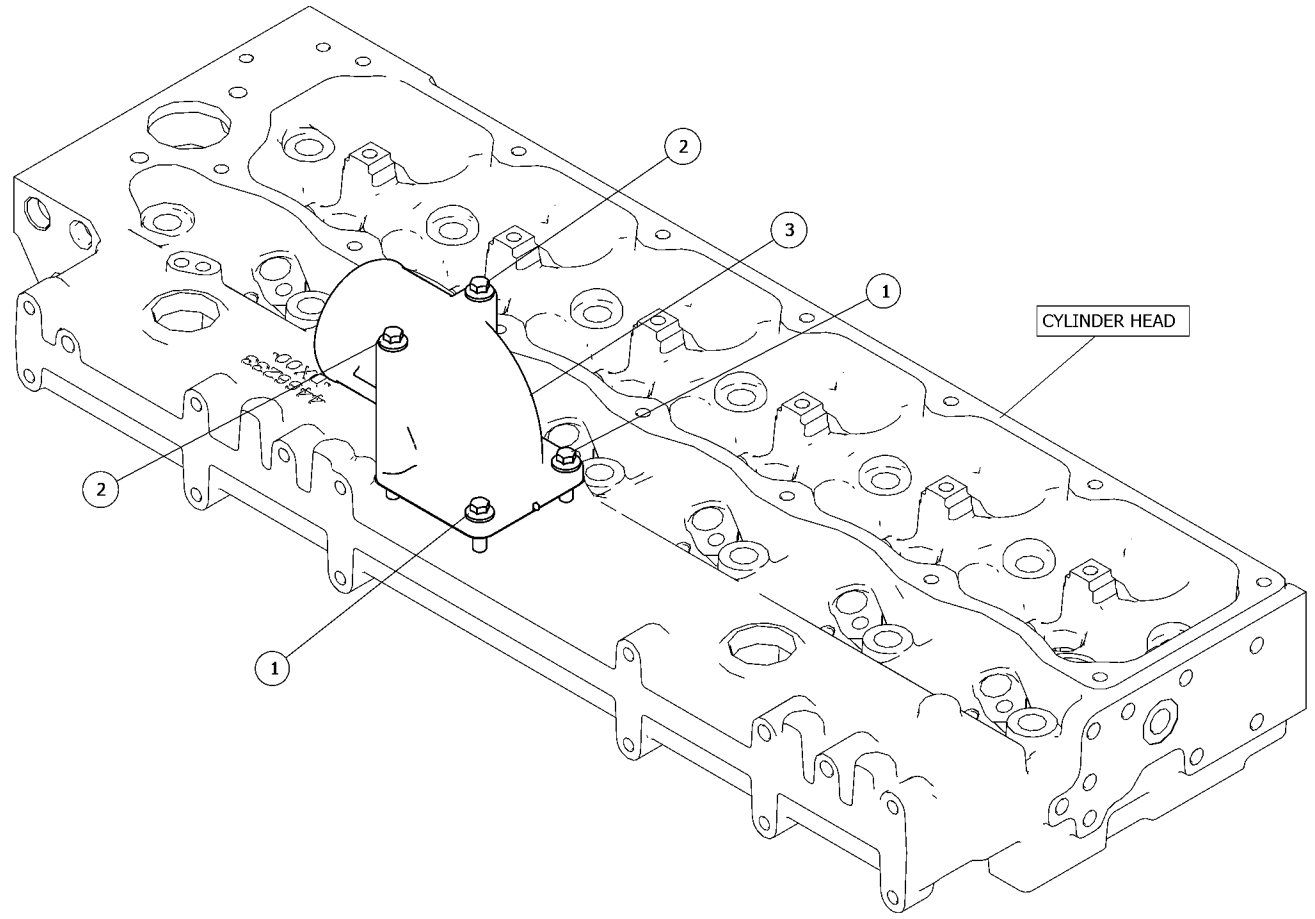


GRAPHIC #1 <END> g06314420

# *394-7470* MUFFLER & MOUNTING GP

**S/N: FEY1-UP**

**PART OF 556-6443 ENGINE AR-COMPLETE**

**SMCS-1062** **i06931190**

| NOTE | REF NO | GRAPHIC REF | PART NUMBER | QTY | PART NAME 1 2 3 4 5 6 (PRODUCT LEVEL) | SEE PAGE |
|---|---|---|---|---|---|---|
| | 1 | 1 | **241-9264** | 1 | CLAMP-MUFFLER | |
| M | 2 | 1 | **455-3798** | 2 | BOLT (M10X1.5X25-MM) | |
| | 3 | 1 | **374-5981** | 1 | PIPE AS-EXHAUST | |
| | 4 | 1 | **374-6038** | 2 | U-BOLT | |
| | 5 | 1 | **467-4842** | 1 | MUFFLER AS | |
| | 6 | 1 | **379-4430** | 1 | PIPE-TAIL | |
| M | 7 | 1 | **8T-4133** | 8 | NUT (M10X1.5-THD) | |
| | 8 | 1 | **419-7580** | 1 | SUPPORT AS | |
| M | 9 | 1 | **451-2181** | 4 | BOLT (M12X1.75X30-MM) | |
| | 10 | 1 | **388-7014** | 1 | CLAMP-BENT BOLT | |
| | 11 | 1 | **453-3454** | 2 | WASHER-HARD (11X21X2.5-MM THK) | |
| | 12 | 1 | **453-8033** | 4 | WASHER-HARD (13.5X30X4-MM THK) | |

M - METRIC PART

*394-7470* **MUFFLER & MOUNTING GP (**contd.**)** **i06931190**

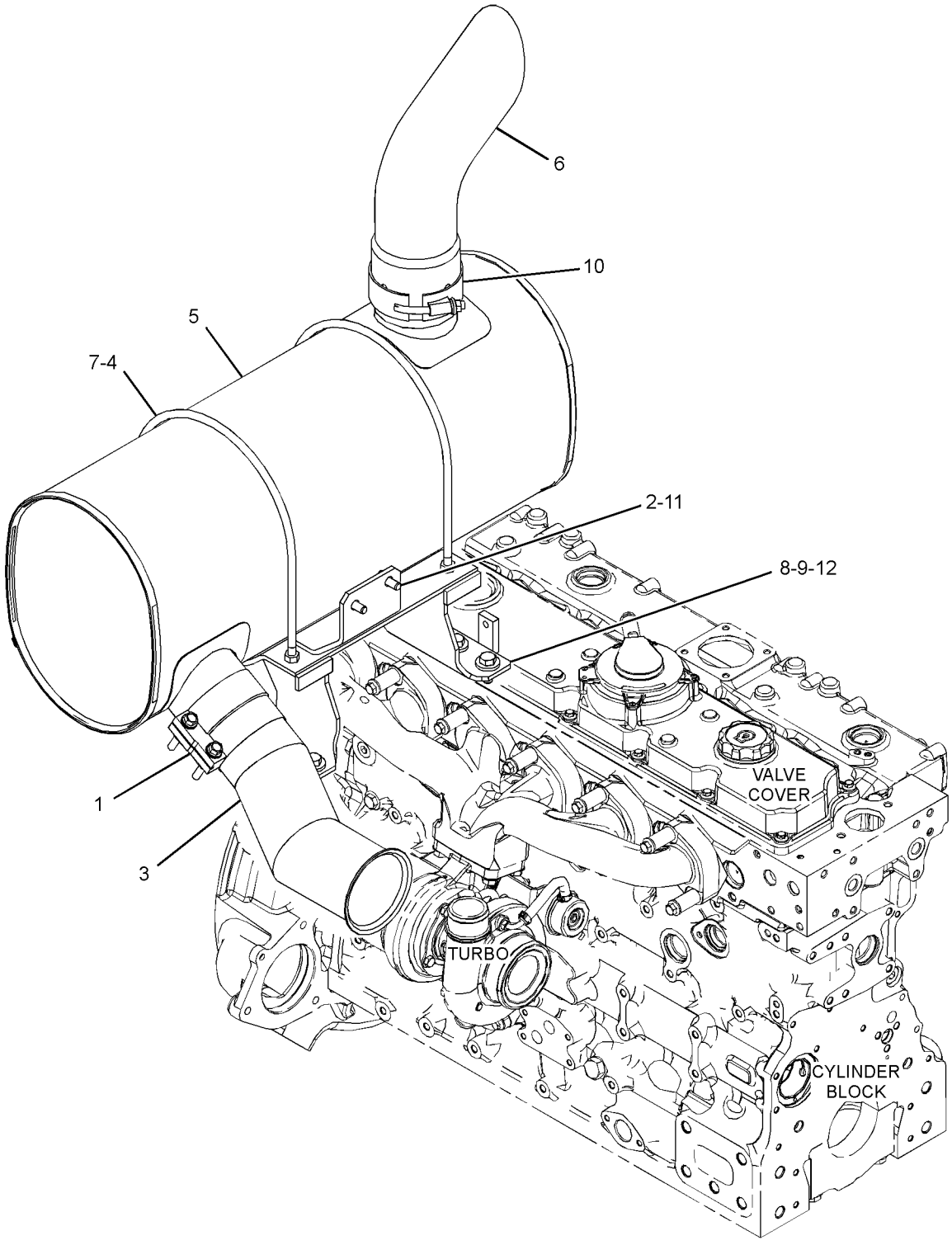


GRAPHIC #1 <END> g06171068

# *396-6322* TURBOCHARGER GP

**S/N: H761-UP**

**PART OF 565-0288 ENGINE AR-PRIMARY**

**SMCS-1052, 1053**

**i07383309**

| NOTE | REF NO | GRAPHIC REF | PART NUMBER | QTY | PART NAME 1 2 3 4 5 6 (PRODUCT LEVEL) | SEE PAGE |
|---|---|---|---|---|---|---|
| M | 1 | 1 | **6I-0217** | 5 | BOLT (M8X1.25X20-MM) | |
| | 2 | 1 | **238-8292** | 12 | BOLT-FLANGE HEAD | |
| | 3 | 1 | **437-4170** | 1 | GASKET | |
| | 4 | 1 | **278-0017** | 1 | GASKET | |
| | 5 | 1 | **416-7727** | 2 | GASKET | |
| | 6 | 1 | **286-7851** | 12 | SPACER | |
| | 7 | 1 | **384-2286** | 1 | MANIFOLD | |
| C | 8 | 1 | **519-2458** | 1 | TUBE AS | |
| | 9 | 1 | **456-5182** | 1 | LINE AS | |
| | 9A | 1 | **3P-0647** | 1 | SEAL-O-RING | |
| | 9B | 1 | **277-9940** | 1 | SEAL-O-RING | |
| | 10 | 1 | **431-4572** | 1 | TURBOCHARGER | |
| | 11 | 1 | **277-9463** | 1 | CLAMP | |
| | 12 | 1 | **361-7519** | 4 | ROD-THREADED | |
| M | 13 | 1 | **6I-0563** | 4 | NUT (M10X1.5-THD) | |
| | 14 | 1 | **451-0548** | 1 | BOLT (BANJO) | |

C - CHANGE FROM PREVIOUS TYPE
M - METRIC PART

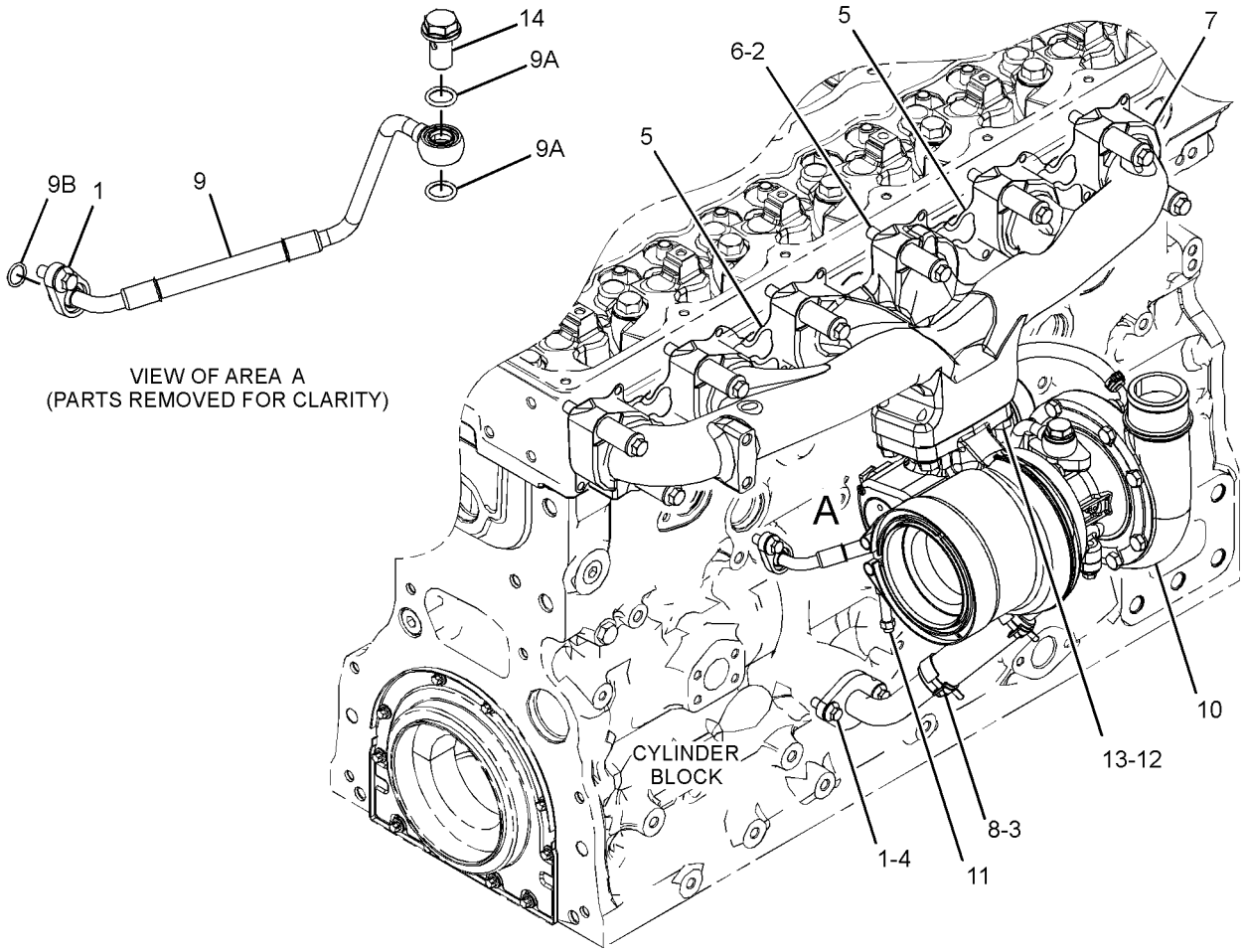


GRAPHIC #1

<END>

g06315724

# *467-7466* CONTROL GP-GOVERNOR

**S/N: FEY1-UP**

**PART OF 556-6447 CHASSIS AR**

**SMCS-1265, 1276** **i06952928**

| NOTE | REF NO | GRAPHIC REF | PART NUMBER | QTY | PART NAME 1 2 3 4 5 6 (PRODUCT LEVEL) | SEE PAGE |
|---|---|---|---|---|---|---|
| | 1 | 1 | **3S-2093** | 1 | STRAP-CABLE | |
| | 2 | 1 | **396-3531** | 1 | BRACKET AS | |
| | 3 | 1 | **396-3533** | 1 | BRACKET AS | |
| | 4 | 1 | **396-3538** | 1 | BRACKET AS | |
| | 5 | 1 | **521-8862** | 1 | BRACKET AS | |
| | 6 | 1 | **503-0794** | 1 | BRACKET AS | |
| | 7 | 1 | **509-9705** | 1 | MOTOR AS-GOVERNOR | |
| | | 1 | **8T-8737** | 1 | PLUG-SEAL | |
| | | 1 | **9X-3401** | 7 | PIN-CONNECTOR (16-GA TO 18-GA) | |
| | | | | | —OR— | |
| | | 1 | **126-1767** | 7 | PIN-CONNECTOR (14-GA TO 16-GA) | |
| | | 1 | **157-3184** | 1 | JOINT | |
| | | 1 | **243-4509** | 1 | RECEPTACLE AS-CONNECTOR (8-PIN) | |
| M | 8 | 1 | **5C-2890** | 1 | NUT (M6X1-THD) | |
| | 9 | 1 | **6V-3265** | 4 | CLIP | |
| M | 10 | 1 | **7X-2537** | 2 | BOLT (M8X1.25X35-MM) | |
| M | 11 | 1 | **7X-2619** | 2 | BOLT (M6X1X10-MM) | |
| | 12 | 1 | **8T-4121** | 7 | WASHER-HARD (11X21X2.5-MM THK) | |
| M | 13 | 1 | **8T-4136** | 3 | BOLT (M10X1.5X25-MM) | |
| M | 14 | 1 | **8T-4137** | 4 | BOLT (M10X1.5X20-MM) | |
| M | 15 | 1 | **8T-4200** | 5 | BOLT (M8X1.25X16-MM) | |
| | 16 | 1 | **8T-4224** | 7 | WASHER-HARD (8.8X16X2-MM THK) | |
| | 17 | 1 | **9X-8256** | 3 | WASHER (6.6X12X2-MM THK) | |

M - METRIC PART

*467-7466* **CONTROL GP-GOVERNOR (**contd.**)** **i06952928**

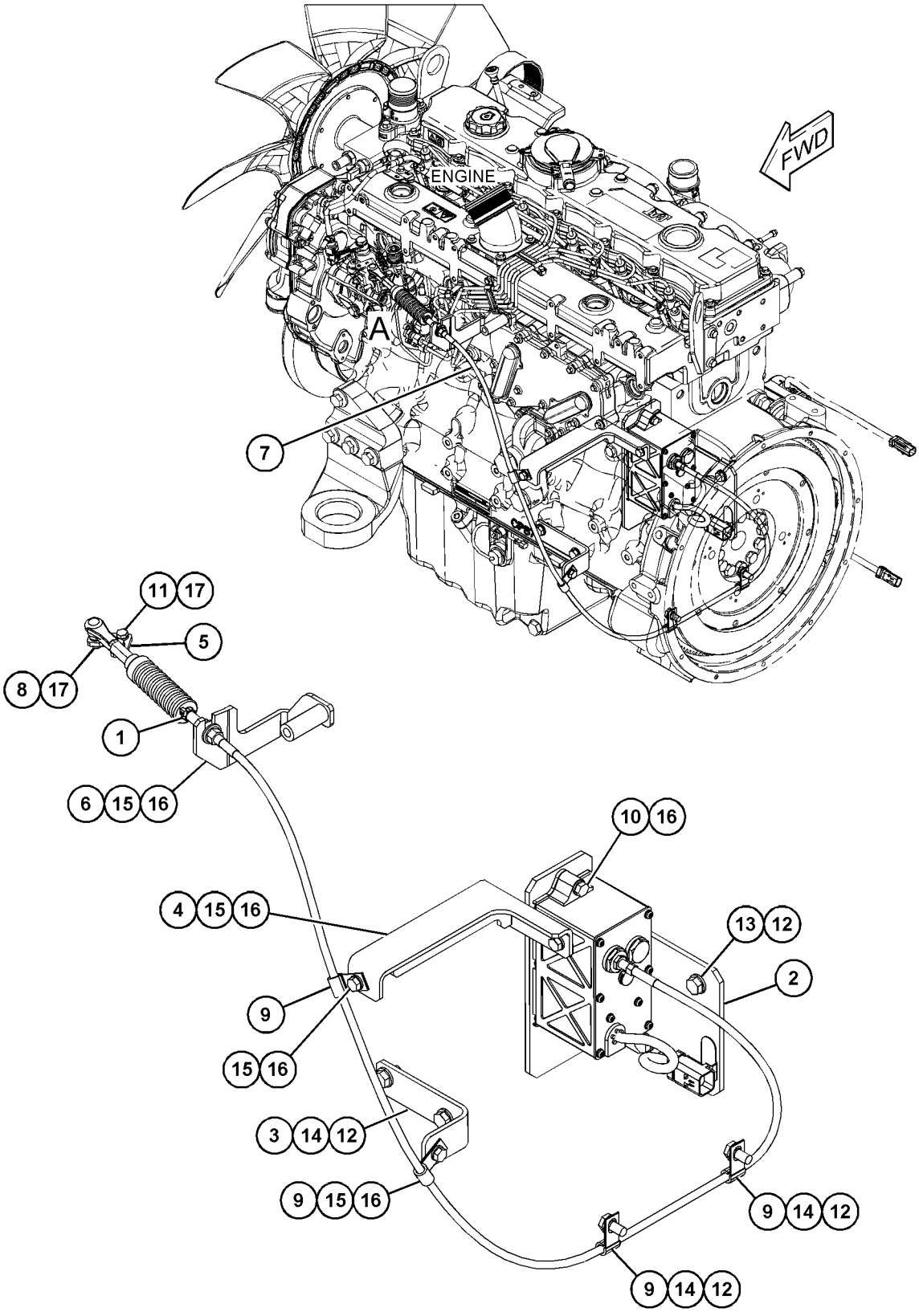


VIEW OF AREA A

GRAPHIC #1 <END> g06128088

# 446-1895 FILTER GP-FUEL–24-VOLT, LONG BOWL

**S/N: FEY1-UP**
**BRUSHLESS FUEL PUMP MODULE**
**PART OF 556-6577 LINES GP-FUEL**

**SMCS-1261** **i07445014**

| NOTE | REF NO | GRAPHIC REF | PART NUMBER | QTY | PART NAME 1 2 3 4 5 6 (PRODUCT LEVEL) | SEE PAGE |
|---|---|---|---|---|---|---|
| | 1 | 1 | **395-3439** | 1 | BOWL AS (FUEL FILTER) | |
| | 2 | 1 | **1R-1804** | 1 | FILTER ELEMENT-WTR SEP & FUEL | |
| | | 1 | **207-2757** | 1 | SEAL | |
| | 3 | 1 | **387-6403** | 1 | STRAINER (FUEL FILTER) | |
| | 4 | 1 | **395-3437** | 1 | VALVE AS-DRAIN (FUEL FILTER) | |

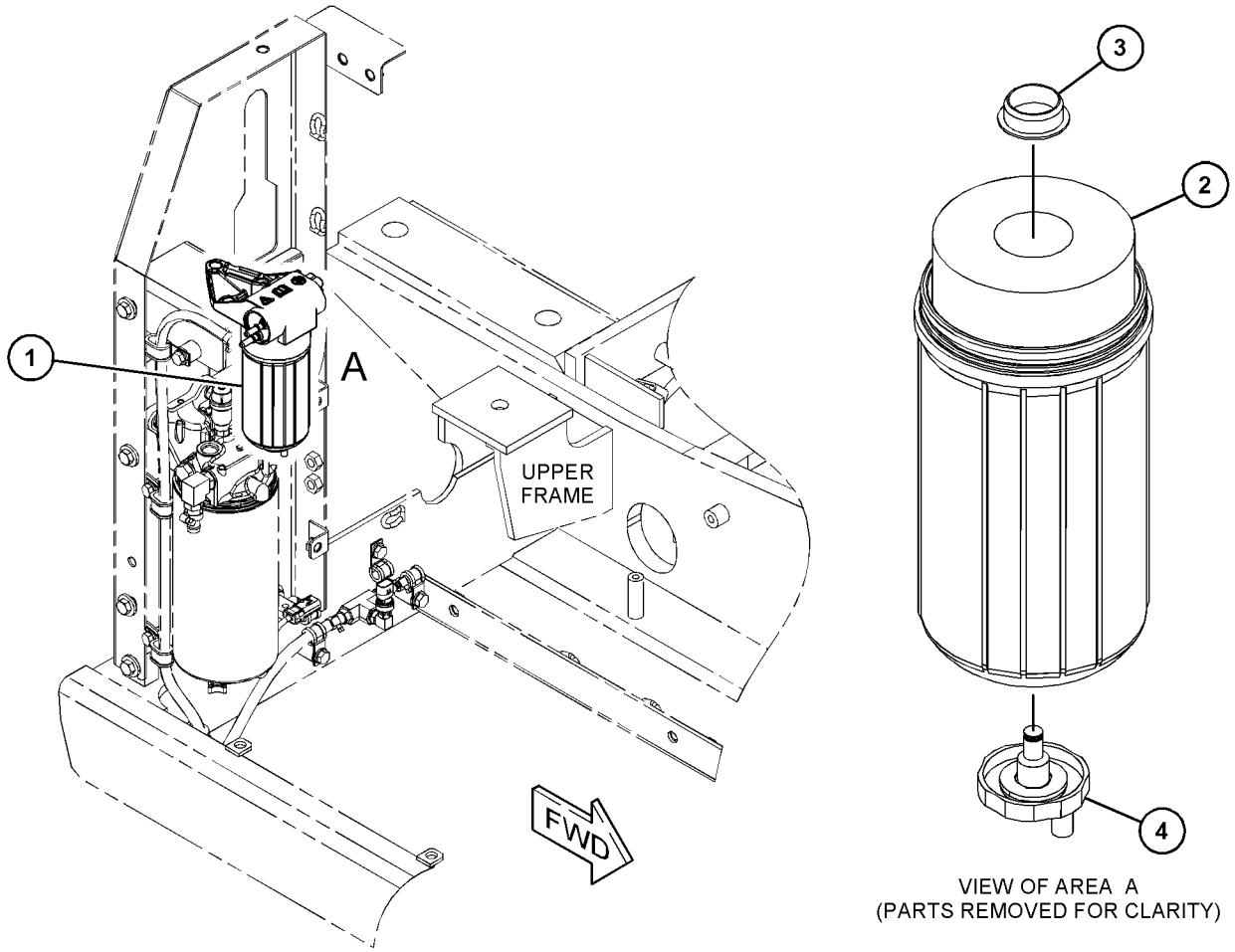


VIEW OF AREA A
(PARTS REMOVED FOR CLARITY)

GRAPHIC #1 <END> g03737125

# *556-6577* LINES GP-FUEL

**S/N: FEY1-UP**

**PART OF 556-6447 CHASSIS AR**

**SMCS-1274** **i07636358**

| NOTE | REF NO | GRAPHIC REF | PART NUMBER | QTY | PART NAME 1 2 3 4 5 6 (PRODUCT LEVEL) | SEE PAGE |
|---|---|---|---|---|---|---|
| M | 1 | 1 | **8T-4191** | 2 | BOLT (M10X1.5X16-MM) | |
| M | 2 | 1 | **8T-4195** | 2 | BOLT (M10X1.5X30-MM) | |
| M | 3 | 1,3 | **8T-4196** | 4 | BOLT (M10X1.5X35-MM) | |
| | 4 | 3 | **3S-2093** | 1 | STRAP-CABLE | |
| | 5 | 2 | **4I-0379** | 1 | VALVE-MANUAL (FUEL) | |
| | 6 | 1,2 | **5V-9155** | 3 | CLAMP-HOSE | |
| | 7 | 1,2,3 | **6S-8620** | 8 | CLAMP-HOSE | |
| | 8 | 1 | **7X-7729** | 2 | WASHER (11X25X3-MM THK) | |
| | 9 | 1 | **8T-1889** | 4 | CLIP (SLOT) | |
| | 10 | 1 | **8T-1890** | 4 | CLIP (TAB) | |
| | 11 | 1,2,3 | **8T-4121** | 26 | WASHER-HARD (11X21X2.5-MM THK) | |
| M | 12 | 1,3 | **8T-4136** | 5 | BOLT (M10X1.5X25-MM) | |
| M | 13 | 1,2,3 | **8T-4137** | 15 | BOLT (M10X1.5X20-MM) | |
| M | 14 | 1 | **8T-4138** | 3 | BOLT (M6X1X20-MM) | |
| M | 15 | 3 | **9X-2480** | 3 | BOLT (M6X1X45-MM) | |
| | 16 | 3 | **9X-6165** | 6 | WASHER (6.5X22X2.5-MM THK) | |
| | 17 | 1 | **9X-8256** | 3 | WASHER (6.6X12X2-MM THK) | |
| | 18 | 3 | **9X-9896** | 6 | MOUNT (ISOLATION) | |
| | 19 | 1,2 | **093-2065** | 3 | GROMMET | |
| | 20 | 3 | *148-8411* | 3 | PLUG AS | |
| | | | | | (EACH INCLUDES) | |
| | | 3 | **3K-0360** | 1 | SEAL-O-RING | |
| | | 3 | **9S-4185** | 1 | PLUG (3/4-16-THD) | |
| | 21 | 2 | **157-1669** | 2 | CONNECTOR | |
| | 22 | 1 | **176-4746** | 1 | GROMMET | |
| | 23 | 1 | **177-2215** | 1 | STRAP-DUAL CLAMP | |
| | 24 | 2 | **281-5987** | 1 | ELBOW | |
| | 25 | 2 | **305-6873** | 1 | SENSOR GP-PRESSURE (FUEL) | |
| | 26 | 1 | **320-3063** | 1 | SENSOR GP-PRESSURE (ATMOSPHERIC AIR) | |
| | 27 | 3 | *332-8591* | 1 | ELBOW AS | |
| | | 3 | **9X-3982** | 1 | ELBOW | |
| | | 3 | **238-5080** | 1 | SEAL-O-RING | |
| | 28 | 2 | *332-8598* | 1 | ADAPTER AS | |
| | | 2 | **034-3679** | 1 | ADAPTER | |
| | | 2 | **238-5080** | 1 | SEAL-O-RING | |
| | 29 | 2 | **343-3917** | 2 | CONNECTION | |
| | 30 | 2 | **368-6658** | 1 | VALVE (FUEL SHUTOFF) | |
| | 31 | 3 | **381-9061** | 1 | BASE AS-FUEL FILTER | |
| | 32 | 3 | **381-9064** | 1 | INDICATOR-FUEL FILTER CHANGE | |
| | 33 | 2 | **387-2637** | 1 | ADAPTER-TEE | |
| | 34 | 2 | **390-2263** | 1 | ADAPTER-TEE | |
| | 35 | 1 | **420-2083** | 1 | PLATE AS | |
| M | | 1 | **6V-9632** | 3 | NUT-WELD (M6X1-THD) | |
| M | | 1 | **8T-3490** | 1 | NUT-WELD (M10X1.5-THD) | |
| | 36 | 3 | **420-5299** | 4 | CLIP (LOOP) | |
| | 37 | 2 | *421-6175* | 2 | ADAPTER AS | |
| | | | | | (EACH INCLUDES) | |
| | | 2 | **214-7568** | 1 | SEAL-O-RING | |

*556-6577* **LINES GP-FUEL (**contd.**)** **i07636358**

| NOTE | REF NO | GRAPHIC REF | PART NUMBER | QTY | PART NAME 1 2 3 4 5 6 (PRODUCT LEVEL) | SEE PAGE |
|---|---|---|---|---|---|---|
| | | 2 | **426-4018** | 1 | ADAPTER | |
| Y | 38 | 3 | **423-6434** | 1 | SENSOR GP-LIQUID LEVEL (WATER IN FUEL) | 114 |
| | 39 | 2 | **433-4841** | 1 | ADAPTER | |
| | 40 | 3 | **438-5386** | 1 | FILTER AS-WATER SEP & FUEL (ULTRA HIGH EFFICIENCY) | |
| | 41 | 3 | *501-7449* | 1 | ADAPTER AS | |
| | | 3 | **214-7568** | 1 | SEAL-O-RING | |
| | | 3 | **504-2756** | 1 | ADAPTER | |
| I | 42 | 1 | **519-8524** | 1 | HOSE AS | |
| | 43 | 2 | **214-7568** | 2 | SEAL-O-RING | |
| | 44 | 2 | **228-7100** | 3 | SEAL-O-RING | |
| | 45 | 2 | **228-7102** | 1 | SEAL-O-RING | |
| | 46 | 3 | *281-5981* | 1 | ELBOW AS | |
| | | 3 | **6V-8722** | 1 | ELBOW | |
| | | 3 | **228-7091** | 1 | SEAL-O-RING | |
| | | 3 | **238-5080** | 1 | SEAL-O-RING | |
| | 47 | 1,2,3 | **344-5360** | 14 | CLIP (LOOP) | |
| | 48 | 2 | **347-4416** | 2 | ADAPTER | |
| | 49 | 1 | **351-4089** | 4 | GROMMET | |
| | 50 | 1,2 | **351-4318** | 4 | CLIP (LOOP) | |
| | 51 | 1 | **351-4320** | 5 | CLIP (LOOP) | |
| | 52 | 2 | **351-4321** | 2 | CLIP (LOOP) | |
| | 53 | 2 | **3J-7354** | 1 | SEAL-O-RING | |
| Y | 54 | 3 | **446-1895** | 1 | FILTER GP-FUEL (24-VOLT, LONG BOWL) | 72 |
| E | 55 | 1 | **347-8646** | | HOSE (211-CM) | |
| I | 56 | 1 | **491-9758** | 1 | HOSE AS | |
| I | 57 | 3 | **556-9112** | 1 | HOSE AS | |
| | 58 | 1 | **556-9113** | 1 | HOSE AS | |
| | 59 | 1 | **556-9114** | 1 | HOSE AS | |
| | 60 | 1 | **556-9116** | 1 | HOSE AS | |
| | 61 | 1 | **563-7848** | 1 | SUPPORT AS | |
| E | 62 | 1 | **347-8645** | | HOSE (136-CM) | |
| E | 62A | 1 | **347-8645** | | HOSE (55-CM) | |
| | 64 | 3 | **8C-5608** | 3 | SPACER (6.5X9.5X25.4-MM THK) | |
| G | 65 | 1 | **423-1984** | | HOSE (41.7-IN) | |

E - ORDER BY THE CENTIMETER
G - ORDER BY THE INCH
I - REFER TO HYDRAULIC INFORMATION SYSTEM
M - METRIC PART
Y - SEPARATE ILLUSTRATION

*556-6577* **LINES GP-FUEL (**contd.**)** **i07636358**

REFER TO ALL ILLUSTRATIONS OF
THIS GROUP FOR AUXILIARY VIEWS

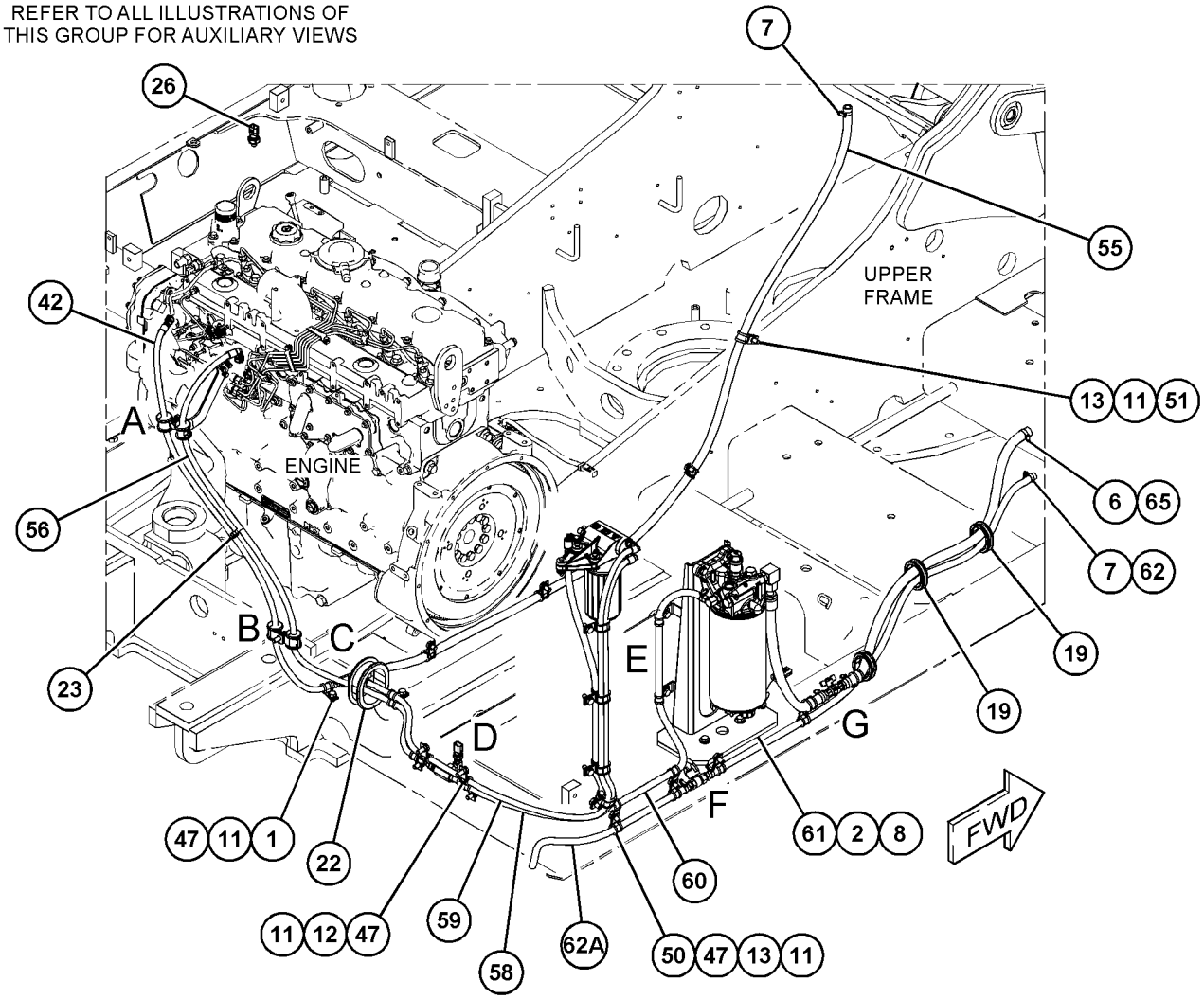


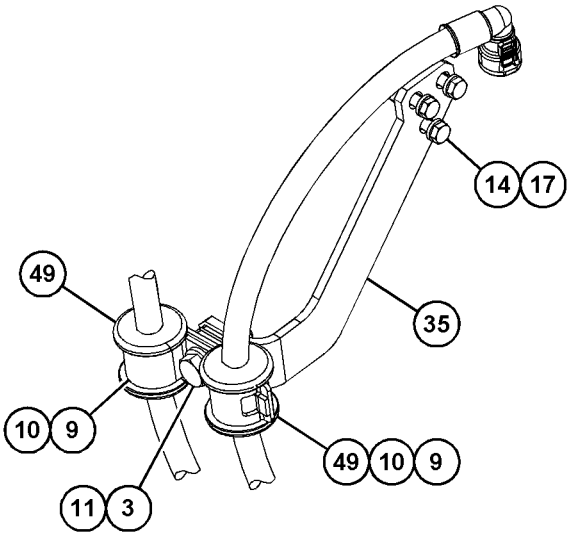


VIEW OF AREA A

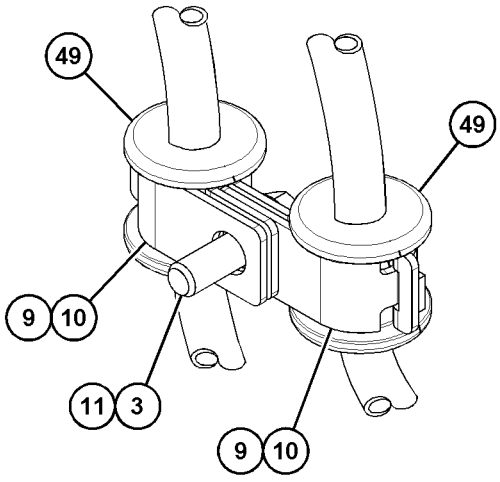


VIEW OF AREA B

GRAPHIC #1 g06391954

*556-6577* **LINES GP-FUEL (**contd.**)** **i07636358**

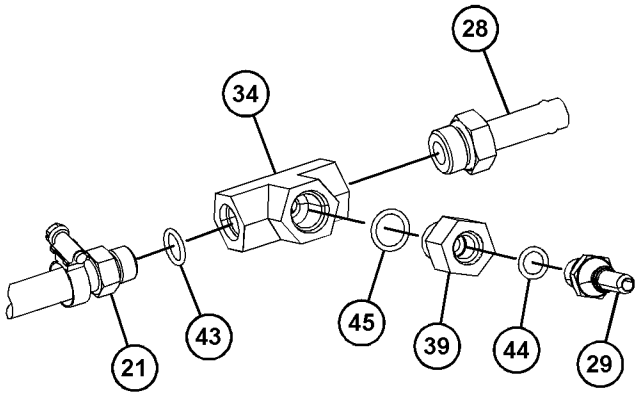


VIEW OF AREA C
(PARTS REMOVED FOR CLARITY)

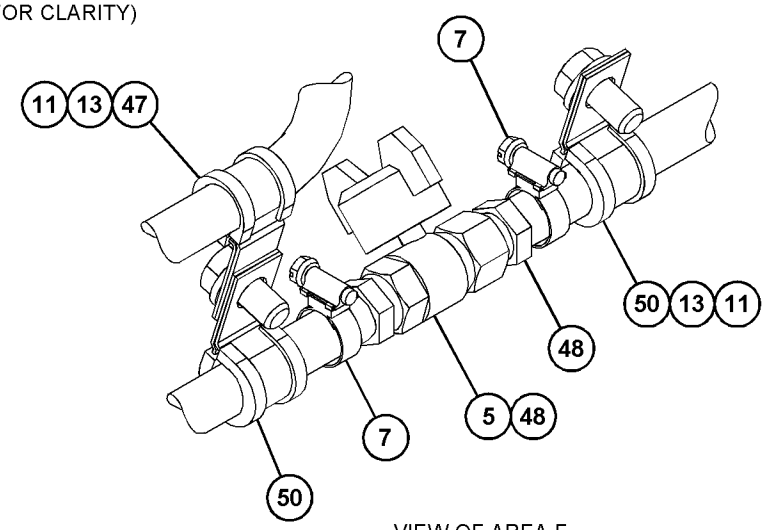


VIEW OF AREA F

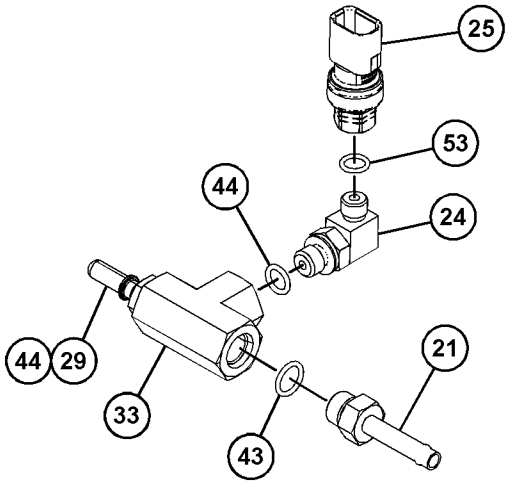


VIEW OF AREA D
(PARTS REMOVED FOR CLARITY)

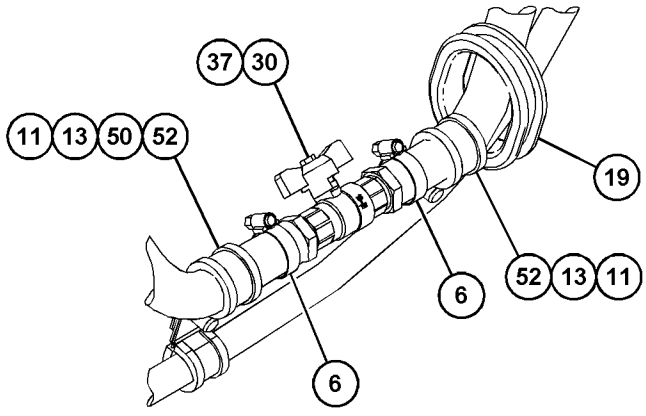


VIEW OF AREA G

GRAPHIC #2 g06318953

*556-6577* **LINES GP-FUEL (**contd.**)** **i07636358**

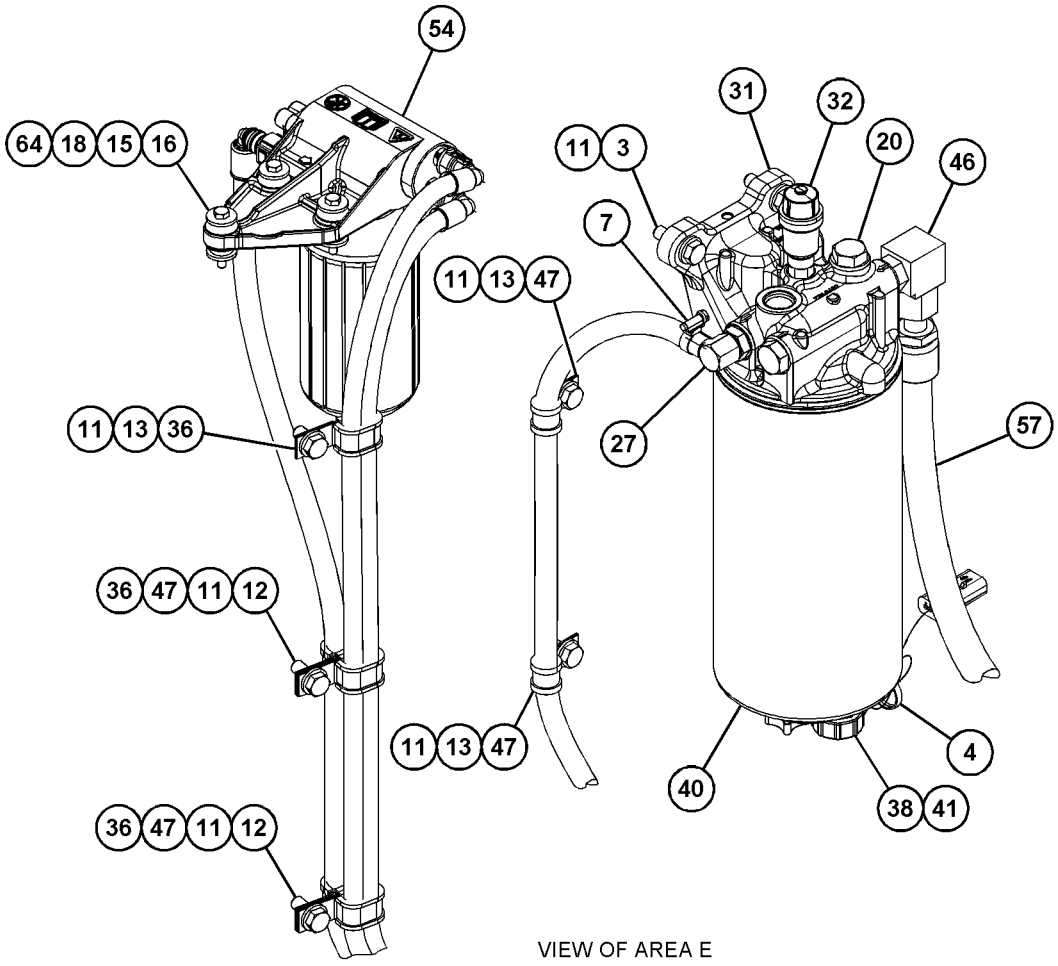


VIEW OF AREA E
(PARTS REMOVED FOR CLARITY)

GRAPHIC #3 <END> g06391955

# *396-6969* LINES GP-FUEL FILTER

**S/N: H761-UP**

**PART OF 565-0288 ENGINE AR-PRIMARY**

**SMCS-1261** **i05245915**

| NOTE | REF NO | GRAPHIC REF | PART NUMBER | QTY | PART NAME 1 2 3 4 5 6 (PRODUCT LEVEL) | SEE PAGE |
|---|---|---|---|---|---|---|
| M | 1 | 1 | **100-4458** | 4 | BOLT (M8X1.25X14-MM) | |
| M | 2 | 1 | **111-8222** | 1 | BOLT (M8X16-MM) | |
| | 3 | 1 | **231-4457** | 1 | GASKET | |
| | 4 | 1 | **246-4383** | 1 | PLATE | |
| | 5 | 1 | **398-3877** | 1 | LINE AS-FUEL | |
| | 6 | 1 | **232-3126** | 1 | CLIP | |
| | 7 | 1 | **240-5571** | 1 | BRACKET | |

M - METRIC PART

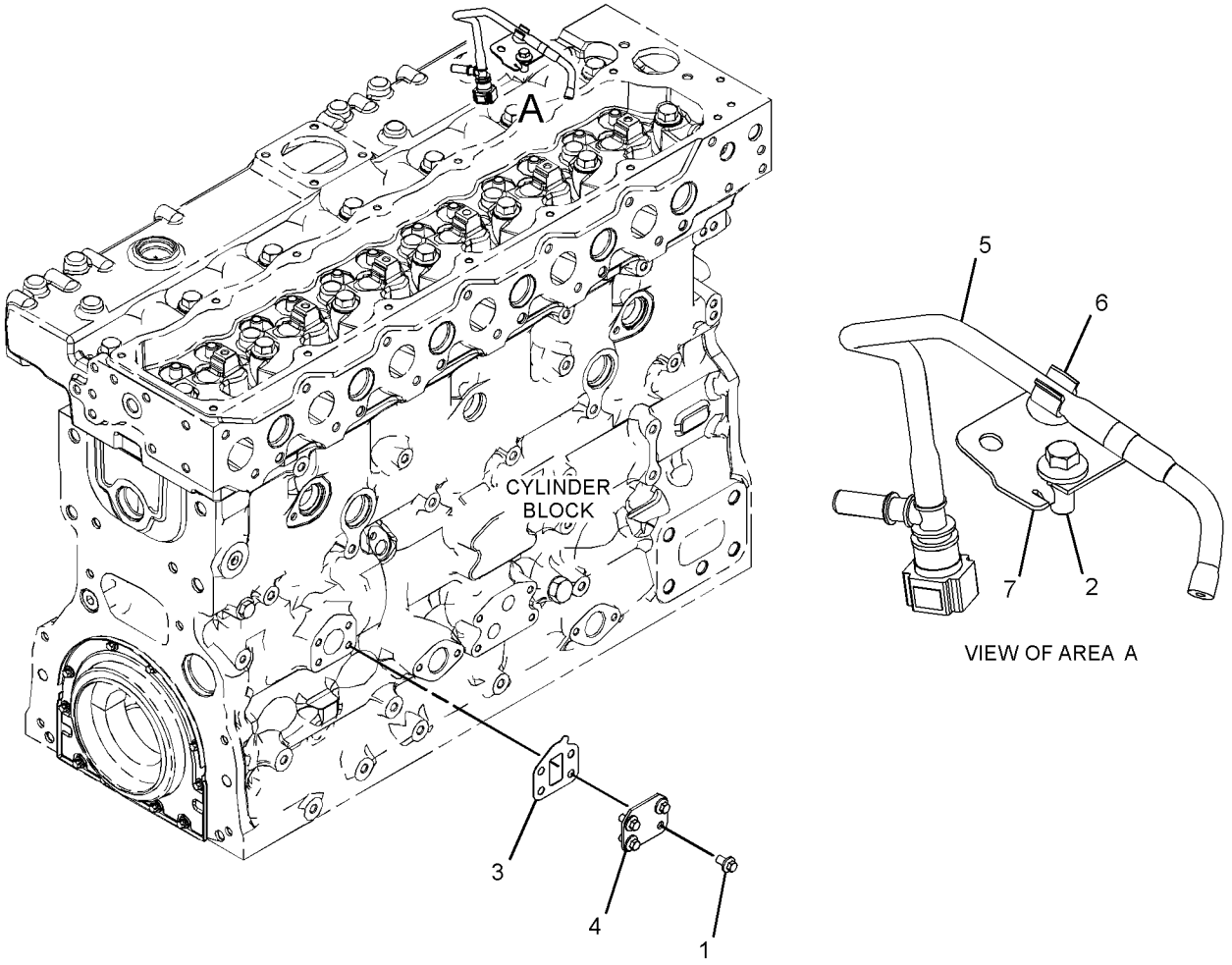


GRAPHIC #1 <END> g03319107

# *364-2901* LINES GP-FUEL INJECTION

**S/N: H761-UP**

**PART OF 396-4502 PUMP GP-FUEL INJECTION**

**SMCS-1252, 1254**

**i05792293**

| NOTE | REF NO | GRAPHIC REF | PART NUMBER | QTY | PART NAME 1 2 3 4 5 6 (PRODUCT LEVEL) | SEE PAGE |
|---|---|---|---|---|---|---|
| | 1 | 1 | **124-3708** | 3 | CLIP | |
| | 2 | 1 | **124-3709** | 1 | CLIP | |
| | 3 | 1 | **162-9994** | 2 | CLIP | |
| | 4 | 1 | **364-2862** | 1 | LINE AS-FUEL | |
| | 5 | 1 | **364-2863** | 1 | LINE AS-FUEL | |
| | 6 | 1 | **364-2864** | 1 | LINE AS-FUEL | |
| | 7 | 1 | **364-2866** | 1 | LINE AS-FUEL | |
| | 8 | 1 | **364-2879** | 1 | LINE AS-FUEL | |
| | 9 | 1 | **364-2882** | 1 | LINE AS-FUEL | |

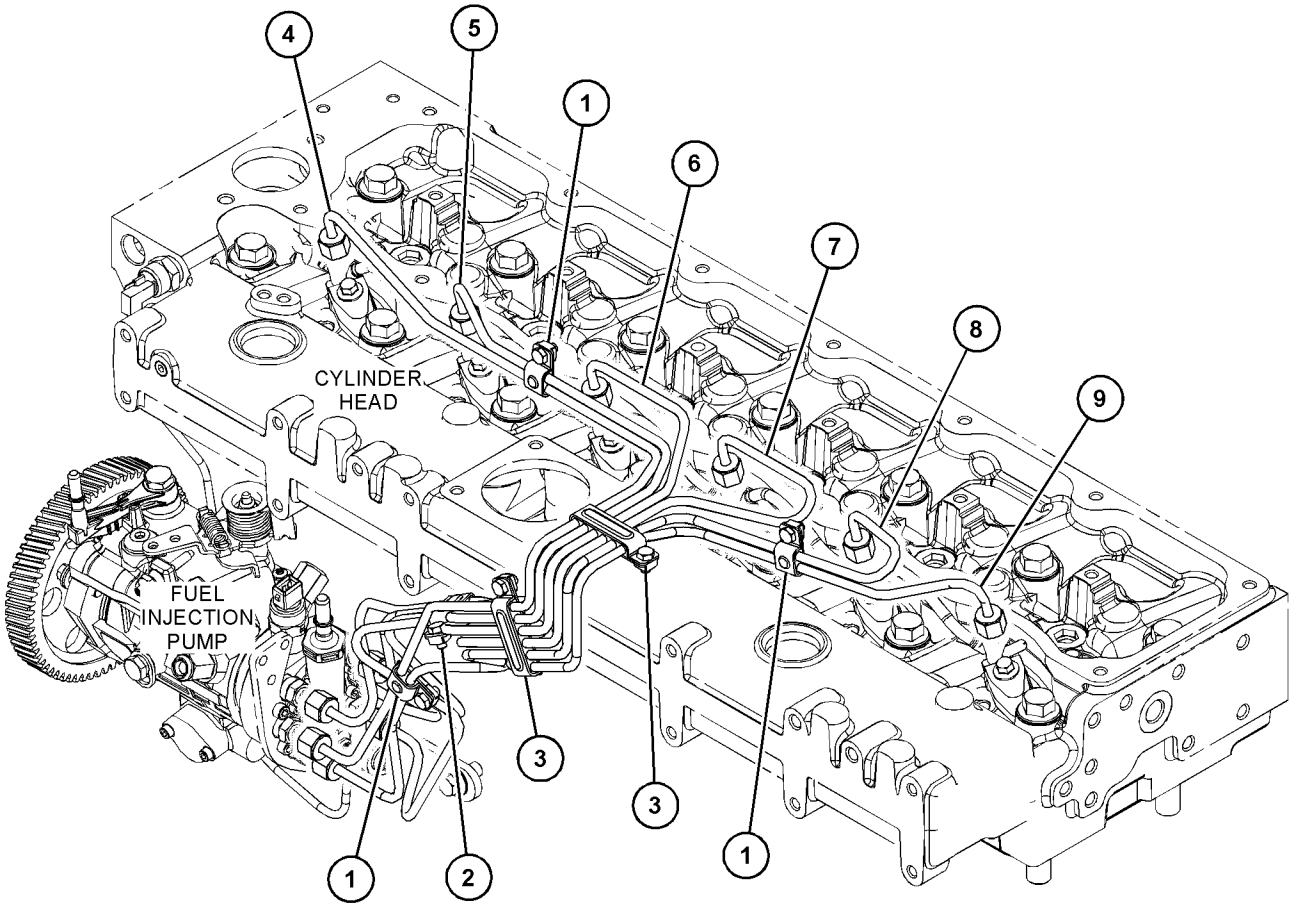


GRAPHIC #1 <END> g03679178

# *396-4502* PUMP GP-FUEL INJECTION

**S/N: H761-UP**
**24-VOLT**
**PART OF 565-0288 ENGINE AR-PRIMARY**

**SMCS-1251, 1290**

**i07510599**

| NOTE | REF NO | GRAPHIC REF | PART NUMBER | QTY | PART NAME 1 2 3 4 5 6 (PRODUCT LEVEL) | SEE PAGE |
|---|---|---|---|---|---|---|
| M | 1 | 1 | **100-4830** | 1 | BOLT (M10X1.5X20-MM) | |
| | 2 | 1 | **169-5326** | 1 | SWITCH-TEMPERATURE | |
| | 3 | 1 | **232-1794** | 5 | HOSE | |
| | 4 | 1 | **232-3149** | 3 | WASHER (8.35X16.85X1.55-MM THK) | |
| | 5 | 1 | **238-8671** | 6 | CLAMP-INJECTOR | |
| | 6 | 1 | **336-4757** | 1 | BRACKET | |
| R | 7 | 1 | **463-1678** | 1 | PUMP AS-FUEL INJECTION | |
| M | | 1 | **111-3422** | 1 | NUT (M14X1.5-THD) | |
| | | 1 | **111-3423** | 1 | WASHER | |
| | | 1 | **147-2645** | 1 | SOLENOID-SHUTOFF (24-VOLT) | |
| | | 1 | **152-3968** | 1 | SEAL-O-RING | |
| | 8 | 1 | **396-8257** | 1 | CAP | |
| Y | 9 | 1 | *364-2901* | 1 | LINES GP-FUEL INJECTION | 79 |
| | 10 | 1 | **454-5091** | 6 | INJECTOR AS-FUEL | |
| | | | | | (EACH INCLUDES) | |
| | | 1 | **232-2724** | 1 | NOZZLE | |
| | | 1 | **275-1038** | 1 | SEAL-O-RING | |
| | | 1 | **140-8718** | 1 | WASHER | |
| M | 11 | 1 | **6I-0260** | 4 | BOLT (M8X1.25X25-MM) | |
| M | 12 | 1 | **178-3336** | 1 | NUT-HEX FLANGE (M8X1.25-THD) | |
| M | 13 | 1 | **232-3274** | 6 | BOLT (M8X1.25X48.1-MM) | |
| | 14 | 1 | **292-3462** | 1 | PLUG-PIPE | |
| | 15 | 1 | **425-7107** | 1 | GEAR-FUEL PUMP (68-TEETH) | |
| | 16 | 1 | **232-1793** | 1 | CABLE | |

M - METRIC PART
R - REMANUFACTURED PART MAY BE AVAILABLE
Y - SEPARATE ILLUSTRATION

*396-4502* **PUMP GP-FUEL INJECTION (**contd.**)** **i07510599**

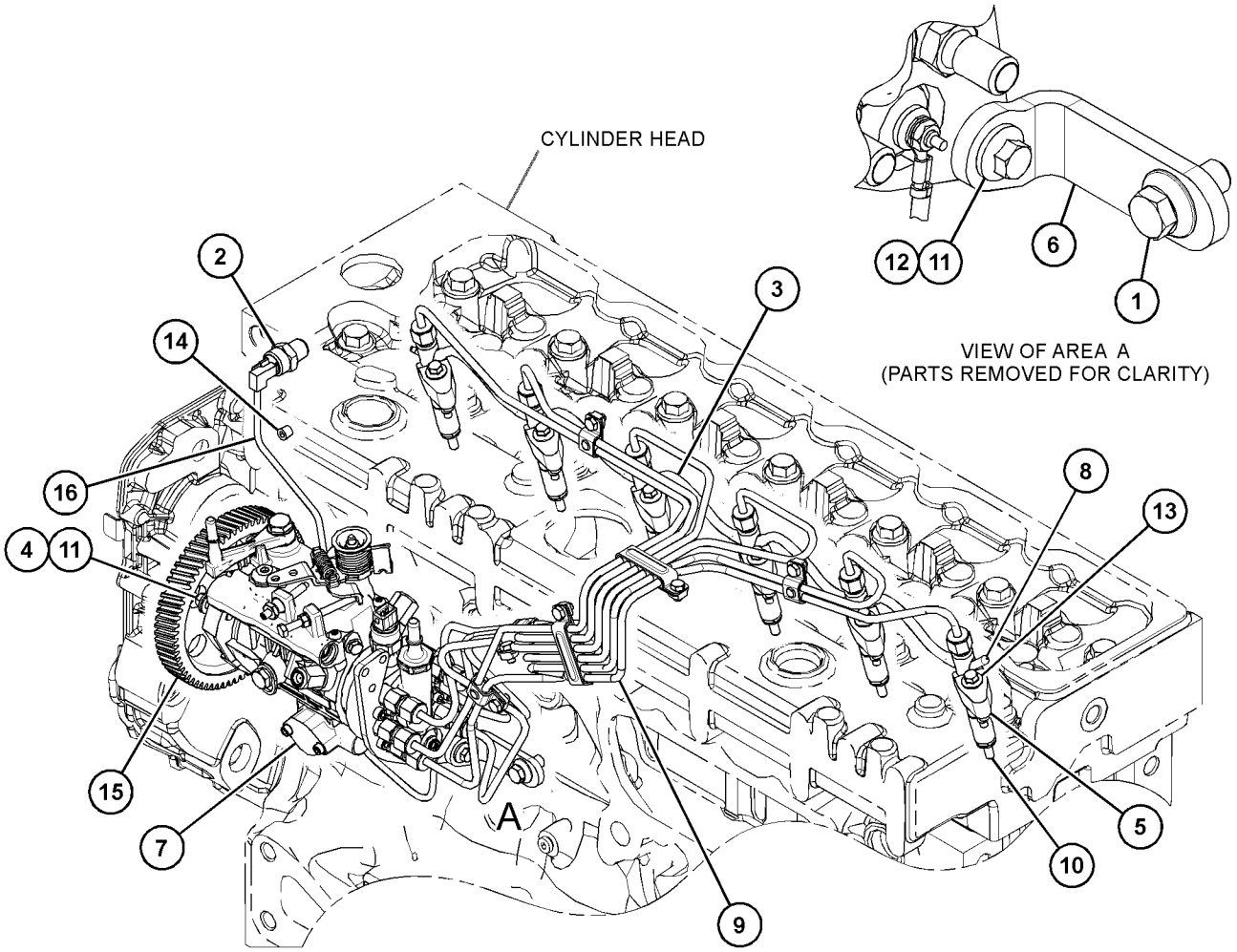


GRAPHIC #1 <END> g03896565

# *524-3350* TANK & MTG GP-FUEL

**S/N: FEY1-UP**
**410-L (108-U.S.GAL)**
**PART OF 556-6447 CHASSIS AR**

**SMCS-1273** **i06909674**

| NOTE | REF NO | GRAPHIC REF | PART NUMBER | QTY | PART NAME 1 2 3 4 5 6 (PRODUCT LEVEL) | SEE PAGE |
|---|---|---|---|---|---|---|
| | 1 | 1 | **246-2641** | 1 | PADLOCK GP | |
| | | 1 | **5P-8500** | | KEY | |
| | 2 | 1 | **085-9310** | 4 | SPACER (16.6X32X26-MM THK) | |
| M | 3 | 1 | **447-1707** | 4 | BOLT (M16X2X60-MM) | |
| Y | 4 | 1 | **524-3351** | 1 | TANK GP-FUEL | 83 |

M - METRIC PART
Y - SEPARATE ILLUSTRATION

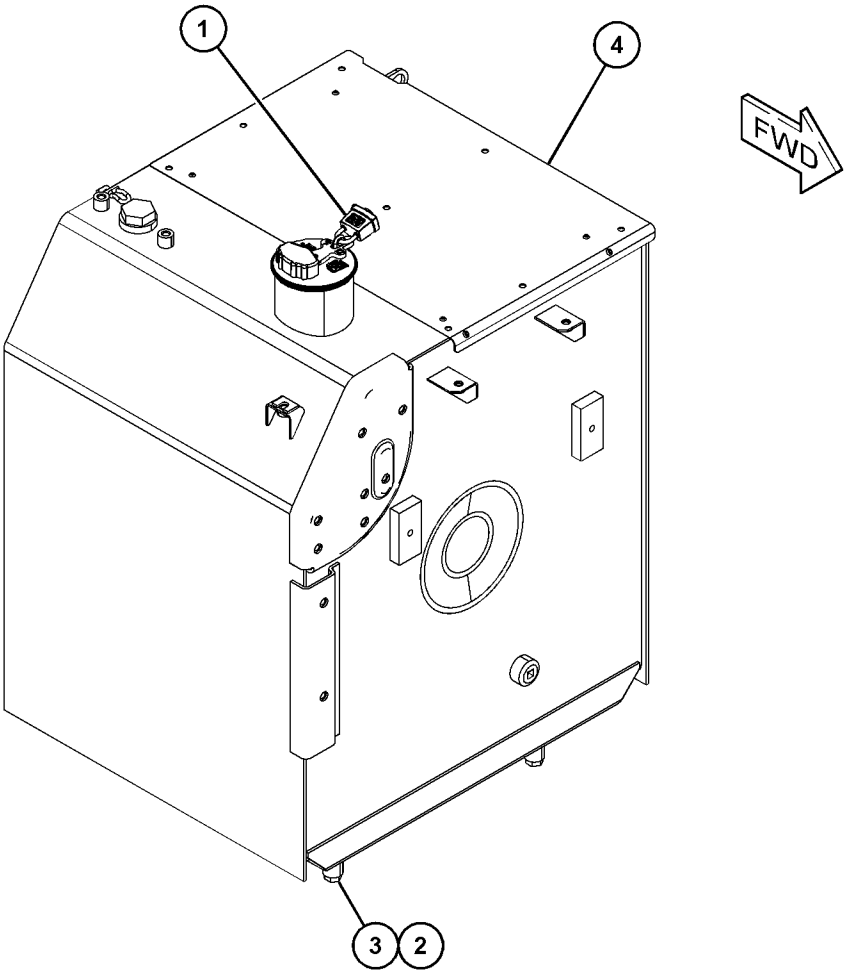


GRAPHIC #1 <END> g06167047

# *524-3351* TANK GP-FUEL

**S/N: FEY1-UP**
**410-L (108.3-U.S. GAL)**
**PART OF 524-3350 TANK & MTG GP-FUEL**

**SMCS-1273** **i07620778**

| NOTE | REF NO | GRAPHIC REF | PART NUMBER | QTY | PART NAME 1 2 3 4 5 6 (PRODUCT LEVEL) | SEE PAGE |
|---|---|---|---|---|---|---|
| | 1 | 1 | **5P-4924** | 1 | ELBOW | |
| | 2 | 1 | **6V-5653** | 1 | ELBOW (7/8-14-THD) | |
| M | 3 | 1 | **6V-9674** | 5 | SCREW-MACHINE (M5X0.8X14-MM) | |
| | 4 | 1 | **214-7568** | 1 | SEAL-O-RING | |
| | 5 | 1 | **238-5081** | 1 | SEAL-O-RING | |
| J | 6 | 1 | **303-9933** | 1 | STRAINER AS-FUEL (FLOAT GAUGE) | |
| H | 7 | 1 | **349-7059** | 1 | CAP AS-FUEL (LOCKABLE, VENTED) | |
| | 8 | 1 | **359-8335** | 1 | GASKET-RUBBER | |
| | 9 | 1 | **481-6691** | 1 | SENDER AS-FUEL LEVEL (FUEL TANK) | |
| | | 1 | **9X-3401** | 2 | PIN-CONNECTOR (16-GA TO 18-GA) | |
| | | 1 | **102-8802** | 1 | KIT-RECEPTACLE (2-PIN) | |
| | | | | | (INCLUDES RECEPTACLE AS & WEDGE) | |
| | 10 | 1 | **8T-0328** | 5 | WASHER-HARD (5.5X10X1-MM THK) | |
| | 11 | 1 | *326-0316* | 1 | PLUG AS | |
| | | 1 | **9S-6130** | 1 | PLUG | |
| | | 1 | **228-7096** | 1 | SEAL-O-RING | |
| | 12 | 1 | *353-5109* | 1 | ELBOW AS | |
| | | 1 | **5P-4906** | 1 | ELBOW | |
| | | 1 | **238-5080** | 1 | SEAL-O-RING | |
| | 13 | 1 | **524-3352** | 1 | TANK AS-FUEL | |
| | | | | | AVAILABLE REPAIR KIT(S): | |
| J | | | **303-9937** | 1 | KIT-GAUGE (FUEL STRAINER) | |
| | | | | | (INCLUDES STOPPER & GAUGE) | |
| H | | | **350-7735** | 1 | KIT-CAP FILTER (FUEL TANK) | |
| | | | | | (INCLUDES BREATHERS, SCREENS & WASHERS) | |

H - KIT MARKED H SERVICES PART(S) MARKED H
J - KIT MARKED J SERVICES PART(S) MARKED J
M - METRIC PART

*524-3351* **TANK GP-FUEL (**contd.**)** **i07620778**

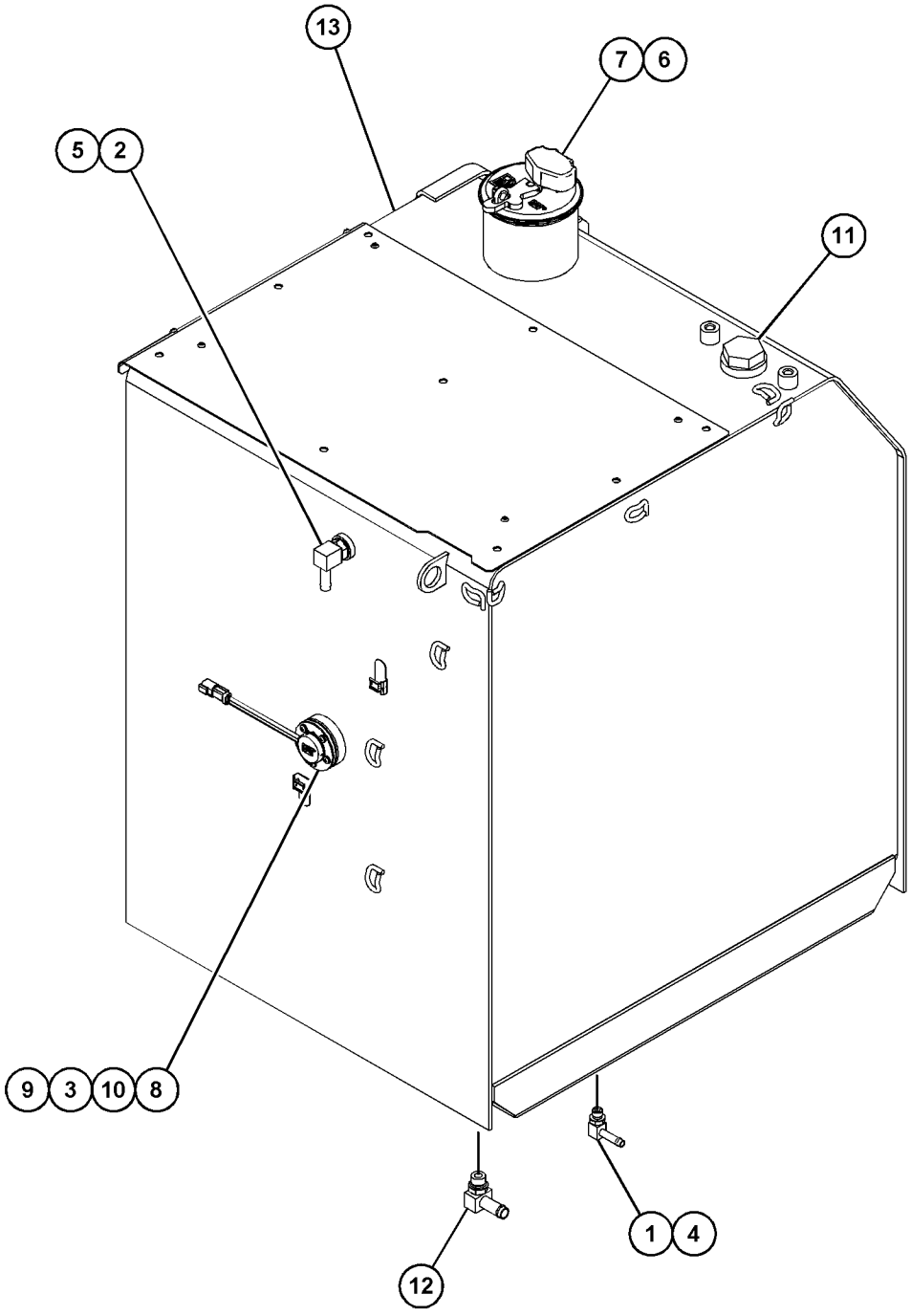


GRAPHIC #1 <END> g06382653

# 132-1829 ALARM GP

**S/N: FEY1-UP**
**24-VOLT**
**PART OF 539-2995 WIRING GP-CAB**

**SMCS-7400, 7402, 7407** **i05665410**

| NOTE | REF NO | GRAPHIC REF | PART NUMBER | QTY | PART NAME 1 2 3 4 5 6 (PRODUCT LEVEL) | SEE PAGE |
|---|---|---|---|---|---|---|
| | 1 | 1 | **102-8802** | 1 | KIT-RECEPTACLE (2-PIN) | |
| | | | | | (INCLUDES RECEPTACLE AS & WEDGE) | |
| | 2 | 1 | **8T-8729** | 2 | PIN-CONNECTOR (16-GA TO 18-GA) | |

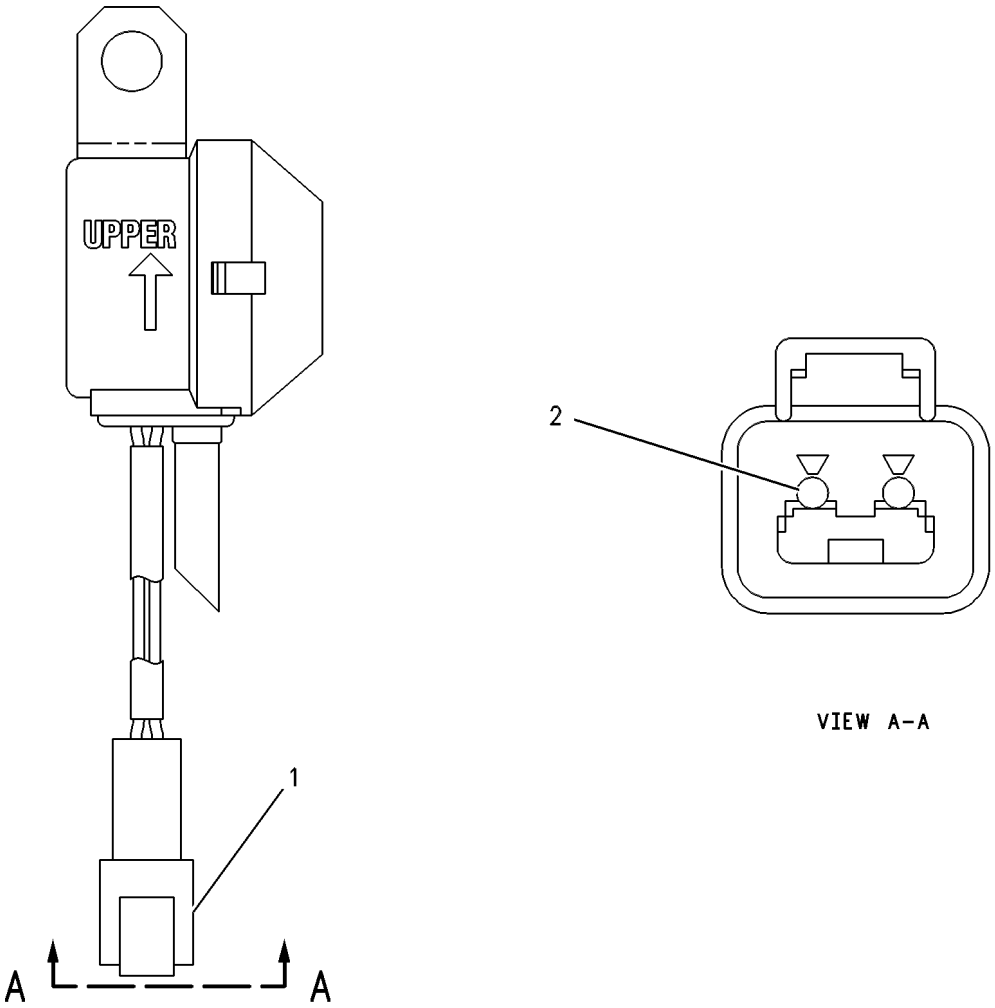


GRAPHIC #1 <END> g00272185

# *550-7698* ALTERNATOR GP-CHARGING

**S/N: H761-UP**

**PART OF 565-0288 ENGINE AR-PRIMARY**

**SMCS-1405** **i07406091**

| NOTE | REF NO | GRAPHIC REF | PART NUMBER | QTY | PART NAME 1 2 3 4 5 6 (PRODUCT LEVEL) | SEE PAGE |
|---|---|---|---|---|---|---|
| R | 1 | 1 | **321-8929** | 1 | ALTERNATOR (24-VOLT, 100-AMPERE) | |
| | 2 | 1 | **329-5252** | 1 | PULLEY (12-GROOVE) | |
| | 3 | 1 | **344-1722** | 1 | TENSIONER-BELT | |
| | 4 | 1 | **369-8284** | 1 | WASHER-HARD (17.5X28X1.6-MM THK) | |
| M | 5 | 1 | **100-4463** | 1 | BOLT (M10X1.5X80-MM) | |
| M | 6 | 1 | **113-7584** | 3 | BOLT (M10X1.5X110-MM) | |
| | 7 | 1 | **546-5809** | 1 | PLATE AS | |
| M | 8 | 1 | **6I-0654** | 2 | BOLT (M10X1.5X25-MM) | |
| | 9 | 1 | **198-4766** | 2 | WASHER-HARD (11X25X10-MM THK) | |
| | 10 | 1 | **8T-7934** | 1 | WASHER-HARD (11X21X5-MM THK) | |
| M | 11 | 1 | **103-5705** | 1 | BOLT (M8X1.25X110-MM) | |
| | 12 | 1 | **7X-0613** | 1 | WASHER-HARD (8.8X25.5X5-MM THK) | |

M - METRIC PART
R - REMANUFACTURED PART MAY BE AVAILABLE

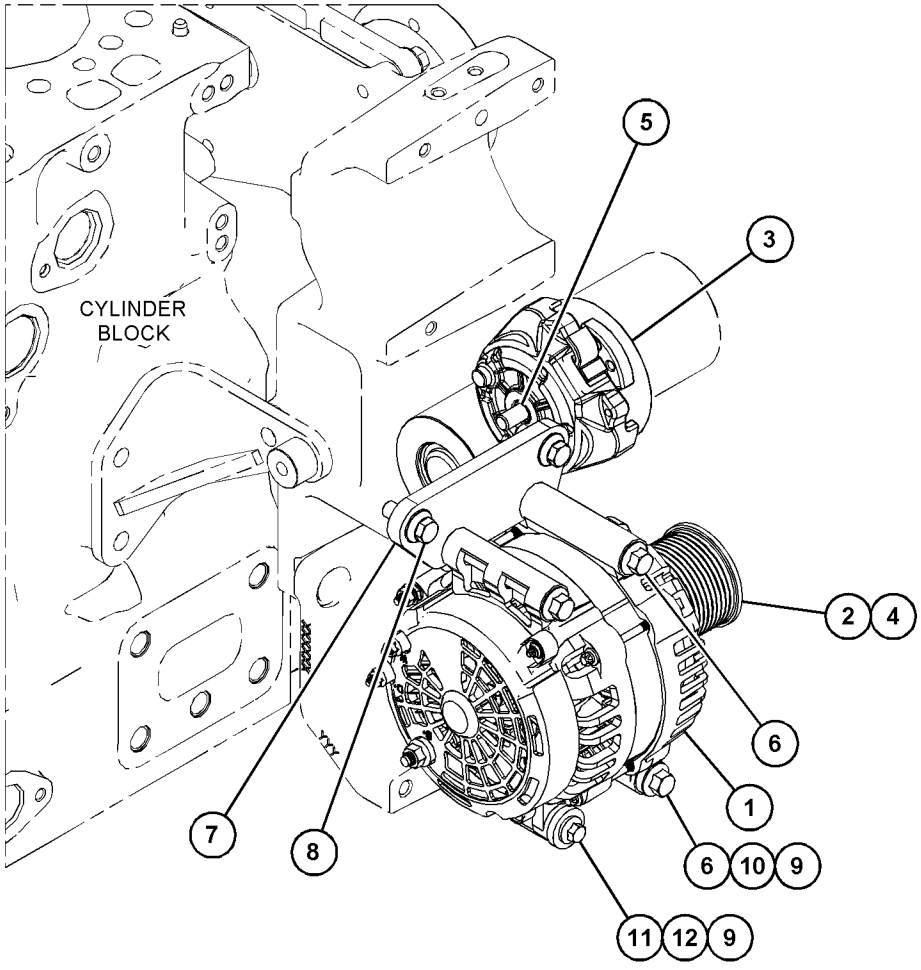


GRAPHIC #1 <END> g06315407

# *539-2881* BATTERY & WIRING GP

**S/N: FEY1-UP**

**PART OF 556-6447 CHASSIS AR**

**SMCS-1401, 1402, 1408** **i07423244**

| NOTE | REF NO | GRAPHIC REF | PART NUMBER | QTY | PART NAME 1 2 3 4 5 6 (PRODUCT LEVEL) | SEE PAGE |
|---|---|---|---|---|---|---|
| | 1 | 1 | **3E-8320** | 1 | PLATE-INSTRUCTION (BATTERY) | |
| | 2 | 1 | **6W-6005** | 1 | HOLD-DOWN-BATTERY | |
| Y | 3 | 1 | **7N-0719** | 1 | SWITCH GP-DISCONNECT (BATTERY) | 121 |
| | 4 | 1 | **170-6929** | 1 | CABLE AS | |
| E | | 1 | **159-8049** | | CABLE (00-GA, RED) (31-CM) | |
| | | 1 | **9G-0005** | 1 | COVER AS-TERMINAL (BLACK) | |
| | | 1 | **9G-0002** | 1 | COVER AS-TERMINAL (RED) | |
| | | | | | (EACH COVER AS INCLUDES) | |
| | | 1 | **8L-8413** | 1 | STRAP-CABLE (WHITE) | |
| | | 1 | **8T-9756** | 1 | TERMINAL AS-BATTERY (POSITIVE) | |
| | | 1 | **8C-5918** | 1 | TERMINAL AS-BATTERY (NEGATIVE) | |
| | | | | | (EACH TERMINAL AS INCLUDES) | |
| | | 1 | **1M-6119** | 1 | BOLT (5/16-18X1.375-IN) | |
| | | 1 | **1M-6120** | 1 | NUT (5/16-18-THD) | |
| | 5 | 1 | **539-2977** | 1 | CABLE AS | |
| D | | 1 | **6V-2722** | | TUBE-HEAT SHRINK (25.4-MM DIA) (0.1-M) | |
| | | 1 | **9G-0004** | 1 | COVER AS-TERMINAL (RED) | |
| | | 1 | **8L-8413** | 1 | STRAP-CABLE (WHITE) | |
| | | 1 | **8C-5917** | 1 | TERMINAL AS-BATTERY (POSITIVE) | |
| | | 1 | **1M-6119** | 1 | BOLT (5/16-18X1.375-IN) | |
| | | 1 | **1M-6120** | 1 | NUT (5/16-18-THD) | |
| | | 1 | **030-1705** | 1 | TERMINAL-CABLE (00-GA, 5/16-IN SCREW) | |
| E | | 1 | **159-8049** | | CABLE (00-GA, RED) (35-CM) | |
| | 6 | 1 | **231-1827** | 1 | CABLE AS | |
| | | 1 | **1S-7252** | 1 | TERMINAL-CABLE (00-GA, 3/8-IN SCREW) | |
| E | | 1 | **159-8050** | | CABLE (00-GA, BLACK) (23-CM) | |
| | | 1 | **9G-0003** | 1 | COVER AS-TERMINAL (BLACK) | |
| | | 1 | **8L-8413** | 1 | STRAP-CABLE (WHITE) | |
| | | 1 | **9G-8909** | 1 | COVER-TERMINAL (BLACK) | |
| | | 1 | **8T-9757** | 1 | TERMINAL AS-BATTERY (NEGATIVE) | |
| | | 1 | **1M-6119** | 1 | BOLT (5/16-18X1.375-IN) | |
| | | 1 | **1M-6120** | 1 | NUT (5/16-18-THD) | |
| | 7 | 1 | **238-2501** | 1 | KNOB | |
| | 8 | 1 | **238-2528** | 1 | ROD | |
| | 9 | 1 | **3T-5760** | 2 | BATTERY GP (12-VOLT, 750-CCA) (MAINTENANCE FREE) | |
| | | | | | (EACH INCLUDES) | |
| | | 1 | **123-1373** | 6 | CAP AS-FILLER (7/8-9-THD) | |
| Y | 10 | 1 | **539-1625** | 1 | HOLDER AS-FUSE | 103 |
| | 11 | 1 | **370-5367** | 1 | STRAP AS-GROUND | |
| | 12 | 1 | **539-2979** | 1 | BRACKET AS | |
| M | | 1 | **083-9539** | 2 | BOSS (M8X1.25X16-MM) | |
| M | 13 | 1 | **5C-7261** | 1 | NUT (M8X1.25-THD) | |
| | 14 | 1 | **5I-8270** | 1 | COVER-BATTERY | |
| | 15 | 1 | **8T-4121** | 4 | WASHER-HARD (11X21X2.5-MM THK) | |
| M | 16 | 1 | **8T-4133** | 1 | NUT (M10X1.5-THD) | |
| M | 17 | 1 | **8T-4137** | 4 | BOLT (M10X1.5X20-MM) | |
| | 18 | 1 | **8T-4224** | 2 | WASHER-HARD (8.8X16X2-MM THK) | |

*539-2881* **BATTERY & WIRING GP** (contd.) **i07423244**

| NOTE | REF NO | GRAPHIC REF | PART NUMBER | QTY | PART NAME 1 2 3 4 5 6 (PRODUCT LEVEL) | SEE PAGE |
|---|---|---|---|---|---|---|
| | 19 | 1 | **8T-4226** | 1 | WASHER-PLATED (10.5X45X3-MM THK) | |
| M | 20 | 1 | **8T-4908** | 2 | BOLT (M8X1.25X25-MM) | |
| | 21 | 1 | **177-2215** | 1 | STRAP-DUAL CLAMP | |

D - ORDER BY THE METER
E - ORDER BY THE CENTIMETER
M - METRIC PART
Y - SEPARATE ILLUSTRATION

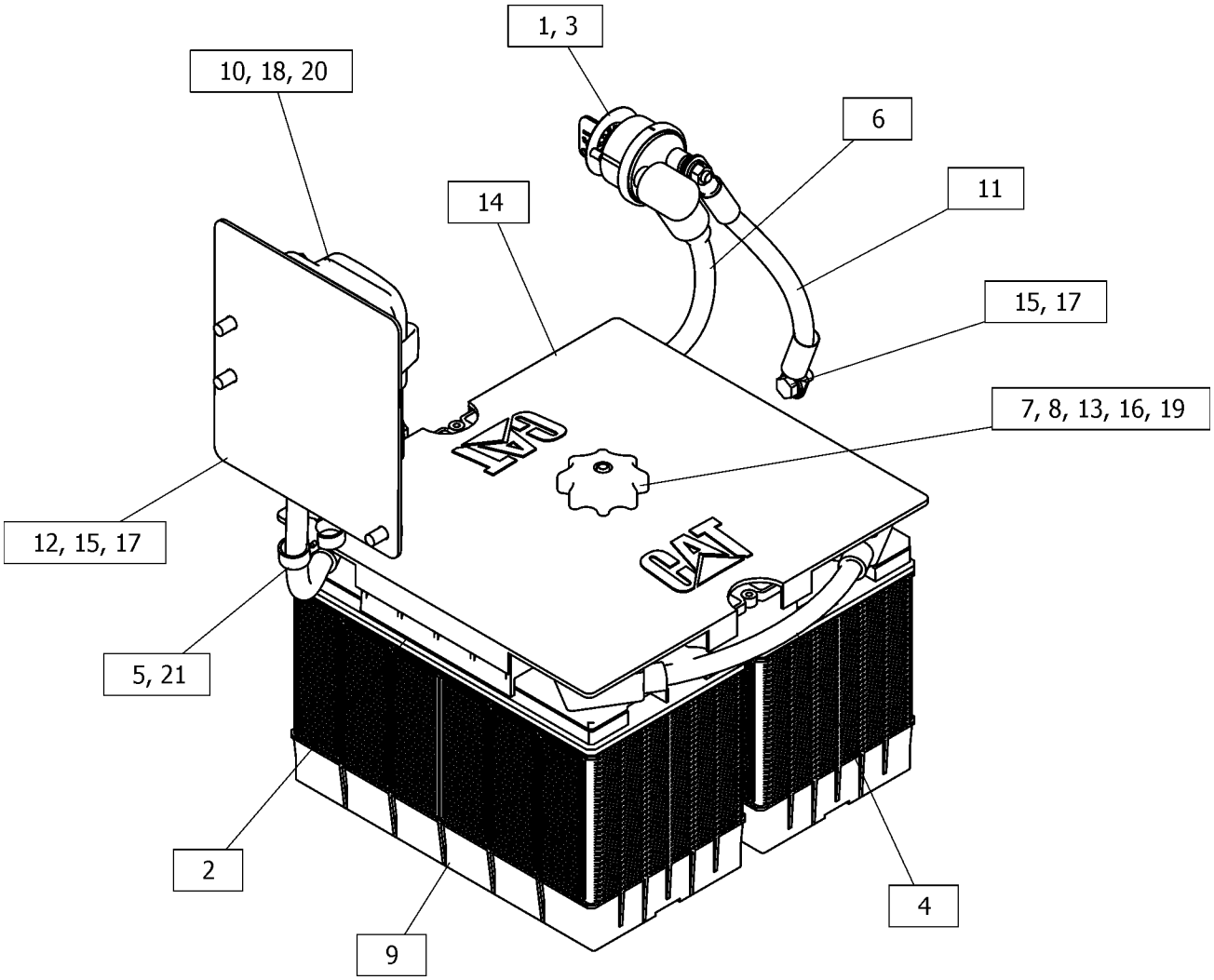


GRAPHIC #1 <END> g06318094

# *477-9413* CONTROL & MTG GP-COMMUNICATION—PRODUCT LINK CELLULAR

**S/N: FEY1-UP**

**PART OF 467-4498, 563-4401 INSTALLATION AR-COMMUNICATION**

**SMCS-7606** **i06924009**

| NOTE | REF NO | GRAPHIC REF | PART NUMBER | QTY | PART NAME 1 2 3 4 5 6 (PRODUCT LEVEL) | SEE PAGE |
|---|---|---|---|---|---|---|
| YR | 1 | 1 | **440-2105** | 1 | CONTROL GP-UNPROGRAMMED (PRODUCT LINK ELITE 641 CELLULAR) | 92 |
| | 2 | 1 | *462-6495* | 1 | PLUG AS | |
| | | 1 | **8T-8737** | 8 | PLUG-SEAL | |
| | | 1 | **155-2265** | 1 | KIT-CONNECTING PLUG (8-PIN) | |
| | | | | | (INCLUDES PLUG AS, WEDGE, & INTERFACE SEAL) | |
| M | 3 | 1 | **8T-4138** | 4 | BOLT (M6X1X20-MM) | |
| | 4 | 1 | **9X-8256** | 4 | WASHER (6.6X12X2-MM THK) | |

M - METRIC PART
R - REMANUFACTURED PART MAY BE AVAILABLE
Y - SEPARATE ILLUSTRATION

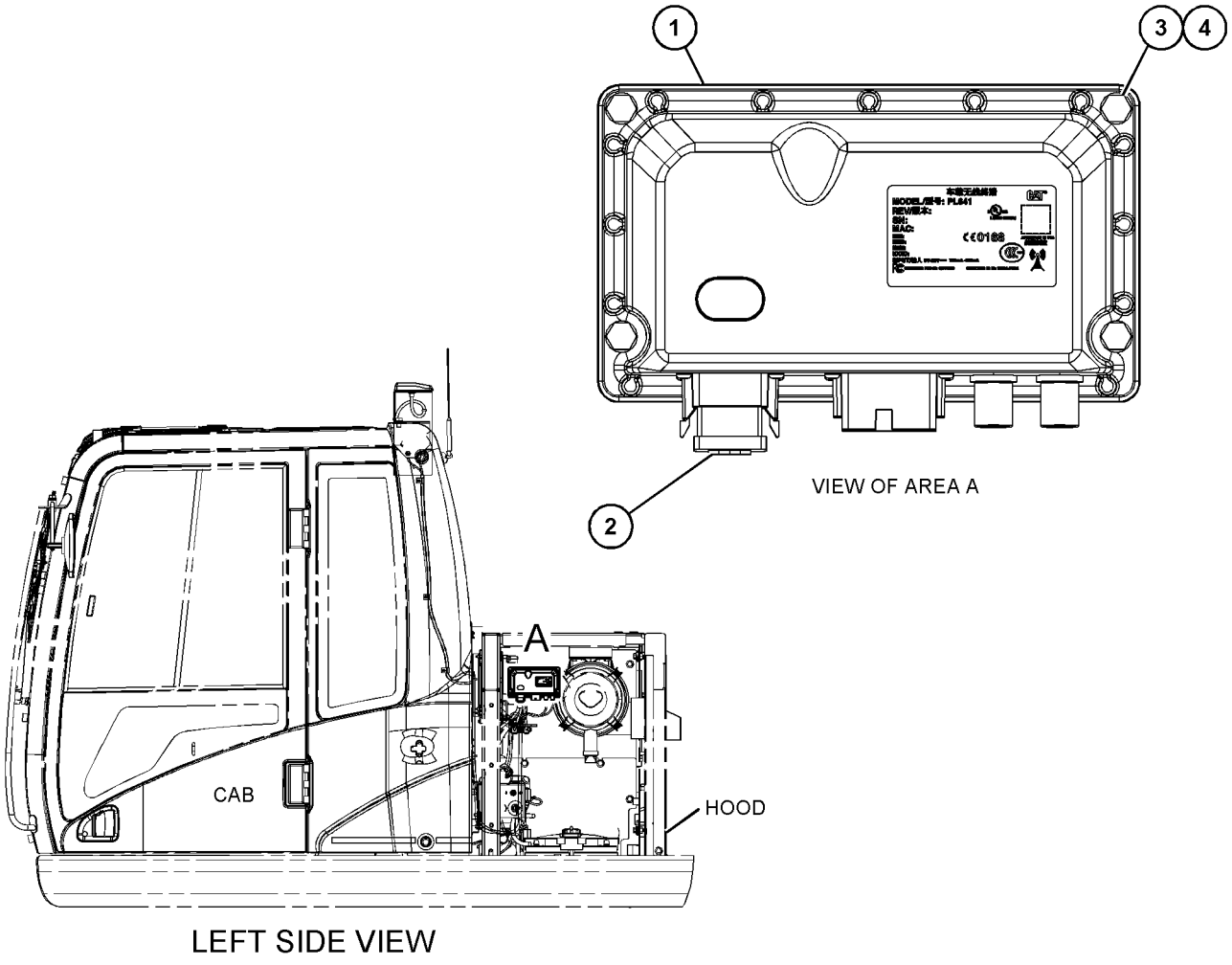


GRAPHIC #1 <END> g06040790

# *539-2993* CONTROL & MTG GP-ELECTRONIC

**S/N: FEY1-UP**

**PART OF 539-2879 OPERATOR AR**

**SMCS-1901, 3168, 7490, 7610** **i07432429**

| NOTE | REF NO | GRAPHIC REF | PART NUMBER | QTY | PART NAME 1 2 3 4 5 6 (PRODUCT LEVEL) | SEE PAGE |
|---|---|---|---|---|---|---|
| | 1 | 1 | **458-0526** | 4 | WASHER-HARD (6.6X12X2-MM THK) | |
| Y | 2 | 1 | *539-2994* | 1 | CONTROL & MTG GP-ELECTRONIC | 91 |
| M | 3 | 1 | **5C-7883** | 4 | BOLT-SOCKET HEAD (M6X1X16-MM) | |

M - METRIC PART
Y - SEPARATE ILLUSTRATION

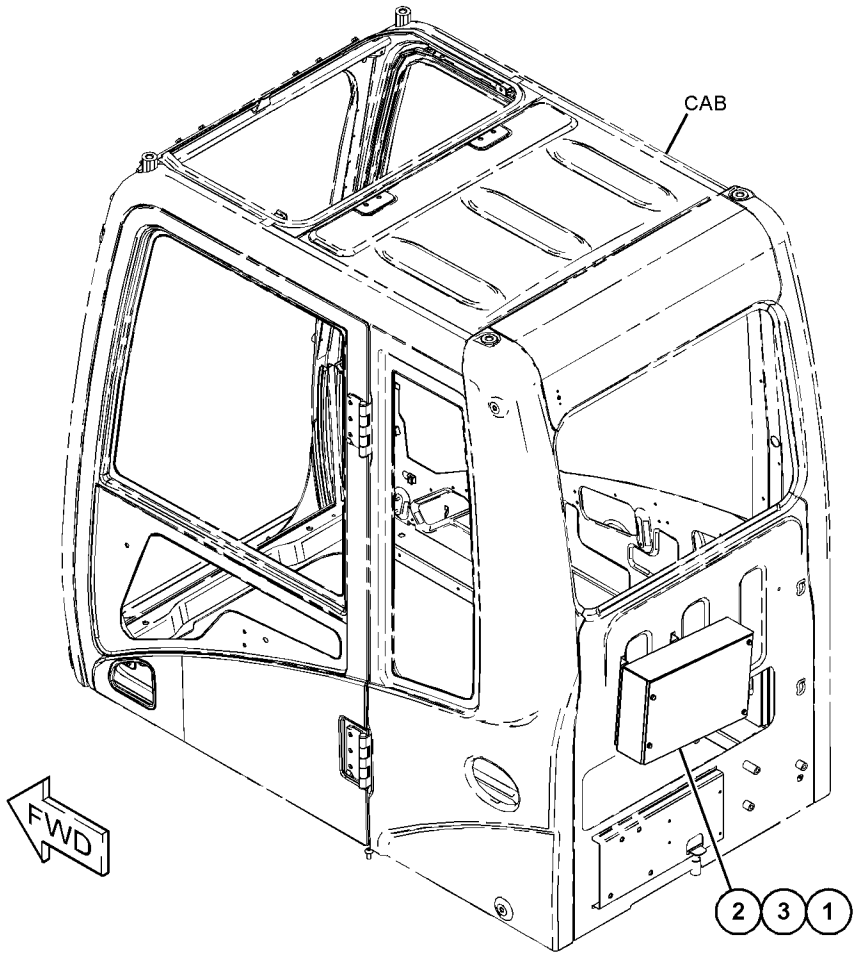


GRAPHIC #1 <END> g06313492

# *539-2994* CONTROL & MTG GP-ELECTRONIC

**S/N: FEY1-UP**

**PART OF 539-2993 CONTROL & MTG GP-ELECTRONIC**

**SMCS-1901, 3168, 7490, 7610** **i07426905**

| NOTE | REF NO | GRAPHIC REF | PART NUMBER | QTY | PART NAME 1 2 3 4 5 6 (PRODUCT LEVEL) | SEE PAGE |
|---|---|---|---|---|---|---|
| | 1 | 1 | **539-3000** | 1 | COVER-CONTROL | |
| | 2 | 1 | **458-0526** | 4 | WASHER-HARD (6.6X12X2-MM THK) | |
| R | 3 | 1 | **460-0132** | 1 | CONTROL GP-ELECTRONIC (ECM) | |
| | | 1 | **467-6039** | 1 | CAP-CONNECTOR | |
| | | 1 | **467-6040** | 1 | CAP-CONNECTOR | |
| | | 1 | **479-8364** | 2 | CLIP-CONNECTOR | |
| | 4 | 1 | **539-2997** | 1 | BRACKET AS | |
| M | | 1 | **6V-9632** | 4 | NUT-WELD (M6X1-THD) | |
| | | 1 | **8X-5496** | 4 | BOSS | |
| M | 5 | 1 | **5C-9553** | 4 | BOLT (M6X1X16-MM) | |
| M | 6 | 1 | **9X-2480** | 4 | BOLT (M6X1X45-MM) | |
| | 7 | 1 | **9X-8256** | 4 | WASHER (6.6X12X2-MM THK) | |

M - METRIC PART
R - REMANUFACTURED PART MAY BE AVAILABLE

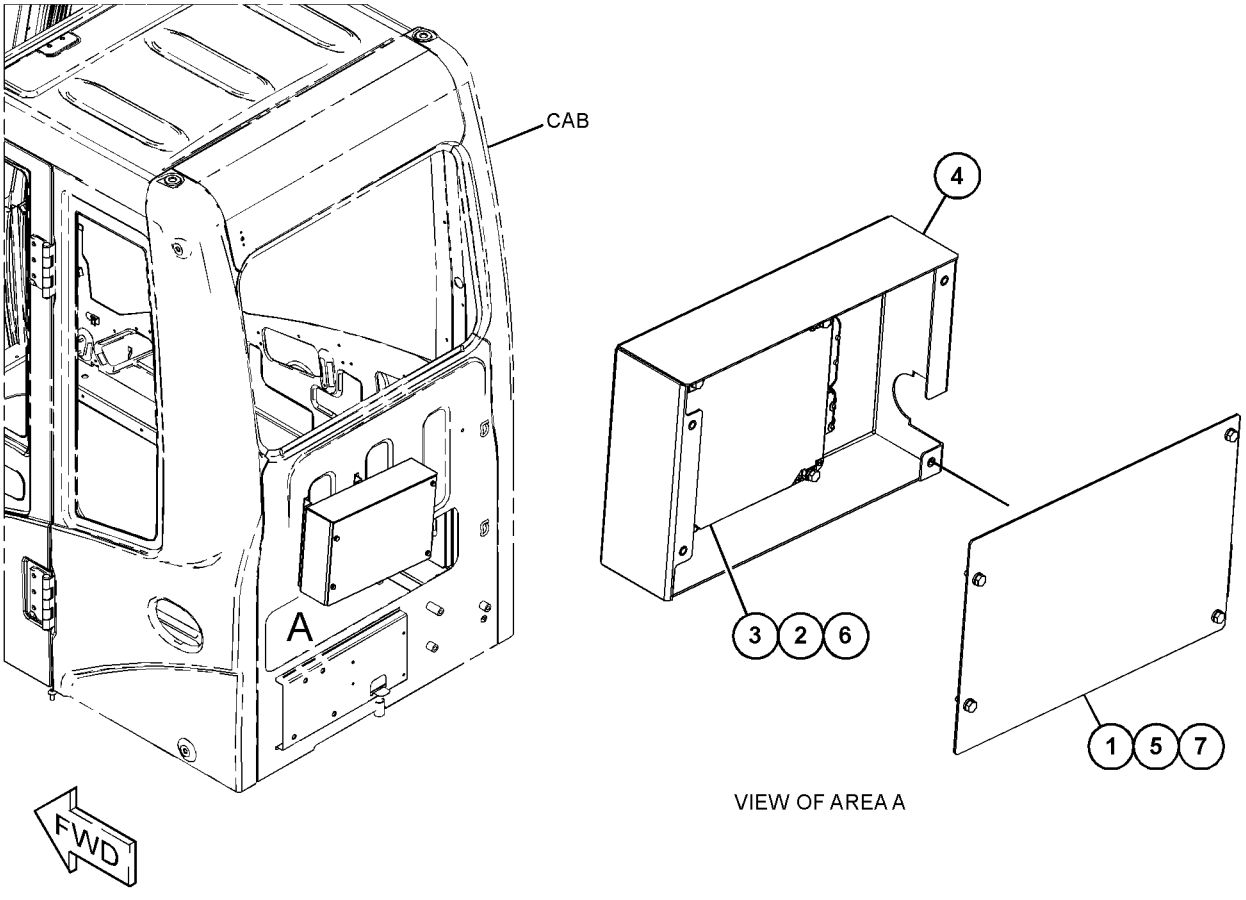


VIEW OF AREA A

GRAPHIC #1 <END> g06313516

# 440-2105 CONTROL GP-UNPROGRAMMED–PL641E CELLULAR*R

**S/N: FEY1-UP**

**PART OF 477-9413 CONTROL & MTG GP-COMMUNICATION**

**SMCS-7610** **i06924992**

| NOTE | REF NO | GRAPHIC REF | PART NUMBER | QTY | PART NAME 1 2 3 4 5 6 (PRODUCT LEVEL) | SEE PAGE |
|---|---|---|---|---|---|---|
| | 1 | 1 | **449-7301** | 1 | FILM-INFORMATION (PRODUCT LINK 641 CELLULAR) | |
| | | | | | | |
| F | | | **505-1260** | 1 | SOFTWARE GP-COMMUNICATION (PL641 CELLULAR) (TELEMATICS CONFIGURATION) | |

F - NOT SHOWN

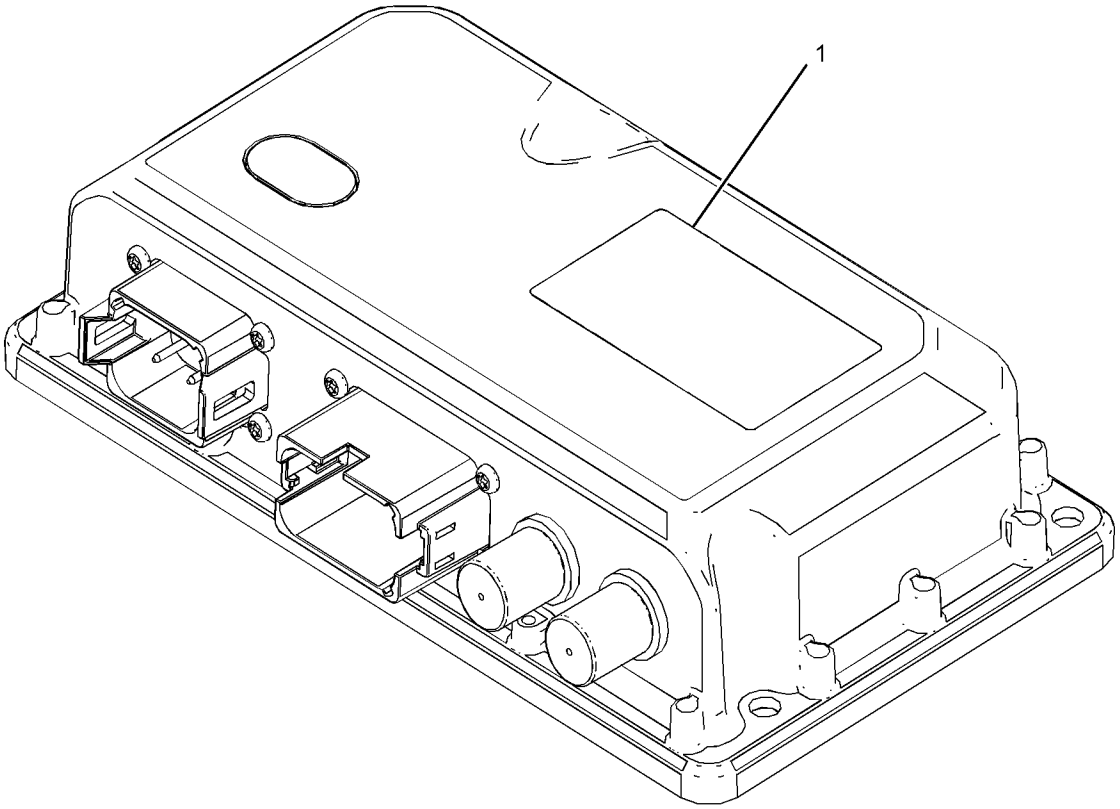


GRAPHIC #1 <END> g03853143

## *550-3547* ELECTRONICS GP-MACHINE

**S/N: FEY1-UP**

**PART OF 556-6434 GENERAL AR**

**SMCS-7610, 7620**

**i07397605**

| NOTE | PART NUMBER | QTY | PART NAME 1 2 3 4 5 6 (PRODUCT LEVEL) | SEE PAGE |
|---|---|---|---|---|
| | **562-1351** | 1 | SOFTWARE GP-MACHINE | |

<END>

## *560-7597* ELECTRONICS GP-MONITOR

**S/N: FEY1-UP**

**PART OF 563-4398 MONITOR GP-OPERATOR**

**SMCS-7490, 7601, 7610, 7620**

**i07418304**

| NOTE | PART NUMBER | QTY | PART NAME 1 2 3 4 5 6 (PRODUCT LEVEL) | SEE PAGE |
|---|---|---|---|---|
| | **560-7599** | 1 | SOFTWARE GP-MONITOR | |

<END>

# *466-1869* FASTENER GP-WIRING HARNESS

**S/N: FEY1-UP**

**PART OF 559-6091 CONTROL AR-AUXILIARY**

**SMCS-1408, 7553**

**i06915244**

| NOTE | REF NO | GRAPHIC REF | PART NUMBER | QTY | PART NAME 1 2 3 4 5 6 (PRODUCT LEVEL) | SEE PAGE |
|---|---|---|---|---|---|---|
| | 1 | 1 | **3S-2093** | 1 | STRAP-CABLE | |

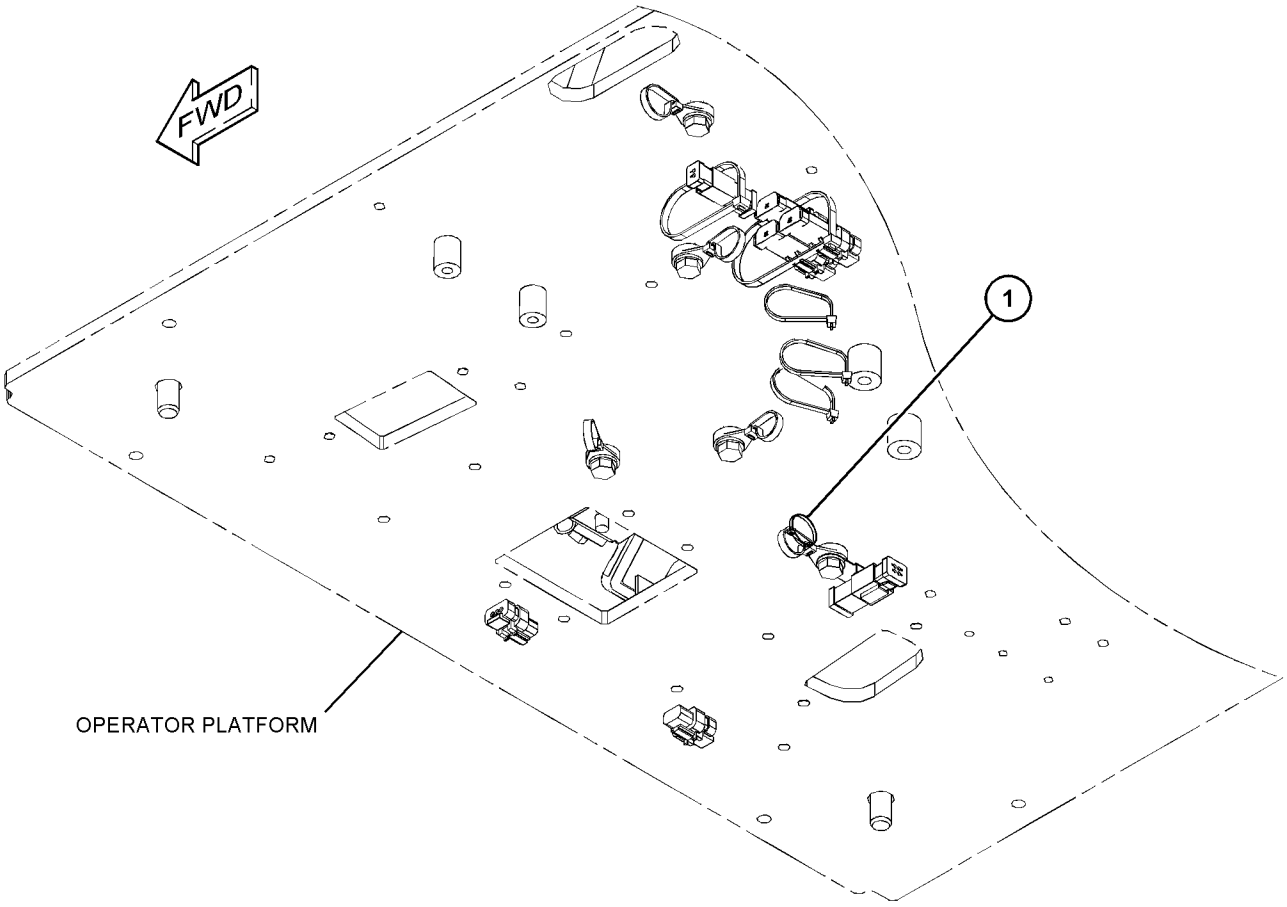


GRAPHIC #1 <END> g03849102

## 557-5523 HARNESS AS-CAB—MONITOR

**S/N: FEY1-UP**

**PART OF 555-2225 MONITOR & MTG GP-OPERATOR**

**SMCS-1408** **i07428068**

| NOTE | PART NUMBER | QTY | PART NAME 1 2 3 4 5 6 (PRODUCT LEVEL) | SEE PAGE |
|---|---|---|---|---|
| | **8T-8729** | 3 | PIN-CONNECTOR (16-GA TO 18-GA) | |
| | **9X-3401** | 4 | PIN-CONNECTOR (16-GA TO 18-GA) | |
| | | | —OR— | |
| | **126-1767** | 4 | PIN-CONNECTOR (14-GA TO 16-GA) | |
| | **483-2762** | 1 | PLUG AS-CONNECTOR (44-PIN) | |
| | **8T-8737** | 5 | PLUG-SEAL | |
| | **483-2768** | 37 | PLUG-SEAL | |
| | **247-2694** | 1 | RECEPTACLE AS-CONNECTOR (12-PIN) | |
| | **483-2777** | 1 | COVER-CONNECTOR | |
| | **483-2767** | 7 | TERMINAL AS (18-GA) | |

<END>

## 486-7094 HARNESS AS-CHASSIS—PRODUCT LINK 641/631

**S/N: FEY1-UP**

**PART OF 477-9415 WIRING GP-COMMUNICATION**

**SMCS-1408** **i06804321**

| NOTE | PART NUMBER | QTY | PART NAME 1 2 3 4 5 6 (PRODUCT LEVEL) | SEE PAGE |
|---|---|---|---|---|
| | **8T-8729** | 2 | PIN-CONNECTOR (16-GA TO 18-GA) | |
| | **9X-3401** | 3 | PIN-CONNECTOR (16-GA TO 18-GA) | |
| | | | —OR— | |
| | **126-1767** | 3 | PIN-CONNECTOR (14-GA TO 16-GA) | |
| | **155-2256** | 1 | KIT-CONNECTING PLUG (12-PIN) | |
| | **155-2260** | 1 | KIT-CONNECTING PLUG (3-PIN) | |
| | | | (EACH PLUG KIT INCLUDES PLUG AS, WEDGE, & INTERFACE SEAL) | |
| | **230-5010** | 1 | PLUG AS-CONNECTOR (6-PIN) | |
| | **455-0707** | 1 | SEAL-CONNECTOR | |
| | **8T-8737** | 9 | PLUG-SEAL | |
| | **102-8803** | 1 | KIT-RECEPTACLE (3-PIN) | |
| | | | (INCLUDES RECEPTACLE AS & WEDGE) | |
| | **243-4508** | 1 | RECEPTACLE AS-CONNECTOR (6-PIN) | |
| | **8T-8730** | 2 | SOCKET-CONNECTOR (16-GA TO 18-GA) | |
| | **9X-3402** | 14 | SOCKET-CONNECTOR (16-GA TO 18-GA) | |
| | | | —OR— | |
| | **126-1768** | 14 | SOCKET-CONNECTOR (14-GA TO 16-GA) | |
| D | **5P-6001** | | TUBE-HEAT SHRINK (4.75-MM DIA) (0.1-M) | |
| E | **125-7874** | | TUBE-HEAT SHRINK (5.72-MM DIA) (10-CM) | |
| E | **125-7876** | | TUBE-HEAT SHRINK (17.78-MM DIA) (10-CM) | |

D - ORDER BY THE METER
E - ORDER BY THE CENTIMETER

<END>

# *518-6777* HARNESS AS-CHASSIS—AIR CLEANER

**S/N: FEY1-UP**

**PART OF 518-8343 WIRING GP**

**SMCS-1408** **i06924452**

| NOTE | PART NUMBER | QTY | PART NAME 1 2 3 4 5 6 (PRODUCT LEVEL) | SEE PAGE |
|---|---|---|---|---|
| | **235-4121** | 1 | RECEPTACLE AS | |
| | **185-1861** | 2 | SEAL-WIRE | |
| | **7Y-3962** | 1 | TERMINAL-BULLET (MALE) | |
| | **7Y-3963** | 1 | TERMINAL-BULLET (FEMALE) | |
| | **7Y-3964** | 1 | TUBE (CONNECTOR TERMINAL) | |
| | **7Y-3965** | 1 | TUBE (RECEPTACLE TERMINAL) | |

<END>

# 557-5526 HARNESS AS-CHASSIS

**S/N: FEY1-UP**

**PART OF 556-7952 WIRING GP-CHASSIS**

**SMCS-1408** **i07455038**

| NOTE | PART NUMBER | QTY | PART NAME 1 2 3 4 5 6 (PRODUCT LEVEL) | SEE PAGE |
|---|---|---|---|---|
| | **9X-9120** | 1 | BOOT (RED) | |
| | **342-2972** | 1 | CAP-CONNECTOR (2-PIN) | |
| | **342-2974** | 2 | CAP-CONNECTOR (6-PIN) | |
| | **342-2975** | 1 | CAP-CONNECTOR (8-PIN) | |
| | **342-2976** | 1 | CAP-CONNECTOR (12-PIN) | |
| | **197-4385** | 1 | DIODE | |
| E | **103-2529** | | HOSE (80-CM) | |
| | **331-4226** | 14 | KIT-CONNECTING PLUG (2-PIN) | |
| | **155-2270** | 14 | KIT-CONNECTING PLUG (2-PIN) | |
| | | | (EACH PLUG KIT INCLUDES PLUG AS, WEDGE, & INTERFACE SEAL) | |
| | **151-9272** | 4 | KIT-RECEPTACLE (2-PIN) | |
| | | | (EACH INCLUDES RECEPTACLE AS & WEDGE) | |
| | **176-9299** | 2 | KIT-RECEPTACLE (3-PIN) | |
| | | | (EACH INCLUDES RECEPTACLE AS & WEDGES) | |
| | **8T-8729** | 21 | PIN-CONNECTOR (16-GA TO 18-GA) | |
| | **9X-3401** | 31 | PIN-CONNECTOR (16-GA TO 18-GA) | |
| | | | —OR— | |
| | **126-1767** | 31 | PIN-CONNECTOR (14-GA TO 16-GA) | |
| | **202-5397** | 4 | PLUG | |
| | **176-1477** | 1 | PLUG AS (2-PIN) | |
| | **100-3320** | 1 | PLUG AS-CONNECTOR (2-PIN) | |
| | **126-5011** | 1 | SEAL-CONNECTOR | |
| | **127-5483** | 1 | PLUG AS-CONNECTOR (1-PIN) | |
| | **240-7874** | 5 | PLUG AS-CONNECTOR (2-PIN) | |
| | | | (EACH INCLUDES) | |
| | **455-0704** | 1 | SEAL-CONNECTOR | |
| | **281-3119** | 3 | PLUG AS-CONNECTOR (3-PIN) | |
| | **281-3120** | 1 | PLUG AS-CONNECTOR (3-PIN) | |
| | **240-7878** | 2 | PLUG AS-CONNECTOR (3-PIN) | |
| | | | (EACH PLUG AS INCLUDES) | |
| | **455-0705** | 1 | SEAL-CONNECTOR | |
| | **281-3132** | 2 | PLUG AS-CONNECTOR (6-PIN) | |
| | | | (EACH INCLUDES) | |
| | **455-0707** | 1 | SEAL-CONNECTOR | |
| | *281-3388* | 2 | PLUG AS-CONNECTOR (6-PIN) | |
| | | | (EACH INCLUDES) | |
| | **455-0708** | 1 | SEAL-CONNECTOR | |
| | **281-3395** | 1 | PLUG AS-CONNECTOR (12-PIN) | |
| | **455-0709** | 1 | SEAL-CONNECTOR | |
| | **442-7945** | 1 | PLUG AS-CONNECTOR (81-PIN) | |
| | **453-6477** | 1 | COVER-CONNECTOR | |
| | **442-7946** | 1 | PLUG AS-CONNECTOR (40-PIN) | |
| | **442-9496** | 1 | COVER-CONNECTOR | |
| | **174-3016** | 2 | PLUG AS-CONNECTOR (3-PIN) | |
| | **8T-8737** | 40 | PLUG-SEAL | |
| | **453-7871** | 61 | PLUG-SEAL | |
| | **163-6637** | 1 | RECEPTACLE AS-CONNECTOR (54-PIN, BLACK) | |
| | **171-0596** | 2 | RECEPTACLE AS-CONNECTOR (3-PIN) | |

*557-5526* **HARNESS AS-CHASSIS (**contd.**)** **i07455038**

| NOTE | PART NUMBER | QTY | PART NAME 1 2 3 4 5 6 (PRODUCT LEVEL) | SEE PAGE |
|---|---|---|---|---|
| | **247-2694** | 1 | RECEPTACLE AS-CONNECTOR (12-PIN) | |
| | **185-1860** | 2 | SEAL-WIRE | |
| | **8N-1547** | 1 | SOCKET-CONNECTOR (6-GA) | |
| | **8T-8730** | 45 | SOCKET-CONNECTOR (16-GA TO 18-GA) | |
| | **9X-3402** | 43 | SOCKET-CONNECTOR (16-GA TO 18-GA) | |
| | | | —OR— | |
| | **126-1768** | 43 | SOCKET-CONNECTOR (14-GA TO 16-GA) | |
| | **3S-2093** | 21 | STRAP-CABLE | |
| | **176-1521** | 2 | TERMINAL | |
| | **456-0575** | 2 | TERMINAL AS | |
| | | | (EACH INCLUDES) | |
| | **313-5671** | 1 | PLUG-SEAL | |
| | **542-1570** | 7 | TERMINAL AS | |
| | **305-5362** | 2 | TERMINAL AS (18-GA) | |
| | **456-0574** | 47 | TERMINAL AS (18-GA) | |
| | **131-1503** | 1 | TERMINAL AS-RING | |
| | **2L-8051** | 1 | TERMINAL-RING (6-GA, 5/16-IN SCREW) | |
| | | | —OR— | |
| | **5P-3455** | 1 | TERMINAL-RING (8-GA, 5/16-IN SCREW) | |
| | **6T-5598** | 1 | TERMINAL-RING (1-GA TO 2-GA, 5/16-IN SCREW) | |
| E | **125-7874** | | TUBE-HEAT SHRINK (5.72-MM DIA) (84-CM) | |
| E | **125-7875** | | TUBE-HEAT SHRINK (7.44-MM DIA) (52-CM) | |

E - ORDER BY THE CENTIMETER

<END>

## 557-5519 HARNESS AS-CONSOLE

**S/N: FEY1-UP**
**LH**
**PART OF 545-9960 WIRING GP-CONSOLE**

**SMCS-1408** **i07397148**

| NOTE | PART NUMBER | QTY | PART NAME 1 2 3 4 5 6 (PRODUCT LEVEL) | SEE PAGE |
|---|---|---|---|---|
| | **155-2260** | 1 | KIT-CONNECTING PLUG (3-PIN) | |
| | | | (INCLUDES PLUG AS, WEDGES & INTERFFACE SEAL) | |
| | **8T-8729** | 4 | PIN-CONNECTOR (16-GA TO 18-GA) | |
| | **8T-8737** | 3 | PLUG-SEAL | |
| | **361-7886** | 1 | RECEPTACLE AS-CONNECTOR (6-PIN) | |
| | **8T-8730** | 2 | SOCKET-CONNECTOR (16-GA TO 18-GA) | |
| | **3S-2093** | 4 | STRAP-CABLE | |
| | *7Y-3967* | 2 | TERMINAL AS | |
| | | | (EACH INCLUDES) | |
| | **7Y-3963** | 1 | TERMINAL-BULLET (FEMALE) | |
| | **7Y-3965** | 1 | TUBE (RECEPTACLE TERMINAL) | |

<END>

## 557-5520 HARNESS AS-CONSOLE

**S/N: FEY1-UP**
**RH**
**PART OF 545-9961 WIRING GP-CONSOLE**

**SMCS-1408** **i07397279**

| NOTE | PART NUMBER | QTY | PART NAME 1 2 3 4 5 6 (PRODUCT LEVEL) | SEE PAGE |
|---|---|---|---|---|
| | *281-3388* | 1 | PLUG AS-CONNECTOR (6-PIN) | |
| | **455-0708** | 1 | SEAL-CONNECTOR | |
| | **281-3395** | 1 | PLUG AS-CONNECTOR (12-PIN) | |
| | **455-0709** | 1 | SEAL-CONNECTOR | |
| | **8T-8737** | 4 | PLUG-SEAL | |
| | **274-3778** | 1 | CAP-SEAL | |
| | **8T-8730** | 19 | SOCKET-CONNECTOR (16-GA TO 18-GA) | |
| | **9X-3402** | 5 | SOCKET-CONNECTOR (16-GA TO 18-GA) | |
| | | | —OR— | |
| | **126-1768** | 5 | SOCKET-CONNECTOR (14-GA TO 16-GA) | |
| | **3S-2093** | 4 | STRAP-CABLE | |
| | *7Y-3967* | 2 | TERMINAL AS | |
| | | | (EACH INCLUDES) | |
| | **7Y-3963** | 1 | TERMINAL-BULLET (FEMALE) | |
| | **7Y-3965** | 1 | TUBE (RECEPTACLE TERMINAL) | |
| E | **125-7874** | | TUBE-HEAT SHRINK (5.72-MM DIA) (10-CM) | |
| | **155-2259** | 1 | WEDGE-PLUG LOCK (8-PIN) | |

E - ORDER BY THE CENTIMETER

<END>

## 563-1445 HARNESS AS-CONTROL—PRODUCT LINK

**S/N: FEY1-UP**

**PART OF 563-4402 WIRING GP-COMMUNICATION**

**SMCS-1408** **i07519980**

| NOTE | PART NUMBER | QTY | PART NAME 1 2 3 4 5 6 (PRODUCT LEVEL) | SEE PAGE |
|---|---|---|---|---|
| | **355-4378** | 1 | KIT-CONNECTING PLUG (3-PIN) | |
| | **155-2260** | 1 | KIT-CONNECTING PLUG (3-PIN) | |
| | | | (EACH PLUG KIT INCLUDES PLUG AS, WEDGES & INTERFACE SEAL) | |
| | **331-4222** | 1 | KIT-CONNECTING PLUG (12-PIN) | |
| | | | (INCLUDES PLUG AS, WEDGE, & INTERFACE SEAL) | |
| | **176-9299** | 1 | KIT-RECEPTACLE (3-PIN) | |
| | | | (INCLUDES RECEPTACLE AS & WEDGE) | |
| | **8T-8729** | 2 | PIN-CONNECTOR (16-GA TO 18-GA) | |
| | **9X-3401** | 3 | PIN-CONNECTOR (16-GA TO 18-GA) | |
| | | | —OR— | |
| | **126-1767** | 3 | PIN-CONNECTOR (14-GA TO 16-GA) | |
| | **281-3132** | 1 | PLUG AS-CONNECTOR (6-PIN) | |
| | **455-0707** | 1 | SEAL-CONNECTOR | |
| | **8T-8737** | 9 | PLUG-SEAL | |
| | **361-7886** | 1 | RECEPTACLE AS-CONNECTOR (6-PIN) | |
| | **171-0596** | 1 | RECEPTACLE AS-CONNECTOR (3-PIN) | |
| | **8T-8730** | 2 | SOCKET-CONNECTOR (16-GA TO 18-GA) | |
| | **9X-3402** | 14 | SOCKET-CONNECTOR (16-GA TO 18-GA) | |
| | | | —OR— | |
| | **126-1768** | 14 | SOCKET-CONNECTOR (14-GA TO 16-GA) | |
| D | **5P-6001** | | TUBE-HEAT SHRINK (4.75-MM DIA) (0.1-M) | |
| E | **125-7874** | | TUBE-HEAT SHRINK (5.72-MM DIA) (10-CM) | |
| E | **125-7876** | | TUBE-HEAT SHRINK (17.78-MM DIA) (10-CM) | |
| E | **155-2258** | 1 | WEDGE-PLUG LOCK (12-PIN) | |

D - ORDER BY THE METER
E - ORDER BY THE CENTIMETER

<END>

## *557-5524* HARNESS AS-PANEL—CONSOLE

**S/N: FEY1-UP**

**PART OF 546-5666 PANEL GP-SWITCH**

**SMCS-1408, 7451** **i07420829**

| NOTE | PART NUMBER | QTY | PART NAME 1 2 3 4 5 6 (PRODUCT LEVEL) | SEE PAGE |
|---|---|---|---|---|
| | **274-3774** | 1 | CAP-CONNECTOR | |
| | **331-4226** | 1 | KIT-CONNECTING PLUG (2-PIN) | |
| | **155-2270** | 1 | KIT-CONNECTING PLUG (2-PIN) | |
| | | | (EACH PLUG KIT INCLUDES PLUG AS, WEDGE, & INTERFACE SEAL) | |
| | **8T-8730** | 2 | SOCKET-CONNECTOR (16-GA TO 18-GA) | |
| | **3S-2093** | 4 | STRAP-CABLE | |
| D | **6V-2689** | | TUBE-HEAT SHRINK (6.35-MM DIA) (0.2-M) | |

D - ORDER BY THE METER

<END>

# 557-5488 HARNESS AS-PLATFORM

**S/N: FEY1-UP**

**PART OF 539-2992 WIRING GP-PLATFORM**

**SMCS-1408** **i07455030**

| NOTE | PART NUMBER | QTY | PART NAME 1 2 3 4 5 6 (PRODUCT LEVEL) | SEE PAGE |
|---|---|---|---|---|
| | **342-2972** | 1 | CAP-CONNECTOR (2-PIN) | |
| | **342-2973** | 3 | CAP-CONNECTOR (3-PIN) | |
| | **342-2974** | 1 | CAP-CONNECTOR (6-PIN) | |
| | **8N-1546** | 1 | PIN-CONNECTOR (6-GA) | |
| | **8T-8729** | 13 | PIN-CONNECTOR (16-GA TO 18-GA) | |
| | **9X-3401** | 6 | PIN-CONNECTOR (16-GA TO 18-GA) | |
| | | | —OR— | |
| | **126-1767** | 6 | PIN-CONNECTOR (14-GA TO 16-GA) | |
| | **153-2620** | 1 | PLUG AS-CONNECTOR (54-PIN, BLACK) | |
| | **163-6759** | 1 | SEAL | |
| | **240-7874** | 2 | PLUG AS-CONNECTOR (2-PIN) | |
| | | | (EACH INCLUDES) | |
| | **455-0704** | 1 | SEAL-CONNECTOR | |
| | **281-3119** | 6 | PLUG AS-CONNECTOR (3-PIN) | |
| | | | (EACH INCLUDES) | |
| | **455-0705** | 1 | SEAL-CONNECTOR | |
| | **281-3132** | 2 | PLUG AS-CONNECTOR (6-PIN) | |
| | | | (EACH INCLUDES) | |
| | **455-0707** | 1 | SEAL-CONNECTOR | |
| | **281-3395** | 2 | PLUG AS-CONNECTOR (12-PIN) | |
| | | | (EACH INCLUDES) | |
| | **455-0709** | 1 | SEAL-CONNECTOR | |
| | **331-4226** | 1 | KIT-CONNECTING PLUG (2-PIN) | |
| | | | (INCLUDES PLUG AS, WEDGE, & INTERFACE SEAL) | |
| | **8T-8737** | 21 | PLUG-SEAL | |
| | **127-5484** | 1 | RECEPTACLE AS-CONNECTOR (1-PIN) | |
| | **151-9272** | 1 | KIT-RECEPTACLE (2-PIN) | |
| | **102-8802** | 1 | KIT-RECEPTACLE (2-PIN) | |
| | | | (EACH RECEPTACLE KIT INCLUDES RECEPTACLE AS & WEDGE) | |
| | **247-2694** | 1 | RECEPTACLE AS-CONNECTOR (12-PIN) | |
| | **325-9571** | 1 | RECEPTACLE AS-CONNECTOR (8-PIN) | |
| | **8T-8730** | 46 | SOCKET-CONNECTOR (16-GA TO 18-GA) | |
| | **9X-3402** | 50 | SOCKET-CONNECTOR (16-GA TO 18-GA) | |
| | | | —OR— | |
| | **126-1768** | 50 | SOCKET-CONNECTOR (14-GA TO 16-GA) | |
| | **3S-2093** | 17 | STRAP-CABLE | |
| | **2L-8050** | 1 | TERMINAL-RING (6-GA, 1/4-IN SCREW) | |
| | | | —OR— | |
| | **2L-8058** | 1 | TERMINAL-RING (8-GA, 1/4-IN SCREW) | |
| E | **119-3662** | | TUBE-HEAT SHRINK (10.85-MM DIA) (8-CM) | |
| E | **125-7874** | | TUBE-HEAT SHRINK (5.72-MM DIA) (33-CM) | |
| E | **125-7875** | | TUBE-HEAT SHRINK (7.44-MM DIA) (38-CM) | |

E - ORDER BY THE CENTIMETER

<END>

# 251-0299 HARNESS AS-SWITCH

**S/N: FEY1-UP**
**SECONDARY SHUTDOWN**
**PART OF 539-2992 WIRING GP-PLATFORM**

**SMCS-1408** **i07397299**

| NOTE | PART NUMBER | QTY | PART NAME 1 2 3 4 5 6 (PRODUCT LEVEL) | SEE PAGE |
|---|---|---|---|---|
| | **9X-3401** | 2 | PIN-CONNECTOR (16-GA TO 18-GA) | |
| | | | —OR— | |
| | **126-1767** | 2 | PIN-CONNECTOR (14-GA TO 16-GA) | |
| | **243-4505** | 1 | RECEPTACLE AS-CONNECTOR (2-PIN) | |
| | **2L-8074** | 2 | TERMINAL-RING (14-GA TO 16-GA, NO. 6 SCREW) | |

<END>

# *539-1625* HOLDER AS-FUSE

**S/N: FEY1-UP**

**PART OF 539-2881 BATTERY & WIRING GP**

**SMCS-1408, 1417** **i07409230**

| NOTE | REF NO | GRAPHIC REF | PART NUMBER | QTY | PART NAME 1 2 3 4 5 6 (PRODUCT LEVEL) | SEE PAGE |
|---|---|---|---|---|---|---|
| | 1 | 1 | **539-1626** | 1 | COVER | |
| | 2 | 1 | **517-2070** | 1 | SEAL-COVER | |
| M | 3 | 1 | **5C-2874** | 4 | NUT (M5X0.8-THD) | |
| | 4 | 1 | **204-6101** | 4 | WASHER-HARD (5.3X10X1-MM THK) | |
| | 5 | 1 | **096-0192** | 4 | LOCKWASHER | |
| M | 6 | 1 | **5C-7261** | 4 | NUT (M8X1.25-THD) | |
| | 7 | 1 | **7H-3937** | 4 | LOCKWASHER | |
| | 8 | 1 | **8T-4224** | 4 | WASHER-HARD (8.8X16X2-MM THK) | |
| | 9 | 1 | **525-4303** | 2 | FUSE (80-AMPERE) | |
| | 10 | 1 | **378-1012** | 2 | FUSE (100-AMPERE) | |

M - METRIC PART

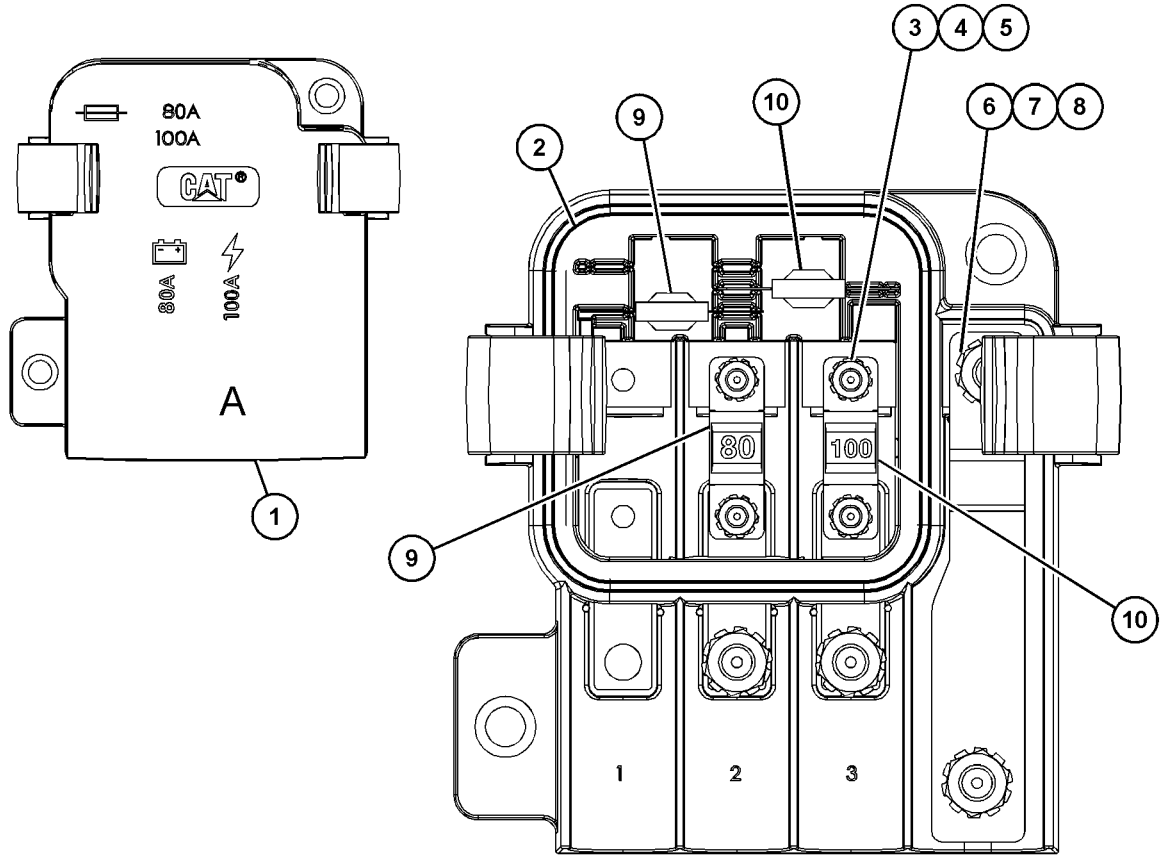


VIEW OF AREA A
(PARTS REMOVED FOR CLARITY)

GRAPHIC #1 <END> g06314225

## *467-4498* INSTALLATION AR-COMMUNICATION

**S/N: FEY1-UP**

**SMCS-7606** **i06924659**

| NOTE | PART NUMBER | QTY | PART NAME 1 2 3 4 5 6 (PRODUCT LEVEL) | SEE PAGE |
|---|---|---|---|---|
| Y | *477-9413* | 1 | CONTROL & MTG GP-COMMUNICATION (PRODUCT LINK CELLULAR) | 89 |
| Y | *366-8771* | 1 | FILM GP (PRODUCT LINK RADIO, INTL) | 500 |
| Y | *461-3434* | 1 | MOUNTING GP-ANTENNA (PRODUCT LINK) | 462 |
| Y | *477-9415* | 1 | WIRING GP-COMMUNICATION (PRODUCT LINK) | 134 |

Y - SEPARATE ILLUSTRATION

<END>

## *563-4401* INSTALLATION AR-COMMUNICATION—PRODUCT LINK 641

**S/N: FEY1-UP**

**SMCS-7606** **i07519985**

| NOTE | PART NUMBER | QTY | PART NAME 1 2 3 4 5 6 (PRODUCT LEVEL) | SEE PAGE |
|---|---|---|---|---|
| Y | *477-9413* | 1 | CONTROL & MTG GP-COMMUNICATION (PRODUCT LINK CELLULAR) | 89 |
| Y | *366-8771* | 1 | FILM GP (PRODUCT LINK RADIO, INTL) | 500 |
| Y | *461-3434* | 1 | MOUNTING GP-ANTENNA (PRODUCT LINK) | 462 |
| Y | *563-4402* | 1 | WIRING GP-COMMUNICATION | 136 |

Y - SEPARATE ILLUSTRATION

<END>

# 153-2521 LAMP GP-FLOOD

**S/N: FEY1-UP**
**24-VOLT**
**PART OF 259-5043 LIGHTING GP-FLOOD**

**SMCS-1434** **i05856235**

| NOTE | REF NO | GRAPHIC REF | PART NUMBER | QTY | PART NAME 1 2 3 4 5 6 (PRODUCT LEVEL) | SEE PAGE |
|---|---|---|---|---|---|---|
| M | 1 | 1 | **6V-5210** | 2 | SCREW-MACHINE (M4X0.7X10-MM) | |
| | 2 | 1 | **3B-4501** | 2 | LOCKWASHER | |
| | 3 | 1 | **351-9918** | 1 | LAMP-HALOGEN (24-VOLT, 70-WATT) | |
| | 4 | 1 | **8T-4223** | 1 | WASHER-HARD (13.5X25.5X3-MM THK) | |
| M | 5 | 1 | **8T-4244** | 1 | NUT (M12X1.75-THD) | |
| M | 6 | 1 | **174-7791** | 1 | SCREW-TAPPING | |
| | 7 | 1 | **9B-0453** | 1 | LOCKWASHER | |
| | 8 | 1 | **170-6993** | 1 | COVER | |
| M | 9 | 1 | **180-3861** | 4 | SCREW-TAPPING | |
| | 10 | 1 | **170-9417** | 1 | LENS AS | |
| | 11 | 1 | **170-9418** | 1 | BAND | |

M - METRIC PART

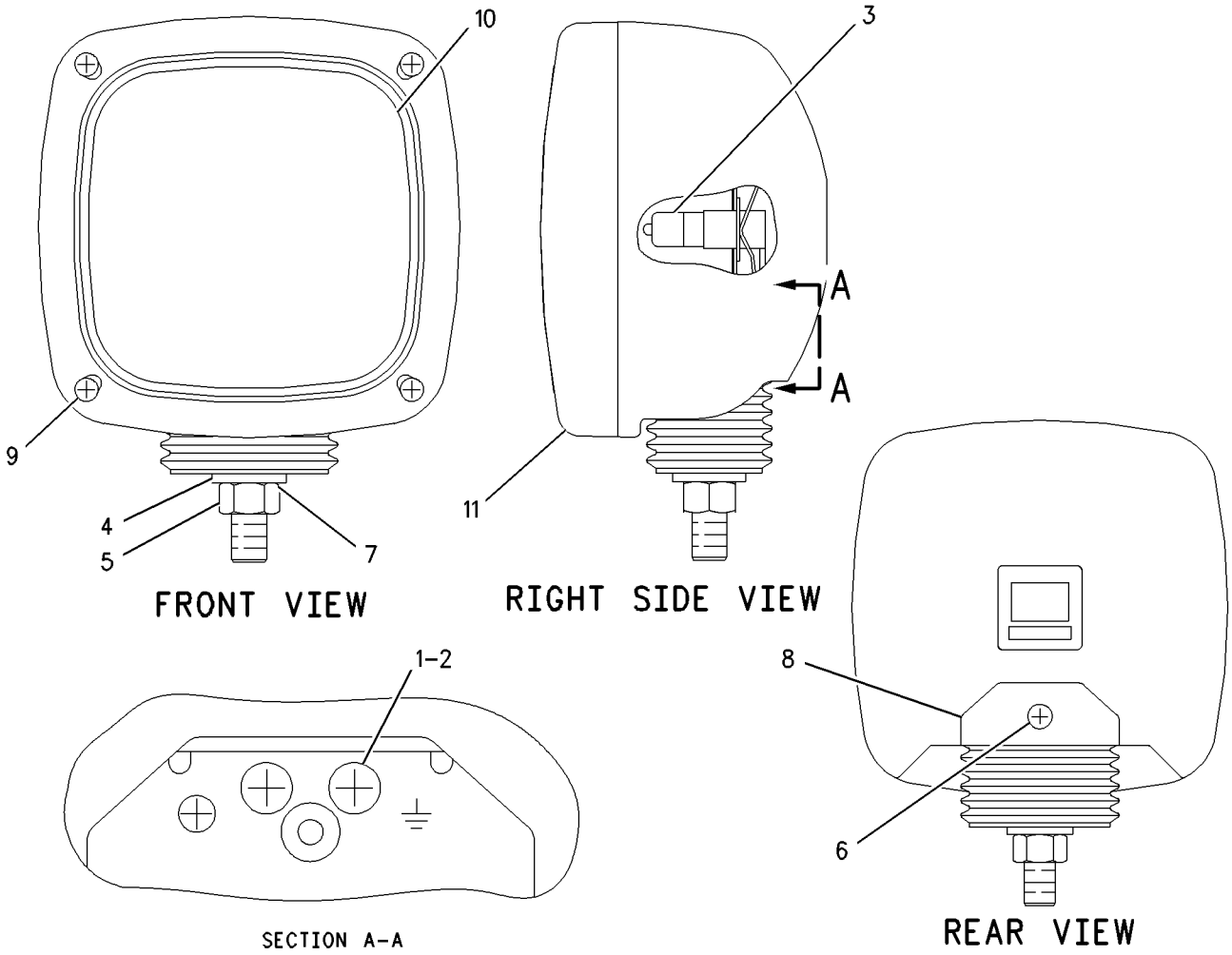


GRAPHIC #1 <END> g00645948

# *153-2523* LAMP GP-FLOOD

**S/N: FEY1-UP**
**24-VOLT**
**PART OF 4I-5409 LIGHTING GP-FLOOD**

**SMCS-1434** **i06285341**

| NOTE | REF NO | GRAPHIC REF | PART NUMBER | QTY | PART NAME 1 2 3 4 5 6 (PRODUCT LEVEL) | SEE PAGE |
|---|---|---|---|---|---|---|
| M | 1 | 1 | **6V-5210** | 2 | SCREW-MACHINE (M4X0.7X10-MM) | |
| | 2 | 1 | **3B-4501** | 2 | LOCKWASHER | |
| | 3 | 1 | **9X-3463** | 1 | LAMP-HALOGEN (24-VOLT, 70-WATT) | |
| | 4 | 1 | **8T-4223** | 1 | WASHER-HARD (13.5X25.5X3-MM THK) | |
| M | 5 | 1 | **8T-4244** | 1 | NUT (M12X1.75-THD) | |
| M | 6 | 1 | **174-7791** | 1 | SCREW-TAPPING | |
| | 7 | 1 | **5C-2889** | 1 | LOCKWASHER | |
| | 8 | 1 | **170-6993** | 1 | COVER | |
| | 9 | 1 | **170-9417** | 1 | LENS AS | |
| M | 10 | 1 | **180-3861** | 4 | SCREW-TAPPING | |
| | 11 | 1 | **170-9418** | 1 | BAND | |

M - METRIC PART

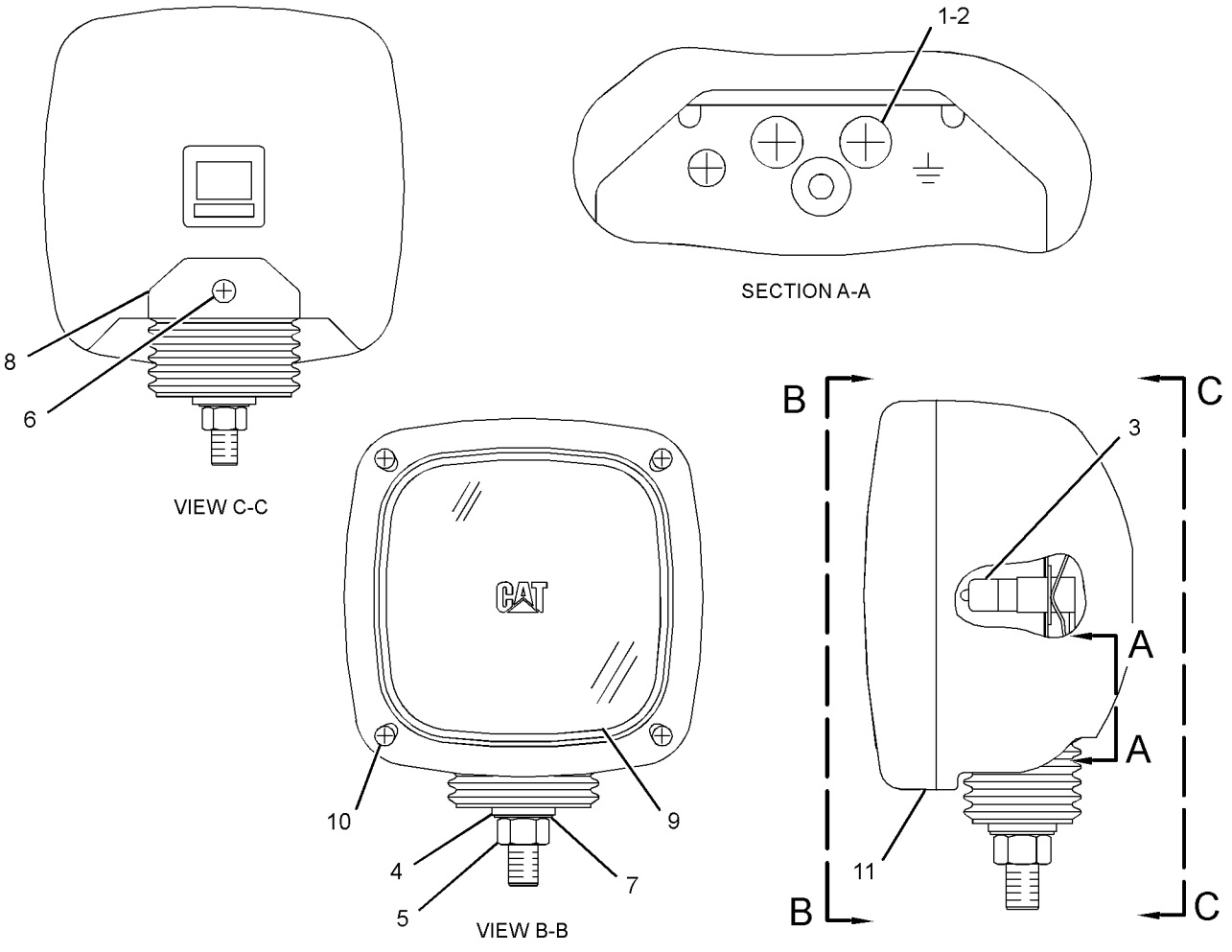


GRAPHIC #1 <END> g01528558

# 325-4471 LAMP GP-FLOOD

**S/N: FEY1-UP**
**24-VOLT**
**PART OF 441-6375 LIGHTING GP-FLOOD**

**SMCS-1434** **i07189815**

| NOTE | REF NO | GRAPHIC REF | PART NUMBER | QTY | PART NAME 1 2 3 4 5 6 (PRODUCT LEVEL) | SEE PAGE |
|---|---|---|---|---|---|---|
| | 1 | 1 | **175-4291** | 1 | BRACKET AS | |
| M | 2 | 1 | **9X-4244** | 2 | SCREW-SPECIAL (M4X1.79X25-MM) | |
| | 3 | 1 | **351-9918** | 1 | LAMP-HALOGEN (24-VOLT, 70-WATT) (FLOODLIGHT) | |
| | 4 | 1 | **8T-4224** | 1 | WASHER-HARD (8.8X16X2-MM THK) | |
| M | 5 | 1 | **8T-7547** | 1 | BOLT (M8X1.25X30-MM) | |
| M | 6 | 1 | **5C-7261** | 1 | NUT (M8X1.25-THD) | |

M - METRIC PART

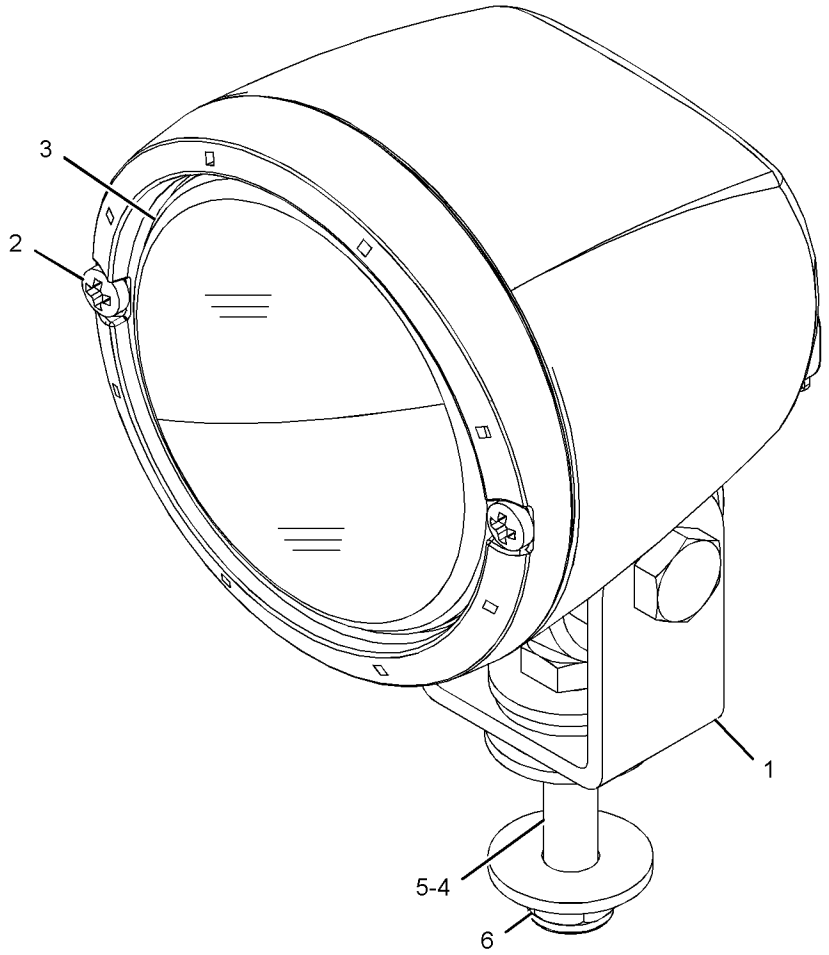


GRAPHIC #1 <END> g02097194

# *259-5043* LIGHTING GP-FLOOD—BOOM, LH

**S/N: FEY1-UP**

**PART OF 376-1084 BOOM AR-1 PIECE LONG**

**SMCS-1434** **i07394711**

| NOTE | REF NO | GRAPHIC REF | PART NUMBER | QTY | PART NAME 1 2 3 4 5 6 (PRODUCT LEVEL) | SEE PAGE |
|---|---|---|---|---|---|---|
| | 1 | 1 | **7I-2673** | 1 | STRAP-CABLE | |
| | 2 | 1 | **111-4836** | 4 | CLIP | |
| | 3 | 1 | **116-0118** | 1 | CLIP | |
| Y | 4 | 1 | **153-2521** | 1 | LAMP GP-FLOOD (24-VOLT) | 105 |
| | 5 | 1 | **259-5326** | 1 | HARNESS AS-LIGHTING (BOOM, LH) | |
| | | 1 | **243-4505** | 1 | RECEPTACLE AS-CONNECTOR (2-PIN) | |
| | | 1 | **9W-0852** | 2 | PIN-CONNECTOR (14-GA TO 16-GA) | |
| | | 1 | **2L-8075** | 2 | TERMINAL-RING (14-GA TO 16-GA, NO. 8 SCREW) | |
| | 6 | 1 | **111-4837** | 1 | CLIP | |
| | 7 | 1 | **134-3284** | 1 | BRACKET | |
| | 8 | 1 | **5P-9297** | 2 | CLIP (LOOP) | |
| | 9 | 1 | **8T-4121** | 3 | WASHER-HARD (11X21X2.5-MM THK) | |
| M | 10 | 1 | **8T-4133** | 3 | NUT (M10X1.5-THD) | |
| M | 11 | 1 | **453-2834** | 1 | BOLT (M16X2X30-MM) | |
| | 12 | 1 | **451-2175** | 1 | WASHER-HARD (17.5X30X3.5-MM THK) | |
| M | 13 | 1 | **175-7141** | 5 | NUT-HEX FLANGE (M10X1.5-THD) | |
| | 14 | 1 | **8T-4223** | 2 | WASHER-HARD (13.5X25.5X3-MM THK) | |

M - METRIC PART
Y - SEPARATE ILLUSTRATION

*259-5043* **LIGHTING GP-FLOOD (**contd.**)** **i07394711**

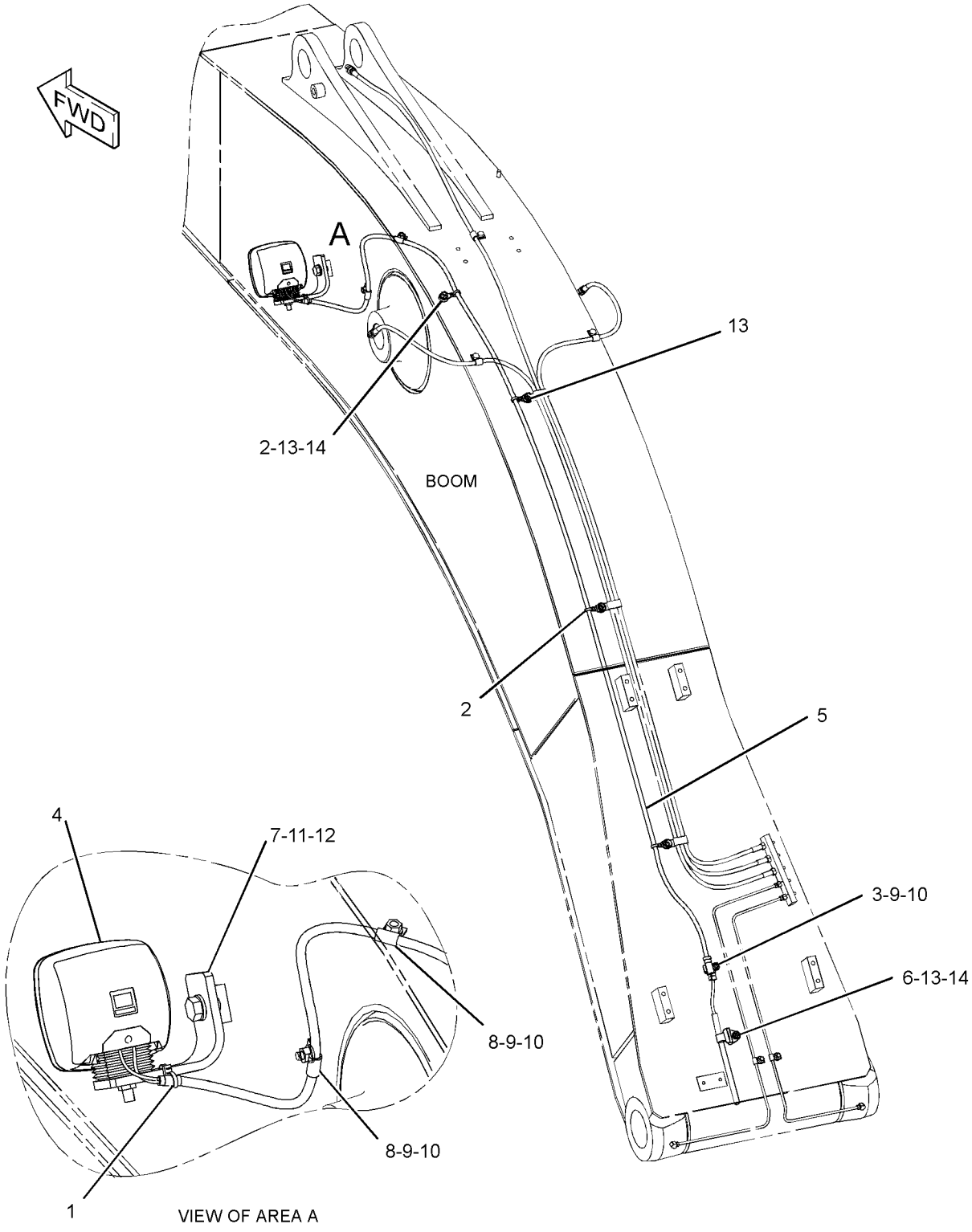


GRAPHIC #1 <END> g06270283

# *441-6375* LIGHTING GP-FLOOD—CAB

**S/N: FEY1-UP**

**PART OF 557-8896 CAB GP**

**SMCS-1434** **i06199492**

| NOTE | REF NO | GRAPHIC REF | PART NUMBER | QTY | PART NAME 1 2 3 4 5 6 (PRODUCT LEVEL) | SEE PAGE |
|---|---|---|---|---|---|---|
| Y | 1 | 1 | **325-4471** | 2 | LAMP GP-FLOOD (24-VOLT, 35-WATT) | 107 |
| | 2 | 1 | **441-6376** | 2 | HARNESS AS-LIGHTING (CAB LIGHT) | |
| | | | | | (EACH INCLUDES) | |
| | | 1 | *7Y-3966* | 1 | TERMINAL AS | |
| | | 1 | **7Y-3962** | 1 | TERMINAL-BULLET (MALE) | |
| | | 1 | **7Y-3964** | 1 | TUBE (CONNECTOR TERMINAL) | |
| | | 1 | *7Y-3967* | 1 | TERMINAL AS | |
| | | 1 | **7Y-3963** | 1 | TERMINAL-BULLET (FEMALE) | |
| | | 1 | **7Y-3965** | 1 | TUBE (RECEPTACLE TERMINAL) | |
| | | 1 | **9X-3402** | 2 | SOCKET-CONNECTOR (16-GA TO 18-GA) | |
| | | | | | —OR— | |
| | | 1 | **126-1768** | 2 | SOCKET-CONNECTOR (14-GA TO 16-GA) | |
| | | 1 | **155-2270** | 1 | KIT-CONNECTING PLUG (2-PIN) | |
| | | | | | (INCLUDES PLUG AS, WEDGE & INTERFACE SEAL) | |
| | 3 | 1 | **441-6377** | 1 | BRACKET-LIGHT (CAB FRONT, RH) | |
| | 4 | 1 | **441-6379** | 1 | BRACKET-LIGHT (CAB FRONT, LH) | |
| | 5 | 1 | **163-6795** | 2 | STRAP-CABLE | |
| M | 6 | 1 | **8T-4200** | 2 | BOLT (M8X1.25X16-MM) | |
| | 7 | 1 | **8T-4224** | 2 | WASHER-HARD (8.8X16X2-MM THK) | |

M - METRIC PART
Y - SEPARATE ILLUSTRATION

*441-6375* **LIGHTING GP-FLOOD (**contd.**)** **i06199492**

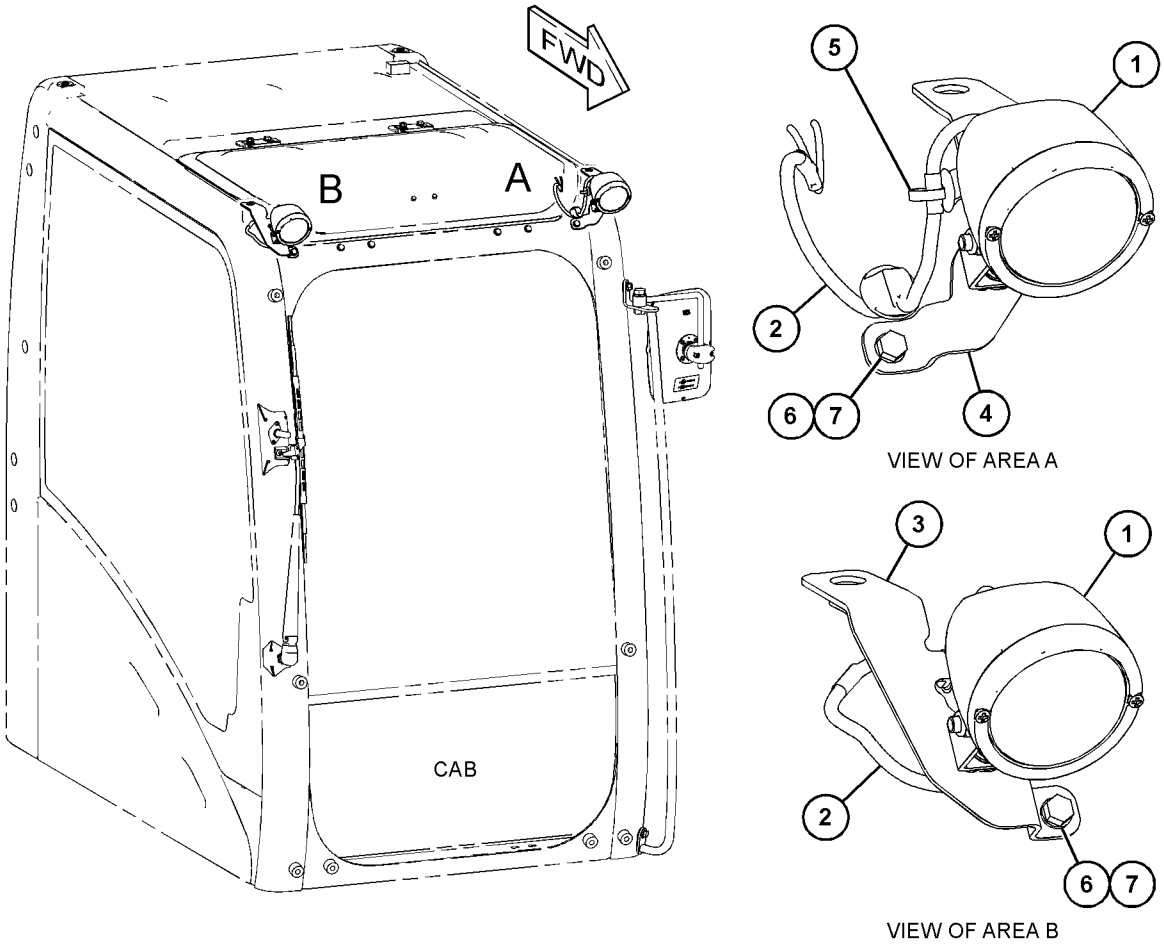


GRAPHIC #1 <END> g03808998

# *4I-5409* LIGHTING GP-FLOOD–CHASSIS

**S/N: FEY1-UP**

**PART OF 556-6447 CHASSIS AR**

**SMCS-1434** **i05441269**

| NOTE | REF NO | GRAPHIC REF | PART NUMBER | QTY | PART NAME 1 2 3 4 5 6 (PRODUCT LEVEL) | SEE PAGE |
|---|---|---|---|---|---|---|
| Y | 1 | 1 | **153-2523** | 1 | LAMP GP-FLOOD (24-VOLT) | 106 |

Y - SEPARATE ILLUSTRATION

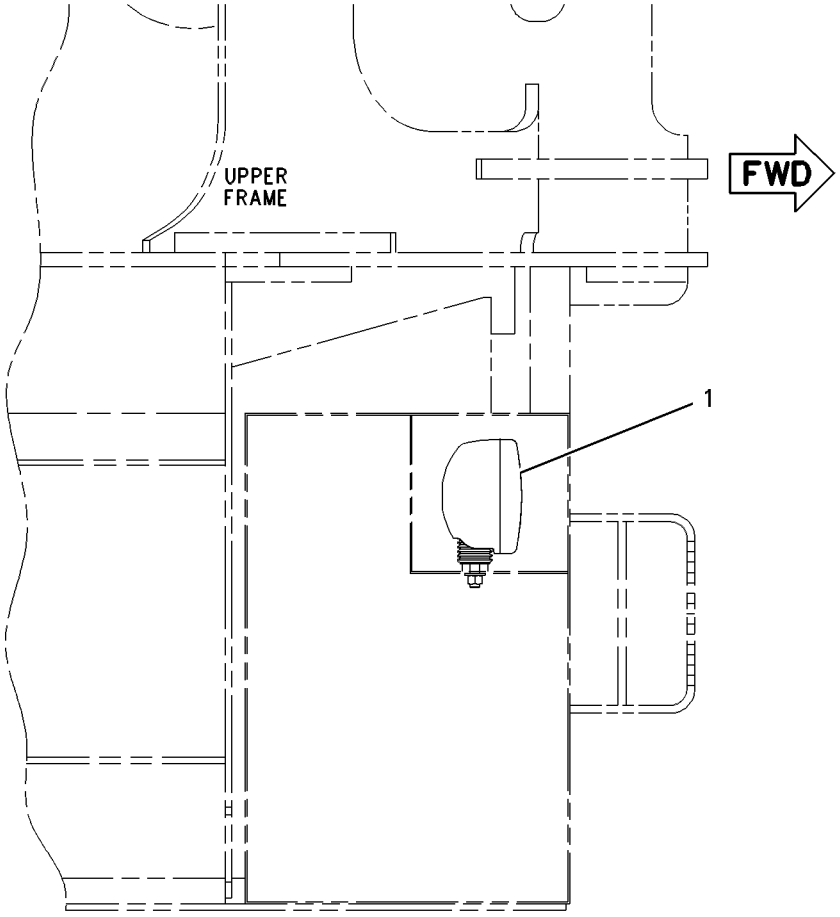


TOP VIEW

GRAPHIC #1 <END> g00588573

# *546-5666* PANEL GP-SWITCH–CONSOLE

**S/N: FEY1-UP**

**PART OF 557-8896 CAB GP**

**SMCS-1408, 1429, 7332, 7451** **i07422865**

| NOTE | REF NO | GRAPHIC REF | PART NUMBER | QTY | PART NAME 1 2 3 4 5 6 (PRODUCT LEVEL) | SEE PAGE |
|---|---|---|---|---|---|---|
| | 1 | 1 | **3S-2093** | 4 | STRAP-CABLE | |
| | 2 | 1 | **170-9324** | 1 | LAMP AS-INDICATOR (24-VOLT, 3-WATT) | |
| | 3 | 1 | **234-1158** | 1 | COVER | |
| Y | 4 | 1 | **255-2751** | 1 | SWITCH GP-START (ENGINE, KEY) | 122 |
| | 5 | 1 | **267-7976** | 1 | PANEL | |
| | 6 | 1 | **398-8931** | 1 | COVER | |
| | 7 | 1 | **096-6166** | 4 | WASHER-HARD (4.5X9X1-MM THK) | |
| | 8 | 1 | **119-5026** | 4 | SCREW-PAN HEAD (10-16X0.63-IN) | |
| Y | 9 | 1 | **557-5524** | 1 | HARNESS AS-PANEL (CONSOLE) | 100 |
| M | 10 | 1 | **123-0707** | 4 | SCREW-HEX SOCKET (M4X0.7X20-MM) | |

M - METRIC PART
Y - SEPARATE ILLUSTRATION

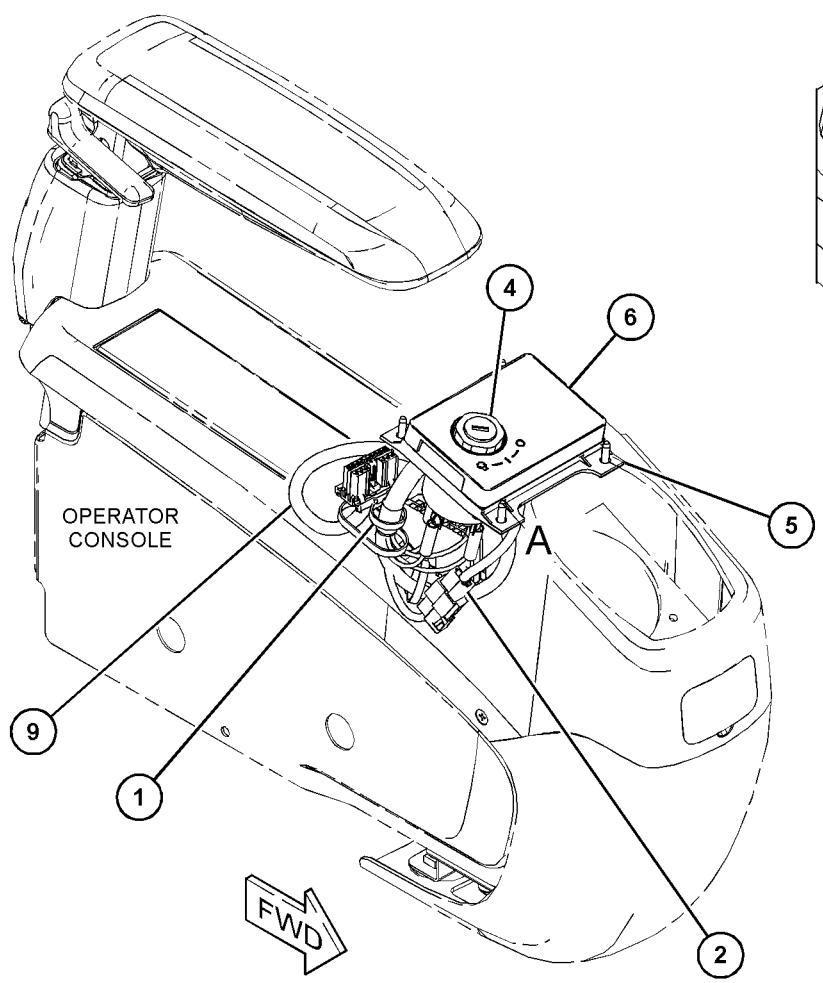


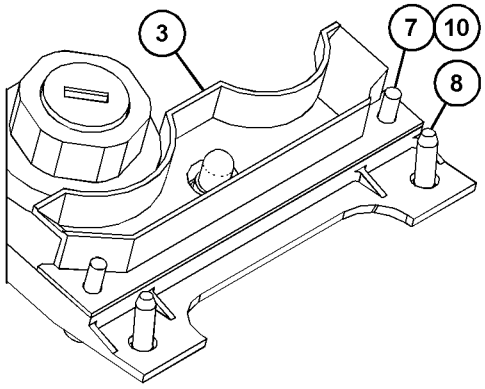


VIEW OF AREA A
(PARTS REMOVED FOR CLARITY)

GRAPHIC #1 <END> g06319277

# 423-6434 SENSOR GP-LIQUID LEVEL

**S/N: FEY1-UP**

**PART OF 556-6577 LINES GP-FUEL**

**SMCS-7422** **i06659647**

| NOTE | REF NO | GRAPHIC REF | PART NUMBER | QTY | PART NAME 1 2 3 4 5 6 (PRODUCT LEVEL) | SEE PAGE |
|---|---|---|---|---|---|---|
| | 1 | 1 | **214-7568** | 1 | SEAL-O-RING | |
| | 2 | 1 | **281-8805** | 1 | RECEPTACLE AS-CONNECTOR | |
| | 3 | 1 | **9X-3401** | 3 | PIN-CONNECTOR (16-GA TO 18-GA) | |

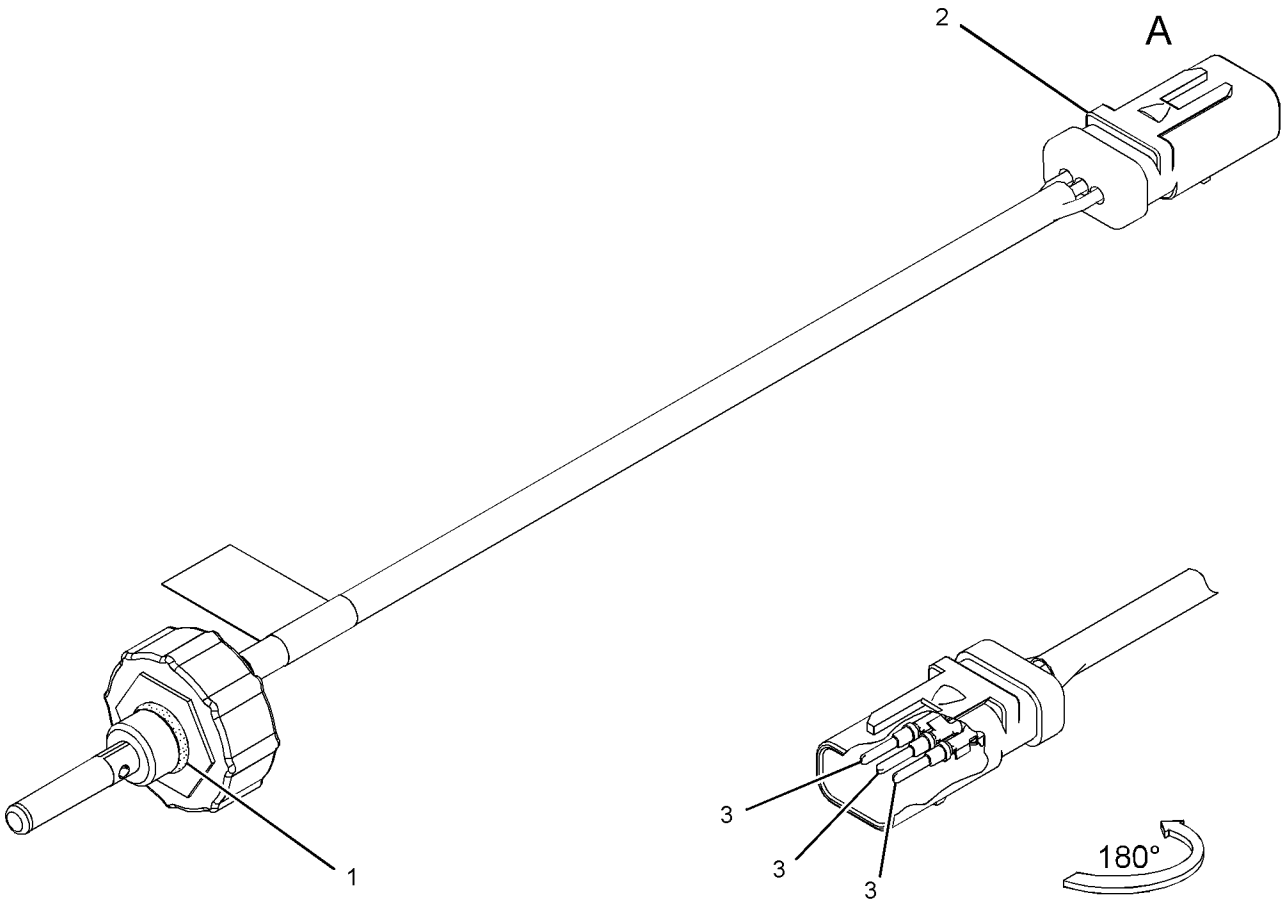


VIEW OF AREA A

GRAPHIC #1 <END> g02423836

# *325-8634* SENSOR GP-PRESSURE

**S/N: FEY1-UP**

**PART OF 416-4969 SENSOR GP-TEMP & PRESS**

**SMCS-1439, 1916, 1917, 1923, 1924**

**i06954924**

| NOTE | REF NO | GRAPHIC REF | PART NUMBER | QTY | PART NAME 1 2 3 4 5 6 (PRODUCT LEVEL) | SEE PAGE |
|---|---|---|---|---|---|---|
| | 1 | 1 | **320-3060** | 1 | SENSOR GP-PRESSURE (ENGINE OIL) | |
| | 2 | 1 | **228-7100** | 1 | SEAL-O-RING | |

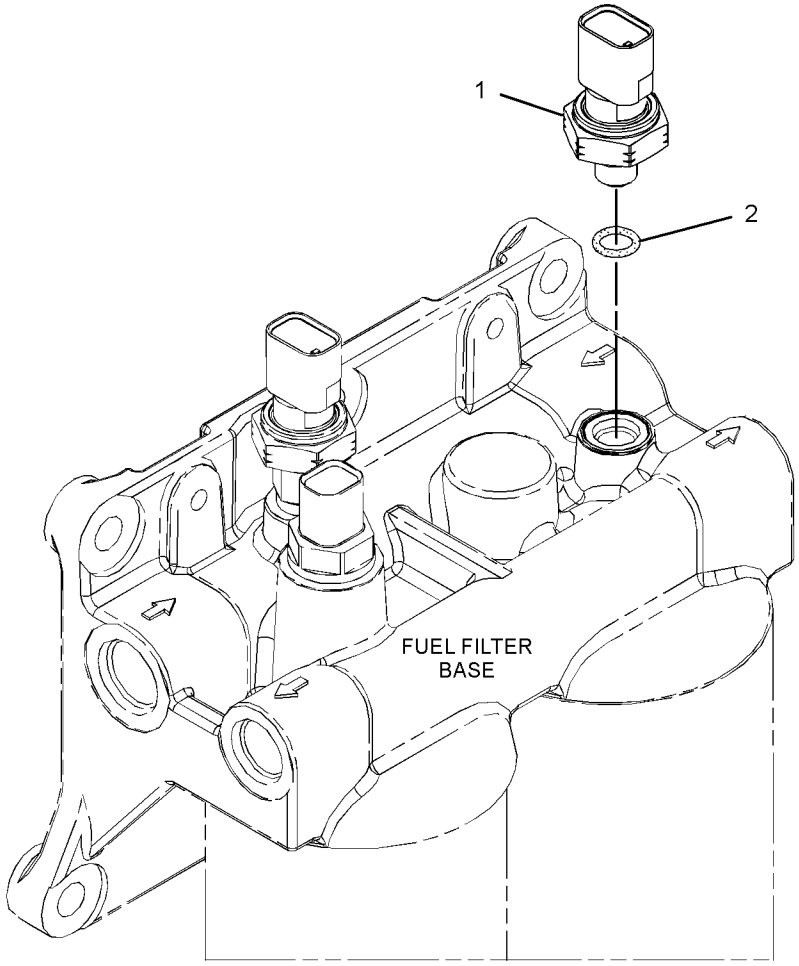


GRAPHIC #1

<END>

g02080674

# *454-5075* SENSOR GP-PRESSURE

**S/N: FEY1-UP**

**PART OF 564-9845 LINES GP-PILOT**

**SMCS-1439, 1916, 1917, 1923, 1924** **i07435500**

| NOTE | REF NO | GRAPHIC REF | PART NUMBER | QTY | PART NAME 1 2 3 4 5 6 (PRODUCT LEVEL) | SEE PAGE |
|---|---|---|---|---|---|---|
| | 1 | 1 | **453-5523** | 1 | SENSOR GP-PRESSURE | |
| | 2 | 1 | **3J-7354** | 1 | SEAL-O-RING | |

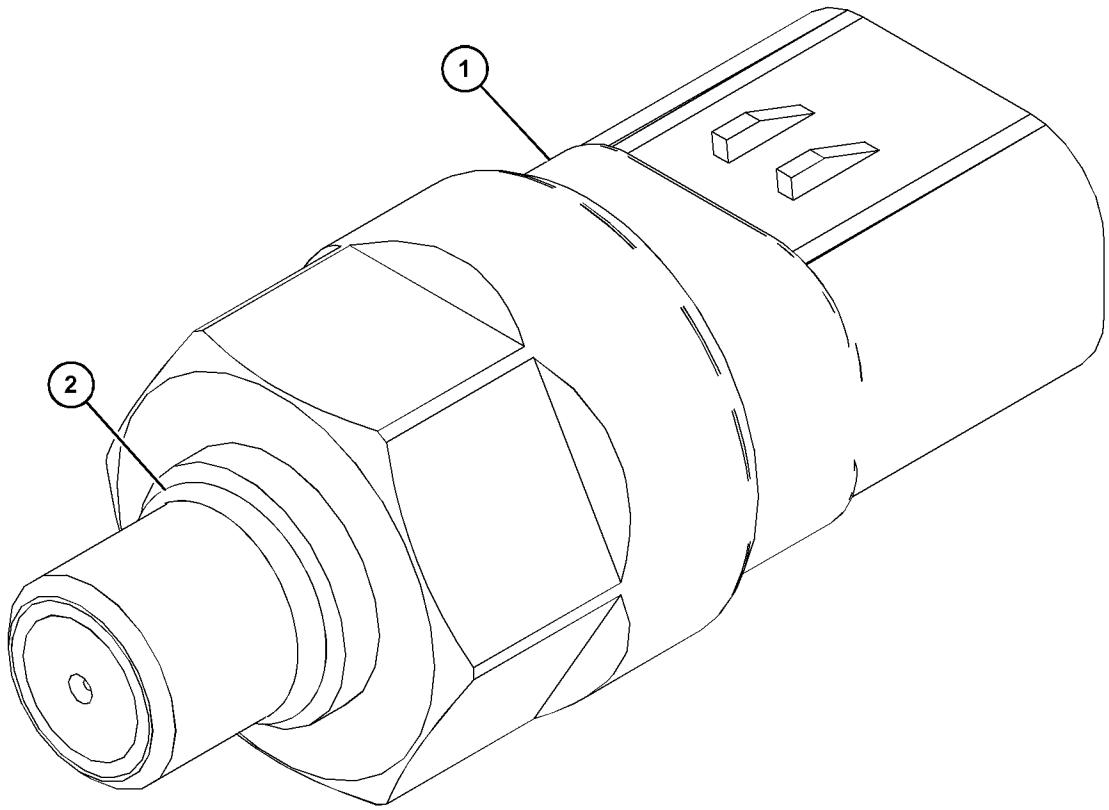


GRAPHIC #1 <END> g06056081

# 318-1181 SENSOR GP-SPEED

**S/N: FEY1-UP**
**MAGNETIC, LOW OUTPUT**
**PART OF 556-7952 WIRING GP-CHASSIS**

**SMCS-1907, 1912, 4803, 7493** **i06921966**

| NOTE | REF NO | GRAPHIC REF | PART NUMBER | QTY | PART NAME 1 2 3 4 5 6 (PRODUCT LEVEL) | SEE PAGE |
|---|---|---|---|---|---|---|
| | 1 | 1 | **171-5349** | 1 | STRAP-MARKER | |
| | 2 | 1 | **102-8802** | 1 | KIT-RECEPTACLE (2-PIN) | |
| | | | | | (INCLUDES RECEPTACLE AS & WEDGE) | |
| | 3 | 1 | **9X-3401** | 2 | PIN-CONNECTOR (16-GA TO 18-GA) | |
| | | | | | –OR– | |
| | | 1 | **126-1767** | 2 | PIN-CONNECTOR (14-GA TO 16-GA) | |
| E | 4 | 1 | **9X-1386** | | SLEEVE (14-CM) | |

E - ORDER BY THE CENTIMETER

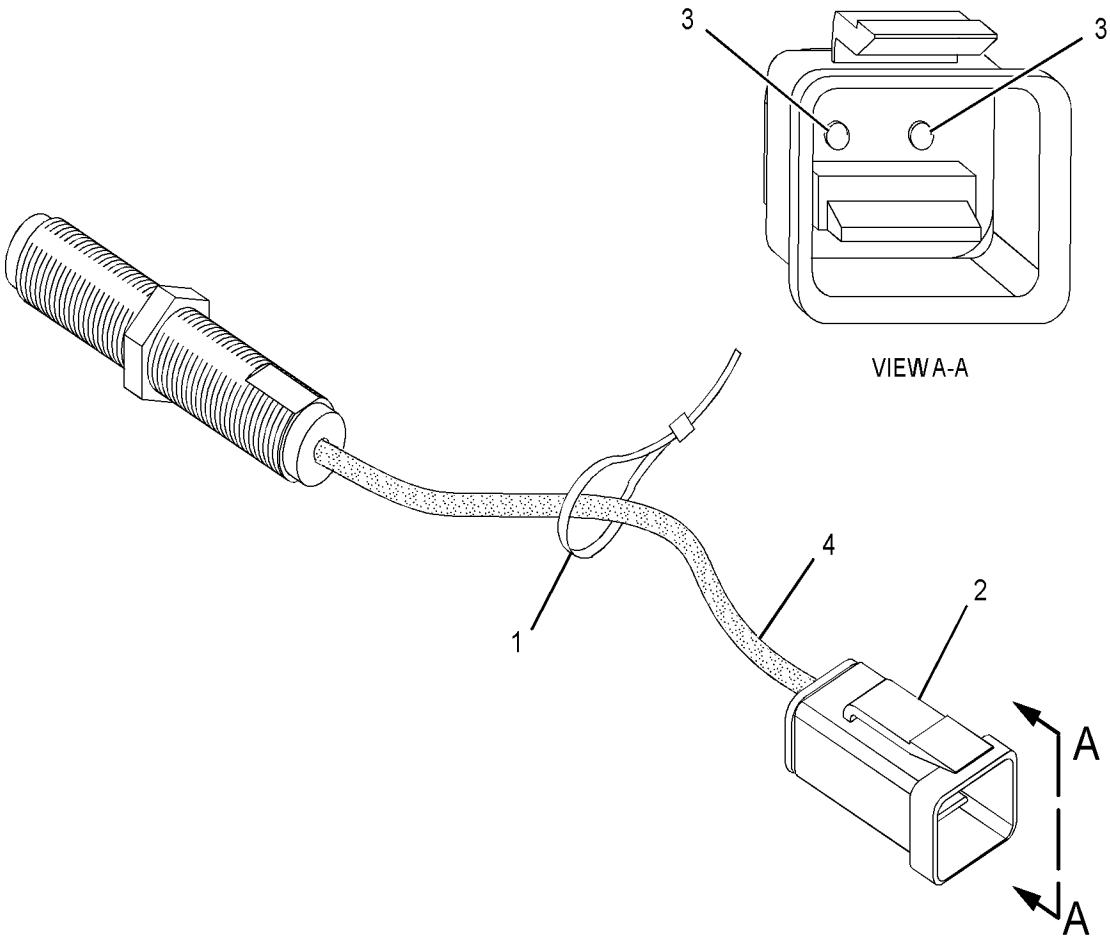


GRAPHIC #1 <END> g03381476

# *416-4969* SENSOR GP-TEMP & PRESS

**S/N: FEY1-UP**

**PART OF 556-6438 INSTALLATION AR-ENGINE**

**SMCS-1408, 1435, 1439, 1906, 1924, 7400** **i07431710**

| NOTE | REF NO | GRAPHIC REF | PART NUMBER | QTY | PART NAME 1 2 3 4 5 6 (PRODUCT LEVEL) | SEE PAGE |
|---|---|---|---|---|---|---|
| | 1 | 1 | **256-6454** | 1 | SENSOR-TEMPERATURE (2-PIN) (ENGINE COOLANT) | |
| Y | 2 | 1 | *325-8634* | 1 | SENSOR GP-PRESSURE (ENGINE OIL) | 115 |
| | 3 | 1 | **199-9751** | 1 | SEAL-O-RING | |

Y - SEPARATE ILLUSTRATION

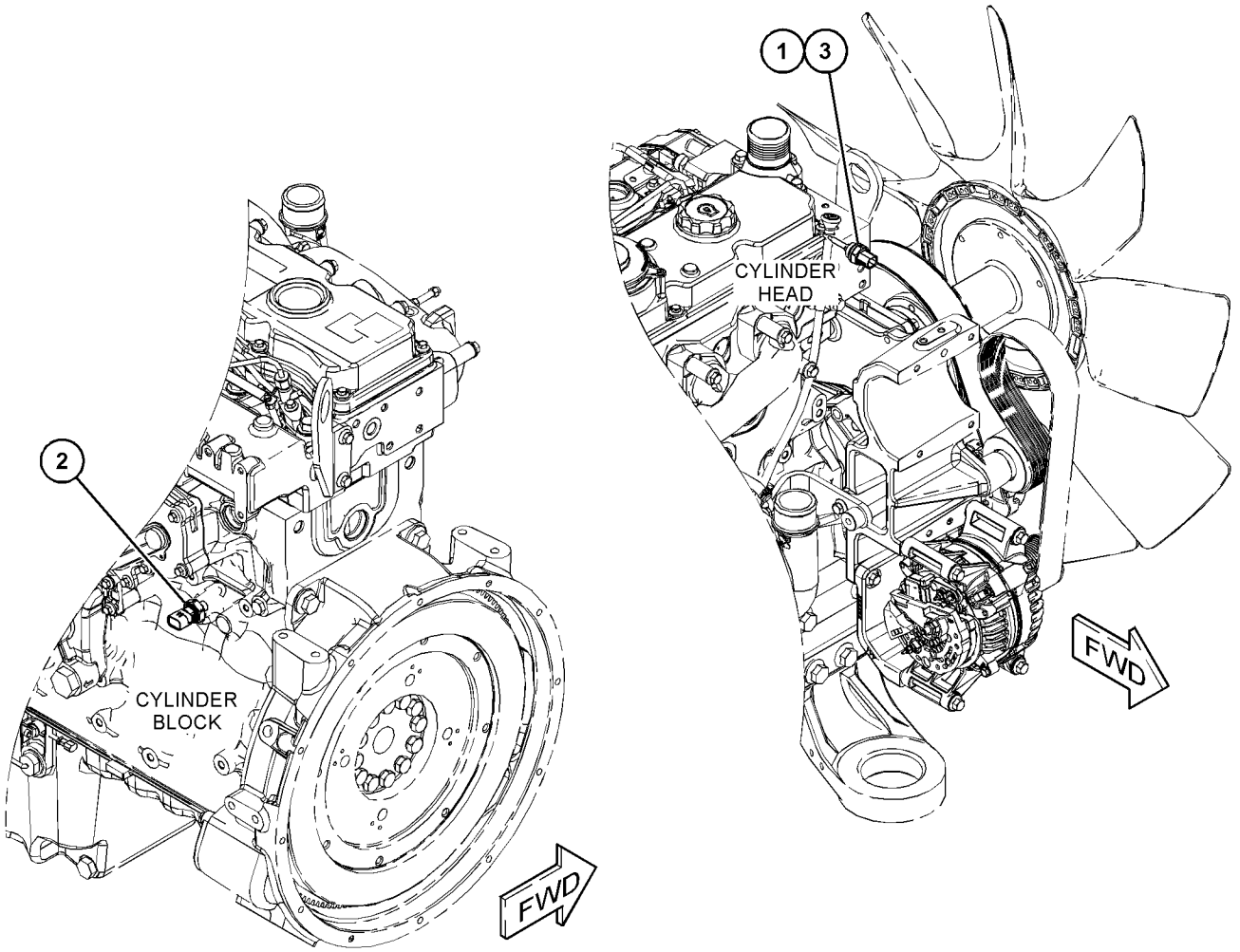


GRAPHIC #1 <END> g03687216

# *346-0798* STARTING AID GP

**S/N: H761-UP**

**PLUG**

**PART OF 565-0288 ENGINE AR-PRIMARY**

**SMCS-1090** **i07406084**

| NOTE | REF NO | GRAPHIC REF | PART NUMBER | QTY | PART NAME 1 2 3 4 5 6 (PRODUCT LEVEL) | SEE PAGE |
|---|---|---|---|---|---|---|
| | 1 | 1 | **298-3484** | 6 | PLUG | |

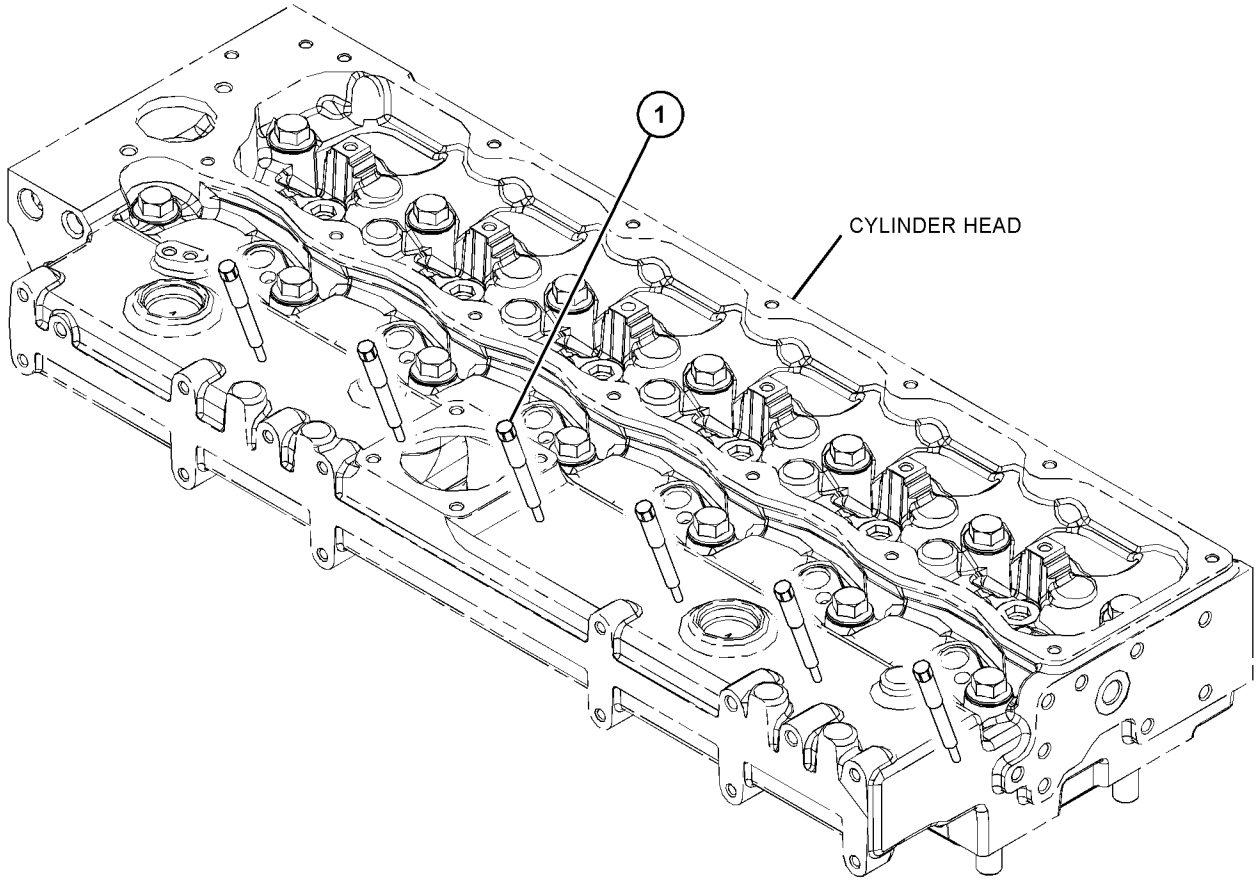


GRAPHIC #1 <END> g03779197

# *445-4703* STARTING MOTOR GP-ELECTRIC

**S/N: H761-UP**

**PART OF 565-0288 ENGINE AR-PRIMARY**

**SMCS-1453** **i07406086**

| NOTE | REF NO | GRAPHIC REF | PART NUMBER | QTY | PART NAME 1 2 3 4 5 6 (PRODUCT LEVEL) | SEE PAGE |
|---|---|---|---|---|---|---|
| | 1 | 1 | **183-1343** | 3 | STUD | |
| | 2 | 1 | **424-6652** | 1 | STARTING MOTOR GP-ELECTRIC | |
| M | 3 | 1 | **184-0983** | 3 | NUT-HEX FLANGE (M12X1.75-THD) | |

M - METRIC PART

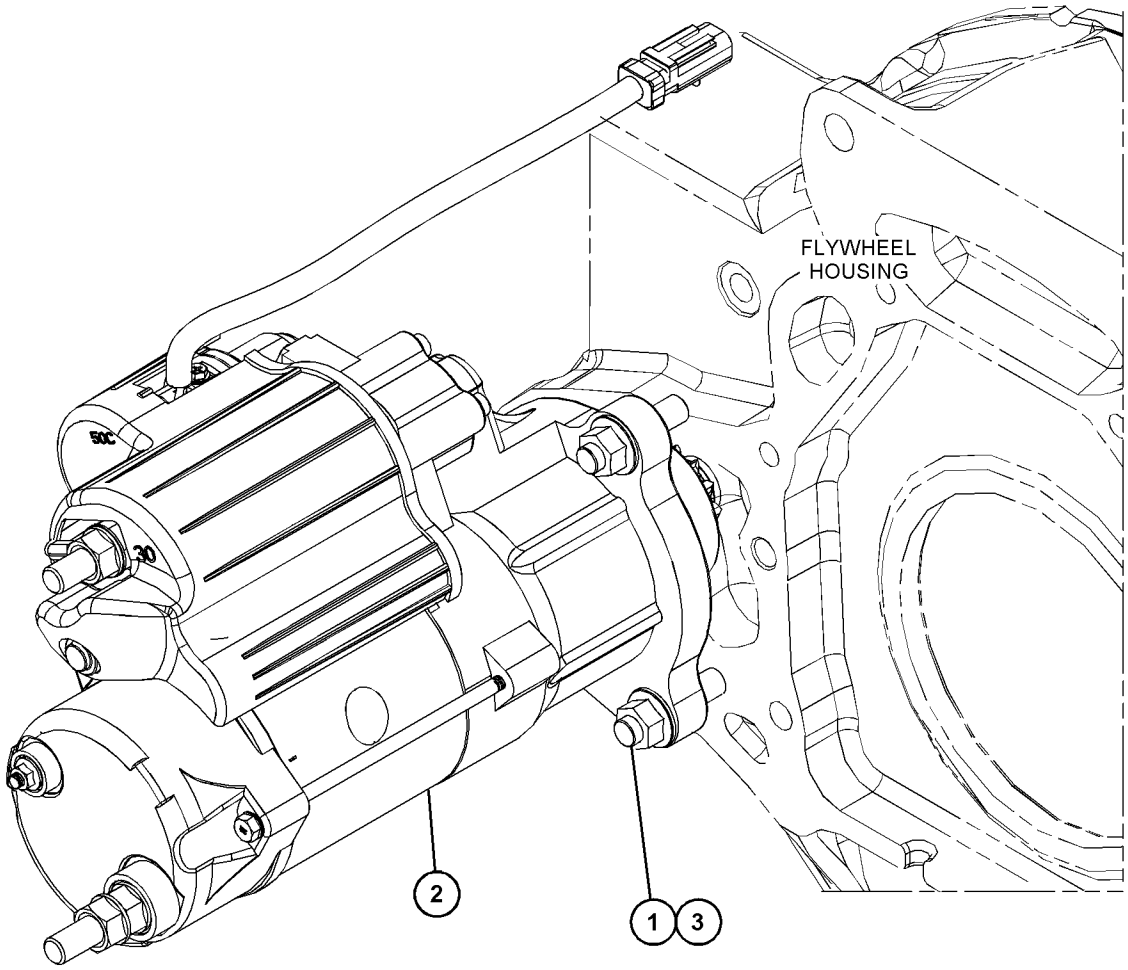


GRAPHIC #1 <END> g03482937

# 7N-0719 SWITCH GP-DISCONNECT–BATTERY

**S/N: FEY1-UP**

**PART OF 539-2881 BATTERY & WIRING GP**

**SMCS-1411** **i04490276**

| NOTE | REF NO | GRAPHIC REF | PART NUMBER | QTY | PART NAME 1 2 3 4 5 6 (PRODUCT LEVEL) | SEE PAGE |
|---|---|---|---|---|---|---|
| | 1 | 1 | **8H-5306** | 1 | KEY (BATTERY DISCONNECT) | |
| | 2 | 1 | **8H-5303** | 1 | NUT (3/4-16-THD) | |
| | 3 | 1 | **2H-3922** | 2 | LOCKWASHER | |
| | 4 | 1 | **9F-5644** | 2 | LOCKWASHER | |
| | 5 | 1 | **6F-7045** | 2 | NUT-FULL (3/8-24-THD) | |

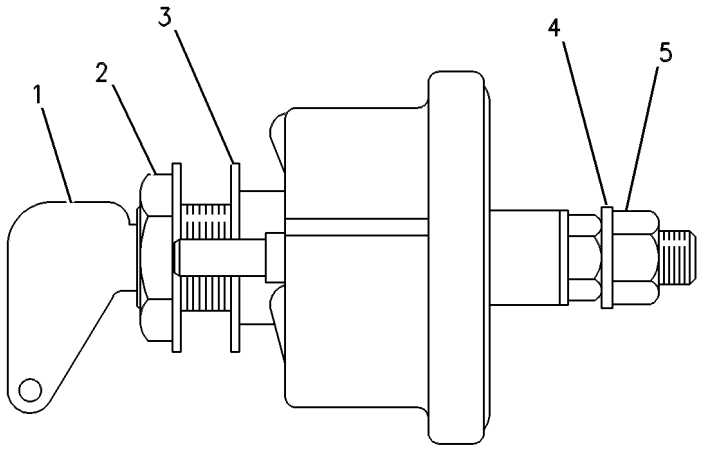


GRAPHIC #1 <END> g00117885

# 255-2751 SWITCH GP-START–ENGINE, KEY

**S/N: FEY1-UP**

**PART OF 546-5666 PANEL GP-SWITCH**

**SMCS-1416** **i04921946**

| NOTE | REF NO | GRAPHIC REF | PART NUMBER | QTY | PART NAME 1 2 3 4 5 6 (PRODUCT LEVEL) | SEE PAGE |
|---|---|---|---|---|---|---|
| | 1 | 1 | **6V-8362** | 4 | SCREW-MACHINE (8-32X0.31-IN) | |
| | 2 | 1 | **9B-7233** | 4 | LOCKWASHER | |
| | 3 | 1 | **7T-6799** | 1 | NUT-MOUNTING (1-32-THD) | |
| | | | | | | |
| AF | | | **5P-8500** | 1 | KEY (IGNITION) | |

A - NOT PART OF THIS GROUP
F - NOT SHOWN

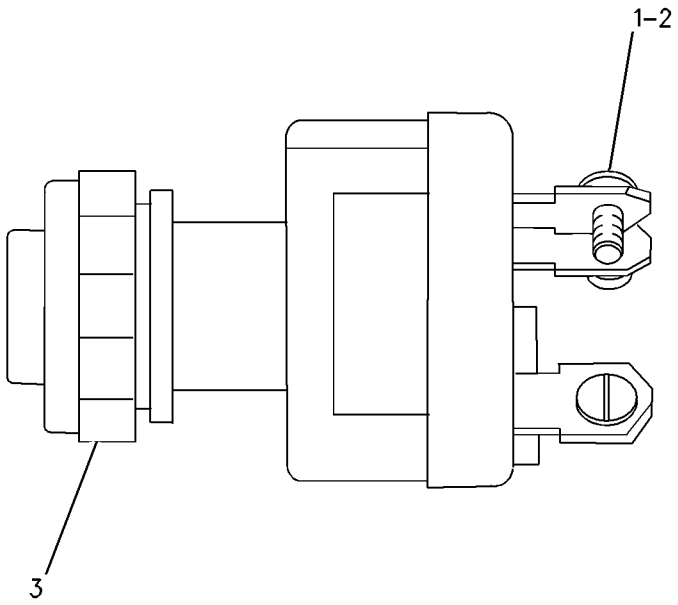


GRAPHIC #1 <END> g00699802

# *518-8343* WIRING GP–AIR CLEANER

**S/N: FEY1-UP**

**PART OF 556-6438 INSTALLATION AR-ENGINE**

**SMCS-1408** **i06803434**

| NOTE | REF NO | GRAPHIC REF | PART NUMBER | QTY | PART NAME 1 2 3 4 5 6 (PRODUCT LEVEL) | SEE PAGE |
|---|---|---|---|---|---|---|
| | 1 | 1 | **3S-2093** | 2 | STRAP-CABLE | |
| Y | 2 | 1 | **518-6777** | 1 | HARNESS AS-CHASSIS (AIR CLEANER) | 96 |

Y - SEPARATE ILLUSTRATION

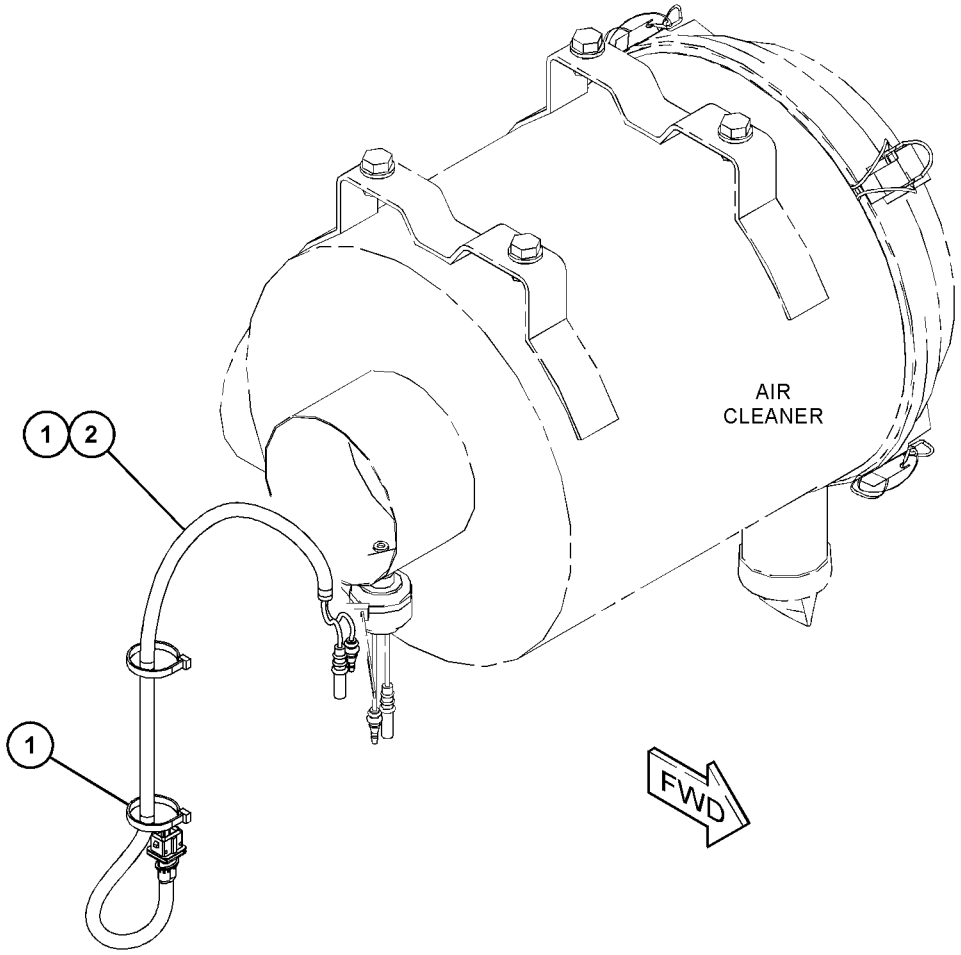


GRAPHIC #1 <END> g06117807

# *539-2995* WIRING GP-CAB

**S/N: FEY1-UP**

**PART OF 557-8896 CAB GP, 539-2879 OPERATOR AR**

**SMCS-1408, 7301**

**i07425864**

| NOTE | REF NO | GRAPHIC REF | PART NUMBER | QTY | PART NAME 1 2 3 4 5 6 (PRODUCT LEVEL) | SEE PAGE |
|---|---|---|---|---|---|---|
| | 1 | 1 | **3S-2093** | 3 | STRAP-CABLE | |
| | 2 | 1,2 | **7K-1181** | 8 | STRAP-CABLE | |
| Y | 3 | 1 | **132-1829** | 1 | ALARM GP (24-VOLT) (FAULT) | 85 |
| | 4 | 2 | **167-3593** | 1 | STRAP | |
| | 5 | 2 | **9W-0335** | 1 | LIGHTER AS-CIGAR (24-VOLT) | |
| | 6 | 2 | **238-2391** | 1 | CABLE AS (PURPLE) | |
| D | | 2 | **6V-2369** | | CABLE (4-GA, BLACK) (0.3-M) | |
| | | 2 | **9G-4343** | 2 | TERMINAL-RING (4-GA, 1/4-IN SCREW) | |
| | 7 | 1 | **245-7760** | 8 | INSULATION | |
| | 8 | 2 | **270-2679** | 1 | LOCKWASHER | |
| | 9 | 1 | **366-4622** | 1 | KIT-SERVICE METER (32-VOLT DC) | |
| | | | | | (INCLUDES SERVICE METER & FILM) | |
| | 10 | 2 | **563-8498** | 1 | BRACKET AS | |
| | | 2 | **183-1051** | 1 | CLIP | |
| | 11 | 2 | **461-6784** | 1 | SWITCH AS-MAGNETIC (MAIN RELAY) | |
| | 12 | 2 | **475-4187** | 1 | CABLE AS (RED) | |
| D | | 2 | **6V-2369** | | CABLE (4-GA, BLACK) (0.3-M) | |
| | | 2 | **9G-4343** | 1 | TERMINAL-RING (4-GA, 1/4-IN SCREW) | |
| | 13 | 2 | **510-9643** | 1 | PANEL AS-CONTROL (12/24-VOLT) | |
| | | 2 | **483-1262** | 1 | KNOB | |
| M | 14 | 1 | **174-8131** | 2 | SCREW-TRUSS HEAD (M4X0.7X12-MM) | |
| | 15 | 2 | **096-5962** | 1 | WASHER-HARD (3.4X7X0.8-MM THK) | |
| | 16 | 1,2 | **096-6166** | 4 | WASHER-HARD (4.5X9X1-MM THK) | |
| | 17 | 1,2 | **156-6175** | 7 | CLIP (LADDER) | |
| | 18 | 1,2 | **163-6795** | 15 | STRAP-CABLE | |
| | 19 | 2 | **203-9007** | 1 | NUT (1-1/2-18-THD) | |
| | 20 | 2 | **4P-7581** | 1 | CLIP (LADDER) | |
| | 21 | 1 | **550-1470** | 1 | PLATE | |
| M | 23 | 2 | **5C-2874** | 2 | NUT (M5X0.8-THD) | |
| M | 24 | 2 | **5C-2890** | 3 | NUT (M6X1-THD) | |
| | 25 | 2 | **5P-4115** | 1 | WASHER-HARD (7.2X19X2-MM THK) | |
| M | 26 | 2 | **6V-5210** | 4 | SCREW-MACHINE (M4X0.7X10-MM) | |
| M | 27 | 2 | **6V-9669** | 1 | SCREW-MACHINE (M3X0.5X8-MM) | |
| M | 28 | 2 | **6V-9674** | 2 | SCREW-MACHINE (M5X0.8X14-MM) | |
| | 29 | 1,2 | **8T-0328** | 5 | WASHER-HARD (5.5X10X1-MM THK) | |
| M | 30 | 1 | **8T-6693** | 1 | SCREW-MACHINE (M5X0.8X16-MM) | |
| M | 32 | 1,2 | **9X-2042** | 6 | SCREW-TRUSS HEAD (M6X1X12-MM) | |
| M | 33 | 2 | **9X-2044** | 7 | SCREW-TRUSS HEAD (M6X1X16-MM) | |
| | 34 | 2 | **9X-8256** | 5 | WASHER (6.6X12X2-MM THK) | |
| E | 35 | 1 | **101-2846** | | GUARD (10-CM) | |
| | 36 | 1 | **557-5521** | 1 | HARNESS AS-CAB | |
| | 36A | 2 | **113-8490** | 18 | FUSE (10-AMPERE) | |
| | 36B | 2 | **113-8491** | 4 | FUSE (15-AMPERE) | |
| | 36C | 2 | **113-8492** | 2 | FUSE (20-AMPERE) | |
| | 36D | 2 | **113-8493** | 3 | FUSE (25-AMPERE) | |
| | 36E | 2 | **124-3548** | 1 | FUSE (30-AMPERE) | |
| | 36F | 2 | **141-2759** | 8 | FUSE (5-AMPERE) | |

*539-2995* **WIRING GP-CAB (**contd.**)** **i07425864**

| NOTE | REF NO | GRAPHIC REF | PART NUMBER | QTY | PART NAME 1 2 3 4 5 6 (PRODUCT LEVEL) | SEE PAGE |
|---|---|---|---|---|---|---|
| | 37 | 2 | **161-3128** | 1 | RELAY (24-VOLT) (BOOM LAMP) | |
| | 37A | 2 | **161-3128** | 1 | RELAY (24-VOLT) (CHASSIS LIGHT) | |
| | 37B | 2 | **161-3128** | 1 | RELAY (24-VOLT) (CAB LIGHT) | |
| | 37C | 2 | **161-3128** | 1 | RELAY (24-VOLT) (HORN) | |
| | 37D | 2 | **161-3128** | 1 | RELAY (24-VOLT) (NEUTRAL START) | |
| | 37E | 2 | **161-3128** | 1 | RELAY (24-VOLT) (ELECTRIC LIFT PUMP) | |
| | 37F | 2 | **161-3128** | 1 | RELAY (24-VOLT) (ENGINE SHUTOFF) | |
| | | 2 | **238-2319** | 1 | BASE AS (FUSE, RELAY PANEL) | |
| M | | 2 | **095-0742** | 2 | SCREW-MACHINE (M6X1X16-MM) | |
| | | 2 | **170-9394** | 40 | TERMINAL | |
| | | 2 | **9X-8256** | 2 | WASHER (6.6X12X2-MM THK) | |
| | | 2 | **342-2972** | 1 | CAP-CONNECTOR (2-PIN) | |
| | | 2 | **5P-6271** | 1 | CONNECTOR AS | |
| | | 2 | **153-2602** | 2 | RECEPTACLE-CONNECTOR (1-PIN) | |
| | | 2 | **424-4322** | 1 | COVER-CONNECTOR | |
| | | 2 | **9X-3401** | 18 | PIN-CONNECTOR (16-GA TO 18-GA) | |
| | | | | | —OR— | |
| | | 2 | **126-1767** | 18 | PIN-CONNECTOR (14-GA TO 16-GA) | |
| | | 2 | **111-4816** | 1 | PLUG-CONNECTOR (13-PIN) | |
| | | 2 | **125-4784** | 1 | PLUG-CONNECTOR (12-PIN) | |
| | | 2 | **138-5184** | 1 | PLUG-CONNECTOR (20-PIN) | |
| | | 2 | **163-6803** | 3 | PLUG-CONNECTOR (5-PIN) | |
| | | 2 | **167-3630** | 1 | CONNECTOR-PLUG | |
| | | 2 | **240-7874** | 2 | PLUG AS-CONNECTOR (2-PIN) | |
| | | | | | (EACH INCLUDES) | |
| | | 2 | **455-0704** | 1 | SEAL-CONNECTOR | |
| | | 2 | **281-3132** | 1 | PLUG AS-CONNECTOR (6-PIN) | |
| | | 2 | **455-0707** | 1 | SEAL-CONNECTOR | |
| | | 2 | **281-3395** | 1 | PLUG AS-CONNECTOR (12-PIN) | |
| | | 2 | **455-0709** | 1 | SEAL-CONNECTOR | |
| | | 2 | **331-4226** | 2 | KIT-CONNECTING PLUG (2-PIN) | |
| | | 2 | **155-2270** | 2 | KIT-CONNECTING PLUG (2-PIN) | |
| | | | | | (EACH PLUG KIT INCLUDES PLUG AS, WEDGE, & INTERFACE SEAL) | |
| | | 2 | **174-3016** | 2 | PLUG AS-CONNECTOR (3-PIN) | |
| | | 2 | **8T-8737** | 17 | PLUG-SEAL | |
| | | 2 | **7Y-3955** | 2 | CONNECTOR-RECEPTACLE | |
| | | 2 | **171-0596** | 2 | RECEPTACLE AS-CONNECTOR (3-PIN) | |
| | | 2 | **349-5085** | 3 | RECEPTACLE AS-CONNECTOR | |
| | | 2 | **361-7886** | 1 | RECEPTACLE AS-CONNECTOR (6-PIN) | |
| | | 2 | **451-8019** | 1 | RECEPTACLE AS-CONNECTOR (14-PIN) | |
| | | 2 | **8T-8730** | 11 | SOCKET-CONNECTOR (16-GA TO 18-GA) | |
| | | 2 | **9X-3402** | 6 | SOCKET-CONNECTOR (16-GA TO 18-GA) | |
| | | | | | —OR— | |
| | | 2 | **126-1768** | 6 | SOCKET-CONNECTOR (14-GA TO 16-GA) | |
| | | 2 | **3S-2093** | 96 | STRAP-CABLE | |
| | | 2 | **218-4935** | 1 | SUPPRESSOR-ARC | |
| | | 2 | *7Y-3966* | 2 | TERMINAL AS | |
| | | | | | (EACH INCLUDES) | |
| | | 2 | **7Y-3962** | 1 | TERMINAL-BULLET (MALE) | |
| | | 2 | **7Y-3964** | 1 | TUBE (CONNECTOR TERMINAL) | |
| | | 2 | *7Y-3967* | 7 | TERMINAL AS | |

*539-2995* **WIRING GP-CAB (**contd.**)** **i07425864**

| NOTE | REF NO | GRAPHIC REF | PART NUMBER | QTY | PART NAME 1 2 3 4 5 6 (PRODUCT LEVEL) | SEE PAGE |
|---|---|---|---|---|---|---|
| | | | | | (EACH INCLUDES) | |
| | | 2 | **7Y-3963** | 1 | TERMINAL-BULLET (FEMALE) | |
| | | 2 | **7Y-3965** | 1 | TUBE (RECEPTACLE TERMINAL) | |
| | | 2 | **2L-8075** | 1 | TERMINAL-RING (14-GA TO 16-GA, NO. 8 SCREW) | |
| | | 2 | **5P-2321** | 1 | TERMINAL-FORK (14-GA TO 16-GA, NO. 6 SCREW) | |
| | | 2 | **2L-8066** | 2 | TERMINAL-RING (10-GA TO 12-GA, NO. 10 SCREW) | |
| | | 2 | **170-6890** | 5 | TERMINAL-BLADE (14-GA) | |
| | | 2 | **170-6891** | 23 | TERMINAL-BLADE (16-GA TO 18-GA) | |
| | | 2 | **349-5084** | 3 | TERMINAL-BLADE | |
| | | 2 | **7Y-3951** | 5 | TERMINAL-BLADE (14-GA) | |
| | | 2 | **102-7965** | 24 | TERMINAL (FEMALE) | |
| | | 2 | **125-4785** | 27 | TERMINAL (FEMALE) | |
| | | 2 | **149-5069** | 11 | TERMINAL-BLADE (14-GA TO 20-GA) | |
| | | 2 | **149-5070** | 20 | TERMINAL-BLADE (16-GA TO 20-GA) | |
| | | 2 | **149-5071** | 9 | TERMINAL-BLADE (12-GA TO 14-GA) | |
| | | 2 | **153-2631** | 2 | TERMINAL (14-GA TO 20-GA) | |
| | | 2 | **167-3631** | 2 | TERMINAL (FEMALE) | |
| | | 2 | **7Y-3950** | 4 | TERMINAL-BLADE (14-GA TO 20-GA) | |
| | | 2 | **170-6888** | 1 | PULLER-FUSE | |
| D | | 2 | **5P-6006** | | TUBE-HEAT SHRINK (9.52-MM DIA) (0.2-M) | |
| D | | 2 | **6V-2689** | | TUBE-HEAT SHRINK (6.35-MM DIA) (0.1-M) | |
| E | | 2 | **125-7874** | | TUBE-HEAT SHRINK (5.72-MM DIA) (80-CM) | |
| E | | 2 | **125-7875** | | TUBE-HEAT SHRINK (7.44-MM DIA) (15-CM) | |
| | | 2 | **125-4840** | 1 | WEDGE-PLUG LOCK (13-PIN) | |
| | | 2 | **167-3487** | 3 | WEDGE-PLUG LOCK (5-PIN) | |
| | | 2 | **3E-3371** | 2 | WEDGE-RECEPTACLE LOCK (3-PIN) | |

D - ORDER BY THE METER
E - ORDER BY THE CENTIMETER
M - METRIC PART
Y - SEPARATE ILLUSTRATION

*539-2995* **WIRING GP-CAB (**contd.**)** **i07425864**

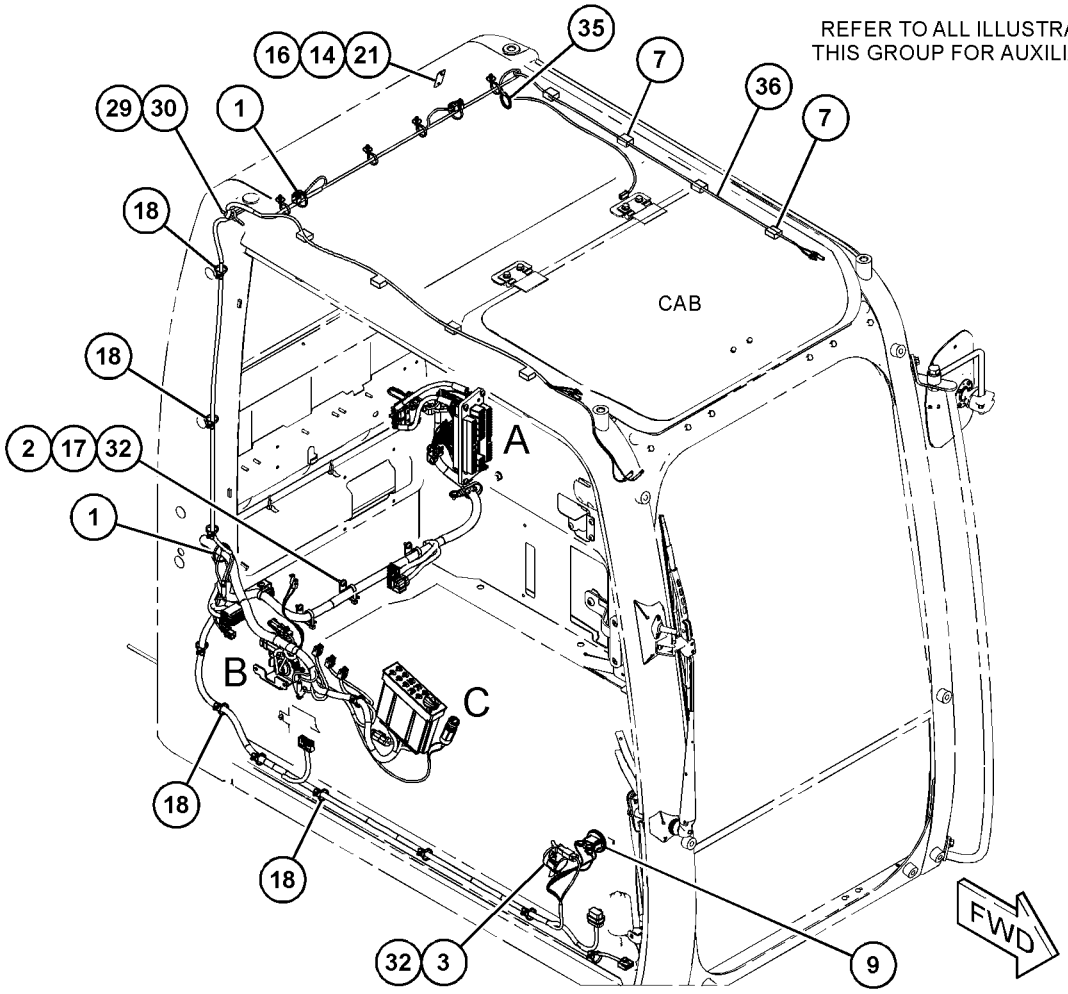


GRAPHIC #1 g06318780

*539-2995* **WIRING GP-CAB (**contd.**)** **i07425864**

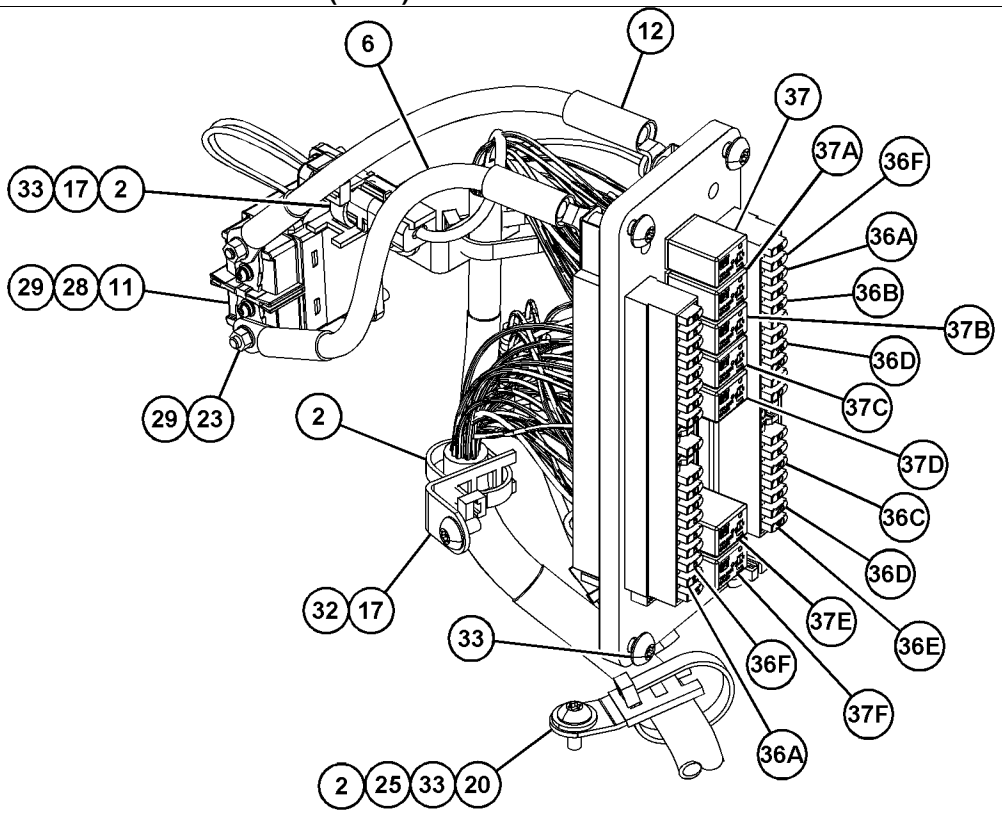


VIEW OF AREA A

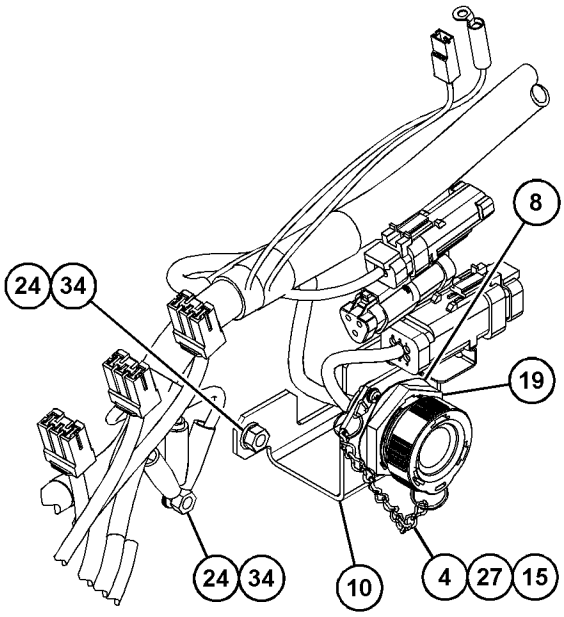


VIEW OF AREA B 90°

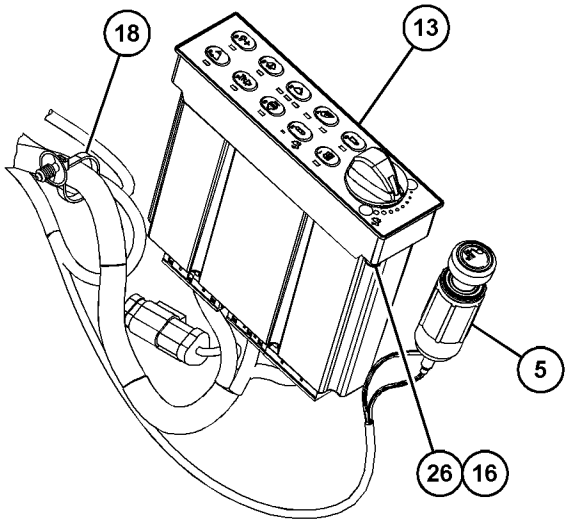


VIEW OF AREA C

GRAPHIC #2 <END> g06318781

# *556-7952* WIRING GP-CHASSIS

**S/N: FEY1-UP**

**PART OF 556-6447 CHASSIS AR**

**SMCS-1408** **i07455045**

| NOTE | REF NO | GRAPHIC REF | PART NUMBER | QTY | PART NAME 1 2 3 4 5 6 (PRODUCT LEVEL) | SEE PAGE |
|---|---|---|---|---|---|---|
| | 1 | 2,3 | **3S-2093** | 39 | STRAP-CABLE | |
| | 2 | 3 | **4I-7889** | 4 | SPACER (11X25X45-MM THK) | |
| | 3 | 2 | **6G-2256** | 2 | CLAMP | |
| | 4 | 2,3 | **7K-1181** | 16 | STRAP-CABLE | |
| | 5 | 1,3 | **7Y-5456** | 2 | GROMMET | |
| | 6 | 2 | **087-4587** | 1 | GROMMET | |
| | 7 | 2 | **111-4836** | 10 | CLIP | |
| | 8 | 2,3 | **111-4837** | 7 | CLIP | |
| | 9 | 1,2,3 | **111-4839** | 13 | STRAP | |
| | 10 | 2,3 | **116-0118** | 7 | CLIP | |
| | 11 | 3 | **251-0467** | 1 | BRACKET AS | |
| | 12 | 3 | **259-5317** | 1 | BRACKET AS | |
| | 13 | 2 | **266-7379** | 1 | STRAP-CABLE | |
| | 14 | 3 | **291-7593** | 1 | BRACKET AS | |
| | 15 | 2 | **306-8401** | 1 | GROMMET (85-MM ID) | |
| Y | 16 | 3 | **318-1181** | 1 | SENSOR GP-SPEED (MAGNETIC) | 117 |
| | 17 | 3 | **347-4734** | 2 | CLIP | |
| | 18 | 2 | **377-8051** | 1 | BRACKET AS (ENGINE) | |
| | | 2 | **7T-1099** | 1 | LINK | |
| | 19 | 2 | **399-0797** | 1 | BRACKET AS (ENGINE) | |
| M | | 2 | **8T-3490** | 1 | NUT-WELD (M10X1.5-THD) | |
| | 20 | 2 | **091-9035** | 2 | SPACER (11X25X20-MM THK) | |
| | 21 | 1,2,3 | **111-4838** | 13 | CLIP | |
| | 22 | 2,3 | **132-5789** | 7 | CLIP (LADDER) | |
| | 23 | 3 | **134-3355** | 1 | STRAP AS | |
| | 24 | 2 | **170-9328** | 1 | STRAP AS-GROUND | |
| | 25 | 3 | **170-9360** | 1 | GROMMET | |
| | 26 | 2 | **2G-8767** | 3 | WASHER (10.5X60X3-MM THK) | |
| | 27 | 2 | **4K-8864** | 2 | CLIP (LOOP) | |
| | 28 | 2 | **4P-7428** | 1 | CLIP (LADDER) | |
| | 29 | 3 | **4P-7581** | 4 | CLIP (LADDER) | |
| | 30 | 1 | **556-7955** | 1 | CABLE AS-STARTER | |
| D | | 1 | **6V-2722** | | TUBE-HEAT SHRINK (25.4-MM DIA) (0.045-M) | |
| | | 1 | **9X-9825** | 1 | TERMINAL-CABLE (00-GA, 1/2-IN SCREW) | |
| | | 1 | **030-1705** | 1 | TERMINAL-CABLE (00-GA, 5/16-IN SCREW) | |
| E | | 1 | **159-8049** | | CABLE (00-GA, RED) (254-CM) | |
| | | 1 | **276-1786** | 1 | COVER-TERMINAL (RED) | |
| | 31 | 2 | **556-7960** | 1 | CABLE AS-GROUND | |
| | | 2 | **311-6184** | 1 | TERMINAL-RING (2-GA, 3/8-IN SCREW) | |
| Y | 32 | 1 | **557-5526** | 1 | HARNESS AS-CHASSIS | 97 |
| | 33 | 2 | **561-3043** | 1 | BRACKET AS | |
| M | | 2 | **178-7023** | 1 | BOSS (M10X1.5X30-MM) | |
| M | | 2 | **294-4550** | 1 | BOSS-WELD (M10X1.5X60-MM) | |
| | 34 | 3 | **563-1443** | 1 | BRACKET AS | |
| | | 3 | **7T-1099** | 2 | LINK | |
| M | 35 | 3 | **289-4232** | 4 | BOLT (M6X1X16-MM) | |
| | 36 | 2 | **5I-3878** | 1 | GROMMET (50-MM ID) | |

*556-7952* **WIRING GP-CHASSIS (**contd.**)** **i07455045**

| NOTE | REF NO | GRAPHIC REF | PART NUMBER | QTY | PART NAME 1 2 3 4 5 6 (PRODUCT LEVEL) | SEE PAGE |
|---|---|---|---|---|---|---|
| | 37 | 3 | **5P-4116** | 3 | WASHER-HARD (8.8X20.5X2-MM THK) | |
| | 38 | 3 | **6G-2263** | 5 | SPACER (10.5X19X28.5-MM THK) | |
| | 39 | 2 | **6K-8178** | 2 | CLIP (LOOP) | |
| | 40 | 2 | **7I-2673** | 2 | STRAP-CABLE | |
| M | 41 | 3 | **7X-2621** | 1 | BOLT (M10X1.5X12-MM) | |
| | 42 | 3 | **7Y-8165** | 1 | GROMMET | |
| | 43 | 2 | **7Y-8167** | 1 | GROMMET (50-MM ID) | |
| | 44 | 1,2,3 | **8T-4121** | 66 | WASHER-HARD (11X21X2.5-MM THK) | |
| M | 45 | 2,3 | **8T-4136** | 13 | BOLT (M10X1.5X25-MM) | |
| M | 46 | 1,2,3 | **8T-4137** | 37 | BOLT (M10X1.5X20-MM) | |
| M | 47 | 2 | **8T-4182** | 2 | BOLT (M10X1.5X45-MM) | |
| M | 48 | 2,3 | **8T-4185** | 4 | BOLT (M10X1.5X50-MM) | |
| M | 49 | 2 | **8T-4186** | 2 | BOLT (M10X1.5X40-MM) | |
| M | 50 | 2 | **8T-4189** | 2 | BOLT (M8X1.25X20-MM) | |
| M | 51 | 2 | **8T-4191** | 1 | BOLT (M10X1.5X16-MM) | |
| M | 52 | 2 | **8T-4195** | 4 | BOLT (M10X1.5X30-MM) | |
| M | 53 | 3 | **8T-4196** | 1 | BOLT (M10X1.5X35-MM) | |
| | 54 | 2 | **8T-4224** | 2 | WASHER-HARD (8.8X16X2-MM THK) | |
| M | 55 | 3 | **8T-5005** | 1 | BOLT (M10X1.5X70-MM) | |
| M | 56 | 2 | **8T-6466** | 1 | BOLT (M10X1.5X60-MM) | |
| M | 57 | 3 | **8T-6869** | 3 | BOLT (M8X1.25X60-MM) | |
| | 58 | 3 | **9X-8256** | 4 | WASHER (6.6X12X2-MM THK) | |

D - ORDER BY THE METER
E - ORDER BY THE CENTIMETER
M - METRIC PART
Y - SEPARATE ILLUSTRATION

*556-7952* **WIRING GP-CHASSIS (**contd.**)** **i07455045**

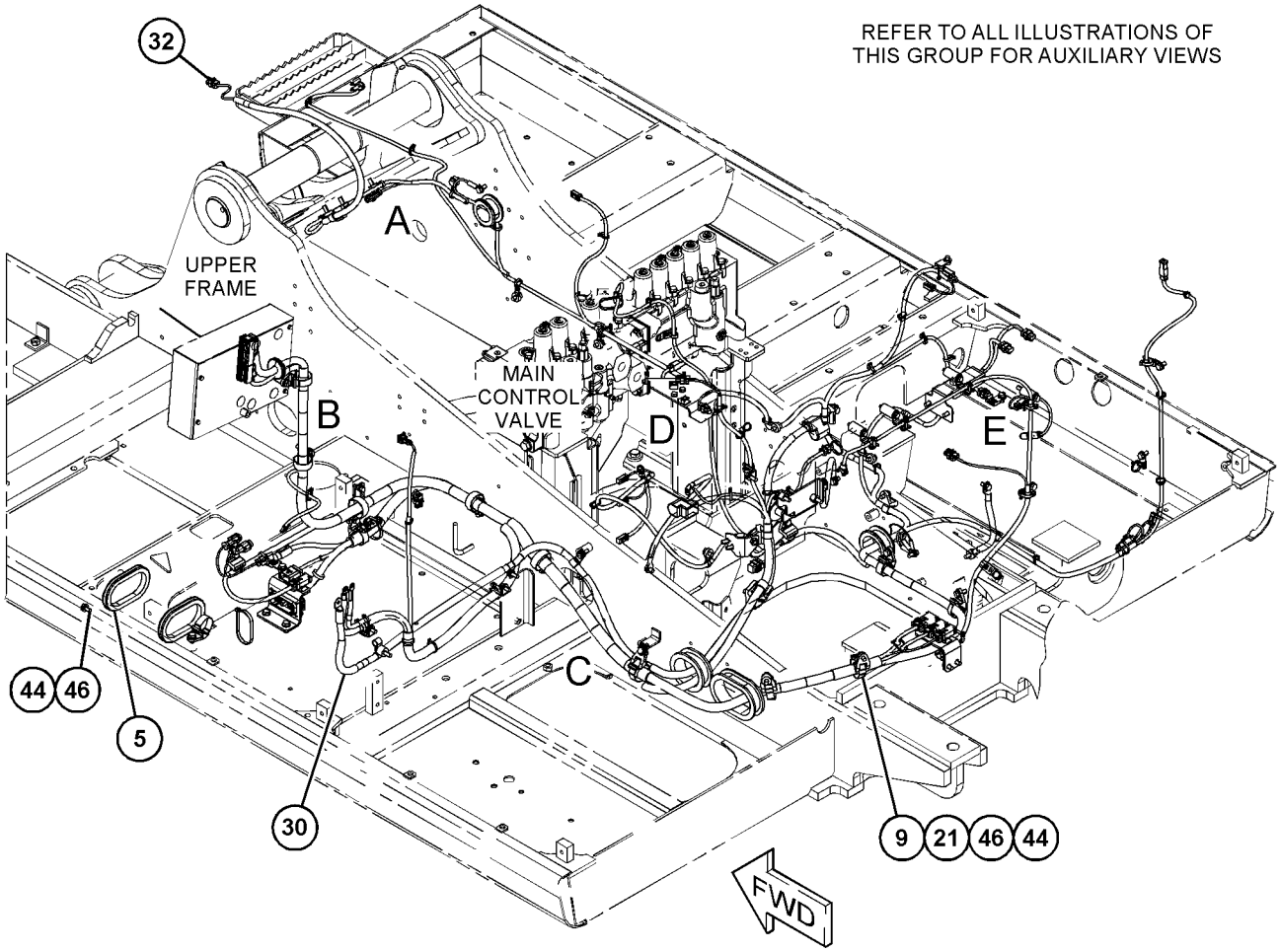


GRAPHIC #1 g06382649

*556-7952* **WIRING GP-CHASSIS (**contd.**)** **i07455045**

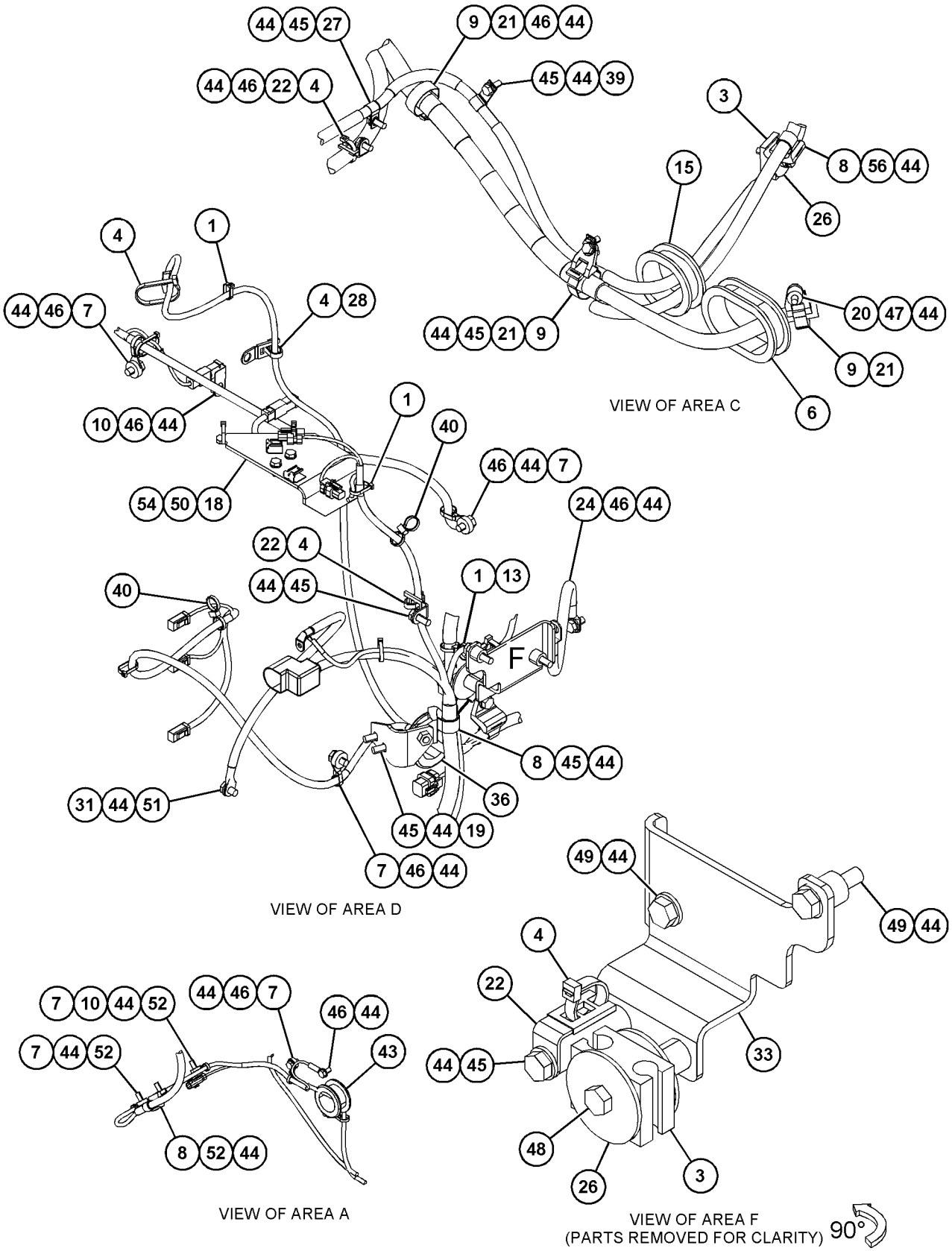


GRAPHIC #2 g06382650

*556-7952* **WIRING GP-CHASSIS (**contd.**)** **i07455045**

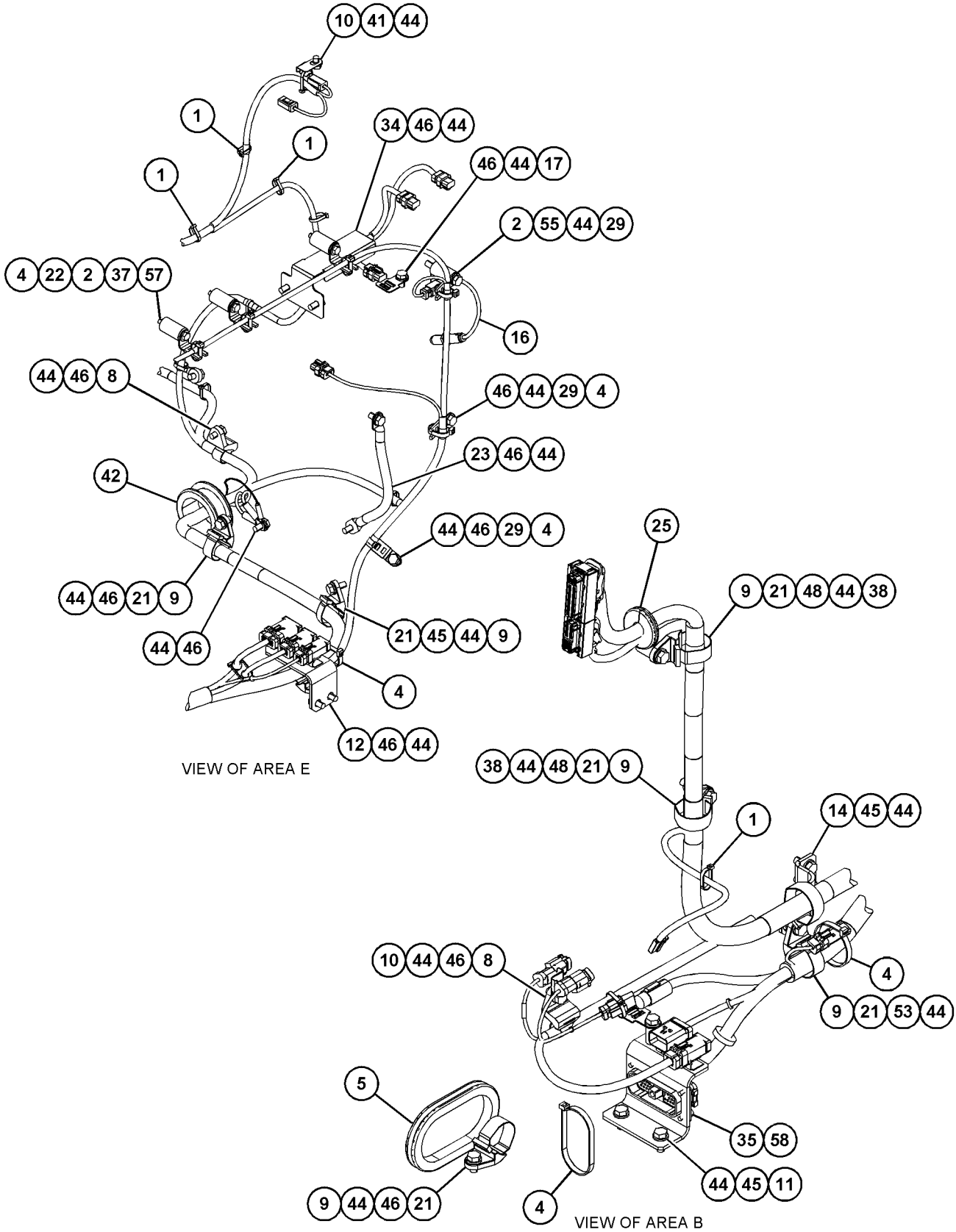


GRAPHIC #3 <END> g06382651

# *477-9415* WIRING GP-COMMUNICATION—PRODUCT LINK

**S/N: FEY1-UP**

**PART OF 467-4498 INSTALLATION AR-COMMUNICATION**

**SMCS-1408** **i07459589**

| NOTE | REF NO | GRAPHIC REF | PART NUMBER | QTY | PART NAME 1 2 3 4 5 6 (PRODUCT LEVEL) | SEE PAGE |
|---|---|---|---|---|---|---|
| | 1 | 1 | **3S-2093** | 3 | STRAP-CABLE | |
| | 2 | 1 | **7K-1181** | 18 | STRAP-CABLE | |
| | 3 | 1 | **111-4836** | 1 | CLIP | |
| | 4 | 1 | **116-0118** | 1 | CLIP | |
| M | 5 | 1 | **143-9397** | 3 | SCREW-PAN HEAD (M4X0.7X12-MM) | |
| Y | 6 | 1 | **486-7094** | 1 | HARNESS AS-CHASSIS (PRODUCT LINK) | 95 |
| | 7 | 1 | **500-4203** | 1 | CABLE AS (ANTENNA) | |
| | 8 | 1 | **096-2626** | 3 | CLIP | |
| | 9 | 1 | **132-5789** | 1 | CLIP (LADDER) | |
| | 10 | 1 | **479-3260** | 3 | WASHER (5.5X13X1.2-MM THK) | |
| | 11 | 1 | **8T-4121** | 2 | WASHER-HARD (11X21X2.5-MM THK) | |
| M | 12 | 1 | **8T-4137** | 2 | BOLT (M10X1.5X20-MM) | |

M - METRIC PART
Y - SEPARATE ILLUSTRATION

*477-9415* **WIRING GP-COMMUNICATION (**contd.**)** **i07459589**

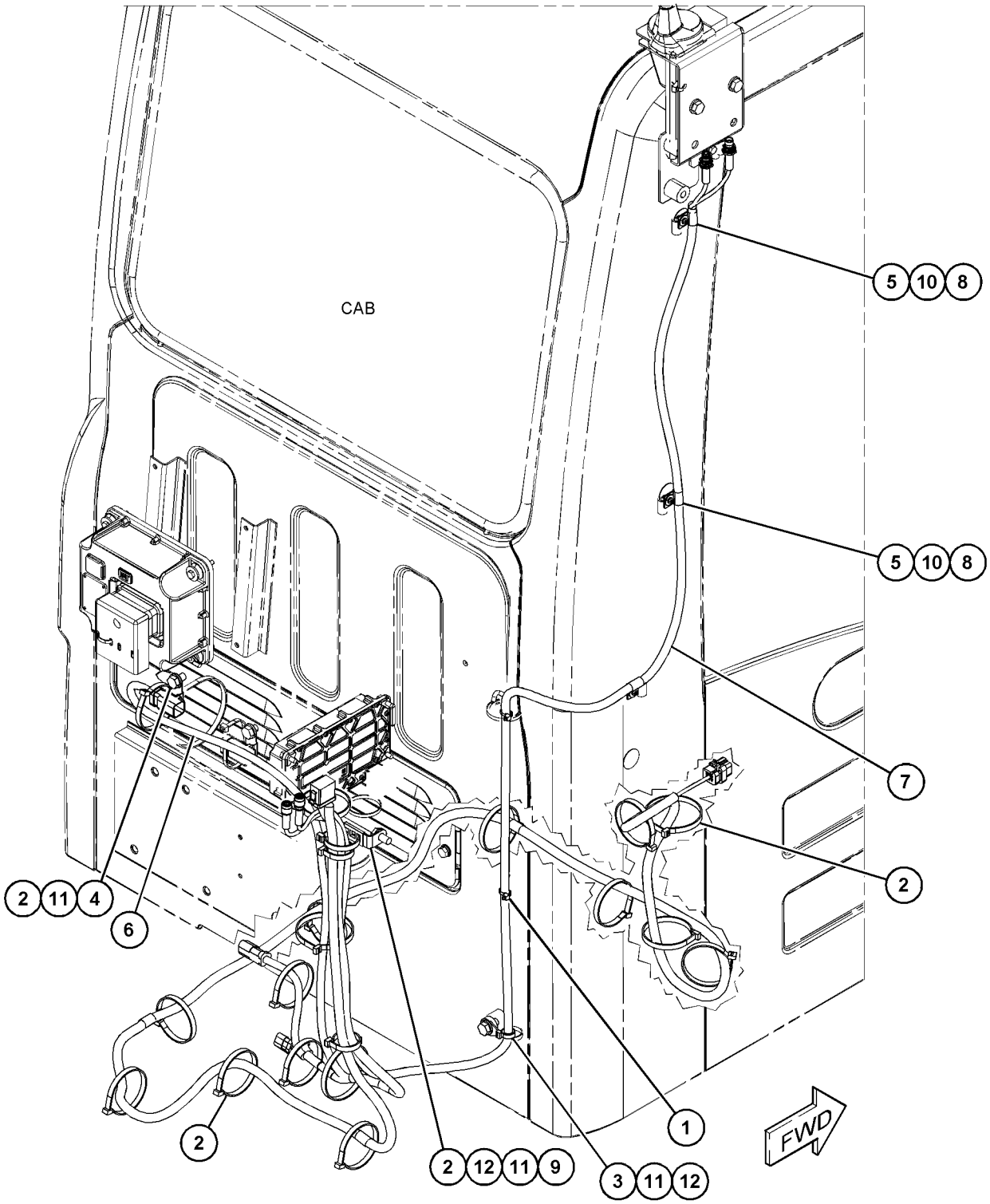


GRAPHIC #1 <END> g06148142

# *563-4402* WIRING GP-COMMUNICATION—PRODUCT LINK 631, 641

**S/N: FEY1-UP**

**PART OF 563-4401 INSTALLATION AR-COMMUNICATION**

**SMCS-1408** **i07519981**

| NOTE | REF NO | GRAPHIC REF | PART NUMBER | QTY | PART NAME 1 2 3 4 5 6 (PRODUCT LEVEL) | SEE PAGE |
|---|---|---|---|---|---|---|
| | 1 | 1 | **3S-2093** | 18 | STRAP-CABLE | |
| | 2 | 1 | **7K-1181** | 2 | STRAP-CABLE | |
| | 3 | 1 | **111-4836** | 1 | CLIP | |
| | 4 | 1 | **479-3260** | 3 | WASHER (5.5X13X1.2-MM THK) | |
| | 5 | 1 | **096-2626** | 3 | CLIP | |
| | 6 | 1 | **132-5789** | 1 | CLIP (LADDER) | |
| M | 7 | 1 | **143-9397** | 3 | SCREW-PAN HEAD (M4X0.7X12-MM) | |
| | 8 | 1 | **500-4203** | 1 | CABLE AS (ANTENNA) | |
| Y | 9 | 1 | **563-1445** | 1 | HARNESS AS-CONTROL (PRODUCT LINK) | 100 |
| | 10 | 1 | **8T-4121** | 2 | WASHER-HARD (11X21X2.5-MM THK) | |
| M | 11 | 1 | **8T-4137** | 2 | BOLT (M10X1.5X20-MM) | |

M - METRIC PART
Y - SEPARATE ILLUSTRATION

*563-4402* **WIRING GP-COMMUNICATION (**contd.**)** **i07519981**

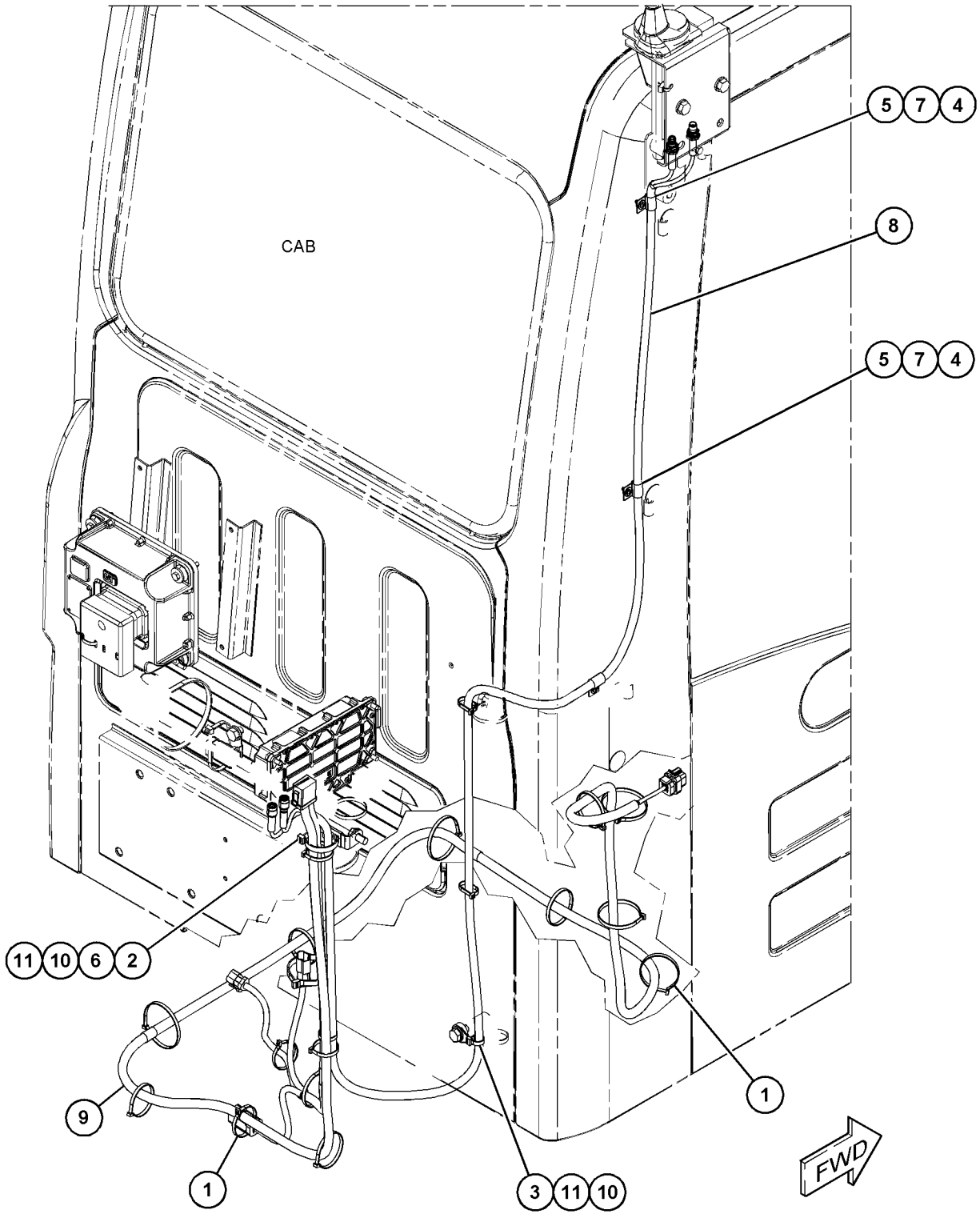


GRAPHIC #1 <END> g06392432

# *545-9959* WIRING GP-CONSOLE

**S/N: FEY1-UP**

**PART OF 557-8896 CAB GP, 539-2879 OPERATOR AR**

**SMCS-1408** **i07397060**

| NOTE | PART NUMBER | QTY | PART NAME 1 2 3 4 5 6 (PRODUCT LEVEL) | SEE PAGE |
|---|---|---|---|---|
| Y | *545-9960* | 1 | WIRING GP-CONSOLE (LH) | 139 |
| Y | *545-9961* | 1 | WIRING GP-CONSOLE (RH) | 140 |

Y - SEPARATE ILLUSTRATION

<END>

# *545-9960* WIRING GP-CONSOLE

**S/N: FEY1-UP**
**LH**
**PART OF 545-9959 WIRING GP-CONSOLE**

**SMCS-1408** **i07397125**

| NOTE | REF NO | GRAPHIC REF | PART NUMBER | QTY | PART NAME 1 2 3 4 5 6 (PRODUCT LEVEL) | SEE PAGE |
|---|---|---|---|---|---|---|
| | 1 | 1 | **3S-2093** | 1 | STRAP-CABLE | |
| | 2 | 1 | **7K-1181** | 1 | STRAP-CABLE | |
| | 3 | 1 | **163-6795** | 2 | STRAP-CABLE | |
| Y | 4 | 1 | **557-5519** | 1 | HARNESS AS-CONSOLE (LH) | 99 |

Y - SEPARATE ILLUSTRATION

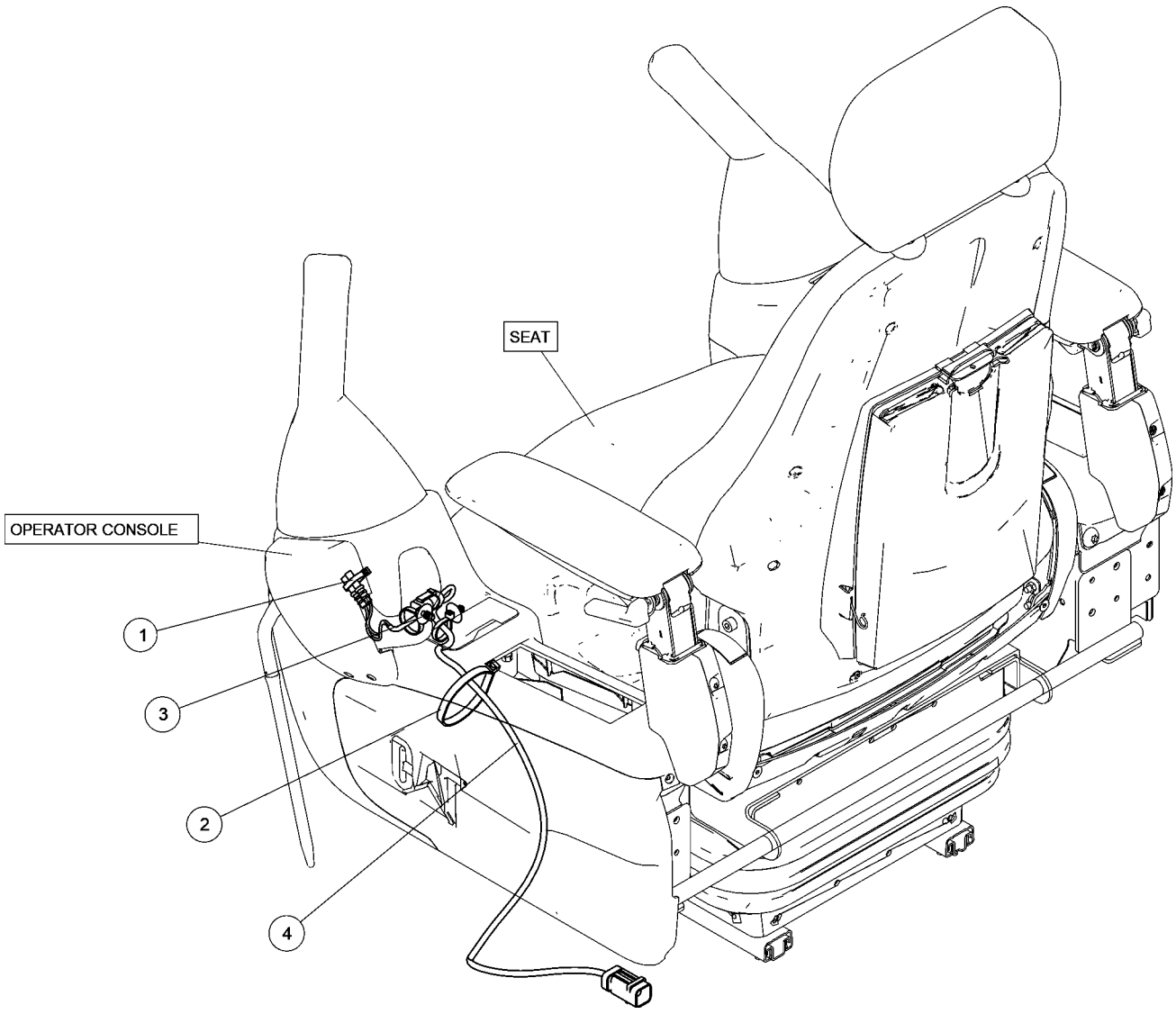


GRAPHIC #1 <END> g06311307

# *545-9961* WIRING GP-CONSOLE

**S/N: FEY1-UP**

**RH**

**PART OF 545-9959 WIRING GP-CONSOLE**

**SMCS-1408** **i07397168**

| NOTE | REF NO | GRAPHIC REF | PART NUMBER | QTY | PART NAME 1 2 3 4 5 6 (PRODUCT LEVEL) | SEE PAGE |
|---|---|---|---|---|---|---|
| | 1 | 1 | **3S-2093** | 1 | STRAP-CABLE | |
| | 2 | 1 | **7K-1181** | 2 | STRAP-CABLE | |
| | 3 | 1 | **163-6795** | 1 | STRAP-CABLE | |
| Y | 4 | 1 | **557-5520** | 1 | HARNESS AS-CONSOLE (RH) | 99 |

Y - SEPARATE ILLUSTRATION

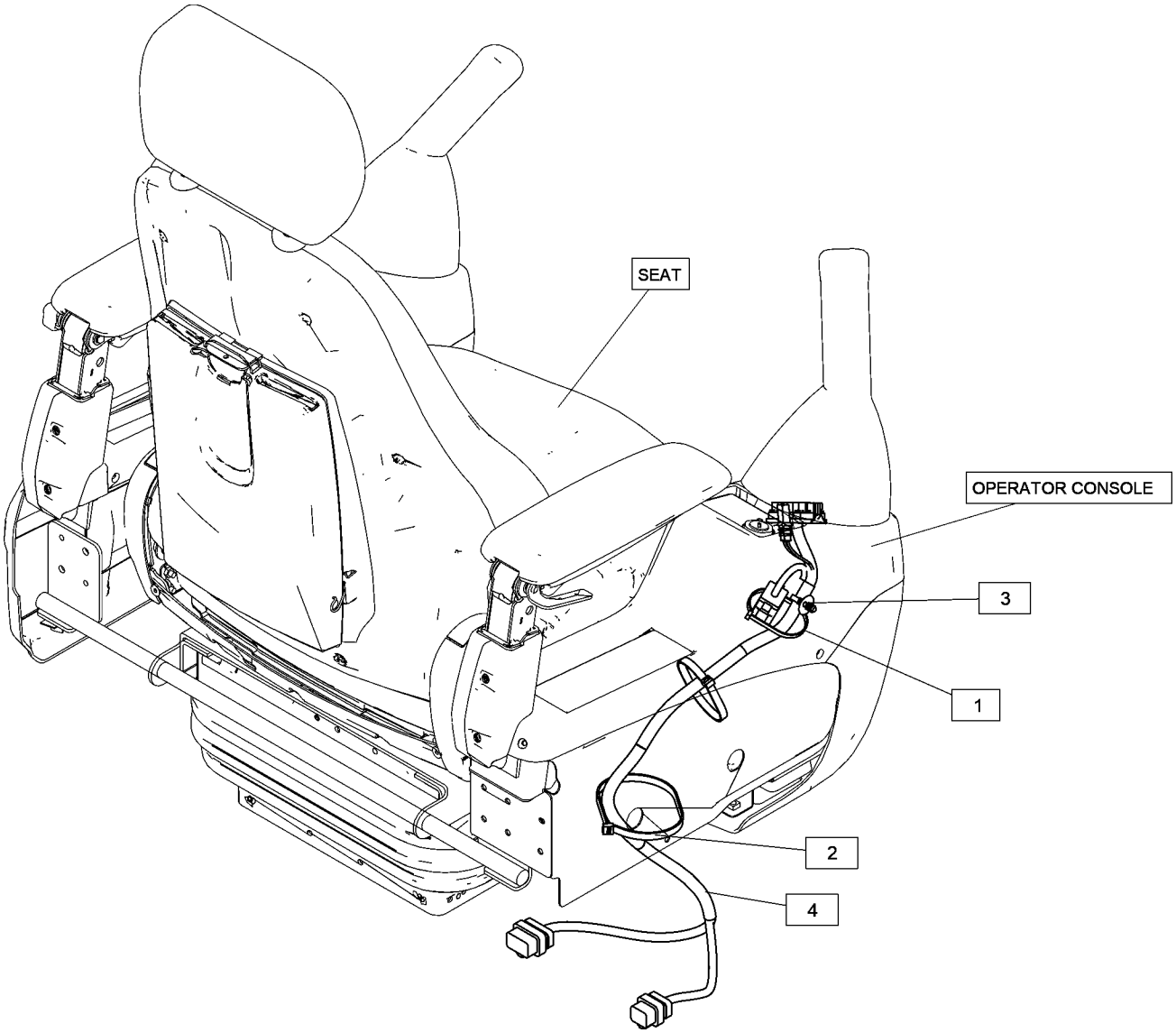


GRAPHIC #1 <END> g06310845

# *435-0868* WIRING GP-CONVERTER

**S/N: FEY1-UP**
**12-VOLT, 10-AMPERE**
**PART OF 557-8297 CAB AR**

**SMCS-1421** **i06619075**

| NOTE | REF NO | GRAPHIC REF | PART NUMBER | QTY | PART NAME 1 2 3 4 5 6 (PRODUCT LEVEL) | SEE PAGE |
|---|---|---|---|---|---|---|
| C | 1 | 1 | **479-9395** | 1 | BRACKET | |
| C | 2 | 1 | **475-2681** | 1 | CONVERTER-POWER (24-VOLT TO 12-VOLT) | |
| | 3 | 1 | **324-5771** | 1 | SOCKET-AUXILIARY POWER (12-VOLT) | |
| | 4 | 1 | **8T-4121** | 2 | WASHER-HARD (11X21X2.5-MM THK) | |
| M | 5 | 1 | **8T-4136** | 2 | BOLT (M10X1.5X25-MM) | |
| CM | 6 | 1 | **8T-4138** | 2 | BOLT (M6X1X20-MM) | |
| C | 7 | 1 | **9X-8256** | 2 | WASHER (6.6X12X2-MM THK) | |

C - CHANGE FROM PREVIOUS TYPE
M - METRIC PART

*435-0868* **WIRING GP-CONVERTER (**contd.**)** **i06619075**

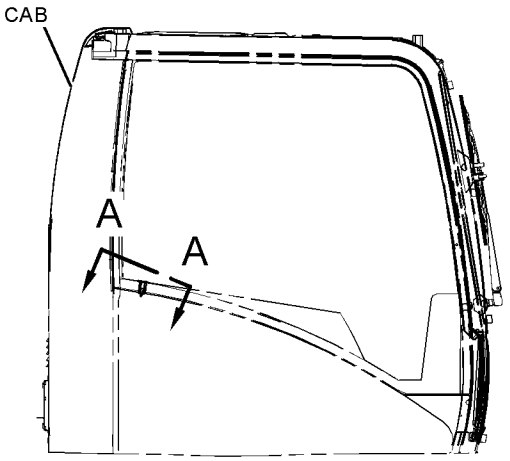


RIGHT SIDE VIEW

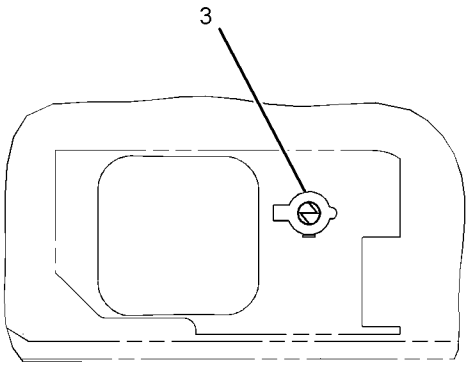


VIEW A-A

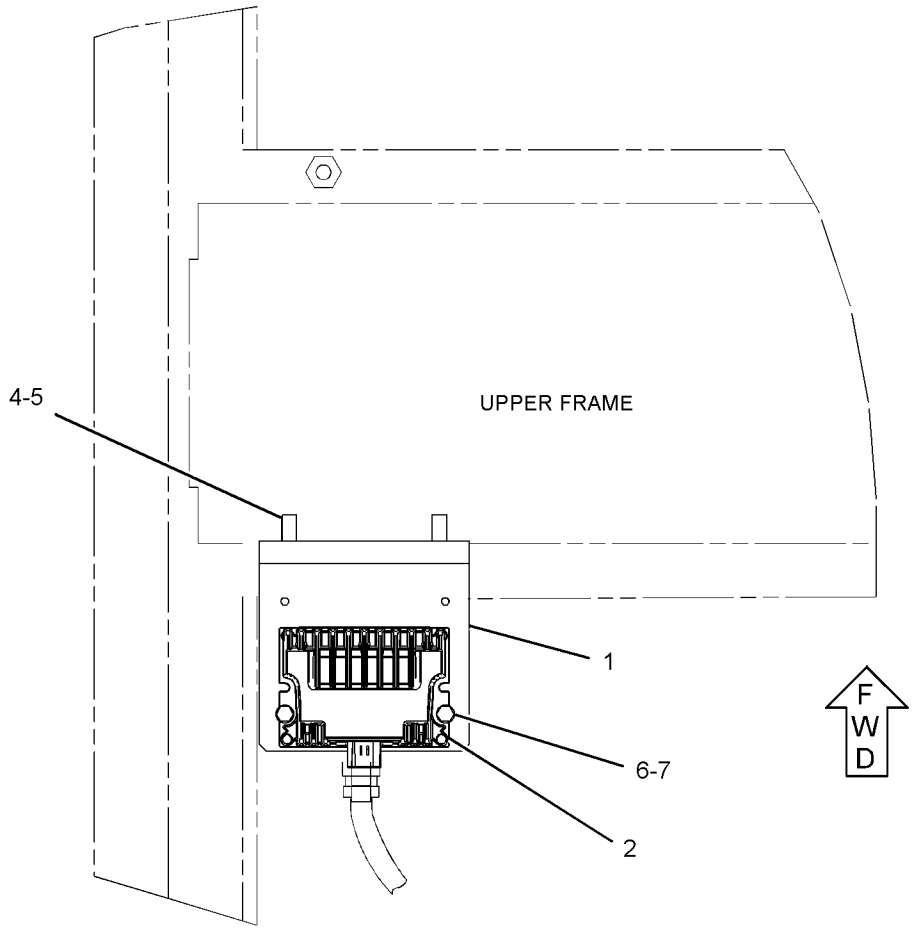


TOP VIEW

GRAPHIC #1 <END> g06153855

# *539-2992* WIRING GP-PLATFORM

**S/N: FEY1-UP**

**PART OF 557-8896 CAB GP, 539-2879 OPERATOR AR**

**SMCS-1408** **i07432428**

| NOTE | REF NO | GRAPHIC REF | PART NUMBER | QTY | PART NAME 1 2 3 4 5 6 (PRODUCT LEVEL) | SEE PAGE |
|---|---|---|---|---|---|---|
| | 1 | 1 | **3E-5169** | 1 | GUARD-SWITCH | |
| | 2 | 1 | **3S-2093** | 3 | STRAP-CABLE | |
| | 3 | 1 | **7K-1181** | 16 | STRAP-CABLE | |
| | 4 | 1 | **116-0118** | 4 | CLIP | |
| | 5 | 1 | **234-1122** | 1 | COVER | |
| | 6 | 1 | **096-6166** | 2 | WASHER-HARD (4.5X9X1-MM THK) | |
| | 7 | 1 | **111-4836** | 6 | CLIP | |
| | 8 | 1 | **111-4838** | 2 | CLIP | |
| | 9 | 1 | **111-4839** | 2 | STRAP | |
| Y | 10 | 1 | **251-0299** | 1 | HARNESS AS-SWITCH (SECONDARY SHUTDOWN) | 102 |
| | 11 | 1 | **4D-1836** | 1 | SWITCH-TOGGLE (SECONDARY SHUTDOWN) | |
| Y | 12 | 1 | **557-5488** | 1 | HARNESS AS-PLATFORM | 101 |
| | 13 | 1 | **7G-1060** | 1 | STRAP AS-GROUND | |
| M | 14 | 1 | **7X-2621** | 4 | BOLT (M10X1.5X12-MM) | |
| M | 15 | 1 | **8T-0337** | 2 | SCREW-MACHINE (M4X0.7X12-MM) | |
| | 16 | 1 | **8T-4121** | 13 | WASHER-HARD (11X21X2.5-MM THK) | |
| M | 17 | 1 | **8T-4137** | 9 | BOLT (M10X1.5X20-MM) | |

M - METRIC PART
Y - SEPARATE ILLUSTRATION

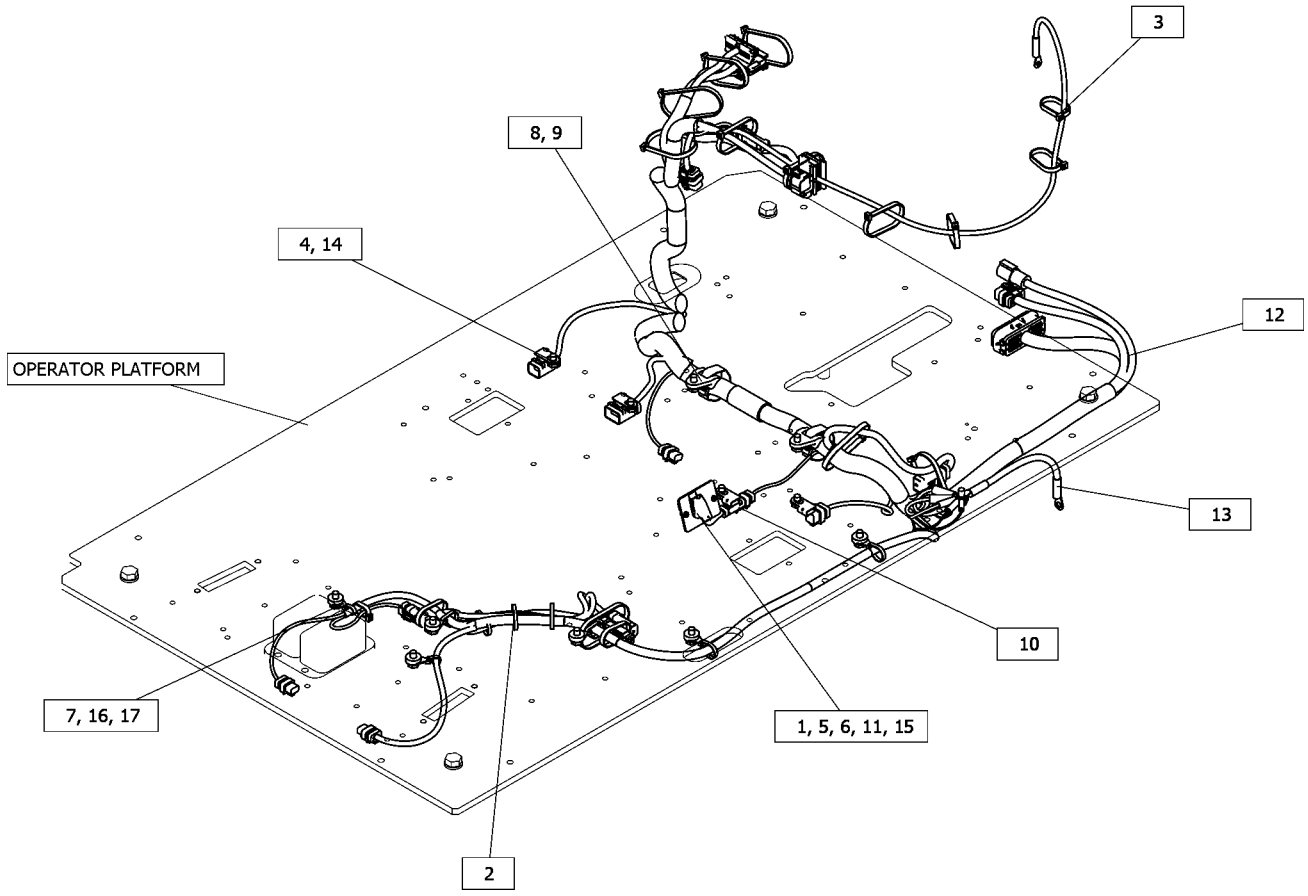


GRAPHIC #1 <END> g06315204

# 525-3672 DRIVE GP-FINAL—WITH MOTOR

**S/N: FEY1-UP**

**PART OF 543-0999 DRIVE GP-FINAL**

**SMCS-4050** **i07329019**

| NOTE | REF NO | GRAPHIC REF | PART NUMBER | QTY | PART NAME 1 2 3 4 5 6 (PRODUCT LEVEL) | SEE PAGE |
|---|---|---|---|---|---|---|
| Y | 1 | 1 | *543-1001* | 1 | DRIVE GP-FINAL (WITH MOTOR) | 146 |

Y - SEPARATE ILLUSTRATION

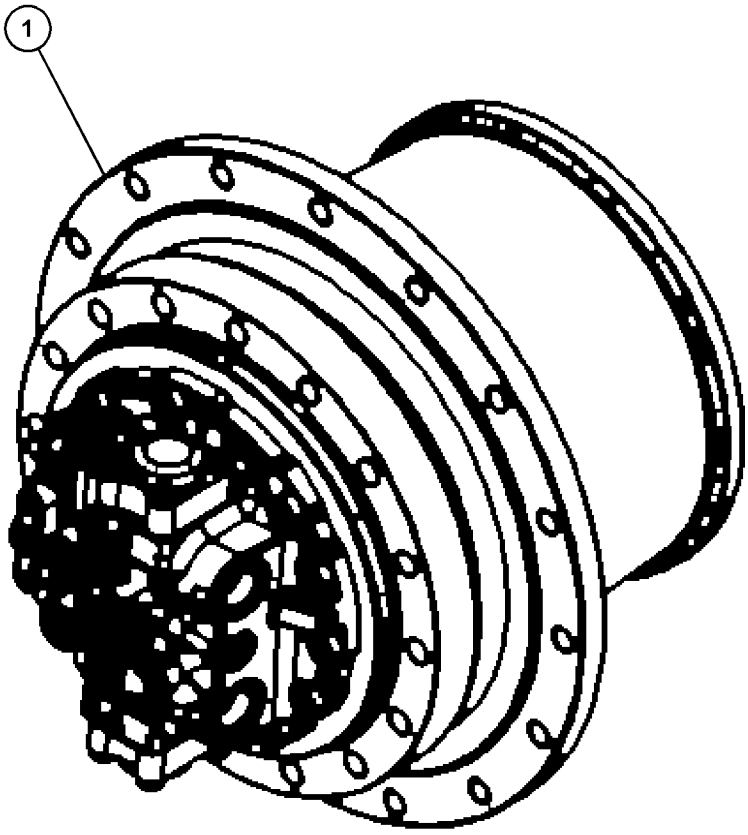


GRAPHIC #1 <END> g06286546

# *543-0999* DRIVE GP-FINAL—WITH MOTOR, SPROCKET

**S/N: FEY1-UP**

**PART OF 543-0244 POWER TRAIN AR**

**SMCS-4050** **i07329014**

| NOTE | REF NO | GRAPHIC REF | PART NUMBER | QTY | PART NAME 1 2 3 4 5 6 (PRODUCT LEVEL) | SEE PAGE |
|---|---|---|---|---|---|---|
| Y | 1 | 1 | **525-3672** | 1 | DRIVE GP-FINAL (WITH MOTOR) | 144 |
| | 2 | 1 | *543-1004* | 1 | SPROCKET GP (NON-SEGMENTED) | |
| | | 1 | **8E-9805** | 1 | SPROCKET-TRACK (21-TEETH) | |
| M | | 1 | **219-7569** | 16 | BOLT (M20X2.5X45-MM) | |

M - METRIC PART
Y - SEPARATE ILLUSTRATION

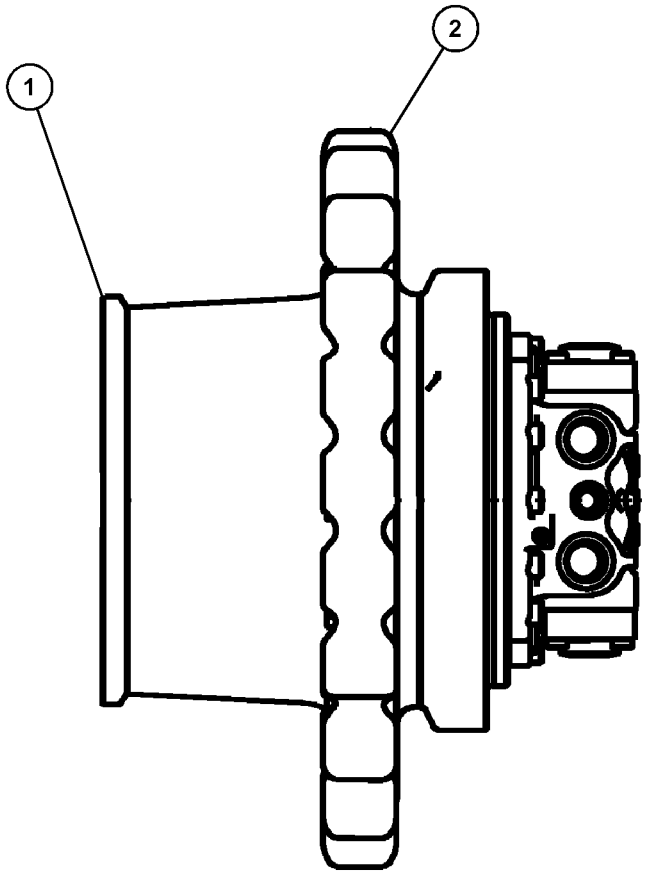


GRAPHIC #1 <END> g06286541

# *543-1001* DRIVE GP-FINAL—WITH MOTOR

**S/N: FEY1-UP**

**PART OF 525-3672 DRIVE GP-FINAL**

**SMCS-4050** **i07329025**

| NOTE | REF NO | GRAPHIC REF | PART NUMBER | QTY | PART NAME 1 2 3 4 5 6 (PRODUCT LEVEL) | SEE PAGE |
|---|---|---|---|---|---|---|
| M | 1 | 1 | **101-7404** | 10 | BOLT-SOCKET HEAD (M10X1.5X30-MM) | |
| | 2 | 1 | **550-5753** | 2 | PLUG | |
| | 3 | 1 | **550-5754** | 1 | COVER | |
| | 4 | 1 | **550-5755** | 1 | PAD | |
| | 5 | 1 | **550-5756** | 1 | SEAL-O-RING | |
| | 6 | 1 | **550-5757** | 1 | GEAR-SUN (14-TEETH) | |
| | 7 | 1 | **550-5758** | 3 | RING-RETAINING | |
| | 8 | 1 | **550-5759** | 3 | GEAR-PLANETARY (35-TEETH) | |
| | 9 | 1 | **550-5760** | 1 | RING-RETAINING | |
| | 10 | 1 | **550-5761** | 1 | CARRIER-PLANETARY | |
| | 11 | 1 | **550-5762** | 1 | GEAR-SUN (17-TEETH) | |
| Y | 12 | 1 | *550-5771* | 1 | MOTOR & MTG GP-TRAVEL | 310 |
| | 13 | 1 | **550-5764** | 4 | RING-RETAINING | |
| | 14 | 1 | **550-5765** | 4 | GEAR-PLANETARY (33-TEETH) | |
| | 15 | 1 | **550-5766** | 4 | SPACER (60X74X7-MM THK) | |
| | 16 | 1 | **550-5767** | 1 | NUT-RING | |
| | 17 | 1 | **550-5768** | 1 | HOUSING | |
| | 18 | 1 | **550-5769** | 1 | SEAL-O-RING | |
| | 19 | 1 | **550-5770** | 1 | SPACER | |

M - METRIC PART
Y - SEPARATE ILLUSTRATION

*543-1001* **DRIVE GP-FINAL (**contd.**)** **i07329025**

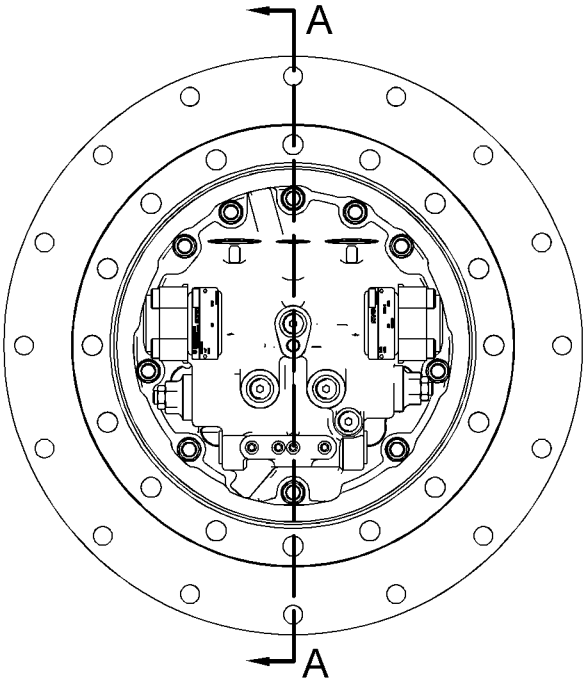


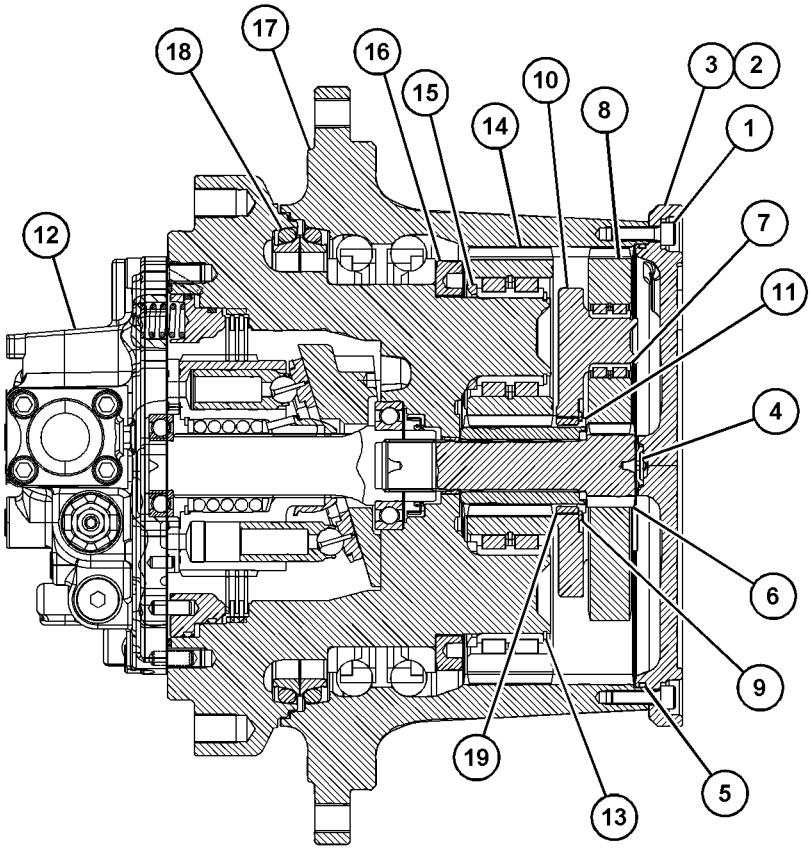


SECTION A-A

GRAPHIC #1 <END> g06288488

# *543-0244* POWER TRAIN AR

**S/N: FEY1-UP**

**PART OF 556-6434 GENERAL AR**

**SMCS-3000, 4000**

**i07327899**

| NOTE | PART NUMBER | QTY | PART NAME 1 2 3 4 5 6 (PRODUCT LEVEL) | SEE PAGE |
|---|---|---|---|---|
| Y | *543-0999* | 2 | DRIVE GP-FINAL | 145 |
| Y | *525-3741* | 1 | DRIVE GP-SWING | 224 |
| Y | *543-0998* | 1 | FASTENER GP-SWING & FINAL DR | 227 |

Y - SEPARATE ILLUSTRATION

<END>

# *524-2918* BOX & MTG GP-STORAGE

**S/N: FEY1-UP**

**PART OF 556-6447 CHASSIS AR**

**SMCS-7268** **i06910443**

| NOTE | REF NO | GRAPHIC REF | PART NUMBER | QTY | PART NAME 1 2 3 4 5 6 (PRODUCT LEVEL) | SEE PAGE |
|---|---|---|---|---|---|---|
| | 1 | 1 | **135-8577** | 4 | BOLT AS | |
| Y | 2 | 1 | **524-3234** | 1 | BOX GP-STORAGE | 150 |

Y - SEPARATE ILLUSTRATION

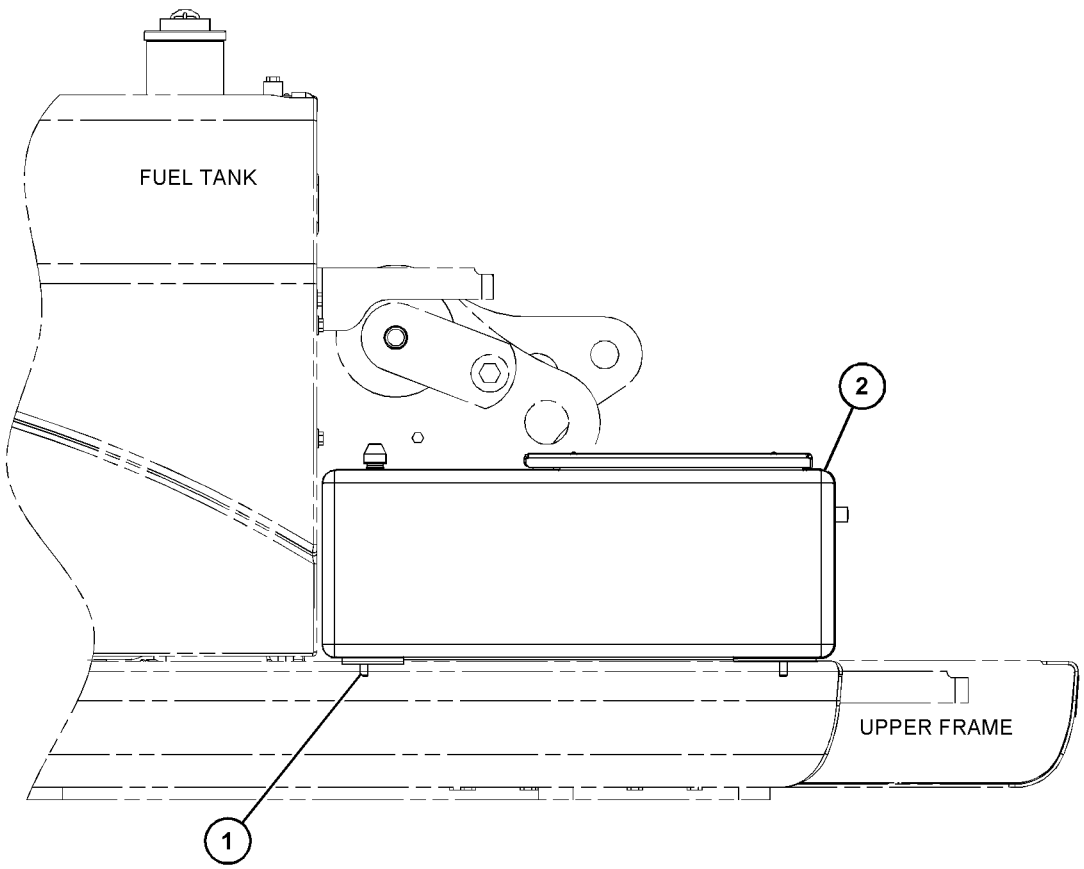


RIGHT SIDE VIEW

GRAPHIC #1 <END> g06167160

# *524-3234* BOX GP-STORAGE

**S/N: FEY1-UP**

**PART OF 524-2918 BOX & MTG GP-STORAGE**

**SMCS-7268** **i06925053**

| NOTE | REF NO | GRAPHIC REF | PART NUMBER | QTY | PART NAME 1 2 3 4 5 6 (PRODUCT LEVEL) | SEE PAGE |
|---|---|---|---|---|---|---|
| M | 1 | 2 | **5C-9553** | 2 | BOLT (M6X1X16-MM) | |
| | 2 | 2 | **4I-2187** | 1 | SUPPORT AS | |
| | 3 | 2 | **5P-1075** | 4 | WASHER-HARD (10.2X22.5X3-MM THK) | |
| | 4 | 2 | **5P-4116** | 1 | WASHER-HARD (8.8X20.5X2-MM THK) | |
| | 5 | 2 | **6I-5976** | 6 | SHIM (1-MM THK) | |
| M | 6 | 2 | **8T-4133** | 4 | NUT (M10X1.5-THD) | |
| | 7 | 2 | **8T-4223** | 4 | WASHER-HARD (13.5X25.5X3-MM THK) | |
| | 8 | 2 | **9X-8256** | 6 | WASHER (6.6X12X2-MM THK) | |
| | 9 | 2 | **170-2755** | 1 | HOOK AS | |
| B | 10 | 2 | **184-8850** | 1 | SHIM (0.5-MM THK) | |
| | 11 | 2 | **320-5737** | 1 | LOCK AS | |
| | 12 | 1 | **390-7991** | 1 | DOOR AS-ACCESS | |
| | 12A | 2 | **3D-9143** | 2 | HINGE-BUTT | |
| | 13 | 2 | **449-4094** | 2 | MOUNT | |
| | 14 | 2 | *524-3235* | 1 | BOX AS-STORAGE | |
| D | 14A | 2 | **5P-9205** | | SEAL (0.8-M EACH) | |
| D | 14B | 2 | **5P-9205** | | SEAL (0.4-M EACH) | |
| | 15 | 2 | **095-0843** | 1 | PIN-COTTER | |
| | 16 | 2 | **096-3780** | 1 | PIN-CLEVIS | |
| M | 17 | 2 | **105-3487** | 4 | BOLT-SOCKET HEAD (M6X1X20-MM) | |
| | 18 | 2 | **170-2983** | 1 | SEAL | |
| | 19 | 2 | **170-9360** | 1 | GROMMET | |

B - USE AS REQUIRED
D - ORDER BY THE METER
M - METRIC PART

*524-3234* **BOX GP-STORAGE (**contd.**)** **i06925053**

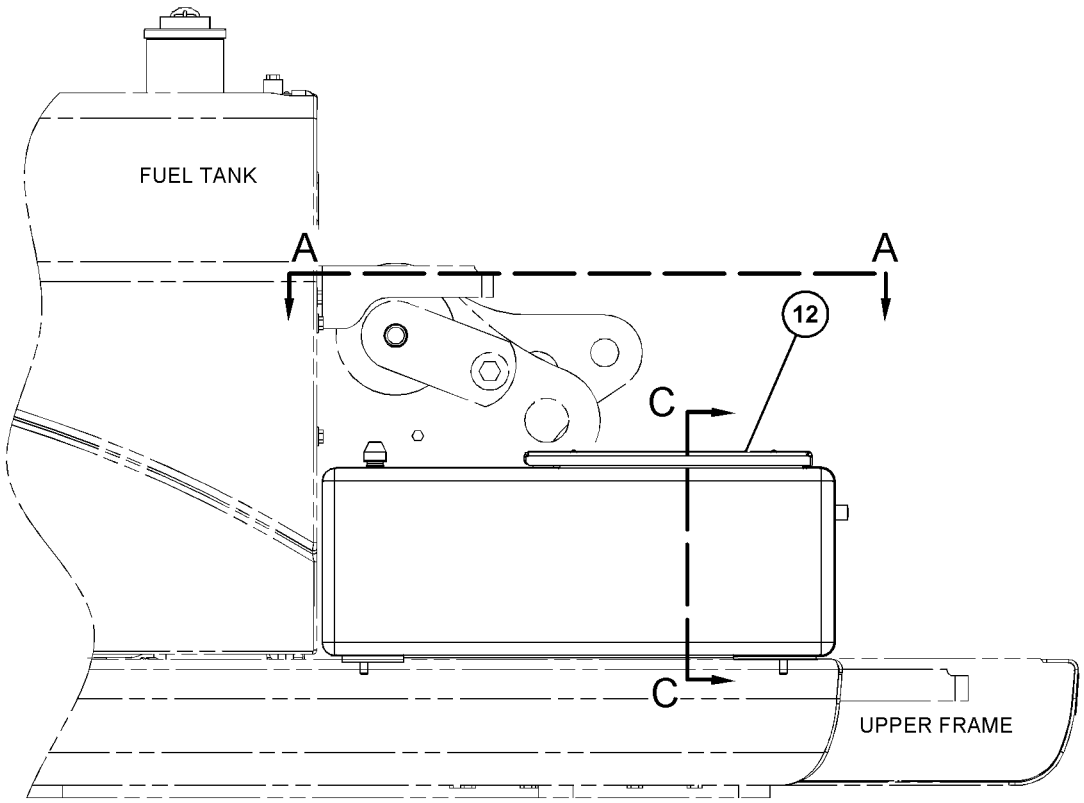


RIGHT SIDE VIEW

GRAPHIC #1 g06167167

*524-3234* **BOX GP-STORAGE (**contd.**)** **i06925053**

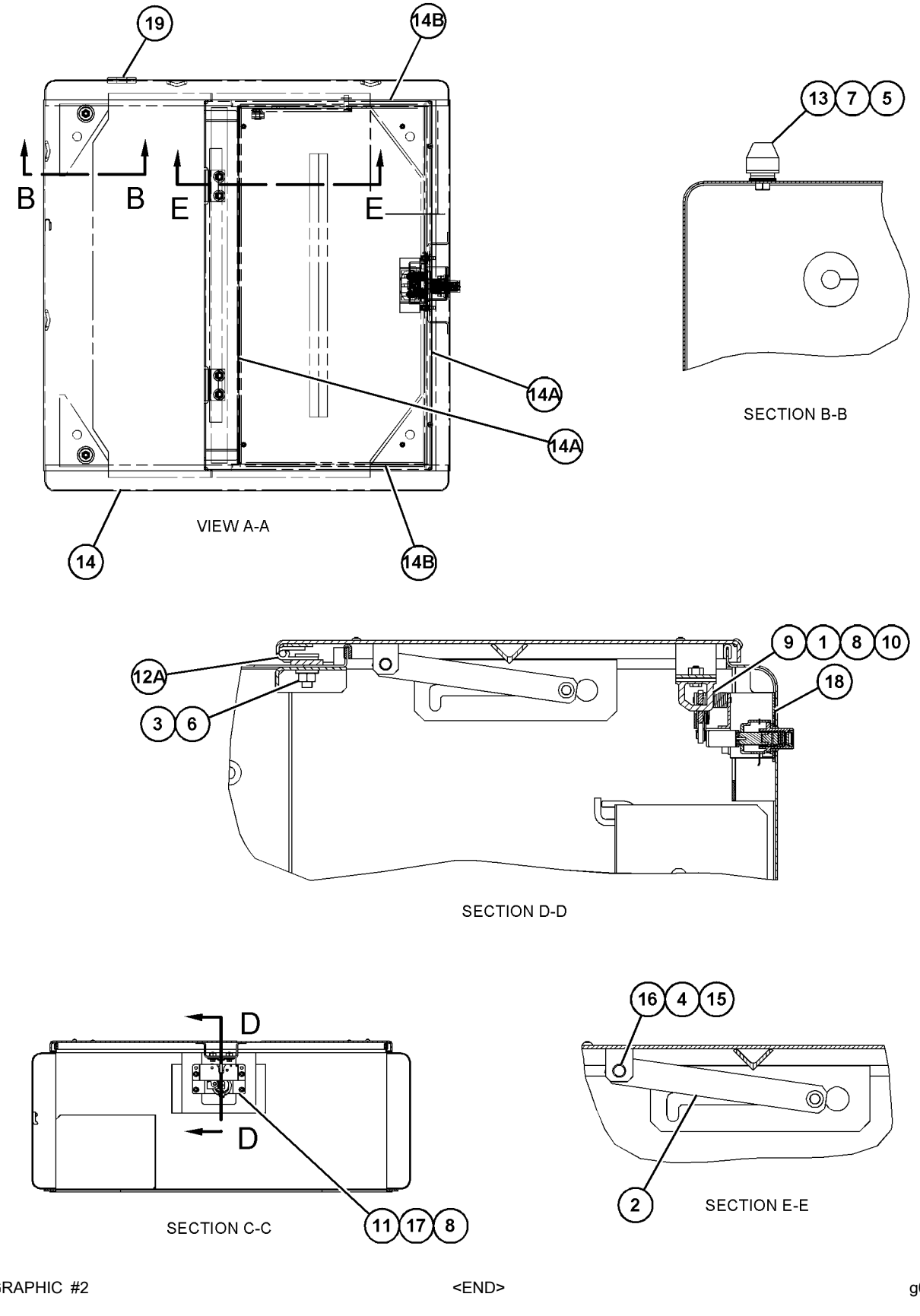


GRAPHIC #2 <END> g06169654

# *557-1174* COUNTERWEIGHT & MOUNTING GP

**S/N: FEY1-UP**
**4256-KG (9383-LB)**
**PART OF 556-6447 CHASSIS AR**

**SMCS-7056** **i07398656**

| NOTE | REF NO | GRAPHIC REF | PART NUMBER | QTY | PART NAME 1 2 3 4 5 6 (PRODUCT LEVEL) | SEE PAGE |
|---|---|---|---|---|---|---|
| | 1 | 1 | **136-0139** | 2 | CAP | |
| | 2 | 1 | **244-8194** | 4 | SPACER (32X65X30-MM THK) | |
| M | 3 | 1 | **447-1733** | 4 | BOLT (M30X3.5X120-MM) | |
| Y | 4 | 1 | *557-1175* | 1 | COUNTERWEIGHT GP | 154 |

M - METRIC PART
Y - SEPARATE ILLUSTRATION

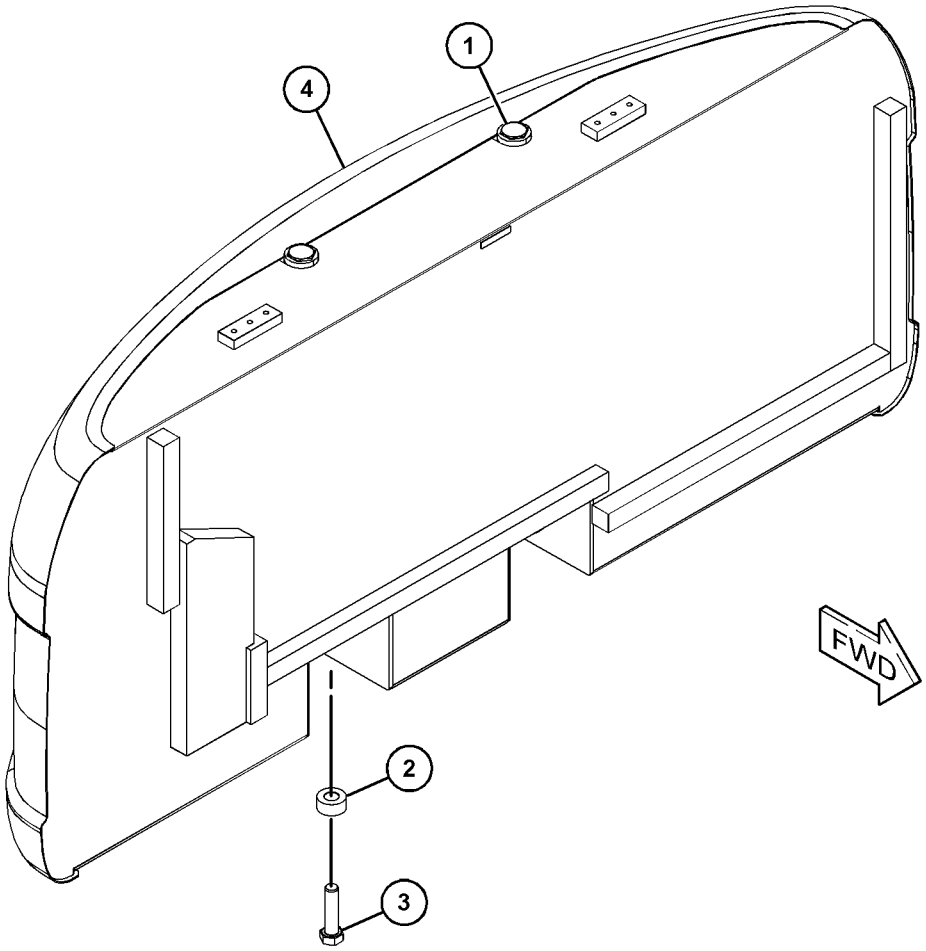


GRAPHIC #1 <END> g06313463

# *557-1175* COUNTERWEIGHT GP

**S/N: FEY1-UP**
**4250-KG (9370-LB)**
**PART OF 557-1174 COUNTERWEIGHT & MOUNTING GP**

**SMCS-7056** **i07398670**

| NOTE | REF NO | GRAPHIC REF | PART NUMBER | QTY | PART NAME 1 2 3 4 5 6 (PRODUCT LEVEL) | SEE PAGE |
|---|---|---|---|---|---|---|
| | 1 | 1 | **7I-0717** | 1 | LINER | |
| | 2 | 1 | **116-1665** | 1 | LINER | |
| | 3 | 1 | **165-3102** | 1 | LINER | |
| | 4 | 1 | **165-3103** | 1 | LINER | |
| | 5 | 1 | **273-7677** | 1 | LINER | |
| | 6 | 1 | **428-7524** | 1 | LINER | |
| | 7 | 1 | **557-1176** | 1 | COUNTERWEIGHT AS | |

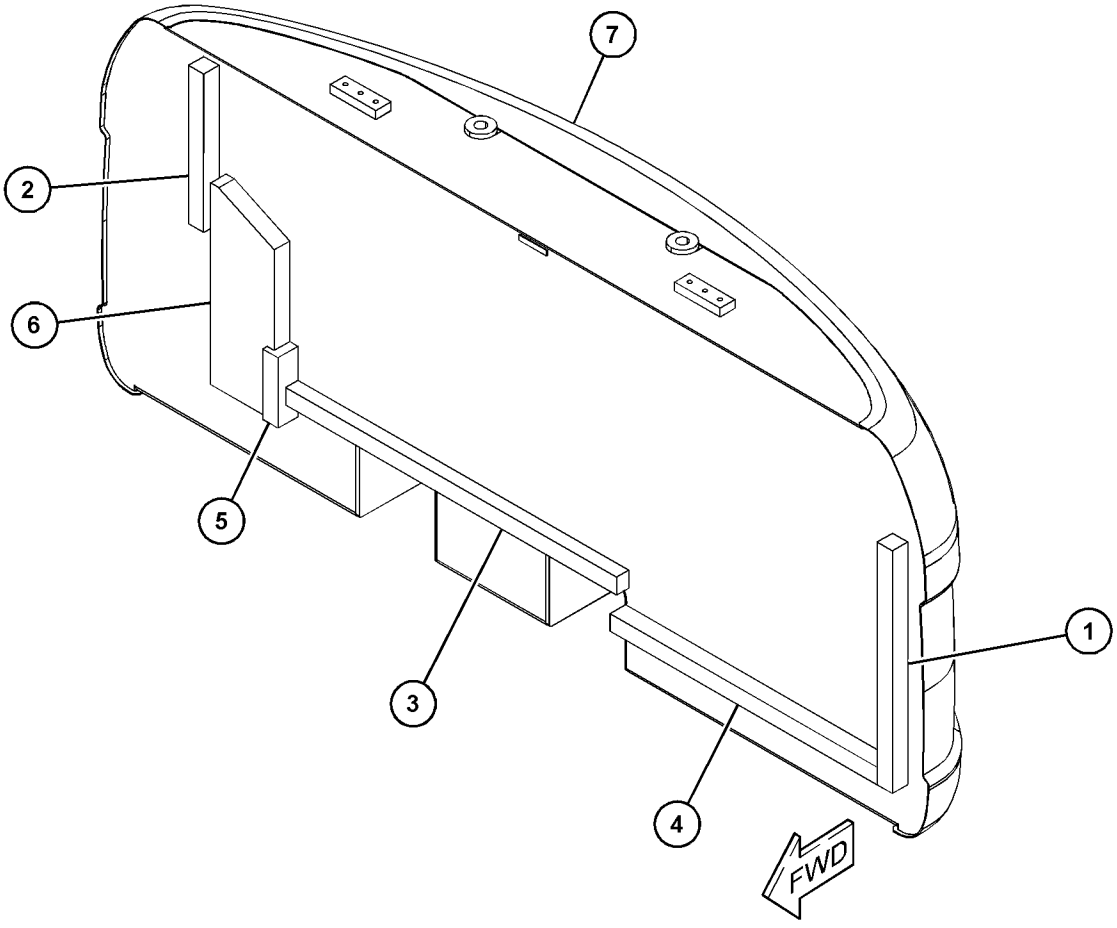


GRAPHIC #1 <END> g06313434

# *430-2804* COVER AS-SOUND SUPPRESSION–FUEL, HYDRAULIC TANKS

**S/N: FEY1-UP**

**PART OF 556-6573 HOOD & GUARD GP**

**SMCS-7253, 7263, 7276, 795C**

**i05197745**

| NOTE | REF NO | GRAPHIC REF | PART NUMBER | QTY | PART NAME 1 2 3 4 5 6 (PRODUCT LEVEL) | SEE PAGE |
|---|---|---|---|---|---|---|
| | 1 | 1 | **170-3015** | 1 | BUMPER | |
| | 2 | 1 | **426-3891** | 1 | LINER | |
| | 3 | 1 | **240-2978** | 2 | LINER | |
| | 4 | 1 | **240-2979** | 1 | LINER | |

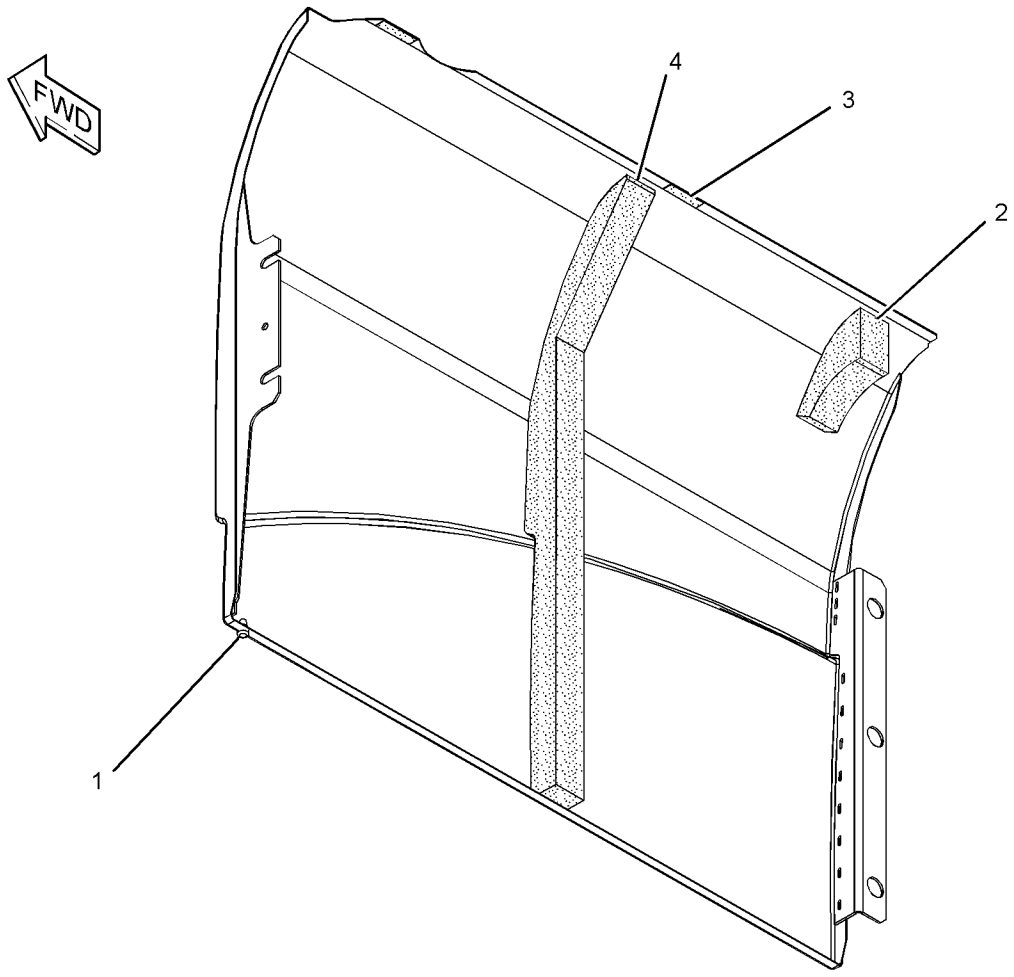


GRAPHIC #1 <END> g01342289

# 422-5388 DOOR AS-ACCESS—AIR CLEANER, BATTERY

**S/N: FEY1-UP**

**PART OF 556-6573 HOOD & GUARD GP**

**SMCS-7273** **i05197747**

| NOTE | REF NO | GRAPHIC REF | PART NUMBER | QTY | PART NAME 1 2 3 4 5 6 (PRODUCT LEVEL) | SEE PAGE |
|---|---|---|---|---|---|---|
| | 1 | 1 | **208-4289** | 1 | CUSHION | |
| | 2 | 1 | **250-5054** | 1 | LINER | |
| | 3 | 1 | **165-2976** | 2 | HINGE | |

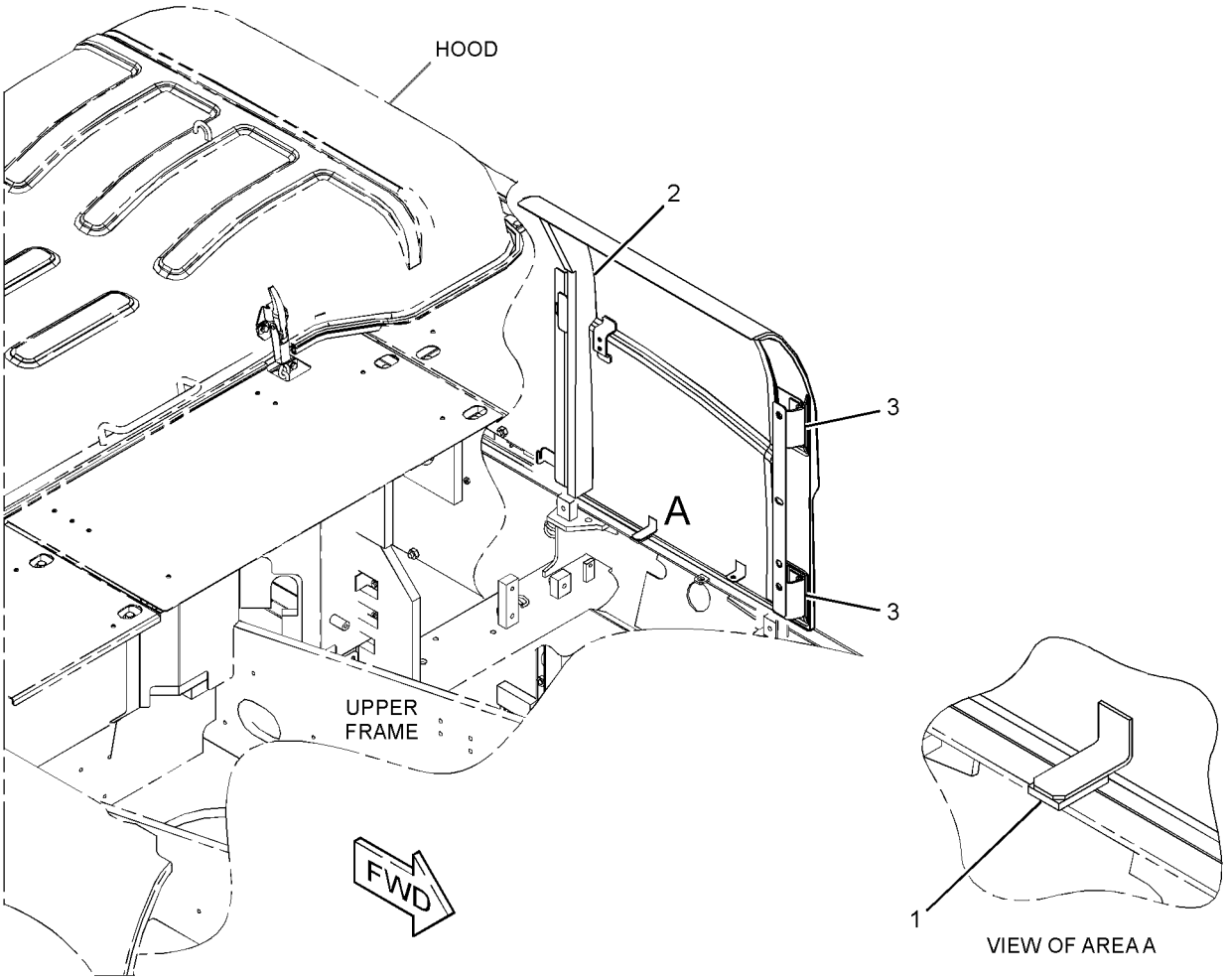


GRAPHIC #1 <END> g03309139

# 421-4416 DOOR GP-ACCESS—RADIATOR

**S/N: FEY1-UP**

**PART OF 556-6573 HOOD & GUARD GP**

**SMCS-7273** **i06672549**

| NOTE | REF NO | GRAPHIC REF | PART NUMBER | QTY | PART NAME 1 2 3 4 5 6 (PRODUCT LEVEL) | SEE PAGE |
|---|---|---|---|---|---|---|
| M | 1 | 1 | **099-6418** | 4 | NUT (M6X1-THD) | |
| | 2 | 1 | **122-4101** | 1 | RUBBER | |
| | 3 | 1 | **208-4289** | 1 | CUSHION | |
| | 4 | 1 | *396-9392* | 1 | DOOR AS-ACCESS | |
| | 4A | 1 | **165-2976** | 2 | HINGE | |
| | 5 | 1 | **505-5962** | 1 | LATCH AS | |
| J | | 1 | **385-3458** | 1 | LOCK AS | |
| | 6 | 1 | **307-7656** | 1 | LINER | |

J - REQUIRES CORPORATE KEY
M - METRIC PART

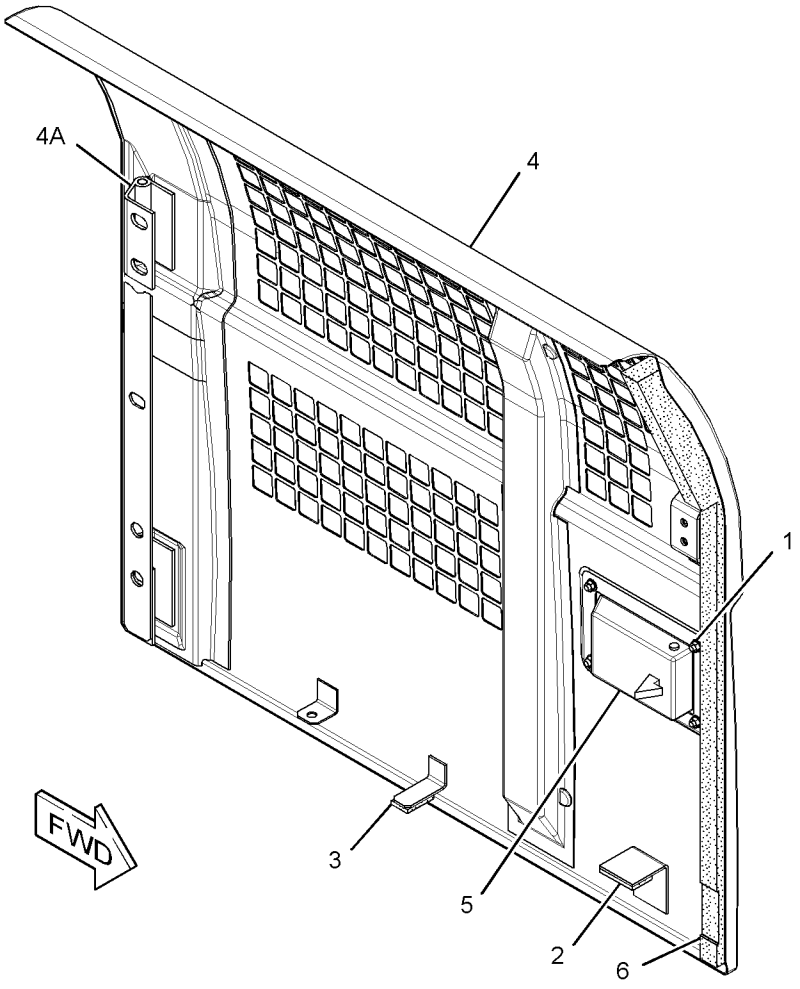


GRAPHIC #1 <END> g01481757

# 425-6092 DOOR GP-ACCESS—PUMP COMPARTMENT

**S/N: FEY1-UP**

**PART OF 556-6573 HOOD & GUARD GP**

**SMCS-7273** **i06917183**

| NOTE | REF NO | GRAPHIC REF | PART NUMBER | QTY | PART NAME 1 2 3 4 5 6 (PRODUCT LEVEL) | SEE PAGE |
|---|---|---|---|---|---|---|
| | 1 | 1 | **184-8862** | 1 | COVER | |
| | 2 | 1 | **244-7927** | 1 | INSULATION | |
| | 3 | 1 | **248-8961** | 1 | LINER | |
| | 4 | 1 | **505-5962** | 1 | LATCH AS | |
| J | | 1 | **385-3458** | 1 | LOCK AS | |
| | 5 | 1 | **165-2976** | 2 | HINGE | |
| M | 6 | 1 | **099-6418** | 4 | NUT (M6X1-THD) | |

J - REQUIRES CORPORATE KEY
M - METRIC PART

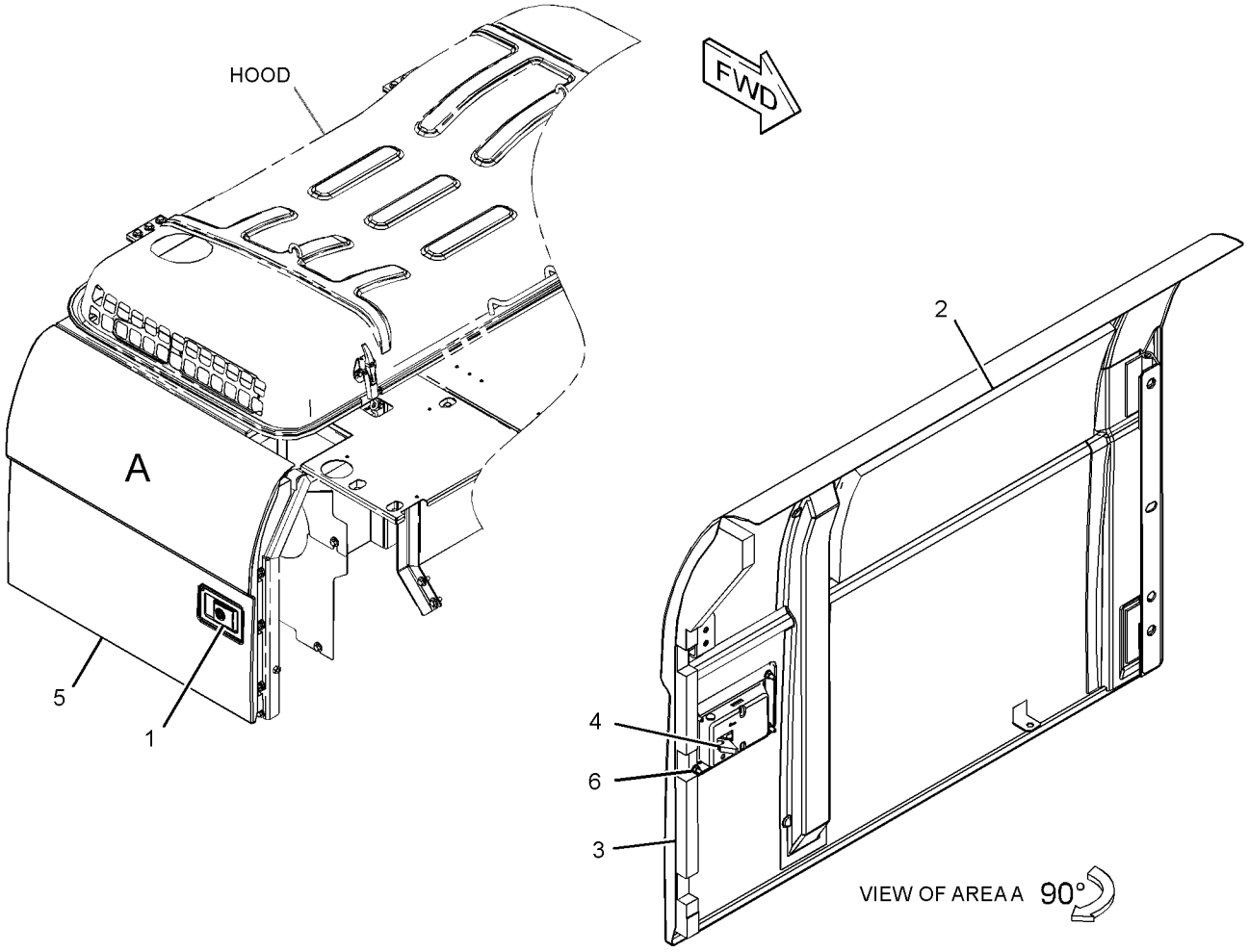


GRAPHIC #1 <END> g03353282

# *445-6262* FENDER & COVER GP

**S/N: FEY1-UP**

**PART OF 556-6447 CHASSIS AR**

**SMCS-7252** **i06910016**

| NOTE | REF NO | GRAPHIC REF | PART NUMBER | QTY | PART NAME 1 2 3 4 5 6 (PRODUCT LEVEL) | SEE PAGE |
|---|---|---|---|---|---|---|
| | 1 | 1 | **135-8573** | 2 | BOLT AS | |
| | 2 | 1 | **236-3702** | 2 | SPACER (15X35X11-MM THK) | |
| | 3 | 1 | **236-3703** | 2 | WASHER (25X35X4-MM THK) | |
| | 4 | 1 | **259-3543** | 1 | STEP AS | |
| | 5 | 1 | **445-6263** | 1 | COVER AS | |
| | | 1 | **6C-3679** | 8 | RIVET-POP | |
| | | 1 | **278-3818** | 1 | LINER | |
| | 6 | 1 | **5P-1075** | 2 | WASHER-HARD (10.2X22.5X3-MM THK) | |
| M | 7 | 1 | **8T-4195** | 2 | BOLT (M10X1.5X30-MM) | |

M - METRIC PART

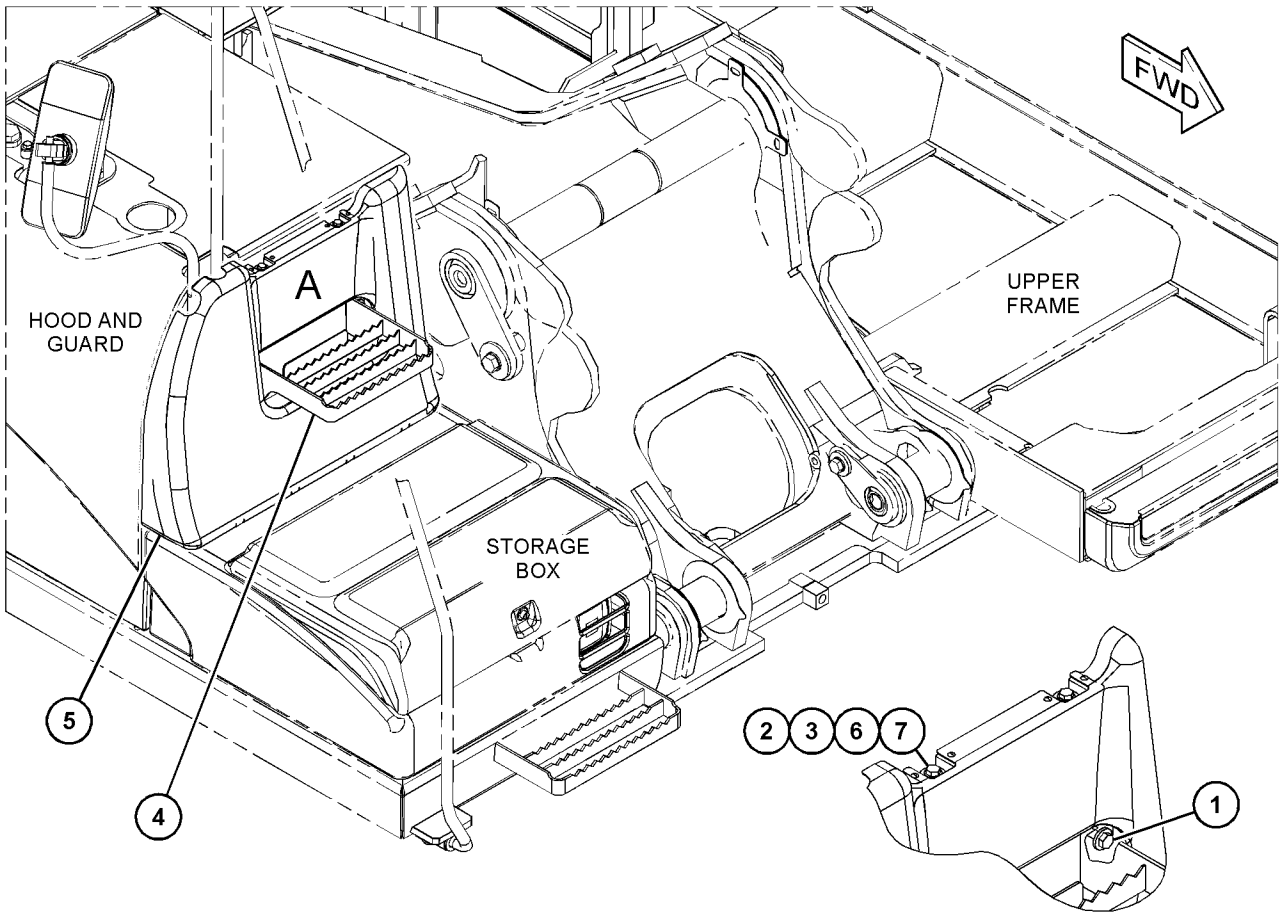


VIEW OF AREA A

GRAPHIC #1 <END> g03474746

# *556-6564* FRAME GP-UPPER

**S/N: FEY1-UP**

**PART OF 556-6447 CHASSIS AR**

**SMCS-7051** **i07398560**

| NOTE | REF NO | GRAPHIC REF | PART NUMBER | QTY | PART NAME 1 2 3 4 5 6 (PRODUCT LEVEL) | SEE PAGE |
|---|---|---|---|---|---|---|
| B | 1 | 1 | **093-0083** | 4 | SHIM (1-MM THK) | |
| B | 2 | 1 | **093-0115** | 2 | SHIM (2-MM THK) | |
| B | 3 | 1 | **133-2425** | 2 | SHIM (0.5-MM THK) | |
| | 4 | 1 | **212-2838** | 2 | SHIM (2-MM THK) | |
| B | 5 | 1 | **308-8775** | 1 | SHIM (0.5-MM THK) | |
| B | 6 | 1 | **308-8776** | 2 | SHIM (1-MM THK) | |
| B | 7 | 1 | **308-8777** | 1 | SHIM (2-MM THK) | |
| | 8 | 1 | **315-0800** | 1 | PIN AS | |
| | 9 | 1 | **451-2176** | 3 | WASHER-HARD (22X35X3.5-MM THK) | |
| M | 10 | 1 | **453-2844** | 3 | BOLT (M20X2.5X30-MM) | |
| | 11 | 1 | **093-0349** | 3 | WASHER (22X60X6-MM THK) | |
| | 12 | 1 | **093-0363** | 2 | SPACER (83X120X12-MM THK) | |
| | 13 | 1 | **4I-4812** | 2 | PIN AS | |
| | 14 | 1 | **557-0050** | 1 | FRAME AS-UPPER | |
| | | 1 | **163-3729** | 1 | STEP AS | |
| | | 1 | **388-0399** | 1 | BOSS | |
| | | | | | | |
| | | | | | THE FOLLOWING REPAIR PARTS ARE AVAILABLE FOR REPAIR OF DAMAGED SKIRTS | |
| F | | | **178-0852** | 1 | PLATE-SKIRT (1100-MM) | |
| F | | | **184-5724** | 1 | PLATE-SKIRT (2000-MM) | |

B - USE AS REQUIRED
F - NOT SHOWN
M - METRIC PART

*556-6564* **FRAME GP-UPPER (**contd.**)** **i07398560**

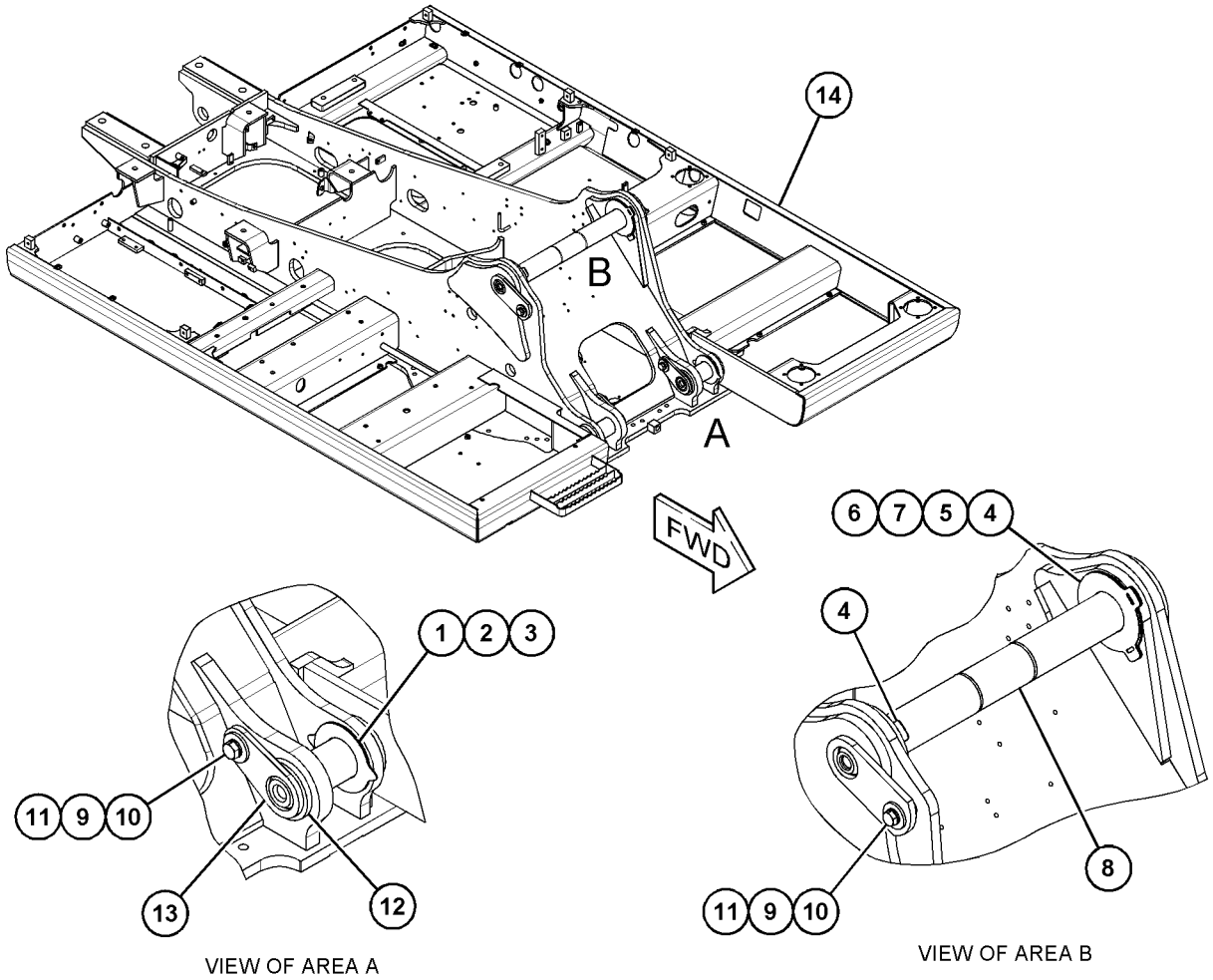


GRAPHIC #1 <END> g06313631

# 227-6081 GEAR & BEARING GP-SWING

**S/N: FEY1-UP**

**PART OF 227-6147 GEAR & BEARING GP-SWING**

**SMCS-7063** **i05326600**

| NOTE | REF NO | GRAPHIC REF | PART NUMBER | QTY | PART NAME 1 2 3 4 5 6 (PRODUCT LEVEL) | SEE PAGE |
|---|---|---|---|---|---|---|
| | 1 | 1 | **3B-8489** | 1 | FITTING-GREASE (1/8-27 PTF) | |
| | 2 | 1 | **227-6071** | 1 | SEAL-DUST | |
| E | 3 | 1 | **148-4685** | | SEAL (368-CM) | |

E - ORDER BY THE CENTIMETER

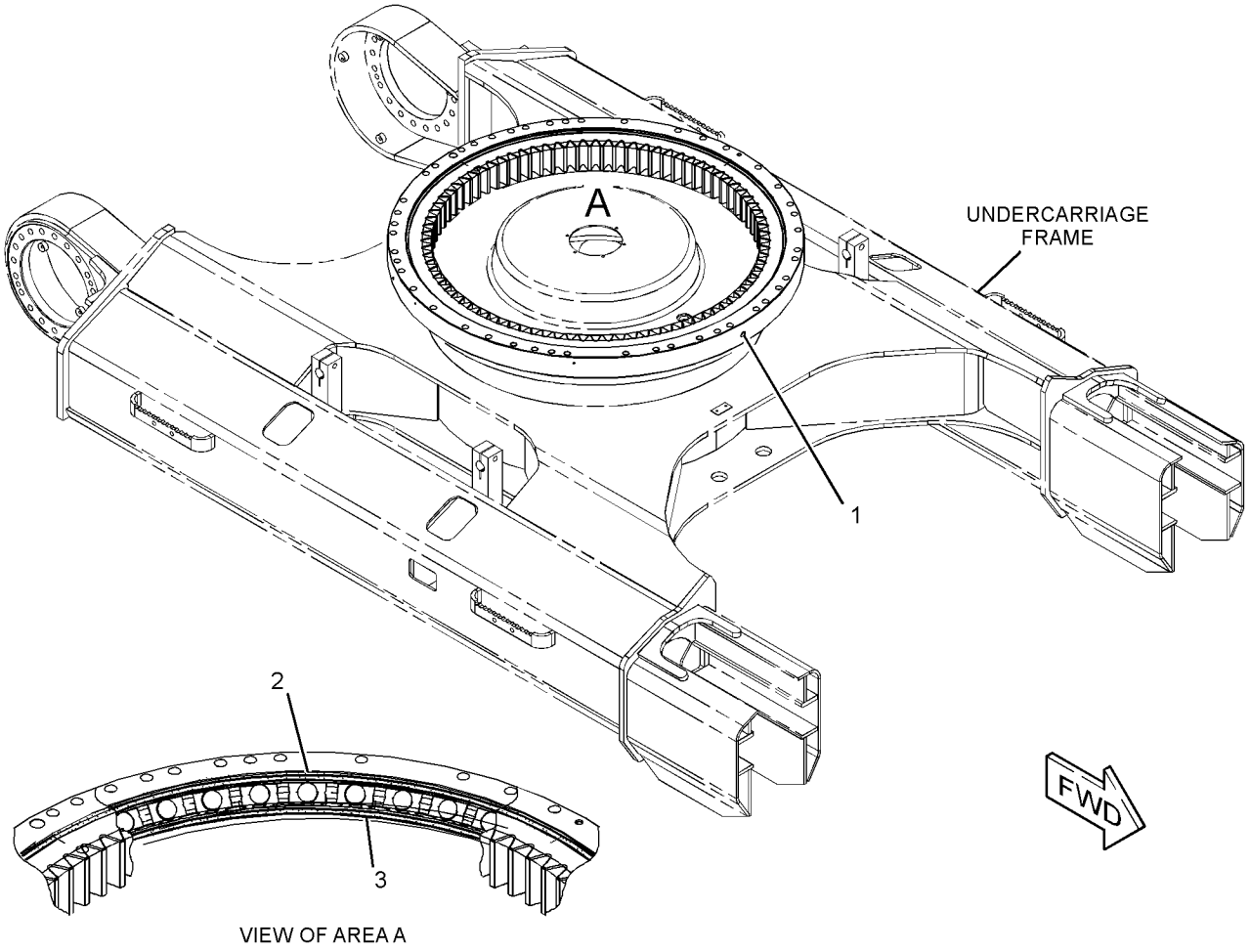


VIEW OF AREA A

GRAPHIC #1 <END> g01671618

# *227-6147* GEAR & BEARING GP-SWING

**S/N: FEY1-UP**

**PART OF 432-5008 FRAME AR-UNDERCARRIAGE**

**SMCS-7063** **i06983819**

| NOTE | REF NO | GRAPHIC REF | PART NUMBER | QTY | PART NAME 1 2 3 4 5 6 (PRODUCT LEVEL) | SEE PAGE |
|---|---|---|---|---|---|---|
| | 1 | 1 | **5K-9243** | 2 | ELBOW-FLARED | |
| | 2 | 1 | **7Y-1647** | 1 | GASKET | |
| | 3 | 1 | **7Y-1650** | 1 | CLAMP-HOSE | |
| | 4 | 1 | **468-5306** | 40 | SPACER (20.5X38X34-MM THK) | |
| | 5 | 1 | **148-4689** | 1 | TUBE AS | |
| | 6 | 1 | **171-9464** | 37 | SPACER (20.6X38X6-MM THK) | |
| Y | 7 | 1 | **227-6081** | 1 | GEAR & BEARING GP-SWING | 162 |
| | 8 | 1 | **227-6105** | 1 | BOOT | |
| | 9 | 1 | **227-6106** | 1 | RETAINER | |
| | 10 | 1 | **096-4902** | 1 | DOWEL | |
| | 11 | 1 | **148-4703** | 1 | COVER | |
| | 12 | 1 | **148-4704** | 1 | GASKET | |
| | 13 | 1 | **3B-8489** | 1 | FITTING-GREASE (1/8-27 PTF) | |
| | 14 | 1 | **4N-9170** | 2 | CLIP (LOOP) | |
| | 15 | 1 | **7Y-1648** | 1 | STRIP | |
| M | 16 | 1 | **145-9278** | 40 | BOLT (M20X2.5X90-MM) | |
| M | 17 | 1 | **5Q-3560** | 37 | BOLT (M20X2.5X110-MM) | |
| | 18 | 1 | **8T-4121** | 14 | WASHER-HARD (11X21X2.5-MM THK) | |
| M | 19 | 1 | **8T-4137** | 2 | BOLT (M10X1.5X20-MM) | |
| M | 20 | 1 | **8T-4136** | 12 | BOLT (M10X1.5X25-MM) | |
| M | 21 | 1 | **8T-4199** | 2 | BOLT (M8X1.25X12-MM) | |
| | | | | | | |
| BF | | | **1U-8846** | | SEALANT-GASKET | |

B - USE AS REQUIRED
F - NOT SHOWN
M - METRIC PART
Y - SEPARATE ILLUSTRATION

*227-6147* **GEAR & BEARING GP-SWING (**contd.**)** **i06983819**

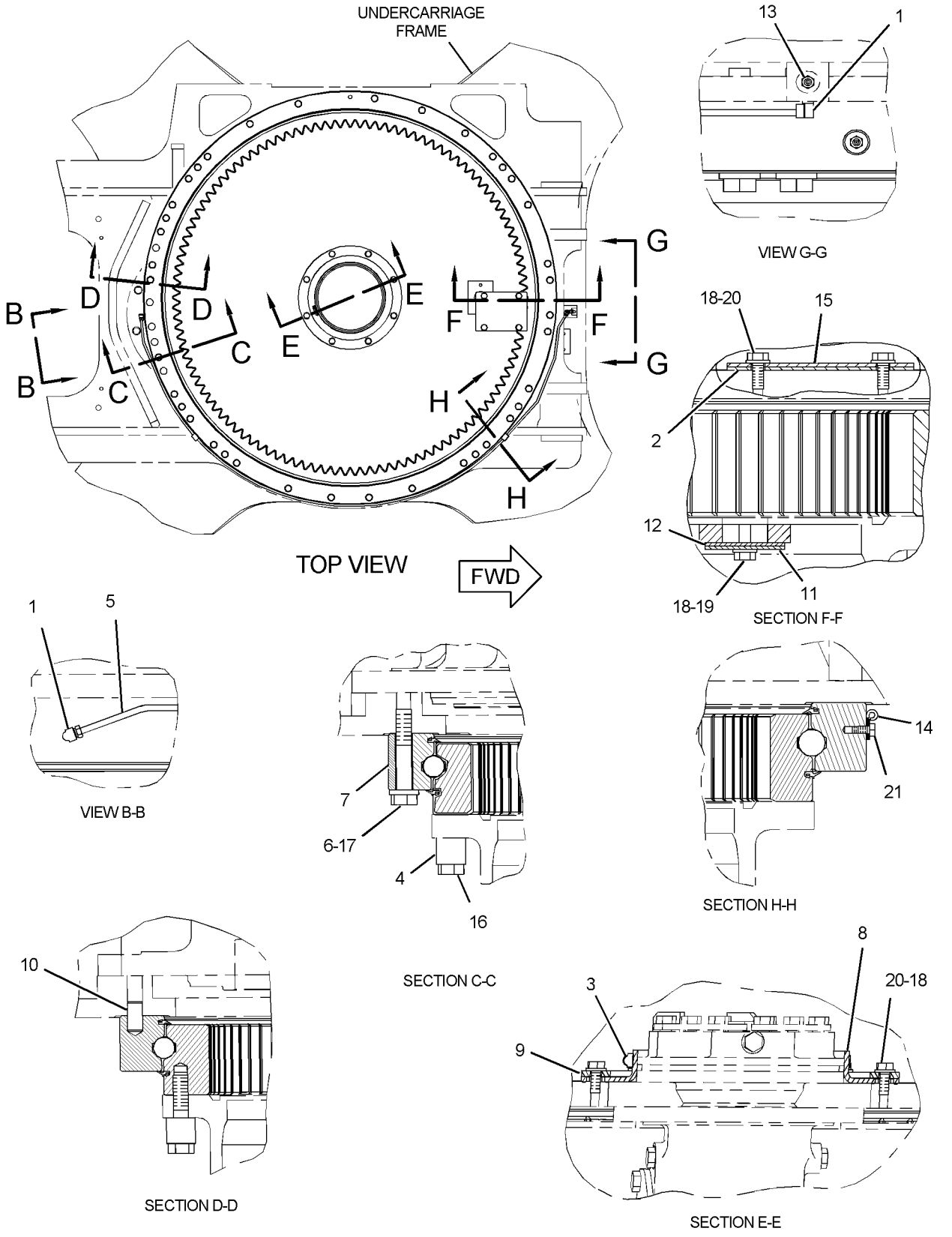


GRAPHIC #1 <END> g03806426

# *433-6299* GUARD GP-BOTTOM

**S/N: FEY1-UP**

**PART OF 556-6447 CHASSIS AR**

**SMCS-7153** **i06659174**

| NOTE | REF NO | GRAPHIC REF | PART NUMBER | QTY | PART NAME 1 2 3 4 5 6 (PRODUCT LEVEL) | SEE PAGE |
|---|---|---|---|---|---|---|
| | 1 | 1 | **453-8030** | 36 | BOLT AS | |
| | 2 | 1 | **165-2823** | 1 | SHEET | |
| | 3 | 1 | **248-8992** | 1 | SHEET | |
| | 4 | 1 | **248-8994** | 1 | SHEET | |
| | 5 | 1 | **248-8995** | 1 | SHEET | |
| | 6 | 1 | **461-0414** | 1 | SHEET AS | |
| | 7 | 1 | **289-6603** | 1 | SHEET | |
| | 8 | 1 | **421-3762** | 1 | SHEET | |
| J | 9 | 1 | **5P-1076** | 2 | WASHER-HARD (13.5X30X4-MM THK) | |
| J | 10 | 1 | **342-0932** | 1 | SHEET AS | |
| J | 11 | 1 | **342-0965** | 1 | PLATE AS | |
| JM | 12 | 1 | **453-8032** | 2 | BOLT (M12X1.75X30-MM, SELF LOCKING) | |

J - OPTIONAL DESIGN FOR COLD WEATHER APPLICATIONS
M - METRIC PART

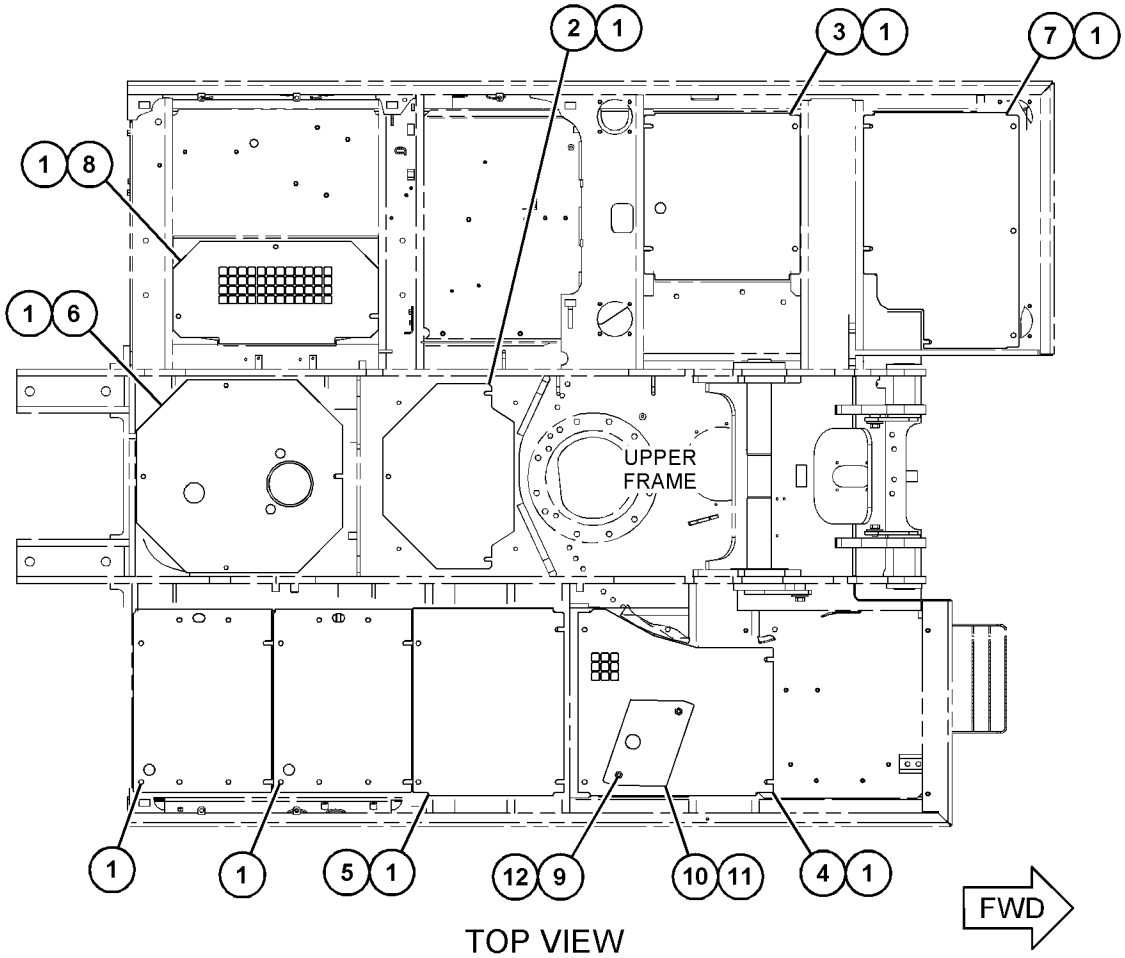


TOP VIEW

GRAPHIC #1 <END> g03822825

# *142-3835* HANDRAIL GP

**S/N: FEY1-UP**

**PART OF 556-6447 CHASSIS AR**

**SMCS-7256** **i04912111**

| NOTE | REF NO | GRAPHIC REF | PART NUMBER | QTY | PART NAME 1 2 3 4 5 6 (PRODUCT LEVEL) | SEE PAGE |
|---|---|---|---|---|---|---|
| | 1 | 1 | **8T-4223** | 2 | WASHER-HARD (13.5X25.5X3-MM THK) | |
| M | 2 | 1 | **8T-4192** | 2 | BOLT (M12X1.75X25-MM) | |
| | 3 | 1 | **177-5880** | 2 | SLEEVE | |
| | 4 | 1 | **177-5879** | 1 | CLAMP | |
| | 5 | 1 | **177-5877** | 1 | HANDHOLD AS | |
| | 6 | 1 | **135-8578** | 3 | BOLT AS | |

M - METRIC PART

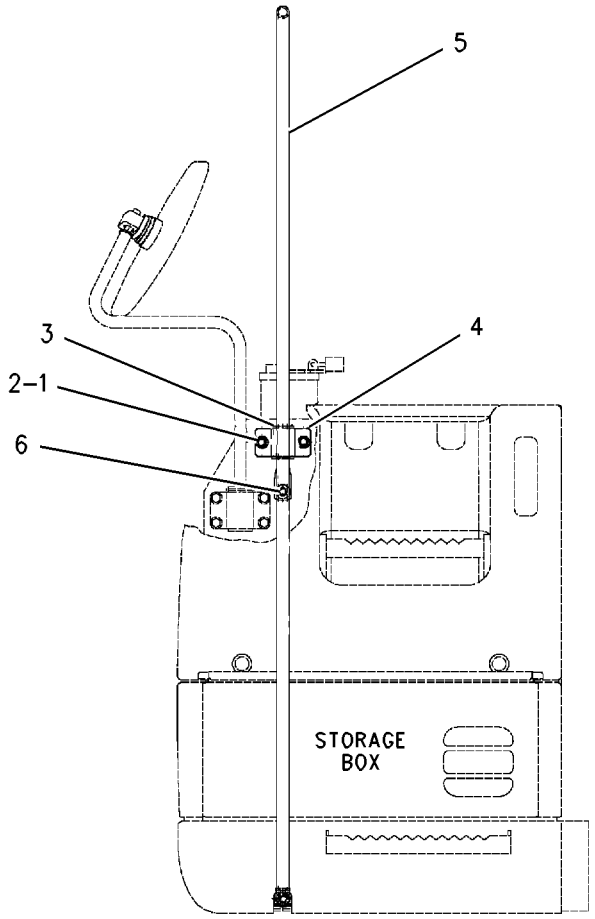


FRONT VIEW

GRAPHIC #1 <END> g00678707

# *556-6573* HOOD & GUARD GP

**S/N: FEY1-UP**

**PART OF 556-6447 CHASSIS AR**

**SMCS-7251, 7276** **i07418427**

| NOTE | REF NO | GRAPHIC REF | PART NUMBER | QTY | PART NAME 1 2 3 4 5 6 (PRODUCT LEVEL) | SEE PAGE |
|---|---|---|---|---|---|---|
| | 1 | 2 | **4I-0118** | 2 | HOOK AS | |
| | 2 | 1,2 | **4I-0232** | 2 | STRIKER | |
| | 3 | 2,3 | **7Y-2853** | 9 | SPACER (13X38X5-MM THK) | |
| | 4 | 1,2 | **087-3908** | 4 | SHIM (1-MM THK) | |
| | 5 | 1,2 | **087-3909** | 4 | SHIM (2-MM THK) | |
| | 6 | 2 | **122-3979** | 1 | BAND | |
| | 7 | 2 | **122-3980** | 1 | ROD | |
| | 8 | 3 | **170-3016** | 15 | SPACER (19X32X2-MM THK) | |
| | 9 | 1,2,3 | **190-6880** | 3 | SUPPORT AS | |
| | 10 | 2 | **244-8228** | 1 | SUPPORT AS | |
| | 11 | 3 | **244-8242** | 1 | SUPPORT AS | |
| | 12 | 3 | **244-8255** | 1 | SUPPORT AS | |
| Y | 13 | 2 | **377-6667** | 1 | SHEET AS-SOUND SUPPRESSION | 173 |
| Y | 14 | 3 | **377-6708** | 1 | SHEET AS-SOUND SUPPRESSION | 174 |
| | 15 | 2 | **377-6786** | 1 | COVER AS | |
| | 16 | 3 | **379-7518** | 1 | SUPPORT AS | |
| | | 3 | **7T-1099** | 8 | LINK | |
| M | | 3 | **8T-3597** | 7 | NUT-WELD (M12X1.75-THD) | |
| | | 3 | **087-5841** | 1 | PLATE | |
| | | 3 | **121-1029** | 1 | CLIP | |
| | 17 | 3 | **391-4751** | 1 | COVER AS | |
| Y | 18 | 2 | **391-9646** | 1 | SHEET AS-SOUND SUPPRESSION | 175 |
| | 19 | 2 | **391-9651** | 1 | SHEET AS-SOUND SUPPRESSION | |
| | 20 | 2 | **526-7759** | 1 | SUPPORT AS | |
| | 21 | 2 | **525-4519** | 1 | SHEET AS | |
| Y | 22 | 2 | **397-9009** | 1 | SUPPORT AS-SOUND SUPPRESSION | 180 |
| Y | 23 | 3 | **419-3368** | 1 | SHEET AS-SOUND SUPPRESSION | 176 |
| Y | 24 | 2 | **422-5388** | 1 | DOOR AS-ACCESS (AIR CLEANER, BATTERY) | 156 |
| Y | 25 | 1 | **430-2804** | 1 | COVER AS-SOUND SUPPRESSION (FUEL, HYDRAULIC TANKS) | 155 |
| | 26 | 3 | **441-1162** | 1 | COVER AS | |
| | 27 | 3 | **451-5175** | 1 | SUPPORT AS | |
| M | 28 | 1,2,3 | **105-3487** | 6 | BOLT-SOCKET HEAD (M6X1X20-MM) | |
| | 29 | 1 | **114-6285** | 2 | BAR | |
| | 30 | 1,2,3 | **122-4120** | 3 | ROD | |
| | 31 | 3 | **289-6698** | 1 | SUPPORT AS | |
| | | 3 | **129-3400** | 1 | GUARD | |
| | | 3 | **244-8198** | 1 | LINER | |
| | 32 | 2 | **392-1262** | 1 | SPRING AS-GAS (ENGINE HOOD) | |
| | 33 | 2 | **396-3542** | 1 | SUPPORT AS | |
| | 34 | 1,2,3 | **3B-4618** | 3 | PIN-COTTER | |
| Y | 35 | 1 | **425-6092** | 1 | DOOR GP-ACCESS (PUMP COMPARTMENT) | 158 |
| | 36 | 3 | **441-1164** | 1 | COVER AS | |
| | | 3 | **190-7081** | 2 | SHEET | |
| | | 3 | **441-1165** | 1 | COVER AS | |
| Y | 37 | 1 | **541-2854** | 1 | HOOD GP-ENGINE | 172 |
| | 38 | 1,3 | **4I-8019** | 3 | SUPPORT | |
| | 39 | 3 | **541-0808** | 1 | COVER AS-ACCESS | |

*556-6573* **HOOD & GUARD GP (**contd.**)** **i07418427**

| NOTE | REF NO | GRAPHIC REF | PART NUMBER | QTY | PART NAME 1 2 3 4 5 6 (PRODUCT LEVEL) | SEE PAGE |
|---|---|---|---|---|---|---|
| | 40 | 3 | **541-0862** | 1 | SUPPORT AS | |
| | 41 | 2 | **556-8999** | 1 | SUPPORT AS | |
| M | | 2 | **6V-9632** | 3 | NUT-WELD (M6X1-THD) | |
| | | 2 | **7T-1099** | 6 | LINK | |
| M | | 2 | **7Y-8763** | 1 | BOSS (M10X1.5X25-MM) | |
| M | | 2 | **8T-3490** | 5 | NUT-WELD (M10X1.5-THD) | |
| M | | 2 | **8T-3597** | 7 | NUT-WELD (M12X1.75-THD) | |
| M | | 2 | **8T-3612** | 4 | NUT-WELD (M8X1.25-THD) | |
| Y | 42 | 2 | **557-3595** | 1 | SHEET AS-SOUND SUPPRESSION | 177 |
| | 43 | 2 | **557-3620** | 1 | SHEET AS | |
| | | 2 | **557-3621** | 1 | LINER | |
| | 44 | 3 | **557-5311** | 1 | SHEET AS | |
| | | 3 | **7T-1099** | 3 | LINK | |
| M | | 3 | **8T-3597** | 1 | NUT-WELD (M12X1.75-THD) | |
| Y | 45 | 3 | **557-7265** | 1 | SUPPORT AS | 178 |
| Y | 46 | 3 | **557-7266** | 1 | SUPPORT AS | 179 |
| Y | 47 | 3 | **421-4416** | 1 | DOOR GP-ACCESS (RADIATOR) | 157 |
| | 48 | 1,2,3 | **135-8573** | 66 | BOLT AS | |
| | 49 | 1,2,3 | **135-8575** | 35 | BOLT AS | |
| | 50 | 3 | **135-8577** | 4 | BOLT AS | |
| | 51 | 1 | **135-8578** | 6 | BOLT AS | |
| M | 52 | 2 | **5C-7261** | 1 | NUT (M8X1.25-THD) | |
| M | 53 | 1,3 | **5C-9553** | 8 | BOLT (M6X1X16-MM) | |
| | 54 | 2 | **5P-0372** | 1 | LOCK PIN | |
| | 55 | 1,2,3 | **5P-4115** | 10 | WASHER-HARD (7.2X19X2-MM THK) | |
| M | 56 | 1,2,3 | **6V-7357** | 10 | BOLT (M6X1X25-MM) | |
| | 57 | 2 | **7F-3708** | 1 | PIN | |
| | 58 | 1,2,3 | **6I-6033** | 3 | STOP | |
| | 59 | 2,3 | **7Y-2854** | 9 | SPACER (24X38X3-MM THK) | |
| | 60 | 1,2,3 | **8T-4121** | 7 | WASHER-HARD (11X21X2.5-MM THK) | |
| M | 61 | 2 | **8T-4137** | 2 | BOLT (M10X1.5X20-MM) | |
| M | 62 | 2 | **8T-4189** | 4 | BOLT (M8X1.25X20-MM) | |
| | 63 | 2 | **8T-4224** | 5 | WASHER-HARD (8.8X16X2-MM THK) | |
| | 64 | 1,2,3 | **9X-8256** | 14 | WASHER (6.6X12X2-MM THK) | |

M - METRIC PART
Y - SEPARATE ILLUSTRATION

*556-6573* **HOOD & GUARD GP** (contd.) **i07418427**

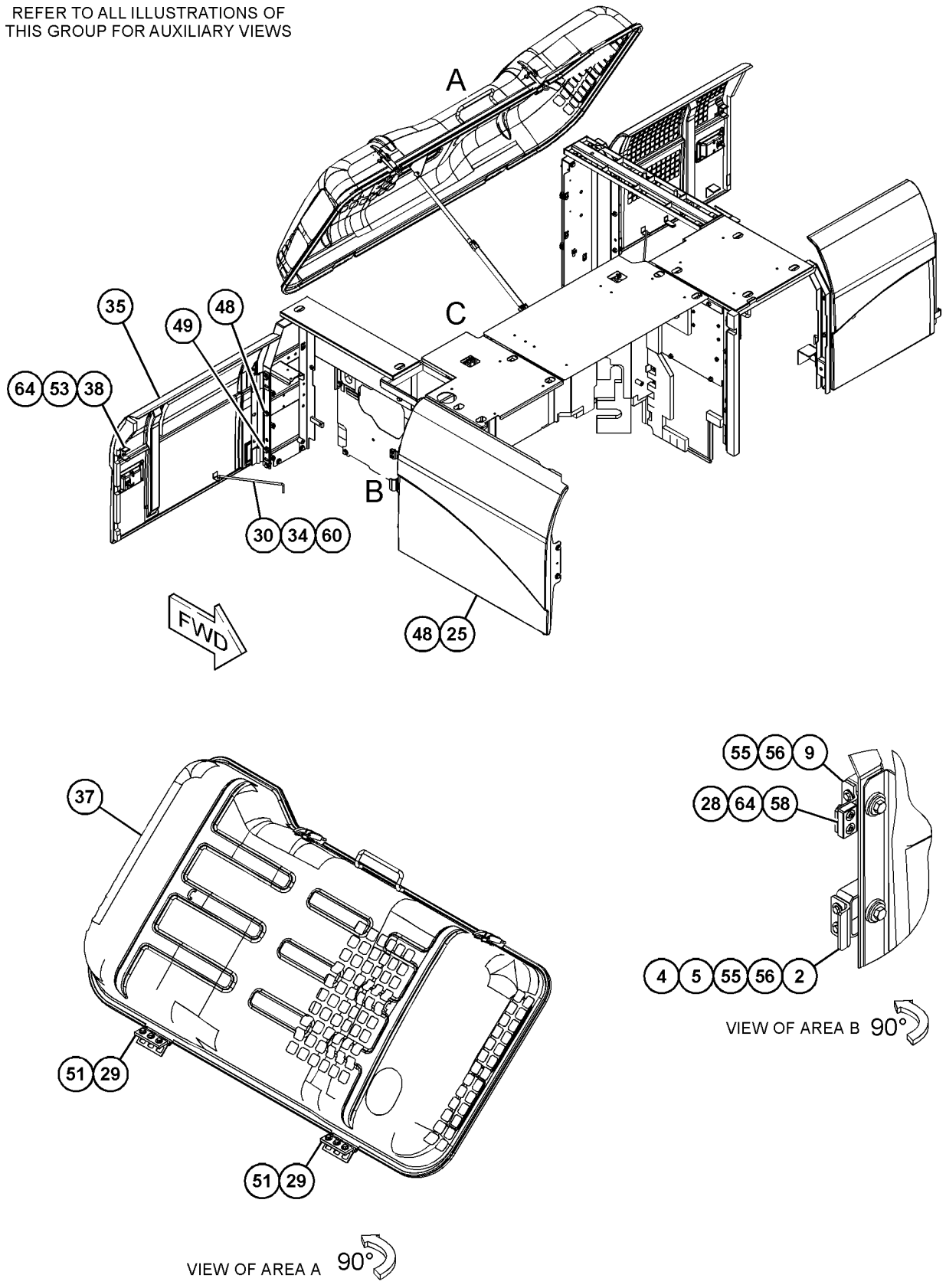


GRAPHIC #1

g06314521

*556-6573* **HOOD & GUARD GP** (contd.) **i07418427**

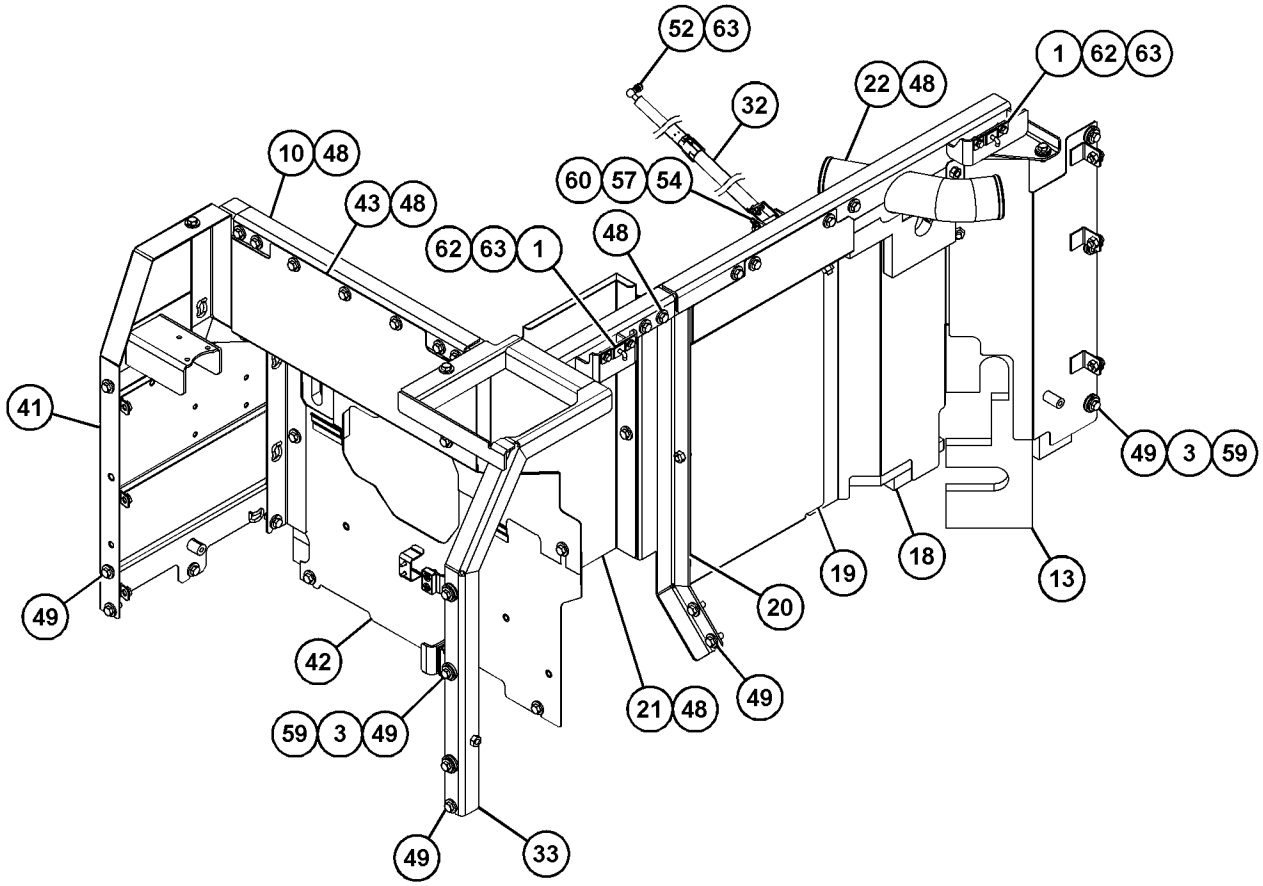


VIEW OF AREA C
(PARTS REMOVED FOR CLARITY)

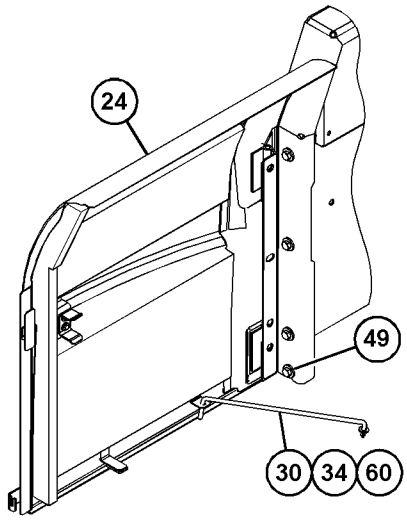


VIEW OF AREA D
(PARTS REMOVED FOR CLARITY) 90°

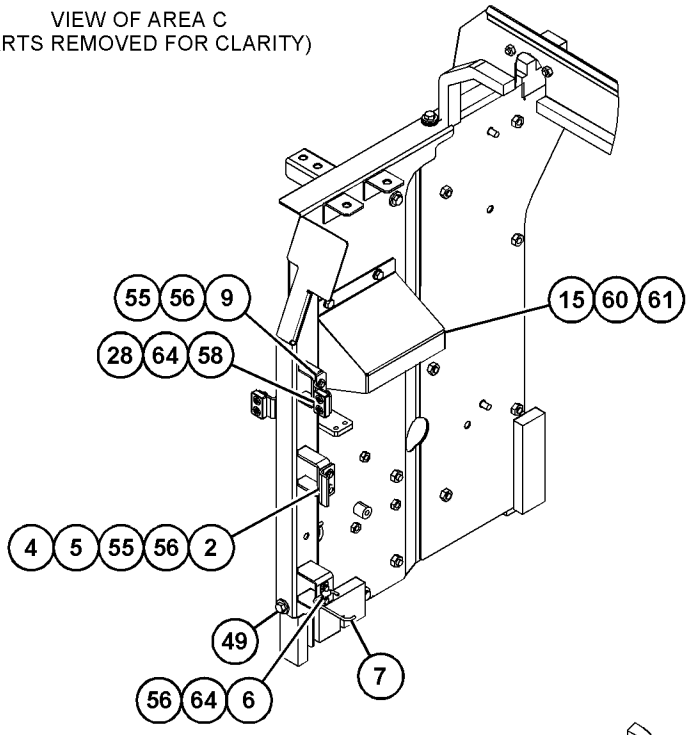


VIEW OF AREA E
(PARTS REMOVED FOR CLARITY) 90°

GRAPHIC #2

g06314525

*556-6573* **HOOD & GUARD GP** (contd.) **i07418427**

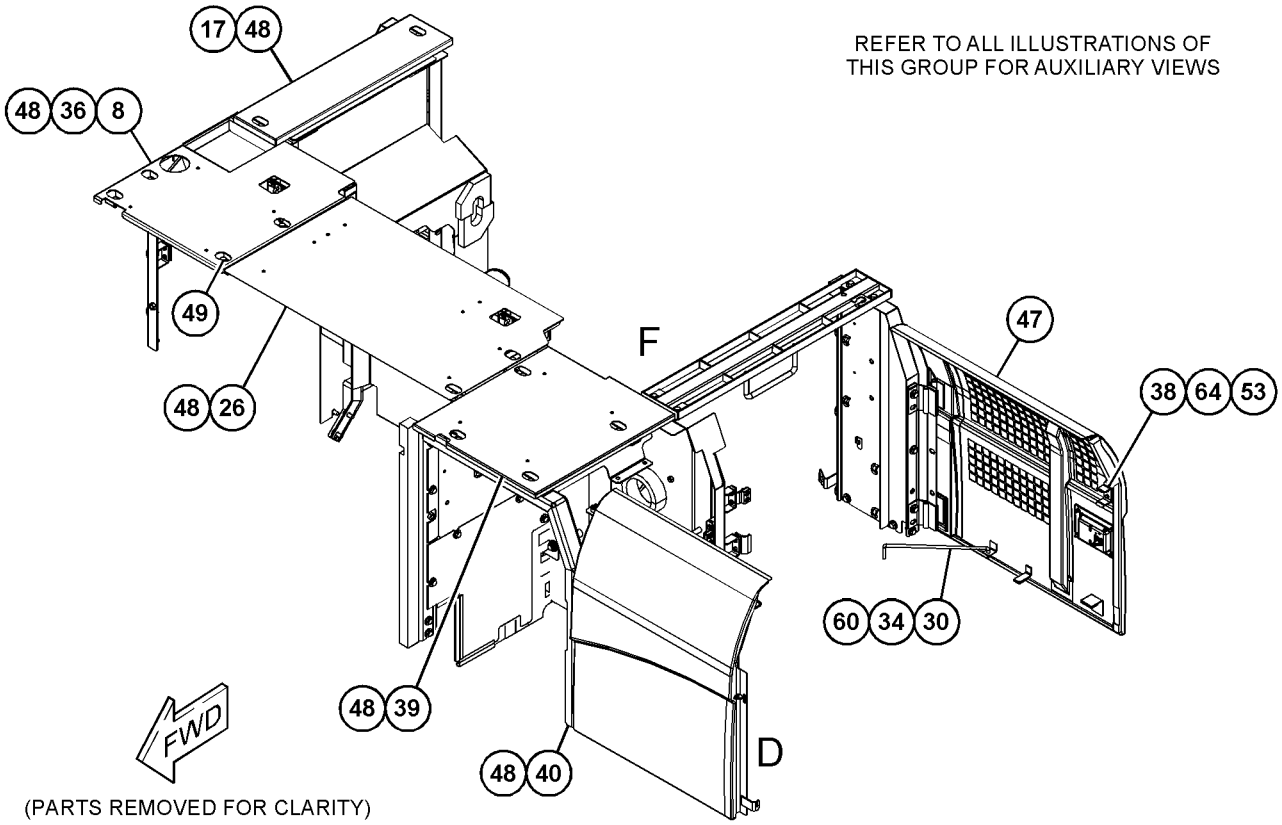


REFER TO ALL ILLUSTRATIONS OF
THIS GROUP FOR AUXILIARY VIEWS

(PARTS REMOVED FOR CLARITY)

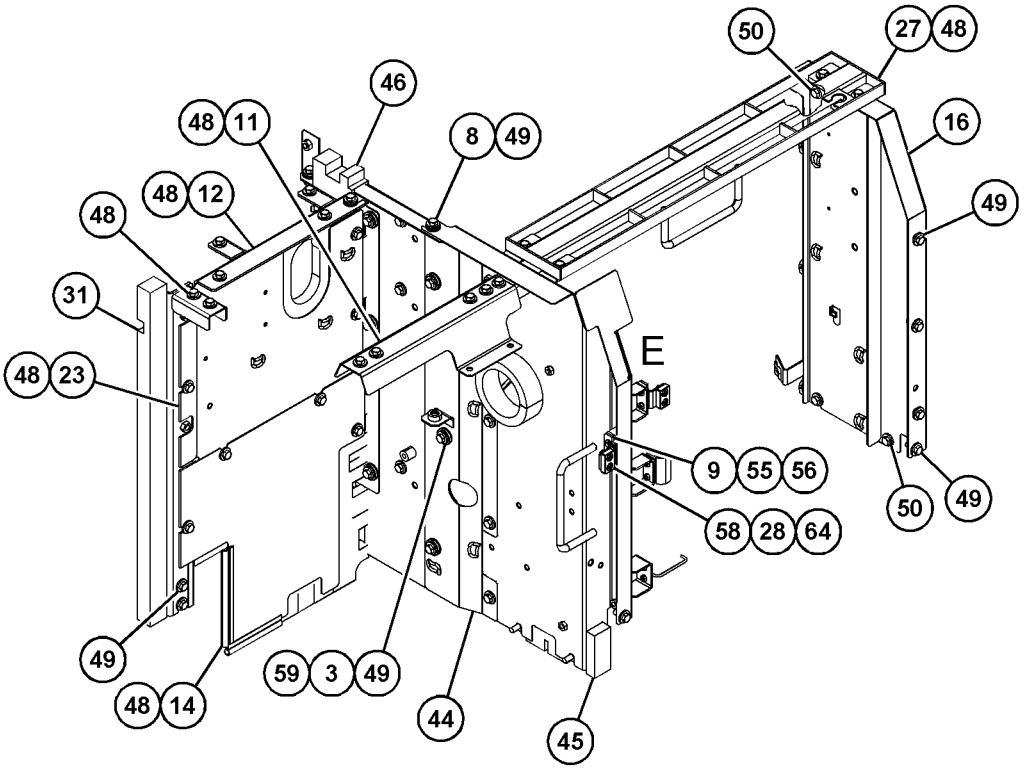


VIEW OF AREA F
(PARTS REMOVED FOR CLARITY)

GRAPHIC #3 <END> g06314522

# *541-2854* HOOD GP-ENGINE

**S/N: FEY1-UP**

**PART OF 556-6573 HOOD & GUARD GP**

**SMCS-7251** **i07418433**

| NOTE | REF NO | GRAPHIC REF | PART NUMBER | QTY | PART NAME 1 2 3 4 5 6 (PRODUCT LEVEL) | SEE PAGE |
|---|---|---|---|---|---|---|
| | 1 | 1 | **096-4129** | 2 | CUSHION | |
| J | 2 | 1 | **375-8749** | 1 | LATCH AS | |
| | 3 | 1 | **375-8750** | 1 | LATCH AS | |
| | 4 | 1 | **541-2855** | 1 | HOOD AS-ENGINE | |
| | 4A | 1 | **114-6289** | 2 | HINGE | |
| | 4B | 1 | **268-0720** | 1 | HANDLE | |
| | 5 | 1 | **563-4949** | 1 | LINER | |
| M | 6 | 1 | **8T-4189** | 4 | BOLT (M8X1.25X20-MM) | |
| | 7 | 1 | **8T-4224** | 4 | WASHER-HARD (8.8X16X2-MM THK) | |
| M | 8 | 1 | **8T-6693** | 4 | SCREW-MACHINE (M5X0.8X16-MM) | |
| | 9 | 1 | **9X-8256** | 4 | WASHER (6.6X12X2-MM THK) | |
| D | 10 | 1 | **101-9848** | | SEAL (2.2-M) | |
| D | 10A | 1 | **101-9848** | | SEAL (0.96-M) | |
| D | 10B | 1 | **101-9848** | | SEAL (1.7-M) | |
| D | 10C | 1 | **101-9848** | | SEAL (1-M) | |

D - ORDER BY THE METER
J - REQUIRES CORPORATE KEY
M - METRIC PART

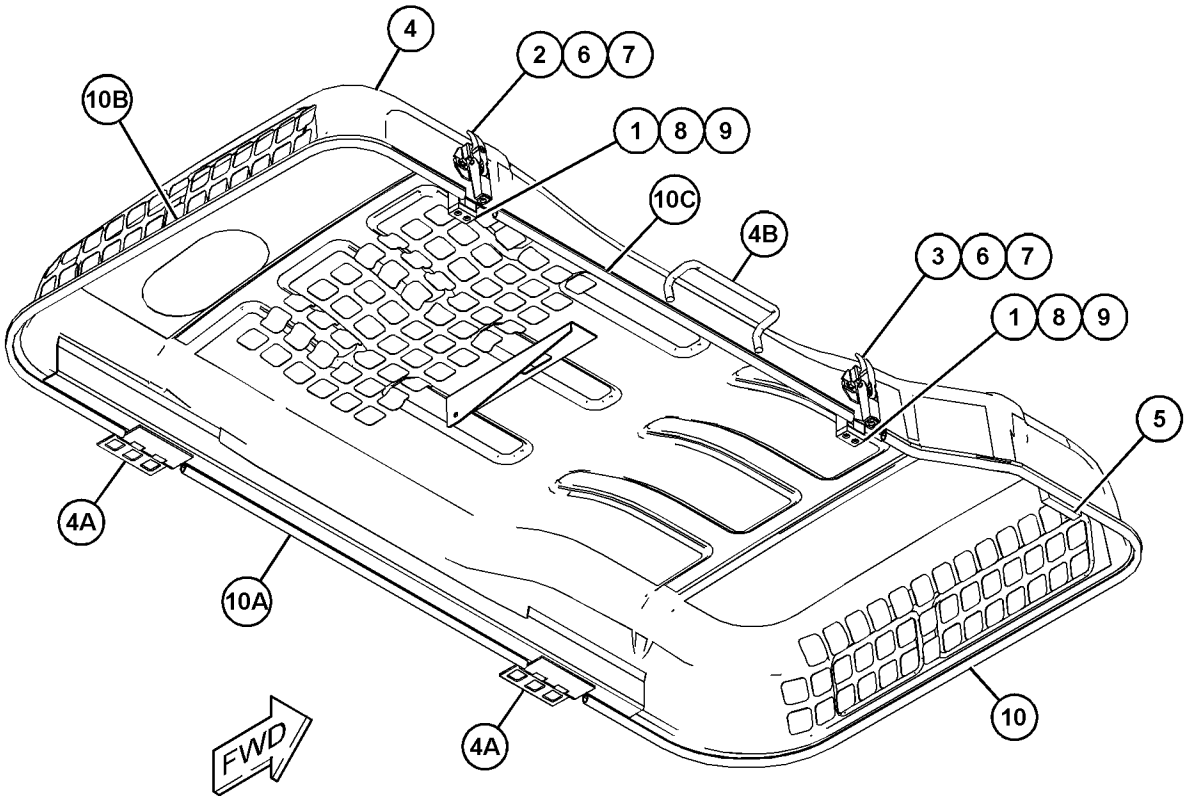


(VIEWED FROM BOTTOM)

GRAPHIC #1 <END> g06317173

# 377-6667 SHEET AS-SOUND SUPPRESSION

**S/N: FEY1-UP**

**PART OF 556-6573 HOOD & GUARD GP**

**SMCS-1801, 7076, 7251, 7267**

**i05430241**

| NOTE | REF NO | GRAPHIC REF | PART NUMBER | QTY | PART NAME 1 2 3 4 5 6 (PRODUCT LEVEL) | SEE PAGE |
|---|---|---|---|---|---|---|
| | 1 | 1 | **289-6700** | 1 | LINER | |
| | 2 | 1 | **377-6743** | 1 | LINER | |

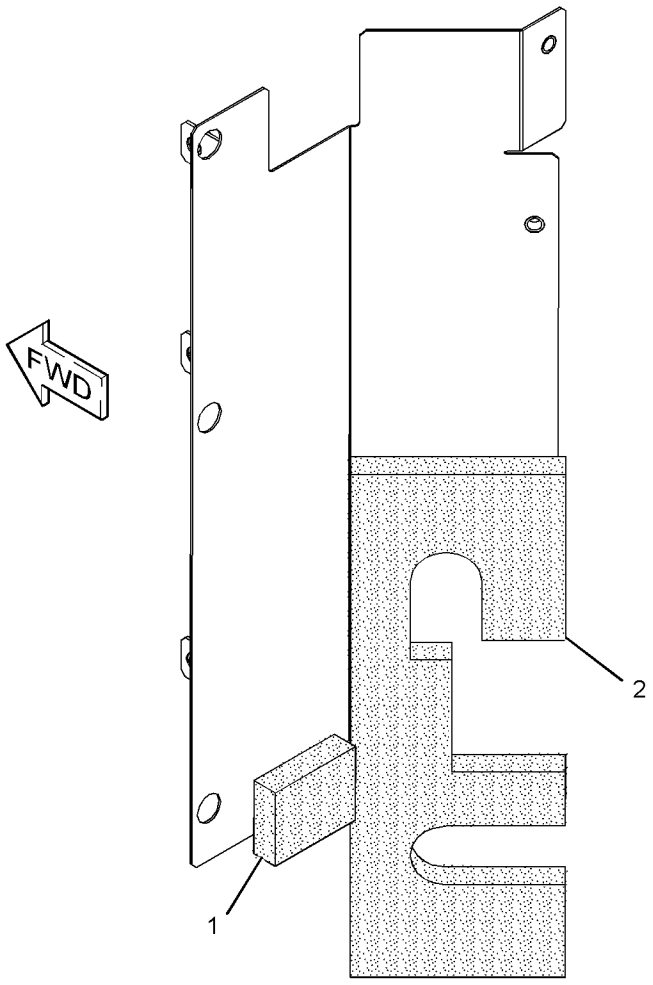


GRAPHIC #1 <END> g02732916

# 377-6708 SHEET AS-SOUND SUPPRESSION

**S/N: FEY1-UP**

**PART OF 556-6573 HOOD & GUARD GP**

**SMCS-1801, 7076, 7251, 7267** **i05260206**

| NOTE | REF NO | GRAPHIC REF | PART NUMBER | QTY | PART NAME 1 2 3 4 5 6 (PRODUCT LEVEL) | SEE PAGE |
|---|---|---|---|---|---|---|
| D | 1 | 1 | **5P-8309** | | SEAL (0.2-M) | |
| D | 1A | 1 | **5P-8309** | | SEAL (0.3-M) | |
| | 2 | 1 | **377-6749** | 1 | LINER | |
| | 3 | 1 | **244-8284** | 1 | LINER | |
| | 4 | 1 | **262-2347** | 1 | LINER | |

D - ORDER BY THE METER

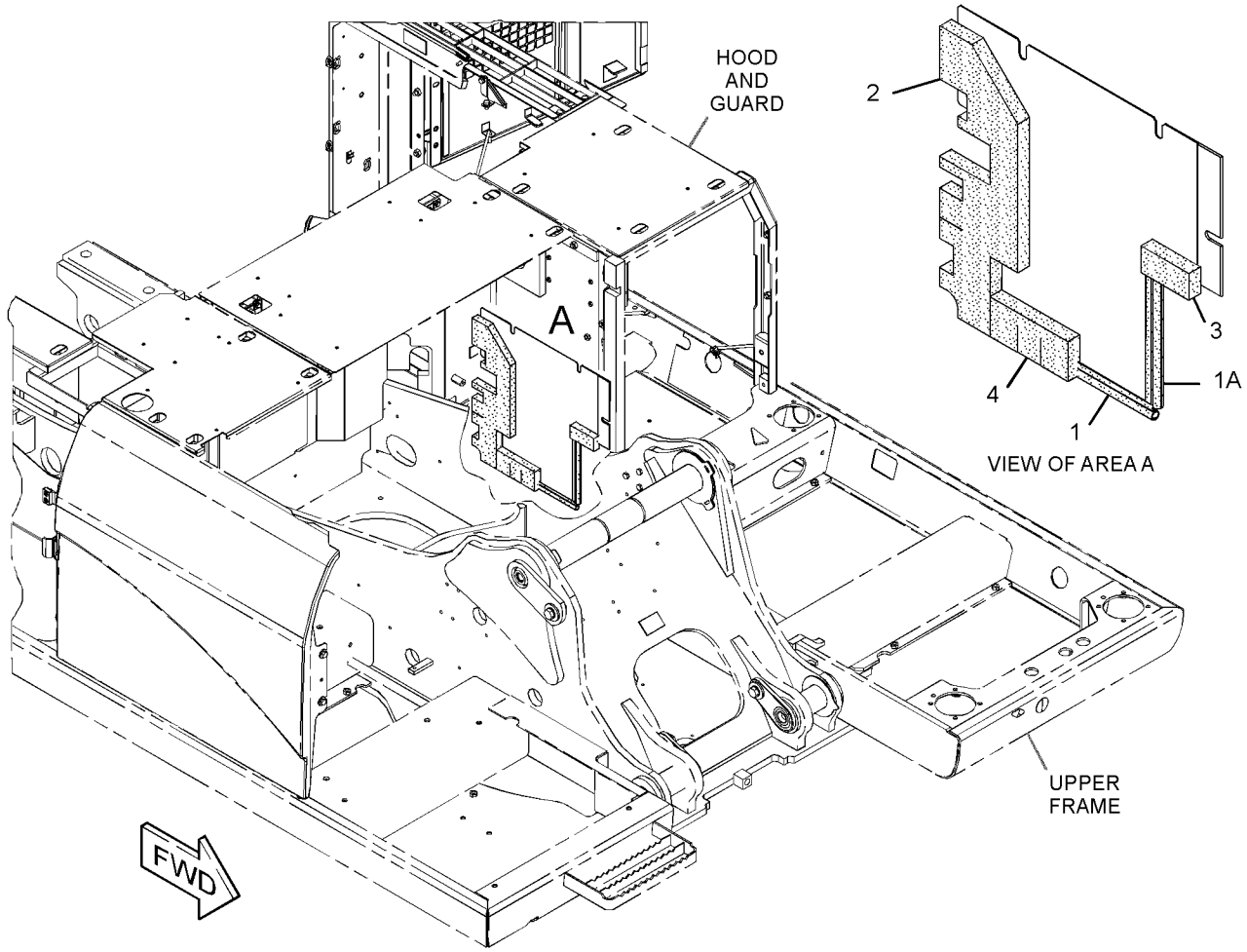


GRAPHIC #1 <END> g02732422

# 391-9646 SHEET AS-SOUND SUPPRESSION

**S/N: FEY1-UP**

**PART OF 556-6573 HOOD & GUARD GP**

**SMCS-1801, 7076, 7251, 7267** **i05349549**

| NOTE | REF NO | GRAPHIC REF | PART NUMBER | QTY | PART NAME 1 2 3 4 5 6 (PRODUCT LEVEL) | SEE PAGE |
|---|---|---|---|---|---|---|
| | 1 | 1 | **377-6746** | 1 | LINER | |
| | 2 | 1 | **377-6727** | 1 | LINER | |
| | 3 | 1 | **394-7410** | 1 | LINER | |

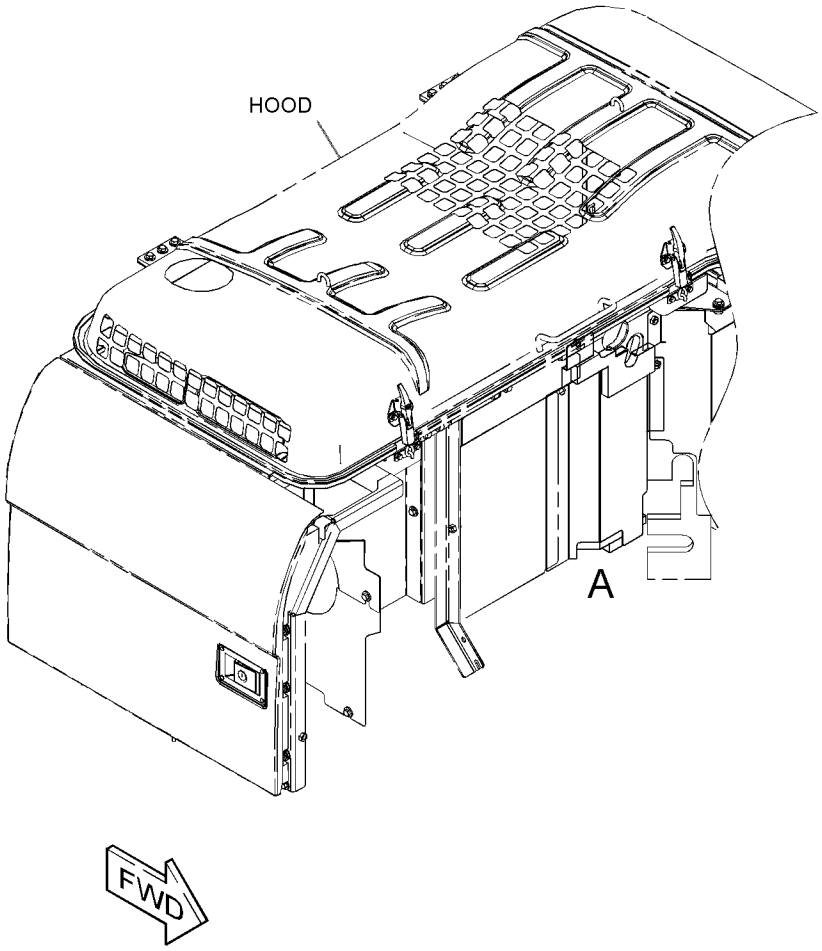


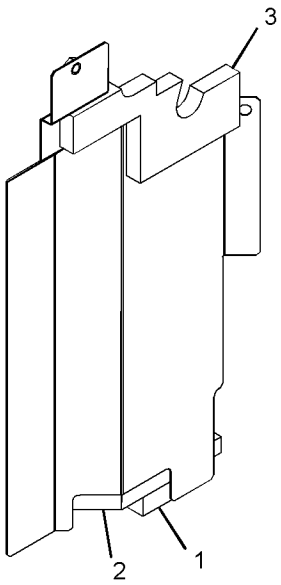


VIEW OF AREA A

GRAPHIC #1 <END> g03388626

# 419-3368 SHEET AS-SOUND SUPPRESSION

**S/N: FEY1-UP**

**PART OF 556-6573 HOOD & GUARD GP**

**SMCS-1801, 7076, 7251, 7267** **i05260214**

| NOTE | REF NO | GRAPHIC REF | PART NUMBER | QTY | PART NAME 1 2 3 4 5 6 (PRODUCT LEVEL) | SEE PAGE |
|---|---|---|---|---|---|---|
| | 1 | 1 | **262-2313** | 1 | LINER | |
| | 2 | 1 | **278-3837** | 1 | LINER | |
| | 3 | 1 | *419-3369* | 1 | SHEET AS | |
| M | | 1 | **6V-9632** | 4 | NUT-WELD (M6X1-THD) | |
| | | 1 | **7T-1099** | 3 | LINK | |
| M | | 1 | **8T-3490** | 1 | NUT-WELD (M10X1.5-THD) | |
| M | | 1 | **8T-3597** | 2 | NUT-WELD (M12X1.75-THD) | |

M - METRIC PART

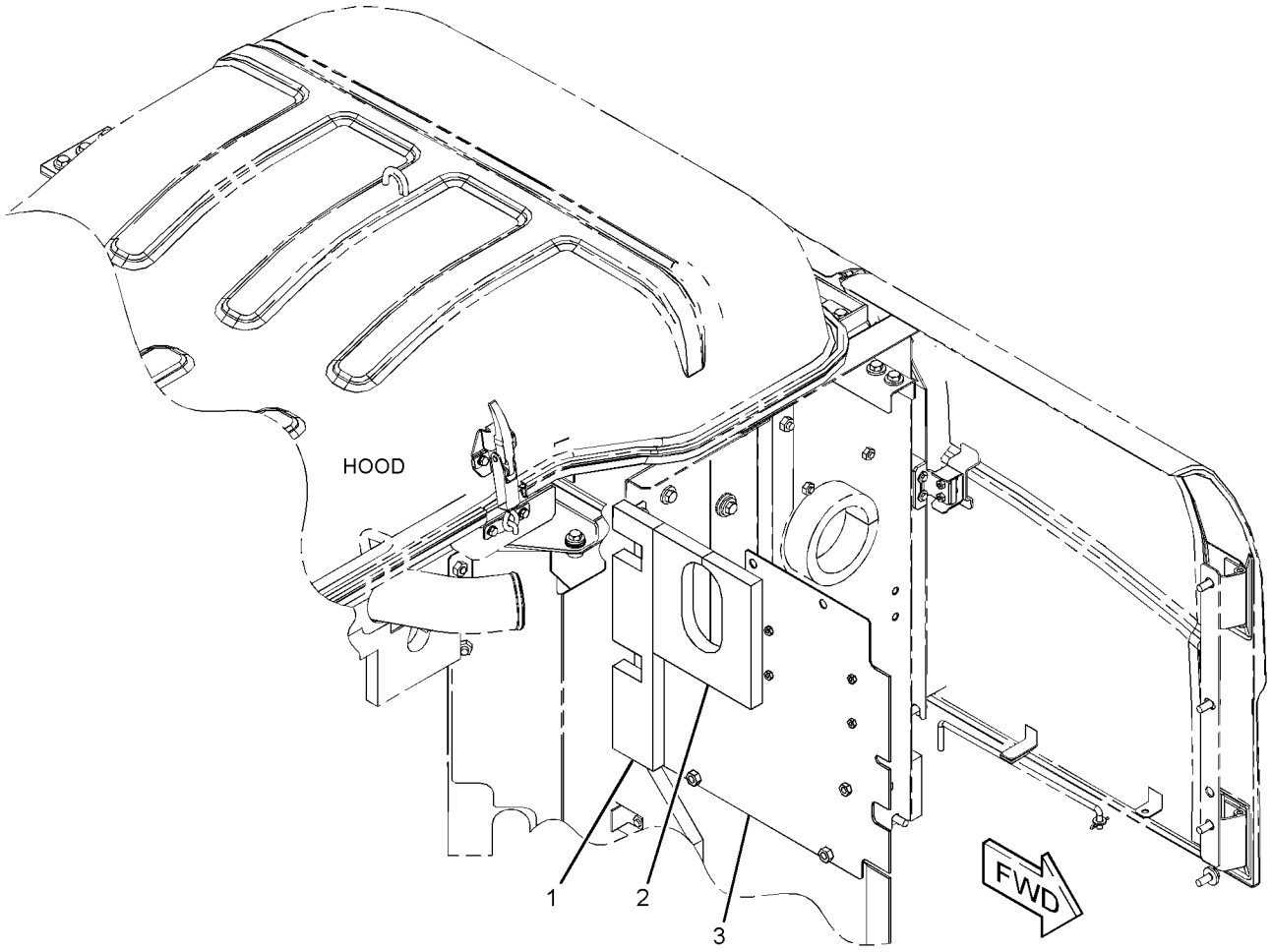


GRAPHIC #1 <END> g03310497

# *557-3595* SHEET AS-SOUND SUPPRESSION

**S/N: FEY1-UP**

**PART OF 556-6573 HOOD & GUARD GP**

**SMCS-1801, 7076, 7251, 7267**

**i07569224**

| NOTE | REF NO | GRAPHIC REF | PART NUMBER | QTY | PART NAME 1 2 3 4 5 6 (PRODUCT LEVEL) | SEE PAGE |
|---|---|---|---|---|---|---|
| | 1 | 1 | **399-6263** | 1 | LINER | |
| | 3 | 1 | **557-3621** | 1 | LINER | |

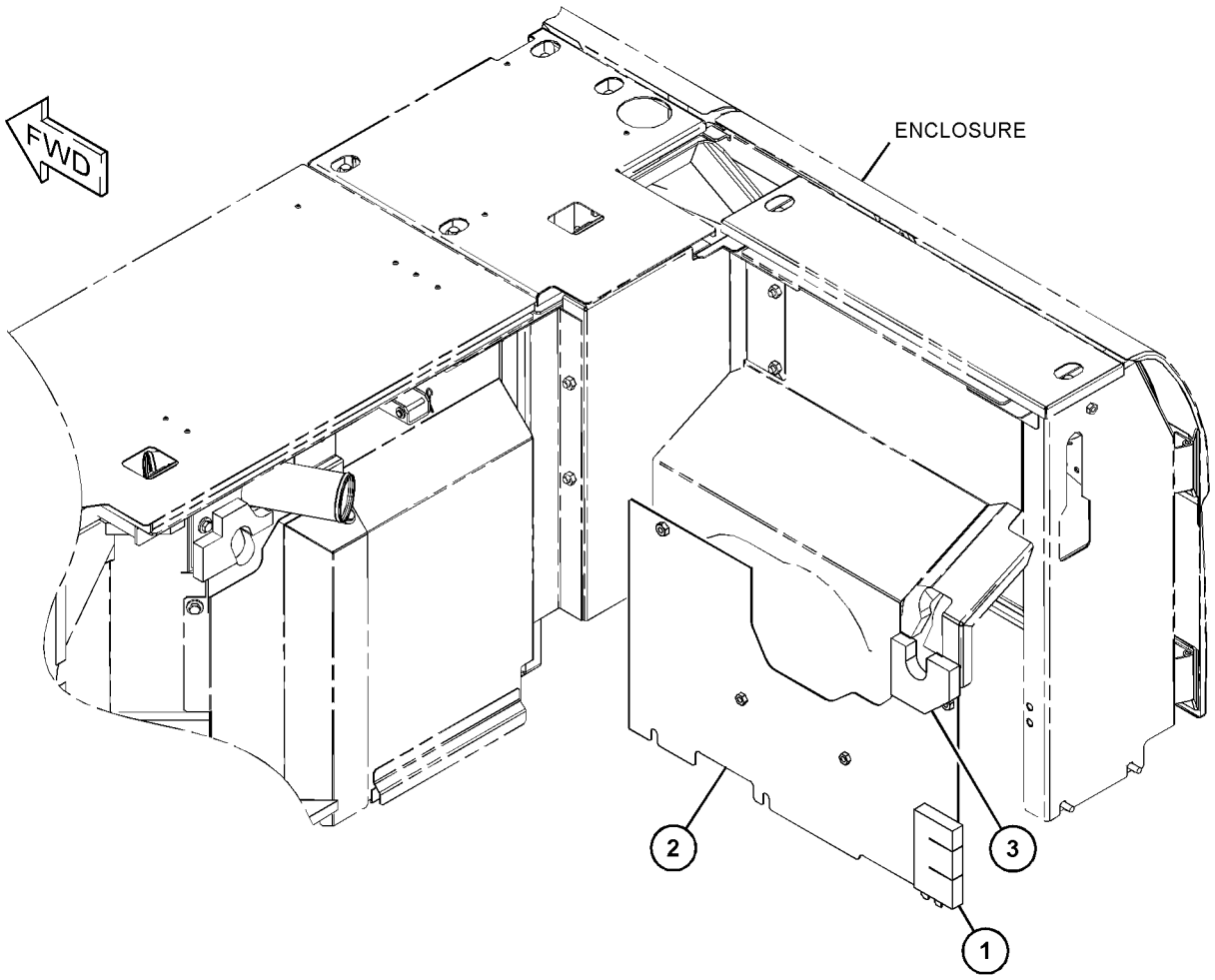


GRAPHIC #1 <END> g06313650

# *557-7265* SUPPORT AS

**S/N: FEY1-UP**

**PART OF 556-6573 HOOD & GUARD GP**

**SMCS-0635, 7276** **i07398604**

| NOTE | REF NO | GRAPHIC REF | PART NUMBER | QTY | PART NAME 1 2 3 4 5 6 (PRODUCT LEVEL) | SEE PAGE |
|---|---|---|---|---|---|---|
| | 1 | 1 | **244-8277** | 1 | LINER | |
| | 2 | 1 | **244-8278** | 1 | LINER | |
| | 3 | 1 | **244-8288** | 1 | LINER | |
| | 4 | 1 | **557-5309** | 1 | SUPPORT AS | |

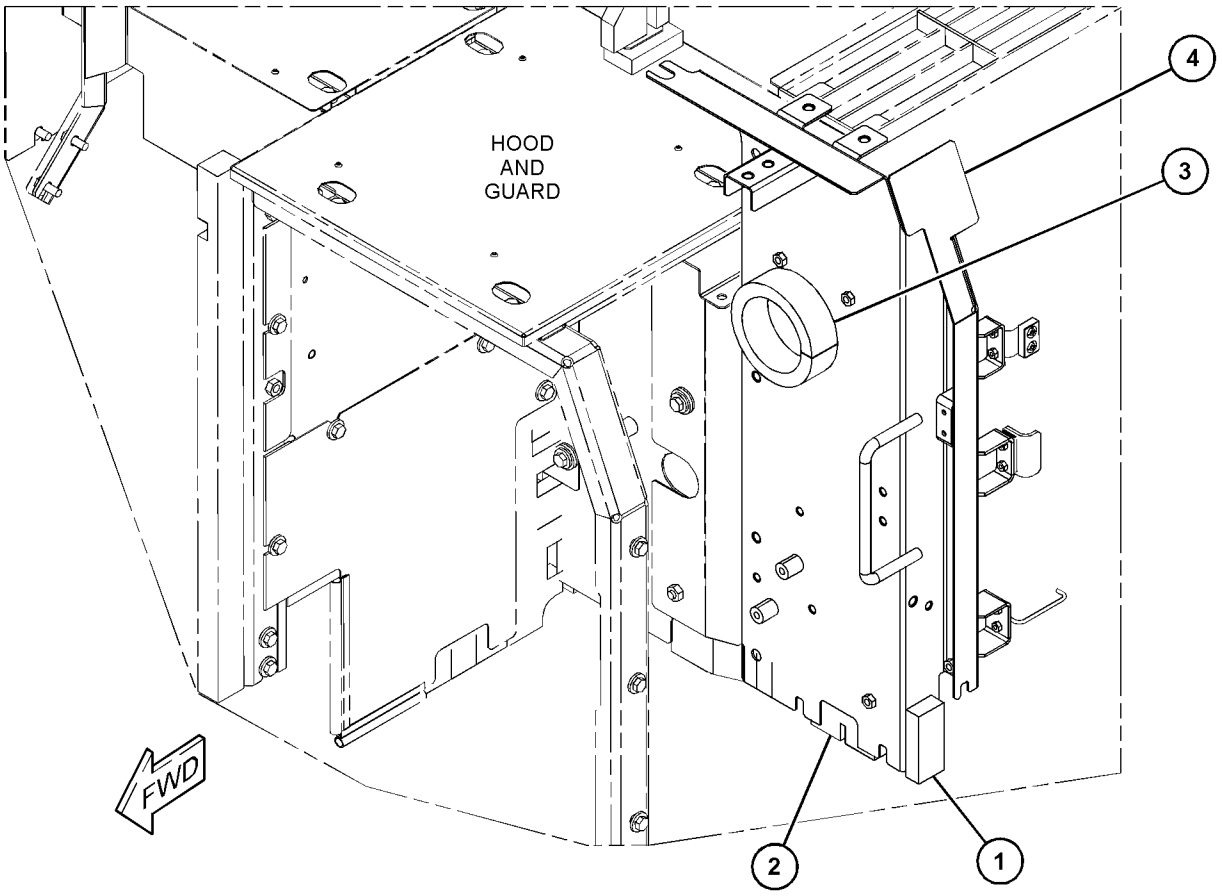


GRAPHIC #1 <END> g06313527

# *557-7266* SUPPORT AS

**S/N: FEY1-UP**

**PART OF 556-6573 HOOD & GUARD GP**

**SMCS-0635, 7276** **i07398618**

| NOTE | REF NO | GRAPHIC REF | PART NUMBER | QTY | PART NAME 1 2 3 4 5 6 (PRODUCT LEVEL) | SEE PAGE |
|---|---|---|---|---|---|---|
| | 1 | 1 | **248-8943** | 1 | LINER | |
| | 2 | 1 | **379-7509** | 1 | LINER | |
| | 3 | 1 | **557-5310** | 1 | SUPPORT AS | |

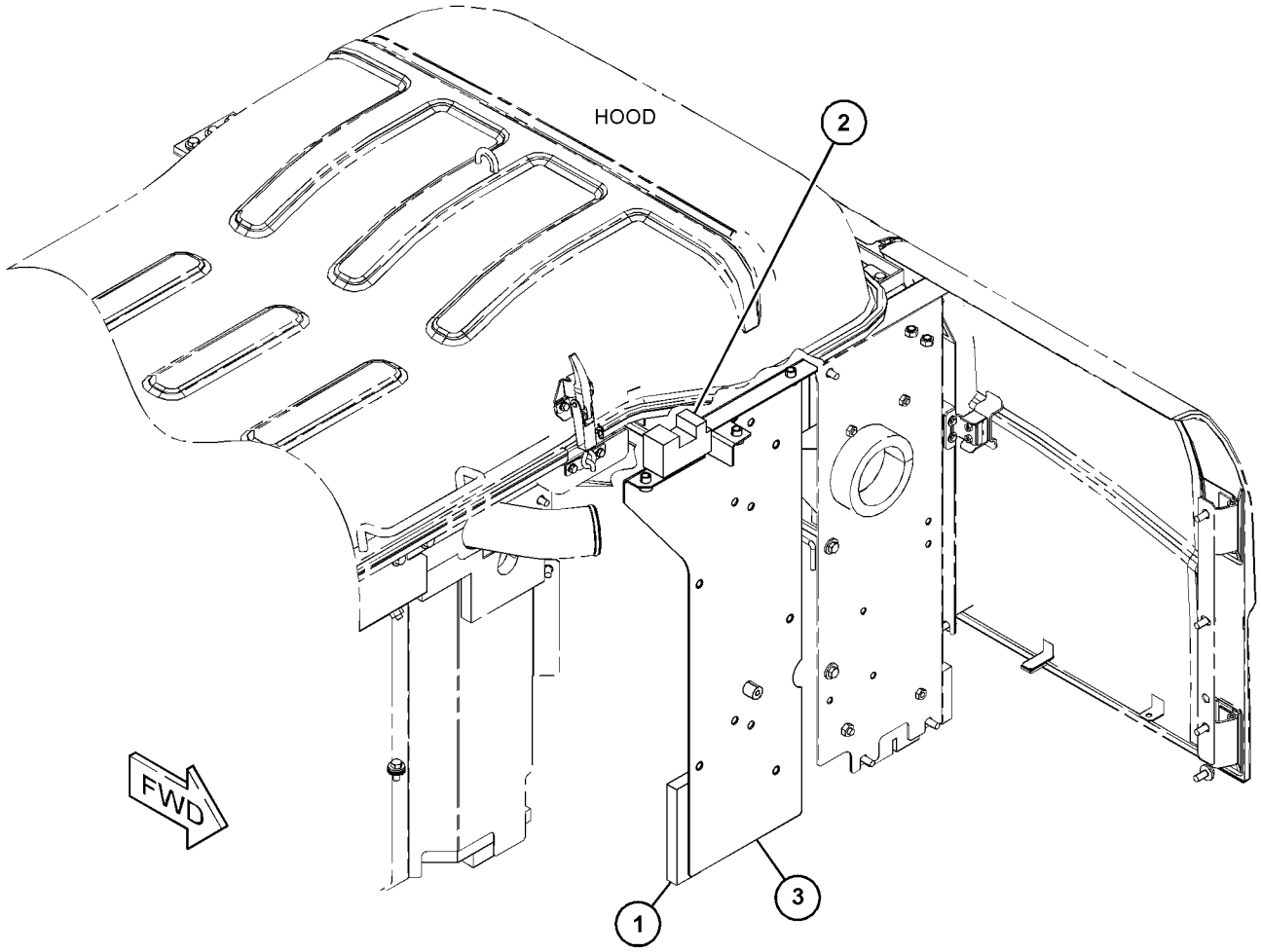


GRAPHIC #1 <END> g06313452

# 397-9009 SUPPORT AS-SOUND SUPPRESSION

**S/N: FEY1-UP**

**PART OF 556-6573 HOOD & GUARD GP**

**SMCS-7276** **i05260213**

| NOTE | REF NO | GRAPHIC REF | PART NUMBER | QTY | PART NAME 1 2 3 4 5 6 (PRODUCT LEVEL) | SEE PAGE |
|---|---|---|---|---|---|---|
| | 1 | 1 | **377-6767** | 1 | LINER | |
| | 2 | 1 | **377-6809** | 1 | LINER | |
| | 3 | 1 | *397-9010* | 1 | SUPPORT AS | |
| M | | 1 | **8T-3597** | 2 | NUT-WELD (M12X1.75-THD) | |
| M | | 1 | **8T-3612** | 2 | NUT-WELD (M8X1.25-THD) | |

M - METRIC PART

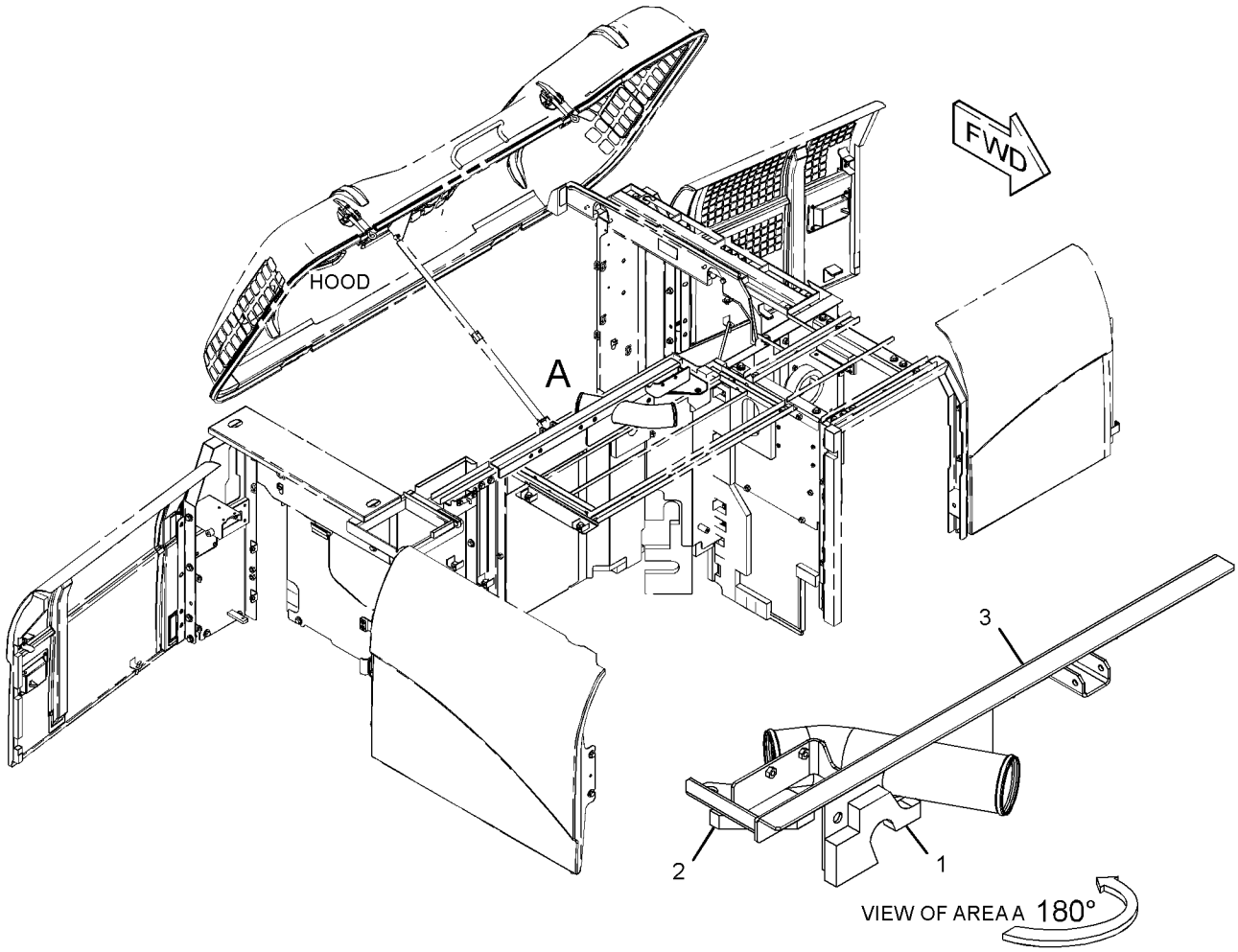


GRAPHIC #1 <END> g03303860

# *432-5008* FRAME AR-UNDERCARRIAGE

**S/N: FEY1-UP**

**PART OF 556-6434 GENERAL AR**

**SMCS-4151** **i07516312**

| NOTE | PART NUMBER | QTY | PART NAME 1 2 3 4 5 6 (PRODUCT LEVEL) | SEE PAGE |
|---|---|---|---|---|
| Y | *442-8572* | 1 | FRAME AS-UNDERCARRIAGE | 182 |
| Y | *227-6147* | 1 | GEAR & BEARING GP-SWING | 163 |
| Y | *445-5630* | 1 | GUARD GP-TRACK GUIDE (CENTER) | 183 |
| Y | *430-6464* | 1 | GUARD GP-TRAVEL MOTOR | 185 |
| Y | *558-7699* | 1 | IDLER GP-FRONT | 186 |
| Y | *543-2703* | 1 | LINES GP-TRAVEL MOTOR (LONG UNDERCARRIAGE) | 305 |
| Y | *546-1942* | 1 | ROLLER AR-TRACK & CARRIER | 191 |

Y - SEPARATE ILLUSTRATION

<END>

# *442-8572* FRAME AS-UNDERCARRIAGE—LONG UNDERCARRIAGE

**S/N: FEY1-UP**

**PART OF 432-5008 FRAME AR-UNDERCARRIAGE**

**SMCS-4150, 7062** **i07231195**

| NOTE | REF NO | GRAPHIC REF | PART NUMBER | QTY | PART NAME 1 2 3 4 5 6 (PRODUCT LEVEL) | SEE PAGE |
|---|---|---|---|---|---|---|
| | 1 | 1 | *442-8574* | 1 | FRAME AS-TRACK ROLLER (LH) | |
| | 1A | 1 | **386-0281** | 2 | BRACKET | |
| | 1B | 1 | **386-0285** | 2 | STEP | |
| | 2 | 1 | *442-8573* | 1 | FRAME AS-TRACK ROLLER (RH) | |
| | 2A | 1 | **386-0281** | 2 | BRACKET | |
| | 2B | 1 | **386-0285** | 2 | STEP | |

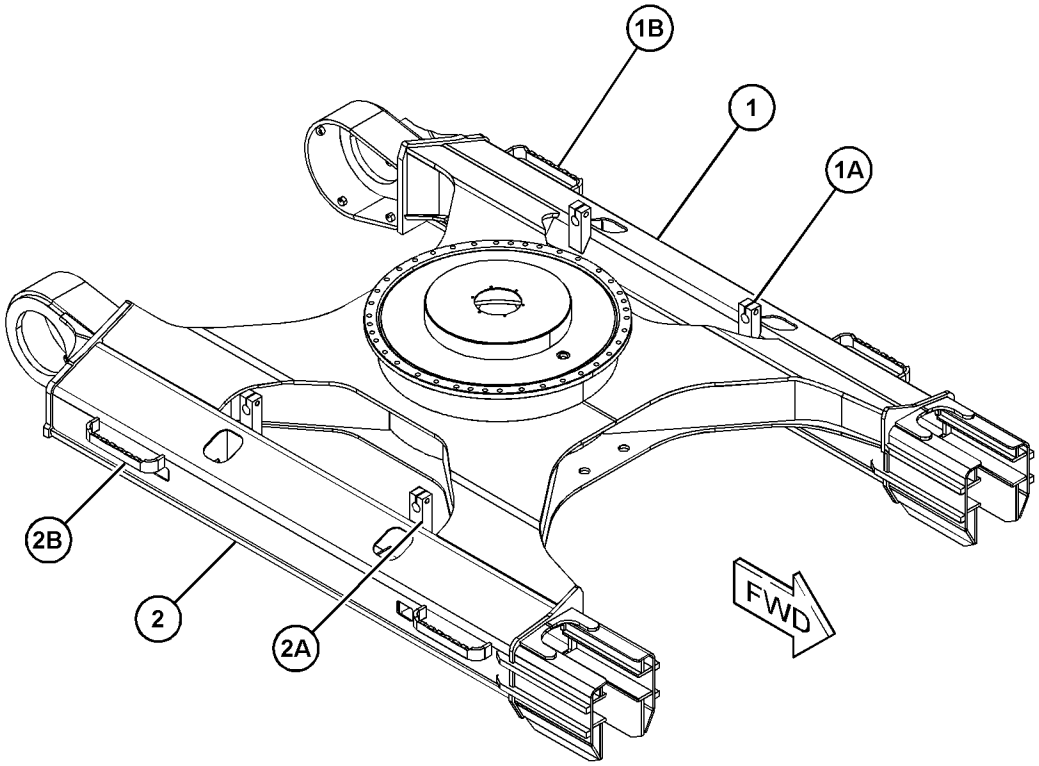


GRAPHIC #1 <END> g06130364

# *445-5630* GUARD GP-TRACK GUIDE

**S/N: FEY1-UP**

**PART OF 432-5008 FRAME AR-UNDERCARRIAGE**

**SMCS-4177** **i07416695**

| NOTE | REF NO | GRAPHIC REF | PART NUMBER | QTY | PART NAME 1 2 3 4 5 6 (PRODUCT LEVEL) | SEE PAGE |
|---|---|---|---|---|---|---|
| | 1 | 1 | **456-5926** | 4 | GUARD AS-TRACK GUIDE | |
| | 2 | 1 | **451-2176** | 16 | WASHER-HARD (22X35X3.5-MM THK) | |
| M | 3 | 1 | **453-2845** | 16 | BOLT (M20X2.5X40-MM) | |

M - METRIC PART

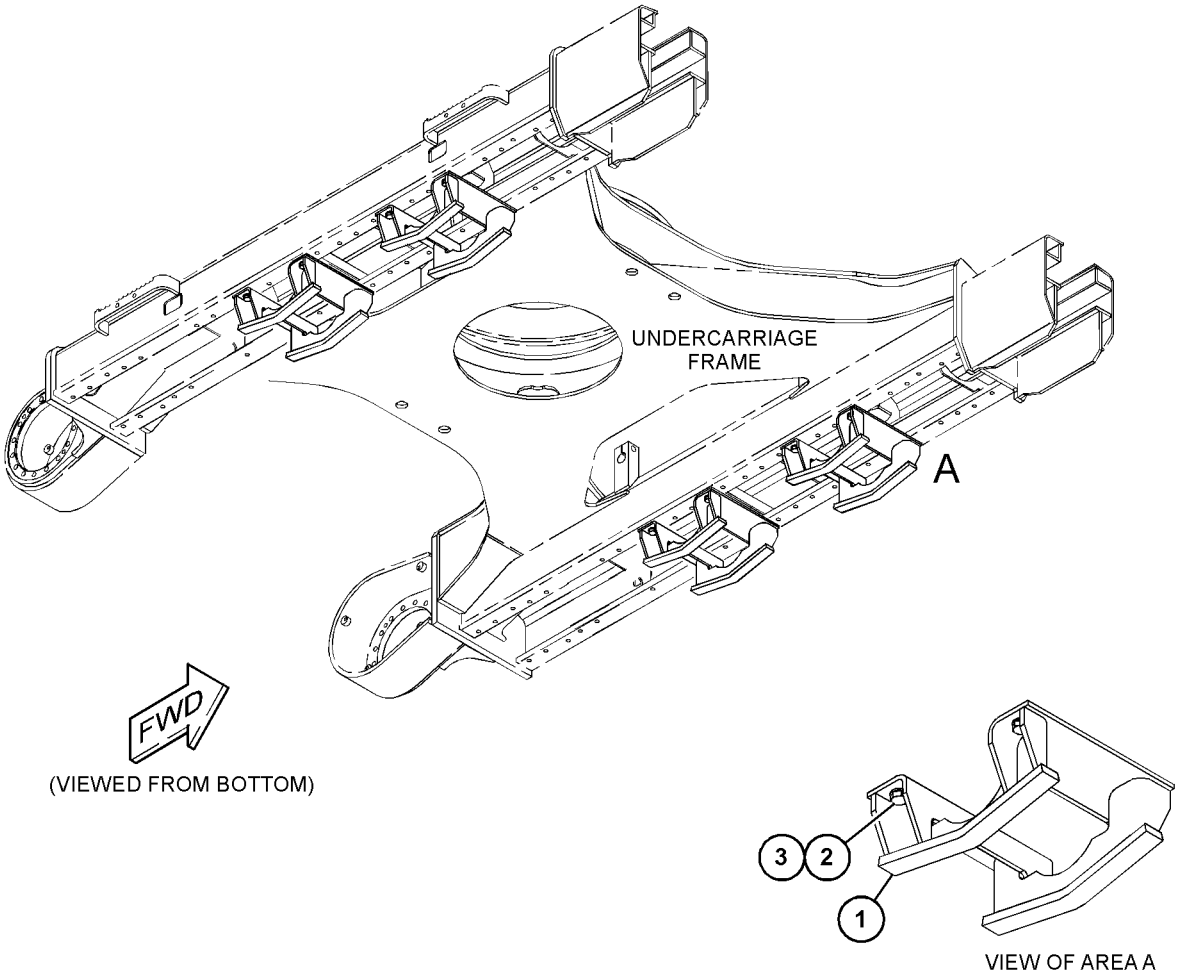


GRAPHIC #1 <END> g06153865

# *562-1612* GUARD GP-TRACK GUIDE

**S/N: FEY1-UP**

**SMCS-4177** **i07398713**

| NOTE | REF NO | GRAPHIC REF | PART NUMBER | QTY | PART NAME 1 2 3 4 5 6 (PRODUCT LEVEL) | SEE PAGE |
|---|---|---|---|---|---|---|
| | 1 | 1 | **451-2176** | 8 | WASHER-HARD (22X35X3.5-MM THK) | |
| M | 2 | 1 | **453-2845** | 8 | BOLT (M20X2.5X40-MM) | |
| | 3 | 1 | **456-5926** | 2 | GUARD AS-TRACK GUIDE | |

M - METRIC PART

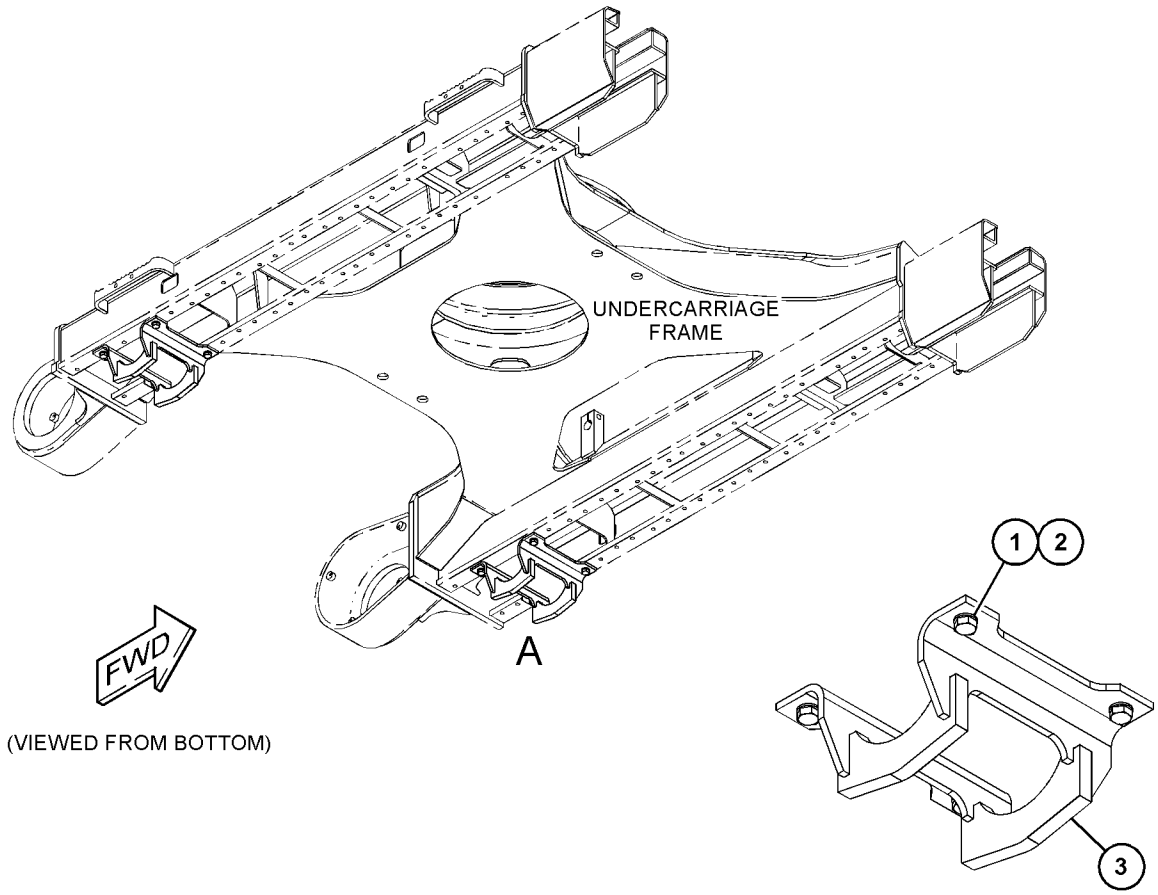


(VIEWED FROM BOTTOM)

VIEW OF AREA A

GRAPHIC #1 <END> g06313258

# *430-6464* GUARD GP-TRAVEL MOTOR

**S/N: FEY1-UP**

**PART OF 432-5008 FRAME AR-UNDERCARRIAGE**

**SMCS-7163** **i06163460**

| NOTE | REF NO | GRAPHIC REF | PART NUMBER | QTY | PART NAME 1 2 3 4 5 6 (PRODUCT LEVEL) | SEE PAGE |
|---|---|---|---|---|---|---|
| | 1 | 1 | **453-8030** | 8 | BOLT AS | |
| | 2 | 1 | **430-6463** | 1 | COVER | |
| | 3 | 1 | **430-6462** | 1 | COVER | |

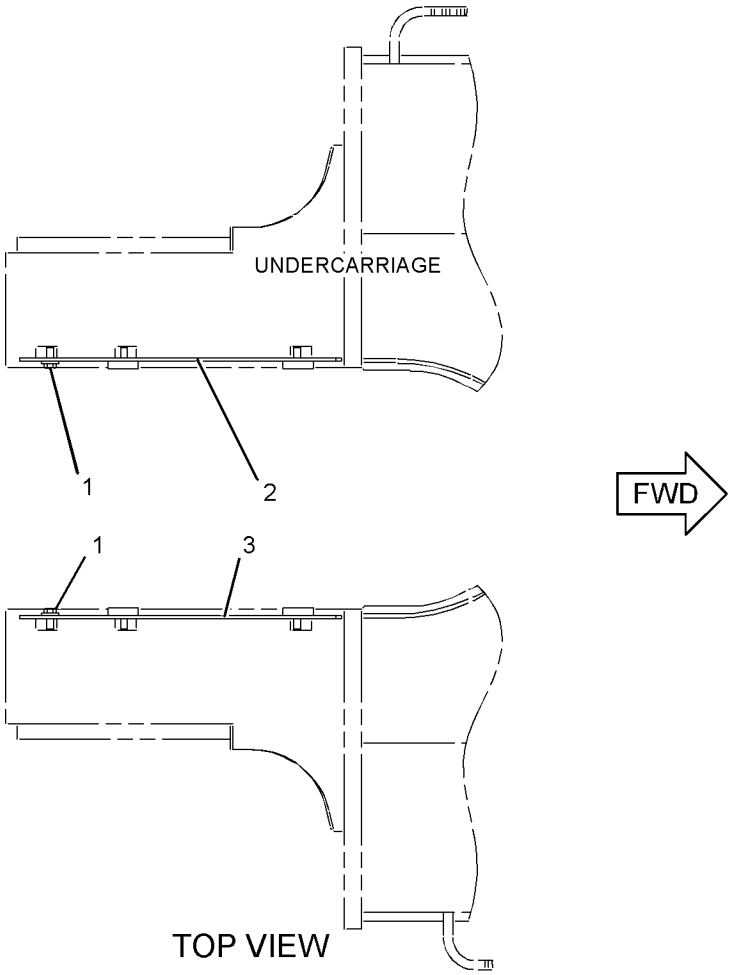


GRAPHIC #1 <END> g03835101

# *558-7699* IDLER GP-FRONT

**S/N: FEY1-UP**

**PART OF 432-5008 FRAME AR-UNDERCARRIAGE**

**SMCS-4159** **i07424425**

| NOTE | REF NO | GRAPHIC REF | PART NUMBER | QTY | PART NAME 1 2 3 4 5 6 (PRODUCT LEVEL) | SEE PAGE |
|---|---|---|---|---|---|---|
| Y | 1 | 1 | *558-7700* | 1 | IDLER GP-FRONT (RH) | 187 |
| Y | 2 | 1 | *558-7701* | 1 | IDLER GP-FRONT (LH) | 188 |

Y - SEPARATE ILLUSTRATION

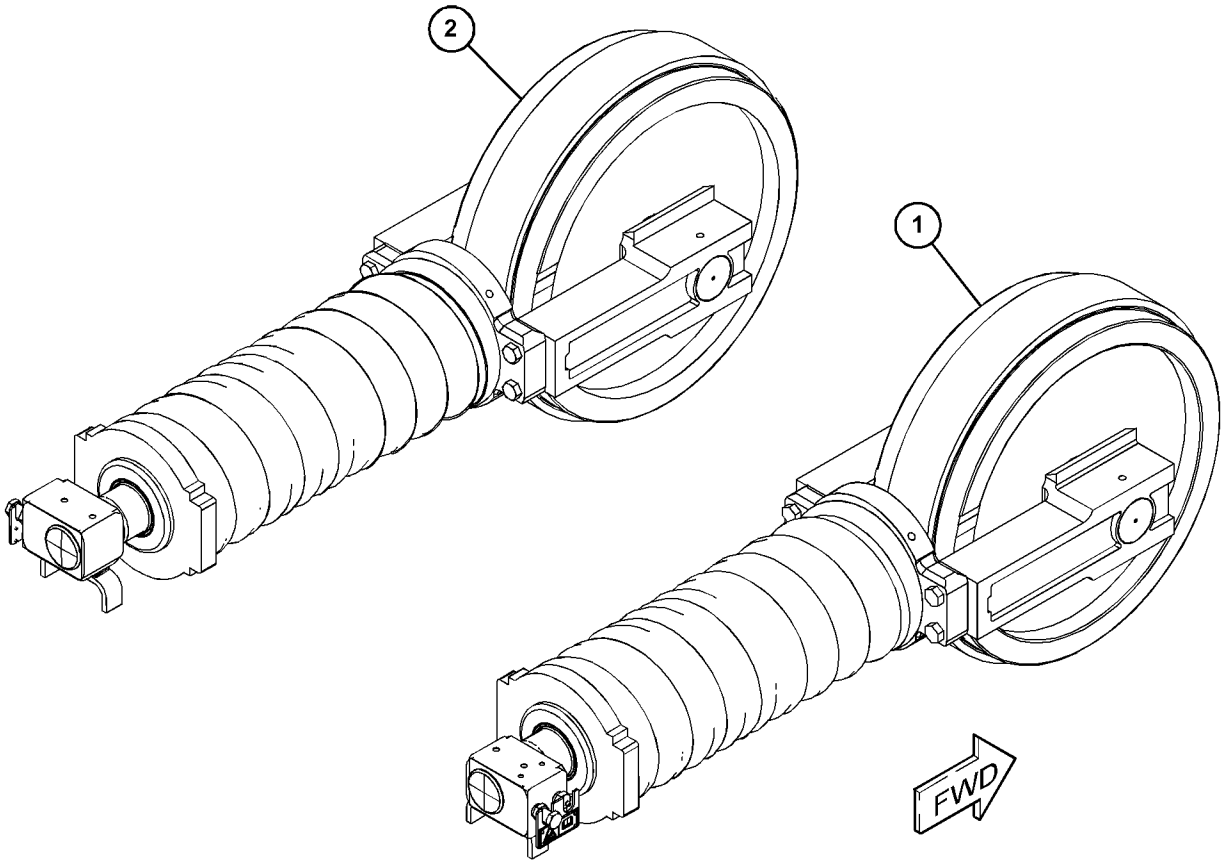


GRAPHIC #1 <END> g06319742

# *558-7700* IDLER GP-FRONT—RH

**S/N: FEY1-UP**

**PART OF 558-7699 IDLER GP-FRONT**

**SMCS-4159** **i07424424**

| NOTE | REF NO | GRAPHIC REF | PART NUMBER | QTY | PART NAME 1 2 3 4 5 6 (PRODUCT LEVEL) | SEE PAGE |
|---|---|---|---|---|---|---|
| M | 1 | 1 | **447-1707** | 4 | BOLT (M16X2X60-MM) | |
| Y | 2 | 1 | *420-6315* | 1 | TRACK ADJUSTER & RECOIL GP (RH) | 196 |
| | 3 | 1 | **558-7702** | 1 | IDLER GP-FRONT | |

M - METRIC PART
Y - SEPARATE ILLUSTRATION

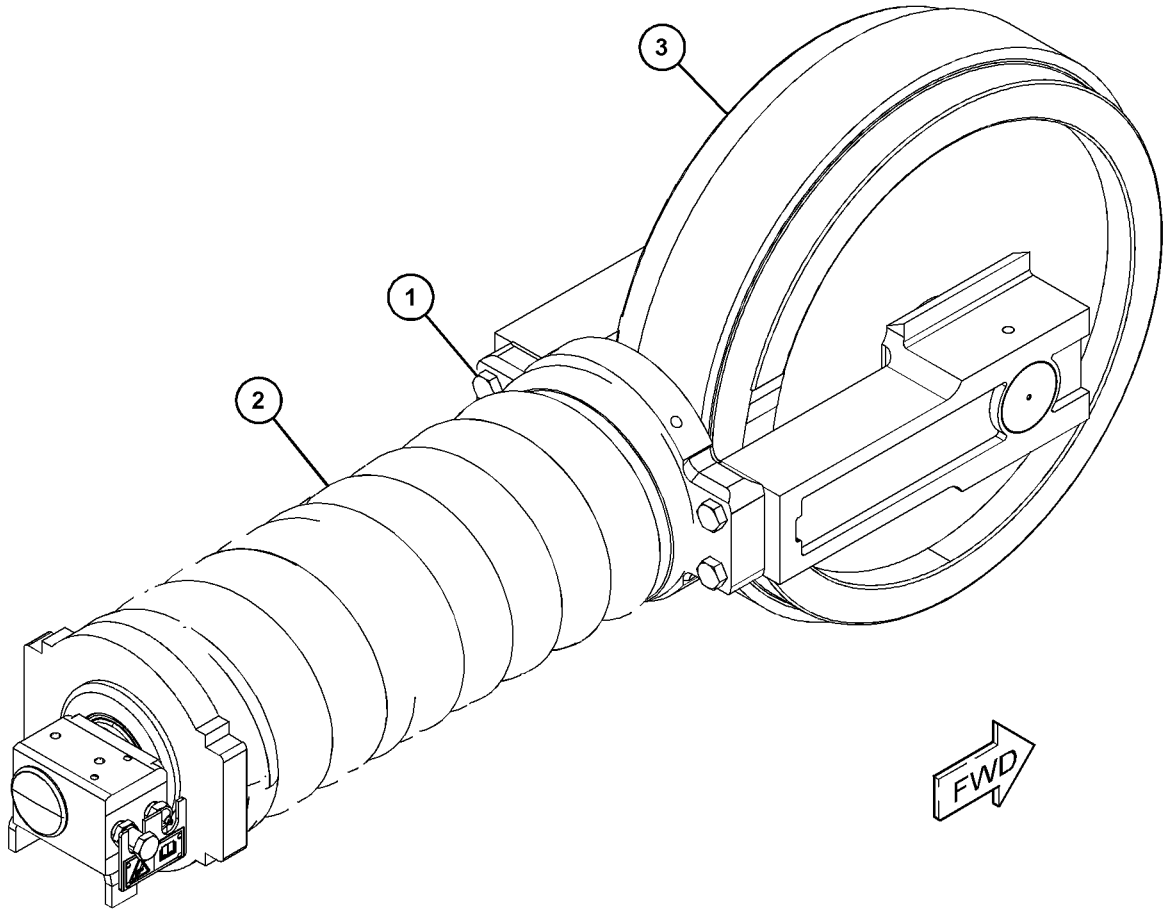


GRAPHIC #1 <END> g06319727

# *558-7701* IDLER GP-FRONT—LH

**S/N: FEY1-UP**

**PART OF 558-7699 IDLER GP-FRONT**

**SMCS-4159** **i07426381**

| NOTE | REF NO | GRAPHIC REF | PART NUMBER | QTY | PART NAME 1 2 3 4 5 6 (PRODUCT LEVEL) | SEE PAGE |
|---|---|---|---|---|---|---|
| M | 1 | 1 | **447-1707** | 4 | BOLT (M16X2X60-MM) | |
| Y | 2 | 1 | *420-6319* | 1 | TRACK ADJUSTER & RECOIL GP (LH) | 198 |
| | 3 | 1 | **558-7702** | 1 | IDLER GP-FRONT | |

M - METRIC PART
Y - SEPARATE ILLUSTRATION

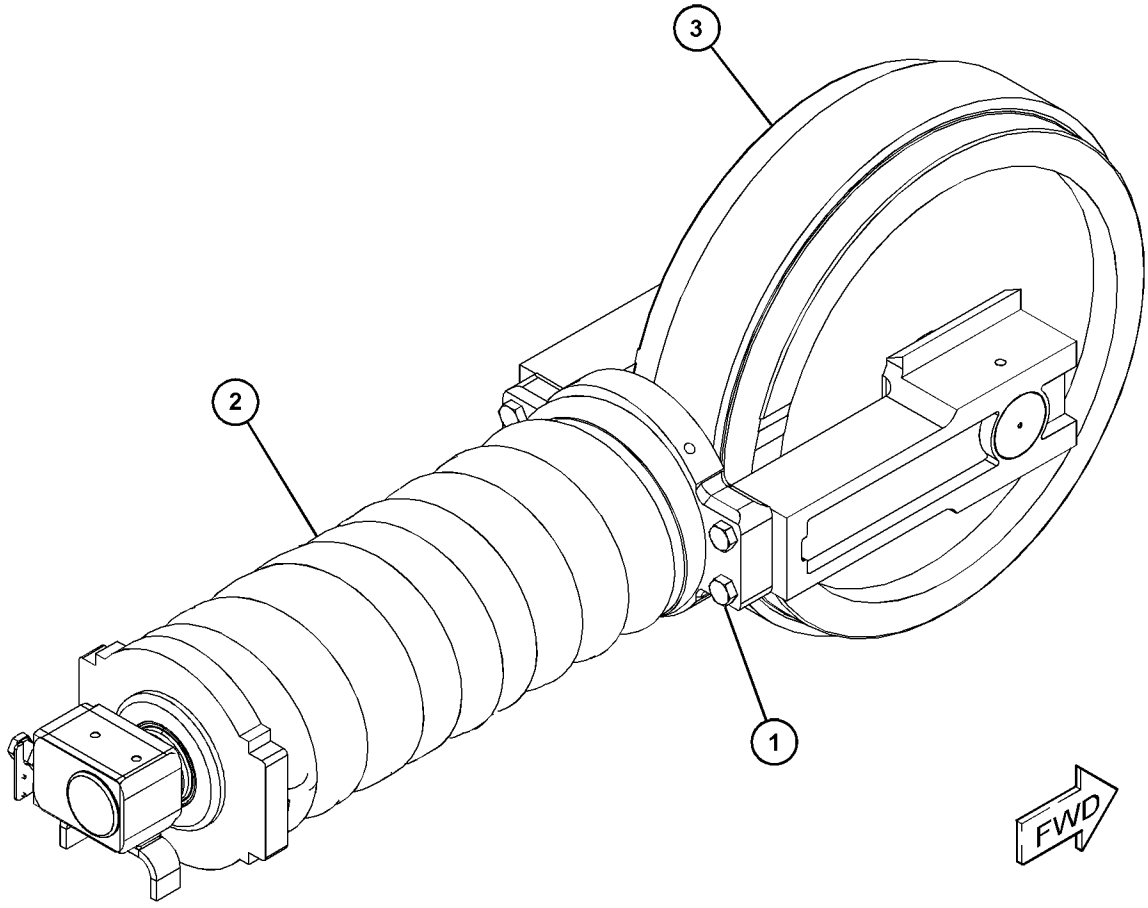


GRAPHIC #1 <END> g06319766

# 542-6613 LINK AS-TRACK

**S/N: FEY1-UP**
**GREASE LUBRICATED TRACK, GENERAL DUTY**
**PART OF 539-8169, 539-8170 TRACK GP**

**SMCS-4169, 4171**

**i07394848**

| NOTE | REF NO | GRAPHIC REF | PART NUMBER | QTY | PART NAME 1 2 3 4 5 6 (PRODUCT LEVEL) | SEE PAGE |
|---|---|---|---|---|---|---|
| | 1 | 1 | **541-8741** | 48 | LINK-TRACK (LH) | |
| | 2 | 1 | **158-4380** | 96 | SEAL-TRACK | |
| | 3 | 1 | **6Y-8186** | 48 | PIN-TRACK | |
| | 4 | 1 | **422-5497** | 1 | PIN-COTTER | |
| | 5 | 1 | **158-4381** | 2 | SEAL-TRACK MASTER | |
| | 6 | 1 | **188-3064** | 1 | PIN-TRACK MASTER | |
| | 7 | 1 | **190-3523** | 48 | BUSHING-TRACK | |
| | 8 | 1 | **190-3524** | 1 | BUSHING-TRACK MASTER | |
| | 9 | 1 | **541-8738** | 1 | LINK-TRACK MASTER (RH) | |
| | 10 | 1 | **541-8739** | 1 | LINK-TRACK MASTER (LH) | |
| | 11 | 1 | **541-8740** | 48 | LINK-TRACK (RH) | |

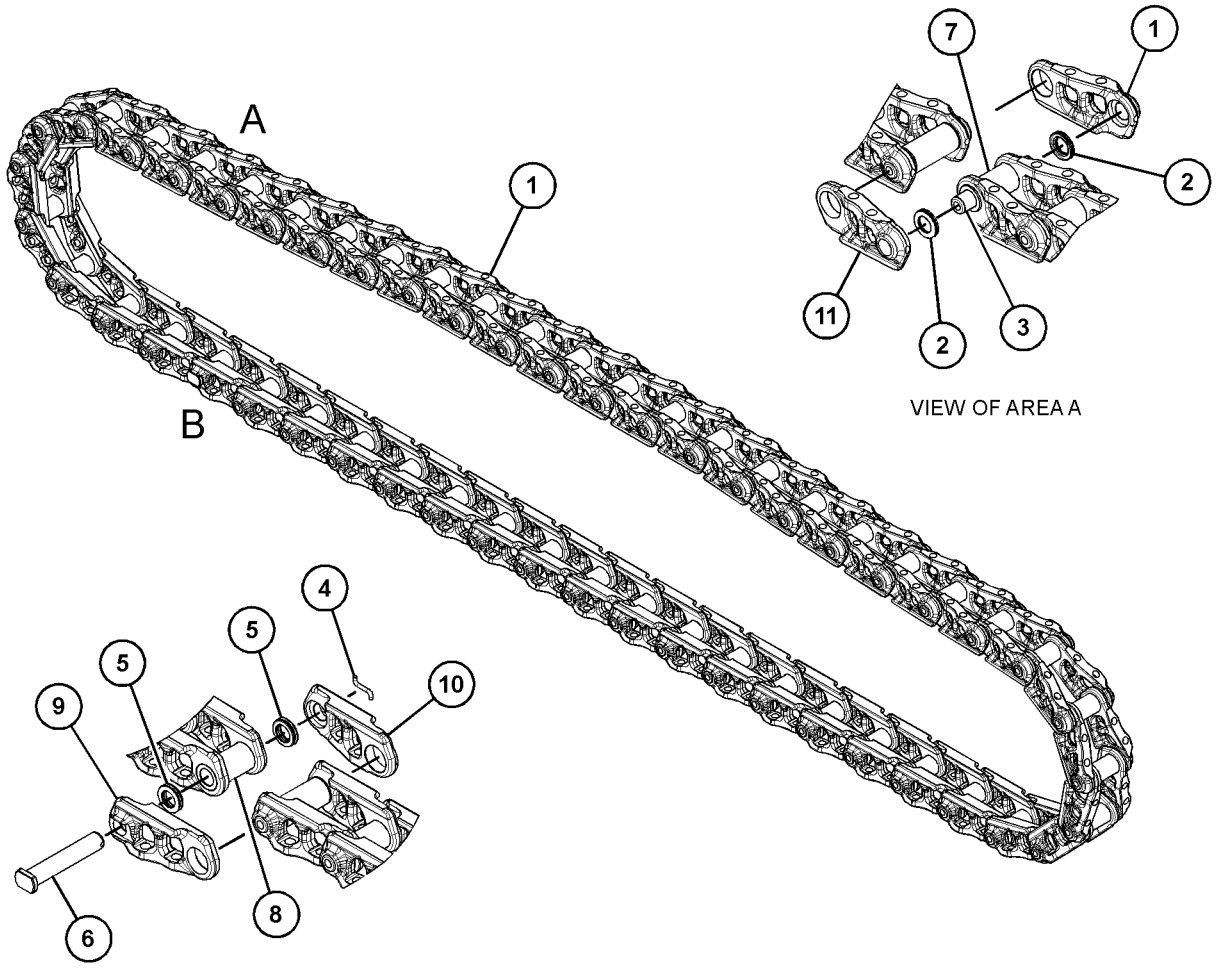


VIEW OF AREA A

VIEW OF AREA B

GRAPHIC #1

<END>

g06308087

# *559-5101* ROLLER AR-TRACK

**S/N: FEY1-UP**

**SMCS-4180** **i07398704**

| NOTE | REF NO | GRAPHIC REF | PART NUMBER | QTY | PART NAME 1 2 3 4 5 6 (PRODUCT LEVEL) | SEE PAGE |
|---|---|---|---|---|---|---|
| Y | 1 | 1 | *422-2405* | 16 | ROLLER GP-TRACK-SINGLE FLANGE | 193 |
| M | 2 | 1 | **447-1731** | 64 | BOLT (M20X2.5X100-MM) | |
| | 3 | 1 | **451-2176** | 64 | WASHER-HARD (22X35X3.5-MM THK) | |

M - METRIC PART
Y - SEPARATE ILLUSTRATION

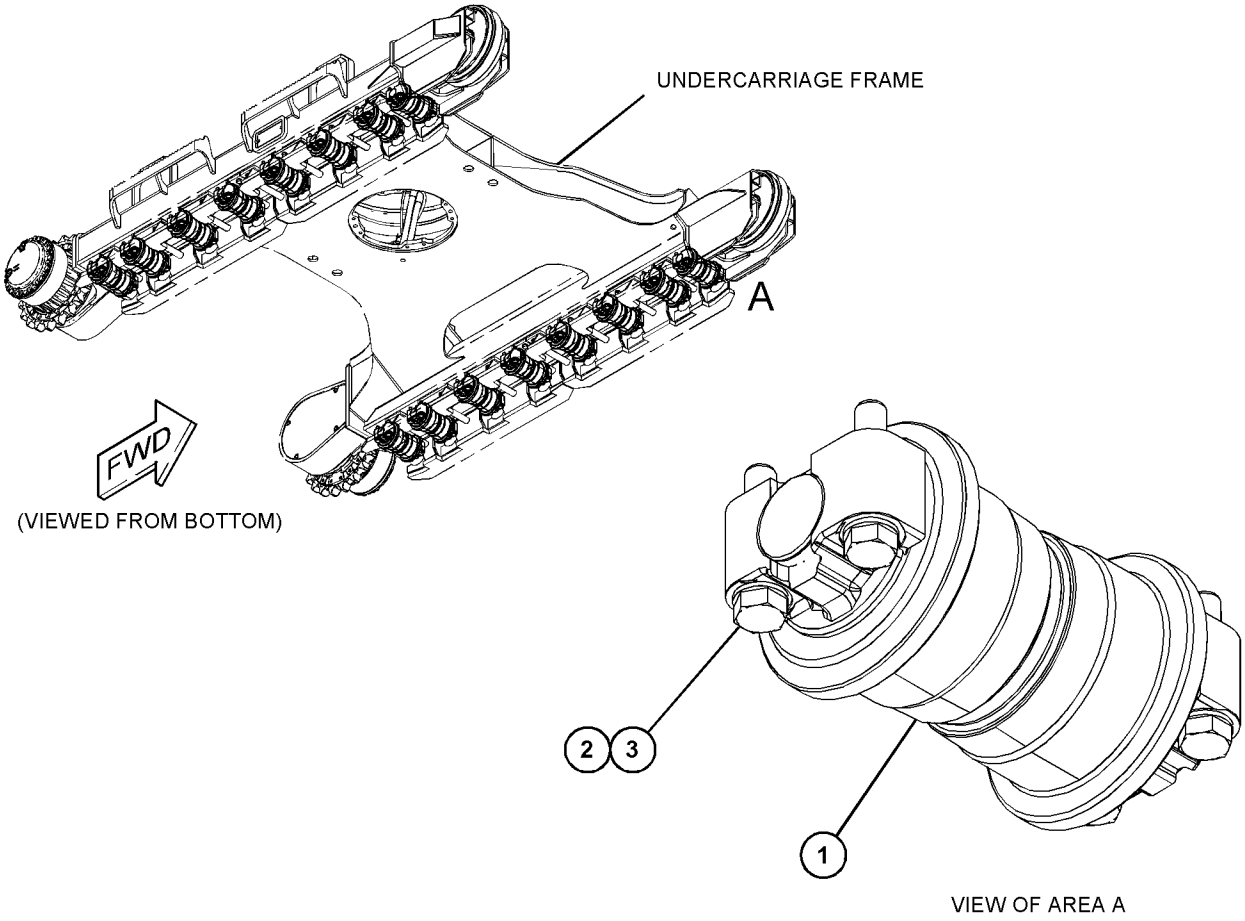


GRAPHIC #1 <END> g06313264

# *546-1942* ROLLER AR-TRACK & CARRIER

**S/N: FEY1-UP**

**PART OF 432-5008 FRAME AR-UNDERCARRIAGE**

**SMCS-4154, 4180** **i07516301**

| NOTE | REF NO | GRAPHIC REF | PART NUMBER | QTY | PART NAME 1 2 3 4 5 6 (PRODUCT LEVEL) | SEE PAGE |
|---|---|---|---|---|---|---|
| M | 1 | 1 | **447-1725** | 4 | BOLT (M24X3X80-MM) | |
| M | 2 | 1 | **447-1731** | 64 | BOLT (M20X2.5X100-MM) | |
| | 3 | 1 | **451-2176** | 64 | WASHER-HARD (22X35X3.5-MM THK) | |
| Y | 4 | 1 | **507-7552** | 16 | ROLLER GP-TRACK-SINGLE FLANGE | 194 |
| Y | 5 | 1 | *507-7553* | 4 | ROLLER GP-TRACK CARRIER | 192 |
| | | | | | | |
| | | | | | QUANTITIES SHOWN ARE THOSE REQUIRED FOR BOTH LH AND RH SIDES | |

M - METRIC PART
Y - SEPARATE ILLUSTRATION

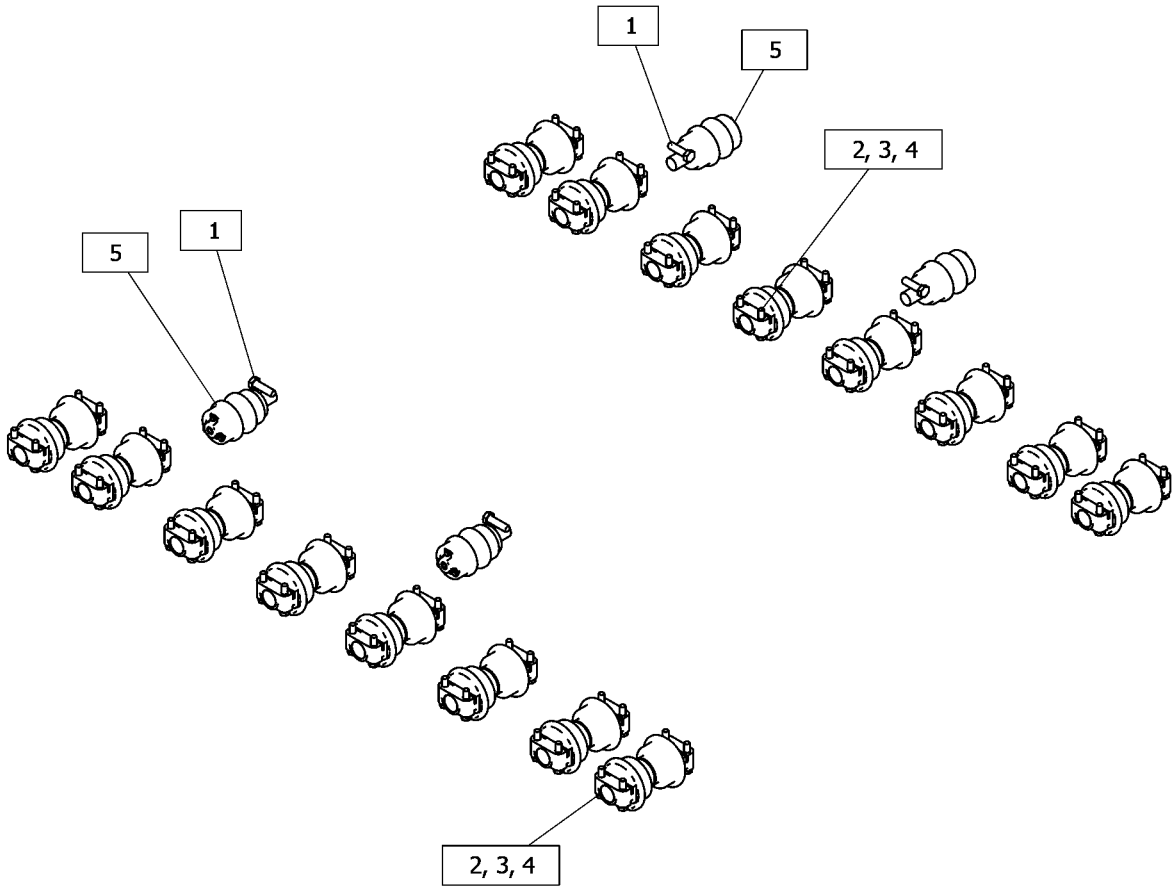


GRAPHIC #1 <END> g06356012

# 507-7553 ROLLER GP-TRACK CARRIER

**S/N: FEY1-UP**

**PART OF 546-1942 ROLLER AR-TRACK & CARRIER**

**SMCS-4154** **i07516335**

| NOTE | PART NUMBER | QTY | PART NAME 1 2 3 4 5 6 (PRODUCT LEVEL) | SEE PAGE |
|---|---|---|---|---|
| | **558-9632** | 1 | SEAL GP-DUO-CONE | |

<END>

# *422-2405* ROLLER GP-TRACK-SINGLE FLANGE

**S/N: FEY1-UP**

**PART OF 559-5101 ROLLER AR-TRACK**

**SMCS-4180** **i06627656**

| NOTE | REF NO | GRAPHIC REF | PART NUMBER | QTY | PART NAME 1 2 3 4 5 6 (PRODUCT LEVEL) | SEE PAGE |
|---|---|---|---|---|---|---|
| | 1 | 1 | **3E-3217** | 2 | DOWEL | |
| | 2 | 1 | **9W-2146** | 1 | PLUG | |
| | 3 | 1 | **206-9211** | 2 | SEAL GP-DUO-CONE | |
| | 4 | 1 | **7F-8268** | 2 | SEAL-O-RING | |

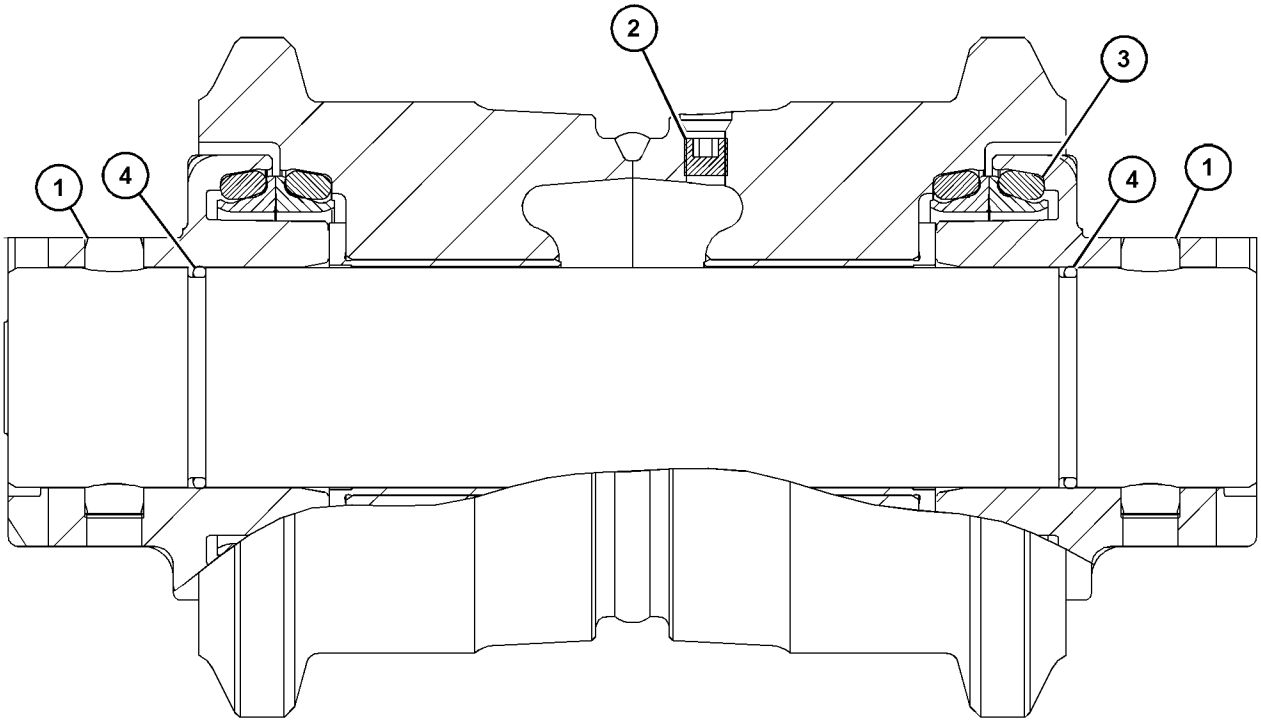


GRAPHIC #1 <END> g03883841

# 507-7552 ROLLER GP-TRACK-SINGLE FLANGE

**S/N: FEY1-UP**

**PART OF 546-1942 ROLLER AR-TRACK & CARRIER**

**SMCS-4180** **i07516336**

| NOTE | PART NUMBER | QTY | PART NAME 1 2 3 4 5 6 (PRODUCT LEVEL) | SEE PAGE |
|---|---|---|---|---|
| | **558-9628** | 2 | SEAL GP-DUO-CONE | |
| | **558-9630** | 2 | SEAL-O-RING | |

<END>

# 239-4390 TRACK ADJUSTER & RECOIL GP

**S/N: FEY1-UP**

**PART OF 420-6316 TRACK ADJUSTER & RECOIL GP**

**SMCS-4157, 4158** **i05815962**

| NOTE | REF NO | GRAPHIC REF | PART NUMBER | QTY | PART NAME 1 2 3 4 5 6 (PRODUCT LEVEL) | SEE PAGE |
|---|---|---|---|---|---|---|
| | 1 | 1 | **2S-5926** | 1 | VALVE-RELIEF | |
| | 2 | 1 | **7Y-0682** | 2 | RING | |
| | 3 | 1 | **093-1436** | 1 | SEAL-LIP TYPE | |
| | 4 | 1 | **093-1512** | 2 | RING | |
| | 5 | 1 | **357-7540** | 1 | VALVE-FILL | |
| | 6 | 1 | **145-3031** | 1 | PISTON AS | |
| | 7 | 1 | **239-4391** | 1 | ROD | |
| | 8 | 1 | **239-4392** | 1 | CYLINDER | |
| | 9 | 1 | **239-4394** | 1 | RING-BACKUP | |
| | 10 | 1 | **248-7174** | 2 | SEAL-O-RING | |
| | 11 | 1 | **095-1704** | 1 | SEAL-O-RING | |

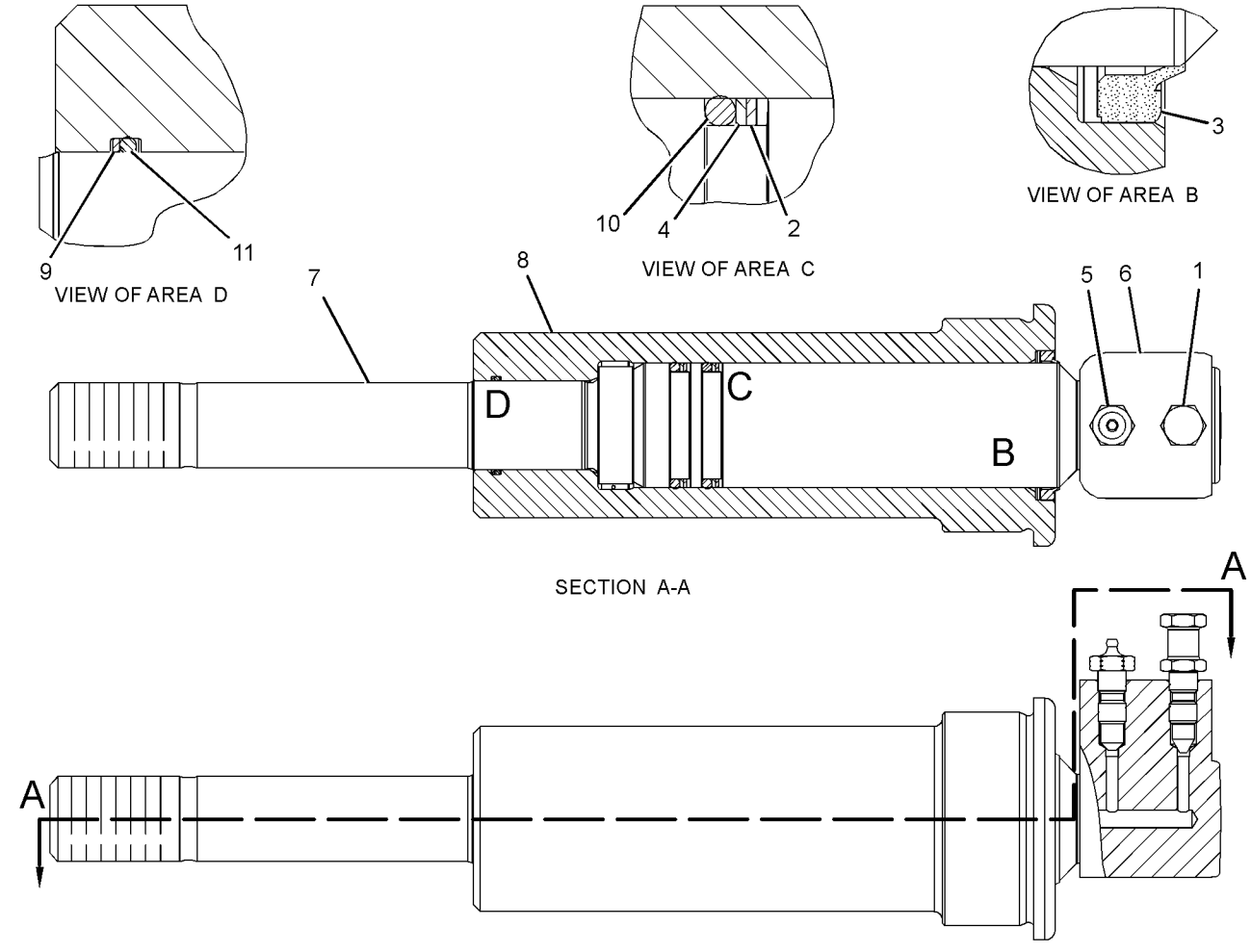


GRAPHIC #1 <END> g02512796

# *420-6315* TRACK ADJUSTER & RECOIL GP–RH

**S/N: FEY1-UP**

**PART OF 558-7700 IDLER GP-FRONT**

**SMCS-4157, 4158** **i06820723**

| NOTE | REF NO | GRAPHIC REF | PART NUMBER | QTY | PART NAME 1 2 3 4 5 6 (PRODUCT LEVEL) | SEE PAGE |
|---|---|---|---|---|---|---|
| | 1 | 1 | **7Y-1746** | 1 | PLATE | |
| | 2 | 1 | **168-6761** | 1 | PLATE AS | |
| | | 1 | **4B-4158** | 4 | SCREW-DRIVE (NO 4X0.25-IN) | |
| | | 1 | **253-1346** | 1 | PLATE-WARNING (HIGH PRESSURE CYLINDER) | |
| Y | 3 | 1 | *420-6316* | 1 | TRACK ADJUSTER & RECOIL GP | 197 |
| M | 4 | 1 | **8T-4137** | 2 | BOLT (M10X1.5X20-MM) | |

M - METRIC PART
Y - SEPARATE ILLUSTRATION

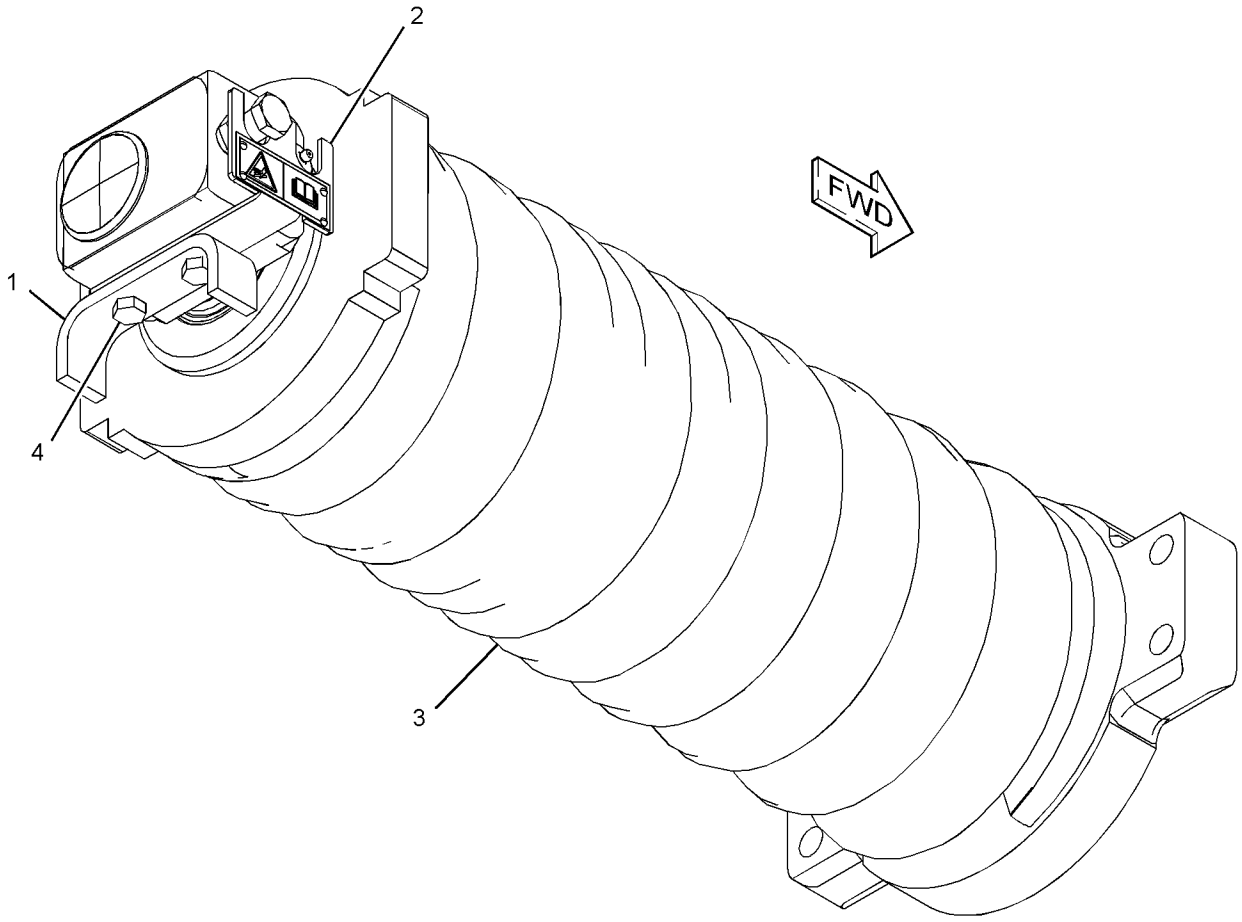


GRAPHIC #1 <END> g03357046

# *420-6316* TRACK ADJUSTER & RECOIL GP

**S/N: FEY1-UP**

**PART OF 420-6315, 420-6319 TRACK ADJUSTER & RECOIL GP**

**SMCS-4157, 4158** **i06820730**

| NOTE | REF NO | GRAPHIC REF | PART NUMBER | QTY | PART NAME 1 2 3 4 5 6 (PRODUCT LEVEL) | SEE PAGE |
|---|---|---|---|---|---|---|
| | 1 | 1 | **145-3035** | 1 | PLATE | |
| | 2 | 1 | **340-8237** | 1 | SPRING | |
| | 3 | 1 | **239-4378** | 1 | SUPPORT | |
| | 4 | 1 | **239-4383** | 1 | STRIP | |
| | 5 | 1 | **239-4384** | 1 | SPACER (49X95X72-MM THK) | |
| Y | 6 | 1 | **239-4390** | 1 | TRACK ADJUSTER & RECOIL GP | 195 |
| | 7 | 1 | **239-4393** | 1 | WASHER (50X78X8-MM THK) | |
| | 8 | 1 | **239-4382** | 1 | NUT (M48X5-THD) | |
| M | 9 | 1 | **7X-2536** | 2 | BOLT (M8X1.25X14-MM) | |

M - METRIC PART
Y - SEPARATE ILLUSTRATION

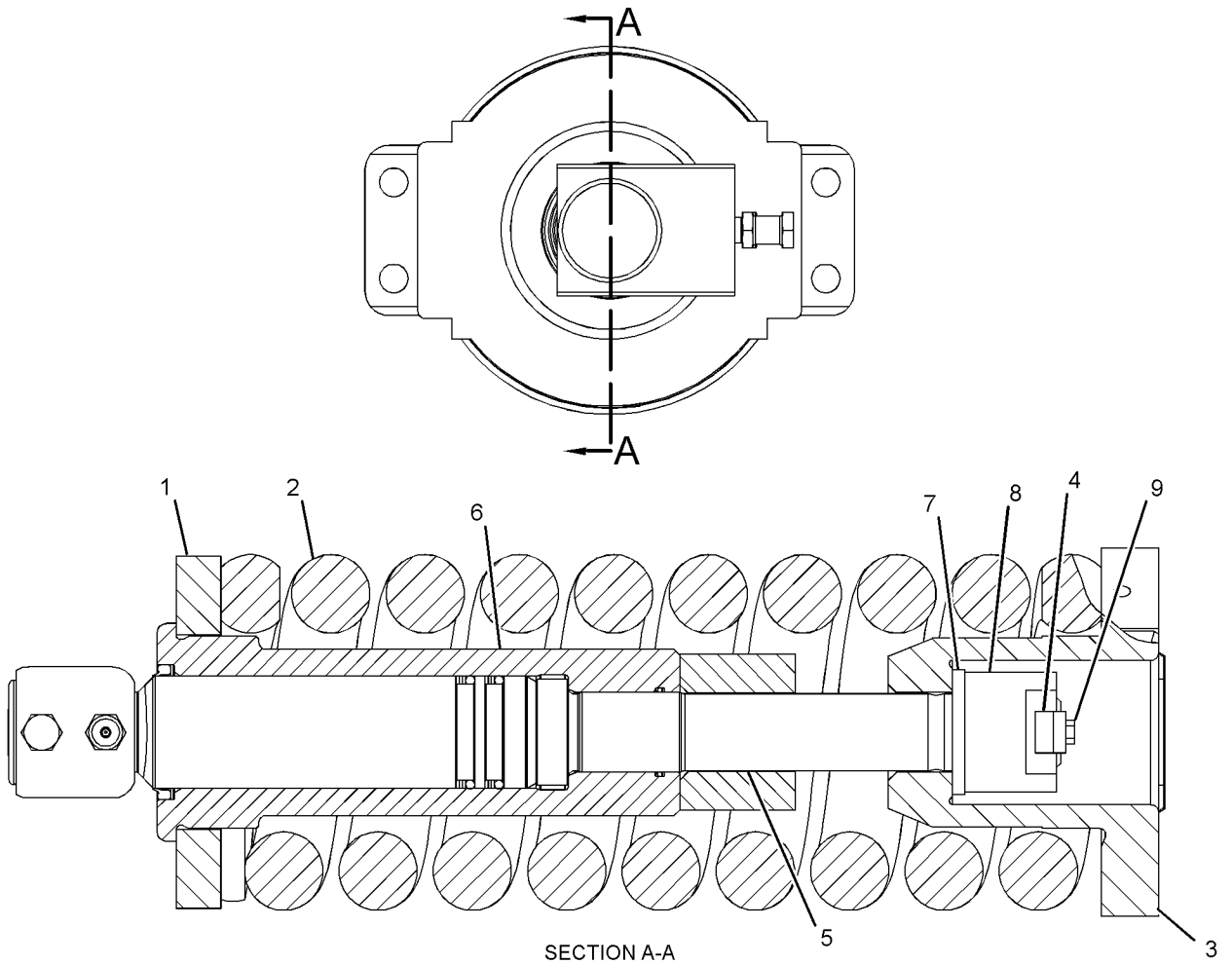


SECTION A-A

GRAPHIC #1 <END> g03360594

# *420-6319* TRACK ADJUSTER & RECOIL GP–LH

**S/N: FEY1-UP**

**PART OF 558-7701 IDLER GP-FRONT**

**SMCS-4157, 4158** **i06820729**

| NOTE | REF NO | GRAPHIC REF | PART NUMBER | QTY | PART NAME 1 2 3 4 5 6 (PRODUCT LEVEL) | SEE PAGE |
|---|---|---|---|---|---|---|
| | 1 | 1 | **7Y-1746** | 1 | PLATE | |
| | 2 | 1 | **168-6761** | 1 | PLATE AS | |
| | | 1 | **4B-4158** | 4 | SCREW-DRIVE (NO 4X0.25-IN) | |
| | | 1 | **253-1346** | 1 | PLATE-WARNING (HIGH PRESSURE CYLINDER) | |
| Y | 3 | 1 | *420-6316* | 1 | TRACK ADJUSTER & RECOIL GP | 197 |
| M | 4 | 1 | **8T-4137** | 2 | BOLT (M10X1.5X20-MM) | |

M - METRIC PART
Y - SEPARATE ILLUSTRATION

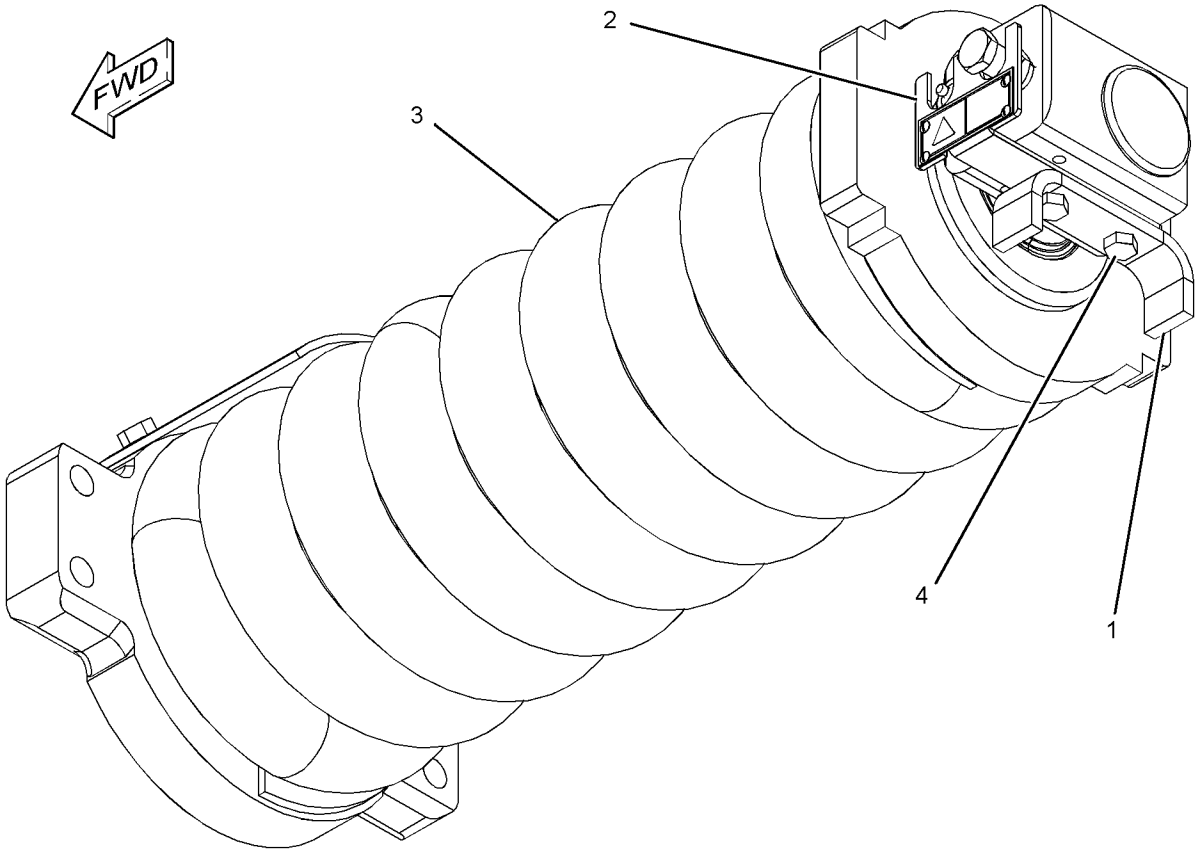


GRAPHIC #1 <END> g01217224

## *539-8169* TRACK GP—2-REQUIRED

**S/N: FEY1-UP**

**600-MM (23.6-IN) TRIPLE GROUSER SHOE. GREASE LUBRICATED TRACK**

**SMCS-4170** **i07394823**

| NOTE | PART NUMBER | QTY | PART NAME 1 2 3 4 5 6 (PRODUCT LEVEL) | SEE PAGE |
|---|---|---|---|---|
| Y | **542-6613** | 1 | LINK AS-TRACK | 189 |
| M | **542-7228** | 196 | BOLT-TRACK (M20X1.5X56-MM) | |
| M | **9W-3361** | 196 | NUT-TRACK (M20X1.5-THD) | |
| | **542-6592** | 49 | SHOE-TRACK | |

M - METRIC PART
Y - SEPARATE ILLUSTRATION

<END>

## *539-8170* TRACK GP—2-REQUIRED

**S/N: FEY1-UP**

**600-MM (23.6-IN) TRIPLE GROUSER SHOE. GREASE LUBRICATED TRACK**

**SMCS-4170** **i07394884**

| NOTE | PART NUMBER | QTY | PART NAME 1 2 3 4 5 6 (PRODUCT LEVEL) | SEE PAGE |
|---|---|---|---|---|
| Y | **542-6613** | 1 | LINK AS-TRACK | 189 |
| M | **542-7228** | 196 | BOLT-TRACK (M20X1.5X56-MM) | |
| M | **9W-3361** | 196 | NUT-TRACK (M20X1.5-THD) | |
| | **542-6593** | 49 | SHOE-TRACK | |

M - METRIC PART
Y - SEPARATE ILLUSTRATION

<END>

# *087-4454* ACCUMULATOR GP-HYDRAULIC—CHARGED

**S/N: FEY1-UP**

**PART OF 5I-8416 ACCUMULATOR GP-HYDRAULIC**

**SMCS-5077** **i04916871**

| NOTE | REF NO | GRAPHIC REF | PART NUMBER | QTY | PART NAME 1 2 3 4 5 6 (PRODUCT LEVEL) | SEE PAGE |
|---|---|---|---|---|---|---|
| | 1 | 1 | **087-4577** | 1 | SEAL | |
| | 2 | 1 | **087-4576** | 1 | CAP | |
| | 3 | 1 | **087-4575** | 1 | CORE | |

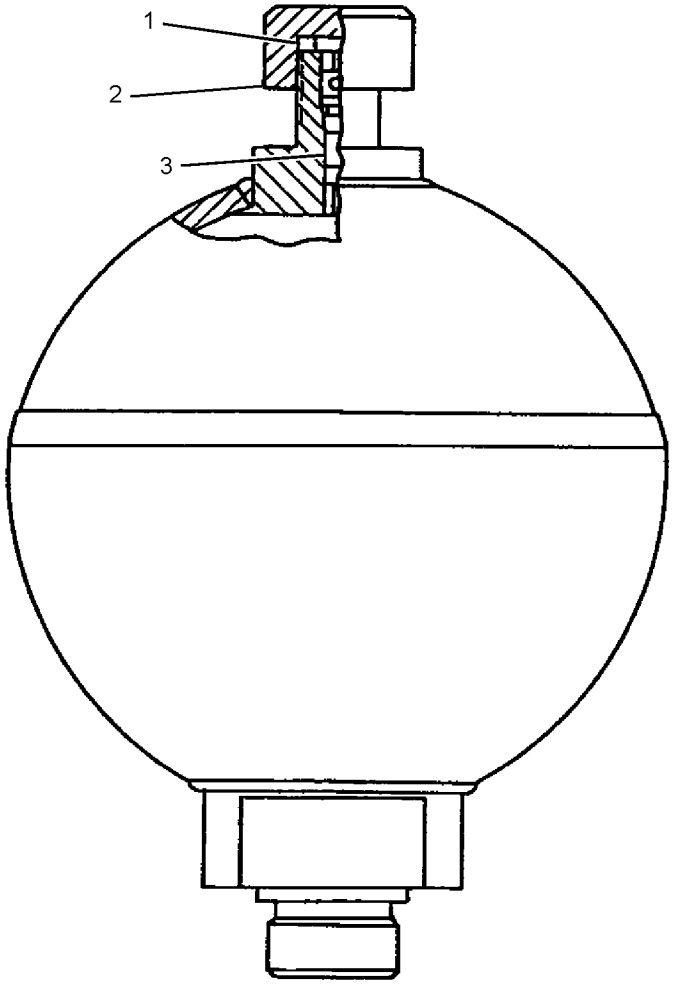


GRAPHIC #1 <END> g02304393

# *087-4456* ACCUMULATOR GP-HYDRAULIC–CHARGED

**S/N: FEY1-UP**

**FIELD REPLACEMENT ORDER 227-8807–PAGE: 204**

**PART OF 164-6981 ACCUMULATOR GP-HYDRAULIC**

**SMCS-5077** **i04916865**

| NOTE | PART NUMBER | QTY | PART NAME 1 2 3 4 5 6 (PRODUCT LEVEL) | SEE PAGE |
|---|---|---|---|---|
| Y | *4I-1536* | 1 | ACCUMULATOR GP-HYDRAULIC (CHARGED) | 205 |
| | | | –OR– | |
| Y | *5I-8416* | 1 | ACCUMULATOR GP-HYDRAULIC (CHARGED) | 206 |
| | | | –OR– | |
| Y | *145-5106* | 1 | ACCUMULATOR GP-HYDRAULIC (CHARGED) | 202 |

Y - SEPARATE ILLUSTRATION

<END>

# *145-5106* ACCUMULATOR GP-HYDRAULIC—CHARGED

**S/N: FEY1-UP**

**FIELD REPLACEMENT ORDER 227-8807—PAGE: 204**

**PART OF 087-4456 ACCUMULATOR GP-HYDRAULIC**

**SMCS-5077** **i04916874**

| NOTE | REF NO | GRAPHIC REF | PART NUMBER | QTY | PART NAME 1 2 3 4 5 6 (PRODUCT LEVEL) | SEE PAGE |
|---|---|---|---|---|---|---|
| | 1 | 1 | **159-4700** | 1 | FILM-WARNING (HIGH PRESSURE CYLINDER) | |

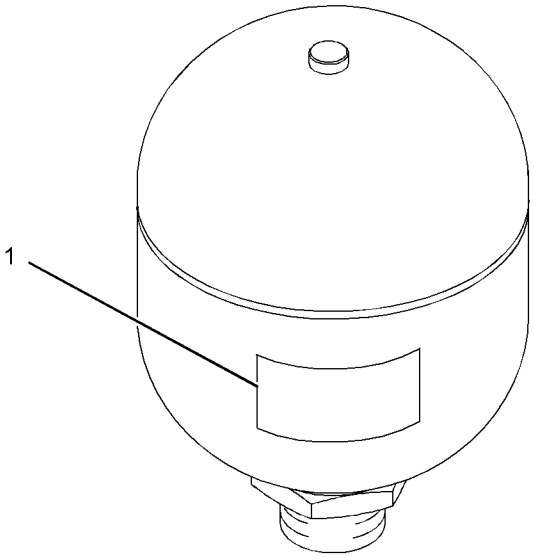


GRAPHIC #1 <END> g01229518

# *164-6981* ACCUMULATOR GP-HYDRAULIC—CHARGED

**S/N: FEY1-UP**

**PART OF 556-6488 LINES GP-PILOT**

**SMCS-5077** **i04916861**

| NOTE | PART NUMBER | QTY | PART NAME 1 2 3 4 5 6 (PRODUCT LEVEL) | SEE PAGE |
|---|---|---|---|---|
| Y | **087-4456** | 1 | ACCUMULATOR GP-HYDRAULIC (CHARGED) | 201 |
| | **3K-0360** | 1 | SEAL-O-RING | |

Y - SEPARATE ILLUSTRATION

<END>

# 227-8807 ACCUMULATOR GP-HYDRAULIC—UNCHARGED

**S/N: FEY1-UP**

**FIELD REPLACEMENT FOR 087-4456—PAGE: 201, 145-5106—PAGE: 202**

**SMCS-5077** **i06737698**

| NOTE | REF NO | GRAPHIC REF | PART NUMBER | QTY | PART NAME 1 2 3 4 5 6 (PRODUCT LEVEL) | SEE PAGE |
|---|---|---|---|---|---|---|
| | 1 | 1 | **232-3317** | 1 | FILM-IDENTIFICATION (HYDRAULIC ACCUMULATOR) | |

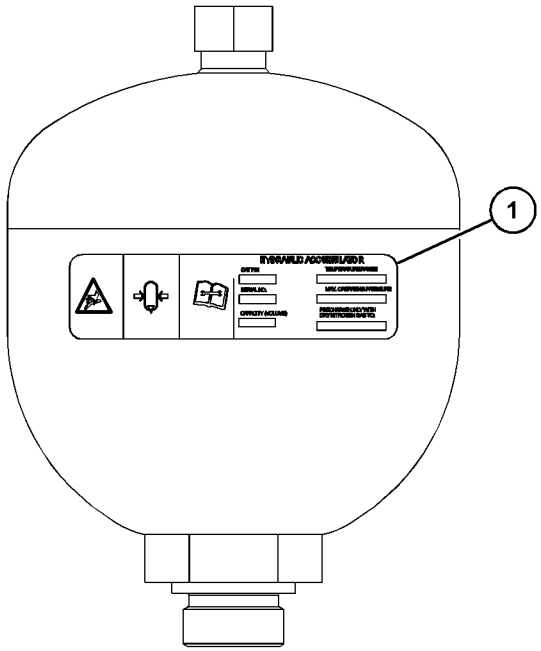


GRAPHIC #1 <END> g06048678

# *4I-1536* ACCUMULATOR GP-HYDRAULIC—CHARGED

**S/N: FEY1-UP**

**PART OF 087-4456 ACCUMULATOR GP-HYDRAULIC**

**SMCS-5077** **i04916867**

| NOTE | REF NO | GRAPHIC REF | PART NUMBER | QTY | PART NAME 1 2 3 4 5 6 (PRODUCT LEVEL) | SEE PAGE |
|---|---|---|---|---|---|---|
| | 1 | 1 | **4I-5862** | 1 | CAP | |
| | 2 | 1 | **4I-1539** | 1 | CORE | |

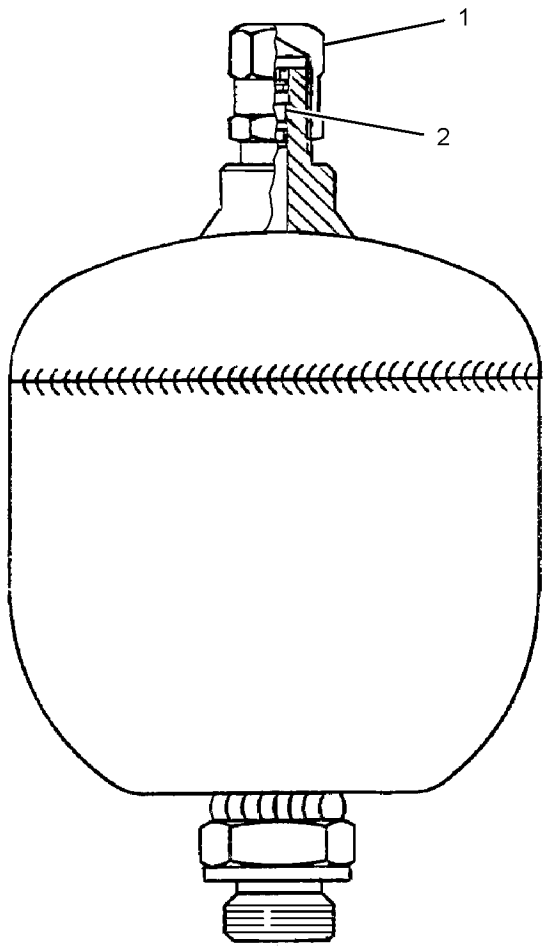


GRAPHIC #1 <END> g01769613

# *5I-8416* ACCUMULATOR GP-HYDRAULIC—CHARGED

**S/N: FEY1-UP**

**PART OF 087-4456 ACCUMULATOR GP-HYDRAULIC**

**SMCS-5077** **i04916869**

| NOTE | REF NO | GRAPHIC REF | PART NUMBER | QTY | PART NAME 1 2 3 4 5 6 (PRODUCT LEVEL) | SEE PAGE |
|---|---|---|---|---|---|---|
| | 1 | 1 | **4I-8267** | 1 | CAP (ACCUMULATOR) | |
| Y | 2 | 1 | *087-4454* | 1 | ACCUMULATOR GP-HYDRAULIC (CHARGED) | 200 |

Y - SEPARATE ILLUSTRATION

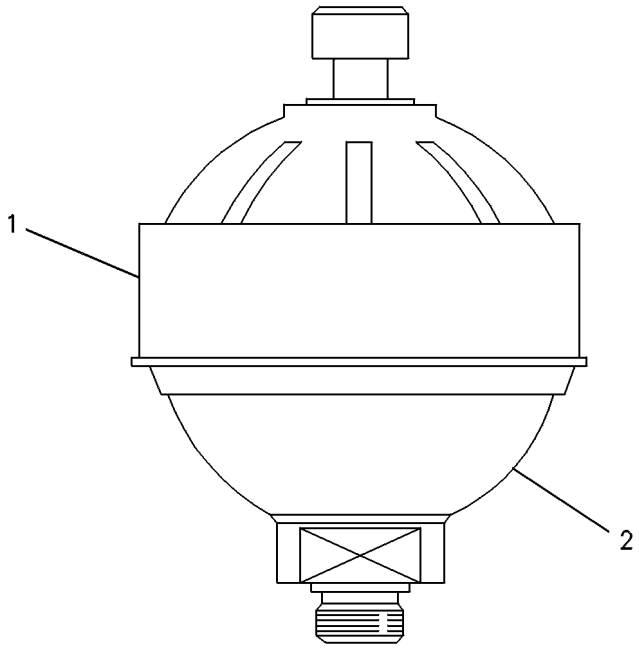


GRAPHIC #1 <END> g00237219

# *173-3503* BLOCK GP-HYDRAULIC

**S/N: FEY1-UP**

**PART OF 188-4140 FILTER GP-OIL**

**SMCS-5264** **i05342089**

| NOTE | REF NO | GRAPHIC REF | PART NUMBER | QTY | PART NAME 1 2 3 4 5 6 (PRODUCT LEVEL) | SEE PAGE |
|---|---|---|---|---|---|---|
| | 1 | 1 | **204-2763** | 1 | BLOCK | |
| | 2 | 1 | **5L-4758** | 1 | SEAL-O-RING | |
| | 3 | 1 | **177-2619** | 2 | PACKING | |
| | 4 | 1 | **173-3505** | 1 | PLATE-SLIDE | |
| | 5 | 1 | **137-3631** | 1 | PACKING | |
| M | 6 | 1 | **137-3626** | 1 | BOLT-SPECIAL (M6X1X23.25-MM) | |
| | 7 | 1 | **173-3506** | 1 | PLUG AS | |
| | 8 | 1 | **3J-1907** | 1 | SEAL-O-RING | |
| | 9 | 1 | **7Y-5272** | 2 | PIN-SPRING | |
| | 10 | 1 | **137-3628** | 1 | SHIM (0.1-MM THK) | |

M - METRIC PART

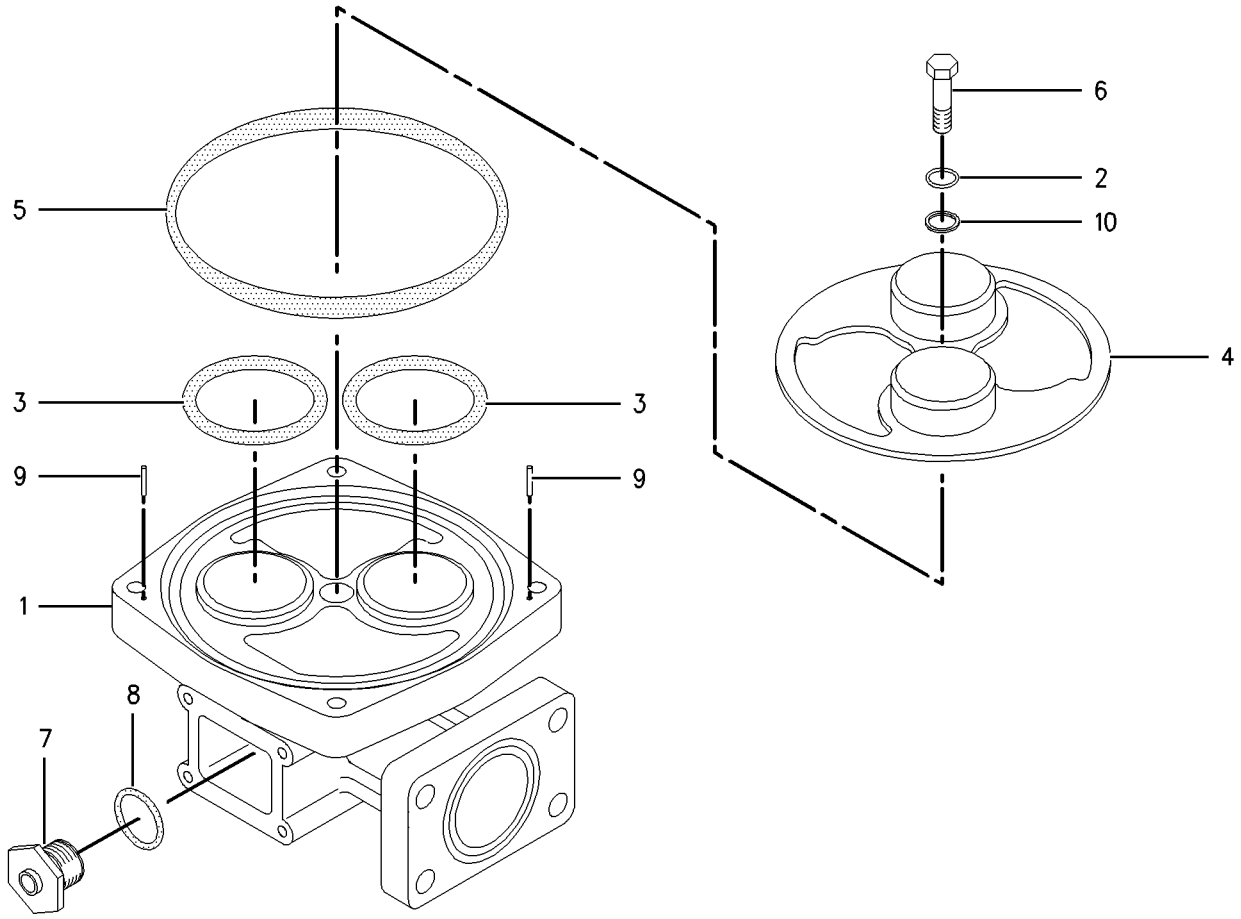


GRAPHIC #1 <END> g00671074

# *418-6282* CLAMP GP-HYDRAULIC LINES

**S/N: FEY1-UP**

**PART OF 556-6488 LINES GP-PILOT**

**SMCS-5057** **i07219769**

| NOTE | PART NUMBER | QTY | PART NAME 1 2 3 4 5 6 (PRODUCT LEVEL) | SEE PAGE |
|---|---|---|---|---|
| Y | *418-6284* | 1 | CLAMP GP-HYDRAULIC LINES | 209 |
| | | | —OR— | |
| Y | *418-6285* | 1 | CLAMP GP-HYDRAULIC LINES | 210 |

Y - SEPARATE ILLUSTRATION

<END>

# *418-6284* CLAMP GP-HYDRAULIC LINES

**S/N: FEY1-UP**

**PART OF 418-6282 CLAMP GP-HYDRAULIC LINES**

**SMCS-5057** **i07219771**

| NOTE | REF NO | GRAPHIC REF | PART NUMBER | QTY | PART NAME 1 2 3 4 5 6 (PRODUCT LEVEL) | SEE PAGE |
|---|---|---|---|---|---|---|
| | 1 | 1 | **275-1442** | 1 | CLIP (TAB) | |
| | 2 | 1 | **275-1443** | 1 | CLIP (SLOT) | |
| | 3 | 1 | **275-1444** | 1 | GROMMET | |

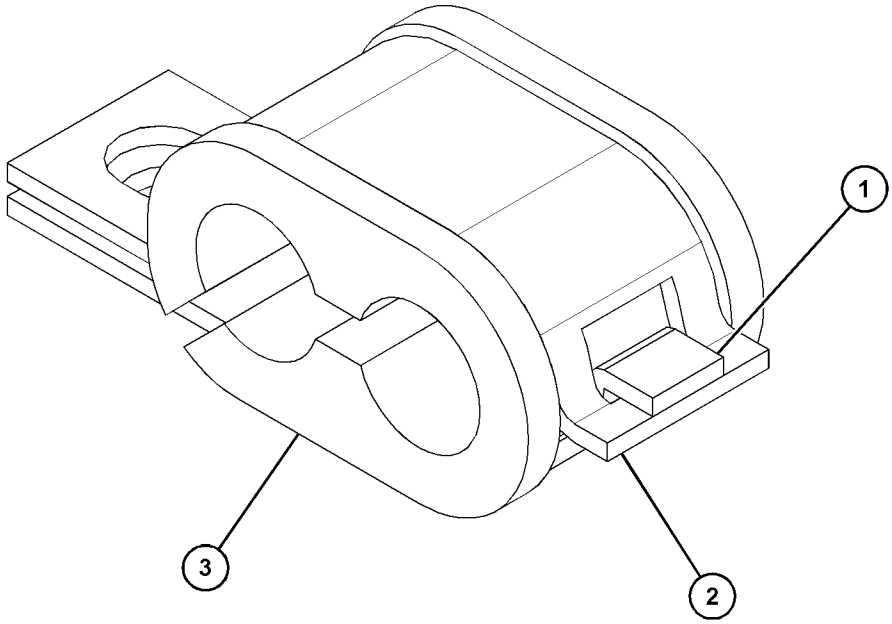


GRAPHIC #1 <END> g03750898

# *418-6285* CLAMP GP-HYDRAULIC LINES

**S/N: FEY1-UP**

**PART OF 418-6282 CLAMP GP-HYDRAULIC LINES**

**SMCS-5057** **i07219772**

| NOTE | REF NO | GRAPHIC REF | PART NUMBER | QTY | PART NAME 1 2 3 4 5 6 (PRODUCT LEVEL) | SEE PAGE |
|---|---|---|---|---|---|---|
| | 1 | 1 | **275-1442** | 1 | CLIP (TAB) | |
| | 2 | 1 | **275-1443** | 1 | CLIP (SLOT) | |
| | 3 | 1 | **333-4609** | 1 | GROMMET | |

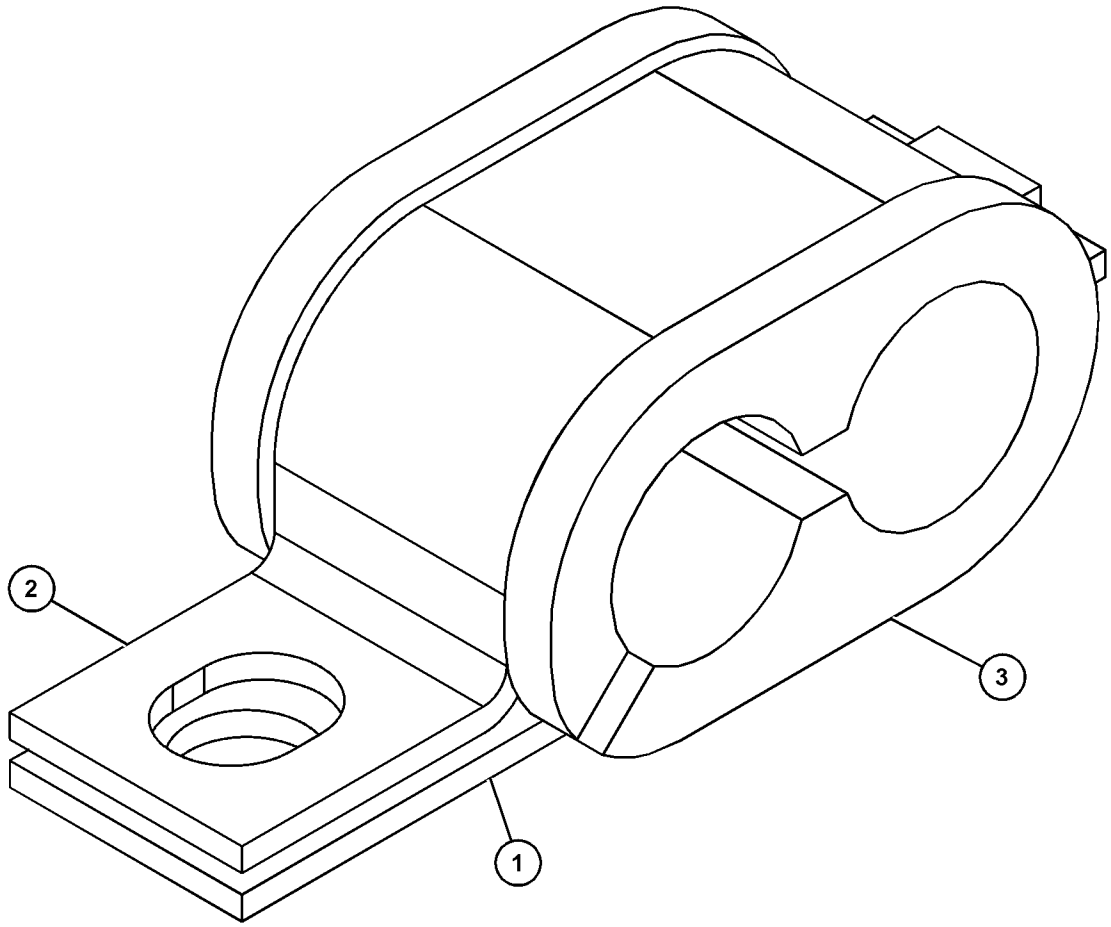


GRAPHIC #1 <END> g03761589

# *418-6286* CLAMP GP-HYDRAULIC LINES

**S/N: FEY1-UP**

**PART OF 556-6488 LINES GP-PILOT**

**SMCS-5057** **i07219773**

| NOTE | PART NUMBER | QTY | PART NAME 1 2 3 4 5 6 (PRODUCT LEVEL) | SEE PAGE |
|---|---|---|---|---|
| Y | *418-6287* | 1 | CLAMP GP-HYDRAULIC LINES | 212 |
| | | | –OR– | |
| Y | *418-6288* | 1 | CLAMP GP-HYDRAULIC LINES | 213 |

Y - SEPARATE ILLUSTRATION

<END>

# *418-6287* CLAMP GP-HYDRAULIC LINES

**S/N: FEY1-UP**

**PART OF 418-6286 CLAMP GP-HYDRAULIC LINES**

**SMCS-5057** **i07219774**

| NOTE | REF NO | GRAPHIC REF | PART NUMBER | QTY | PART NAME 1 2 3 4 5 6 (PRODUCT LEVEL) | SEE PAGE |
|---|---|---|---|---|---|---|
| | 1 | 1 | **5P-7462** | 1 | CLIP (SLOT) | |
| | 2 | 1 | **5P-7463** | 1 | CLIP (TAB) | |
| | 3 | 1 | **6V-0683** | 1 | GROMMET | |

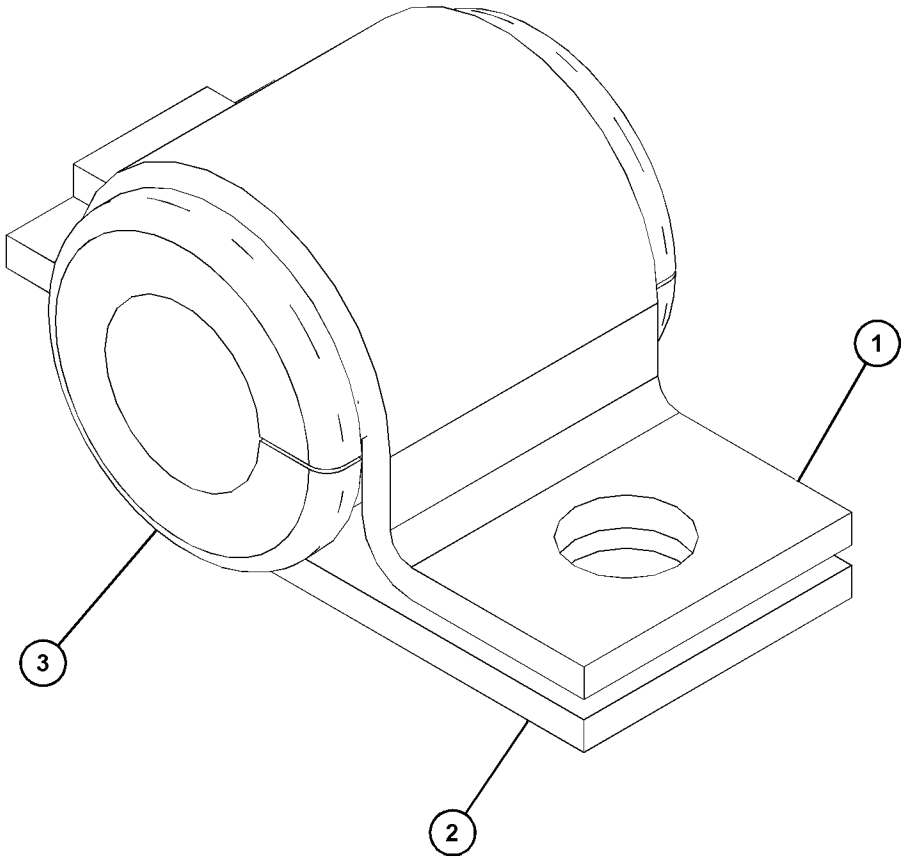


GRAPHIC #1 <END> g03765916

# *418-6288* CLAMP GP-HYDRAULIC LINES

**S/N: FEY1-UP**

**PART OF 418-6286 CLAMP GP-HYDRAULIC LINES**

**SMCS-5057** **i07219776**

| NOTE | REF NO | GRAPHIC REF | PART NUMBER | QTY | PART NAME 1 2 3 4 5 6 (PRODUCT LEVEL) | SEE PAGE |
|---|---|---|---|---|---|---|
| | 1 | 1 | **5P-7464** | 1 | CLIP (SLOT) | |
| | 2 | 1 | **5P-7465** | 1 | CLIP (TAB) | |
| | 3 | 1 | **6V-1249** | 1 | GROMMET (22-MM ID) | |

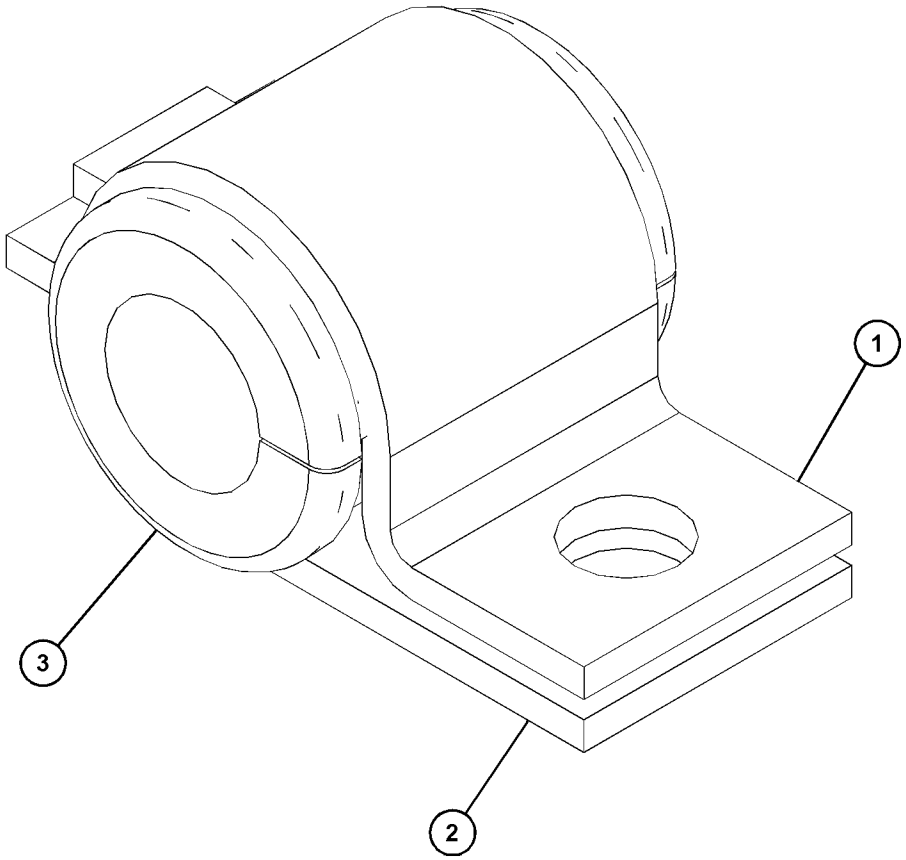


GRAPHIC #1 <END> g03765916

# *559-6091* CONTROL AR-AUXILIARY—SYSTEM 3 PRIME, 1-WAY, 2-PUMP

**S/N: FEY1-UP**

**PART OF 559-6090 OPTION AR-HYDRAULIC**

**SMCS-5051** **i07620797**

| NOTE | PART NUMBER | QTY | PART NAME 1 2 3 4 5 6 (PRODUCT LEVEL) | SEE PAGE |
|---|---|---|---|---|
| Y | *239-8693* | 1 | CONTROL GP-HYDRAULIC PEDAL (RH) | 439 |
| Y | *466-1869* | 1 | FASTENER GP-WIRING HARNESS (COMBINED FUNCTION) | 94 |
| Y | *247-7423* | 1 | FILM GP (OPERATOR CONTROLS, NOTICE) | 498 |
| Y | *572-5692* | 1 | LINES GP-FRONT (SYSTEM 3 PRIME, 1-WAY, 2-PUMP) | 272 |
| Y | *564-9845* | 1 | LINES GP-PILOT (SYSTEM 3 PRIME, 1-WAY, 2-PUMP) | 299 |
| Y | *558-5407* | 1 | LINES GP-PILOT (SYSTEM 3 PRIME, 1-WAY, 2-PUMP) | 291 |
| Y | *255-5713* | 1 | VALVE & MTG GP-CONTROL (AUXILIARY) | 330 |

Y - SEPARATE ILLUSTRATION

<END>

# 339-6951 COUPLING GP-FLEXIBLE

**S/N: FEY1-UP**

**PART OF 341-5368 COUPLING GP-PUMP**

**SMCS-3252** **i06659054**

| NOTE | REF NO | GRAPHIC REF | PART NUMBER | QTY | PART NAME 1 2 3 4 5 6 (PRODUCT LEVEL) | SEE PAGE |
|---|---|---|---|---|---|---|
| M | 1 | 1 | **7Y-0466** | 2 | SETSCREW-SOCKET (M16X2X22-MM) | |
| M | 2 | 1 | **7Y-0467** | 4 | BOLT-SOCKET HEAD (M18X2.5X55-MM) | |
| | 3 | 1 | **339-6952** | 1 | HUB | |
| | 4 | 1 | **339-6953** | 4 | INSERT-COUPLING | |
| | 5 | 1 | **339-6954** | 4 | INSERT-COUPLING | |
| | 6 | 1 | **339-6955** | 1 | ELEMENT-COUPLING | |
| | 7 | 1 | **7Y-0468** | 8 | PIN-SPRING | |

M - METRIC PART

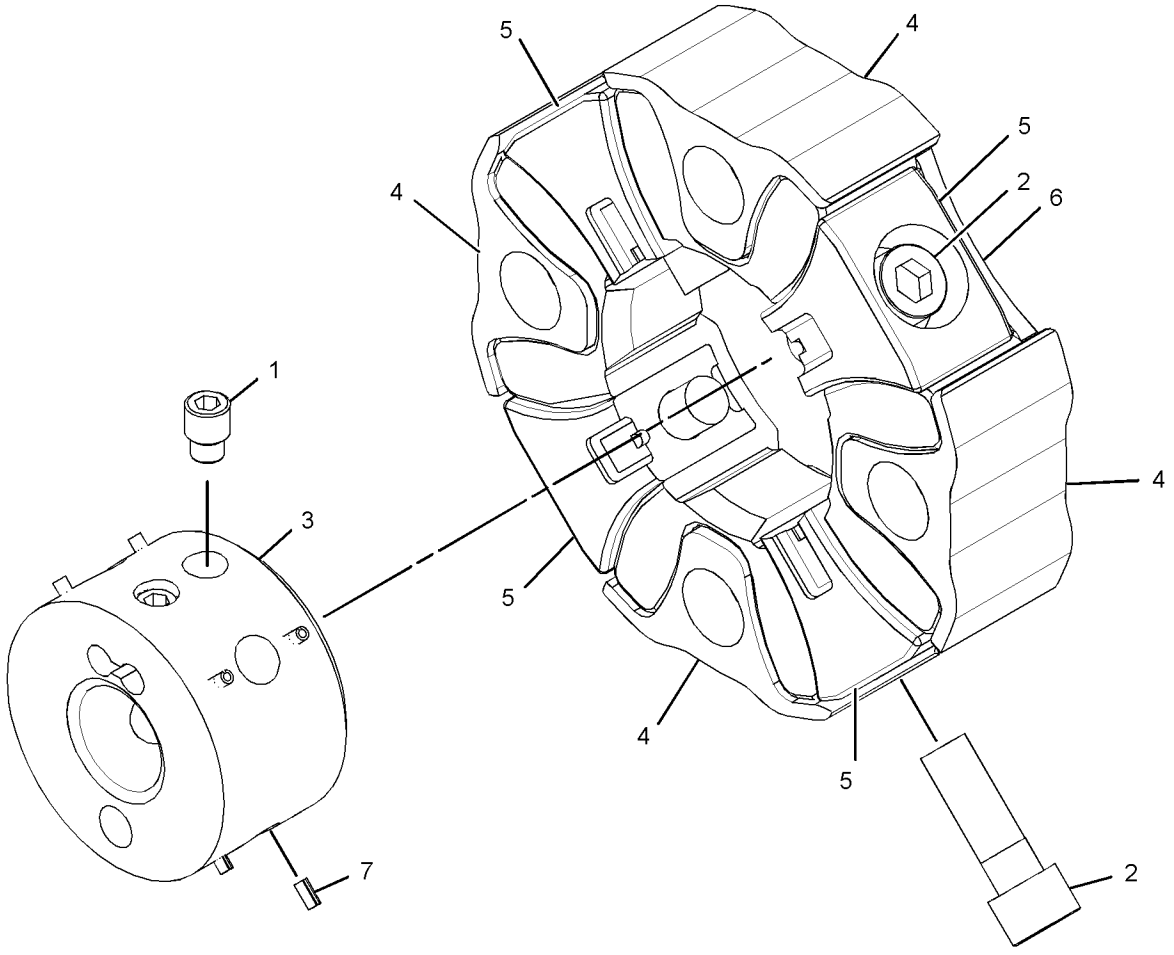


GRAPHIC #1 <END> g02635658

# *341-5368* COUPLING GP-PUMP

**S/N: FEY1-UP**

**PART OF 556-6522 PUMP & MTG GP-MAIN HYDRAULIC**

**SMCS-5062** **i06659051**

| NOTE | REF NO | GRAPHIC REF | PART NUMBER | QTY | PART NAME 1 2 3 4 5 6 (PRODUCT LEVEL) | SEE PAGE |
|---|---|---|---|---|---|---|
| M | 1 | 1 | **458-8848** | 4 | BOLT-SOCKET HEAD (M18X2.5X60-MM) | |
| Y | 2 | 1 | **339-6951** | 1 | COUPLING GP-FLEXIBLE | 215 |
| | 3 | 1 | **7Y-0468** | 4 | PIN-SPRING | |

M - METRIC PART
Y - SEPARATE ILLUSTRATION

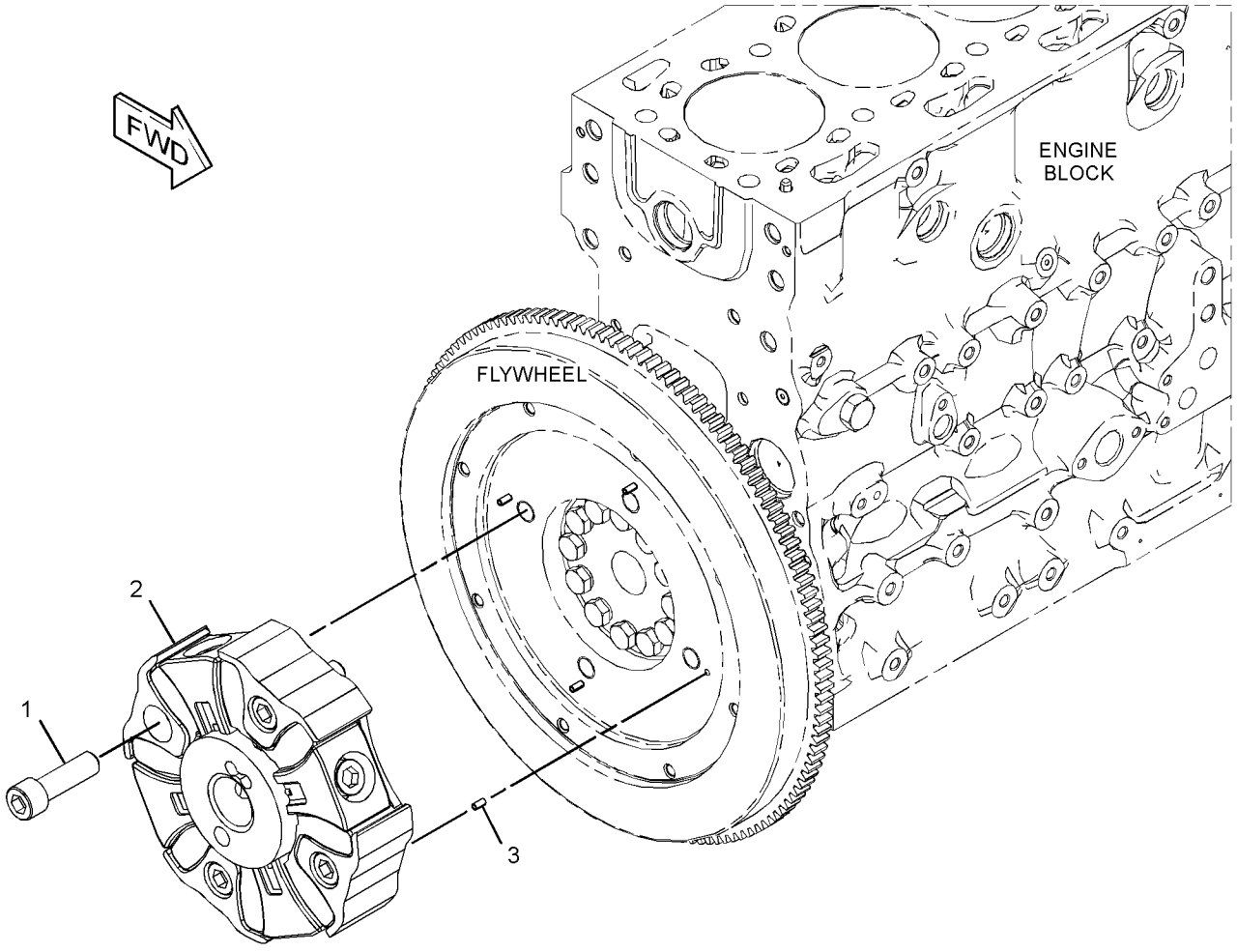


GRAPHIC #1 <END> g02601676

## *373-1106* CYLINDER & LINES GP-BOOM—LH

**S/N: FEY1-UP**

**PART OF 376-1084 BOOM AR-1 PIECE LONG**

**SMCS-5456, 7562** **i07419349**

| NOTE | PART NUMBER | QTY | PART NAME 1 2 3 4 5 6 (PRODUCT LEVEL) | SEE PAGE |
|---|---|---|---|---|
| Y | **373-1111** | 1 | CYLINDER & SEAL GP-BOOM | 218 |
| Y | *373-1110* | 1 | LINES GP-BOOM CYLINDER | 263 |

Y - SEPARATE ILLUSTRATION

<END>

## *373-1107* CYLINDER & LINES GP-BOOM—RH

**S/N: FEY1-UP**

**PART OF 376-1084 BOOM AR-1 PIECE LONG**

**SMCS-5456, 7562** **i07419348**

| NOTE | PART NUMBER | QTY | PART NAME 1 2 3 4 5 6 (PRODUCT LEVEL) | SEE PAGE |
|---|---|---|---|---|
| Y | **373-1111** | 1 | CYLINDER & SEAL GP-BOOM | 218 |
| Y | *373-1115* | 1 | LINES GP-BOOM CYLINDER | 264 |

Y - SEPARATE ILLUSTRATION

<END>

## *373-1109* CYLINDER & LINES GP-BUCKET

**S/N: FEY1-UP**

**PART OF 453-8143 LINKAGE AR-BUCKET**

**SMCS-5457** **i06867817**

| NOTE | PART NUMBER | QTY | PART NAME 1 2 3 4 5 6 (PRODUCT LEVEL) | SEE PAGE |
|---|---|---|---|---|
| Y | **504-4611** | 1 | CYLINDER & SEAL GP-BUCKET | 220 |
| Y | *501-8429* | 1 | LINES GP-BUCKET CYLINDER | 267 |

Y - SEPARATE ILLUSTRATION

<END>

## *373-1108* CYLINDER & LINES GP-STICK

**S/N: FEY1-UP**

**PART OF 376-1084 BOOM AR-1 PIECE LONG**

**SMCS-5458** **i04925073**

| NOTE | PART NUMBER | QTY | PART NAME 1 2 3 4 5 6 (PRODUCT LEVEL) | SEE PAGE |
|---|---|---|---|---|
| Y | **373-1119** | 1 | CYLINDER & SEAL GP-STICK | 222 |
| Y | *373-1118* | 1 | LINES GP-STICK CYLINDER | 304 |

Y - SEPARATE ILLUSTRATION

<END>

# 373-1111 CYLINDER & SEAL GP-BOOM

**S/N: FEY1-UP**

**120-MM (4.7-IN) BORE X 1260-MM (49.6-IN) STROKE**

**PART OF 373-1106, 373-1107 CYLINDER & LINES GP-BOOM**

**SMCS-5456** **i07416750**

| NOTE | REF NO | GRAPHIC REF | PART NUMBER | QTY | PART NAME 1 2 3 4 5 6 (PRODUCT LEVEL) | SEE PAGE |
|---|---|---|---|---|---|---|
| | 1 | 1 | **398-0933** | 1 | CYLINDER AS-BOOM | |
| | | 1 | **415-4565** | 1 | BEARING-SLEEVE | |
| | 2 | 1 | **398-0934** | 1 | ROD AS | |
| | | 1 | **415-4568** | 1 | BEARING-SLEEVE | |
| J | 4 | 1 | **240-6332** | 1 | SEAL | |
| J | 5 | 1 | **240-6359** | 2 | RING-EXPANDER | |
| | 6 | 1 | **398-0100** | 1 | BALL | |
| | 7 | 1 | **398-0106** | 1 | SETSCREW (M12X1.75X14-MM) | |
| | 8 | 1 | **398-0109** | 12 | BOLT-SOCKET HEAD (M16X2X70-MM) | |
| | 9 | 1 | **398-0935** | 1 | HEAD | |
| | 10 | 1 | **398-0936** | 1 | PISTON | |
| | 11 | 1 | **398-0937** | 1 | LOCKNUT-SPECIAL | |
| | 12 | 1 | **398-0938** | 1 | STOP | |
| | 13 | 1 | **398-0941** | 1 | BUSHING | |
| J | 14 | 1 | **398-0943** | 2 | RING | |
| J | 15 | 1 | **398-0944** | 1 | RING | |
| | 16 | 1 | **398-0945** | 1 | RING | |
| | 17 | 1 | **398-0946** | 1 | RING | |
| J | 18 | 1 | **398-0948** | 1 | RING-BACKUP | |
| J | 19 | 1 | **398-0949** | 1 | RING | |
| J | 20 | 1 | **398-0951** | 1 | SEAL | |
| J | 21 | 1 | **398-0952** | 1 | SEAL | |
| J | 22 | 1 | **398-0953** | 2 | SEAL | |
| J | 23 | 1 | **398-0954** | 2 | SEAL | |
| J | 24 | 1 | **398-0955** | 1 | SEAL | |
| J | 25 | 1 | **398-0956** | 1 | SEAL | |
| J | 26 | 1 | **398-0962** | 1 | SEAL AS | |
| | 28 | 1 | **3B-8489** | 1 | FITTING-GREASE (1/8-27 PTF) | |
| | | | | | AVAILABLE REPAIR KIT(S): | |
| J | | | **398-0963** | 1 | KIT-SEAL (BOOM CYLINDER) | |

J - KIT MARKED J SERVICES PART(S) MARKED J

*373-1111* **CYLINDER & SEAL GP-BOOM** (contd.) **i07416750**

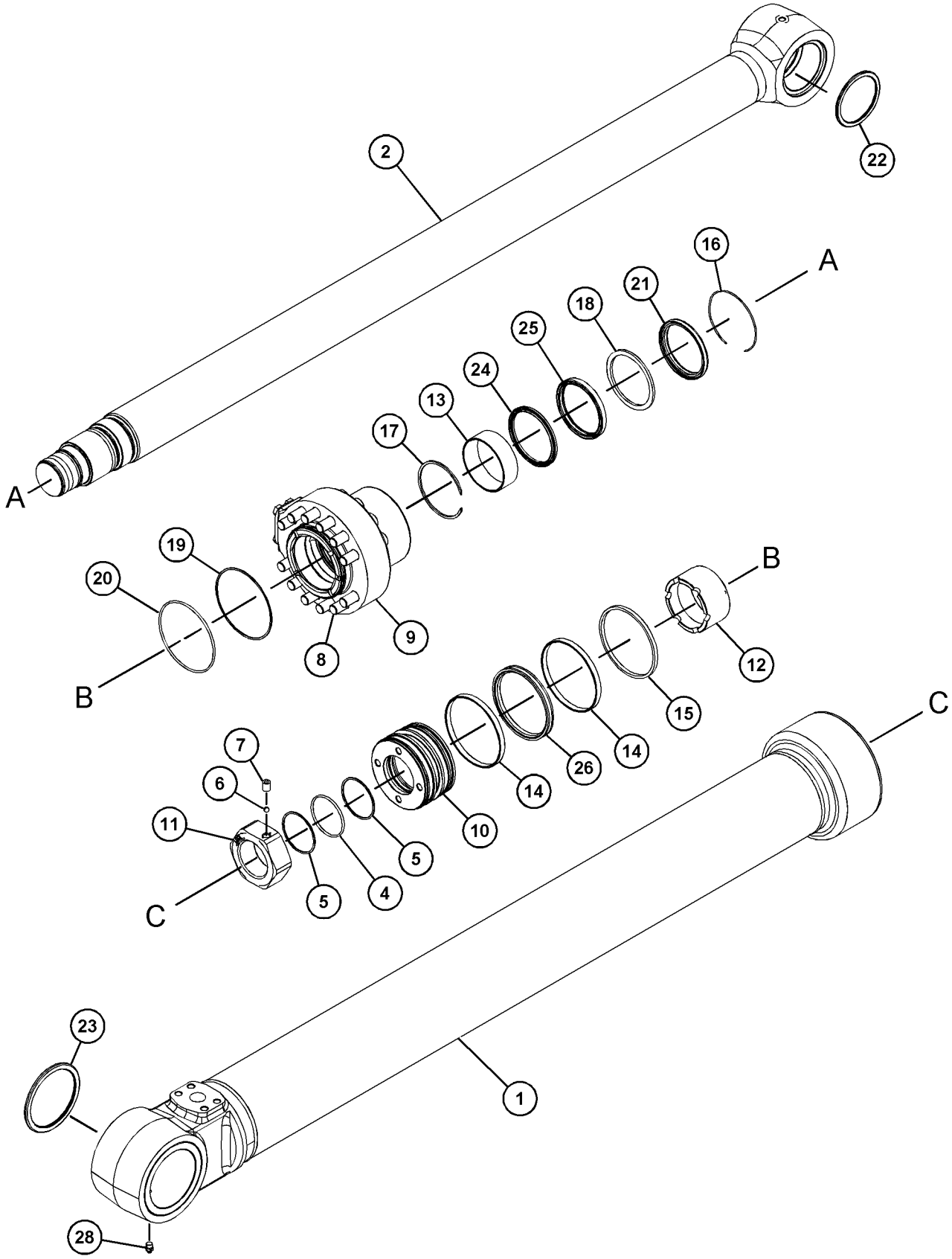


GRAPHIC #1 <END> g03854249

# 504-4611 CYLINDER & SEAL GP-BUCKET

**S/N: FEY1-UP**

**120-MM (4.7-IN) BORE X 1104-MM (43.5-IN) STROKE**

**PART OF 373-1109 CYLINDER & LINES GP-BUCKET**

**SMCS-5457** **i07450858**

| NOTE | REF NO | GRAPHIC REF | PART NUMBER | QTY | PART NAME 1 2 3 4 5 6 (PRODUCT LEVEL) | SEE PAGE |
|---|---|---|---|---|---|---|
| | 1 | 1 | **3B-8489** | 2 | FITTING-GREASE (1/8-27 PTF) | |
| J | 2 | 1 | **240-6332** | 1 | SEAL | |
| J | 3 | 1 | **240-6359** | 2 | RING-EXPANDER | |
| | 4 | 1 | **398-0100** | 1 | BALL | |
| | 5 | 1 | **398-0106** | 1 | SETSCREW (M12X1.75X14-MM) | |
| | 6 | 1 | **504-2956** | 12 | BOLT-SOCKET HEAD | |
| | 7 | 1 | **504-2958** | 1 | HEAD | |
| | 8 | 1 | **398-0936** | 1 | PISTON | |
| | 9 | 1 | **398-0937** | 1 | LOCKNUT-SPECIAL | |
| | 10 | 1 | **398-0941** | 1 | BUSHING | |
| J | 11 | 1 | **398-0943** | 2 | RING | |
| J | 12 | 1 | **398-0944** | 1 | RING | |
| | 13 | 1 | **398-0945** | 1 | RING | |
| | 14 | 1 | **398-0946** | 1 | RING | |
| J | 15 | 1 | **398-0948** | 1 | RING-BACKUP | |
| J | 16 | 1 | **398-0949** | 1 | RING | |
| J | 17 | 1 | **398-0951** | 1 | SEAL | |
| J | 18 | 1 | **398-0952** | 1 | SEAL | |
| J | 19 | 1 | **398-0953** | 2 | SEAL | |
| J | 20 | 1 | **398-0955** | 1 | SEAL | |
| J | 21 | 1 | **398-0956** | 1 | SEAL | |
| J | 22 | 1 | **398-0962** | 1 | SEAL AS | |
| J | 23 | 1 | **398-2329** | 2 | SEAL | |
| | 24 | 1 | **504-4612** | 1 | CYLINDER AS-HYDRAULIC | |
| | 24A | 1 | **415-4566** | 1 | BEARING-SLEEVE | |
| | 25 | 1 | **481-9524** | 1 | ROD AS | |
| | 25A | 1 | **415-4572** | 1 | BEARING-SLEEVE | |
| | | | | | AVAILABLE REPAIR KIT(S): | |
| J | | | **398-2332** | 1 | KIT-SEAL (BUCKET CYLINDER) | |

J - KIT MARKED J SERVICES PART(S) MARKED J

*504-4611* **CYLINDER & SEAL GP-BUCKET** (contd.) **i07450858**

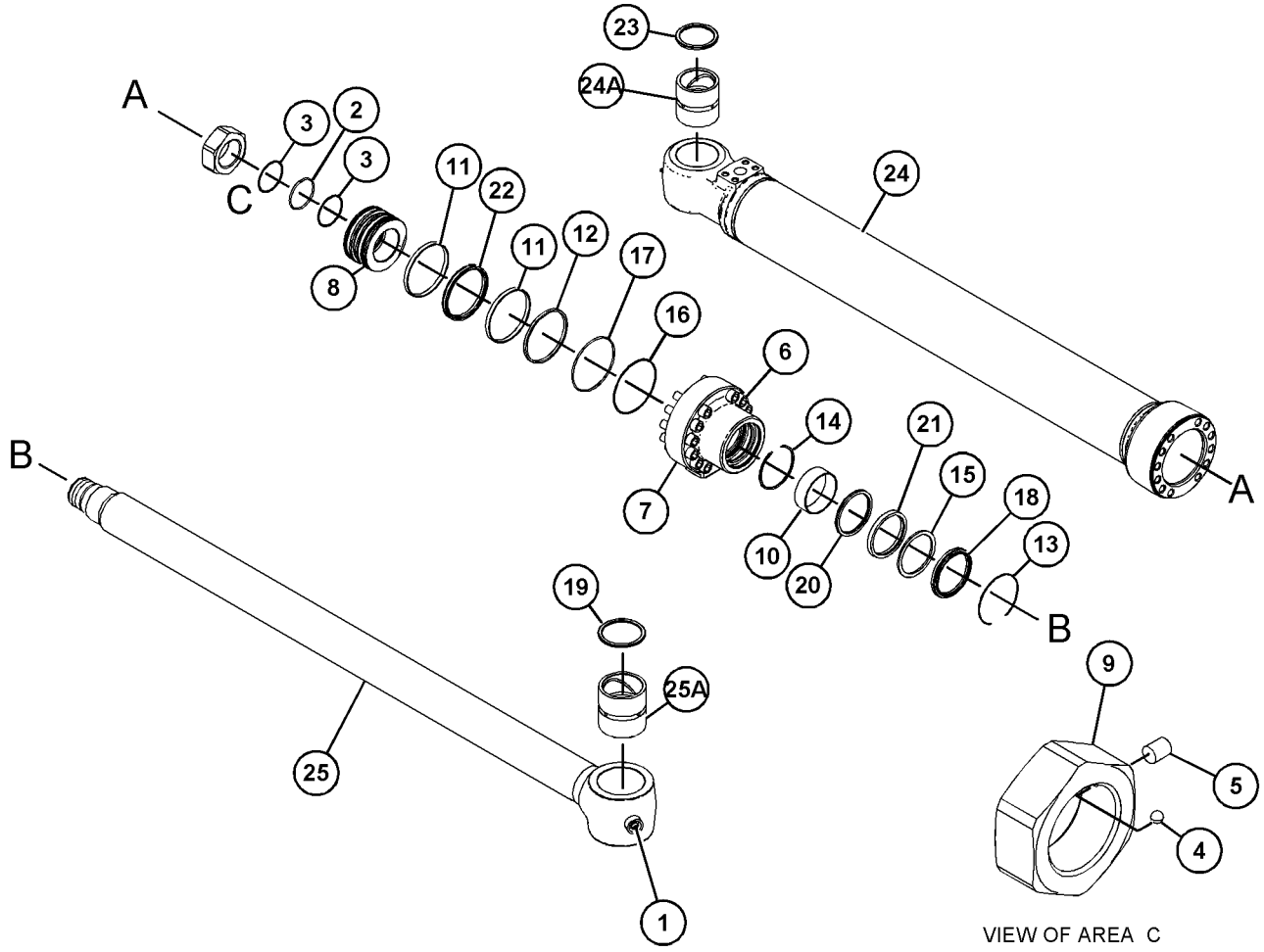


GRAPHIC #1 <END> g06147833

# 373-1119 CYLINDER & SEAL GP-STICK

**S/N: FEY1-UP**
**135-MM (5.3-IN) BORE X 1504-MM (59.2-IN) STROKE**
**PART OF 373-1108 CYLINDER & LINES GP-STICK**

**SMCS-5458** **i07450861**

| NOTE | REF NO | GRAPHIC REF | PART NUMBER | QTY | PART NAME 1 2 3 4 5 6 (PRODUCT LEVEL) | SEE PAGE |
|---|---|---|---|---|---|---|
| | 1 | 1 | **3B-8489** | 1 | FITTING-GREASE (1/8-27 PTF) | |
| | 2 | 1 | **397-5469** | 1 | PISTON | |
| | 3 | 1 | **397-5517** | 1 | HEAD | |
| | 4 | 1 | **397-5521** | 1 | ROD AS | |
| | 4A | 1 | **415-4567** | 1 | BEARING-SLEEVE | |
| | 5 | 1 | **455-2765** | 1 | CYLINDER AS | |
| | 5A | 1 | **415-4567** | 1 | BEARING-SLEEVE | |
| | 6 | 1 | **397-9063** | 1 | LOCKNUT-SPECIAL | |
| | 7 | 1 | **397-9064** | 1 | BUSHING | |
| J | 8 | 1 | **397-9066** | 1 | SEAL-O-RING | |
| J | 9 | 1 | **397-9067** | 1 | SEAL-O-RING | |
| J | 10 | 1 | **397-9068** | 1 | SEAL-O-RING | |
| J | 11 | 1 | **397-9069** | 1 | SEAL (LIP TYPE) | |
| | 12 | 1 | **398-0953** | 4 | SEAL | |
| J | 13 | 1 | **397-9076** | 1 | SEAL-BUFFER | |
| J | 14 | 1 | **397-9077** | 1 | SEAL-U-CUP | |
| J | 15 | 1 | **397-9078** | 2 | RING | |
| J | 16 | 1 | **397-9079** | 2 | RING | |
| J | 17 | 1 | **397-9080** | 2 | RING | |
| J | 18 | 1 | **397-9081** | 1 | RING | |
| J | 19 | 1 | **397-9082** | 1 | RING | |
| J | 20 | 1 | **397-9088** | 1 | SEAL AS | |
| | 21 | 1 | **397-9089** | 1 | RING | |
| | 22 | 1 | **397-9090** | 1 | RING | |
| | 23 | 1 | **397-9092** | 1 | STOP | |
| | 24 | 1 | **397-9093** | 1 | STOP-PLUNGER | |
| | 25 | 1 | **397-9273** | 1 | SPRING | |
| | 26 | 1 | **397-9277** | 1 | ORIFICE | |
| | 27 | 1 | **398-0095** | 1 | SPACER | |
| | 28 | 1 | **398-0096** | 1 | PLUG | |
| | 29 | 1 | **398-0097** | 12 | BALL | |
| | 30 | 1 | **398-0100** | 1 | BALL | |
| | 31 | 1 | **398-0105** | 1 | SCREW-SET (M10X1.5X16-MM) | |
| | 32 | 1 | **398-0106** | 1 | SETSCREW (M12X1.75X14-MM) | |
| | 33 | 1 | **398-0109** | 14 | BOLT-SOCKET HEAD (M16X2X70-MM) | |
| | | | | | AVAILABLE REPAIR KIT(S): | |
| J | | | **397-9091** | 1 | KIT-SEAL (STICK CYLINDER) | |

J - KIT MARKED J SERVICES PART(S) MARKED J

*373-1119* **CYLINDER & SEAL GP-STICK (**contd.**)** **i07450861**

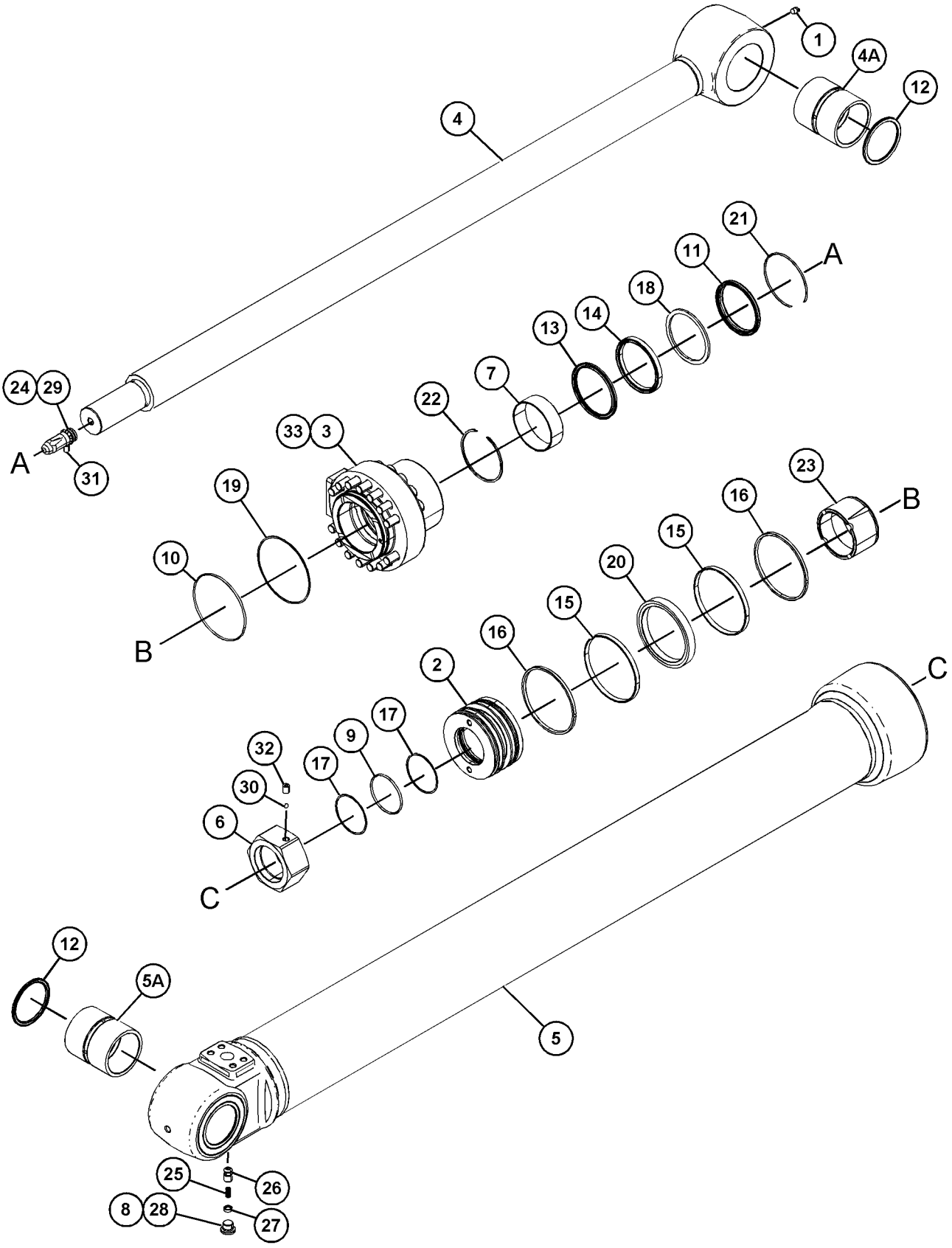


GRAPHIC #1 <END> g06171268

# *525-3741* DRIVE GP-SWING—WITH MOTOR

**S/N: FEY1-UP**

**PART OF 543-0244 POWER TRAIN AR**

**SMCS-5459** **i07362548**

| NOTE | REF NO | GRAPHIC REF | PART NUMBER | QTY | PART NAME 1 2 3 4 5 6 (PRODUCT LEVEL) | SEE PAGE |
|---|---|---|---|---|---|---|
| Y | 1 | 1 | **524-2647** | 1 | MOTOR GP-SWING | 311 |
| Y | 2 | 1 | **543-1000** | 1 | DRIVE GP-SWING (WITHOUT MOTOR) | 225 |
| | 3 | 1 | **546-5611** | 4 | BOLT-SOCKET HEAD | |
| | 4 | 1 | **546-5612** | 1 | SEAL-O-RING | |

Y - SEPARATE ILLUSTRATION

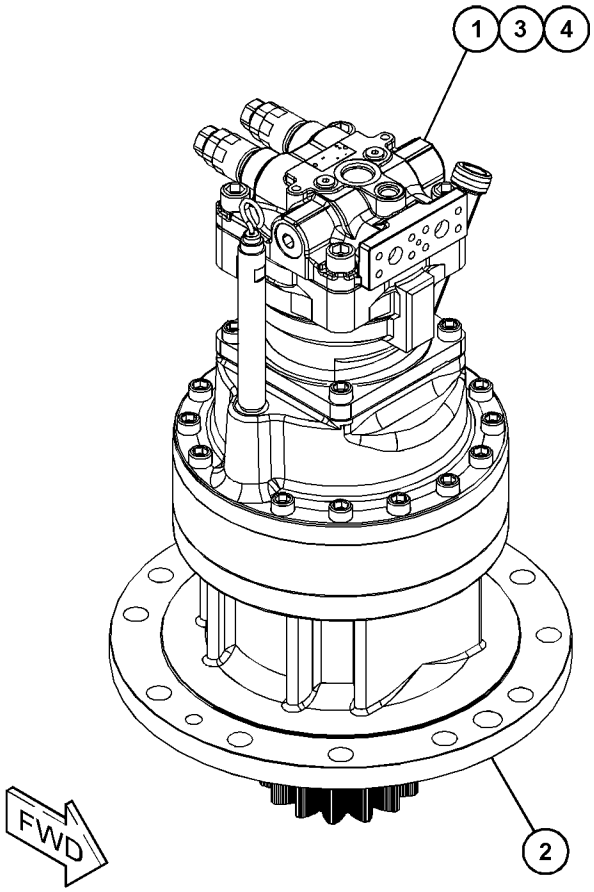


GRAPHIC #1 <END> g06286565

# 543-1000 DRIVE GP-SWING—WITHOUT MOTOR

**S/N: FEY1-UP**

**PART OF 525-3741 DRIVE GP-SWING**

**SMCS-5459** **i07329016**

| NOTE | REF NO | GRAPHIC REF | PART NUMBER | QTY | PART NAME 1 2 3 4 5 6 (PRODUCT LEVEL) | SEE PAGE |
|---|---|---|---|---|---|---|
| | 1 | 1 | **550-5488** | 1 | SHAFT-PINION | |
| | 2 | 1 | **550-5489** | 1 | SPACER (120X140X7.5-MM THK) | |
| | 3 | 1 | **550-5490** | 1 | SEAL-O-RING | |
| | 4 | 1 | **550-5491** | 1 | BEARING | |
| | 5 | 1 | **550-5492** | 1 | HOUSING | |
| | 6 | 1 | **6V-7238** | 1 | VALVE-SHUTOFF (SWING DRIVE) | |
| | 7 | 1 | **3K-0360** | 1 | SEAL-O-RING | |
| | 8 | 1 | **550-5493** | 1 | SEAL-RING | |
| | 9 | 1 | **550-5494** | 1 | BEARING | |
| | 10 | 1 | **550-5495** | 1 | NUT-RING | |
| | 11 | 1 | **550-5496** | 2 | SEAL-O-RING | |
| | 12 | 1 | **550-5497** | 1 | GEAR-RING | |
| | 13 | 1 | **550-5498** | 1 | PLANETARY AS | |
| | 14 | 1 | **550-5499** | 1 | GEAR-SUN | |
| | 15 | 1 | **550-5500** | 1 | PLANETARY AS | |
| | 16 | 1 | **550-5501** | 1 | GEAR-SUN (22-TEETH) | |
| | 17 | 1 | **550-5502** | 1 | COVER | |
| | 18 | 1 | **550-5505** | 1 | GAUGE-OIL LEVEL (SWING DRIVE) | |
| M | 19 | 1 | **491-3927** | 15 | BOLT-FLANGE HEAD (M16X2X120-MM) | |
| | 20 | 1 | **550-5506** | 1 | BREATHER AS (SWING DRIVE) | |

M - METRIC PART

*543-1000* **DRIVE GP-SWING (**contd.**)** **i07329016**

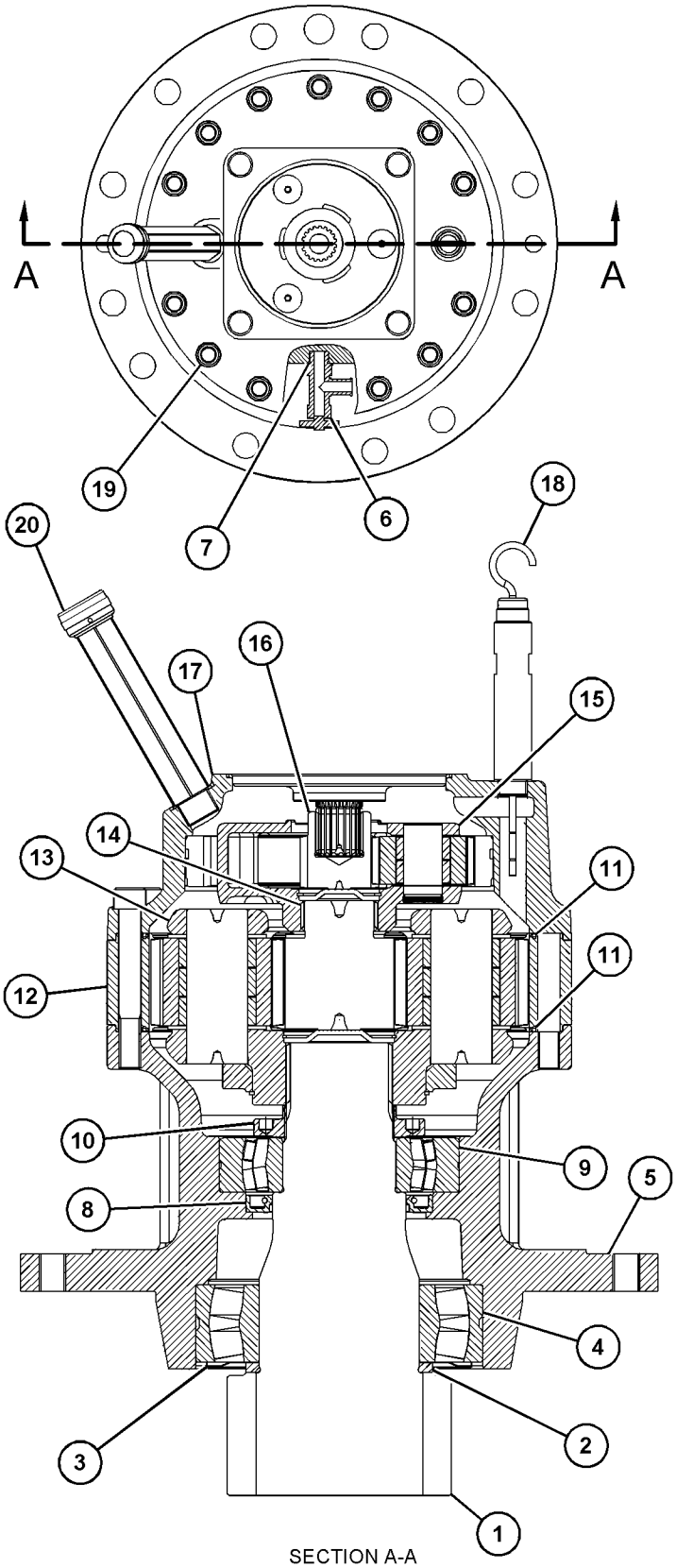


SECTION A-A

GRAPHIC #1 <END> g06288709

# *543-0998* FASTENER GP-SWING & FINAL DR

**S/N: FEY1-UP**

**PART OF 543-0244 POWER TRAIN AR**

**SMCS-4050, 5459**

**i07329015**

| NOTE | REF NO | GRAPHIC REF | PART NUMBER | QTY | PART NAME 1 2 3 4 5 6 (PRODUCT LEVEL) | SEE PAGE |
|---|---|---|---|---|---|---|
| | 1 | 1 | **2Y-5503** | 2 | CORK | |
| | 2 | 1 | **5D-1026** | 1 | CLAMP-BAND | |
| | 3 | 1 | **6V-8237** | 12 | WASHER (26X44X4-MM THK) | |
| | 4 | 1 | **8T-3282** | 32 | WASHER-HARD (22X35X3.5-MM THK) | |
| | 5 | 1 | **096-4755** | 1 | PIN | |
| M | 6 | 1 | **287-3585** | 32 | BOLT (M20X2.5X60-MM) | |
| M | 7 | 1 | **201-7949** | 12 | BOLT (M24X3X70-MM) | |
| E | 8 | 1 | **5P-0767** | | HOSE (74-CM) | |
| | | | | | | |
| BF | | 1 | **1U-8846** | | SEALANT-GASKET | |

B - USE AS REQUIRED
E - ORDER BY THE CENTIMETER
F - NOT SHOWN
M - METRIC PART

*543-0998* **FASTENER GP-SWING & FINAL DR (**contd.**)** **i07329015**

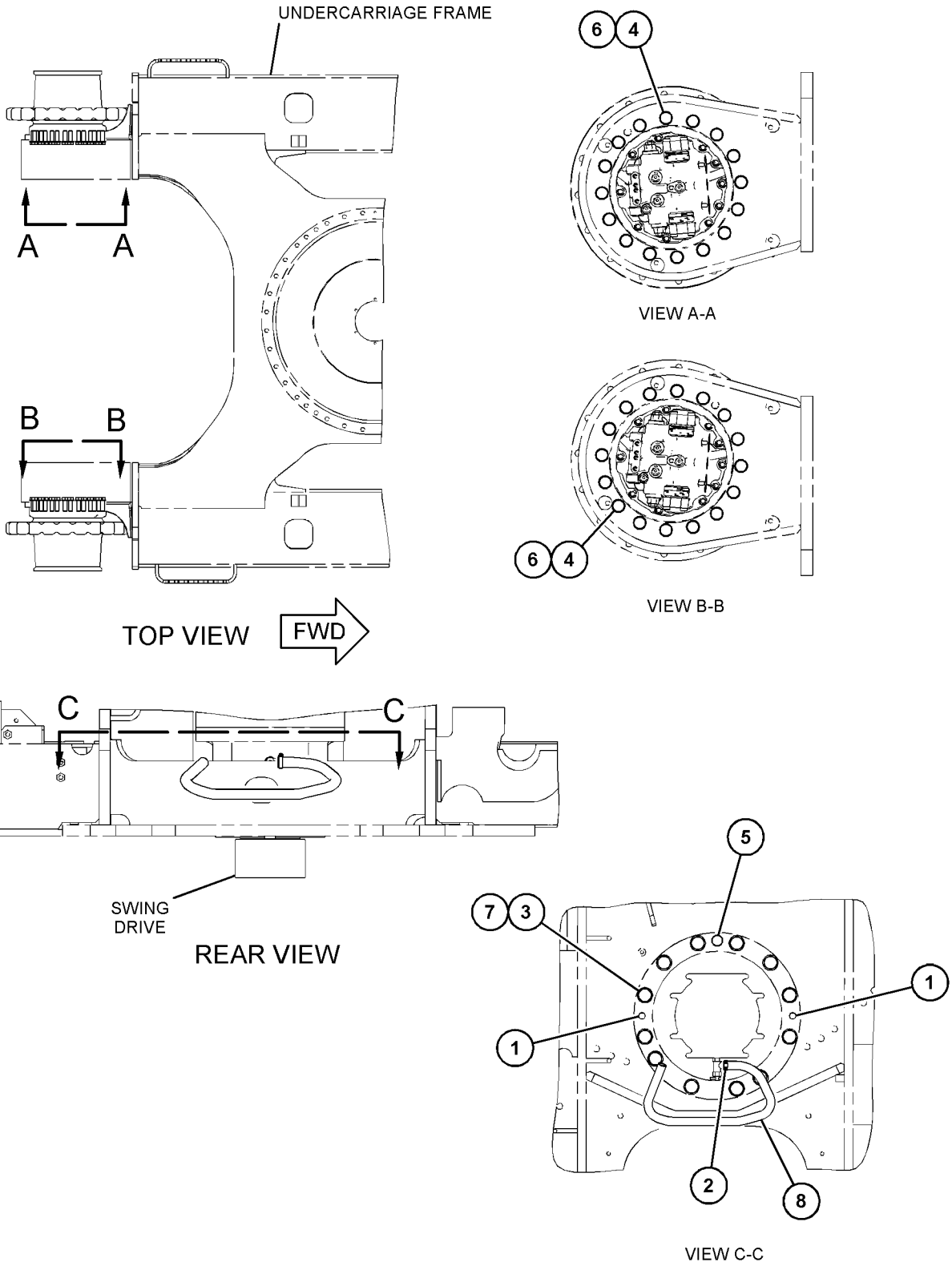


GRAPHIC #1 <END> g06286535

# 158-8987 FILTER & VALVE GP-PILOT—HYDRAULIC OIL

**S/N: FEY1-UP**

**PART OF 507-5950 TANK & FILTER GP-HYDRAULIC**

**SMCS-5072, 5092**

**i06984824**

| NOTE | REF NO | GRAPHIC REF | PART NUMBER | QTY | PART NAME 1 2 3 4 5 6 (PRODUCT LEVEL) | SEE PAGE |
|---|---|---|---|---|---|---|
| | 1 | 1 | **5I-8670** | 1 | FILTER-OIL (ADVANCED EFFICIENCY) (HYDRAULIC, PILOT) | |
| | 2 | 1 | **215-4909** | 1 | VALVE GP-PILOT RELIEF (HYDRAULIC FILTER) | |
| | 2A | 1 | **095-1584** | 1 | SEAL-O-RING | |
| | 2B | 1 | **095-1590** | 1 | SEAL-O-RING | |
| | 2C | 1 | **095-1596** | 1 | SEAL-O-RING | |

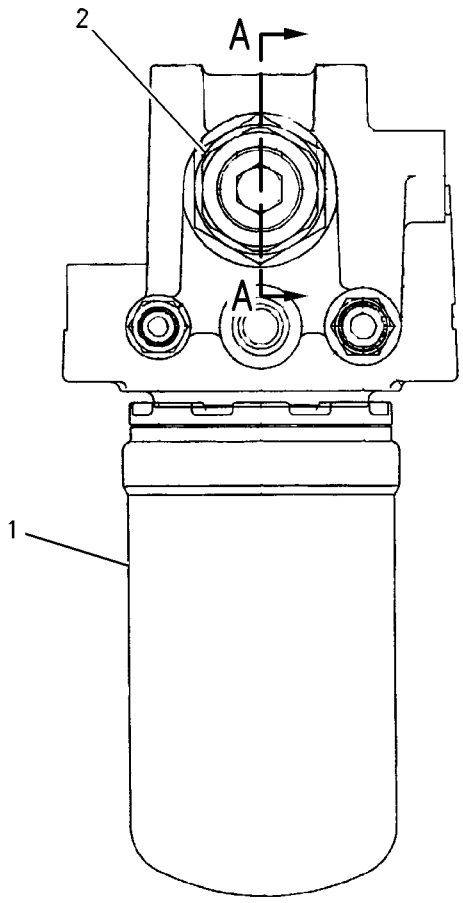


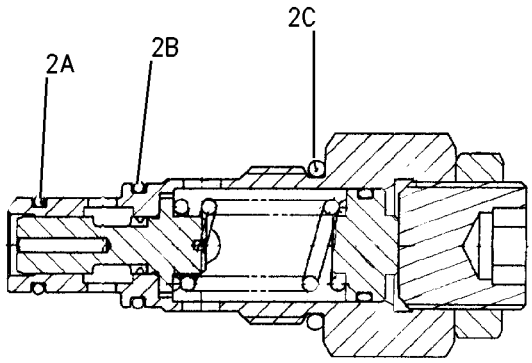


SECTION A–A

GRAPHIC #1

<END>

g00842119

# *188-4140* FILTER GP-OIL—HYDRAULIC RETURN

**S/N: FEY1-UP**

**PART OF 507-5950 TANK & FILTER GP-HYDRAULIC**

**SMCS-3004, 4295, 431F, 5068, 5091, 5092** **i05654458**

| NOTE | REF NO | GRAPHIC REF | PART NUMBER | QTY | PART NAME 1 2 3 4 5 6 (PRODUCT LEVEL) | SEE PAGE |
|---|---|---|---|---|---|---|
| Y | 1 | 1 | **173-3503** | 1 | BLOCK GP-HYDRAULIC | 207 |
| | 2 | 1 | **129-8034** | 1 | VALVE AS-BYPASS | |
| | 3 | 1 | **123-2003** | 2 | SEAL-O-RING | |
| | 4 | 1 | **173-3507** | 1 | HOUSING AS | |
| M | 5 | 1 | **8T-4194** | 8 | BOLT (M12X1.75X50-MM) | |
| | 6 | 1 | **8T-4223** | 8 | WASHER-HARD (13.5X25.5X3-MM THK) | |
| CY | 7 | 1 | **419-8528** | 1 | FILTER GP-OIL (HYDRAULIC RETURN) | 233 |
| | 8 | 1 | **173-3510** | 1 | COVER | |
| | 9 | 1 | **173-3518** | 1 | INDICATOR AS (HYDRAULIC RETURN FILTER) | |
| | 10 | 1 | **159-7784** | 1 | SEAL-O-RING | |
| | 12 | 1 | **8T-0328** | 4 | WASHER-HARD (5.5X10X1-MM THK) | |
| M | 13 | 1 | **8T-6693** | 4 | SCREW-MACHINE (M5X0.8X16-MM) | |

C - CHANGE FROM PREVIOUS TYPE
M - METRIC PART
Y - SEPARATE ILLUSTRATION

*188-4140* **FILTER GP-OIL (**contd.**)** **i05654458**

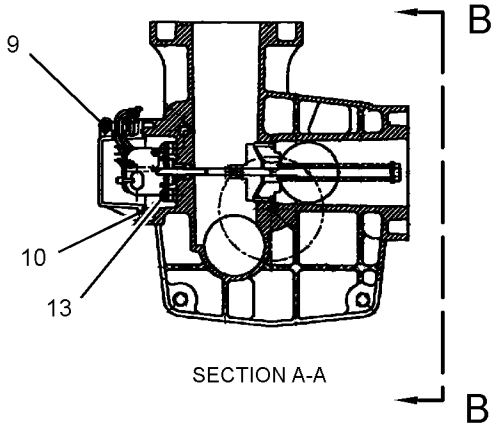


SECTION A-A

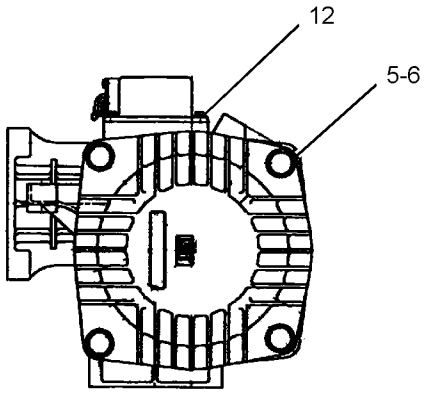


VIEW B-B

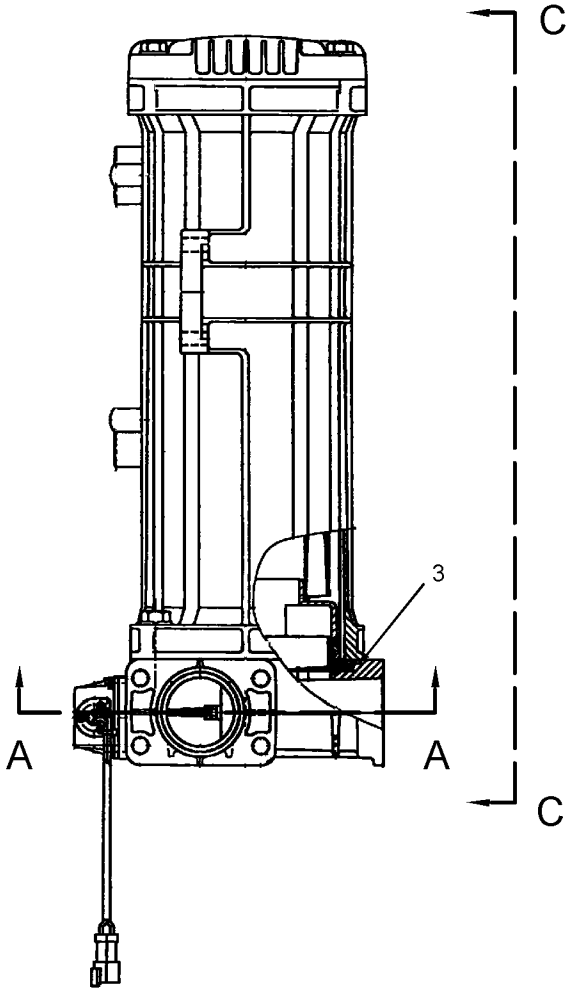


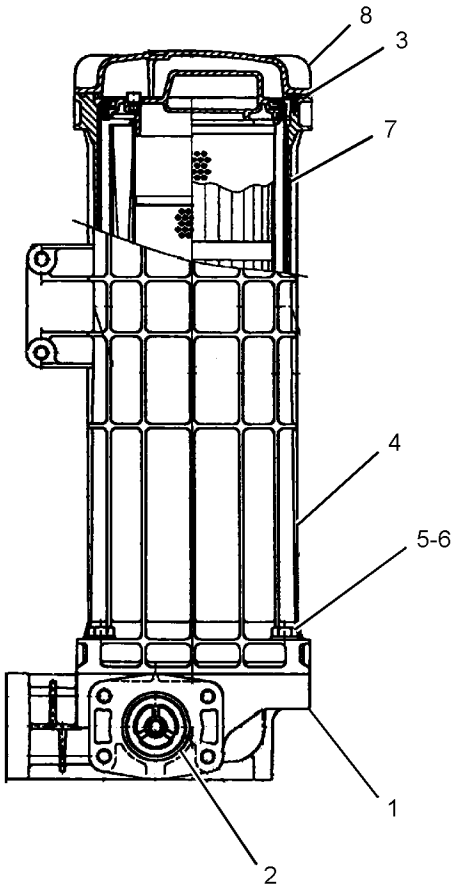


VIEW C-C

GRAPHIC #1 <END> g03327388

# 289-8194 FILTER GP-OIL—HYDRAULIC, CASE DRAIN

**S/N: FEY1-UP**

**PART OF 507-5950 TANK & FILTER GP-HYDRAULIC**

**SMCS-3004, 4295, 431F, 5068, 5091, 5092**

**i06984825**

| NOTE | REF NO | GRAPHIC REF | PART NUMBER | QTY | PART NAME 1 2 3 4 5 6 (PRODUCT LEVEL) | SEE PAGE |
|---|---|---|---|---|---|---|
| | 1 | 1 | **093-7521** | 1 | FILTER-OIL (ADVANCED EFFICIENCY) (HYDRAULIC, CASE DRAIN) | |
| | 2 | 1 | **289-8195** | 1 | HEAD AS-FILTER | |

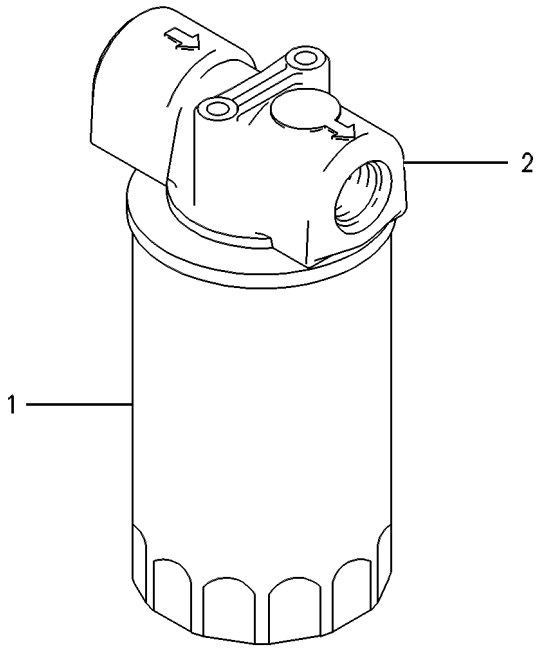


GRAPHIC #1 <END> g00258224

# 419-8528 FILTER GP-OIL—HYDRAULIC RETURN

**S/N: FEY1-UP**

**PART OF 188-4140 FILTER GP-OIL**

**SMCS-3004, 4295, 431F, 5068, 5091, 5092** **i06681784**

| NOTE | REF NO | GRAPHIC REF | PART NUMBER | QTY | PART NAME 1 2 3 4 5 6 (PRODUCT LEVEL) | SEE PAGE |
|---|---|---|---|---|---|---|
| | 1 | 1 | **419-8531** | 1 | PLATE-SLIDE | |
| JM | 2 | 1 | **173-3529** | 6 | BOLT (M6X1X15-MM) | |
| J | 3 | 1 | **3T-7528** | 6 | SEAL-O-RING | |
| | 4 | 1 | **173-3513** | 1 | BASE | |
| J | 5 | 1 | **3E-4297** | 2 | SEAL-O-RING | |
| M | 6 | 1 | **137-3626** | 1 | BOLT-SPECIAL (M6X1X23.25-MM) | |
| | 8 | 1 | **179-9806** | 1 | FILTER ELEMENT AS-OIL (ADVANCED EFFICIENCY) (HYDRAULIC RETURN) | |
| J | 9 | 1 | **137-3623** | 4 | SEAL-O-RING | |
| J | 10 | 1 | **6V-7658** | 2 | SEAL-O-RING | |
| J | 11 | 1 | **177-2553** | 1 | SEAL-O-RING | |
| J | 12 | 1 | **095-1681** | 1 | SEAL-O-RING | |
| | 13 | 1 | **173-3515** | 1 | RING-RETAINING | |
| | 14 | 1 | **173-3516** | 1 | HANDLE | |
| J | 15 | 1 | **4J-7533** | 1 | SEAL-O-RING | |
| J | 16 | 1 | **9S-4180** | 1 | PLUG | |
| JM | 17 | 1 | **137-3624** | 8 | SCREW (M3X0.5X5-MM) | |
| J | 18 | 1 | **137-3625** | 2 | PAD | |
| | 19 | 1 | **173-3517** | 1 | PLATE | |
| J | 20 | 1 | **137-3628** | 1 | SHIM (0.1-MM THK) | |
| | 21 | 1 | **419-8533** | 1 | FILM-INSTRUCTION (HYDRAULIC OIL RETURN FILTER) | |
| | | | | | | |
| | | | | | PARTS SHOWN IN GRAPHIC(S) WITHOUT A REFERECE NUMBER ARE NOT SERVICED SEPARATELY | |
| | | | | | AVAILABLE REPAIR KIT(S): | |
| J | | | **201-9299** | 1 | KIT-SERVICE (HYDRAULIC RETURN FILTER) | |

J - KIT MARKED J SERVICES PART(S) MARKED J
M - METRIC PART

*419-8528* **FILTER GP-OIL (**contd.**)** **i06681784**

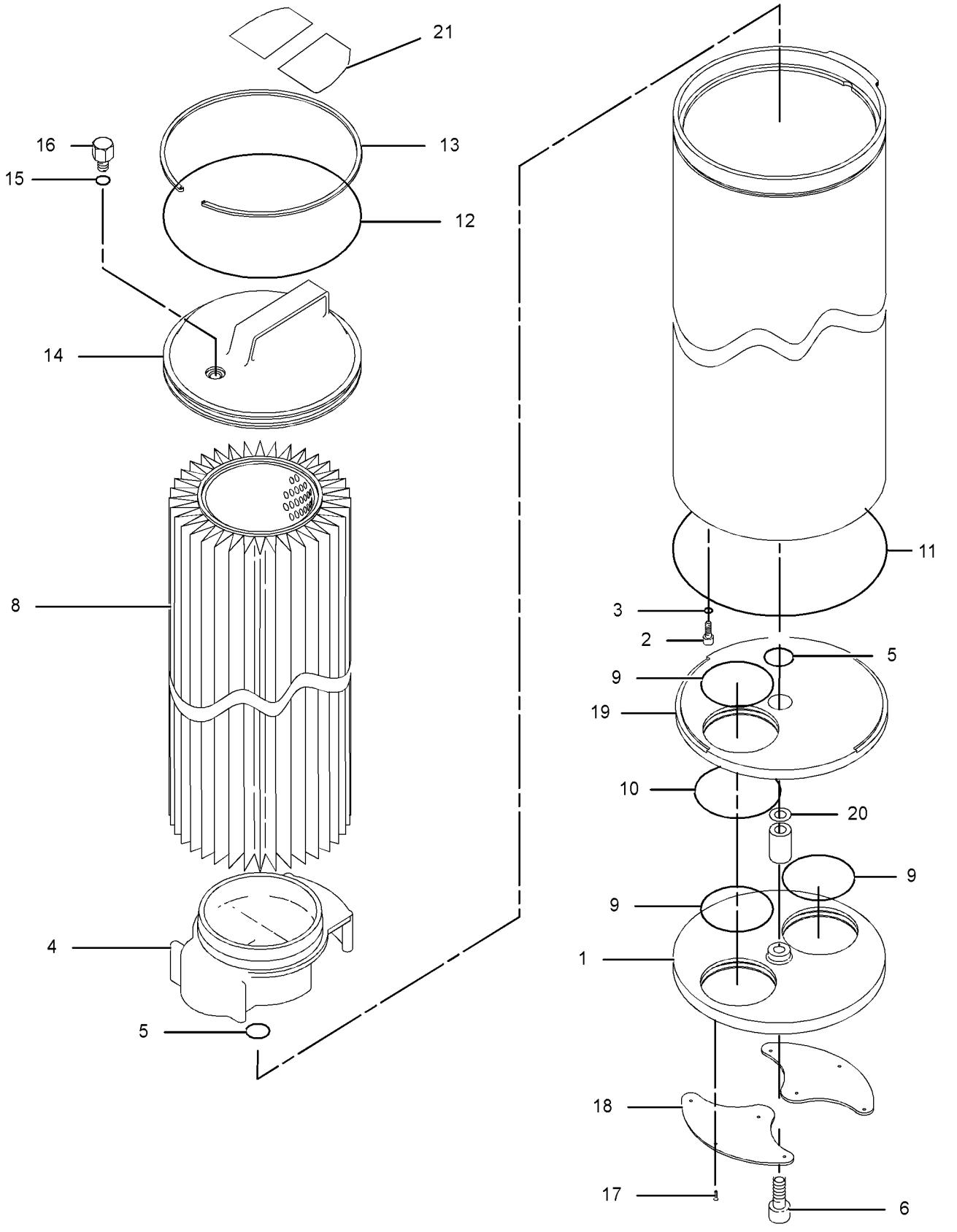


GRAPHIC #1 <END> g03323353

# 214-4511 FITTING GP-HYDRAULIC—4-BOLT FLANGE

**S/N: FEY1-UP**

**PART OF 239-1714 LINES GP-FRONT**

**SMCS-5057, 7553**

**i04915553**

| NOTE | REF NO | GRAPHIC REF | PART NUMBER | QTY | PART NAME 1 2 3 4 5 6 (PRODUCT LEVEL) | SEE PAGE |
|---|---|---|---|---|---|---|
| | 1 | 1 | *214-4400* | 1 | FLANGE AS | |
| | 1A | 1 | **5K-9090** | 1 | SEAL-O-RING | |
| | | | | | —OR— | |
| | 2 | 1 | *214-4518* | 1 | FLANGE AS | |
| | 2A | 1 | **5K-9090** | 1 | SEAL-O-RING | |
| | 2B | 1 | **6V-8635** | 1 | CONNECTOR | |
| | 2C | 1 | **7M-8485** | 1 | SEAL-O-RING | |

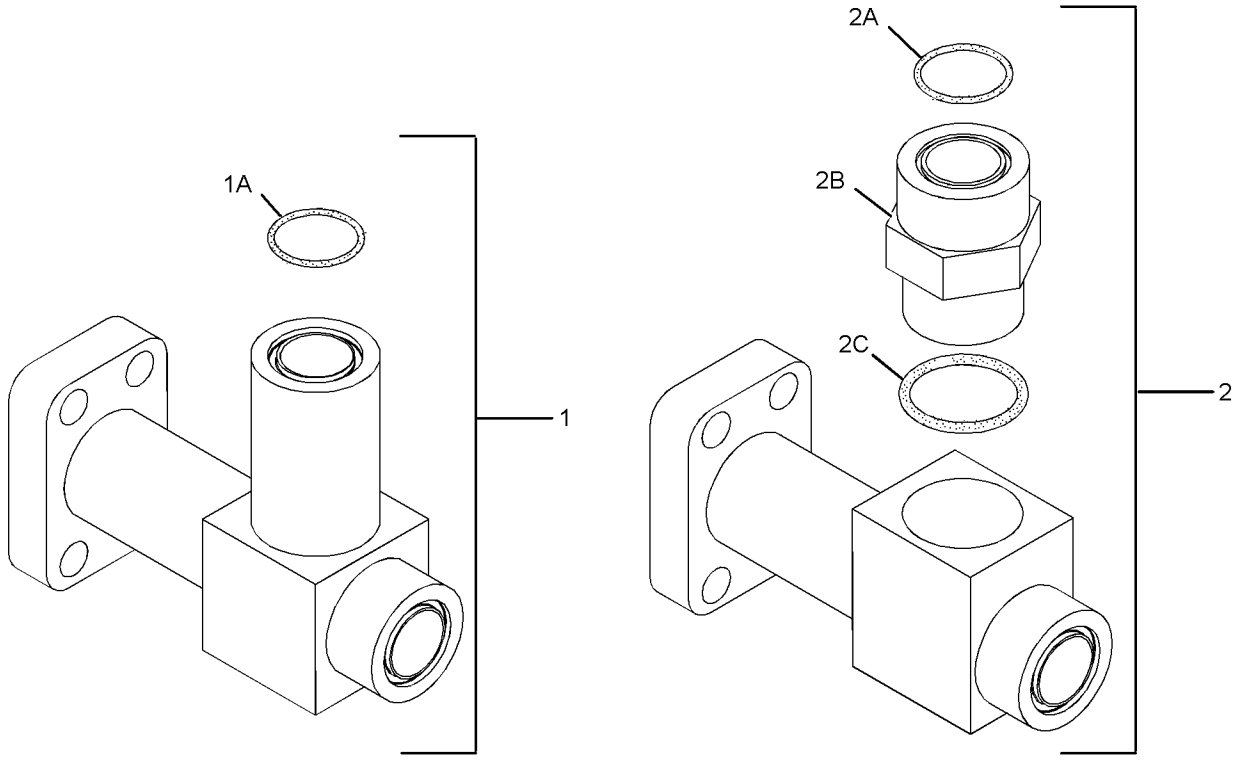


OPTIONAL DESIGN

GRAPHIC #1

<END>

g02154439

# 347-6081 GAUGE GP-SIGHT—HYDRAULIC OIL LEVEL

**S/N: FEY1-UP**

**PART OF 507-5950 TANK & FILTER GP-HYDRAULIC**

**SMCS-7479** **i05654464**

| NOTE | REF NO | GRAPHIC REF | PART NUMBER | QTY | PART NAME 1 2 3 4 5 6 (PRODUCT LEVEL) | SEE PAGE |
|---|---|---|---|---|---|---|
| | 1 | 1 | **347-6082** | 2 | BLOCK | |
| M | 2 | 1 | **236-3259** | 2 | BOLT-SPECIAL | |
| | 3 | 1 | **236-3257** | 1 | PIPE | |
| | 4 | 1 | **6F-6672** | 4 | SEAL-O-RING | |
| | 5 | 1 | **6F-4855** | 4 | SEAL-O-RING | |

M - METRIC PART

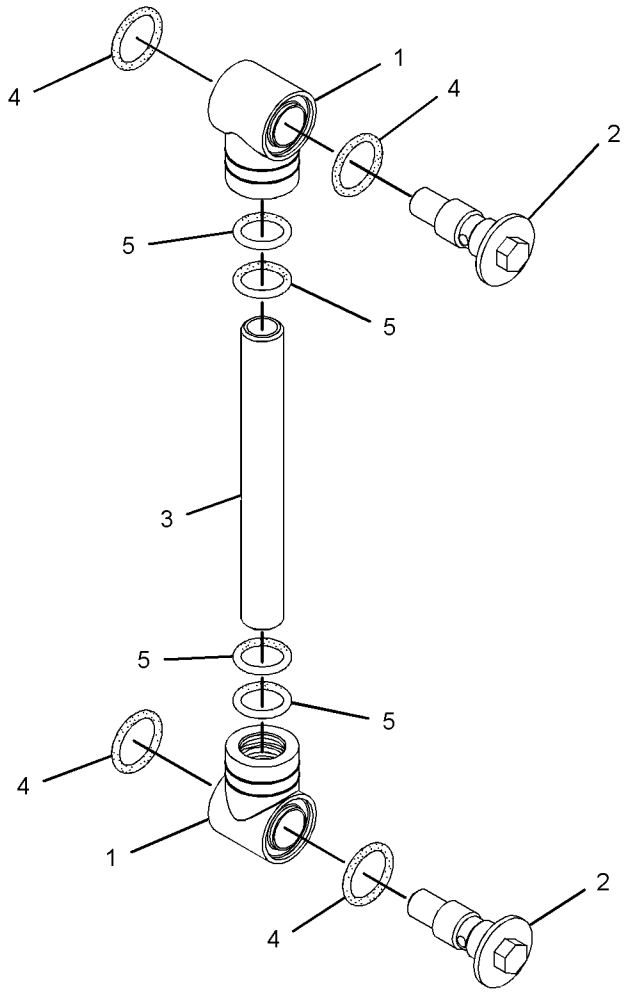


GRAPHIC #1 <END> g02270933

# *551-6788* HEAD GP-PUMP

**S/N: FEY1-UP**
**REGULATOR**
**PART OF 524-2648 PUMP GP-MAIN HYDRAULIC**

**SMCS-3222, 5070, 5086** **i07397859**

| NOTE | REF NO | GRAPHIC REF | PART NUMBER | QTY | PART NAME 1 2 3 4 5 6 (PRODUCT LEVEL) | SEE PAGE |
|---|---|---|---|---|---|---|
| | 1 | 1 | **552-7948** | 1 | BODY AS | |
| | | 1 | **371-7201** | 5 | PLUG | |
| | 2 | 1 | **552-7950** | 1 | SPOOL AS | |
| | 3 | 1 | **247-8733** | 1 | LEVER AS | |
| | 4 | 1 | **247-8734** | 1 | LEVER AS | |
| | 5 | 1 | **247-8735** | 1 | PIN AS | |
| | 6 | 1 | **552-7952** | 1 | LEVER AS | |
| M | 7 | 1 | **3E-8025** | 2 | BOLT-SOCKET HEAD (M8X1.25X50-MM) | |
| M | 8 | 2 | **6V-8213** | 2 | BOLT-SOCKET HEAD (M8X1.25X70-MM) | |
| M | 9 | 2 | **8T-8442** | 2 | BOLT-SOCKET HEAD (M6X1X30-MM) | |
| M | 10 | 2 | **8T-0269** | 10 | BOLT-SOCKET HEAD (M6X1X20-MM) | |
| | 11 | 2 | **371-7201** | 5 | PLUG | |
| | 12 | 1 | **5I-8790** | 1 | PLUG | |
| | 13 | 1 | **5I-8791** | 1 | PISTON-COMPENSATOR | |
| | 14 | 1 | **349-4154** | 1 | SLEEVE | |
| | 15 | 1 | **295-9584** | 1 | ROD | |
| | 16 | 1 | **295-9583** | 1 | SEAT | |
| | 17 | 1 | **129-7971** | 1 | SPRING | |
| | 18 | 1 | **541-3352** | 1 | SPRING | |
| | 19 | 1 | **295-9890** | 1 | KIT-SEAL (HYDRAULIC CYLINDER) | |
| | | | | | (INCLUDES WEAR RINGS, O-RINGS, U-CUP & SEAL AS) | |
| M | 20 | 1 | **295-9579** | 1 | SETSCREW (M30X1.5X29-MM) | |
| | 21 | 1 | **5I-8799** | 1 | COVER | |
| M | 22 | 1 | **5I-8800** | 1 | LOCKNUT (M30X1.5-THD) | |
| | 23 | 1 | **552-7953** | 1 | SLEEVE | |
| | 24 | 1 | **5I-8802** | 1 | COVER-PILOT | |
| | 25 | 2 | **295-9578** | 1 | PISTON | |
| | 26 | 2 | **295-9577** | 1 | SEAT | |
| | 27 | 2 | **541-3355** | 1 | RETAINER | |
| | 28 | 2 | **5I-8806** | 1 | SPRING-PILOT | |
| | 29 | 1 | **5I-8809** | 1 | SEAT-SPRING | |
| | 30 | 1 | **5I-8810** | 1 | SPRING-RETURN | |
| | 31 | 1 | **5I-8811** | 1 | SPRING | |
| | 32 | 2 | **5I-8812** | 1 | COVER-BLOCK | |
| | 33 | 2 | **206-9300** | 1 | SEAL-O-RING | |
| | 34 | 2 | **249-6658** | 3 | SEAL-O-RING | |
| | 35 | 2 | **347-6530** | 9 | SEAL-RECTANGULAR | |
| | 36 | 2 | **189-9763** | 1 | SEAL-O-RING | |
| | 37 | 2 | **206-9295** | 1 | SEAL-O-RING | |
| | 38 | 2 | **277-2545** | 1 | SEAL-O-RING | |
| | 39 | 1 | **206-9294** | 1 | SEAL-O-RING | |
| | 40 | 1 | **206-9296** | 1 | SEAL-O-RING | |
| | 41 | 1 | **249-6659** | 1 | SEAL-O-RING | |
| | 42 | 2 | **249-6660** | 1 | SEAL-O-RING | |
| | 43 | 1 | **295-9575** | 1 | SEAL-O-RING | |
| | 44 | 1 | **249-6661** | 2 | SEAL-O-RING | |

*551-6788* **HEAD GP-PUMP (**contd.**)** **i07397859**

| NOTE | REF NO | GRAPHIC REF | PART NUMBER | QTY | PART NAME 1 2 3 4 5 6 (PRODUCT LEVEL) | SEE PAGE |
|---|---|---|---|---|---|---|
| | 45 | 1 | **206-9301** | 1 | SEAL-O-RING | |
| | 46 | 1 | **206-9299** | 1 | SEAL-O-RING | |
| M | 47 | 2 | **5C-7261** | 1 | NUT (M8X1.25-THD) | |
| M | 48 | 1 | **160-8503** | 1 | NUT (M10X1.5-THD) | |
| | 49 | 1 | **096-2323** | 1 | RING-RETAINING (EXTERNAL) | |
| | 50 | 1 | **5I-8813** | 1 | RING-RETAINING | |
| | 51 | 1 | **5I-8814** | 2 | RING-RETAINING | |
| | 52 | 1 | **5I-8815** | 1 | PIN | |
| | 53 | 1 | **552-7955** | 1 | DOWEL | |
| M | 54 | 2 | **095-7982** | 1 | SETSCREW-SOCKET | |

M - METRIC PART

*551-6788* **HEAD GP-PUMP (**contd.**)** **i07397859**

REFER TO ALL ILLUSTRATIONS OF
THIS GROUP FOR AUXILIARY VIEWS

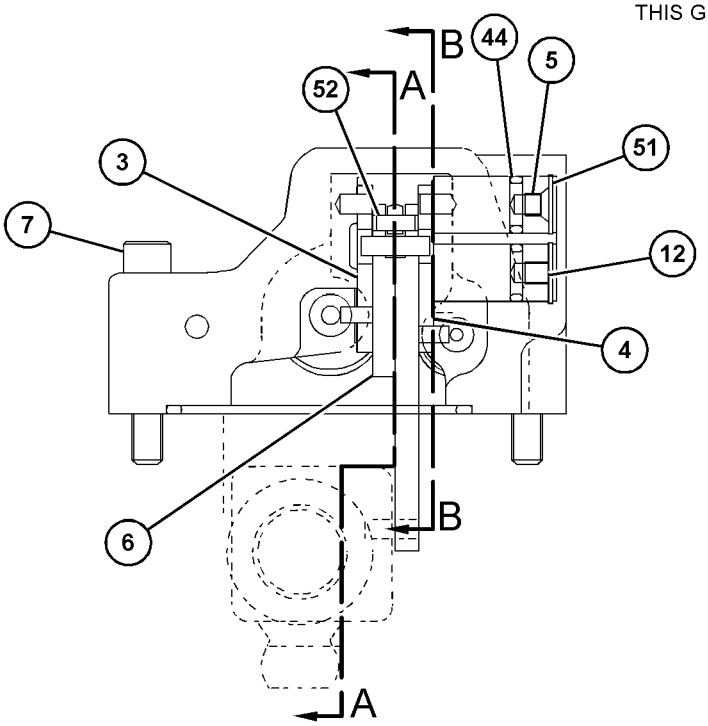


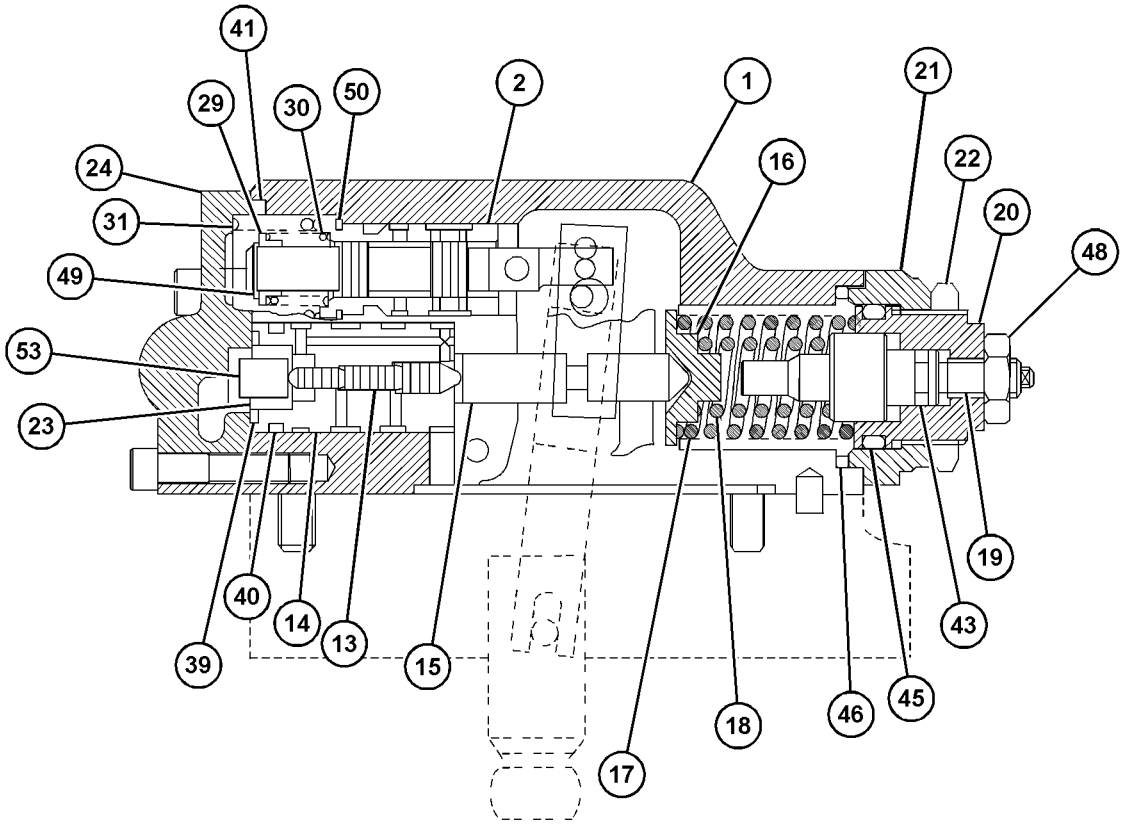


SECTION A-A

GRAPHIC #1 g06315720

*551-6788* **HEAD GP-PUMP** (contd.) **i07397859**

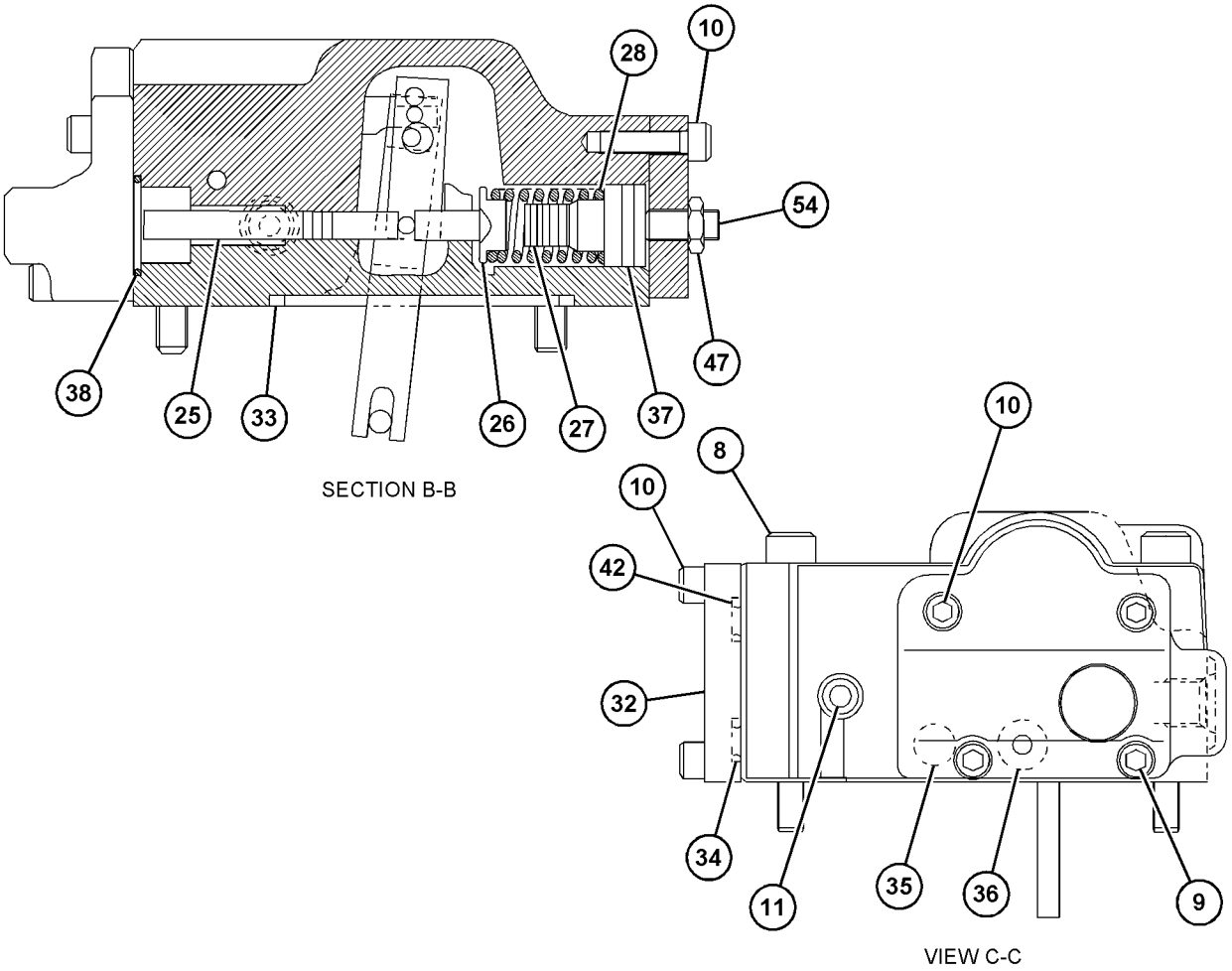


GRAPHIC #2 <END> g06315722

# 194-0174 HOSE GP-HYDRAULIC

**S/N: FEY1-UP**

**PART OF 239-1714 LINES GP-FRONT**

**SMCS-5057** **i06925191**

| NOTE | PART NUMBER | QTY | PART NAME 1 2 3 4 5 6 (PRODUCT LEVEL) | SEE PAGE |
|---|---|---|---|---|
| Y | *194-0176* | 1 | HOSE GP-HYDRAULIC | 242 |
| | | | –OR– | |
| | **168-9760** | 1 | HOSE AS | |

Y - SEPARATE ILLUSTRATION

<END>

# *194-0176* HOSE GP-HYDRAULIC

**S/N: FEY1-UP**

**PART OF 194-0174 HOSE GP-HYDRAULIC**

**SMCS-5057** **i06925192**

| NOTE | REF NO | GRAPHIC REF | PART NUMBER | QTY | PART NAME 1 2 3 4 5 6 (PRODUCT LEVEL) | SEE PAGE |
|---|---|---|---|---|---|---|
| | 1 | 1 | **142-7765** | 1 | TUBE AS | |
| | 2 | 1 | **5K-9090** | 1 | SEAL-O-RING | |
| I | 3 | 1 | **165-3165** | 1 | HOSE AS | |

I - REFER TO HYDRAULIC INFORMATION SYSTEM

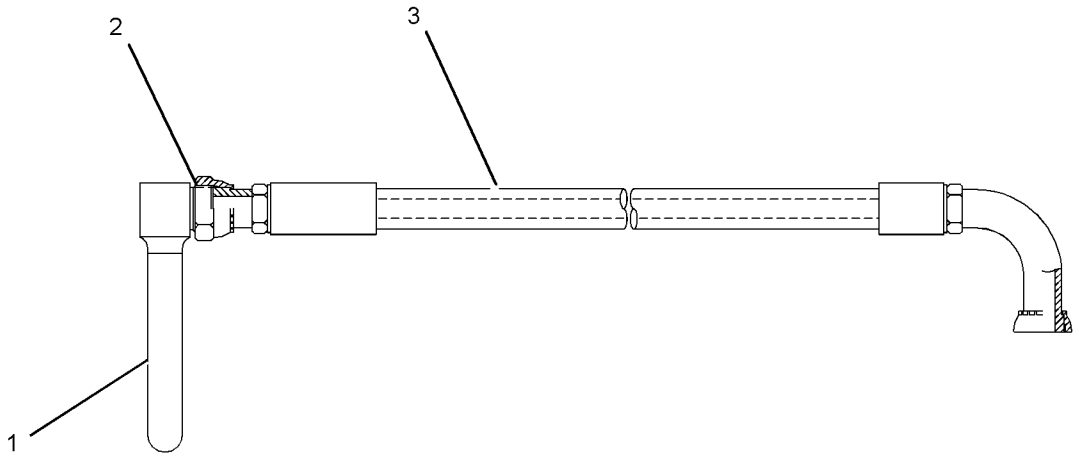


GRAPHIC #1 <END> g01041998

# 194-0180 HOSE GP-HYDRAULIC

**S/N: FEY1-UP**

**PART OF 239-1714 LINES GP-FRONT**

**SMCS-5057** **i05345953**

| NOTE | PART NUMBER | QTY | PART NAME 1 2 3 4 5 6 (PRODUCT LEVEL) | SEE PAGE |
|---|---|---|---|---|
| Y | *194-0181* | 1 | HOSE GP-HYDRAULIC | 244 |
| | | | –OR– | |
| Y | *194-0182* | 1 | HOSE GP-HYDRAULIC | 245 |

Y - SEPARATE ILLUSTRATION

<END>

# *194-0181* HOSE GP-HYDRAULIC

**S/N: FEY1-UP**

**PART OF 194-0180 HOSE GP-HYDRAULIC**

**SMCS-5057** **i04915512**

| NOTE | REF NO | GRAPHIC REF | PART NUMBER | QTY | PART NAME 1 2 3 4 5 6 (PRODUCT LEVEL) | SEE PAGE |
|---|---|---|---|---|---|---|
| | 1 | 1 | **168-9762** | 1 | HOSE AS | |
| | 2 | 1 | **8C-3206** | 2 | FLANGE-HALF | |
| | 3 | 1 | **4J-0520** | 1 | SEAL-O-RING | |




GRAPHIC #1 <END> g01049500

# *194-0182* HOSE GP-HYDRAULIC

**S/N: FEY1-UP**

**PART OF 194-0180 HOSE GP-HYDRAULIC**

**SMCS-5057** **i04915524**

| NOTE | REF NO | GRAPHIC REF | PART NUMBER | QTY | PART NAME 1 2 3 4 5 6 (PRODUCT LEVEL) | SEE PAGE |
|---|---|---|---|---|---|---|
| I | 1 | 1 | **165-3173** | 1 | HOSE AS | |
| | 2 | 1 | **168-9523** | 1 | TUBE AS | |
| | 3 | 1 | **113-6479** | 1 | FLANGE-SPECIAL | |
| | 4 | 1 | **5K-9090** | 2 | SEAL-O-RING | |
| | 5 | 1 | **1P-3703** | 1 | SEAL-RECTANGULAR | |

I - REFER TO HYDRAULIC INFORMATION SYSTEM

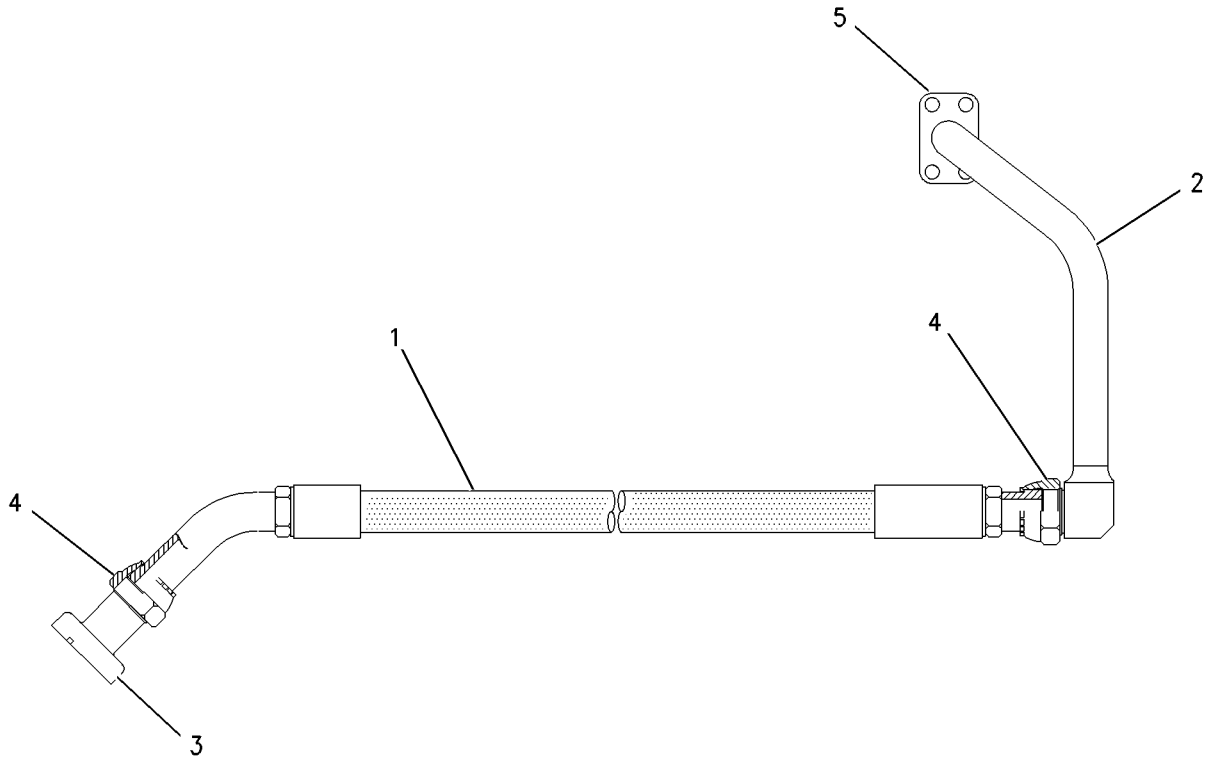


GRAPHIC #1 <END> g00834662

## 236-3212 HOSE GP-HYDRAULIC—FRONT

**S/N: FEY1-UP**

**PART OF 239-1714 LINES GP-FRONT**

**SMCS-5057** **i06925375**

| NOTE | PART NUMBER | QTY | PART NAME 1 2 3 4 5 6 (PRODUCT LEVEL) | SEE PAGE |
|---|---|---|---|---|
| Y | *236-3214* | 1 | HOSE GP-HYDRAULIC | 247 |
| | | | —OR— | |
| | *207-6666* | 1 | HOSE AS | |
| BE | **7Y-5074** | | GUARD-HOSE (154-CM) | |

B - USE AS REQUIRED
E - ORDER BY THE CENTIMETER
Y - SEPARATE ILLUSTRATION

<END>

## 236-3213 HOSE GP-HYDRAULIC—FRONT

**S/N: FEY1-UP**

**PART OF 239-1714 LINES GP-FRONT**

**SMCS-5057** **i06931768**

| NOTE | PART NUMBER | QTY | PART NAME 1 2 3 4 5 6 (PRODUCT LEVEL) | SEE PAGE |
|---|---|---|---|---|
| Y | *236-3215* | 1 | HOSE GP-HYDRAULIC | 248 |
| | | | —OR— | |
| | *207-6667* | 1 | HOSE AS | |
| BE | **7Y-5074** | | GUARD-HOSE (162-CM) | |

B - USE AS REQUIRED
E - ORDER BY THE CENTIMETER
Y - SEPARATE ILLUSTRATION

<END>

# *236-3214* HOSE GP-HYDRAULIC

**S/N: FEY1-UP**

**PART OF 236-3212 HOSE GP-HYDRAULIC**

**SMCS-5057** **i04915569**

| NOTE | REF NO | GRAPHIC REF | PART NUMBER | QTY | PART NAME 1 2 3 4 5 6 (PRODUCT LEVEL) | SEE PAGE |
|---|---|---|---|---|---|---|
| | 1 | 1 | **7Y-3721** | 1 | TUBE AS | |
| I | 2 | 1 | **187-5954** | 1 | HOSE AS | |
| | 3 | 1 | **6V-9746** | 1 | SEAL-O-RING | |

I - REFER TO HYDRAULIC INFORMATION SYSTEM

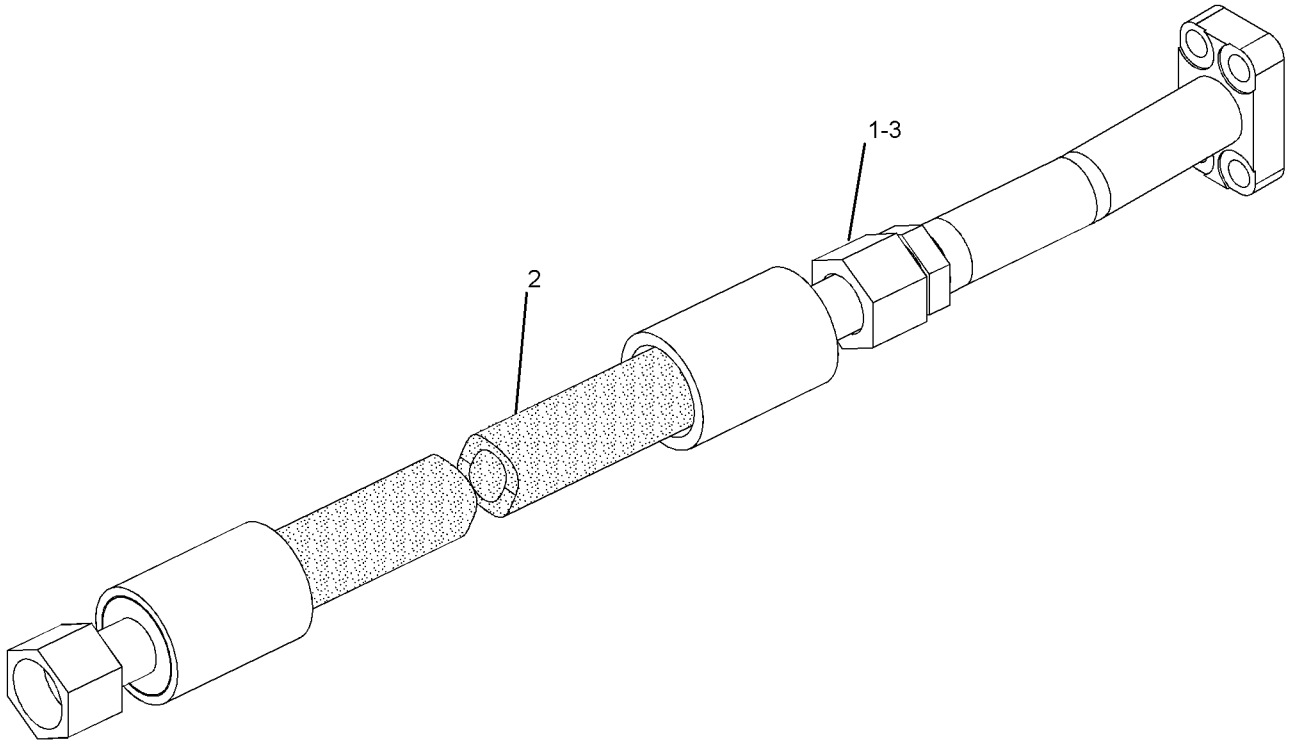


GRAPHIC #1 <END> g01133931

# *236-3215* HOSE GP-HYDRAULIC

**S/N: FEY1-UP**

**PART OF 236-3213 HOSE GP-HYDRAULIC**

**SMCS-5057** **i04915573**

| NOTE | REF NO | GRAPHIC REF | PART NUMBER | QTY | PART NAME 1 2 3 4 5 6 (PRODUCT LEVEL) | SEE PAGE |
|---|---|---|---|---|---|---|
| | 1 | 1 | **137-0856** | 1 | TUBE AS | |
| I | 2 | 1 | **187-5954** | 1 | HOSE AS | |
| | 3 | 1 | **6V-9746** | 1 | SEAL-O-RING | |

I - REFER TO HYDRAULIC INFORMATION SYSTEM

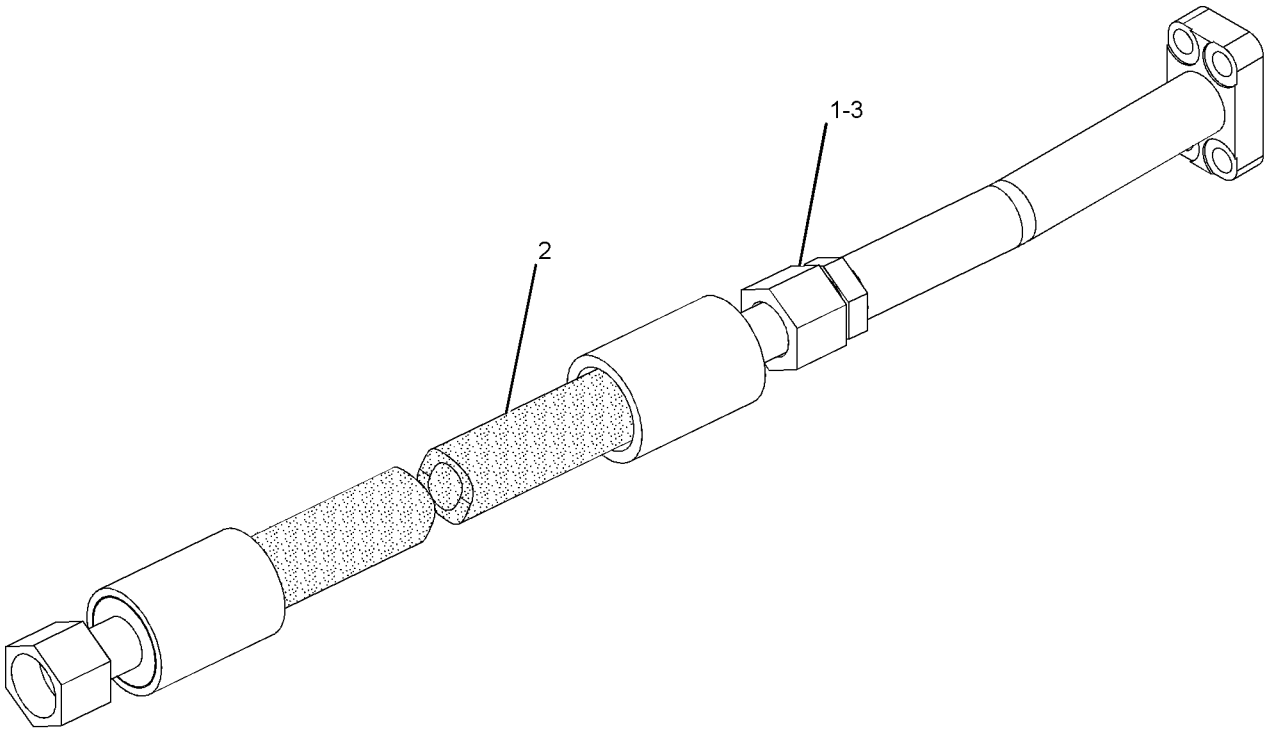


GRAPHIC #1 <END> g01133918

# 260-7910 HOSE GP-HYDRAULIC

**S/N: FEY1-UP**

**PART OF 239-1714 LINES GP-FRONT**

**SMCS-5057** **i05334618**

| NOTE | PART NUMBER | QTY | PART NAME 1 2 3 4 5 6 (PRODUCT LEVEL) | SEE PAGE |
|---|---|---|---|---|
| Y | *260-7911* | 1 | HOSE GP-HYDRAULIC | 250 |
| | | | –OR– | |
| Y | *260-7913* | 1 | HOSE GP-HYDRAULIC | 251 |

Y - SEPARATE ILLUSTRATION

<END>

# *260-7911* HOSE GP-HYDRAULIC

**S/N: FEY1-UP**

**PART OF 260-7910 HOSE GP-HYDRAULIC**

**SMCS-5057** **i04915586**

| NOTE | REF NO | GRAPHIC REF | PART NUMBER | QTY | PART NAME 1 2 3 4 5 6 (PRODUCT LEVEL) | SEE PAGE |
|---|---|---|---|---|---|---|
| | 1 | 1 | **260-7912** | 1 | HOSE AS | |
| | 2 | 1 | **8C-3206** | 2 | FLANGE-HALF | |
| | 3 | 1 | **4J-0520** | 1 | SEAL-O-RING | |

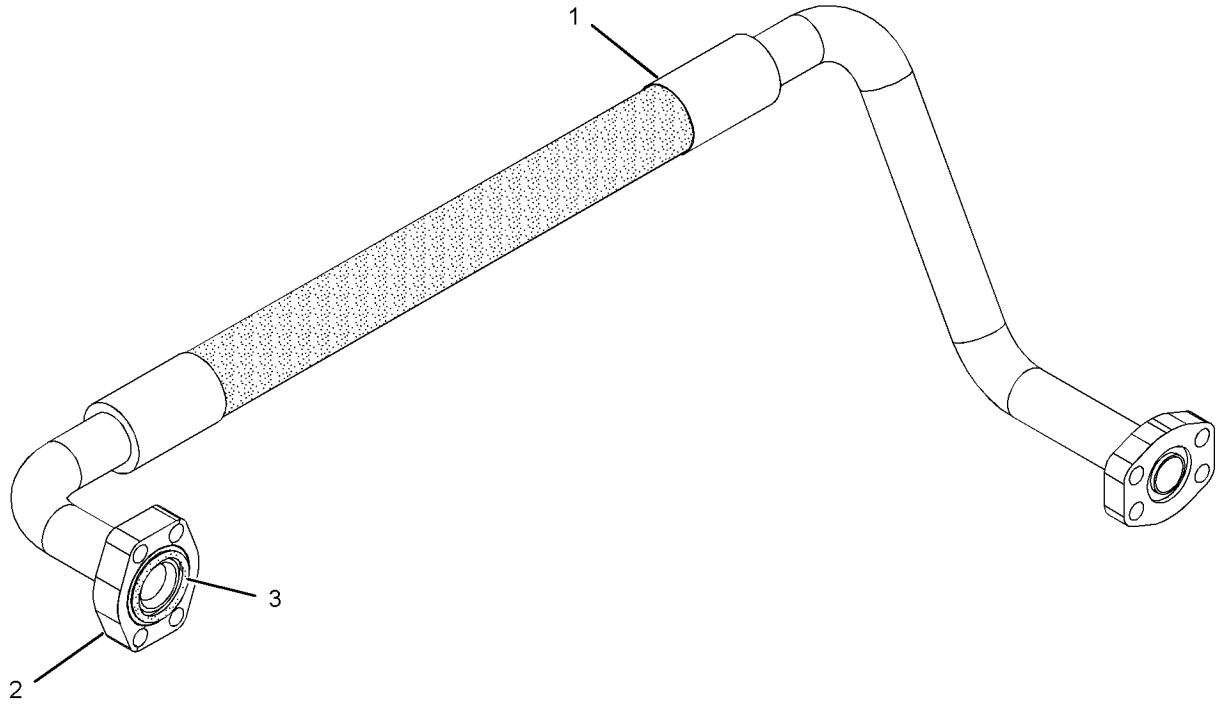


GRAPHIC #1 <END> g01277264

# *260-7913* HOSE GP-HYDRAULIC

**S/N: FEY1-UP**

**PART OF 260-7910 HOSE GP-HYDRAULIC**

**SMCS-5057** **i04915588**

| NOTE | REF NO | GRAPHIC REF | PART NUMBER | QTY | PART NAME 1 2 3 4 5 6 (PRODUCT LEVEL) | SEE PAGE |
|---|---|---|---|---|---|---|
| | 1 | 1 | **142-7764** | 1 | TUBE AS | |
| I | 2 | 1 | **260-7914** | 1 | HOSE AS | |
| | 3 | 1 | **1P-3703** | 1 | SEAL-RECTANGULAR | |
| | 4 | 1 | **5K-9090** | 2 | SEAL-O-RING | |
| | 5 | 1 | **7Y-3731** | 1 | FLANGE | |

I - REFER TO HYDRAULIC INFORMATION SYSTEM

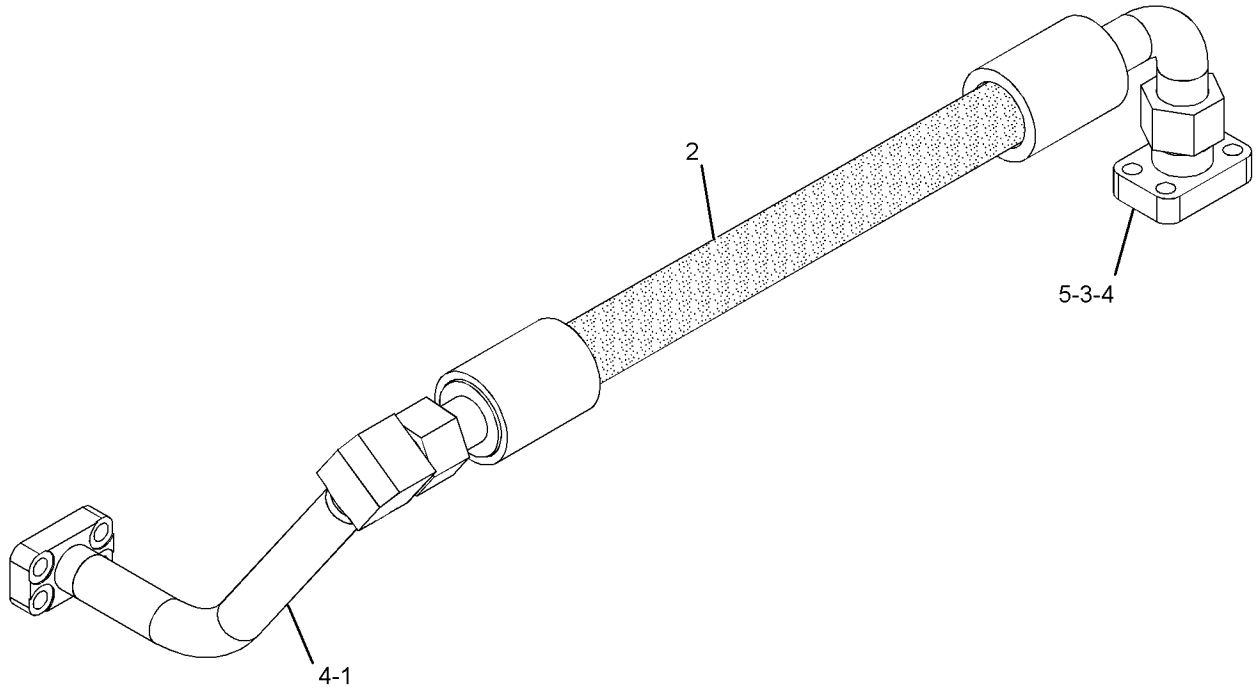


GRAPHIC #1 <END> g01277324

# *556-6437* HYDRAULIC AR

**S/N: FEY1-UP**

**PART OF 556-6434 GENERAL AR**

**SMCS-5050** **i07426873**

| NOTE | PART NUMBER | QTY | PART NAME 1 2 3 4 5 6 (PRODUCT LEVEL) | SEE PAGE |
|---|---|---|---|---|
| Y | *563-5607* | 1 | LINES GP-BOOM CYLINDER (BOOM) | 265 |
| Y | *556-6479* | 1 | LINES GP-CONTROL (REAR) | 268 |
| Y | *239-1714* | 1 | LINES GP-FRONT (HYDRAULIC) | 270 |
| Y | *556-6517* | 1 | LINES GP-HYDRAULIC (RADIATOR, REAR) | 276 |
| Y | *563-5608* | 1 | LINES GP-PILOT (JOYSTICK, PEDALS) | 295 |
| Y | *563-4948* | 1 | LINES GP-PILOT (MAIN CONTROL VALVE) | 293 |
| Y | *556-6488* | 1 | LINES GP-PILOT (MAIN CONTROL VALVE) | 283 |
| Y | *556-6497* | 1 | LINES GP-PILOT (FILTER, PILOT PUMP) | 289 |
| Y | *556-6500* | 1 | LINES GP-PUMP (SUPPLY, MAIN PUMP) | 301 |
| Y | *260-7868* | 1 | MOUNTING GP-MAIN CONTROL VALVE | 314 |
| Y | *556-6522* | 1 | PUMP & MTG GP-MAIN HYDRAULIC | 316 |
| Y | *562-9614* | 1 | TANK & MTG GP-HYDRAULIC | 329 |
| Y | **259-7464** | 1 | VALVE GP-MAIN CONTROL (HYDRAULIC) | 348 |

Y - SEPARATE ILLUSTRATION

<END>

# 234-6613 LEVER GP-CONTROL—HYDRAULIC LOCKOUT

**S/N: FEY1-UP**

**PART OF 421-1434 CONSOLE GP-OPERATOR**

**SMCS-4805, 5063** **i04912170**

| NOTE | REF NO | GRAPHIC REF | PART NUMBER | QTY | PART NAME 1 2 3 4 5 6 (PRODUCT LEVEL) | SEE PAGE |
|---|---|---|---|---|---|---|
| | 1 | 1 | **3S-2093** | 1 | STRAP-CABLE | |
| | 2 | 1 | **4I-3038** | 2 | WASHER (3.3X8X0.5-MM THK) | |
| | 3 | 1 | **111-4799** | 1 | SWITCH AS-LIMIT (HYDRAULIC LOCKOUT) | |
| | | 1 | **102-8803** | 1 | KIT-RECEPTACLE (3-PIN) | |
| | | | | | (INCLUDES RECEPTACLE AS & WEDGE) | |
| | | 1 | **8T-8729** | 3 | PIN-CONNECTOR (16-GA TO 18-GA) | |
| D | | 1 | **5P-5998** | | TUBE (0.3-M) | |
| M | 4 | 1 | **185-8286** | 2 | SCREW-MACHINE (M4X0.7X8-MM) | |
| | 5 | 1 | **234-6615** | 1 | KNOB | |
| | 6 | 1 | **087-4683** | 2 | LOCKWASHER | |
| M | 7 | 1 | **120-9027** | 2 | SCREW-PAN HEAD (M3X0.5X16-MM) | |

D - ORDER BY THE METER
M - METRIC PART

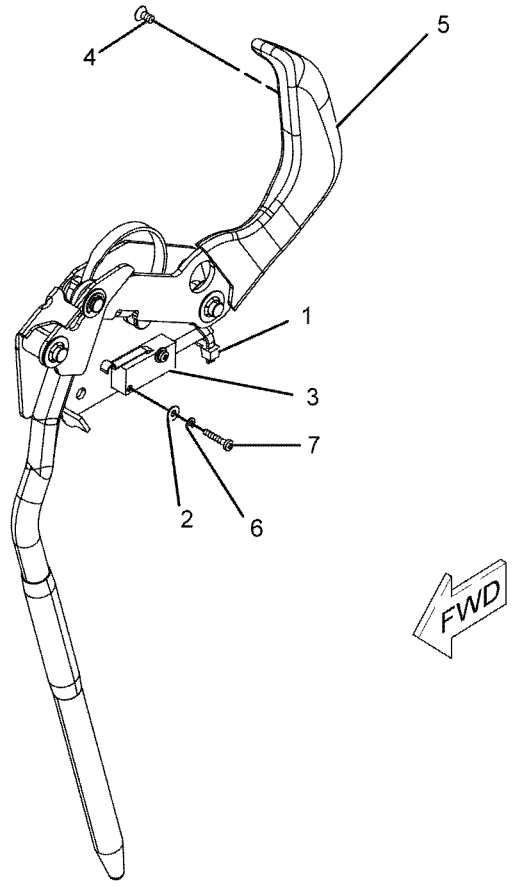


GRAPHIC #1 <END> g01096293

# 465-4558 LINES GP-ATTACHMENT—CONNECTING

**S/N: FEY1-UP**

**SMCS-5057** **i07531648**

| NOTE | PART NUMBER | QTY | PART NAME 1 2 3 4 5 6 (PRODUCT LEVEL) | SEE PAGE |
|---|---|---|---|---|
| | **552-5313** | 1 | ADAPTER | |
| M | **8T-4194** | 8 | BOLT (M12X1.75X50-MM) | |
| | **339-0546** | 2 | CONNECTOR | |
| | **131-3025** | 4 | FLANGE-SPLIT | |
| I | **465-4562** | 2 | HOSE AS | |
| | **4J-0522** | 2 | SEAL-O-RING | |
| | **5K-9090** | 2 | SEAL-O-RING | |
| | **5P-8245** | 8 | WASHER-HARD (13.5X25.5X3-MM THK) | |

I - REFER TO HYDRAULIC INFORMATION SYSTEM
M - METRIC PART

<END>

# *237-3184* LINES GP-AUXILIARY HYDRAULIC—STICK, HIGH PRESSURE

**S/N: FEY1-UP**
**FOR USE WITH 2.4 TO 2.5-M (7.9 TO 8.2-FT) STICK**
**PART OF 559-5102 OPTION AR-HYDRAULIC**

**SMCS-5057** **i06199642**

| NOTE | REF NO | GRAPHIC REF | PART NUMBER | QTY | PART NAME 1 2 3 4 5 6 (PRODUCT LEVEL) | SEE PAGE |
|---|---|---|---|---|---|---|
| | 1 | 1 | **127-6780** | 1 | TUBE AS | |
| | 2 | 1 | **142-6582** | 1 | TUBE AS | |
| | 3 | 1 | **173-7916** | 4 | CLAMP-HALF | |
| Y | 4 | 1 | **173-7992** | 2 | VALVE GP-MANUAL (AUXILIARY, SHUTOFF) | 349 |
| I | 5 | 1 | **253-6694** | 1 | HOSE AS | |
| I | 6 | 1 | **253-6697** | 1 | HOSE AS | |
| | 7 | 1 | **1P-3703** | 3 | SEAL-RECTANGULAR | |
| | 8 | 1 | **1P-3704** | 3 | SEAL-RECTANGULAR | |
| | 9 | 1 | **1P-5767** | 4 | FLANGE-HALF | |
| | 10 | 1 | **6V-0400** | 4 | FLANGE-HALF | |
| | 11 | 1 | **7Y-4538** | 4 | CLAMP-HALF | |
| | 12 | 1 | **8T-4121** | 4 | WASHER-HARD (11X21X2.5-MM THK) | |
| M | 13 | 1 | **8T-4139** | 8 | BOLT (M12X1.75X30-MM) | |
| M | 14 | 1 | **8T-4183** | 4 | BOLT (M12X1.75X40-MM) | |
| M | 15 | 1 | **8T-4184** | 8 | BOLT (M12X1.75X45-MM) | |
| M | 16 | 1 | **8T-4194** | 8 | BOLT (M12X1.75X50-MM) | |
| | 17 | 1 | **8T-4223** | 24 | WASHER-HARD (13.5X25.5X3-MM THK) | |
| M | 18 | 1 | **8T-4956** | 4 | BOLT (M12X1.75X35-MM) | |
| M | 19 | 1 | **8T-6685** | 4 | BOLT (M10X1.5X110-MM) | |

I - REFER TO HYDRAULIC INFORMATION SYSTEM
M - METRIC PART
Y - SEPARATE ILLUSTRATION

*237-3184* **LINES GP-AUXILIARY HYDRAULIC (**contd.**)** **i06199642**

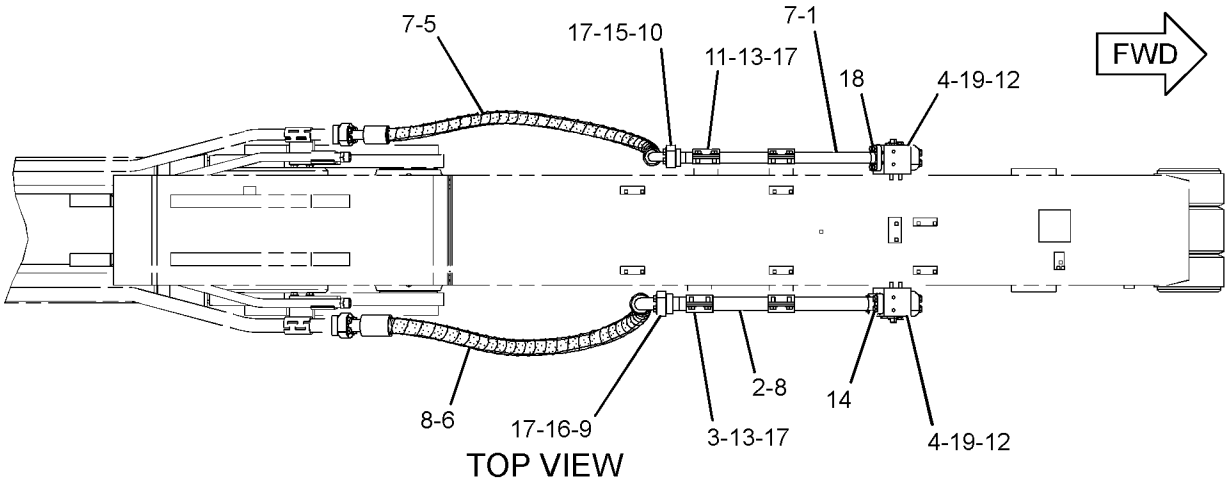


GRAPHIC #1 <END> g01238858

# *242-6475* LINES GP-AUXILIARY HYDRAULIC–BOOM, HIGH PRESSURE

**S/N: FEY1-UP**

**PART OF 559-5102 OPTION AR-HYDRAULIC**

**SMCS-5057** **i06199645**

| NOTE | REF NO | GRAPHIC REF | PART NUMBER | QTY | PART NAME 1 2 3 4 5 6 (PRODUCT LEVEL) | SEE PAGE |
|---|---|---|---|---|---|---|
| | 1 | 1 | **124-1107** | 1 | GROMMET | |
| | 2 | 1 | **129-5874** | 1 | GROMMET | |
| | 3 | 1 | **138-5708** | 2 | CLIP-HALF | |
| | 4 | 1 | **153-8798** | 2 | PLATE | |
| | 5 | 1 | **173-7916** | 6 | CLAMP-HALF | |
| | 6 | 1 | **173-7995** | 1 | PLATE | |
| | 7 | 1 | **193-6606** | 2 | PLATE | |
| | 8 | 1 | **202-7127** | 1 | PLATE | |
| | 9 | 1 | **202-7128** | 2 | PLATE | |
| I | 10 | 1 | **216-6589** | 1 | HOSE AS | |
| J | 11 | 1 | **306-1611** | 1 | TUBE GP | |
| L | 11A | 1 | **306-1614** | 1 | TUBE AS | |
| L | 11B | 1 | **306-1615** | 1 | TUBE AS | |
| L | 11C | 1 | **1P-3705** | 1 | SEAL-RECTANGULAR | |
| LM | 11D | 1 | **8T-4183** | 4 | BOLT (M12X1.75X40-MM) | |
| J | 12 | 1 | **247-9030** | 1 | TUBE GP | |
| L | 12A | 1 | **247-9033** | 1 | TUBE AS | |
| L | 12B | 1 | **247-9034** | 1 | TUBE AS | |
| L | 12C | 1 | **1P-3703** | 1 | SEAL-RECTANGULAR | |
| LM | 12D | 1 | **8T-4139** | 4 | BOLT (M12X1.75X30-MM) | |
| | 13 | 1 | **277-0786** | 1 | SUPPORT AS | |
| I | 14 | 1 | **288-7502** | 1 | HOSE AS | |
| | 15 | 1 | **124-1108** | 2 | CLIP | |
| | 16 | 1 | **1P-3703** | 2 | SEAL-RECTANGULAR | |
| | 17 | 1 | **1P-3704** | 2 | SEAL-RECTANGULAR | |
| | 18 | 1 | **1P-5767** | 4 | FLANGE-HALF | |
| | 19 | 1 | **6V-0400** | 4 | FLANGE-HALF | |
| M | 20 | 1 | **7X-2549** | 4 | BOLT (M12X1.75X100-MM) | |
| M | 21 | 1 | **453-1259** | 2 | BOLT (M16X2X40-MM) | |
| | 22 | 1 | **7Y-4538** | 6 | CLAMP-HALF | |
| M | 23 | 1 | **8T-4139** | 10 | BOLT (M12X1.75X30-MM) | |
| M | 24 | 1 | **8T-4184** | 14 | BOLT (M12X1.75X45-MM) | |
| M | 25 | 1 | **8T-4194** | 10 | BOLT (M12X1.75X50-MM) | |
| | 26 | 1 | **8T-4223** | 42 | WASHER-HARD (13.5X25.5X3-MM THK) | |
| M | 27 | 1 | **8T-4648** | 4 | BOLT (M12X1.75X70-MM) | |
| | 28 | 1 | **451-2175** | 2 | WASHER-HARD (17.5X30X3.5-MM THK) | |

I - REFER TO HYDRAULIC INFORMATION SYSTEM
J - TUBE MAY BE 1-PIECE OR 2-PIECE DESIGN (2-PIECE SHOWN)
L - PARTS REQUIRED ONLY WITH 2-PIECE TUBE DESIGN
M - METRIC PART

*242-6475* **LINES GP-AUXILIARY HYDRAULIC (**contd.**)** **i06199645**

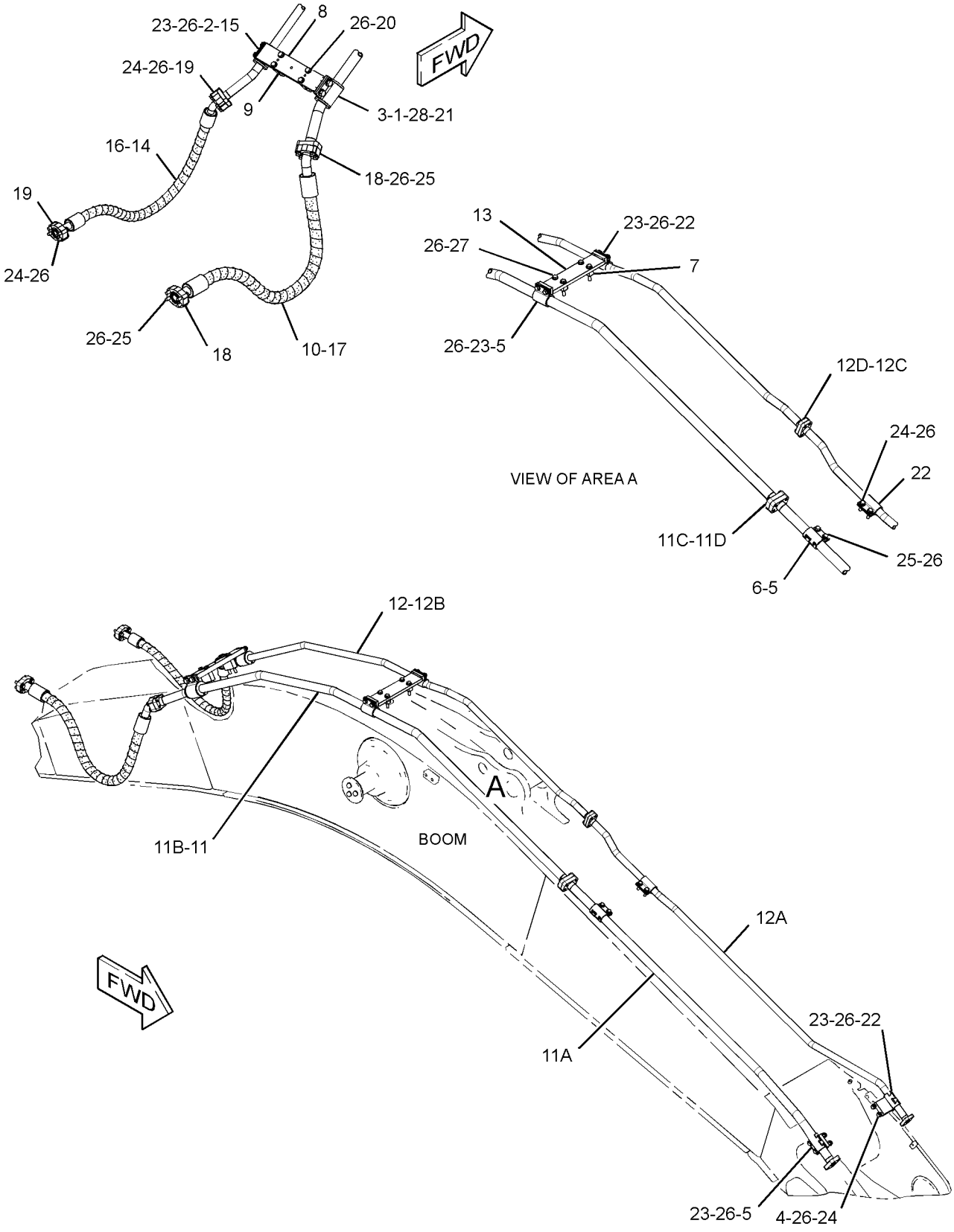


GRAPHIC #1 <END> g01426849

# *260-8010* LINES GP-BOOM

**S/N: FEY1-UP**

**PART OF 376-1084 BOOM AR-1 PIECE LONG**

**SMCS-5057** **i04924829**

| NOTE | REF NO | GRAPHIC REF | PART NUMBER | QTY | PART NAME 1 2 3 4 5 6 (PRODUCT LEVEL) | SEE PAGE |
|---|---|---|---|---|---|---|
| | 1 | 1 | **4I-1674** | 6 | CLIP | |
| | 2 | 1 | **4I-1676** | 6 | CLIP | |
| | 3 | 1 | **7Y-4868** | 8 | CLIP | |
| | 4 | 1 | **307-5034** | 1 | TUBE AS | |
| | 5 | 1 | **202-3855** | 1 | TUBE AS | |
| | 6 | 1 | **202-3856** | 1 | TUBE AS | |
| | 7 | 1 | **202-3857** | 1 | TUBE AS | |
| | 8 | 1 | **202-3858** | 1 | TUBE AS | |
| I | 9 | 1 | **202-6996** | 1 | HOSE AS | |
| | 10 | 1 | **260-8315** | 1 | TUBE AS | |
| I | 11 | 1 | **260-8316** | 1 | HOSE AS | |
| | 12 | 1 | **1P-3703** | 2 | SEAL-RECTANGULAR | |
| | 13 | 1 | **6V-0400** | 4 | FLANGE-HALF | |
| | 14 | 1 | **6V-9746** | 9 | SEAL-O-RING | |
| M | 15 | 1 | **8T-4139** | 20 | BOLT (M12X1.75X30-MM) | |
| M | 16 | 1 | **8T-4184** | 8 | BOLT (M12X1.75X45-MM) | |
| | 17 | 1 | **8T-4223** | 28 | WASHER-HARD (13.5X25.5X3-MM THK) | |

I - REFER TO HYDRAULIC INFORMATION SYSTEM
M - METRIC PART

*260-8010* **LINES GP-BOOM (**contd.**)** **i04924829**

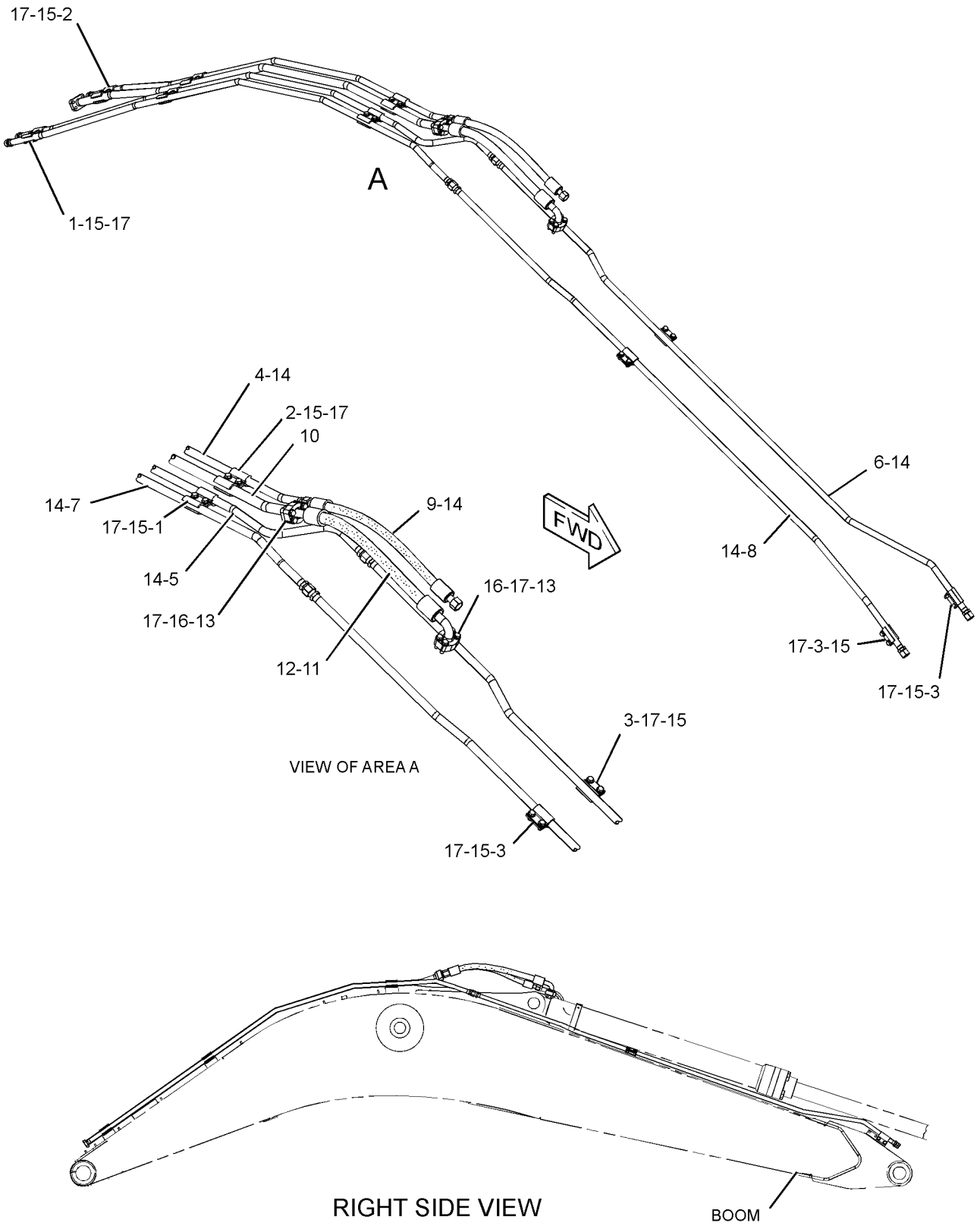


GRAPHIC #1 <END> g01366545

# *575-0786* LINES GP-BOOM–1-PIECE

**S/N: FEY1-UP**

**PART OF 376-1084 BOOM AR-1 PIECE LONG**

**SMCS-5057** **i07672917**

| NOTE | REF NO | GRAPHIC REF | PART NUMBER | QTY | PART NAME 1 2 3 4 5 6 (PRODUCT LEVEL) | SEE PAGE |
|---|---|---|---|---|---|---|
| | 1 | 1 | **4I-1674** | 6 | CLIP | |
| | 2 | 1 | **4I-1676** | 6 | CLIP | |
| | 3 | 1 | **7Y-4868** | 8 | CLIP | |
| | 4 | 1 | **202-3855** | 1 | TUBE AS | |
| | 5 | 1 | **202-3856** | 1 | TUBE AS | |
| | 6 | 1 | **202-3857** | 1 | TUBE AS | |
| | 7 | 1 | **202-3858** | 1 | TUBE AS | |
| I | 8 | 1 | **202-6996** | 1 | HOSE AS | |
| | 9 | 1 | **576-4110** | 1 | TUBE AS | |
| I | 10 | 1 | **573-7861** | 1 | HOSE AS | |
| | 11 | 1 | **307-5034** | 1 | TUBE AS | |
| | 12 | 1 | **1P-3703** | 2 | SEAL-RECTANGULAR | |
| | 13 | 1 | **6V-0400** | 4 | FLANGE-HALF | |
| | 14 | 1 | **6V-9746** | 9 | SEAL-O-RING | |
| M | 15 | 1 | **8T-4139** | 20 | BOLT (M12X1.75X30-MM) | |
| M | 16 | 1 | **8T-4184** | 4 | BOLT (M12X1.75X45-MM) | |
| | 17 | 1 | **8T-4223** | 28 | WASHER-HARD (13.5X25.5X3-MM THK) | |

I - REFER TO HYDRAULIC INFORMATION SYSTEM
M - METRIC PART

*575-0786* **LINES GP-BOOM (**contd.**)** **i07672917**

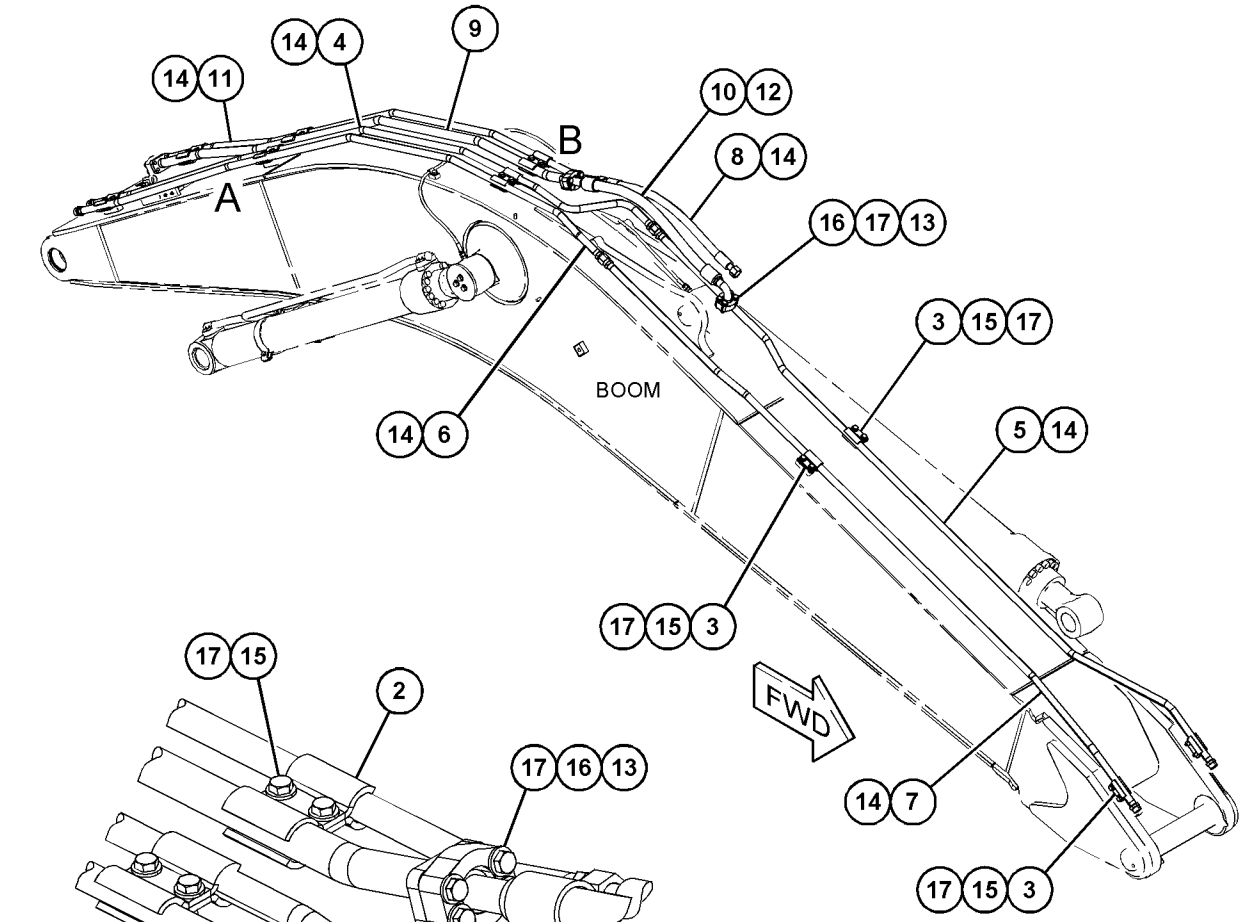


VIEW OF AREA B

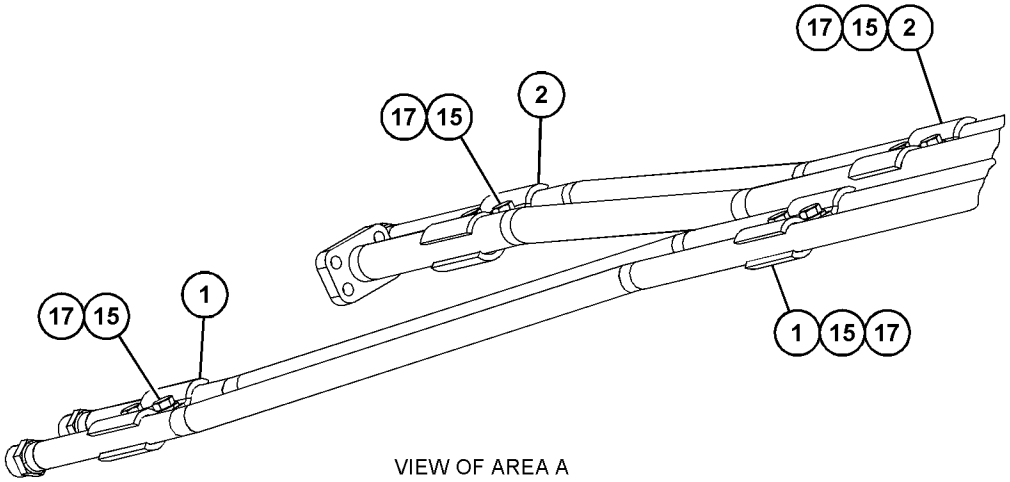


VIEW OF AREA A

GRAPHIC #1 <END> g06393760

# *373-1110* LINES GP-BOOM CYLINDER–LH

**S/N: FEY1-UP**

**PART OF 373-1106 CYLINDER & LINES GP-BOOM**

**SMCS-5057, 5456** **i06033060**

| NOTE | REF NO | GRAPHIC REF | PART NUMBER | QTY | PART NAME 1 2 3 4 5 6 (PRODUCT LEVEL) | SEE PAGE |
|---|---|---|---|---|---|---|
| CM | 1 | 1 | **8T-4648** | 5 | BOLT (M12X1.75X70-MM) | |
| | 2 | 1 | **394-6125** | 1 | TUBE AS | |
| | 3 | 1 | **394-6126** | 1 | TUBE AS | |
| | 4 | 1 | **394-9371** | 1 | SUPPORT | |
| | 5 | 1 | **394-9372** | 1 | SUPPORT AS | |
| C | 6 | 1 | **399-1961** | 1 | CLAMP | |
| | 7 | 1 | **1P-3703** | 1 | SEAL-RECTANGULAR | |
| | 8 | 1 | **1P-3704** | 1 | SEAL-RECTANGULAR | |
| M | 9 | 1 | **457-5821** | 2 | BOLT (M10X1.5X35-MM) | |
| C | 10 | 1 | **451-2182** | 5 | WASHER-HARD (13.5X25.5X3-MM THK) | |
| | 11 | 1 | **8T-4121** | 4 | WASHER-HARD (11X21X2.5-MM THK) | |
| | 12 | 1 | **8T-4896** | 2 | WASHER-HARD (10.2X18.5X2.5-MM THK) | |
| M | 13 | 1 | **8T-6466** | 4 | BOLT (M10X1.5X60-MM) | |

C - CHANGE FROM PREVIOUS TYPE
M - METRIC PART

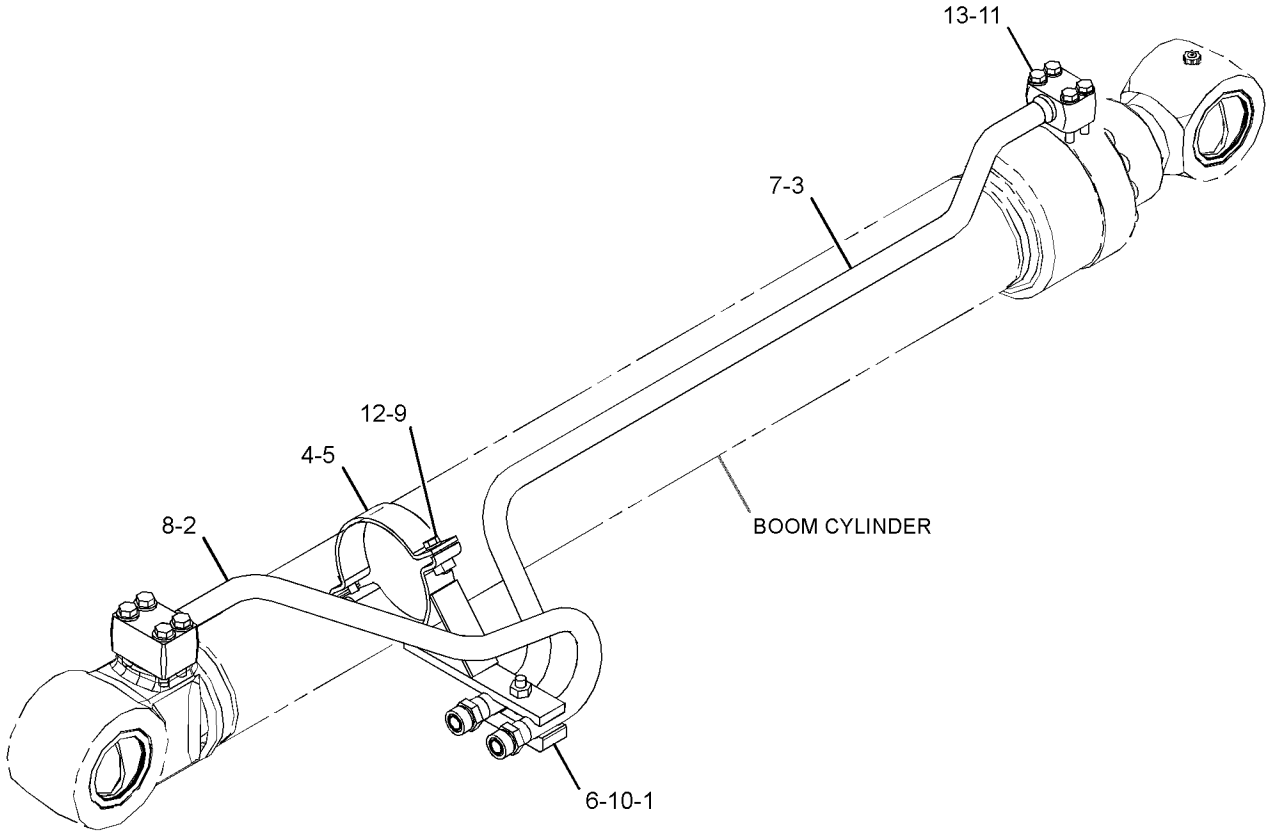


GRAPHIC #1 <END> g03363113

# *373-1115* LINES GP-BOOM CYLINDER–RH

**S/N: FEY1-UP**

**PART OF 373-1107 CYLINDER & LINES GP-BOOM**

**SMCS-5057, 5456** **i06033062**

| NOTE | REF NO | GRAPHIC REF | PART NUMBER | QTY | PART NAME 1 2 3 4 5 6 (PRODUCT LEVEL) | SEE PAGE |
|---|---|---|---|---|---|---|
| CM | 1 | 1 | **8T-4648** | 5 | BOLT (M12X1.75X70-MM) | |
| | 2 | 1 | **394-6145** | 1 | TUBE AS | |
| | 3 | 1 | **394-6147** | 1 | TUBE AS | |
| | 4 | 1 | **394-9371** | 1 | SUPPORT | |
| | 5 | 1 | **394-9372** | 1 | SUPPORT AS | |
| C | 6 | 1 | **399-1961** | 1 | CLAMP | |
| | 7 | 1 | **1P-3703** | 1 | SEAL-RECTANGULAR | |
| | 8 | 1 | **1P-3704** | 1 | SEAL-RECTANGULAR | |
| | 9 | 1 | **8T-4121** | 4 | WASHER-HARD (11X21X2.5-MM THK) | |
| M | 10 | 1 | **457-5821** | 2 | BOLT (M10X1.5X35-MM) | |
| C | 11 | 1 | **451-2182** | 5 | WASHER-HARD (13.5X25.5X3-MM THK) | |
| | 12 | 1 | **8T-4896** | 2 | WASHER-HARD (10.2X18.5X2.5-MM THK) | |
| M | 13 | 1 | **8T-6466** | 4 | BOLT (M10X1.5X60-MM) | |

C - CHANGE FROM PREVIOUS TYPE
M - METRIC PART

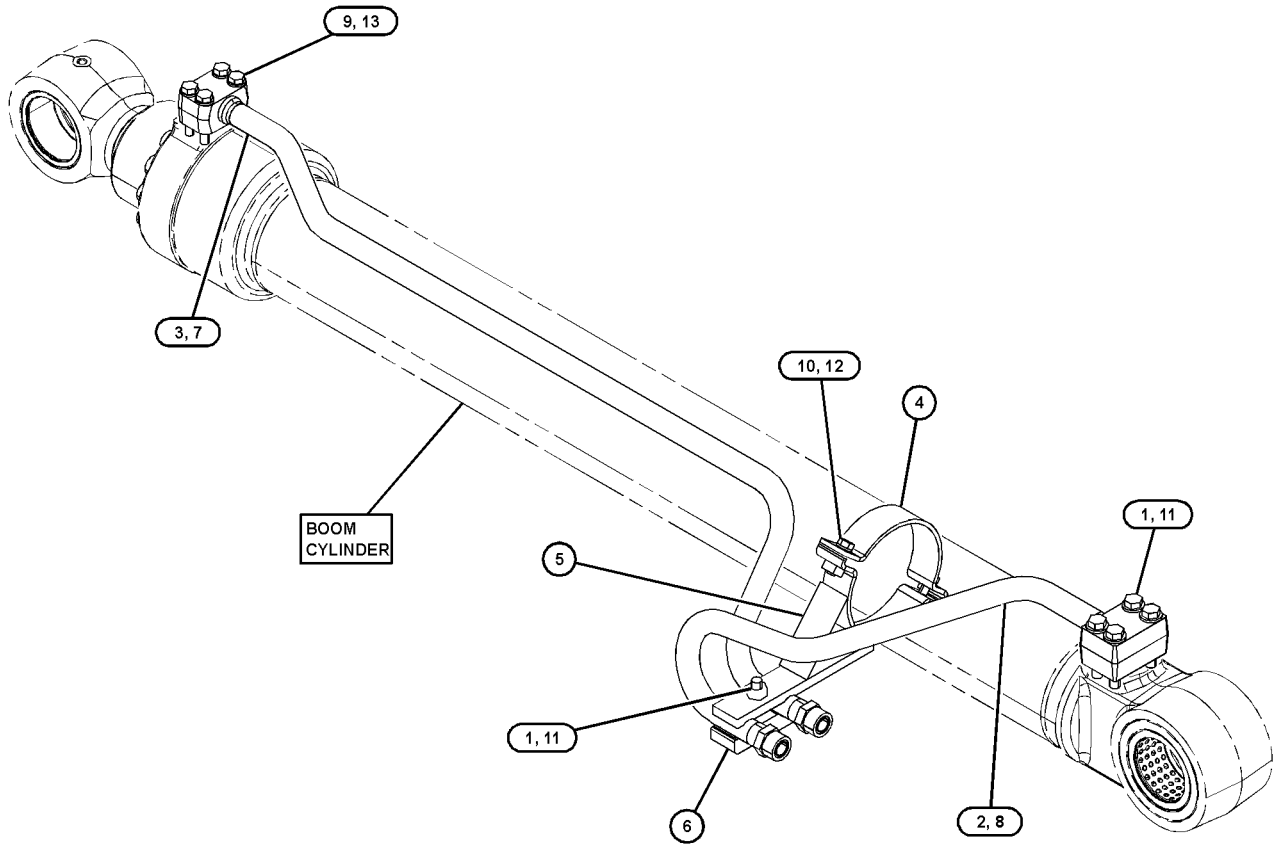


GRAPHIC #1 <END> g03362055

# *563-5607* LINES GP-BOOM CYLINDER—BOOM

**S/N: FEY1-UP**

**PART OF 556-6437 HYDRAULIC AR**

**SMCS-5057, 5456** **i07424208**

| NOTE | REF NO | GRAPHIC REF | PART NUMBER | QTY | PART NAME 1 2 3 4 5 6 (PRODUCT LEVEL) | SEE PAGE |
|---|---|---|---|---|---|---|
| M | 1 | 1 | **8T-4182** | 8 | BOLT (M10X1.5X45-MM) | |
| M | 2 | 1 | **8T-4910** | 2 | BOLT (M12X1.75X60-MM) | |
| M | 3 | 1 | **8T-4648** | 2 | BOLT (M12X1.75X70-MM) | |
| | 4 | 1 | **4I-1674** | 2 | CLIP | |
| | 5 | 1 | **5P-1076** | 2 | WASHER-HARD (13.5X30X4-MM THK) | |
| | 6 | 1 | **6H-3615** | 1 | PLUG-PROTECTION | |
| | 7 | 1 | **6V-9746** | 4 | SEAL-O-RING | |
| | 8 | 1 | **8T-9403** | 4 | FLANGE-HALF | |
| | 9 | 1 | **9F-2167** | 1 | SCREW-PURGE (3/8-24X1.164-IN) | |
| M | 10 | 1 | **101-7404** | 4 | BOLT-SOCKET HEAD (M10X1.5X30-MM) | |
| | 11 | 1 | **142-7768** | 1 | TUBE AS | |
| | 12 | 1 | **142-7769** | 1 | TUBE AS | |
| | 13 | 1 | *148-8336* | 1 | CONNECTOR AS | |
| | | 1 | **3J-1907** | 1 | SEAL-O-RING | |
| | | 1 | **6V-8397** | 1 | SEAL-O-RING | |
| | | 1 | **6V-8636** | 1 | CONNECTOR | |
| | 14 | 1 | *148-8353* | 1 | ELBOW AS | |
| | | 1 | **3J-1907** | 1 | SEAL-O-RING | |
| | | 1 | **6V-8397** | 1 | SEAL-O-RING | |
| | | 1 | **6V-9001** | 1 | ELBOW | |
| | 15 | 1 | *148-8364* | 1 | ELBOW AS | |
| | | 1 | **3K-0360** | 1 | SEAL-O-RING | |
| | | 1 | **6V-8398** | 1 | SEAL-O-RING | |
| | | 1 | **6V-8625** | 1 | ELBOW | |
| | 16 | 1 | *148-8367* | 1 | ELBOW AS | |
| | | 1 | **6V-8397** | 1 | SEAL-O-RING | |
| | | 1 | **6V-9850** | 1 | ELBOW | |
| | 17 | 1 | *148-8444* | 1 | TEE AS-SWIVEL | |
| | | 1 | **6V-8398** | 2 | SEAL-O-RING | |
| | | 1 | **6V-9837** | 1 | TEE-SWIVEL | |
| Y | 18 | 1 | **158-9085** | 1 | VALVE GP-SWING CUSHION (CROSSOVER RELIEF) | 378 |
| | 19 | 1 | *164-5552* | 1 | CONNECTOR AS | |
| | | 1 | **3D-2824** | 1 | SEAL-O-RING | |
| | | 1 | **4I-7745** | 1 | CONNECTOR | |
| | | 1 | **6V-8398** | 1 | SEAL-O-RING | |
| | 20 | 1 | **234-4492** | 1 | SUPPORT | |
| | 21 | 1 | *307-4918* | 1 | CONNECTOR AS | |
| | | 1 | **5K-9090** | 1 | SEAL-O-RING | |
| | | 1 | **7M-8485** | 1 | SEAL-O-RING | |
| | | 1 | **307-4919** | 1 | CONNECTOR | |
| | 22 | 1 | **453-3454** | 8 | WASHER-HARD (11X21X2.5-MM THK) | |
| M | 23 | 1 | **461-2758** | 2 | BOLT (M12X1.75X25-MM) | |
| M | 24 | 1 | **101-7398** | 4 | BOLT-SOCKET HEAD (M10X1.5X40-MM) | |
| | 25 | 1 | **108-7550** | 1 | CLIP | |
| I | 26 | 1 | *124-1047* | 4 | HOSE AS | |
| | 27 | 1 | **124-1062** | 1 | SUPPORT AS | |
| | 28 | 1 | **133-5828** | 1 | SUPPORT AS | |

*563-5607* **LINES GP-BOOM CYLINDER (**contd.**)** **i07424208**

| NOTE | REF NO | GRAPHIC REF | PART NUMBER | QTY | PART NAME 1 2 3 4 5 6 (PRODUCT LEVEL) | SEE PAGE |
|---|---|---|---|---|---|---|
| | 29 | 1 | **1P-3703** | 2 | SEAL-RECTANGULAR | |
| I | 30 | 1 | **558-8186** | 1 | HOSE AS | |
| M | 31 | 1 | **8T-4139** | 2 | BOLT (M12X1.75X30-MM) | |
| M | 32 | 1 | **8T-4178** | 6 | BOLT (M10X1.5X90-MM) | |
| | 33 | 1 | **8T-4223** | 6 | WASHER-HARD (13.5X25.5X3-MM THK) | |

I - REFER TO HYDRAULIC INFORMATION SYSTEM
M - METRIC PART
Y - SEPARATE ILLUSTRATION

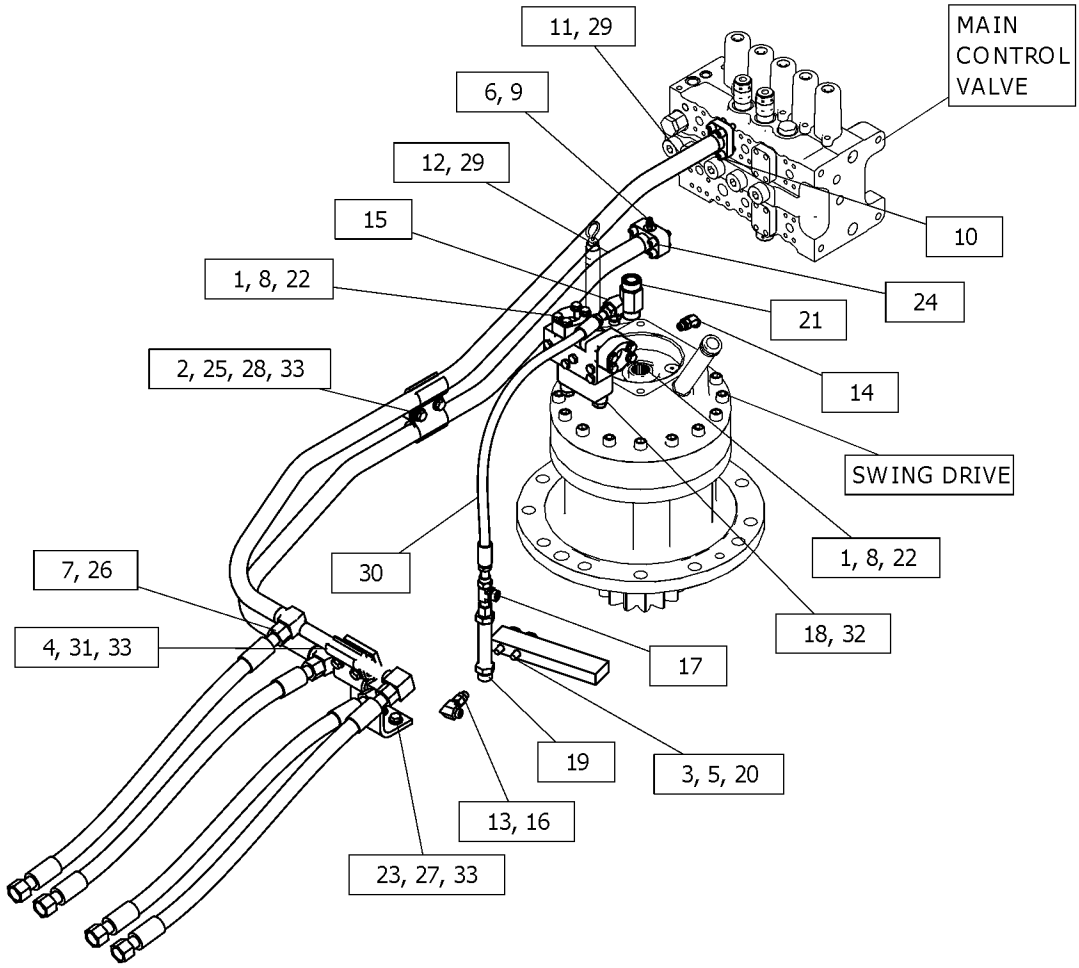


GRAPHIC #1 <END> g06319930

# *501-8429* LINES GP-BUCKET CYLINDER

**S/N: FEY1-UP**

**PART OF 373-1109 CYLINDER & LINES GP-BUCKET**

**SMCS-5457** **i06867941**

| NOTE | REF NO | GRAPHIC REF | PART NUMBER | QTY | PART NAME 1 2 3 4 5 6 (PRODUCT LEVEL) | SEE PAGE |
|---|---|---|---|---|---|---|
| | 1 | 1 | **399-1962** | 1 | CLAMP | |
| M | 2 | 1 | **453-3450** | 1 | BOLT (M12X1.75X60-MM) | |
| | 3 | 1 | **453-3456** | 1 | WASHER-HARD (13.5X25.5X5-MM THK) | |
| M | 4 | 1 | **457-5821** | 2 | BOLT (M10X1.5X35-MM) | |
| | 5 | 1 | **501-8430** | 1 | TUBE AS | |
| | 6 | 1 | **501-8431** | 1 | SUPPORT AS | |
| | 7 | 1 | **501-8432** | 1 | SUPPORT | |
| | 8 | 1 | **1P-3703** | 1 | SEAL-RECTANGULAR | |
| | 9 | 1 | **8T-4121** | 4 | WASHER-HARD (11X21X2.5-MM THK) | |
| | 10 | 1 | **8T-4896** | 2 | WASHER-HARD (10.2X18.5X2.5-MM THK) | |
| M | 11 | 1 | **8T-6466** | 4 | BOLT (M10X1.5X60-MM) | |

M - METRIC PART

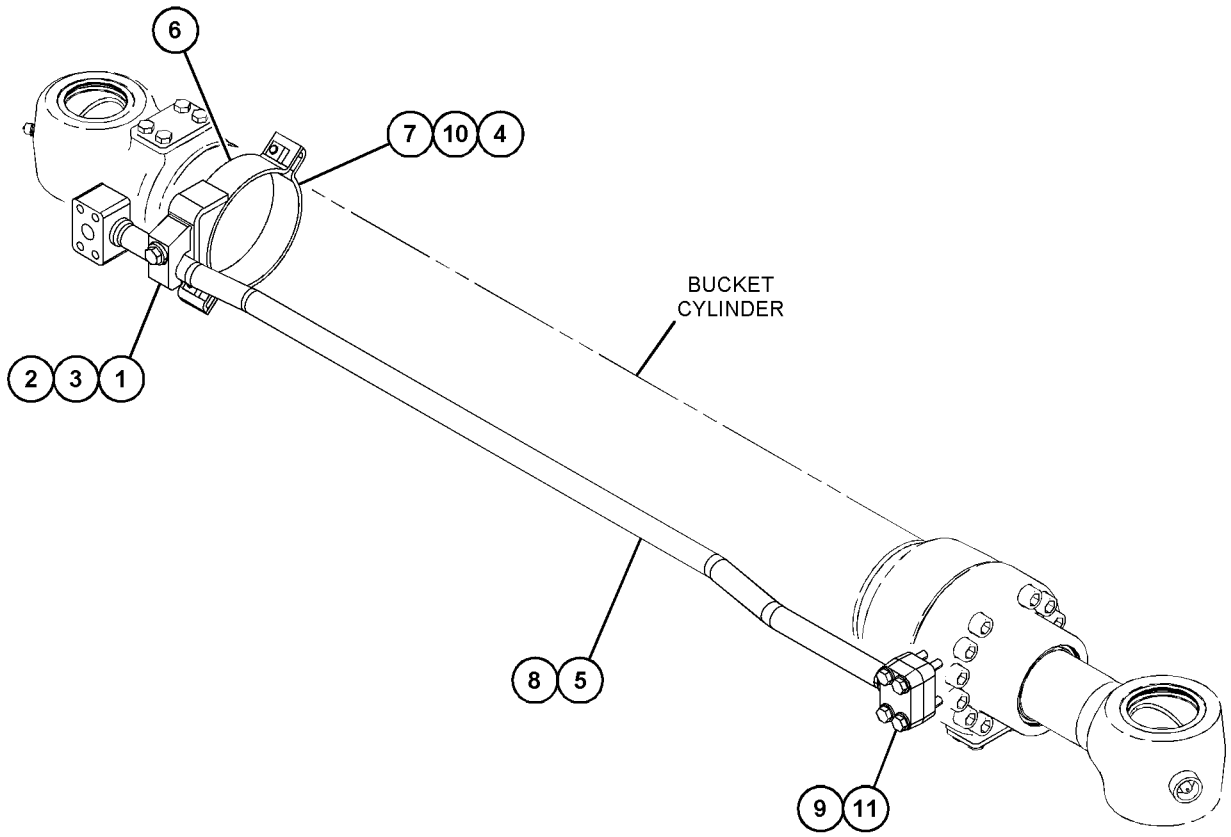


GRAPHIC #1 <END> g06147520

# *556-6479* LINES GP-CONTROL

**S/N: FEY1-UP**

**REAR**

**PART OF 556-6437 HYDRAULIC AR**

**SMCS-5057** **i07397691**

| NOTE | REF NO | GRAPHIC REF | PART NUMBER | QTY | PART NAME 1 2 3 4 5 6 (PRODUCT LEVEL) | SEE PAGE |
|---|---|---|---|---|---|---|
| | 1 | 1 | **4J-0524** | 3 | SEAL-O-RING | |
| M | 2 | 1 | **8T-4186** | 2 | BOLT (M10X1.5X40-MM) | |
| M | 3 | 1 | **7X-2544** | 4 | BOLT (M10X1.5X140-MM) | |
| | 4 | 1 | **1P-3702** | 2 | SEAL-RECTANGULAR | |
| | 5 | 1 | **4J-0527** | 1 | SEAL-O-RING | |
| | 6 | 1 | **5P-7468** | 1 | CLIP (SLOT) | |
| | 7 | 1 | **5P-7469** | 1 | CLIP (TAB) | |
| | 8 | 1 | **5P-8444** | 1 | GROMMET (37-MM ID) | |
| | 9 | 1 | **6V-0400** | 4 | FLANGE-HALF | |
| | 10 | 1 | **7G-3833** | 1 | CLIP (TAB) | |
| | 11 | 1 | **7G-3834** | 1 | CLIP (SLOT) | |
| | 12 | 1 | **7X-7729** | 2 | WASHER (11X25X3-MM THK) | |
| M | 13 | 1 | **7Y-5247** | 1 | U-BOLT (M10X1.5-THD) | |
| M | 14 | 1 | **096-4883** | 2 | LOCKNUT (M10X1.5-THD) | |
| M | 15 | 1 | **101-7402** | 4 | BOLT-SOCKET HEAD (M12X1.75X30-MM) | |
| | 16 | 1 | *148-8354* | 1 | ELBOW AS | |
| | | 1 | **3K-0360** | 1 | SEAL-O-RING | |
| | | 1 | **6V-8398** | 1 | SEAL-O-RING | |
| | | 1 | **6V-9002** | 1 | ELBOW | |
| | 17 | 1 | *148-8357* | 1 | ELBOW AS | |
| | | 1 | **5K-9090** | 1 | SEAL-O-RING | |
| | | 1 | **6V-9008** | 1 | ELBOW | |
| | | 1 | **7M-8485** | 1 | SEAL-O-RING | |
| | 18 | 1 | **173-4816** | 1 | SUPPORT AS | |
| | 19 | 1 | **196-0807** | 1 | PLATE | |
| | 20 | 1 | **199-7394** | 1 | PIPE AS | |
| | 21 | 1 | **227-0581** | 1 | HOSE | |
| | 22 | 1 | **369-8420** | 1 | VALVE GP-CHECK (RETURN OIL) | |
| | | 1 | **2S-4078** | 1 | SEAL-O-RING | |
| | | 1 | **9S-6130** | 1 | PLUG | |
| | | 1 | **095-1547** | 2 | SEAL-O-RING | |
| | 23 | 1 | **144-0367** | 2 | CLAMP-HOSE | |
| I | 24 | 1 | **199-7403** | 1 | HOSE AS | |
| | 25 | 1 | **1P-3703** | 2 | SEAL-RECTANGULAR | |
| I | 26 | 1 | **524-9944** | 1 | HOSE AS | |
| I | 27 | 1 | **524-9945** | 1 | HOSE AS | |
| | 28 | 1 | **524-9946** | 1 | SUPPORT AS | |
| | 29 | 1 | **548-0127** | 1 | PIPE AS | |
| | 30 | 1 | **548-0128** | 1 | PIPE AS | |
| | 31 | 1 | **7G-3832** | 1 | GROMMET | |
| | 32 | 1 | **8T-4121** | 8 | WASHER-HARD (11X21X2.5-MM THK) | |
| M | 33 | 1 | **8T-4136** | 2 | BOLT (M10X1.5X25-MM) | |
| M | 34 | 1 | **8T-4139** | 4 | BOLT (M12X1.75X30-MM) | |
| M | 35 | 1 | **8T-4194** | 8 | BOLT (M12X1.75X50-MM) | |
| | 36 | 1 | **8T-4223** | 13 | WASHER-HARD (13.5X25.5X3-MM THK) | |
| M | 37 | 1 | **8T-4956** | 7 | BOLT (M12X1.75X35-MM) | |

*556-6479* **LINES GP-CONTROL (**contd.**)** **i07397691**

| NOTE | REF NO | GRAPHIC REF | PART NUMBER | QTY | PART NAME 1 2 3 4 5 6 (PRODUCT LEVEL) | SEE PAGE |
|---|---|---|---|---|---|---|

I - REFER TO HYDRAULIC INFORMATION SYSTEM
M - METRIC PART

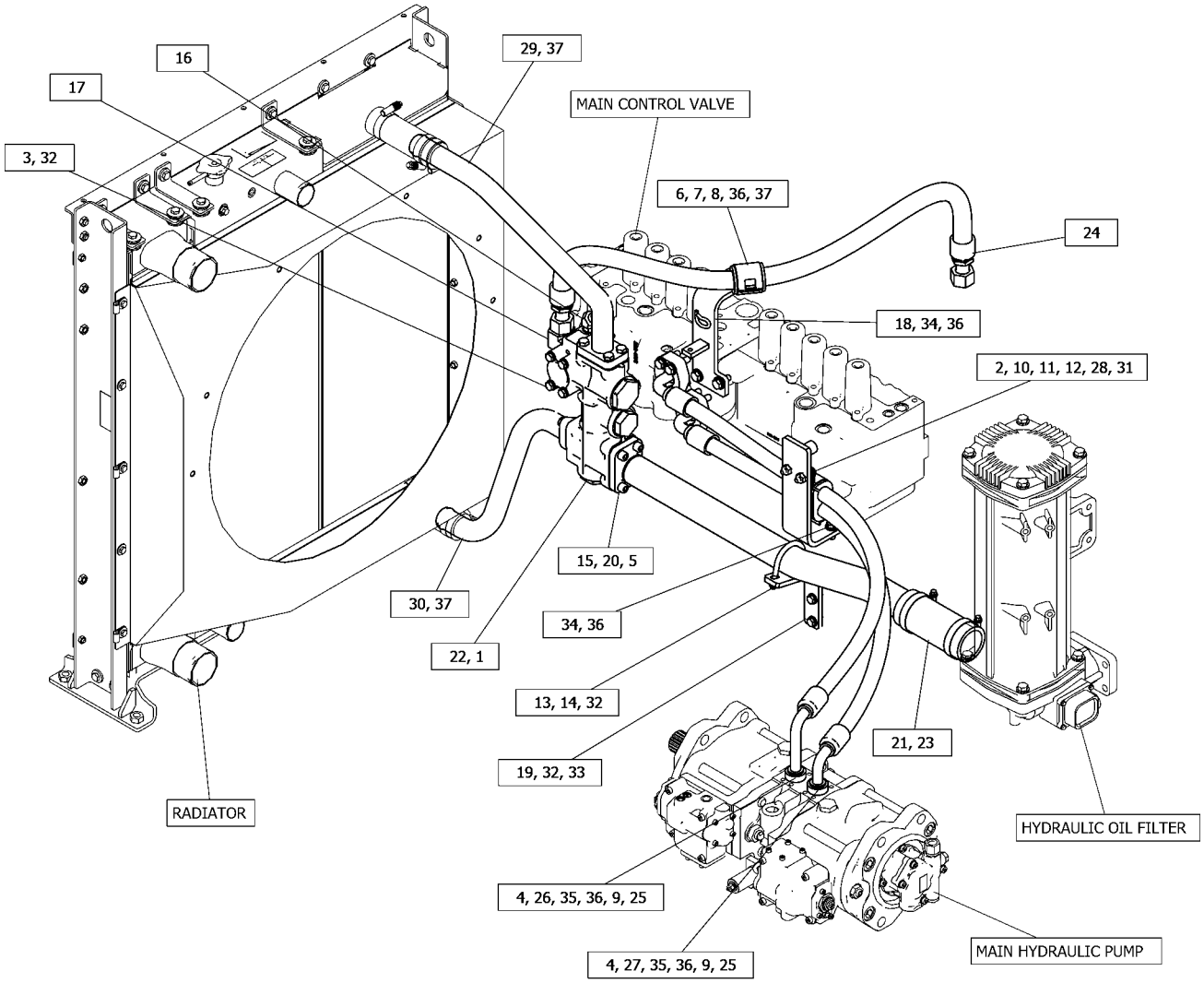


GRAPHIC #1 <END> g06315102

# *239-1714* LINES GP-FRONT

**S/N: FEY1-UP**

**PART OF 556-6437 HYDRAULIC AR**

**SMCS-5057** **i06925599**

| NOTE | REF NO | GRAPHIC REF | PART NUMBER | QTY | PART NAME 1 2 3 4 5 6 (PRODUCT LEVEL) | SEE PAGE |
|---|---|---|---|---|---|---|
| | 1 | 1 | **7Y-3730** | 2 | FLANGE-SPECIAL | |
| M | 2 | 1 | **101-7403** | 2 | BOLT-SOCKET HEAD (M10X1.5X80-MM) | |
| M | 3 | 1 | **105-3477** | 8 | BOLT-SOCKET HEAD (M10X1.5X45-MM) | |
| M | 4 | 1 | **105-3483** | 2 | BOLT-SOCKET HEAD (M10X1.5X70-MM) | |
| | 5 | 1 | **113-6479** | 2 | FLANGE-SPECIAL | |
| I | 6 | 1 | **165-3185** | 1 | HOSE AS | |
| I | 7 | 1 | **165-3190** | 1 | HOSE AS | |
| I | 8 | 1 | **337-1182** | 1 | HOSE AS | |
| Y | 9 | 1 | **194-0174** | 1 | HOSE GP-HYDRAULIC | 241 |
| Y | 10 | 1 | **194-0180** | 1 | HOSE GP-HYDRAULIC | 243 |
| Y | 11 | 1 | **214-4511** | 1 | FITTING GP-HYDRAULIC (4-BOLT FLANGE) | 235 |
| Y | 12 | 1 | **236-3212** | 1 | HOSE GP-HYDRAULIC | 246 |
| Y | 13 | 1 | **236-3213** | 1 | HOSE GP-HYDRAULIC | 246 |
| I | 14 | 1 | **289-5672** | 1 | HOSE AS | |
| Y | 15 | 1 | **255-5680** | 1 | VALVE GP-LOAD CONTROL (STICK DRIFT RED, LINE RELIEF) | 344 |
| Y | 16 | 1 | **255-5683** | 1 | VALVE GP-LOAD CONTROL (BOOM DRIFT RED, LINE RELIEF) | 346 |
| Y | 17 | 1 | **260-7910** | 1 | HOSE GP-HYDRAULIC | 249 |
| I | 18 | 1 | **260-7988** | 1 | HOSE AS | |
| I | 19 | 1 | **260-7992** | 1 | HOSE AS | |
| I | 20 | 1 | **260-7996** | 1 | HOSE AS | |
| I | 21 | 1 | **260-8000** | 1 | HOSE AS | |
| M | 22 | 1 | **101-7397** | 4 | BOLT-SOCKET HEAD (M12X1.75X50-MM) | |
| M | 23 | 1 | **101-7404** | 42 | BOLT-SOCKET HEAD (M10X1.5X30-MM) | |
| M | 24 | 1 | **199-1286** | 6 | BOLT-SOCKET HEAD (M10X1.5X150-MM) | |
| | 25 | 1 | **1P-3702** | 4 | SEAL-RECTANGULAR | |
| | 26 | 1 | **1P-3703** | 9 | SEAL-RECTANGULAR | |
| | 27 | 1 | **4J-5267** | 10 | SEAL-O-RING | |
| | 28 | 1 | **4J-5268** | 1 | SEAL-O-RING | |
| | 29 | 1 | **5K-9090** | 5 | SEAL-O-RING | |
| | 30 | 1 | **6V-0400** | 4 | FLANGE-HALF | |
| | 31 | 1 | **8T-4121** | 8 | WASHER-HARD (11X21X2.5-MM THK) | |
| M | 32 | 1 | **8T-4194** | 4 | BOLT (M12X1.75X50-MM) | |
| | 33 | 1 | **8T-4223** | 8 | WASHER-HARD (13.5X25.5X3-MM THK) | |
| | 34 | 1 | **8T-9403** | 4 | FLANGE-HALF | |

I - REFER TO HYDRAULIC INFORMATION SYSTEM
M - METRIC PART
Y - SEPARATE ILLUSTRATION

*239-1714* **LINES GP-FRONT (**contd.**)** **i06925599**

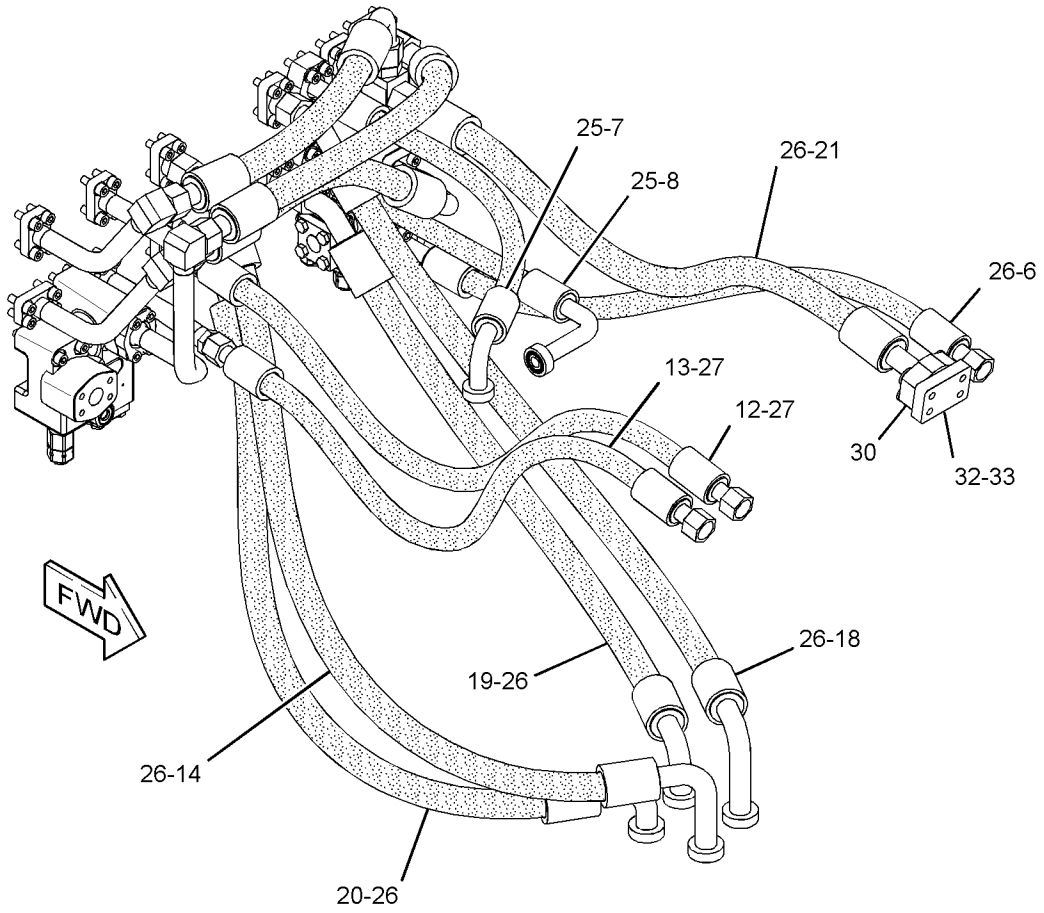


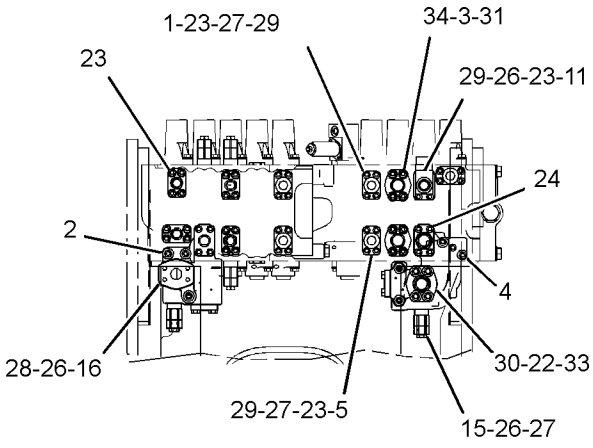


VIEW A-A
(HOSES REMOVED)

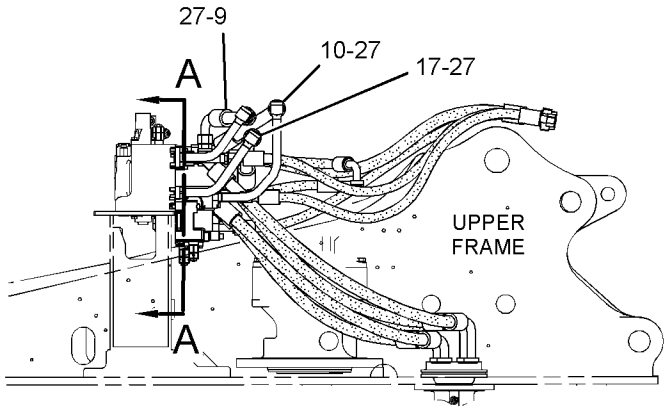


RIGHT SIDE VIEW

GRAPHIC #1 <END> g01806235

# *572-5692* LINES GP-FRONT—SYSTEM 3 PRIME, 1-WAY, 2-PUMP

**S/N: FEY1-UP**

**PART OF 559-6091 CONTROL AR-AUXILIARY**

**SMCS-5057** **i07621367**

| NOTE | REF NO | GRAPHIC REF | PART NUMBER | QTY | PART NAME 1 2 3 4 5 6 (PRODUCT LEVEL) | SEE PAGE |
|---|---|---|---|---|---|---|
| | 1 | 1,2 | **099-8232** | 2 | SEAL-O-RING | |
| M | 2 | 2 | **101-7397** | 4 | BOLT-SOCKET HEAD (M12X1.75X50-MM) | |
| M | 3 | 2 | **101-7401** | 4 | BOLT-SOCKET HEAD (M10X1.5X20-MM) | |
| M | 4 | 2 | **101-7402** | 4 | BOLT-SOCKET HEAD (M12X1.75X30-MM) | |
| M | 5 | 1 | **101-7404** | 4 | BOLT-SOCKET HEAD (M10X1.5X30-MM) | |
| I | 6 | 1 | **102-1248** | 1 | HOSE AS | |
| M | 7 | 2 | **105-3477** | 4 | BOLT-SOCKET HEAD (M10X1.5X45-MM) | |
| | 8 | 2 | *148-8323* | 1 | CONNECTOR AS | |
| | | 2 | **2S-4078** | 1 | SEAL-O-RING | |
| | | 2 | **5K-9090** | 1 | SEAL-O-RING | |
| | | 2 | **6V-9875** | 1 | CONNECTOR | |
| | 9 | 2 | *148-8330* | 1 | CONNECTOR AS | |
| | | 2 | **5K-9090** | 1 | SEAL-O-RING | |
| | | 2 | **7M-8485** | 1 | SEAL-O-RING | |
| | | 2 | **8T-0198** | 1 | CONNECTOR | |
| | 10 | 2 | *148-8347* | 1 | ELBOW AS | |
| | | 2 | **3D-2824** | 1 | SEAL-O-RING | |
| | | 2 | **6V-9007** | 1 | ELBOW | |
| | | 2 | **6V-9746** | 1 | SEAL-O-RING | |
| | 11 | 2 | *148-8355* | 1 | ELBOW AS | |
| | | 2 | **5K-9090** | 1 | SEAL-O-RING | |
| | | 2 | **6V-9005** | 1 | ELBOW | |
| | | 2 | **7M-8485** | 1 | SEAL-O-RING | |
| | 12 | 2 | *148-8411* | 1 | PLUG AS | |
| | | 2 | **3K-0360** | 1 | SEAL-O-RING | |
| | | 2 | **9S-4185** | 1 | PLUG (3/4-16-THD) | |
| | 13 | 2 | *148-8429* | 1 | TEE AS | |
| | | 2 | **5K-9090** | 2 | SEAL-O-RING | |
| | | 2 | **6V-9840** | 1 | TEE-SWIVEL | |
| | 14 | 2 | *153-6237* | 1 | ELBOW AS | |
| | | 2 | **3D-2824** | 1 | SEAL-O-RING | |
| | | 2 | **6V-9004** | 1 | ELBOW | |
| | | 2 | **6V-9746** | 1 | SEAL-O-RING | |
| | 15 | 2 | **173-4664** | 1 | FLANGE | |
| | 16 | 2 | *177-1061* | 1 | ELBOW AS | |
| | | 2 | **5K-9090** | 1 | SEAL-O-RING | |
| | | 2 | **142-0038** | 1 | ELBOW | |
| Y | 17 | 1 | **177-2653** | 1 | VALVE GP-RELIEF (LINE) | 367 |
| | 18 | 2 | **1P-3702** | 3 | SEAL-RECTANGULAR | |
| | 19 | 1,2 | **1P-3703** | 4 | SEAL-RECTANGULAR | |
| | 20 | 2 | **207-6222** | 1 | BLOCK | |
| | 21 | 2 | **212-5148** | 2 | BLOCK | |
| | 22 | 2 | **218-1139** | 1 | BLOCK | |
| | 23 | 2 | **260-7872** | 1 | SUPPORT AS | |
| | 24 | 2 | **260-8043** | 1 | BLOCK | |
| | 25 | 2 | **266-0912** | 1 | BRACKET | |
| | 26 | 2 | **266-0913** | 1 | SUPPORT AS | |

*572-5692* **LINES GP-FRONT (**contd.**)** **i07621367**

| NOTE | REF NO | GRAPHIC REF | PART NUMBER | QTY | PART NAME 1 2 3 4 5 6 (PRODUCT LEVEL) | SEE PAGE |
|---|---|---|---|---|---|---|
| | 27 | 2 | **266-1278** | 1 | BLOCK | |
| | 28 | 2 | **266-1279** | 1 | FLANGE | |
| I | 29 | 1 | **266-1303** | 1 | HOSE AS | |
| | 30 | 2 | **275-1439** | 1 | BLOCK | |
| M | 31 | 2 | **280-2747** | 4 | BOLT-SOCKET HEAD (M10X1.5X60-MM) | |
| | 32 | 2 | **296-7067** | 1 | SUPPORT AS | |
| | 33 | 2 | **296-7069** | 1 | SUPPORT AS | |
| I | 34 | 1 | **317-4712** | 1 | HOSE AS | |
| | 35 | 2 | **325-8865** | 1 | SUPPORT AS | |
| | 36 | 2 | *369-6858* | 2 | PLUG AS | |
| | | | | | (EACH INCLUDES) | |
| | | 2 | **7M-8485** | 1 | SEAL-O-RING | |
| | | 2 | **360-3697** | 1 | PLUG | |
| JI | 37 | 1 | **377-3291** | 1 | HOSE AS | |
| | 38 | 1,2 | **5K-9090** | 2 | SEAL-O-RING | |
| | 39 | 2 | **5P-7468** | 2 | CLIP (SLOT) | |
| | 40 | 2 | **5P-7469** | 2 | CLIP (TAB) | |
| | 41 | 2 | **6V-1876** | 1 | GROMMET | |
| | 42 | 2 | **7G-5984** | 1 | CLIP (TAB) | |
| | 43 | 2 | **7G-5985** | 1 | CLIP (SLOT) | |
| | 44 | 1 | **7Y-3731** | 1 | FLANGE | |
| | 45 | 2 | **8T-4121** | 8 | WASHER-HARD (11X21X2.5-MM THK) | |
| M | 46 | 2 | **8T-4136** | 6 | BOLT (M10X1.5X25-MM) | |
| M | 47 | 1 | **8T-4176** | 4 | BOLT (M12X1.75X90-MM) | |
| M | 48 | 2 | **8T-4183** | 8 | BOLT (M12X1.75X40-MM) | |
| M | 49 | 2 | **8T-4196** | 2 | BOLT (M10X1.5X35-MM) | |
| | 50 | 1,2 | **8T-4223** | 26 | WASHER-HARD (13.5X25.5X3-MM THK) | |
| M | 51 | 2 | **8T-4956** | 6 | BOLT (M12X1.75X35-MM) | |
| M | 52 | 2 | **8T-5092** | 8 | BOLT (M12X1.75X150-MM) | |
| | 53 | 2 | **8T-7087** | 2 | GROMMET (34-MM ID) | |

I - REFER TO HYDRAULIC INFORMATION SYSTEM
J - NOT REQUIRED WHEN USED WITH LINES GP-FRONT (HAMMER RETURN)
M - METRIC PART
Y - SEPARATE ILLUSTRATION

*572-5692* **LINES GP-FRONT (**contd.**)** **i07621367**

REFER TO ALL ILLUSTRATIONS OF
THIS GROUP FOR AUXILIARY VIEWS

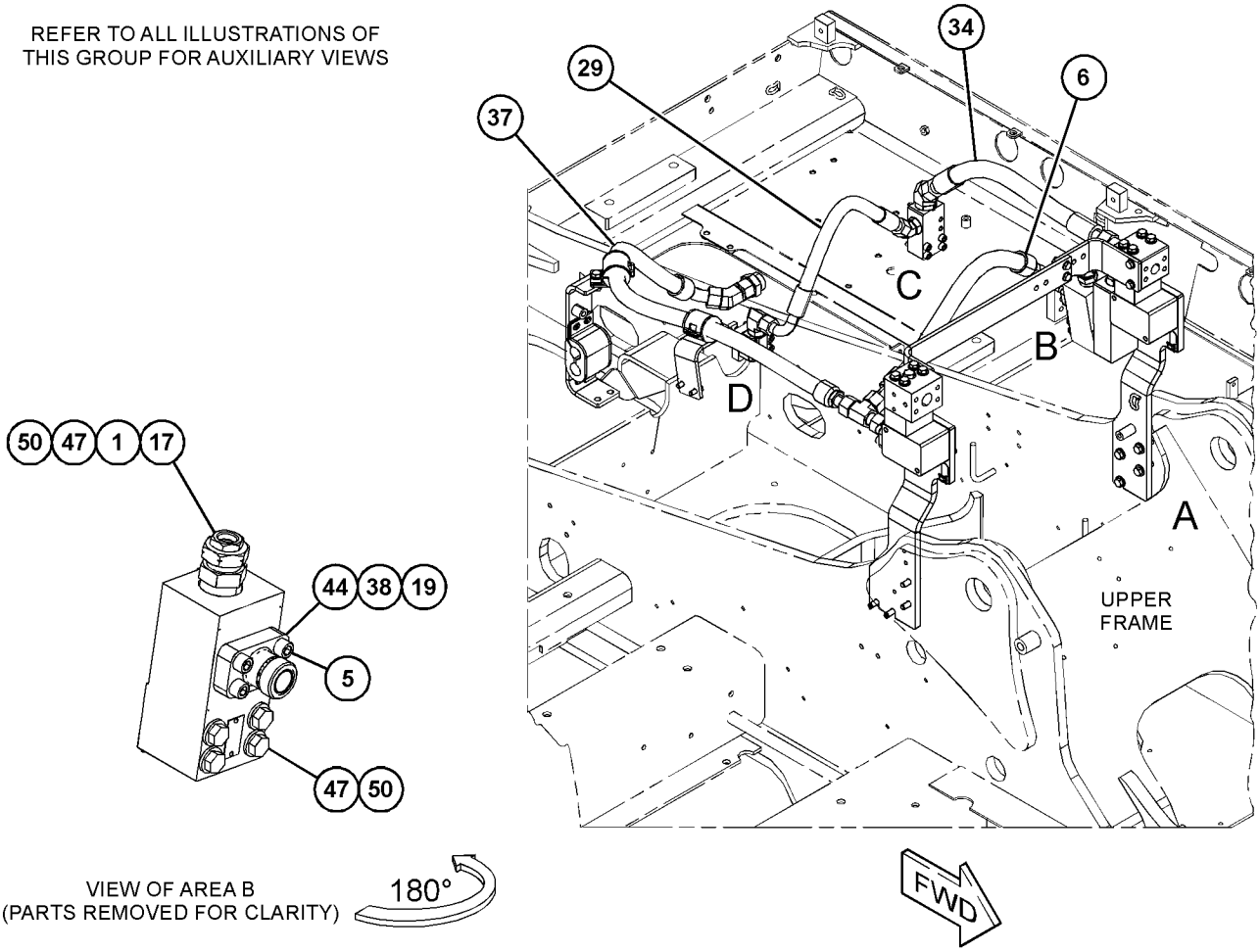


GRAPHIC #1 g06391734

*572-5692* **LINES GP-FRONT (**contd.**)** **i07621367**

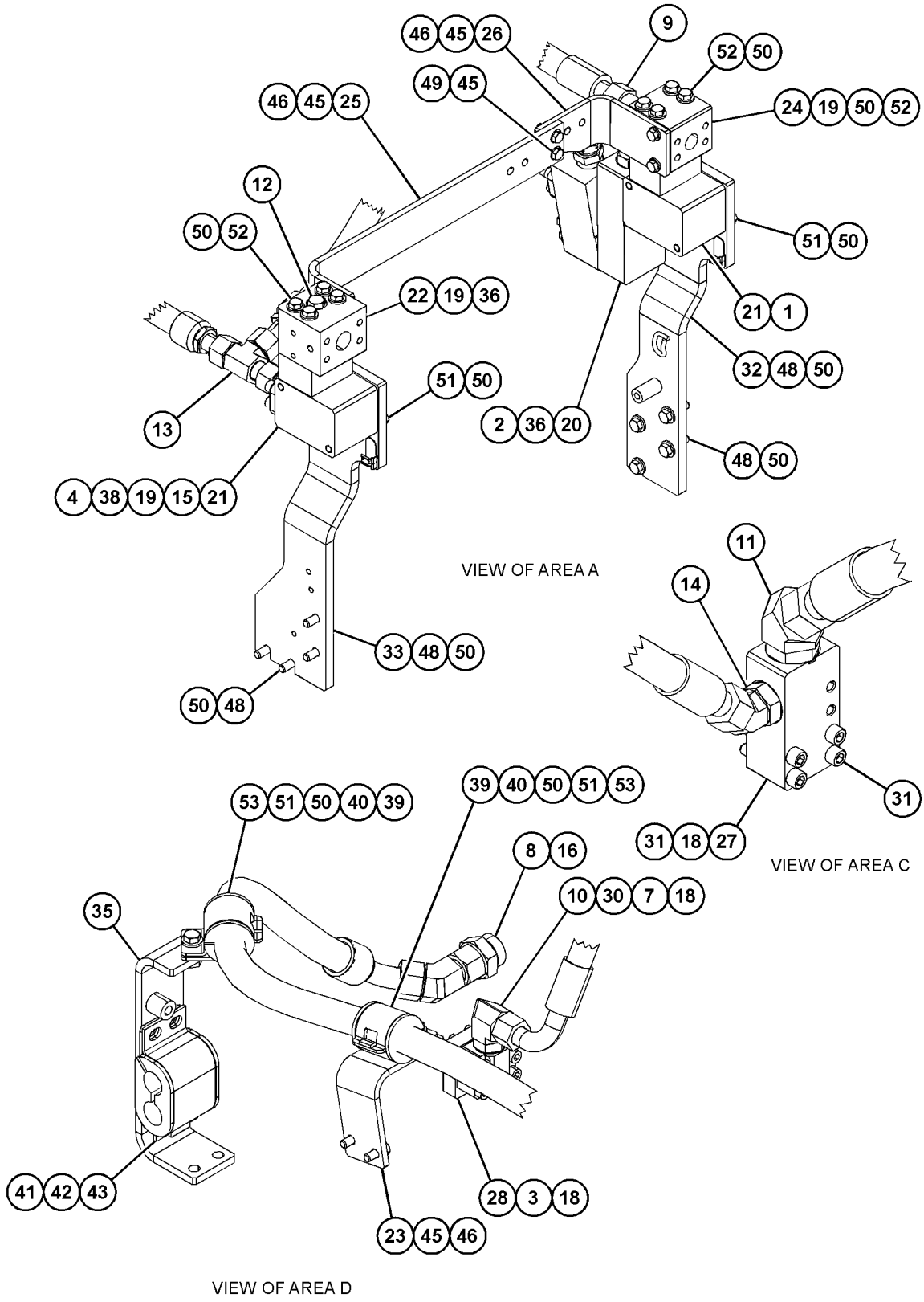


GRAPHIC #2 <END> g06391742

# *556-6517* LINES GP-HYDRAULIC

**S/N: FEY1-UP**

**RADIATOR, REAR**

**PART OF 556-6437 HYDRAULIC AR**

**SMCS-5057** **i07397755**

| NOTE | REF NO | GRAPHIC REF | PART NUMBER | QTY | PART NAME 1 2 3 4 5 6 (PRODUCT LEVEL) | SEE PAGE |
|---|---|---|---|---|---|---|
| | 1 | 1 | **227-0265** | 2 | HOSE | |
| | 2 | 1 | **8T-6703** | 5 | CLAMP-HOSE (CONSTANT TENSION) | |

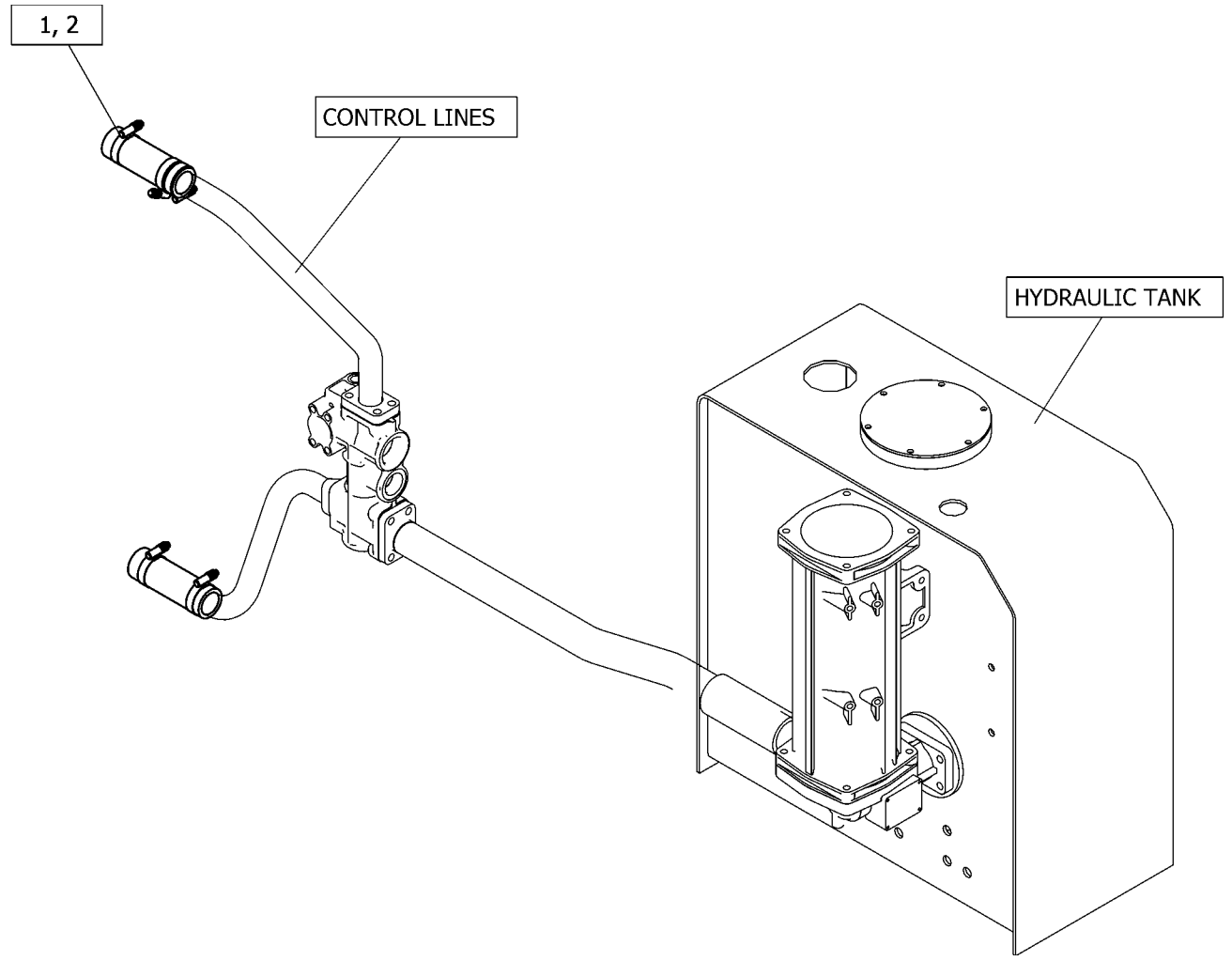


GRAPHIC #1 <END> g06309427

# *562-9615* LINES GP-HYDRAULIC

**S/N: FEY1-UP**

**HYDRAULIC TANK**

**PART OF 562-9614 TANK & MTG GP-HYDRAULIC**

**SMCS-5057** **i07426929**

| NOTE | REF NO | GRAPHIC REF | PART NUMBER | QTY | PART NAME 1 2 3 4 5 6 (PRODUCT LEVEL) | SEE PAGE |
|---|---|---|---|---|---|---|
| | 1 | 1 | **4I-9527** | 2 | BAND-MARKER (GREEN, R3) | |
| | 2 | 1 | **5P-7464** | 1 | CLIP (SLOT) | |
| | 3 | 1 | **5P-7465** | 1 | CLIP (TAB) | |
| | 4 | 1 | **6J-2680** | 1 | SEAL-O-RING | |
| | 5 | 1 | **7K-1181** | 2 | STRAP-CABLE | |
| M | 6 | 1 | **8T-4139** | 1 | BOLT (M12X1.75X30-MM) | |
| | 7 | 1 | **8T-4223** | 5 | WASHER-HARD (13.5X25.5X3-MM THK) | |
| M | 8 | 1 | **8T-4956** | 4 | BOLT (M12X1.75X35-MM) | |
| | 9 | 1 | *148-8327* | 1 | CONNECTOR AS | |
| | | 1 | **3D-2824** | 1 | SEAL-O-RING | |
| | | 1 | **6V-8637** | 1 | CONNECTOR | |
| | | 1 | **6V-9746** | 1 | SEAL-O-RING | |
| | 10 | 1 | *148-8347* | 1 | ELBOW AS | |
| | | 1 | **3D-2824** | 1 | SEAL-O-RING | |
| | | 1 | **6V-9007** | 1 | ELBOW | |
| | | 1 | **6V-9746** | 1 | SEAL-O-RING | |
| | 11 | 1 | *148-8354* | 2 | ELBOW AS | |
| | | | | | (EACH INCLUDES) | |
| | | 1 | **3K-0360** | 1 | SEAL-O-RING | |
| | | 1 | **6V-8398** | 1 | SEAL-O-RING | |
| | | 1 | **6V-9002** | 1 | ELBOW | |
| | 12 | 1 | *148-8358* | 1 | ELBOW AS | |
| | | 1 | **2M-9780** | 1 | SEAL-O-RING | |
| | | 1 | **6V-8398** | 1 | SEAL-O-RING | |
| | | 1 | **6V-8624** | 1 | ELBOW | |
| | 13 | 1 | *148-8363* | 1 | ELBOW AS | |
| | | 1 | **3K-0360** | 1 | SEAL-O-RING | |
| | | 1 | **6V-8397** | 1 | SEAL-O-RING | |
| | | 1 | **6V-9876** | 1 | ELBOW | |
| | 14 | 1 | *148-8411* | 1 | PLUG AS | |
| | | 1 | **3K-0360** | 1 | SEAL-O-RING | |
| | | 1 | **9S-4185** | 1 | PLUG (3/4-16-THD) | |
| | 15 | 1 | *164-5608* | 2 | CONNECTOR AS | |
| | | | | | (EACH INCLUDES) | |
| | | 1 | **3K-0360** | 1 | SEAL-O-RING | |
| | | 1 | **6V-8398** | 1 | SEAL-O-RING | |
| | | 1 | **8T-1687** | 1 | CONNECTOR | |
| | 16 | 1 | **165-3260** | 1 | PIPE AS | |
| | 17 | 1 | *268-1621* | 1 | FITTING AS | |
| | | 1 | **3D-2824** | 1 | SEAL-O-RING | |
| | | 1 | **6V-9746** | 1 | SEAL-O-RING | |
| | | 1 | **124-1212** | 1 | FITTING | |
| | 18 | 1 | *307-5097* | 1 | TEE AS | |
| | | 1 | **2M-9780** | 1 | SEAL-O-RING | |
| | | 1 | **6V-8397** | 1 | SEAL-O-RING | |
| | | 1 | **6V-8398** | 1 | SEAL-O-RING | |
| | | 1 | **307-5098** | 1 | ADAPTER-TEE | |

*562-9615* **LINES GP-HYDRAULIC (**contd.**)** **i07426929**

| NOTE | REF NO | GRAPHIC REF | PART NUMBER | QTY | PART NAME 1 2 3 4 5 6 (PRODUCT LEVEL) | SEE PAGE |
|---|---|---|---|---|---|---|
| I | 19 | 1 | **176-4770** | 1 | HOSE AS | |
| I | 20 | 1 | **558-8198** | 1 | HOSE AS | |
| I | 21 | 1 | **558-8199** | 1 | HOSE AS | |
| | 22 | 1 | **8T-2920** | 1 | GROMMET (27-MM ID) | |

I - REFER TO HYDRAULIC INFORMATION SYSTEM
M - METRIC PART

*562-9615* **LINES GP-HYDRAULIC (**contd.**)** **i07426929**

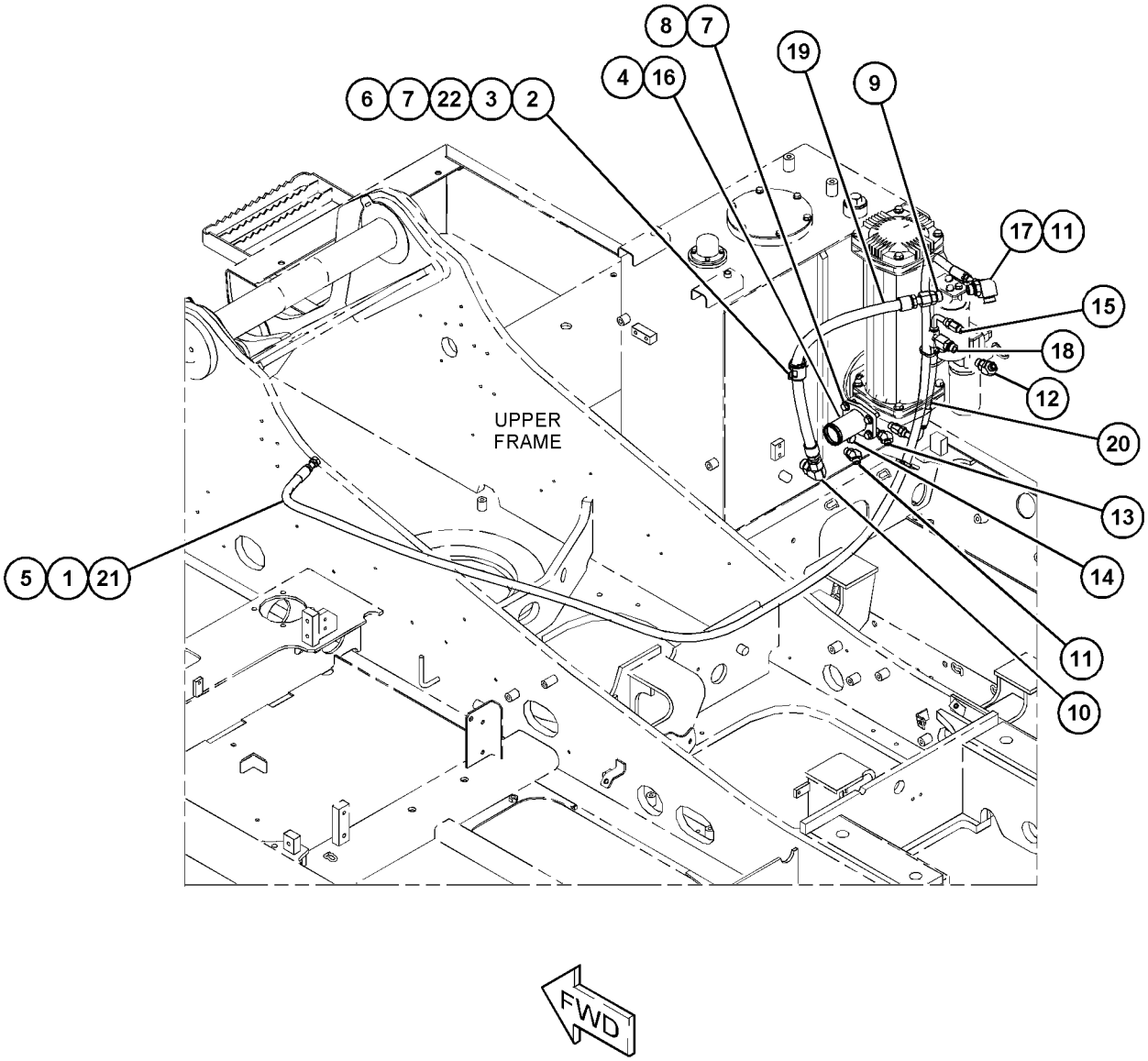


GRAPHIC #1 <END> g06321168

# *465-8275* LINES GP-PILOT—JOYSTICK, PEDALS

**S/N: FEY1-UP**

**PART OF 557-8896 CAB GP**

**SMCS-5057, 5059** **i06925647**

| NOTE | REF NO | GRAPHIC REF | PART NUMBER | QTY | PART NAME 1 2 3 4 5 6 (PRODUCT LEVEL) | SEE PAGE |
|---|---|---|---|---|---|---|
| | 1 | 1 | **4I-9521** | 2 | BAND-MARKER (RED, L1) | |
| | 2 | 1 | **4I-9522** | 2 | BAND-MARKER (YELLOW, L2) | |
| | 3 | 1 | **4I-9523** | 2 | BAND-MARKER (BLUE, L3) | |
| | 4 | 1 | **4I-9524** | 2 | BAND-MARKER (BROWN, L4) | |
| | 5 | 1 | **4I-9525** | 2 | BAND-MARKER (ORANGE, R1) | |
| | 6 | 1 | **4I-9526** | 2 | BAND-MARKER (WHITE, R2) | |
| | 7 | 1 | **4I-9527** | 2 | BAND-MARKER (GREEN, R3) | |
| | 8 | 1 | **4I-9528** | 2 | BAND-MARKER (PURPLE, R4) | |
| | 9 | 1 | **7K-1181** | 5 | STRAP-CABLE | |
| I | 10 | 1 | **087-4402** | 2 | HOSE AS | |
| | 11 | 1 | **133-5813** | 4 | BAND-MARKER (GRAY, P) | |
| | 12 | 1 | *164-5628* | 3 | CONNECTOR AS | |
| | | | | | (EACH INCLUDES) | |
| | | 1 | **3J-1907** | 1 | SEAL-O-RING | |
| | | 1 | **6V-8397** | 1 | SEAL-O-RING | |
| | | 1 | **107-6631** | 1 | CONNECTOR-FILTER | |
| | 13 | 1 | **168-9759** | 1 | BLOCK | |
| | 14 | 1 | **236-2843** | 4 | HOSE AS | |
| | 15 | 1 | **236-2844** | 3 | HOSE AS | |
| | 16 | 1 | **236-2848** | 1 | HOSE AS | |
| | 17 | 1 | **245-5079** | 1 | HOSE AS | |
| | 18 | 1 | **255-1665** | 1 | HOSE AS | |
| | 19 | 1 | **255-1666** | 1 | HOSE AS | |
| | 20 | 1 | **289-5657** | 1 | HOSE AS | |
| Y | 21 | 1 | **369-8502** | 1 | VALVE GP-PILOT (TRAVEL, SHUTTLE) | 355 |
| | 22 | 1 | **387-3699** | 1 | BRACKET | |
| | 23 | 1 | **392-2185** | 3 | SUPPORT | |
| | 24 | 1 | **454-5075** | 1 | SENSOR GP-PRESSURE (BUCKET) | |
| | 24A | 1 | **454-5075** | 1 | SENSOR GP-PRESSURE (TRAVEL LEFT) | |
| | 24B | 1 | **454-5075** | 1 | SENSOR GP-PRESSURE (TRAVEL RIGHT) | |
| Y | 25 | 1 | **464-7318** | 1 | VALVE GP-SHUTTLE | 373 |
| | 26 | 1 | *148-8336* | 23 | CONNECTOR AS | |
| | | | | | (EACH INCLUDES) | |
| | | 1 | **3J-1907** | 1 | SEAL-O-RING | |
| | | 1 | **6V-8397** | 1 | SEAL-O-RING | |
| | | 1 | **6V-8636** | 1 | CONNECTOR | |
| | 27 | 1 | *148-8353* | 8 | ELBOW AS | |
| | | | | | (EACH INCLUDES) | |
| | | 1 | **3J-1907** | 1 | SEAL-O-RING | |
| | | 1 | **6V-8397** | 1 | SEAL-O-RING | |
| | | 1 | **6V-9001** | 1 | ELBOW | |
| | 28 | 1 | *148-8354* | 2 | ELBOW AS | |
| | | | | | (EACH INCLUDES) | |
| | | 1 | **3K-0360** | 1 | SEAL-O-RING | |
| | | 1 | **6V-8398** | 1 | SEAL-O-RING | |
| | | 1 | **6V-9002** | 1 | ELBOW | |
| | 29 | 1 | *148-8378* | 6 | ELBOW AS | |
| | | | | | (EACH INCLUDES) | |

*465-8275* **LINES GP-PILOT (**contd.**)** **i06925647**

| NOTE | REF NO | GRAPHIC REF | PART NUMBER | QTY | PART NAME 1 2 3 4 5 6 (PRODUCT LEVEL) | SEE PAGE |
|---|---|---|---|---|---|---|
| | | 1 | **3J-1907** | 1 | SEAL-O-RING | |
| | | 1 | **6V-8397** | 1 | SEAL-O-RING | |
| | | 1 | **6V-8724** | 1 | ELBOW | |
| | 30 | 1 | *148-8407* | 4 | PLUG AS | |
| | | | | | (EACH INCLUDES) | |
| | | 1 | **3J-1907** | 1 | SEAL-O-RING | |
| | | 1 | **9S-4191** | 1 | PLUG (9/16-18-THD) | |
| | 31 | 1 | **4P-7581** | 1 | CLIP (LADDER) | |
| | 32 | 1 | **8T-4121** | 18 | WASHER-HARD (11X21X2.5-MM THK) | |
| M | 33 | 1 | **8T-4137** | 7 | BOLT (M10X1.5X20-MM) | |
| M | 34 | 1 | **8T-4191** | 10 | BOLT (M10X1.5X16-MM) | |
| M | 35 | 1 | **8T-4198** | 2 | BOLT (M10X1.5X100-MM) | |

I - REFER TO HYDRAULIC INFORMATION SYSTEM
M - METRIC PART
Y - SEPARATE ILLUSTRATION

*465-8275* **LINES GP-PILOT (**contd.**)** **i06925647**

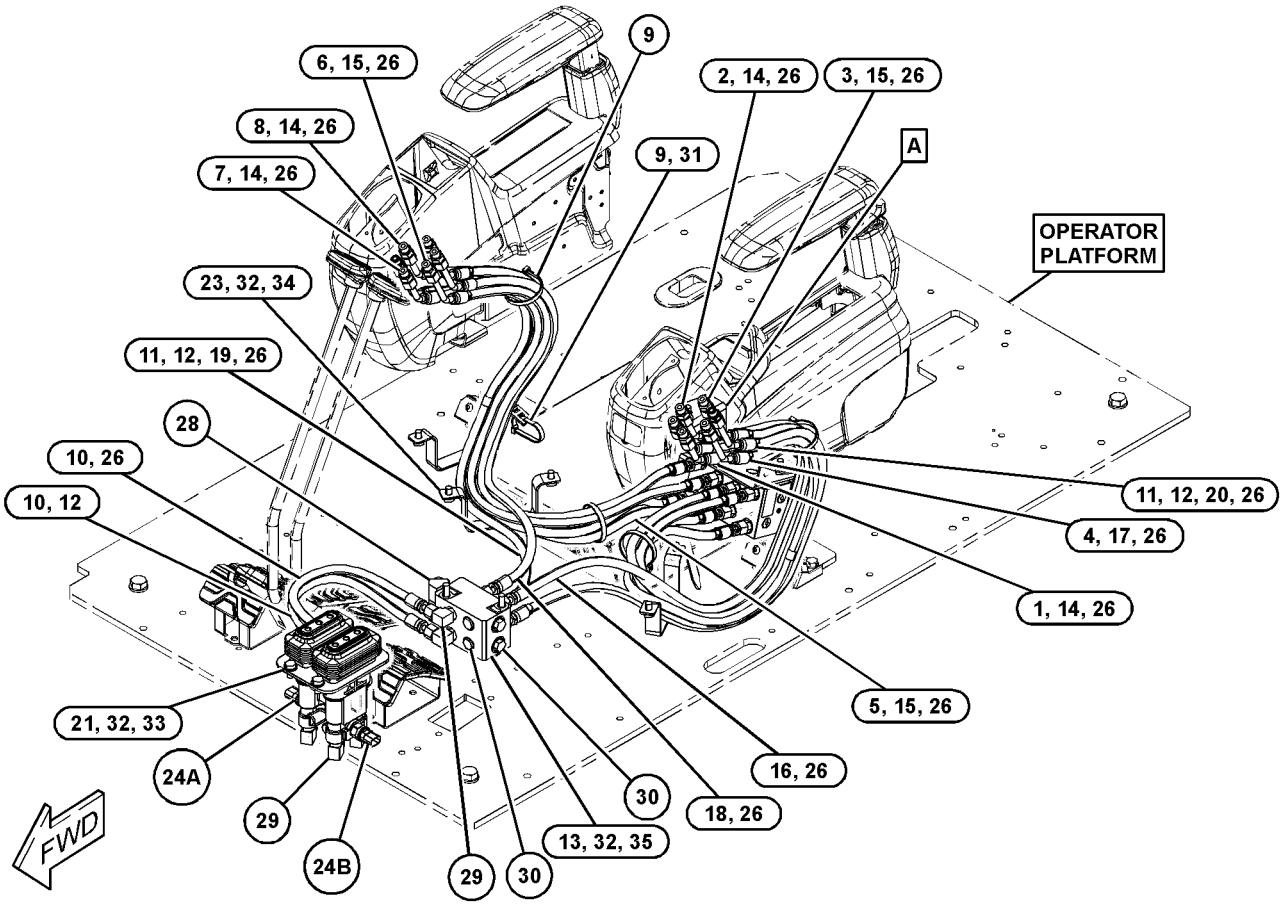


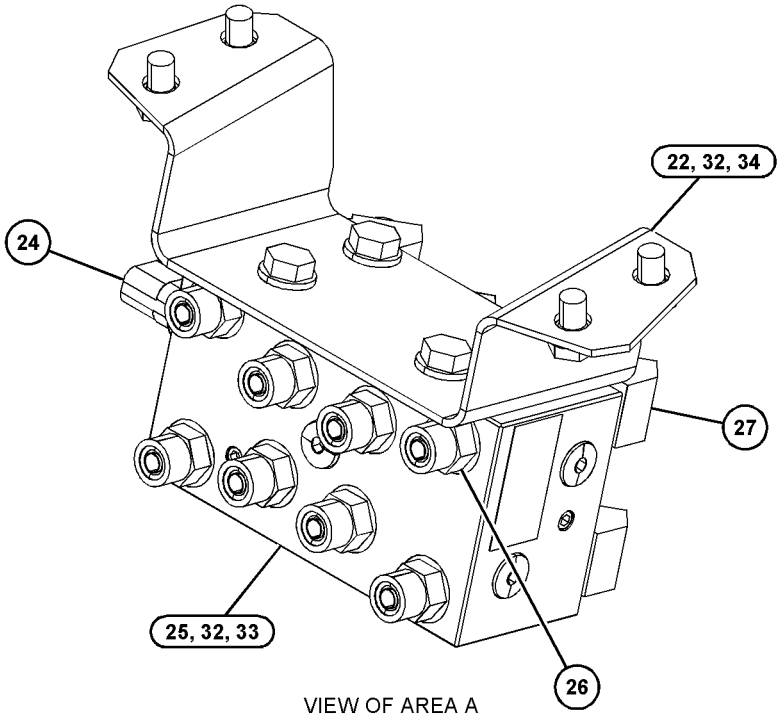


VIEW OF AREA A

GRAPHIC #1 <END> g03819378

# *556-6488* LINES GP-PILOT

**S/N: FEY1-UP**
**MAIN CONTROL VALVE**
**PART OF 556-6437 HYDRAULIC AR**

**SMCS-5057, 5059** **i07418398**

| NOTE | REF NO | GRAPHIC REF | PART NUMBER | QTY | PART NAME 1 2 3 4 5 6 (PRODUCT LEVEL) | SEE PAGE |
|---|---|---|---|---|---|---|
| | 1 | 2 | **6V-8397** | 2 | SEAL-O-RING | |
| | 2 | 1 | **7K-1181** | 15 | STRAP-CABLE | |
| M | 3 | 3 | **8T-4172** | 2 | BOLT (M10X1.5X80-MM) | |
| M | 4 | 3 | **8T-4192** | 3 | BOLT (M12X1.75X25-MM) | |
| M | 5 | 2 | **099-3649** | 2 | BOLT (M8X1.25X40-MM) | |
| M | 6 | 2 | **105-3484** | 2 | BOLT-SOCKET HEAD (M10X1.5X25-MM) | |
| | 7 | 2,3 | *148-8336* | 7 | CONNECTOR AS | |
| | | | | | (EACH INCLUDES) | |
| | | 2,3 | **3J-1907** | 1 | SEAL-O-RING | |
| | | 2,3 | **6V-8397** | 1 | SEAL-O-RING | |
| | | 2,3 | **6V-8636** | 1 | CONNECTOR | |
| | 8 | 2,3 | *148-8340* | 4 | CONNECTOR AS | |
| | | | | | (EACH INCLUDES) | |
| | | 2,3 | **3K-0360** | 1 | SEAL-O-RING | |
| | | 2,3 | **6V-8398** | 1 | SEAL-O-RING | |
| | | 2,3 | **6V-8639** | 1 | CONNECTOR | |
| | 9 | 2,3 | *148-8353* | 5 | ELBOW AS | |
| | | | | | (EACH INCLUDES) | |
| | | 2,3 | **3J-1907** | 1 | SEAL-O-RING | |
| | | 2,3 | **6V-8397** | 1 | SEAL-O-RING | |
| | | 2,3 | **6V-9001** | 1 | ELBOW | |
| | 10 | 2 | *148-8354* | 1 | ELBOW AS | |
| | | 2 | **3K-0360** | 1 | SEAL-O-RING | |
| | | 2 | **6V-8398** | 1 | SEAL-O-RING | |
| | | 2 | **6V-9002** | 1 | ELBOW | |
| | 11 | 2 | *148-8364* | 1 | ELBOW AS | |
| | | 2 | **3K-0360** | 1 | SEAL-O-RING | |
| | | 2 | **6V-8398** | 1 | SEAL-O-RING | |
| | | 2 | **6V-8625** | 1 | ELBOW | |
| | 12 | 2,3 | *148-8367* | 2 | ELBOW AS | |
| | | | | | (EACH INCLUDES) | |
| | | 2,3 | **6V-8397** | 1 | SEAL-O-RING | |
| | | 2,3 | **6V-9850** | 1 | ELBOW | |
| | 13 | 2 | *148-8433* | 2 | TEE AS | |
| | | | | | (EACH INCLUDES) | |
| | | 2 | **6V-8397** | 2 | SEAL-O-RING | |
| | | 2 | **6V-9836** | 1 | TEE-SWIVEL | |
| | 14 | 2 | *148-8434* | 1 | TEE AS | |
| | | 2 | **6V-8397** | 2 | SEAL-O-RING | |
| | | 2 | **6V-9843** | 1 | TEE | |
| | 15 | 2 | *148-8439* | 2 | TEE AS | |
| | | | | | (EACH INCLUDES) | |
| | | 2 | **3J-1907** | 1 | SEAL-O-RING | |
| | | 2 | **6V-8397** | 2 | SEAL-O-RING | |
| | | 2 | **6V-8774** | 1 | TEE | |
| | 16 | 2,3 | *150-4044* | 3 | CONNECTOR AS | |
| | | | | | (EACH INCLUDES) | |

*556-6488* **LINES GP-PILOT (**contd.**)** **i07418398**

| NOTE | REF NO | GRAPHIC REF | PART NUMBER | QTY | PART NAME 1 2 3 4 5 6 (PRODUCT LEVEL) | SEE PAGE |
|---|---|---|---|---|---|---|
| | | 2,3 | **3J-1907** | 1 | SEAL-O-RING | |
| | | 2,3 | **6V-8397** | 1 | SEAL-O-RING | |
| | | 2,3 | **8T-1779** | 1 | CONNECTOR | |
| | 17 | 3 | *164-5639* | 1 | ELBOW AS | |
| | | 3 | **3K-0360** | 1 | SEAL-O-RING | |
| | | 3 | **6V-8398** | 1 | SEAL-O-RING | |
| | | 3 | **124-0988** | 1 | ELBOW-FILTER | |
| Y | 18 | 2 | **164-6979** | 1 | VALVE GP-SHUTTLE | 372 |
| | 19 | 3 | **176-4463** | 1 | PLATE | |
| | 20 | 2 | **176-4469** | 1 | BLOCK | |
| Y | 21 | 3 | **215-5037** | 1 | MANIFOLD GP-CONTROL (PILOT OIL SUPPLY) | 307 |
| Y | 22 | 3 | **310-0210** | 1 | VALVE GP-PRESSURE REDUCING (BOOM, SWING PRIORITY) | 357 |
| | 23 | 2 | *351-0286* | 1 | CONNECTOR AS | |
| | | 2 | **3J-1907** | 1 | SEAL-O-RING | |
| | | 2 | **6V-8397** | 1 | SEAL-O-RING | |
| | | 2 | **259-7733** | 1 | CONNECTOR | |
| Y | 24 | 1 | *418-6282* | 1 | CLAMP GP-HYDRAULIC LINES | 208 |
| Y | 25 | 1,2 | *418-6286* | 2 | CLAMP GP-HYDRAULIC LINES | 211 |
| I | 26 | 2 | **558-8178** | 1 | HOSE AS | |
| I | 27 | 2 | **558-8179** | 2 | HOSE AS | |
| I | 28 | 2 | **558-8181** | 1 | HOSE AS | |
| I | 29 | 2 | **558-8182** | 1 | HOSE AS | |
| I | 30 | 2 | **558-8183** | 1 | HOSE AS | |
| I | 31 | 2 | **558-8184** | 1 | HOSE AS | |
| I | 32 | 2 | **558-8185** | 1 | HOSE AS | |
| I | 33 | 2 | **558-8187** | 1 | HOSE AS | |
| I | 34 | 1,2 | **558-8189** | 2 | HOSE AS | |
| | 35 | 1,2,3 | *148-8378* | 8 | ELBOW AS | |
| | | | | | (EACH INCLUDES) | |
| | | 1,2,3 | **3J-1907** | 1 | SEAL-O-RING | |
| | | 1,2,3 | **6V-8397** | 1 | SEAL-O-RING | |
| | | 1,2,3 | **6V-8724** | 1 | ELBOW | |
| | 36 | 1,3 | *148-8407* | 6 | PLUG AS | |
| | | | | | (EACH INCLUDES) | |
| | | 1,3 | **3J-1907** | 1 | SEAL-O-RING | |
| | | 1,3 | **9S-4191** | 1 | PLUG (9/16-18-THD) | |
| | 37 | 2,3 | *148-8435* | 4 | TEE AS | |
| | | | | | (EACH INCLUDES) | |
| | | 2,3 | **3J-1907** | 1 | SEAL-O-RING | |
| | | 2,3 | **6V-8397** | 2 | SEAL-O-RING | |
| | | 2,3 | **6V-8781** | 1 | TEE | |
| Y | 38 | 2 | *164-6981* | 1 | ACCUMULATOR GP-HYDRAULIC (CHARGED) | 203 |
| I | 39 | 2 | **558-8190** | 1 | HOSE AS | |
| I | 40 | 2 | **558-8191** | 2 | HOSE AS | |
| I | 41 | 3 | **558-8192** | 1 | HOSE AS | |
| I | 42 | 1 | **558-8193** | 2 | HOSE AS | |
| I | 43 | 1 | **558-8194** | 1 | HOSE AS | |
| | 44 | 1 | **202-4004** | 1 | GROMMET | |
| | 45 | 1 | **204-2281** | 2 | STRAP-CABLE | |
| | 46 | 2 | *285-1399* | 1 | CONNECTOR AS | |
| | | 2 | **3J-1907** | 1 | SEAL-O-RING | |

*556-6488* **LINES GP-PILOT (**contd.**)** **i07418398**

| NOTE | REF NO | GRAPHIC REF | PART NUMBER | QTY | PART NAME 1 2 3 4 5 6 (PRODUCT LEVEL) | SEE PAGE |
|---|---|---|---|---|---|---|
| | | 2 | **6V-8397** | 1 | SEAL-O-RING | |
| | | 2 | **285-1465** | 1 | CONNECTOR | |
| I | 47 | 2 | **558-8200** | 1 | HOSE AS | |
| I | 48 | 2 | **558-8201** | 1 | HOSE AS | |
| I | 49 | 1 | **558-8202** | 1 | HOSE AS | |
| I | 50 | 2 | **558-8203** | 1 | HOSE AS | |
| I | 51 | 2 | **558-8204** | 1 | HOSE AS | |
| I | 52 | 2 | **558-8206** | 1 | HOSE AS | |
| I | 53 | 2 | **558-8207** | 1 | HOSE AS | |
| I | 54 | 2 | **558-8221** | 1 | HOSE AS | |
| I | 55 | 2 | **558-8210** | 1 | HOSE AS | |
| I | 56 | 1 | **558-8211** | 1 | HOSE AS | |
| | 57 | 2 | **4I-9521** | 2 | BAND-MARKER (RED, L1) | |
| | 58 | 1,2 | **4I-9522** | 6 | BAND-MARKER (YELLOW, L2) | |
| | 59 | 1 | **4I-9523** | 4 | BAND-MARKER (BLUE, L3) | |
| | 60 | 1,2 | **4I-9524** | 6 | BAND-MARKER (BROWN, L4) | |
| | 61 | 1 | **4I-9525** | 2 | BAND-MARKER (ORANGE, R1) | |
| | 62 | 1,2 | **4I-9527** | 4 | BAND-MARKER (GREEN, R3) | |
| | 63 | 2 | **4I-9528** | 4 | BAND-MARKER (PURPLE, R4) | |
| | 64 | 2 | **4K-8864** | 1 | CLIP (LOOP) (LOOP) | |
| I | 65 | 1 | **524-9949** | 1 | HOSE AS | |
| I | 66 | 1 | **548-4703** | 1 | HOSE AS | |
| I | 67 | 1 | **558-8213** | 1 | HOSE AS | |
| I | 68 | 2 | **558-8214** | 1 | HOSE AS | |
| I | 69 | 2 | **558-8715** | 1 | HOSE AS | |
| I | 70 | 1 | **558-8219** | 1 | HOSE AS | |
| | 71 | 1,2,3 | **8T-4121** | 8 | WASHER-HARD (11X21X2.5-MM THK) | |
| M | 72 | 2 | **8T-4136** | 1 | BOLT (M10X1.5X25-MM) | |
| M | 73 | 1,3 | **8T-4137** | 5 | BOLT (M10X1.5X20-MM) | |
| M | 74 | 1 | **8T-4139** | 1 | BOLT (M12X1.75X30-MM) | |
| | 75 | 1,3 | **8T-4223** | 4 | WASHER-HARD (13.5X25.5X3-MM THK) | |

I - REFER TO HYDRAULIC INFORMATION SYSTEM
M - METRIC PART
Y - SEPARATE ILLUSTRATION

*556-6488* **LINES GP-PILOT (**contd.**)** **i07418398**

REFER TO ALL ILLUSTRATIONS OF
THIS GROUP FOR AUXILIARY VIEWS

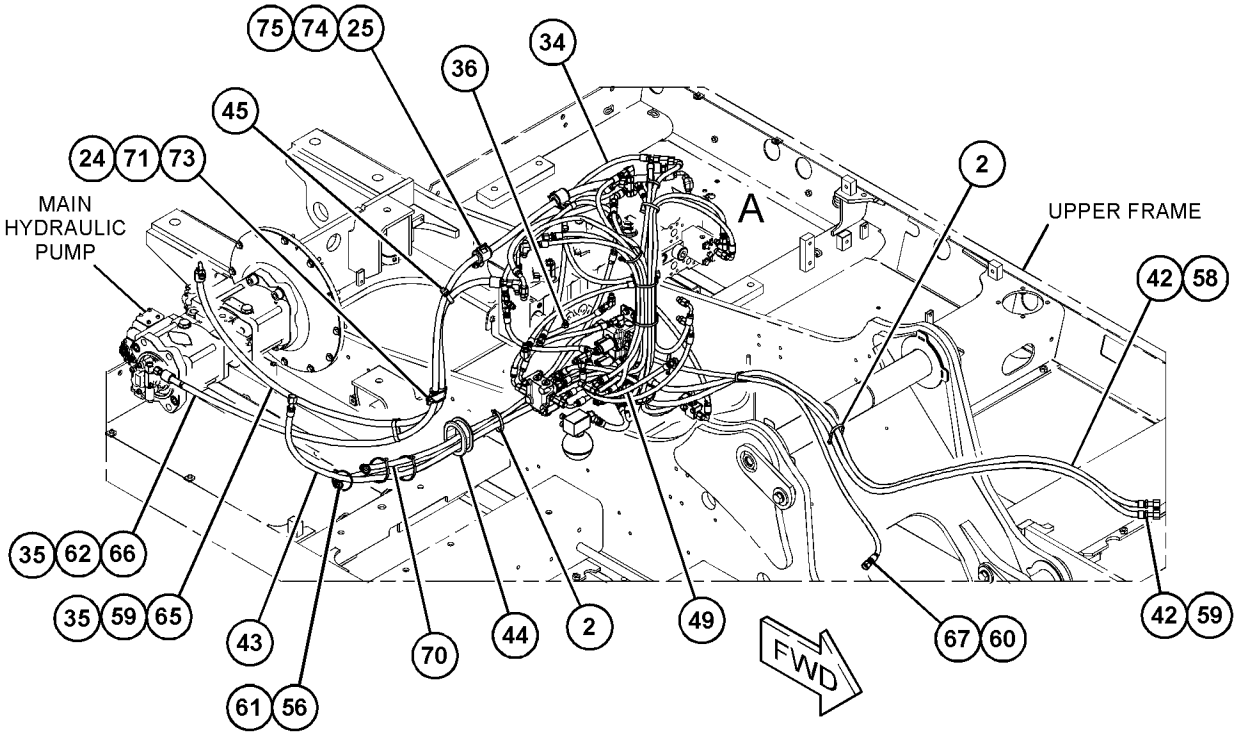


GRAPHIC #1 g06315387

*556-6488* **LINES GP-PILOT (**contd.**)** **i07418398**

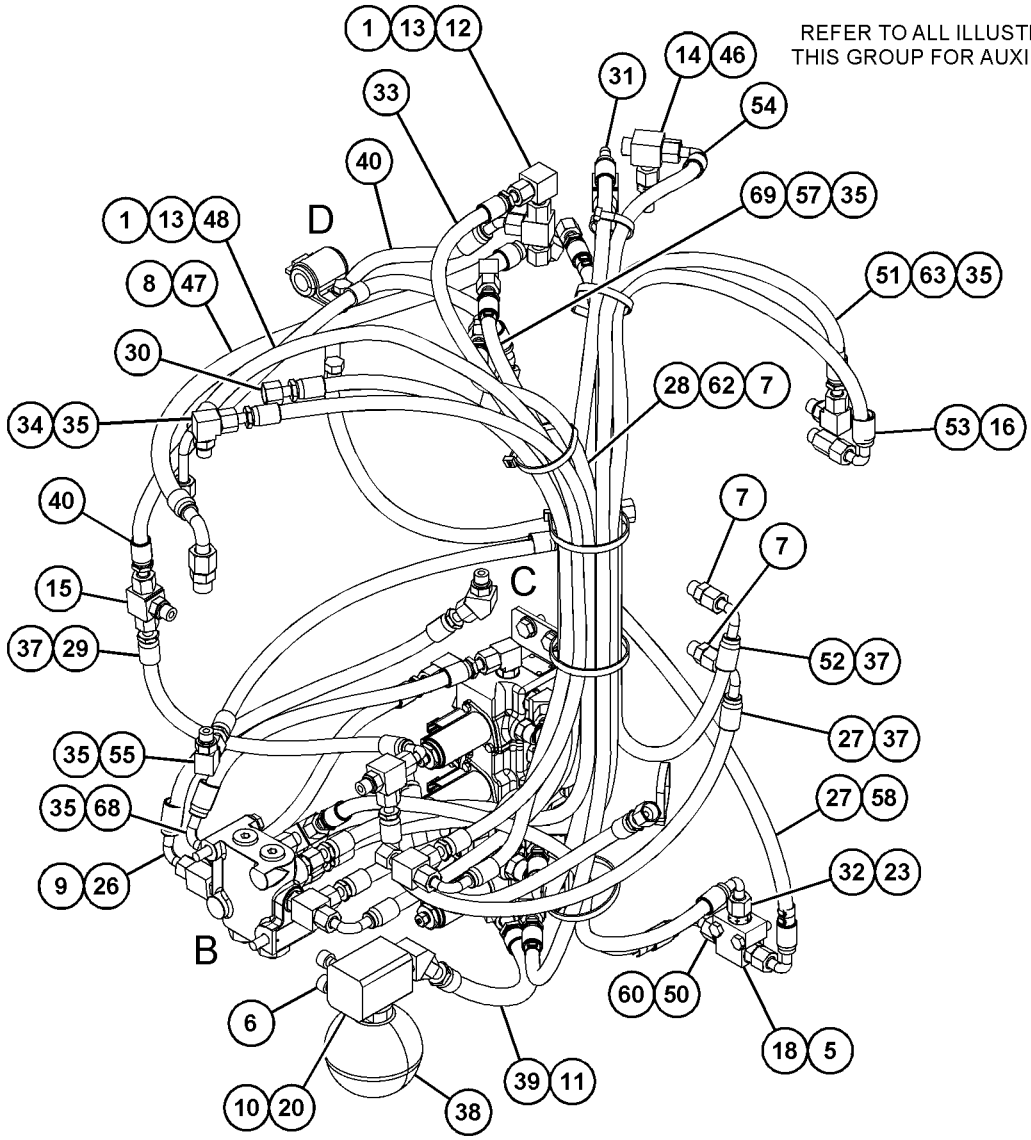


VIEW OF AREA A
(PARTS REMOVED FOR CLARITY)

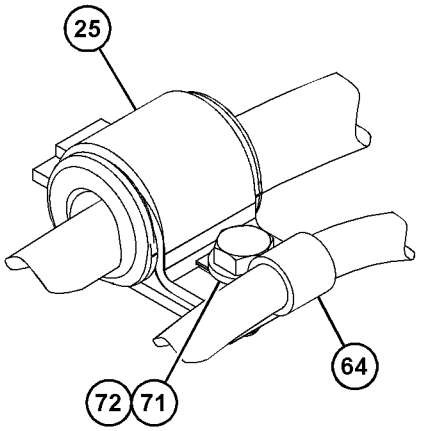


VIEW OF AREA D

GRAPHIC #2 g06315388

*556-6488* **LINES GP-PILOT (**contd.**)** **i07418398**

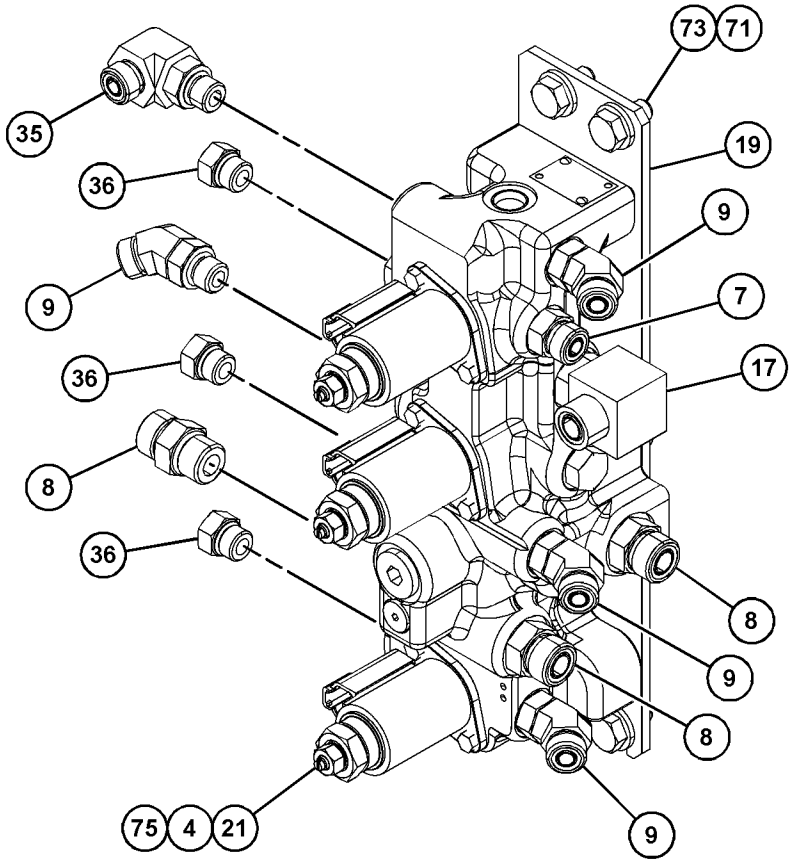


VIEW OF AREA C
(PARTS REMOVED FOR CLARITY)

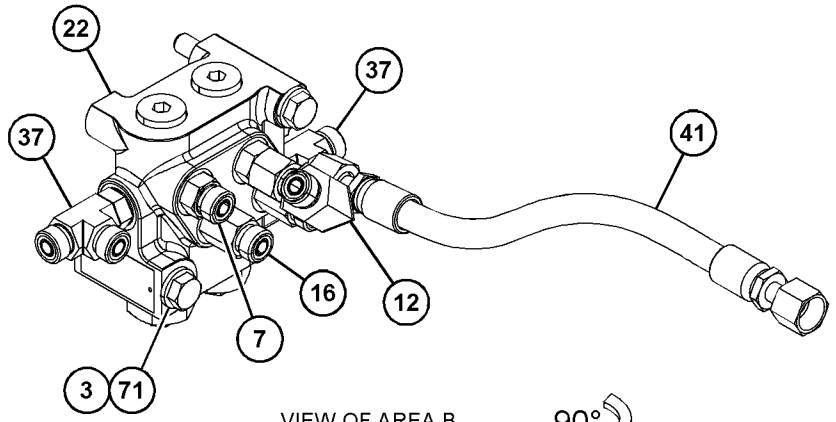


VIEW OF AREA B
(PARTS REMOVED FOR CLARITY) 90°

GRAPHIC #3 <END> g06315389

# *556-6497* LINES GP-PILOT

**S/N: FEY1-UP**
**FILTER, PILOT PUMP**
**PART OF 556-6437 HYDRAULIC AR**

**SMCS-5057, 5059** **i07455732**

| NOTE | REF NO | GRAPHIC REF | PART NUMBER | QTY | PART NAME 1 2 3 4 5 6 (PRODUCT LEVEL) | SEE PAGE |
|---|---|---|---|---|---|---|
| | 1 | 1 | **6V-0852** | 4 | CAP-DUST | |
| | 2 | 1 | *148-8327* | 2 | CONNECTOR AS | |
| | | | | | (EACH INCLUDES) | |
| | | 1 | **3D-2824** | 1 | SEAL-O-RING | |
| | | 1 | **6V-8637** | 1 | CONNECTOR | |
| | | 1 | **6V-9746** | 1 | SEAL-O-RING | |
| | 3 | 1 | *148-8340* | 1 | CONNECTOR AS | |
| | | 1 | **3K-0360** | 1 | SEAL-O-RING | |
| | | 1 | **6V-8398** | 1 | SEAL-O-RING | |
| | | 1 | **6V-8639** | 1 | CONNECTOR | |
| | 4 | 1 | **210-2768** | 2 | FITTING | |
| | 5 | 1 | **434-3436** | 2 | SENSOR AS-PRESSURE (MAIN HYDRAULIC PUMP) | |
| | | | | | (EACH INCLUDES) | |
| | | 1 | **3K-0360** | 1 | SEAL-O-RING | |
| I | 6 | 1 | **087-5772** | 1 | HOSE AS | |
| | 7 | 1 | *148-8378* | 2 | ELBOW AS | |
| | | | | | (EACH INCLUDES) | |
| | | 1 | **3J-1907** | 1 | SEAL-O-RING | |
| | | 1 | **6V-8397** | 1 | SEAL-O-RING | |
| | | 1 | **6V-8724** | 1 | ELBOW | |
| | 8 | 1 | *150-3036* | 1 | ELBOW AS | |
| | | 1 | **3J-1907** | 1 | SEAL-O-RING | |
| | | 1 | **6V-8397** | 1 | SEAL-O-RING | |
| | | 1 | **8T-1905** | 1 | ELBOW | |
| | 9 | 1 | *164-5567* | 4 | COUPLER AS-QUICK DISCONNECT (MALE) | |
| | | | | | (EACH INCLUDES) | |
| | | 1 | **6V-3965** | 1 | FITTING (QUICK DISCONNECT) | |
| | | 1 | **214-7568** | 1 | SEAL-O-RING | |
| | 10 | 1 | *180-9286* | 1 | TEE AS | |
| | | 1 | **3D-2824** | 1 | SEAL-O-RING | |
| | | 1 | **3E-2345** | 1 | ADAPTER-TEE | |
| | | 1 | **6V-9746** | 1 | SEAL-O-RING | |
| | 11 | 1 | **214-7568** | 2 | SEAL-O-RING | |
| I | 12 | 1 | **452-7122** | 1 | HOSE AS | |
| I | 13 | 1 | **524-9953** | 1 | HOSE AS | |
| I | 14 | 1 | **548-4708** | 1 | HOSE AS | |

I - REFER TO HYDRAULIC INFORMATION SYSTEM

*556-6497* **LINES GP-PILOT (**contd.**)** **i07455732**

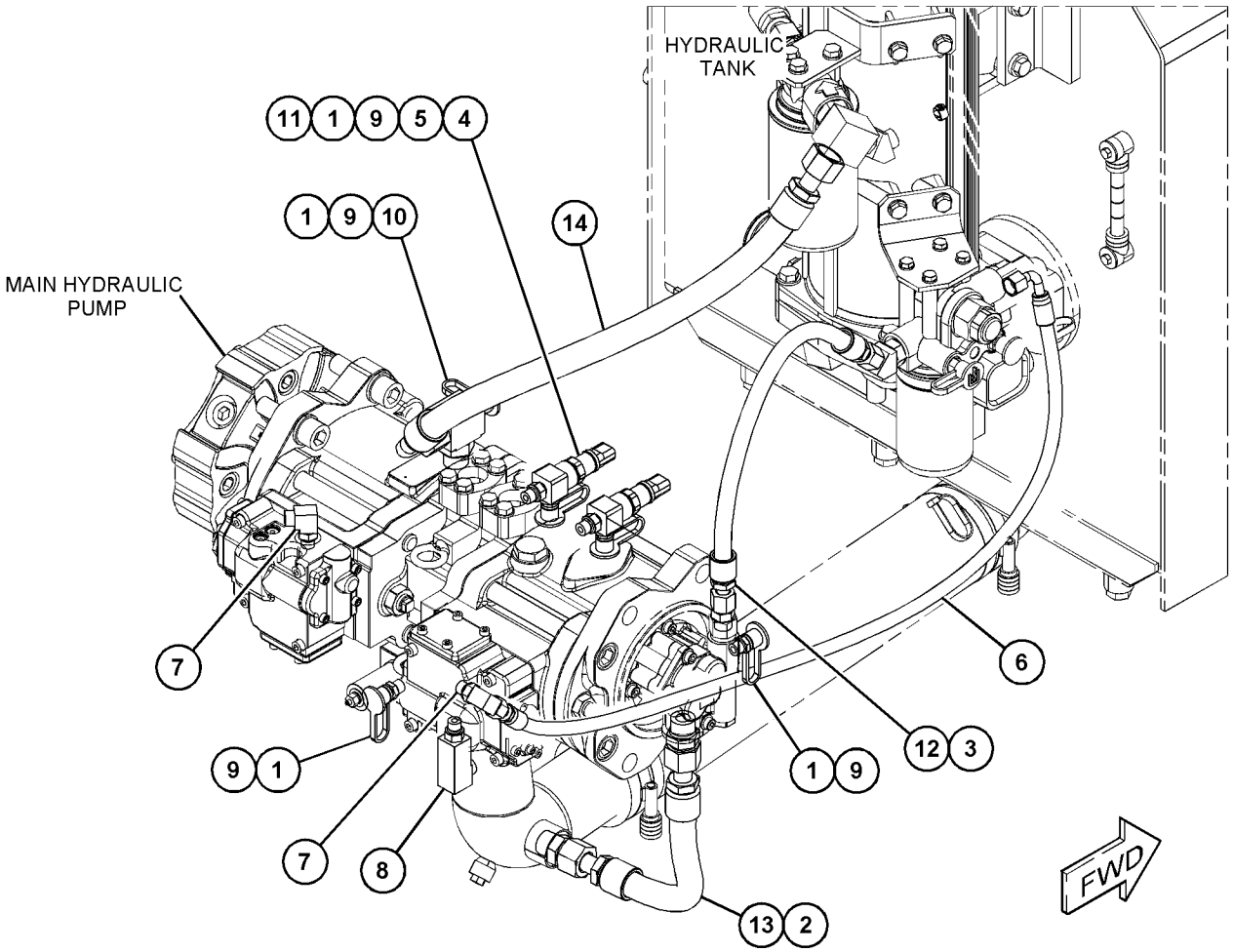


GRAPHIC #1 <END> g06314088

## *558-5407* LINES GP-PILOT—SYSTEM 3 PRIME, 1-WAY, 2-PUMP

**S/N: FEY1-UP**

**PART OF 559-6091 CONTROL AR-AUXILIARY**

**SMCS-5057, 5059** **i07621364**

| NOTE | REF NO | GRAPHIC REF | PART NUMBER | QTY | PART NAME 1 2 3 4 5 6 (PRODUCT LEVEL) | SEE PAGE |
|---|---|---|---|---|---|---|
| | 1 | 1 | **204-2281** | 1 | STRAP-CABLE | |
| M | 2 | 1 | **8T-4192** | 4 | BOLT (M12X1.75X25-MM) | |
| | 3 | 1 | **4I-9523** | 4 | BAND-MARKER (BLUE, L3) | |
| | 4 | 1 | **4I-9524** | 2 | BAND-MARKER (BROWN, L4) | |
| | 5 | 1 | **4I-9525** | 2 | BAND-MARKER (ORANGE, R1) | |
| | 6 | 1 | **4I-9527** | 8 | BAND-MARKER (GREEN, R3) | |
| | 7 | 1 | **6V-0852** | 2 | CAP-DUST | |
| B | 8 | 1 | **6V-9829** | 1 | CAP (ORFS) | |
| | 9 | 1 | **7K-1181** | 11 | STRAP-CABLE | |
| M | 10 | 1 | **8T-4177** | 4 | BOLT (M8X1.25X90-MM) | |
| | 11 | 1 | **8T-4223** | 4 | WASHER-HARD (13.5X25.5X3-MM THK) | |
| | 12 | 1 | **8T-4224** | 4 | WASHER-HARD (8.8X16X2-MM THK) | |
| | 13 | 1 | **124-1008** | 1 | GUARD | |
| | 14 | 1 | *148-8336* | 1 | CONNECTOR AS | |
| | | 1 | **3J-1907** | 1 | SEAL-O-RING | |
| | | 1 | **6V-8397** | 1 | SEAL-O-RING | |
| | | 1 | **6V-8636** | 1 | CONNECTOR | |
| | 15 | 1 | *148-8338* | 2 | CONNECTOR AS | |
| | | | | | (EACH INCLUDES) | |
| | | 1 | **3J-1907** | 1 | SEAL-O-RING | |
| | | 1 | **6V-8397** | 1 | SEAL-O-RING | |
| | | 1 | **8T-0075** | 1 | CONNECTOR | |
| | 16 | 1 | *148-8378* | 9 | ELBOW AS | |
| | | | | | (EACH INCLUDES) | |
| | | 1 | **3J-1907** | 1 | SEAL-O-RING | |
| | | 1 | **6V-8397** | 1 | SEAL-O-RING | |
| | | 1 | **6V-8724** | 1 | ELBOW | |
| | 17 | 1 | *148-8433* | 2 | TEE AS | |
| | | | | | (EACH INCLUDES) | |
| | | 1 | **6V-8397** | 2 | SEAL-O-RING | |
| | | 1 | **6V-9836** | 1 | TEE-SWIVEL | |
| | 18 | 1 | *148-8443* | 1 | TEE AS | |
| | | 1 | **3J-1907** | 1 | SEAL-O-RING | |
| | | 1 | **6V-8397** | 1 | SEAL-O-RING | |
| | | 1 | **7X-2459** | 1 | ADAPTER-TEE | |
| | 19 | 1 | *150-3036* | 1 | ELBOW AS | |
| | | 1 | **3J-1907** | 1 | SEAL-O-RING | |
| | | 1 | **6V-8397** | 1 | SEAL-O-RING | |
| | | 1 | **8T-1905** | 1 | ELBOW | |
| | 20 | 1 | *164-5567* | 2 | COUPLER AS-QUICK DISCONNECT (MALE) | |
| | | | | | (EACH INCLUDES) | |
| | | 1 | **6V-3965** | 1 | FITTING (QUICK DISCONNECT) | |
| | | 1 | **214-7568** | 1 | SEAL-O-RING | |
| | 21 | 1 | *168-1968* | 2 | TEE AS | |
| | | | | | (EACH INCLUDES) | |
| | | 1 | **3J-1907** | 1 | SEAL-O-RING | |
| | | 1 | **6V-8397** | 1 | SEAL-O-RING | |
| | | 1 | **126-6872** | 1 | TEE | |

*558-5407* **LINES GP-PILOT (**contd.**)** **i07621364**

| NOTE | REF NO | GRAPHIC REF | PART NUMBER | QTY | PART NAME 1 2 3 4 5 6 (PRODUCT LEVEL) | SEE PAGE |
|---|---|---|---|---|---|---|
| | 22 | 1 | **266-1108** | 1 | SUPPORT AS | |
| Y | 23 | 1 | **398-2282** | 1 | VALVE GP-SOLENOID (NEGATIVE FLOW CONTROL) | 376 |
| I | 24 | 1 | **455-5674** | 1 | HOSE AS | |
| | 25 | 1 | **559-3060** | 1 | HOSE AS | |
| I | 26 | 1 | **256-1138** | 1 | HOSE AS | |
| I | 27 | 1 | **266-1139** | 1 | HOSE AS | |
| I | 28 | 1 | **558-5405** | 1 | HOSE AS | |
| | 29 | 1 | **558-8197** | 1 | HOSE AS | |
| I | 30 | 1 | **558-8214** | 2 | HOSE AS | |
| | 31 | 1 | **564-2840** | 1 | HOSE AS | |
| | 32 | 1 | **564-2850** | 1 | HOSE AS | |

B - USE AS REQUIRED
I - REFER TO HYDRAULIC INFORMATION SYSTEM
M - METRIC PART
Y - SEPARATE ILLUSTRATION

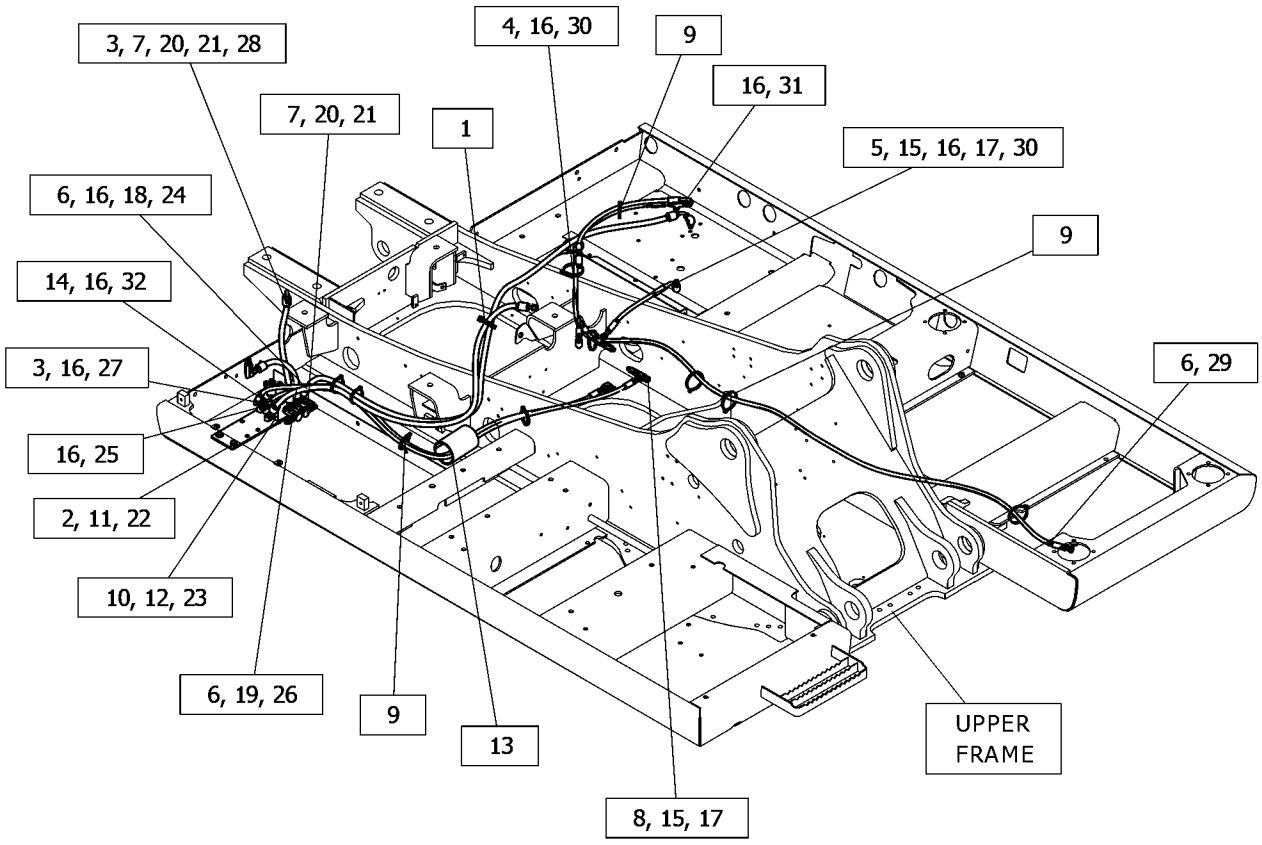


GRAPHIC #1 <END> g06392306

# *563-4948* LINES GP-PILOT—MAIN CONTROL VALVE

**S/N: FEY1-UP**

**PART OF 556-6437 HYDRAULIC AR**

**SMCS-5057, 5059** **i07424202**

| NOTE | REF NO | GRAPHIC REF | PART NUMBER | QTY | PART NAME 1 2 3 4 5 6 (PRODUCT LEVEL) | SEE PAGE |
|---|---|---|---|---|---|---|
| | 1 | 1 | **4I-9521** | 6 | BAND-MARKER (RED, L1) | |
| | 2 | 1 | **4I-9522** | 6 | BAND-MARKER (YELLOW, L2) | |
| | 3 | 1 | **4I-9523** | 2 | BAND-MARKER (BLUE, L3) | |
| | 4 | 1 | **4I-9524** | 2 | BAND-MARKER (BROWN, L4) | |
| | 5 | 1 | **4I-9525** | 6 | BAND-MARKER (ORANGE, R1) | |
| | 6 | 1 | **4I-9526** | 6 | BAND-MARKER (WHITE, R2) | |
| | 7 | 1 | **4I-9527** | 2 | BAND-MARKER (GREEN, R3) | |
| | 8 | 1 | **4I-9528** | 2 | BAND-MARKER (PURPLE, R4) | |
| | 9 | 1 | **7K-1181** | 13 | STRAP-CABLE | |
| | 10 | 1 | **115-8645** | 3 | GUARD | |
| | 11 | 1 | **337-1205** | 2 | GROMMET | |
| | 12 | 1 | *148-8378* | 6 | ELBOW AS | |
| | | | | | (EACH INCLUDES) | |
| | | 1 | **3J-1907** | 1 | SEAL-O-RING | |
| | | 1 | **6V-8397** | 1 | SEAL-O-RING | |
| | | 1 | **6V-8724** | 1 | ELBOW | |
| | 13 | 1 | *148-8435* | 6 | TEE AS | |
| | | | | | (EACH INCLUDES) | |
| | | 1 | **3J-1907** | 1 | SEAL-O-RING | |
| | | 1 | **6V-8397** | 2 | SEAL-O-RING | |
| | | 1 | **6V-8781** | 1 | TEE | |
| | 14 | 1 | **176-4708** | 1 | GROMMET | |
| | 15 | 1 | **202-4004** | 1 | GROMMET | |
| I | 16 | 1 | **558-8180** | 2 | HOSE AS | |
| I | 17 | 1 | **558-8196** | 2 | HOSE AS | |
| I | 18 | 1 | **558-8205** | 1 | HOSE AS | |
| I | 19 | 1 | **558-8208** | 1 | HOSE AS | |
| I | 20 | 1 | **558-8209** | 1 | HOSE AS | |
| I | 21 | 1 | **558-8212** | 1 | HOSE AS | |
| I | 22 | 1 | **558-8216** | 1 | HOSE AS | |
| I | 23 | 1 | **558-8217** | 2 | HOSE AS | |
| I | 24 | 1 | **558-8218** | 1 | HOSE AS | |
| X | 25 | 1 | **337-1205** | 1 | GROMMET | |

I - REFER TO HYDRAULIC INFORMATION SYSTEM
X - USED ONLY D-ROPS

*563-4948* **LINES GP-PILOT (**contd.**)** **i07424202**

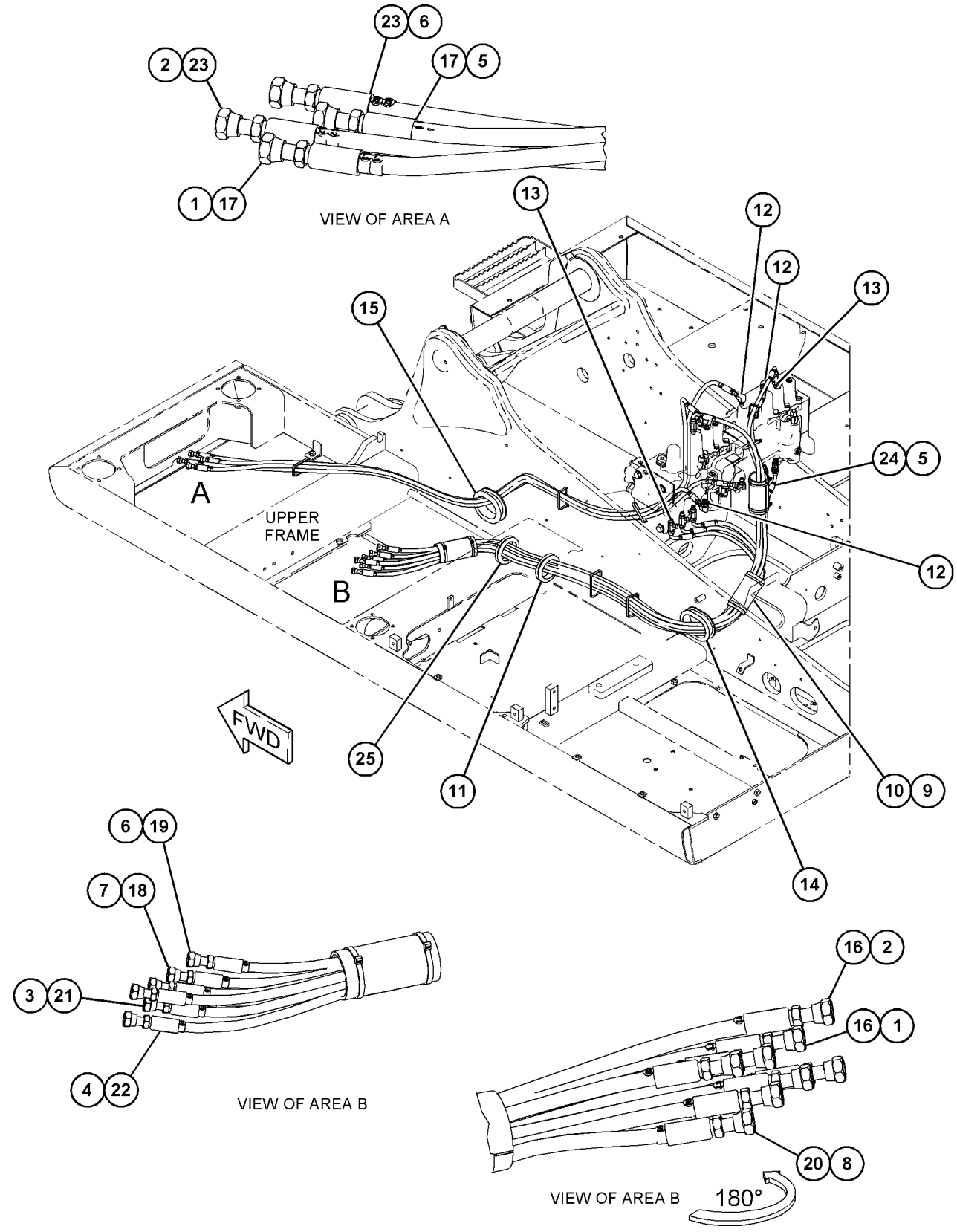


GRAPHIC #1 <END> g06322053

# *563-5608* LINES GP-PILOT—JOYSTICK, PEDALS

**S/N: FEY1-UP**

**PART OF 556-6437 HYDRAULIC AR**

**SMCS-5057, 5059** **i07424209**

| NOTE | REF NO | GRAPHIC REF | PART NUMBER | QTY | PART NAME 1 2 3 4 5 6 (PRODUCT LEVEL) | SEE PAGE |
|---|---|---|---|---|---|---|
| M | 1 | 1 | **8T-4191** | 10 | BOLT (M10X1.5X16-MM) | |
| M | 2 | 1 | **8T-4198** | 2 | BOLT (M10X1.5X100-MM) | |
| | 3 | 1,2 | **7K-1181** | 5 | STRAP-CABLE | |
| | 4 | 2 | **133-5813** | 4 | BAND-MARKER (GRAY, P) | |
| | 5 | 1,2 | *148-8336* | 23 | CONNECTOR AS | |
| | | | | | (EACH INCLUDES) | |
| | | 1,2 | **3J-1907** | 1 | SEAL-O-RING | |
| | | 1,2 | **6V-8397** | 1 | SEAL-O-RING | |
| | | 1,2 | **6V-8636** | 1 | CONNECTOR | |
| | 6 | 1 | *148-8353* | 8 | ELBOW AS | |
| | | | | | (EACH INCLUDES) | |
| | | 1 | **3J-1907** | 1 | SEAL-O-RING | |
| | | 1 | **6V-8397** | 1 | SEAL-O-RING | |
| | | 1 | **6V-9001** | 1 | ELBOW | |
| | 7 | 1 | *148-8354* | 2 | ELBOW AS | |
| | | | | | (EACH INCLUDES) | |
| | | 1 | **3K-0360** | 1 | SEAL-O-RING | |
| | | 1 | **6V-8398** | 1 | SEAL-O-RING | |
| | | 1 | **6V-9002** | 1 | ELBOW | |
| | 8 | 1 | *148-8378* | 6 | ELBOW AS | |
| | | | | | (EACH INCLUDES) | |
| | | 1 | **3J-1907** | 1 | SEAL-O-RING | |
| | | 1 | **6V-8397** | 1 | SEAL-O-RING | |
| | | 1 | **6V-8724** | 1 | ELBOW | |
| | 9 | 1 | *148-8407* | 4 | PLUG AS | |
| | | | | | (EACH INCLUDES) | |
| | | 1 | **3J-1907** | 1 | SEAL-O-RING | |
| | | 1 | **9S-4191** | 1 | PLUG (9/16-18-THD) | |
| | 10 | 1,2 | *164-5628* | 3 | CONNECTOR AS | |
| | | | | | (EACH INCLUDES) | |
| | | 1,2 | **3J-1907** | 1 | SEAL-O-RING | |
| | | 1,2 | **6V-8397** | 1 | SEAL-O-RING | |
| | | 1,2 | **107-6631** | 1 | CONNECTOR-FILTER | |
| | 11 | 1 | **168-9759** | 1 | BLOCK | |
| Y | 12 | 1 | **369-8502** | 1 | VALVE GP-PILOT (TRAVEL, SHUTTLE) | 355 |
| | 13 | 1 | **387-3699** | 1 | BRACKET | |
| | 14 | 1 | **392-2185** | 3 | SUPPORT | |
| | 15 | 1 | **454-5075** | 1 | SENSOR GP-PRESSURE (BUCKET) | |
| | 15A | 1 | **454-5075** | 1 | SENSOR GP-PRESSURE (TRAVEL LEFT) | |
| | 15B | 1 | **454-5075** | 1 | SENSOR GP-PRESSURE (TRAVEL RIGHT) | |
| Y | 16 | 1 | **464-7318** | 1 | VALVE GP-SHUTTLE | 373 |
| | 17 | 2 | **4I-9521** | 2 | BAND-MARKER (RED, L1) | |
| | 18 | 2 | **4I-9522** | 2 | BAND-MARKER (YELLOW, L2) | |
| | 19 | 2 | **4I-9523** | 2 | BAND-MARKER (BLUE, L3) | |
| | 20 | 2 | **4I-9524** | 2 | BAND-MARKER (BROWN, L4) | |
| | 21 | 2 | **4I-9525** | 2 | BAND-MARKER (ORANGE, R1) | |
| | 22 | 2 | **4I-9526** | 2 | BAND-MARKER (WHITE, R2) | |
| | 23 | 2 | **4I-9527** | 2 | BAND-MARKER (GREEN, R3) | |

*563-5608* **LINES GP-PILOT (**contd.**)** **i07424209**

| NOTE | REF NO | GRAPHIC REF | PART NUMBER | QTY | PART NAME 1 2 3 4 5 6 (PRODUCT LEVEL) | SEE PAGE |
|---|---|---|---|---|---|---|
| | 24 | 2 | **4I-9528** | 2 | BAND-MARKER (PURPLE, R4) | |
| | 25 | 1 | **4P-7581** | 1 | CLIP (LADDER) | |
| | 26 | 1 | **558-8177** | 2 | HOSE AS | |
| | 27 | 2 | **558-8222** | 4 | HOSE AS | |
| | 28 | 2 | **558-8223** | 3 | HOSE AS | |
| | 29 | 2 | **558-8224** | 1 | HOSE AS | |
| | 30 | 2 | **558-8225** | 1 | HOSE AS | |
| | 31 | 2 | **558-8226** | 1 | HOSE AS | |
| | 32 | 2 | **558-8227** | 1 | HOSE AS | |
| | 33 | 2 | **558-8231** | 1 | HOSE AS | |
| | 34 | 1 | **8T-4121** | 18 | WASHER-HARD (11X21X2.5-MM THK) | |
| M | 35 | 1 | **8T-4137** | 7 | BOLT (M10X1.5X20-MM) | |

M - METRIC PART
Y - SEPARATE ILLUSTRATION

*563-5608* **LINES GP-PILOT (**contd.**)** **i07424209**

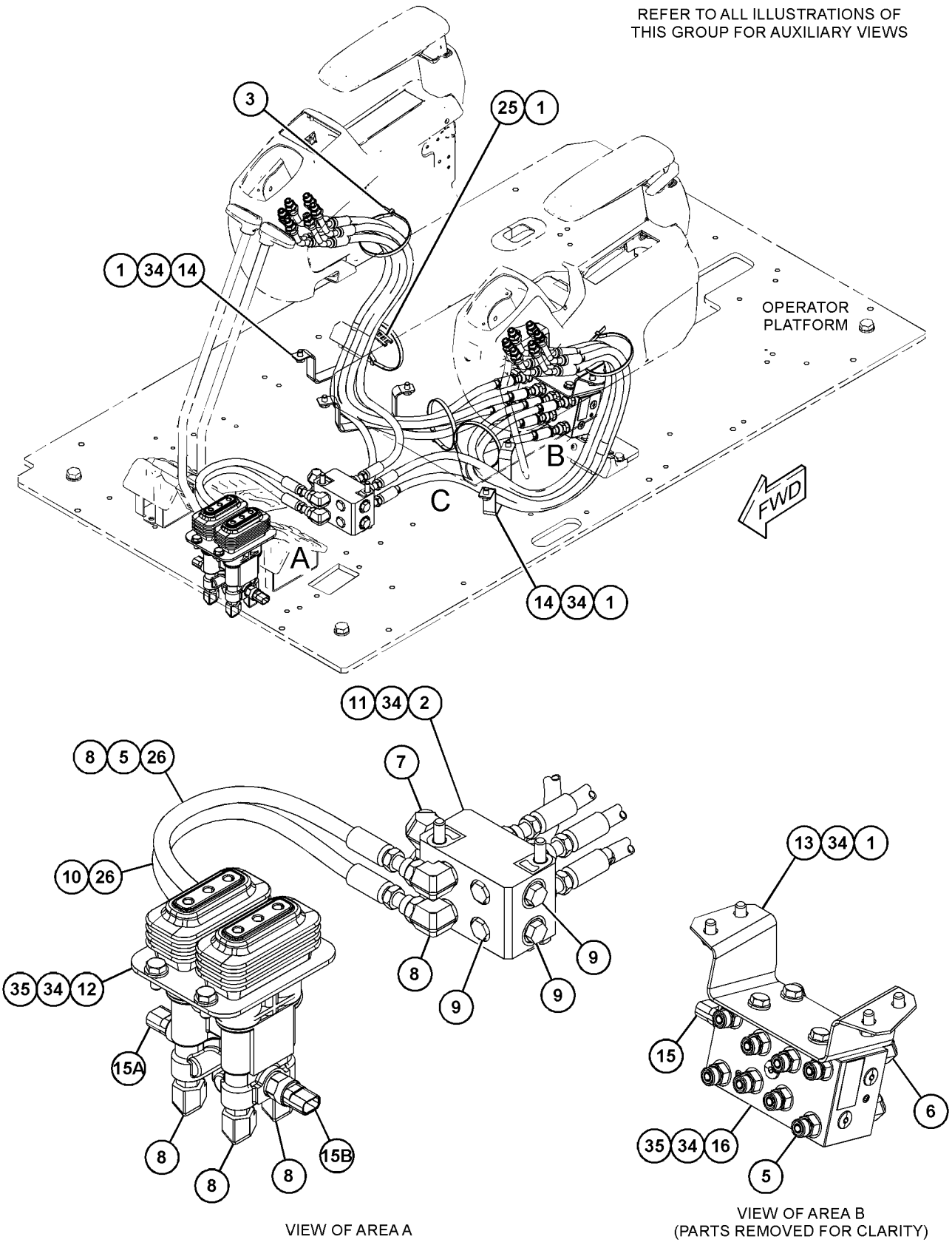


GRAPHIC #1 g06321576

*563-5608* **LINES GP-PILOT (**contd.**)** **i07424209**

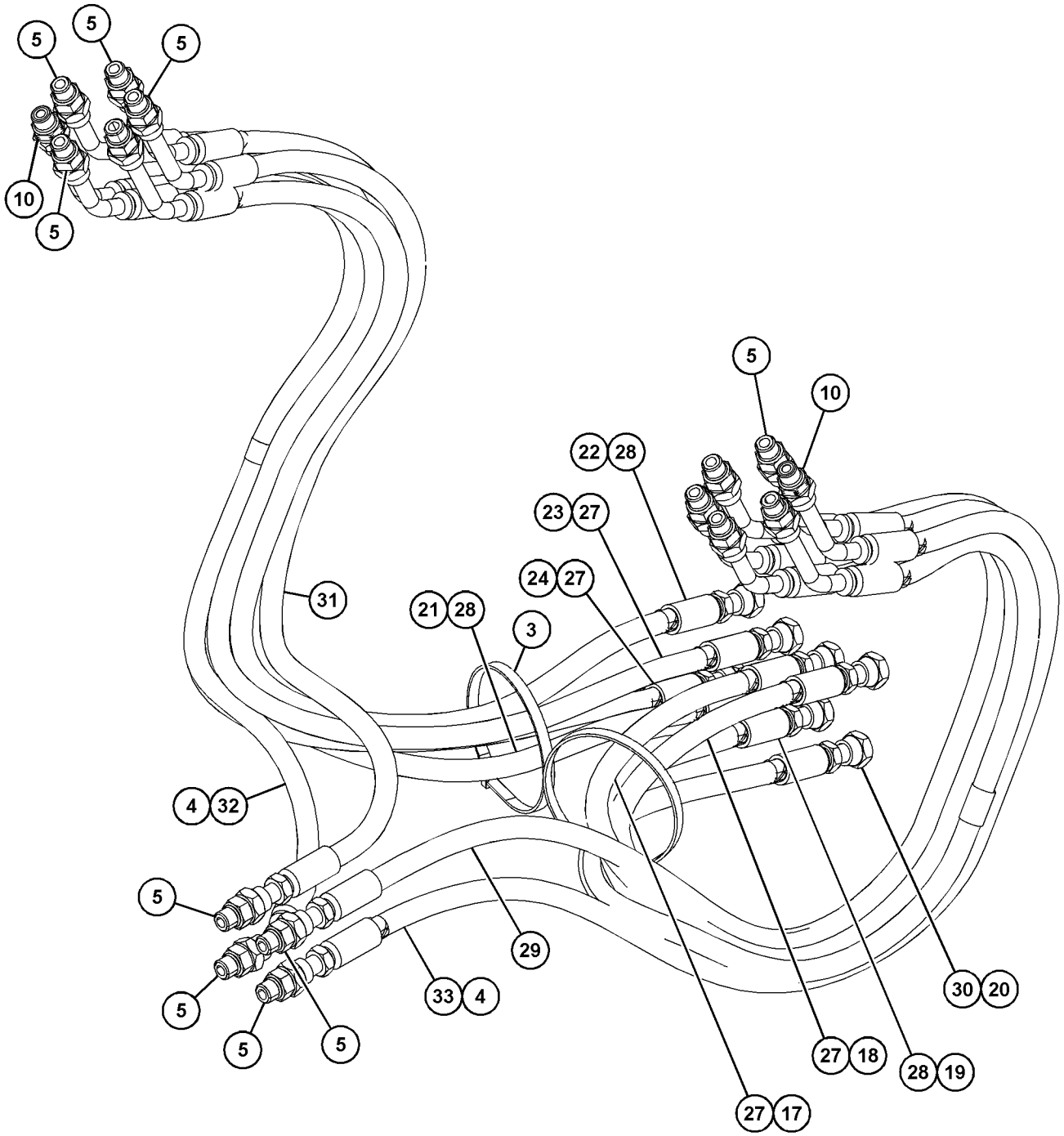


VIEW OF AREA C
(PARTS REMOVED FOR CLARITY)

GRAPHIC #2 <END> g06321577

# *564-9845* LINES GP-PILOT

**S/N: FEY1-UP**

**PART OF 559-6091 CONTROL AR-AUXILIARY**

**SMCS-5057, 5059** **i07434266**

| NOTE | REF NO | GRAPHIC REF | PART NUMBER | QTY | PART NAME 1 2 3 4 5 6 (PRODUCT LEVEL) | SEE PAGE |
|---|---|---|---|---|---|---|
| | 1 | 1 | *148-8305* | 1 | ADAPTER AS | |
| | | 1 | **3J-1907** | 1 | SEAL-O-RING | |
| | | 1 | **5P-9617** | 1 | ADAPTER | |
| | 2 | 1 | *148-8336* | 1 | CONNECTOR AS | |
| | | 1 | **3J-1907** | 1 | SEAL-O-RING | |
| | | 1 | **6V-8397** | 1 | SEAL-O-RING | |
| | | 1 | **6V-8636** | 1 | CONNECTOR | |
| | 3 | 1 | *148-8353* | 2 | ELBOW AS | |
| | | | | | (EACH INCLUDES) | |
| | | 1 | **3J-1907** | 1 | SEAL-O-RING | |
| | | 1 | **6V-8397** | 1 | SEAL-O-RING | |
| | | 1 | **6V-9001** | 1 | ELBOW | |
| | 4 | 1 | *148-8378* | 1 | ELBOW AS | |
| | | 1 | **3J-1907** | 1 | SEAL-O-RING | |
| | | 1 | **6V-8397** | 1 | SEAL-O-RING | |
| | | 1 | **6V-8724** | 1 | ELBOW | |
| | 5 | 1 | *148-8407* | 1 | PLUG AS | |
| | | 1 | **3J-1907** | 1 | SEAL-O-RING | |
| | | 1 | **9S-4191** | 1 | PLUG (9/16-18-THD) | |
| | 6 | 1 | *164-5628* | 1 | CONNECTOR AS | |
| | | 1 | **3J-1907** | 1 | SEAL-O-RING | |
| | | 1 | **6V-8397** | 1 | SEAL-O-RING | |
| | | 1 | **107-6631** | 1 | CONNECTOR-FILTER | |
| Y | 7 | 1 | *454-5075* | 1 | SENSOR GP-PRESSURE (WORK TOOL CONTROL, PEDAL, LH) | 116 |
| | 8 | 1 | **564-9848** | 1 | HOSE AS | |
| | 9 | 1 | **564-9849** | 1 | HOSE AS | |

Y - SEPARATE ILLUSTRATION

*564-9845* **LINES GP-PILOT (**contd.**)** **i07434266**

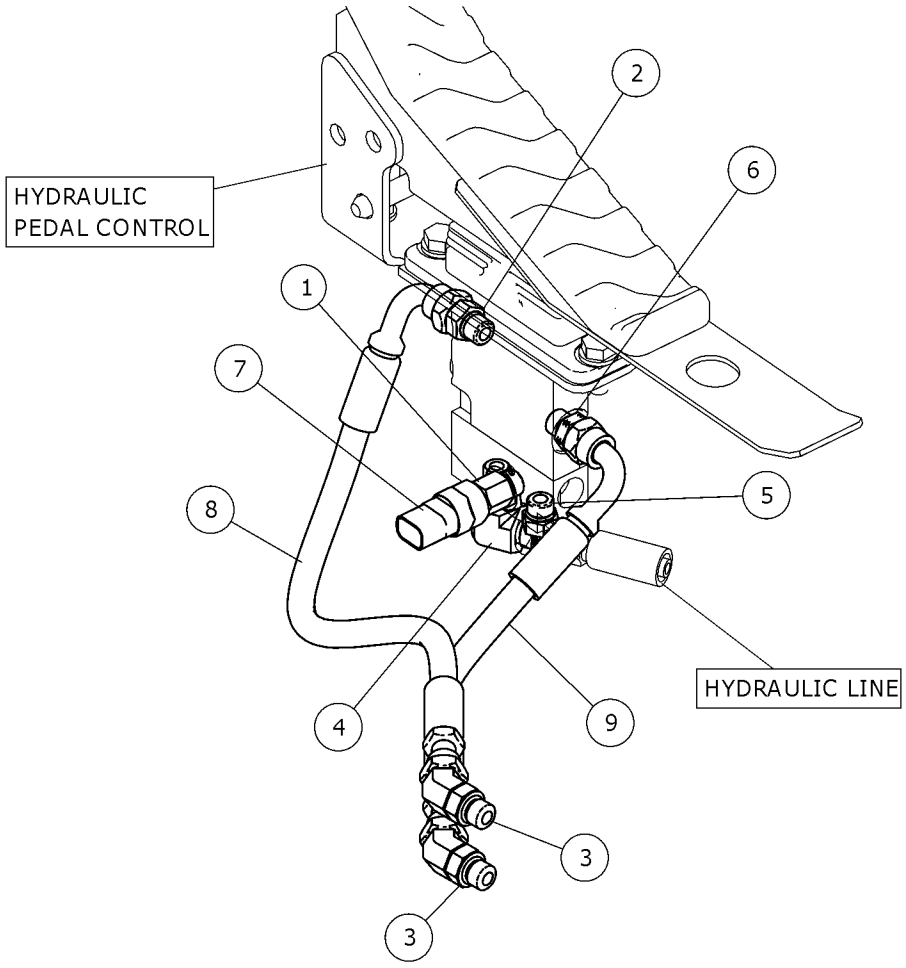


GRAPHIC #1 <END> g06323876

# *556-6500* LINES GP-PUMP

**S/N: FEY1-UP**

**SUPPLY, MAIN PUMP**

**PART OF 556-6437 HYDRAULIC AR**

**SMCS-5057** **i07397753**

| NOTE | REF NO | GRAPHIC REF | PART NUMBER | QTY | PART NAME 1 2 3 4 5 6 (PRODUCT LEVEL) | SEE PAGE |
|---|---|---|---|---|---|---|
| M | 1 | 1 | **8T-4182** | 8 | BOLT (M10X1.5X45-MM) | |
| | 2 | 1 | **6J-2680** | 1 | SEAL-O-RING | |
| | 3 | 1 | **1P-5765** | 4 | FLANGE-HALF | |
| | 4 | 1 | **6D-9157** | 1 | SEAL-O-RING | |
| | 5 | 1 | **7X-3392** | 4 | WASHER-HARD (13.5X22.5X3-MM THK) | |
| | 6 | 1 | **347-2081** | 1 | HOSE | |
| M | 7 | 1 | **447-1709** | 4 | BOLT (M16X2X45-MM) | |
| | 8 | 1 | **451-2175** | 4 | WASHER-HARD (17.5X30X3.5-MM THK) | |
| | 9 | 1 | *148-8407* | 1 | PLUG AS | |
| | | 1 | **3J-1907** | 1 | SEAL-O-RING | |
| | | 1 | **9S-4191** | 1 | PLUG (9/16-18-THD) | |
| | 10 | 1 | *155-3624* | 1 | PLUG AS | |
| | | 1 | **3J-7354** | 1 | SEAL-O-RING | |
| | | 1 | **9S-4182** | 1 | PLUG (7/16-20-THD) | |
| | 11 | 1 | **547-7863** | 1 | PIPE AS | |
| | 12 | 1 | **547-7864** | 1 | PIPE AS | |
| | 13 | 1 | **8T-4121** | 8 | WASHER-HARD (11X21X2.5-MM THK) | |
| M | 14 | 1 | **8T-4956** | 4 | BOLT (M12X1.75X35-MM) | |
| | 15 | 1 | **9X-2201** | 4 | CLAMP-HOSE | |

M - METRIC PART

*556-6500* **LINES GP-PUMP (**contd.**)** **i07397753**

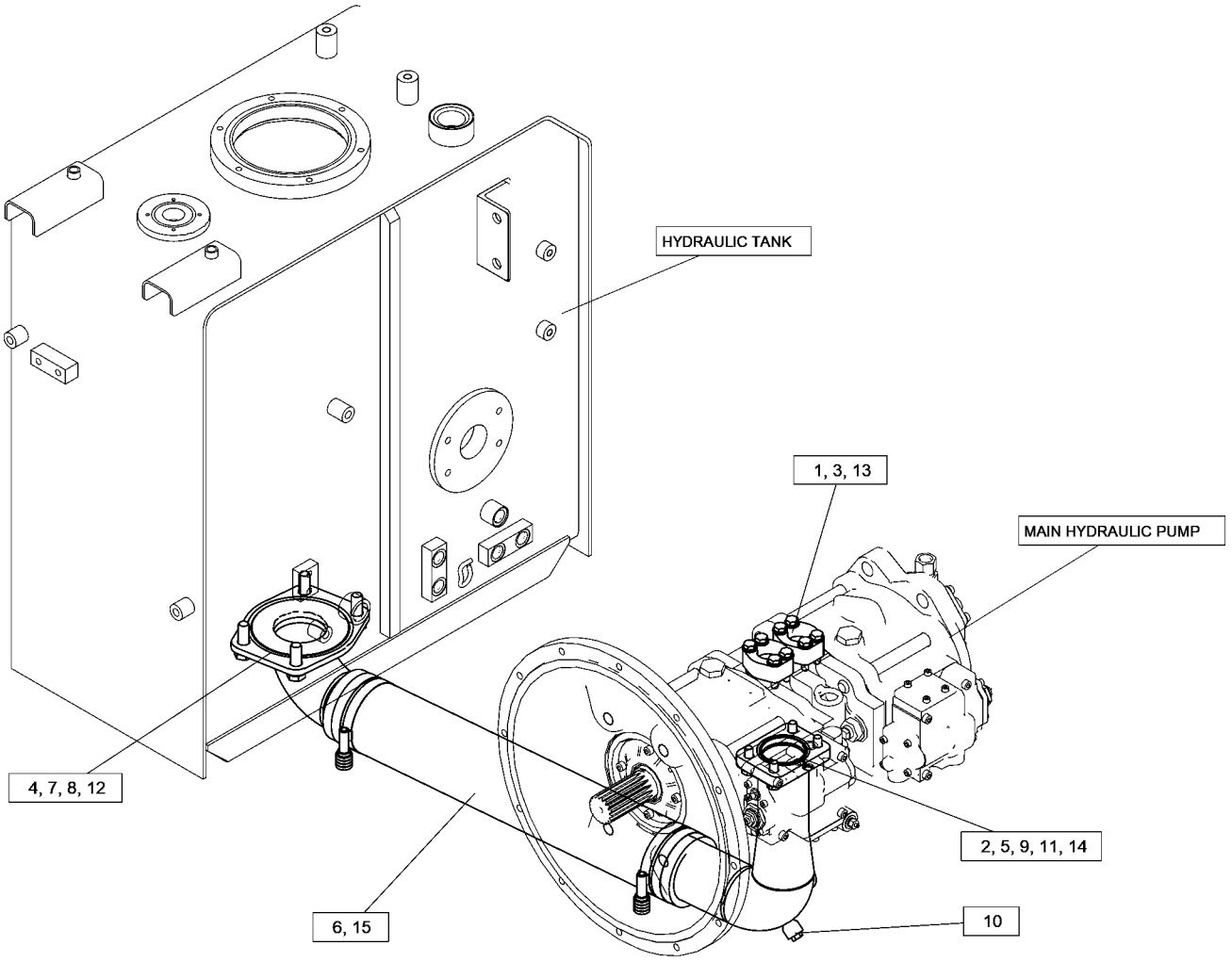


GRAPHIC #1 <END> g06314015

# 431-1642 LINES GP-STICK

**S/N: FEY1-UP**
**FOR USE WITH 2.5-M (8.2-FT) STICK**
**PART OF 375-6281 STICK AR-HOE**

**SMCS-5057, 5458**

**i06739102**

| NOTE | REF NO | GRAPHIC REF | PART NUMBER | QTY | PART NAME 1 2 3 4 5 6 (PRODUCT LEVEL) | SEE PAGE |
|---|---|---|---|---|---|---|
| I | 1 | 1 | **187-6058** | 1 | HOSE AS | |
| | 2 | 1 | **289-5690** | 1 | FLANGE-SPECIAL | |
| I | 3 | 1 | **431-1802** | 1 | HOSE AS | |
| | 4 | 1 | **1P-3702** | 1 | SEAL-RECTANGULAR | |
| | 5 | 1 | **1P-3703** | 2 | SEAL-RECTANGULAR | |
| | 6 | 1 | **6V-0400** | 2 | FLANGE-HALF | |
| M | 7 | 1 | **7X-2549** | 4 | BOLT (M12X1.75X100-MM) | |
| | 8 | 1 | **8T-4121** | 4 | WASHER-HARD (11X21X2.5-MM THK) | |
| M | 9 | 1 | **8T-4182** | 4 | BOLT (M10X1.5X45-MM) | |
| | 10 | 1 | **8T-4223** | 4 | WASHER-HARD (13.5X25.5X3-MM THK) | |
| | 11 | 1 | **8T-9403** | 2 | FLANGE-HALF | |

I - REFER TO HYDRAULIC INFORMATION SYSTEM
M - METRIC PART

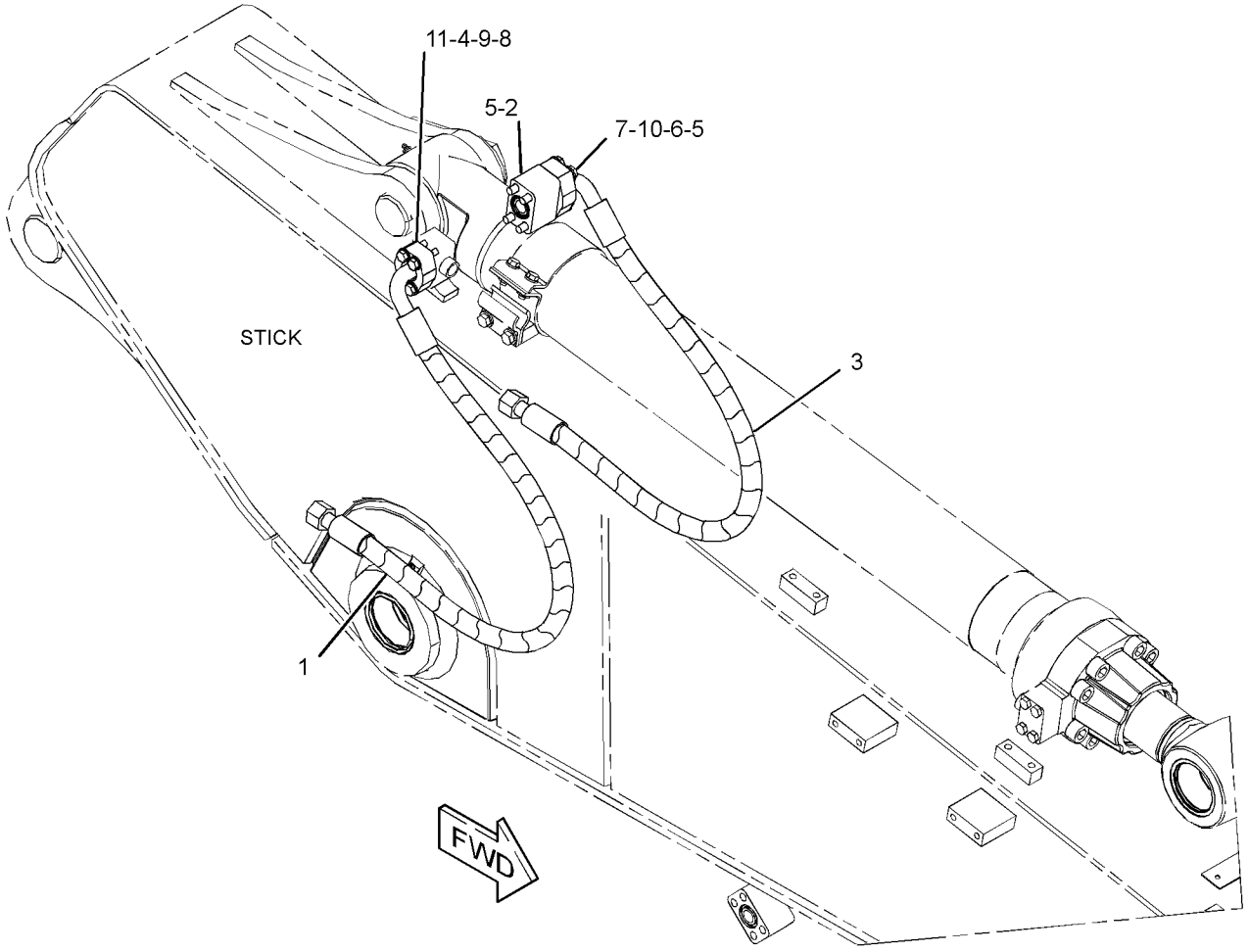


GRAPHIC #1

<END>

g03322929

# *373-1118* LINES GP-STICK CYLINDER

**S/N: FEY1-UP**

**PART OF 373-1108 CYLINDER & LINES GP-STICK**

**SMCS-5458** **i06033065**

| NOTE | REF NO | GRAPHIC REF | PART NUMBER | QTY | PART NAME 1 2 3 4 5 6 (PRODUCT LEVEL) | SEE PAGE |
|---|---|---|---|---|---|---|
| | 1 | 1 | **394-6123** | 1 | TUBE AS | |
| C | 2 | 1 | **474-0161** | 1 | SUPPORT | |
| C | 3 | 1 | **474-0154** | 1 | SUPPORT AS | |
| | 4 | 1 | **399-1962** | 1 | CLAMP | |
| | 5 | 1 | **1P-3704** | 1 | SEAL-RECTANGULAR | |
| CM | 6 | 1 | **457-5821** | 2 | BOLT (M10X1.5X35-MM) | |
| C | 7 | 1 | **451-2182** | 5 | WASHER-HARD (13.5X25.5X3-MM THK) | |
| M | 8 | 1 | **8T-4648** | 4 | BOLT (M12X1.75X70-MM) | |
| | 9 | 1 | **8T-4896** | 2 | WASHER-HARD (10.2X18.5X2.5-MM THK) | |
| M | 10 | 1 | **8T-4910** | 1 | BOLT (M12X1.75X60-MM) | |

C - CHANGE FROM PREVIOUS TYPE
M - METRIC PART

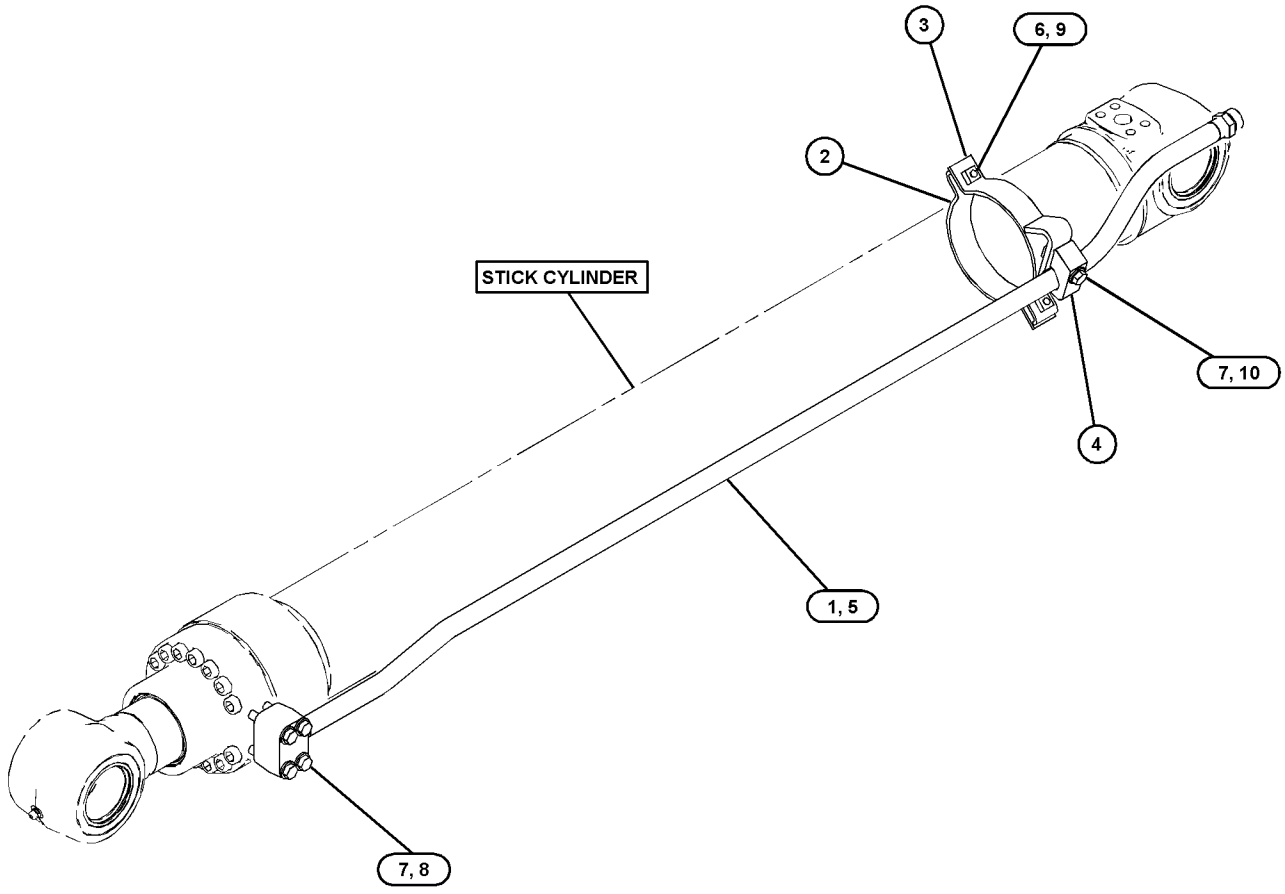


GRAPHIC #1 <END> g03110916

# *543-2703* LINES GP-TRAVEL MOTOR

**S/N: FEY1-UP**

**PART OF 432-5008 FRAME AR-UNDERCARRIAGE**

**SMCS-5057, 5058** **i07516278**

| NOTE | REF NO | GRAPHIC REF | PART NUMBER | QTY | PART NAME 1 2 3 4 5 6 (PRODUCT LEVEL) | SEE PAGE |
|---|---|---|---|---|---|---|
| I | 1 | 1 | **5I-8853** | 2 | HOSE AS | |
| | 2 | 1 | **7K-1181** | 4 | STRAP-CABLE | |
| | 3 | 1 | **108-7118** | 4 | GROMMET | |
| I | 4 | 1 | **124-1266** | 2 | HOSE AS | |
| | 5 | 1 | *164-6872* | 1 | TEE AS | |
| | | 1 | **2M-9780** | 1 | SEAL-O-RING | |
| | | 1 | **6V-8398** | 2 | SEAL-O-RING | |
| | | 1 | **115-8634** | 1 | TEE-O-RING | |
| Y | 6 | 1 | **234-4440** | 1 | SWIVEL GP | 324 |
| I | 7 | 1 | **539-0468** | 4 | HOSE AS | |
| | 8 | 1 | *544-4844* | 4 | ELBOW AS | |
| | | | | | (EACH INCLUDES) | |
| | | 1 | **5K-9090** | 1 | SEAL-O-RING | |
| | | 1 | **7M-8485** | 1 | SEAL-O-RING | |
| | | 1 | **541-2865** | 1 | ELBOW | |
| | 9 | 1 | *148-8340* | 2 | CONNECTOR AS | |
| | | | | | (EACH INCLUDES) | |
| | | 1 | **3K-0360** | 1 | SEAL-O-RING | |
| | | 1 | **6V-8398** | 1 | SEAL-O-RING | |
| | | 1 | **6V-8639** | 1 | CONNECTOR | |
| | 10 | 1 | *148-8378* | 2 | ELBOW AS | |
| | | | | | (EACH INCLUDES) | |
| | | 1 | **3J-1907** | 1 | SEAL-O-RING | |
| | | 1 | **6V-8397** | 1 | SEAL-O-RING | |
| | | 1 | **6V-8724** | 1 | ELBOW | |
| | 11 | 1 | *150-4044* | 2 | CONNECTOR AS | |
| | | | | | (EACH INCLUDES) | |
| | | 1 | **3J-1907** | 1 | SEAL-O-RING | |
| | | 1 | **6V-8397** | 1 | SEAL-O-RING | |
| | | 1 | **8T-1779** | 1 | CONNECTOR | |
| | 12 | 1 | **1P-3703** | 4 | SEAL-RECTANGULAR | |
| | 13 | 1 | **6V-0400** | 16 | FLANGE-HALF | |
| | 14 | 1 | **8T-4121** | 6 | WASHER-HARD (11X21X2.5-MM THK) | |
| M | 15 | 1 | **8T-4136** | 6 | BOLT (M10X1.5X25-MM) | |
| M | 16 | 1 | **8T-4184** | 32 | BOLT (M12X1.75X45-MM) | |
| | 17 | 1 | **8T-4223** | 32 | WASHER-HARD (13.5X25.5X3-MM THK) | |
| | | | | | | |
| BF | | | **1U-8846** | | SEALANT-GASKET | |

B - USE AS REQUIRED
F - NOT SHOWN
I - REFER TO HYDRAULIC INFORMATION SYSTEM
M - METRIC PART
Y - SEPARATE ILLUSTRATION

*543-2703* **LINES GP-TRAVEL MOTOR (**contd.**)** **i07516278**

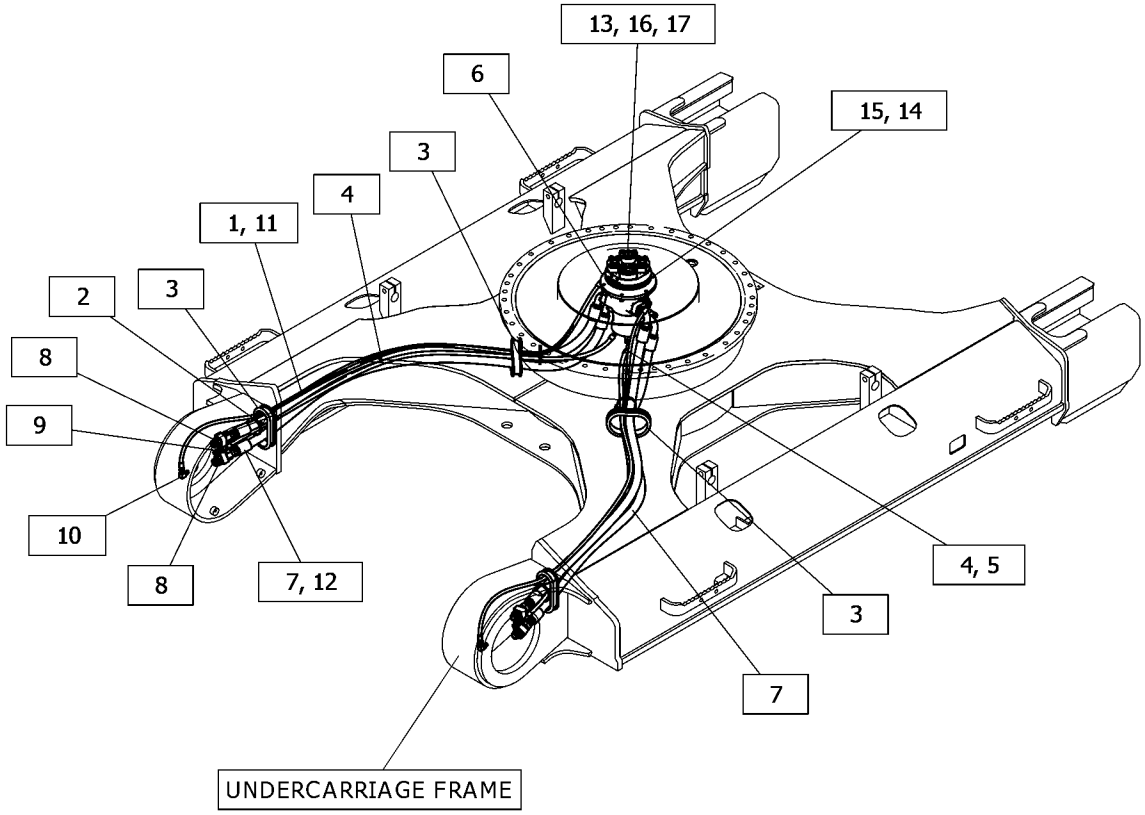


GRAPHIC #1 <END> g06357169

# 215-5037 MANIFOLD GP-CONTROL–PILOT OIL SUPPLY

**S/N: FEY1-UP**

**PART OF 556-6488 LINES GP-PILOT**

**SMCS-5264** **i04916876**

| NOTE | PART NUMBER | QTY | PART NAME 1 2 3 4 5 6 (PRODUCT LEVEL) | SEE PAGE |
|---|---|---|---|---|
| Y | *239-8998* | 1 | MANIFOLD GP-CONTROL (PILOT OIL SUPPLY) (STEEL BODY) | 309 |
| | | | –OR– | |
| Y | *239-8697* | 1 | MANIFOLD GP-CONTROL (PILOT OIL SUPPLY) (ALUMINUM BODY) | 308 |
| Y - SEPARATE ILLUSTRATION | | | | |

<END>

# *239-8697* MANIFOLD GP-CONTROL—PILOT OIL SUPPLY

**S/N: FEY1-UP**
**ALUMINUM BODY**
**PART OF 215-5037 MANIFOLD GP-CONTROL**

**SMCS-5264** **i04916886**

| NOTE | REF NO | GRAPHIC REF | PART NUMBER | QTY | PART NAME 1 2 3 4 5 6 (PRODUCT LEVEL) | SEE PAGE |
|---|---|---|---|---|---|---|
| Y | 1 | 1 | **121-1491** | 1 | VALVE GP-SOLENOID (SWING BRAKE RELEASE) | 375 |
| Y | 1A | 1 | **121-1491** | 1 | VALVE GP-SOLENOID (HYDRAULIC LOCKOUT) | 375 |
| Y | 1B | 1 | **121-1491** | 1 | VALVE GP-SOLENOID (TRAVEL SPEED) | 375 |
| | 4 | 1 | **197-0196** | 1 | VALVE-CHECK | |
| | 5 | 1 | **197-0199** | 1 | SPRING | |
| | 6 | 1 | **197-0273** | 1 | SPRING | |
| | 7 | 1 | **9S-8005** | 4 | PLUG (3/4-16-THD) | |
| | 8 | 1 | **3J-1907** | 1 | SEAL-O-RING | |
| | 9 | 1 | **3K-0360** | 4 | SEAL-O-RING | |
| M | 11 | 1 | **7I-2272** | 6 | BOLT (M5X0.8X12-MM) | |
| | 12 | 1 | *225-4818* | 6 | PLUG AS | |
| | | | | | (EACH INCLUDES) | |
| | | 1 | **4J-7533** | 1 | SEAL-O-RING | |
| | | 1 | **225-4804** | 1 | PLUG | |
| | 13 | 1 | **9S-8004** | 1 | PLUG (9/16-18-THD) | |

M - METRIC PART
Y - SEPARATE ILLUSTRATION

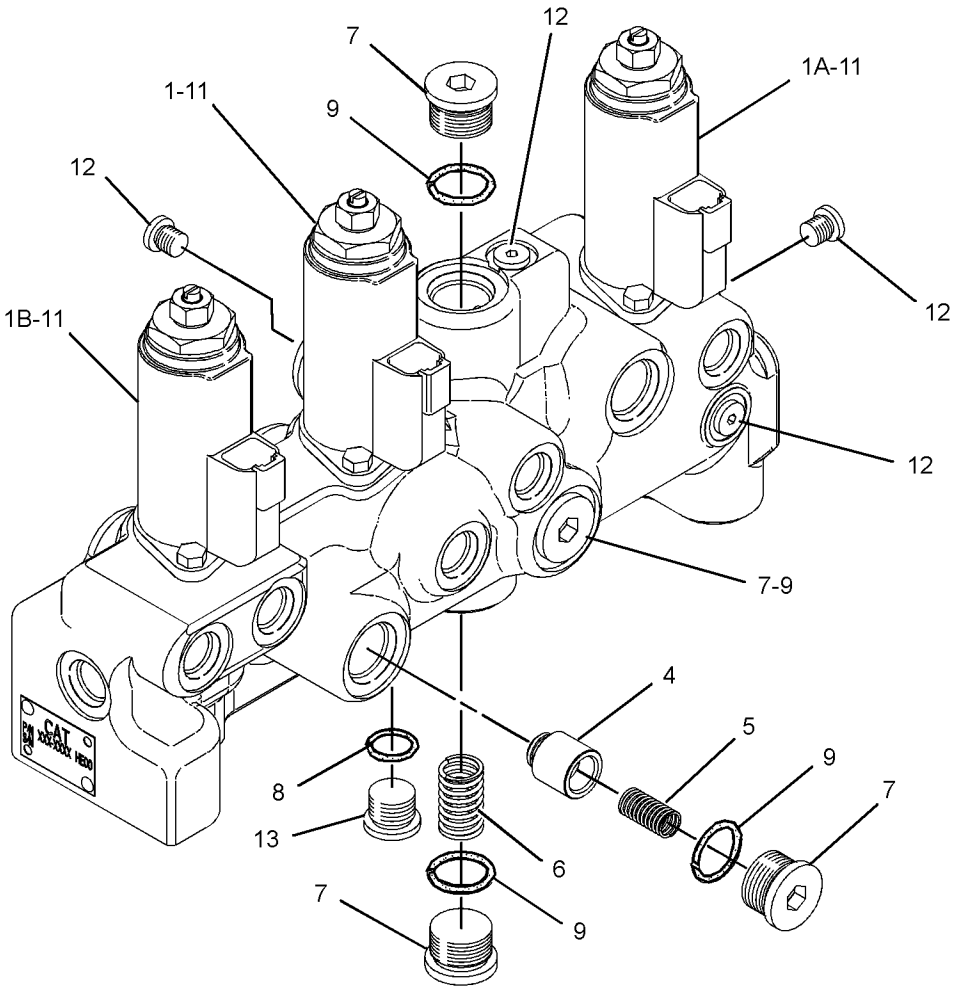


GRAPHIC #1 <END> g02345260

# *239-8998* MANIFOLD GP-CONTROL—PILOT OIL SUPPLY

**S/N: FEY1-UP**
**STEEL BODY**
**PART OF 215-5037 MANIFOLD GP-CONTROL**

**SMCS-5264** **i04917411**

| NOTE | REF NO | GRAPHIC REF | PART NUMBER | QTY | PART NAME 1 2 3 4 5 6 (PRODUCT LEVEL) | SEE PAGE |
|---|---|---|---|---|---|---|
| Y | 1 | 1 | **121-1491** | 1 | VALVE GP-SOLENOID (SWING BRAKE RELEASE) | 375 |
| Y | 1A | 1 | **121-1491** | 1 | VALVE GP-SOLENOID (HYDRAULIC LOCKOUT) | 375 |
| Y | 1B | 1 | **121-1491** | 1 | VALVE GP-SOLENOID (TRAVEL SPEED) | 375 |
| | 2 | 1 | **7M-7410** | 2 | PLUG-PIPE | |
| | 3 | 1 | **8T-6759** | 6 | PLUG-PIPE | |
| | 4 | 1 | **197-0196** | 1 | VALVE-CHECK | |
| | 5 | 1 | **9S-8005** | 3 | PLUG (3/4-16-THD) | |
| | 6 | 1 | **197-0199** | 1 | SPRING | |
| | 7 | 1 | **197-0273** | 1 | SPRING | |
| | 8 | 1 | **3K-0360** | 3 | SEAL-O-RING | |
| M | 9 | 1 | **7I-2272** | 6 | BOLT (M5X0.8X12-MM) | |

M - METRIC PART
Y - SEPARATE ILLUSTRATION

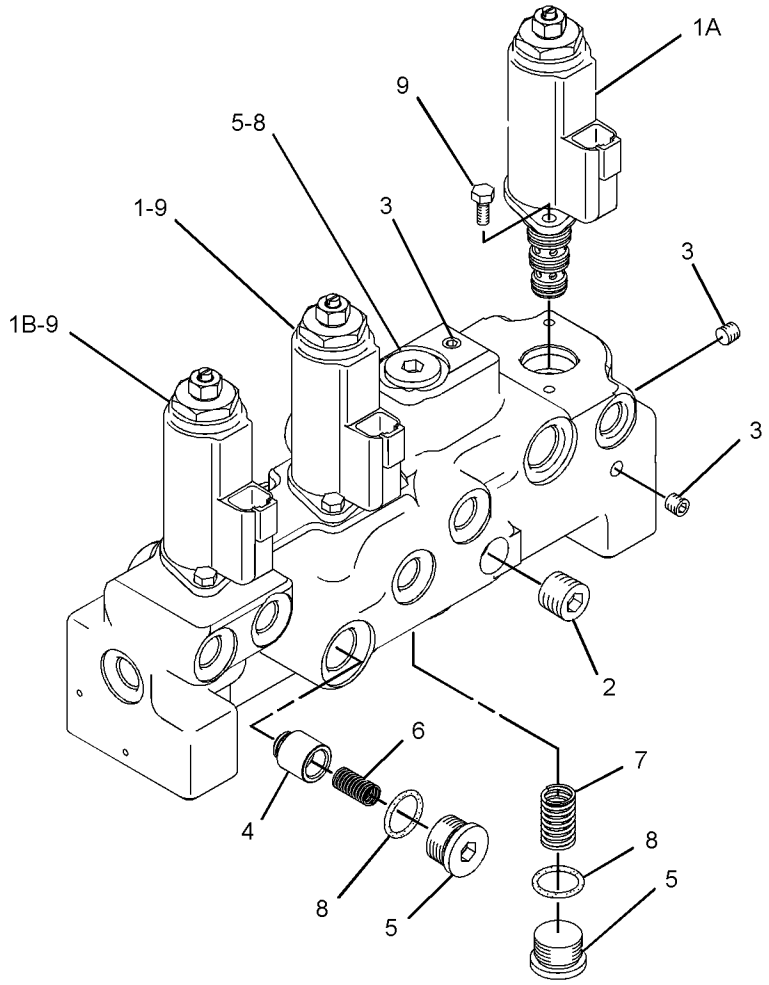


GRAPHIC #1 <END> g03089517

# *550-5771* MOTOR & MTG GP-TRAVEL

**S/N: FEY1-UP**

**PART OF 543-1001 DRIVE GP-FINAL**

**SMCS-4351** **i07531380**

| NOTE | REF NO | GRAPHIC REF | PART NUMBER | QTY | PART NAME 1 2 3 4 5 6 (PRODUCT LEVEL) | SEE PAGE |
|---|---|---|---|---|---|---|
| | 1 | 1 | **550-5772** | 1 | PLATE AS-BASE | |
| | 2 | 1 | **550-5773** | 1 | VALVE AS | |
| | 3 | 1 | **550-5774** | 1 | PLUNGER AS | |
| | 4 | 1 | **550-5775** | 2 | PLUG AS | |
| | 5 | 1 | **550-5776** | 1 | ORIFICE AS | |
| | 6 | 1 | **550-5777** | 1 | SHIFTER | |
| | 7 | 1 | **550-5778** | 1 | PLUG AS | |
| | 8 | 1 | **550-5779** | 2 | VALVE AS-RELIEF | |
| | 9 | 1 | **550-5780** | 1 | CYLINDER BLOCK AS | |
| | 10 | 1 | **550-5781** | 1 | SWASHPLATE | |
| | 11 | 1 | **550-5782** | 1 | SHAFT AS-MOTOR | |
| | 12 | 1 | **550-5783** | 1 | SEAL | |
| | 13 | 1 | **550-5784** | 1 | BEARING AS | |
| | 14 | 1 | **550-5785** | 1 | BRAKE AS | |
| | 15 | 1 | **550-5786** | 1 | SEAL AS | |
| M | 16 | 1 | **095-9805** | 10 | BOLT-SOCKET HEAD (M14X2X40-MM) | |

M - METRIC PART

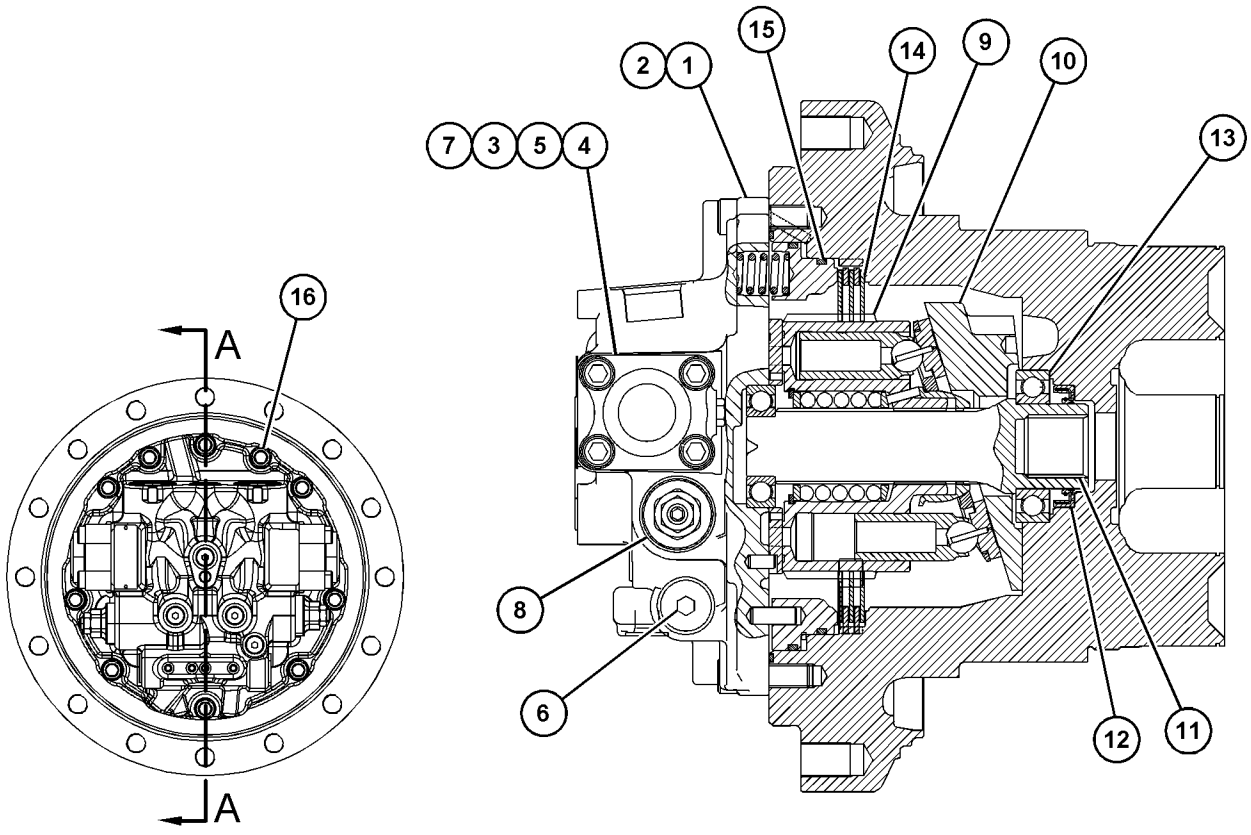


SECTION A-A

GRAPHIC #1 <END> g06351927

# 524-2647 MOTOR GP-SWING

**S/N: FEY1-UP**

**PART OF 525-3741 DRIVE GP-SWING**

**SMCS-5058** **i07362550**

| NOTE | REF NO | GRAPHIC REF | PART NUMBER | QTY | PART NAME 1 2 3 4 5 6 (PRODUCT LEVEL) | SEE PAGE |
|---|---|---|---|---|---|---|
| Y | 1 | 1 | **549-3964** | 1 | MOTOR GP-SWING | 312 |
| Y | 2 | 1 | **173-3452** | 2 | VALVE GP-RELIEF (DIRECT OPERATED) (SWING MOTOR) | 365 |

Y - SEPARATE ILLUSTRATION

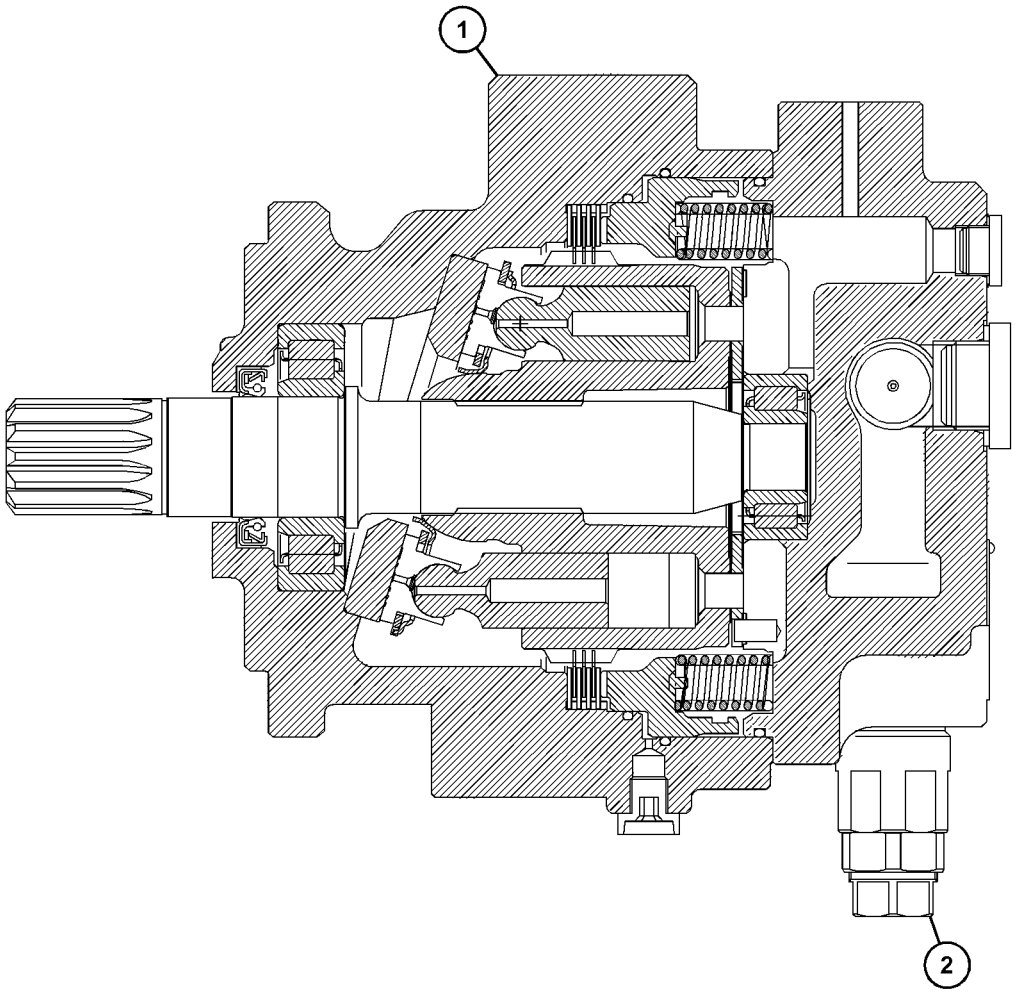


GRAPHIC #1 <END> g06286531

# 549-3964 MOTOR GP-SWING

**S/N: FEY1-UP**

**PART OF 524-2647 MOTOR GP-SWING**

**SMCS-5058** **i07329030**

| NOTE | REF NO | GRAPHIC REF | PART NUMBER | QTY | PART NAME 1 2 3 4 5 6 (PRODUCT LEVEL) | SEE PAGE |
|---|---|---|---|---|---|---|
| | 1 | 1 | **334-9981** | 1 | PISTON AS-PUMP | |
| | 2 | 1 | **173-3439** | 1 | HEAD GP-MOTOR | |
| | | 1 | **095-0882** | 2 | PIN-SPRING | |
| | 3 | 1 | **173-3451** | 4 | PLATE-SEPARATOR | |
| | 4 | 1 | **173-3450** | 3 | PLATE-FRICTION | |
| | 5 | 1 | **126-2055** | 20 | SPRING | |
| J | 6 | 1 | **5I-8417** | 1 | SEAL-O-RING | |
| J | 7 | 1 | **5I-8426** | 1 | SEAL-O-RING | |
| | 8 | 1 | **177-2584** | 1 | PISTON-BRAKE | |
| J | 9 | 1 | **173-3447** | 1 | SEAL-OIL | |
| J | 10 | 1 | **095-1595** | 2 | SEAL-O-RING | |
| J | 11 | 1 | **3J-1907** | 2 | SEAL-O-RING | |
| J | 12 | 1 | **5I-8623** | 1 | SEAL-O-RING | |
| | 13 | 1 | **094-1900** | 2 | PLUG | |
| | 14 | 1 | **446-7230** | 2 | PLUG | |
| | 15 | 1 | **5I-8625** | 1 | BEARING | |
| | 16 | 1 | **122-5318** | 1 | BEARING | |
| M | 17 | 1 | **7Y-5221** | 4 | BOLT-SOCKET HEAD (M20X2.5X45-MM) | |
| | 18 | 1 | **5B-9304** | 2 | SCREW-DRIVE (NO 2X3/16-IN) | |
| | 19 | 1 | **7Y-4268** | 2 | SPRING | |
| | 20 | 1 | **7Y-4267** | 2 | VALVE | |
| | 21 | 1 | **549-3963** | 1 | HOUSING | |
| | 22 | 1 | **173-3445** | 1 | PLATE-VALVE | |
| | 23 | 1 | **173-3444** | 1 | PLATE | |
| | 24 | 1 | **173-3443** | 1 | PLATE | |
| | 25 | 1 | **173-3442** | 1 | SPRING | |
| | 26 | 1 | **173-3441** | 1 | BARREL | |
| | 27 | 1 | **549-3962** | 1 | SHAFT | |
| | | | | | AVAILABLE REPAIR KIT(S): | |
| J | | | **173-3454** | 1 | KIT-SEAL (SWING MOTOR) | |

J - KIT MARKED J SERVICES PART(S) MARKED J
M - METRIC PART

*549-3964* **MOTOR GP-SWING (**contd.**)** **i07329030**

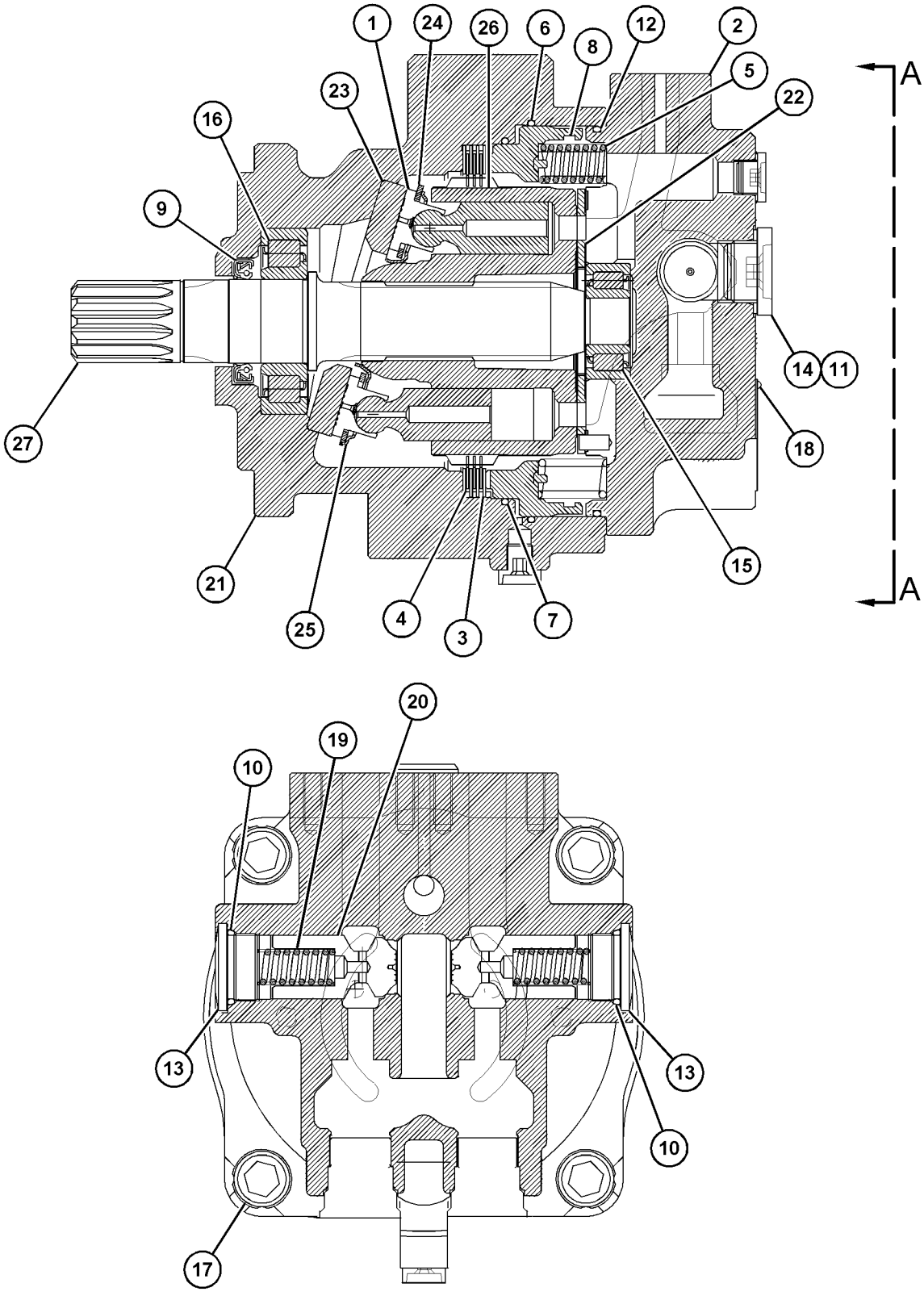


VIEW A-A

GRAPHIC #1 <END> g06287041

# *260-7868* MOUNTING GP-MAIN CONTROL VALVE

**S/N: FEY1-UP**

**PART OF 556-6437 HYDRAULIC AR**

**SMCS-5051** **i05686879**

| NOTE | REF NO | GRAPHIC REF | PART NUMBER | QTY | PART NAME 1 2 3 4 5 6 (PRODUCT LEVEL) | SEE PAGE |
|---|---|---|---|---|---|---|
| | 1 | 1 | **260-7904** | 1 | SUPPORT AS | |
| | 2 | 1 | **260-7906** | 1 | SUPPORT AS | |
| M | 3 | 1 | **453-2835** | 8 | BOLT (M16X2X40-MM) | |
| | 4 | 1 | **451-2175** | 4 | WASHER-HARD (17.5X30X3.5-MM THK) | |
| | 5 | 1 | **196-0711** | 4 | WASHER (17X40X8-MM THK) | |

M - METRIC PART

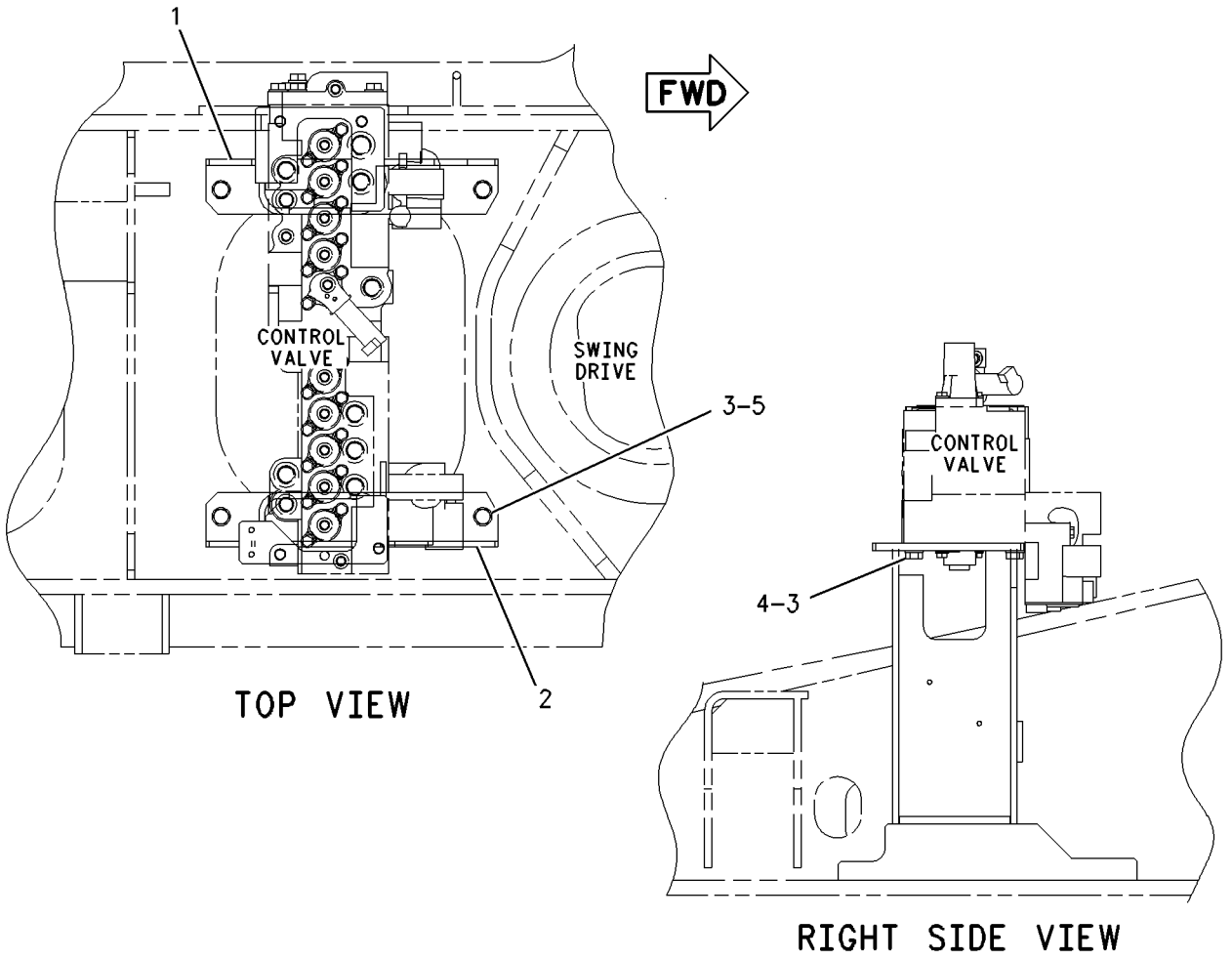


GRAPHIC #1 <END> g00676425

# *310-0404* PLUG GP-CONTROL VALVE

**S/N: FEY1-UP**

**PART OF 435-1484 VALVE GP-CONTROL**

**SMCS-5051** **i05653973**

| NOTE | REF NO | GRAPHIC REF | PART NUMBER | QTY | PART NAME 1 2 3 4 5 6 (PRODUCT LEVEL) | SEE PAGE |
|---|---|---|---|---|---|---|
| | 1 | 1 | **310-0405** | 1 | PLUG | |
| | 2 | 1 | **3D-2824** | 1 | SEAL-O-RING | |
| | 3 | 1 | **6M-5062** | 1 | SEAL-O-RING | |
| | 4 | 1 | **9J-0705** | 1 | RING-BACKUP | |

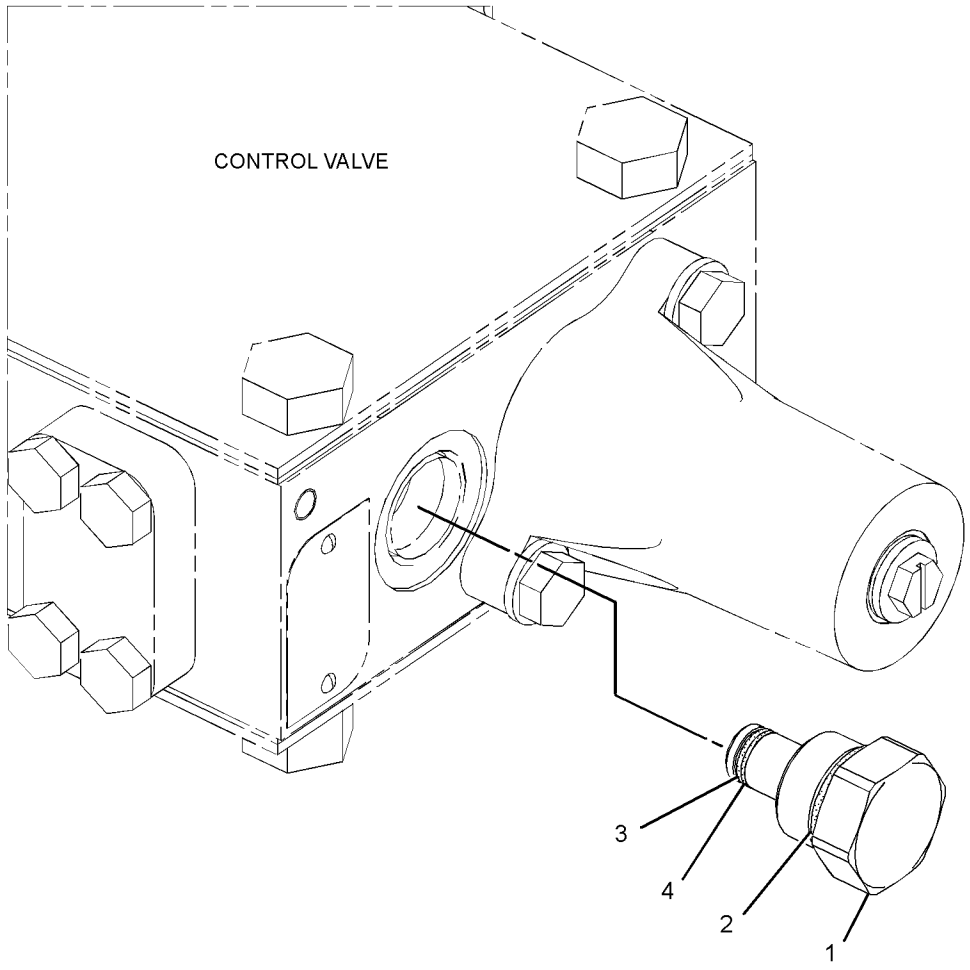


GRAPHIC #1 <END> g02377560

# *556-6522* PUMP & MTG GP-MAIN HYDRAULIC

**S/N: FEY1-UP**

**PART OF 556-6437 HYDRAULIC AR**

**SMCS-5070** **i07676115**

| NOTE | REF NO | GRAPHIC REF | PART NUMBER | QTY | PART NAME 1 2 3 4 5 6 (PRODUCT LEVEL) | SEE PAGE |
|---|---|---|---|---|---|---|
| M | 1 | 1 | **8T-4186** | 12 | BOLT (M10X1.5X40-MM) | |
| | 2 | 1 | **7X-7729** | 12 | WASHER (11X25X3-MM THK) | |
| Y | 3 | 1 | *341-5368* | 1 | COUPLING GP-PUMP | 216 |
| | 4 | 1 | **451-2176** | 4 | WASHER-HARD (22X35X3.5-MM THK) | |
| Y | 5 | 1 | **524-2648** | 1 | PUMP GP-MAIN HYDRAULIC | 319 |
| | 6 | 1 | **548-4883** | 1 | FLANGE | |
| M | 7 | 1 | **7Y-5217** | 4 | BOLT-SOCKET HEAD (M20X2.5X70-MM) | |

M - METRIC PART
Y - SEPARATE ILLUSTRATION

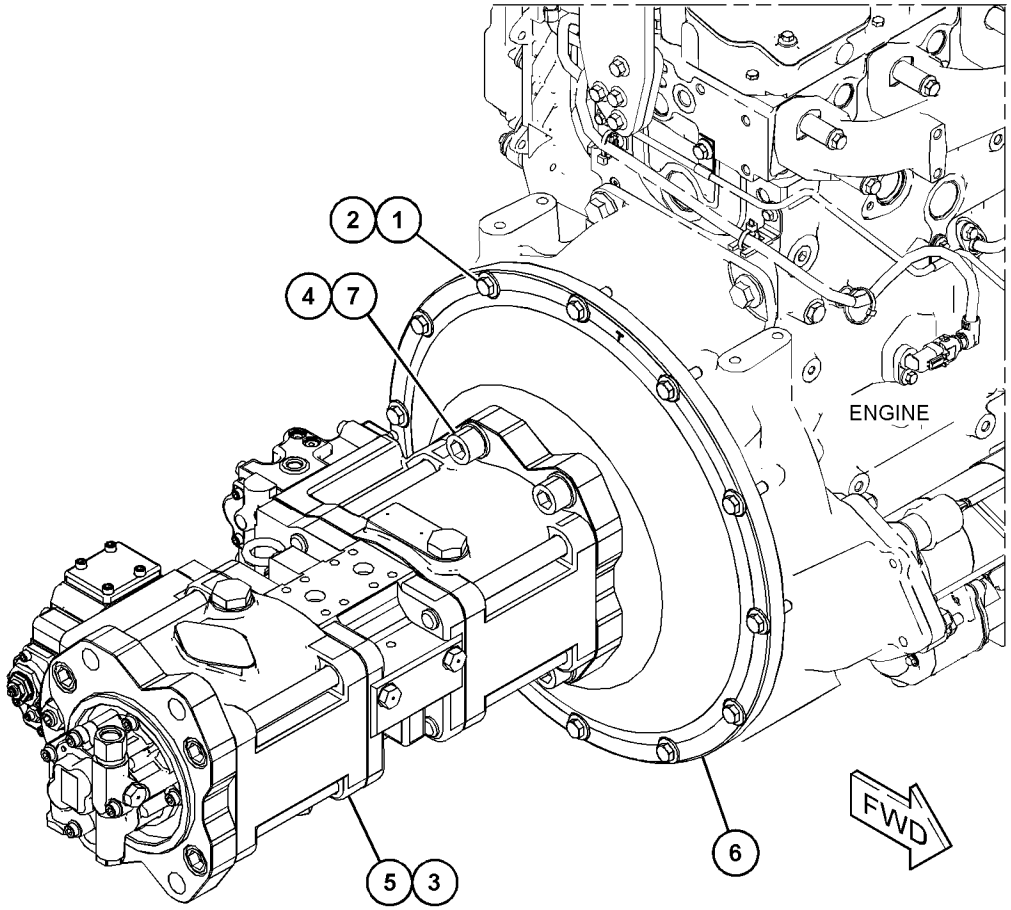


GRAPHIC #1 <END> g06313502

# *551-6789* PUMP GP-GEAR

**S/N: FEY1-UP**

**PART OF 524-2648 PUMP GP-MAIN HYDRAULIC**

**SMCS-5073** **i07397891**

| NOTE | REF NO | GRAPHIC REF | PART NUMBER | QTY | PART NAME 1 2 3 4 5 6 (PRODUCT LEVEL) | SEE PAGE |
|---|---|---|---|---|---|---|
| | 1 | 1 | **552-7946** | 1 | PLUNGER | |
| | 2 | 1 | **551-6806** | 1 | RING | |
| | 3 | 1 | **551-6807** | 1 | SPRING | |
| | 4 | 1 | **551-6808** | 1 | SETSCREW | |
| M | 5 | 1 | **551-6812** | 1 | LOCKNUT (M14X1.5-THD) | |
| | 6 | 1 | **551-6813** | 1 | SCREEN | |
| | 7 | 1 | **387-4672** | 2 | BOLT | |
| M | 8 | 1 | **6I-0455** | 2 | BOLT (M8X1.25X55-MM) | |
| M | 9 | 1 | **197-0165** | 4 | BOLT (M8X1.25X20-MM) | |
| | 10 | 1 | **110-5525** | 1 | PLUG | |
| | 11 | 1 | **5I-8775** | 1 | ADAPTER | |
| | 12 | 1 | **551-6814** | 1 | RING | |
| | 13 | 1 | **249-6657** | 1 | SEAL-O-RING | |
| | 14 | 1 | **214-7568** | 1 | SEAL-O-RING | |
| | 15 | 1 | **206-9295** | 1 | SEAL-O-RING | |
| | 16 | 1 | **206-9294** | 1 | SEAL-O-RING | |
| | 17 | 1 | **096-2593** | 1 | RING-RETAINING | |
| | 18 | 1 | **551-6817** | 2 | PIN | |

M - METRIC PART

*551-6789* **PUMP GP-GEAR (**contd.**)** **i07397891**

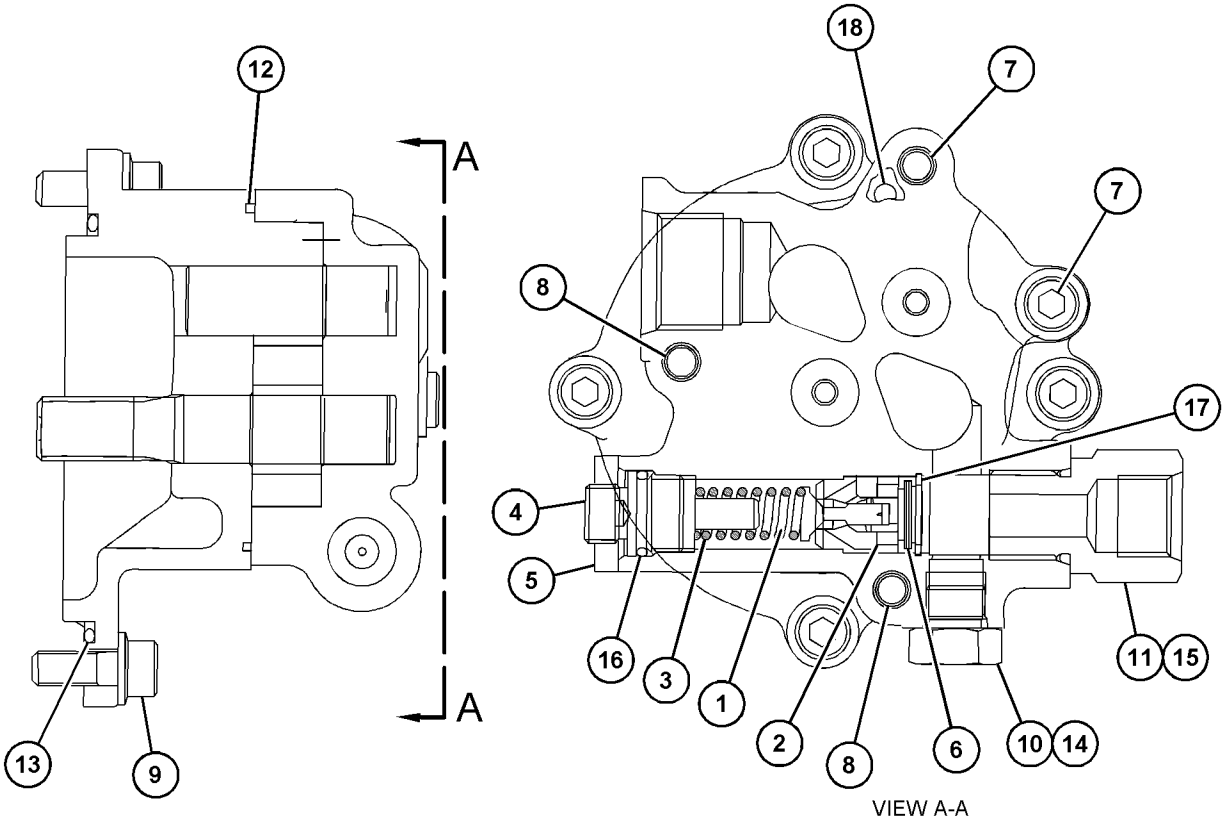


VIEW A-A

GRAPHIC #1 <END> g06313567

# 524-2648 PUMP GP-MAIN HYDRAULIC

**S/N: FEY1-UP**

**PART OF 556-6522 PUMP & MTG GP-MAIN HYDRAULIC**

**SMCS-5070** **i07419343**

| NOTE | REF NO | GRAPHIC REF | PART NUMBER | QTY | PART NAME 1 2 3 4 5 6 (PRODUCT LEVEL) | SEE PAGE |
|---|---|---|---|---|---|---|
| | 1 | 1 | **551-6809** | 2 | PIN AS | |
| Y | 2 | 1 | **551-6788** | 2 | HEAD GP-PUMP (REGULATOR) | 237 |
| Y | 3 | 1 | **551-6789** | 1 | PUMP GP-GEAR | 317 |
| Y | 4 | 1 | **551-6795** | 1 | VALVE GP-SOLENOID (MAIN HYDRAULIC PUMP) | 377 |
| | 5 | 1 | **551-6790** | 2 | PISTON AS | |
| | 6 | 1 | **551-6791** | 1 | BARREL AS (RH) | |
| | 7 | 1 | **551-6792** | 1 | BARREL AS (LH) | |
| | 8 | 1 | **551-6793** | 2 | SWASHPLATE AS | |
| | 9 | 2 | **551-6794** | 2 | VALVE AS-CHECK | |
| | 10 | 2 | **247-8966** | 2 | VALVE AS-CHECK | |
| | | | | | (EACH INCLUDES) | |
| | | 2 | **5H-1472** | 1 | BALL | |
| | 11 | 1 | **551-6797** | 1 | SHAFT-DRIVE (REVERSE) | |
| | 12 | 1 | **551-6796** | 1 | SHAFT-DRIVE (FORWARD) | |
| | 13 | 1 | **551-6798** | 1 | COUPLING | |
| | 14 | 1 | **551-6799** | 2 | BEARING-ROLLER | |
| | 15 | 1 | **551-6800** | 2 | BEARING-NEEDLE | |
| | 16 | 1 | **541-3320** | 3 | SPACER-BEARING | |
| | 17 | 1 | **541-3318** | 2 | PLATE-RETAINER | |
| | 18 | 1 | **541-3317** | 2 | GUIDE-BALL | |
| | 19 | 1 | **551-6801** | 18 | SPRING-CYLINDER | |
| | 20 | 1 | **541-3312** | 2 | PLATE | |
| | 21 | 1 | **541-3307** | 2 | STOPPER | |
| | 22 | 1 | **551-6803** | 1 | COVER | |
| | 23 | 1 | **551-6804** | 2 | BODY | |
| | 24 | 1 | **552-7939** | 2 | SUPPORT AS | |
| | | | | | (EACH INCLUDES) | |
| | | 1 | **371-7201** | 4 | PLUG | |
| | | 1 | **551-6802** | 1 | SUPPORT | |
| | 25 | 1 | **505-1681** | 8 | BOLT-SOCKET HEAD | |
| M | 26 | 1 | **8T-1158** | 4 | BOLT-SOCKET HEAD (M8X1.25X20-MM) | |
| M | 27 | 1 | **5I-8773** | 2 | SETSCREW (M16X2X30-MM) | |
| | 28 | 1 | **9S-4183** | 3 | PLUG (1-1/16-12-THD) | |
| | 29 | 1 | **371-7201** | 18 | PLUG | |
| | 30 | 1 | **551-6810** | 2 | PISTON | |
| | 31 | 1 | **551-6811** | 2 | STOPPER | |
| | 32 | 1 | **206-9299** | 2 | SEAL-O-RING | |
| | 33 | 1 | **249-6657** | 1 | SEAL-O-RING | |
| | 34 | 1 | **095-1723** | 4 | SEAL-O-RING | |
| | 35 | 1 | **347-6530** | 16 | SEAL-RECTANGULAR | |
| | 36 | 2 | **206-9292** | 2 | SEAL-O-RING | |
| | 37 | 1 | **238-5082** | 3 | SEAL-O-RING | |
| | 38 | 1 | **206-9295** | 2 | SEAL-O-RING | |
| | 39 | 1 | **551-6815** | 1 | SEAL | |
| | 40 | 1 | **095-1784** | 2 | RING-BACKUP | |
| | 41 | 1 | **153-8623** | 2 | RING-BACKUP | |
| M | 42 | 1 | **8T-1757** | 2 | NUT (M16X2-THD) | |
| M | 43 | 1 | **8T-4131** | 2 | NUT (M20X2.5-THD) | |

*524-2648* **PUMP GP-MAIN HYDRAULIC (**contd.**)** **i07419343**

| NOTE | REF NO | GRAPHIC REF | PART NUMBER | QTY | PART NAME 1 2 3 4 5 6 (PRODUCT LEVEL) | SEE PAGE |
|---|---|---|---|---|---|---|
| | 44 | 1 | **8T-4240** | 2 | RING-RETAINING | |
| | 45 | 1 | **295-9517** | 2 | DOWEL | |
| | 46 | 1 | **551-6821** | 4 | PIN-SPRING | |
| | 47 | 1 | **5I-8772** | 2 | EYEBOLT | |
| | 48 | 1 | **551-6822** | 2 | SETSCREW | |
| | 49 | 1 | **551-6823** | 1 | PLATE-IDENTIFICATION | |
| | 50 | 1 | **7Y-4359** | 2 | SCREW | |
| | 51 | 1 | **552-7941** | 1 | BODY AS | |
| | | 1 | **371-7201** | 10 | PLUG | |
| | | 1 | **551-6805** | 1 | BODY AS | |

M - METRIC PART
Y - SEPARATE ILLUSTRATION

*524-2648* **PUMP GP-MAIN HYDRAULIC (**contd.**)** **i07419343**

REFER TO ALL ILLUSTRATIONS OF
THIS GROUP FOR AUXILIARY VIEWS

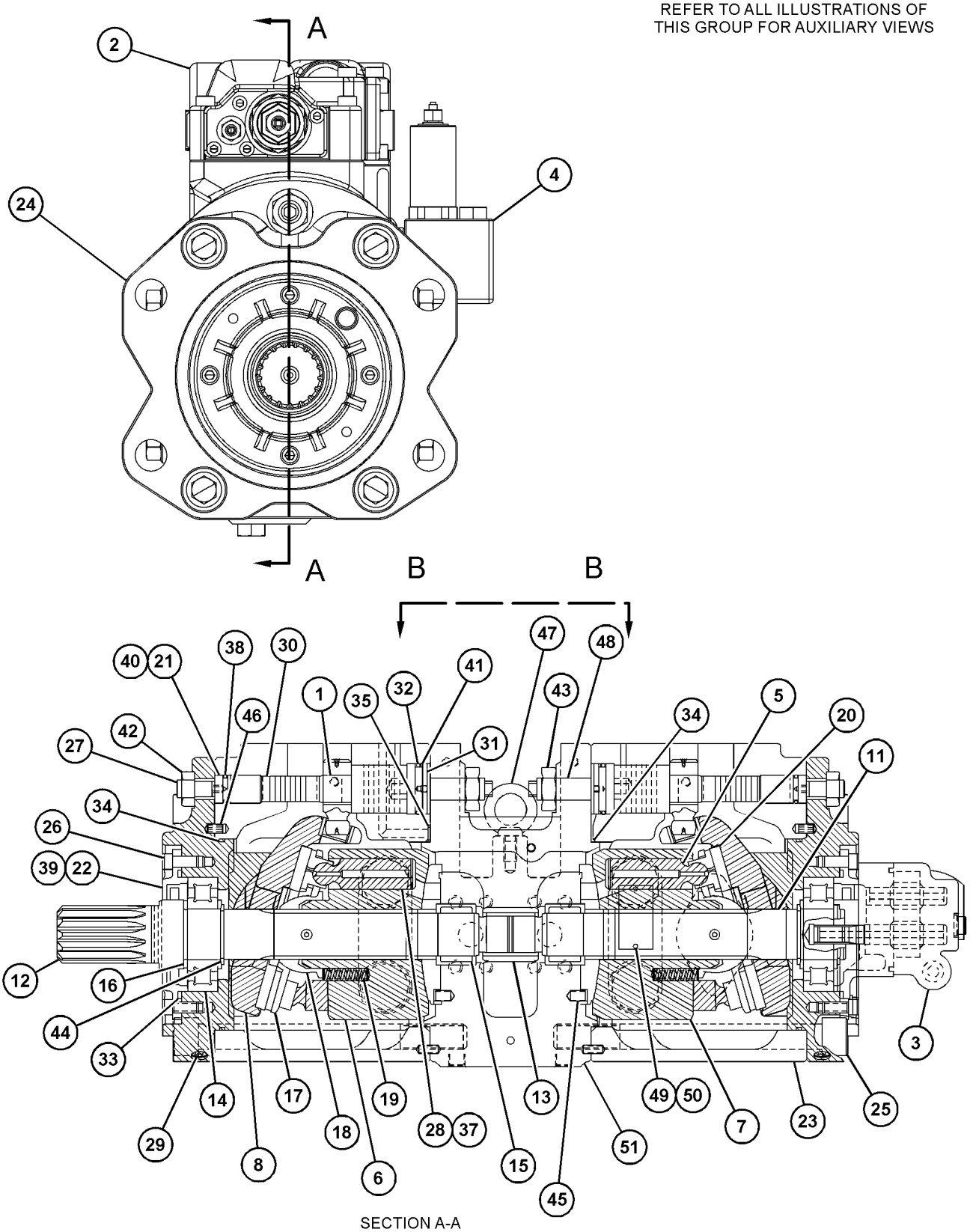


SECTION A-A

GRAPHIC #1 g06316920

*524-2648* **PUMP GP-MAIN HYDRAULIC (**contd.**)** **i07419343**

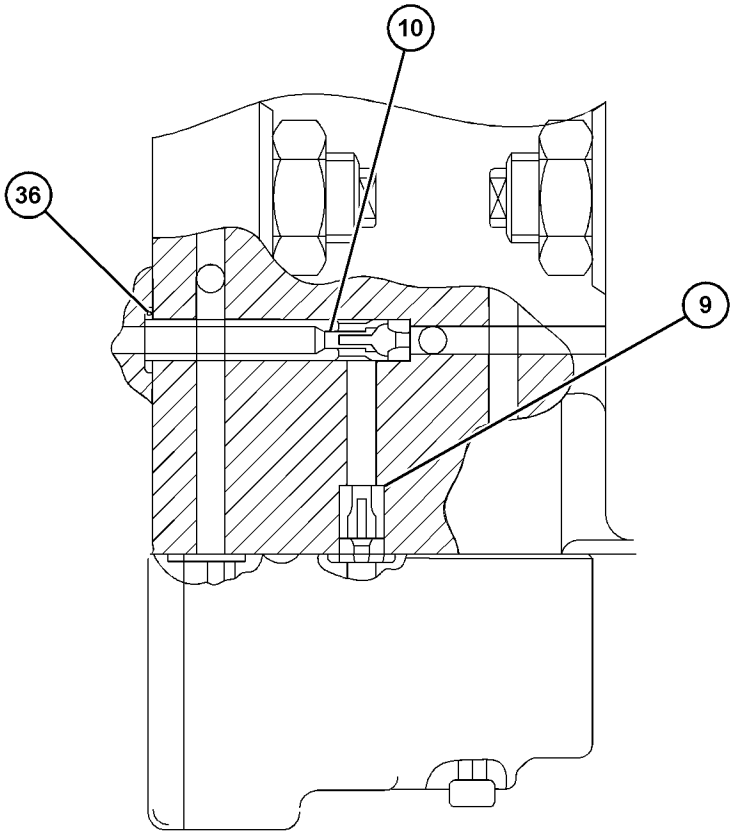


VIEW B-B

GRAPHIC #2 <END> g06316921

# 259-0922 SCREEN GP-HYDRAULIC–TANK

**S/N: FEY1-UP**

**PART OF 507-5950 TANK & FILTER GP-HYDRAULIC**

**SMCS-5068** **i05654471**

| NOTE | REF NO | GRAPHIC REF | PART NUMBER | QTY | PART NAME 1 2 3 4 5 6 (PRODUCT LEVEL) | SEE PAGE |
|---|---|---|---|---|---|---|
| | 1 | 1 | **259-0918** | 1 | GUIDE | |
| | 2 | 1 | **095-6639** | 1 | SPRING | |
| M | 3 | 1 | **8T-4133** | 2 | NUT (M10X1.5-THD) | |
| | 4 | 1 | **129-7784** | 1 | ROD | |
| | 5 | 1 | **209-6000** | 1 | SCREEN AS (HYDRAULIC TANK) | |
| | 6 | 1 | **5H-5672** | 1 | SEAL-O-RING | |

M - METRIC PART

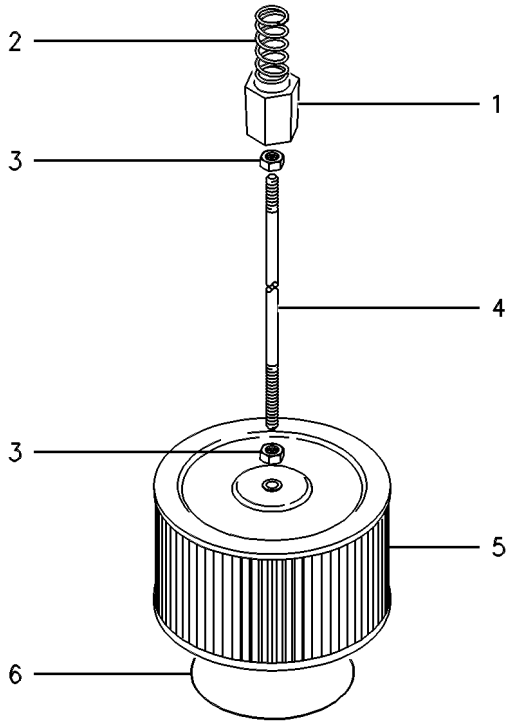


GRAPHIC #1 <END> g00267878

# 234-4440 SWIVEL GP

**S/N: FEY1-UP**

**PART OF 543-2703 LINES GP-TRAVEL MOTOR**

**SMCS-5060** **i06983940**

| NOTE | REF NO | GRAPHIC REF | PART NUMBER | QTY | PART NAME 1 2 3 4 5 6 (PRODUCT LEVEL) | SEE PAGE |
|---|---|---|---|---|---|---|
| | 1 | 1 | **7I-7131** | 1 | RETAINER | |
| | 2 | 1 | **7Y-4817** | 1 | COVER | |
| | 3 | 1 | **159-7782** | 5 | SEAL | |
| | 4 | 1 | **225-4548** | 1 | HOUSING | |
| | 5 | 1 | **225-4549** | 1 | ROTOR | |
| | 6 | 1 | **095-1625** | 3 | SEAL-O-RING | |
| | 7 | 1 | **095-1716** | 1 | SEAL-O-RING | |
| | 8 | 1 | **453-3454** | 2 | WASHER-HARD (11X21X2.5-MM THK) | |
| M | 9 | 1 | **455-3798** | 6 | BOLT (M10X1.5X25-MM) | |
| | 10 | 1 | **8T-6759** | 1 | PLUG-PIPE | |

M - METRIC PART

*234-4440* **SWIVEL GP (**contd.**)** **i06983940**

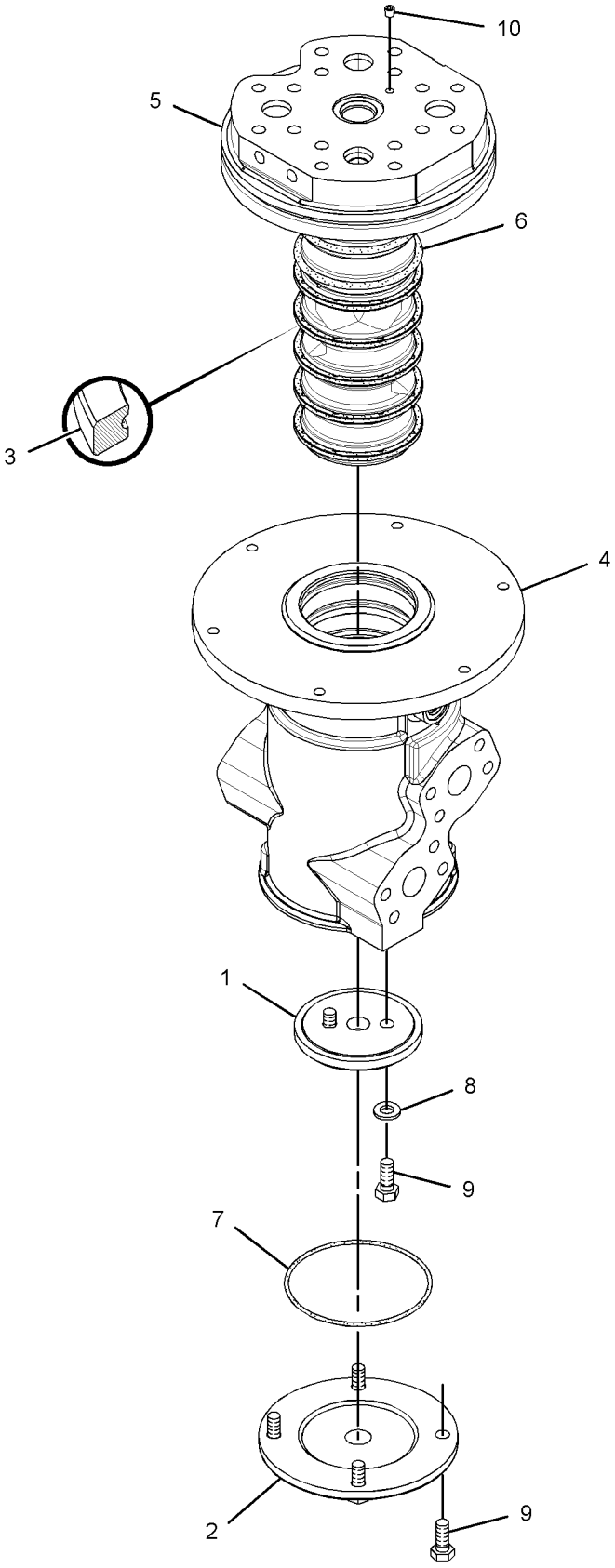


GRAPHIC #1 <END> g01373464

# *507-5950* TANK & FILTER GP-HYDRAULIC

**S/N: FEY1-UP**

**210-L (55.5-US GAL)**

**PART OF 562-9614 TANK & MTG GP-HYDRAULIC**

**SMCS-5056, 5068**

**i06682351**

| NOTE | REF NO | GRAPHIC REF | PART NUMBER | QTY | PART NAME 1 2 3 4 5 6 (PRODUCT LEVEL) | SEE PAGE |
|---|---|---|---|---|---|---|
| | 1 | 1 | **1U-2827** | 1 | GUIDE-VALVE | |
| | 2 | 1 | **3K-0360** | 1 | SEAL-O-RING | |
| | 3 | 1 | **6D-9157** | 1 | SEAL-O-RING | |
| | 4 | 1 | **6J-2680** | 1 | SEAL-O-RING | |
| | 5 | 1 | **8J-8782** | 1 | BODY-DRAIN VALVE | |
| | 6 | 1 | **8J-8783** | 1 | VALVE-DRAIN | |
| | 7 | 1 | **9J-7031** | 1 | PLUG-DRAIN | |
| | 8 | 1 | **095-1608** | 1 | SEAL-O-RING | |
| Y | 9 | 1 | **158-8987** | 1 | FILTER & VALVE GP-PILOT (HYDRAULIC OIL) | 229 |
| | 10 | 1 | **165-3256** | 1 | PIPE AS | |
| | 11 | 1 | **207-6403** | 1 | PLUG | |
| | 12 | 1 | **207-6404** | 1 | WASHER (49.5X60.5X1.5-MM THK) | |
| | 13 | 1 | **227-0590** | 1 | BREATHER (HYDRAULIC TANK) | |
| Y | 14 | 1 | **259-0922** | 1 | SCREEN GP-HYDRAULIC (TANK) | 323 |
| | 15 | 1 | **275-1362** | 1 | BRACKET | |
| Y | 16 | 1 | **289-8194** | 1 | FILTER GP-OIL (HYDRAULIC, CASE DRAIN) | 232 |
| | 17 | 1 | **292-7297** | 1 | SUPPORT AS | |
| Y | 18 | 1 | **347-6081** | 1 | GAUGE GP-SIGHT (HYDRAULIC OIL LEVEL) | 236 |
| | 19 | 1 | **395-0021** | 1 | COVER AS | |
| | 20 | 1 | **432-6291** | 1 | SENSOR-TEMPERATURE (HYDRAULIC OIL) | |
| | 21 | 1 | **451-2182** | 4 | WASHER-HARD (13.5X25.5X3-MM THK) | |
| M | 22 | 1 | **453-3433** | 4 | BOLT (M8X1.25X25-MM) | |
| M | 23 | 1 | **453-3440** | 4 | BOLT (M10X1.5X30-MM) | |
| M | 24 | 1 | **453-3447** | 6 | BOLT (M12X1.75X40-MM) | |
| | 25 | 1 | **453-3451** | 4 | WASHER-HARD (8.8X16X2-MM THK) | |
| | 26 | 1 | **453-3454** | 13 | WASHER-HARD (11X21X2.5-MM THK) | |
| | 27 | 1 | **453-3456** | 2 | WASHER-HARD (13.5X25.5X5-MM THK) | |
| M | 28 | 1 | **457-5821** | 2 | BOLT (M10X1.5X35-MM) | |
| | 29 | 1 | **459-1351** | 1 | TANK AS-HYDRAULIC | |
| | 30 | 1 | **095-1730** | 1 | SEAL-O-RING | |
| | 31 | 1 | *164-5567* | 1 | COUPLER AS-QUICK DISCONNECT (MALE) | |
| | | 1 | **6V-3965** | 1 | FITTING (QUICK DISCONNECT) | |
| | | 1 | **214-7568** | 1 | SEAL-O-RING | |
| | 32 | 1 | *164-5590* | 1 | VALVE AS-FLUID SAMPLING | |
| | | 1 | **3J-7354** | 1 | SEAL-O-RING | |
| | | 1 | **8C-3446** | 1 | VALVE-SAMPLING | |
| Y | 33 | 1 | **188-4140** | 1 | FILTER GP-OIL (HYDRAULIC RETURN) | 230 |
| | 34 | 1 | **4J-0527** | 1 | SEAL-O-RING | |
| M | 35 | 1 | **5C-9553** | 4 | BOLT (M6X1X16-MM) | |
| | 36 | 1 | **5M-2057** | 1 | SEAL-O-RING | |
| | 37 | 1 | **6V-0852** | 1 | CAP-DUST | |
| | 38 | 1 | **6V-5839** | 2 | WASHER (11X21X2.5-MM THK) | |
| | 39 | 1 | **7B-3039** | 1 | SPRING | |
| | 40 | 1 | **8C-3451** | 1 | CAP-DUST (HYDRAULIC OIL) | |
| M | 41 | 1 | **8T-0267** | 2 | BOLT-SOCKET HEAD (M6X1X12-MM) | |
| | 42 | 1 | **8T-3298** | 1 | SEAL-RECTANGULAR | |
| M | 43 | 1 | **8T-4136** | 3 | BOLT (M10X1.5X25-MM) | |

*507-5950* **TANK & FILTER GP-HYDRAULIC (**contd.**)** **i06682351**

| NOTE | REF NO | GRAPHIC REF | PART NUMBER | QTY | PART NAME 1 2 3 4 5 6 (PRODUCT LEVEL) | SEE PAGE |
|---|---|---|---|---|---|---|
| M | 44 | 1 | **8T-4137** | 6 | BOLT (M10X1.5X20-MM) | |
| | 45 | 1 | **9X-8256** | 4 | WASHER (6.6X12X2-MM THK) | |

M - METRIC PART
Y - SEPARATE ILLUSTRATION

*507-5950* **TANK & FILTER GP-HYDRAULIC** (contd.) **i06682351**

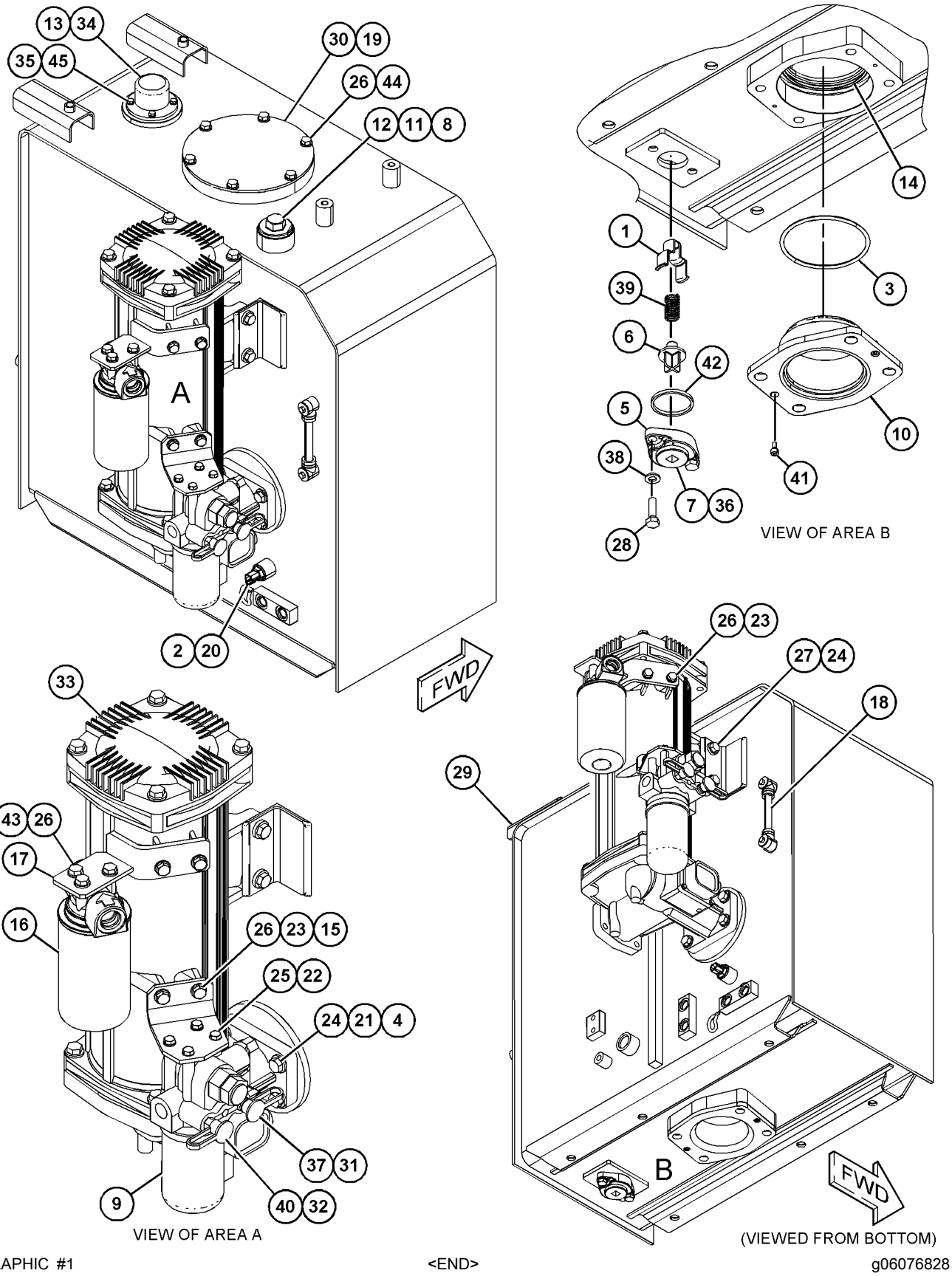


GRAPHIC #1 <END> g06076828

# *562-9614* TANK & MTG GP-HYDRAULIC

**S/N: FEY1-UP**
**210-L (55.5-U.S. GAL)**
**PART OF 556-6437 HYDRAULIC AR**

**SMCS-5056** **i07426919**

| NOTE | REF NO | GRAPHIC REF | PART NUMBER | QTY | PART NAME 1 2 3 4 5 6 (PRODUCT LEVEL) | SEE PAGE |
|---|---|---|---|---|---|---|
| | 1 | 1 | **085-9310** | 6 | SPACER (16.6X32X26-MM THK) | |
| Y | 2 | 1 | *562-9615* | 1 | LINES GP-HYDRAULIC | 277 |
| M | 3 | 1 | **447-1707** | 6 | BOLT (M16X2X60-MM) | |
| Y | 4 | 1 | **507-5950** | 1 | TANK & FILTER GP-HYDRAULIC | 326 |

M - METRIC PART
Y - SEPARATE ILLUSTRATION

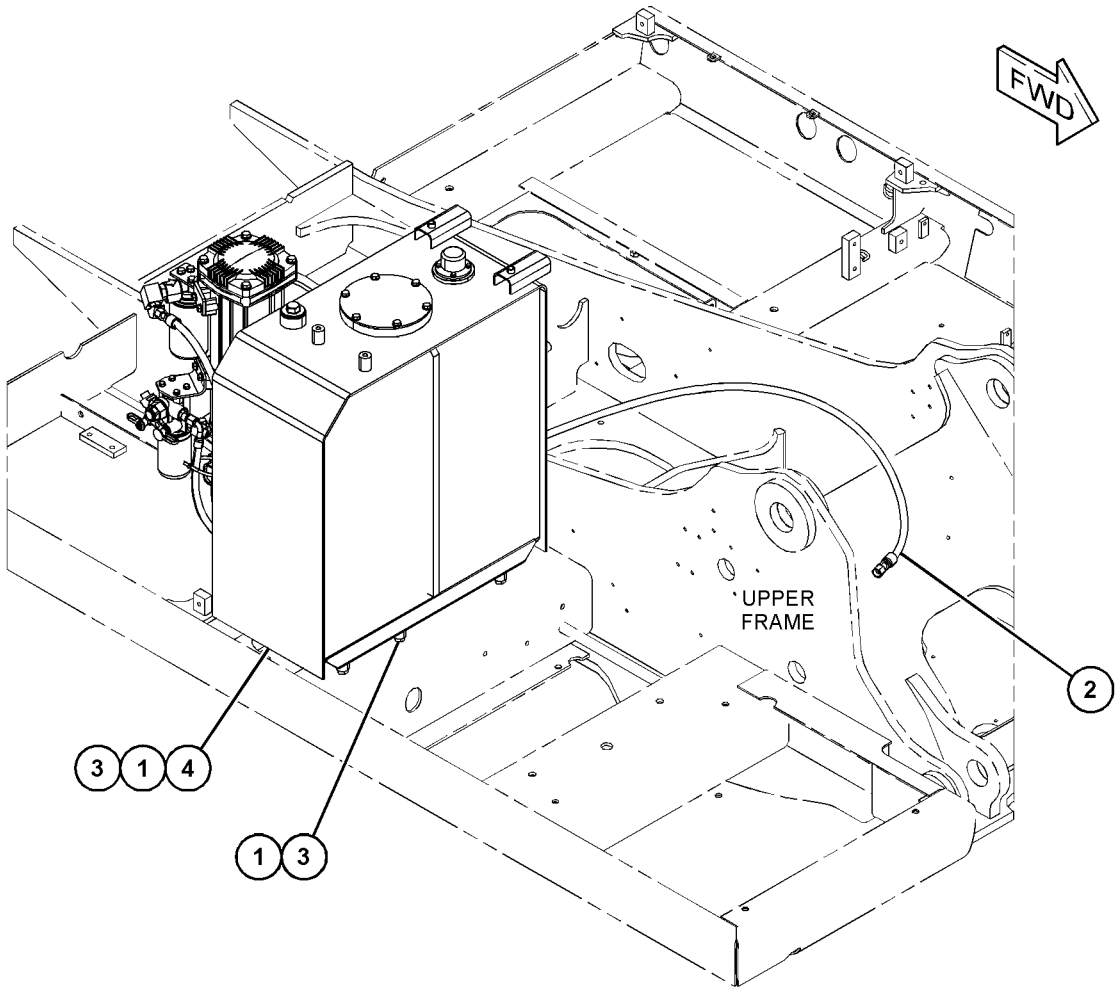


GRAPHIC #1 <END> g06075104

# *255-5713* VALVE & MTG GP-CONTROL–AUXILIARY

**S/N: FEY1-UP**

**PART OF 559-6091 CONTROL AR-AUXILIARY**

**SMCS-5051** **i06199711**

| NOTE | REF NO | GRAPHIC REF | PART NUMBER | QTY | PART NAME 1 2 3 4 5 6 (PRODUCT LEVEL) | SEE PAGE |
|---|---|---|---|---|---|---|
| Y | 1 | 1 | **259-7378** | 1 | VALVE GP-CONTROL (AUXILIARY) | 332 |
| M | 2 | 1 | **447-1706** | 5 | BOLT (M16X2X130-MM) | |
| | 3 | 1 | **4J-8998** | 2 | SEAL-O-RING | |
| | 4 | 1 | **1P-3702** | 2 | SEAL-RECTANGULAR | |

M - METRIC PART
Y - SEPARATE ILLUSTRATION

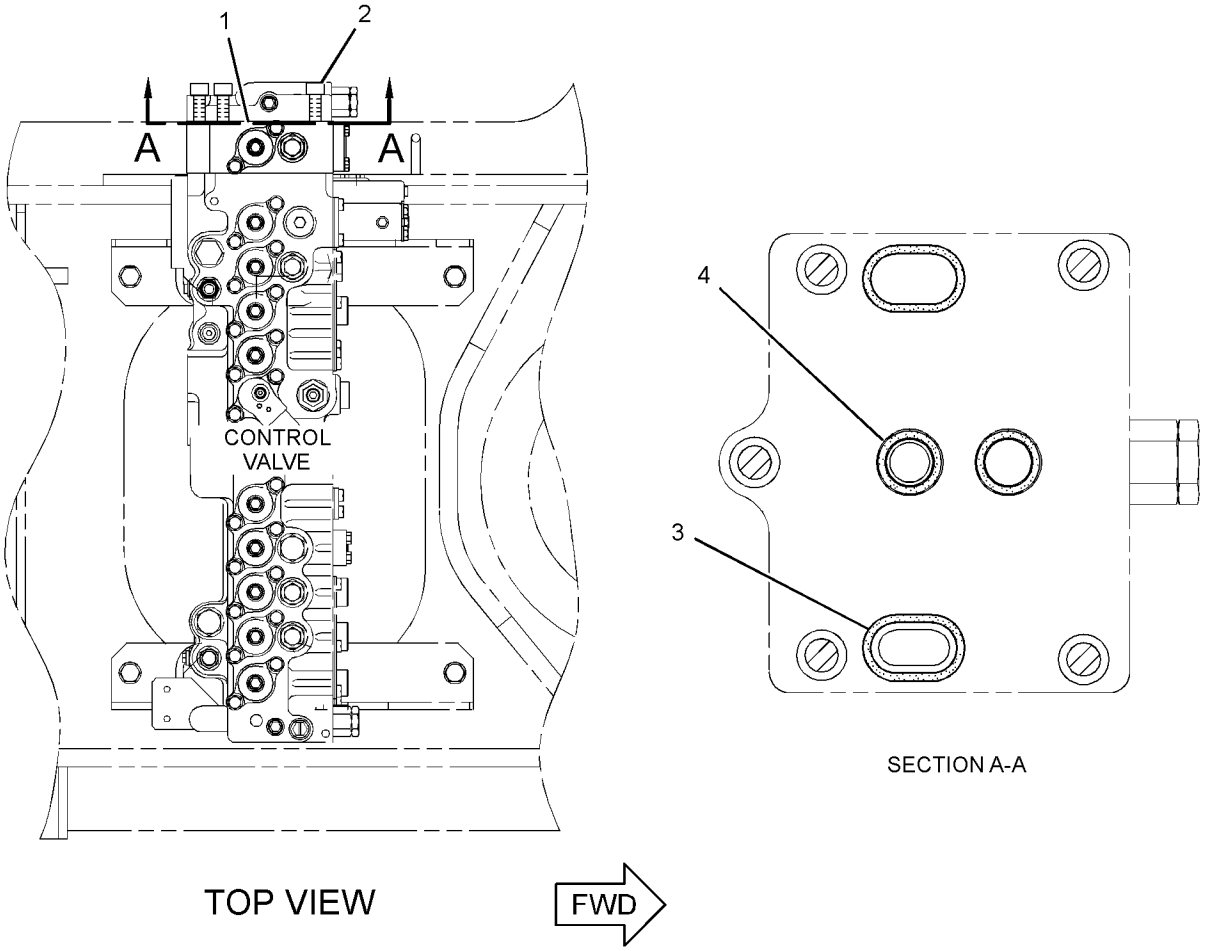


GRAPHIC #1 <END> g01214142

# *244-8400* VALVE GP-CONTROL—WITHOUT COVERS, HOUSINGS

**S/N: FEY1-UP**

**PART OF 259-7378 VALVE GP-CONTROL**

**SMCS-5051** **i06199720**

| NOTE | REF NO | GRAPHIC REF | PART NUMBER | QTY | PART NAME 1 2 3 4 5 6 (PRODUCT LEVEL) | SEE PAGE |
|---|---|---|---|---|---|---|
| | 1 | 1 | **104-7293** | 1 | SPRING | |
| Z | 2 | 1 | | 1 | STEM-AUXILIARY | |
| Z | 3 | 1 | | 1 | BLOCK | |
| M | 4 | 1 | **153-5276** | 1 | BOLT-SPECIAL (M10X1.5X82-MM) | |
| | 5 | 1 | **6E-2271** | 2 | RETAINER | |

M - METRIC PART
Z - NOT SERVICED SEPARATELY

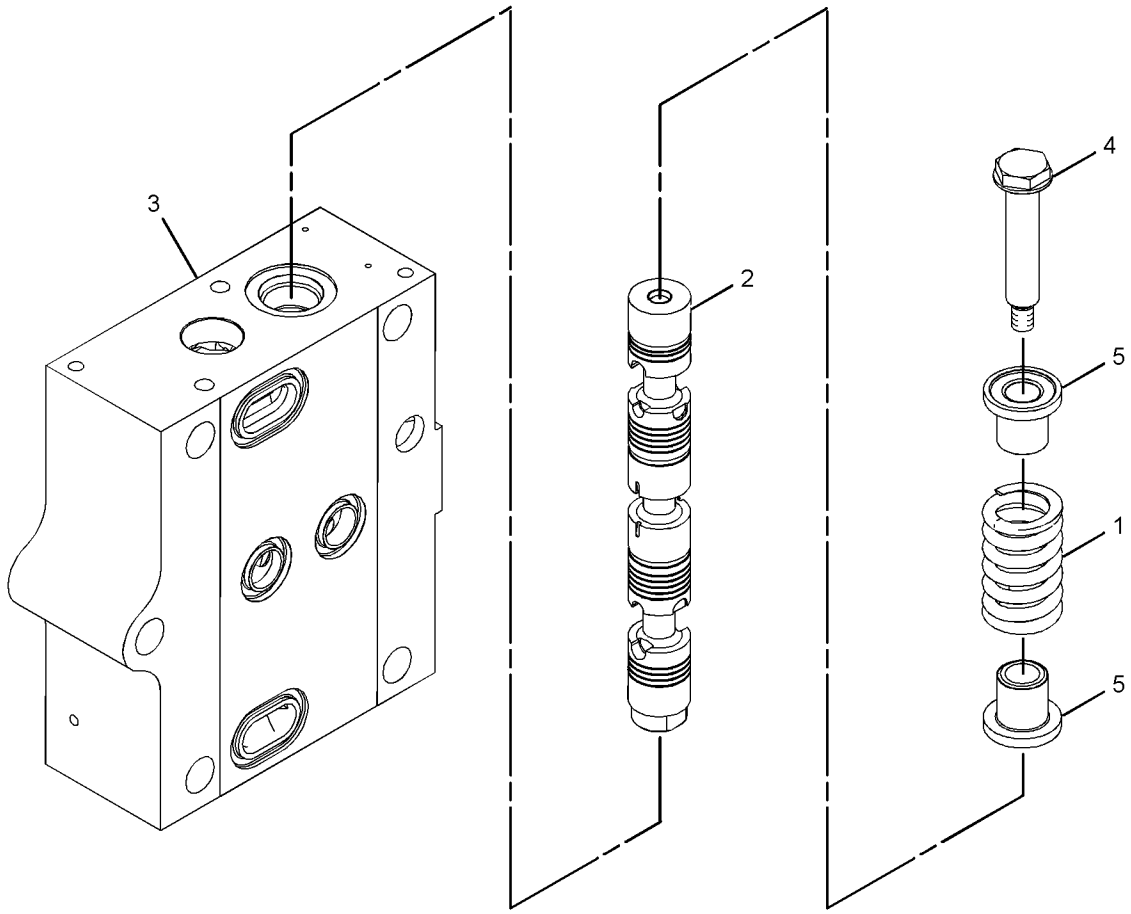


GRAPHIC #1 <END> g01235962

# 259-7378 VALVE GP-CONTROL–AUXILIARY

**S/N: FEY1-UP**

**PART OF 255-5713 VALVE & MTG GP-CONTROL**

**SMCS-5051** **i06199716**

| NOTE | REF NO | GRAPHIC REF | PART NUMBER | QTY | PART NAME 1 2 3 4 5 6 (PRODUCT LEVEL) | SEE PAGE |
|---|---|---|---|---|---|---|
| M | 1 | 1 | **8T-4195** | 12 | BOLT (M10X1.5X30-MM) | |
| | 2 | 1 | **4J-8998** | 2 | SEAL-O-RING | |
| | 3 | 1 | **6E-5731** | 1 | VALVE (LOAD CHECK) | |
| | 4 | 1 | **7I-1248** | 1 | SPRING | |
| | 5 | 1 | **171-0150** | 2 | COVER | |
| | 6 | 1 | **236-6419** | 1 | PLUG | |
| Y | 7 | 1 | *244-8400* | 1 | VALVE GP-CONTROL (WITHOUT COVERS, HOUSINGS) | 331 |
| Y | 8 | 1 | **255-5661** | 2 | VALVE GP-RELIEF (LINE) | 368 |
| | 9 | 1 | **8T-4121** | 4 | WASHER-HARD (11X21X2.5-MM THK) | |
| | 10 | 1 | **095-1590** | 1 | SEAL-O-RING | |
| | 11 | 1 | **095-1787** | 1 | RING-BACKUP | |
| | 12 | 1 | **158-8159** | 1 | HOUSING | |
| | 13 | 1 | **1P-3702** | 4 | SEAL-RECTANGULAR | |
| | 14 | 1 | **6E-2274** | 1 | COVER | |
| | 15 | 1 | **6V-5597** | 2 | SEAL-O-RING | |

M - METRIC PART
Y - SEPARATE ILLUSTRATION

*259-7378* **VALVE GP-CONTROL (**contd.**)** **i06199716**

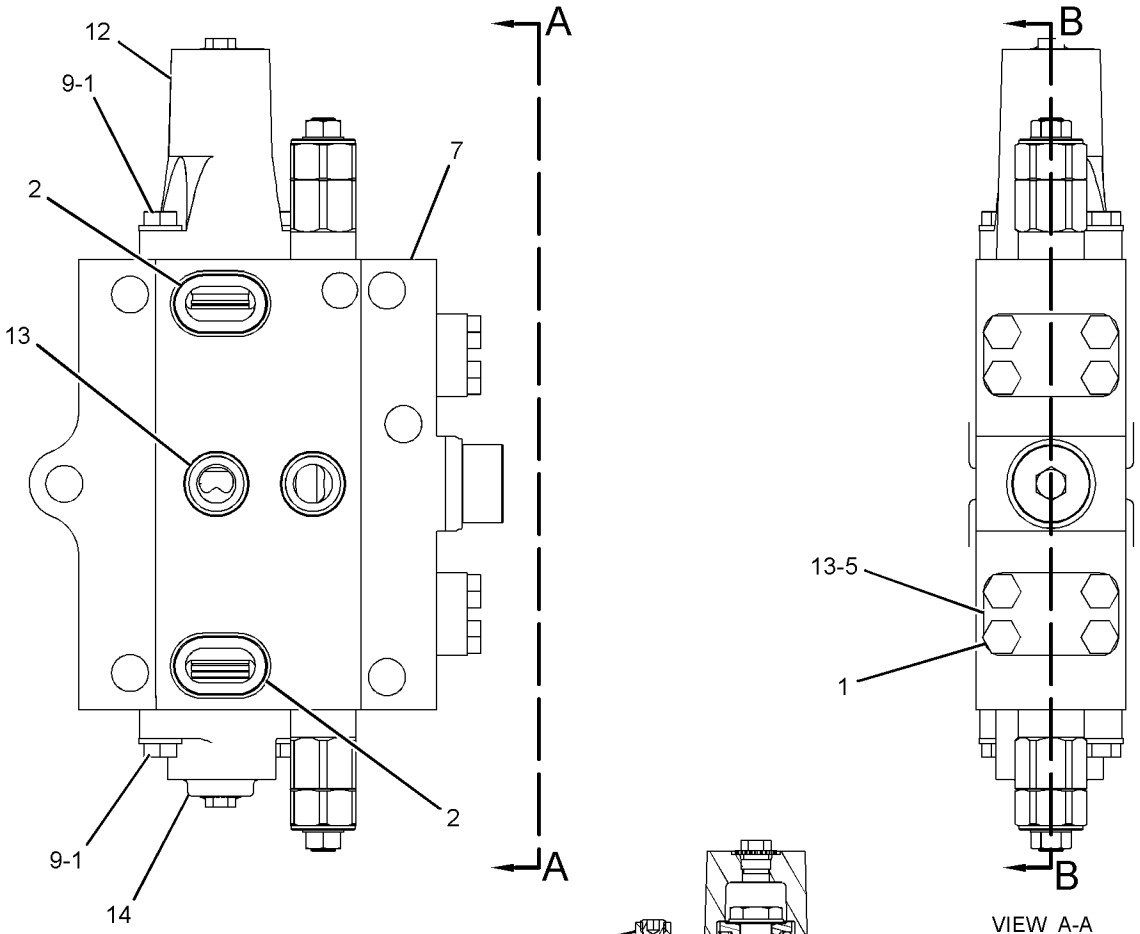


VIEW A-A

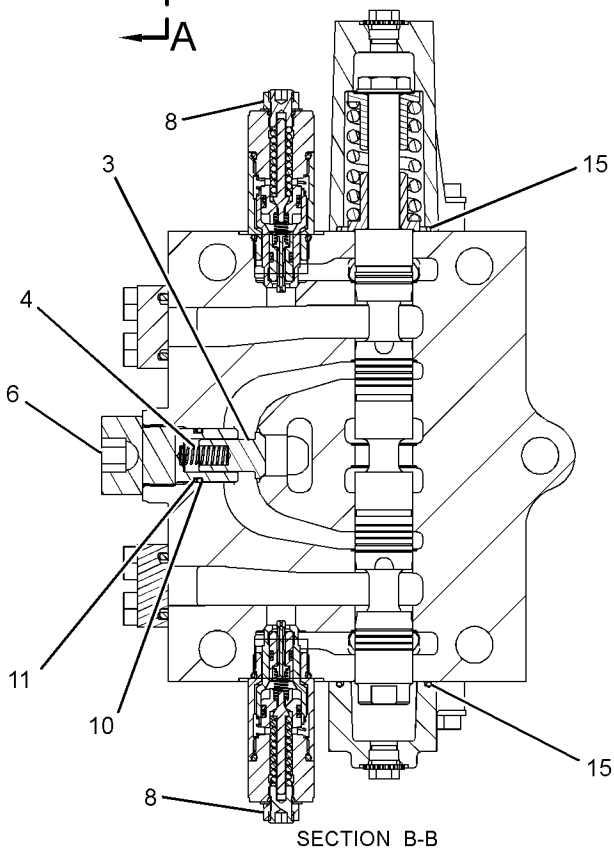


SECTION B-B

GRAPHIC #1 <END> g01219416

# 259-7632 VALVE GP-CONTROL—WITHOUT COVERS, HOUSINGS

**S/N: FEY1-UP**

**PART OF 352-7138 VALVE GP-CONTROL**

**SMCS-5051** **i04916999**

| NOTE | REF NO | GRAPHIC REF | PART NUMBER | QTY | PART NAME 1 2 3 4 5 6 (PRODUCT LEVEL) | SEE PAGE |
|---|---|---|---|---|---|---|
| | 1 | 1 | **2S-2596** | 1 | SPRING | |
| | 2 | 1 | **6E-2163** | 1 | VALVE-CHECK (STRAIGHT TRAVEL) | |
| | 3 | 1 | **6E-2271** | 8 | RETAINER | |
| | 4 | 1 | **352-7057** | 2 | SPRING-RETURN | |
| | 5 | 1 | **352-7058** | 1 | SPRING-RETURN | |
| | 6 | 1 | **352-7059** | 1 | SPRING-RETURN | |
| M | 7 | 1 | **153-5276** | 4 | BOLT-SPECIAL (M10X1.5X82-MM) | |
| | 8 | 1 | **3K-0360** | 1 | SEAL-O-RING | |

M - METRIC PART

*259-7632* **VALVE GP-CONTROL (**contd.**)** **i04916999**

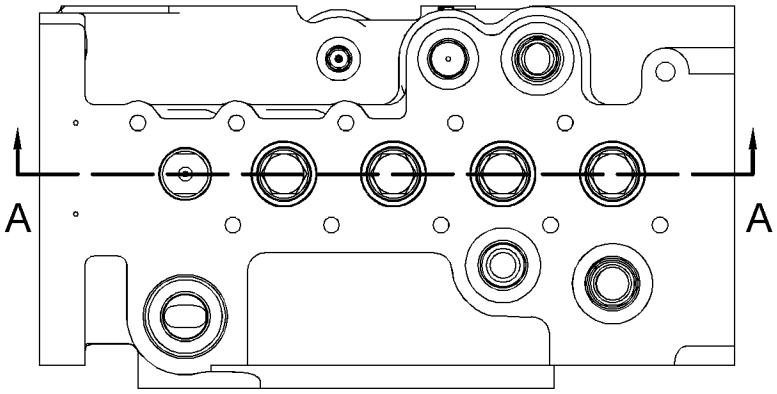


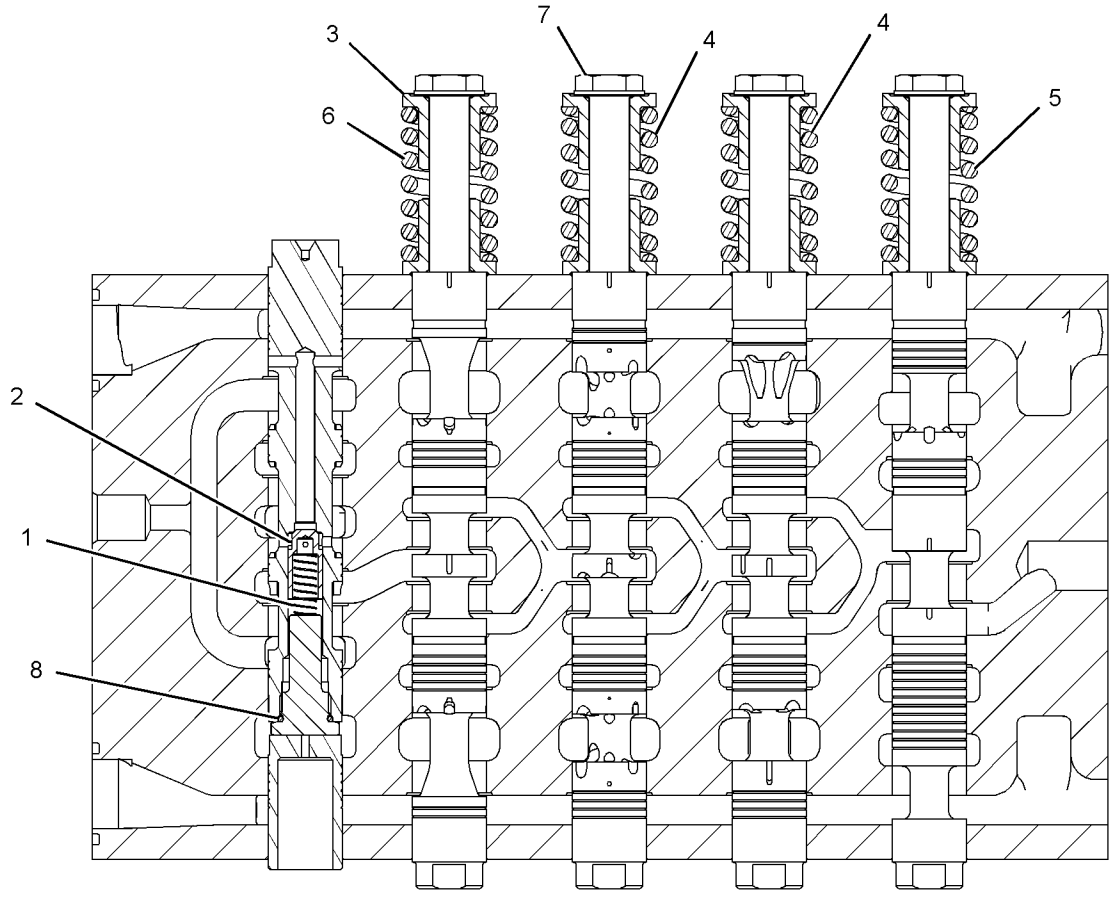


SECTION A-A

GRAPHIC #1 <END> g02689837

# 352-7138 VALVE GP-CONTROL—BOOM, STICK, SWING, TRAVEL

**S/N: FEY1-UP**

**PART OF 259-7464 VALVE GP-MAIN CONTROL**

**SMCS-5051** **i06925685**

| NOTE | REF NO | GRAPHIC REF | PART NUMBER | QTY | PART NAME 1 2 3 4 5 6 (PRODUCT LEVEL) | SEE PAGE |
|---|---|---|---|---|---|---|
| | 1 | 2,3 | **4T-3148** | 3 | SPRING | |
| | 2 | 1 | **6E-2274** | 5 | COVER | |
| | 3 | 3 | **6E-5169** | 1 | SPRING | |
| | 4 | 2,3 | **6E-5643** | 3 | VALVE (LOAD CHECK) (BOOM II, STRAIGHT TRAVEL) | |
| | 5 | 2 | **7I-1248** | 1 | SPRING | |
| Y | 6 | 1 | **121-1491** | 1 | VALVE GP-SOLENOID (STRAIGHT TRAVEL) | 375 |
| | 7 | 3 | **153-5288** | 1 | SPRING | |
| | 8 | 3 | **153-5289** | 1 | GUIDE | |
| | 9 | 3 | **153-5290** | 2 | PLUG | |
| | 10 | 3 | **153-5291** | 1 | CONNECTOR | |
| | 11 | 3 | **153-5292** | 1 | VALVE-CHECK (BOOM 2) | |
| | 12 | 3 | **153-5293** | 1 | SPRING | |
| Y | 13 | 2 | **323-7898** | 1 | VALVE GP-PRIORITY (SWING) (BOOM 2) | 359 |
| | 14 | 2 | **153-5298** | 1 | SLEEVE | |
| | 15 | 2 | **153-5299** | 1 | VALVE (STICK 1) | |
| | 16 | 2 | **153-5306** | 1 | SPRING | |
| | 17 | 3 | **153-5309** | 1 | SLEEVE | |
| | 18 | 3 | **153-5311** | 1 | SPRING | |
| | 19 | 3 | **158-8150** | 1 | VALVE GP-UNLOADING (SWING) | |
| | 20 | 1 | **158-8159** | 4 | HOUSING | |
| | 21 | 1 | **158-8206** | 1 | HOUSING | |
| | 22 | 3 | **158-8207** | 1 | STOPPER | |
| | 23 | 2 | **323-7897** | 1 | COVER | |
| | 24 | 3 | **201-9263** | 2 | PLUG | |
| | 25 | 1,2 | *225-4818* | 3 | PLUG AS | |
| | | | | | (EACH INCLUDES) | |
| | | 1,2 | **4J-7533** | 1 | SEAL-O-RING | |
| | | 1,2 | **225-4804** | 1 | PLUG | |
| | 26 | 2 | **236-6419** | 1 | PLUG | |
| | 27 | 3 | **236-6421** | 1 | PLUG | |
| | 28 | 2 | **250-2446** | 1 | PLUG | |
| | 29 | 3 | **250-2447** | 1 | PLUG | |
| Y | 30 | 3 | **352-7116** | 1 | VALVE GP-RELIEF (PILOT OPERATED) (STRAIGHT TRAVEL) | 369 |
| Y | 31 | 2 | **352-7122** | 1 | VALVE GP-RELIEF (PILOT OPERATED) (STICK 1) | 370 |
| Y | 32 | 1 | **259-7632** | 1 | VALVE GP-CONTROL (WITHOUT COVERS, HOUSINGS) | 334 |
| | 33 | 2 | **264-9961** | 1 | PLUG | |
| | 34 | 3 | **095-1575** | 1 | SEAL-O-RING | |
| | 35 | 2,3 | **095-1590** | 3 | SEAL-O-RING | |
| | 36 | 3 | **095-1603** | 1 | SEAL-O-RING | |
| | 37 | 3 | **095-1778** | 1 | RING-BACKUP | |
| | 38 | 2,3 | **095-1787** | 3 | RING-BACKUP | |
| | 39 | 2 | **255-5594** | 1 | SEAL-O-RING | |
| | 40 | 3 | **103-8177** | 1 | ADAPTER | |
| | 41 | 3 | **123-2485** | 1 | PLUG | |
| | 42 | 3 | **2M-9780** | 1 | SEAL-O-RING | |
| | 43 | 3 | **3J-1907** | 1 | SEAL-O-RING | |
| | 44 | 1 | **4I-3569** | 1 | RING-BACKUP | |

*352-7138* **VALVE GP-CONTROL (**contd.**)** **i06925685**

| NOTE | REF NO | GRAPHIC REF | PART NUMBER | QTY | PART NAME 1 2 3 4 5 6 (PRODUCT LEVEL) | SEE PAGE |
|---|---|---|---|---|---|---|
| | 45 | 3 | **4I-6397** | 3 | RING-BACKUP | |
| | 46 | 2 | **4J-5309** | 1 | SEAL-O-RING | |
| | 47 | 2 | **4T-5074** | 1 | RING-BACKUP | |
| | 48 | 1 | **6E-3653** | 1 | PLUG | |
| | 49 | 2 | **6E-5731** | 1 | VALVE (LOAD CHECK) (SWING) | |
| | 50 | 3 | **6V-3922** | 3 | SEAL-O-RING | |
| | 51 | 3 | **6V-5393** | 1 | SEAL-O-RING | |
| | 52 | 2 | **6V-5556** | 1 | SEAL-O-RING | |
| | 53 | 2,3 | **6V-5597** | 9 | SEAL-O-RING | |
| M | 54 | 1 | **7I-2272** | 2 | BOLT (M5X0.8X12-MM) | |
| | 55 | 3 | **7M-8485** | 2 | SEAL-O-RING | |
| M | 56 | 2 | **7X-2621** | 1 | BOLT (M10X1.5X12-MM) | |
| | 57 | 1 | **7Y-5219** | 1 | SEAL-O-RING | |
| | 58 | 1,2 | **8T-4121** | 24 | WASHER-HARD (11X21X2.5-MM THK) | |
| M | 59 | 1 | **8T-4195** | 20 | BOLT (M10X1.5X30-MM) | |
| M | 60 | 2 | **8T-6685** | 4 | BOLT (M10X1.5X110-MM) | |
| | 61 | 1 | **8T-6759** | 2 | PLUG-PIPE | |
| | 62 | 3 | **111-9959** | 1 | PLUG-PIPE | |

M - METRIC PART
Y - SEPARATE ILLUSTRATION

*352-7138* **VALVE GP-CONTROL (**contd.**)** **i06925685**

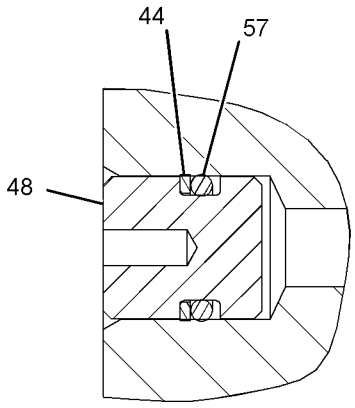


SECTION J-J

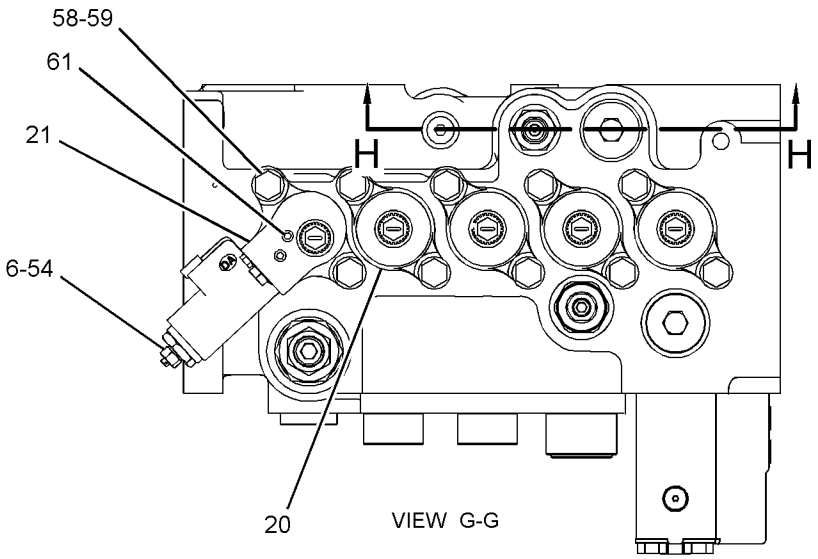


VIEW G-G

REFER TO ALL ILLUSTRATIONS OF THIS GROUP FOR AUXILIARY VIEWS

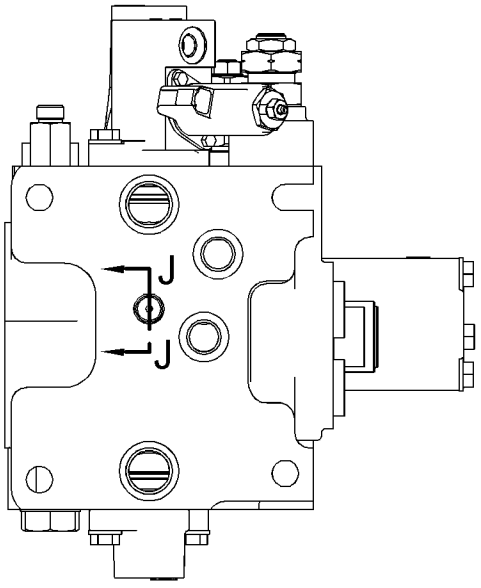


VIEW A-A

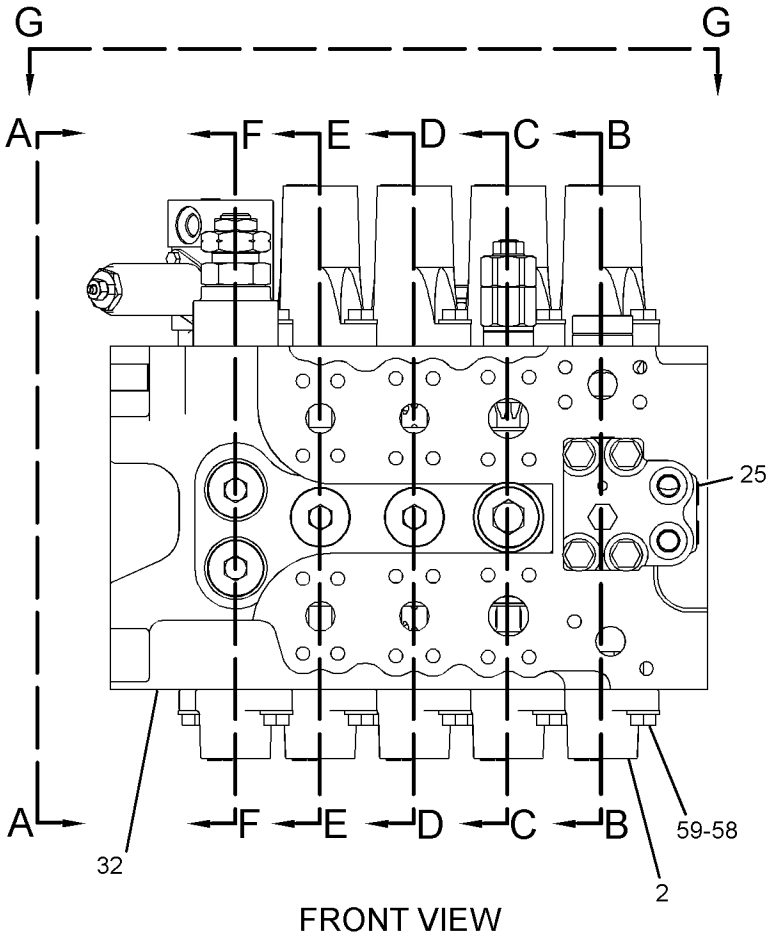


FRONT VIEW

GRAPHIC #1 g02482439

*352-7138* **VALVE GP-CONTROL (**contd.**)** **i06925685**

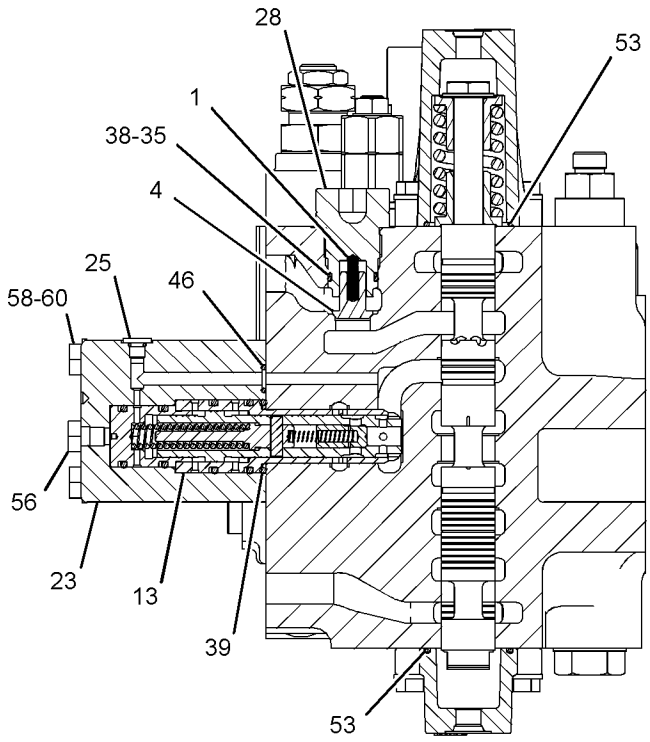


SECTION B-B

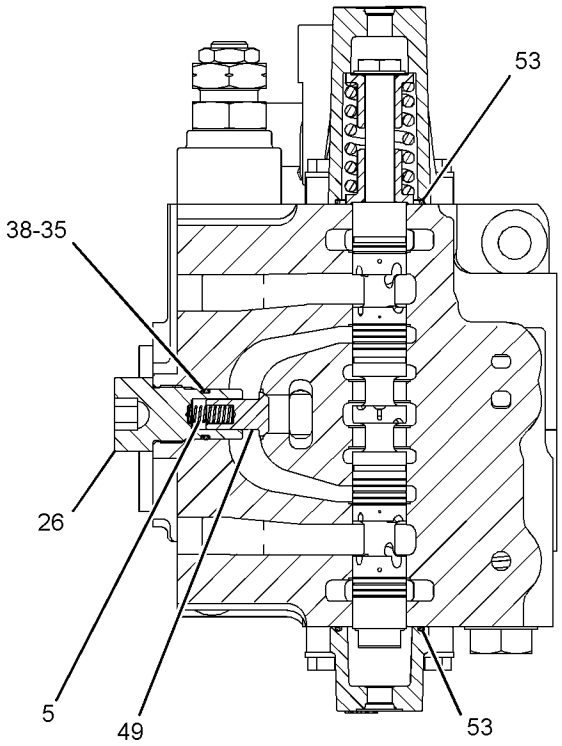


SECTION D-D

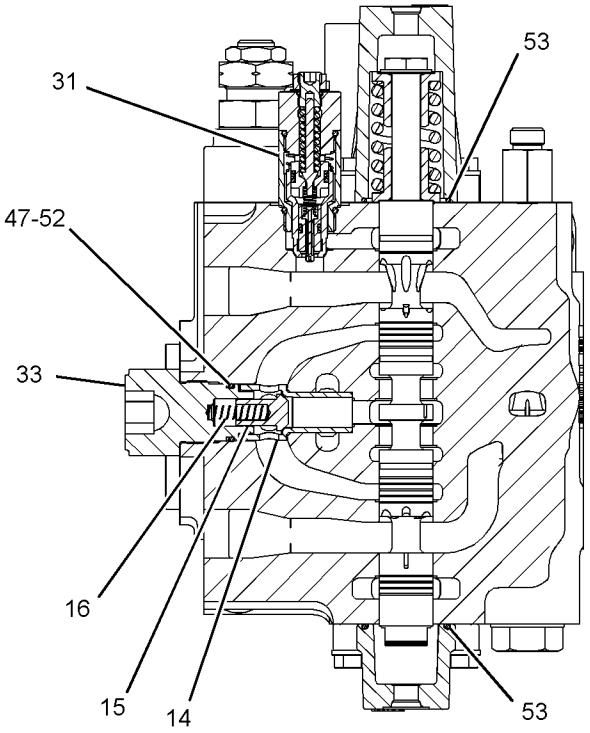


SECTION C-C

GRAPHIC #2 g02482442

*352-7138* **VALVE GP-CONTROL (**contd.**)** **i06925685**

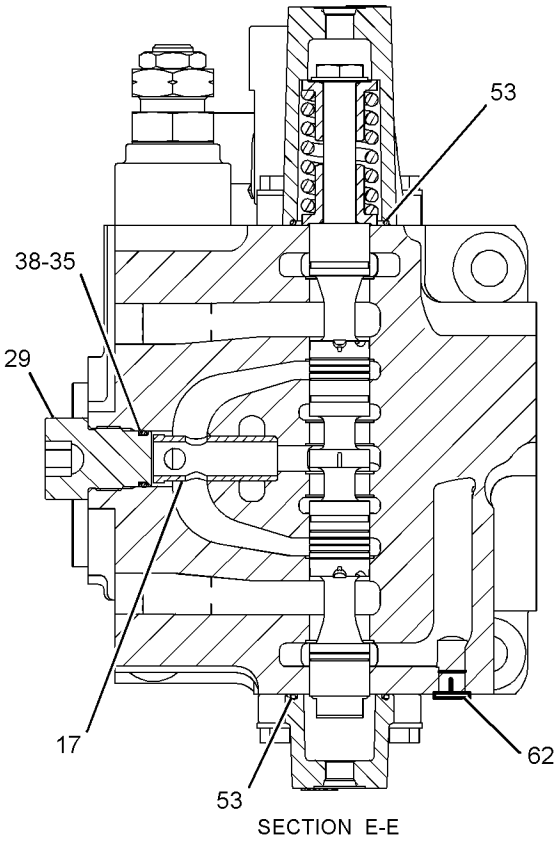


SECTION E-E

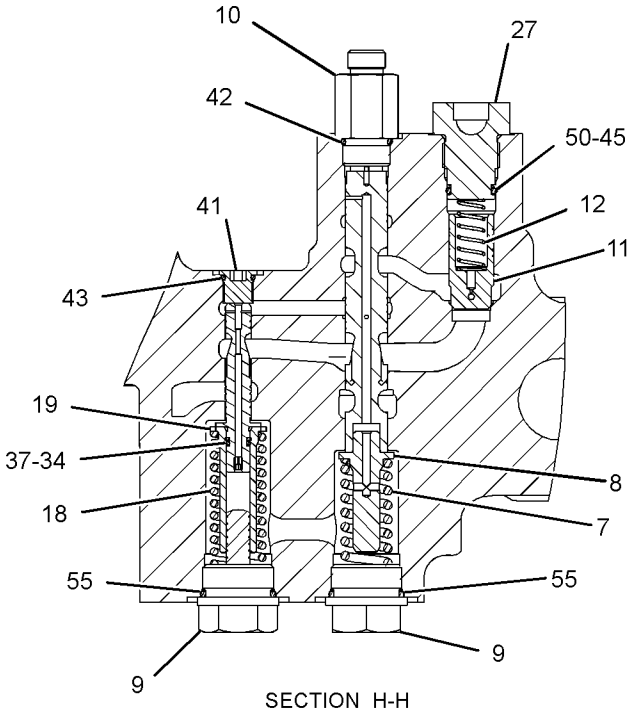


SECTION H-H

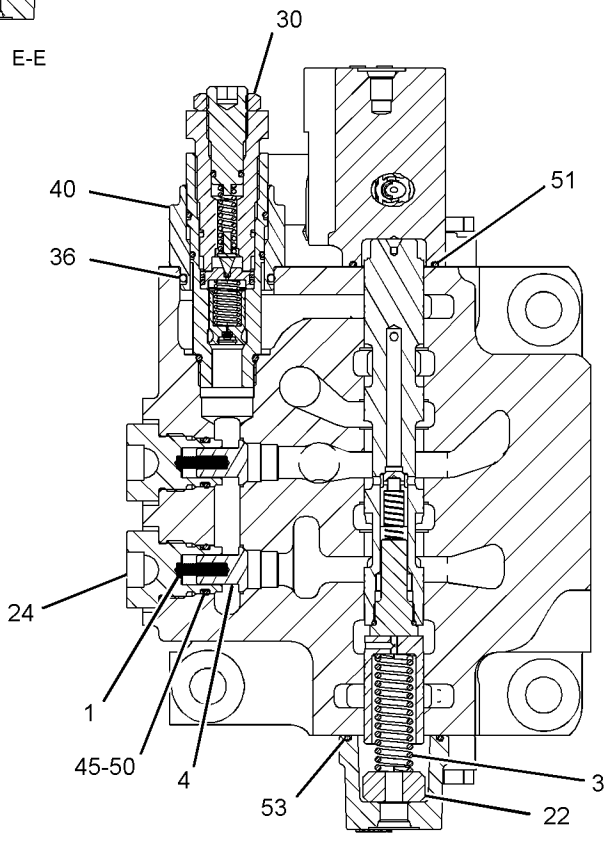


SECTION F-F

GRAPHIC #3 <END> g02696758

## *435-1484* VALVE GP-CONTROL—STK, BM, BKT, WKTL, TRVL RH

**S/N: FEY1-UP**

**PART OF 259-7464 VALVE GP-MAIN CONTROL**

**SMCS-5051** **i06925737**

| NOTE | REF NO | GRAPHIC REF | PART NUMBER | QTY | PART NAME 1 2 3 4 5 6 (PRODUCT LEVEL) | SEE PAGE |
|---|---|---|---|---|---|---|
| | 1 | 1 | **6E-2274** | 5 | COVER | |
| | 2 | 1 | **6E-5731** | 4 | VALVE (LOAD CHECK) | |
| | 3 | 1 | **7I-1248** | 5 | SPRING | |
| | 4 | 1 | **7Y-8099** | 2 | COVER | |
| | 5 | 1 | **153-5286** | 1 | VALVE (LOAD CHECK) | |
| | 6 | 1 | **153-5288** | 1 | SPRING | |
| | 7 | 1 | **153-5289** | 1 | GUIDE | |
| | 8 | 1 | **153-5290** | 1 | PLUG | |
| | 9 | 1 | **153-5291** | 1 | CONNECTOR | |
| | 10 | 1 | **153-5292** | 1 | VALVE-CHECK | |
| | 11 | 1 | **153-5293** | 1 | SPRING | |
| | 12 | 1 | **158-8159** | 5 | HOUSING | |
| | 13 | 1 | **236-6419** | 5 | PLUG | |
| | 14 | 1 | **236-6421** | 1 | PLUG | |
| Y | 15 | 1 | *310-0404* | 2 | PLUG GP-CONTROL VALVE | 315 |
| | | | | | (EACH INCLUDES) | |
| | | 1 | **3D-2824** | 1 | SEAL-O-RING | |
| | | 1 | **6M-5062** | 1 | SEAL-O-RING | |
| | | 1 | **9J-0705** | 1 | RING-BACKUP | |
| | | 1 | **310-0405** | 1 | PLUG | |
| Y | 16 | 1 | **352-7122** | 3 | VALVE GP-RELIEF (PILOT OPERATED) | 370 |
| Y | 17 | 1 | *435-1485* | 1 | VALVE GP-CONTROL (WITHOUT COVERS, HOUSINGS) | 343 |
| | 18 | 1 | **095-1590** | 5 | SEAL-O-RING | |
| | 19 | 1 | **095-1787** | 5 | RING-BACKUP | |
| Y | 20 | 1 | **109-5152** | 1 | VALVE GP-RELIEF (NEGATIVE FLOW CONTROL) | 361 |
| | 21 | 1 | **111-9959** | 2 | PLUG-PIPE | |
| | 22 | 1 | **2M-9780** | 1 | SEAL-O-RING | |
| | 23 | 1 | **4I-6397** | 1 | RING-BACKUP | |
| | 24 | 1 | **4J-0520** | 2 | SEAL-O-RING | |
| | 25 | 1 | **6V-3922** | 1 | SEAL-O-RING | |
| | 26 | 1 | **6V-5597** | 10 | SEAL-O-RING | |
| | 27 | 1 | **7M-8485** | 1 | SEAL-O-RING | |
| | 28 | 1 | **8T-4121** | 20 | WASHER-HARD (11X21X2.5-MM THK) | |
| M | 29 | 1 | **8T-4195** | 28 | BOLT (M10X1.5X30-MM) | |

M - METRIC PART
Y - SEPARATE ILLUSTRATION

*435-1484* **VALVE GP-CONTROL (**contd.**)** **i06925737**

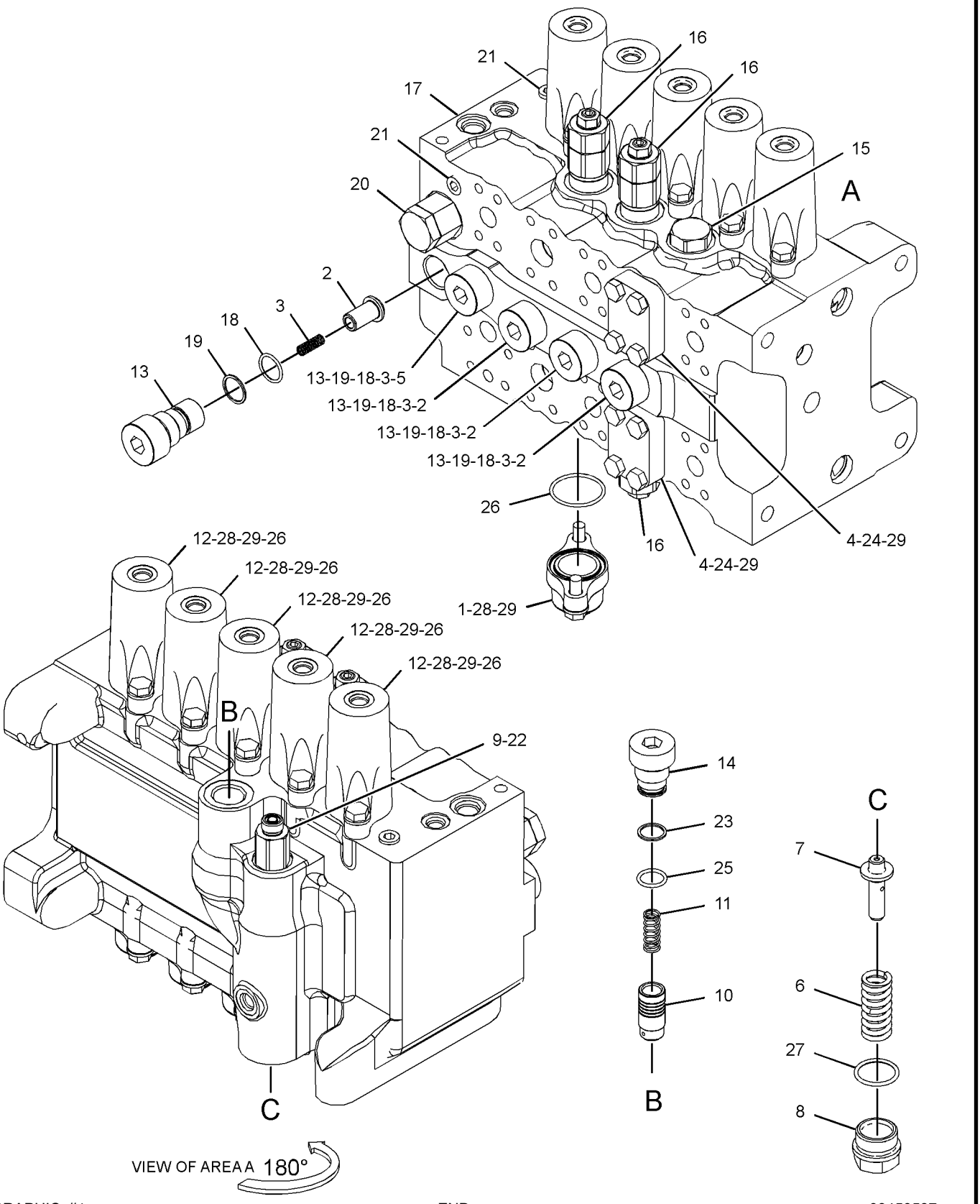


GRAPHIC #1 <END> g03450537

# *435-1485* VALVE GP-CONTROL—WITHOUT COVERS, HOUSINGS

**S/N: FEY1-UP**

**PART OF 435-1484 VALVE GP-CONTROL**

**SMCS-5051** **i06925777**

| NOTE | REF NO | GRAPHIC REF | PART NUMBER | QTY | PART NAME 1 2 3 4 5 6 (PRODUCT LEVEL) | SEE PAGE |
|---|---|---|---|---|---|---|
| | 1 | 1 | **6E-2271** | 10 | RETAINER | |
| | 2 | 1 | **352-7059** | 1 | SPRING-RETURN | |
| | 3 | 1 | **352-7058** | 1 | SPRING-RETURN | |
| M | 4 | 1 | **153-5276** | 5 | BOLT-SPECIAL (M10X1.5X82-MM) | |
| | 5 | 1 | **352-7057** | 3 | SPRING-RETURN | |

M - METRIC PART

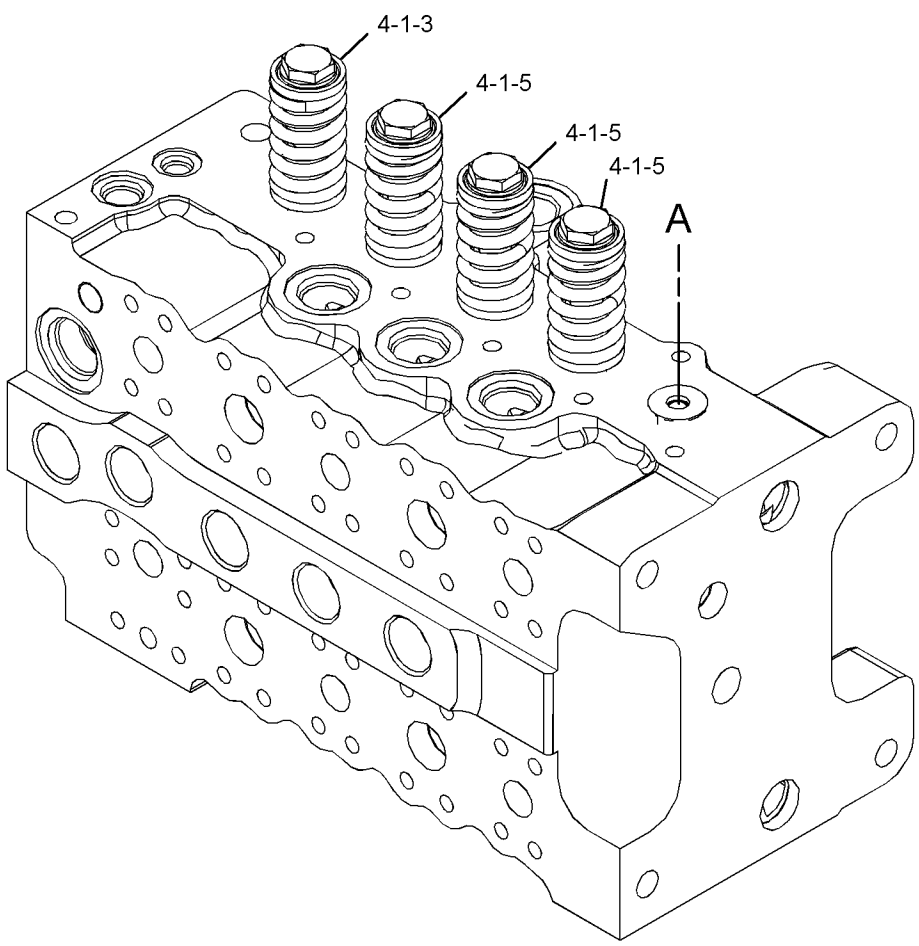


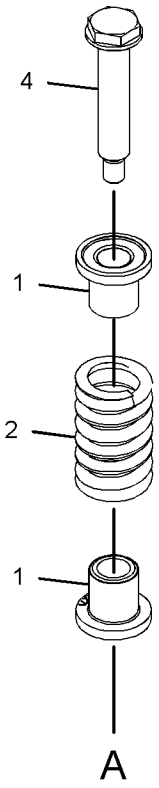


GRAPHIC #1 <END> g03448962

# 255-5680 VALVE GP-LOAD CONTROL—STICK DRIFT RED, LINE RELIEF

**S/N: FEY1-UP**

**PART OF 239-1714 LINES GP-FRONT**

**SMCS-5067, 5117, 5147, 5811** **i07231205**

| NOTE | REF NO | GRAPHIC REF | PART NUMBER | QTY | PART NAME 1 2 3 4 5 6 (PRODUCT LEVEL) | SEE PAGE |
|---|---|---|---|---|---|---|
| M | 1 | 1 | **8T-4136** | 4 | BOLT (M10X1.5X25-MM) | |
| | 2 | 1 | **4I-8965** | 1 | GUIDE | |
| | 3 | 1 | **5I-8511** | 1 | SPRING | |
| | 4 | 1 | **087-5166** | 1 | SPRING | |
| | 5 | 1 | **118-4044** | 1 | COVER | |
| | 7 | 1 | **147-4184** | 1 | PLUG | |
| | 8 | 1 | *225-4818* | 2 | PLUG AS | |
| | | | | | (EACH INCLUDES) | |
| | | 1 | **4J-7533** | 1 | SEAL-O-RING | |
| | | 1 | **225-4804** | 1 | PLUG | |
| Y | 9 | 1 | **352-7123** | 1 | VALVE GP-RELIEF (LINE) | 371 |
| | 11 | 1 | **095-1594** | 1 | SEAL-O-RING | |
| | 12 | 1 | **095-1789** | 1 | RING | |
| | 13 | 1 | *148-8395* | 1 | PLUG AS | |
| | | 1 | **3K-0360** | 1 | SEAL-O-RING | |
| | | 1 | **9S-8005** | 1 | PLUG (3/4-16-THD) | |
| | 14 | 1 | *162-0177* | 1 | PLUG AS | |
| | | 1 | **3J-1907** | 1 | SEAL-O-RING | |
| | | 1 | **9S-8004** | 1 | PLUG (9/16-18-THD) | |

M - METRIC PART
Y - SEPARATE ILLUSTRATION

*255-5680* **VALVE GP-LOAD CONTROL** (contd.) **i07231205**

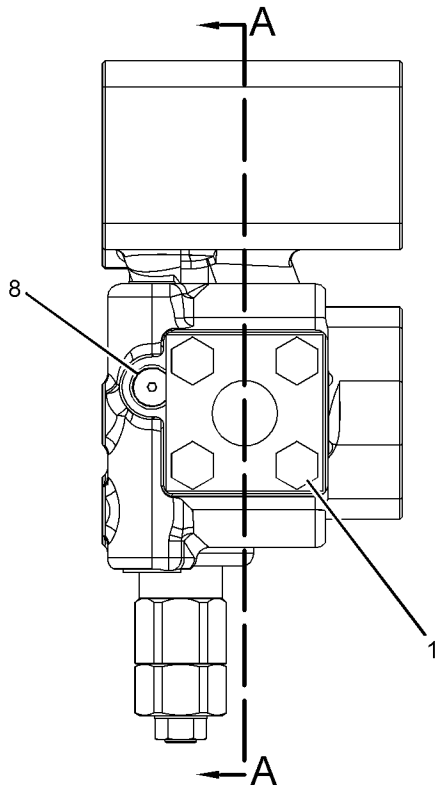


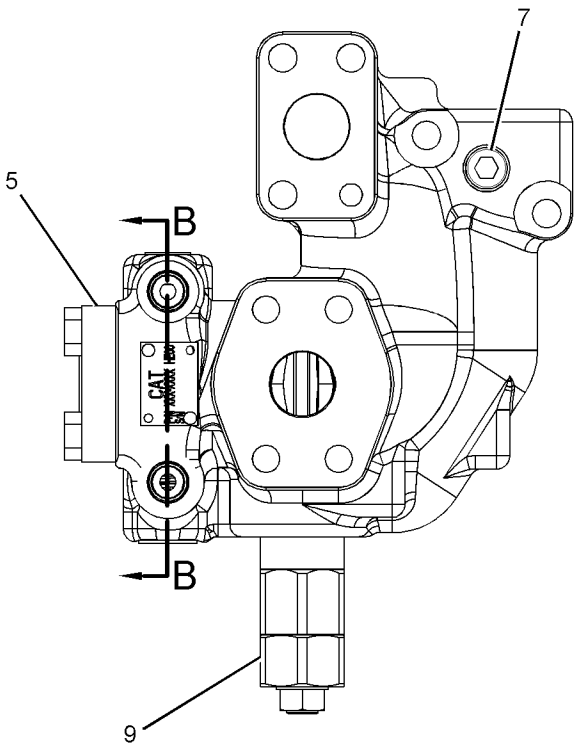


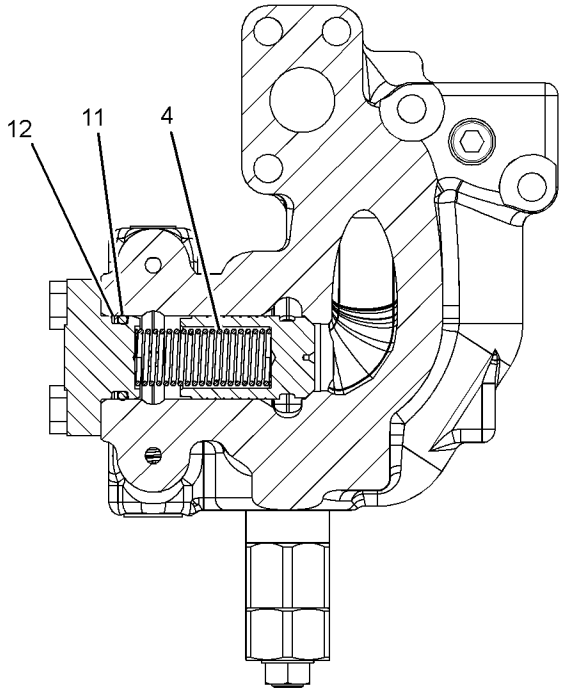


SECTION A-A

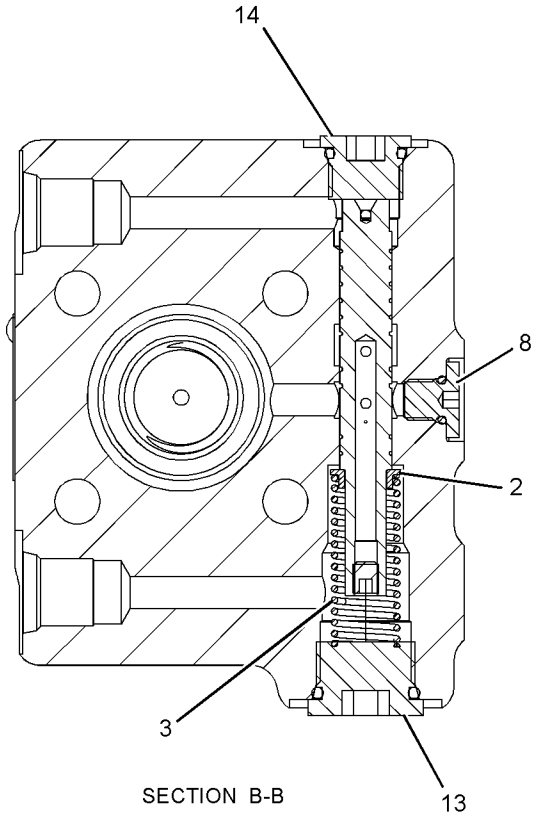


SECTION B-B

GRAPHIC #1 <END> g02320560

# 255-5683 VALVE GP-LOAD CONTROL—BOOM DRIFT RED, LINE RELIEF

**S/N: FEY1-UP**

**PART OF 239-1714 LINES GP-FRONT**

**SMCS-5067, 5117, 5147, 5811** **i05282303**

| NOTE | REF NO | GRAPHIC REF | PART NUMBER | QTY | PART NAME 1 2 3 4 5 6 (PRODUCT LEVEL) | SEE PAGE |
|---|---|---|---|---|---|---|
| M | 1 | 1 | **8T-4136** | 4 | BOLT (M10X1.5X25-MM) | |
| | 2 | 1 | **4I-8965** | 1 | GUIDE | |
| | 3 | 1 | **5I-8511** | 1 | SPRING | |
| | 4 | 1 | **087-5166** | 1 | SPRING | |
| | 5 | 1 | **118-4044** | 1 | COVER | |
| | 7 | 1 | *225-4818* | 2 | PLUG AS | |
| | | | | | (EACH INCLUDES) | |
| | | 1 | **225-4804** | 1 | PLUG | |
| | 7A | 1 | **4J-7533** | 1 | SEAL-O-RING | |
| CY | 8 | 1 | **352-7123** | 1 | VALVE GP-RELIEF (LINE) (BOOM CYLINDER) | 371 |
| | 10 | 1 | **095-1594** | 1 | SEAL-O-RING | |
| | 11 | 1 | **095-1789** | 1 | RING | |
| | 12 | 1 | *148-8395* | 1 | PLUG AS | |
| | | 1 | **9S-8005** | 1 | PLUG (3/4-16-THD) | |
| | 12A | 1 | **3K-0360** | 1 | SEAL-O-RING | |
| | 13 | 1 | *148-8407* | 1 | PLUG AS | |
| | | 1 | **9S-4191** | 1 | PLUG (9/16-18-THD) | |
| | 13A | 1 | **3J-1907** | 1 | SEAL-O-RING | |
| | 14 | 1 | **190-7865** | 1 | CONNECTOR | |
| | 15 | 1 | **3J-1907** | 1 | SEAL-O-RING | |
| | 16 | 1 | **6V-8397** | 1 | SEAL-O-RING | |

C - CHANGE FROM PREVIOUS TYPE
M - METRIC PART
Y - SEPARATE ILLUSTRATION

*255-5683* **VALVE GP-LOAD CONTROL (**contd.**)** **i05282303**

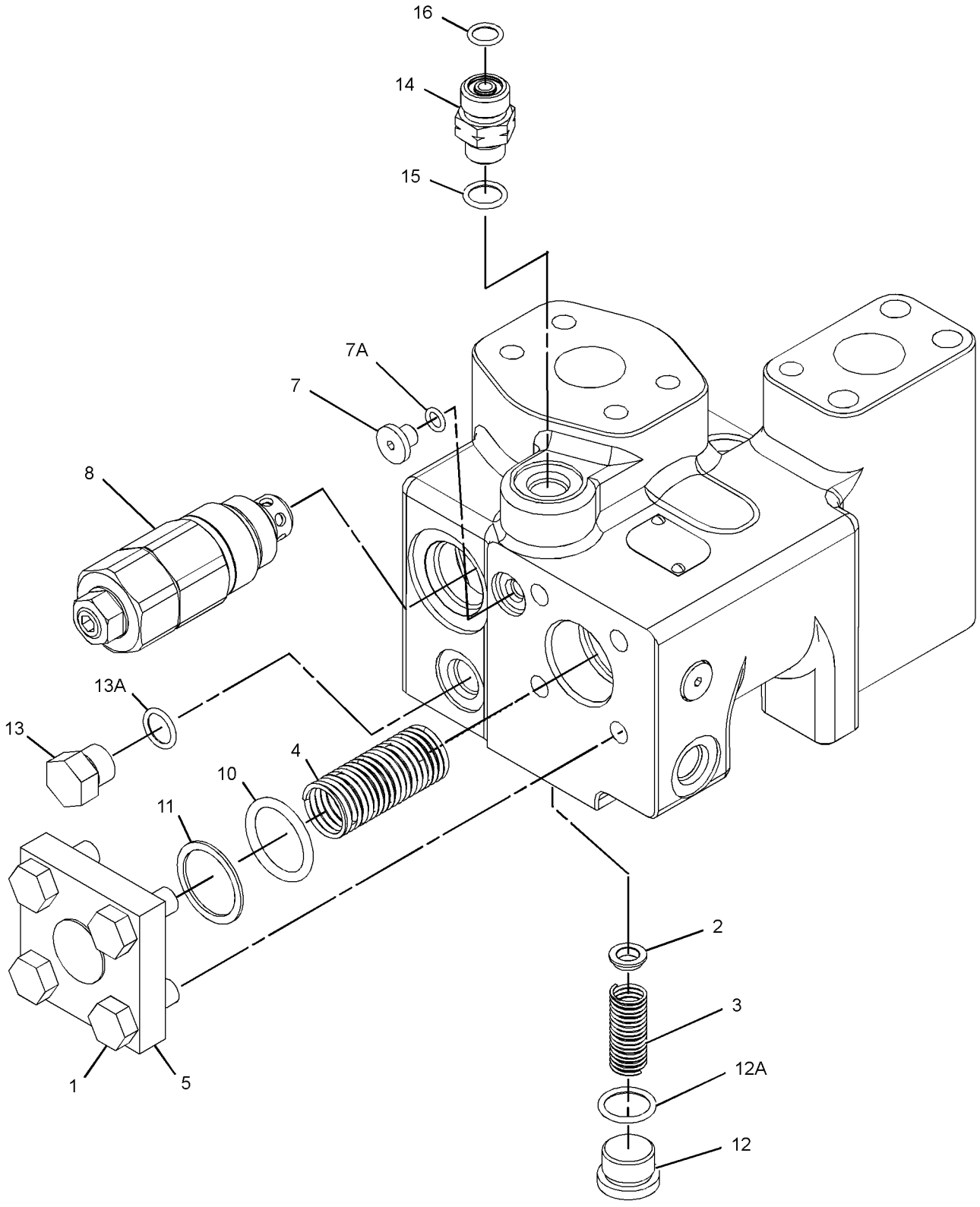


GRAPHIC #1 <END> g03358446

# 259-7464 VALVE GP-MAIN CONTROL

**S/N: FEY1-UP**

**PART OF 556-6437 HYDRAULIC AR**

**SMCS-5051** **i06984686**

| NOTE | REF NO | GRAPHIC REF | PART NUMBER | QTY | PART NAME 1 2 3 4 5 6 (PRODUCT LEVEL) | SEE PAGE |
|---|---|---|---|---|---|---|
| Y | 1 | 1 | **153-5313** | 1 | VALVE GP-RELIEF (NEGATIVE FLOW CONTROL) | 362 |
| CY | 2 | 1 | **435-1484** | 1 | VALVE GP-CONTROL (STK, BM, BKT, WKTL, TRVL RH) | 341 |
| Y | 3 | 1 | **352-7138** | 1 | VALVE GP-CONTROL (BOOM, STICK, SWING, TRAVEL) | 336 |
| | 4 | 1 | **1P-3702** | 2 | SEAL-RECTANGULAR | |
| | 5 | 1 | **4J-0519** | 2 | SEAL-O-RING | |
| M | 6 | 1 | **447-1707** | 5 | BOLT (M16X2X60-MM) | |
| M | 7 | 1 | **447-1711** | 4 | BOLT (M16X2X50-MM) | |
| | 8 | 1 | **451-2175** | 9 | WASHER-HARD (17.5X30X3.5-MM THK) | |

C - CHANGE FROM PREVIOUS TYPE
M - METRIC PART
Y - SEPARATE ILLUSTRATION

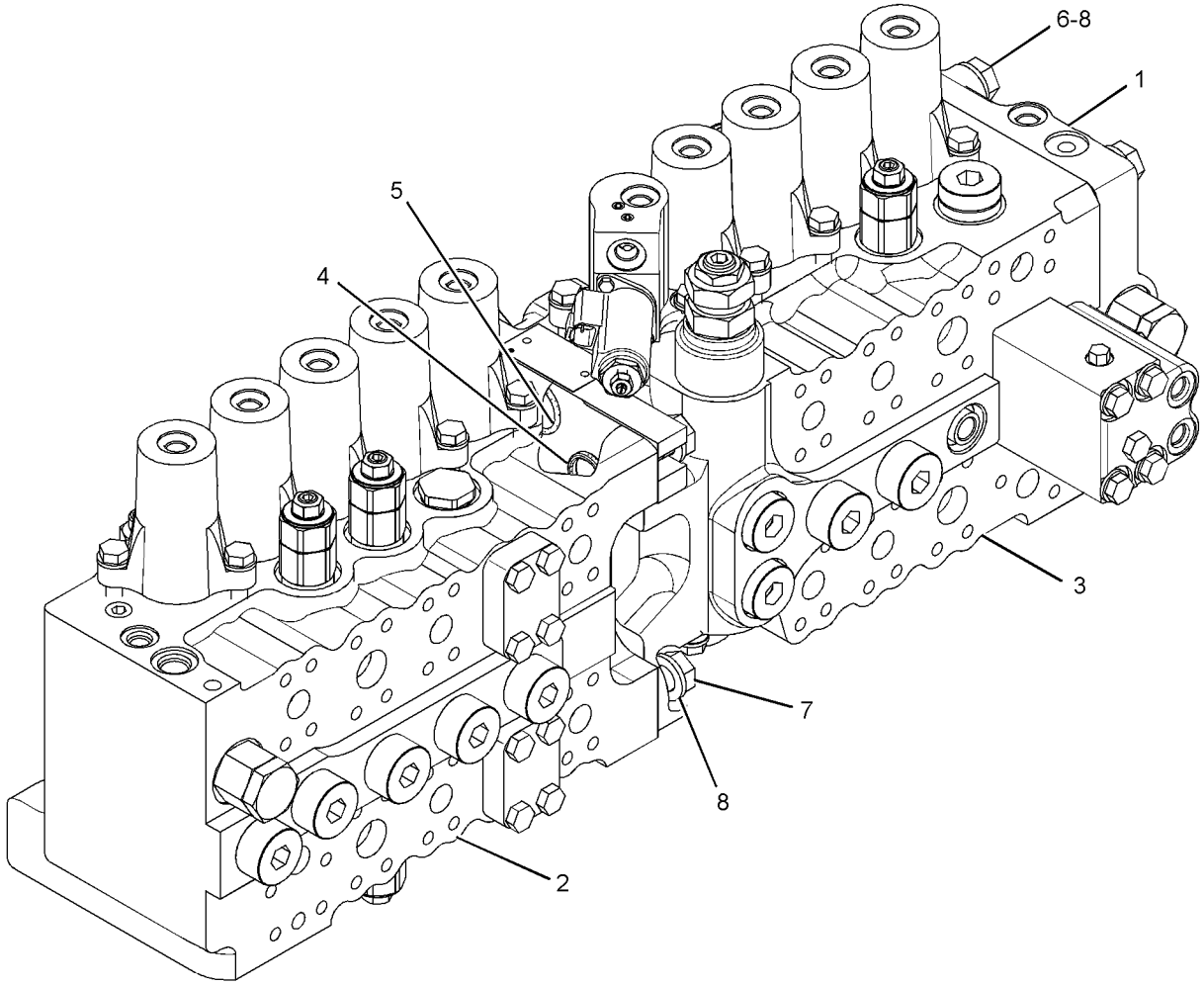


GRAPHIC #1 <END> g01190229

# 173-7992 VALVE GP-MANUAL–AUXILIARY, SHUTOFF

**S/N: FEY1-UP**

**PART OF 237-3184 LINES GP-AUXILIARY HYDRAULIC**

**SMCS-1329, 5001, 5130**

**i06199652**

| NOTE | PART NUMBER | QTY | PART NAME 1 2 3 4 5 6 (PRODUCT LEVEL) | SEE PAGE |
|---|---|---|---|---|
| Y | **197-2248** | 1 | VALVE GP-MANUAL (AUXILIARY, SHUTOFF) | 351 |
| | | | –OR– | |
| Y | **197-2247** | 1 | VALVE GP-MANUAL (AUXILIARY, SHUTOFF) | 350 |

Y - SEPARATE ILLUSTRATION

<END>

# *197-2247* VALVE GP-MANUAL

**S/N: FEY1-UP**

**PART OF 173-7992 VALVE GP-MANUAL**

**SMCS-1329, 5001, 5130** **i06204157**

| NOTE | REF NO | GRAPHIC REF | PART NUMBER | QTY | PART NAME 1 2 3 4 5 6 (PRODUCT LEVEL) | SEE PAGE |
|---|---|---|---|---|---|---|
| | 1 | 1 | **119-9447** | 1 | HANDLE | |
| | 2 | 1 | **3J-1907** | 1 | SEAL-O-RING | |
| | 3 | 1 | **099-5845** | 1 | PLUG | |
| | 4 | 1 | **153-8644** | 1 | STOP AS | |
| | | 1 | **153-8645** | 1 | PLUNGER | |
| | 5 | 1 | **153-8748** | 1 | SEAL | |
| | 6 | 1 | **5J-2974** | 1 | SEAL-O-RING | |
| | 7 | 1 | **8T-0706** | 1 | RING-RETAINING | |
| | 8 | 1 | **095-1783** | 1 | RING-BACKUP | |
| | 9 | 1 | **142-6742** | 1 | SEAL-O-RING | |

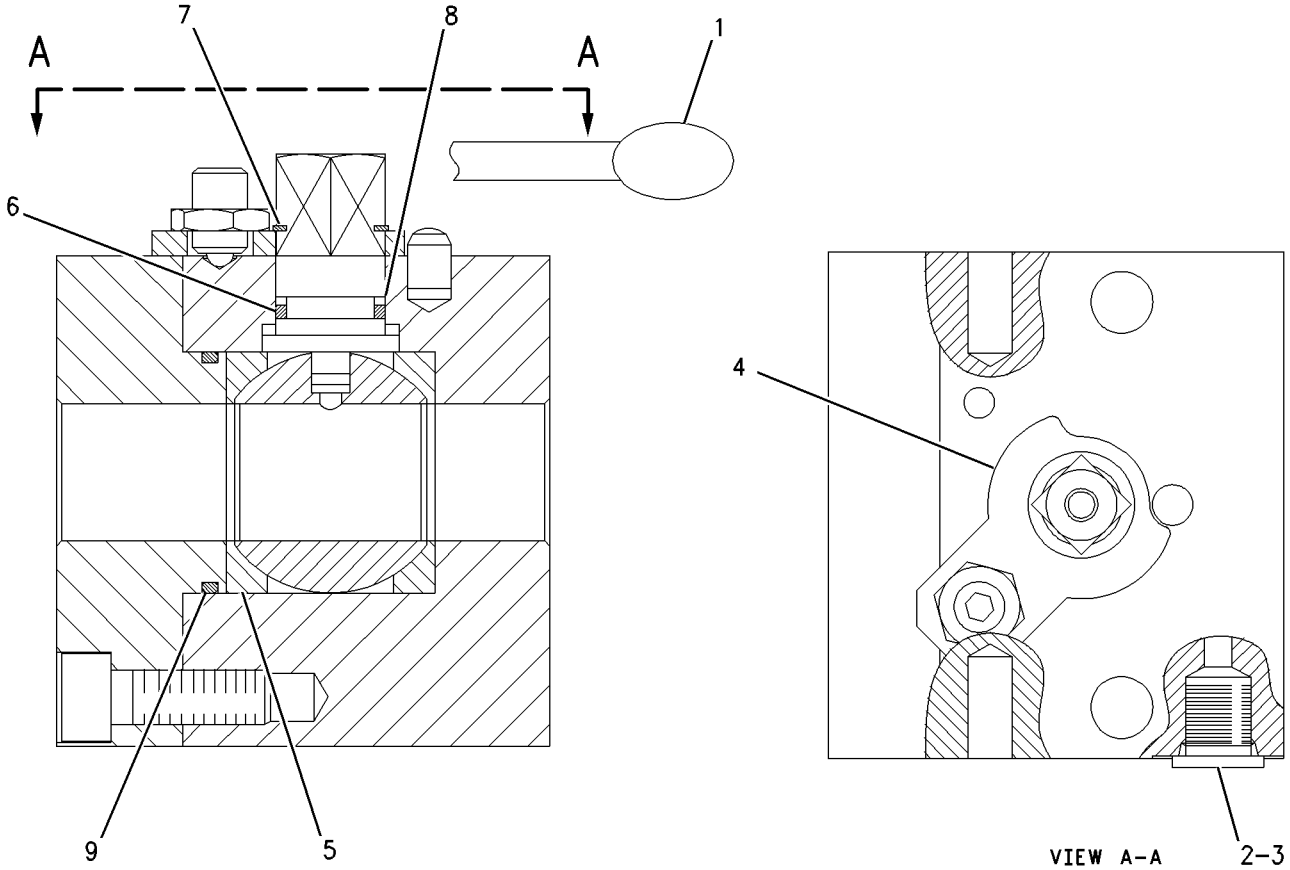


GRAPHIC #1 <END> g00709011

# *197-2248* VALVE GP-MANUAL

**S/N: FEY1-UP**

**PART OF 173-7992 VALVE GP-MANUAL**

**SMCS-1329, 5001, 5130**

**i06204171**

| NOTE | REF NO | GRAPHIC REF | PART NUMBER | QTY | PART NAME 1 2 3 4 5 6 (PRODUCT LEVEL) | SEE PAGE |
|---|---|---|---|---|---|---|
| | 1 | 1 | **9S-4191** | 1 | PLUG (9/16-18-THD) | |
| | 2 | 1 | **3J-1907** | 1 | SEAL-O-RING | |
| | 3 | 1 | **119-1353** | 1 | HANDLE | |

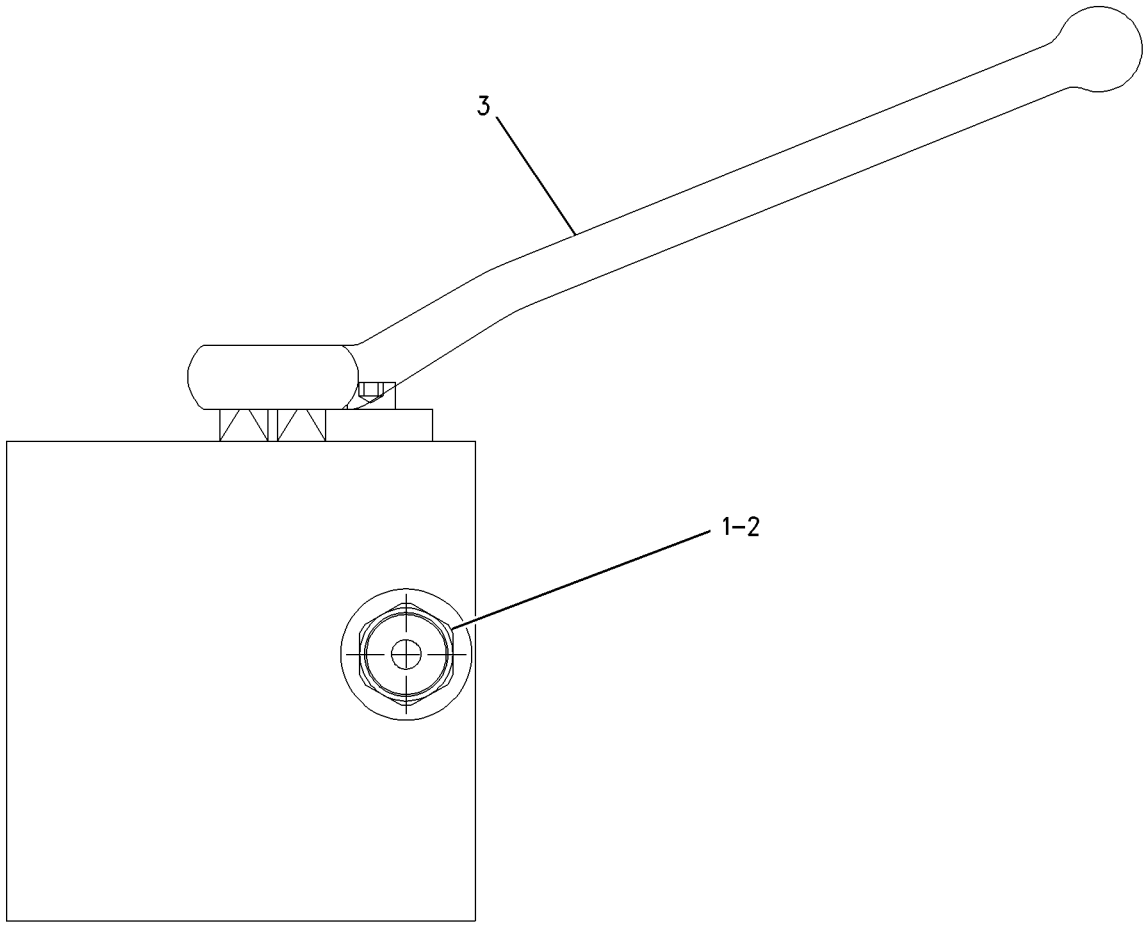


GRAPHIC #1 <END> g00843158

# 206-3336 VALVE GP-PILOT

**S/N: FEY1-UP**

**PART OF 239-8693 CONTROL GP-HYDRAULIC PEDAL**

**SMCS-5059** **i06199703**

| NOTE | REF NO | GRAPHIC REF | PART NUMBER | QTY | PART NAME 1 2 3 4 5 6 (PRODUCT LEVEL) | SEE PAGE |
|---|---|---|---|---|---|---|
| | 1 | 1 | **107-6479** | 1 | PLUG | |
| | 2 | 1 | **438-4965** | 2 | SPRING (STANDARD) | |
| | | | | | —OR— | |
| | | 1 | **190-7819** | 2 | SPRING (OPTIONAL) | |
| | | | | | (REDUCES OPERATING FORCE BY 40%) | |
| | 3 | 1 | **335-0136** | 1 | BELLOWS | |
| | 4 | 1 | **335-0138** | 2 | PACKING | |
| | 5 | 1 | **095-1575** | 1 | SEAL-O-RING | |
| | 6 | 1 | **095-1578** | 2 | SEAL-O-RING | |
| | 7 | 1 | **095-1579** | 1 | SEAL-O-RING | |
| | 8 | 1 | **095-1584** | 1 | SEAL-O-RING | |
| | 9 | 1 | **6V-8399** | 2 | SEAL-O-RING | |
| | 10 | 1 | **9M-5590** | 1 | BALL | |

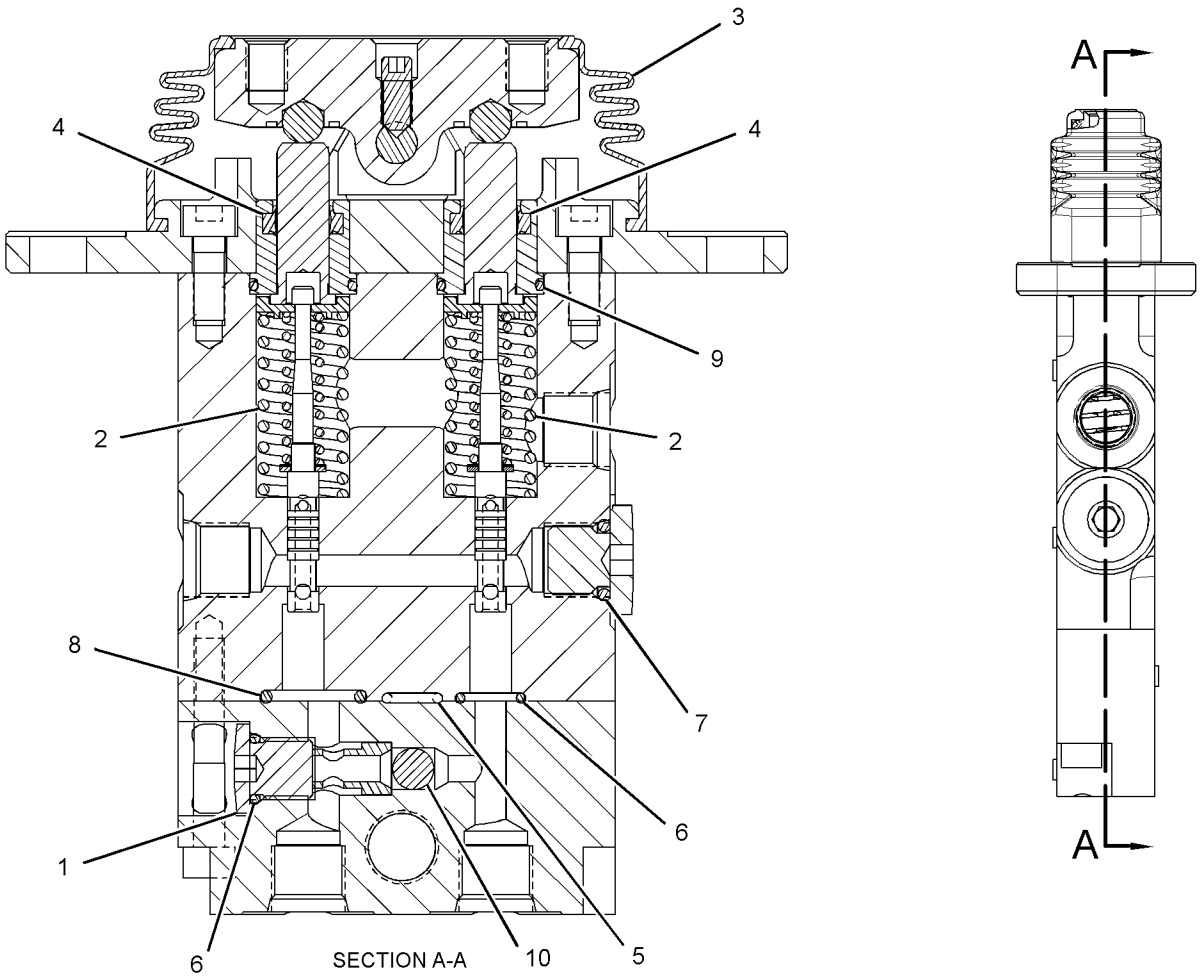


GRAPHIC #1 <END> g03371302

# 297-0529 VALVE GP-PILOT—JOYSTICK

**S/N: FEY1-UP**

**PART OF 297-0532, 297-0533 CONTROL GP-JOYSTICK**

**SMCS-5059** **i07263090**

| NOTE | REF NO | GRAPHIC REF | PART NUMBER | QTY | PART NAME 1 2 3 4 5 6 (PRODUCT LEVEL) | SEE PAGE |
|---|---|---|---|---|---|---|
| | 1 | 1 | **270-5953** | 4 | SPRING | |
| | 2 | 1 | **095-1586** | 4 | SEAL-O-RING | |
| | 3 | 1 | **4I-6365** | 1 | JOINT | |
| | 4 | 1 | **094-0876** | 4 | SEAL | |
| | 5 | 1 | **096-1628** | 4 | PLUG | |
| B | 6 | 1 | **099-6137** | 4 | WASHER (6.1X9X0.2-MM THK) | |
| | 7 | 1 | **118-4086** | 4 | ROD | |
| | 8 | 1 | **118-4087** | 4 | SPRING | |
| M | 9 | 1 | **131-5915** | 1 | NUT-SPECIAL | |
| | 10 | 1 | **165-9431** | 1 | PLATE | |
| | 11 | 1 | **165-9435** | 2 | SEAT | |
| | 12 | 1 | **165-9436** | 2 | SEAT | |
| | 13 | 1 | **165-9438** | 1 | PLATE | |
| | 14 | 1 | **165-9442** | 2 | SPRING | |
| | 15 | 1 | **165-9443** | 2 | SEAT-SPRING | |
| | 16 | 1 | **165-9444** | 2 | SEAT-SPRING | |
| | 17 | 1 | **165-9460** | 2 | SPRING | |
| | 18 | 1 | **171-0087** | 1 | BELLOWS | |

B - USE AS REQUIRED
M - METRIC PART

*297-0529* **VALVE GP-PILOT (**contd.**)** **i07263090**

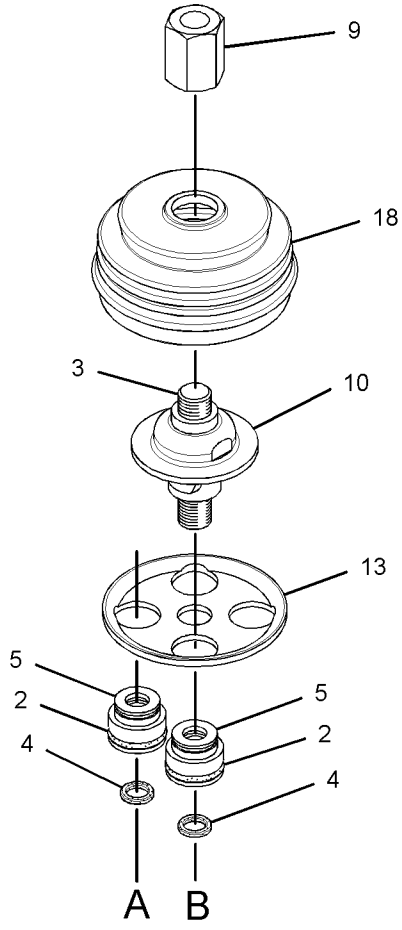


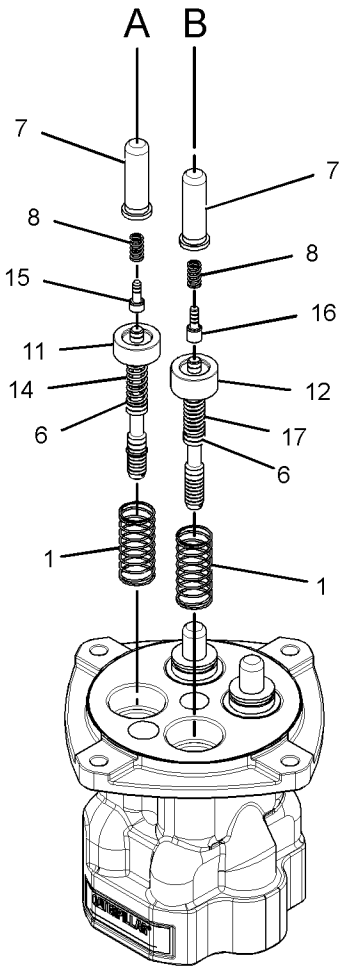


GRAPHIC #1 <END> g01528724

# 369-8502 VALVE GP-PILOT–TRAVEL, SHUTTLE

**S/N: FEY1-UP**

**PART OF 465-8275, 563-5608 LINES GP-PILOT**

**SMCS-5059** **i07189851**

| NOTE | REF NO | GRAPHIC REF | PART NUMBER | QTY | PART NAME 1 2 3 4 5 6 (PRODUCT LEVEL) | SEE PAGE |
|---|---|---|---|---|---|---|
| | 1 | 1 | **087-5708** | 2 | PEDAL | |
| | 2 | 1 | **099-6137** | 4 | WASHER (6.1X9X0.2-MM THK) | |
| | 3 | 1 | **099-6141** | 4 | WASHER (6.1X11X1.5-MM THK) | |
| | 4 | 1 | **099-6144** | 4 | BUSHING-TERMINAL | |
| | 5 | 1 | **099-6145** | 2 | CAMSHAFT | |
| | 6 | 1 | **119-5388** | 4 | CAP | |
| | 7 | 1 | **119-5389** | 4 | PACKING | |
| | 8 | 1 | **119-5391** | 4 | SEAT | |
| | 9 | 1 | **126-1865** | 4 | SPRING | |
| | 10 | 1 | **126-1866** | 4 | SPRING | |
| | 11 | 1 | **131-5818** | 4 | SPRING | |
| | 12 | 1 | **153-5223** | 12 | BALL | |
| | 13 | 1 | **165-9552** | 4 | PUSHROD | |
| | 14 | 1 | **165-9554** | 4 | PLUG | |
| | 15 | 1 | **270-5949** | 4 | PISTON | |
| | 16 | 1 | **270-5950** | 4 | SPRING | |
| | 17 | 1 | **310-0419** | 4 | SEAT | |
| | 18 | 1 | **310-0420** | 4 | SEAL-O-RING | |
| | 19 | 1 | **369-8507** | 2 | PLUG-O-RING | |
| | 20 | 1 | **369-8508** | 2 | SEAT | |
| | 21 | 1 | **369-8509** | 2 | COVER | |
| | 22 | 1 | **369-8510** | 1 | COVER | |
| M | 23 | 1 | **369-8568** | 2 | BOLT-SOCKET HEAD (M10X1.5X65-MM) | |
| | 24 | 1 | **369-8569** | 2 | BELLOWS | |
| M | 25 | 1 | **087-4710** | 4 | SETSCREW (M10X21-MM) | |
| M | 26 | 1 | **095-1260** | 2 | SETSCREW-SOCKET (M6X1X6-MM) | |
| | 27 | 1 | **095-1575** | 4 | SEAL-O-RING | |
| | 28 | 1 | **3Y-9267** | 2 | BALL | |
| M | 29 | 1 | **6V-8202** | 2 | BOLT-SOCKET HEAD (M8X1.25X16-MM) | |
| | 30 | 1 | **6V-8400** | 4 | SEAL-O-RING | |
| M | 31 | 1 | **8C-6965** | 2 | BOLT-SOCKET HEAD (M6X1X45-MM) | |
| M | 32 | 1 | **8T-4133** | 4 | NUT (M10X1.5-THD) | |
| | 33 | 1 | **8T-6759** | 1 | PLUG-PIPE | |

M - METRIC PART

*369-8502* **VALVE GP-PILOT (**contd.**)** **i07189851**

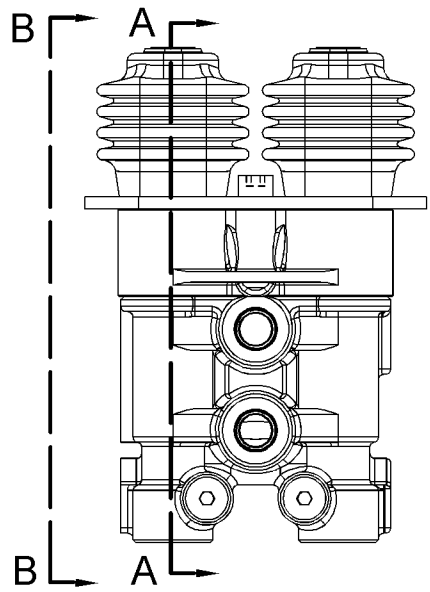


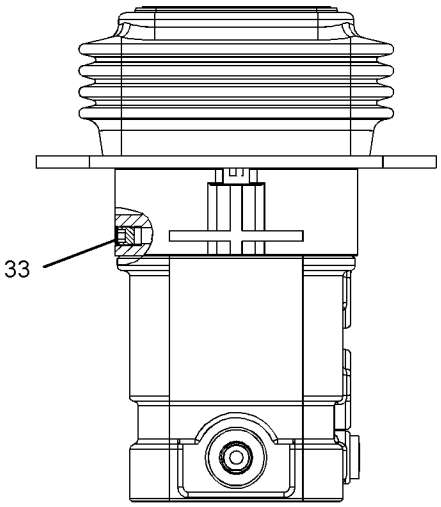


VIEW B-B

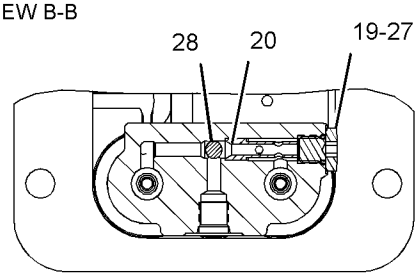


SECTION D-D

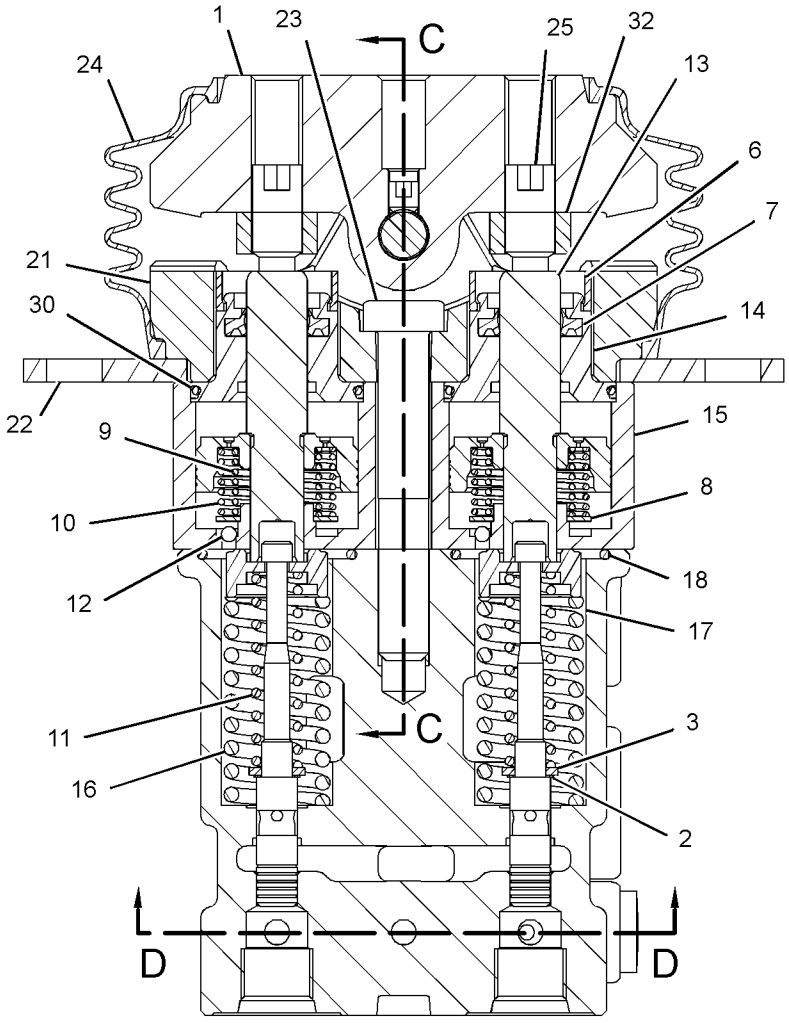


SECTION A-A

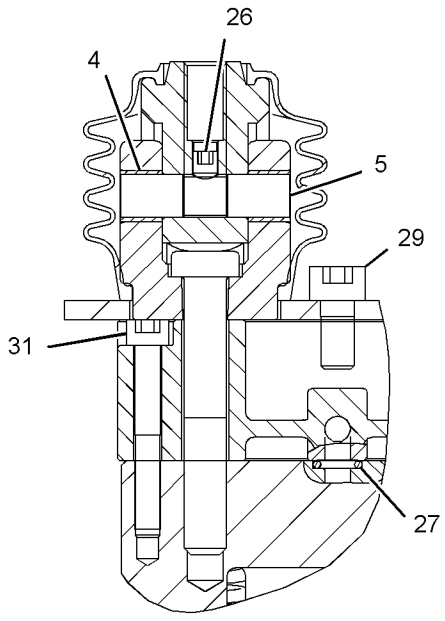


SECTION C-C

GRAPHIC #1 <END> g02835743

# 310-0210 VALVE GP-PRESSURE REDUCING–BOOM, SWING PRIORITY

**S/N: FEY1-UP**

**PART OF 556-6488 LINES GP-PILOT**

**SMCS-5117** **i06984794**

| NOTE | REF NO | GRAPHIC REF | PART NUMBER | QTY | PART NAME 1 2 3 4 5 6 (PRODUCT LEVEL) | SEE PAGE |
|---|---|---|---|---|---|---|
| | 1 | 1 | **111-9998** | 2 | PLUG | |
| | 2 | 1 | **171-0123** | 2 | PLUG | |
| M | 3 | 1 | **171-0124** | 2 | SETSCREW (M8X1.25X18-MM) | |
| | 4 | 1 | **171-0126** | 2 | SEAT-SPRING | |
| | 5 | 1 | **171-0127** | 2 | SEAT-SPRING | |
| | 6 | 1 | **171-0128** | 2 | SPRING | |
| | 7 | 1 | **185-0423** | 2 | STOP | |
| | 8 | 1 | **095-1580** | 2 | SEAL-O-RING | |
| | 9 | 1 | **095-1582** | 2 | SEAL-O-RING | |
| | 10 | 1 | **095-1590** | 2 | SEAL-O-RING | |
| M | 11 | 1 | **5C-7261** | 2 | NUT (M8X1.25-THD) | |

M - METRIC PART

*310-0210* **VALVE GP-PRESSURE REDUCING (**contd.**)** **i06984794**

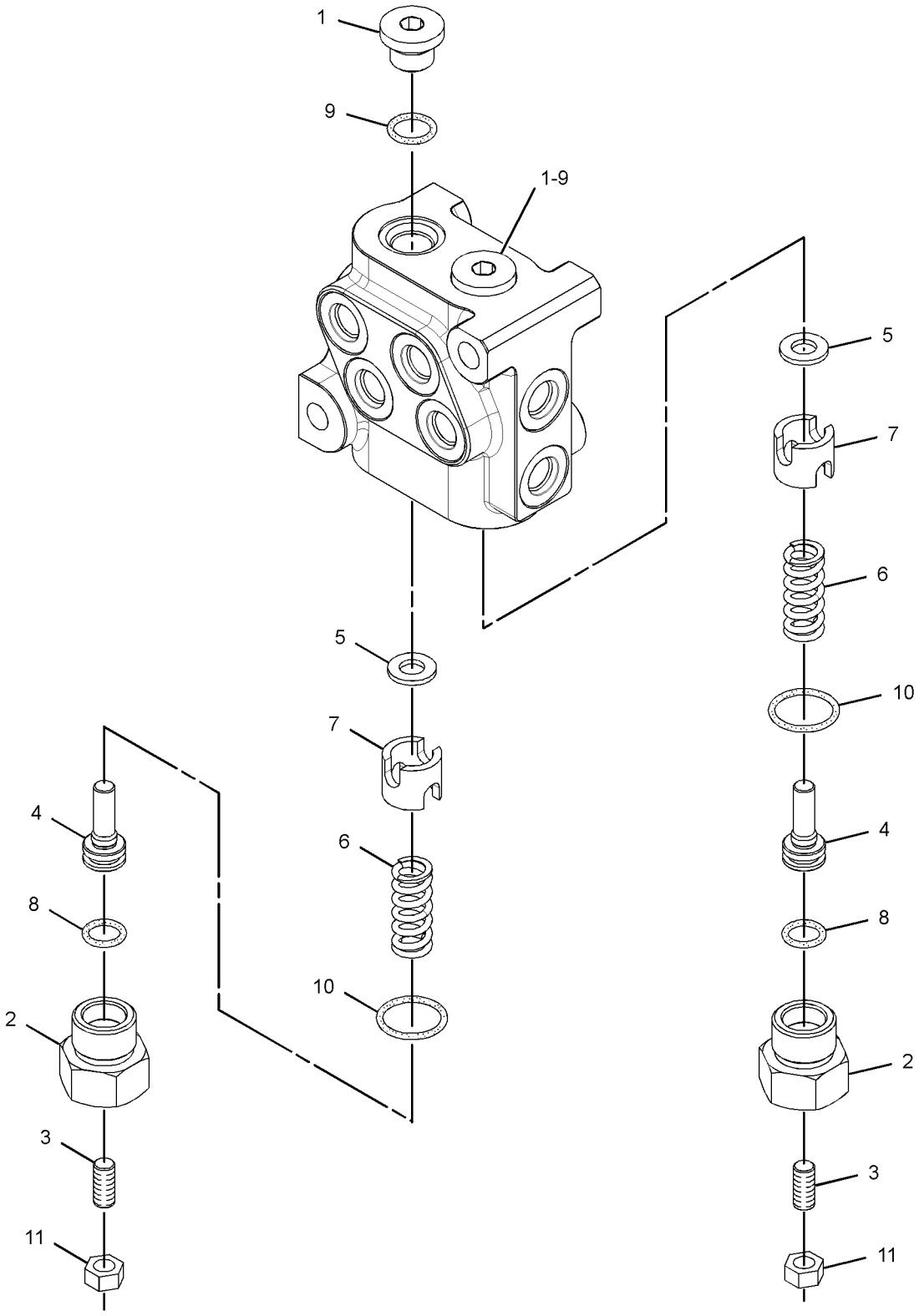


GRAPHIC #1 <END> g01506435

# 323-7898 VALVE GP-PRIORITY–SWING

**S/N: FEY1-UP**

**PART OF 352-7138 VALVE GP-CONTROL**

**SMCS-506P** **i05654474**

| NOTE | REF NO | GRAPHIC REF | PART NUMBER | QTY | PART NAME 1 2 3 4 5 6 (PRODUCT LEVEL) | SEE PAGE |
|---|---|---|---|---|---|---|
| | 1 | 1 | **140-0674** | 1 | VALVE | |
| | 2 | 1 | **158-8186** | 1 | SPRING | |
| | 3 | 1 | **255-5594** | 2 | SEAL-O-RING | |
| | 4 | 1 | **297-0483** | 2 | SEAL-O-RING | |
| | 5 | 1 | **140-0677** | 1 | PIN | |
| | | | | | | |
| | | | | | PARTS SHOWN IN GRAPHIC(S) WITHOUT A REFERENCE NUMBER ARE NOT SERVICED SEPARATELY | |

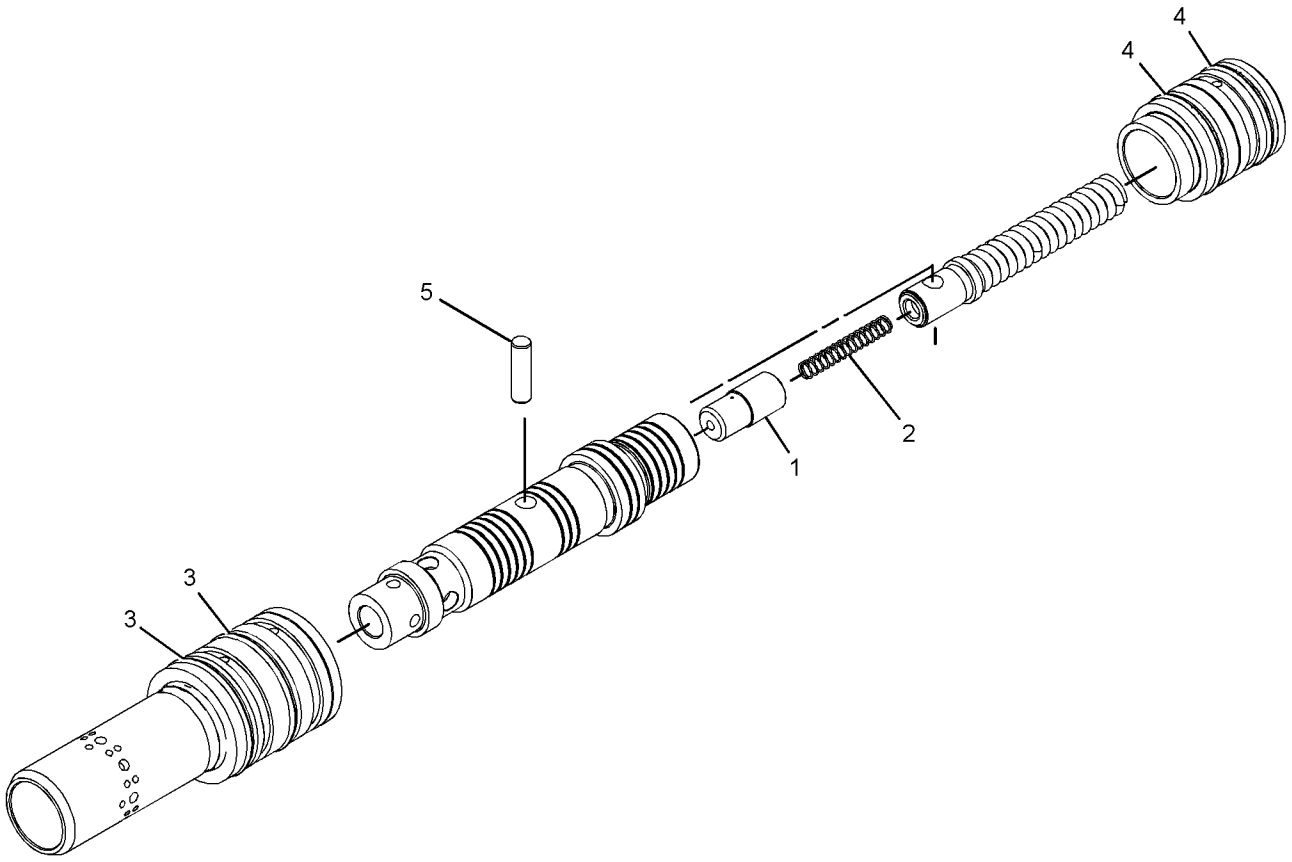


GRAPHIC #1 <END> g02144637

# 109-2667 VALVE GP-RELIEF

**S/N: FEY1-UP**

**PART OF 153-5313 VALVE GP-RELIEF**

**SMCS-5069, 5117** **i04917511**

| NOTE | REF NO | GRAPHIC REF | PART NUMBER | QTY | PART NAME 1 2 3 4 5 6 (PRODUCT LEVEL) | SEE PAGE |
|---|---|---|---|---|---|---|
| | 1 | 1 | **5I-4111** | 1 | PLUG | |
| | 2 | 1 | **109-2665** | 1 | BODY-VALVE | |
| | 3 | 1 | **107-6370** | 1 | SPRING | |
| | 4 | 1 | **107-6371** | 1 | VALVE | |
| | 5 | 1 | **4K-1388** | 2 | SEAL-O-RING | |
| B | 6 | 1 | **4J-7385** | 1 | SHIM (0.048-IN THK) | |
| B | 7 | 1 | **4J-7386** | 5 | SHIM (0.01-IN THK) | |
| | 8 | 1 | **5P-3108** | 1 | SEAL-O-RING | |

B - USE AS REQUIRED

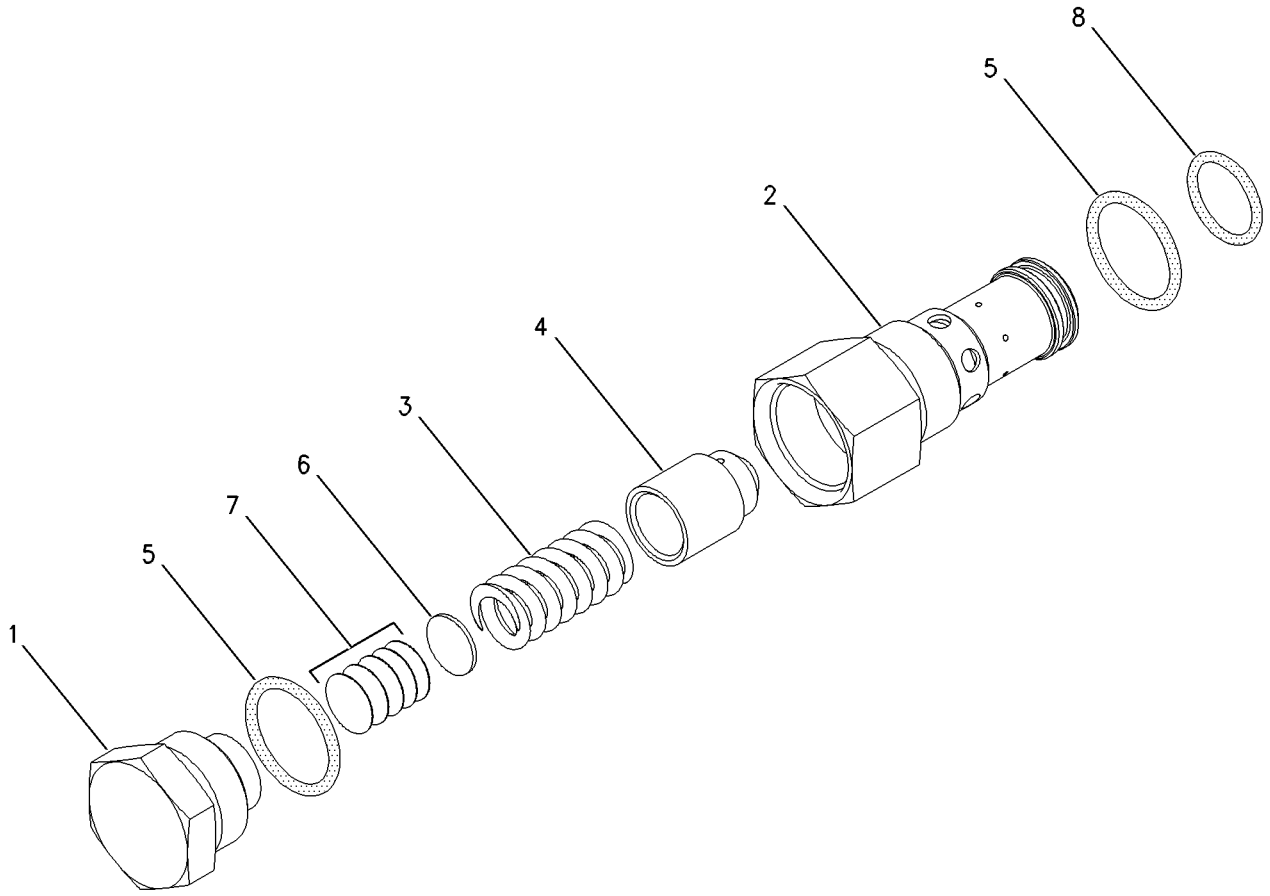


GRAPHIC #1 <END> g00672680

# 109-5152 VALVE GP-RELIEF—NEGATIVE FLOW CONTROL

**S/N: FEY1-UP**

**PART OF 435-1484 VALVE GP-CONTROL**

**SMCS-5069, 5117**

**i04917438**

| NOTE | REF NO | GRAPHIC REF | PART NUMBER | QTY | PART NAME 1 2 3 4 5 6 (PRODUCT LEVEL) | SEE PAGE |
|---|---|---|---|---|---|---|
| | 1 | 1 | **5I-4111** | 1 | PLUG | |
| | 3 | 1 | **107-6370** | 1 | SPRING | |
| | 4 | 1 | **107-6371** | 1 | VALVE | |
| | 5 | 1 | **4K-1388** | 2 | SEAL-O-RING | |
| B | 6 | 1 | **4J-7385** | 1 | SHIM (0.048-IN THK) | |
| B | 7 | 1 | **4J-7386** | 1 | SHIM (0.01-IN THK) | |
| | 8 | 1 | **5P-3108** | 1 | SEAL-O-RING | |

B - USE AS REQUIRED

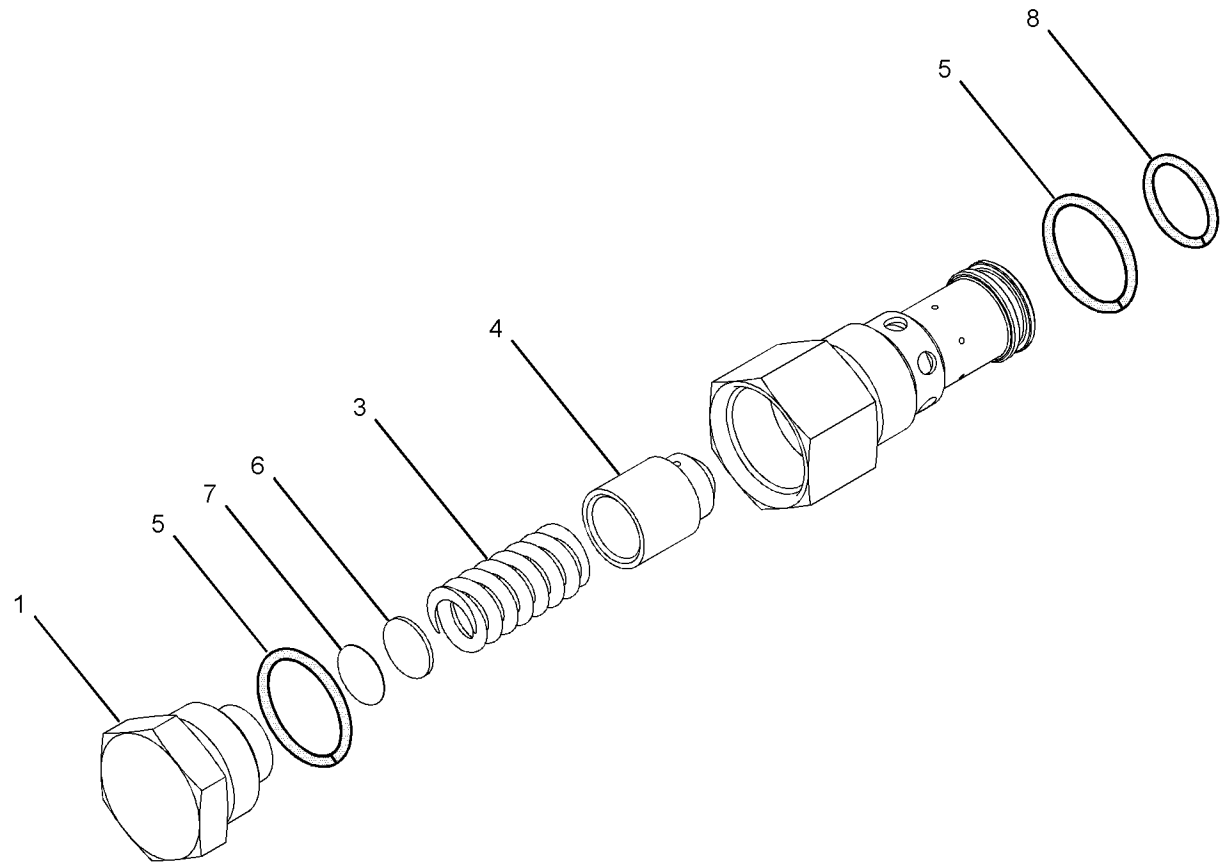


GRAPHIC #1 <END> g03092324

# 153-5313 VALVE GP-RELIEF—NEGATIVE FLOW CONTROL

**S/N: FEY1-UP**

**PART OF 259-7464 VALVE GP-MAIN CONTROL**

**SMCS-5069, 5117** **i06925833**

| NOTE | REF NO | GRAPHIC REF | PART NUMBER | QTY | PART NAME 1 2 3 4 5 6 (PRODUCT LEVEL) | SEE PAGE |
|---|---|---|---|---|---|---|
| | 1 | 1 | **153-5239** | 1 | COVER | |
| Y | 2 | 1 | **109-2667** | 1 | VALVE GP-RELIEF (NEGATIVE FLOW CONTROL) | 360 |
| | 3 | 1 | **1P-3702** | 2 | SEAL-RECTANGULAR | |
| | 4 | 1 | **4J-8998** | 2 | SEAL-O-RING | |

Y - SEPARATE ILLUSTRATION

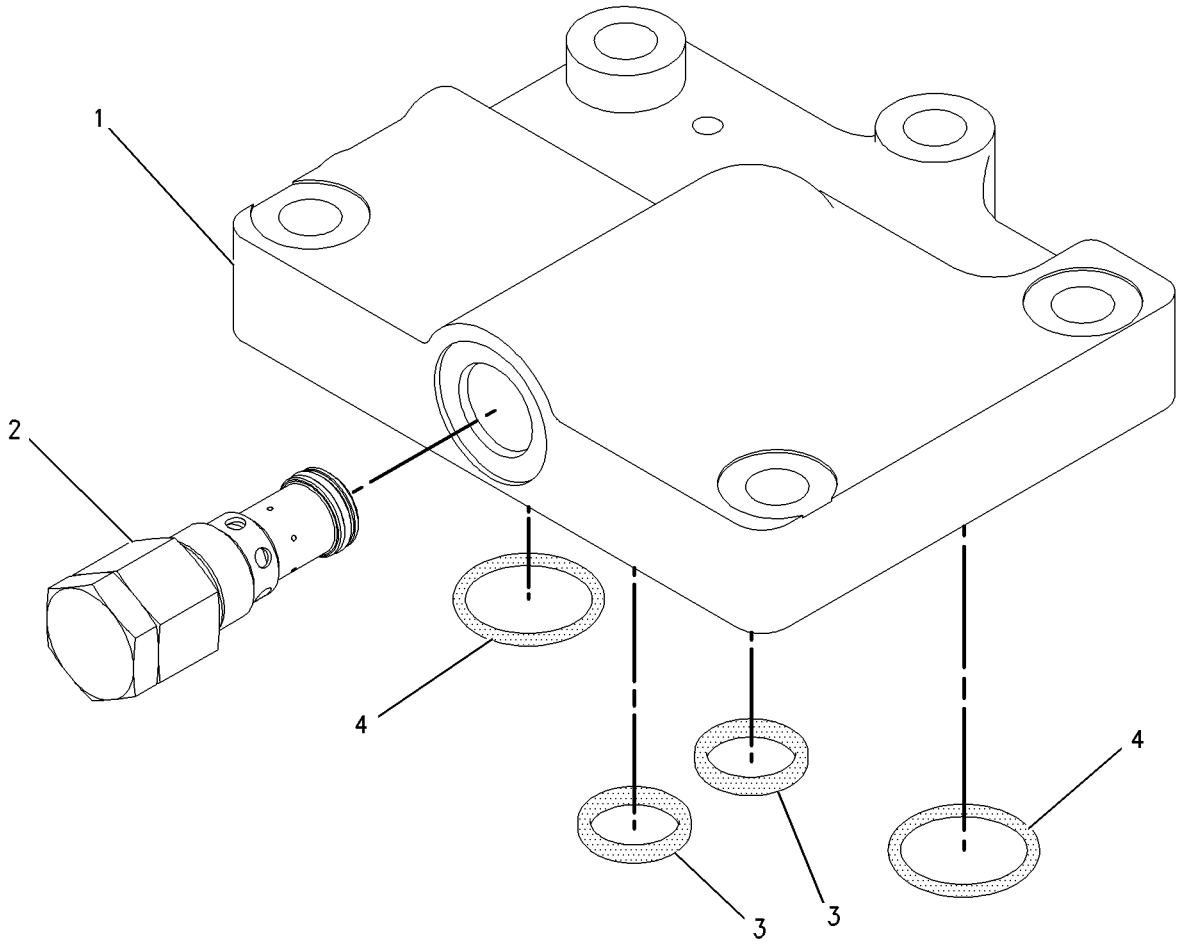


GRAPHIC #1 <END> g00743238

# *171-0030* VALVE GP-RELIEF

**S/N: FEY1-UP**

**PART OF 177-2653 VALVE GP-RELIEF**

**SMCS-5069, 5117**

**i06199738**

| NOTE | REF NO | GRAPHIC REF | PART NUMBER | QTY | PART NAME 1 2 3 4 5 6 (PRODUCT LEVEL) | SEE PAGE |
|---|---|---|---|---|---|---|
| | 1 | 1 | *171-0031* | 1 | VALVE GP-RELIEF | |
| | 2 | 1 | **6I-6795** | 1 | SPRING | |
| | 3 | 1 | **171-0034** | 1 | SEAT | |
| | 4 | 1 | **171-0037** | 1 | VALVE | |
| | 5 | 1 | **4I-3510** | 1 | SPRING | |
| | 6 | 1 | **171-0035** | 1 | HOLDER | |
| | 7 | 1 | **4I-7714** | 1 | NUT (3/4-16-THD) | |
| | 8 | 1 | **171-0036** | 1 | ADJUSTER | |
| | 9 | 1 | **095-1579** | 1 | SEAL-O-RING | |
| | 10 | 1 | **6V-8218** | 1 | SEAL-O-RING | |
| | 11 | 1 | **095-1590** | 1 | SEAL-O-RING | |
| | 12 | 1 | **6V-8978** | 1 | SEAL-O-RING | |
| | 13 | 1 | **095-1786** | 1 | RING-BACKUP | |
| | 14 | 1 | **095-1587** | 1 | SEAL-O-RING | |
| | 15 | 1 | **3D-2824** | 1 | SEAL-O-RING | |
| | 16 | 1 | **107-6541** | 1 | RING-RETAINING | |
| | 17 | 1 | **107-6540** | 1 | COLLAR | |
| | 18 | 1 | **119-5398** | 1 | SCREEN-FILTER | |

*171-0030* **VALVE GP-RELIEF (**contd.**)** **i06199738**

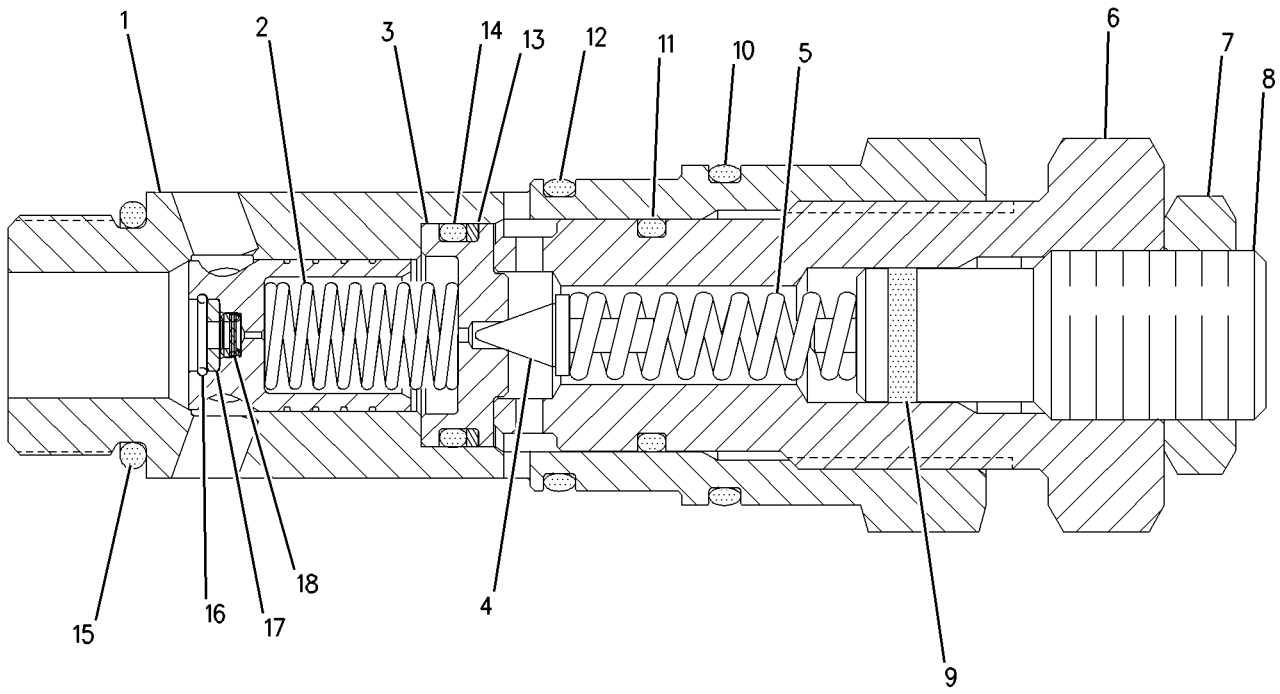


GRAPHIC #1 <END> g00680513

# 173-3452 VALVE GP-RELIEF

**S/N: FEY1-UP**

**PART OF 524-2647 MOTOR GP-SWING**

**SMCS-5069, 5117**

**i04913528**

| NOTE | REF NO | GRAPHIC REF | PART NUMBER | QTY | PART NAME 1 2 3 4 5 6 (PRODUCT LEVEL) | SEE PAGE |
|---|---|---|---|---|---|---|
| | 1 | 1 | **168-0765** | 1 | RING-BACKUP | |
| | 2 | 1 | **7J-9933** | 1 | SEAL-O-RING | |
| | 3 | 1 | **7I-0966** | 1 | RING-BACKUP | |
| | 4 | 1 | **6V-5556** | 1 | SEAL-O-RING | |
| | 5 | 1 | **095-1698** | 1 | SEAL-O-RING | |

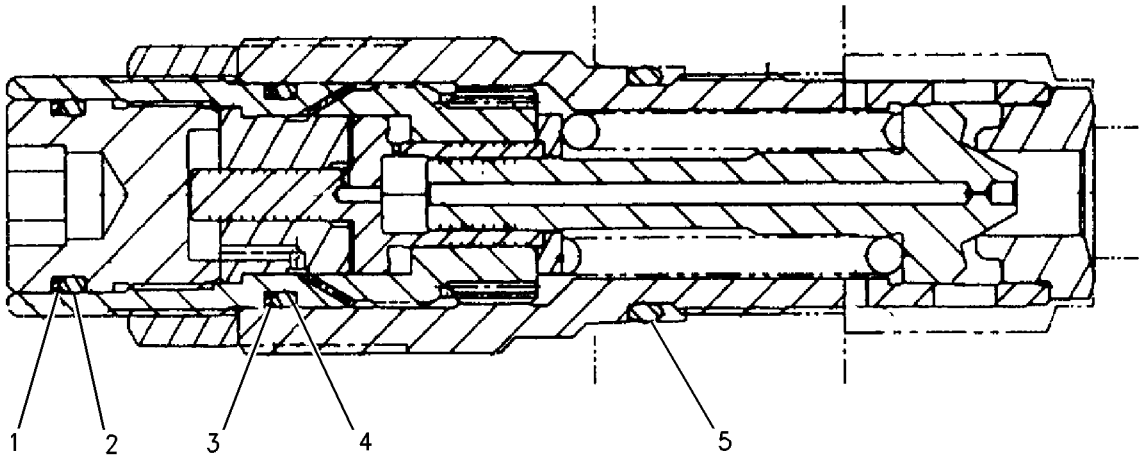


GRAPHIC #1 <END> g00671043

# 173-3536 VALVE GP-RELIEF

**S/N: FEY1-UP**

**PART OF 158-9085 VALVE GP-SWING CUSHION**

**SMCS-5069, 5117** **i04917322**

| NOTE | REF NO | GRAPHIC REF | PART NUMBER | QTY | PART NAME 1 2 3 4 5 6 (PRODUCT LEVEL) | SEE PAGE |
|---|---|---|---|---|---|---|
| | 1 | 1 | **095-1785** | 1 | RING-BACKUP | |
| | 2 | 1 | **095-1586** | 1 | SEAL-O-RING | |

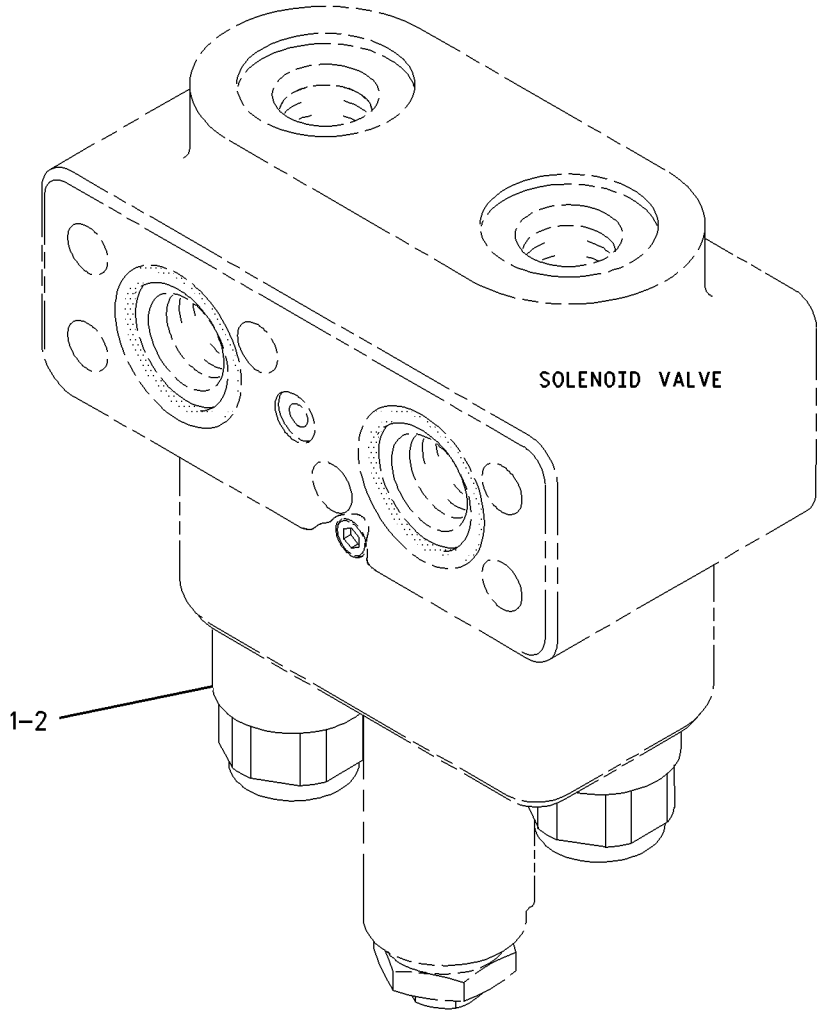


GRAPHIC #1 <END> g00672771

# 177-2653 VALVE GP-RELIEF–LINE

**S/N: FEY1-UP**

**PART OF 572-5692 LINES GP-FRONT**

**SMCS-5069, 5117**

**i06199735**

| NOTE | REF NO | GRAPHIC REF | PART NUMBER | QTY | PART NAME 1 2 3 4 5 6 (PRODUCT LEVEL) | SEE PAGE |
|---|---|---|---|---|---|---|
| Y | 1 | 1 | **171-0030** | 1 | VALVE GP-RELIEF | 363 |
| Z | 2 | 1 | | 1 | BLOCK | |

Y - SEPARATE ILLUSTRATION
Z - NOT SERVICED SEPARATELY

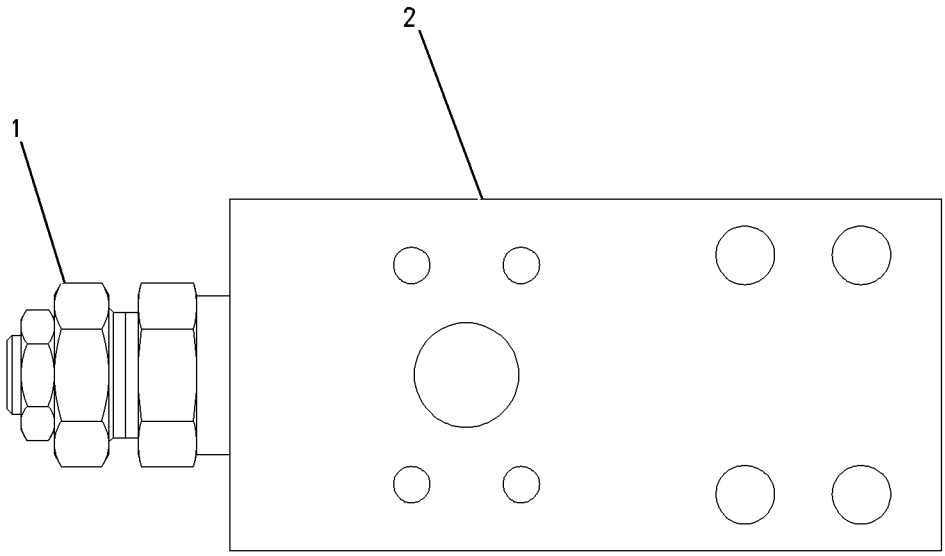


GRAPHIC #1

<END>

g00684155

# 255-5661 VALVE GP-RELIEF–LINE

**S/N: FEY1-UP**

**PART OF 259-7378 VALVE GP-CONTROL**

**SMCS-5069, 5117**

**i06199722**

| NOTE | REF NO | GRAPHIC REF | PART NUMBER | QTY | PART NAME 1 2 3 4 5 6 (PRODUCT LEVEL) | SEE PAGE |
|---|---|---|---|---|---|---|
| | 1 | 1 | **095-1578** | 1 | SEAL-O-RING | |
| | 2 | 1 | **103-8252** | 2 | RING | |
| | 3 | 1 | **103-8253** | 2 | RING | |
| | 4 | 1 | **103-8254** | 1 | SEAL-O-RING | |
| | 5 | 1 | **103-8255** | 1 | SEAL-O-RING | |
| | 6 | 1 | **3D-2824** | 2 | SEAL-O-RING | |

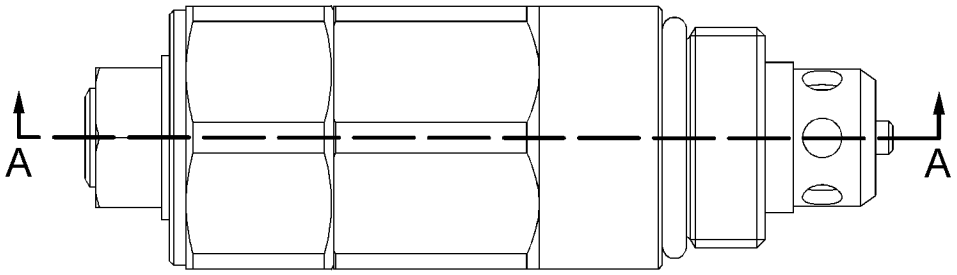


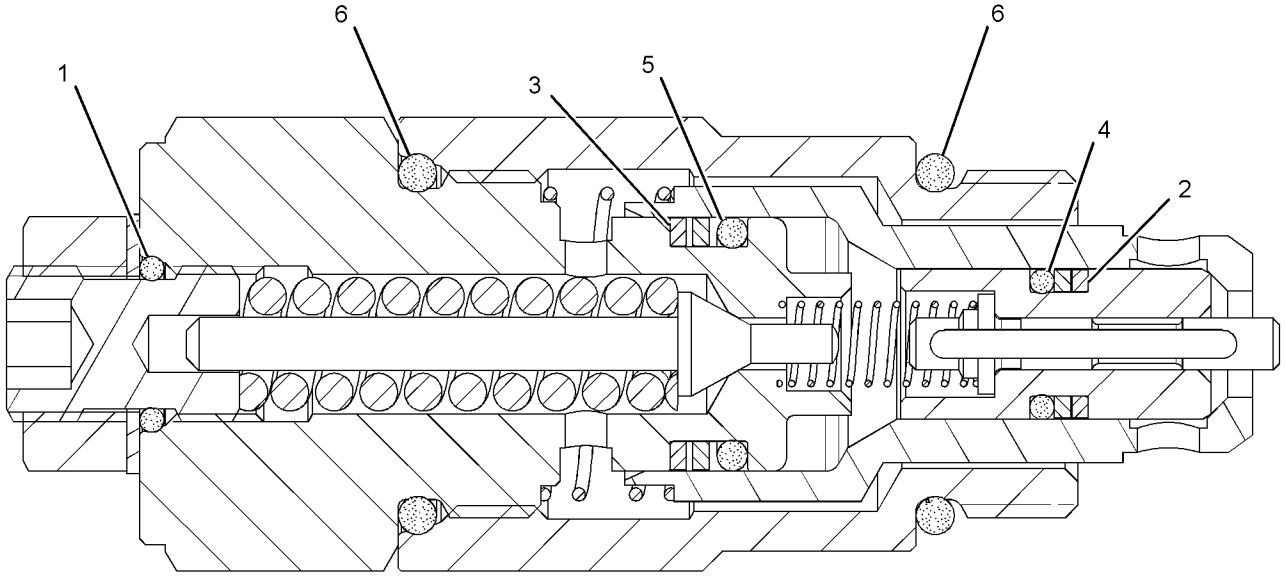


SECTION A-A

GRAPHIC #1

<END>

g01251398

# 352-7116 VALVE GP-RELIEF—PILOT OPERATED

**S/N: FEY1-UP**

**PART OF 352-7138 VALVE GP-CONTROL**

**SMCS-5069, 5117**

**i06925839**

| NOTE | REF NO | GRAPHIC REF | PART NUMBER | QTY | PART NAME 1 2 3 4 5 6 (PRODUCT LEVEL) | SEE PAGE |
|---|---|---|---|---|---|---|
| | 1 | 1 | **4I-3510** | 1 | SPRING | |
| | 2 | 1 | **4I-7714** | 1 | NUT (3/4-16-THD) | |
| | 3 | 1 | **6I-6795** | 1 | SPRING | |
| | 4 | 1 | **095-1786** | 1 | RING-BACKUP | |
| | 5 | 1 | **107-6540** | 1 | COLLAR | |
| | 6 | 1 | **107-6541** | 1 | RING-RETAINING | |
| | 7 | 1 | **119-5398** | 1 | SCREEN-FILTER (RELIEF VALVE) | |
| | 8 | 1 | **171-0035** | 1 | HOLDER | |
| | 9 | 1 | **171-0036** | 1 | ADJUSTER | |
| | 10 | 1 | **171-0037** | 1 | VALVE | |
| | 11 | 1 | **352-6864** | 1 | SEAT-VALVE | |
| | 12 | 1 | **6V-8978** | 1 | SEAL-O-RING | |
| | 13 | 1 | **095-1579** | 1 | SEAL-O-RING | |
| | 14 | 1 | **095-1587** | 1 | SEAL-O-RING | |
| | 15 | 1 | **095-1590** | 1 | SEAL-O-RING | |
| | 16 | 1 | **3D-2824** | 1 | SEAL-O-RING | |
| | 17 | 1 | **6V-8218** | 1 | SEAL-O-RING | |

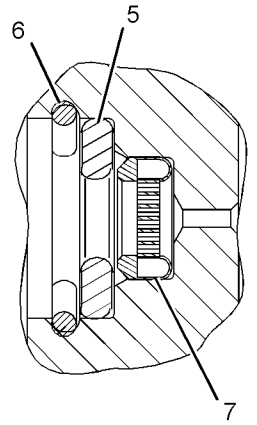


VIEW OF AREA B

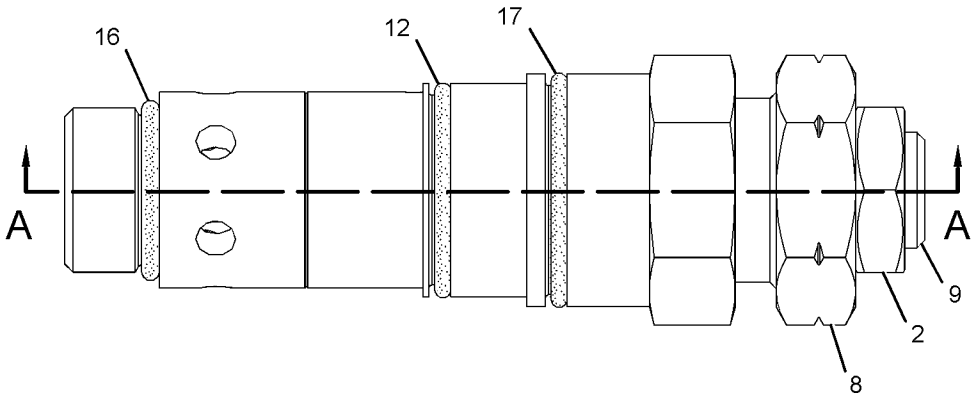


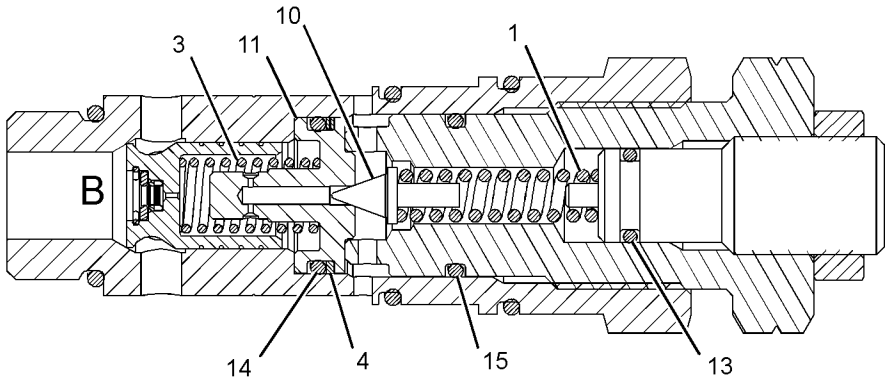


SECTION A-A

GRAPHIC #1 <END> g02283174

# 352-7122 VALVE GP-RELIEF

**S/N: FEY1-UP**

**PART OF 352-7138, 435-1484 VALVE GP-CONTROL**

**SMCS-5069, 5117**

**i05654479**

| NOTE | REF NO | GRAPHIC REF | PART NUMBER | QTY | PART NAME 1 2 3 4 5 6 (PRODUCT LEVEL) | SEE PAGE |
|---|---|---|---|---|---|---|
| | 1 | 1 | **095-1578** | 1 | SEAL-O-RING | |
| | 2 | 1 | **103-8252** | 2 | RING | |
| | 3 | 1 | **103-8253** | 2 | RING | |
| | 4 | 1 | **103-8254** | 1 | SEAL-O-RING | |
| | 5 | 1 | **103-8255** | 1 | SEAL-O-RING | |
| | 6 | 1 | **3D-2824** | 2 | SEAL-O-RING | |

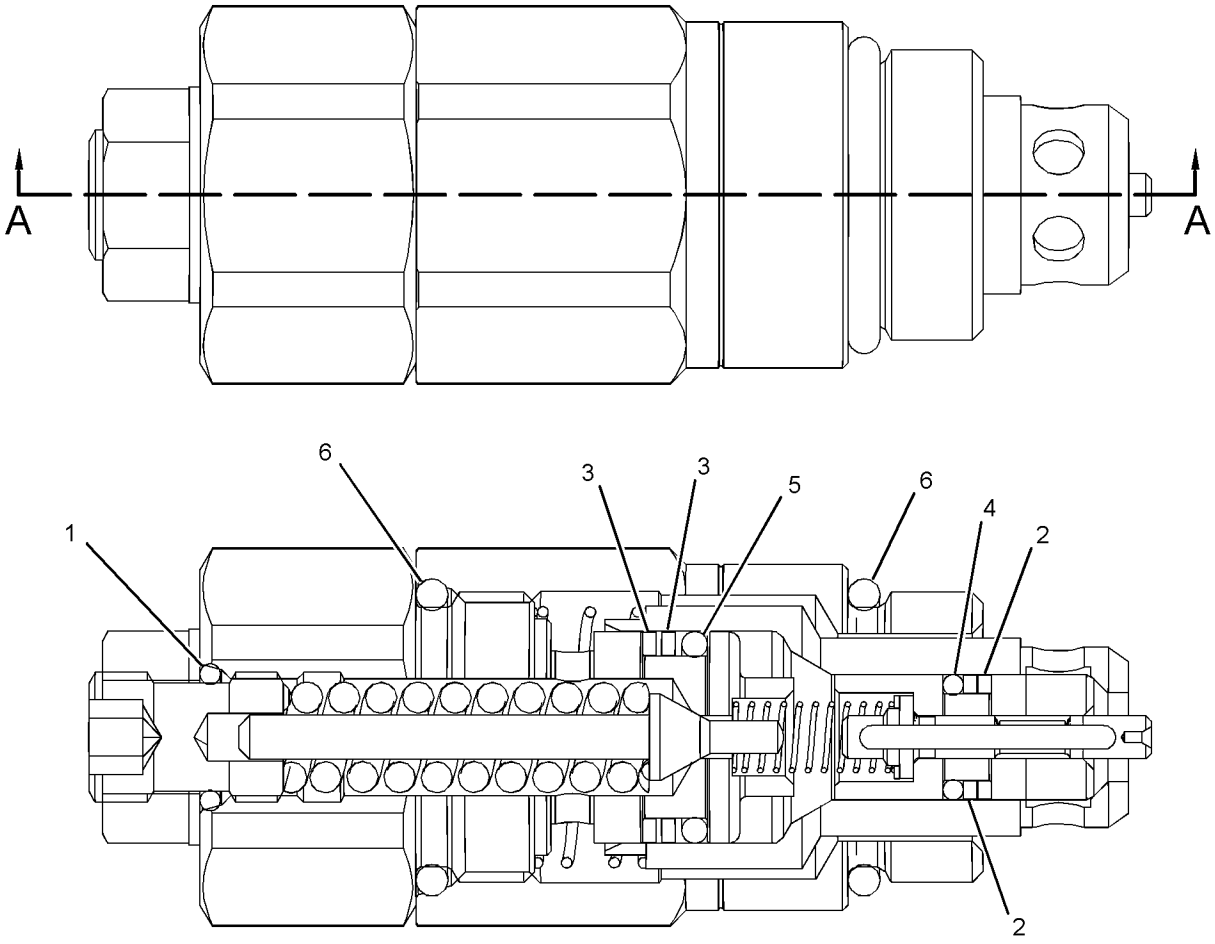


SECTION A-A

GRAPHIC #1 <END> g02270493

# 352-7123 VALVE GP-RELIEF–LINE

**S/N: FEY1-UP**

**PART OF 255-5680, 255-5683 VALVE GP-LOAD CONTROL**

**SMCS-5069, 5117**

**i05654482**

| NOTE | REF NO | GRAPHIC REF | PART NUMBER | QTY | PART NAME 1 2 3 4 5 6 (PRODUCT LEVEL) | SEE PAGE |
|---|---|---|---|---|---|---|
| | 1 | 1 | **095-1578** | 1 | SEAL-O-RING | |
| | 2 | 1 | **103-8252** | 2 | RING | |
| | 3 | 1 | **103-8253** | 2 | RING | |
| | 4 | 1 | **103-8254** | 1 | SEAL-O-RING | |
| | 5 | 1 | **103-8255** | 1 | SEAL-O-RING | |
| | 6 | 1 | **3D-2824** | 2 | SEAL-O-RING | |

PARTS SHOWN IN GRAPHIC(S) WITHOUT A REFERENCE NUMBER ARE NOT SERVICED SEPARATELY

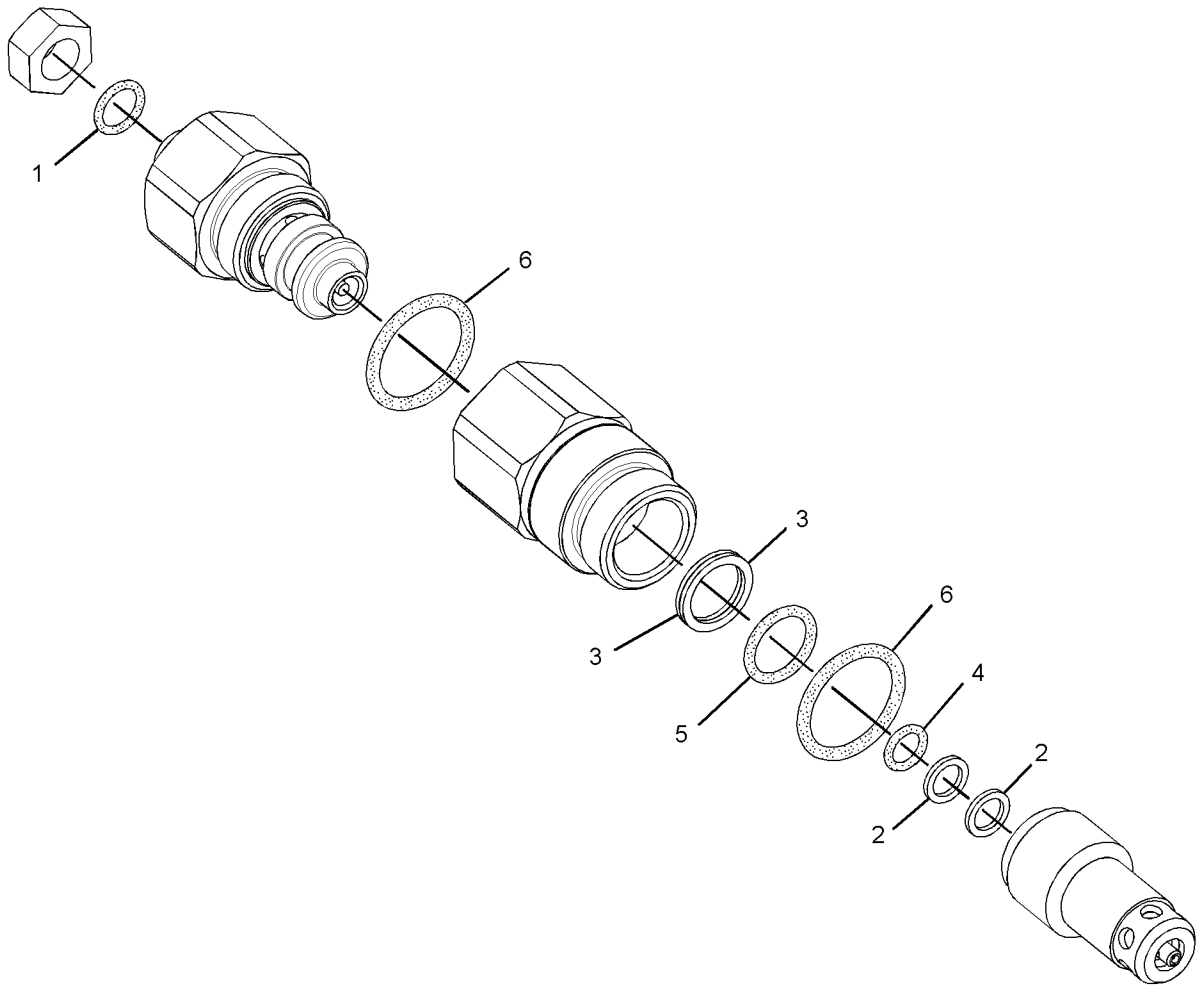


GRAPHIC #1 <END> g02217774

# 164-6979 VALVE GP-SHUTTLE

**S/N: FEY1-UP**

**PART OF 556-6488 LINES GP-PILOT**

**SMCS-5079** **i05654489**

| NOTE | REF NO | GRAPHIC REF | PART NUMBER | QTY | PART NAME 1 2 3 4 5 6 (PRODUCT LEVEL) | SEE PAGE |
|---|---|---|---|---|---|---|
| | 1 | 1 | **352-6815** | 1 | BODY-VALVE | |
| | 2 | 1 | **4B-9783** | 1 | BALL | |
| | 3 | 1 | *175-4430* | 2 | CONNECTOR AS | |
| | | | | | (EACH INCLUDES) | |
| | | 1 | **3J-1907** | 1 | SEAL-O-RING | |
| | | 1 | **6V-8397** | 1 | SEAL-O-RING | |
| | | 1 | **123-2552** | 1 | CONNECTOR | |

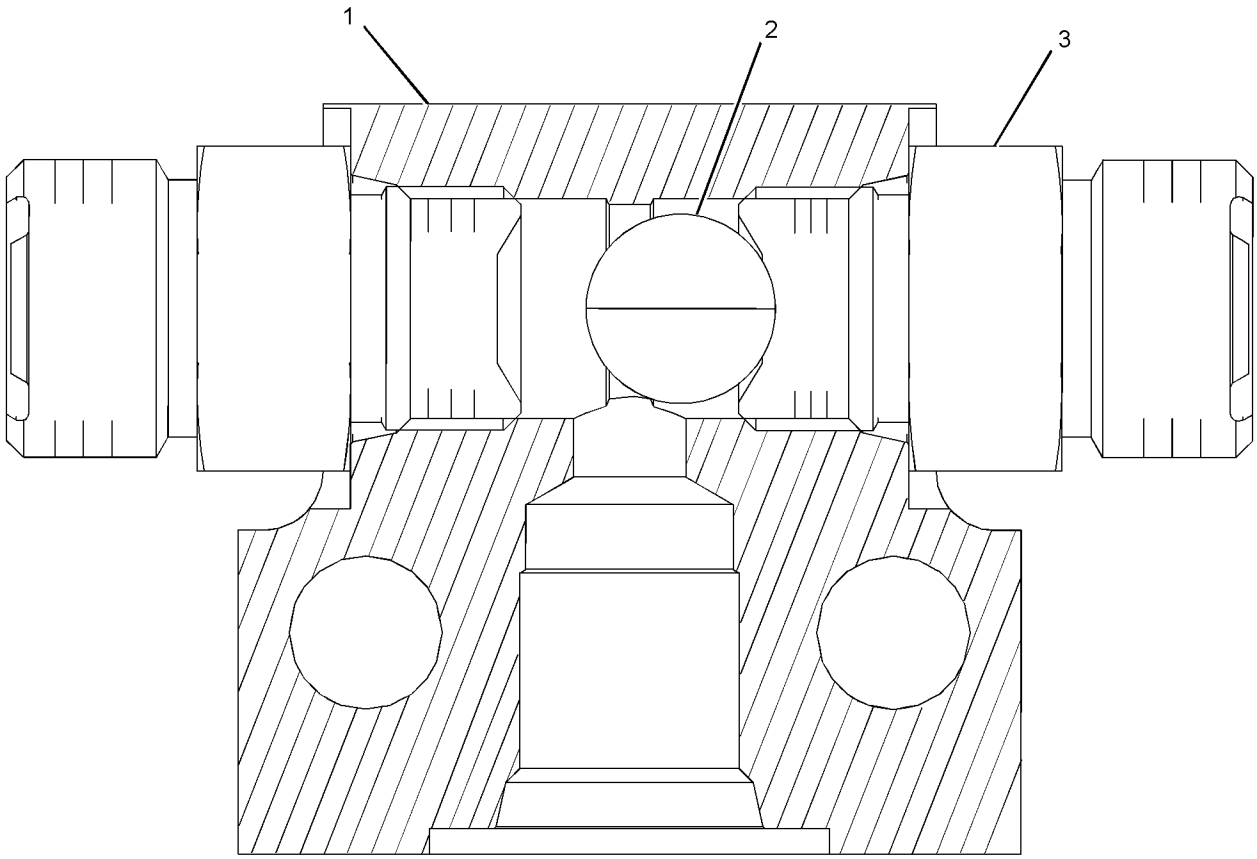


GRAPHIC #1 <END> g01955237

# *464-7318* VALVE GP-SHUTTLE

**S/N: FEY1-UP**

**PART OF 465-8275, 563-5608 LINES GP-PILOT**

**SMCS-5079** **i06659120**

| NOTE | REF NO | GRAPHIC REF | PART NUMBER | QTY | PART NAME 1 2 3 4 5 6 (PRODUCT LEVEL) | SEE PAGE |
|---|---|---|---|---|---|---|
| | 1 | 1 | **107-6479** | 7 | PLUG | |
| | 2 | 1 | **165-9464** | 6 | SEAT | |
| | 3 | 1 | **185-0463** | 1 | SEAT | |
| | 4 | 1 | **095-1578** | 7 | SEAL-O-RING | |
| | 5 | 1 | **8T-6759** | 4 | PLUG-PIPE | |
| | 6 | 1 | **9M-5590** | 7 | BALL | |

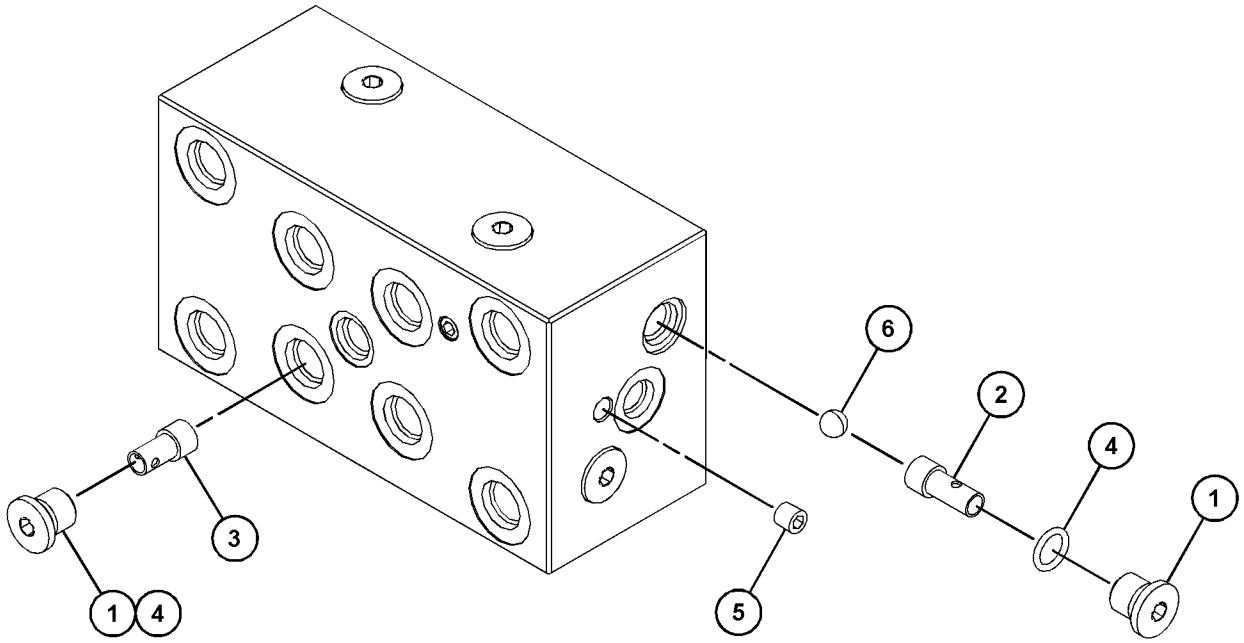


GRAPHIC #1 <END> g03818361

# 111-9916 VALVE GP-SOLENOID

**S/N: FEY1-UP**

**PART OF 398-2282 VALVE GP-SOLENOID**

**SMCS-5479** **i05606722**

| NOTE | REF NO | GRAPHIC REF | PART NUMBER | QTY | PART NAME 1 2 3 4 5 6 (PRODUCT LEVEL) | SEE PAGE |
|---|---|---|---|---|---|---|
| | 1 | 1 | **095-1750** | 1 | SEAL-O-RING | |
| | 2 | 1 | **6V-8398** | 1 | SEAL-O-RING | |
| | 3 | 1 | **095-1751** | 1 | SEAL-O-RING | |
| | 4 | 1 | **095-1586** | 1 | SEAL-O-RING | |
| M | 5 | 1 | **114-0623** | 1 | NUT AS (M6X1-THD) | |

M - METRIC PART

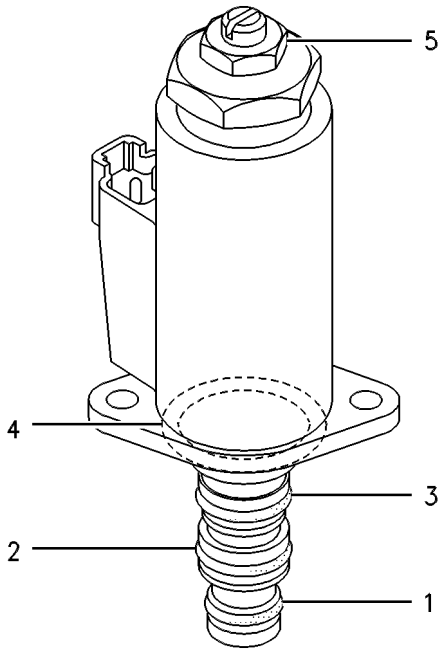


GRAPHIC #1 <END> g00258219

# 121-1491 VALVE GP-SOLENOID

**S/N: FEY1-UP**

**PART OF 239-8697, 239-8998 MANIFOLD GP-CONTROL, 352-7138 VALVE GP-CONTROL**

**SMCS-5479** **i05607145**

| NOTE | REF NO | GRAPHIC REF | PART NUMBER | QTY | PART NAME 1 2 3 4 5 6 (PRODUCT LEVEL) | SEE PAGE |
|---|---|---|---|---|---|---|
| | 1 | 1 | **095-1750** | 1 | SEAL-O-RING | |
| | 2 | 1 | **6V-8398** | 1 | SEAL-O-RING | |
| | 3 | 1 | **095-1751** | 1 | SEAL-O-RING | |
| | 4 | 1 | **095-1586** | 1 | SEAL-O-RING | |
| M | 5 | 1 | **114-0623** | 1 | NUT AS (M6X1-THD) | |

M - METRIC PART

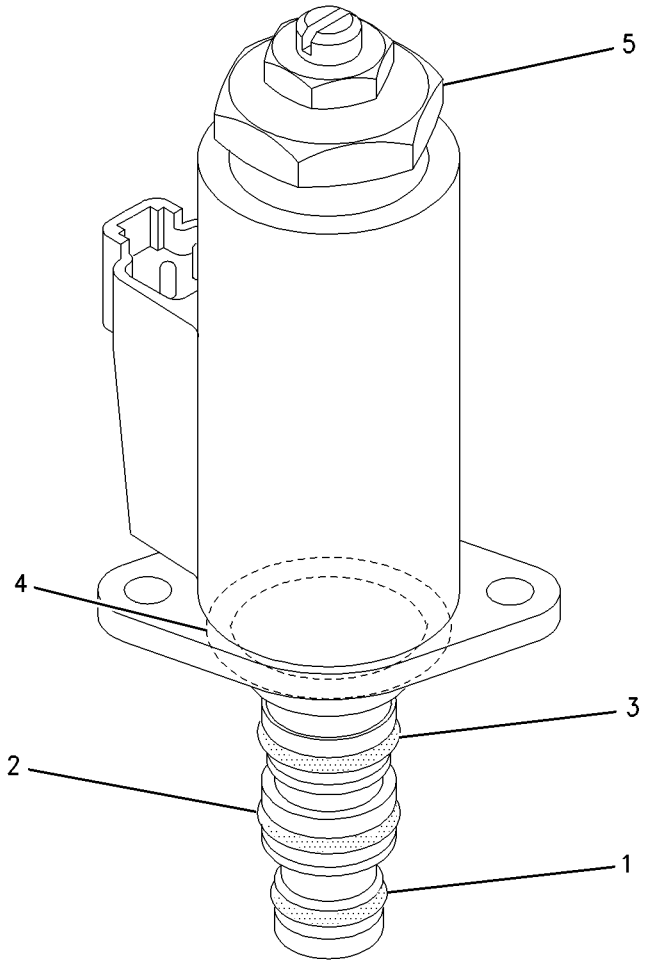


GRAPHIC #1 <END> g00928680

# 398-2282 VALVE GP-SOLENOID—NEGATIVE FLOW CONTROL

**S/N: FEY1-UP**

**PART OF 558-5407 LINES GP-PILOT**

**SMCS-5479** **i06199728**

| NOTE | REF NO | GRAPHIC REF | PART NUMBER | QTY | PART NAME 1 2 3 4 5 6 (PRODUCT LEVEL) | SEE PAGE |
|---|---|---|---|---|---|---|
| | 1 | 1 | **7I-8084** | 3 | PLUG | |
| | 2 | 1 | **107-6479** | 2 | PLUG | |
| Y | 3 | 1 | **111-9916** | 1 | VALVE GP-SOLENOID (PRESSURE REDUCING) (PUMP CONTROL) | 374 |
| | 4 | 1 | **185-0463** | 2 | SEAT | |
| | 5 | 1 | **095-1578** | 2 | SEAL-O-RING | |
| M | 6 | 1 | **7I-2272** | 2 | BOLT (M5X0.8X12-MM) | |
| | 7 | 1 | **9M-5590** | 2 | BALL | |

M - METRIC PART
Y - SEPARATE ILLUSTRATION

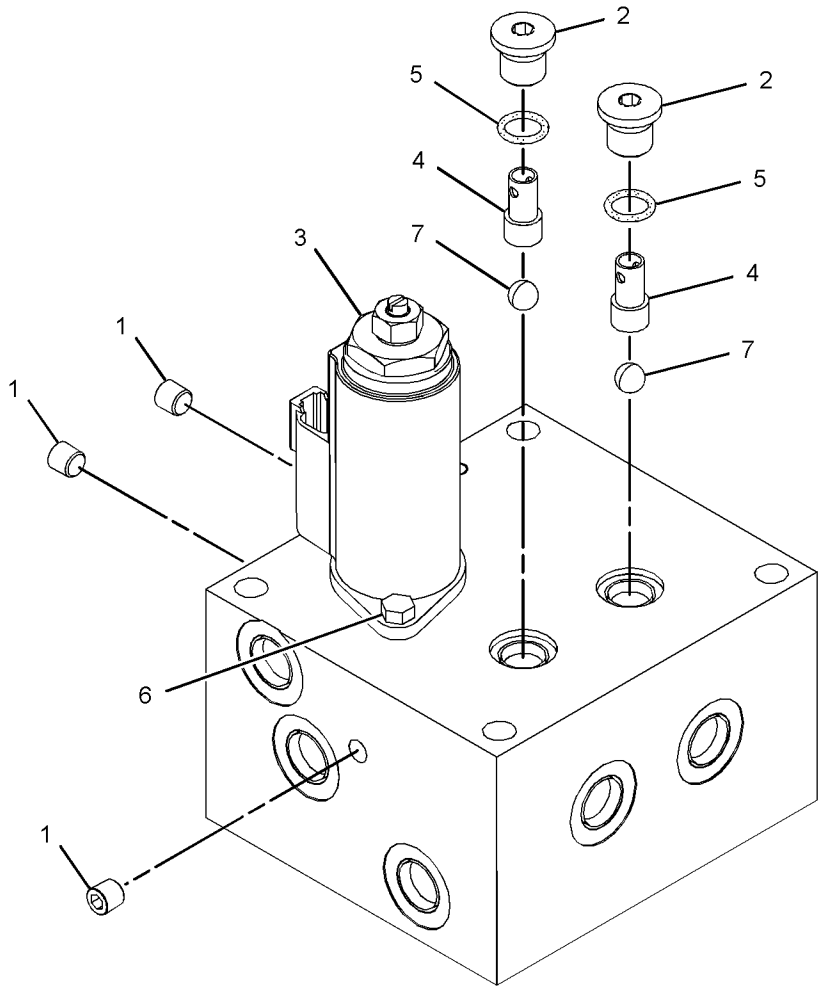


GRAPHIC #1 <END> g03149637

# *551-6795* VALVE GP-SOLENOID

**S/N: FEY1-UP**

**PART OF 524-2648 PUMP GP-MAIN HYDRAULIC**

**SMCS-5479** **i07397899**

| NOTE | REF NO | GRAPHIC REF | PART NUMBER | QTY | PART NAME 1 2 3 4 5 6 (PRODUCT LEVEL) | SEE PAGE |
|---|---|---|---|---|---|---|
| | 1 | 1 | **552-7943** | 1 | VALVE-SOLENOID | |
| | 2 | 1 | **552-7945** | 1 | BLOCK-VALVE | |
| M | 3 | 1 | **8T-2396** | 3 | BOLT (M6X1X60-MM) | |
| | 4 | 1 | **110-5525** | 1 | PLUG | |
| | 5 | 1 | **7I-8084** | 3 | PLUG | |
| | 6 | 1 | **206-9292** | 3 | SEAL-O-RING | |
| | 7 | 1 | **214-7568** | 1 | SEAL-O-RING | |
| | 8 | 1 | **206-9294** | 1 | SEAL-O-RING | |

M - METRIC PART

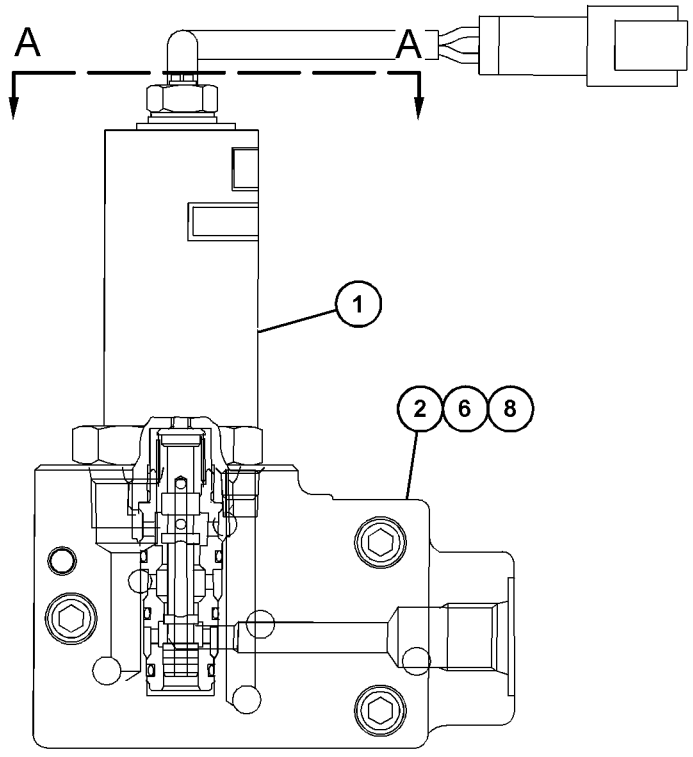


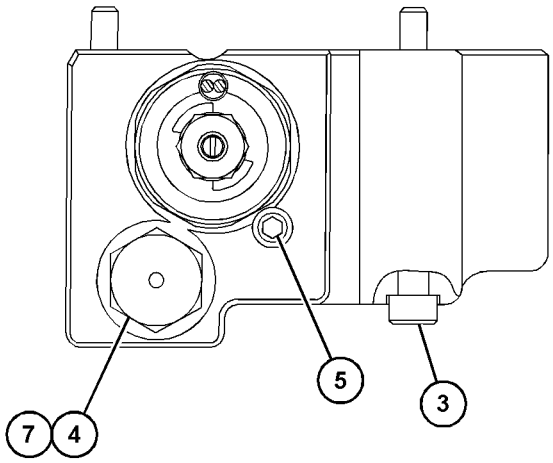


SECTION A-A

GRAPHIC #1 <END> g06313484

# 158-9085 VALVE GP-SWING CUSHION–CROSSOVER RELIEF

**S/N: FEY1-UP**

**PART OF 563-5607 LINES GP-BOOM CYLINDER**

**SMCS-5480** **i04917462**

| NOTE | REF NO | GRAPHIC REF | PART NUMBER | QTY | PART NAME 1 2 3 4 5 6 (PRODUCT LEVEL) | SEE PAGE |
|---|---|---|---|---|---|---|
| | 1 | 1 | **8T-6759** | 4 | PLUG-PIPE | |
| | 2 | 1 | **095-1576** | 1 | SEAL-O-RING | |
| Y | 3 | 1 | **173-3536** | 2 | VALVE GP-RELIEF | 366 |
| | 4 | 1 | **095-1698** | 2 | SEAL-O-RING | |

Y - SEPARATE ILLUSTRATION

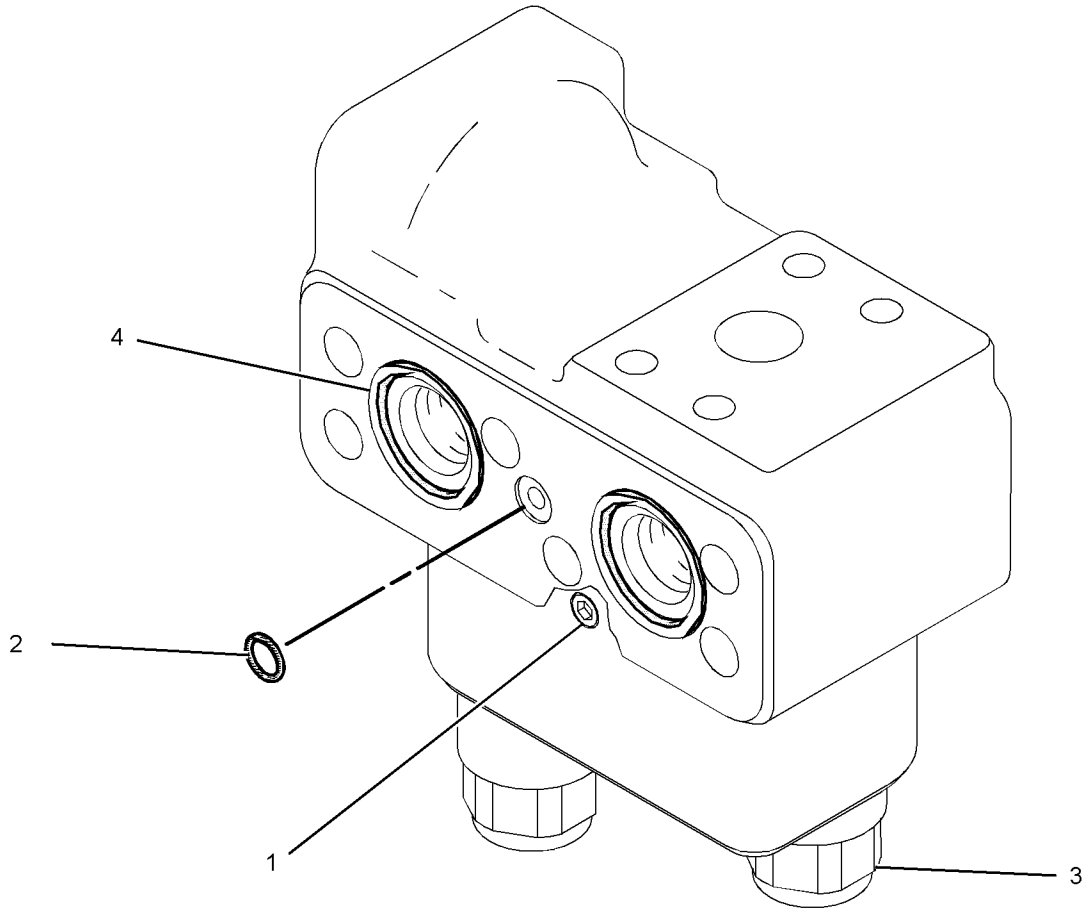


GRAPHIC #1 <END> g03087461

# *376-1084* BOOM AR-1 PIECE LONG—HEAVY-DUTY

**S/N: FEY1-UP**

**5.7-M (17.1-FT)**

**PART OF 556-6432 DISTRIBUTION AR**

**SMCS-6501** **i07672801**

| NOTE | PART NUMBER | QTY | PART NAME 1 2 3 4 5 6 (PRODUCT LEVEL) | SEE PAGE |
|---|---|---|---|---|
| Y | *376-1085* | 1 | BOOM GP (LONG REACH) | 380 |
| Y | *373-1106* | 1 | CYLINDER & LINES GP-BOOM (LH) | 217 |
| Y | *373-1107* | 1 | CYLINDER & LINES GP-BOOM (RH) | 217 |
| Y | *373-1108* | 1 | CYLINDER & LINES GP-STICK | 217 |
| Y | *259-5043* | 1 | LIGHTING GP-FLOOD (BOOM, LH) | 108 |
| Y | *260-8010* | 1 | LINES GP-BOOM (1-PIECE LONG) | 259 |
| | | | —OR— | |
| Y | *575-0786* | 1 | LINES GP-BOOM (1-PIECE LONG) | 261 |
| Y | *563-5606* | 1 | LINES GP-GREASE (BOOM) | 382 |

Y - SEPARATE ILLUSTRATION

<END>

# *376-1085* BOOM GP—HEAVY-DUTY

**S/N: FEY1-UP**

**5.7-M (17.1-FT)**

**PART OF 376-1084 BOOM AR-1 PIECE LONG**

**SMCS-6301, 6302, 6460, 6501, 6516, 6521, 6535, 6536** **i07450847**

| NOTE | REF NO | GRAPHIC REF | PART NUMBER | QTY | PART NAME 1 2 3 4 5 6 (PRODUCT LEVEL) | SEE PAGE |
|---|---|---|---|---|---|---|
| | 1 | 1 | **4I-3308** | 2 | PLATE | |
| | 2 | 1 | **4I-3309** | 2 | SPACER (82X110X3-MM THK) | |
| B | 3 | 1 | **093-0116** | 2 | SHIM (2-MM THK) | |
| | 4 | 1 | **093-0349** | 2 | WASHER (22X60X6-MM THK) | |
| | 5 | 1 | **093-0363** | 1 | SPACER (83X120X12-MM THK) | |
| B | 6 | 1 | **113-2127** | 1 | SHIM (0.5-MM THK) | |
| | 7 | 1 | **166-1486** | 2 | SHIM (2-MM THK) | |
| | 8 | 1 | **166-1495** | 2 | SEAL-LIP TYPE | |
| | 9 | 1 | **176-2278** | 1 | PIN | |
| | 10 | 1 | **264-1702** | 1 | PIN AS | |
| | 11 | 1 | **376-1087** | 1 | BOOM & BEARING AS | |
| | 11A | 1 | **396-3815** | 2 | BUSHING | |
| | 12 | 1 | **166-1487** | 2 | SHIM (2-MM THK) | |
| | 13 | 1 | **4I-4809** | 1 | PIN AS | |
| | 14 | 1 | **451-2176** | 2 | WASHER-HARD (22X35X3.5-MM THK) | |
| | 15 | 1 | **451-2182** | 6 | WASHER-HARD (13.5X25.5X3-MM THK) | |
| M | 16 | 1 | **453-2844** | 2 | BOLT (M20X2.5X30-MM) | |
| M | 17 | 1 | **453-3446** | 6 | BOLT (M12X1.75X35-MM) | |

B - USE AS REQUIRED
M - METRIC PART

*376-1085* **BOOM GP** (contd.) **i07450847**

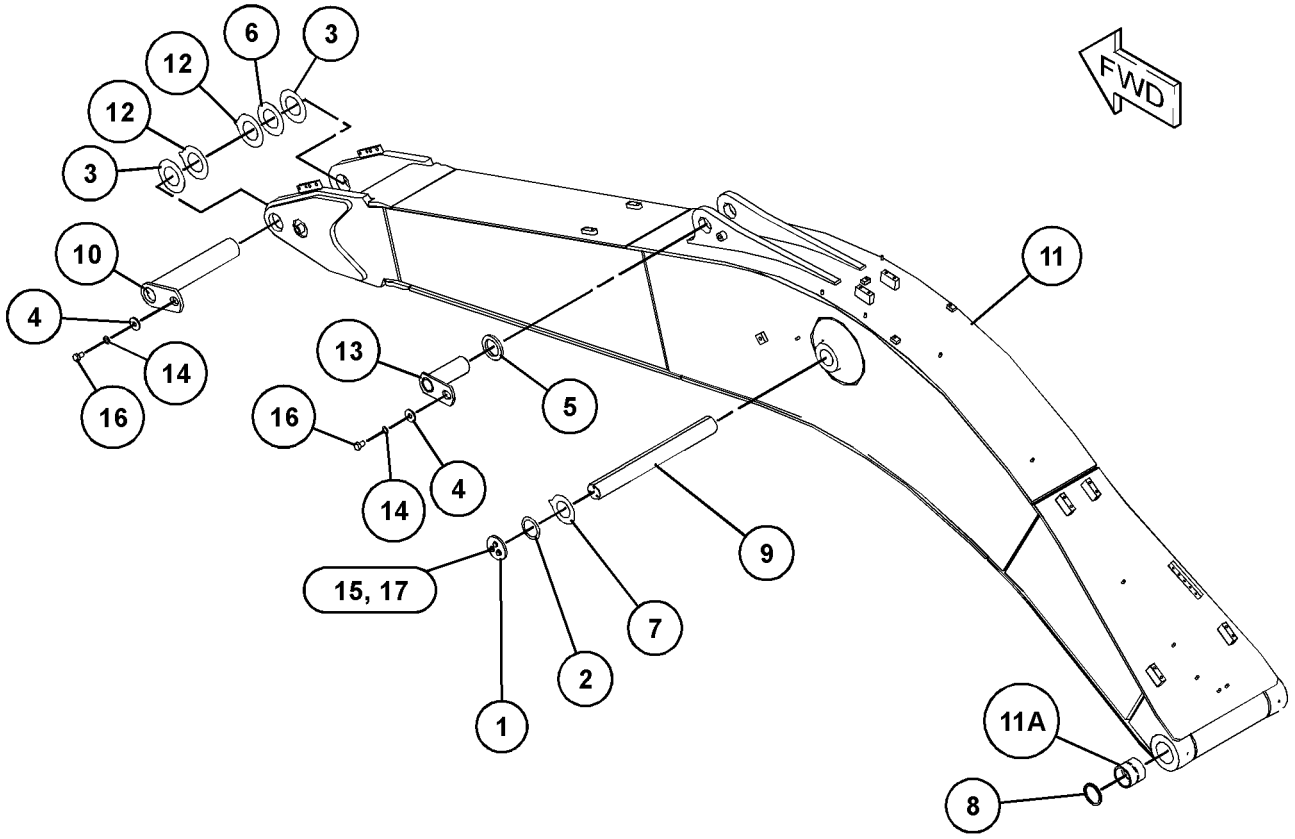


GRAPHIC #1 <END> g03104458

# *563-5606* LINES GP-GREASE

**S/N: FEY1-UP**
**FOR USE WITH 5.7-M (18.7-FT) BOOM**
**PART OF 376-1084 BOOM AR-1 PIECE LONG**

**SMCS-7510** **i07455005**

| NOTE | REF NO | GRAPHIC REF | PART NUMBER | QTY | PART NAME 1 2 3 4 5 6 (PRODUCT LEVEL) | SEE PAGE |
|---|---|---|---|---|---|---|
| M | 1 | 1 | **8T-4191** | 3 | BOLT (M10X1.5X16-MM) | |
| | 2 | 1 | **5K-9243** | 2 | ELBOW-FLARED | |
| | 3 | 1 | **6L-3616** | 2 | CONNECTOR | |
| | 4 | 1 | **033-8248** | 3 | CLIP (LOOP) | |
| | 5 | 1 | **166-1579** | 3 | CLIP | |
| | 6 | 1 | **3B-8489** | 5 | FITTING-GREASE (1/8-27 PTF) | |
| | 7 | 1 | **4I-4543** | 1 | TUBE AS | |
| | 8 | 1 | **4I-4544** | 1 | TUBE AS | |
| | 9 | 1 | **558-8188** | 1 | HOSE AS | |
| | 10 | 1 | **558-8195** | 2 | HOSE AS | |
| | 11 | 1 | **8M-2772** | 2 | CLIP (LOOP) | |
| | 12 | 1 | **8T-4121** | 8 | WASHER-HARD (11X21X2.5-MM THK) | |
| M | 13 | 1 | **8T-4133** | 5 | NUT (M10X1.5-THD) | |

M - METRIC PART

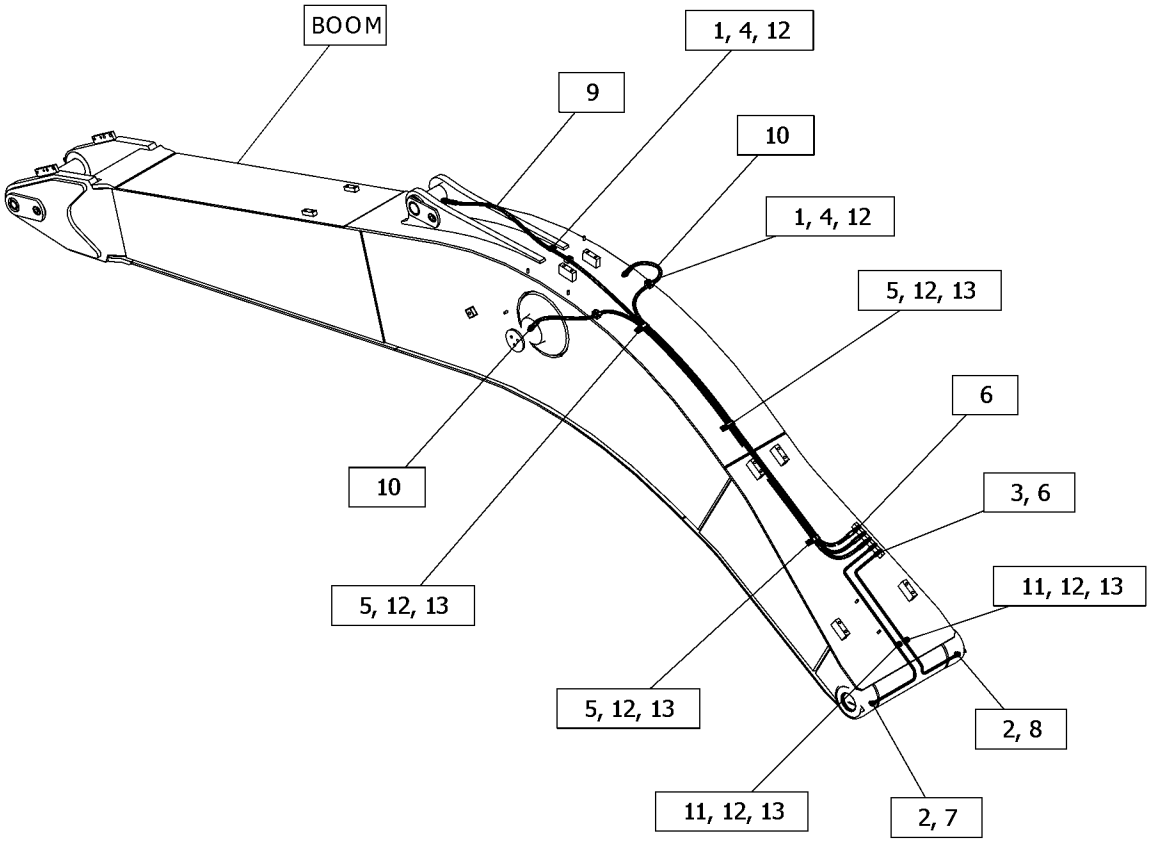


GRAPHIC #1 <END> g06352745

## *453-8143* LINKAGE AR-BUCKET—B1-FAMILY, WITHOUT LIFTING EYE

**S/N: FEY1-UP**

**PART OF 556-6432 DISTRIBUTION AR**

**SMCS-6513** **i05665255**

| NOTE | PART NUMBER | QTY | PART NAME 1 2 3 4 5 6 (PRODUCT LEVEL) | SEE PAGE |
|---|---|---|---|---|
| Y | *373-1109* | 1 | CYLINDER & LINES GP-BUCKET | 217 |
| Y | *453-8149* | 1 | LINKAGE GP-BUCKET (B1-FAMILY, WITHOUT LIFTING EYE) | 384 |

Y - SEPARATE ILLUSTRATION

<END>

# *453-8149* LINKAGE GP-BUCKET—B1-FAMILY, WITHOUT LIFTING EYE

**S/N: FEY1-UP**

**PART OF 453-8143 LINKAGE AR-BUCKET**

**SMCS-6513** **i07052540**

| NOTE | REF NO | GRAPHIC REF | PART NUMBER | QTY | PART NAME 1 2 3 4 5 6 (PRODUCT LEVEL) | SEE PAGE |
|---|---|---|---|---|---|---|
| | 1 | 1 | **3B-8489** | 5 | FITTING-GREASE (1/8-27 PTF) | |
| | 2 | 1 | **087-5805** | 2 | PIN | |
| | 3 | 1 | **166-1486** | 2 | SHIM (2-MM THK) | |
| | 4 | 1 | **254-3052** | 1 | PIN | |
| | 5 | 1 | **254-3053** | 1 | PIN | |
| | 6 | 1 | **367-8467** | 4 | SEAL-O-RING | |
| | 7 | 1 | **375-6871** | 1 | LINK AS | |
| | 8 | 1 | **375-6872** | 1 | LINK | |
| C | 9 | 1 | **522-4935** | 1 | LINK & BEARING AS | |
| | 9A | 1 | **396-3817** | 2 | BUSHING | |
| | 9B | 1 | **396-3819** | 2 | BUSHING | |
| | 10 | 1 | **166-1494** | 6 | SEAL-LIP TYPE | |
| M | 11 | 1 | **236-6365** | 2 | BOLT (M16X2X150-MM) | |
| M | 12 | 1 | **236-6366** | 2 | BOLT (M16X2X195-MM) | |
| M | 13 | 1 | **451-2183** | 8 | NUT (M16X2-THD) | |

C - CHANGE FROM PREVIOUS TYPE
M - METRIC PART

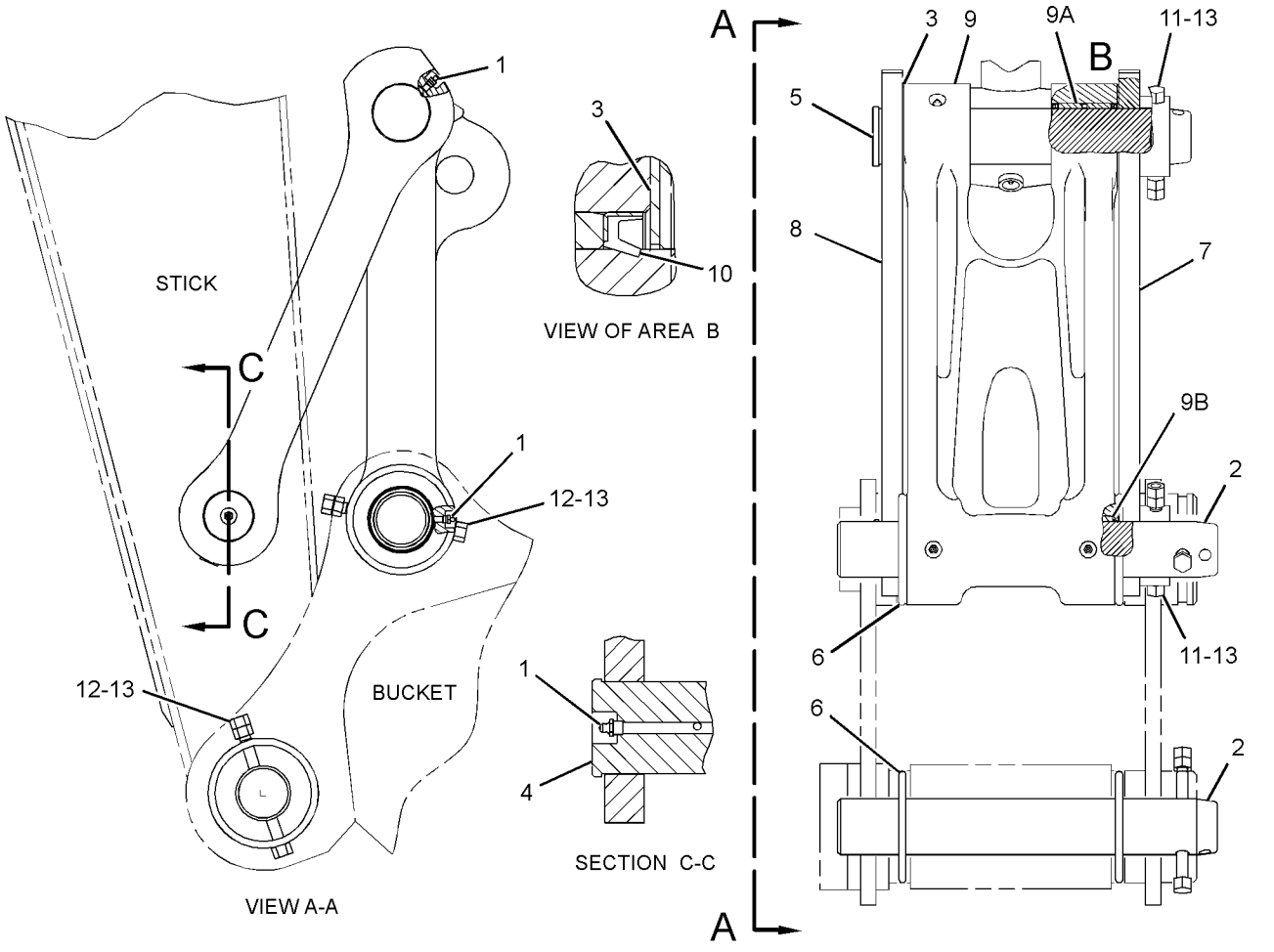


GRAPHIC #1 <END> g06122348

# *375-6281* STICK AR-HOE–REACH

**S/N: FEY1-UP**
**2.5-M (8.2-FT). B1-FAMILY, HEAVY-DUTY**
**PART OF 556-6432 DISTRIBUTION AR**

**SMCS-6502** **i06738935**

| NOTE | PART NUMBER | QTY | PART NAME 1 2 3 4 5 6 (PRODUCT LEVEL) | SEE PAGE |
|---|---|---|---|---|
| Y | *431-1642* | 1 | LINES GP-STICK | 303 |
| Y | *375-6280* | 1 | STICK GP-HOE | 386 |

Y - SEPARATE ILLUSTRATION

<END>

# *375-6280* STICK GP-HOE–REACH

**S/N: FEY1-UP**

**2.5-M (8.2-FT). B1-FAMILY, HEAVY-DUTY**

**PART OF 375-6281 STICK AR-HOE**

**SMCS-6502** **i07450844**

| NOTE | REF NO | GRAPHIC REF | PART NUMBER | QTY | PART NAME 1 2 3 4 5 6 (PRODUCT LEVEL) | SEE PAGE |
|---|---|---|---|---|---|---|
| | 1 | 1 | **3B-8489** | 3 | FITTING-GREASE (1/8-27 PTF) | |
| | 2 | 1 | **4I-4811** | 1 | PIN AS | |
| | 3 | 1 | **093-0349** | 2 | WASHER (22X60X6-MM THK) | |
| | 4 | 1 | **093-0363** | 1 | SPACER (83X120X12-MM THK) | |
| | 5 | 1 | **118-5982** | 1 | SPACER (73X105X14-MM THK) | |
| | 6 | 1 | **166-1486** | 2 | SHIM (2-MM THK) | |
| | 7 | 1 | **235-7679** | 2 | SEAL-LIP TYPE | |
| | 8 | 1 | **375-6276** | 1 | STICK & BEARING AS | |
| | 8A | 1 | **396-3816** | 2 | BUSHING | |
| | 8B | 1 | **396-3818** | 2 | BUSHING | |
| | 8C | 1 | **396-3815** | 2 | BUSHING | |
| | 9 | 1 | **166-1494** | 2 | SEAL-LIP TYPE | |
| | 10 | 1 | **166-1495** | 2 | SEAL-LIP TYPE | |
| | 11 | 1 | **4I-4809** | 1 | PIN AS | |
| | 12 | 1 | **451-2176** | 2 | WASHER-HARD (22X35X3.5-MM THK) | |
| M | 13 | 1 | **453-2844** | 2 | BOLT (M20X2.5X30-MM) | |

M - METRIC PART

*375-6280* **STICK GP-HOE (**contd.**)** **i07450844**

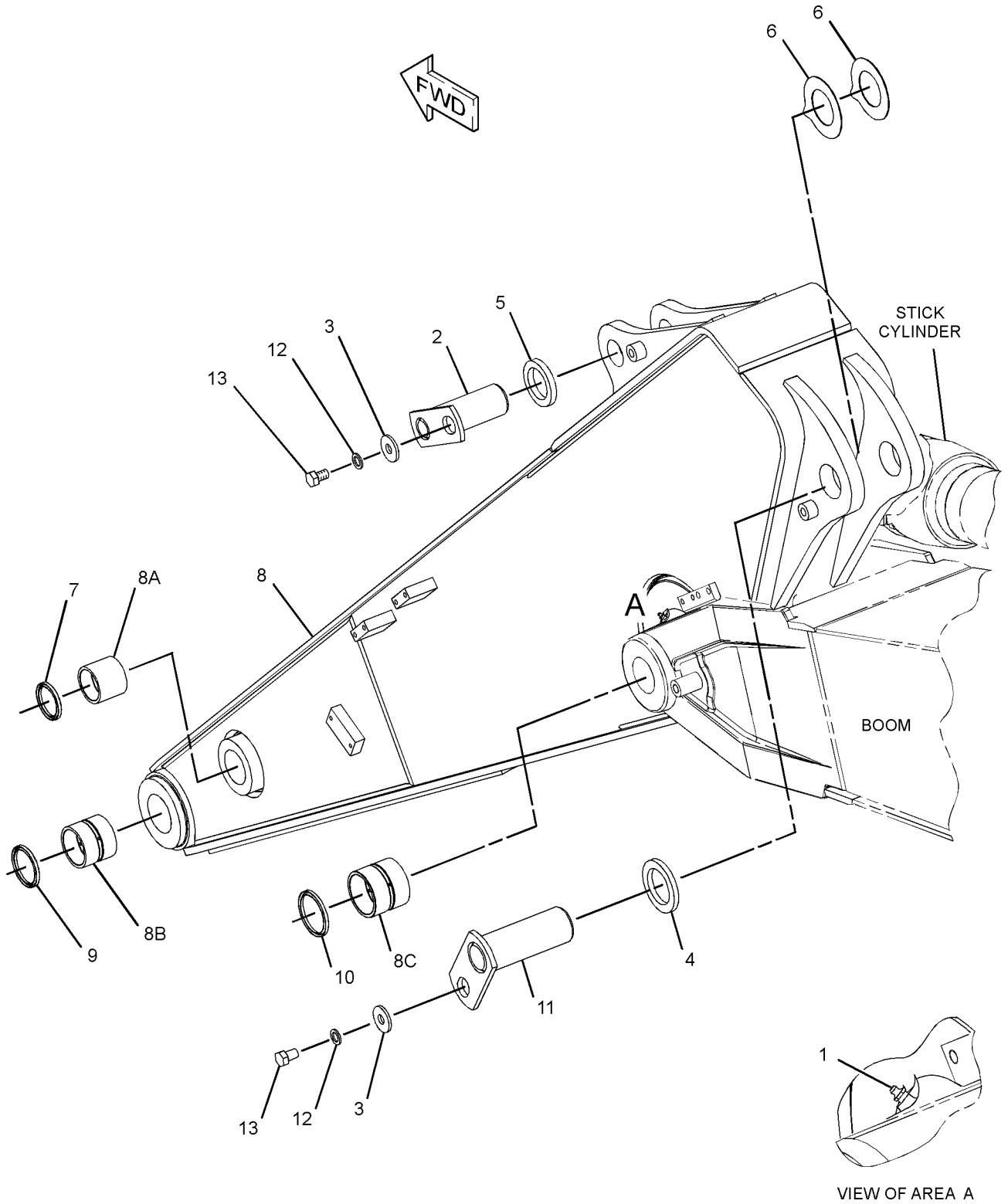


GRAPHIC #1 <END> g03330883

# *528-2286* ADJUSTER GP-BUCKET

**S/N: FEY1-UP**

**B-LINKAGE**

**PART OF 546-5051 BUCKET & ADJUSTER GP**

**SMCS-6513, 6700**

**i07532610**

| NOTE | REF NO | GRAPHIC REF | PART NUMBER | QTY | PART NAME 1 2 3 4 5 6 (PRODUCT LEVEL) | SEE PAGE |
|---|---|---|---|---|---|---|
| | 1 | 1 | **528-2285** | 1 | PLATE | |
| B | 2 | 1 | **086-0321** | 4 | SHIM (0.5-MM THK) | |
| B | | 1 | **086-0322** | 6 | SHIM (1-MM THK) | |
| | 3 | 1 | **9X-8257** | 4 | WASHER (17.5X30X3.5-MM THK) | |
| | 4 | 1 | **193-5014** | 1 | PIN | |
| | 5 | 1 | **193-5015** | 1 | FLANGE | |
| M | 6 | 1 | **8T-4193** | 4 | BOLT (M16X2X50-MM) | |

B - USE AS REQUIRED
M - METRIC PART

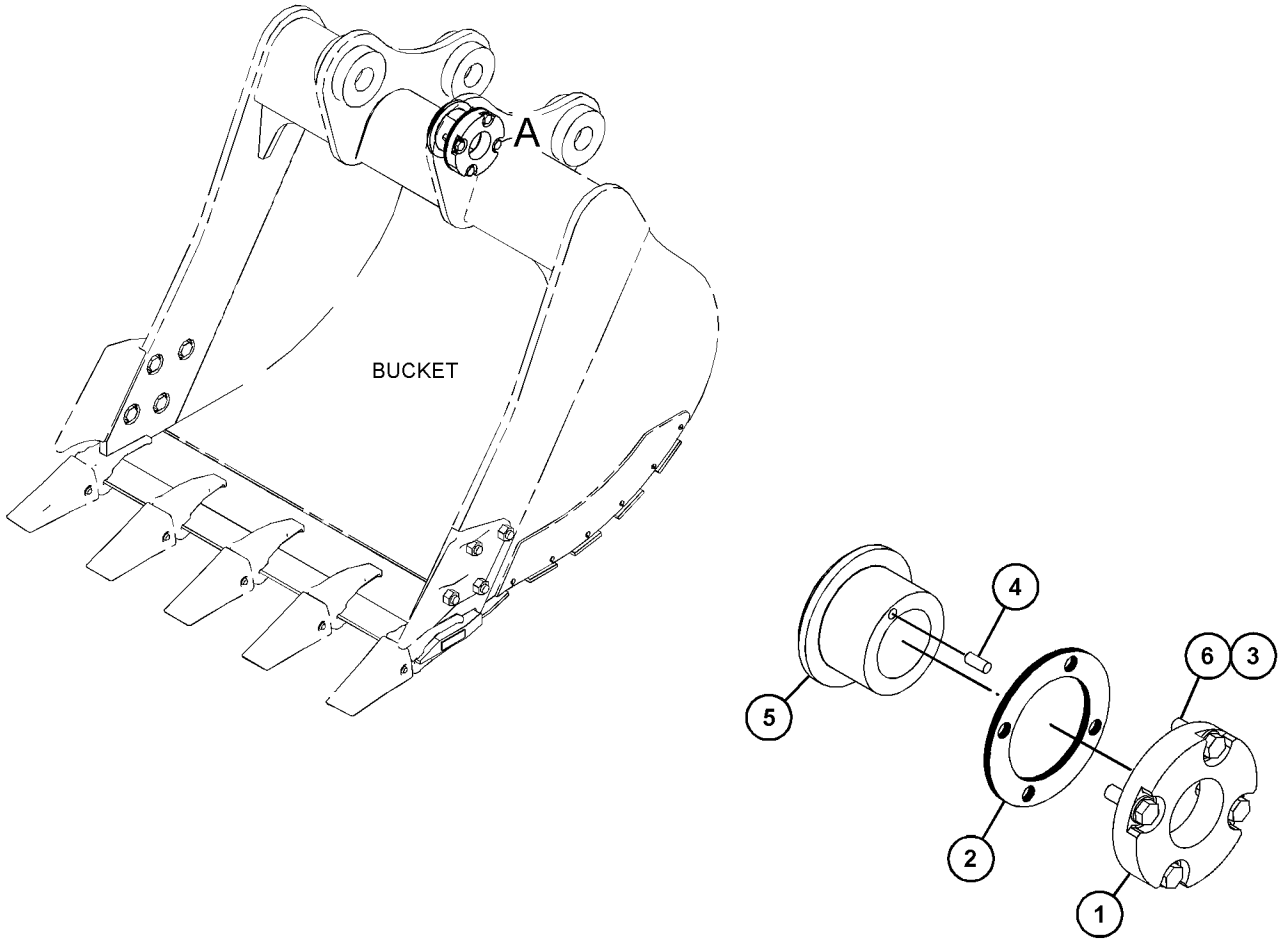


VIEW OF AREA A

GRAPHIC #1

<END>

g06363989

# 7Y-2219 ADJUSTER GP-BUCKET—B-FAMILY

**S/N: FEY1-UP**

**PART OF 347-6740, 347-6850 BUCKET & ADJUSTER GP**

**SMCS-6513, 6700** **i04922257**

| NOTE | REF NO | GRAPHIC REF | PART NUMBER | QTY | PART NAME 1 2 3 4 5 6 (PRODUCT LEVEL) | SEE PAGE |
|---|---|---|---|---|---|---|
| B | 1 | 1 | **086-0322** | 6 | SHIM (1-MM THK) | |
| B | 2 | 1 | **086-0321** | 4 | SHIM (0.5-MM THK) | |
| | 3 | 1 | **193-5014** | 1 | PIN | |
| | 4 | 1 | **134-8948** | 1 | PLATE | |
| M | 5 | 1 | **8T-4193** | 4 | BOLT (M16X2X50-MM) | |
| | 6 | 1 | **9X-8257** | 4 | WASHER (17.5X30X3.5-MM THK) | |
| | 7 | 1 | **193-5015** | 1 | FLANGE | |

B - USE AS REQUIRED
M - METRIC PART

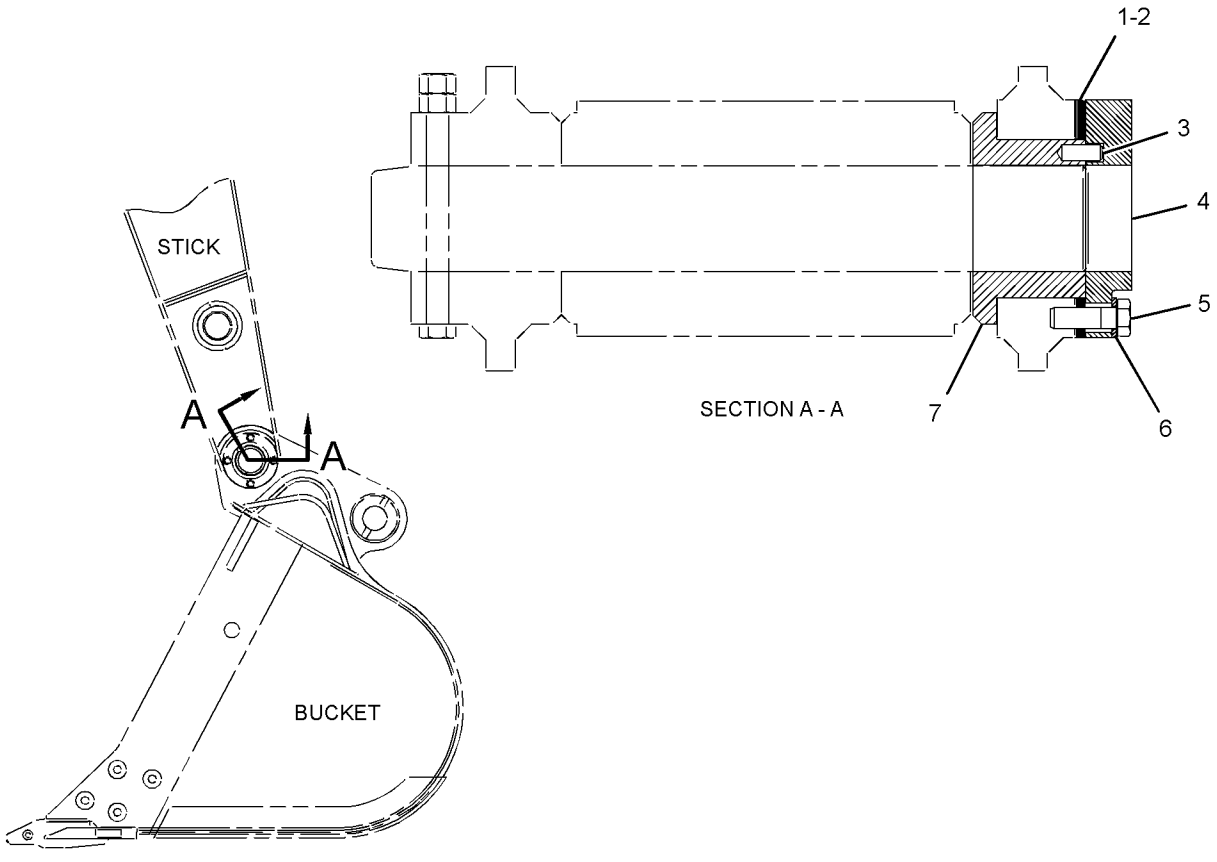


RIGHT SIDE VIEW

GRAPHIC #1 <END> g02812617

## *347-6740* BUCKET & ADJUSTER GP—B-FAMILY, HEAVY-DUTY

**S/N: FEY1-UP**

**1200-MM (49-IN) WIDE X 1.2-CU M (1.6-CU YD) CAPACITY. J-350 ADAPTERS, QTY OF 5**

**PART OF 392-5377 BUCKET AR-HEAVY DUTY**

**SMCS-6503, 6513** **i06199365**

| NOTE | PART NUMBER | QTY | PART NAME 1 2 3 4 5 6 (PRODUCT LEVEL) | SEE PAGE |
|---|---|---|---|---|
| Y | **7Y-2219** | 1 | ADJUSTER GP-BUCKET (B-FAMILY) | 389 |
| Y | *347-6742* | 1 | BUCKET AS-HEAVY DUTY | 393 |
| | | | | |
| | **2C-9259** | 1 | PLATE-IDENTIFICATION (CAT) | |
| | | | (ON LH SIDE OF BUCKET) | |
| | **312-5694** | 1 | SETSCREW (1/4-20X0.25-IN) | |
| | | | (USE TO MOUNT BUCKET INFORMATION PLATE) | |
| Y - SEPARATE ILLUSTRATION | | | | |

<END>

## *347-6850* BUCKET & ADJUSTER GP—GENERAL PURPOSE, B-FAMILY

**S/N: FEY1-UP**

**1400-MM (56-IN) WIDE X 1.14-CU M (1.49-CU YD) CAPACITY. J-350 ADAPTERS, QTY OF 6**

**PART OF 377-5395 BUCKET AR-GENERAL PURPOSE**

**SMCS-6503, 6513** **i07222461**

| NOTE | PART NUMBER | QTY | PART NAME 1 2 3 4 5 6 (PRODUCT LEVEL) | SEE PAGE |
|---|---|---|---|---|
| Y | **7Y-2219** | 1 | ADJUSTER GP-BUCKET (B-FAMILY) | 389 |
| Y | *371-9083* | 1 | BUCKET AS-GENERAL PURPOSE | 392 |
| | | | | |
| | **2C-9259** | 1 | PLATE-IDENTIFICATION (CAT) | |
| | | | (ON LH SIDE OF BUCKET) | |
| | **312-5694** | 1 | SETSCREW (1/4-20X0.25-IN) | |
| | | | (USE TO MOUNT BUCKET INFORMATION PLATE) | |
| Y - SEPARATE ILLUSTRATION | | | | |

<END>

## *546-5051* BUCKET & ADJUSTER GP—SEVERE SERVICE ROCK

**S/N: FEY1-UP**

**1450-MM (57-IN) WIDE X 1.20-CU M (1.57-CU YD) CAPACITY. J-350 ADAPTERS, QTY OF 6**

**PART OF 546-5050 BUCKET AR-SEVERE SERVICE ROCK**

**SMCS-6503, 6513** **i07532584**

| NOTE | PART NUMBER | QTY | PART NAME 1 2 3 4 5 6 (PRODUCT LEVEL) | SEE PAGE |
|---|---|---|---|---|
| Y | *528-2286* | 1 | ADJUSTER GP-BUCKET (B-FAMILY) | 388 |
| Y | *546-5052* | 1 | BUCKET AS-SEVERE SERVICE ROCK (B-FAMILY, SEVERE DUTY) | 394 |
| | | | | |
| | **312-5694** | 1 | SETSCREW (1/4-20X0.25-IN) | |
| | | | (USE TO MOUNT BUCKET INFORMATION PLATE) | |
| Y - SEPARATE ILLUSTRATION | | | | |

<END>

## *377-5395* BUCKET AR-GENERAL PURPOSE—B-FAMILY

**S/N: FEY1-UP**

**1400-MM (56-IN) WIDE X 1.14-CU M (1.49-CU YD) CAPACITY**

**SMCS-6101** **i04925224**

| NOTE | PART NUMBER | QTY | PART NAME 1 2 3 4 5 6 (PRODUCT LEVEL) | SEE PAGE |
|---|---|---|---|---|
| Y | **347-6850** | 1 | BUCKET & ADJUSTER GP (GENERAL PURPOSE, B-FAMILY) | 390 |
| Y | *380-1204* | 6 | SIDECUTTER GP | 398 |
| Y | *8J-4955* | 1 | TIP GP-LONG (J-350) | 399 |

Y - SEPARATE ILLUSTRATION

<END>

## *392-5377* BUCKET AR-HEAVY DUTY—B-FAMILY

**S/N: FEY1-UP**

**1200-MM (49-IN) WIDE X 1.19-CU M (1.56-CU YD) CAPACITY**

**SMCS-6531** **i06199362**

| NOTE | PART NUMBER | QTY | PART NAME 1 2 3 4 5 6 (PRODUCT LEVEL) | SEE PAGE |
|---|---|---|---|---|
| Y | **347-6740** | 1 | BUCKET & ADJUSTER GP (HEAVY-DUTY, B-FAMILY) | 390 |
| Y | *357-2698* | 1 | SIDECUTTER GP | 397 |
| Y | *195-9181* | 5 | TIP GP-PENETRATION PLUS (J-350) | 400 |

Y - SEPARATE ILLUSTRATION

<END>

## *546-5050* BUCKET AR-SEVERE SERVICE ROCK—B-FAMILY

**S/N: FEY1-UP**

**1450-MM (57-IN) WIDE X 1.20-CU M (1.57-CU YD) CAPACITY**

**SMCS-6102, 6529** **i07532600**

| NOTE | PART NUMBER | QTY | PART NAME 1 2 3 4 5 6 (PRODUCT LEVEL) | SEE PAGE |
|---|---|---|---|---|
| Y | *546-5051* | 1 | BUCKET & ADJUSTER GP | 390 |
| Y | *380-1204* | 1 | SIDECUTTER GP | 398 |
| Y | *195-9181* | 6 | TIP GP-PENETRATION PLUS (J-350) | 400 |

Y - SEPARATE ILLUSTRATION

<END>

# *371-9083* BUCKET AS-GENERAL PURPOSE–B-FAMILY

**S/N: FEY1-UP**

**1400-MM (56-IN) WIDE X 1.14-CU M (1.49-CU YD) CAPACITY. J-350 ADAPTERS, QTY OF 6**

**PART OF 347-6850 BUCKET & ADJUSTER GP**

**SMCS-6101** **i04922387**

| NOTE | REF NO | GRAPHIC REF | PART NUMBER | QTY | PART NAME 1 2 3 4 5 6 (PRODUCT LEVEL) | SEE PAGE |
|---|---|---|---|---|---|---|
| | 1 | 1 | **378-0321** | 1 | EDGE AS | |
| | 1A | 1 | **6I-6354** | 4 | ADAPTER-TIP (J-350, 2-STRAP, CENTER) | |
| | 1B | 1 | **6I-6355** | 1 | ADAPTER-TIP (J-350, 2-STRAP, RH) | |
| | 1C | 1 | **6I-6356** | 1 | ADAPTER-TIP (J-350, 2-STRAP, LH) | |
| | 1D | 1 | **8P-9770** | 1 | PLATE | |
| | 2 | 1 | **347-7485** | 4 | PLATE-WEAR | |
| | 3 | 1 | **348-3197** | 1 | PLATE-WEAR | |
| | 4 | 1 | **371-9131** | 1 | PLATE AS-HINGE | |
| | 5 | 1 | **378-0319** | 2 | PLATE-WEAR | |

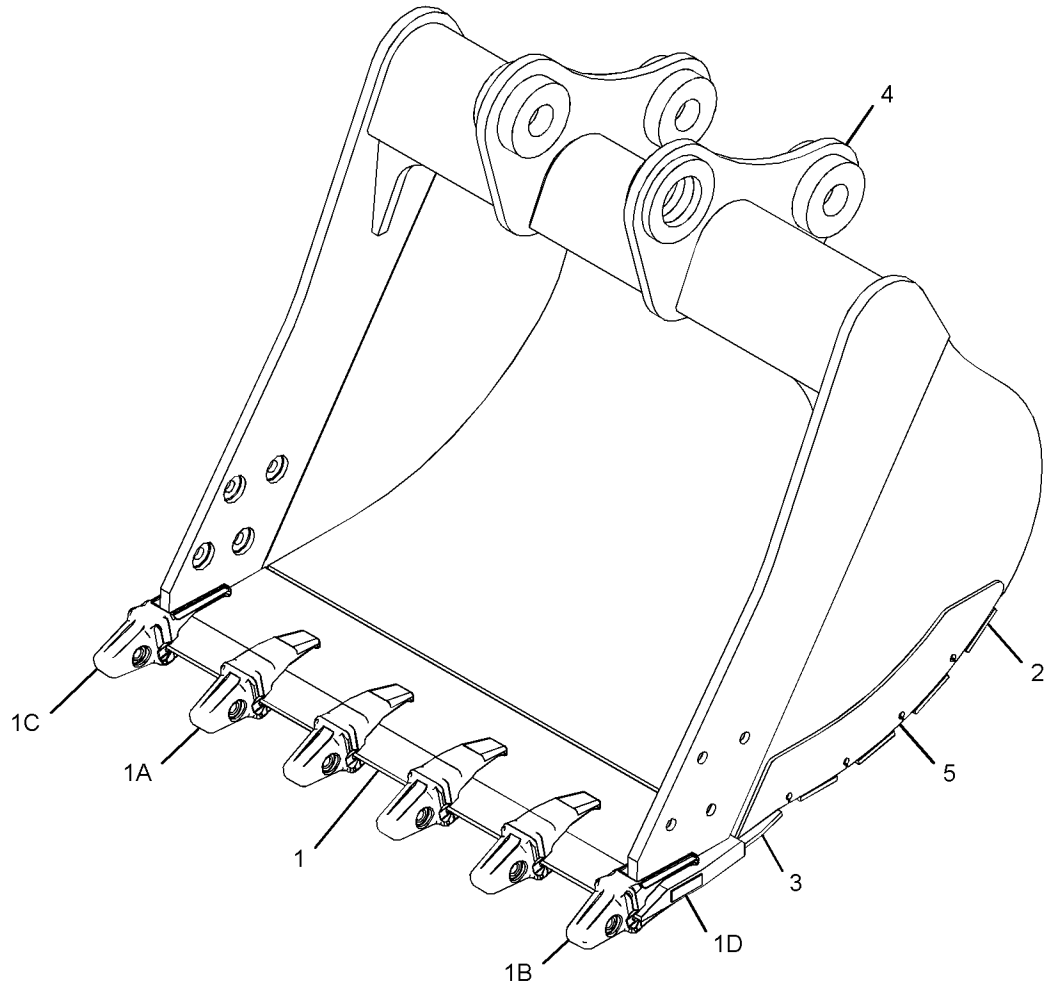


GRAPHIC #1 <END> g02979197

# *347-6742* BUCKET AS-HEAVY DUTY–B-FAMILY

**S/N: FEY1-UP**

**1200-MM (49-IN) WIDE X 1.2-CU M (1.6-CU YD) CAPACITY. J-350 ADAPTERS, QTY OF 5**

**PART OF 347-6740 BUCKET & ADJUSTER GP**

**SMCS-6531** **i06199409**

| NOTE | REF NO | GRAPHIC REF | PART NUMBER | QTY | PART NAME 1 2 3 4 5 6 (PRODUCT LEVEL) | SEE PAGE |
|---|---|---|---|---|---|---|
| | 1 | 1 | **331-1924** | 4 | PLATE-WEAR | |
| | 2 | 1 | **331-1926** | 1 | PLATE-WEAR | |
| | 3 | 1 | **347-7545** | 1 | PLATE-WEAR | |
| | 4 | 1 | **358-1630** | 1 | EDGE AS | |
| | 4A | 1 | **6I-6354** | 3 | ADAPTER-TIP (J-350, 2-STRAP, CENTER) | |
| | 4B | 1 | **6I-6355** | 1 | ADAPTER-TIP (J-350, 2-STRAP, RH) | |
| | 4C | 1 | **6I-6356** | 1 | ADAPTER-TIP (J-350, 2-STRAP, LH) | |
| | 4D | 1 | **8P-9770** | 1 | PLATE | |
| | 5 | 1 | **347-7574** | 2 | PLATE-WEAR | |
| | 6 | 1 | **378-0361** | 1 | PLATE (LH) | |
| | 7 | 1 | **378-0362** | 1 | PLATE (RH) | |
| | 8 | 1 | **378-0364** | 1 | PLATE AS-HINGE | |

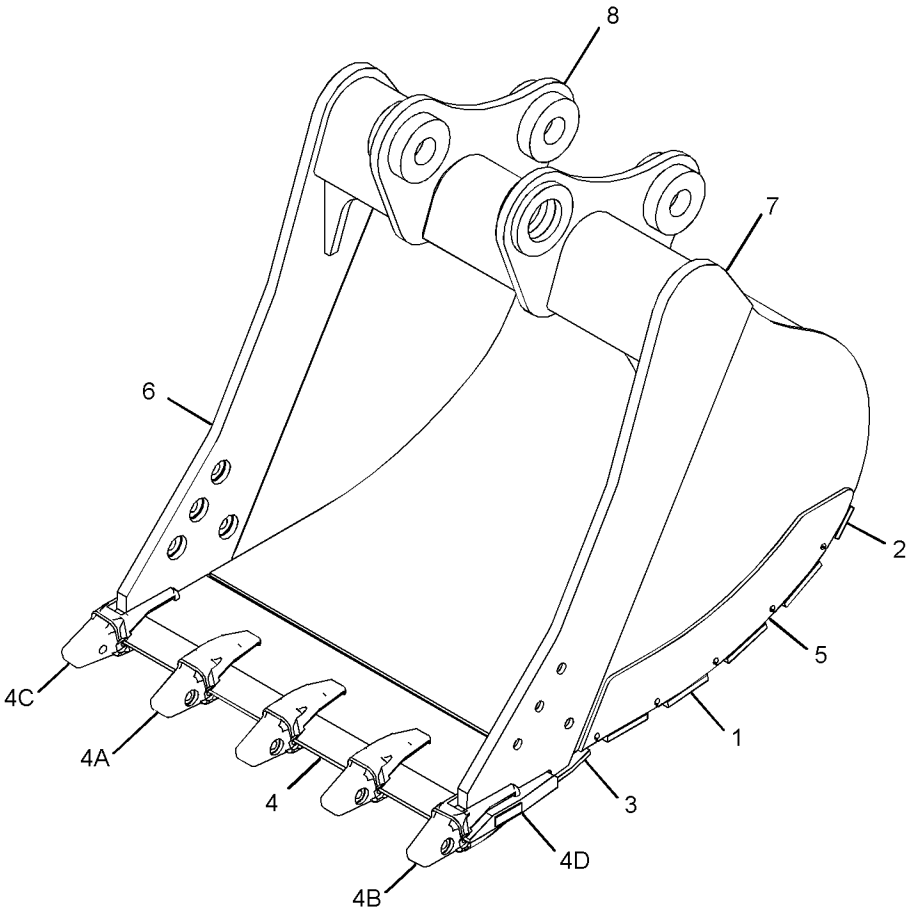


GRAPHIC #1 <END> g03381531

# *546-5052* BUCKET AS-SEVERE SERVICE ROCK—B-FAMILY

**S/N: FEY1-UP**

**1450-MM (57-IN) WIDE X 1.20-CU M (1.57-CU YD) CAPACITY. J-350 ADAPTERS, QTY OF 6**

**PART OF 546-5051 BUCKET & ADJUSTER GP**

**SMCS-6001** **i07532585**

| NOTE | REF NO | GRAPHIC REF | PART NUMBER | QTY | PART NAME 1 2 3 4 5 6 (PRODUCT LEVEL) | SEE PAGE |
|---|---|---|---|---|---|---|
| | 1 | 1 | **285-3254** | 1 | PLATE (PROTECTOR) | |
| | 2 | 1 | **2C-9259** | 1 | PLATE-IDENTIFICATION (CAT) | |
| | 3 | 1 | **557-3506** | 2 | PLATE-WEAR | |
| | 4 | 1 | **557-3503** | 1 | PLATE-SIDE (LH) | |
| | 5 | 1 | **557-3504** | 1 | PLATE-SIDE (RH) | |
| | 6 | 1 | **558-2779** | 5 | PLATE-SIDE (LH) | |
| | 7 | 1 | **554-6992** | 1 | EDGE AS | |
| | 7A | 1 | **6I-6354** | 4 | ADAPTER-TIP (J-350, 2-STRAP, CENTER) | |
| | 7B | 1 | **6I-6355** | 1 | ADAPTER-TIP (J-350, 2-STRAP, RH) | |
| | 7C | 1 | **6I-6356** | 1 | ADAPTER-TIP (J-350, 2-STRAP, LH) | |
| | 7D | 1 | **8P-9770** | 1 | PLATE | |
| | 8 | 1 | **554-6994** | 1 | PLATE-WEAR | |
| | 9 | 1 | **554-6995** | 5 | PLATE-WEAR | |
| | 10 | 1 | **554-6996** | 1 | PLATE-WEAR | |
| | 11 | 1 | **554-6997** | 1 | PLATE AS-HINGE | |
| | 12 | 1 | **558-2776** | 5 | PLATE-SIDE (RH) | |
| | 13 | 1 | **558-2777** | 2 | PLATE | |
| | 14 | 1 | **558-2778** | 2 | PLATE | |

*546-5052* **BUCKET AS-SEVERE SERVICE ROCK (**contd.**)** **i07532585**

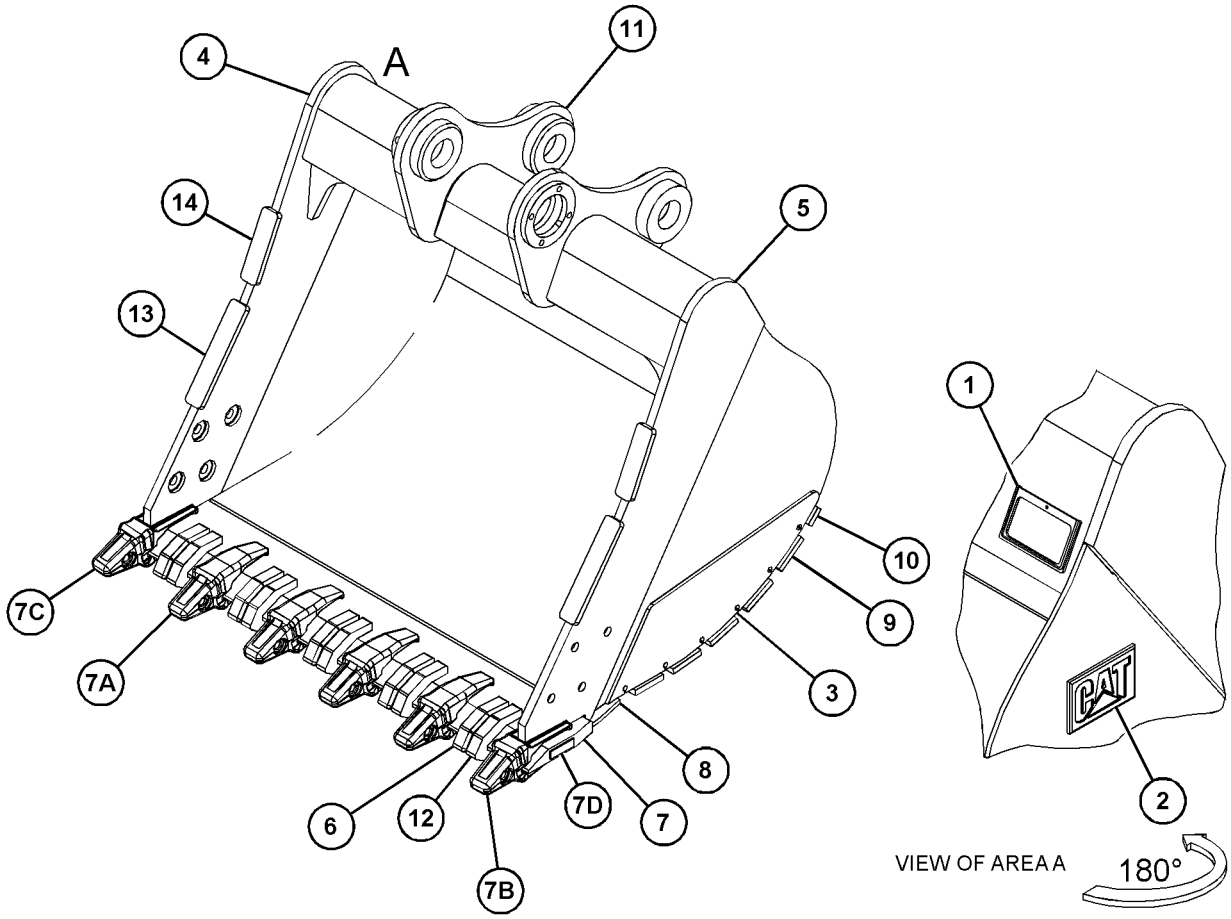


GRAPHIC #1 <END> g06378135

# 572-7136 KIT-BUCKET TIP

**S/N: FEY1-UP**

**SMCS-6800** **i07676780**

| NOTE | PART NUMBER | QTY | PART NAME 1 2 3 4 5 6 (PRODUCT LEVEL) | SEE PAGE |
|---|---|---|---|---|
| | **114-0358** | 6 | PIN | |
| | **114-0359** | 6 | RETAINER AS | |
| | **168-1359** | 6 | TIP-PENETRATION | |

<END>

# *357-2698* SIDECUTTER GP

**S/N: FEY1-UP**

**PART OF 392-5377 BUCKET AR-HEAVY DUTY**

**SMCS-6813** **i07157316**

| NOTE | REF NO | GRAPHIC REF | PART NUMBER | QTY | PART NAME 1 2 3 4 5 6 (PRODUCT LEVEL) | SEE PAGE |
|---|---|---|---|---|---|---|
| | 1 | 1 | **522-6333** | 1 | SIDECUTTER (RH) | |
| | 2 | 1 | **522-6334** | 1 | SIDECUTTER (LH) | |
| | 3 | 1 | **1D-4635** | 8 | BOLT (1-8X2.5-IN) | |
| | 4 | 1 | **2J-3507** | 8 | NUT-FULL (1-8-THD) | |
| | 5 | 1 | **3K-5234** | 8 | WASHER-HARD (28X49X6-MM THK) | |

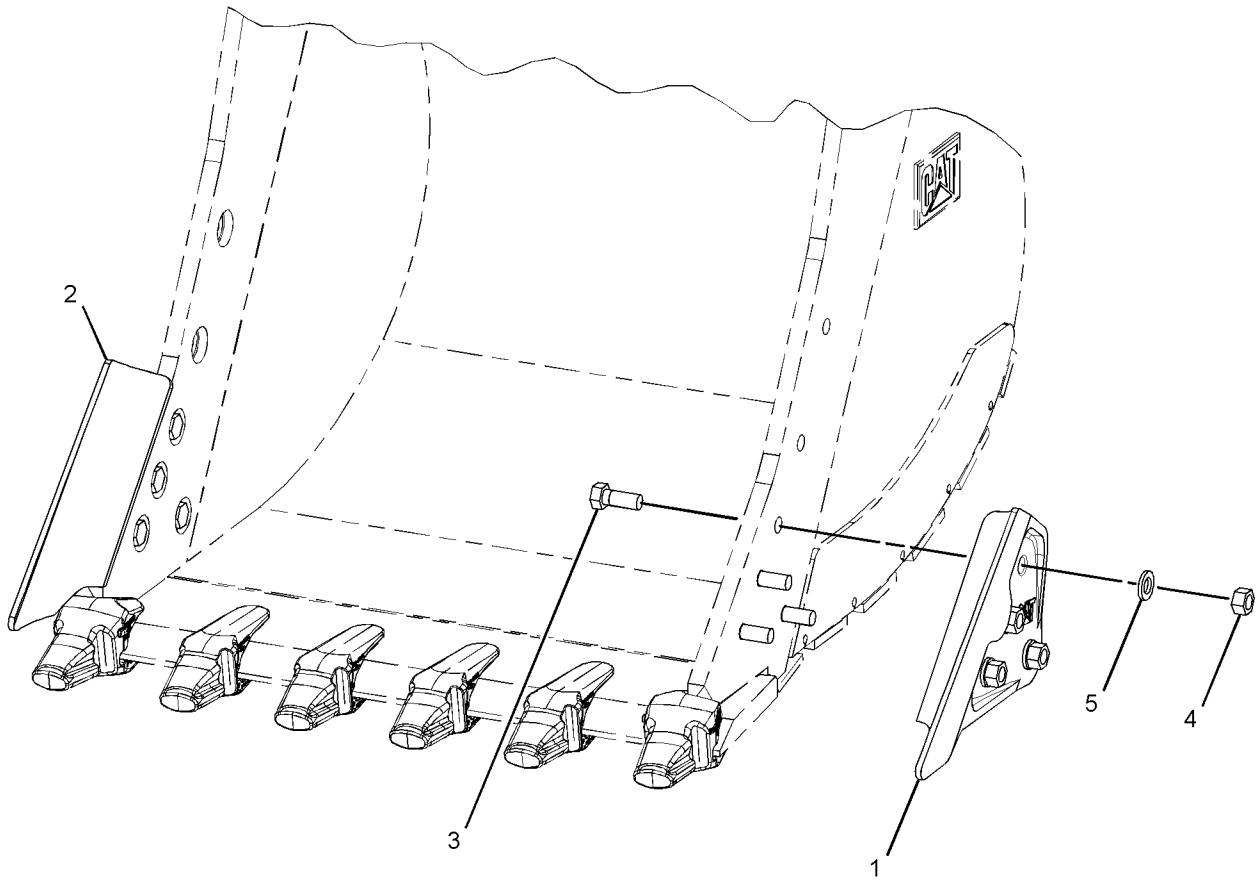


GRAPHIC #1 <END> g02266733

# *380-1204* SIDECUTTER GP

**S/N: FEY1-UP**

**PART OF 377-5395 BUCKET AR-GENERAL PURPOSE, 546-5050 BUCKET AR-SEVERE SERVICE ROCK**

**SMCS-6813** **i06225271**

| NOTE | REF NO | GRAPHIC REF | PART NUMBER | QTY | PART NAME 1 2 3 4 5 6 (PRODUCT LEVEL) | SEE PAGE |
|---|---|---|---|---|---|---|
| | 1 | 1 | **357-2713** | 1 | SIDECUTTER (LH) | |
| | 2 | 1 | **357-2714** | 1 | SIDECUTTER (RH) | |
| M | 3 | 1 | **7X-0851** | 8 | NUT (M24X3-THD) | |
| M | 4 | 1 | **8T-0664** | 8 | BOLT (M24X3X70-MM) | |

M - METRIC PART

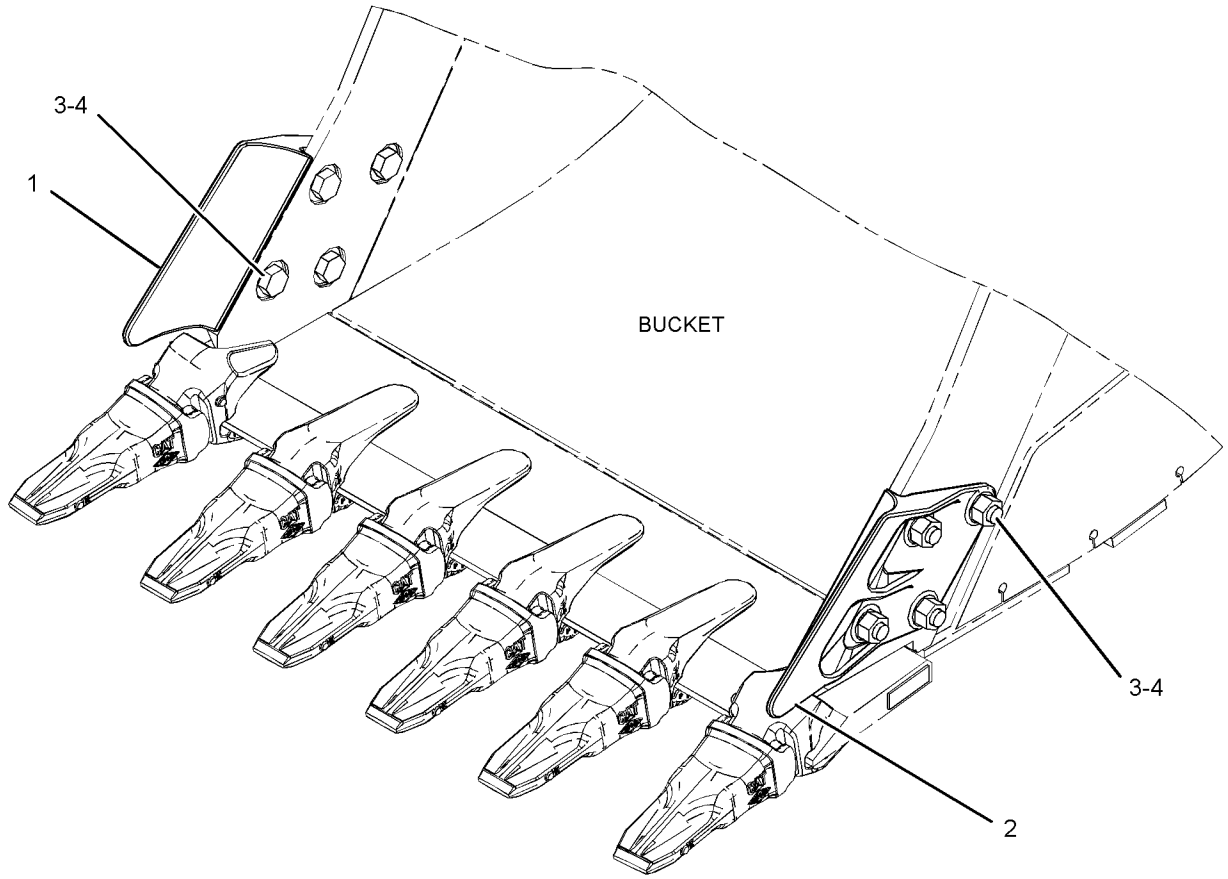


GRAPHIC #1 <END> g02719648

# *8J-4955* TIP GP-LONG–J-350

**S/N: FEY1-UP**

**PART OF 377-5395 BUCKET AR-GENERAL PURPOSE**

**SMCS-6805** **i05335173**

| NOTE | REF NO | GRAPHIC REF | PART NUMBER | QTY | PART NAME 1 2 3 4 5 6 (PRODUCT LEVEL) | SEE PAGE |
|---|---|---|---|---|---|---|
| | 1 | 1 | **114-0359** | 1 | RETAINER AS | |
| | 2 | 1 | **1U-3352** | 1 | TIP-LONG | |
| | 3 | 1 | **114-0358** | 1 | PIN | |

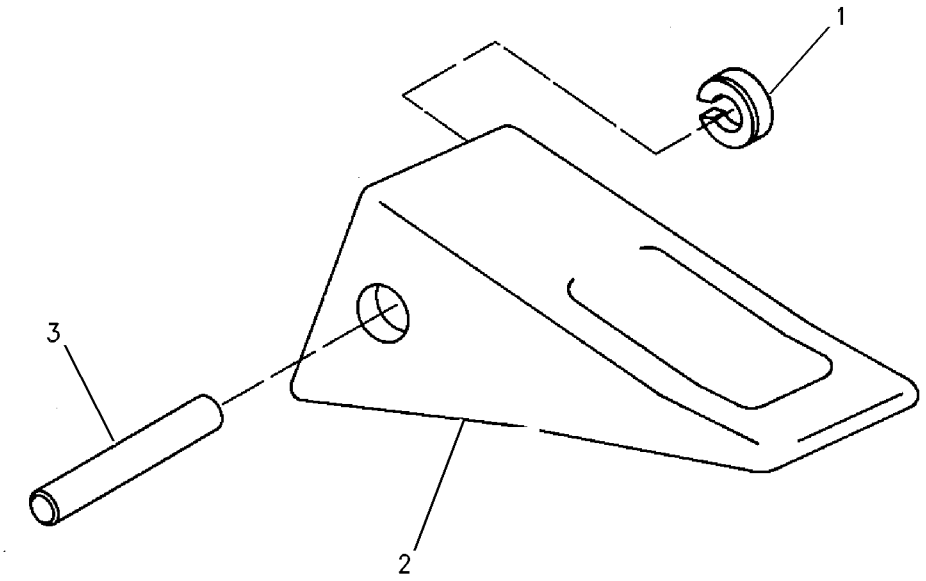


GRAPHIC #1 <END> g00523955

# *195-9181* TIP GP-PENETRATION PLUS—J-350

**S/N: FEY1-UP**

**PART OF 392-5377 BUCKET AR-HEAVY DUTY, 546-5050 BUCKET AR-SEVERE SERVICE ROCK**

**SMCS-6805** **i06199358**

| NOTE | REF NO | GRAPHIC REF | PART NUMBER | QTY | PART NAME 1 2 3 4 5 6 (PRODUCT LEVEL) | SEE PAGE |
|---|---|---|---|---|---|---|
| | 1 | 1 | **114-0358** | 1 | PIN | |
| | 2 | 1 | **114-0359** | 1 | RETAINER AS | |
| | 3 | 1 | **168-1359** | 1 | TIP-PENETRATION | |

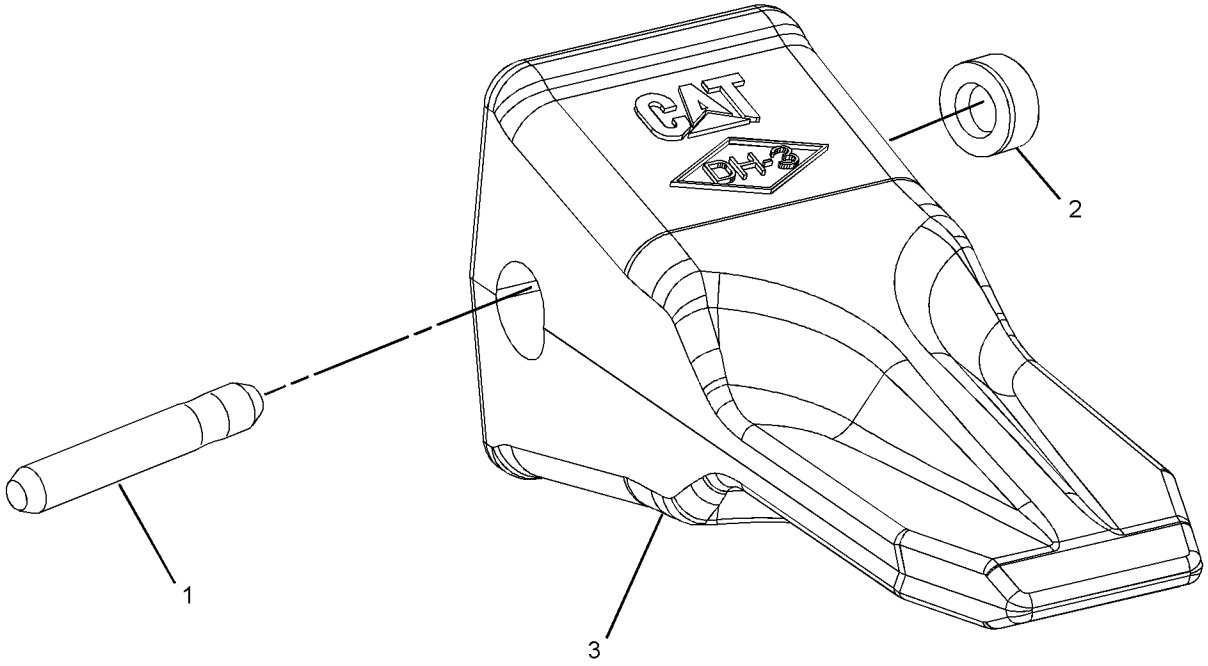


GRAPHIC #1 <END> g01381522

# *416-1798* AIR CONDITIONER & MOUNTING GP

**S/N: FEY1-UP**

**PART OF 418-9897 AIR CONDITIONER AR, 557-8896 CAB GP**

**SMCS-7320** **i06022429**

| NOTE | REF NO | GRAPHIC REF | PART NUMBER | QTY | PART NAME 1 2 3 4 5 6 (PRODUCT LEVEL) | SEE PAGE |
|---|---|---|---|---|---|---|
| | 1 | 1 | **111-4836** | 3 | CLIP | |
| | 2 | 1 | **235-8874** | 1 | SENSOR-TEMPERATURE (AMBIENT AIR) | |
| | 3 | 1 | **235-8875** | 1 | BRACKET | |
| | 4 | 1 | **235-9005** | 1 | HARNESS AS-HEATER & AIR COND (LOW SIDE) | |
| Y | 5 | 1 | **316-8916** | 1 | AIR CONDITIONER GP | 404 |
| | 6 | 1 | **396-6895** | 1 | PANEL AS-CONTROL | |
| | 7 | 1 | **416-1802** | 1 | HARNESS AS-HEATER & AIR COND (HIGH SIDE) | |
| | 8 | 1 | **119-5026** | 4 | SCREW-PAN HEAD (10-16X0.63-IN) | |
| | 9 | 1 | **3S-2093** | 1 | STRAP-CABLE | |
| | 10 | 1 | **4P-7581** | 1 | CLIP (LADDER) | |
| M | 11 | 1 | **5C-9553** | 1 | BOLT (M6X1X16-MM) | |
| | 12 | 1 | **7X-7729** | 7 | WASHER (11X25X3-MM THK) | |
| | 13 | 1 | **8T-4121** | 3 | WASHER-HARD (11X21X2.5-MM THK) | |
| M | 14 | 1 | **8T-4136** | 7 | BOLT (M10X1.5X25-MM) | |
| M | 15 | 1 | **8T-4137** | 3 | BOLT (M10X1.5X20-MM) | |
| | 16 | 1 | **9X-8256** | 1 | WASHER (6.6X12X2-MM THK) | |
| | 17 | 1 | **235-8950** | 2 | CLIP | |

M - METRIC PART
Y - SEPARATE ILLUSTRATION

*416-1798* **AIR CONDITIONER & MOUNTING GP** (contd.) **i06022429**

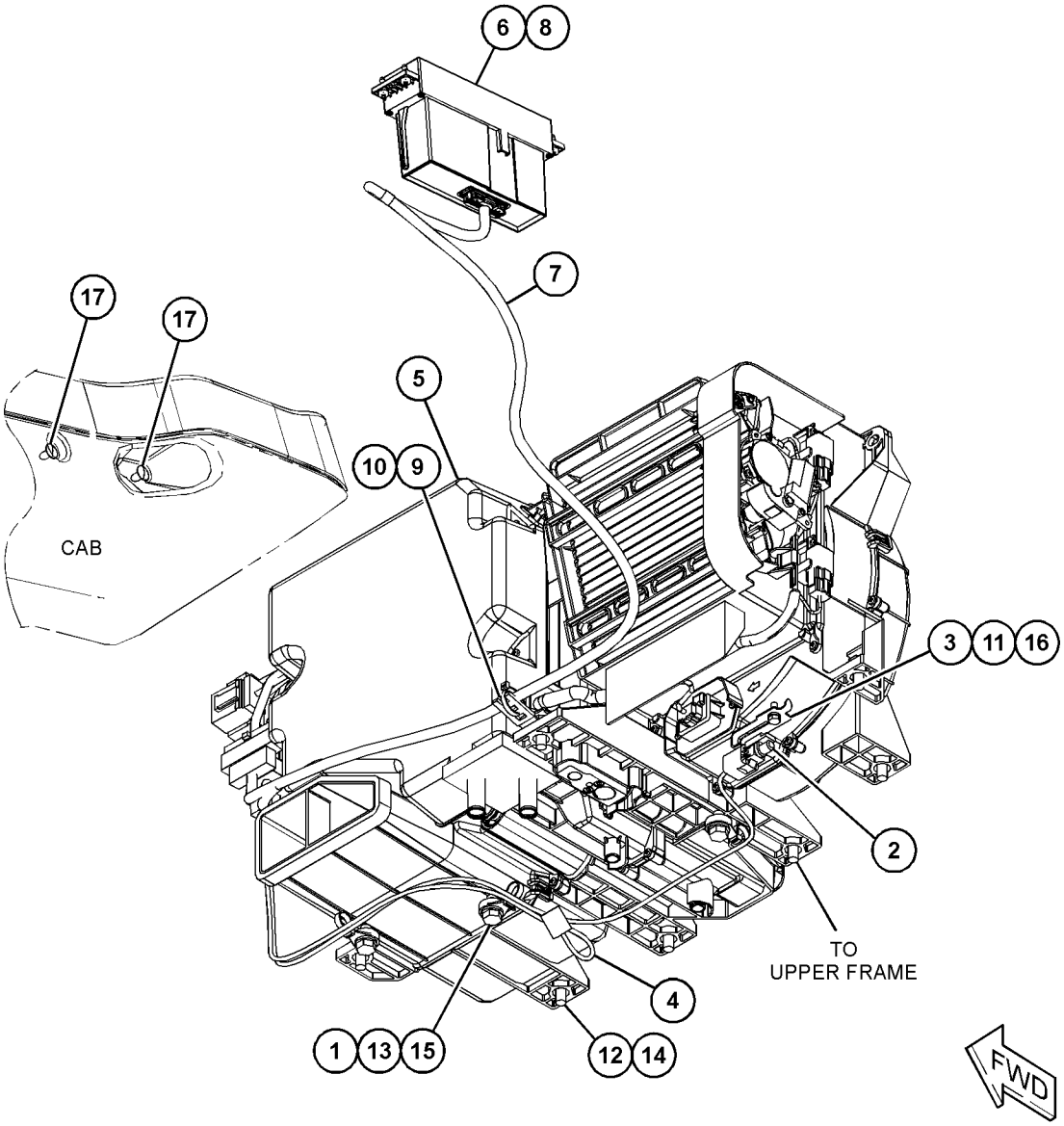


GRAPHIC #1 <END> g03785323

# *418-9897* AIR CONDITIONER AR

**S/N: FEY1-UP**

**PART OF 557-8297 CAB AR**

**SMCS-7320** **i05335336**

| NOTE | PART NUMBER | QTY | PART NAME 1 2 3 4 5 6 (PRODUCT LEVEL) | SEE PAGE |
|---|---|---|---|---|
| Y | *416-1798* | 1 | AIR CONDITIONER & MOUNTING GP | 401 |
| Y | *229-9082* | 1 | DUCT GP-CAB AIR | 445 |
| | | | | |
| | **185-8284** | 1 | COVER | |
| | **235-8950** | 2 | CLIP | |
| | | | (LOCATED ON RH CAB CONSOLE SWITCH PANEL) | |

Y - SEPARATE ILLUSTRATION

<END>

# 316-8916 AIR CONDITIONER GP

**S/N: FEY1-UP**

**PART OF 416-1798 AIR CONDITIONER & MOUNTING GP**

**SMCS-7320** **i05654494**

| NOTE | REF NO | GRAPHIC REF | PART NUMBER | QTY | PART NAME 1 2 3 4 5 6 (PRODUCT LEVEL) | SEE PAGE |
|---|---|---|---|---|---|---|
| | 1 | 1 | **185-8300** | 35 | SCREW-TAPPING | |
| | 2 | 1 | **185-8302** | 3 | SCREW-TAPPING | |
| | 3 | 1 | **245-7817** | 2 | MOTOR AS | |
| | 4 | 1 | **245-7818** | 3 | CLIP | |
| | 5 | 1 | **245-7819** | 2 | CLIP | |
| | 6 | 1 | **245-7820** | 1 | COVER-FRONT | |
| | 7 | 1 | **245-7825** | 1 | INSULATOR | |
| | 8 | 1 | **245-7826** | 1 | INSULATOR | |
| | 9 | 1 | **245-7827** | 1 | INSULATOR | |
| | 10 | 1 | **245-7828** | 1 | INSULATOR | |
| | 11 | 1 | **245-7829** | 1 | PACKING | |
| | 12 | 1 | **245-7830** | 1 | CLIP | |
| | 13 | 1 | **245-7831** | 1 | SENSOR AS-TEMPERATURE (COOLANT) | |
| | 14 | 1 | **245-7832** | 1 | CONTROL AS | |
| | 15 | 1 | **245-7833** | 1 | CORE AS-HEATER | |
| | 16 | 1 | **245-7834** | 1 | DAMPER AS | |
| | 17 | 1 | **245-7835** | 1 | SENSOR AS-TEMPERATURE (AMBIENT AIR TEMP) | |
| Y | 18 | 1 | **245-7836** | 1 | COIL GP-EVAPORATOR | 419 |
| | 19 | 1 | **245-7838** | 1 | PACKING | |
| | 20 | 1 | **245-7839** | 1 | MOTOR AS (WITH FAN) | |
| Y | 21 | 1 | **245-7846** | 1 | CONTROL GP-HEAT & AIR COND (AIR INLET) | 438 |
| | 22 | 1 | **245-7847** | 1 | HARNESS AS-HEATER & AIR COND | |
| | 23 | 1 | **245-7856** | 3 | SCREW-TAPPING | |
| | 24 | 1 | **293-1137** | 1 | FILTER AS-AIR (AIR CONDITIONER) | |
| | | 1 | **245-7823** | 1 | FILTER ELEMENT-CAB AIR | |
| | | 1 | **245-7824** | 1 | PACKING | |
| | 25 | 1 | **316-8846** | 1 | PLATE | |
| | 26 | 1 | **316-8847** | 2 | ROD | |
| | 27 | 1 | **316-8849** | 1 | ROD | |
| | 28 | 1 | **316-8918** | 1 | PLATE | |
| | 29 | 1 | **316-8920** | 1 | ROD | |
| | 30 | 1 | **316-8921** | 1 | ROD | |

Y - SEPARATE ILLUSTRATION

*316-8916* **AIR CONDITIONER GP (**contd.**)** **i05654494**

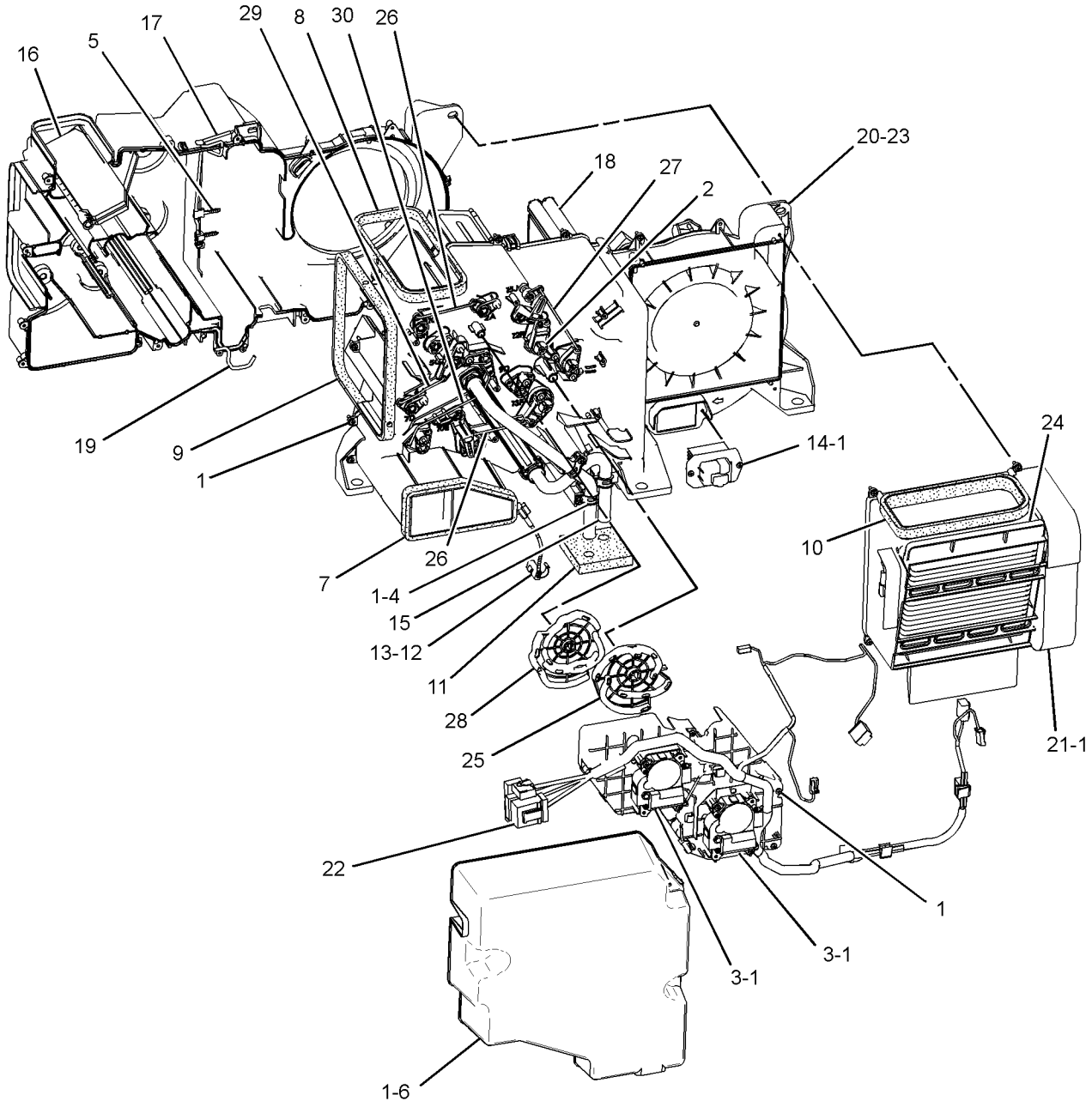


FRONT VIEW
(UPPER RIGHT)

GRAPHIC #1 <END> g01684274

# 259-7346 ARMREST GP–RH

**S/N: FEY1-UP**

**PART OF 459-2731 CONSOLE GP-OPERATOR**

**SMCS-7307** **i05509625**

| NOTE | REF NO | GRAPHIC REF | PART NUMBER | QTY | PART NAME 1 2 3 4 5 6 (PRODUCT LEVEL) | SEE PAGE |
|---|---|---|---|---|---|---|
| M | 1 | 1 | **171-7325** | 3 | SCREW-TAPPING (M5X0.8-THD) | |
| M | 2 | 1 | **185-8286** | 2 | SCREW-MACHINE (M4X0.7X8-MM) | |
| | 3 | 1 | **235-8951** | 1 | SUPPORT AS | |
| | 4 | 1 | **235-8996** | 1 | COVER | |
| | 5 | 1 | **235-8997** | 1 | KNOB | |
| | 6 | 1 | **259-7345** | 1 | CUSHION | |

M - METRIC PART

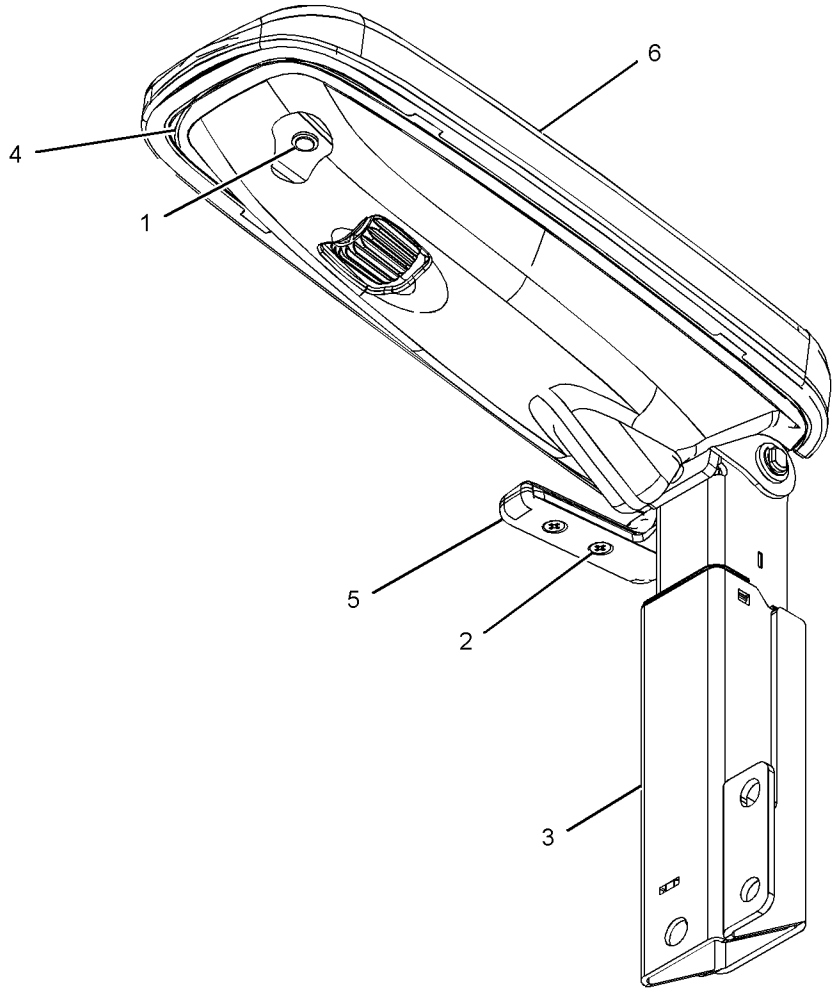


GRAPHIC #1 <END> g03482800

# 259-7347 ARMREST GP–LH

**S/N: FEY1-UP**

**PART OF 421-1434 CONSOLE GP-OPERATOR**

**SMCS-7307** **i04913367**

| NOTE | REF NO | GRAPHIC REF | PART NUMBER | QTY | PART NAME 1 2 3 4 5 6 (PRODUCT LEVEL) | SEE PAGE |
|---|---|---|---|---|---|---|
| M | 1 | 1 | **171-7325** | 3 | SCREW-TAPPING (M5X0.8-THD) | |
| M | 2 | 1 | **185-8286** | 2 | SCREW-MACHINE (M4X0.7X8-MM) | |
| | 3 | 1 | **235-8952** | 1 | SUPPORT AS | |
| | 4 | 1 | **235-8996** | 1 | COVER | |
| | 5 | 1 | **235-8998** | 1 | KNOB | |
| | 6 | 1 | **259-7345** | 1 | CUSHION | |

M - METRIC PART

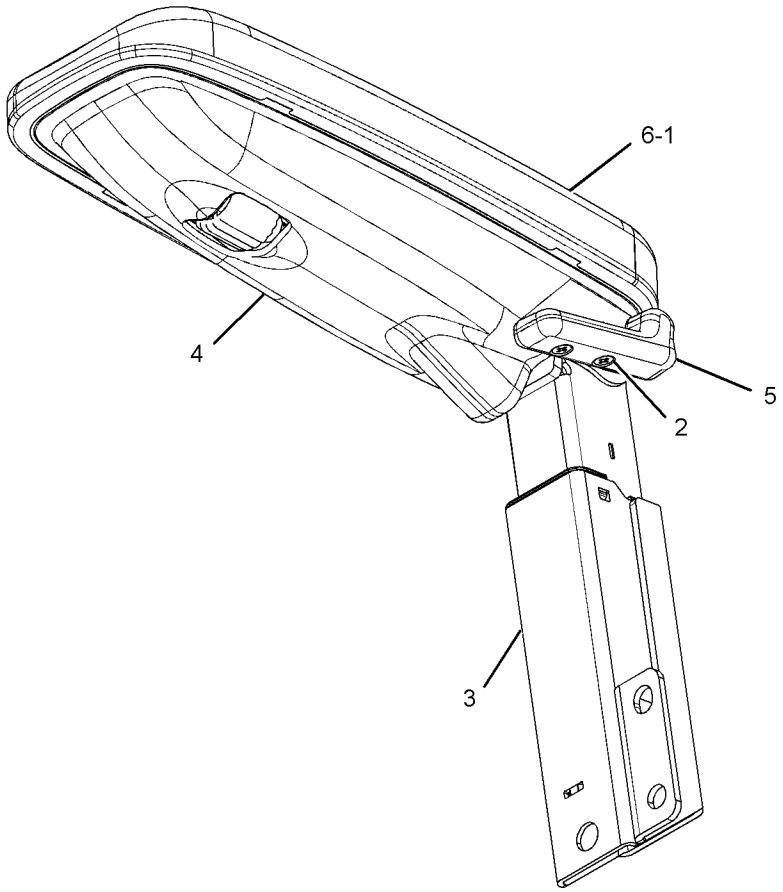


GRAPHIC #1 <END> g01210886

# *557-8297* CAB AR

**S/N: FEY1-UP**

**PART OF 556-6432 DISTRIBUTION AR**

**SMCS-7301, 7325**

**i07396427**

| NOTE | PART NUMBER | QTY | PART NAME 1 2 3 4 5 6 (PRODUCT LEVEL) | SEE PAGE |
|---|---|---|---|---|
| Y | *418-9897* | 1 | AIR CONDITIONER AR | 403 |
| Y | *557-8895* | 1 | CAB GP | 416 |
| Y | *557-8896* | 1 | CAB GP | 417 |
| Y | *229-9070* | 1 | WASHER GP-WINDOW | 487 |
| Y | *435-0868* | 1 | WIRING GP-CONVERTER | 141 |

Y - SEPARATE ILLUSTRATION

<END>

# *416-9608* CAB GP—INTERIOR

**S/N: FEY1-UP**

**PART OF 557-8897 CAB GP**

**SMCS-7301, 7325** **i06546652**

| NOTE | REF NO | GRAPHIC REF | PART NUMBER | QTY | PART NAME 1 2 3 4 5 6 (PRODUCT LEVEL) | SEE PAGE |
|---|---|---|---|---|---|---|
| | 1 | 1 | **164-0646** | 1 | CUP | |
| | 2 | 1 | **164-0655** | 1 | PANEL-SWITCH | |
| | 3 | 1 | **170-9724** | 5 | CLIP | |
| | 4 | 1 | **171-7420** | 6 | CLIP | |
| | 5 | 1 | **176-1972** | 1 | COVER | |
| | 6 | 1 | **185-8205** | 7 | CLIP | |
| | 7 | 1 | **189-2678** | 3 | SPACER | |
| | 8 | 1 | **189-2853** | 1 | COVER | |
| | 9 | 1 | **189-2854** | 1 | COVER | |
| | 10 | 1 | **234-6468** | 1 | COVER AS | |
| | | 1 | **259-7353** | 4 | CLIP | |
| | 11 | 1 | **234-6470** | 1 | COVER-MONITOR | |
| | 12 | 1 | **234-6471** | 1 | COVER-DUCT | |
| | 13 | 1 | **234-6472** | 1 | COVER | |
| | 14 | 1 | **234-6473** | 1 | COVER-FRONT (UPPER, RH) | |
| | 15 | 1 | **234-6476** | 1 | DUCT | |
| | 16 | 1 | **234-6477** | 1 | BRACKET AS | |
| | 17 | 1 | **234-6483** | 1 | BRACKET AS | |
| | 18 | 1 | **234-6485** | 1 | BRACKET AS | |
| | 19 | 1 | **234-6490** | 1 | CUP | |
| | 20 | 1 | **234-6491** | 1 | COVER | |
| | 21 | 1 | **234-6497** | 1 | COVER | |
| | 22 | 1 | **234-6498** | 3 | RIVET | |
| | 23 | 1 | **234-6579** | 2 | NUT-SPEED | |
| | 24 | 1 | **235-8923** | 2 | CAP | |
| | 25 | 1 | **235-8930** | 1 | LINER | |
| | 26 | 1 | **235-8950** | 12 | CLIP | |
| | 27 | 1 | **245-7790** | 2 | SCREW-TAPPING | |
| | 28 | 1 | **305-0330** | 1 | COVER (LOWER, RH) | |
| | 29 | 1 | **383-5767** | 1 | COVER | |
| | 30 | 1 | **388-9091** | 1 | COVER | |
| | 31 | 1 | **388-9094** | 1 | COVER | |
| | 32 | 1 | **388-9095** | 1 | COVER | |
| | 33 | 1 | **396-2351** | 1 | LOUVER AS | |
| | 34 | 1 | **396-2352** | 2 | LOUVER AS | |
| | 35 | 1 | **399-0061** | 1 | BRACKET AS | |
| | 36 | 1 | **399-0062** | 1 | COVER | |
| | 37 | 1 | **399-0065** | 1 | BRACKET | |
| M | 38 | 1 | **128-2135** | 13 | SCREW-TRUSS HEAD (M6X1X13-MM) | |
| M | 39 | 1 | **128-2136** | 1 | SCREW-TRUSS HEAD (M6X1X16-MM) | |
| | 40 | 1 | **234-6469** | 1 | COVER | |
| M | 41 | 1 | **9X-2042** | 16 | SCREW-TRUSS HEAD (M6X1X12-MM) | |
| | 42 | 1 | **8R-1803** | 1 | WASHER (10.5X18X1-MM THK) | |

M - METRIC PART

*416-9608* **CAB GP** (contd.) **i06546652**

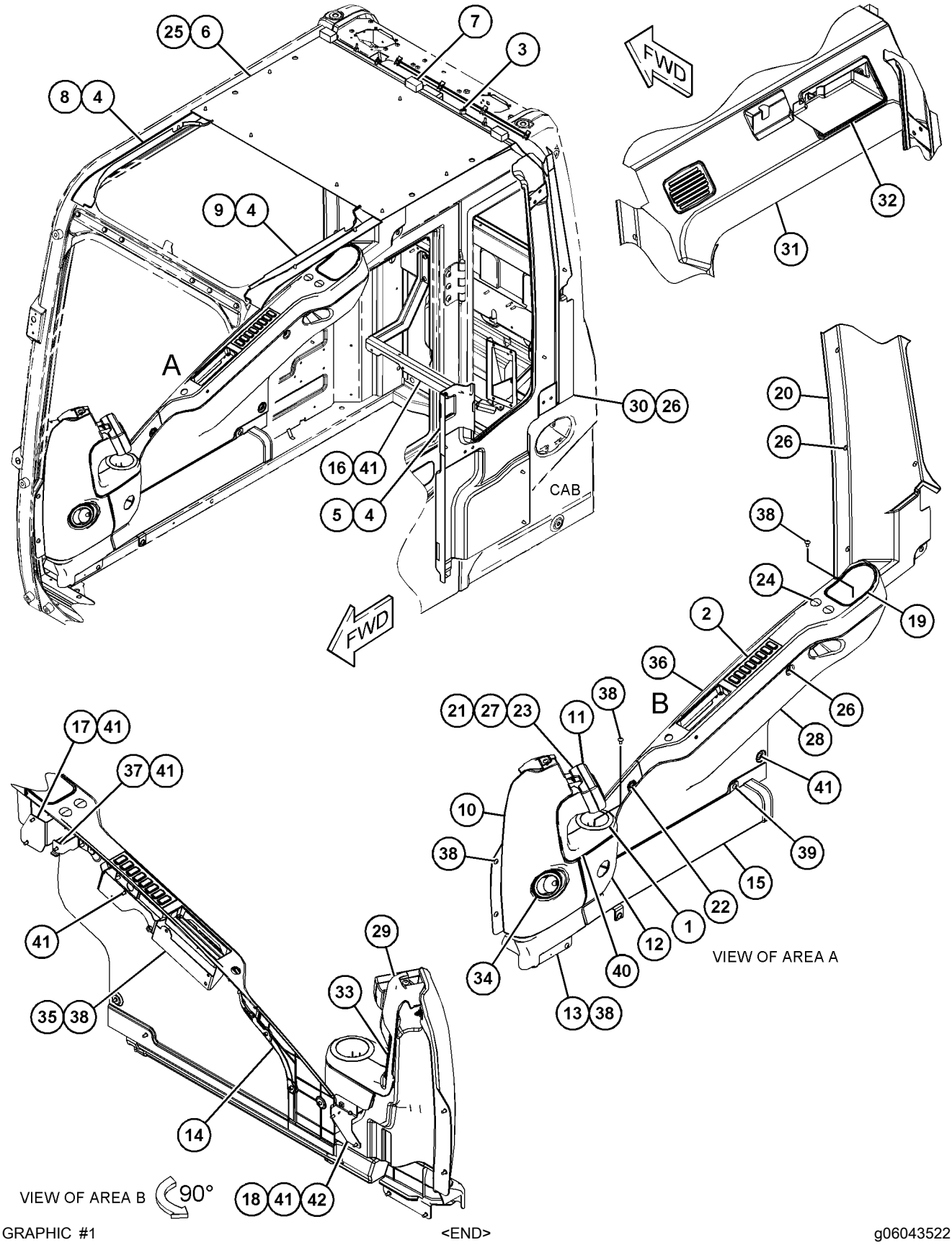


GRAPHIC #1 <END> g06043522

# *550-1463* CAB GP

**S/N: FEY1-UP**

**EXTERIOR**

**PART OF 555-5135 CAB GP**

**SMCS-7301, 7325** **i07396505**

| NOTE | REF NO | GRAPHIC REF | PART NUMBER | QTY | PART NAME 1 2 3 4 5 6 (PRODUCT LEVEL) | SEE PAGE |
|---|---|---|---|---|---|---|
| | 1 | 1 | **4I-1205** | 2 | BUMPER | |
| | 2 | 1 | **5C-7793** | 1 | HOOK-COAT | |
| | 3 | 2 | **105-2169** | 2 | BOLT AS | |
| | 4 | 2 | **161-3685** | 1 | ROD | |
| | 5 | 1 | **161-3697** | 1 | GUARD | |
| Y | 6 | 2 | *164-0528* | 1 | LEVER GP-CAB DOOR | 453 |
| | 7 | 2 | **167-7018** | 1 | COVER AS | |
| | 8 | 1 | **167-7042** | 2 | SEAL | |
| | 9 | 2 | **171-7426** | 1 | CABLE AS | |
| | 10 | 2 | *176-1939* | 1 | LEVER AS | |
| M | | 2 | **9X-2044** | 1 | SCREW-TRUSS HEAD (M6X1X16-MM) | |
| | | 2 | **176-1937** | 1 | BRACKET AS | |
| | | 2 | **176-1938** | 1 | LEVER | |
| | 11 | 1 | **178-5570** | 2 | GROMMET | |
| | 12 | 2 | **201-4530** | 1 | BRACKET AS | |
| M | | 2 | **3E-8020** | 4 | SCREW-TRUSS HEAD (M6X1X25-MM) | |
| | | 2 | **205-6295** | 1 | LATCH AS | |
| | 13 | 1 | **235-8912** | 1 | HANDLE AS | |
| | 14 | 2 | **315-5313** | 1 | COVER | |
| | 15 | 2 | **383-5666** | 1 | LATCH AS | |
| | 16 | 1 | **416-4309** | 1 | SEAL | |
| | 17 | 1 | **450-4908** | 1 | HANDLE AS | |
| M | 18 | 1 | **095-0755** | 2 | SCREW-MACHINE (M4X0.7X12-MM) | |
| M | 19 | 1 | **099-0823** | 3 | SCREW-MACHINE (M6X1X6-MM) | |
| M | 20 | 1 | **127-0580** | 2 | SCREW-FLAT HEAD (M8X1.25X20-MM) | |
| | 21 | 1 | **156-6599** | 1 | STRIKER | |
| | 22 | 2 | **156-6618** | 1 | SUPPORT AS | |
| | 23 | 1 | **176-1986** | 1 | LAMP AS-DOME | |
| | | 1 | **201-4417** | 1 | LAMP (24-VOLT, 10-WATT) | |
| | 24 | 2 | **185-8196** | 1 | GROMMET | |
| | 25 | 2 | **189-2704** | 1 | SEAL | |
| M | 26 | 2 | **189-2864** | 2 | SCREW-FLAT HEAD (M8X1.25X30-MM) | |
| | 27 | 1,2 | **1R-5998** | 4 | LOCKWASHER | |
| M | 28 | 2 | **284-4426** | 1 | BOLT-WING (M8X1.25X15-MM) | |
| | 29 | 2 | **394-9460** | 1 | MIRROR GP (REAR VIEW) | |
| | | 2 | **9X-8256** | 2 | WASHER (6.6X12X2-MM THK) | |
| M | | 2 | **191-8921** | 2 | BOLT-SOCKET HEAD (M6X1X25-MM) | |
| | 30 | 2 | **3B-4510** | 1 | LOCKWASHER | |
| M | 31 | 2 | **3E-8020** | 4 | SCREW-TRUSS HEAD (M6X1X25-MM) | |
| | 32 | 2 | **4B-4278** | 3 | WASHER (10.2X20.5X1.6-MM THK) | |
| | 33 | 1 | **4I-3090** | 4 | SEAL | |
| | 34 | 2 | **4I-4392** | 3 | CLIP | |
| | 35 | 2 | **5P-1075** | 2 | WASHER-HARD (10.2X22.5X3-MM THK) | |
| | 36 | 1 | **5P-4115** | 7 | WASHER-HARD (7.2X19X2-MM THK) | |
| | 37 | 2 | **6V-7636** | 2 | PIN AS-SPRING | |
| | 38 | 1 | **7X-0578** | 2 | WASHER-HARD (10.2X32X2.5-MM THK) | |
| M | 39 | 1,2 | **8T-4133** | 5 | NUT (M10X1.5-THD) | |

*550-1463* **CAB GP (**contd.**)** **i07396505**

| NOTE | REF NO | GRAPHIC REF | PART NUMBER | QTY | PART NAME 1 2 3 4 5 6 (PRODUCT LEVEL) | SEE PAGE |
|---|---|---|---|---|---|---|
| M | 40 | 2 | **8T-4137** | 2 | BOLT (M10X1.5X20-MM) | |
| M | 41 | 2 | **8T-4193** | 1 | BOLT (M16X2X50-MM) | |
| M | 42 | 1 | **9X-2041** | 2 | SCREW-TRUSS HEAD (M10X1.5X20-MM) | |
| M | 43 | 2 | **9X-2042** | 5 | SCREW-TRUSS HEAD (M6X1X12-MM) | |
| M | 44 | 1 | **9X-2044** | 7 | SCREW-TRUSS HEAD (M6X1X16-MM) | |
| | 45 | 2 | **9X-8257** | 1 | WASHER (17.5X30X3.5-MM THK) | |
| E | 46 | 2 | **6I-5470** | | SEAL (140-CM) | |

E - ORDER BY THE CENTIMETER
M - METRIC PART
Y - SEPARATE ILLUSTRATION

*550-1463* **CAB GP (**contd.**)** **i07396505**

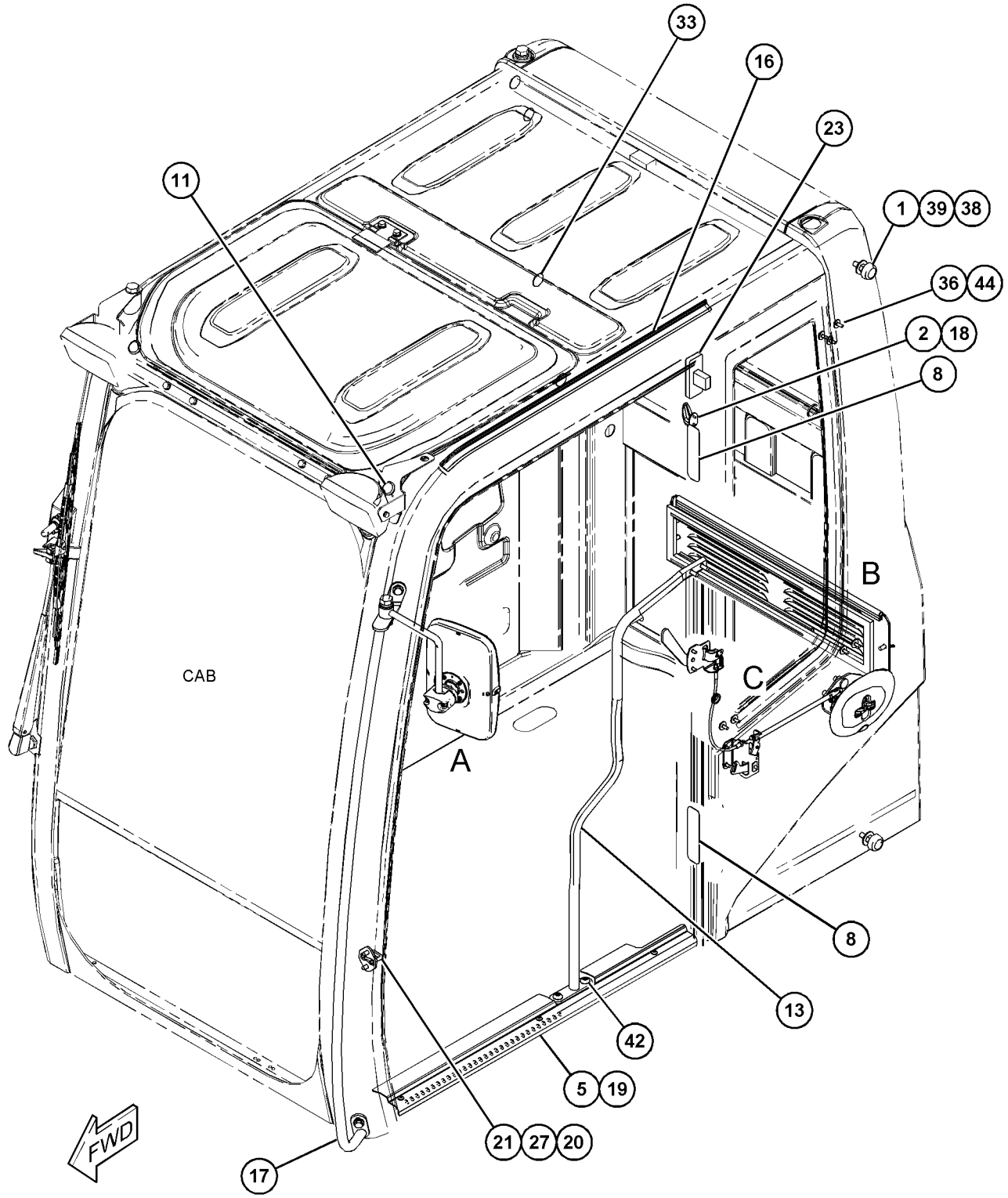


REFER TO ALL ILLUSTRATIONS OF
THIS GROUP FOR AUXILIARY VIEWS

GRAPHIC #1 g06314375

*550-1463* **CAB GP** (contd.) **i07396505**

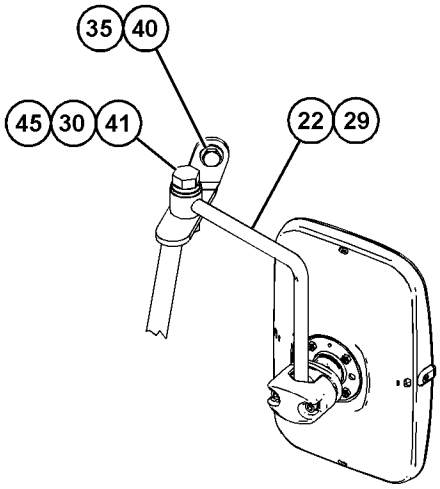


VIEW OF AREA A

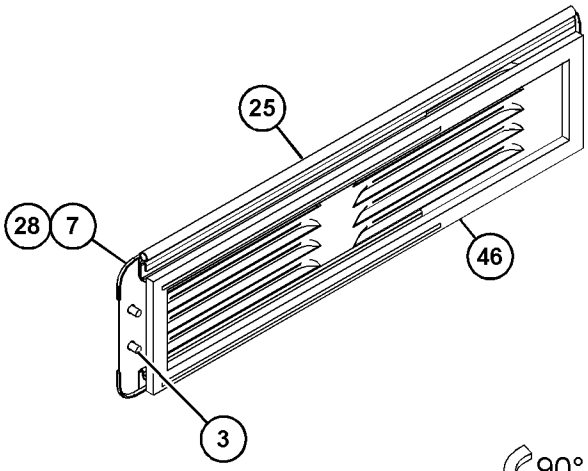


VIEW OF AREA B 90°

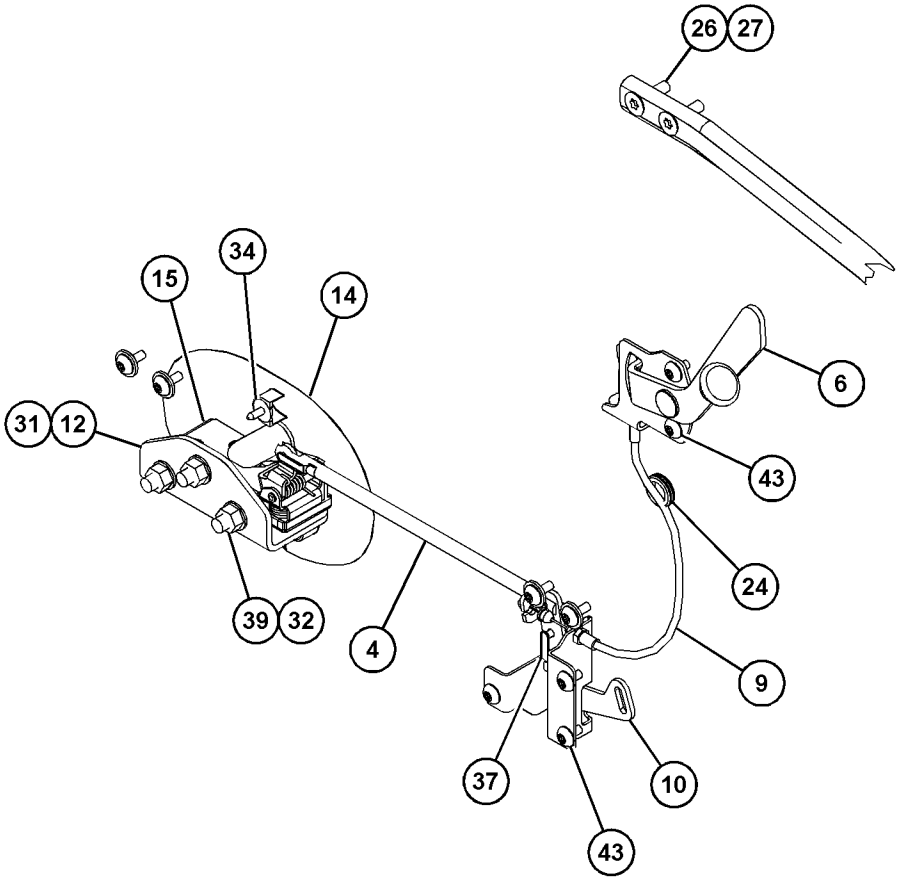


VIEW OF AREA C 90°

GRAPHIC #2 <END> g06314376

# *554-3491* CAB GP

**S/N: FEY1-UP**

**PART OF 555-5135 CAB GP**

**SMCS-7301, 7325** **i07396512**

| NOTE | REF NO | GRAPHIC REF | PART NUMBER | QTY | PART NAME 1 2 3 4 5 6 (PRODUCT LEVEL) | SEE PAGE |
|---|---|---|---|---|---|---|
| | 1 | 1 | **5P-1075** | 6 | WASHER-HARD (10.2X22.5X3-MM THK) | |
| M | 2 | 1 | **8T-4137** | 6 | BOLT (M10X1.5X20-MM) | |
| Y | 3 | 1 | *420-3151* | 1 | DOOR & MTG GP-CAB | 444 |

M - METRIC PART
Y - SEPARATE ILLUSTRATION

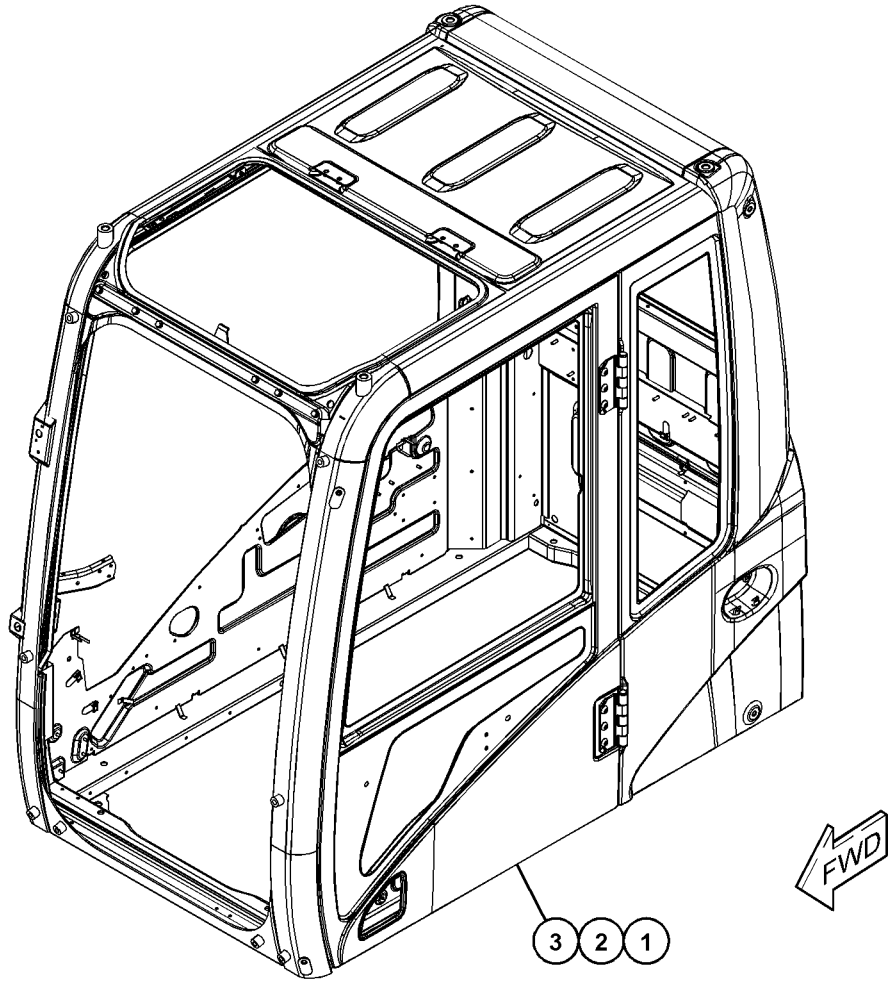


GRAPHIC #1 <END> g06313430

## 555-5135 CAB GP

**S/N: FEY1-UP**

**PART OF 557-8897 CAB GP**

**SMCS-7301, 7325** **i07396462**

| NOTE | PART NUMBER | QTY | PART NAME 1 2 3 4 5 6 (PRODUCT LEVEL) | SEE PAGE |
|---|---|---|---|---|
| Y | *550-1463* | 1 | CAB GP (EXTERIOR) | 411 |
| Y | *554-3491* | 1 | CAB GP (BASE) | 415 |
| Y | *431-8611* | 1 | HATCH GP-ROOF | 448 |
| Y | *388-9105* | 1 | PARTS GP-DOOR (CAB) | 467 |
| Y | *388-9107* | 1 | WINDOW GP-CAB (SIDE, REAR) | 488 |
| Y | *388-9108* | 1 | WINDOW GP-CAB (FRONT, LOWER) | 489 |
| Y | *549-8887* | 1 | WINDOW GP-CAB (FRONT, UPPER) | 491 |
| Y | *436-1116* | 1 | WIPER GP-WINDOW (FRONT, UPPER) | 496 |

Y - SEPARATE ILLUSTRATION

<END>

## *557-8895* CAB GP

**S/N: FEY1-UP**

**PART OF 557-8297 CAB AR**

**SMCS-7301, 7325** **i07396436**

| NOTE | PART NUMBER | QTY | PART NAME 1 2 3 4 5 6 (PRODUCT LEVEL) | SEE PAGE |
|---|---|---|---|---|
| Y | *557-8897* | 1 | CAB GP | 418 |
| Y | **234-6501** | 1 | COVER GP-CAB (REAR) | 443 |
| M | **8T-4179** | 5 | BOLT (M12X1.75X20-MM) | |
| M | **8T-4190** | 4 | BOLT (M16X2X25-MM) | |
| M | **8T-4910** | 6 | BOLT (M12X1.75X60-MM) | |
| M | **8T-6868** | 2 | BOLT (M12X1.75X80-MM) | |
| | **8Y-6967** | 2 | LOUVER AS-VENT | |
| | **164-8474** | 2 | LOUVER AS-VENT | |
| M | **128-2135** | 5 | SCREW-TRUSS HEAD (M6X1X13-MM) | |
| | **235-9001** | 1 | SUPPORT | |
| | **9X-8257** | 6 | WASHER (17.5X30X3.5-MM THK) | |
| | **8T-4223** | 13 | WASHER-HARD (13.5X25.5X3-MM THK) | |

M - METRIC PART
Y - SEPARATE ILLUSTRATION

<END>

# *557-8896* CAB GP

**S/N: FEY1-UP**

**PART OF 557-8297 CAB AR**

**SMCS-7301, 7325** **i07519877**

| NOTE | PART NUMBER | QTY | PART NAME 1 2 3 4 5 6 (PRODUCT LEVEL) | SEE PAGE |
|---|---|---|---|---|
| Y | *416-1798* | 1 | AIR CONDITIONER & MOUNTING GP | 401 |
| Y | **557-8897** | 1 | CAB GP | 418 |
| Y | *421-1431* | 1 | CONSOLE GP-OPERATOR | 428 |
| Y | *310-0078* | 1 | CONTROL & MTG GP-JOYSTICK | 434 |
| Y | *170-9497* | 1 | CONTROL GP-PILOT OPERATED HYD (TRAVEL) | 442 |
| Y | *441-6375* | 1 | LIGHTING GP-FLOOD (CAB) | 110 |
| Y | *465-8275* | 1 | LINES GP-PILOT (JOYSTICK, PEDALS) | 280 |
| Y | *555-2225* | 1 | MONITOR & MTG GP-OPERATOR | 460 |
| Y | *546-5666* | 1 | PANEL GP-SWITCH (CONSOLE) | 113 |
| Y | *559-2717* | 1 | SEAT GP-SUSPENSION (MECH SUSP SEAT) | 480 |
| | | | —OR— | |
| Y | *490-5980* | 1 | SEAT GP-SUSPENSION (MECH SUSP SEAT) | 477 |
| Y | *549-8895* | 1 | SUPPORT GP-SEAT | 481 |
| Y | *539-2995* | 1 | WIRING GP-CAB | 124 |
| Y | *545-9959* | 1 | WIRING GP-CONSOLE | 138 |
| Y | *539-2992* | 1 | WIRING GP-PLATFORM | 143 |
| | | | | |
| M | **8T-4179** | 5 | BOLT (M12X1.75X20-MM) | |
| M | **8T-4190** | 4 | BOLT (M16X2X25-MM) | |
| M | **8T-4191** | 4 | BOLT (M10X1.5X16-MM) | |
| M | **8T-4910** | 6 | BOLT (M12X1.75X60-MM) | |
| M | **8T-6868** | 2 | BOLT (M12X1.75X80-MM) | |
| | **122-9657** | 2 | CLAMP | |
| | **235-8879** | 1 | DUCT AS (FLOOR) | |
| | **245-7873** | 1 | INSULATOR | |
| | **293-1183** | 1 | FILTER GP-CAB AIR | |
| | **293-1184** | 1 | FILTER ELEMENT-CAB AIR | |
| | **135-8965** | 1 | GROMMET | |
| | **135-8966** | 1 | GROMMET | |
| | **130-0252** | 2 | HOSE-DRAIN | |
| | **549-8893** | 1 | PLATFORM AS | |
| | **324-5771** | 2 | SOCKET-AUXILIARY POWER (12-VOLT) (CAB) | |
| | **4I-3266** | 1 | STRIP | |
| | **161-3717** | 1 | STRIP | |
| | **235-9001** | 1 | SUPPORT | |
| | **9X-8257** | 6 | WASHER (17.5X30X3.5-MM THK) | |
| | **8T-4121** | 4 | WASHER-HARD (11X21X2.5-MM THK) | |
| | **8T-4223** | 13 | WASHER-HARD (13.5X25.5X3-MM THK) | |

M - METRIC PART
Y - SEPARATE ILLUSTRATION

<END>

# *557-8897* CAB GP

**S/N: FEY1-UP**

**PART OF 557-8895, 557-8896 CAB GP**

**SMCS-7301, 7325**

**i07396452**

| NOTE | PART NUMBER | QTY | PART NAME 1 2 3 4 5 6 (PRODUCT LEVEL) | SEE PAGE |
|---|---|---|---|---|
| Y | *416-9608* | 1 | CAB GP (INTERIOR) | 409 |
| Y | **555-5135** | 1 | CAB GP (EXTERIOR) | 416 |

Y - SEPARATE ILLUSTRATION

<END>

# 245-7836 COIL GP-EVAPORATOR

**S/N: FEY1-UP**

**FIELD REPLACEMENT ORDER 353-2151—PAGE: 421**

**PART OF 316-8916 AIR CONDITIONER GP**

**SMCS-7343** **i05503854**

| NOTE | REF NO | GRAPHIC REF | PART NUMBER | QTY | PART NAME 1 2 3 4 5 6 (PRODUCT LEVEL) | SEE PAGE |
|---|---|---|---|---|---|---|
| | 1 | 1 | **245-7837** | 1 | VALVE AS-EXPANSION | |
| | 2 | 1 | **245-7905** | 1 | INSULATOR | |
| M | 3 | 1 | **281-0791** | 2 | BOLT-SOCKET HEAD (M5X0.8X40-MM) | |
| | 4 | 1 | **121-7136** | 1 | SEAL-O-RING | |
| | 5 | 1 | **121-7137** | 1 | SEAL-O-RING | |

M - METRIC PART

*245-7836* **COIL GP-EVAPORATOR (**contd.**)** **i05503854**

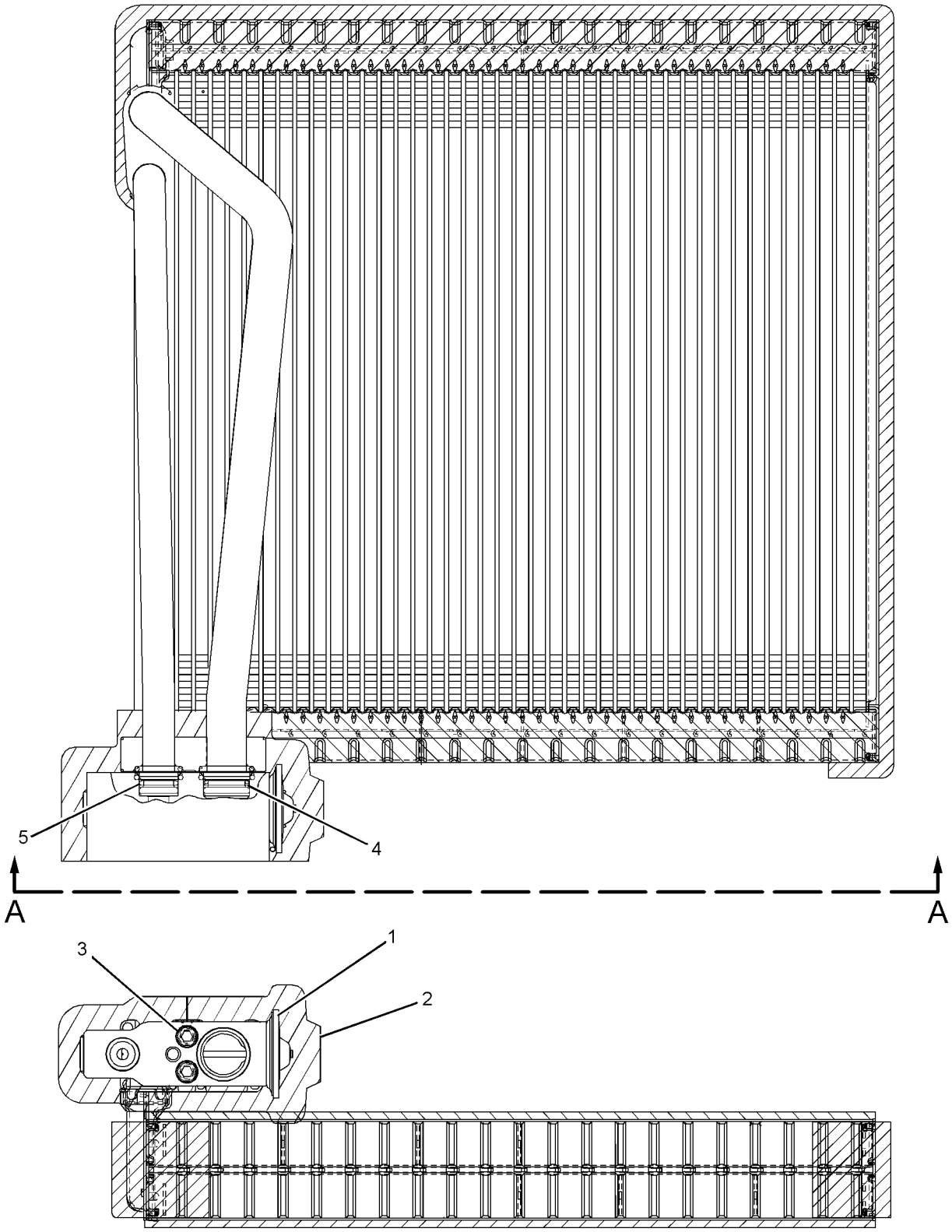


VIEW A-A

GRAPHIC #1 <END> g01134658

# 353-2151 COIL GP-EVAPORATOR

**S/N: FEY1-UP**

**FIELD REPLACEMENT FOR 245-7836—PAGE: 419**

**SMCS-7343** **i06693042**

| NOTE | REF NO | GRAPHIC REF | PART NUMBER | QTY | PART NAME 1 2 3 4 5 6 (PRODUCT LEVEL) | SEE PAGE |
|---|---|---|---|---|---|---|
| | 1 | 1 | **245-7837** | 1 | VALVE AS-EXPANSION | |
| | 2 | 1 | **245-7905** | 1 | INSULATOR | |
| M | 3 | 1 | **281-0791** | 2 | BOLT-SOCKET HEAD (M5X0.8X40-MM) | |
| | 4 | 1 | **121-7136** | 1 | SEAL-O-RING | |
| | 5 | 1 | **121-7137** | 1 | SEAL-O-RING | |

M - METRIC PART

*353-2151* **COIL GP-EVAPORATOR (**contd.**)** **i06693042**

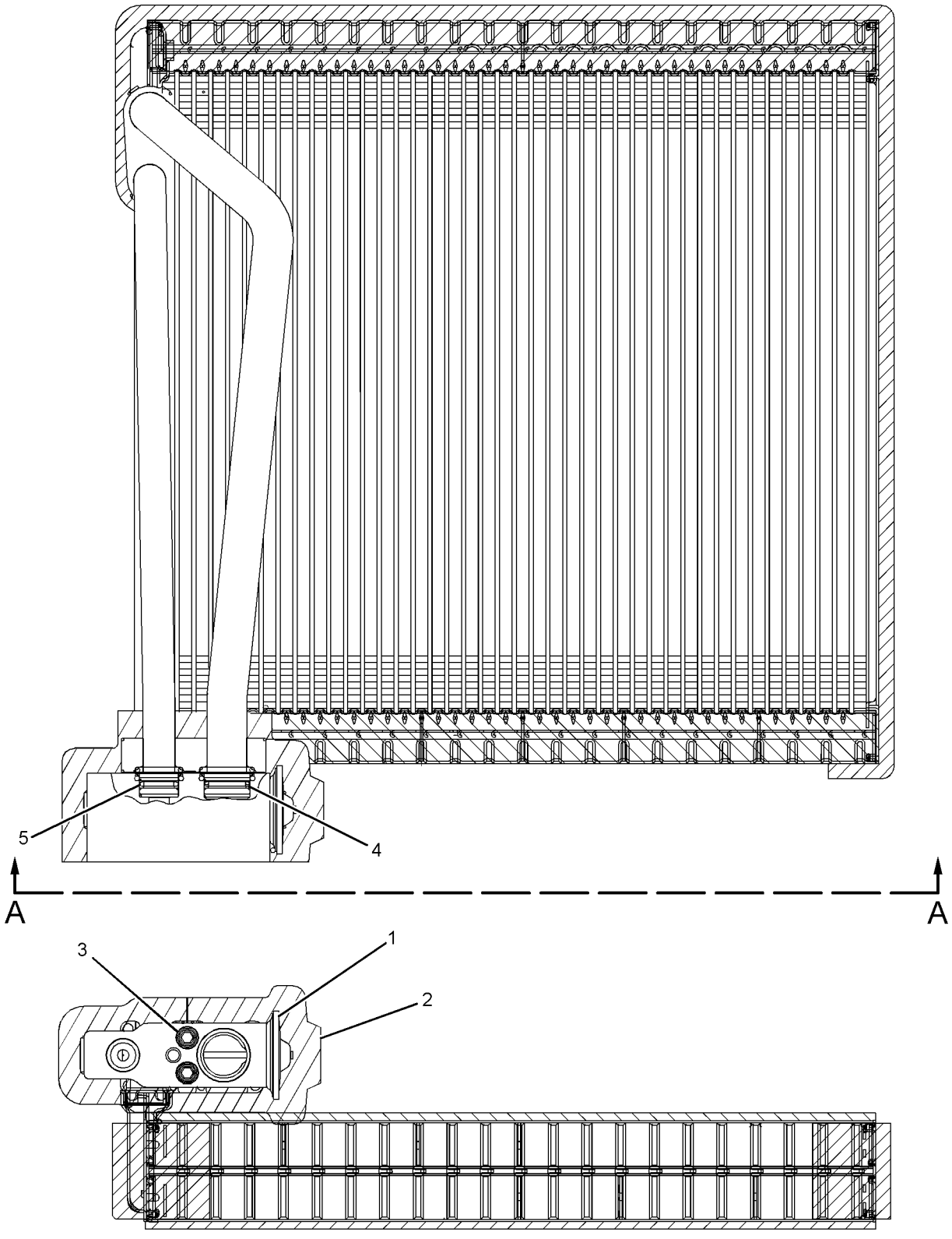


VIEW A-A

GRAPHIC #1 <END> g02150001

# *379-4415* COMPRESSOR & MTG GP-REFRIG

**S/N: FEY1-UP**

**PART OF 556-6438 INSTALLATION AR-ENGINE**

**SMCS-1802** **i05338526**

| NOTE | REF NO | GRAPHIC REF | PART NUMBER | QTY | PART NAME 1 2 3 4 5 6 (PRODUCT LEVEL) | SEE PAGE |
|---|---|---|---|---|---|---|
| M | 1 | 1 | **364-1614** | 4 | BOLT-FLANGE HEAD (M8X1.25X95-MM) | |
| Y | 2 | 1 | **372-9295** | 1 | COMPRESSOR GP-REFRIGERANT | 424 |
| | 3 | 1 | **383-5626** | 1 | BRACKET AS | |

M - METRIC PART
Y - SEPARATE ILLUSTRATION

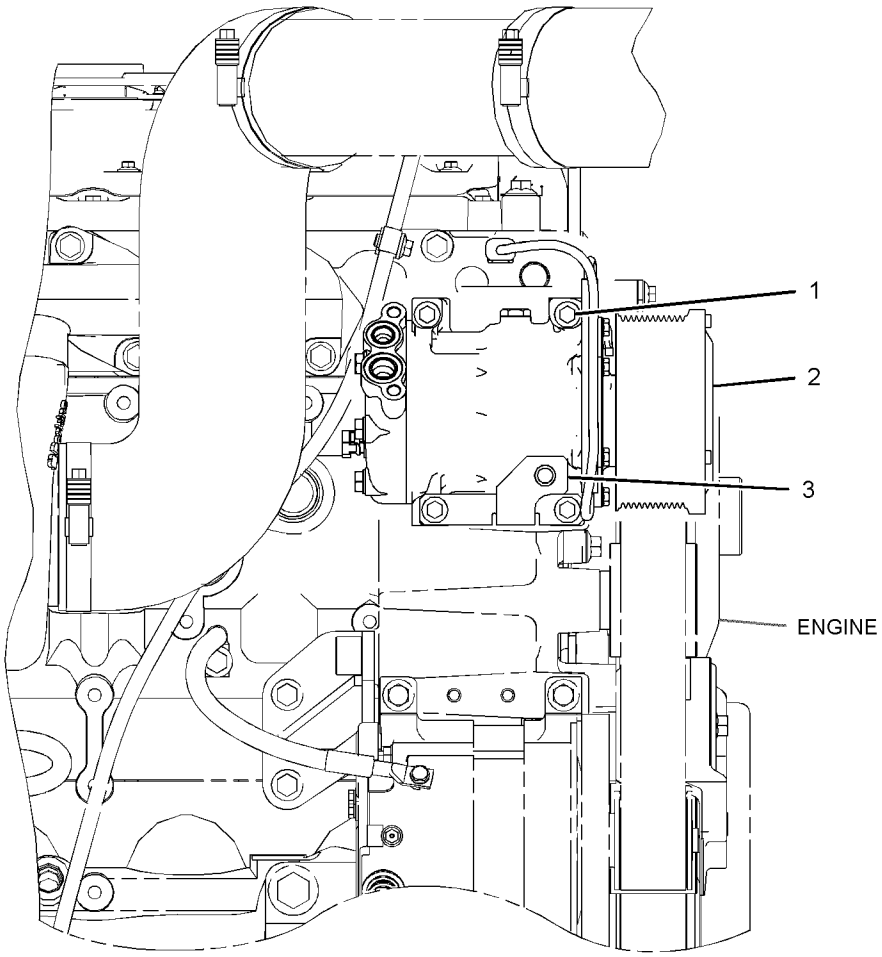


FRONT VIEW

GRAPHIC #1 <END> g03381542

# 372-9295 COMPRESSOR GP-REFRIGERANT

**S/N: FEY1-UP**

**24-VOLT**

**PART OF 379-4415 COMPRESSOR & MTG GP-REFRIG**

**SMCS-1802** **i05265327**

| NOTE | REF NO | GRAPHIC REF | PART NUMBER | QTY | PART NAME 1 2 3 4 5 6 (PRODUCT LEVEL) | SEE PAGE |
|---|---|---|---|---|---|---|
| | 1 | 1 | **9W-0852** | 2 | PIN-CONNECTOR (14-GA TO 16-GA) | |
| | 2 | 1 | **243-4505** | 1 | RECEPTACLE AS-CONNECTOR (2-PIN) | |
| | 3 | 1 | **327-6593** | 1 | SEAL-O-RING | |
| | 4 | 1 | **327-6594** | 1 | SEAL-O-RING | |

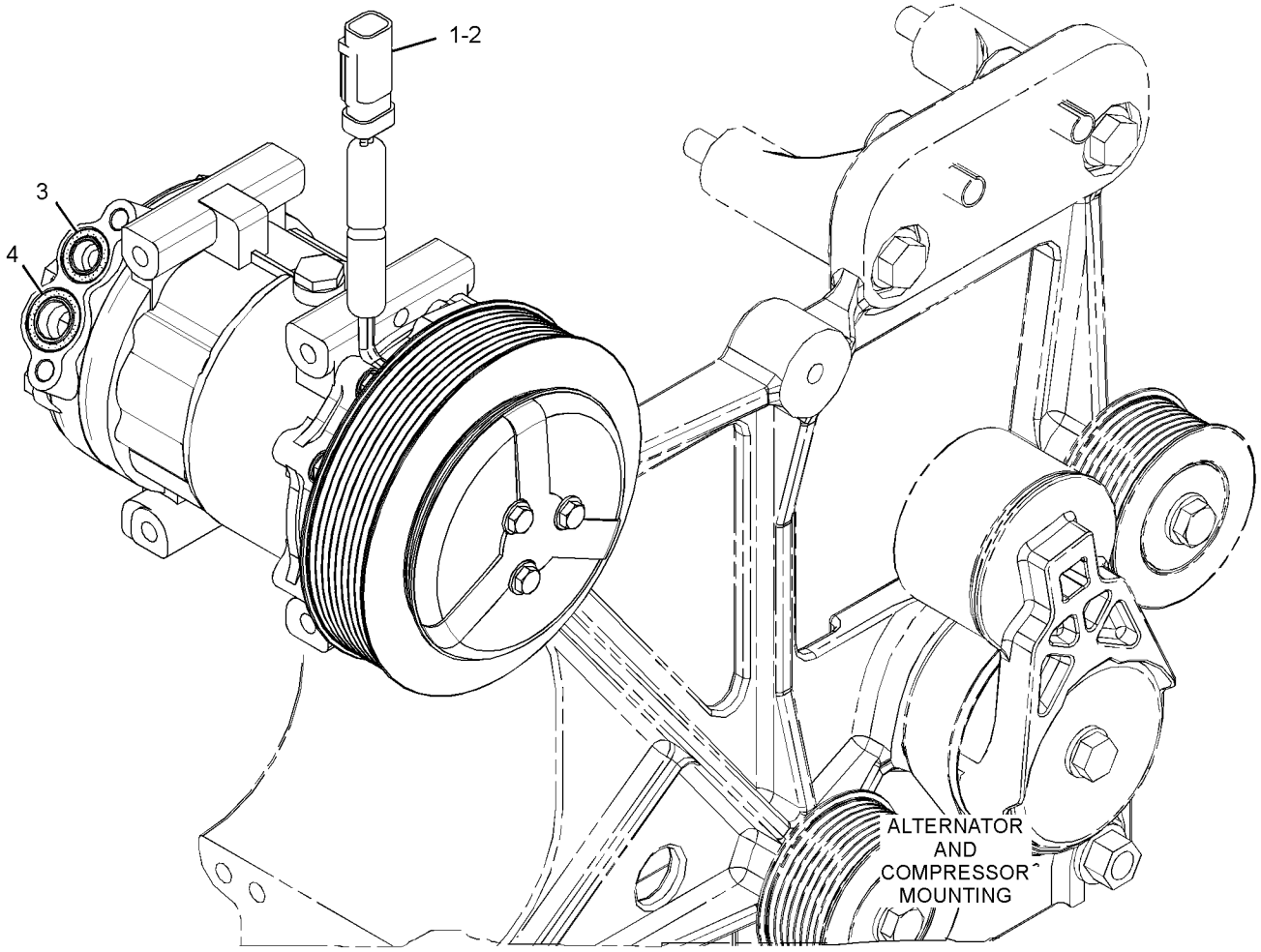


GRAPHIC #1 <END> g02149988

# *556-6525* CONDENSER & MTG GP-REFRIGERANT

**S/N: FEY1-UP**

**PART OF 556-6438 INSTALLATION AR-ENGINE**

**SMCS-1805** **i07443715**

| NOTE | REF NO | GRAPHIC REF | PART NUMBER | QTY | PART NAME 1 2 3 4 5 6 (PRODUCT LEVEL) | SEE PAGE |
|---|---|---|---|---|---|---|
| M | 1 | 1 | **7X-2533** | 4 | BOLT (M6X1X35-MM) | |
| | 2 | 1 | **8T-4121** | 4 | WASHER-HARD (11X21X2.5-MM THK) | |
| M | 3 | 1 | **8T-4137** | 4 | BOLT (M10X1.5X20-MM) | |
| | 4 | 1 | **9X-2038** | 4 | WASHER (7X19X2-MM THK) | |
| Y | 5 | 1 | **245-7749** | 1 | CONDENSER GP-REFRIGERANT | 426 |
| | 6 | 1 | **557-3966** | 1 | SUPPORT AS-CONDENSER | |
| M | | 1 | **6V-9632** | 4 | NUT-WELD (M6X1-THD) | |
| | | 1 | **7Y-6215** | 1 | PLATE | |
| M | | 1 | **8T-3612** | 2 | NUT-WELD (M8X1.25-THD) | |
| M | | 1 | **9R-9866** | 1 | BOSS-THREADED (M10X1.5-THD) | |

M - METRIC PART
Y - SEPARATE ILLUSTRATION

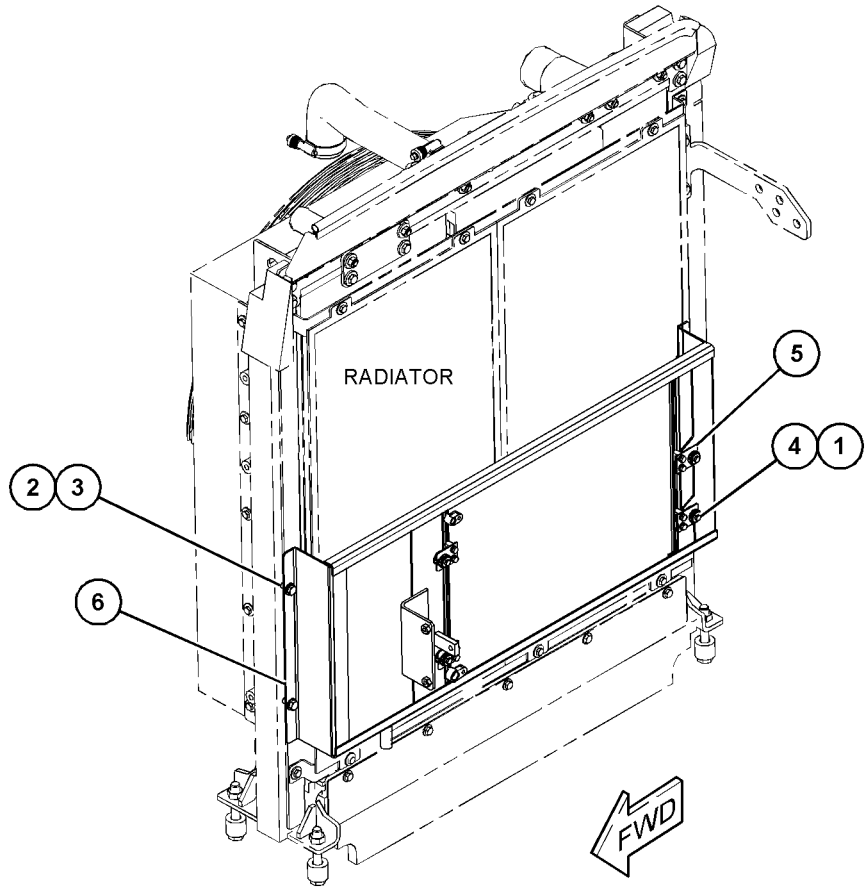


GRAPHIC #1 <END> g06313811

# 245-7749 CONDENSER GP-REFRIGERANT

**S/N: FEY1-UP**

**PART OF 556-6525 CONDENSER & MTG GP-REFRIGERANT**

**SMCS-1805** **i04913536**

| NOTE | REF NO | GRAPHIC REF | PART NUMBER | QTY | PART NAME 1 2 3 4 5 6 (PRODUCT LEVEL) | SEE PAGE |
|---|---|---|---|---|---|---|
| | 1 | 1 | **235-8880** | 1 | CONDENSER AS | |
| | 2 | 1 | **245-7750** | 4 | BUSHING-RUBBER | |
| | 3 | 1 | **245-7751** | 4 | BRACKET | |
| | 4 | 1 | **095-0827** | 8 | LOCKWASHER | |
| M | 5 | 1 | **8T-4171** | 8 | BOLT (M6X1X12-MM) | |
| | 6 | 1 | **9X-8256** | 8 | WASHER (6.6X12X2-MM THK) | |

M - METRIC PART

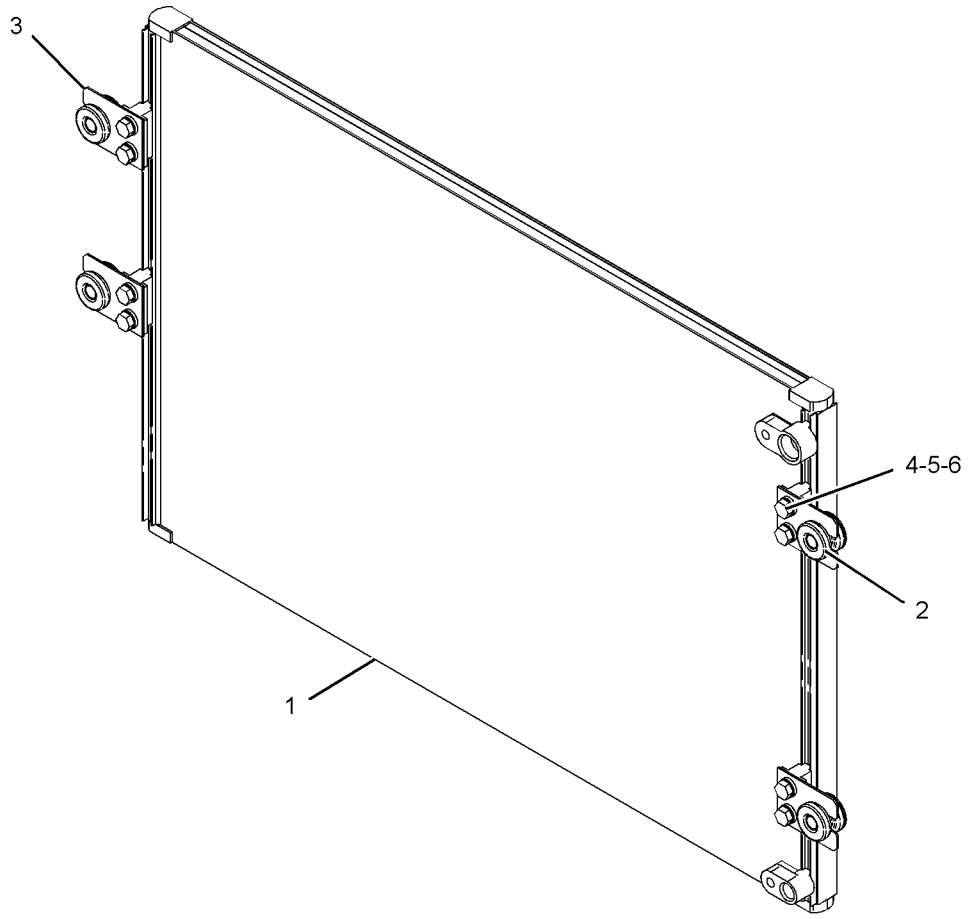


GRAPHIC #1 <END> g01086695

# *259-7348* CONSOLE GP-OPERATOR–RH

**S/N: FEY1-UP**

**PART OF 421-1431 CONSOLE GP-OPERATOR**

**SMCS-5258** **i06985852**

| NOTE | REF NO | GRAPHIC REF | PART NUMBER | QTY | PART NAME 1 2 3 4 5 6 (PRODUCT LEVEL) | SEE PAGE |
|---|---|---|---|---|---|---|
| Y | 1 | 1 | *459-2731* | 1 | CONSOLE GP-OPERATOR (RH) | 432 |
| | 2 | 1 | **185-8284** | 1 | COVER | |

Y - SEPARATE ILLUSTRATION

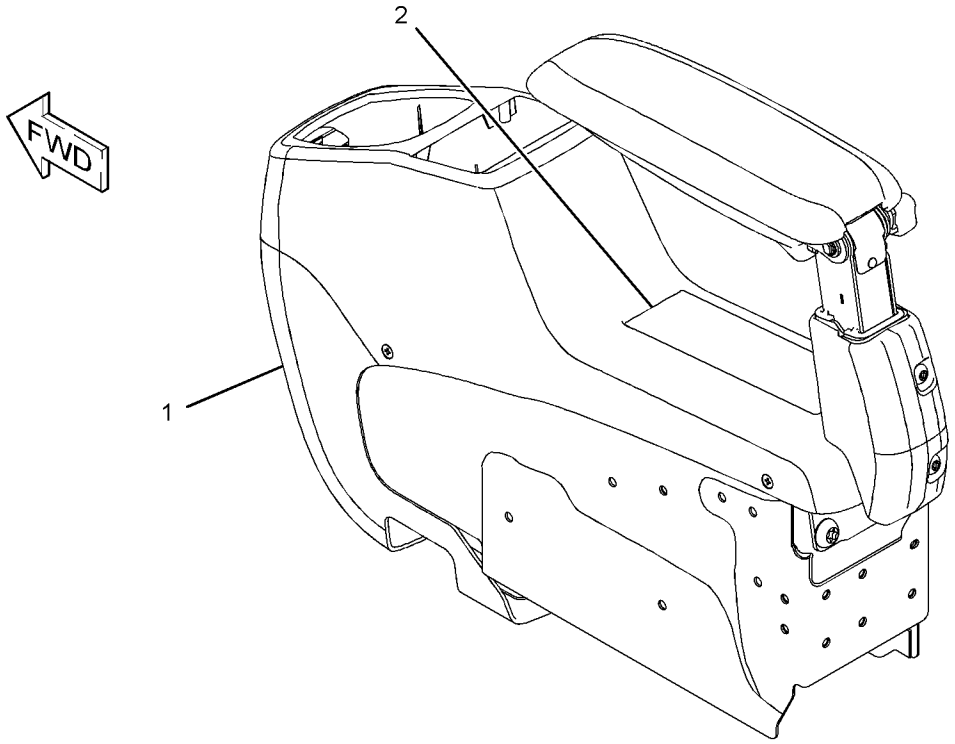


GRAPHIC #1 <END> g03837421

# *421-1431* CONSOLE GP-OPERATOR

**S/N: FEY1-UP**

**PART OF 557-8896 CAB GP, 539-2879 OPERATOR AR**

**SMCS-5258** **i07098950**

| NOTE | REF NO | GRAPHIC REF | PART NUMBER | QTY | PART NAME 1 2 3 4 5 6 (PRODUCT LEVEL) | SEE PAGE |
|---|---|---|---|---|---|---|
| | 1 | 1 | **176-1916** | 2 | GROMMET | |
| | 2 | 1 | **178-5422** | 2 | GROMMET | |
| | 3 | 1 | **178-5423** | 2 | GROMMET | |
| | 4 | 1 | **185-8161** | 2 | INSULATOR | |
| | 5 | 1 | **235-8893** | 2 | SUPPORT | |
| | 6 | 1 | **235-8894** | 2 | SUPPORT | |
| Y | 7 | 1 | *421-1434* | 1 | CONSOLE GP-OPERATOR (LH) | 430 |
| Y | 8 | 1 | *259-7348* | 1 | CONSOLE GP-OPERATOR (RH) | 427 |
| | 9 | 1 | **8T-4121** | 4 | WASHER-HARD (11X21X2.5-MM THK) | |
| M | 10 | 1 | **8T-4195** | 4 | BOLT (M10X1.5X30-MM) | |
| M | 11 | 1 | **9X-2046** | 8 | SCREW-TRUSS HEAD (M6X1X35-MM) | |
| M | 12 | 1 | **9X-2045** | 12 | SCREW-TRUSS HEAD (M6X1X20-MM) | |
| | 13 | 1 | **7K-1181** | 4 | STRAP-CABLE | |
| | 14 | 1 | **122-9617** | 2 | GUARD | |
| | 15 | 1 | **475-4173** | 2 | INSULATOR | |
| D | 16 | 1 | **5P-5927** | | SEAL (0.12-M EACH) | |

D - ORDER BY THE METER
M - METRIC PART
Y - SEPARATE ILLUSTRATION

*421-1431* **CONSOLE GP-OPERATOR (**contd.**)** **i07098950**

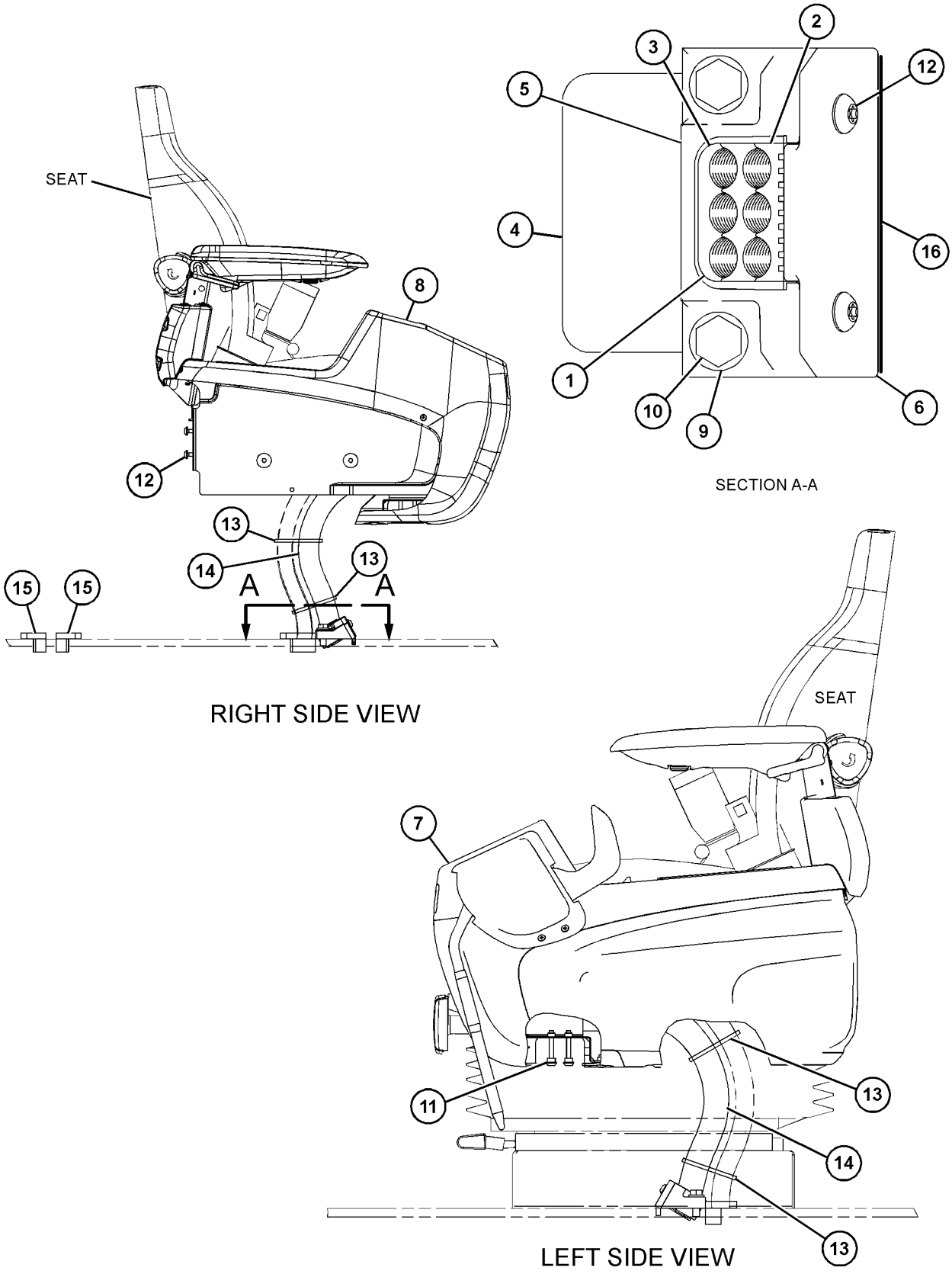


GRAPHIC #1 <END> g06013472

# *421-1434* CONSOLE GP-OPERATOR—LH

**S/N: FEY1-UP**

**PART OF 421-1431 CONSOLE GP-OPERATOR**

**SMCS-5258** **i06703326**

| NOTE | REF NO | GRAPHIC REF | PART NUMBER | QTY | PART NAME 1 2 3 4 5 6 (PRODUCT LEVEL) | SEE PAGE |
|---|---|---|---|---|---|---|
| M | 1 | 1 | **128-2135** | 5 | SCREW-TRUSS HEAD (M6X1X13-MM) | |
| M | 2 | 1 | **171-7325** | 3 | SCREW-TAPPING (M5XO.8-THD) | |
| | 3 | 1 | **234-6579** | 6 | NUT-SPEED | |
| | 4 | 1 | **234-6580** | 4 | CAP | |
| | 5 | 1 | **234-6603** | 1 | COVER | |
| | 6 | 1 | **234-6605** | 1 | COVER | |
| | 7 | 1 | **234-6608** | 1 | COVER | |
| | 8 | 1 | **234-6609** | 1 | COVER | |
| | 9 | 1 | **234-6610** | 1 | COVER | |
| | 11 | 1 | **234-6612** | 1 | COVER | |
| Y | 12 | 1 | **234-6613** | 1 | LEVER GP-CONTROL (HYDRAULIC LOCKOUT) | 253 |
| | 13 | 1 | **234-6614** | 1 | COVER | |
| | 14 | 1 | **235-8914** | 4 | NUT-SPEED | |
| | 15 | 1 | **235-8965** | 1 | GUARD | |
| | 16 | 1 | **245-7790** | 3 | SCREW-TAPPING | |
| | 17 | 1 | **245-7925** | 1 | SUPPORT AS | |
| | 18 | 1 | **245-7948** | 7 | SCREW-TAPPING | |
| | 19 | 1 | **259-7202** | 1 | ASHTRAY | |
| Y | 20 | 1 | **259-7347** | 1 | ARMREST GP (LH) | 407 |
| M | 21 | 1 | **9X-2041** | 3 | SCREW-TRUSS HEAD (M10X1.5X20-MM) | |
| M | 22 | 1 | **9X-2042** | 2 | SCREW-TRUSS HEAD (M6X1X12-MM) | |

M - METRIC PART
Y - SEPARATE ILLUSTRATION

*421-1434* **CONSOLE GP-OPERATOR (**contd.**)** **i06703326**

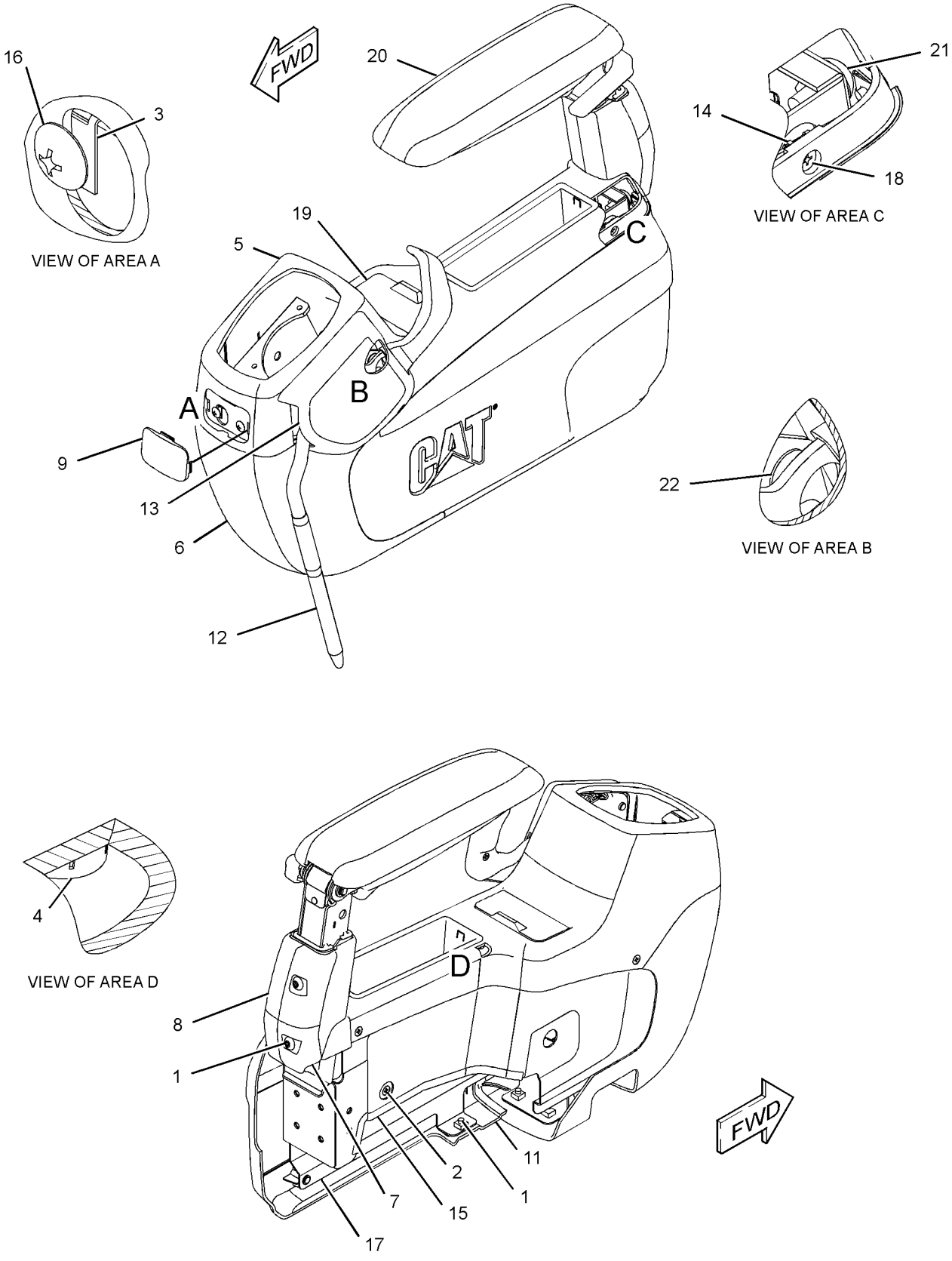


GRAPHIC #1 <END> g03401396

# *459-2731* CONSOLE GP-OPERATOR–RH

**S/N: FEY1-UP**

**PART OF 259-7348 CONSOLE GP-OPERATOR**

**SMCS-5258** **i06985849**

| NOTE | REF NO | GRAPHIC REF | PART NUMBER | QTY | PART NAME 1 2 3 4 5 6 (PRODUCT LEVEL) | SEE PAGE |
|---|---|---|---|---|---|---|
| M | 1 | 1 | **128-2135** | 4 | SCREW-TRUSS HEAD (M6X1X13-MM) | |
| | 3 | 1 | **234-6579** | 2 | NUT-SPEED | |
| | 4 | 1 | **234-6580** | 2 | CAP | |
| | 5 | 1 | **234-6602** | 1 | COVER | |
| | 6 | 1 | **234-6604** | 1 | COVER | |
| | 7 | 1 | **234-6608** | 1 | COVER | |
| | 8 | 1 | **234-6609** | 1 | COVER | |
| | 9 | 1 | **234-6610** | 1 | COVER | |
| | 10 | 1 | **235-8914** | 4 | NUT-SPEED | |
| | 11 | 1 | **235-8966** | 2 | BASE-MOUNTING | |
| | 12 | 1 | **245-7790** | 2 | SCREW-TAPPING | |
| | 13 | 1 | **245-7926** | 1 | SUPPORT AS | |
| | 14 | 1 | **245-7948** | 4 | SCREW-TAPPING | |
| Y | 15 | 1 | **259-7346** | 1 | ARMREST GP (RH) | 406 |
| M | 16 | 1 | **9X-2041** | 3 | SCREW-TRUSS HEAD (M10X1.5X20-MM) | |

M - METRIC PART
Y - SEPARATE ILLUSTRATION

*459-2731* **CONSOLE GP-OPERATOR (**contd.**)** **i06985849**

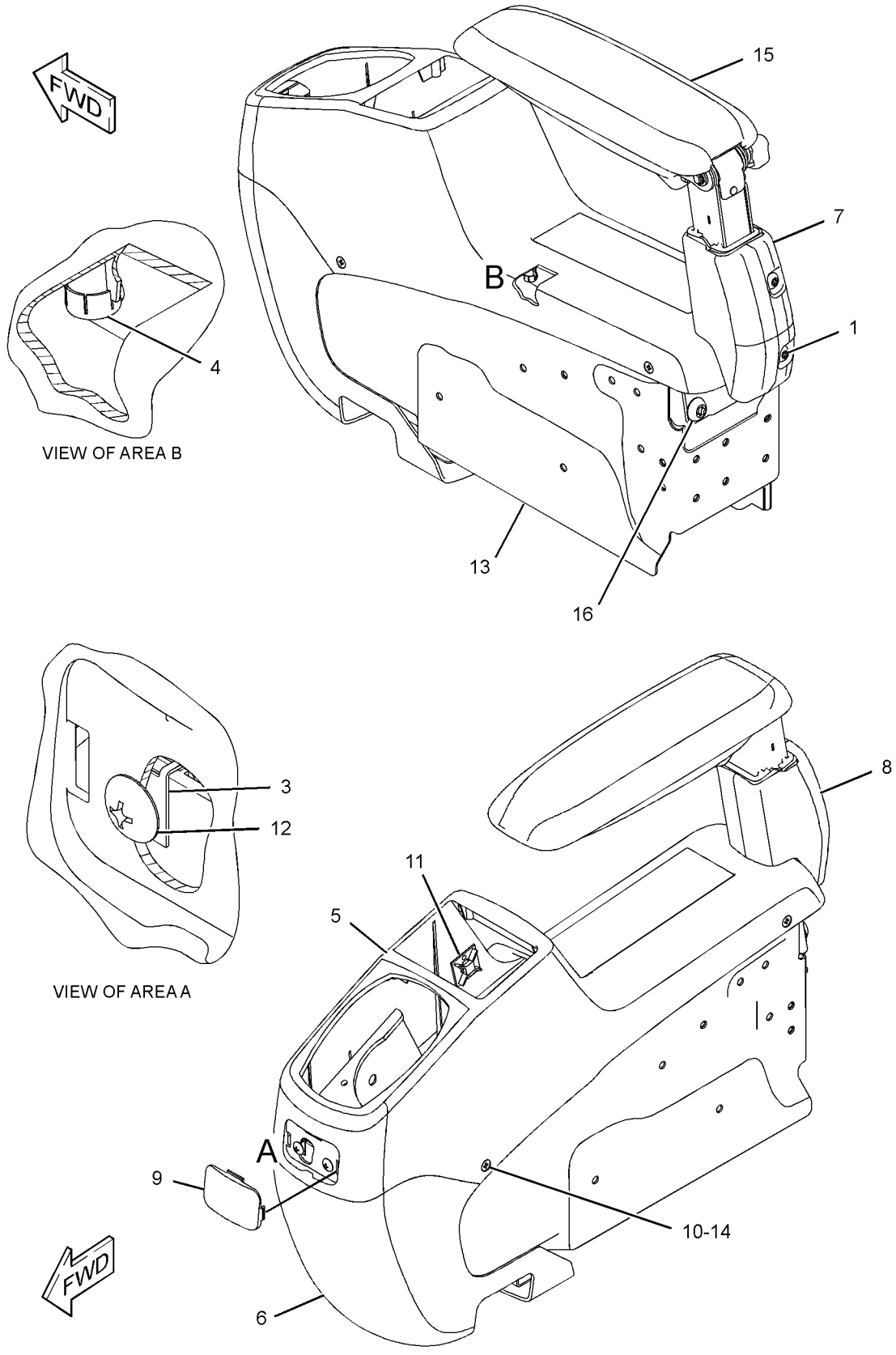


GRAPHIC #1 <END> g03837441

# *310-0078* CONTROL & MTG GP-JOYSTICK

**S/N: FEY1-UP**

**PART OF 557-8896 CAB GP, 559-6090 OPTION AR-HYDRAULIC**

**SMCS-5063, 5705** **i06896649**

| NOTE | REF NO | GRAPHIC REF | PART NUMBER | QTY | PART NAME 1 2 3 4 5 6 (PRODUCT LEVEL) | SEE PAGE |
|---|---|---|---|---|---|---|
| Y | 1 | 1 | **297-0532** | 1 | CONTROL GP-JOYSTICK (RH) | 440 |
| Y | 2 | 1 | **297-0533** | 1 | CONTROL GP-JOYSTICK (LH) | 441 |
| M | 3 | 1 | **6V-7357** | 6 | BOLT (M6X1X25-MM) | |
| | 4 | 1 | **9X-8256** | 6 | WASHER (6.6X12X2-MM THK) | |

M - METRIC PART
Y - SEPARATE ILLUSTRATION

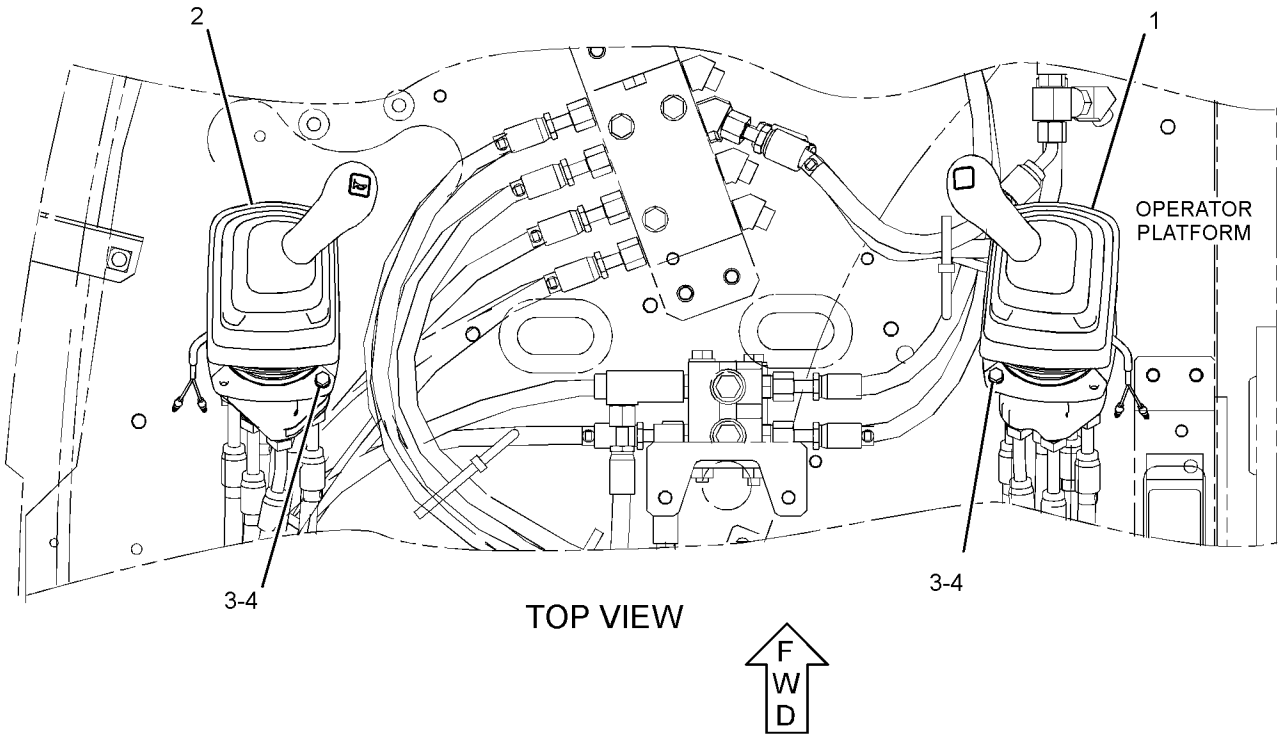


GRAPHIC #1 <END> g01442248

# 235-8969 CONTROL GP-HANDLE—JOYSTICK, LH

**S/N: FEY1-UP**

**PART OF 297-0533 CONTROL GP-JOYSTICK**

**SMCS-5705** **i04921983**

| NOTE | REF NO | GRAPHIC REF | PART NUMBER | QTY | PART NAME 1 2 3 4 5 6 (PRODUCT LEVEL) | SEE PAGE |
|---|---|---|---|---|---|---|
| | 1 | 1 | **124-4010** | 1 | LEVER | |
| | 2 | 1 | **353-2149** | 1 | BOOT | |
| | 3 | 1 | **245-7842** | 1 | KNOB AS | |
| M | | 1 | **6I-5298** | 1 | SCREW-TAPPING | |
| | | 1 | **124-4009** | 1 | SHAFT | |
| | | 1 | **222-0225** | 1 | SWITCH AS-PUSH BUTTON (HORN) | |
| M | 4 | 1 | **095-0735** | 2 | SCREW-MACHINE (M5X0.8X8-MM) | |

M - METRIC PART

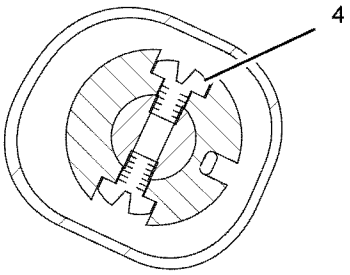


SECTION B-B

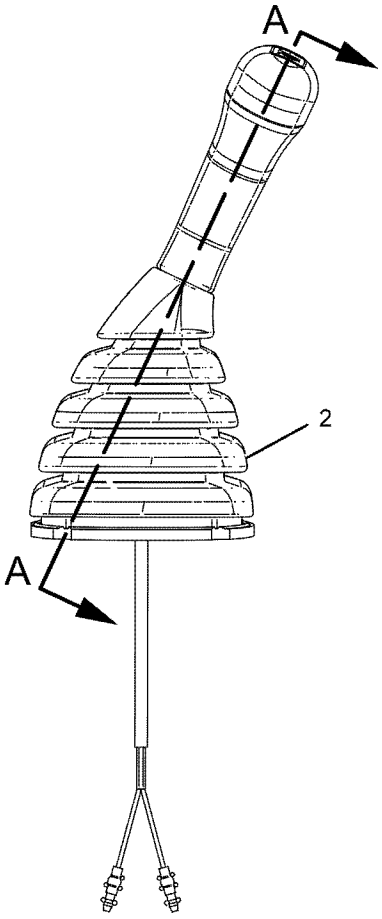


LEFT SIDE VIEW

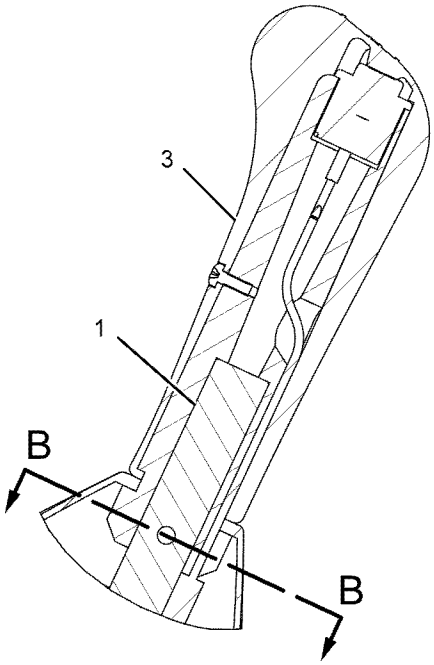


SECTION A-A

GRAPHIC #1 <END> g01082395

# *235-8970* CONTROL GP-HANDLE—JOYSTICK, RH

**S/N: FEY1-UP**

**PART OF 297-0532 CONTROL GP-JOYSTICK**

**SMCS-5705** **i04921967**

| NOTE | REF NO | GRAPHIC REF | PART NUMBER | QTY | PART NAME 1 2 3 4 5 6 (PRODUCT LEVEL) | SEE PAGE |
|---|---|---|---|---|---|---|
| | 1 | 1 | **124-4010** | 1 | LEVER | |
| | 2 | 1 | **353-2150** | 1 | BOOT | |
| | 3 | 1 | **245-7844** | 1 | KNOB AS | |
| M | | 1 | **6I-5298** | 1 | SCREW-TAPPING | |
| | | 1 | **124-4009** | 1 | SHAFT | |
| | | 1 | **222-0225** | 1 | SWITCH AS-PUSH BUTTON (MANUAL LOW IDLE) | |
| M | 4 | 1 | **095-0735** | 2 | SCREW-MACHINE (M5X0.8X8-MM) | |

M - METRIC PART

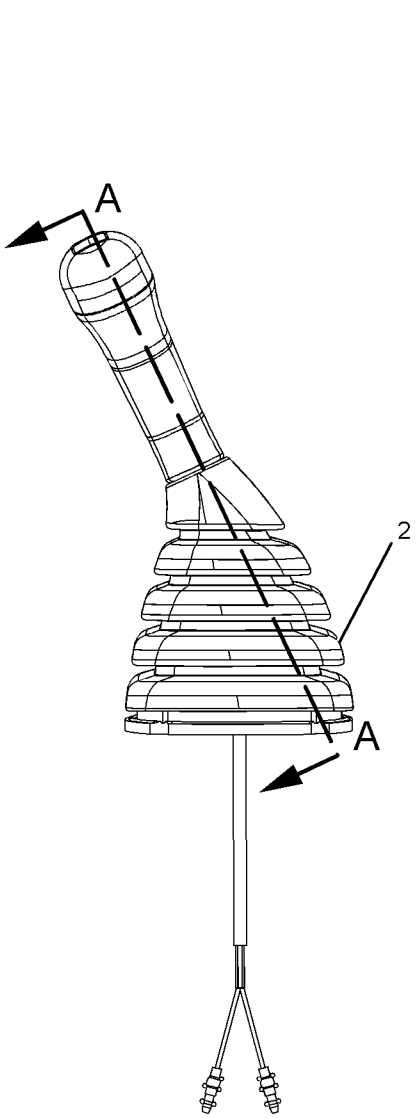


**RIGHT SIDE VIEW**

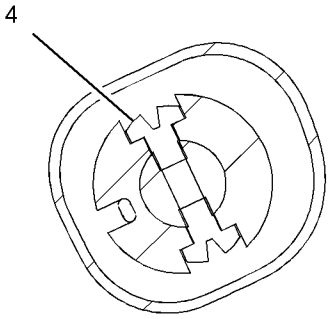


**SECTION B-B**

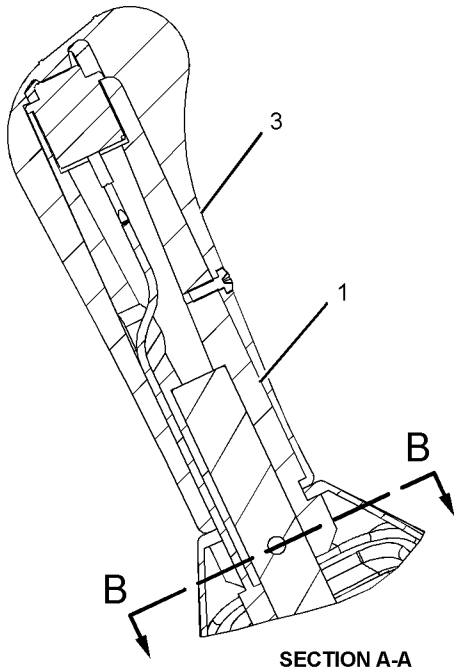


**SECTION A-A**

GRAPHIC #1 <END> g01082427

# 245-7846 CONTROL GP-HEAT & AIR COND–AIR INLET

**S/N: FEY1-UP**

**PART OF 316-8916 AIR CONDITIONER GP**

**SMCS-7309** **i05343325**

| NOTE | REF NO | GRAPHIC REF | PART NUMBER | QTY | PART NAME 1 2 3 4 5 6 (PRODUCT LEVEL) | SEE PAGE |
|---|---|---|---|---|---|---|
| | 1 | 1 | **185-8300** | 4 | SCREW-TAPPING | |
| | 2 | 1 | **196-1666** | 1 | RELAY (COMPRESSOR CLUTCH) | |
| | 2A | 1 | **196-1666** | 1 | RELAY (BLOWER) | |
| | 3 | 1 | **245-7813** | 1 | MOTOR AS | |
| | 4 | 1 | **245-7814** | 1 | BRACKET | |
| | 5 | 1 | **245-7815** | 1 | SENSOR AS-TEMPERATURE (AIR) | |
| | 6 | 1 | **245-7816** | 1 | DAMPER AS | |

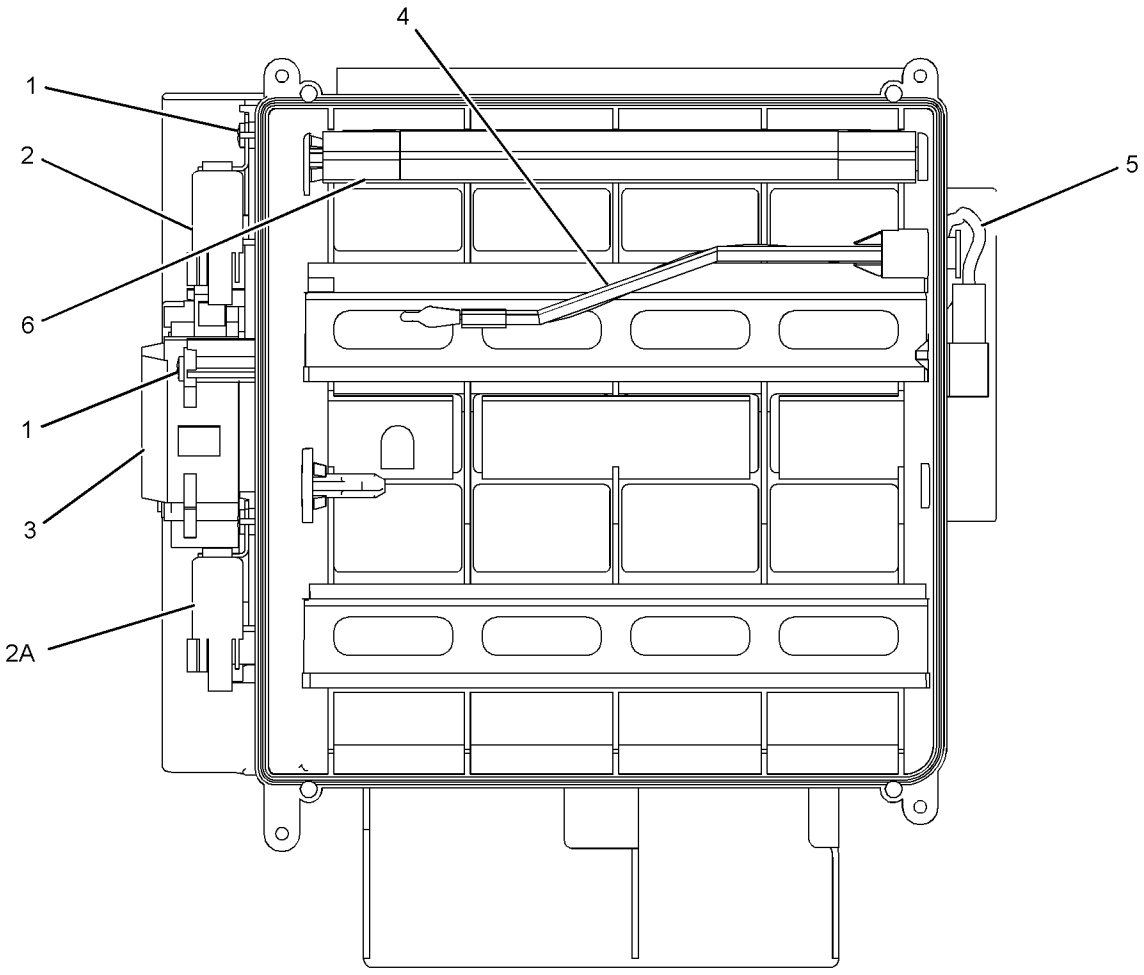


GRAPHIC #1 <END> g01245591

# *239-8693* CONTROL GP-HYDRAULIC PEDAL—RH

**S/N: FEY1-UP**

**PART OF 559-6091 CONTROL AR-AUXILIARY**

**SMCS-5059, 5063** **i06925845**

| NOTE | REF NO | GRAPHIC REF | PART NUMBER | QTY | PART NAME 1 2 3 4 5 6 (PRODUCT LEVEL) | SEE PAGE |
|---|---|---|---|---|---|---|
| | 1 | 1 | **233-5260** | 1 | LANYARD | |
| | 2 | 1 | **122-9611** | 1 | PEDAL-RUBBER (RH) | |
| | 3 | 1 | **357-3877** | 1 | PIN | |
| | 4 | 1 | **153-8762** | 1 | PEDAL AS | |
| | 5 | 1 | **153-8763** | 1 | SUPPORT AS | |
| Y | 6 | 1 | **206-3336** | 1 | VALVE GP-PILOT (WORK TOOL) | 352 |
| M | 7 | 1 | **095-0735** | 2 | SCREW-MACHINE (M5X0.8X8-MM) | |
| M | 8 | 1 | **7X-2536** | 2 | BOLT (M8X1.25X14-MM) | |
| | 9 | 1 | **8T-0114** | 1 | PIN-SPRING | |
| | 10 | 1 | **8T-4121** | 3 | WASHER-HARD (11X21X2.5-MM THK) | |
| M | 11 | 1 | **8T-4136** | 2 | BOLT (M10X1.5X25-MM) | |
| M | 12 | 1 | **8T-4137** | 1 | BOLT (M10X1.5X20-MM) | |
| | 13 | 1 | **8T-4224** | 2 | WASHER-HARD (8.8X16X2-MM THK) | |

M - METRIC PART
Y - SEPARATE ILLUSTRATION

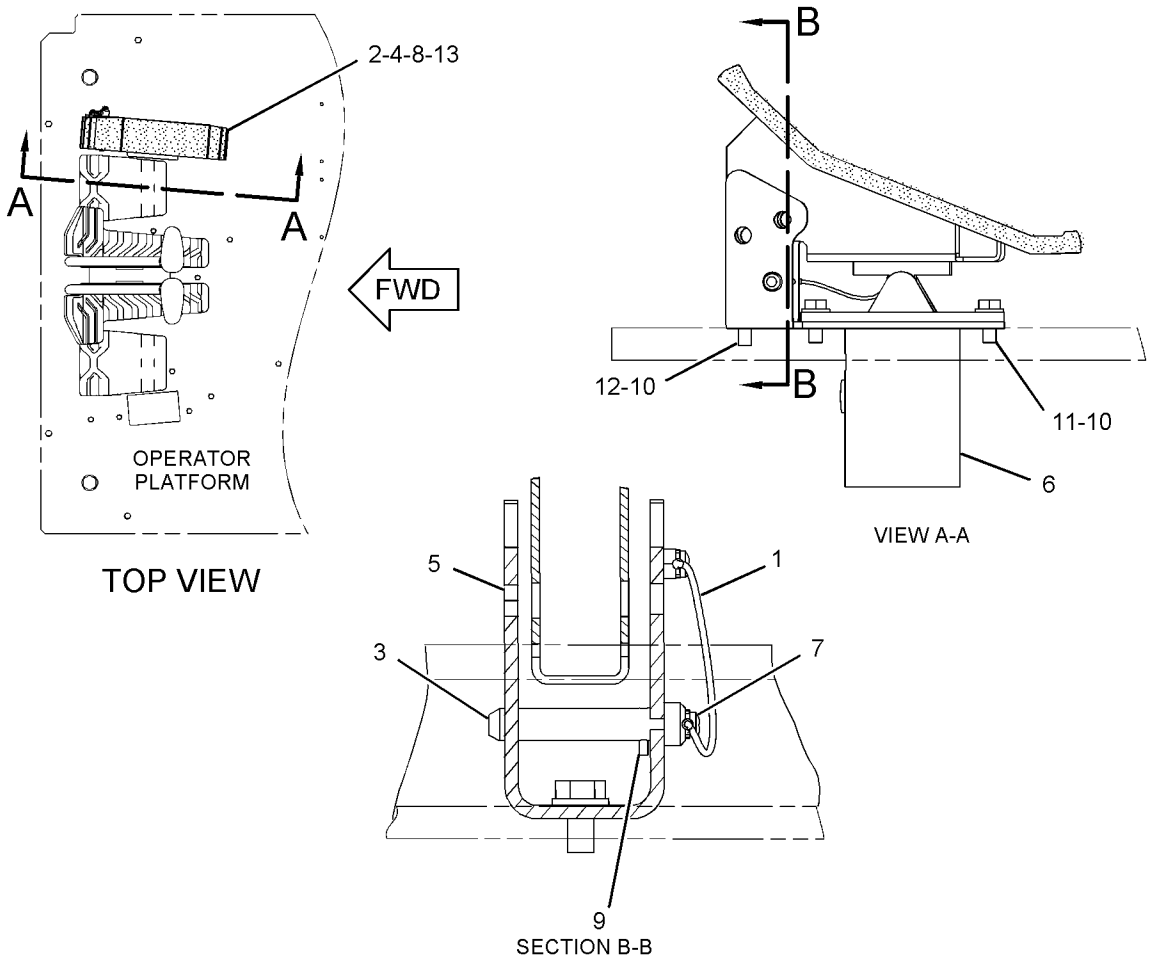


GRAPHIC #1 <END> g02360561

# 297-0532 CONTROL GP-JOYSTICK–RH

**S/N: FEY1-UP**

**PART OF 310-0078 CONTROL & MTG GP-JOYSTICK**

**SMCS-5705** **i05654497**

| NOTE | REF NO | GRAPHIC REF | PART NUMBER | QTY | PART NAME 1 2 3 4 5 6 (PRODUCT LEVEL) | SEE PAGE |
|---|---|---|---|---|---|---|
| M | 1 | 1 | **271-7843** | 1 | NUT (M14X2-THD) | |
| Y | 2 | 1 | **235-8970** | 1 | CONTROL GP-HANDLE (JOYSTICK, RH) | 437 |
| Y | 3 | 1 | **297-0529** | 1 | VALVE GP-PILOT (JOYSTICK) | 353 |
| | 4 | 1 | **6K-0806** | 1 | STRAP-CABLE | |

M - METRIC PART
Y - SEPARATE ILLUSTRATION

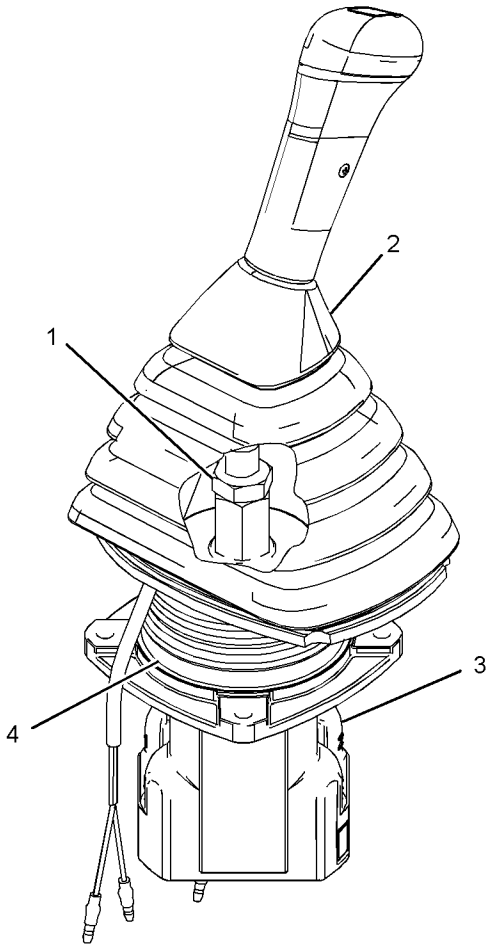


GRAPHIC #1 <END> g03057522

# 297-0533 CONTROL GP-JOYSTICK–LH

**S/N: FEY1-UP**

**PART OF 310-0078 CONTROL & MTG GP-JOYSTICK**

**SMCS-5705** **i05654499**

| NOTE | REF NO | GRAPHIC REF | PART NUMBER | QTY | PART NAME 1 2 3 4 5 6 (PRODUCT LEVEL) | SEE PAGE |
|---|---|---|---|---|---|---|
| M | 1 | 1 | **271-7843** | 1 | NUT (M14X2-THD) | |
| Y | 2 | 1 | **235-8969** | 1 | CONTROL GP-HANDLE (JOYSTICK, LH) | 435 |
| Y | 3 | 1 | **297-0529** | 1 | VALVE GP-PILOT (JOYSTICK) | 353 |
| | 4 | 1 | **6K-0806** | 1 | STRAP-CABLE | |

M - METRIC PART
Y - SEPARATE ILLUSTRATION

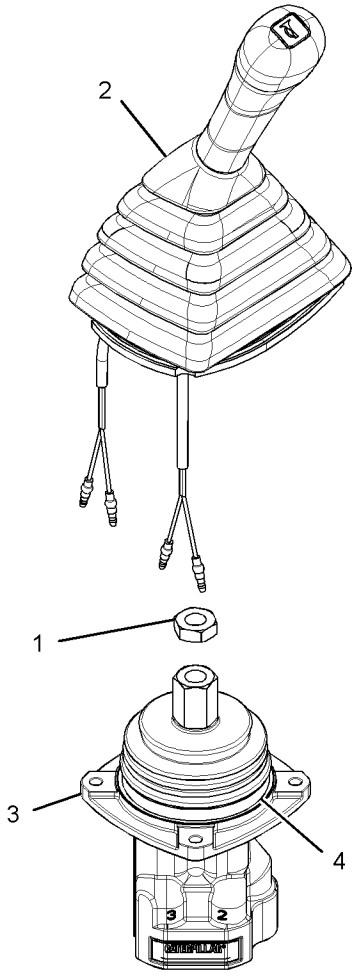


GRAPHIC #1 <END> g03057536

# *170-9497* CONTROL GP-PILOT OPERATED HYD–TRAVEL

**S/N: FEY1-UP**

**PART OF 557-8896 CAB GP, 539-2879 OPERATOR AR**

**SMCS-5059** **i04912143**

| NOTE | REF NO | GRAPHIC REF | PART NUMBER | QTY | PART NAME 1 2 3 4 5 6 (PRODUCT LEVEL) | SEE PAGE |
|---|---|---|---|---|---|---|
| | 1 | 1 | **096-6166** | 2 | WASHER-HARD (4.5X9X1-MM THK) | |
| M | 2 | 1 | **8T-0337** | 2 | SCREW-MACHINE (M4X0.7X12-MM) | |
| | 3 | 1 | **8T-4121** | 12 | WASHER-HARD (11X21X2.5-MM THK) | |
| M | 4 | 1 | **8T-4136** | 4 | BOLT (M10X1.5X25-MM) | |
| M | 5 | 1 | **8T-4191** | 8 | BOLT (M10X1.5X16-MM) | |
| | 6 | 1 | **142-5546** | 2 | KNOB | |
| | 7 | 1 | **117-6356** | 2 | STEP AS | |
| | 8 | 1 | **122-9610** | 2 | STEP | |
| | 9 | 1 | **170-9499** | 1 | LEVER AS (LH) | |
| | 10 | 1 | **170-9498** | 1 | LEVER AS (RH) | |
| | 11 | 1 | **122-9608** | 1 | PEDAL-RUBBER (RH) | |
| | 12 | 1 | **117-6350** | 1 | PEDAL AS (RH) | |
| | 13 | 1 | **122-9609** | 1 | PEDAL-RUBBER (LH) | |
| | 14 | 1 | **117-6349** | 1 | PEDAL AS (LH) | |

M - METRIC PART

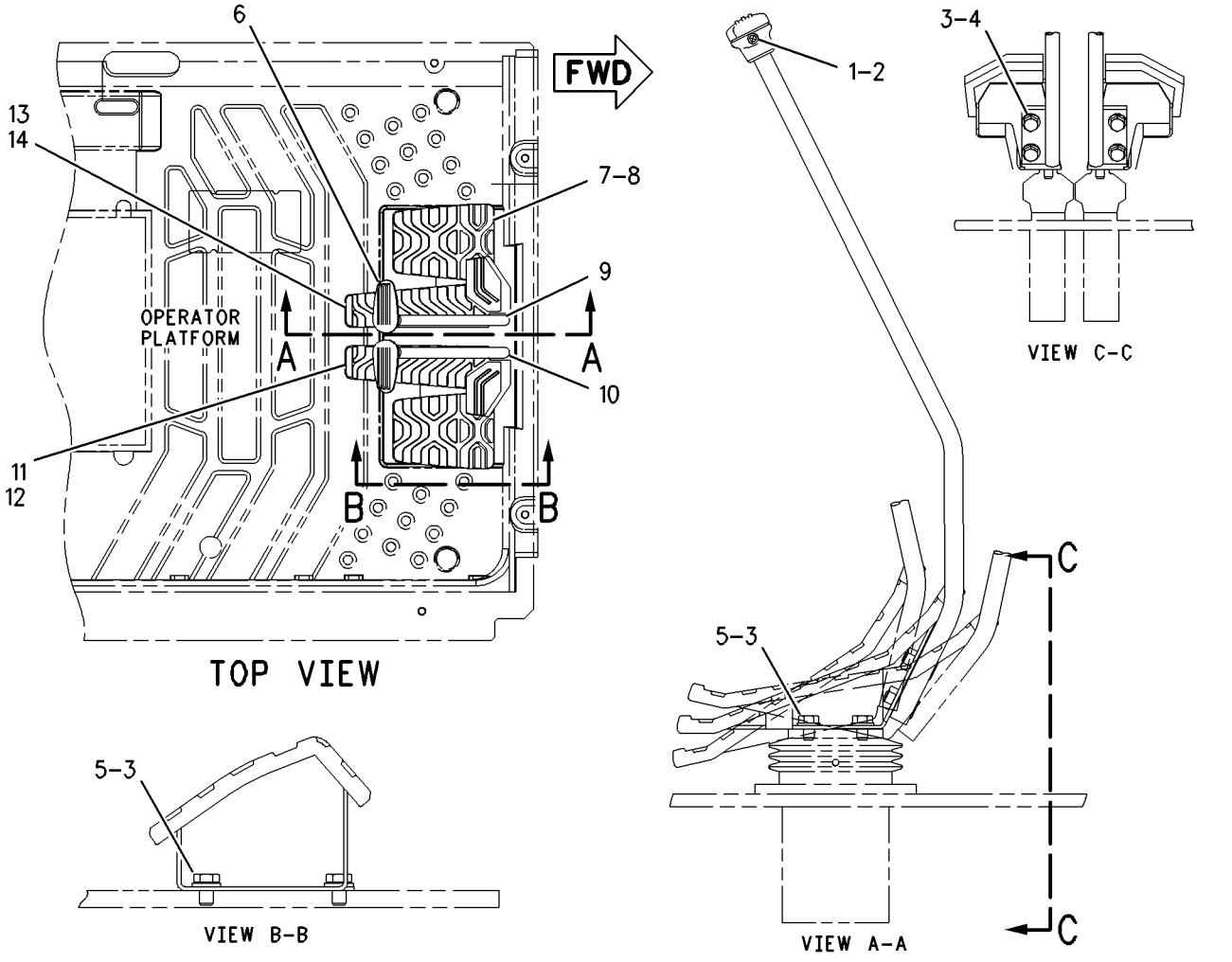


GRAPHIC #1 <END> g00672963

# 234-6501 COVER GP-CAB–REAR

**S/N: FEY1-UP**

**PART OF 557-8895 CAB GP**

**SMCS-7301, 7308**

**i05349675**

| NOTE | REF NO | GRAPHIC REF | PART NUMBER | QTY | PART NAME 1 2 3 4 5 6 (PRODUCT LEVEL) | SEE PAGE |
|---|---|---|---|---|---|---|
| | 1 | 1 | **234-6499** | 1 | COVER AS | |
| | 2 | 1 | **234-6502** | 1 | COVER-ACCESS (FUSE-REAR PANEL) | |
| | 3 | 1 | **234-6593** | 2 | FASTENER | |
| | | | | | USE WITH COVER WITH A 9-MM DIAMETER UPPER MOUNTING HOLE | |
| | | | | | –OR– | |
| | | 1 | **245-7929** | 2 | CLIP | |
| | | | | | USE WITH COVER WITH A 7.6-MM DIAMETER UPPER MOUNTING HOLE | |

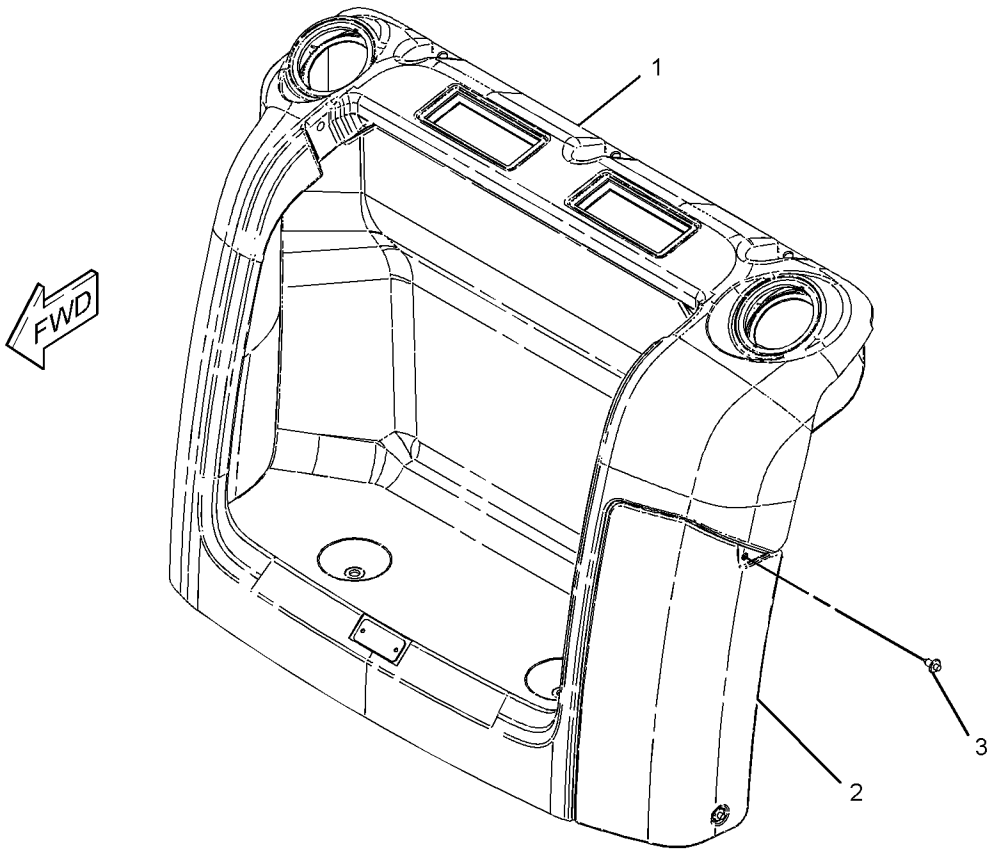


GRAPHIC #1

<END>

g03389225

# *420-3151* DOOR & MTG GP-CAB

**S/N: FEY1-UP**

**PART OF 554-3491 CAB GP**

**SMCS-7308** **i06199412**

| NOTE | REF NO | GRAPHIC REF | PART NUMBER | QTY | PART NAME 1 2 3 4 5 6 (PRODUCT LEVEL) | SEE PAGE |
|---|---|---|---|---|---|---|
| | 1 | 1 | **436-1901** | 2 | HINGE | |
| | 2 | 1 | **425-7079** | 1 | PANEL AS-DOOR | |
| M | 3 | 1 | **9X-2041** | 6 | SCREW-TRUSS HEAD (M10X1.5X20-MM) | |

M - METRIC PART

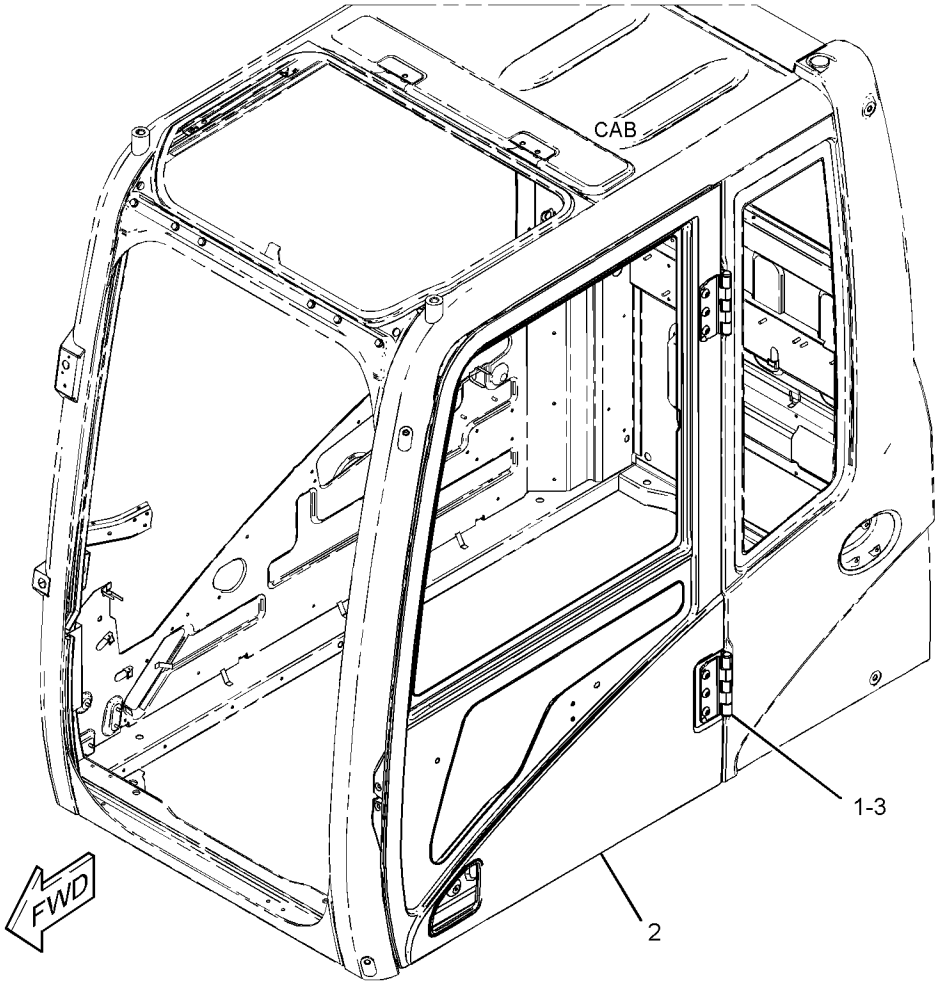


GRAPHIC #1 <END> g03440163

# *229-9082* DUCT GP-CAB AIR

**S/N: FEY1-UP**

**PART OF 418-9897 AIR CONDITIONER AR**

**SMCS-734D** **i04919864**

| NOTE | REF NO | GRAPHIC REF | PART NUMBER | QTY | PART NAME 1 2 3 4 5 6 (PRODUCT LEVEL) | SEE PAGE |
|---|---|---|---|---|---|---|
| | 1 | 1 | **293-1183** | 1 | FILTER GP-CAB AIR | |
| | | 1 | **293-1184** | 1 | FILTER ELEMENT-CAB AIR | |
| | 2 | 1 | **235-8876** | 1 | DUCT AS (FRESH AIR, UPPER) | |
| | | 1 | **245-7872** | 1 | INSULATOR | |
| | 3 | 1 | **235-8877** | 1 | DUCT AS (VENT, REAR) | |
| | | 1 | **245-7792** | 1 | INSULATOR | |
| | 4 | 1 | **235-8878** | 1 | DUCT AS (VENT, FRONT) | |
| | | 1 | **245-7793** | 1 | INSULATOR | |
| | 5 | 1 | **235-8879** | 1 | DUCT AS (FLOOR) | |
| | | 1 | **245-7873** | 1 | INSULATOR | |
| | 6 | 1 | **240-5074** | 1 | DUCT AS (FRESH AIR, LOWER) | |
| | | 1 | **245-7791** | 1 | INSULATOR | |
| M | 7 | 1 | **101-8899** | 2 | SCREW AS (M6X1.0X16-MM) | |
| | 8 | 1 | **176-1996** | 5 | CLIP | |

M - METRIC PART

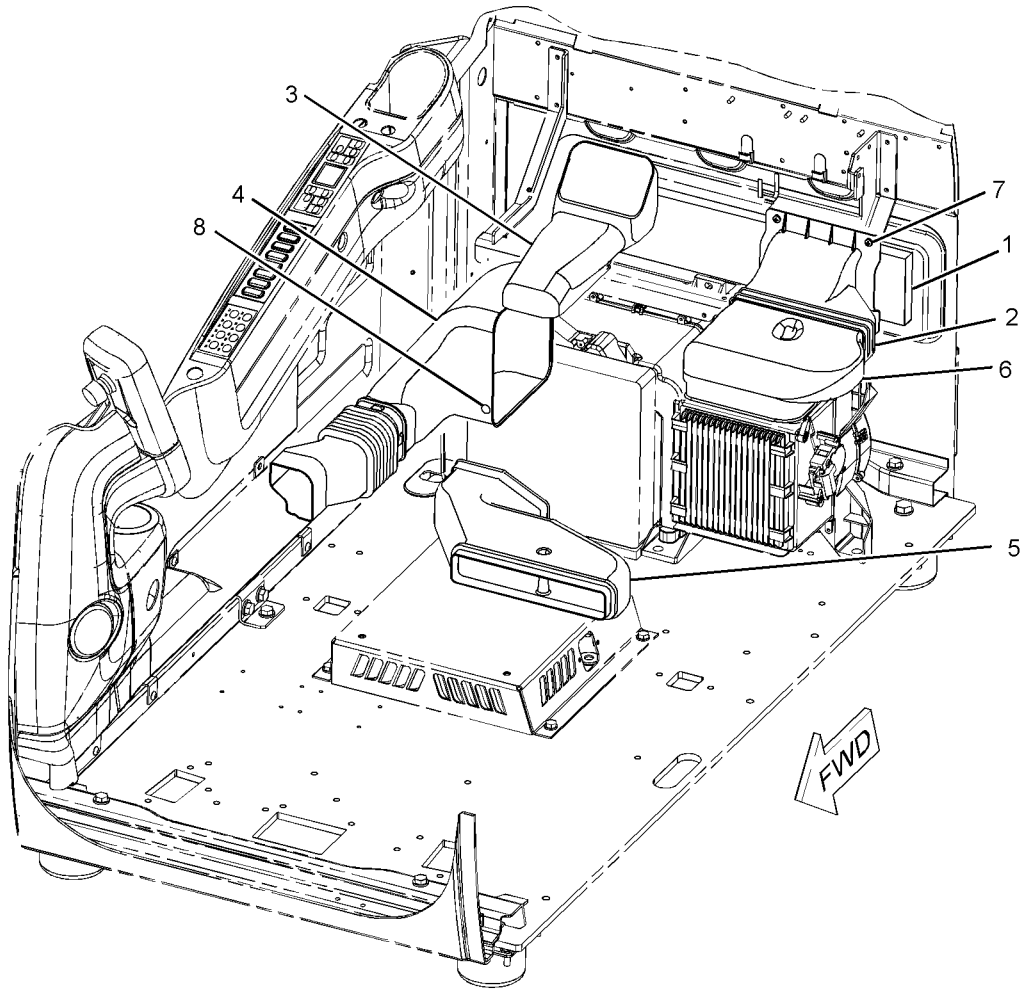


GRAPHIC #1 <END> g01126665

# *554-3508* FLOOR MAT

**S/N: FEY1-UP**

**PART OF 559-6090 OPTION AR-HYDRAULIC**

**SMCS-726M** **i07395794**

| NOTE | REF NO | GRAPHIC REF | PART NUMBER | QTY | PART NAME 1 2 3 4 5 6 (PRODUCT LEVEL) | SEE PAGE |
|---|---|---|---|---|---|---|
| | | | | | (NO SERVICED PARTS) | |

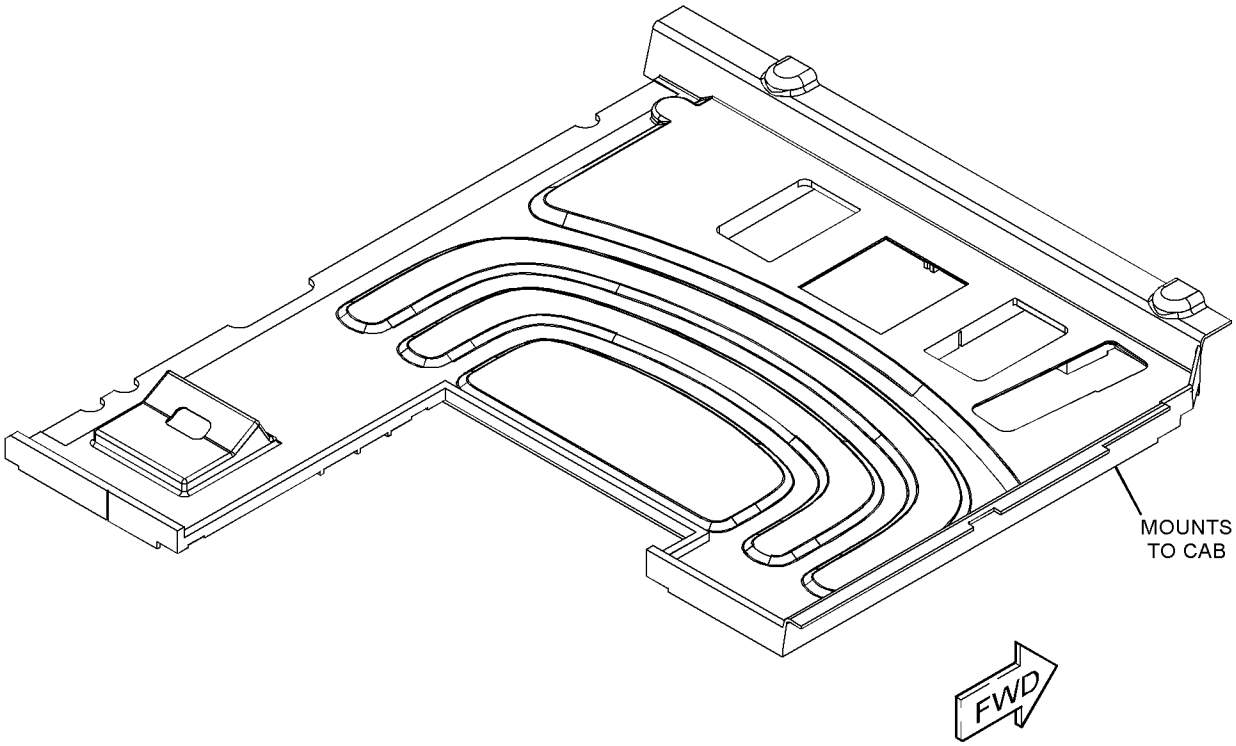


GRAPHIC #1 <END> g06313432

# *555-5076* FLOOR MAT

**S/N: FEY1-UP**

**SMCS-726M** **i07395797**

| NOTE | REF NO | GRAPHIC REF | PART NUMBER | QTY | PART NAME 1 2 3 4 5 6 (PRODUCT LEVEL) | SEE PAGE |
|---|---|---|---|---|---|---|
| | | | | | (NO SERVICED PARTS) | |

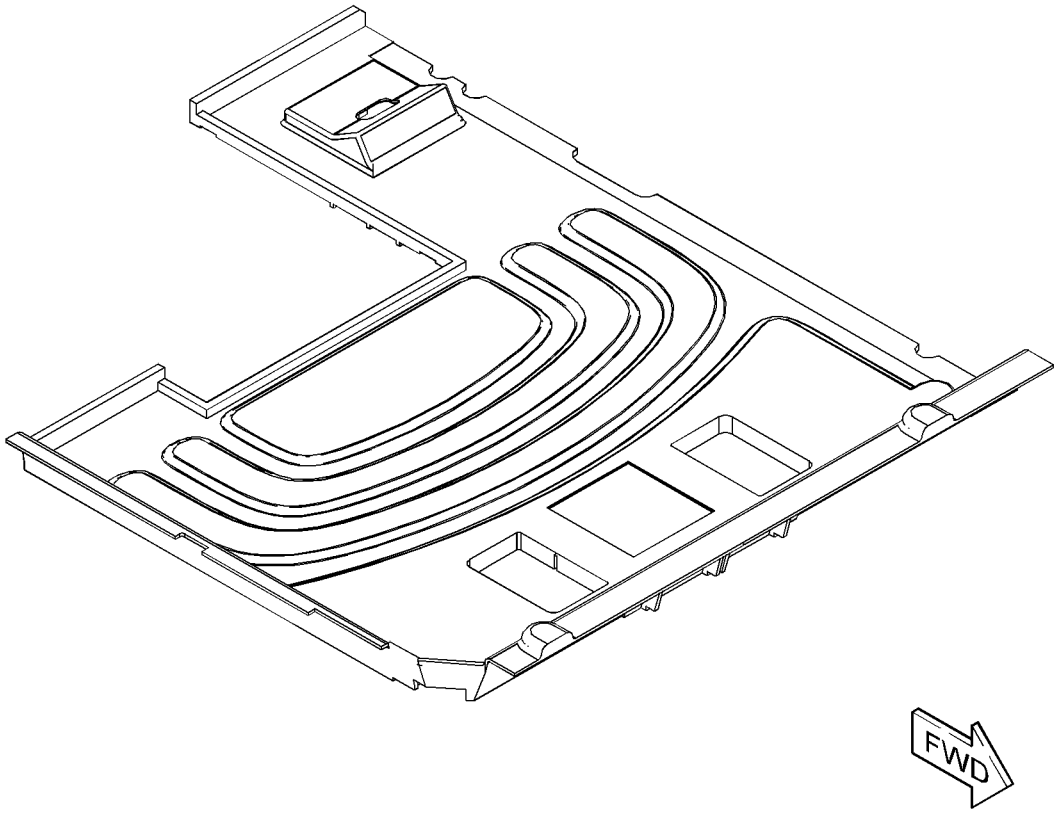


GRAPHIC #1 <END> g06313837

# *431-8611* HATCH GP-ROOF

**S/N: FEY1-UP**

**PART OF 555-5135 CAB GP**

**SMCS-7303** **i06199436**

| NOTE | REF NO | GRAPHIC REF | PART NUMBER | QTY | PART NAME 1 2 3 4 5 6 (PRODUCT LEVEL) | SEE PAGE |
|---|---|---|---|---|---|---|
| | 1 | 1 | **189-2847** | 1 | SEAL | |
| | 2 | 1 | **259-7351** | 1 | HATCH AS | |
| | 2A | 1 | **176-1949** | 2 | BRACKET AS | |
| | 2B | 1 | **189-2717** | 2 | HINGE AS | |
| | 3 | 1 | **259-7352** | 1 | CATCH | |
| | 4 | 1 | **398-1505** | 2 | SPRING AS-GAS (HATCH) | |
| | 5 | 1 | **3B-4505** | 4 | LOCKWASHER | |
| | 6 | 1 | **5D-4822** | 4 | RING-RETAINING | |
| M | 7 | 1 | **8T-4200** | 4 | BOLT (M8X1.25X16-MM) | |
| | 8 | 1 | **8T-4224** | 4 | WASHER-HARD (8.8X16X2-MM THK) | |
| M | 9 | 1 | **9X-2042** | 2 | SCREW-TRUSS HEAD (M6X1X12-MM) | |

M - METRIC PART

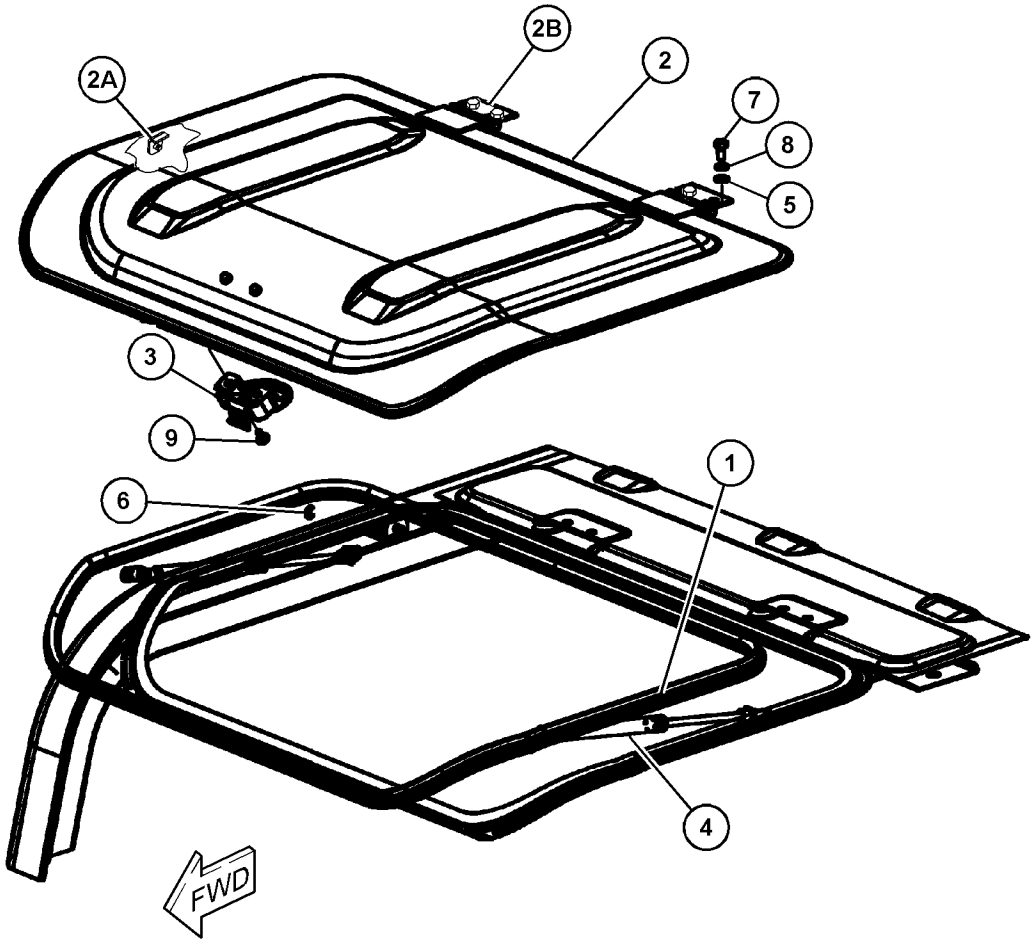


GRAPHIC #1 <END> g03683184

# *267-8071* HORN GP-ELECTRIC

**S/N: FEY1-UP**

**PART OF 556-6447 CHASSIS AR**

**SMCS-7402** **i06985743**

| NOTE | REF NO | GRAPHIC REF | PART NUMBER | QTY | PART NAME 1 2 3 4 5 6 (PRODUCT LEVEL) | SEE PAGE |
|---|---|---|---|---|---|---|
| CY | 1 | 1 | **381-7416** | 1 | HORN GP-ELECTRIC | 452 |
| | 2 | 1 | **8T-4121** | 2 | WASHER-HARD (11X21X2.5-MM THK) | |
| M | 3 | 1 | **8T-4195** | 2 | BOLT (M10X1.5X30-MM) | |

C - CHANGE FROM PREVIOUS TYPE
M - METRIC PART
Y - SEPARATE ILLUSTRATION

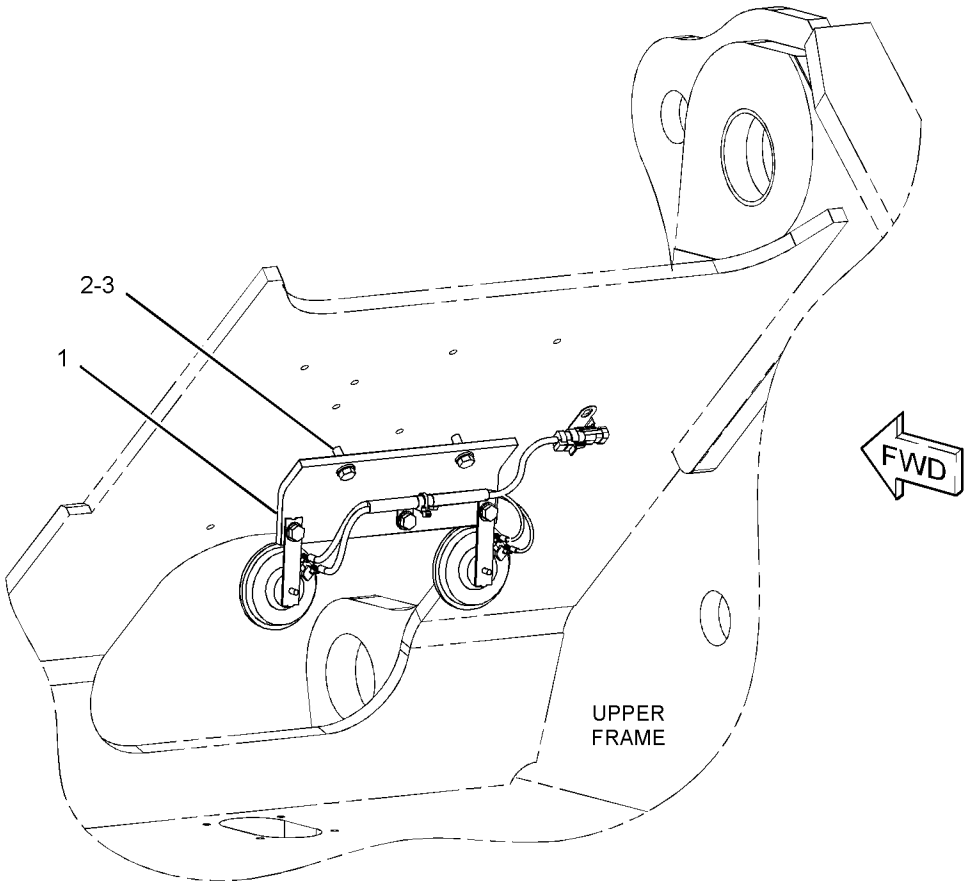


GRAPHIC #1 <END> g01289732

# *291-7559* HORN GP-ELECTRIC

**S/N: FEY1-UP**

**PART OF 381-7416 HORN GP-ELECTRIC**

**SMCS-7402** **i05349699**

| NOTE | REF NO | GRAPHIC REF | PART NUMBER | QTY | PART NAME 1 2 3 4 5 6 (PRODUCT LEVEL) | SEE PAGE |
|---|---|---|---|---|---|---|
| | 1 | 1 | **3S-2093** | 1 | STRAP-CABLE | |
| | 2 | 1 | **7Y-3919** | 1 | HORN AS (24-VOLT, LOW TONE) | |
| | 3 | 1 | **7Y-3920** | 1 | HORN AS (24-VOLT, HIGH TONE) | |
| | | | | | (EACH HORN AS INCLUDES) | |
| | | 1 | **095-0826** | 2 | LOCKWASHER | |
| M | | 1 | **095-7930** | 2 | SCREW-MACHINE (M4X0.7X6-MM) | |
| | 4 | 1 | **291-7560** | 1 | HARNESS AS-CHASSIS (HORN) | |
| | | 1 | **3S-2093** | 1 | STRAP-CABLE | |
| | | 1 | **9W-0844** | 2 | SOCKET-CONNECTOR (14-GA TO 16-GA) | |
| | | 1 | **2L-8065** | 2 | TERMINAL-RING (10-GA TO 12-GA, NO. 8 SCREW) | |
| | | 1 | **2L-8075** | 2 | TERMINAL-RING (14-GA TO 16-GA, NO. 8 SCREW) | |
| | | 1 | **230-4011** | 1 | PLUG AS-CONNECTOR (2-PIN) | |
| | | 1 | **264-7029** | 1 | SEAL-CONNECTOR | |
| | 5 | 1 | **291-7561** | 1 | BRACKET | |
| | 6 | 1 | **132-5789** | 1 | CLIP (LADDER) | |
| | 7 | 1 | **8T-4121** | 3 | WASHER-HARD (11X21X2.5-MM THK) | |
| M | 8 | 1 | **8T-4191** | 3 | BOLT (M10X1.5X16-MM) | |

M - METRIC PART

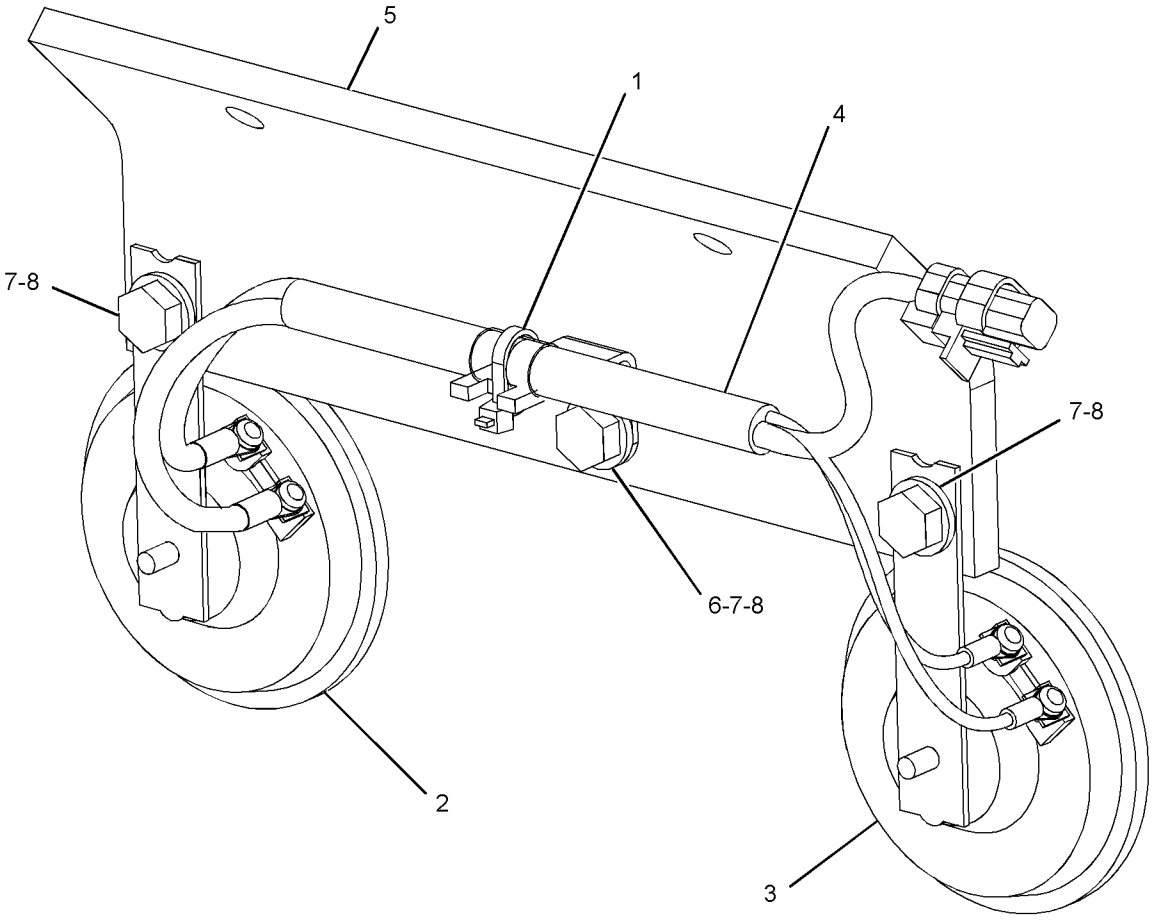


GRAPHIC #1 <END> g03389246

# *377-6536* HORN GP-ELECTRIC

**S/N: FEY1-UP**

**PART OF 381-7416 HORN GP-ELECTRIC**

**SMCS-7402** **i06989559**

| NOTE | REF NO | GRAPHIC REF | PART NUMBER | QTY | PART NAME 1 2 3 4 5 6 (PRODUCT LEVEL) | SEE PAGE |
|---|---|---|---|---|---|---|
| | 1 | 1 | **3S-2093** | 1 | STRAP-CABLE | |
| | 2 | 1 | **7Y-3919** | 1 | HORN AS (24-VOLT, LOW TONE) | |
| | | 1 | **1H-4393** | 2 | LOCKWASHER | |
| M | | 1 | **095-7930** | 2 | SCREW-MACHINE (M4X0.7X6-MM) | |
| | 3 | 1 | **7Y-3920** | 1 | HORN AS (24-VOLT, HIGH TONE) | |
| | | 1 | **1H-4393** | 2 | LOCKWASHER | |
| M | | 1 | **095-7930** | 2 | SCREW-MACHINE (M4X0.7X6-MM) | |
| | 4 | 1 | **291-7560** | 1 | HARNESS AS-CHASSIS | |
| | | 1 | **3S-2093** | 1 | STRAP-CABLE | |
| | | 1 | **9W-0844** | 2 | SOCKET-CONNECTOR (14-GA TO 16-GA) | |
| | | 1 | **2L-8065** | 2 | TERMINAL-RING (10-GA TO 12-GA, NO. 8 SCREW) | |
| | | 1 | **2L-8075** | 2 | TERMINAL-RING (14-GA TO 16-GA, NO. 8 SCREW) | |
| | | 1 | **230-4011** | 1 | PLUG AS-CONNECTOR (2-PIN) | |
| | | 1 | **264-7029** | 1 | SEAL-CONNECTOR | |
| | 5 | 1 | **377-5887** | 1 | BRACKET AS | |
| | 6 | 1 | **8T-4121** | 2 | WASHER-HARD (11X21X2.5-MM THK) | |
| M | 7 | 1 | **8T-4137** | 2 | BOLT (M10X1.5X20-MM) | |

M - METRIC PART

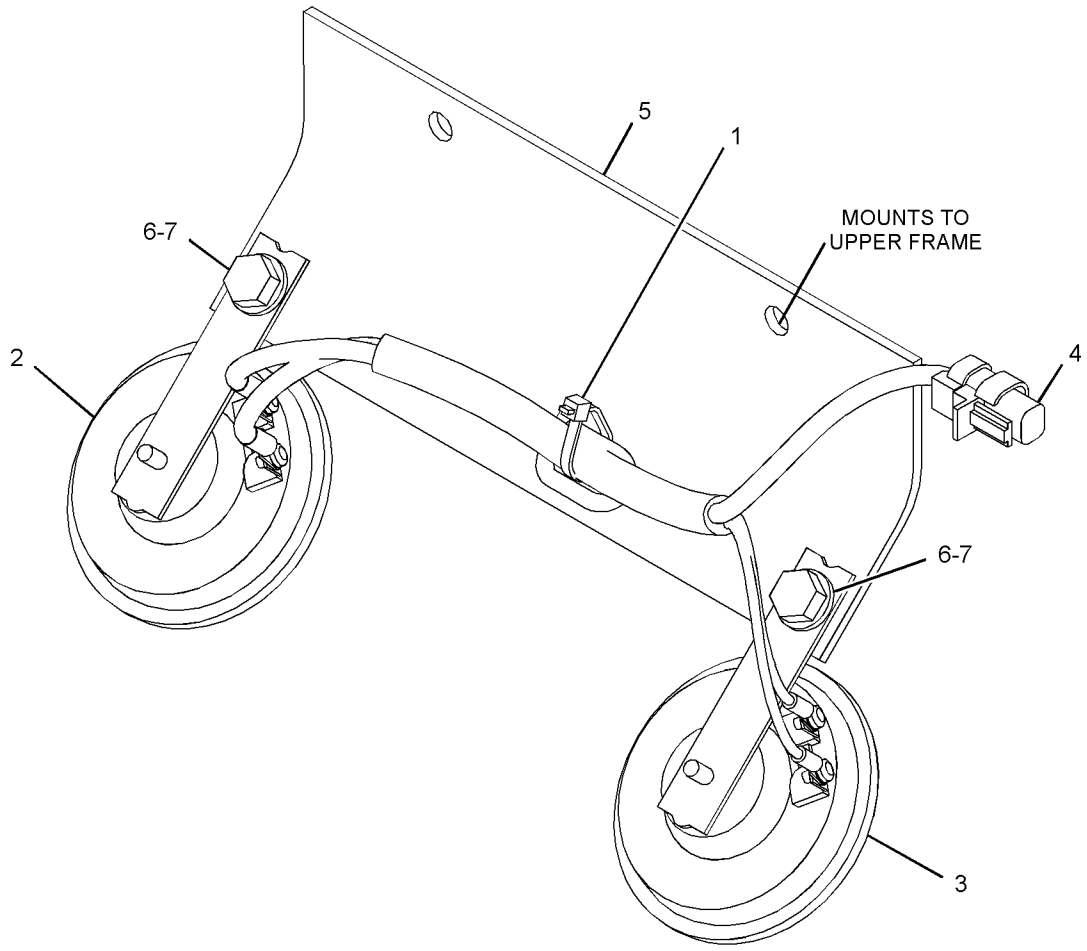


GRAPHIC #1 <END> g03097697

# *381-7416* HORN GP-ELECTRIC

**S/N: FEY1-UP**

**PART OF 267-8071 HORN GP-ELECTRIC**

**SMCS-7402** **i06985749**

| NOTE | PART NUMBER | QTY | PART NAME 1 2 3 4 5 6 (PRODUCT LEVEL) | SEE PAGE |
|---|---|---|---|---|
| Y | *291-7559* | 1 | HORN GP-ELECTRIC | 450 |
| | | | —OR— | |
| Y | *377-6536* | 1 | HORN GP-ELECTRIC | 451 |

Y - SEPARATE ILLUSTRATION

<END>

# *164-0528* LEVER GP-CAB DOOR

**S/N: FEY1-UP**

**PART OF 550-1463 CAB GP**

**SMCS-7308** **i04922241**

| NOTE | REF NO | GRAPHIC REF | PART NUMBER | QTY | PART NAME 1 2 3 4 5 6 (PRODUCT LEVEL) | SEE PAGE |
|---|---|---|---|---|---|---|
| | 1 | 1 | **156-6642** | 1 | LEVER AS | |
| | 2 | 1 | **164-0664** | 1 | BRACKET | |
| | 3 | 1 | **176-1941** | 1 | PIN | |
| | 4 | 1 | **185-8280** | 1 | WASHER-WAVE (10.5X15X0.3-MM THK) | |
| | 5 | 1 | **185-8281** | 1 | SPRING | |

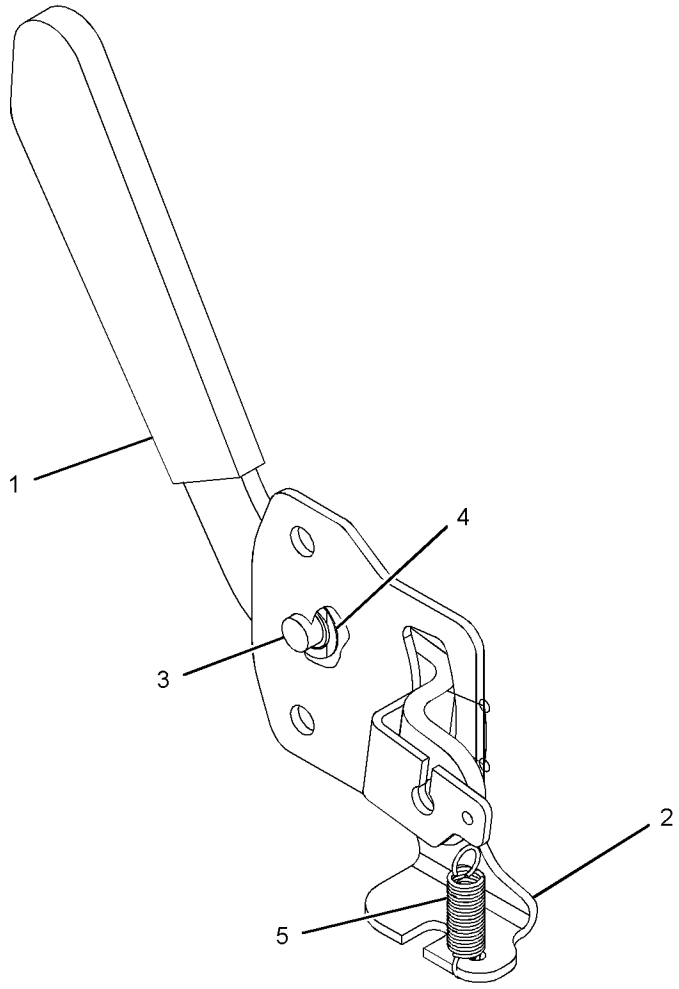


GRAPHIC #1 <END> g01217036

# *556-6548* LINES GP-AIR CONDITIONER

**S/N: FEY1-UP**

**PART OF 556-6447 CHASSIS AR**

**SMCS-1808** **i07398558**

| NOTE | REF NO | GRAPHIC REF | PART NUMBER | QTY | PART NAME 1 2 3 4 5 6 (PRODUCT LEVEL) | SEE PAGE |
|---|---|---|---|---|---|---|
| M | 1 | 2 | **8T-4191** | 1 | BOLT (M10X1.5X16-MM) | |
| | 2 | 2 | **122-9605** | 2 | TUBE | |
| | 3 | 1 | **176-1902** | 1 | DRYER AS-REFRIGERANT (RECEIVER) | |
| | 4 | 2 | **235-8891** | 1 | PLATE | |
| M | 5 | 1 | **8T-4196** | 1 | BOLT (M10X1.5X35-MM) | |
| M | 6 | 1 | **8T-4200** | 2 | BOLT (M8X1.25X16-MM) | |
| M | 7 | 1 | **8T-4908** | 2 | BOLT (M8X1.25X25-MM) | |
| M | 8 | 1 | **8T-4971** | 2 | BOLT (M6X1X30-MM) | |
| | 9 | 1 | **121-7098** | 1 | BRACKET AS | |
| | 10 | 1 | **5P-7462** | 1 | CLIP (SLOT) | |
| | 11 | 2 | **130-0252** | 2 | HOSE-DRAIN | |
| | 12 | 1 | **5P-7463** | 1 | CLIP (TAB) | |
| | 13 | 1 | **5P-7464** | 1 | CLIP (SLOT) | |
| | 14 | 1 | **5P-7465** | 1 | CLIP (TAB) | |
| | 15 | 2 | **305-0441** | 2 | BAND-MARKER (HS) | |
| | 16 | 1 | **6V-0683** | 1 | GROMMET | |
| | 17 | 1 | **6V-1249** | 1 | GROMMET (22-MM ID) | |
| | 18 | 2 | **6V-3265** | 1 | CLIP | |
| M | 19 | 1,2 | **6V-7357** | 3 | BOLT (M6X1X25-MM) | |
| | 20 | 2 | **7K-1181** | 1 | STRAP-CABLE | |
| | 21 | 1 | **8M-2773** | 1 | CLIP (LOOP) | |
| | 22 | 1,2 | **8T-4121** | 19 | WASHER-HARD (11X21X2.5-MM THK) | |
| M | 23 | 2 | **8T-4136** | 1 | BOLT (M10X1.5X25-MM) | |
| M | 24 | 1 | **8T-4137** | 16 | BOLT (M10X1.5X20-MM) | |
| | 25 | 1 | **8T-4224** | 4 | WASHER-HARD (8.8X16X2-MM THK) | |
| | 26 | 1,2 | **9X-8256** | 5 | WASHER (6.6X12X2-MM THK) | |
| | 27 | 2 | **132-5789** | 1 | CLIP (LADDER) | |
| | 28 | 2 | **235-9015** | 2 | HOSE | |
| | 29 | 1 | **245-7756** | 1 | TUBE AS | |
| | | 1 | **121-7138** | 2 | SEAL-O-RING | |
| | 30 | 2 | **305-0442** | 2 | BAND-MARKER (HR) | |
| | 31 | 1 | **100-4336** | 2 | CLIP (LOOP) | |
| | 32 | 2 | **122-9657** | 2 | CLAMP | |
| | 33 | 2 | **235-9014** | 8 | CLAMP-SPRING | |
| | 34 | 1 | **245-7757** | 1 | HOSE AS | |
| | | 1 | **121-7138** | 2 | SEAL-O-RING | |
| | | 1 | **130-0270** | 1 | SWITCH AS-PRESSURE (REFRIGERANT) | |
| | | 1 | **185-8293** | 1 | SEAL-O-RING | |
| | 35 | 1 | **513-5041** | 1 | HOSE AS-REFRIGERANT | |
| | | 1 | **121-7137** | 1 | SEAL-O-RING | |
| | | 1 | **245-7850** | 1 | CAP | |
| | 36 | 1 | **513-5042** | 1 | HOSE AS-REFRIGERANT | |
| | | 1 | **121-7136** | 1 | SEAL-O-RING | |
| | | 1 | **245-7851** | 1 | CAP | |
| | 37 | 1 | **557-3811** | 1 | BRACKET AS | |
| M | | 1 | **8T-3490** | 1 | NUT-WELD (M10X1.5-THD) | |
| | 38 | 1 | **6D-1641** | 13 | CLIP (LOOP) | |

*556-6548* **LINES GP-AIR CONDITIONER (**contd.**)** **i07398558**

| NOTE | REF NO | GRAPHIC REF | PART NUMBER | QTY | PART NAME 1 2 3 4 5 6 (PRODUCT LEVEL) | SEE PAGE |
|---|---|---|---|---|---|---|
| | 39 | 2 | **6D-3479** | 1 | CLIP (LOOP) | |
| | 40 | 1 | **6W-7293** | 1 | GROMMET | |
| E | 41 | 1 | **5P-0767** | | HOSE (345-CM) | |
| E | 41A | 1 | **5P-0767** | | HOSE (370-CM) | |

E - ORDER BY THE CENTIMETER
M - METRIC PART

*556-6548* **LINES GP-AIR CONDITIONER (**contd.**)** **i07398558**

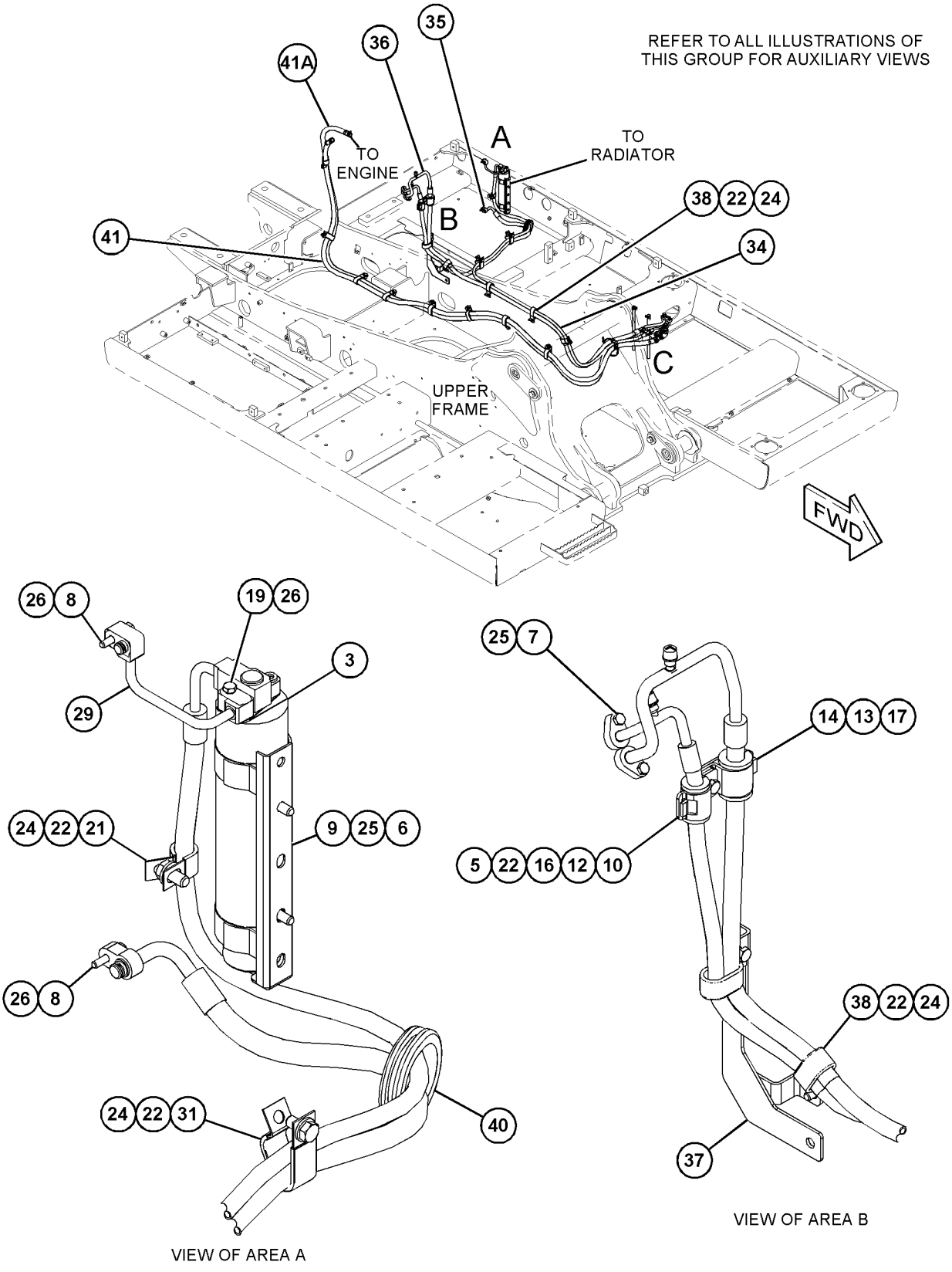


GRAPHIC #1 g06314172

*556-6548* **LINES GP-AIR CONDITIONER (**contd.**)** **i07398558**

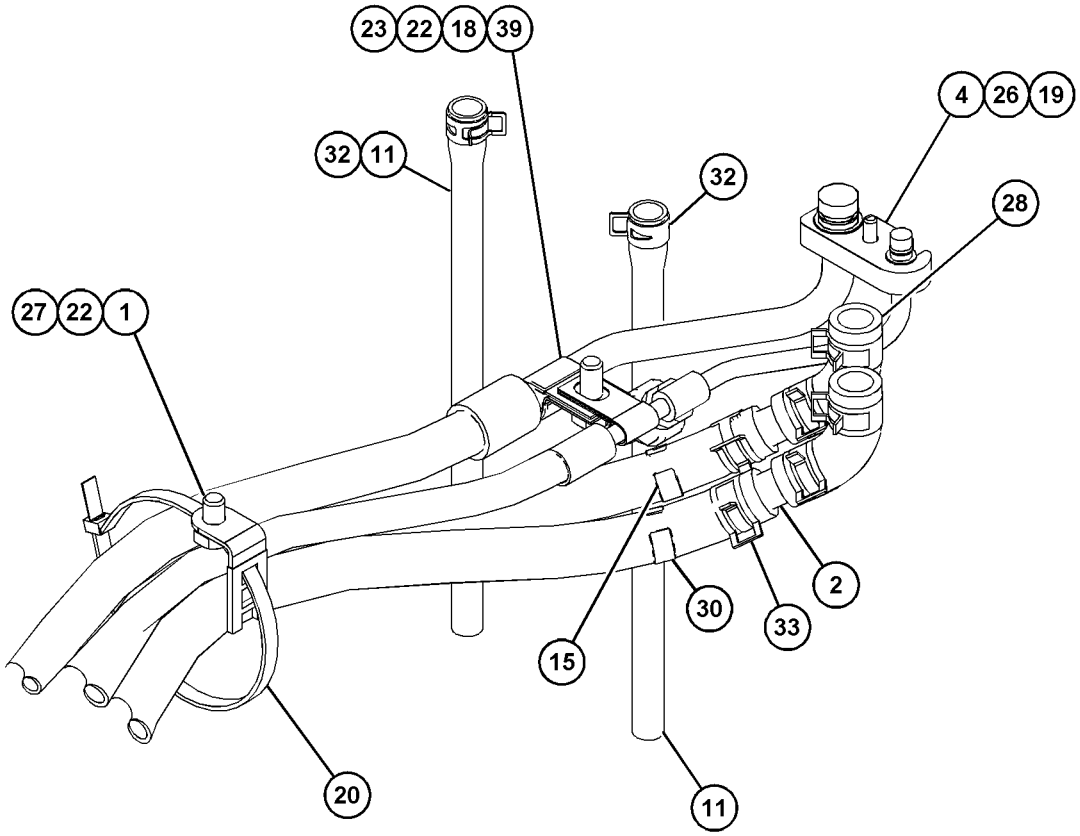


VIEW OF AREA C

GRAPHIC #2 <END> g06314173

# *7Y-0059* LITERATURE GP

**S/N: FEY1-UP**

**PART OF 556-6447 CHASSIS AR**

**SMCS-7300** **i06985388**

| NOTE | PART NUMBER | QTY | PART NAME 1 2 3 4 5 6 (PRODUCT LEVEL) | SEE PAGE |
|---|---|---|---|---|
| | **099-3645** | 1 | CABLE-LANYARD | |
| | **5P-8500** | 2 | KEY | |
| | **5P-7958** | 2 | SLEEVE-CABLE SPLICE | |
| | **364-8522** | 1 | TAG-WARNING (TIPPING HAZARD, READ OMM) | |
| | | | (ATTACH TO JOYSTICK WHEN MACHINE IS TRANSPORTED WITHOUT FRONT (BOOM) STRUCTURE OR COUNTERWEIGHT) | |
| | | | <END> | |

# *142-3836* MIRROR GP-REAR VIEW

**S/N: FEY1-UP**

**PART OF 556-6447 CHASSIS AR**

**SMCS-7319** **i06910887**

| NOTE | REF NO | GRAPHIC REF | PART NUMBER | QTY | PART NAME 1 2 3 4 5 6 (PRODUCT LEVEL) | SEE PAGE |
|---|---|---|---|---|---|---|
| | 1 | 1 | **8T-7971** | 4 | WASHER-HARD (13.5X25.5X5-MM THK) | |
| C | 2 | 1 | **443-7859** | 1 | MOUNTING GP-MIRROR | |
| | | 1 | **9X-8256** | 2 | WASHER (6.6X12X2-MM THK) | |
| M | | 1 | **105-3487** | 2 | BOLT-SOCKET HEAD (M6X1X20-MM) | |
| | 3 | 1 | **165-3065** | 1 | BRACKET-MIRROR | |
| M | 4 | 1 | **8T-4192** | 4 | BOLT (M12X1.75X25-MM) | |

C - CHANGE FROM PREVIOUS TYPE
M - METRIC PART

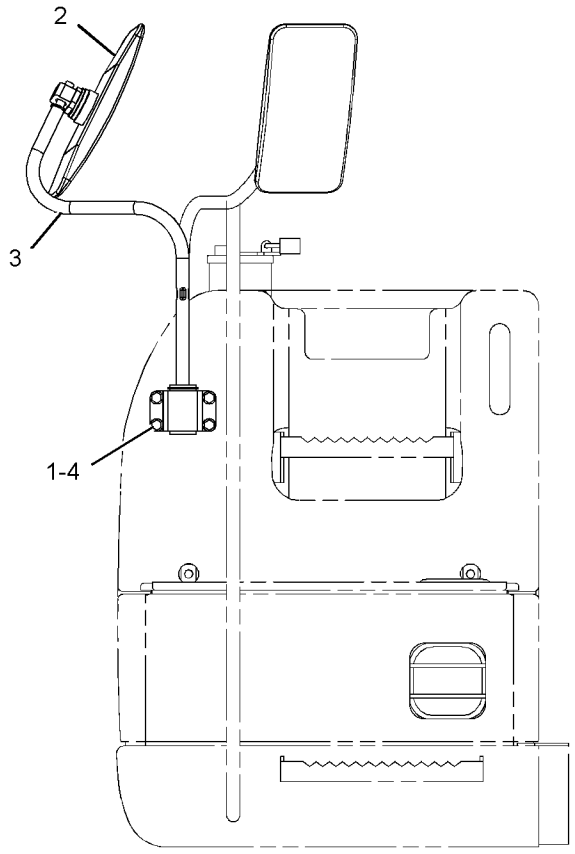


FRONT VIEW

GRAPHIC #1 <END> g02169635

# *555-2225* MONITOR & MTG GP-OPERATOR

**S/N: FEY1-UP**

**PART OF 557-8896 CAB GP, 539-2879 OPERATOR AR**

**SMCS-7490** **i07416278**

| NOTE | REF NO | GRAPHIC REF | PART NUMBER | QTY | PART NAME 1 2 3 4 5 6 (PRODUCT LEVEL) | SEE PAGE |
|---|---|---|---|---|---|---|
| | 1 | 1 | **3S-2093** | 1 | STRAP-CABLE | |
| | 2 | 1 | **163-6795** | 2 | STRAP-CABLE | |
| Y | 3 | 1 | **557-5523** | 1 | HARNESS AS-CAB (MONITOR) | 95 |
| | 4 | 1 | **563-1444** | 1 | BRACKET AS | |
| Y | 5 | 1 | **563-4398** | 1 | MONITOR GP-OPERATOR | 461 |
| M | 6 | 1 | **9X-2042** | 4 | SCREW-TRUSS HEAD (M6X1X12-MM) | |
| M | 7 | 1 | **9X-2044** | 3 | SCREW-TRUSS HEAD (M6X1X16-MM) | |

M - METRIC PART
Y - SEPARATE ILLUSTRATION

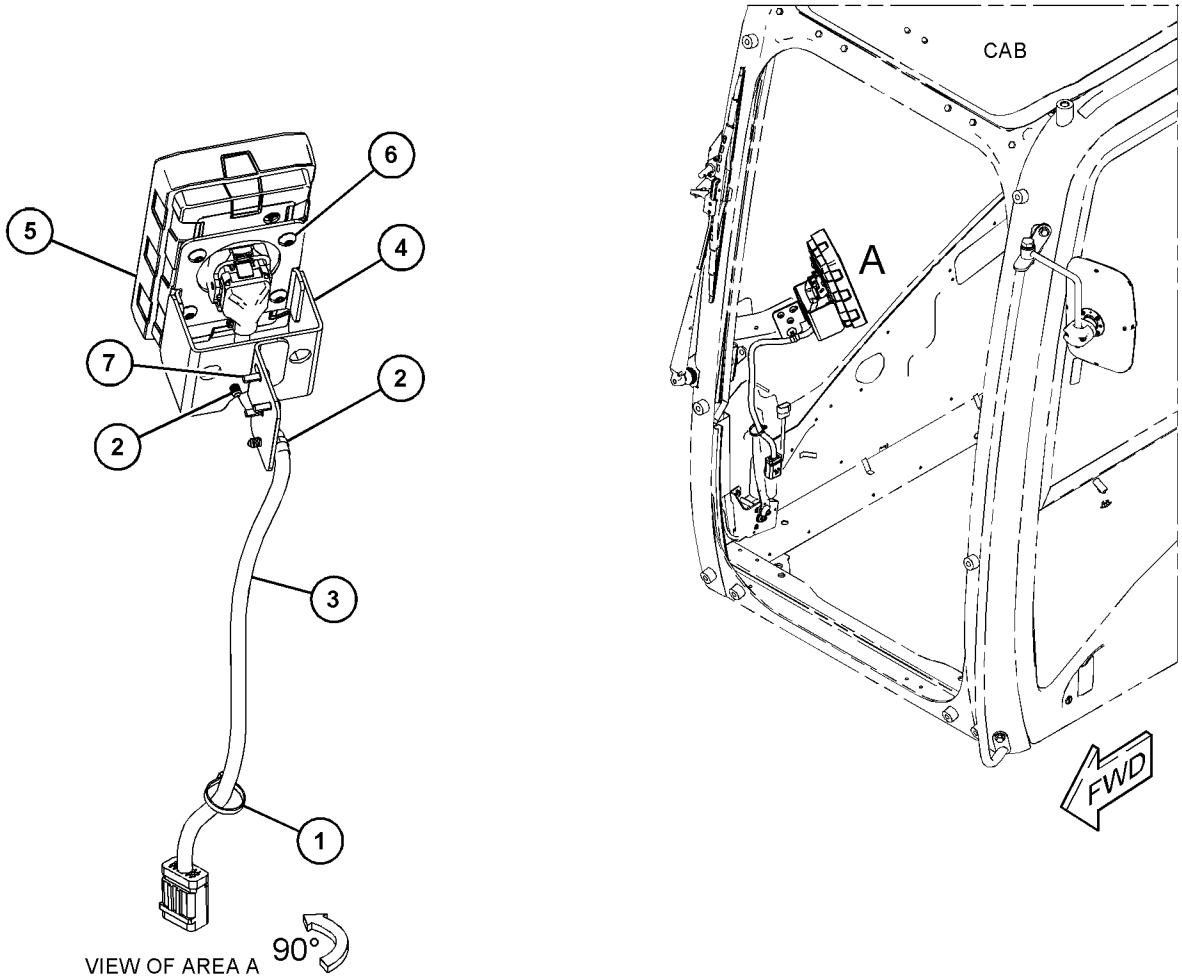


GRAPHIC #1 <END> g06315723

# *563-4398* MONITOR GP-OPERATOR

**S/N: FEY1-UP**

**PART OF 555-2225 MONITOR & MTG GP-OPERATOR**

**SMCS-7490** **i07418276**

| NOTE | REF NO | GRAPHIC REF | PART NUMBER | QTY | PART NAME 1 2 3 4 5 6 (PRODUCT LEVEL) | SEE PAGE |
|---|---|---|---|---|---|---|
| | 1 | 1 | **550-7775** | 1 | MONITOR-DISPLAY | |
| Y | 2 | 1 | *560-7597* | 1 | ELECTRONICS GP-MONITOR | 93 |

Y - SEPARATE ILLUSTRATION

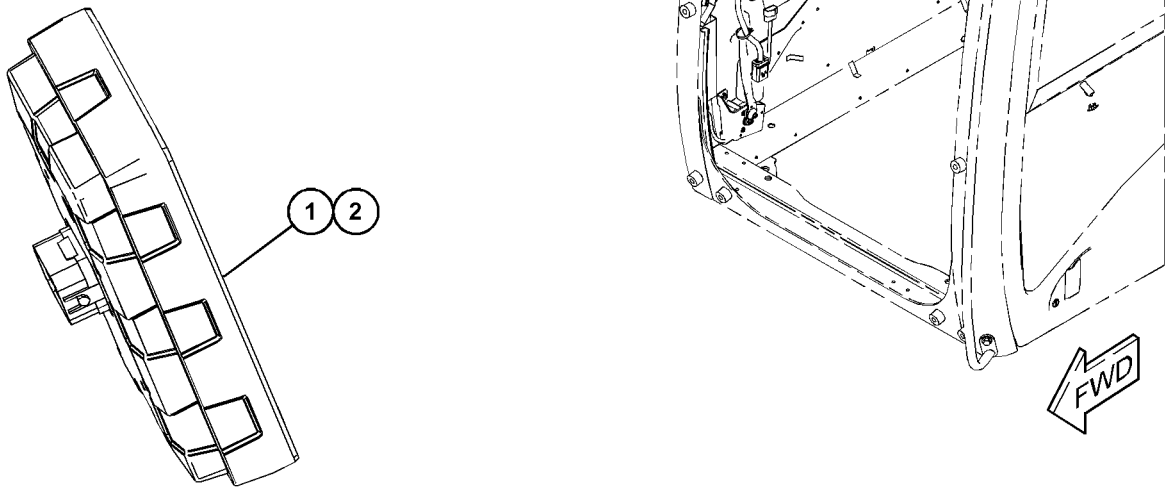


VIEW OF AREA A

GRAPHIC #1 <END> g06316263

# *461-3434* MOUNTING GP-ANTENNA

**S/N: FEY1-UP**

**PART OF 467-4498, 563-4401 INSTALLATION AR-COMMUNICATION**

**SMCS-7338, 7606** **i06803890**

| NOTE | REF NO | GRAPHIC REF | PART NUMBER | QTY | PART NAME 1 2 3 4 5 6 (PRODUCT LEVEL) | SEE PAGE |
|---|---|---|---|---|---|---|
| | 1 | 1 | **3S-2093** | 2 | STRAP-CABLE | |
| | 2 | 1 | **443-8460** | 1 | ANTENNA AS | |
| | | 1 | **361-1045** | 1 | NUT-SPECIAL (5/8-18-THD) | |
| | 3 | 1 | **449-4129** | 1 | BRACKET AS | |
| | 4 | 1 | **471-3641** | 1 | BRACKET AS | |
| | 5 | 1 | **114-6658** | 1 | WASHER (6.5X17X1-MM THK) | |
| | 6 | 1 | **8T-4121** | 3 | WASHER-HARD (11X21X2.5-MM THK) | |
| M | 7 | 1 | **8T-4137** | 3 | BOLT (M10X1.5X20-MM) | |
| M | 8 | 1 | **8T-4190** | 1 | BOLT (M16X2X25-MM) | |
| M | 9 | 1 | **8T-4970** | 1 | BOLT (M6X1X14-MM) | |
| | 10 | 1 | **9X-8257** | 1 | WASHER (17.5X30X3.5-MM THK) | |

M - METRIC PART

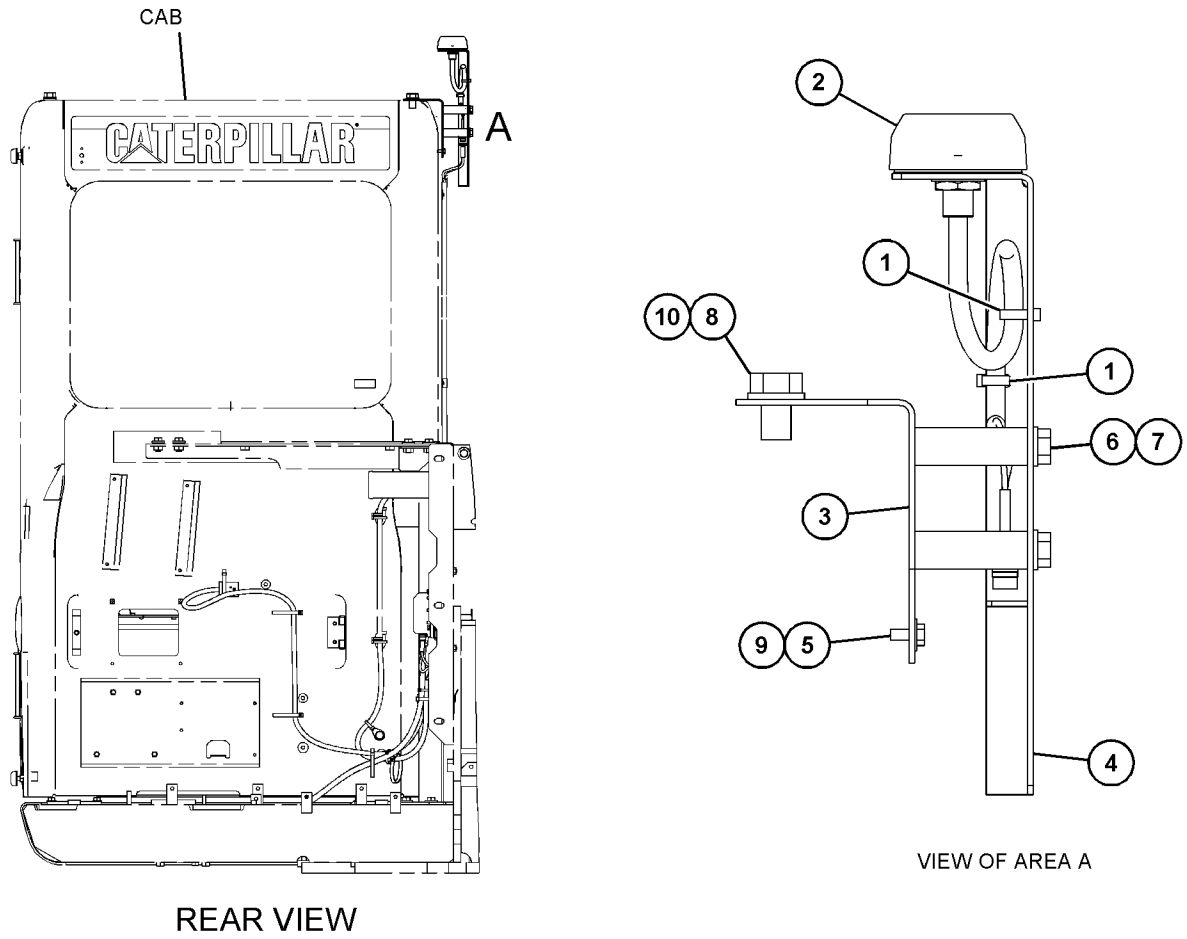


REAR VIEW

VIEW OF AREA A

GRAPHIC #1 <END> g06041267

# *245-7811* MOUNTING GP-PLATFORM

**S/N: FEY1-UP**

**PART OF 556-6447 CHASSIS AR**

**SMCS-7253** **i04912115**

| NOTE | REF NO | GRAPHIC REF | PART NUMBER | QTY | PART NAME 1 2 3 4 5 6 (PRODUCT LEVEL) | SEE PAGE |
|---|---|---|---|---|---|---|
| | 1 | 1 | **235-8862** | 4 | MOUNT AS | |
| | 2 | 1 | **8T-4121** | 16 | WASHER-HARD (11X21X2.5-MM THK) | |
| M | 3 | 1 | **8T-4195** | 16 | BOLT (M10X1.5X30-MM) | |

M - METRIC PART

*245-7811* **MOUNTING GP-PLATFORM (**contd.**)** **i04912115**

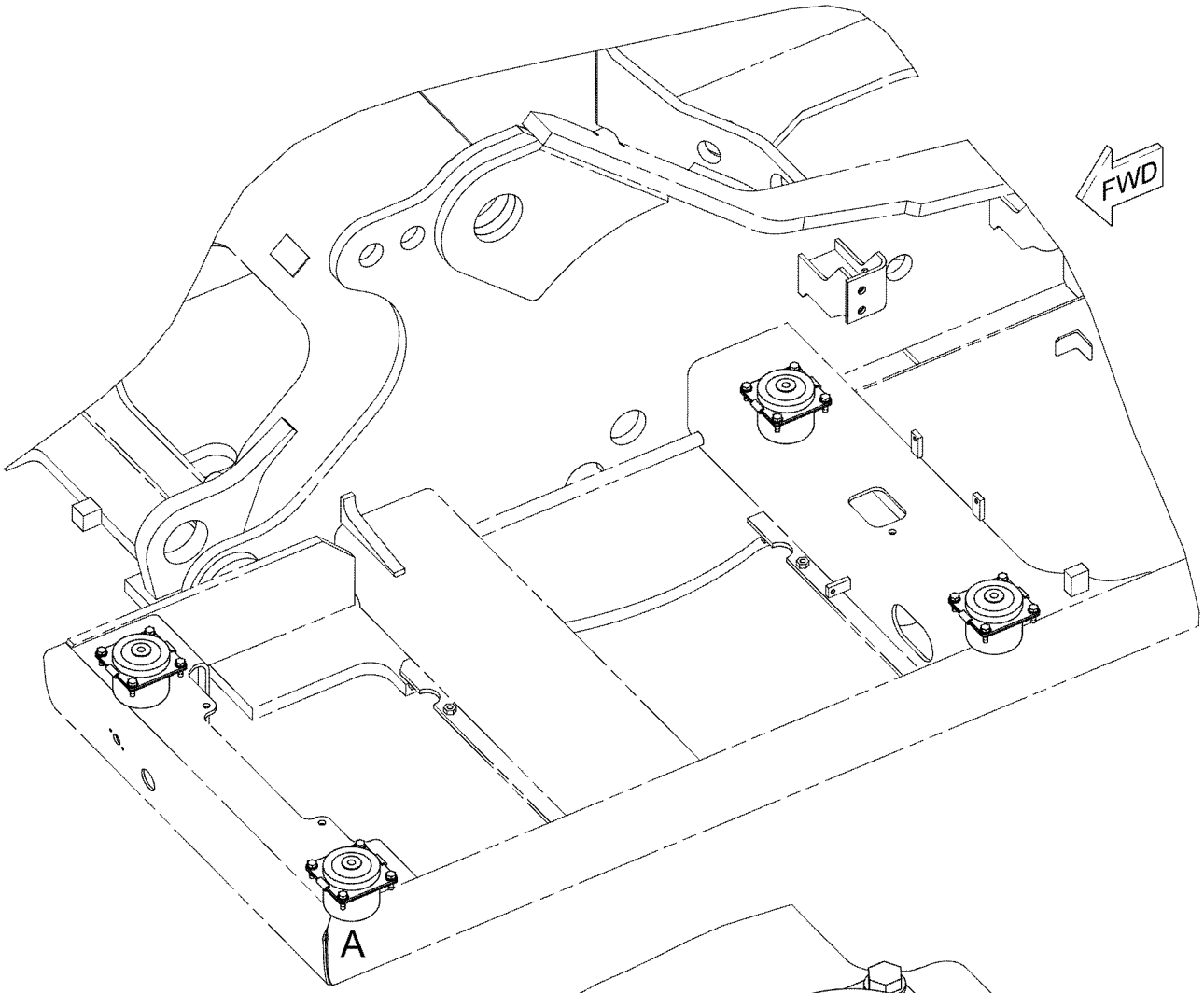


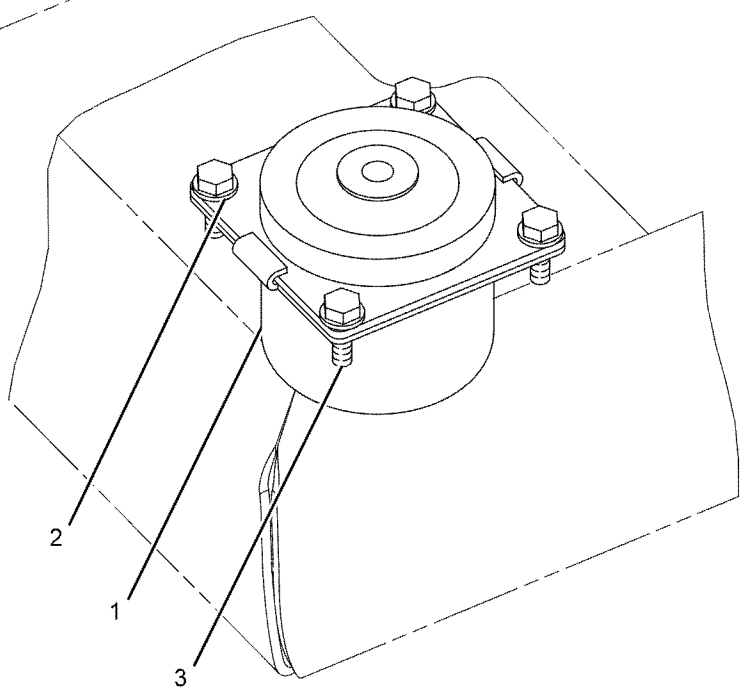


VIEW OF AREA A

GRAPHIC #1 <END> g01101486

# *539-2879* OPERATOR AR

**S/N: FEY1-UP**

**PART OF 556-6447 CHASSIS AR**

**SMCS-7301** **i07398183**

| NOTE | PART NUMBER | QTY | PART NAME 1 2 3 4 5 6 (PRODUCT LEVEL) | SEE PAGE |
|---|---|---|---|---|
| Y | *421-1431* | 1 | CONSOLE GP-OPERATOR | 428 |
| Y | *539-2993* | 1 | CONTROL & MTG GP-ELECTRONIC | 90 |
| Y | *170-9497* | 1 | CONTROL GP-PILOT OPERATED HYD (TRAVEL) | 442 |
| Y | *555-2225* | 1 | MONITOR & MTG GP-OPERATOR | 460 |
| Y | *549-8890* | 1 | PLATFORM GP-OPERATOR | 469 |
| Y | *549-8895* | 1 | SUPPORT GP-SEAT | 481 |
| Y | *539-2995* | 1 | WIRING GP-CAB | 124 |
| Y | *545-9959* | 1 | WIRING GP-CONSOLE | 138 |
| Y | *539-2992* | 1 | WIRING GP-PLATFORM | 143 |

Y - SEPARATE ILLUSTRATION

<END>

# *554-3494* PAN GP-SEAT

**S/N: FEY1-UP**

**PART OF 554-3444 SEAT GP**

**SMCS-7312** **i07422970**

| NOTE | REF NO | GRAPHIC REF | PART NUMBER | QTY | PART NAME 1 2 3 4 5 6 (PRODUCT LEVEL) | SEE PAGE |
|---|---|---|---|---|---|---|
| | 1 | 1 | **153-0088** | 2 | WASHER-HARD (10.31X20X1.65-MM THK) | |
| M | 2 | 1 | **208-8469** | 2 | LOCKNUT (M6X1-THD) | |
| M | 3 | 1 | **209-8296** | 1 | BOLT-SOCKET HEAD (M8X1.25X25-MM) | |
| | 4 | 1 | **260-6685** | 1 | WASHER (9X25X1.6-MM THK) | |
| M | 5 | 1 | **3T-0852** | 1 | LOCKNUT (M8X1.25-THD) | |
| M | 6 | 1 | **8T-0389** | 2 | LOCKNUT (M10X1.5-THD) | |
| M | 7 | 1 | **8T-0267** | 12 | BOLT-SOCKET HEAD (M6X1X12-MM) | |
| | | | | | | |
| | | | | | PARTS SHOWN IN GRAPHIC(S) WITHOUT A REFERENCE NUMBER ARE NOT SERVICED SEPARATELY | |

M - METRIC PART

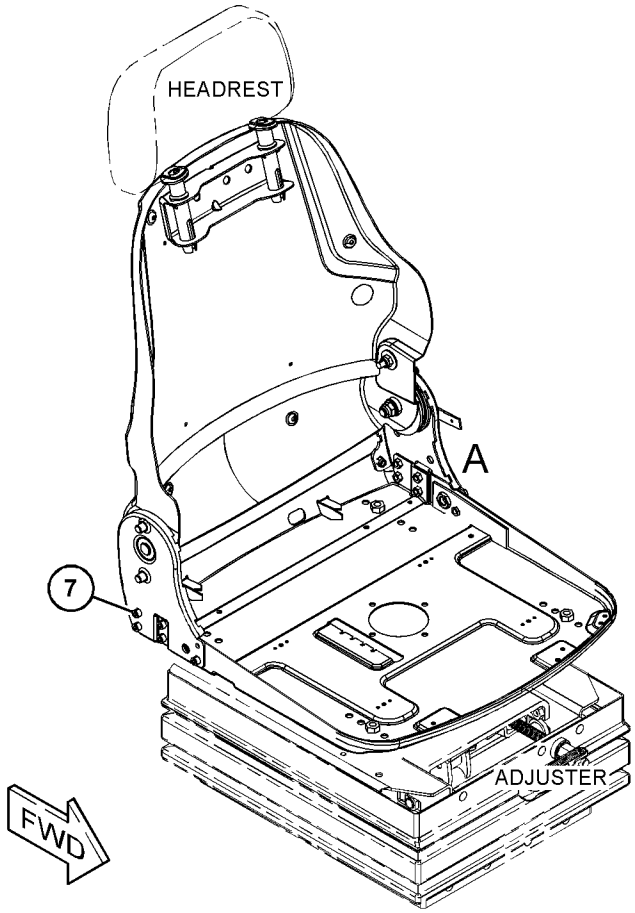


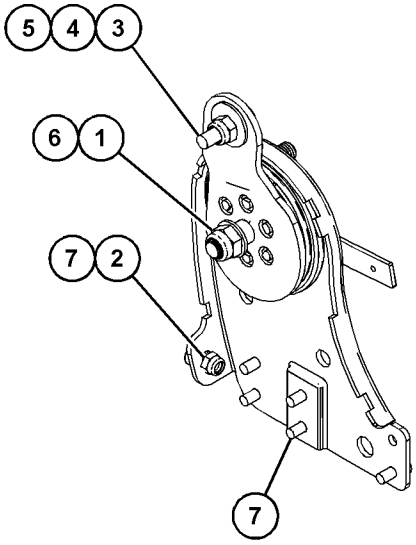


VIEW OF AREA A
(PARTS REMOVED FOR CLARITY)

GRAPHIC #1 <END> g06321338

# *388-9105* PARTS GP-DOOR

**S/N: FEY1-UP**

**PART OF 555-5135 CAB GP**

**SMCS-7308** **i05437226**

| NOTE | REF NO | GRAPHIC REF | PART NUMBER | QTY | PART NAME 1 2 3 4 5 6 (PRODUCT LEVEL) | SEE PAGE |
|---|---|---|---|---|---|---|
| | 1 | 1 | **151-6703** | 1 | HANDLE-PULL | |
| | 2 | 1 | **151-6704** | 2 | CAP | |
| Y | 3 | 1 | **384-6533** | 1 | WINDOW GP-DOOR | 494 |
| | 4 | 1 | **383-6933** | 1 | GLASS | |
| | 5 | 1 | **156-6598** | 1 | HOOK | |
| | 6 | 1 | **398-7107** | 1 | LOCK AS | |
| | 6A | 1 | **398-7105** | 1 | CLIP | |
| | | 1 | **398-7105** | 1 | CLIP | |
| | 7 | 1 | **156-6643** | 2 | COVER | |
| | 8 | 1 | **398-7111** | 1 | HANDLE AS | |
| | | 1 | **398-7106** | 1 | CLIP | |
| | 9 | 1 | **161-3639** | 1 | HANDLE AS | |
| | 10 | 1 | **161-3650** | 1 | COVER AS | |
| | 11 | 1 | **161-3663** | 1 | SEAL AS | |
| | | 1 | **151-9497** | 45 | CLIP | |
| | 12 | 1 | **161-3665** | 1 | SEAL | |
| | 13 | 1 | **164-0515** | 1 | JOINT | |
| | 14 | 1 | **167-7039** | 1 | GROMMET | |
| M | 15 | 1 | **185-8180** | 3 | SCREW (M6X1X16-MM) | |
| | 16 | 1 | **8T-4224** | 2 | WASHER-HARD (8.8X16X2-MM THK) | |
| | 17 | 1 | **259-7354** | 1 | COVER | |
| M | 18 | 1 | **096-2622** | 2 | SCREW-MACHINE (M4X0.7X8-MM) | |
| M | 19 | 1 | **096-3884** | 2 | NUT-SPRING (M8X1.25-THD) | |
| M | 20 | 1 | **101-8899** | 2 | SCREW AS (M6X1.0X16-MM) | |
| M | 21 | 1 | **101-8900** | 2 | SCREW AS (M6X1X20-MM) | |
| | 22 | 1 | **151-9461** | 4 | SPACER | |
| | 23 | 1 | **178-5573** | 4 | SPACER | |
| | 24 | 1 | **178-5574** | 3 | SPACER | |
| | 25 | 1 | **189-2690** | 1 | HANDLE | |
| | 26 | 1 | **4I-4286** | 1 | KNOB (HANDLE) | |
| M | 27 | 1 | **9X-2042** | 8 | SCREW-TRUSS HEAD (M6X1X12-MM) | |

M - METRIC PART
Y - SEPARATE ILLUSTRATION

*388-9105* **PARTS GP-DOOR (**contd.**)** **i05437226**

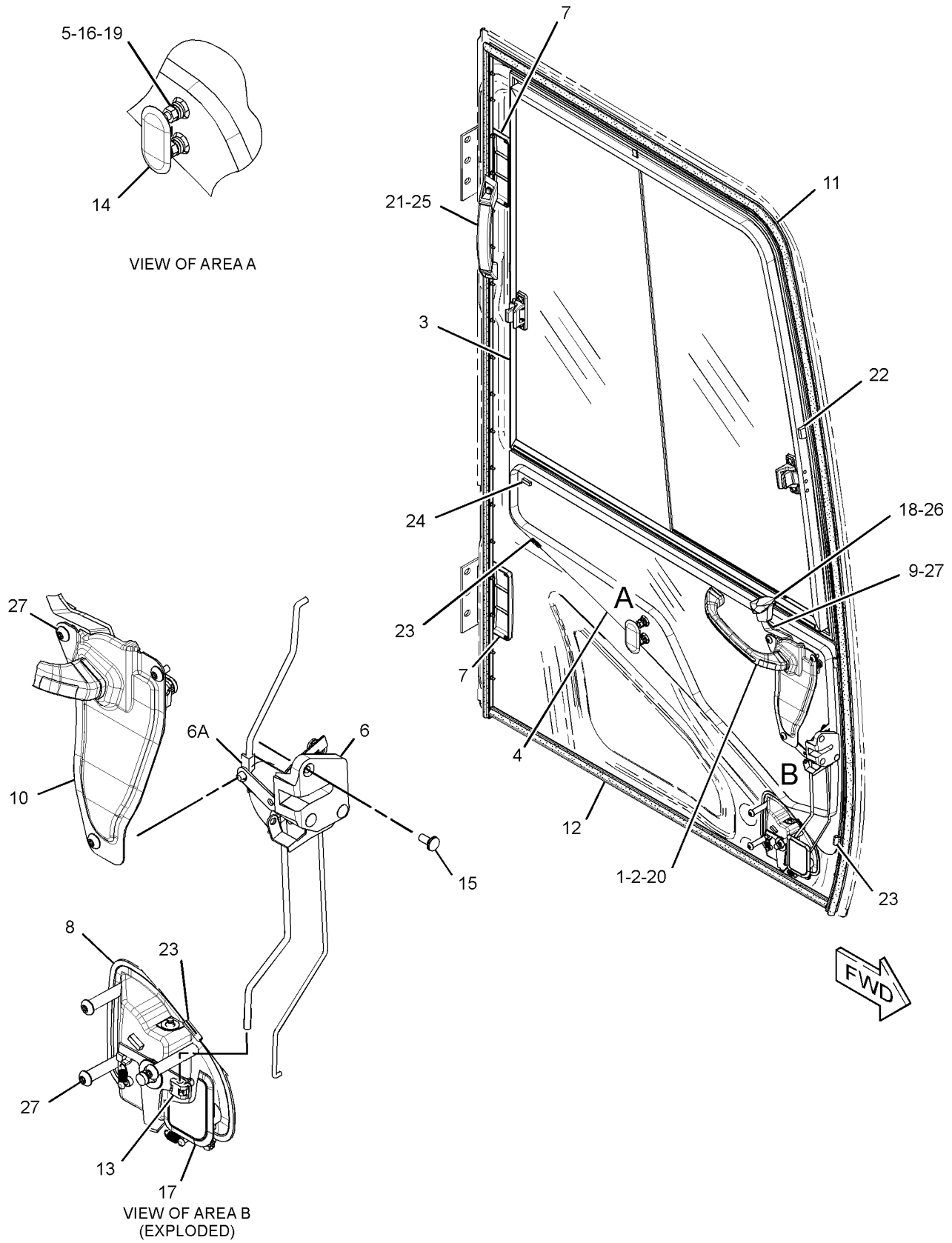


GRAPHIC #1 <END> g02178270

# *549-8890* PLATFORM GP-OPERATOR

**S/N: FEY1-UP**

**PART OF 539-2879 OPERATOR AR**

**SMCS-7253** **i07395784**

| NOTE | REF NO | GRAPHIC REF | PART NUMBER | QTY | PART NAME 1 2 3 4 5 6 (PRODUCT LEVEL) | SEE PAGE |
|---|---|---|---|---|---|---|
| | 1 | 1 | **4I-3266** | 1 | STRIP | |
| | 2 | 1 | **135-8965** | 1 | GROMMET | |
| | 3 | 1 | **135-8966** | 1 | GROMMET | |
| | 4 | 1 | **161-3717** | 1 | STRIP | |
| | 5 | 1 | **451-2175** | 4 | WASHER-HARD (17.5X30X3.5-MM THK) | |
| M | 6 | 1 | **453-1259** | 4 | BOLT (M16X2X40-MM) | |
| | 7 | 1 | **549-8893** | 1 | PLATFORM AS | |
| | 8 | 1 | **8T-4121** | 4 | WASHER-HARD (11X21X2.5-MM THK) | |
| M | 9 | 1 | **7X-2621** | 4 | BOLT (M10X1.5X12-MM) | |

M - METRIC PART

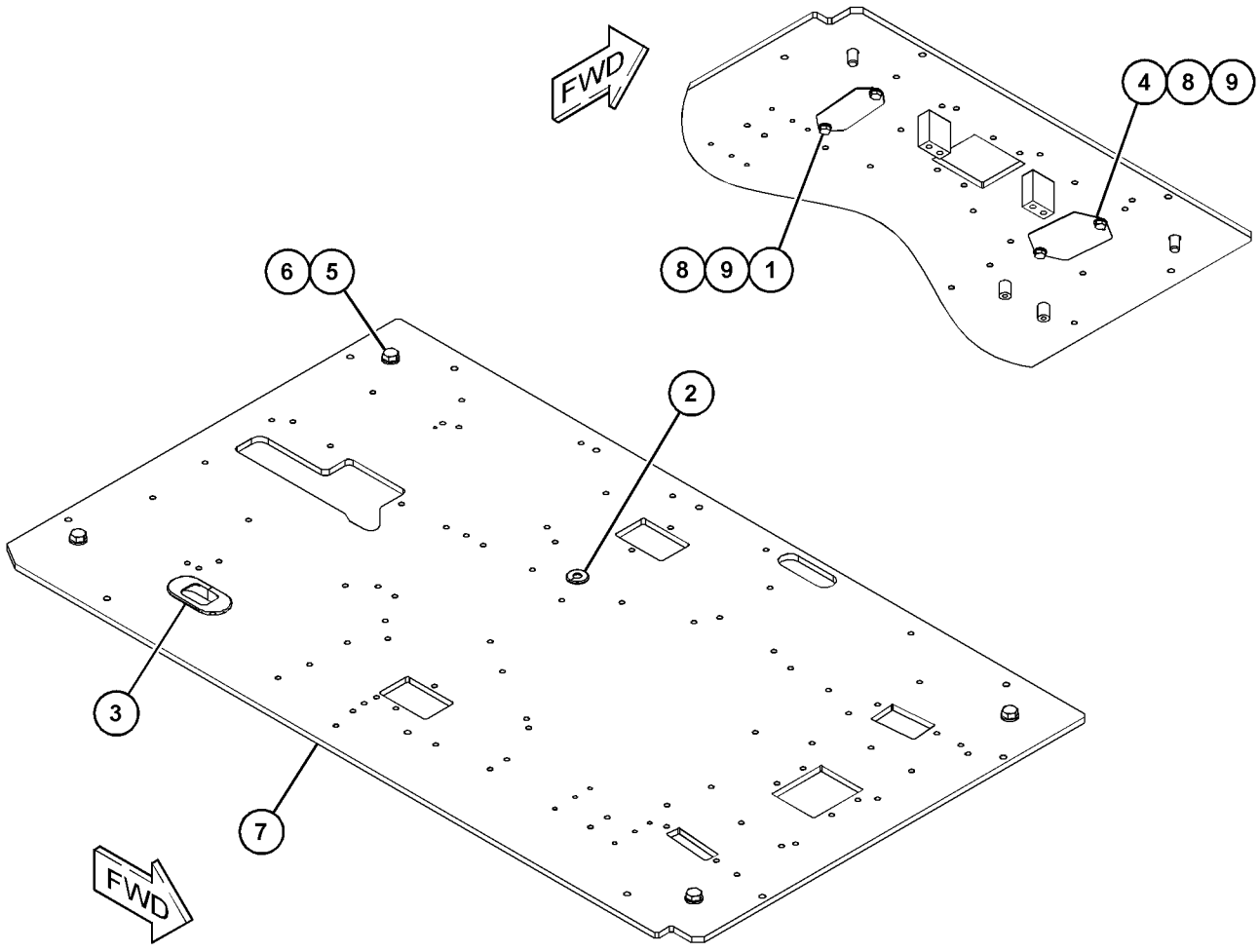


GRAPHIC #1 <END> g03818584

# *490-5979* SEAT BELT GP–RETRACTABLE

**S/N: FEY1-UP**

**51-MM (2-IN)**

**PART OF 490-5980, 559-2717 SEAT GP-SUSPENSION**

**SMCS-7327** **i06791258**

| NOTE | REF NO | GRAPHIC REF | PART NUMBER | QTY | PART NAME 1 2 3 4 5 6 (PRODUCT LEVEL) | SEE PAGE |
|---|---|---|---|---|---|---|
| | | | | | (INDIVIDUAL PARTS ARE NOT SERVICED SEPARATELY) | |

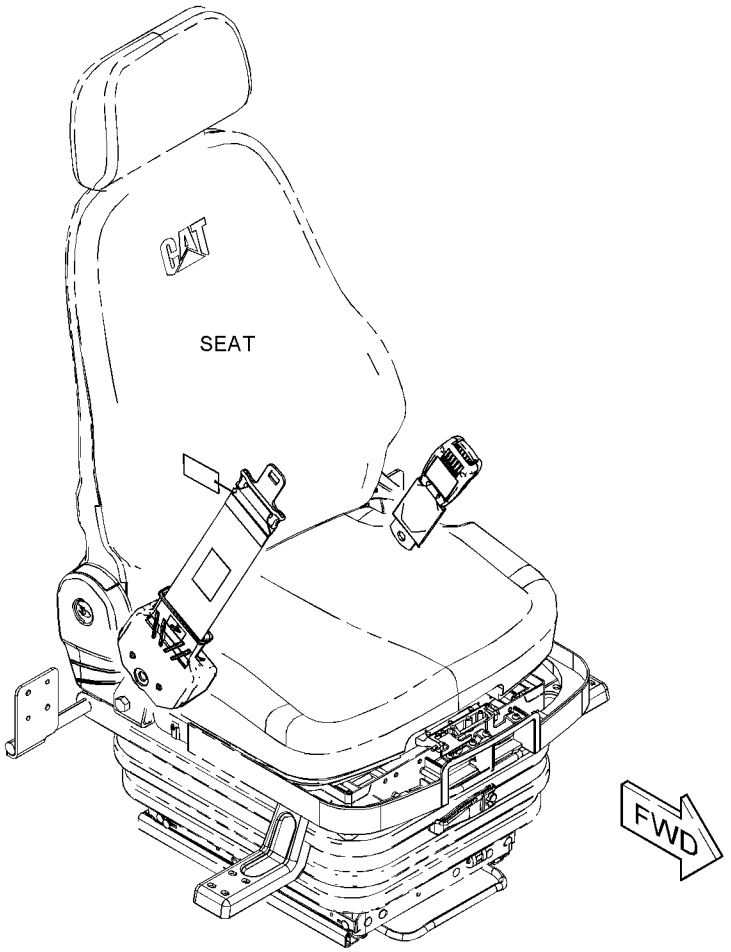


GRAPHIC #1 <END> g06108550

# *366-5257* SEAT GP—DELUXE, CLOTH

**S/N: FEY1-UP**

**PART OF 384-2207 SEAT GP**

**SMCS-7312** **i06913465**

| NOTE | REF NO | GRAPHIC REF | PART NUMBER | QTY | PART NAME 1 2 3 4 5 6 (PRODUCT LEVEL) | SEE PAGE |
|---|---|---|---|---|---|---|
| | 1 | 1 | **3H-5368** | 1 | BOLT (7/16-14X1.375-IN) | |
| | 2 | 1 | **190-0386** | 10 | BOLT (M5X0.8X16-MM) | |
| | 3 | 1 | **366-5267** | 1 | CUSHION AS-BACK | |
| | 4 | 1 | **366-5269** | 1 | CUSHION AS-SEAT | |
| | 5 | 1 | **366-5271** | 1 | PAN AS | |
| | 6 | 1 | **373-2588** | 1 | HEADREST AS-SEAT | |
| | 7 | 1 | **373-2590** | 1 | PAN AS-SEAT | |
| | 8 | 1 | **373-2591** | 1 | PAN AS-SEAT | |
| | 9 | 1 | **373-2594** | 1 | BUSHING | |
| | 10 | 1 | **373-2595** | 1 | BRACKET AS | |
| | 11 | 1 | **373-2596** | 1 | COVER (LH) | |
| | 12 | 1 | **373-2597** | 1 | COVER (RH) | |
| | 13 | 1 | **373-2600** | 2 | SPRING | |
| | 14 | 1 | **374-5958** | 1 | HANDLE | |
| | 15 | 1 | **377-2843** | 1 | HOLDER | |
| | 16 | 1 | **4K-9429** | 4 | RIVET-POP | |
| M | 17 | 1 | **8T-3991** | 2 | SCREW-BUTTON HEAD (M6X1X20-MM) | |
| M | 18 | 1 | **8U-7803** | 1 | SCREW | |
| E | 19 | 1 | **7X-7877** | | STRIP-EDGE (13-CM) | |

E - ORDER BY THE CENTIMETER
M - METRIC PART

*366-5257* **SEAT GP (**contd.**)** **i06913465**

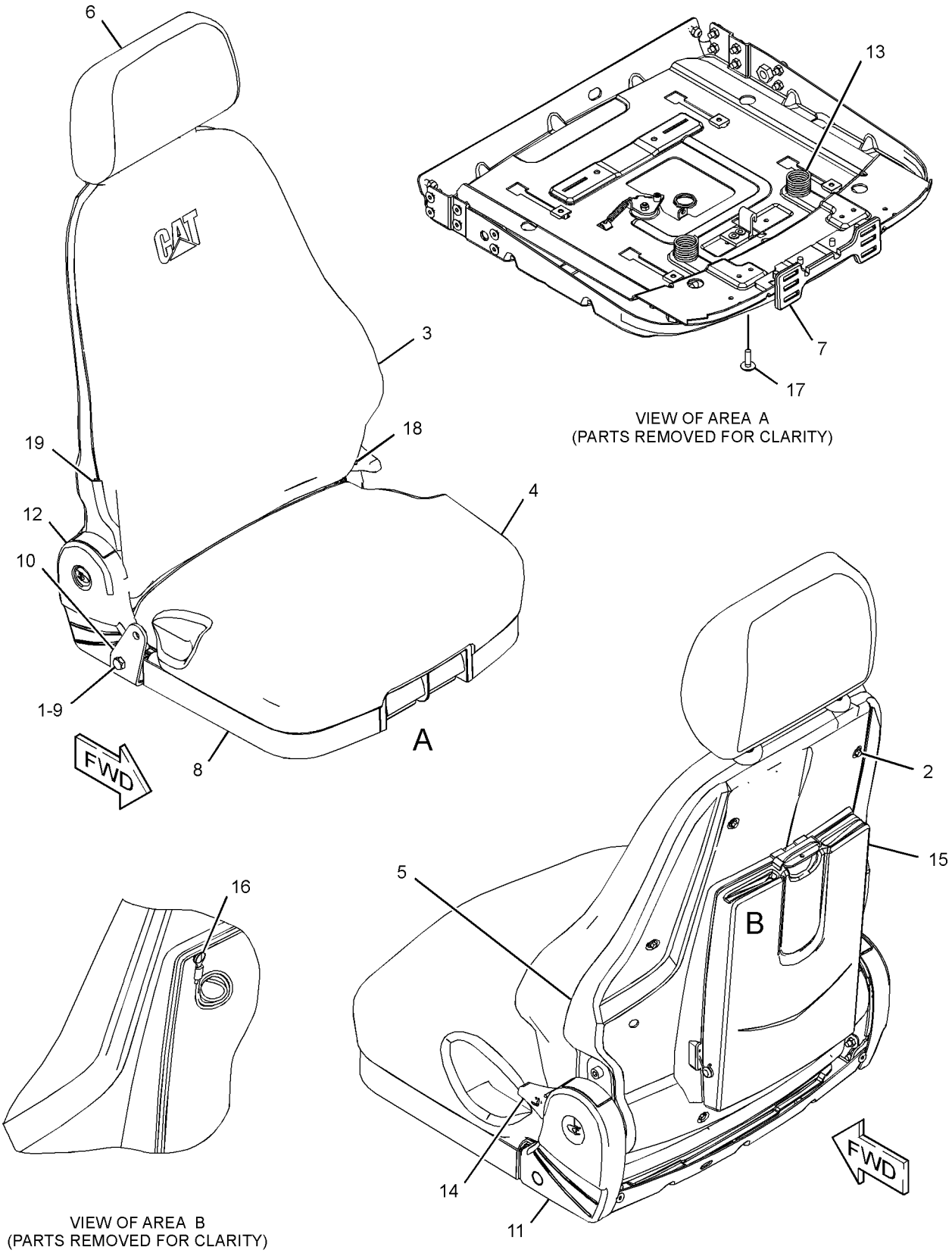


GRAPHIC #1 <END> g03078058

# 384-2207 SEAT GP–DELUXE, CLOTH

**S/N: FEY1-UP**

**PART OF 366-5260 SEAT GP-SUSPENSION**

**SMCS-7312** **i04926073**

| NOTE | REF NO | GRAPHIC REF | PART NUMBER | QTY | PART NAME 1 2 3 4 5 6 (PRODUCT LEVEL) | SEE PAGE |
|---|---|---|---|---|---|---|
| Y | 1 | 1 | *366-5257* | 1 | SEAT GP (DELUXE, CLOTH) | 471 |
| | 2 | 1 | **366-5265** | 1 | KIT-SLIDE (UPPER) | |
| | | | | | (ALSO INCLUDES BAR, LH & RH SLIDE AS) | |
| M | | 1 | **6V-7743** | 2 | LOCKNUT (M6X1-THD) | |
| | | 1 | **8T-0334** | 4 | WASHER-HARD (6.6X12.5X1.6-MM THK) | |
| | 3 | 1 | **107-2961** | 4 | WASHER (8.25X17X1.136-MM THK) | |
| M | 4 | 1 | **6V-8202** | 4 | BOLT-SOCKET HEAD (M8X1.25X16-MM) | |
| | 5 | 1 | **7X-0579** | 4 | WASHER-HARD (8.8X25.5X2-MM THK) | |

M - METRIC PART
Y - SEPARATE ILLUSTRATION

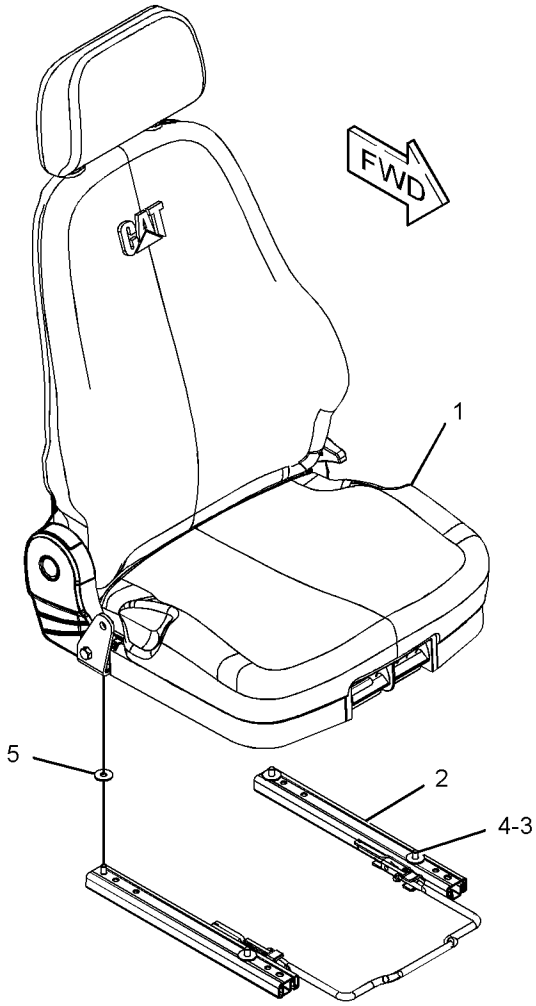


GRAPHIC #1 <END> g02798928

# 554-3439 SEAT GP–CLOTH

**S/N: FEY1-UP**

**PART OF 549-8888 SEAT GP-SUSPENSION**

**SMCS-7312** **i07474580**

| NOTE | REF NO | GRAPHIC REF | PART NUMBER | QTY | PART NAME 1 2 3 4 5 6 (PRODUCT LEVEL) | SEE PAGE |
|---|---|---|---|---|---|---|
| | 1 | 1 | **107-2961** | 4 | WASHER (8.25X17X1.136-MM THK) | |
| | 2 | 1 | **366-5265** | 1 | KIT-SLIDE (UPPER) | |
| | | | | | (INCLUDES BAR, SLIDE ASSEMBLIES, LOCKNUTS & WASHERS) | |
| | 3 | 1 | **446-9621** | 1 | HEADREST AS-SEAT | |
| Y | 4 | 1 | **554-3444** | 1 | SEAT GP (FABRIC) | 475 |
| | 5 | 1 | **554-3473** | 2 | CAP | |
| M | 6 | 1 | **6V-8202** | 4 | BOLT-SOCKET HEAD (M8X1.25X16-MM) | |
| | 7 | 1 | **7X-0579** | 4 | WASHER-HARD (8.8X25.5X2-MM THK) | |

M - METRIC PART
Y - SEPARATE ILLUSTRATION




GRAPHIC #1 <END> g06344551

# *554-3444* SEAT GP—FABRIC

**S/N: FEY1-UP**

**PART OF 554-3439 SEAT GP**

**SMCS-7312** **i07422968**

| NOTE | REF NO | GRAPHIC REF | PART NUMBER | QTY | PART NAME 1 2 3 4 5 6 (PRODUCT LEVEL) | SEE PAGE |
|---|---|---|---|---|---|---|
| | 1 | 1 | **373-2594** | 1 | BUSHING | |
| | 2 | 1 | **373-2595** | 1 | BRACKET AS | |
| | 3 | 1 | **373-2596** | 1 | COVER (LH) | |
| | 4 | 1 | **373-2597** | 1 | COVER (RH) | |
| | 5 | 1 | **374-5958** | 1 | HANDLE | |
| | 6 | 1 | **446-9619** | 1 | CUSHION AS-SEAT | |
| | 7 | 1 | **446-9620** | 1 | CUSHION AS-BACK | |
| | 8 | 1 | **3H-5368** | 1 | BOLT (7/16-14X1.375-IN) | |
| Y | 9 | 1 | *554-3494* | 1 | PAN GP-SEAT | 466 |
| M | 10 | 1 | **7Y-7389** | 10 | SCREW (M5X0.8X16-MM) | |
| M | 11 | 1 | **8U-7803** | 1 | SCREW | |
| | 12 | 1 | **7X-7877** | | STRIP-EDGE (14-CM) | |

M - METRIC PART
Y - SEPARATE ILLUSTRATION

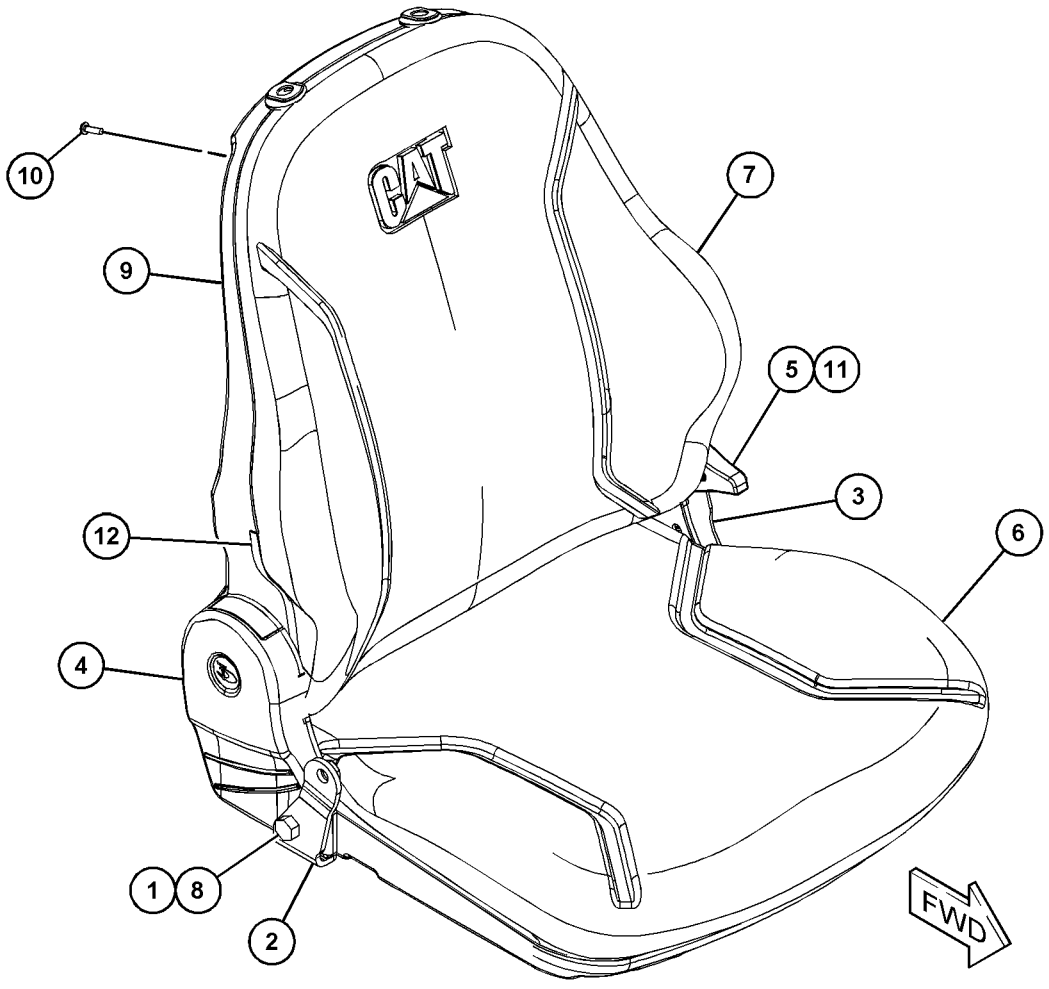


GRAPHIC #1 <END> g06318050

# 366-5260 SEAT GP-SUSPENSION—HIGH BACK, TILT

**S/N: FEY1-UP**

**MECHANICAL SUSPENSION**

**PART OF 490-5980 SEAT GP-SUSPENSION**

**SMCS-7324, 7336** **i05873741**

| NOTE | REF NO | GRAPHIC REF | PART NUMBER | QTY | PART NAME 1 2 3 4 5 6 (PRODUCT LEVEL) | SEE PAGE |
|---|---|---|---|---|---|---|
| Y | 1 | 1 | **384-2207** | 1 | SEAT GP (DELUXE, CLOTH) | 473 |
| | 2 | 1 | **373-3495** | 4 | PLATE | |
| Y | 3 | 1 | *377-2012* | 1 | SUSPENSION GP-SEAT (MECHANICAL) | 485 |
| M | 4 | 1 | **096-0001** | 4 | BOLT-SOCKET HEAD (M8X1.25X40-MM) | |

M - METRIC PART
Y - SEPARATE ILLUSTRATION

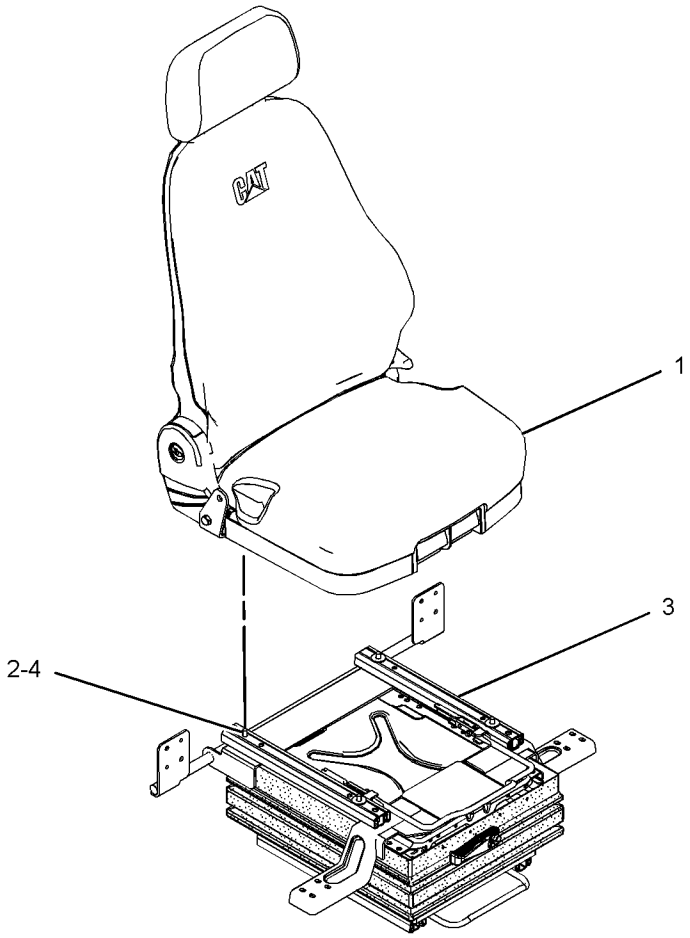


GRAPHIC #1 <END> g02797187

# *490-5980* SEAT GP-SUSPENSION—MECH SUSP SEAT

**S/N: FEY1-UP**

**PART OF 557-8896 CAB GP**

**SMCS-7324, 7336** **i06780588**

| NOTE | REF NO | GRAPHIC REF | PART NUMBER | QTY | PART NAME 1 2 3 4 5 6 (PRODUCT LEVEL) | SEE PAGE |
|---|---|---|---|---|---|---|
| Y | 1 | 1 | **366-5260** | 1 | SEAT GP-SUSPENSION (HIGH BACK, TILT) | 476 |
| Y | 2 | 1 | **490-5979** | 1 | SEAT BELT GP (RETRACTABLE) | 470 |
| | 3 | 1 | **0T-0489** | 1 | BOLT (7/16-20X2-IN) | |
| | 4 | 1 | **1V-5872** | 1 | SPACER (0.493X0.675X0.95-IN THK) | |
| M | 5 | 1 | **6V-8202** | 4 | BOLT-SOCKET HEAD (M8X1.25X16-MM) | |
| | 6 | 1 | **7J-8337** | 1 | BOLT (7/16-20-THD) | |
| | 7 | 1 | **7X-0584** | 1 | WASHER-HARD (13.5X20.5X2-MM THK) | |
| | 8 | 1 | **8T-4223** | 1 | WASHER-HARD (13.5X25.5X3-MM THK) | |
| | | | | | | |
| | | | | | PARTS SHOWN IN GRAPHIC(S) WITHOUT A REFERENCE NUMBER ARE NOT SERVICED SEPARATELY | |

M - METRIC PART
Y - SEPARATE ILLUSTRATION

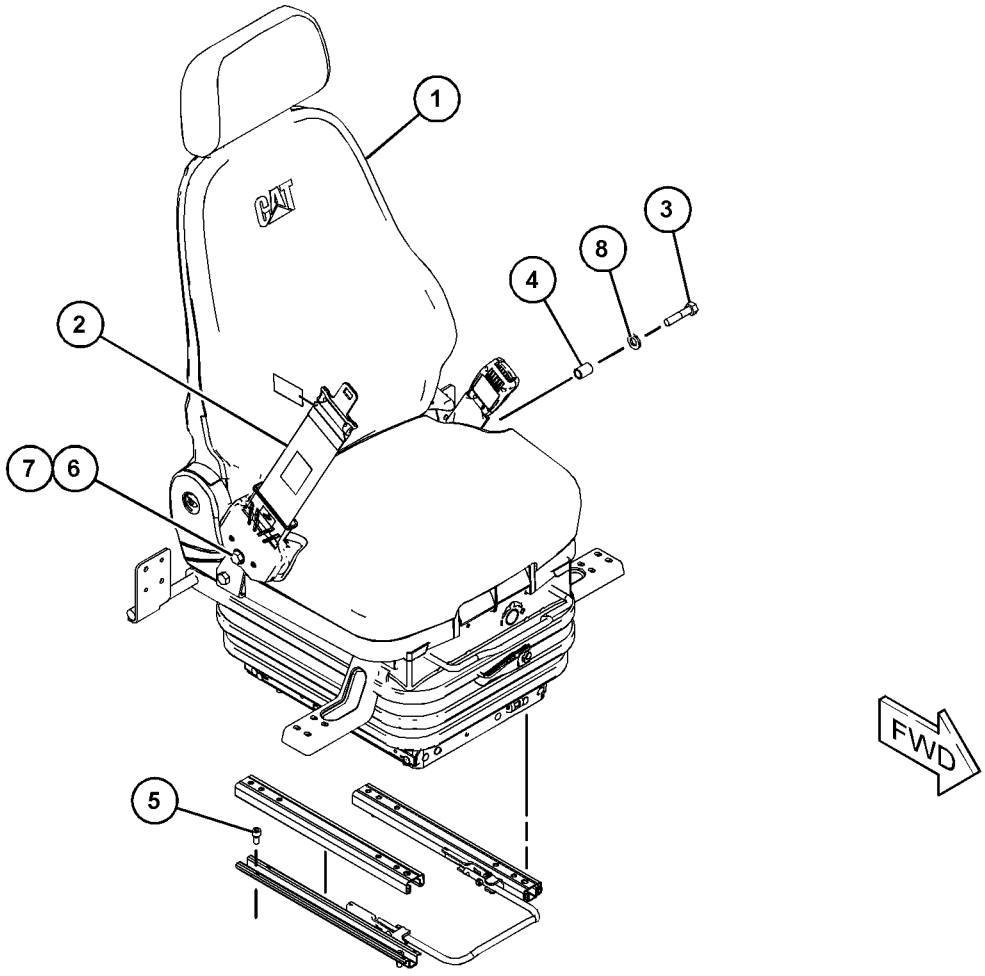


GRAPHIC #1 <END> g06109402

# 549-8888 SEAT GP-SUSPENSION—HIGH BACK, CLOTH, SUSPENSION

**S/N: FEY1-UP**

**PART OF 559-2717 SEAT GP-SUSPENSION**

**SMCS-7324, 7336**

**i07474584**

| NOTE | REF NO | GRAPHIC REF | PART NUMBER | QTY | PART NAME 1 2 3 4 5 6 (PRODUCT LEVEL) | SEE PAGE |
|---|---|---|---|---|---|---|
| | 1 | 1 | **373-3495** | 4 | PLATE | |
| Y | 2 | 1 | **377-2012** | 1 | SUSPENSION GP-SEAT (MECHANICAL) | 485 |
| M | 3 | 1 | **096-0001** | 4 | BOLT-SOCKET HEAD (M8X1.25X40-MM) | |
| Y | 4 | 1 | **554-3439** | 1 | SEAT GP (FABRIC) | 474 |

M - METRIC PART
Y - SEPARATE ILLUSTRATION

*549-8888* **SEAT GP-SUSPENSION (**contd.**)** **i07474584**

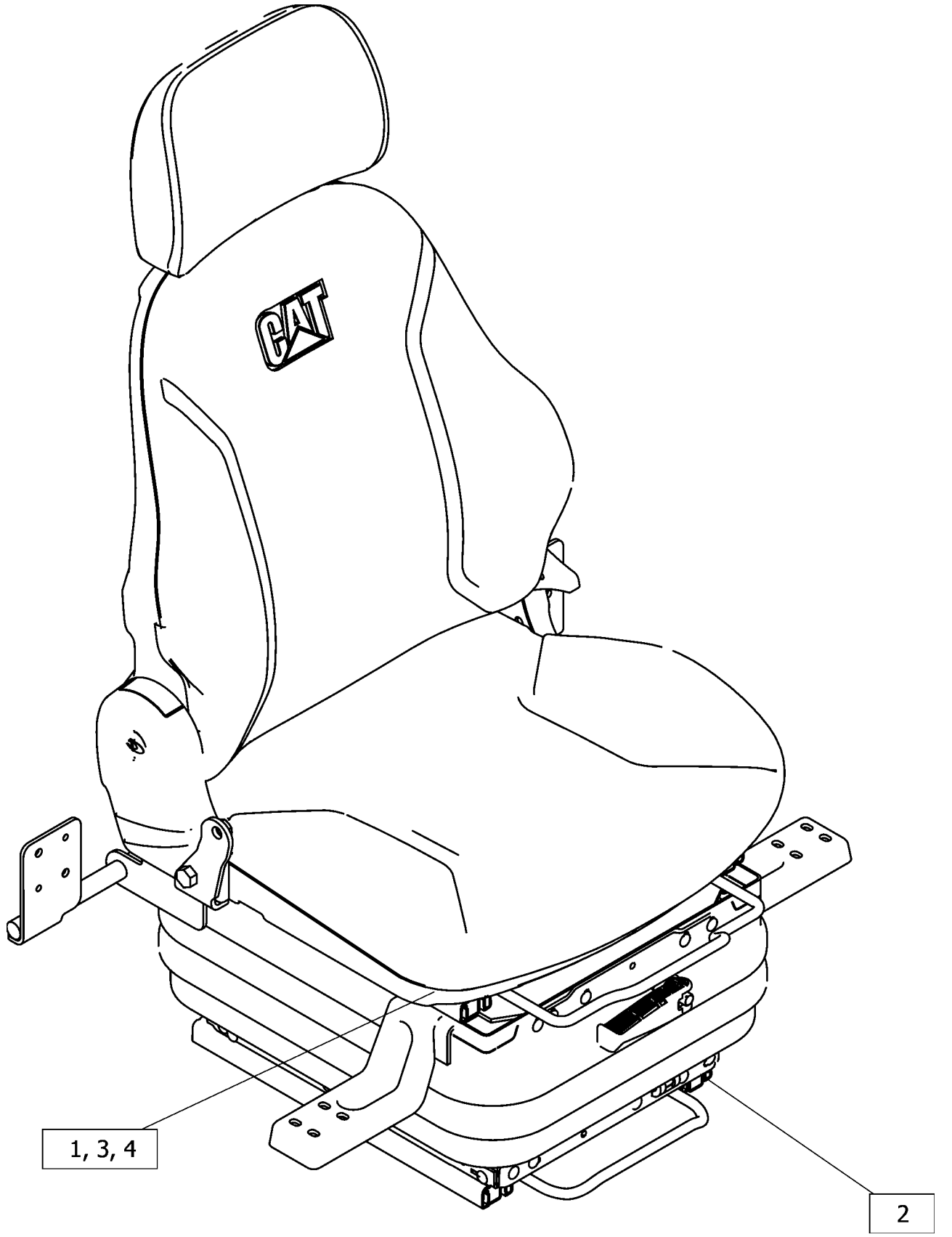


GRAPHIC #1 <END> g06387933

# *559-2717* SEAT GP-SUSPENSION—MECH SUSP SEAT

**S/N: FEY1-UP**

**PART OF 557-8896 CAB GP**

**SMCS-7324, 7336** **i07474591**

| NOTE | REF NO | GRAPHIC REF | PART NUMBER | QTY | PART NAME 1 2 3 4 5 6 (PRODUCT LEVEL) | SEE PAGE |
|---|---|---|---|---|---|---|
| Y | 1 | 1 | **490-5979** | 1 | SEAT BELT GP (RETRACTABLE) | 470 |
| | 2 | 1 | **1V-5872** | 1 | SPACER (0.493X0.675X0.95-IN THK) | |
| | 3 | 1 | **205-6388** | 1 | BOLT (7/16-20X1.75-IN) | |
| Y | 4 | 1 | **549-8888** | 1 | SEAT GP-SUSPENSION (HIGH BACK, CLOTH, SUSPENSION) | 478 |
| M | 5 | 1 | **6V-8202** | 4 | BOLT-SOCKET HEAD (M8X1.25X16-MM) | |
| | 6 | 1 | **7J-8337** | 1 | BOLT (7/16-20-THD) | |
| | 7 | 1 | **8T-4223** | 1 | WASHER-HARD (13.5X25.5X3-MM THK) | |

M - METRIC PART
Y - SEPARATE ILLUSTRATION

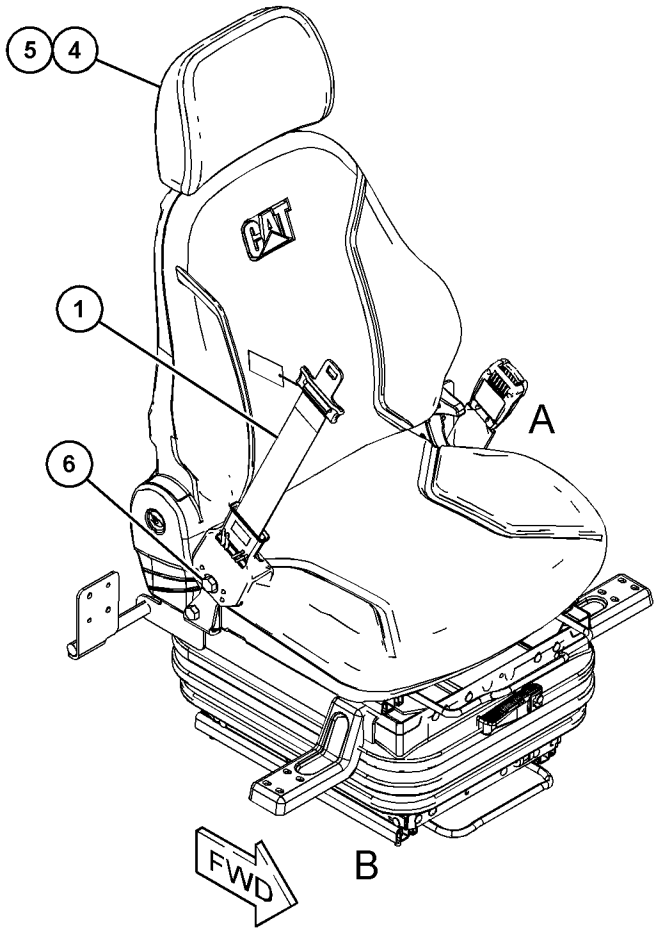


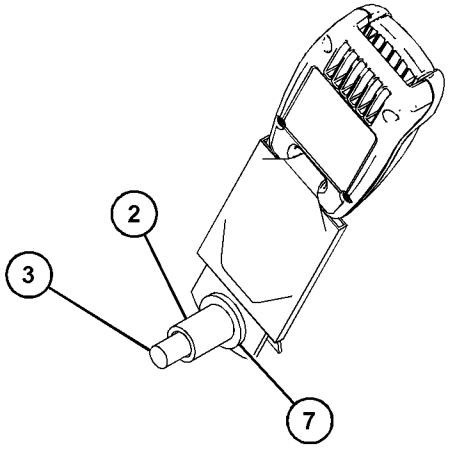


VIEW OF AREA A
(PARTS REMOVED FOR CLARITY)

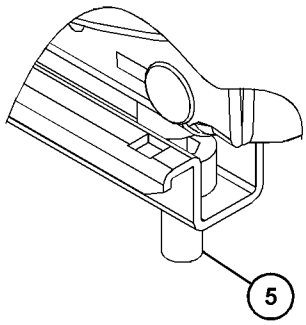


VIEW OF AREA B
(PARTS REMOVED FOR CLARITY)

GRAPHIC #1 <END> g06391855

# *549-8895* SUPPORT GP-SEAT

**S/N: FEY1-UP**

**PART OF 557-8896 CAB GP, 539-2879 OPERATOR AR**

**SMCS-7321** **i07396897**

| NOTE | REF NO | GRAPHIC REF | PART NUMBER | QTY | PART NAME 1 2 3 4 5 6 (PRODUCT LEVEL) | SEE PAGE |
|---|---|---|---|---|---|---|
| | 1 | 1 | **549-8894** | 1 | SUPPORT AS | |
| | 2 | 1 | **8T-4121** | 4 | WASHER-HARD (11X21X2.5-MM THK) | |
| M | 3 | 1 | **8T-4191** | 4 | BOLT (M10X1.5X16-MM) | |

M - METRIC PART

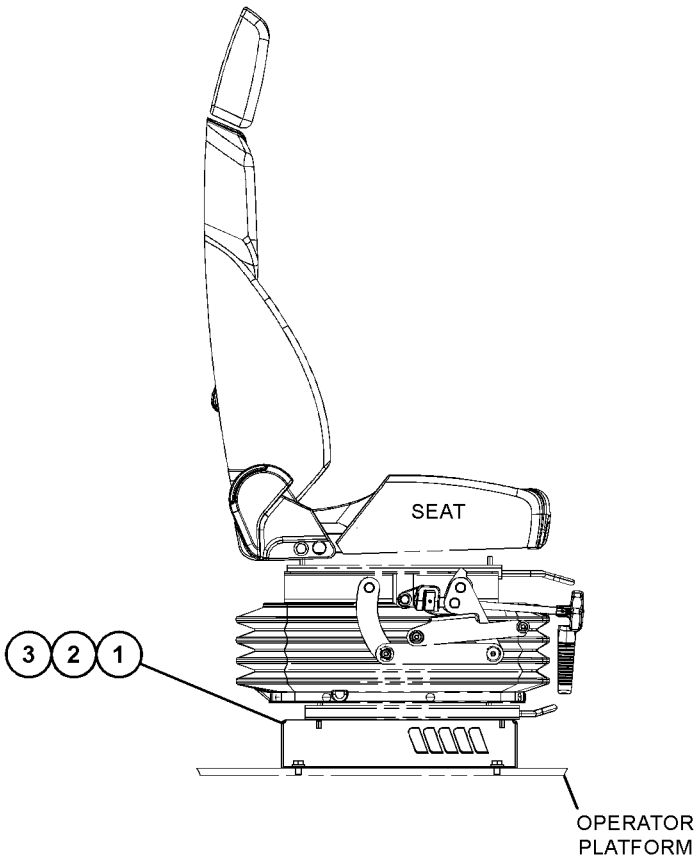


RIGHT SIDE VIEW

GRAPHIC #1 <END> g06313448

# 366-5262 SUSPENSION GP-SEAT—MECHANICAL

**S/N: FEY1-UP**

**PART OF 377-2012 SUSPENSION GP-SEAT**

**SMCS-7324** **i04926071**

| NOTE | REF NO | GRAPHIC REF | PART NUMBER | QTY | PART NAME 1 2 3 4 5 6 (PRODUCT LEVEL) | SEE PAGE |
|---|---|---|---|---|---|---|
| | 1 | 2 | **6W-8281** | 2 | BUMPER | |
| | 2 | 1 | **9V-6754** | 31 | FASTENER | |
| | 3 | 2 | **039-9452** | 2 | WASHER | |
| | 4 | 1 | **356-2353** | 1 | BUSHING | |
| | 5 | 1 | **359-3576** | 1 | PLATE | |
| | 6 | 1 | **359-3582** | 1 | BOOT | |
| | 7 | 2 | **371-7140** | 1 | ARM AS-SUSPENSION | |
| | 8 | 1 | **371-7141** | 1 | HOUSING AS (UPPER) | |
| | 9 | 2 | **371-7142** | 1 | HOUSING AS (LOWER) | |
| | 10 | 2 | **371-7144** | 4 | ROLLER | |
| | 11 | 2 | **371-7146** | 1 | KIT-SPRING (SUSPENSION SEAT) | |
| | 12 | 2 | **371-7148** | 1 | SHAFT | |
| | 13 | 2 | **380-6351** | 2 | BUSHING | |
| | 14 | 2 | **385-1278** | 1 | LINK AS | |
| | 15 | 1 | **385-1279** | 1 | ADJUSTER AS | |
| | | 1 | **6V-8235** | 1 | PIN-SPRING | |
| | | 1 | **371-7147** | 1 | HANDLE | |
| | 16 | 1,2 | **385-1400** | 4 | BUMPER | |
| | 17 | 2 | **386-6071** | 2 | BOLT-PIVOT | |
| | 18 | 1 | **386-6072** | 1 | BOLT-PIVOT | |
| | 19 | 1 | **107-2961** | 1 | WASHER (8.25X17X1.136-MM THK) | |
| | 20 | 2 | **5P-8244** | 2 | WASHER-HARD (12X22.5X2.5-MM THK) | |
| | 21 | 2 | **5V-1497** | 1 | RETAINER | |
| | 22 | 1 | **8T-0114** | 1 | PIN-SPRING | |
| M | 23 | 1 | **8T-0389** | 1 | LOCKNUT (M10X1.5-THD) | |
| | 24 | 2 | **9M-5048** | 2 | LOCKNUT (7/16-14-THD) | |
| | 25 | 2 | **385-2474** | 1 | INDICATOR AS (SEAT ADJUSTMENT) | |
| | 26 | 2 | **371-7143** | 1 | KIT-SHOCK ABSORBER (SUSPENSION SEAT) | |

M - METRIC PART

*366-5262* **SUSPENSION GP-SEAT (**contd.**)** **i04926071**

REFER TO ALL ILLUSTRATIONS OF
THIS GROUP FOR AUXILIARY VIEWS

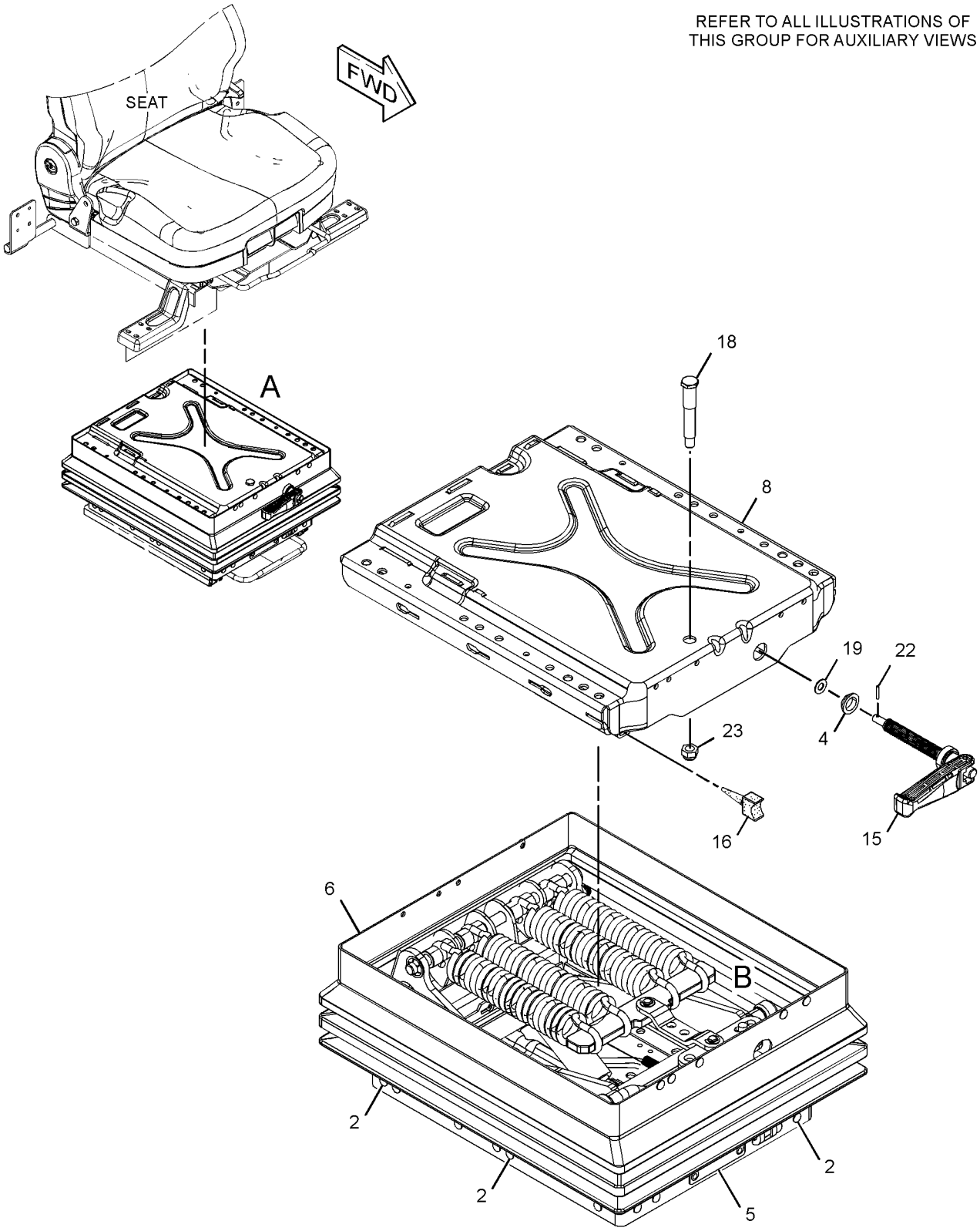


VIEW OF AREA A
(EXPLODED)

GRAPHIC #1 g02805016

*366-5262* **SUSPENSION GP-SEAT (**contd.**)** **i04926071**

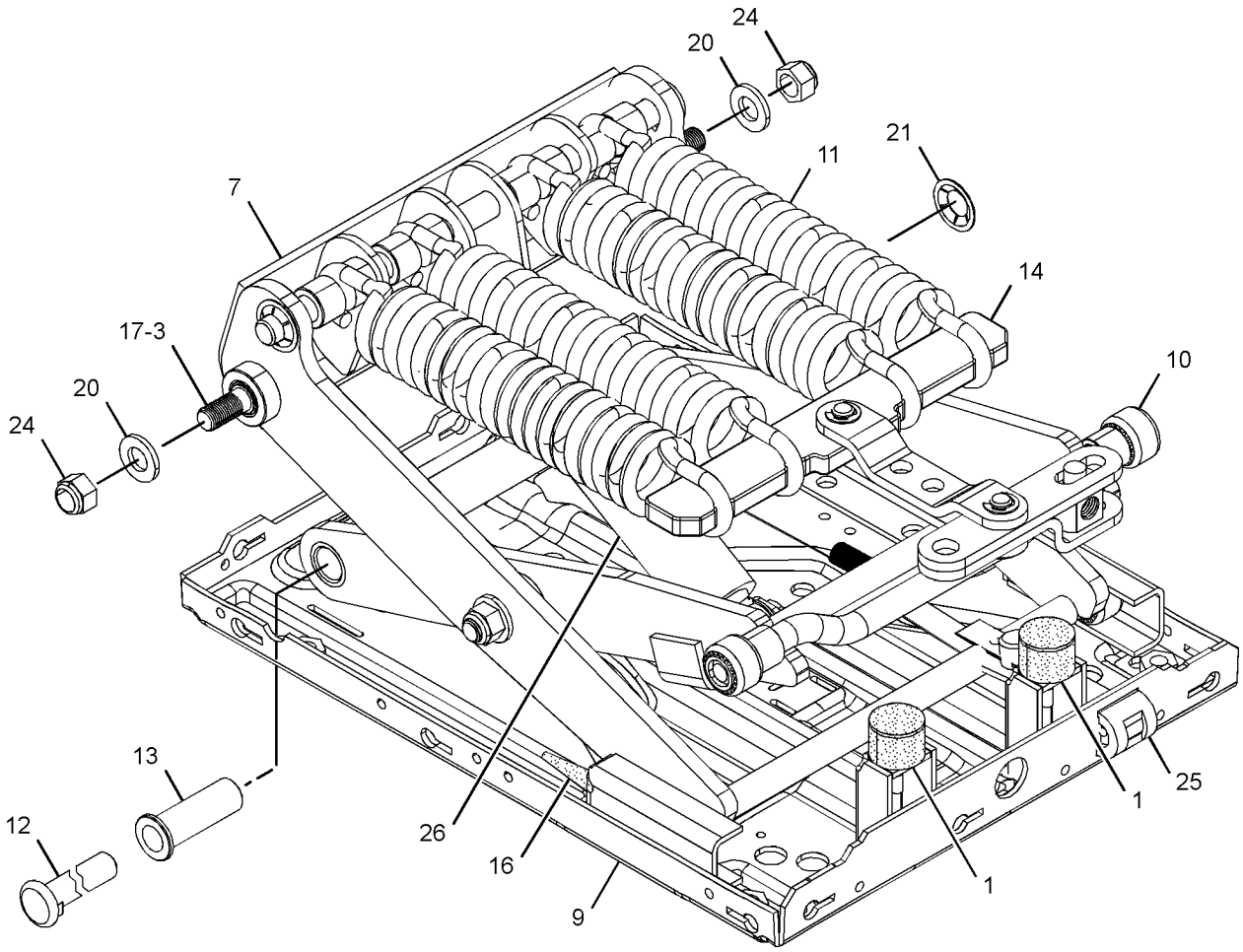


VIEW OF AREA B
(PARTS REMOVED FOR CLARITY)

GRAPHIC #2 <END> g02805017

# 377-2012 SUSPENSION GP-SEAT—MECHANICAL

**S/N: FEY1-UP**

**PART OF 366-5260, 549-8888 SEAT GP-SUSPENSION**

**SMCS-7324** **i05510693**

| NOTE | REF NO | GRAPHIC REF | PART NUMBER | QTY | PART NAME 1 2 3 4 5 6 (PRODUCT LEVEL) | SEE PAGE |
|---|---|---|---|---|---|---|
| Y | 1 | 1 | **366-5262** | 1 | SUSPENSION GP-SEAT (MECHANICAL) | 482 |
| | 2 | 1 | **366-5264** | 1 | BRACKET AS | |
| | 3 | 1 | **366-5266** | 1 | KIT-SLIDE (LOWER) | |
| | | | | | (ALSO INCLUDES BAR, LH & RH SLIDE ASSEMBLIES) | |
| M | | 1 | **6V-7743** | 2 | LOCKNUT (M6X1-THD) | |
| | | 1 | **8T-0334** | 4 | WASHER-HARD (6.6X12.5X1.6-MM THK) | |
| | 4 | 1 | **384-2205** | 4 | BLOCK | |
| | 5 | 1 | **107-2961** | 4 | WASHER (8.25X17X1.136-MM THK) | |
| M | 6 | 1 | **193-7720** | 4 | SCREW-BUTTON HEAD (M6X1X35-MM) | |
| M | 7 | 1 | **209-8296** | 4 | BOLT-SOCKET HEAD (M8X1.25X25-MM) | |

M - METRIC PART
Y - SEPARATE ILLUSTRATION

*377-2012* **SUSPENSION GP-SEAT (**contd.**)** **i05510693**

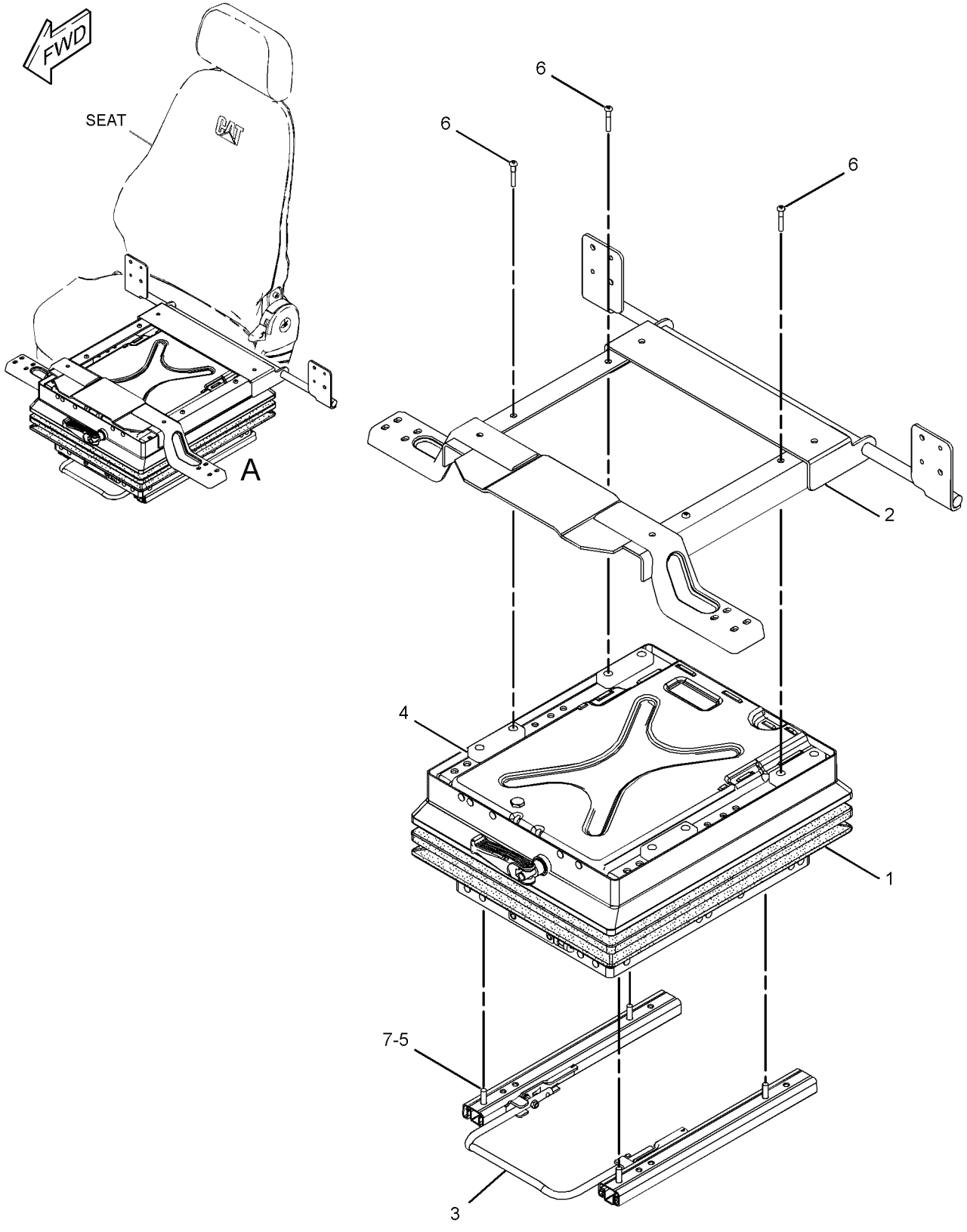


VIEW OF AREA A

GRAPHIC #1 <END> g03476567

# *229-9070* WASHER GP-WINDOW

**S/N: FEY1-UP**

**PART OF 557-8297 CAB AR**

**SMCS-7306** **i04919178**

| NOTE | REF NO | GRAPHIC REF | PART NUMBER | QTY | PART NAME 1 2 3 4 5 6 (PRODUCT LEVEL) | SEE PAGE |
|---|---|---|---|---|---|---|
| | 1 | 1 | **7Y-3474** | 1 | VALVE AS-CHECK (WINDOW WASHER) | |
| | 2 | 1 | **163-6795** | 2 | STRAP-CABLE | |
| | 3 | 1 | **176-1931** | 1 | TANK AS-WINDOW WASHER | |
| | | 1 | **5C-8138** | 1 | GROMMET | |
| | | 1 | **7T-8890** | 1 | PUMP AS-WASHER (24-VOLT) | |
| | | 1 | **178-5431** | 1 | CAP AS-FILLER (WINDOW WASHER) | |
| | | 1 | **3W-6399** | | PACKING | |
| | 4 | 1 | **235-9012** | 1 | SUPPORT AS | |
| M | 5 | 1 | **8T-4970** | 2 | BOLT (M6X1X14-MM) | |
| | 6 | 1 | **9X-8256** | 2 | WASHER (6.6X12X2-MM THK) | |
| E | 7 | 1 | **144-0195** | | HOSE (13-CM) | |
| | 8 | 1 | **3S-2093** | 1 | STRAP-CABLE | |

E - ORDER BY THE CENTIMETER
M - METRIC PART

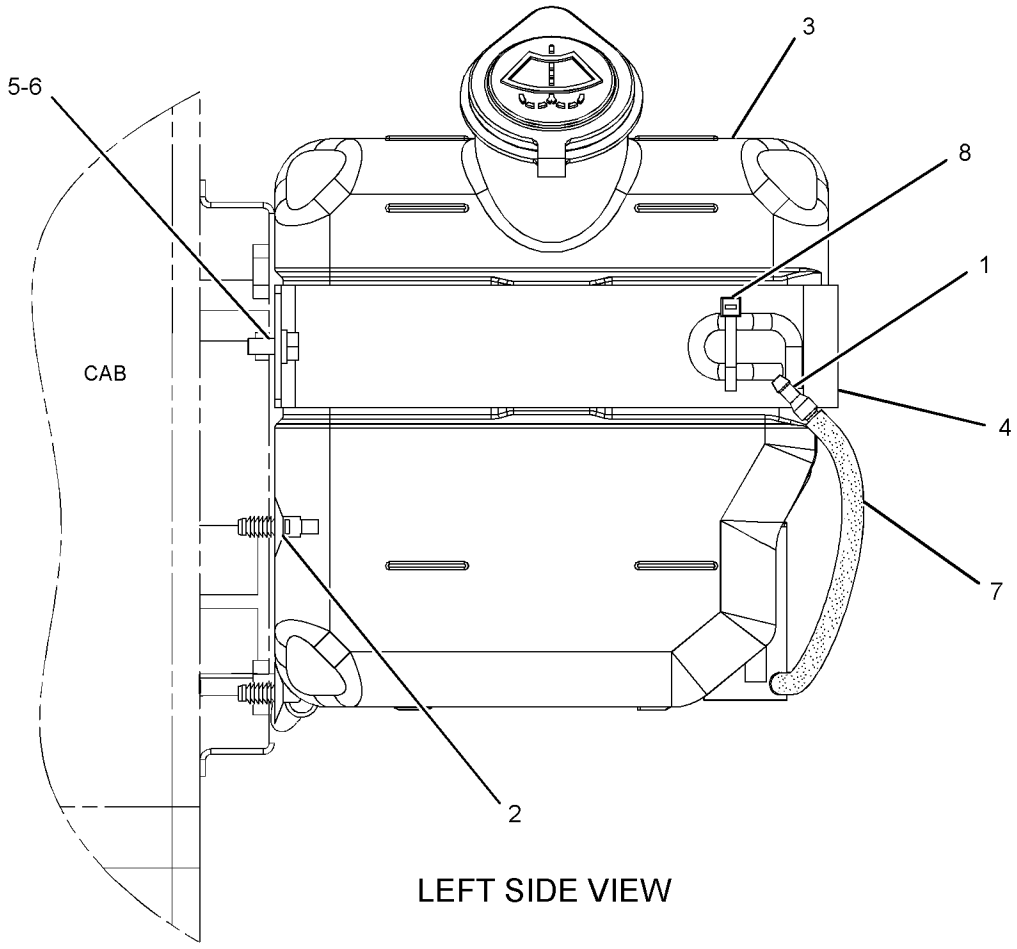


LEFT SIDE VIEW

GRAPHIC #1 <END> g01307642

# *388-9107* WINDOW GP-CAB—SIDE, REAR

**S/N: FEY1-UP**

**PART OF 555-5135 CAB GP**

**SMCS-7310** **i05503866**

| NOTE | REF NO | GRAPHIC REF | PART NUMBER | QTY | PART NAME 1 2 3 4 5 6 (PRODUCT LEVEL) | SEE PAGE |
|---|---|---|---|---|---|---|
| | 1 | 1 | **383-6931** | 1 | GLASS (LH) | |
| | 2 | 1 | **383-6929** | 1 | GLASS (REAR) | |
| | 3 | 1 | **164-0666** | 1 | SEAL | |
| | 4 | 1 | **178-5572** | 4 | SPACER-SPECIAL (WINDOW) | |
| | 5 | 1 | **383-6932** | 1 | GLASS (RH) | |
| | 6 | 1 | **099-3629** | 1 | RING-KEY | |
| | 7 | 1 | **178-5573** | 4 | SPACER | |
| | 8 | 1 | **178-5574** | 10 | SPACER | |

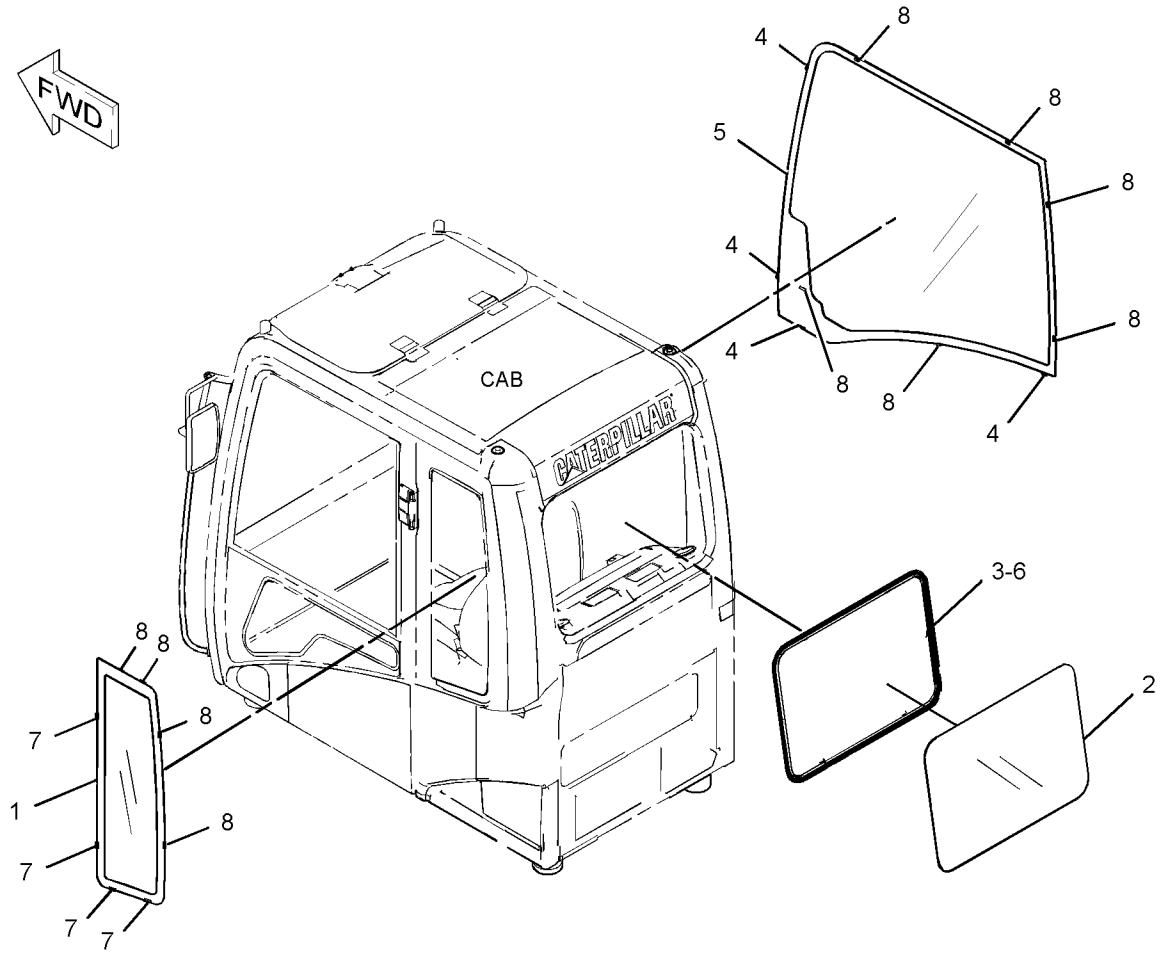


GRAPHIC #1 <END> g03499618

## *388-9108* WINDOW GP-CAB—FRONT, LOWER

**S/N: FEY1-UP**

**PART OF 555-5135 CAB GP**

**SMCS-7310** **i05269651**

| NOTE | REF NO | GRAPHIC REF | PART NUMBER | QTY | PART NAME 1 2 3 4 5 6 (PRODUCT LEVEL) | SEE PAGE |
|---|---|---|---|---|---|---|
| | 1 | 1 | **383-6930** | 1 | GLASS (FRONT, LOWER) | |
| | 2 | 1 | **156-6631** | 2 | STOP | |
| | 3 | 1 | **305-0361** | 1 | SEAL | |
| | 4 | 1 | **178-5569** | 2 | SEAL | |
| | 5 | 1 | **189-2702** | 2 | SEAL | |
| | 6 | 1 | **139-7119** | 2 | PLUG | |

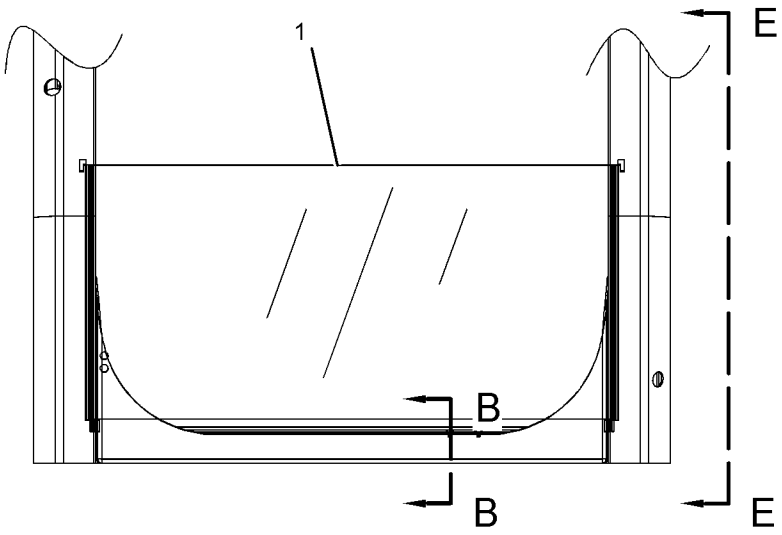


FRONT VIEW

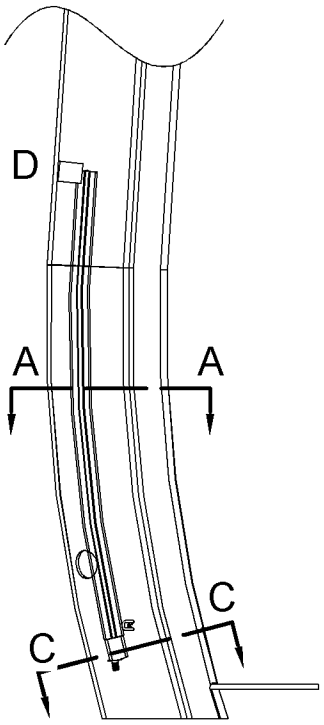


VIEW E-E

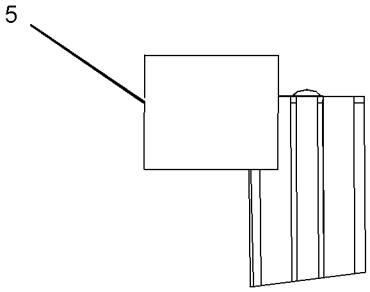


VIEW OF AREA D

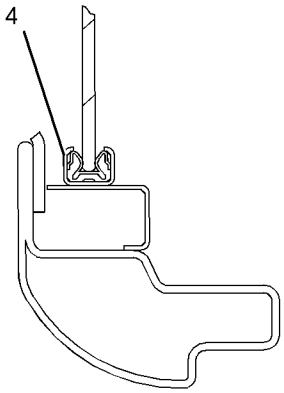


SECTION A-A

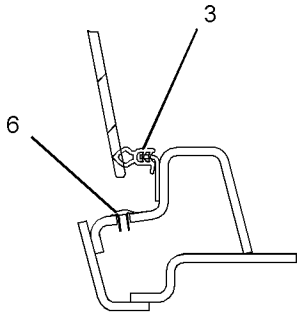


SECTION B-B

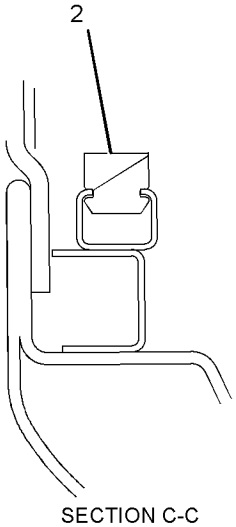


SECTION C-C

GRAPHIC #1 <END> g01398601

# *549-8887* WINDOW GP-CAB

**S/N: FEY1-UP**
**FRONT, UPPER**
**PART OF 555-5135 CAB GP**

**SMCS-7310** **i07396483**

| NOTE | REF NO | GRAPHIC REF | PART NUMBER | QTY | PART NAME 1 2 3 4 5 6 (PRODUCT LEVEL) | SEE PAGE |
|---|---|---|---|---|---|---|
| | 1 | 2 | **170-9722** | 1 | CUSHION | |
| M | 2 | 2 | **8T-4137** | 4 | BOLT (M10X1.5X20-MM) | |
| M | 3 | 2 | **101-8900** | 2 | SCREW AS (M6X1X20-MM) | |
| | 4 | 2 | **117-6306** | 1 | SWITCH | |
| | 5 | 2 | **151-6703** | 1 | HANDLE-PULL | |
| | 6 | 2 | **151-6704** | 2 | CAP | |
| | 7 | 1 | **151-6778** | 1 | FRAME AS | |
| | | 1 | **156-6470** | 1 | HANDLE | |
| | 8 | 2 | **151-6813** | 1 | BRACKET AS | |
| | 9 | 2 | **151-6815** | 1 | BRACKET AS | |
| | 10 | 2 | **151-6831** | 1 | LOCK AS | |
| | 11 | 2 | **151-6832** | 1 | LEVER AS | |
| | 12 | 1 | **151-9557** | 2 | STOP-RUBBER | |
| | 13 | 2 | **151-9576** | 4 | ROLLER | |
| | 14 | 2 | **156-6562** | 1 | BRACKET | |
| | 15 | 2 | **156-6563** | 1 | CATCH AS | |
| | 16 | 2 | **156-6579** | 1 | STOP | |
| | 17 | 1 | **156-6627** | 1 | STOP AS | |
| | 18 | 1 | **161-3684** | 2 | STOP | |
| | 19 | 1 | **161-3698** | 1 | SEAL | |
| | 20 | 2 | **164-0648** | 1 | BRACKET AS | |
| | 21 | 1 | **178-5576** | 1 | STOP | |
| M | 22 | 2 | **138-8454** | 2 | SCREW-TRUSS HEAD (M4X0.7X10-MM) | |
| | 23 | 2 | **185-8221** | 1 | STOP | |
| | 24 | 2 | **273-5274** | 1 | CATCH AS | |
| | 25 | 2 | **273-5345** | 1 | LINK AS | |
| | 26 | 2 | **273-5346** | 1 | LINK AS | |
| | 27 | 2 | **388-9097** | 1 | COVER | |
| | 28 | 2 | **398-7110** | 1 | STRIKER AS | |
| | 29 | 2 | **417-1143** | 1 | BRACKET AS | |
| M | 30 | 1 | **7Y-9096** | 2 | SCREW-TRUSS HEAD (M6X1X6-MM) | |
| M | 31 | 1 | **142-0485** | 1 | NUT (M10X1.5-THD) | |
| | 32 | 1 | **418-8379** | 1 | SEAL AS | |
| | 33 | 2 | **4I-0420** | 1 | STRIP | |
| | 34 | 1 | **549-8886** | 1 | GLASS | |
| M | 35 | 2 | **5C-8312** | 1 | NUT (M4X0.7-THD) | |
| | 36 | 2 | **5P-1075** | 4 | WASHER-HARD (10.2X22.5X3-MM THK) | |
| | 37 | 1 | **7X-0578** | 1 | WASHER-HARD (10.2X32X2.5-MM THK) | |
| M | 38 | 1,2 | **9X-2042** | 20 | SCREW-TRUSS HEAD (M6X1X12-MM) | |
| M | 39 | 2 | **9X-2044** | 2 | SCREW-TRUSS HEAD (M6X1X16-MM) | |
| M | 40 | 2 | **9X-2045** | 3 | SCREW-TRUSS HEAD (M6X1X20-MM) | |
| | 41 | 2 | **9X-8256** | 2 | WASHER (6.6X12X2-MM THK) | |

M - METRIC PART

*549-8887* **WINDOW GP-CAB (**contd.**)** **i07396483**

REFER TO ALL ILLUSTRATIONS OF
THIS GROUP FOR AUXILIARY VIEWS

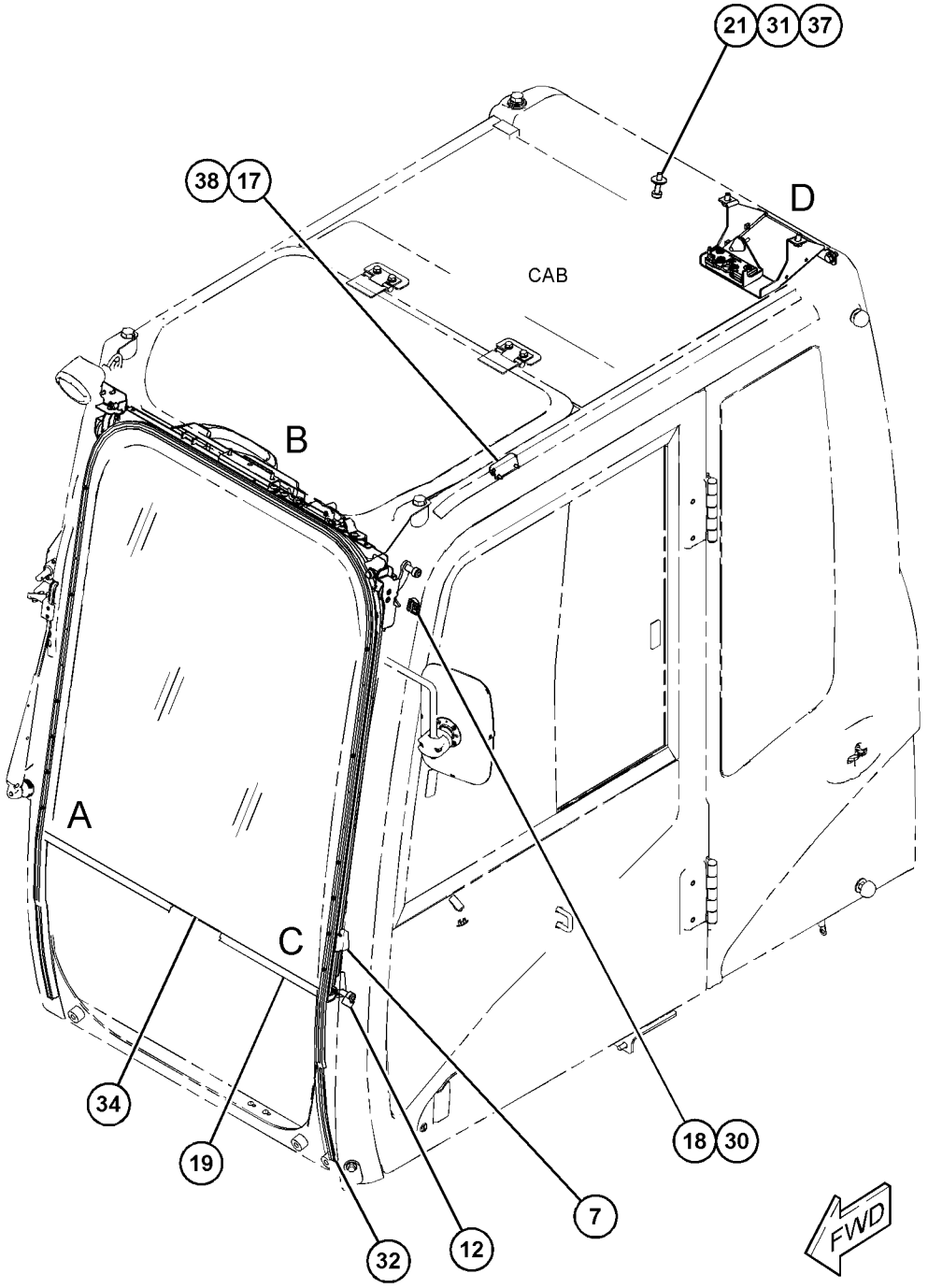


GRAPHIC #1 g06310152

*549-8887* **WINDOW GP-CAB (**contd.**)** **i07396483**

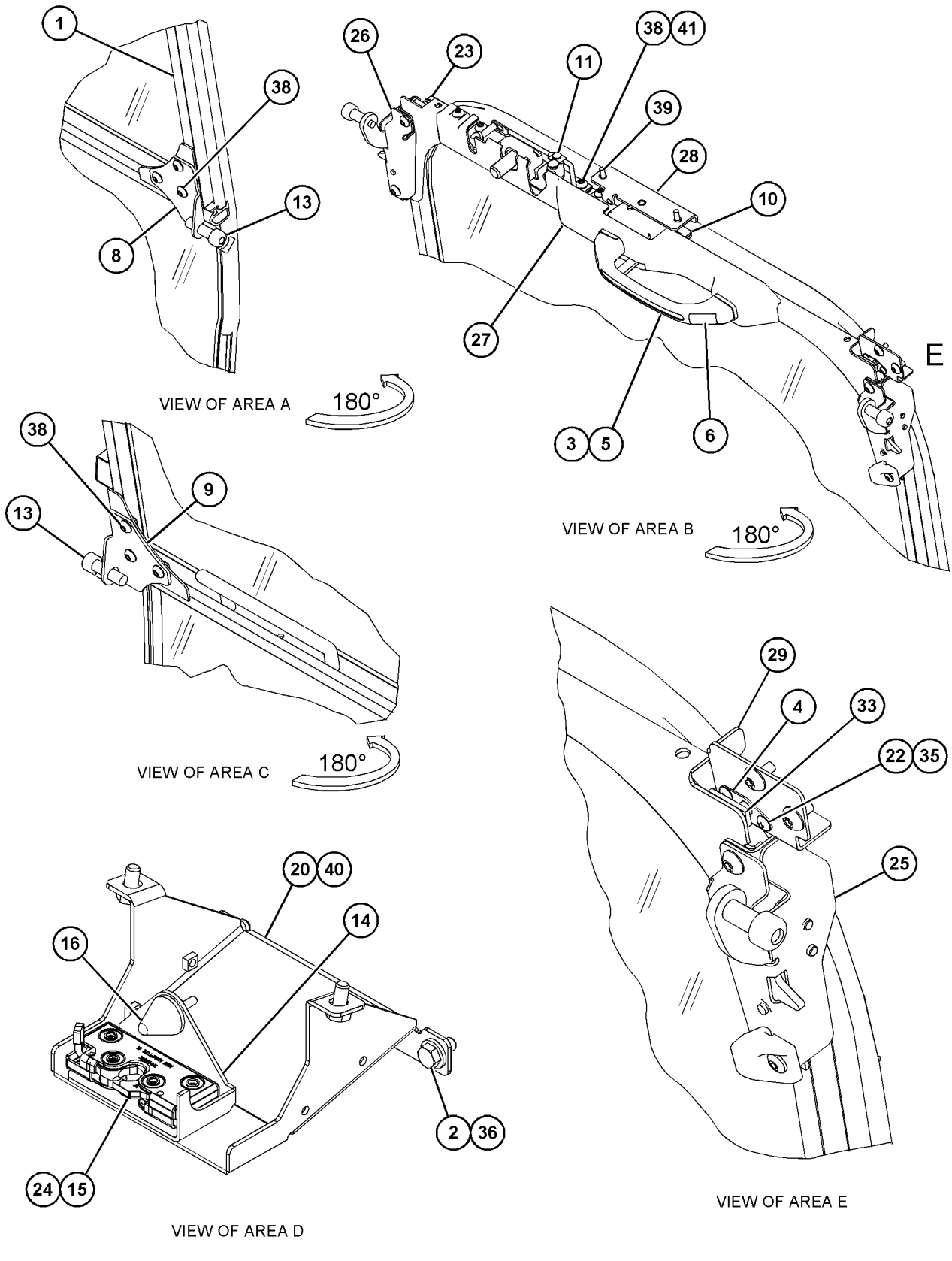


GRAPHIC #2 <END> g06314412

# 384-6533 WINDOW GP-DOOR

**S/N: FEY1-UP**

**PART OF 388-9105 PARTS GP-DOOR**

**SMCS-7308, 7310** **i05444052**

| NOTE | REF NO | GRAPHIC REF | PART NUMBER | QTY | PART NAME 1 2 3 4 5 6 (PRODUCT LEVEL) | SEE PAGE |
|---|---|---|---|---|---|---|
| | 1 | 1 | **385-8757** | 2 | CATCH AS | |
| | 2 | 1 | **387-2846** | 1 | GLASS | |
| | 3 | 1 | **387-2847** | 1 | GLASS | |
| | 4 | 1 | **387-2848** | 1 | PILLAR | |
| | 5 | 1 | **387-2849** | 1 | HOOK | |
| | 6 | 1 | **438-4951** | 1 | SEAL | |
| | 7 | 1 | **438-4952** | 1 | SEAL | |
| | 8 | 1 | **438-4953** | 1 | SEAL | |
| | 9 | 1 | **438-4954** | 1 | SEAL | |
| | 10 | 1 | **438-4955** | 1 | SEAL | |
| | 11 | 1 | **438-4956** | 1 | SEAL | |
| | 12 | 1 | **438-4957** | 1 | SEAL | |
| | 13 | 1 | **438-4958** | 1 | SEAL | |
| E | 14 | 1 | **430-4119** | | RUBBER (10-CM) | |
| E | 14A | 1 | **430-4119** | | RUBBER (5.2-CM EACH) | |

E - ORDER BY THE CENTIMETER

*384-6533* **WINDOW GP-DOOR (**contd.**)** **i05444052**

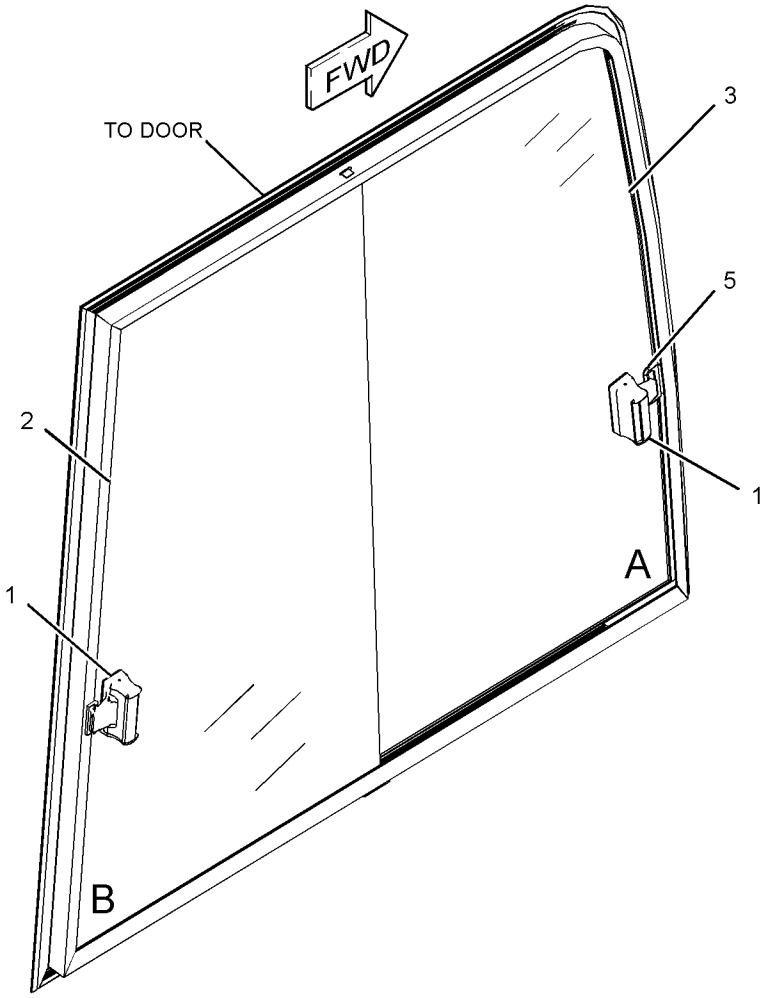


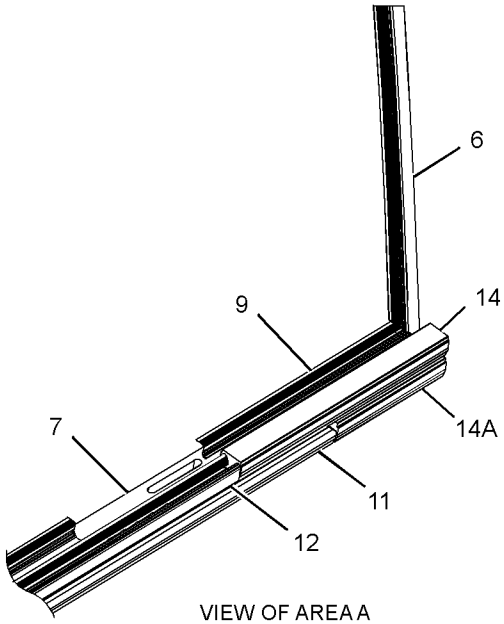


VIEW OF AREA A
(PARTS REMOVED FOR CLARITY)

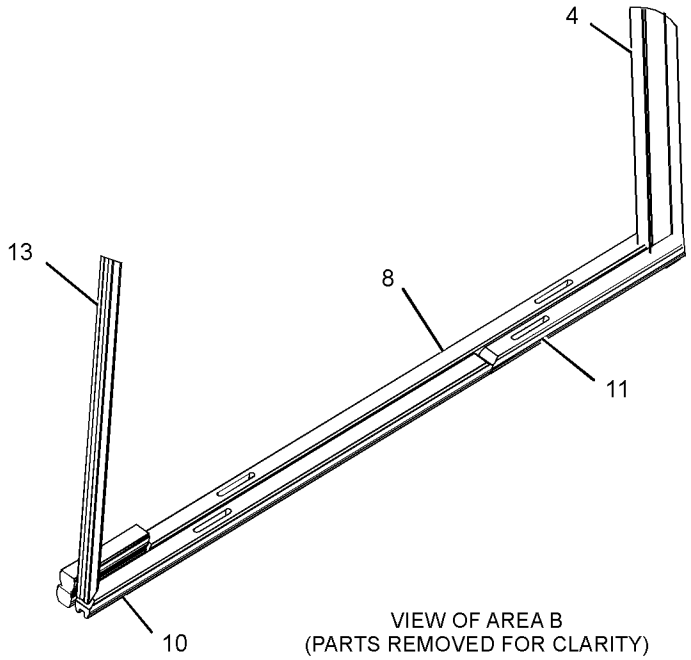


VIEW OF AREA B
(PARTS REMOVED FOR CLARITY)

GRAPHIC #1 <END> g03405579

# *436-1116* WIPER GP-WINDOW—FRONT, UPPER

**S/N: FEY1-UP**

**PART OF 555-5135 CAB GP**

**SMCS-7305** **i06286303**

| NOTE | REF NO | GRAPHIC REF | PART NUMBER | QTY | PART NAME 1 2 3 4 5 6 (PRODUCT LEVEL) | SEE PAGE |
|---|---|---|---|---|---|---|
| E | 1 | 1 | **144-0195** | | HOSE (360-CM) | |
| | 2 | 1 | **099-3633** | 1 | GROMMET | |
| | 3 | 1 | **424-0331** | 1 | HOLDER | |
| | 4 | 1 | **424-0332** | 1 | NOZZLE AS | |
| | 5 | 1 | **424-0333** | 1 | MOTOR AS-WINDOW WIPER | |
| M | | 1 | **175-7141** | 1 | NUT-HEX FLANGE (M10X1.5-THD) | |
| | | 1 | **438-1294** | 1 | CAP | |
| | 6 | 1 | **424-0334** | 1 | ARM GP-WINDOW WIPER (FRONT, UPPER) | |
| | | 1 | **424-0335** | 1 | GUIDE | |
| | | 1 | **424-0336** | 1 | BLADE AS-WIPER (600-MM) | |
| | | 1 | **424-0337** | 1 | ARM AS-WIPER | |
| | 7 | 1 | **424-0338** | 1 | RELAY AS (WIPER) | |
| | 8 | 1 | **096-6166** | 2 | WASHER-HARD (4.5X9X1-MM THK) | |
| | 9 | 1 | **163-6795** | 1 | STRAP-CABLE | |
| | 10 | 1 | **4I-3090** | 1 | SEAL | |
| M | 11 | 1 | **5C-2890** | 4 | NUT (M6X1-THD) | |
| M | 12 | 1 | **8T-0337** | 2 | SCREW-MACHINE (M4X0.7X12-MM) | |
| M | 13 | 1 | **9X-2042** | 2 | SCREW-TRUSS HEAD (M6X1X12-MM) | |
| M | 14 | 1 | **9X-2044** | 3 | SCREW-TRUSS HEAD (M6X1X16-MM) | |

E - ORDER BY THE CENTIMETER
M - METRIC PART

*436-1116* **WIPER GP-WINDOW (**contd.**)** **i06286303**

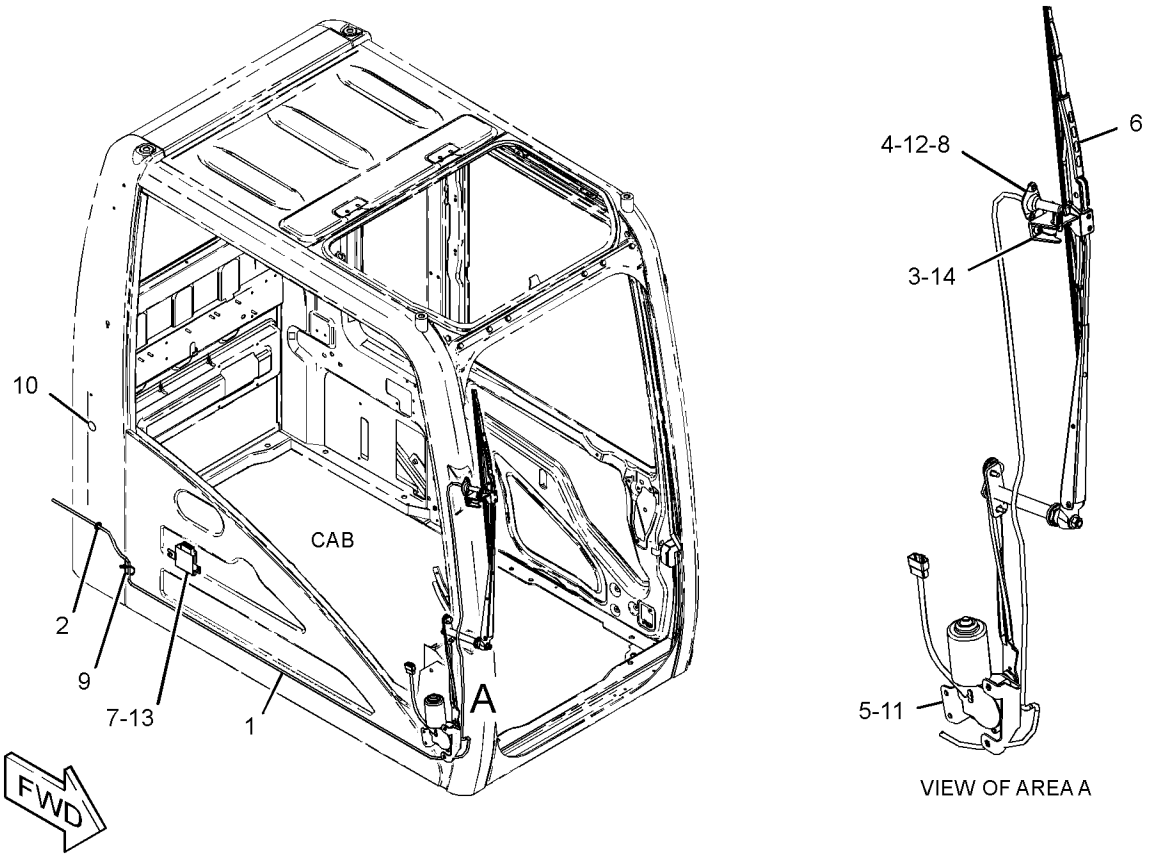


GRAPHIC #1 <END> g03400173

# *247-7423* FILM GP–TOOL CONTROL

**S/N: FEY1-UP**

**PART OF 559-6091 CONTROL AR-AUXILIARY**

**SMCS-7405, 7557** **i06199706**

| NOTE | REF NO | GRAPHIC REF | PART NUMBER | QTY | PART NAME 1 2 3 4 5 6 (PRODUCT LEVEL) | SEE PAGE |
|---|---|---|---|---|---|---|
| | 1 | 1 | **260-6945** | 1 | FILM-INSTRUCTION (OPERATOR CONTROL PEDALS) | |
| | 2 | 1 | **250-8054** | 1 | FILM-NOTICE (HAMMER, READ OMM) | |

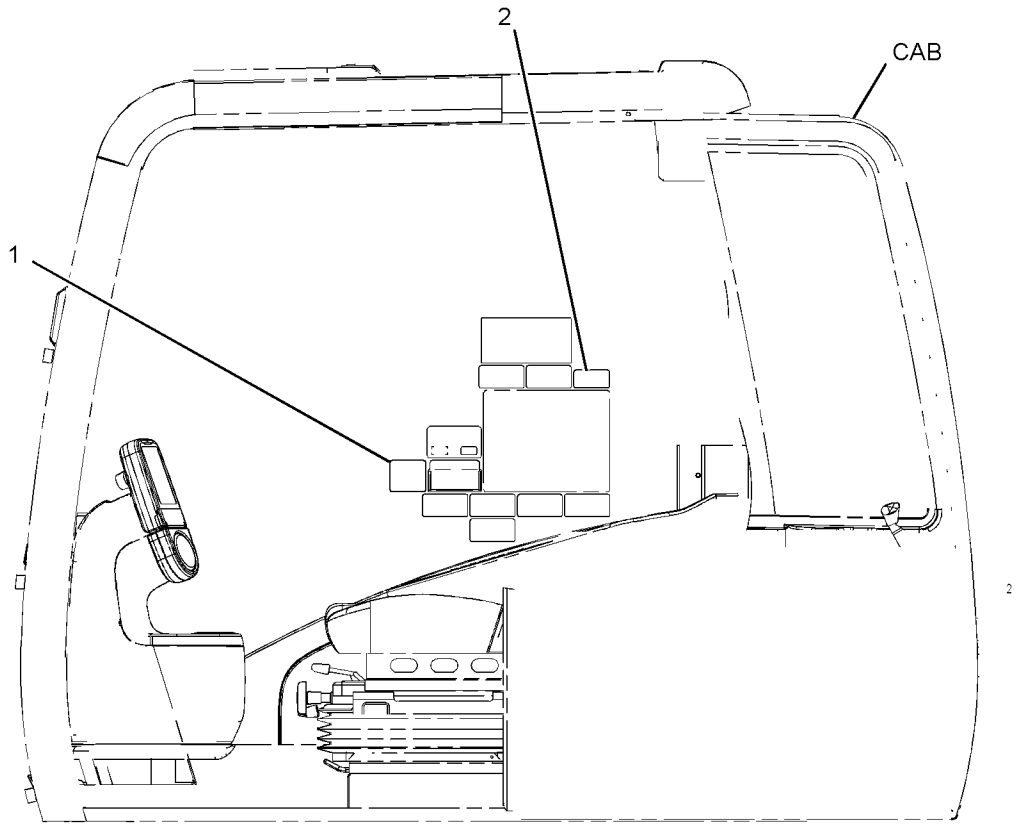


LEFT SIDE VIEW

GRAPHIC #1 <END> g01231531

# *346-0466* FILM GP

**S/N: H761-UP**

**PART OF 565-0288 ENGINE AR-PRIMARY**

**SMCS-7405, 7557**

**i07406092**

| NOTE | REF NO | GRAPHIC REF | PART NUMBER | QTY | PART NAME 1 2 3 4 5 6 (PRODUCT LEVEL) | SEE PAGE |
|---|---|---|---|---|---|---|
| | 1 | 1 | **451-7225** | 1 | FILM-IDENTIFICATION (CAT) | |

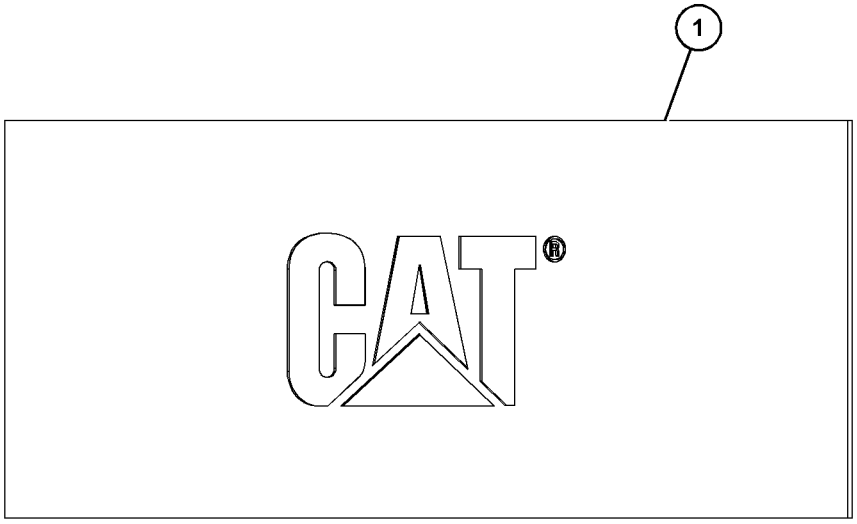


GRAPHIC #1 <END> g06317221

# *366-8771* FILM GP—PRODUCT LINK RADIO, INTL

**S/N: FEY1-UP**

**PART OF 467-4498, 563-4401 INSTALLATION AR-COMMUNICATION**

**SMCS-7405, 7557**

**i07394749**

| NOTE | REF NO | GRAPHIC REF | PART NUMBER | QTY | PART NAME 1 2 3 4 5 6 (PRODUCT LEVEL) | SEE PAGE |
|---|---|---|---|---|---|---|
| | 1 | 1 | **230-1341** | 1 | FILM-WARNING (PRODUCT LINK RADIO, INTL) | |
| | 2 | 1 | **307-0047** | 1 | FILM-INFORMATION (PRODUCT LINK, READ OMM) | |

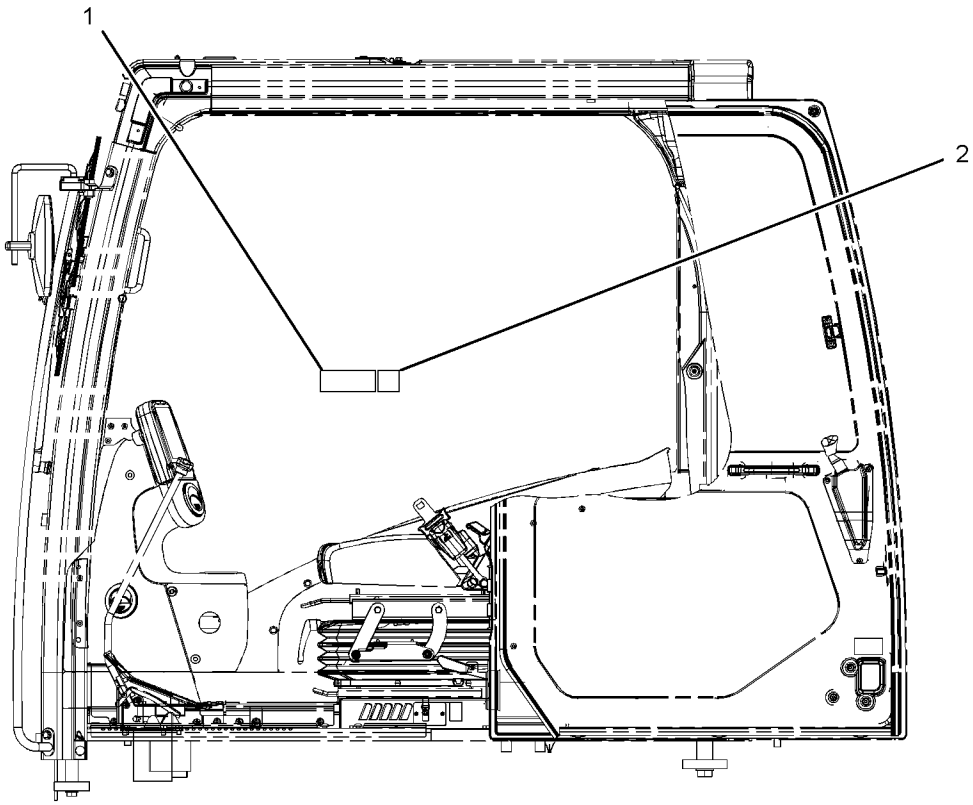


LEFT SIDE VIEW
(CAB)

GRAPHIC #1 <END> g03439537

# *461-5994* PLATE & FILM GP

**S/N: H761-UP**

**PART OF 565-0288 ENGINE AR-PRIMARY**

**SMCS-7405, 7557**

**i07660474**

| NOTE | REF NO | GRAPHIC REF | PART NUMBER | QTY | PART NAME 1 2 3 4 5 6 (PRODUCT LEVEL) | SEE PAGE |
|---|---|---|---|---|---|---|
| | 1 | 1 | **317-6198** | 1 | FILM-IDENTIFICATION (ENGINE SERIAL NUMBER) | |
| | 2 | 1 | **326-9052** | 1 | FILM-WARNING (DO NOT SPRAY, READ OMM) | |
| | 3 | 1 | **346-8219** | 2 | FILM-WARNING (UNIVERSAL WARNING) | |
| | 4 | 1 | **450-9772** | 1 | PLATE-IDENTIFICATION (CAT) | |

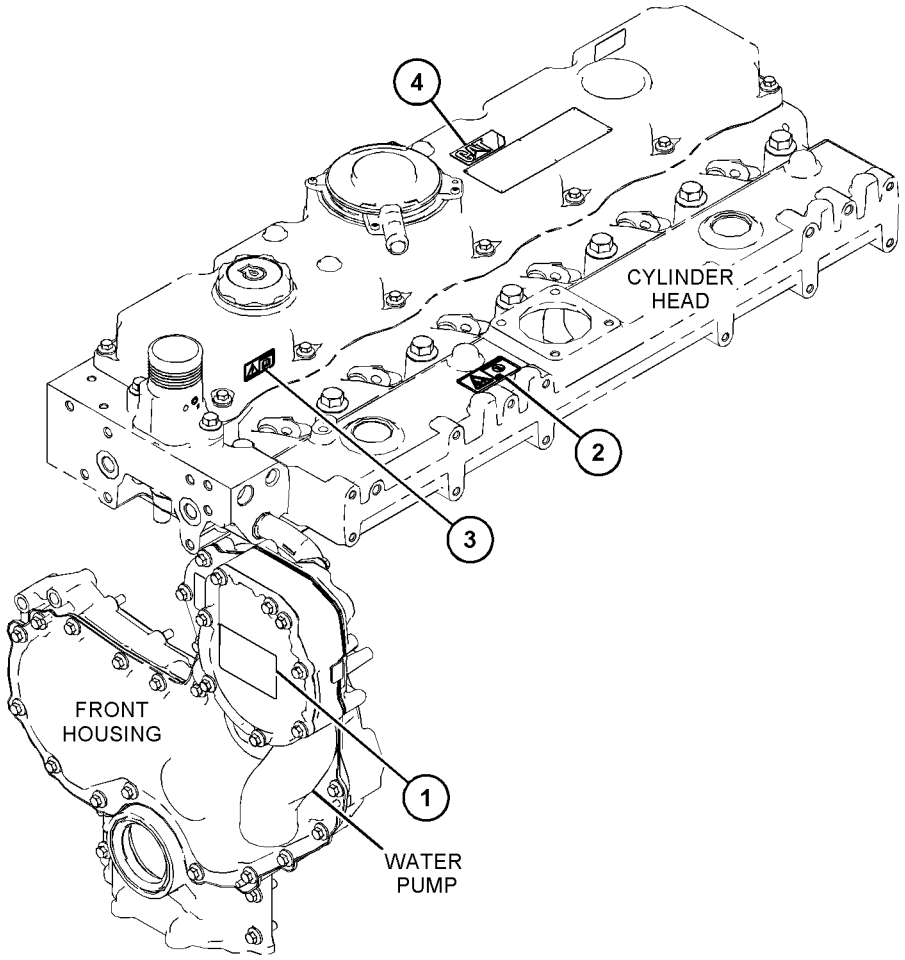


GRAPHIC #1 <END> g06393204

# *554-6935* PLATE & FILM GP

**S/N: FEY1-UP**

**PART OF 556-6447 CHASSIS AR**

**SMCS-7405, 7557** **i07398284**

| NOTE | REF NO | GRAPHIC REF | PART NUMBER | QTY | PART NAME 1 2 3 4 5 6 (PRODUCT LEVEL) | SEE PAGE |
|---|---|---|---|---|---|---|
| | 1 | 1,2 | **1P-2807** | 4 | FILM-IDENTIFICATION (LIFT EYE LOCATION) | |
| | 2 | 2 | **7X-7644** | 4 | FILM-IDENTIFICATION (TIE-DOWN) | |
| | 3 | 4 | **8T-6842** | 1 | FILM-INSTRUCTION (PULL RING, ALTERNATE EXIT) | |
| | 4 | 3 | **110-6393** | 1 | PLATE-INSTRUCTION (AIR CONDITIONER) | |
| | 5 | 1 | **134-7258** | 1 | FILM-INFORMATION (EXTENDED LIFE COOLANT) | |
| | 6 | 4 | **146-6747** | 1 | FILM-INFORMATION (24-VOLT) | |
| | 7 | 1,3,4 | **167-7270** | 2 | FILM-INSTRUCTION (NO STEP) | |
| | 8 | 2 | **187-0661** | 1 | FILM-INSTRUCTION (ALTERNATE EXIT) | |
| | 9 | 2 | **190-5386** | 2 | FILM-IDENTIFICATION (ROUND RED REFLECTIVE) | |
| | 10 | 3 | **214-7915** | 1 | FILM-INSTRUCTION (ENGINE SHUTOFF) | |
| | 11 | 3 | **221-8045** | 1 | FILM-WARNING (SEAT BELT, INTERNATIONAL) | |
| | 13 | 3 | **224-0554** | 1 | FILM-WARNING (UNIVERSAL, READ OMM) | |
| | 14 | 2 | **224-8946** | 1 | FILM-WARNING (NO ETHER SPRAY/AIR INTK, INTL) | |
| | 15 | 4 | **225-0312** | 1 | FILM-WARNING (JUMP START, READ OMM, INTL) | |
| | 16 | 1,4 | **225-4257** | 2 | FILM-WARNING (HOT FLUID UNDER PRESS) | |
| X | 17 | 1,2 | **228-2781** | 2 | FILM-WARNING (MACHINE SWING, CRUSHING, INTL) | |
| | 18 | 1,4 | **228-7316** | 2 | FILM-WARNING (HOT SURFACE, HANDS CLEAR, INTL) | |
| | 19 | 3 | **228-9254** | 1 | FILM-WARNING (ELEC HAZARD, READ OMM, INTL) | |
| | 21 | 1 | **239-6986** | 1 | PLATE-SERIAL NUMBER (MACHINE) | |
| | 22 | 1 | **242-1510** | 1 | FILM-INSTRUCTION (HYDRAULIC OIL CHECK) | |
| | 23 | 3 | **242-1588** | 1 | FILM-WARNING (FRONT WINDOW, READ OMM, INTL) | |
| | 24 | 1 | **493-1610** | 1 | FILM-WARNING (ACCUMULATOR PRESSURE) | |
| | 26 | 4 | **247-7437** | 1 | FILM-IDENTIFICATION (BATTERY CIRCUIT BREAKER) | |
| | 27 | 4 | **247-7438** | 1 | FILM-IDENTIFICATION (ELECTRICAL CIRCUIT BREAKER) | |
| | 28 | 3 | **266-5431** | 1 | FILM-WARNING (CRUSH HAZARD, READ OMM, INTL) | |
| | 29 | 1,2 | **290-1729** | 2 | FILM-IDENTIFICATION (CAT) | |
| | 30 | 1,2 | **549-2643** | 2 | FILM-IDENTIFICATION (323D) | |
| | 31 | 2 | **298-4282** | 2 | FILM-WARNING (CRUSH HAZARD, STAY BACK, INTL) | |
| | 32 | 1 | **331-7972** | 1 | FILM-IDENTIFICATION (CAT, RH) | |
| | 33 | 2 | **331-7973** | 1 | FILM-IDENTIFICATION (CAT, LH) | |
| | 35 | 2 | **358-6390** | 1 | FILM-IDENTIFICATION (STRIPE, LH) | |
| | 36 | 2 | **367-0844** | 1 | FILM-INSTRUCTION (FUEL, READ OMM) | |
| | 37 | 4 | **369-4243** | 1 | FILM-INFORMATION (BELT ROUTING) | |
| | 38 | 3 | **381-1372** | 1 | FILM-IDENTIFICATION (FUSE, RELAY PANEL) | |
| | 39 | 4 | **381-1373** | 1 | FILM-IDENTIFICATION (CIRCUIT BREAKER) | |
| | 40 | 1 | **385-4093** | 1 | FILM-IDENTIFICATION (STRIPE, RH) | |
| | 41 | 3 | **4I-8472** | 1 | FILM-INSTRUCTION (OPERATOR CONTROLS) | |
| | 42 | 1 | **443-5690** | 2 | FILM-WARNING (LIFTING EYE, READ OMM) | |
| BJ | 43 | 1 | **334-4603** | 1 | FILM-INFORMATION (HYDO ADVANCED 10) | |
| | 44 | 2 | **549-2642** | 1 | FILM-IDENTIFICATION (CATERPILLAR, REAR) | |
| | 45 | 2 | **229-0887** | 1 | FILM-INFORMATION (AIR CLEANER) | |
| | | | | | | |
| AF | | 1 | **498-2479** | 1 | PLATE-SERIAL NUMBER (ENGINE) | |
| | | | | | (ON LH SIDE OF CYLINDER BLOCK, TOWARDS THE BOTTOM/REAR) | |

*554-6935* **PLATE & FILM GP (**contd.**)** **i07398284**

| NOTE | REF NO | GRAPHIC REF | PART NUMBER | QTY | PART NAME 1 2 3 4 5 6 (PRODUCT LEVEL) | SEE PAGE |
|---|---|---|---|---|---|---|

A - NOT PART OF THIS GROUP
B - USE AS REQUIRED
F - NOT SHOWN
J - REQUIRED ONLY WHEN HYDRAULIC TANK IS FILLED WITH HYDO ADVANCED 10 OIL
X - AREAS MARKED X IN GRAPHICS SHOW ALTERNATE FILM LOCATION ON MACHINE EQUIPPED WITH BUMPERS

*554-6935* **PLATE & FILM GP** (contd.) **i07398284**

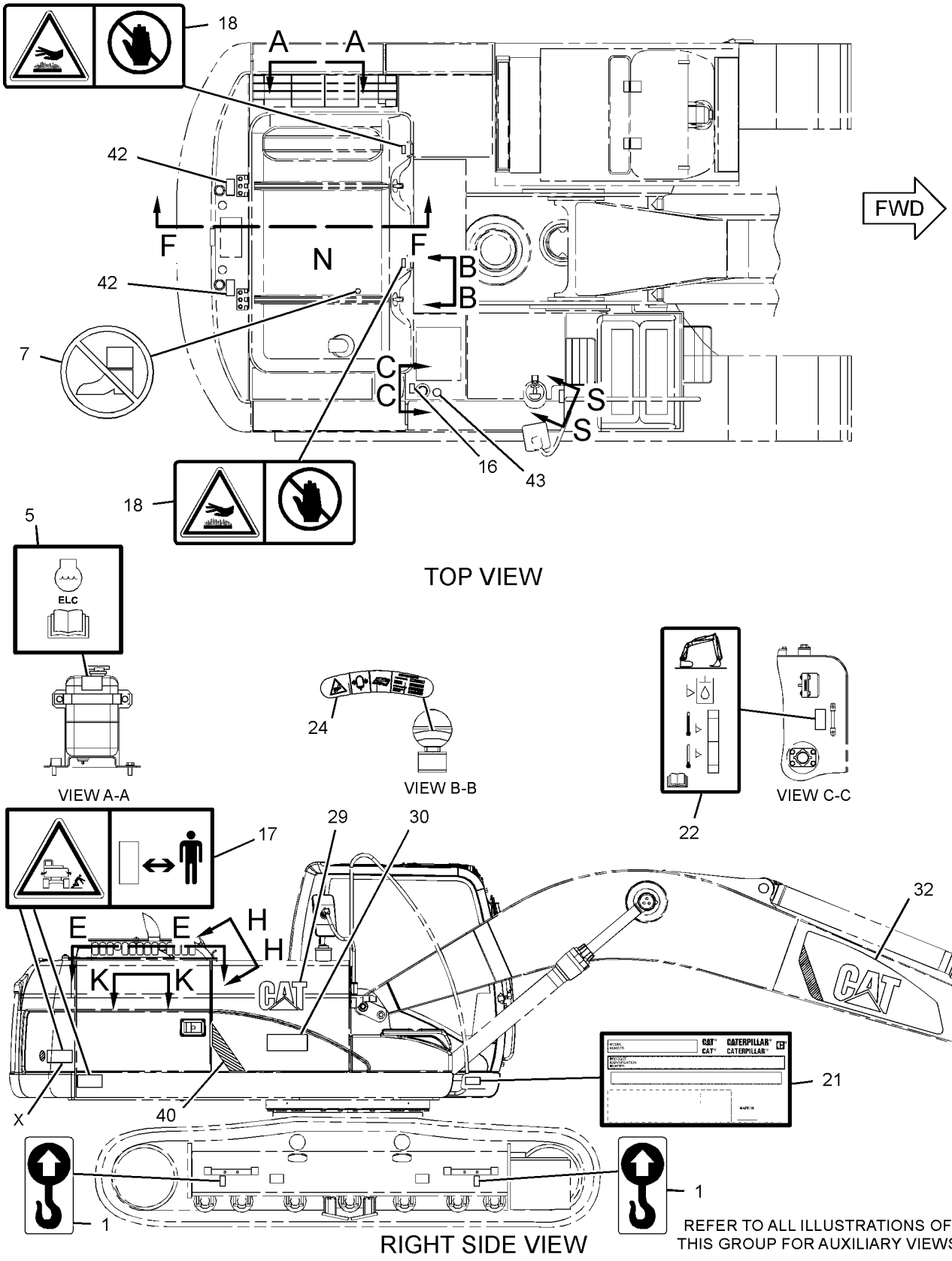


GRAPHIC #1 g06166266

*554-6935* **PLATE & FILM GP (**contd.**)** **i07398284**

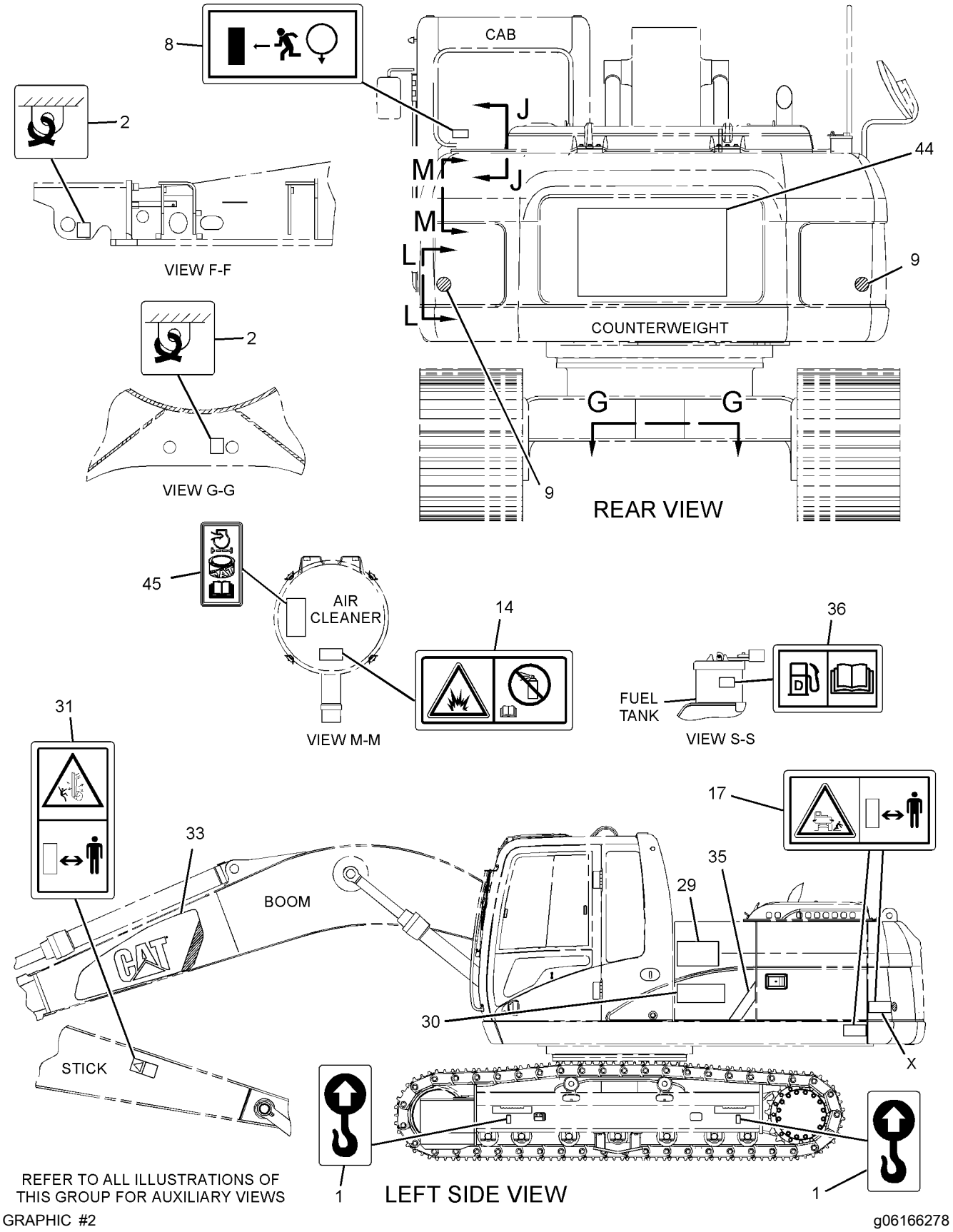

*554-6935* **PLATE & FILM GP (**contd.**)** **i07398284**

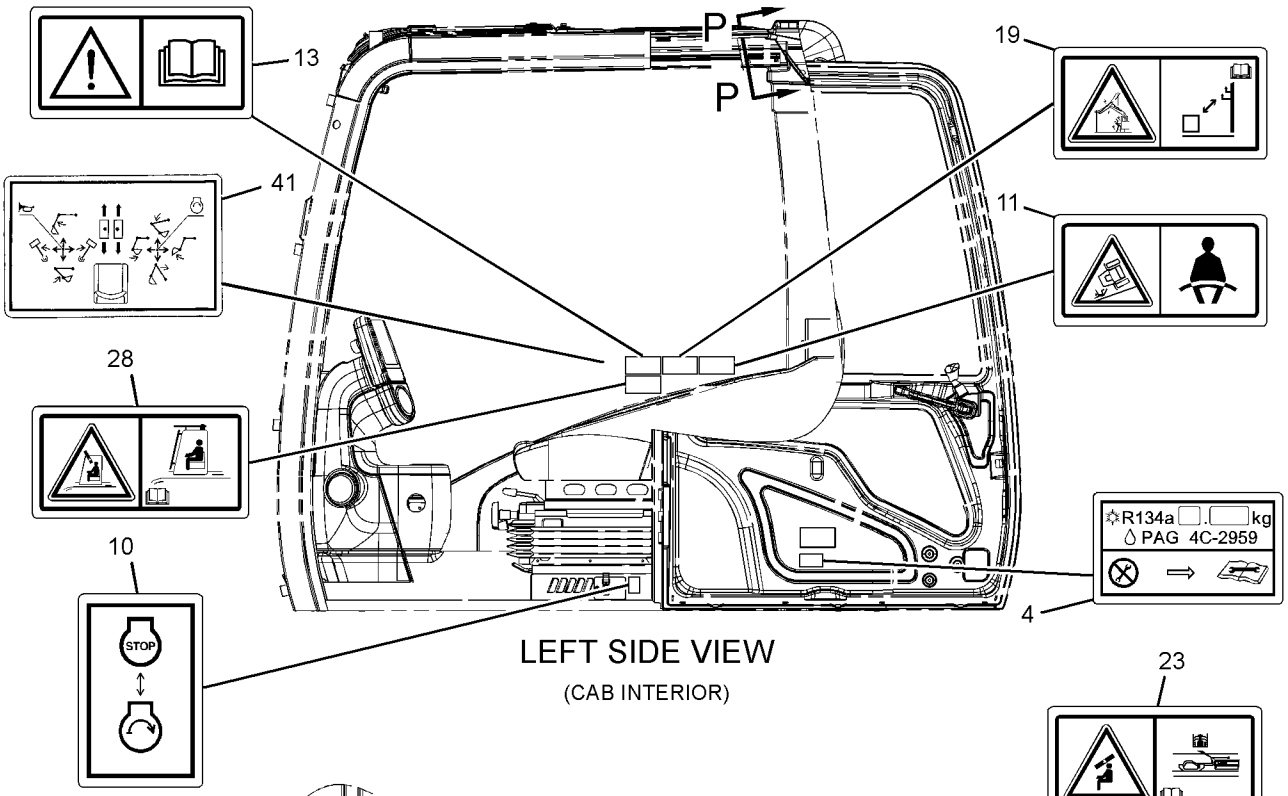


LEFT SIDE VIEW
(CAB INTERIOR)

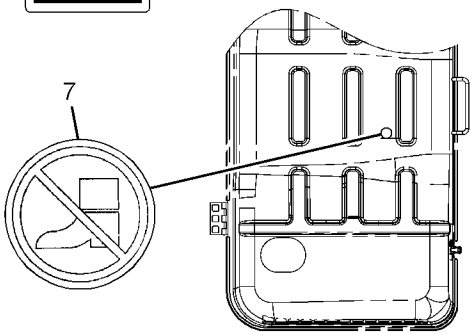


VIEW OF AREA N
(IF EQUIPPED)

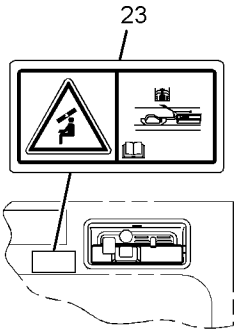


VIEW P-P

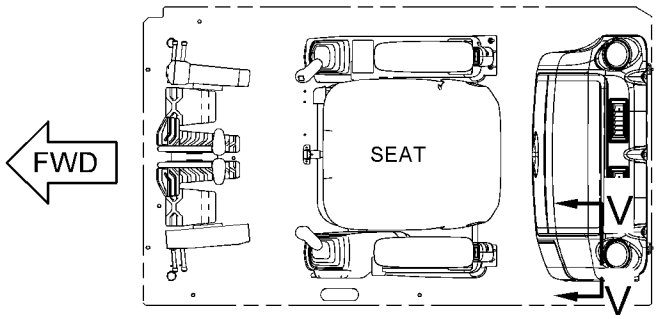


TOP VIEW
(OPERATOR PLATFORM)

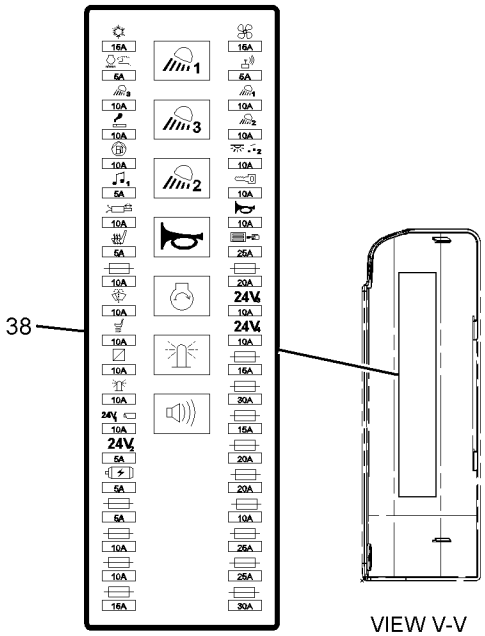


VIEW V-V

GRAPHIC #3

g06077510

*554-6935* **PLATE & FILM GP (**contd.**)** **i07398284**

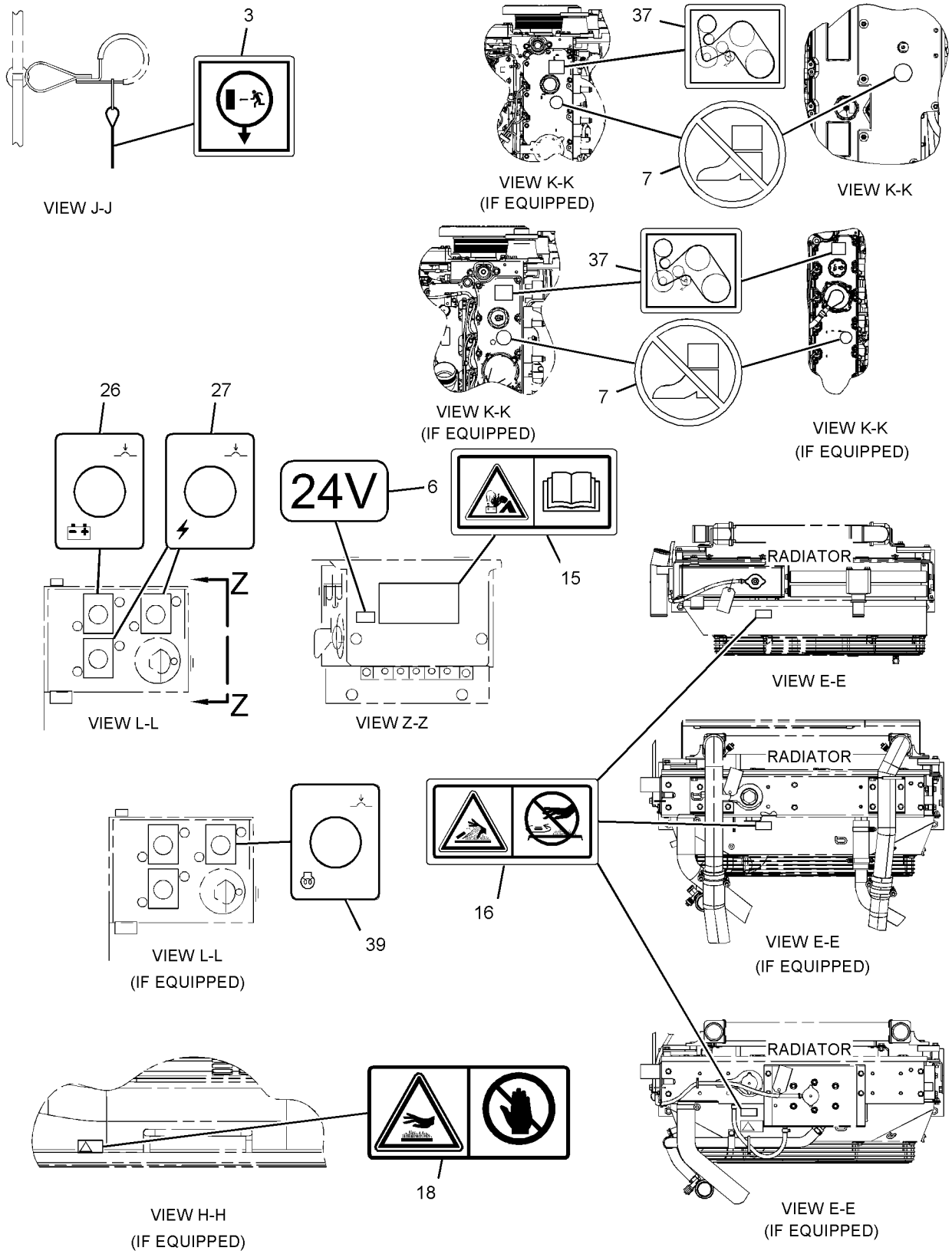


GRAPHIC #4 <END> g03414260

# PART NUMBER INDEX


Part Page

## 0

0S-1603 . . . . . 21
0T-0489 . . . . . 477

## 1

1D-4635 . . . . . 397
1H-4393 . . . . . 451
1M-6119 . . . . . 87
1M-6120 . . . . . 87
1P-2807 . . . . . 502
1P-3702 . . . . . 268
270
272
303
330
332
348
362
1P-3703 . . . . . 245
251
255
257
259
261
263
264
266
267
268
270
272
303
305
1P-3704 . . . . . 255
257
263
264
304
1P-3705 . . . . . 257
1P-5765 . . . . . 301
1P-5767 . . . . . 255
257
1R-1804 . . . . . 72
1R-5998 . . . . . 411
1S-7252 . . . . . 87
1U-2827 . . . . . 326
1U-3352 . . . . . 399
1U-8846 . . . . . 163
227
305
1V-5872 . . . . . 477
480

## 2

2C-9259 . . . . . 390
394
2G-8767 . . . . . 129
2H-3922 . . . . . 121
2J-3507 . . . . . 397
2L-8050 . . . . . 101
2L-8051 . . . . . 98
2L-8058 . . . . . 101
2L-8065 . . . . . 450
451
2L-8066 . . . . . 126
2L-8074 . . . . . 102
2L-8075 . . . . . 108

Part Page

126
450
451
2M-9780 . . . . . 277
305
336
341
2S-2596 . . . . . 334
2S-4078 . . . . . 268
272
2S-5926 . . . . . 195
2Y-5503 . . . . . 227

## 3

3B-4501 . . . . . 105
106
3B-4505 . . . . . 448
3B-4510 . . . . . 411
3B-4618 . . . . . 167
3B-8489 . . . . . 162
163
218
220
222
382
384
386
3D-2824 . . . . . 265
272
277
289
315
341
363
368
369
370
371
3D-9143 . . . . . 150
3E-2345 . . . . . 289
3E-3217 . . . . . 193
3E-3371 . . . . . 126
3E-4297 . . . . . 233
3E-5169 . . . . . 143
3E-8020 . . . . . 411
3E-8025 . . . . . 237
3E-8320 . . . . . 87
3H-5368 . . . . . 471
475
3J-1907 . . . . . 207
265
280
281
283
284
289
291
293
295
299
301
305
308
312
336
344
346
350
351
372
3J-7354 . . . . . 74

Part Page

116
301
326
3K-0360 . . . . . 18
73
203
225
265
268
272
277
280
283
284
289
295
305
308
309
326
334
344
346
3K-5234 . . . . . 397
3P-0647 . . . . . 69
3S-2093 . . . . . 59
70
73
94
98
99
100
101
113
123
124
125
129
134
136
139
140
143
253
401
450
451
460
462
487
3T-0852 . . . . . 466
3T-5760 . . . . . 87
3T-7528 . . . . . 233
3W-6399 . . . . . 487
3Y-9267 . . . . . 355

## 4

4B-4158 . . . . . 196
198
4B-4278 . . . . . 411
4B-9783 . . . . . 372
4D-1836 . . . . . 143
4I-0118 . . . . . 167
4I-0232 . . . . . 167
4I-0379 . . . . . 73
4I-0420 . . . . . 491
4I-1205 . . . . . 411
4I-1536 . . . . . 201
►205
4I-1539 . . . . . 205
4I-1674 . . . . . 259

Part Page

261
265
4I-1676 . . . . . 259
261
4I-2187 . . . . . 150
4I-3038 . . . . . 253
4I-3090 . . . . . 411
496
4I-3266 . . . . . 417
469
4I-3308 . . . . . 380
4I-3309 . . . . . 380
4I-3510 . . . . . 363
369
4I-3569 . . . . . 336
4I-4286 . . . . . 467
4I-4392 . . . . . 411
4I-4543 . . . . . 382
4I-4544 . . . . . 382
4I-4809 . . . . . 380
386
4I-4811 . . . . . 386
4I-4812 . . . . . 160
4I-5409 . . . . . 1
►112
4I-5862 . . . . . 205
4I-6365 . . . . . 353
4I-6397 . . . . . 337
341
4I-7714 . . . . . 363
369
4I-7745 . . . . . 265
4I-7889 . . . . . 129
4I-8019 . . . . . 167
4I-8267 . . . . . 206
4I-8472 . . . . . 502
4I-8965 . . . . . 344
346
4I-9521 . . . . . 280
285
293
295
4I-9522 . . . . . 280
285
293
295
4I-9523 . . . . . 280
285
291
293
295
4I-9524 . . . . . 280
285
291
293
295
4I-9525 . . . . . 280
285
291
293
295
4I-9526 . . . . . 280
293
295
4I-9527 . . . . . 277
280
285
291
293
295
4I-9528 . . . . . 280
285
293
296

# PART NUMBER INDEX


| Part | Page |
|---|---|
| 4J-0519 | 348 |
| 4J-0520 | 244 |
| | 250 |
| | 341 |
| 4J-0522 | 254 |
| 4J-0524 | 268 |
| 4J-0527 | 268 |
| | 326 |
| 4J-5267 | 270 |
| 4J-5268 | 270 |
| 4J-5309 | 337 |
| 4J-7385 | 360 |
| | 361 |
| 4J-7386 | 360 |
| | 361 |
| 4J-7533 | 233 |
| | 308 |
| | 336 |
| | 344 |
| | 346 |
| 4J-8998 | 330 |
| | 332 |
| | 362 |
| 4K-1388 | 360 |
| | 361 |
| 4K-8864 | 129 |
| | 285 |
| 4K-9429 | 471 |
| 4N-9170 | 163 |
| 4P-7428 | 129 |
| 4P-7581 | 124 |
| | 129 |
| | 281 |
| | 296 |
| | 401 |
| 4T-3148 | 336 |
| 4T-5074 | 337 |

## 5

| | |
|---|---|
| 5B-9079 | 41 |
| 5B-9304 | 312 |
| 5C-2874 | 103 |
| | 124 |
| 5C-2889 | 106 |
| 5C-2890 | 70 |
| | 124 |
| | 496 |
| 5C-7261 | 87 |
| | 103 |
| | 107 |
| | 168 |
| | 238 |
| | 357 |
| 5C-7793 | 411 |
| 5C-7883 | 90 |
| 5C-8138 | 487 |
| 5C-8312 | 491 |
| 5C-9553 | 91 |
| | 150 |
| | 168 |
| | 326 |
| | 401 |
| 5D-1026 | 227 |
| 5D-4822 | 448 |
| 5H-1472 | 319 |
| 5H-5672 | 323 |
| 5I-3878 | 129 |
| 5I-4111 | 360 |
| | 361 |
| 5I-8270 | 87 |
| 5I-8416 | 201 |
| | ►206 |
| 5I-8417 | 312 |
| 5I-8426 | 312 |
| 5I-8511 | 344 |
| | 346 |
| 5I-8623 | 312 |
| 5I-8625 | 312 |
| 5I-8670 | 229 |
| 5I-8772 | 320 |
| 5I-8773 | 319 |
| 5I-8775 | 317 |
| 5I-8790 | 237 |
| 5I-8791 | 237 |
| 5I-8799 | 237 |
| 5I-8800 | 237 |
| 5I-8802 | 237 |
| 5I-8806 | 237 |
| 5I-8809 | 237 |
| 5I-8810 | 237 |
| 5I-8811 | 237 |
| 5I-8812 | 237 |
| 5I-8813 | 238 |
| 5I-8814 | 238 |
| 5I-8815 | 238 |
| 5I-8853 | 305 |
| 5J-2974 | 350 |
| 5K-9090 | 235 |
| | 242 |
| | 245 |
| | 251 |
| | 254 |
| | 265 |
| | 268 |
| | 270 |
| | 272 |
| | 273 |
| | 305 |
| 5K-9243 | 163 |
| | 382 |
| 5L-3233 | 64 |
| 5L-4758 | 207 |
| 5M-2057 | 326 |
| 5P-0372 | 168 |
| 5P-0743 | 47 |
| 5P-0767 | 227 |
| | 455 |
| 5P-1075 | 150 |
| | 159 |
| | 411 |
| | 415 |
| | 491 |
| 5P-1076 | 165 |
| | 265 |
| 5P-2321 | 126 |
| 5P-3108 | 360 |
| | 361 |
| 5P-3455 | 98 |
| 5P-4115 | 124 |
| | 168 |
| | 411 |
| 5P-4116 | 55 |
| | 59 |
| | 130 |
| | 150 |
| 5P-4906 | 83 |
| 5P-4924 | 83 |
| 5P-5649 | 59 |
| 5P-5927 | 428 |
| 5P-5998 | 253 |
| 5P-6001 | 95 |
| | 100 |
| 5P-6006 | 126 |
| 5P-6271 | 125 |
| 5P-7462 | 212 |
| | 454 |
| 5P-7463 | 212 |
| | 454 |
| 5P-7464 | 213 |
| | 277 |
| | 454 |
| 5P-7465 | 213 |
| | 277 |
| | 454 |
| 5P-7468 | 268 |
| | 273 |
| 5P-7469 | 268 |
| | 273 |
| 5P-7958 | 458 |
| 5P-8244 | 482 |
| 5P-8245 | 254 |
| 5P-8309 | 174 |
| 5P-8444 | 268 |
| 5P-8500 | 82 |
| | 122 |
| | 458 |
| 5P-9205 | 150 |
| 5P-9297 | 108 |
| 5P-9617 | 299 |
| 5P-9909 | 59 |
| 5Q-3560 | 163 |
| 5V-1497 | 482 |
| 5V-9155 | 46 |
| | 73 |

## 6

| | |
|---|---|
| 6C-3679 | 159 |
| 6D-1641 | 454 |
| 6D-3479 | 455 |
| 6D-9157 | 301 |
| | 326 |
| 6E-2163 | 334 |
| 6E-2271 | 331 |
| | 334 |
| | 343 |
| 6E-2274 | 332 |
| | 336 |
| | 341 |
| 6E-3653 | 337 |
| 6E-5169 | 336 |
| 6E-5643 | 336 |
| 6E-5731 | 332 |
| | 337 |
| | 341 |
| 6F-4855 | 236 |
| 6F-6672 | 236 |
| 6F-7045 | 121 |
| 6G-2256 | 129 |
| 6G-2263 | 130 |
| 6H-3615 | 265 |
| 6I-0217 | 23 |
| | 29 |
| | 42 |
| | 52 |
| | 57 |
| | 69 |
| 6I-0254 | 9 |
| | 57 |
| 6I-0260 | 29 |
| | 50 |
| | 80 |
| 6I-0289 | 29 |
| 6I-0455 | 52 |
| | 317 |
| 6I-0563 | 69 |
| 6I-0572 | 29 |
| 6I-0593 | 19 |
| 6I-0645 | 23 |
| | 66 |
| 6I-0650 | 23 |
| 6I-0654 | 19 |
| | 26 |
| | 29 |
| | 86 |
| 6I-0839 | 57 |
| 6I-0917 | 22 |
| 6I-1090 | 48 |
| 6I-4200 | 29 |
| 6I-4681 | 29 |
| 6I-4793 | 50 |
| | 52 |
| 6I-5298 | 435 |
| | 437 |
| 6I-5470 | 412 |
| 6I-5976 | 150 |
| 6I-6033 | 168 |
| 6I-6354 | 392 |
| | 393 |
| | 394 |
| 6I-6355 | 392 |
| | 393 |
| | 394 |
| 6I-6356 | 392 |
| | 393 |
| | 394 |
| 6I-6795 | 363 |
| | 369 |
| 6J-2680 | 277 |
| | 301 |
| | 326 |
| 6K-0806 | 440 |
| | 441 |
| 6K-8178 | 130 |
| 6L-3616 | 382 |
| 6M-5062 | 315 |
| | 341 |
| 6S-8620 | 73 |
| 6T-5598 | 98 |
| 6V-0400 | 255 |
| | 257 |
| | 259 |
| | 261 |
| | 268 |
| | 270 |
| | 303 |
| | 305 |
| 6V-0683 | 212 |
| | 454 |
| 6V-0852 | 289 |
| | 291 |
| | 326 |
| 6V-1249 | 213 |
| | 454 |
| 6V-1876 | 273 |
| 6V-2369 | 124 |
| 6V-2689 | 100 |
| | 126 |
| 6V-2722 | 87 |
| | 129 |
| 6V-3265 | 70 |
| | 454 |
| 6V-3922 | 337 |
| | 341 |
| 6V-3965 | 289 |
| | 291 |
| | 326 |
| 6V-5210 | 105 |
| | 106 |
| | 124 |
| 6V-5393 | 337 |


► PRIMARY REFERENCE

# PART NUMBER INDEX


| Part | Page |
|---|---|
| 6V-5556 | 337 |
| | 365 |
| 6V-5597 | 332 |
| | 337 |
| | 341 |
| 6V-5653 | 83 |
| 6V-5839 | 326 |
| 6V-7238 | 18 |
| | 225 |
| 6V-7357 | 168 |
| | 434 |
| | 454 |
| 6V-7636 | 411 |
| 6V-7658 | 233 |
| 6V-7743 | 473 |
| | 485 |
| 6V-8202 | 355 |
| | 473 |
| | 474 |
| | 477 |
| | 480 |
| 6V-8213 | 237 |
| 6V-8218 | 363 |
| | 369 |
| 6V-8235 | 482 |
| 6V-8237 | 227 |
| 6V-8362 | 122 |
| 6V-8397 | 265 |
| | 277 |
| | 280 |
| | 281 |
| | 283 |
| | 284 |
| | 285 |
| | 289 |
| | 291 |
| | 293 |
| | 295 |
| | 299 |
| | 305 |
| | 346 |
| | 372 |
| 6V-8398 | 265 |
| | 268 |
| | 277 |
| | 280 |
| | 283 |
| | 284 |
| | 289 |
| | 295 |
| | 305 |
| | 374 |
| | 375 |
| 6V-8399 | 352 |
| 6V-8400 | 355 |
| 6V-8624 | 277 |
| 6V-8625 | 265 |
| | 283 |
| 6V-8635 | 43 |
| | 235 |
| 6V-8636 | 265 |
| | 280 |
| | 283 |
| | 291 |
| | 295 |
| | 299 |
| 6V-8637 | 277 |
| | 289 |
| 6V-8639 | 283 |
| | 289 |
| | 305 |
| 6V-8714 | 43 |
| 6V-8722 | 74 |
| 6V-8724 | 281 |
| | 284 |
| | 289 |
| | 291 |
| | 293 |
| | 295 |
| | 299 |
| | 305 |
| 6V-8774 | 283 |
| 6V-8781 | 284 |
| | 293 |
| 6V-8978 | 363 |
| | 369 |
| 6V-9001 | 265 |
| | 280 |
| | 283 |
| | 295 |
| | 299 |
| 6V-9002 | 268 |
| | 277 |
| | 280 |
| | 283 |
| | 295 |
| 6V-9004 | 272 |
| 6V-9005 | 272 |
| 6V-9007 | 272 |
| | 277 |
| 6V-9008 | 43 |
| | 268 |
| 6V-9027 | 59 |
| 6V-9632 | 73 |
| | 91 |
| | 168 |
| | 176 |
| | 425 |
| 6V-9669 | 124 |
| 6V-9674 | 83 |
| | 124 |
| 6V-9746 | 247 |
| | 248 |
| | 259 |
| | 261 |
| | 265 |
| | 272 |
| | 277 |
| | 289 |
| 6V-9829 | 291 |
| 6V-9836 | 283 |
| | 291 |
| 6V-9837 | 265 |
| 6V-9840 | 272 |
| 6V-9843 | 283 |
| 6V-9850 | 265 |
| | 283 |
| 6V-9875 | 272 |
| 6V-9876 | 277 |
| 6W-6005 | 87 |
| 6W-7293 | 455 |
| 6W-8281 | 482 |
| 6Y-8186 | 189 |
| 7B-3039 | 326 |
| 7C-4616 | 23 |
| 7F-3708 | 168 |
| 7F-8268 | 193 |
| 7G-1060 | 143 |
| 7G-3832 | 268 |
| 7G-3833 | 268 |
| 7G-3834 | 268 |
| 7G-5984 | 273 |
| 7G-5985 | 273 |
| 7H-3937 | 103 |
| 7I-0717 | 154 |
| 7I-0966 | 365 |
| 7I-1248 | 332 |
| | 336 |
| | 341 |
| 7I-2272 | 308 |
| | 309 |
| | 337 |
| | 376 |
| 7I-2673 | 64 |
| | 108 |
| | 130 |
| 7I-7131 | 324 |
| 7I-8084 | 376 |
| | 377 |
| 7J-8337 | 477 |
| | 480 |
| 7J-9933 | 365 |
| 7K-1181 | 124 |
| | 129 |
| | 134 |
| | 136 |
| | 139 |
| | 140 |
| | 143 |
| | 277 |
| | 280 |
| | 283 |
| | 291 |
| | 293 |
| | 295 |
| | 305 |
| | 428 |
| | 454 |
| 7M-7410 | 309 |
| 7M-8485 | 235 |
| | 265 |
| | 268 |
| | 272 |
| | 273 |
| | 305 |
| | 337 |
| | 341 |
| 7N-0719 | 87 |
| | ►121 |
| 7T-1099 | 129 |
| | 167 |
| | 168 |
| | 176 |
| 7T-6799 | 122 |
| 7T-8890 | 487 |
| 7W-4669 | 49 |
| 7X-0578 | 411 |
| | 491 |
| 7X-0579 | 473 |
| | 474 |
| 7X-0584 | 477 |
| 7X-0613 | 86 |
| 7X-0851 | 398 |
| 7X-2459 | 291 |
| 7X-2533 | 425 |
| 7X-2536 | 197 |
| | 439 |
| 7X-2537 | 70 |
| 7X-2544 | 268 |
| 7X-2549 | 257 |
| | 303 |
| 7X-2619 | 70 |
| 7X-2621 | 130 |
| | 143 |
| | 337 |
| | 469 |
| 7X-3392 | 301 |
| 7X-7644 | 502 |
| 7X-7729 | 59 |
| | 73 |
| | 268 |
| | 316 |
| | 401 |
| 7X-7877 | 471 |
| | 475 |
| 7Y-0059 | 1 |
| | ►458 |
| 7Y-0466 | 215 |
| 7Y-0467 | 215 |
| 7Y-0468 | 215 |
| | 216 |
| 7Y-0682 | 195 |
| 7Y-1647 | 163 |
| 7Y-1648 | 163 |
| 7Y-1650 | 163 |
| 7Y-1746 | 196 |
| | 198 |
| 7Y-1976 | 59 |
| 7Y-2219 | ►389 |
| | 390 |
| 7Y-2853 | 167 |
| 7Y-2854 | 168 |
| 7Y-3474 | 487 |
| 7Y-3721 | 247 |
| 7Y-3730 | 270 |
| 7Y-3731 | 251 |
| | 273 |
| 7Y-3919 | 450 |
| | 451 |
| 7Y-3920 | 450 |
| | 451 |
| 7Y-3950 | 126 |
| 7Y-3951 | 126 |
| 7Y-3955 | 125 |
| 7Y-3962 | 96 |
| | 110 |
| | 125 |
| 7Y-3963 | 96 |
| | 99 |
| | 110 |
| | 126 |
| 7Y-3964 | 96 |
| | 110 |
| | 125 |
| 7Y-3965 | 96 |
| | 99 |
| | 110 |
| | 126 |
| 7Y-3966 | 110 |
| | 125 |
| 7Y-3967 | 99 |
| | 110 |
| | 125 |
| 7Y-4267 | 312 |
| 7Y-4268 | 312 |
| 7Y-4359 | 320 |
| 7Y-4538 | 255 |
| | 257 |
| 7Y-4817 | 324 |
| 7Y-4868 | 259 |
| | 261 |
| 7Y-5074 | 43 |
| | 246 |
| 7Y-5217 | 316 |
| 7Y-5219 | 337 |
| 7Y-5221 | 312 |
| 7Y-5247 | 268 |
| 7Y-5272 | 207 |
| 7Y-5456 | 129 |
| 7Y-6215 | 425 |
| 7Y-7389 | 475 |


**7**

► PRIMARY REFERENCE

# PART NUMBER INDEX


| Part | Page |
|---|---|
| 7Y-8099 | 341 |
| 7Y-8165 | 130 |
| 7Y-8167 | 130 |
| 7Y-8763 | 168 |
| 7Y-9096 | 491 |
| **8** | |
| 8C-3206 | 244 |
| | 250 |
| 8C-3445 | 43 |
| 8C-3446 | 43 |
| | 326 |
| 8C-3451 | 326 |
| 8C-5608 | 74 |
| 8C-5723 | 43 |
| 8C-5917 | 87 |
| 8C-5918 | 87 |
| 8C-6965 | 355 |
| 8E-9805 | 145 |
| 8H-5303 | 121 |
| 8H-5306 | 121 |
| 8J-4955 | 391 |
| | ►399 |
| 8J-8782 | 326 |
| 8J-8783 | 326 |
| 8L-2786 | 31 |
| 8L-8413 | 87 |
| 8M-2772 | 382 |
| 8M-2773 | 454 |
| 8N-1546 | 101 |
| 8N-1547 | 98 |
| 8P-9770 | 392 |
| | 393 |
| | 394 |
| 8R-1803 | 409 |
| 8T-0075 | 291 |
| 8T-0114 | 439 |
| | 482 |
| 8T-0198 | 272 |
| 8T-0267 | 326 |
| | 466 |
| 8T-0269 | 29 |
| | 237 |
| 8T-0328 | 83 |
| | 124 |
| | 230 |
| 8T-0334 | 473 |
| | 485 |
| 8T-0337 | 8 |
| | 143 |
| | 442 |
| | 496 |
| 8T-0389 | 466 |
| | 482 |
| 8T-0664 | 398 |
| 8T-0706 | 350 |
| 8T-1158 | 319 |
| 8T-1687 | 277 |
| 8T-1757 | 319 |
| 8T-1779 | 284 |
| | 305 |
| 8T-1889 | 73 |
| 8T-1890 | 73 |
| 8T-1905 | 289 |
| | 291 |
| 8T-2396 | 377 |
| 8T-2920 | 278 |
| 8T-3282 | 227 |
| 8T-3298 | 326 |
| 8T-3490 | 59 |
| | 73 |
| | 129 |
| | 168 |
| | 176 |
| | 454 |
| 8T-3597 | 55 |
| | 59 |
| | 167 |
| | 168 |
| | 176 |
| | 180 |
| 8T-3612 | 55 |
| | 168 |
| | 180 |
| | 425 |
| 8T-3991 | 471 |
| 8T-4121 | 46 |
| | 55 |
| | 59 |
| | 63 |
| | 70 |
| | 73 |
| | 87 |
| | 108 |
| | 130 |
| | 134 |
| | 136 |
| | 141 |
| | 143 |
| | 163 |
| | 168 |
| | 255 |
| | 263 |
| | 264 |
| | 267 |
| | 268 |
| | 270 |
| | 273 |
| | 281 |
| | 285 |
| | 296 |
| | 301 |
| | 303 |
| | 305 |
| | 332 |
| | 337 |
| | 341 |
| | 382 |
| | 401 |
| | 417 |
| | 425 |
| | 428 |
| | 439 |
| | 442 |
| | 449 |
| | 450 |
| | 451 |
| | 454 |
| | 462 |
| | 463 |
| | 469 |
| | 481 |
| 8T-4131 | 27 |
| | 319 |
| 8T-4133 | 67 |
| | 87 |
| | 108 |
| | 150 |
| | 323 |
| | 355 |
| | 382 |
| | 411 |
| 8T-4136 | 59 |
| | 70 |
| | 73 |
| | 130 |
| | 141 |
| | 163 |
| | 268 |
| | 273 |
| | 285 |
| | 305 |
| | 326 |
| | 344 |
| | 346 |
| | 401 |
| | 439 |
| | 442 |
| | 454 |
| 8T-4137 | 46 |
| | 59 |
| | 63 |
| | 70 |
| | 73 |
| | 87 |
| | 130 |
| | 134 |
| | 136 |
| | 143 |
| | 163 |
| | 168 |
| | 196 |
| | 198 |
| | 281 |
| | 285 |
| | 296 |
| | 327 |
| | 401 |
| | 412 |
| | 415 |
| | 425 |
| | 439 |
| | 451 |
| | 454 |
| | 462 |
| | 491 |
| 8T-4138 | 73 |
| | 89 |
| | 141 |
| 8T-4139 | 55 |
| | 255 |
| | 257 |
| | 259 |
| | 261 |
| | 266 |
| | 268 |
| | 277 |
| | 285 |
| 8T-4171 | 426 |
| 8T-4172 | 283 |
| 8T-4176 | 273 |
| 8T-4177 | 291 |
| 8T-4178 | 266 |
| 8T-4179 | 416 |
| | 417 |
| 8T-4182 | 130 |
| | 265 |
| | 301 |
| | 303 |
| 8T-4183 | 255 |
| | 257 |
| | 273 |
| 8T-4184 | 255 |
| | 257 |
| | 259 |
| | 261 |
| | 305 |
| 8T-4185 | 130 |
| 8T-4186 | 130 |
| | 268 |
| | 316 |
| 8T-4189 | 55 |
| | 130 |
| | 168 |
| | 172 |
| 8T-4190 | 416 |
| | 417 |
| | 462 |
| 8T-4191 | 73 |
| | 130 |
| | 281 |
| | 295 |
| | 382 |
| | 417 |
| | 442 |
| | 450 |
| | 454 |
| | 481 |
| 8T-4192 | 43 |
| | 166 |
| | 283 |
| | 291 |
| | 459 |
| 8T-4193 | 388 |
| | 389 |
| | 412 |
| 8T-4194 | 230 |
| | 254 |
| | 255 |
| | 257 |
| | 268 |
| | 270 |
| 8T-4195 | 55 |
| | 59 |
| | 73 |
| | 130 |
| | 159 |
| | 332 |
| | 337 |
| | 341 |
| | 428 |
| | 449 |
| | 463 |
| 8T-4196 | 55 |
| | 73 |
| | 130 |
| | 273 |
| | 454 |
| 8T-4198 | 281 |
| | 295 |
| 8T-4199 | 163 |
| 8T-4200 | 59 |
| | 70 |
| | 110 |
| | 448 |
| | 454 |
| 8T-4223 | 43 |
| | 55 |
| | 105 |
| | 106 |
| | 108 |
| | 150 |
| | 166 |
| | 230 |
| | 255 |
| | 257 |
| | 259 |
| | 261 |
| | 266 |
| | 268 |
| | 270 |
| | 273 |
| | 277 |


► PRIMARY REFERENCE

# PART NUMBER INDEX


| Part | Page |
|---|---|
| | 285 |
| | 291 |
| | 303 |
| | 305 |
| | 416 |
| | 417 |
| | 477 |
| | 480 |
| 8T-4224 | 43 |
| | 46 |
| | 55 |
| | 59 |
| | 70 |
| | 87 |
| | 103 |
| | 107 |
| | 110 |
| | 130 |
| | 168 |
| | 172 |
| | 291 |
| | 439 |
| | 448 |
| | 454 |
| | 467 |
| 8T-4226 | 88 |
| 8T-4240 | 320 |
| 8T-4244 | 105 |
| | 106 |
| 8T-4648 | 257 |
| | 263 |
| | 264 |
| | 265 |
| | 304 |
| 8T-4896 | 263 |
| | 264 |
| | 267 |
| | 304 |
| 8T-4908 | 55 |
| | 59 |
| | 88 |
| | 454 |
| 8T-4910 | 265 |
| | 304 |
| | 416 |
| | 417 |
| 8T-4956 | 255 |
| | 268 |
| | 273 |
| | 277 |
| | 301 |
| 8T-4970 | 462 |
| | 487 |
| 8T-4971 | 454 |
| 8T-4985 | 55 |
| 8T-4986 | 65 |
| 8T-5005 | 130 |
| 8T-5092 | 273 |
| 8T-6466 | 130 |
| | 263 |
| | 264 |
| | 267 |
| 8T-6685 | 255 |
| | 337 |
| 8T-6693 | 124 |
| | 172 |
| | 230 |
| 8T-6703 | 55 |
| | 59 |
| | 276 |
| 8T-6759 | 309 |
| | 324 |
| | 337 |
| | 355 |
| | 373 |
| | 378 |
| 8T-6842 | 502 |
| 8T-6868 | 416 |
| | 417 |
| 8T-6869 | 130 |
| 8T-6870 | 46 |
| 8T-7087 | 273 |
| 8T-7547 | 43 |
| | 107 |
| 8T-7934 | 86 |
| 8T-7971 | 459 |
| 8T-8442 | 237 |
| 8T-8729 | 85 |
| | 95 |
| | 97 |
| | 99 |
| | 100 |
| | 101 |
| | 253 |
| 8T-8730 | 95 |
| | 98 |
| | 99 |
| | 100 |
| | 101 |
| | 125 |
| 8T-8737 | 70 |
| | 89 |
| | 95 |
| | 97 |
| | 99 |
| | 100 |
| | 101 |
| | 125 |
| 8T-9403 | 265 |
| | 270 |
| | 303 |
| 8T-9535 | 41 |
| 8T-9756 | 87 |
| 8T-9757 | 87 |
| 8U-7803 | 471 |
| | 475 |
| 8X-5496 | 91 |
| 8Y-6967 | 416 |

## 9

| Part | Page |
|---|---|
| 9B-0453 | 105 |
| 9B-7233 | 122 |
| 9F-2167 | 265 |
| 9F-5644 | 121 |
| 9G-0002 | 87 |
| 9G-0003 | 87 |
| 9G-0004 | 87 |
| 9G-0005 | 87 |
| 9G-4343 | 124 |
| 9G-8909 | 87 |
| 9J-0705 | 315 |
| | 341 |
| 9J-7031 | 326 |
| 9M-5048 | 482 |
| 9M-5590 | 352 |
| | 373 |
| | 376 |
| 9R-2060 | 43 |
| 9R-3845 | 43 |
| 9R-9866 | 425 |
| 9S-4180 | 233 |
| 9S-4182 | 43 |
| | 301 |
| 9S-4183 | 319 |
| 9S-4185 | 31 |
| | 73 |
| | 272 |
| | 277 |
| 9S-4188 | 43 |
| 9S-4191 | 281 |
| | 284 |
| | 295 |
| | 299 |
| | 301 |
| | 346 |
| | 351 |
| 9S-6130 | 83 |
| | 268 |
| 9S-8004 | 308 |
| | 344 |
| 9S-8005 | 308 |
| | 309 |
| | 344 |
| | 346 |
| 9V-6754 | 482 |
| 9W-0335 | 124 |
| 9W-0844 | 450 |
| | 451 |
| 9W-0852 | 108 |
| | 424 |
| 9W-2146 | 193 |
| 9W-3361 | 199 |
| 9X-1386 | 117 |
| 9X-2038 | 425 |
| 9X-2041 | 412 |
| | 430 |
| | 432 |
| | 444 |
| 9X-2042 | 124 |
| | 409 |
| | 412 |
| | 430 |
| | 448 |
| | 460 |
| | 467 |
| | 491 |
| | 496 |
| 9X-2044 | 124 |
| | 411 |
| | 412 |
| | 460 |
| | 491 |
| | 496 |
| 9X-2045 | 428 |
| | 491 |
| 9X-2046 | 428 |
| 9X-2201 | 65 |
| | 301 |
| 9X-2480 | 73 |
| | 91 |
| 9X-3401 | 70 |
| | 83 |
| | 95 |
| | 97 |
| | 100 |
| | 101 |
| | 102 |
| | 114 |
| | 117 |
| | 125 |
| 9X-3402 | 95 |
| | 98 |
| | 99 |
| | 100 |
| | 101 |
| | 110 |
| | 125 |
| 9X-3463 | 106 |
| 9X-3959 | 49 |
| 9X-3982 | 73 |
| 9X-4244 | 107 |
| 9X-6165 | 73 |
| 9X-8256 | 70 |
| | 73 |
| | 89 |
| | 91 |
| | 124 |
| | 125 |
| | 130 |
| | 141 |
| | 150 |
| | 168 |
| | 172 |
| | 327 |
| | 401 |
| | 411 |
| | 426 |
| | 434 |
| | 454 |
| | 459 |
| | 487 |
| | 491 |
| 9X-8257 | 388 |
| | 389 |
| | 412 |
| | 416 |
| | 417 |
| | 462 |
| 9X-9120 | 97 |
| 9X-9825 | 129 |
| 9X-9896 | 73 |

## 0

| Part | Page |
|---|---|
| 030-1705 | 87 |
| | 129 |
| 033-8248 | 382 |
| 034-3679 | 73 |
| 039-9452 | 482 |
| 067-3045 | 46 |
| 067-6006 | 15 |
| 067-6043 | 12 |
| 067-6095 | 6 |
| 067-6135 | 6 |
| | 10 |
| 067-6179 | 23 |
| 067-6823 | 12 |
| | 49 |
| 083-9539 | 87 |
| 085-9310 | 82 |
| | 329 |
| 086-0321 | 388 |
| | 389 |
| 086-0322 | 388 |
| | 389 |
| 087-3908 | 167 |
| 087-3909 | 167 |
| 087-4402 | 280 |
| 087-4454 | ►200 |
| | 206 |
| 087-4456 | ►201 |
| | 203 |
| 087-4575 | 200 |
| 087-4576 | 200 |
| 087-4577 | 200 |
| 087-4587 | 129 |
| 087-4683 | 253 |
| 087-4710 | 355 |
| 087-5166 | 344 |
| | 346 |
| 087-5708 | 355 |


► PRIMARY REFERENCE

# PART NUMBER INDEX


| Part | Page |
|---|---|
| 087-5772 | 289 |
| 087-5805 | 384 |
| 087-5841 | 167 |
| 091-9035 | 129 |
| 093-0083 | 160 |
| 093-0115 | 160 |
| 093-0116 | 380 |
| 093-0349 | 160 |
| | 380 |
| | 386 |
| 093-0363 | 160 |
| | 380 |
| | 386 |
| 093-1436 | 195 |
| 093-1512 | 195 |
| 093-2065 | 73 |
| 093-7521 | 232 |
| 094-0876 | 353 |
| 094-1900 | 312 |
| 095-0735 | 435 |
| | 437 |
| | 439 |
| 095-0742 | 125 |
| 095-0755 | 411 |
| 095-0826 | 450 |
| 095-0827 | 426 |
| 095-0843 | 150 |
| 095-0882 | 312 |
| 095-1260 | 355 |
| 095-1388 | 47 |
| 095-1547 | 268 |
| 095-1575 | 336 |
| | 352 |
| | 355 |
| 095-1576 | 378 |
| 095-1578 | 352 |
| | 368 |
| | 370 |
| | 371 |
| | 373 |
| | 376 |
| 095-1579 | 352 |
| | 363 |
| | 369 |
| 095-1580 | 357 |
| 095-1582 | 357 |
| 095-1584 | 229 |
| | 352 |
| 095-1586 | 353 |
| | 366 |
| | 374 |
| | 375 |
| 095-1587 | 363 |
| | 369 |
| 095-1590 | 229 |
| | 332 |
| | 336 |
| | 341 |
| | 357 |
| | 363 |
| | 369 |
| 095-1594 | 344 |
| | 346 |
| 095-1595 | 312 |
| 095-1596 | 229 |
| 095-1603 | 336 |
| 095-1608 | 326 |
| 095-1625 | 324 |
| 095-1681 | 233 |
| 095-1698 | 365 |
| | 378 |
| 095-1704 | 195 |
| 095-1716 | 324 |
| 095-1723 | 319 |
| 095-1730 | 326 |
| 095-1750 | 374 |
| | 375 |
| 095-1751 | 374 |
| | 375 |
| 095-1778 | 336 |
| 095-1783 | 350 |
| 095-1784 | 319 |
| 095-1785 | 366 |
| 095-1786 | 363 |
| | 369 |
| 095-1787 | 332 |
| | 336 |
| | 341 |
| 095-1789 | 344 |
| | 346 |
| 095-6639 | 323 |
| 095-7930 | 450 |
| | 451 |
| 095-7982 | 238 |
| 095-9805 | 310 |
| 096-0001 | 476 |
| | 478 |
| 096-0192 | 103 |
| 096-1628 | 353 |
| 096-2323 | 238 |
| 096-2593 | 317 |
| 096-2622 | 467 |
| 096-2626 | 134 |
| | 136 |
| 096-3780 | 150 |
| 096-3884 | 467 |
| 096-4035 | 59 |
| 096-4129 | 172 |
| 096-4755 | 227 |
| 096-4883 | 268 |
| 096-4902 | 163 |
| 096-5819 | 59 |
| 096-5962 | 124 |
| 096-6166 | 113 |
| | 124 |
| | 143 |
| | 442 |
| | 496 |
| 099-0823 | 411 |
| 099-3629 | 488 |
| 099-3633 | 496 |
| 099-3645 | 458 |
| 099-3649 | 283 |
| 099-5845 | 350 |
| 099-6137 | 353 |
| | 355 |
| 099-6141 | 355 |
| 099-6144 | 355 |
| 099-6145 | 355 |
| 099-6418 | 157 |
| | 158 |
| 099-8232 | 272 |

## 1

| Part | Page |
|---|---|
| 100-3320 | 97 |
| 100-3751 | 23 |
| 100-4336 | 454 |
| 100-4458 | 78 |
| 100-4463 | 86 |
| 100-4830 | 80 |
| 100-4841 | 25 |
| 101-2846 | 124 |
| 101-3895 | 23 |
| 101-7397 | 270 |
| | 272 |
| 101-7398 | 265 |
| 101-7401 | 272 |
| 101-7402 | 268 |
| | 272 |
| 101-7403 | 270 |
| 101-7404 | 146 |
| | 265 |
| | 270 |
| | 272 |
| 101-8899 | 445 |
| | 467 |
| 101-8900 | 467 |
| | 491 |
| 101-9848 | 172 |
| 102-1248 | 272 |
| 102-7965 | 126 |
| 102-8802 | 83 |
| | 85 |
| | 101 |
| | 117 |
| 102-8803 | 95 |
| | 253 |
| 103-2529 | 97 |
| 103-5705 | 86 |
| 103-8177 | 336 |
| 103-8252 | 368 |
| | 370 |
| | 371 |
| 103-8253 | 368 |
| | 370 |
| | 371 |
| 103-8254 | 368 |
| | 370 |
| | 371 |
| 103-8255 | 368 |
| | 370 |
| | 371 |
| 104-7293 | 331 |
| 105-2169 | 411 |
| 105-3477 | 270 |
| | 272 |
| 105-3483 | 270 |
| 105-3484 | 283 |
| 105-3487 | 150 |
| | 167 |
| | 459 |
| 107-2961 | 473 |
| | 474 |
| | 482 |
| | 485 |
| 107-6370 | 360 |
| | 361 |
| 107-6371 | 360 |
| | 361 |
| 107-6479 | 352 |
| | 373 |
| | 376 |
| 107-6540 | 363 |
| | 369 |
| 107-6541 | 363 |
| | 369 |
| 107-6631 | 280 |
| | 295 |
| | 299 |
| 108-7118 | 305 |
| 108-7550 | 265 |
| 109-2665 | 360 |
| 109-2667 | ▶360 |
| | 362 |
| 109-5152 | 341 |
| | ▶361 |
| 109-9313 | 5 |
| | ▶63 |
| 109-9329 | 27 |
| 110-5525 | 317 |
| | 377 |
| 110-6393 | 502 |
| 111-3422 | 80 |
| 111-3423 | 80 |
| 111-4799 | 253 |
| 111-4816 | 125 |
| 111-4836 | 108 |
| | 129 |
| | 134 |
| | 136 |
| | 143 |
| | 401 |
| 111-4837 | 108 |
| | 129 |
| 111-4838 | 129 |
| | 143 |
| 111-4839 | 129 |
| | 143 |
| 111-8222 | 78 |
| 111-9916 | ▶374 |
| | 376 |
| 111-9959 | 337 |
| | 341 |
| 111-9998 | 357 |
| 112-9717 | 64 |
| 113-2127 | 380 |
| 113-6479 | 245 |
| | 270 |
| 113-7584 | 86 |
| 113-8129 | 57 |
| 113-8490 | 124 |
| 113-8491 | 124 |
| 113-8492 | 124 |
| 113-8493 | 124 |
| 114-0358 | 396 |
| | 399 |
| | 400 |
| 114-0359 | 396 |
| | 399 |
| | 400 |
| 114-0623 | 374 |
| | 375 |
| 114-6285 | 167 |
| 114-6289 | 172 |
| 114-6658 | 462 |
| 115-8634 | 305 |
| 115-8645 | 293 |
| 116-0118 | 108 |
| | 129 |
| | 134 |
| | 143 |
| 116-1665 | 154 |
| 117-6306 | 491 |
| 117-6349 | 442 |
| 117-6350 | 442 |
| 117-6356 | 442 |
| 118-4044 | 344 |
| | 346 |
| 118-4086 | 353 |
| 118-4087 | 353 |
| 118-5982 | 386 |
| 118-9930 | 27 |
| 119-1353 | 351 |
| 119-3662 | 101 |
| 119-5026 | 113 |
| | 401 |
| 119-5388 | 355 |
| 119-5389 | 355 |
| 119-5391 | 355 |
| 119-5398 | 363 |
| | 369 |
| 119-9447 | 350 |
| 120-9027 | 253 |


▶ PRIMARY REFERENCE

# PART NUMBER INDEX


| Part | Page |
|---|---|
| 121-1029 | 167 |
| 121-1491 | 308 |
| | 309 |
| | 336 |
| | ▶375 |
| 121-7098 | 454 |
| 121-7136 | 419 |
| | 421 |
| | 454 |
| 121-7137 | 419 |
| | 421 |
| | 454 |
| 121-7138 | 454 |
| 122-3606 | 55 |
| 122-3979 | 167 |
| 122-3980 | 167 |
| 122-4101 | 157 |
| 122-4120 | 167 |
| 122-5318 | 312 |
| 122-9605 | 454 |
| 122-9608 | 442 |
| 122-9609 | 442 |
| 122-9610 | 442 |
| 122-9611 | 439 |
| 122-9617 | 428 |
| 122-9657 | 417 |
| | 454 |
| 123-0707 | 113 |
| 123-1373 | 87 |
| 123-2003 | 230 |
| 123-2485 | 336 |
| 123-2552 | 372 |
| 123-2899 | 26 |
| | 57 |
| 124-0988 | 284 |
| 124-1008 | 291 |
| 124-1047 | 265 |
| 124-1062 | 265 |
| 124-1107 | 257 |
| 124-1108 | 257 |
| 124-1212 | 277 |
| 124-1266 | 305 |
| 124-3536 | 32 |
| | 34 |
| 124-3548 | 124 |
| 124-3708 | 79 |
| 124-3709 | 79 |
| 124-3815 | 23 |
| | 29 |
| 124-4009 | 435 |
| | 437 |
| 124-4010 | 435 |
| | 437 |
| 125-4784 | 125 |
| 125-4785 | 126 |
| 125-4840 | 126 |
| 125-7874 | 95 |
| | 98 |
| | 99 |
| | 100 |
| | 101 |
| | 126 |
| 125-7875 | 98 |
| | 101 |
| | 126 |
| 125-7876 | 95 |
| | 100 |
| 126-1767 | 70 |
| | 95 |
| | 97 |
| | 100 |
| | 101 |
| | 102 |
| | 117 |
| | 125 |
| 126-1768 | 95 |
| | 98 |
| | 99 |
| | 100 |
| | 101 |
| | 110 |
| | 125 |
| 126-1865 | 355 |
| 126-1866 | 355 |
| 126-2055 | 312 |
| 126-5011 | 97 |
| 126-6872 | 291 |
| 127-0580 | 411 |
| 127-5483 | 97 |
| 127-5484 | 101 |
| 127-6780 | 255 |
| 128-2135 | 409 |
| | 416 |
| | 430 |
| | 432 |
| 128-2136 | 409 |
| 129-3400 | 167 |
| 129-5874 | 257 |
| 129-7784 | 323 |
| 129-7971 | 237 |
| 129-8034 | 230 |
| 130-0252 | 417 |
| | 454 |
| 130-0270 | 454 |
| 131-1503 | 98 |
| 131-3025 | 254 |
| 131-5818 | 355 |
| 131-5915 | 353 |
| 131-8821 | 64 |
| 131-8822 | 64 |
| 131-8826 | 64 |
| 131-8932 | 64 |
| 132-1829 | ▶85 |
| | 124 |
| 132-5789 | 129 |
| | 134 |
| | 136 |
| | 450 |
| | 454 |
| 133-1011 | 23 |
| 133-2425 | 160 |
| 133-5813 | 280 |
| | 295 |
| 133-5828 | 265 |
| 134-0685 | 64 |
| 134-3284 | 108 |
| 134-3355 | 129 |
| 134-7258 | 502 |
| 134-8948 | 389 |
| 135-8573 | 159 |
| | 168 |
| 135-8575 | 168 |
| 135-8577 | 149 |
| | 168 |
| 135-8578 | 166 |
| | 168 |
| 135-8965 | 417 |
| | 469 |
| 135-8966 | 417 |
| | 469 |
| 136-0139 | 153 |
| 137-0856 | 248 |
| 137-3623 | 233 |
| 137-3624 | 233 |
| 137-3625 | 233 |
| 137-3626 | 207 |
| | 233 |
| 137-3628 | 207 |
| 137-3631 | 207 |
| 138-5184 | 125 |
| 138-5708 | 257 |
| 138-8454 | 491 |
| 139-7119 | 489 |
| 140-0674 | 359 |
| 140-0677 | 359 |
| 140-8718 | 80 |
| 141-2759 | 124 |
| 142-0038 | 272 |
| 142-0485 | 491 |
| 142-3835 | 1 |
| | ▶166 |
| 142-3836 | 1 |
| | ▶459 |
| 142-5546 | 442 |
| 142-6582 | 255 |
| 142-6742 | 350 |
| 142-7764 | 251 |
| 142-7765 | 242 |
| 142-7768 | 265 |
| 142-7769 | 265 |
| 143-9397 | 134 |
| | 136 |
| 144-0195 | 487 |
| | 496 |
| 144-0367 | 55 |
| | 268 |
| 145-3031 | 195 |
| 145-3035 | 197 |
| 145-4911 | 21 |
| 145-5106 | 201 |
| | ▶202 |
| 145-9278 | 163 |
| 146-6747 | 502 |
| 147-2645 | 80 |
| 147-4184 | 344 |
| 148-4685 | 162 |
| 148-4689 | 163 |
| 148-4703 | 163 |
| 148-4704 | 163 |
| 148-8305 | 299 |
| 148-8323 | 272 |
| 148-8327 | 277 |
| | 289 |
| 148-8330 | 272 |
| 148-8336 | 265 |
| | 280 |
| | 283 |
| | 291 |
| | 295 |
| | 299 |
| 148-8338 | 291 |
| 148-8340 | 283 |
| | 289 |
| | 305 |
| 148-8347 | 272 |
| | 277 |
| 148-8353 | 265 |
| | 280 |
| | 283 |
| | 295 |
| | 299 |
| 148-8354 | 268 |
| | 277 |
| | 280 |
| | 283 |
| | 295 |
| 148-8355 | 272 |
| 148-8357 | 268 |
| 148-8358 | 277 |
| 148-8363 | 277 |
| 148-8364 | 265 |
| | 283 |
| 148-8367 | 265 |
| | 283 |
| 148-8378 | 280 |
| | 284 |
| | 289 |
| | 291 |
| | 293 |
| | 295 |
| | 299 |
| | 305 |
| 148-8395 | 344 |
| | 346 |
| 148-8407 | 281 |
| | 284 |
| | 295 |
| | 299 |
| | 301 |
| | 346 |
| 148-8411 | 73 |
| | 272 |
| | 277 |
| 148-8429 | 272 |
| 148-8433 | 283 |
| | 291 |
| 148-8434 | 283 |
| 148-8435 | 284 |
| | 293 |
| 148-8439 | 283 |
| 148-8443 | 291 |
| 148-8444 | 265 |
| 149-5069 | 126 |
| 149-5070 | 126 |
| 149-5071 | 126 |
| 150-3036 | 289 |
| | 291 |
| 150-4044 | 283 |
| | 305 |
| 151-6703 | 467 |
| | 491 |
| 151-6704 | 467 |
| | 491 |
| 151-6778 | 491 |
| 151-6813 | 491 |
| 151-6815 | 491 |
| 151-6831 | 491 |
| 151-6832 | 491 |
| 151-9272 | 97 |
| | 101 |
| 151-9461 | 467 |
| 151-9497 | 467 |
| 151-9557 | 491 |
| 151-9576 | 491 |
| 152-3968 | 80 |
| 153-0088 | 466 |
| 153-2521 | ▶105 |
| | 108 |
| 153-2523 | ▶106 |
| | 112 |
| 153-2602 | 125 |
| 153-2620 | 101 |
| 153-2631 | 126 |
| 153-5223 | 355 |
| 153-5239 | 362 |
| 153-5276 | 331 |
| | 334 |
| | 343 |
| 153-5286 | 341 |
| 153-5288 | 336 |
| | 341 |
| 153-5289 | 336 |
| | 341 |
| 153-5290 | 336 |
| | 341 |


▶ PRIMARY REFERENCE

# PART NUMBER INDEX


| Part | Page |
|---|---|
| 153-5291 | 336 |
| | 341 |
| 153-5292 | 336 |
| | 341 |
| 153-5293 | 336 |
| | 341 |
| 153-5298 | 336 |
| 153-5299 | 336 |
| 153-5306 | 336 |
| 153-5309 | 336 |
| 153-5311 | 336 |
| 153-5313 | 348 |
| | ▶362 |
| 153-6237 | 272 |
| 153-8623 | 319 |
| 153-8644 | 350 |
| 153-8645 | 350 |
| 153-8748 | 350 |
| 153-8762 | 439 |
| 153-8763 | 439 |
| 153-8798 | 257 |
| 154-9023 | 59 |
| 155-2256 | 95 |
| 155-2258 | 100 |
| 155-2259 | 99 |
| 155-2260 | 95 |
| | 99 |
| | 100 |
| 155-2265 | 89 |
| 155-2270 | 97 |
| | 100 |
| | 110 |
| | 125 |
| 155-3624 | 301 |
| 156-6175 | 124 |
| 156-6470 | 491 |
| 156-6562 | 491 |
| 156-6563 | 491 |
| 156-6579 | 491 |
| 156-6598 | 467 |
| 156-6599 | 411 |
| 156-6618 | 411 |
| 156-6627 | 491 |
| 156-6631 | 489 |
| 156-6642 | 453 |
| 156-6643 | 467 |
| 157-0670 | 59 |
| 157-1669 | 73 |
| 157-3184 | 70 |
| 158-4380 | 189 |
| 158-4381 | 189 |
| 158-8150 | 336 |
| 158-8159 | 332 |
| | 336 |
| | 341 |
| 158-8186 | 359 |
| 158-8206 | 336 |
| 158-8207 | 336 |
| 158-8987 | ▶229 |
| | 326 |
| 158-9085 | 265 |
| | ▶378 |
| 159-4700 | 202 |
| 159-7782 | 324 |
| 159-7784 | 230 |
| 159-8049 | 87 |
| | 129 |
| 159-8050 | 87 |
| 160-8503 | 238 |
| 161-3128 | 125 |
| 161-3639 | 467 |
| 161-3650 | 467 |
| 161-3663 | 467 |
| 161-3665 | 467 |
| 161-3684 | 491 |
| 161-3685 | 411 |
| 161-3697 | 411 |
| 161-3698 | 491 |
| 161-3717 | 417 |
| | 469 |
| 162-0177 | 344 |
| 162-9994 | 79 |
| 163-3729 | 160 |
| 163-6637 | 97 |
| 163-6759 | 101 |
| 163-6795 | 110 |
| | 124 |
| | 139 |
| | 140 |
| | 460 |
| | 487 |
| | 496 |
| 163-6803 | 125 |
| 164-0515 | 467 |
| 164-0528 | 411 |
| | ▶453 |
| 164-0646 | 409 |
| 164-0648 | 491 |
| 164-0655 | 409 |
| 164-0664 | 453 |
| 164-0666 | 488 |
| 164-5552 | 265 |
| 164-5567 | 289 |
| | 291 |
| | 326 |
| 164-5590 | 326 |
| 164-5608 | 277 |
| 164-5628 | 280 |
| | 295 |
| | 299 |
| 164-5639 | 284 |
| 164-6872 | 305 |
| 164-6979 | 284 |
| | ▶372 |
| 164-6981 | ▶203 |
| | 284 |
| 164-8474 | 416 |
| 165-2823 | 165 |
| 165-2976 | 156 |
| | 157 |
| | 158 |
| 165-3065 | 459 |
| 165-3102 | 154 |
| 165-3103 | 154 |
| 165-3165 | 242 |
| 165-3173 | 245 |
| 165-3185 | 270 |
| 165-3190 | 270 |
| 165-3256 | 326 |
| 165-3260 | 277 |
| 165-9431 | 353 |
| 165-9435 | 353 |
| 165-9436 | 353 |
| 165-9438 | 353 |
| 165-9442 | 353 |
| 165-9443 | 353 |
| 165-9444 | 353 |
| 165-9460 | 353 |
| 165-9464 | 373 |
| 165-9552 | 355 |
| 165-9554 | 355 |
| 166-1486 | 380 |
| | 384 |
| | 386 |
| 166-1487 | 380 |
| 166-1494 | 384 |
| | 386 |
| 166-1495 | 380 |
| | 386 |
| 166-1579 | 382 |
| 167-3487 | 126 |
| 167-3593 | 124 |
| 167-3630 | 125 |
| 167-3631 | 126 |
| 167-7018 | 411 |
| 167-7039 | 467 |
| 167-7042 | 411 |
| 167-7270 | 502 |
| 168-0765 | 365 |
| 168-1359 | 396 |
| | 400 |
| 168-1968 | 291 |
| 168-6761 | 196 |
| | 198 |
| 168-9523 | 245 |
| 168-9759 | 280 |
| | 295 |
| 168-9760 | 241 |
| 168-9762 | 244 |
| 169-5326 | 80 |
| 170-2755 | 150 |
| 170-2983 | 150 |
| 170-3015 | 155 |
| 170-3016 | 167 |
| 170-6888 | 126 |
| 170-6890 | 126 |
| 170-6891 | 126 |
| 170-6929 | 87 |
| 170-6993 | 105 |
| | 106 |
| 170-9324 | 113 |
| 170-9328 | 129 |
| 170-9360 | 129 |
| | 150 |
| 170-9394 | 125 |
| 170-9417 | 105 |
| | 106 |
| 170-9418 | 105 |
| | 106 |
| 170-9497 | 417 |
| | ▶442 |
| | 465 |
| 170-9498 | 442 |
| 170-9499 | 442 |
| 170-9722 | 491 |
| 170-9724 | 409 |
| 171-0030 | ▶363 |
| | 367 |
| 171-0031 | 363 |
| 171-0034 | 363 |
| 171-0035 | 363 |
| | 369 |
| 171-0036 | 363 |
| | 369 |
| 171-0037 | 363 |
| | 369 |
| 171-0087 | 353 |
| 171-0123 | 357 |
| 171-0124 | 357 |
| 171-0126 | 357 |
| 171-0127 | 357 |
| 171-0128 | 357 |
| 171-0150 | 332 |
| 171-0596 | 97 |
| | 100 |
| | 125 |
| 171-3369 | 59 |
| 171-5349 | 117 |
| 171-7325 | 406 |
| | 407 |
| | 430 |
| 171-7420 | 409 |
| 171-7426 | 411 |
| 171-9077 | 59 |
| 171-9464 | 163 |
| 173-3439 | 312 |
| 173-3441 | 312 |
| 173-3442 | 312 |
| 173-3443 | 312 |
| 173-3444 | 312 |
| 173-3445 | 312 |
| 173-3447 | 312 |
| 173-3450 | 312 |
| 173-3451 | 312 |
| 173-3452 | 311 |
| | ▶365 |
| 173-3454 | 312 |
| 173-3503 | ▶207 |
| | 230 |
| 173-3505 | 207 |
| 173-3506 | 207 |
| 173-3507 | 230 |
| 173-3510 | 230 |
| 173-3513 | 233 |
| 173-3515 | 233 |
| 173-3516 | 233 |
| 173-3517 | 233 |
| 173-3518 | 230 |
| 173-3529 | 233 |
| 173-3536 | ▶366 |
| | 378 |
| 173-4664 | 272 |
| 173-4816 | 268 |
| 173-7916 | 255 |
| | 257 |
| 173-7992 | 255 |
| | ▶349 |
| 173-7995 | 257 |
| 174-3016 | 97 |
| | 125 |
| 174-7791 | 105 |
| | 106 |
| 174-8131 | 124 |
| 175-4291 | 107 |
| 175-4430 | 372 |
| 175-7141 | 108 |
| | 496 |
| 176-0773 | 19 |
| 176-1477 | 97 |
| 176-1521 | 98 |
| 176-1902 | 454 |
| 176-1916 | 428 |
| 176-1931 | 487 |
| 176-1937 | 411 |
| 176-1938 | 411 |
| 176-1939 | 411 |
| 176-1941 | 453 |
| 176-1949 | 448 |
| 176-1972 | 409 |
| 176-1986 | 411 |
| 176-1996 | 445 |
| 176-2278 | 380 |
| 176-4463 | 284 |
| 176-4469 | 284 |
| 176-4708 | 293 |
| 176-4746 | 73 |
| 176-4770 | 278 |
| 176-9299 | 97 |
| | 100 |
| 177-1061 | 272 |
| 177-2215 | 73 |
| | 88 |
| 177-2553 | 233 |
| 177-2584 | 312 |
| 177-2619 | 207 |
| 177-2653 | 272 |


▶ PRIMARY REFERENCE

# PART NUMBER INDEX


| Part | Page |
|---|---|
| | ▶367 |
| 177-5877 | 166 |
| 177-5879 | 166 |
| 177-5880 | 166 |
| 178-0852 | 160 |
| 178-3336 | 80 |
| 178-5422 | 428 |
| 178-5423 | 428 |
| 178-5431 | 487 |
| 178-5569 | 489 |
| 178-5570 | 411 |
| 178-5572 | 488 |
| 178-5573 | 467 |
| | 488 |
| 178-5574 | 467 |
| | 488 |
| 178-5576 | 491 |
| 178-6450 | 59 |
| 178-7023 | 129 |
| 179-9806 | 233 |
| 180-3861 | 105 |
| | 106 |
| 180-9286 | 289 |
| 183-1051 | 124 |
| 183-1343 | 120 |
| 184-0983 | 120 |
| 184-3983 | 64 |
| 184-5724 | 160 |
| 184-8850 | 150 |
| 184-8862 | 158 |
| 185-0423 | 357 |
| 185-0463 | 373 |
| | 376 |
| 185-0884 | 12 |
| 185-1546 | 41 |
| 185-1860 | 98 |
| 185-1861 | 96 |
| 185-8161 | 428 |
| 185-8180 | 467 |
| 185-8196 | 411 |
| 185-8205 | 409 |
| 185-8221 | 491 |
| 185-8280 | 453 |
| 185-8281 | 453 |
| 185-8284 | 403 |
| | 427 |
| 185-8286 | 253 |
| | 406 |
| | 407 |
| 185-8293 | 454 |
| 185-8300 | 404 |
| | 438 |
| 185-8302 | 404 |
| 187-0661 | 502 |
| 187-5954 | 247 |
| | 248 |
| 187-6058 | 303 |
| 188-3064 | 189 |
| 188-4140 | ▶230 |
| | 326 |
| 189-2678 | 409 |
| 189-2690 | 467 |
| 189-2702 | 489 |
| 189-2704 | 411 |
| 189-2717 | 448 |
| 189-2847 | 448 |
| 189-2853 | 409 |
| 189-2854 | 409 |
| 189-2864 | 411 |
| 189-9763 | 237 |
| 190-0386 | 471 |
| 190-3523 | 189 |
| 190-3524 | 189 |
| 190-5386 | 502 |
| 190-6880 | 167 |
| 190-7081 | 167 |
| 190-7819 | 352 |
| 190-7865 | 346 |
| 191-8921 | 411 |
| 193-5014 | 388 |
| | 389 |
| 193-5015 | 388 |
| | 389 |
| 193-6606 | 257 |
| 193-7720 | 485 |
| 194-0174 | ▶241 |
| | 270 |
| 194-0176 | 241 |
| | ▶242 |
| 194-0180 | ▶243 |
| | 270 |
| 194-0181 | 243 |
| | ▶244 |
| 194-0182 | 243 |
| | ▶245 |
| 195-9181 | 391 |
| | ▶400 |
| 196-0711 | 314 |
| 196-0807 | 268 |
| 196-1666 | 438 |
| 197-0165 | 317 |
| 197-0196 | 308 |
| | 309 |
| 197-0199 | 308 |
| | 309 |
| 197-0273 | 308 |
| | 309 |
| 197-2247 | 349 |
| | ▶350 |
| 197-2248 | 349 |
| | ▶351 |
| 197-4385 | 97 |
| 198-4766 | 55 |
| | 86 |
| 199-1286 | 270 |
| 199-7394 | 268 |
| 199-7403 | 268 |
| 199-9267 | 7 |
| 199-9751 | 118 |

## 2

| Part | Page |
|---|---|
| 201-4417 | 411 |
| 201-4530 | 411 |
| 201-7949 | 227 |
| 201-9263 | 336 |
| 201-9299 | 233 |
| 202-3855 | 259 |
| | 261 |
| 202-3856 | 259 |
| | 261 |
| 202-3857 | 259 |
| | 261 |
| 202-3858 | 259 |
| | 261 |
| 202-4004 | 284 |
| | 293 |
| 202-5397 | 97 |
| 202-6996 | 259 |
| | 261 |
| 202-7127 | 257 |
| 202-7128 | 257 |
| 203-9007 | 124 |
| 204-2281 | 284 |
| | 291 |
| 204-2763 | 207 |
| 204-6101 | 103 |
| 205-6295 | 411 |
| 205-6388 | 480 |
| 206-1345 | 46 |
| 206-3336 | ▶352 |
| | 439 |
| 206-9211 | 193 |
| 206-9292 | 319 |
| | 377 |
| 206-9294 | 237 |
| | 317 |
| | 377 |
| 206-9295 | 237 |
| | 317 |
| | 319 |
| 206-9296 | 237 |
| 206-9299 | 238 |
| | 319 |
| 206-9300 | 237 |
| 206-9301 | 238 |
| 207-2757 | 72 |
| 207-6222 | 272 |
| 207-6403 | 326 |
| 207-6404 | 326 |
| 207-6666 | 246 |
| 207-6667 | 246 |
| 208-4289 | 156 |
| | 157 |
| 208-8469 | 466 |
| 209-6000 | 323 |
| 209-8296 | 466 |
| | 485 |
| 209-9219 | 13 |
| 210-2768 | 289 |
| 212-2838 | 160 |
| 212-5148 | 272 |
| 214-4400 | 235 |
| 214-4511 | ▶235 |
| | 270 |
| 214-4518 | 235 |
| 214-7566 | 43 |
| 214-7568 | 73 |
| | 74 |
| | 83 |
| | 114 |
| | 289 |
| | 291 |
| | 317 |
| | 326 |
| | 377 |
| 214-7915 | 502 |
| 215-4909 | 229 |
| 215-5037 | 284 |
| | ▶307 |
| 216-6589 | 257 |
| 216-8634 | 23 |
| 218-1139 | 272 |
| 218-4935 | 125 |
| 219-7569 | 145 |
| 221-8045 | 502 |
| 222-0225 | 435 |
| | 437 |
| 224-0554 | 502 |
| 224-8946 | 502 |
| 225-0312 | 502 |
| 225-4257 | 502 |
| 225-4548 | 324 |
| 225-4549 | 324 |
| 225-4804 | 308 |
| | 336 |
| | 344 |
| | 346 |
| 225-4818 | 308 |
| | 336 |
| | 344 |
| | 346 |
| 225-5625 | 41 |
| 225-5638 | 41 |
| 225-5640 | 41 |
| 225-5959 | 41 |
| 225-5961 | 41 |
| 225-5962 | 41 |
| 225-6522 | 42 |
| 225-6524 | 42 |
| 225-7738 | 57 |
| 225-7944 | 52 |
| 225-8019 | 57 |
| 225-8287 | 23 |
| 225-8858 | 12 |
| 227-0265 | 276 |
| 227-0581 | 268 |
| 227-0590 | 326 |
| 227-6071 | 162 |
| 227-6081 | ▶162 |
| | 163 |
| 227-6105 | 163 |
| 227-6106 | 163 |
| 227-6147 | ▶163 |
| | 181 |
| 227-8807 | ▶204 |
| 228-2781 | 502 |
| 228-7091 | 74 |
| 228-7093 | 43 |
| 228-7096 | 83 |
| 228-7100 | 74 |
| | 115 |
| 228-7102 | 74 |
| 228-7316 | 502 |
| 228-9254 | 502 |
| 229-0887 | 502 |
| 229-9070 | 408 |
| | ▶487 |
| 229-9082 | 403 |
| | ▶445 |
| 230-1341 | 500 |
| 230-4011 | 450 |
| | 451 |
| 230-5010 | 95 |
| 230-8094 | 29 |
| 231-1827 | 87 |
| 231-4457 | 78 |
| 232-1322 | 13 |
| 232-1793 | 80 |
| 232-1794 | 80 |
| 232-2724 | 80 |
| 232-3126 | 78 |
| 232-3149 | 80 |
| 232-3274 | 80 |
| 232-3317 | 204 |
| 232-3657 | 23 |
| 232-3666 | 23 |
| 232-3751 | 52 |
| 232-3861 | 7 |
| 232-7449 | 13 |
| 232-7596 | 12 |
| 232-7597 | 12 |
| 232-7599 | 12 |
| | 43 |
| 233-5260 | 439 |
| 233-7489 | 66 |
| 234-1122 | 143 |
| 234-1158 | 113 |
| 234-4440 | 305 |
| | ▶324 |
| 234-4492 | 265 |
| 234-6468 | 409 |
| 234-6469 | 409 |
| 234-6470 | 409 |


▶ PRIMARY REFERENCE

# PART NUMBER INDEX


| Part | Page |
|---|---|
| 234-6471 | 409 |
| 234-6472 | 409 |
| 234-6473 | 409 |
| 234-6476 | 409 |
| 234-6477 | 409 |
| 234-6483 | 409 |
| 234-6485 | 409 |
| 234-6490 | 409 |
| 234-6491 | 409 |
| 234-6497 | 409 |
| 234-6498 | 409 |
| 234-6499 | 443 |
| 234-6501 | 416 |
| | ▶443 |
| 234-6502 | 443 |
| 234-6579 | 409 |
| | 430 |
| | 432 |
| 234-6580 | 430 |
| | 432 |
| 234-6593 | 443 |
| 234-6602 | 432 |
| 234-6603 | 430 |
| 234-6604 | 432 |
| 234-6605 | 430 |
| 234-6608 | 430 |
| | 432 |
| 234-6609 | 430 |
| | 432 |
| 234-6610 | 430 |
| | 432 |
| 234-6612 | 430 |
| 234-6613 | ▶253 |
| | 430 |
| 234-6614 | 430 |
| 234-6615 | 253 |
| 235-4121 | 96 |
| 235-7679 | 386 |
| 235-8862 | 463 |
| 235-8874 | 401 |
| 235-8875 | 401 |
| 235-8876 | 445 |
| 235-8877 | 445 |
| 235-8878 | 445 |
| 235-8879 | 417 |
| | 445 |
| 235-8880 | 426 |
| 235-8891 | 454 |
| 235-8893 | 428 |
| 235-8894 | 428 |
| 235-8912 | 411 |
| 235-8914 | 430 |
| | 432 |
| 235-8923 | 409 |
| 235-8930 | 409 |
| 235-8950 | 401 |
| | 403 |
| | 409 |
| 235-8951 | 406 |
| 235-8952 | 407 |
| 235-8965 | 430 |
| 235-8966 | 432 |
| 235-8969 | ▶435 |
| | 441 |
| 235-8970 | ▶437 |
| | 440 |
| 235-8996 | 406 |
| | 407 |
| 235-8997 | 406 |
| 235-8998 | 407 |
| 235-9001 | 416 |
| | 417 |
| 235-9005 | 401 |
| 235-9012 | 487 |
| 235-9014 | 454 |
| 235-9015 | 454 |
| 236-2843 | 280 |
| 236-2844 | 280 |
| 236-2848 | 280 |
| 236-3212 | ▶246 |
| | 270 |
| 236-3213 | ▶246 |
| | 270 |
| 236-3214 | 246 |
| | ▶247 |
| 236-3215 | 246 |
| | ▶248 |
| 236-3257 | 236 |
| 236-3259 | 236 |
| 236-3702 | 159 |
| 236-3703 | 159 |
| 236-5511 | 29 |
| 236-6365 | 384 |
| 236-6366 | 384 |
| 236-6419 | 332 |
| | 336 |
| | 341 |
| 236-6421 | 336 |
| | 341 |
| 237-3184 | 2 |
| | ▶255 |
| 238-2319 | 125 |
| 238-2391 | 124 |
| 238-2501 | 87 |
| 238-2528 | 87 |
| 238-5080 | 73 |
| | 74 |
| | 83 |
| 238-5081 | 83 |
| 238-5082 | 43 |
| | 319 |
| 238-5083 | 43 |
| 238-5084 | 43 |
| 238-8288 | 66 |
| 238-8292 | 69 |
| 238-8671 | 80 |
| 239-1714 | 252 |
| | ▶270 |
| 239-4378 | 197 |
| 239-4382 | 197 |
| 239-4383 | 197 |
| 239-4384 | 197 |
| 239-4390 | ▶195 |
| | 197 |
| 239-4391 | 195 |
| 239-4392 | 195 |
| 239-4393 | 197 |
| 239-4394 | 195 |
| 239-6986 | 502 |
| 239-8693 | 214 |
| | ▶439 |
| 239-8697 | 307 |
| | ▶308 |
| 239-8998 | 307 |
| | ▶309 |
| 240-2978 | 155 |
| 240-2979 | 155 |
| 240-5074 | 445 |
| 240-5571 | 78 |
| 240-6332 | 218 |
| | 220 |
| 240-6359 | 218 |
| | 220 |
| 240-7874 | 97 |
| | 101 |
| | 125 |
| 240-7878 | 97 |
| 241-9264 | 67 |
| 242-1510 | 502 |
| 242-1588 | 502 |
| 242-6475 | 2 |
| | ▶257 |
| 243-4505 | 102 |
| | 108 |
| | 424 |
| 243-4508 | 95 |
| 243-4509 | 70 |
| 244-7927 | 158 |
| 244-8194 | 153 |
| 244-8198 | 167 |
| 244-8228 | 167 |
| 244-8242 | 167 |
| 244-8255 | 167 |
| 244-8277 | 178 |
| 244-8278 | 178 |
| 244-8284 | 174 |
| 244-8288 | 178 |
| 244-8400 | ▶331 |
| | 332 |
| 245-5079 | 280 |
| 245-7749 | 425 |
| | ▶426 |
| 245-7750 | 426 |
| 245-7751 | 426 |
| 245-7756 | 454 |
| 245-7757 | 454 |
| 245-7760 | 124 |
| 245-7790 | 409 |
| | 430 |
| | 432 |
| 245-7791 | 445 |
| 245-7792 | 445 |
| 245-7793 | 445 |
| 245-7811 | 1 |
| | ▶463 |
| 245-7813 | 438 |
| 245-7814 | 438 |
| 245-7815 | 438 |
| 245-7816 | 438 |
| 245-7817 | 404 |
| 245-7818 | 404 |
| 245-7819 | 404 |
| 245-7820 | 404 |
| 245-7823 | 404 |
| 245-7824 | 404 |
| 245-7825 | 404 |
| 245-7826 | 404 |
| 245-7827 | 404 |
| 245-7828 | 404 |
| 245-7829 | 404 |
| 245-7830 | 404 |
| 245-7831 | 404 |
| 245-7832 | 404 |
| 245-7833 | 404 |
| 245-7834 | 404 |
| 245-7835 | 404 |
| 245-7836 | 404 |
| | ▶419 |
| 245-7837 | 419 |
| | 421 |
| 245-7838 | 404 |
| 245-7839 | 404 |
| 245-7842 | 435 |
| 245-7844 | 437 |
| 245-7846 | 404 |
| | ▶438 |
| 245-7847 | 404 |
| 245-7850 | 454 |
| 245-7851 | 454 |
| 245-7856 | 404 |
| 245-7872 | 445 |
| 245-7873 | 417 |
| | 445 |
| 245-7905 | 419 |
| | 421 |
| 245-7925 | 430 |
| 245-7926 | 432 |
| 245-7929 | 443 |
| 245-7948 | 430 |
| | 432 |
| 246-2641 | 82 |
| 246-4383 | 78 |
| 247-2694 | 95 |
| | 98 |
| | 101 |
| 247-7423 | 214 |
| | ▶498 |
| 247-7437 | 502 |
| 247-7438 | 502 |
| 247-8733 | 237 |
| 247-8734 | 237 |
| 247-8735 | 237 |
| 247-8966 | 319 |
| 247-9030 | 257 |
| 247-9033 | 257 |
| 247-9034 | 257 |
| 248-7174 | 195 |
| 248-8943 | 179 |
| 248-8961 | 158 |
| 248-8992 | 165 |
| 248-8994 | 165 |
| 248-8995 | 165 |
| 249-6657 | 317 |
| | 319 |
| 249-6658 | 237 |
| 249-6659 | 237 |
| 249-6660 | 237 |
| 249-6661 | 237 |
| 250-2446 | 336 |
| 250-2447 | 336 |
| 250-5054 | 156 |
| 250-8054 | 498 |
| 251-0299 | ▶102 |
| | 143 |
| 251-0467 | 129 |
| 252-6438 | 39 |
| | 40 |
| 253-1346 | 196 |
| | 198 |
| 253-6694 | 255 |
| 253-6697 | 255 |
| 254-3052 | 384 |
| 254-3053 | 384 |
| 254-3954 | 39 |
| | 40 |
| 255-1665 | 280 |
| 255-1666 | 280 |
| 255-2751 | 113 |
| | ▶122 |
| 255-2966 | 64 |
| 255-5594 | 336 |
| | 359 |
| 255-5661 | 332 |
| | ▶368 |
| 255-5680 | 270 |
| | ▶344 |
| 255-5683 | 270 |
| | ▶346 |
| 255-5713 | 214 |
| | ▶330 |
| 256-1138 | 292 |
| 256-4447 | 66 |
| 256-6454 | 118 |
| 256-7704 | 8 |
| 259-0918 | 323 |
| 259-0922 | ▶323 |


▶ PRIMARY REFERENCE

# PART NUMBER INDEX


| Part | Page |
|---|---|
| | 326 |
| 259-3543 | 159 |
| 259-5043 | ▶108 |
| | 379 |
| 259-5317 | 129 |
| 259-5326 | 108 |
| 259-7202 | 430 |
| 259-7345 | 406 |
| | 407 |
| 259-7346 | ▶406 |
| | 432 |
| 259-7347 | ▶407 |
| | 430 |
| 259-7348 | ▶427 |
| | 428 |
| 259-7351 | 448 |
| 259-7352 | 448 |
| 259-7353 | 409 |
| 259-7354 | 467 |
| 259-7378 | 330 |
| | ▶332 |
| 259-7464 | 252 |
| | ▶348 |
| 259-7632 | ▶334 |
| | 336 |
| 259-7733 | 284 |
| 260-6685 | 466 |
| 260-6945 | 498 |
| 260-7868 | 252 |
| | ▶314 |
| 260-7872 | 272 |
| 260-7904 | 314 |
| 260-7906 | 314 |
| 260-7910 | ▶249 |
| | 270 |
| 260-7911 | 249 |
| | ▶250 |
| 260-7912 | 250 |
| 260-7913 | 249 |
| | ▶251 |
| 260-7914 | 251 |
| 260-7988 | 270 |
| 260-7992 | 270 |
| 260-7996 | 270 |
| 260-8000 | 270 |
| 260-8010 | ▶259 |
| | 379 |
| 260-8043 | 272 |
| 260-8315 | 259 |
| 260-8316 | 259 |
| 262-2313 | 176 |
| 262-2347 | 174 |
| 264-1702 | 380 |
| 264-7029 | 450 |
| | 451 |
| 264-9961 | 336 |
| 266-0912 | 272 |
| 266-0913 | 272 |
| 266-1108 | 292 |
| 266-1139 | 292 |
| 266-1278 | 273 |
| 266-1279 | 273 |
| 266-1303 | 273 |
| 266-5431 | 502 |
| 266-7379 | 129 |
| 267-7976 | 113 |
| 267-8071 | 1 |
| | ▶449 |
| 268-0720 | 172 |
| 268-1621 | 277 |
| 270-2679 | 124 |
| 270-5949 | 355 |
| 270-5950 | 355 |
| 270-5953 | 353 |
| 271-7843 | 440 |
| | 441 |
| 273-5274 | 491 |
| 273-5345 | 491 |
| 273-5346 | 491 |
| 273-7677 | 154 |
| 273-9292 | 19 |
| 274-1935 | 37 |
| 274-3774 | 100 |
| 274-3778 | 99 |
| 275-1038 | 80 |
| 275-1362 | 326 |
| 275-1439 | 273 |
| 275-1442 | 209 |
| | 210 |
| 275-1443 | 209 |
| | 210 |
| 275-1444 | 209 |
| 275-9891 | 29 |
| 275-9897 | 29 |
| 276-1786 | 129 |
| 276-5600 | 12 |
| 276-5602 | 12 |
| 276-5603 | 13 |
| 276-7391 | 10 |
| 276-7476 | 32 |
| | 34 |
| 276-7478 | 32 |
| | 34 |
| 276-9200 | 41 |
| 277-0588 | 21 |
| 277-0786 | 257 |
| 277-1974 | 42 |
| 277-1975 | 42 |
| 277-2500 | 50 |
| 277-2537 | 52 |
| 277-2545 | 237 |
| 277-2923 | 57 |
| 277-2925 | 57 |
| 277-3012 | 23 |
| 277-3013 | 23 |
| 277-4223 | 23 |
| 277-6078 | 19 |
| 277-9463 | 69 |
| 277-9940 | 69 |
| 278-0017 | 69 |
| 278-3242 | 57 |
| 278-3818 | 159 |
| 278-3837 | 176 |
| 279-7907 | 65 |
| 279-9651 | 26 |
| 280-1384 | 29 |
| 280-2747 | 273 |
| 281-0791 | 419 |
| | 421 |
| 281-3119 | 97 |
| | 101 |
| 281-3120 | 97 |
| 281-3132 | 97 |
| | 100 |
| | 101 |
| | 125 |
| 281-3388 | 97 |
| | 99 |
| 281-3395 | 97 |
| | 99 |
| | 101 |
| | 125 |
| 281-5981 | 74 |
| 281-5987 | 73 |
| 281-7039 | 50 |
| 281-7040 | 50 |
| 281-8744 | 57 |
| 281-8805 | 114 |
| 283-4662 | 22 |
| 283-8301 | 28 |
| 283-8302 | 28 |
| 284-4426 | 411 |
| 285-1399 | 284 |
| 285-1465 | 285 |
| 285-3254 | 394 |
| 286-7851 | 69 |
| 287-3585 | 227 |
| 287-8597 | 22 |
| 288-6974 | 22 |
| 288-6975 | 22 |
| 288-7502 | 257 |
| 289-4232 | 129 |
| 289-5657 | 280 |
| 289-5672 | 270 |
| 289-5690 | 303 |
| 289-6603 | 165 |
| 289-6698 | 167 |
| 289-6700 | 173 |
| 289-8194 | ▶232 |
| | 326 |
| 289-8195 | 232 |
| 290-1729 | 502 |
| 291-7559 | ▶450 |
| | 452 |
| 291-7560 | 450 |
| | 451 |
| 291-7561 | 450 |
| 291-7593 | 129 |
| 292-3462 | 80 |
| 292-7297 | 326 |
| 293-1137 | 404 |
| 293-1183 | 417 |
| | 445 |
| 293-1184 | 417 |
| | 445 |
| 294-0286 | 23 |
| 294-4550 | 129 |
| 295-9517 | 320 |
| 295-9575 | 237 |
| 295-9577 | 237 |
| 295-9578 | 237 |
| 295-9579 | 237 |
| 295-9583 | 237 |
| 295-9584 | 237 |
| 295-9890 | 237 |
| 296-7067 | 273 |
| 296-7069 | 273 |
| 297-0483 | 359 |
| 297-0529 | ▶353 |
| | 440 |
| | 441 |
| 297-0532 | 434 |
| | ▶440 |
| 297-0533 | 434 |
| | ▶441 |
| 298-3484 | 119 |
| 298-4282 | 502 |
| | 3 |
| 303-9933 | 83 |
| 303-9937 | 83 |
| 304-5062 | 26 |
| 304-5063 | 26 |
| 305-0330 | 409 |
| 305-0361 | 489 |
| 305-0441 | 454 |
| 305-0442 | 454 |
| 305-5362 | 98 |
| 305-6873 | 73 |
| 305-7664 | 59 |
| 306-1611 | 257 |
| 306-1614 | 257 |
| 306-1615 | 257 |
| 306-8401 | 129 |
| 307-0047 | 500 |
| 307-4918 | 265 |
| 307-4919 | 265 |
| 307-5034 | 259 |
| | 261 |
| 307-5097 | 277 |
| 307-5098 | 277 |
| 307-7656 | 157 |
| 308-8775 | 160 |
| 308-8776 | 160 |
| 308-8777 | 160 |
| 309-5130 | 43 |
| 309-5137 | 43 |
| 310-0078 | 2 |
| | 417 |
| | ▶434 |
| 310-0210 | 284 |
| | ▶357 |
| 310-0404 | ▶315 |
| | 341 |
| 310-0405 | 315 |
| | 341 |
| 310-0419 | 355 |
| 310-0420 | 355 |
| 310-9667 | 63 |
| | ▶64 |
| 311-6184 | 129 |
| 312-5694 | 390 |
| 313-5671 | 98 |
| 315-0800 | 160 |
| 315-3393 | 39 |
| | 40 |
| 315-3394 | 39 |
| | 40 |
| 315-5313 | 411 |
| 316-8846 | 404 |
| 316-8847 | 404 |
| 316-8849 | 404 |
| 316-8916 | 401 |
| | ▶404 |
| 316-8918 | 404 |
| 316-8920 | 404 |
| 316-8921 | 404 |
| 317-4712 | 273 |
| 317-5482 | 32 |
| | 34 |
| 317-6198 | 501 |
| 317-6665 | 29 |
| 318-1181 | ▶117 |
| | 129 |
| 319-6212 | 43 |
| 319-6220 | 43 |
| 320-3060 | 115 |
| 320-3063 | 73 |
| 320-5737 | 150 |
| 321-8649 | 43 |
| 321-8929 | 86 |
| 321-9994 | 19 |
| 322-3154 | 43 |
| | ▶45 |
| 322-3155 | 45 |
| 323-7897 | 336 |
| 323-7898 | 336 |
| | ▶359 |
| 323-9312 | 32 |
| | 34 |
| 324-0444 | 23 |
| 324-4488 | 27 |
| 324-4489 | 27 |

# PART NUMBER INDEX


| Part | Page |
|---|---|
| 324-5771 | 141 |
| | 417 |
| 325-4471 | ▶107 |
| | 110 |
| 325-8634 | ▶115 |
| | 118 |
| 325-8865 | 273 |
| 325-9571 | 101 |
| 326-0316 | 83 |
| 326-0319 | 43 |
| 326-7289 | 8 |
| 326-7401 | ▶50 |
| | 52 |
| 326-9052 | 501 |
| 327-6593 | 424 |
| 327-6594 | 424 |
| 329-3796 | 25 |
| 329-5252 | 86 |
| 329-5255 | 38 |
| 329-5534 | 43 |
| 331-0290 | 32 |
| | 34 |
| 331-1682 | ▶12 |
| | 13 |
| 331-1924 | 393 |
| 331-1926 | 393 |
| 331-4222 | 100 |
| 331-4226 | 97 |
| | 100 |
| | 101 |
| | 125 |
| 331-7972 | 502 |
| 331-7973 | 502 |
| 332-8591 | 73 |
| 332-8598 | 73 |
| 333-4609 | 210 |
| 334-4603 | 502 |
| 334-9981 | 312 |
| 335-0136 | 352 |
| 335-0138 | 352 |
| 335-2092 | 22 |
| 335-5602 | 39 |
| | ▶41 |
| 335-5604 | 41 |
| 335-5605 | 41 |
| 335-5607 | 39 |
| | 40 |
| 335-6264 | 15 |
| 335-6266 | 15 |
| 335-6883 | ▶8 |
| | 9 |
| 335-7055 | 15 |
| 336-4757 | 80 |
| 337-1182 | 270 |
| 337-1205 | 293 |
| 339-0546 | 254 |
| 339-6951 | ▶215 |
| | 216 |
| 339-6952 | 215 |
| 339-6953 | 215 |
| 339-6954 | 215 |
| 339-6955 | 215 |
| 339-8780 | 19 |
| 340-4212 | 52 |
| 340-8237 | 197 |
| 341-5368 | ▶216 |
| | 316 |
| 342-0932 | 165 |
| 342-0965 | 165 |
| 342-2972 | 97 |
| | 101 |
| | 125 |
| 342-2973 | 101 |
| 342-2974 | 97 |
| | 101 |
| 342-2975 | 97 |
| 342-2976 | 97 |
| 342-6510 | 37 |
| 343-0701 | 4 |
| | ▶6 |
| 343-3917 | 73 |
| 344-1722 | 86 |
| 344-5360 | 74 |
| 344-7700 | 37 |
| 345-2568 | 37 |
| 345-9694 | 4 |
| | ▶29 |
| 346-0407 | 23 |
| 346-0408 | 23 |
| 346-0411 | 4 |
| | ▶57 |
| 346-0466 | 4 |
| | ▶499 |
| 346-0495 | 4 |
| | ▶23 |
| 346-0798 | 4 |
| | ▶119 |
| 346-1841 | 4 |
| | ▶36 |
| 346-2911 | 4 |
| | ▶49 |
| 346-3229 | 43 |
| 346-8219 | 501 |
| 347-2081 | 301 |
| 347-4416 | 74 |
| 347-4734 | 129 |
| 347-6081 | ▶236 |
| | 326 |
| 347-6082 | 236 |
| 347-6530 | 237 |
| | 319 |
| 347-6740 | ▶390 |
| | 391 |
| 347-6742 | 390 |
| | ▶393 |
| 347-6850 | ▶390 |
| | 391 |
| 347-7485 | 392 |
| 347-7545 | 393 |
| 347-7574 | 393 |
| 347-8645 | 74 |
| 347-8646 | 74 |
| 348-3197 | 392 |
| 348-3283 | 4 |
| | ▶13 |
| | 14 |
| 348-3285 | 4 |
| | ▶10 |
| | 14 |
| 348-3296 | 4 |
| | ▶32 |
| 348-3300 | 14 |
| | ▶34 |
| 348-3503 | 4 |
| | 14 |
| | ▶25 |
| 348-5409 | 59 |
| 348-5434 | 19 |
| 349-4154 | 237 |
| 349-5084 | 126 |
| 349-5085 | 125 |
| 349-7059 | 83 |
| 350-0637 | 6 |
| 350-7735 | 83 |
| 351-0286 | 284 |
| 351-1724 | 37 |
| 351-3886 | 5 |
| | ▶27 |
| 351-4089 | 74 |
| 351-4318 | 74 |
| 351-4320 | 74 |
| 351-4321 | 74 |
| 351-4749 | 29 |
| 351-9918 | 105 |
| | 107 |
| 352-6815 | 372 |
| 352-6864 | 369 |
| 352-7057 | 334 |
| | 343 |
| 352-7058 | 334 |
| | 343 |
| 352-7059 | 334 |
| | 343 |
| 352-7116 | 336 |
| | ▶369 |
| 352-7122 | 336 |
| | 341 |
| | ▶370 |
| 352-7123 | 344 |
| | 346 |
| | ▶371 |
| 352-7138 | ▶336 |
| | 348 |
| 353-2149 | 435 |
| 353-2150 | 437 |
| 353-2151 | ▶421 |
| 353-5109 | 83 |
| 354-5833 | 45 |
| 354-8322 | 22 |
| 355-4378 | 100 |
| 356-2353 | 482 |
| 357-0147 | 8 |
| 357-2698 | 391 |
| | ▶397 |
| 357-2713 | 398 |
| 357-2714 | 398 |
| 357-3877 | 439 |
| 357-7540 | 195 |
| 358-1630 | 393 |
| 358-6390 | 502 |
| 359-3576 | 482 |
| 359-3582 | 482 |
| 359-6616 | 15 |
| 359-8335 | 83 |
| 360-3697 | 273 |
| 361-1045 | 462 |
| 361-7519 | 69 |
| 361-7886 | 99 |
| | 100 |
| | 125 |
| 362-3147 | 55 |
| | 59 |
| 363-0559 | 10 |
| 364-1614 | 423 |
| 364-2862 | 79 |
| 364-2863 | 79 |
| 364-2864 | 79 |
| 364-2866 | 79 |
| 364-2879 | 79 |
| 364-2882 | 79 |
| 364-2901 | ▶79 |
| | 80 |
| 364-5145 | 10 |
| 364-8522 | 458 |
| 366-0149 | 34 |
| 366-4622 | 124 |
| 366-5257 | ▶471 |
| | 473 |
| 366-5260 | ▶476 |
| | 477 |
| 366-5262 | ▶482 |
| | 485 |
| 366-5264 | 485 |
| 366-5265 | 473 |
| | 474 |
| 366-5266 | 485 |
| 366-5267 | 471 |
| 366-5269 | 471 |
| 366-5271 | 471 |
| 366-8771 | 104 |
| | ▶500 |
| 367-0844 | 502 |
| 367-8467 | 384 |
| 368-6658 | 73 |
| 369-3869 | 8 |
| 369-4243 | 502 |
| 369-6858 | 273 |
| 369-8284 | 86 |
| 369-8420 | 268 |
| 369-8502 | 280 |
| | 295 |
| | ▶355 |
| 369-8507 | 355 |
| 369-8508 | 355 |
| 369-8509 | 355 |
| 369-8510 | 355 |
| 369-8568 | 355 |
| 369-8569 | 355 |
| 370-5367 | 87 |
| 370-6545 | 12 |
| 370-7998 | 32 |
| 371-2539 | 4 |
| | ▶21 |
| 371-2553 | 4 |
| | ▶52 |
| 371-7140 | 482 |
| 371-7141 | 482 |
| 371-7142 | 482 |
| 371-7143 | 482 |
| 371-7144 | 482 |
| 371-7146 | 482 |
| 371-7147 | 482 |
| 371-7148 | 482 |
| 371-7201 | 237 |
| | 319 |
| | 320 |
| 371-9083 | 390 |
| | ▶392 |
| 371-9131 | 392 |
| 372-9295 | 423 |
| | ▶424 |
| 373-1106 | ▶217 |
| | 379 |
| 373-1107 | ▶217 |
| | 379 |
| 373-1108 | ▶217 |
| | 379 |
| 373-1109 | ▶217 |
| | 383 |
| 373-1110 | 217 |
| | ▶263 |
| 373-1111 | 217 |
| | ▶218 |
| 373-1115 | 217 |
| | ▶264 |
| 373-1118 | 217 |
| | ▶304 |
| 373-1119 | 217 |
| | ▶222 |
| 373-2588 | 471 |
| 373-2590 | 471 |
| 373-2591 | 471 |
| 373-2594 | 471 |
| | 475 |
| 373-2595 | 471 |
| | 475 |


▶ PRIMARY REFERENCE

# PART NUMBER INDEX


| Part | Page |
|---|---|
| 373-2596 | 471 |
| | 475 |
| 373-2597 | 471 |
| | 475 |
| 373-2600 | 471 |
| 373-3495 | 476 |
| | 478 |
| 374-4419 | 57 |
| 374-5958 | 471 |
| | 475 |
| 374-5981 | 67 |
| 374-6004 | 5 |
| | ▶47 |
| 374-6038 | 67 |
| 375-5008 | 4 |
| | ▶28 |
| 375-6276 | 386 |
| 375-6280 | 385 |
| | ▶386 |
| 375-6281 | 2 |
| | ▶385 |
| 375-6871 | 384 |
| 375-6872 | 384 |
| 375-8749 | 172 |
| 375-8750 | 172 |
| 376-0601 | 28 |
| 376-1084 | 2 |
| | ▶379 |
| 376-1085 | 379 |
| | ▶380 |
| 376-1087 | 380 |
| 376-4074 | 10 |
| 377-2012 | 476 |
| | 478 |
| | ▶485 |
| 377-2843 | 471 |
| 377-3291 | 273 |
| 377-4718 | 29 |
| | ▶31 |
| 377-5395 | ▶391 |
| 377-5887 | 451 |
| 377-6536 | ▶451 |
| | 452 |
| 377-6667 | 167 |
| | ▶173 |
| 377-6708 | 167 |
| | ▶174 |
| 377-6727 | 175 |
| 377-6743 | 173 |
| 377-6746 | 175 |
| 377-6749 | 174 |
| 377-6767 | 180 |
| 377-6786 | 167 |
| 377-6809 | 180 |
| 377-8051 | 129 |
| 378-0319 | 392 |
| 378-0321 | 392 |
| 378-0361 | 393 |
| 378-0362 | 393 |
| 378-0364 | 393 |
| 378-1012 | 103 |
| 378-4739 | 21 |
| 378-8587 | 29 |
| 379-2022 | 19 |
| 379-2023 | 19 |
| 379-4415 | 5 |
| | ▶423 |
| 379-4430 | 67 |
| 379-7509 | 179 |
| 379-7518 | 167 |
| 380-1204 | 391 |
| | ▶398 |
| 380-2065 | 32 |
| | 34 |
| 380-4848 | 32 |
| 380-4849 | 34 |
| 380-5077 | 32 |
| 380-5078 | 34 |
| 380-6351 | 482 |
| 381-1372 | 502 |
| 381-1373 | 502 |
| 381-6236 | 15 |
| 381-7416 | 449 |
| | ▶452 |
| 381-9061 | 73 |
| 381-9064 | 73 |
| 383-5626 | 423 |
| 383-5666 | 411 |
| 383-5767 | 409 |
| 383-6929 | 488 |
| 383-6930 | 489 |
| 383-6931 | 488 |
| 383-6932 | 488 |
| 383-6933 | 467 |
| 384-2205 | 485 |
| 384-2207 | ▶473 |
| | 476 |
| 384-2286 | 69 |
| 384-6533 | 467 |
| | ▶494 |
| 385-1278 | 482 |
| 385-1279 | 482 |
| 385-1400 | 482 |
| 385-2474 | 482 |
| 385-3458 | 157 |
| | 158 |
| 385-4093 | 502 |
| 385-8757 | 494 |
| 386-0281 | 182 |
| 386-0285 | 182 |
| 386-6071 | 482 |
| 386-6072 | 482 |
| 387-2637 | 73 |
| 387-2846 | 494 |
| 387-2847 | 494 |
| 387-2848 | 494 |
| 387-2849 | 494 |
| 387-3699 | 280 |
| | 295 |
| 387-4672 | 317 |
| 387-6403 | 72 |
| 388-0399 | 160 |
| 388-1869 | 19 |
| 388-7014 | 67 |
| 388-9091 | 409 |
| 388-9094 | 409 |
| 388-9095 | 409 |
| 388-9097 | 491 |
| 388-9105 | 416 |
| | ▶467 |
| 388-9107 | 416 |
| | ▶488 |
| 388-9108 | 416 |
| | ▶489 |
| 389-5891 | 34 |
| 390-2252 | 27 |
| 390-2263 | 73 |
| 390-7991 | 150 |
| 391-3193 | 4 |
| | ▶15 |
| | 16 |
| 391-3197 | 4 |
| | ▶39 |
| 391-4751 | 167 |
| 391-9646 | 167 |
| | ▶175 |
| 391-9651 | 167 |
| 392-1262 | 167 |
| 392-2185 | 280 |
| | 295 |
| 392-5377 | ▶391 |
| 393-4006 | 22 |
| 394-5874 | 22 |
| 394-6123 | 304 |
| 394-6125 | 263 |
| 394-6126 | 263 |
| 394-6145 | 264 |
| 394-6147 | 264 |
| 394-7410 | 175 |
| 394-7470 | 3 |
| | ▶67 |
| 394-7474 | 5 |
| | ▶46 |
| 394-7970 | 46 |
| 394-9371 | 263 |
| | 264 |
| 394-9372 | 263 |
| | 264 |
| 394-9460 | 411 |
| 395-0021 | 326 |
| 395-1699 | 46 |
| 395-3437 | 72 |
| 395-3439 | 72 |
| 396-2351 | 409 |
| 396-2352 | 409 |
| 396-2395 | 29 |
| 396-3531 | 70 |
| 396-3533 | 70 |
| 396-3538 | 70 |
| 396-3542 | 167 |
| 396-3815 | 380 |
| | 386 |
| 396-3816 | 386 |
| 396-3817 | 384 |
| 396-3818 | 386 |
| 396-3819 | 384 |
| 396-4502 | 4 |
| | ▶80 |
| 396-6322 | 4 |
| | ▶69 |
| 396-6895 | 401 |
| 396-6954 | 4 |
| | ▶22 |
| 396-6969 | 4 |
| | ▶78 |
| 396-6979 | 4 |
| | ▶19 |
| 396-8257 | 80 |
| 396-9392 | 157 |
| 397-5469 | 222 |
| 397-5517 | 222 |
| 397-5521 | 222 |
| 397-9009 | 167 |
| | ▶180 |
| 397-9010 | 180 |
| 397-9063 | 222 |
| 397-9064 | 222 |
| 397-9066 | 222 |
| 397-9067 | 222 |
| 397-9068 | 222 |
| 397-9069 | 222 |
| 397-9076 | 222 |
| 397-9077 | 222 |
| 397-9078 | 222 |
| 397-9079 | 222 |
| 397-9080 | 222 |
| 397-9081 | 222 |
| 397-9082 | 222 |
| 397-9088 | 222 |
| 397-9089 | 222 |
| 397-9090 | 222 |
| 397-9091 | 222 |
| 397-9092 | 222 |
| 397-9093 | 222 |
| 397-9273 | 222 |
| 397-9277 | 222 |
| 398-0095 | 222 |
| 398-0096 | 222 |
| 398-0097 | 222 |
| 398-0100 | 218 |
| | 220 |
| | 222 |
| 398-0105 | 222 |
| 398-0106 | 218 |
| | 220 |
| | 222 |
| 398-0109 | 218 |
| | 222 |
| 398-0933 | 218 |
| 398-0934 | 218 |
| 398-0935 | 218 |
| 398-0936 | 218 |
| | 220 |
| 398-0937 | 218 |
| | 220 |
| 398-0938 | 218 |
| 398-0941 | 218 |
| | 220 |
| 398-0943 | 218 |
| | 220 |
| 398-0944 | 218 |
| | 220 |
| 398-0945 | 218 |
| | 220 |
| 398-0946 | 218 |
| | 220 |
| 398-0948 | 218 |
| | 220 |
| 398-0949 | 218 |
| | 220 |
| 398-0951 | 218 |
| | 220 |
| 398-0952 | 218 |
| | 220 |
| 398-0953 | 218 |
| | 220 |
| | 222 |
| 398-0954 | 218 |
| 398-0955 | 218 |
| | 220 |
| 398-0956 | 218 |
| | 220 |
| 398-0962 | 218 |
| | 220 |
| 398-0963 | 218 |
| 398-1505 | 448 |
| 398-2282 | 292 |
| | ▶376 |
| 398-2329 | 220 |
| 398-2332 | 220 |
| 398-3877 | 78 |
| 398-7105 | 467 |
| 398-7106 | 467 |
| 398-7107 | 467 |
| 398-7110 | 491 |
| 398-7111 | 467 |
| 398-8931 | 113 |
| 399-0061 | 409 |
| 399-0062 | 409 |
| 399-0065 | 409 |
| 399-0797 | 129 |
| 399-1961 | 263 |
| | 264 |
| 399-1962 | 267 |
| | 304 |
| 399-6263 | 177 |


▶ PRIMARY REFERENCE

# PART NUMBER INDEX


Part Page

**4**

415-4315 . . . . . 32
415-4565 . . . . . 218
415-4566 . . . . . 220
415-4567 . . . . . 222
415-4568 . . . . . 218
415-4572 . . . . . 220
415-4600 . . . . . 4
►26
416-1798 . . . . . ►401
403
417
416-1802 . . . . . 401
416-4309 . . . . . 411
416-4969 . . . . . 5
►118
416-7727 . . . . . 69
416-9608 . . . . . ►409
418
417-1143 . . . . . 491
417-5871 . . . . . 4
►42
417-7185 . . . . . 4
►7
417-7187 . . . . . 4
►37
417-7782 . . . . . 57
418-6282 . . . . . ►208
284
418-6284 . . . . . 208
►209
418-6285 . . . . . 208
►210
418-6286 . . . . . ►211
284
418-6287 . . . . . 211
►212
418-6288 . . . . . 211
►213
418-8379 . . . . . 491
418-9897 . . . . . ►403
408
419-3368 . . . . . 167
►176
419-3369 . . . . . 176
419-7580 . . . . . 67
419-8528 . . . . . 230
►233
419-8531 . . . . . 233
419-8533 . . . . . 233
420-0454 . . . . . 48
420-2083 . . . . . 73
420-3151 . . . . . 415
►444
420-5299 . . . . . 73
420-6315 . . . . . 187
►196
420-6316 . . . . . 196
►197
198
420-6319 . . . . . 188
►198
421-1431 . . . . . 417
►428
465
421-1434 . . . . . 428
►430
421-3762 . . . . . 165
421-4416 . . . . . ►157
168
421-6175 . . . . . 73
422-2405 . . . . . 190
►193
422-5388 . . . . . ►156
167
422-5497 . . . . . 189
423-1984 . . . . . 74
423-6434 . . . . . 74
►114
424-0331 . . . . . 496
424-0332 . . . . . 496
424-0333 . . . . . 496
424-0334 . . . . . 496
424-0335 . . . . . 496
424-0336 . . . . . 496
424-0337 . . . . . 496
424-0338 . . . . . 496
424-4322 . . . . . 125
424-6652 . . . . . 120
425-0779 . . . . . ►14
425-3316 . . . . . ►16
17
425-6092 . . . . . ►158
167
425-7079 . . . . . 444
425-7107 . . . . . 80
426-1498 . . . . . 4
►9
426-3891 . . . . . 155
426-4018 . . . . . 74
428-7524 . . . . . 154
430-2804 . . . . . ►155
167
430-4119 . . . . . 494
430-6462 . . . . . 185
430-6463 . . . . . 185
430-6464 . . . . . 181
►185
431-1642 . . . . . ►303
385
431-1802 . . . . . 303
431-4572 . . . . . 69
431-8611 . . . . . 416
►448
432-5008 . . . . . 2
►181
432-6291 . . . . . 326
433-4841 . . . . . 74
433-6299 . . . . . 1
►165
434-3436 . . . . . 289
435-0868 . . . . . ►141
408
435-1484 . . . . . ►341
348
435-1485 . . . . . 341
►343
436-0520 . . . . . 39
40
436-1116 . . . . . 416
►496
436-1901 . . . . . 444
436-7781 . . . . . 32
34
437-4170 . . . . . 69
438-1294 . . . . . 496
438-3180 . . . . . 16
►40
438-4951 . . . . . 494
438-4952 . . . . . 494
438-4953 . . . . . 494
438-4954 . . . . . 494
438-4955 . . . . . 494
438-4956 . . . . . 494
438-4957 . . . . . 494
438-4958 . . . . . 494
438-4965 . . . . . 352
438-5386 . . . . . 74
440-2105 . . . . . 89
►92
441-1162 . . . . . 167
441-1164 . . . . . 167
441-1165 . . . . . 167
441-6375 . . . . . ►110
417
441-6376 . . . . . 110
441-6377 . . . . . 110
441-6379 . . . . . 110
442-7945 . . . . . 97
442-7946 . . . . . 97
442-8572 . . . . . 181
►182
442-8573 . . . . . 182
442-8574 . . . . . 182
442-9496 . . . . . 97
443-5690 . . . . . 502
443-7859 . . . . . 459
443-8460 . . . . . 462
445-4703 . . . . . 4
►120
445-5630 . . . . . 181
►183
445-6262 . . . . . 1
►159
445-6263 . . . . . 159
446-1895 . . . . . ►72
74
446-7230 . . . . . 312
446-9619 . . . . . 475
446-9620 . . . . . 475
446-9621 . . . . . 474
447-1706 . . . . . 330
447-1707 . . . . . 82
187
188
329
348
447-1709 . . . . . 301
447-1711 . . . . . 348
447-1715 . . . . . 27
447-1725 . . . . . 191
447-1731 . . . . . 190
191
447-1733 . . . . . 153
448-4217 . . . . . 10
448-4227 . . . . . 10
449-4094 . . . . . 150
449-4129 . . . . . 462
449-7301 . . . . . 92
450-4908 . . . . . 411
450-9263 . . . . . 15
450-9772 . . . . . 501
451-0548 . . . . . 69
451-2175 . . . . . 108
257
301
314
348
469
451-2176 . . . . . 27
160
183
184
190
191
316
380
386
451-2181 . . . . . 67
451-2182 . . . . . 27
451-2183 . . . . . 384
451-5175 . . . . . 167
451-7225 . . . . . 499
451-8019 . . . . . 125
452-7122 . . . . . 289
453-1259 . . . . . 257
469
453-2834 . . . . . 108
453-2835 . . . . . 314
453-2844 . . . . . 160
380
386
453-2845 . . . . . 183
184
453-3432 . . . . . 54
453-3433 . . . . . 326
453-3440 . . . . . 326
453-3441 . . . . . 54
453-3446 . . . . . 380
453-3447 . . . . . 326
453-3450 . . . . . 27
267
453-3451 . . . . . 54
326
453-3454 . . . . . 54
67
265
324
326
453-3456 . . . . . 267
326
453-5523 . . . . . 116
453-6477 . . . . . 97
453-7871 . . . . . 97
453-8030 . . . . . 165
185
453-8032 . . . . . 165
453-8033 . . . . . 67
453-8143 . . . . . 2
►383
453-8149 . . . . . 383
►384
454-3745 . . . . . 10
454-3931 . . . . . 10
454-3935 . . . . . 10
454-5075 . . . . . ►116
280
295
299
454-5091 . . . . . 80
455-0704 . . . . . 97
101
125
455-0705 . . . . . 97
101
455-0707 . . . . . 95
97
100
101
125
455-0708 . . . . . 97
99
455-0709 . . . . . 97
99
101
125
455-2765 . . . . . 222
455-3798 . . . . . 67
324


► PRIMARY REFERENCE

# PART NUMBER INDEX


| Part | Page |
|---|---|
| 455-5674 | 292 |
| 456-0574 | 98 |
| 456-0575 | 98 |
| 456-5182 | 69 |
| 456-5926 | 183 |
| | 184 |
| 457-5821 | 263 |
| | 264 |
| | 267 |
| | 304 |
| | 326 |
| 458-0526 | 90 |
| | 91 |
| 458-8848 | 216 |
| 459-1351 | 326 |
| 459-2731 | 427 |
| | ▶432 |
| 460-0132 | 91 |
| 461-0414 | 165 |
| 461-2758 | 265 |
| 461-3434 | 104 |
| | ▶462 |
| 461-5994 | 4 |
| | ▶501 |
| 461-6784 | 124 |
| 462-6495 | 89 |
| 462-6685 | 4 |
| | ▶48 |
| 463-1678 | 80 |
| 464-6253 | 6 |
| 464-7318 | 280 |
| | 295 |
| | ▶373 |
| 465-4558 | ▶254 |
| 465-4562 | 254 |
| 465-8275 | ▶280 |
| | 417 |
| 466-1869 | ▶94 |
| | 214 |
| 466-4849 | 32 |
| | 34 |
| 467-4498 | ▶104 |
| 467-4842 | 67 |
| 467-6039 | 91 |
| 467-6040 | 91 |
| 467-7466 | 1 |
| | ▶70 |
| 468-5306 | 163 |
| 470-4925 | 36 |
| 470-8038 | 32 |
| | 34 |
| 470-8101 | 10 |
| 470-8171 | 10 |
| 471-3641 | 462 |
| 474-0154 | 304 |
| 474-0161 | 304 |
| 475-2681 | 141 |
| 475-4173 | 428 |
| 475-4187 | 124 |
| 476-6624 | 1 |
| | ▶17 |
| 476-6625 | 1 |
| | ▶14 |
| 477-9413 | ▶89 |
| | 104 |
| 477-9415 | 104 |
| | ▶134 |
| 477-9886 | 43 |
| 479-3260 | 134 |
| | 136 |
| 479-8364 | 91 |
| 479-9395 | 141 |
| 480-4489 | 32 |
| | 34 |
| 480-4490 | 32 |
| | 34 |
| 480-4491 | 32 |
| | 34 |
| 480-9457 | 43 |
| 480-9458 | 43 |
| 481-6691 | 83 |
| 481-9524 | 220 |
| 483-1262 | 124 |
| 483-2762 | 95 |
| 483-2767 | 95 |
| 483-2768 | 95 |
| 483-2777 | 95 |
| 485-4894 | 57 |
| 485-4895 | 57 |
| 486-7094 | ▶95 |
| | 134 |
| 490-5979 | ▶470 |
| | 477 |
| | 480 |
| 490-5980 | 417 |
| | ▶477 |
| 491-3927 | 225 |
| 491-9758 | 74 |
| 493-1610 | 502 |
| 497-1111 | 39 |
| | 40 |
| 498-2479 | 502 |


## 5


| Part | Page |
|---|---|
| 500-4203 | 134 |
| | 136 |
| 501-7449 | 74 |
| 501-8429 | 217 |
| | ▶267 |
| 501-8430 | 267 |
| 501-8431 | 267 |
| 501-8432 | 267 |
| 503-0794 | 70 |
| 504-2756 | 74 |
| 504-2956 | 220 |
| 504-2958 | 220 |
| 504-4611 | 217 |
| | ▶220 |
| 504-4612 | 220 |
| 505-1260 | 92 |
| 505-1681 | 319 |
| 505-5962 | 157 |
| | 158 |
| 507-5950 | ▶326 |
| | 329 |
| 507-7552 | 191 |
| | ▶194 |
| 507-7553 | 191 |
| | ▶192 |
| 509-8503 | 4 |
| | ▶18 |
| 509-9705 | 70 |
| 510-9643 | 124 |
| 513-5041 | 454 |
| 513-5042 | 454 |
| 515-1893 | 28 |
| 517-2070 | 103 |
| 518-6777 | ▶96 |
| | 123 |
| 518-8343 | 5 |
| | ▶123 |
| 519-2458 | 69 |
| 519-8524 | 74 |
| 521-8862 | 70 |
| 522-0896 | 59 |
| 522-4935 | 384 |
| 522-6333 | 397 |
| 522-6334 | 397 |
| 524-2647 | 224 |
| | ▶311 |
| 524-2648 | 316 |
| | ▶319 |
| 524-2918 | 1 |
| | ▶149 |
| 524-3234 | 149 |
| | ▶150 |
| 524-3235 | 150 |
| 524-3350 | 1 |
| | ▶82 |
| 524-3351 | 82 |
| | ▶83 |
| 524-3352 | 83 |
| 524-9944 | 268 |
| 524-9945 | 268 |
| 524-9946 | 268 |
| 524-9949 | 285 |
| 524-9953 | 289 |
| 524-9955 | 59 |
| 525-3672 | ▶144 |
| | 145 |
| 525-3741 | 148 |
| | ▶224 |
| 525-4303 | 103 |
| 525-4519 | 167 |
| 526-7759 | 167 |
| 528-2285 | 388 |
| 528-2286 | ▶388 |
| | 390 |
| 539-0468 | 305 |
| 539-1625 | 87 |
| | ▶103 |
| 539-1626 | 103 |
| 539-2879 | 1 |
| | ▶465 |
| 539-2881 | 1 |
| | ▶87 |
| 539-2977 | 87 |
| 539-2979 | 87 |
| 539-2992 | ▶143 |
| | 417 |
| | 465 |
| 539-2993 | ▶90 |
| | 465 |
| 539-2994 | 90 |
| | ▶91 |
| 539-2995 | ▶124 |
| | 417 |
| | 465 |
| 539-2997 | 91 |
| 539-3000 | 91 |
| 539-8169 | ▶199 |
| 539-8170 | ▶199 |
| 541-0808 | 167 |
| 541-0862 | 168 |
| 541-2854 | 167 |
| | ▶172 |
| 541-2855 | 172 |
| 541-2865 | 305 |
| 541-3307 | 319 |
| 541-3312 | 319 |
| 541-3317 | 319 |
| 541-3318 | 319 |
| 541-3320 | 319 |
| 541-3352 | 237 |
| 541-3355 | 237 |
| 541-8738 | 189 |
| 541-8739 | 189 |
| 541-8740 | 189 |
| 541-8741 | 189 |
| 542-1363 | 15 |
| 542-1570 | 98 |
| 542-6592 | 199 |
| 542-6593 | 199 |
| 542-6613 | ▶189 |
| | 199 |
| 542-7228 | 199 |
| 543-0244 | 2 |
| | ▶148 |
| 543-0998 | 148 |
| | ▶227 |
| 543-0999 | ▶145 |
| | 148 |
| 543-1000 | 224 |
| | ▶225 |
| 543-1001 | 144 |
| | ▶146 |
| 543-1004 | 145 |
| 543-2703 | 181 |
| | ▶305 |
| 544-4844 | 305 |
| 545-9959 | ▶138 |
| | 417 |
| | 465 |
| 545-9960 | 138 |
| | ▶139 |
| 545-9961 | 138 |
| | ▶140 |
| 546-1942 | 181 |
| | ▶191 |
| 546-5050 | ▶391 |
| 546-5051 | ▶390 |
| | 391 |
| 546-5052 | 390 |
| | ▶394 |
| 546-5611 | 224 |
| 546-5612 | 224 |
| 546-5666 | ▶113 |
| | 417 |
| 546-5809 | 86 |
| 546-5810 | 38 |
| 547-7863 | 301 |
| 547-7864 | 301 |
| 548-0127 | 268 |
| 548-0128 | 268 |
| 548-0129 | 59 |
| 548-0130 | 59 |
| 548-0131 | 59 |
| 548-0132 | 55 |
| 548-0133 | 55 |
| 548-0134 | 65 |
| 548-4703 | 285 |
| 548-4708 | 289 |
| 548-4883 | 316 |
| 548-5561 | 59 |
| 549-2642 | 502 |
| 549-2643 | 502 |
| 549-3962 | 312 |
| 549-3963 | 312 |
| 549-3964 | 311 |
| | ▶312 |
| 549-6012 | 4 |
| 549-8886 | 491 |
| 549-8887 | 416 |
| | ▶491 |
| 549-8888 | ▶478 |
| | 480 |
| 549-8890 | 465 |
| | ▶469 |
| 549-8893 | 417 |
| | 469 |
| 549-8894 | 481 |
| 549-8895 | 417 |
| | 465 |

# PART NUMBER INDEX


| Part | Page |
|---|---|
| | ▶481 |
| 550-1463 | ▶411 |
| | 416 |
| 550-1470 | 124 |
| 550-3547 | 2 |
| | ▶93 |
| 550-5488 | 225 |
| 550-5489 | 225 |
| 550-5490 | 225 |
| 550-5491 | 225 |
| 550-5492 | 225 |
| 550-5493 | 225 |
| 550-5494 | 225 |
| 550-5495 | 225 |
| 550-5496 | 225 |
| 550-5497 | 225 |
| 550-5498 | 225 |
| 550-5499 | 225 |
| 550-5500 | 225 |
| 550-5501 | 225 |
| 550-5502 | 225 |
| 550-5505 | 225 |
| 550-5506 | 225 |
| 550-5753 | 146 |
| 550-5754 | 146 |
| 550-5755 | 146 |
| 550-5756 | 146 |
| 550-5757 | 146 |
| 550-5758 | 146 |
| 550-5759 | 146 |
| 550-5760 | 146 |
| 550-5761 | 146 |
| 550-5762 | 146 |
| 550-5764 | 146 |
| 550-5765 | 146 |
| 550-5766 | 146 |
| 550-5767 | 146 |
| 550-5768 | 146 |
| 550-5769 | 146 |
| 550-5770 | 146 |
| 550-5771 | 146 |
| | ▶310 |
| 550-5772 | 310 |
| 550-5773 | 310 |
| 550-5774 | 310 |
| 550-5775 | 310 |
| 550-5776 | 310 |
| 550-5777 | 310 |
| 550-5778 | 310 |
| 550-5779 | 310 |
| 550-5780 | 310 |
| 550-5781 | 310 |
| 550-5782 | 310 |
| 550-5783 | 310 |
| 550-5784 | 310 |
| 550-5785 | 310 |
| 550-5786 | 310 |
| 550-7698 | 4 |
| | ▶86 |
| 550-7775 | 461 |
| 551-1869 | 54 |
| 551-6788 | ▶237 |
| | 319 |
| 551-6789 | ▶317 |
| | 319 |
| 551-6790 | 319 |
| 551-6791 | 319 |
| 551-6792 | 319 |
| 551-6793 | 319 |
| 551-6794 | 319 |
| 551-6795 | 319 |
| | ▶377 |
| 551-6796 | 319 |
| 551-6797 | 319 |
| 551-6798 | 319 |
| 551-6799 | 319 |
| 551-6800 | 319 |
| 551-6801 | 319 |
| 551-6802 | 319 |
| 551-6803 | 319 |
| 551-6804 | 319 |
| 551-6805 | 320 |
| 551-6806 | 317 |
| 551-6807 | 317 |
| 551-6808 | 317 |
| 551-6809 | 319 |
| 551-6810 | 319 |
| 551-6811 | 319 |
| 551-6812 | 317 |
| 551-6813 | 317 |
| 551-6814 | 317 |
| 551-6815 | 319 |
| 551-6817 | 317 |
| 551-6821 | 320 |
| 551-6822 | 320 |
| 551-6823 | 320 |
| 552-5313 | 254 |
| 552-7939 | 319 |
| 552-7941 | 320 |
| 552-7943 | 377 |
| 552-7945 | 377 |
| 552-7946 | 317 |
| 552-7948 | 237 |
| 552-7950 | 237 |
| 552-7952 | 237 |
| 552-7953 | 237 |
| 552-7955 | 238 |
| 553-5747 | 55 |
| 553-5748 | 59 |
| 553-5749 | 55 |
| 554-1656 | 54 |
| 554-3439 | ▶474 |
| | 478 |
| 554-3444 | 474 |
| | ▶475 |
| 554-3473 | 474 |
| 554-3491 | ▶415 |
| | 416 |
| 554-3494 | ▶466 |
| | 475 |
| 554-3508 | 2 |
| | ▶446 |
| 554-6935 | 1 |
| | ▶502 |
| 554-6992 | 394 |
| 554-6994 | 394 |
| 554-6995 | 394 |
| 554-6996 | 394 |
| 554-6997 | 394 |
| 555-2225 | 417 |
| | ▶460 |
| | 465 |
| 555-5076 | 2 |
| | ▶447 |
| 555-5135 | ▶416 |
| | 418 |
| 556-6432 | ▶2 |
| 556-6434 | ▶2 |
| 556-6437 | 2 |
| | ▶252 |
| 556-6438 | 2 |
| | ▶5 |
| 556-6443 | 2 |
| | ▶3 |
| 556-6447 | ▶1 |
| | 2 |
| 556-6479 | 252 |
| | ▶268 |
| 556-6488 | 252 |
| | ▶283 |
| 556-6497 | 252 |
| | ▶289 |
| 556-6500 | 252 |
| | ▶301 |
| 556-6517 | 252 |
| | ▶276 |
| 556-6522 | 252 |
| | ▶316 |
| 556-6525 | 5 |
| | ▶425 |
| 556-6526 | 5 |
| | ▶43 |
| 556-6529 | 5 |
| | ▶55 |
| 556-6534 | 5 |
| | ▶59 |
| 556-6542 | 5 |
| | ▶65 |
| 556-6548 | 1 |
| | ▶454 |
| 556-6558 | ▶38 |
| | 53 |
| 556-6564 | 1 |
| | ▶160 |
| 556-6568 | 53 |
| | ▶54 |
| 556-6573 | 1 |
| | ▶167 |
| 556-6577 | 1 |
| | ▶73 |
| 556-7952 | 1 |
| | ▶129 |
| 556-7955 | 129 |
| 556-7960 | 129 |
| 556-8999 | 168 |
| 556-9112 | 74 |
| 556-9113 | 74 |
| 556-9114 | 74 |
| 556-9116 | 74 |
| 557-0050 | 160 |
| 557-0253 | 59 |
| 557-1174 | 1 |
| | ▶153 |
| 557-1175 | 153 |
| | ▶154 |
| 557-1176 | 154 |
| 557-3503 | 394 |
| 557-3504 | 394 |
| 557-3506 | 394 |
| 557-3514 | 59 |
| 557-3515 | 59 |
| 557-3595 | 168 |
| | ▶177 |
| 557-3613 | 59 |
| 557-3620 | 168 |
| 557-3621 | 168 |
| | 177 |
| 557-3772 | 59 |
| | ▶62 |
| 557-3806 | 59 |
| 557-3811 | 454 |
| 557-3966 | 425 |
| 557-5309 | 178 |
| 557-5310 | 179 |
| 557-5311 | 168 |
| 557-5488 | ▶101 |
| | 143 |
| 557-5519 | ▶99 |
| | 139 |
| 557-5520 | ▶99 |
| | 140 |
| 557-5521 | 124 |
| 557-5523 | ▶95 |
| | 460 |
| 557-5524 | ▶100 |
| | 113 |
| 557-5526 | ▶97 |
| | 129 |
| 557-7208 | 3 |
| | ▶53 |
| 557-7265 | 168 |
| | ▶178 |
| 557-7266 | 168 |
| | ▶179 |
| 557-8297 | 2 |
| | ▶408 |
| 557-8895 | 408 |
| | ▶416 |
| 557-8896 | 408 |
| | ▶417 |
| 557-8897 | 416 |
| | 417 |
| | ▶418 |
| 558-2776 | 394 |
| 558-2777 | 394 |
| 558-2778 | 394 |
| 558-2779 | 394 |
| 558-5405 | 292 |
| 558-5407 | 214 |
| | ▶291 |
| 558-7699 | 181 |
| | ▶186 |
| 558-7700 | 186 |
| | ▶187 |
| 558-7701 | 186 |
| | ▶188 |
| 558-7702 | 187 |
| | 188 |
| 558-8177 | 296 |
| 558-8178 | 284 |
| 558-8179 | 284 |
| 558-8180 | 293 |
| 558-8181 | 284 |
| 558-8182 | 284 |
| 558-8183 | 284 |
| 558-8184 | 284 |
| 558-8185 | 284 |
| 558-8186 | 266 |
| 558-8187 | 284 |
| 558-8188 | 382 |
| 558-8189 | 284 |
| 558-8190 | 284 |
| 558-8191 | 284 |
| 558-8192 | 284 |
| 558-8193 | 284 |
| 558-8194 | 284 |
| 558-8195 | 382 |
| 558-8196 | 293 |
| 558-8197 | 292 |
| 558-8198 | 278 |
| 558-8199 | 278 |
| 558-8200 | 285 |
| 558-8201 | 285 |
| 558-8202 | 285 |
| 558-8203 | 285 |
| 558-8204 | 285 |
| 558-8205 | 293 |
| 558-8206 | 285 |
| 558-8207 | 285 |
| 558-8208 | 293 |
| 558-8209 | 293 |
| 558-8210 | 285 |
| 558-8211 | 285 |
| 558-8212 | 293 |
| 558-8213 | 285 |


▶ PRIMARY REFERENCE

# PART NUMBER INDEX


| Part | Page |
|---|---|
| 558-8214 | 285 |
| | 292 |
| 558-8216 | 293 |
| 558-8217 | 293 |
| 558-8218 | 293 |
| 558-8219 | 285 |
| 558-8221 | 285 |
| 558-8222 | 296 |
| 558-8223 | 296 |
| 558-8224 | 296 |
| 558-8225 | 296 |
| 558-8226 | 296 |
| 558-8227 | 296 |
| 558-8231 | 296 |
| 558-8715 | 285 |
| 558-9628 | 194 |
| 558-9630 | 194 |
| 558-9632 | 192 |
| 559-2717 | 417 |
| | ▶480 |
| 559-3000 | 4 |
| | ▶66 |
| 559-3060 | 292 |
| 559-5101 | ▶190 |
| 559-5102 | ▶2 |
| 559-6090 | ▶2 |
| 559-6091 | 2 |
| | ▶214 |
| 560-7597 | ▶93 |
| | 461 |
| 560-7599 | 93 |
| 561-3043 | 129 |
| 562-1351 | 93 |
| 562-1612 | ▶184 |
| 562-9614 | 252 |
| | ▶329 |
| 562-9615 | ▶277 |
| | 329 |
| 563-1443 | 129 |
| 563-1444 | 460 |
| 563-1445 | ▶100 |
| | 136 |
| 563-4398 | 460 |
| | ▶461 |
| 563-4401 | ▶104 |
| 563-4402 | 104 |
| | ▶136 |
| 563-4948 | 252 |
| | ▶293 |
| 563-4949 | 172 |
| 563-5606 | 379 |
| | ▶382 |
| 563-5607 | 252 |
| | ▶265 |
| 563-5608 | 252 |
| | ▶295 |
| 563-7846 | 43 |
| 563-7848 | 74 |
| 563-8498 | 124 |
| 564-2840 | 292 |
| 564-2850 | 292 |
| 564-9845 | 214 |
| | ▶299 |
| 564-9848 | 299 |
| 564-9849 | 299 |
| 565-0288 | 1 |
| | ▶4 |
| 565-1436 | 62 |
| 565-1438 | 62 |
| 565-1443 | 62 |
| 565-1445 | 62 |
| 565-1446 | 62 |
| 565-3168 | 62 |
| 565-3169 | 62 |
| 565-3170 | 62 |
| 565-3171 | 62 |
| 565-3172 | 62 |
| 565-3173 | 62 |
| 565-3174 | 62 |
| 565-3175 | 62 |
| 565-3176 | 62 |
| 565-3177 | 62 |
| 565-3178 | 62 |
| 565-3465 | 62 |
| 565-3466 | 62 |
| 565-5300 | ▶1 |
| | 3 |
| 572-5692 | 214 |
| | ▶272 |
| 572-7136 | ▶396 |
| 573-7861 | 261 |
| 575-0786 | ▶261 |
| | 379 |
| 576-4110 | 261 |


▶ PRIMARY REFERENCE



©2019 Caterpillar
All Rights Reserved

CAT, CATERPILLAR, their respective logos, “Caterpillar Yellow”, and the POWER EDGE trade dress as well as corporate and product identity used herein, are trademarks of Caterpillar and may not be used without permission.