CATERPILLAR®

SEBP4418-10
September 2008

VOLUME I
Pages 1-574

RUTHZIL TRATOR COMERCIAL DE PEÇAS LTDA 11 97083-6812 ROLANDO

Parts Manual

SIS

See “General Information” for New Parts Manual Features.

324D & 324D L Excavators

CJX1-Up (Machine)
DFP1-Up (Machine)
KHX1-Up (Engine)

Powered By C7 Engine

Product and Dealer Information

Note: For product identification plate locations, see the section “Product Identification Information” in the Operation and Maintenance Manual.

Delivery Date: _____

Product Information

Model: _____

Product Identification Number: _____

Engine Serial Number: _____

Transmission Serial Number: _____

Generator Serial Number: _____

Attachment Serial Numbers: _____

Attachment Information: _____

Customer Equipment Number: _____

Dealer Equipment Number: _____

Dealer Information

Name: _____ Branch: _____

Address: _____

_____

_____

	Dealer Contact	Phone Number	Hours
Sales:	_____	_____	_____
Parts:	_____	_____	_____
Service:	_____	_____	_____

MEMORANDA

TABLE OF CONTENTS

Name	Page
GENERAL INFORMATION	A5
REPAIR ALTERNATIVES	A8
SUPPLEMENTAL COOLANT ADDITIVES	A9
MAINTENANCE PARTS	A10
INDEX	A14
MACHINE ARRANGEMENT	1
CHASSIS AR	1
CONVERSION AR-MACHINE	2
GENERAL AR	2
SPECIAL AR	3
ENGINE ARRANGEMENT	4
ENGINE AR	4
ENGINE AR-COMPLETE	7
ENGINE AR-CORE	16
INSTALLATION AR-ENGINE	20
BASIC ENGINE	21
BELT TENSIONER GP	21
BRACKET GP-ENGINE	22
CAMSHAFT GP	23
CARRIER GP-SEAL	24
COVER GP-CYLINDER BLOCK	25
COVER GP-FRONT HOUSING	28
COVER GP-VALVE MECHANISM	31
CRANKSHAFT GP	33
CYLINDER BLOCK GP	35
CYLINDER HEAD AS	39
CYLINDER HEAD GP	42
DAMPER & PULLEY GP	48
DRIVE GP-FAN	50
FASTENER GP-CYLINDER HEAD	53
FASTENER GP-FRONT COVER	54
FASTENER GP-FRONT HOUSING	55
FASTENER GP-LIFTING	56
FLYWHEEL GP	57
GEAR GP-FRONT	58
HOUSING GP-FLYWHEEL	60
HOUSING GP-FRONT	61
LIFTER GP-VALVE	62
LIFTING GP-ENGINE	63
MOUNTING GP-ENGINE	64
PAN GP-OIL	66
PISTON & ROD GP	68
PLUG GP-CYLINDER BLOCK	69
PLUG GP-ENGINE	70
PULLEY GP	71
ROCKER ARM GP	75
SEAL GP-CRANKSHAFT	77
VALVE MECHANISM GP	78
LUBRICATION SYSTEM	83
ADAPTER GP-OIL LINE	83
BREATHER GP	84
FILTER GP-ENGINE OIL	85
FUMES DISPOSAL GP	91
GAUGE GP-OIL LEVEL (DIPSTICK)	93
LINES GP-ENGINE OIL	94
LINES GP-ENGINE OIL DRAIN	95
LINES GP-TURBOCHARGER OIL	96
MOUNTING GP-LINES	99
PUMP GP-ENGINE OIL	101
COOLING SYSTEM	103
COOLER GP-ENGINE OIL	103
COOLING AR-HIGH AMBIENT TEMP	104
FAN GP-SUCTION	105
LINES GP-WATER	106
PUMP GP-WATER	108
RADIATOR & HYD OIL COOLER GP	111
AIR INLET AND EXHAUST SYSTEM	128
AIR CLEANER AR	128
AIR CLEANER GP	129
COVER GP-AIR INLET	137
ELBOW GP-AIR INLET	141
LINES GP-AIR	142
LINES GP-MUFFLER DRAIN	145
MANIFOLD GP-EXHAUST	147
MUFFLER GP	149
TURBOCHARGER GP	150
FUEL SYSTEM	154
FILTER GP-WATER SEP & FUEL	154
INJECTOR GP-FUEL	155
LINES GP-FUEL	158
LINES GP-INJECTOR HYD PUMP	182
PUMP & MOTOR GP-REFUELING	183
PUMP & MTG GP-UNIT INJ HYD	184
PUMP AR-FUEL TRANSFER	194
PUMP GP-FUEL INJECTION	195
PUMP GP-FUEL PRIMING	198
PUMP GP-FUEL PRM & PRIM FILTER	200
PUMP GP-FUEL PRM & WATER SEP	201
PUMP GP-REFUELING	202
PUMP GP-UNIT INJECTOR HYD	206
REGULATOR GP-FUEL PRESSURE	212
TANK & MTG GP-FUEL	213
TANK GP-FUEL	216
VALVE GP-FUEL BYPASS	235
VALVE GP-FUEL SHUTOFF	236
ELECTRICAL AND STARTING SYSTEM	237
ALARM GP	237
ALARM GP-TRAVEL	238
ALTERNATOR GP-CHARGING	239

TABLE OF CONTENTS

Name	Page
BATTERY & WIRING GP	242
BLOCK GP-JUNCTION	260
CAMERA & MOUNTING GP	261
CAMERA & WIRING GP	262
CAMERA GP	263
CONTROL & MTG GP-COMMUNICATION	266
CONTROL & MTG GP-ENGINE ELEK	273
CONTROL & MTG GP-MACHINE	274
CONTROL GP-UNPROGRAMMED	275
ELECTRONICS GP-COMMUNICATION	276
ELECTRONICS GP-MACHINE	276
ELECTRONICS GP-MONITOR	277
FASTENER GP-WIRING HARNESS	278
GRADE CONTROL AR-SATELLITE	282
INSTALLATION AR-COMMUNICATION	282
INSTALLATION GP-SECURITY	284
KIT-BRACKET	286
LAMP GP-FLOOD	287
LIGHTING GP-CHASSIS	290
LIGHTING GP-FLOOD	291
MOUNTING GP-GRADE CONTROL	299
PANEL & MTG GP-CIRCUIT BREAKER	300
PANEL GP-CIRCUIT BREAKER	301
PANEL GP-SWITCH	303
PLUG GP-CONNECTOR	311
RECEIVER GP-SATELLITE	312
SENSOR AR-GRADE	312
SENSOR GP-ENGINE	313
SENSOR GP-PRESSURE	317
SENSOR GP-SPEED	324
SENSOR GP-TEMPERATURE	326
STARTING AID GP	331
STARTING AID GP-ETHER	334
STARTING AR-COLD WEATHER	336
STARTING MOTOR GP-ELECTRIC	337
SWITCH GP-DISCONNECT	346
SWITCH GP-MAGNETIC	347
SWITCH GP-POSITION	350
SWITCH GP-PRESSURE	351
SWITCH GP-PUSH BUTTON	353
SWITCH GP-REFUELING	355
SWITCH GP-ROTARY	356
SWITCH GP-START	358
SWITCH GP-TOGGLE	359
SWITCH GP-WIPER	361
VALVE GP-ETHER STARTING	362
WIRING GP-AUX START RECEPTACLE	363
WIRING GP-BOOM FLOAT	365
WIRING GP-CAB	367
WIRING GP-CAMERA	381
WIRING GP-CHASSIS	382
WIRING GP-COMBINED FLOW	389
WIRING GP-COMMUNICATION	394
WIRING GP-CONSOLE	404
WIRING GP-CONVERTER	408
WIRING GP-ENGINE	413
WIRING GP-FAN	415
WIRING GP-FINE SWING	417
WIRING GP-FUEL SYSTEM	418
WIRING GP-GRADE CONTROL	426
WIRING GP-HAMMER	427
WIRING GP-PLATFORM	428
WIRING GP-QUICK COUPLER	430
WIRING GP-COUPLER	432
POWER TRAIN	433
FINAL DRIVE GP	433
DRIVE GP-FINAL	434
FINAL DRIVE GP	440
POWER TRAIN AR	441
SPROCKET GP	442
FRAME AND BODY	443
BOX & MTG GP-STORAGE	443
BOX GP-STORAGE	444
BUMPER GP	446
COUNTERWEIGHT & MOUNTING GP	447
COUNTERWEIGHT AR	453
COUNTERWEIGHT GP	454
COVER AS-SOUND SUPPRESSION	470
DOOR GP-ACCESS	474
FENDER & COVER GP	482
FRAME GP-UPPER	484
GEAR & BEARING GP-SWING	486
GUARD GP-BOTTOM	493
GUARD GP-SWIVEL	496
HANDRAIL GP	497
HOOD & GUARD GP	498
HOOD AR	510
HOOD GP	512
HOOD GP-ENGINE	516
SHEET AS-SOUND SUPPRESSION	523
STEP GP	531
STORAGE GP-VANDALISM GUARD	533
SUPPORT AS-ENCLOSURE	535
UNDERCARRIAGE	537
ADJUSTMENT GP-HYDRAULIC TRACK	537
FRAME AR-UNDERCARRIAGE	538
GUARD GP-TRACK GUIDE	539
GUARD GP-TRAVEL MOTOR	544
IDLER & BEARING GP-FRONT	546
IDLER GP-FRONT	547
LINK AS-TRACK	550
ROLLER AR-TRACK & CARRIER	552
ROLLER GP-TRACK CARRIER	555

TABLE OF CONTENTS

Name	Page
ROLLER GP-TRACK-SINGLE FLANGE	556
TRACK ADJUSTER & RECOIL GP	559
TRACK AR	562
TRACK GP	563
HYDRAULIC SYSTEM	575
ACCUMULATOR GP-HYDRAULIC	575
ACTUATOR GP-PUMP	582
BASE GP-OIL FILTER	603
CONTROL AR-AUXILIARY	604
CONTROL AR-COUPLER	605
COUPLING GP-PUMP	606
CYLINDER & LINES GP-BOOM	607
CYLINDER & LINES GP-BUCKET	608
CYLINDER & LINES GP-STICK	610
CYLINDER & SEAL GP-BOOM	611
CYLINDER & SEAL GP-BUCKET	617
CYLINDER & SEAL GP-STICK	629
CYLINDER AR-HYDRAULIC	636
CYLINDER GP-BUCKET	637
CYLINDER GP-STICK	641
DRIVE GP-SWING	643
FASTENER GP-SWING & FINAL DR	646
FILTER & VALVE GP-PILOT	648
FILTER AR-HYDRAULIC	652
FILTER GP-OIL	653
FITTING GP-HYDRAULIC	660
GAUGE GP-SIGHT	661
GUARD GP-CYLINDER	662
HOSE GP-HYDRAULIC	663
HYDRAULIC AR	671
LINES GP-AUXILIARY HYDRAULIC	672
LINES GP-BOOM	716
LINES GP-BOOM CYLINDER	743
LINES GP-BOOM DRAIN	754
LINES GP-BUCKET CYLINDER	755
LINES GP-CONTROL	759
LINES GP-COUPLER	762
LINES GP-FRONT	770
LINES GP-HYDRAULIC OIL COOLER	808
LINES GP-PILOT	810
LINES GP-PUMP	931
LINES GP-RETURN	932
LINES GP-STICK	942
LINES GP-STICK CYLINDER	947
LINES GP-TRAVEL MOTOR	952
MANIFOLD GP-CONTROL	957
MOTOR & MTG GP-SWING	960
MOTOR & MTG GP-TRAVEL	961
MOTOR GP-SWING	962
MOTOR GP-TRAVEL	965
MOUNTING GP-MAIN CONTROL VALVE	972
PLUG GP-CONTROL VALVE	973
PUMP & MTG GP-MAIN HYDRAULIC	975
PUMP GP-MAIN HYDRAULIC	976
SCREEN GP-HYDRAULIC	981
SPOOL AR-CONTROL VALVE	982
SPOOL GP-CONTROL VALVE	983
SWIVEL GP	989
TANK & FILTER GP-HYDRAULIC	991
TANK & MTG GP-HYDRAULIC	995
TANK GP-HYDRAULIC	996
VALVE & LINES GP-HEAVY LIFT	999
VALVE & MTG GP-CONTROL	1000
VALVE AR-ALT PATTERN CONTROL	1002
VALVE AR-LOAD CONTROL	1002
VALVE AR-CHECK & RELIEF	1002
VALVE AR-SWING	1003
VALVE GP-CHECK	1004
VALVE GP-CONTROL	1008
VALVE GP-COUPLER	1054
VALVE GP-FLOW CONTROL & RELIEF	1056
VALVE GP-LOAD CONTROL	1058
VALVE GP-MAIN CONTROL	1067
VALVE GP-MANUAL	1071
VALVE GP-PILOT	1075
VALVE GP-PILOT RELIEF	1085
VALVE GP-PRESSURE REDUCING	1087
VALVE GP-PRIORITY	1090
VALVE GP-RELIEF	1091
VALVE GP-SELECTOR	1109
VALVE GP-SHUTTLE	1111
VALVE GP-SOLENOID	1117
VALVE GP-SOLENOID & MANIFOLD	1125
VALVE GP-SWING CUSHION	1127
VALVE GP-TRAVEL COUNTERBALANCE	1132
IMPLEMENTS	1133
BOOM AR-1 PIECE LONG	1133
BOOM AR-1 PIECE SHORT	1134
BOOM GP	1136
BOOM GP-REACH	1144
FRONT AR-LONG REACH	1146
LINES GP-GREASE	1147
LINKAGE AR	1154
LINKAGE AR-BUCKET	1154
LINKAGE GP-BUCKET	1156
LOCK GP-TRANSPORT	1165
STICK AR-HOE	1166
STICK GP-HOE	1168
WORK TOOLS	1178
ADJUSTER GP-BUCKET	1178
BUCKET & ADJUSTER GP	1181
BUCKET AR-EXCAVATION	1190
BUCKET AS-DITCH CLEANING	1191
BUCKET AS-EXCAVATION	1194
BUCKET AS-GENERAL PURPOSE	1198

TABLE OF CONTENTS

Name	Page
BUCKET AS-HEAVY DUTY	1201
BUCKET AS-HEAVY DUTY POWER	1230
BUCKET AS-HEAVY DUTY ROCK	1231
BUCKET AS-UTILITY	1235
BUCKET GP-DITCH CLEANING	1236
BUCKET GP-HEAVY DUTY	1237
BUCKET GP	1240
BUCKET GP-HEAVY DUTY	1240
BUCKET GP-HEAVY DUTY ROCK	1244
EDGE GP-CUTTING	1246
PIN GP-BUCKET	1247
PROTECTOR GP-SIDE BAR	1249
SIDECUTTER GP	1250
TIP GP-LONG	1252
TIP GP-PENETRATION PLUS	1253
TIP-LEVELING EDGE	1256
OPERATOR STATION	1257
ADJUSTER GP-SEAT	1257
AIR CONDITIONER & MOUNTING GP	1259
AIR CONDITIONER AR	1263
AIR CONDITIONER GP	1264
ANTENNA & MOUNTING GP	1276
ARMREST GP	1277
BRACKET GP-MIRROR	1281
BRACKET GP-MOUNTING	1282
CAB GP	1283
CAMERA & MIRROR AR	1311
COIL GP-EVAPORATOR	1312
COMPRESSOR GP-REFRIGERANT	1314
CONDENSER & MTG GP-REFRIGERANT	1316
CONDENSER GP-REFRIGERANT	1317
CONSOLE GP-OPERATOR	1319
CONTROL & MTG GP-JOYSTICK	1333
CONTROL GP-HANDLE	1334
CONTROL GP-HEAT & AIR COND	1336
CONTROL GP-HYDRAULIC PEDAL	1337
CONTROL GP-JOYSTICK	1342
COVER GP-CAB	1344
COVER GP-STORAGE	1345
DISPLAY GP-MONITOR	1346
DOOR & MTG GP-CAB	1347
DOOR GP-CAB	1348
DUCT GP-CAB AIR	1359
FLOOR MAT	1360
FLOOR MAT GP	1361
FRAME GP-UPPER FRONT WINDOW	1365
GUARD AR-OVERHEAD	1367
GUARD AR-VANDALISM	1367
GUARD GP-FRONT WINDOW	1368
GUARD GP-OVERHEAD	1375
GUARD GP-VANDALISM	1377
HATCH GP-ROOF	1379
HEADREST AS-SEAT	1382
HEATER & MTG GP-CAB	1386
HEATER AR-CAB	1390
HORN GP-ELECTRIC	1391
HOUSING GP-AIR CONDITIONER	1395
INSTALLATION GP-RADIO	1396
KIT-SEAT SUSPENSION	1401
LEVER GP-AIR & TEMP CONTROL	1404
LINES GP-AIR CONDITIONER	1405
LINES GP-HEATER	1413
LITERATURE GP	1417
MIRROR AR-REAR VIEW	1417
MIRROR GP	1418
MIRROR GP-REAR VIEW	1419
MONITOR & MTG GP-OPERATOR	1423
MONITOR GP-OPERATOR	1424
MOUNTING GP-ANTENNA	1425
MOUNTING GP-MONITOR	1428
MOUNTING GP-PLATFORM	1429
MOUNTING GP-RADIO	1431
OPERATOR AR	1432
PEDAL AR-AUXILIARY	1432
PLATFORM GP-OPERATOR	1433
RADIO GP-COMMUNICATION	1434
SCREEN GP-SUN	1435
SEAT & MOUNTING GP	1436
SEAT BELT GP	1441
SEAT GP	1445
SEAT GP-SUSPENSION	1461
SUPPORT GP-SEAT	1473
SUSPENSION GP-SEAT	1475
VISOR GP-CAB	1483
VISOR GP-PROTECTION	1484
WASHER GP-WINDOW	1485
WINDOW AS-FRONT	1489
WINDOW GP-CAB	1490
WINDOW GP-DOOR	1498
WINDOW GP-REAR	1500
WIPER & WASHER GP-WINDOW	1503
WIPER AR-WINDOW	1507
WIPER GP-WINDOW	1508
SERVICE EQUIPMENT AND SUPPLIES	1510
FILM GP	1510
PLATE & FILM GP	1528
PART NUMBER INDEX	B1

GENERAL INFORMATION

1. MACHINE IDENTIFICATION

Caterpillar machines are identified by Product Identification Numbers (PIN). Some components included in a machine may be identified by Serial Numbers (S/N). Typical components that will be serialized include engines, transmissions, bulldozers, and rippers. The machine and engine are further identified by arrangement numbers and in some cases modification numbers. These numbers are shown on the product identification plate(s) and on the master plate in the operator's compartment.

Caterpillar dealers need all of these numbers to determine accurate parts identification.

SIS *New Feature*

Effective First Quarter 2001 the Caterpillar Product Identification Number (PIN) changed from 8 to 17 characters. In an effort to provide uniform equipment identification, Caterpillar and other construction equipment manufacturers are moving to comply with the latest version of the product identification numbering standard. Non-road machine PINs are defined by ISO 10261. The new PIN format will apply to all Caterpillar machines and generator sets. The PIN plates and frame marking will display the 17 character PIN. The new format will look like the following:

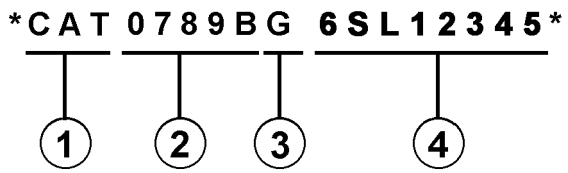

Where:

1. Caterpillar's World Manufacturing Code (characters 1-3)

2. Machine Descriptor (characters 4-8)

3. Check Character (character 9)

4. Machine Indicator Section (MIS) or Product Sequence Number (characters 10-17). These were previously referred to as the Serial Number.

Machines and generator sets produced before First Quarter 2001 will maintain their 8 character PIN format.

Components such as engines, transmissions, axles, etc. and work tools will continue to use an 8 character Serial Number (S/N).

2. ORDERING PARTS

WARNING

When replacement parts are required for this product Caterpillar recommends using Caterpillar replacement parts or parts with equivalent specifications including, but not limited to, physical dimensions, type, strength and material.

Failure to heed this warning can lead to premature failures, product damage, personal injury or death.

Quality Caterpillar replacement parts are available from Caterpillar dealers throughout the world. Their parts inventories are up to date and include all parts normally required to protect your investment in Caterpillar machines. Dealers may offer repair kits or remanufactured parts to allow selection of the most effective repair alternative for a particular situation. When ordering parts, your order should specify the quantity, part number, part name, and the serial number/product identification number of the machine for which the parts are needed.

3. PARTS MANUAL ORGANIZATION

Product information in this manual is presented as "information elements" that represent all of the components for the specific model. Engine Arrangement and Seat Group are examples of information elements. The information elements are organized alphabetically by part name and secondarily by part number within each major section of the manual.

4. TABLE OF CONTENTS

A table of contents (TOC) is found at the beginning of the manual. The TOC lists each section of the manual with a complete list of all information elements organized as they appear in the manual. Page numbers are provided for quick reference to detailed parts identification illustrations and serviceable consist lists.

5. MAINTENANCE PARTS INDEX

The Maintenance Parts Index, located near the beginning of the manual, references most frequently used maintenance part numbers, providing description, quantity, usage and page number. This information is organized alphabetically by part description.

6. INDEX

The index located near the front of the manual is an alphabetical listing of all information elements included in the manual. Page numbers are provided for quick reference to detailed parts identification illustrations and serviceable consist lists.

7. PART NUMBER INDEX

A numerical index listing all part numbers and the corresponding page number(s) appears at the back of the manual.

8. CAPTIONS

Captions located at the beginning of each information element identify the part number and part name along with additional descriptive information. PIN and S/N information found in each caption should be used to select correct information for a specific machine. Field replacement options, identification of optional attachment components, and where used ("part of") information is also provided.

The first line of a caption is shown in larger type font to indicate the beginning of an information element. Captions for additional pages that may be required to illustrate an information element will be shown in standard type font and will include the term *(contd.)* .

9. NON-SERVICED PARTS

In some instances it is necessary to display non-serviced parts that are a link to a lower level serviceable consist lists. These non-serviced part numbers are shown in *italic* type indicating that they are not available.

10. PARTS LIST REFERENCE NUMBERS

Numbers shown in the Ref No column correspond to numbers used in the associated graphic(s). An alphabetic suffix may be added to a reference number to identify lower level consist items. Numbers shown in the Graphic Ref column refer to the graphic number identifier displayed in the lower left corner of each illustration. The Graphic Ref number may be used in combination with the item Ref No to determine the correct part number. There may be intentional omission of a Ref No in a consist list as information is updated to reflect the latest serviceable part numbers.

11. INDENTED PART NAMES

When a part name is indented in a parts list, it is part of (included in) the group or assembly under which it is indented.

12. ILLUSTRATION REFERENCE LETTERS

When necessary, illustrations contain reference letters (A, B, C etc.) that are intended to track lines and harnesses from one point to another. They are also used to show where to reconnect illustrations that have been separated.

13. ABBREVIATIONS AND SYMBOLS

O.D. – Outside Diameter
I.D. – Inside Diameter
A – Not Part Of This Group
B – Use As Required
C – Change From Previous Type
D – Order By The Meter
E – Order By The Centimeter
F – Not Shown
G – Order By The Inch
I – Refer To Hydraulic Information System
M – Metric Part
R – Remfg Part May Be Available
Y – Separate Illustration
Z – Not Serviced Separately

SIS *New Feature*

14. DESCRIPTION OF TYPE CHANGES

Type - A type is defined as any configuration change that requires an additional Information Element for an Arrangement, Group, or Assembly. If serial number breaks for types are not available, a type # (Type 1, Type 2, etc.) will be displayed in the caption. These "type" changes are identified with a "C" note (change from previous type) in the Parts List. Only the "types" that apply to this Parts Manual will be included. Additional types may exist causing "C" notes to appear on an Information Element when no other types are shown.

15.<END>

This symbol indicates the end of an information element.

NOTE:

Continuing improvement and advancement of product design may cause changes to your machine which may not be included in this publication. Whenever a question arises regarding your caterpillar product or this publication, please consult your caterpillar dealer for the latest available information.

FRAME AND BODY

8E-3299 PLATFORM GP-CAB

PIN 3SK1-99999

SMCS-7253 100090751

NOTE	REF NO	GRAPHIC REF	PART NUMBER	QTY	PART NAME 1 2 3 4 5 6 (PRODUCT LEVEL)	SEE PAGE
	*	1	3T-3953	1	PLATE AS	
	2	1	6E-2062	25	BOLT (3/8-16X.750IN)	
	3	1	6F-1076	41	WASHER-HARD (3MM THK)	
	4	1	9F-1444	2	SUPPORT AS-FOOT	
	5	1	7P-2229	18	BOLT (1/2-13X1IN)	
		1	6F-	18	WASHER-HARD (4MM THK)	
	6	1	8E-6136	*	COVER AS-LH	
		1	9F-2978	5	NUT-WELD (3/8-16 THD)	
		1	1P-0188	1	CLIP	
	7	1	7S-3411	4	COVER	
	8		9J-0488	18	SCREW-HEAD (3/8-16X.875IN)	
	9	1	-4474	1	COVER	
		1	8E-897	*	GASKET	
	10	1	8E-3249	1		
		1	8E-3250	1	GASKET	
	11	1	3T-3638	1	HANDHOLD	
	12	1	8E-8978	1	COVER AS	
		1	9F-2978	8	NUT-WELD (3/8-16 THD)	
		1	8E-8979	1	GASKET	
	13	1	7T-0131	1	FLOORPLATE AS	
		1	1F-0748	4	NUT-WELD (1/2-13 THD)	
	14	1	7V-8067	1	PLUG-BUTTON	
	15	1	7T-0136	1	PLATE AS	
		1	9F-2978	5	NUT-WELD (3/8-16 THD)	
	16	1	7T-8066	1	COVER	
		1	7T-8779	1	GASKET	
	17	1	3T-3951	1	PLATE AS	
	18	1	6T-8364	4	BOLT (1/4-20X.625IN)	
M		1	9T-4205	4	WASHER-HARD (2MM THK)	
	19	1	6L-8494	1	FLOOR MAT	
	20	1	8E-8846	1	MODULE AS-OPERATOR	
	21	1	3T-3834	1	HANDHOLD	
	22	1	9F-8671	2	PLUG	
	23	2	6T-8364	4	BOLT (1/4-20X.625IN)	
M		2	9T-4205	4	WASHER-HARD (2MM THK)	
	24	2	6E-2062	17	BOLT (3/8-16X.750IN)	
	26	2	6F-1076	21	WASHER-HARD (3MM THK)	
	26	2	7T-0135	1	SEAL	
	27	2	7X-0075	2	BOLT (3/4-10X5IN)	
		2	7X-0682	2	WASHER-HARD (6MM THK)	
	28	2	3T-3452	2	PLATE	
	29	2	3T-8290	1	PLATE AS	
		2	7S-8828	8	SPACER	
	30	2	3T-8281	1	SEAL	
	31	2	7S-8817	1	GASKET	
	32	2	7S-8816	1	COVER AS	
		2	2R-3276	2	WASHER	
		2	6F-8626	2	SCREW-KNURLED	
	33	2	9W-3429	1	COVER	
	34	2	8E-8697	1	COVER	
	35	2	6D-3931	8	SCREW-SOCKET HEAD	
	36	2	9W-3142	8	MOUNTING	
	37	2	9W-8027	2	PLATE	
	38	2	7X-0990	2	BOLT (7/8-9X5IN)	
		2	7X-0672	2	WASHER-HARD	
	39	2	4L-8454	4	BOLT (3/8-16X1.0IN)	
	40	2	3T-4788	1	COVER	

12 FRAME AND BODY 1 of 4 SELP4570-01

FRAME AND BODY

8E-3299 PLATFORM GP-CAB (contd.)

100090751

NOTE	REF NO	GRAPHIC REF	PART NUMBER	QTY	PART NAME 1 2 3 4 5 6 (PRODUCT LEVEL)	SEE PAGE
	41	2	6E-2516	1	COVER	
	42	2	7T-0134	1	PLATE	
	43	2	7T-0138	1	GASKET	
	44	2	7S-8724	1	GASKET	
	45	2	7S-8723	1	COVER	
	46	2	6V-1950	2	PLUG-BUTTON	

M-METRIC PART

SELP4570-01 2 of 4 FRAME AND BODY 13

FRAME AND BODY

8E-3299 PLATFORM GP-CAB (contd.)

100090751

TOP VIEW

GRAPHIC #1 g00036729

14 FRAME AND BODY 3 of 4 SELP4570-01

FRAME AND BODY

8E-3299 PLATFORM GP-CAB (contd.)

100090751

SECTION A-A VIEW D-D SECTION G-G

SECTION B-B VIEW E-E SECTION H-H

SECTION C-C SECTION F-F SECTION J-J

GRAPHIC #2 g00105874

SELP4570-01 4 of 4 FRAME AND BODY 16

REPAIR ALTERNATIVES

REMANUFACTURED COMPONENTS

As an option when making repairs consider Caterpillar Remanufactured Components. Components that are available through the Caterpillar Remanufactured Program are identified three ways in the parts book:

- with the letter R in the note field of the parts list
- with an R* at the beginning of the first line of the caption
- with an *R at the end of the first line of the caption

Typical components included in the Remanufacturing Program include:

ALTERNATORS
CONNECTING RODS
CRANKSHAFTS - UNDERSIZE
CRANKSHAFTS - UPGRADE TO NEW
CYLINDER HEADS
ELECTRONIC CONTROL MODULES (ECM)
ELECTRONIC SENSORS
FUEL INJECTORS
FUEL NOZZLES
FUEL PUMPS
GOVERNORS
OIL PUMPS
PISTONS
SHORT BLOCKS
STARTERS
TURBOCHARGERS - COMPLETE
TURBOCHARGER CARTRIDGES
WATER PUMPS

Caterpillar Remanufactured engines for many engine arrangements are also available.

SUPPLEMENTAL COOLANT ADDITIVES

CUSTOMER BENEFITS:

Protects against cavitation, foam, erosion, corrosion, and scale buildup in cooling systems.

- Provides measured coolant conditioner.

DESCRIPTION:

Additives deplete from the coolant with normal operation. For this reason, Supplemental Coolant Additives (SCA) must be added to all heavy duty coolants at regular intervals. In addition, when not using a fully formulated, pre-charged antifreeze, like Caterpillar's DEAC, an initial charge of SCA must be added to the cooling system. The amount of SCA added to the system is dependent on the capacity of the system.

The SCA for initial fill is provided as a liquid. SCA's for maintenance intervals are available in liquid form and as a spin-on element. (No Spin-on available for 3600 Family of Engines)

NOTE:

The amount of SCA added at initial fill is not the same as the amount added at maintenance intervals.

The coolant additive elements can be used with any ethylene or propylene glycol type antifreeze which meets ASTM D4985 or ASTM D5345 Specifications.

NOTE:

For use with standard heavy duty coolant only, not for use with Extended Life Coolant.

PARTS NEEDED:

Cooling System Capacity		Liquid SCA at Initial Fill	Liquid SCA at Maintenance*	Spin-on SCA Maintenance Element*
Liters	Gallons			
22-30	(6-8)	3P-2044 (1)	6V-3542 (1)	111-2370 (1)
30-38	(8-10)	3P-2044 (1) 6V-3542 (1)	111-2372 (1)	111-2369 (1)
38-49	(10-13)	3P-2044 (1) 8T-1589 (1)	111-2372 (1)	111-2369 (1)
49-64	(13-17)	3P-2044 (2)	8T-1589 (1)	9N-3368 (1)
64-83	(17-22)	3P-2044 (2) 8T-1589 (1)	111-2372 (1) 6V-3542 (1)	111-2371 (1)
83-114	(22-30)	3P-2044 (3) 8T-1589 (1)	3P-2044 (1)	9N-3718 (1)
114-163	(30-43)	3P-2044 (5)	3P-2044 (1) 6V-3542 (1)	111-2371 (2)
163-242	(43-64)	3P-2044 (8)	3P-2044 (2)	9N-3718 (2)

** Normal maintenance period is 250 hrs. See your Operation and Maintenance Manual for complete coolant maintenance instructions.*

( ) Indicates quantity required.

MAINTENANCE PARTS

DESCRIPTION	PART NUMBER	QTY	WHERE USED	PAGE
AIR INLET AND EXHAUST SYSTEM				
FILTER ELEMENT AS-AIR (PRIMARY)	6I-2503	1	AIR CLEANER GP	129
		1	AIR CLEANER GP	130
		1	AIR CLEANER GP	135
		1	AIR CLEANER GP	136
FILTER ELEMENT AS-AIR (PRIMARY) (ULTRA HIGH EFFICIENCY)	132-7165	1	AIR CLEANER GP	135
		1	AIR CLEANER GP	136
FILTER ELEMENT AS-AIR (SECONDARY)	6I-2504	1	AIR CLEANER GP	129
		1	AIR CLEANER GP	130
		1	AIR CLEANER GP	135
		1	AIR CLEANER GP	136
BASIC ENGINE				
BELT-SERPENTINE (FAN PULLEY)	230-2190	1	PULLEY GP	72
	241-2896	1	PULLEY GP	74
	263-1830	1	PULLEY GP	71
	263-1849	1	PULLEY GP	73
BREATHER AS (CRANKCASE)	204-4444	1	COVER GP-VALVE MECHANISM	31
		1	COVER GP-VALVE MECHANISM	32
CAP AS-ENGINE OIL FILLER	227-4531	1	COVER GP-VALVE MECHANISM	31
		1	COVER GP-VALVE MECHANISM	32
ELEMENT (BREATHER) (CRANKCASE)	185-3159	1	COVER GP-VALVE MECHANISM	31
		1	COVER GP-VALVE MECHANISM	32
SEAL-VALVE COVER (VALVE COVER)	272-0388	1	COVER GP-VALVE MECHANISM	32
COOLING SYSTEM				
CAP AS (COOLANT RECOVERY)	171-3369	1	RADIATOR & HYD OIL COOLER GP	114
		1	RADIATOR & HYD OIL COOLER GP	116
		1	RADIATOR & HYD OIL COOLER GP	118
		1	RADIATOR & HYD OIL COOLER GP	120
CAP AS-RADIATOR	245-9212	1	RADIATOR & HYD OIL COOLER GP	111
		1	RADIATOR & HYD OIL COOLER GP	122
		1	RADIATOR & HYD OIL COOLER GP	124
		1	RADIATOR & HYD OIL COOLER GP	126
GASKET-WATER REGULATOR (TEMPERATURE REGULATOR HOUSING)	136-0812	1	LINES GP-WATER	106
HOSE-RADIATOR (LOWER)	230-2870	1	RADIATOR & HYD OIL COOLER GP	114
		1	RADIATOR & HYD OIL COOLER GP	116
		1	RADIATOR & HYD OIL COOLER GP	118
		1	RADIATOR & HYD OIL COOLER GP	120
HOSE-RADIATOR (UPPER)	230-2869	1	RADIATOR & HYD OIL COOLER GP	114
		1	RADIATOR & HYD OIL COOLER GP	116
	281-3487	1	RADIATOR & HYD OIL COOLER GP	118
		1	RADIATOR & HYD OIL COOLER GP	120
REGULATOR-WATER TEMPERATURE (94-DEG C) (COOLANT)	126-5869	1	LINES GP-WATER	106

MAINTENANCE PARTS

DESCRIPTION	PART NUMBER	QTY	WHERE USED	PAGE
ELECTRICAL AND STARTING SYSTEM				
BATTERY (12-VOLT, MAINTENANCE FREE)	263-9574	2	BATTERY & WIRING GP	250
		2	BATTERY & WIRING GP	258
BATTERY (12-VOLT, MAINTENANCE FREE, WET)	3T-5760	2	BATTERY & WIRING GP	242
CIRCUIT BREAKER AS (120-AMPERE) (HEATER)	216-4970	1	PANEL GP-CIRCUIT BREAKER	301
CIRCUIT BREAKER AS (80-AMPERE) (ALTERNATOR)	171-2210	1	PANEL GP-CIRCUIT BREAKER	301
CIRCUIT BREAKER AS (80-AMPERE) (MAIN)	171-2210	1	PANEL GP-CIRCUIT BREAKER	301
FUSE (10-AMPERE)	113-8490	22	WIRING GP-CAB	367
FUSE (15-AMPERE)	113-8491	5	WIRING GP-CAB	367
		1	WIRING GP-CAB	379
FUSE (25-AMPERE)	113-8493	3	WIRING GP-CAB	367
FUSE (30-AMPERE)	124-3548	2	WIRING GP-CAB	367
FUSE (5-AMPERE)	141-2759	8	WIRING GP-CAB	367
KEY (BATTERY DISCONNECT)	8H-5306	1	SWITCH GP-DISCONNECT	346
KEY AS-ELECTRONIC (SECURITY)	206-5162	2	INSTALLATION GP-SECURITY	284
LAMP AS (24-VOLT, 3-WATT)	170-9324	1	PANEL GP-SWITCH	303
		1	PANEL GP-SWITCH	305
LAMP-HALOGEN (24-VOLT, 65-WATT)	9X-3463	1	LAMP GP-FLOOD	287
		1	LAMP GP-FLOOD	288
		1	LAMP GP-FLOOD	289
		1	LIGHTING GP-FLOOD	293

MAINTENANCE PARTS

DESCRIPTION	PART NUMBER	QTY	WHERE USED	PAGE
FUEL SYSTEM				
CAP AS-FILLER (FUEL TANK)	7X-7700	1	TANK GP-FUEL	217
		1	TANK GP-FUEL	219
		1	TANK GP-FUEL	222
		1	TANK GP-FUEL	224
		1	TANK GP-FUEL	226
		1	TANK GP-FUEL	228
		1	TANK GP-FUEL	231
		1	TANK GP-FUEL	233
FILTER AS-WATER SEP & FUEL (PRIMARY)	326-1644	1	FILTER GP-WATER SEP & FUEL	154
FILTER-FUEL (ADVANCED EFFICIENCY)	1R-0762	1	LINES GP-FUEL	158
		1	LINES GP-FUEL	161
		1	LINES GP-FUEL	165
FILTER-FUEL (ADVANCED EFFICIENCY) (SECONDARY)	1R-0762	1	LINES GP-FUEL	171
		1	LINES GP-FUEL	175
		1	LINES GP-FUEL	178
GASKET (FUEL FILTER)	9Y-8389	1	LINES GP-FUEL	178
GASKET (FUEL PRIMING PUMP)	9Y-8389	1	LINES GP-FUEL	165
		1	PUMP GP-FUEL PRIMING	198
STRAINER AS-FUEL	229-1860	1	PUMP GP-REFUELING	202
		1	PUMP GP-REFUELING	204
STRAINER AS-FUEL (FLOAT GAUGE)	303-9933	1	TANK GP-FUEL	224
		1	TANK GP-FUEL	228
		1	TANK GP-FUEL	231
		1	TANK GP-FUEL	233
STRAINER-FUEL	9P-7121	1	TANK GP-FUEL	217
		1	TANK GP-FUEL	219
		1	TANK GP-FUEL	222
		1	TANK GP-FUEL	226
HYDRAULIC SYSTEM				
BREATHER (SWING DRIVE)	4H-6112	1	DRIVE GP-SWING	644
BREATHER GP (HYDRAULIC TANK)	227-0590	1	TANK GP-HYDRAULIC	996
FILTER ELEMENT AS-OIL (HYDRAULIC RETURN)	179-9806	1	FILTER GP-OIL	656
FILTER ELEMENT-HYDRAULIC (HYDRAULIC)	196-6581	1	FILTER GP-OIL	658
FILTER-OIL (ADVANCED EFFICIENCY)	093-7521	1	FILTER GP-OIL	653
FILTER-OIL (ADVANCED EFFICIENCY) (HYDRAULIC)	5I-8670	1	FILTER & VALVE GP-PILOT	649
FILTER-OIL (ADVANCED EFFICIENCY) (HYDRAULIC, CASE DRAIN)	093-7521	1	FILTER GP-OIL	659
FILTER-OIL (ADVANCED EFFICIENCY) (HYDRAULIC, PILOT)	5I-8670	1	FILTER & VALVE GP-PILOT	651
FILTER-OIL (ULTRA HIGH EFFICIENCY) (HYDRAULIC, PILOT)	126-1813	1	FILTER & VALVE GP-PILOT	650
PLUG-OIL DRAIN	6I-0723	1	TANK GP-HYDRAULIC	996
SCREEN AS (HYDRAULIC TANK)	209-6000	1	SCREEN GP-HYDRAULIC	981

MAINTENANCE PARTS

DESCRIPTION	PART NUMBER	QTY	WHERE USED	PAGE
LUBRICATION SYSTEM				
BREATHER AS (CRANKCASE)	164-0210	1	BREATHER GP	84
FILTER AS-ENGINE OIL (ADVANCED EFFICIENCY)	1R-1807	1	FILTER GP-ENGINE OIL	85
		1	FILTER GP-ENGINE OIL	88
OPERATOR STATION				
BLADE AS-WIPER (275-MM) (LOWER)	4I-5021	1	WIPER & WASHER GP-WINDOW	1503
		1	WIPER & WASHER GP-WINDOW	1505
BLADE AS-WIPER (600-MM) (UPPER)	161-3670	1	WIPER GP-WINDOW	1508
CAP AS (WINDOW WASHER)	178-5431	1	WASHER GP-WINDOW	1485
		1	WASHER GP-WINDOW	1486
FILTER ELEMENT-CAB AIR	293-1184	1	DUCT GP-CAB AIR	1359
FILTER ELEMENT-CAB AIR (AIR CONDITIONER)	245-7823	1	AIR CONDITIONER GP	1264
		1	AIR CONDITIONER GP	1267
		1	AIR CONDITIONER GP	1270
		1	AIR CONDITIONER GP	1273
FUSE (5-AMPERE) (RADIO)	141-2759	1	INSTALLATION GP-RADIO	1399
LAMP (24-VOLT, 10-WATT) (DOME)	201-4417	1	CAB GP	1297
		1	CAB GP	1301
LAMP AS-DOME	176-1986	1	CAB GP	1297
		1	CAB GP	1301
RECEIVER DRYER AS (REFRIGERANT)	176-1902	1	LINES GP-AIR CONDITIONER	1405
		1	LINES GP-AIR CONDITIONER	1409
SEAT BELT GP	327-6540	1	SEAT BELT GP	1443
	327-6541	1	SEAT BELT GP	1444
SEAT BELT GP (RETRACTABLE, 3-IN)	235-9020	1	SEAT BELT GP	1442

INDEX

Name	Page
A	
ACCUMULATOR GP-HYDRAULIC–CHARGED	575, 576, 577, 578, 579, 580
ACCUMULATOR GP-HYDRAULIC–UNCHARGED	581
ACTUATOR GP-PUMP–DRIVE	582, 585, 588
ACTUATOR GP-PUMP–DRIVEN	591, 595, 599
ADAPTER GP-OIL LINE	83
ADJUSTER GP-BUCKET	1179, 1180
ADJUSTER GP-BUCKET–B-FAMILY	1178
ADJUSTER GP-SEAT (UPPER SLIDE)	1475, 1476, 1477
ADJUSTER GP-SEAT–LOWER SLIDE	1258
ADJUSTER GP-SEAT–UPPER SLIDE	1257
ADJUSTMENT GP-HYDRAULIC TRACK	537
AFTERCOOLER AS	111, 122, 124, 126
AIR CLEANER AR–WITH PRECLEANER	128
AIR CLEANER GP	129, 130, 131, 132, 133, 134, 135, 136
AIR CONDITIONER & MOUNTING GP	1259, 1261
AIR CONDITIONER AR	1263
AIR CONDITIONER GP	1264, 1267, 1270, 1273
ALARM GP	237, 238
ALARM GP-TRAVEL	238
ALTERNATOR GP-CHARGING	239, 240
ANTENNA & MOUNTING GP–PRODUCT LINK	1276
ARMREST GP–LH	1278, 1280
ARMREST GP–RH	1277, 1279
ATOMIZER GP-ETHER	334
B	
BASE GP-OIL FILTER–HYDRAULIC	603
BATTERY & WIRING GP	242, 250
BATTERY & WIRING GP–COLD WEATHER	258
BATTERY (12-VOLT, MAINTENANCE FREE)	250, 258
BATTERY (12-VOLT, MAINTENANCE FREE, WET)	242
BEARING GP-MAIN	33
BELT TENSIONER GP	21
BELT-SERPENTINE (FAN PULLEY)	71, 72, 73, 74
BLADE AS-WIPER (275-MM) (LOWER)	1503, 1505
BLADE AS-WIPER (600-MM) (UPPER)	1508
BLOCK GP-JUNCTION–BATTERY	260
BOOM AR-1 PIECE LONG	1133
BOOM AR-1 PIECE LONG–ACCUGRADE READY, HIGH AMBIENT	1134
BOOM AR-1 PIECE LONG–HEAVY-DUTY, HIGH AMBIENT TEMPERATURE	1134
BOOM AR-1 PIECE LONG–HIGH TEMPERATURE	1133
BOOM AR-1 PIECE SHORT	1134
BOOM AR-1 PIECE SHORT–HIGH TEMPERATURE	1135
BOOM GP	1138, 1140, 1142
BOOM GP–B-FAMILY	1136
BOOM GP-REACH	1144
BOX & MTG GP-STORAGE	443
BOX GP-STORAGE	444
BRACKET GP-ENGINE	22
BRACKET GP-MIRROR	1281
BRACKET GP-MOUNTING	1475, 1476
BRACKET GP-MOUNTING (SUSPENSION SEAT)	1477
BRACKET GP-MOUNTING–SUSPENSION SEAT	1282
BREATHER (SWING DRIVE)	644
BREATHER AS (CRANKCASE)	31, 32, 84
BREATHER GP	84

INDEX

Name	Page
BREATHER GP (HYDRAULIC TANK)	996
BUCKET & ADJUSTER GP–B-FAMILY	1187
	1190
BUCKET & ADJUSTER GP–CB-FAMILY	1190
BUCKET & ADJUSTER GP–DB-FAMILY	1187
BUCKET & ADJUSTER GP– EXCAVATION, B-FAMILY	1183
BUCKET & ADJUSTER GP– EXCAVATION, CB-FAMILY	1181
	1182
	1183
BUCKET & ADJUSTER GP– EXCAVATION, DB-FAMILY	1184
	1185
BUCKET & ADJUSTER GP– EXTREME EXCAVATION, CB-FAMILY	1183
BUCKET & ADJUSTER GP– GENERAL PURPOSE, B-FAMILY	1186
	1187
	1188
BUCKET & ADJUSTER GP– HEAVY-DUTY ROCK, B-FAMILY	1186
BUCKET & ADJUSTER GP– HEAVY-DUTY, B-FAMILY	1186
	1190
BUCKET & ADJUSTER GP– HEAVY-DUTY, DB-FAMILY	1187
	1189
BUCKET AR-EXCAVATION–DB-FAMILY	1190
BUCKET AS-DITCH CLEANING–B-FAMILY	1191
BUCKET AS-DITCH CLEANING–CB-FAMILY	1193
BUCKET AS-DITCH CLEANING–DB-FAMILY	1192
BUCKET AS-EXCAVATION–B-FAMILY	1195
	1197
BUCKET AS-EXCAVATION–CB-FAMILY	1194
	1196
BUCKET AS-GENERAL PURPOSE–B-FAMIL	1199
BUCKET AS-GENERAL PURPOSE– B-FAMILY	1198
	1200
BUCKET AS-HEAVY DUTY–B-FAMILY	1217
	1218
	1219
	1220
	1221
	1222
	1223
	1224
	1225
	1228
	1229
BUCKET AS-HEAVY DUTY–CB-FAMILY	1201
	1202
	1203
	1204
	1205
	1206
	1207
	1216
BUCKET AS-HEAVY DUTY–DB-FAMILY	1208
	1209
	1210
	1211
	1212
	1213
	1214
	1215
	1226
	1227
BUCKET AS-HEAVY DUTY POWER– CB-FAMILY	1230
BUCKET AS-HEAVY DUTY ROCK–B-FAMILY	1233
	1234
BUCKET AS-HEAVY DUTY ROCK– CB-FAMILY	1231
BUCKET AS-HEAVY DUTY ROCK– DB-FAMILY	1232
BUCKET AS-UTILITY–B-FAMILY	1235
BUCKET GP–HEAVY-DUTY, CB-FAMILY	1240
BUCKET GP-DITCH CLEANING–B-FAMILY	1236
BUCKET GP-DITCH CLEANING–CB-FAMILY	1236
BUCKET GP-DITCH CLEANING–DB-FAMILY	1236
BUCKET GP-HEAVY DUTY–B-FAMILY	1237
	1238
	1239
BUCKET GP-HEAVY DUTY–CB-FAMILY	1237
	1239
	1240
	1241
BUCKET GP-HEAVY DUTY–DB-FAMILY	1242
	1243
	1244
BUCKET GP-HEAVY DUTY ROCK–B-FAMILY	1244
BUCKET GP-HEAVY DUTY ROCK– CB-FAMILY	1245
BUCKET GP-HEAVY DUTY ROCK– DB-FAMILY	1245
BUMPER GP–STANDARD UPPER FRAME	446

C

CAB GP	1283
	1285
	1287
	1289
	1291
	1293
	1309
CAB GP–EXTERIOR	1297
	1301

INDEX

Name	Page
CAB GP–INTERIOR	1295, 1305, 1307
CAMERA & MIRROR AR	1311
CAMERA & MOUNTING GP	261
CAMERA & WIRING GP	262
CAMERA GP	263, 264
CAMSHAFT GP	23
CAP AS (COOLANT RECOVERY)	114, 116, 118, 120
CAP AS (WINDOW WASHER)	1485, 1486
CAP AS-ENGINE OIL FILLER	31, 32
CAP AS-FILLER (FUEL TANK)	217, 219, 222, 224, 226, 228, 231, 233
CAP AS-RADIATOR	111, 122, 124, 126
CARRIER GP-SEAL	24
CHASSIS AR	1
CIRCUIT BREAKER AS (120-AMPERE) (HEATER)	301
CIRCUIT BREAKER AS (80-AMPERE) (ALTERNATOR)	301
CIRCUIT BREAKER AS (80-AMPERE) (MAIN)	301
COIL GP-EVAPORATOR	1312
COMPRESSOR & MTG GP-REFRIG	1315
COMPRESSOR GP-REFRIGERANT	1314, 1315
CONDENSER & MTG GP-REFRIGERANT	1316
CONDENSER GP-REFRIGERANT	1317, 1318
CONSOLE GP-OPERATOR	1319, 1321, 1323
CONSOLE GP-OPERATOR–LH	1325, 1331
CONSOLE GP-OPERATOR–RH	1327, 1329
CONTROL & MTG GP-COMMUNICATION–PRODUCT LINK	266, 267
CONTROL & MTG GP-COMMUNICATION–PRODUCT LINK 121SR	268
	271
CONTROL & MTG GP-COMMUNICATION–PRODUCT LINK 321SR	270
CONTROL & MTG GP-ENGINE ELEK	273
CONTROL & MTG GP-JOYSTICK	1333
CONTROL & MTG GP-MACHINE	274
CONTROL AR-AUXILIARY–1-PUMP, 2-WAY, PEDAL	604
CONTROL AR-AUXILIARY–1-PUMP/2-PUMP, 1-WAY FLOW	604
CONTROL AR-AUXILIARY–COMB FCTN, MED PRESS, 2-PEDALS	605
CONTROL AR-AUXILIARY–COMBINED FCTN, 2-HYD PEDALS	604
CONTROL AR-COUPLER	605
CONTROL GP-HANDLE–JOYSTICK, LH	1334
CONTROL GP-HANDLE–JOYSTICK, RH	1335
CONTROL GP-HEAT & AIR COND–AIR INLET	1336
CONTROL GP-HYDRAULIC PEDAL	1339, 1340
CONTROL GP-HYDRAULIC PEDAL–TRAVEL	1337
CONTROL GP-HYDRAULIC PEDAL–WORK TOOL	1338
CONTROL GP-JOYSTICK–LH	1343
CONTROL GP-JOYSTICK–RH	1342
CONTROL GP-UNPROGRAMMED	274, 275
CONTROL GP-UNPROGRAMMED (ENGINE)	273
CONVERSION AR-MACHINE–ACCUGRADE READY	2
COOLER GP-ENGINE OIL	103
COOLING AR-HIGH AMBIENT TEMP	104
CORE AS-ENGINE OIL COOLER	103
CORE AS-HEATER	1264, 1267, 1270, 1273
CORE AS-OIL COOLER	111
CORE AS-OIL COOLER (HYDRAULIC)	122, 124, 126
CORE AS-RADIATOR	111, 122, 124, 126
COUNTERWEIGHT & MOUNTING GP	447, 448, 449, 450, 451, 452
COUNTERWEIGHT AR	453
COUNTERWEIGHT GP	454, 455, 456

INDEX

Name	Page
	457
	458
	459
	460
	461
	462
	463
	464
	465
	466
	467
	468
	469
COUPLING GP-PUMP	606
COVER AS-SOUND SUPPRESSION	471
	473
COVER AS-SOUND SUPPRESSION–FUEL TANK	470
	472
COVER GP-AIR INLET	139
	140
COVER GP-AIR INLET–STARTING AID HEATER	137
	138
COVER GP-CAB–REAR	1344
COVER GP-CYLINDER BLOCK	25
	26
COVER GP-FRONT HOUSING	28
	29
	30
COVER GP-STORAGE	1345
COVER GP-VALVE MECHANISM	31
	32
CRANKSHAFT GP	33
CYLINDER & LINES GP-BOOM–LH	607
	608
CYLINDER & LINES GP-BOOM–RH	607
	608
CYLINDER & LINES GP-BUCKET	608
	609
CYLINDER & LINES GP-BUCKET–CB1-FAMILY	609
CYLINDER & LINES GP-STICK	610
CYLINDER & SEAL GP-BOOM	611
	613
	615
CYLINDER & SEAL GP-BUCKET	617
	619
	621
	623
	625
	626
	627
CYLINDER & SEAL GP-STICK	629
	630
	632
	634
CYLINDER AR-HYDRAULIC	636
CYLINDER BLOCK GP	35
	36
	37
CYLINDER GP-BUCKET	637
	639
CYLINDER GP-STICK	641
CYLINDER HEAD AS	39
	40
CYLINDER HEAD GP	42
	43
	44
	45
	46

D

DAMPER & PULLEY GP	48
	49
DISPLAY GP-MONITOR (CD700)	1346
DISPLAY GP-MONITOR–CD700	1346
DOOR & MTG GP-CAB	1347
DOOR GP-ACCESS–AIR CLEANER	477
	481
DOOR GP-ACCESS–PUMP COMPARTMENT	480
DOOR GP-ACCESS–RADIATOR	476
	479
DOOR GP-ACCESS–RADIATOR, LH	475
	478
DOOR GP-ACCESS–RH	474
DOOR GP-CAB	1348
	1350
	1352
	1355
	1358
DRIVE GP-FAN	50
	51
DRIVE GP-FINAL–WITHOUT MOTOR	434
	437
DRIVE GP-SWING–WITH MOTOR	643
DRIVE GP-SWING–WITHOUT MOTOR	644
DUCT GP-CAB AIR	1359

E

EDGE GP-CUTTING	1246
	1247
ELBOW GP-AIR INLET	141
ELECTRONICS GP-COMMUNICATION–PRODUCT LINK 300	276
ELECTRONICS GP-MACHINE	276
ELECTRONICS GP-MACHINE–HIGH POWER	277
ELECTRONICS GP-MONITOR	277

INDEX

Name	Page
ELEMENT (BREATHER) (CRANKCASE)	31
	32
ENGINE AR	4
	5
	6
ENGINE AR-COMPLETE	7
	9
	10
	11
	12
	13
	14
	15
ENGINE AR-CORE	16
	17
	18
	19

F

FAN GP-SUCTION	105
FASTENER GP-CYLINDER HEAD	53
FASTENER GP-FRONT COVER	54
FASTENER GP-FRONT HOUSING	55
FASTENER GP-LIFTING	56
FASTENER GP-SWING & FINAL DR	646
FASTENER GP-WIRING HARNESS	278
FASTENER GP-WIRING HARNESS–HEAVY LIFT	281
FASTENER GP-WIRING HARNESS–STRAIGHT TRAVEL	280
FENDER & COVER GP	482
	483
FILM GP	1511
	1513
	1515
	1524
	1527
FILM GP–ALT PATTERN CONTROL, WARNING	1519
FILM GP–FUEL TRANSFER PUMP	1523
FILM GP–LONG REACH BOOM	1521
	1525
FILM GP–OPERATOR CONTROLS	1517
FILM GP–OPERATOR CONTROLS, NOTICE	1518
FILM GP–QUICK COUPLER	1520
	1522
FILM GP–SECONDARY EXIT	1510
FILM GP–WORK AREA VISUAL SYSTEM, REAR	1526
FILM-CERTIFICATION (OPS GUARD, READ OMM)	1375
FILM-CERTIFICATION (OPS GUARD, READ OMM, ENGLISH)	1373
FILM-IDENTIFICATION (ELECTRONIC CONTROL MODULE)	276
FILM-IDENTIFICATION (FUEL)	422
	424
FILM-INFORMATION (24-VOLT)	1536
	1542
	1548
	1554
	1560
	1565
	1570
FILM-INFORMATION (DO NOT LIFT)	449
	450
FILM-INSTRUCTION (HYDRAULIC OIL RETURN FILTER)	656
FILM-INSTRUCTION (MACHINE SECURITY, CONSOLE)	307
	309
FILM-INSTRUCTION (PULL RING, ALTERNATE EXIT)	1530
	1536
	1542
	1548
	1554
	1560
	1565
	1570
FILM-INSTRUCTION (REFUELING PUMP)	202
	204
FILM-INSTRUCTION (TOP, AIR CLEANER COVER)	129
	135
FILM-WARNING (HIGH PRESSURE CYLINDER)	579
FILM-WARNING (HOT FLUID UNDER PRESSURE, U.S.)	1528
FILM-WARNING (HOT SURFACE, HANDS CLEAR)	1542
	1548
	1565
	1570
FILM-WARNING (NO WELD, NO DRILL, READ OMM)	1373
FILM-WARNING (PRODUCT LINK RADIO, INTL)	266
	268
	271
FILM-WARNING (PRODUCT LINK RADIO, U.S.)	266
	268
	271
FILM-WARNING (SEAT BELT, U.S.)	1528
FILTER & VALVE GP-PILOT–HYDRAULIC OIL	648
	649
	650

INDEX

Name	Page
	651
FILTER AR-HYDRAULIC–HAMMER	652
FILTER AS-ENGINE OIL (ADVANCED EFFICIENCY)	85
	88
FILTER AS-WATER SEP & FUEL (PRIMARY)	154
FILTER ELEMENT AS-AIR (PRIMARY)	129
	130
	135
	136
FILTER ELEMENT AS-AIR (PRIMARY) (ULTRA HIGH EFFICIENCY)	135
	136
FILTER ELEMENT AS-AIR (SECONDARY)	129
	130
	135
	136
FILTER ELEMENT AS-OIL (HYDRAULIC RETURN)	656
FILTER ELEMENT-CAB AIR	1359
FILTER ELEMENT-CAB AIR (AIR CONDITIONER)	1264
	1267
	1270
	1273
FILTER ELEMENT-HYDRAULIC (HYDRAULIC)	658
FILTER GP-ENGINE OIL	85
	88
FILTER GP-OIL–HYDRAULIC	658
FILTER GP-OIL–HYDRAULIC RETURN	654
	656
FILTER GP-OIL–HYDRAULIC, CASE DRAIN	653
	659
FILTER GP-WATER SEP & FUEL	154
FILTER-FUEL (ADVANCED EFFICIENCY)	158
	161
	165
FILTER-FUEL (ADVANCED EFFICIENCY) (SECONDARY)	171
	175
	178
FILTER-OIL (ADVANCED EFFICIENCY)	653
FILTER-OIL (ADVANCED EFFICIENCY) (HYDRAULIC)	649
FILTER-OIL (ADVANCED EFFICIENCY) (HYDRAULIC, CASE DRAIN)	659
FILTER-OIL (ADVANCED EFFICIENCY) (HYDRAULIC, PILOT)	651
FILTER-OIL (ULTRA HIGH EFFICIENCY) (HYDRAULIC, PILOT)	650
FINAL DRIVE GP	433
	434
	437
FINAL DRIVE GP–WITH MOTOR	440
FITTING GP-HYDRAULIC	660
FLOOR MAT	1360
FLOOR MAT GP	1361
	1362
	1363
	1364
FLYWHEEL GP	57
FRAME AR-UNDERCARRIAGE	538
FRAME AR-UNDERCARRIAGE–LONG UNDERCARRIAGE	538
FRAME GP-UPPER	484
FRAME GP-UPPER FRONT WINDOW	1365
FRONT AR-LONG REACH	1146
FUMES DISPOSAL GP	91
FUSE (10-AMPERE)	367
FUSE (15-AMPERE)	367
	379
FUSE (25-AMPERE)	367
FUSE (30-AMPERE)	367
FUSE (5-AMPERE)	367
FUSE (5-AMPERE) (RADIO)	1399

G

GASKET (FUEL FILTER)	178
GASKET (FUEL PRIMING PUMP)	165
	198
GASKET-WATER REGULATOR (TEMPERATURE REGULATOR HOUSING)	106
GAUGE (FUEL STRAINER)	217
	219
GAUGE GP-OIL LEVEL (DIPSTICK)	93
GAUGE GP-SIGHT–HYDRAULIC OIL LEVEL	661
GAUGE-OIL LEVEL (SWING DRIVE)	644
GEAR & BEARING GP-SWING	486
	487
	488
	490
GEAR GP-FRONT	58
GENERAL AR	2
GRADE CONTROL AR-SATELLITE–ACCUGRADE	282
GUARD AR-OVERHEAD–FOG	1367
GUARD AR-VANDALISM	1367
GUARD AR-VANDALISM–WITH SUN VISOR	1367
GUARD GP-BOTTOM	493
	495
GUARD GP-BOTTOM–HEAVY-DUTY	494
GUARD GP-CYLINDER	662
GUARD GP-FRONT WINDOW	1373
GUARD GP-FRONT WINDOW–FULL	1368
	1370
GUARD GP-FRONT WINDOW–LOWER	1372
GUARD GP-OVERHEAD	1375
GUARD GP-SWIVEL	496

INDEX

Name	Page
GUARD GP-TRACK GUIDE	539
GUARD GP-TRACK GUIDE–FULL LENGTH	542, 543
GUARD GP-TRACK GUIDE–SPROCKET	540, 541
GUARD GP-TRAVEL MOTOR	544, 545
GUARD GP-VANDALISM–CAB	1377, 1378

H

Name	Page
HANDRAIL GP	497
HARNESS AS-AUXILIARY	380, 389
HARNESS AS-CAB	367, 375
HARNESS AS-CHASSIS	243, 251
HARNESS AS-CHASSIS (HORN)	1393, 1394
HARNESS AS-CONSOLE	309
HARNESS AS-CONSOLE (LH)	404
HARNESS AS-CONSOLE (RH)	303, 305, 307, 406
HARNESS AS-CONTROL	379, 385, 392, 402, 416
HARNESS AS-CONTROL (BODY TILT SENSOR, GPS RECEIVER)	382, 385
HARNESS AS-CONTROL (DISPLAY, GPS RADIO)	382, 385
HARNESS AS-CONTROL (FAN CLUTCH)	388
HARNESS AS-CONTROL (POWER MODULE)	382
HARNESS AS-CONTROL (PRODUCT LINK)	396
HARNESS AS-CONTROL (PRODUCT LINK, ANTENNA)	394, 396, 398, 400
HARNESS AS-ENGINE (ELECTRONIC CONTROL MODULE)	413
HARNESS AS-ENGINE (FUEL INJECTION)	413
HARNESS AS-HEATER	1386, 1388
HARNESS AS-HEATER & AIR COND	1259, 1261, 1264, 1267, 1270, 1273
HARNESS AS-HEATER & AIR COND (CONTROL PANEL SWITCHES)	1259, 1261, 1386, 1388
HARNESS AS-LIGHTING	294, 296
HARNESS AS-LIGHTING (CAB FLOODLIGHT)	291
HARNESS AS-LIGHTING (CAB FLOODLIGHTS, FRONT)	293
HARNESS AS-LIGHTING (SHORT BOOM, RH)	298
HARNESS AS-MONITOR (HIGH MOUNT)	1428
HARNESS AS-MONITOR (LOW MOUNT)	1428
HARNESS AS-MOTOR (CONDENSER FAN)	1317, 1318
HARNESS AS-MOTOR (SWING MOTOR CONTROL)	417
HARNESS AS-PLATFORM	428
HARNESS AS-POWER (RADIO)	1399
HARNESS AS-PUMP (FUEL)	424
HARNESS AS-PUMP (REFUELING)	418, 420
HARNESS AS-QUICK COUPLER	377
HARNESS AS-RADIO	1396
HARNESS AS-SOLENOID	430
HARNESS AS-SOLENOID (1-WAY/2-WAY FLOW)	371
HARNESS AS-SOLENOID (QUICK COUPLER)	365
HARNESS AS-SWITCH	353, 354
HARNESS AS-SWITCH (SECONDARY SHUTDOWN)	428
HARNESS AS-WIRING	286, 380, 420
HARNESS AS-WIRING (CAB)	377
HARNESS AS-WIRING (LIGHT BAR)	1428
HARNESS AS-WIRING (QUICK COUPLER SWITCH)	360
HARNESS AS-WIRING (SERVICE CONNECTOR)	394, 396, 398, 400
HATCH GP-ROOF	1379, 1380, 1381
HEAD GP-MOTOR	963
HEADREST AS-SEAT	1383, 1384

INDEX

Name	Page
	1385
HEADREST AS-SEAT–CLOTH	1382
HEATER & MTG GP-CAB	1386
	1388
HEATER AR-CAB	1390
HOOD & GUARD GP	498
	502
	506
HOOD AR–PERFORATED	510
	511
HOOD GP–ACCUGRADE READY	514
	515
HOOD GP–PRECLEANER	512
HOOD GP-ENGINE	517
	518
	519
	521
HOOD GP-ENGINE–PERFORATED	516
HORN GP-ELECTRIC	1391
	1392
	1393
	1394
HOSE GP-HYDRAULIC–CONTROL VALVE, BOOM	668
HOSE GP-HYDRAULIC–CONTROL VALVE, STICK	663
	665
HOSE GP-HYDRAULIC–FRONT	664
	666
	667
	669
	670
HOSE-RADIATOR (LOWER)	114
	116
	118
	120
HOSE-RADIATOR (UPPER)	114
	116
	118
	120
HOUSING GP-AIR CONDITIONER–INLET AIR	1395
HOUSING GP-FLYWHEEL	60
HOUSING GP-FRONT	61
HYDRAULIC AR	671

I

Name	Page
IDLER & BEARING GP-FRONT	546
IDLER GP-FRONT	547
IDLER GP-FRONT–LH	549
IDLER GP-FRONT–RH	548
INDICATOR AS (HYDRAULIC RETURN FILTER)	654
INDICATOR AS-AIR FILTER CHANGE (AIR RESTRICTION)	129
	130
	135
	136
INJECTOR GP-FUEL	155
	156
	157
INSTALLATION AR-COMMUNICATION	282
INSTALLATION AR-COMMUNICATION–PRODUCT LINK 121SR	283
INSTALLATION AR-COMMUNICATION–PRODUCT LINK 321SR	283
INSTALLATION AR-COMMUNICATION–PRODUCT LINK 321SR, 121SR	282
INSTALLATION AR-ENGINE	20
INSTALLATION GP-RADIO	1396
	1398
	1399
INSTALLATION GP-SECURITY	284

K

Name	Page
KEY (BATTERY DISCONNECT)	346
KEY AS-ELECTRONIC (SECURITY)	284
KIT-BRACKET–PRODUCT LINK 321SR	286
KIT-SEAT SUSPENSION	1402
	1403
KIT-SEAT SUSPENSION–SEAT HEIGHT	1401

L

Name	Page
LAMP (24-VOLT, 10-WATT) (DOME)	1297
	1301
LAMP AS (24-VOLT, 3-WATT)	303
	305
LAMP AS-DOME	1297
	1301
LAMP GP-FLOOD	287
	288
	289
	293
LAMP-HALOGEN (24-VOLT, 65-WATT)	287
	288
	289
	293
LEVER GP-AIR & TEMP CONTROL	1404
LIFTER GP-VALVE	62
LIFTING GP-ENGINE	63
LIGHTING GP-CHASSIS–FRONT, RH	290
LIGHTING GP-FLOOD	296
LIGHTING GP-FLOOD–BOOM, LH	294
LIGHTING GP-FLOOD–CAB	291
LIGHTING GP-FLOOD–CAB GUARD	293
LIGHTING GP-FLOOD–SHORT BOOM, RH	298
LINES GP-AIR	142
	144

INDEX

Name	Page
LINES GP-AIR CONDITIONER	1405
	1409
LINES GP-AUXILIARY HYDRAULIC	672
	674
	676
	678
	680
	702
	704
	710
LINES GP-AUXILIARY HYDRAULIC– HIGH PRESSURE	706
	708
LINES GP-AUXILIARY HYDRAULIC– MASS BOOM, HIGH PRESSURE	692
LINES GP-AUXILIARY HYDRAULIC– MASS BOOM, MEDIUM PRESSURE	694
	696
	698
	700
LINES GP-AUXILIARY HYDRAULIC– MEDIUM PRESSURE	712
	714
LINES GP-AUXILIARY HYDRAULIC– REACH BOOM	682
	684
	686
	688
	690
LINES GP-BOOM	724
	726
	728
	730
	732
LINES GP-BOOM–BOOM CYLINDER	720
	722
LINES GP-BOOM CYLINDER–LH	743
	751
LINES GP-BOOM CYLINDER– LOAD CONTROL	745
	748
LINES GP-BOOM CYLINDER–RH	744
	753
LINES GP-BOOM DRAIN	754
LINES GP-BOOM–REACH BOOM	718
	719
LINES GP-BOOM– REACH BOOM, STICK LOAD CONTROL	716
	735
	737
LINES GP-BOOM– STICK LOAD CONTROL VALVE	739
	741
LINES GP-BUCKET CYLINDER	755
	756
	757
	758
LINES GP-CONTROL– CONTROL VALVE, REAR	759
LINES GP-COUPLER	762
	767
	768
	769
LINES GP-COUPLER–MASS BOOM	765
LINES GP-COUPLER–REACH BOOM	763
LINES GP-ENGINE OIL	94
LINES GP-ENGINE OIL DRAIN	95
LINES GP-FRONT–1-PUMP, 1-WAY, PEDAL	788
LINES GP-FRONT–BOOM CYLINDER	803
LINES GP-FRONT–COMBINED FUNCTION	791
	795
LINES GP-FRONT–CONTROL VALVE	770
LINES GP-FRONT–HAMMER	781
	785
LINES GP-FRONT–MEDIUM PRESSURE	802
LINES GP-FRONT–QUICK COUPLER	773
	775
	777
	779
	804
LINES GP-FRONT– SYSTEM 3, 1-WAY, 2-PUMP	799
LINES GP-FUEL	158
	161
	165
	168
	170
	174
	178
LINES GP-GREASE	1147
	1149
	1150
	1152
LINES GP-GREASE–STICK	1148
LINES GP-HEATER	1413
	1415
LINES GP-HYDRAULIC OIL COOLER	808
LINES GP-INJECTOR HYD PUMP	182
LINES GP-MUFFLER DRAIN	145
	146
LINES GP-PILOT– ALT PATTERN CONTROL, 2-WAY	871
	874
LINES GP-PILOT–AUXILIARY SYSTEM	881
	884
LINES GP-PILOT– COMB FCTN, MED PRESS, 2-PEDALS	891
	896
	900

INDEX

Name	Page
LINES GP-PILOT–COMBINED FCTN, 2-HYD PEDALS	920
LINES GP-PILOT–CONTROL VALVE, PUMP	823, 830, 837, 844, 851, 858
LINES GP-PILOT–CONTROL VALVE, TRAVEL VALVE	928
LINES GP-PILOT–HEAVY LIFT	877, 879
LINES GP-PILOT–JOYSTICK, PEDALS	810, 813, 817
LINES GP-PILOT–LOAD CONTROL, BOOM CYLINDER	930
LINES GP-PILOT–LOAD CONTROL, STICK	904, 906
LINES GP-PILOT–PEDAL CONTROLS	887, 889, 918
LINES GP-PILOT–PEDAL, RH	908
LINES GP-PILOT–PUMP	865, 867, 869
LINES GP-PILOT–PUMP CONTROL	910, 914
LINES GP-PILOT–THIRD PEDAL, PILOT VALVE	924, 926
LINES GP-PILOT–TRAVEL	821
LINES GP-PUMP–SUPPLY	931
LINES GP-RETURN	934, 936
LINES GP-RETURN–BOOM LOWERING CONTROL	938, 940
LINES GP-RETURN–MASS BOOM	932, 933
LINES GP-STICK	942, 943, 945, 946
LINES GP-STICK CYLINDER	947, 951
LINES GP-STICK CYLINDER–LOAD CONTROL	949
LINES GP-STICK CYLINDER–LONG REACH	948
LINES GP-STICK–LONG REACH	944
LINES GP-TRAVEL MOTOR	952, 955
LINES GP-TURBOCHARGER OIL	96, 97
LINES GP-WATER	106
LINK AS-TRACK	550, 551
LINKAGE AR–ACCUGRADE READY, HIGH AMBIENT	1154
LINKAGE AR-BUCKET–B1-FAMILY, WITH LIFTING EYE	1154
LINKAGE AR-BUCKET–CB1-FAMILY	1154, 1155
LINKAGE AR-BUCKET–HIGH TEMPERATURE, CB1-FAMILY	1155
LINKAGE GP-BUCKET	1158
LINKAGE GP-BUCKET–B1-FAMILY, WITH LIFTING EYE	1162
LINKAGE GP-BUCKET–CB1-FAMILY	1156, 1160
LINKAGE GP-BUCKET–CB1-FAMILY, ACCUGRADE READY	1163
LITERATURE GP	1417
LOCK GP-TRANSPORT	1165

M

Name	Page
MANIFOLD GP-CONTROL–PILOT OIL SUPPLY	957, 958, 959
MANIFOLD GP-EXHAUST	147, 148
MIRROR AR-REAR VIEW	1417
MIRROR GP	1418
MIRROR GP-REAR VIEW	1420, 1421, 1422
MIRROR GP-REAR VIEW–FRONT, RH	1419
MODULE GP-INTERFACE (KEY)	284
MONITOR & MTG GP-OPERATOR	1423, 1432
MONITOR GP-OPERATOR	1424
MOTOR & MTG GP-SWING	960
MOTOR & MTG GP-TRAVEL	961
MOTOR AS (WIPER)	1508
MOTOR GP-SWING	962, 963
MOTOR GP-TRAVEL	965, 969
MOUNTING GP-ANTENNA	1425
MOUNTING GP-ANTENNA–PRODUCT LINK, ANTENNA	1427
MOUNTING GP-ENGINE	64
MOUNTING GP-GRADE CONTROL–ACCUGRADE	299
MOUNTING GP-LINES	99, 100
MOUNTING GP-MAIN CONTROL VALVE	972
MOUNTING GP-MONITOR–ACCUGRADE	1428

INDEX

Name	Page
MOUNTING GP-PLATFORM	1429
MOUNTING GP-RADIO–GRADE CONTROL	1431
MUFFLER GP	149

O

OPERATOR AR	1432

P

PADLOCK GP	214
	215
PADLOCK GP (FUEL TANK FILL CAP)	213
PAN GP-OIL	66
PANEL & MTG GP-CIRCUIT BREAKER	300
PANEL GP-CIRCUIT BREAKER	301
PANEL GP-SWITCH–ENGINE SPEED, START	303
	305
	307
	309
PEDAL AR-AUXILIARY– THIRD PEDAL, STRAIGHT TRAVEL	1432
PIN GP-BUCKET	1247
	1248
PISTON & ROD GP	68
PLATE & FILM GP	1530
	1536
	1542
	1548
	1554
	1560
	1565
	1570
PLATE & FILM GP–U.S.	1528
PLATE-INSTRUCTION (BATTERY)	301
PLATE-WARNING (HIGH PRESSURE CYLINDER)	559
	560
PLATFORM GP-OPERATOR	1433
PLUG GP-CONNECTOR	311
PLUG GP-CONTROL VALVE	973
	974
PLUG GP-CYLINDER BLOCK	69
PLUG GP-ENGINE	70
PLUG-OIL DRAIN	996
POWER TRAIN AR	441
PROTECTOR GP-SIDE BAR	1249
PULLEY GP	71
	72
	73
	74
PUMP & MOTOR GP-REFUELING	183
PUMP & MTG GP-MAIN HYDRAULIC	975
PUMP & MTG GP-UNIT INJ HYD	184
	186
	188
	190
	192
PUMP AR-FUEL TRANSFER	194
PUMP GP-ENGINE OIL	101
	102
PUMP GP-FUEL INJECTION	195
	196
	197
PUMP GP-FUEL PRIMING	198
	199
PUMP GP-FUEL PRM & PRIM FILTER– WITH WATER SEPARATOR	200
PUMP GP-FUEL PRM & WATER SEP	201
PUMP GP-FUEL TRANSFER	206
	207
	208
	209
	210
PUMP GP-GEAR (PILOT)	976
PUMP GP-MAIN HYDRAULIC	976
PUMP GP-REFUELING	202
	204
PUMP GP-UNIT INJECTOR HYD	206
	207
	208
	209
	210
PUMP GP-WATER	108
	110

R

RADIATOR & HYD OIL COOLER GP	111
	114
	116
	118
	120
	122
	124
	126
RADIO GP-COMMUNICATION	266
RADIO GP-COMMUNICATION– PRODUCT LINK 121SR	1434
RECEIVER DRYER AS (REFRIGERANT)	1405
	1409
RECEIVER GP-SATELLITE– DUAL GNSS, MS990	312
REGULATOR AS-VOLTAGE (24-VOLT) (ALTERNATOR)	240
REGULATOR GP-FUEL PRESSURE	212
REGULATOR-PRESSURE (FUEL TRANSFER PUMP)	200
REGULATOR-WATER TEMPERATURE (94-DEG C) (COOLANT)	106

INDEX

Name	Page
RELAY (24-VOLT) (1-WAY/2-WAY SOLENOID)	371
RELAY (24-VOLT) (BOOM FLOODLIGHT)	367
RELAY (24-VOLT) (CAB FLOODLIGHT)	367
RELAY (24-VOLT) (CHASSIS LIGHT)	367
RELAY (24-VOLT) (ETHER)	367
RELAY (24-VOLT) (HORN)	367
RELAY (24-VOLT) (NEUTRAL START)	367
RELAY (24-VOLT) (PRIMING PUMP)	375
RELAY (24-VOLT) (QUICK COUPLER LOCK ON)	377
RELAY (24-VOLT) (QUICK COUPLER LOCK PRIORITY)	377
RELAY (24-VOLT) (QUICK COUPLER LOCK)	377
RELAY (24-VOLT) (REFUELING PUMP, START)	418
	420
RELAY (24-VOLT) (REFUELING PUMP, STOP)	418
	420
RELAY (24-VOLT) (START CONTROL)	402
RELAY (24-VOLT) (TRAVEL ALARM)	367
RELAY (BLOWER)	1336
	1395
RELAY (COMPRESSOR CLUTCH)	1336
	1395
RELAY (CONDENSER)	1395
RELAY (CONDENSER, HIGH)	1395
RELAY AS (WIPER)	1508
ROCKER ARM GP	75
	76
ROCKER ARM GP (EXHAUST)	80
ROCKER ARM GP (INTAKE)	80
ROLLER AR-TRACK & CARRIER	552
	553
	554
ROLLER GP-TRACK CARRIER	555
ROLLER GP-TRACK-SINGLE FLANGE	556
	557

S

Name	Page
SCREEN AS (HYDRAULIC TANK)	981
SCREEN GP-HYDRAULIC–TANK	981
SCREEN GP-SUN	1435
SEAL GP-CRANKSHAFT	77
SEAL-VALVE COVER (VALVE COVER)	32
SEAT & MOUNTING GP–AIR SUSPENSION	1438
SEAT & MOUNTING GP–HIGH BACK, TILT	1437
	1439
	1440
SEAT & MOUNTING GP–LOW BACK WITH TILT	1436
SEAT BELT GP	1443
	1444
SEAT BELT GP (RETRACTABLE, 3-IN)	1442
SEAT BELT GP–RETRACTABLE	1441
	1443
	1444
SEAT BELT GP–RETRACTABLE, 3-IN	1442
SEAT GP	1470
	1471
SEAT GP–HIGH BACK, TILT	1446
	1459
SEAT GP–HIGH BACK, WITH HEATER	1447
	1460
SEAT GP–LOW BACK WITH TILT	1445
SEAT GP–LOW BACK, TILT	1448
	1449
	1450
	1451
	1452
	1454
	1456
	1458
SEAT GP–LOW BACK, VINYL	1453
	1455
	1457
SEAT GP-SUSPENSION–AIR SUSP, HIGH BACK, WITH HTR	1464
	1466
SEAT GP-SUSPENSION–AIR SUSPENSION	1463
SEAT GP-SUSPENSION–HIGH BACK, TILT	1462
	1470
	1471
SEAT GP-SUSPENSION–HIGH BACK, WITH HEATER	1468
	1472
SEAT GP-SUSPENSION–LOW BACK, TILT	1461
	1467
	1469
SENDER AS (HYDRAULIC OIL PRESSURE)	658
SENDER AS-TEMPERATURE (HYDRAULIC OIL)	996
SENSOR AR-GRADE–ANGLE SENSOR	312
SENSOR AS (AMBIENT AIR TEMP)	1264
	1267
	1270
	1273
SENSOR AS-POSITION (ANGLE)	312
SENSOR AS-POSITION (ANGLE, PITCH)	312
SENSOR AS-PRESSURE	319
SENSOR AS-PRESSURE (MAIN HYDRAULIC PUMP)	867
	869
SENSOR AS-PRESSURE (MAIN PUMP)	865
SENSOR AS-TEMPERATURE (AIR)	1336
	1395
SENSOR AS-TEMPERATURE (COOLANT)	1264
	1267
	1270
	1273

INDEX

Name	Page
SENSOR GP-ENGINE	313
	315
SENSOR GP-FUEL LEVEL	217
	219
	222
	224
	226
	228
	231
	233
SENSOR GP-PRESSURE	318
	319
	320
	321
	322
	323
SENSOR GP-PRESSURE (ATMOSPHERIC AIR)	313
	315
SENSOR GP-PRESSURE (BOOST)	313
	315
SENSOR GP-PRESSURE (ENGINE OIL)	313
	315
SENSOR GP-PRESSURE (FUEL)	158
	161
	165
	170
	174
	178
SENSOR GP-PRESSURE (INJECTION ACTUATION)	313
	315
SENSOR GP-PRESSURE–FUEL	317
	323
SENSOR GP-SPEED	324
	325
SENSOR GP-SPEED (ENGINE TIMING) (ENGINE TIMING)	313
	315
SENSOR GP-SPEED (ENGINE)	324
SENSOR GP-TEMPERATURE	326
	327
	328
	329
	330
SENSOR GP-TEMPERATURE (AIR INLET MANIFOLD)	313
SENSOR GP-TEMPERATURE (AMBIENT)	388
SENSOR GP-TEMPERATURE (FUEL)	158
	161
	165
	170
	174
	178
	326
	327
SENSOR GP-TEMPERATURE (INLET AIR)	114
SENSOR GP-TEMPERATURE (WATER, COOLANT)	313
SENSOR-TEMPERATURE (AMBIENT AIR)	1259
	1261
	1386
	1388
SERVICE GP-COMMUNICATION (PRODUCT LINK 300)	276
SHEET AS-SOUND SUPPRESSION	523
	524
	525
	526
	528
	529
	530
SIDECUTTER GP	1251
SIDECUTTER GP–C, D-FAMILY	1250
SOFTWARE GP-COMMUNICATION (PRODUCT LINK 121SR)	1434
SOFTWARE GP-COMMUNICATION (PRODUCT LINK 300)	276
SOFTWARE GP-MONITOR	277
SOLENOID AS (24-VOLT)	340
SOLENOID AS-STARTING MOTOR (24-VOLT) (STARTER)	344
SPECIAL AR	3
SPOOL AR-CONTROL VALVE	982
SPOOL GP-CONTROL VALVE–AUXILIARY	984
SPOOL GP-CONTROL VALVE–BOOM II	988
SPOOL GP-CONTROL VALVE–BUCKET	983
SPOOL GP-CONTROL VALVE–STICK II	987
SPOOL GP-CONTROL VALVE–SWING	986
SPOOL GP-CONTROL VALVE–TRAVEL	985
SPRING AS-GAS	1373
SPROCKET GP	442
STARTING AID GP	331
	332
	333
STARTING AID GP-ETHER	334
STARTING AR-COLD WEATHER	336
STARTING MOTOR GP-ELECTRIC	337
	338
	339
	340
	342
	344
STEP GP	531
	532
STICK AR-HOE–ACCUGRADE READY	1167
STICK AR-HOE–MASS	1167
STICK AR-HOE–REACH	1166
	1167
STICK GP-HOE	1168

INDEX

Name	Page
	1170
	1171
	1172
	1176
	1177
STICK GP-HOE–MASS	1174
	1175
STICK GP-HOE–REACH	1173
STORAGE GP-VANDALISM GUARD	533
STRAINER AS-FUEL	202
	204
STRAINER AS-FUEL (FLOAT GAUGE)	224
	228
	231
	233
STRAINER GP-FUEL (FLOAT GAUGE)	217
	219
	222
	226
STRAINER-FUEL	217
	219
	222
	226
SUN VISOR	1483
SUPPORT AS-ENCLOSURE	535
	536
SUPPORT GP-SEAT	1473
	1474
SUSPENSION GP-SEAT	1469
	1470
	1471
	1472
	1475
	1476
	1478
	1479
	1480
	1481
	1482
SUSPENSION GP-SEAT–AIR	1477
SWITCH (LIQUID LEVEL) (FUEL)	355
SWITCH (WINDOW LOWER LIMIT)	1490
SWITCH AS (NORMALLY CLOSED)	354
SWITCH AS (NORMALLY OPEN)	353
SWITCH AS (REFUELING PUMP, STOP)	354
SWITCH AS-LIMIT (HYDRAULIC LOCKOUT)	350
SWITCH AS-LIQUID LEVEL	66
SWITCH AS-LIQUID LEVEL (FUEL TANK SHUTOFF)	204
SWITCH AS-LIQUID LEVEL (HYDRAULIC OIL)	996
SWITCH AS-MAGNETIC (24-VOLT) (MAIN RELAY)	367
	418
	420
SWITCH AS-PRESSURE (ACTION INPUT, MEDIUM PRESSURE)	889
SWITCH AS-PRESSURE (ACTION INPUT, WORK TOOL)	908
SWITCH AS-PRESSURE (AUXILIARY, COMBINED FUNCTION)	889
SWITCH AS-PRESSURE (COMBINED FUNC, MEDIUM PRESSURE)	887
SWITCH AS-PRESSURE (IMPLEMENT, SWING)	810
	813
	817
SWITCH AS-PRESSURE (PILOT, BOOM UP)	892
	897
	901
	918
	921
SWITCH AS-PRESSURE (REFRIGERANT)	1405
	1409
SWITCH AS-PRESSURE (THIRD PEDAL, STRAIGHT TRAVEL)	924
	926
SWITCH AS-PRESSURE (TRAVEL, LH)	810
	813
	817
SWITCH AS-PRESSURE (TRAVEL, RH)	810
	813
	817
SWITCH AS-PUSH BUTTON (HORN)	1334
SWITCH AS-PUSH BUTTON (MANUAL LOW IDLE)	1335
SWITCH AS-ROCKER (FINE SWING)	367
SWITCH AS-ROCKER (HEATED SEAT)	1464
	1468
SWITCH AS-ROCKER (LOWER WASHER)	361
SWITCH AS-ROCKER (RADIO MUTE)	1396
	1399
SWITCH AS-ROCKER (WIPER, LOWER)	361
SWITCH AS-ROLLER (WIPER, LOWER)	1503
	1505
SWITCH AS-TOGGLE (AUTO/MANUAL ENG SPEED CONTROL)	406
SWITCH AS-TOGGLE (MANUAL ENGINE SPEED CONTROL)	406
SWITCH AS-TOGGLE (QUICK COUPLER)	360
	377
SWITCH AS-TOGGLE (SECONDARY SHUTDOWN)	428
SWITCH GP-DISCONNECT (BATTERY)	301
SWITCH GP-DISCONNECT–BATTERY	346
SWITCH GP-MAGNETIC	348
	349
SWITCH GP-MAGNETIC (24-VOLT) (AIR INLET HEATER RELAY)	333
	349

INDEX

Name	Page
SWITCH GP-MAGNETIC–START RELAY	347
SWITCH GP-POSITION–HYDRAULIC LOCKOUT	350
SWITCH GP-PRESSURE (FUEL)	161, 165, 170, 174, 178
SWITCH GP-PRESSURE–FUEL	351, 352
SWITCH GP-PUSH BUTTON (REFUELING PUMP, START)	418
SWITCH GP-PUSH BUTTON (REFUELING PUMP, STOP)	418
SWITCH GP-PUSH BUTTON–REFUELING PUMP, START	353
SWITCH GP-PUSH BUTTON–REFUELING PUMP, STOP	354
SWITCH GP-PUSHBUTTON (REFUELING PUMP, START)	353
SWITCH GP-REFUELING–FUEL TANK SHUTOFF	355
SWITCH GP-ROTARY (THROTTLE POSITION)	303, 305, 307, 309
SWITCH GP-ROTARY–THROTTLE POSITION	356, 357
SWITCH GP-START–ENGINE, KEY	358
SWITCH GP-TOGGLE (QUICK COUPLER)	377
SWITCH GP-TOGGLE–FUEL PRIMING PUMP	359
SWITCH GP-TOGGLE–QUICK COUPLER	360
SWITCH GP-WIPER–LOWER	361
SWIVEL GP	989

T

Name	Page
TANK & FILTER GP-HYDRAULIC	991, 993
TANK & MTG GP-FUEL	213, 214, 215
TANK & MTG GP-HYDRAULIC	995
TANK GP-FUEL	216, 217, 219, 221, 222, 224, 226, 228, 230, 231, 233
TANK GP-HYDRAULIC	996
TIP GP-LONG	1252
TIP GP-PENETRATION PLUS	1253
TIP GP-PENETRATION PLUS–K-100	1254
TIP GP-PENETRATION PLUS–K-110	1255
TIP-LEVELING EDGE–K-100	1256
TRACK ADJUSTER & RECOIL GP	561
TRACK ADJUSTER & RECOIL GP–LH	560
TRACK ADJUSTER & RECOIL GP–RH	559
TRACK AR–2-REQUIRED	562
TRACK GP–2-REQUIRED	563, 564, 565, 566, 567, 568, 569, 570, 571, 572, 573
TURBOCHARGER GP	150, 151, 152, 153

V

Name	Page
VALVE & LINES GP-HEAVY LIFT–HEAVY	999
VALVE & MTG GP-CONTROL–AUXILIARY	1000, 1001
VALVE AR-ALT PATTERN CONTROL–2-WAY	1002
VALVE AR-CHECK & RELIEF–STICK LOWERING CONTROL	1002
VALVE AR-LOAD CONTROL–BOOM CYLINDER	1002
VALVE AR-LOAD CONTROL–STICK	1002
VALVE AR-SWING	1003
VALVE GP-CHECK	803
VALVE GP-CHECK (SOLENOID CONTROLLED) (1-WAY/2-WAY, CHECK)	795
VALVE GP-CHECK–1-WAY/2-WAY FLOW	1006
VALVE GP-CHECK–1-WAY/2-WAY, CHECK	1005
VALVE GP-CHECK–OIL COOLER BYPASS	1004
VALVE GP-CONTROL	1013, 1019, 1025, 1035
VALVE GP-CONTROL–AUXILIARY	1011
VALVE GP-CONTROL–HEAVY LIFT, LH	1044, 1048
VALVE GP-CONTROL–LH	1031
VALVE GP-CONTROL–MEDIUM FLOW	1009

INDEX

Name	Page
VALVE GP-CONTROL–WITHOUT COVERS, HOUSINGS	1008, 1042, 1052
VALVE GP-CONTROL–WITHOUT HOUSINGS	1040
VALVE GP-COUPLER–QUICK COUPLER	1054
VALVE GP-ETHER STARTING	362
VALVE GP-FLOW CONTROL & RELIEF–MEDIUM FLOW, ROTATOR MOTOR	1056
VALVE GP-FUEL BYPASS	235
VALVE GP-FUEL SHUTOFF	236
VALVE GP-LOAD CONTROL–BOOM CYLINDER	1058
VALVE GP-LOAD CONTROL–BOOM DRIFT RED, LINE RELIEF	1065
VALVE GP-LOAD CONTROL–STICK CYLINDER	1061
VALVE GP-LOAD CONTROL–STICK DRIFT RED, LINE RELIEF	1063
VALVE GP-MAIN CONTROL	1067, 1069, 1070
VALVE GP-MANUAL	1071
VALVE GP-MANUAL–AUXILIARY, SHUTOFF	1072, 1073, 1074
VALVE GP-PILOT	1338, 1339
VALVE GP-PILOT (THIRD PEDAL, STRAIGHT TRAVEL)	1340
VALVE GP-PILOT–ALT PATTERN CONTROL, 2-WAY	1079
VALVE GP-PILOT–JOYSTICK	1081
VALVE GP-PILOT RELIEF	1085, 1086
VALVE GP-PILOT RELIEF (HYDRAULIC FILTER)	649, 650, 651
VALVE GP-PILOT–TRAVEL	1075, 1077, 1083
VALVE GP-PRESSURE REDUCING (QUICK COUPLER)	1054
VALVE GP-PRESSURE REDUCING–BOOM, SWING PRIORITY	1087, 1088
VALVE GP-PRIORITY–SWING	1090
VALVE GP-RELIEF	1091, 1094, 1098, 1127, 1132
VALVE GP-RELIEF (CUSHION CROSSOVER)	1128
VALVE GP-RELIEF (LINE)	1011, 1058, 1063, 1065
VALVE GP-RELIEF (LINE) (BOOM, BUCKET)	1031
VALVE GP-RELIEF (LINE) (STICK CYLINDER)	1061
VALVE GP-RELIEF–LINE	1097, 1103, 1104
VALVE GP-RELIEF–MAIN	1102, 1105
VALVE GP-RELIEF–MAIN, HEAVY LIFT	1100, 1106
VALVE GP-RELIEF–NEGATIVE FLOW CONTROL	1092, 1093
VALVE GP-RELIEF–PILOT OPERATED	1099, 1108
VALVE GP-RELIEF–WITH BLOCK	1095, 1096
VALVE GP-SELECTOR–ALT PATTERN CONTROL, 2-WAY	1109
VALVE GP-SHUTTLE	1112, 1114, 1115
VALVE GP-SHUTTLE–1-PUMP/2-PUMP	1113
VALVE GP-SHUTTLE–SWING	1116
VALVE GP-SHUTTLE–THIRD PEDAL, STRAIGHT TRAVEL	1111
VALVE GP-SOLENOID	582, 585, 1118, 1119, 1121, 1124
VALVE GP-SOLENOID & MANIFOLD (QUICK COUPLER)	773, 775, 777, 779
VALVE GP-SOLENOID & MANIFOLD–QUICK COUPLER	1125, 1126
VALVE GP-SOLENOID (24-VOLT) (FINE SWING)	1130
VALVE GP-SOLENOID (AUXILIARY, 1-PUMP/2-PUMP)	1044, 1048
VALVE GP-SOLENOID (AUXILIARY, COMBINED FUNCTION) (1-PUMP/2-PUMP, 1-WAY/2-WAY FLW)	892, 897, 901, 921
VALVE GP-SOLENOID (HEAVY LIFT)	877, 879

INDEX

Name	Page
VALVE GP-SOLENOID (HYDRAULIC LOCKOUT)	958, 959
VALVE GP-SOLENOID (NEG FLOW CONT, PROPN RED VALVE)	881, 884, 892, 897, 901, 910, 914, 921
VALVE GP-SOLENOID (PRESSURE REDUCING)	1122
VALVE GP-SOLENOID (PUMP CONTROL)	588
VALVE GP-SOLENOID (QUICK COUPLER PIN)	1123
VALVE GP-SOLENOID (QUICK COUPLER)	1054
VALVE GP-SOLENOID (STRAIGHT TRAVEL)	1013, 1019, 1025, 1035
VALVE GP-SOLENOID (SWING BRAKE RELEASE)	958, 959
VALVE GP-SOLENOID (TRAVEL SPEED)	958, 959
VALVE GP-SOLENOID–COMBINED FCTN, MEDIUM PRESSURE	1121
VALVE GP-SOLENOID–HEAVY LIFT	1120
VALVE GP-SOLENOID–NEG FLOW CONT, PROPN RED VALVE	1122
VALVE GP-SOLENOID–PRESSURE REDUCING	1117
VALVE GP-SOLENOID–QUICK COUPLER	1123
VALVE GP-SWING CUSHION	1127, 1129
VALVE GP-SWING CUSHION–FINE SWING	1128, 1130
VALVE GP-TRAVEL COUNTERBALANCE	1132
VALVE GP-UNLOADING (STICK CYLINDER)	1013, 1019, 1025, 1035, 1044, 1048
VALVE MECHANISM GP	78, 79, 80, 82
VALVE-FILL	537
VALVE-RELIEF	537
VISOR GP-CAB	1483
VISOR GP-PROTECTION–RAIN	1484

W

Name	Page
WASHER GP-WINDOW	1485, 1486
WASHER GP-WINDOW–LOWER	1487
WATER SEP & FUEL PRM PUMP GP	201
WINDOW AS-FRONT–UPPER	1489
WINDOW GP-CAB	1497
WINDOW GP-CAB–FRONT, LOWER	1493
WINDOW GP-CAB–FRONT, UPPER	1490
WINDOW GP-CAB–LOWER	1494
WINDOW GP-CAB–SIDE, REAR	1496
WINDOW GP-DOOR	1498
WINDOW GP-REAR	1500, 1502
WIPER & WASHER GP-WINDOW–LOWER	1503, 1505
WIPER AR-WINDOW	1507
WIPER GP-WINDOW–FRONT, UPPER	1508
WIRING GP-AUX START RECEPTACLE–JUMP START	363
WIRING GP-BOOM FLOAT–COUPLER	365
WIRING GP-CAB	367
WIRING GP-CAB–1-WAY/2-WAY FLOW	371
WIRING GP-CAB–ACCUGRADE READY	379
WIRING GP-CAB–COUPLER	377
WIRING GP-CAB–PRIMING PUMP	375
WIRING GP-CAB–REAR VISION CAMERA	380
WIRING GP-CAMERA–REAR VISION CAMERA	381
WIRING GP-CHASSIS	382, 385
WIRING GP-CHASSIS–FAN CLUTCH	388
WIRING GP-COMBINED FLOW	389, 392
WIRING GP-COMMUNICATION	402
WIRING GP-COMMUNICATION–PRODUCT LINK	394
WIRING GP-COMMUNICATION–PRODUCT LINK 121SR	398, 400
WIRING GP-COMMUNICATION–PRODUCT LINK 321SR	396
WIRING GP-CONSOLE	405
WIRING GP-CONSOLE–LH	404
WIRING GP-CONSOLE–RH	406
WIRING GP-CONVERTER	408, 411, 412
WIRING GP-CONVERTER–12-VOLT, 7-AMPERE	409
WIRING GP-COUPLER	432
WIRING GP-ENGINE	413
WIRING GP-FAN–FAN CLUTCH	415, 416

INDEX

Name	Page	Name	Page
WIRING GP-FINE SWING	417		
WIRING GP-FUEL SYSTEM–PRIMING PUMP	422		
	424		
WIRING GP-FUEL SYSTEM–REFUELING	418		
	420		
WIRING GP-GRADE CONTROL	426		
WIRING GP-HAMMER–RETURN FILTER	427		
WIRING GP-PLATFORM	428		
WIRING GP-QUICK COUPLER	430		

MEMORANDA

MACHINE ARRANGEMENT

240-3970 CHASSIS AR

S/N: CJX1-UP

PART OF 240-3961 GENERAL AR

SMCS-7000 **i02628290**

NOTE	PART NUMBER	QTY	PART NAME 1 2 3 4 5 6 (PRODUCT LEVEL)	SEE PAGE
Y	*251-0429*	1	BATTERY & WIRING GP	242
Y	*223-3040*	1	BOX & MTG GP-STORAGE	443
Y	*244-8139*	1	COUNTERWEIGHT & MOUNTING GP	447
Y	*223-3042*	1	FENDER & COVER GP	482
Y	*241-7151*	1	FRAME GP-UPPER	484
Y	*244-8150*	1	GUARD GP-BOTTOM	493
Y	*256-1644*	1	HANDRAIL GP	497
Y	*223-3043*	1	HOOD & GUARD GP	498
Y	*267-8071*	1	HORN GP-ELECTRIC	1391
Y	*4I-5409*	1	LIGHTING GP-CHASSIS (FRONT, RH)	290
Y	*229-9071*	1	LINES GP-AIR CONDITIONER	1405
Y	*223-3046*	1	LINES GP-FUEL	158
Y	*7Y-0059*	1	LITERATURE GP	1417
Y	*142-3836*	1	MIRROR GP-REAR VIEW (FRONT, RH)	1419
Y	*245-7811*	1	MOUNTING GP-PLATFORM	1429
Y	*229-9072*	1	OPERATOR AR	1432
Y	*240-3979*	1	PLATE & FILM GP	1530
Y	*223-3037*	1	TANK & MTG GP-FUEL	213
Y	*259-4965*	1	WIRING GP-FINE SWING	417

Y-SEPARATE ILLUSTRATION

<END>

240-3971 CHASSIS AR

S/N: DFP1-UP

PART OF 240-3962 GENERAL AR

SMCS-7000 **i02628267**

NOTE	PART NUMBER	QTY	PART NAME 1 2 3 4 5 6 (PRODUCT LEVEL)	SEE PAGE
Y	*251-0429*	1	BATTERY & WIRING GP	242
Y	*223-3040*	1	BOX & MTG GP-STORAGE	443
Y	*244-8139*	1	COUNTERWEIGHT & MOUNTING GP	447
Y	*223-3042*	1	FENDER & COVER GP	482
Y	*241-7151*	1	FRAME GP-UPPER	484
Y	*244-8150*	1	GUARD GP-BOTTOM	493
Y	*256-1644*	1	HANDRAIL GP	497
Y	*223-3043*	1	HOOD & GUARD GP	498
Y	*267-8071*	1	HORN GP-ELECTRIC	1391
Y	*4I-5409*	1	LIGHTING GP-CHASSIS (FRONT, RH)	290
Y	*229-9071*	1	LINES GP-AIR CONDITIONER	1405
Y	*223-3046*	1	LINES GP-FUEL	158
Y	*7Y-0059*	1	LITERATURE GP	1417
Y	*142-3836*	1	MIRROR GP-REAR VIEW (FRONT, RH)	1419
Y	*245-7811*	1	MOUNTING GP-PLATFORM	1429
Y	*229-9072*	1	OPERATOR AR	1432
Y	*240-3980*	1	PLATE & FILM GP	1554
Y	*223-3037*	1	TANK & MTG GP-FUEL	213
Y	*259-4965*	1	WIRING GP-FINE SWING	417

Y-SEPARATE ILLUSTRATION

<END>

MACHINE ARRANGEMENT

290-1778 CONVERSION AR-MACHINE–ACCUGRADE READY

S/N: DFP1-UP; CJX1-UP

FOR USE WITH 275-3697–PAGE 1134, 275-3703–PAGE 1167, 275-3709–PAGE 1154, 278-3920–PAGE 459, 278-3922–PAGE 462

AN ATTACHMENT

SMCS-7000 **i02892214**

NOTE	PART NUMBER	QTY	PART NAME 1 2 3 4 5 6 (PRODUCT LEVEL)	SEE PAGE
Y	*273-5358*	1	FLOOR MAT GP	1364
Y	*298-2885*	1	HOOD GP	514
Y	*270-5603*	1	MOUNTING GP-ANTENNA (ACCUGRADE)	1425
Y	*306-8349*	1	WIRING GP-CAB (ACCUGRADE READY)	379
Y	*275-7192*	1	WIRING GP-CHASSIS	382
Y-SEPARATE ILLUSTRATION				

<END>

240-3961 GENERAL AR

S/N: CJX1-UP

SMCS-7000 **i02356970**

NOTE	PART NUMBER	QTY	PART NAME 1 2 3 4 5 6 (PRODUCT LEVEL)	SEE PAGE
Y	*240-3970*	1	CHASSIS AR	1
Y	*227-7749*	1	ELECTRONICS GP-MACHINE	276
Y	*221-8861*	1	ELECTRONICS GP-MONITOR	277
Y	*266-6260*	1	ENGINE AR	5
Y	*240-3984*	1	FRAME AR-UNDERCARRIAGE	538
Y	*255-5777*	1	HYDRAULIC AR	671
Y	*222-8379*	1	INSTALLATION AR-ENGINE	20
Y	*199-4593*	1	POWER TRAIN AR	441
Y-SEPARATE ILLUSTRATION				

<END>

240-3962 GENERAL AR

S/N: DFP1-UP

SMCS-7000 **i02356973**

NOTE	PART NUMBER	QTY	PART NAME 1 2 3 4 5 6 (PRODUCT LEVEL)	SEE PAGE
Y	*240-3971*	1	CHASSIS AR	1
Y	*227-7749*	1	ELECTRONICS GP-MACHINE	276
Y	*221-8861*	1	ELECTRONICS GP-MONITOR	277
Y	*266-6260*	1	ENGINE AR	5
Y	*240-3985*	1	FRAME AR-UNDERCARRIAGE	538
Y	*255-5778*	1	HYDRAULIC AR	671
Y	*222-8379*	1	INSTALLATION AR-ENGINE	20
Y	*199-4593*	1	POWER TRAIN AR	441
Y-SEPARATE ILLUSTRATION				

<END>

MACHINE ARRANGEMENT

314-3574 SPECIAL AR

S/N: DFP1-UP; CJX1-UP
CHINA MARKET
FOR USE WITH 600-MM (23.6-IN) TRACK SHOES
AN ATTACHMENT

SMCS-7000 **i03001022**

NOTE	PART NUMBER	QTY	PART NAME 1 2 3 4 5 6 (PRODUCT LEVEL)	SEE PAGE
Y	*298-4281*	1	FILM GP	1524
Y-SEPARATE ILLUSTRATION				

<END>

314-3575 SPECIAL AR

S/N: DFP1-UP; CJX1-UP
CHINA MARKET
FOR USE WITH 700-MM (27.6-IN) TRACK SHOES
AN ATTACHMENT

SMCS-7000 **i03001023**

NOTE	PART NUMBER	QTY	PART NAME 1 2 3 4 5 6 (PRODUCT LEVEL)	SEE PAGE
Y	*298-4281*	1	FILM GP	1524
Y	*235-7764*	2	STEP GP	531
Y-SEPARATE ILLUSTRATION				

<END>

314-3576 SPECIAL AR

S/N: DFP1-UP; CJX1-UP
CHINA MARKET
FOR USE WITH 800-MM (31.5-IN) TRACK SHOES
AN ATTACHMENT

SMCS-7000 **i03001024**

NOTE	PART NUMBER	QTY	PART NAME 1 2 3 4 5 6 (PRODUCT LEVEL)	SEE PAGE
Y	*298-4281*	1	FILM GP	1524
Y	*308-8881*	2	STEP GP	532
Y-SEPARATE ILLUSTRATION				

<END>

314-3846 SPECIAL AR

S/N: DFP1-UP; CJX1-UP
CHINA
FOR USE WITH 700-MM (27.5-IN) TRACK SHOE
AN ATTACHMENT

SMCS-7000 **i03207788**

NOTE	PART NUMBER	QTY	PART NAME 1 2 3 4 5 6 (PRODUCT LEVEL)	SEE PAGE
Y	*314-3848*	1	FILM GP	1527
Y	*235-7764*	2	STEP GP	531
Y-SEPARATE ILLUSTRATION				

<END>

ENGINE ARRANGEMENT

264-8555 ENGINE AR

S/N: DFP1-UP; CJX1-UP
TIER II HIGH POWER ENGINE
AN ATTACHMENT

SMCS-1000 **i02410288**

NOTE	PART NUMBER	QTY	PART NAME 1 2 3 4 5 6 (PRODUCT LEVEL)	SEE PAGE
Y	*260-2056*	1	ELECTRONICS GP-MACHINE	277
Y	**270-2768**	1	ENGINE AR-COMPLETE	12

Y-SEPARATE ILLUSTRATION

ENGINE ARRANGEMENT

266-6260 ENGINE AR

S/N: DFP1-UP; CJX1-UP

PART OF 240-3961, 240-3962 GENERAL AR

SMCS-1000 **i03258861**

NOTE	PART NUMBER	QTY	PART NAME 1 2 3 4 5 6 (PRODUCT LEVEL)	SEE PAGE
Y	*270-2767*	1	ENGINE AR-COMPLETE	11
			S/N: CJX1-193; DFP1-268	
Y	*290-0758*	1	ENGINE AR-COMPLETE	15
			S/N: CJX194-UP; DFP269-UP	
Y	*230-2893*	1	FAN GP-SUCTION	105
Y	*222-8299*	1	MUFFLER GP	149

Y-SEPARATE ILLUSTRATION

ENGINE ARRANGEMENT

275-3819 ENGINE AR

S/N: DFP1-UP

AN ATTACHMENT

SMCS-1000 **i02615705**

NOTE	PART NUMBER	QTY	PART NAME 1 2 3 4 5 6 (PRODUCT LEVEL)	SEE PAGE
Y	*260-2056*	1	ELECTRONICS GP-MACHINE (HIGH POWER)	277
Y	*235-8135*	1	ENGINE AR-COMPLETE	9
			—OR—	
Y	*290-0755*	1	ENGINE AR-COMPLETE	13

Y-SEPARATE ILLUSTRATION

ENGINE ARRANGEMENT

235-8134 ENGINE AR-COMPLETE

S/N: KHX1-UP

PART OF 264-8596 ENGINE AR-COMPLETE

AN ATTACHMENT

SMCS-1000 **i02455590**

NOTE	PART NUMBER	QTY	PART NAME 1 2 3 4 5 6 (PRODUCT LEVEL)	SEE PAGE
Y	*177-6972*	1	ALTERNATOR GP-CHARGING	239
Y	*253-0433*	1	BELT TENSIONER GP	21
Y	*253-0437*	1	BRACKET GP-ENGINE	22
Y	*222-5946*	1	BREATHER GP	84
Y	*4W-3462*	1	CARRIER GP-SEAL	24
Y	*212-8518*	1	COMPRESSOR GP-REFRIGERANT	1314
			S/N: KHX1-392	
Y	*276-3815*	1	COMPRESSOR GP-REFRIGERANT	1315
			S/N: KHX393-UP	
Y	*241-7602*	1	CONTROL & MTG GP-ENGINE ELEK	273
Y	*189-8780*	1	COVER GP-AIR INLET	137
Y	*257-9145*	1	COVER GP-CYLINDER BLOCK	25
Y	*118-1727*	1	COVER GP-FRONT HOUSING (ACCESSORY DRIVE)	28
Y	*172-8732*	1	COVER GP-FRONT HOUSING	29
Y	*252-2328*	1	COVER GP-VALVE MECHANISM	31
Y	*263-1850*	1	DAMPER & PULLEY GP	48
Y	*231-3950*	1	ELBOW GP-AIR INLET	141
Y	*236-4283*	1	ENGINE AR-CORE	16
Y	*116-4556*	1	FASTENER GP-FRONT HOUSING	55
Y	*252-9551*	1	FASTENER GP-FRONT COVER	54
Y	*113-6170*	1	FASTENER GP-LIFTING	56
Y	*258-8723*	1	FASTENER GP-CYLINDER HEAD	53
Y	*231-7266*	1	FILTER GP-ENGINE OIL	85
Y	*186-5892*	1	FLYWHEEL GP	57
Y	*254-7342*	1	FUMES DISPOSAL GP	91
Y	*177-4814*	1	GAUGE GP-OIL LEVEL (DIPSTICK) (ENGINE)	93
Y	*7W-8813*	1	HOUSING GP-FLYWHEEL	60
Y	*142-8100*	1	LIFTING GP-ENGINE	63
Y	*7C-2475*	1	LINES GP-ENGINE OIL	94
Y	*231-3046*	1	LINES GP-FUEL	168
Y	*159-0285*	1	LINES GP-TURBOCHARGER OIL	96
			S/N: KHX1-392	
Y	*280-4371*	1	LINES GP-TURBOCHARGER OIL	97
			S/N: KHX393-UP	
Y	*192-9972*	1	LINES GP-WATER	106
Y	*219-5840*	1	MANIFOLD GP-EXHAUST	147
Y	*176-9429*	1	PAN GP-OIL	66
Y	*235-8200*	1	PLUG GP-CONNECTOR (ENGINE HARNESS, PROT COVER)	311
Y	*159-0303*	1	PLUG GP-CYLINDER BLOCK	69
Y	*162-8068*	1	PLUG GP-ENGINE	70
Y	*263-1848*	1	PULLEY GP	73
Y	*177-9823*	1	PUMP GP-WATER	108
Y	*115-4203*	1	SEAL GP-CRANKSHAFT	77
Y	*257-2186*	1	SENSOR GP-ENGINE (ELECTRONIC)	313
Y	*190-6186*	1	SENSOR GP-SPEED	324
Y	*231-3949*	1	STARTING AID GP (MAGNETIC SWITCH)	331
			S/N: KHX1-302	
Y	*249-9223*	1	STARTING AID GP (WIRING)	332
			S/N: KHX303-UP	
Y	*201-4204*	1	STARTING MOTOR GP-ELECTRIC	339
			S/N: KHX1-392	
Y	*111-4275*	1	STARTING MOTOR GP-ELECTRIC	337
			S/N: KHX393-UP	
Y	*198-2714*	1	WIRING GP-ENGINE	413

ENGINE ARRANGEMENT

235-8134 **ENGINE AR-COMPLETE** ***(contd.)*** **i02455590**

NOTE	PART NUMBER	QTY	PART NAME 1 2 3 4 5 6 (PRODUCT LEVEL)	SEE PAGE
			PLEASE USE THE GASKET KIT LINK IN SIS OR CONTACT YOUR LOCAL DEALER FOR THE LATEST GASKET KIT INFORMATION	

Y-SEPARATE ILLUSTRATION

ENGINE ARRANGEMENT

235-8135 ENGINE AR-COMPLETE

S/N: KHX1-UP
PART OF 275-3819 ENGINE AR
AN ATTACHMENT

SMCS-1000 **i02527194**

NOTE	PART NUMBER	QTY	PART NAME 1 2 3 4 5 6 (PRODUCT LEVEL)	SEE PAGE
Y	*177-6972*	1	ALTERNATOR GP-CHARGING	239
Y	*253-0433*	1	BELT TENSIONER GP	21
Y	*253-0437*	1	BRACKET GP-ENGINE	22
Y	*222-5946*	1	BREATHER GP	84
Y	*4W-3462*	1	CARRIER GP-SEAL	24
Y	*212-8518*	1	COMPRESSOR GP-REFRIGERANT	1314
			S/N: KHX1-1490	
Y	*276-3815*	1	COMPRESSOR GP-REFRIGERANT	1315
			S/N: KHX1491-UP	
Y	*241-7602*	1	CONTROL & MTG GP-ENGINE ELEK	273
Y	*189-8780*	1	COVER GP-AIR INLET	137
Y	*257-9145*	1	COVER GP-CYLINDER BLOCK	25
Y	*118-1727*	1	COVER GP-FRONT HOUSING (ACCESSORY DRIVE)	28
Y	*172-8732*	1	COVER GP-FRONT HOUSING	29
Y	*252-2328*	1	COVER GP-VALVE MECHANISM	31
Y	*263-1850*	1	DAMPER & PULLEY GP	48
Y	*231-3950*	1	ELBOW GP-AIR INLET	141
Y	*236-4284*	1	ENGINE AR-CORE	17
Y	*258-8723*	1	FASTENER GP-CYLINDER HEAD	53
Y	*116-4556*	1	FASTENER GP-FRONT HOUSING	55
Y	*252-9551*	1	FASTENER GP-FRONT COVER	54
Y	*113-6170*	1	FASTENER GP-LIFTING	56
Y	*231-7266*	1	FILTER GP-ENGINE OIL	85
Y	*186-5892*	1	FLYWHEEL GP	57
Y	*254-7342*	1	FUMES DISPOSAL GP	91
Y	*177-4814*	1	GAUGE GP-OIL LEVEL (DIPSTICK)	93
Y	*7W-8813*	1	HOUSING GP-FLYWHEEL	60
Y	*142-8100*	1	LIFTING GP-ENGINE	63
Y	*7C-2475*	1	LINES GP-ENGINE OIL	94
Y	*231-3046*	1	LINES GP-FUEL	168
Y	*159-0285*	1	LINES GP-TURBOCHARGER OIL	96
			S/N: KHX1-392	
Y	*280-4371*	1	LINES GP-TURBOCHARGER OIL	97
			S/N: KHX393-UP	
Y	*192-9972*	1	LINES GP-WATER	106
Y	*219-5840*	1	MANIFOLD GP-EXHAUST	147
Y	*176-9429*	1	PAN GP-OIL	66
Y	*235-8200*	1	PLUG GP-CONNECTOR (ENGINE HARNESS, PROT COVER)	311
Y	*159-0303*	1	PLUG GP-CYLINDER BLOCK	69
Y	*162-8068*	1	PLUG GP-ENGINE	70
Y	*263-1848*	1	PULLEY GP	73
Y	*177-9823*	1	PUMP GP-WATER	108
Y	*115-4203*	1	SEAL GP-CRANKSHAFT	77
Y	*257-2186*	1	SENSOR GP-ENGINE (ELECTRONIC)	313
Y	*190-6186*	1	SENSOR GP-SPEED	324
Y	*231-3949*	1	STARTING AID GP (MAGNETIC SWITCH)	331
			S/N: KHX1-312	
Y	*249-9223*	1	STARTING AID GP (WIRING)	332
			S/N: KHX313-UP	
Y	*201-4204*	1	STARTING MOTOR GP-ELECTRIC	339
			S/N: KHX1-392	
Y	*111-4275*	1	STARTING MOTOR GP-ELECTRIC	337
			S/N: KHX393-UP	
Y	*198-2714*	1	WIRING GP-ENGINE	413

Y-SEPARATE ILLUSTRATION

ENGINE ARRANGEMENT

264-8596 ENGINE AR-COMPLETE

S/N: DFP1-UP

AN ATTACHMENT

SMCS-1000 **i03022342**

NOTE	PART NUMBER	QTY	PART NAME 1 2 3 4 5 6 (PRODUCT LEVEL)	SEE PAGE
Y	**235-8134**	1	ENGINE AR-COMPLETE	7
			—OR—	
Y	**290-0757**	1	ENGINE AR-COMPLETE	14

Y-SEPARATE ILLUSTRATION

ENGINE ARRANGEMENT

270-2767 ENGINE AR-COMPLETE

S/N: KHX1-UP

PART OF 266-6260 ENGINE AR

SMCS-1000 **i02500734**

NOTE	PART NUMBER	QTY	PART NAME 1 2 3 4 5 6 (PRODUCT LEVEL)	SEE PAGE
Y	*177-6972*	1	ALTERNATOR GP-CHARGING	239
Y	*253-0433*	1	BELT TENSIONER GP	21
Y	*253-0437*	1	BRACKET GP-ENGINE	22
Y	*222-5946*	1	BREATHER GP	84
Y	*4W-3462*	1	CARRIER GP-SEAL	24
Y	*212-8518*	1	COMPRESSOR GP-REFRIGERANT	1314
			S/N: KHX1-603	
Y	*276-3815*	1	COMPRESSOR GP-REFRIGERANT	1315
			S/N: KHX604-UP	
Y	*241-7602*	1	CONTROL & MTG GP-ENGINE ELEK	273
Y	*189-8780*	1	COVER GP-AIR INLET	137
Y	*257-9145*	1	COVER GP-CYLINDER BLOCK	25
Y	*118-1727*	1	COVER GP-FRONT HOUSING (ACCESSORY DRIVE)	28
Y	*172-8732*	1	COVER GP-FRONT HOUSING	29
Y	*252-2328*	1	COVER GP-VALVE MECHANISM	31
Y	*263-1850*	1	DAMPER & PULLEY GP	48
Y	*231-3950*	1	ELBOW GP-AIR INLET	141
Y	*270-4211*	1	ENGINE AR-CORE	18
Y	*116-4556*	1	FASTENER GP-FRONT HOUSING	55
Y	*252-9551*	1	FASTENER GP-FRONT COVER	54
Y	*113-6170*	1	FASTENER GP-LIFTING	56
Y	*258-8723*	1	FASTENER GP-CYLINDER HEAD	53
Y	*231-7266*	1	FILTER GP-ENGINE OIL	85
Y	*186-5892*	1	FLYWHEEL GP	57
Y	*254-7342*	1	FUMES DISPOSAL GP	91
Y	*177-4814*	1	GAUGE GP-OIL LEVEL (DIPSTICK) (ENGINE)	93
Y	*7W-8813*	1	HOUSING GP-FLYWHEEL	60
Y	*142-8100*	1	LIFTING GP-ENGINE	63
Y	*7C-2475*	1	LINES GP-ENGINE OIL	94
Y	*231-3046*	1	LINES GP-FUEL	168
Y	*159-0285*	1	LINES GP-TURBOCHARGER OIL	96
			S/N: KHX1-392	
Y	*280-4371*	1	LINES GP-TURBOCHARGER OIL	97
			S/N: KHX393-UP	
Y	*192-9972*	1	LINES GP-WATER	106
Y	*219-5840*	1	MANIFOLD GP-EXHAUST	147
Y	*176-9429*	1	PAN GP-OIL	66
Y	*235-8200*	1	PLUG GP-CONNECTOR (ENGINE HARNESS, PROT COVER)	311
Y	*159-0303*	1	PLUG GP-CYLINDER BLOCK	69
Y	*162-8068*	1	PLUG GP-ENGINE	70
Y	*263-1848*	1	PULLEY GP	73
Y	*177-9823*	1	PUMP GP-WATER	108
Y	*115-4203*	1	SEAL GP-CRANKSHAFT	77
Y	*257-2186*	1	SENSOR GP-ENGINE (ELECTRONIC)	313
Y	*190-6186*	1	SENSOR GP-SPEED	324
Y	*249-9223*	1	STARTING AID GP (WIRING)	332
Y	*201-4204*	1	STARTING MOTOR GP-ELECTRIC	339
			S/N: KHX1-392	
Y	*111-4275*	1	STARTING MOTOR GP-ELECTRIC	337
			S/N: KHX393-UP	
Y	*198-2714*	1	WIRING GP-ENGINE	413
			PLEASE USE THE GASKET KIT LINK IN SIS OR CONTACT YOUR LOCAL DEALER FOR THE LATEST GASKET KIT INFORMATION	

Y-SEPARATE ILLUSTRATION

ENGINE ARRANGEMENT

270-2768 ENGINE AR-COMPLETE

S/N: KHX1-UP
PART OF 264-8555 ENGINE AR
AN ATTACHMENT

SMCS-1000 **i02459729**

NOTE	PART NUMBER	QTY	PART NAME 1 2 3 4 5 6 (PRODUCT LEVEL)	SEE PAGE
Y	*177-6972*	1	ALTERNATOR GP-CHARGING	239
Y	*253-0433*	1	BELT TENSIONER GP	21
Y	*253-0437*	1	BRACKET GP-ENGINE	22
Y	*222-5946*	1	BREATHER GP	84
Y	*4W-3462*	1	CARRIER GP-SEAL	24
Y	*212-8518*	1	COMPRESSOR GP-REFRIGERANT	1314
			S/N: KHX1-392	
Y	*276-3815*	1	COMPRESSOR GP-REFRIGERANT	1315
			S/N: KHX393-UP	
Y	*241-7602*	1	CONTROL & MTG GP-ENGINE ELEK	273
Y	*189-8780*	1	COVER GP-AIR INLET	137
Y	*257-9145*	1	COVER GP-CYLINDER BLOCK	25
Y	*118-1727*	1	COVER GP-FRONT HOUSING (ACCESSORY DRIVE)	28
Y	*172-8732*	1	COVER GP-FRONT HOUSING	29
Y	*252-2328*	1	COVER GP-VALVE MECHANISM	31
Y	*263-1850*	1	DAMPER & PULLEY GP	48
Y	*231-3950*	1	ELBOW GP-AIR INLET	141
Y	*270-4212*	1	ENGINE AR-CORE	19
Y	*116-4556*	1	FASTENER GP-FRONT HOUSING	55
Y	*252-9551*	1	FASTENER GP-FRONT COVER	54
Y	*113-6170*	1	FASTENER GP-LIFTING	56
Y	*258-8723*	1	FASTENER GP-CYLINDER HEAD	53
Y	*231-7266*	1	FILTER GP-ENGINE OIL	85
Y	*186-5892*	1	FLYWHEEL GP	57
Y	*254-7342*	1	FUMES DISPOSAL GP	91
Y	*177-4814*	1	GAUGE GP-OIL LEVEL (DIPSTICK) (ENGINE)	93
Y	*7W-8813*	1	HOUSING GP-FLYWHEEL	60
Y	*142-8100*	1	LIFTING GP-ENGINE	63
Y	*7C-2475*	1	LINES GP-ENGINE OIL	94
Y	*231-3046*	1	LINES GP-FUEL	168
Y	*159-0285*	1	LINES GP-TURBOCHARGER OIL	96
			S/N: KHX1-392	
Y	*280-4371*	1	LINES GP-TURBOCHARGER OIL	97
			S/N: KHX393-UP	
Y	*192-9972*	1	LINES GP-WATER	106
Y	*219-5840*	1	MANIFOLD GP-EXHAUST	147
Y	*176-9429*	1	PAN GP-OIL	66
Y	*235-8200*	1	PLUG GP-CONNECTOR (ENGINE HARNESS, PROT COVER)	311
Y	*159-0303*	1	PLUG GP-CYLINDER BLOCK	69
Y	*162-8068*	1	PLUG GP-ENGINE	70
Y	*263-1848*	1	PULLEY GP	73
Y	*177-9823*	1	PUMP GP-WATER	108
Y	*115-4203*	1	SEAL GP-CRANKSHAFT	77
Y	*257-2186*	1	SENSOR GP-ENGINE (ELECTRONIC)	313
Y	*190-6186*	1	SENSOR GP-SPEED	324
Y	*249-9223*	1	STARTING AID GP (WIRING)	332
Y	*201-4204*	1	STARTING MOTOR GP-ELECTRIC	339
			S/N: KHX1-392	
Y	*111-4275*	1	STARTING MOTOR GP-ELECTRIC	337
			S/N: KHX393-UP	
Y	*198-2714*	1	WIRING GP-ENGINE	413
			PLEASE USE THE GASKET KIT LINK IN SIS OR CONTACT YOUR LOCAL DEALER FOR THE LATEST GASKET KIT INFORMATION	

Y-SEPARATE ILLUSTRATION

ENGINE ARRANGEMENT

290-0755 ENGINE AR-COMPLETE

S/N: KHX1-UP
PART OF 275-3819 ENGINE AR
AN ATTACHMENT

SMCS-1000 **i02981190**

NOTE	PART NUMBER	QTY	PART NAME 1 2 3 4 5 6 (PRODUCT LEVEL)	SEE PAGE
Y	*177-6972*	1	ALTERNATOR GP-CHARGING	239
Y	*253-0433*	1	BELT TENSIONER GP	21
Y	*253-0437*	1	BRACKET GP-ENGINE	22
Y	*222-5946*	1	BREATHER GP	84
Y	*4W-3462*	1	CARRIER GP-SEAL	24
Y	*276-3815*	1	COMPRESSOR GP-REFRIGERANT	1315
Y	*241-7602*	1	CONTROL & MTG GP-ENGINE ELEK	273
Y	*257-9145*	1	COVER GP-CYLINDER BLOCK	25
Y	*118-1727*	1	COVER GP-FRONT HOUSING (ACCESSORY DRIVE)	28
Y	*172-8732*	1	COVER GP-FRONT HOUSING	29
Y	*252-2328*	1	COVER GP-VALVE MECHANISM	31
Y	*263-1850*	1	DAMPER & PULLEY GP	48
Y	*231-3950*	1	ELBOW GP-AIR INLET	141
Y	*236-4284*	1	ENGINE AR-CORE	17
Y	*258-8723*	1	FASTENER GP-CYLINDER HEAD	53
Y	*252-9551*	1	FASTENER GP-FRONT COVER	54
Y	*116-4556*	1	FASTENER GP-FRONT HOUSING	55
Y	*113-6170*	1	FASTENER GP-LIFTING	56
Y	*231-7266*	1	FILTER GP-ENGINE OIL	85
Y	*186-5892*	1	FLYWHEEL GP	57
Y	*254-7342*	1	FUMES DISPOSAL GP	91
Y	*177-4814*	1	GAUGE GP-OIL LEVEL (DIPSTICK)	93
Y	*7W-8813*	1	HOUSING GP-FLYWHEEL	60
Y	*142-8100*	1	LIFTING GP-ENGINE	63
Y	*7C-2475*	1	LINES GP-ENGINE OIL	94
Y	*231-3046*	1	LINES GP-FUEL	168
Y	*280-4371*	1	LINES GP-TURBOCHARGER OIL	97
Y	*192-9972*	1	LINES GP-WATER	106
Y	*219-5840*	1	MANIFOLD GP-EXHAUST	147
Y	*176-9429*	1	PAN GP-OIL	66
Y	*235-8200*	1	PLUG GP-CONNECTOR (ENGINE HARNESS, PROT COVER)	311
Y	*159-0303*	1	PLUG GP-CYLINDER BLOCK	69
Y	*162-8068*	1	PLUG GP-ENGINE	70
Y	*263-1848*	1	PULLEY GP	73
Y	*177-9823*	1	PUMP GP-WATER	108
Y	*115-4203*	1	SEAL GP-CRANKSHAFT	77
Y	*257-2186*	1	SENSOR GP-ENGINE (ELECTRONIC)	313
Y	*190-6186*	1	SENSOR GP-SPEED	324
Y	*189-8780*	1	COVER GP-AIR INLET	137
Y	*249-9223*	1	STARTING AID GP (WIRING)	332
Y	*111-4275*	1	STARTING MOTOR GP-ELECTRIC (COLD WEATHER)	337
			S/N: KHX1-10522	
Y	*128-5626*	1	STARTING MOTOR GP-ELECTRIC (COLD WEATHER)	338
			S/N: KHX10523-UP	
Y	*198-2714*	1	WIRING GP-ENGINE	413
			PLEASE USE THE GASKET KIT LINK IN SIS OR CONTACT YOUR LOCAL DEALER FOR THE LATEST GASKET KIT INFORMATION	

Y-SEPARATE ILLUSTRATION

ENGINE ARRANGEMENT

290-0757 ENGINE AR-COMPLETE

S/N: KHX1-UP
130 BRAKE KW (174 BHP) AT 1800 RPM
PART OF 264-8596 ENGINE AR-COMPLETE
AN ATTACHMENT

SMCS-1000 **i02852606**

NOTE	PART NUMBER	QTY	PART NAME 1 2 3 4 5 6 (PRODUCT LEVEL)	SEE PAGE
Y	*177-6972*	1	ALTERNATOR GP-CHARGING	239
Y	*253-0433*	1	BELT TENSIONER GP	21
Y	*253-0437*	1	BRACKET GP-ENGINE	22
Y	*222-5946*	1	BREATHER GP	84
Y	*4W-3462*	1	CARRIER GP-SEAL	24
Y	*276-3815*	1	COMPRESSOR GP-REFRIGERANT	1315
Y	*241-7602*	1	CONTROL & MTG GP-ENGINE ELEK	273
Y	*257-9145*	1	COVER GP-CYLINDER BLOCK	25
Y	*118-1727*	1	COVER GP-FRONT HOUSING (ACCESSORY DRIVE)	28
Y	*172-8732*	1	COVER GP-FRONT HOUSING	29
Y	*252-2328*	1	COVER GP-VALVE MECHANISM	31
Y	*263-1850*	1	DAMPER & PULLEY GP	48
Y	*231-3950*	1	ELBOW GP-AIR INLET	141
Y	*236-4283*	1	ENGINE AR-CORE	16
Y	*258-8723*	1	FASTENER GP-CYLINDER HEAD	53
Y	*116-4556*	1	FASTENER GP-FRONT HOUSING	55
Y	*252-9551*	1	FASTENER GP-FRONT COVER	54
Y	*113-6170*	1	FASTENER GP-LIFTING	56
Y	*231-7266*	1	FILTER GP-ENGINE OIL	85
Y	*186-5892*	1	FLYWHEEL GP	57
Y	*254-7342*	1	FUMES DISPOSAL GP	91
Y	*177-4814*	1	GAUGE GP-OIL LEVEL (DIPSTICK) (ENGINE)	93
Y	*7W-8813*	1	HOUSING GP-FLYWHEEL	60
Y	*142-8100*	1	LIFTING GP-ENGINE	63
Y	*7C-2475*	1	LINES GP-ENGINE OIL	94
Y	*231-3046*	1	LINES GP-FUEL	168
Y	*280-4371*	1	LINES GP-TURBOCHARGER OIL	97
Y	*192-9972*	1	LINES GP-WATER	106
Y	*219-5840*	1	MANIFOLD GP-EXHAUST	147
Y	*176-9429*	1	PAN GP-OIL	66
Y	*235-8200*	1	PLUG GP-CONNECTOR (ENGINE HARNESS, PROT COVER)	311
Y	*159-0303*	1	PLUG GP-CYLINDER BLOCK	69
Y	*162-8068*	1	PLUG GP-ENGINE	70
Y	*263-1848*	1	PULLEY GP	73
Y	*177-9823*	1	PUMP GP-WATER	108
Y	*115-4203*	1	SEAL GP-CRANKSHAFT	77
Y	*257-2186*	1	SENSOR GP-ENGINE (ELECTRONIC)	313
Y	*190-6186*	1	SENSOR GP-SPEED	324
Y	*189-8780*	1	COVER GP-AIR INLET	137
Y	*249-9223*	1	STARTING AID GP (WIRING)	332
Y	*111-4275*	1	STARTING MOTOR GP-ELECTRIC	337
Y	*198-2714*	1	WIRING GP-ENGINE	413
			PLEASE USE THE GASKET KIT LINK IN SIS OR CONTACT YOUR LOCAL DEALER FOR THE LATEST GASKET KIT INFORMATION	

Y-SEPARATE ILLUSTRATION

ENGINE ARRANGEMENT

290-0758 ENGINE AR-COMPLETE

S/N: KHX1-UP
130 BRAKE KW (174 BHP) AT 1800 RPM
PART OF 266-6260 ENGINE AR

SMCS-1000 **i03117726**

NOTE	PART NUMBER	QTY	PART NAME 1 2 3 4 5 6 (PRODUCT LEVEL)	SEE PAGE
Y	*177-6972*	1	ALTERNATOR GP-CHARGING	239
Y	*253-0433*	1	BELT TENSIONER GP	21
Y	*253-0437*	1	BRACKET GP-ENGINE	22
Y	*222-5946*	1	BREATHER GP	84
Y	*4W-3462*	1	CARRIER GP-SEAL	24
Y	*276-3815*	1	COMPRESSOR GP-REFRIGERANT	1315
Y	*241-7602*	1	CONTROL & MTG GP-ENGINE ELEK	273
Y	*257-9145*	1	COVER GP-CYLINDER BLOCK	25
Y	*118-1727*	1	COVER GP-FRONT HOUSING (ACCESSORY DRIVE)	28
Y	*172-8732*	1	COVER GP-FRONT HOUSING	29
Y	*252-2328*	1	COVER GP-VALVE MECHANISM	31
Y	*263-1850*	1	DAMPER & PULLEY GP	48
Y	*231-3950*	1	ELBOW GP-AIR INLET	141
Y	*270-4211*	1	ENGINE AR-CORE	18
Y	*258-8723*	1	FASTENER GP-CYLINDER HEAD	53
Y	*252-9551*	1	FASTENER GP-FRONT COVER	54
Y	*116-4556*	1	FASTENER GP-FRONT HOUSING	55
Y	*113-6170*	1	FASTENER GP-LIFTING	56
Y	*231-7266*	1	FILTER GP-ENGINE OIL	85
Y	*186-5892*	1	FLYWHEEL GP	57
Y	*254-7342*	1	FUMES DISPOSAL GP	91
Y	*177-4814*	1	GAUGE GP-OIL LEVEL (DIPSTICK)	93
Y	*7W-8813*	1	HOUSING GP-FLYWHEEL	60
Y	*142-8100*	1	LIFTING GP-ENGINE	63
Y	*7C-2475*	1	LINES GP-ENGINE OIL	94
Y	*231-3046*	1	LINES GP-FUEL	168
Y	*280-4371*	1	LINES GP-TURBOCHARGER OIL	97
Y	*192-9972*	1	LINES GP-WATER	106
Y	*219-5840*	1	MANIFOLD GP-EXHAUST	147
Y	*176-9429*	1	PAN GP-OIL	66
Y	*235-8200*	1	PLUG GP-CONNECTOR (ENGINE HARNESS, PROT COVER)	311
Y	*159-0303*	1	PLUG GP-CYLINDER BLOCK	69
Y	*162-8068*	1	PLUG GP-ENGINE	70
Y	*263-1848*	1	PULLEY GP	73
Y	*177-9823*	1	PUMP GP-WATER	108
Y	*115-4203*	1	SEAL GP-CRANKSHAFT	77
Y	*257-2186*	1	SENSOR GP-ENGINE (ELECTRONIC)	313
Y	*190-6186*	1	SENSOR GP-SPEED	324
Y	*189-8780*	1	COVER GP-AIR INLET	137
Y	*249-9223*	1	STARTING AID GP (WIRING)	332
Y	*128-5626*	1	STARTING MOTOR GP-ELECTRIC (COLD WEATHER)	338
Y	*198-2714*	1	WIRING GP-ENGINE	413
			PLEASE USE THE GASKET KIT LINK IN SIS OR CONTACT YOUR LOCAL DEALER FOR THE LATEST GASKET KIT INFORMATION	

Y-SEPARATE ILLUSTRATION

ENGINE ARRANGEMENT

236-4283 ENGINE AR-CORE

S/N: KHX1-UP
PART OF 235-8134, 290-0757 ENGINE AR-COMPLETE
AN ATTACHMENT

SMCS-1000 **i02545037**

NOTE	PART NUMBER	QTY	PART NAME 1 2 3 4 5 6 (PRODUCT LEVEL)	SEE PAGE
Y	*212-4289*	1	CAMSHAFT GP	23
Y	*117-3643*	1	COOLER GP-ENGINE OIL	103
Y	*211-9120*	1	COVER GP-FRONT HOUSING	30
Y	*210-5590*	1	CRANKSHAFT GP	33
Y	*221-4482*	1	CYLINDER BLOCK GP	35
Y	*219-5849*	1	CYLINDER HEAD GP	45
Y	*205-1321*	1	GEAR GP-FRONT	58
Y	*245-3260*	1	HOUSING GP-FRONT	61
Y	*191-0461*	1	LINES GP-INJECTOR HYD PUMP	182
Y	*210-5592*	6	PISTON & ROD GP	68
Y	*222-5900*	1	PUMP & MTG GP-UNIT INJ HYD	184
Y	*192-2981*	1	PUMP GP-ENGINE OIL	101
Y	*222-5958*	6	PUMP GP-FUEL INJECTION	195
			S/N: KHX1-302	
Y	*268-1839*	6	PUMP GP-FUEL INJECTION	196
			S/N: KHX303-UP	
Y	*177-0438*	1	TURBOCHARGER GP	150
			S/N: KHX1-2240	
Y	*254-3808*	1	TURBOCHARGER GP	153
			S/N: KHX2241-UP	
Y	*232-3717*	1	VALVE MECHANISM GP	78
	235-8224	1	ELECTRONICS GP-ENGINE RATINGS	

Y-SEPARATE ILLUSTRATION

ENGINE ARRANGEMENT

236-4284 ENGINE AR-CORE

S/N: KHX1-UP

PART OF 235-8135, 290-0755 ENGINE AR-COMPLETE

AN ATTACHMENT

SMCS-1000 **i02546785**

NOTE	PART NUMBER	QTY	PART NAME 1 2 3 4 5 6 (PRODUCT LEVEL)	SEE PAGE
Y	*212-4289*	1	CAMSHAFT GP	23
Y	*117-3643*	1	COOLER GP-ENGINE OIL	103
Y	*211-9120*	1	COVER GP-FRONT HOUSING	30
Y	*210-5590*	1	CRANKSHAFT GP	33
Y	*221-4482*	1	CYLINDER BLOCK GP	35
Y	*219-5849*	1	CYLINDER HEAD GP	45
Y	*205-1321*	1	GEAR GP-FRONT	58
Y	*245-3260*	1	HOUSING GP-FRONT	61
Y	*191-0461*	1	LINES GP-INJECTOR HYD PUMP	182
Y	*210-5592*	6	PISTON & ROD GP	68
Y	*222-5900*	1	PUMP & MTG GP-UNIT INJ HYD	184
Y	*192-2981*	1	PUMP GP-ENGINE OIL	101
Y	*268-1839*	6	PUMP GP-FUEL INJECTION	196
Y	*177-0438*	1	TURBOCHARGER GP	150
			S/N: KHX305-2240	
Y	*254-3808*	1	TURBOCHARGER GP	153
			S/N: KHX2241-UP	
Y	*232-3717*	1	VALVE MECHANISM GP	78
	235-8226	1	ELECTRONICS GP-ENGINE RATINGS	

Y-SEPARATE ILLUSTRATION

ENGINE ARRANGEMENT

270-4211 ENGINE AR-CORE

S/N: KHX1-UP

PART OF 270-2767, 290-0758 ENGINE AR-COMPLETE

SMCS-1000 **i02630220**

NOTE	PART NUMBER	QTY	PART NAME 1 2 3 4 5 6 (PRODUCT LEVEL)	SEE PAGE
Y	*212-4289*	1	CAMSHAFT GP	23
Y	*117-3643*	1	COOLER GP-ENGINE OIL	103
Y	*211-9120*	1	COVER GP-FRONT HOUSING	30
Y	*210-5590*	1	CRANKSHAFT GP	33
Y	*221-4482*	1	CYLINDER BLOCK GP	35
Y	*219-5849*	1	CYLINDER HEAD GP	45
Y	*205-1321*	1	GEAR GP-FRONT	58
Y	*245-3260*	1	HOUSING GP-FRONT	61
Y	*191-0461*	1	LINES GP-INJECTOR HYD PUMP	182
Y	*210-5592*	6	PISTON & ROD GP	68
Y	*222-5900*	1	PUMP & MTG GP-UNIT INJ HYD	184
Y	*192-2981*	1	PUMP GP-ENGINE OIL	101
Y	*268-1839*	6	PUMP GP-FUEL INJECTION	196
Y	*177-0438*	1	TURBOCHARGER GP	150
			S/N: KHX1-2240	
Y	*254-3808*	1	TURBOCHARGER GP	153
			S/N: KHX2241-UP	
Y	*232-3717*	1	VALVE MECHANISM GP	78
	270-7510	1	ELECTRONICS GP-ENGINE RATINGS	

Y-SEPARATE ILLUSTRATION

ENGINE ARRANGEMENT

270-4212 ENGINE AR-CORE

S/N: KHX1-UP
PART OF 270-2768 ENGINE AR-COMPLETE
AN ATTACHMENT

SMCS-1000 **i02615777**

NOTE	PART NUMBER	QTY	PART NAME 1 2 3 4 5 6 (PRODUCT LEVEL)	SEE PAGE
Y	*212-4289*	1	CAMSHAFT GP	23
Y	*117-3643*	1	COOLER GP-ENGINE OIL	103
Y	*211-9120*	1	COVER GP-FRONT HOUSING	30
Y	*210-5590*	1	CRANKSHAFT GP	33
Y	*221-4482*	1	CYLINDER BLOCK GP	35
Y	*219-5849*	1	CYLINDER HEAD GP	45
Y	*205-1321*	1	GEAR GP-FRONT	58
Y	*245-3260*	1	HOUSING GP-FRONT	61
Y	*191-0461*	1	LINES GP-INJECTOR HYD PUMP	182
Y	*210-5592*	6	PISTON & ROD GP	68
Y	*222-5900*	1	PUMP & MTG GP-UNIT INJ HYD	184
Y	*192-2981*	1	PUMP GP-ENGINE OIL	101
Y	*268-1839*	6	PUMP GP-FUEL INJECTION	196
Y	*254-3808*	1	TURBOCHARGER GP	153
			S/N: KHX2241-UP	
Y	*232-3717*	1	VALVE MECHANISM GP	78
	270-7512	1	ELECTRONICS GP-ENGINE RATINGS	

Y-SEPARATE ILLUSTRATION

ENGINE ARRANGEMENT

222-8379 INSTALLATION AR-ENGINE

S/N: DFP1-UP; CJX1-UP

PART OF 240-3961, 240-3962 GENERAL AR

SMCS-1000 **i02500923**

NOTE	PART NUMBER	QTY	PART NAME 1 2 3 4 5 6 (PRODUCT LEVEL)	SEE PAGE
Y	*255-3053*	1	AIR CLEANER GP	133
Y	*245-7909*	1	CONDENSER & MTG GP-REFRIGERANT	1316
Y	*233-1123*	1	MOUNTING GP-LINES (ENGINE OIL FILTER)	99
Y	*233-1119*	1	LINES GP-AIR	144
Y	*210-8175*	1	LINES GP-AIR	142
Y	*171-9114*	1	LINES GP-ENGINE OIL DRAIN	95
Y	*272-4624*	1	LINES GP-MUFFLER DRAIN	145
Y	*233-1120*	1	MOUNTING GP-ENGINE	64
Y	*245-9295*	1	RADIATOR & HYD OIL COOLER GP	120

Y-SEPARATE ILLUSTRATION

253-0433 BELT TENSIONER GP

S/N: KHX1-UP
PART OF 235-8134, 235-8135, 270-2767, 270-2768, 290-0755, 290-0757, 290-0758
ENGINE AR-COMPLETE
ALSO AN ATTACHMENT

SMCS-1357, 1358, 1397 **i02298308**

NOTE	REF NO	GRAPHIC REF	PART NUMBER	QTY	PART NAME 1 2 3 4 5 6 (PRODUCT LEVEL)	SEE PAGE
	1	1	**190-0643**	1	BELT TENSIONER GP	
	2	1	**6V-5839**	1	WASHER (11X21X2.5-MM THK)	
M	3	1	**8T-0643**	1	BOLT (M10X1.5X80-MM)	

M-METRIC PART

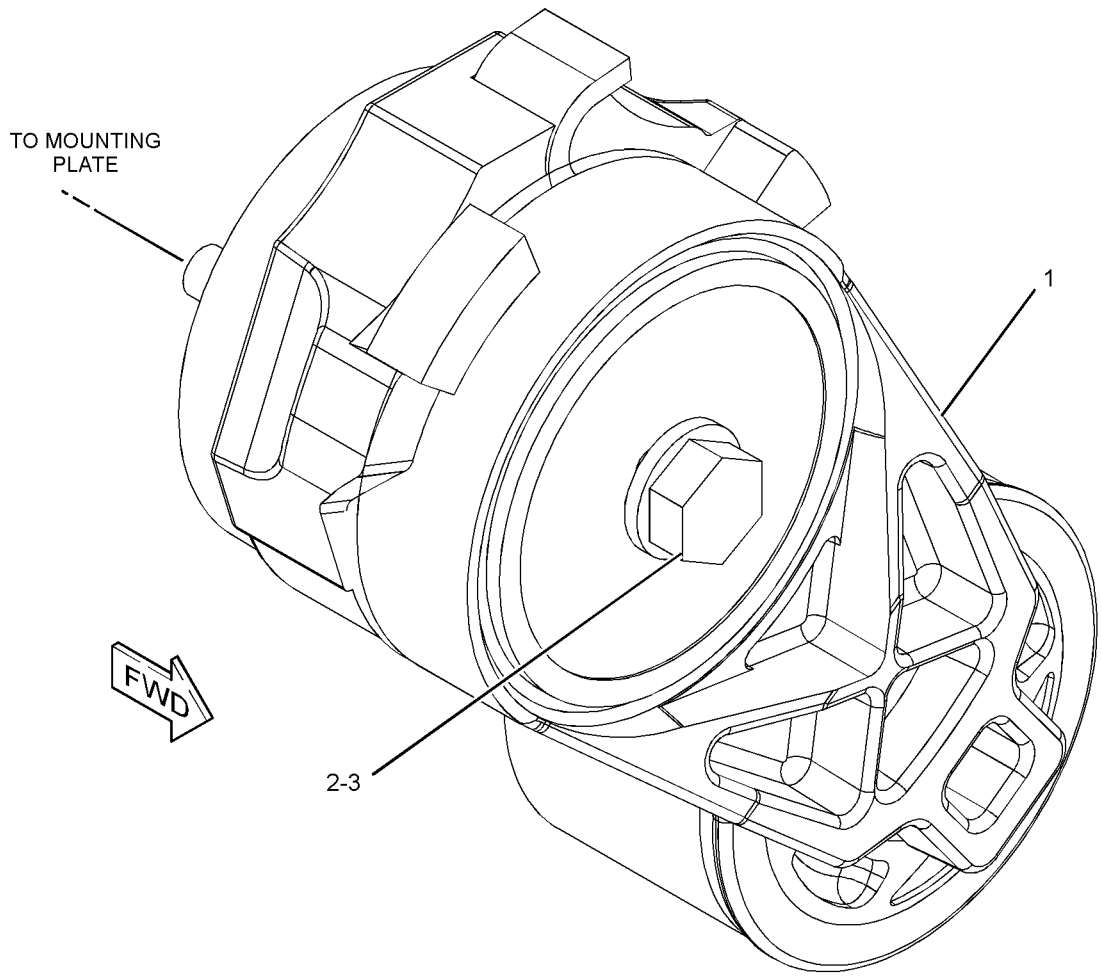

GRAPHIC #1 **<END>** g01152745

253-0437 BRACKET GP-ENGINE

S/N: KHX1-UP
PART OF 235-8134, 235-8135, 270-2767, 270-2768, 290-0755, 290-0757, 290-0758
ENGINE AR-COMPLETE
ALSO AN ATTACHMENT

SMCS-1000 **i02353052**

NOTE	REF NO	GRAPHIC REF	PART NUMBER	QTY	PART NAME 1 2 3 4 5 6 (PRODUCT LEVEL)	SEE PAGE
Y	1	1	**177-6973**	1	DRIVE GP-FAN	50
	2	1	**183-3351**	1	SUPPORT-COMPRESSOR	
M	4	1	**6V-2317**	4	BOLT (M8X1.25X30-MM)	
	5	1	**6V-5839**	6	WASHER (11X21X2.5-MM THK)	
M	6	1	**6V-5842**	6	BOLT (M10X1.5X40-MM)	
	7	1	**9M-1974**	4	WASHER-HARD (8.8X16X2-MM THK)	

M-METRIC PART
Y-SEPARATE ILLUSTRATION

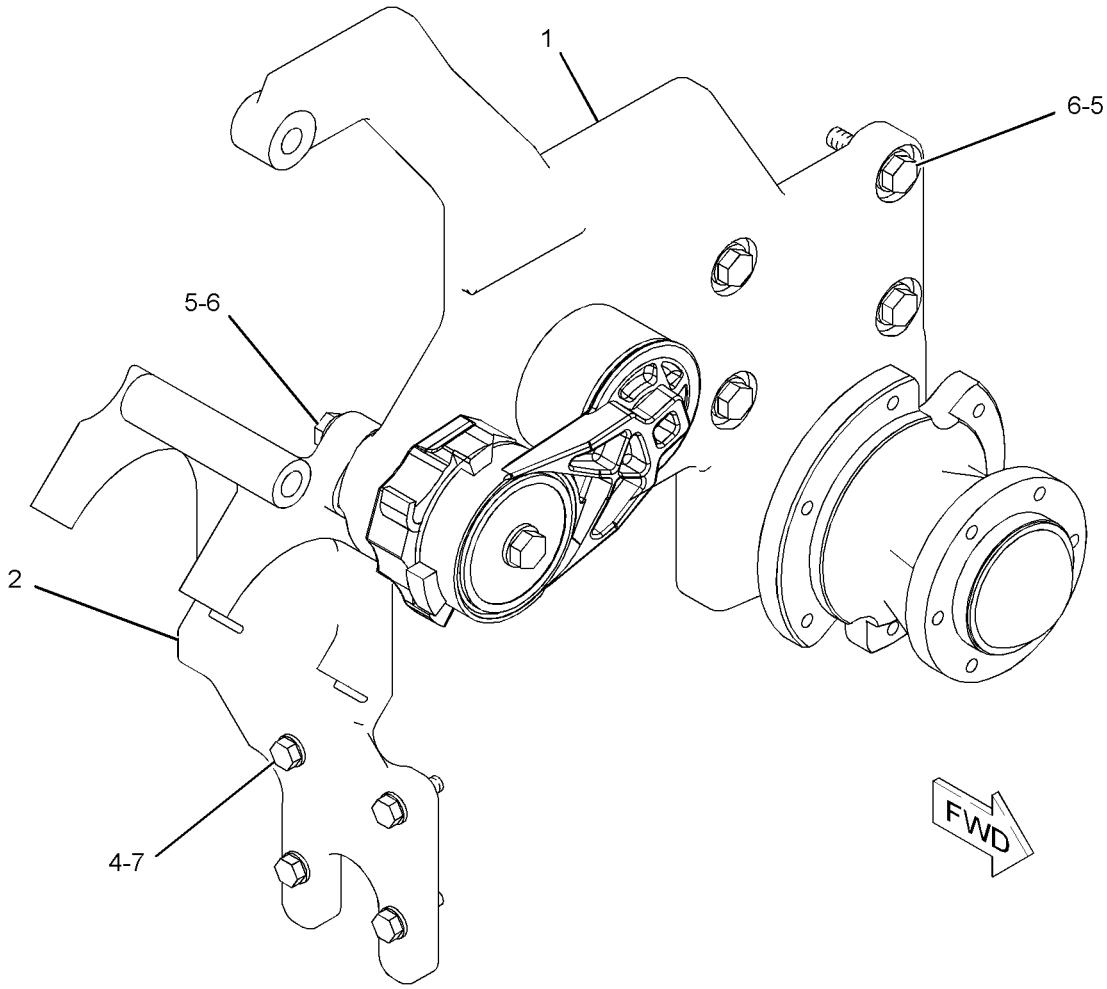

GRAPHIC #1 **<END>** g01152056

212-4289 CAMSHAFT GP

S/N: KHX1-UP

PART OF 236-4283, 236-4284, 270-4211, 270-4212 ENGINE AR-CORE

ALSO AN ATTACHMENT

SMCS-1210 **i02355591**

NOTE	REF NO	GRAPHIC REF	PART NUMBER	QTY	PART NAME 1 2 3 4 5 6 (PRODUCT LEVEL)	SEE PAGE
	1	1	**107-7694**	1	PLATE-THRUST	
	2	1	**212-4288**	1	CAMSHAFT AS	
	2A	1	**1B-8705**	1	KEY-WOODRUFF	
	2B	1	**224-3247**	1	GEAR (100-TEETH)	
M	3	1	**6V-3940**	2	BOLT (M8X1.25X25-MM)	

M-METRIC PART

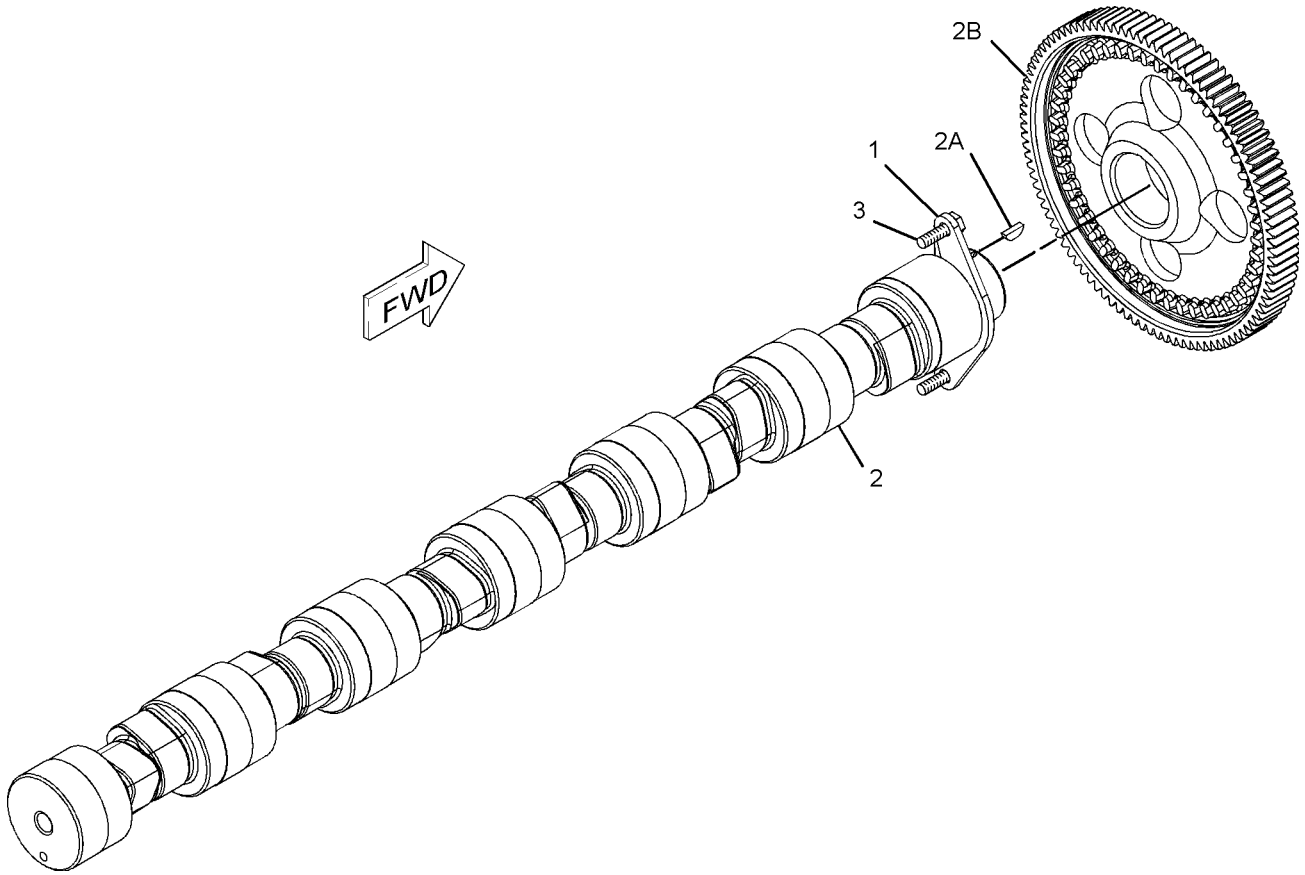

GRAPHIC #1 **<END>** g01099239

4W-3462 CARRIER GP-SEAL

S/N: KHX1-UP
PART OF 235-8134, 235-8135, 270-2767, 270-2768, 290-0755, 290-0757, 290-0758
ENGINE AR-COMPLETE
ALSO AN ATTACHMENT

SMCS-1161 **i02482036**

NOTE	REF NO	GRAPHIC REF	PART NUMBER	QTY	PART NAME 1 2 3 4 5 6 (PRODUCT LEVEL)	SEE PAGE
	1	1	**2W-6546**	1	COVER	
	2	1	**247-1876**	1	SEAL	
	3	1	**239-0583**	1	GASKET	
	4	1	**6V-3538**	2	DOWEL	
M	5	1	**6V-3940**	8	BOLT (M8X1.25X25-MM)	
	6	1	**9M-1974**	8	WASHER-HARD (8.8X16X2-MM THK)	
BF		1	**4C-9612**		SEALANT-SILICONE	

B-USE AS REQUIRED
F-NOT SHOWN
M-METRIC PART

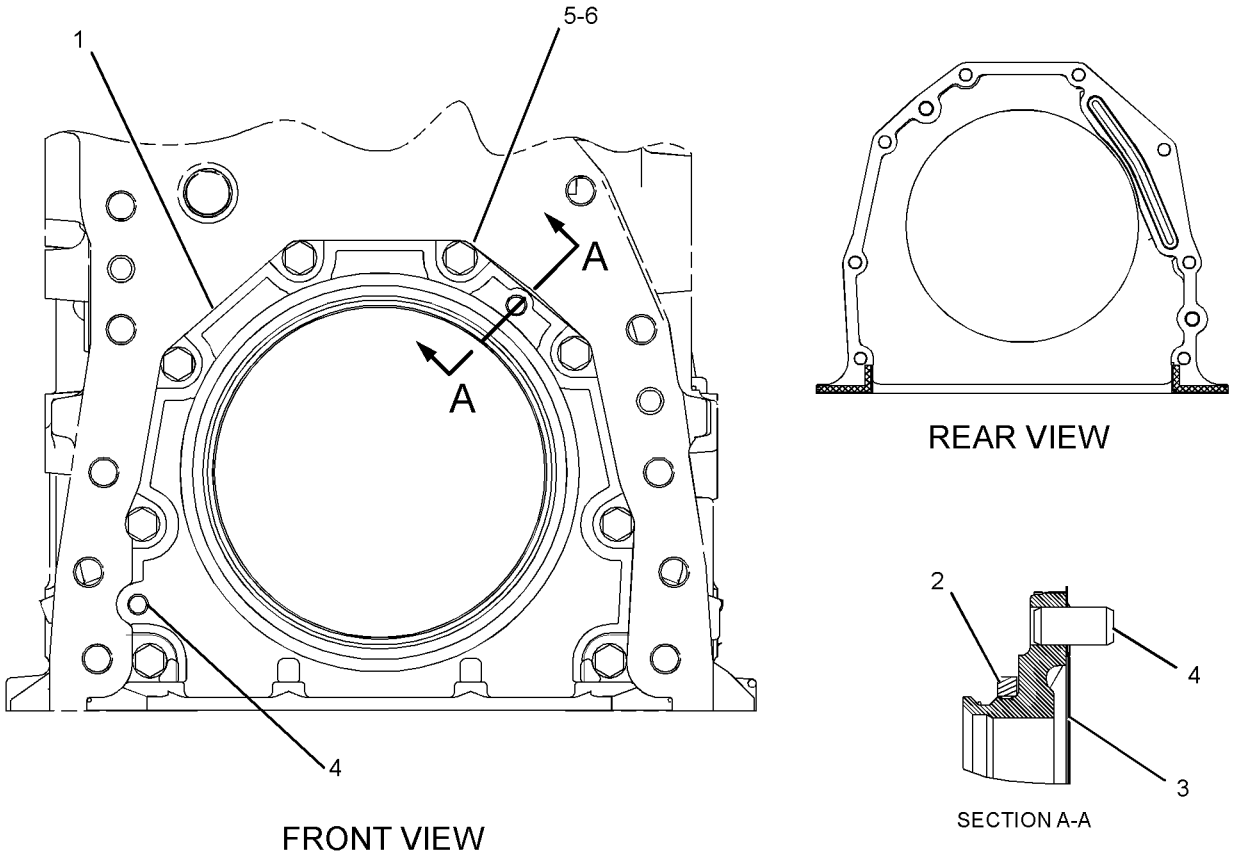

GRAPHIC #1 **<END>** g01239787

257-9145 COVER GP-CYLINDER BLOCK

S/N: KHX1-2442

PART OF 235-8134, 270-2767, 270-2768 ENGINE AR-COMPLETE

ALSO AN ATTACHMENT

SMCS-1201 **i02353278**

NOTE	REF NO	GRAPHIC REF	PART NUMBER	QTY	PART NAME 1 2 3 4 5 6 (PRODUCT LEVEL)	SEE PAGE
	1	1	**2W-6544**	1	COVER	
	2	1	**4P-5918**	3	CLIP	
	3	1	**7W-3871**	2	COVER-SIDE	
	4	1	**7W-3872**	6	SLEEVE	
M	5	1	**9X-2099**	1	STUD (M8X1.25X52.75-MM)	
	6	1	**110-7618**	3	BOLT AS	
	7	1	**175-1367**	8	SPACER (8.8X16X10-MM THK)	
	8	1	**249-5523**	1	COVER-SIDE	
M	9	1	**5C-7261**	1	NUT (M8X1.25-THD)	
	10	1	**8T-4224**	1	WASHER-HARD (8.8X16X2-MM THK)	
	11	1	**9M-1974**	14	WASHER-HARD (8.8X16X2-MM THK)	
	12	1	**4Y-9652**	2	GASKET (SIDE COVER)	
	13	1	**250-5785**	1	GASKET (SIDE COVER)	
	14	1	**210-3321**	1	STUD (M8X1.25-THD)	
M	15	1	**6V-2317**	23	BOLT (M8X1.25X30-MM)	
B	16	1	**1U-8846**		SEALANT-GASKET (2-ML)	

B-USE AS REQUIRED
M-METRIC PART

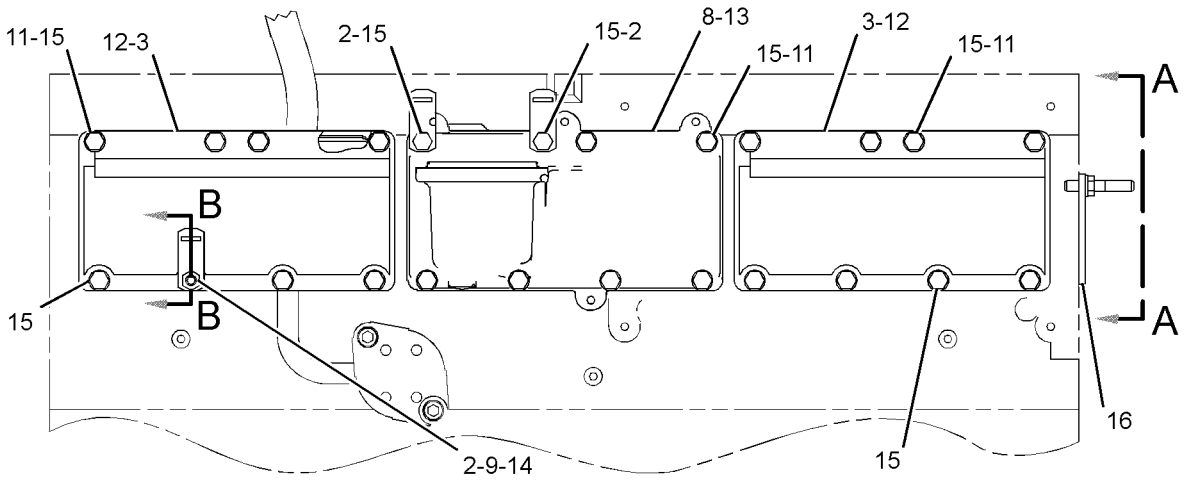

LEFT SIDE VIEW

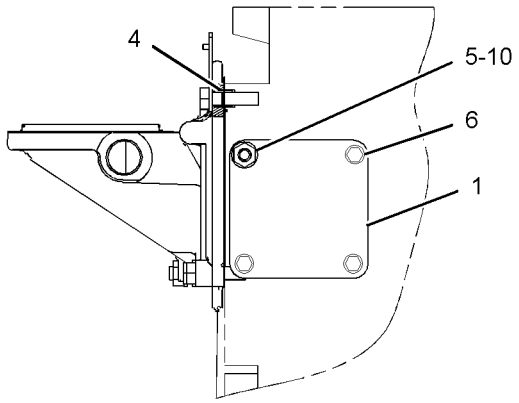

VIEW A-A

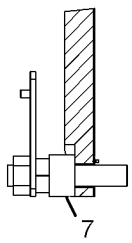

SECTION B-B

GRAPHIC #1

<END>

g01152785

BASIC ENGINE

257-9145 COVER GP-CYLINDER BLOCK

S/N: KHX1-UP

PART OF 235-8134, 235-8135, 270-2767, 270-2768, 290-0755, 290-0757, 290-0758

ENGINE AR-COMPLETE

ALSO AN ATTACHMENT

SMCS-1201 **i02553845**

NOTE	REF NO	GRAPHIC REF	PART NUMBER	QTY	PART NAME 1 2 3 4 5 6 (PRODUCT LEVEL)	SEE PAGE
	1	1	**2W-6544**	1	COVER	
	2	1	**4P-5918**	3	CLIP	
	3	1	**7W-3871**	2	COVER-SIDE	
	4	1	**7W-3872**	6	SLEEVE	
M	5	1	**9X-2099**	1	STUD (M8X1.25X52.75-MM)	
	6	1	**110-7618**	3	BOLT AS	
	7	1	**175-1367**	8	SPACER (8.8X16X10-MM THK)	
	8	1	**249-5523**	1	COVER-SIDE	
CM	9	1	**5C-7261**	3	NUT (M8X1.25-THD)	
	10	1	**8T-4224**	1	WASHER-HARD (8.8X16X2-MM THK)	
C	11	1	**9M-1974**	16	WASHER-HARD (8.8X16X2-MM THK)	
	12	1	**4Y-9652**	2	GASKET (SIDE COVER)	
	13	1	**250-5785**	1	GASKET (SIDE COVER)	
C	14	1	**210-3321**	2	STUD (M8X1.25-THD)	
CM	15	1	**6V-2317**	21	BOLT (M8X1.25X30-MM)	
BF			**1U-8846**		SEALANT-GASKET (2-ML)	

B-USE AS REQUIRED
C-CHANGE FROM PREVIOUS TYPE
F-NOT SHOWN
M-METRIC PART

257-9145 **COVER GP-CYLINDER BLOCK** *(contd.)* **i02553845**

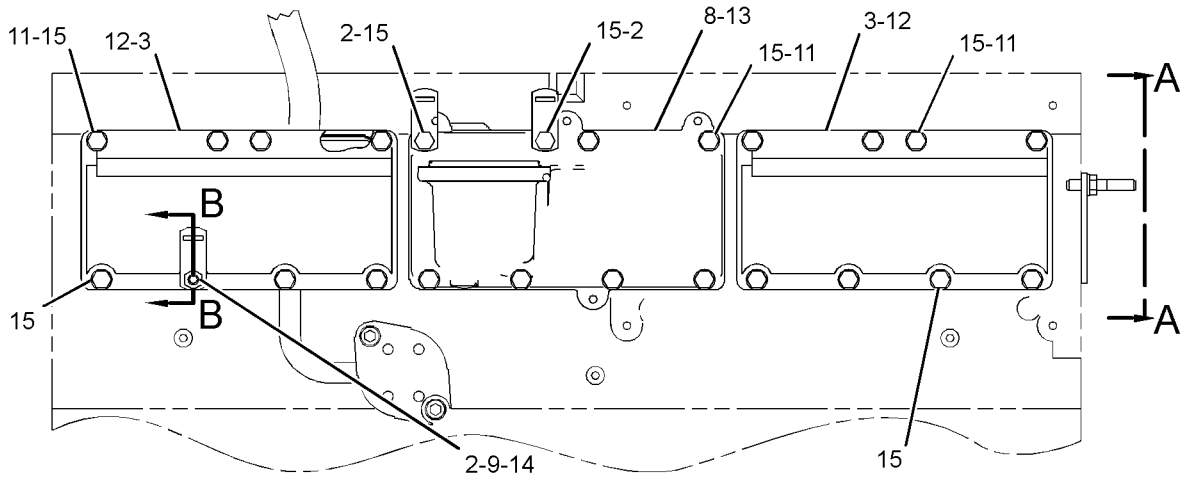

LEFT SIDE VIEW

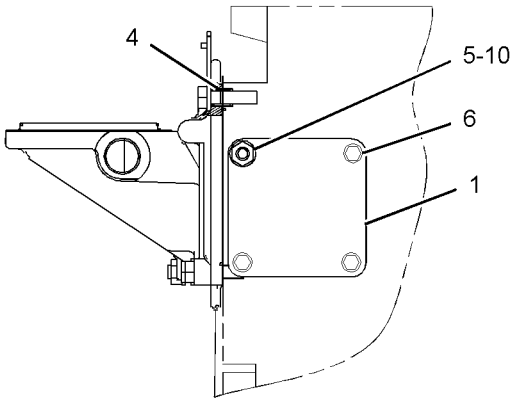

VIEW A-A

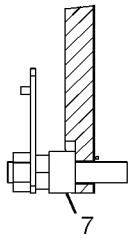

SECTION B-B

GRAPHIC #1 **<END>** g01280609

118-1727 COVER GP-FRONT HOUSING

S/N: KHX1-UP

PART OF 235-8134, 235-8135, 270-2767, 270-2768, 290-0755, 290-0757, 290-0758

ENGINE AR-COMPLETE

ALSO AN ATTACHMENT

SMCS-1150 **i01339642**

NOTE	REF NO	GRAPHIC REF	PART NUMBER	QTY	PART NAME 1 2 3 4 5 6 (PRODUCT LEVEL)	SEE PAGE
	1	1	**5P-8245**	4	WASHER-HARD (13.5X25.5X3-MM THK)	
M	2	1	**6V-5696**	2	BOLT (M12X1.75X80-MM)	
	3	1	**4W-2026**	1	COVER	
	4	1	**135-9819**	1	SEAL-INTEGRAL	
M	5	1	**6V-8149**	2	NUT (M12X1.75-THD)	

M-METRIC PART

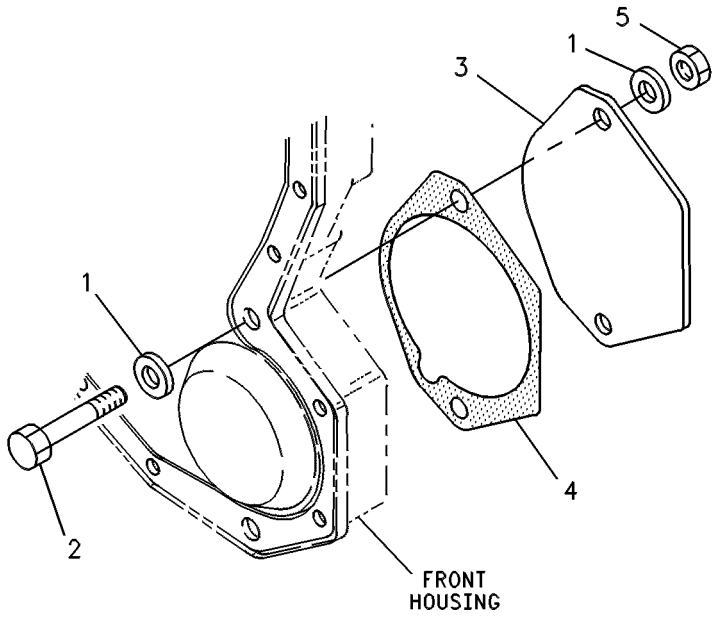

GRAPHIC #1 **<END>** g00245495

172-8732 COVER GP-FRONT HOUSING

S/N: KHX1-UP
PART OF 235-8134, 235-8135, 270-2767, 270-2768, 290-0755, 290-0757, 290-0758
ENGINE AR-COMPLETE
ALSO AN ATTACHMENT

SMCS-1150 **i02352999**

NOTE	REF NO	GRAPHIC REF	PART NUMBER	QTY	PART NAME 1 2 3 4 5 6 (PRODUCT LEVEL)	SEE PAGE
	1	1	**7C-1445**	1	COVER (TURNING TOOL)	
	2	1	**061-9455**	1	SEAL-O-RING	
	3	1	**8T-4224**	2	WASHER-HARD (8.8X16X2-MM THK)	
M	4	1	**5C-7261**	2	NUT (M8X1.25-THD)	

M-METRIC PART

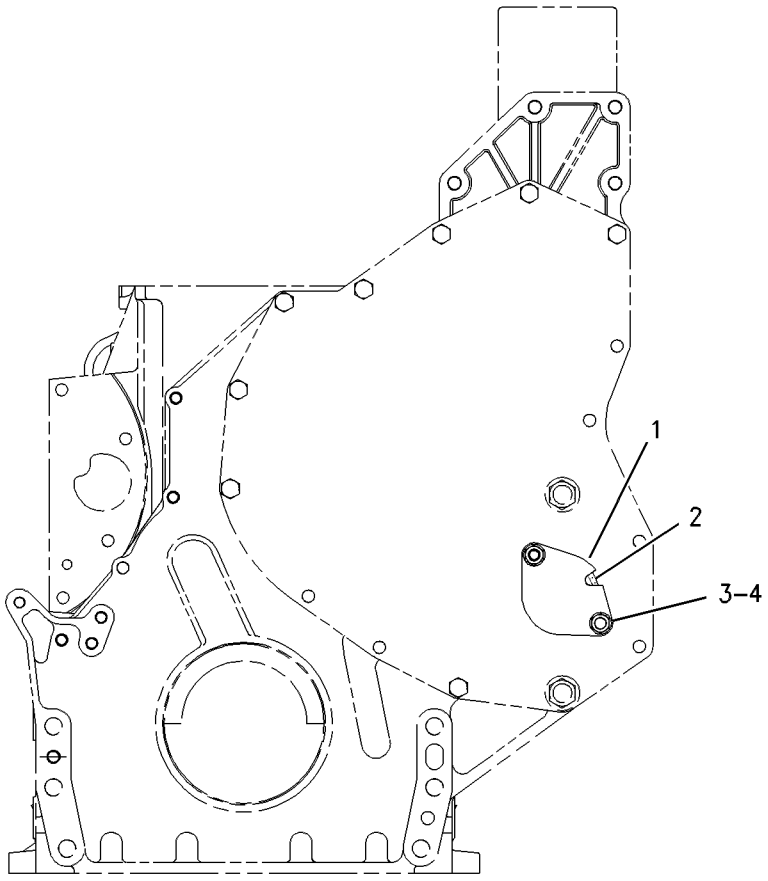

FRONT VIEW

GRAPHIC #1 **<END>** g00596335

211-9120 COVER GP-FRONT HOUSING

S/N: KHX1-UP

PART OF 236-4283, 236-4284, 270-4211, 270-4212 ENGINE AR-CORE

ALSO AN ATTACHMENT

SMCS-1150 **i02355588**

NOTE	REF NO	GRAPHIC REF	PART NUMBER	QTY	PART NAME 1 2 3 4 5 6 (PRODUCT LEVEL)	SEE PAGE
	1	1	**166-1776**	1	COVER AS-FRONT	
	1A	1	**126-1757**	2	WASHER (10.85X19.3X1.27-MM THK)	
	1B	1	**136-0822**	2	STUD	
	2	1	**166-1781**	1	GASKET	

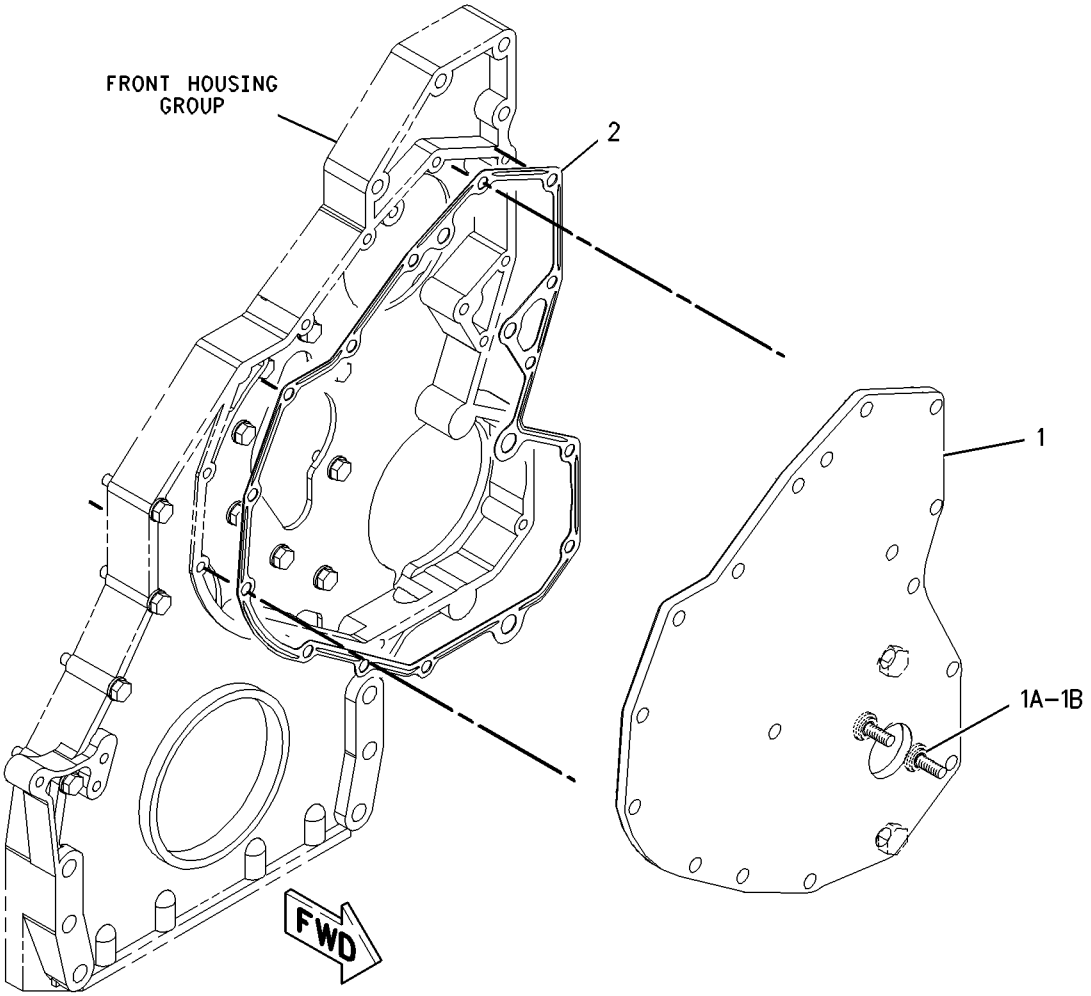

GRAPHIC #1 **<END>** g00849279

252-2328 COVER GP-VALVE MECHANISM

S/N: KHX1-3795
FRONT AND REAR ENGINE OIL FILL
PART OF 235-8134, 270-2767, 270-2768 ENGINE AR-COMPLETE
ALSO AN ATTACHMENT

SMCS-1107 **i02554678**

NOTE	REF NO	GRAPHIC REF	PART NUMBER	QTY	PART NAME 1 2 3 4 5 6 (PRODUCT LEVEL)	SEE PAGE
	1	1	**242-2450**	1	COVER GP (VALVE MECHANISM)	
J	1A	1	**217-5701**		SEAL-BULK (21-DM)(VALVE MECHANISM COVER)	
	3	1	**271-2417**	1	COVER GP-VALVE MECHANISM (BASE)	
	3A	1	**244-4486**	1	SEAL-COVER (VALVE MECHANISM BASE)	
	4	1	**246-5083**	13	SLEEVE-SPACER	
M	5	1	**099-3649**	13	BOLT (M8X1.25X40-MM)	
	6	1	**8T-4224**	13	WASHER-HARD (8.8X16X2-MM THK)	
	7	1	**227-4531**	1	CAP AS-ENGINE OIL FILLER	
		1	**7F-8268**	1	SEAL-O-RING	
	8	1	**204-4444**	1	BREATHER AS (CRANKCASE)	
		1	**124-0506**	1	SEAL	
		1	**160-0526**	1	SEAL-O-RING	
		1	**185-3159**	1	ELEMENT (BREATHER) (CRANKCASE)	
BF		1	**4C-9612**		SEALANT-SILICONE	

B-USE AS REQUIRED
F-NOT SHOWN
J-ORDER BY THE DECIMETER
M-METRIC PART

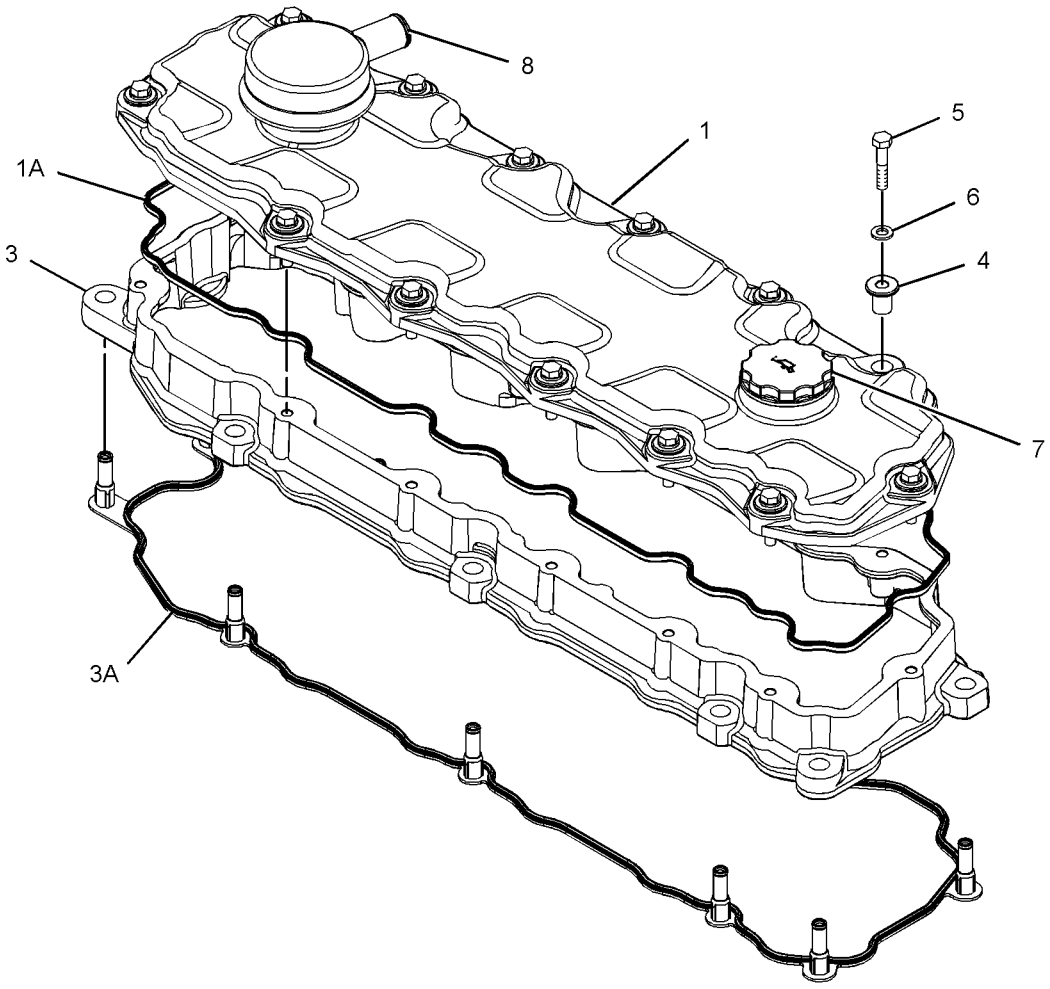

GRAPHIC #1 **<END>** g01246475

252-2328 COVER GP-VALVE MECHANISM

S/N: KHX1-UP
FRONT AND REAR ENGINE OIL FILL
PART OF 235-8134, 235-8135, 270-2767, 270-2768, 290-0755, 290-0757, 290-0758
ENGINE AR-COMPLETE
ALSO AN ATTACHMENT

SMCS-1107 **i02554679**

NOTE	REF NO	GRAPHIC REF	PART NUMBER	QTY	PART NAME 1 2 3 4 5 6 (PRODUCT LEVEL)	SEE PAGE
	1	1	**271-2417**	1	COVER GP-VALVE MECHANISM (BASE)	
		1	**245-6796**	1	COVER AS-BASE	
	1A	1	**244-4486**	1	SEAL-COVER (VALVE MECHANISM BASE)	
C	2	1	**273-2838**	13	SLEEVE-SPACER	
C	3	1	**288-9179**	1	COVER GP-VALVE MECHANISM	
C	3A	1	**272-0388**	1	SEAL-VALVE COVER (VALVE COVER)	
M	4	1	**099-3649**	13	BOLT (M8X1.25X40-MM)	
	5	1	**8T-4224**	13	WASHER-HARD (8.8X16X2-MM THK)	
	6	1	**227-4531**	1	CAP AS-ENGINE OIL FILLER	
		1	**7F-8268**	1	SEAL-O-RING	
	7	1	**204-4444**	1	BREATHER AS (CRANKCASE)	
		1	**124-0506**	1	SEAL (CRANKCASE BREATHER)	
		1	**160-0526**	1	SEAL-O-RING	
		1	**185-3159**	1	ELEMENT (BREATHER) (CRANKCASE)	

C-CHANGE FROM PREVIOUS TYPE
M-METRIC PART

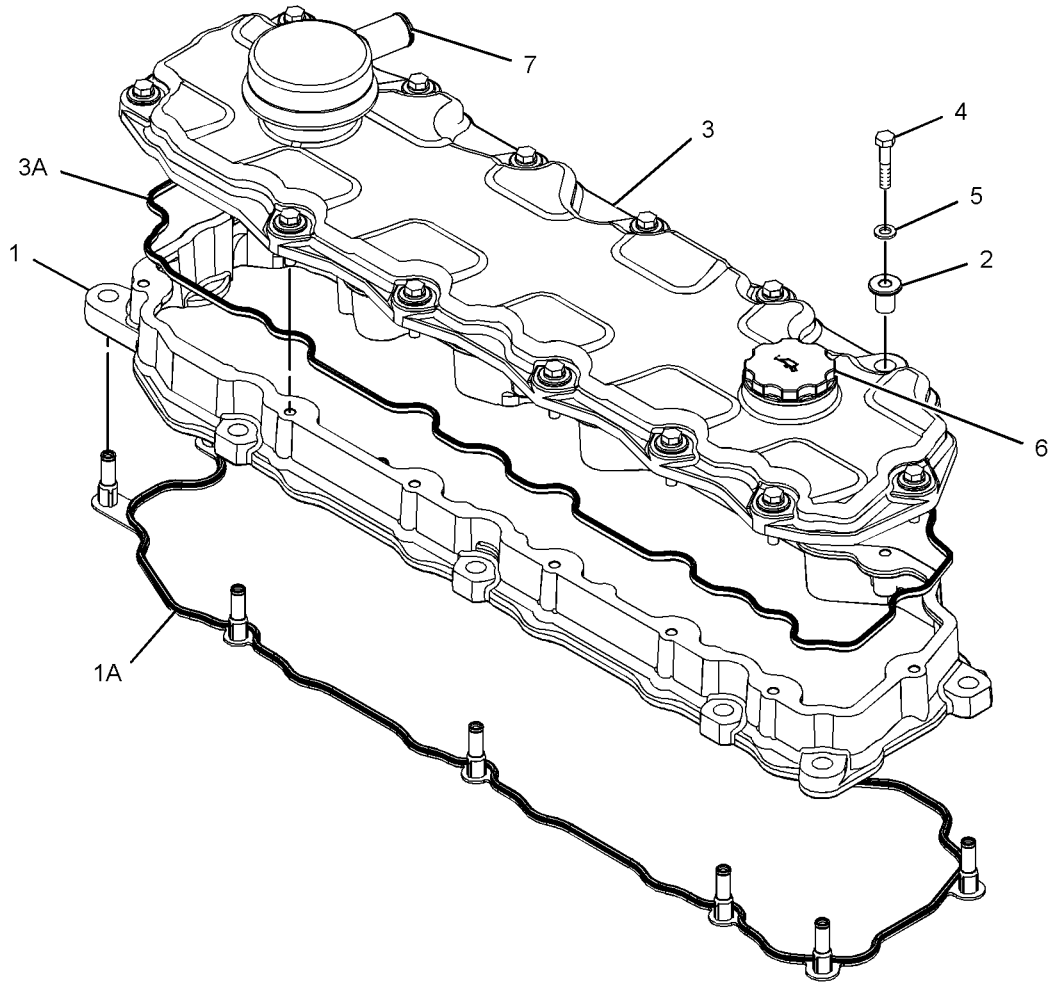

GRAPHIC #1 **<END>** g01271004

210-5590 CRANKSHAFT GP

S/N: KHX1-UP

PART OF 236-4283, 236-4284, 270-4211, 270-4212 ENGINE AR-CORE

ALSO AN ATTACHMENT

SMCS-1202 **i02355564**

NOTE	REF NO	GRAPHIC REF	PART NUMBER	QTY	PART NAME 1 2 3 4 5 6 (PRODUCT LEVEL)	SEE PAGE
	1	1	**227-5480**	1	CRANKSHAFT AS	
	1A	1	**1B-8705**	1	KEY-WOODRUFF	
	1B	1	**2W-8147**	1	GEAR (50-TEETH)	
J	2	1	**212-4893**	1	BEARING-THRUST (STANDARD)	
AB		1	**229-5153**		BEARING-THRUST (0.25-MM US)	
AB		1	**229-5154**		BEARING-THRUST (0.5-MM US)	
AB		1	**229-5155**		BEARING-THRUST (0.5-MM OS)	
AB		1	**229-5156**		BEARING-THRUST (0.5-MM US - 0.5-MM OS)	
J	3	1	**107-7708**	6	BEARING-MAIN (STANDARD)	
AB		1	**145-0168**		BEARING-MAIN (0.5-MM OS)	
AB		1	**145-0170**		BEARING-MAIN (0.5-MM US - 0.5-MM OS)	
AB		1	**145-0162**		BEARING-MAIN (0.25-MM US)	
AB		1	**145-0164**		BEARING-MAIN (0.5-MM US)	
ABF		1	**7C-7980**	1	SLEEVE-OIL SEAL	
					(THIS WEAR SLEEVE IS USED ONLY TO SALVAGE (REPAIR) THE REAR SEAL SURFACE OF THE CRANKSHAFT)	
					AVAILABLE REPAIR KIT(S):	
AJ			**196-9519**		BEARING GP-MAIN	

A-NOT PART OF THIS GROUP
B-USE AS REQUIRED
F-NOT SHOWN
J-KIT MARKED J SERVICES PARTS MARKED J

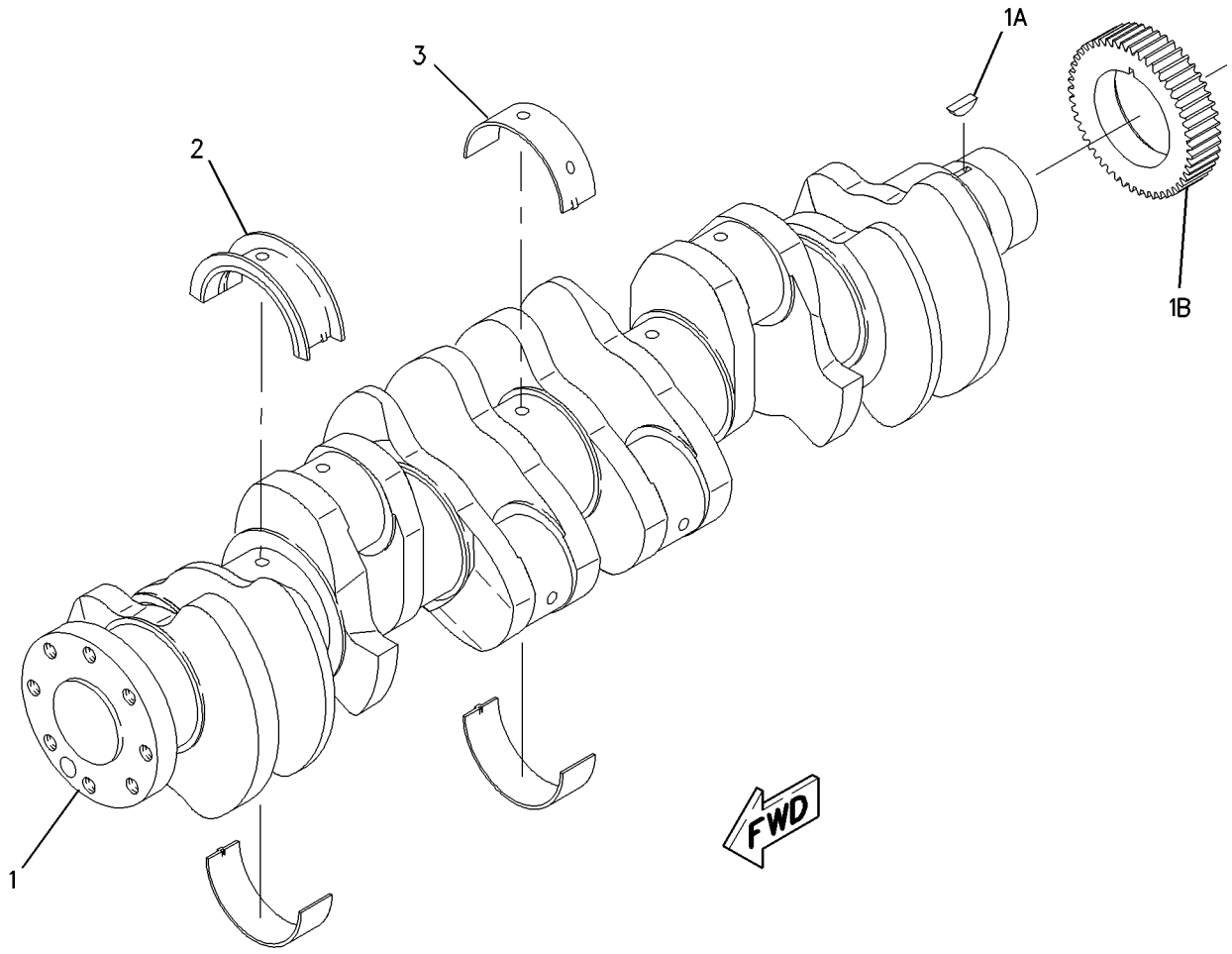

GRAPHIC #1 **<END>** g00977492

221-4482 CYLINDER BLOCK GP

S/N: KHX1-UP

PART OF 236-4283, 236-4284, 270-4211, 270-4212 ENGINE AR-CORE

ALSO AN ATTACHMENT

SMCS-1201 **i02690903**

NOTE	REF NO	GRAPHIC REF	PART NUMBER	QTY	PART NAME 1 2 3 4 5 6 (PRODUCT LEVEL)	SEE PAGE
CY	1	1	**305-8141**	1	CYLINDER BLOCK GP	37
	2	1	**7N-5683**	2	DOWEL	
	3	1	**1W-8407**	2	SLEEVE	
	4	1	**6V-3538**	2	DOWEL	

C-CHANGE FROM PREVIOUS TYPE
Y-SEPARATE ILLUSTRATION

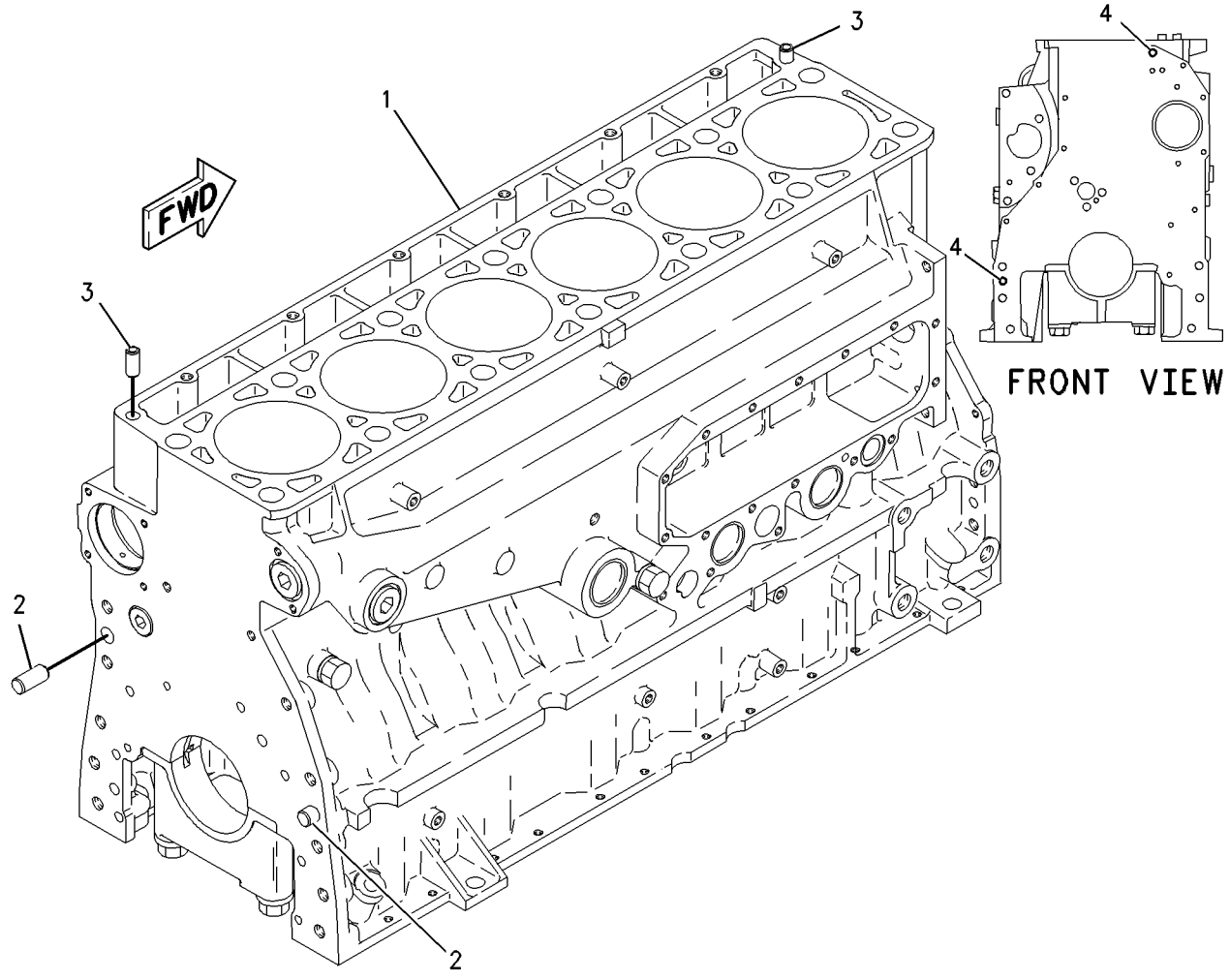

GRAPHIC #1 **<END>** g00800849

263-3774 CYLINDER BLOCK GP

S/N: KHX1-UP
PART OF 305-8141 CYLINDER BLOCK GP
ALSO AN ATTACHMENT

SMCS-1201 **i02696321**

NOTE	REF NO	GRAPHIC REF	PART NUMBER	QTY	PART NAME 1 2 3 4 5 6 (PRODUCT LEVEL)	SEE PAGE
	1	1	**7E-2968**	7	CAP-CRANKSHAFT BEARING	
M	2	1	**9X-8916**	14	BOLT (M16X2X140-MM)	
	3	1	**5P-8247**	14	WASHER-HARD (17X32X3.5-MM THK)	

M-METRIC PART

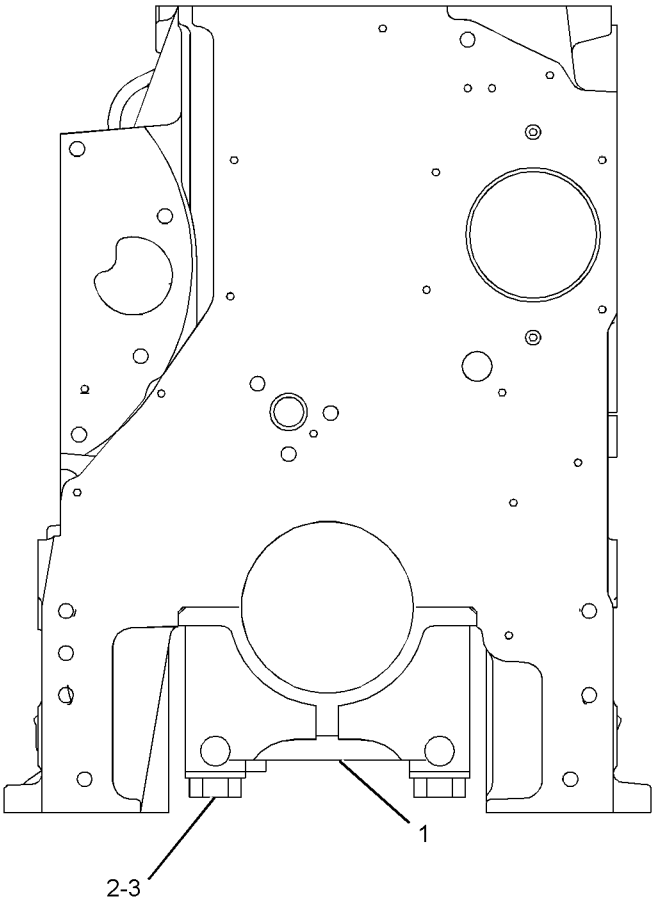

FRONT VIEW

GRAPHIC #1 **<END>** g01352581

305-8141 CYLINDER BLOCK GP

S/N: KHX1-UP
PART OF 221-4482 CYLINDER BLOCK GP
ALSO AN ATTACHMENT

SMCS-1201 **i02690913**

NOTE	REF NO	GRAPHIC REF	PART NUMBER	QTY	PART NAME 1 2 3 4 5 6 (PRODUCT LEVEL)	SEE PAGE
Y	1	1	*263-3774*	1	CYLINDER BLOCK GP	36
	2	1	**2M-6471**	2	PLUG-CUP	
	3	1	**3H-5552**	1	PLUG-CUP	
	4	1	**9S-8006**	1	PLUG-O-RING	
	5	1	**2M-9780**	1	SEAL-O-RING	
	6	1	**216-5586**	1	BEARING-SLEEVE (CAMSHAFT)	
	7	1	**2W-7213**	6	BEARING-SLEEVE (CAMSHAFT)	

Y-SEPARATE ILLUSTRATION

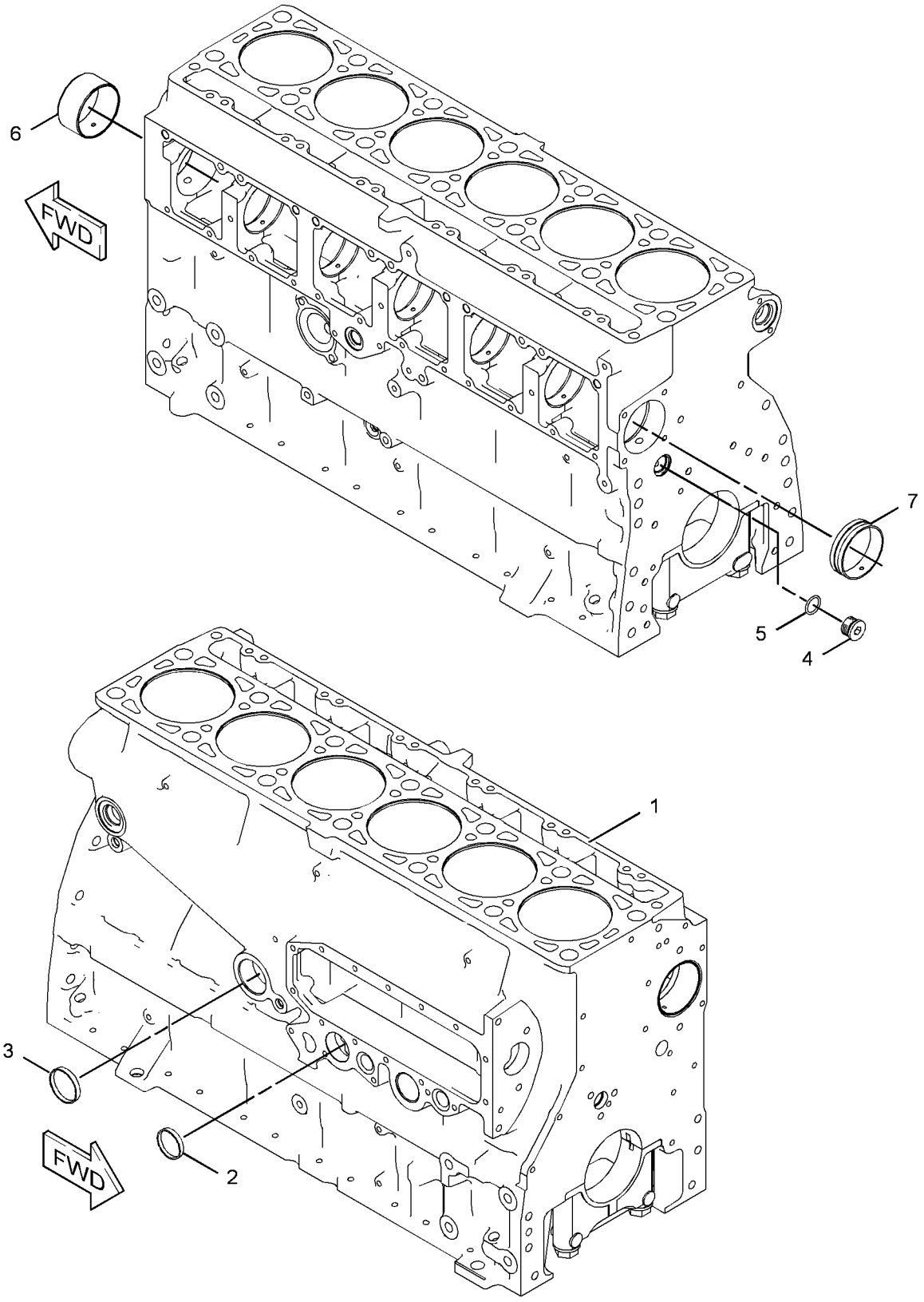

GRAPHIC #1 **<END>** g01348114

219-5844 CYLINDER HEAD AS

S/N: KHX1-UP

PART OF 219-5846 CYLINDER HEAD GP

ALSO AN ATTACHMENT

SMCS-1100 **i02357683**

NOTE	REF NO	GRAPHIC REF	PART NUMBER	QTY	PART NAME 1 2 3 4 5 6 (PRODUCT LEVEL)	SEE PAGE
	2	1	**8M-5860**	12	PLUG-CUP	
	3	1	**4F-5695**	2	PLUG-CUP	
	4	1	**227-1200**	6	SLEEVE-INJECTOR	
	5	1	**217-5213**	12	INSERT-VALVE SEAT (INLET)	
	6	1	**147-8218**	6	INSERT-VALVE SEAT (EXHAUST)	
	7	1	**8C-0563**	12	SEAL-O-RING	
	8	1	**9S-9334**	1	PLUG-O-RING	
	9	1	**9X-7712**	1	SEAL-O-RING	

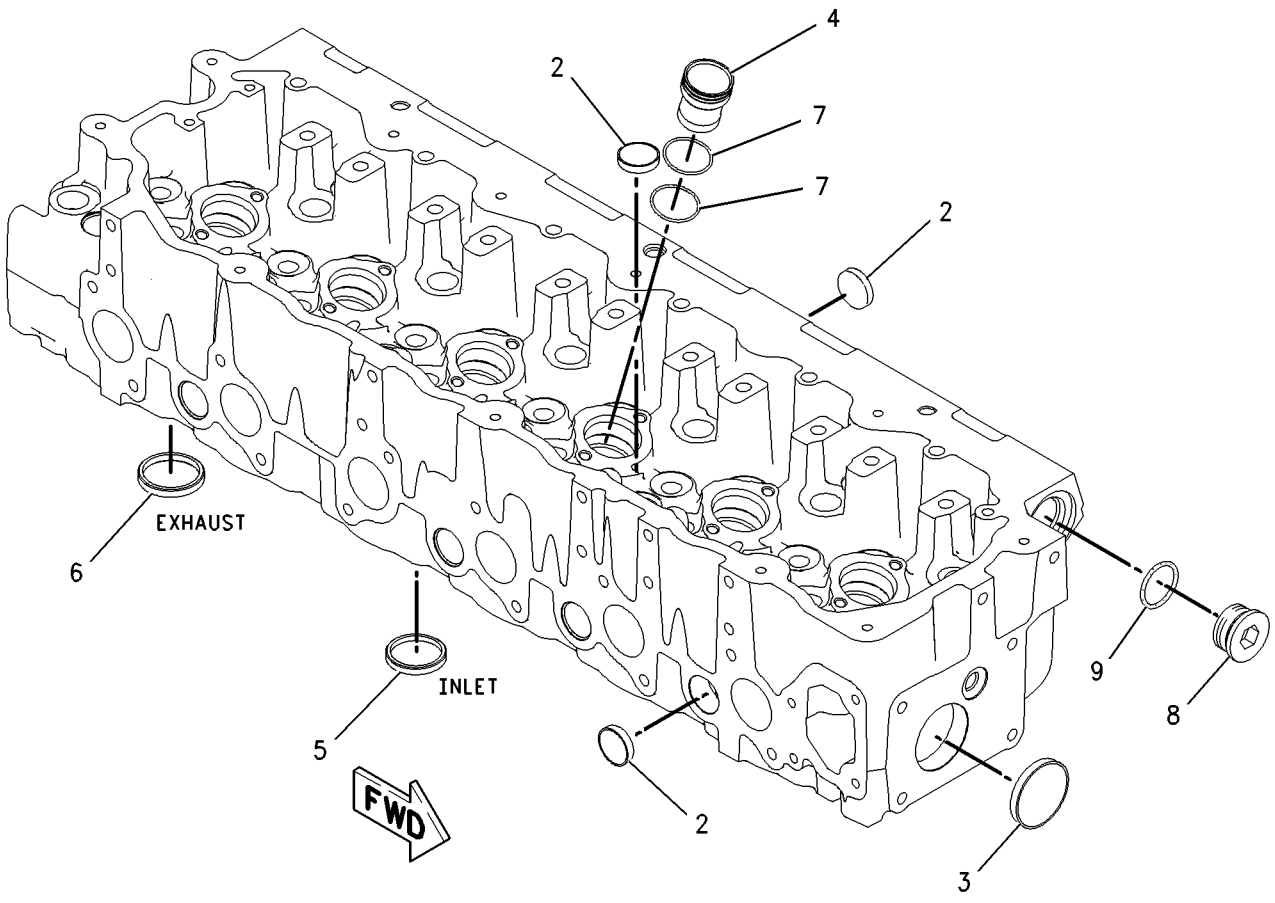

GRAPHIC #1 **<END>** g00948980

BASIC ENGINE

314-4184 CYLINDER HEAD AS

S/N: KHX1-UP

PART OF 300-9550 CYLINDER HEAD GP

ALSO AN ATTACHMENT

SMCS-1100 **i03163345**

NOTE	REF NO	GRAPHIC REF	PART NUMBER	QTY	PART NAME 1 2 3 4 5 6 (PRODUCT LEVEL)	SEE PAGE
	1	1	**8M-5860**	12	PLUG-CUP	
	2	1	**4F-5695**	2	PLUG-CUP	
	3	1	**227-1200**	6	SLEEVE-INJECTOR	
	4	1	**232-1285**	6	INSERT-VALVE SEAT	
AB		1	**319-3822**		SEAT-VALVE (EXHAUST 0.13-MM OS OD)	
AB		1	**319-3823**		SEAT-VALVE (EXHAUST 0.25-MM OS OD)	
AB		1	**319-3824**		SEAT-VALVE (EXHAUST 0.51-MM OS OD)	
	5	1	**264-6157**	12	INSERT-VALVE SEAT	
AB		1	**319-3819**		SEAT-VALVE (INLET 0.13-MM OS OD)	
AB		1	**319-3820**		SEAT-VALVE (INLET 0.25-MM OS OD)	
AB		1	**319-3821**		SEAT-VALVE (INLET 0.51-MM OS OD)	
	6	1	**310-7255**	6	SEAL-O-RING	
	7	1	**310-7257**	6	SEAL-O-RING	
	8	1	**9X-7712**	1	SEAL-O-RING	
	9	1	**9S-9334**	1	PLUG-O-RING	

A-NOT PART OF THIS GROUP
B-USE AS REQUIRED

314-4184 **CYLINDER HEAD AS** *(contd.)* **i03163345**

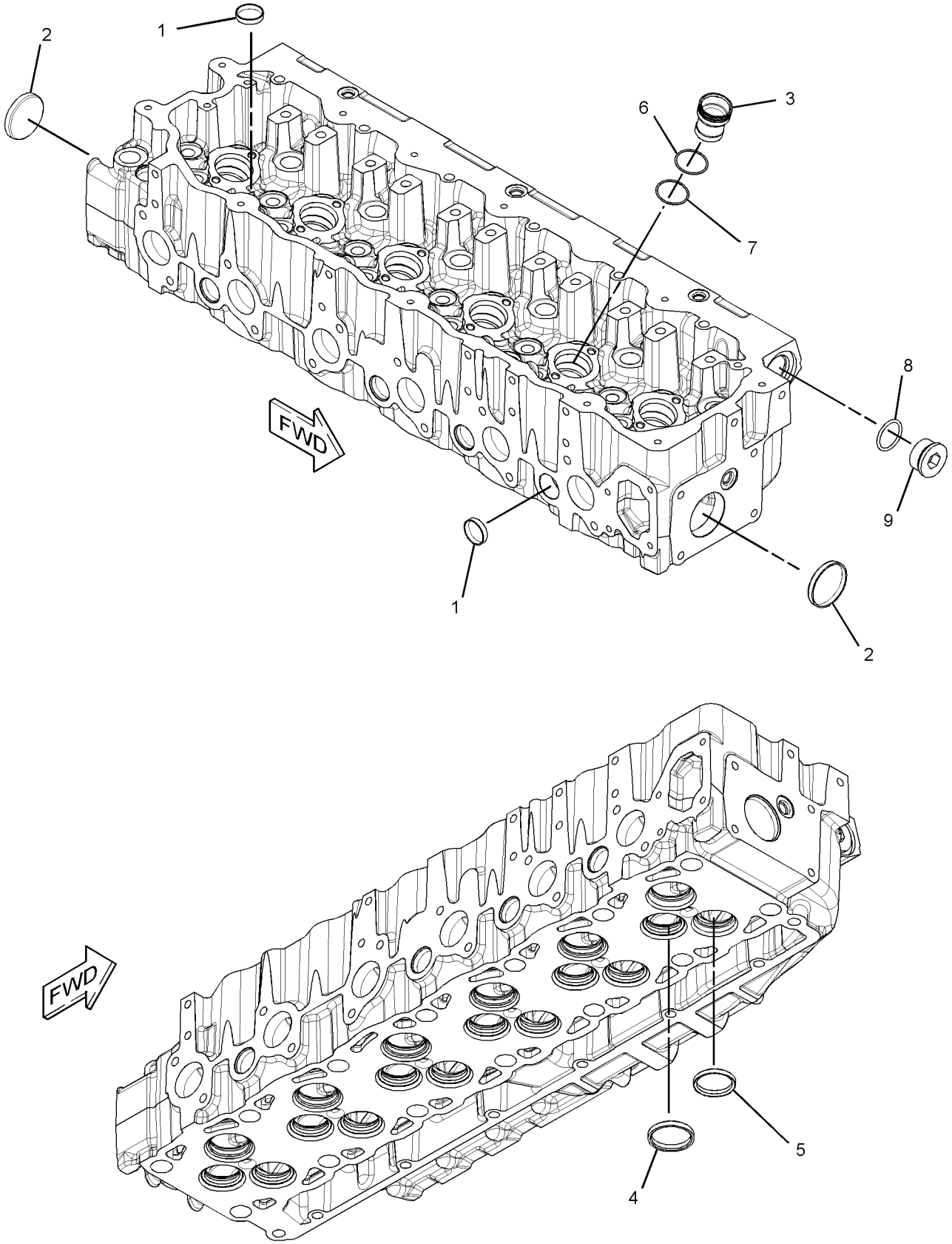

GRAPHIC #1 **<END>** g01622741

219-5846 CYLINDER HEAD GP*R

S/N: KHX1-UP
PART OF 219-5847 CYLINDER HEAD GP
ALSO AN ATTACHMENT

SMCS-1100 **i02357680**

NOTE	REF NO	GRAPHIC REF	PART NUMBER	QTY	PART NAME 1 2 3 4 5 6 (PRODUCT LEVEL)	SEE PAGE
Y	1	1	*219-5844*	1	CYLINDER HEAD AS	39
	2	1	**145-7390**	12	VALVE-INLET	
	3	1	**147-8211**	6	VALVE-EXHAUST	
	4	1	**1W-2715**	24	LOCK-RETAINER	
	5	1	**7E-7779**	12	RETAINER-SPRING	
	6	1	**147-8214**	12	SEAL-VALVE STEM	
	7	1	**140-9670**	12	GUIDE-VALVE	
	8	1	**137-6718**	6	SPRING-VALVE	
	9	1	**140-6188**	12	SPRING-VALVE	
	10	1	**2A-4429**	12	LOCK-RETAINER	
	11	1	**134-4483**	6	RETAINER-SPRING	
	12	1	**147-8220**	6	GUIDE-VALVE	
	13	1	**163-2478**	6	SEAL-VALVE STEM	
	14	1	**137-6715**	6	SEAT-VALVE SPRING	

Y-SEPARATE ILLUSTRATION

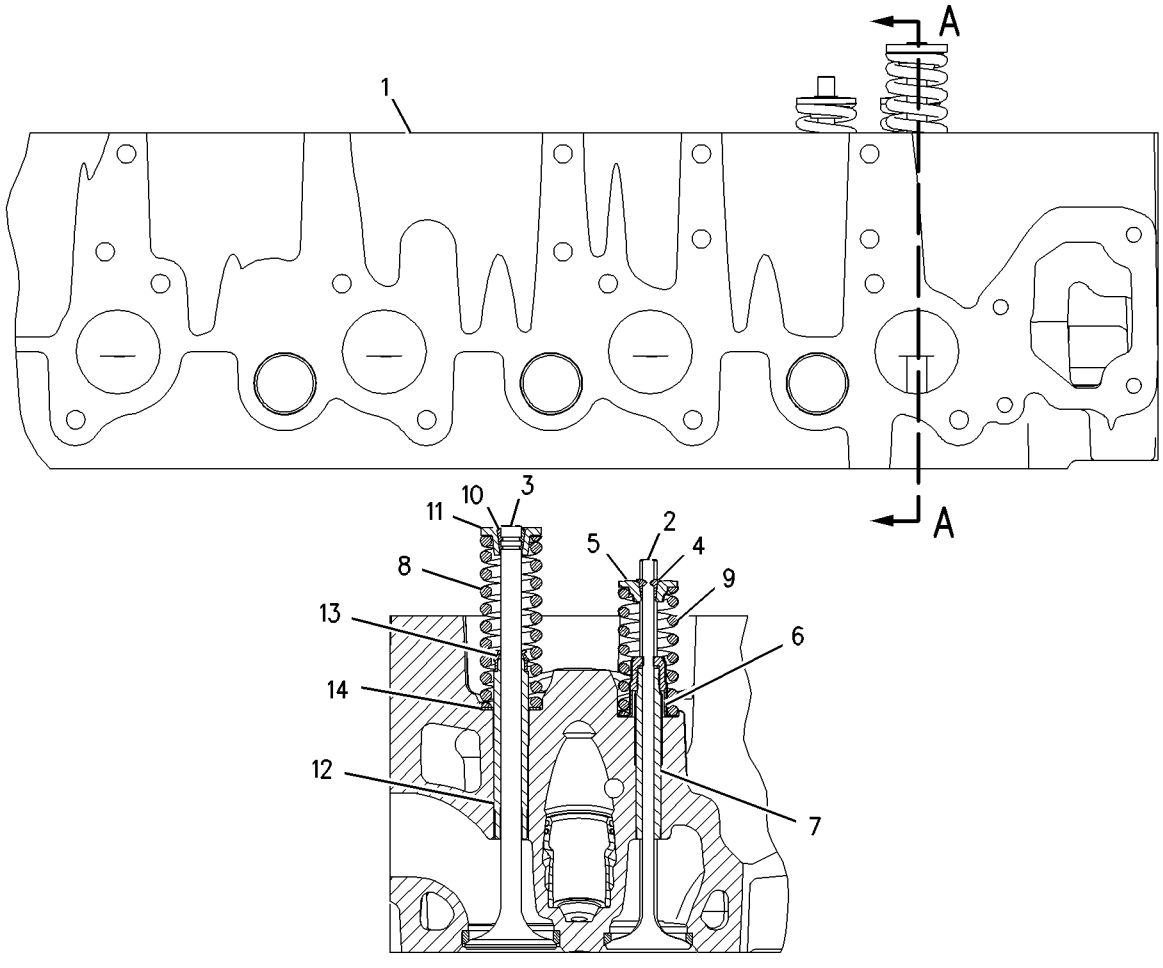

SECTION A-A

GRAPHIC #1 **<END>** g00947786

219-5847 CYLINDER HEAD GP*R

S/N: KHX1-UP
PART OF 219-5849 CYLINDER HEAD GP
ALSO AN ATTACHMENT
TYPE 1

SMCS-1100 **i02357667**

NOTE	REF NO	GRAPHIC REF	PART NUMBER	QTY	PART NAME 1 2 3 4 5 6 (PRODUCT LEVEL)	SEE PAGE
YR	1	1	**219-5846**	1	CYLINDER HEAD GP	42
	2	1	**1N-5999**	2	PLUG-O-RING	
	3	1	**2M-9780**	1	SEAL-O-RING	
	4	1	**3J-1907**	2	SEAL-O-RING	
	5	1	**6V-5048**	6	SEAL-O-RING	
	6	1	**7J-0204**	2	SEAL-O-RING	
	7	1	**9S-8002**	6	PLUG-O-RING	
	8	1	**9S-8004**	2	PLUG-O-RING	
	9	1	**9S-8006**	1	PLUG-O-RING	
	10	1	**9S-9334**	1	PLUG-O-RING	
	11	1	**9X-7712**	1	SEAL-O-RING	

R-REMFG PART MAY BE AVAILABLE
Y-SEPARATE ILLUSTRATION

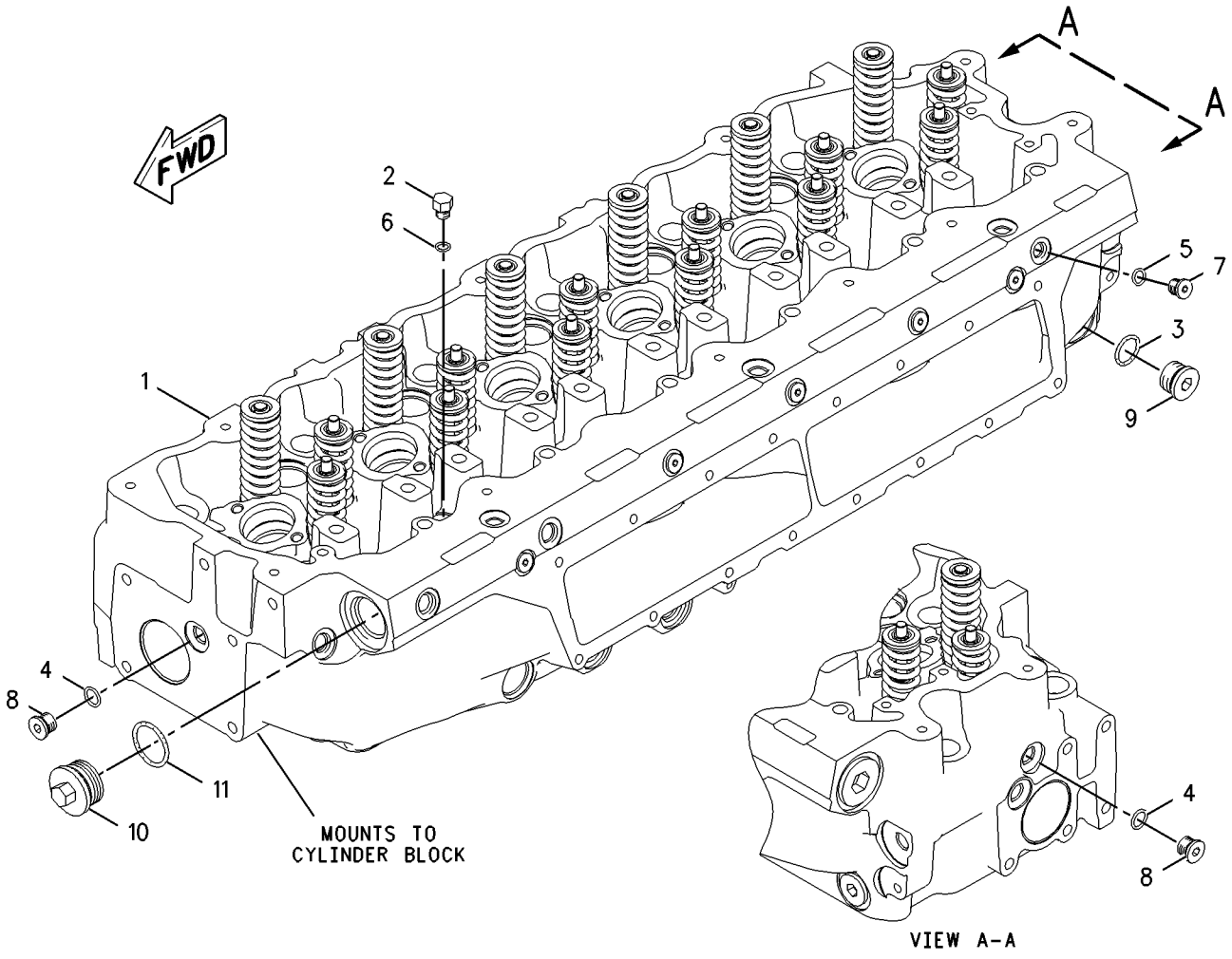

GRAPHIC #1 **<END>** g00947578

219-5847 CYLINDER HEAD GP*R

S/N: KHX1-UP
PART OF 219-5849 CYLINDER HEAD GP
ALSO AN ATTACHMENT
TYPE 2

SMCS-1100 **i02901858**

NOTE	REF NO	GRAPHIC REF	PART NUMBER	QTY	PART NAME 1 2 3 4 5 6 (PRODUCT LEVEL)	SEE PAGE
CYR	1	1	**300-9550**	1	CYLINDER HEAD GP	46
	2	1	**1N-5999**	2	PLUG-O-RING	
	3	1	**2M-9780**	1	SEAL-O-RING	
	4	1	**3J-1907**	2	SEAL-O-RING	
	5	1	**6V-5048**	6	SEAL-O-RING	
	6	1	**7J-0204**	2	SEAL-O-RING	
	7	1	**9S-8002**	6	PLUG-O-RING	
	8	1	**9S-8004**	2	PLUG-O-RING	
	9	1	**9S-8006**	1	PLUG-O-RING	
	10	1	**9S-9334**	1	PLUG-O-RING	
	11	1	**9X-7712**	1	SEAL-O-RING	

C-CHANGE FROM PREVIOUS TYPE
R-REMFG PART MAY BE AVAILABLE
Y-SEPARATE ILLUSTRATION

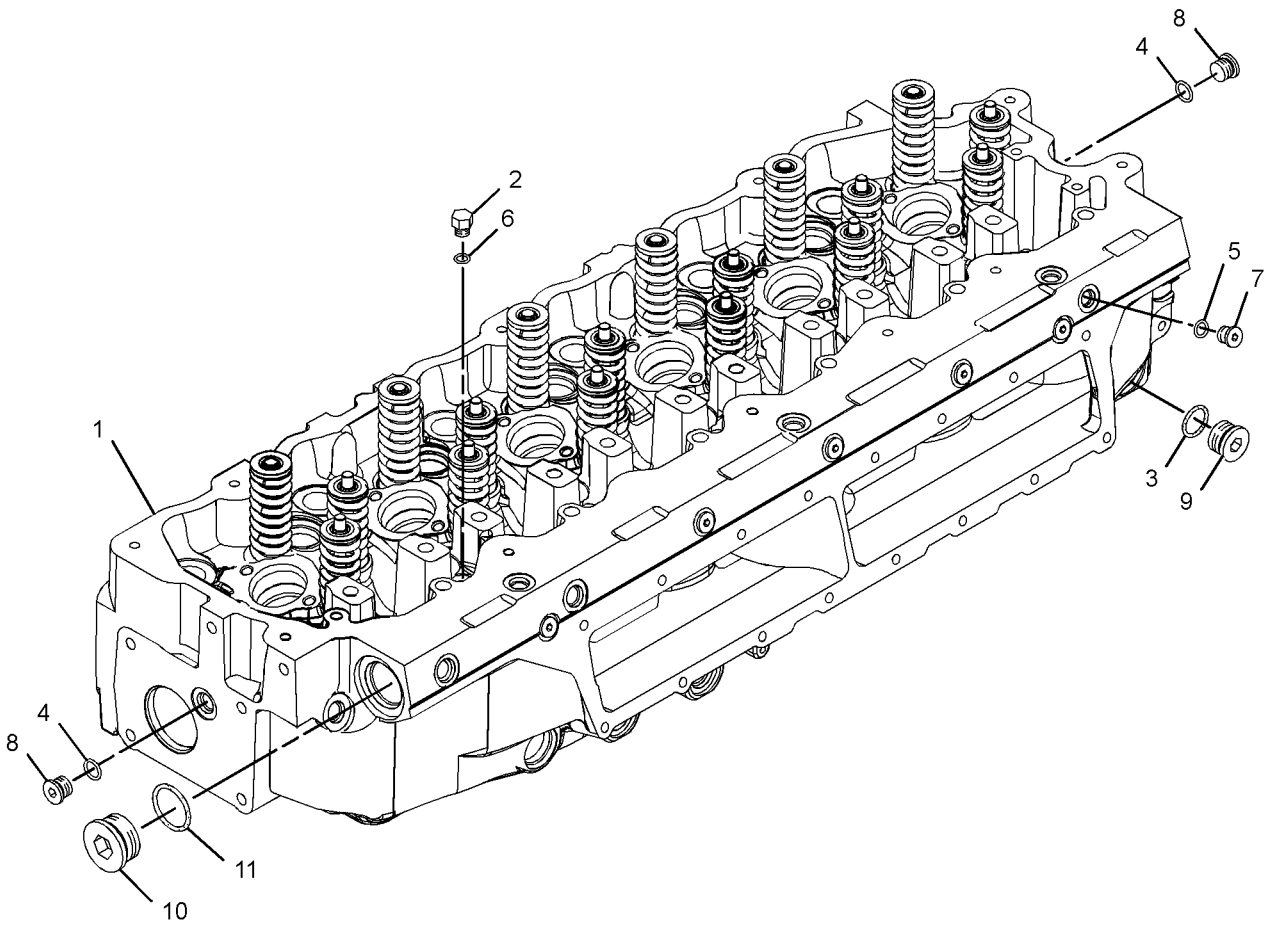

GRAPHIC #1 **<END>** g01445079

219-5849 CYLINDER HEAD GP

S/N: KHX1-UP

PART OF 236-4283, 236-4284, 270-4211, 270-4212 ENGINE AR-CORE

ALSO AN ATTACHMENT

SMCS-1100 **i02355592**

NOTE	REF NO	GRAPHIC REF	PART NUMBER	QTY	PART NAME 1 2 3 4 5 6 (PRODUCT LEVEL)	SEE PAGE
Y	1	1	*219-5847*	1	CYLINDER HEAD GP	43
	2	1	**133-4995**	1	GASKET-CYLINDER HEAD	
	3	1	**138-3252**	14	BOLT-12 POINT HEAD	
		1	**8T-3282**	14	WASHER-HARD (22X35X3.5-MM THK)	
M	4	1	**8T-7950**	6	BOLT (M10X1.5X180-MM)	
	5	1	**6V-5839**	6	WASHER (11X21X2.5-MM THK)	

M-METRIC PART
Y-SEPARATE ILLUSTRATION

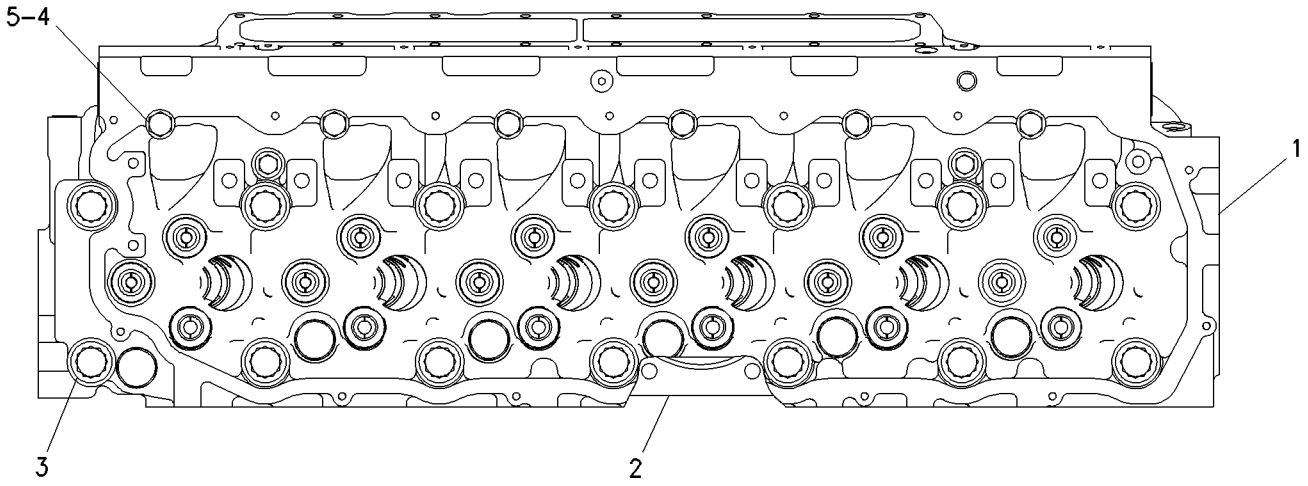

TOP VIEW

GRAPHIC #1 **<END>** g00760746

BASIC ENGINE

300-9550 CYLINDER HEAD GP*R

S/N: KHX1-UP

PART OF 219-5847 CYLINDER HEAD GP

ALSO AN ATTACHMENT

SMCS-1100 **i03162504**

NOTE	REF NO	GRAPHIC REF	PART NUMBER	QTY	PART NAME 1 2 3 4 5 6 (PRODUCT LEVEL)	SEE PAGE
	1	1	**1W-2715**	24	LOCK-RETAINER	
	2	1	**2A-4429**	12	LOCK-RETAINER	
	3	1	**137-6715**	6	SEAT-VALVE SPRING	
	4	1	**137-6718**	6	SPRING-VALVE (EXHAUST)	
	5	1	**140-6188**	12	SPRING-VALVE (INLET)	
	6	1	**147-8214**	12	SEAL-VALVE STEM (INLET)	
	7	1	**147-8220**	6	GUIDE-VALVE (STANDARD)	
AB		1	**187-8278**		GUIDE-VALVE (0.13-MM OS OD)	
AB		1	**187-8279**		GUIDE-VALVE (0.51-MM OS OD)	
	8	1	**163-2478**	6	SEAL-VALVE STEM (EXHAUST)	
	9	1	**252-7801**	12	VALVE-INLET	
Y	10	1	*314-4184*	1	CYLINDER HEAD AS	40
	11	1	**134-4483**	6	RETAINER-SPRING	
	12	1	**140-9670**	12	GUIDE-VALVE (STANDARD)	
AB		1	**187-8280**		GUIDE-VALVE (0.13-MM OS OD)	
AB		1	**187-8281**		GUIDE-VALVE (0.51-MM OS OD)	
	13	1	**147-8211**	6	VALVE-EXHAUST	
	14	1	**7E-7779**	12	RETAINER-SPRING	

A-NOT PART OF THIS GROUP
B-USE AS REQUIRED
Y-SEPARATE ILLUSTRATION

300-9550 **CYLINDER HEAD GP** *(contd.)* **i03162504**

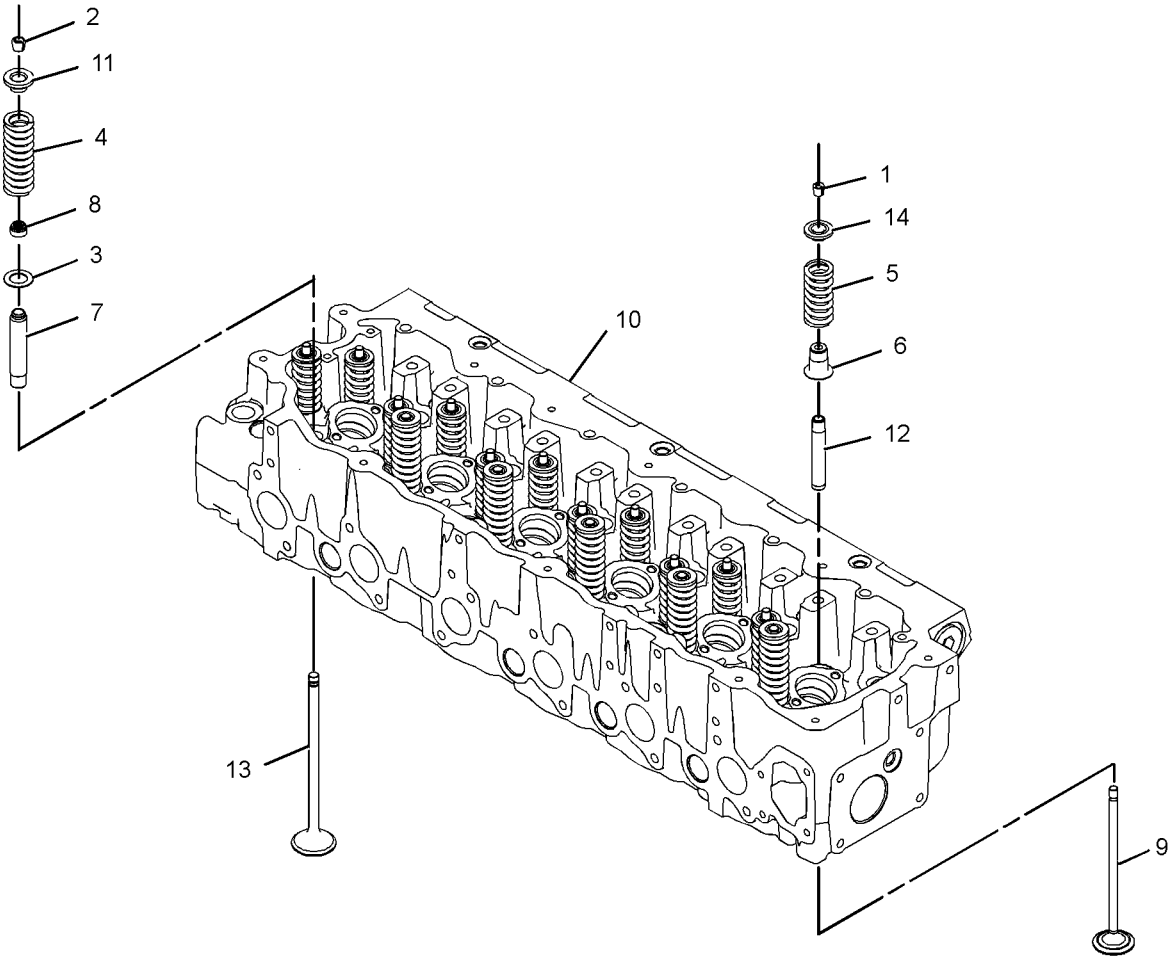

GRAPHIC #1 **<END>** g01384206

263-1850 DAMPER & PULLEY GP

S/N: KHX1-2381

PART OF 235-8134, 270-2767, 270-2768 ENGINE AR-COMPLETE

ALSO AN ATTACHMENT

SMCS-1205 **i02353366**

NOTE	REF NO	GRAPHIC REF	PART NUMBER	QTY	PART NAME 1 2 3 4 5 6 (PRODUCT LEVEL)	SEE PAGE
	1	1	**2W-7381**	1	PLATE-CLAMP	
	2	1	**116-6332**	1	SPACER	
	3	1	**167-8121**	1	DAMPER AS	
	4	1	**228-3621**	1	SPACER (101.5X167X8-MM THK)	
	5	1	**263-1826**	1	PULLEY-CRANKSHAFT	
M	6	1	**8T-3666**	4	BOLT (M14X2X60-MM)	
M	7	1	**8T-5035**	8	BOLT (M10X1.5X65-MM)	

M-METRIC PART

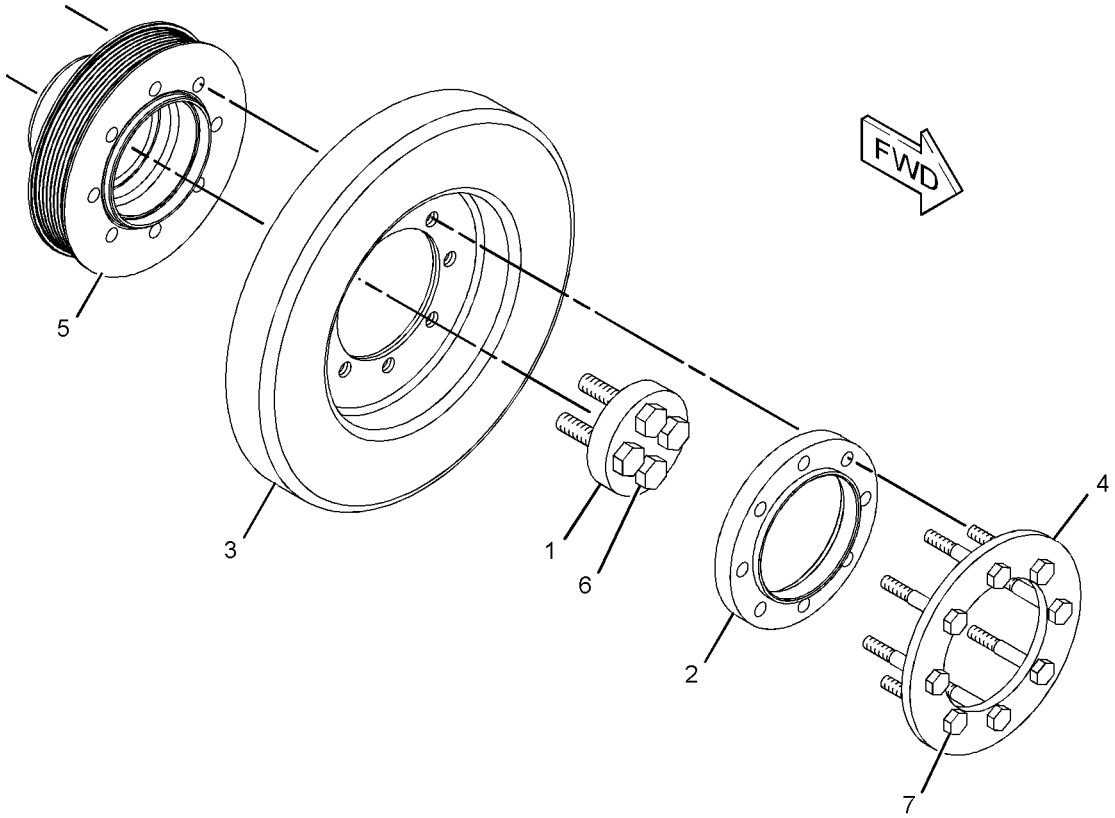

GRAPHIC #1 **<END>** g01152759

263-1850 DAMPER & PULLEY GP

S/N: KHX1-UP
PART OF 235-8134, 235-8135, 270-2767, 270-2768, 290-0755, 290-0757, 290-0758
ENGINE AR-COMPLETE
ALSO AN ATTACHMENT

SMCS-1205 **i02585779**

NOTE	REF NO	GRAPHIC REF	PART NUMBER	QTY	PART NAME 1 2 3 4 5 6 (PRODUCT LEVEL)	SEE PAGE
	1	1	**2W-7381**	1	PLATE-CLAMP	
	2	1	**116-6332**	1	SPACER	
	3	1	**167-8121**	1	DAMPER AS	
	4	1	**228-3621**	1	SPACER (101.5X167X8-MM THK)	
C	5	1	**153-1036**	1	PULLEY-CRANKSHAFT	
M	6	1	**8T-3666**	4	BOLT (M14X2X60-MM)	
M	7	1	**8T-5035**	8	BOLT (M10X1.5X65-MM)	

C-CHANGE FROM PREVIOUS TYPE
M-METRIC PART

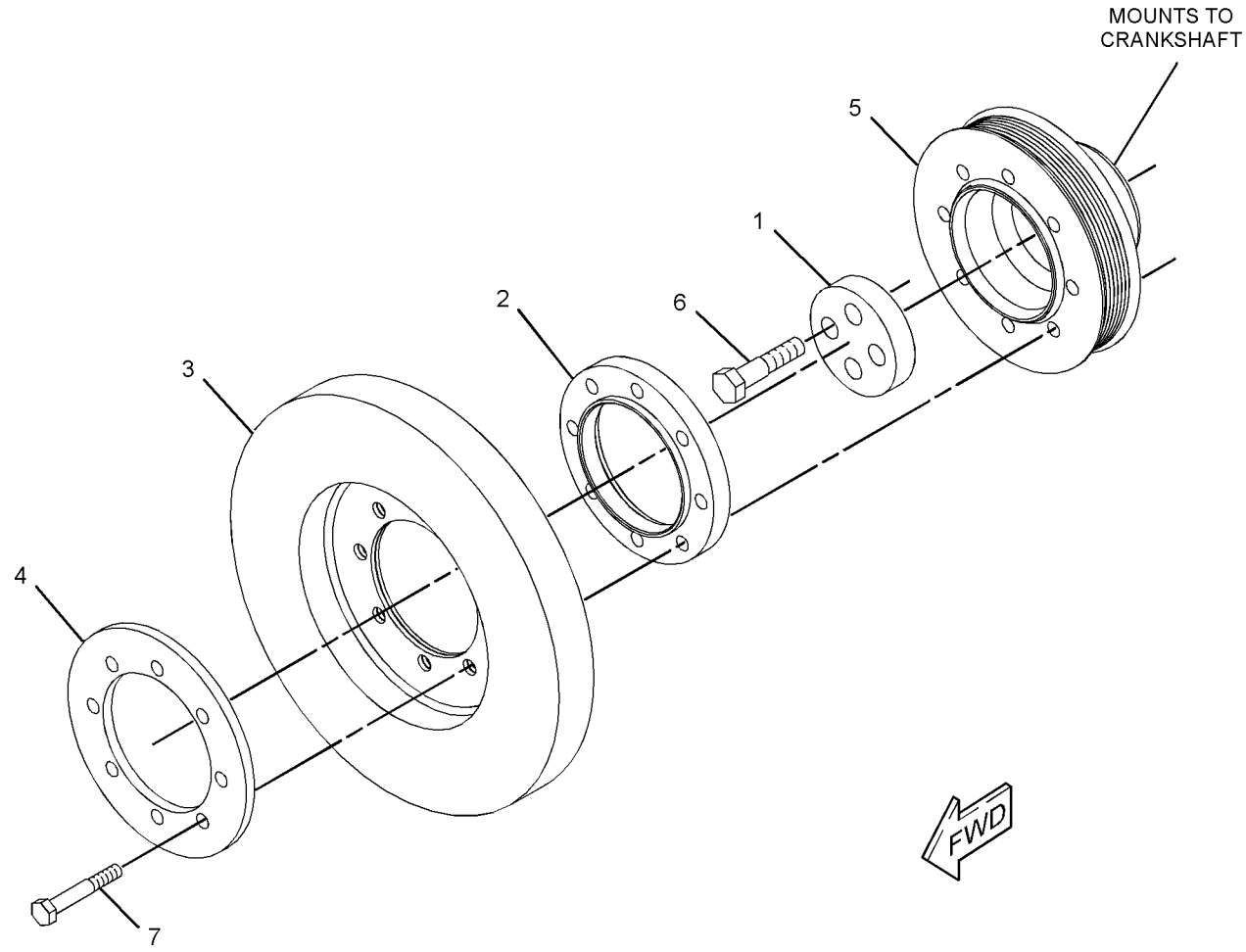

GRAPHIC #1 **<END>** g01218896

BASIC ENGINE

177-6973 DRIVE GP-FAN

S/N: KHX1-UP
PART OF 253-0437 BRACKET GP-ENGINE
ALSO AN ATTACHMENT

SMCS-1359 **i01555717**

NOTE	REF NO	GRAPHIC REF	PART NUMBER	QTY	PART NAME 1 2 3 4 5 6 (PRODUCT LEVEL)	SEE PAGE
	1	1	**4W-1203**	2	CUP-ROLLER BEARING	
	2	1	**4W-1204**	2	CONE-ROLLER BEARING	
	3	1	**4W-2042**	1	SPACER (35.3X45.5X38.331MM THK)	
	4	1	**6V-9748**	1	SEAL-LIP	
	5	1	**7C-8369**	1	HUB	
	6	1	**7C-8370**	1	CAP	
	7	1	**7C-8634**	1	PLATE	
	8	1	**183-2854**	1	BRACKET AS	
	9	1	**5S-9062**	1	SPACER (35.032X50.8X15.88MM THK)	
M	10	1	**6V-8004**	1	BOLT (M12X1.75X120MM)	

M-METRIC PART

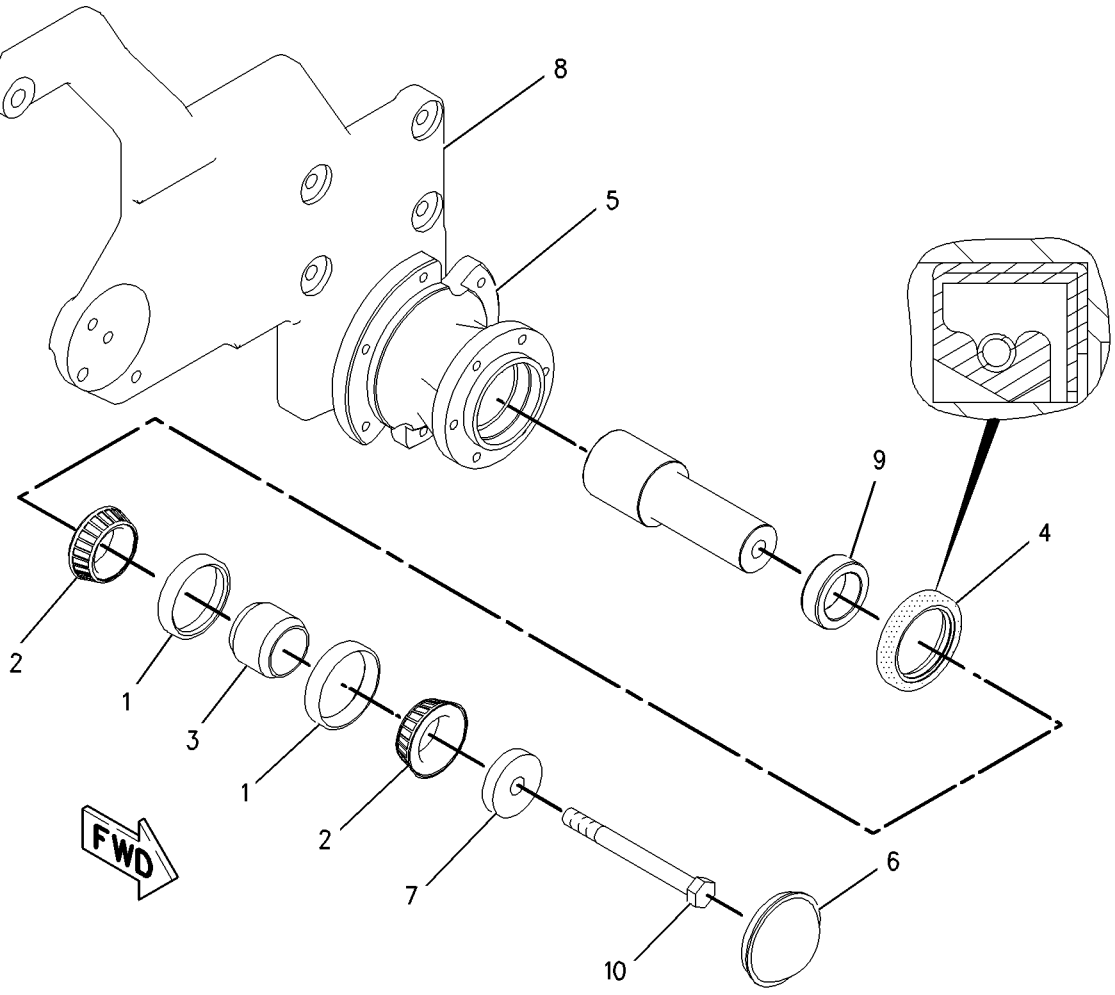

GRAPHIC #1 **<END>** g00808648

210-8176 DRIVE GP-FAN

S/N: DFP1-UP; CJX1-UP
PART OF 229-1786, 229-1787 COOLING AR-HIGH AMBIENT TEMP
AN ATTACHMENT

SMCS-1359 **i02896763**

NOTE	REF NO	GRAPHIC REF	PART NUMBER	QTY	PART NAME 1 2 3 4 5 6 (PRODUCT LEVEL)	SEE PAGE
	1	1	**8T-4224**	15	WASHER-HARD (8.8X16X2-MM THK)	
	2	1	**265-3593**	1	PLATE AS	
	3	1	**281-3589**	1	DRIVE AS-FAN	
		1	**102-8805**	1	KIT-RECEPTACLE (6-PIN)	
					(INCLUDES RECEPTACLE AS & WEDGE)	
		1	**186-3735**	6	PIN-CONNECTOR (16-GA TO 18-GA)	
	4	1	**230-2892**	1	FAN AS (11-BLADE)	
M	5	1	**8T-4200**	3	BOLT (M8X1.25X16-MM)	
M	6	1	**5C-7261**	6	NUT (M8X1.25-THD)	
M	7	1	**7X-0818**	6	BOLT (M8X1.25X45-MM)	

M-METRIC PART

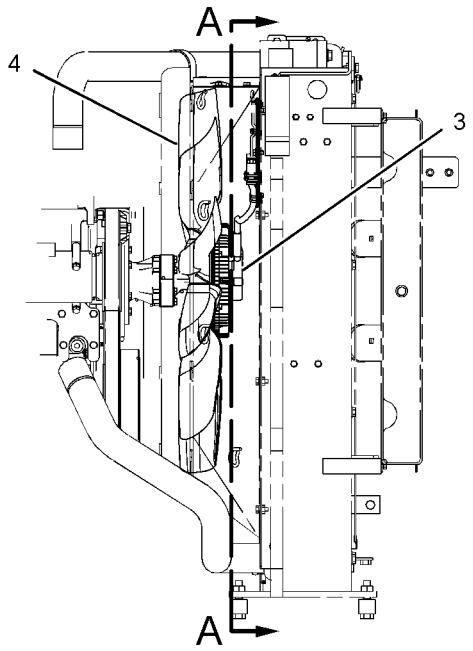

FRONT VIEW

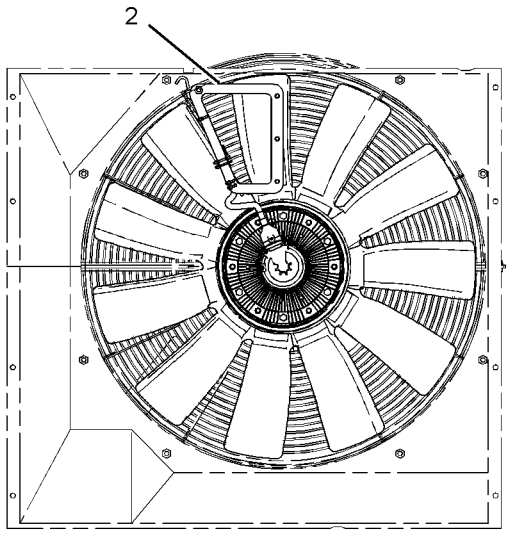

LEFT SIDE VIEW

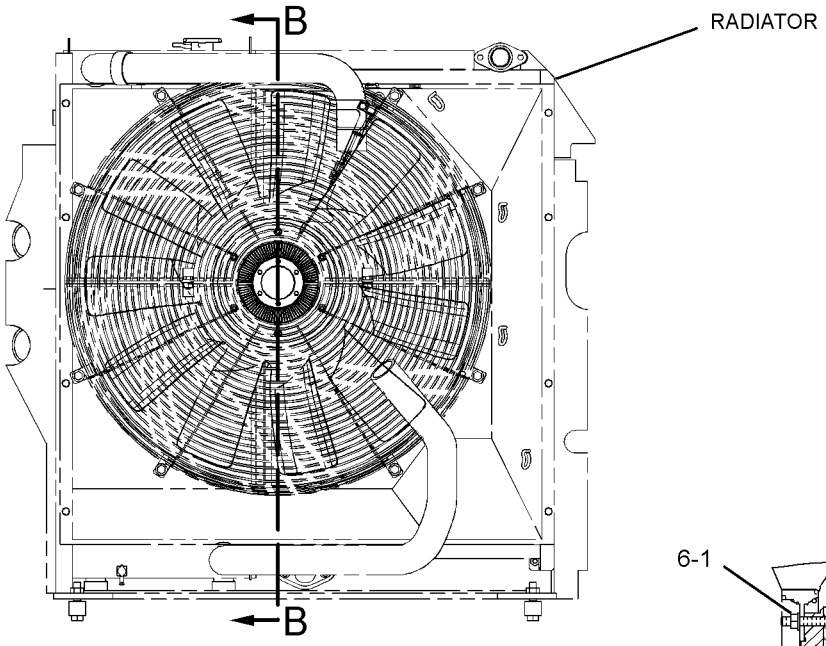

RIGHT SIDE VIEW

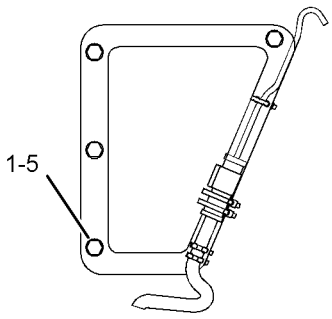

VIEW A-A

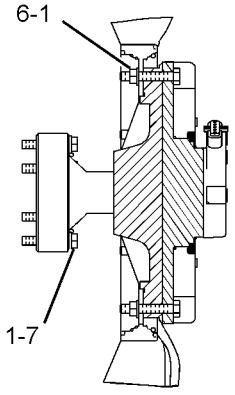

SECTION B-B

GRAPHIC #1 **<END>** g01236524

258-8723 FASTENER GP-CYLINDER HEAD

S/N: KHX1-UP
PART OF 235-8134, 235-8135, 270-2767, 270-2768, 290-0755, 290-0757, 290-0758
ENGINE AR-COMPLETE
ALSO AN ATTACHMENT

SMCS-1100 **i02353343**

NOTE	REF NO	GRAPHIC REF	PART NUMBER	QTY	PART NAME 1 2 3 4 5 6 (PRODUCT LEVEL)	SEE PAGE
	1	1	**229-8844**	3	CLIP	
	2	1	**244-4500**	11	SPRING	
M	3	1	**8T-0100**	11	BOLT (M8X1.25X60-MM)	
	4	1	**9N-0869**	11	WASHER-HARD (8.8X25.5X2-MM THK)	

M-METRIC PART

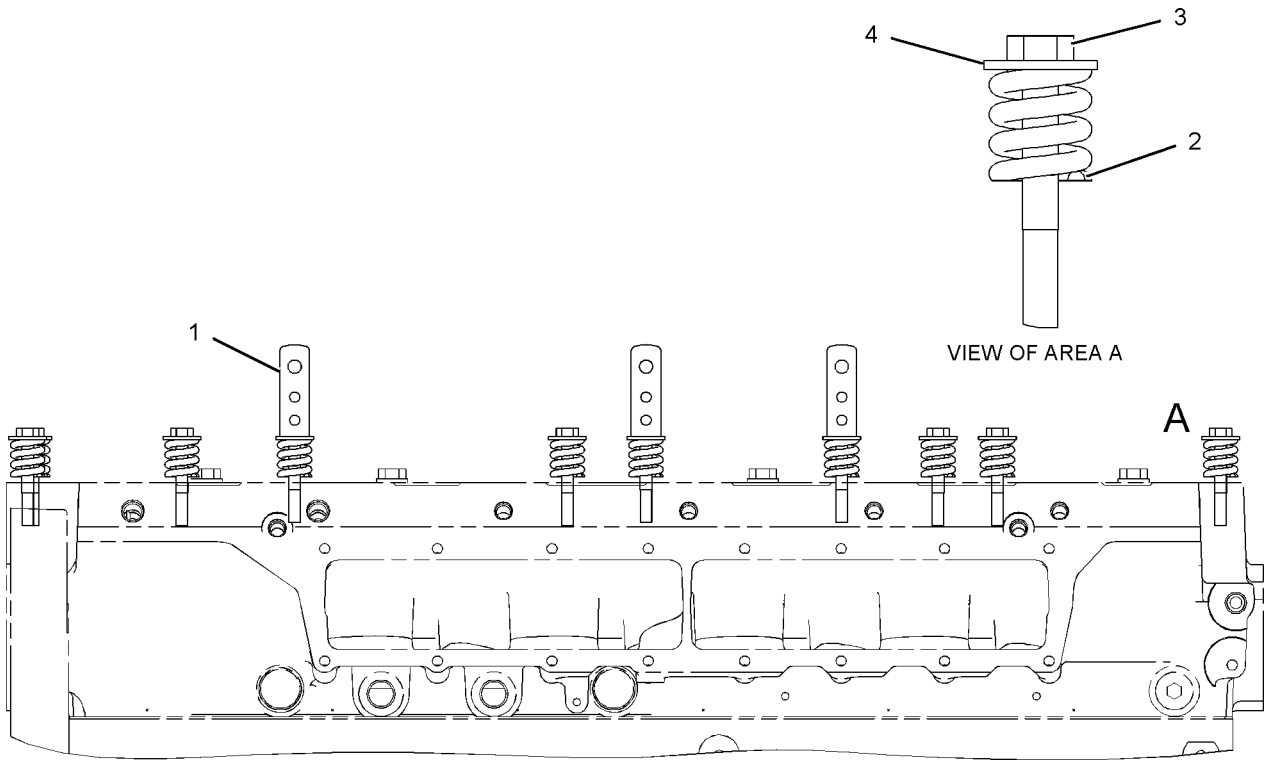

RIGHT SIDE VIEW

GRAPHIC #1 **<END>** g01125046

252-9551 FASTENER GP-FRONT COVER

S/N: KHX1-UP
PART OF 235-8134, 235-8135, 270-2767, 270-2768, 290-0755, 290-0757, 290-0758
ENGINE AR-COMPLETE
ALSO AN ATTACHMENT

SMCS-1151, 1166 **i02213913**

NOTE	REF NO	GRAPHIC REF	PART NUMBER	QTY	PART NAME 1 2 3 4 5 6 (PRODUCT LEVEL)	SEE PAGE
M	1	1	**9X-2098**	1	STUD-TAPERLOCK (BOLT)	
M	2	1	**6V-2317**	12	BOLT (M8X1.25X30-MM)	
M	3	1	**8T-0100**	2	BOLT (M8X1.25X60-MM)	
	4	1	**8T-4224**	1	WASHER-HARD (8.8X16X2-MM THK)	

M-METRIC PART

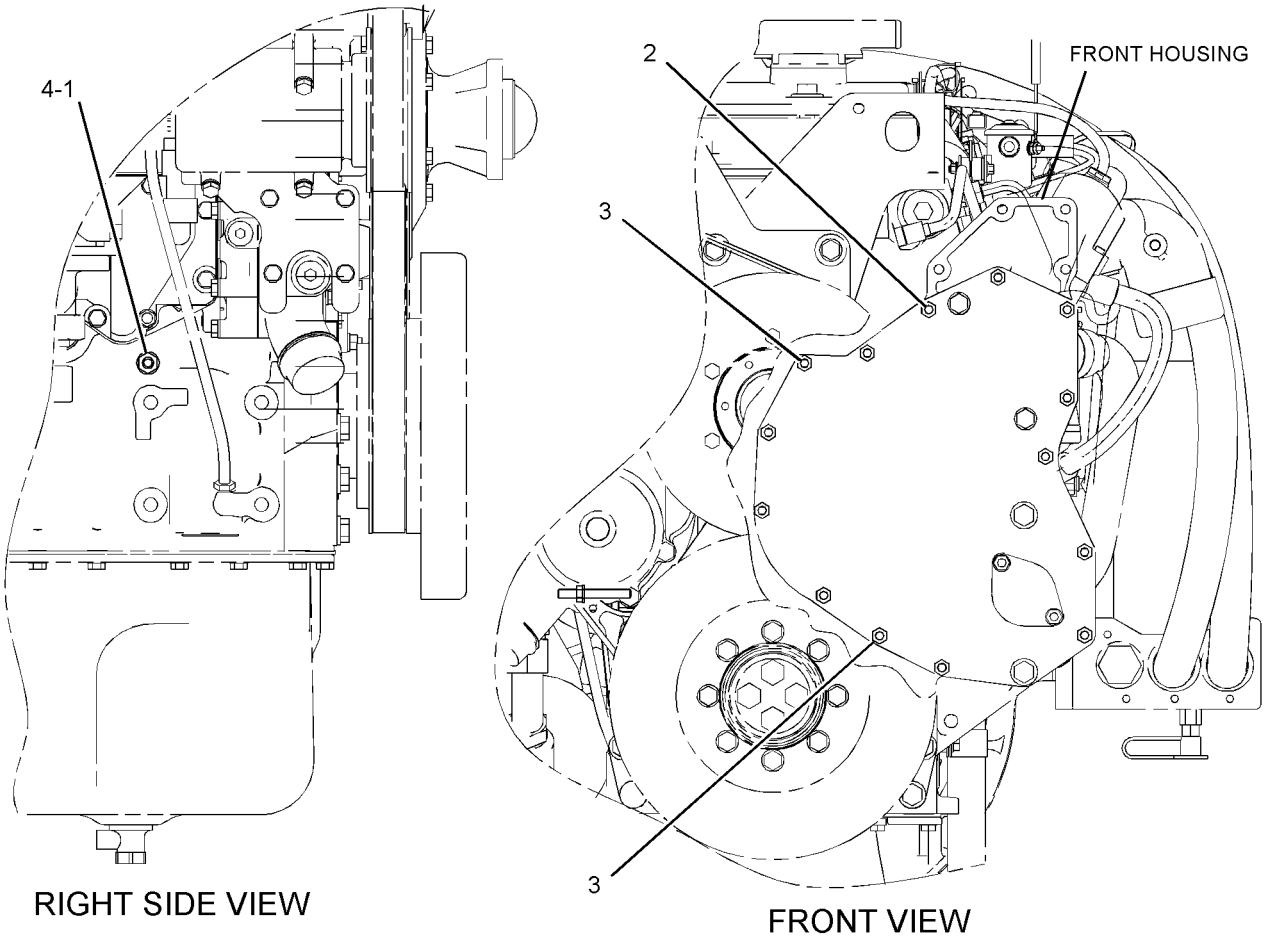

GRAPHIC #1 **<END>** g01121644

116-4556 FASTENER GP-FRONT HOUSING

S/N: KHX1-UP
PART OF 235-8134, 235-8135, 270-2767, 270-2768, 290-0755, 290-0757, 290-0758
ENGINE AR-COMPLETE
ALSO AN ATTACHMENT

SMCS-1162 **i01516753**

NOTE	REF NO	GRAPHIC REF	PART NUMBER	QTY	PART NAME 1 2 3 4 5 6 (PRODUCT LEVEL)	SEE PAGE
M	1	1	**6V-8336**	6	BOLT (M12X1.75X70-MM)	
		1	**5P-8245**	6	WASHER-HARD (13.5X25.5X3-MM THK)	

M-METRIC PART

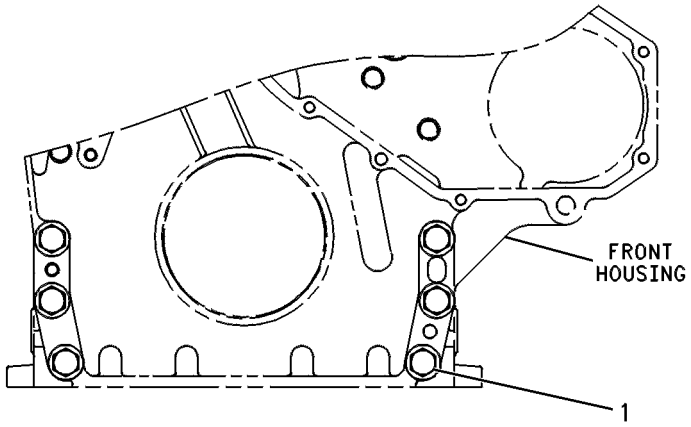

FRONT VIEW

GRAPHIC #1 **<END>** g00244671

113-6170 FASTENER GP-LIFTING

S/N: KHX1-UP
PART OF 235-8134, 235-8135, 270-2767, 270-2768, 290-0755, 290-0757, 290-0758
ENGINE AR-COMPLETE
ALSO AN ATTACHMENT

SMCS-1122 **i01515859**

NOTE	REF NO	GRAPHIC REF	PART NUMBER	QTY	PART NAME 1 2 3 4 5 6 (PRODUCT LEVEL)	SEE PAGE
	1	1	**8T-4121**	3	WASHER-HARD (11X21X2.5-MM THK)	
M	2	1	**8T-4136**	3	BOLT (M10X1.5X25-MM)	

M-METRIC PART

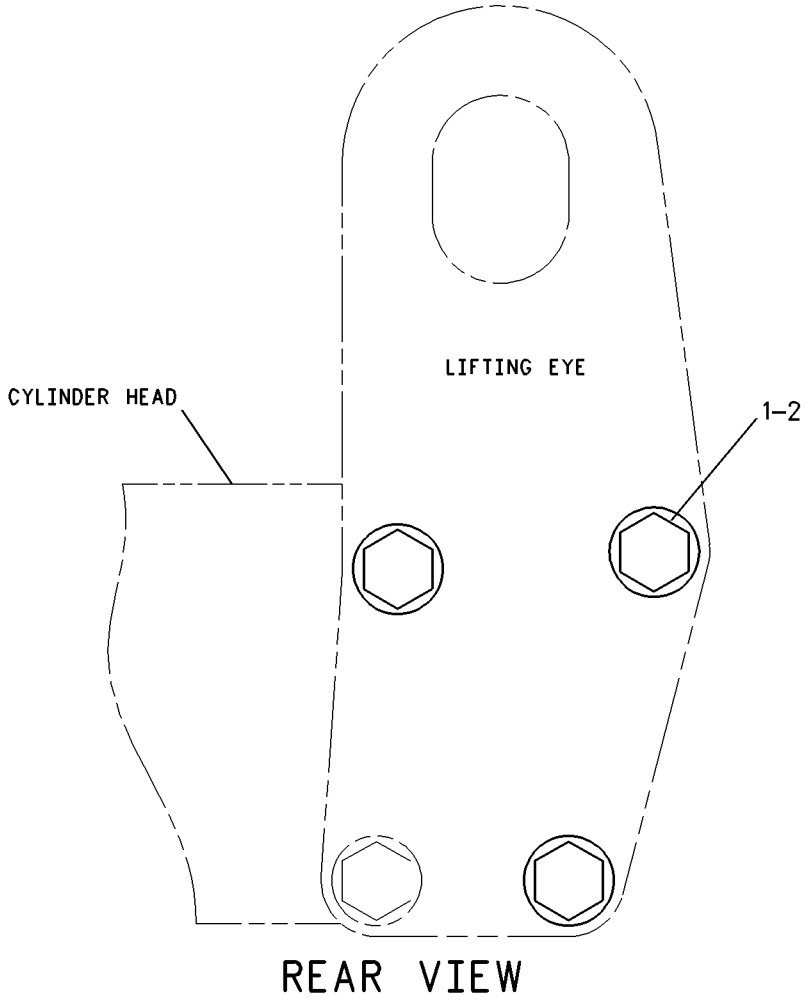

GRAPHIC #1 **<END>** g00786762

186-5892 FLYWHEEL GP

S/N: KHX1-UP
PART OF 235-8134, 235-8135, 270-2767, 270-2768, 290-0755, 290-0757, 290-0758
ENGINE AR-COMPLETE
ALSO AN ATTACHMENT

SMCS-1156 **i02293843**

NOTE	REF NO	GRAPHIC REF	PART NUMBER	QTY	PART NAME 1 2 3 4 5 6 (PRODUCT LEVEL)	SEE PAGE
	1	1	**202-2382**	1	FLYWHEEL AS	
	1A	1	**1W-1064**	1	GEAR-FLYWHEEL RING (126-TEETH)	
M	2	1	**6V-8197**	8	BOLT (M12X1.75X40-MM)	
	3	1	**5P-8245**	8	WASHER-HARD (13.5X25.5X3-MM THK)	
	4	1	**3E-3213**	1	PIN-SPRING	

M-METRIC PART

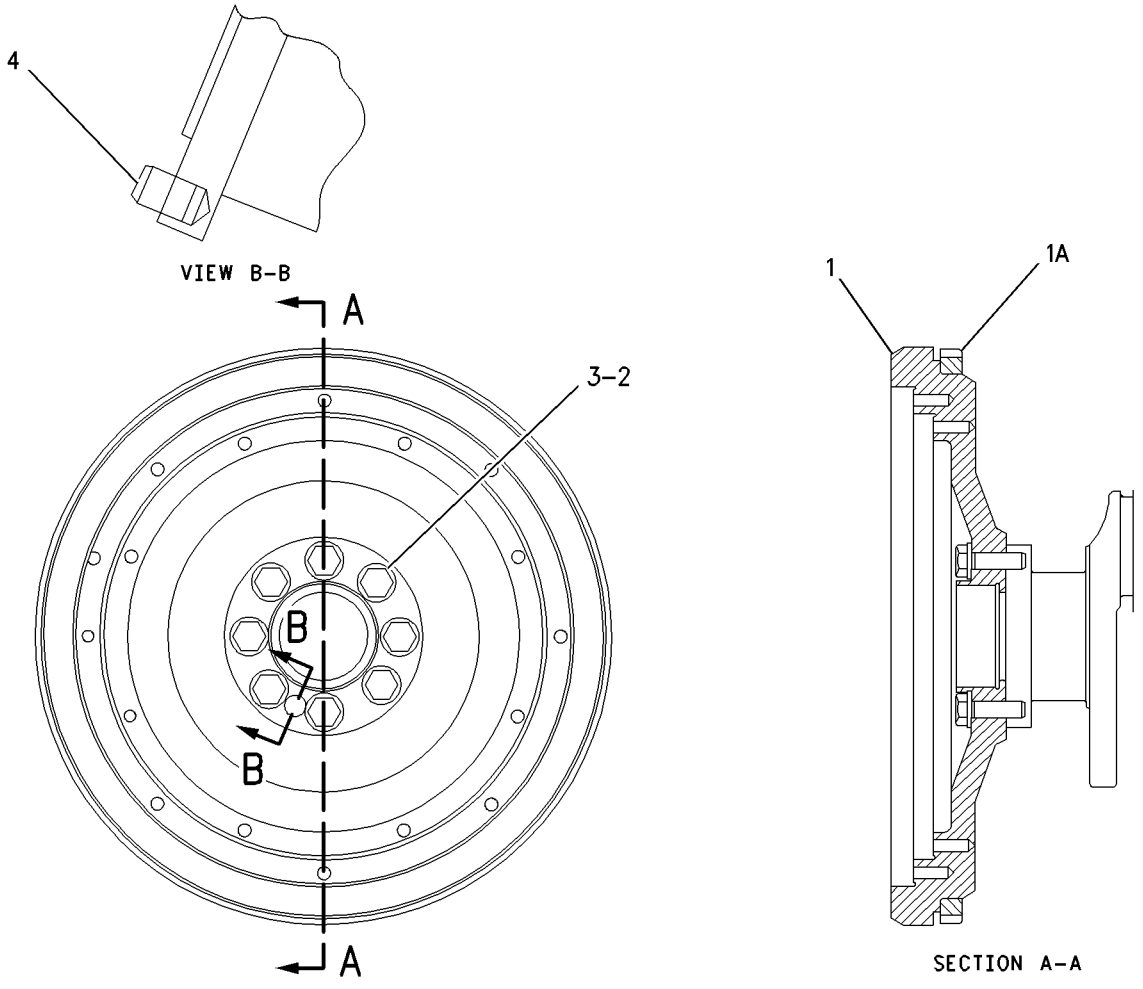

GRAPHIC #1 **<END>** g00764000

BASIC ENGINE

205-1321 GEAR GP-FRONT

S/N: KHX1-UP

PART OF 236-4283, 236-4284, 270-4211, 270-4212 ENGINE AR-CORE

ALSO AN ATTACHMENT

SMCS-1151, 1162, 1206 **i01773939**

NOTE	REF NO	GRAPHIC REF	PART NUMBER	QTY	PART NAME 1 2 3 4 5 6 (PRODUCT LEVEL)	SEE PAGE
	1	1	**113-6069**	1	PLATE-THRUST	
	2	1	**115-4219**	1	PLATE-RETAINING	
	3	1	**200-4495**	1	SHAFT-IDLER	
	4	1	**205-1320**	1	GEAR AS-IDLER (50 TEETH)	
	4A	1	**115-4072**	1	BEARING	
M	5	1	**136-4183**	1	BOLT-12 POINT HEAD (M10X1.5X30MM)	
M	6	1	**6V-5843**	2	BOLT (M10X1.50X45MM)	

M-METRIC PART

205 - 1321 **GEAR GP - FRONT** *(contd.)* **i01773939**

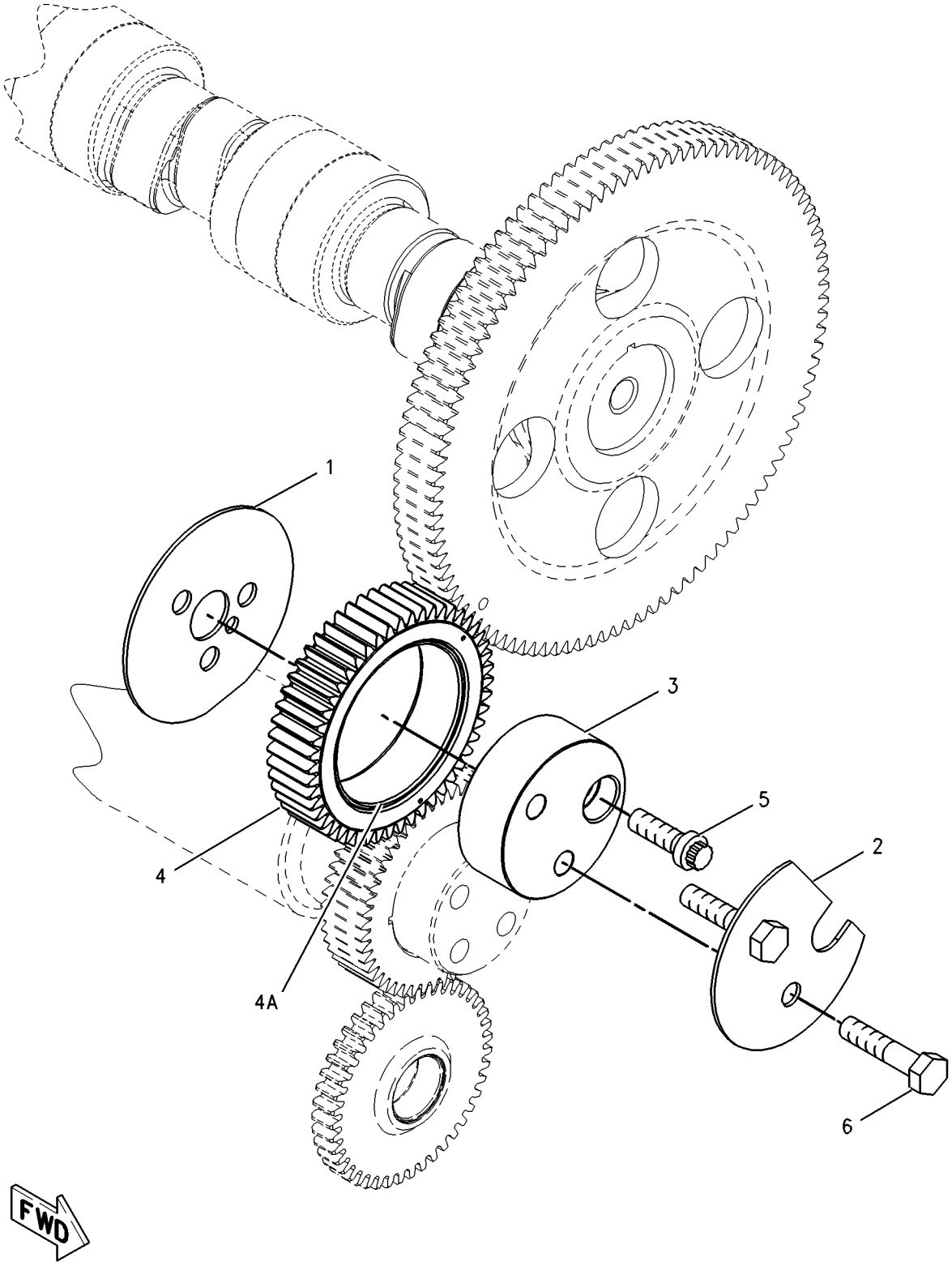

GRAPHIC #1 **<END>** g00870175

7W-8813 HOUSING GP-FLYWHEEL

S/N: KHX1-UP
PART OF 235-8134, 235-8135, 270-2767, 270-2768, 290-0755, 290-0757, 290-0758
ENGINE AR-COMPLETE
ALSO AN ATTACHMENT

SMCS-1157 **i02353640**

NOTE	REF NO	GRAPHIC REF	PART NUMBER	QTY	PART NAME 1 2 3 4 5 6 (PRODUCT LEVEL)	SEE PAGE
	1	1	**7C-5233**	1	HOUSING-FLYWHEEL	
	2	1	**2P-1294**	1	PLUG-SEAL	
M	3	1	**6V-5842**	2	BOLT (M10X1.5X40-MM)	
M	4	1	**8T-0226**	10	BOLT (M14X2X45-MM)	
	5	1	**9S-4182**	1	PLUG-O-RING (STRAIGHT THREAD O-RING)	
B	6	1	**9S-4183**	1	PLUG-O-RING	

B-USE AS REQUIRED
M-METRIC PART

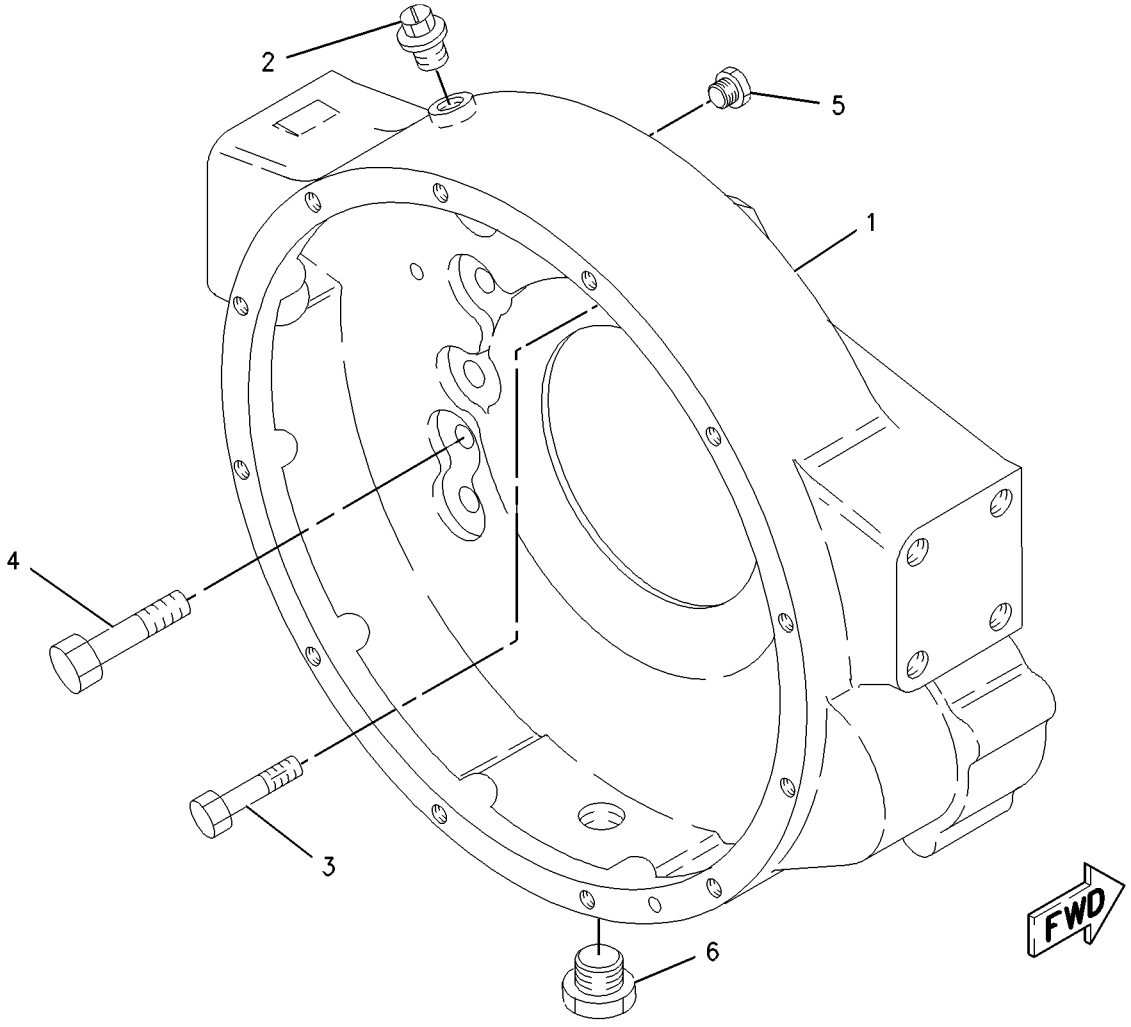

GRAPHIC #1 **<END>** g00893275

245-3260 HOUSING GP-FRONT

S/N: KHX1-UP

PART OF 236-4283, 236-4284, 270-4211, 270-4212 ENGINE AR-CORE

ALSO AN ATTACHMENT

SMCS-1151, 1162, 1206 **i02355632**

NOTE	REF NO	GRAPHIC REF	PART NUMBER	QTY	PART NAME 1 2 3 4 5 6 (PRODUCT LEVEL)	SEE PAGE
	1	1	**245-3259**	1	HOUSING-FRONT	
M	2	1	**6V-3918**	4	BOLT (M8X1.25X50-MM)	
M	3	1	**6V-5217**	8	BOLT (M8X1.25X20-MM)	
	4	1	**9M-1974**	12	WASHER-HARD (8.8X16X2-MM THK)	
B	5	1	**1U-8846**		SEALANT-GASKET	

B-USE AS REQUIRED
M-METRIC PART

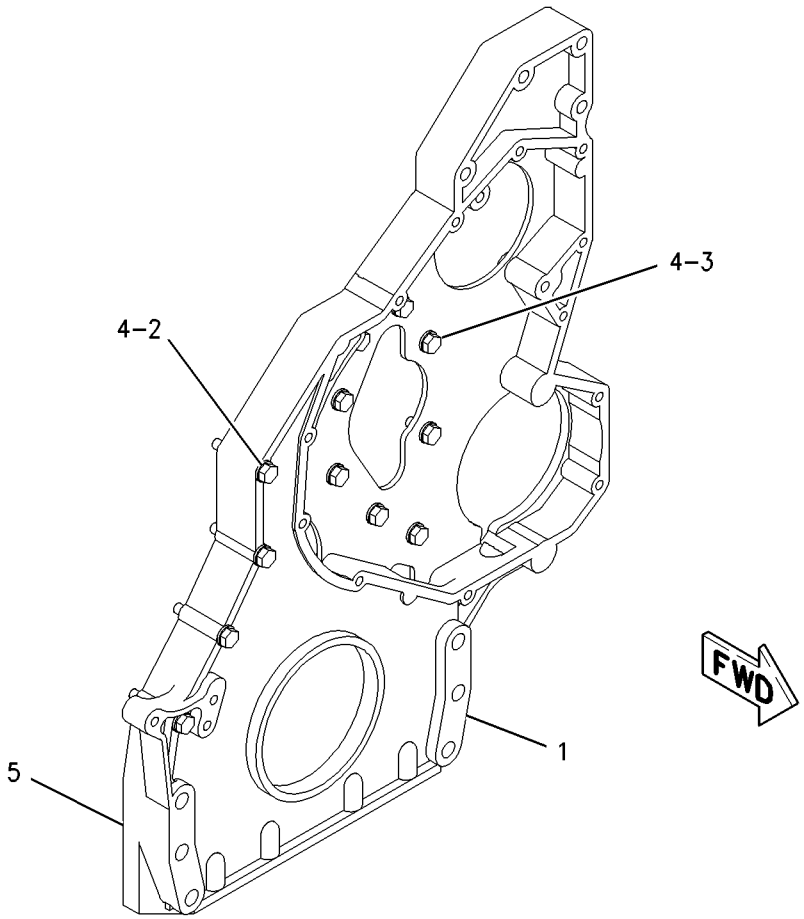

GRAPHIC #1 **<END>** g00713985

139-4081 LIFTER GP-VALVE

S/N: KHX1-UP
PART OF 232-3717 VALVE MECHANISM GP
ALSO AN ATTACHMENT

SMCS-1209 **i01517939**

NOTE	REF NO	GRAPHIC REF	PART NUMBER	QTY	PART NAME 1 2 3 4 5 6 (PRODUCT LEVEL)	SEE PAGE
	1	1	**139-9476**	1	SHAFT AS-LIFTER	
		1	**2D-6642**	2	BALL	
	2	1	**7E-6794**	4	ARM AS-LIFTER	
	3	1	**139-4084**	2	SPACER	

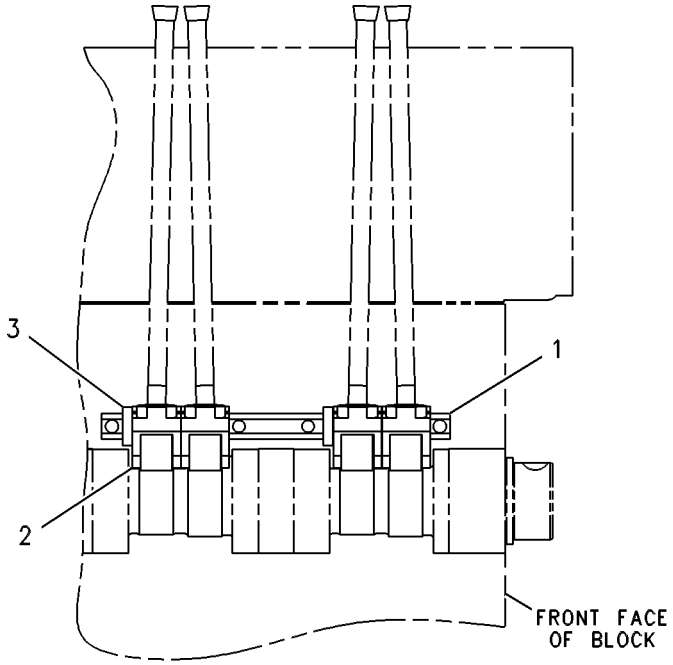

RIGHT SIDE VIEW

GRAPHIC #1 **<END>** g00288708

142-8100 LIFTING GP-ENGINE

S/N: KHX1-UP
PART OF 235-8134, 235-8135, 270-2767, 270-2768, 290-0755, 290-0757, 290-0758
ENGINE AR-COMPLETE
ALSO AN ATTACHMENT

SMCS-1122 **i01970139**

NOTE	REF NO	GRAPHIC REF	PART NUMBER	QTY	PART NAME 1 2 3 4 5 6 (PRODUCT LEVEL)	SEE PAGE
	1	1	**228-4766**	1	PLATE-LIFTING	
	2	1	**154-0896**	1	PLATE-LIFTING	
M	3	1	**8T-4136**	1	BOLT (M10X1.5X25-MM)	
	4	1	**8T-4121**	1	WASHER-HARD (11X21X2.5-MM THK)	

M-METRIC PART

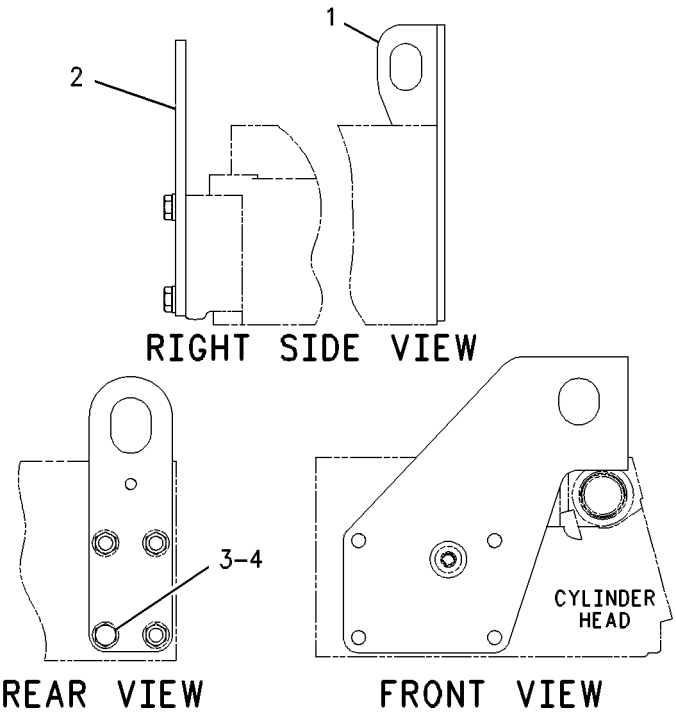

GRAPHIC #1 **<END>** g00597754

BASIC ENGINE

233-1120 MOUNTING GP-ENGINE

S/N: DFP1-UP; CJX1-UP

PART OF 222-8379 INSTALLATION AR-ENGINE

SMCS-1152 **i02533036**

NOTE	REF NO	GRAPHIC REF	PART NUMBER	QTY	PART NAME 1 2 3 4 5 6 (PRODUCT LEVEL)	SEE PAGE
	1	1	**109-9329**	4	WASHER (21.5X120X8-MM THK)	
	2	1	**109-9350**	4	MOUNT-FLEXIBLE	
	3	1	**109-9369**	4	MOUNT-FLEXIBLE	
	4	1	**118-9930**	4	SUPPORT AS	
	5	1	**233-1293**	1	BRACKET AS (FRONT, LH)	
	6	1	**233-1296**	1	BRACKET AS (FRONT, RH)	
	7	1	**233-1299**	1	BRACKET AS (REAR, RH)	
	8	1	**272-4800**	1	BRACKET AS (REAR, LH)	
M	9	1	**096-9259**	6	BOLT (M14X2X60-MM)	
M	10	1	**096-9988**	2	BOLT (M14X2X30-MM)	
	11	1	**7M-0242**	2	WASHER-HARD (15.1X25.4X5-MM THK)	
	12	1	**7X-0510**	6	WASHER-HARD (15.5X29X3-MM THK)	
M	13	1	**7X-2532**	4	BOLT (M20X2.5X130-MM)	
M	14	1	**7X-2555**	8	BOLT (M16X2X80-MM)	
	15	1	**8T-4123**	8	WASHER (22X35X3.5-MM THK)	
	16	1	**9X-8257**	8	WASHER (17.5X30X3.5-MM THK)	

M-METRIC PART

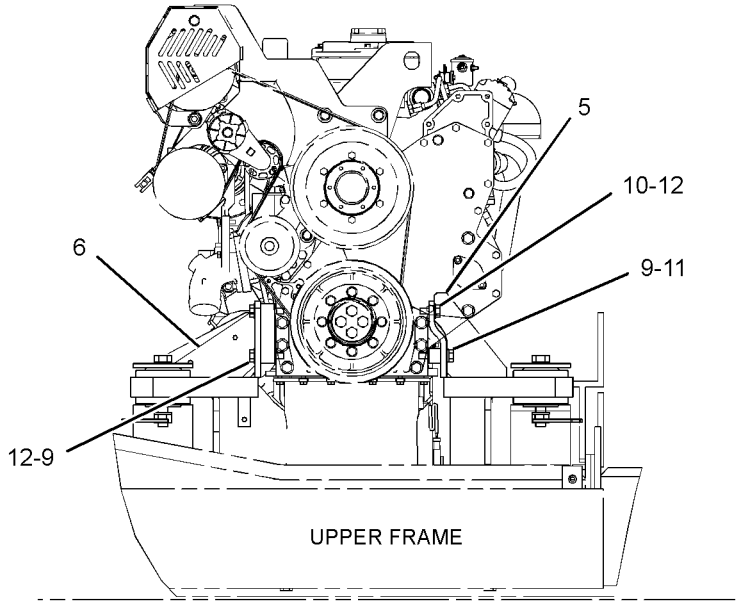

LEFT SIDE VIEW

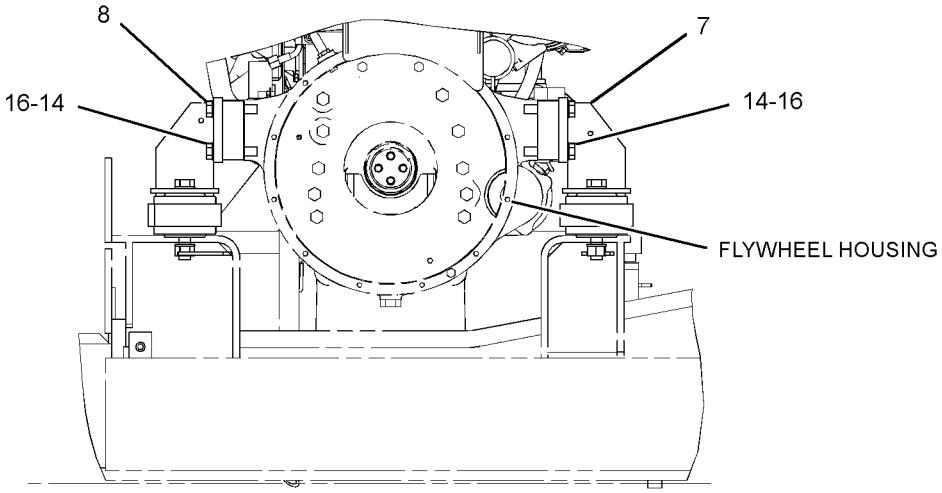

RIGHT SIDE VIEW

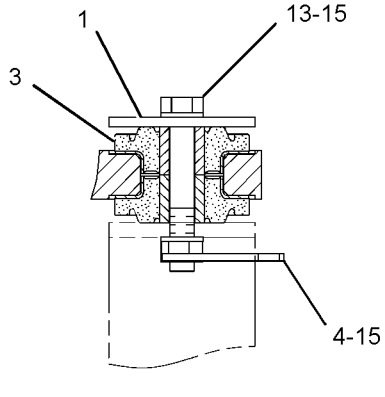

SECTION A-A

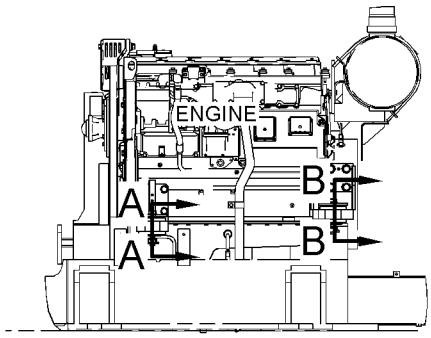

REAR VIEW

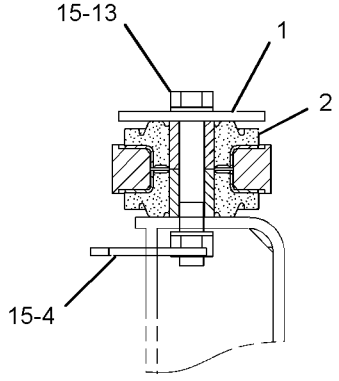

SECTION B-B

GRAPHIC #1

<END>

g01185786

BASIC ENGINE

176-9429 PAN GP-OIL

S/N: KHX1-UP

PART OF 235-8134, 235-8135, 270-2767, 270-2768, 290-0755, 290-0757, 290-0758

ENGINE AR-COMPLETE

ALSO AN ATTACHMENT

SMCS-1302 **i01736372**

NOTE	REF NO	GRAPHIC REF	PART NUMBER	QTY	PART NAME 1 2 3 4 5 6 (PRODUCT LEVEL)	SEE PAGE
	1	1	**176-9430**	1	PAN AS-OIL	
M	2	1	**175-3676**	36	BOLT (M8X1.25X19.5-MM)	
	3	1	**166-2905**	1	SEAL-INTEGRAL	
B	4	1	**136-4303**	1	PLUG AS-CONNECTOR (2-PIN)	
		1	**155-2270**	1	KIT-CONNECTING PLUG (2-PIN)	
					(INCLUDES PLUG AS AND WEDGE)	
		1	**3E-3362**	1	WEDGE-PLUG LOCK (2-PIN)	
		1	**8T-8737**	2	PLUG-SEAL	
	5	1	**213-0677**	1	SWITCH AS-LIQUID LEVEL	
		1	**3E-3365**	1	WEDGE-RECEPTACLE LOCK (2-PIN)	
		1	**144-1636**	1	PIN-CONNECTOR (14-GA TO 18-GA)	
		1	**102-8802**	1	KIT-RECEPTACLE (2-PIN)	
					(INCLUDES RECEPTACLE AS & WEDGE)	
	6	1	**189-9377**	1	SEAL-O-RING	
	7	1	**203-4183**	1	VALVE AS	
	8	1	**2K-8199**	1	SEAL-O-RING	

B-USE AS REQUIRED
M-METRIC PART

176-9429 **PAN GP-OIL** *(contd.)* **i01736372**

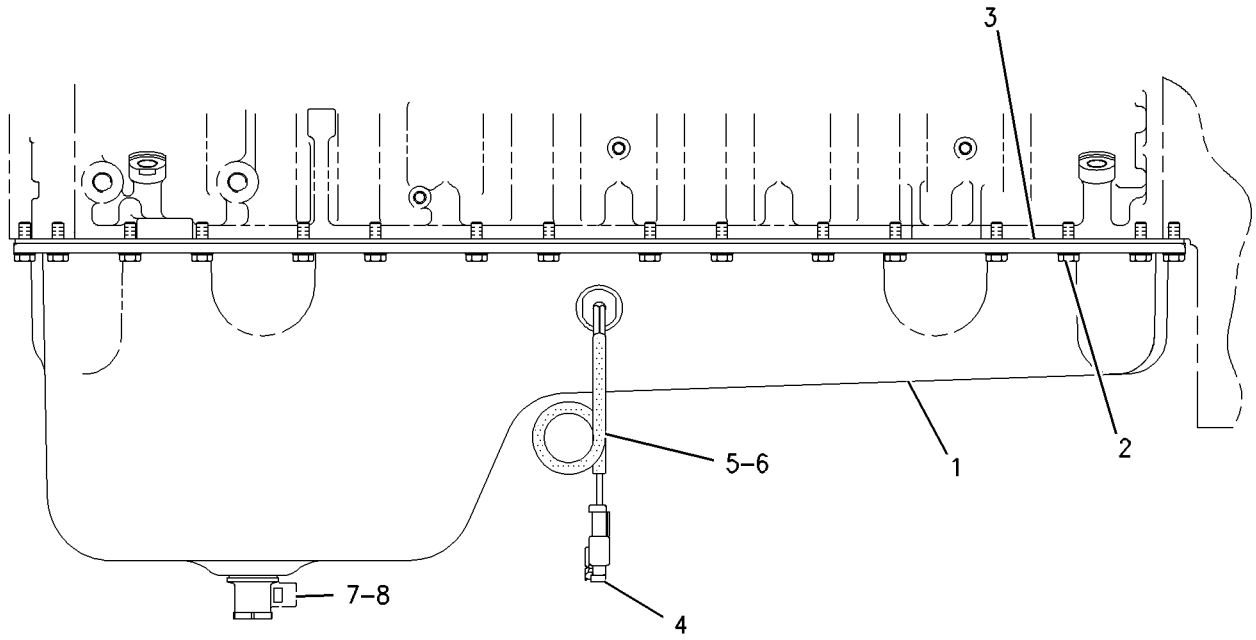

LEFT SIDE VIEW

GRAPHIC #1 **<END>** g00825659

210-5592 PISTON & ROD GP

S/N: KHX1-UP

PART OF 236-4283, 236-4284, 270-4211, 270-4212 ENGINE AR-CORE

ALSO AN ATTACHMENT

SMCS-1225 **i02355585**

NOTE	REF NO	GRAPHIC REF	PART NUMBER	QTY	PART NAME 1 2 3 4 5 6 (PRODUCT LEVEL)	SEE PAGE
R	1	1	**213-3193**	1	ROD AS-CONNECTING (NON-DRILLED)	
	1A	1	**2W-0027**	1	BEARING (EYE END)	
	1B	1	**195-0321**	2	BOLT	
	2	1	**224-6638**	1	BEARING-CONNECTING ROD (STANDARD)	
	3	1	**197-9354**	1	RING-PISTON (OIL CONTROL)	
	4	1	**197-9353**	1	RING-PISTON (INTERMEDIATE)	
	5	1	**197-9386**	1	RING-PISTON (TOP)	
	6	1	**168-7224**	1	PIN-PISTON	
	7	1	**173-0143**	1	JET AS-PISTON COOLING	
	8	1	**238-2698**	1	BODY AS	
M	9	1	**6V-3940**	1	BOLT (M8X1.25X25-MM)	
	10	1	**7C-0111**	2	RETAINER-PIN	

M-METRIC PART
R-REMFG PART MAY BE AVAILABLE

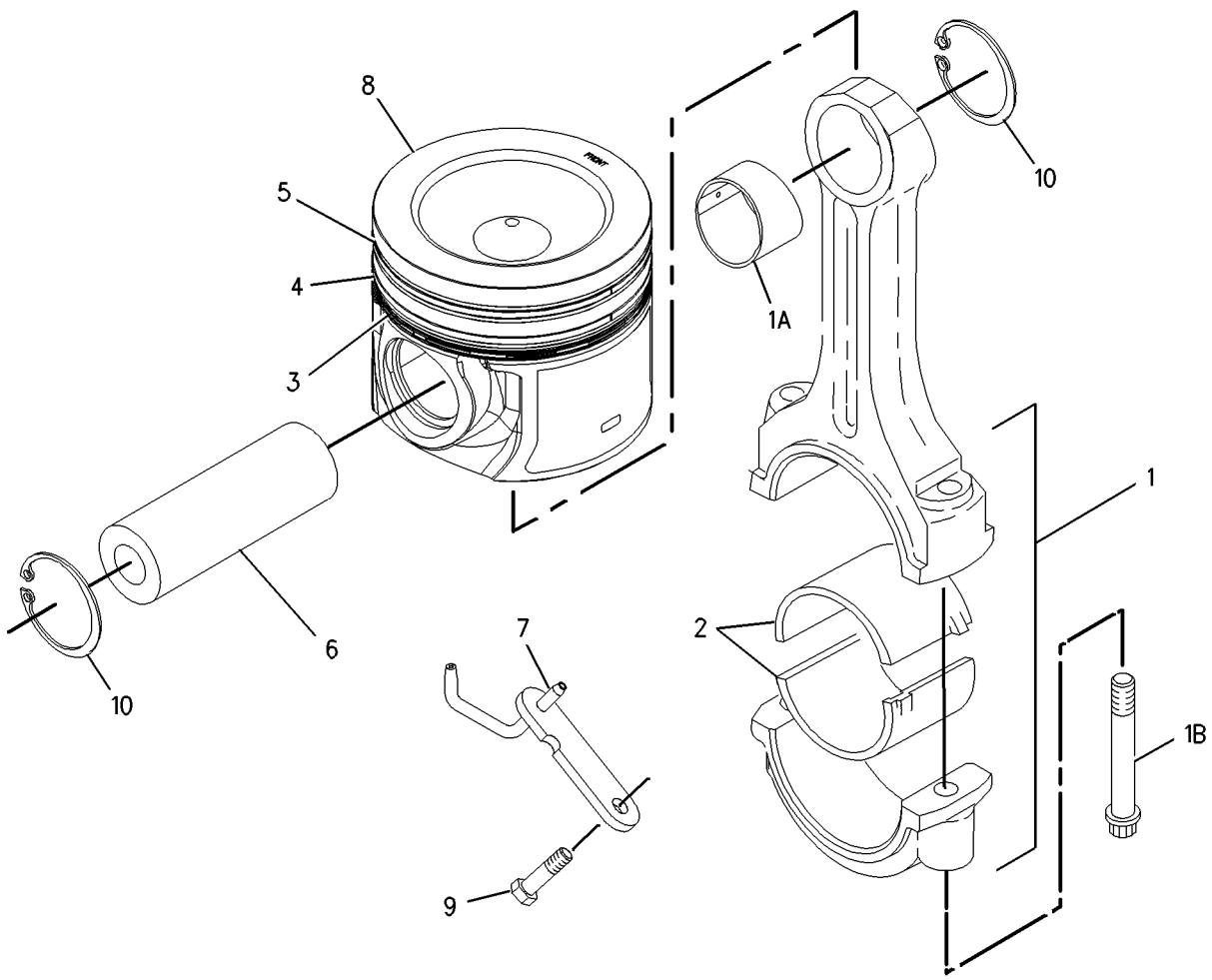

GRAPHIC #1 **<END>** g00903037

159-0303 PLUG GP-CYLINDER BLOCK

S/N: KHX1-UP
PART OF 235-8134, 235-8135, 270-2767, 270-2768, 290-0755, 290-0757, 290-0758
ENGINE AR-COMPLETE
ALSO AN ATTACHMENT

SMCS-1201 **i01521631**

NOTE	REF NO	GRAPHIC REF	PART NUMBER	QTY	PART NAME 1 2 3 4 5 6 (PRODUCT LEVEL)	SEE PAGE
M	1	1	**8T-0293**	1	BOLT (M12X1.75X20-MM)	
	2	1	**6F-7062**	1	WASHER (12.7X19.05X1.83-MM THK)	
	3	1	**9S-8008**	2	PLUG-O-RING	
	4	1	**3D-2824**	2	SEAL-O-RING	

M-METRIC PART

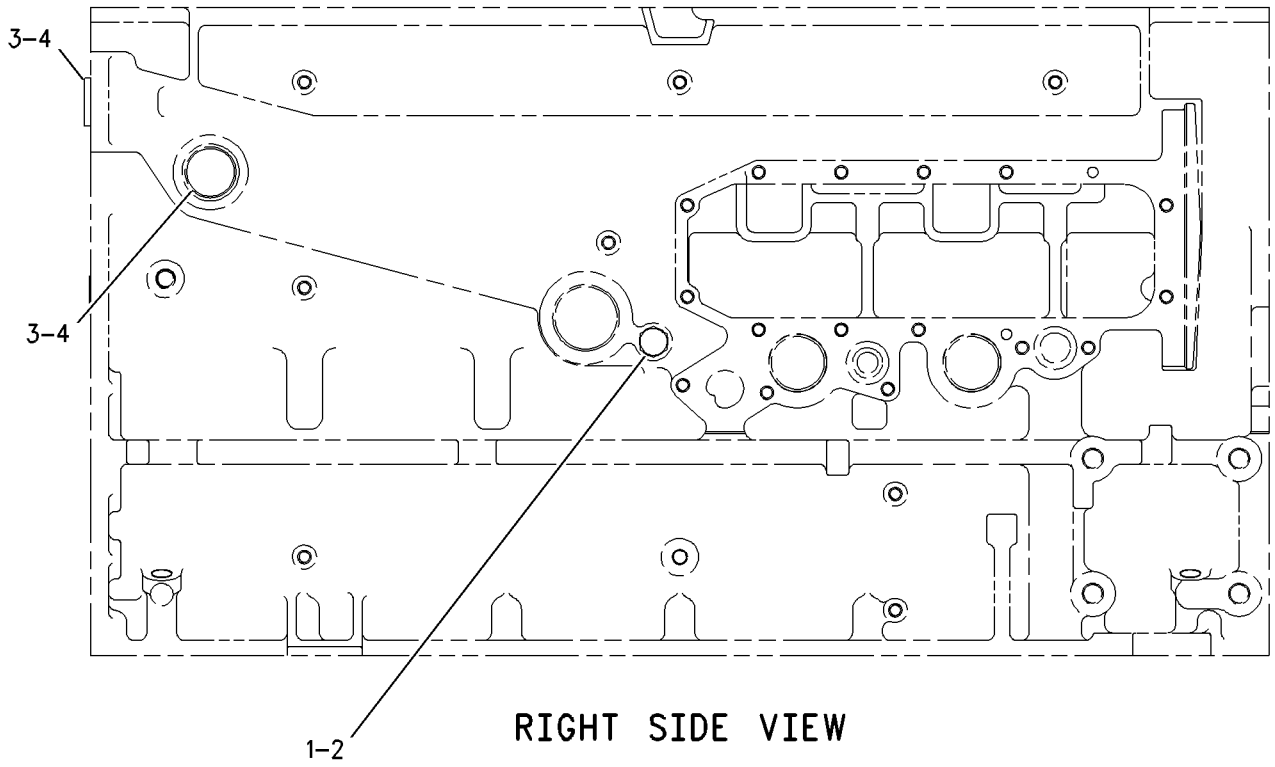

RIGHT SIDE VIEW

GRAPHIC #1 **<END>** g00677138

162-8068 PLUG GP-ENGINE

S/N: KHX1-UP
PART OF 235-8134, 235-8135, 270-2767, 270-2768, 290-0755, 290-0757, 290-0758
ENGINE AR-COMPLETE
ALSO AN ATTACHMENT

SMCS-1000 **i02940608**

NOTE	REF NO	GRAPHIC REF	PART NUMBER	QTY	PART NAME 1 2 3 4 5 6 (PRODUCT LEVEL)	SEE PAGE
	1	1	*148-8395*	1	PLUG AS	
		1	**9S-8005**	1	PLUG-O-RING	
		1	**3K-0360**	1	SEAL-O-RING	

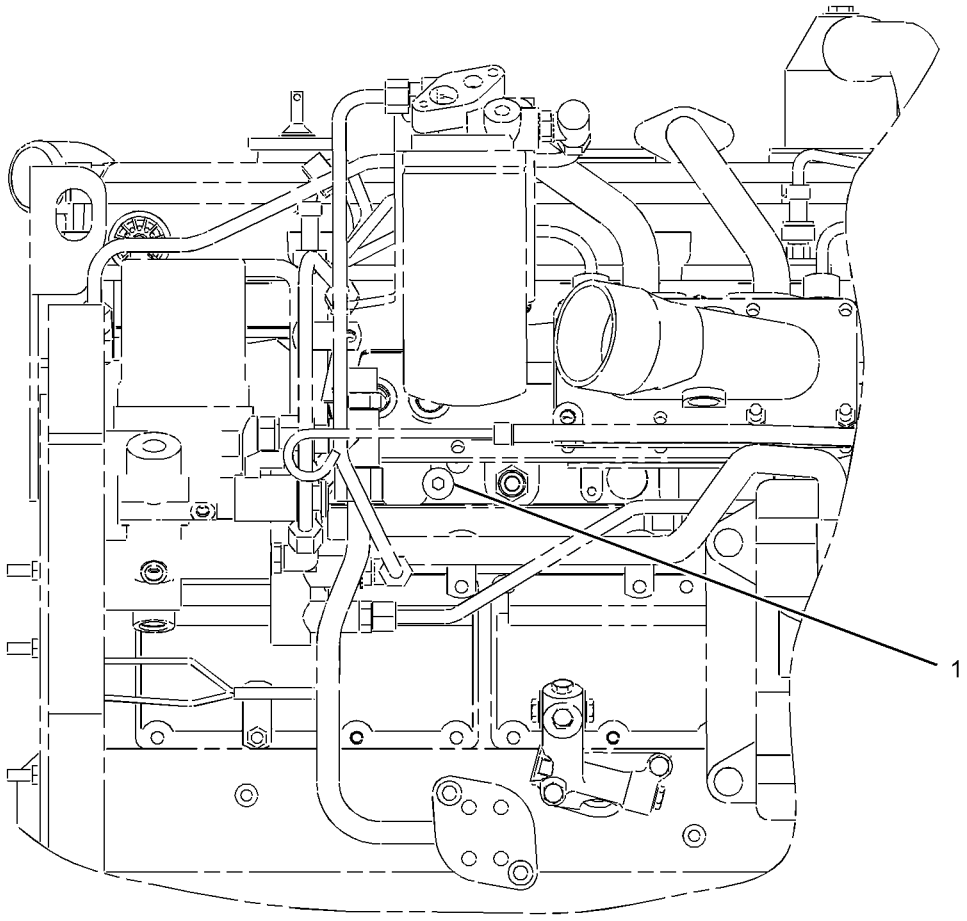

LEFT SIDE VIEW

GRAPHIC #1 **<END>** g01457732

233-1125 PULLEY GP

S/N: DFP1-UP; CJX1-UP
PART OF 229-1786, 229-1787 COOLING AR-HIGH AMBIENT TEMP
AN ATTACHMENT
TYPE 1

SMCS-1205, 1207, 1358, 1384, 1425 **i02662831**

NOTE	REF NO	GRAPHIC REF	PART NUMBER	QTY	PART NAME 1 2 3 4 5 6 (PRODUCT LEVEL)	SEE PAGE
	1	1	**263-1825**	1	PULLEY-FAN	
	2	1	**263-1830**	1	BELT-SERPENTINE (FAN PULLEY)	

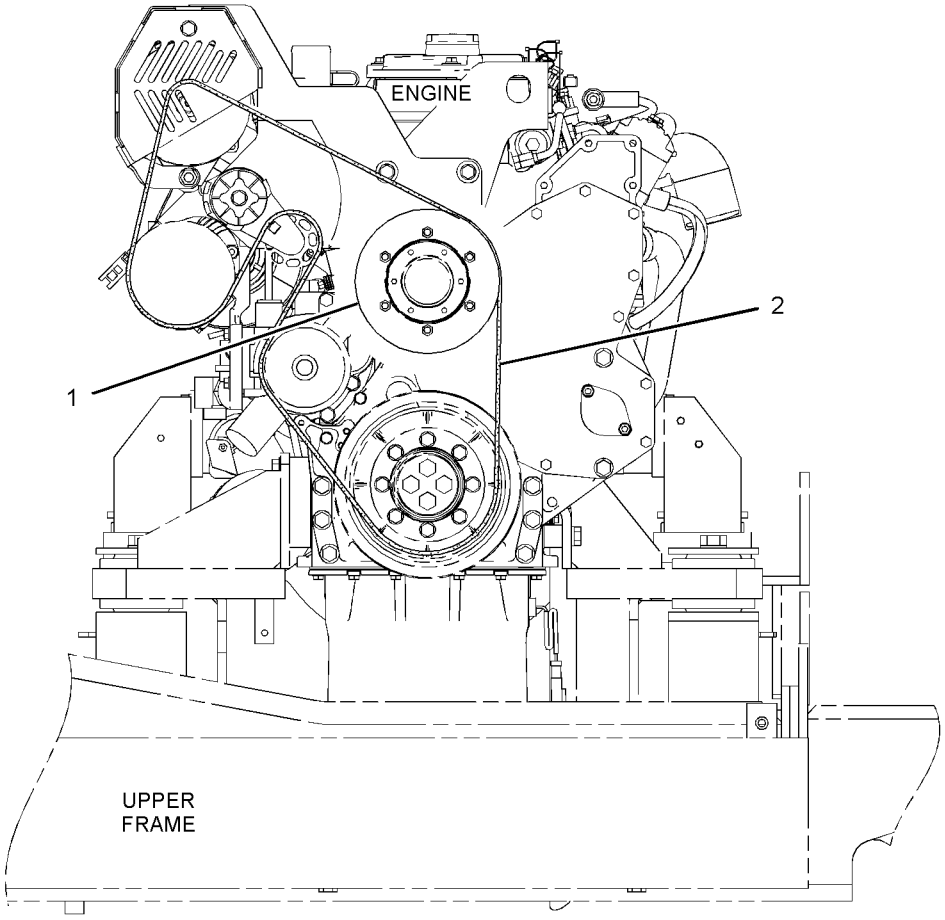

LEFT SIDE VIEW

GRAPHIC #1 **<END>** g01241704

BASIC ENGINE

233-1125 PULLEY GP

S/N: DFP1-UP; CJX1-UP
PART OF 229-1786, 229-1787 COOLING AR-HIGH AMBIENT TEMP
AN ATTACHMENT
TYPE 2

SMCS-1205, 1207, 1358, 1384, 1425 **i02998728**

NOTE	REF NO	GRAPHIC REF	PART NUMBER	QTY	PART NAME 1 2 3 4 5 6 (PRODUCT LEVEL)	SEE PAGE
C	1	1	**290-2778**	1	PULLEY-FAN	
C	2	1	**230-2190**	1	BELT-SERPENTINE (FAN PULLEY)	
CM	3	1	**6V-5215**	6	BOLT (M8X1.25X16-MM)	

C-CHANGE FROM PREVIOUS TYPE
M-METRIC PART

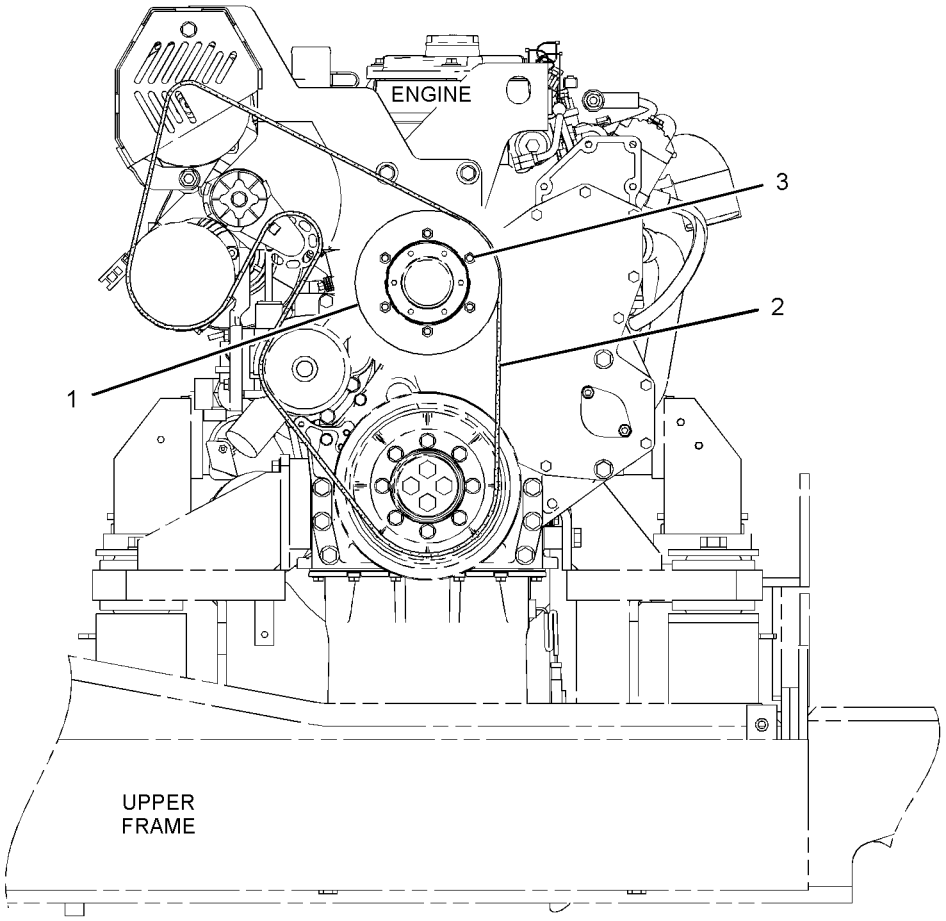

LEFT SIDE VIEW

GRAPHIC #1 **<END>** g01521441

263-1848 PULLEY GP

S/N: KHX1-2381

PART OF 235-8134, 270-2767, 270-2768 ENGINE AR-COMPLETE

ALSO AN ATTACHMENT

SMCS-1205, 1207, 1358, 1384, 1425 **i02353352**

NOTE	REF NO	GRAPHIC REF	PART NUMBER	QTY	PART NAME 1 2 3 4 5 6 (PRODUCT LEVEL)	SEE PAGE
	1	1	**227-3811**	1	PULLEY-FAN (8-GROOVE)	
	2	1	**263-1849**	1	BELT-SERPENTINE (FAN PULLEY)	
M	3	1	**6V-5215**	6	BOLT (M8X1.25X16-MM)	

M-METRIC PART

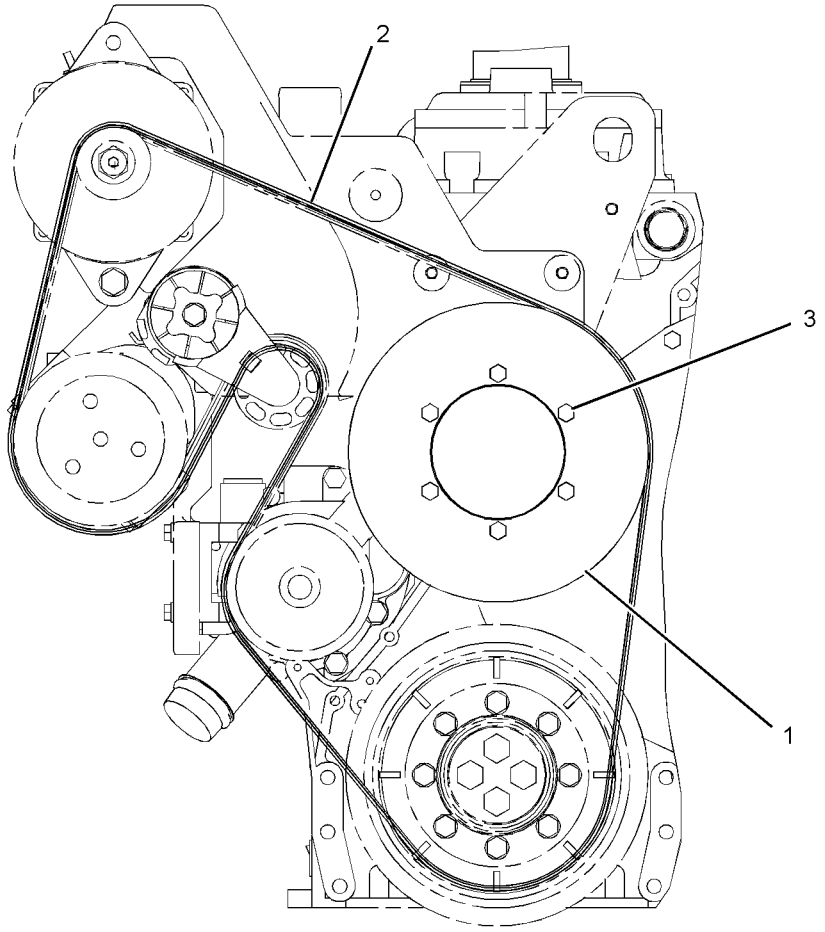

FRONT VIEW

GRAPHIC #1 **<END>** g01178921

263-1848 PULLEY GP

S/N: KHX1-UP
PART OF 235-8134, 235-8135, 270-2767, 270-2768, 290-0755, 290-0757, 290-0758
ENGINE AR-COMPLETE
ALSO AN ATTACHMENT

SMCS-1205, 1207, 1358, 1384, 1425 **i02585657**

NOTE	REF NO	GRAPHIC REF	PART NUMBER	QTY	PART NAME 1 2 3 4 5 6 (PRODUCT LEVEL)	SEE PAGE
C	1	1	**291-0515**	1	PULLEY-FAN	
C	2	1	**241-2896**	1	BELT-SERPENTINE (FAN PULLEY)	
CM	3	1	**6V-5217**	6	BOLT (M8X1.25X20-MM)	

C-CHANGE FROM PREVIOUS TYPE
M-METRIC PART

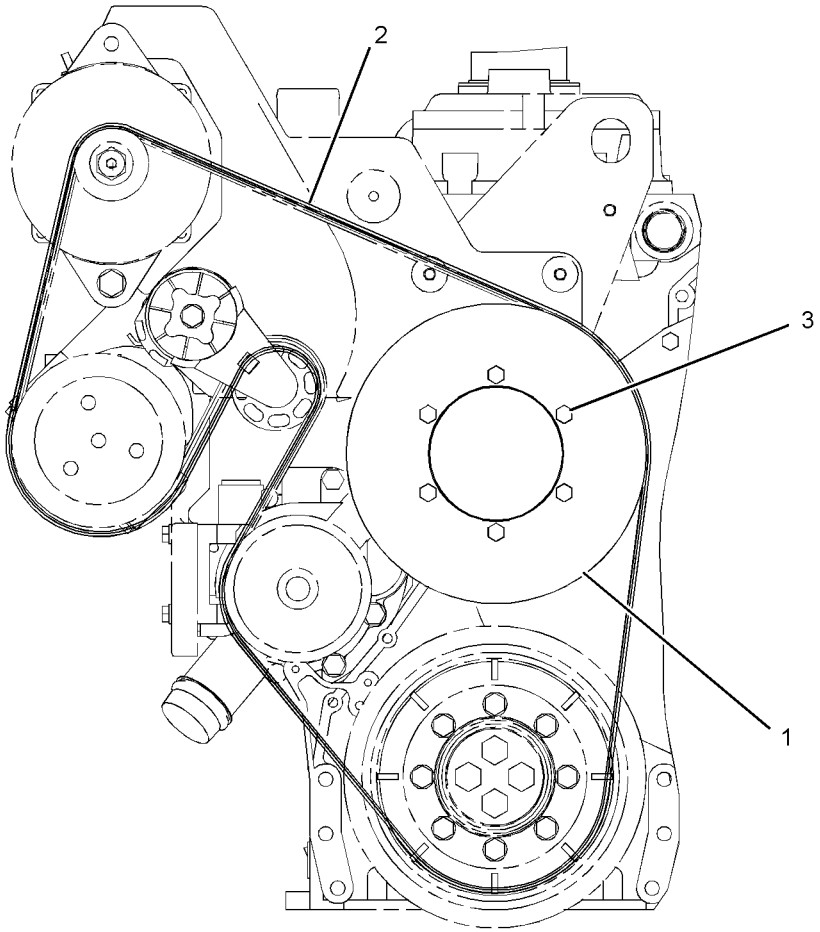

FRONT VIEW

GRAPHIC #1 **<END>** g01178921

256-3831 ROCKER ARM GP

S/N: KHX2463-UP
EXHAUST
PART OF 256-3830 VALVE MECHANISM GP
ALSO AN ATTACHMENT

SMCS-1123 **i02555031**

NOTE	REF NO	GRAPHIC REF	PART NUMBER	QTY	PART NAME 1 2 3 4 5 6 (PRODUCT LEVEL)	SEE PAGE
R	1	1	**256-3832**	1	ROCKER ARM AS (EXHAUST)	
CM	2	1	**183-4365**	1	SCREW-ADJUSTMENT (M10X1.15-THD)	
M	3	1	**2Y-5829**	1	NUT (M10X1.5-THD)	

C-CHANGE FROM PREVIOUS TYPE
M-METRIC PART
R-REMFG PART MAY BE AVAILABLE

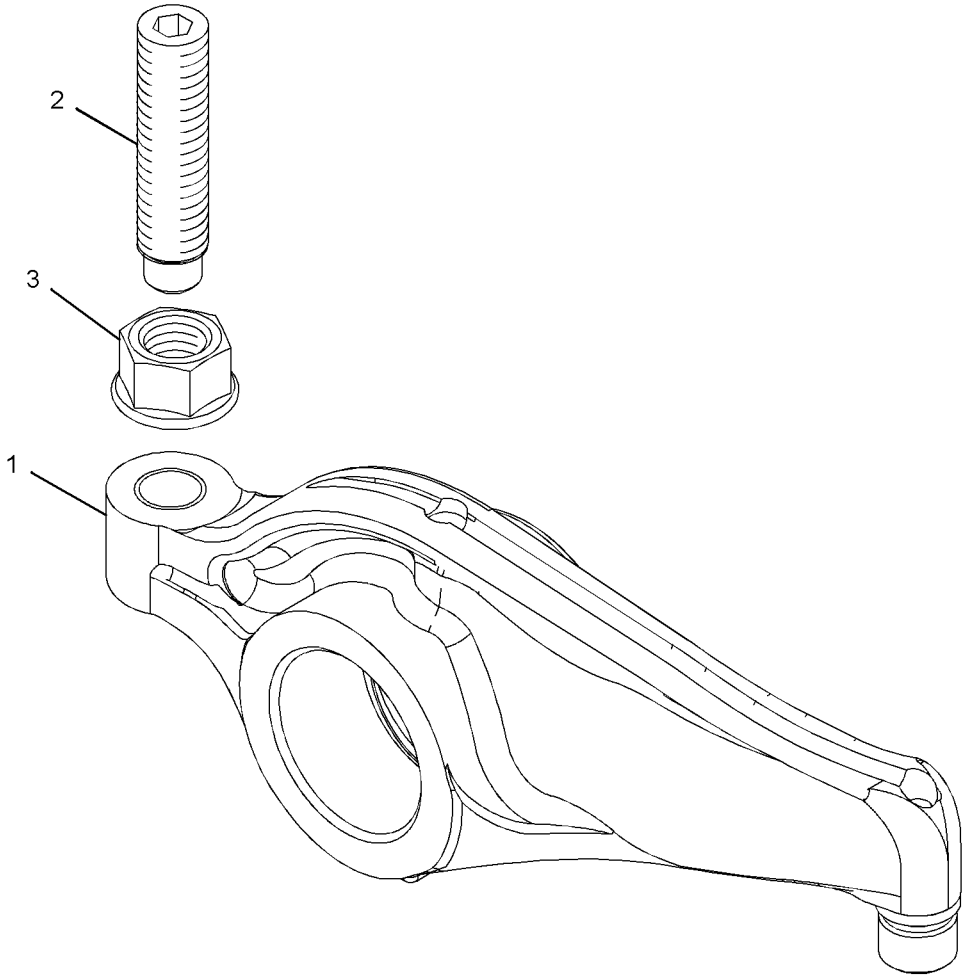

GRAPHIC #1 **<END>** g01293346

256-3834 ROCKER ARM GP

S/N: KHX2463-UP
INTAKE
PART OF 256-3830 VALVE MECHANISM GP
ALSO AN ATTACHMENT

SMCS-1123 **i02990080**

NOTE	REF NO	GRAPHIC REF	PART NUMBER	QTY	PART NAME 1 2 3 4 5 6 (PRODUCT LEVEL)	SEE PAGE
M	1	1	**260-7524**	1	SCREW-VALVE ADJUSTMENT (M10X1.5-THD)	
R	2	1	**256-3835**	1	ROCKER ARM AS (INLET)	
M	3	1	**2Y-5829**	1	NUT (M10X1.5-THD)	

M-METRIC PART
R-REMFG PART MAY BE AVAILABLE

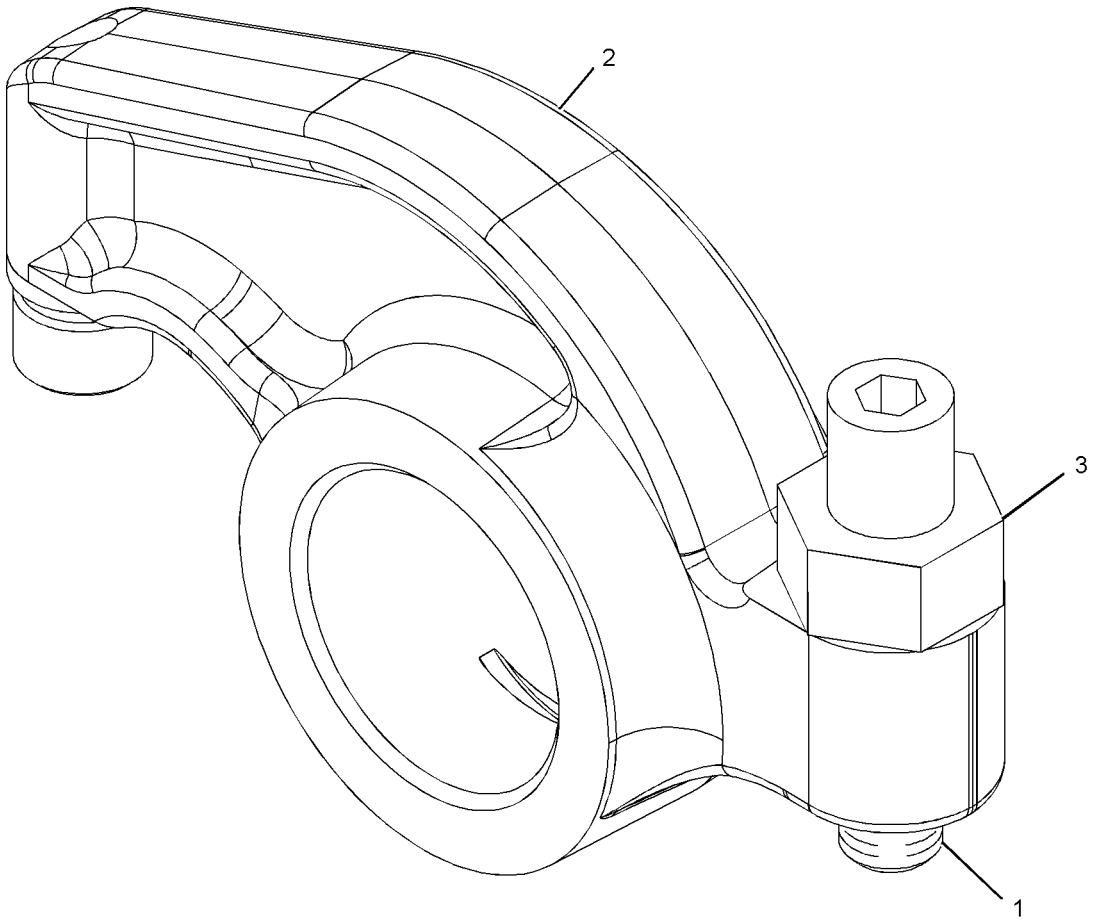

GRAPHIC #1 **<END>** g01056688

115-4203 SEAL GP-CRANKSHAFT

S/N: KHX1-UP
PART OF 235-8134, 235-8135, 270-2767, 270-2768, 290-0755, 290-0757, 290-0758
ENGINE AR-COMPLETE
ALSO AN ATTACHMENT

SMCS-1160, 1161 **i01518048**

NOTE	REF NO	GRAPHIC REF	PART NUMBER	QTY	PART NAME 1 2 3 4 5 6 (PRODUCT LEVEL)	SEE PAGE
	1	1	**7C-3571**	1	SEAL GP-CRANKSHAFT (REAR)	
	2	1	**119-2921**	1	SEAL GP-CRANKSHAFT (FRONT)	
	3	1	**4R-9999**	1	EXCLUDER-CRANKSHAFT SEAL	

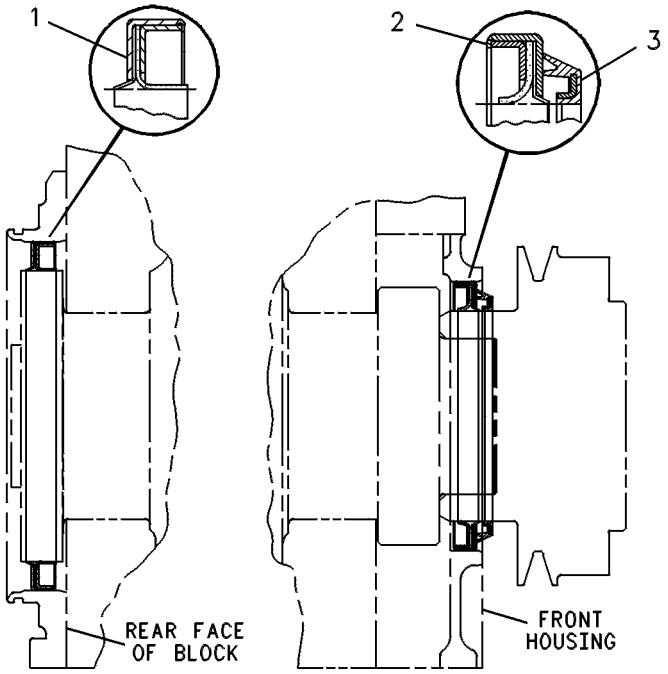

GRAPHIC #1 **<END>** g00131231

BASIC ENGINE

232-3717 VALVE MECHANISM GP

S/N: KHX1-2462

PART OF 236-4283, 270-4211, 270-4212 ENGINE AR-CORE

ALSO AN ATTACHMENT

SMCS-1209 **i02355624**

NOTE	REF NO	GRAPHIC REF	PART NUMBER	QTY	PART NAME 1 2 3 4 5 6 (PRODUCT LEVEL)	SEE PAGE
	1	1	**133-6379**	12	ROD-VALVE PUSH	
	2	1	**219-3309**	6	BRIDGE-VALVE	
Y	3	1	*139-4081*	3	LIFTER GP-VALVE	62
M	4	1	**8T-8442**	12	BOLT-SOCKET HEAD (M6X1X30-MM)	
	5	1	**3E-9412**	6	DOWEL	
Y	6	1	*235-5528*	1	VALVE MECHANISM GP	80
M	7	1	**6V-5696**	11	BOLT (M12X1.75X80-MM)	
	8	1	**9M-1974**	2	WASHER-HARD (8.8X16X2-MM THK)	
	9	1	**3H-7654**	9	WASHER-HARD (13.5X22.5X3-MM THK)	
M	10	1	**8T-0100**	2	BOLT (M8X1.25X60-MM)	
	11	1	**232-1754**	1	CLIP	

M-METRIC PART
Y-SEPARATE ILLUSTRATION

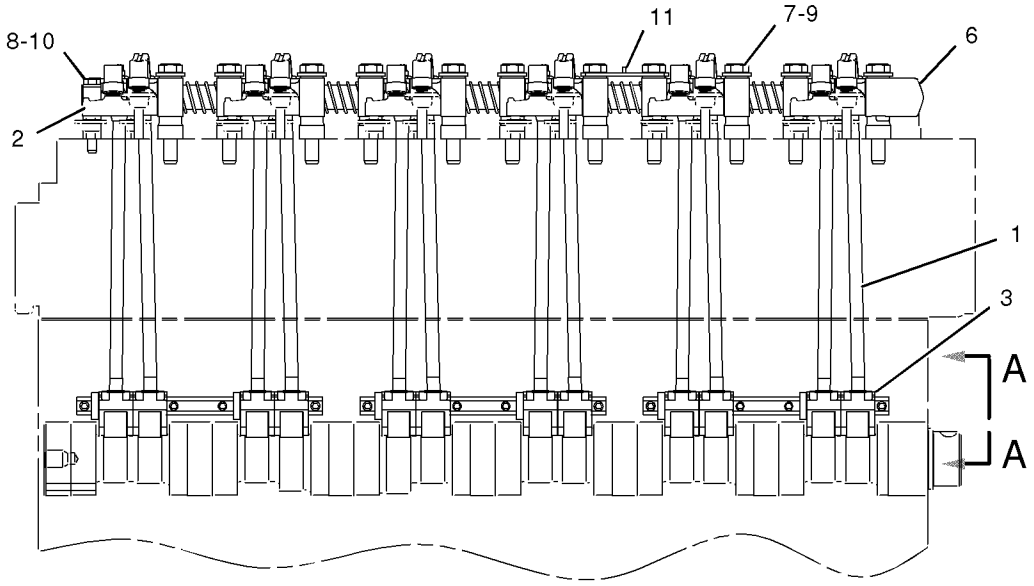

RIGHT SIDE VIEW

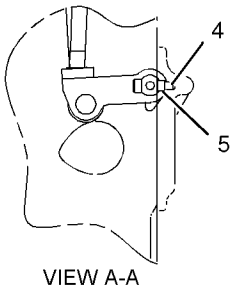

VIEW A-A

GRAPHIC #1

<END>

g01028897

BASIC ENGINE

232-3717 VALVE MECHANISM GP

S/N: KHX2463-UP

PART OF 236-4283, 236-4284, 270-4211, 270-4212 ENGINE AR-CORE

ALSO AN ATTACHMENT

SMCS-1209 **i02554994**

NOTE	REF NO	GRAPHIC REF	PART NUMBER	QTY	PART NAME 1 2 3 4 5 6 (PRODUCT LEVEL)	SEE PAGE
	1	1	**133-6379**	12	ROD-VALVE PUSH	
	2	1	**219-3309**	6	BRIDGE-VALVE	
Y	3	1	*139-4081*	3	LIFTER GP-VALVE	62
M	4	1	**8T-8442**	12	BOLT-SOCKET HEAD (M6X1X30-MM)	
	5	1	**3E-9412**	6	DOWEL	
CY	6	1	**256-3830**	1	VALVE MECHANISM GP	82
M	7	1	**6V-5696**	11	BOLT (M12X1.75X80-MM)	
	8	1	**9M-1974**	2	WASHER-HARD (8.8X16X2-MM THK)	
	9	1	**3H-7654**	9	WASHER-HARD (13.5X22.5X3-MM THK)	
M	10	1	**8T-0100**	2	BOLT (M8X1.25X60-MM)	
	11	1	**232-1754**	1	CLIP	

C-CHANGE FROM PREVIOUS TYPE
M-METRIC PART
Y-SEPARATE ILLUSTRATION

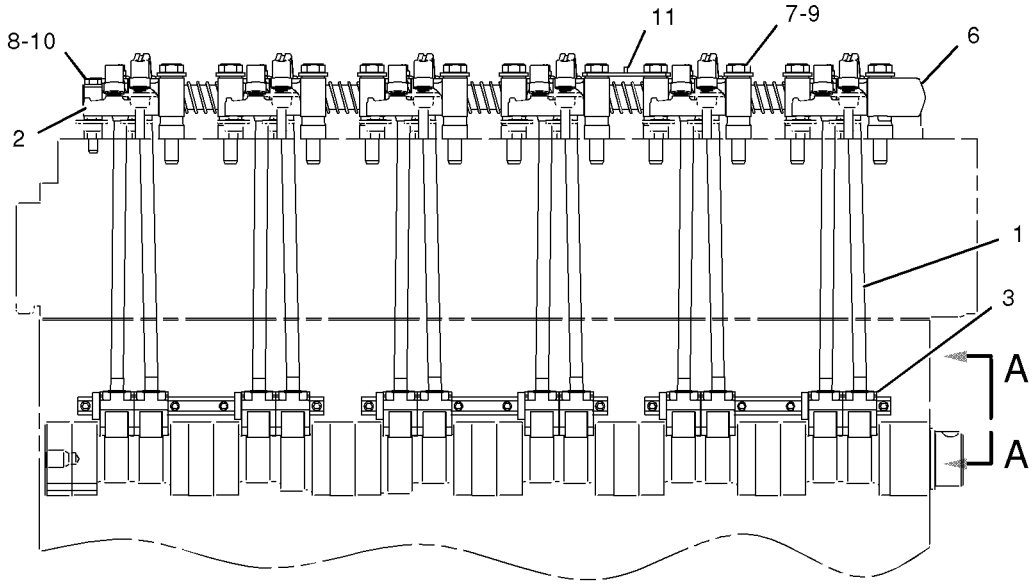

RIGHT SIDE VIEW

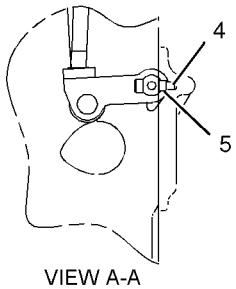

VIEW A-A

GRAPHIC #1

<END>

g01028897

BASIC ENGINE

235-5528 VALVE MECHANISM GP

S/N: KHX1-2462

PART OF 232-3717 VALVE MECHANISM GP

ALSO AN ATTACHMENT

SMCS-1209 **i02246615**

NOTE	REF NO	GRAPHIC REF	PART NUMBER	QTY	PART NAME 1 2 3 4 5 6 (PRODUCT LEVEL)	SEE PAGE
	1	1	**137-6717**	5	SPRING	
	2	1	*222-1185*	6	ROCKER ARM GP (INTAKE)	
					(EACH INCLUDES)	
M	2A	1	**2Y-5829**	1	NUT (M10X1.5-THD)	
M		1	**183-4365**	1	SCREW-ADJUSTMENT (M10X1.15-THD)	
R	2B	1	**153-8467**	1	ROCKER ARM AS	
	2C	1	**173-5549**	1	SEAL-O-RING	
	2D	1	**145-7376**	1	INSERT	
	2E	1	**145-7385**	1	SOCKET	
	3	1	**138-8403**	1	STAND	
	4	1	*222-1186*	6	ROCKER ARM GP (EXHAUST)	
					(EACH INCLUDES)	
M	4A	1	**2Y-5829**	1	NUT (M10X1.5-THD)	
M		1	**183-4365**	1	SCREW-ADJUSTMENT (M10X1.15-THD)	
R	4B	1	**153-8470**	1	ROCKER ARM AS	
	4C	1	**173-5549**	1	SEAL-O-RING	
	4D	1	**145-7376**	1	INSERT	
	4E	1	**145-7385**	1	SOCKET	
	5	1	**235-5527**	10	STAND	
	6	1	**138-8402**	1	STAND (END)	
	7	1	**138-9868**	1	RING-RETAINING	
	8	1	**8H-5244**	1	DOWEL	
	9	1	**138-7198**	1	SHAFT AS	
		1	**5B-1866**	1	PLUG-CUP	

M-METRIC PART
R-REMFG PART MAY BE AVAILABLE

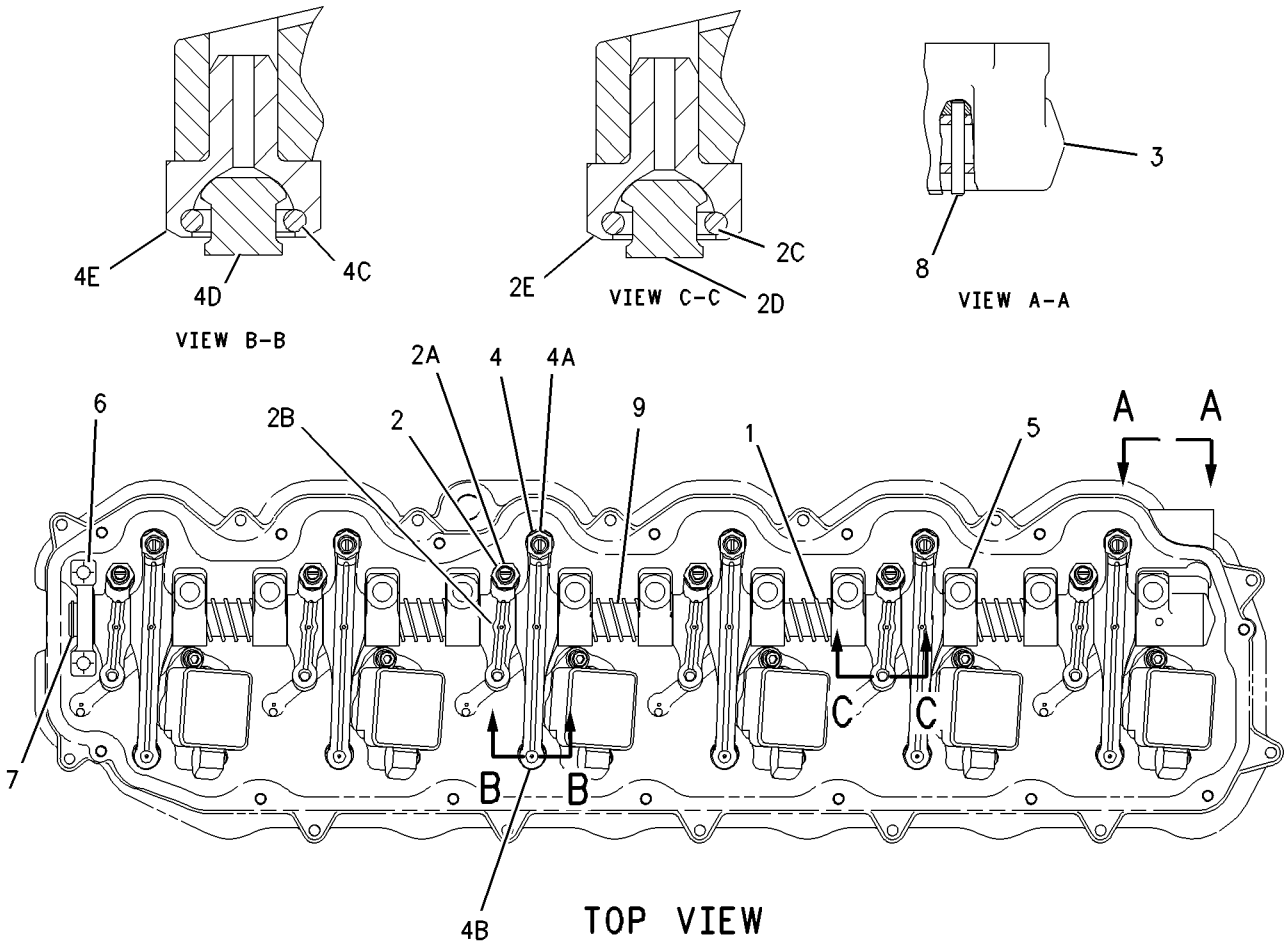

GRAPHIC #1 **<END>** g00901133

256-3830 VALVE MECHANISM GP

S/N: KHX2463-UP
PART OF 232-3717 VALVE MECHANISM GP
ALSO AN ATTACHMENT

SMCS-1209 **i02555004**

NOTE	REF NO	GRAPHIC REF	PART NUMBER	QTY	PART NAME 1 2 3 4 5 6 (PRODUCT LEVEL)	SEE PAGE
	1	1	**137-6717**	5	SPRING	
Y	2	1	*256-3834*	6	ROCKER ARM GP (INLET)	76
	3	1	**138-8403**	1	STAND	
Y	4	1	*256-3831*	6	ROCKER ARM GP (EXHAUST)	75
	5	1	**235-5527**	10	STAND	
	6	1	**138-8402**	1	STAND	
	7	1	**138-9868**	1	RING-RETAINING	
	8	1	**8H-5244**	1	DOWEL	
	9	1	**138-7198**	1	SHAFT AS	
	9A	1	**5B-1866**	1	PLUG-CUP	

Y-SEPARATE ILLUSTRATION

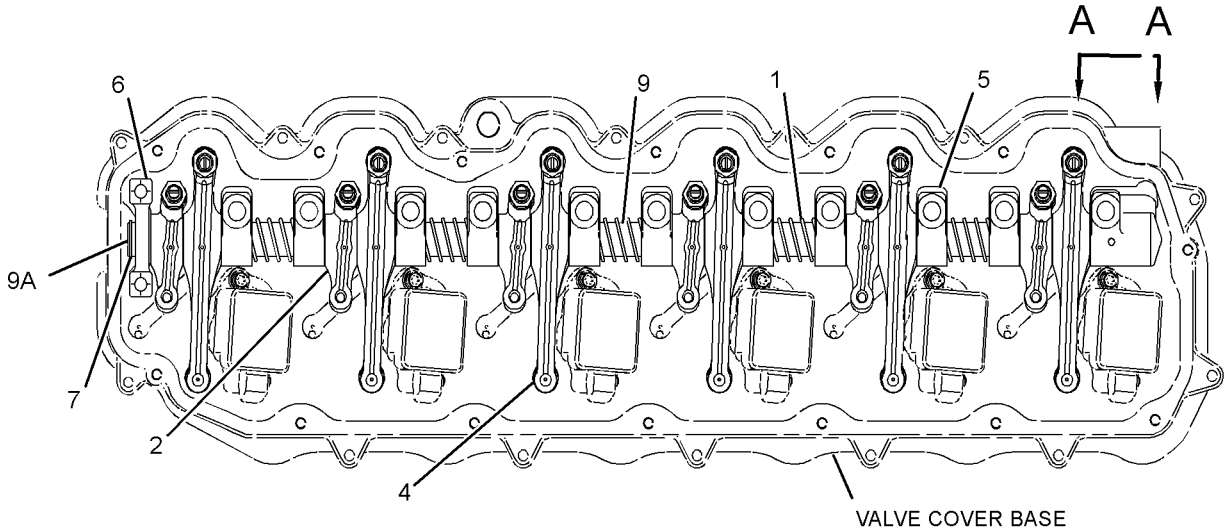

TOP VIEW OF ENGINE

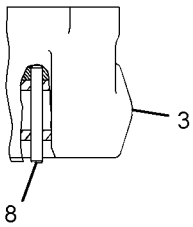

VIEW A-A

GRAPHIC #1 **<END>** g01300505

191-0523 ADAPTER GP-OIL LINE

S/N: KHX1-UP

PART OF 191-0461 LINES GP-INJECTOR HYD PUMP

ALSO AN ATTACHMENT

SMCS-1307 **i02356173**

NOTE	REF NO	GRAPHIC REF	PART NUMBER	QTY	PART NAME 1 2 3 4 5 6 (PRODUCT LEVEL)	SEE PAGE
	1	1	**191-0522**	1	ADAPTER	
	2	1	**033-6027**	1	SEAL-O-RING	

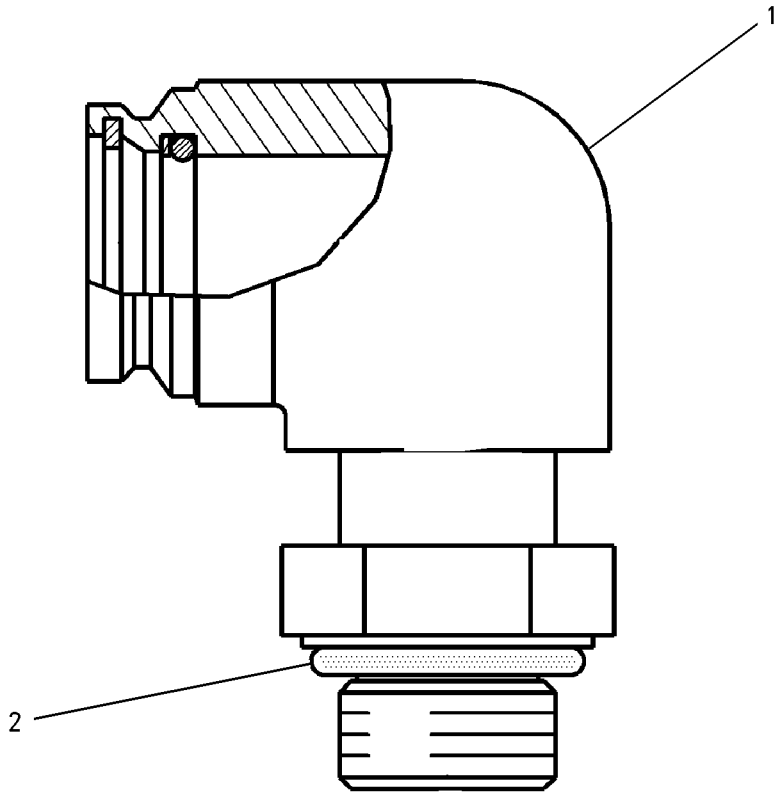

GRAPHIC #1 **<END>** g00807476

222-5946 BREATHER GP

S/N: KHX1-UP

PART OF 235-8134, 235-8135, 270-2767, 270-2768, 290-0755, 290-0757, 290-0758 ENGINE AR-COMPLETE

ALSO AN ATTACHMENT

SMCS-1317 **i02869430**

NOTE	REF NO	GRAPHIC REF	PART NUMBER	QTY	PART NAME 1 2 3 4 5 6 (PRODUCT LEVEL)	SEE PAGE
	1	1	**164-0210**	1	BREATHER AS (CRANKCASE)	
M	2	1	**143-4654**	1	BOLT (M8X1.25X105-MM)	
	3	1	**8H-2046**	1	SEAL-O-RING (CRANKCASE BREATHER)	
	4	1	**5N-4185**	1	WASHER-SPECIAL	

M-METRIC PART

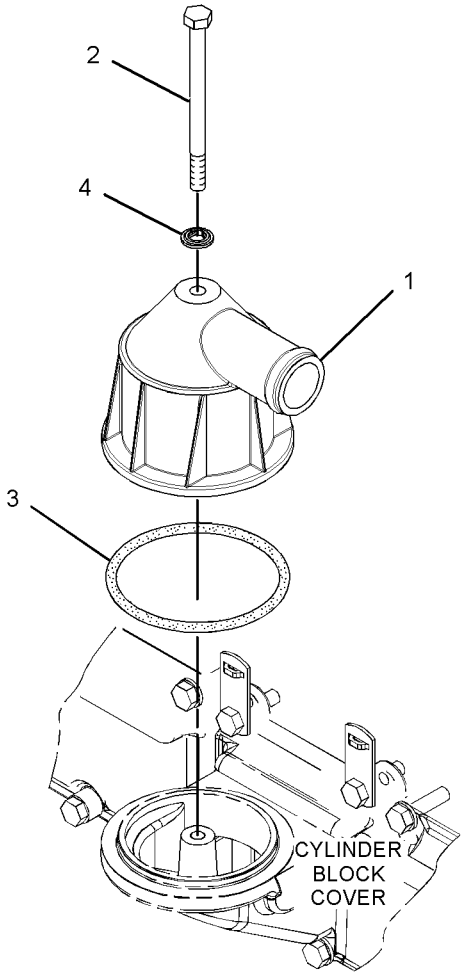

GRAPHIC #1 **<END>** g01426131

231-7266 FILTER GP-ENGINE OIL

S/N: KHX1-302

PART OF 270-2767 ENGINE AR-COMPLETE

SMCS-1308 **i02352554**

NOTE	REF NO	GRAPHIC REF	PART NUMBER	QTY	PART NAME 1 2 3 4 5 6 (PRODUCT LEVEL)	SEE PAGE
	1	1	**4P-9103**	1	ADAPTER-BASE	
	2	1,2	**6K-0806**	3	STRAP-CABLE	
	3	1,2	**7C-1493**	3	VALVE AS-BYPASS (ENGINE OIL FILTER BASE)	
	4	1	**7F-0216**	1	NUT-JAM	
	5	2	**8C-3445**	1	CAP-DUST	
	6	2	**121-0307**	1	BASE	
I	7	1	**141-7677**	1	HOSE AS	
	8	1	**160-5140**	1	BASE AS-OIL FILTER (ENGINE)	
		1	**4P-9107**	1	STUD-HOLLOW	
	9	1	**233-7654**	1	GASKET	
	10	1,2	**242-3864**	3	SPRING	
I	11	1	**274-6343**	1	HOSE AS	
	12	2	**1R-1807**	1	FILTER AS-ENGINE OIL (ADVANCED EFFICIENCY)	
	13	1,2	**2M-9780**	3	SEAL-O-RING	
	14	1,2	**3D-2824**	2	SEAL-O-RING	
	15	2	**3J-1907**	1	SEAL-O-RING	
	16	2	**3J-7354**	1	SEAL-O-RING	
	17	1,2	**3R-6790**	2	CONNECTOR-PORT	
	18	2	**4K-1388**	2	SEAL-O-RING	
	19	2	**5F-9657**	3	SEAL-O-RING	
	20	1	**5K-9090**	2	SEAL-O-RING	
	21	1	**5P-8066**	1	SEAL-O-RING	
M	22	1,2	**5P-8196**	3	PLUG	
	23	2	**5P-9617**	1	ADAPTER	
M	24	1,2	**6V-2317**	12	BOLT (M8X1.25X30-MM)	
M	25	2	**6V-5219**	3	BOLT (M8X1.25X40-MM)	
	26	1	**6V-9008**	1	ELBOW	
	27	1	**7M-8485**	1	SEAL-O-RING	
	28	2	**7W-9028**	1	BASE AS-OIL FILTER (ENGINE)	
		2	**2P-2537**	1	STUD-HOLLOW	
	29	2	**8C-3446**	1	VALVE-FLUID SAMPLING (ENGINE OIL)	
	30	1	**8H-7521**	1	SEAL-O-RING	
M	31	1	**8T-0276**	4	BOLT (M8X1.25X45-MM)	
	32	2	**8T-6453**	1	CONNECTOR	
	33	1,2	**9M-1974**	19	WASHER-HARD (8.8X16X2-MM THK)	
	34	2	**9S-4188**	1	PLUG	

I-REFER TO HYDRAULIC INFORMATION SYSTEM
M-METRIC PART

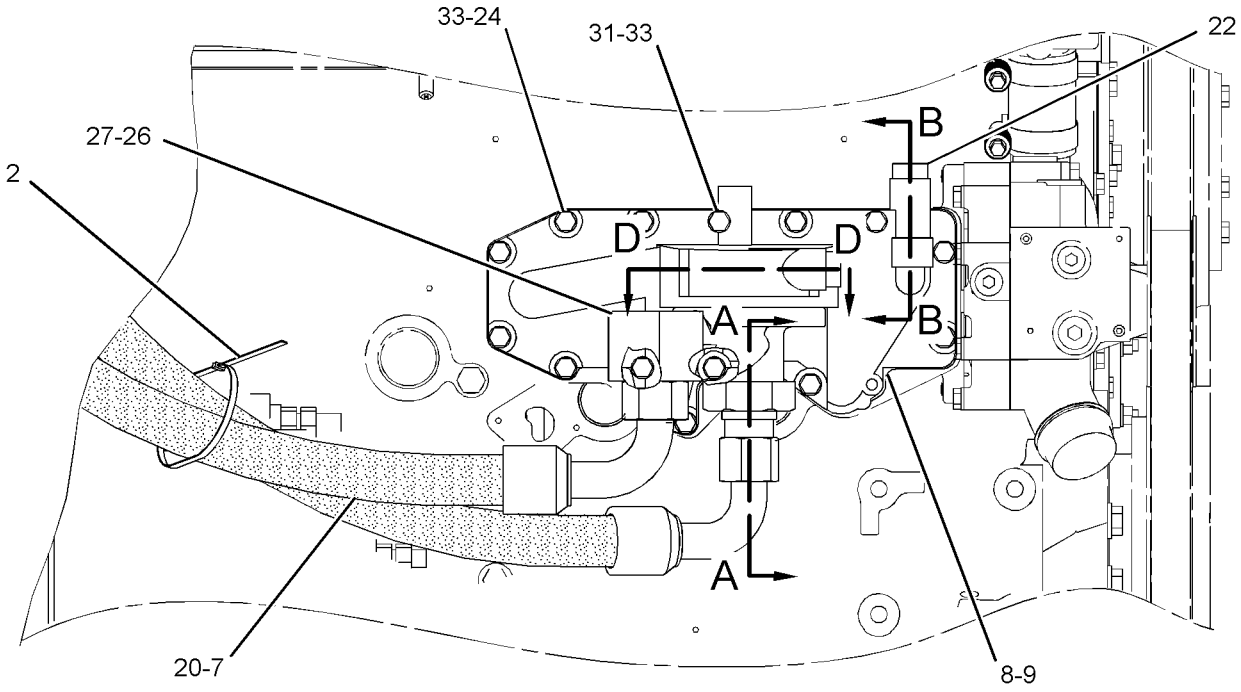

RIGHT SIDE VIEW

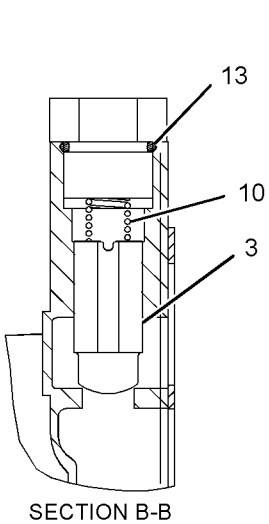

SECTION B-B

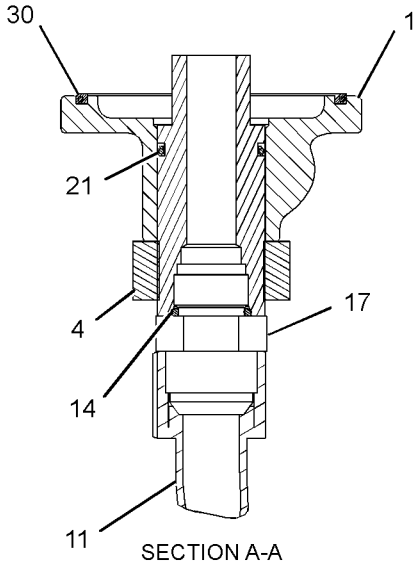

SECTION A-A

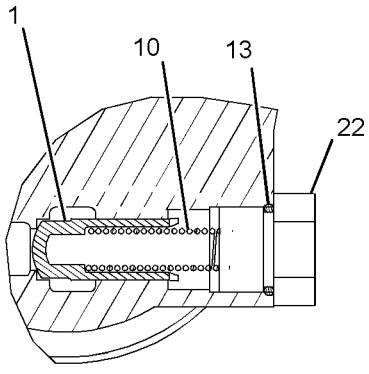

SECTION D-D

GRAPHIC #1

g01178686

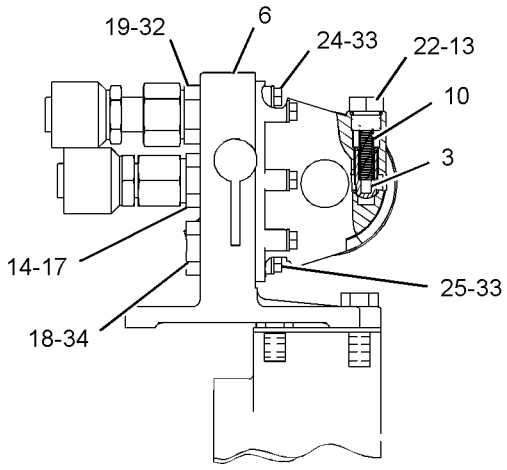

VIEW C-C

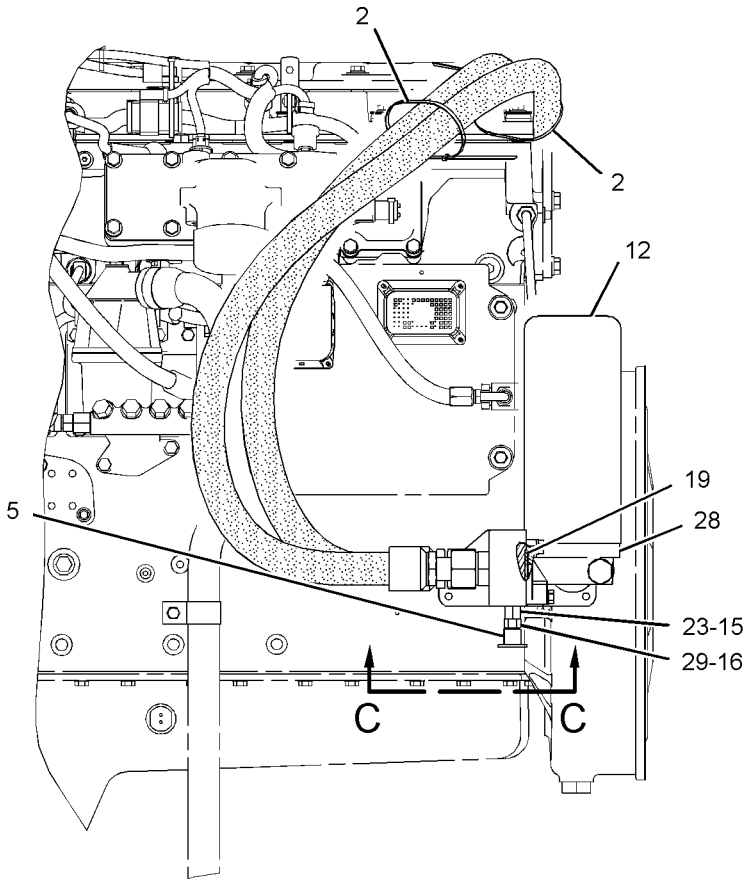

LEFT SIDE VIEW

GRAPHIC #2 **<END>** g01178687

LUBRICATION SYSTEM

231-7266 FILTER GP-ENGINE OIL

S/N: KHX1-UP
PART OF 235-8134, 235-8135, 270-2767, 270-2768, 290-0755, 290-0757, 290-0758
ENGINE AR-COMPLETE
ALSO AN ATTACHMENT

SMCS-1308 **i02814484**

NOTE	REF NO	GRAPHIC REF	PART NUMBER	QTY	PART NAME 1 2 3 4 5 6 (PRODUCT LEVEL)	SEE PAGE
	1	1	**4P-9103**	1	ADAPTER-BASE	
	2	2	**6K-0806**	2	STRAP-CABLE	
	3	1,2	**7C-1493**	3	VALVE AS-BYPASS (ENGINE OIL FILTER BASE)	
	4	1	**7F-0216**	1	NUT-JAM	
	5	2	**8C-3445**	1	CAP-DUST	
	6	2	**121-0307**	1	BASE	
	7	1	**160-5140**	1	BASE AS-OIL FILTER (ENGINE)	
		1	**4P-9107**	1	STUD-HOLLOW	
	8	1	**300-7933**	1	GASKET	
	9	1,2	**242-3864**	3	SPRING	
I	10	1	**280-1548**	1	HOSE AS	
I	11	1	**280-1549**	1	HOSE AS	
	12	2	**1R-1807**	1	FILTER AS-ENGINE OIL (ADVANCED EFFICIENCY)	
	13	1,2	**2M-9780**	3	SEAL-O-RING	
	14	1,2	**3D-2824**	2	SEAL-O-RING	
	15	2	**3J-1907**	1	SEAL-O-RING	
	16	2	**3J-7354**	1	SEAL-O-RING	
	17	1,2	**3R-6790**	2	CONNECTOR-PORT	
	18	2	**4K-1388**	1	SEAL-O-RING	
	19	2	**5F-9657**	3	SEAL-O-RING	
	20	1	**5K-9090**	1	SEAL-O-RING	
	21	1	**5P-8066**	1	SEAL-O-RING	
M	22	1,2	**5P-8196**	3	PLUG	
	23	2	**5P-9617**	1	ADAPTER	
M	24	1,2	**6V-2317**	12	BOLT (M8X1.25X30-MM)	
M	25	2	**6V-5219**	3	BOLT (M8X1.25X40-MM)	
	26	1	**6V-9008**	1	ELBOW	
	27	1	**7M-8485**	1	SEAL-O-RING	
	28	2	**7W-9028**	1	BASE AS-OIL FILTER (ENGINE)	
		2	**2P-2537**	1	STUD-HOLLOW	
	29	2	**8C-3446**	1	VALVE-FLUID SAMPLING (ENGINE OIL)	
	30	1	**8H-7521**	1	SEAL-O-RING	
M	31	1	**8T-0276**	4	BOLT (M8X1.25X45-MM)	
	32	2	*148-8329*	1	CONNECTOR AS	
		2	**4K-1388**	1	SEAL-O-RING	
		2	**5K-9090**	1	SEAL-O-RING	
		2	**8T-6453**	1	CONNECTOR	
	33	1,2	**9M-1974**	19	WASHER-HARD (8.8X16X2-MM THK)	
	34	2	**9S-4188**	1	PLUG	

I-REFER TO HYDRAULIC INFORMATION SYSTEM
M-METRIC PART

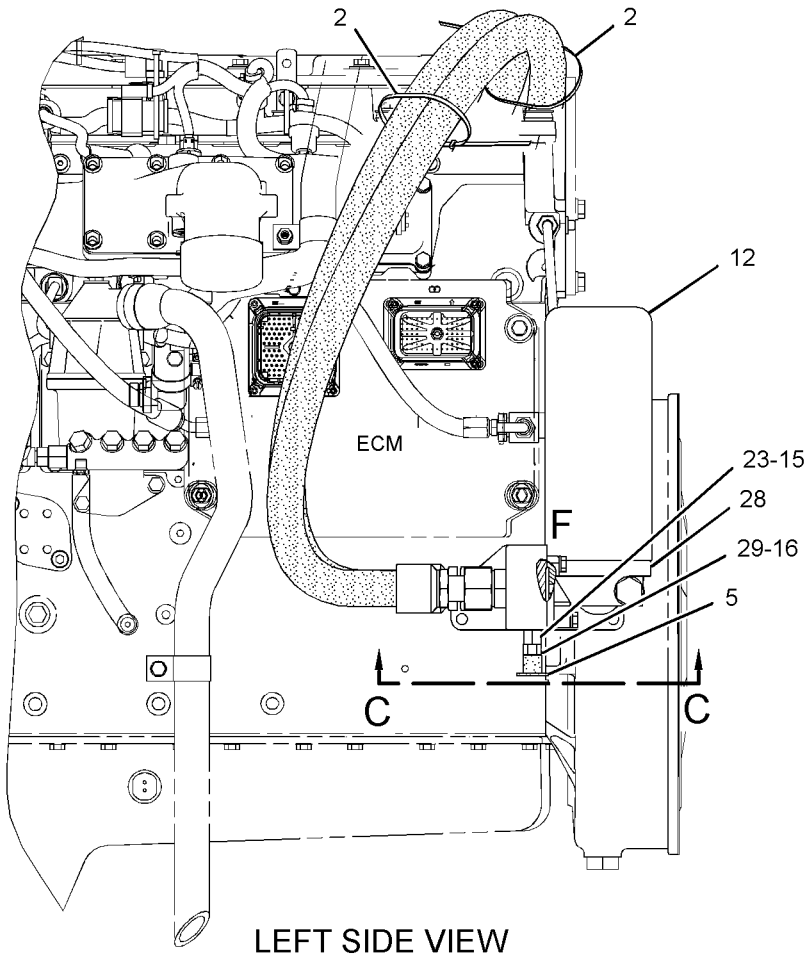

LEFT SIDE VIEW

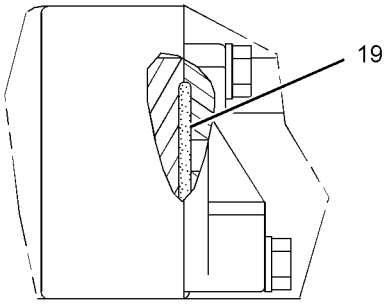

VIEW OF AREA F

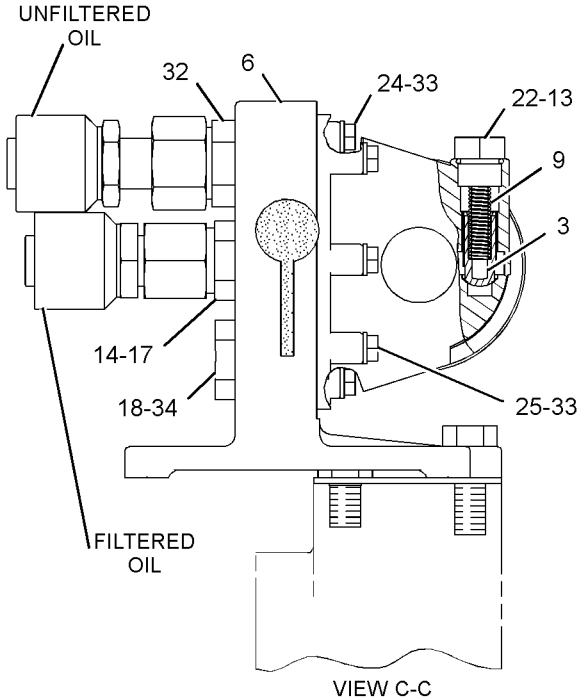

VIEW C-C

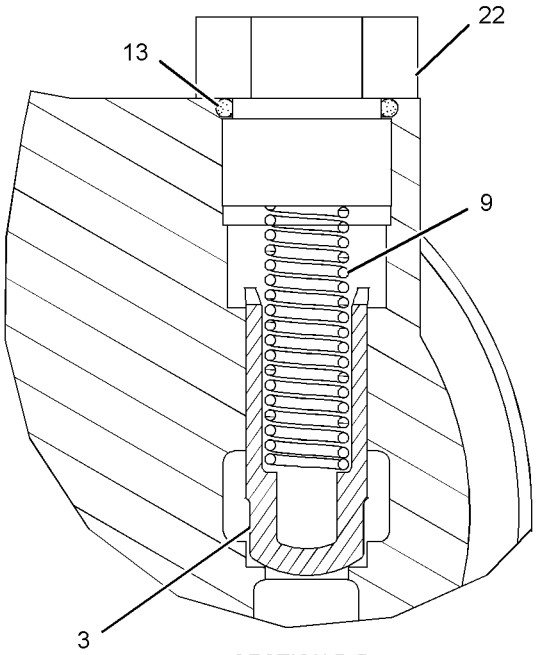

SECTION D-D
(ROTATED 90° CCW)

GRAPHIC #1

g01255810

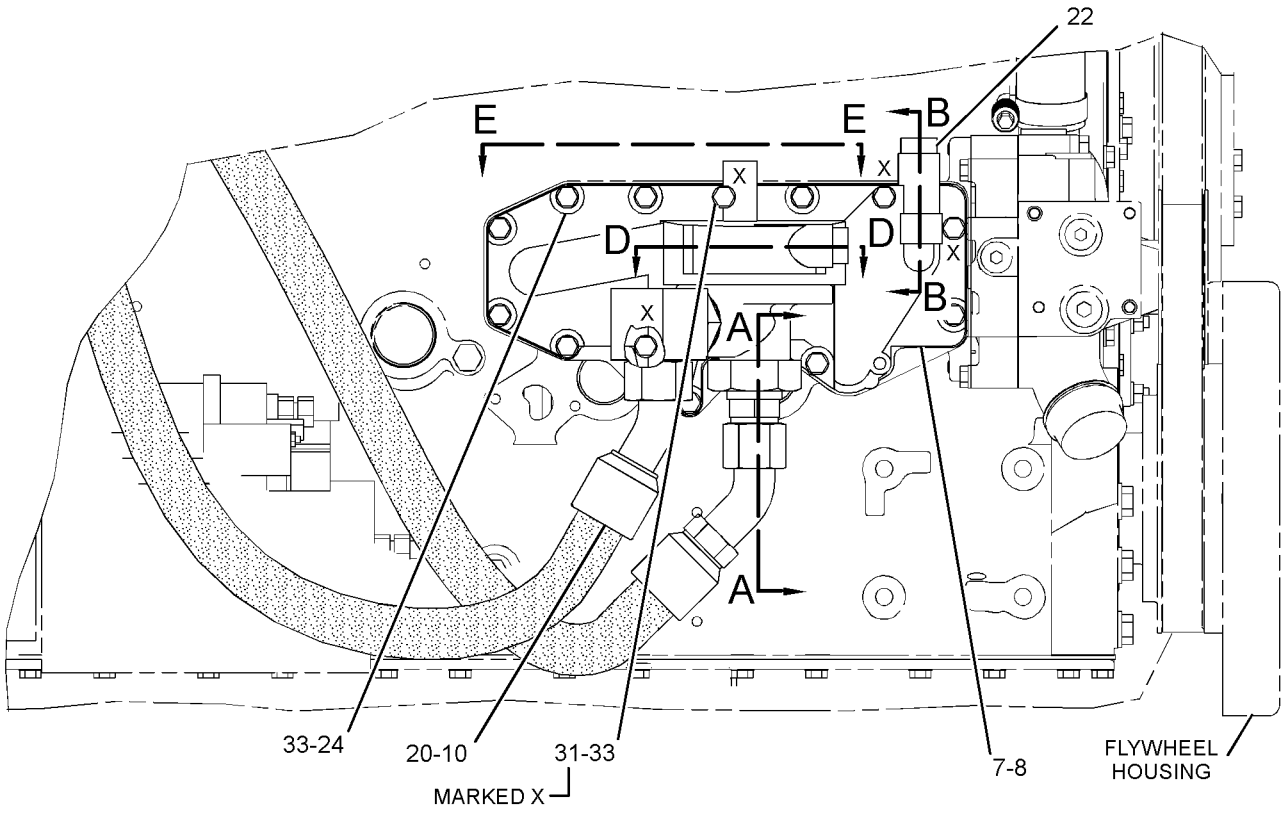

RIGHT SIDE VIEW

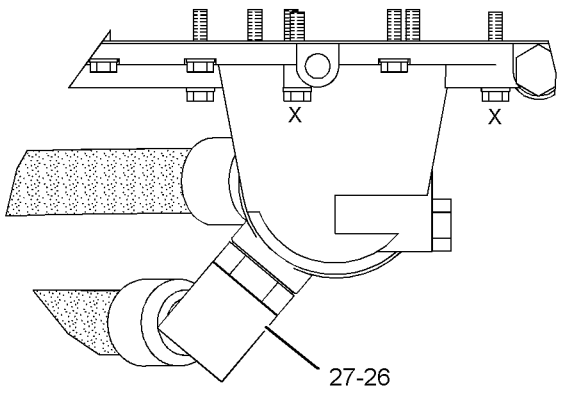

VIEW E-E

REFER TO ALL ILLUSTRATIONS OF THIS GROUP FOR AUXILIARY VIEWS

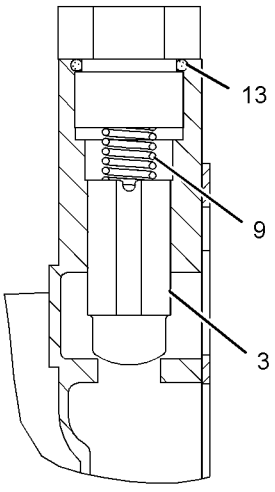

SECTION B-B

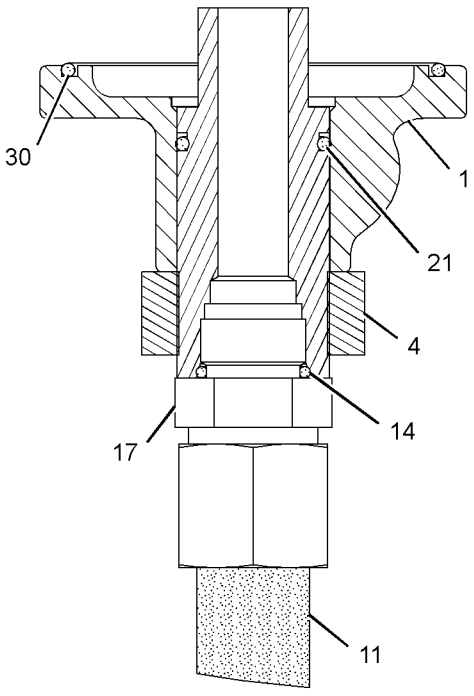

SECTION A-A

GRAPHIC #2

<END>

g01255812

254-7342 FUMES DISPOSAL GP

S/N: KHX1-UP
PART OF 235-8134, 235-8135, 270-2767, 270-2768, 290-0755, 290-0757, 290-0758
ENGINE AR-COMPLETE
ALSO AN ATTACHMENT

SMCS-1317 **i02940617**

NOTE	REF NO	GRAPHIC REF	PART NUMBER	QTY	PART NAME 1 2 3 4 5 6 (PRODUCT LEVEL)	SEE PAGE
	1	1	**5P-4961**	2	CLAMP-HOSE	
	2	1	**7S-6369**	1	WASHER (0.344X0.75X0.188-IN THK)	
	3	1	**9M-2904**	1	CLAMP-HOSE	
	4	1	**284-3502**	2	CLAMP-BAND	
	5	1	**039-2280**	1	SPACER (9X16X36-MM)	
	6	1	**092-6629**	2	CONNECTOR	
	7	1	**229-2543**	1	HOSE (FUMES DISPOSAL, LOWER)	
	8	1	**249-6673**	1	ELBOW	
	9	1	**293-8781**	1	HOSE (FUMES DISPOSAL, UPPER)	
	10	1	**2M-9780**	1	SEAL-O-RING	
	11	1	**2S-2053**	2	CLIP	
	12	1	**3J-7354**	2	SEAL-O-RING	
M	13	1	**5P-7970**	1	NUT (M8X1.25-THD)	
M	14	1	**6V-3918**	1	BOLT (M8X1.25X50-MM)	
	15	1	**9M-1974**	2	WASHER-HARD (8.8X16X2-MM THK)	
E	16	1	**5P-1425**		HOSE (27-CM)	

E-ORDER BY THE CENTIMETER
M-METRIC PART

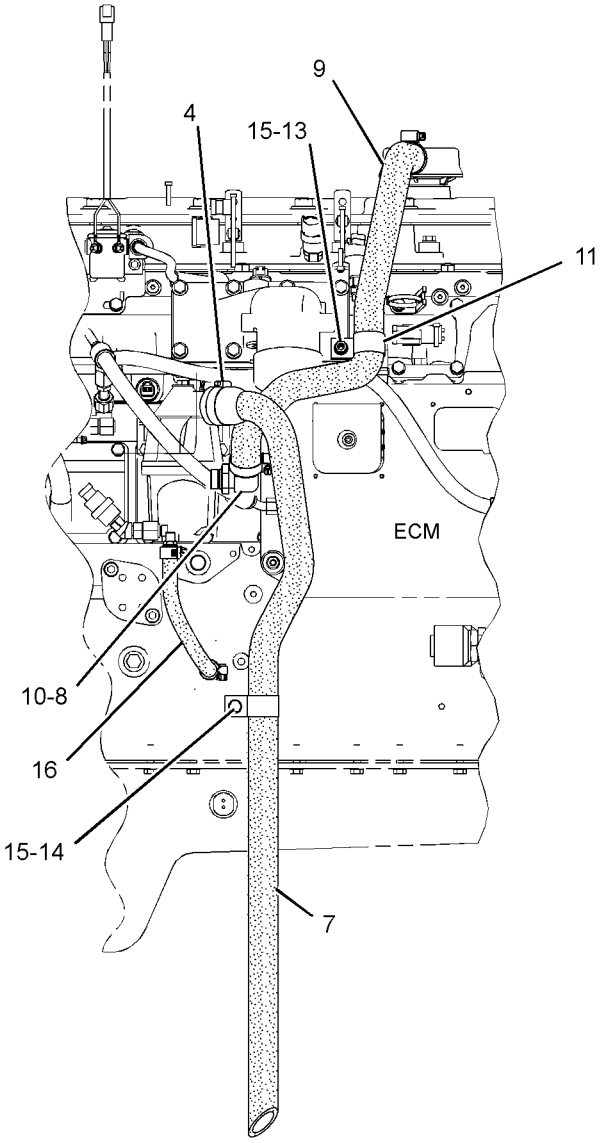

LEFT SIDE VIEW

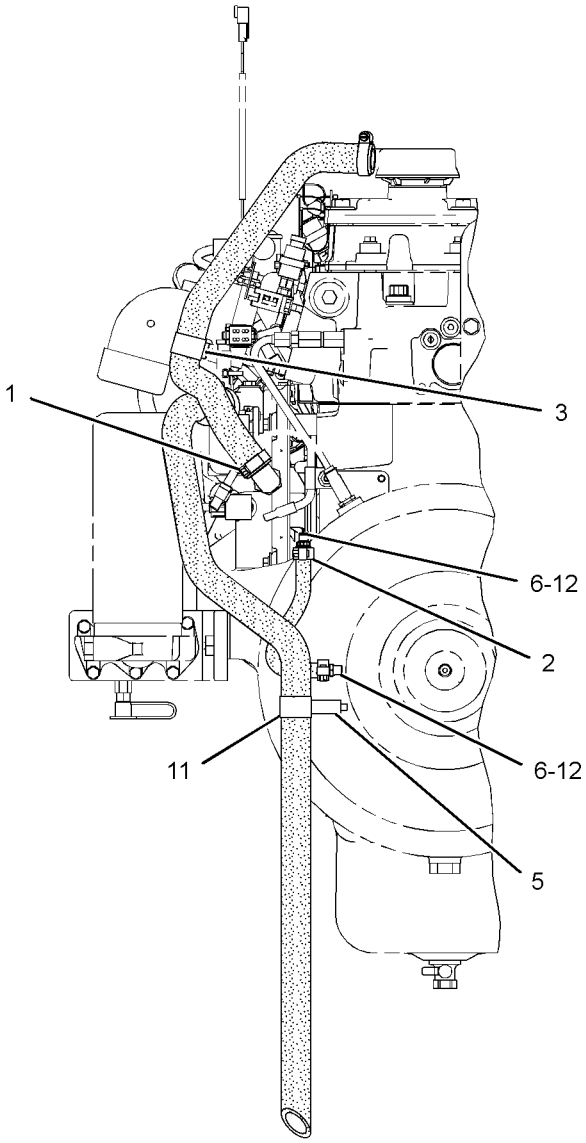

REAR VIEW

GRAPHIC #1 **<END>** g01152747

177-4814 GAUGE GP-OIL LEVEL (DIPSTICK)

S/N: KHX1-UP
PART OF 235-8134, 235-8135, 270-2767, 270-2768, 290-0755, 290-0757, 290-0758
ENGINE AR-COMPLETE
ALSO AN ATTACHMENT

SMCS-1326 **i01518777**

NOTE	REF NO	GRAPHIC REF	PART NUMBER	QTY	PART NAME 1 2 3 4 5 6 (PRODUCT LEVEL)	SEE PAGE
	1	1	**1S-2563**	3	PLUG	
	2	1	**134-8226**	1	BRACKET	
	3	1	**176-4179**	1	GAUGE AS-OIL LEVEL	
	4	1	**183-2851**	1	TUBE AS-OIL GAUGE	
M	5	1	**5P-7970**	1	NUT (M8X1.25-THD)	
M	6	1	**6V-5217**	1	BOLT (M8X1.25X20-MM)	
	7	1	**6V-5839**	1	WASHER (11X21X2.5-MM THK)	
M	8	1	**6V-6317**	1	BOLT (M10X1.5X20-MM)	
	9	1	**9M-1974**	2	WASHER-HARD (8.8X16X2-MM THK)	
	10	1	**9S-1350**	1	CLIP	

M-METRIC PART

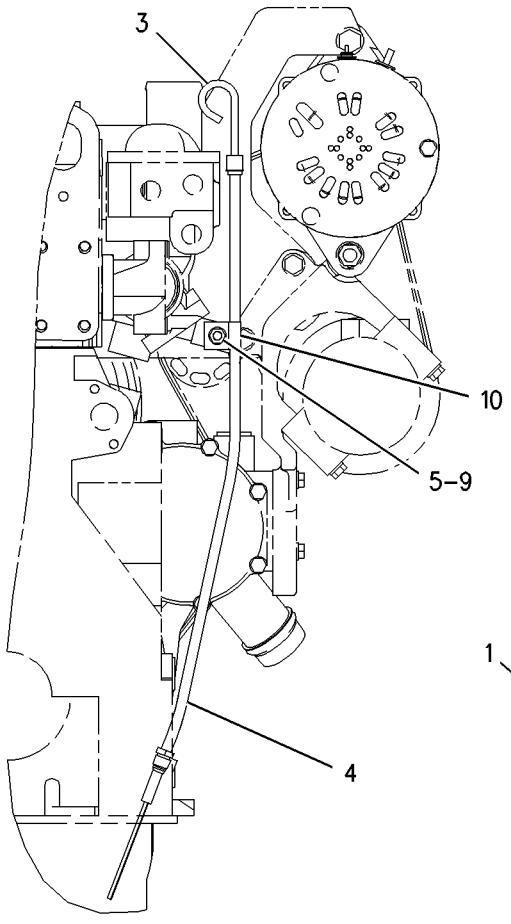

REAR VIEW

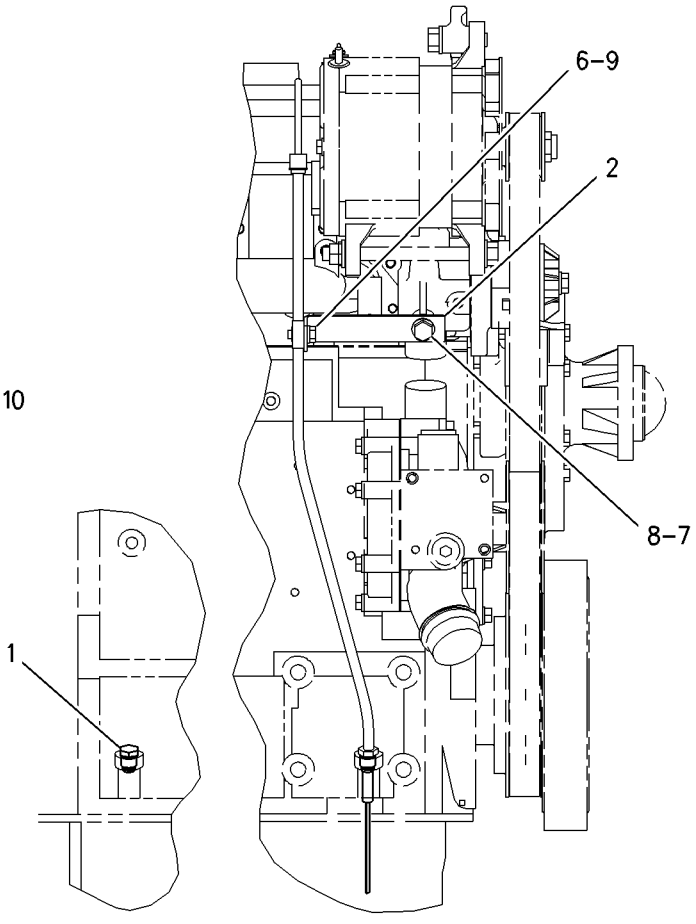

RIGHT SIDE VIEW

GRAPHIC #1 **<END>** g00777544

LUBRICATION SYSTEM

7C-2475 LINES GP-ENGINE OIL

S/N: KHX1-UP
PART OF 235-8134, 235-8135, 270-2767, 270-2768, 290-0755, 290-0757, 290-0758
ENGINE AR-COMPLETE
ALSO AN ATTACHMENT

SMCS-1307 **i01743393**

NOTE	REF NO	GRAPHIC REF	PART NUMBER	QTY	PART NAME 1 2 3 4 5 6 (PRODUCT LEVEL)	SEE PAGE
	1	1	**7C-5403**	1	TUBE AS	
	2	1	**7W-5340**	1	GASKET	
	3	1	**9M-1974**	2	WASHER-HARD (8.8X16X2-MM THK)	
M	4	1	**6V-3940**	4	BOLT (M8X1.25X25-MM)	
	5	1	**4W-2232**	1	ELBOW-OUTLET	
	6	1	**3P-1156**	2	SEAL-O-RING	

M-METRIC PART

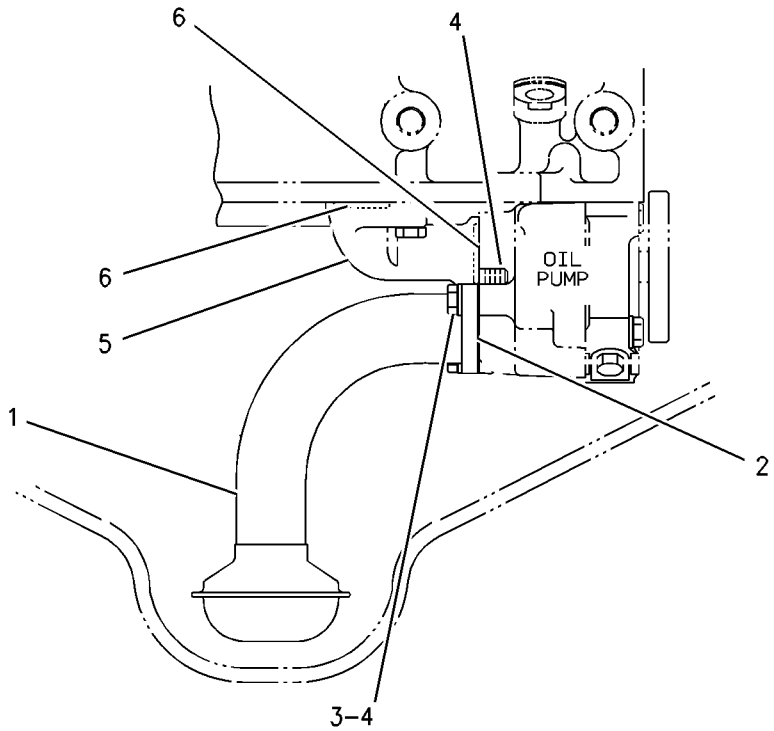

RIGHT SIDE VIEW

GRAPHIC #1 **<END>** g00891413

171-9114 LINES GP-ENGINE OIL DRAIN

S/N: DFP1-UP; CJX1-UP

PART OF 222-8379 INSTALLATION AR-ENGINE

SMCS-1307 **i01591863**

NOTE	REF NO	GRAPHIC REF	PART NUMBER	QTY	PART NAME 1 2 3 4 5 6 (PRODUCT LEVEL)	SEE PAGE
	1	1	**095-1388**	1	CLAMP-HOSE	
E	2	1	**5P-0743**		HOSE (24CM)	
	3	1	**2K-8199**	1	SEAL-O-RING	
	4	1	**203-4183**	1	VALVE AS	

E-ORDER BY THE CENTIMETER

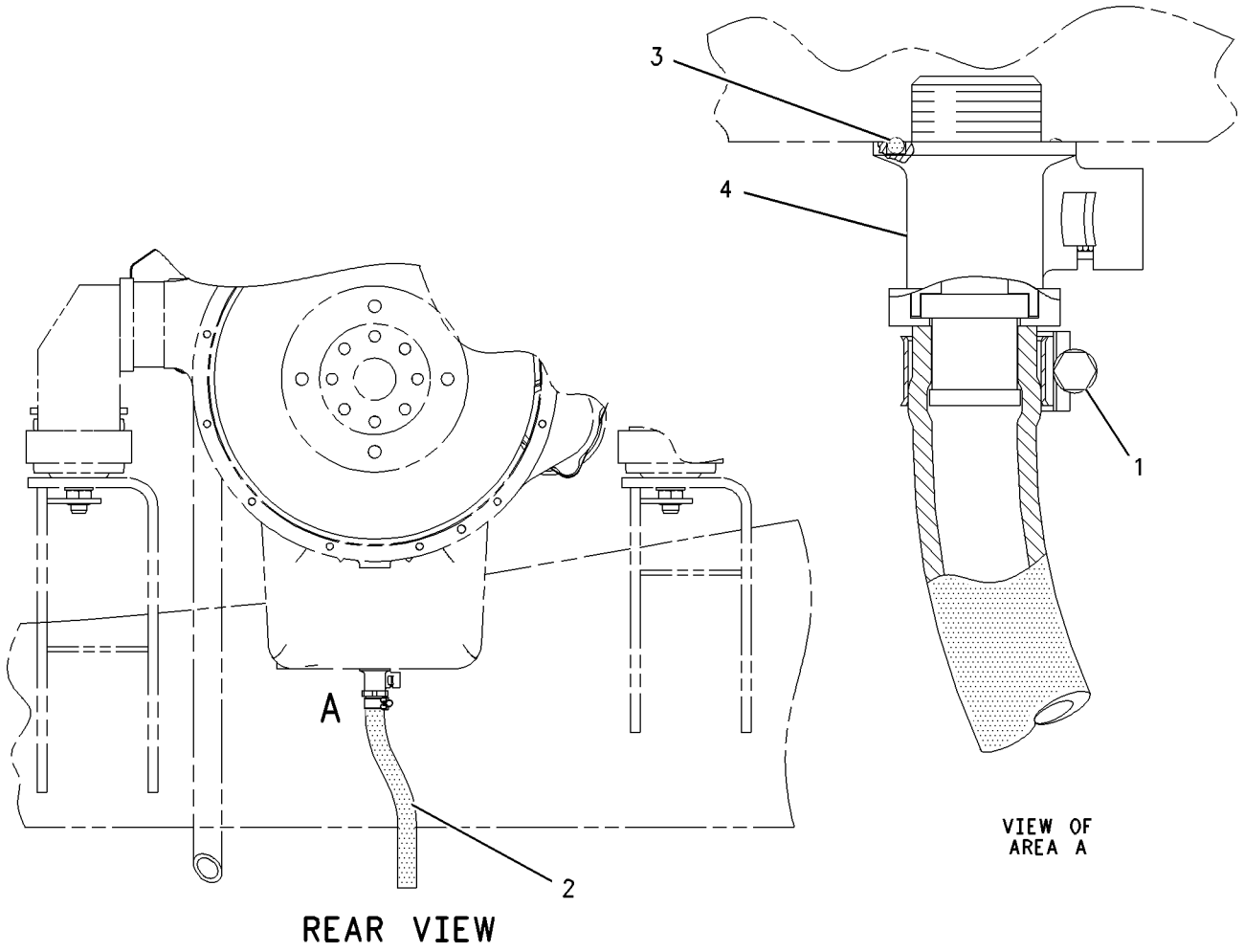

GRAPHIC #1 **<END>** g00825719

159-0285 LINES GP-TURBOCHARGER OIL

S/N: KHX1-392

PART OF 235-8134, 270-2767, 270-2768 ENGINE AR-COMPLETE

ALSO AN ATTACHMENT

SMCS-1052 **i01633981**

NOTE	REF NO	GRAPHIC REF	PART NUMBER	QTY	PART NAME 1 2 3 4 5 6 (PRODUCT LEVEL)	SEE PAGE
	1	1	**3P-1156**	1	SEAL-O-RING	
	2	1	**6V-8636**	1	CONNECTOR	
M	3	1	**6V-3940**	2	BOLT (M8X1.25X25-MM)	
	4	1	**9M-1974**	4	WASHER-HARD (8.8X16X2-MM THK)	
	5	1	**159-0918**	1	TUBE AS-OIL DRAIN	
	6	1	**8L-2779**	1	SEAL-O-RING	
	7	1	**6V-5049**	1	SEAL-O-RING	
	8	1	**6V-8724**	1	ELBOW	
	8A	1	**3J-1907**	1	SEAL-O-RING	
	8B	1	**6V-8397**	1	SEAL-O-RING	
	9	1	**5P-8066**	1	SEAL-O-RING	
	10	1	**205-1332**	1	HOSE AS	
M	11	1	**6V-5217**	2	BOLT (M8X1.25X20-MM)	

M-METRIC PART

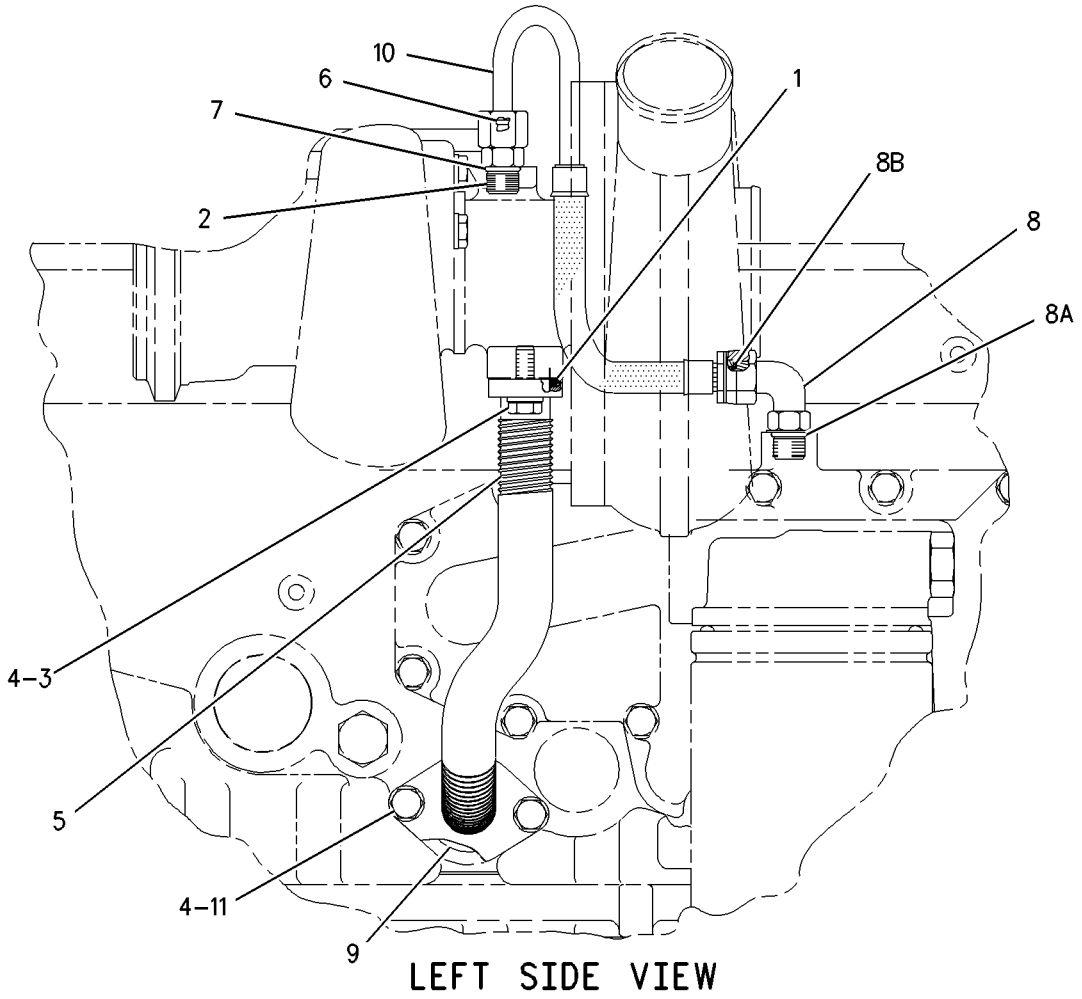

LEFT SIDE VIEW

GRAPHIC #1 **<END>** g00839356

LUBRICATION SYSTEM

280-4371 LINES GP-TURBOCHARGER OIL

S/N: KHX1-UP

PART OF 235-8134, 235-8135, 270-2767, 270-2768, 290-0755, 290-0757, 290-0758

ENGINE AR-COMPLETE

ALSO AN ATTACHMENT

SMCS-1052 **i02443627**

NOTE	REF NO	GRAPHIC REF	PART NUMBER	QTY	PART NAME 1 2 3 4 5 6 (PRODUCT LEVEL)	SEE PAGE
	1	1	**119-2942**	1	ADAPTER	
	2	1	**197-8419**	1	GASKET	
	3	1	**205-1332**	1	HOSE AS	
	4	1	**252-9620**	1	TUBE AS	
	5	1	*148-8378*	1	ELBOW AS	
	5A	1	**3J-1907**	1	SEAL-O-RING	
	5B	1	**6V-8397**	1	SEAL-O-RING	
		1	**6V-8724**	1	ELBOW (90-DEG)	
	6	1	**5P-8066**	1	SEAL-O-RING	
	7	1	**5P-9890**	1	SEAL-O-RING	
	8	1	**6V-5049**	1	SEAL-O-RING	
M	9	1	**6V-5218**	4	BOLT (M8X1.25X35-MM)	
	10	1	**6V-8636**	1	CONNECTOR	
	11	1	**8L-2779**	1	SEAL-O-RING	
	12	1	**9M-1974**	2	WASHER-HARD (8.8X16X2-MM THK)	

M-METRIC PART

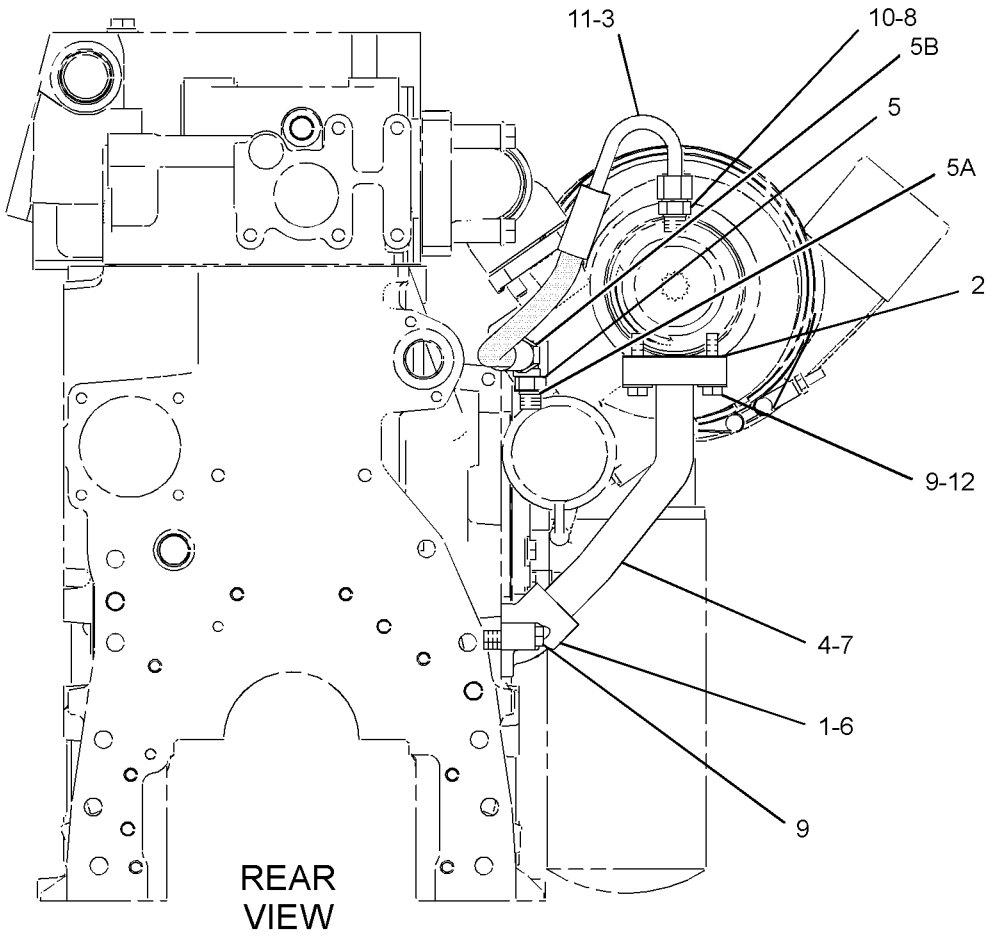

GRAPHIC #1 **<END>** g01214641

LUBRICATION SYSTEM

233-1123 MOUNTING GP-LINES

S/N: DFP1-306; CJX1-222

PART OF 222-8379 INSTALLATION AR-ENGINE

SMCS-1307, 1308 **i02346523**

NOTE	REF NO	GRAPHIC REF	PART NUMBER	QTY	PART NAME 1 2 3 4 5 6 (PRODUCT LEVEL)	SEE PAGE
	1	1	**4I-7856**	1	SPACER (11X30X75-MM THK)	
	2	1	**228-2775**	1	CLIP	
	3	1	**7D-7233**	2	CLIP	
	4	1	**7X-0507**	1	WASHER-HARD (12X22.5X5-MM THK)	
	5	1	**8T-4121**	4	WASHER-HARD (11X21X2.5-MM THK)	
M	6	1	**8T-4137**	1	BOLT (M10X1.5X20-MM)	
M	7	1	**8T-4195**	3	BOLT (M10X1.5X30-MM)	
M	8	1	**8T-4198**	1	BOLT (M10X1.5X100-MM)	

M-METRIC PART

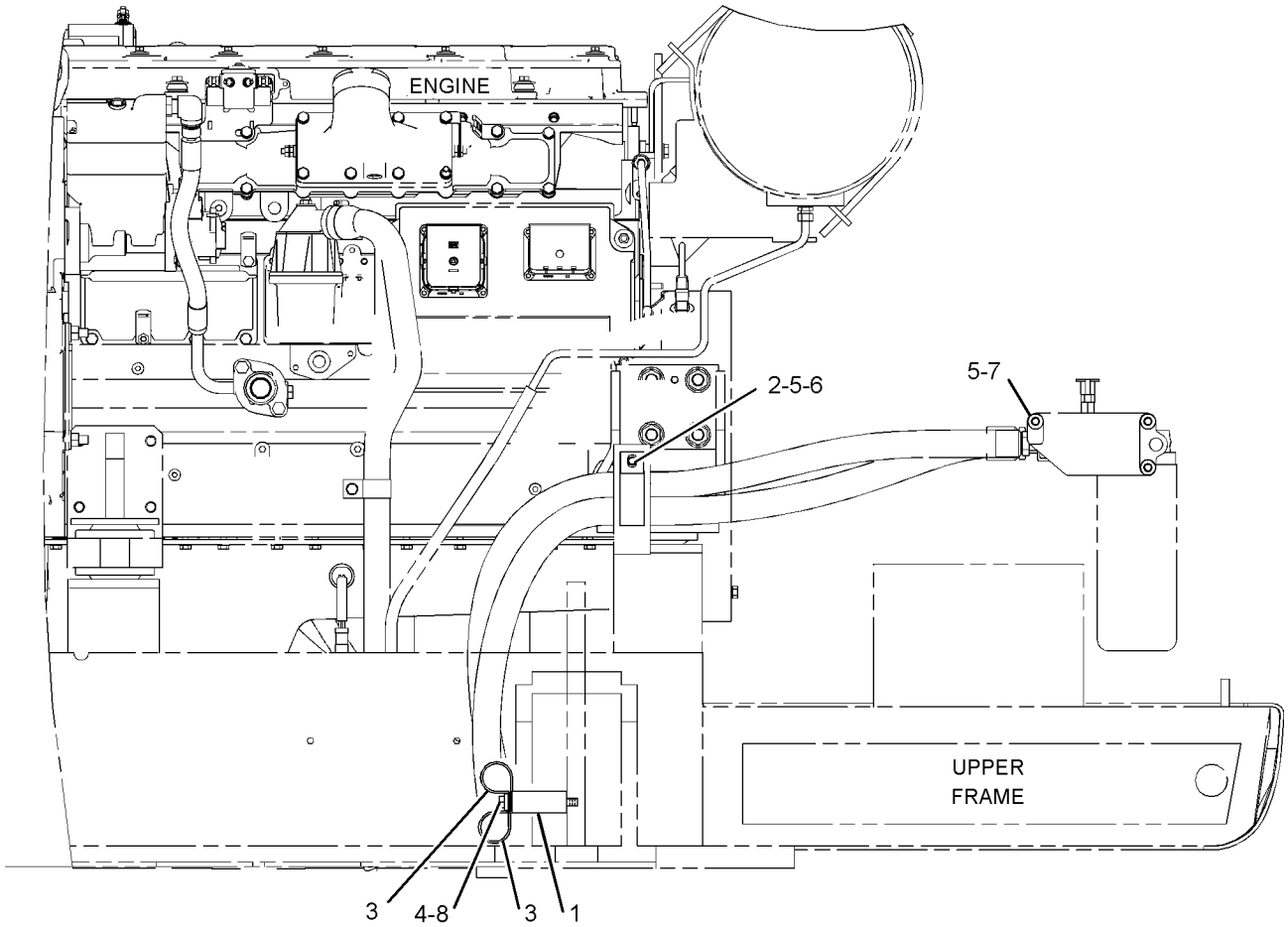

GRAPHIC #1

<END>

g01152243

LUBRICATION SYSTEM

233-1123 MOUNTING GP-LINES

S/N: DFP307-UP; CJX223-UP

PART OF 222-8379 INSTALLATION AR-ENGINE

SMCS-1307, 1308 **i02782186**

NOTE	REF NO	GRAPHIC REF	PART NUMBER	QTY	PART NAME 1 2 3 4 5 6 (PRODUCT LEVEL)	SEE PAGE
C	1	1	**203-2287**	2	CLIP	
	2	1	**4D-7388**	2	CLIP	
	3	1	**7X-0507**	1	WASHER-HARD (12X22.5X5-MM THK)	
	4	1	**7X-7729**	1	WASHER (11X25X3-MM THK)	
C	5	1	**8T-4121**	3	WASHER-HARD (11X21X2.5-MM THK)	
CM	6	1	**8T-4137**	2	BOLT (M10X1.5X20-MM)	
M	7	1	**8T-4195**	3	BOLT (M10X1.5X30-MM)	
CM	8	1	**8T-4196**	1	BOLT (M10X1.5X35-MM)	

C-CHANGE FROM PREVIOUS TYPE
M-METRIC PART

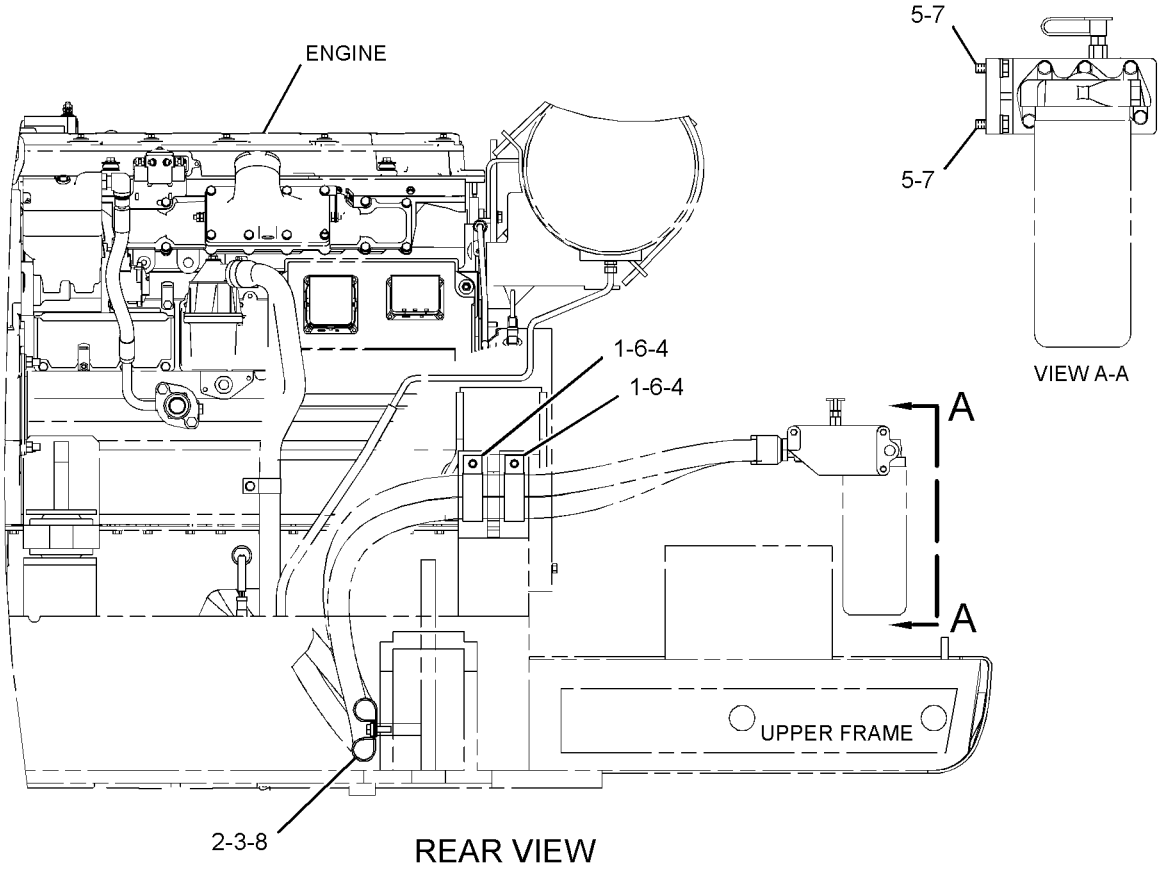

GRAPHIC #1 **<END>** g01396124

192-2981 PUMP GP-ENGINE OIL

S/N: KHX1-UP

PART OF 236-4283, 236-4284, 270-4211, 270-4212 ENGINE AR-CORE

ALSO AN ATTACHMENT

SMCS-1304, 1315 **i02355493**

NOTE	REF NO	GRAPHIC REF	PART NUMBER	QTY	PART NAME 1 2 3 4 5 6 (PRODUCT LEVEL)	SEE PAGE
Y	1	1	*200-4497*	1	PUMP GP-ENGINE OIL	102
M	2	1	**6V-5815**	2	BOLT (M10X1.5X75-MM)	
	3	1	**6V-5839**	2	WASHER (11X21X2.5-MM THK)	

M-METRIC PART
Y-SEPARATE ILLUSTRATION

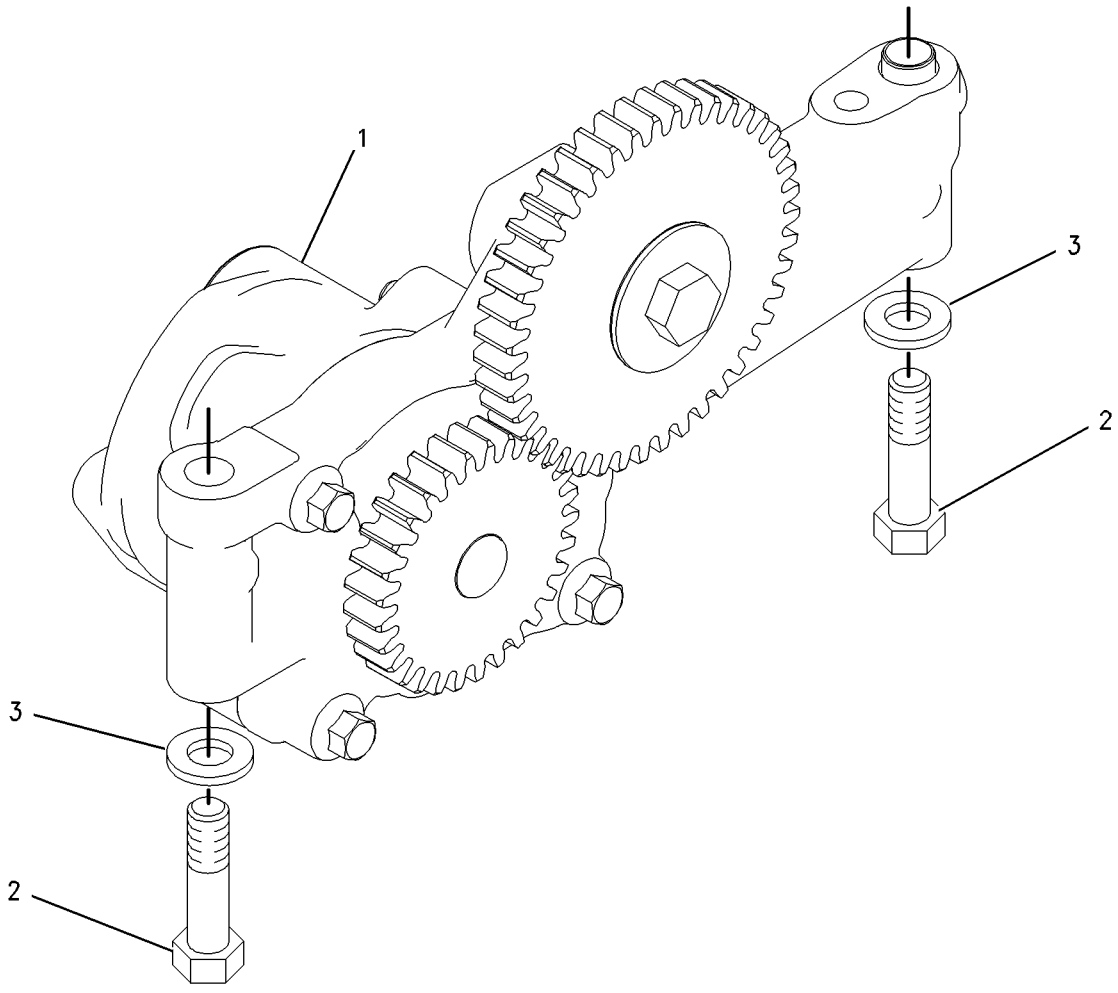

GRAPHIC #1 **<END>** g00775811

200-4497 PUMP GP-ENGINE OIL

S/N: KHX1-UP
PART OF 192-2981 PUMP GP-ENGINE OIL
ALSO AN ATTACHMENT

SMCS-1304, 1315 **i01582169**

NOTE	REF NO	GRAPHIC REF	PART NUMBER	QTY	PART NAME 1 2 3 4 5 6 (PRODUCT LEVEL)	SEE PAGE
	1	1	**7W-9737**	1	SHAFT-OIL PUMP	
	2	1	**7W-9738**	1	WASHER (10.5X38X1.6MM THK)	
	3	1	**7W-9740**	1	GEAR AS-IDLER (43 TEETH)	
	3A	1	**7W-9930**	1	BEARING-SLEEVE	
M	4	1	**9X-2305**	1	BOLT-LOCKING (M10X1.5 THD)	
	5	1	**189-8777**	1	PUMP GP-GEROTOR	

M-METRIC PART

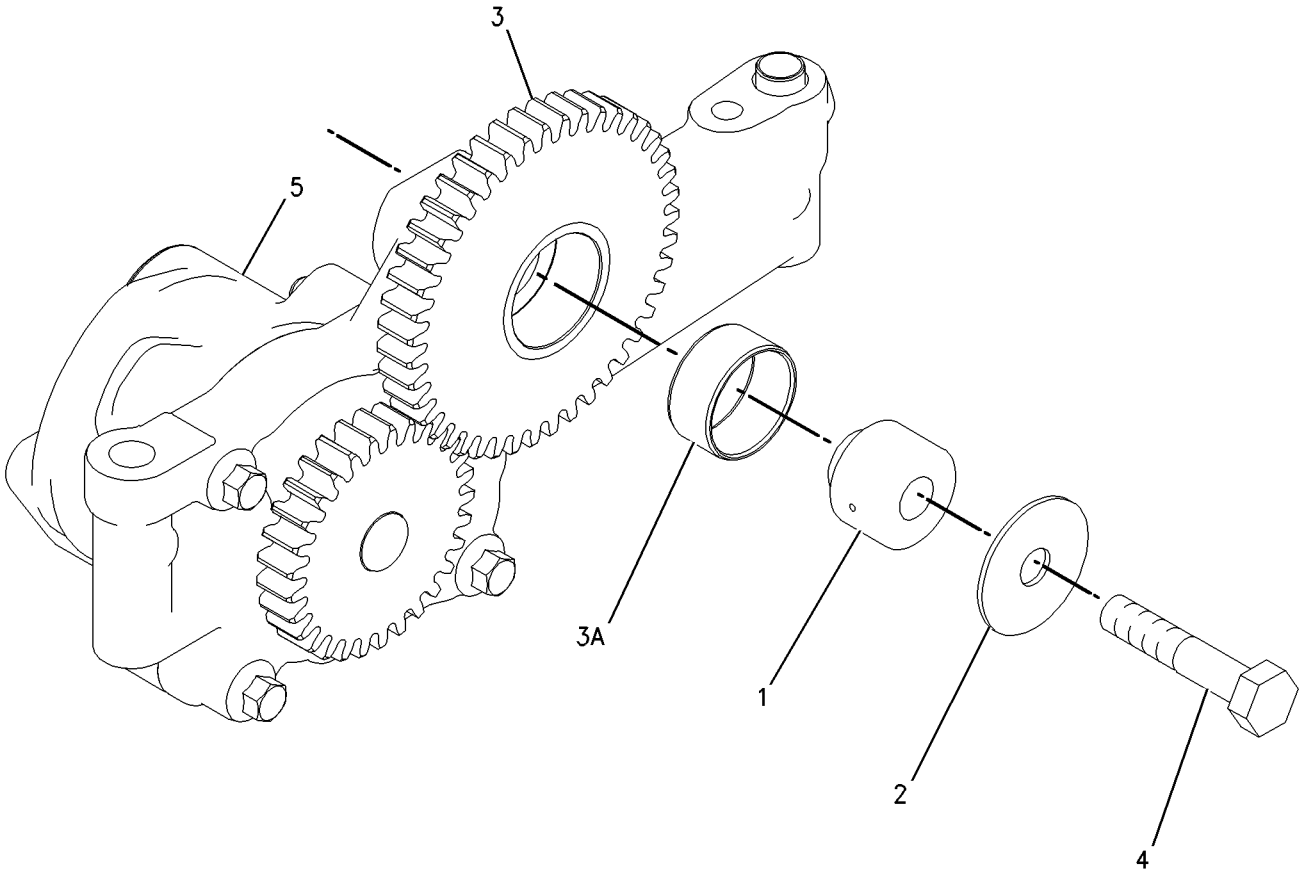

GRAPHIC #1 **<END>** g00775788

117-3643 COOLER GP-ENGINE OIL

S/N: KHX1-UP

PART OF 236-4283, 236-4284, 270-4211, 270-4212 ENGINE AR-CORE

ALSO AN ATTACHMENT

SMCS-1378 **i02835828**

NOTE	REF NO	GRAPHIC REF	PART NUMBER	QTY	PART NAME 1 2 3 4 5 6 (PRODUCT LEVEL)	SEE PAGE
R	1	1	**267-4743**	1	CORE AS-ENGINE OIL COOLER	
	2	1	**233-7655**	1	GASKET	
	3	1	**3P-1156**	2	SEAL-O-RING	

R-REMFG PART MAY BE AVAILABLE

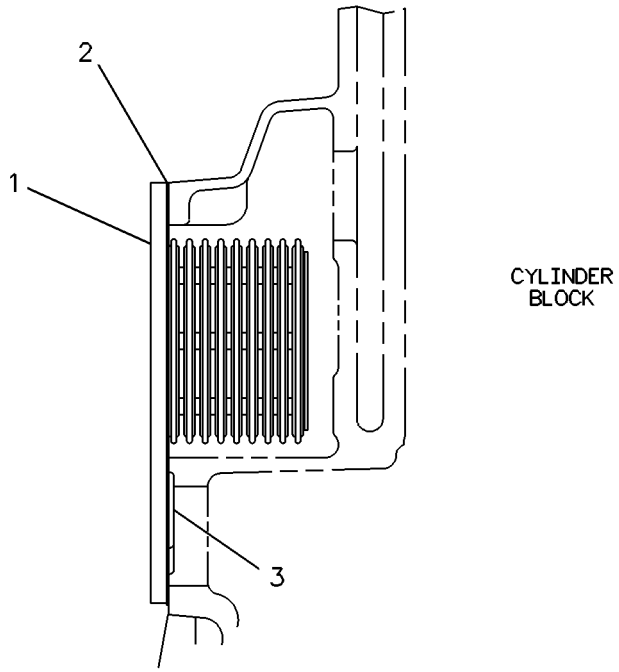

GRAPHIC #1 **<END>** g00117316

229-1786 COOLING AR-HIGH AMBIENT TEMP

S/N: DFP1-UP; CJX1-UP
AN ATTACHMENT

SMCS-1350 **i02397965**

NOTE	PART NUMBER	QTY	PART NAME 1 2 3 4 5 6 (PRODUCT LEVEL)	SEE PAGE
Y	*210-8176*	1	DRIVE GP-FAN	51
Y	*262-2486*	1	GUARD GP-BOTTOM	495
Y	*223-3044*	1	HOOD GP-ENGINE (PERFORATED)	516
Y	*233-1125*	1	PULLEY GP	71
Y	*230-2887*	1	RADIATOR & HYD OIL COOLER GP	114
Y	*251-0448*	1	WIRING GP-FAN (FAN CLUTCH)	415

Y-SEPARATE ILLUSTRATION

<END>

229-1787 COOLING AR-HIGH AMBIENT TEMP

S/N: DFP1-UP; CJX1-UP
AN ATTACHMENT

SMCS-1350 **i02399666**

NOTE	PART NUMBER	QTY	PART NAME 1 2 3 4 5 6 (PRODUCT LEVEL)	SEE PAGE
Y	*210-8176*	1	DRIVE GP-FAN	51
Y	*262-2486*	1	GUARD GP-BOTTOM	495
Y	*236-3395*	1	HOOD AR (PERFORATED)	510
Y	*233-1125*	1	PULLEY GP	71
Y	*230-2887*	1	RADIATOR & HYD OIL COOLER GP	114
Y	*251-0448*	1	WIRING GP-FAN (FAN CLUTCH)	415

Y-SEPARATE ILLUSTRATION

<END>

230-2893 FAN GP-SUCTION

S/N: DFP1-UP; CJX1-UP
PART OF 266-6260 ENGINE AR

SMCS-1356 **i02349091**

NOTE	REF NO	GRAPHIC REF	PART NUMBER	QTY	PART NAME 1 2 3 4 5 6 (PRODUCT LEVEL)	SEE PAGE
	1	1	**230-2892**	1	FAN AS (11-BLADES)	
	2	1	**230-2901**	1	SPACER-FAN	
M	3	1	**7X-2539**	6	BOLT (M8X1.25X110-MM)	
M	4	1	**8T-4189**	6	BOLT (M8X1.25X20-MM)	
	5	1	**8T-4224**	12	WASHER-HARD (8.8X16X2-MM THK)	

M-METRIC PART

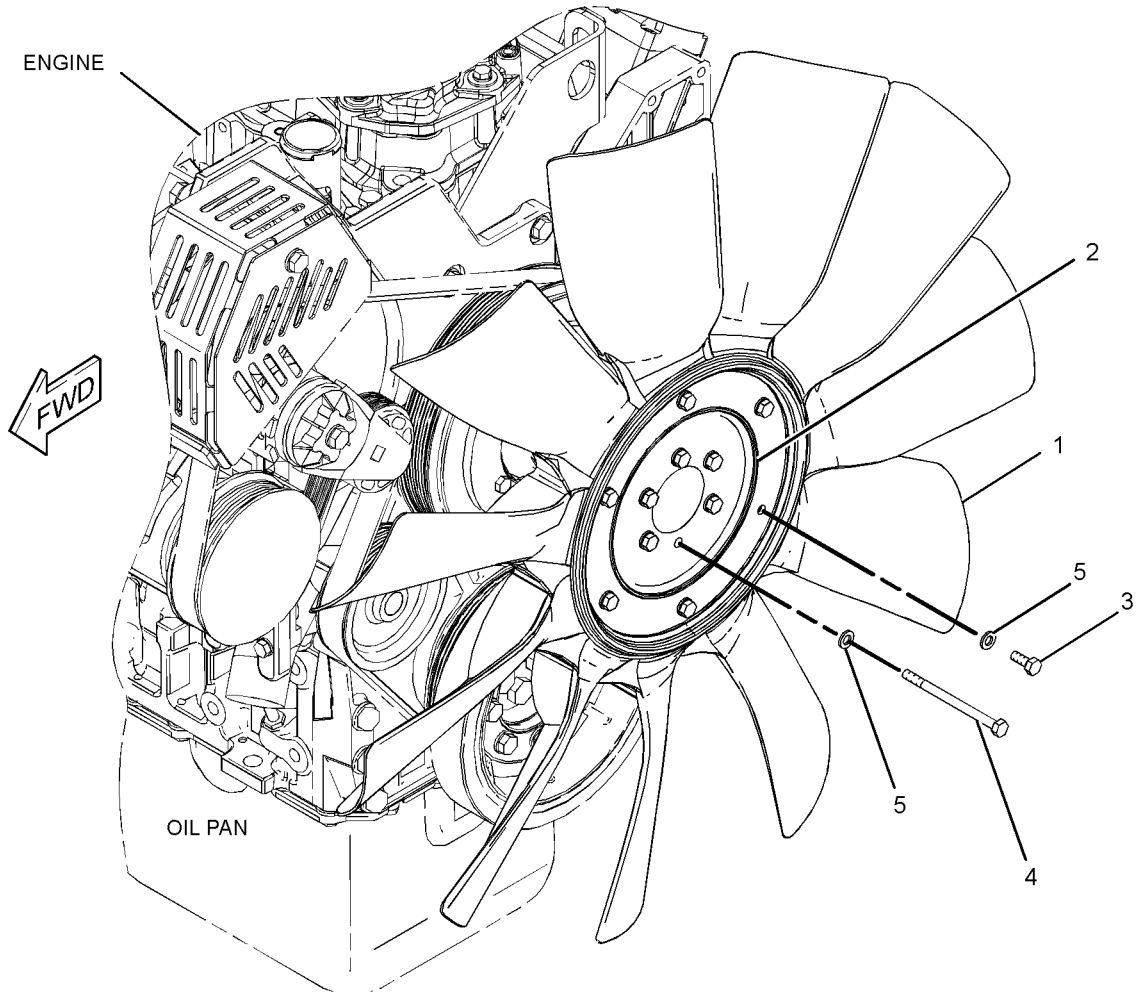

GRAPHIC #1 **<END>** g01186015

COOLING SYSTEM

192-9972 LINES GP-WATER

S/N: KHX1-UP
PROVIDES COOLANT SAMPLING VALVE
PART OF 235-8134, 235-8135, 270-2767, 270-2768, 290-0755, 290-0757, 290-0758
ENGINE AR-COMPLETE
ALSO AN ATTACHMENT

SMCS-1355, 1380 **i02353611**

NOTE	REF NO	GRAPHIC REF	PART NUMBER	QTY	PART NAME 1 2 3 4 5 6 (PRODUCT LEVEL)	SEE PAGE
	1	1	**7E-0759**	1	HOSE	
	3	1	**237-5176**	2	CLAMP-BAND	
	4	1	**126-5869**	1	REGULATOR-WATER TEMPERATURE (94-DEG C) (COOLANT)	
	5	1	**227-5942**	1	HOUSING-WATER REGULATOR	
	6	1	**136-0812**	1	GASKET-WATER REGULATOR (TEMPERATURE REGULATOR HOUSING)	
	7	1	**154-9023**	1	VALVE-SAMPLING (WATER, COOLANT)	
	8	1	**157-0670**	1	CAP-DUST (COOLANT SAMPLING VALVE)	
	9	1	**192-9971**	1	PIPE	
	10	1	**126-5466**	1	GASKET	
	11	1	**3J-7354**	1	SEAL-O-RING	
	12	1	**3K-0360**	1	SEAL-O-RING	
	13	1	**3P-1932**	1	ADAPTER	
M	14	1	**5P-8347**	2	BOLT (M8X1.25X70-MM)	
M	15	1	**6V-3940**	5	BOLT (M8X1.25X25-MM)	
M	16	1	**6V-5223**	1	BOLT (M8X1.25X100-MM)	
	17	1	*148-8411*	3	PLUG AS	
					(EACH INCLUDES)	
	17A	1	**3K-0360**	1	SEAL-O-RING	
		1	**9S-4185**	1	PLUG-O-RING	
	18	1	*155-3624*	1	PLUG AS	
	18A	1	**3J-7354**	1	SEAL-O-RING	
		1	**9S-4182**	1	PLUG-O-RING	
M	19	1	**8T-0100**	1	BOLT (M8X1.25X60-MM)	
	20	1	**162-0177**	1	PLUG AS	
	20A	1	**3J-1907**	1	SEAL-O-RING	
		1	**9S-8004**	1	PLUG-O-RING	
	21	1	**9M-1974**	6	WASHER-HARD (8.8X16X2-MM THK)	
	22	1	*148-8395*	2	PLUG AS	
					(EACH INCLUDES)	
	22A	1	**3K-0360**	1	SEAL-O-RING	
		1	**9S-8005**	1	PLUG-O-RING	

M-METRIC PART

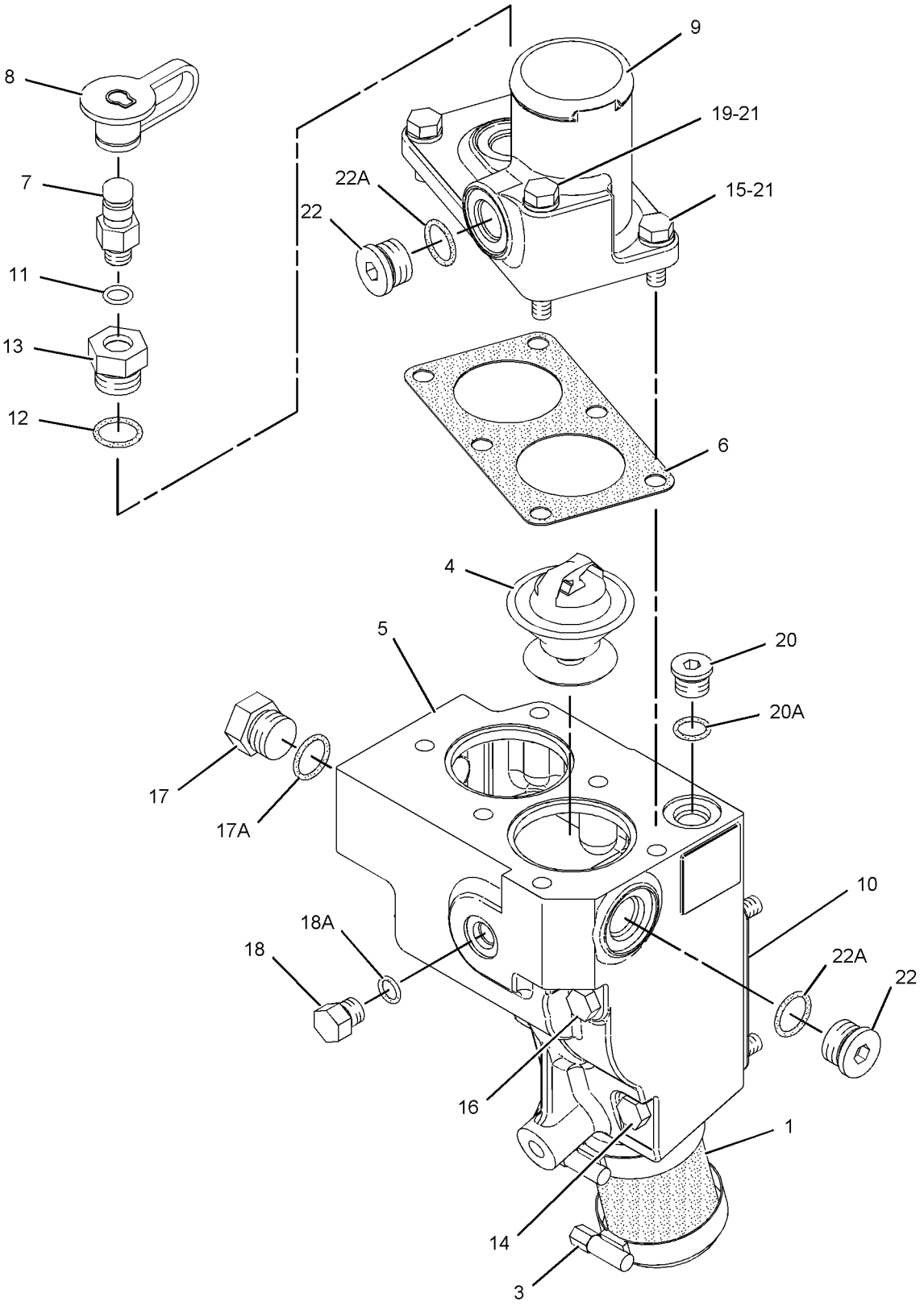

GRAPHIC #1 **<END>** g01105138

COOLING SYSTEM

177-9823 PUMP GP-WATER

S/N: KHX1-UP
PART OF 235-8134, 235-8135, 270-2767, 270-2768, 290-0755, 290-0757, 290-0758
ENGINE AR-COMPLETE
ALSO AN ATTACHMENT

SMCS-1361 **i02134811**

NOTE	REF NO	GRAPHIC REF	PART NUMBER	QTY	PART NAME 1 2 3 4 5 6 (PRODUCT LEVEL)	SEE PAGE
CYR	2	1	**236-4413**	1	PUMP GP-WATER	110
C	3	1	*148-8395*	2	PLUG AS	
					(EACH INCLUDES)	
		1	**3K-0360**	1	SEAL-O-RING	
		1	**9S-8005**	1	PLUG-O-RING	
C	4	1	*148-8409*	2	PLUG AS	
					(EACH INCLUDES)	
		1	**3D-2824**	1	SEAL-O-RING	
		1	**9S-8008**	1	PLUG-O-RING	
C	5	1	**164-5619**	1	PLUG AS	
		1	**2M-9780**	1	SEAL-O-RING	
		1	**9S-8006**	1	PLUG-O-RING	
	6	1	**2M-4453**	1	SEAL-O-RING	
C	7	1	*3J-3679*	1	PLUG AS	
		1	**1J-9671**	1	SEAL-O-RING	
		1	**9S-8003**	1	PLUG	
	8	1	**4J-0524**	1	SEAL-O-RING	
M	9	1	**8T-0644**	4	BOLT (M10X1.5X90-MM)	

C-CHANGE FROM PREVIOUS TYPE
M-METRIC PART
R-REMFG PART MAY BE AVAILABLE
Y-SEPARATE ILLUSTRATION

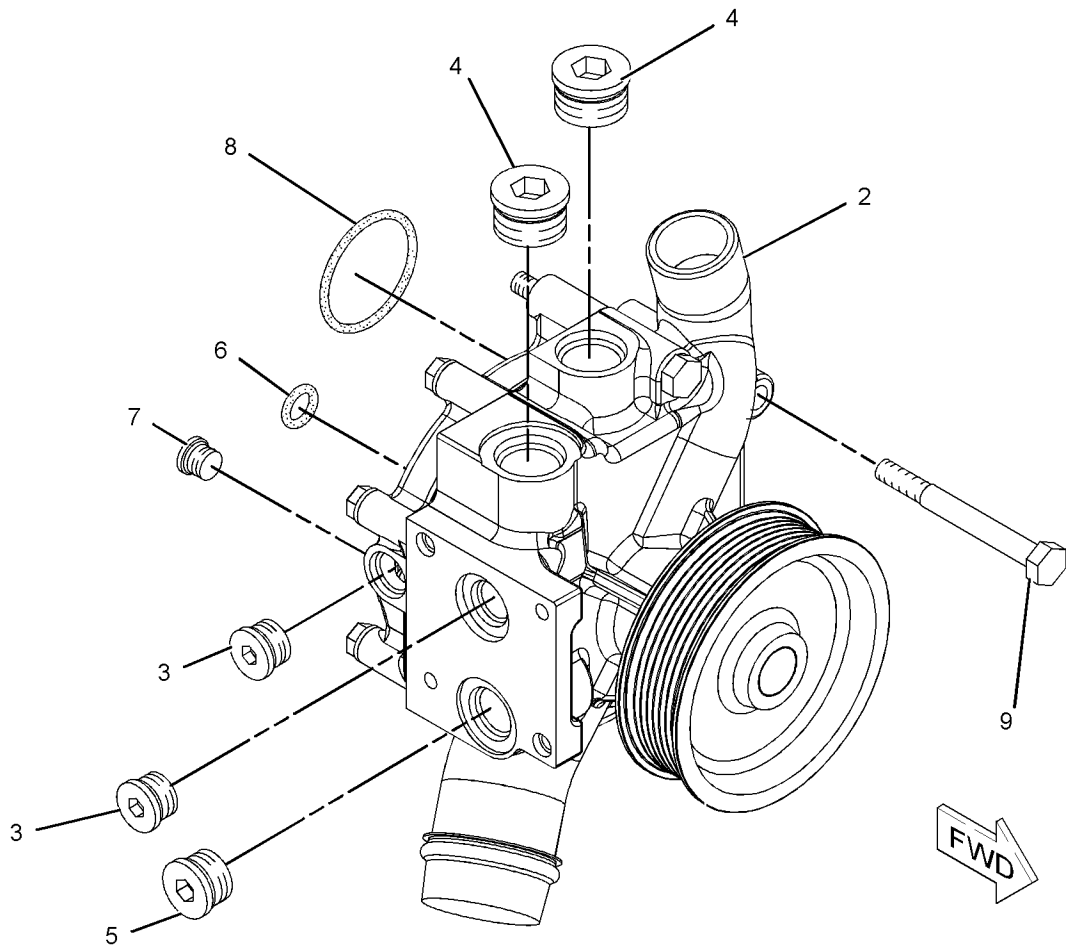

GRAPHIC #1 **<END>** g01086091

236-4413 PUMP GP-WATER*R

S/N: KHX1-UP
PART OF 177-9823 PUMP GP-WATER
ALSO AN ATTACHMENT

SMCS-1361 **i02134845**

NOTE	REF NO	GRAPHIC REF	PART NUMBER	QTY	PART NAME 1 2 3 4 5 6 (PRODUCT LEVEL)	SEE PAGE
	1	1	**4W-0253**	1	COVER	
	2	1	**4W-7592**	1	GASKET	
R	3	1	**236-4420**	1	PUMP AS-WATER	
		1	**117-3437**	1	PULLEY	
		1	**119-3025**	1	PLUG-FELT (PUMP)	
		1	**129-1170**	1	SHAFT AS	
		1	**147-5088**	1	SEAL AS-WATER PUMP	
		1	**152-3952**	1	IMPELLER-PUMP	
		1	**236-4421**	1	HOUSING-PUMP	
M	4	1	**6V-3918**	4	BOLT (M8X1.25X50-MM)	
	5	1	**9M-1974**	4	WASHER-HARD (8.8X16X2-MM THK)	

M-METRIC PART
R-REMFG PART MAY BE AVAILABLE

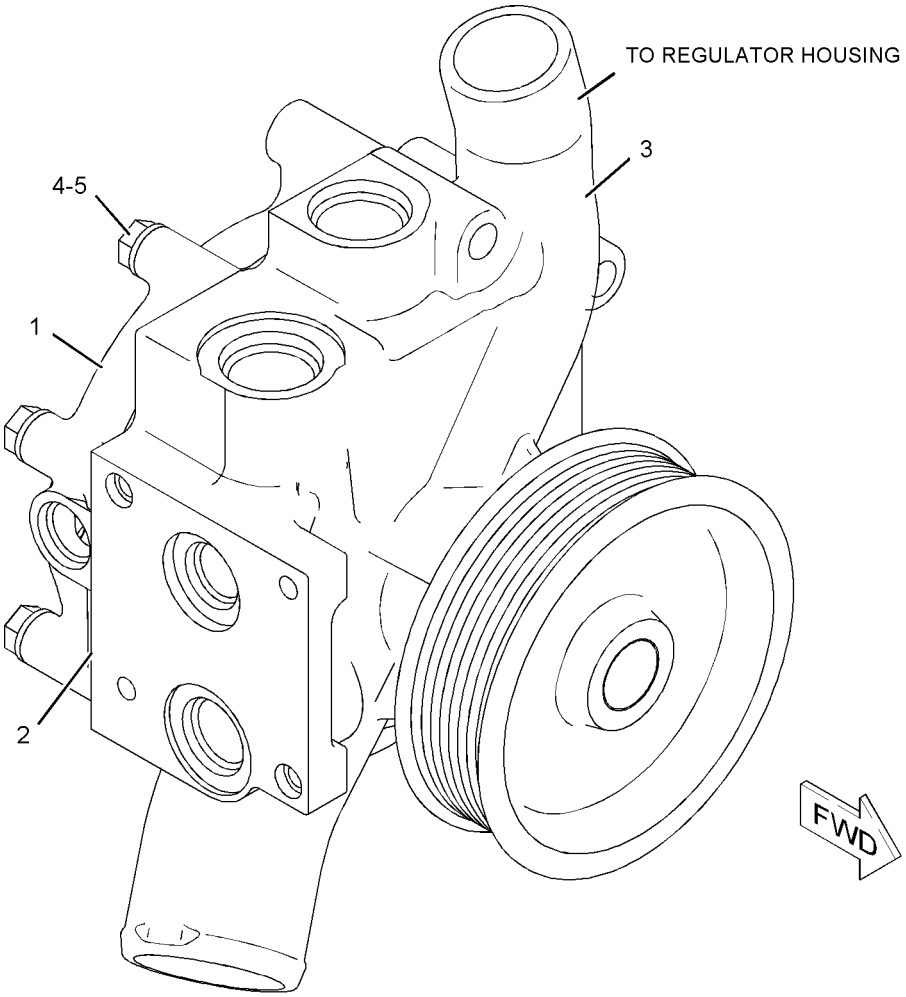

GRAPHIC #1 **<END>** g01040531

230-2860 RADIATOR & HYD OIL COOLER GP

S/N: DFP1-UP; CJX1-UP
PART OF 230-2887 RADIATOR & HYD OIL COOLER GP
AN ATTACHMENT

SMCS-1351 **i02459306**

NOTE	REF NO	GRAPHIC REF	PART NUMBER	QTY	PART NAME 1 2 3 4 5 6 (PRODUCT LEVEL)	SEE PAGE
	1	1	**5D-8159**	4	PIN AS	
M	2	1	**093-5432**	1	VALVE AS-DRAIN (RADIATOR)	
	3	1	**096-4035**	2	CLIP	
	4	1	**245-9207**	1	CORE AS-RADIATOR	
	5	1	**245-9208**	1	CORE AS-OIL COOLER	
	6	2	**245-9209**	1	AFTERCOOLER AS	
	7	1	**245-9211**	1	FRAME AS-RADIATOR	
	8	1	**245-9212**	1	CAP AS-RADIATOR	
	9	2	**245-9213**	2	SEAL	
	10	2	**245-9214**	2	SEAL	
	11	1	**245-9215**	1	SEAL	
	12	2	**245-9216**	2	BOSS	
	13	2	**245-9217**	2	CUSHION-RUBBER	
	14	2	**245-9218**	2	CUSHION-RUBBER	
	15	2	**245-9219**	1	SCREEN AS-HYDRAULIC OIL COOLER	
	16	2	**245-9220**	1	SCREEN AS-RADIATOR	
	17	1	**245-9221**	1	SEAL	
	18	1	**245-9222**	1	SEAL	
	19	1	**245-9223**	1	SHROUD AS-RADIATOR	
	20	2	**245-9276**	2	SEAL	
	21	2	**245-9277**	1	PLATE AS-RADIATOR	
	22	1	**265-3515**	1	SHEET-RUBBER	
	23	2	**095-1543**	4	SEAL-O-RING	
	24	1,2	**8T-4121**	8	WASHER-HARD (11X21X2.5-MM THK)	
M	25	1	**8T-4136**	6	BOLT (M10X1.5X25-MM)	
M	26	1,2	**8T-4189**	20	BOLT (M8X1.25X20-MM)	
M	27	2	**8T-4195**	2	BOLT (M10X1.5X30-MM)	
	28	1,2	**8T-4224**	20	WASHER-HARD (8.8X16X2-MM THK)	
E	29	1	**7Y-1976**		HOSE-WATER (140-CM)	
E	29A	1	**7Y-1976**		HOSE-WATER (20-CM)	

E-ORDER BY THE CENTIMETER
M-METRIC PART

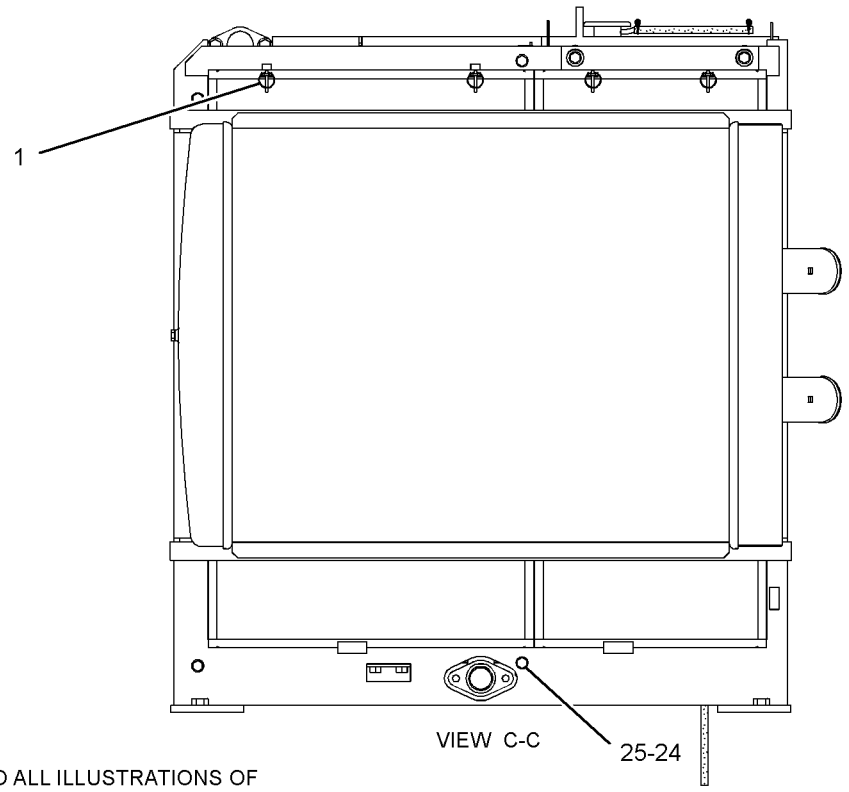

REFER TO ALL ILLUSTRATIONS OF
THIS GROUP FOR AUXILIARY VIEWS

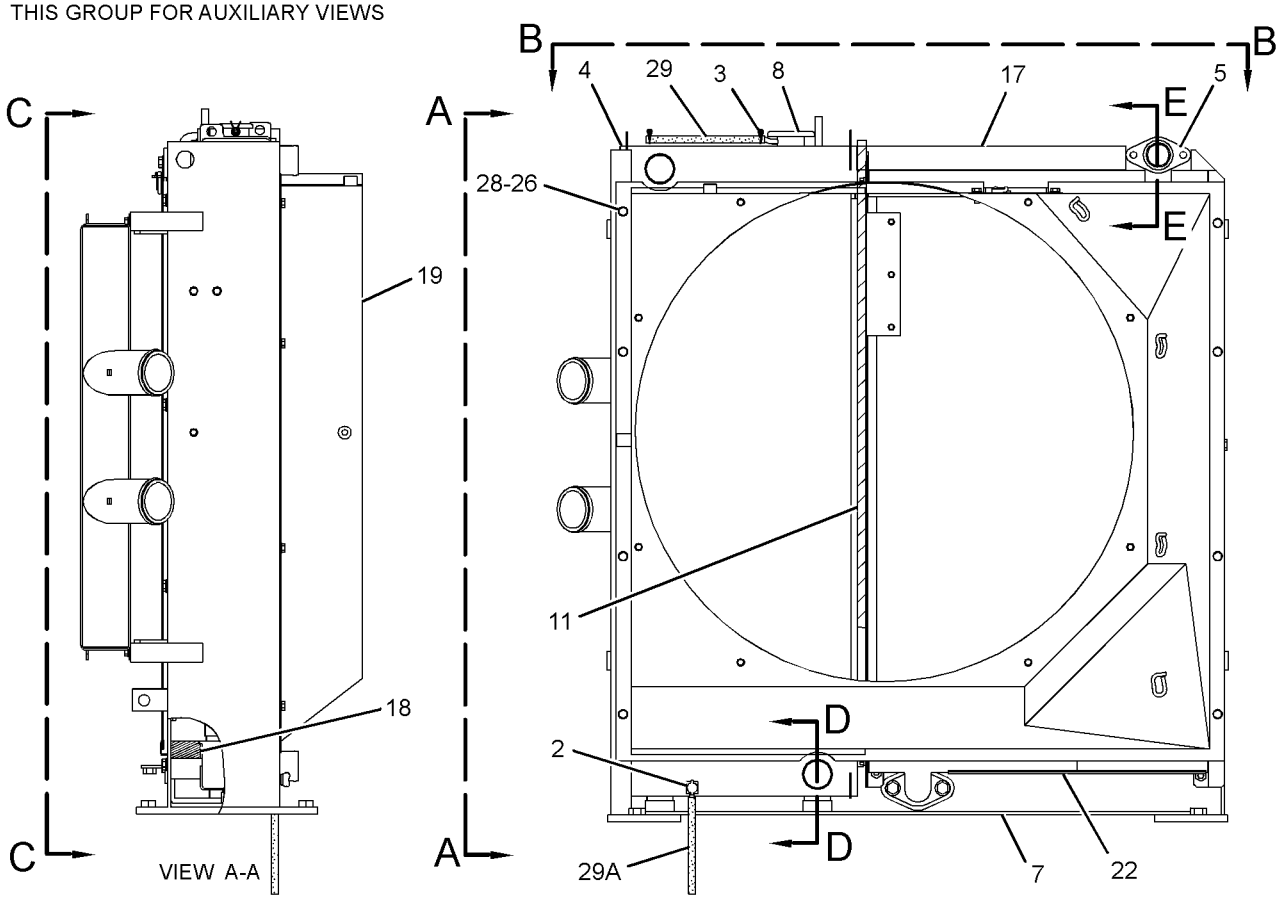

GRAPHIC #1

g01203539

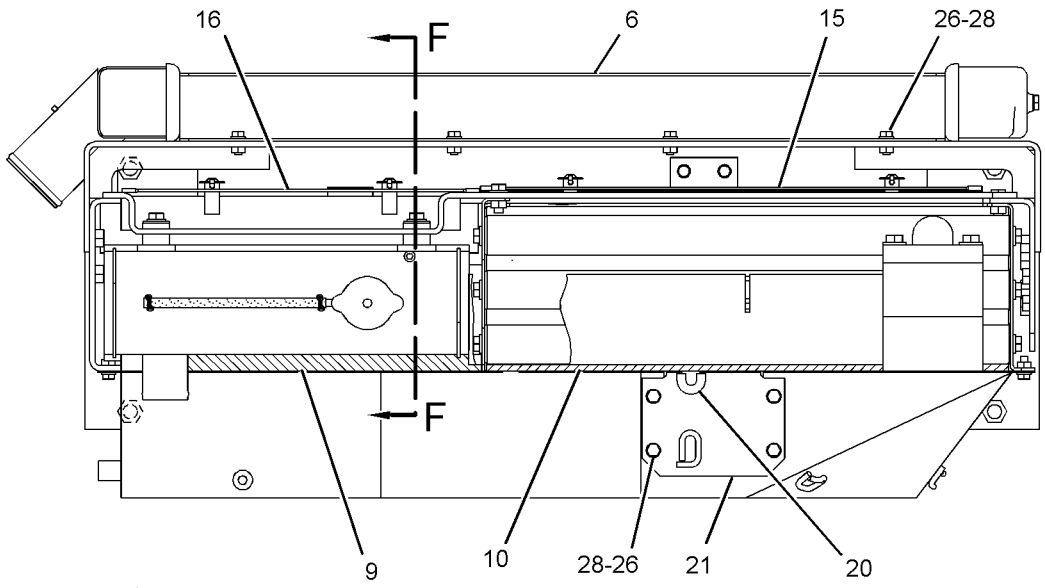

VIEW B-B

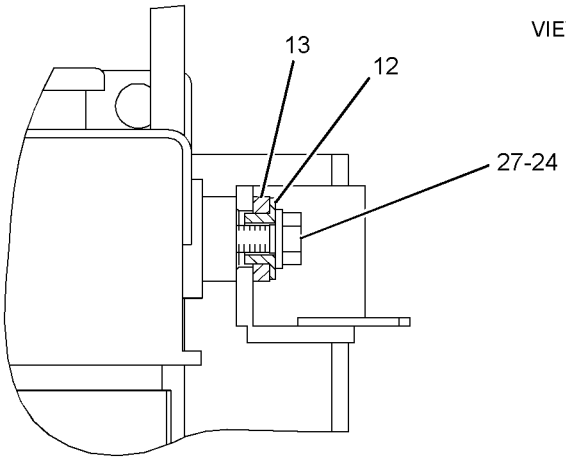

SECTION F-F

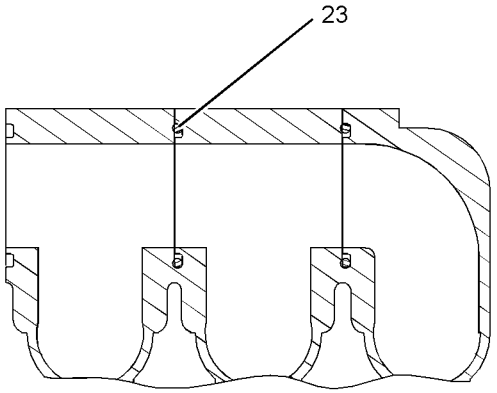

SECTION E-E

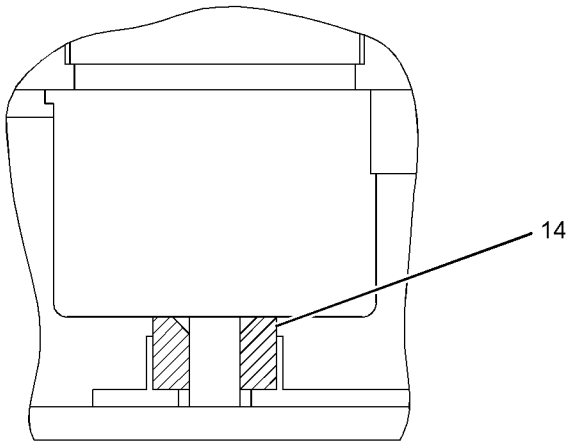

SECTION D-D

GRAPHIC #2 **<END>** g01203789

230-2887 RADIATOR & HYD OIL COOLER GP

S/N: DFP1-UP; CJX1-UP
PART OF 229-1786, 229-1787 COOLING AR-HIGH AMBIENT TEMP
AN ATTACHMENT
TYPE 1

SMCS-1351 **i02586615**

NOTE	REF NO	GRAPHIC REF	PART NUMBER	QTY	PART NAME 1 2 3 4 5 6 (PRODUCT LEVEL)	SEE PAGE
	1	1	**3S-2093**	4	STRAP-CABLE	
	2	1	**8T-6703**	4	CLAMP-HOSE	
	3	1	**096-4035**	1	CLIP	
	4	1	**099-6607**	1	BAND	
	5	1	**107-8618**	1	SENSOR GP-TEMPERATURE (INLET AIR)	
		1	**186-3735**	1	PIN-CONNECTOR (16-GA TO 18-GA)	
		1	**102-8803**	1	KIT-RECEPTACLE (3-PIN)	
					(INCLUDES RECEPTACLE AS AND WEDGE)	
E		1	**112-4550**		SLEEVE (31-CM)	
	6	1	**178-6450**	4	SPACER (17X35X30-MM THK)	
Y	7	1	**230-2860**	1	RADIATOR & HYD OIL COOLER GP	111
	8	1	**230-2869**	1	HOSE-RADIATOR (UPPER)	
	9	1	**230-2870**	1	HOSE-RADIATOR (LOWER)	
	10	1	**230-2880**	1	SEAL	
	11	1	**230-2881**	1	SEAL	
	12	1	**230-2882**	1	SEAL	
	13	1	**230-2884**	1	SEAL	
	14	1	**230-2888**	1	PLATE AS	
	15	1	**230-2890**	1	GUARD AS-RADIATOR (UPPER)	
	16	1	**245-9181**	1	GUARD AS-RADIATOR (LOWER)	
	17	1	**245-9205**	1	TANK AS-COOLANT (RECOVERY)	
		1	**171-3369**	1	CAP AS (COOLANT RECOVERY)	
	18	1	**3P-9847**	1	CLIP	
M	19	1	**7X-2554**	4	BOLT (M16X2X70-MM)	
	20	1	**7X-7729**	10	WASHER (11X25X3-MM THK)	
	21	1	**8T-4121**	1	WASHER-HARD (11X21X2.5-MM THK)	
M	22	1	**8T-4137**	11	BOLT (M10X1.5X20-MM)	
M	23	1	**8T-4139**	2	BOLT (M12X1.75X30-MM)	
M	24	1	**8T-4200**	2	BOLT (M8X1.25X16-MM)	
	25	1	**8T-4223**	2	WASHER-HARD (13.5X25.5X3-MM THK)	
	26	1	**8T-4224**	2	WASHER-HARD (8.8X16X2-MM THK)	
E	27	1	**7Y-1976**		HOSE-WATER (60-CM)	
D	28	1	**5P-9909**		SEAL (.81-M)	
D	29	1	**5P-9909**		SEAL (.1-M)	

D-ORDER BY THE METER
E-ORDER BY THE CENTIMETER
M-METRIC PART
Y-SEPARATE ILLUSTRATION

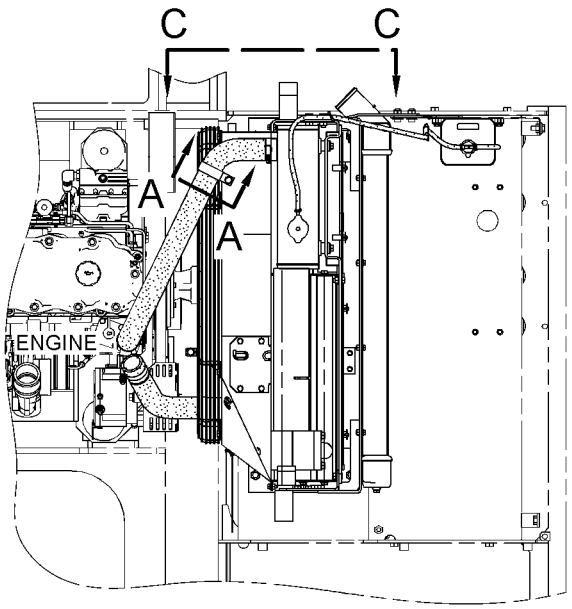

TOP VIEW

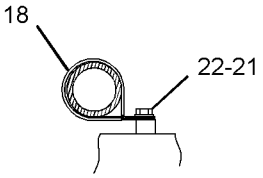

SECTION A-A

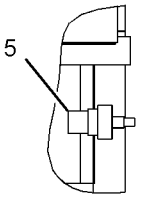

VIEW B-B

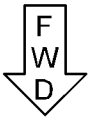

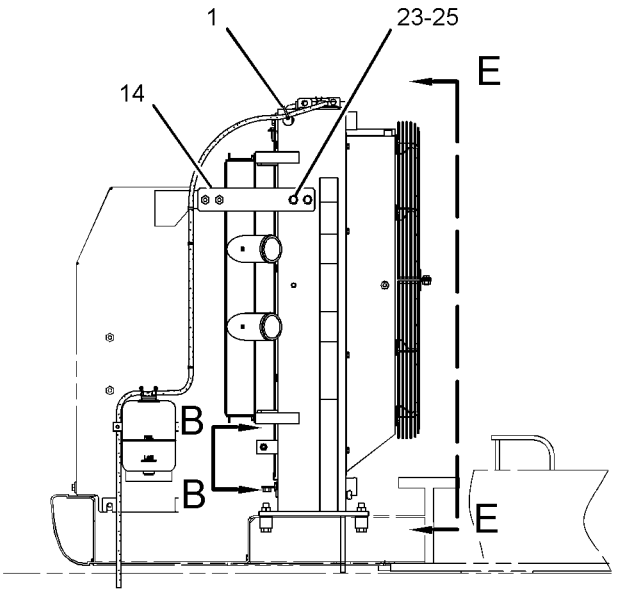

VIEW C-C

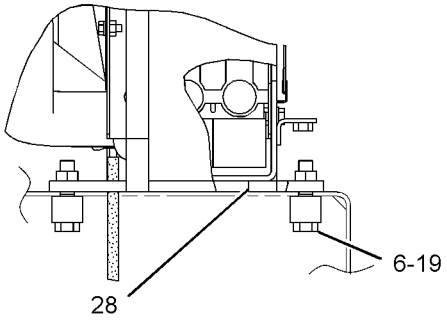

VIEW OF AREA D

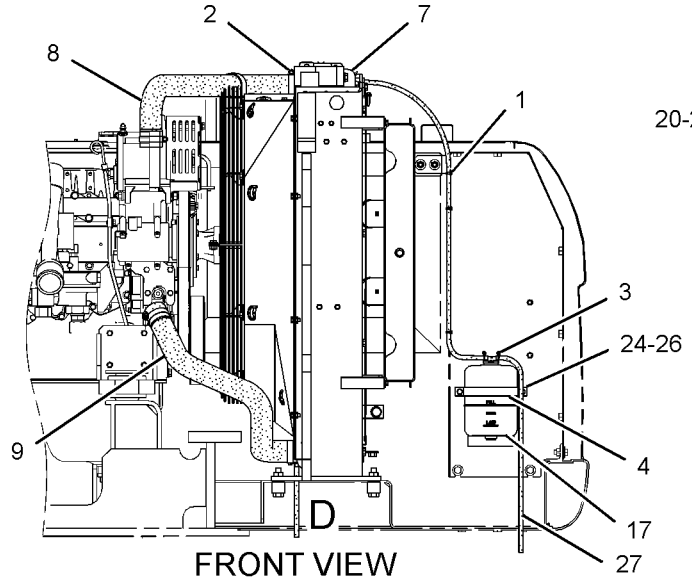

FRONT VIEW

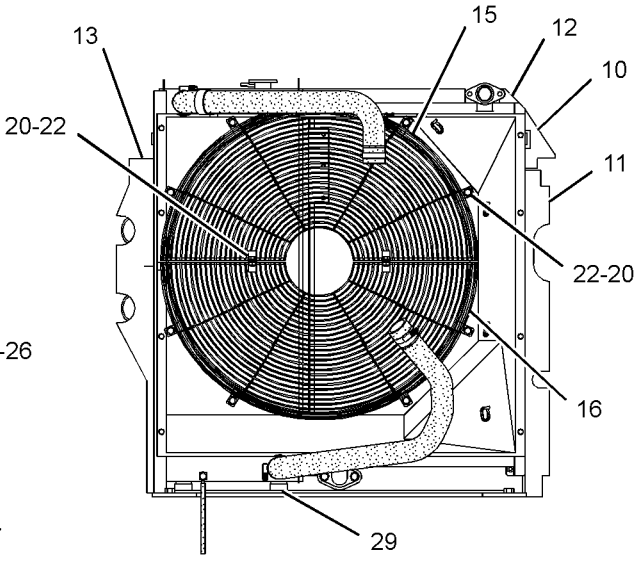

VIEW E-E

GRAPHIC #1 **<END>** g01228265

230-2887 RADIATOR & HYD OIL COOLER GP

S/N: DFP1-UP; CJX1-UP
PART OF 229-1786, 229-1787 COOLING AR-HIGH AMBIENT TEMP
AN ATTACHMENT
TYPE 2

SMCS-1351 **i02586619**

NOTE	REF NO	GRAPHIC REF	PART NUMBER	QTY	PART NAME 1 2 3 4 5 6 (PRODUCT LEVEL)	SEE PAGE
	1	1	**3S-2093**	4	STRAP-CABLE	
	2	1	**8T-6703**	4	CLAMP-HOSE	
	3	1	**096-4035**	1	CLIP	
	4	1	**099-6607**	1	BAND	
	6	1	**178-6450**	4	SPACER (17X35X30-MM THK)	
	7	1	**230-2869**	1	HOSE-RADIATOR (UPPER)	
	8	1	**230-2870**	1	HOSE-RADIATOR (LOWER)	
	9	1	**230-2881**	1	SEAL	
	10	1	**230-2882**	1	SEAL	
	11	1	**230-2888**	1	PLATE AS	
	12	1	**230-2890**	1	GUARD AS-RADIATOR (UPPER)	
	13	1	**245-9181**	1	GUARD AS-RADIATOR (LOWER)	
	14	1	**245-9205**	1	TANK AS-COOLANT (RECOVERY)	
		1	**171-3369**	1	CAP AS (COOLANT RECOVERY)	
CY	15	1	**265-3559**	1	RADIATOR & HYD OIL COOLER GP	122
	16	1	**265-3560**	1	SEAL	
	17	1	**3P-9847**	1	CLIP	
M	18	1	**7X-2554**	4	BOLT (M16X2X70-MM)	
	19	1	**7X-7729**	10	WASHER (11X25X3-MM THK)	
	20	1	**8T-4121**	1	WASHER-HARD (11X21X2.5-MM THK)	
M	21	1	**8T-4137**	11	BOLT (M10X1.5X20-MM)	
M	22	1	**8T-4139**	2	BOLT (M12X1.75X30-MM)	
M	23	1	**8T-4200**	2	BOLT (M8X1.25X16-MM)	
	24	1	**8T-4223**	2	WASHER-HARD (13.5X25.5X3-MM THK)	
	25	1	**8T-4224**	2	WASHER-HARD (8.8X16X2-MM THK)	
E	26	1	**7Y-1976**		HOSE-WATER (60-CM)	
D	27	1	**5P-9909**		SEAL (0.81-M)	
D	27A	1	**5P-9909**		SEAL (0.1-M)	

C-CHANGE FROM PREVIOUS TYPE
D-ORDER BY THE METER
E-ORDER BY THE CENTIMETER
M-METRIC PART
Y-SEPARATE ILLUSTRATION

230-2887 **RADIATOR & HYD OIL COOLER GP** *(contd.)* **i02586619**

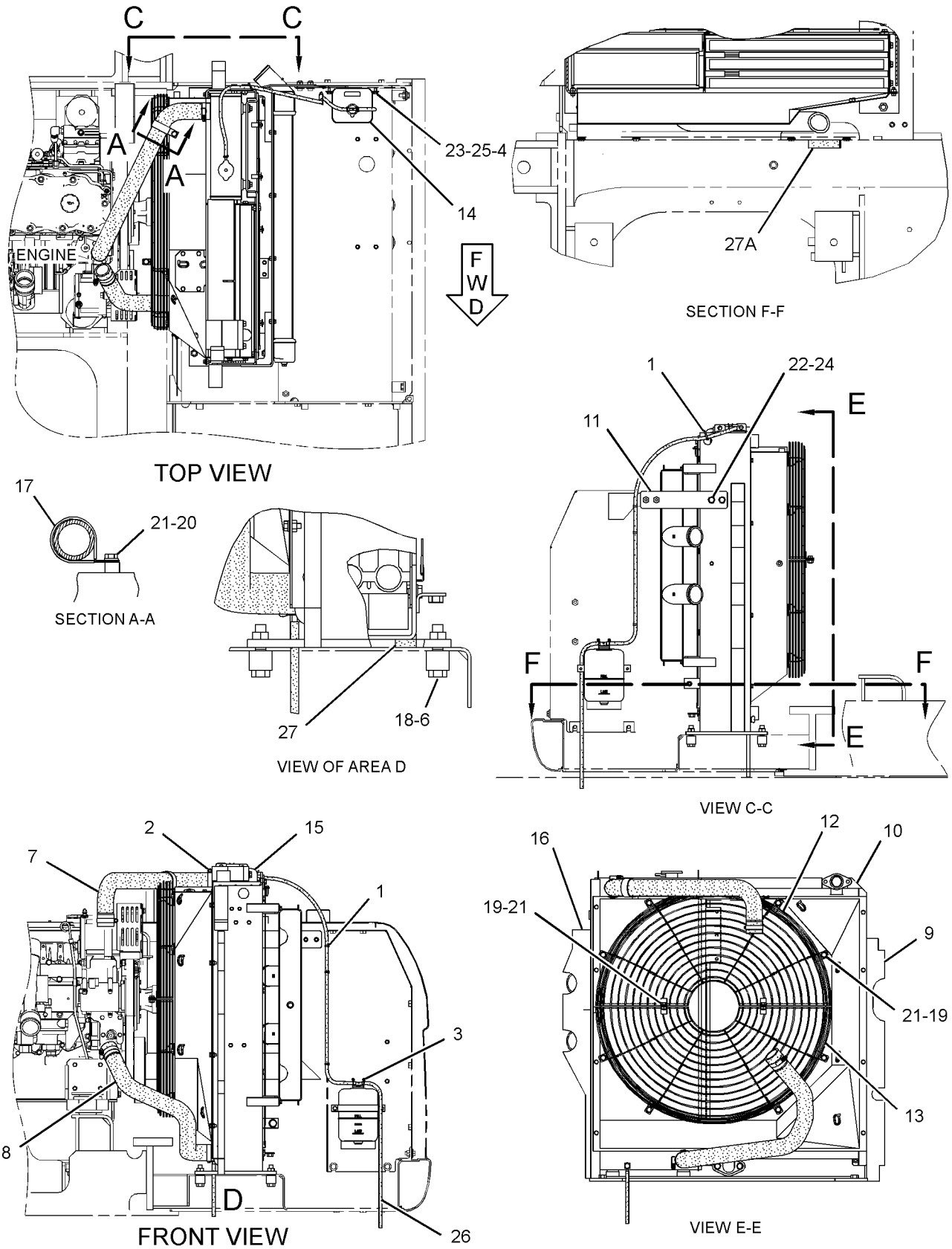

GRAPHIC #1 **<END>** g01253163

230-2887 RADIATOR & HYD OIL COOLER GP

S/N: DFP1-UP; CJX1-UP
PART OF 229-1786, 229-1787 COOLING AR-HIGH AMBIENT TEMP
AN ATTACHMENT
TYPE 3

SMCS-1351 **i02781841**

NOTE	REF NO	GRAPHIC REF	PART NUMBER	QTY	PART NAME 1 2 3 4 5 6 (PRODUCT LEVEL)	SEE PAGE
	1	1	**3S-2093**	4	STRAP-CABLE	
	2	1	**8T-6703**	4	CLAMP-HOSE	
	3	1	**096-4035**	1	CLIP	
	4	1	**099-6607**	1	BAND	
D	5	1	**5P-9909**		SEAL (0.9-M)	
	6	1	**178-6450**	4	SPACER (17X35X30-MM THK)	
	7	1	**281-3487**	1	HOSE-RADIATOR (UPPER)	
	8	1	**230-2870**	1	HOSE-RADIATOR (LOWER)	
	9	1	**230-2881**	1	SEAL	
	10	1	**230-2882**	1	SEAL	
	11	1	**230-2888**	1	PLATE AS	
M		1	**8T-3597**	2	NUT-WELD (M12X1.75-THD)	
	12	1	**230-2890**	1	GUARD AS-RADIATOR (UPPER)	
	13	1	**245-9181**	1	GUARD AS-RADIATOR (LOWER)	
M		1	**8T-3490**	2	NUT-WELD (M10X1.5-THD)	
	14	1	**245-9205**	1	TANK AS-COOLANT (RECOVERY)	
		1	**171-3369**	1	CAP AS (COOLANT RECOVERY)	
CY	15	1	**265-3686**	1	RADIATOR & HYD OIL COOLER GP	124
	16	1	**265-3560**	1	SEAL	
C	17	1	**3P-9847**	2	CLIP	
M	18	1	**7X-2554**	4	BOLT (M16X2X70-MM)	
	19	1	**7X-7729**	10	WASHER (11X25X3-MM THK)	
C	20	1	**8T-4121**	2	WASHER-HARD (11X21X2.5-MM THK)	
CM	21	1	**8T-4137**	12	BOLT (M10X1.5X20-MM)	
M	22	1	**8T-4139**	2	BOLT (M12X1.75X30-MM)	
M	23	1	**8T-4200**	2	BOLT (M8X1.25X16-MM)	
	24	1	**8T-4223**	2	WASHER-HARD (13.5X25.5X3-MM THK)	
	25	1	**8T-4224**	2	WASHER-HARD (8.8X16X2-MM THK)	
E	26	1	**7Y-1976**		HOSE-WATER (60-CM)	

C-CHANGE FROM PREVIOUS TYPE
D-ORDER BY THE METER
E-ORDER BY THE CENTIMETER
M-METRIC PART
Y-SEPARATE ILLUSTRATION

230-2887 **RADIATOR & HYD OIL COOLER GP** *(contd.)* **i02781841**

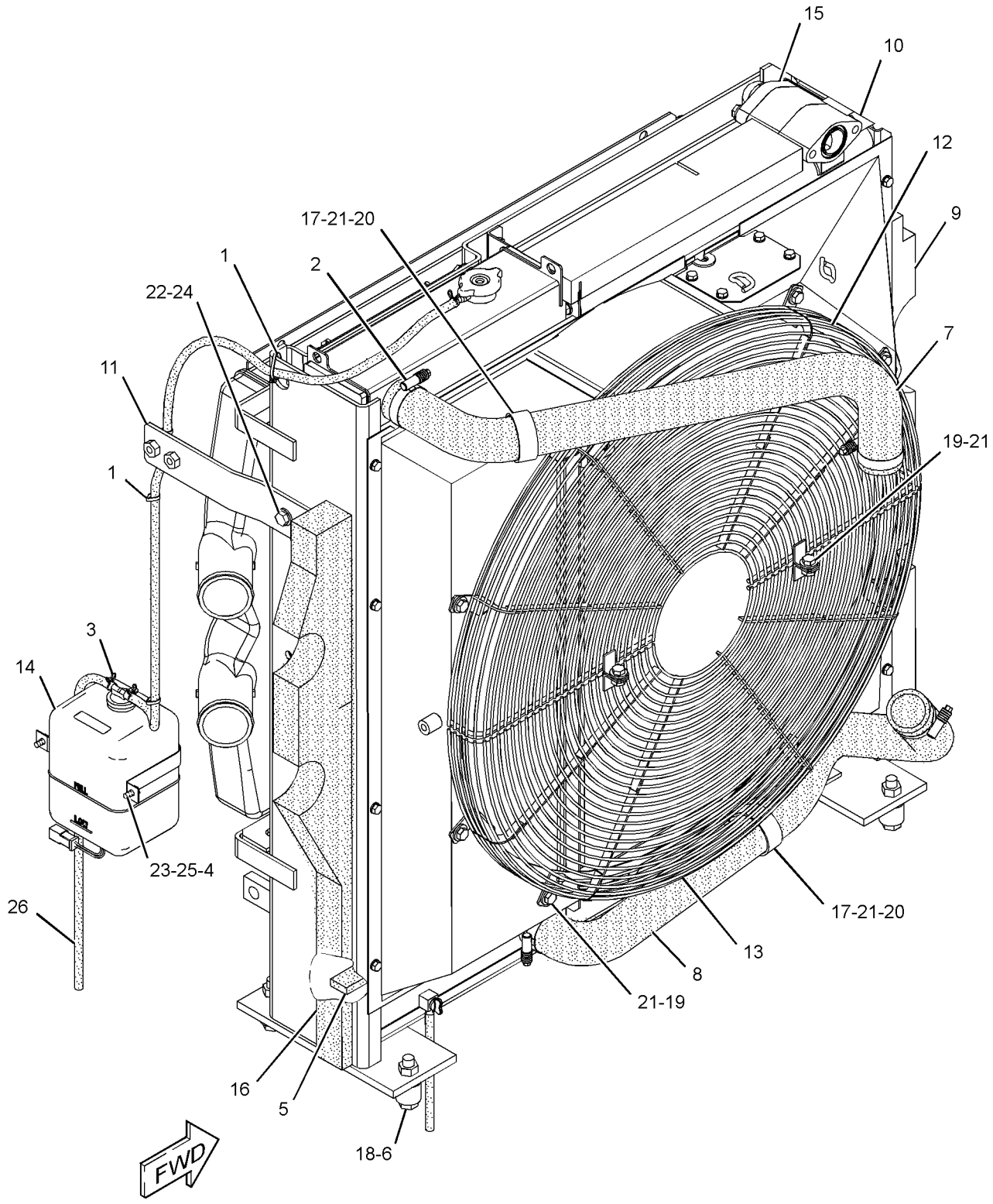

GRAPHIC #1 **<END>** g01390512

COOLING SYSTEM

245-9295 RADIATOR & HYD OIL COOLER GP

S/N: DFP1-UP; CJX1-UP

PART OF 222-8379 INSTALLATION AR-ENGINE

SMCS-1351 **i02781837**

NOTE	REF NO	GRAPHIC REF	PART NUMBER	QTY	PART NAME 1 2 3 4 5 6 (PRODUCT LEVEL)	SEE PAGE
	1	1	**3S-2093**	4	STRAP-CABLE	
	2	1	**8T-6703**	4	CLAMP-HOSE	
	3	1	**096-4035**	1	CLIP	
	4	1	**099-6607**	1	BAND	
	5	1	**178-6450**	4	SPACER (17X35X30-MM THK)	
	6	1	**230-2870**	1	HOSE-RADIATOR (LOWER)	
	7	1	**230-2881**	1	SEAL	
	8	1	**230-2882**	1	SEAL	
	9	1	**230-2888**	1	PLATE AS	
	10	1	**230-2890**	1	GUARD AS-RADIATOR (UPPER)	
	11	1	**245-9181**	1	GUARD AS-RADIATOR (LOWER)	
	12	1	**245-9205**	1	TANK AS-COOLANT (RECOVERY)	
	12A	1	**171-3369**	1	CAP AS (COOLANT RECOVERY)	
	13	1	**265-3560**	1	SEAL	
Y	14	1	**265-3688**	1	RADIATOR & HYD OIL COOLER GP	126
	15	1	**281-3487**	1	HOSE-RADIATOR (UPPER)	
	16	1	**3P-9847**	2	CLIP	
M	17	1	**7X-2554**	4	BOLT (M16X2X70-MM)	
	18	1	**7X-7729**	10	WASHER (11X25X3-MM THK)	
	19	1	**8T-4121**	2	WASHER-HARD (11X21X2.5-MM THK)	
M	20	1	**8T-4137**	12	BOLT (M10X1.5X20-MM)	
M	21	1	**8T-4139**	2	BOLT (M12X1.75X30-MM)	
M	22	1	**8T-4200**	2	BOLT (M8X1.25X16-MM)	
	23	1	**8T-4223**	2	WASHER-HARD (13.5X25.5X3-MM THK)	
	24	1	**8T-4224**	2	WASHER-HARD (8.8X16X2-MM THK)	
E	25	1	**7Y-1976**		HOSE-WATER (60-CM)	
D	26	1	**5P-9909**		SEAL (0.9-M)	

D-ORDER BY THE METER
E-ORDER BY THE CENTIMETER
M-METRIC PART
Y-SEPARATE ILLUSTRATION

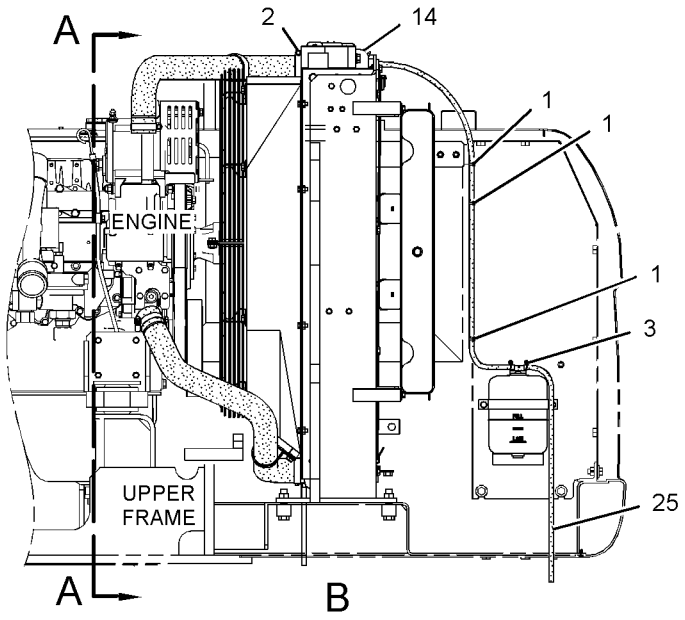

FRONT VIEW

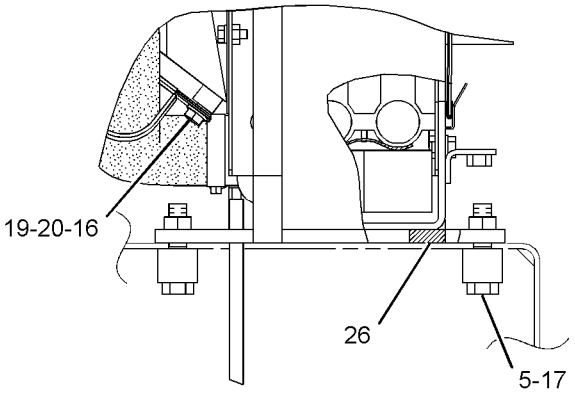

VIEW OF AREA B

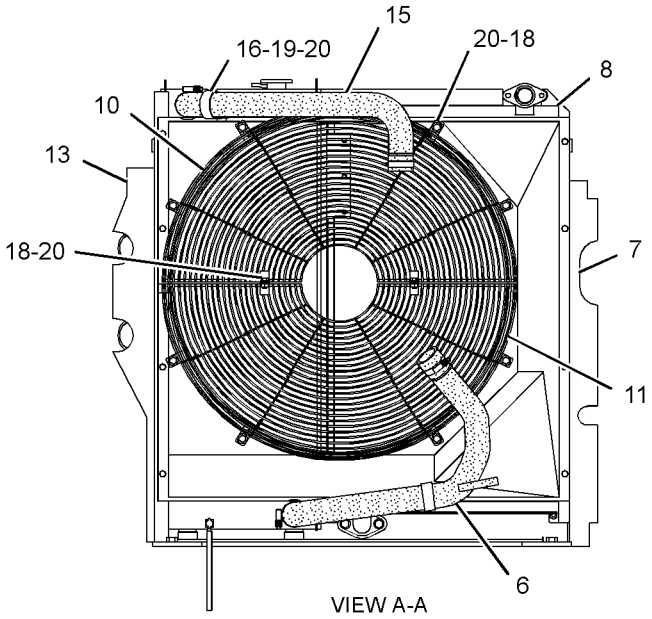

VIEW A-A

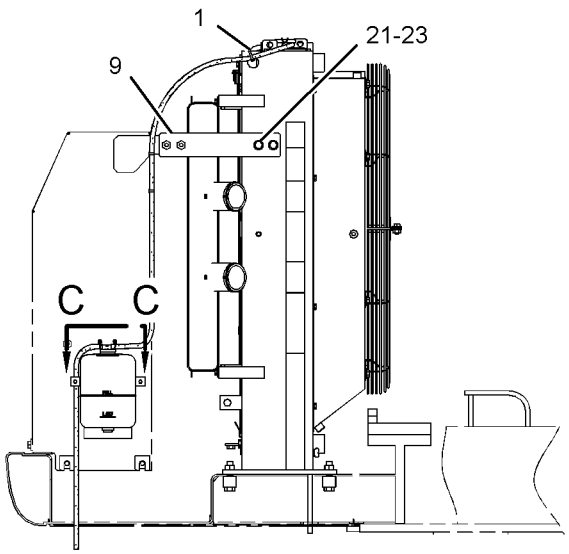

REAR VIEW

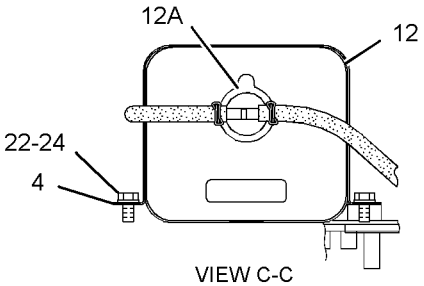

VIEW C-C

GRAPHIC #1 **<END>** g01272012

265-3559 RADIATOR & HYD OIL COOLER GP

S/N: DFP1-UP; CJX1-UP
PART OF 230-2887 RADIATOR & HYD OIL COOLER GP
AN ATTACHMENT

SMCS-1351 **i03257920**

NOTE	REF NO	GRAPHIC REF	PART NUMBER	QTY	PART NAME 1 2 3 4 5 6 (PRODUCT LEVEL)	SEE PAGE
	1	1	**5D-8159**	4	PIN AS	
M	2	1	**093-5432**	1	VALVE AS-DRAIN (WATER)	
	3	1	**096-4035**	2	CLIP	
	4	1	**245-9207**	1	CORE AS-RADIATOR	
	5	1	**245-9208**	1	CORE AS-OIL COOLER (HYDRAULIC)	
	6	1	**245-9209**	1	AFTERCOOLER AS	
	7	1	**245-9212**	1	CAP AS-RADIATOR	
	8	1	**245-9213**	2	SEAL	
	9	1	**245-9214**	2	SEAL	
	10	1	**245-9215**	1	SEAL	
	11	1	**245-9216**	2	BOSS	
	12	1	**245-9217**	2	CUSHION-RUBBER	
	13	1	**245-9218**	2	CUSHION-RUBBER	
	14	1	**245-9219**	1	SCREEN AS-HYDRAULIC OIL COOLER	
	15	1	**245-9220**	1	SCREEN AS-RADIATOR	
	16	1	**245-9221**	1	SEAL	
	17	1	**245-9222**	1	SEAL	
	18	1	**245-9276**	2	SEAL	
	19	1	**245-9277**	1	PLATE AS-RADIATOR	
	20	1	**265-3515**	1	SHEET-RUBBER	
	21	1	**265-3580**	1	FRAME AS	
	22	1	**265-3592**	1	SHROUD AS-RADIATOR	
	23	1	**095-1543**	4	SEAL-O-RING	
	24	1	**8T-4121**	8	WASHER-HARD (11X21X2.5-MM THK)	
M	25	1	**8T-4136**	6	BOLT (M10X1.5X25-MM)	
M	26	1	**8T-4189**	20	BOLT (M8X1.25X20-MM)	
M	27	1	**8T-4195**	2	BOLT (M10X1.5X30-MM)	
	28	1	**8T-4224**	20	WASHER-HARD (8.8X16X2-MM THK)	
E	29	1	**7Y-1976**		HOSE-WATER (140-CM)	
E	29A	1	**7Y-1976**		HOSE-WATER (20-CM)	

E-ORDER BY THE CENTIMETER
M-METRIC PART

265-3559 RADIATOR & HYD OIL COOLER GP *(contd.)* i03257920

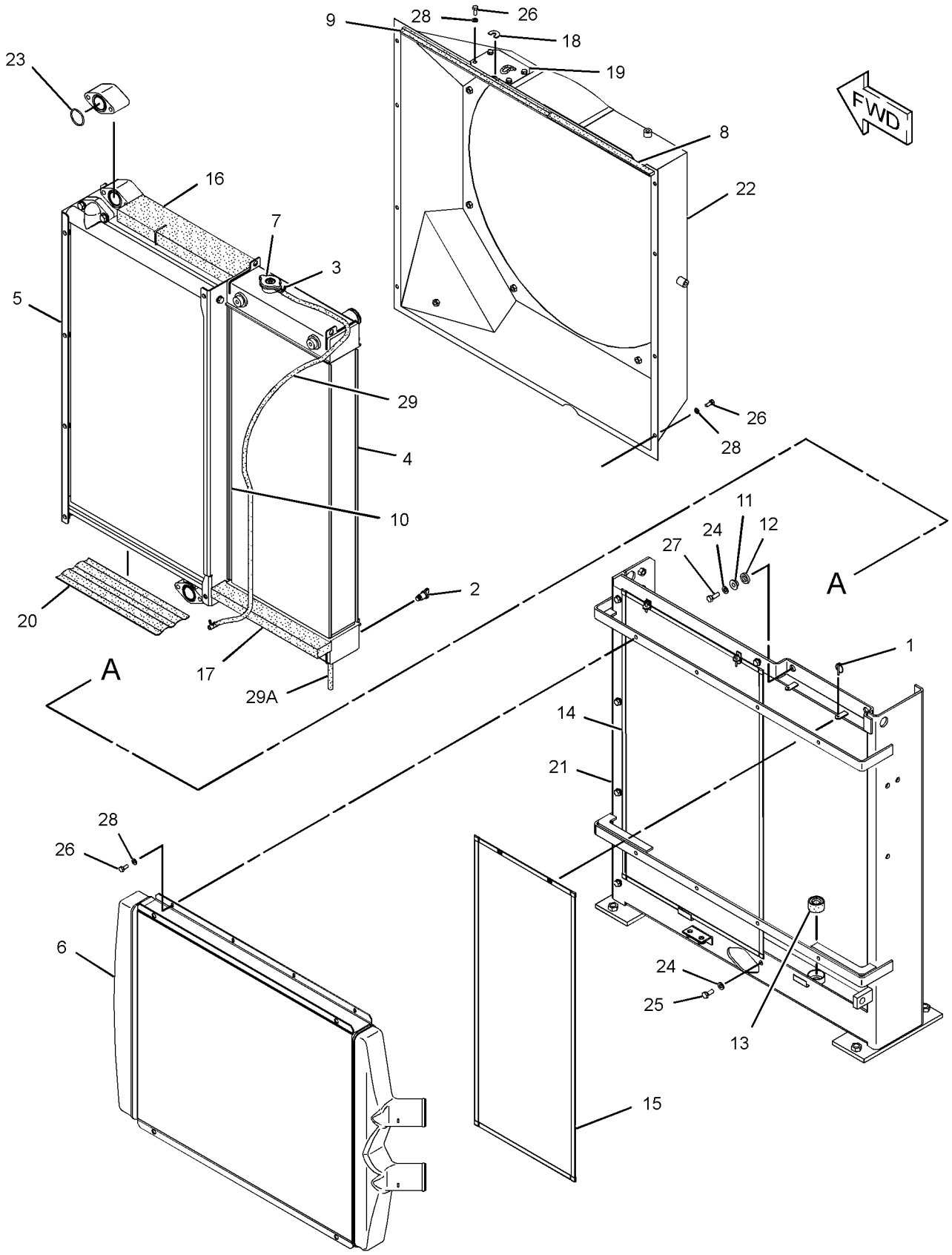

GRAPHIC #1 **<END>** g01236561

265-3686 RADIATOR & HYD OIL COOLER GP

S/N: DFP1-UP; CJX1-UP
PART OF 230-2887 RADIATOR & HYD OIL COOLER GP
AN ATTACHMENT

SMCS-1351 **i02662841**

NOTE	REF NO	GRAPHIC REF	PART NUMBER	QTY	PART NAME 1 2 3 4 5 6 (PRODUCT LEVEL)	SEE PAGE
	1	1	**5D-8159**	4	PIN AS	
M	2	1	**093-5432**	1	VALVE AS-DRAIN (COOLANT)	
	3	1	**096-4035**	2	CLIP	
	4	1	**245-9207**	1	CORE AS-RADIATOR	
	5	1	**245-9208**	1	CORE AS-OIL COOLER (HYDRAULIC)	
	6	1	**245-9209**	1	AFTERCOOLER AS	
	7	1	**245-9212**	1	CAP AS-RADIATOR	
	8	1	**245-9213**	2	SEAL	
	9	1	**245-9214**	2	SEAL	
	10	1	**245-9215**	1	SEAL	
	11	1	**245-9216**	2	BOSS	
	12	1	**245-9217**	2	CUSHION-RUBBER	
	13	1	**245-9218**	2	CUSHION-RUBBER	
	14	1	**245-9219**	1	SCREEN AS-HYDRAULIC OIL COOLER	
	15	1	**245-9220**	1	SCREEN AS-RADIATOR	
	16	1	**245-9221**	1	SEAL	
	17	1	**245-9222**	1	SEAL	
	18	1	**245-9276**	2	SEAL	
	19	1	**265-3515**	1	SHEET-RUBBER	
	20	1	**265-3580**	1	FRAME AS	
	21	1	**265-3687**	1	SHROUD AS-RADIATOR	
	22	1	**281-3486**	1	PLATE AS	
	23	1	**095-1543**	4	SEAL-O-RING	
	24	1	**8T-4121**	8	WASHER-HARD (11X21X2.5-MM THK)	
M	25	1	**8T-4136**	6	BOLT (M10X1.5X25-MM)	
M	26	1	**8T-4189**	20	BOLT (M8X1.25X20-MM)	
M	27	1	**8T-4195**	2	BOLT (M10X1.5X30-MM)	
	28	1	**8T-4224**	20	WASHER-HARD (8.8X16X2-MM THK)	
E	29	1	**7Y-1976**		HOSE-WATER (140-CM)	
E	29A	1	**7Y-1976**		HOSE-WATER (20-CM)	

E-ORDER BY THE CENTIMETER
M-METRIC PART

265-3686 RADIATOR & HYD OIL COOLER GP *(contd.)* i02662841

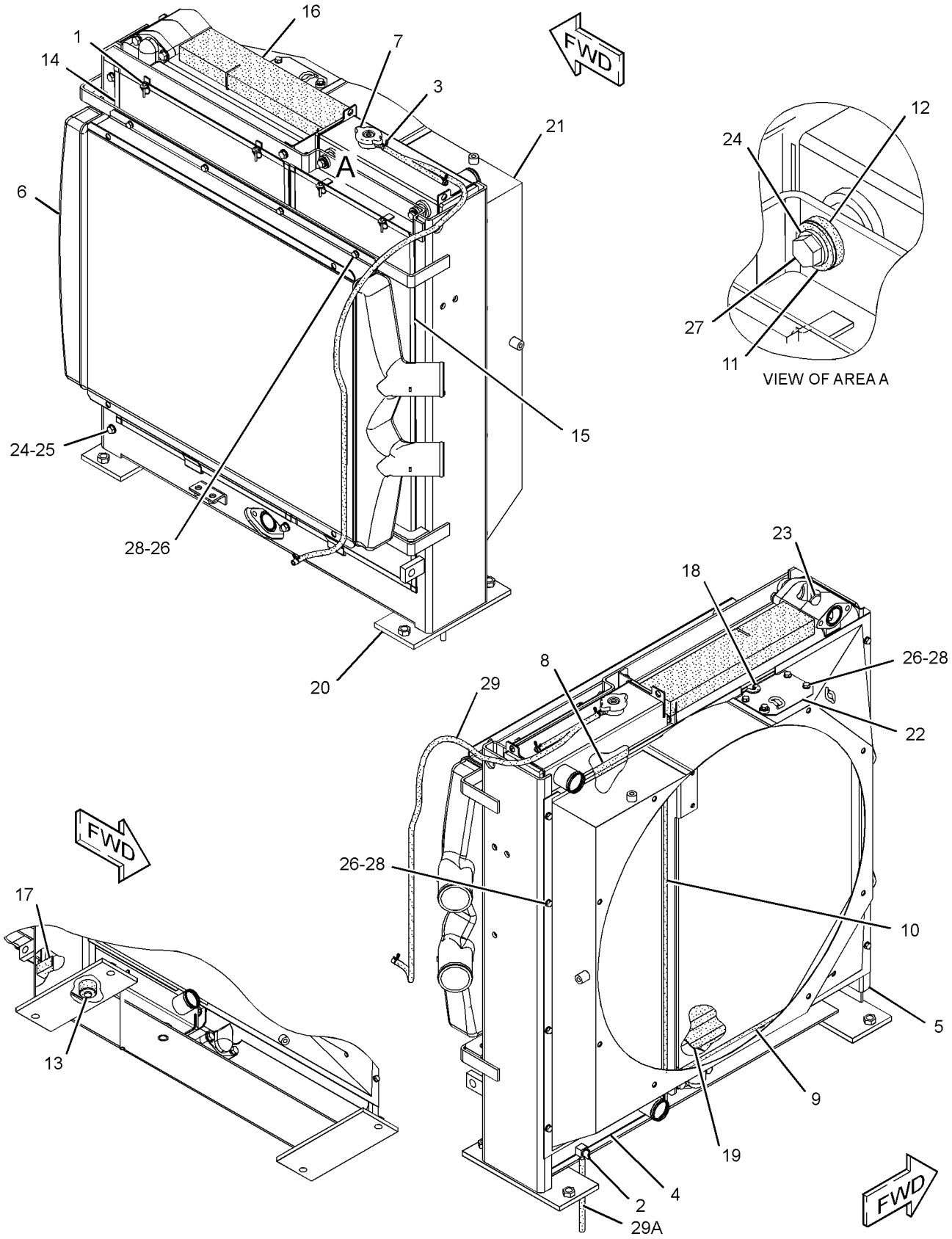

GRAPHIC #1 **<END>** g01274007

COOLING SYSTEM

265-3688 RADIATOR & HYD OIL COOLER GP

S/N: DFP1-UP; CJX1-UP

PART OF 245-9295 RADIATOR & HYD OIL COOLER GP

SMCS-1351 **i02662840**

NOTE	REF NO	GRAPHIC REF	PART NUMBER	QTY	PART NAME 1 2 3 4 5 6 (PRODUCT LEVEL)	SEE PAGE
	1	1	**5D-8159**	4	PIN AS	
M	2	1	**093-5432**	1	VALVE AS-DRAIN (COOLANT)	
	3	1	**096-4035**	2	CLIP	
	4	1	**245-9207**	1	CORE AS-RADIATOR	
	5	1	**245-9208**	1	CORE AS-OIL COOLER (HYDRAULIC)	
	6	1	**245-9209**	1	AFTERCOOLER AS	
	7	1	**245-9212**	1	CAP AS-RADIATOR	
	8	1	**245-9213**	2	SEAL	
	9	1	**245-9214**	2	SEAL	
	10	1	**245-9215**	1	SEAL	
	11	1	**245-9216**	2	BOSS	
	12	1	**245-9217**	2	CUSHION-RUBBER	
	13	1	**245-9218**	2	CUSHION-RUBBER	
	14	1	**245-9219**	1	SCREEN AS-HYDRAULIC OIL COOLER	
	15	1	**245-9220**	1	SCREEN AS-RADIATOR	
	16	1	**245-9221**	1	SEAL	
	17	1	**245-9222**	1	SEAL	
	18	1	**265-3515**	1	SHEET-RUBBER	
	19	1	**265-3580**	1	FRAME AS	
	20	1	**281-3448**	1	SHROUD AS-RADIATOR	
	21	1	**095-1543**	4	SEAL-O-RING	
	22	1	**8T-4121**	8	WASHER-HARD (11X21X2.5-MM THK)	
M	23	1	**8T-4136**	6	BOLT (M10X1.5X25-MM)	
M	24	1	**8T-4189**	16	BOLT (M8X1.25X20-MM)	
M	25	1	**8T-4195**	2	BOLT (M10X1.5X30-MM)	
	26	1	**8T-4224**	16	WASHER-HARD (8.8X16X2-MM THK)	
E	27	1	**7Y-1976**		HOSE-WATER (140-CM)	
E	27A	1	**7Y-1976**		HOSE-WATER (20-CM)	

E-ORDER BY THE CENTIMETER
M-METRIC PART

265-3688 RADIATOR & HYD OIL COOLER GP *(contd.)* i02662840

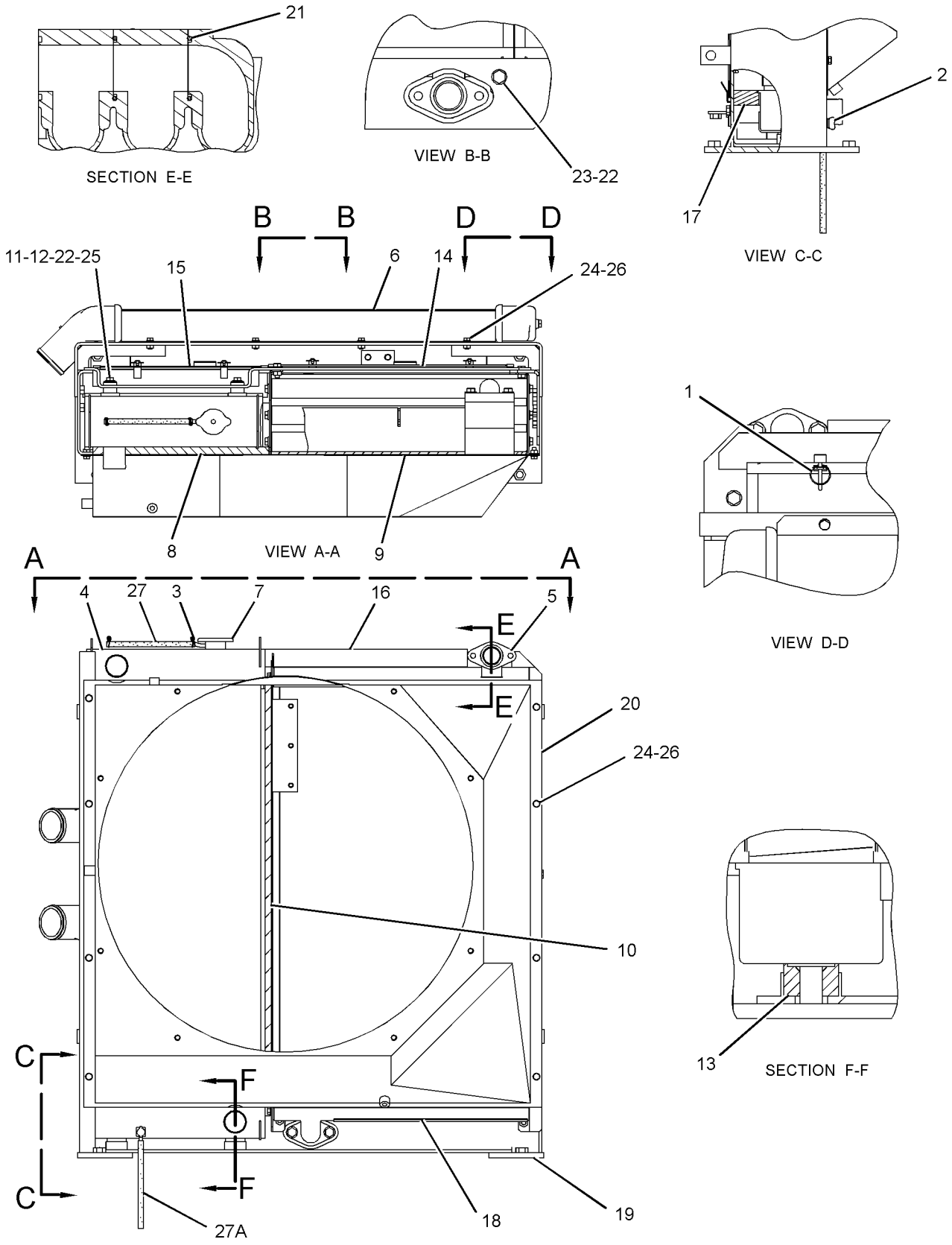

GRAPHIC #1 **<END>** g01272832

AIR INLET AND EXHAUST SYSTEM

229-1794 AIR CLEANER AR—WITH PRECLEANER

S/N: DFP1-UP; CJX1-UP

AN ATTACHMENT

SMCS-1051 **i02399791**

NOTE	PART NUMBER	QTY	PART NAME 1 2 3 4 5 6 (PRODUCT LEVEL)	SEE PAGE
Y	*233-1127*	1	AIR CLEANER GP	131
Y	*223-3045*	1	HOOD GP (PRECLEANER)	512

Y-SEPARATE ILLUSTRATION

<END>

AIR INLET AND EXHAUST SYSTEM

124-1708 AIR CLEANER GP

S/N: DFP1-359; CJX1-322

PART OF 255-3053 AIR CLEANER GP

SMCS-1051, 1054 **i02458596**

NOTE	REF NO	GRAPHIC REF	PART NUMBER	QTY	PART NAME 1 2 3 4 5 6 (PRODUCT LEVEL)	SEE PAGE
Z	1	1		1	BODY AS	
	2	1	**6I-2503**	1	FILTER ELEMENT AS-AIR (PRIMARY)	
	3	1	**6I-2504**	1	FILTER ELEMENT AS-AIR (SECONDARY)	
	4	1	**159-7667**	1	SEAL-O-RING	
	5	1	**131-8828**	1	COVER AS	
		1	**139-8794**	3	LATCH	
	6	1	**131-8826**	1	FILM-INSTRUCTION (TOP, AIR CLEANER COVER)	
	7	1	**131-8829**	1	VALVE-VACUATOR	
	8	1	**255-2966**	1	INDICATOR AS-AIR FILTER CHANGE (AIR RESTRICTION)	
	9	1	**5L-3233**	1	FITTING	

Z-NOT SERVICED SEPARATELY

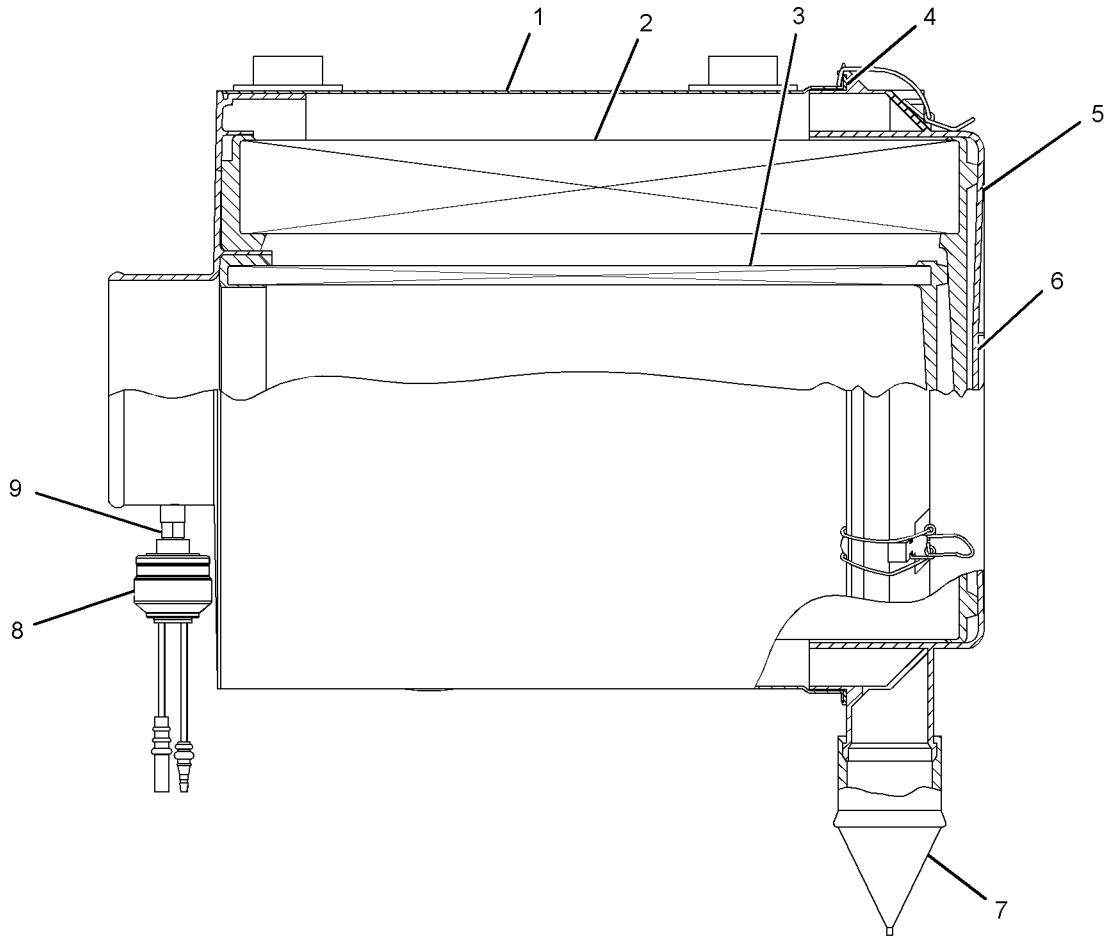

GRAPHIC #1 **<END>** g01243549

134-7085 AIR CLEANER GP

S/N: DFP1-UP; CJX1-UP
PRECLEANER
PART OF 233-1127 AIR CLEANER GP
AN ATTACHMENT

SMCS-1051, 1054 **i02852052**

NOTE	REF NO	GRAPHIC REF	PART NUMBER	QTY	PART NAME 1 2 3 4 5 6 (PRODUCT LEVEL)	SEE PAGE
Z	1	1		1	BODY AS	
	2	1	**6I-2504**	1	FILTER ELEMENT AS-AIR (SECONDARY)	
	3	1	**6I-2503**	1	FILTER ELEMENT AS-AIR (PRIMARY)	
	4	1	**6I-4464**	1	COVER AS-AIR CLEANER	
		1	**4P-5524**	1	SEAL-O-RING	
	5	1	**255-2966**	1	INDICATOR AS-AIR FILTER CHANGE (AIR RESTRICTION)	

Z-NOT SERVICED SEPARATELY

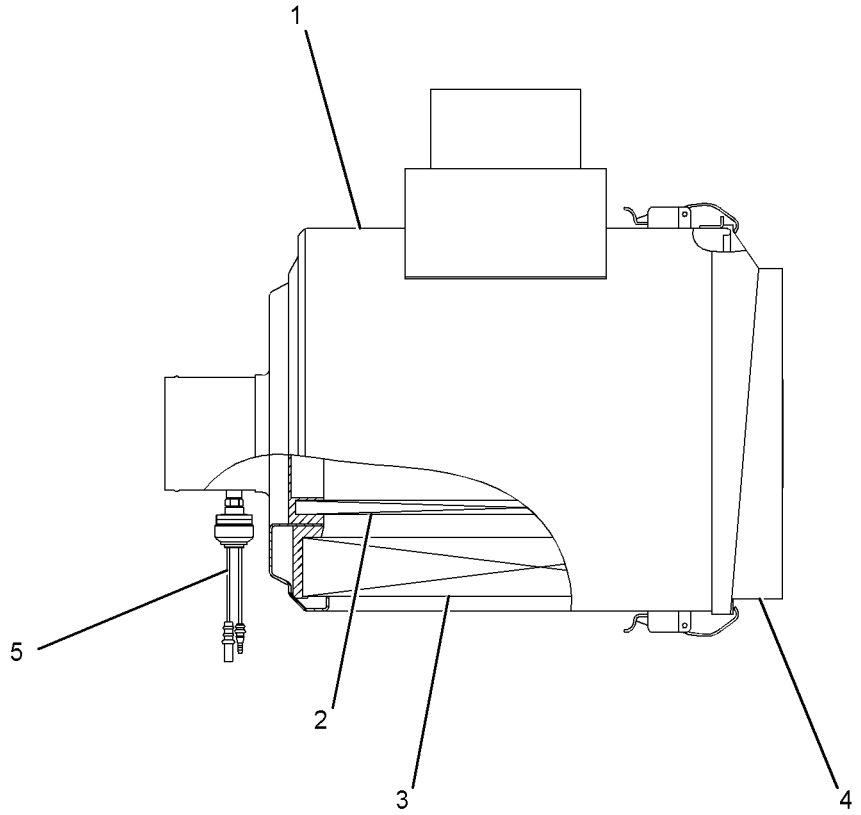

GRAPHIC #1 **<END>** g01255076

233-1127 AIR CLEANER GP

S/N: DFP1-UP; CJX1-UP
PART OF 229-1794 AIR CLEANER AR
AN ATTACHMENT
TYPE 1

SMCS-1051, 1054 **i02400201**

NOTE	REF NO	GRAPHIC REF	PART NUMBER	QTY	PART NAME 1 2 3 4 5 6 (PRODUCT LEVEL)	SEE PAGE
	1	1	**9X-2201**	1	CLAMP-HOSE	
	2	1	**116-2659**	1	DAMPER	
	3	1	**130-3280**	1	PRECLEANER AS	
		1	**174-5415**	1	CLAMP	
Y	4	1	**134-7085**	1	AIR CLEANER GP	130
	5	1	**134-7089**	1	CLAMP	
	6	1	**193-2882**	1	PIPE AS	
	7	1	**255-2866**	1	HOSE	
	8	1	**5P-1076**	4	WASHER-HARD (13.5X30X4-MM THK)	
M	9	1	**8T-4139**	4	BOLT (M12X1.75X30-MM)	

M-METRIC PART
Y-SEPARATE ILLUSTRATION

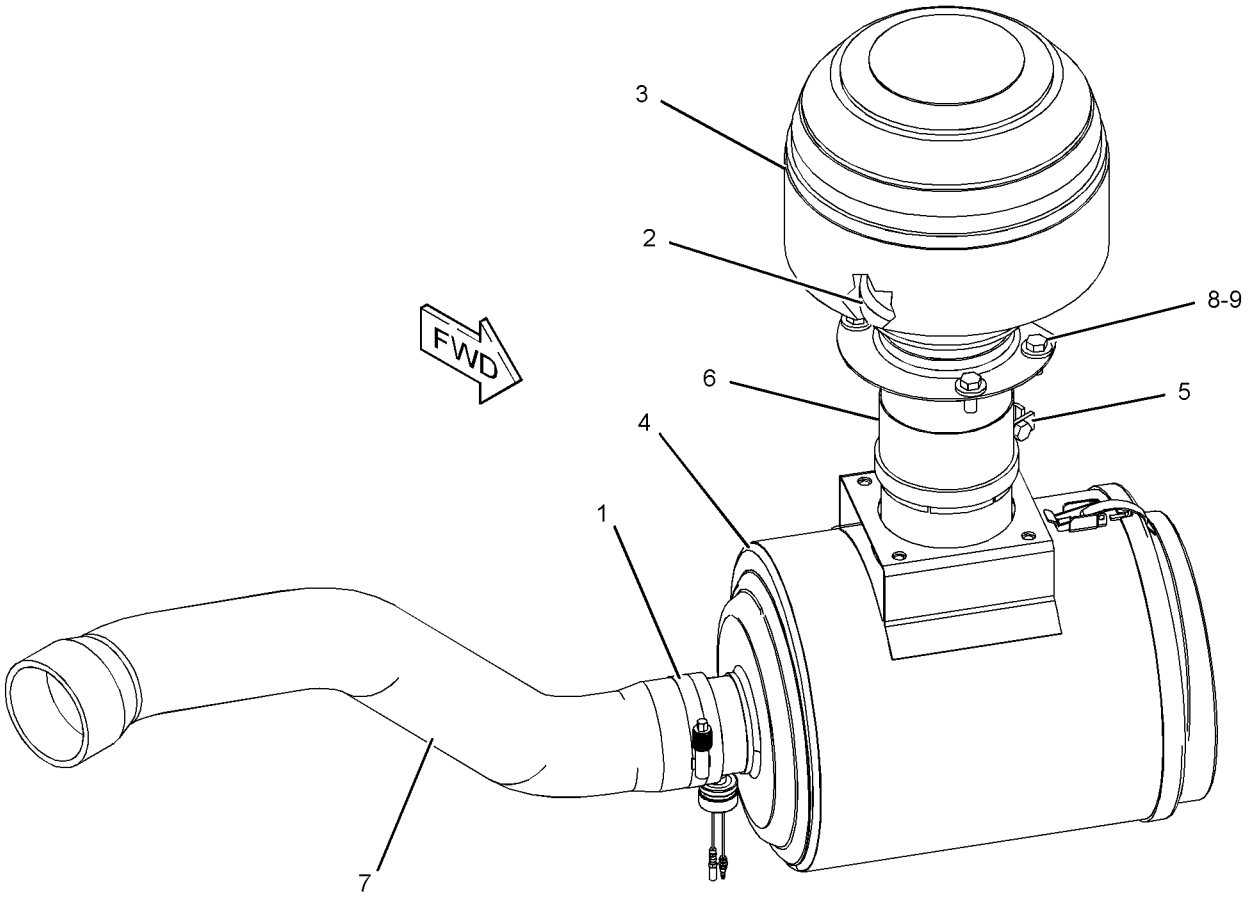

GRAPHIC #1 **<END>** g01218427

233-1127 AIR CLEANER GP

S/N: DFP1-UP; CJX1-UP
PART OF 229-1794 AIR CLEANER AR
AN ATTACHMENT
TYPE 2

SMCS-1051, 1054 **i03011893**

NOTE	REF NO	GRAPHIC REF	PART NUMBER	QTY	PART NAME 1 2 3 4 5 6 (PRODUCT LEVEL)	SEE PAGE
	1	1	**9X-2201**	1	CLAMP-HOSE	
	2	1	**116-2659**	1	DAMPER	
	3	1	**130-3280**	1	PRECLEANER AS	
		1	**174-5415**	1	CLAMP	
CY	4	1	**310-9677**	1	AIR CLEANER GP	136
	5	1	**134-7089**	1	CLAMP	
	6	1	**193-2882**	1	PIPE AS	
	7	1	**255-2866**	1	HOSE	
	8	1	**5P-1076**	4	WASHER-HARD (13.5X30X4-MM THK)	
M	9	1	**8T-4139**	4	BOLT (M12X1.75X30-MM)	

C-CHANGE FROM PREVIOUS TYPE
M-METRIC PART
Y-SEPARATE ILLUSTRATION

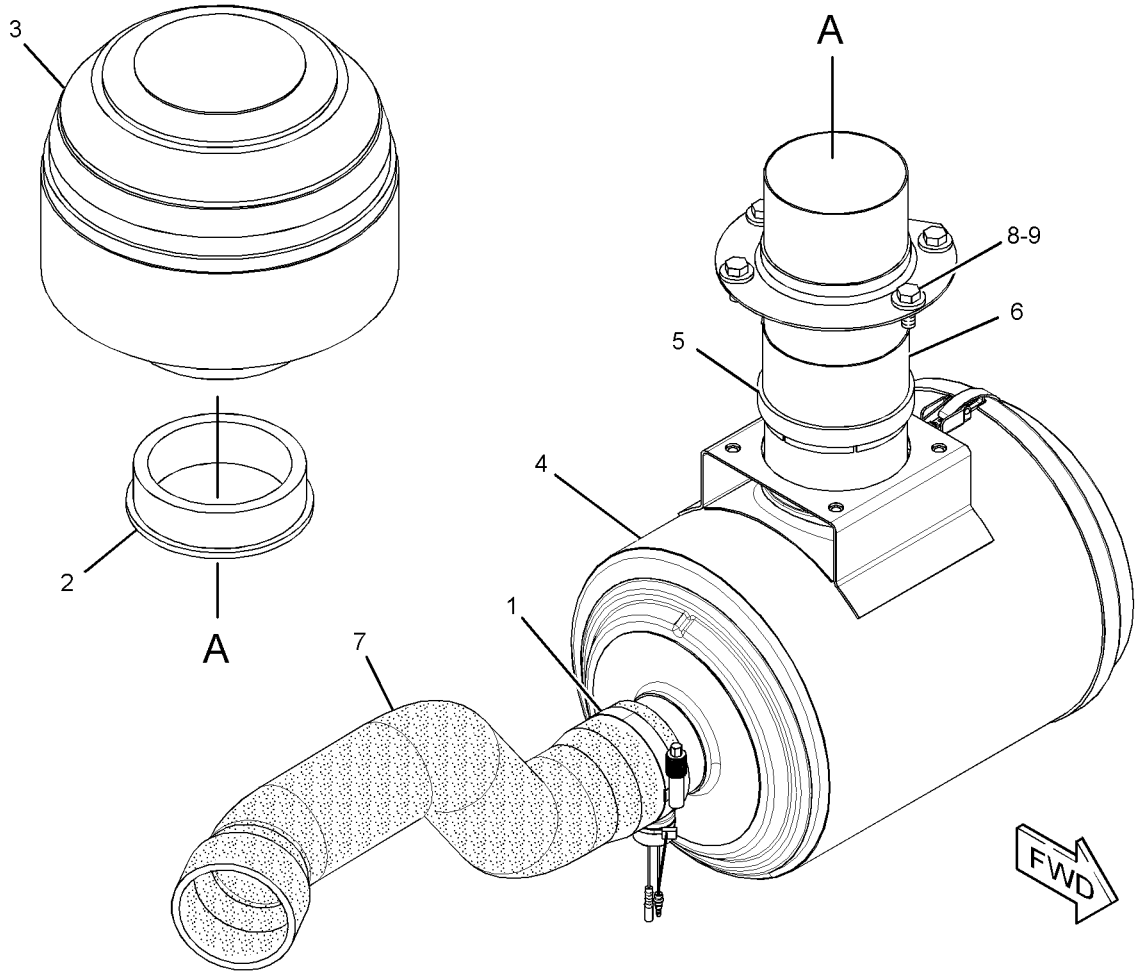

GRAPHIC #1 **<END>** g01525717

AIR INLET AND EXHAUST SYSTEM

255-3053 AIR CLEANER GP

S/N: DFP1-358; CJX1-322

PART OF 222-8379 INSTALLATION AR-ENGINE

SMCS-1051, 1054 **i02502918**

NOTE	REF NO	GRAPHIC REF	PART NUMBER	QTY	PART NAME 1 2 3 4 5 6 (PRODUCT LEVEL)	SEE PAGE
Y	1	1	**124-1708**	1	AIR CLEANER GP	129
	2	1	**8T-4121**	4	WASHER-HARD (11X21X2.5-MM THK)	
M	3	1	**8T-4137**	4	BOLT (M10X1.5X20-MM)	

M-METRIC PART
Y-SEPARATE ILLUSTRATION

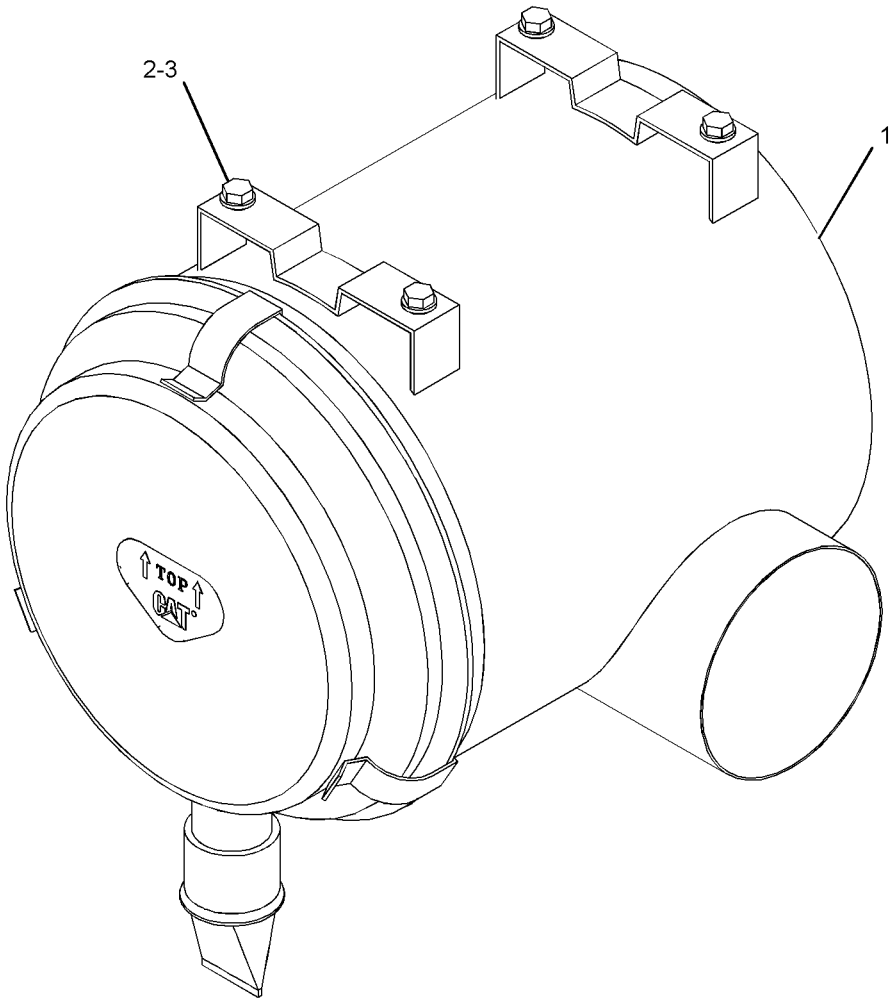

GRAPHIC #1 **<END>** g01210958

AIR INLET AND EXHAUST SYSTEM

255-3053 AIR CLEANER GP

S/N: DFP359-UP; CJX323-UP

PART OF 222-8379 INSTALLATION AR-ENGINE

SMCS-1051, 1054 **i03081162**

NOTE	REF NO	GRAPHIC REF	PART NUMBER	QTY	PART NAME 1 2 3 4 5 6 (PRODUCT LEVEL)	SEE PAGE
CY	1	1	**310-9668**	1	AIR CLEANER GP	135
	2	1	**8T-4121**	4	WASHER-HARD (11X21X2.5-MM THK)	
M	3	1	**8T-4137**	4	BOLT (M10X1.5X20-MM)	

C-CHANGE FROM PREVIOUS TYPE
M-METRIC PART
Y-SEPARATE ILLUSTRATION

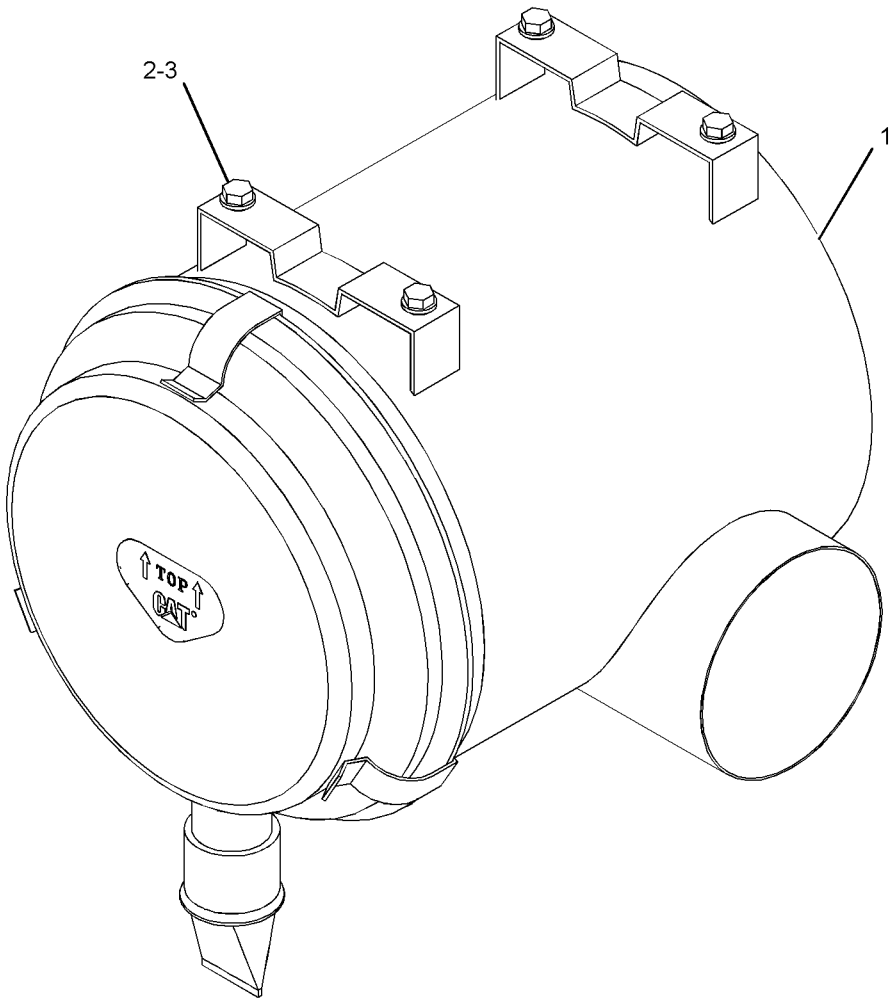

GRAPHIC #1 **<END>** g01210958

AIR INLET AND EXHAUST SYSTEM

310-9668 AIR CLEANER GP

S/N: DFP359-UP; CJX323-UP

PART OF 255-3053 AIR CLEANER GP

SMCS-1051, 1054 **i03081165**

NOTE	REF NO	GRAPHIC REF	PART NUMBER	QTY	PART NAME 1 2 3 4 5 6 (PRODUCT LEVEL)	SEE PAGE
	1	1	**5L-3233**	1	FITTING	
	2	1	**6I-2503**	1	FILTER ELEMENT AS-AIR (PRIMARY)	
					—OR—	
		1	**132-7165**	1	FILTER ELEMENT AS-AIR (PRIMARY) (ULTRA HIGH EFFICIENCY)	
	3	1	**6I-2504**	1	FILTER ELEMENT AS-AIR (SECONDARY)	
	4	1	**7I-2673**	1	STRAP-CABLE	
	5	1	**131-8826**	1	FILM-INSTRUCTION (TOP, AIR CLEANER COVER)	
	6	1	**131-8828**	1	COVER AS	
	6A	1	**139-8794**	3	LATCH	
	7	1	**131-8829**	1	VALVE-VACUATOR	
	8	1	**159-7667**	1	SEAL-O-RING	
	9	1	**255-2966**	1	INDICATOR AS-AIR FILTER CHANGE (AIR RESTRICTION)	

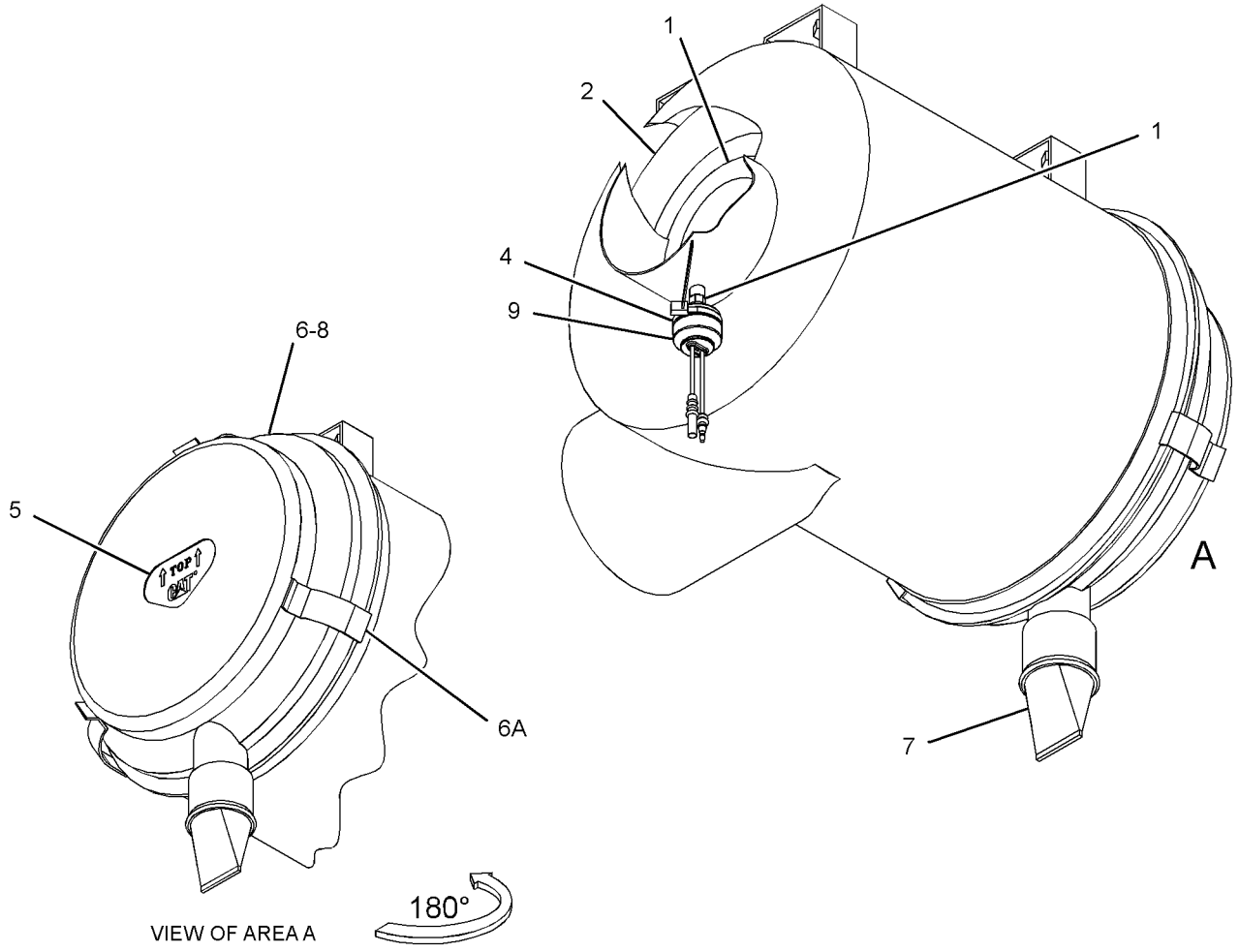

GRAPHIC #1 **<END>** g01532601

310-9677 AIR CLEANER GP

S/N: DFP1-UP; CJX1-UP
PART OF 233-1127 AIR CLEANER GP
AN ATTACHMENT

SMCS-1051, 1054 **i03011897**

NOTE	REF NO	GRAPHIC REF	PART NUMBER	QTY	PART NAME 1 2 3 4 5 6 (PRODUCT LEVEL)	SEE PAGE
	1	1	**7I-2673**	1	STRAP-CABLE	
	2	1	**6I-2504**	1	FILTER ELEMENT AS-AIR (SECONDARY)	
	3	1	**6I-2503**	1	FILTER ELEMENT AS-AIR (PRIMARY)	
					—OR—	
F			**132-7165**	1	FILTER ELEMENT AS-AIR (PRIMARY) (ULTRA HIGH EFFICIENCY)	
	4	1	**6I-4464**	1	COVER AS-AIR CLEANER	
		1	**4P-5524**	1	SEAL-O-RING	
	5	1	**255-2966**	1	INDICATOR AS-AIR FILTER CHANGE (AIR RESTRICTION)	

F-NOT SHOWN

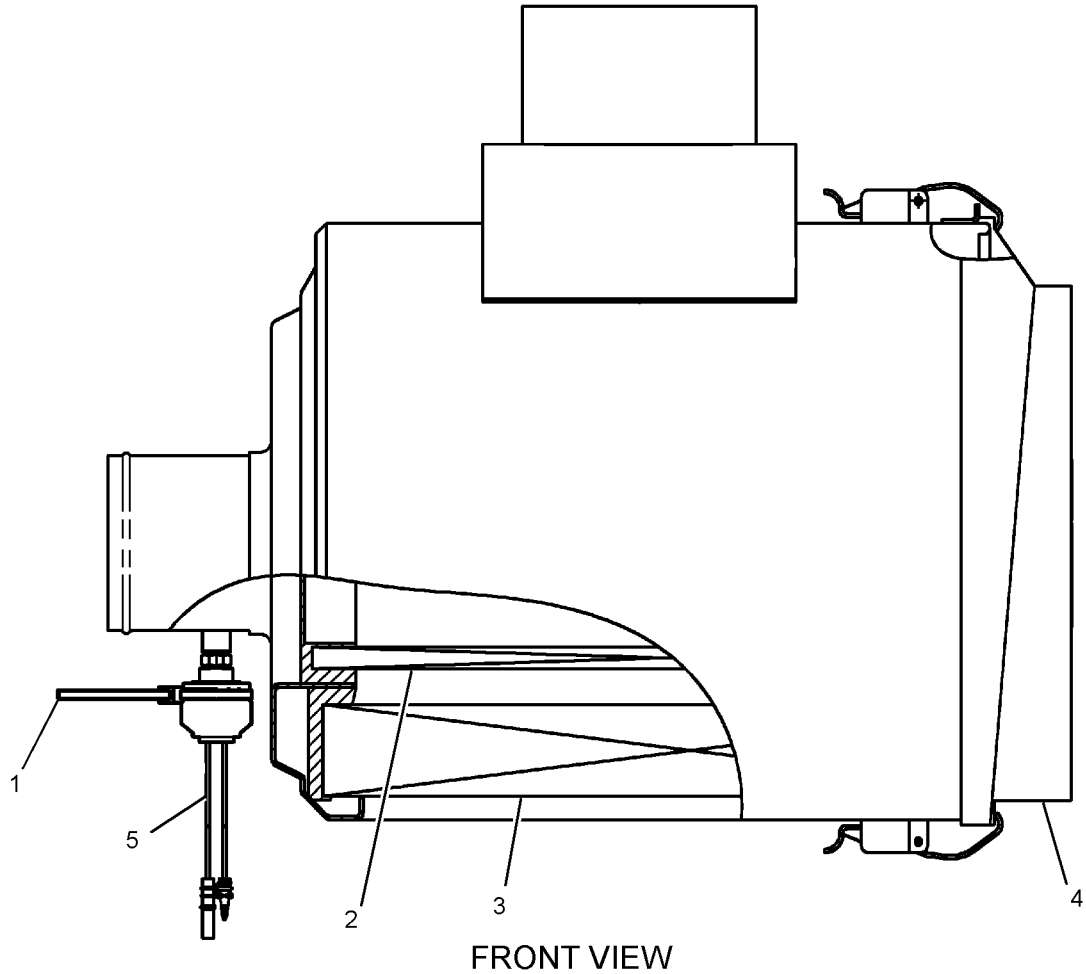

FRONT VIEW

GRAPHIC #1 **<END>** g01525733

189-8780 COVER GP-AIR INLET–STARTING AID HEATER

S/N: KHX1-4776

PART OF 235-8134, 235-8135, 270-2767, 270-2768, 290-0755 ENGINE AR-COMPLETE

ALSO AN ATTACHMENT

SMCS-1051 **i02691683**

NOTE	REF NO	GRAPHIC REF	PART NUMBER	QTY	PART NAME 1 2 3 4 5 6 (PRODUCT LEVEL)	SEE PAGE
Y	1	1	**288-0973**	1	COVER GP-AIR INLET (STARTING AID HEATER)	139
BC	2	1	**1U-8846**		SEALANT-GASKET	

B-USE AS REQUIRED
C-CHANGE FROM PREVIOUS TYPE
Y-SEPARATE ILLUSTRATION

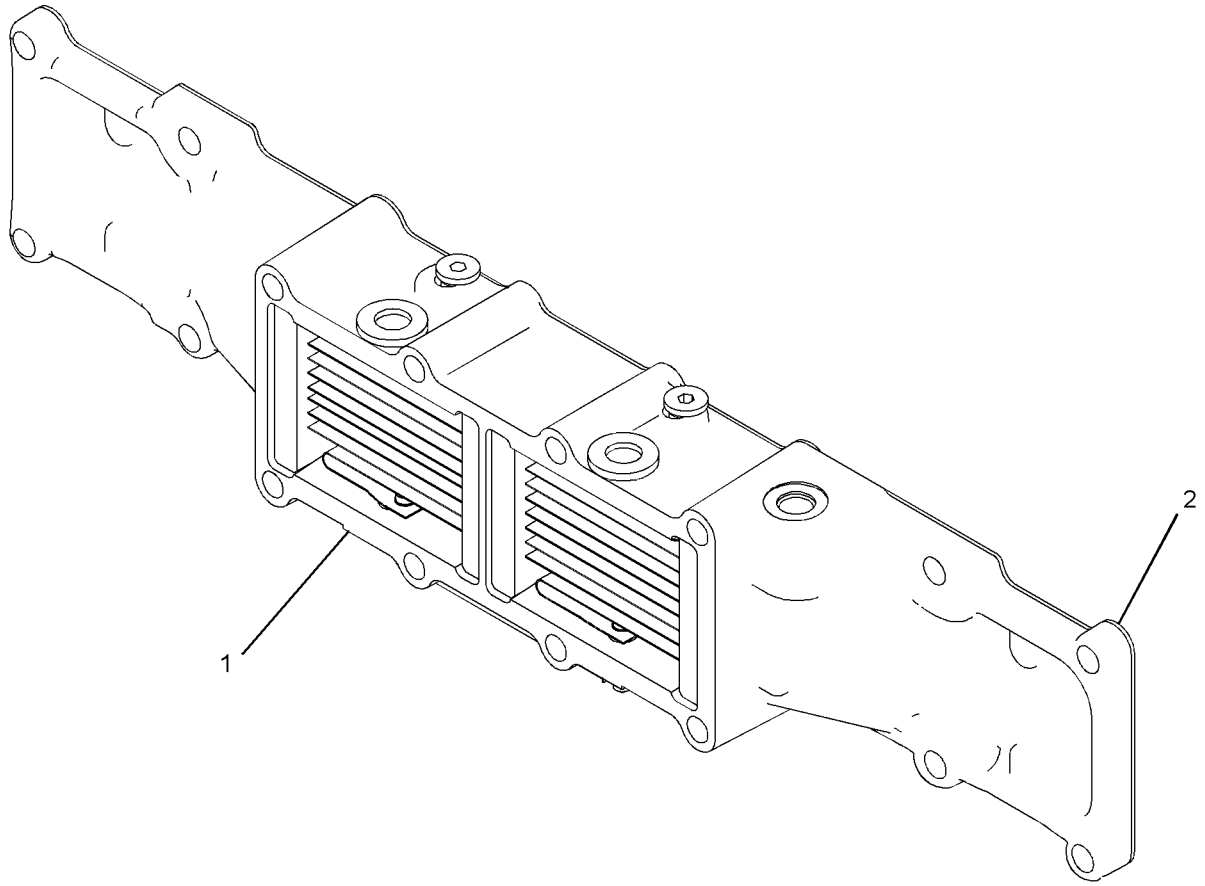

GRAPHIC #1 **<END>** g01350893

189-8780 COVER GP-AIR INLET—STARTING AID HEATER

S/N: KHX1-UP
PART OF 235-8134, 270-2767, 270-2768, 290-0755, 290-0757, 290-0758 ENGINE
AR-COMPLETE
ALSO AN ATTACHMENT

SMCS-1051 **i02691337**

NOTE	REF NO	GRAPHIC REF	PART NUMBER	QTY	PART NAME 1 2 3 4 5 6 (PRODUCT LEVEL)	SEE PAGE
CY	1	1	**294-7675**	1	COVER GP-AIR INLET (STARTING AID HEATER)	140
B	2	1	**1U-8846**		SEALANT-GASKET	

B-USE AS REQUIRED
C-CHANGE FROM PREVIOUS TYPE
Y-SEPARATE ILLUSTRATION

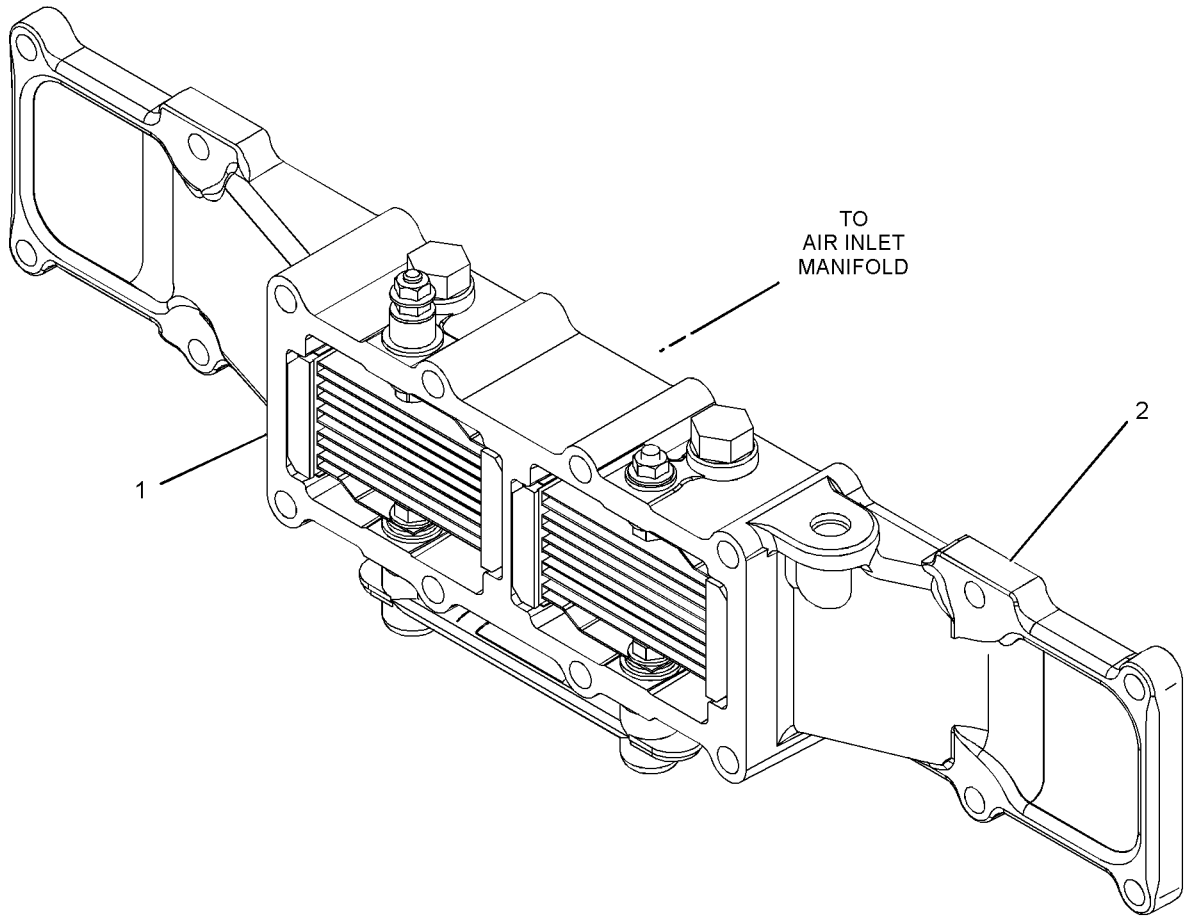

GRAPHIC #1 **<END>** g01350757

288-0973 COVER GP-AIR INLET

S/N: KHX1-4776
24-VOLT
PART OF 189-8780 COVER GP-AIR INLET
ALSO AN ATTACHMENT

SMCS-1051 **i02493754**

NOTE	REF NO	GRAPHIC REF	PART NUMBER	QTY	PART NAME 1 2 3 4 5 6 (PRODUCT LEVEL)	SEE PAGE
	1	1	**9S-4191**	2	PLUG-O-RING	
	2	1	**3J-1907**	2	SEAL-O-RING	
	3	1	**245-6795**	1	INSULATOR	

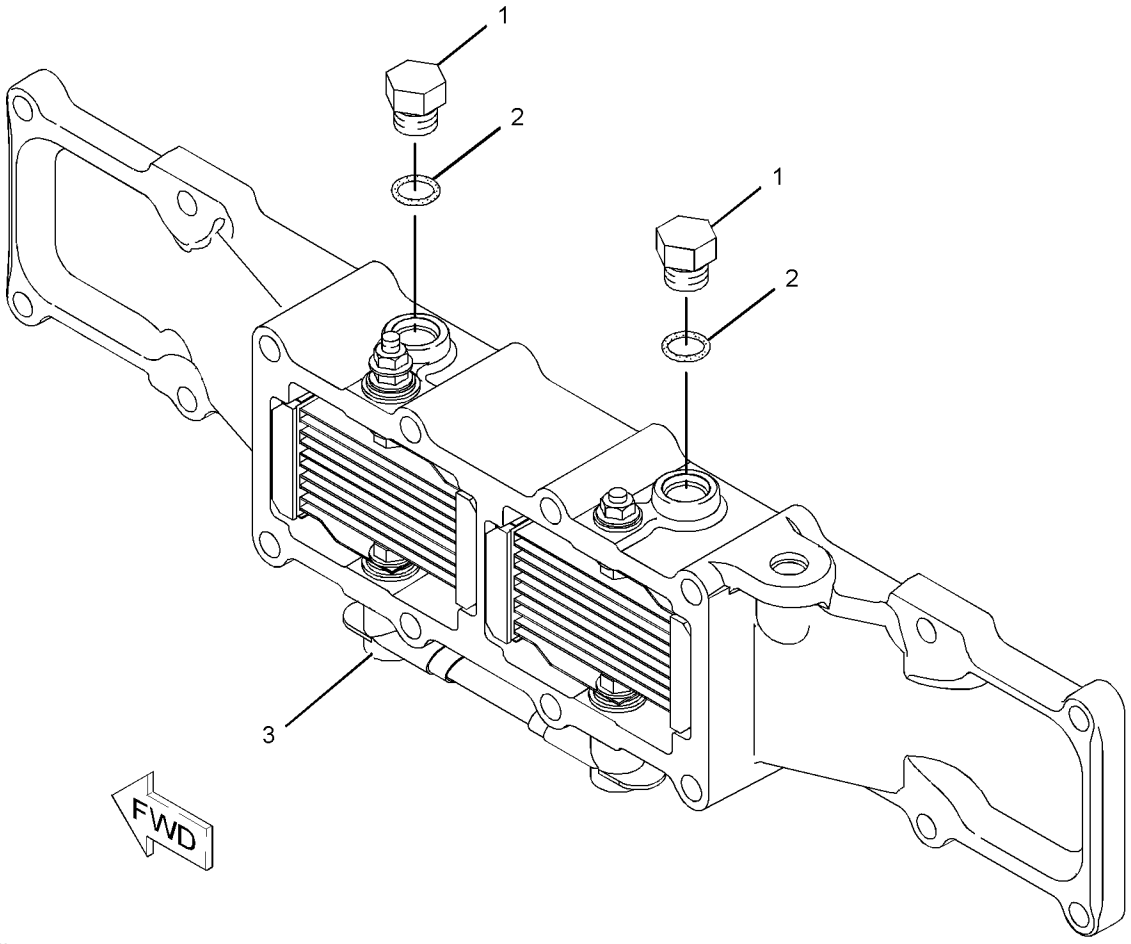

GRAPHIC #1 **<END>** g01071181

AIR INLET AND EXHAUST SYSTEM

294-7675 COVER GP-AIR INLET

S/N: KHX4777-UP
PART OF 189-8780 COVER GP-AIR INLET
ALSO AN ATTACHMENT

SMCS-1051 **i02674862**

NOTE	REF NO	GRAPHIC REF	PART NUMBER	QTY	PART NAME 1 2 3 4 5 6 (PRODUCT LEVEL)	SEE PAGE
	1	1	**9S-4191**	2	PLUG-O-RING	
	2	1	**3J-1907**	2	SEAL-O-RING	
	3	1	**245-6795**	1	INSULATOR	

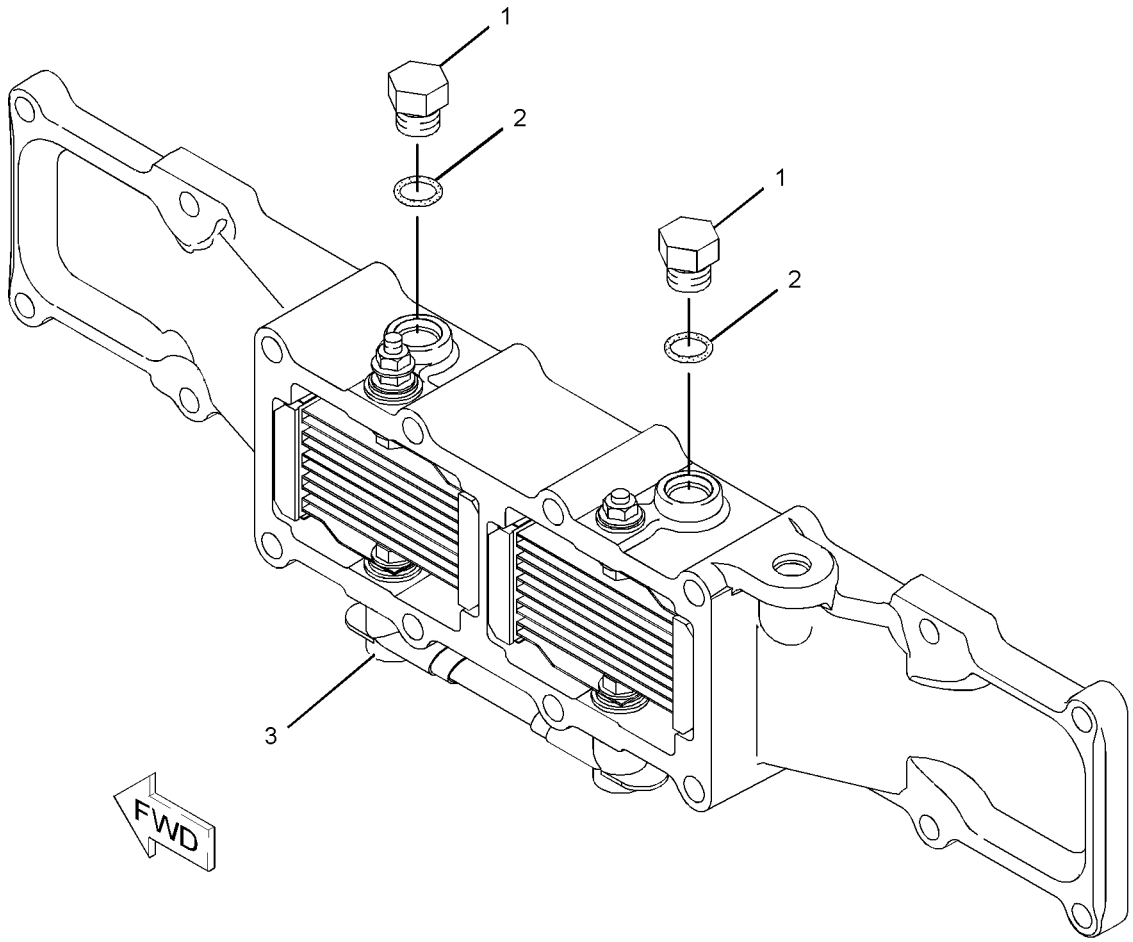

GRAPHIC #1 **<END>** g01071181

231-3950 ELBOW GP-AIR INLET

S/N: KHX1-UP
PART OF 235-8134, 235-8135, 270-2767, 270-2768, 290-0755, 290-0757, 290-0758
ENGINE AR-COMPLETE
ALSO AN ATTACHMENT

SMCS-1058 **i02352192**

NOTE	REF NO	GRAPHIC REF	PART NUMBER	QTY	PART NAME 1 2 3 4 5 6 (PRODUCT LEVEL)	SEE PAGE
B	1	1	**1U-8846**		SEALANT-GASKET	
	2	1	**7S-6369**	8	WASHER (0.344X0.75X0.188-IN THK)	
	3	1	**102-6671**	1	SPACER	
	4	1	**116-4663**	1	ELBOW	
F		1	**3K-0360**	2	SEAL-O-RING	
F		1	**9S-8005**	2	PLUG-O-RING	
M	5	1	**137-6726**	1	STUD (M8X1.25X132.75-MM OAL)	
M	6	1	**6V-3821**	7	BOLT (M8X1.25X110-MM)	
	7	1	**8L-2786**	1	SEAL-O-RING	
	8	1	**9S-8005**	1	PLUG-O-RING	

B-USE AS REQUIRED
F-NOT SHOWN
M-METRIC PART

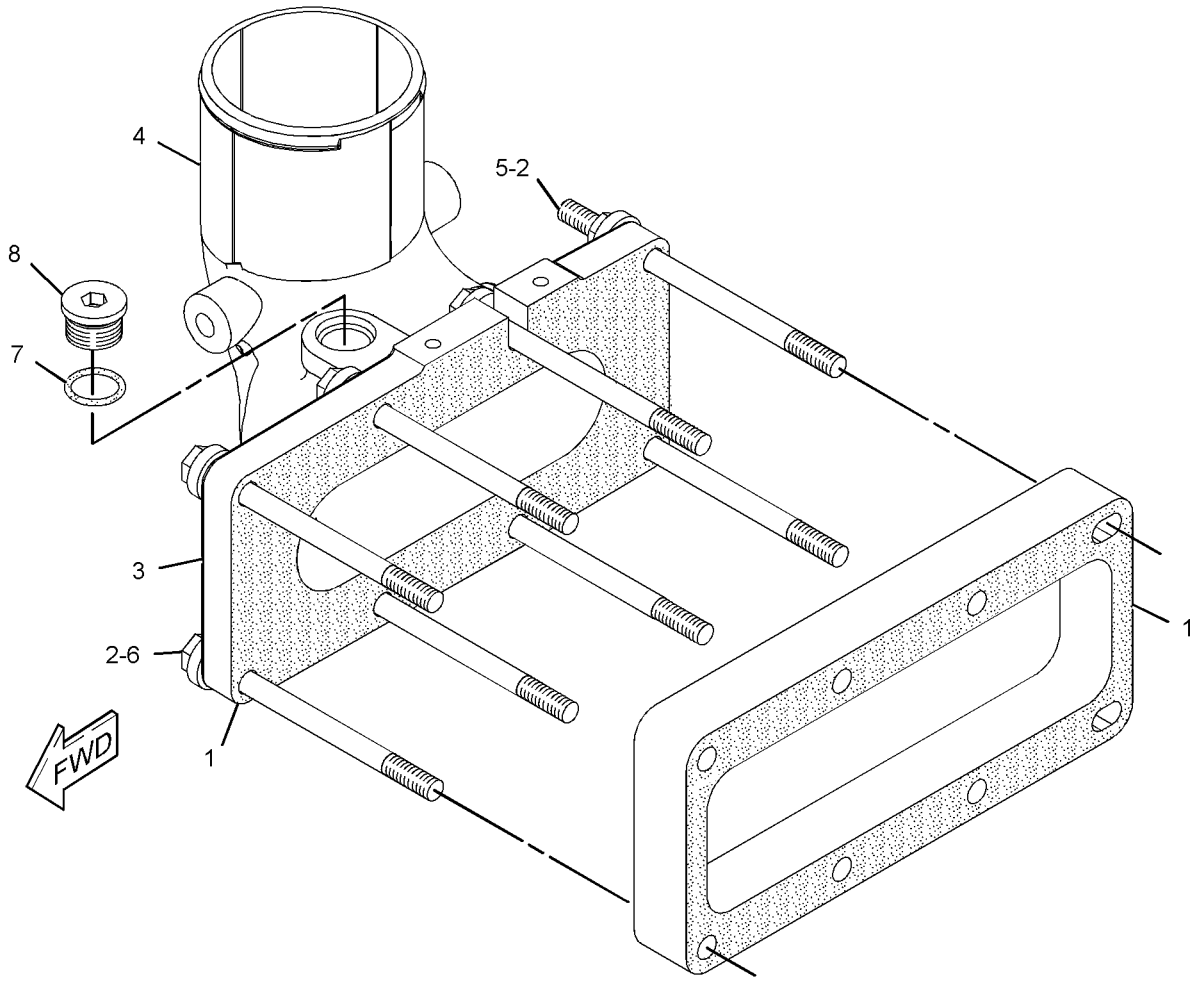

GRAPHIC #1 **<END>** g01158926

AIR INLET AND EXHAUST SYSTEM

210-8175 LINES GP-AIR

S/N: DFP1-UP; CJX1-UP

PART OF 222-8379 INSTALLATION AR-ENGINE

SMCS-1071 **i02467709**

NOTE	REF NO	GRAPHIC REF	PART NUMBER	QTY	PART NAME 1 2 3 4 5 6 (PRODUCT LEVEL)	SEE PAGE
	1	1	**144-0367**	12	CLAMP-HOSE	
	2	1	**230-2865**	1	HOSE	
	3	1	**230-2866**	1	HOSE	
	4	1	**230-2867**	1	HOSE	
	5	1	**230-2868**	1	HOSE	
	6	1	**230-2871**	1	TUBE AS	
	7	1	**230-2876**	1	TUBE AS	
	8	1	**7X-7729**	2	WASHER (11X25X3-MM THK)	
	9	1	**8T-4121**	2	WASHER-HARD (11X21X2.5-MM THK)	
M	10	1	**8T-4136**	4	BOLT (M10X1.5X25-MM)	

M-METRIC PART

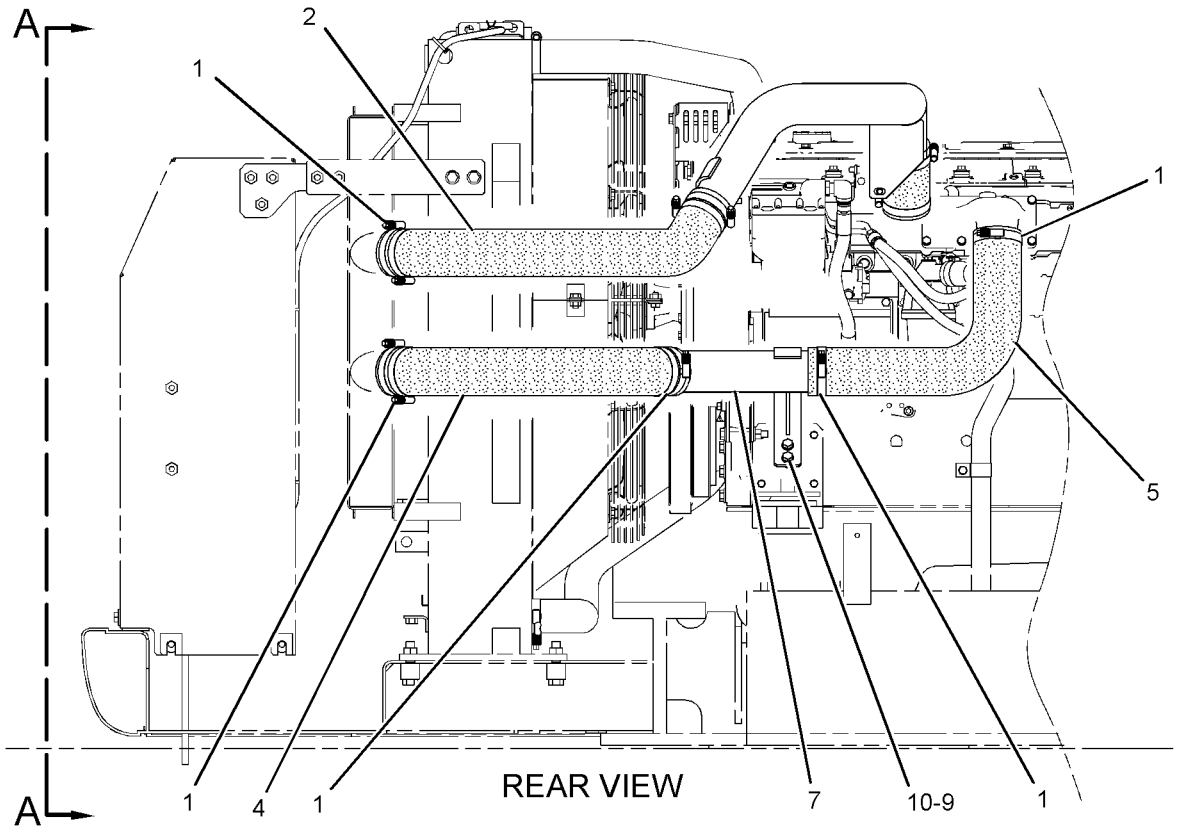

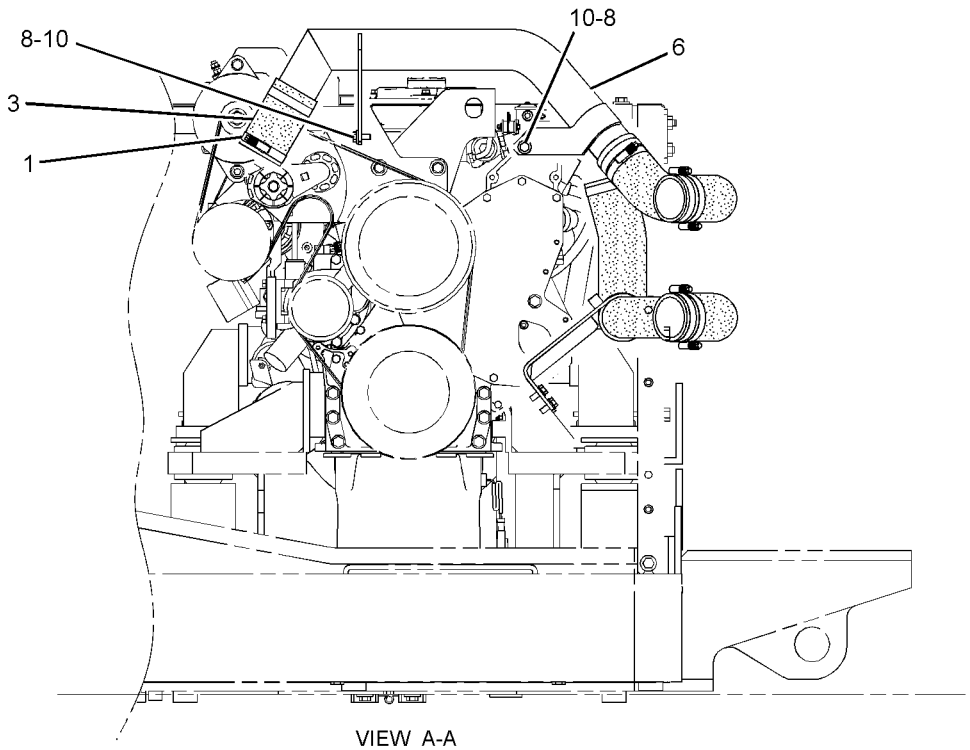

VIEW A-A

GRAPHIC #1 **<END>** g01248686

AIR INLET AND EXHAUST SYSTEM

233-1119 LINES GP-AIR

S/N: DFP1-UP; CJX1-UP

PART OF 222-8379 INSTALLATION AR-ENGINE

SMCS-1071 **i02346496**

NOTE	REF NO	GRAPHIC REF	PART NUMBER	QTY	PART NAME 1 2 3 4 5 6 (PRODUCT LEVEL)	SEE PAGE
	1	1	**8T-4986**	3	CLAMP-HOSE	
	2	1	**8T-4987**	1	CLAMP-HOSE	
	3	1	**190-5791**	1	ELBOW	
	4	1	**239-6686**	1	TUBE AS	
	5	1	**239-6687**	1	HOSE	
M	6	1	**8T-4192**	2	BOLT (M12X1.75X25-MM)	
	7	1	**8T-4223**	2	WASHER-HARD (13.5X25.5X3-MM THK)	

M-METRIC PART

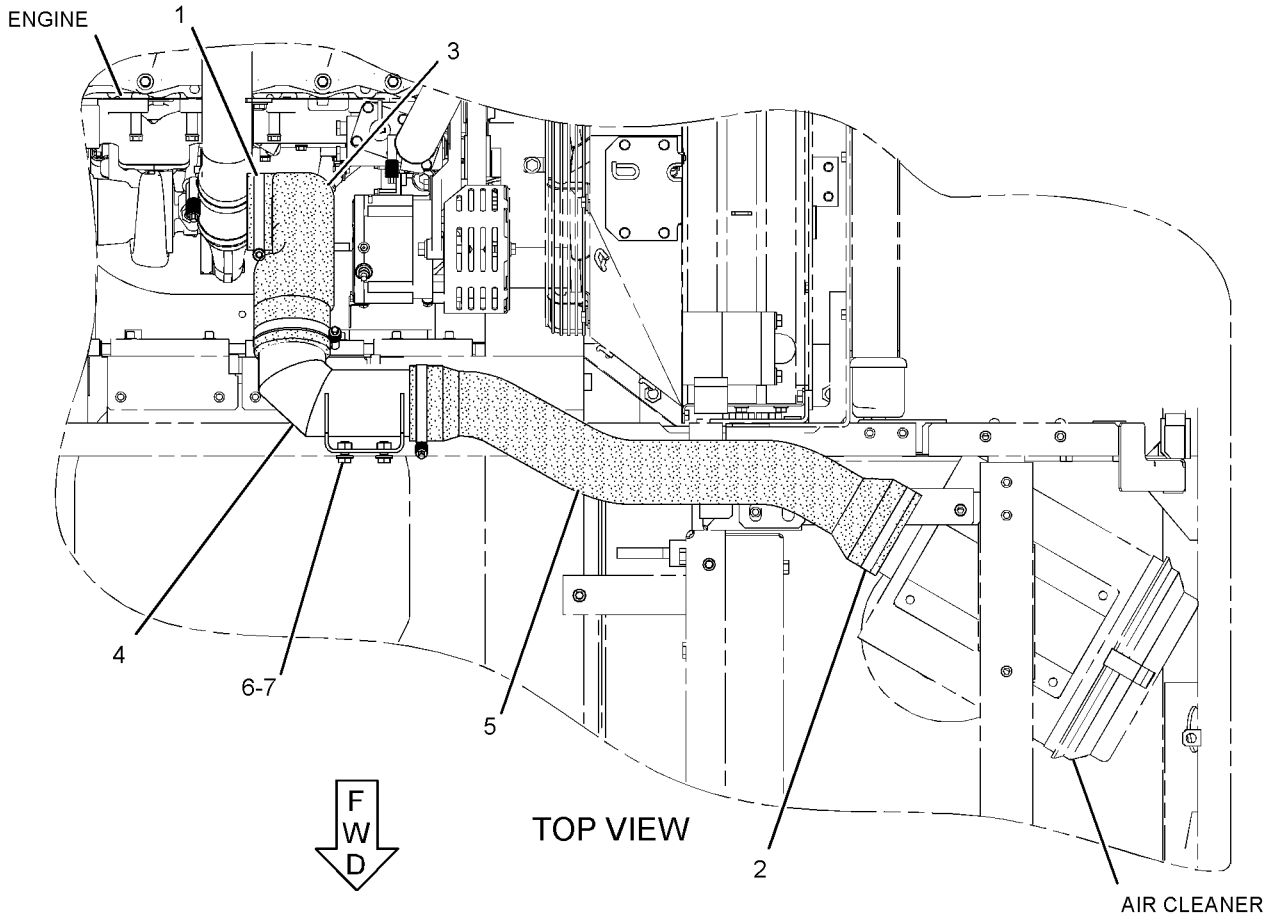

GRAPHIC #1 **<END>** g01156032

272-4624 LINES GP-MUFFLER DRAIN

S/N: DFP1-UP; CJX1-UP
PART OF 222-8379 INSTALLATION AR-ENGINE
TYPE 1

SMCS-1062 **i02502915**

NOTE	REF NO	GRAPHIC REF	PART NUMBER	QTY	PART NAME 1 2 3 4 5 6 (PRODUCT LEVEL)	SEE PAGE
	1	1	**3S-2093**	1	STRAP-CABLE	
	2	1	**5P-4961**	1	CLAMP-HOSE	
	3	1	**178-6626**	1	SUPPORT AS	
	4	1	**272-4625**	1	TUBE AS	
	5	1	**171-9073**	1	CLIP	
	6	1	**8T-4121**	1	WASHER-HARD (11X21X2.5-MM THK)	
M	7	1	**8T-4136**	1	BOLT (M10X1.5X25-MM)	
E	8	1	**5P-1442**		HOSE (84-CM)	

E-ORDER BY THE CENTIMETER
M-METRIC PART

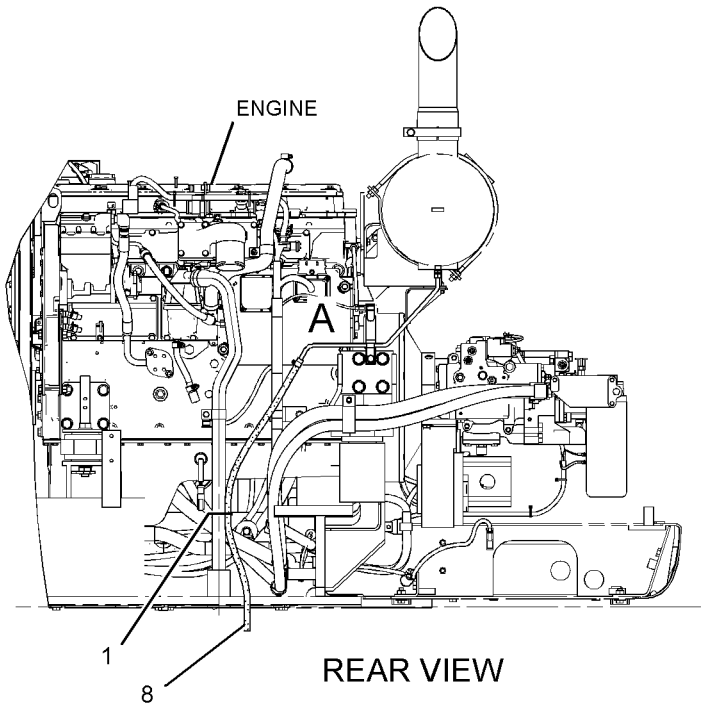

REAR VIEW

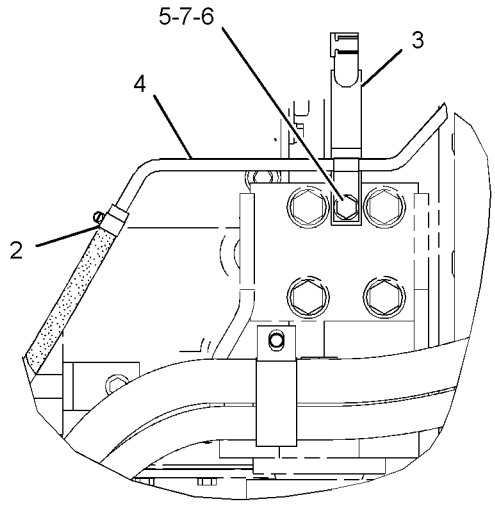

VIEW OF AREA A

GRAPHIC #1 **<END>** g01226159

AIR INLET AND EXHAUST SYSTEM

272-4624 LINES GP-MUFFLER DRAIN

S/N: DFP1-UP; CJX1-UP
PART OF 222-8379 INSTALLATION AR-ENGINE
TYPE 2

SMCS-1062 **i03140192**

NOTE	REF NO	GRAPHIC REF	PART NUMBER	QTY	PART NAME 1 2 3 4 5 6 (PRODUCT LEVEL)	SEE PAGE
	1	1	**3S-2093**	1	STRAP-CABLE	
	2	1	**5P-4961**	1	CLAMP-HOSE	
	3	1	**272-4625**	1	TUBE AS	
	4	1	**171-9073**	1	CLIP	
C	5	1	**8T-4121**	3	WASHER-HARD (11X21X2.5-MM THK)	
M	6	1	**8T-4136**	1	BOLT (M10X1.5X25-MM)	
E	7	1	**5P-1442**		HOSE (84-CM)	

C-CHANGE FROM PREVIOUS TYPE
E-ORDER BY THE CENTIMETER
M-METRIC PART

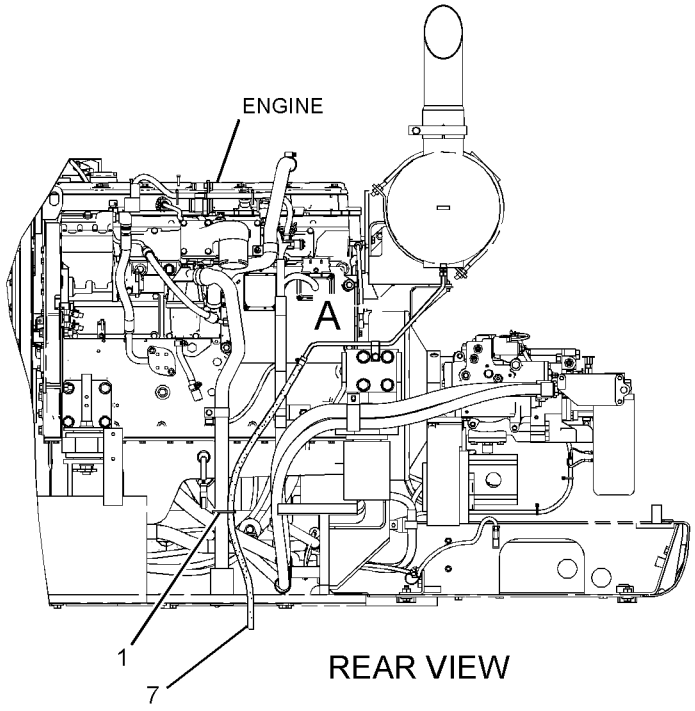

REAR VIEW

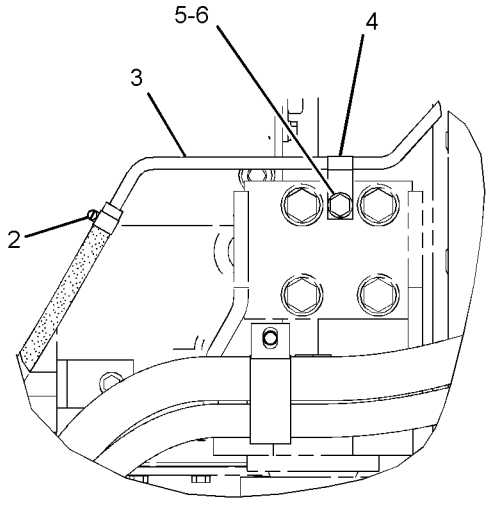

VIEW OF AREA A

GRAPHIC #1 **<END>** g01586114

219-5840 MANIFOLD GP-EXHAUST

S/N: KHX1-UP
PART OF 235-8134, 270-2767, 270-2768 ENGINE AR-COMPLETE
ALSO AN ATTACHMENT
TYPE 1

SMCS-1059 **i02515440**

NOTE	REF NO	GRAPHIC REF	PART NUMBER	QTY	PART NAME 1 2 3 4 5 6 (PRODUCT LEVEL)	SEE PAGE
M	1	1	**8T-7044**	4	STUD-TAPERLOCK (M10X1.5X40-MM)	
	2	1	**198-4610**	12	BOLT-FLANGE HEAD	
	3	1	**212-3664**	2	MANIFOLD-EXHAUST	
	4	1	**219-5855**	1	MANIFOLD-EXHAUST	
	5	1	**272-1956**	6	GASKET	
	6	1	**189-8772**	12	SPACER (11X16X35-MM THK)	

M-METRIC PART

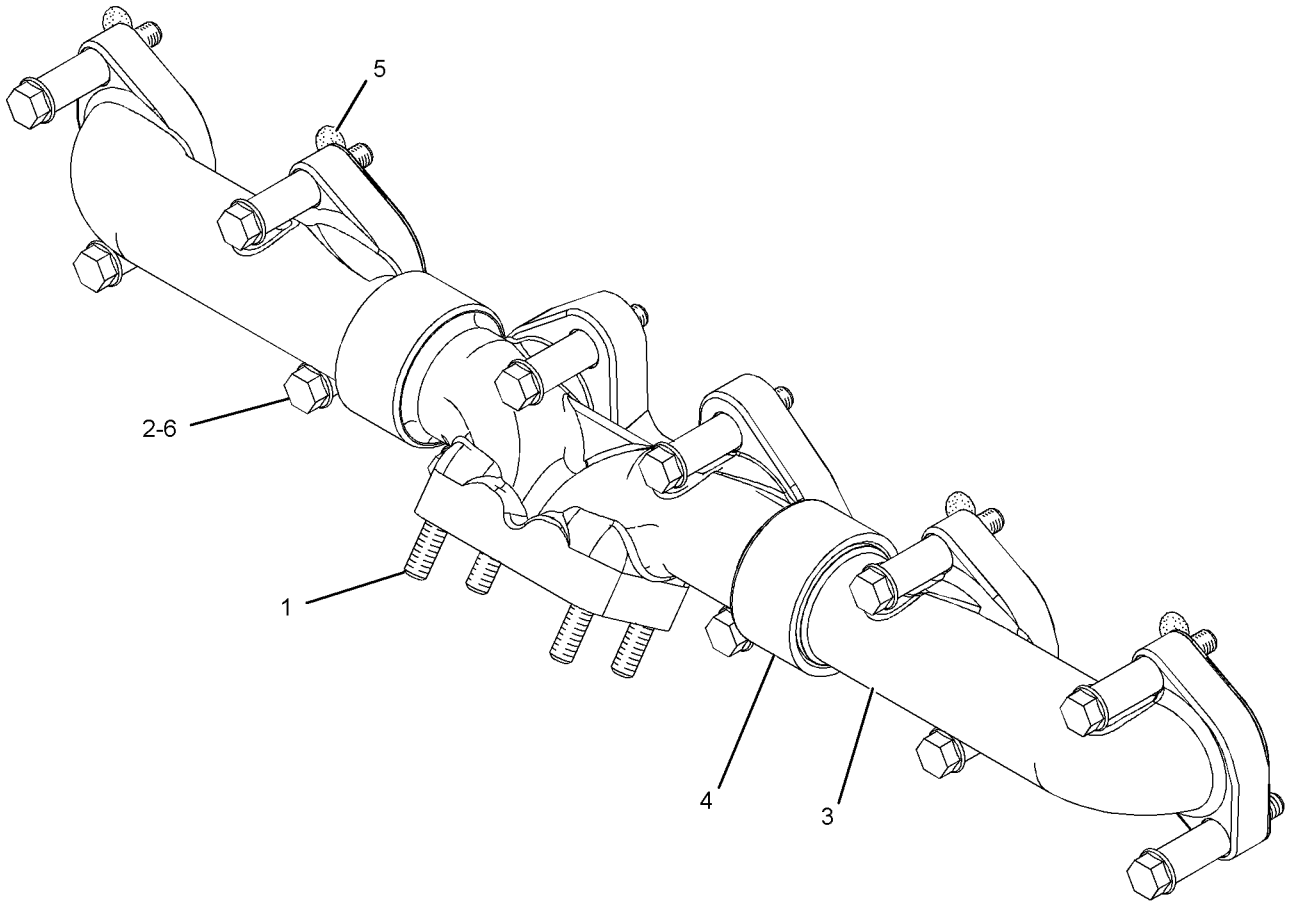

GRAPHIC #1 **<END>** g01256850

AIR INLET AND EXHAUST SYSTEM

219-5840 MANIFOLD GP-EXHAUST

S/N: KHX1-UP
PART OF 235-8134, 235-8135, 270-2767, 270-2768, 290-0755, 290-0757, 290-0758
ENGINE AR-COMPLETE
ALSO AN ATTACHMENT
TYPE 2

SMCS-1059 **i02516662**

NOTE	REF NO	GRAPHIC REF	PART NUMBER	QTY	PART NAME 1 2 3 4 5 6 (PRODUCT LEVEL)	SEE PAGE
M	1	1	**8T-7044**	4	STUD-TAPERLOCK (M10X1.5X40-MM)	
	2	1	**212-3664**	2	MANIFOLD-EXHAUST (END)	
	3	1	**219-5855**	1	MANIFOLD-EXHAUST (CENTER)	
	4	1	**272-1956**	6	GASKET	
C	5	1	**280-2072**	12	SPACER	
C	6	1	**278-8316**	12	STUD-TAPERLOCK	
CM	7	1	**3E-8017**	12	LOCKNUT (M10X1.5-MM-THD)	
C	8	1	**6V-5839**	12	WASHER (11X21X2.5-MM THK)	

C-CHANGE FROM PREVIOUS TYPE
M-METRIC PART

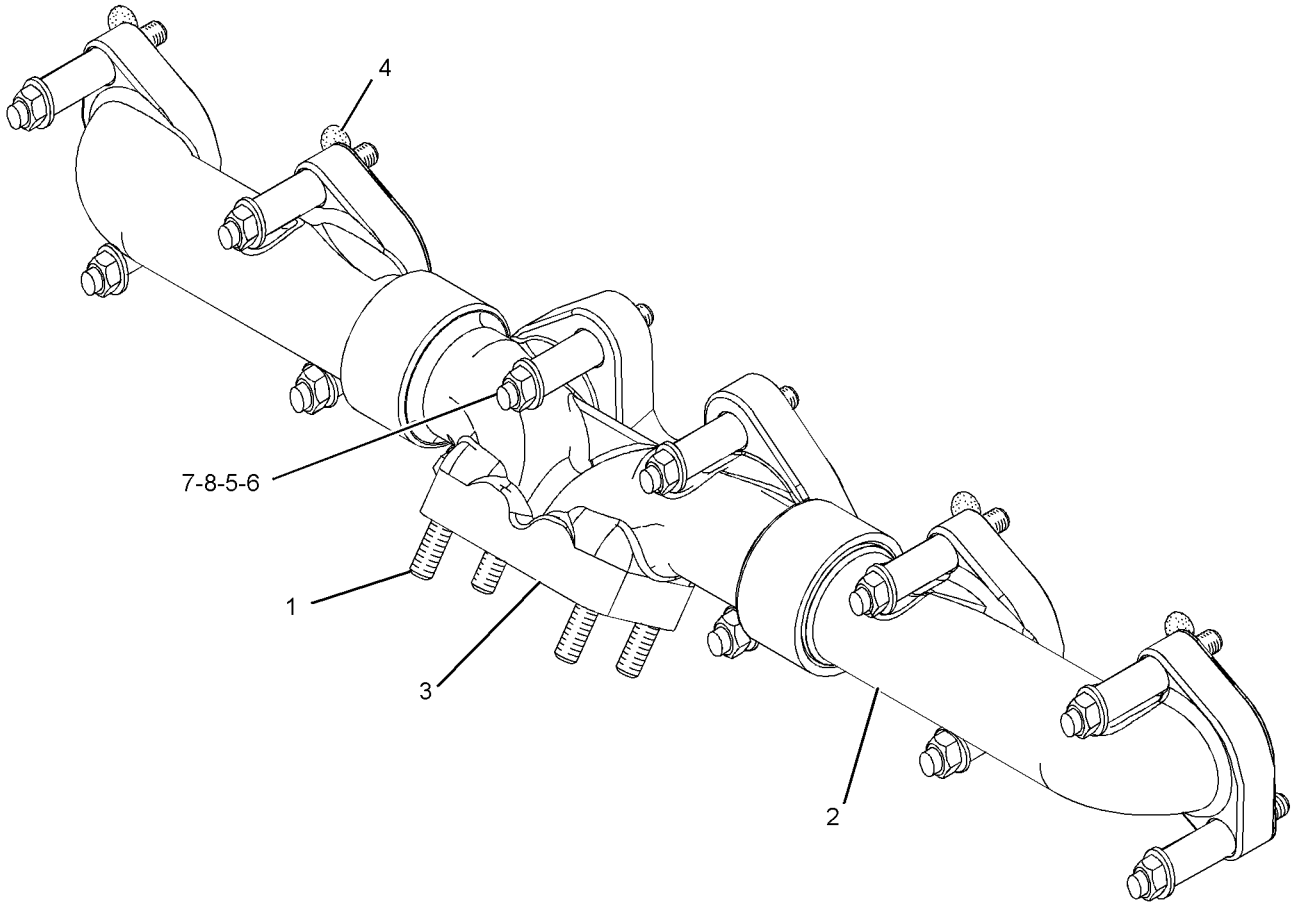

GRAPHIC #1 **<END>** g01259088

222-8299 MUFFLER GP

S/N: DFP1-UP; CJX1-UP
PART OF 266-6260 ENGINE AR

SMCS-1062 **i02976039**

NOTE	REF NO	GRAPHIC REF	PART NUMBER	QTY	PART NAME 1 2 3 4 5 6 (PRODUCT LEVEL)	SEE PAGE
	1	1	**1W-2431**	1	CLAMP-BAND	
	2	1	**183-8192**	1	SUPPORT AS	
	3	1	**233-1254**	1	MUFFLER AS	
	4	1	**241-9264**	1	CLAMP-MUFFLER	
	5	1	**255-2899**	1	PIPE AS-TAIL	
	6	1	**266-6329**	1	PIPE AS-EXHAUST	
	7	1	**266-6348**	1	BRACKET AS	
	8	1	**7S-8735**	1	CLAMP	
	9	1	**7Y-1319**	2	U-BOLT	
	10	1	**8T-4121**	10	WASHER-HARD (11X21X2.5-MM THK)	
M	11	1	**8T-4133**	9	NUT (M10X1.5-THD)	
M	12	1	**8T-4136**	2	BOLT (M10X1.5X25-MM)	
M	13	1	**8T-4185**	1	BOLT (M10X1.5X50-MM)	
M	14	1	**8T-4196**	7	BOLT (M10X1.5X35-MM)	
	15	1	**8T-7934**	3	WASHER-HARD (11X21X5-MM THK)	

M-METRIC PART

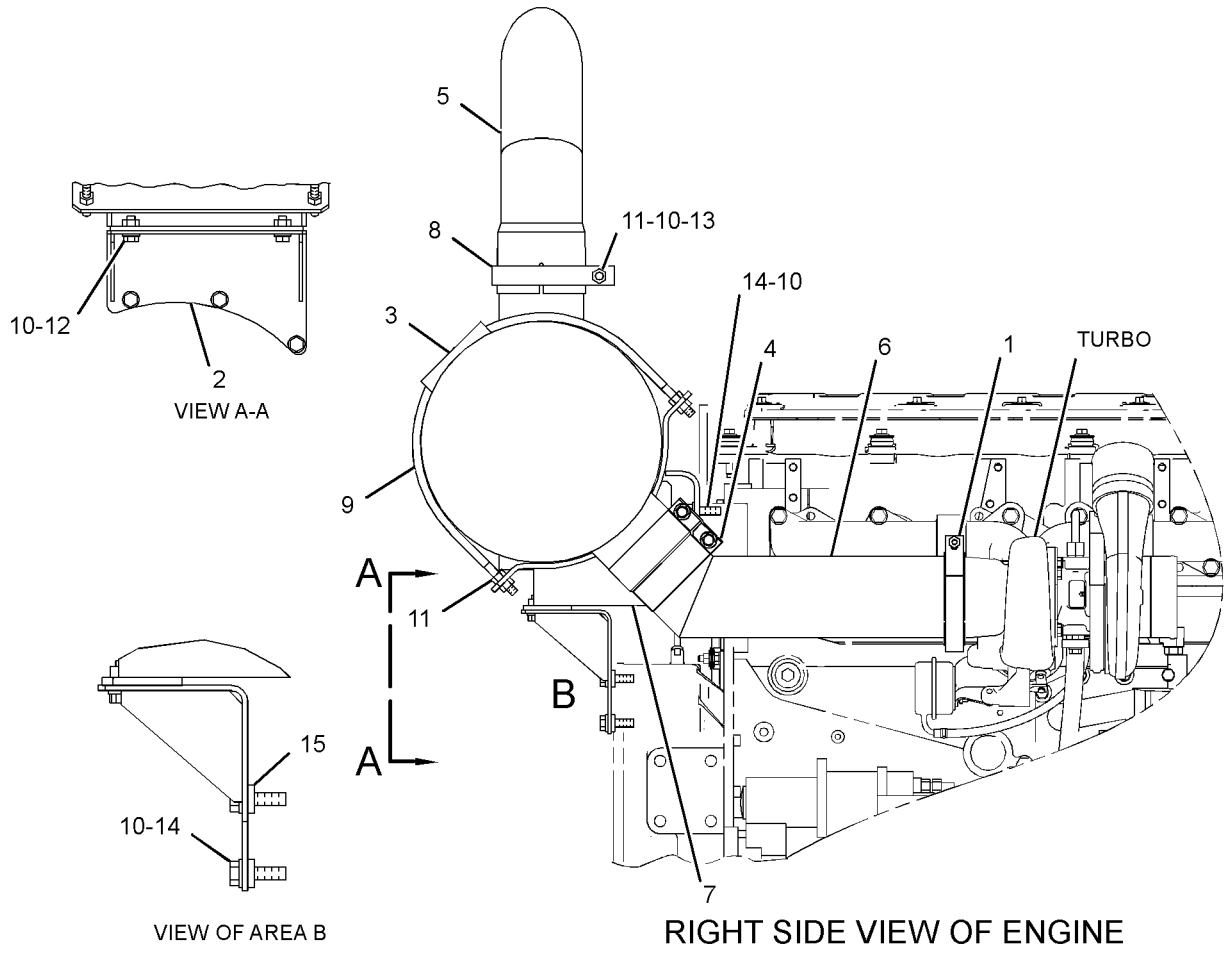

GRAPHIC #1 **<END>** g01526792

AIR INLET AND EXHAUST SYSTEM

177-0438 TURBOCHARGER GP

S/N: KHX1-2240

PART OF 236-4283, 236-4284, 270-4211, 270-4212 ENGINE AR-CORE

ALSO AN ATTACHMENT

SMCS-1052, 1053 **i01518994**

NOTE	REF NO	GRAPHIC REF	PART NUMBER	QTY	PART NAME 1 2 3 4 5 6 (PRODUCT LEVEL)	SEE PAGE
Y	1	1	**177-0440**	1	TURBOCHARGER GP	151
M	2	1	**3E-8017**	4	LOCKNUT (M10X1.5)	
	3	1	**7C-7431**	1	GASKET-TURBOCHARGER	

M-METRIC PART
Y-SEPARATE ILLUSTRATION

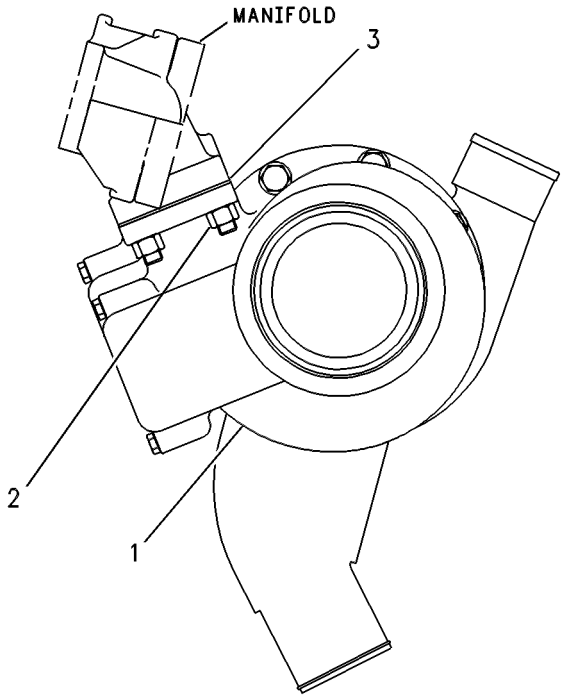

GRAPHIC #1 **<END>** g00258686

AIR INLET AND EXHAUST SYSTEM

177-0440 TURBOCHARGER GP*R

S/N: KHX1-2240
BASIC
PART OF 177-0438 TURBOCHARGER GP
ALSO AN ATTACHMENT

SMCS-1052, 1053 **i01519001**

NOTE	REF NO	GRAPHIC REF	PART NUMBER	QTY	PART NAME 1 2 3 4 5 6 (PRODUCT LEVEL)	SEE PAGE
	1	1	**161-6963**	2	CLAMP	
	2	1	**5P-4536**	1	ELBOW	
	3	1	**177-6920**	1	HOSE	
M	4	1	**7C-6670**	4	BOLT (M8X1.25X12.5-MM)	
	5	1	**196-0354**	1	HOUSING AS-TURBINE	
	6	1	**7C-6672**	2	PLATE-CLAMP (TURBINE)	
	7	1	**7M-9918**	1	LOCKNUT (1/4-28-THD)	
	8	1	**158-6072**	1	CLAMP AS (COMPRESSOR)	
	9	1	**196-0267**	1	COVER-COMPRESSOR	
	10	1	**195-6025**	1	CARTRIDGE GP-TURBOCHARGER	

M-METRIC PART

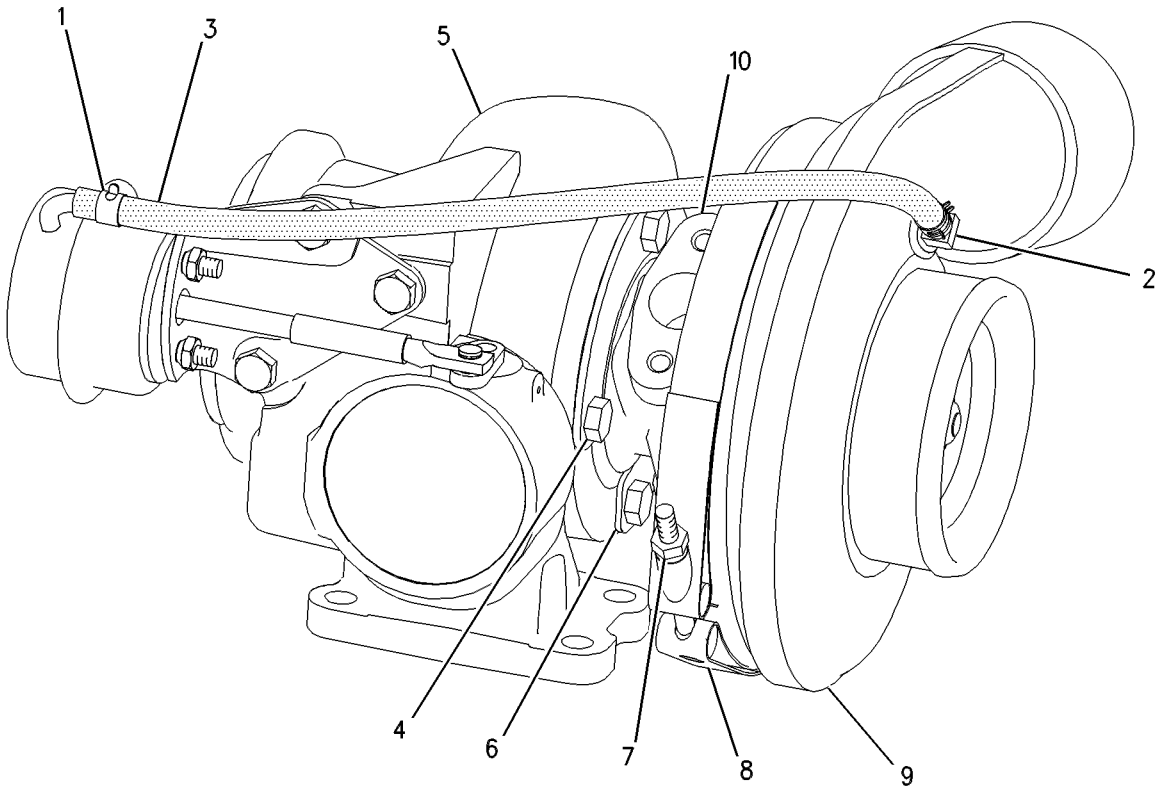

GRAPHIC #1 **<END>** g00606204

250-7696 TURBOCHARGER GP

S/N: KHX2241-UP
PART OF 254-3808 TURBOCHARGER GP
ALSO AN ATTACHMENT

SMCS-1052, 1053 **i02978162**

NOTE	REF NO	GRAPHIC REF	PART NUMBER	QTY	PART NAME 1 2 3 4 5 6 (PRODUCT LEVEL)	SEE PAGE
	1	1	**137-1602**	1	CLAMP AS (TURBINE)	
	2	1	**158-6072**	1	CLAMP AS (COMPRESSOR)	
	3	1	**161-6963**	2	CLAMP	
	4	1	**261-9367**	1	CARTRIDGE GP-TURBOCHARGER	
	5	1	**5P-4536**	1	ELBOW	
E	6	1	**242-3360**		HOSE (47-CM)	

E-ORDER BY THE CENTIMETER

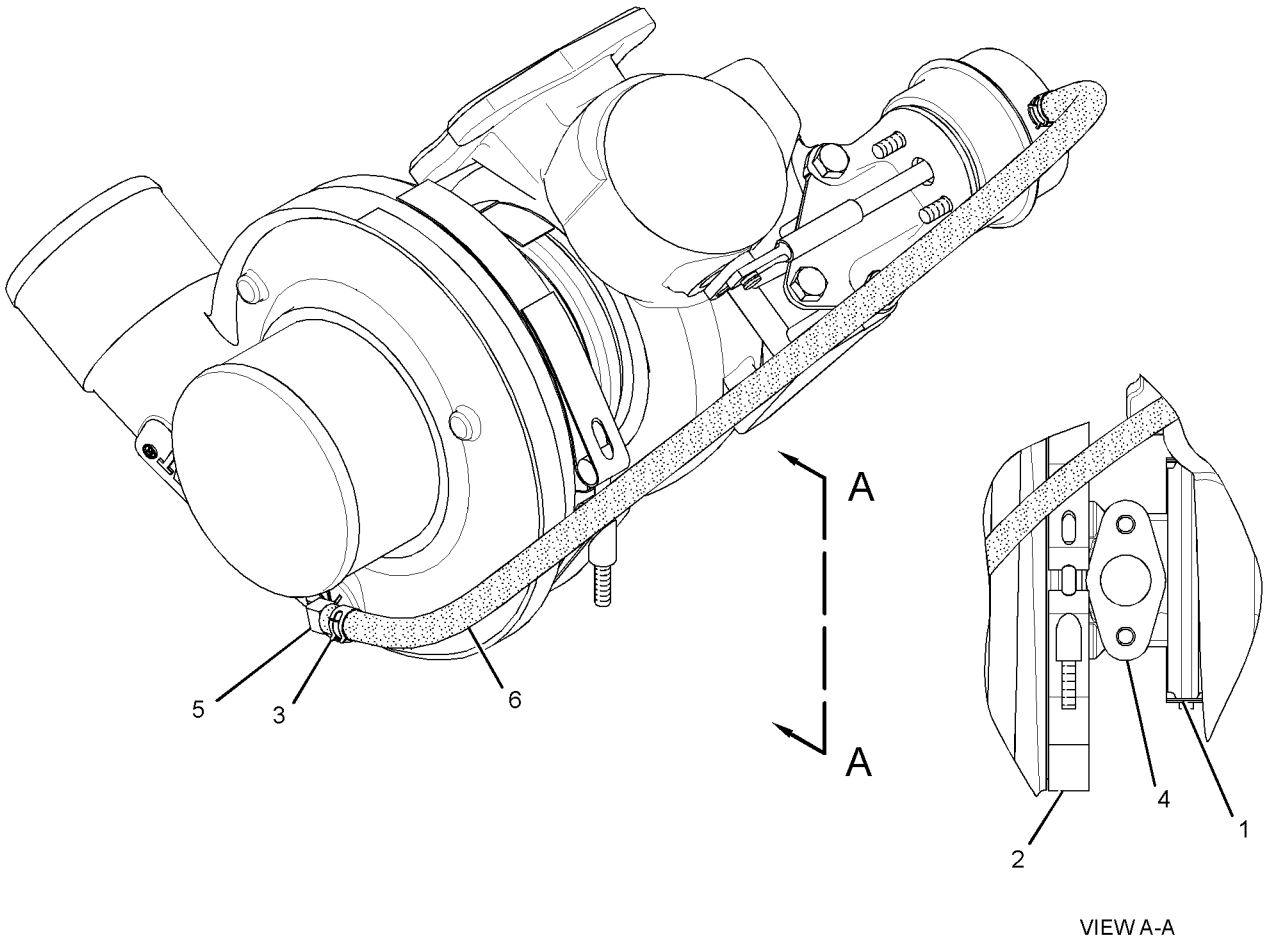

VIEW A-A

GRAPHIC #1 **<END>** g01336968

AIR INLET AND EXHAUST SYSTEM

254-3808 TURBOCHARGER GP

S/N: KHX2241-UP

PART OF 236-4283, 236-4284, 270-4211, 270-4212 ENGINE AR-CORE

ALSO AN ATTACHMENT

SMCS-1052, 1053 **i02659465**

NOTE	REF NO	GRAPHIC REF	PART NUMBER	QTY	PART NAME 1 2 3 4 5 6 (PRODUCT LEVEL)	SEE PAGE
	1	1	**7C-7431**	1	GASKET	
Y	2	1	**250-7696**	1	TURBOCHARGER GP	152
M	3	1	**3E-8017**	4	LOCKNUT (M10X1.5-THD)	

M-METRIC PART
Y-SEPARATE ILLUSTRATION

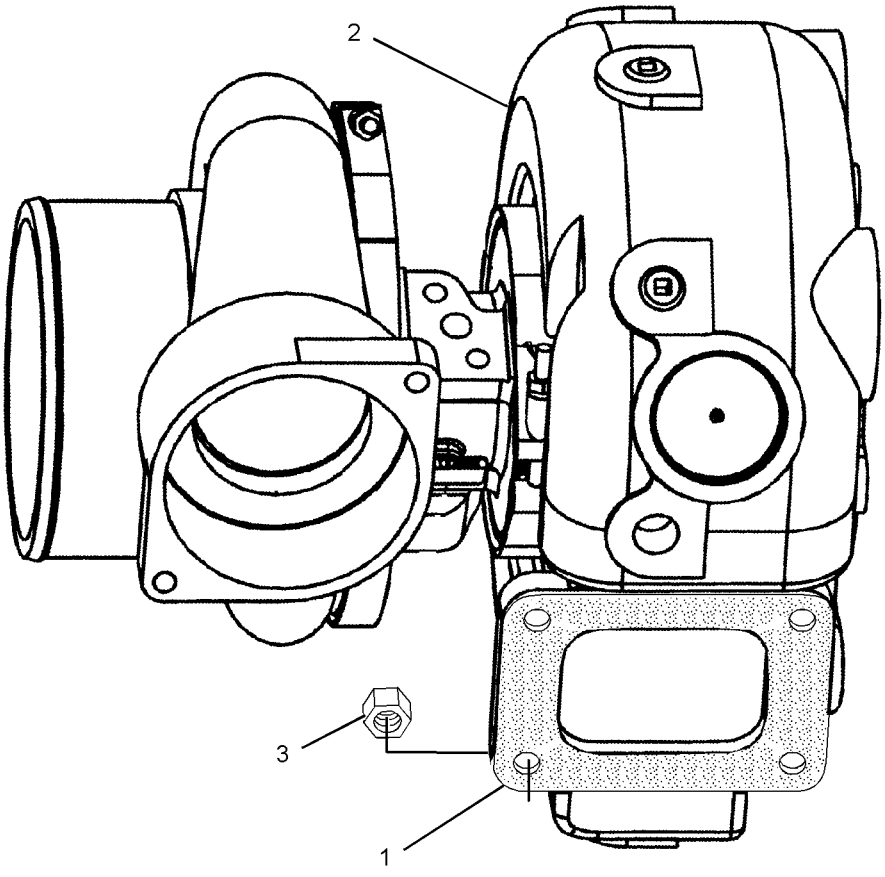

GRAPHIC #1 **<END>** g01256932

174-9570 FILTER GP-WATER SEP & FUEL

S/N: DFP1-UP; CJX1-UP

PART OF 223-3046 LINES GP-FUEL, 190-8977 PUMP GP-FUEL PRM & WATER SEP

ALSO AN ATTACHMENT

SMCS-1261, 1263 **i03181950**

NOTE	REF NO	GRAPHIC REF	PART NUMBER	QTY	PART NAME 1 2 3 4 5 6 (PRODUCT LEVEL)	SEE PAGE
	1	1	**326-1644**	1	FILTER AS-WATER SEP & FUEL (PRIMARY)	
	1A	1	**220-8678**	1	SEAL-RING (FUEL, WATER SEPARATOR)	
	2	1	**270-5320**	1	BOWL AS (FUEL, WATER SEPARATOR)	

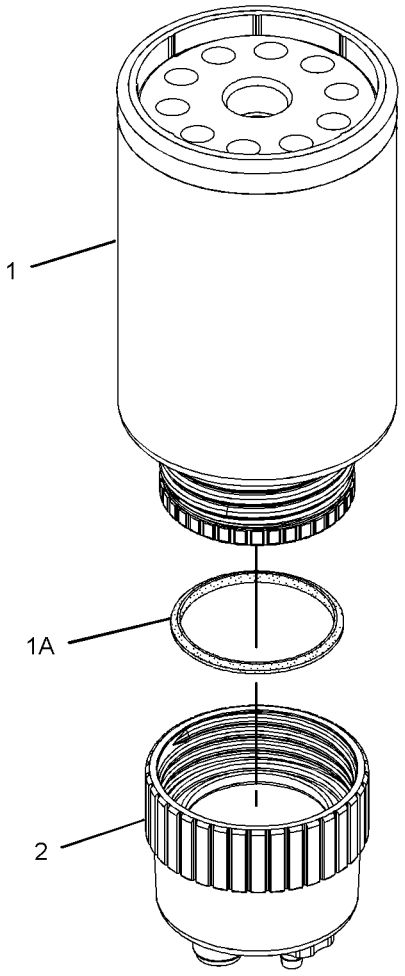

GRAPHIC #1 **<END>** g01179858

241-3400 INJECTOR GP-FUEL*R

S/N: KHX1-302

PART OF 222-5958 PUMP GP-FUEL INJECTION

AN ATTACHMENT

SMCS-1251, 1254, 1290, 1713 **i02403461**

NOTE	REF NO	GRAPHIC REF	PART NUMBER	QTY	PART NAME 1 2 3 4 5 6 (PRODUCT LEVEL)	SEE PAGE
	1	1	**149-5240**	1	RING-BACKUP	
	2	1	**169-3104**	1	RING-BACKUP	
	3	1	**169-8598**	1	SEAL-O-RING	
	5	1	**109-3207**	1	SEAL-O-RING	
	6	1	**148-2903**	1	SEAL-O-RING	
	7	1	**169-8586**	1	RING-BACKUP	

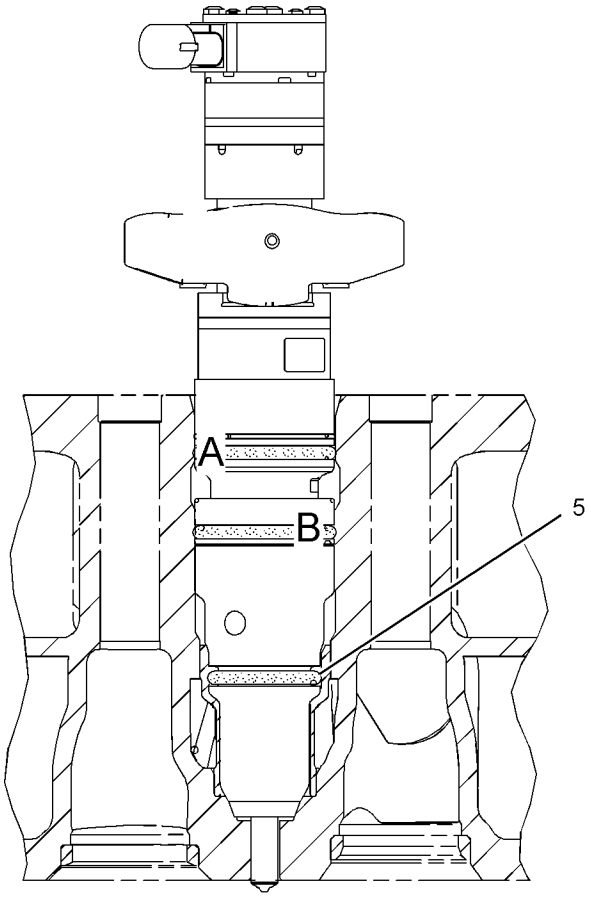

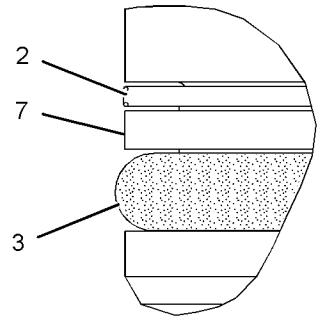

VIEW OF AREA A

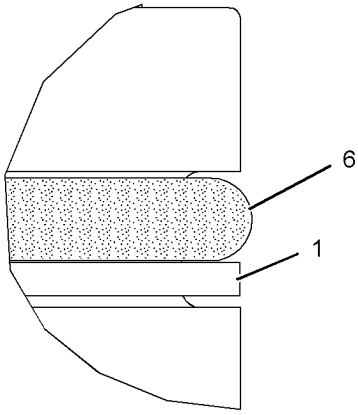

VIEW OF AREA B

GRAPHIC #1 **<END>** g01032697

268-1835 INJECTOR GP-FUEL

S/N: KHX1-3171
PART OF 268-1839 PUMP GP-FUEL INJECTION
ALSO AN ATTACHMENT

SMCS-1251, 1254, 1290, 1713 **i02357729**

NOTE	REF NO	GRAPHIC REF	PART NUMBER	QTY	PART NAME 1 2 3 4 5 6 (PRODUCT LEVEL)	SEE PAGE
	1	1	**149-5240**	1	RING-BACKUP	
	2	1	**169-3104**	1	RING-BACKUP	
	3	1	**169-8598**	1	SEAL-O-RING	
	5	1	**109-3207**	1	SEAL-O-RING	
	6	1	**148-2903**	1	SEAL-O-RING	
	7	1	**169-8586**	1	RING-BACKUP	

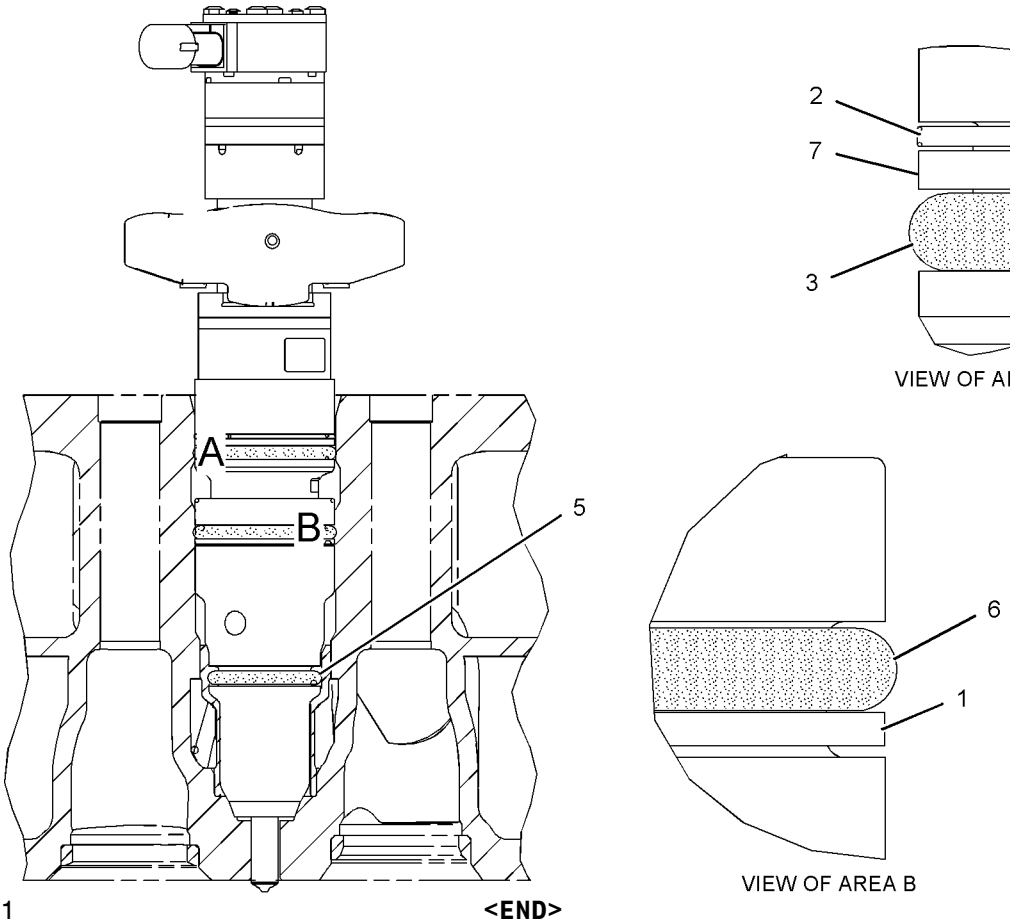

GRAPHIC #1 **<END>** g01032697

295-1411 INJECTOR GP-FUEL

S/N: KHX3172-UP
PART OF 268-1839 PUMP GP-FUEL INJECTION
ALSO AN ATTACHMENT

SMCS-1251, 1254, 1290, 1713 **i02572725**

NOTE	REF NO	GRAPHIC REF	PART NUMBER	QTY	PART NAME 1 2 3 4 5 6 (PRODUCT LEVEL)	SEE PAGE
	1	1	**149-5240**	1	RING-BACKUP	
	2	1	**293-0730**	1	RING-BACKUP	
	3	1	**109-3207**	1	SEAL-O-RING	
	4	1	**148-2903**	2	SEAL-O-RING	

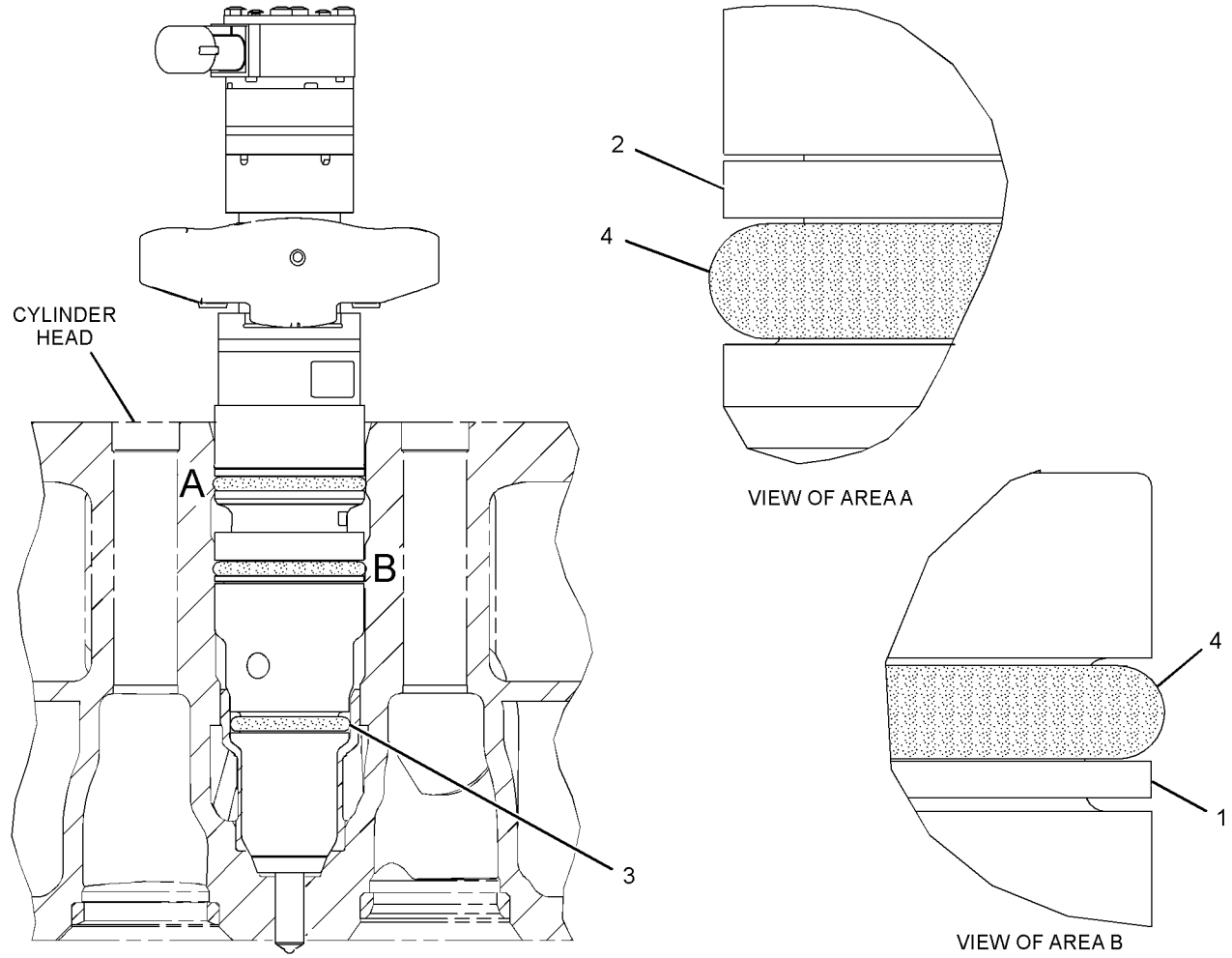

GRAPHIC #1 **<END>** g01290525

FUEL SYSTEM

223-3046 LINES GP-FUEL

S/N: DFP1-185; CJX1-187

PART OF 240-3970, 240-3971 CHASSIS AR

SMCS-1274 **i03257921**

NOTE	REF NO	GRAPHIC REF	PART NUMBER	QTY	PART NAME 1 2 3 4 5 6 (PRODUCT LEVEL)	SEE PAGE
	1	2	**4I-0379**	1	VALVE-MANUAL (DRAIN, FUEL TANK)	
	2	2	**250-6183**	1	ADAPTER	
	3	2	**9Y-8389**	1	GASKET (FUEL PRIMING PUMP)	
	4	2	**003-7764**	2	END-HOSE	
	5	1,2	**095-1386**	8	CLAMP-HOSE	
	6	2	**134-6852**	1	CONNECTOR	
M	7	1	**135-8575**	4	BOLT AS-LOCKING (M12X1.75X30-MM)	
Y	8	2	**139-6873**	1	VALVE GP-FUEL BYPASS	235
	9	1	*150-3024*	2	ELBOW AS	
					(EACH INCLUDES)	
		1	**3J-1907**	1	SEAL-O-RING	
		1	**5P-4924**	1	ELBOW	
Y	10	2	*197-8391*	1	SENSOR GP-TEMPERATURE (FUEL)	326
Y	11	2	**212-2768**	1	SWITCH GP-PRESSURE (FUEL)	351
	12	2	**237-9312**	1	BASE AS-FUEL FILTER	
		2	**9S-4167**	1	STUD-HOLLOW (1-14X1.47-IN)	
Y	13	2	*239-2396*	1	SENSOR GP-PRESSURE (FUEL)	323
	14	1,2	**248-9296**	1	HOSE AS	
	15	2	**262-2598**	1	SUPPORT AS	
	16	1,2	**256-1665**	1	HOSE AS	
	17	2	**256-1666**	1	HOSE AS	
	18	2	*148-8311*	1	ADAPTER AS	
		2	**3K-0360**	1	SEAL-O-RING	
		2	**8T-1715**	1	ADAPTER	
	19	1	*148-8318*	1	CONNECTOR AS	
		1	**3K-0360**	1	SEAL-O-RING	
		1	**6V-8397**	1	SEAL-O-RING	
		1	**6V-8634**	1	CONNECTOR	
	20	1	*148-8336*	1	CONNECTOR AS	
		1	**3J-1907**	1	SEAL-O-RING	
		1	**6V-8397**	1	SEAL-O-RING	
		1	**6V-8636**	1	CONNECTOR	
	21	1	*148-8367*	1	ELBOW AS	
		1	**6V-8397**	1	SEAL-O-RING	
		1	**6V-9850**	1	ELBOW	
	22	2	*148-8374*	1	ELBOW AS	
		2	**3K-0360**	1	SEAL-O-RING	
		2	**6V-8397**	1	SEAL-O-RING	
		2	**6V-8723**	1	ELBOW	
	23	1	*148-8378*	1	ELBOW AS	
		1	**3J-1907**	1	SEAL-O-RING	
		1	**6V-8397**	1	SEAL-O-RING	
		1	**6V-8724**	1	ELBOW	
	24	1	*148-8383*	1	ELBOW AS	
		1	**3K-0360**	1	SEAL-O-RING	
		1	**6V-8397**	1	SEAL-O-RING	
		1	**8T-1683**	1	ELBOW	
Y	25	1	*183-2824*	1	PUMP GP-FUEL PRIMING (MANUAL)	198
	26	2	**1R-0762**	1	FILTER-FUEL (ADVANCED EFFICIENCY)	
	27	2	**2D-1290**	3	GROMMET	
	28	2	**3J-1907**	5	SEAL-O-RING	
	29	1,2	**5K-8451**	13	CLIP	
	30	2	**6K-8178**	6	CLIP	
	31	2	**6V-4589**	1	SEAL-O-RING	
M	32	2	**8T-4971**	1	BOLT (M6X1X30-MM)	
	33	2	**8L-2786**	3	SEAL-O-RING	

223-3046 **LINES GP-FUEL** *(contd.)* **i03257921**

NOTE	REF NO	GRAPHIC REF	PART NUMBER	QTY	PART NAME 1 2 3 4 5 6 (PRODUCT LEVEL)	SEE PAGE
	34	1,2	**8T-4121**	28	WASHER-HARD (11X21X2.5-MM THK)	
M	35	2	**8T-4133**	1	NUT (M10X1.5-THD)	
M	36	2	**8T-4136**	4	BOLT (M10X1.5X25-MM)	
M	37	1,2	**8T-4137**	17	BOLT (M10X1.5X20-MM)	
M	38	2	**8T-4195**	4	BOLT (M10X1.5X30-MM)	
M	39	2	**8T-4196**	2	BOLT (M10X1.5X35-MM)	
	40	2	**8T-4224**	1	WASHER-HARD (8.8X16X2-MM THK)	
M	41	2	**8T-7547**	1	BOLT (M8X1.25X30-MM)	
	42	2	**9M-8406**	6	CLIP	
	43	2	**9S-8004**	5	PLUG-O-RING	
	44	2	**9S-8005**	2	PLUG-O-RING	
	45	2	**9X-8256**	1	WASHER (6.6X12X2-MM THK)	
	46	2	**229-0999**	1	HOSE	
E	47	2	**5P-1442**		HOSE (147.5)	
E	47A	2	**5P-1442**		HOSE (35.0-CM)	
E	47B	2	**5P-1442**		HOSE (473.5-CM)	
E	47C	1,2	**5P-1442**		HOSE (481.5-CM)	
	48	1,2	**7K-1181**	3	STRAP-CABLE	
Y	49	2	*174-9570*	1	FILTER GP-WATER SEP & FUEL	154
	50	2	**177-9778**	1	BASE AS	
		2	**9S-4167**	1	STUD-HOLLOW (1-14X1.47-IN)	

E-ORDER BY THE CENTIMETER
M-METRIC PART
Y-SEPARATE ILLUSTRATION

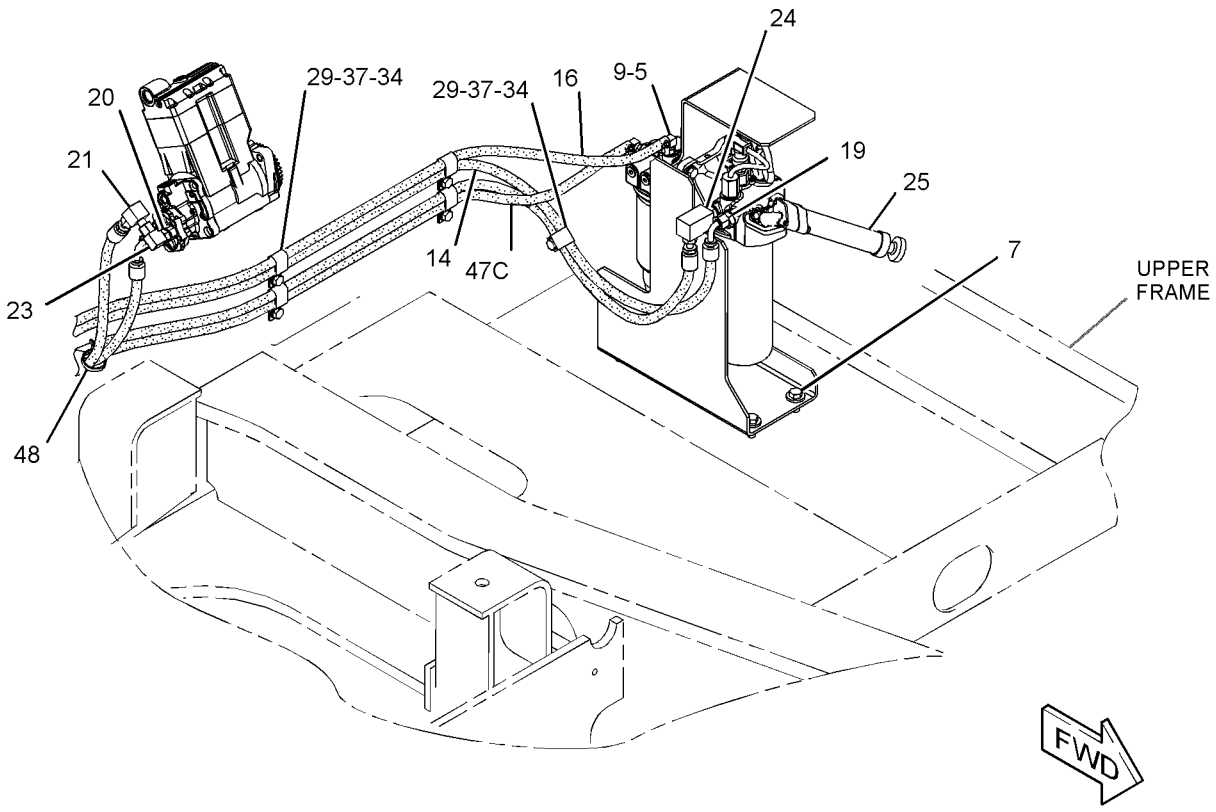

GRAPHIC #1 g01249739

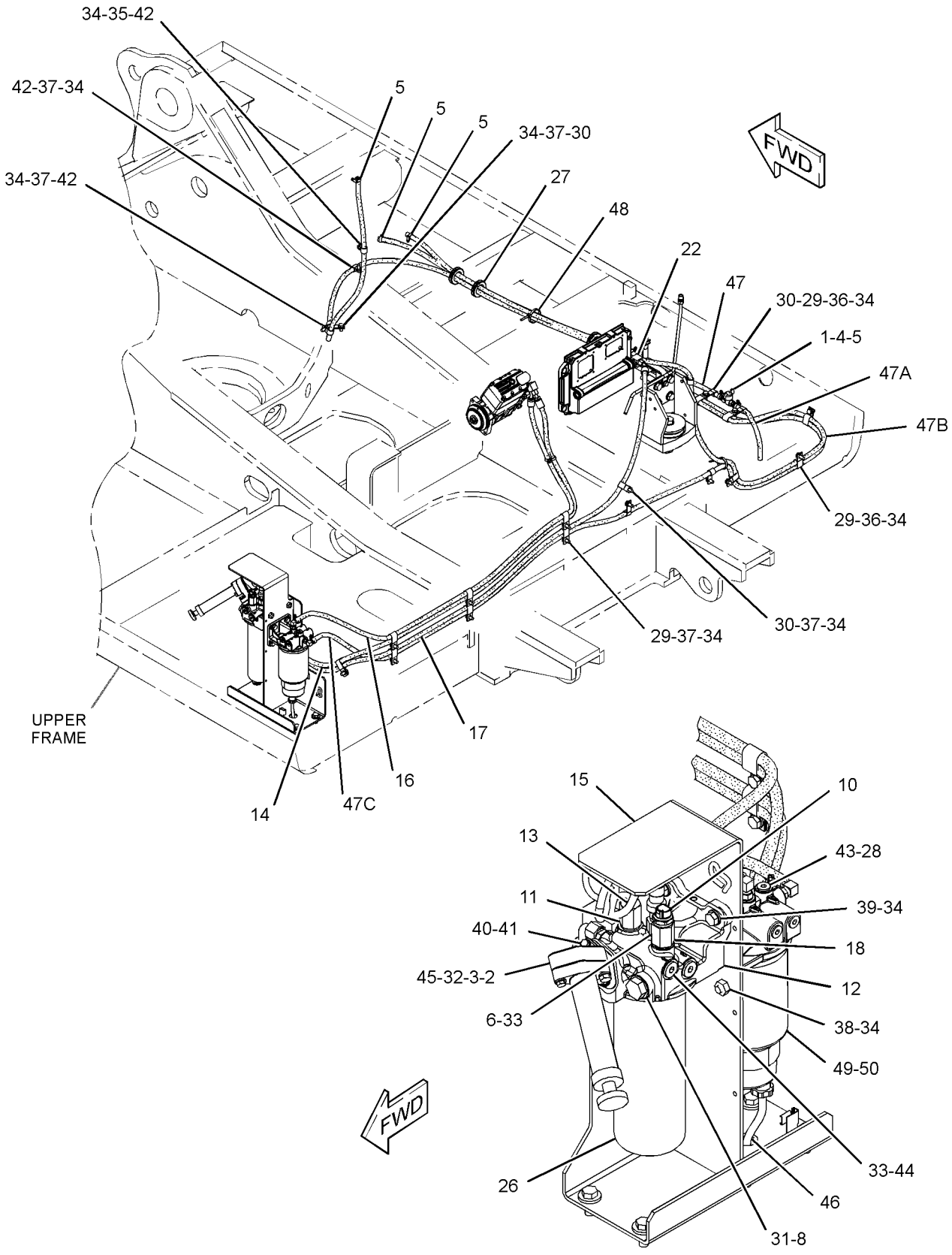

GRAPHIC #2 **<END>** g01249740

FUEL SYSTEM

223-3046 LINES GP-FUEL

S/N: DFP186-328; CJX188-231

PART OF 240-3970, 240-3971 CHASSIS AR

SMCS-1274 **i03257922**

NOTE	REF NO	GRAPHIC REF	PART NUMBER	QTY	PART NAME 1 2 3 4 5 6 (PRODUCT LEVEL)	SEE PAGE
	1	2	**4I-0379**	1	VALVE-MANUAL (DRAIN, FUEL TANK)	
	2	2	**250-6183**	1	ADAPTER	
	3	2	**9Y-8389**	1	GASKET (FUEL PRIMING PUMP)	
	4	2	**003-7764**	2	END-HOSE	
	5	1,2	**095-1386**	8	CLAMP-HOSE	
	6	2	**134-6852**	1	CONNECTOR	
M	7	1	**135-8575**	4	BOLT AS-LOCKING (M12X1.75X30-MM)	
Y	8	2	**139-6873**	1	VALVE GP-FUEL BYPASS	235
	9	1	*150-3024*	2	ELBOW AS	
					(EACH INCLUDES)	
		1	**3J-1907**	1	SEAL-O-RING	
		1	**5P-4924**	1	ELBOW	
Y	10	2	*197-8391*	1	SENSOR GP-TEMPERATURE (FUEL)	326
CY	11	2	**258-0883**	1	SWITCH GP-PRESSURE (FUEL)	352
	12	2	**237-9312**	1	BASE AS-FUEL FILTER	
		2	**9S-4167**	1	STUD-HOLLOW (1-14X1.47-IN)	
Y	13	2	*239-2396*	1	SENSOR GP-PRESSURE (FUEL)	323
	14	1,2	**248-9296**	1	HOSE AS	
	15	2	**262-2598**	1	SUPPORT AS	
	16	1,2	**256-1665**	1	HOSE AS	
	17	2	**256-1666**	1	HOSE AS	
	18	2	*148-8311*	1	ADAPTER AS	
		2	**3K-0360**	1	SEAL-O-RING	
		2	**8T-1715**	1	ADAPTER	
	19	1	*148-8318*	1	CONNECTOR AS	
		1	**3K-0360**	1	SEAL-O-RING	
		1	**6V-8397**	1	SEAL-O-RING	
		1	**6V-8634**	1	CONNECTOR	
	20	1	*148-8336*	1	CONNECTOR AS	
		1	**3J-1907**	1	SEAL-O-RING	
		1	**6V-8397**	1	SEAL-O-RING	
		1	**6V-8636**	1	CONNECTOR	
	21	1	*148-8367*	1	ELBOW AS	
		1	**6V-8397**	1	SEAL-O-RING	
		1	**6V-9850**	1	ELBOW	
	22	2	*148-8374*	1	ELBOW AS	
		2	**3K-0360**	1	SEAL-O-RING	
		2	**6V-8397**	1	SEAL-O-RING	
		2	**6V-8723**	1	ELBOW	
	23	1	*148-8378*	1	ELBOW AS	
		1	**3J-1907**	1	SEAL-O-RING	
		1	**6V-8397**	1	SEAL-O-RING	
		1	**6V-8724**	1	ELBOW	
	24	1	*148-8383*	1	ELBOW AS	
		1	**3K-0360**	1	SEAL-O-RING	
		1	**6V-8397**	1	SEAL-O-RING	
		1	**8T-1683**	1	ELBOW	
Y	25	1	*183-2824*	1	PUMP GP-FUEL PRIMING (MANUAL)	198
	26	2	**1R-0762**	1	FILTER-FUEL (ADVANCED EFFICIENCY)	
	27	2	**2D-1290**	3	GROMMET	
	28	2	**3J-1907**	5	SEAL-O-RING	
	29	1,2	**5K-8451**	13	CLIP	
	30	2	**6K-8178**	6	CLIP	
	31	2	**6V-4589**	1	SEAL-O-RING	
M	32	2	**8T-4971**	1	BOLT (M6X1X30-MM)	
	33	2	**8L-2786**	3	SEAL-O-RING	

223-3046 **LINES GP-FUEL** ***(contd.)*** **i03257922**

NOTE	REF NO	GRAPHIC REF	PART NUMBER	QTY	PART NAME 1 2 3 4 5 6 (PRODUCT LEVEL)	SEE PAGE
	34	1,2	**8T-4121**	28	WASHER-HARD (11X21X2.5-MM THK)	
M	35	2	**8T-4133**	1	NUT (M10X1.5-THD)	
M	36	2	**8T-4136**	4	BOLT (M10X1.5X25-MM)	
M	37	1,2	**8T-4137**	17	BOLT (M10X1.5X20-MM)	
M	38	2	**8T-4195**	4	BOLT (M10X1.5X30-MM)	
M	39	2	**8T-4196**	2	BOLT (M10X1.5X35-MM)	
	40	2	**8T-4224**	1	WASHER-HARD (8.8X16X2-MM THK)	
M	41	2	**8T-7547**	1	BOLT (M8X1.25X30-MM)	
	42	2	**9M-8406**	6	CLIP	
	43	2	**9S-8004**	5	PLUG-O-RING	
	44	2	**9S-8005**	2	PLUG-O-RING	
	45	2	**9X-8256**	1	WASHER (6.6X12X2-MM THK)	
	46	2	**229-0999**	1	HOSE	
E	47	2	**5P-1442**		HOSE (147.5)	
E	47A	2	**5P-1442**		HOSE (35.0-CM)	
E	47B	2	**5P-1442**		HOSE (473.5-CM)	
E	47C	1,2	**5P-1442**		HOSE (481.5-CM)	
	48	1,2	**7K-1181**	3	STRAP-CABLE	
Y	49	2	*174-9570*	1	FILTER GP-WATER SEP & FUEL	154
	50	2	**177-9778**	1	BASE AS	
		2	**9S-4167**	1	STUD-HOLLOW (1-14X1.47-IN)	

C-CHANGE FROM PREVIOUS TYPE
E-ORDER BY THE CENTIMETER
M-METRIC PART
Y-SEPARATE ILLUSTRATION

223-3046 **LINES GP-FUEL** ***(contd.)*** **i03257922**

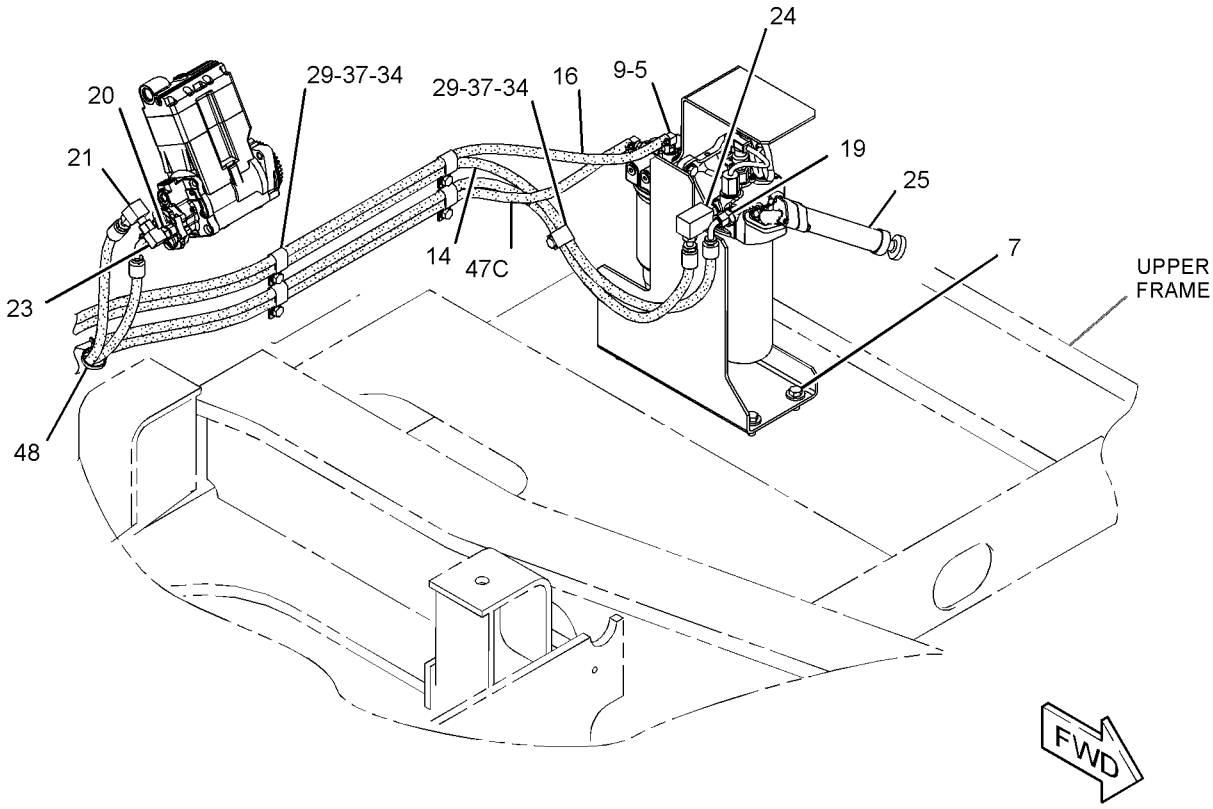

GRAPHIC #1 g01249739

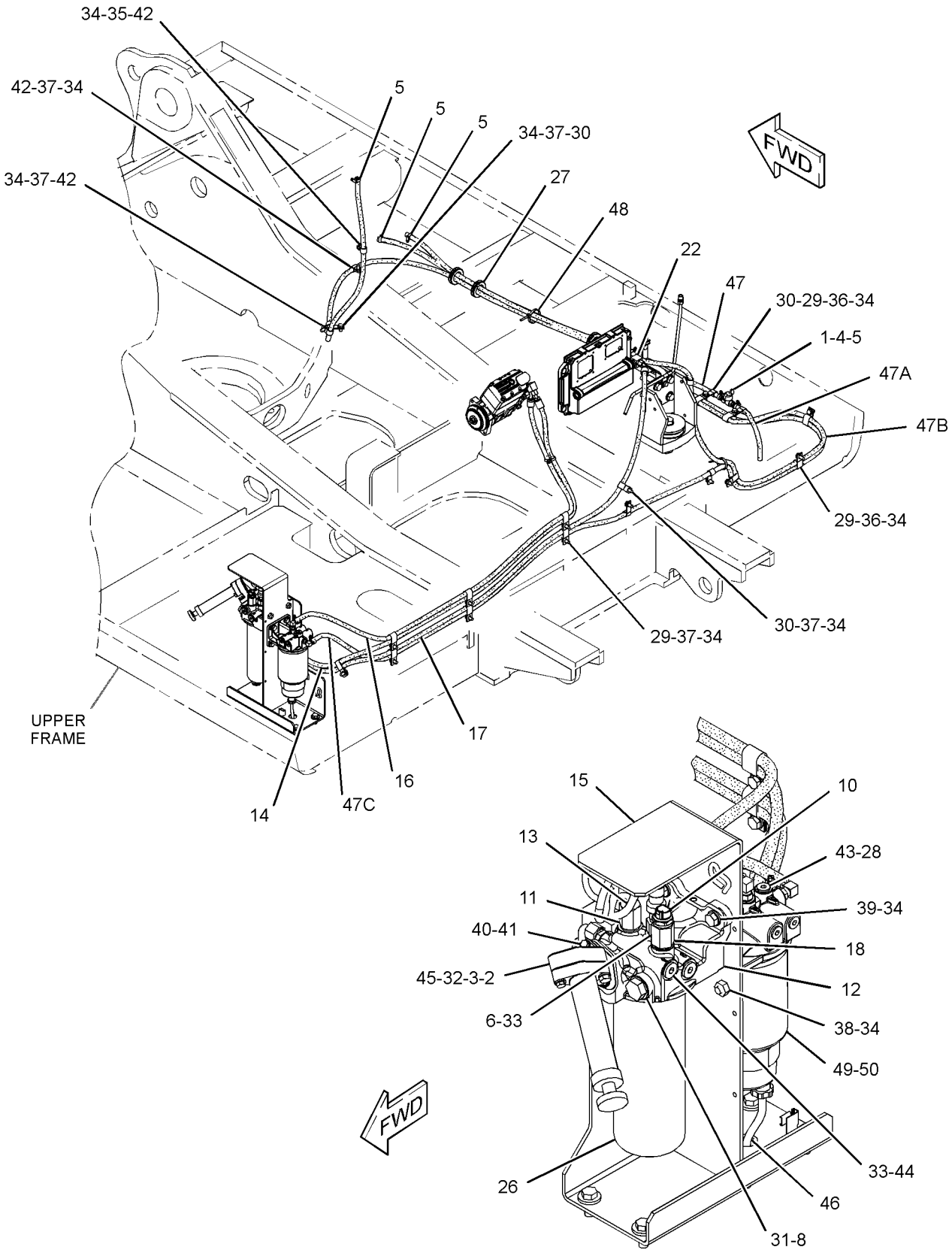

GRAPHIC #2 **<END>** g01249740

FUEL SYSTEM

223-3046 LINES GP-FUEL

S/N: DFP329-UP; CJX232-UP

PART OF 240-3970, 240-3971 CHASSIS AR

SMCS-1274 **i03206253**

NOTE	REF NO	GRAPHIC REF	PART NUMBER	QTY	PART NAME 1 2 3 4 5 6 (PRODUCT LEVEL)	SEE PAGE
	1	2	**4I-0379**	1	VALVE-MANUAL (DRAIN, FUEL TANK)	
C	2	2	**5P-7175**	1	FITTING-STRAIGHT	
	3	2	**9Y-8389**	1	GASKET (FUEL PRIMING PUMP)	
	4	2	**003-7764**	2	END-HOSE	
	5	1,2	**095-1386**	8	CLAMP-HOSE	
	6	2	**134-6852**	1	CONNECTOR	
M	7	1	**135-8575**	4	BOLT AS-LOCKING (M12X1.75X30-MM)	
Y	8	2	**139-6873**	1	VALVE GP-FUEL BYPASS	235
C	9	1	*150-3024*	1	ELBOW AS	
		1	**3J-1907**	1	SEAL-O-RING	
		1	**5P-4924**	1	ELBOW	
Y	10	2	*174-9570*	1	FILTER GP-WATER SEP & FUEL	154
	11	2	**177-9778**	1	BASE AS	
		2	**9S-4167**	1	STUD-HOLLOW (1-14X1.47-IN)	
Y	12	1	*183-2824*	1	PUMP GP-FUEL PRIMING (MANUAL)	198
Y	13	2	*197-8391*	1	SENSOR GP-TEMPERATURE (FUEL)	326
	14	2	**229-0999**	1	HOSE	
	15	2	**237-9312**	1	BASE AS-FUEL FILTER	
		2	**9S-4167**	1	STUD-HOLLOW (1-14X1.47-IN)	
Y	16	2	*239-2396*	1	SENSOR GP-PRESSURE (FUEL)	323
	17	2	**250-6183**	1	ADAPTER	
Y	18	2	**258-0883**	1	SWITCH GP-PRESSURE (FUEL)	352
	19	2	**262-2598**	1	SUPPORT AS	
CY	20	2	**298-3147**	1	VALVE GP-FUEL SHUTOFF	236
	21	2	**307-7975**	1	HOSE AS	
	22	2	**307-7976**	1	HOSE AS	
	23	2	**307-7977**	1	HOSE AS	
	24	2	**307-7978**	1	HOSE AS	
	25	2	**307-7979**	1	HOSE AS	
	26	2	*148-8311*	1	ADAPTER AS	
		2	**3K-0360**	1	SEAL-O-RING	
		2	**8T-1715**	1	ADAPTER	
	27	1	*148-8318*	1	CONNECTOR AS	
		1	**3K-0360**	1	SEAL-O-RING	
		1	**6V-8397**	1	SEAL-O-RING	
		1	**6V-8634**	1	CONNECTOR	
	28	1	*148-8367*	1	ELBOW AS	
		1	**6V-8397**	1	SEAL-O-RING	
		1	**6V-9850**	1	ELBOW	
	29	1	*148-8383*	1	ELBOW AS	
		1	**3K-0360**	1	SEAL-O-RING	
		1	**6V-8397**	1	SEAL-O-RING	
		1	**8T-1683**	1	ELBOW	
	30	2	**1R-0762**	1	FILTER-FUEL (ADVANCED EFFICIENCY)	
	31	2	**2D-1290**	3	GROMMET	
	32	2	**3J-1907**	5	SEAL-O-RING	
	33	1,2	**5K-8451**	13	CLIP	
	34	2	**6K-8178**	5	CLIP	
	35	2	**6V-4589**	1	SEAL-O-RING	
	36	2	**8L-2786**	3	SEAL-O-RING	
	37	1,2	**8T-4121**	28	WASHER-HARD (11X21X2.5-MM THK)	
M	38	2	**8T-4133**	1	NUT (M10X1.5-THD)	
M	39	2	**8T-4136**	4	BOLT (M10X1.5X25-MM)	
M	40	1,2	**8T-4137**	17	BOLT (M10X1.5X20-MM)	
M	41	2	**8T-4195**	4	BOLT (M10X1.5X30-MM)	
M	42	2	**8T-4196**	2	BOLT (M10X1.5X35-MM)	

223-3046 **LINES GP-FUEL** *(contd.)* **i03206253**

NOTE	REF NO	GRAPHIC REF	PART NUMBER	QTY	PART NAME 1 2 3 4 5 6 (PRODUCT LEVEL)	SEE PAGE
	43	2	**8T-4224**	1	WASHER-HARD (8.8X16X2-MM THK)	
M	44	2	**8T-4971**	1	BOLT (M6X1X30-MM)	
M	45	2	**8T-7547**	1	BOLT (M8X1.25X30-MM)	
	46	2	**9M-8406**	6	CLIP	
	47	2	**9S-8004**	5	PLUG-O-RING	
	48	2	**9S-8005**	2	PLUG-O-RING	
	49	2	**9X-8250**	1	CLIP	
	50	2	**9X-8256**	1	WASHER (6.6X12X2-MM THK)	
CE	51	2	**5P-1442**		HOSE (147.5)	
E	51A	2	**5P-1442**		HOSE (35-CM)	
	52	1,2	**7K-1181**	3	STRAP-CABLE	

C-CHANGE FROM PREVIOUS TYPE
E-ORDER BY THE CENTIMETER
M-METRIC PART
Y-SEPARATE ILLUSTRATION

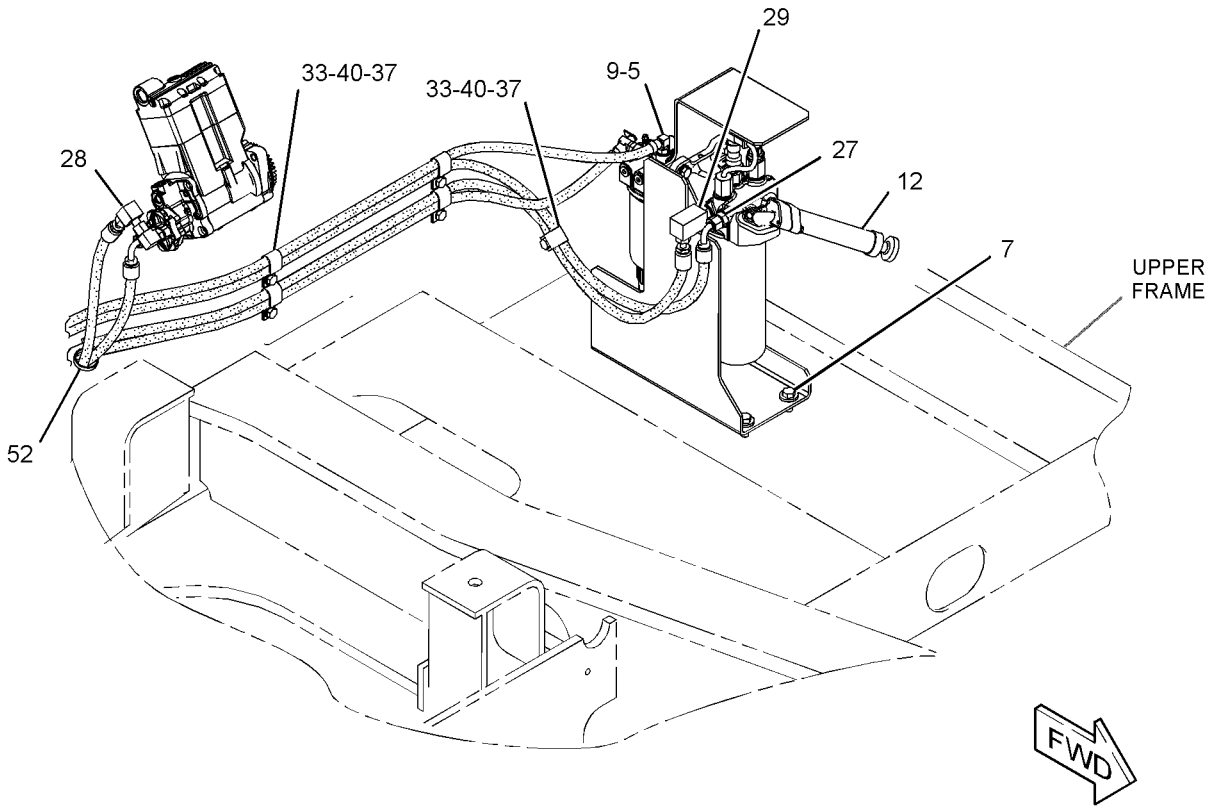

GRAPHIC #1 g01620569

223-3046 **LINES GP-FUEL** *(contd.)* **i03206253**

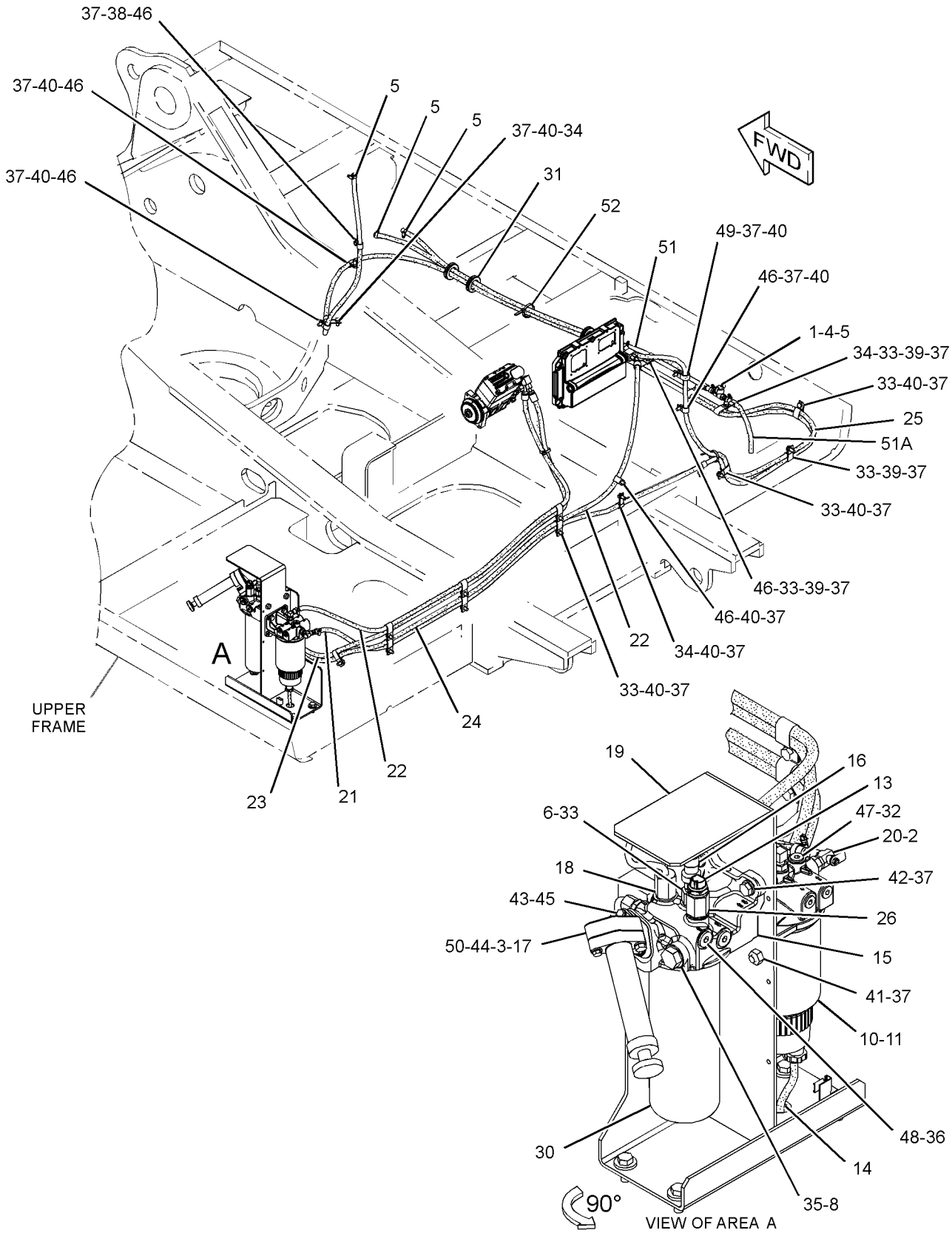

GRAPHIC #2 **<END>** g01620551

FUEL SYSTEM

231-3046 LINES GP-FUEL

S/N: KHX1-UP
PART OF 235-8134, 235-8135, 270-2767, 270-2768, 290-0755, 290-0757, 290-0758
ENGINE AR-COMPLETE
ALSO AN ATTACHMENT

SMCS-1274 **i02352177**

NOTE	REF NO	GRAPHIC REF	PART NUMBER	QTY	PART NAME 1 2 3 4 5 6 (PRODUCT LEVEL)	SEE PAGE
I	1	1	**193-0158**	1	HOSE AS	
	2	1	**231-3047**	1	TUBE AS	
	3	1	**231-7847**	1	TUBE AS	
Y	4	1	*232-0343*	1	REGULATOR GP-FUEL PRESSURE	212
	5	1	**030-8188**	1	CONNECTOR	
	6	1	*148-8336*	1	CONNECTOR AS	
		1	**3J-1907**	1	SEAL-O-RING	
		1	**6V-8397**	1	SEAL-O-RING	
	7	1	*148-8374*	1	ELBOW AS	
		1	**3K-0360**	1	SEAL-O-RING	
		1	**6V-8397**	1	SEAL-O-RING	
	8	1	*148-8378*	1	ELBOW AS	
		1	**3J-1907**	1	SEAL-O-RING	
		1	**6V-8397**	1	SEAL-O-RING	
	9	1	**6V-3265**	1	CLIP	
	10	1	**2R-6806**	2	CONNECTOR-O-RING	
	11	1	**3J-1907**	3	SEAL-O-RING	
	12	1	**3K-0360**	1	SEAL-O-RING	
M	13	1	**5C-7261**	1	NUT (M8X1.25-THD)	
	14	1	**5P-4116**	2	WASHER-HARD (8.8X20.5X2-MM THK)	
	15	1	**5P-9297**	1	CLIP	
	16	1	**9S-8004**	1	PLUG-O-RING	

I-REFER TO HYDRAULIC INFORMATION SYSTEM
M-METRIC PART
Y-SEPARATE ILLUSTRATION

231-3046 **LINES GP-FUEL** *(contd.)* **i02352177**

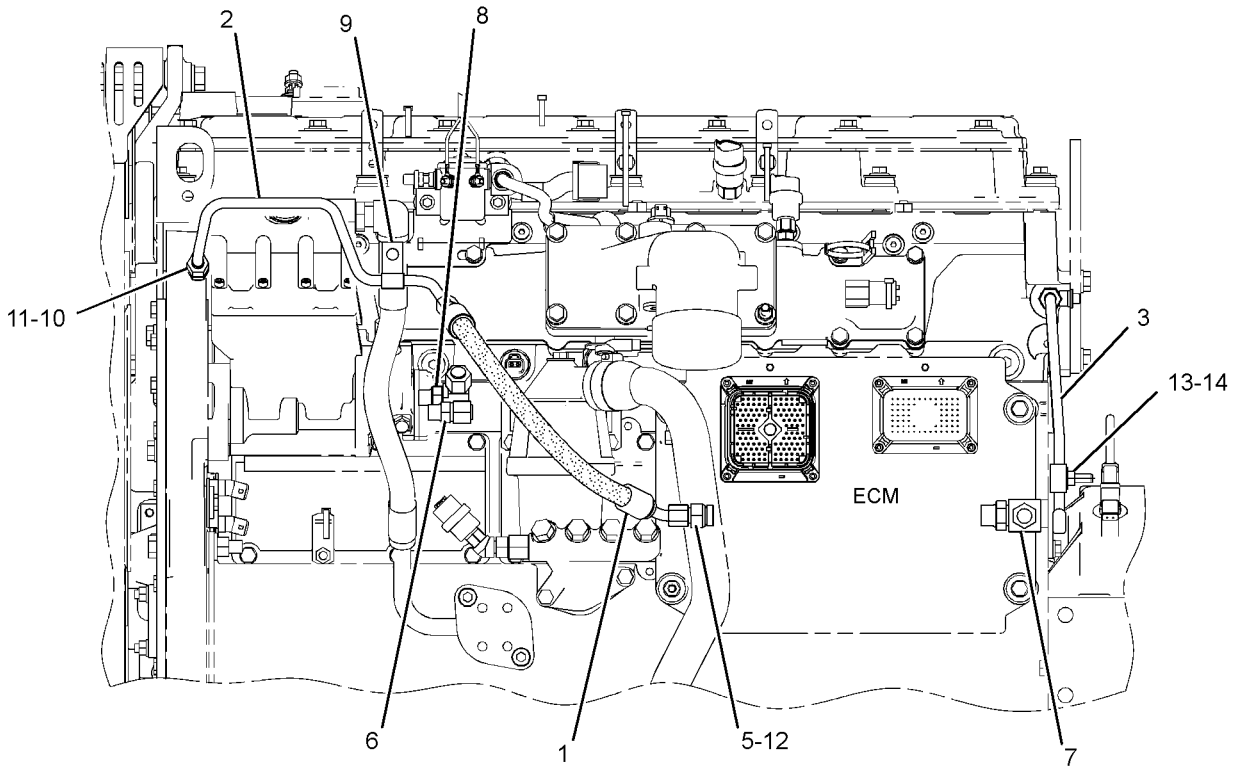

LEFT SIDE VIEW

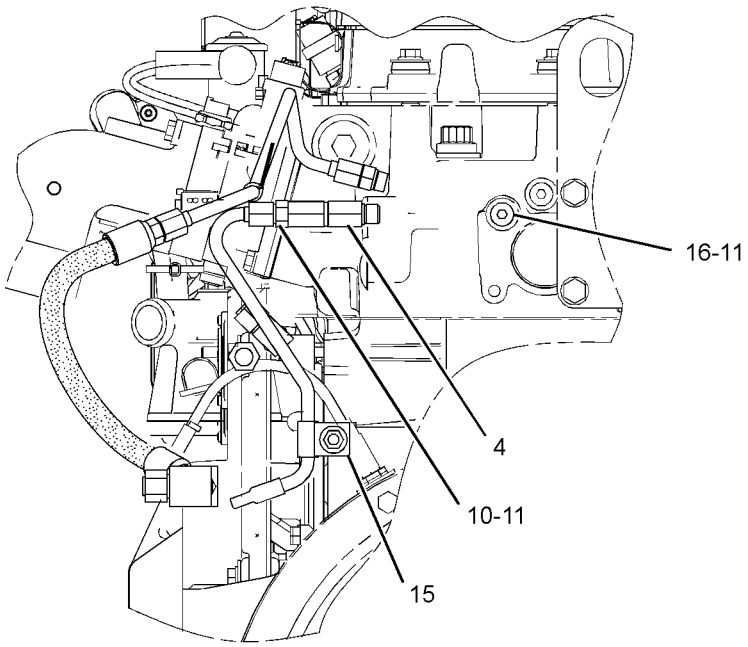

REAR VIEW

GRAPHIC #1

<END>

g01152429

FUEL SYSTEM

259-3885 LINES GP-FUEL

S/N: DFP1-UP; CJX1-UP
PART OF 247-7458 PUMP GP-FUEL PRIMING
AN ATTACHMENT
TYPE 1

SMCS-1274 **i03257923**

NOTE	REF NO	GRAPHIC REF	PART NUMBER	QTY	PART NAME 1 2 3 4 5 6 (PRODUCT LEVEL)	SEE PAGE
	1	1	**4I-0379**	1	VALVE-MANUAL (DRAIN, FUEL TANK)	
	2	1	**8T-9655**	6	MOUNT-ISOLATION	
	3	1	**9Y-8389**	1	GASKET (FUEL FILTER)	
	4	1	**003-7764**	2	END-HOSE	
	5	1	**095-1386**	7	CLAMP-HOSE	
	6	2	**134-6852**	1	CONNECTOR	
M	7	1	**135-8575**	4	BOLT AS-LOCKING (M12X1.75X30-MM)	
	8	2	*164-5619*	1	PLUG AS	
		2	**2M-9780**	1	SEAL-O-RING	
		2	**9S-8006**	1	PLUG-O-RING	
	9	1	**184-9114**	1	ELBOW	
Y	10	1	*188-6121*	1	PUMP GP-FUEL PRM & PRIM FILTER (WITH WATER SEPARATOR)	200
	11	1	**191-1782**	1	SPACER (8.5X12.7X38.2-MM THK)	
	12	1	**191-1783**	2	SPACER (8.5X12.7X87.3-MM THK)	
Y	13	2	*197-8391*	1	SENSOR GP-TEMPERATURE (FUEL)	326
Y	14	2	**258-0883**	1	SWITCH GP-PRESSURE (FUEL)	352
	15	1	**229-0999**	1	HOSE	
	16	1	**237-9312**	1	BASE AS-FUEL FILTER	
		1	**9S-4167**	1	STUD-HOLLOW (1-14X1.47-IN)	
Y	17	2	*239-2396*	1	SENSOR GP-PRESSURE (FUEL)	323
	18	2	**248-9296**	1	HOSE AS	
	19	2	**256-1666**	1	HOSE AS	
	20	2	**259-3890**	1	HOSE AS	
	21	1	**259-3915**	1	COVER	
	22	1	**262-2604**	1	SUPPORT AS	
	23	2	*148-8311*	1	ADAPTER AS	
		2	**3K-0360**	1	SEAL-O-RING	
		2	**8T-1715**	1	ADAPTER	
	24	2	*148-8318*	1	CONNECTOR AS	
		2	**3K-0360**	1	SEAL-O-RING	
		2	**6V-8397**	1	SEAL-O-RING	
		2	**6V-8634**	1	CONNECTOR	
	25	2	*148-8319*	1	CONNECTOR AS	
		2	**2M-9780**	1	SEAL-O-RING	
		2	**6V-8397**	1	SEAL-O-RING	
		2	**6V-8715**	1	CONNECTOR	
	26	1	*148-8336*	1	CONNECTOR AS	
		1	**3J-1907**	1	SEAL-O-RING	
		1	**6V-8397**	1	SEAL-O-RING	
		1	**6V-8636**	1	CONNECTOR	
	27	2	**148-8367**	2	ELBOW AS	
					(EACH INCLUDES)	
		2	**6V-8397**	1	SEAL-O-RING	
		2	**6V-9850**	1	ELBOW	
	28	2	*148-8374*	1	ELBOW AS	
		2	**3K-0360**	1	SEAL-O-RING	
		2	**6V-8397**	1	SEAL-O-RING	
		2	**6V-8723**	1	ELBOW	
	29	2	*148-8378*	1	ELBOW AS	
		2	**3J-1907**	1	SEAL-O-RING	
		2	**6V-8397**	1	SEAL-O-RING	
		2	**6V-8724**	1	ELBOW	
	30	2	*148-8383*	1	ELBOW AS	

259-3885 **LINES GP-FUEL** ***(contd.)*** **i03257923**

NOTE	REF NO	GRAPHIC REF	PART NUMBER	QTY	PART NAME 1 2 3 4 5 6 (PRODUCT LEVEL)	SEE PAGE
		2	**3K-0360**	1	SEAL-O-RING	
		2	**6V-8397**	1	SEAL-O-RING	
		2	**8T-1683**	1	ELBOW	
	31	1	**1R-0762**	1	FILTER-FUEL (ADVANCED EFFICIENCY) (SECONDARY)	
	32	2	**2D-1290**	3	GROMMET	
	33	1,2	**5K-8451**	13	CLIP	
	34	1	**6K-8178**	6	CLIP	
	35	1	**6V-4589**	1	SEAL-O-RING	
M	36	1	**6V-7357**	1	BOLT (M6X1X25-MM)	
M	37	1	**7X-2539**	2	BOLT (M8X1.25X110-MM)	
	38	1,2	**8L-2786**	3	SEAL-O-RING	
	39	1,2	**8T-4121**	24	WASHER-HARD (11X21X2.5-MM THK)	
M	40	1	**8T-4133**	1	NUT (M10X1.5-THD)	
M	41	1,2	**8T-4136**	5	BOLT (M10X1.5X25-MM)	
M	42	1,2	**8T-4137**	16	BOLT (M10X1.5X20-MM)	
M	43	1	**8T-4196**	2	BOLT (M10X1.5X35-MM)	
	44	1	**8T-4224**	1	WASHER-HARD (8.8X16X2-MM THK)	
M	45	1	**8T-4908**	1	BOLT (M8X1.25X25-MM)	
M	46	1	**8T-6869**	1	BOLT (M8X1.25X60-MM)	
	47	1,2	**9M-8406**	7	CLIP	
	48	1	**9N-0869**	3	WASHER-HARD (8.8X25.5X2-MM THK)	
	49	1	**9S-8005**	2	PLUG-O-RING	
	50	1	**9X-8256**	1	WASHER (6.6X12X2-MM THK)	
E	51	2	**5P-1442**		HOSE (147-CM)	
E	51A	2	**5P-1442**		HOSE (35-CM)	
E	51B	2	**5P-1442**		HOSE (473.5-CM)	
E	51C	2	**5P-1442**		HOSE (505-CM)	
	52	1,2	**7K-1181**	3	STRAP-CABLE	

E-ORDER BY THE CENTIMETER
M-METRIC PART
Y-SEPARATE ILLUSTRATION

259-3885 **LINES GP-FUEL** *(contd.)* **i03257923**

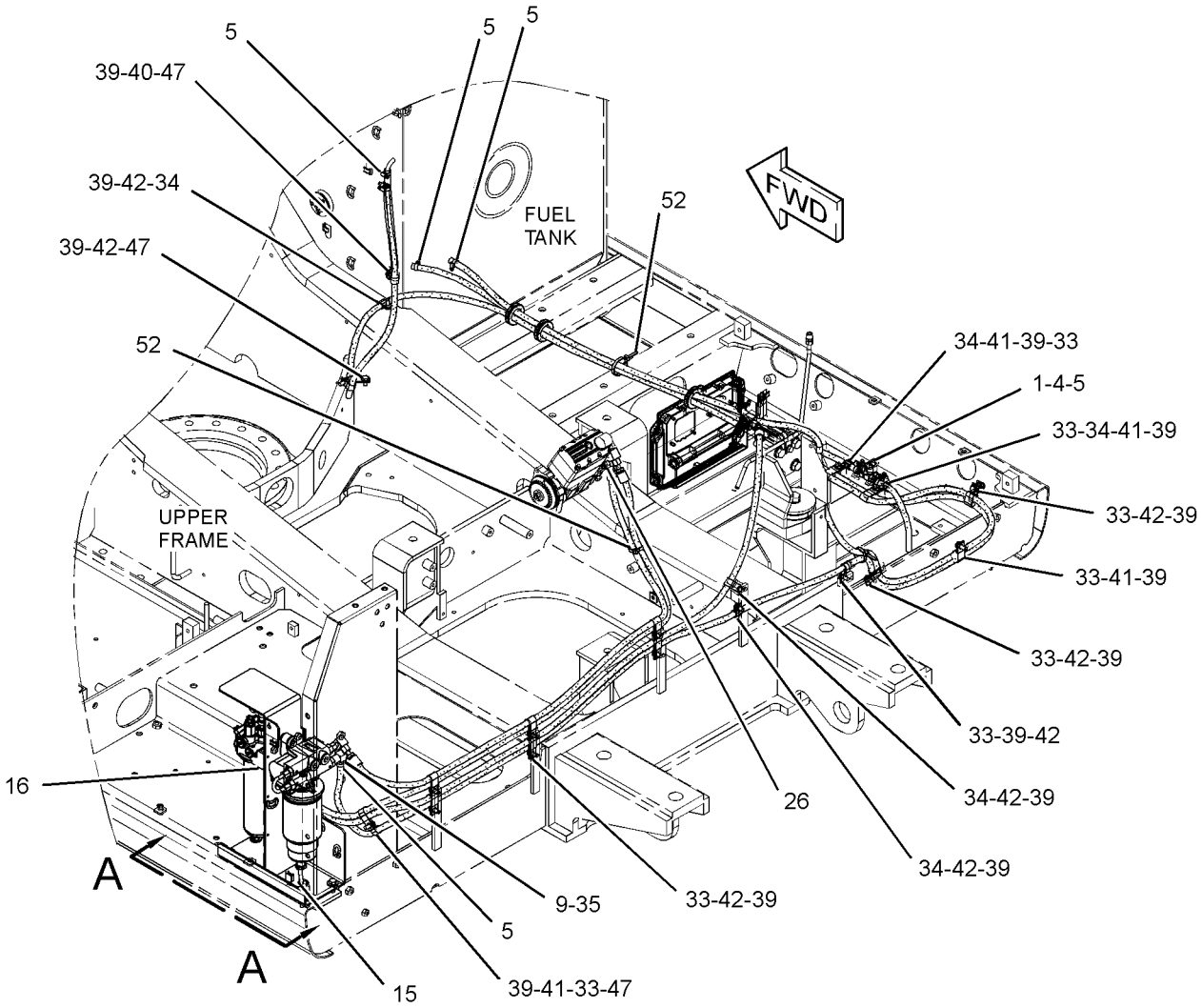

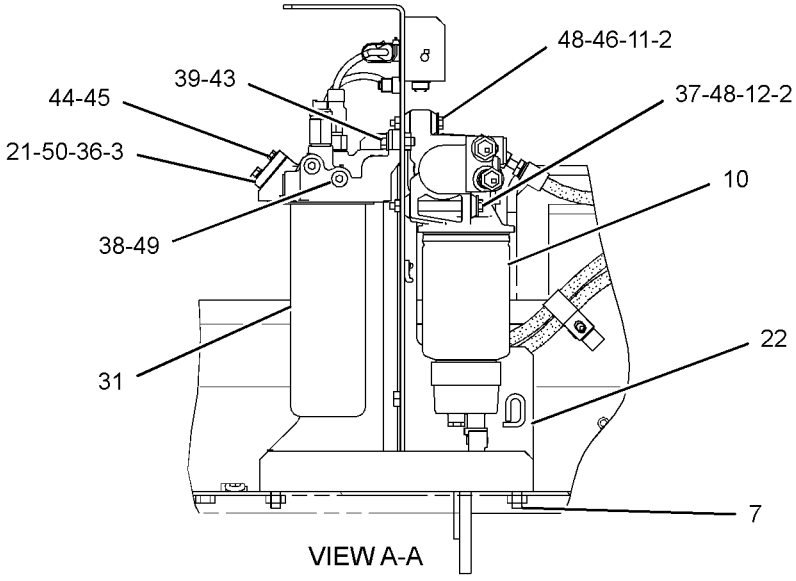

GRAPHIC #1

g01228926

259-3885 **LINES GP-FUEL** *(contd.)* **i03257923**

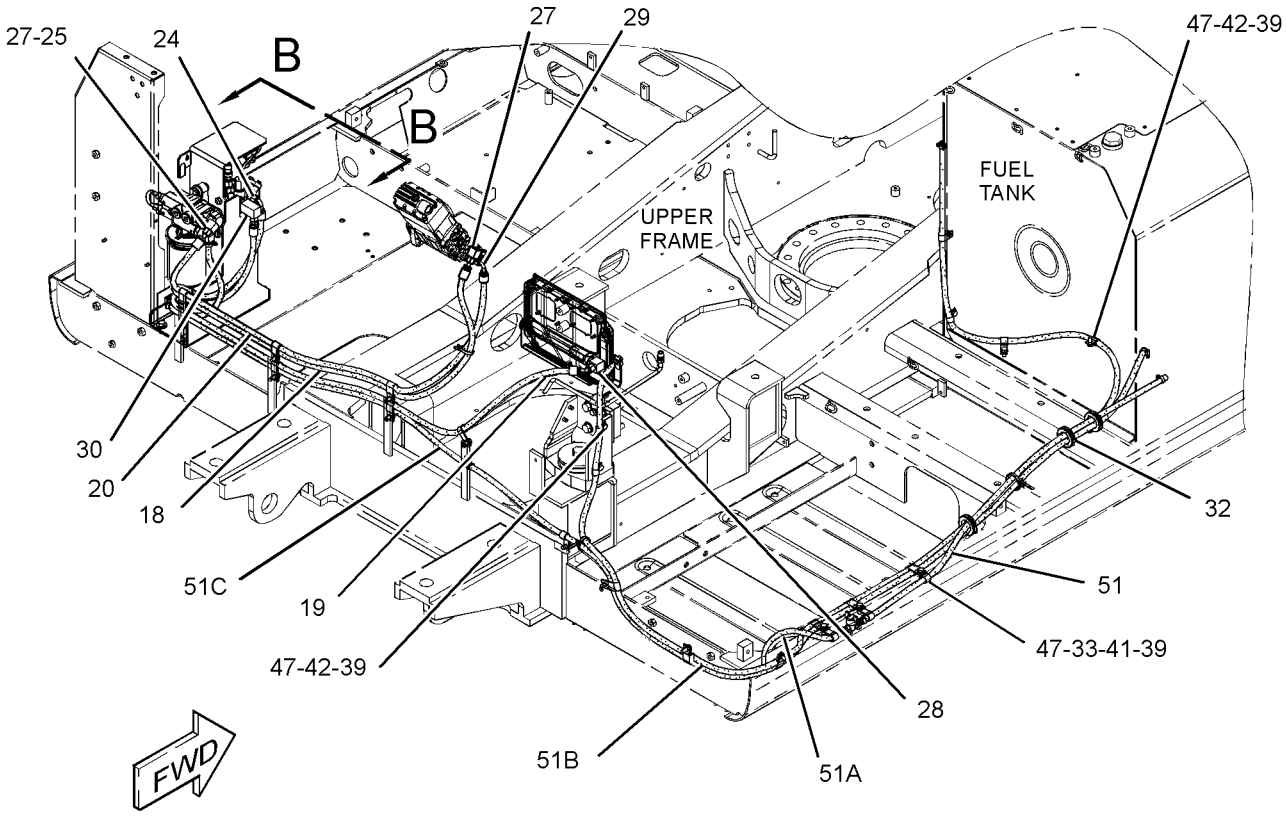

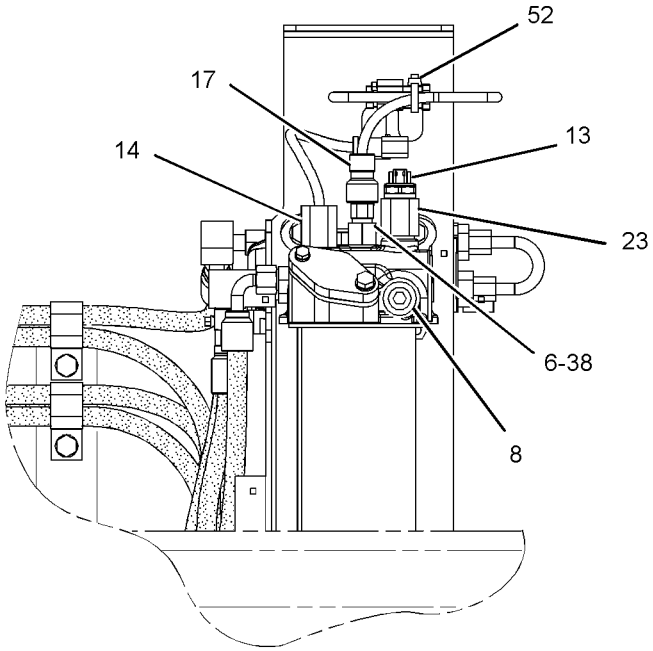

VIEW B-B

GRAPHIC #2 **<END>** g01218402

FUEL SYSTEM

259-3885 LINES GP-FUEL

S/N: DFP1-UP; CJX1-UP
PART OF 247-7458 PUMP GP-FUEL PRIMING
AN ATTACHMENT
TYPE 2

SMCS-1274 **i03258345**

NOTE	REF NO	GRAPHIC REF	PART NUMBER	QTY	PART NAME 1 2 3 4 5 6 (PRODUCT LEVEL)	SEE PAGE
	1	1	**4I-0379**	1	VALVE-MANUAL (DRAIN, FUEL TANK)	
	2	1	**8T-9655**	6	MOUNT-ISOLATION	
	3	1	**9Y-8389**	1	GASKET (FUEL FILTER)	
	4	1	**003-7764**	2	END-HOSE	
	5	1	**095-1386**	7	CLAMP-HOSE	
	6	2	**134-6852**	1	CONNECTOR	
M	7	1	**135-8575**	4	BOLT AS-LOCKING (M12X1.75X30-MM)	
	8	2	*164-5619*	1	PLUG AS	
		2	**2M-9780**	1	SEAL-O-RING	
		2	**9S-8006**	1	PLUG-O-RING (7/8-14-THD)	
CY	9	1	**298-3147**	1	VALVE GP-FUEL SHUTOFF	236
Y	10	1	*188-6121*	1	PUMP GP-FUEL PRM & PRIM FILTER (WITH WATER SEPARATOR)	200
	11	1	**191-1782**	1	SPACER (8.5X12.7X38.2-MM THK)	
	12	1	**191-1783**	2	SPACER (8.5X12.7X87.3-MM THK)	
Y	13	2	*197-8391*	1	SENSOR GP-TEMPERATURE (FUEL)	326
Y	14	2	**258-0883**	1	SWITCH GP-PRESSURE (FUEL)	352
	15	1	**229-0999**	1	HOSE	
	16	1	**237-9312**	1	BASE AS-FUEL FILTER	
		1	**9S-4167**	1	STUD-HOLLOW (1-14X1.47-IN)	
Y	17	2	*239-2396*	1	SENSOR GP-PRESSURE (FUEL)	323
	18	2	**248-9296**	1	HOSE AS	
	19	2	**256-1666**	1	HOSE AS	
C	20	2	**303-9630**	1	HOSE AS	
	21	1	**259-3915**	1	COVER	
	22	1	**262-2604**	1	SUPPORT AS	
	23	2	*148-8311*	1	ADAPTER AS	
		2	**3K-0360**	1	SEAL-O-RING	
		2	**8T-1715**	1	ADAPTER	
	24	2	*148-8318*	1	CONNECTOR AS	
		2	**3K-0360**	1	SEAL-O-RING	
		2	**6V-8397**	1	SEAL-O-RING	
		2	**6V-8634**	1	CONNECTOR	
	25	2	*148-8319*	1	CONNECTOR AS	
		2	**2M-9780**	1	SEAL-O-RING	
		2	**6V-8397**	1	SEAL-O-RING	
		2	**6V-8715**	1	CONNECTOR	
	26	1	*148-8336*	1	CONNECTOR AS	
		1	**3J-1907**	1	SEAL-O-RING	
		1	**6V-8397**	1	SEAL-O-RING	
		1	**6V-8636**	1	CONNECTOR	
C	27	2	*148-8367*	1	ELBOW AS	
		2	**6V-8397**	1	SEAL-O-RING	
		2	**6V-9850**	1	ELBOW	
	28	2	*148-8374*	1	ELBOW AS	
		2	**3K-0360**	1	SEAL-O-RING	
		2	**6V-8397**	1	SEAL-O-RING	
		2	**6V-8723**	1	ELBOW	
	29	2	*148-8378*	1	ELBOW AS	
		2	**3J-1907**	1	SEAL-O-RING	
		2	**6V-8397**	1	SEAL-O-RING	
		2	**6V-8724**	1	ELBOW	
	30	2	*148-8383*	1	ELBOW AS	
		2	**3K-0360**	1	SEAL-O-RING	

259-3885 **LINES GP-FUEL** ***(contd.)*** **i03258345**

NOTE	REF NO	GRAPHIC REF	PART NUMBER	QTY	PART NAME 1 2 3 4 5 6 (PRODUCT LEVEL)	SEE PAGE
		2	**6V-8397**	1	SEAL-O-RING	
		2	**8T-1683**	1	ELBOW	
	31	1	**1R-0762**	1	FILTER-FUEL (ADVANCED EFFICIENCY) (SECONDARY)	
	32	1,2	**2D-1290**	3	GROMMET	
	33	1,2	**5K-8451**	13	CLIP	
	34	1,2	**6K-8178**	6	CLIP	
M	36	1	**6V-7357**	1	BOLT (M6X1X25-MM)	
M	37	1	**7X-2539**	2	BOLT (M8X1.25X110-MM)	
	38	1,2	**8L-2786**	3	SEAL-O-RING	
	39	1,2	**8T-4121**	24	WASHER-HARD (11X21X2.5-MM THK)	
M	40	1	**8T-4133**	1	NUT (M10X1.5-THD)	
M	41	1,2	**8T-4136**	5	BOLT (M10X1.5X25-MM)	
M	42	1,2	**8T-4137**	16	BOLT (M10X1.5X20-MM)	
M	43	1	**8T-4196**	2	BOLT (M10X1.5X35-MM)	
	44	1	**8T-4224**	1	WASHER-HARD (8.8X16X2-MM THK)	
M	45	1	**8T-4908**	1	BOLT (M8X1.25X25-MM)	
M	46	1	**8T-6869**	1	BOLT (M8X1.25X60-MM)	
	47	1,2	**9M-8406**	7	CLIP	
	48	1	**9N-0869**	3	WASHER-HARD (8.8X25.5X2-MM THK)	
	49	1	**9S-8005**	2	PLUG-O-RING	
	50	1	**9X-8256**	1	WASHER (6.6X12X2-MM THK)	
E	51	2	**5P-1442**		HOSE (147-CM)	
E	51A	2	**5P-1442**		HOSE (35-CM)	
E	51B	2	**5P-1442**		HOSE (473.5-CM)	
CE	51C	2	**5P-1442**		HOSE (498.5-CM)	
	52	1	**7K-1181**	3	STRAP-CABLE	
C	53	1	**2M-9780**	1	SEAL-O-RING	
C	54	1	**5P-7175**	1	FITTING-STRAIGHT	
C	55	1	**6V-2606**	1	ADAPTER	

C-CHANGE FROM PREVIOUS TYPE
E-ORDER BY THE CENTIMETER
M-METRIC PART
Y-SEPARATE ILLUSTRATION

259-3885 **LINES GP-FUEL** *(contd.)* **i03258345**

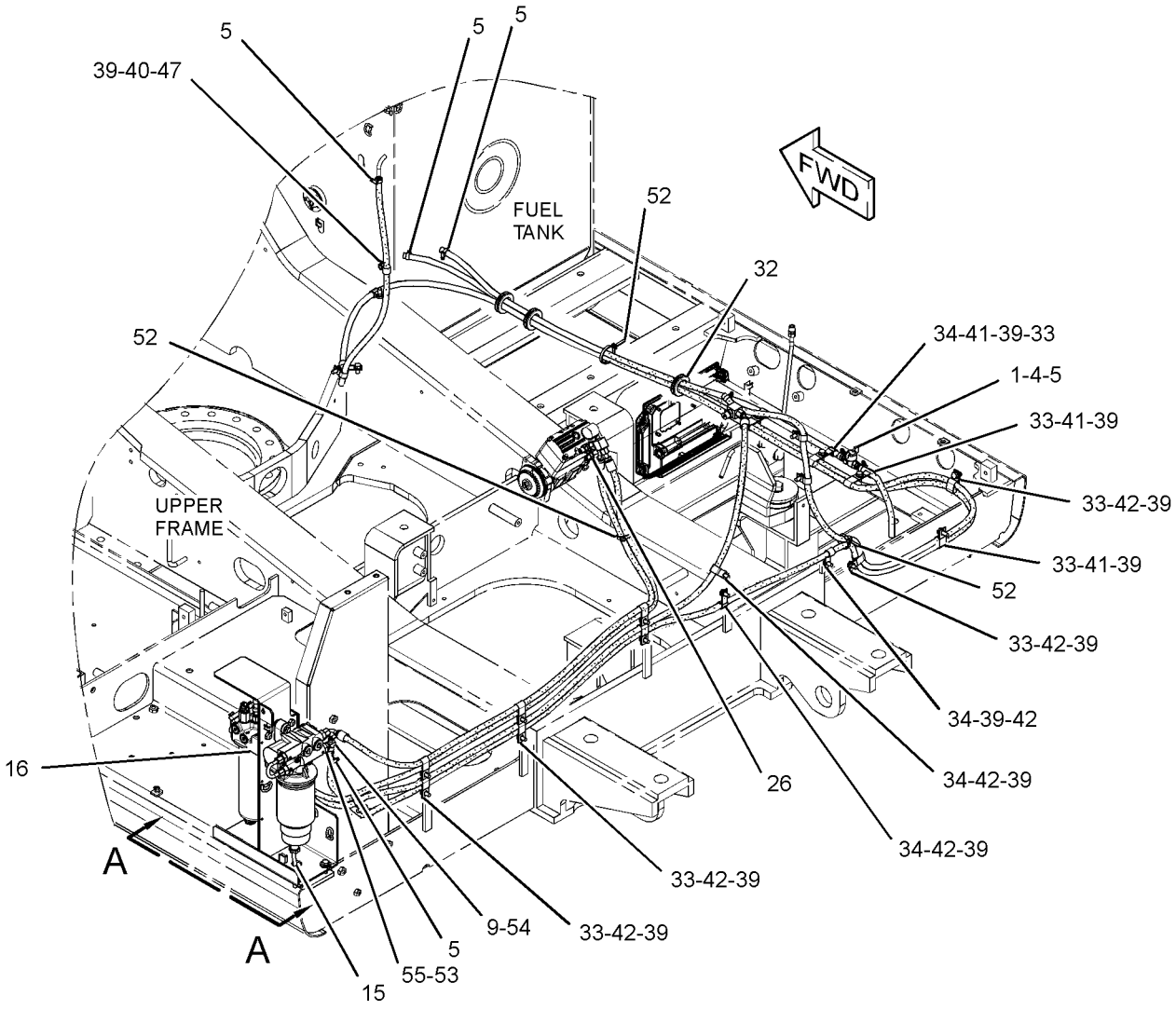

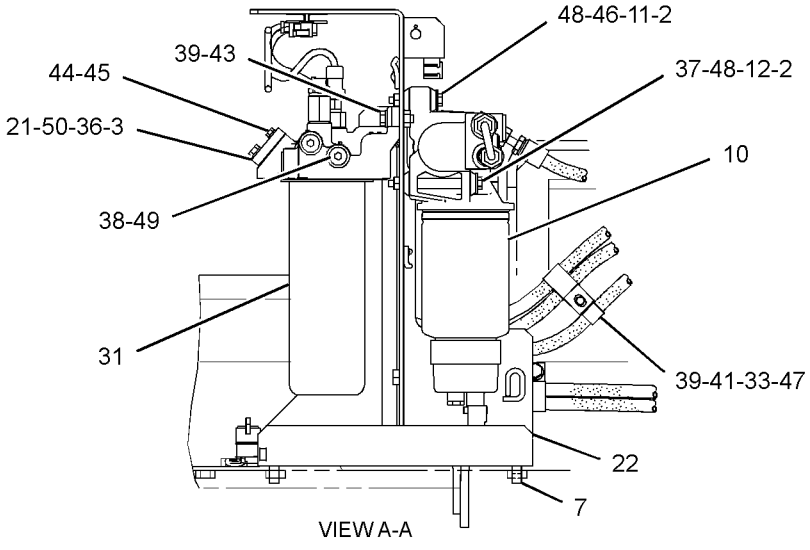

GRAPHIC #1

g01411682

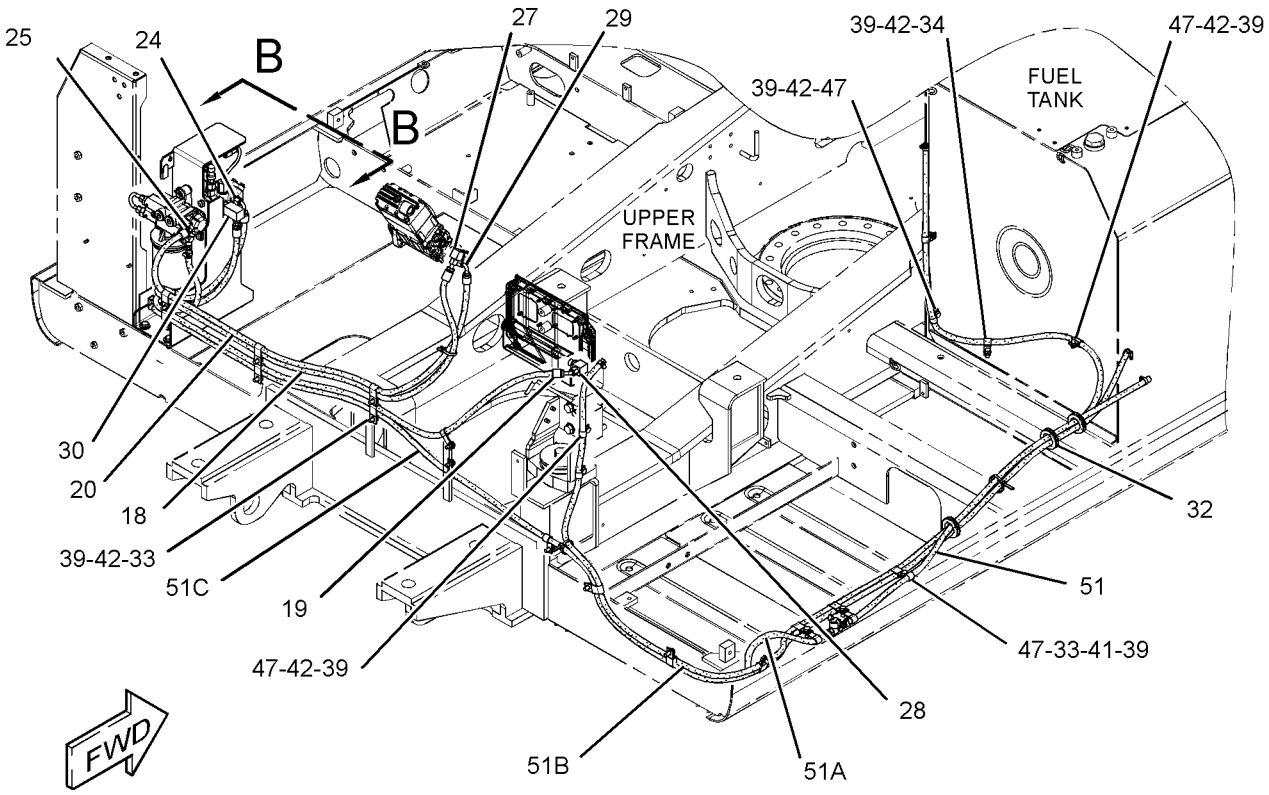

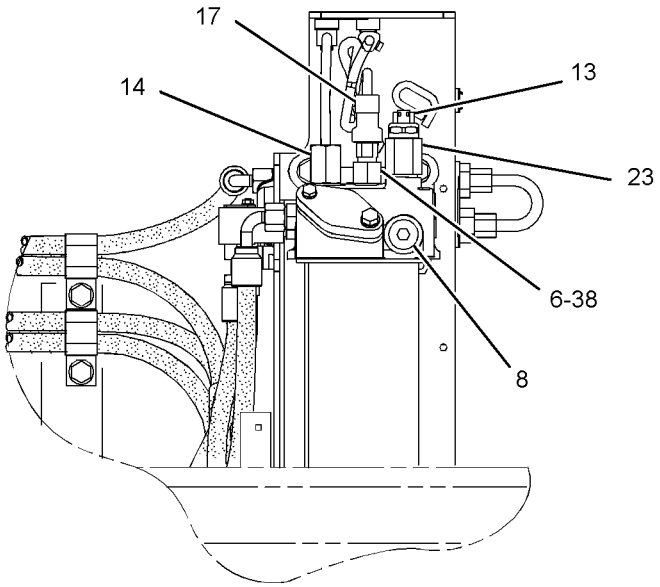

VIEW B-B

GRAPHIC #2 **<END>** g01411683

FUEL SYSTEM

259-3885 LINES GP-FUEL

S/N: DFP1-UP; CJX1-UP
PART OF 247-7458 PUMP GP-FUEL PRIMING
AN ATTACHMENT
TYPE 3

SMCS-1274 **i03167902**

NOTE	REF NO	GRAPHIC REF	PART NUMBER	QTY	PART NAME 1 2 3 4 5 6 (PRODUCT LEVEL)	SEE PAGE
	1	2	**4I-0379**	1	VALVE-MANUAL (DRAIN, FUEL TANK)	
	2	1	**8T-9655**	6	MOUNT-ISOLATION	
	3	1	**9Y-8389**	1	GASKET (FUEL FILTER)	
	4	2	**003-7764**	2	END-HOSE	
	5	1,2	**095-1386**	7	CLAMP-HOSE	
	6	2	**134-6852**	1	CONNECTOR	
M	7	1	**135-8575**	4	BOLT AS-LOCKING (M12X1.75X30-MM)	
	8	2	*164-5619*	1	PLUG AS	
		2	**2M-9780**	1	SEAL-O-RING	
		2	**9S-8006**	1	PLUG-O-RING (7/8-14-THD)	
Y	9	1	**298-3147**	1	VALVE GP-FUEL SHUTOFF	236
Y	10	1	*188-6121*	1	PUMP GP-FUEL PRM & PRIM FILTER (WITH WATER SEPARATOR)	200
	11	1	**191-1782**	1	SPACER (8.5X12.7X38.2-MM THK)	
	12	1	**191-1783**	2	SPACER (8.5X12.7X87.3-MM THK)	
Y	13	2	*197-8391*	1	SENSOR GP-TEMPERATURE (FUEL)	326
Y	14	2	**258-0883**	1	SWITCH GP-PRESSURE (FUEL)	352
	15	1	**229-0999**	1	HOSE	
	16	1	**237-9312**	1	BASE AS-FUEL FILTER	
		1	**9S-4167**	1	STUD-HOLLOW (1-14X1.47-IN)	
Y	17	2	*239-2396*	1	SENSOR GP-PRESSURE (FUEL)	323
C	18	2	**307-7977**	1	HOSE AS	
C	19	2	**307-7978**	1	HOSE AS	
C	20	2	**307-8013**	1	HOSE AS	
	21	1	**259-3915**	1	COVER	
	22	1	**262-2604**	1	SUPPORT AS	
	23	2	*148-8311*	1	ADAPTER AS	
		2	**3K-0360**	1	SEAL-O-RING	
		2	**8T-1715**	1	ADAPTER	
	24	2	*148-8318*	1	CONNECTOR AS	
		2	**3K-0360**	1	SEAL-O-RING	
		2	**6V-8397**	1	SEAL-O-RING	
		2	**6V-8634**	1	CONNECTOR (SEAL)	
	25	2	*148-8319*	1	CONNECTOR AS	
		2	**2M-9780**	1	SEAL-O-RING	
		2	**6V-8397**	1	SEAL-O-RING	
		2	**6V-8715**	1	CONNECTOR	
	27	1	**148-8367**	1	ELBOW AS (45-DEG)	
		1	**6V-8397**	1	SEAL-O-RING	
		1	**6V-9850**	1	ELBOW (SWIVEL)	
	30	2	*148-8383*	1	ELBOW AS	
		2	**3K-0360**	1	SEAL-O-RING	
		2	**6V-8397**	1	SEAL-O-RING	
		2	**8T-1683**	1	ELBOW (90-DEG)	
	31	1	**1R-0762**	1	FILTER-FUEL (ADVANCED EFFICIENCY) (SECONDARY)	
	32	1,2	**2D-1290**	3	GROMMET	
C	33	1,2	**5K-8451**	13	CLIP	
C	34	1,2	**6K-8178**	5	CLIP	
M	36	1	**6V-7357**	1	BOLT (M6X1X25-MM)	
M	37	1	**7X-2539**	2	BOLT (M8X1.25X110-MM)	
	38	1,2	**8L-2786**	3	SEAL-O-RING	
	39	1,2	**8T-4121**	24	WASHER-HARD (11X21X2.5-MM THK)	
M	40	1	**8T-4133**	1	NUT (M10X1.5-THD)	
M	41	1,2	**8T-4136**	5	BOLT (M10X1.5X25-MM)	

259-3885 **LINES GP-FUEL** ***(contd.)*** **i03167902**

NOTE	REF NO	GRAPHIC REF	PART NUMBER	QTY	PART NAME 1 2 3 4 5 6 (PRODUCT LEVEL)	SEE PAGE
M	42	1,2	**8T-4137**	16	BOLT (M10X1.5X20-MM)	
M	43	1	**8T-4196**	2	BOLT (M10X1.5X35-MM)	
	44	1	**8T-4224**	1	WASHER-HARD (8.8X16X2-MM THK)	
M	45	1	**8T-4908**	1	BOLT (M8X1.25X25-MM)	
M	46	1	**8T-6869**	1	BOLT (M8X1.25X60-MM)	
C	47	1,2	**9M-8406**	7	CLIP (SMALL)	
	48	1	**7X-0579**	3	WASHER-HARD (8.8X25.5X2-MM THK)	
	49	1	**9S-8005**	2	PLUG-O-RING	
	50	1	**9X-8256**	1	WASHER (6.6X12X2-MM THK)	
CE	51	2	**5P-1442**		HOSE (147-CM)	
CE	51A	2	**5P-1442**		HOSE (35-CM)	
	52	1,2	**7K-1181**	3	STRAP-CABLE	
	53	1	**2M-9780**	1	SEAL-O-RING	
	54	1	**5P-7175**	1	FITTING-STRAIGHT	
	55	1	**6V-2606**	1	ADAPTER	
C	56	2	**307-8012**	1	HOSE AS	
C	57	2	**307-7979**	1	HOSE AS	
C	58	2	**9X-8250**	1	CLIP	

C-CHANGE FROM PREVIOUS TYPE
E-ORDER BY THE CENTIMETER
M-METRIC PART
Y-SEPARATE ILLUSTRATION

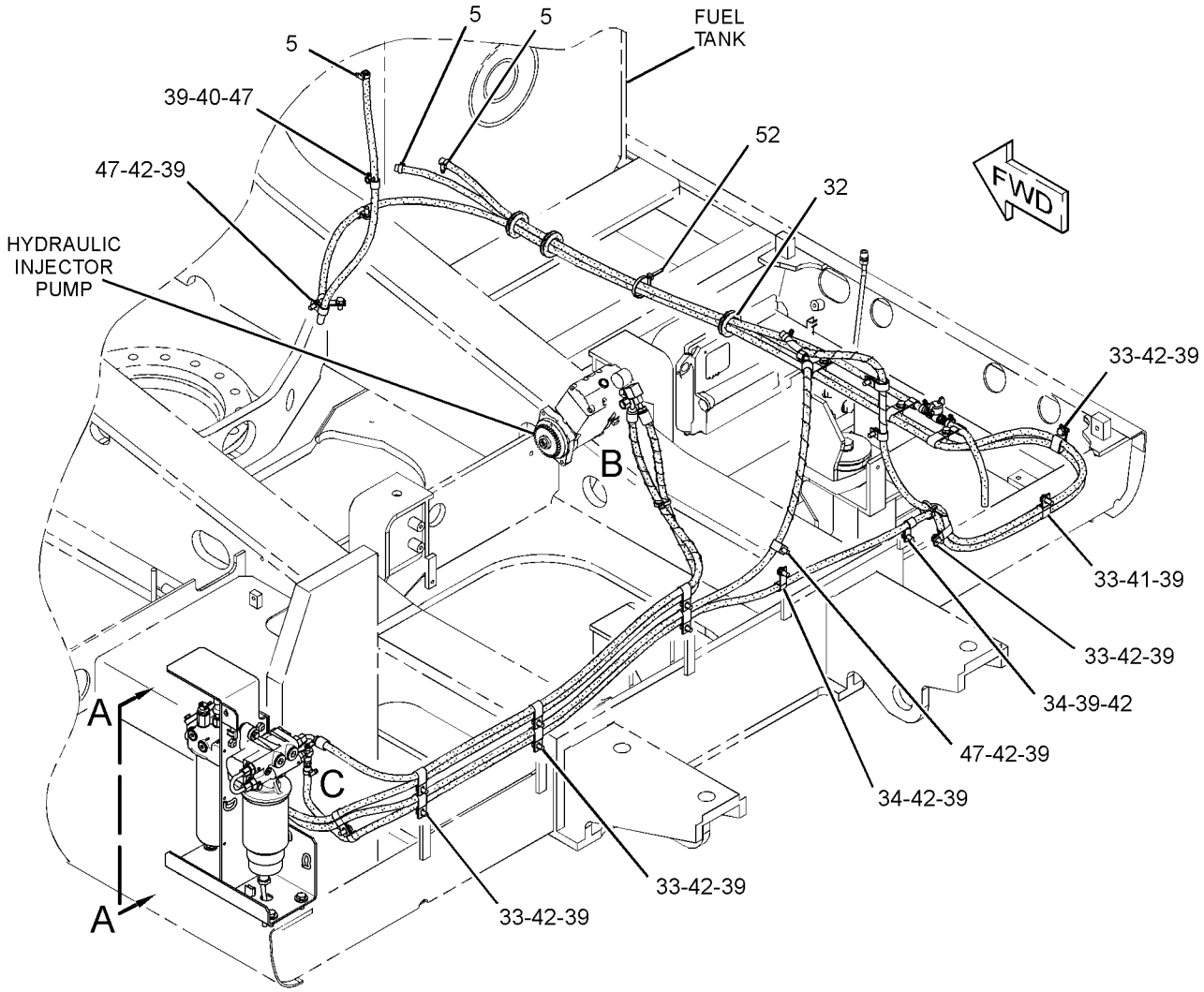

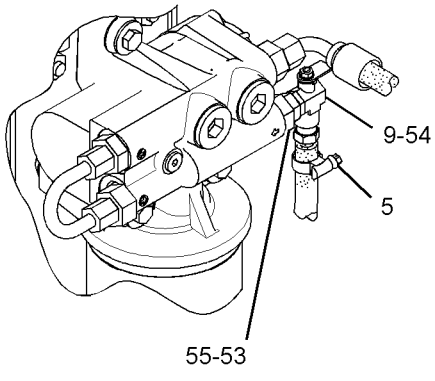

VIEW OF AREA C

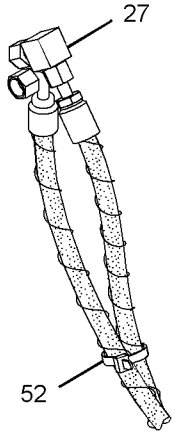

VIEW OF AREA B

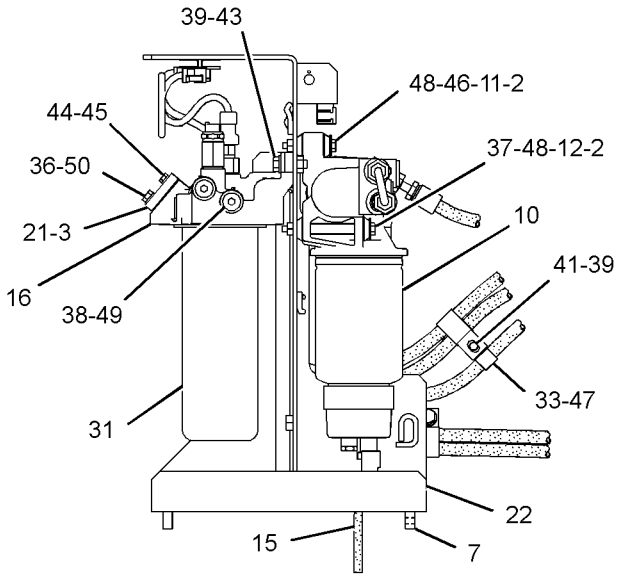

VIEW A-A

GRAPHIC #1

g01466547

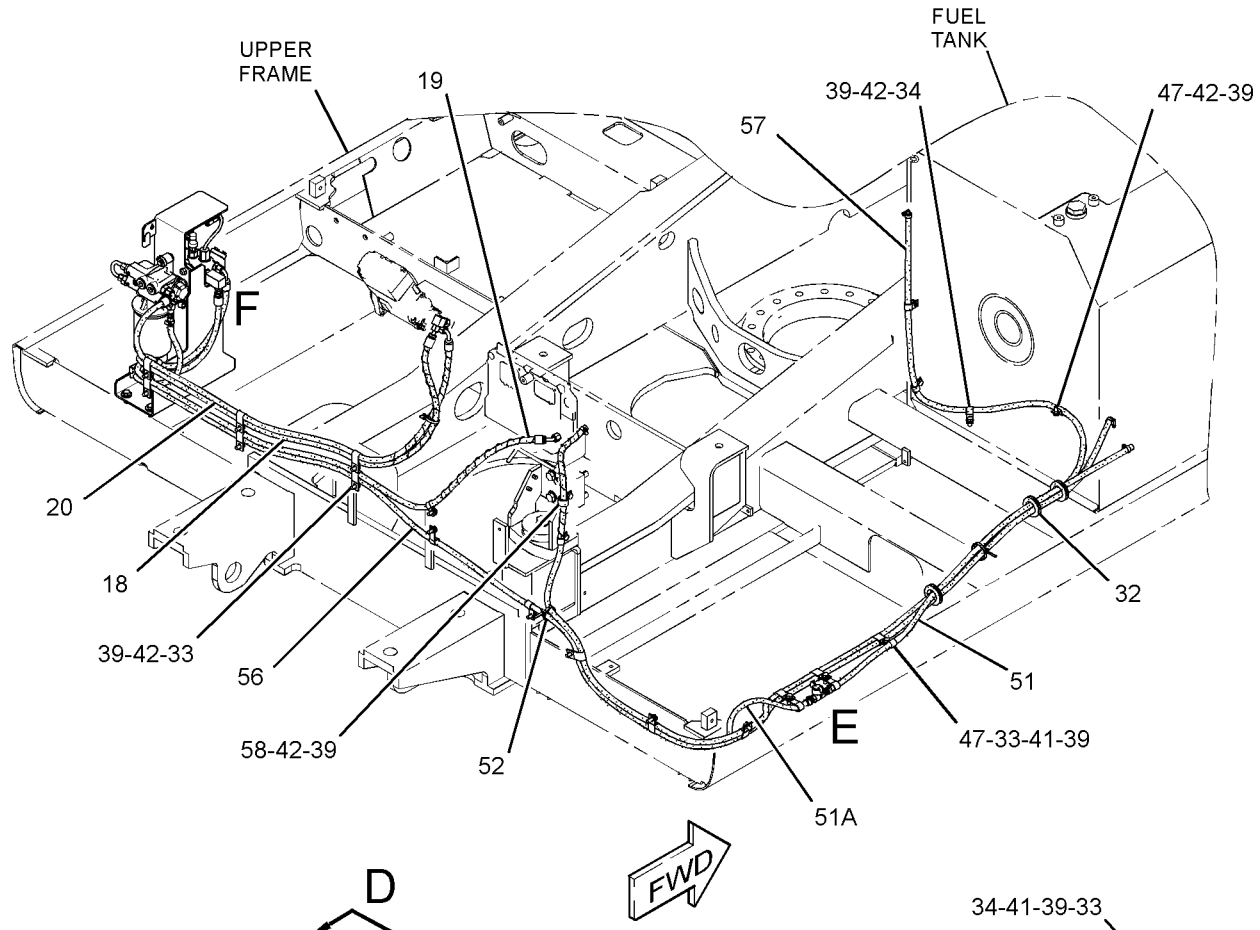

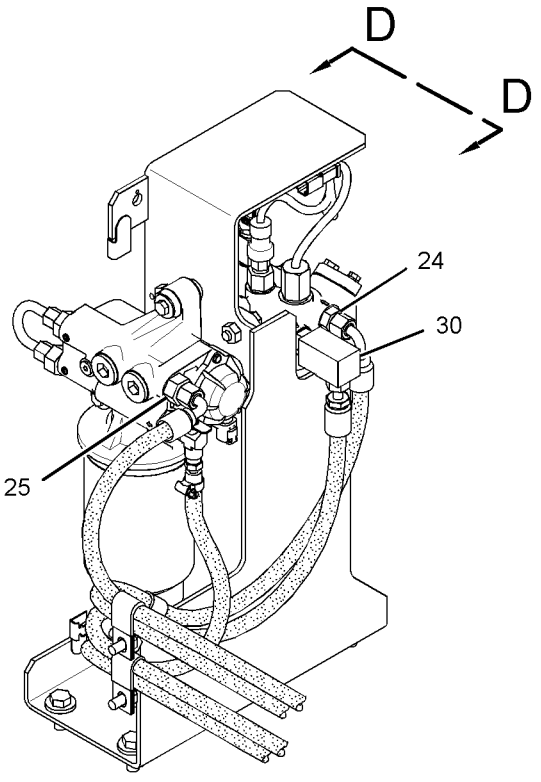

VIEW OF AREA F

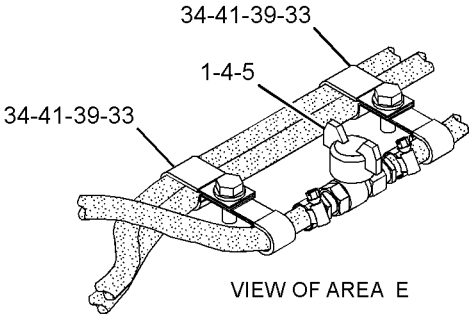

VIEW OF AREA E

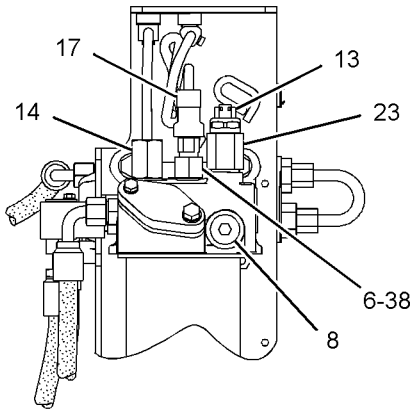

VIEW D-D

GRAPHIC #2 **<END>** g01466548

191-0461 LINES GP-INJECTOR HYD PUMP

S/N: KHX1-UP

PART OF 236-4283, 236-4284, 270-4211, 270-4212 ENGINE AR-CORE

ALSO AN ATTACHMENT

SMCS-1714 **i02354651**

NOTE	REF NO	GRAPHIC REF	PART NUMBER	QTY	PART NAME 1 2 3 4 5 6 (PRODUCT LEVEL)	SEE PAGE
	1	1	**6V-8636**	2	CONNECTOR	
		1	**214-7568**	2	SEAL-O-RING	
		1	**221-3494**	2	SEAL-O-RING	
Y	2	1	*191-0523*	1	ADAPTER GP-OIL LINE	83
	3	1	**205-1280**	1	HOSE AS	
	4	1	**212-3706**	1	TUBE AS	
	5	1	**3V-2431**	2	WASHER (10.2X16X2-MM THK)	
	6	1	**4F-9653**	1	SEAL-O-RING	
M	7	1	**8T-1159**	2	BOLT-SOCKET HEAD (M10X1.5X25-MM)	

M-METRIC PART
Y-SEPARATE ILLUSTRATION

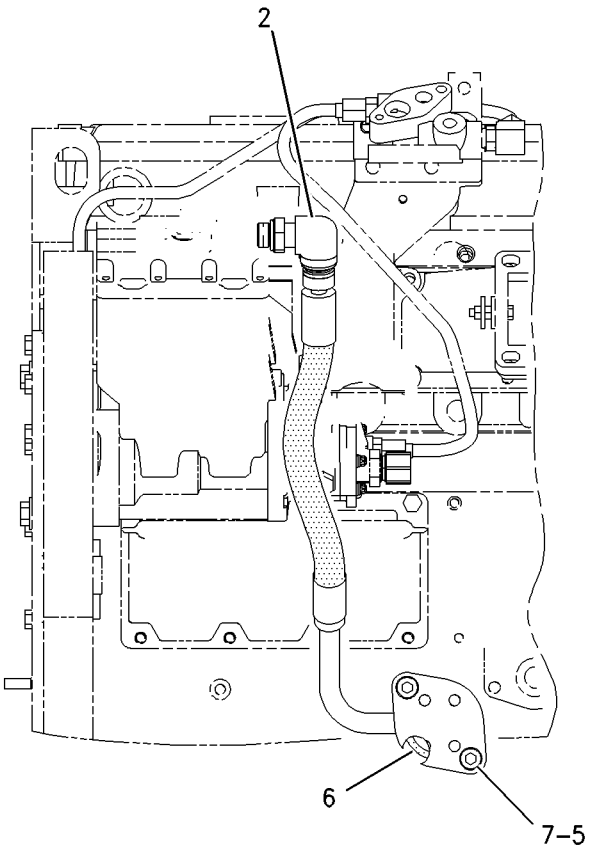

LEFT SIDE VIEW

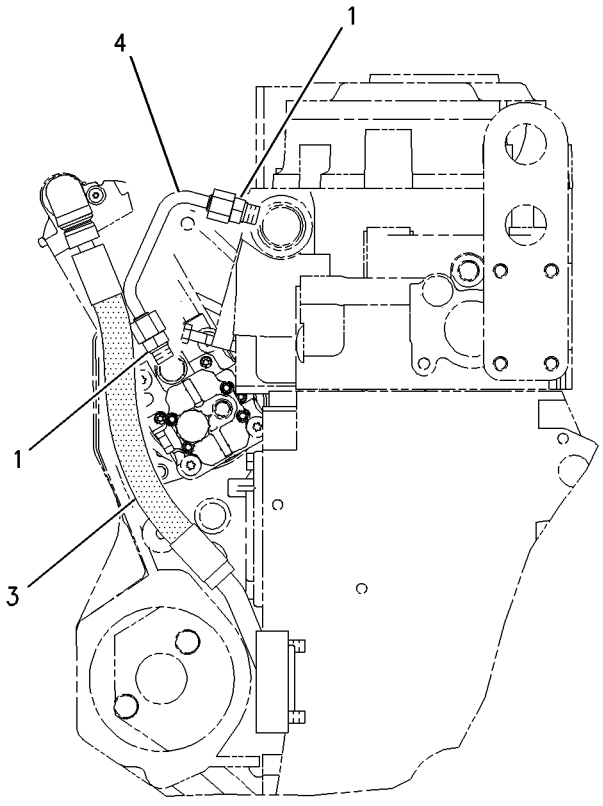

REAR VIEW

GRAPHIC #1 **<END>** g00881566

229-1859 PUMP & MOTOR GP-REFUELING

S/N: DFP1-UP; CJX1-UP
PART OF 229-1785 PUMP GP-REFUELING
AN ATTACHMENT

SMCS-1295 **i02213969**

NOTE	REF NO	GRAPHIC REF	PART NUMBER	QTY	PART NAME 1 2 3 4 5 6 (PRODUCT LEVEL)	SEE PAGE
	1	1	**121-1038**	1	HOUSING-RECEPTACLE	
	2	1	**116-0128**	1	SEAL	
	3	1	**121-1039**	2	TERMINAL (MALE)	

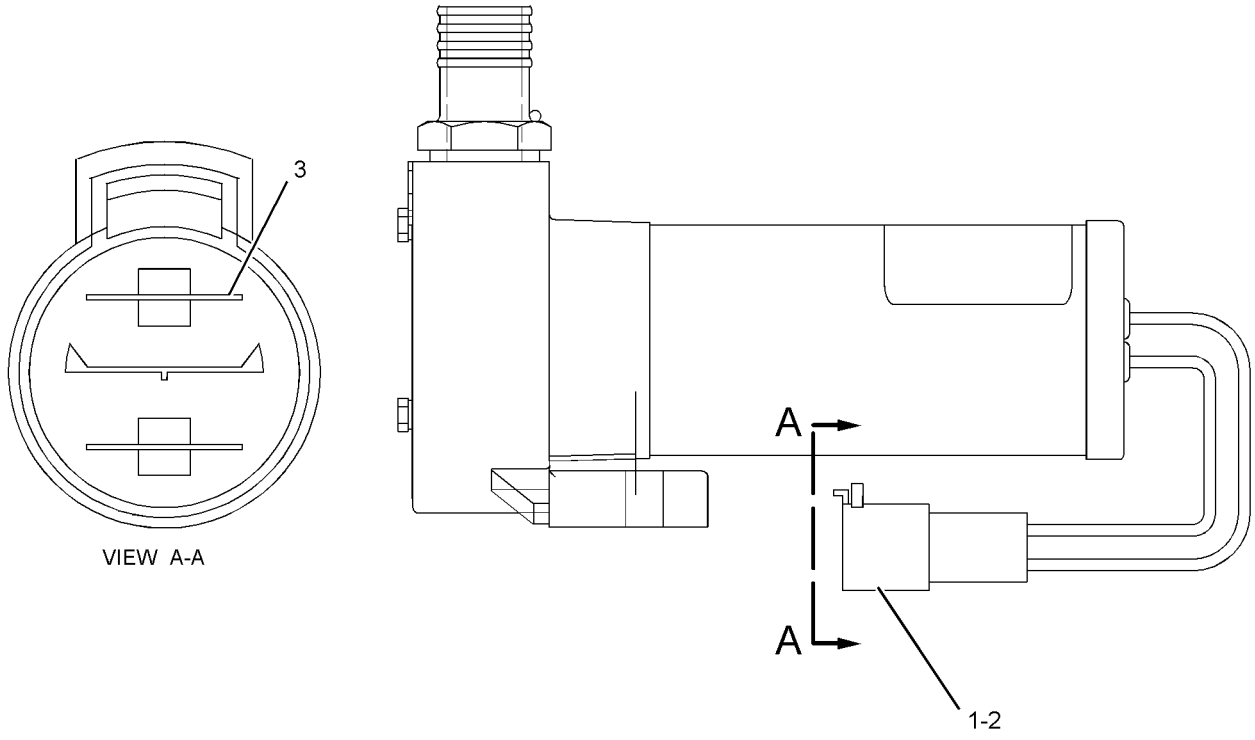

GRAPHIC #1 **<END>** g01104176

222-5900 PUMP & MTG GP-UNIT INJ HYD

S/N: KHX1-4813

PART OF 236-4283, 236-4284, 270-4211, 270-4212 ENGINE AR-CORE

ALSO AN ATTACHMENT

SMCS-1714 **i02355616**

NOTE	REF NO	GRAPHIC REF	PART NUMBER	QTY	PART NAME 1 2 3 4 5 6 (PRODUCT LEVEL)	SEE PAGE
	1	1	**214-7568**	2	SEAL-O-RING	
C	2	1	**227-5904**	1	SEAL-O-RING (UNIT INJECTOR HYD PUMP)	
CYR	3	1	**254-4357**	1	PUMP GP-UNIT INJECTOR HYD	206
C	4	1	**3E-9412**	1	DOWEL	
	5	1	**6V-5839**	2	WASHER (11X21X2.5-MM THK)	
M	6	1	**6V-7981**	2	BOLT (M10X1.5X70-MM)	
	7	1	**9S-8004**	2	PLUG-O-RING	

C-CHANGE FROM PREVIOUS TYPE
M-METRIC PART
R-REMFG PART MAY BE AVAILABLE
Y-SEPARATE ILLUSTRATION

222-5900 **PUMP & MTG GP-UNIT INJ HYD** *(contd.)* **i02355616**

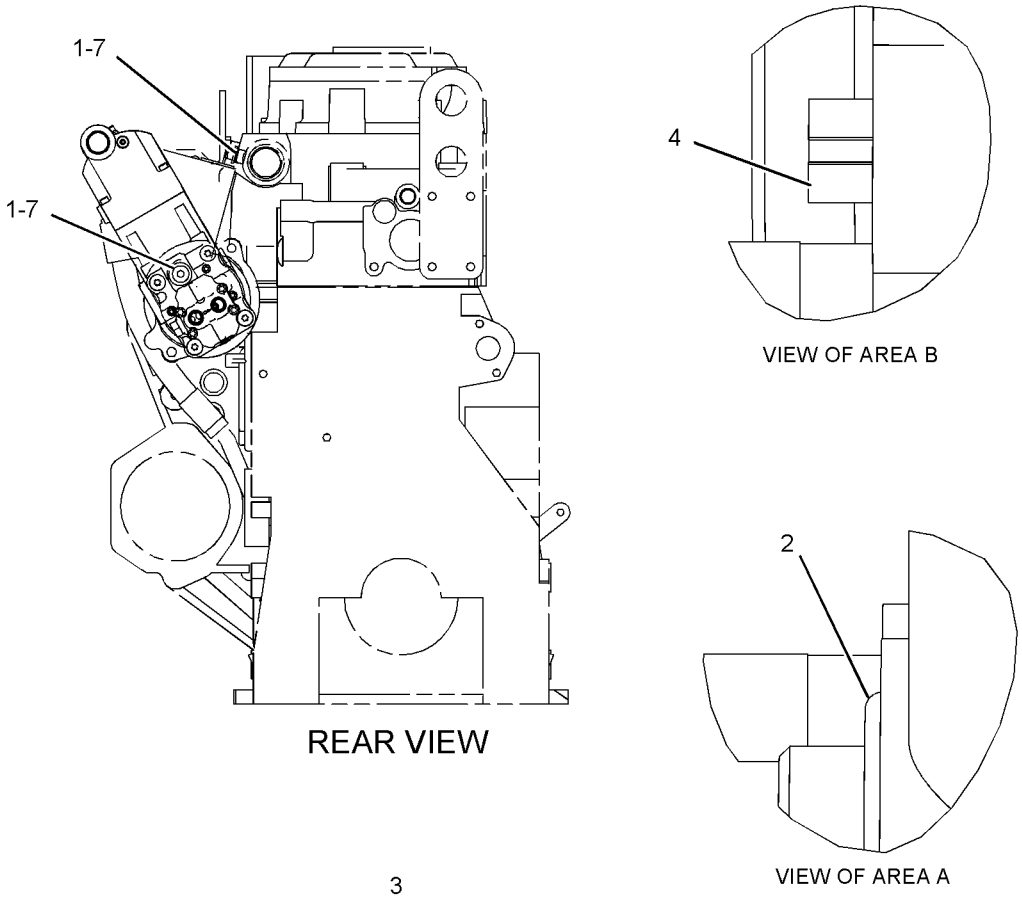

GRAPHIC #1 **<END>** g01017748

222-5900 PUMP & MTG GP-UNIT INJ HYD

S/N: KHX4814-6017

PART OF 236-4283, 236-4284, 270-4211, 270-4212 ENGINE AR-CORE

ALSO AN ATTACHMENT

SMCS-1714 **i02684145**

NOTE	REF NO	GRAPHIC REF	PART NUMBER	QTY	PART NAME 1 2 3 4 5 6 (PRODUCT LEVEL)	SEE PAGE
	1	1	**214-7568**	2	SEAL-O-RING	
	2	1	**227-5904**	1	SEAL-O-RING (UNIT INJECTOR HYD PUMP)	
CYR	3	1	**295-4777**	1	PUMP GP-UNIT INJECTOR HYD	207
	4	1	**3E-9412**	1	DOWEL	
	5	1	**6V-5839**	2	WASHER (11X21X2.5-MM THK)	
M	6	1	**6V-7981**	2	BOLT (M10X1.5X70-MM)	
	7	1	**9S-8004**	2	PLUG-O-RING	

C-CHANGE FROM PREVIOUS TYPE
M-METRIC PART
R-REMFG PART MAY BE AVAILABLE
Y-SEPARATE ILLUSTRATION

222-5900 **PUMP & MTG GP-UNIT INJ HYD** *(contd.)* **i02684145**

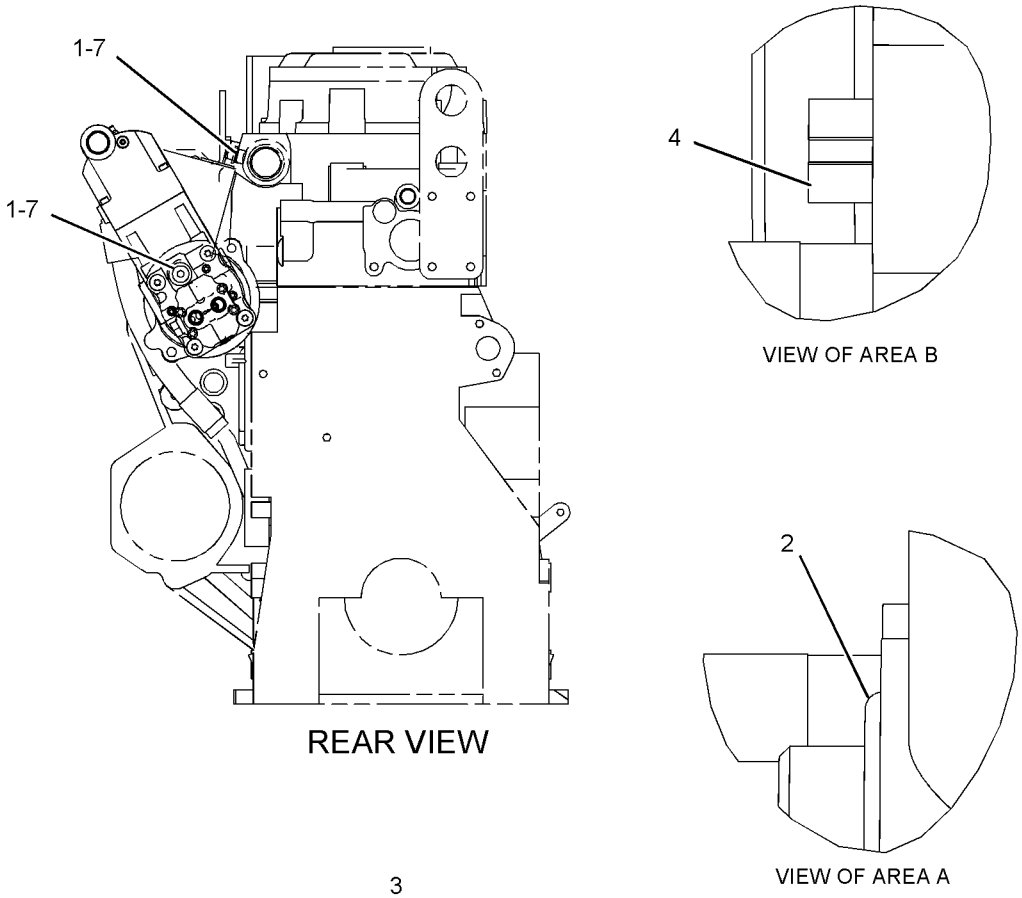

GRAPHIC #1 **<END>** g01017748

222-5900 PUMP & MTG GP-UNIT INJ HYD

S/N: KHX6018-UP

PART OF 236-4283, 236-4284, 270-4211, 270-4212 ENGINE AR-CORE

ALSO AN ATTACHMENT

SMCS-1714 **i02755469**

NOTE	REF NO	GRAPHIC REF	PART NUMBER	QTY	PART NAME 1 2 3 4 5 6 (PRODUCT LEVEL)	SEE PAGE
	1	1	**214-7568**	2	SEAL-O-RING	
	2	1	**227-5904**	1	SEAL-O-RING	
CY	3	1	**304-0677**	1	PUMP GP-UNIT INJECTOR HYD	208
	4	1	**3E-9412**	1	DOWEL	
	5	1	**6V-5839**	2	WASHER (11X21X2.5-MM THK)	
M	6	1	**6V-7981**	2	BOLT (M10X1.5X70-MM)	
	7	1	**9S-8004**	2	PLUG-O-RING	

C-CHANGE FROM PREVIOUS TYPE
M-METRIC PART
Y-SEPARATE ILLUSTRATION

222-5900 **PUMP & MTG GP-UNIT INJ HYD** *(contd.)* **i02755469**

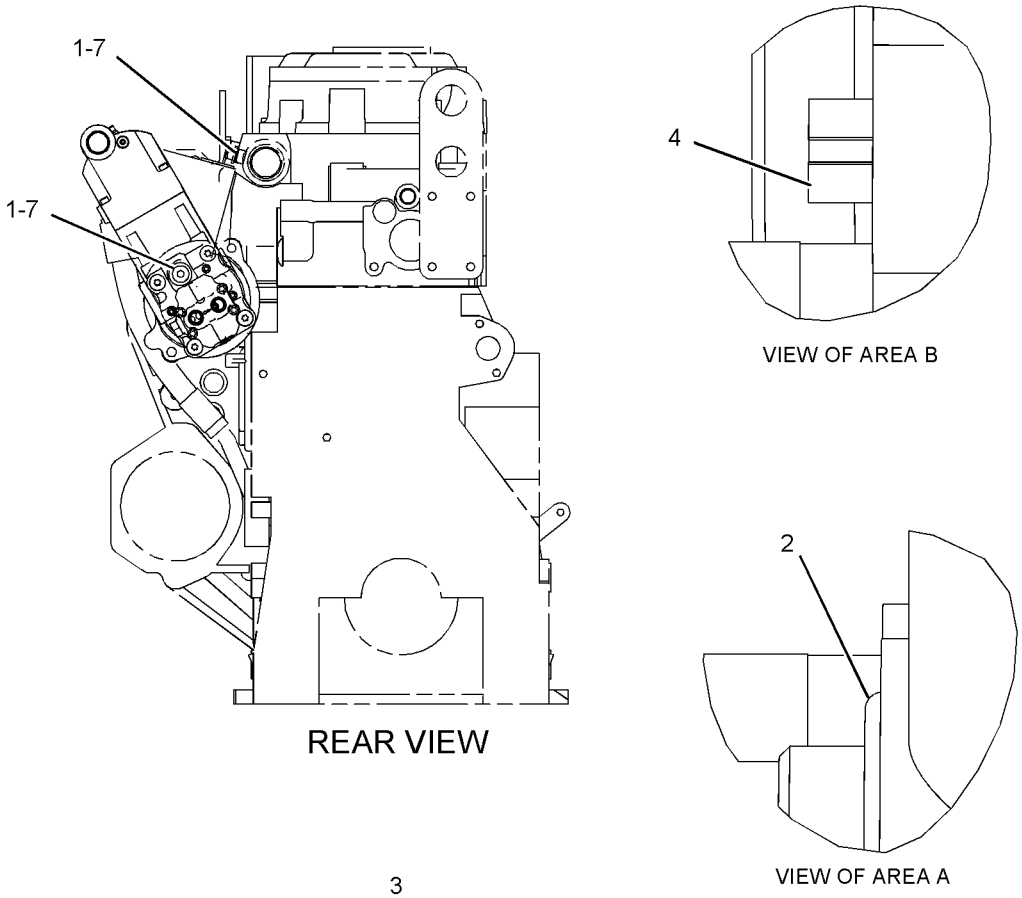

GRAPHIC #1 **<END>** g01017748

222-5900 PUMP & MTG GP-UNIT INJ HYD

S/N: KHX6018-9401
PART OF 236-4283, 236-4284, 270-4211, 270-4212 ENGINE AR-CORE
ALSO AN ATTACHMENT

SMCS-1714 **i02808702**

NOTE	REF NO	GRAPHIC REF	PART NUMBER	QTY	PART NAME 1 2 3 4 5 6 (PRODUCT LEVEL)	SEE PAGE
	1	1	**214-7568**	2	SEAL-O-RING	
	2	1	**227-5904**	1	SEAL-O-RING	
CY	3	1	**312-0677**	1	PUMP GP-UNIT INJECTOR HYD	209
	4	1	**3E-9412**	1	DOWEL	
	5	1	**6V-5839**	2	WASHER (11X21X2.5-MM THK)	
M	6	1	**6V-7981**	2	BOLT (M10X1.5X70-MM)	
	7	1	**9S-8004**	2	PLUG-O-RING	

C-CHANGE FROM PREVIOUS TYPE
M-METRIC PART
Y-SEPARATE ILLUSTRATION

222-5900 **PUMP & MTG GP-UNIT INJ HYD** *(contd.)* **i02808702**

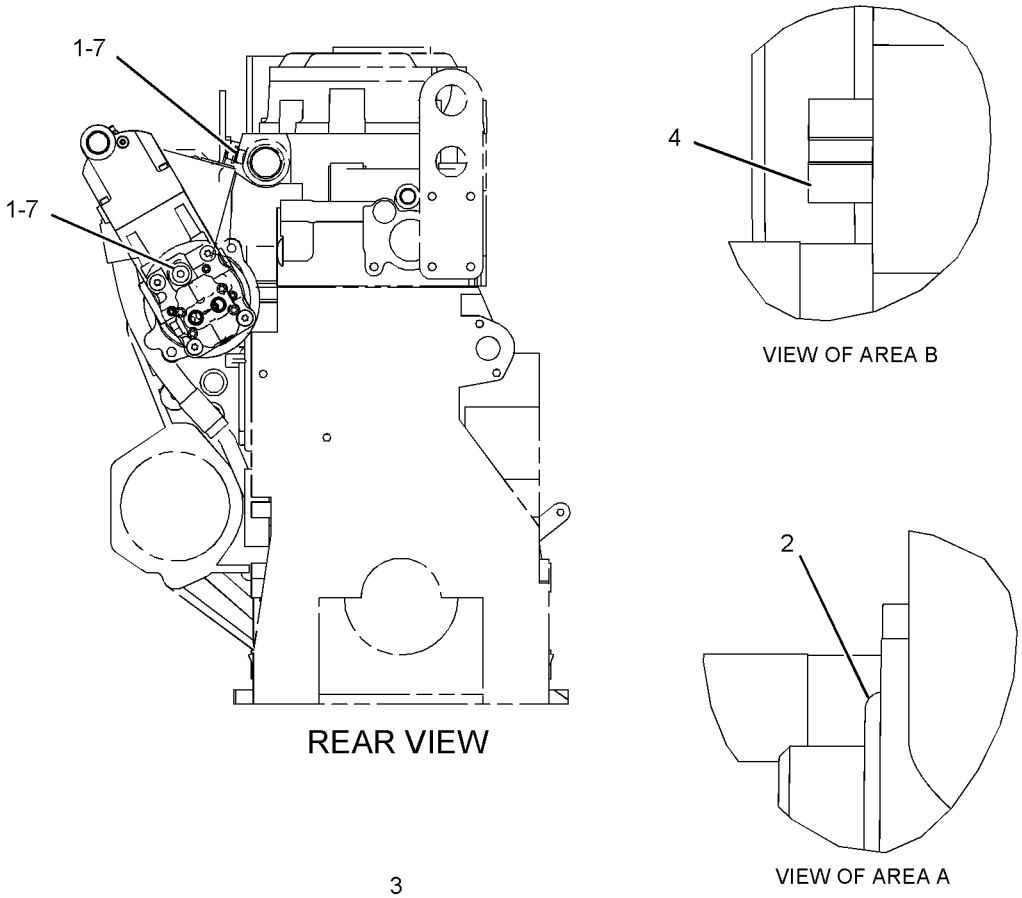

GRAPHIC #1 **<END>** g01017748

222-5900 PUMP & MTG GP-UNIT INJ HYD

S/N: KHX9402-UP

PART OF 236-4283, 236-4284, 270-4211, 270-4212 ENGINE AR-CORE

ALSO AN ATTACHMENT

SMCS-1714 **i03028970**

NOTE	REF NO	GRAPHIC REF	PART NUMBER	QTY	PART NAME 1 2 3 4 5 6 (PRODUCT LEVEL)	SEE PAGE
	1	1	**214-7568**	2	SEAL-O-RING	
	2	1	**227-5904**	1	SEAL-O-RING	
CYR	3	1	**319-0677**	1	PUMP GP-UNIT INJECTOR HYD	210
	4	1	**3E-9412**	1	DOWEL	
	5	1	**6V-5839**	2	WASHER (11X21X2.5-MM THK)	
M	6	1	**6V-7981**	2	BOLT (M10X1.5X70-MM)	
	7	1	**9S-8004**	2	PLUG-O-RING	

C-CHANGE FROM PREVIOUS TYPE
M-METRIC PART
R-REMFG PART MAY BE AVAILABLE
Y-SEPARATE ILLUSTRATION

222-5900 **PUMP & MTG GP-UNIT INJ HYD** *(contd.)* **i03028970**

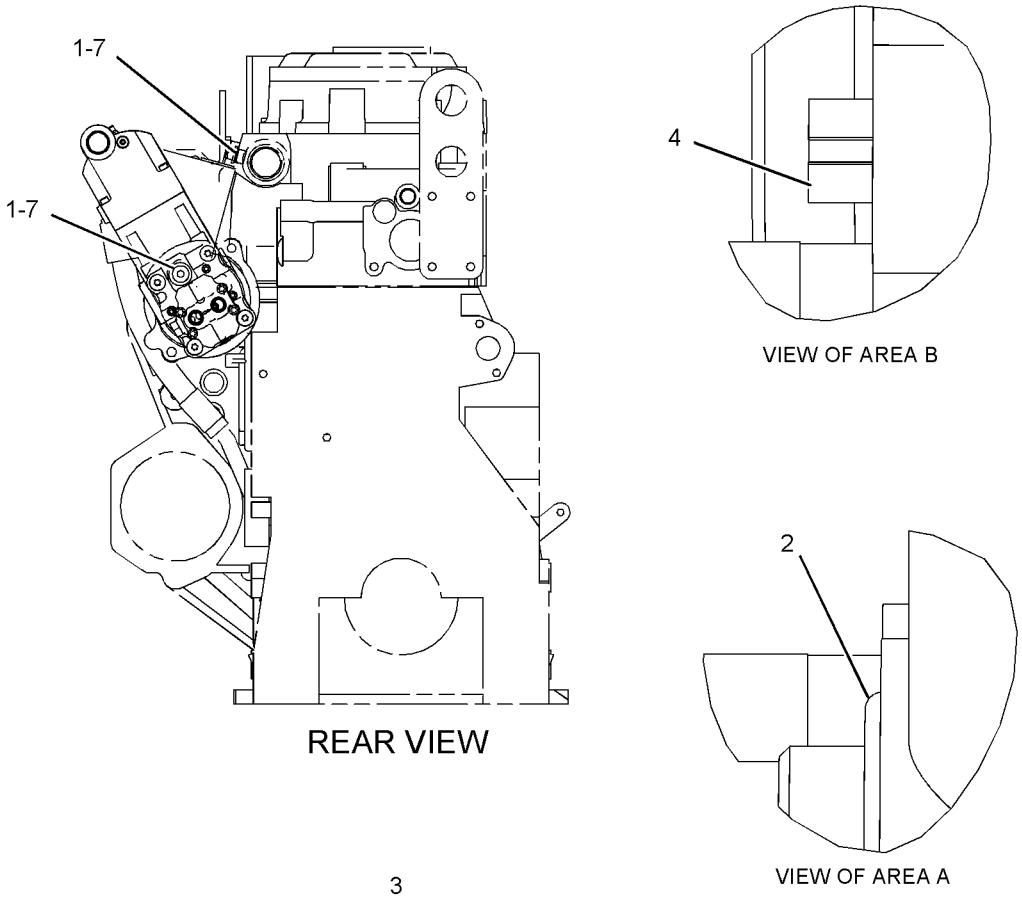

GRAPHIC #1 **<END>** g01017748

FUEL SYSTEM

229-1784 PUMP AR-FUEL TRANSFER

S/N: DFP1-UP; CJX1-UP

AN ATTACHMENT

SMCS-1256 **i03023868**

NOTE	PART NUMBER	QTY	PART NAME 1 2 3 4 5 6 (PRODUCT LEVEL)	SEE PAGE
Y	*298-4258*	1	FILM GP (FUEL TRANSFER PUMP)	1523
Y	*229-1785*	1	PUMP GP-REFUELING	202
Y	*238-1570*	1	WIRING GP-FUEL SYSTEM (REFUELING)	418

Y-SEPARATE ILLUSTRATION

<END>

222-5958 PUMP GP-FUEL INJECTION

S/N: KHX1-302
PART OF 236-4283 ENGINE AR-CORE
AN ATTACHMENT

SMCS-1251, 1290 **i02403448**

NOTE	REF NO	GRAPHIC REF	PART NUMBER	QTY	PART NAME 1 2 3 4 5 6 (PRODUCT LEVEL)	SEE PAGE
	1	1	**235-9651**	2	BOLT-SOCKET HEAD (M8X1.25X65-MM)	
Y	2	1	**241-3400**	1	INJECTOR GP-FUEL	155

Y-SEPARATE ILLUSTRATION

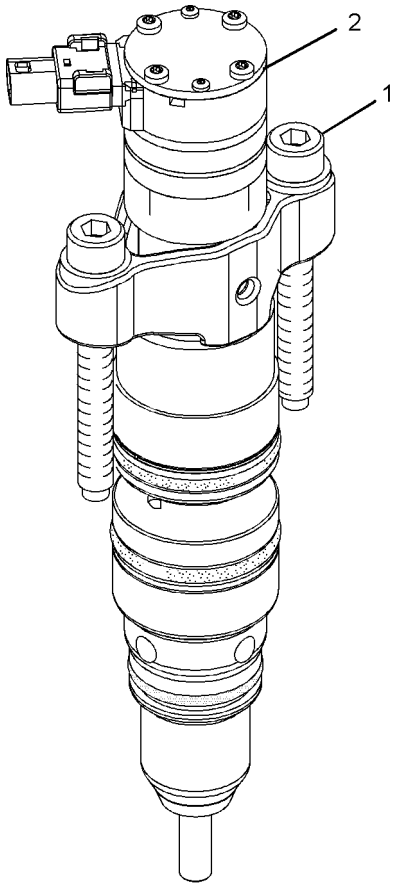

ISOMETRIC VIEW

GRAPHIC #1

<END>

g01038652

268-1839 PUMP GP-FUEL INJECTION

S/N: KHX1-3171

PART OF 236-4283, 270-4211, 270-4212 ENGINE AR-CORE

ALSO AN ATTACHMENT

SMCS-1251, 1290 **i02355640**

NOTE	REF NO	GRAPHIC REF	PART NUMBER	QTY	PART NAME 1 2 3 4 5 6 (PRODUCT LEVEL)	SEE PAGE
	1	1	**235-9651**	2	BOLT-SOCKET HEAD (M8X1.25X65-MM)	
Y	2	1	**268-1835**	1	INJECTOR GP-FUEL	156

Y-SEPARATE ILLUSTRATION

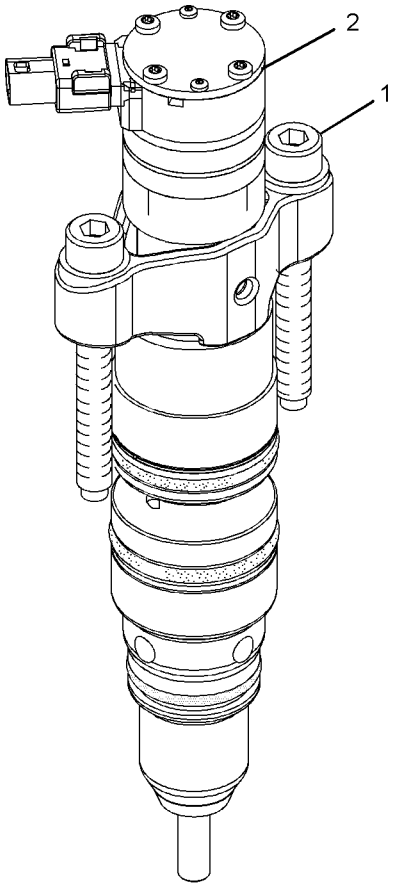

ISOMETRIC VIEW

GRAPHIC #1

<END>

g01038652

268-1839 PUMP GP-FUEL INJECTION

S/N: KHX3172-UP

PART OF 236-4283, 236-4284, 270-4211, 270-4212 ENGINE AR-CORE

ALSO AN ATTACHMENT

SMCS-1251, 1290 **i02572543**

NOTE	REF NO	GRAPHIC REF	PART NUMBER	QTY	PART NAME 1 2 3 4 5 6 (PRODUCT LEVEL)	SEE PAGE
	1	1	**235-9651**	2	BOLT-SOCKET HEAD (M8X1.25X65-MM)	
Y	2	1	**295-1411**	1	INJECTOR GP-FUEL	157

Y-SEPARATE ILLUSTRATION

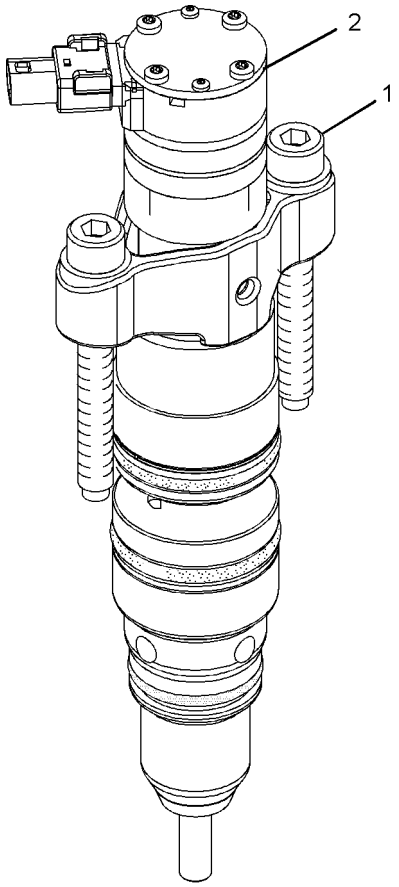

ISOMETRIC VIEW

GRAPHIC #1

<END>

g01038652

183-2824 PUMP GP-FUEL PRIMING

S/N: DFP1-UP; CJX1-UP

PART OF 223-3046 LINES GP-FUEL

SMCS-1258 **i03011849**

NOTE	REF NO	GRAPHIC REF	PART NUMBER	QTY	PART NAME 1 2 3 4 5 6 (PRODUCT LEVEL)	SEE PAGE
	1	1	**9Y-8389**	1	GASKET (FUEL PRIMING PUMP)	
	2	1	**183-2823**	1	PUMP AS-FUEL PRIMING	
		1	**1H-8171**	1	SEAL-O-RING	
		1	**7E-2985**	2	VALVE AS	
	3	1	**5P-0537**	1	WASHER-HARD (7.2X14.5X2-MM THK)	
M	4	1	**6V-2317**	1	BOLT (M8X1.25X30-MM)	
M	5	1	**8T-0640**	1	BOLT (M6X1X30-MM)	
	6	1	**9M-1974**	1	WASHER-HARD (8.8X16X2-MM THK)	

M-METRIC PART

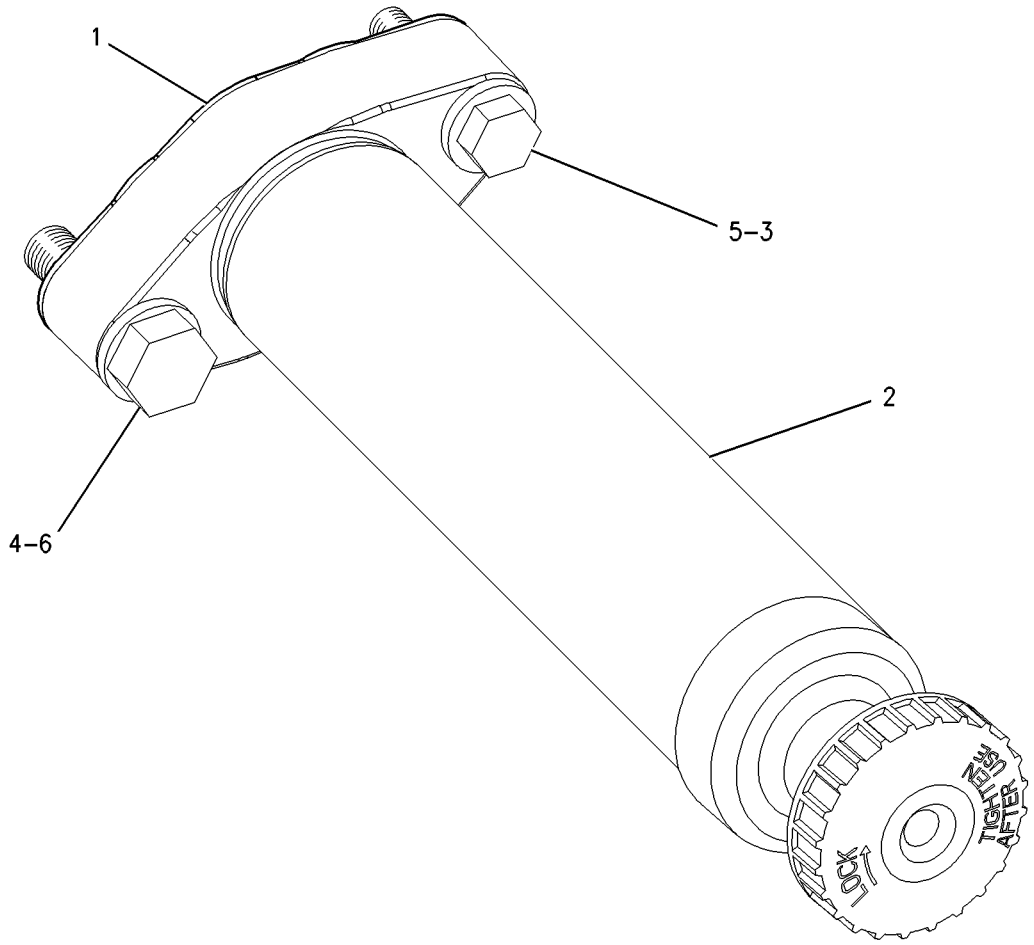

GRAPHIC #1 **<END>** g00671509

FUEL SYSTEM

247-7458 PUMP GP-FUEL PRIMING

S/N: DFP1-UP; CJX1-UP
AN ATTACHMENT

SMCS-1258 **i02407798**

NOTE	PART NUMBER	QTY	PART NAME 1 2 3 4 5 6 (PRODUCT LEVEL)	SEE PAGE
Y	*259-3885*	1	LINES GP-FUEL	170
Y	*259-5118*	1	WIRING GP-CAB (PRIMING PUMP)	375
Y	*259-5053*	1	WIRING GP-FUEL SYSTEM (PRIMING PUMP)	422

Y-SEPARATE ILLUSTRATION

<END>

188-6121 PUMP GP-FUEL PRM & PRIM FILTER–

WITH WATER SEPARATOR

S/N: DFP1-UP; CJX1-UP

PART OF 259-3885 LINES GP-FUEL

AN ATTACHMENT

SMCS-1258 **i02662869**

NOTE	REF NO	GRAPHIC REF	PART NUMBER	QTY	PART NAME 1 2 3 4 5 6 (PRODUCT LEVEL)	SEE PAGE
Y	1	1	**190-8977**	1	PUMP GP-FUEL PRM & WATER SEP	201
	2	1	**209-9234**	1	REGULATOR-PRESSURE (FUEL TRANSFER PUMP)	
	3	1	**211-7730**	1	TUBE AS	
	4	1	**030-8194**	1	CONNECTOR	
	5	1	**136-7227**	2	SEAL-O-RING	

Y-SEPARATE ILLUSTRATION

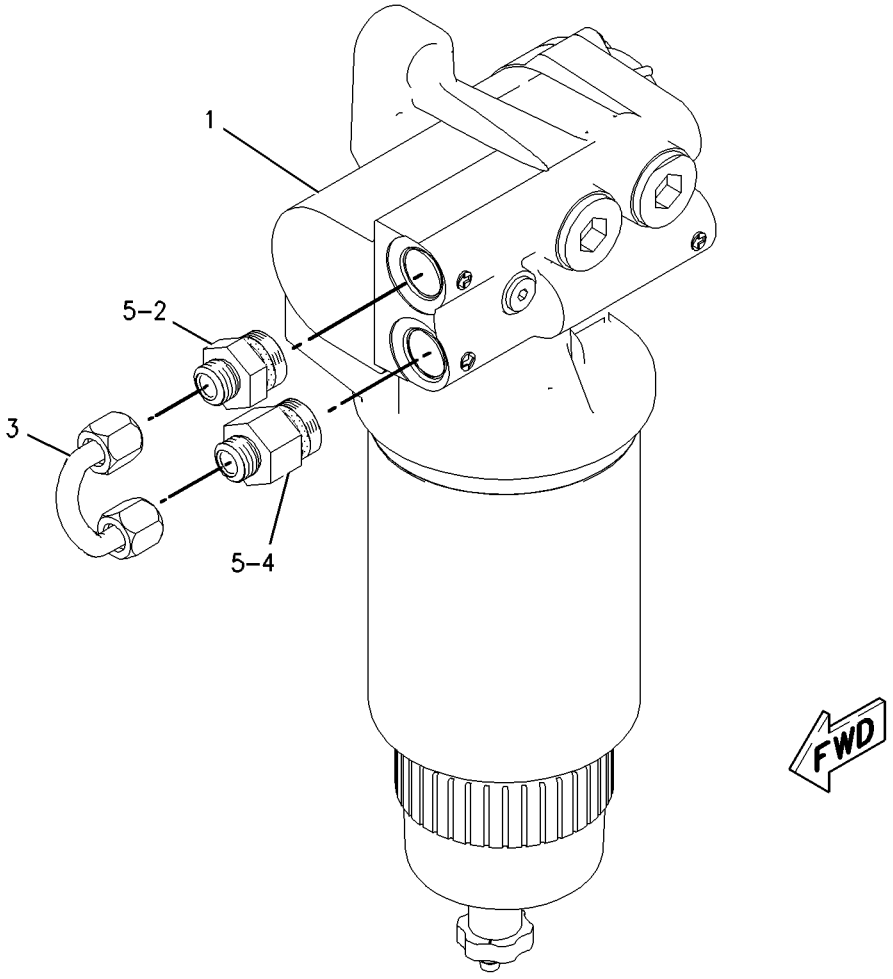

GRAPHIC #1 **<END>** g00850001

190-8977 PUMP GP-FUEL PRM & WATER SEP

S/N: DFP1-UP; CJX1-UP
PART OF 188-6121 PUMP GP-FUEL PRM & PRIM FILTER
AN ATTACHMENT

SMCS-1258, 1261, 1263 **i01934932**

NOTE	REF NO	GRAPHIC REF	PART NUMBER	QTY	PART NAME 1 2 3 4 5 6 (PRODUCT LEVEL)	SEE PAGE
Y	1	1	*174-9570*	1	FILTER GP-WATER SEP & FUEL (PRIMARY)	154
	2	1	**190-8970**	1	BASE AS (FUEL PRIMING PUMP)	

Y-SEPARATE ILLUSTRATION

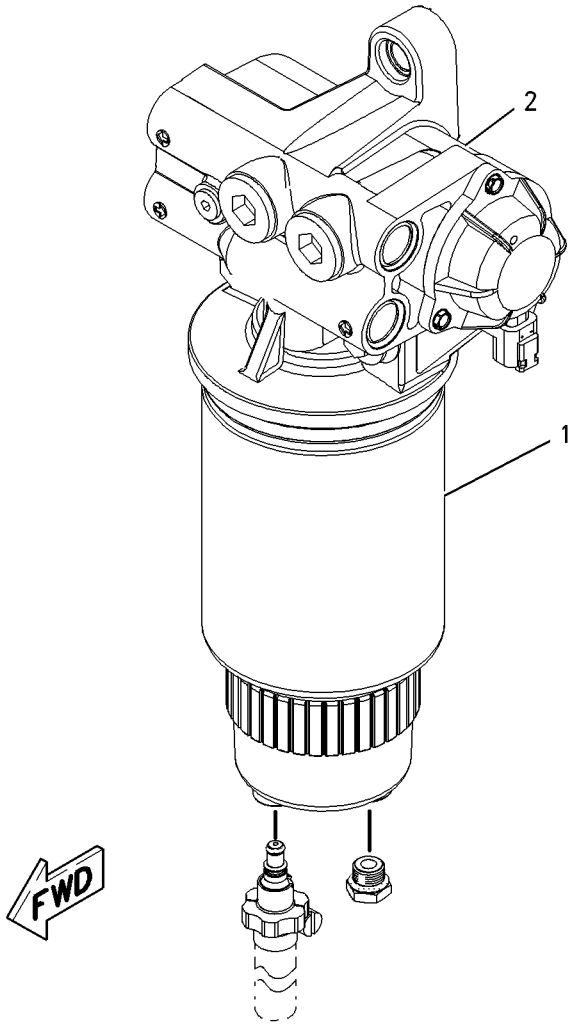

GRAPHIC #1 **<END>** g00904493

229-1785 PUMP GP-REFUELING

S/N: DFP1-UP; CJX1-UP
PART OF 229-1784 PUMP AR-FUEL TRANSFER
AN ATTACHMENT
TYPE 1

SMCS-1295 **i02706815**

NOTE	REF NO	GRAPHIC REF	PART NUMBER	QTY	PART NAME 1 2 3 4 5 6 (PRODUCT LEVEL)	SEE PAGE
Y	1	1	**5C-6108**	1	SWITCH GP-REFUELING (FUEL TANK SHUTOFF)	355
	2	1	**7K-1181**	1	STRAP-CABLE	
	3	1	**9M-7958**	4	CLAMP-HOSE	
	4	1	**120-5114**	1	FILM-INSTRUCTION (REFUELING PUMP)	
	5	1	**122-4021**	1	COVER	
M	6	1	**135-8572**	2	BOLT AS	
M	7	1	**135-8573**	4	BOLT AS	
Y	8	1	**229-1859**	1	PUMP & MOTOR GP-REFUELING	183
	9	1	**229-1860**	1	STRAINER AS-FUEL	
	10	1	**229-1861**	1	CONNECTOR-HOSE	
	11	1	**240-3920**	1	SUPPORT AS	
M	12	1	**8T-4194**	2	BOLT (M12X1.75X50-MM)	
	13	1	**8T-4223**	4	WASHER-HARD (13.5X25.5X3-MM THK)	
M	14	1	**8T-4244**	2	NUT (M12X1.75-THD)	
E	15	1	**229-1857**		HOSE (430-CM)	
E	15A	1	**229-1857**		HOSE (38-CM)	

E-ORDER BY THE CENTIMETER
M-METRIC PART
Y-SEPARATE ILLUSTRATION

229-1785 **PUMP GP-REFUELING** *(contd.)* **i02706815**

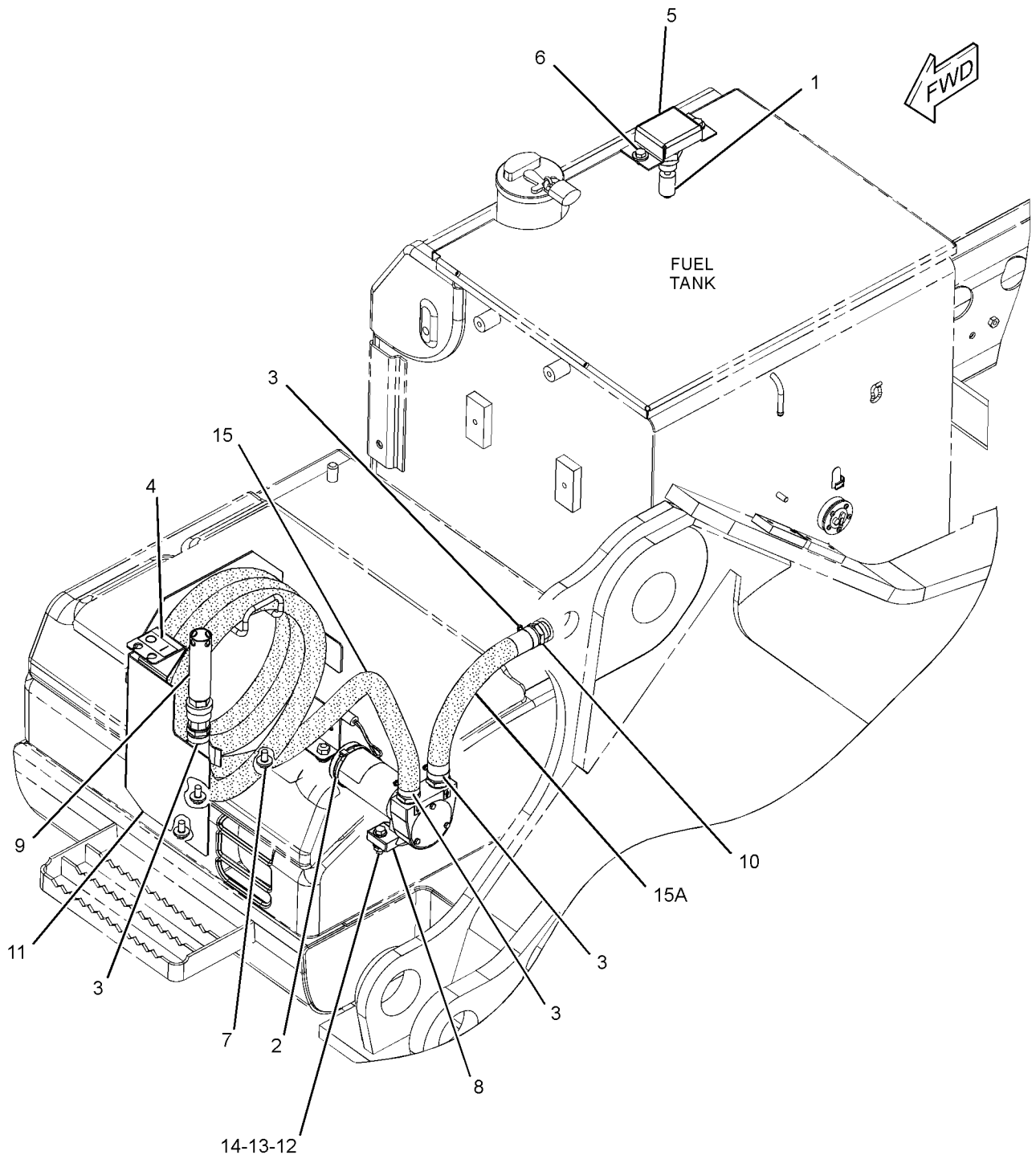

GRAPHIC #1 **<END>** g01236403

229-1785 PUMP GP-REFUELING

S/N: DFP1-UP; CJX1-UP
PART OF 229-1784 PUMP AR-FUEL TRANSFER
AN ATTACHMENT
TYPE 2

SMCS-1295 **i03089681**

NOTE	REF NO	GRAPHIC REF	PART NUMBER	QTY	PART NAME 1 2 3 4 5 6 (PRODUCT LEVEL)	SEE PAGE
C	1	1	**312-2645**	1	SWITCH AS-LIQUID LEVEL (FUEL TANK SHUTOFF)	
		1	**2S-4078**	1	SEAL-O-RING	
		1	**186-3735**	2	PIN-CONNECTOR (16-GA TO 18-GA)	
		1	**243-4505**	1	RECEPTACLE AS-CONNECTOR (2-PIN)	
	2	1	**7K-1181**	1	STRAP-CABLE	
	3	1	**9M-7958**	4	CLAMP-HOSE	
	4	1	**120-5114**	1	FILM-INSTRUCTION (REFUELING PUMP)	
C	5	1	**324-5761**	1	COVER AS	
M	6	1	**135-8572**	2	BOLT AS	
M	7	1	**135-8573**	4	BOLT AS	
Y	8	1	**229-1859**	1	PUMP & MOTOR GP-REFUELING	183
	9	1	**229-1860**	1	STRAINER AS-FUEL	
	10	1	**229-1861**	1	CONNECTOR-HOSE	
	11	1	**240-3920**	1	SUPPORT AS	
M	12	1	**8T-4194**	2	BOLT (M12X1.75X50-MM)	
	13	1	**8T-4223**	4	WASHER-HARD (13.5X25.5X3-MM THK)	
M	14	1	**8T-4244**	2	NUT (M12X1.75-THD)	
E	15	1	**229-1857**		HOSE (430-CM)	
E	15A	1	**229-1857**		HOSE (38-CM)	

C-CHANGE FROM PREVIOUS TYPE
E-ORDER BY THE CENTIMETER
M-METRIC PART
Y-SEPARATE ILLUSTRATION

229-1785 **PUMP GP-REFUELING** *(contd.)* **i03089681**

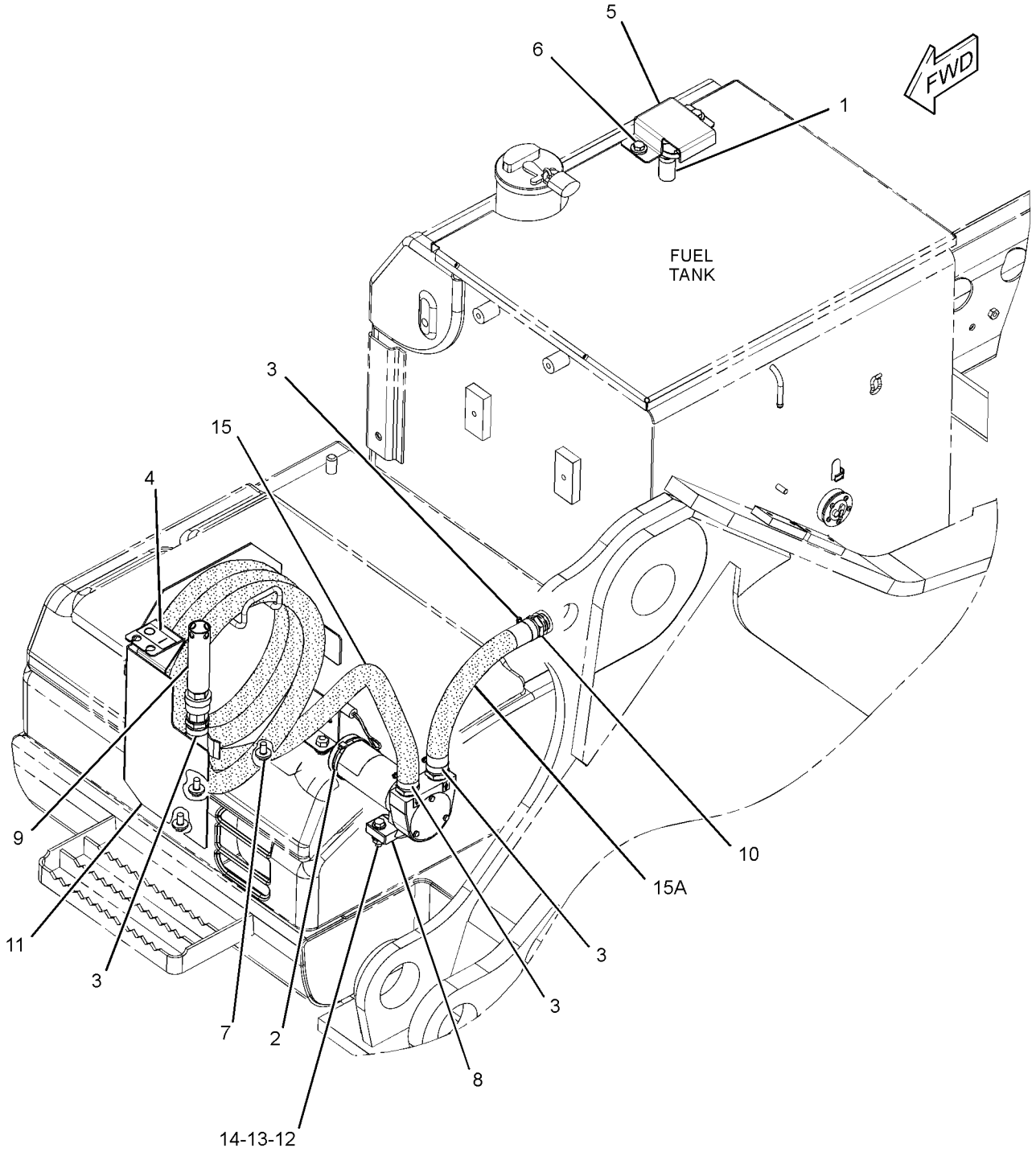

GRAPHIC #1 **<END>** g01582453

254-4357 PUMP GP-UNIT INJECTOR HYD*R

S/N: KHX1-UP
PART OF 222-5900 PUMP & MTG GP-UNIT INJ HYD
ALSO AN ATTACHMENT

SMCS-1714 **i02455472**

NOTE	REF NO	GRAPHIC REF	PART NUMBER	QTY	PART NAME 1 2 3 4 5 6 (PRODUCT LEVEL)	SEE PAGE
	1	1	**178-2357**	1	PUMP GP-FUEL TRANSFER	
	2	1	**179-8128**	1	SEAL-O-RING (FUEL TRANSFER PUMP)	
	3	1	**227-5904**	1	SEAL-O-RING (UNIT INJECTOR HYD PUMP)	

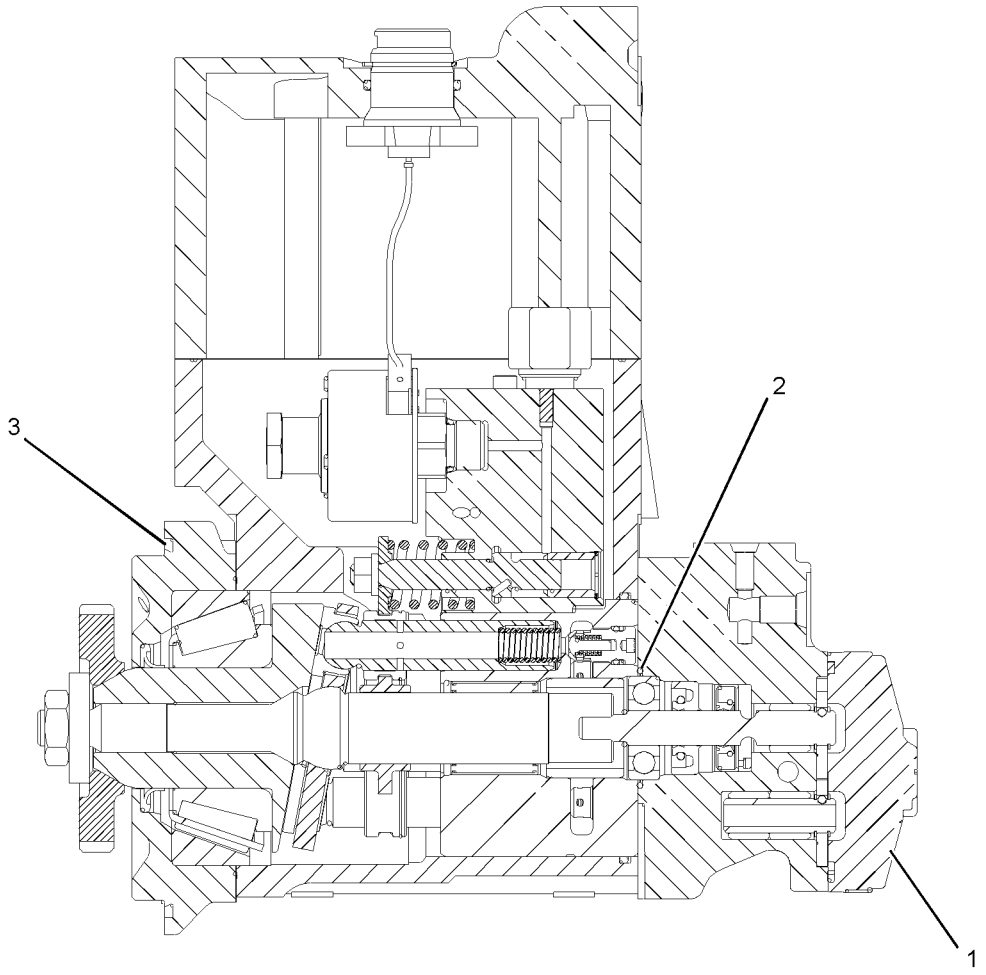

GRAPHIC #1 **<END>** g01225442

295-4777 PUMP GP-UNIT INJECTOR HYD*R

S/N: KHX4814-6017
PART OF 222-5900 PUMP & MTG GP-UNIT INJ HYD
ALSO AN ATTACHMENT

SMCS-1714 **i02684193**

NOTE	REF NO	GRAPHIC REF	PART NUMBER	QTY	PART NAME 1 2 3 4 5 6 (PRODUCT LEVEL)	SEE PAGE
	1	1	**178-2357**	1	PUMP GP-FUEL TRANSFER	
	2	1	**179-8128**	1	SEAL-O-RING (FUEL TRANSFER PUMP)	
	3	1	**227-5904**	1	SEAL-O-RING (UNIT INJECTOR HYD PUMP)	

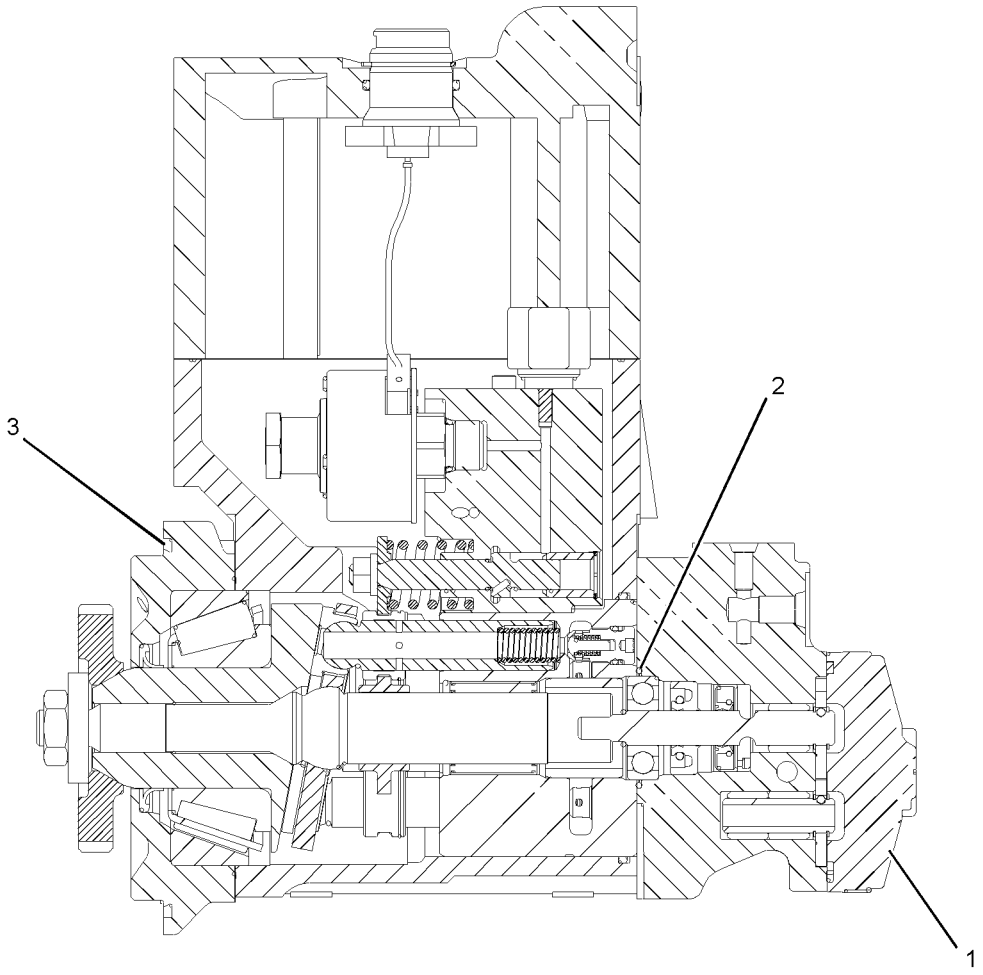

GRAPHIC #1 **<END>** g01225442

304-0677 PUMP GP-UNIT INJECTOR HYD

S/N: KHX6018-UP
PART OF 222-5900 PUMP & MTG GP-UNIT INJ HYD
ALSO AN ATTACHMENT

SMCS-1714 **i02755499**

NOTE	REF NO	GRAPHIC REF	PART NUMBER	QTY	PART NAME 1 2 3 4 5 6 (PRODUCT LEVEL)	SEE PAGE
	1	1	**178-2357**	1	PUMP GP-FUEL TRANSFER	
	2	1	**179-8128**	1	SEAL-O-RING (FUEL TRANSFER PUMP)	
	3	1	**227-5904**	1	SEAL-O-RING (UNIT INJECTOR HYD PUMP)	

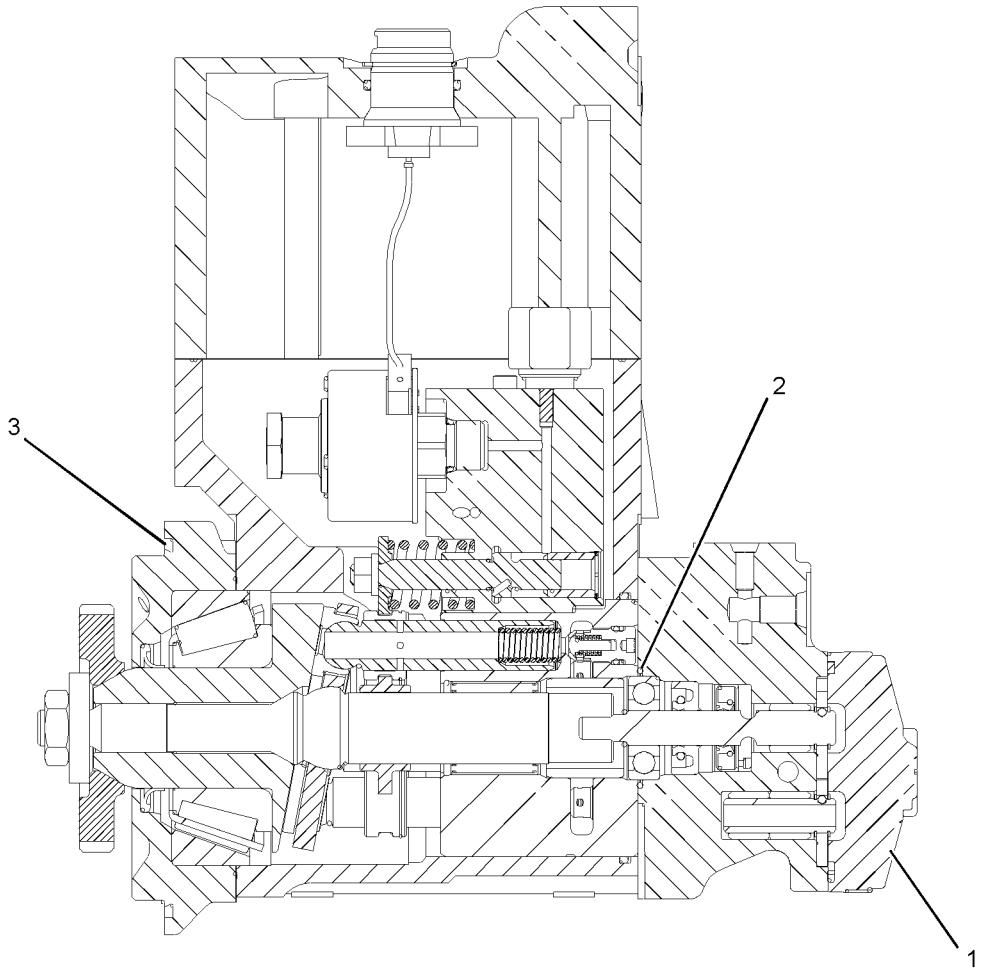

GRAPHIC #1 **<END>** g01225442

312-0677 PUMP GP-UNIT INJECTOR HYD*R

S/N: KHX6018-UP

PART OF 222-5900 PUMP & MTG GP-UNIT INJ HYD

ALSO AN ATTACHMENT

SMCS-1714 **i02813629**

NOTE	REF NO	GRAPHIC REF	PART NUMBER	QTY	PART NAME 1 2 3 4 5 6 (PRODUCT LEVEL)	SEE PAGE
	1	1	**1F-7960**	1	WASHER (13.5X32X6-MM THK)	
M	2	1	**166-8636**	3	BOLT-SOCKET HEAD (M5X0.8X18-MM)	
	3	1	**178-2357**	1	PUMP GP-FUEL TRANSFER	
	4	1	**179-8128**	1	SEAL-O-RING (FUEL TRANSFER PUMP)	
M	5	1	**228-5897**	4	BOLT-TORX (M8X1.25X136.7-MM)	
	6	1	**239-2402**	4	SEAL-O-RING	

M-METRIC PART

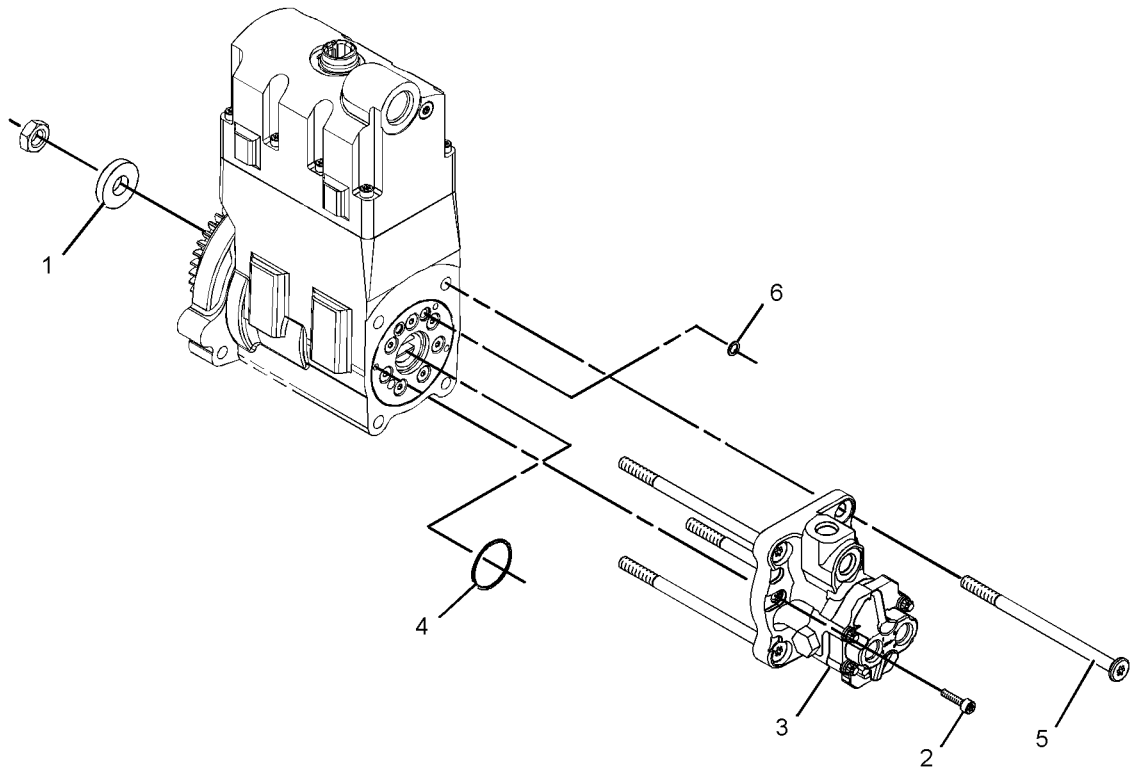

GRAPHIC #1 **<END>** g01401250

319-0677 PUMP GP-UNIT INJECTOR HYD*R

S/N: KHX9402-UP

PART OF 222-5900 PUMP & MTG GP-UNIT INJ HYD

ALSO AN ATTACHMENT

SMCS-1714 **i03030625**

NOTE	REF NO	GRAPHIC REF	PART NUMBER	QTY	PART NAME 1 2 3 4 5 6 (PRODUCT LEVEL)	SEE PAGE
	1	1	**313-4620**	3	SCREW-PAN HEAD	
	2	1	**318-6357**	1	PUMP GP-FUEL TRANSFER	
	3	1	**179-8128**	1	SEAL-O-RING	
M	4	1	**223-9848**	1	NUT (M12X1.25-THD)	
M	5	1	**228-5897**	4	BOLT-TORX (M8X1.25X136.7-MM)	
	6	1	**239-2402**	3	SEAL-O-RING	
	7	1	**1F-7960**	1	WASHER (13.5X32X6-MM THK)	

M-METRIC PART

319-0677 PUMP GP-UNIT INJECTOR HYD *(contd.)* i03030625

REFER TO ALL ILLUSTRATIONS OF
THIS GROUP FOR AUXILIARY VIEWS

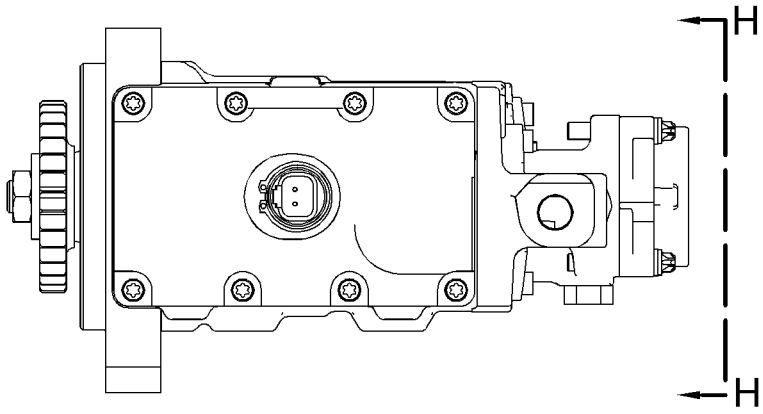

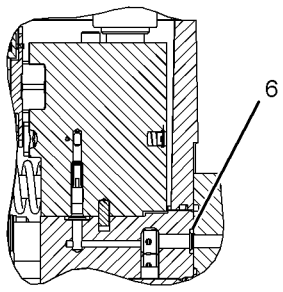

SECTION C-C

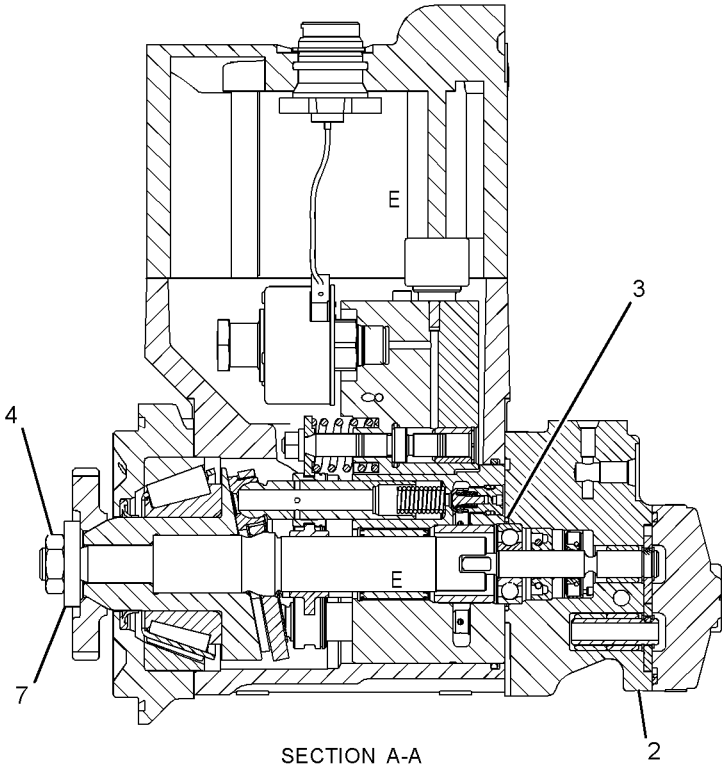

SECTION A-A

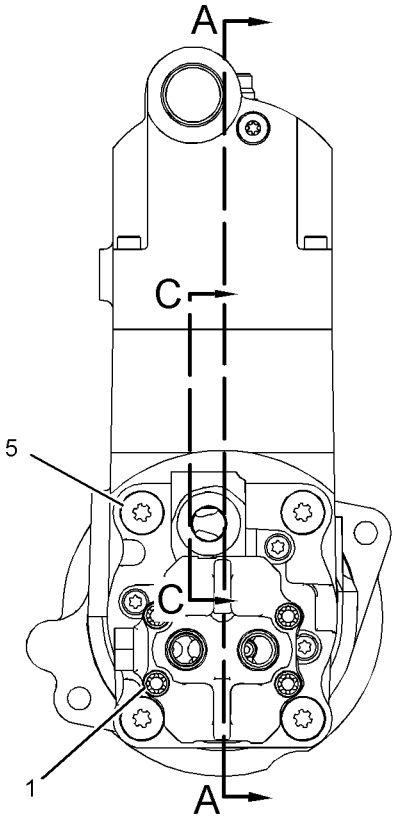

VIEW H-H

GRAPHIC #1 **<END>** g01535476

232-0343 REGULATOR GP-FUEL PRESSURE

S/N: KHX1-UP
PART OF 231-3046 LINES GP-FUEL
ALSO AN ATTACHMENT

SMCS-1715 **i02676269**

NOTE	REF NO	GRAPHIC REF	PART NUMBER	QTY	PART NAME 1 2 3 4 5 6 (PRODUCT LEVEL)	SEE PAGE
	1	1	**6V-5049**	1	SEAL-O-RING	
	2	1	**294-8620**	1	REGULATOR AS (FUEL PRESSURE)	

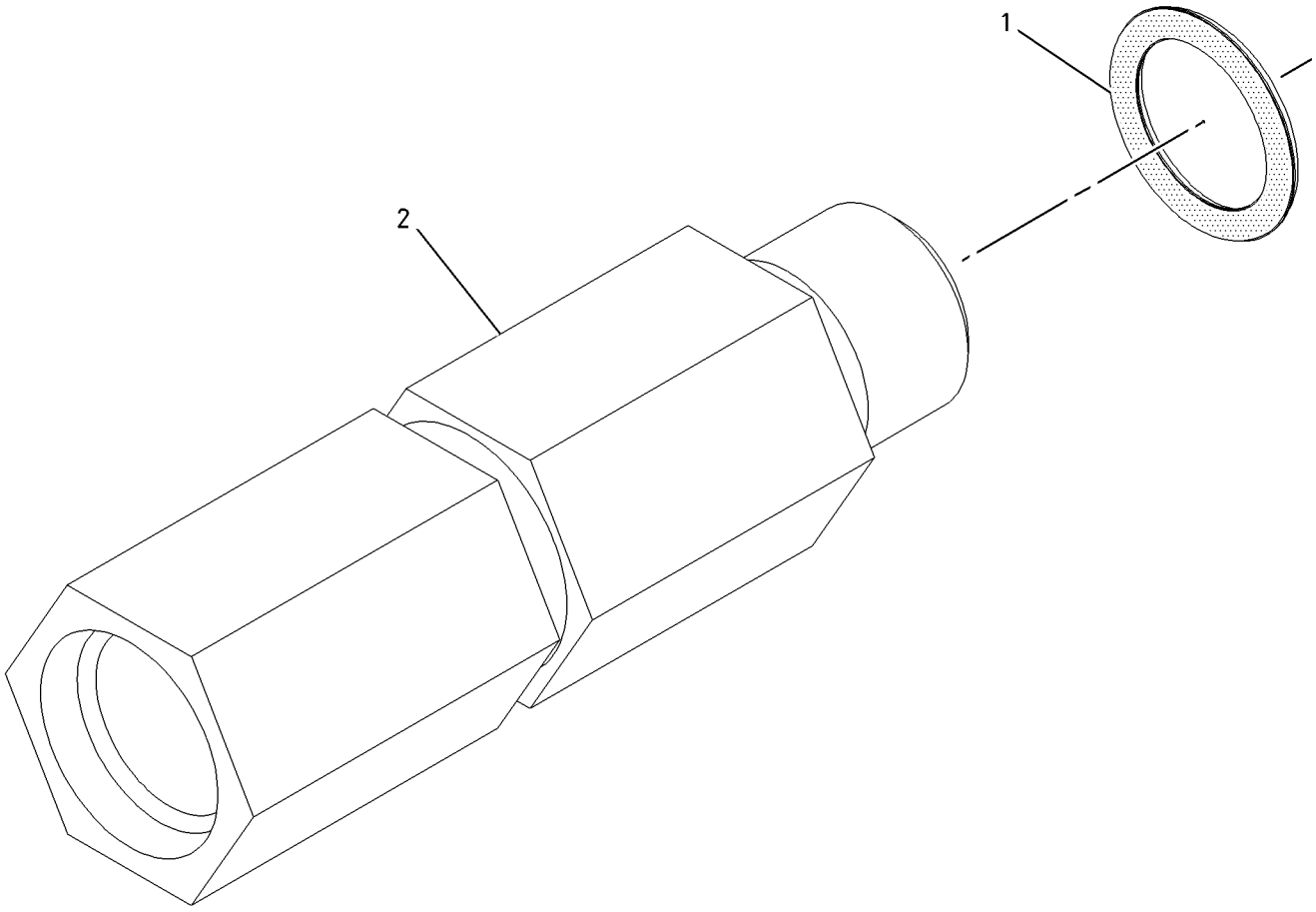

GRAPHIC #1 **<END>** g01004480

FUEL SYSTEM

223-3037 TANK & MTG GP-FUEL

S/N: DFP1-304; CJX1-219

PART OF 240-3970, 240-3971 CHASSIS AR

SMCS-1273 **i03257924**

NOTE	REF NO	GRAPHIC REF	PART NUMBER	QTY	PART NAME 1 2 3 4 5 6 (PRODUCT LEVEL)	SEE PAGE
	1	1	**246-2641**	1	PADLOCK GP (FUEL TANK FILL CAP)	
		1	**5P-8500**	1	KEY (FUEL TANK FILL CAP)	
M	2	1	**135-8572**	2	BOLT AS	
Y	3	1	**223-3038**	1	TANK GP-FUEL	216
	4	1	**085-9310**	4	SPACER (16.6X32X26-MM THK)	
M	5	1	**8T-4140**	4	BOLT (M16X2X60-MM)	

M-METRIC PART
Y-SEPARATE ILLUSTRATION

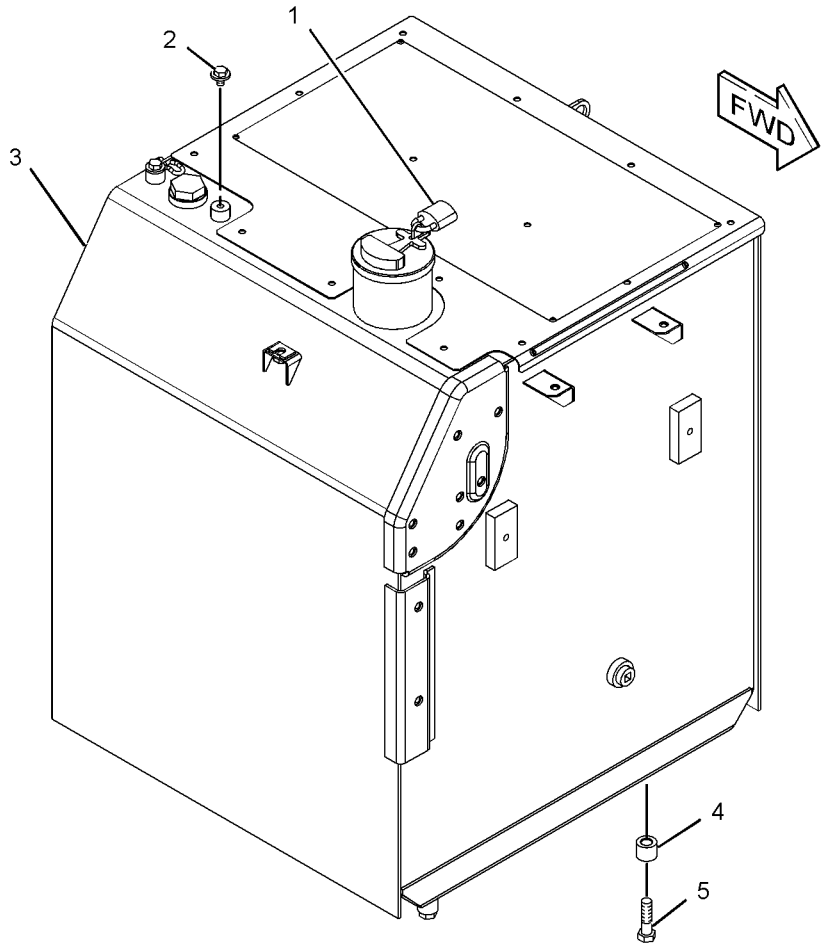

GRAPHIC #1 **<END>** g01151415

FUEL SYSTEM

223-3037 TANK & MTG GP-FUEL

S/N: DFP305-UP; CJX220-UP
PART OF 240-3970, 240-3971 CHASSIS AR
TYPE 1

SMCS-1273 **i03206256**

NOTE	REF NO	GRAPHIC REF	PART NUMBER	QTY	PART NAME 1 2 3 4 5 6 (PRODUCT LEVEL)	SEE PAGE
	1	1	**246-2641**	1	PADLOCK GP	
		1	**5P-8500**	1	KEY (FUEL TANK FILL CAP)	
M	2	1	**135-8572**	2	BOLT AS	
CY	3	1	**303-9866**	1	TANK GP-FUEL	221
	4	1	**085-9310**	4	SPACER (16.6X32X26-MM THK)	
M	5	1	**8T-4140**	4	BOLT (M16X2X60-MM)	

C-CHANGE FROM PREVIOUS TYPE
M-METRIC PART
Y-SEPARATE ILLUSTRATION

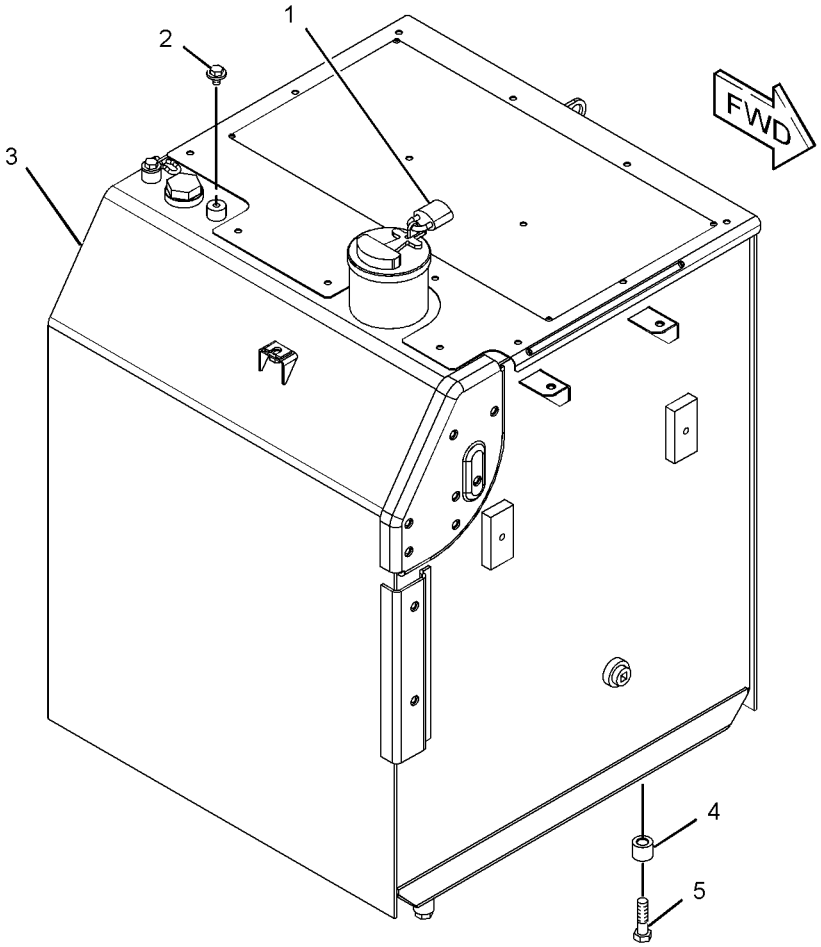

GRAPHIC #1 **<END>** g01151415

FUEL SYSTEM

223-3037 TANK & MTG GP-FUEL

S/N: DFP305-UP; CJX220-UP
PART OF 240-3970, 240-3971 CHASSIS AR
TYPE 2

SMCS-1273 **i03206257**

NOTE	REF NO	GRAPHIC REF	PART NUMBER	QTY	PART NAME 1 2 3 4 5 6 (PRODUCT LEVEL)	SEE PAGE
	1	1	**246-2641**	1	PADLOCK GP	
		1	**5P-8500**	1	KEY (FUEL TANK FILL CAP)	
M	2	1	**135-8572**	2	BOLT AS	
CY	3	1	*327-3323*	1	TANK GP-FUEL	230
	4	1	**085-9310**	4	SPACER (16.6X32X26-MM THK)	
M	5	1	**8T-4140**	4	BOLT (M16X2X60-MM)	

C-CHANGE FROM PREVIOUS TYPE
M-METRIC PART
Y-SEPARATE ILLUSTRATION

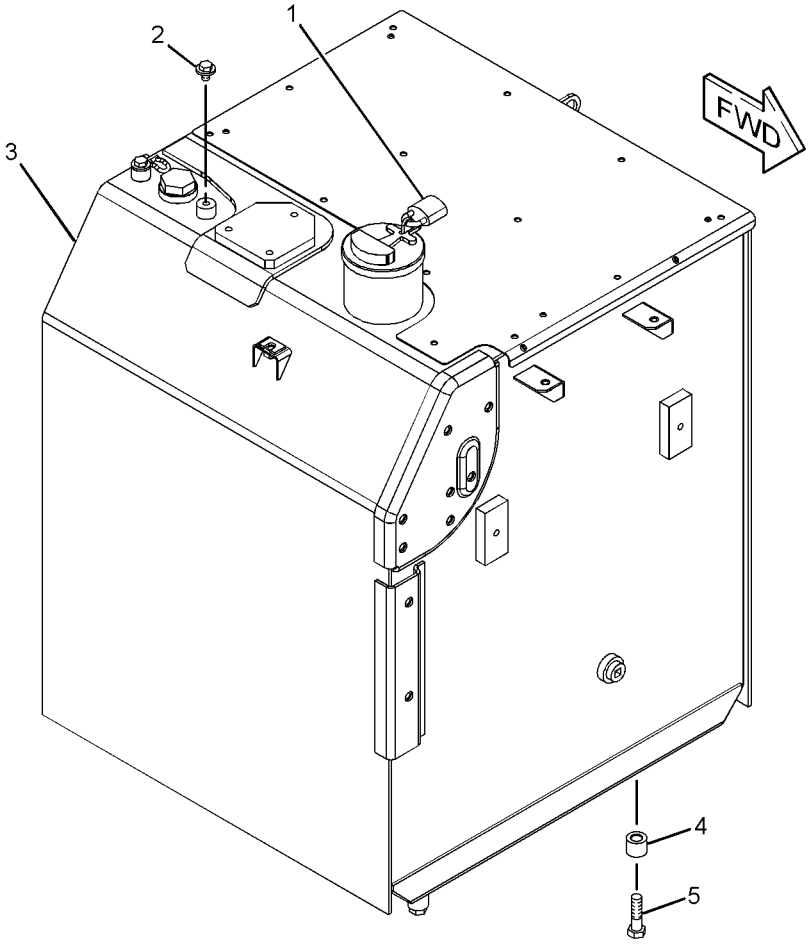

GRAPHIC #1 **<END>** g01607293

223-3038 TANK GP-FUEL

S/N: DFP1-304; CJX1-219

PART OF 223-3037 TANK & MTG GP-FUEL

SMCS-1273 **i02346765**

NOTE	PART NUMBER	QTY	PART NAME 1 2 3 4 5 6 (PRODUCT LEVEL)	SEE PAGE
Y	*259-3872*	1	TANK GP-FUEL	217
			-OR-	
Y	*259-3875*	1	TANK GP-FUEL	219

Y-SEPARATE ILLUSTRATION

<END>

FUEL SYSTEM

259-3872 TANK GP-FUEL

S/N: DFP1-304; CJX1-219
520-L (137.4-US GAL)
PART OF 223-3038 TANK GP-FUEL

SMCS-1273 **i03257925**

NOTE	REF NO	GRAPHIC REF	PART NUMBER	QTY	PART NAME 1 2 3 4 5 6 (PRODUCT LEVEL)	SEE PAGE
	1	1	**4I-0378**	1	GASKET-RUBBER	
	2	1	**5P-4924**	1	ELBOW	
J	3	1	**7X-7700**	1	CAP AS-FILLER (FUEL TANK)	
	3A	1	**9X-8600**	1	SEAL-O-RING	
	4	1	**003-7764**	1	END-HOSE	
	5	1	**128-4411**	1	VALVE AS (FUEL SHUTOFF)	
	6	1	**163-6700**	1	SENSOR GP-FUEL LEVEL	
		1	**186-3735**	2	PIN-CONNECTOR (16-GA TO 18-GA)	
		1	**102-8802**	1	KIT-RECEPTACLE (2-PIN)	
					(KIT INCLUDES RECEPTACLE AS & WEDGE)	
Z	7	1		1	TANK AS-FUEL	
	8	1	**262-9372**	1	STRAINER GP-FUEL (FLOAT GAUGE)	
		1	**9P-7121**	1	STRAINER-FUEL	
		1	**241-2296**	1	STOP	
		1	**262-9373**	1	GAUGE (FUEL STRAINER)	
M	9	1	**095-0736**	5	SCREW-MACHINE (M5X0.8X10-MM)	
	10	1	**2S-4078**	1	SEAL-O-RING	
	11	1	**3B-0551**	1	PLUG-PIPE	
	12	1	**3J-1907**	1	SEAL-O-RING	
	13	1	**8T-0328**	5	WASHER-HARD (5.5X10X1-MM THK)	
	14	1	**9S-6130**	1	PLUG	
					AVAILABLE REPAIR KIT(S):	
J			**9X-2205**	1	KIT-CAP FILTER (FUEL TANK)	
					(INCLUDES FILTER AS, 2 SCREWS, 4 GASKETS & VALVE)	

J-KIT MARKED J AVAILABLE FOR PART(S) MARKED J
M-METRIC PART
Z-NOT SERVICED SEPARATELY

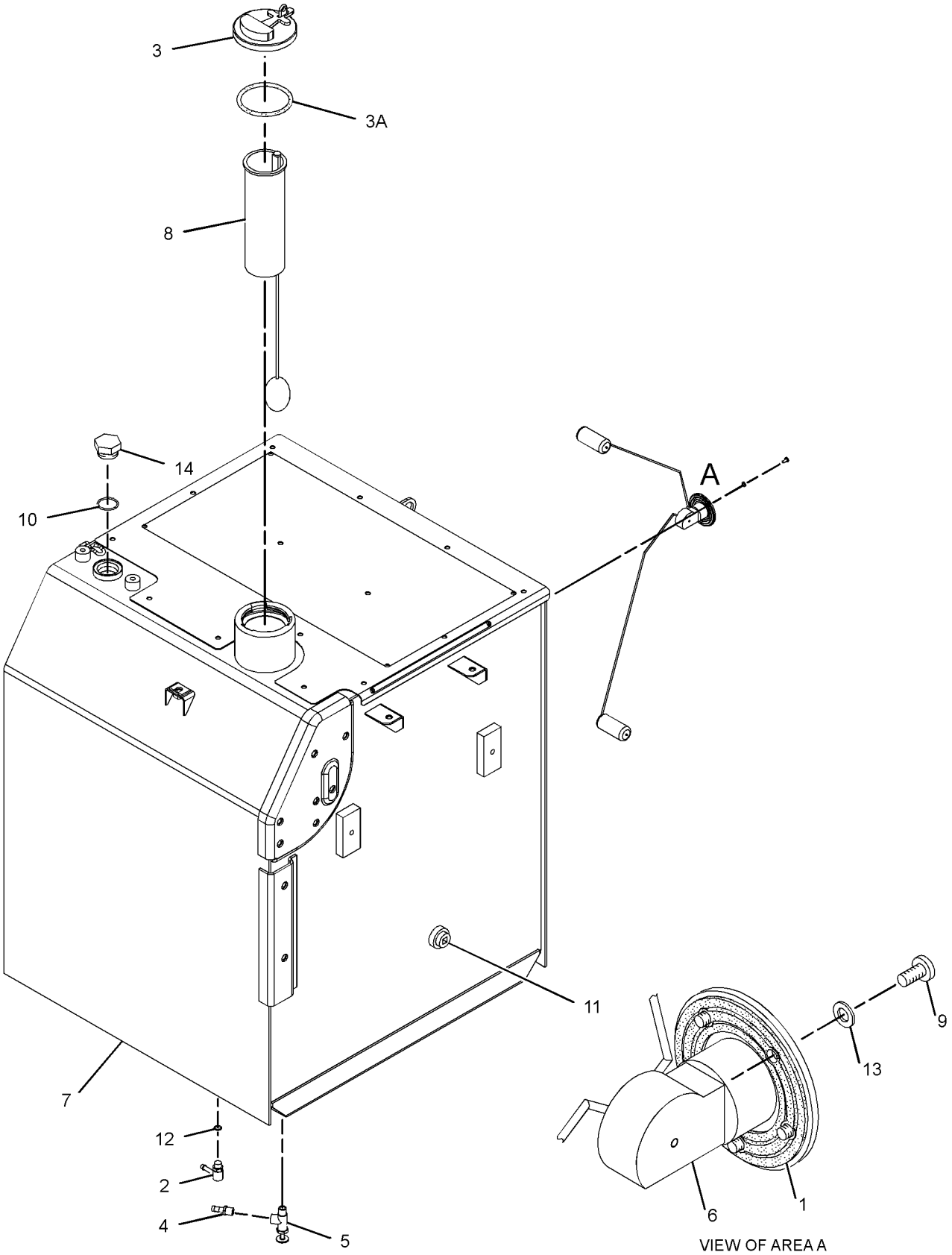

GRAPHIC #1 **<END>** g01186282

FUEL SYSTEM

259-3875 TANK GP-FUEL

S/N: DFP1-304; CJX1-219
520-L (137.4-US GAL)
PART OF 223-3038 TANK GP-FUEL

SMCS-1273 **i03257926**

NOTE	REF NO	GRAPHIC REF	PART NUMBER	QTY	PART NAME 1 2 3 4 5 6 (PRODUCT LEVEL)	SEE PAGE
	1	1	**4I-0378**	1	GASKET-RUBBER	
	2	1	**5P-4924**	1	ELBOW	
J	3	1	**7X-7700**	1	CAP AS-FILLER (FUEL TANK)	
	3A	1	**9X-8600**	1	SEAL-O-RING	
	4	1	**003-7764**	1	END-HOSE	
	5	1	**128-4411**	1	VALVE AS (FUEL SHUTOFF)	
	6	1	**163-6700**	1	SENSOR GP-FUEL LEVEL	
		1	**186-3735**	2	PIN-CONNECTOR (16-GA TO 18-GA)	
		1	**102-8802**	1	KIT-RECEPTACLE (2-PIN)	
					(KIT INCLUDES RECEPTACLE AS & WEDGE)	
Z	7	1		1	TANK AS-FUEL	
	8	1	**262-9372**	1	STRAINER GP-FUEL (FLOAT GAUGE)	
		1	**9P-7121**	1	STRAINER-FUEL	
		1	**241-2296**	1	STOP	
		1	**262-9373**	1	GAUGE (FUEL STRAINER)	
M	9	1	**095-0736**	5	SCREW-MACHINE (M5X0.8X10-MM)	
	10	1	**2S-4078**	1	SEAL-O-RING	
	11	1	**3B-0551**	1	PLUG-PIPE	
	12	1	**3J-1907**	1	SEAL-O-RING	
	13	1	**8T-0328**	5	WASHER-HARD (5.5X10X1-MM THK)	
	14	1	**9S-6130**	1	PLUG	
					AVAILABLE REPAIR KIT(S):	
J			**9X-2205**	1	KIT-CAP FILTER (FUEL TANK)	
					(INCLUDES FILTER AS, 2 SCREWS, 4 GASKETS & VALVE	

J-KIT MARKED J AVAILABLE FOR PART(S) MARKED J
M-METRIC PART
Z-NOT SERVICED SEPARATELY

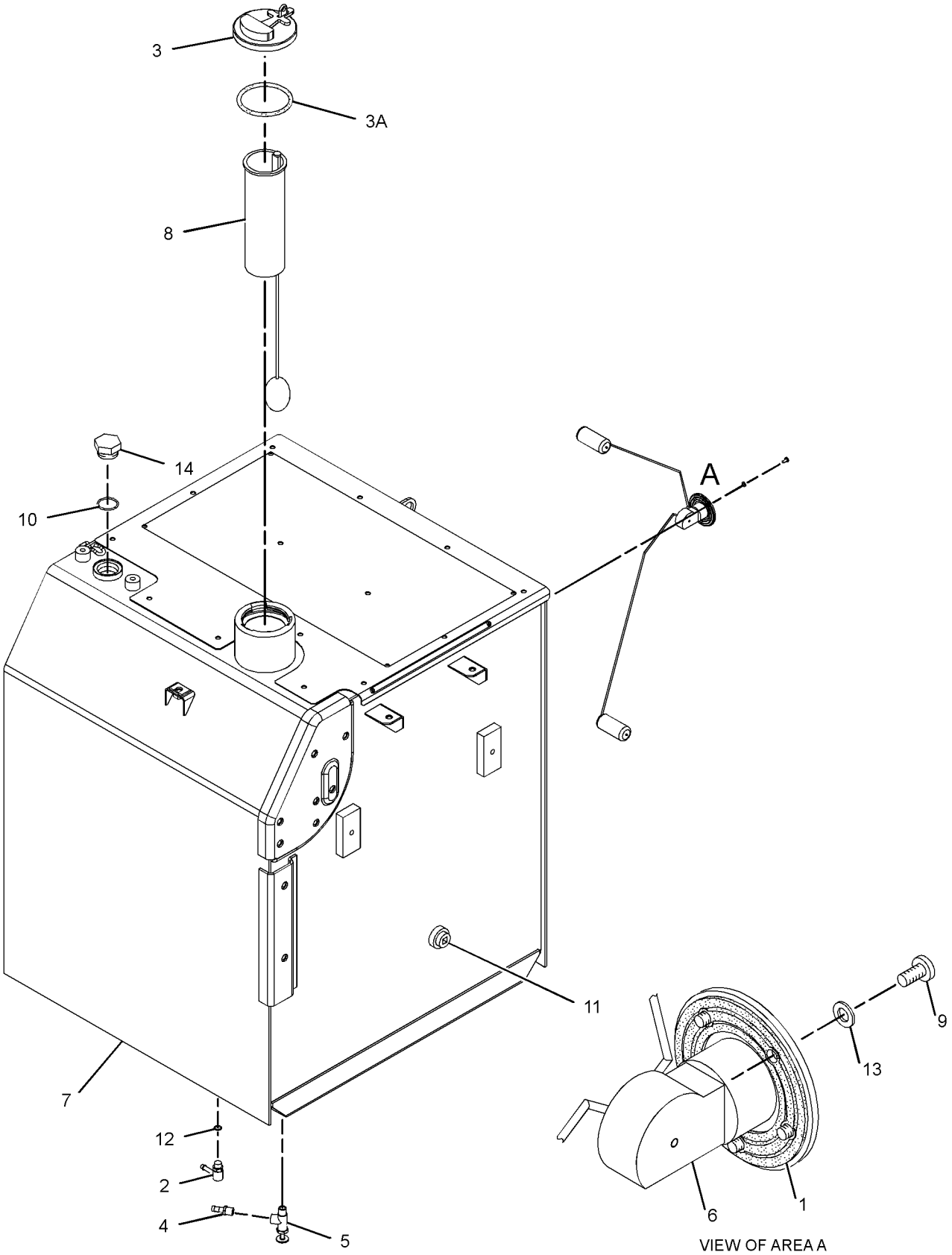

GRAPHIC #1 **<END>** g01186282

303-9866 TANK GP-FUEL

S/N: DFP305-UP; CJX220-UP
520-L (137.4-US GAL)
PART OF 223-3037 TANK & MTG GP-FUEL

SMCS-1273 **i02720057**

NOTE	PART NUMBER	QTY	PART NAME 1 2 3 4 5 6 (PRODUCT LEVEL)	SEE PAGE
Y	*303-9867*	1	TANK GP-FUEL	222
			–OR–	
Y	*303-9871*	1	TANK GP-FUEL	226

Y-SEPARATE ILLUSTRATION

<END>

FUEL SYSTEM

303-9867 TANK GP-FUEL

S/N: DFP305-318; CJX220-242
520-L (137.4-US GAL)
PART OF 303-9866 TANK GP-FUEL

SMCS-1273 **i03257927**

NOTE	REF NO	GRAPHIC REF	PART NUMBER	QTY	PART NAME 1 2 3 4 5 6 (PRODUCT LEVEL)	SEE PAGE
	1	1	**4I-0378**	1	GASKET-RUBBER	
	2	1	**5P-4924**	1	ELBOW	
	3	1	**7X-7700**	1	CAP AS-FILLER (FUEL TANK)	
		1	**9X-2205**	1	KIT-CAP FILTER (FUEL TANK)	
					(INCLUDES FILTER AS, SCREWS, GASKETS & VALVE)	
		1	**9X-8600**	1	SEAL-O-RING	
	4	1	**003-7764**	1	END-HOSE	
	5	1	**128-4411**	1	VALVE AS (FUEL SHUTOFF)	
	6	1	**163-6700**	1	SENSOR GP-FUEL LEVEL	
		1	**186-3735**	2	PIN-CONNECTOR (16-GA TO 18-GA)	
		1	**102-8802**	1	KIT-RECEPTACLE (2-PIN)	
					(INCLUDES RECEPTACLE AS & WEDGE)	
J	7	1	**262-9372**	1	STRAINER GP-FUEL (FLOAT GAUGE)	
		1	**9P-7121**	1	STRAINER-FUEL	
M	9	1	**095-0736**	5	SCREW-MACHINE (M5X0.8X10-MM)	
	10	1	**2S-4078**	1	SEAL-O-RING	
	11	1	**3B-0551**	1	PLUG-PIPE	
	12	1	**3J-1907**	1	SEAL-O-RING	
	13	1	**8T-0328**	5	WASHER-HARD (5.5X10X1-MM THK)	
	14	1	**9S-6130**	1	PLUG	
					AVAILABLE REPAIR KIT(S):	
J			**278-3970**	1	KIT-GAUGE (FUEL STRAINER)	
					(INCLUDES STOPPER & FLOAT GAUGE)	

J-KIT MARKED J SERVICES PART(S) MARKED J
M-METRIC PART

303-9867 **TANK GP-FUEL** *(contd.)* **i03257927**

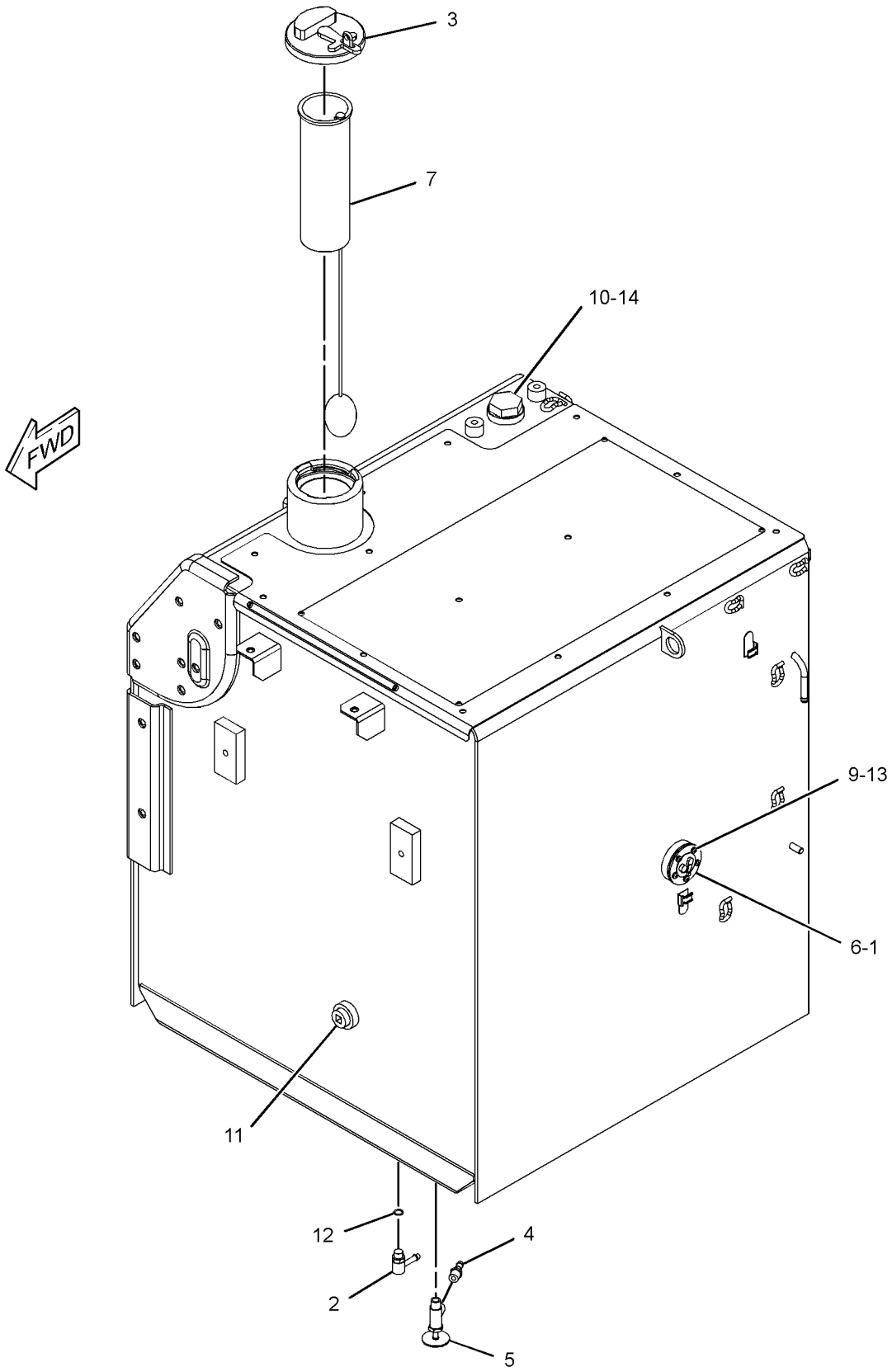

GRAPHIC #1 **<END>** g01372483

FUEL SYSTEM

303-9867 TANK GP-FUEL

S/N: DFP319-UP; CJX243-UP
520-L (137.4-US GAL)
PART OF 303-9866 TANK GP-FUEL

SMCS-1273 **i03121883**

NOTE	REF NO	GRAPHIC REF	PART NUMBER	QTY	PART NAME 1 2 3 4 5 6 (PRODUCT LEVEL)	SEE PAGE
	1	1	**4I-0378**	1	GASKET-RUBBER	
	2	1	**5P-4924**	1	ELBOW	
	3	1	**7X-7700**	1	CAP AS-FILLER (FUEL TANK)	
		1	**9X-2205**	1	KIT-CAP FILTER (FUEL TANK)	
					(INCLUDES FILTER AS, SCREWS, GASKETS, & VALVE)	
		1	**9X-8600**	1	SEAL-O-RING	
	4	1	**003-7764**	1	END-HOSE	
	5	1	**128-4411**	1	VALVE AS (FUEL SHUTOFF)	
	6	1	**163-6700**	1	SENSOR GP-FUEL LEVEL	
		1	**186-3735**	2	PIN-CONNECTOR (16-GA TO 18-GA)	
		1	**102-8802**	1	KIT-RECEPTACLE (2-PIN)	
					(INCLUDES RECEPTACLE AS & WEDGE)	
CJ	7	1	**303-9933**	1	STRAINER AS-FUEL (FLOAT GAUGE)	
M	9	1	**095-0736**	5	SCREW-MACHINE (M5X0.8X10-MM)	
	10	1	**2S-4078**	1	SEAL-O-RING	
	11	1	**3B-0551**	1	PLUG-PIPE	
	12	1	**3J-1907**	1	SEAL-O-RING	
	13	1	**8T-0328**	5	WASHER-HARD (5.5X10X1-MM THK)	
	14	1	**9S-6130**	1	PLUG	
					AVAILABLE REPAIR KIT(S):	
J			**303-9937**	1	KIT-GAUGE (FLOAT)	
					(KIT INCLUDES STOPPER & GAUGE FLOAT)	

C-CHANGE FROM PREVIOUS TYPE
J-KIT MARKED J SERVICES PART(S) MARKED J
M-METRIC PART

303-9867 **TANK GP-FUEL** *(contd.)* **i03121883**

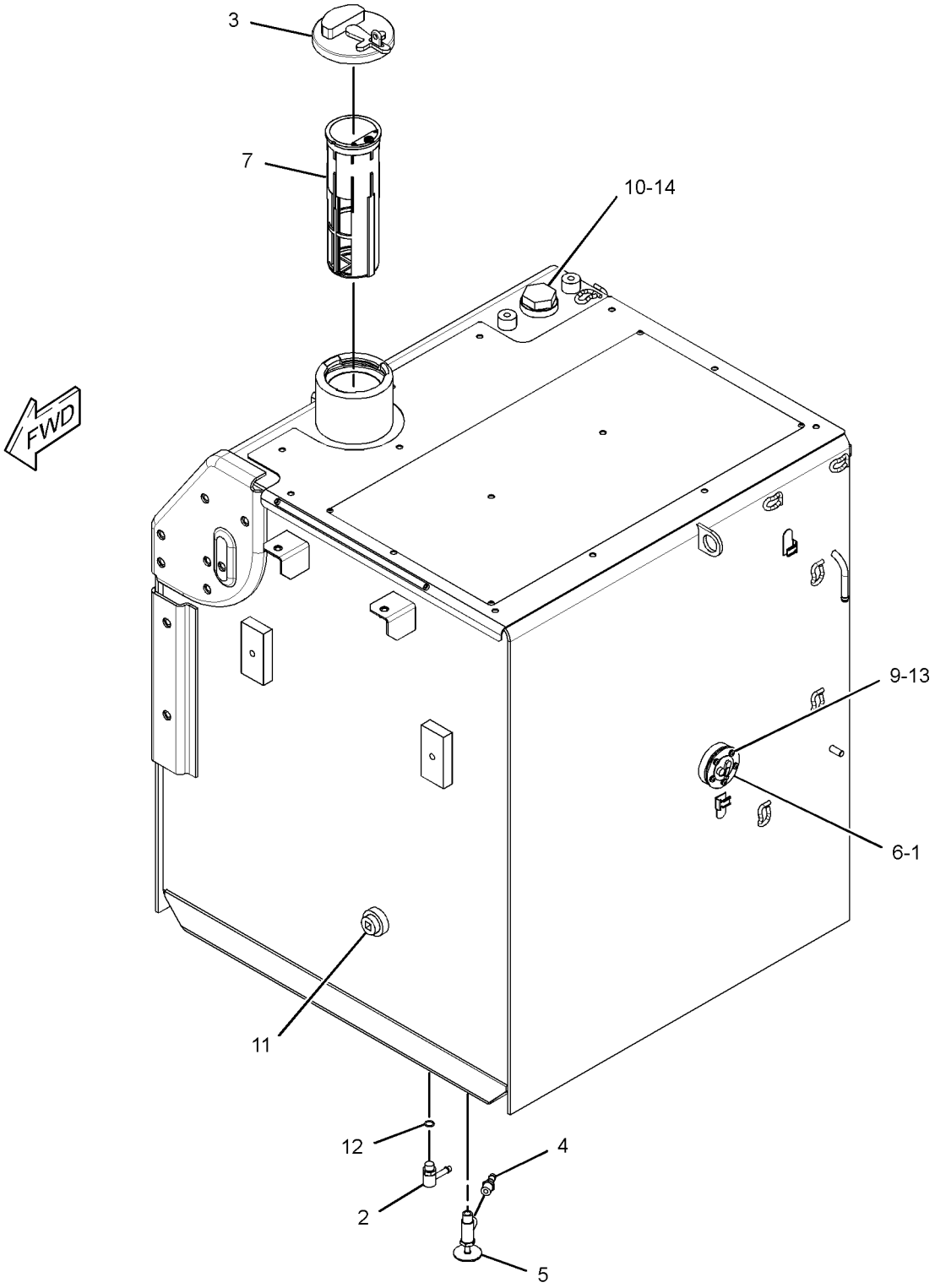

GRAPHIC #1 **<END>** g01601213

303-9871 TANK GP-FUEL

S/N: DFP305-UP; CJX220-UP
520-L (137.4-US GAL)
PART OF 303-9866 TANK GP-FUEL
TYPE 1

SMCS-1273 **i03257928**

NOTE	REF NO	GRAPHIC REF	PART NUMBER	QTY	PART NAME 1 2 3 4 5 6 (PRODUCT LEVEL)	SEE PAGE
	1	1	**4I-0378**	1	GASKET-RUBBER	
	2	1	**5P-4924**	1	ELBOW	
	3	1	**7X-7700**	1	CAP AS-FILLER (FUEL TANK)	
		1	**9X-2205**	1	KIT-CAP FILTER (FUEL TANK)	
					(INCLUDES FILTER AS, SCREWS, GASKETS & VALVE)	
		1	**9X-8600**	1	SEAL-O-RING	
	4	1	**003-7764**	1	END-HOSE	
	5	1	**128-4411**	1	VALVE AS (FUEL SHUTOFF)	
	6	1	**163-6700**	1	SENSOR GP-FUEL LEVEL	
		1	**186-3735**	2	PIN-CONNECTOR (16-GA TO 18-GA)	
		1	**102-8802**	1	KIT-RECEPTACLE (2-PIN)	
					(INCLUDES RECEPTACLE AS & WEDGE)	
J	7	1	**262-9372**	1	STRAINER GP-FUEL (FLOAT GAUGE)	
		1	**9P-7121**	1	STRAINER-FUEL	
M	9	1	**095-0736**	5	SCREW-MACHINE (M5X0.8X10-MM)	
	10	1	**2S-4078**	1	SEAL-O-RING	
	11	1	**3B-0551**	1	PLUG-PIPE	
	12	1	**3J-1907**	1	SEAL-O-RING	
	13	1	**8T-0328**	5	WASHER-HARD (5.5X10X1-MM THK)	
	14	1	**9S-6130**	1	PLUG	
					AVAILABLE REPAIR KIT(S):	
J			**278-3970**	1	KIT-GAUGE (FUEL STRAINER)	
					(INCLUDES STOPPER & FLOAT GAUGE)	

J-KIT MARKED J SERVICES PART(S) MARKED J
M-METRIC PART

303-9871 **TANK GP-FUEL** *(contd.)* **i03257928**

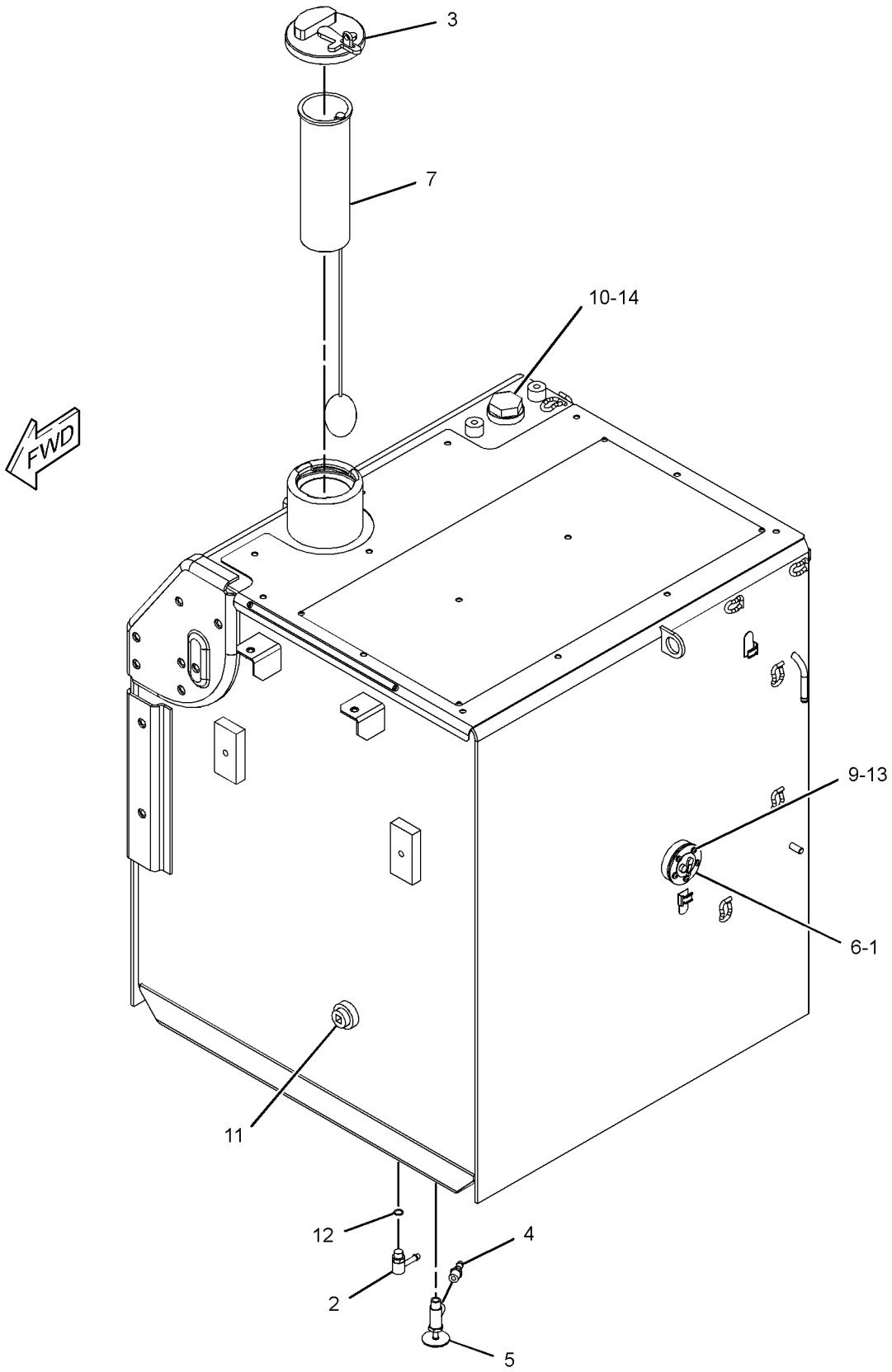

GRAPHIC #1 **<END>** g01372483

FUEL SYSTEM

303-9871 TANK GP-FUEL

S/N: DFP305-UP; CJX220-UP
520-L (137.4-US GAL)
PART OF 303-9866 TANK GP-FUEL
TYPE 2

SMCS-1273 **i03115580**

NOTE	REF NO	GRAPHIC REF	PART NUMBER	QTY	PART NAME 1 2 3 4 5 6 (PRODUCT LEVEL)	SEE PAGE
	1	1	**4I-0378**	1	GASKET-RUBBER	
	2	1	**5P-4924**	1	ELBOW	
	3	1	**7X-7700**	1	CAP AS-FILLER (FUEL TANK)	
		1	**9X-2205**	1	KIT-CAP FILTER (FUEL TANK)	
					(INCLUDES FILTER AS, SCREWS, GASKETS, & VALVE)	
		1	**9X-8600**	1	SEAL-O-RING	
	4	1	**003-7764**	1	END-HOSE	
	5	1	**128-4411**	1	VALVE AS (FUEL SHUTOFF)	
	6	1	**163-6700**	1	SENSOR GP-FUEL LEVEL	
		1	**186-3735**	2	PIN-CONNECTOR (16-GA TO 18-GA)	
		1	**102-8802**	1	KIT-RECEPTACLE (2-PIN)	
					(INCLUDES RECEPTACLE AS & WEDGE)	
CL	7	1	**303-9933**	1	STRAINER AS-FUEL (FLOAT GAUGE)	
M	9	1	**095-0736**	5	SCREW-MACHINE (M5X0.8X10-MM)	
	10	1	**2S-4078**	1	SEAL-O-RING	
	11	1	**3B-0551**	1	PLUG-PIPE	
	12	1	**3J-1907**	1	SEAL-O-RING	
	13	1	**8T-0328**	5	WASHER-HARD (5.5X10X1-MM THK)	
	14	1	**9S-6130**	1	PLUG	
					AVAILABLE REPAIR KIT(S):	
L			**303-9937**	1	KIT-GAUGE (FLOAT)	
					(INCLUDES STOPPER & GAUGE)	

C-CHANGE FROM PREVIOUS TYPE
L-KIT MARKED L SERVICES PART(S) MARKED L
M-METRIC PART

303-9871 **TANK GP-FUEL** *(contd.)* **i03115580**

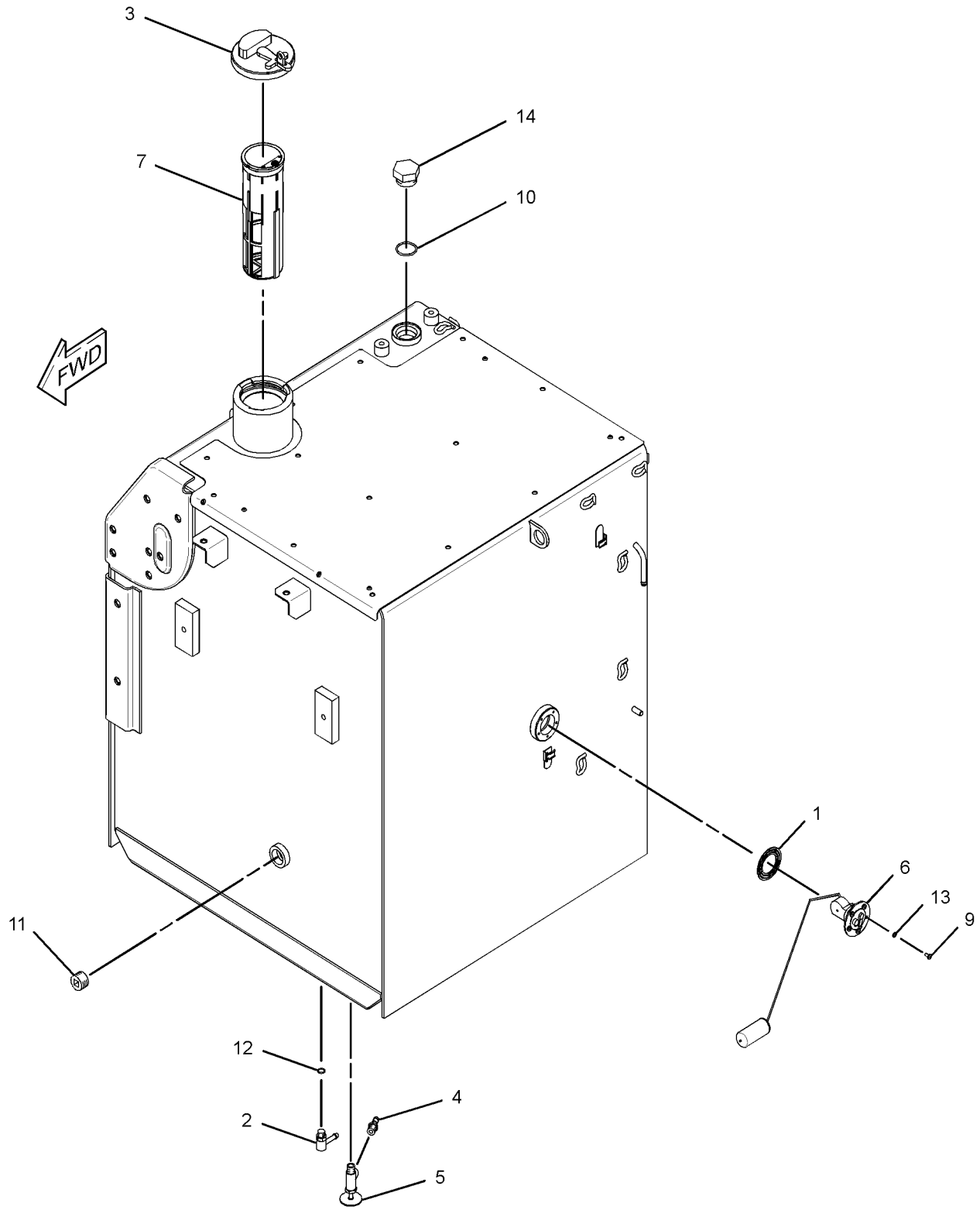

GRAPHIC #1 **<END>** g01511553

FUEL SYSTEM

327-3323 TANK GP-FUEL

S/N: DFP305-UP; CJX220-UP
520-L (137.4-US GAL)
PART OF 223-3037 TANK & MTG GP-FUEL

SMCS-1273 **i03133124**

NOTE	PART NUMBER	QTY	PART NAME 1 2 3 4 5 6 (PRODUCT LEVEL)	SEE PAGE
Y	*327-3324*	1	TANK GP-FUEL	231
			—OR—	
Y	*327-3325*	1	TANK GP-FUEL	233

Y-SEPARATE ILLUSTRATION

<END>

FUEL SYSTEM

327-3324 TANK GP-FUEL

S/N: DFP1-UP; CJX1-UP
520-L (137.4-US GAL)
PART OF 327-3323 TANK GP-FUEL

SMCS-1273 **i03133125**

NOTE	REF NO	GRAPHIC REF	PART NUMBER	QTY	PART NAME 1 2 3 4 5 6 (PRODUCT LEVEL)	SEE PAGE
	1	1	**4I-0378**	1	GASKET-RUBBER	
	2	1	**5P-4924**	1	ELBOW	
	3	1	**7X-7700**	1	CAP AS-FILLER (FUEL TANK)	
		1	**9X-2205**	1	KIT-CAP FILTER (FUEL TANK)	
					(INCLUDES FILTER AS, SCREWS, GASKETS, & VALVE)	
		1	**9X-8600**	1	SEAL-O-RING	
	4	1	**003-7764**	1	END-HOSE	
	5	1	**128-4411**	1	VALVE AS (FUEL SHUTOFF)	
	6	1	**163-6700**	1	SENSOR GP-FUEL LEVEL	
		1	**186-3735**	1	PIN-CONNECTOR (16-GA TO 18-GA)	
		1	**102-8802**	1	KIT-RECEPTACLE (2-PIN)	
					(INCLUDES RECEPTACLE AS & WEDGE)	
J	7	1	**303-9933**	1	STRAINER AS-FUEL (FLOAT GAUGE)	
	8	1	**9S-6130**	1	PLUG	
M	9	1	**095-0736**	5	SCREW-MACHINE (M5X0.8X10-MM)	
	10	1	**2S-4078**	1	SEAL-O-RING	
	11	1	**3B-0551**	1	PLUG-PIPE	
	12	1	**3J-1907**	1	SEAL-O-RING	
	13	1	**8T-0328**	5	WASHER-HARD (5.5X10X1-MM THK)	
					AVAILABLE REPAIR KIT(S):	
J				1	KIT-GAUGE (FUEL STRAINER)	
					(INCLUDES STOPPER & GAUGE FLOAT)	

J-KIT MARKED J SERVICES PART(S) MARKED J
M-METRIC PART

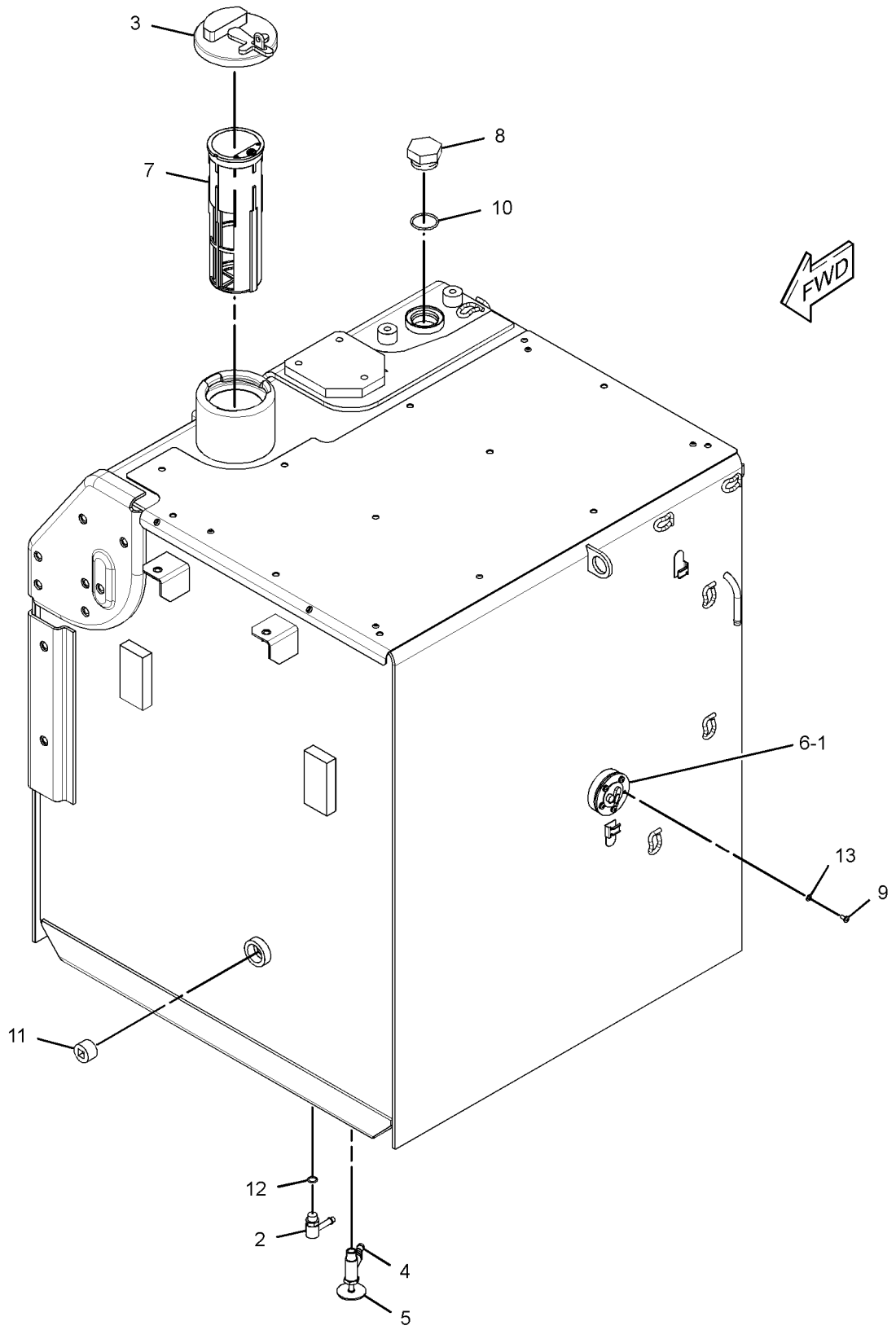

GRAPHIC #1

<END>

g01618879

327-3325 TANK GP-FUEL

S/N: DFP1-UP; CJX1-UP
520-L (137.4-US GAL)
PART OF 327-3323 TANK GP-FUEL

SMCS-1273 **i03133128**

NOTE	REF NO	GRAPHIC REF	PART NUMBER	QTY	PART NAME 1 2 3 4 5 6 (PRODUCT LEVEL)	SEE PAGE
	1	1	**4I-0378**	1	GASKET-RUBBER	
	2	1	**5P-4924**	1	ELBOW	
	3	1	**7X-7700**	1	CAP AS-FILLER (FUEL TANK)	
		1	**9X-2205**	1	KIT-CAP FILTER (FUEL TANK)	
					(INCLUDES FILTER AS, SCREWS, GASKETS, & VALVE)	
		1	**9X-8600**	1	SEAL-O-RING	
	4	1	**003-7764**	1	END-HOSE	
	5	1	**128-4411**	1	VALVE AS (FUEL SHUTOFF)	
	6	1	**163-6700**	1	SENSOR GP-FUEL LEVEL	
		1	**186-3735**	2	PIN-CONNECTOR (16-GA TO 18-GA)	
		1	**102-8802**	1	KIT-RECEPTACLE (2-PIN)	
					(INCLUDES RECEPTACLE AS & WEDGE)	
J	7	1	**303-9933**	1	STRAINER AS-FUEL (FLOAT GAUGE)	
	8	1	**9S-6130**	1	PLUG	
M	9	1	**095-0736**	5	SCREW-MACHINE (M5X0.8X10-MM)	
	10	1	**2S-4078**	1	SEAL-O-RING	
	11	1	**3B-0551**	1	PLUG-PIPE	
	12	1	**3J-1907**	1	SEAL-O-RING	
	13	1	**8T-0328**	5	WASHER-HARD (5.5X10X1-MM THK)	
					AVAILABLE REPAIR KIT(S):	
J			**303-9937**	1	KIT-GAUGE (FUEL STRAINER)	
					(INCLUDES STOPPER & GAUGE FLOAT)	

J-KIT MARKED J SERVICES PART(S) MARKED J
M-METRIC PART

327-3325 **TANK GP-FUEL** *(contd.)* **i03133128**

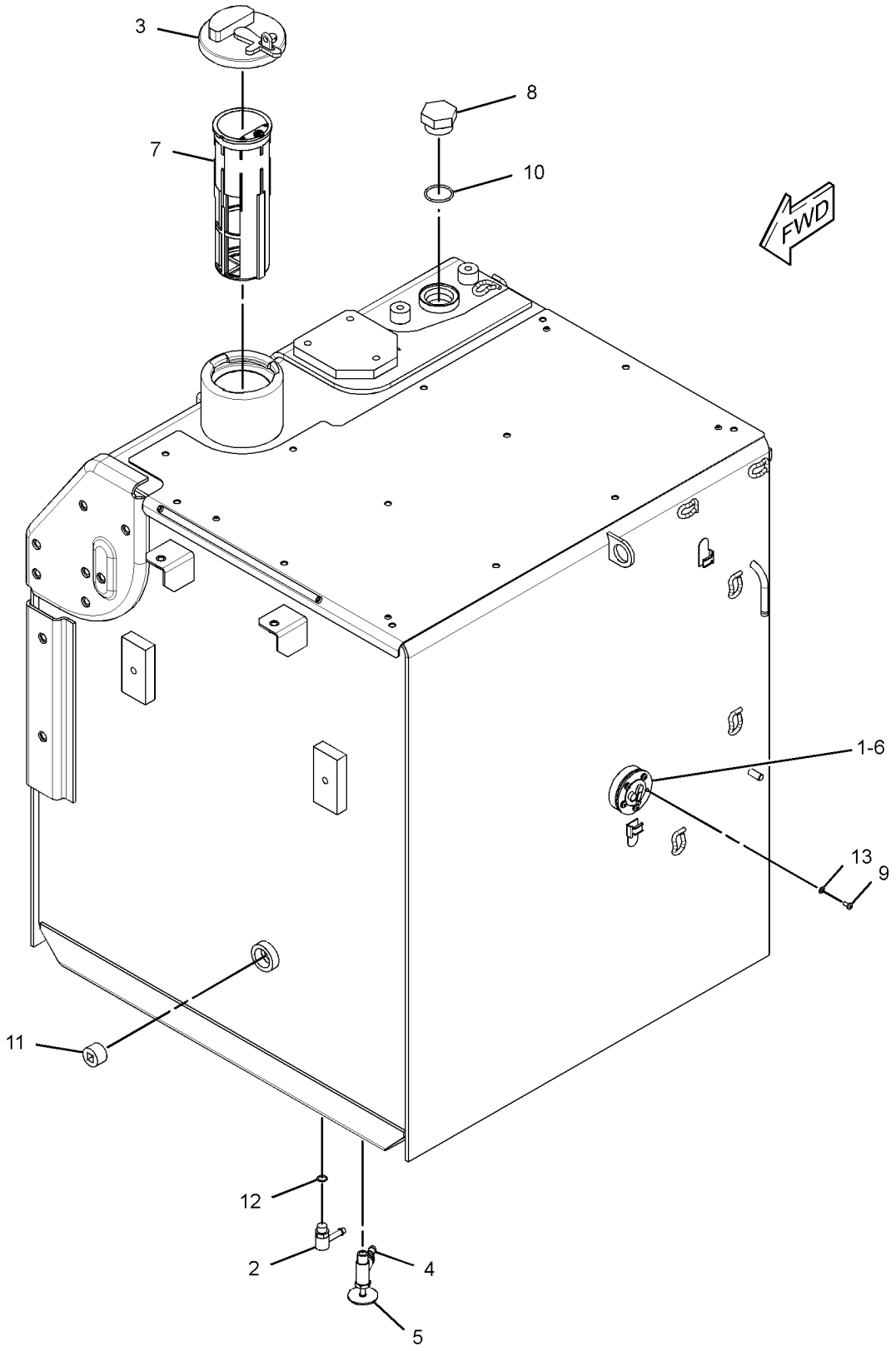

GRAPHIC #1 **<END>** g01618870

139-6873 VALVE GP-FUEL BYPASS

S/N: DFP1-UP; CJX1-UP

PART OF 223-3046 LINES GP-FUEL

SMCS-1250, 1261, 1715 **i02233267**

NOTE	REF NO	GRAPHIC REF	PART NUMBER	QTY	PART NAME 1 2 3 4 5 6 (PRODUCT LEVEL)	SEE PAGE
	1	1	**9X-7737**	1	SEAL-O-RING	

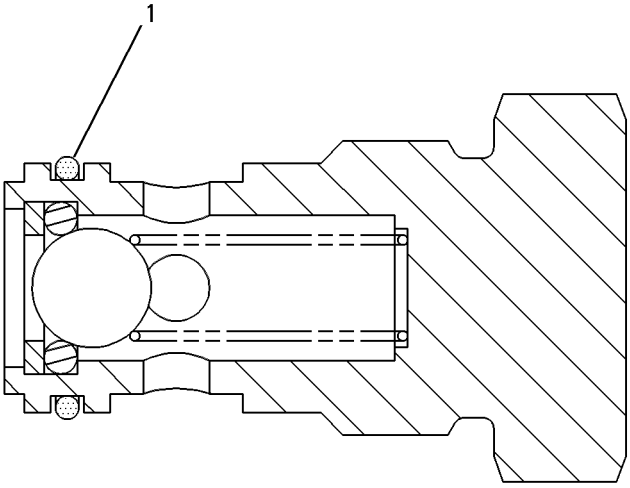

GRAPHIC #1 **<END>** g00266124

298-3147 VALVE GP-FUEL SHUTOFF

S/N: DFP329-UP; CJX232-UP
PART OF 223-3046, 259-3885 LINES GP-FUEL
ALSO AN ATTACHMENT

SMCS-1273 **i02750485**

NOTE	REF NO	GRAPHIC REF	PART NUMBER	QTY	PART NAME 1 2 3 4 5 6 (PRODUCT LEVEL)	SEE PAGE
	1	1	**298-3257**	1	STOP	
	2	1	**298-3258**	1	LEVER	
M	3	1	**260-6692**	1	NUT (M5X0.8-THD)	
	4	1	**3J-1907**	1	SEAL-O-RING	
	5	1	**8T-0328**	1	WASHER-HARD (5.5X10X1-MM THK)	
					PARTS SHOWN IN GRAPHIC(S) WITHOUT A REFERENCE NUMBER ARE NOT SERVICED SEPARATELY	

M-METRIC PART

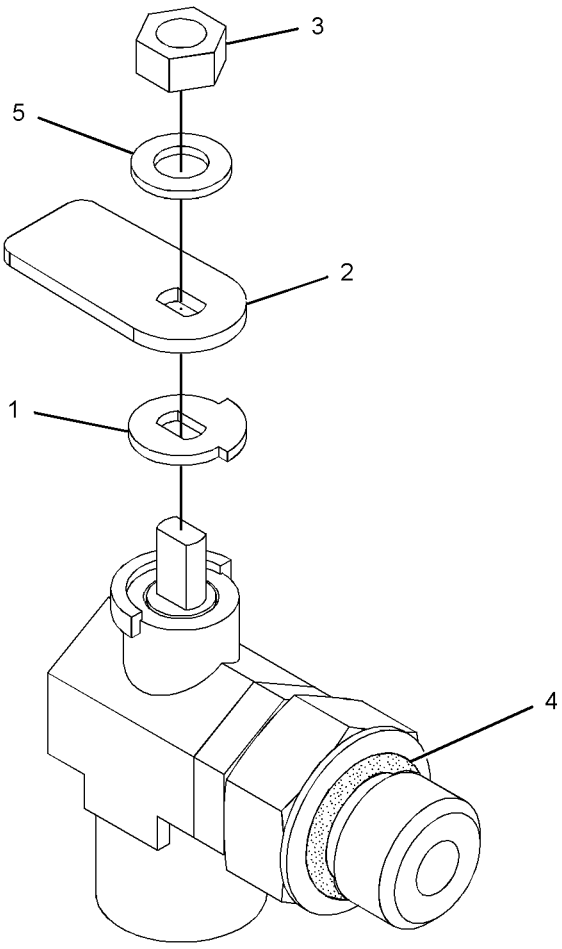

GRAPHIC #1 **<END>** g01377343

132-1829 ALARM GP

S/N: DFP1-UP; CJX1-UP
24-VOLT
PART OF 251-0432 WIRING GP-CAB

SMCS-7400, 7402, 7407 **i03254766**

NOTE	REF NO	GRAPHIC REF	PART NUMBER	QTY	PART NAME 1 2 3 4 5 6 (PRODUCT LEVEL)	SEE PAGE
	1	1	**102-8802**	1	KIT-RECEPTACLE (2-PIN)	
					(INCLUDES RECEPTACLE AS & WEDGE)	
	2	1	**186-3735**	2	PIN-CONNECTOR (16-GA TO 18-GA)	

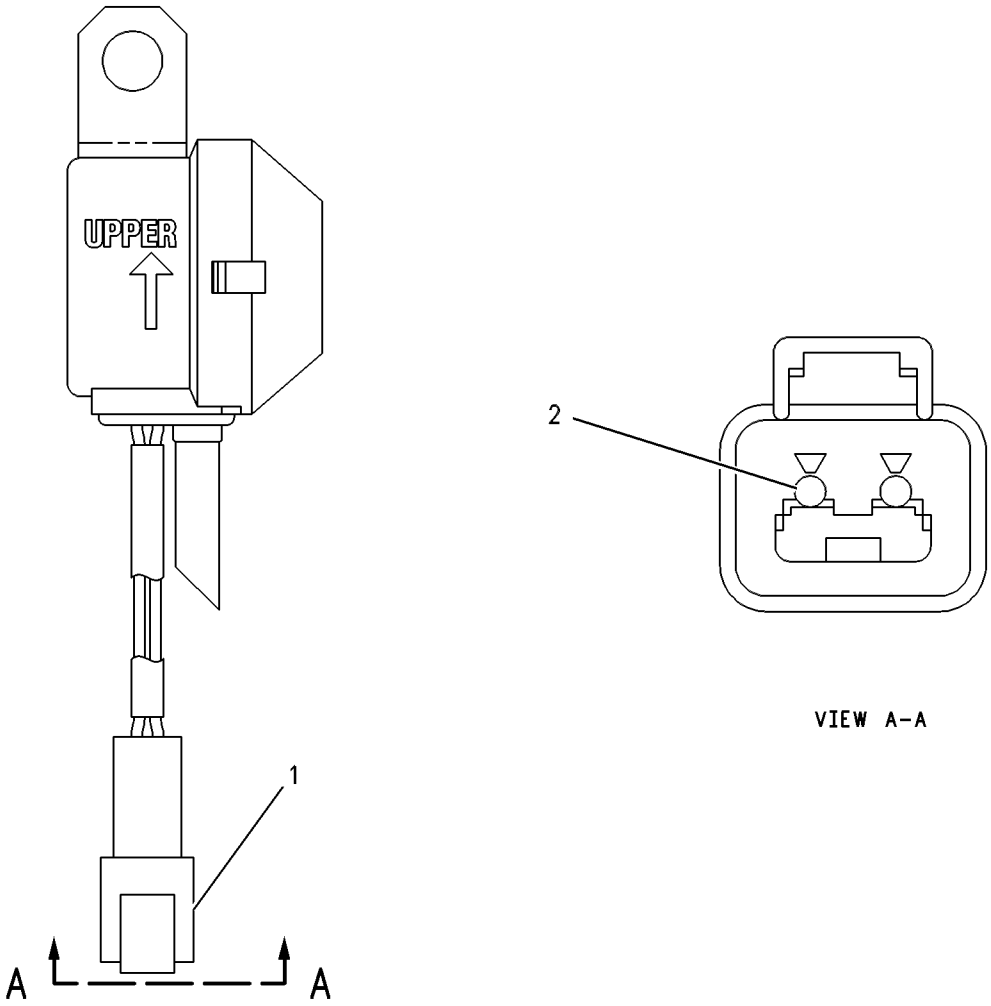

GRAPHIC #1 **<END>** g00272185

231-1771 ALARM GP-TRAVEL

S/N: DFP1-UP; CJX1-UP
AN ATTACHMENT

SMCS-7429 **i02693231**

NOTE	REF NO	GRAPHIC REF	PART NUMBER	QTY	PART NAME 1 2 3 4 5 6 (PRODUCT LEVEL)	SEE PAGE
	1	1	**213-9100**	1	ALARM GP	
BD		1	**5P-5623**		WIRE-ELECTRICAL (16-GA, BLACK)	
		1	**102-8802**	1	KIT-RECEPTACLE (2-PIN)	
					(INCLUDES RECEPTACLE AS & WEDGE)	
		1	**186-3735**	2	PIN-CONNECTOR (16-GA TO 18-GA)	
BE		1	**9X-1813**		SLEEVE	
M	2	1	**8T-4189**	2	BOLT (M8X1.25X20-MM)	
	3	1	**5P-4116**	2	WASHER-HARD (8.8X20.5X2-MM THK)	

B-USE AS REQUIRED
D-ORDER BY THE METER
E-ORDER BY THE CENTIMETER
M-METRIC PART

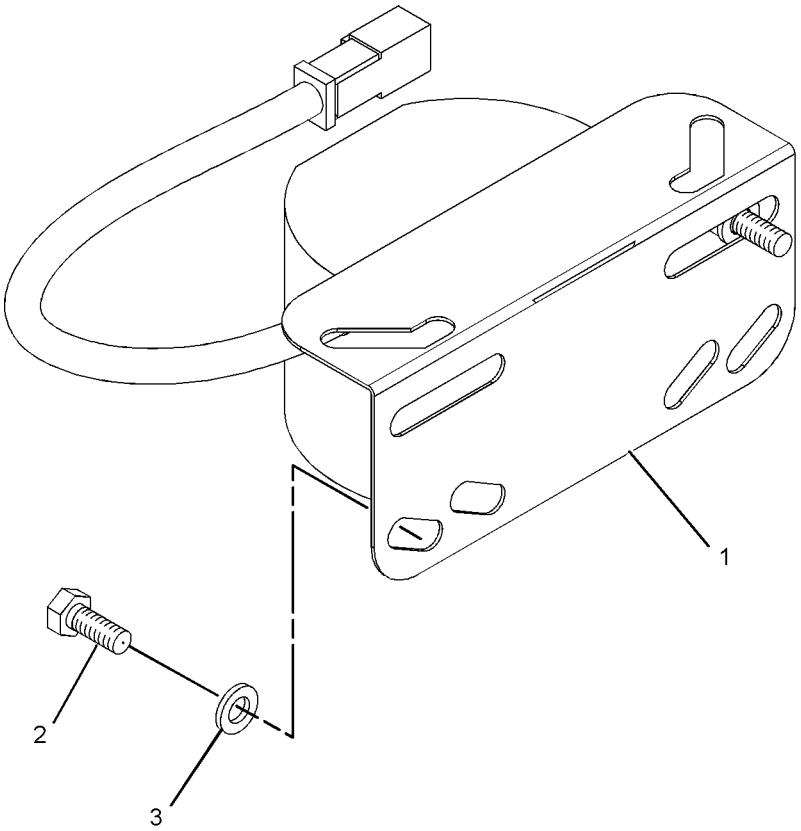

GRAPHIC #1 **<END>** g01071794

177-6972 ALTERNATOR GP-CHARGING

S/N: KHX1-UP
24-VOLT, 65-AMPERE
PART OF 235-8134, 235-8135, 270-2767, 270-2768, 290-0755, 290-0757, 290-0758
ENGINE AR-COMPLETE
ALSO AN ATTACHMENT

SMCS-1405 **i02246446**

NOTE	REF NO	GRAPHIC REF	PART NUMBER	QTY	PART NAME 1 2 3 4 5 6 (PRODUCT LEVEL)	SEE PAGE
	1	1	**129-5096**	1	PULLEY-ALTERNATOR	
YR	2	1	**185-5294**	1	ALTERNATOR GP-CHARGING (24-VOLT)	240
	3	1	**203-0199**	1	SPACER	
	4	1	**258-7531**	1	GUARD AS	
	5	1	**5P-2424**	1	BOLT (1/2-13X2.25-IN)	
	6	1	**6V-8188**	1	NUT (1/2-13-THD)	
	7	1	**7X-0339**	1	BOLT (1/2-13X6.25-IN)	
	8	1	**8T-4121**	1	WASHER-HARD (11X21X2.5-MM THK)	
M	9	1	**8T-4136**	1	BOLT (M10X1.5X25-MM)	
	10	1	**8T-4223**	3	WASHER-HARD (13.5X25.5X3-MM THK)	

M-METRIC PART
R-REMFG PART MAY BE AVAILABLE
Y-SEPARATE ILLUSTRATION

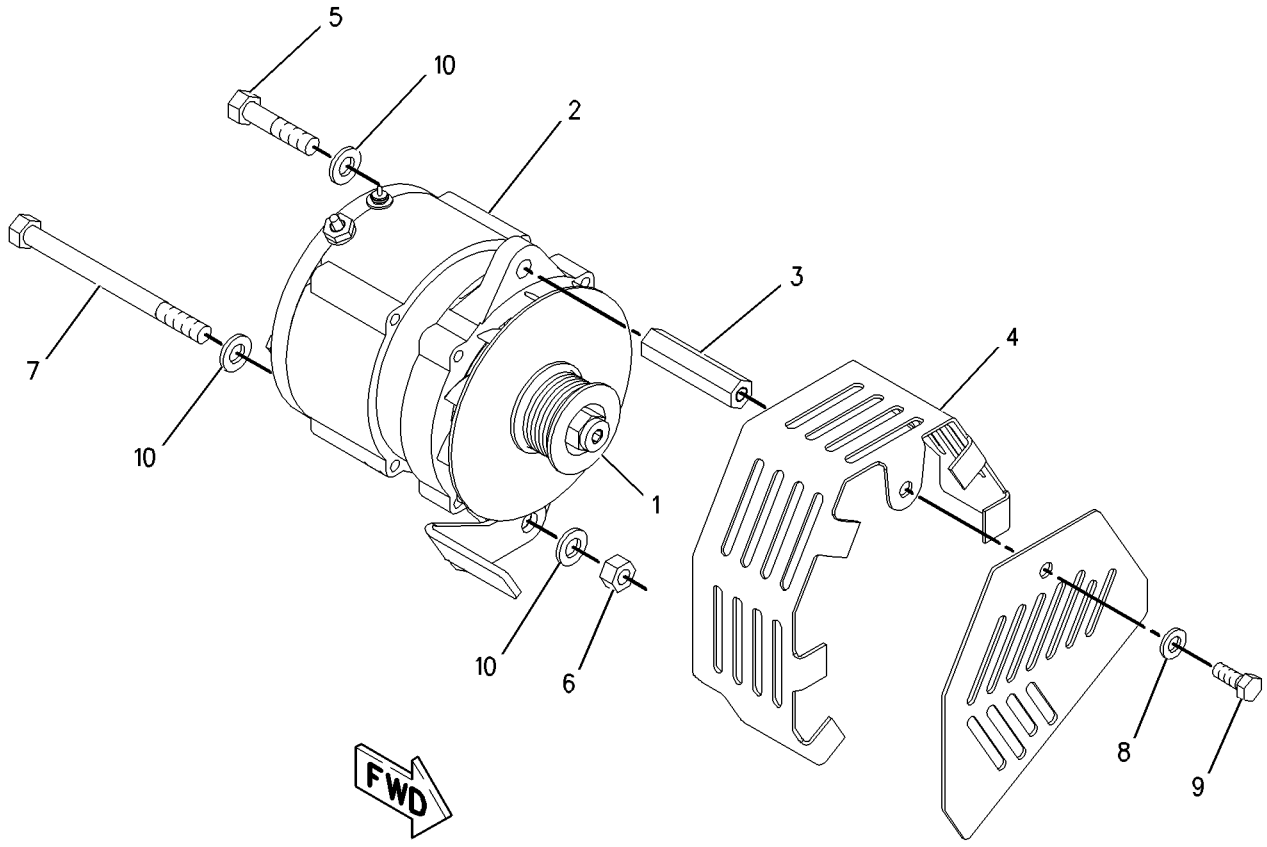

GRAPHIC #1 **<END>** g00775601

ELECTRICAL AND STARTING SYSTEM

185-5294 ALTERNATOR GP-CHARGING*R

S/N: KHX1-UP
24-VOLT, 65-AMPERE
PART OF 177-6972 ALTERNATOR GP-CHARGING
ALSO AN ATTACHMENT

SMCS-1405 **i02293147**

NOTE	REF NO	GRAPHIC REF	PART NUMBER	QTY	PART NAME 1 2 3 4 5 6 (PRODUCT LEVEL)	SEE PAGE
	1	1	**185-2653**	1	FRAME	
	2	1	**5S-7349**	1	BOLT (1/4-20X0.5-IN)	
	3	1	**185-2639**	1	FAN AS	
	4	1	**1H-3244**	1	LOCKWASHER	
	5	1	**185-2645**	1	FRAME	
	6	1	**2K-4821**	1	LOCKNUT (5/8-18-THD)	
	7	1	**5P-8247**	1	WASHER-HARD (17X32X3.5-MM THK)	
	8	1	**185-2651**	1	COVER	
	9	1	**8T-4205**	1	WASHER-HARD (7.2X14.5X2-MM THK)	
	10	1	**185-2647**	1	GROMMET	
	11	1	**9L-6770**	1	CAP-DUST	
	12	1	**185-2642**	1	STATOR AS	
	13	1	**185-2638**	2	COLLAR	
	14	1	**185-2654**	1	PLATE	
	15	1	**185-2650**	1	ROTOR AS	
	16	1	**185-2644**	1	COIL AS	
	17	1	**185-2648**	1	REGULATOR AS-VOLTAGE (24-VOLT) (ALTERNATOR)	
	18	1	**6V-8189**	1	NUT (5/16-18-THD)	
	19	1	**8T-4224**	1	WASHER-HARD (8.8X16X2-MM THK)	
	20	1	**3F-9556**	1	LOCKWASHER	
					AVAILABLE REPAIR KIT(S):	
			185-2655	1	KIT-BEARING (ALTERNATOR)	
			199-8436	1	KIT-TERMINAL (ALTERNATOR)	
					(INCLUDES HOLDER AS, PLATE INSULATOR, PIN, BOLT KIT, GROMMET, AND NUT)	
			199-7891	1	KIT-TERMINAL (ALTERNATOR)	
					(INCLUDES INSULATORS, WASHERS, AND NUTS)	
			185-2658	1	KIT-HARDWARE (ALTERNATOR)	

185-5294 **ALTERNATOR GP-CHARGING** *(contd.)* **i02293147**

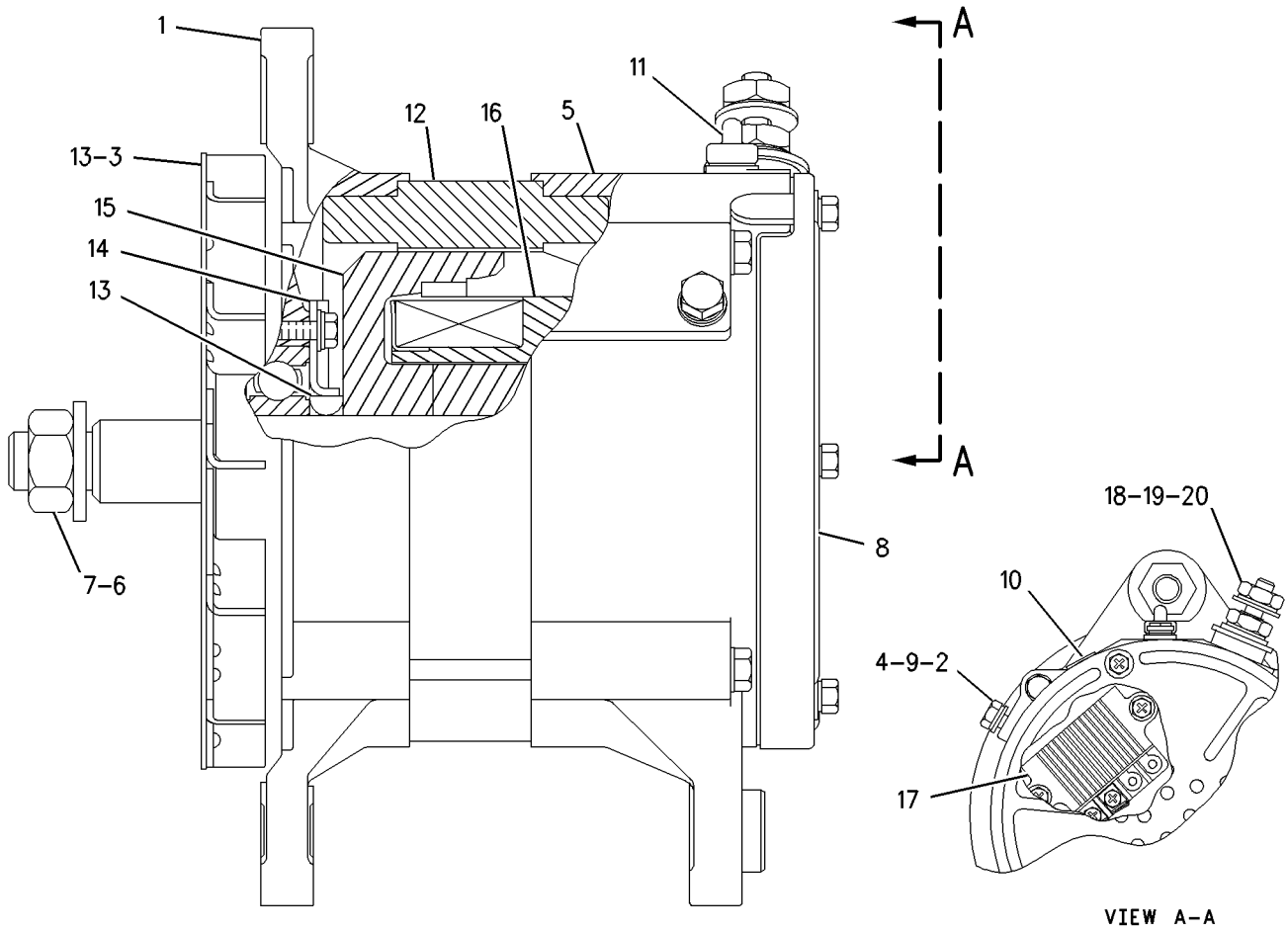

GRAPHIC #1 **<END>** g00789053

ELECTRICAL AND STARTING SYSTEM

251-0429 BATTERY & WIRING GP

S/N: DFP1-168; CJX1-187

PART OF 240-3970, 240-3971 CHASSIS AR

SMCS-1401, 1402, 1408 **i02495184**

NOTE	REF NO	GRAPHIC REF	PART NUMBER	QTY	PART NAME 1 2 3 4 5 6 (PRODUCT LEVEL)	SEE PAGE
	1	2,5	**2G-8767**	3	WASHER (10.5X60X3-MM THK)	
	2	1,2,3, 4,5	**3S-2093**	46	STRAP-CABLE	
	3	4	**3T-5760**	2	BATTERY (12-VOLT, MAINTENANCE FREE, WET)	
	4	4	**5I-8270**	1	COVER-BATTERY	
	5	4	**6W-6005**	1	HOLD-DOWN-BATTERY	
	6	2,3	**7I-2673**	5	STRAP-CABLE	
	7	2,4,4,5	**7K-1181**	13	STRAP-CABLE	
	8	1,4	**7Y-5456**	2	GROMMET	
	9	4	**087-4587**	1	GROMMET	
	10	1,2,3	**111-4836**	10	CLIP	
	11	1,2,4,5	**111-4837**	13	CLIP	
	12	2,4	**111-4838**	9	CLIP	
	13	2,4	**111-4839**	9	STRAP	
	14	1,2,3, 4,5	**116-0118**	12	CLIP	
	15	4	**132-1805**	1	STRAP AS-GROUND	
M	16	2	**135-8572**	2	BOLT AS	
M	17	4	**135-8573**	2	BOLT AS	
	18	5	**140-0860**	1	STRAP AS-GROUND	
	19	4	**170-6929**	1	CABLE AS	
E		4	**5P-0761**		CABLE (00-GA, RED) (31-CM)	
		4	**9G-0002**	1	COVER-TERMINAL (RED)	
		4	**9G-0005**	1	COVER-TERMINAL (BLACK)	
					(EACH COVER-TERMINAL INCLUDES)	
		4	**8L-8413**	1	STRAP-CABLE	
		4	**8C-5918**	1	TERMINAL AS (NEGATIVE)	
		4	**8T-9756**	1	TERMINAL AS (POSITIVE)	
					(EACH TERMINAL AS INCLUDES)	
		4	**1M-6119**	1	BOLT (5/16-18X1.375-IN)	
		4	**1M-6120**	1	NUT (5/16-18-THD)	
	20	2	**170-9336**	1	BRACKET AS	
	21	4	**231-1827**	1	CABLE AS	
		4	**1S-7252**	1	TERMINAL-CABLE (00-GA, 3/8-IN BOLT)	
E		4	**5P-0747**		CABLE (00-GA, BLACK) (23-CM)	
		4	**9G-0003**	1	COVER-TERMINAL (BLACK)	
		4	**8L-8413**	1	STRAP-CABLE	
		4	**9G-8909**	1	COVER-TERMINAL (BLACK)	
		4	**8T-9757**	1	TERMINAL AS-BATTERY (NEGATIVE)	
		4	**1M-6119**	1	BOLT (5/16-18X1.375-IN)	
		4	**1M-6120**	1	NUT (5/16-18-THD)	
	22	5	**234-1051**	2	BRACKET	
	23	4	**238-2501**	1	KNOB	
	24	4	**238-2528**	1	ROD	
	25	5	**238-2529**	1	BRACKET AS	
	26	2	**250-5072**	1	SHEET AS	
		2	**250-5073**	1	INSULATION	
	27	2	**250-5075**	1	SHEET AS	
		2	**250-5076**	1	INSULATION	
	28	4	**251-0451**	1	CABLE AS	
		4	**1S-7251**	1	TERMINAL-CABLE (00-GA, 1/2-IN BOLT)	
E		4	**5P-0761**		CABLE (00-GA, RED) (288-CM)	
		4	**8N-0869**	1	COVER-TERMINAL (RED)	
		4	**8N-1725**	1	COVER-TERMINAL (RED)	
		4	**8L-8413**	1	STRAP-CABLE	
		4	**3S-6049**	1	TERMINAL AS-BATTERY (POSITIVE)	

251-0429 **BATTERY & WIRING GP** *(contd.)* **i02495184**

NOTE	REF NO	GRAPHIC REF	PART NUMBER	QTY	PART NAME 1 2 3 4 5 6 (PRODUCT LEVEL)	SEE PAGE
		4	**1M-6119**	1	BOLT (5/16-18X1.375-IN)	
		4	**1M-6120**	1	NUT (5/16-18-THD)	
	29	2	**251-0464**	1	GROMMET	
	30	4	**251-0467**	1	BRACKET AS	
	31	4	**256-1705**	1	SHEET AS	
		4	**256-1707**	1	INSULATION	
	32	4	**267-7969**	1	HARNESS AS-CHASSIS	
		4	**102-8802**	4	KIT-RECEPTACLE (2-PIN)	
		4	**102-8803**	3	KIT-RECEPTACLE (3-PIN)	
		4	**102-8804**	1	KIT-RECEPTACLE (4-PIN)	
		4	**102-8806**	1	KIT-RECEPTACLE (8-PIN)	
					(EACH RECEPTACLE KIT INCLUDES RECEPTACLE AS & WEDGE)	
		4	**153-2620**	1	PLUG AS-CONNECTOR (54-PIN, BLACK)	
		4	**153-2630**	1	PLUG AS-CONNECTOR (54-PIN, BROWN)	
		4	**155-2260**	3	KIT-CONNECTING PLUG (3-PIN)	
		4	**155-2270**	17	KIT-CONNECTING PLUG (2-PIN)	
		4	**155-2271**	1	KIT-CONNECTING PLUG (4-PIN)	
					(EACH PLUG KIT INCLUDES PLUG AS, WEDGE & INTERFACE SEAL)	
		4	**160-7689**	1	PLUG AS-CONNECTOR (70-PIN)	
		4	**163-6637**	1	RECEPTACLE AS-CONNECTOR (54-PIN, BLACK)	
		4	**174-3016**	2	PLUG AS-CONNECTOR (3-PIN)	
		4	**230-4009**	2	PLUG AS-CONNECTOR (12-PIN)	
		4	**230-4011**	7	PLUG AS-CONNECTOR (2-PIN)	
		4	**230-4013**	1	PLUG AS-CONNECTOR (3-PIN)	
		4	**230-5010**	2	PLUG AS-CONNECTOR (6-PIN)	
		4	**231-2295**	2	PLUG AS-CONNECTOR (8-PIN)	
		4	**243-4505**	6	RECEPTACLE AS-CONNECTOR (2-PIN)	
		4	**243-4506**	1	RECEPTACLE AS-CONNECTOR (3-PIN)	
		4	**243-4508**	2	RECEPTACLE AS-CONNECTOR (6-PIN)	
		4	**243-4509**	2	RECEPTACLE AS-CONNECTOR (8-PIN)	
	33	4	**093-2065**	1	GROMMET	
	34	5	**132-5789**	3	CLIP	
	35	1,4	**4I-7889**	1	SPACER (11X25X45-MM THK)	
	36	4	**4K-8864**	3	CLIP	
	37	2	**4P-7428**	1	CLIP	
	38	5	**4P-7581**	2	CLIP	
M	39	4	**5C-7261**	1	NUT (M8X1.25-THD)	
M	40	4	**5C-7883**	4	BOLT-SOCKET HEAD (M6X1X16-MM)	
	41	5	**5P-4116**	2	WASHER-HARD (8.8X20.5X2-MM THK)	
	42	2,5	**6G-2256**	2	CLAMP	
	43	2,4,5	**6G-2263**	5	SPACER (10.5X19X28.5-MM THK)	
	44	2	**6K-8178**	1	CLIP	
M	45	2,5	**7X-2621**	2	BOLT (M10X1.5X12-MM)	
	46	2,3	**7Y-8165**	2	GROMMET	
	47	4	**8M-2770**	1	CLIP	
	48	1,2,3, 4,5	**8T-4121**	54	WASHER-HARD (11X21X2.5-MM THK)	
M	49	4	**8T-4133**	1	NUT (M10X1.5-THD)	
M	50	2,4	**8T-4136**	5	BOLT (M10X1.5X25-MM)	
M	51	1,2,3, 4,5	**8T-4137**	33	BOLT (M10X1.5X20-MM)	
M	52	4	**8T-4172**	1	BOLT (M10X1.5X80-MM)	
M	53	5	**8T-4182**	1	BOLT (M10X1.5X45-MM)	
M	54	4,5	**8T-4185**	2	BOLT (M10X1.5X50-MM)	
M	55	5	**8T-4189**	1	BOLT (M8X1.25X20-MM)	
M	56	2,3,5	**8T-4191**	8	BOLT (M10X1.5X16-MM)	
M	57	3,4	**8T-4195**	2	BOLT (M10X1.5X30-MM)	
	58	4	**8T-4226**	1	WASHER-PLATED (10.5X45X3-MM THK)	

251-0429 **BATTERY & WIRING GP** *(contd.)* **i02495184**

NOTE	REF NO	GRAPHIC REF	PART NUMBER	QTY	PART NAME 1 2 3 4 5 6 (PRODUCT LEVEL)	SEE PAGE
M	59	1	**8T-5005**	1	BOLT (M10X1.5X70-MM)	
M	60	2	**8T-6466**	1	BOLT (M10X1.5X60-MM)	
M	61	5	**8T-6869**	1	BOLT (M8X1.25X60-MM)	
M	62	5	**8T-6912**	1	BOLT (M8X1.25X50-MM)	
	63	4	**9X-8256**	4	WASHER (6.6X12X2-MM THK)	

E-ORDER BY THE CENTIMETER
M-METRIC PART

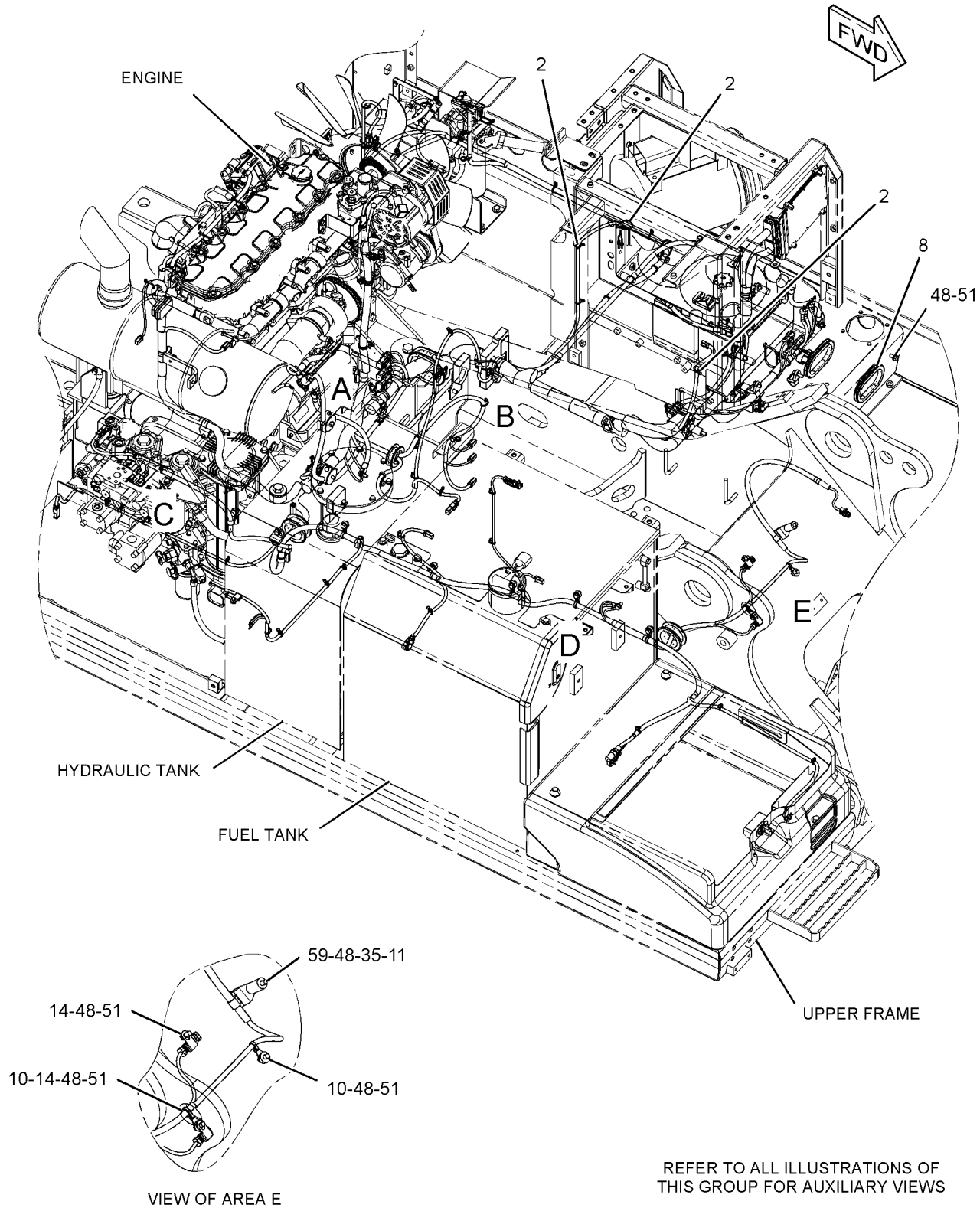

GRAPHIC #1 g01240151

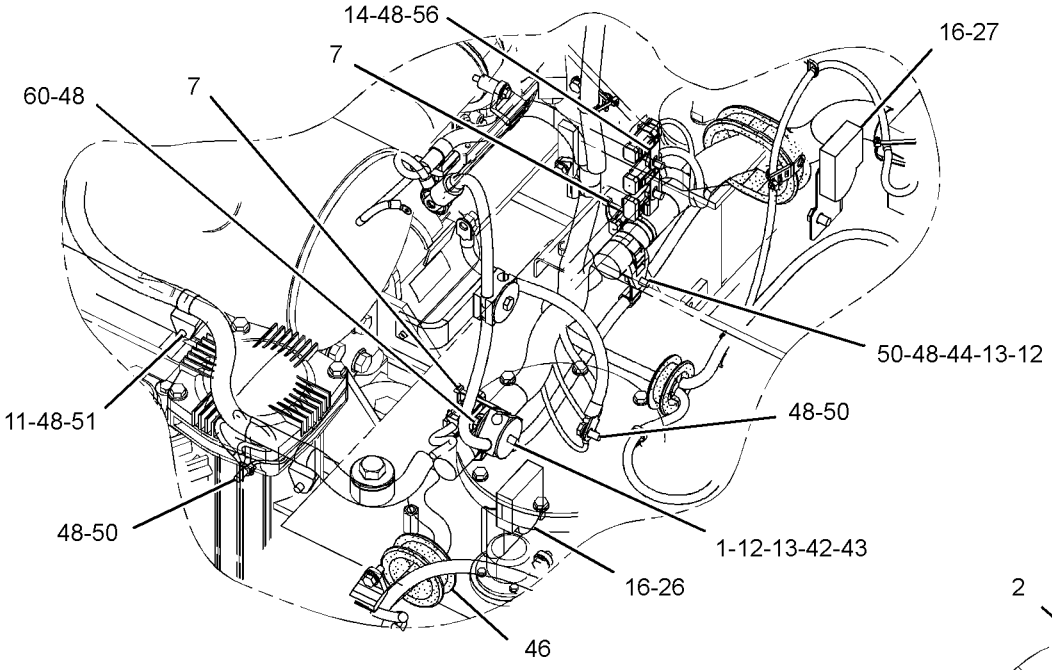

VIEW OF AREA A

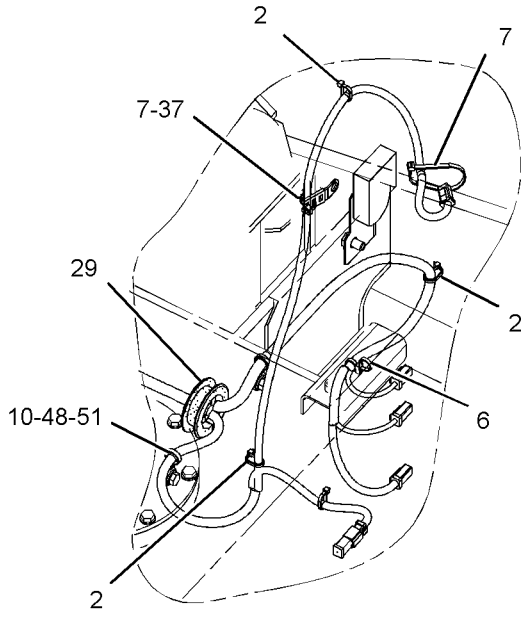

VIEW OF AREA B

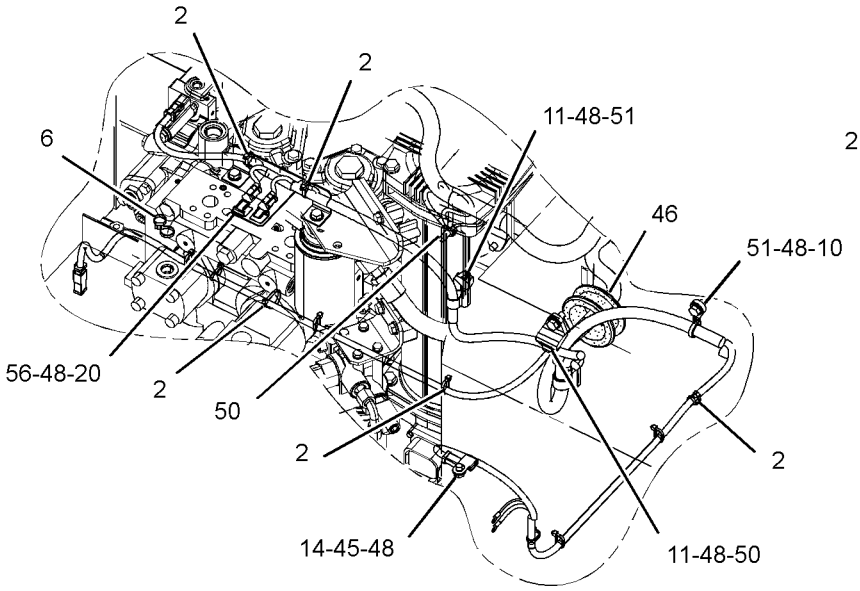

VIEW OF AREA C

GRAPHIC #2

g01240153

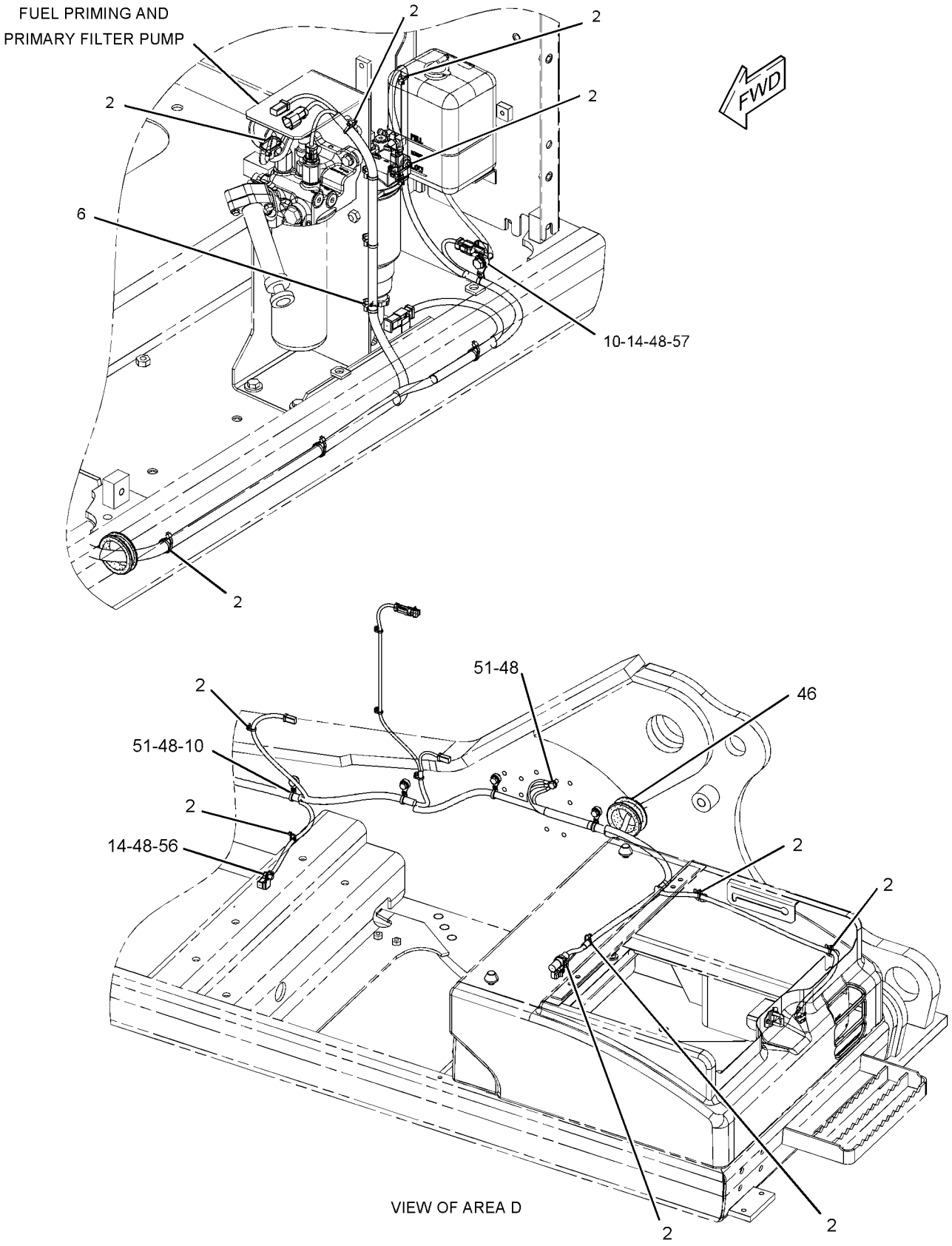

GRAPHIC #3

g01240154

251-0429 **BATTERY & WIRING GP** *(contd.)* **i02495184**

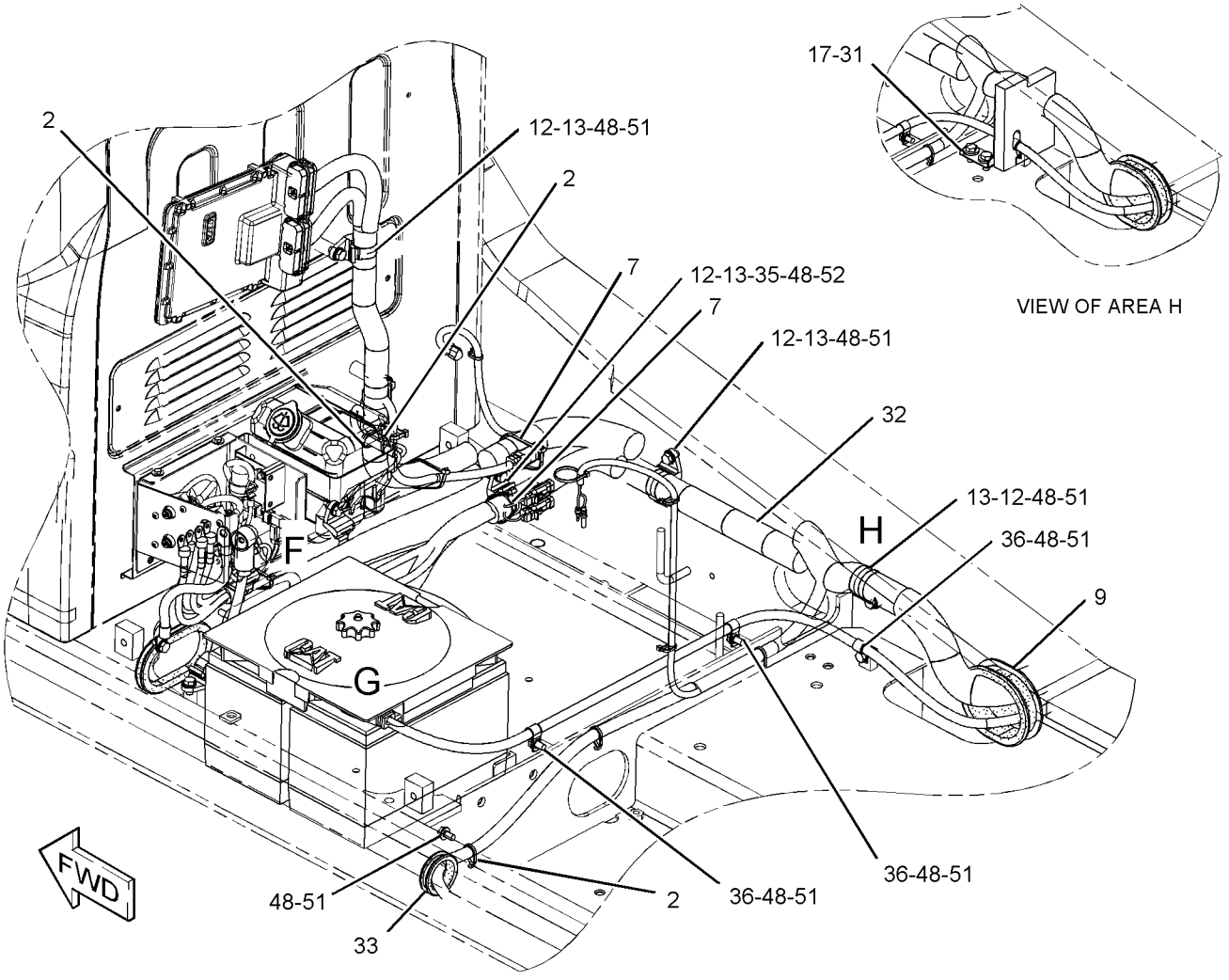

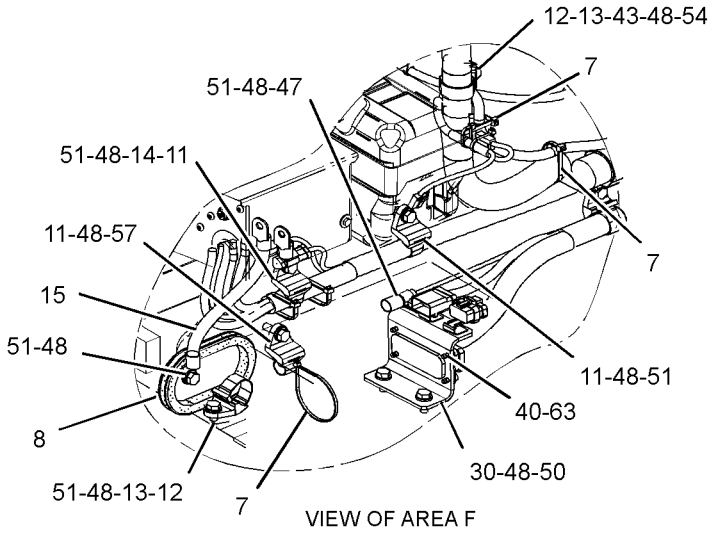

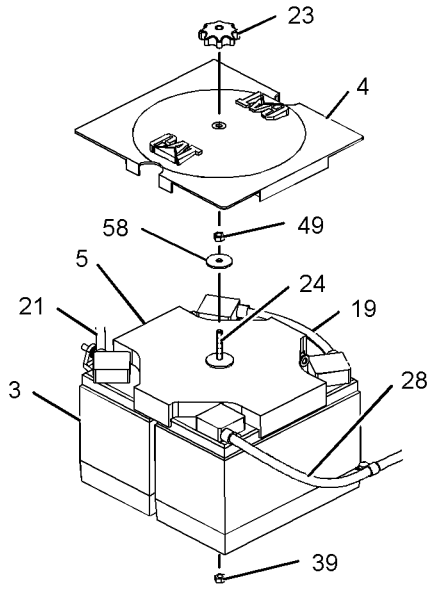

GRAPHIC #4 g01240155

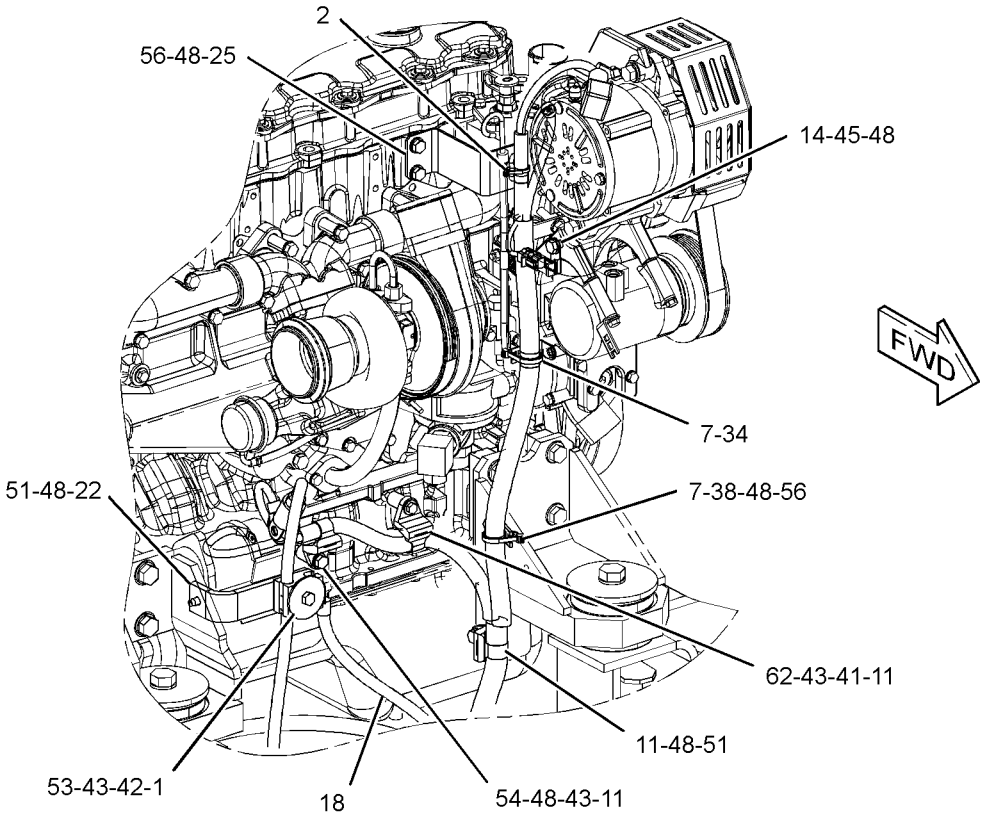

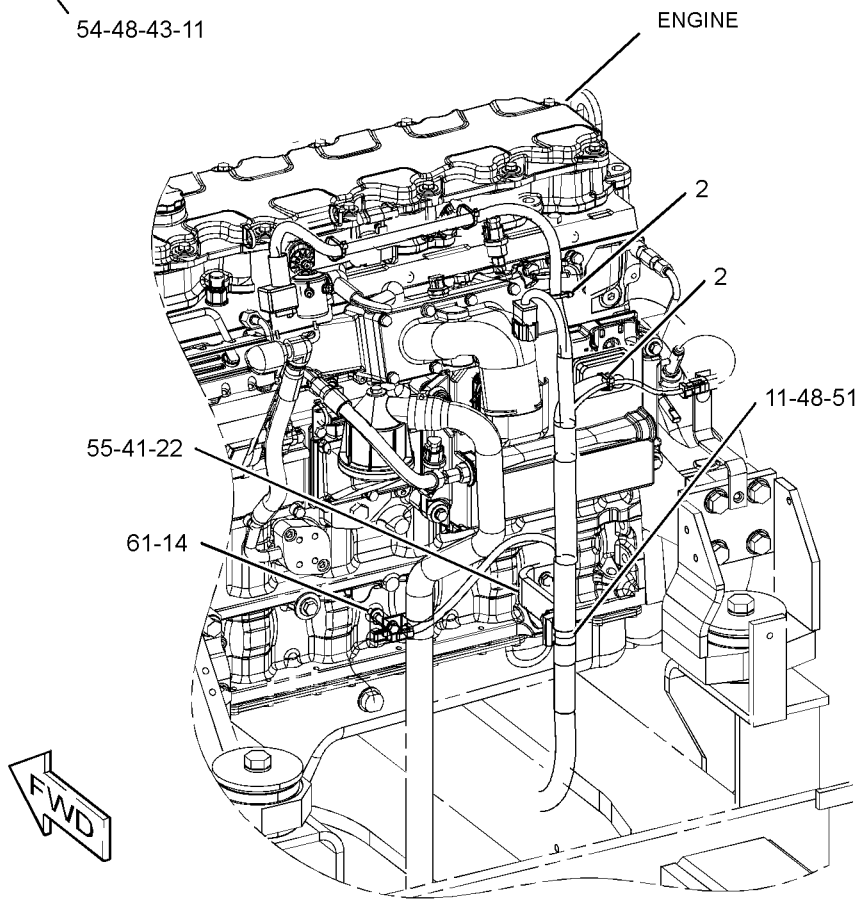

GRAPHIC #5 **<END>** g01240156

ELECTRICAL AND STARTING SYSTEM

251-0429 BATTERY & WIRING GP

S/N: DFP169-UP; CJX188-UP

PART OF 240-3970, 240-3971 CHASSIS AR

SMCS-1401, 1402, 1408 **i02987480**

NOTE	REF NO	GRAPHIC REF	PART NUMBER	QTY	PART NAME 1 2 3 4 5 6 (PRODUCT LEVEL)	SEE PAGE
	1	2,5	**2G-8767**	3	WASHER (10.5X60X3-MM THK)	
	2	1,2,3, 4,5	**3S-2093**	46	STRAP-CABLE	
	3	4	**263-9574**	2	BATTERY (12-VOLT, MAINTENANCE FREE)	
	4	4	**5I-8270**	1	COVER-BATTERY	
	5	4	**6W-6005**	1	HOLD-DOWN-BATTERY	
	6	2,3	**7I-2673**	5	STRAP-CABLE	
C	7	2,4,5	**7K-1181**	14	STRAP-CABLE	
	8	1,4	**7Y-5456**	2	GROMMET	
	9	4	**087-4587**	1	GROMMET	
	10	1,2,3	**111-4836**	10	CLIP	
	11	1,2,4,5	**111-4837**	13	CLIP	
	12	2,4	**111-4838**	9	CLIP	
	13	2,4	**111-4839**	9	STRAP	
	14	1,2,3, 4,5	**116-0118**	12	CLIP	
	15	4	**132-1805**	1	STRAP AS-GROUND	
M	16	2	**135-8572**	2	BOLT AS	
M	17	4	**135-8573**	2	BOLT AS	
	18	5	**140-0860**	1	STRAP AS-GROUND	
	19	4	**170-6929**	1	CABLE AS	
E		4	**5P-0761**		CABLE (00-GA, RED) (31-CM)	
		4	**9G-0002**	1	COVER-TERMINAL (RED)	
		4	**9G-0005**	1	COVER-TERMINAL (BLACK)	
					(EACH COVER-TERMINAL INCLUDES)	
		4	**8L-8413**	1	STRAP-CABLE	
		4	**8C-5918**	1	TERMINAL AS (NEGATIVE)	
		4	**8T-9756**	1	TERMINAL AS (POSITIVE)	
					(EACH TERMINAL AS INCLUDES)	
		4	**1M-6119**	1	BOLT (5/16-18X1.375-IN)	
		4	**1M-6120**	1	NUT (5/16-18-THD)	
	20	2	**170-9336**	1	BRACKET AS	
	21	4	**231-1827**	1	CABLE AS	
		4	**1S-7252**	1	TERMINAL-CABLE (00-GA, 3/8-IN BOLT)	
E		4	**5P-0747**		CABLE (00-GA, BLACK) (23-CM)	
		4	**9G-0003**	1	COVER-TERMINAL (BLACK) (BATTERY)	
		4	**8L-8413**	1	STRAP-CABLE	
		4	**9G-8909**	1	COVER-TERMINAL (BLACK) (DISCONNECT SWITCH)	
		4	**8T-9757**	1	TERMINAL AS-BATTERY (NEGATIVE)	
		4	**1M-6119**	1	BOLT (5/16-18X1.375-IN)	
		4	**1M-6120**	1	NUT (5/16-18-THD)	
	22	5	**234-1051**	2	BRACKET	
	23	4	**238-2501**	1	KNOB	
	24	4	**238-2528**	1	ROD	
	25	5	**238-2529**	1	BRACKET AS	
	26	2	**250-5072**	1	SHEET AS	
		2	**250-5073**	1	INSULATION	
	27	2	**250-5075**	1	SHEET AS	
		2	**250-5076**	1	INSULATION	
	28	4	**251-0451**	1	CABLE AS	
		4	**1S-7251**	1	TERMINAL-CABLE (00-GA, 1/2-IN BOLT)	
E		4	**5P-0761**		CABLE (00-GA, RED) (288-CM)	
		4	**8N-0869**	1	COVER-TERMINAL (RED) (STARTING MOTOR)	
		4	**8N-1725**	1	COVER-TERMINAL (RED) (BATTERY)	
		4	**8L-8413**	1	STRAP-CABLE	
		4	**3S-6049**	1	TERMINAL AS-BATTERY (POSITIVE)	

251-0429 **BATTERY & WIRING GP** *(contd.)* **i02987480**

NOTE	REF NO	GRAPHIC REF	PART NUMBER	QTY	PART NAME 1 2 3 4 5 6 (PRODUCT LEVEL)	SEE PAGE
		4	**1M-6119**	1	BOLT (5/16-18X1.375-IN)	
		4	**1M-6120**	1	NUT (5/16-18-THD)	
	29	2	**251-0464**	1	GROMMET	
	30	4	**251-0467**	1	BRACKET AS	
	31	4	**256-1705**	1	SHEET AS	
		4	**256-1707**	1	INSULATION	
C	32	4	**283-2932**	1	HARNESS AS-CHASSIS	
		4	**102-8802**	4	KIT-RECEPTACLE (2-PIN)	
		4	**102-8803**	3	KIT-RECEPTACLE (3-PIN)	
		4	**102-8804**	1	KIT-RECEPTACLE (4-PIN)	
		4	**102-8806**	1	KIT-RECEPTACLE (8-PIN)	
					(EACH RECEPTACLE KIT INCLUDES RECEPTACLE AS & WEDGE)	
		4	**153-2620**	1	PLUG AS-CONNECTOR (54-PIN, BLACK)	
		4	**153-2630**	1	PLUG AS-CONNECTOR (54-PIN, BROWN)	
		4	**155-2260**	3	KIT-CONNECTING PLUG (3-PIN)	
		4	**155-2270**	17	KIT-CONNECTING PLUG (2-PIN)	
		4	**155-2271**	1	KIT-CONNECTING PLUG (4-PIN)	
					(EACH PLUG KIT INCLUDES PLUG AS, WEDGE & INTERFACE SEAL)	
		4	**160-7689**	1	PLUG AS-CONNECTOR (70-PIN)	
		4	**163-6637**	1	RECEPTACLE AS-CONNECTOR (54-PIN, BLACK)	
		4	**174-3016**	2	PLUG AS-CONNECTOR (3-PIN)	
		4	**230-4009**	2	PLUG AS-CONNECTOR (12-PIN)	
		4	**230-4011**	7	PLUG AS-CONNECTOR (2-PIN)	
		4	**230-4013**	2	PLUG AS-CONNECTOR (3-PIN)	
		4	**230-5010**	2	PLUG AS-CONNECTOR (6-PIN)	
		4	**231-2295**	2	PLUG AS-CONNECTOR (8-PIN)	
		4	**243-4505**	6	RECEPTACLE AS-CONNECTOR (2-PIN)	
		4	**243-4506**	2	RECEPTACLE AS-CONNECTOR (3-PIN)	
		4	**243-4508**	2	RECEPTACLE AS-CONNECTOR (6-PIN)	
		4	**243-4509**	2	RECEPTACLE AS-CONNECTOR (8-PIN)	
		4	**3S-2093**	19	STRAP-CABLE	
		4	**8T-8827**	2	BOOT	
E		4	**103-2529**		HOSE (75-CM)	
E		4	**119-3662**		TUBE-HEAT SHRINK (10.85-MM DIA) (33-CM)	
E		4	**125-7874**		TUBE-HEAT SHRINK (5.72-MM DIA) (75-CM)	
E		4	**125-7875**		TUBE-HEAT SHRINK (7.44-MM DIA) (40-CM)	
		4	**243-4510**	2	RECEPTACLE AS-CONNECTOR (12-PIN)	
	33	4	**093-2065**	1	GROMMET	
	34	5	**132-5789**	1	CLIP	
	35	1,4	**4I-7889**	2	SPACER (11X25X45-MM THK)	
	36	4	**4K-8864**	3	CLIP	
	37	2	**4P-7428**	1	CLIP	
	38	5	**4P-7581**	1	CLIP	
M	39	4	**5C-7261**	1	NUT (M8X1.25-THD)	
M	40	4	**5C-7883**	4	BOLT-SOCKET HEAD (M6X1X16-MM)	
	41	5	**5P-4116**	2	WASHER-HARD (8.8X20.5X2-MM THK)	
	42	2,5	**6G-2256**	2	CLAMP	
	43	2,4,5	**6G-2263**	5	SPACER (10.5X19X28.5-MM THK)	
	44	2	**6K-8178**	1	CLIP	
M	45	2,5	**7X-2621**	2	BOLT (M10X1.5X12-MM)	
	46	2,3	**7Y-8165**	2	GROMMET	
	47	4	**8M-2770**	1	CLIP	
	48	1,2,3, 4,5	**8T-4121**	54	WASHER-HARD (11X21X2.5-MM THK)	
M	49	4	**8T-4133**	1	NUT (M10X1.5-THD)	
M	50	2,4	**8T-4136**	5	BOLT (M10X1.5X25-MM)	
M	51	1,2,3, 4,5	**8T-4137**	31	BOLT (M10X1.5X20-MM)	

251-0429 **BATTERY & WIRING GP** *(contd.)* **i02987480**

NOTE	REF NO	GRAPHIC REF	PART NUMBER	QTY	PART NAME 1 2 3 4 5 6 (PRODUCT LEVEL)	SEE PAGE
M	52	4	**8T-4172**	1	BOLT (M10X1.5X80-MM)	
M	53	2,5	**8T-4182**	2	BOLT (M10X1.5X45-MM)	
M	54	4,5	**8T-4185**	2	BOLT (M10X1.5X50-MM)	
M	55	5	**8T-4189**	1	BOLT (M8X1.25X20-MM)	
M	56	2,3,5	**8T-4191**	8	BOLT (M10X1.5X16-MM)	
M	57	3,4	**8T-4195**	2	BOLT (M10X1.5X30-MM)	
	58	4	**8T-4226**	1	WASHER-PLATED (10.5X45X3-MM THK)	
M	59	1	**8T-5005**	1	BOLT (M10X1.5X70-MM)	
M	60	2	**8T-6466**	1	BOLT (M10X1.5X60-MM)	
M	61	5	**8T-6869**	1	BOLT (M8X1.25X60-MM)	
M	62	5	**8T-6912**	1	BOLT (M8X1.25X50-MM)	
	63	4	**9X-8256**	4	WASHER (6.6X12X2-MM THK)	
	64	2	**091-9035**	1	SPACER (11X25X20-MM THK)	

C-CHANGE FROM PREVIOUS TYPE
E-ORDER BY THE CENTIMETER
M-METRIC PART

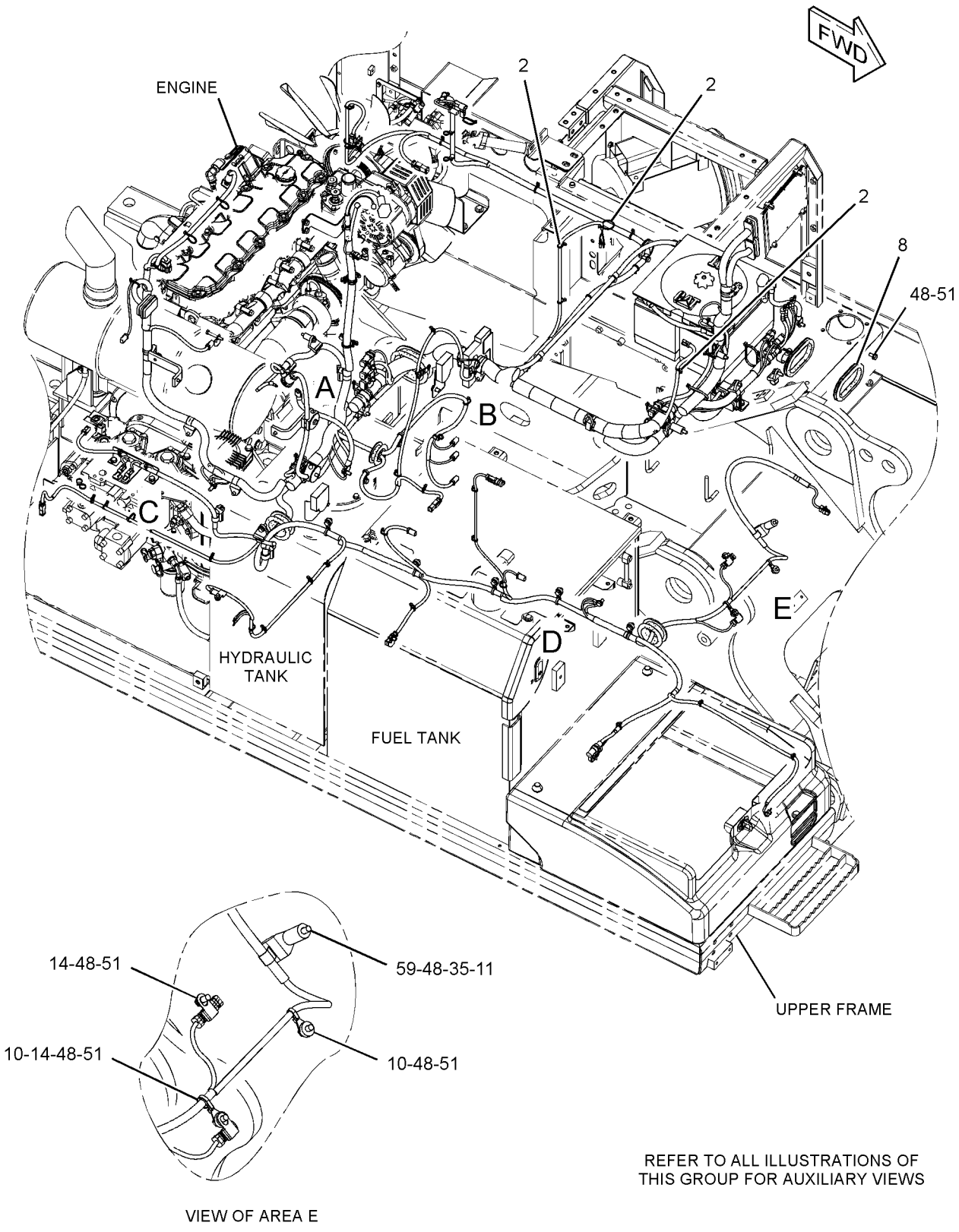

GRAPHIC #1 g01334056

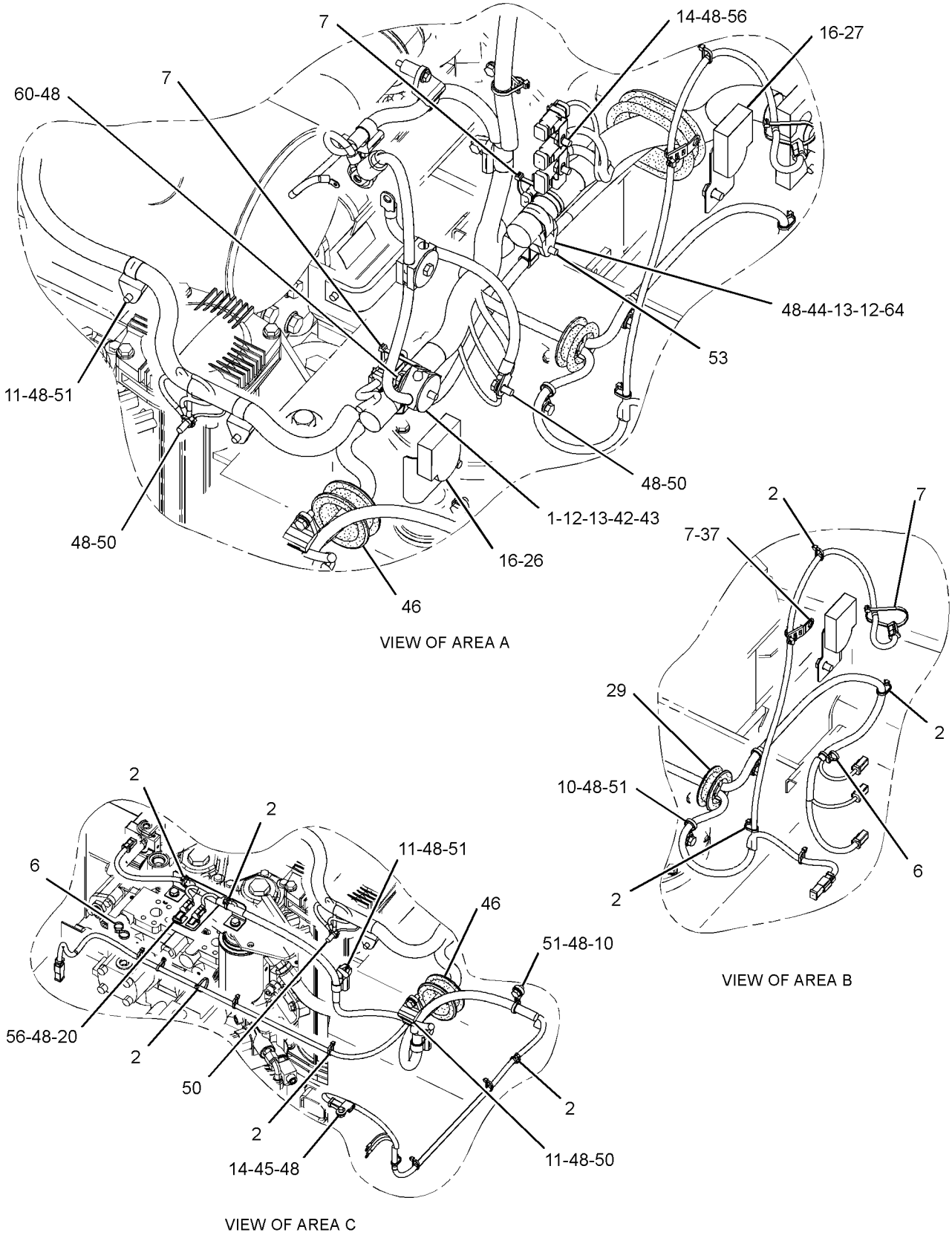

GRAPHIC #2

g01334058

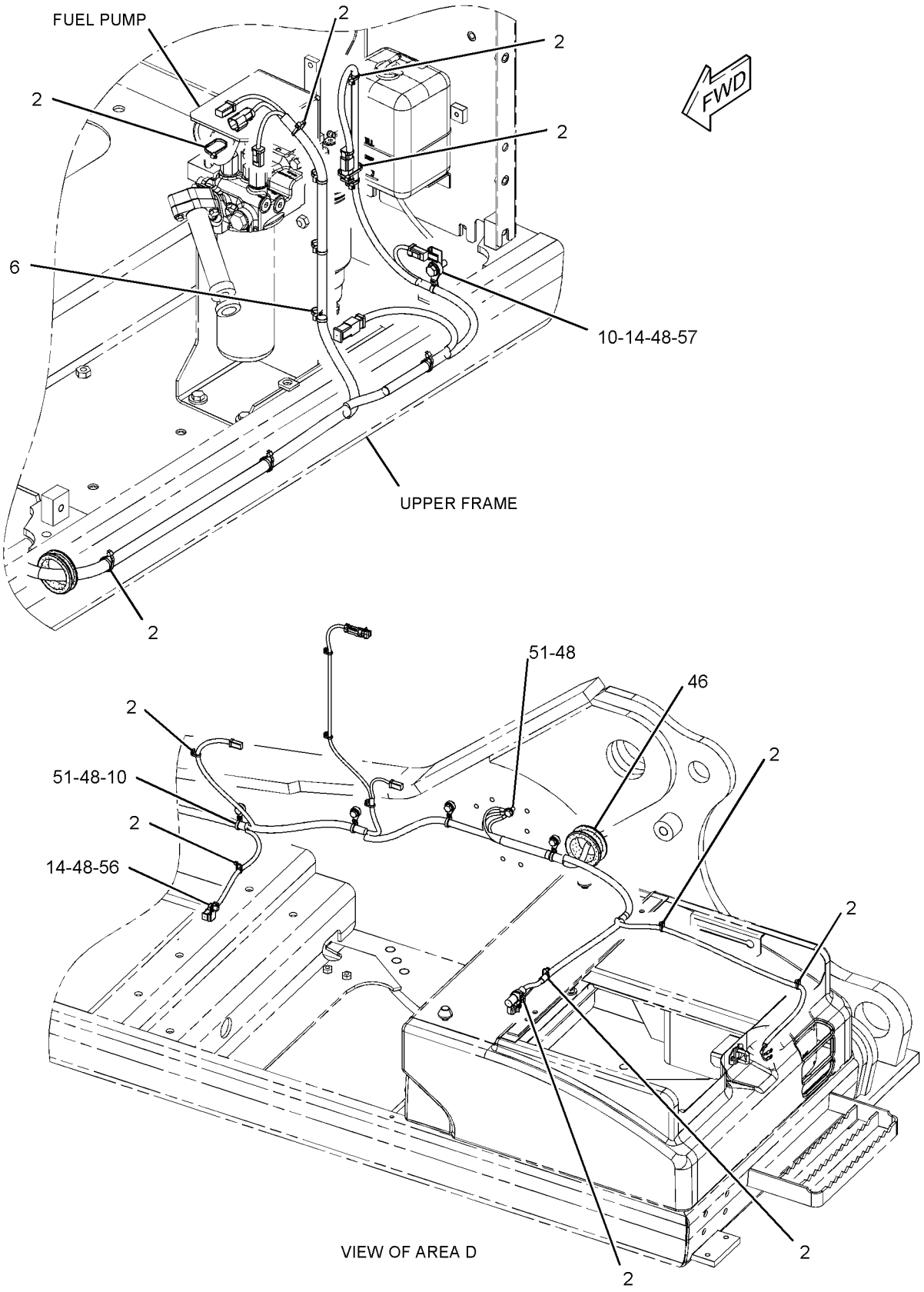

GRAPHIC #3

g01334059

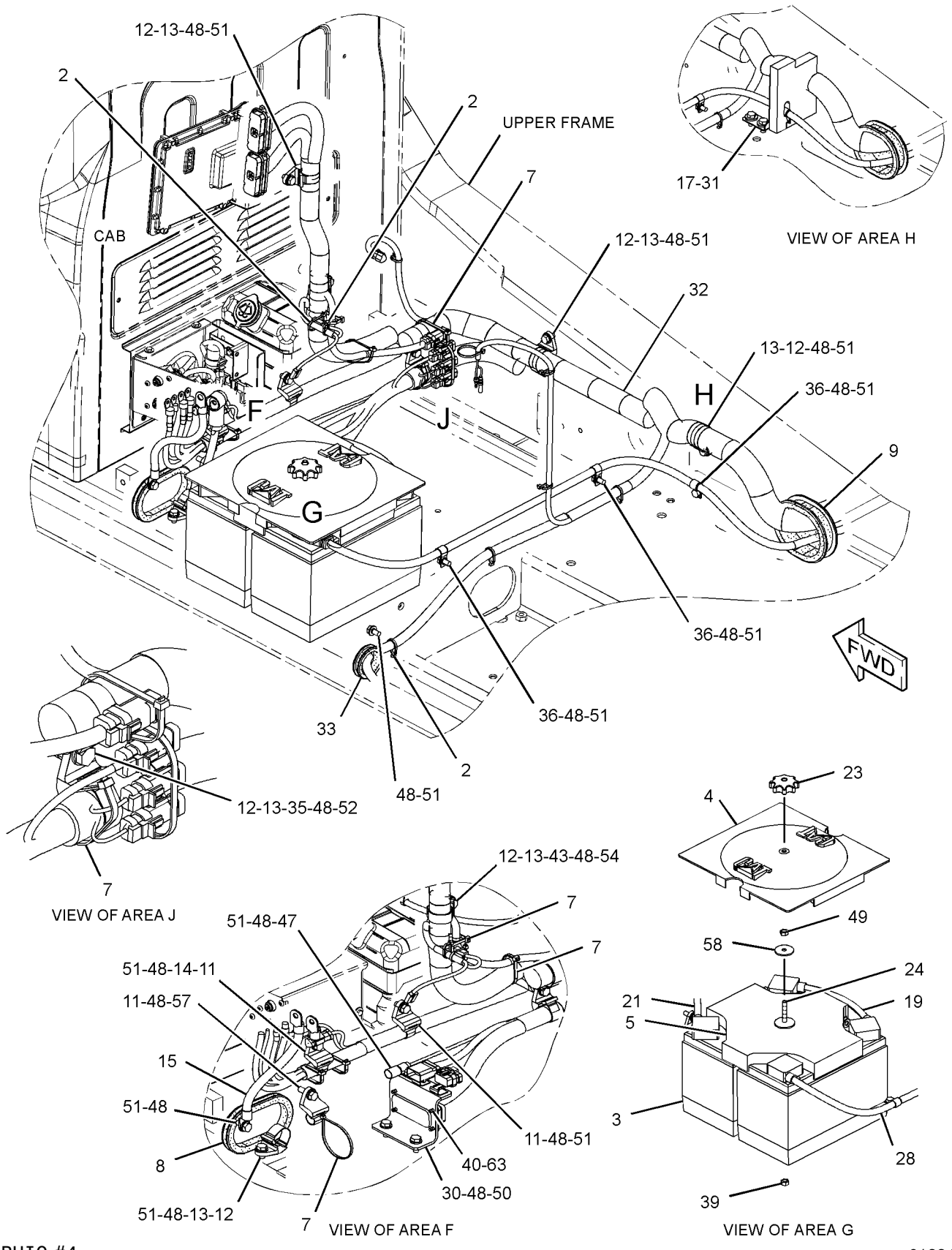

GRAPHIC #4

g01334060

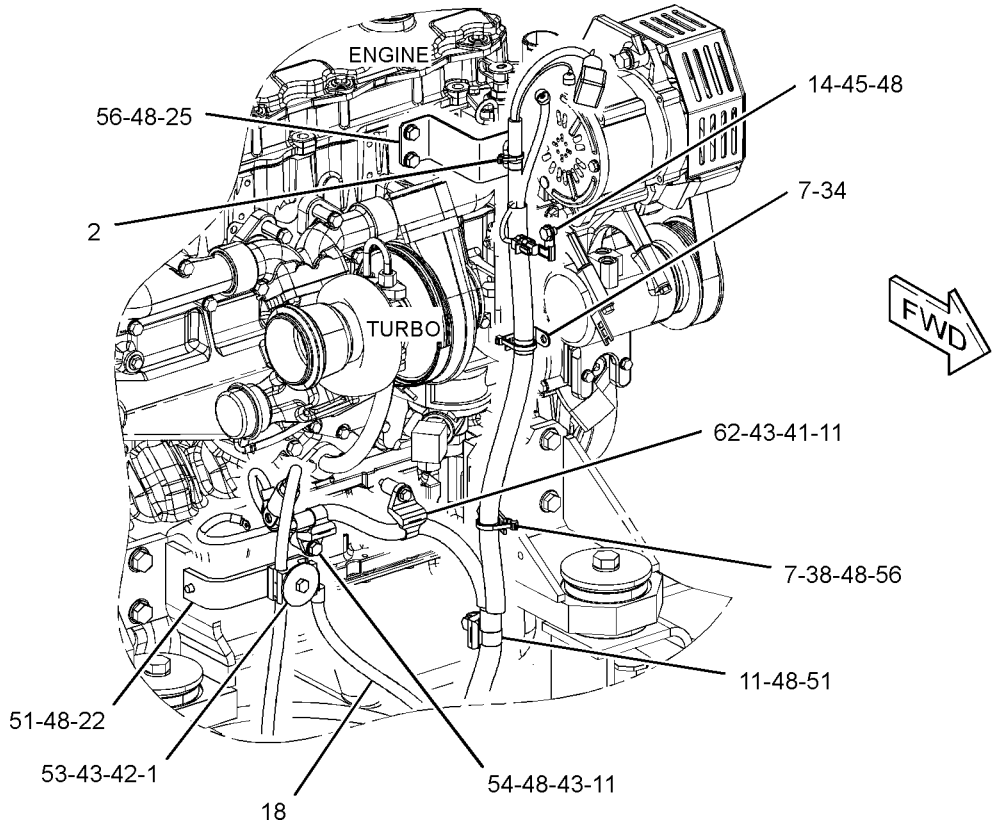

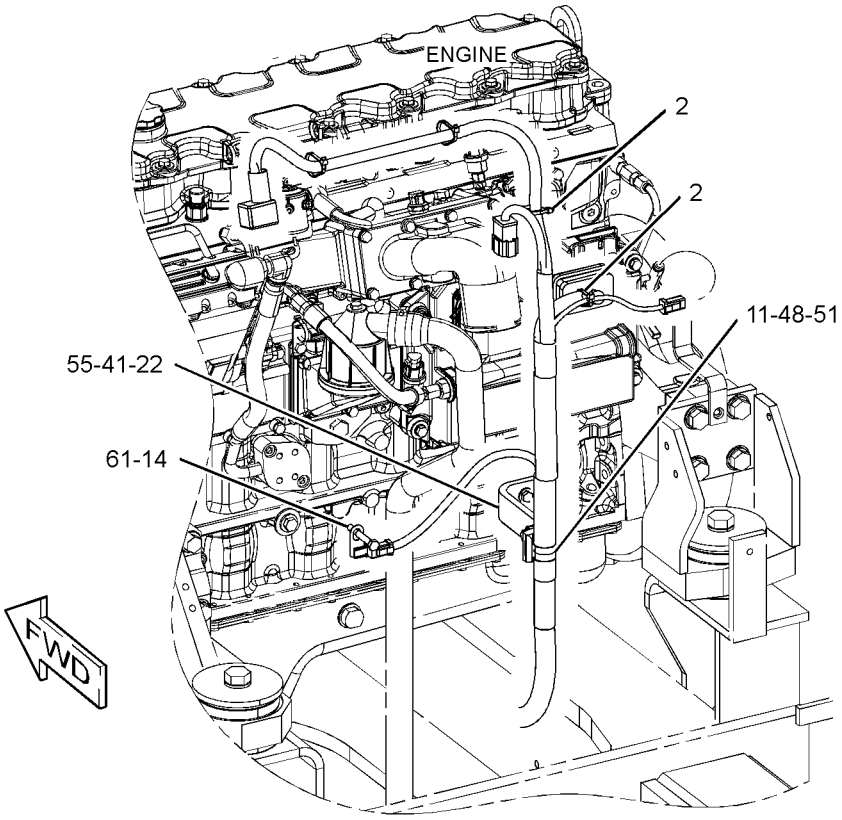

GRAPHIC #5 **<END>** g01334061

251-0440 BATTERY & WIRING GP–COLD WEATHER

S/N: DFP1-UP; CJX1-UP
PART OF 314-3586 STARTING AR-COLD WEATHER
AN ATTACHMENT

SMCS-1401, 1402, 1408 **i03005972**

NOTE	REF NO	GRAPHIC REF	PART NUMBER	QTY	PART NAME 1 2 3 4 5 6 (PRODUCT LEVEL)	SEE PAGE
	1	1	**263-9574**	2	BATTERY (12-VOLT, MAINTENANCE FREE)	
	2	1	**5I-8270**	1	COVER-BATTERY	
	3	1	**6W-6005**	1	HOLD-DOWN-BATTERY	
	4	1	**170-6929**	1	CABLE AS	
E		1	**5P-0761**		CABLE (00-GA, RED) (31-CM)	
		1	**9G-0002**	1	COVER-TERMINAL (RED)	
		1	**8L-8413**	1	STRAP-CABLE	
		1	**9G-0005**	1	COVER-TERMINAL (BLACK)	
		1	**8L-8413**	1	STRAP-CABLE	
		1	**8C-5918**	1	TERMINAL AS (NEGATIVE) (RH)	
		1	**8T-9756**	1	TERMINAL AS (POSITIVE) (LH)	
	5	1	**291-7457**	1	CABLE AS	
		1	**1S-7252**	1	TERMINAL-CABLE (00-GA, 3/8-IN BOLT)	
		1	**7N-5274**	1	COVER-TERMINAL (BLACK)	
		1	**8L-8413**	1	STRAP-CABLE	
E		1	**5P-0747**		CABLE (00-GA, BLACK) (55-CM)	
D		1	**6V-2722**		TUBE-HEAT SHRINK (25.4-MM DIA) (0.1-M)	
		1	**3S-6050**	1	TERMINAL AS-BATTERY (NEGATIVE)	
		1	**1M-6119**	1	BOLT (5/16-18X1.375-IN)	
		1	**1M-6120**	1	NUT (5/16-18-THD)	
	6	1	**238-2501**	1	KNOB	
	7	1	**238-2528**	1	ROD	
	8	1	**251-0454**	1	CABLE AS	
		1	**1S-7251**	1	TERMINAL-CABLE (00-GA, 1/2-IN BOLT)	
E		1	**5P-0761**		CABLE (00-GA, RED) (238-CM)	
		1	**8N-1725**	1	COVER-TERMINAL (RED)	
		1	**8L-8413**	1	STRAP-CABLE	
D		1	**6V-2722**		TUBE-HEAT SHRINK (25.4-MM DIA) (0.1-M)	
		1	**3S-6049**	1	TERMINAL AS-BATTERY (POSITIVE)	
		1	**1M-6119**	1	BOLT (5/16-18X1.375-IN)	
		1	**1M-6120**	1	NUT (5/16-18-THD)	
Y	9	1	**262-2497**	1	SHEET AS-SOUND SUPPRESSION	529
	10	1	**262-2502**	1	SHEET AS	
		1	**262-2503**	1	LINER	
	11	1	**4K-8864**	1	CLIP	
M	12	1	**5C-7261**	1	NUT (M8X1.25-THD)	
	13	1	**6K-8178**	2	CLIP	
M	14	1	**8T-4133**	1	NUT (M10X1.5-THD)	
	15	1	**8T-4226**	1	WASHER-PLATED (10.5X45X3-MM THK)	
	16	1	**204-1673**	1	STRAP-CABLE	

D-ORDER BY THE METER
E-ORDER BY THE CENTIMETER
M-METRIC PART
Y-SEPARATE ILLUSTRATION

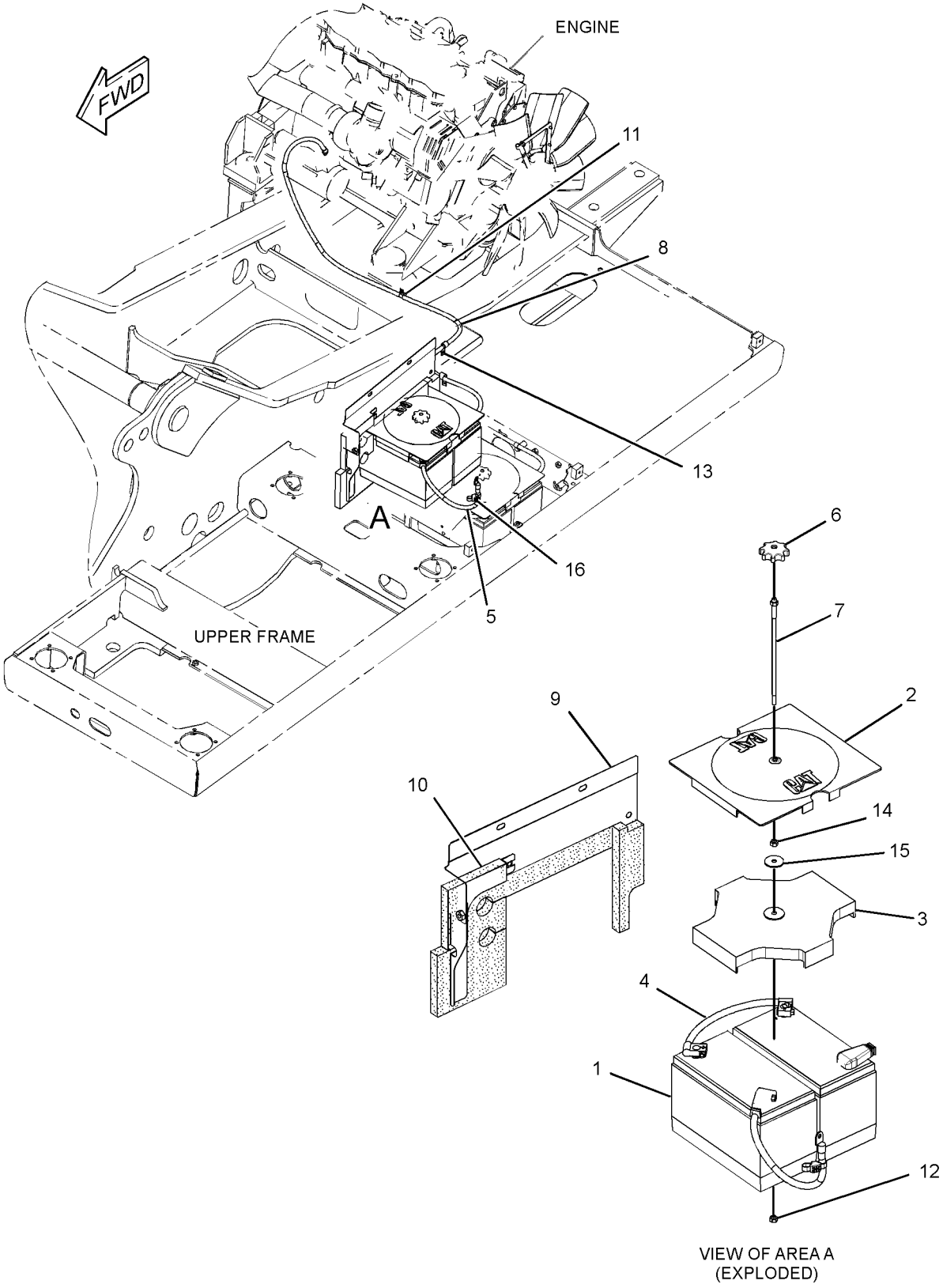

GRAPHIC #1 **<END>** g01395671

9W-0742 BLOCK GP-JUNCTION–BATTERY

S/N: DFP1-UP; CJX1-UP
PART OF 251-0441 WIRING GP-AUX START RECEPTACLE
AN ATTACHMENT

SMCS-7426 **i02236462**

NOTE	REF NO	GRAPHIC REF	PART NUMBER	QTY	PART NAME 1 2 3 4 5 6 (PRODUCT LEVEL)	SEE PAGE
	1	1	**8C-6358**	1	BLOCK GP-JUNCTION (BATTERY)	
	1A	1	**8T-3519**	3	BOLT-BRONZE (1/2-13X2-IN)	
BD	2	1	**6V-2722**		TUBE-HEAT SHRINK (25.4-MM DIA)	
	3	1	**7F-0560**	6	WASHER (0.516X0.938X0.101-IN THK)	
	4	1	**8T-3518**	6	NUT-FULL (1/2-13-THD)	

B-USE AS REQUIRED
D-ORDER BY THE METER

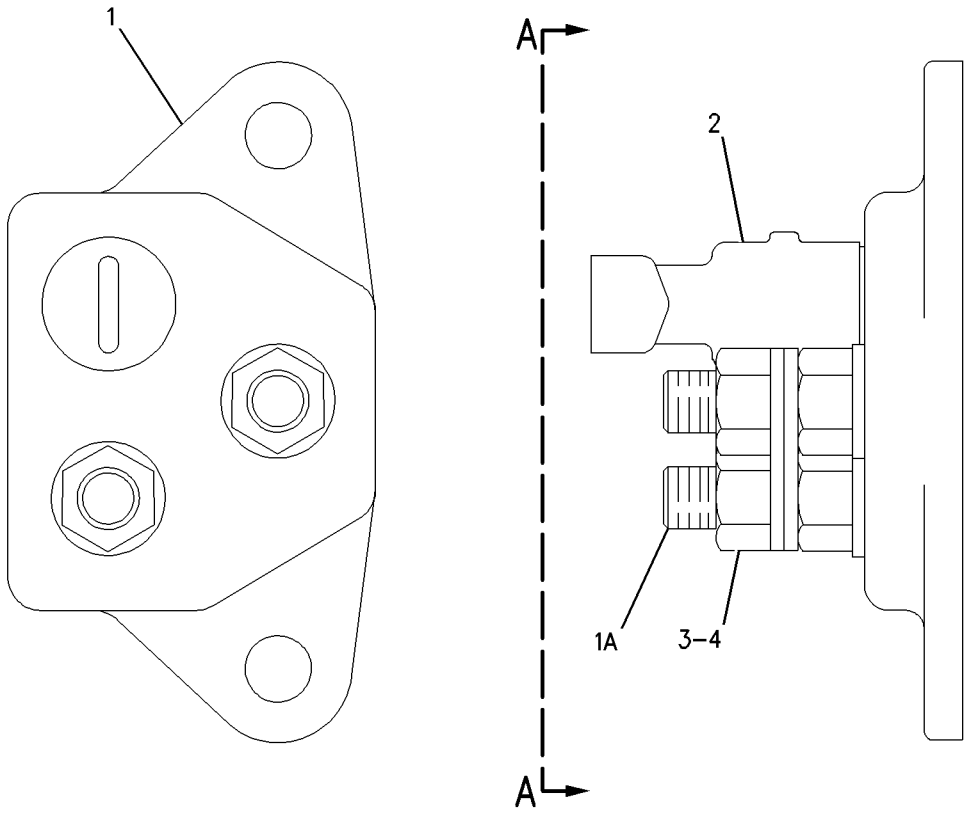

VIEW A-A

GRAPHIC #1 **<END>** g00650721

327-3329 CAMERA & MOUNTING GP

S/N: DFP1-UP; CJX1-UP
PART OF 329-6570 CAMERA & WIRING GP
AN ATTACHMENT

SMCS-7348 **i03114041**

NOTE	REF NO	GRAPHIC REF	PART NUMBER	QTY	PART NAME 1 2 3 4 5 6 (PRODUCT LEVEL)	SEE PAGE
Y	1	1	*313-7833*	1	CAMERA GP (WITH MOUNTING)	264
	2	1	**320-5396**	1	COVER	
	3	1	**8T-4121**	4	WASHER-HARD (11X21X2.5-MM THK)	
M	4	1	**8T-4137**	4	BOLT (M10X1.5X20-MM)	

M-METRIC PART
Y-SEPARATE ILLUSTRATION

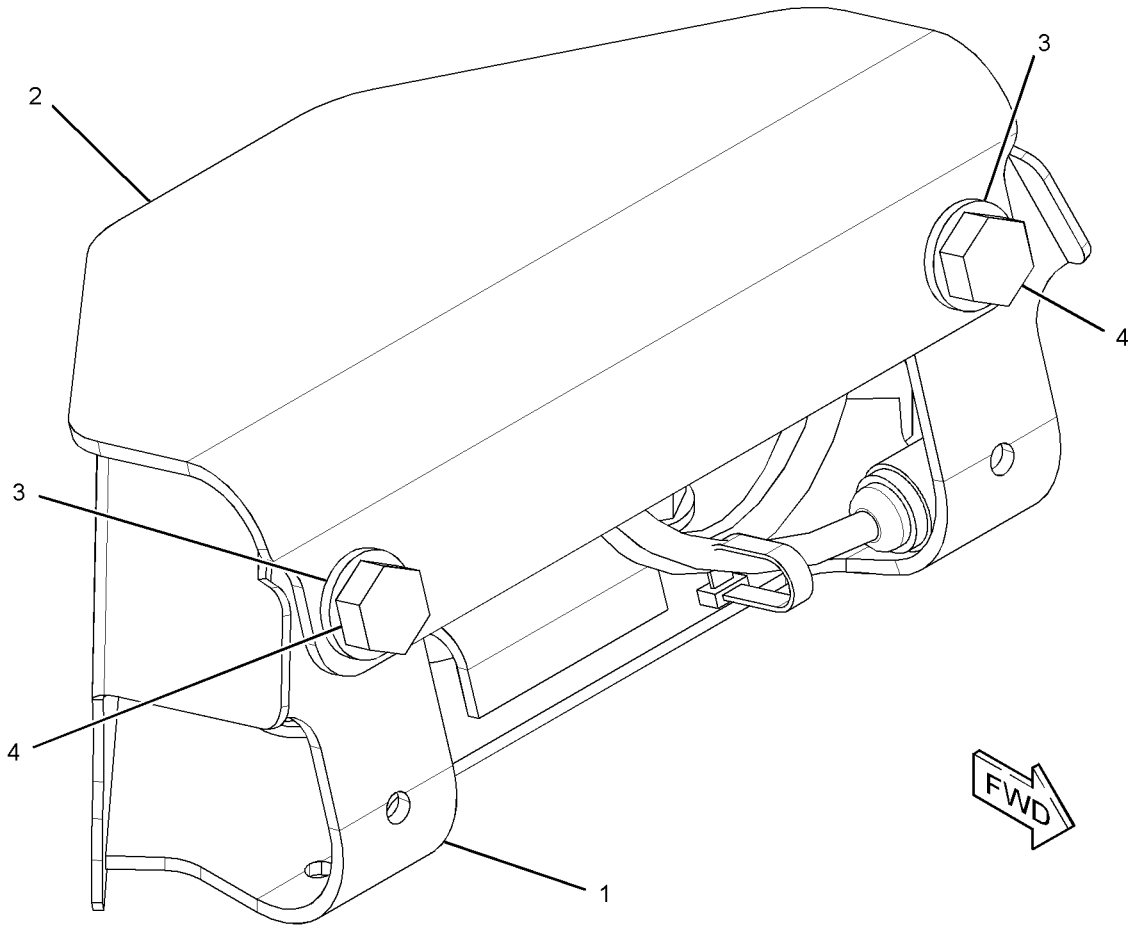

GRAPHIC #1 **<END>** g01609019

329-6570 CAMERA & WIRING GP

S/N: DFP1-UP; CJX1-UP
PART OF 329-6569 CAMERA & MIRROR AR
AN ATTACHMENT

SMCS-7348 **i03167783**

NOTE	PART NUMBER	QTY	PART NAME 1 2 3 4 5 6 (PRODUCT LEVEL)	SEE PAGE
Y	*327-3329*	1	CAMERA & MOUNTING GP	261
Y	*303-2787*	1	FILM GP	1526
Y	*328-0048*	1	WIRING GP-CAB	380
Y	*306-8720*	1	WIRING GP-CAMERA	381

Y-SEPARATE ILLUSTRATION

<END>

286-4271 CAMERA GP

S/N: DFP1-UP; CJX1-UP
PART OF 313-7833 CAMERA GP
AN ATTACHMENT

SMCS-7348 **i02957535**

NOTE	REF NO	GRAPHIC REF	PART NUMBER	QTY	PART NAME 1 2 3 4 5 6 (PRODUCT LEVEL)	SEE PAGE
					AVAILABLE REPAIR KIT(S):	
			251-4162	1	KIT-BRACKET (CAMERA)	
					(KIT INCLUDES BRACKET, BOLTS, LOCKNUTS, SOCKET BOLTS, GASKET, & ALLEN KEY)	

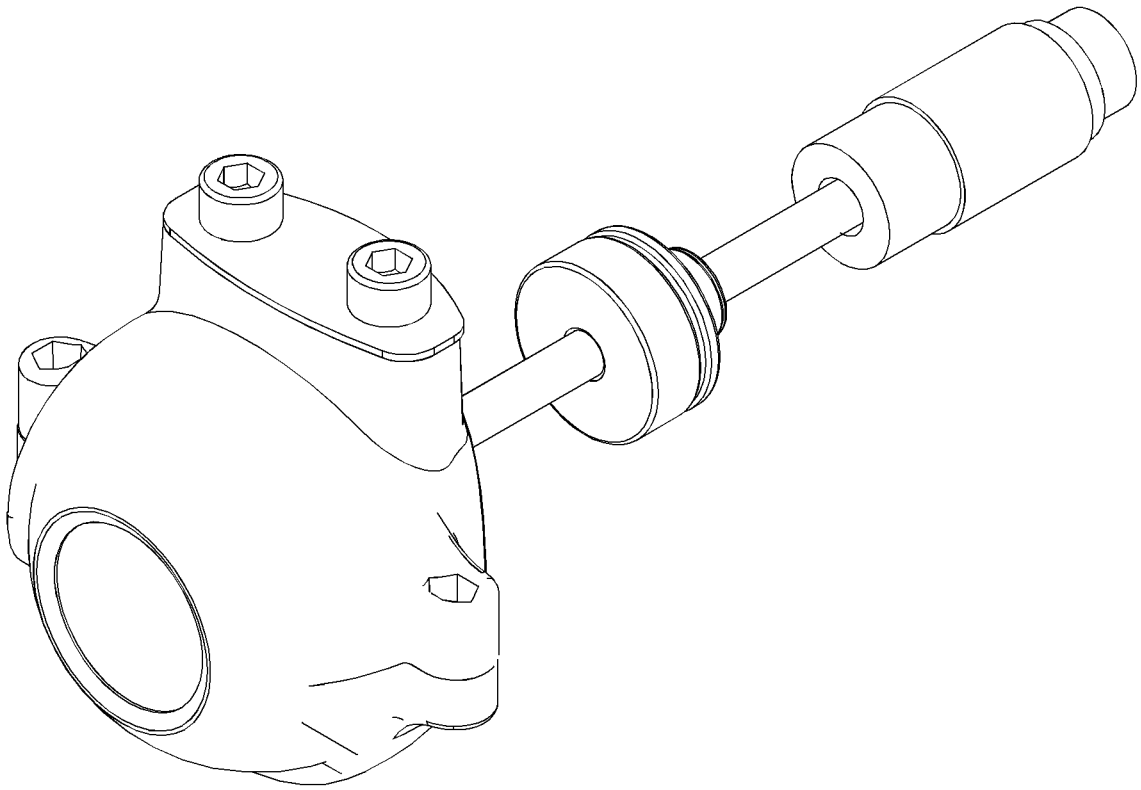

GRAPHIC #1 **<END>** g01356476

313-7833 CAMERA GP

S/N: DFP1-UP; CJX1-UP
PART OF 327-3329 CAMERA & MOUNTING GP
AN ATTACHMENT

SMCS-7348 **i03045209**

NOTE	REF NO	GRAPHIC REF	PART NUMBER	QTY	PART NAME 1 2 3 4 5 6 (PRODUCT LEVEL)	SEE PAGE
	1	1	**096-0061**	1	STRAP-CABLE	
Y	2	1	**286-4271**	1	CAMERA GP	263
	3	1	**320-5392**	1	BRACKET AS	
M	4	1	**8T-4970**	2	BOLT (M6X1X14-MM)	
	5	1	**9X-8256**	2	WASHER (6.6X12X2-MM THK)	

M-METRIC PART
Y-SEPARATE ILLUSTRATION

313-7833 **CAMERA GP** *(contd.)* **i03045209**

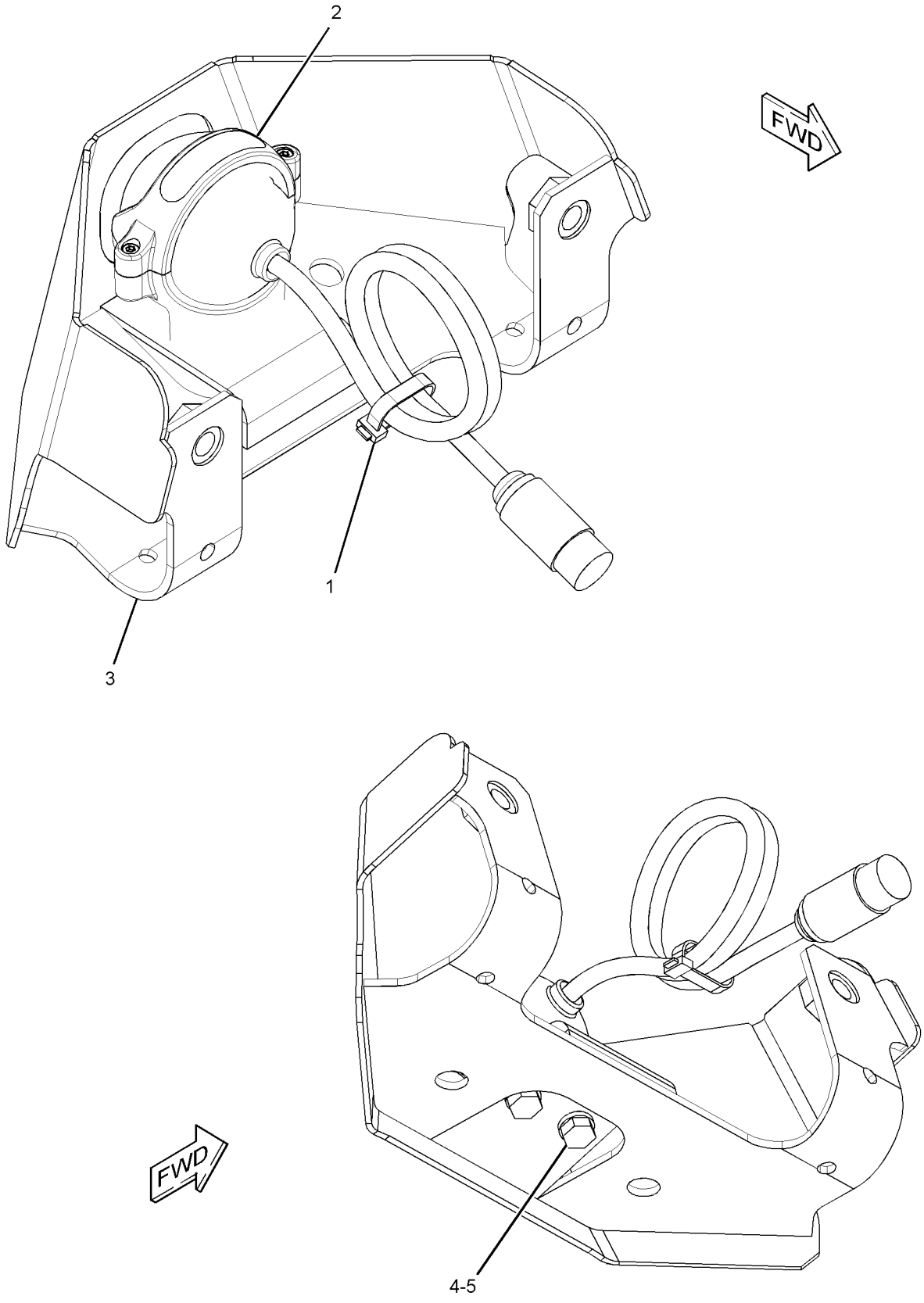

GRAPHIC #1 **<END>** g01515863

227-7751 CONTROL & MTG GP-COMMUNICATION—PRODUCT LINK

S/N: DFP1-UP; CJX1-UP

PART OF 240-3957 INSTALLATION AR-COMMUNICATION

AN ATTACHMENT

SMCS-7606 **i02211939**

NOTE	REF NO	GRAPHIC REF	PART NUMBER	QTY	PART NAME 1 2 3 4 5 6 (PRODUCT LEVEL)	SEE PAGE
	1	1	**242-9230**	1	RADIO GP-COMMUNICATION	
		1	**230-1340**		FILM-WARNING (PRODUCT LINK RADIO, U.S.)	
		1	**230-1341**		FILM-WARNING (PRODUCT LINK RADIO, INTL)	
	2	1	**260-2046**	1	BRACKET AS	
M	3	1	**8T-4138**	4	BOLT (M6X1X20-MM)	
M	4	1	**8T-4171**	2	BOLT (M6X1X12-MM)	
	5	1	**9X-8256**	6	WASHER (6.6X12X2-MM THK)	

M-METRIC PART

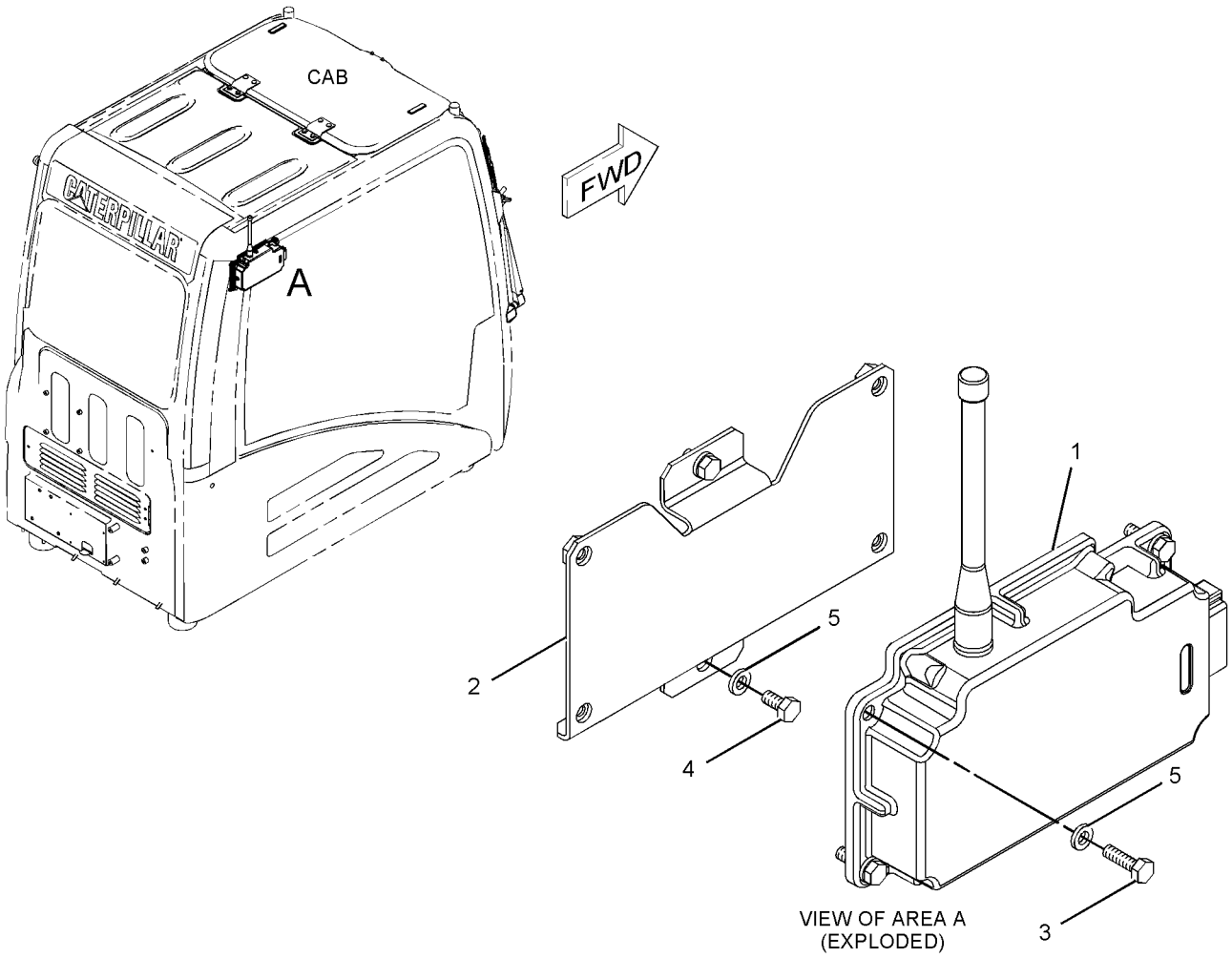

GRAPHIC #1 **<END>** g01126943

247-5284 CONTROL & MTG GP-COMMUNICATION–PRODUCT LINK

S/N: DFP1-UP; CJX1-UP
PART OF 264-8550 INSTALLATION AR-COMMUNICATION
AN ATTACHMENT

SMCS-7606 **i02518472**

NOTE	REF NO	GRAPHIC REF	PART NUMBER	QTY	PART NAME 1 2 3 4 5 6 (PRODUCT LEVEL)	SEE PAGE
	1	1	**8C-5608**	4	SPACER (6.5X9.5X25.4-MM THK)	
	2	1	**9X-9896**	8	MOUNT (ISOLATION)	
Y	3	1	**239-9954**	1	CONTROL GP-UNPROGRAMMED (PRODUCT LINK 300) (PRODUCT LINK 300)	275
	4	1	**260-2042**	1	BRACKET AS	
M	5	1	**8C-8451**	4	BOLT (M6X1X40-MM)	
	6	1	**9X-6165**	4	WASHER (6.5X22X2.5-MM THK)	

M-METRIC PART
Y-SEPARATE ILLUSTRATION

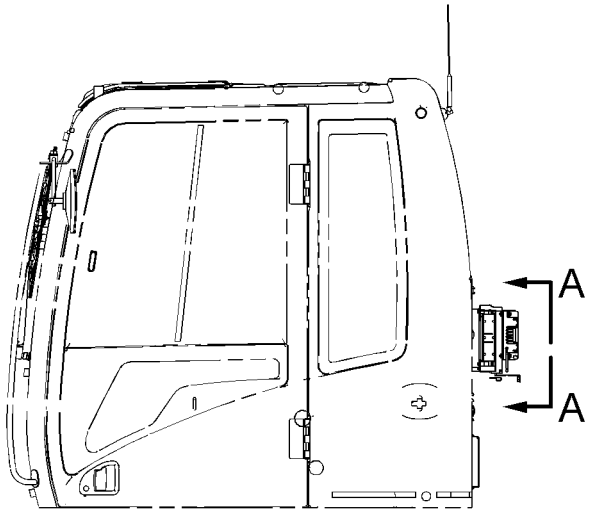

LEFT SIDE VIEW

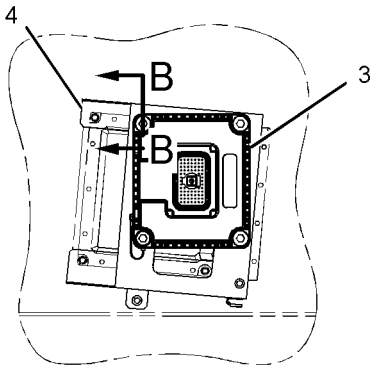

VIEW A-A

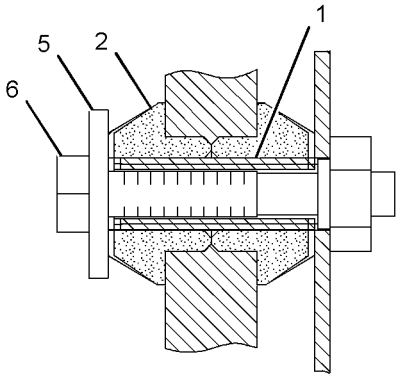

SECTION B-B

GRAPHIC #1 **<END>** g01126708

260-2207 CONTROL & MTG GP-COMMUNICATION–

PRODUCT LINK 121SR

S/N: DFP1-UP; CJX1-UP

PART OF 264-8550, 264-8551 INSTALLATION AR-COMMUNICATION

AN ATTACHMENT

SMCS-7606 **i03022070**

NOTE	REF NO	GRAPHIC REF	PART NUMBER	QTY	PART NAME 1 2 3 4 5 6 (PRODUCT LEVEL)	SEE PAGE
	1	2	**3S-2093**	7	STRAP-CABLE	
	2	2	**7K-1181**	3	STRAP-CABLE	
	3	2	**260-2229**	1	BRACKET AS	
Y	4	2	**263-9088**	1	RADIO GP-COMMUNICATION (PRODUCT LINK 121SR)	1434
	5	2	**111-4836**	1	CLIP	
	6	2	**8T-4121**	1	WASHER-HARD (11X21X2.5-MM THK)	
M	7	2	**8T-4137**	1	BOLT (M10X1.5X20-MM)	
M	8	2	**8T-4138**	4	BOLT (M6X1X20-MM)	
M	9	2	**8T-4183**	2	BOLT (M12X1.75X40-MM)	
	10	2	**8T-4223**	2	WASHER-HARD (13.5X25.5X3-MM THK)	
	11	2	**9X-8256**	4	WASHER (6.6X12X2-MM THK)	
	13	1	**230-1341**	1	FILM-WARNING (PRODUCT LINK RADIO, INTL)	
					–OR–	
		1	**230-1340**	1	FILM-WARNING (PRODUCT LINK RADIO, U.S.)	

M-METRIC PART
Y-SEPARATE ILLUSTRATION

REFER TO ALL ILLUSTRATIONS OF
THIS GROUP FOR AUXILIARY VIEWS

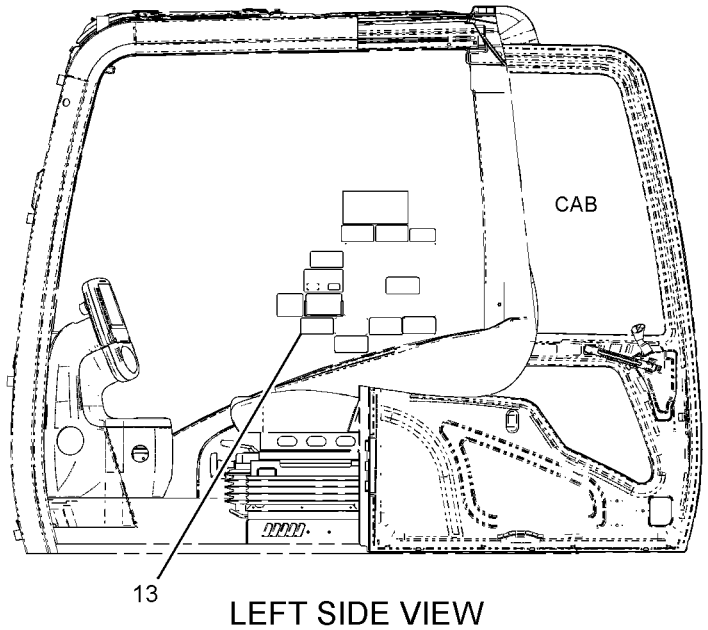

LEFT SIDE VIEW

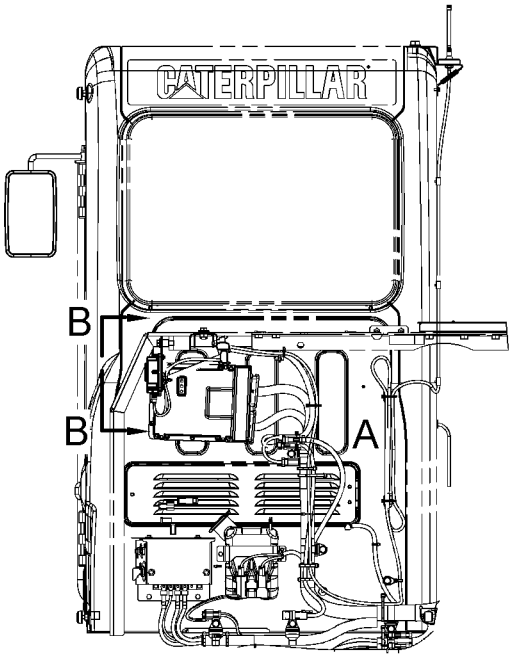

REAR VIEW

GRAPHIC #1 g01379414

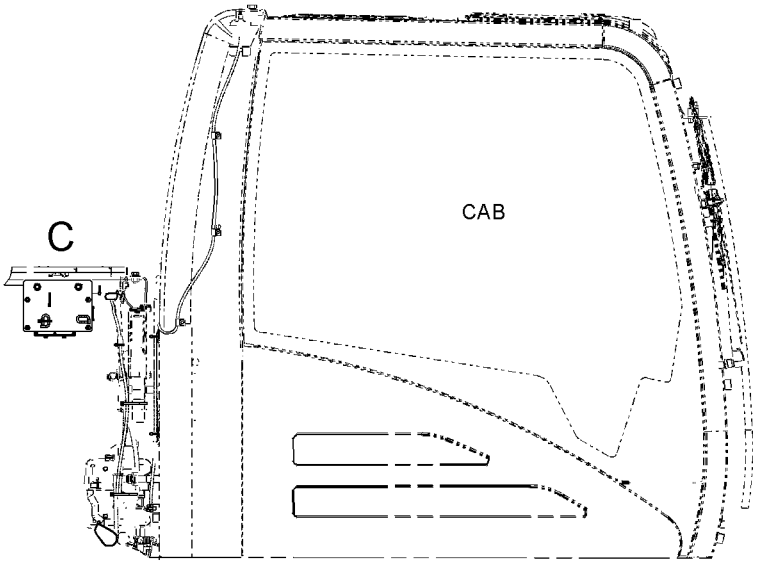

RIGHT SIDE VIEW

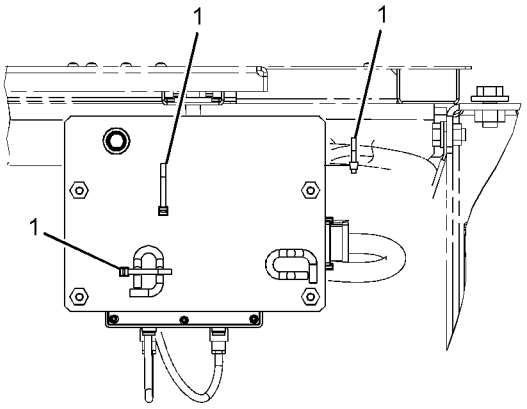

VIEW OF AREA C

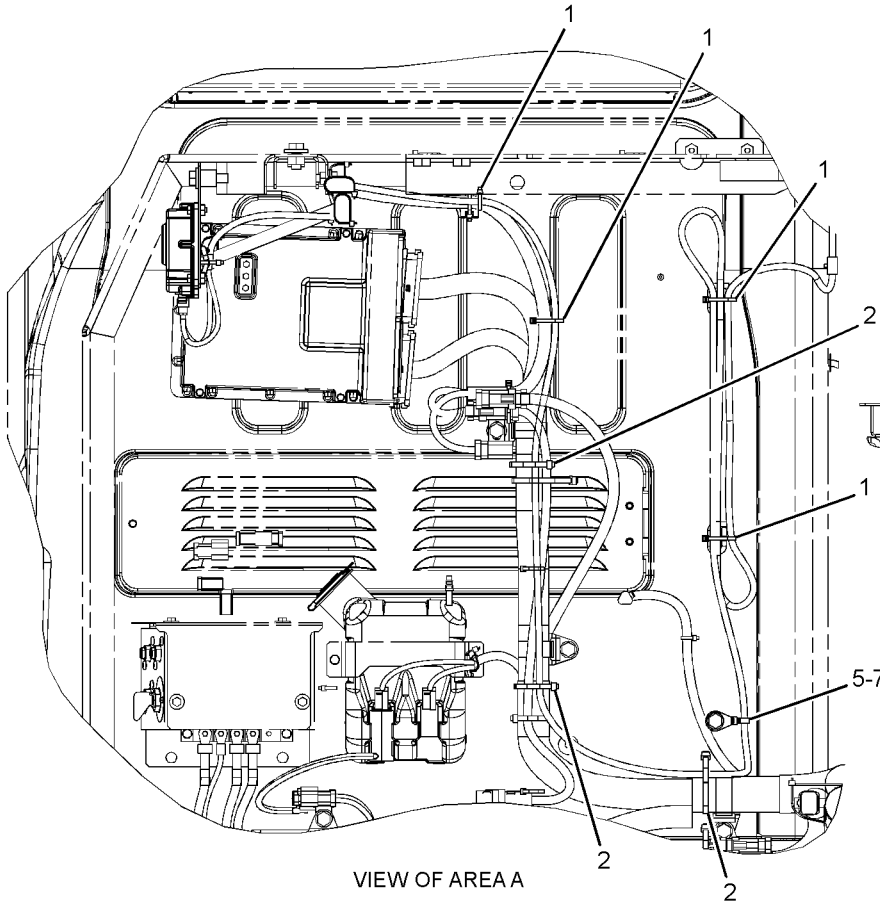

VIEW OF AREA A

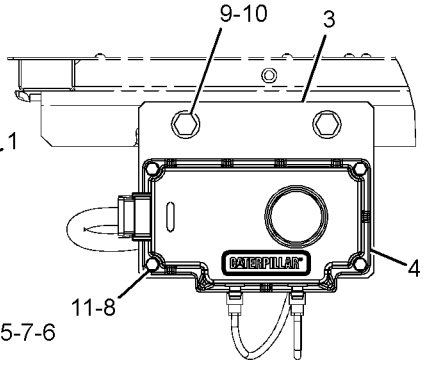

VIEW B-B

GRAPHIC #2 **<END>** g01379415

309-5842 CONTROL & MTG GP-COMMUNICATION–

PRODUCT LINK 321SR

S/N: DFP1-UP; CJX1-UP

PART OF 314-3529 INSTALLATION AR-COMMUNICATION

AN ATTACHMENT

SMCS-7606 **i02898031**

NOTE	REF NO	GRAPHIC REF	PART NUMBER	QTY	PART NAME 1 2 3 4 5 6 (PRODUCT LEVEL)	SEE PAGE
	1	1	**8C-5608**	4	SPACER (6.5X9.5X25.4-MM THK)	
	2	1	**9X-9896**	8	MOUNT (ISOLATION)	
	3	1	**260-2042**	1	BRACKET AS	
Y	4	1	*262-1421*	1	ELECTRONICS GP-COMMUNICATION (PRODUCT LINK 300)	276
M	5	1	**8C-8451**	4	BOLT (M6X1X40-MM)	
	6	1	**9X-6165**	4	WASHER (6.5X22X2.5-MM THK)	

M-METRIC PART
Y-SEPARATE ILLUSTRATION

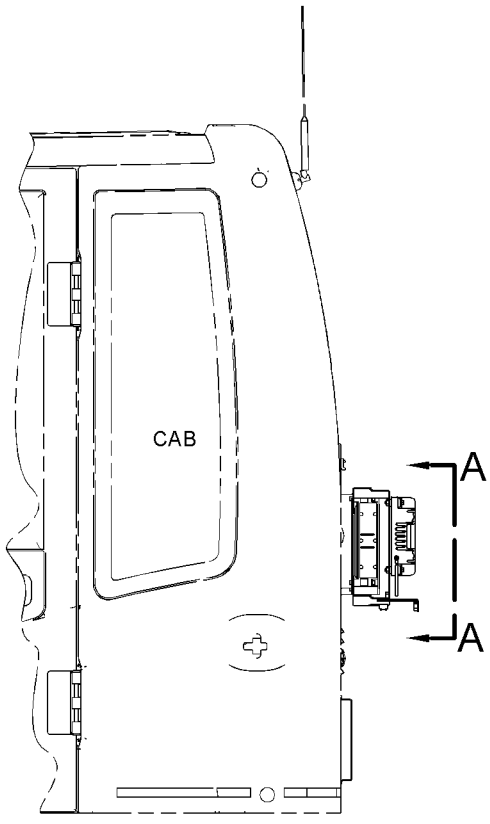

LEFT SIDE VIEW

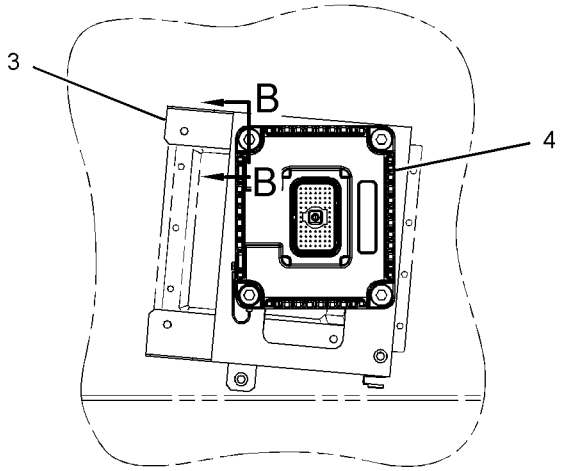

VIEW A-A

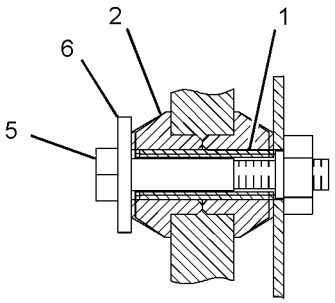

SECTION B-B

GRAPHIC #1 **<END>** g01447041

309-5885 CONTROL & MTG GP-COMMUNICATION–

PRODUCT LINK 121SR

S/N: DFP1-UP; CJX1-UP

PART OF 314-3529, 314-3530 INSTALLATION AR-COMMUNICATION

AN ATTACHMENT

SMCS-7606 **i03077049**

NOTE	REF NO	GRAPHIC REF	PART NUMBER	QTY	PART NAME 1 2 3 4 5 6 (PRODUCT LEVEL)	SEE PAGE
	1	1	**3S-2093**	7	STRAP-CABLE	
	2	1	**7K-1181**	4	STRAP-CABLE	
	3	1	**260-2229**	1	BRACKET AS	
Y	4	1	**263-9088**	1	RADIO GP-COMMUNICATION (PRODUCT LINK 121SR)	1434
	5	1	**111-4836**	1	CLIP	
	6	1	**8T-4121**	1	WASHER-HARD (11X21X2.5-MM THK)	
M	7	1	**8T-4137**	1	BOLT (M10X1.5X20-MM)	
M	8	1	**8T-4138**	4	BOLT (M6X1X20-MM)	
M	9	1	**8T-4183**	2	BOLT (M12X1.75X40-MM)	
	10	1	**8T-4223**	2	WASHER-HARD (13.5X25.5X3-MM THK)	
	11	1	**9X-8256**	4	WASHER (6.6X12X2-MM THK)	
	12	1	**230-1340**	1	FILM-WARNING (PRODUCT LINK RADIO, U.S.)	
					–OR–	
		1	**230-1341**	1	FILM-WARNING (PRODUCT LINK RADIO, INTL)	

M-METRIC PART
Y-SEPARATE ILLUSTRATION

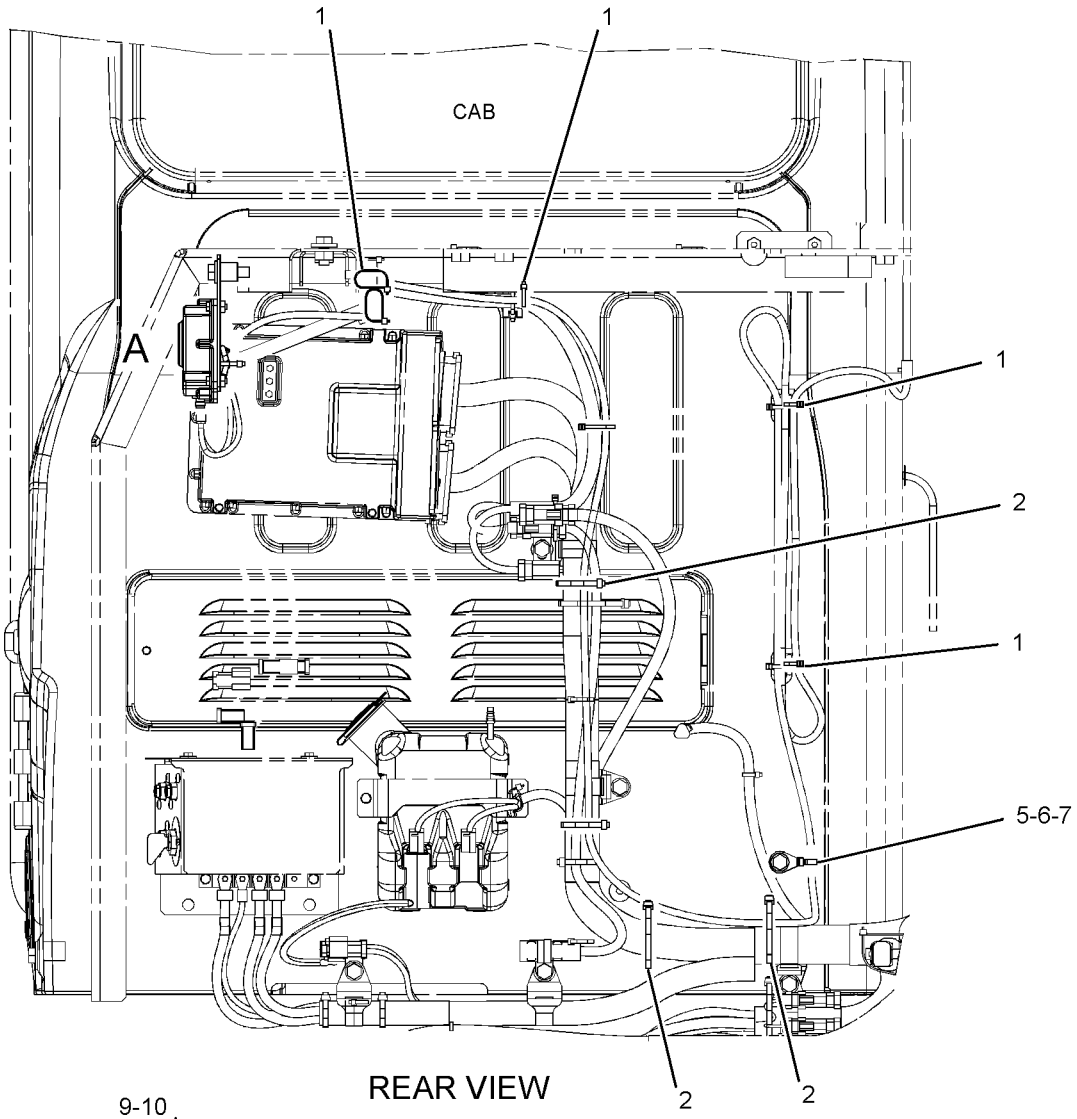

REAR VIEW

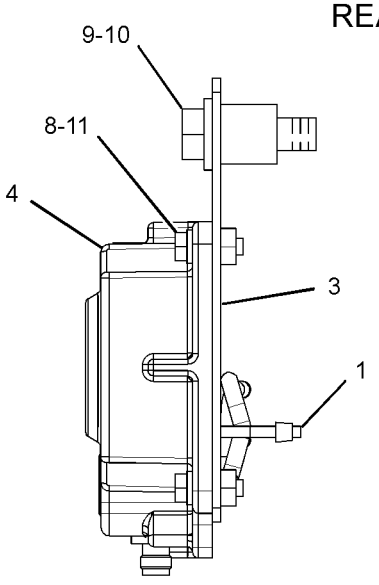

VIEW OF AREA A

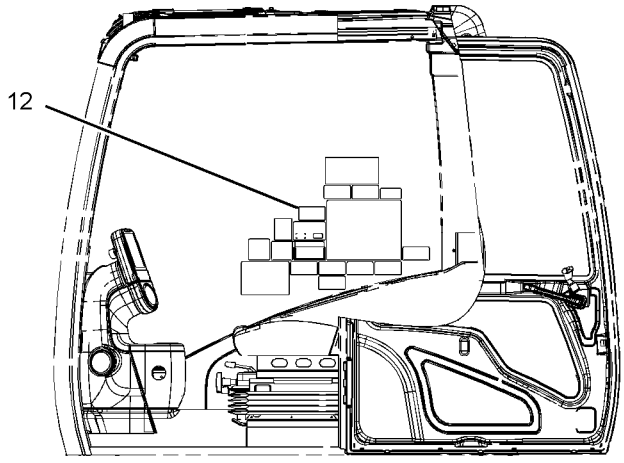

LEFT SIDE VIEW

GRAPHIC #1 **<END>** g01506563

241-7602 CONTROL & MTG GP-ENGINE ELEK

S/N: KHX1-UP
ADEM IV. FUEL COOLED
PART OF 235-8134, 235-8135, 270-2767, 270-2768, 290-0755, 290-0757, 290-0758
ENGINE AR-COMPLETE
ALSO AN ATTACHMENT

SMCS-1901 **i02616569**

NOTE	REF NO	GRAPHIC REF	PART NUMBER	QTY	PART NAME 1 2 3 4 5 6 (PRODUCT LEVEL)	SEE PAGE
	1	1	**8T-9655**	8	MOUNT-ISOLATION	
	2	1	**101-3128**	4	SPACER-SPECIAL	
	3	1	**130-5300**	1	CLIP	
M	4	1	**143-9392**	4	STUD (M8X1.25-THD)	
	6	1	**244-3168**	1	BRACKET AS	
R	7	1	**262-2879**	1	CONTROL GP-UNPROGRAMMED (ENGINE)	
M	8	1	**5P-7970**	1	NUT (M8X1.25-THD)	
	9	1	**9M-1974**	4	WASHER-HARD (8.8X16X2-MM THK)	
	10	1	**9N-0869**	6	WASHER-HARD (8.8X25.5X2-MM THK)	

M-METRIC PART
R-REMFG PART MAY BE AVAILABLE

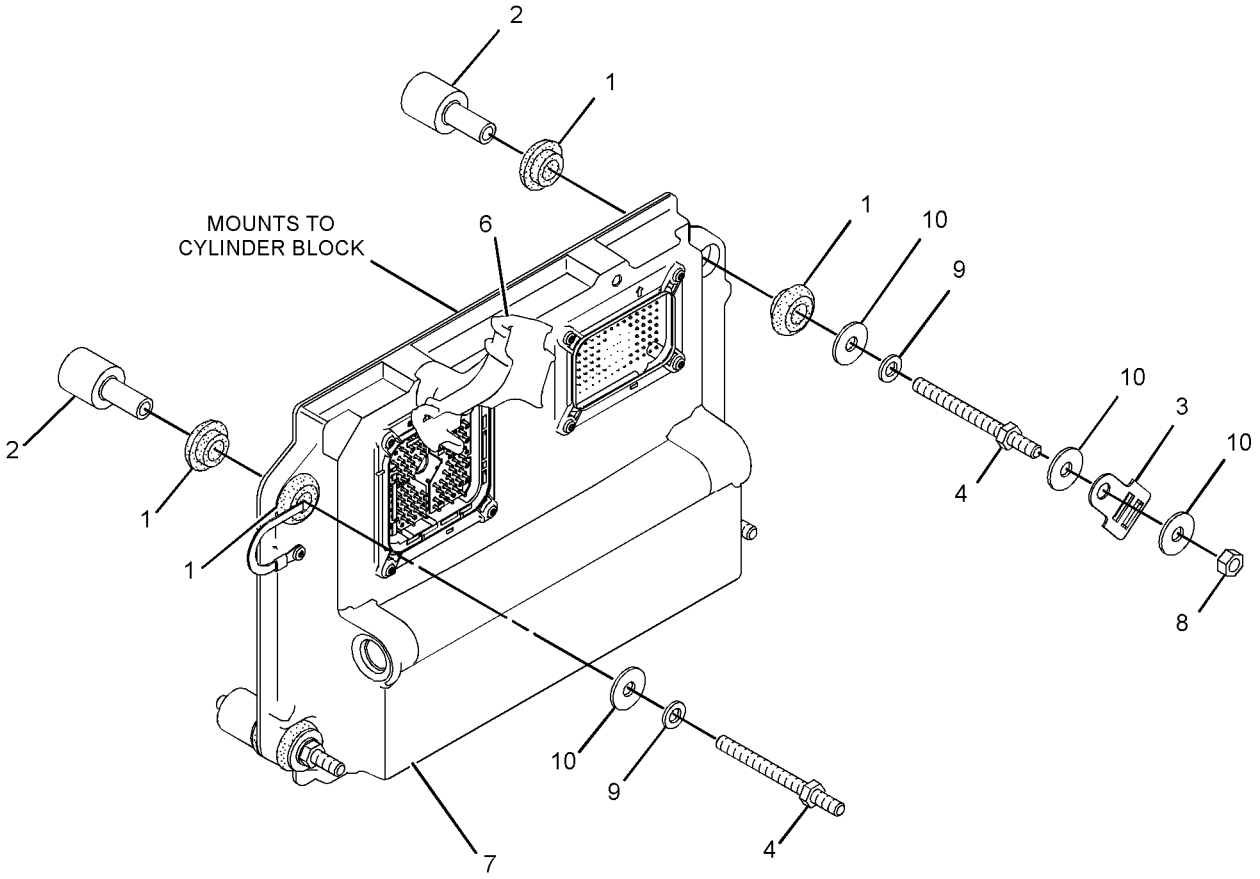

GRAPHIC #1 **<END>** g01311763

221-8872 CONTROL & MTG GP-MACHINE

S/N: DFP1-UP; CJX1-UP

PART OF 229-9072 OPERATOR AR

SMCS-1931, 7600 **i02348301**

NOTE	REF NO	GRAPHIC REF	PART NUMBER	QTY	PART NAME 1 2 3 4 5 6 (PRODUCT LEVEL)	SEE PAGE
	1	1	**221-8874**	1	CONTROL GP-UNPROGRAMMED	
M	2	1	**9X-2480**	4	BOLT (M6X1X45-MM)	
	3	1	**9X-8256**	4	WASHER (6.6X12X2-MM THK)	

M-METRIC PART

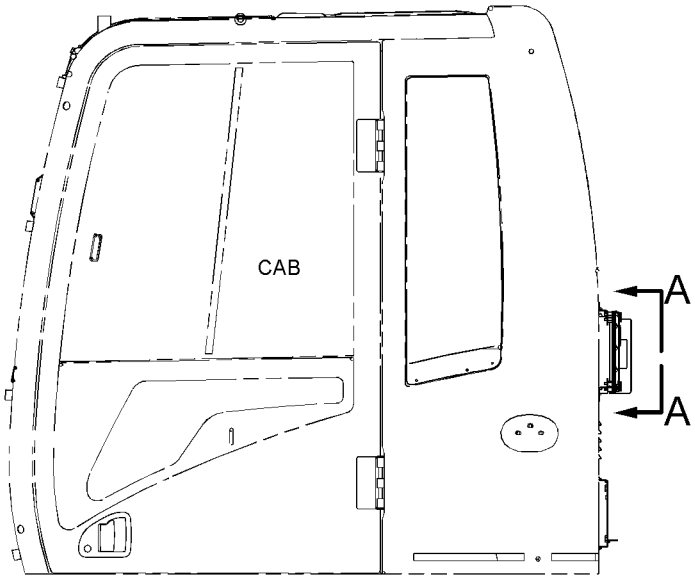

LEFT SIDE VIEW

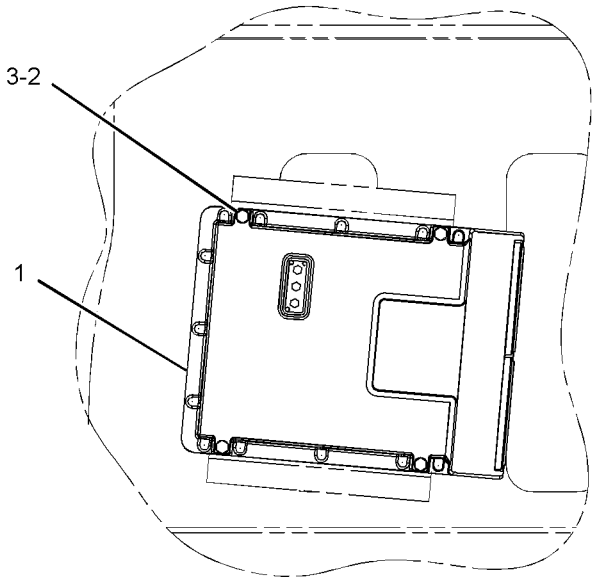

VIEW A-A

GRAPHIC #1 **<END>** g01150750

239-9954 CONTROL GP-UNPROGRAMMED

S/N: DFP1-UP; CJX1-UP
COMMUNICATION
PART OF 247-5284 CONTROL & MTG GP-COMMUNICATION
AN ATTACHMENT

SMCS-7610 **i02418848**

NOTE	REF NO	GRAPHIC REF	PART NUMBER	QTY	PART NAME 1 2 3 4 5 6 (PRODUCT LEVEL)	SEE PAGE
	1	1	**7X-6315**	1	STRAP AS-GROUND	
	2	1	**126-7574**	1	SCREW-PAN HEAD (8-32X9.52-MM)	
	3	1	**134-4126**	1	WASHER (4.52X8.28X0.76-MM THK)	

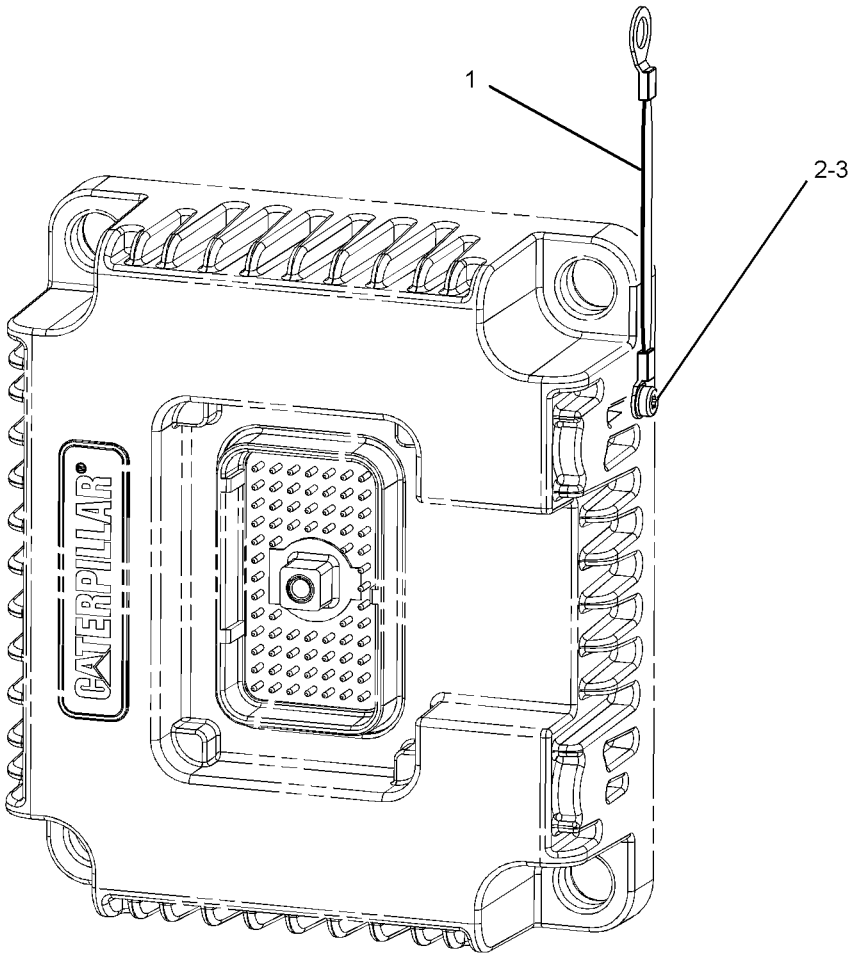

GRAPHIC #1 **<END>** g01213660

262-1421 ELECTRONICS GP-COMMUNICATION–

PRODUCT LINK 300

S/N: DFP1-UP; CJX1-UP

PART OF 309-5842 CONTROL & MTG GP-COMMUNICATION

AN ATTACHMENT

SMCS-7606, 7610, 7620 **i03136107**

NOTE	PART NUMBER	QTY	PART NAME 1 2 3 4 5 6 (PRODUCT LEVEL)	SEE PAGE
	330-3409	1	SOFTWARE GP-COMMUNICATION (PRODUCT LINK 300)	
			–OR–	
	330-3410	1	SERVICE GP-COMMUNICATION (PRODUCT LINK 300)	
			(OPTIONAL SERVICE REPLACEMENT)(INCLUDES CONTROL GP & SOFTWARE)	
	7X-6315	1	STRAP AS-GROUND	
	126-7574	1	SCREW-PAN HEAD (8-32X9.52-MM)	
	134-4126	1	WASHER (4.52X8.28X0.76-MM THK)	

<END>

262-2043 ELECTRONICS GP-COMMUNICATION–

PRODUCT LINK 300

S/N: DFP1-UP; CJX1-UP

PART OF 264-8550 INSTALLATION AR-COMMUNICATION

AN ATTACHMENT

SMCS-7606, 7610, 7620 **i02485254**

NOTE	PART NUMBER	QTY	PART NAME 1 2 3 4 5 6 (PRODUCT LEVEL)	SEE PAGE
	265-9642	1	SOFTWARE GP-COMMUNICATION (PRODUCT LINK 300)	
			(SOFTWARE ONLY)	
			–OR–	
	265-9643	1	SERVICE GP-COMMUNICATION (PRODUCT LINK 300)	
			(INCLUDES SOFTWARE)	
			(OPTIONAL SERVICE REPLACEMENT)	
	134-3379	1	FILM-IDENTIFICATION (ELECTRONIC CONTROL MODULE)	

<END>

227-7749 ELECTRONICS GP-MACHINE

S/N: DFP1-UP; CJX1-UP

PART OF 240-3961, 240-3962 GENERAL AR

SMCS-7610, 7620 **i03235941**

NOTE	PART NUMBER	QTY	PART NAME 1 2 3 4 5 6 (PRODUCT LEVEL)	SEE PAGE
	327-7488	1	SOFTWARE GP-MACHINE	
			–OR–	
	327-7489	1	SERVICE GP-MACHINE	
			(OPTIONAL SERVICE REPLACEMENT) (INCLUDES CONTROL GP & SOFTWARE)	

<END>

260-2056 ELECTRONICS GP-MACHINE–HIGH POWER

S/N: DFP1-UP; CJX1-UP
PART OF 264-8555, 275-3819 ENGINE AR
AN ATTACHMENT

SMCS-7610, 7620 **i03250689**

NOTE	PART NUMBER	QTY	PART NAME 1 2 3 4 5 6 (PRODUCT LEVEL)	SEE PAGE
	327-7490	1	SOFTWARE GP-MACHINE	
			–OR–	
	327-7491	1	SERVICE GP-MACHINE	
			(OPTIONAL SERVICE REPLACEMENT)(INCLUDES CONTROL GP & SOFTWARE)	

<END>

221-8861 ELECTRONICS GP-MONITOR

S/N: DFP1-UP; CJX1-UP
PART OF 240-3961, 240-3962 GENERAL AR

SMCS-7490, 7601, 7610, 7620 **i03250673**

NOTE	PART NUMBER	QTY	PART NAME 1 2 3 4 5 6 (PRODUCT LEVEL)	SEE PAGE
	327-7486	1	SOFTWARE GP-MONITOR	
			–OR–	
	327-7483	1	MONITOR GP-OPERATOR	
			(OPTIONAL SERVICE REPLACEMENT)(PREPROGRAMMED CONTROL GP)	

<END>

251-0436 FASTENER GP-WIRING HARNESS

S/N: DFP1-UP; CJX1-UP
PART OF 255-5824, 255-5826 CONTROL AR-AUXILIARY
AN ATTACHMENT

SMCS-1408, 7553 **i02536437**

NOTE	REF NO	GRAPHIC REF	PART NUMBER	QTY	PART NAME 1 2 3 4 5 6 (PRODUCT LEVEL)	SEE PAGE
	1	1	**3S-2093**	1	STRAP-CABLE	
	2	1	**116-0118**	1	CLIP	
	3	1	**156-6175**	1	CLIP	
M	4	1	**7X-2621**	1	BOLT (M10X1.5X12-MM)	
	5	1	**8T-4121**	1	WASHER-HARD (11X21X2.5-MM THK)	
M	6	1	**8T-4171**	1	BOLT (M6X1X12-MM)	
	7	1	**9X-8256**	1	WASHER (6.6X12X2-MM THK)	
	8	1	**7K-1181**	1	STRAP-CABLE	

M-METRIC PART

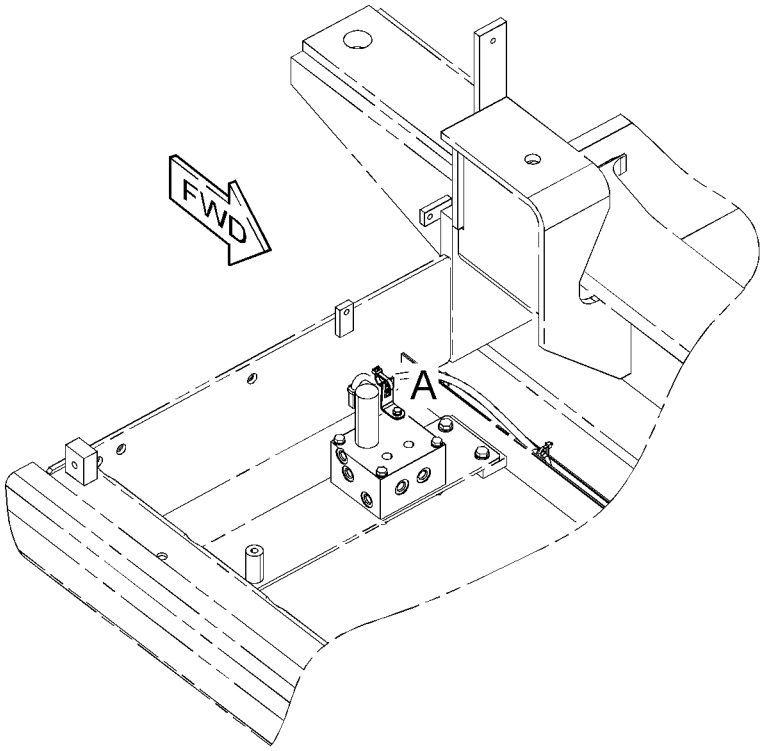

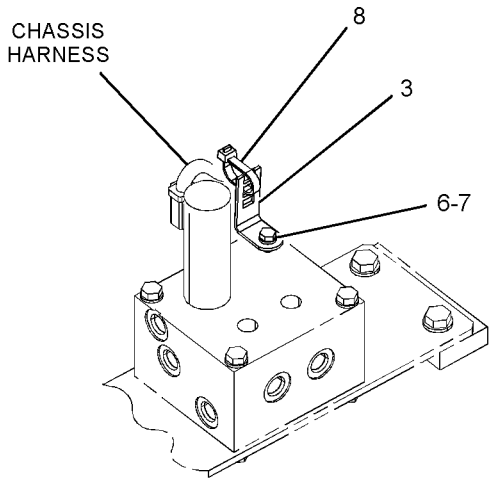

VIEW OF AREA A

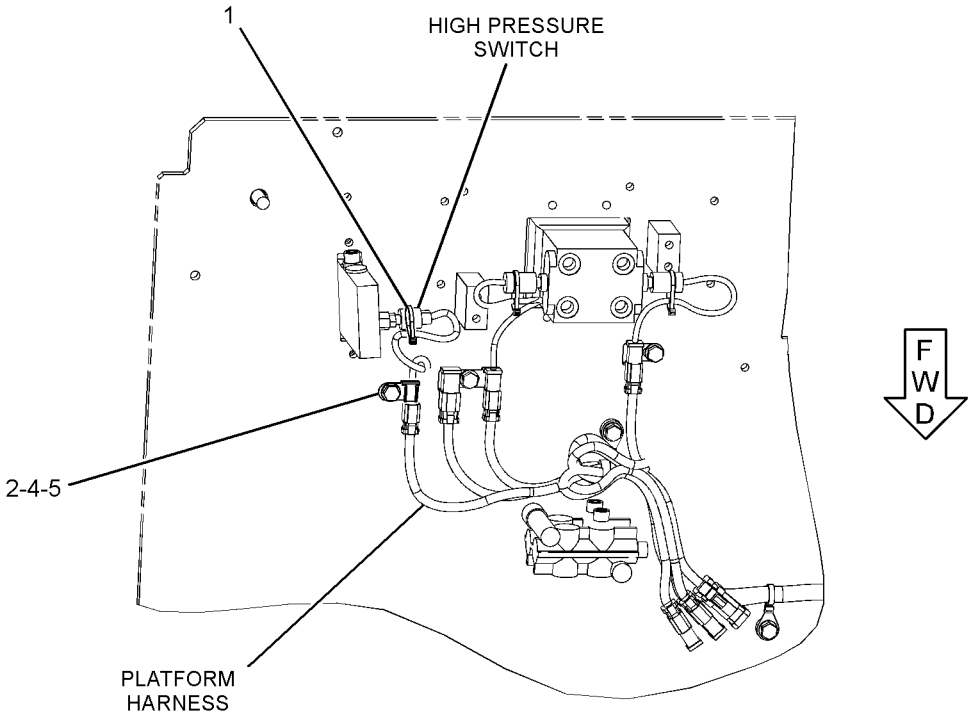

BOTTOM VIEW

GRAPHIC #1 **<END>** g01273033

251-0526 FASTENER GP-WIRING HARNESS–STRAIGHT TRAVEL

S/N: DFP1-UP; CJX1-UP
PART OF 259-7177 PEDAL AR-AUXILIARY
AN ATTACHMENT

SMCS-1408, 7553 **i02344768**

NOTE	REF NO	GRAPHIC REF	PART NUMBER	QTY	PART NAME 1 2 3 4 5 6 (PRODUCT LEVEL)	SEE PAGE
	1	1	**3S-2093**	1	STRAP-CABLE	
	2	1	**116-0118**	1	CLIP	
M	3	1	**7X-2621**	1	BOLT (M10X1.5X12-MM)	
	4	1	**8T-4121**	1	WASHER-HARD (11X21X2.5-MM THK)	

M-METRIC PART

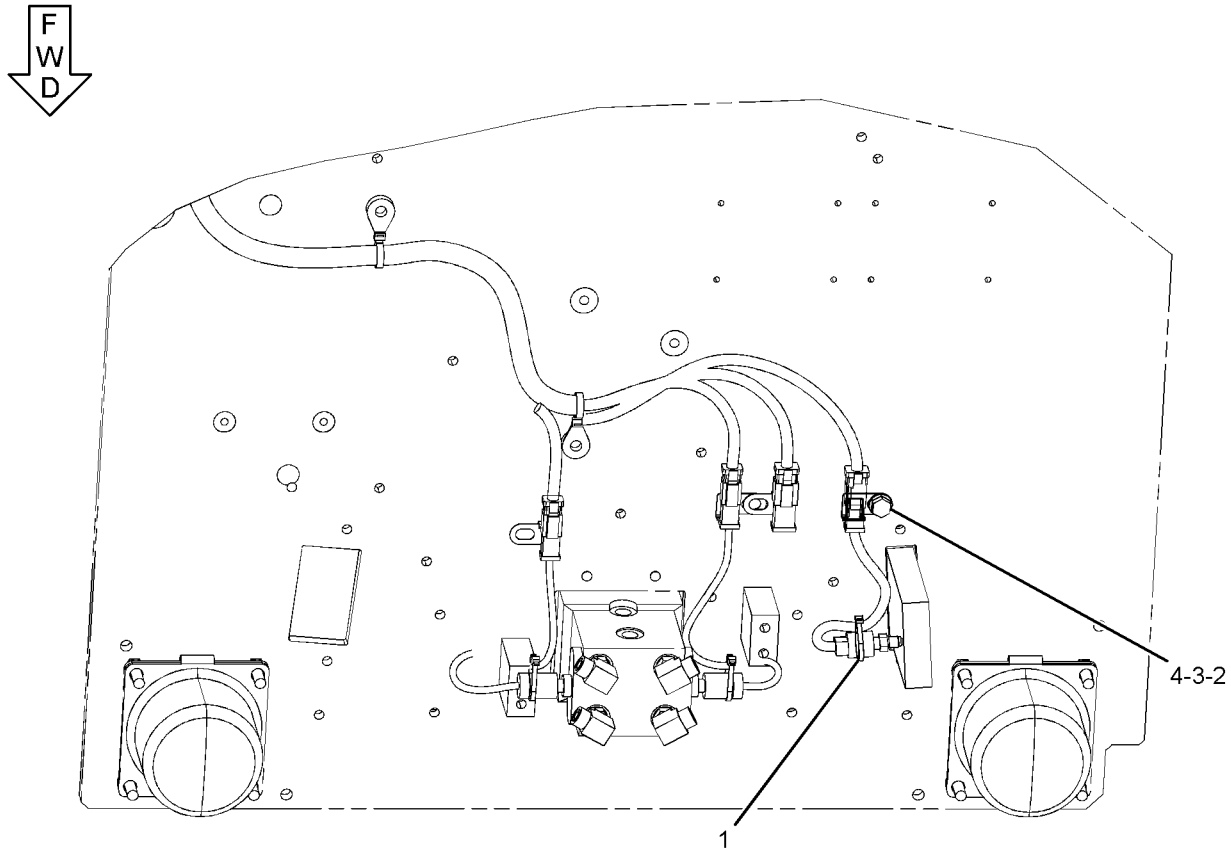

BOTTOM VIEW

GRAPHIC #1 **<END>** g01190326

259-5237 FASTENER GP-WIRING HARNESS–HEAVY LIFT

S/N: DFP1-UP; CJX1-UP
PART OF 247-7462 VALVE & LINES GP-HEAVY LIFT
AN ATTACHMENT

SMCS-1408, 7553 **i02408058**

NOTE	REF NO	GRAPHIC REF	PART NUMBER	QTY	PART NAME 1 2 3 4 5 6 (PRODUCT LEVEL)	SEE PAGE
	1	1	**7I-2673**	1	STRAP - CABLE	

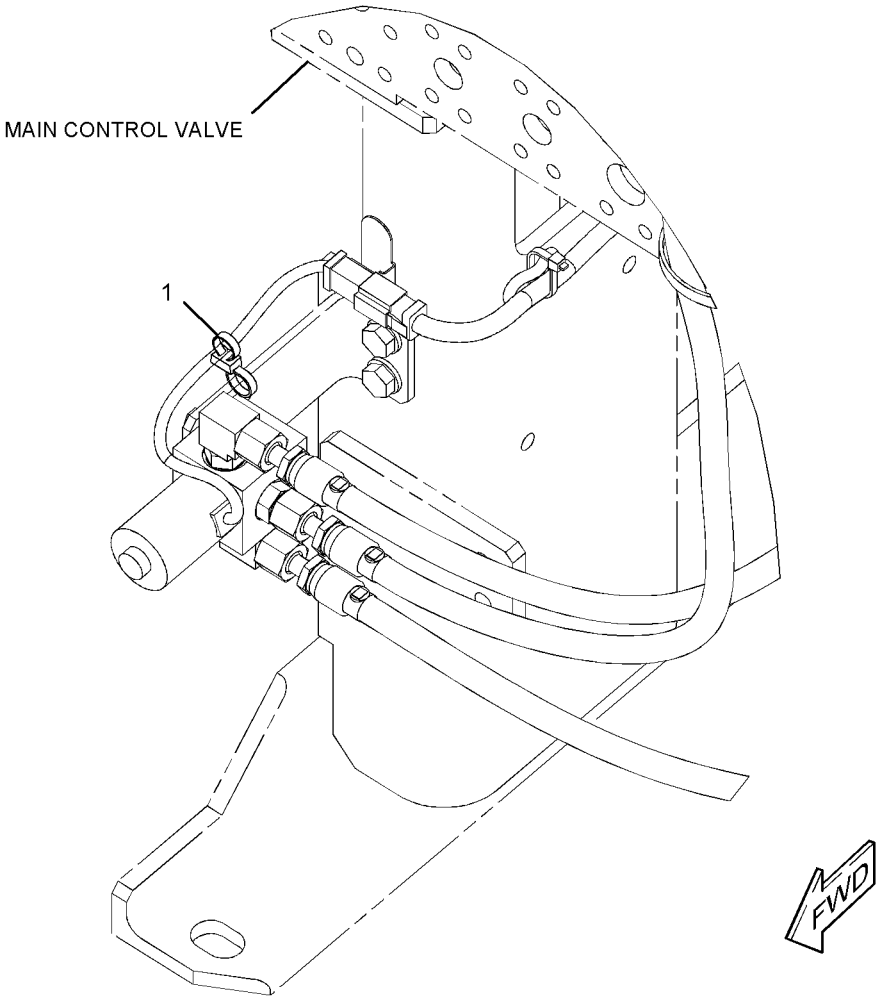

GRAPHIC #1 **<END>** g01200808

292-0276 GRADE CONTROL AR-SATELLITE–ACCUGRADE

S/N: DFP1-UP; CJX1-UP
FIELD INSTALLATION

SMCS-7220 **i03177165**

NOTE	PART NUMBER	QTY	PART NAME 1 2 3 4 5 6 (PRODUCT LEVEL)	SEE PAGE
Y	*286-0134*	1	DISPLAY GP-MONITOR (CD700)	1346
Y	*297-5592*	1	MOUNTING GP-GRADE CONTROL	299
Y	*292-0304*	1	MOUNTING GP-MONITOR	1428
Y	*259-4746*	1	MOUNTING GP-RADIO	1431
Y	*292-0291*	1	RECEIVER GP-SATELLITE (DUAL GNSS, MS990)	312
Y	*297-5594*	1	SENSOR AR-GRADE (ANGLE SENSOR)	312
Y	*204-3461*	1	WIRING GP-GRADE CONTROL	426
	293-6883	2	MAST AS	

Y-SEPARATE ILLUSTRATION

<END>

240-3957 INSTALLATION AR-COMMUNICATION

S/N: DFP1-UP; CJX1-UP
AN ATTACHMENT

SMCS-7606 **i02216194**

NOTE	PART NUMBER	QTY	PART NAME 1 2 3 4 5 6 (PRODUCT LEVEL)	SEE PAGE
Y	*227-7751*	1	CONTROL & MTG GP-COMMUNICATION (PRODUCT LINK)	266
Y	*259-4938*	1	WIRING GP-COMMUNICATION (PRODUCT LINK)	394

Y-SEPARATE ILLUSTRATION

<END>

264-8550 INSTALLATION AR-COMMUNICATION–

PRODUCT LINK 321SR, 121SR
S/N: DFP1-UP; CJX1-UP
AN ATTACHMENT

SMCS-7606 **i02905628**

NOTE	PART NUMBER	QTY	PART NAME 1 2 3 4 5 6 (PRODUCT LEVEL)	SEE PAGE
Y	*247-5284*	1	CONTROL & MTG GP-COMMUNICATION (PRODUCT LINK 300)	267
Y	*260-2207*	1	CONTROL & MTG GP-COMMUNICATION (PRODUCT LINK 121SR)	268
Y	*262-2043*	1	ELECTRONICS GP-COMMUNICATION (PRODUCT LINK 300)	276
Y	*290-9467*	1	MOUNTING GP-ANTENNA (PRODUCT LINK, ANTENNA)	1427
Y	*267-7751*	1	WIRING GP-COMMUNICATION (PRODUCT LINK 321SR)	396

Y-SEPARATE ILLUSTRATION

<END>

264-8551 INSTALLATION AR-COMMUNICATION–
PRODUCT LINK 121SR
S/N: DFP1-UP; CJX1-UP
AN ATTACHMENT

SMCS-7606 **i02905662**

NOTE	PART NUMBER	QTY	PART NAME 1 2 3 4 5 6 (PRODUCT LEVEL)	SEE PAGE
Y	*260-2207*	1	CONTROL & MTG GP-COMMUNICATION (PRODUCT LINK 121SR)	268
Y	*290-9467*	1	MOUNTING GP-ANTENNA (PRODUCT LINK, ANTENNA)	1427
Y	*267-7752*	1	WIRING GP-COMMUNICATION (PRODUCT LINK 121SR)	398
Y-SEPARATE ILLUSTRATION				

<END>

314-3529 INSTALLATION AR-COMMUNICATION–
PRODUCT LINK 321SR
S/N: DFP1-UP; CJX1-UP
AN ATTACHMENT

SMCS-7606 **i03077051**

NOTE	PART NUMBER	QTY	PART NAME 1 2 3 4 5 6 (PRODUCT LEVEL)	SEE PAGE
Y	*309-5789*	1	ANTENNA & MOUNTING GP	1276
Y	*309-5842*	1	CONTROL & MTG GP-COMMUNICATION (PRODUCT LINK 321SR)	270
Y	*309-5885*	1	CONTROL & MTG GP-COMMUNICATION (PRODUCT LINK 121SR)	271
Y	*267-7751*	1	WIRING GP-COMMUNICATION (PRODUCT LINK 321SR)	396
Y-SEPARATE ILLUSTRATION				

<END>

314-3530 INSTALLATION AR-COMMUNICATION–
PRODUCT LINK 121SR
S/N: DFP1-UP; CJX1-UP
AN ATTACHMENT

SMCS-7606 **i03087020**

NOTE	PART NUMBER	QTY	PART NAME 1 2 3 4 5 6 (PRODUCT LEVEL)	SEE PAGE
Y	*309-5789*	1	ANTENNA & MOUNTING GP	1276
Y	*309-5885*	1	CONTROL & MTG GP-COMMUNICATION	271
Y	*267-7752*	1	WIRING GP-COMMUNICATION (PRODUCT LINK 121SR)	398
Y-SEPARATE ILLUSTRATION				

<END>

227-7581 INSTALLATION GP-SECURITY

S/N: DFP1-UP; CJX1-UP

AN ATTACHMENT

SMCS-7631 **i02397785**

NOTE	REF NO	GRAPHIC REF	PART NUMBER	QTY	PART NAME 1 2 3 4 5 6 (PRODUCT LEVEL)	SEE PAGE
	1	1	**8C-5607**	4	MOUNT-ISOLATION	
	2	1	**8C-5608**	2	SPACER (6.5X9.5X25.4-MM THK)	
	3	1	**206-5162**	2	KEY AS-ELECTRONIC (SECURITY)	
	4	1	**218-0404**	1	MODULE GP-INTERFACE (KEY)	
	5	1	**219-6314**	2	KEY RING (IDENTIFICATION)	
Y	6	1	*251-0544*	1	PANEL GP-SWITCH (ENGINE SPEED, START)	307
M	7	1	**7X-2533**	2	BOLT (M6X1X35-MM)	
	8	1	**9X-6165**	2	WASHER (6.5X22X2.5-MM THK)	

M-METRIC PART
Y-SEPARATE ILLUSTRATION

227-7581 **INSTALLATION GP-SECURITY** *(contd.)* **i02397785**

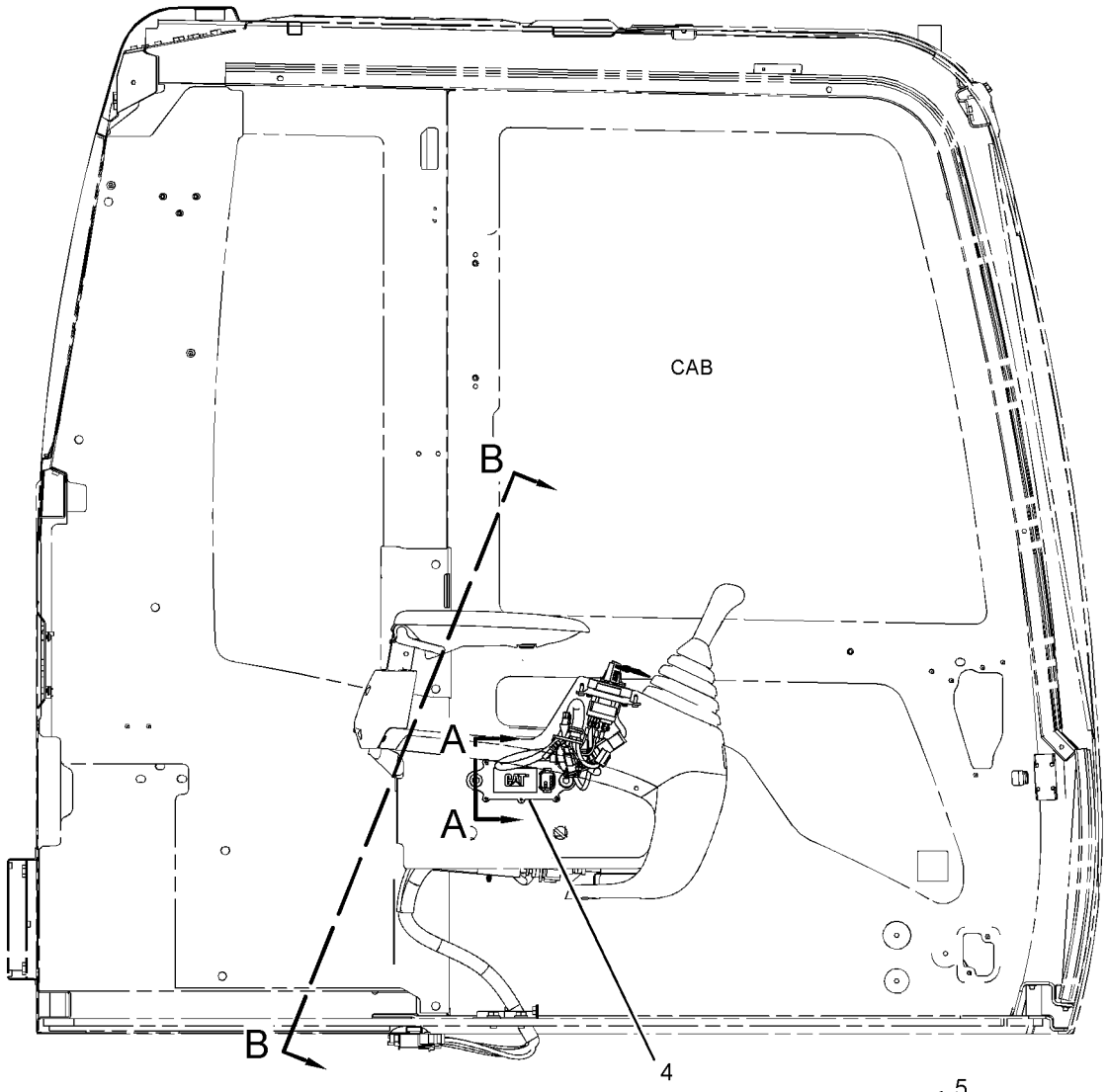

RIGHT SIDE VIEW

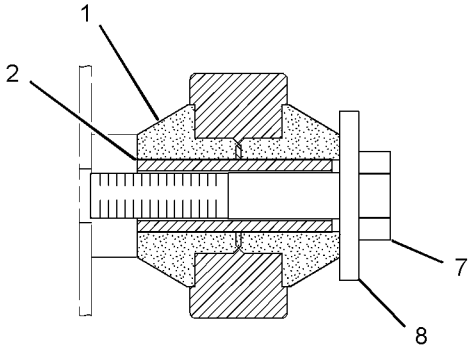

SECTION A-A

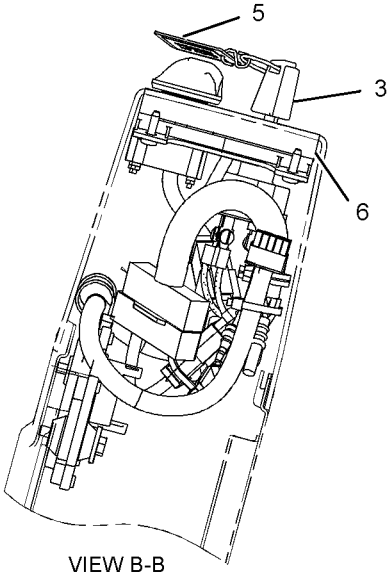

VIEW B-B

GRAPHIC #1 **<END>** g01196691

291-7705 KIT-BRACKET—PRODUCT LINK 321SR

S/N: DFP1-UP; CJX1-UP

FIELD INSTALLATION

SMCS-0635, 7606 **i02894738**

NOTE	PART NUMBER	QTY	PART NAME 1 2 3 4 5 6 (PRODUCT LEVEL)	SEE PAGE
	260-2042	1	BRACKET AS	
	260-2229	1	BRACKET AS	
	270-5455	1	BRACKET AS	
	291-7700	1	HARNESS AS-WIRING	
M	**8T-4171**	1	BOLT (M6X1X12-MM)	
M	**8T-4179**	4	BOLT (M12X1.75X20-MM)	
M	**8T-4183**	2	BOLT (M12X1.75X40-MM)	
M	**8T-4190**	1	BOLT (M16X2X25-MM)	
	270-5433	1	BRACKET	
	096-3872	1	GROMMET	
	9X-8256	1	WASHER (6.6X12X2-MM THK)	
	9X-8257	1	WASHER (17.5X30X3.5-MM THK)	
	8T-4223	4	WASHER-HARD (13.5X25.5X3-MM THK)	

M-METRIC PART

<END>

153-2521 LAMP GP-FLOOD

S/N: DFP1-UP; CJX1-UP
24-VOLT
PART OF 238-2346, 251-0611, 251-0612 LIGHTING GP-FLOOD
AN ATTACHMENT

SMCS-1434 **i02743410**

NOTE	REF NO	GRAPHIC REF	PART NUMBER	QTY	PART NAME 1 2 3 4 5 6 (PRODUCT LEVEL)	SEE PAGE
M	1	1	**6V-5210**	2	SCREW-MACHINE (M4X0.7X10-MM)	
	2	1	**3B-4501**	2	LOCKWASHER	
	3	1	**9X-3463**	1	LAMP-HALOGEN (24-VOLT, 65-WATT)	
	4	1	**8T-4223**	1	WASHER-HARD (13.5X25.5X3-MM THK)	
M	5	1	**8T-4244**	1	NUT (M12X1.75-THD)	
M	6	1	**174-7791**	1	SCREW-TAPPING	
	7	1	**5C-2889**	1	LOCKWASHER	
	8	1	**170-6993**	1	COVER	
M	9	1	**180-3861**	4	SCREW-TAPPING	
	10	1	**170-9417**	1	LENS AS (FLOODLIGHT)	
	11	1	**170-9418**	1	BAND	

M-METRIC PART

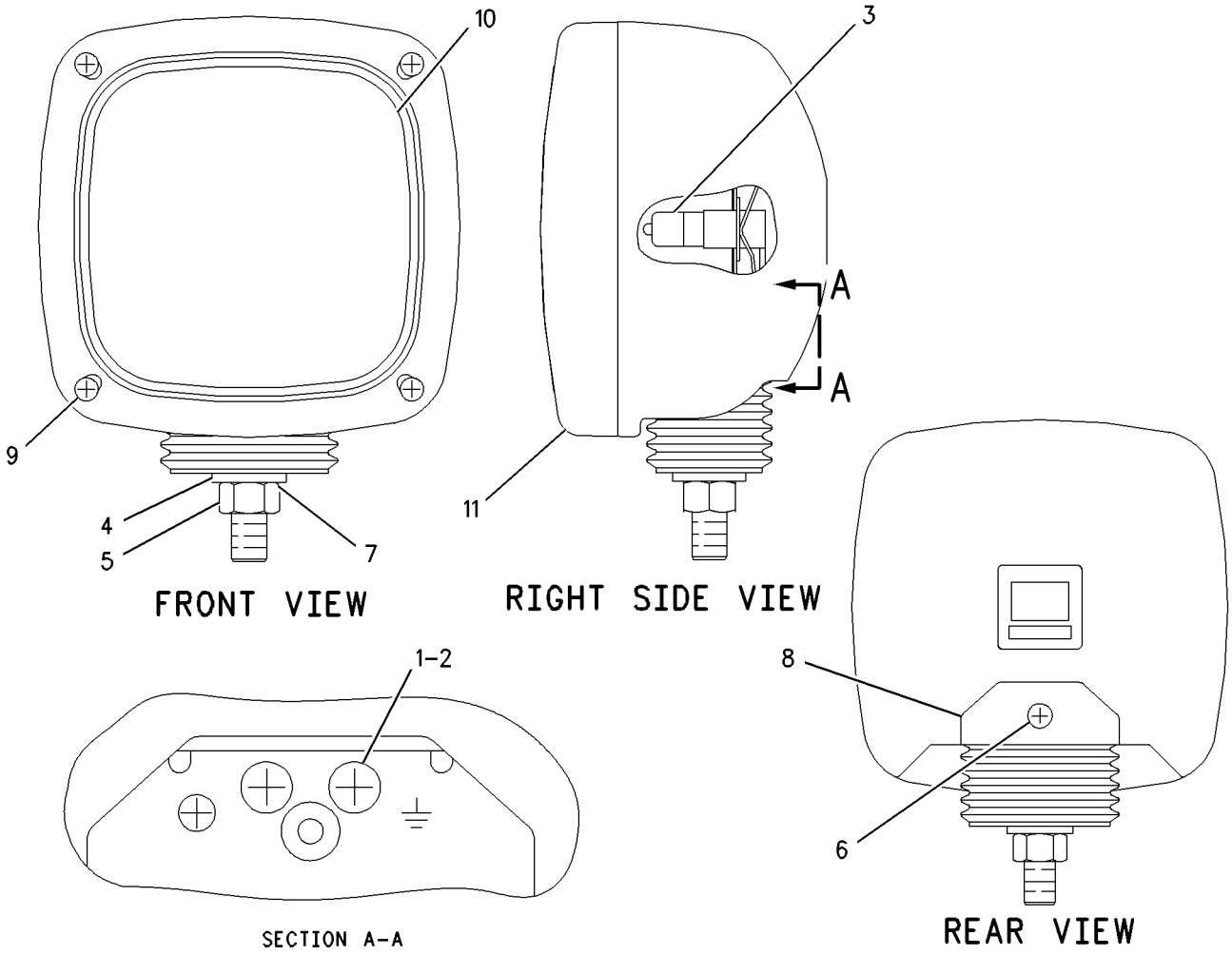

GRAPHIC #1 **<END>** g00645948

153-2523 LAMP GP-FLOOD

S/N: DFP1-UP; CJX1-UP
24-VOLT
PART OF 4I-5409 LIGHTING GP-CHASSIS

SMCS-1434 **i02724687**

NOTE	REF NO	GRAPHIC REF	PART NUMBER	QTY	PART NAME 1 2 3 4 5 6 (PRODUCT LEVEL)	SEE PAGE
M	1	1	**6V-5210**	2	SCREW-MACHINE (M4X0.7X10-MM)	
	2	1	**3B-4501**	2	LOCKWASHER	
	3	1	**9X-3463**	1	LAMP-HALOGEN (24-VOLT, 65-WATT)	
	4	1	**8T-4223**	1	WASHER-HARD (13.5X25.5X3-MM THK)	
M	5	1	**8T-4244**	1	NUT (M12X1.75-THD)	
M	6	1	**174-7791**	1	SCREW-TAPPING	
	7	1	**5C-2889**	1	LOCKWASHER	
	8	1	**170-6993**	1	COVER	
M	9	1	**180-3861**	4	SCREW-TAPPING	
	10	1	**170-9417**	1	LENS AS	
	11	1	**170-9418**	1	BAND	

M-METRIC PART

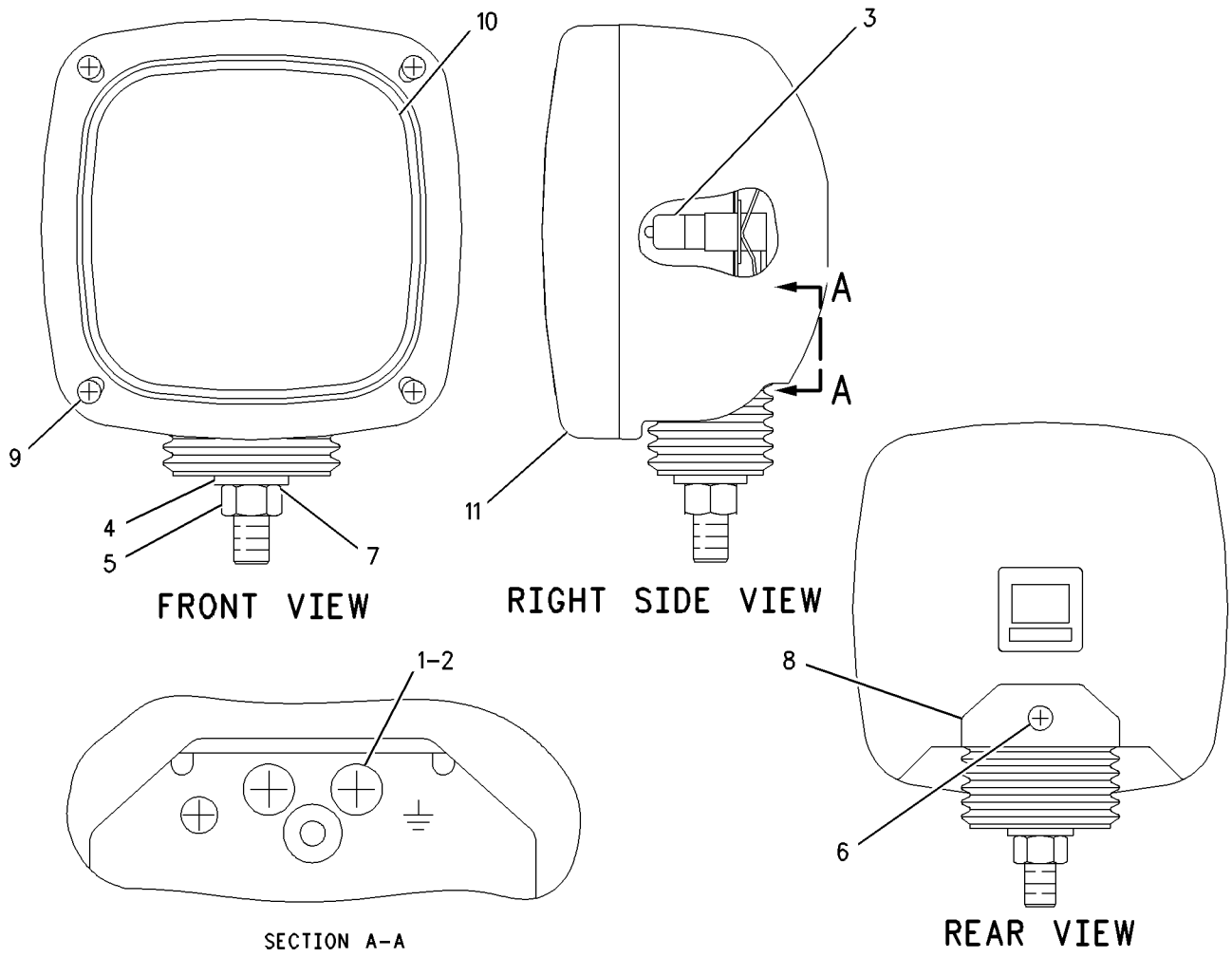

GRAPHIC #1 **<END>** g00645948

167-3441 LAMP GP-FLOOD

S/N: DFP1-UP; CJX1-UP
PART OF 163-6772 LIGHTING GP-FLOOD
AN ATTACHMENT

SMCS-1434 **i01823005**

NOTE	REF NO	GRAPHIC REF	PART NUMBER	QTY	PART NAME 1 2 3 4 5 6 (PRODUCT LEVEL)	SEE PAGE
	1	1	**9X-3463**	1	LAMP-HALOGEN (24-VOLT, 65-WATT)	

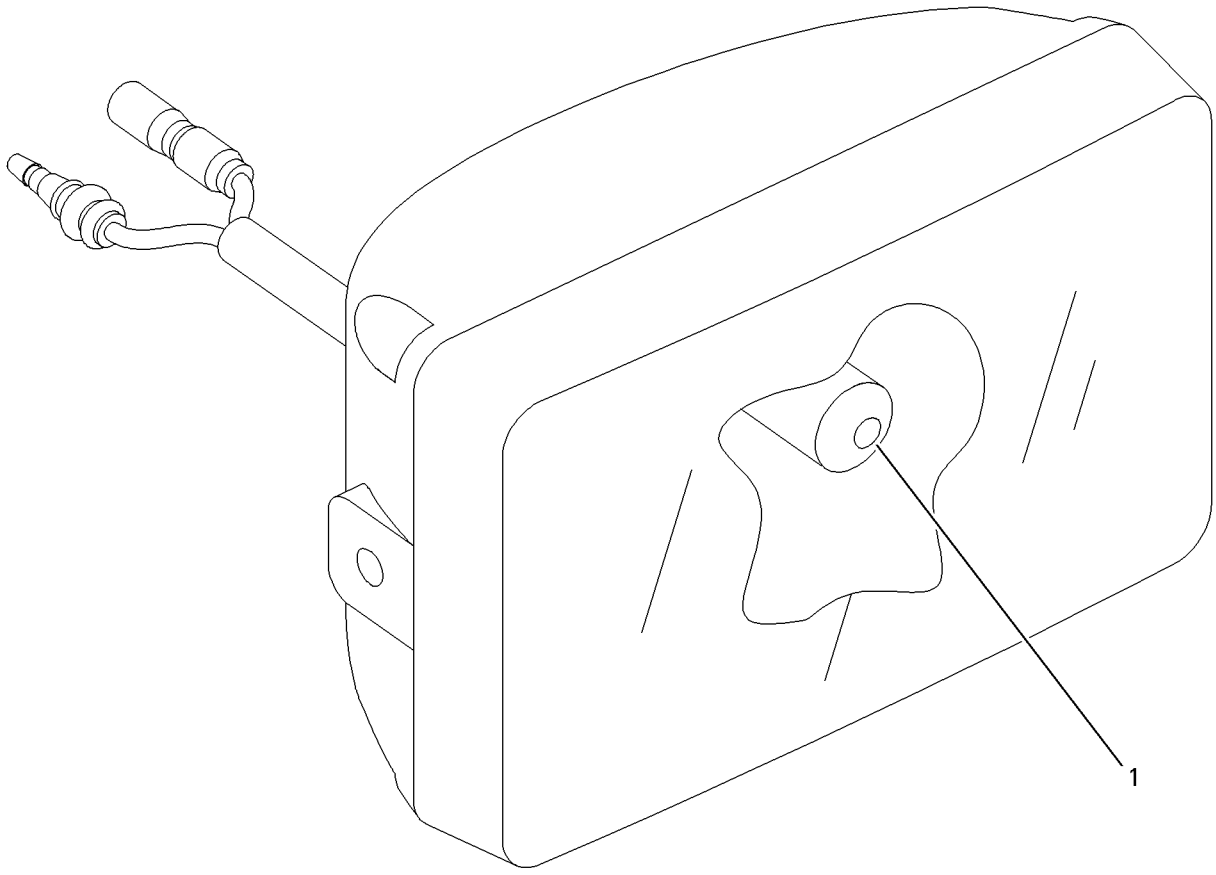

GRAPHIC #1 **<END>** g00692317

4I-5409 LIGHTING GP-CHASSIS–FRONT, RH

S/N: DFP1-UP; CJX1-UP

PART OF 240-3970, 240-3971 CHASSIS AR

SMCS-1429 **i01097714**

NOTE	REF NO	GRAPHIC REF	PART NUMBER	QTY	PART NAME 1 2 3 4 5 6 (PRODUCT LEVEL)	SEE PAGE
Y	1	1	**153-2523**	1	LAMP GP-FLOOD	288

Y-SEPARATE ILLUSTRATION

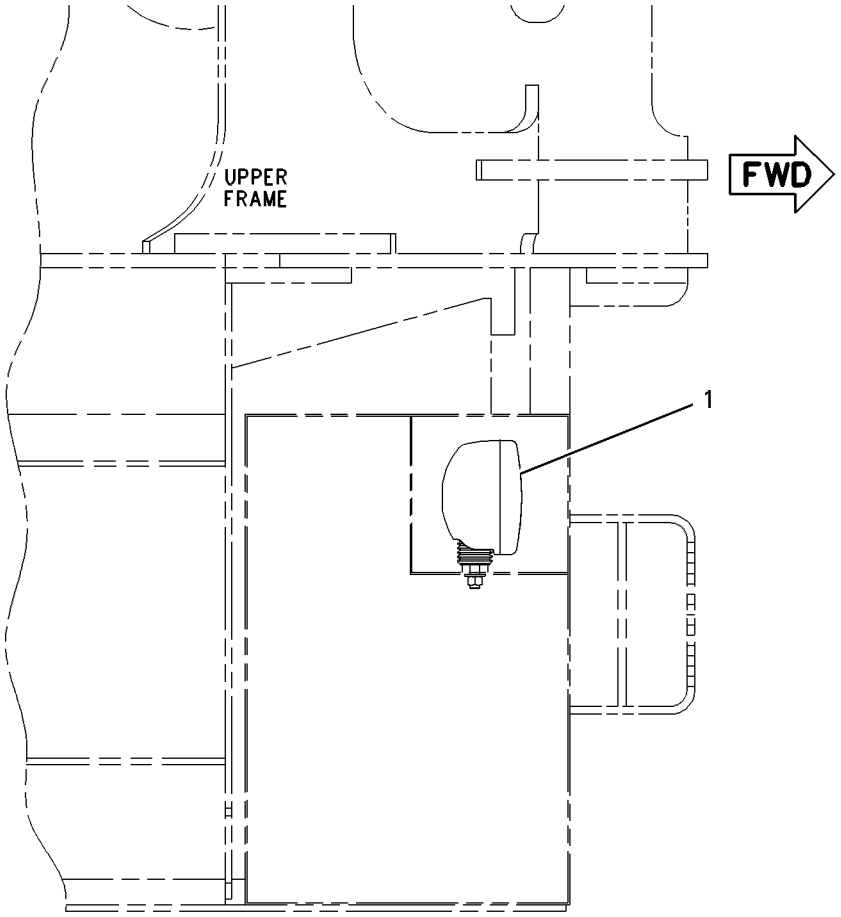

TOP VIEW

GRAPHIC #1 **<END>** g00588573

163-6772 LIGHTING GP-FLOOD–CAB

S/N: DFP1-UP; CJX1-UP
PART OF 259-7174 CAB GP
AN ATTACHMENT

SMCS-1434 **i02075362**

NOTE	REF NO	GRAPHIC REF	PART NUMBER	QTY	PART NAME 1 2 3 4 5 6 (PRODUCT LEVEL)	SEE PAGE
	1	1	**163-6814**	1	COVER (RH)	
	2	1	**163-6813**	1	COVER (LH)	
M	3	1	**8T-4970**	4	BOLT (M6X1X14-MM)	
	4	1	**9X-8256**	12	WASHER (6.6X12X2-MM THK)	
Y	5	1	**167-3441**	2	LAMP GP-FLOOD	289
	6	1	**163-6795**	2	STRAP-CABLE	
B	7	1	**9X-8256**	4	WASHER (6.6X12X2-MM THK)	
	8	1	**167-3437**	1	BRACKET AS (LH)	
M	9	1	**8T-6411**	6	SCREW-MACHINE (M6X1X12-MM)	
M	10	1	**8T-4200**	2	BOLT (M8X1.25X16-MM)	
	11	1	**8T-4224**	2	WASHER-HARD (8.8X16X2-MM THK)	
	12	1	**167-3456**	2	HARNESS AS-LIGHTING (CAB FLOODLIGHT)	
		1	**7Y-3962**	1	TERMINAL (CONNECTOR)	
		1	**7Y-3964**	1	TUBE (CONNECTOR TERMINAL)	
		1	**7Y-3963**	1	TERMINAL (RECEPTACLE)	
		1	**7Y-3965**	1	TUBE (RECEPTACLE TERMINAL)	
	13	1	**167-3438**	1	BRACKET AS (RH)	
M	14	1	**8T-6412**	2	SCREW-MACHINE (M6X1X20-MM)	

B-USE AS REQUIRED
M-METRIC PART
Y-SEPARATE ILLUSTRATION

163-6772 **LIGHTING GP-FLOOD** *(contd.)* **i02075362**

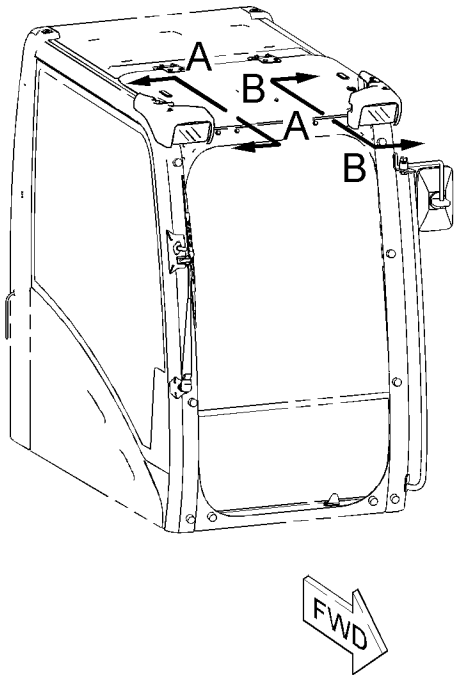

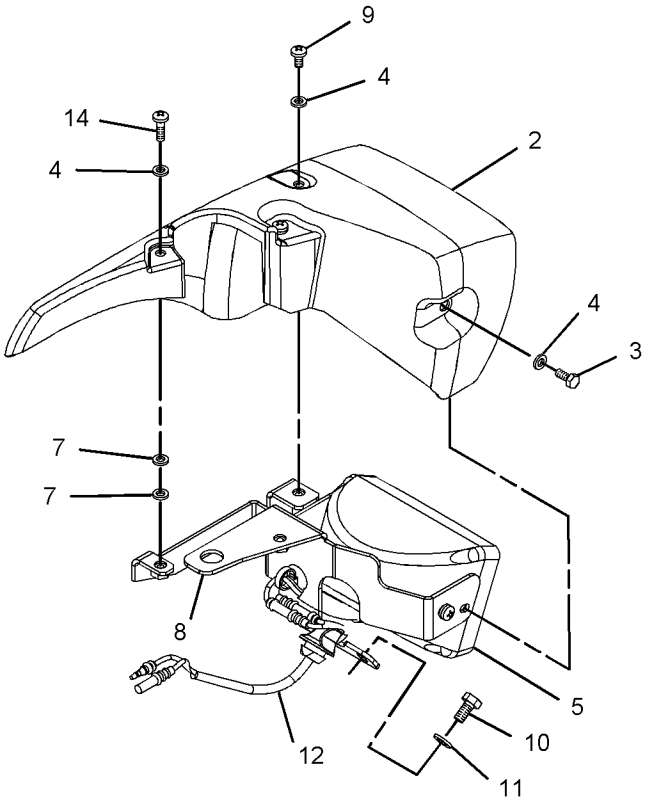

VIEW B-B
(EXPLODED)

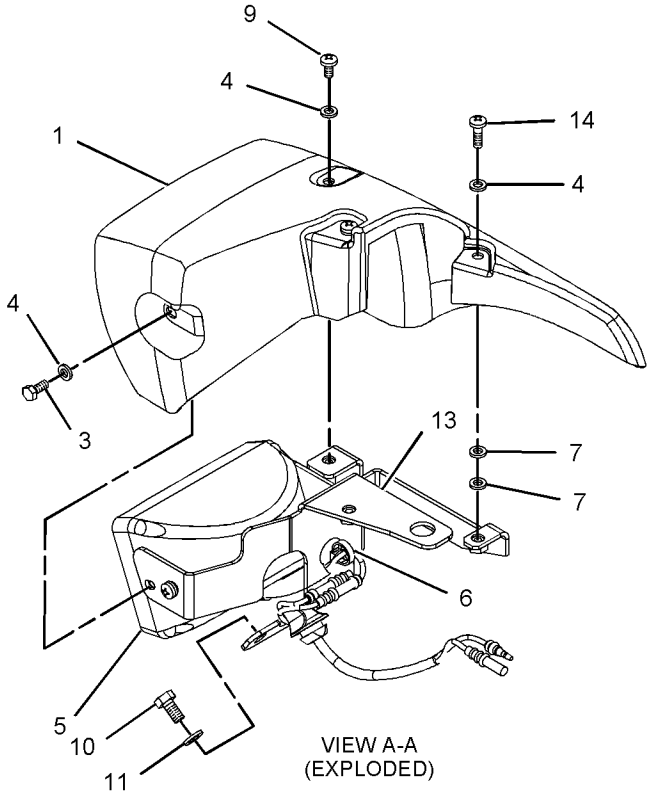

VIEW A-A
(EXPLODED)

GRAPHIC #1 **<END>** g01062205

170-9294 LIGHTING GP-FLOOD–CAB GUARD

S/N: DFP1-UP; CJX1-UP
AN ATTACHMENT

SMCS-1434 **i02259861**

NOTE	REF NO	GRAPHIC REF	PART NUMBER	QTY	PART NAME 1 2 3 4 5 6 (PRODUCT LEVEL)	SEE PAGE
	1	1	**183-1035**	2	LAMP GP-FLOOD	
					(EACH INCLUDES)	
		1	**9X-3463**	1	LAMP-HALOGEN (24-VOLT, 65-WATT)	
	2	1	**163-6795**	2	STRAP-CABLE	
M	3	1	**8T-4133**	2	NUT (M10X1.5-THD)	
	4	1	**8T-4121**	4	WASHER-HARD (11X21X2.5-MM THK)	
M	5	1	**8T-4137**	2	BOLT (M10X1.5X20-MM)	
	6	1	**170-9295**	2	HARNESS AS-LIGHTING (CAB FLOODLIGHTS, FRONT)	
					(EACH INCLUDES)	
		1	**7Y-3962**	2	TERMINAL (CONNECTOR)	
		1	**7Y-3964**	2	TUBE (CONNECTOR TERMINAL)	
		1	**7Y-3963**	2	TERMINAL (RECEPTACLE)	
		1	**7Y-3965**	2	TUBE (RECEPTACLE TERMINAL)	

M-METRIC PART

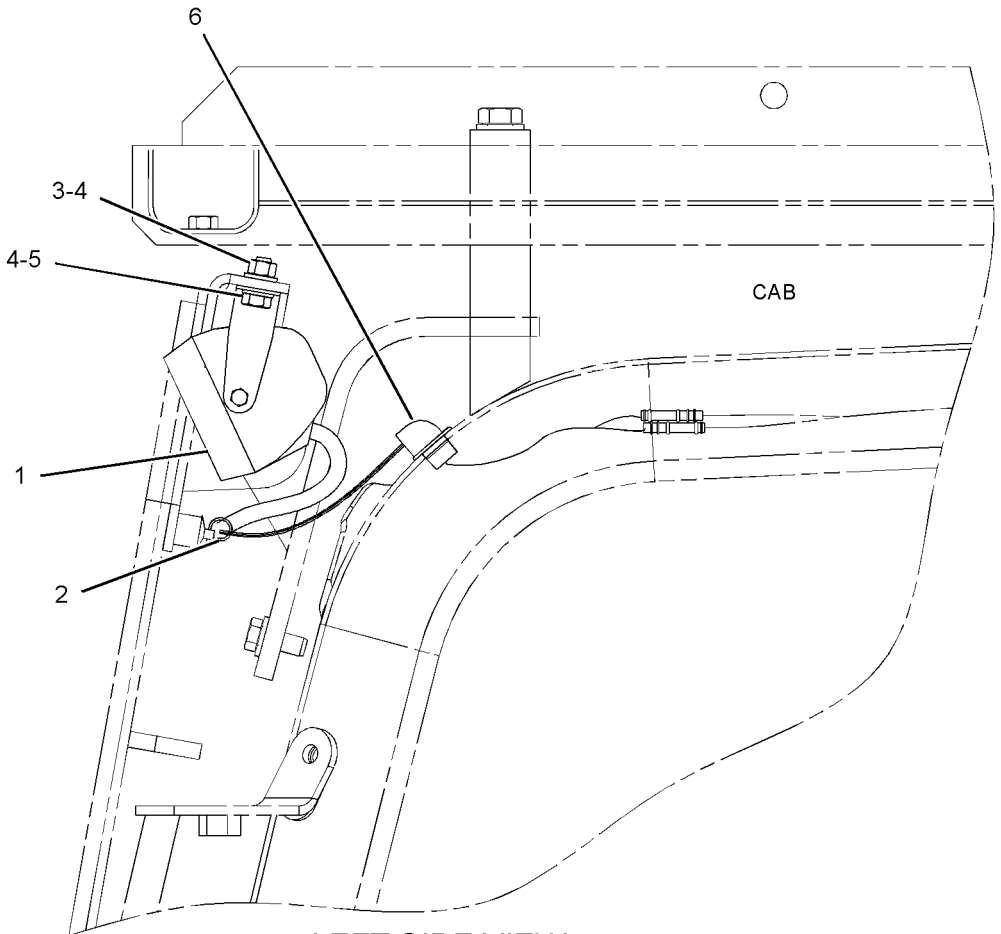

LEFT SIDE VIEW

GRAPHIC #1 **<END>** g01134805

238-2346 LIGHTING GP-FLOOD—BOOM, LH

S/N: DFP1-UP; CJX1-UP

PART OF 240-3994, 240-3998, 240-4000, 275-3697, 275-3838 BOOM AR-1 PIECE LONG, 240-3996, 240-3999 BOOM AR-1 PIECE SHORT, 262-3582 FRONT AR-LONG REACH AN ATTACHMENT

SMCS-1434 **i02951880**

NOTE	REF NO	GRAPHIC REF	PART NUMBER	QTY	PART NAME 1 2 3 4 5 6 (PRODUCT LEVEL)	SEE PAGE
	1	1	**7I-2673**	1	STRAP-CABLE	
	2	1	**111-4836**	5	CLIP	
	3	1	**116-0118**	1	CLIP	
Y	4	1	**153-2521**	1	LAMP GP-FLOOD (24-VOLT)	287
	5	1	**238-2347**	1	HARNESS AS-LIGHTING	
	6	1	**111-4837**	1	CLIP	
	7	1	**134-3284**	1	BRACKET	
	8	1	**5P-9297**	2	CLIP	
	9	1	**8T-4121**	6	WASHER-HARD (11X21X2.5-MM THK)	
M	10	1	**8T-4133**	5	NUT (M10X1.5-THD)	
M	11	1	**8T-4137**	1	BOLT (M10X1.5X20-MM)	
M	12	1	**8T-4190**	1	BOLT (M16X2X25-MM)	
	13	1	**9X-8257**	1	WASHER (17.5X30X3.5-MM THK)	

M-METRIC PART
Y-SEPARATE ILLUSTRATION

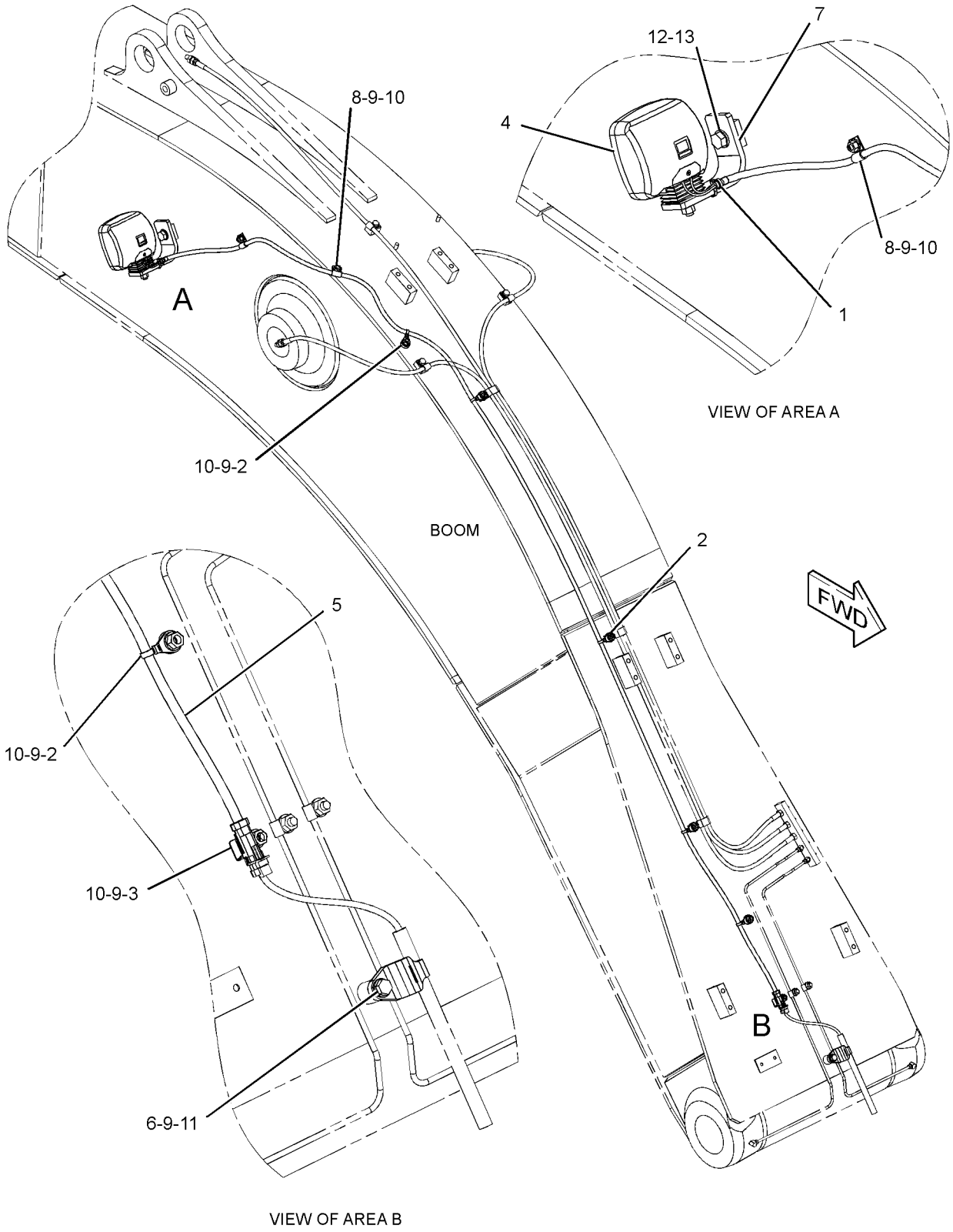

GRAPHIC #1 **<END>** g01207405

251-0611 LIGHTING GP-FLOOD

S/N: DFP1-UP; CJX1-UP
PART OF 262-3582 FRONT AR-LONG REACH
AN ATTACHMENT

SMCS-1434 **i02408169**

NOTE	REF NO	GRAPHIC REF	PART NUMBER	QTY	PART NAME 1 2 3 4 5 6 (PRODUCT LEVEL)	SEE PAGE
	1	1	**3S-2093**	1	STRAP-CABLE	
	2	1	**7I-2673**	1	STRAP-CABLE	
Y	3	1	**153-2521**	1	LAMP GP-FLOOD (24-VOLT)	287
	4	1	**259-5323**	1	HARNESS AS-LIGHTING	
	5	1	**111-4836**	1	CLIP	
	6	1	**134-3284**	1	BRACKET	
	7	1	**5P-9297**	2	CLIP	
	8	1	**7N-3718**	2	CLIP	
	9	1	**8T-4121**	3	WASHER-HARD (11X21X2.5-MM THK)	
M	10	1	**8T-4133**	3	NUT (M10X1.5-THD)	
M	11	1	**8T-4190**	1	BOLT (M16X2X25-MM)	
	12	1	**9X-8257**	1	WASHER (17.5X30X3.5-MM THK)	

M-METRIC PART
Y-SEPARATE ILLUSTRATION

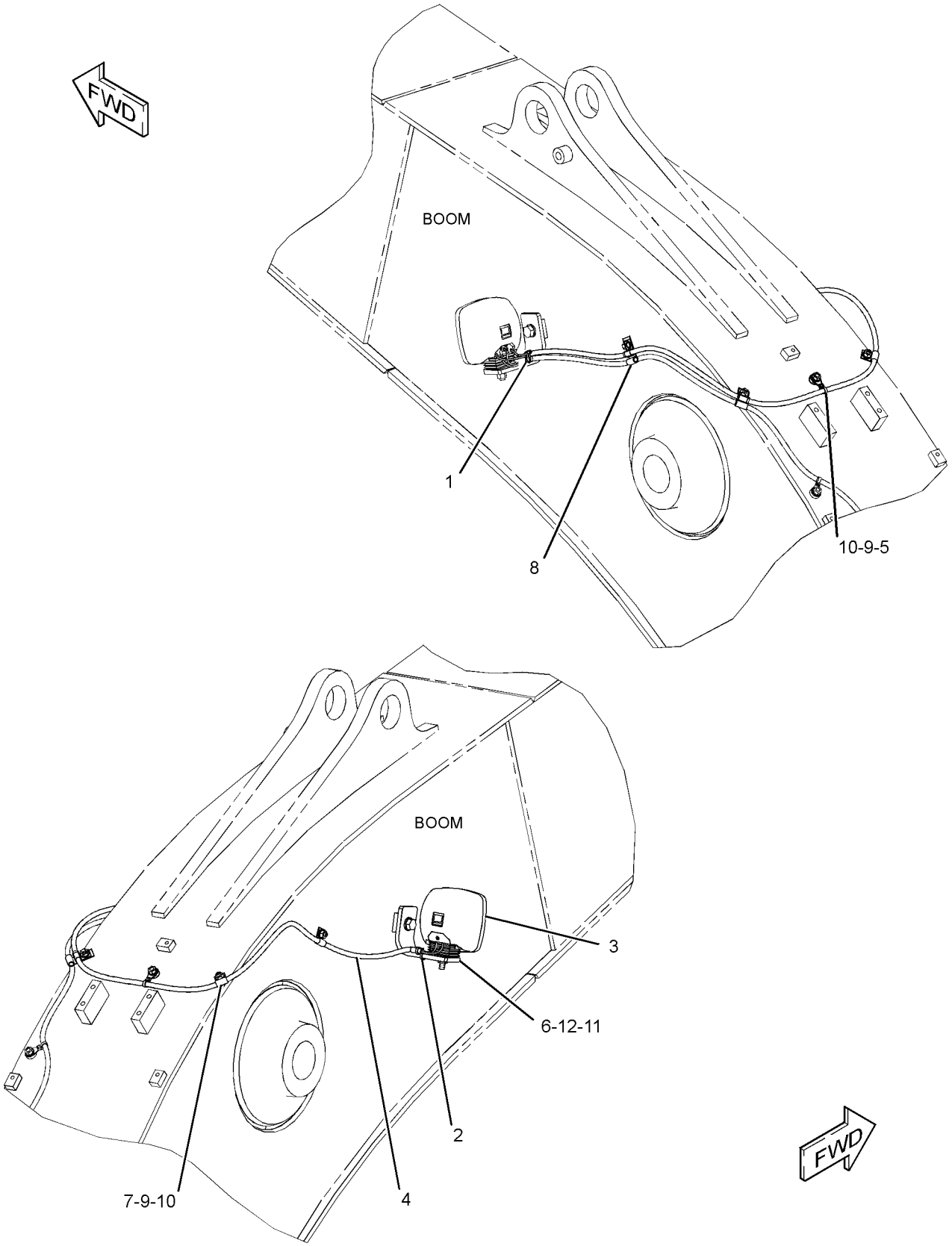

GRAPHIC #1 **<END>** g01209953

251-0612 LIGHTING GP-FLOOD—SHORT BOOM, RH

S/N: DFP1-UP; CJX1-UP

AN ATTACHMENT

SMCS-1434 **i02408173**

NOTE	REF NO	GRAPHIC REF	PART NUMBER	QTY	PART NAME 1 2 3 4 5 6 (PRODUCT LEVEL)	SEE PAGE
	1	1	**3S-2093**	1	STRAP-CABLE	
	2	1	**7I-2673**	1	STRAP-CABLE	
Y	3	1	**153-2521**	1	LAMP GP-FLOOD (24-VOLT)	287
	4	1	**259-5324**	1	HARNESS AS-LIGHTING (SHORT BOOM, RH)	
	5	1	**111-4836**	2	CLIP	
	6	1	**134-3284**	1	BRACKET	
	7	1	**5P-9297**	2	CLIP	
	8	1	**7N-3718**	3	CLIP	
	9	1	**8T-4121**	4	WASHER-HARD (11X21X2.5-MM THK)	
M	10	1	**8T-4133**	4	NUT (M10X1.5-THD)	
M	11	1	**8T-4190**	1	BOLT (M16X2X25-MM)	
	12	1	**9X-8257**	1	WASHER (17.5X30X3.5-MM THK)	

M-METRIC PART
Y-SEPARATE ILLUSTRATION

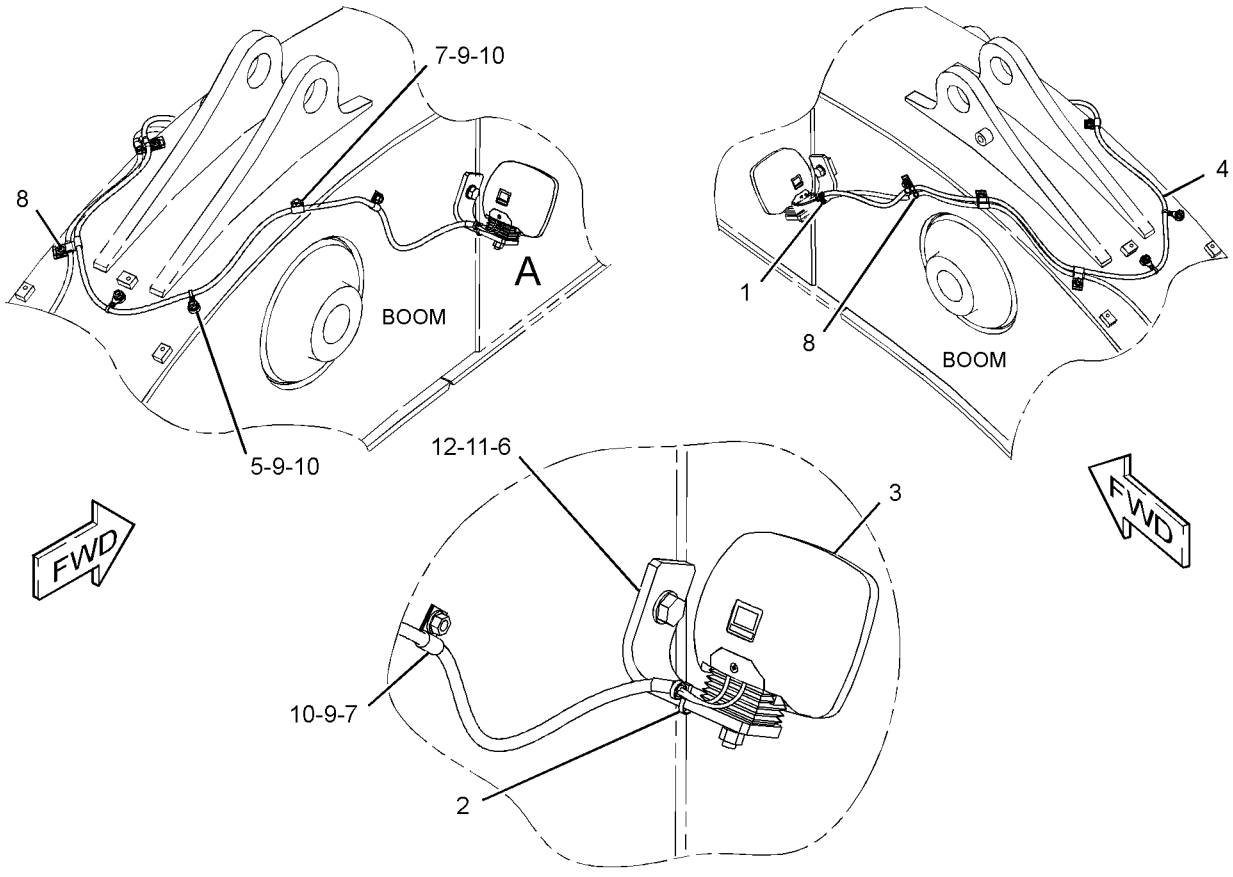

VIEW OF AREA A

GRAPHIC #1 **<END>** g01219586

297-5592 MOUNTING GP-GRADE CONTROL–ACCUGRADE

S/N: DFP1-UP; CJX1-UP

PART OF 292-0276 GRADE CONTROL AR-SATELLITE

SMCS-7220 **i03177280**

NOTE	PART NUMBER	QTY	PART NAME 1 2 3 4 5 6 (PRODUCT LEVEL)	SEE PAGE
M	**5C-9553**	19	BOLT (M6X1X16-MM)	
M	**6V-8212**	3	BOLT (M10X1.5X16-MM)	
M	**8T-4137**	21	BOLT (M10X1.5X20-MM)	
M	**8T-4140**	8	BOLT (M16X2X60-MM)	
M	**8T-4200**	4	BOLT (M8X1.25X16-MM)	
M	**8T-7852**	3	BOLT (M4X0.7X10-MM)	
	265-8145	4	BRACKET-HOUSING	
	292-0305	2	CABLE AS (MAST)	
			(EACH INCLUDES)	
	8T-8737	5	PLUG-SEAL	
	9X-3402	7	SOCKET-CONNECTOR (16-GA TO 18-GA)	
	230-4009	1	PLUG AS-CONNECTOR (12-PIN)	
	264-7034	1	SEAL-CONNECTOR	
	116-0118	3	CLIP	
	132-5789	5	CLIP	
	8J-1256	3	CLIP	
	265-8146	4	COVER	
	263-6699	2	FLANGE-CONNECTOR	
	7Y-8169	1	GROMMET	
M	**179-4324**	16	LOCKNUT (M5X0.8-THD)	
	3L-8187	8	LOCKWASHER	
M	**3E-8048**	8	SCREW-MACHINE (M3X0.5X6-MM)	
	093-0332	2	SHIM (1-MM THK)	
	093-0334	6	SHIM (0.4-MM THK)	
	085-9310	8	SPACER (16.6X32X26-MM THK)	
	7K-1181	22	STRAP-CABLE	
	3S-2093	10	STRAP-CABLE	
	9X-8256	19	WASHER (6.6X12X2-MM THK)	
	8T-0328	16	WASHER-HARD (5.5X10X1-MM THK)	
	8T-4121	6	WASHER-HARD (11X21X2.5-MM THK)	
	8T-4224	4	WASHER-HARD (8.8X16X2-MM THK)	
	8T-7934	19	WASHER-HARD (11X21X5-MM THK)	
	161-6987	3	WASHER-HARD (5.2X16X1.5-MM THK)	

M-METRIC PART

<END>

238-1432 PANEL & MTG GP-CIRCUIT BREAKER

S/N: DFP1-UP; CJX1-UP
PART OF 229-9072 OPERATOR AR

SMCS-1417, 1420 **i02348252**

NOTE	REF NO	GRAPHIC REF	PART NUMBER	QTY	PART NAME 1 2 3 4 5 6 (PRODUCT LEVEL)	SEE PAGE
Y	1	1	*231-1756*	1	PANEL GP-CIRCUIT BREAKER	301
	2	1	**8T-4121**	4	WASHER-HARD (11X21X2.5-MM THK)	
M	3	1	**8T-4137**	4	BOLT (M10X1.5X20-MM)	

M-METRIC PART
Y-SEPARATE ILLUSTRATION

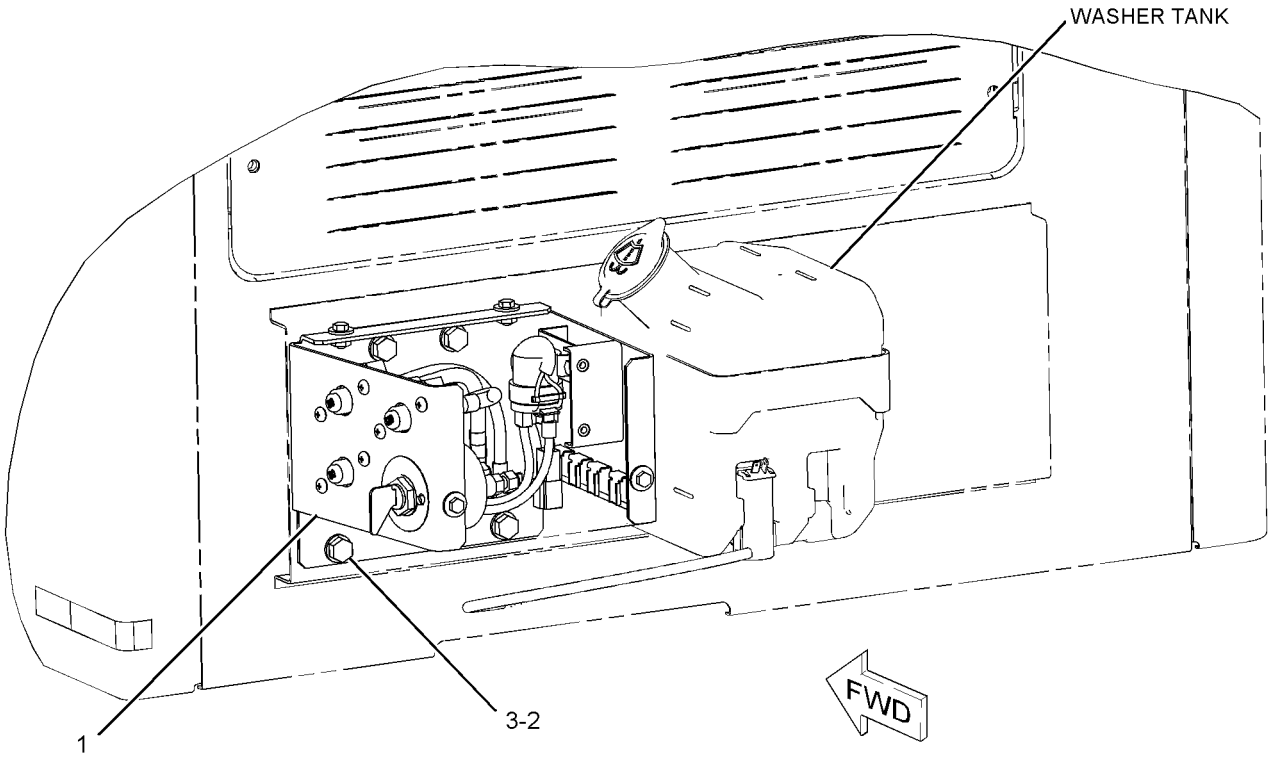

GRAPHIC #1 **<END>** g01150497

231-1756 PANEL GP-CIRCUIT BREAKER

S/N: DFP1-UP; CJX1-UP

PART OF 238-1432 PANEL & MTG GP-CIRCUIT BREAKER

SMCS-1417 **i02612374**

NOTE	REF NO	GRAPHIC REF	PART NUMBER	QTY	PART NAME 1 2 3 4 5 6 (PRODUCT LEVEL)	SEE PAGE
	1	1	**3E-8320**	1	PLATE-INSTRUCTION (BATTERY)	
Y	2	1	**7N-0719**	1	SWITCH GP-DISCONNECT (BATTERY)	346
	3	1	**121-1023**	1	BLOCK-TERMINAL	
Y	4	1	**125-1302**	1	SWITCH GP-MAGNETIC (24-VOLT) (START RELAY)	347
	5	1	**216-4970**	1	CIRCUIT BREAKER AS (120-AMPERE) (HEATER)	
		1	**6V-8187**	2	NUT (1/4-28-THD)	
		1	**8T-4205**	2	WASHER-HARD (7.2X14.5X2-MM THK)	
		1	**253-2111**	2	LOCKWASHER	
	6	1	**291-7547**	1	BRACKET AS	
	7	1	**234-1035**	1	CABLE AS	
	8	1	**234-1037**	1	WIRE AS	
	9	1	**234-1038**	1	WIRE AS	
	10	1	**238-1506**	1	COVER	
	11	1	**238-2279**	1	BAR-BUS	
	12	1	**238-2280**	1	WIRE AS	
	13	1	**251-0303**	1	CABLE AS	
	14	1	**251-0304**	1	CABLE AS	
	15	1	**171-2210**	1	CIRCUIT BREAKER AS (80-AMPERE) (MAIN)	
	15A	1	**171-2210**	1	CIRCUIT BREAKER AS (80-AMPERE) (ALTERNATOR)	
					(EACH CIRCUIT BREAKER AS INCLUDES)	
		1	**6V-8187**	2	NUT (1/4-28-THD)	
		1	**8T-4205**	2	WASHER-HARD (7.2X14.5X2-MM THK)	
		1	**253-2111**	2	LOCKWASHER	
M	16	1	**5C-9553**	5	BOLT (M6X1X16-MM)	
	17	1	**5P-4115**	4	WASHER-HARD (7.2X19X2-MM THK)	
	18	1	**6V-5645**	6	SCREW-MACHINE (10-32X0.87-IN)	
	19	1	**8T-0328**	6	WASHER-HARD (5.5X10X1-MM THK)	
M	20	1	**8T-4171**	4	BOLT (M6X1X12-MM)	
M	21	1	**8T-4970**	4	BOLT (M6X1X14-MM)	
	22	1	**9X-8256**	11	WASHER (6.6X12X2-MM THK)	

M-METRIC PART
Y-SEPARATE ILLUSTRATION

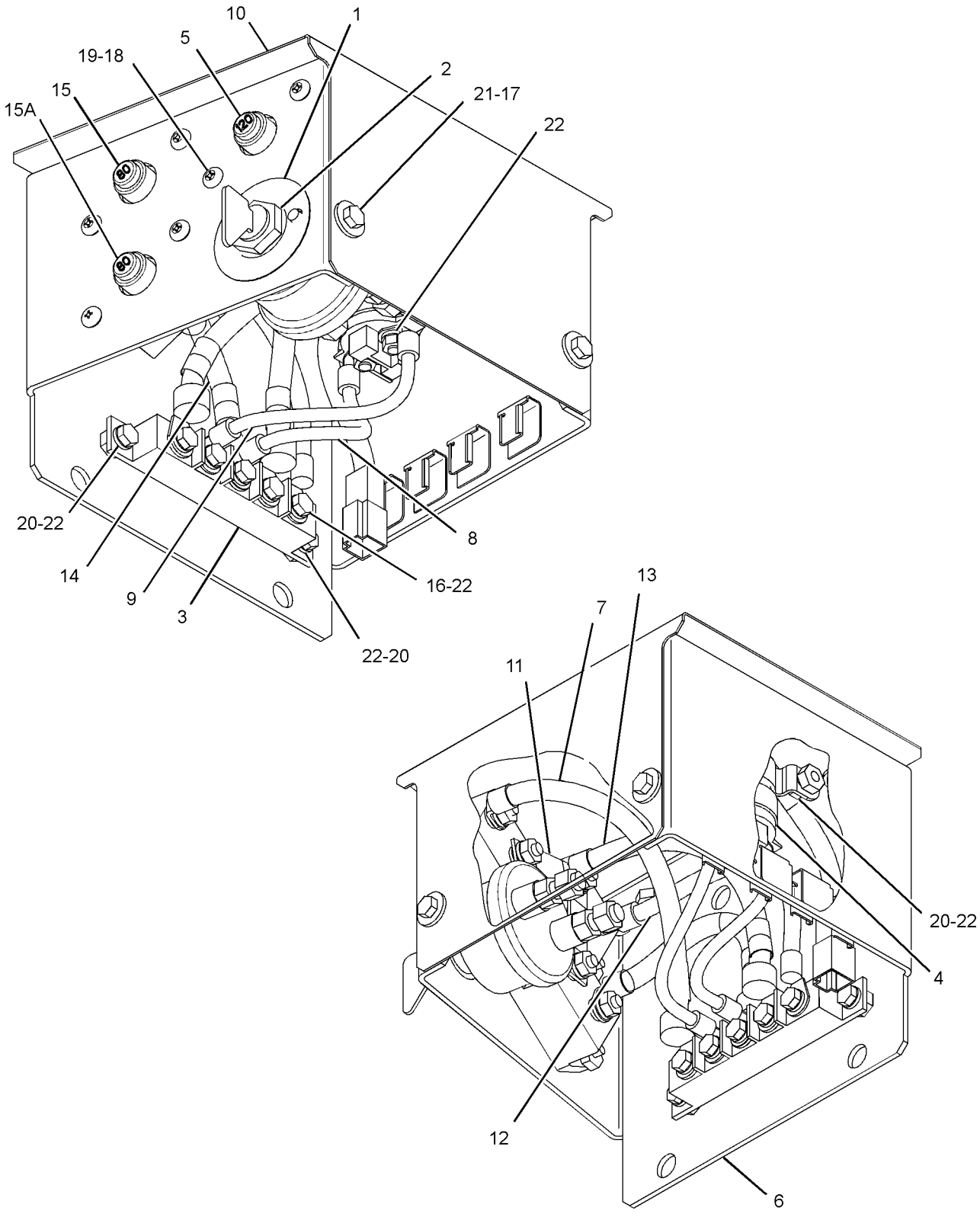

GRAPHIC #1 **<END>** g01326247

251-0542 PANEL GP-SWITCH–ENGINE SPEED, START

S/N: DFP1-UP; CJX1-UP
CONSOLE
CANNOT BE USED WITH 251-0544–PAGE 307
AN ATTACHMENT
TYPE 1

SMCS-1408, 1429, 7332, 7451 **i02742287**

NOTE	REF NO	GRAPHIC REF	PART NUMBER	QTY	PART NAME 1 2 3 4 5 6 (PRODUCT LEVEL)	SEE PAGE
	1	1	**3S-2093**	4	STRAP-CABLE	
Y	2	1	**9G-7641**	1	SWITCH GP-START (ENGINE, KEY)	358
Y	3	1	**106-0107**	1	SWITCH GP-ROTARY (THROTTLE POSITION)	356
	4	1	**170-9324**	1	LAMP AS (24-VOLT, 3-WATT)	
	5	1	**185-9208**	1	KNOB AS (THROTTLE POSITION)	
	6	1	**234-1156**	1	COVER	
	7	1	**234-1158**	1	COVER	
	8	1	**267-7976**	1	PANEL	
	9	1	**251-0543**	1	HARNESS AS-CONSOLE (RH)	
		1	**102-8802**	1	KIT-RECEPTACLE (2-PIN)	
					(INCLUDES RECEPTACLE AS & WEDGE)	
		1	**155-2270**	1	KIT-CONNECTING PLUG (2-PIN)	
		1	**155-2274**	1	KIT-CONNECTING PLUG (6-PIN)	
					(EACH CONNECTING PLUG KIT INCLUDES PLUG AS, WEDGE & INTERFACE SEAL)	
	10	1	**096-6166**	4	WASHER-HARD (4.5X9X1-MM THK)	
	11	1	**119-5026**	4	SCREW-PAN HEAD (10-16X0.63-IN)	
M	12	1	**6V-9491**	4	SCREW-MACHINE (M4X0.7X20-MM)	

M-METRIC PART
Y-SEPARATE ILLUSTRATION

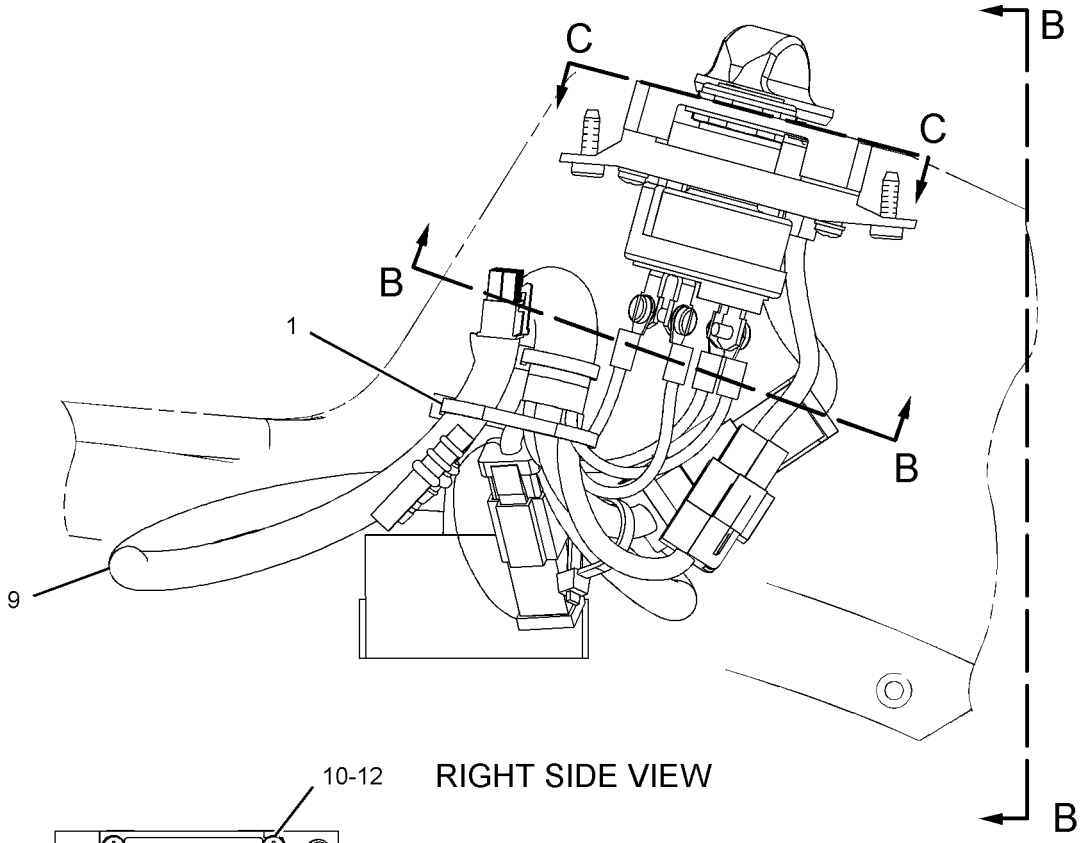

RIGHT SIDE VIEW

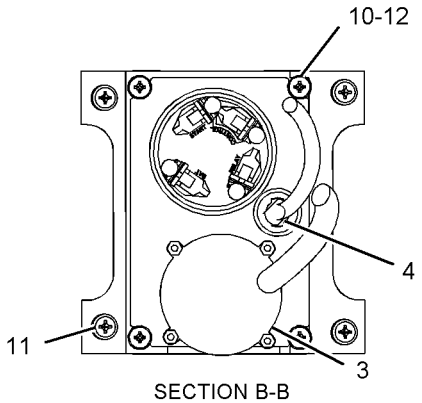

SECTION B-B

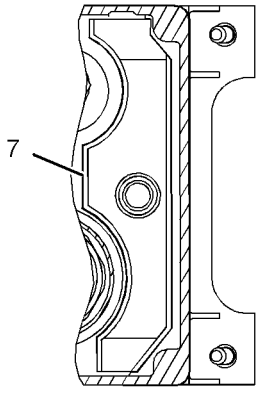

VIEW C-C

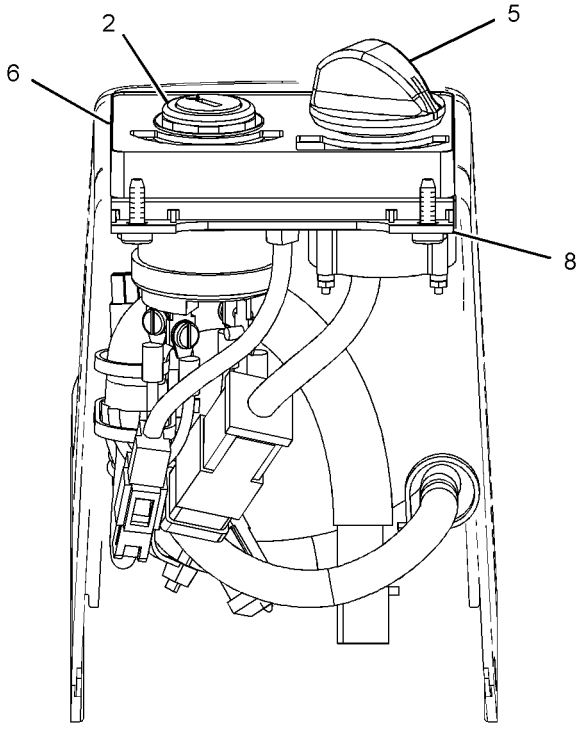

VIEW B-B

GRAPHIC #1 **<END>** g01112022

251-0542 PANEL GP-SWITCH–ENGINE SPEED, START

S/N: DFP1-UP; CJX1-UP
CONSOLE
CANNOT BE USED WITH 251-0544–PAGE 307
AN ATTACHMENT
TYPE 2

SMCS-1408, 1429, 7332, 7451 **i03098161**

NOTE	REF NO	GRAPHIC REF	PART NUMBER	QTY	PART NAME 1 2 3 4 5 6 (PRODUCT LEVEL)	SEE PAGE
	1	1	**3S-2093**	4	STRAP-CABLE	
Y	2	1	**9G-7641**	1	SWITCH GP-START (ENGINE, KEY)	358
CY	3	1	**319-4420**	1	SWITCH GP-ROTARY (THROTTLE POSITION)	357
	4	1	**170-9324**	1	LAMP AS (24-VOLT, 3-WATT)	
	5	1	**185-9208**	1	KNOB AS (THROTTLE POSITION)	
	6	1	**234-1156**	1	COVER	
	7	1	**234-1158**	1	COVER	
	8	1	**267-7976**	1	PANEL	
C	9	1	**328-0021**	1	HARNESS AS-CONSOLE (RH)	
	10	1	**096-6166**	4	WASHER-HARD (4.5X9X1-MM THK)	
	11	1	**119-5026**	4	SCREW-PAN HEAD (10-16X0.63-IN)	
M	12	1	**6V-9491**	4	SCREW-MACHINE (M4X0.7X20-MM)	

C-CHANGE FROM PREVIOUS TYPE
M-METRIC PART
Y-SEPARATE ILLUSTRATION

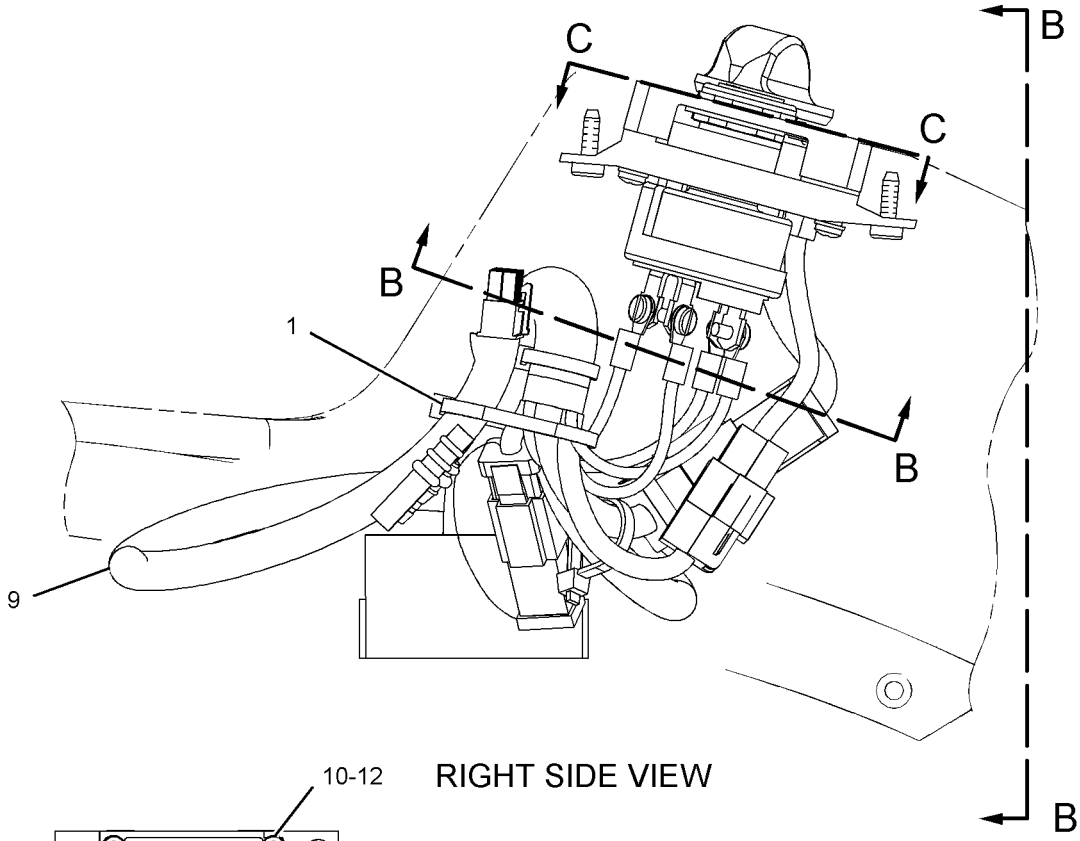

RIGHT SIDE VIEW

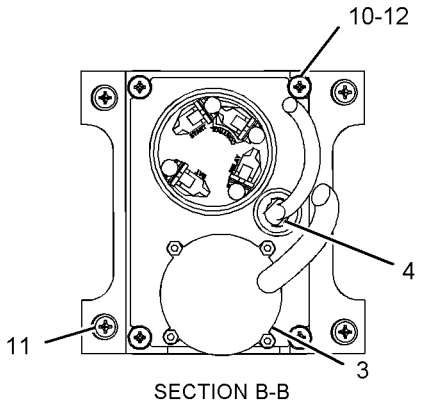

SECTION B-B

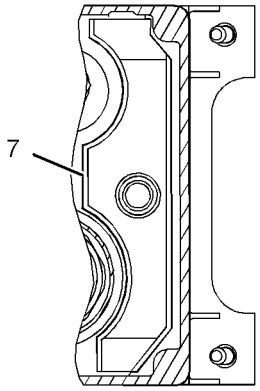

VIEW C-C

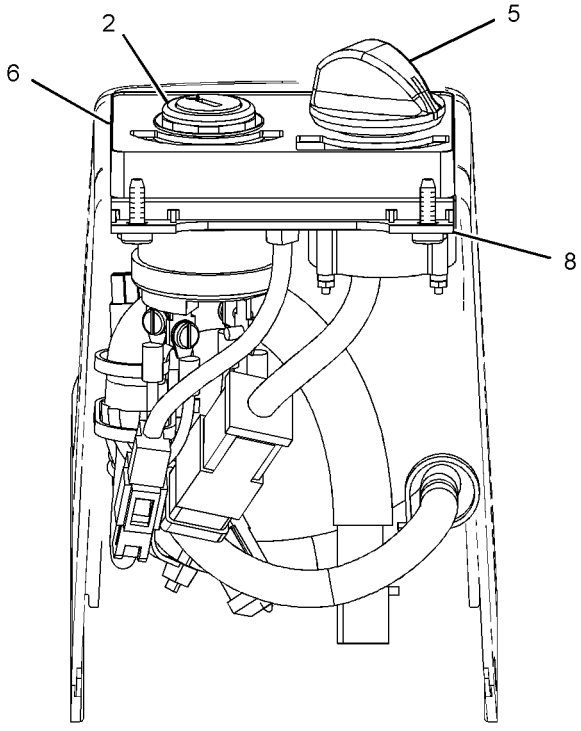

VIEW B-B

GRAPHIC #1 **<END>** g01112022

251-0544 PANEL GP-SWITCH–ENGINE SPEED, START

S/N: DFP1-UP; CJX1-UP
PART OF 227-7581 INSTALLATION GP-SECURITY
AN ATTACHMENT
TYPE 1

SMCS-1408, 1429, 7332, 7451 **i02742288**

NOTE	REF NO	GRAPHIC REF	PART NUMBER	QTY	PART NAME 1 2 3 4 5 6 (PRODUCT LEVEL)	SEE PAGE
	1	1	**3S-2093**	5	STRAP-CABLE	
Y	2	1	**9G-7641**	1	SWITCH GP-START (ENGINE, KEY)	358
Y	3	1	**106-0107**	1	SWITCH GP-ROTARY (THROTTLE POSITION)	356
	4	1	**185-9208**	1	KNOB AS	
	5	1	**205-0826**	1	FILM-INSTRUCTION (MACHINE SECURITY, CONSOLE)	
	6	1	**205-8257**	1	COIL AS (EXCITER)	
		1	**186-3735**	2	PIN-CONNECTOR (16-GA TO 18-GA)	
	7	1	**234-1156**	1	COVER	
	8	1	**267-7977**	1	PANEL	
	9	1	**251-0543**	1	HARNESS AS-CONSOLE (RH)	
		1	**102-8802**	1	KIT-RECEPTACLE (2-PIN)	
					(INCLUDES RECEPTACLE AS & WEDGE)	
		1	**155-2270**	1	KIT-CONNECTING PLUG (2-PIN)	
		1	**155-2274**	1	KIT-CONNECTING PLUG (6-PIN)	
					(EACH PLUG KIT INCLUDES PLUG AS, WEDGE & INTERFACE SEAL)	
	10	1	**096-6166**	4	WASHER-HARD (4.5X9X1-MM THK)	
	11	1	**119-5026**	4	SCREW-PAN HEAD (10-16X0.63-IN)	
M	12	1	**6V-9491**	4	SCREW-MACHINE (M4X0.7X20-MM)	

M-METRIC PART
Y-SEPARATE ILLUSTRATION

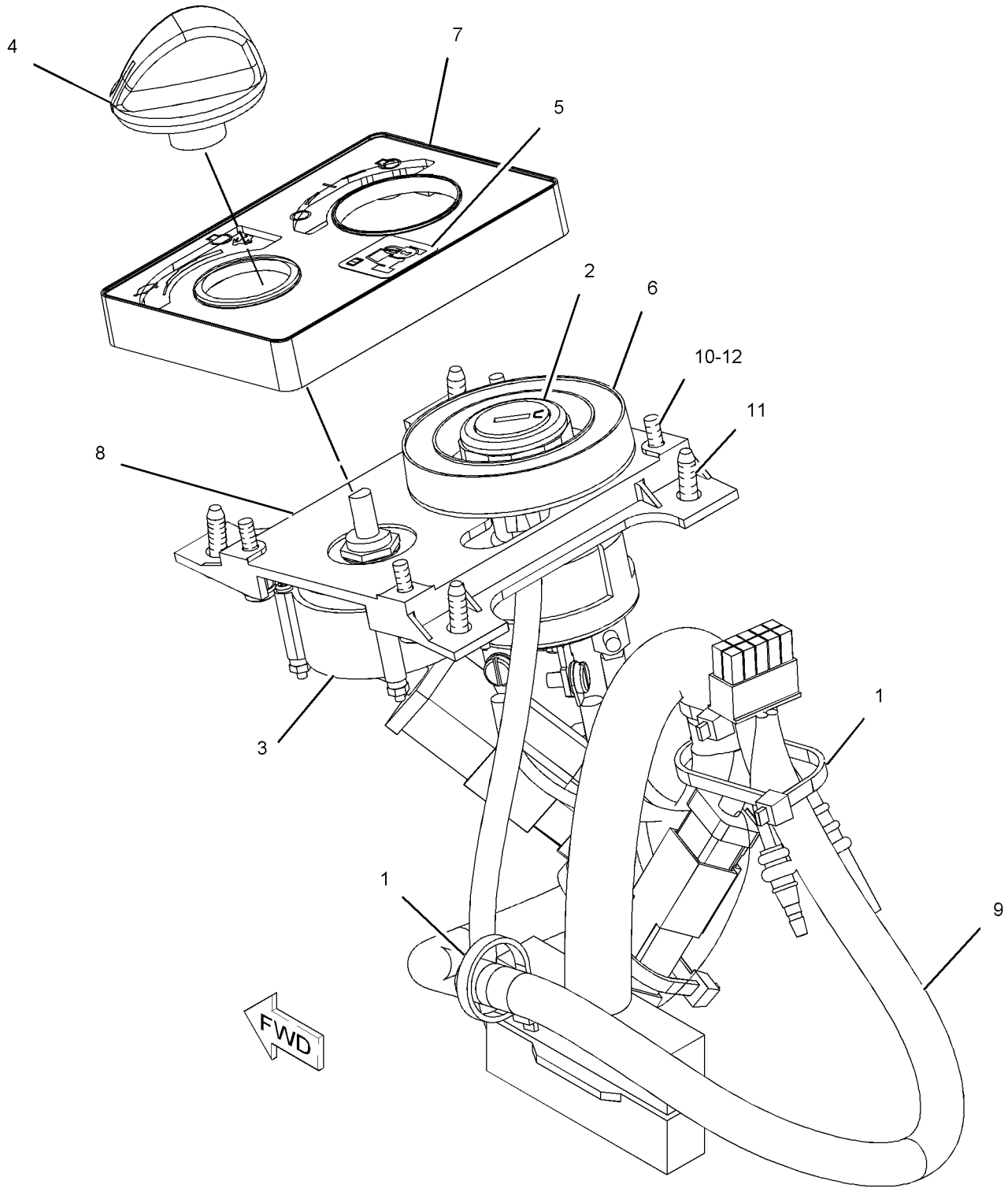

GRAPHIC #1 **<END>** g01123869

251-0544 PANEL GP-SWITCH–ENGINE SPEED, START

S/N: DFP1-UP; CJX1-UP
PART OF 227-7581 INSTALLATION GP-SECURITY
AN ATTACHMENT
TYPE 2

SMCS-1408, 1429, 7332, 7451 **i03115847**

NOTE	REF NO	GRAPHIC REF	PART NUMBER	QTY	PART NAME 1 2 3 4 5 6 (PRODUCT LEVEL)	SEE PAGE
	1	1	**3S-2093**	5	STRAP-CABLE	
Y	2	1	**9G-7641**	1	SWITCH GP-START (ENGINE, KEY)	358
CY	3	1	**319-4420**	1	SWITCH GP-ROTARY (THROTTLE POSITION)	357
	4	1	**185-9208**	1	KNOB AS	
	5	1	**205-0826**	1	FILM-INSTRUCTION (MACHINE SECURITY, CONSOLE)	
	6	1	**206-5208**	1	COIL AS (EXCITER)	
	7	1	**234-1156**	1	COVER	
	8	1	**267-7977**	1	PANEL	
C	9	1	**328-0021**	1	HARNESS AS-CONSOLE	
	10	1	**096-6166**	4	WASHER-HARD (4.5X9X1-MM THK)	
	11	1	**119-5026**	4	SCREW-PAN HEAD (10-16X0.63-IN)	
M	12	1	**6V-9491**	4	SCREW-MACHINE (M4X0.7X20-MM)	

C-CHANGE FROM PREVIOUS TYPE
M-METRIC PART
Y-SEPARATE ILLUSTRATION

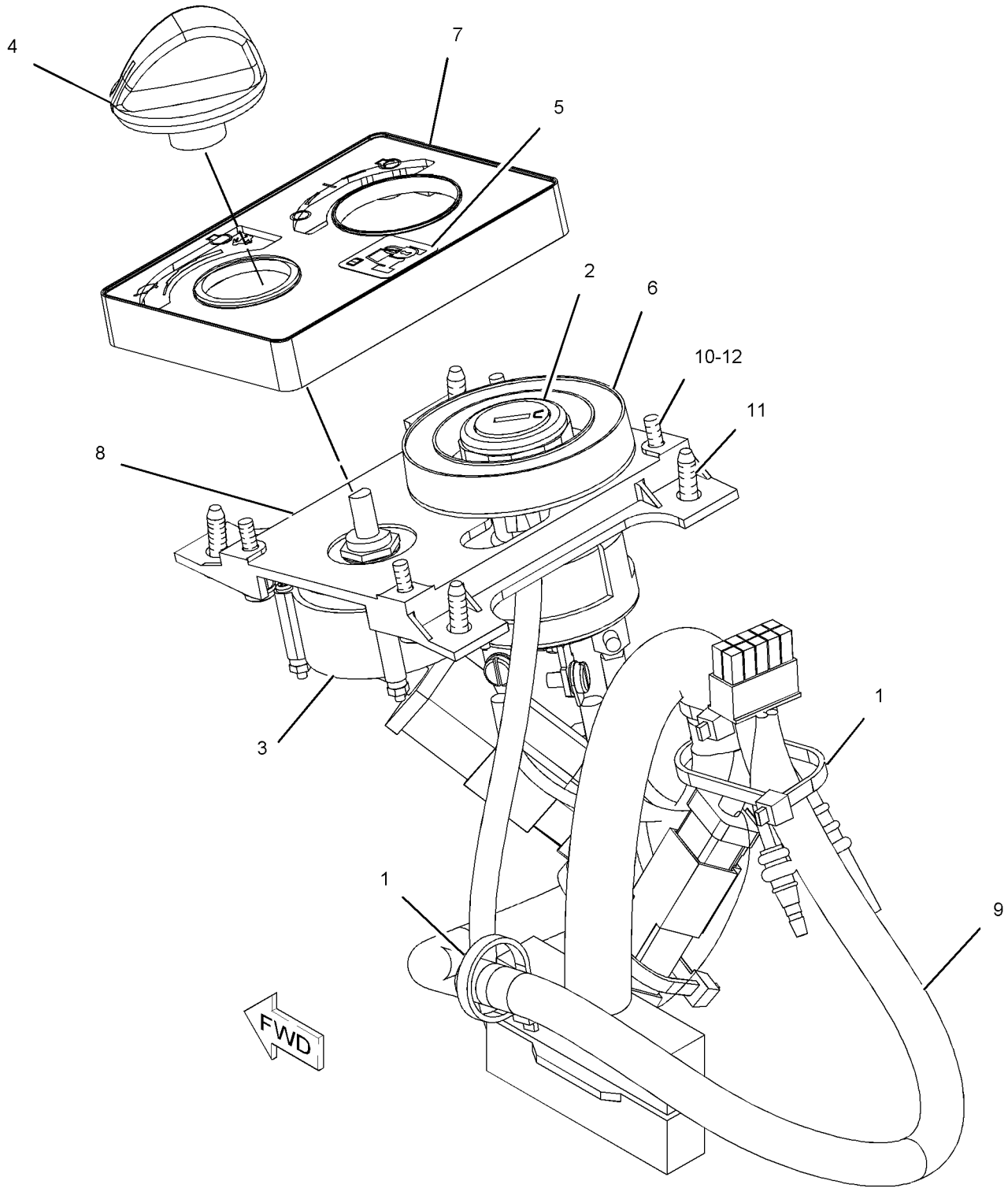

GRAPHIC #1 **<END>** g01123869

235-8200 PLUG GP-CONNECTOR

S/N: KHX1-UP
PART OF 235-8134, 235-8135, 270-2767, 270-2768, 290-0755, 290-0757, 290-0758
ENGINE AR-COMPLETE
ALSO AN ATTACHMENT

SMCS-1403, 1408 **i02951920**

NOTE	REF NO	GRAPHIC REF	PART NUMBER	QTY	PART NAME 1 2 3 4 5 6 (PRODUCT LEVEL)	SEE PAGE
	1	1	**246-9353**	1	PLUG AS	
		1	**102-8806**	1	KIT-RECEPTACLE (8-PIN)	
					(INCLUDES RECEPTACLE AS & WEDGE)	
	2	1	**3S-2093**	1	STRAP-CABLE (PLASTIC)	

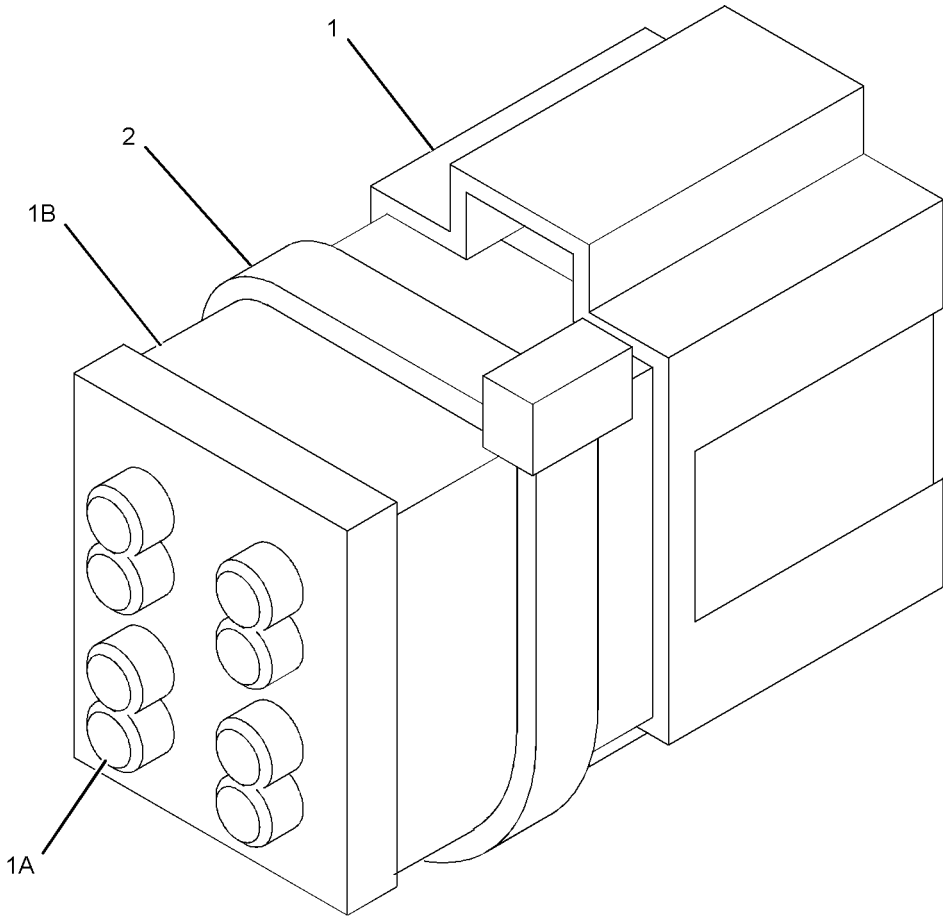

GRAPHIC #1 **<END>** g01105455

292-0291 RECEIVER GP-SATELLITE—DUAL GNSS, MS990

S/N: DFP1-UP; CJX1-UP

PART OF 292-0276 GRADE CONTROL AR-SATELLITE

SMCS-7010 **i03177244**

NOTE	PART NUMBER	QTY	PART NAME 1 2 3 4 5 6 (PRODUCT LEVEL)	SEE PAGE
	252-9628	2	BRACKET AS (RECEIVER)	
			(EACH INCLUDES)	
	8R-1803	5	WASHER (10.5X18X1-MM THK)	
M	**8T-9388**	4	BOLT (M10X1.5X25-MM)	
	113-0693	5	LOCKWASHER	
	289-8449	1	HANDLE AS	
R	**291-1913**	2	RECEIVER AS-SATELLITE (GNSS, MS990)	
	255-0939	1	CASE-PLASTIC (RECEIVER)	
	286-3017	2	HANDLE (RECEIVER)	

M-METRIC PART
R-REMFG PART MAY BE AVAILABLE

<END>

297-5594 SENSOR AR-GRADE—ANGLE SENSOR

S/N: DFP1-UP; CJX1-UP

PART OF 292-0276 GRADE CONTROL AR-SATELLITE

SMCS-5953, 7220 **i03177320**

NOTE	PART NUMBER	QTY	PART NAME 1 2 3 4 5 6 (PRODUCT LEVEL)	SEE PAGE
	265-9492	1	JUNCTION BOX	
	226-9169	1	MODULE AS-POWER SUPPLY	
	244-1720	3	MONITOR AS (LIGHT BAR)	
	265-8047	1	SENSOR AS-POSITION (ANGLE, PITCH)	
	265-8059	3	SENSOR AS-POSITION (ANGLE)	

<END>

257-2186 SENSOR GP-ENGINE

S/N: KHX1-UP
PART OF 235-8134, 270-2767, 270-2768 ENGINE AR-COMPLETE
ALSO AN ATTACHMENT
TYPE 1

SMCS-1000, 1906, 1907, 1924, 7422 **i02353261**

NOTE	REF NO	GRAPHIC REF	PART NUMBER	QTY	PART NAME 1 2 3 4 5 6 (PRODUCT LEVEL)	SEE PAGE
	1	1	**3E-2332**	1	ELBOW	
	2	1	**9X-0262**	1	ADAPTER	
	3	1	*171-6718*	1	TEE AS	
		1	**3K-0360**	1	SEAL-O-RING	
		1	**105-7704**	1	TEE	
Y	4	1	*197-8391*	1	SENSOR GP-TEMPERATURE (AIR INLET MANIFOLD)	326
Y	5	1	*197-8392*	1	SENSOR GP-TEMPERATURE (WATER, COOLANT)	328
Y	6	1	*197-8393*	1	SENSOR GP-PRESSURE (ATMOSPHERIC AIR)	318
Y	7	1	*197-8394*	1	SENSOR GP-PRESSURE (ENGINE OIL)	319
Y	8	1	*210-1747*	1	SENSOR GP-PRESSURE (BOOST)	320
Y	9	1	*236-6220*	1	SENSOR GP-PRESSURE (INJECTION ACTUATION)	322
Y	10	1	*236-6221*	1	SENSOR GP-SPEED (ENGINE TIMING) (ENGINE TIMING)	325
	11	1	*169-5861*	1	PLUG AS	
		1	**3K-8460**	1	PLUG	
		1	**5P-7814**	1	SEAL-O-RING	
	12	1	*183-3406*	2	PLUG AS	
					(EACH INCLUDES)	
		1	**6V-5049**	1	SEAL-O-RING	
		1	**9S-4191**	1	PLUG-O-RING	
	13	1	**3E-4352**	1	WASHER-HARD (8.8X20.5X2.5-MM THK)	
M	14	1	**6V-3940**	1	BOLT (M8X1.25X25-MM)	
	15	1	**6V-5048**	1	SEAL-O-RING	
	16	1	**6V-5049**	1	SEAL-O-RING	

M-METRIC PART
Y-SEPARATE ILLUSTRATION

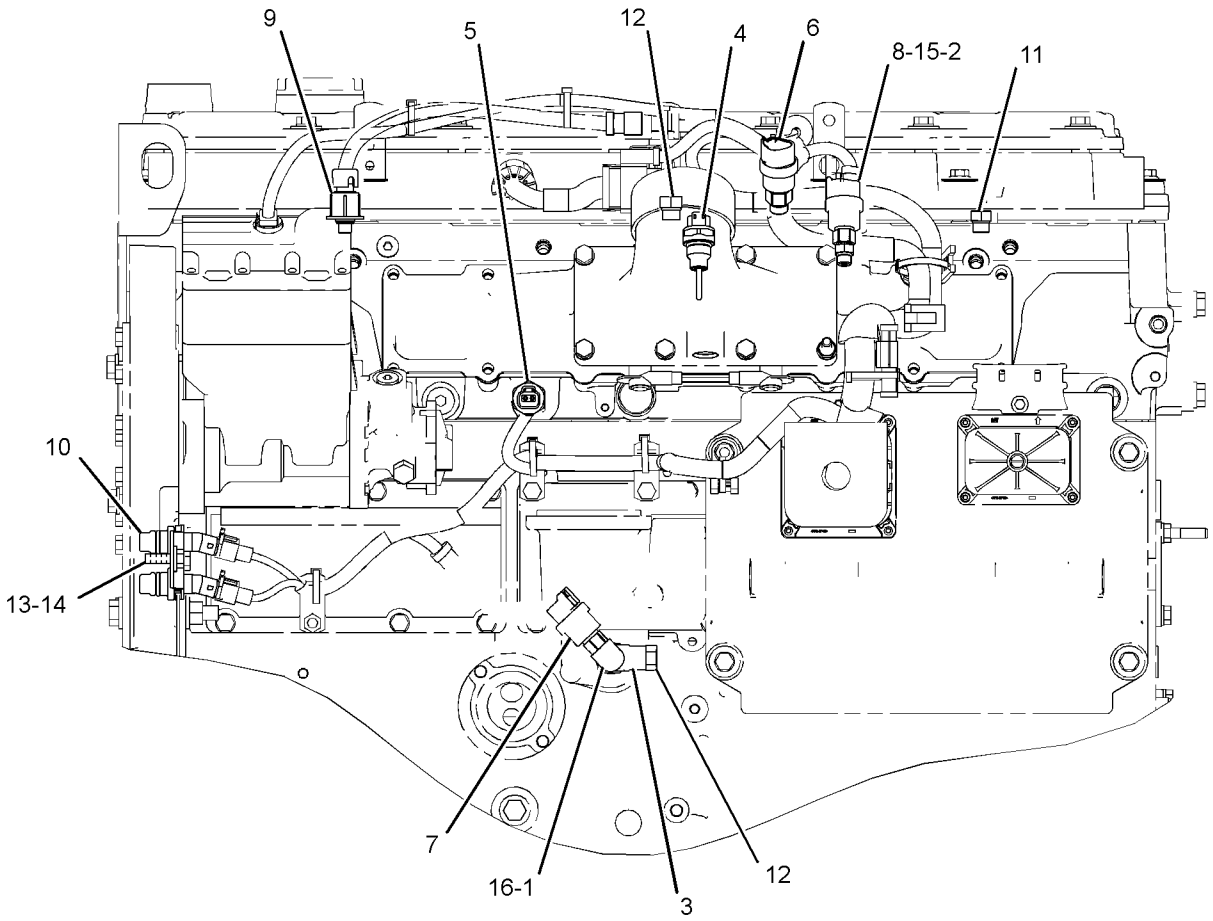

LEFT SIDE VIEW

GRAPHIC #1

<END>

g01152754

257-2186 SENSOR GP-ENGINE

S/N: KHX1-UP
PART OF 235-8134, 235-8135, 270-2767, 270-2768, 290-0755, 290-0757, 290-0758
ENGINE AR-COMPLETE
ALSO AN ATTACHMENT
TYPE 2

SMCS-1000, 1906, 1907, 1924, 7422 **i02421127**

NOTE	REF NO	GRAPHIC REF	PART NUMBER	QTY	PART NAME 1 2 3 4 5 6 (PRODUCT LEVEL)	SEE PAGE
	1	1	**3E-2332**	1	ELBOW	
	2	1	**9X-0262**	1	ADAPTER	
	3	1	*171-6718*	1	TEE AS	
		1	**3K-0360**	1	SEAL-O-RING	
		1	**105-7704**	1	TEE	
CY	4	1	*274-7395*	1	SENSOR GP-TEMPERATURE (AIR INLET MANIFOLD)	329
CY	5	1	*274-7396*	1	SENSOR GP-TEMPERATURE (WATER, COOLANT)	330
Y	6	1	*197-8393*	1	SENSOR GP-PRESSURE (ATMOSPHERIC AIR)	318
Y	7	1	*197-8394*	1	SENSOR GP-PRESSURE (ENGINE OIL)	319
Y	8	1	*210-1747*	1	SENSOR GP-PRESSURE (BOOST)	320
Y	9	1	*236-6220*	1	SENSOR GP-PRESSURE (INJECTION ACTUATION)	322
Y	10	1	*236-6221*	1	SENSOR GP-SPEED (ENGINE TIMING) (ENGINE TIMING)	325
	11	1	*169-5861*	1	PLUG AS	
		1	**3K-8460**	1	PLUG	
		1	**5P-7814**	1	SEAL-O-RING	
	12	1	*183-3406*	2	PLUG AS	
					(EACH INCLUDES)	
		1	**6V-5049**	1	SEAL-O-RING	
		1	**9S-4191**	1	PLUG-O-RING	
	13	1	**3E-4352**	1	WASHER-HARD (8.8X20.5X2.5-MM THK)	
M	14	1	**6V-3940**	1	BOLT (M8X1.25X25-MM)	
	15	1	**6V-5048**	1	SEAL-O-RING	
	16	1	**6V-5049**	1	SEAL-O-RING	

C-CHANGE FROM PREVIOUS TYPE
M-METRIC PART
Y-SEPARATE ILLUSTRATION

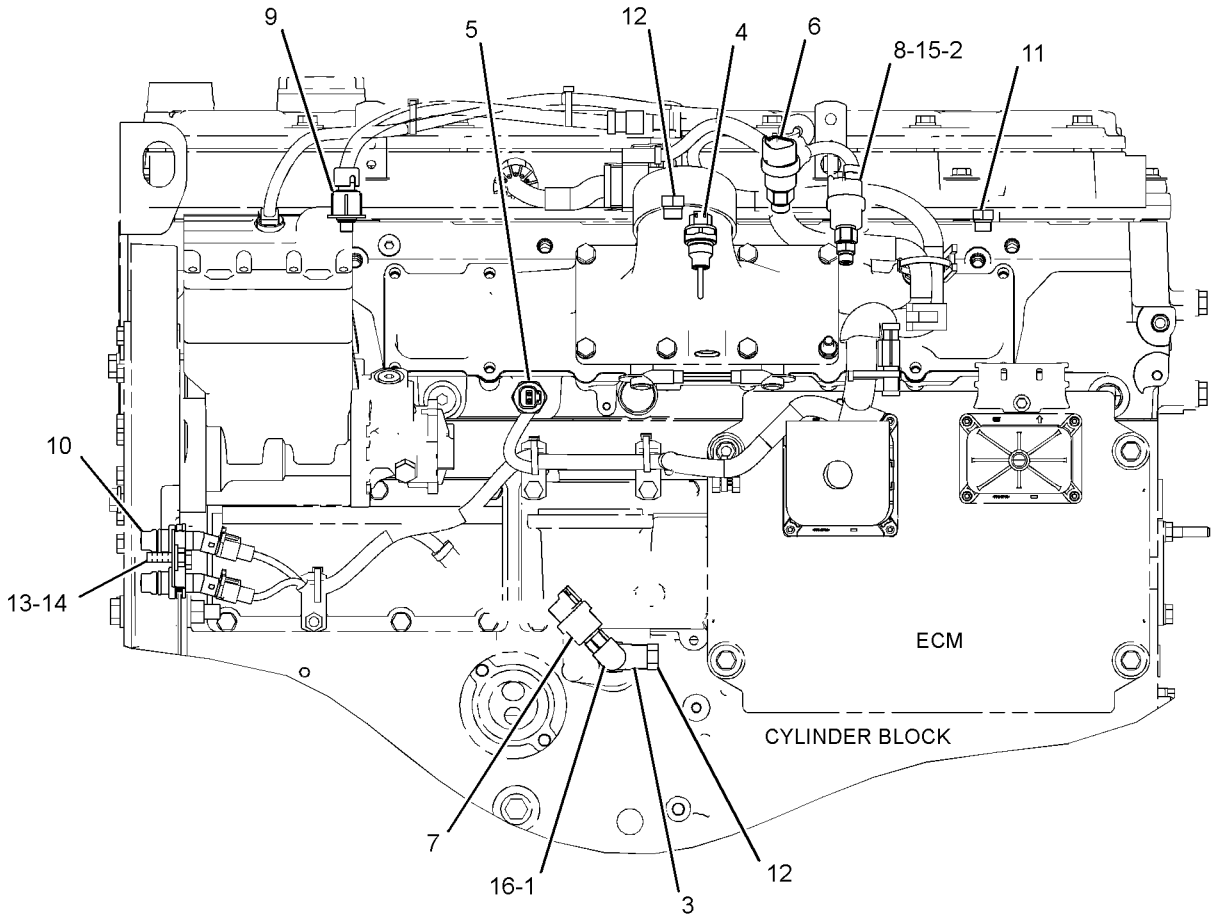

LEFT SIDE VIEW

GRAPHIC #1 **<END>** g01216474

194-6725 SENSOR GP-PRESSURE–FUEL

S/N: DFP1-UP; CJX1-UP
PART OF 239-2396 SENSOR GP-PRESSURE
ALSO AN ATTACHMENT

SMCS-1439, 1916, 1917, 1923, 1924 **i02819906**

NOTE	REF NO	GRAPHIC REF	PART NUMBER	QTY	PART NAME 1 2 3 4 5 6 (PRODUCT LEVEL)	SEE PAGE
E	1	1	**9X-1813**		SLEEVE (34-CM)	
	2	1	**155-2260**	1	KIT-CONNECTING PLUG (3-PIN)	
					(INCLUDES PLUG AS AND WEDGE)	
	3	1	**194-5226**	3	WIRE AS-HARNESS (16-GA TO 18-GA)	
	4	1	**3E-3368**	1	WEDGE-PLUG LOCK (3-PIN)	

E-ORDER BY THE CENTIMETER

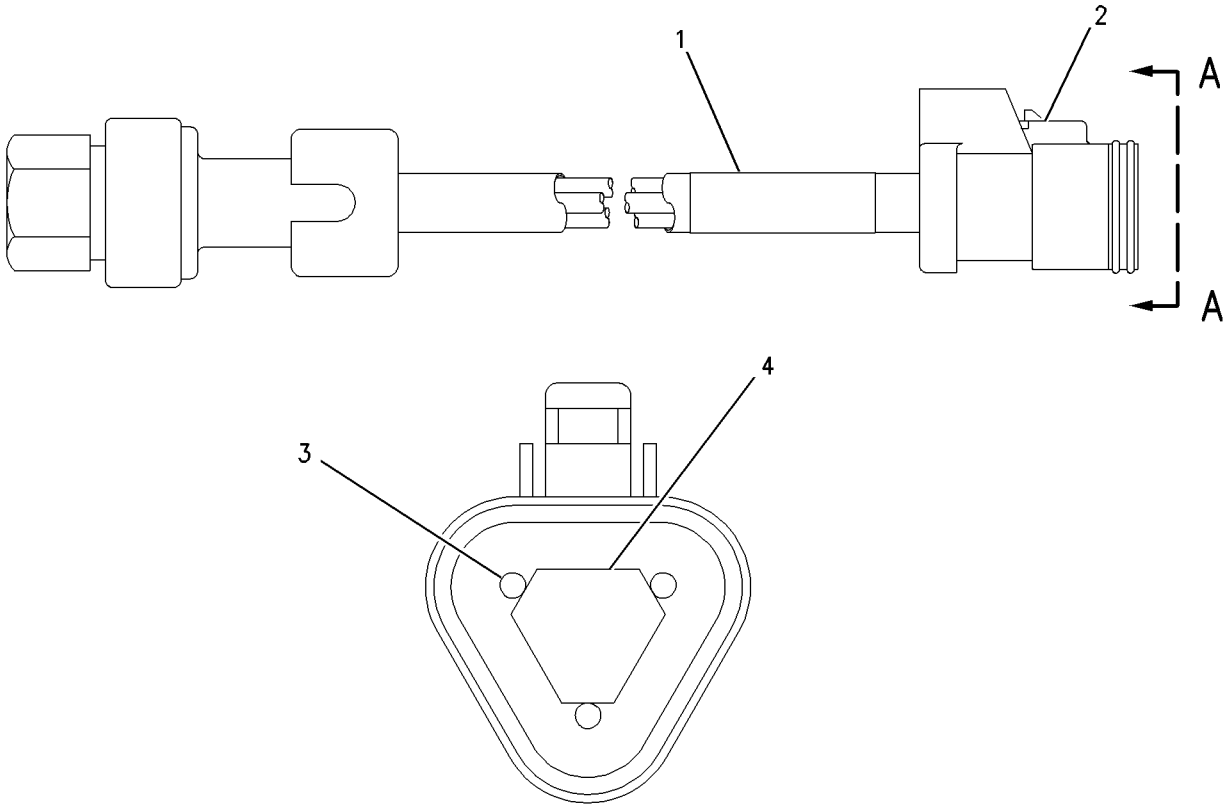

VIEW A-A

GRAPHIC #1 **<END>** g00851220

197-8393 SENSOR GP-PRESSURE

S/N: KHX1-UP
PART OF 257-2186 SENSOR GP-ENGINE
ALSO AN ATTACHMENT

SMCS-1439, 1916, 1917, 1923, 1924 **i02274095**

NOTE	REF NO	GRAPHIC REF	PART NUMBER	QTY	PART NAME 1 2 3 4 5 6 (PRODUCT LEVEL)	SEE PAGE
	1	1	**161-1703**	1	SENSOR GP-PRESSURE	
	2	1	**6V-5049**	1	SEAL-O-RING	

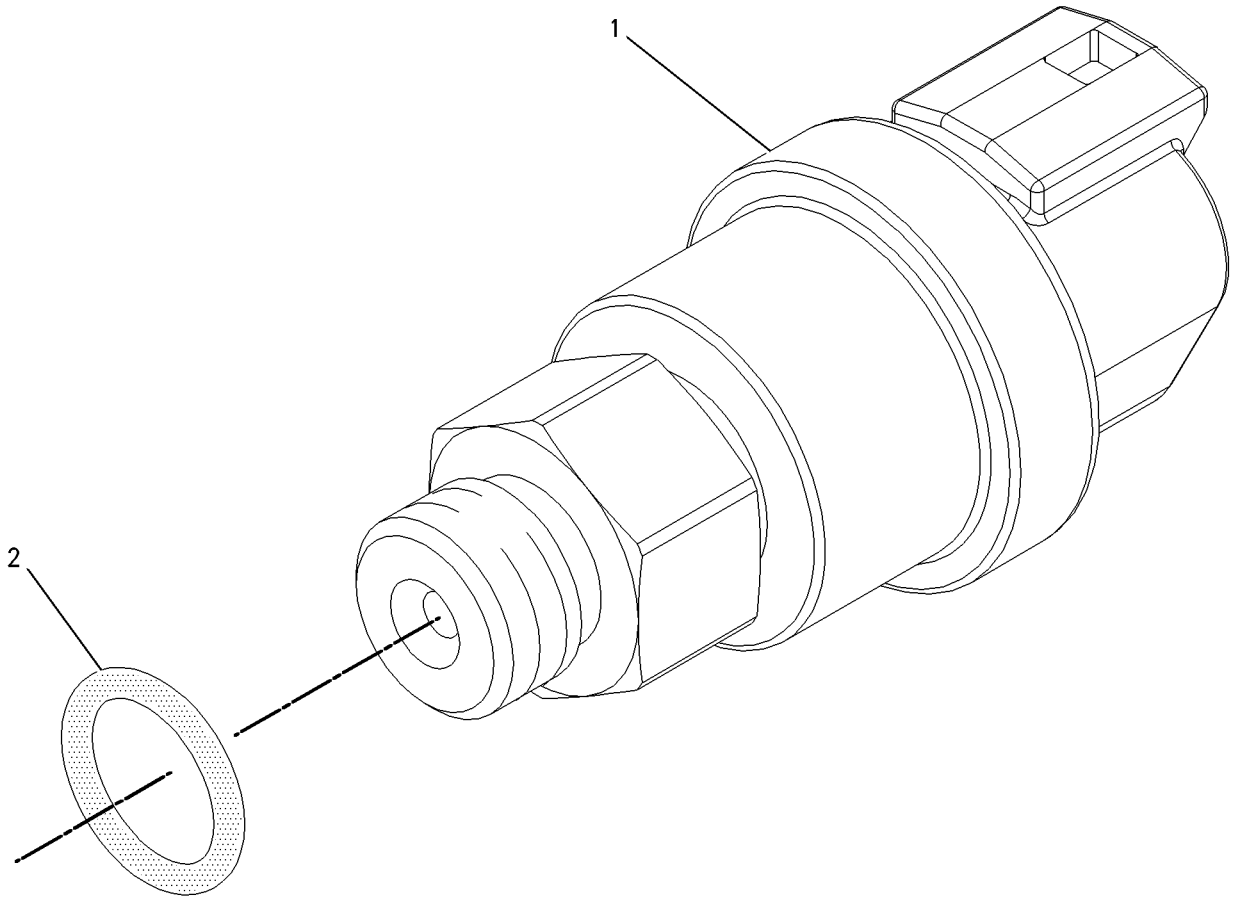

GRAPHIC #1 **<END>** g00855973

197-8394 SENSOR GP-PRESSURE

S/N: KHX1-UP

PART OF 257-2186 SENSOR GP-ENGINE

ALSO AN ATTACHMENT

SMCS-1439, 1916, 1917, 1923, 1924 **i02274098**

NOTE	REF NO	GRAPHIC REF	PART NUMBER	QTY	PART NAME 1 2 3 4 5 6 (PRODUCT LEVEL)	SEE PAGE
	1	1	**161-1705**	1	SENSOR AS-PRESSURE	
	2	1	**6V-5048**	1	SEAL-O-RING	

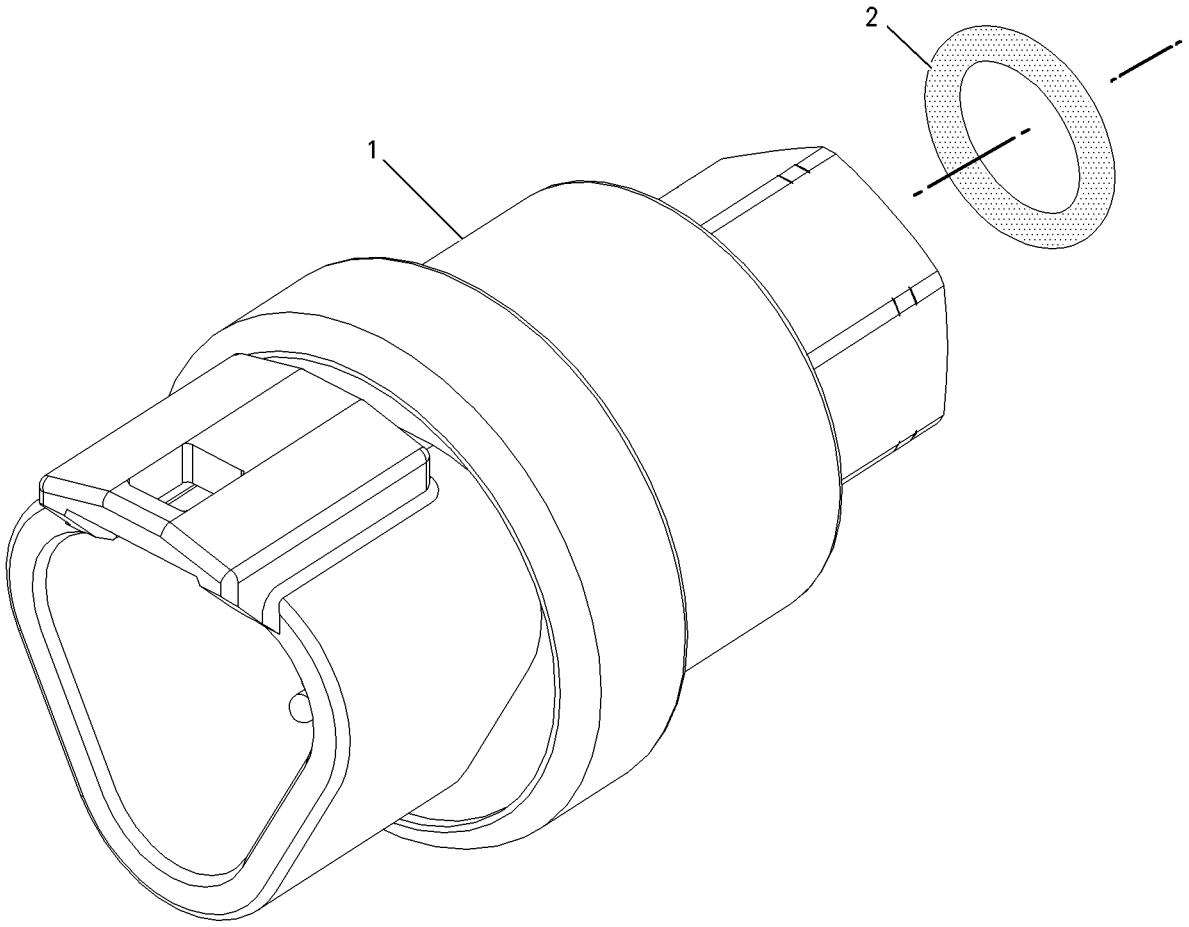

GRAPHIC #1 **<END>** g00856107

210-1747 SENSOR GP-PRESSURE

S/N: KHX1-UP
PART OF 257-2186 SENSOR GP-ENGINE
ALSO AN ATTACHMENT

SMCS-1439, 1916, 1917, 1923, 1924 **i02274100**

NOTE	REF NO	GRAPHIC REF	PART NUMBER	QTY	PART NAME 1 2 3 4 5 6 (PRODUCT LEVEL)	SEE PAGE
	1	1	**161-1704**	1	SENSOR GP-PRESSURE	
	2	1	**6V-5048**	1	SEAL-O-RING	

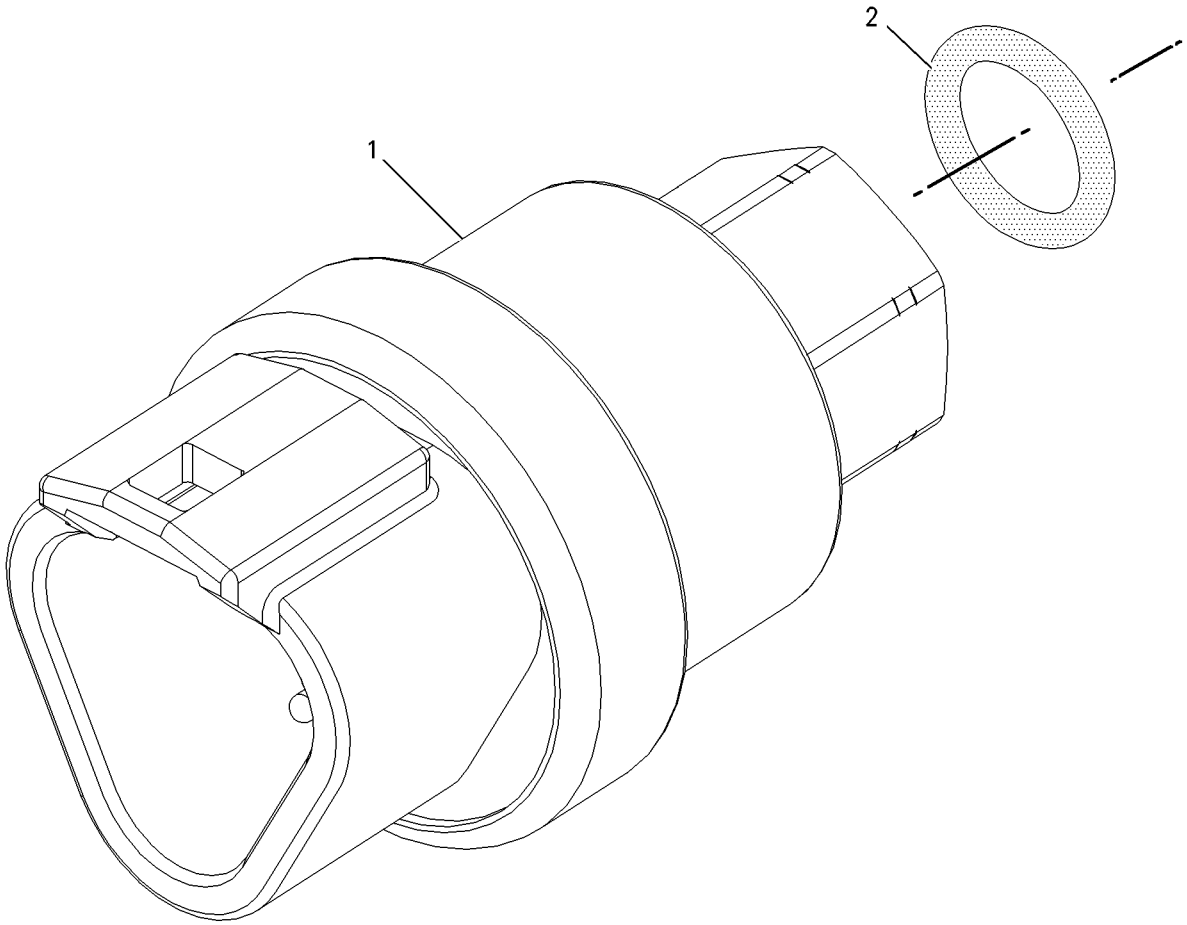

GRAPHIC #1 **<END>** g00856107

224-4536 SENSOR GP-PRESSURE

S/N: KHX1-UP

PART OF 236-6220 SENSOR GP-PRESSURE

ALSO AN ATTACHMENT

SMCS-1439, 1916, 1917, 1923, 1924 **i02154693**

NOTE	REF NO	GRAPHIC REF	PART NUMBER	QTY	PART NAME 1 2 3 4 5 6 (PRODUCT LEVEL)	SEE PAGE
E	1	1	**9X-1813**		SLEEVE (35-CM)	
	2	1	**155-2260**	1	KIT-CONNECTING PLUG (3-PIN)	
					(INCLUDES PLUG AS AND WEDGE)	
	3	1	**194-5226**	1	WIRE AS-HARNESS (16-GA TO 18-GA) (INJECTION ACTUATION)	
					—OR—	
		1	**194-5227**	1	WIRE AS-HARNESS (14-GA WIRE) (INJECTION ACTUATION)	
	4	1	**155-2276**	1	WEDGE-PLUG LOCK (3-PIN)	

E-ORDER BY THE CENTIMETER

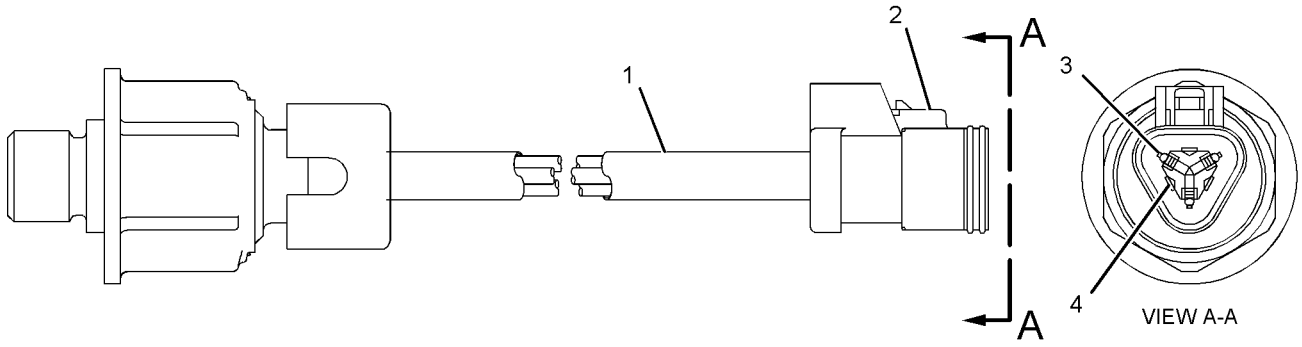

GRAPHIC #1 **<END>** g01040301

236-6220 SENSOR GP-PRESSURE

S/N: KHX1-UP
PART OF 257-2186 SENSOR GP-ENGINE
ALSO AN ATTACHMENT

SMCS-1439, 1916, 1917, 1923, 1924 **i02096855**

NOTE	REF NO	GRAPHIC REF	PART NUMBER	QTY	PART NAME 1 2 3 4 5 6 (PRODUCT LEVEL)	SEE PAGE
	1	1	**214-7567**	1	SEAL-O-RING	
Y	2	1	**224-4536**	1	SENSOR GP-PRESSURE	321

Y-SEPARATE ILLUSTRATION

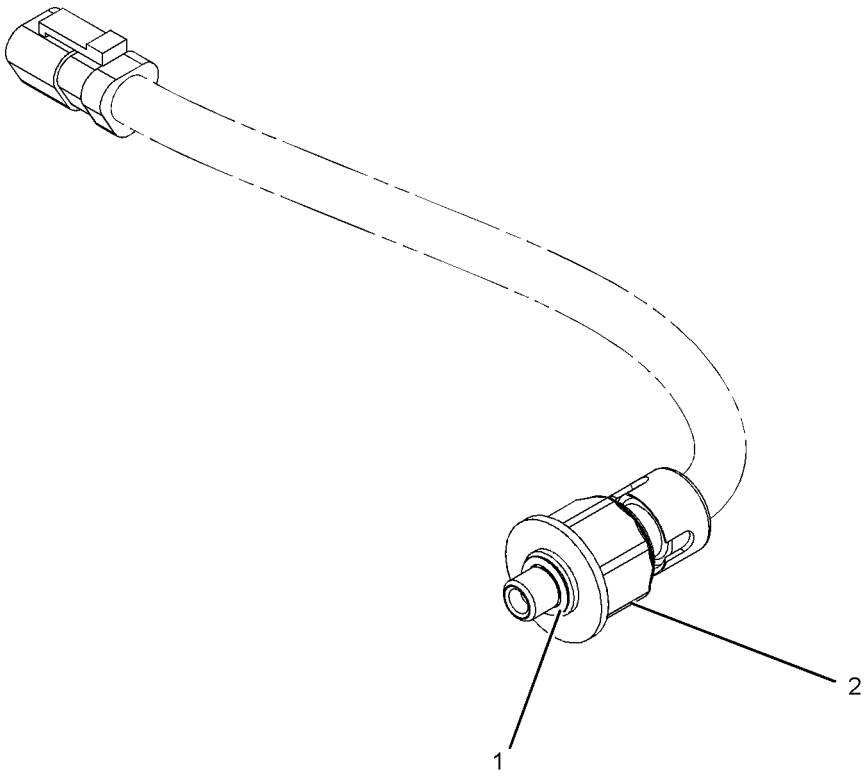

GRAPHIC #1 **<END>** g01054528

239-2396 SENSOR GP-PRESSURE–FUEL

S/N: DFP1-UP; CJX1-UP
PART OF 223-3046, 259-3885 LINES GP-FUEL
ALSO AN ATTACHMENT

SMCS-1439, 1916, 1917, 1923, 1924 **i02973768**

NOTE	REF NO	GRAPHIC REF	PART NUMBER	QTY	PART NAME 1 2 3 4 5 6 (PRODUCT LEVEL)	SEE PAGE
Y	1	1	**194-6725**	1	SENSOR GP-PRESSURE	317
	2	1	**6V-5048**	1	SEAL-O-RING	

Y-SEPARATE ILLUSTRATION

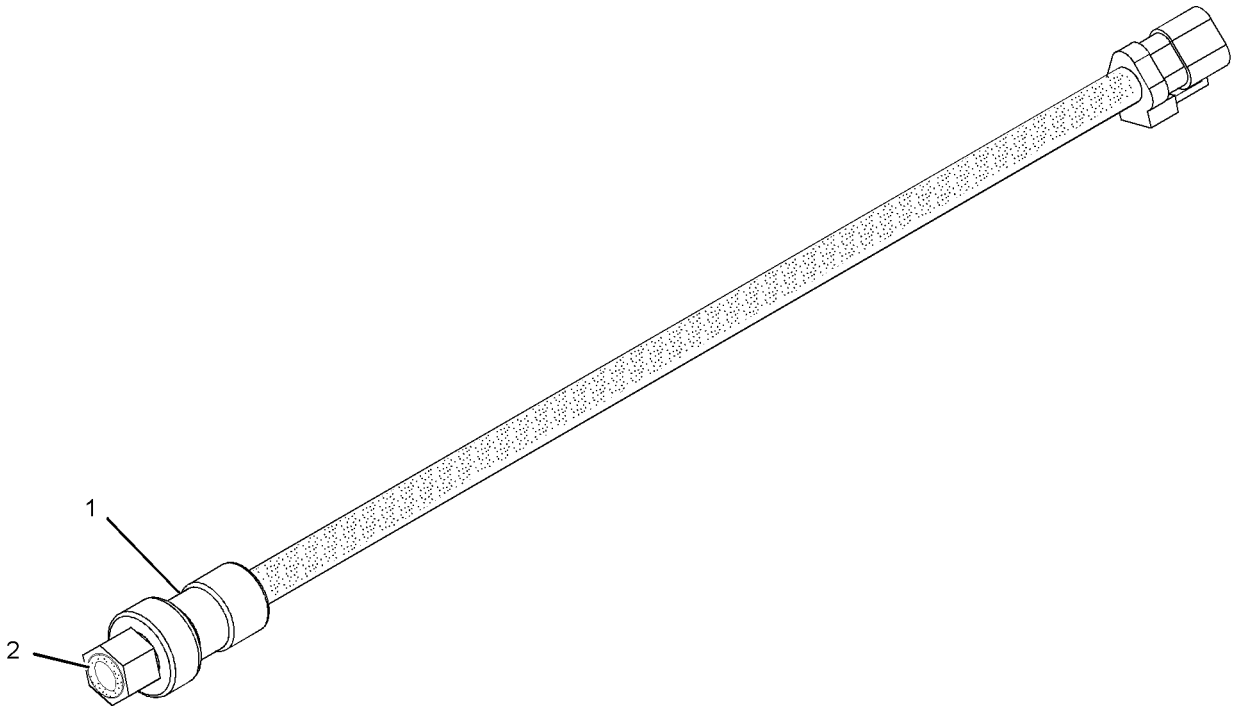

GRAPHIC #1 **<END>** g01019323

190-6186 SENSOR GP-SPEED

S/N: KHX1-UP
PART OF 235-8134, 235-8135, 270-2767, 270-2768, 290-0755, 290-0757, 290-0758
ENGINE AR-COMPLETE
ALSO AN ATTACHMENT

SMCS-1907, 1912, 4803, 7493 **i01518767**

NOTE	REF NO	GRAPHIC REF	PART NUMBER	QTY	PART NAME 1 2 3 4 5 6 (PRODUCT LEVEL)	SEE PAGE
	1	1	**188-2128**	1	PLUG AS	
		1	**8T-8737**	2	PLUG-SEAL	
		1	**155-2270**	1	KIT-CONNECTING PLUG (2-PIN)	
					(KIT INCLUDES PLUG AS AND WEDGE)	
	2	1	**189-5746**	1	SENSOR GP-SPEED (ENGINE)	
		1	**171-5349**	1	STRAP-MARKER	
		1	**102-8802**	1	KIT-RECEPTACLE (2-PIN)	
					(KIT INCLUDES RECEPTACLE AS AND WEDGE)	
		1	**186-3735**	2	PIN-CONNECTOR (16-GA TO 18-GA)	
E		1	**9X-1386**		SLEEVE	

E-ORDER BY THE CENTIMETER

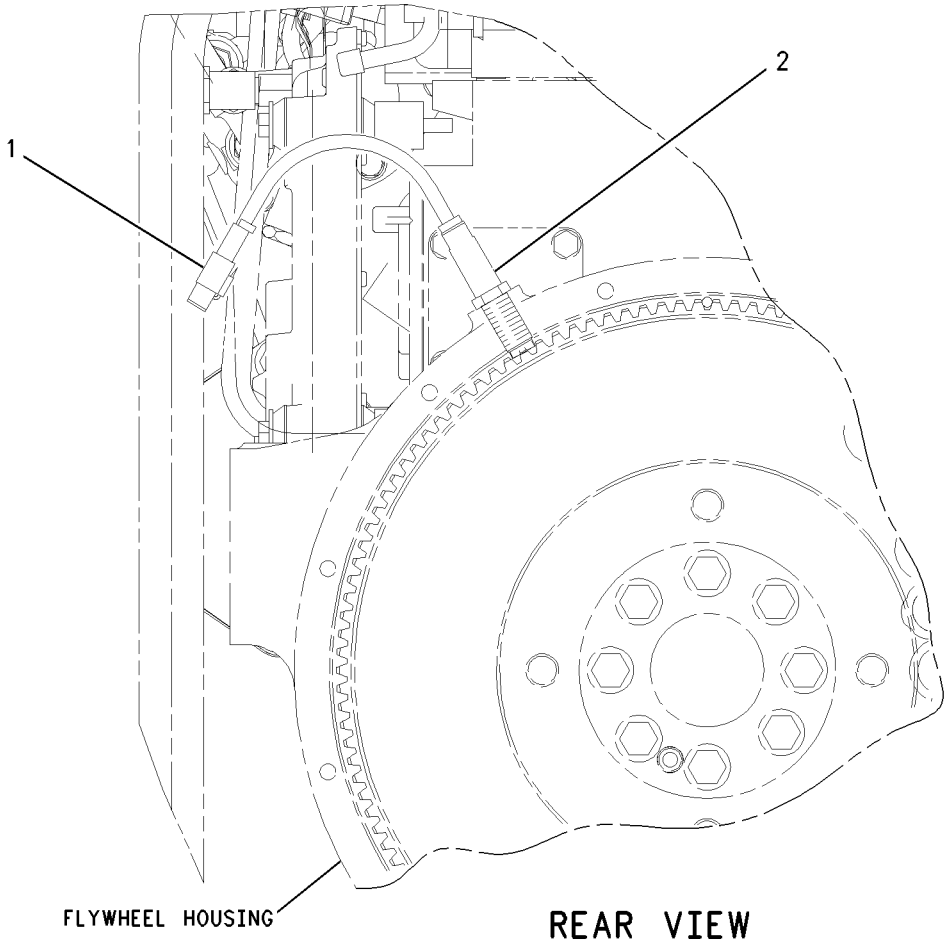

GRAPHIC #1 **<END>** g00777915

236-6221 SENSOR GP-SPEED

S/N: KHX1-UP
PART OF 257-2186 SENSOR GP-ENGINE
ALSO AN ATTACHMENT

SMCS-1907, 1912, 4803, 7493 **i02096853**

NOTE	REF NO	GRAPHIC REF	PART NUMBER	QTY	PART NAME 1 2 3 4 5 6 (PRODUCT LEVEL)	SEE PAGE
	1	1	**203-3940**	2	SEAL-O-RING	
	2	1	**245-4630**	1	SENSOR GP-SPEED (ENGINE TIMING)	

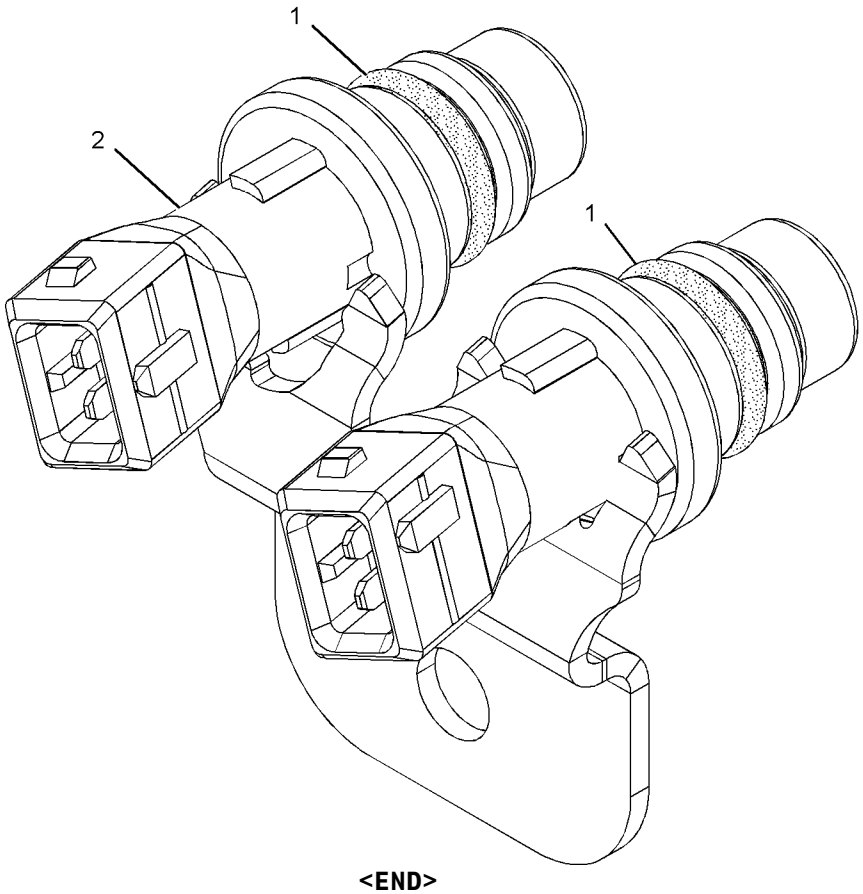

GRAPHIC #1 **<END>** g01013894

197-8391 SENSOR GP-TEMPERATURE

PART OF 223-3046, 259-3885 LINES GP-FUEL, 257-2186 SENSOR GP-ENGINE
ALSO AN ATTACHMENT

SMCS-1906, 1921, 1922, 1928, 1929, 3290, 7344 **i02742298**

NOTE	REF NO	GRAPHIC REF	PART NUMBER	QTY	PART NAME 1 2 3 4 5 6 (PRODUCT LEVEL)	SEE PAGE
	1	1	**130-9811**	1	SENSOR GP-TEMPERATURE (FUEL)	
	2	1	**8L-2786**	1	SEAL-O-RING	

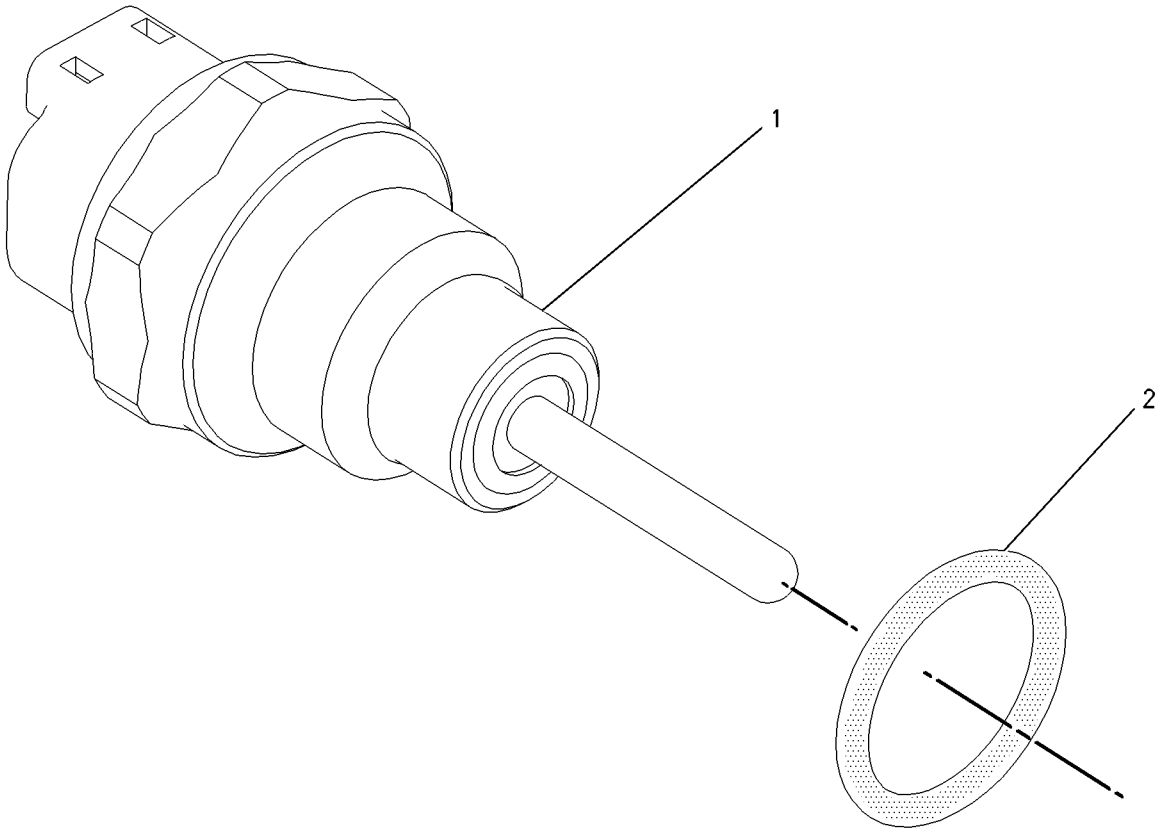

GRAPHIC #1 **<END>** g00856011

197-8391 SENSOR GP-TEMPERATURE

S/N: DFP1-UP; CJX1-UP
PART OF 223-3046, 259-3885 LINES GP-FUEL
ALSO AN ATTACHMENT

SMCS-1906, 1921, 1922, 1928, 1929, 3290, 7344 **i02742297**

NOTE	REF NO	GRAPHIC REF	PART NUMBER	QTY	PART NAME 1 2 3 4 5 6 (PRODUCT LEVEL)	SEE PAGE
C	1	1	**264-4297**	1	SENSOR GP-TEMPERATURE (FUEL)	
		1	**137-6645**		PAD	
	2	1	**8L-2786**	1	SEAL-O-RING	

C-CHANGE FROM PREVIOUS TYPE

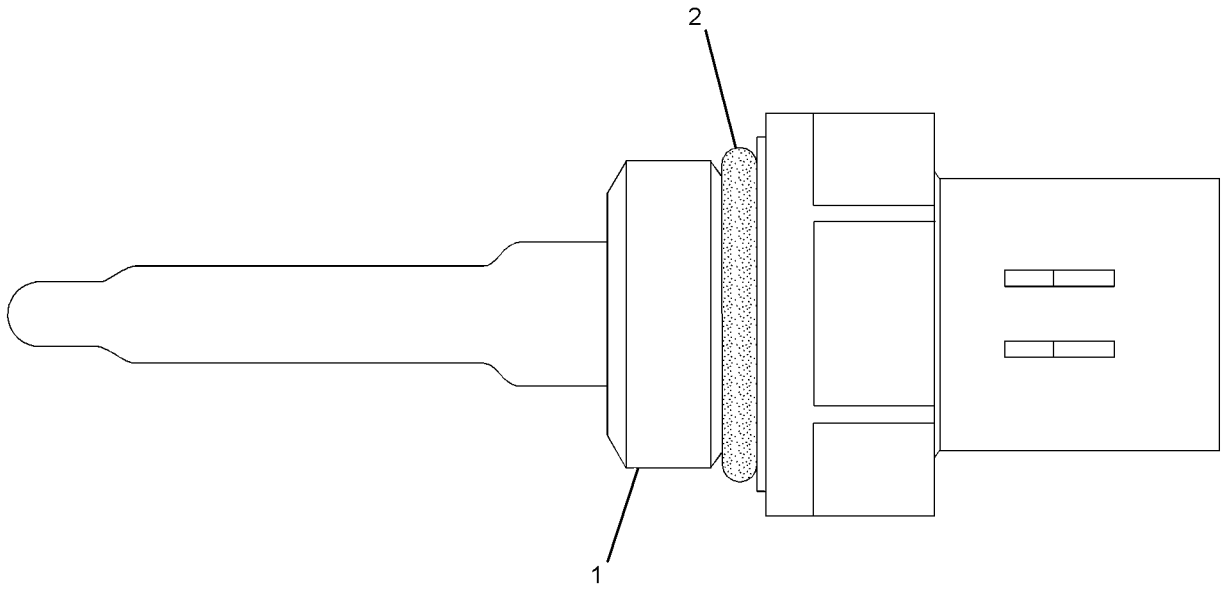

GRAPHIC #1 **<END>** g01164268

197-8392 SENSOR GP-TEMPERATURE

S/N: KHX1-UP
PART OF 257-2186 SENSOR GP-ENGINE
ALSO AN ATTACHMENT

SMCS-1906, 1921, 1922, 1928, 1929, 3290, 7344 **i02096841**

NOTE	REF NO	GRAPHIC REF	PART NUMBER	QTY	PART NAME 1 2 3 4 5 6 (PRODUCT LEVEL)	SEE PAGE
	1	1	**130-9811**	1	SENSOR GP-TEMPERATURE	
	2	1	**6V-6609**	1	SEAL-O-RING	

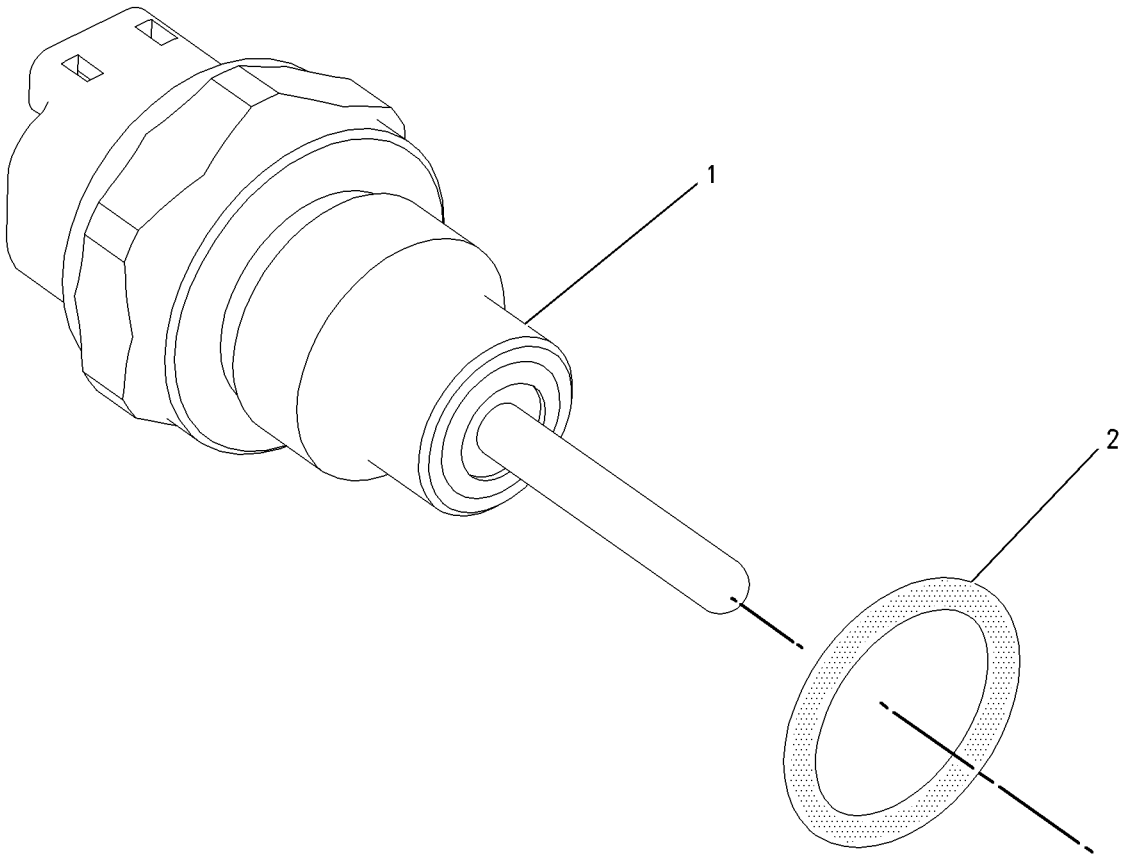

GRAPHIC #1 **<END>** g00856005

274-7395 SENSOR GP-TEMPERATURE

S/N: KHX1-UP
PART OF 257-2186 SENSOR GP-ENGINE
ALSO AN ATTACHMENT

SMCS-1906, 1921, 1922, 1928, 1929, 3290, 7344 **i02397686**

NOTE	REF NO	GRAPHIC REF	PART NUMBER	QTY	PART NAME 1 2 3 4 5 6 (PRODUCT LEVEL)	SEE PAGE
	1	1	**130-9811**	1	SENSOR GP-TEMPERATURE	
	2	1	**8L-2786**	1	SEAL-O-RING	

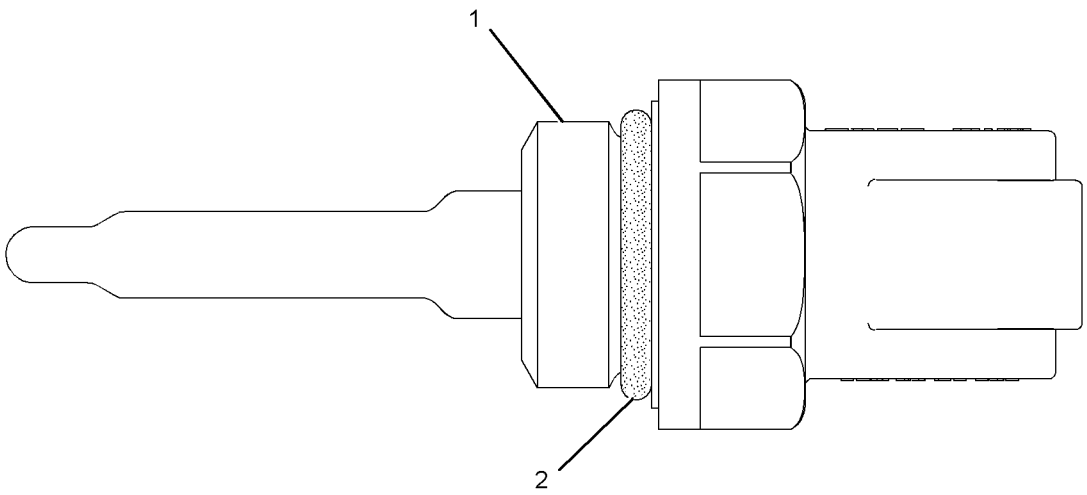

GRAPHIC #1 **<END>** g01199840

274-7396 SENSOR GP-TEMPERATURE

S/N: KHX1-UP
PART OF 257-2186 SENSOR GP-ENGINE
ALSO AN ATTACHMENT

SMCS-1906, 1921, 1922, 1928, 1929, 3290, 7344 **i02403863**

NOTE	REF NO	GRAPHIC REF	PART NUMBER	QTY	PART NAME 1 2 3 4 5 6 (PRODUCT LEVEL)	SEE PAGE
	1	1	**130-9811**	1	SENSOR GP-TEMPERATURE	
	2	1	**6V-6609**	1	SEAL-O-RING	

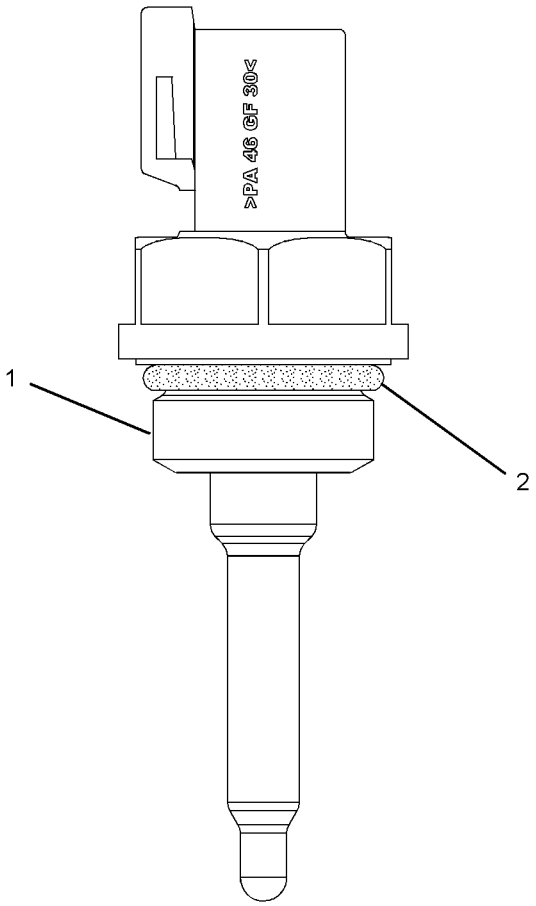

GRAPHIC #1 **<END>** g01193032

231-3949 STARTING AID GP

S/N: KHX1-302
PART OF 235-8134 ENGINE AR-COMPLETE
AN ATTACHMENT

SMCS-1090 **i02352982**

NOTE	REF NO	GRAPHIC REF	PART NUMBER	QTY	PART NAME 1 2 3 4 5 6 (PRODUCT LEVEL)	SEE PAGE
	2	1	**117-7032**	1	WIRE AS	
	3	1	**193-9141**	2	COVER-TERMINAL	
Y	4	1	**223-7577**	1	SWITCH GP-MAGNETIC (AIR INLET HEATER)	349
M	5	1	**6V-2317**	4	BOLT (M8X1.25X30-MM)	
M	6	1	**6V-5192**	1	BOLT-SOCKET HEAD (M8X1.25X30-MM)	
M	7	1	**6V-5218**	2	BOLT (M8X1.25X35-MM)	
	8	1	**9M-1974**	7	WASHER-HARD (8.8X16X2-MM THK)	

M-METRIC PART
Y-SEPARATE ILLUSTRATION

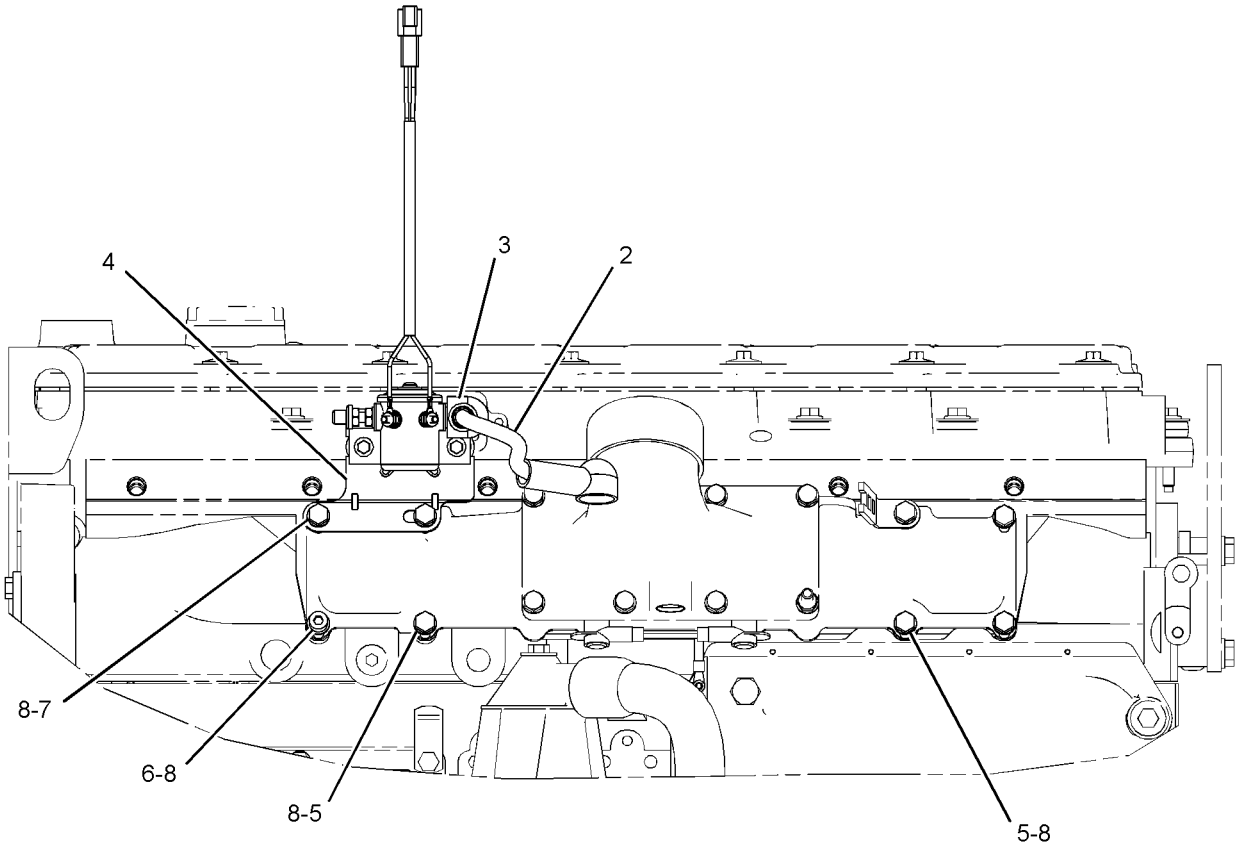

GRAPHIC #1 **<END>** g01150929

249-9223 STARTING AID GP

S/N: KHX1-UP
24-VOLT FRONT
PART OF 235-8134, 270-2767, 270-2768 ENGINE AR-COMPLETE
ALSO AN ATTACHMENT
TYPE 1

SMCS-1090 **i02485086**

NOTE	REF NO	GRAPHIC REF	PART NUMBER	QTY	PART NAME 1 2 3 4 5 6 (PRODUCT LEVEL)	SEE PAGE
	1	1	**3E-4352**	2	WASHER-HARD (8.8X20.5X2.5-MM THK)	
	2	1	**229-8851**	1	CABLE AS	
E		1	**6V-9023**		TUBE-HEAT SHRINK (12.7-MM DIA) (3-CM)	
		1	**030-1712**	1	TERMINAL-RING (2-GA, 6.35-MM)	
		1	**135-2543**	1	BOOT	
Y	3	1	**223-7577**	1	SWITCH GP-MAGNETIC (AIR INLET HEATER)	349
M	4	1	**6V-2317**	4	BOLT (M8X1.25X30-MM)	
M	5	1	**6V-5192**	1	BOLT-SOCKET HEAD (M8X1.25X30-MM)	
	6	1	**5B-5492**	1	WASHER	
	7	1	**9M-1974**	5	WASHER-HARD (8.8X16X2-MM THK)	
M	8	1	**5P-7970**	2	NUT (M8X1.25-THD)	
	9	1	**210-3321**	2	STUD (M8X1.25-THD)	

E-ORDER BY THE CENTIMETER
M-METRIC PART
Y-SEPARATE ILLUSTRATION

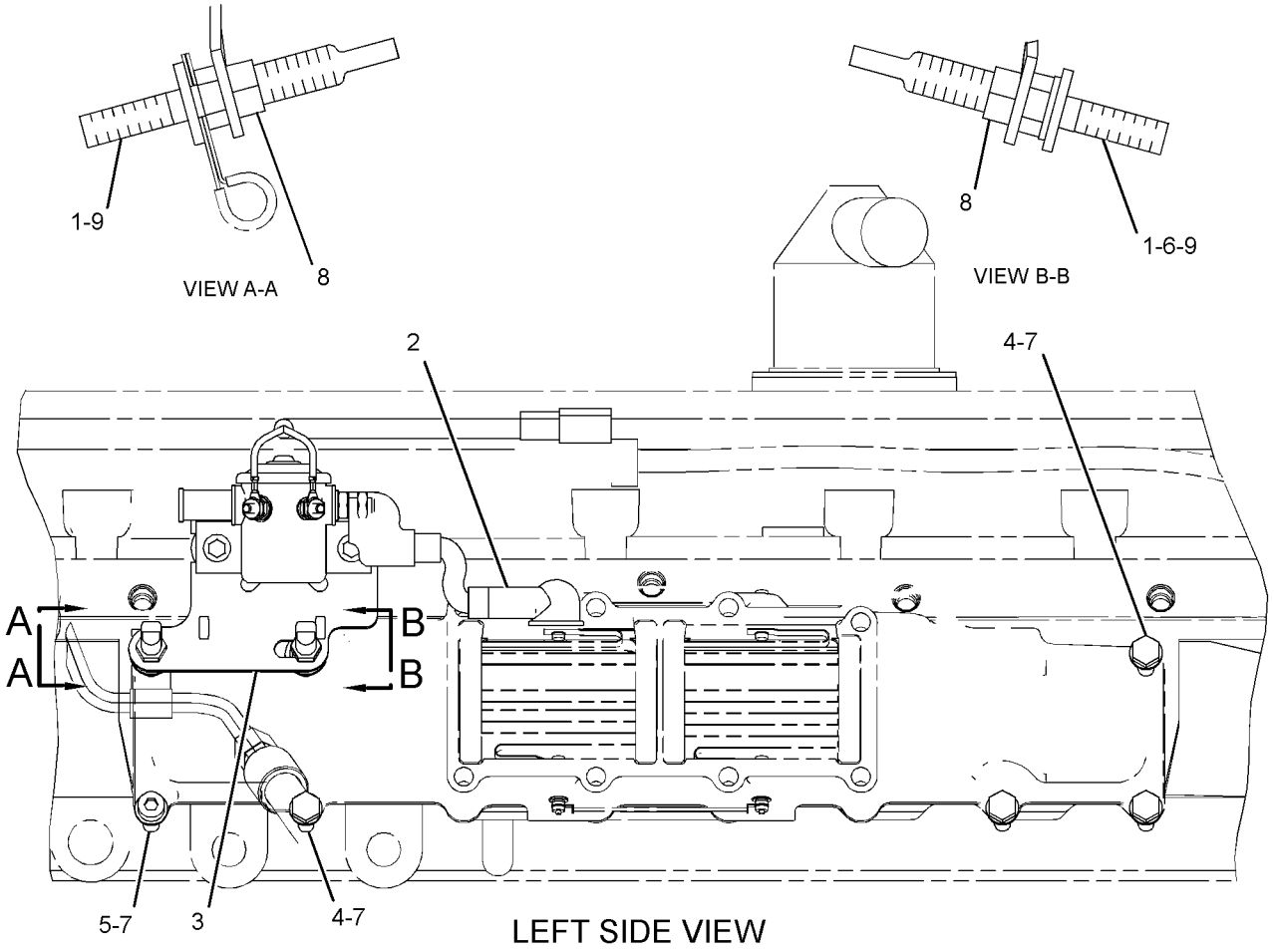

GRAPHIC #1 **<END>** g01215621

249-9223 STARTING AID GP

S/N: KHX1-UP
24-VOLT FRONT
PART OF 235-8134, 235-8135, 270-2767, 270-2768, 290-0755, 290-0757, 290-0758
ENGINE AR-COMPLETE
ALSO AN ATTACHMENT
TYPE 2

SMCS-1090 **i02616595**

NOTE	REF NO	GRAPHIC REF	PART NUMBER	QTY	PART NAME 1 2 3 4 5 6 (PRODUCT LEVEL)	SEE PAGE
Y	1	1	**209-5582**	1	SWITCH GP-MAGNETIC (24-VOLT) (AIR INLET HEATER RELAY)	348
	2	1	**229-8851**	1	CABLE AS	
E		1	**6V-9023**		TUBE-HEAT SHRINK (12.7-MM DIA) (3-CM)	
		1	**030-1712**	1	TERMINAL-RING (2-GA, 6.35-MM)	
		1	**135-2543**	1	BOOT	
	3	1	**283-1224**	1	BRACKET AS	
	4	1	**208-9277**	2	BOLT-FLANGE HEAD (M8X1X25-MM)	
M	5	1	**208-9282**	4	BOLT (M8X1.25X25-MM)	
	6	1	**208-9283**	2	BOLT-FLANGE HEAD (M8X1.25X30-MM)	
M	7	1	**6V-5192**	1	BOLT-SOCKET HEAD (M8X1.25X30-MM)	
	8	1	**9M-1974**	1	WASHER-HARD (8.8X16X2-MM THK)	
	9	1	**3S-2093**	1	STRAP-CABLE	

E-ORDER BY THE CENTIMETER
M-METRIC PART
Y-SEPARATE ILLUSTRATION

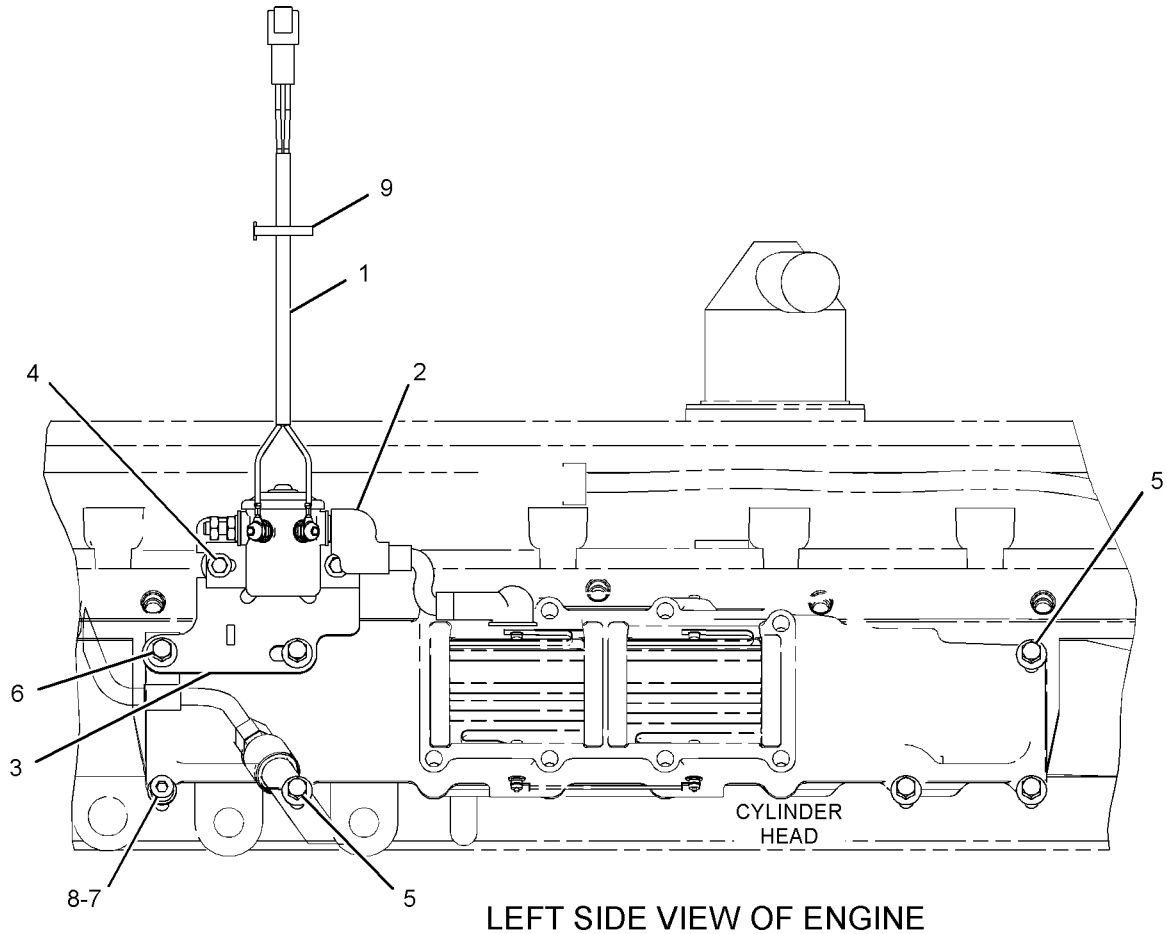

LEFT SIDE VIEW OF ENGINE

GRAPHIC #1 **<END>** g01312265

ELECTRICAL AND STARTING SYSTEM

239-6676 STARTING AID GP-ETHER

S/N: DFP1-UP; CJX1-UP
PART OF 314-3586 STARTING AR-COLD WEATHER
AN ATTACHMENT

SMCS-1456 **i02989450**

NOTE	REF NO	GRAPHIC REF	PART NUMBER	QTY	PART NAME 1 2 3 4 5 6 (PRODUCT LEVEL)	SEE PAGE
	1	1	**5P-6312**	1	UNION	
	2	1	**5P-6313**	3	NUT (5/16-24-THD)	
	3	1	**5P-6314**	3	SLEEVE	
	4	1	**7N-0140**	1	TUBE AS-COIL	
	5	1	**7N-2059**	1	CLAMP AS	
	6	1	**9T-6635**	1	PLUG	
Y	7	1	**239-1134**	1	VALVE GP-ETHER STARTING (24-VOLT)	362
	8	1	**241-4194**	1	FITTING AS (CONTROL)	
		1	**236-4545**	1	NUT-SLEEVE (5/16-24-THD)	
	9	1	**255-2906**	1	TUBE	
	10	1	**255-2909**	1	PLATE AS	
	11	1	**255-2910**	1	PLATE AS	
	12	1	**255-2994**	1	TUBE	
	13	1	**255-2995**	1	TUBE	
	14	1	**297-6828**	1	ATOMIZER GP-ETHER	
		1	**236-4545**	1	NUT-SLEEVE (5/16-24-THD)	
	15	1	**2B-2404**	3	CLIP	
	16	1	**3D-5102**	3	GROMMET	
	17	1	**3K-0360**	1	SEAL-O-RING	
	18	1	**5P-1076**	4	WASHER-HARD (13.5X30X4-MM THK)	
	19	1	**8T-4121**	3	WASHER-HARD (11X21X2.5-MM THK)	
M	20	1	**8T-4136**	2	BOLT (M10X1.5X25-MM)	
M	21	1	**8T-4137**	1	BOLT (M10X1.5X20-MM)	
M	22	1	**8T-4189**	4	BOLT (M8X1.25X20-MM)	
M	23	1	**8T-4192**	4	BOLT (M12X1.75X25-MM)	
	24	1	**8T-4224**	4	WASHER-HARD (8.8X16X2-MM THK)	

M-METRIC PART
Y-SEPARATE ILLUSTRATION

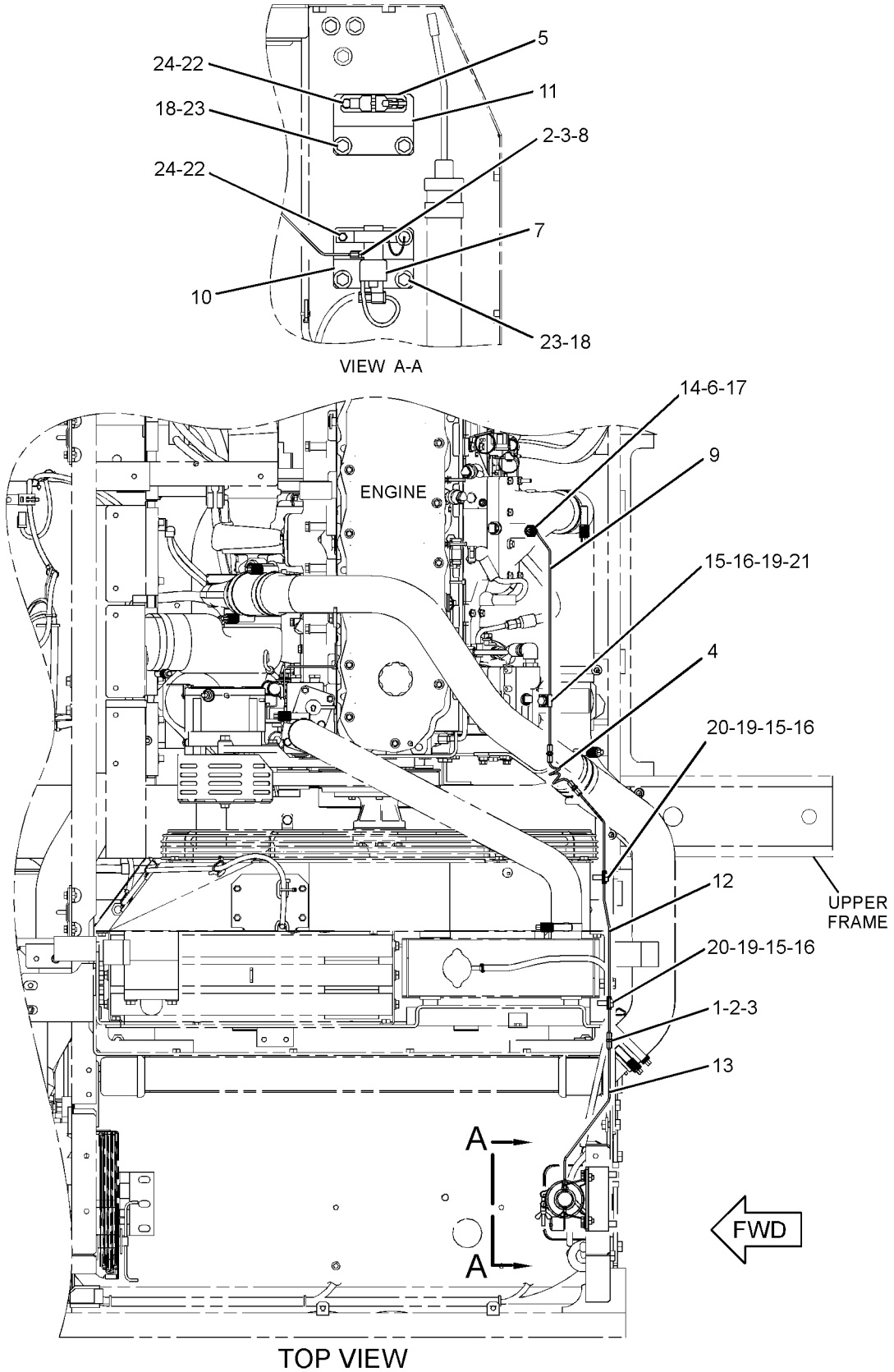

GRAPHIC #1 **<END>** g01154195

ELECTRICAL AND STARTING SYSTEM

314-3586 STARTING AR-COLD WEATHER

S/N: DFP1-UP; CJX1-UP
AN ATTACHMENT

SMCS-1450 **i03033062**

NOTE	PART NUMBER	QTY	PART NAME 1 2 3 4 5 6 (PRODUCT LEVEL)	SEE PAGE
Y	*251-0440*	1	BATTERY & WIRING GP (COLD WEATHER)	258
Y	*239-6676*	1	STARTING AID GP-ETHER	334

Y-SEPARATE ILLUSTRATION

<END>

111-4275 STARTING MOTOR GP-ELECTRIC

S/N: KHX393-UP
PART OF 235-8134, 235-8135, 270-2767, 270-2768, 290-0755, 290-0757 ENGINE
AR-COMPLETE
ALSO AN ATTACHMENT

SMCS-1453 **i02455664**

NOTE	REF NO	GRAPHIC REF	PART NUMBER	QTY	PART NAME 1 2 3 4 5 6 (PRODUCT LEVEL)	SEE PAGE
M	1	1	**118-9573**	3	BOLT-12 POINT HEAD (M10X1.15-THD)	
	2	1	**8Y-9603**	1	CABLE AS-STARTING MOTOR	
		1	**1S-7251**	1	TERMINAL-CABLE (00-GA, 1/2-IN BOLT)	
		1	**1S-7252**	1	TERMINAL-CABLE (00-GA, 3/8-IN BOLT)	
E		1	**5P-0747**		CABLE (00-GA, BLACK) (28-CM)	
	3	1	**3K-3257**	1	GASKET	
M	4	1	**8T-4191**	1	BOLT (M10X1.5X16-MM)	
	5	1	**8T-4121**	4	WASHER-HARD (11X21X2.5-MM THK)	
YR	6	1	**207-1517**	1	STARTING MOTOR GP-ELECTRIC	342

E-ORDER BY THE CENTIMETER
M-METRIC PART
R-REMFG PART MAY BE AVAILABLE
Y-SEPARATE ILLUSTRATION

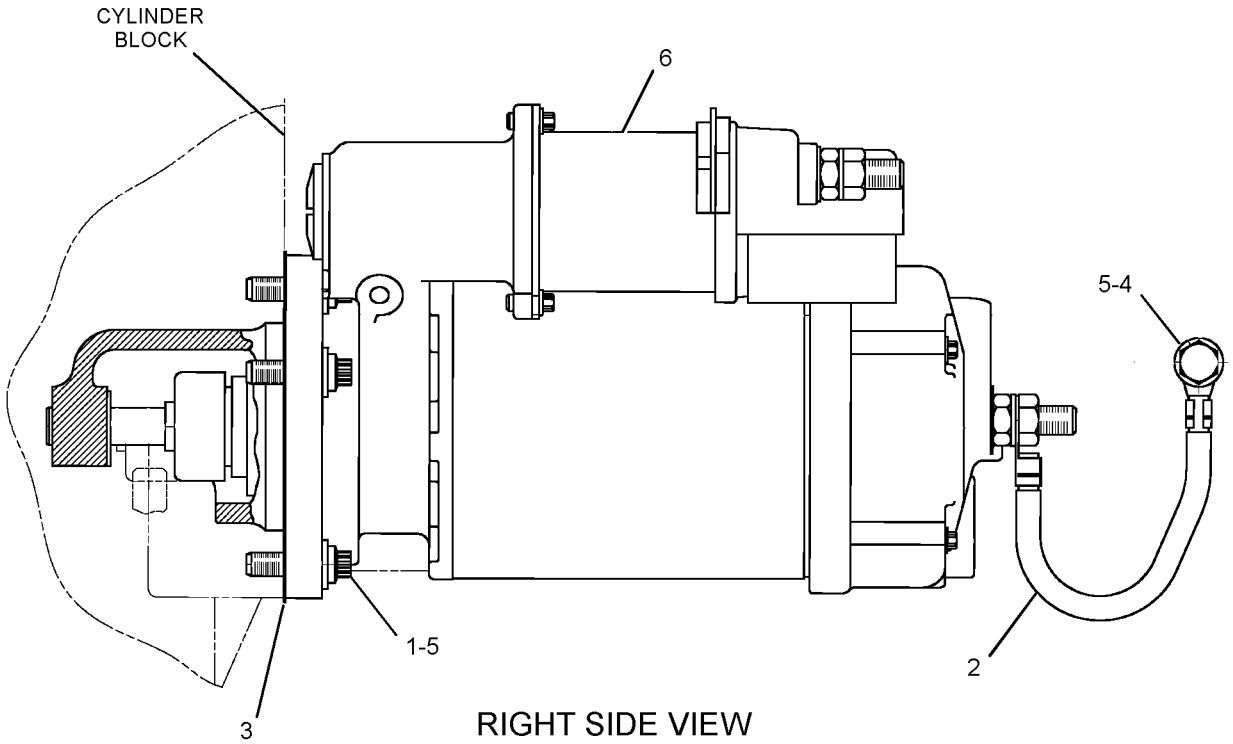

RIGHT SIDE VIEW

GRAPHIC #1 **<END>** g01238323

128-5626 STARTING MOTOR GP-ELECTRIC

S/N: KHX1-UP
24 VOLT
PART OF 290-0755, 290-0758 ENGINE AR-COMPLETE
ALSO AN ATTACHMENT

SMCS-1453 **i02938526**

NOTE	REF NO	GRAPHIC REF	PART NUMBER	QTY	PART NAME 1 2 3 4 5 6 (PRODUCT LEVEL)	SEE PAGE
	1	1	**3K-3257**	1	GASKET	
	2	1	**8Y-9603**	1	CABLE AS-STARTING MOTOR	
		1	**1S-7251**	1	TERMINAL-CABLE (00-GA, 1/2-IN BOLT)	
		1	**1S-7252**	1	TERMINAL-CABLE (00-GA, 3/8-IN BOLT)	
E		1	**5P-0747**		CABLE (00-GA, BLACK) (28-CM)	
M	3	1	**118-9573**	3	BOLT-12 POINT HEAD (M10X1.15-THD)	
CYR	4	1	**207-1551**	1	STARTING MOTOR GP-ELECTRIC (STARTING)	344
	5	1	**8T-4121**	4	WASHER-HARD (11X21X2.5-MM THK)	
M	6	1	**8T-4191**	1	BOLT (M10X1.5X16-MM)	

C-CHANGE FROM PREVIOUS TYPE
E-ORDER BY THE CENTIMETER
M-METRIC PART
R-REMFG PART MAY BE AVAILABLE
Y-SEPARATE ILLUSTRATION

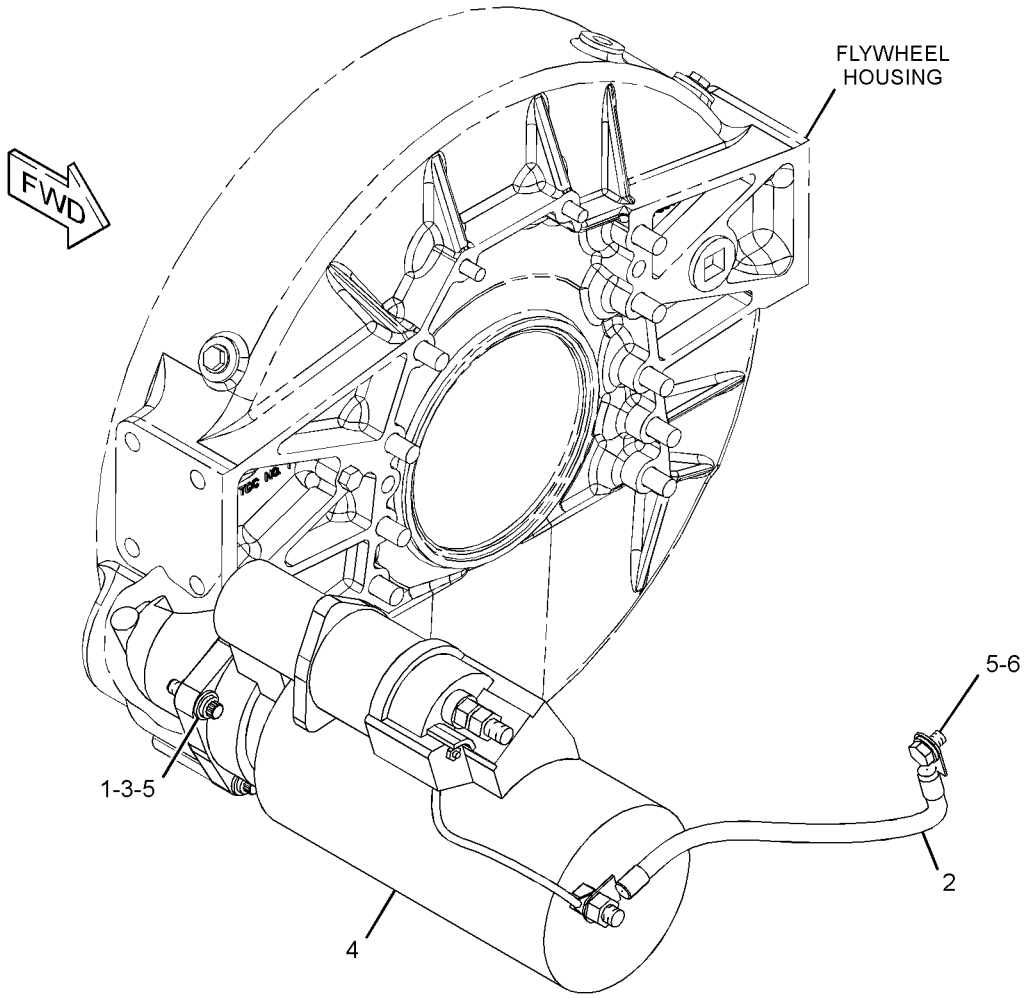

GRAPHIC #1 **<END>** g01392379

201-4204 STARTING MOTOR GP-ELECTRIC

S/N: KHX1-392
24 VOLT
PART OF 235-8134, 270-2767, 270-2768 ENGINE AR-COMPLETE
ALSO AN ATTACHMENT

SMCS-1453 **i01653301**

NOTE	REF NO	GRAPHIC REF	PART NUMBER	QTY	PART NAME 1 2 3 4 5 6 (PRODUCT LEVEL)	SEE PAGE
M	1	1	**118-9573**	3	BOLT-12 POINT HEAD (M10X1.15-THD)	
	2	1	**8T-4121**	4	WASHER-HARD (11X21X2.5-MM THK)	
	3	1	**3K-3257**	1	GASKET	
M	4	1	**8T-4191**	1	BOLT (M10X1.5X16-MM)	
	5	1	**201-3153**	1	WIRE AS	
Y	6	1	*207-1511*	1	STARTING MOTOR GP-ELECTRIC	340

M-METRIC PART
Y-SEPARATE ILLUSTRATION

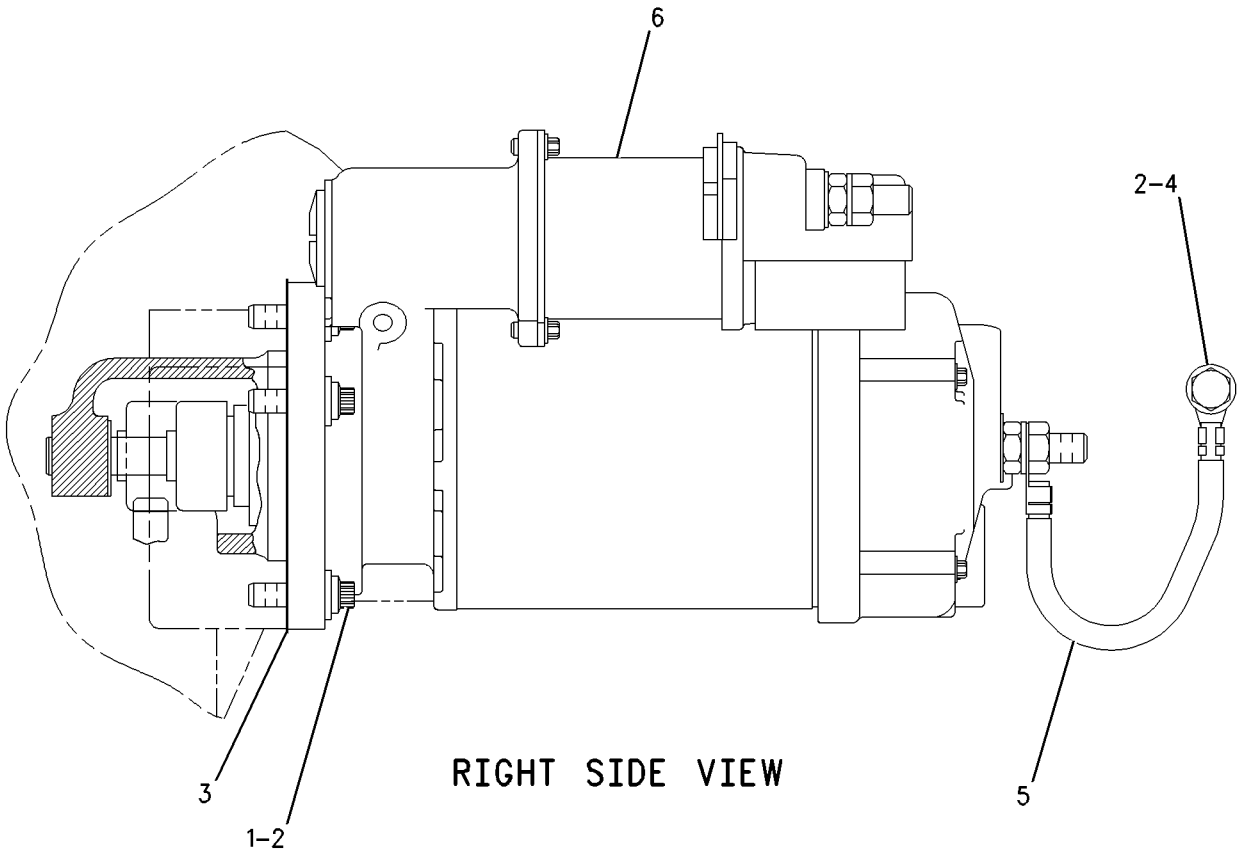

RIGHT SIDE VIEW

GRAPHIC #1 **<END>** g00855420

ELECTRICAL AND STARTING SYSTEM

207-1511 STARTING MOTOR GP-ELECTRIC

S/N: KHX1-UP
24 VOLT
PART OF 201-4204 STARTING MOTOR GP-ELECTRIC
FIELD REPLACEMENT ORDER 207-1517–PAGE 342
ALSO AN ATTACHMENT

SMCS-1453 **i01677511**

NOTE	REF NO	GRAPHIC REF	PART NUMBER	QTY	PART NAME 1 2 3 4 5 6 (PRODUCT LEVEL)	SEE PAGE
	1	1	**8T-9884**	1	KIT-INSULATOR (STARTING MOTOR)	
					(INCLUDES INSULATORS & BUSHING)	
	2	1	**106-7149**	1	HOUSING AS	
	3	1	**102-9863**	1	TERMINAL AS	
	4	1	**6V-8188**	4	NUT (1/2-13-THD)	
	5	1	**7X-0562**	4	WASHER-HARD (13.5X19X0.8-MM THK)	
	6	1	**3E-7853**	1	TERMINAL	
	7	1	**9X-4821**	1	PLATE AS	
	8	1	**9X-4822**	1	COIL AS	
	9	1	**7T-3454**	1	INSULATOR	
	10	1	**9X-4271**	1	CONNECTOR	
	11	1	**7T-3451**	1	KIT-INSULATOR (TERMINAL)	
	12	1	**8T-8569**	1	INSULATOR-TERMINAL	
	13	1	**5S-7349**	4	BOLT (1/4-20X0.5-IN)	
	14	1	**8T-4205**	4	WASHER-HARD (7.2X14.5X2-MM THK)	
	15	1	**7X-1950**	4	SHOE-POLE	
	16	1	**7X-1958**	1	KIT-LEVER (STARTING MOTOR)	
					(INCLUDES LEVER AS, SHAFT AS, GASKET, SEALS, RINGS, STOP & NUT)	
	17	1	**3F-0379**	8	SCREW-POLE SHOE (3/8-24-THD)	
	18	1	**7X-1951**	1	ARMATURE AS	
	19	1	**7X-1952**	1	HOUSING AS-LEVER	
	20	1	**4M-1831**	1	PLUG-LEVER HOUSING	
	21	1	**7L-2894**	1	GASKET	
	22	1	**036-9823**	5	BOLT (1/4-28X1-IN)	
	23	1	**7X-1953**	1	DRIVE AS-MOTOR	
	24	1	**7X-1954**	1	HOUSING AS-DRIVE	
	25	1	**7X-3373**	6	BOLT (5/16-18X0.88-IN)	
	26	1	**206-8781**	1	SOLENOID AS (24-VOLT)	
	27	1	**6V-8378**	2	NUT (10-32-THD)	
	28	1	**8F-1434**	1	LOCKWASHER	
	29	1	**8T-0328**	2	WASHER-HARD (5.5X10X1-MM THK)	
	30	1	**9X-4824**	1	COVER-STARTING MOTOR	
	31	1	**9X-4825**	1	KIT-BRUSH (STARTING MOTOR)	
					(INCLUDES BRUSHES, SEAL, SCREWS & SPRINGS)	
					AVAILABLE REPAIR KIT(S):	
			9X-4270	1	KIT-BUSHING (STARTING MOTOR)	
					(INCLUDES BUSHINGS, SEALS, CUPS, SPACER, STOP, PLUGS, GASKET, WASHERS, RING & SCREW AS)	

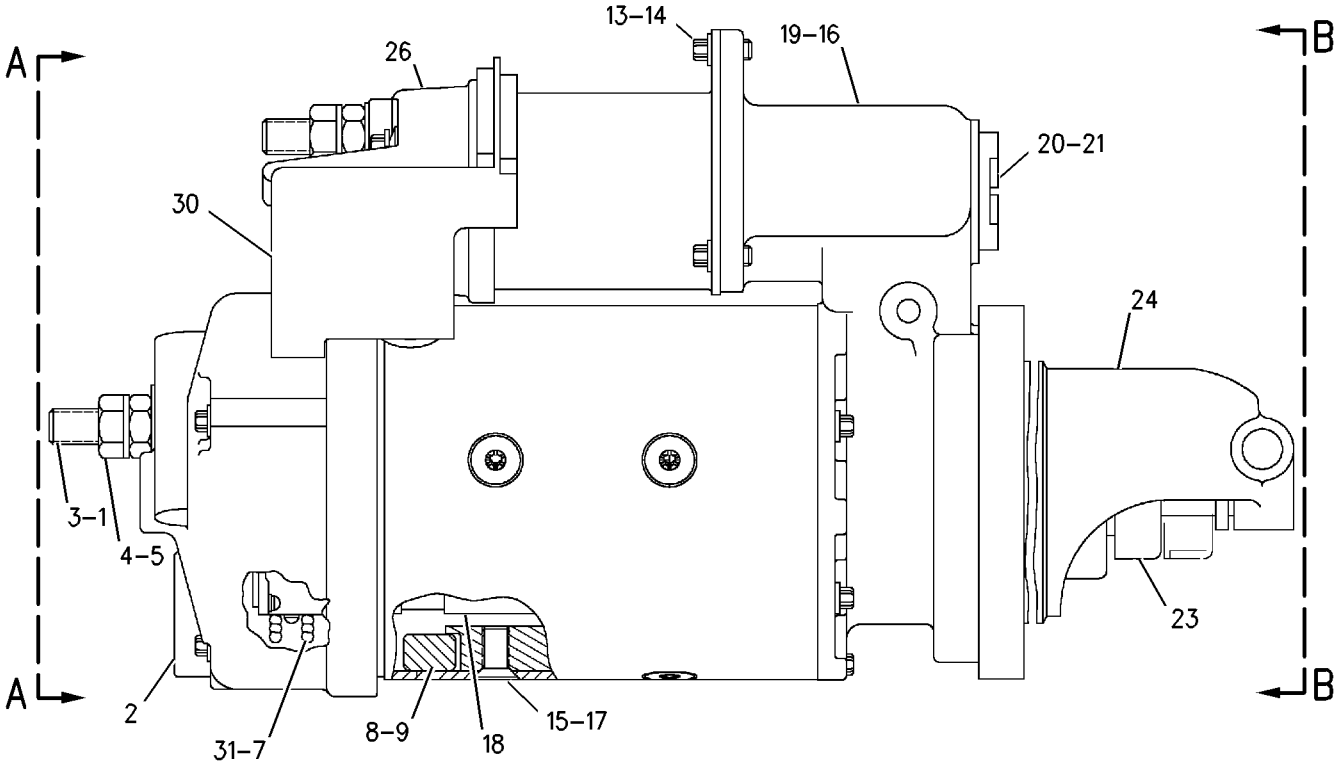

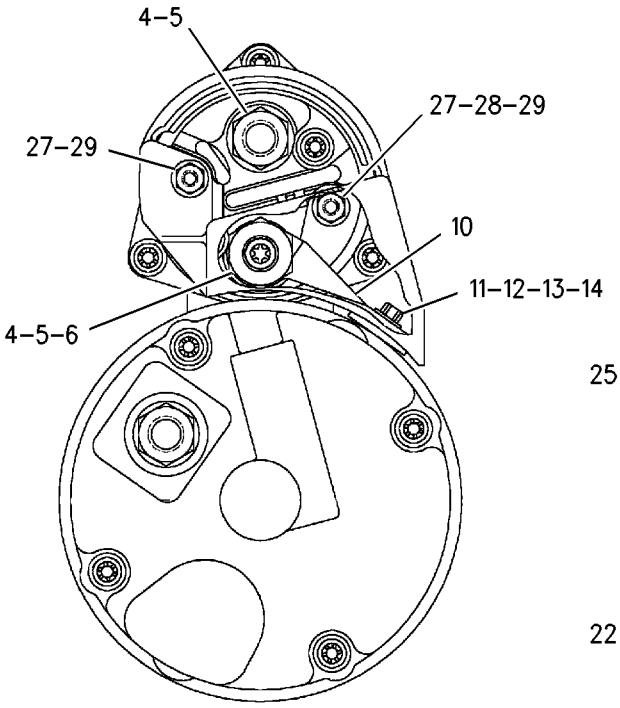

VIEW A-A

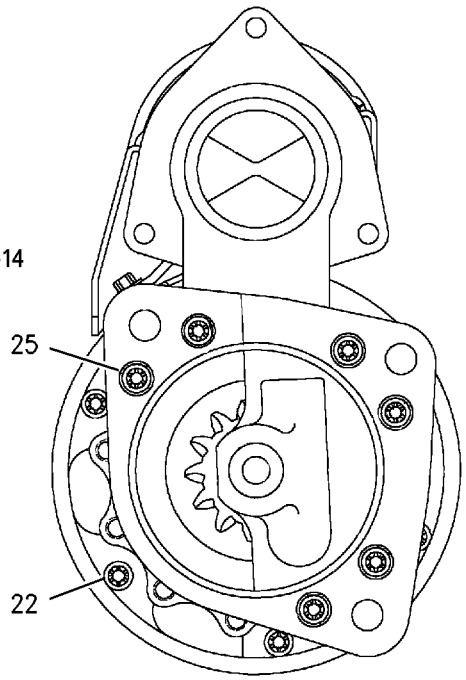

VIEW B-B

GRAPHIC #1 **<END>** g00865809

207-1517 STARTING MOTOR GP-ELECTRIC*R

S/N: KHX393-UP
24 VOLT
PART OF 111-4275 STARTING MOTOR GP-ELECTRIC
FIELD REPLACEMENT FOR 207-1511—PAGE 340
ALSO AN ATTACHMENT

SMCS-1453 **i02946762**

NOTE	REF NO	GRAPHIC REF	PART NUMBER	QTY	PART NAME 1 2 3 4 5 6 (PRODUCT LEVEL)	SEE PAGE
	1	1	**8T-9884**	1	KIT-INSULATOR (STARTING MOTOR)	
					(INCLUDES INSULATORS & BUSHING)	
	2	1	**106-7149**	1	HOUSING AS	
	3	1	**102-9863**	1	TERMINAL AS	
	4	1	**6V-8188**	4	NUT (1/2-13-THD)	
	5	1	**7X-0562**	4	WASHER-HARD (13.5X19X0.8-MM THK)	
	6	1	**3E-7853**	1	TERMINAL	
	7	1	**9X-4821**	1	PLATE AS	
	8	1	**3E-7852**	1	COIL-STARTING MOTOR	
	9	1	**7T-3454**	1	INSULATOR	
	10	1	**9X-4271**	1	CONNECTOR	
	11	1	**7T-3451**	1	KIT-INSULATOR (TERMINAL)	
	12	1	**8T-8569**	1	INSULATOR-TERMINAL	
	13	1	**5S-7349**	4	BOLT (1/4-20X0.5-IN)	
	14	1	**8T-4205**	4	WASHER-HARD (7.2X14.5X2-MM THK)	
	15	1	**7X-1950**	4	SHOE-POLE	
	16	1	**3E-7861**	1	KIT-LEVER (STARTING MOTOR)	
					(INCLUDES LEVER AS, SHAFT AS, GASKET, O-RINGS, RING & NUT)	
	17	1	**3R-8797**	8	SCREW & WASHER AS (3/8-24X0.72-IN)	
	18	1	**3E-7855**	1	ARMATURE AS-STARTER (24-VOLT)	
	19	1	**7X-1952**	1	HOUSING AS-LEVER	
	20	1	**4M-1831**	1	PLUG-LEVER HOUSING	
	21	1	**7L-2894**	1	GASKET	
	22	1	**036-9823**	5	BOLT (1/4-28X1-IN)	
	23	1	**3E-7857**	1	DRIVE AS-STARTING MOTOR	
	24	1	**3E-7858**	1	HOUSING AS	
	25	1	**7X-3373**	6	BOLT (5/16-18X0.88-IN)	
	26	1	**206-8784**	1	KIT-SOLENOID (STARTING MOTOR)	
					(INCLUDES SOLENOID AS, BOLT, CONNECTORS, NUT & NUT AS)	
	27	1	**6V-8378**	2	NUT (10-32-THD)	
	28	1	**8F-1434**	1	LOCKWASHER	
	29	1	**8T-0328**	2	WASHER-HARD (5.5X10X1-MM THK)	
	30	1	**9X-4824**	1	COVER-STARTING MOTOR	
	31	1	**9X-4825**	1	KIT-BRUSH (STARTING MOTOR)	
					(INCLUDES O-RING, SCREWS, BRUSHES & SPRINGS)	
					AVAILABLE REPAIR KIT(S):	
			3E-7860	1	KIT-BUSHING (STARTING MOTOR)	
					(INCLUDES BUSHINGS, PLUGS, CUPS, SEAL, NUT, O-RINGS, GASKET, SPACER, WASHERS & SCREW ASSEMBLIES)	

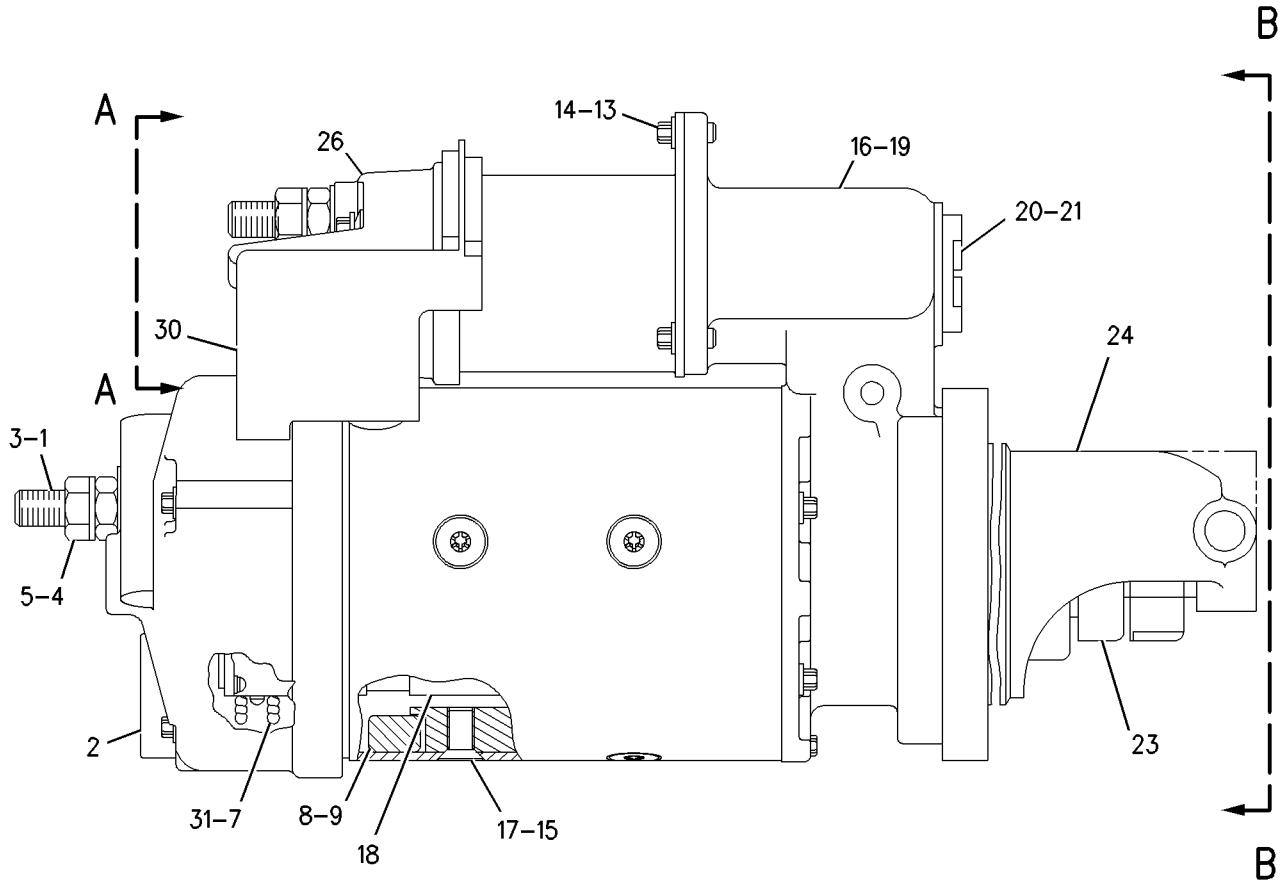

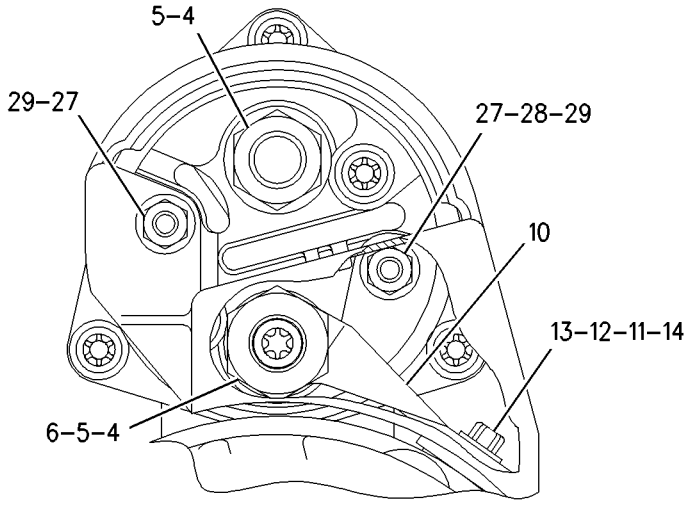

VIEW A–A

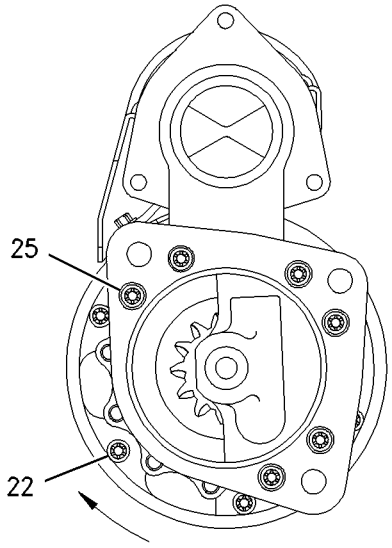

VIEW B–B

GRAPHIC #1 **<END>** g00839695

207-1551 STARTING MOTOR GP-ELECTRIC*R

S/N: KHX1-UP

PART OF 128-5626 STARTING MOTOR GP-ELECTRIC

ALSO AN ATTACHMENT

SMCS-1453 **i02952082**

NOTE	REF NO	GRAPHIC REF	PART NUMBER	QTY	PART NAME 1 2 3 4 5 6 (PRODUCT LEVEL)	SEE PAGE
	1	1	**9F-2247**	1	PLUG-PIPE	
	2	1	**7T-3279**	1	HOUSING AS	
	3	1	**8T-8566**	1	TERMINAL AS	
	4	1	**6V-8188**	4	NUT (1/2-13-THD)	
	5	1	**7X-0562**	4	WASHER-HARD (13.5X19X0.8-MM THK)	
	6	1	**3T-3422**	1	WIRE AS	
	7	1	**7T-3278**	1	HOLDER AS-BRUSH	
	8	1	**7T-3277**	1	COIL AS-FIELD	
	9	1	**7T-3454**	1	INSULATOR	
	10	1	**7T-3271**	1	CONNECTOR	
	11	1	**7T-3451**	1	KIT-INSULATOR (TERMINAL)	
	12	1	**8T-8569**	1	INSULATOR-TERMINAL	
	13	1	**5S-7349**	4	BOLT (1/4-20X0.5-IN)	
	14	1	**8T-4205**	4	WASHER-HARD (7.2X14.5X2-MM THK)	
	15	1	**8H-1141**	4	SHOE-POLE	
	16	1	**3F-0379**	8	SCREW-POLE SHOE (3/8-24-THD)	
	17	1	**7T-3276**	1	ARMATURE AS (24-VOLT)	
	18	1	**105-9702**	1	HOUSING AS	
	19	1	**4M-1831**	1	PLUG-LEVER HOUSING	
	20	1	**7L-2894**	1	GASKET	
	21	1	**036-9823**	5	BOLT (1/4-28X1-IN)	
	22	1	**6N-3827**	1	DRIVE AS-MOTOR	
	23	1	**9X-9510**	1	HOUSING AS	
	24	1	**7X-3373**	6	BOLT (5/16-18X0.88-IN)	
	25	1	**193-8570**	1	SOLENOID AS-STARTING MOTOR (24-VOLT) (STARTER)	
	26	1	**6V-8378**	3	NUT (10-32-THD)	
	27	1	**8F-1434**	2	LOCKWASHER	
	28	1	**8T-0328**	3	WASHER-HARD (5.5X10X1-MM THK)	
	29	1	**9X-4824**	1	COVER-STARTING MOTOR	
	30	1	**7T-3268**	1	KIT-LEVER (STARTING MOTOR)	
					(INCLUDES LEVER AS, SHAFT AS, GASKETS, SEALS, RINGS, STOP & NUT)	
	31	1	**8C-3655**	1	KIT-BRUSH (STARTING MOTOR)	
					(INCLUDES BRUSHES, SEAL, SCREWS & SPRINGS)	
	32	1	**8T-9884**	1	KIT-INSULATOR (STARTING MOTOR)	
					(INCLUDES INSULATORS & BUSHING)	
	33	1	**9F-2547**	1	WICK	
					AVAILABLE REPAIR KIT(S):	
			7T-3267	1	KIT-BUSHING (STARTING MOTOR)	
					(INCLUDES BUSHINGS, WICKS, CUPS, SEALS, GASKET, WASHERS, SPACER, NUT & SCREW ASSEMBLIES)	

207-1551 STARTING MOTOR GP-ELECTRIC *(contd.)* **i02952082**

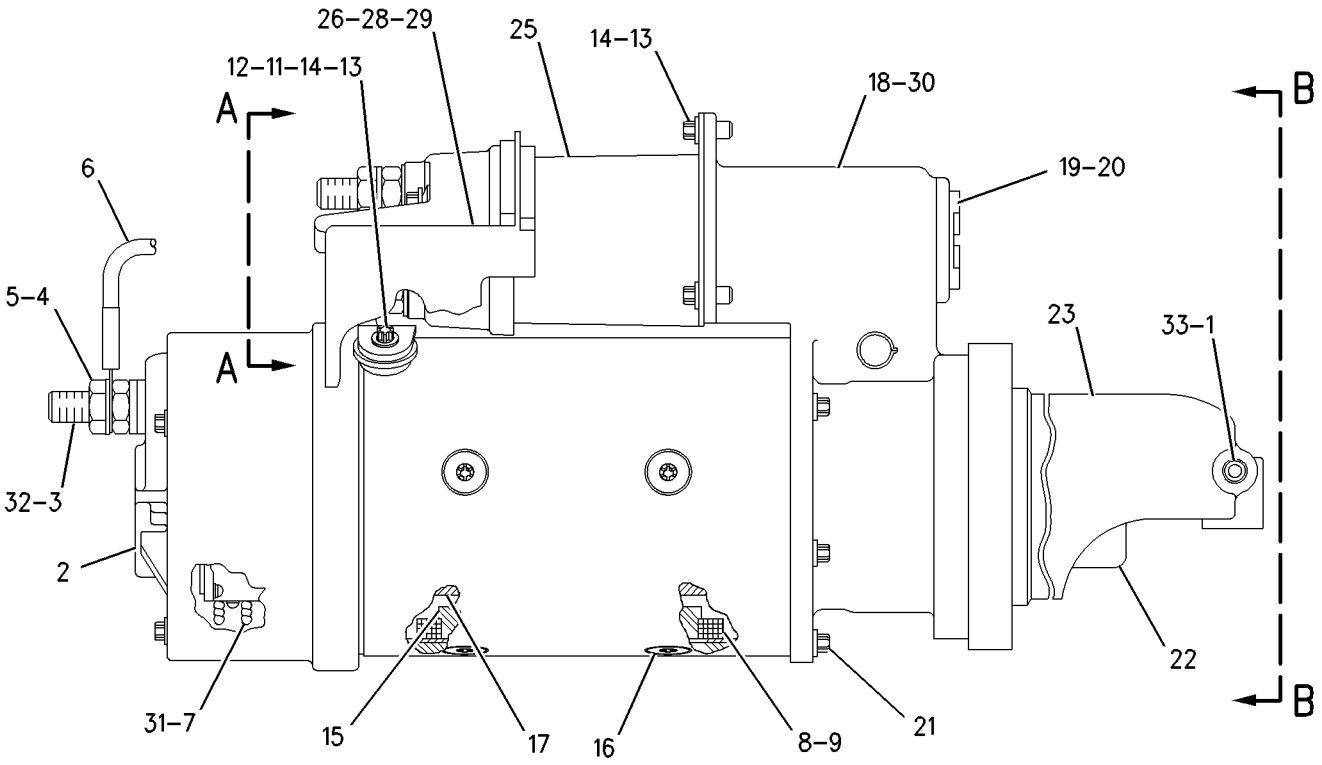

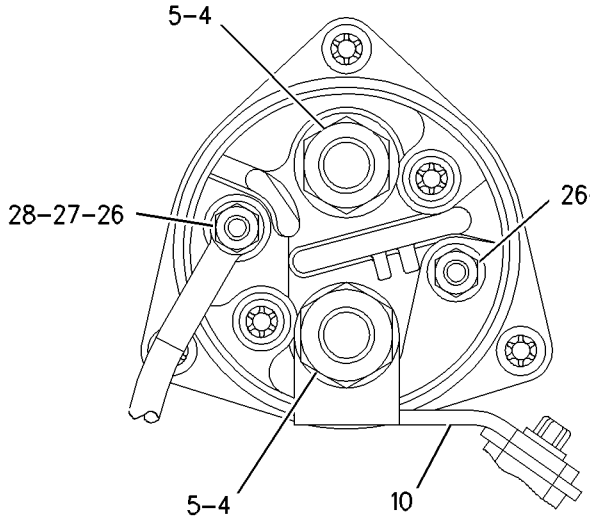

VIEW A-A

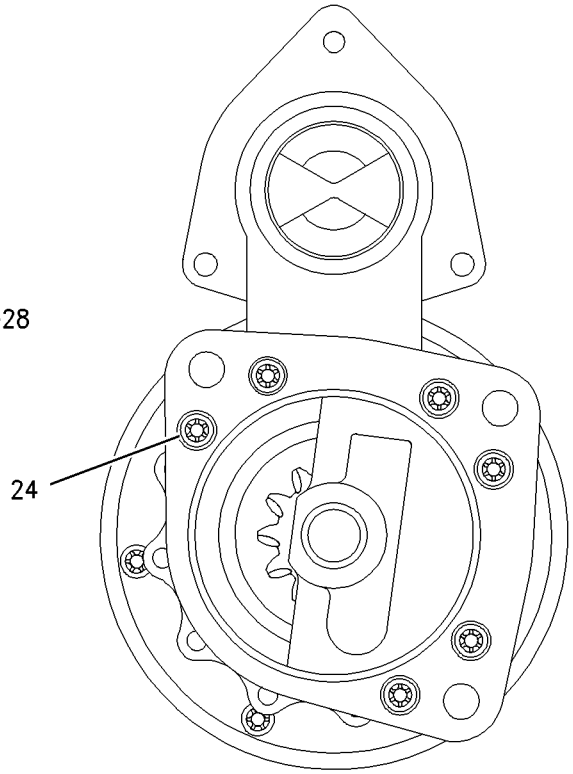

VIEW B-B

GRAPHIC #1 **<END>** g00868789

7N-0719 SWITCH GP-DISCONNECT–BATTERY

S/N: DFP1-UP; CJX1-UP

PART OF 231-1756 PANEL GP-CIRCUIT BREAKER

SMCS-1411 **i01102384**

NOTE	REF NO	GRAPHIC REF	PART NUMBER	QTY	PART NAME 1 2 3 4 5 6 (PRODUCT LEVEL)	SEE PAGE
	1	1	**2H-3922**	1	LOCKWASHER	
	2	1	**8H-5303**	1	NUT (3/4-16-THD)	
	3	1	**9F-5644**	2	LOCKWASHER	
	4	1	**6F-7045**	2	NUT-FULL (3/8-24-THD)	
	5	1	**8H-5306**	1	KEY (BATTERY DISCONNECT)	

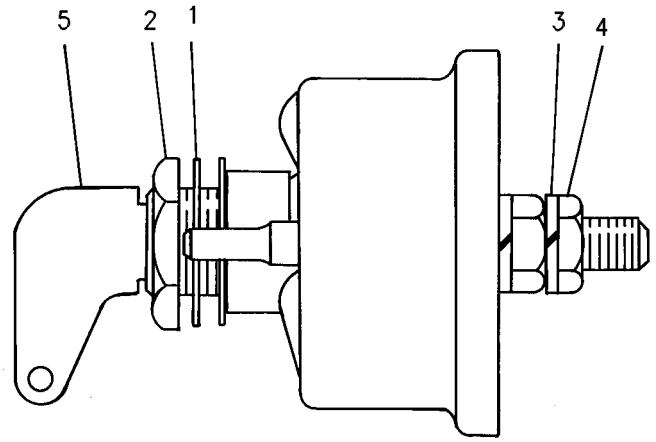

GRAPHIC #1 **<END>** g00580531

125-1302 SWITCH GP-MAGNETIC–START RELAY

S/N: DFP1-UP; CJX1-UP

PART OF 231-1756 PANEL GP-CIRCUIT BREAKER

SMCS-7499 **i01896613**

NOTE	REF NO	GRAPHIC REF	PART NUMBER	QTY	PART NAME 1 2 3 4 5 6 (PRODUCT LEVEL)	SEE PAGE
	1	1	**102-8802**	1	KIT-RECEPTACLE (2-PIN)	
					(INCLUDES RECEPTACLE AS & WEDGE)	
	2	1	**186-3735**	2	PIN-CONNECTOR (16-GA TO 18-GA)	
	3	1	**1H-3338**	2	LOCKWASHER	
	4	1	**012-0380**	2	LOCKWASHER	
M	5	1	**5C-2890**	2	NUT (M6X1-THD)	
E	6	1	**9X-1813**		SLEEVE (16CM)	

E-ORDER BY THE CENTIMETER
M-METRIC PART

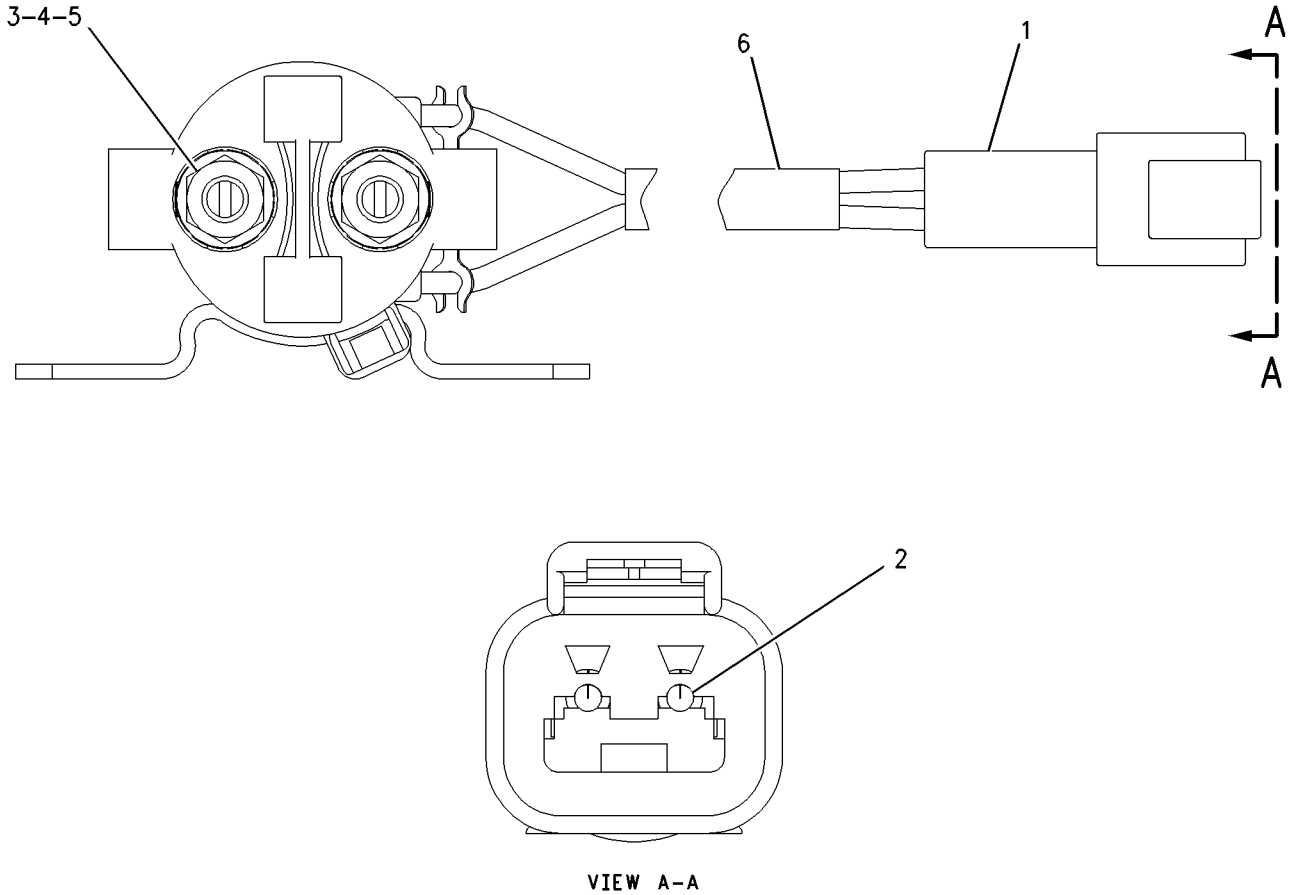

GRAPHIC #1 **<END>** g00988002

209-5582 SWITCH GP-MAGNETIC

S/N: KHX1-UP
PART OF 249-9223 STARTING AID GP
ALSO AN ATTACHMENT

SMCS-7499 **i02555095**

NOTE	REF NO	GRAPHIC REF	PART NUMBER	QTY	PART NAME 1 2 3 4 5 6 (PRODUCT LEVEL)	SEE PAGE
	1	1	**102-8802**	1	KIT-RECEPTACLE (2-PIN)	
					(INCLUDES RECEPTACLE AS & WEDGE)	
	2	1	**186-3735**	2	PIN-CONNECTOR (16-GA TO 18-GA)	
	3	1	**3F-9556**	2	LOCKWASHER	
	4	1	**6V-8186**	2	NUT-FULL (5/16-24-THD)	
	5	1	**6V-8378**	2	NUT (10-32-THD)	
	6	1	**8F-1434**	2	LOCKWASHER	

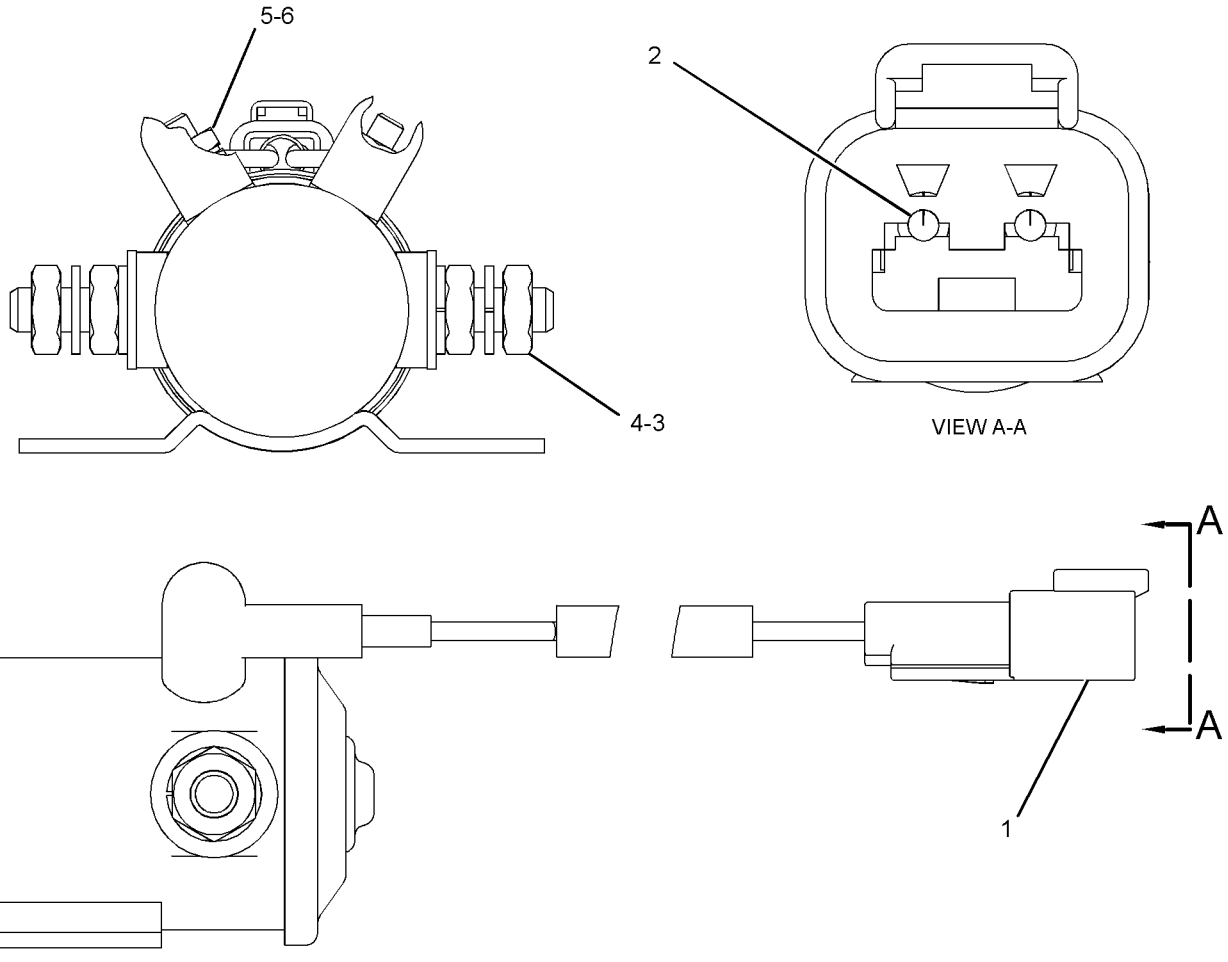

GRAPHIC #1 **<END>** g01279452

223-7577 SWITCH GP-MAGNETIC

S/N: KHX1-UP
24 VOLT
PART OF 231-3949, 249-9223 STARTING AID GP
ALSO AN ATTACHMENT

SMCS-7499 **i02953207**

NOTE	REF NO	GRAPHIC REF	PART NUMBER	QTY	PART NAME 1 2 3 4 5 6 (PRODUCT LEVEL)	SEE PAGE
	1	1	**209-5582**	1	SWITCH GP-MAGNETIC (24-VOLT) (AIR INLET HEATER RELAY)	
	1A	1	**102-8802**	1	KIT-RECEPTACLE (2-PIN)	
					(INCLUDES RECEPTACLE AS & WEDGE)	
	1B	1	**186-3735**	2	PIN-CONNECTOR (16-GA TO 18-GA)	
	1C	1	**3F-9556**	2	LOCKWASHER	
	1D	1	**6V-8186**	2	NUT-FULL (5/16-24-THD)	
	1E	1	**6V-8378**	2	NUT (10-32-THD)	
	1F	1	**8F-1434**	2	LOCKWASHER	
	2	1	**283-1224**	1	BRACKET AS	
	3	1	**208-9277**	2	BOLT-FLANGE HEAD (M8X1X25-MM)	

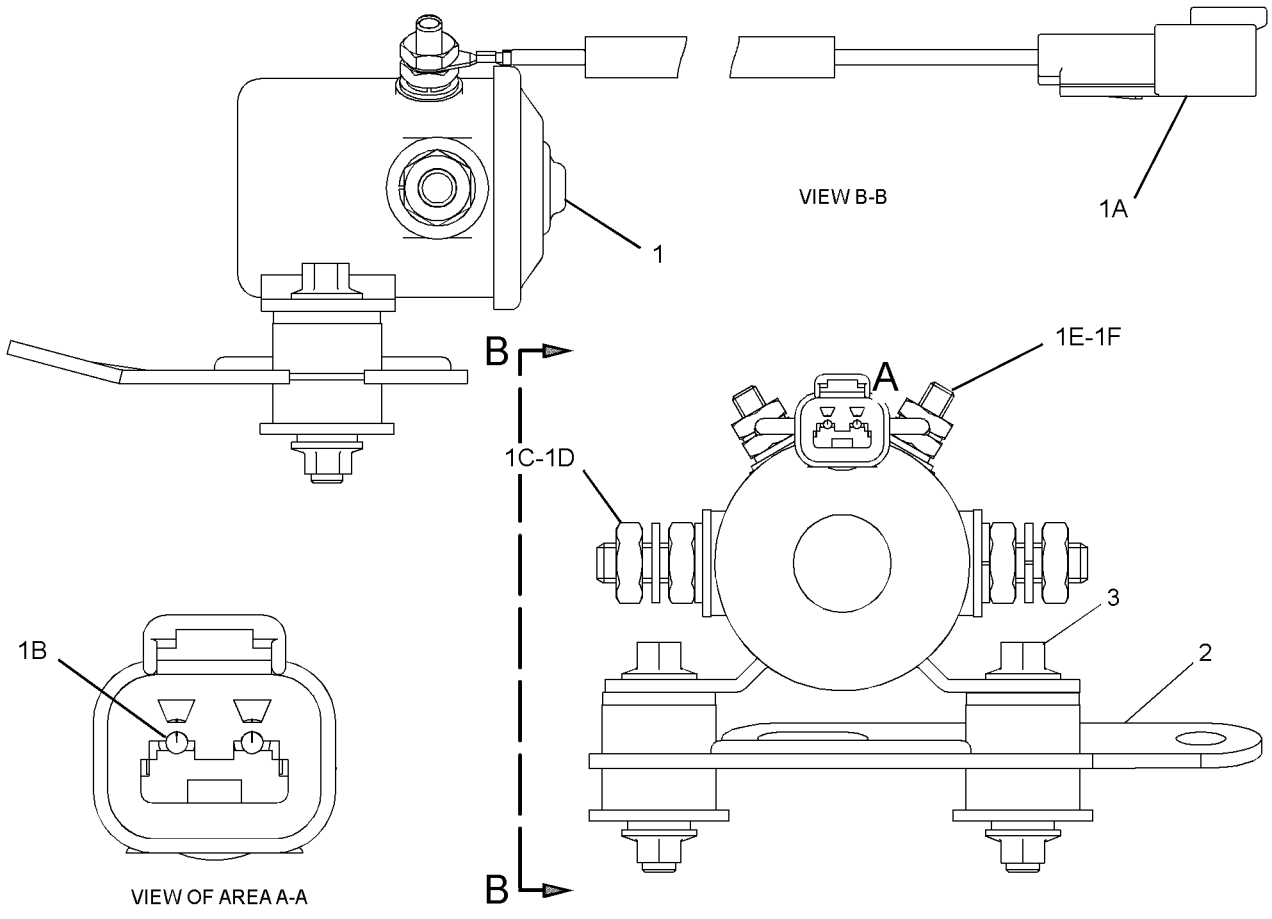

GRAPHIC #1 **<END>** g01269556

234-6613 SWITCH GP-POSITION—HYDRAULIC LOCKOUT

S/N: DFP1-UP; CJX1-UP

PART OF 245-7923, 259-7349 CONSOLE GP-OPERATOR

SMCS-1408, 1435 **i02175053**

NOTE	REF NO	GRAPHIC REF	PART NUMBER	QTY	PART NAME 1 2 3 4 5 6 (PRODUCT LEVEL)	SEE PAGE
	1	1	**3S-2093**	1	STRAP-CABLE	
	2	1	**4I-3038**	2	WASHER (3.3X8X0.5-MM THK)	
	3	1	**111-4799**	1	SWITCH AS-LIMIT (HYDRAULIC LOCKOUT)	
		1	**102-8803**	1	KIT-RECEPTACLE (3-PIN)	
					(INCLUDES RECEPTACLE AS & WEDGE)	
		1	**186-3735**		PIN-CONNECTOR (16-GA TO 18-GA)	
BD		1	**5P-5998**		TUBE	
M	4	1	**185-8286**	2	SCREW-MACHINE (M4X0.7X8-MM)	
	5	1	**234-6615**	1	KNOB	
	6	1	**087-4683**	2	LOCKWASHER	
M	7	1	**120-9027**	2	SCREW-PAN HEAD (M3X0.5X16-MM)	

B-USE AS REQUIRED
D-ORDER BY THE METER
M-METRIC PART

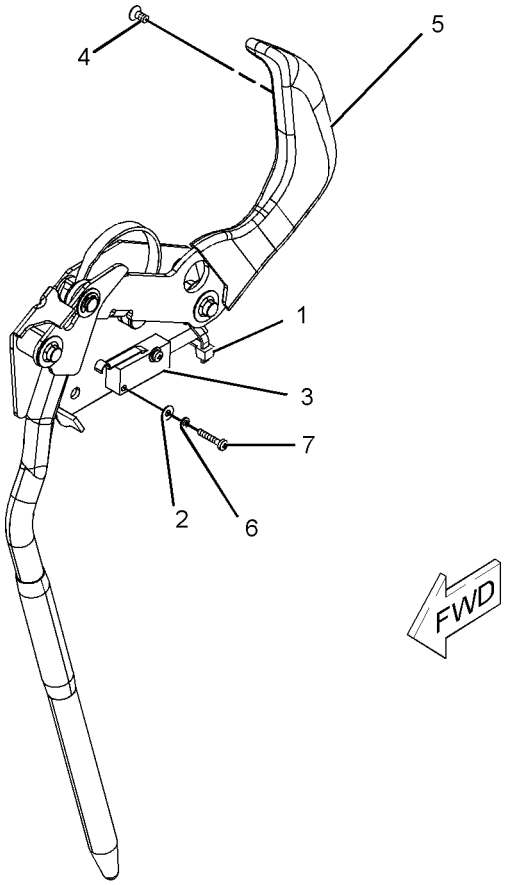

GRAPHIC #1 **<END>** g01096293

212-2768 SWITCH GP-PRESSURE–FUEL

S/N: DFP1-185; CJX1-187

PART OF 223-3046 LINES GP-FUEL

SMCS-1435 **i02233299**

NOTE	REF NO	GRAPHIC REF	PART NUMBER	QTY	PART NAME 1 2 3 4 5 6 (PRODUCT LEVEL)	SEE PAGE
	1	1	**102-8802**	1	KIT-RECEPTACLE (2-PIN)	
					(INCLUDES RECEPTACLE AS AND WEDGE)	
	2	1	**3E-3365**	1	WEDGE-RECEPTACLE LOCK (2-PIN)	
	3	1	**186-3735**	2	PIN-CONNECTOR (16-GA TO 18-GA)	
BE	4	1	**9X-1813**		SLEEVE	
	5	1	**6V-4589**	1	SEAL-O-RING	
	6	1	**7L-9061**	1	SEAL-O-RING	

B-USE AS REQUIRED
E-ORDER BY THE CENTIMETER

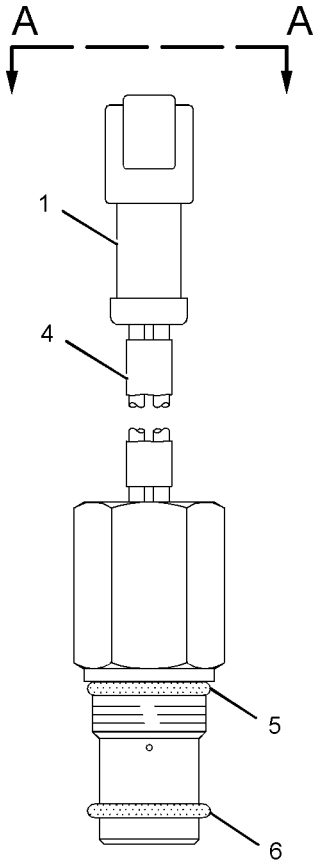

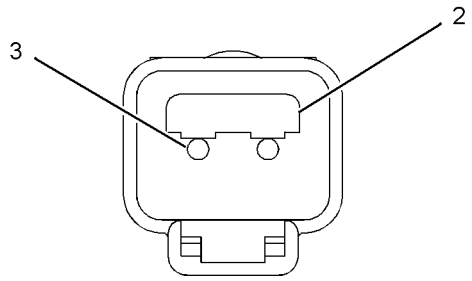

VIEW A-A

GRAPHIC #1 **<END>** g01072091

258-0883 SWITCH GP-PRESSURE–FUEL

S/N: DFP186-UP; CJX188-UP
PART OF 223-3046, 259-3885 LINES GP-FUEL
ALSO AN ATTACHMENT

SMCS-1435 **i02294948**

NOTE	REF NO	GRAPHIC REF	PART NUMBER	QTY	PART NAME 1 2 3 4 5 6 (PRODUCT LEVEL)	SEE PAGE
	1	1	**102-8802**	1	KIT-RECEPTACLE (2-PIN)	
					(INCLUDES RECEPTACLE AS AND WEDGE)	
	2	1	**3E-3365**	1	WEDGE-RECEPTACLE LOCK (2-PIN)	
	3	1	**186-3735**	2	PIN-CONNECTOR (16-GA TO 18-GA)	
BE	4	1	**9X-1813**		SLEEVE (14-CM)	
	5	1	**6V-4589**	1	SEAL-O-RING	
	6	1	**7L-9061**	1	SEAL-O-RING	

B-USE AS REQUIRED
E-ORDER BY THE CENTIMETER

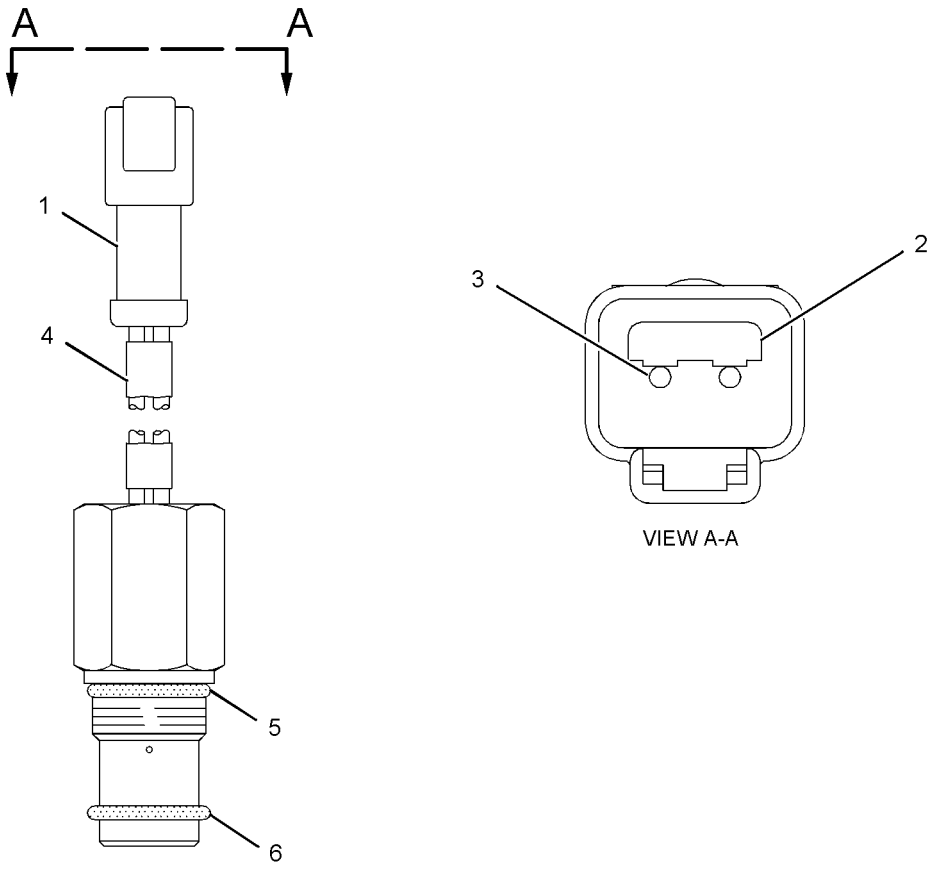

GRAPHIC #1 **<END>** g01072091

238-1594 SWITCH GP-PUSH BUTTON–REFUELING PUMP, START

S/N: DFP1-UP; CJX1-UP
PART OF 238-1570 WIRING GP-FUEL SYSTEM
AN ATTACHMENT

SMCS-1435, 7332 **i03156060**

NOTE	REF NO	GRAPHIC REF	PART NUMBER	QTY	PART NAME 1 2 3 4 5 6 (PRODUCT LEVEL)	SEE PAGE
	1	1	**6T-9442**	1	SWITCH GP-PUSHBUTTON (REFUELING PUMP, START)	
		1	**1S-0812**	2	SCREW-TAPPING	
		1	**3K-0835**	1	NUT (5/8-24-THD)	
		1	**6F-0253**	1	LOCKWASHER	
		1	**8T-8748**	1	ADAPTER-MOUNT	
		1	**9W-0625**	1	SWITCH AS (NORMALLY OPEN)	
	2	1	**238-1595**	1	HARNESS AS-SWITCH	
E	3	1	**125-7875**		TUBE-HEAT SHRINK (7.44-MM DIA) (6-CM)	

E-ORDER BY THE CENTIMETER

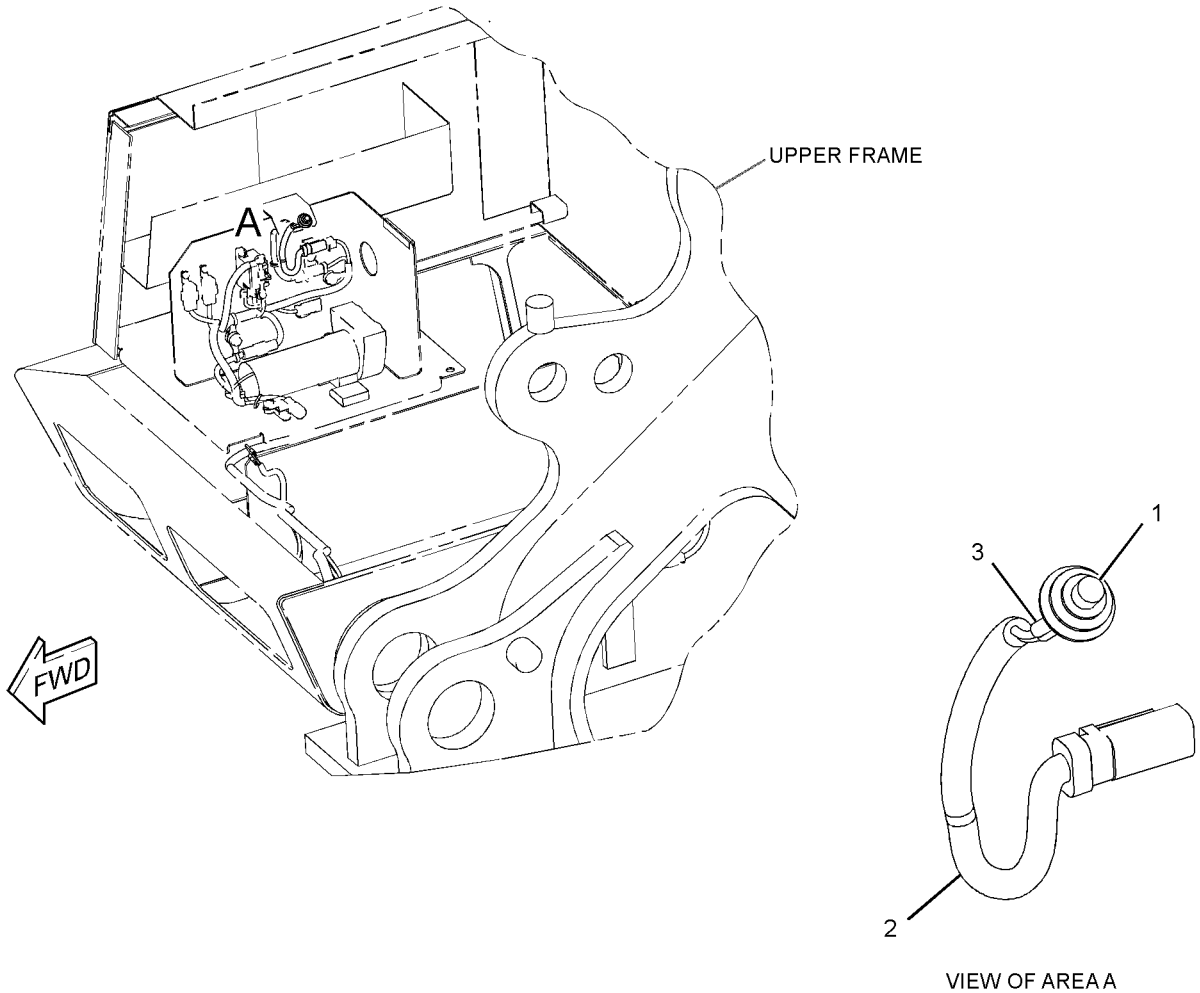

GRAPHIC #1 **<END>** g01560235

238-1596 SWITCH GP-PUSH BUTTON–REFUELING PUMP, STOP

S/N: DFP1-UP; CJX1-UP
PART OF 238-1570 WIRING GP-FUEL SYSTEM
AN ATTACHMENT

SMCS-1435, 7332 **i03156100**

NOTE	REF NO	GRAPHIC REF	PART NUMBER	QTY	PART NAME 1 2 3 4 5 6 (PRODUCT LEVEL)	SEE PAGE
	1	1	*9X-4184*	1	SWITCH AS (REFUELING PUMP, STOP)	
		1	**1S-0812**	2	SCREW-TAPPING	
		1	**3E-7389**	1	SWITCH AS (NORMALLY CLOSED)	
		1	**3K-0835**	1	NUT (5/8-24-THD)	
		1	**6F-0253**	1	LOCKWASHER	
		1	**8T-8748**	1	ADAPTER-MOUNT	
	2	1	**238-1597**	1	HARNESS AS-SWITCH	
E	3	1	**125-7875**		TUBE-HEAT SHRINK (7.44-MM DIA) (6-CM)	

E-ORDER BY THE CENTIMETER

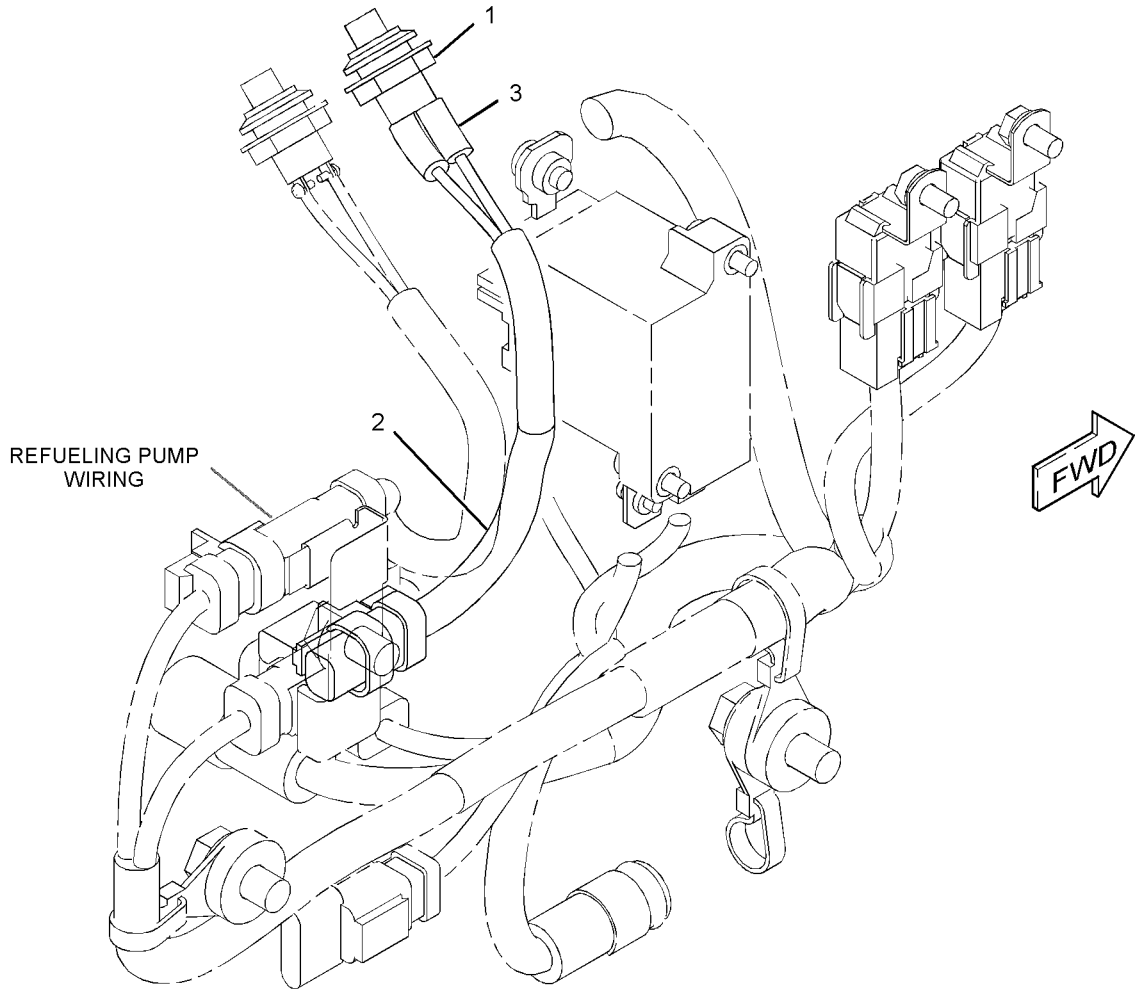

GRAPHIC #1 **<END>** g01560319

5C-6108 SWITCH GP-REFUELING–FUEL TANK SHUTOFF

S/N: DFP1-UP; CJX1-UP
PART OF 229-1785 PUMP GP-REFUELING
AN ATTACHMENT

SMCS-1295 **i02742303**

NOTE	REF NO	GRAPHIC REF	PART NUMBER	QTY	PART NAME 1 2 3 4 5 6 (PRODUCT LEVEL)	SEE PAGE
	1	1	**8J-9236**	1	SWITCH (LIQUID LEVEL) (FUEL)	
	2	1	**5C-6074**	1	FITTING	
	3	1	**2S-4078**	1	SEAL-O-RING	
	4	1	**3D-2824**	1	SEAL-O-RING	
	5	1	**8S-1815**	1	PLUG	
	6	1	**8S-1814**	2	INSULATOR	
	7	1	**4B-2049**	2	NUT (10-32-THD)	
	8	1	**8S-1812**	1	TERMINAL	
	9	1	**9B-4499**	1	SCREW-MACHINE (8-36X0.375-IN)	
	10	1	**2L-8076**	1	TERMINAL (14-GA TO 16-GA, NO. 10 SCREW)	

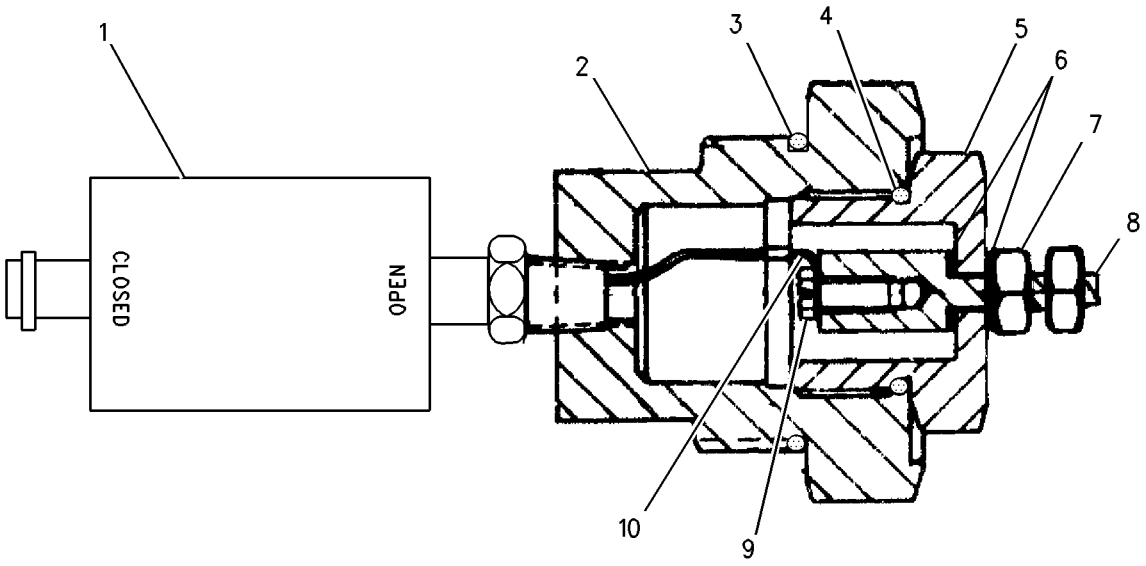

GRAPHIC #1 **<END>** g00687581

106-0107 SWITCH GP-ROTARY–THROTTLE POSITION

S/N: DFP1-UP; CJX1-UP
PART OF 251-0542, 251-0544 PANEL GP-SWITCH
AN ATTACHMENT

SMCS-7332 **i02164374**

NOTE	REF NO	GRAPHIC REF	PART NUMBER	QTY	PART NAME 1 2 3 4 5 6 (PRODUCT LEVEL)	SEE PAGE
	1	1	**102-8805**	1	KIT-RECEPTACLE (6-PIN)	
					(INCLUDES RECEPTACLE AS & WEDGE)	
	2	1	**3E-3383**	1	WEDGE-RECEPTACLE LOCK (6-PIN)	
	3	1	**8T-8737**	1	PLUG-SEAL	
	4	1	**144-1636**	5	PIN-CONNECTOR (14-GA TO 18-GA)	
M	5	1	**7Y-5458**	1	NUT (M12X1-THD)	
	6	1	**7Y-5464**	1	WASHER (M12.2X15.4X0.5-MM THK)	
	7	1	**106-0210**	1	SEAL	

M-METRIC PART

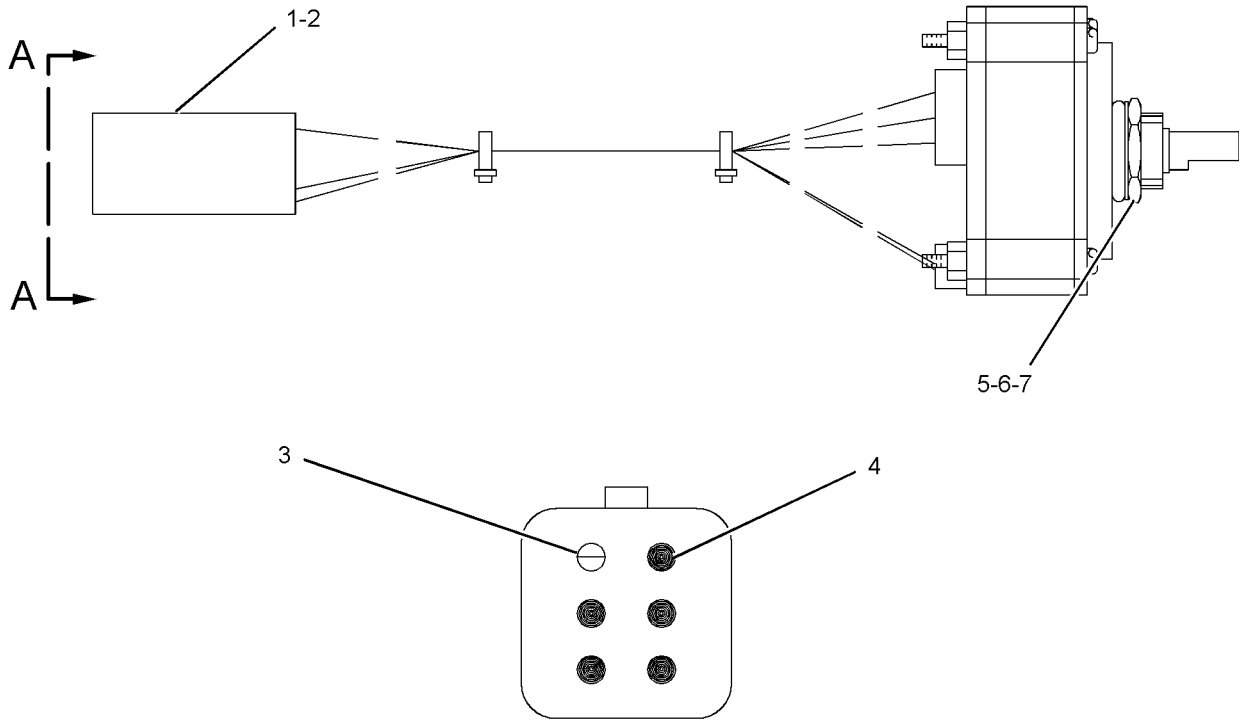

VIEW A-A

GRAPHIC #1 **<END>** g01098706

319-4420 SWITCH GP-ROTARY–THROTTLE POSITION

S/N: DFP1-UP; CJX1-UP
PART OF 251-0542, 251-0544 PANEL GP-SWITCH
AN ATTACHMENT

SMCS-7332 **i03105700**

NOTE	REF NO	GRAPHIC REF	PART NUMBER	QTY	PART NAME 1 2 3 4 5 6 (PRODUCT LEVEL)	SEE PAGE
	1	1	**243-4508**	1	RECEPTACLE AS-CONNECTOR (6-PIN)	
	2	1	**9X-3401**	5	PIN-CONNECTOR (16-GA TO 18-GA)	
					–OR–	
		1	**126-1767**	5	PIN-CONNECTOR (14-GA)	
	3	1	**8T-8737**	1	PLUG-SEAL	
M	4	1	**7Y-5458**	1	NUT (M12X1-THD)	
	5	1	**7Y-5464**	1	WASHER (M12.2X15.4X0.5-MM THK)	
	6	1	**106-0210**	1	SEAL	

M-METRIC PART

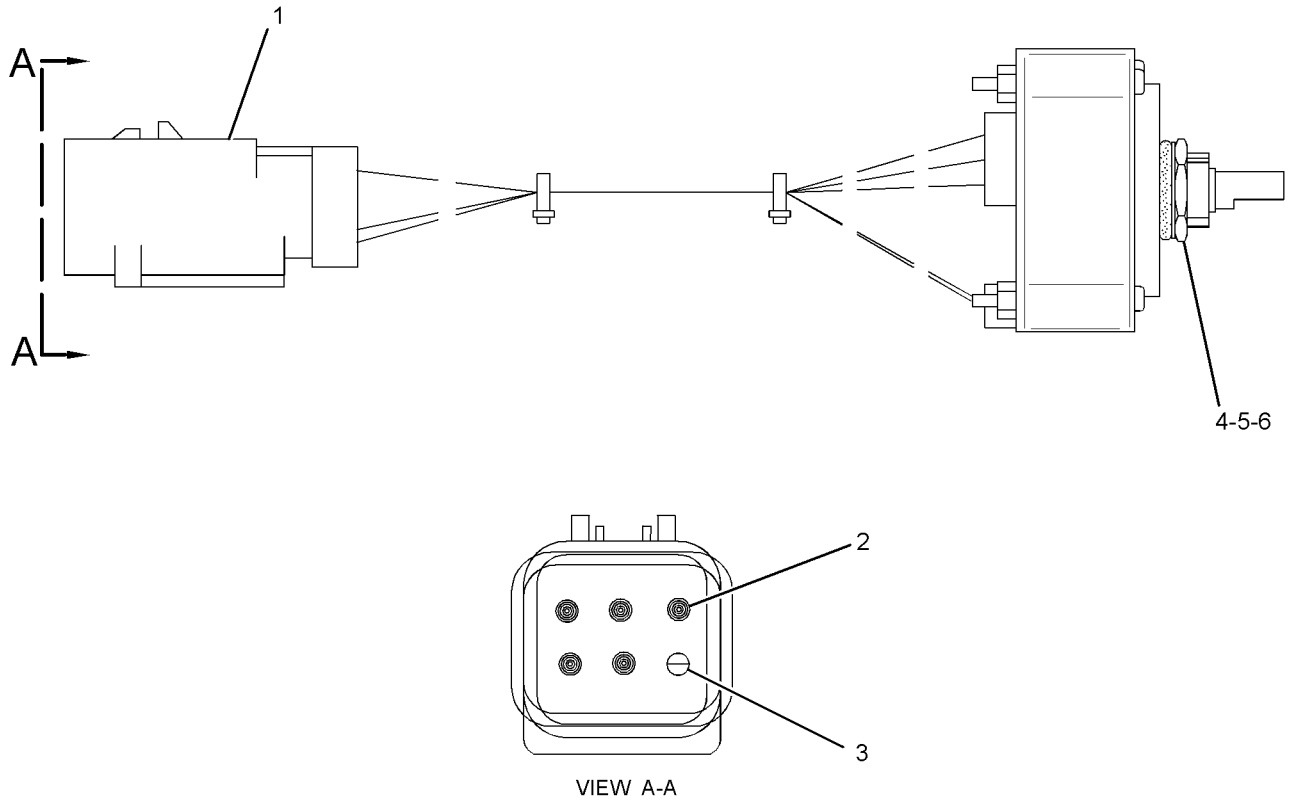

GRAPHIC #1 **<END>** g01588034

9G-7641 SWITCH GP-START–ENGINE, KEY

S/N: DFP1-UP; CJX1-UP
PART OF 251-0542, 251-0544 PANEL GP-SWITCH
AN ATTACHMENT

SMCS-1416 **i01101254**

NOTE	REF NO	GRAPHIC REF	PART NUMBER	QTY	PART NAME 1 2 3 4 5 6 (PRODUCT LEVEL)	SEE PAGE
	1	1	**6V-8362**	4	SCREW-MACHINE (8-32X0.31-IN)	
	2	1	**9B-7233**	4	LOCKWASHER	
	3	1	**7T-6799**	1	NUT-MOUNTING (1-32-THD)	

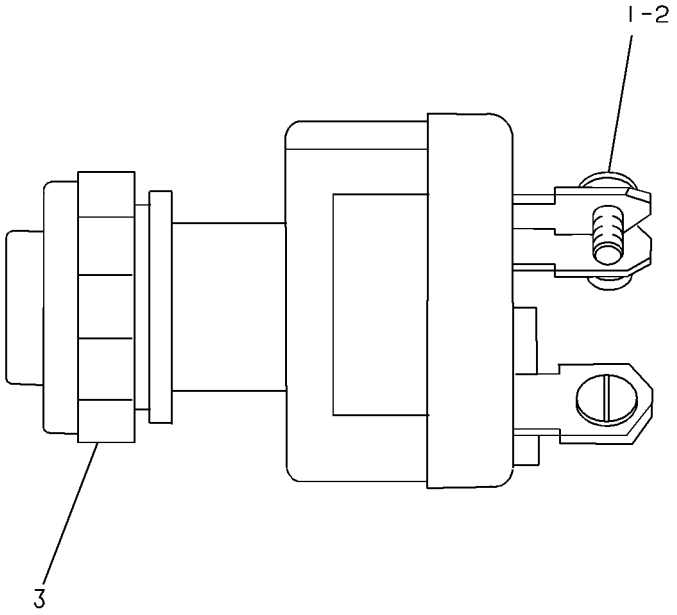

GRAPHIC #1 **<END>** g00081868

165-5970 SWITCH GP-TOGGLE–FUEL PRIMING PUMP

S/N: DFP1-UP; CJX1-UP
PART OF 259-5053 WIRING GP-FUEL SYSTEM
AN ATTACHMENT

SMCS-7332 **i02408655**

NOTE	REF NO	GRAPHIC REF	PART NUMBER	QTY	PART NAME 1 2 3 4 5 6 (PRODUCT LEVEL)	SEE PAGE
	1	1	**6T-3631**	2	NUT-HEX (15/32-32-THD)	
	2	1	**6T-3632**	1	LOCKWASHER	
	3	1	**6T-3633**	1	RING-LOCKING	
	4	1	**102-8803**	1	KIT-RECEPTACLE (3-PIN)	
					(INCLUDES RECEPTACLE AS & WEDGE)	
	5	1	**186-3735**	3	PIN-CONNECTOR (16-GA TO 18-GA)	

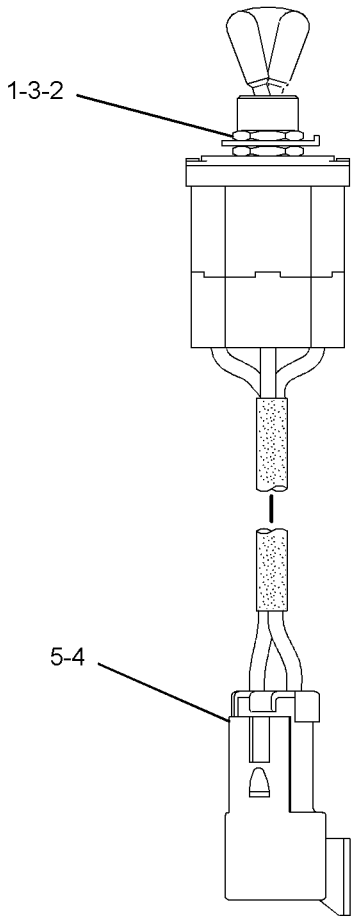

GRAPHIC #1 **<END>** g01203825

238-2478 SWITCH GP-TOGGLE–QUICK COUPLER

S/N: DFP1-UP; CJX1-UP

PART OF 238-2485 WIRING GP-QUICK COUPLER

AN ATTACHMENT

SMCS-7332 **i02518014**

NOTE	REF NO	GRAPHIC REF	PART NUMBER	QTY	PART NAME 1 2 3 4 5 6 (PRODUCT LEVEL)	SEE PAGE
	1	1	**7N-2353**	1	SWITCH AS-TOGGLE (QUICK COUPLER)	
	2	1	**238-2479**	1	HARNESS AS-WIRING (QUICK COUPLER SWITCH)	
		1	**7Y-3950**	2	TERMINAL (MALE)	
		1	**7Y-3953**	1	CONNECTOR-RECEPTACLE	
		1	**3S-2093**	1	STRAP-CABLE	

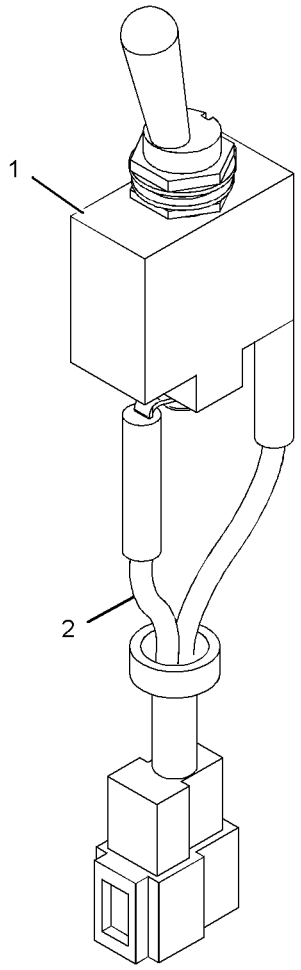

GRAPHIC #1

<END>

g01125914

238-2208 SWITCH GP-WIPER–LOWER

S/N: DFP1-UP; CJX1-UP
PART OF 229-9086 WIPER AR-WINDOW
AN ATTACHMENT

SMCS-7305 **i02971621**

NOTE	REF NO	GRAPHIC REF	PART NUMBER	QTY	PART NAME 1 2 3 4 5 6 (PRODUCT LEVEL)	SEE PAGE
	1	1	**238-2209**	1	SWITCH AS-ROCKER (WIPER, LOWER)	
		1	**167-3542**	1	CONNECTOR-RECEPTACLE	
		1	**167-3543**	5	TERMINAL (MALE)	
	2	1	**238-2210**	1	SWITCH AS-ROCKER (LOWER WASHER)	
		1	**167-3542**	1	CONNECTOR-RECEPTACLE	
		1	**167-3543**	4	TERMINAL (MALE)	

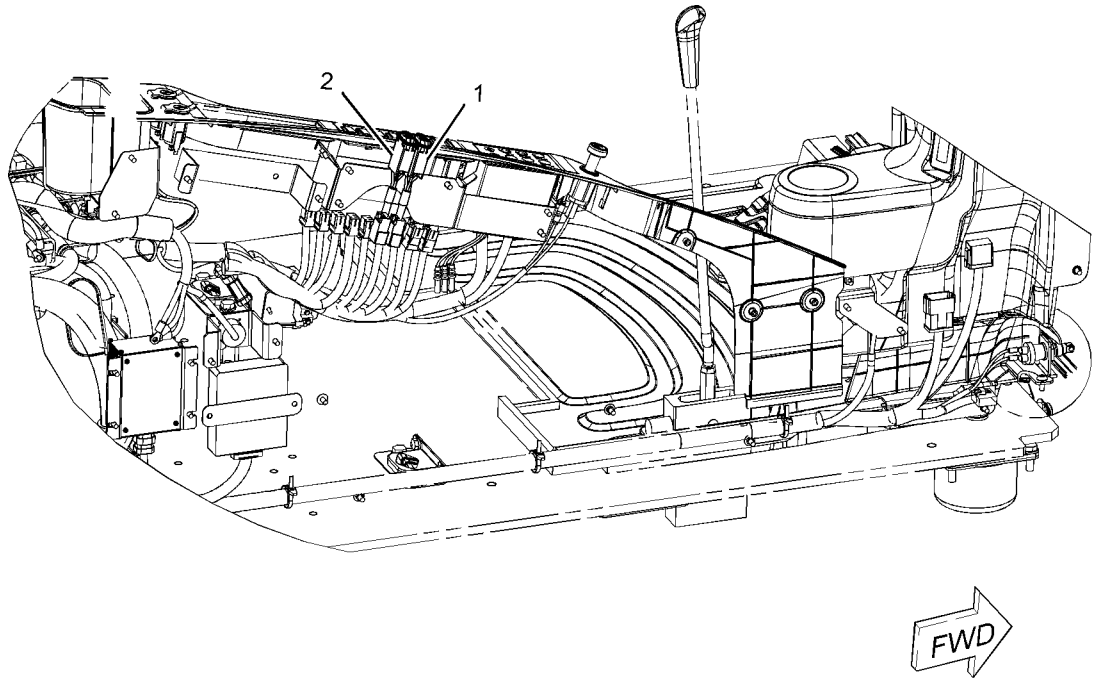

GRAPHIC #1 **<END>** g01098895

239-1134 VALVE GP-ETHER STARTING

S/N: DFP1-UP; CJX1-UP
PART OF 239-6676 STARTING AID GP-ETHER
AN ATTACHMENT

SMCS-1456 **i02748165**

NOTE	REF NO	GRAPHIC REF	PART NUMBER	QTY	PART NAME 1 2 3 4 5 6 (PRODUCT LEVEL)	SEE PAGE
	1	1	**7N-9801**	1	GASKET	
	2	1	**102-8802**	1	KIT-RECEPTACLE (2-PIN)	
					(INCLUDES RECEPTACLE AS & WEDGE)	
	3	1	**186-3735**	2	PIN-CONNECTOR (16-GA TO 18-GA)	

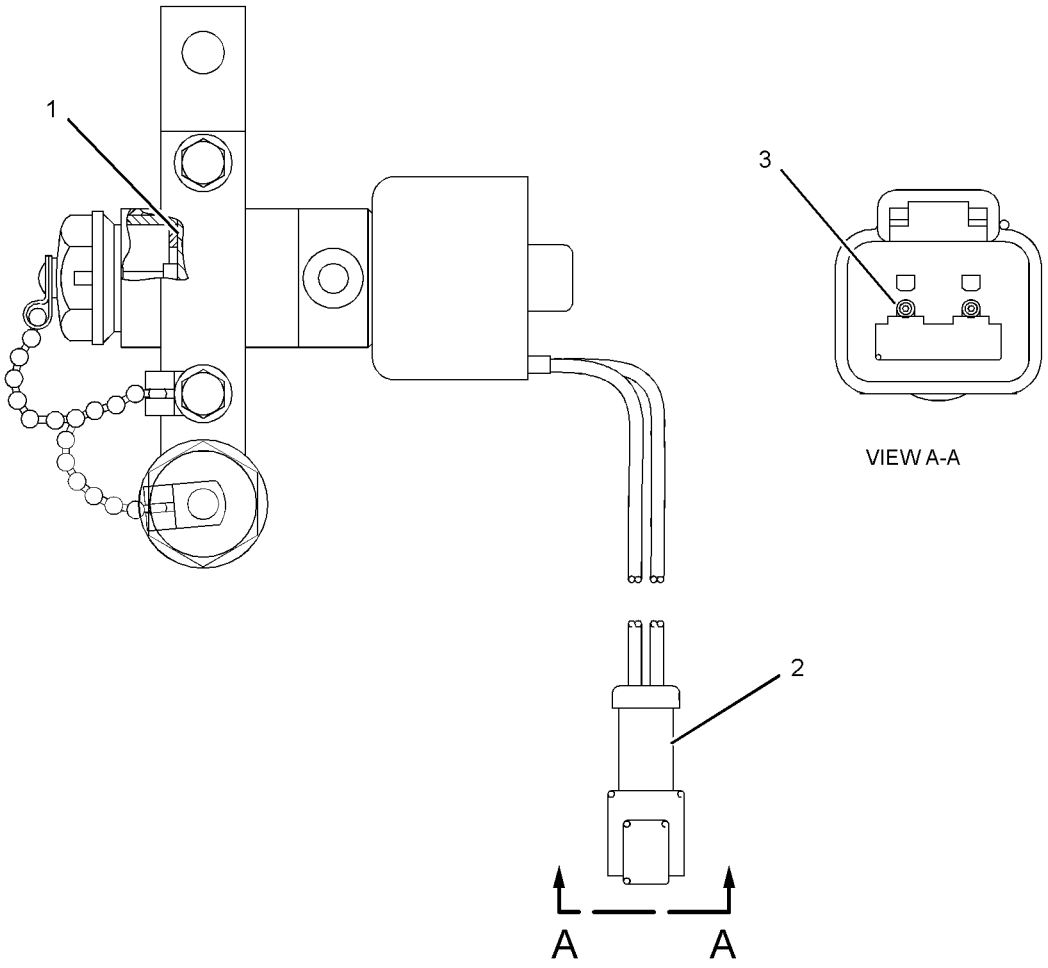

GRAPHIC #1 **<END>** g01375620

251-0441 WIRING GP-AUX START RECEPTACLE–JUMP START

S/N: DFP1-UP; CJX1-UP
AN ATTACHMENT

SMCS-1408, 1463 **i02989497**

NOTE	REF NO	GRAPHIC REF	PART NUMBER	QTY	PART NAME 1 2 3 4 5 6 (PRODUCT LEVEL)	SEE PAGE
	1	1	**2G-1830**	1	RECEPTACLE AS	
		1	**1S-7251**	2	TERMINAL-CABLE (00-GA, 1/2-IN BOLT)	
E		1	**5P-0747**		CABLE (00-GA, BLACK) (49-CM)	
E		1	**5P-0761**		CABLE (00-GA, RED) (56-CM)	
D		1	**6V-2722**		TUBE-HEAT SHRINK (25.4-MM DIA) (0.1-M)	
	2	1	**301-0091**	1	COVER-TERMINAL (RED)	
	3	1	**8S-2634**	1	COVER AS	
	4	1	**251-0452**	1	BRACKET	
	5	1	**251-0455**	1	CABLE AS (POSITIVE)	
		1	**301-0091**	1	COVER-TERMINAL (RED)	
		1	**1S-7251**	2	TERMINAL-CABLE (00-GA, 1/2-IN BOLT)	
E		1	**5P-0761**		CABLE (00-GA, RED) (250-CM)	
		1	**8N-0869**	1	COVER-TERMINAL (RED)	
	6	1	**251-0456**	1	CABLE AS (POSITIVE)	
		1	**3S-6049**	1	TERMINAL AS-BATTERY (POSITIVE)	
		1	**1S-7251**	1	TERMINAL-CABLE (00-GA, 1/2-IN BOLT)	
E		1	**5P-0761**		CABLE (00-GA, RED) (37-CM)	
		1	**301-0091**	1	COVER-TERMINAL (RED)	
		1	**8N-1725**	1	COVER-TERMINAL (RED)	
	7	1	**4I-7889**	1	SPACER (11X25X45-MM THK)	
	8	1	**4K-8864**	2	CLIP	
M	9	1	**5C-9553**	4	BOLT (M6X1X16-MM)	
	10	1	**5P-4115**	4	WASHER-HARD (7.2X19X2-MM THK)	
	11	1	**6G-2263**	1	SPACER (10.5X19X28.5-MM THK)	
	12	1	**8T-4121**	6	WASHER-HARD (11X21X2.5-MM THK)	
M	13	1	**8T-4136**	2	BOLT (M10X1.5X25-MM)	
M	14	1	**8T-4137**	2	BOLT (M10X1.5X20-MM)	
M	15	1	**8T-4182**	1	BOLT (M10X1.5X45-MM)	
M	16	1	**8T-5005**	1	BOLT (M10X1.5X70-MM)	
Y	17	1	**9W-0742**	1	BLOCK GP-JUNCTION (BATTERY)	260

D-ORDER BY THE METER
E-ORDER BY THE CENTIMETER
M-METRIC PART
Y-SEPARATE ILLUSTRATION

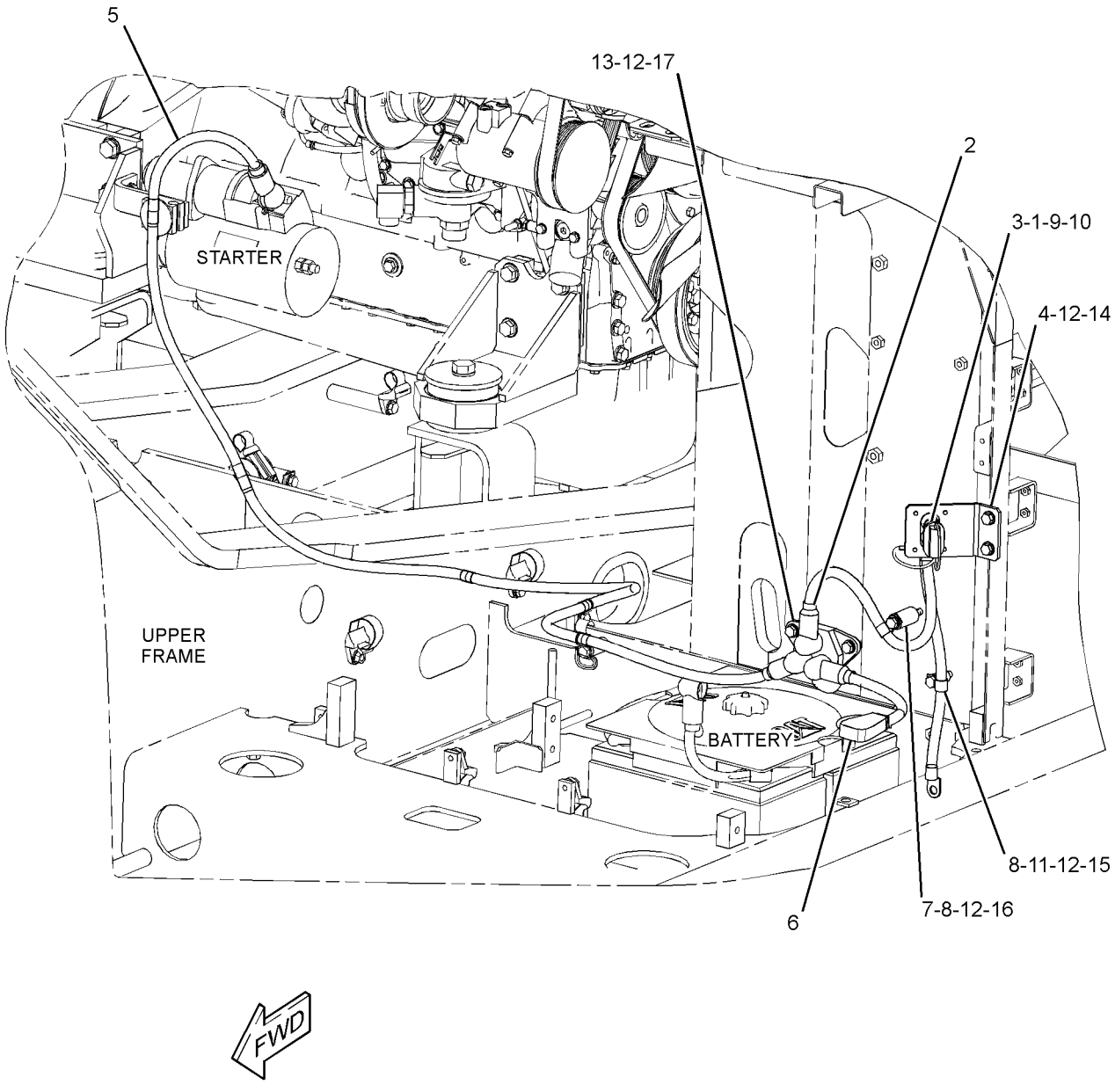

GRAPHIC #1 **<END>** g01401978

267-7643 WIRING GP-BOOM FLOAT–COUPLER

S/N: DFP1-UP; CJX1-UP
PART OF 268-6820 CONTROL AR-COUPLER
AN ATTACHMENT

SMCS-1408 **i02490827**

NOTE	REF NO	GRAPHIC REF	PART NUMBER	QTY	PART NAME 1 2 3 4 5 6 (PRODUCT LEVEL)	SEE PAGE
	1	2	**3S-2093**	14	STRAP-CABLE	
	2	1,2	**7K-1181**	9	STRAP-CABLE	
	3	1	**116-0118**	1	CLIP	
	4	1	**267-7645**	1	HARNESS AS-SOLENOID (QUICK COUPLER)	
		1	**102-8802**	1	KIT-RECEPTACLE (2-PIN)	
					(INCLUDES RECEPTACLE AS & WEDGE)	
		1	**155-2270**	3	KIT-CONNECTING PLUG (2-PIN)	
					(EACH INCLUDES PLUG AS, WEDGE & INTERFACE SEAL)	
E		1	**125-7874**		TUBE-HEAT SHRINK (5.72-MM DIA) (5-CM)	
		1	**243-4507**	1	RECEPTACLE AS-CONNECTOR (4-PIN)	
	5	2	**4P-7581**	1	CLIP	
	6	2	**8T-4121**	1	WASHER-HARD (11X21X2.5-MM THK)	
M	7	2	**8T-4136**	1	BOLT (M10X1.5X25-MM)	

E-ORDER BY THE CENTIMETER
M-METRIC PART

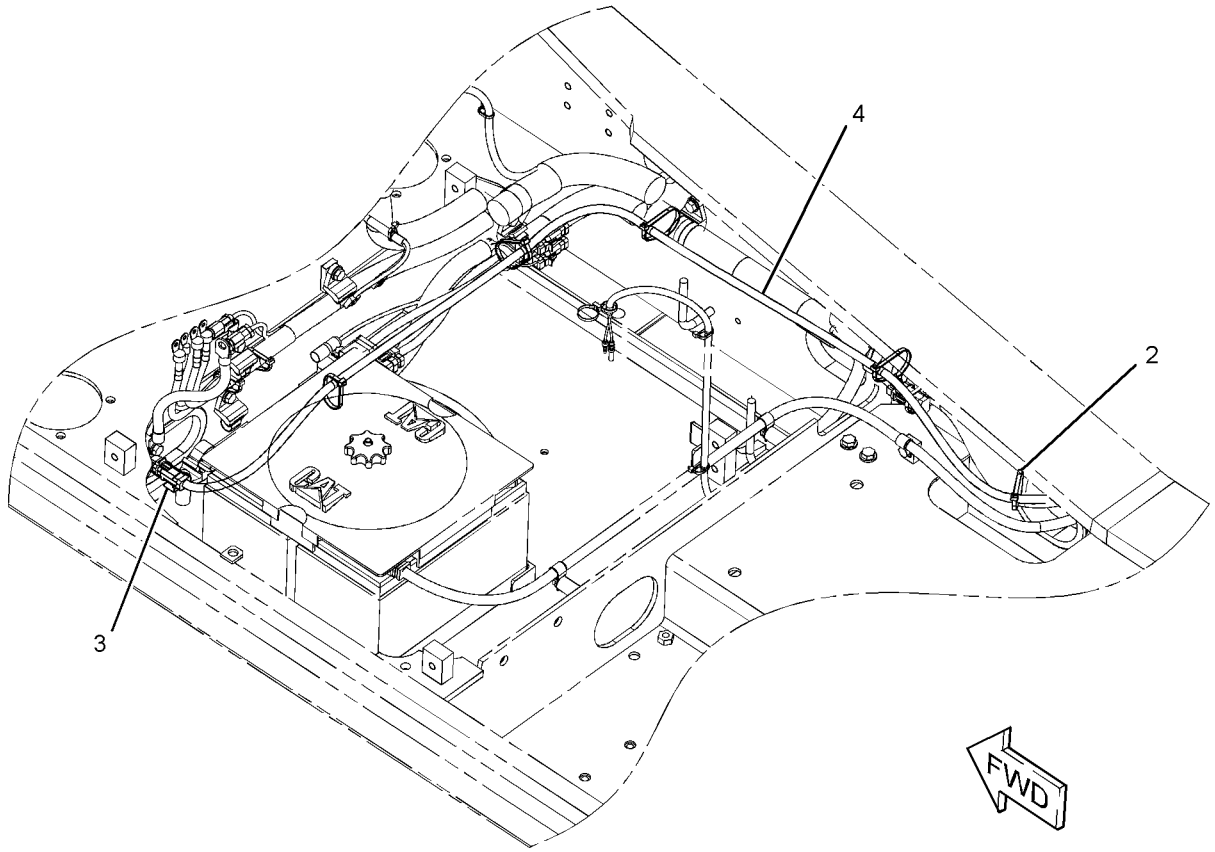

GRAPHIC #1 g01210975

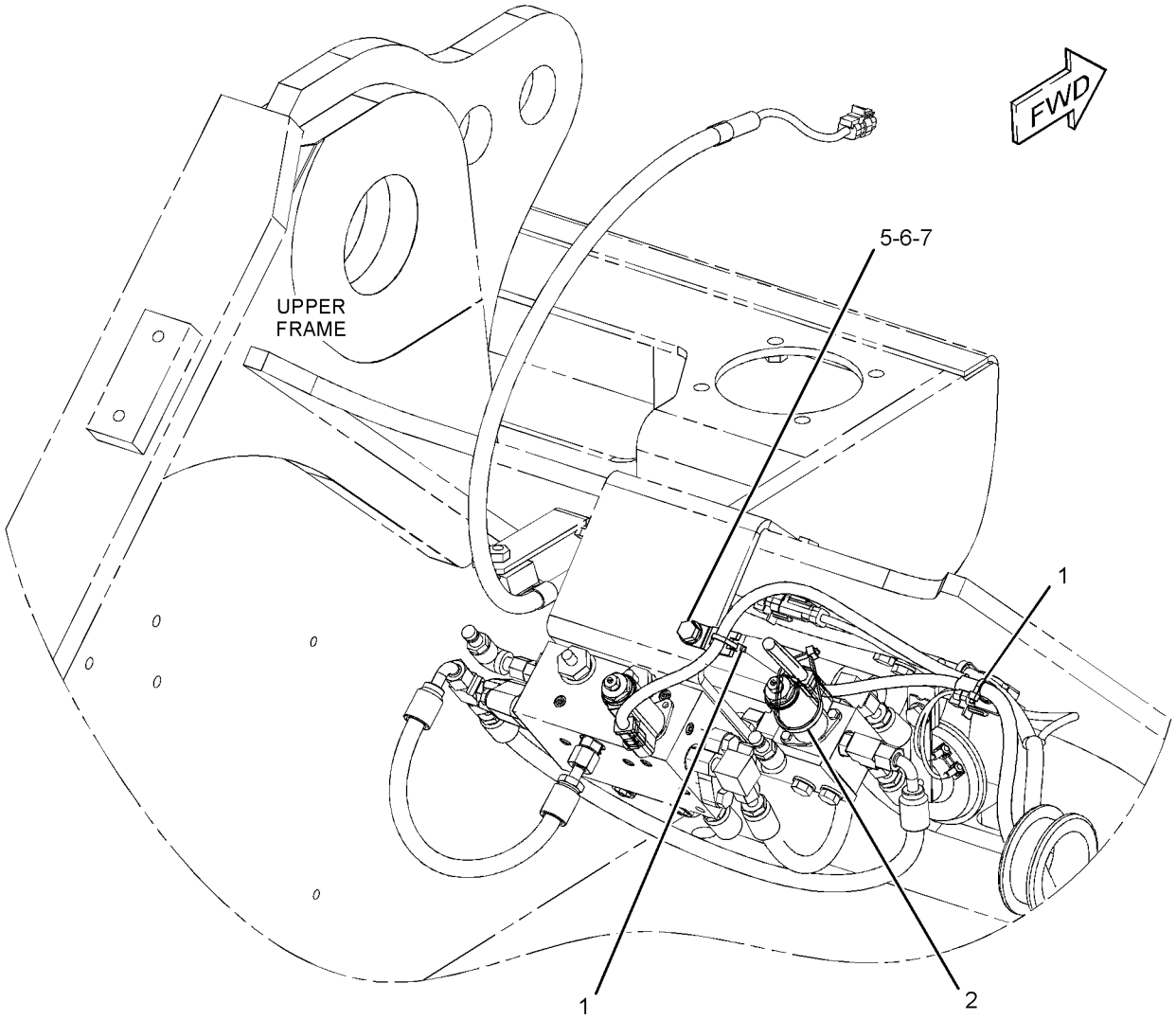

GRAPHIC #2 **<END>** g01210981

ELECTRICAL AND STARTING SYSTEM

251-0432 WIRING GP-CAB

S/N: DFP1-UP; CJX1-UP
PART OF 229-9072 OPERATOR AR

SMCS-1408, 7301 **i02896259**

NOTE	REF NO	GRAPHIC REF	PART NUMBER	QTY	PART NAME 1 2 3 4 5 6 (PRODUCT LEVEL)	SEE PAGE
	1	1,2	**3S-2093**	9	STRAP-CABLE	
	2	1,2	**7Y-5505**	2	SPEAKER AS	
					(EACH INCLUDES)	
		1,2	**7Y-3951**	2	TERMINAL (FEMALE)	
		1,2	**7Y-3954**	1	CONNECTOR-PLUG	
	3	1	**9W-0335**	1	LIGHTER AS-CIGAR (24-VOLT)	
					—OR—	
		1	**238-2318**	1	LIGHTER AS-CIGAR (24-VOLT)	
M	4	1,2	**099-7127**	8	SCREW-MACHINE (M4X0.7X12-MM)	
	5	1	**102-8016**	1	RESISTOR AS	
	6	2	**113-8490**	22	FUSE (10-AMPERE)	
	7	2	**113-8491**	5	FUSE (15-AMPERE)	
	8	2	**113-8493**	3	FUSE (25-AMPERE)	
	9	1,2	**116-0210**	4	BRACKET AS	
	10	2	**124-3548**	2	FUSE (30-AMPERE)	
Y	11	1	**132-1829**	1	ALARM GP (24-VOLT)	237
	12	2	**141-2759**	8	FUSE (5-AMPERE)	
	13	2	**161-3128**	1	RELAY (24-VOLT) (BOOM FLOODLIGHT)	
	13A	2	**161-3128**	1	RELAY (24-VOLT) (CHASSIS LIGHT)	
	13B	2	**161-3128**	1	RELAY (24-VOLT) (CAB FLOODLIGHT)	
	13C	2	**161-3128**	1	RELAY (24-VOLT) (HORN)	
	13D	2	**161-3128**	1	RELAY (24-VOLT) (NEUTRAL START)	
	13E	2	**161-3128**	1	RELAY (24-VOLT) (TRAVEL ALARM)	
	13F	2	**161-3128**	1	RELAY (24-VOLT) (ETHER)	
	14	1	**268-1964**	1	KIT-SERVICE METER	
					(INCLUDES SERVICE METER & FILM)	
	15	2	**163-6758**	1	WIRE AS	
	16	1	**167-3593**	1	STRAP	
	17	2	**170-6888**	1	PULLER-FUSE	
	18	2	**213-0772**	1	SWITCH AS-MAGNETIC (24-VOLT) (MAIN RELAY)	
	19	1	**227-7575**	1	PANEL-CONTROL (SWITCH)	
	20	1	**234-1097**	1	BRACKET	
	21	1	**238-2212**	1	SWITCH AS-ROCKER (FINE SWING)	
		1	**167-3542**	1	CONNECTOR-RECEPTACLE	
		1	**167-3543**	5	TERMINAL (MALE)	
	23	2	**238-2390**	1	CABLE AS	
D		2	**6V-2369**		WIRE (4-GA, BLACK) (0.3-M)	
		2	**9G-4343**	2	TERMINAL (4-GA)	
	24	2	**238-2391**	1	CABLE AS	
D		2	**6V-2369**		WIRE (4-GA, BLACK) (0.3-M)	
		2	**9G-4343**	2	TERMINAL (4-GA)	
	25	1	**245-7760**	8	INSULATION	
	26	1	**251-0637**	1	INSULATION	
	27	1	**259-4883**	1	ANTENNA AS	
	28	1	**267-7591**	1	HARNESS AS-CAB	
M	29	1	**095-0723**	3	SCREW (M3X0.5X10-MM)	
	30	1	**096-5962**	3	WASHER-HARD (3.4X7X0.8-MM THK)	
	31	1	**096-6166**	2	WASHER-HARD (4.5X9X1-MM THK)	
	32	1,2	**132-5789**	7	CLIP	
	33	1	**163-6795**	15	STRAP-CABLE	
	34	2	**4P-7581**	1	CLIP	
M	35	1	**5C-2890**	3	NUT (M6X1-THD)	
M	36	1,2	**6V-5210**	8	SCREW-MACHINE (M4X0.7X10-MM)	
M	37	1	**6V-9672**	2	SCREW-MACHINE (M4X0.7X16-MM)	
	38	2	**8T-0328**	3	WASHER-HARD (5.5X10X1-MM THK)	
M	39	2	**8T-4127**	2	SCREW-MACHINE (M5X0.8X20-MM)	

251-0432 **WIRING GP-CAB** ***(contd.)*** **i02896259**

NOTE	REF NO	GRAPHIC REF	PART NUMBER	QTY	PART NAME 1 2 3 4 5 6 (PRODUCT LEVEL)	SEE PAGE
M	40	2	**8T-6693**	1	SCREW-MACHINE (M5X0.8X16-MM)	
M	41	1,2	**9X-2042**	11	SCREW-TRUSS HEAD (M6X1X12-MM)	
M	42	1,2	**9X-2044**	5	SCREW-TRUSS HEAD (M6X1X16-MM)	
	43	1	**9X-8256**	3	WASHER (6.6X12X2-MM THK)	
E	44	1	**101-2846**		GUARD (9.5-CM)	
E	44A	1	**101-2846**		GUARD (9-CM EACH)	

D-ORDER BY THE METER
E-ORDER BY THE CENTIMETER
M-METRIC PART
Y-SEPARATE ILLUSTRATION

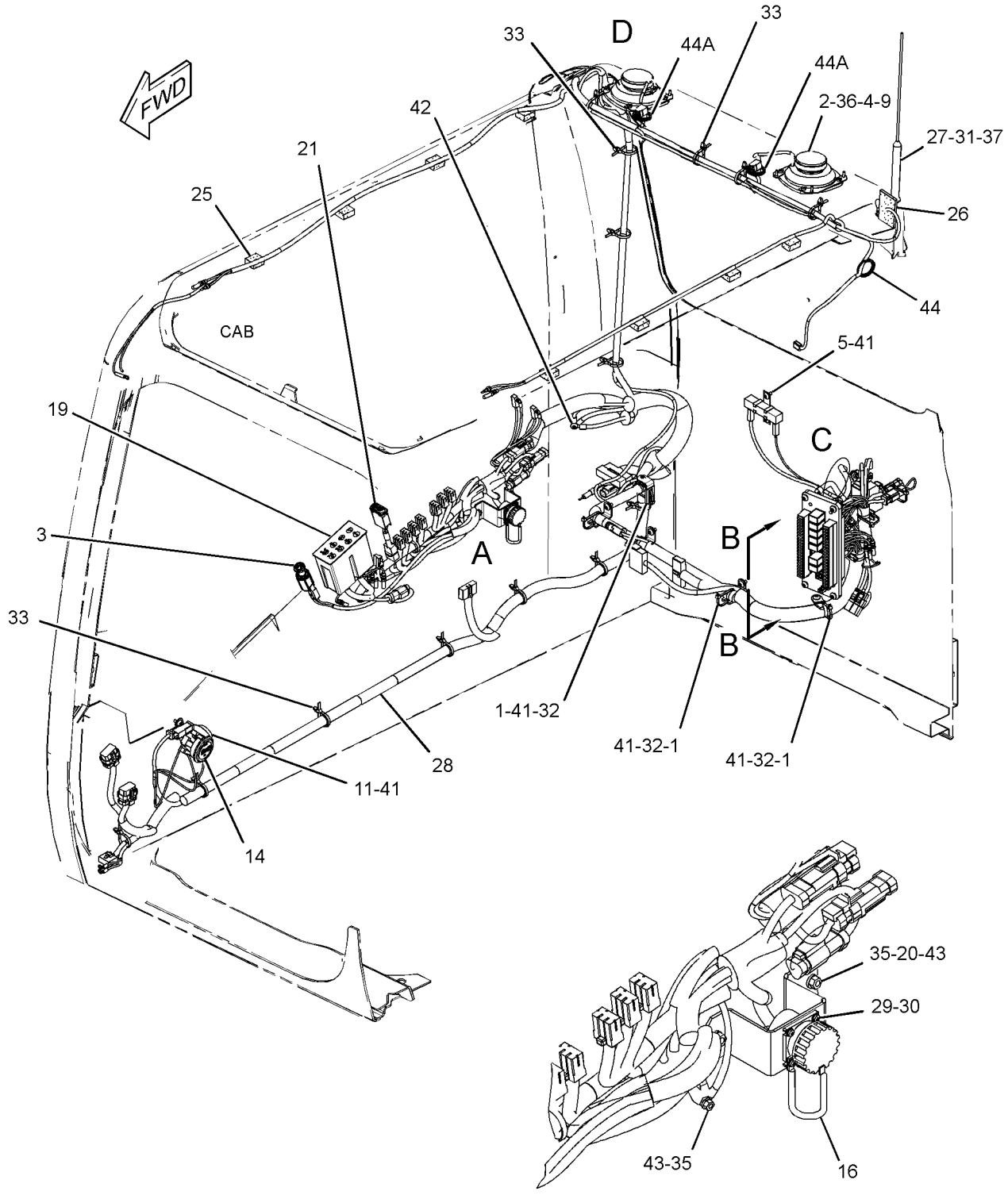

GRAPHIC #1 g01505996

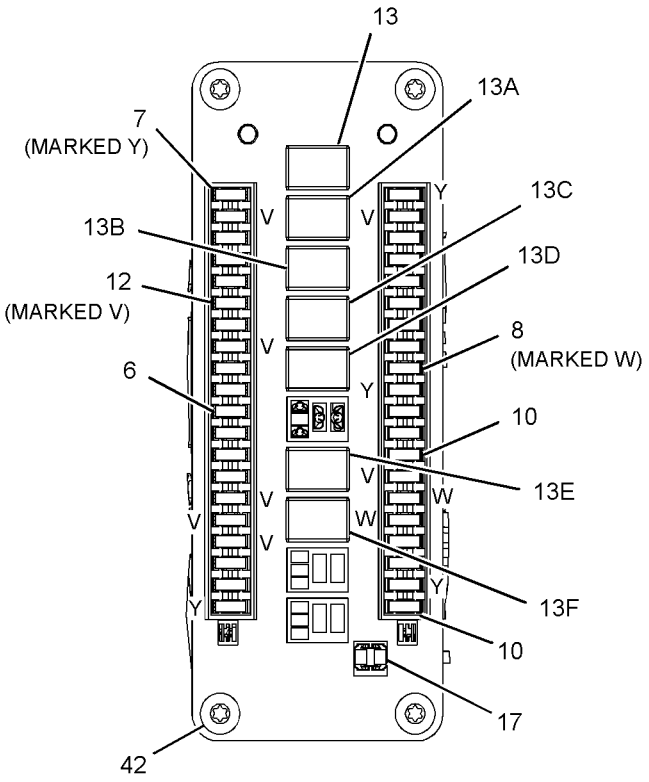

VIEW B-B

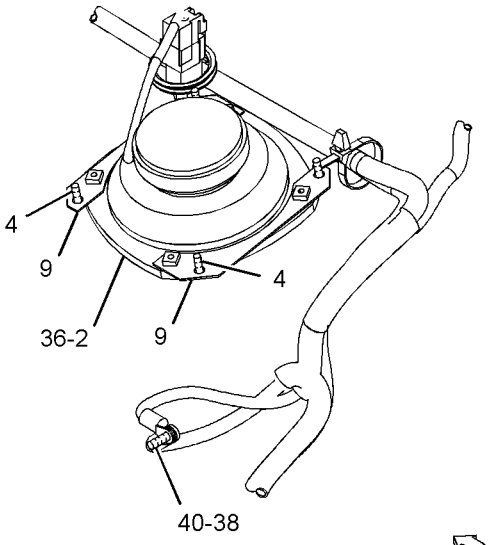

VIEW OF AREA D

180°

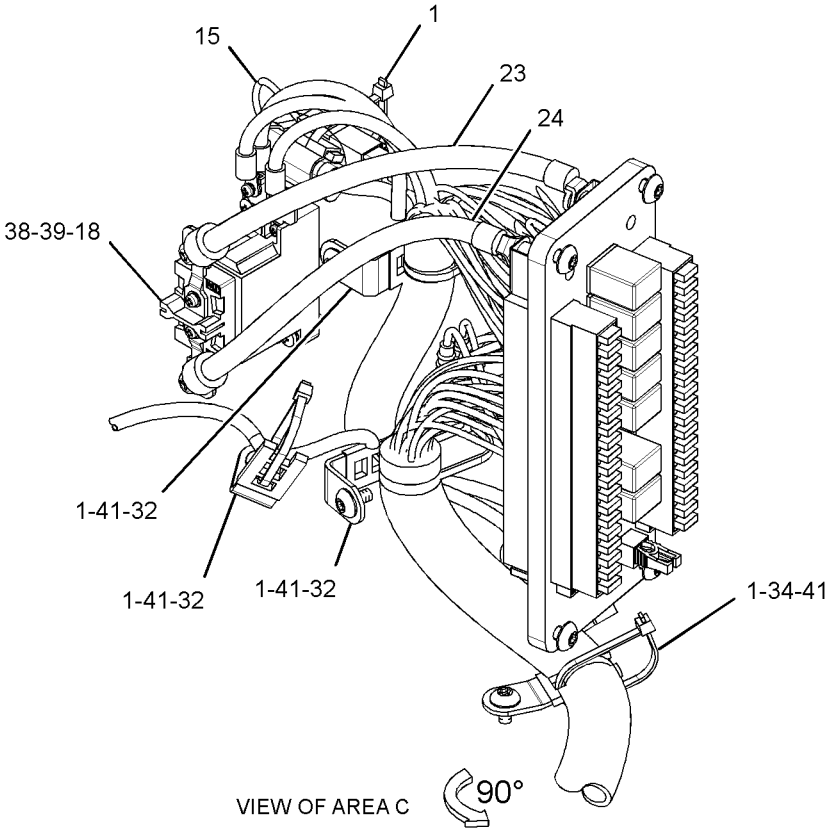

VIEW OF AREA C

90°

GRAPHIC #2

<END>

g01505997

251-0529 WIRING GP-CAB–1-WAY/2-WAY FLOW

S/N: DFP1-UP; CJX1-UP

PART OF 255-5825, 255-5827 CONTROL AR-AUXILIARY

AN ATTACHMENT

SMCS-1408, 7301 **i02723812**

NOTE	REF NO	GRAPHIC REF	PART NUMBER	QTY	PART NAME 1 2 3 4 5 6 (PRODUCT LEVEL)	SEE PAGE
	1	1,3	**3S-2093**	4	STRAP-CABLE	
	2	1,2	**7K-1181**	8	STRAP-CABLE	
	3	3	**116-0118**	2	CLIP	
	4	1	**149-5050**	1	RELAY (24-VOLT) (1-WAY/2-WAY SOLENOID)	
	5	1	**251-0598**	1	HARNESS AS-SOLENOID (1-WAY/2-WAY FLOW)	
		1	**3S-2093**	6	STRAP-CABLE	
		1	**8T-8737**	1	PLUG-SEAL	
		1	**243-4508**	1	RECEPTACLE AS-CONNECTOR (6-PIN)	
M	6	1	**5C-2890**	1	NUT (M6X1-THD)	
M	7	3	**7X-2621**	2	BOLT (M10X1.5X12-MM)	
	8	3	**8T-4121**	2	WASHER-HARD (11X21X2.5-MM THK)	
	9	1	**9X-8256**	1	WASHER (6.6X12X2-MM THK)	

M-METRIC PART

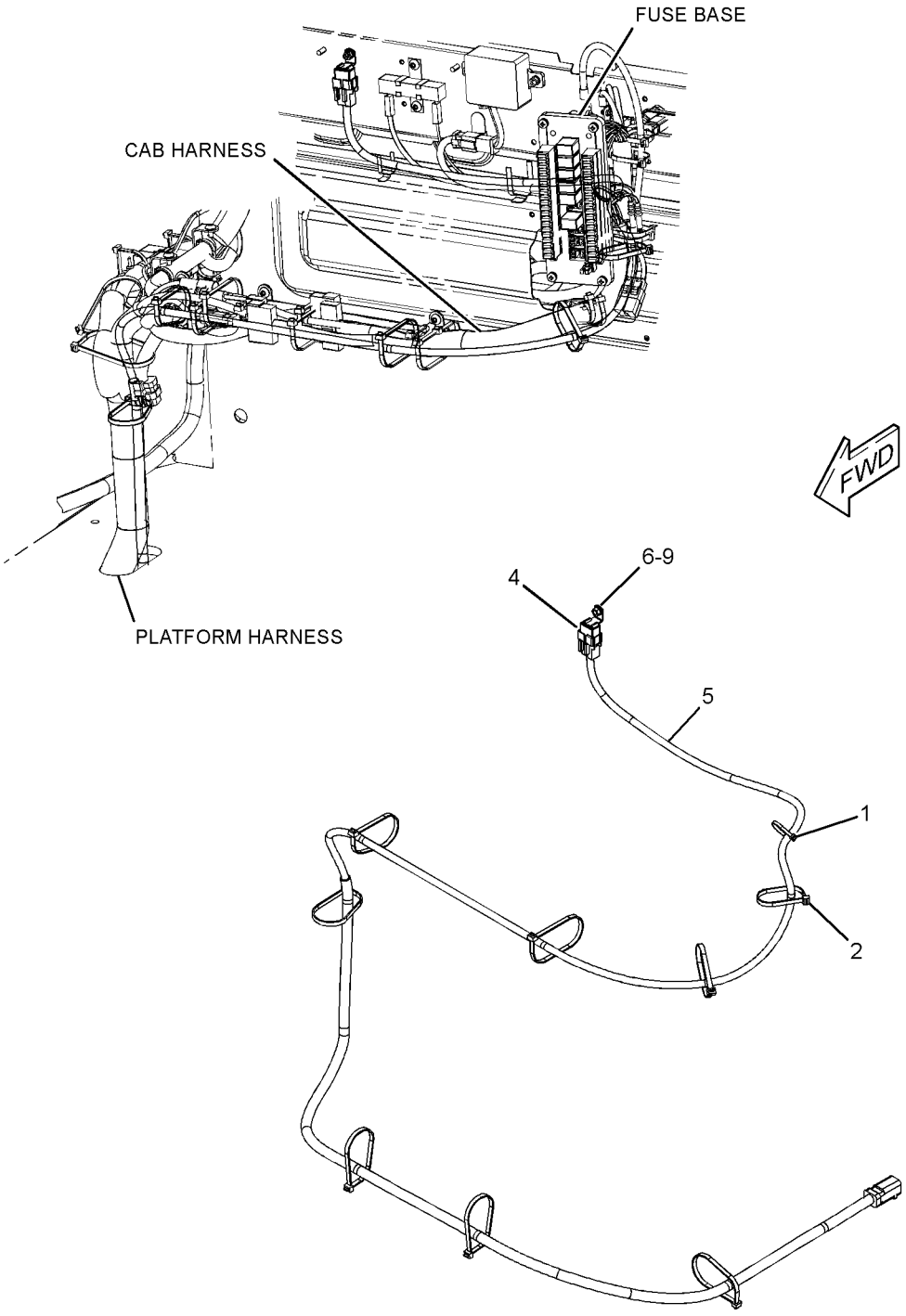

REFER TO ALL ILLUSTRATIONS OF
THIS GROUP FOR AUXILIARY VIEWS

GRAPHIC #1

g01233498

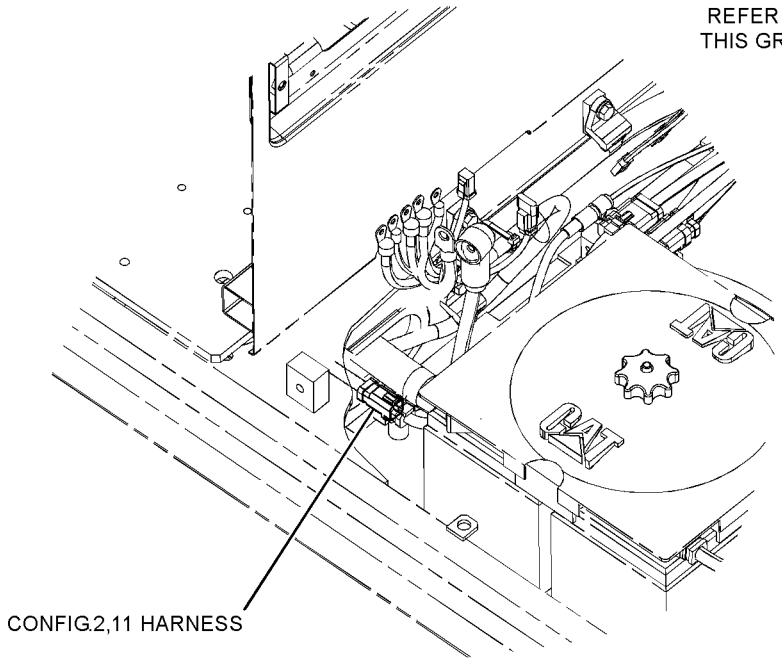

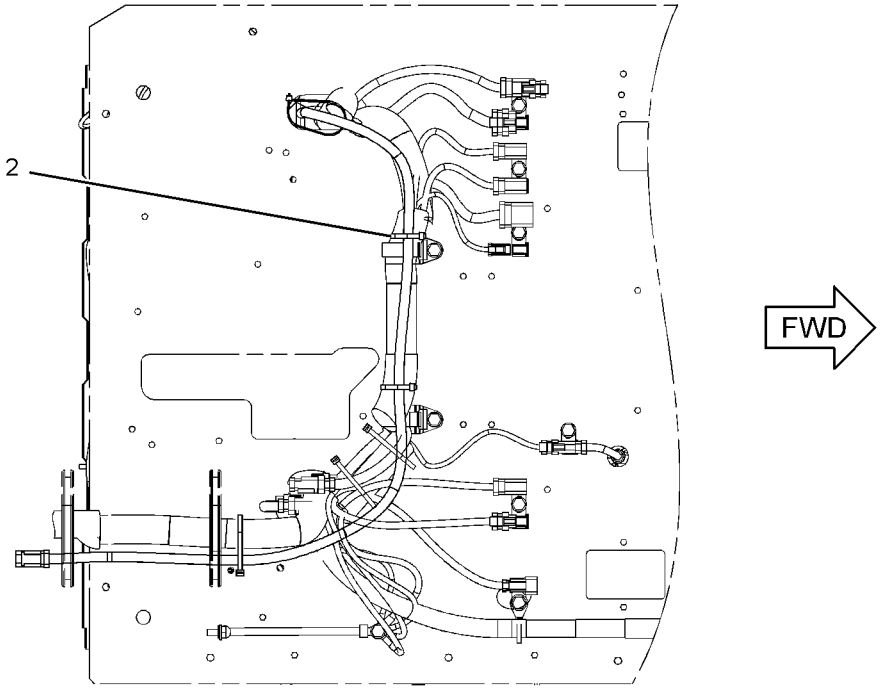

BOTTOM VIEW
(FOR CONFIG. 2,11)

GRAPHIC #2 g01233501

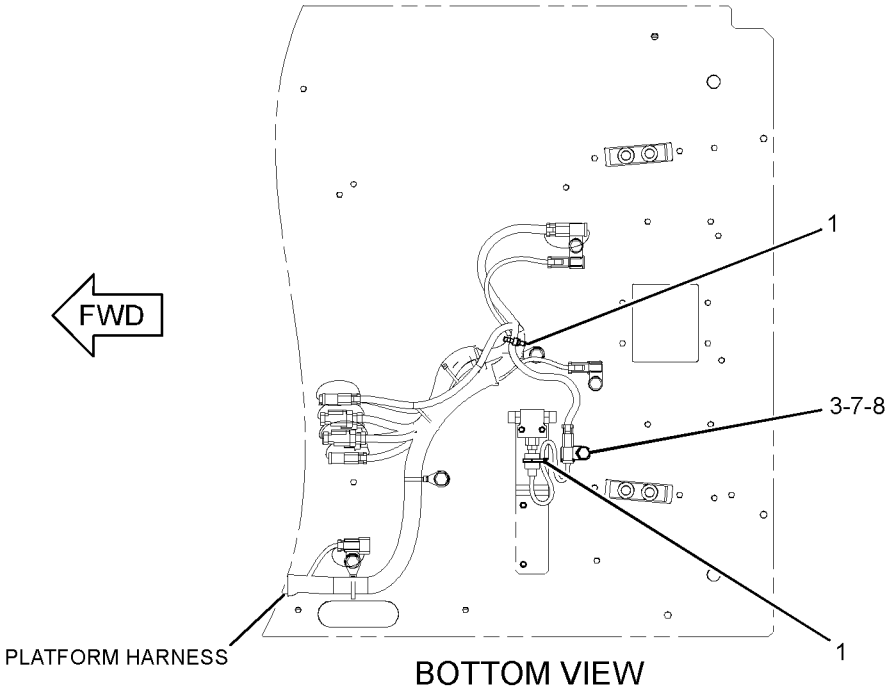

BOTTOM VIEW
(FOR CONFIG. 2)

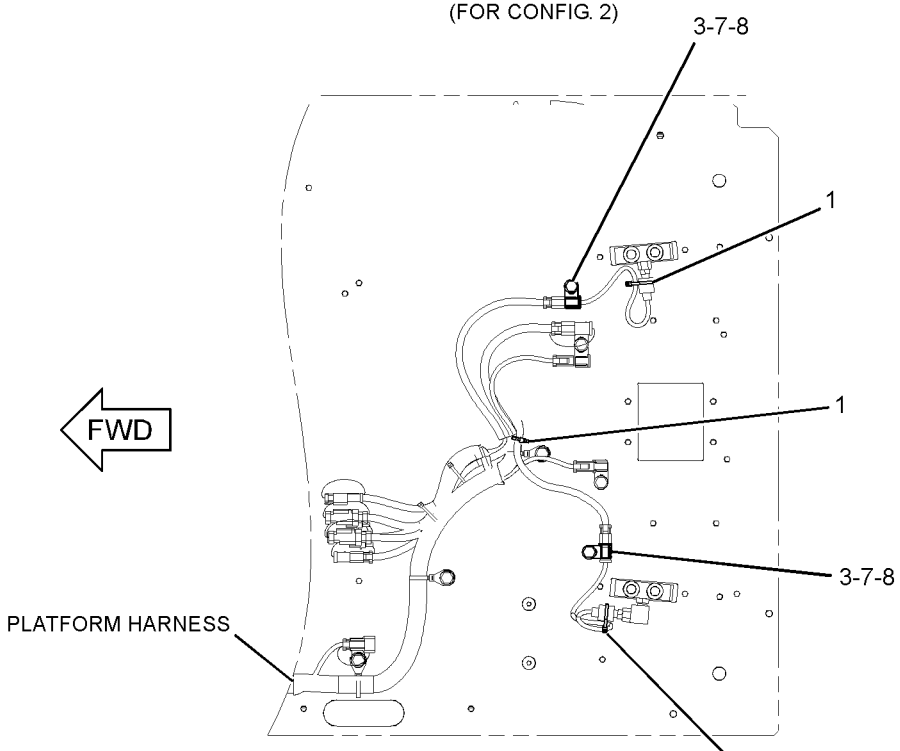

BOTTOM VIEW
(FOR CONFIG. 11)

GRAPHIC #3 **<END>** g01233503

259-5118 WIRING GP-CAB—PRIMING PUMP

S/N: DFP1-UP; CJX1-UP
PART OF 247-7458 PUMP GP-FUEL PRIMING
AN ATTACHMENT

SMCS-1408, 7301 **i02407779**

NOTE	REF NO	GRAPHIC REF	PART NUMBER	QTY	PART NAME 1 2 3 4 5 6 (PRODUCT LEVEL)	SEE PAGE
	1	1	**3S-2093**	5	STRAP-CABLE	
	2	1	**7K-1181**	9	STRAP-CABLE	
	3	1	**149-5050**	1	RELAY (24-VOLT) (PRIMING PUMP)	
	4	1	**259-5119**	1	HARNESS AS-CAB	
		1	**3S-2093**	2	STRAP-CABLE	
		1	**230-5008**	1	PLUG AS-CONNECTOR (4-PIN)	
		1	**243-4505**	1	RECEPTACLE AS-CONNECTOR (2-PIN)	
M	5	1	**5C-2890**	1	NUT (M6X1-THD)	
	6	1	**9X-8256**	1	WASHER (6.6X12X2-MM THK)	

M-METRIC PART

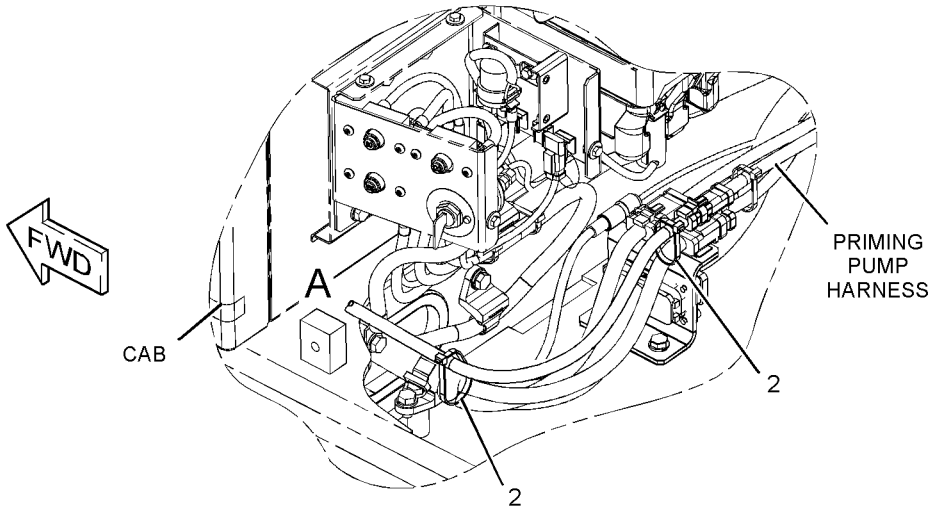

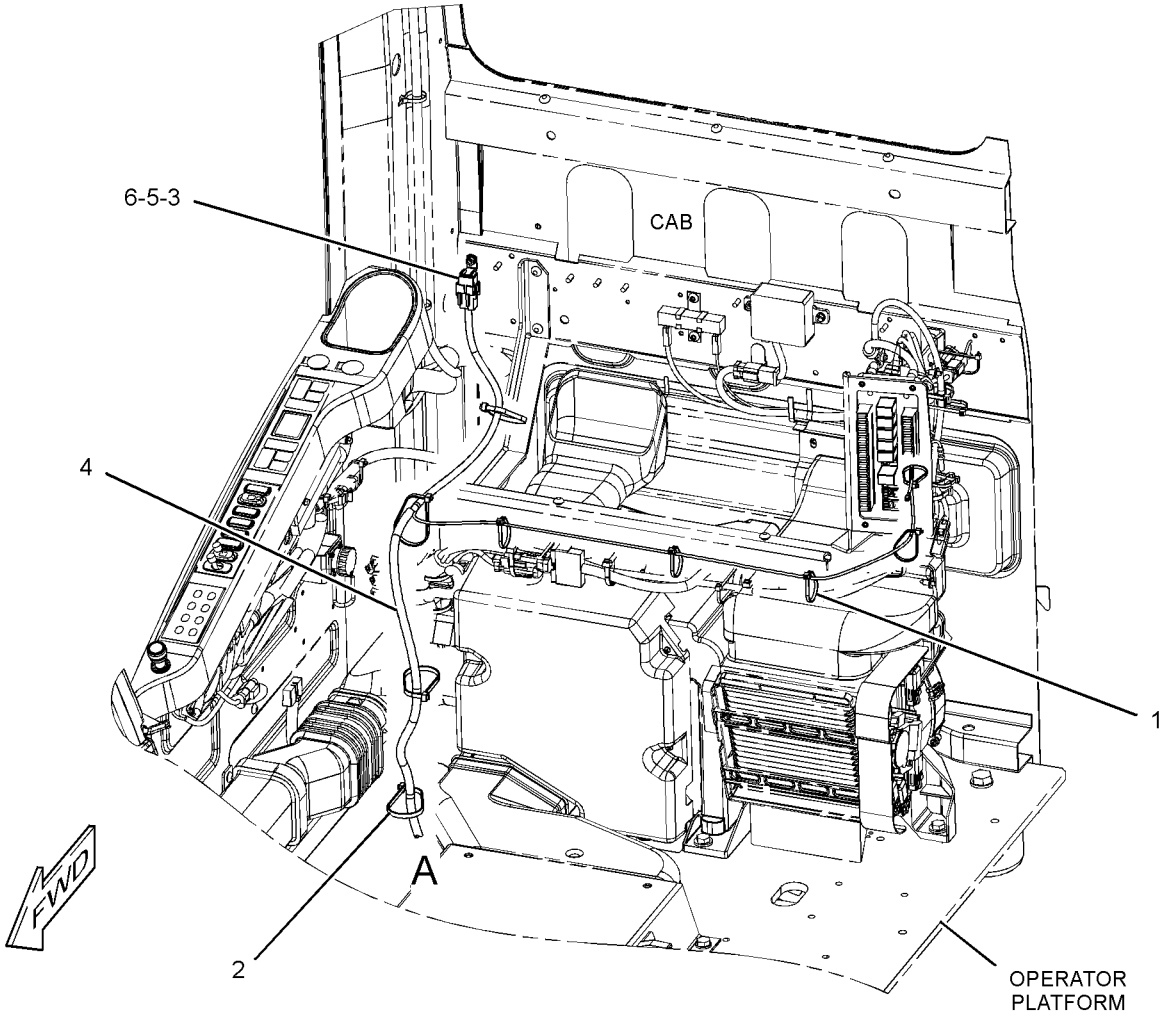

GRAPHIC #1 **<END>** g01155307

267-7642 WIRING GP-CAB–COUPLER

S/N: DFP1-UP; CJX1-UP
PART OF 268-6820 CONTROL AR-COUPLER
AN ATTACHMENT

SMCS-1408, 7301 **i02706844**

NOTE	REF NO	GRAPHIC REF	PART NUMBER	QTY	PART NAME 1 2 3 4 5 6 (PRODUCT LEVEL)	SEE PAGE
	1	1	**7K-1181**	13	STRAP-CABLE	
	2	1	**149-5050**	1	RELAY (24-VOLT) (QUICK COUPLER LOCK PRIORITY)	
	2A	1	**149-5050**	1	RELAY (24-VOLT) (QUICK COUPLER LOCK ON)	
	2B	1	**149-5050**	1	RELAY (24-VOLT) (QUICK COUPLER LOCK)	
	2C	1	**149-5050**	1	RELAY (24-VOLT) (QUICK COUPLER LOCK)	
	3	1	**259-4884**	1	BRACKET AS	
	4	1	**259-7220**	1	COVER	
	5	1	**267-7644**	1	HARNESS AS-QUICK COUPLER	
		1	**102-7965**	3	TERMINAL (FEMALE)	
E		1	**125-7874**		TUBE-HEAT SHRINK (5.72-MM DIA) (10-CM)	
E		1	**125-7875**		TUBE-HEAT SHRINK (7.44-MM DIA) (15-CM)	
		1	**149-5070**	9	TERMINAL (FEMALE)	
		1	**163-6803**	1	CONNECTOR-PLUG	
		1	**230-5008**	1	PLUG AS-CONNECTOR (4-PIN)	
		1	**7Y-3950**	2	TERMINAL (MALE)	
		1	**7Y-3953**	1	CONNECTOR-RECEPTACLE	
		1	**149-5069**	7	TERMINAL (FEMALE)	
		1	**3S-2093**	15	STRAP-CABLE	
		1	**230-5008**	1	PLUG AS-CONNECTOR (4-PIN)	
	6	1	*267-7671*	1	SWITCH GP-TOGGLE (QUICK COUPLER)	
		1	**105-5175**	1	SWITCH AS-TOGGLE (QUICK COUPLER)	
		1	**3L-8187**	6	LOCKWASHER	
		1	**6T-3631**	2	NUT-HEX (15/32-32-THD)	
		1	**6T-3632**	1	LOCKWASHER	
		1	**6T-3633**	1	RING-LOCKING	
		1	**6V-8374**	6	SCREW-MACHINE (6-32X0.25-IN)	
		1	**267-7672**	1	HARNESS AS-WIRING (CAB)	
		1	**3S-2093**	1	STRAP-CABLE	
		1	**121-1173**	3	TERMINAL	
		1	**167-3542**	1	CONNECTOR-RECEPTACLE	
	7	1	**267-7676**	1	BRACKET AS	
M	8	1	**9X-2042**	7	SCREW-TRUSS HEAD (M6X1X12-MM)	

E-ORDER BY THE CENTIMETER
M-METRIC PART

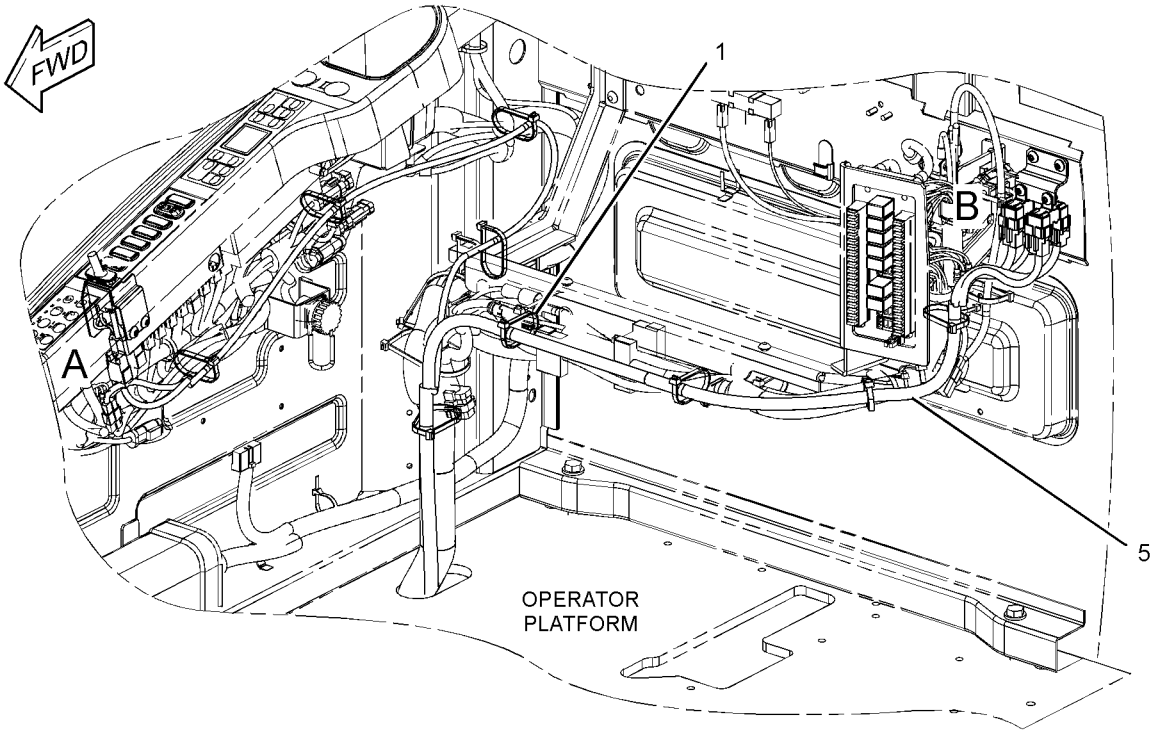

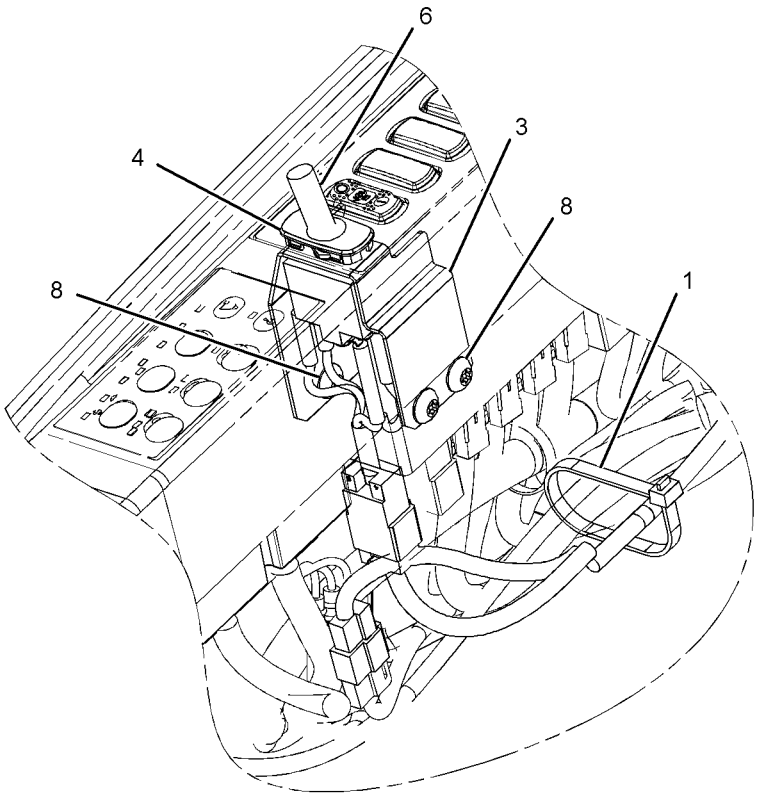

VIEW OF AREA A

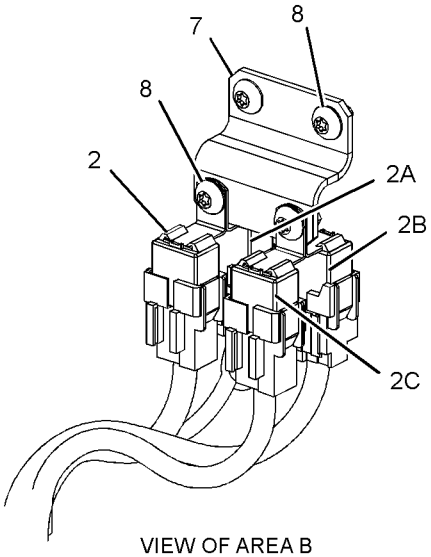

VIEW OF AREA B

GRAPHIC #1 **<END>** g01235651

306-8349 WIRING GP-CAB–ACCUGRADE READY

S/N: DFP1-UP; CJX1-UP
PART OF 290-1778 CONVERSION AR-MACHINE
AN ATTACHMENT

SMCS-1408, 7301 **i02825113**

NOTE	REF NO	GRAPHIC REF	PART NUMBER	QTY	PART NAME 1 2 3 4 5 6 (PRODUCT LEVEL)	SEE PAGE
	1	1	**7K-1181**	7	STRAP-CABLE	
	2	1	**113-8491**	1	FUSE (15-AMPERE)	
	3	1	**306-8350**	1	HARNESS AS-CONTROL	

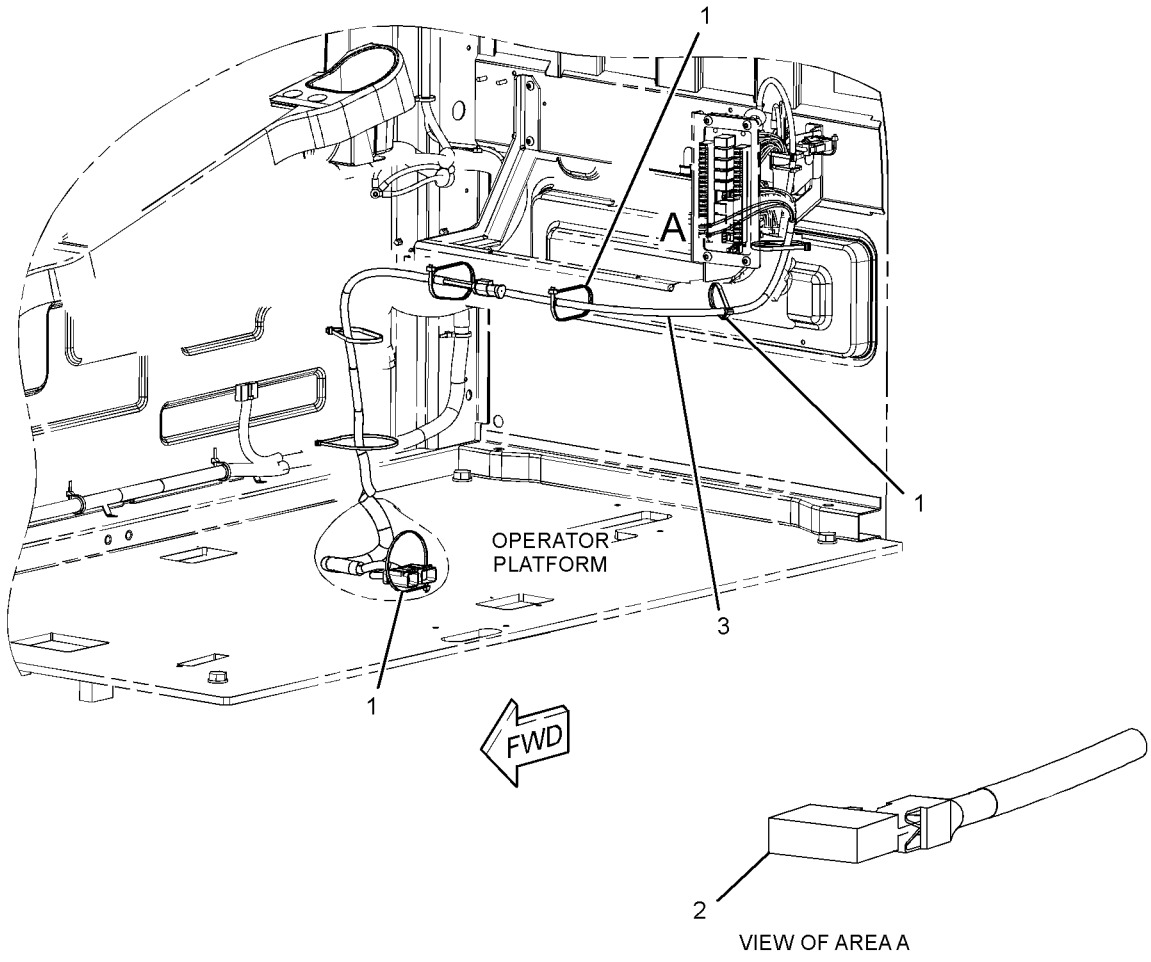

GRAPHIC #1 **<END>** g01398198

328-0048 WIRING GP-CAB–REAR VISION CAMERA

S/N: DFP1-UP; CJX1-UP
PART OF 329-6570 CAMERA & WIRING GP
AN ATTACHMENT

SMCS-1408, 7301 **i03114038**

NOTE	REF NO	GRAPHIC REF	PART NUMBER	QTY	PART NAME 1 2 3 4 5 6 (PRODUCT LEVEL)	SEE PAGE
	1	1	**3S-2093**	13	STRAP-CABLE	
	2	1	**7K-1181**	16	STRAP-CABLE	
	3	1	**306-8590**	1	HARNESS AS-WIRING	
	4	1	**327-9998**	1	HARNESS AS-AUXILIARY	

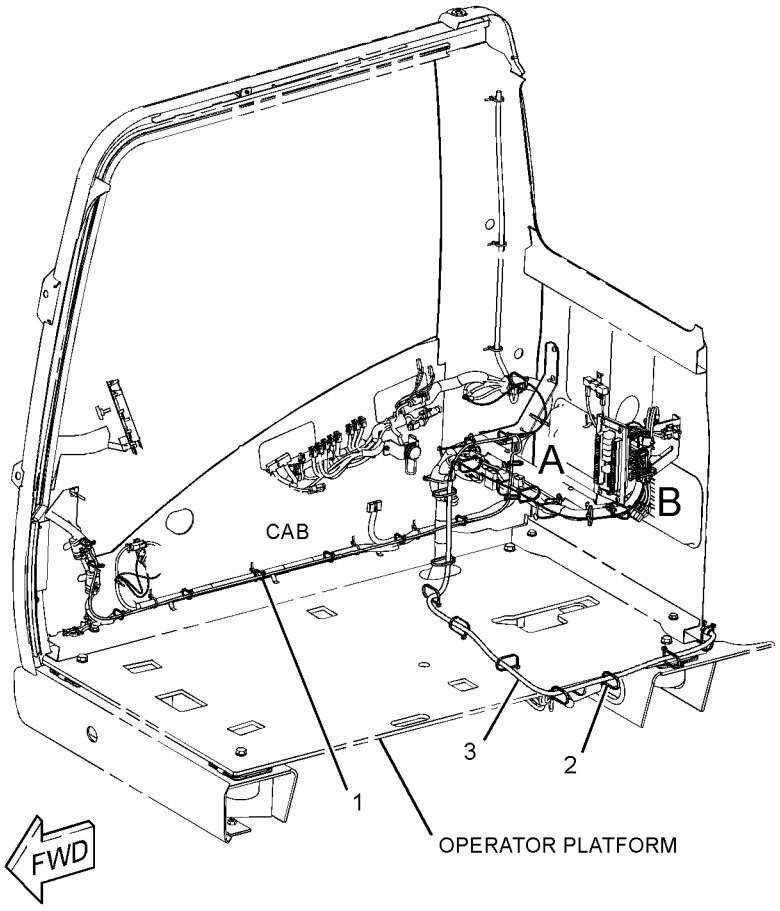

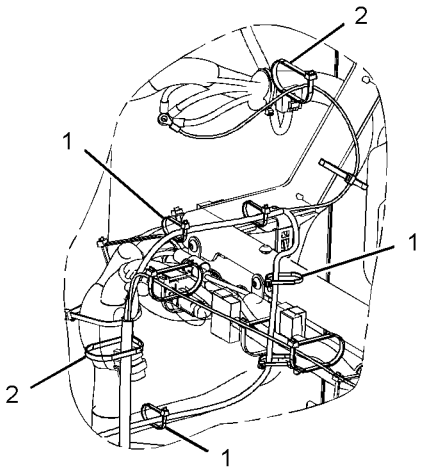

VIEW OF AREA A

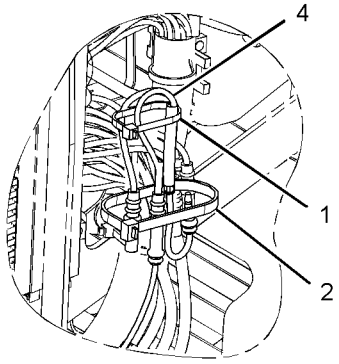

VIEW OF AREA B

GRAPHIC #1 **<END>** g01609106

306-8720 WIRING GP-CAMERA—REAR VISION CAMERA

S/N: DFP1-UP; CJX1-UP
PART OF 329-6570 CAMERA & WIRING GP
AN ATTACHMENT

SMCS-1408, 7348 **i03112885**

NOTE	REF NO	GRAPHIC REF	PART NUMBER	QTY	PART NAME 1 2 3 4 5 6 (PRODUCT LEVEL)	SEE PAGE
	1	1	**3S-2093**	21	STRAP-CABLE	
	2	1	**7K-1181**	6	STRAP-CABLE	
	3	1	**111-4836**	1	CLIP	
	4	1	**268-8643**	1	CABLE AS	
	5	1	**8T-4121**	1	WASHER-HARD (11X21X2.5-MM THK)	
M	6	1	**8T-4191**	1	BOLT (M10X1.5X16-MM)	

M-METRIC PART

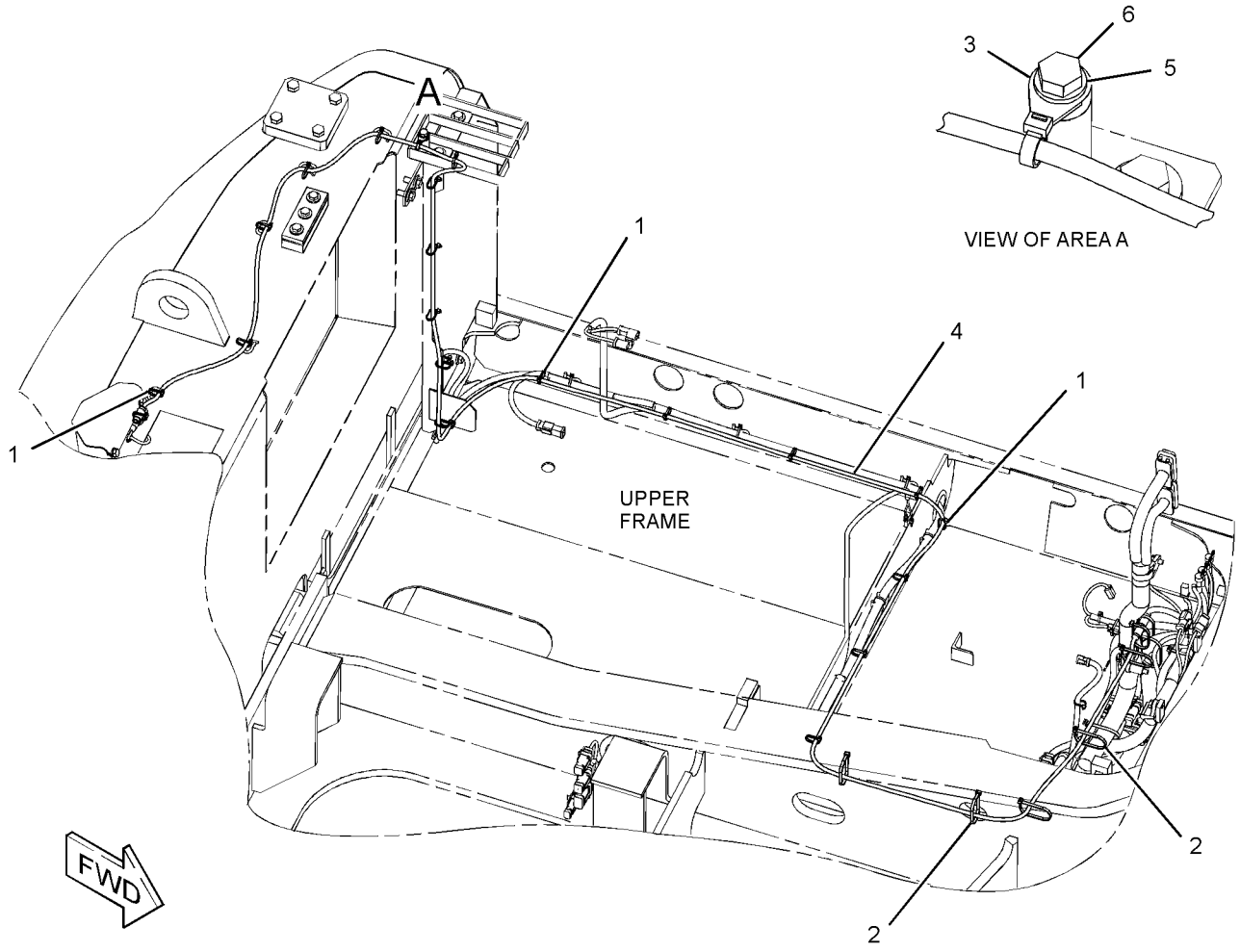

GRAPHIC #1 **<END>** g01609055

275-7192 WIRING GP-CHASSIS

S/N: DFP1-UP; CJX1-UP
PART OF 290-1778 CONVERSION AR-MACHINE
AN ATTACHMENT
TYPE 1

SMCS-1408 **i02892236**

NOTE	REF NO	GRAPHIC REF	PART NUMBER	QTY	PART NAME 1 2 3 4 5 6 (PRODUCT LEVEL)	SEE PAGE
	1	1,2	**7K-1181**	36	STRAP-CABLE	
	2	1	*239-1844*	2	SPACER (14X25X70-MM)	
	3	2	**275-6841**	1	HARNESS AS-CONTROL (BODY TILT SENSOR, GPS RECEIVER)	
		2	**230-4009**	1	PLUG AS-CONNECTOR (12-PIN)	
		2	**239-7356**	1	PLUG AS-CONNECTOR (12-PIN)	
		2	**243-4510**	1	RECEPTACLE AS-CONNECTOR (12-PIN)	
E		2	**125-7874**		TUBE-HEAT SHRINK (5.72-MM DIA) (20-CM)	
	4	2	**275-6842**	1	HARNESS AS-CONTROL (DISPLAY, GPS RADIO)	
		2	**167-8987**	1	PLUG AS-CONNECTOR (8-PIN)	
		2	**243-4510**	1	RECEPTACLE AS-CONNECTOR (12-PIN)	
		2	**263-6699**	1	FLANGE-CONNECTOR	
	5	1	**275-7212**	1	HARNESS AS-CONTROL (POWER MODULE)	
	6	1	**279-7609**	1	BRACKET AS	
		1	**7T-1099**	1	LINK	
	7	2	**091-9035**	1	SPACER (11X25X20-MM THK)	
	8	2	**132-5789**	1	CLIP	
	9	2	**2S-1647**	1	GROMMET	
	10	1	**4P-7428**	1	CLIP	
	11	2	**4P-7581**	1	CLIP	
M	12	1	**7X-2550**	2	BOLT (M12X1.75X110-MM)	
	13	2	**8T-4121**	2	WASHER-HARD (11X21X2.5-MM THK)	
M	14	2	**8T-4191**	1	BOLT (M10X1.5X16-MM)	
M	15	2	**8T-4196**	1	BOLT (M10X1.5X35-MM)	
	16	1	**8T-4223**	2	WASHER-HARD (13.5X25.5X3-MM THK)	

E-ORDER BY THE CENTIMETER
M-METRIC PART

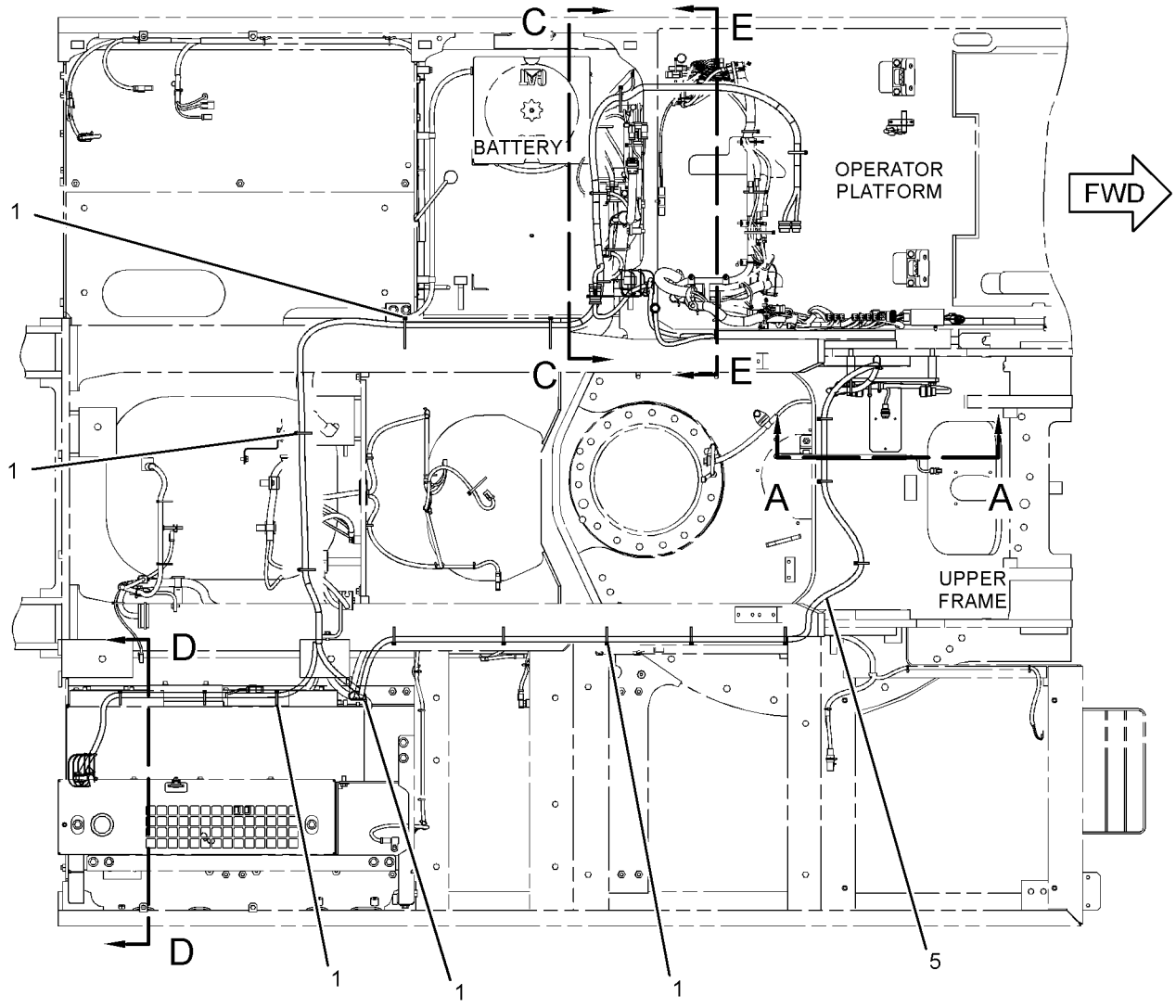

TOP VIEW

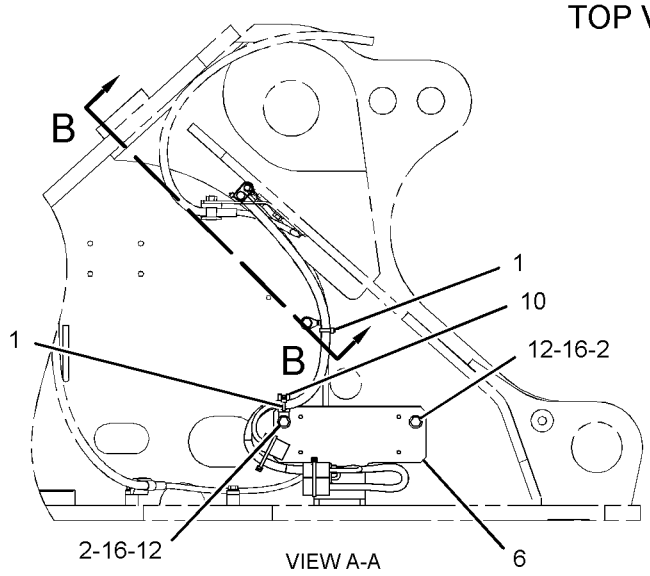

VIEW A-A

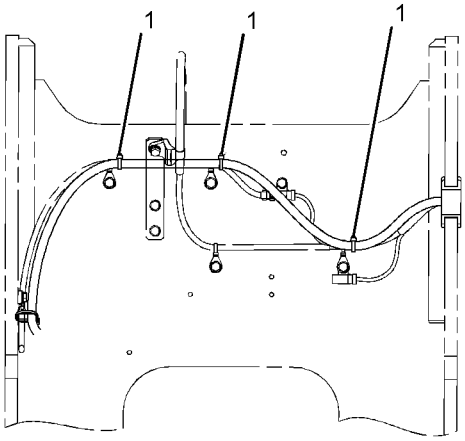

VIEW B-B

REFER TO ALL ILLUSTRATIONS OF THIS GROUP FOR AUXILIARY VIEWS

GRAPHIC #1

g01371542

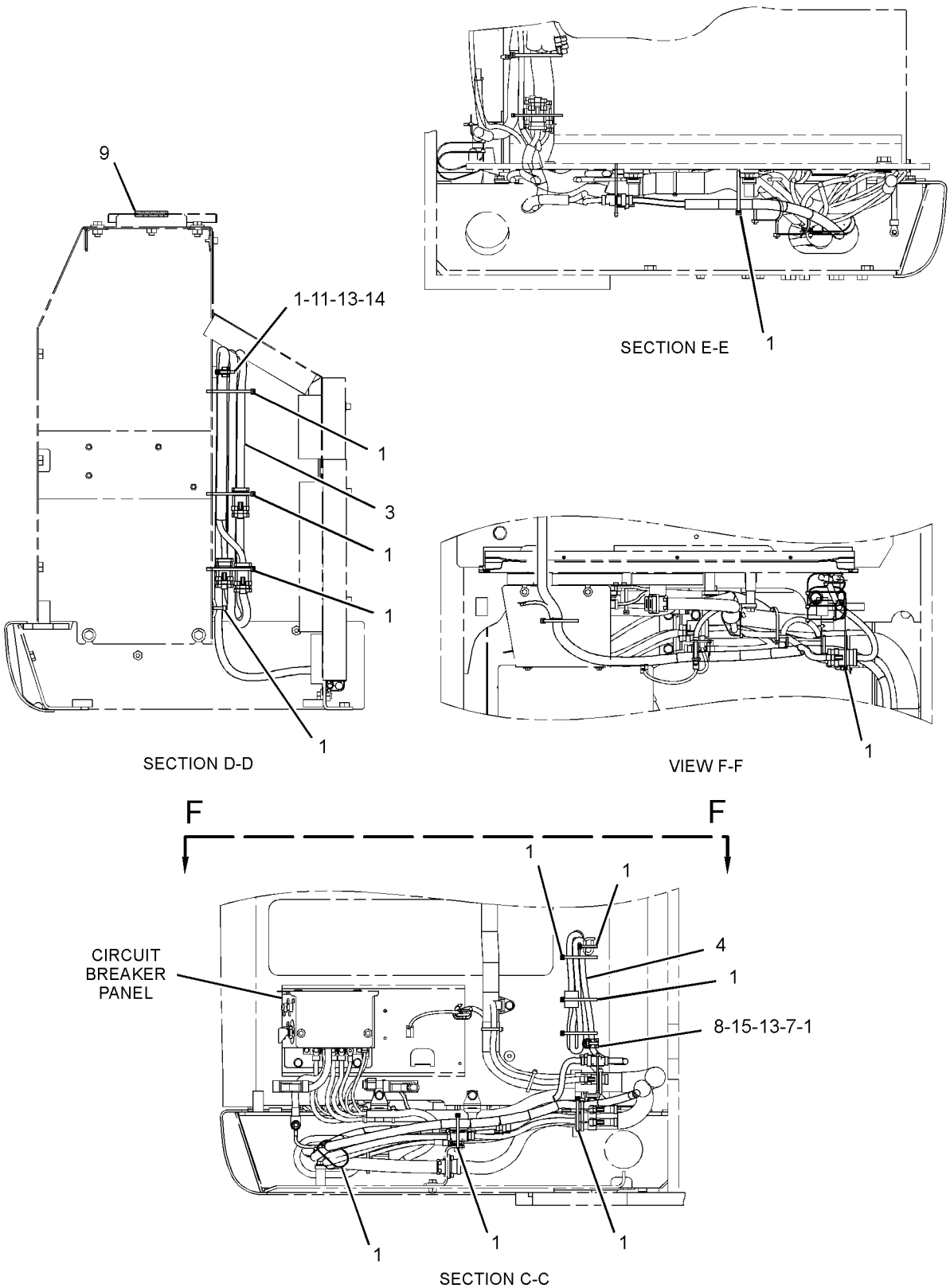

GRAPHIC #2 **<END>** g01371543

275-7192 WIRING GP-CHASSIS

S/N: DFP1-UP; CJX1-UP
PART OF 290-1778 CONVERSION AR-MACHINE
AN ATTACHMENT
TYPE 2

SMCS-1408 **i02892253**

NOTE	REF NO	GRAPHIC REF	PART NUMBER	QTY	PART NAME 1 2 3 4 5 6 (PRODUCT LEVEL)	SEE PAGE
C	1	1,2	**7K-1181**	38	STRAP-CABLE	
	3	2	**275-6841**	1	HARNESS AS-CONTROL (BODY TILT SENSOR, GPS RECEIVER)	
		2	**230-4009**	1	PLUG AS-CONNECTOR (12-PIN)	
		2	**239-7356**	1	PLUG AS-CONNECTOR (12-PIN)	
		2	**243-4510**	1	RECEPTACLE AS-CONNECTOR (12-PIN)	
E		2	**125-7874**		TUBE-HEAT SHRINK (5.72-MM DIA) (20-CM)	
	4	2	**275-6842**	1	HARNESS AS-CONTROL (DISPLAY, GPS RADIO)	
		2	**167-8987**	1	PLUG AS-CONNECTOR (8-PIN)	
		2	**243-4510**	1	RECEPTACLE AS-CONNECTOR (12-PIN)	
		2	**263-6699**	1	FLANGE-CONNECTOR	
C	5	1	**306-8367**	1	HARNESS AS-CONTROL	
	6	1	**279-7609**	1	BRACKET AS	
		1	**7T-1099**	1	LINK	
	7	2	**091-9035**	1	SPACER (11X25X20-MM THK)	
	8	2	**132-5789**	1	CLIP	
	9	2	**2S-1647**	1	GROMMET	
	10	1	**4P-7428**	1	CLIP	
	11	2	**4P-7581**	1	CLIP	
M	12	1	**7X-2550**	2	BOLT (M12X1.75X110-MM)	
	13	2	**8T-4121**	2	WASHER-HARD (11X21X2.5-MM THK)	
M	14	2	**8T-4191**	1	BOLT (M10X1.5X16-MM)	
M	15	2	**8T-4196**	1	BOLT (M10X1.5X35-MM)	
	16	1	**8T-4223**	2	WASHER-HARD (13.5X25.5X3-MM THK)	

C-CHANGE FROM PREVIOUS TYPE
E-ORDER BY THE CENTIMETER
M-METRIC PART

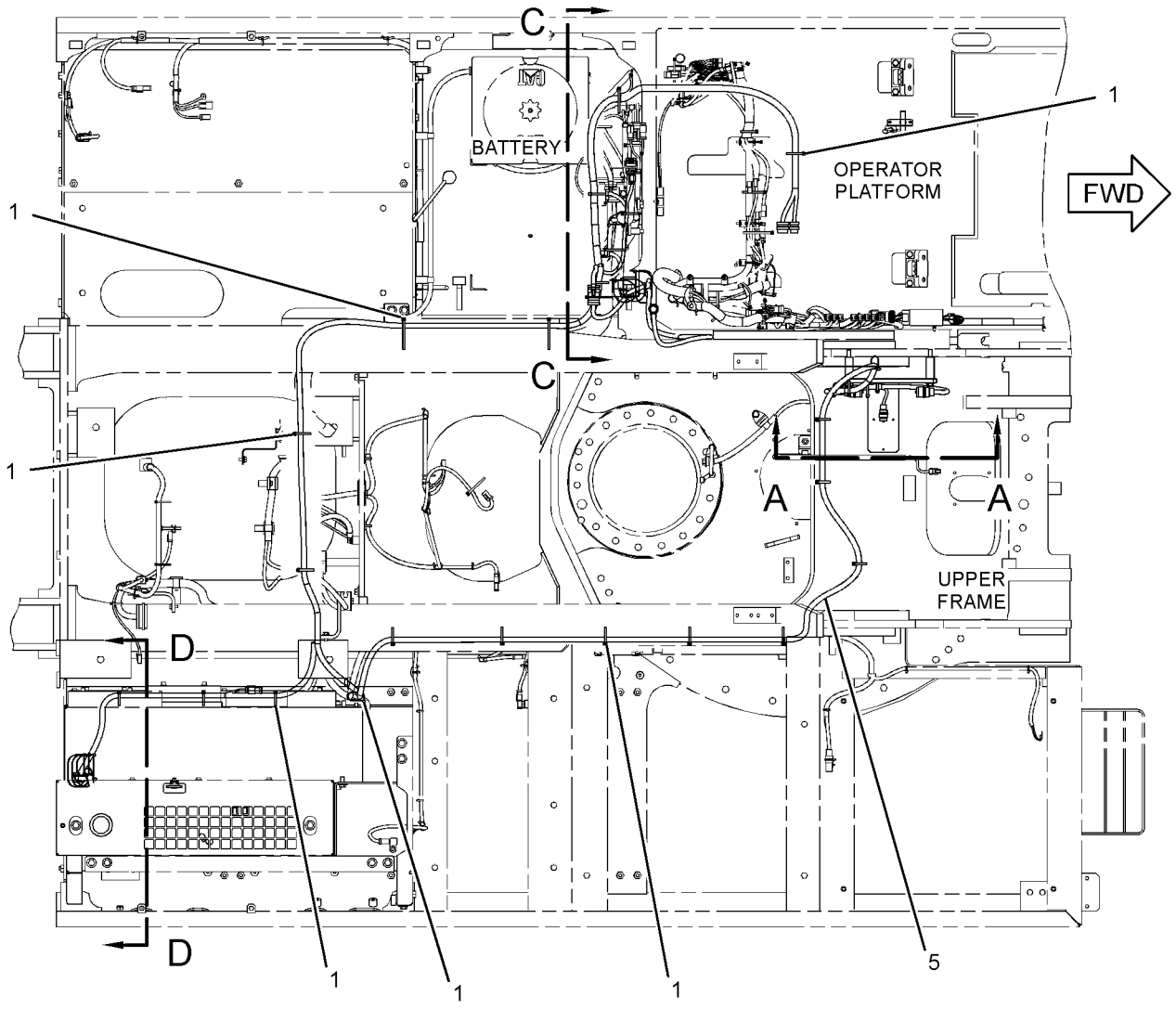

TOP VIEW

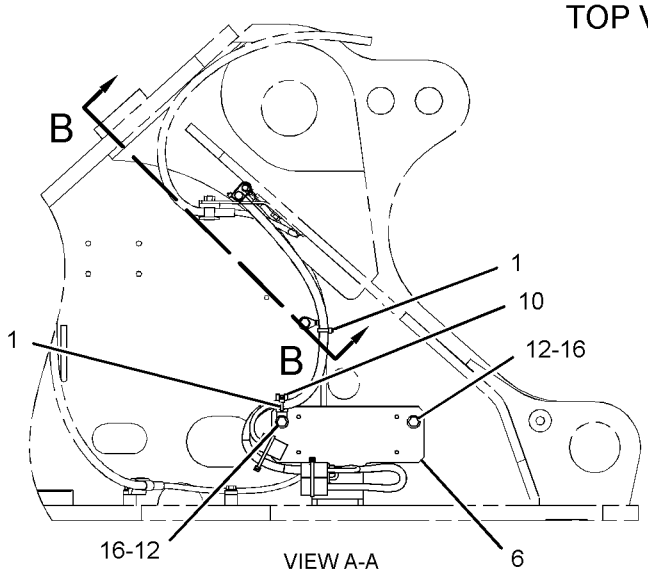

VIEW A-A

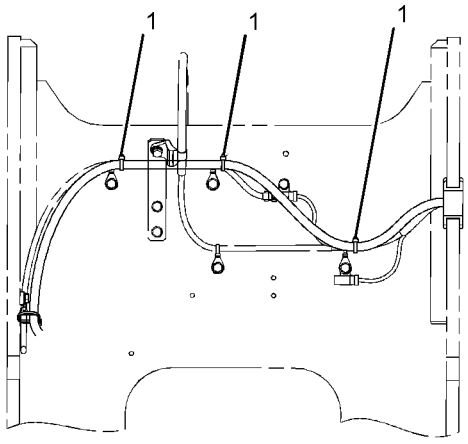

VIEW B-B

REFER TO ALL ILLUSTRATIONS OF
THIS GROUP FOR AUXILIARY VIEWS

GRAPHIC #1

g01409551

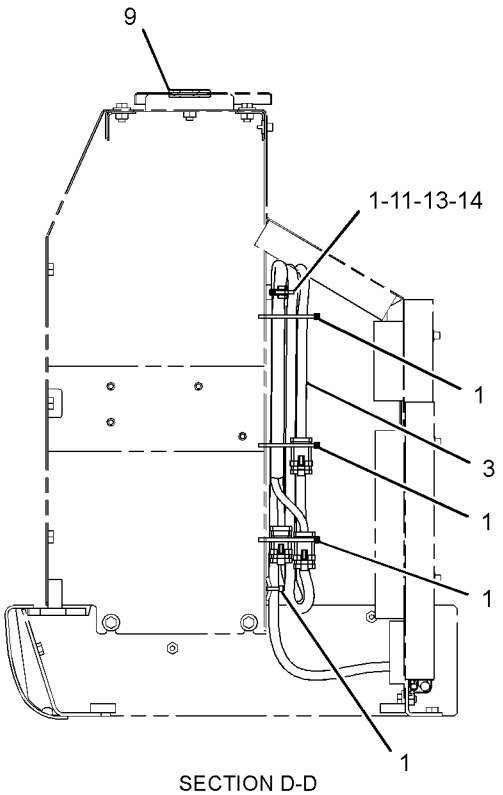

SECTION D-D

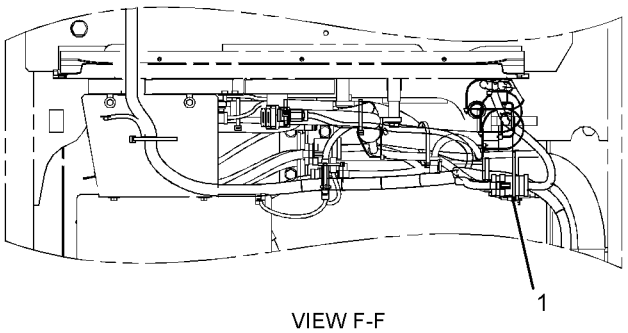

VIEW F-F

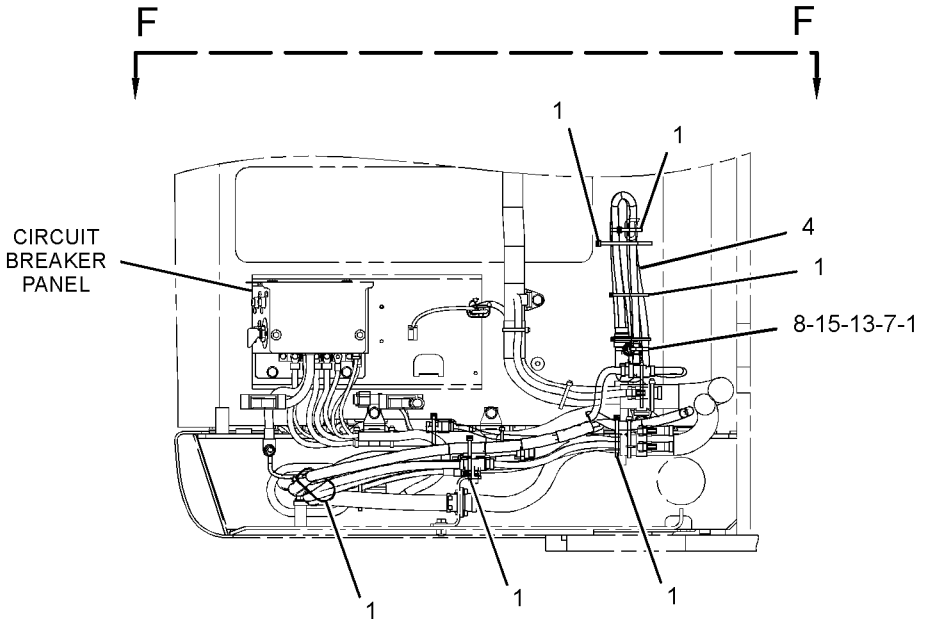

SECTION C-C

GRAPHIC #2 **<END>** g01409552

291-7459 WIRING GP-CHASSIS–FAN CLUTCH

S/N: DFP1-UP; CJX1-UP
PART OF 251-0448 WIRING GP-FAN
AN ATTACHMENT

SMCS-1408 **i02970480**

NOTE	REF NO	GRAPHIC REF	PART NUMBER	QTY	PART NAME 1 2 3 4 5 6 (PRODUCT LEVEL)	SEE PAGE
	1	1	**3S-2093**	7	STRAP-CABLE	
	2	1	**7K-1181**	5	STRAP-CABLE	
	3	1	**107-8618**	1	SENSOR GP-TEMPERATURE (AMBIENT)	
E		1	**112-4550**		SLEEVE (31-CM)	
		1	**186-3735**	3	PIN-CONNECTOR (16-GA TO 18-GA)	
		1	**102-8803**	1	KIT-RECEPTACLE (3-PIN)	
					(INCLUDES RECEPTACLE AS & WEDGE)	
	4	1	**116-0118**	1	CLIP	
	5	1	**267-8020**	1	HARNESS AS-CONTROL (FAN CLUTCH)	
		1	**3S-2093**	1	STRAP-CABLE	
		1	**155-2260**	1	KIT-CONNECTING PLUG (3-PIN)	
					(INCLUDES PLUG AS, WEDGE & INTERFACE SEAL)	
		1	**230-5010**	1	PLUG AS-CONNECTOR (6-PIN)	
		1	**243-4509**	1	RECEPTACLE AS-CONNECTOR (8-PIN)	
	6	1	**8T-4121**	1	WASHER-HARD (11X21X2.5-MM THK)	
M	7	1	**8T-4137**	1	BOLT (M10X1.5X20-MM)	

E-ORDER BY THE CENTIMETER
M-METRIC PART

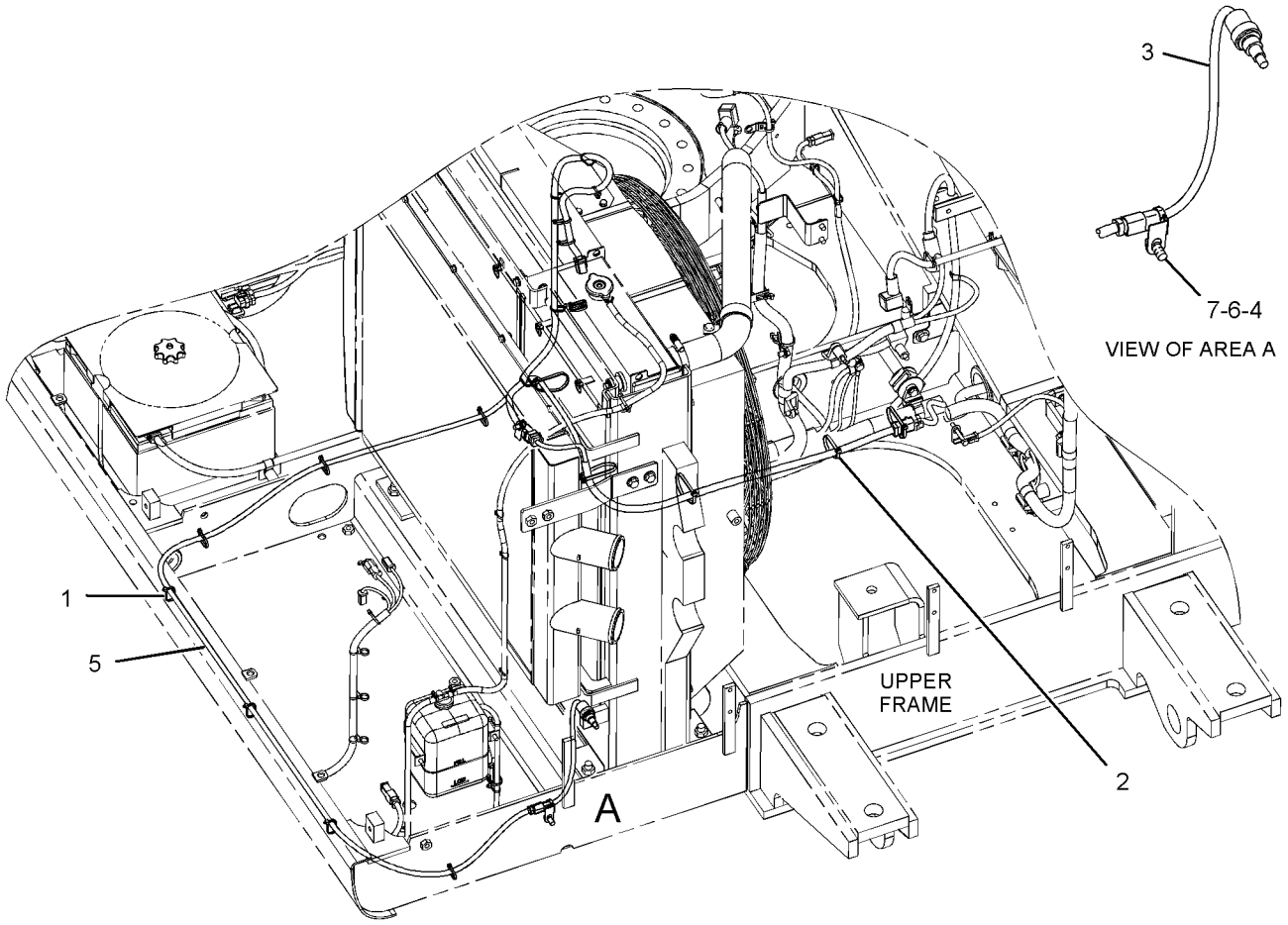

REAR VIEW
(UPPER LEFT)

GRAPHIC #1 **<END>** g01316294

251-0530 WIRING GP-COMBINED FLOW

S/N: DFP1-UP; CJX1-UP
PART OF 255-5825, 255-5827 CONTROL AR-AUXILIARY
AN ATTACHMENT
TYPE 1

SMCS-1408 **i02412850**

NOTE	REF NO	GRAPHIC REF	PART NUMBER	QTY	PART NAME 1 2 3 4 5 6 (PRODUCT LEVEL)	SEE PAGE
	1	2	**3S-2093**	21	STRAP-CABLE	
	2	2	**7K-1181**	12	STRAP-CABLE	
	3	2	**111-4836**	3	CLIP	
	4	2	**116-0118**	1	CLIP	
	5	2	**204-1611**	3	STRAP-CABLE	
	6	2	**251-0599**	1	HARNESS AS-AUXILIARY	
		2	**8T-8737**	9	PLUG-SEAL	
		2	**155-2270**	6	KIT-CONNECTING PLUG (2-PIN)	
					(EACH INCLUDES PLUG AS, WEDGE & INTERFACE SEAL)	
		2	**230-5010**	1	PLUG AS-CONNECTOR (6-PIN)	
		2	**243-4510**	1	RECEPTACLE AS-CONNECTOR (12-PIN)	
	7	2	**259-5071**	2	BRACKET AS	
	8	2	**259-5073**	1	BRACKET AS	
	9	2	**259-5075**	1	BRACKET AS	
	10	2	**132-5789**	1	CLIP	
	11	2	**4P-7581**	1	CLIP	
	12	2	**8T-4121**	9	WASHER-HARD (11X21X2.5-MM THK)	
M	13	2	**8T-4137**	3	BOLT (M10X1.5X20-MM)	
M	14	2	**8T-4179**	4	BOLT (M12X1.75X20-MM)	
M	15	2	**8T-4191**	6	BOLT (M10X1.5X16-MM)	
	16	2	**8T-4223**	4	WASHER-HARD (13.5X25.5X3-MM THK)	

M-METRIC PART

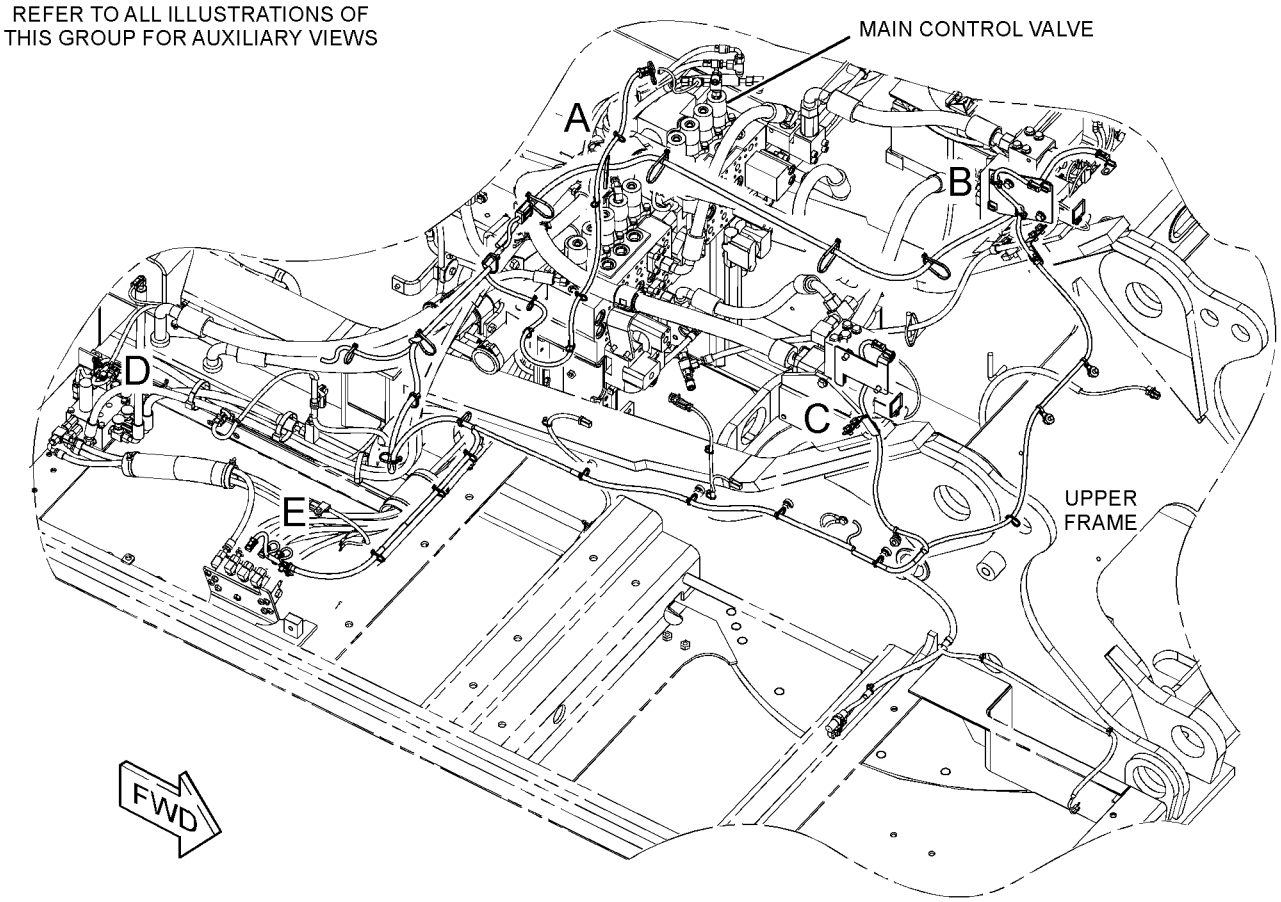

GRAPHIC #1 g01247577

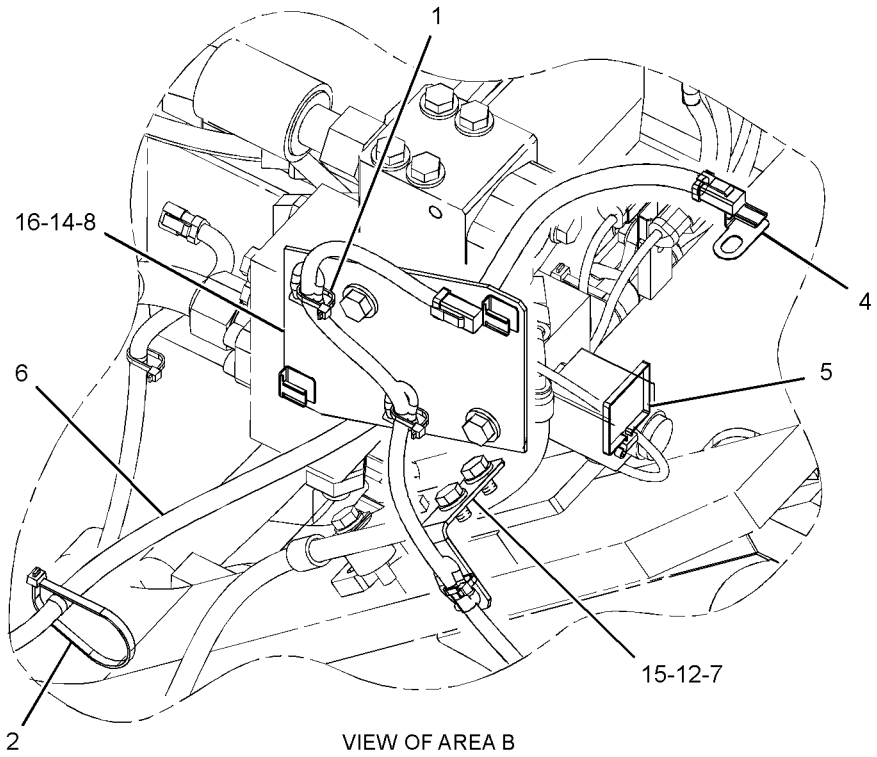

VIEW OF AREA B

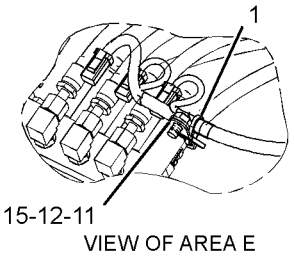

VIEW OF AREA E

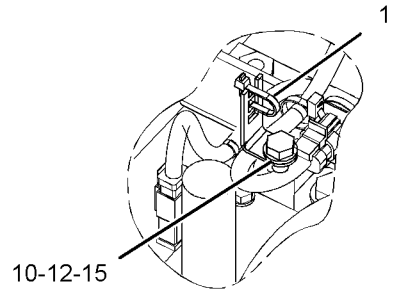

VIEW OF AREA D

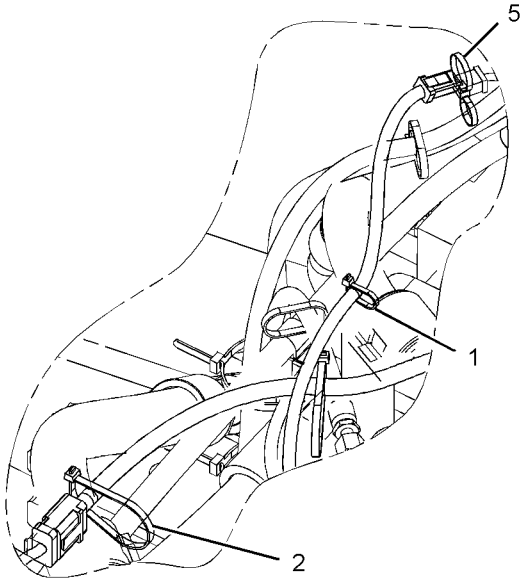

VIEW OF AREA A

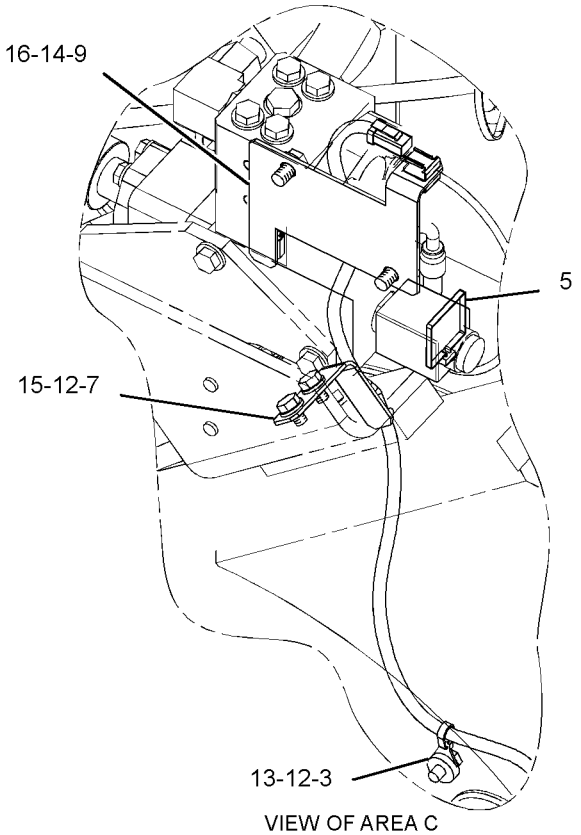

VIEW OF AREA C

GRAPHIC #2 **<END>** g01247586

251-0530 WIRING GP-COMBINED FLOW

S/N: DFP1-UP; CJX1-UP
PART OF 255-5825, 255-5827 CONTROL AR-AUXILIARY
AN ATTACHMENT
TYPE 2

SMCS-1408 **i02593908**

NOTE	REF NO	GRAPHIC REF	PART NUMBER	QTY	PART NAME 1 2 3 4 5 6 (PRODUCT LEVEL)	SEE PAGE
C	1	1	**3S-2093**	18	STRAP-CABLE	
C	2	1	**7K-1181**	15	STRAP-CABLE	
	3	1	**111-4836**	3	CLIP	
	4	1	**116-0118**	1	CLIP	
C	5	1	**204-1611**	4	STRAP-CABLE	
	6	1	**259-5071**	2	BRACKET AS	
	7	1	**259-5075**	1	BRACKET AS	
C	8	1	**267-7968**	1	HARNESS AS-CONTROL	
		1	**155-2270**	6	KIT-CONNECTING PLUG (2-PIN)	
					(EACH INCLUDES PLUG AS, WEDGE & INTERFACE SEAL)	
		1	**230-5010**	1	PLUG AS-CONNECTOR (6-PIN)	
		1	**243-4510**	1	RECEPTACLE AS-CONNECTOR (12-PIN)	
	9	1	**283-3000**	1	BRACKET AS	
	10	1	**132-5789**	1	CLIP	
C	11	1	**156-6175**	1	CLIP	
C	12	1	**8T-4121**	8	WASHER-HARD (11X21X2.5-MM THK)	
M	13	1	**8T-4137**	3	BOLT (M10X1.5X20-MM)	
CM	14	1	**8T-4171**	1	BOLT (M6X1X12-MM)	
M	15	1	**8T-4179**	4	BOLT (M12X1.75X20-MM)	
CM	16	1	**8T-4191**	5	BOLT (M10X1.5X16-MM)	
	17	1	**8T-4223**	4	WASHER-HARD (13.5X25.5X3-MM THK)	
C	18	1	**9X-8256**	1	WASHER (6.6X12X2-MM THK)	

C-CHANGE FROM PREVIOUS TYPE
M-METRIC PART

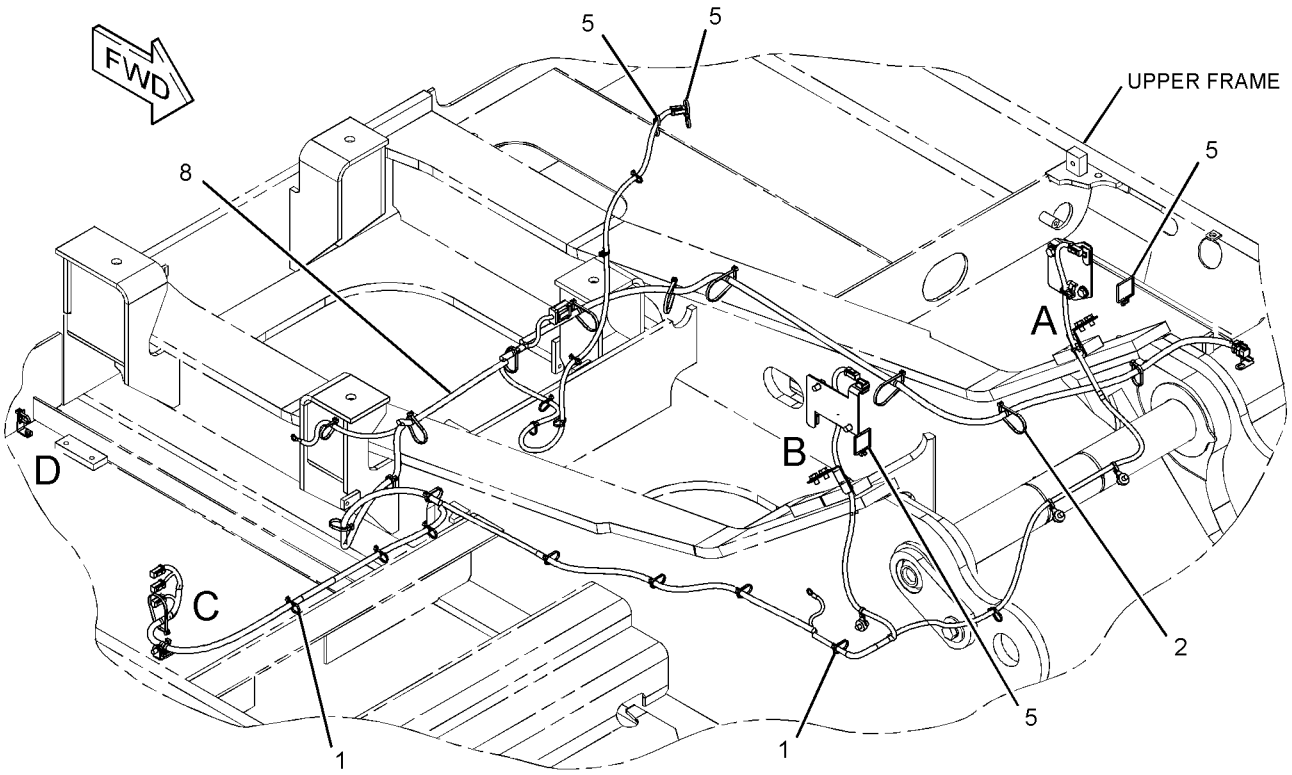

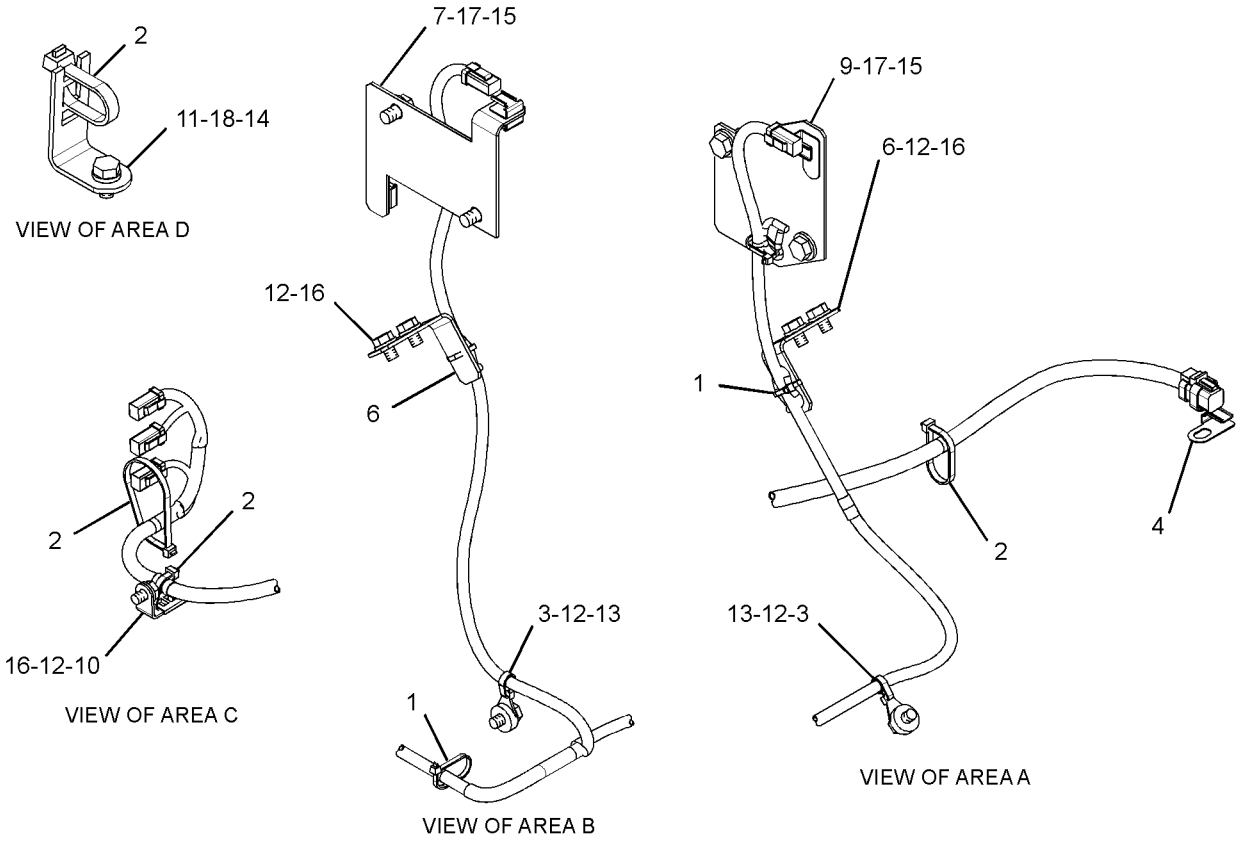

GRAPHIC #1 **<END>** g01327029

259-4938 WIRING GP-COMMUNICATION—PRODUCT LINK

S/N: DFP1-UP; CJX1-UP

PART OF 240-3957 INSTALLATION AR-COMMUNICATION

AN ATTACHMENT

SMCS-1408 **i02216191**

NOTE	REF NO	GRAPHIC REF	PART NUMBER	QTY	PART NAME 1 2 3 4 5 6 (PRODUCT LEVEL)	SEE PAGE
	1	1	**3S-2093**	3	STRAP-CABLE	
	2	1	**7K-1181**	3	STRAP-CABLE	
	3	1	**9X-3495**	1	CLIP AS	
		1	**8C-3334**	2	RIVET-TUBULAR	
	4	1	**116-0118**	2	CLIP	
	5	1	**259-4886**	1	HARNESS AS-CONTROL (PRODUCT LINK, ANTENNA)	
		1	**155-2255**	1	KIT-CONNECTING PLUG (12-PIN)	
					(INCLUDES PLUG AS, WEDGE & INTERFACE SEAL)	
		1	**230-5010**	1	PLUG AS-CONNECTOR (6-PIN)	
		1	**243-4508**	1	RECEPTACLE AS-CONNECTOR (6-PIN)	
	6	1	**259-4940**	1	HARNESS AS-WIRING (SERVICE CONNECTOR)	
		1	**243-4508**	1	RECEPTACLE AS-CONNECTOR (6-PIN)	
	7	1	**091-9035**	2	SPACER (11X25X20-MM THK)	
	8	1	**096-4840**	3	CLIP	
	9	1	**132-5789**	1	CLIP	
	10	1	**156-6175**	1	CLIP	
	11	1	**161-6987**	3	WASHER-HARD (5.2X16X1.5-MM THK)	
	12	1	**4I-7889**	1	SPACER (11X25X45-MM THK)	
M	13	1	**6V-5210**	3	SCREW-MACHINE (M4X0.7X10-MM)	
	14	1	**8T-4121**	1	WASHER-HARD (11X21X2.5-MM THK)	
M	15	1	**8T-4185**	1	BOLT (M10X1.5X50-MM)	
M	16	1	**8T-4195**	1	BOLT (M10X1.5X30-MM)	
M	17	1	**8T-5005**	1	BOLT (M10X1.5X70-MM)	

M-METRIC PART

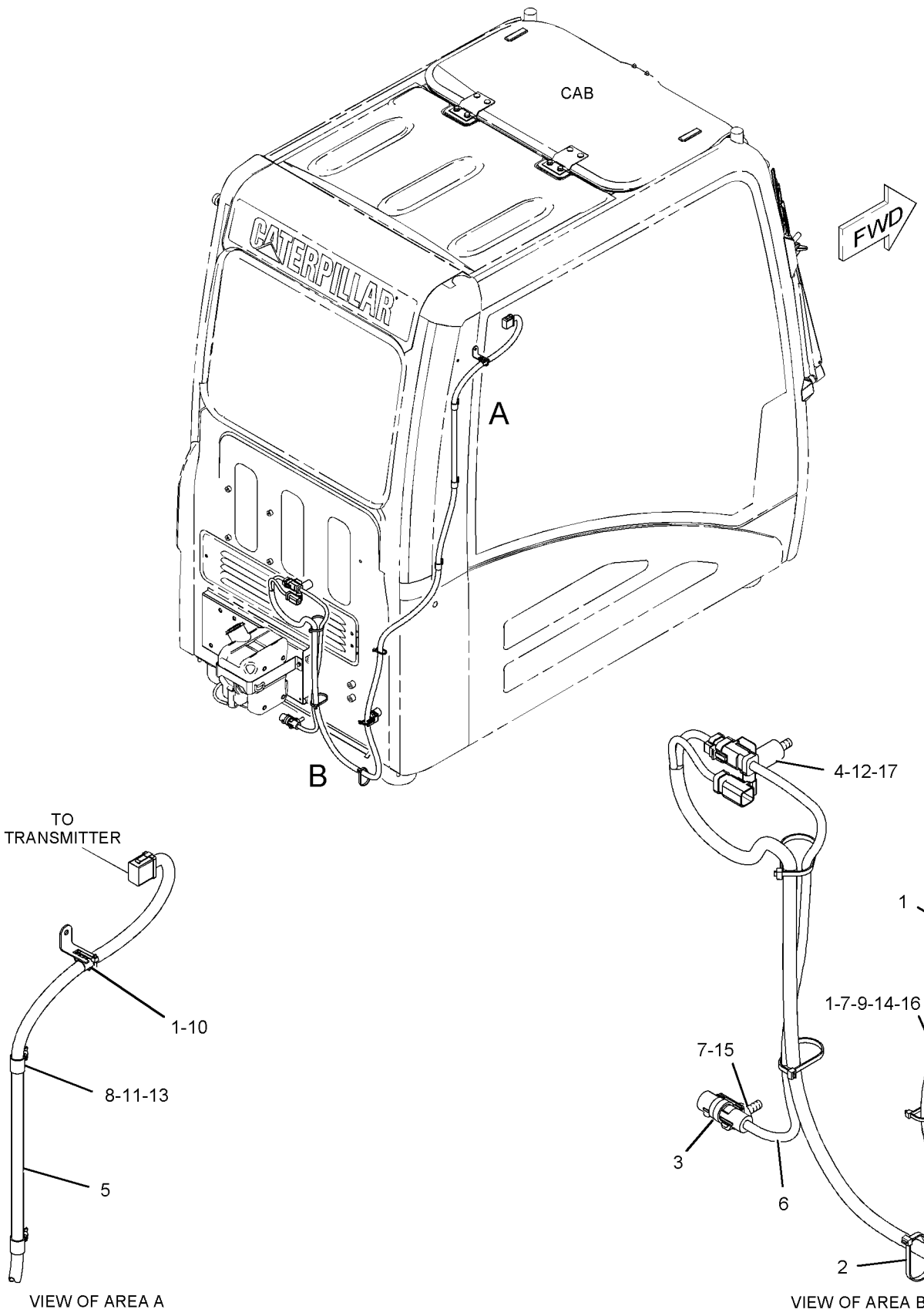

GRAPHIC #1 **<END>** g01127119

267-7751 WIRING GP-COMMUNICATION–PRODUCT LINK 321SR

S/N: DFP1-UP; CJX1-UP

PART OF 264-8550, 314-3529 INSTALLATION AR-COMMUNICATION

AN ATTACHMENT

SMCS-1408 **i03079190**

NOTE	REF NO	GRAPHIC REF	PART NUMBER	QTY	PART NAME 1 2 3 4 5 6 (PRODUCT LEVEL)	SEE PAGE
	1	1	**3S-2093**	5	STRAP-CABLE	
	2	1	**7K-1181**	3	STRAP-CABLE	
	3	1	**9X-3495**	1	CLIP AS	
	4	1	**111-4837**	1	CLIP	
	5	1	**116-0118**	3	CLIP	
	6	1	**259-4887**	1	HARNESS AS-CONTROL (PRODUCT LINK)	
	7	1	**259-4940**	1	HARNESS AS-WIRING (SERVICE CONNECTOR)	
	8	1	**267-7790**	1	HARNESS AS-CONTROL (PRODUCT LINK, ANTENNA)	
	10	1	**132-5789**	1	CLIP	
	11	1	**4I-7889**	1	SPACER (11X25X45-MM THK)	
	12	1	**4P-7581**	2	CLIP	
	13	1	**8T-4121**	4	WASHER-HARD (11X21X2.5-MM THK)	
M	14	1	**8T-4136**	2	BOLT (M10X1.5X25-MM)	
M	15	1	**8T-4137**	2	BOLT (M10X1.5X20-MM)	
M	17	1	**8T-4191**	1	BOLT (M10X1.5X16-MM)	
M	18	1	**8T-5005**	1	BOLT (M10X1.5X70-MM)	

M-METRIC PART

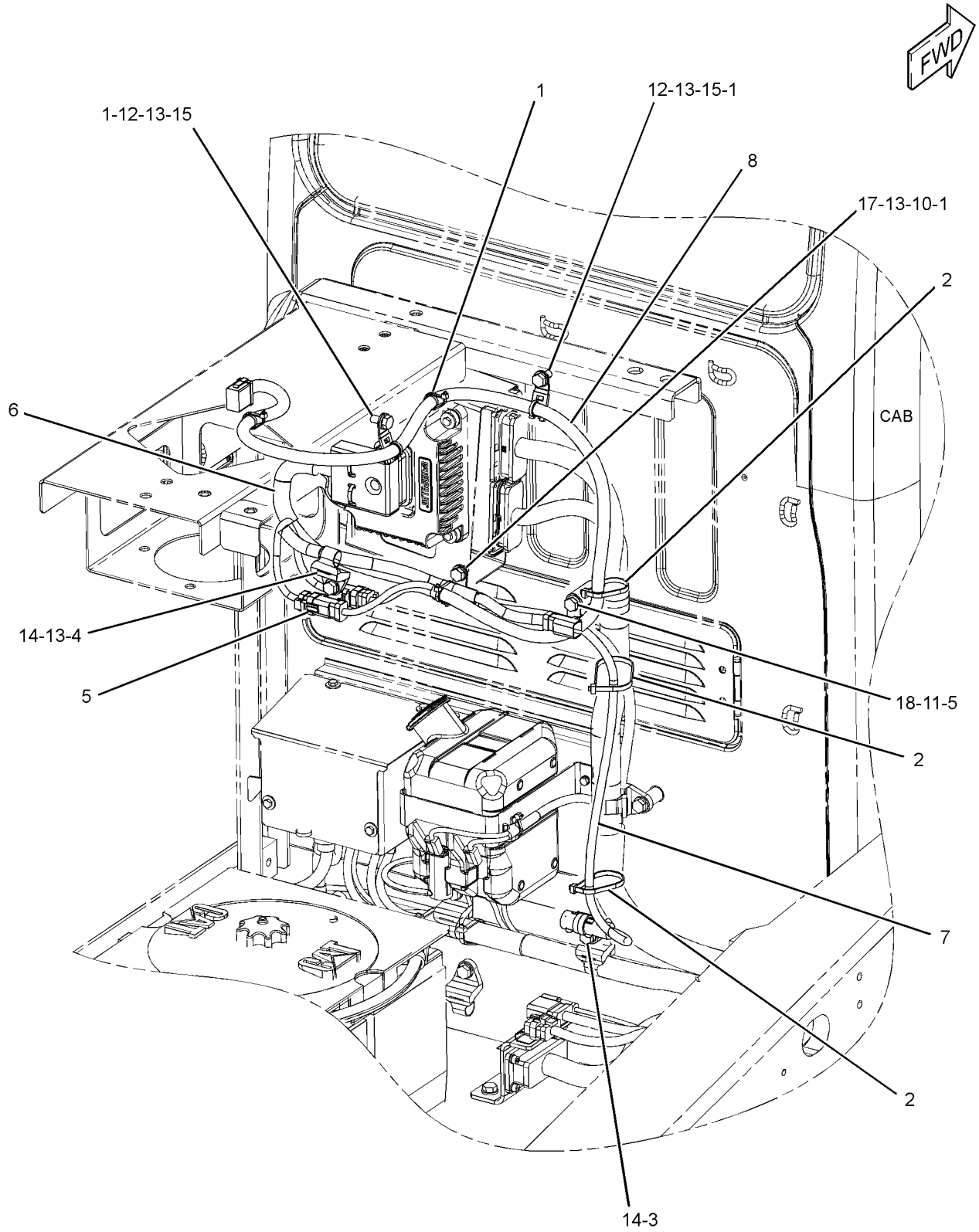

GRAPHIC #1 **<END>** g01505343

267-7752 WIRING GP-COMMUNICATION—PRODUCT LINK 121SR

S/N: DFP1-UP; CJX1-UP
PART OF 264-8551, 314-3530 INSTALLATION AR-COMMUNICATION
AN ATTACHMENT
TYPE 1

SMCS-1408 **i02491077**

NOTE	REF NO	GRAPHIC REF	PART NUMBER	QTY	PART NAME 1 2 3 4 5 6 (PRODUCT LEVEL)	SEE PAGE
	1	1	**3S-2093**	5	STRAP-CABLE	
	2	1	**7K-1181**	2	STRAP-CABLE	
	3	1	**9X-3495**	1	CLIP AS	
	4	1	**116-0118**	2	CLIP	
	5	1	**259-4940**	1	HARNESS AS-WIRING (SERVICE CONNECTOR)	
		1	**243-4508**	1	RECEPTACLE AS-CONNECTOR (6-PIN)	
	6	1	**267-7790**	1	HARNESS AS-CONTROL (PRODUCT LINK, ANTENNA)	
		1	**155-2255**	1	KIT-CONNECTING PLUG (12-PIN)	
					(INCLUDES RECEPTACLE AS AND WEDGE)	
		1	**230-5010**	1	PLUG AS-CONNECTOR (6-PIN)	
		1	**243-4508**	1	RECEPTACLE AS-CONNECTOR (6-PIN)	
	7	1	**091-9035**	1	SPACER (11X25X20-MM THK)	
	8	1	**4I-7889**	1	SPACER (11X25X45-MM THK)	
	9	1	**4P-7581**	2	CLIP	
	10	1	**8T-4121**	2	WASHER-HARD (11X21X2.5-MM THK)	
M	11	1	**8T-4137**	2	BOLT (M10X1.5X20-MM)	
M	12	1	**8T-4185**	1	BOLT (M10X1.5X50-MM)	
M	13	1	**8T-5005**	1	BOLT (M10X1.5X70-MM)	

M-METRIC PART

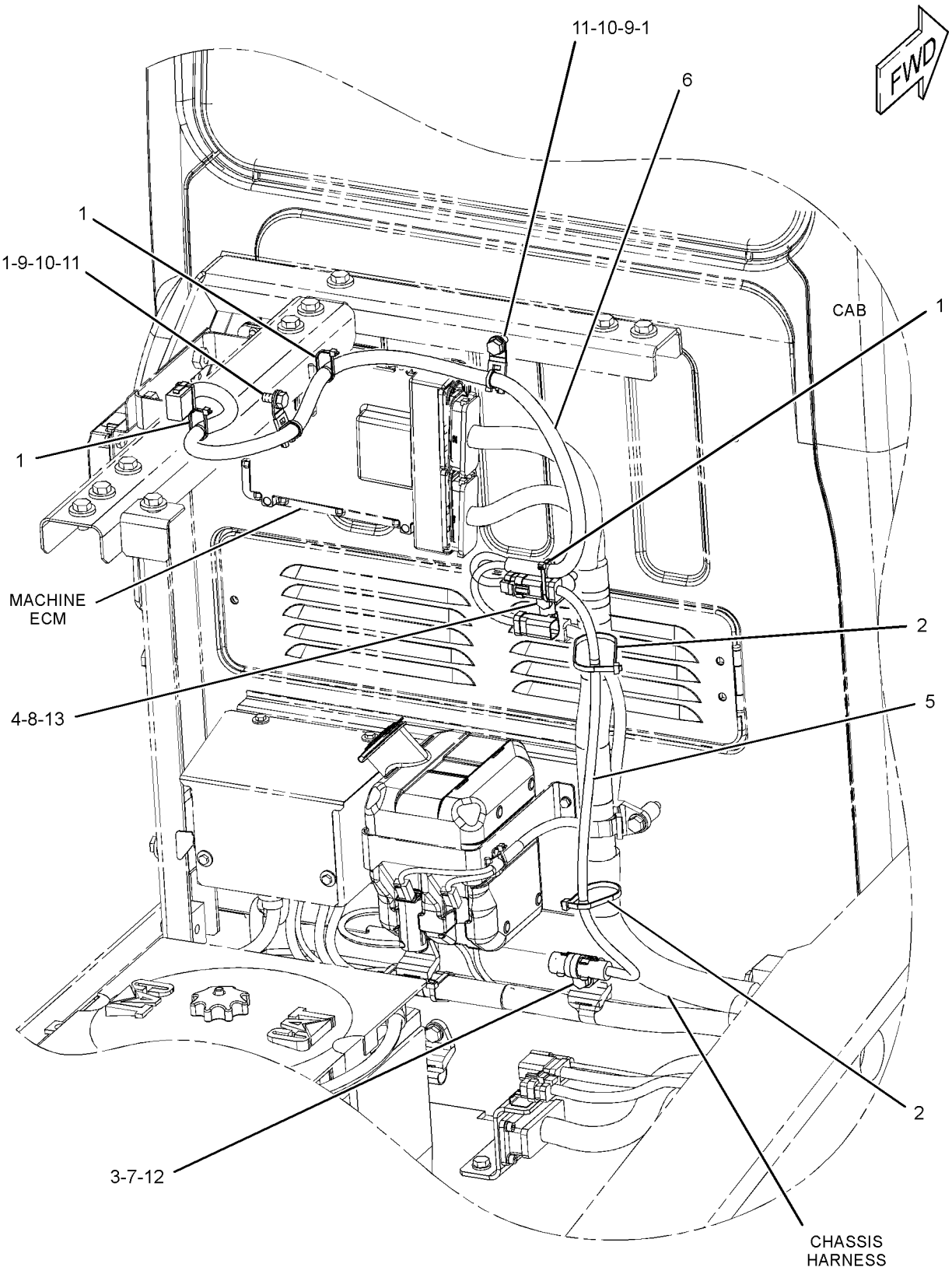

GRAPHIC #1 **<END>** g01220819

267-7752 WIRING GP-COMMUNICATION—PRODUCT LINK 121SR

S/N: DFP1-UP; CJX1-UP

PART OF 264-8551, 314-3530 INSTALLATION AR-COMMUNICATION

AN ATTACHMENT

TYPE 2

SMCS-1408 **i02998691**

NOTE	REF NO	GRAPHIC REF	PART NUMBER	QTY	PART NAME 1 2 3 4 5 6 (PRODUCT LEVEL)	SEE PAGE
	1	1	**3S-2093**	5	STRAP-CABLE	
	2	1	**7K-1181**	2	STRAP-CABLE	
	3	1	**9X-3495**	1	CLIP AS	
	4	1	**116-0118**	2	CLIP	
	5	1	**259-4940**	1	HARNESS AS-WIRING (SERVICE CONNECTOR)	
	6	1	**267-7790**	1	HARNESS AS-CONTROL (PRODUCT LINK, ANTENNA)	
M	7	1	**8T-5005**	1	BOLT (M10X1.5X70-MM)	
	8	1	**4I-7889**	1	SPACER (11X25X45-MM THK)	
	9	1	**4P-7581**	2	CLIP	
	10	1	**8T-4121**	2	WASHER-HARD (11X21X2.5-MM THK)	
M	11	1	**8T-4137**	2	BOLT (M10X1.5X20-MM)	
CM	12	1	**8T-4136**	1	BOLT (M10X1.5X25-MM)	

C-CHANGE FROM PREVIOUS TYPE
M-METRIC PART

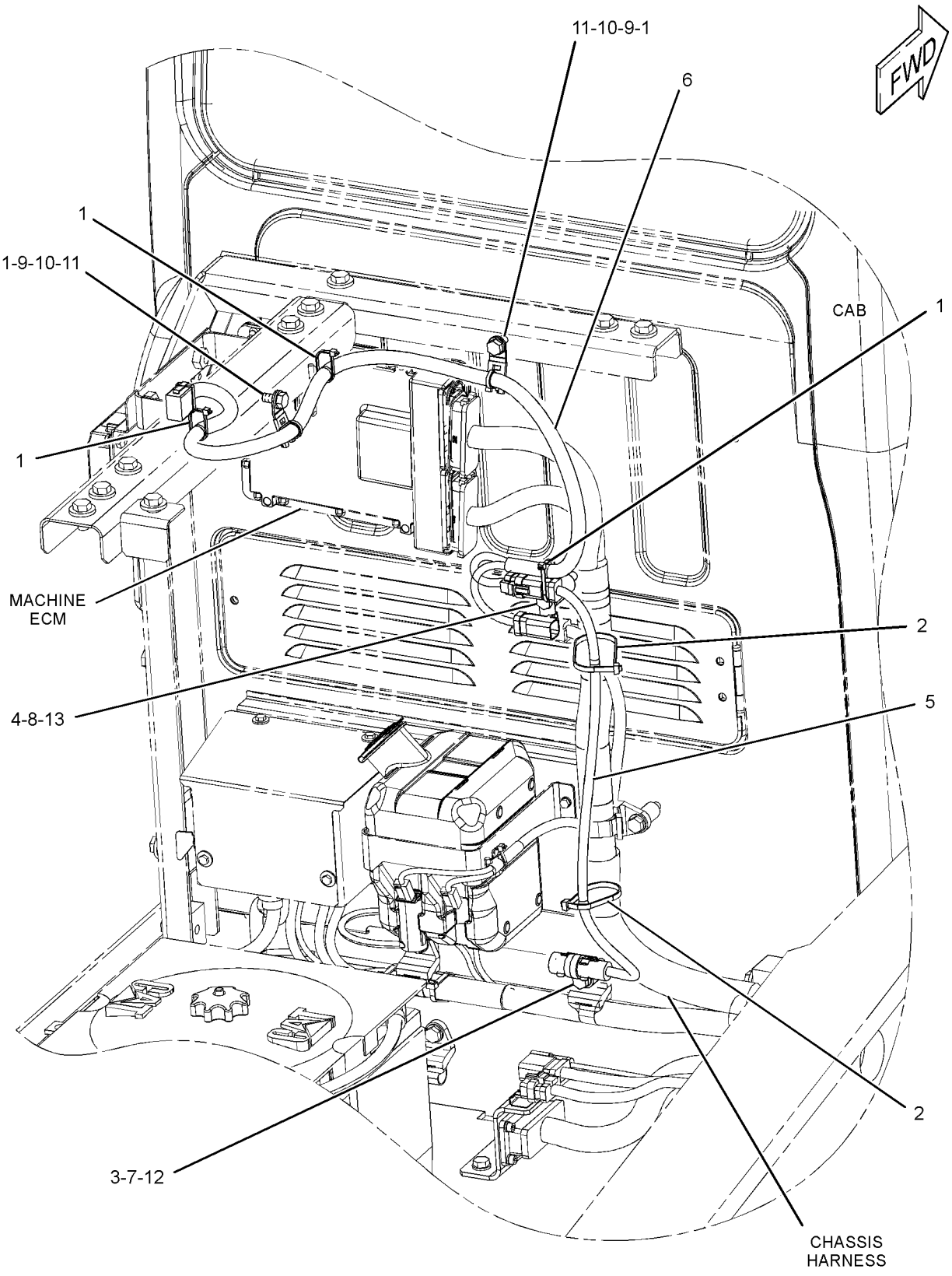

GRAPHIC #1 **<END>** g01220819

ELECTRICAL AND STARTING SYSTEM

283-2761 WIRING GP-COMMUNICATION

S/N: DFP1-UP; CJX1-UP

AN ATTACHMENT

SMCS-1408 **i03084913**

NOTE	REF NO	GRAPHIC REF	PART NUMBER	QTY	PART NAME 1 2 3 4 5 6 (PRODUCT LEVEL)	SEE PAGE
	1	1	**3S-2093**	3	STRAP-CABLE	
	2	1	**4I-7889**	1	SPACER (11X25X45-MM THK)	
	3	1	**7K-1181**	10	STRAP-CABLE	
	4	1	**116-0118**	1	CLIP	
	5	1	**149-5050**	1	RELAY (24-VOLT) (START CONTROL)	
	6	1	**283-2762**	1	HARNESS AS-CONTROL	
M	7	1	**5C-2890**	1	NUT (M6X1-THD)	
M	8	1	**8T-5005**	1	BOLT (M10X1.5X70-MM)	
	9	1	**9X-8256**	1	WASHER (6.6X12X2-MM THK)	

M-METRIC PART

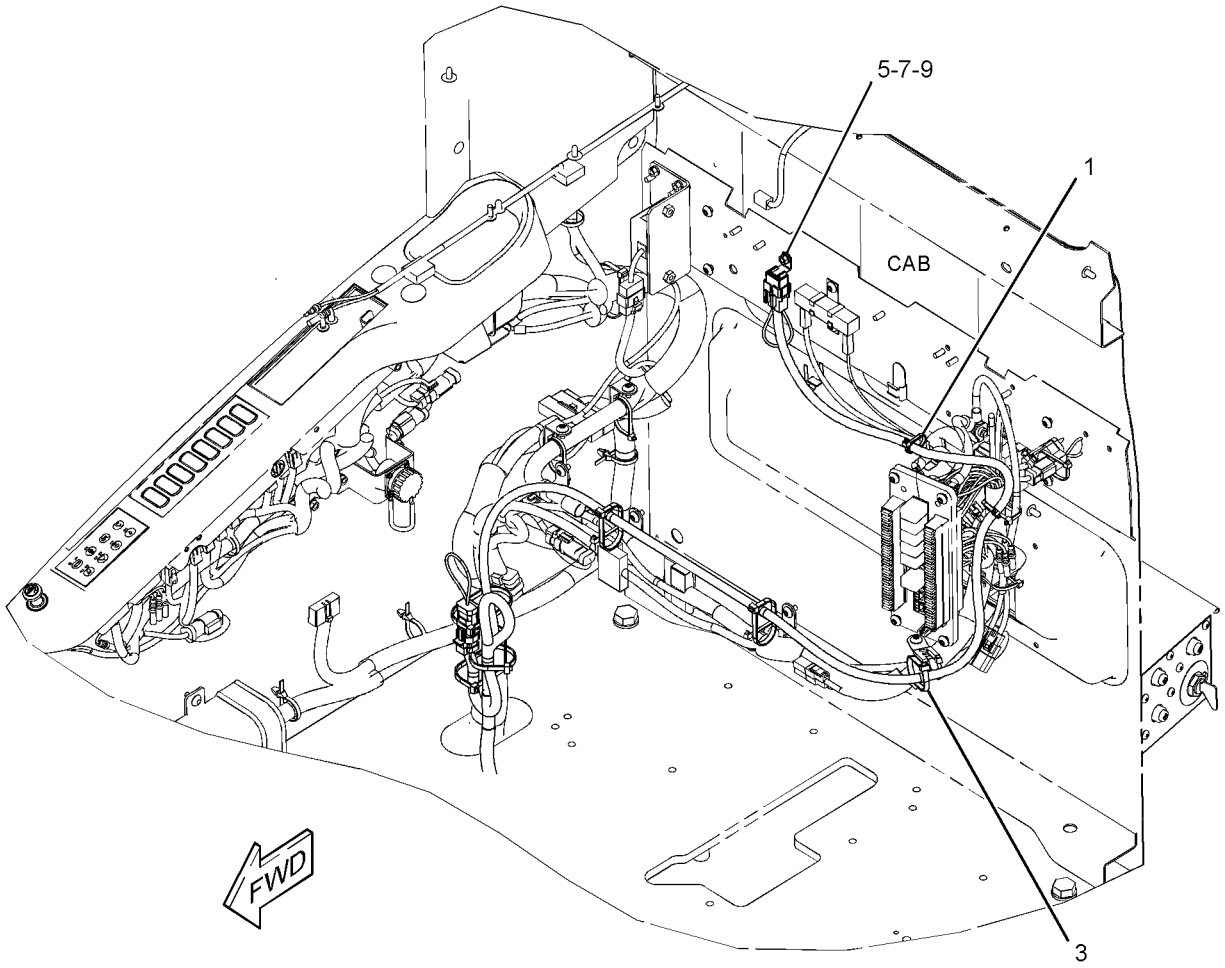

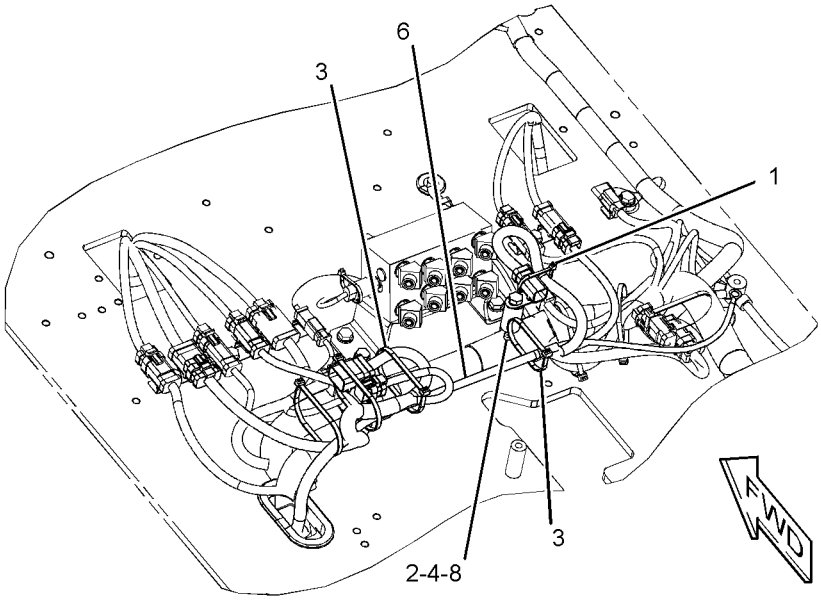

GRAPHIC #1 **<END>** g01571474

231-1836 WIRING GP-CONSOLE–LH

S/N: DFP1-UP; CJX1-UP

PART OF 251-0433 WIRING GP-CONSOLE

SMCS-1408 **i02348297**

NOTE	REF NO	GRAPHIC REF	PART NUMBER	QTY	PART NAME 1 2 3 4 5 6 (PRODUCT LEVEL)	SEE PAGE
	1	1	**3S-2093**	2	STRAP-CABLE	
	2	1	**7K-1181**	1	STRAP-CABLE	
	3	1	**163-6795**	2	STRAP-CABLE	
	4	1	**251-0580**	1	HARNESS AS-CONSOLE (LH)	
		1	**155-2260**	1	KIT-CONNECTING PLUG (3-PIN)	
					(INCLUDES PLUG AS, WEDGE & INTERFACE SEAL)	
		1	**230-4011**	1	PLUG AS-CONNECTOR (2-PIN)	
		1	**230-5010**	1	PLUG AS-CONNECTOR (6-PIN)	
		1	**239-7352**	1	PLUG AS-CONNECTOR (6-PIN)	
		1	**243-4505**	1	RECEPTACLE AS-CONNECTOR (2-PIN)	
		1	**243-4508**	1	RECEPTACLE AS-CONNECTOR (6-PIN)	
		1	**247-2693**	1	RECEPTACLE AS-CONNECTOR (6-PIN)	

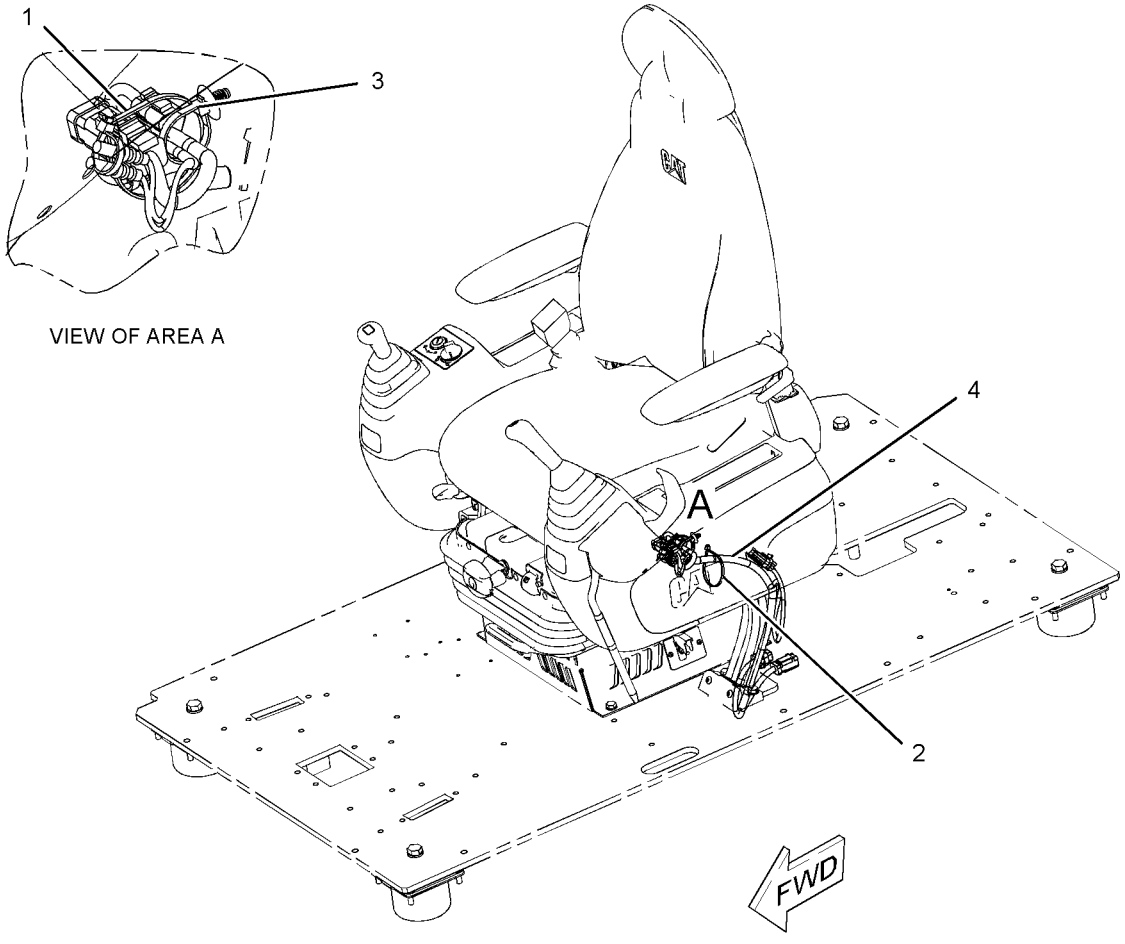

GRAPHIC #1 **<END>** g01150799

251-0433 WIRING GP-CONSOLE

S/N: DFP1-UP; CJX1-UP

PART OF 229-9072 OPERATOR AR

SMCS-1408 **i02706845**

NOTE	PART NUMBER	QTY	PART NAME 1 2 3 4 5 6 (PRODUCT LEVEL)	SEE PAGE
Y	*231-1836*	1	WIRING GP-CONSOLE (LH)	404
Y	*251-0435*	1	WIRING GP-CONSOLE (RH)	406

Y-SEPARATE ILLUSTRATION

<END>

251-0435 WIRING GP-CONSOLE—RH

S/N: DFP1-UP; CJX1-UP

PART OF 251-0433 WIRING GP-CONSOLE

SMCS-1408 **i02553916**

NOTE	REF NO	GRAPHIC REF	PART NUMBER	QTY	PART NAME 1 2 3 4 5 6 (PRODUCT LEVEL)	SEE PAGE
	1	1	**3S-2093**	3	STRAP-CABLE	
	2	1	**7K-1181**	1	STRAP-CABLE	
	3	1	**283-3074**	1	SWITCH AS-TOGGLE (AUTO/MANUAL ENG SPEED CONTROL)	
	4	1	**163-6711**	1	SWITCH AS-TOGGLE (MANUAL ENGINE SPEED CONTROL)	
	5	1	**163-6795**	3	STRAP-CABLE	
	6	1	**251-0602**	1	BRACKET	
	7	1	**259-4877**	1	HARNESS AS-CONSOLE (RH)	
		1	**102-8806**	1	KIT-RECEPTACLE (8-PIN)	
					(INCLUDES RECEPTACLE AS & WEDGE)	
		1	**3S-2093**	10	STRAP-CABLE	
		1	**7Y-3967**	2	TERMINAL AS	
		1	**7Y-3963**	1	TERMINAL (RECEPTACLE)	
		1	**7Y-3965**	1	TUBE (RECEPTACLE TERMINAL)	
		1	**102-7964**	1	CONNECTOR-PLUG	
		1	**102-7965**	14	TERMINAL (FEMALE)	
E		1	**125-7874**		TUBE-HEAT SHRINK (5.72-MM DIA) (10-CM)	
E		1	**125-7875**		TUBE-HEAT SHRINK (7.44-MM DIA) (10-CM)	
		1	**155-2265**	1	KIT-CONNECTING PLUG (8-PIN)	
					(INCLUDES PLUG AS, WEDGE & INTERFACE SEAL)	
		1	**9X-3401**	2	PIN-CONNECTOR (16-GA TO 18-GA)	
					—OR—	
		1	**126-1767**	2	PIN-CONNECTOR (14-GA)	
		1	**230-4009**	1	PLUG AS-CONNECTOR (12-PIN)	
		1	**230-4011**	1	PLUG AS-CONNECTOR (2-PIN)	
		1	**230-5008**	1	PLUG AS-CONNECTOR (4-PIN)	
		1	**230-5010**	1	PLUG AS-CONNECTOR (6-PIN)	
		1	**231-2295**	1	PLUG AS-CONNECTOR (8-PIN)	
		1	**239-7352**	1	PLUG AS-CONNECTOR (6-PIN)	
		1	**243-4505**	1	RECEPTACLE AS-CONNECTOR (2-PIN)	
		1	**243-4510**	1	RECEPTACLE AS-CONNECTOR (12-PIN)	
		1	**247-2693**	1	RECEPTACLE AS-CONNECTOR (6-PIN)	
M	8	1	**9X-2042**	3	SCREW-TRUSS HEAD (M6X1X12-MM)	

E-ORDER BY THE CENTIMETER
M-METRIC PART

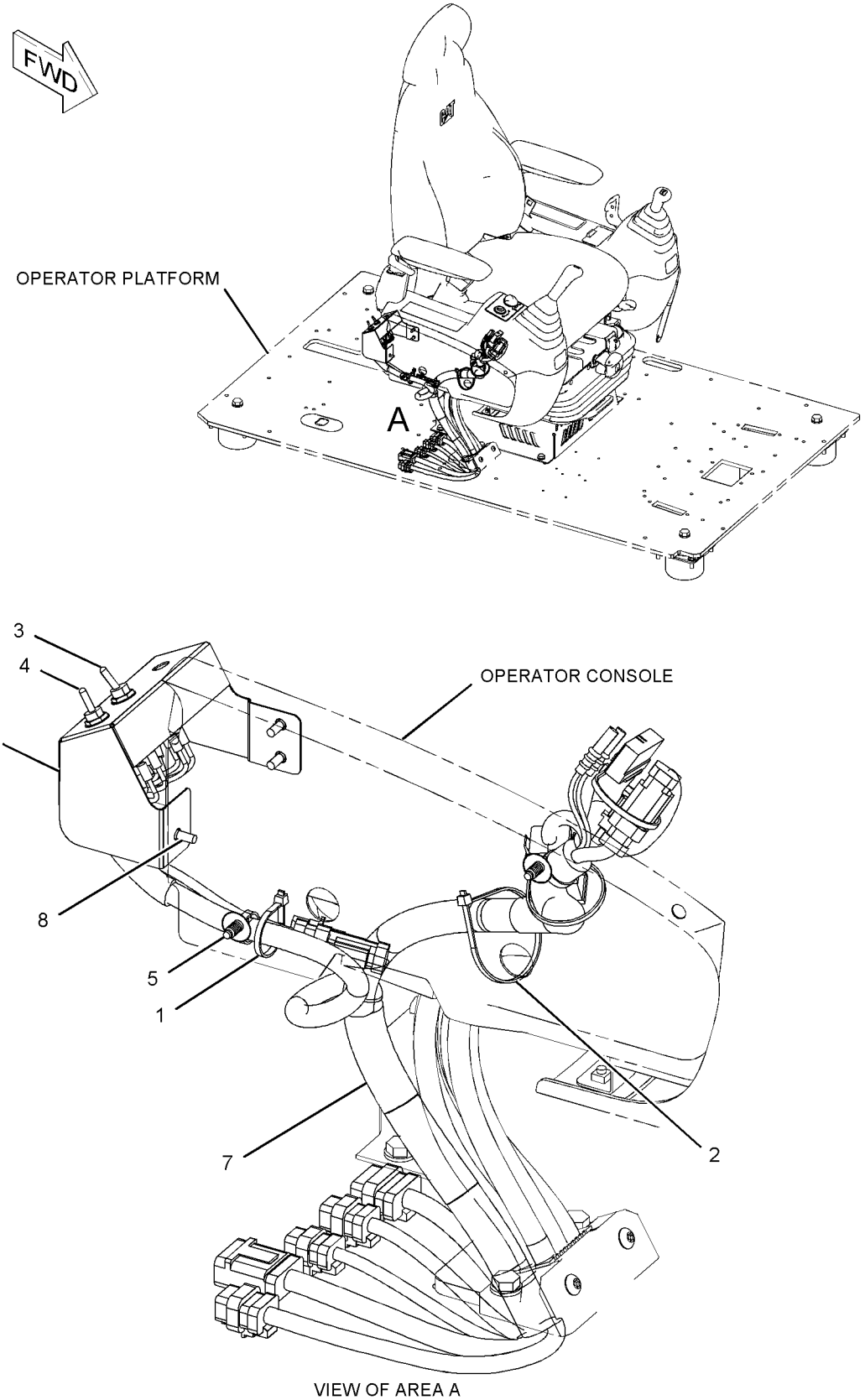

GRAPHIC #1 **<END>** g01231684

231-1766 WIRING GP-CONVERTER

S/N: DFP1-UP; CJX1-UP
12 VOLT - 7 AMPERE POWER SUPPLY
CANNOT BE USED WITH 231-1767—PAGE 409
AN ATTACHMENT

SMCS-1421 **i02598401**

NOTE	REF NO	GRAPHIC REF	PART NUMBER	QTY	PART NAME 1 2 3 4 5 6 (PRODUCT LEVEL)	SEE PAGE
	1	1	**121-0987**	1	SOCKET (12-VOLT, 7-AMPERE)	
	2	1	**283-2783**	1	CONVERTER-POWER (24-VOLT TO 12-VOLT)	
M	3	1	**5C-9553**	4	BOLT (M6X1X16-MM)	
	4	1	**9X-8256**	4	WASHER (6.6X12X2-MM THK)	

M-METRIC PART

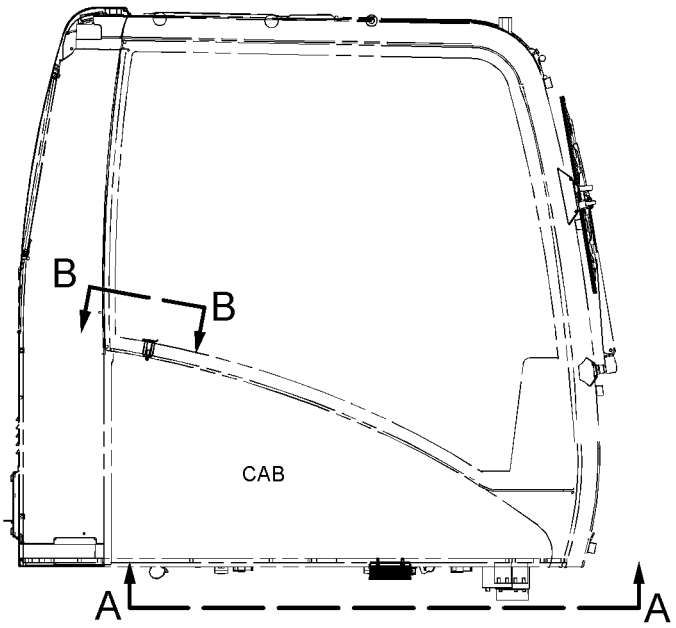

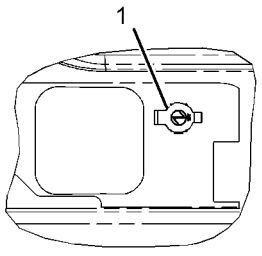

VIEW B-B

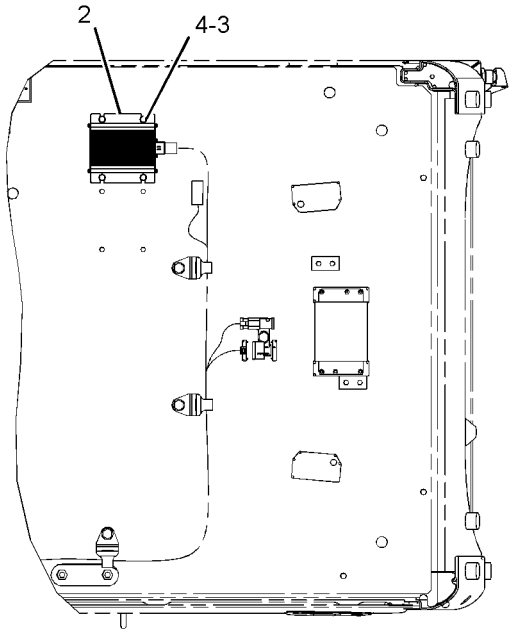

VIEW A-A

GRAPHIC #1 **<END>** g01129903

231-1767 WIRING GP-CONVERTER—12-VOLT, 7-AMPERE

S/N: DFP1-UP; CJX1-UP
CANNOT BE USED WITH 231-1766—PAGE 408
AN ATTACHMENT

SMCS-1421 **i02598402**

NOTE	REF NO	GRAPHIC REF	PART NUMBER	QTY	PART NAME 1 2 3 4 5 6 (PRODUCT LEVEL)	SEE PAGE
	1	1	**121-0987**	2	SOCKET (12-VOLT, 7-AMPERE)	
	2	1	**283-2783**	2	CONVERTER-POWER (24-VOLT TO 12-VOLT)	
M	3	1	**5C-9553**	8	BOLT (M6X1X16-MM)	
	4	1	**9X-8256**	8	WASHER (6.6X12X2-MM THK)	

M-METRIC PART

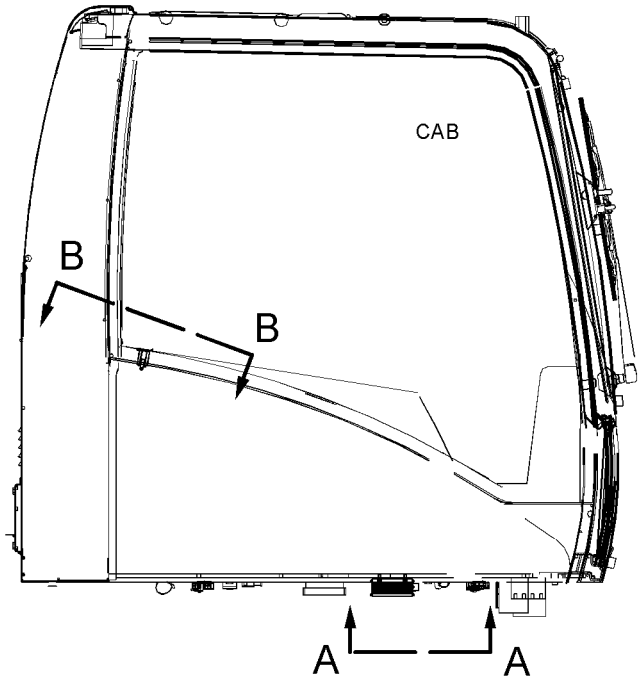

RIGHT SIDE VIEW

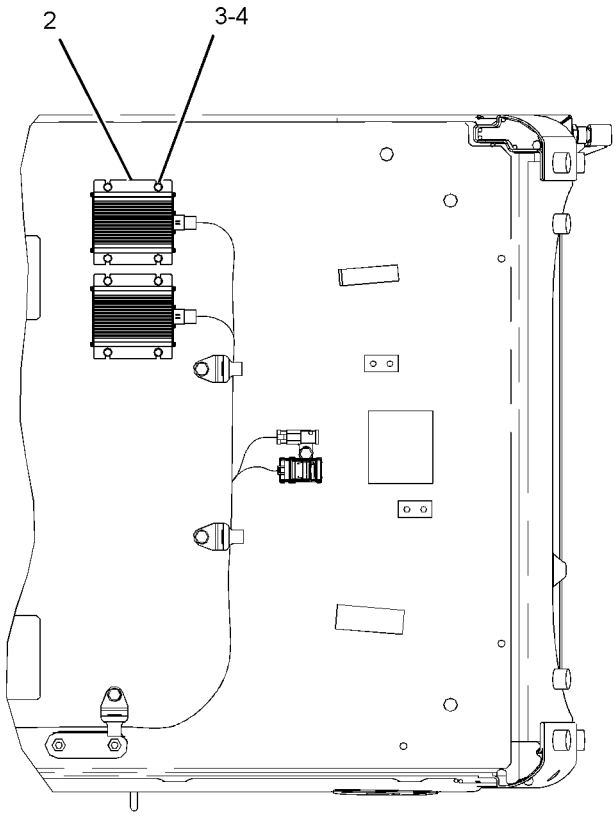

VIEW A-A

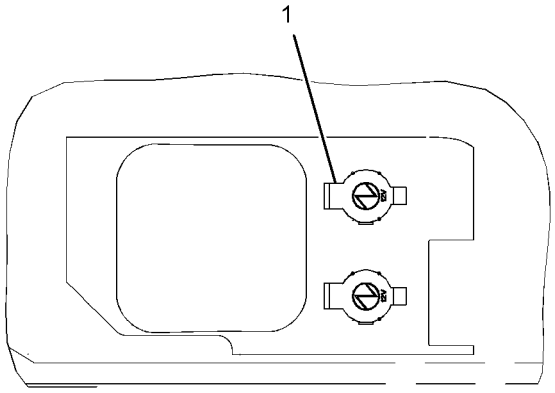

VIEW B-B

GRAPHIC #1 **<END>** g01130627

251-0482 WIRING GP-CONVERTER

S/N: DFP1-UP; CJX1-UP
12-VOLT, 7-AMPERE POWER SUPPLY
CANNOT BE USED WITH 251-0485—PAGE 412
AN ATTACHMENT

SMCS-1421 **i02559417**

NOTE	REF NO	GRAPHIC REF	PART NUMBER	QTY	PART NAME 1 2 3 4 5 6 (PRODUCT LEVEL)	SEE PAGE
	1	1	**7K-1181**	2	STRAP-CABLE	
	2	1	**121-0987**	1	SOCKET (12-VOLT, 7-AMPERE)	
	3	1	**283-2783**	1	CONVERTER-POWER (24-VOLT TO 12-VOLT)	
	4	1	**251-0483**	1	BRACKET	
	5	1	**8T-4121**	2	WASHER-HARD (11X21X2.5-MM THK)	
M	6	1	**8T-4136**	2	BOLT (M10X1.5X25-MM)	
M	7	1	**8T-4171**	4	BOLT (M6X1X12-MM)	
	8	1	**9X-8256**	4	WASHER (6.6X12X2-MM THK)	

M-METRIC PART

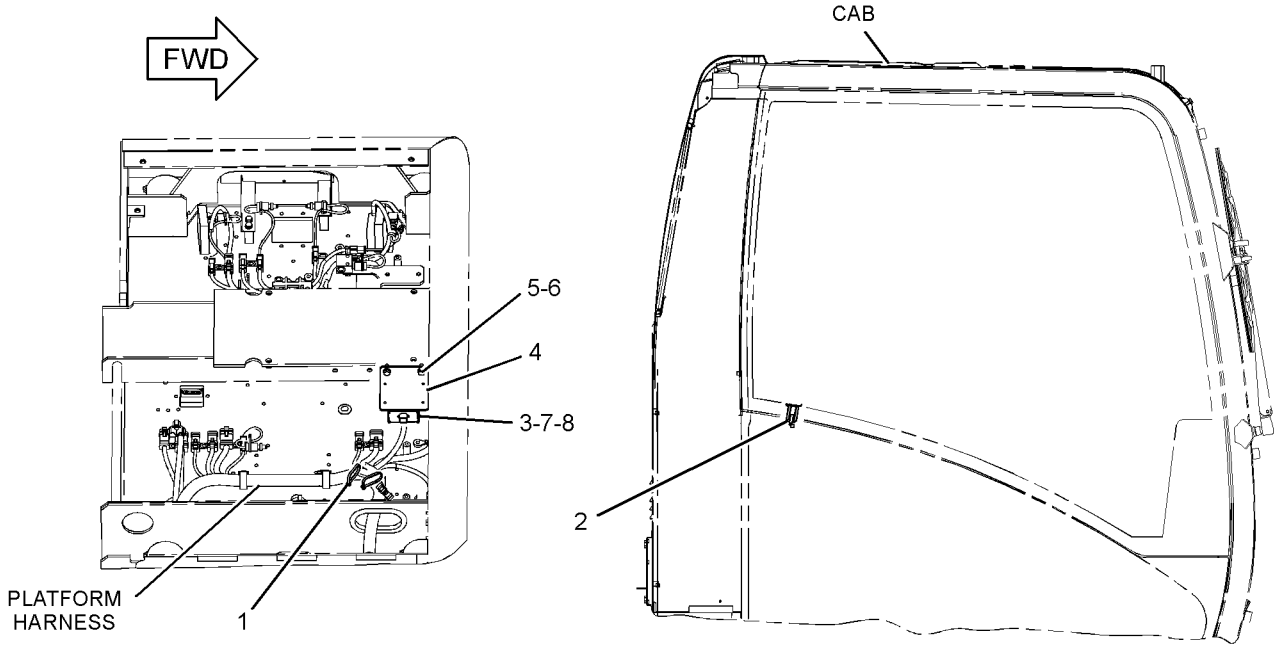

BOTTOM VIEW (PLATFORM)

RIGHT SIDE VIEW

GRAPHIC #1 **<END>** g01155726

251-0485 WIRING GP-CONVERTER

S/N: DFP1-UP; CJX1-UP
12-VOLT, 7-AMPERE X2 POWER SUPPLY
CANNOT BE USED WITH 251-0482—PAGE 411
AN ATTACHMENT

SMCS-1421 **i02559437**

NOTE	REF NO	GRAPHIC REF	PART NUMBER	QTY	PART NAME 1 2 3 4 5 6 (PRODUCT LEVEL)	SEE PAGE
	1	1	**121-0987**	2	SOCKET (12-VOLT, 7-AMPERE)	
	2	1	**283-2783**	2	CONVERTER-POWER (24-VOLT TO 12-VOLT)	
	3	1	**251-0483**	2	BRACKET	
	4	1	**8T-4121**	4	WASHER-HARD (11X21X2.5-MM THK)	
M	5	1	**8T-4136**	4	BOLT (M10X1.5X25-MM)	
M	6	1	**8T-4171**	8	BOLT (M6X1X12-MM)	
	7	1	**9X-8256**	8	WASHER (6.6X12X2-MM THK)	

M-METRIC PART

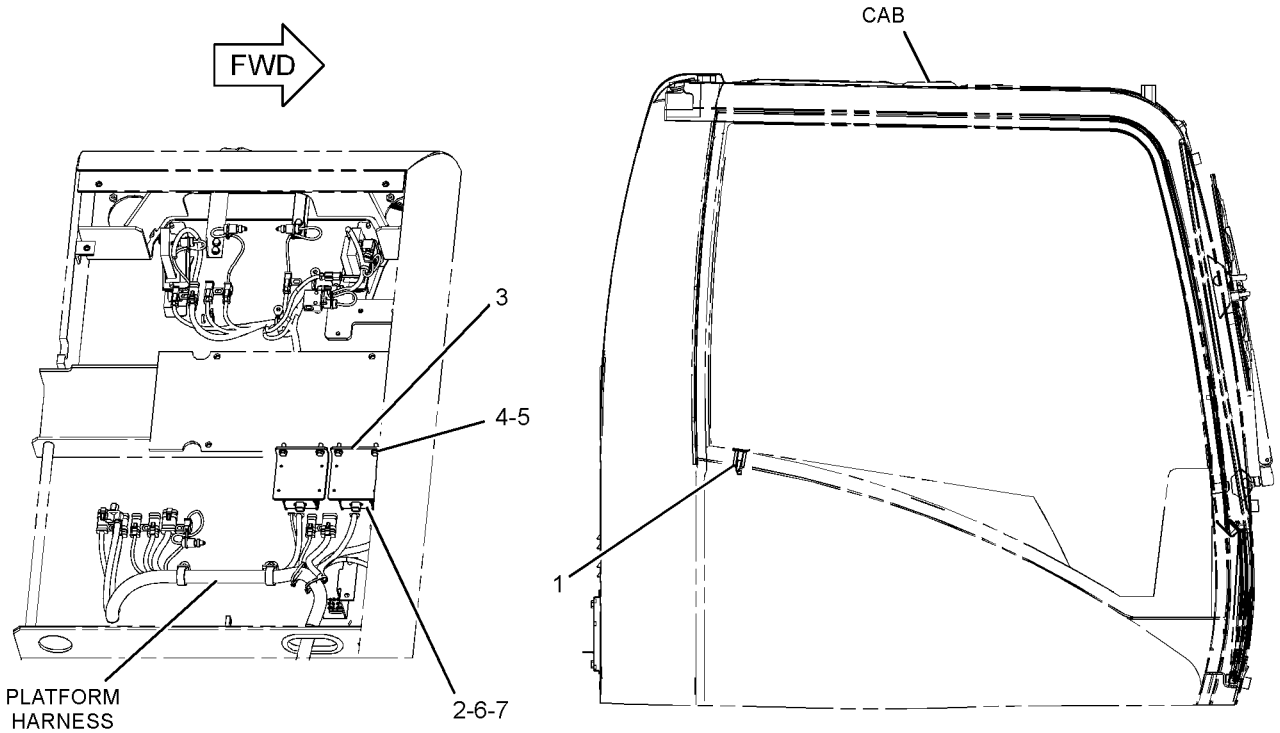

BOTTOM VIEW (PLATFORM)

RIGHT SIDE VIEW

GRAPHIC #1 **<END>** g01155779

198-2714 WIRING GP-ENGINE

S/N: KHX1-UP

PART OF 235-8134, 235-8135, 270-2767, 270-2768, 290-0755, 290-0757, 290-0758

ENGINE AR-COMPLETE

ALSO AN ATTACHMENT

SMCS-1408 **i02953266**

NOTE	REF NO	GRAPHIC REF	PART NUMBER	QTY	PART NAME 1 2 3 4 5 6 (PRODUCT LEVEL)	SEE PAGE
	1	1	**3S-2093**	18	STRAP-CABLE	
	2	1	**4P-5918**	1	CLIP	
	3	1	**105-1797**	7	MOUNT	
	4	1	**198-2713**	1	HARNESS AS-ENGINE (ELECTRONIC CONTROL MODULE)	
	5	1	**206-1345**	2	STRAP-CABLE	
	6	1	**222-5917**	1	HARNESS AS-ENGINE (FUEL INJECTION)	
	7	1	**4P-8134**	1	CLIP	
M	8	1	**6V-2317**	1	BOLT (M8X1.25X30-MM)	
	9	1	**9M-1974**	1	WASHER-HARD (8.8X16X2-MM THK)	

M-METRIC PART

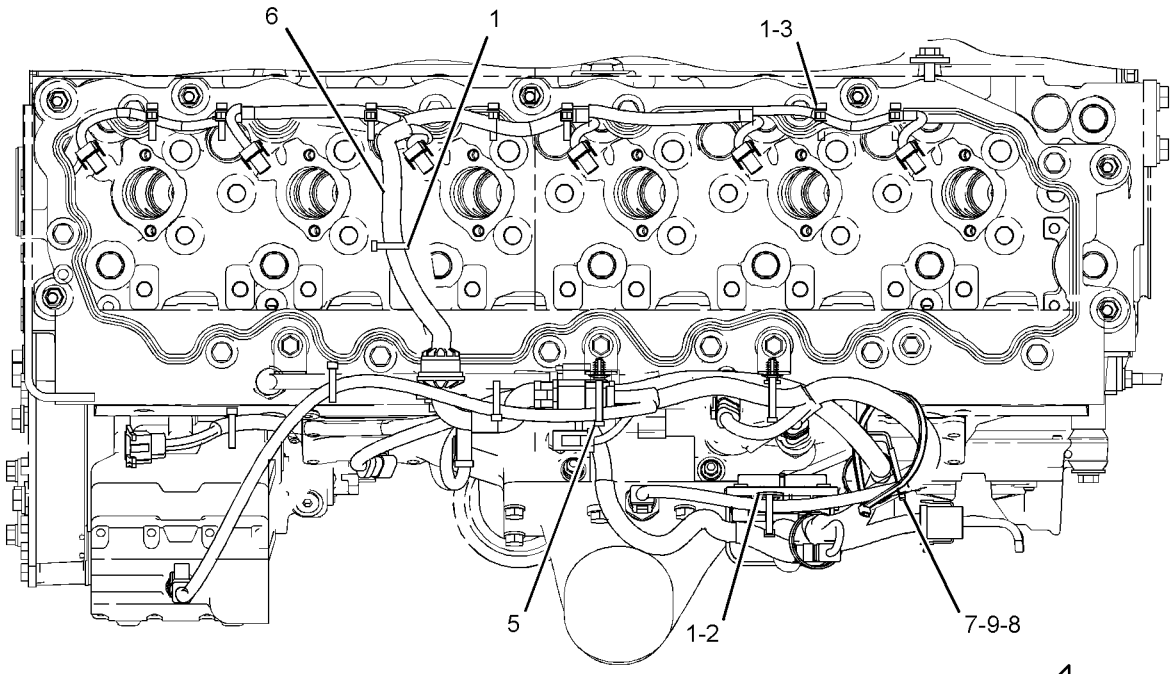

TOP VIEW

FWD

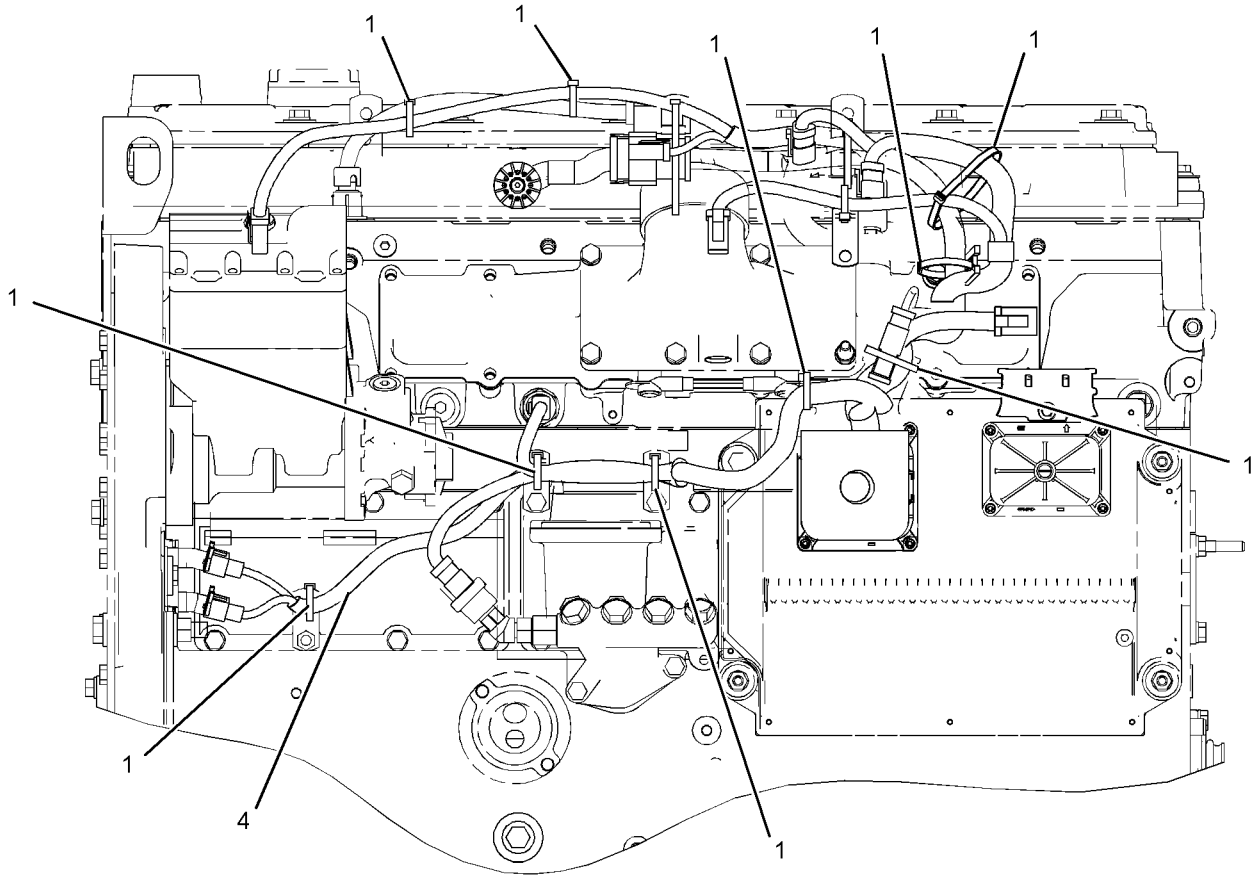

LEFT SIDE VIEW

GRAPHIC #1

<END>

g01175334

251-0448 WIRING GP-FAN–FAN CLUTCH

S/N: DFP1-UP; CJX1-UP

PART OF 229-1786, 229-1787 COOLING AR-HIGH AMBIENT TEMP

AN ATTACHMENT

SMCS-1408 **i02970460**

NOTE	PART NUMBER	QTY	PART NAME 1 2 3 4 5 6 (PRODUCT LEVEL)	SEE PAGE
Y	*291-7459*	1	WIRING GP-CHASSIS	388
Y	*291-7460*	1	WIRING GP-FAN (FAN CLUTCH)	416

Y-SEPARATE ILLUSTRATION

<END>

291-7460 WIRING GP-FAN–FAN CLUTCH

S/N: DFP1-UP; CJX1-UP
PART OF 251-0448 WIRING GP-FAN
AN ATTACHMENT

SMCS-1408 **i02970462**

NOTE	REF NO	GRAPHIC REF	PART NUMBER	QTY	PART NAME 1 2 3 4 5 6 (PRODUCT LEVEL)	SEE PAGE
	1	1	**3S-2093**	9	STRAP-CABLE	
	2	1	**116-0118**	1	CLIP	
	3	1	**275-6911**	1	HARNESS AS-CONTROL	
		1	**155-2274**	1	KIT-CONNECTING PLUG (6-PIN)	
					(INCLUDES PLUS AS, WEDGE & INTERFACE SEAL)	
		1	**243-4508**	1	RECEPTACLE AS-CONNECTOR (6-PIN)	
	4	1	**8T-4121**	1	WASHER-HARD (11X21X2.5-MM THK)	
M	5	1	**8T-4191**	1	BOLT (M10X1.5X16-MM)	

M-METRIC PART

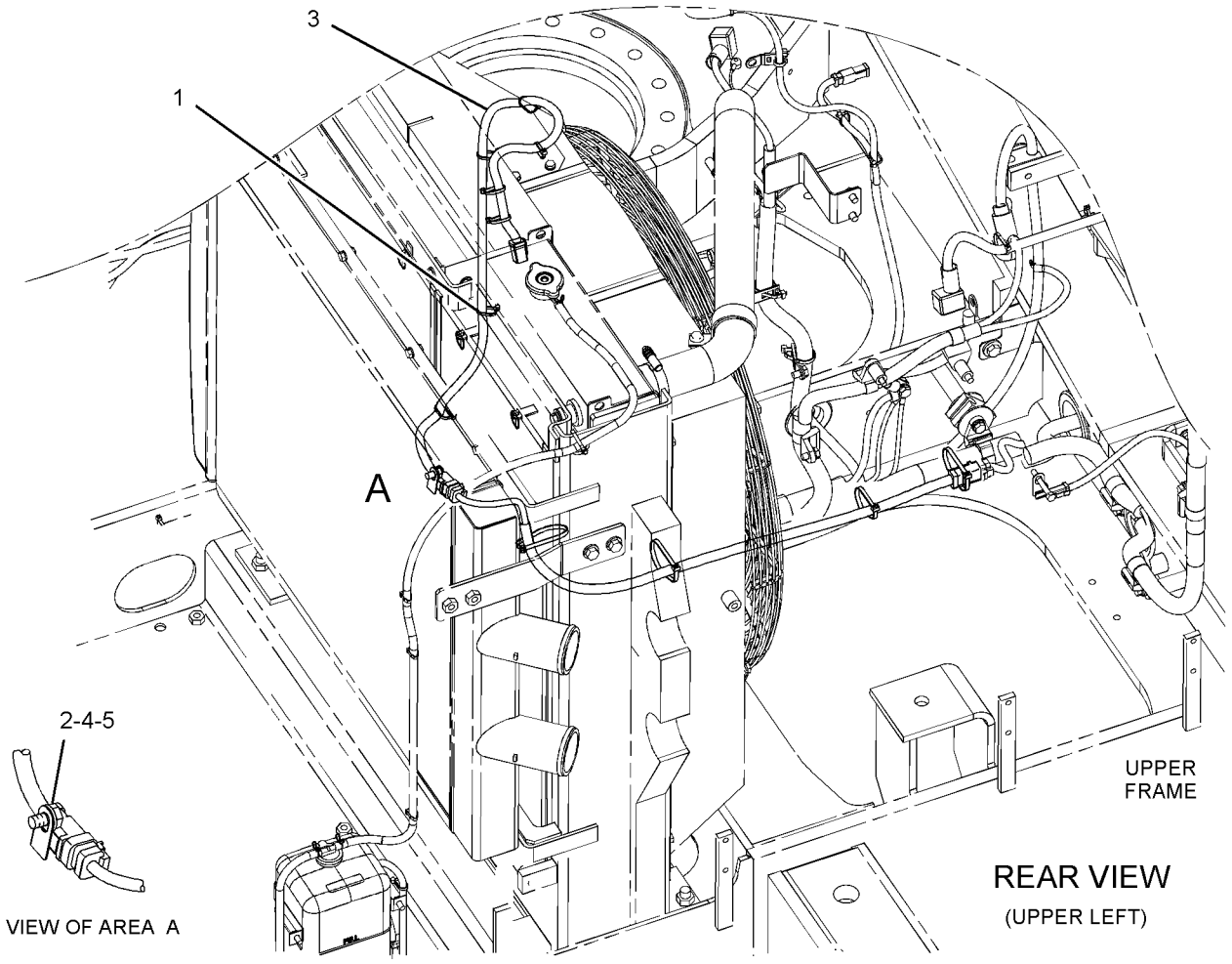

GRAPHIC #1 **<END>** g01316171

259-4965 WIRING GP-FINE SWING

S/N: DFP1-UP; CJX1-UP

PART OF 240-3970, 240-3971 CHASSIS AR

SMCS-1408 **i02926845**

NOTE	REF NO	GRAPHIC REF	PART NUMBER	QTY	PART NAME 1 2 3 4 5 6 (PRODUCT LEVEL)	SEE PAGE
	1	1	**7Y-8109**	1	BRACKET AS	
	2	1	**111-4836**	6	CLIP	
	3	1	**111-4837**	2	CLIP	
	4	1	**291-7551**	1	HARNESS AS-MOTOR (SWING MOTOR CONTROL)	
	5	1	**8T-4121**	7	WASHER-HARD (11X21X2.5-MM THK)	
M	6	1	**8T-4137**	6	BOLT (M10X1.5X20-MM)	
M	7	1	**8T-4195**	1	BOLT (M10X1.5X30-MM)	

M-METRIC PART

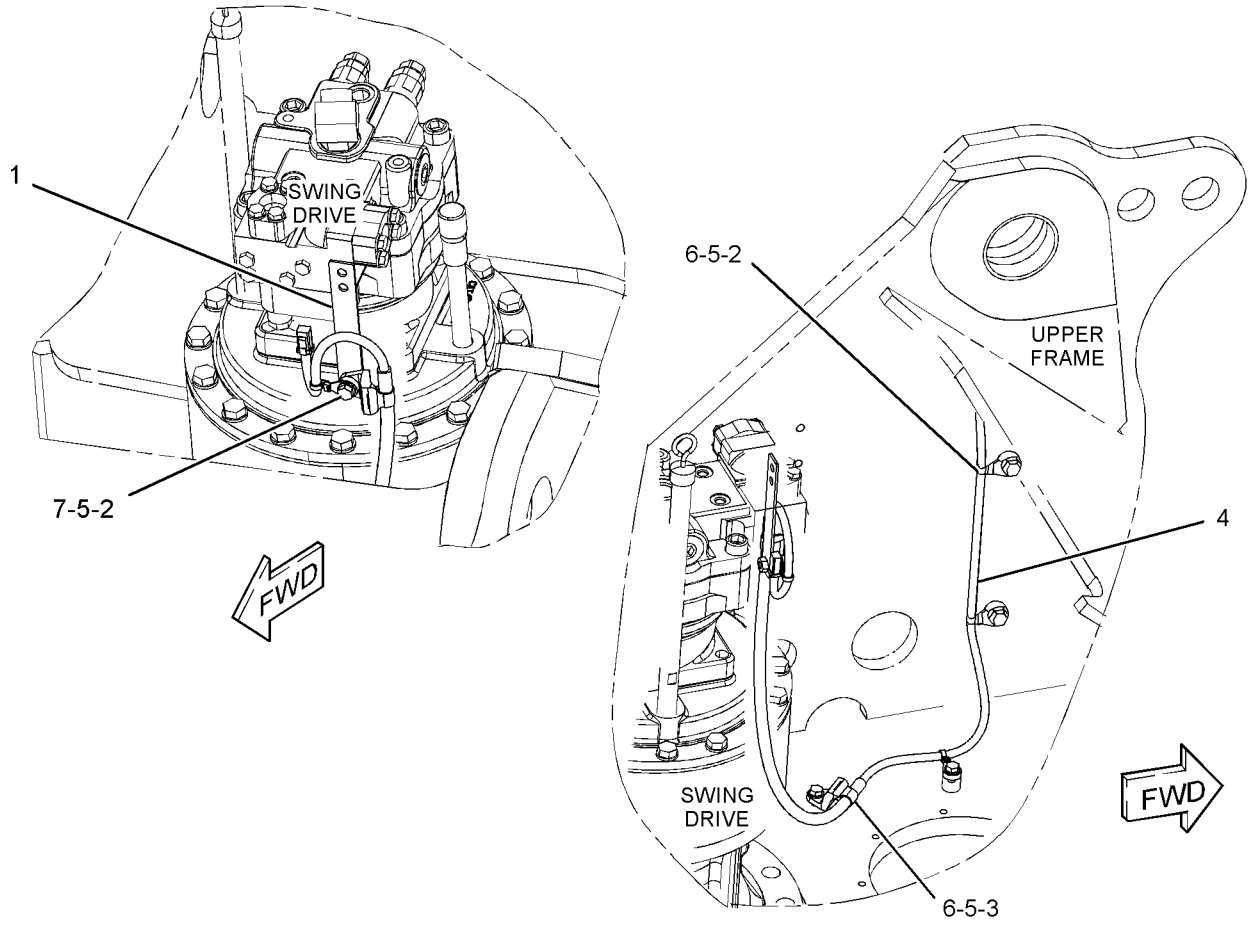

GRAPHIC #1 **<END>** g01309729

238-1570 WIRING GP-FUEL SYSTEM–REFUELING

S/N: DFP1-UP; CJX1-UP
PART OF 229-1784 PUMP AR-FUEL TRANSFER
AN ATTACHMENT
TYPE 1

SMCS-1408 **i03156140**

NOTE	REF NO	GRAPHIC REF	PART NUMBER	QTY	PART NAME 1 2 3 4 5 6 (PRODUCT LEVEL)	SEE PAGE
	1	1	**3S-2093**	16	STRAP-CABLE	
	2	1	**9X-3495**	1	CLIP AS	
	3	1	**149-5050**	1	RELAY (24-VOLT) (REFUELING PUMP, STOP)	
	3A	1	**149-5050**	1	RELAY (24-VOLT) (REFUELING PUMP, START)	
	4	1	**213-0772**	1	SWITCH AS-MAGNETIC (24-VOLT) (MAIN RELAY)	
	5	1	**238-1579**	1	HARNESS AS-PUMP (REFUELING)	
	6	1	**238-1593**	1	WIRE AS	
Y	7	1	**238-1594**	1	SWITCH GP-PUSH BUTTON (REFUELING PUMP, START)	353
Y	8	1	**238-1596**	1	SWITCH GP-PUSH BUTTON (REFUELING PUMP, STOP)	354
M	9	1	**096-2591**	2	SCREW-MACHINE (M5X0.8X35-MM)	
M	10	1	**7X-2619**	2	BOLT (M6X1X10-MM)	
	11	1	**8T-0328**	3	WASHER-HARD (5.5X10X1-MM THK)	
M	12	1	**8T-4199**	1	BOLT (M8X1.25X12-MM)	
	13	1	**8T-4224**	1	WASHER-HARD (8.8X16X2-MM THK)	
	14	1	**9X-8256**	2	WASHER (6.6X12X2-MM THK)	
	15	1	**275-6993**	1	COVER	

M-METRIC PART
Y-SEPARATE ILLUSTRATION

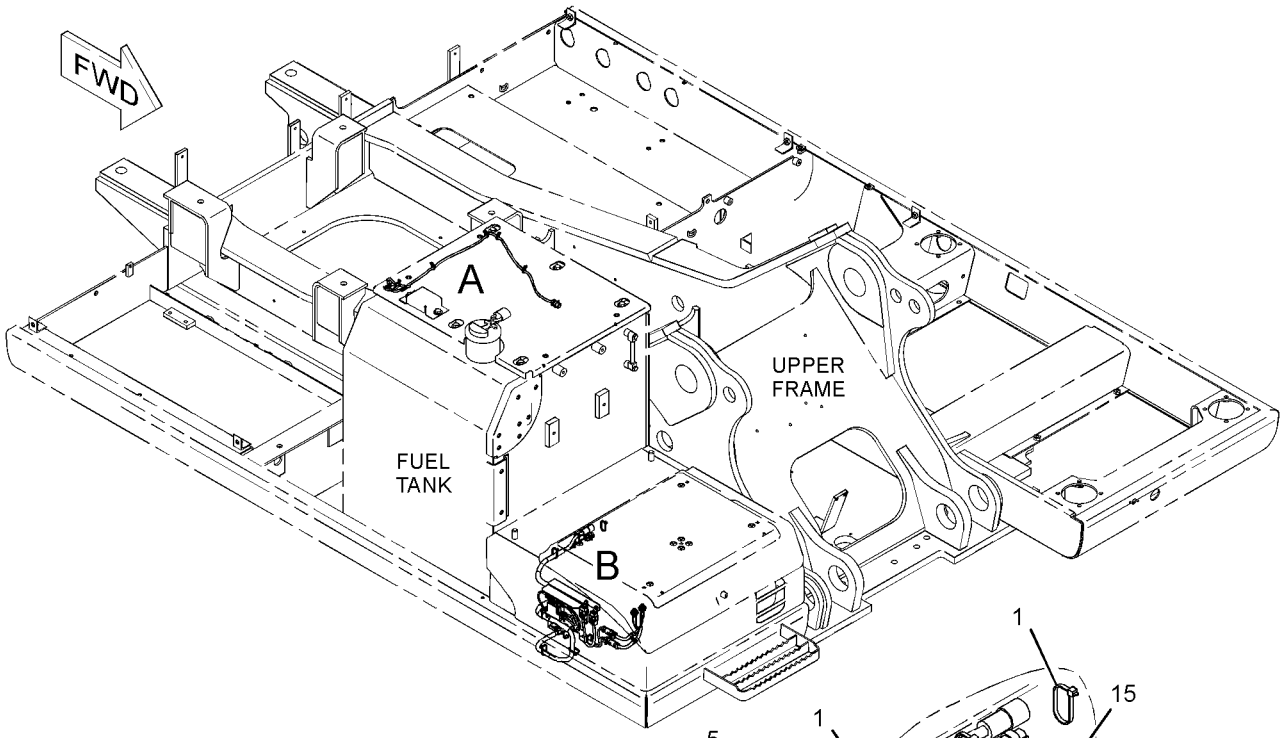

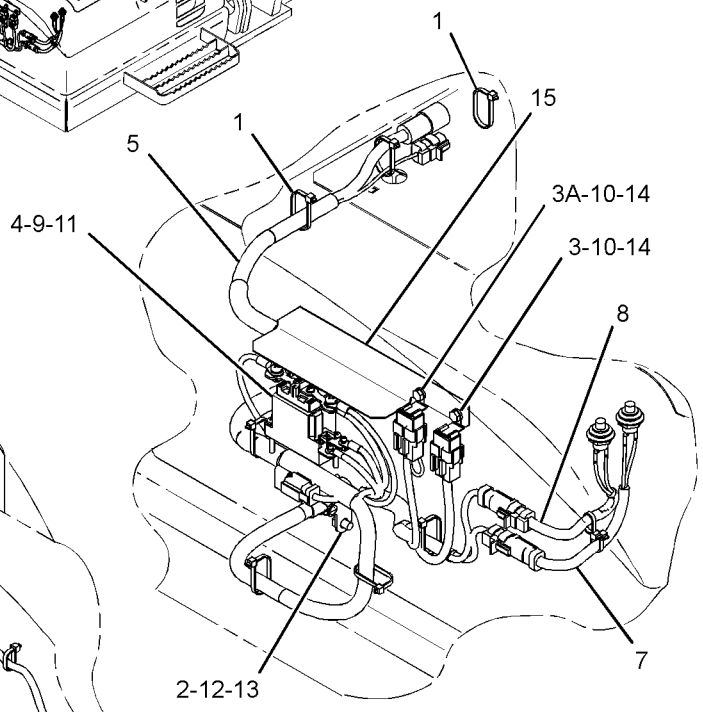

VIEW OF AREA B

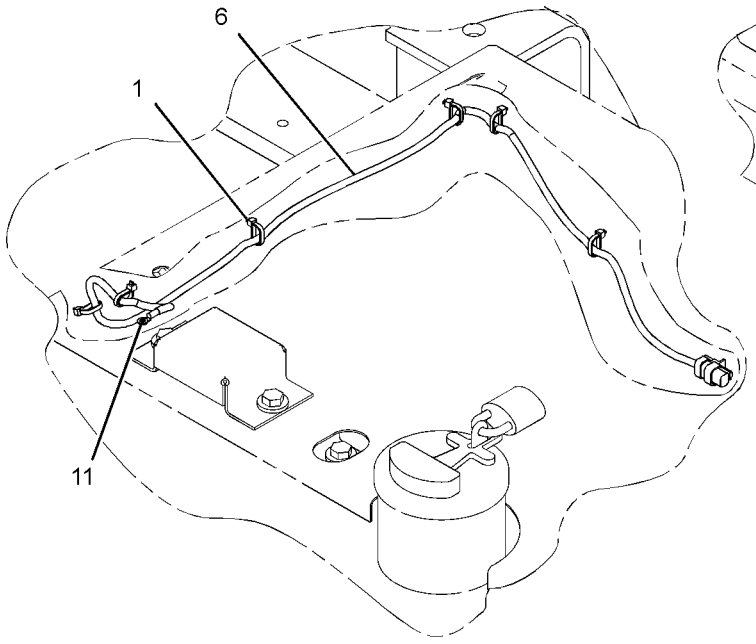

VIEW OF AREA A

GRAPHIC #1 **<END>** g01481290

238-1570 WIRING GP-FUEL SYSTEM–REFUELING

S/N: DFP1-UP; CJX1-UP
PART OF 229-1784 PUMP AR-FUEL TRANSFER
AN ATTACHMENT
TYPE 2

SMCS-1408 **i03087780**

NOTE	REF NO	GRAPHIC REF	PART NUMBER	QTY	PART NAME 1 2 3 4 5 6 (PRODUCT LEVEL)	SEE PAGE
	1	1	**3S-2093**	16	STRAP-CABLE	
	2	1	**9X-3495**	1	CLIP AS	
	3	1	**149-5050**	1	RELAY (24-VOLT) (REFUELING PUMP, STOP)	
	3A	1	**149-5050**	1	RELAY (24-VOLT) (REFUELING PUMP, START)	
	4	1	**213-0772**	1	SWITCH AS-MAGNETIC (24-VOLT) (MAIN RELAY)	
	5	1	**238-1579**	1	HARNESS AS-PUMP (REFUELING)	
C	6	1	**319-1335**	1	HARNESS AS-WIRING	
Y	7	1	**238-1594**	1	SWITCH GP-PUSH BUTTON (REFUELING PUMP, START)	353
Y	8	1	**238-1596**	1	SWITCH GP-PUSH BUTTON (REFUELING PUMP, STOP)	354
M	9	1	**096-2591**	2	SCREW-MACHINE (M5X0.8X35-MM)	
M	10	1	**7X-2619**	2	BOLT (M6X1X10-MM)	
C	11	1	**8T-0328**	2	WASHER-HARD (5.5X10X1-MM THK)	
M	12	1	**8T-4199**	1	BOLT (M8X1.25X12-MM)	
	13	1	**8T-4224**	1	WASHER-HARD (8.8X16X2-MM THK)	
	14	1	**9X-8256**	2	WASHER (6.6X12X2-MM THK)	
	15	1	**275-6993**	1	COVER	
C	16	1	**7K-1181**	11	STRAP-CABLE	

C-CHANGE FROM PREVIOUS TYPE
M-METRIC PART
Y-SEPARATE ILLUSTRATION

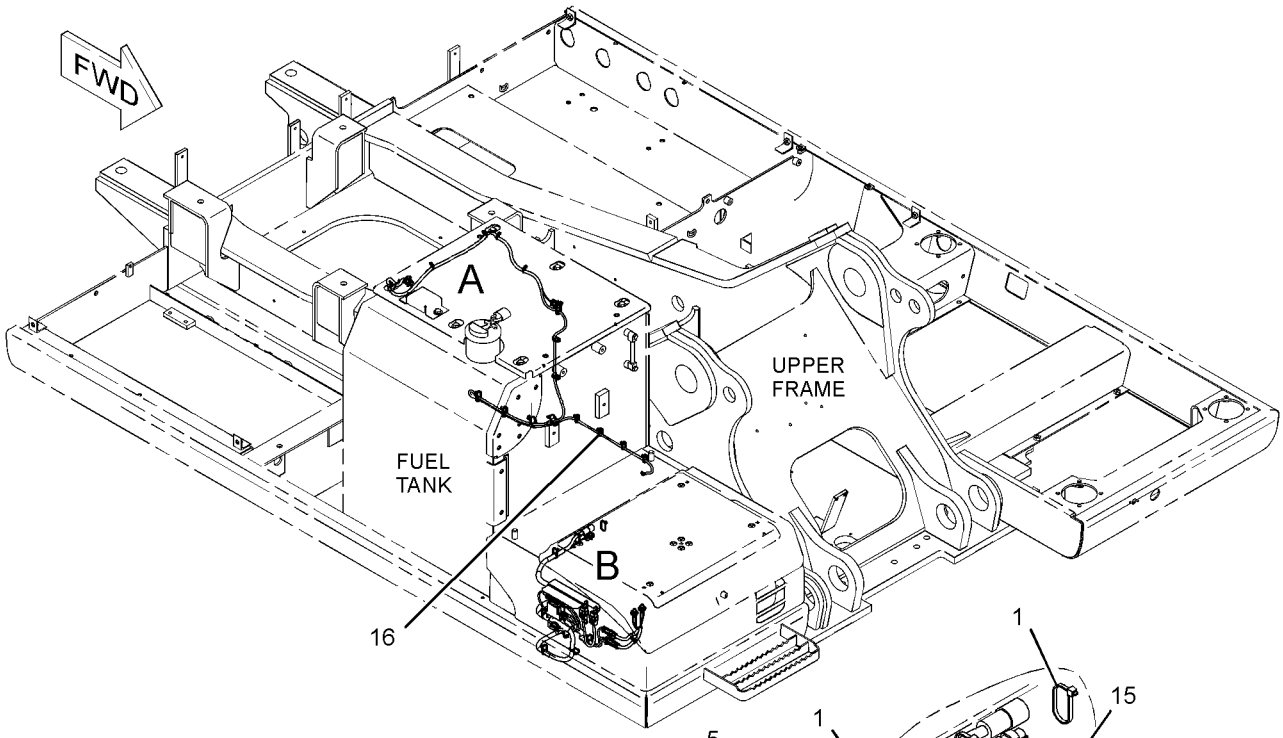

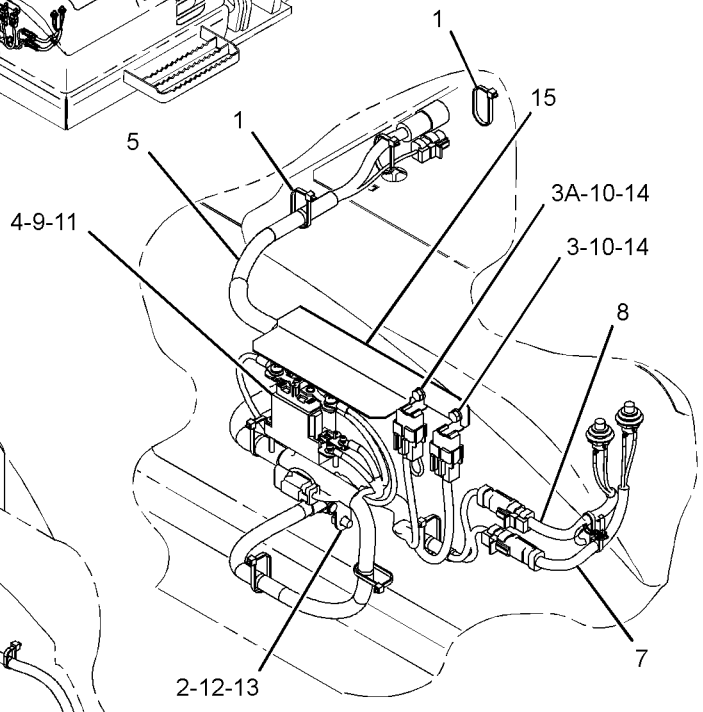

VIEW OF AREA B

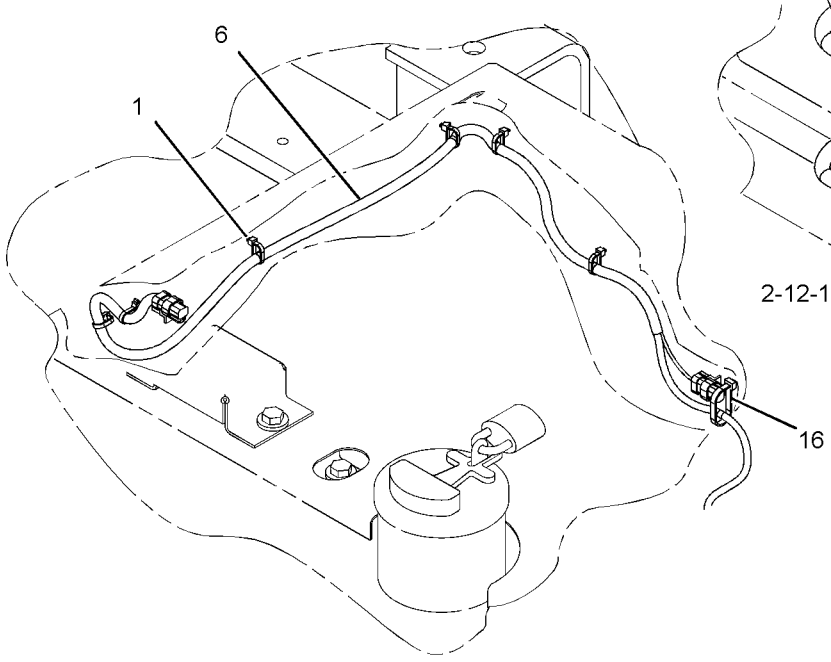

VIEW OF AREA A

GRAPHIC #1 **<END>** g01620056

259-5053 WIRING GP-FUEL SYSTEM–PRIMING PUMP

S/N: DFP1-UP; CJX1-UP
PART OF 247-7458 PUMP GP-FUEL PRIMING
AN ATTACHMENT
TYPE 1

SMCS-1408 **i02407772**

NOTE	REF NO	GRAPHIC REF	PART NUMBER	QTY	PART NAME 1 2 3 4 5 6 (PRODUCT LEVEL)	SEE PAGE
	1	1	**3S-2093**	10	STRAP-CABLE	
	2	1	**7K-1181**	7	STRAP-CABLE	
	3	1	**137-6606**	1	FILM-IDENTIFICATION (FUEL)	
Y	4	1	**165-5970**	1	SWITCH GP-TOGGLE (FUEL PRIMING PUMP)	359
	5	1	**259-5054**	1	HARNESS AS-PUMP	
		1	**155-2260**	1	KIT-CONNECTING PLUG (3-PIN)	
		1	**155-2270**	1	KIT-CONNECTING PLUG (2-PIN)	
					(EACH CONNECTING PLUG KIT INCLUDES PLUG AS, WEDGE & INTERFACE SEAL)	
		1	**243-4507**	1	RECEPTACLE AS-CONNECTOR (4-PIN)	

Y-SEPARATE ILLUSTRATION

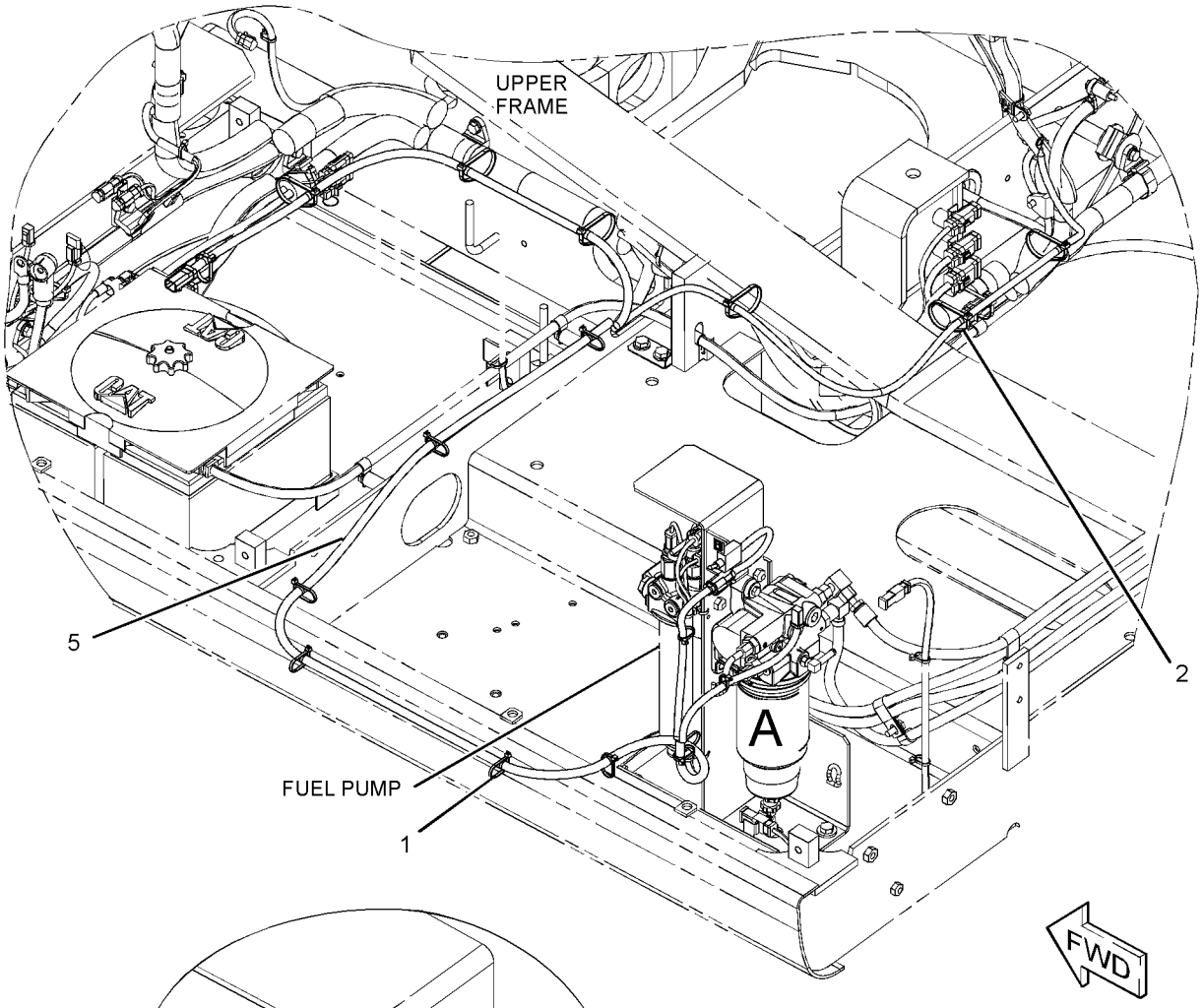

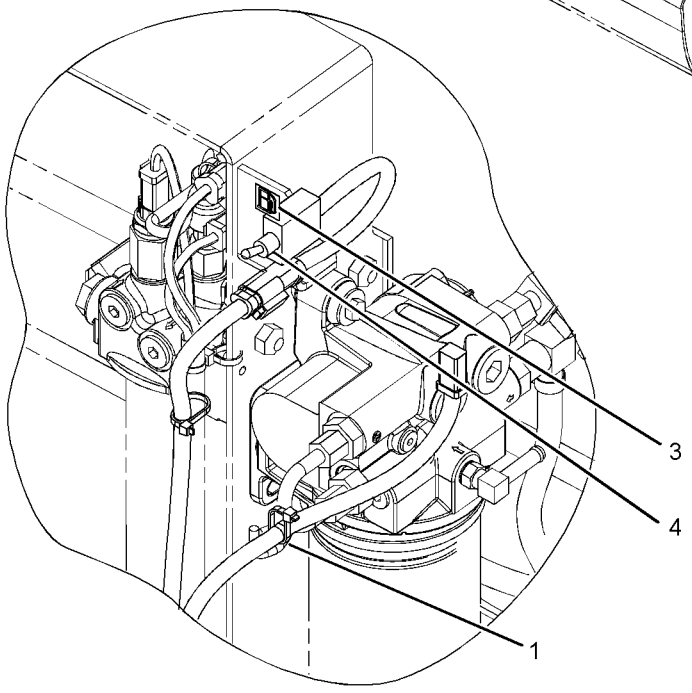

VIEW OF AREA A

GRAPHIC #1 **<END>** g01160769

259-5053 WIRING GP-FUEL SYSTEM–PRIMING PUMP

S/N: DFP1-UP; CJX1-UP
PART OF 247-7458 PUMP GP-FUEL PRIMING
AN ATTACHMENT
TYPE 2

SMCS-1408 **i02562362**

NOTE	REF NO	GRAPHIC REF	PART NUMBER	QTY	PART NAME 1 2 3 4 5 6 (PRODUCT LEVEL)	SEE PAGE
	1	1	**3S-2093**	10	STRAP-CABLE	
	2	1	**7K-1181**	7	STRAP-CABLE	
	3	1	**137-6606**	1	FILM-IDENTIFICATION (FUEL)	
Y	4	1	**165-5970**	1	SWITCH GP-TOGGLE (FUEL PRIMING PUMP)	359
C	5	1	**267-7967**	1	HARNESS AS-PUMP (FUEL)	
		1	**155-2260**	1	KIT-CONNECTING PLUG (3-PIN)	
		1	**155-2270**	1	KIT-CONNECTING PLUG (2-PIN)	
					(EACH PLUG KIT INCLUDES PLUG AS, WEDGE & INTERFACE SEAL)	
		1	**243-4507**	1	RECEPTACLE AS-CONNECTOR (4-PIN)	

C-CHANGE FROM PREVIOUS TYPE
Y-SEPARATE ILLUSTRATION

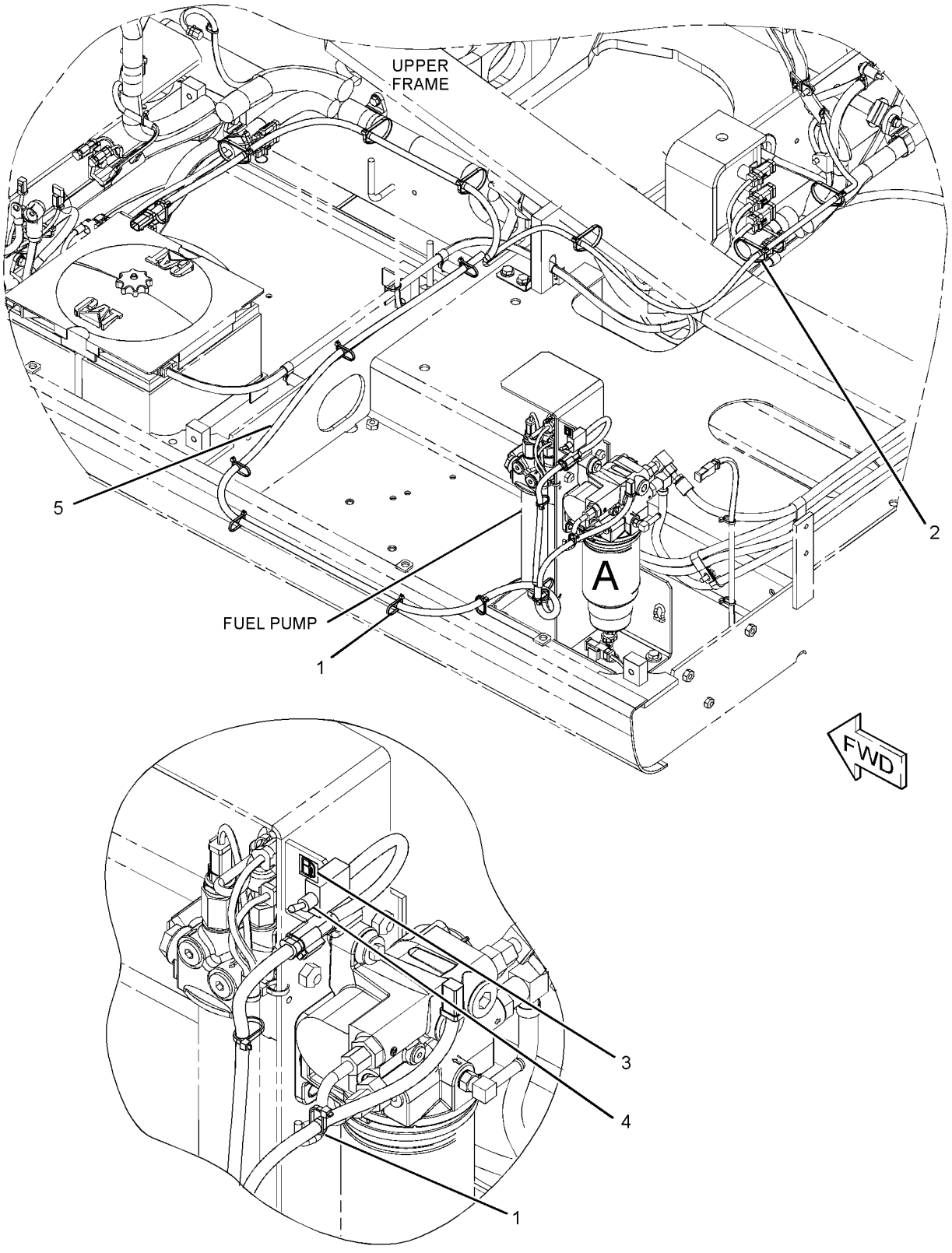

GRAPHIC #1 **<END>** g01160769

204-3461 WIRING GP-GRADE CONTROL

S/N: DFP1-UP; CJX1-UP

PART OF 292-0276 GRADE CONTROL AR-SATELLITE

SMCS-1408, 7220 **i03177182**

NOTE	PART NUMBER	QTY	PART NAME 1 2 3 4 5 6 (PRODUCT LEVEL)	SEE PAGE
M	**9X-2480**	4	BOLT (M6X1X45-MM)	
	177-3941	1	CABLE AS (BUCKET)	
	177-3942	1	CABLE AS (STICK)	
	177-3943	1	CABLE AS (BOOM)	
	286-2484	4	CLAMP	
	6D-4244	2	CLIP	
	111-4836	8	CLIP	
	132-5789	1	CLIP (LADDER)	
M	**8T-4133**	10	NUT (M10X1.5-THD)	
	107-4749	2	PLATE	
	3S-2093	6	STRAP-CABLE	
	7K-1181	16	STRAP-CABLE	
	9X-8256	4	WASHER (6.6X12X2-MM THK)	
	8T-4121	10	WASHER-HARD (11X21X2.5-MM THK)	

M-METRIC PART

<END>

251-0442 WIRING GP-HAMMER–RETURN FILTER

S/N: DFP1-UP; CJX1-UP
PART OF 247-7393 FILTER AR-HYDRAULIC
AN ATTACHMENT

SMCS-1408 **i02407144**

NOTE	REF NO	GRAPHIC REF	PART NUMBER	QTY	PART NAME 1 2 3 4 5 6 (PRODUCT LEVEL)	SEE PAGE
	1	1	**3S-2093**	8	STRAP-CABLE	
	2	1	**7K-1181**	7	STRAP-CABLE	
	3	1	**251-0457**	1	HARNESS AS-PUMP	

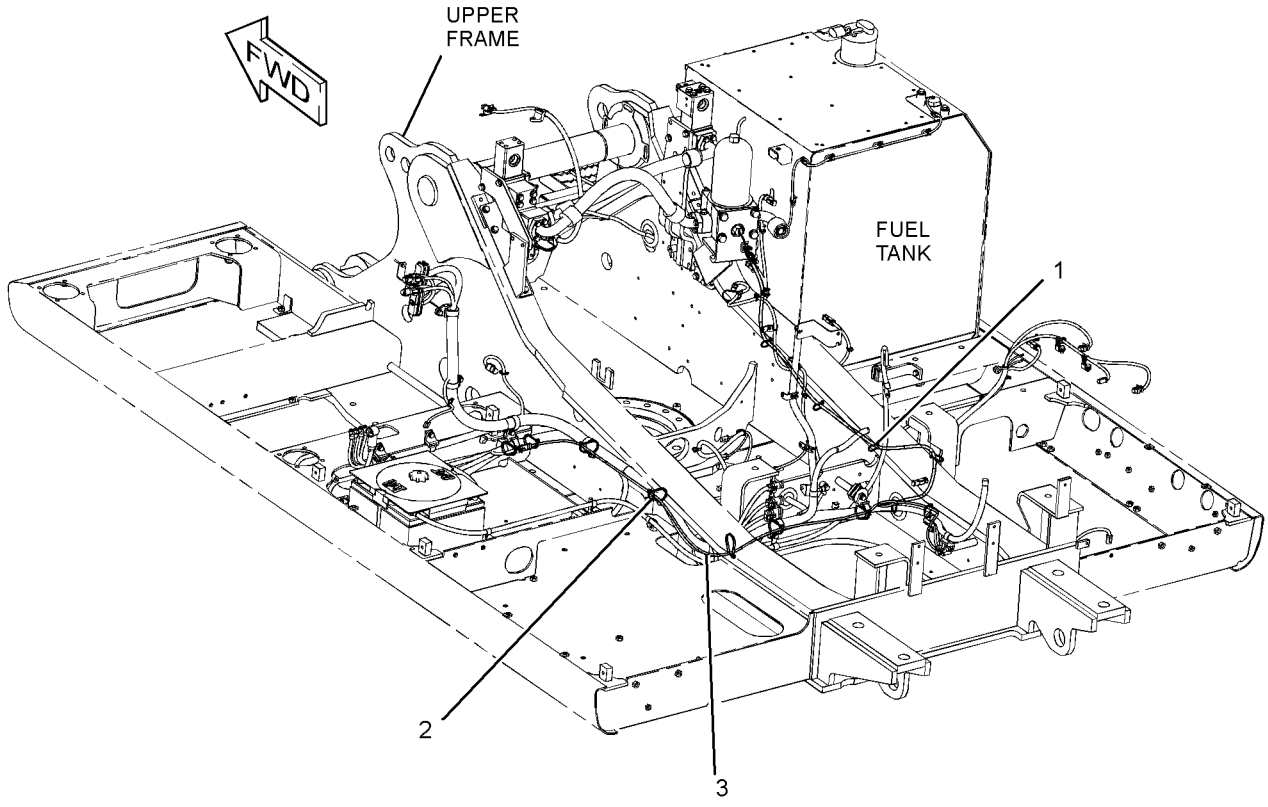

GRAPHIC #1 **<END>** g01247486

ELECTRICAL AND STARTING SYSTEM

251-0430 WIRING GP-PLATFORM

S/N: DFP1-UP; CJX1-UP

PART OF 229-9072 OPERATOR AR

SMCS-1408 **i02528394**

NOTE	REF NO	GRAPHIC REF	PART NUMBER	QTY	PART NAME 1 2 3 4 5 6 (PRODUCT LEVEL)	SEE PAGE
	1	1	**3S-2093**	6	STRAP-CABLE	
	2	1	**7G-1060**	1	STRAP AS-GROUND	
	3	1	**7K-1181**	18	STRAP-CABLE	
	4	1	**111-4836**	4	CLIP	
	5	1	**111-4838**	2	CLIP	
	6	1	**111-4839**	2	STRAP	
	7	1	**116-0118**	14	CLIP	
	8	1	**234-1122**	1	COVER	
	9	1	**251-0299**	1	HARNESS AS-SWITCH (SECONDARY SHUTDOWN)	
		1	**243-4505**	1	RECEPTACLE AS-CONNECTOR (2-PIN)	
	10	1	**267-7592**	1	HARNESS AS-PLATFORM	
		1	**197-4385**	3	DIODE	
		1	**3S-2093**	23	STRAP-CABLE	
		1	**239-7352**	2	PLUG AS-CONNECTOR (6-PIN)	
		1	**243-4505**	2	RECEPTACLE AS-CONNECTOR (2-PIN)	
		1	**243-4507**	1	RECEPTACLE AS-CONNECTOR (4-PIN)	
		1	**243-4508**	4	RECEPTACLE AS-CONNECTOR (6-PIN)	
		1	**243-4509**	1	RECEPTACLE AS-CONNECTOR (8-PIN)	
		1	**243-4510**	2	RECEPTACLE AS-CONNECTOR (12-PIN)	
		1	**247-2693**	1	RECEPTACLE AS-CONNECTOR (6-PIN)	
		1	**102-8802**	5	KIT-RECEPTACLE (2-PIN)	
		1	**102-8804**	1	KIT-RECEPTACLE (4-PIN)	
					(EACH RECEPTACLE KIT INCLUDES RECEPTACLE AS & WEDGE)	
		1	**153-2620**	1	PLUG AS-CONNECTOR (54-PIN, BLACK)	
		1	**155-2272**	1	PLUG AS-CONNECTOR (4-PIN)	
		1	**230-4009**	3	PLUG AS-CONNECTOR (12-PIN)	
		1	**230-4011**	4	PLUG AS-CONNECTOR (2-PIN)	
		1	**230-5010**	3	PLUG AS-CONNECTOR (6-PIN)	
		1	**239-7352**	1	PLUG AS-CONNECTOR (6-PIN)	
		1	**155-2270**	12	KIT-CONNECTING PLUG (2-PIN)	
		1	**155-2271**	1	KIT-CONNECTING PLUG (4-PIN)	
					(EACH PLUG KIT INCLUDES PLUG AS,WEDGE & INTERFACE SEAL)	
M	11	1	**095-0728**	2	SCREW-MACHINE (M4X0.7X12-MM)	
	12	1	**096-6166**	2	WASHER-HARD (4.5X9X1-MM THK)	
	13	1	**3E-5169**	1	GUARD-SWITCH	
	14	1	**4D-1836**	1	SWITCH AS-TOGGLE (SECONDARY SHUTDOWN)	
M	15	1	**7X-2621**	7	BOLT (M10X1.5X12-MM)	
	16	1	**8T-4121**	14	WASHER-HARD (11X21X2.5-MM THK)	
M	17	1	**8T-4137**	7	BOLT (M10X1.5X20-MM)	

M-METRIC PART

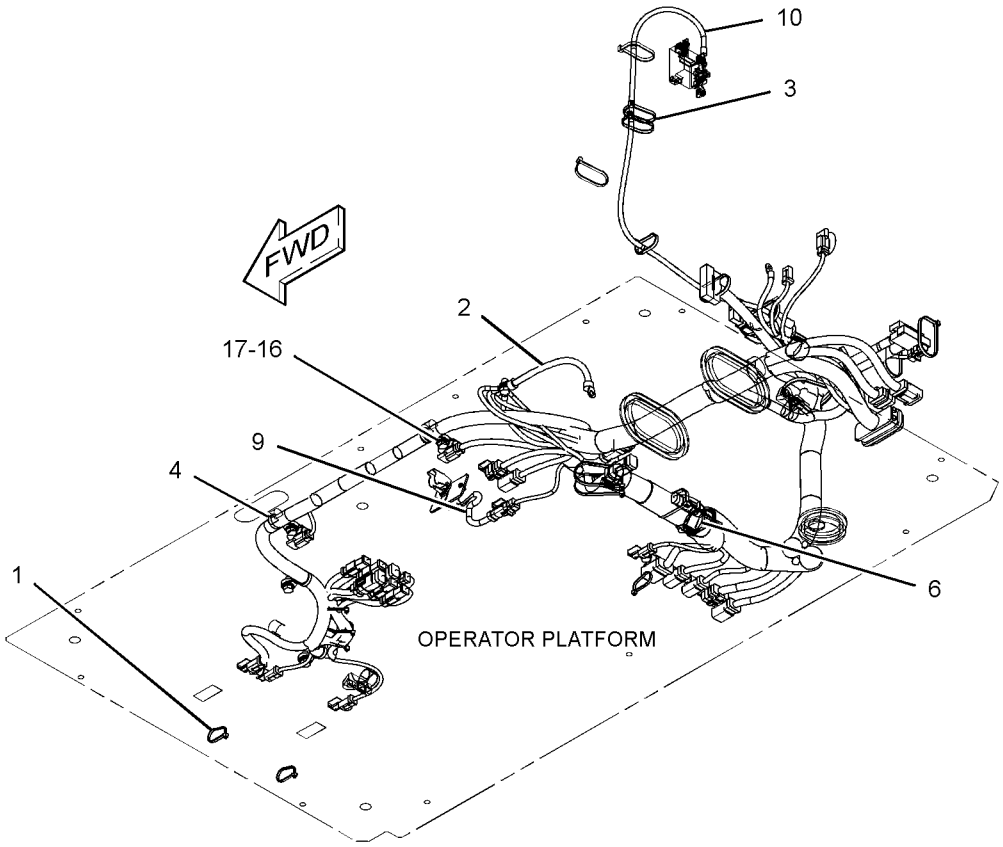

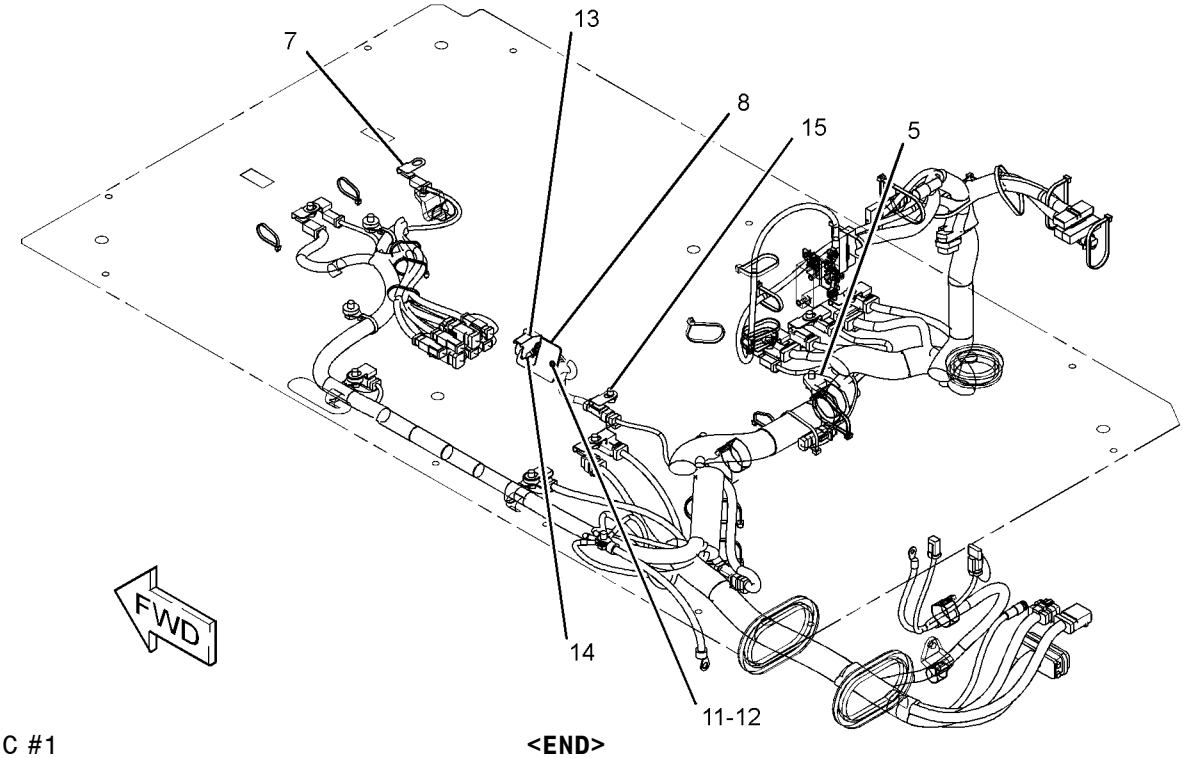

GRAPHIC #1 **<END>** g01152308

231-1764 WIRING GP-QUICK COUPLER

S/N: DFP1-UP; CJX1-UP
PART OF 253-6719 CONTROL AR-COUPLER
AN ATTACHMENT

SMCS-1408, 6129 **i02555460**

NOTE	REF NO	GRAPHIC REF	PART NUMBER	QTY	PART NAME 1 2 3 4 5 6 (PRODUCT LEVEL)	SEE PAGE
	1	1	**3S-2093**	7	STRAP-CABLE	
	2	1	**7K-1181**	6	STRAP-CABLE	
	3	1	**267-7961**	1	HARNESS AS-SOLENOID	
		1	**230-4011**	1	PLUG AS-CONNECTOR (2-PIN)	
		1	**243-4505**	1	RECEPTACLE AS-CONNECTOR (2-PIN)	

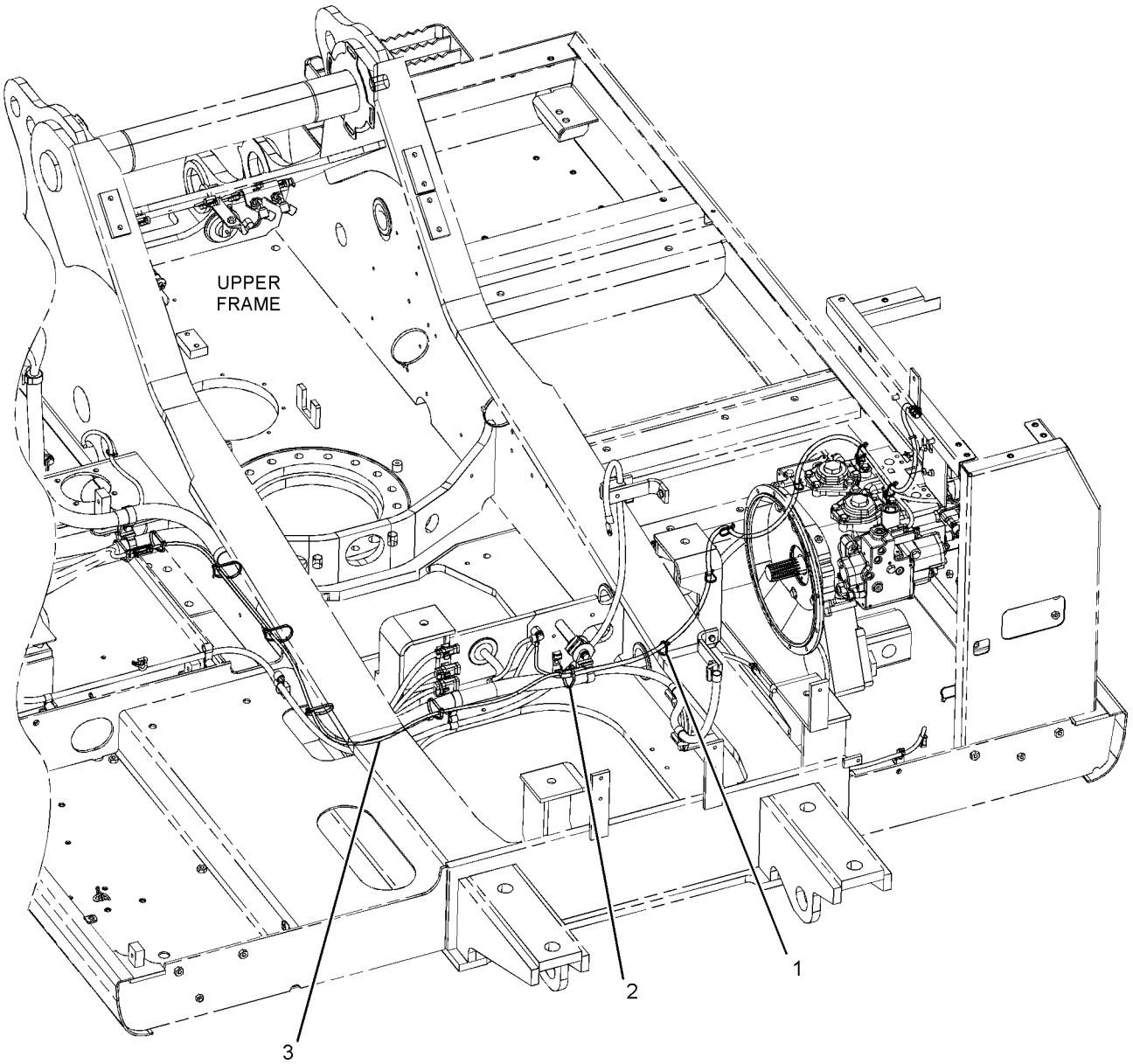

REAR VIEW
(UPPER LEFT)

GRAPHIC #1 **<END>** g01242553

238-2485 WIRING GP-COUPLER

S/N: DFP1-UP; CJX1-UP
PART OF 253-6719 CONTROL AR-COUPLER
AN ATTACHMENT

SMCS-1408, 6129 **i02517794**

NOTE	REF NO	GRAPHIC REF	PART NUMBER	QTY	PART NAME 1 2 3 4 5 6 (PRODUCT LEVEL)	SEE PAGE
Y	1	1	*238-2478*	1	SWITCH GP-TOGGLE (QUICK COUPLER)	360
	2	1	**259-4884**	1	BRACKET AS	
	3	1	**259-7180**	1	COVER	
M	4	1	**9X-2042**	3	SCREW-TRUSS HEAD (M6X1X12-MM)	

M-METRIC PART
Y-SEPARATE ILLUSTRATION

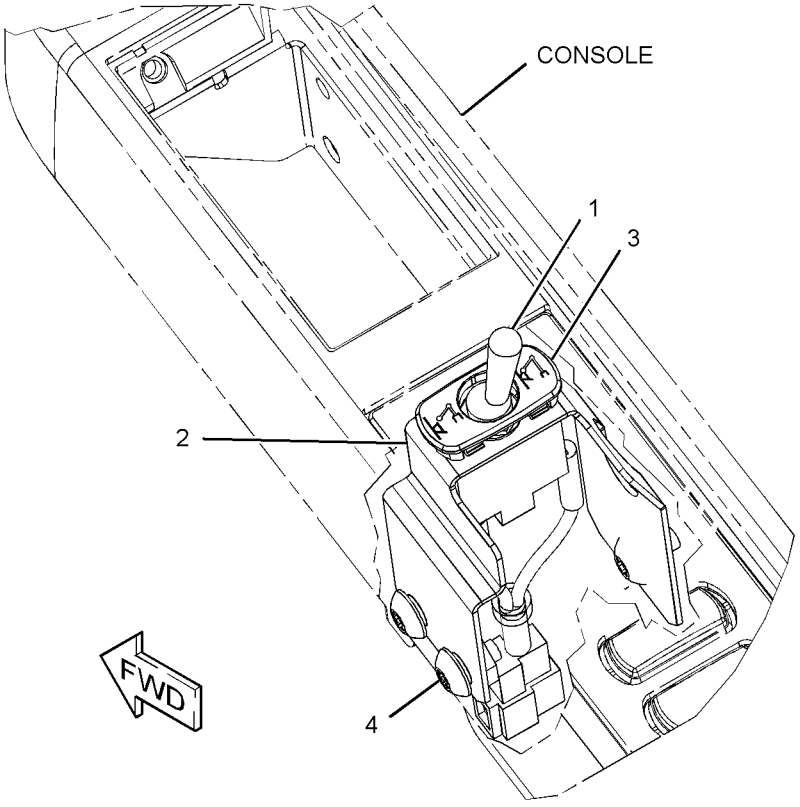

GRAPHIC #1 **<END>** g01259744

227-6132 FINAL DRIVE GP

S/N: DFP1-340; CJX1-306

PART OF 199-4593 POWER TRAIN AR

SMCS-4050 **i02292808**

NOTE	REF NO	GRAPHIC REF	PART NUMBER	QTY	PART NAME 1 2 3 4 5 6 (PRODUCT LEVEL)	SEE PAGE
Y	1	1	*215-9982*	1	MOTOR & MTG GP-TRAVEL	961
Y	2	1	**227-6133**	1	FINAL DRIVE GP	434

Y-SEPARATE ILLUSTRATION

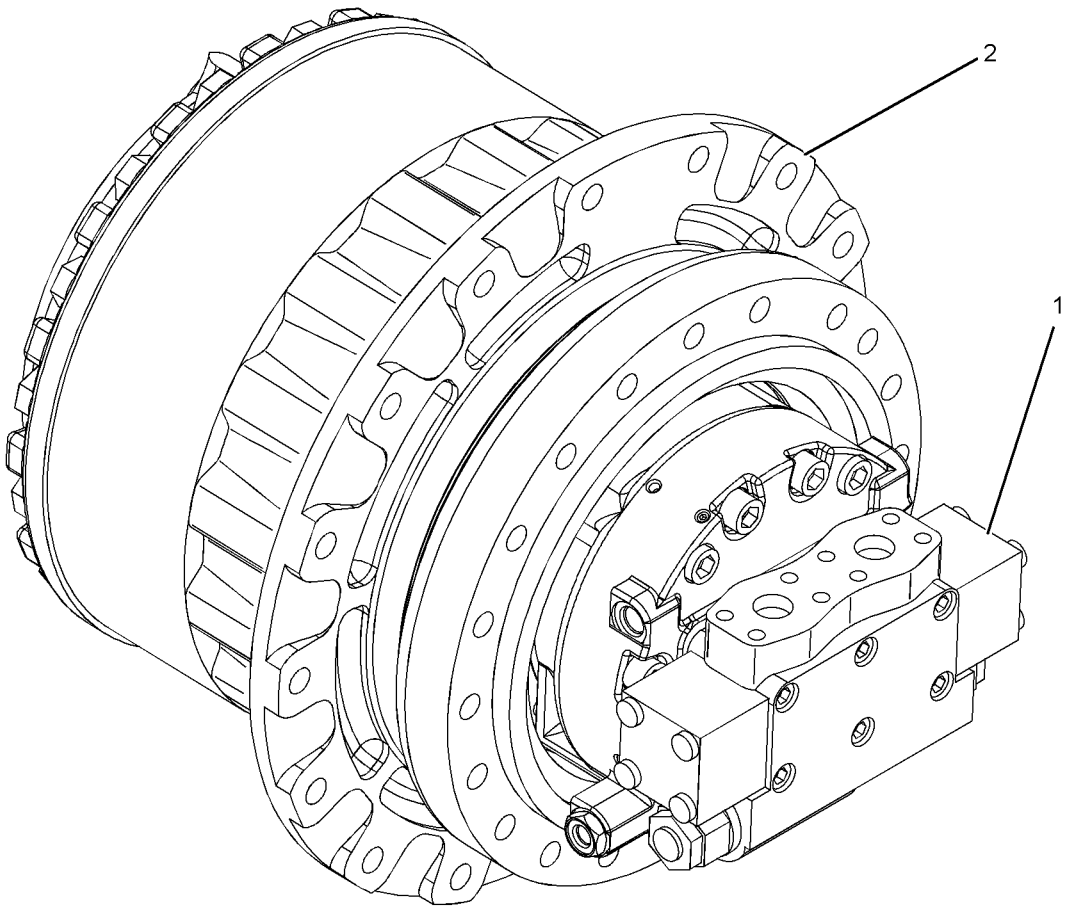

GRAPHIC #1 **<END>** g01165701

227-6133 DRIVE GP-FINAL—WITHOUT MOTOR

S/N: DFP1-340; CJX1-306

PART OF 227-6132 DRIVE GP-FINAL

SMCS-4050 **i02292810**

NOTE	REF NO	GRAPHIC REF	PART NUMBER	QTY	PART NAME 1 2 3 4 5 6 (PRODUCT LEVEL)	SEE PAGE
	1	1	**3E-2338**	2	PLUG-PIPE	
	2	1	**094-0578**	1	PLATE (8-MM THK)	
	3	1	**094-0579**	1	PLATE (9-MM THK)	
	4	1	**094-0580**	1	PLATE (10-MM THK)	
M	5	2	**094-1528**	12	WASHER (53X84X1-MM THK)	
J	6	1	**168-8452**	2	BALL BEARING	
	7	1	**169-5589**	1	GEAR-SUN (24-TEETH)	
	8	1	**169-5590**	1	GEAR-SUN (24-TEETH)	
	9	2	**169-5592**	3	GEAR-PLANETARY (23-TEETH)	
	10	2	**169-5593**	3	GEAR-PLANETARY (23-TEETH)	
	11	1	**169-5594**	1	GEAR-RING (65-TEETH)	
	12	2	**169-5601**	3	SHAFT-PLANETARY	
	13	2	**169-5602**	3	SHAFT-PLANETARY	
J	14	1	**169-5608**	1	HOUSING	
	15	2	**171-9297**	6	WASHER (34.3X62X1-MM THK)	
	16	2	**191-2569**	3	BEARING AS (CAGED ROLLER)	
	17	2	**191-2570**	6	BEARING AS (CAGED ROLLER)	
	18	1	**191-2571**	1	CARRIER-PLANETARY	
	19	1	**191-2674**	1	GEAR-SUN (25-TEETH)	
	20	2	**191-2675**	3	GEAR-PLANETARY (20-TEETH)	
	21	1	**191-2676**	1	GEAR-RING (72-TEETH)	
	22	2	**191-2677**	3	BEARING AS (CAGED ROLLER)	
	23	1	**191-2678**	1	CARRIER AS	
	24	1	**199-4503**	1	COVER	
J	25	1	**207-1571**	1	SEAL GP-DUO-CONE	
		1	**214-3570**	2	RING-TORIC	
J	26	1	**227-6117**	1	HOUSING-MOTOR	
J	27	1	**227-6118**	1	STOP	
	28	1	**227-6119**	1	CARRIER-PLANETARY	
J	29	1	**227-6123**	2	DOWEL	
J	30	1	**227-6124**	2	PLATE-WASHER	
	31	1	**093-1731**	2	RING-RETAINING	
	32	2	**095-0891**	6	PIN-SPRING	
	33	2	**096-0433**	3	RING-RETAINING	
M	34	1	**096-3216**	2	SETSCREW-SOCKET (M12X1.75X12-MM)	
	35	1	**171-9298**	1	SEAL-O-RING	
M	36	1	**179-8733**	16	BOLT (M20X2.5X170-MM)	
	37	1	**7M-8485**	2	SEAL-O-RING	
	38	1	**7Y-0595**	3	SPACER (58X79.6X6-MM THK)	
JM	39	1	**8T-0293**	4	BOLT (M12X1.75X20-MM)	
	40	1	**8T-4123**	16	WASHER (22X35X3.5-MM THK)	
M	41	1	**9X-6032**	12	BOLT-SOCKET HEAD (M10X1.5X30-MM)	
					AVAILABLE REPAIR KIT(S):	
J			**227-6134**	1	KIT-HOUSING (FINAL DRIVE)	

J-KIT MARKED J SERVICES PART(S) MARKED J
M-METRIC PART

227-6133 DRIVE GP-FINAL *(contd.)* **i02292810**

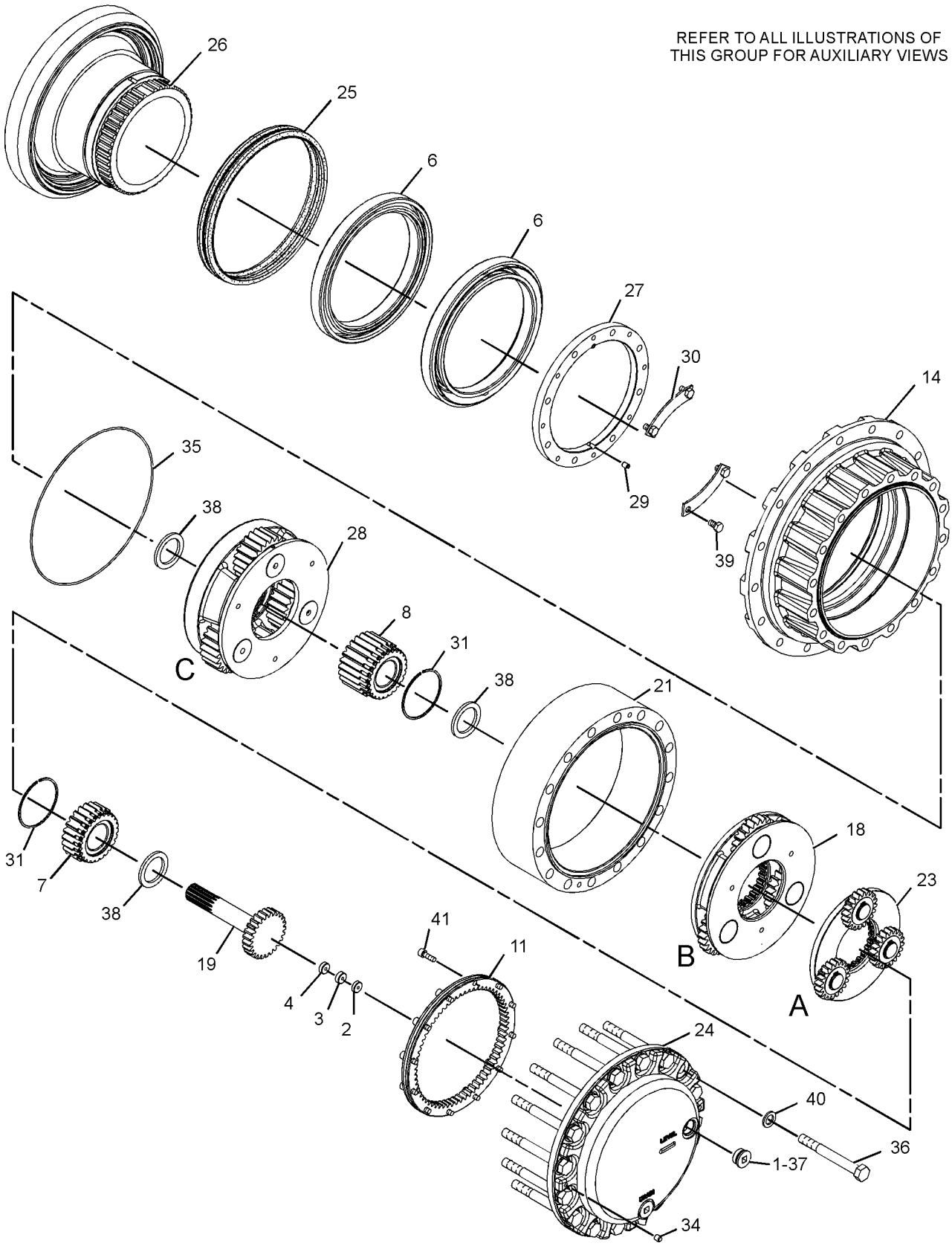

GRAPHIC #1 g01166658

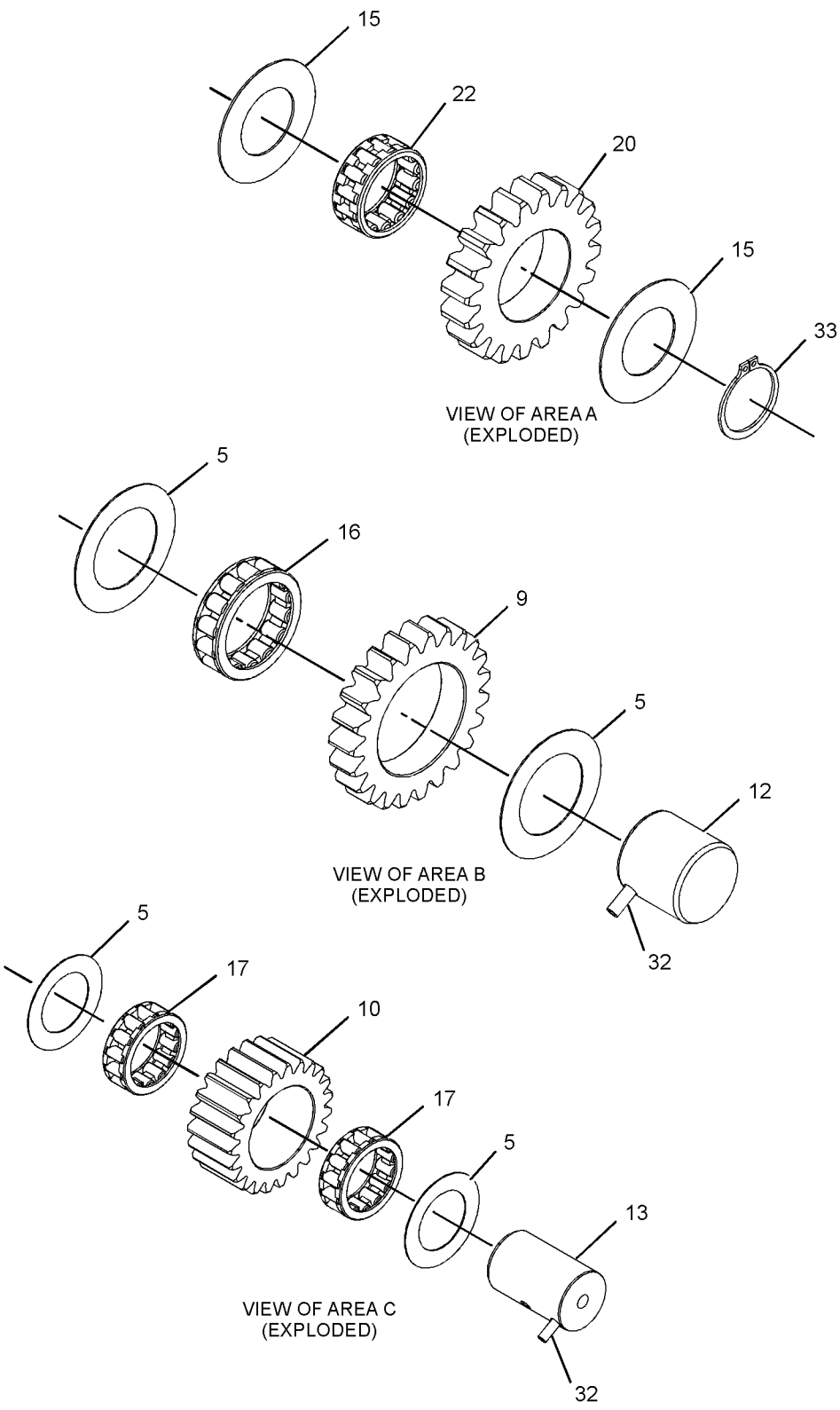

GRAPHIC #2 **<END>** g01168324

267-6878 DRIVE GP-FINAL—WITHOUT MOTOR

S/N: DFP341-UP; CJX307-UP

PART OF 267-6913 DRIVE GP-FINAL

SMCS-4050 **i02973843**

NOTE	REF NO	GRAPHIC REF	PART NUMBER	QTY	PART NAME 1 2 3 4 5 6 (PRODUCT LEVEL)	SEE PAGE
	1	1	**3E-2338**	2	PLUG-PIPE	
BJ	2	1	**7Y-0752**	1	SHIM (0.8-MM THK)	
BJ	3		**7Y-0753**	1	SHIM (1-MM THK)	
BJ	4		**7Y-0754**	1	SHIM (1.6-MM THK)	
B	5	1	**094-0578**	1	PLATE (8-MM THK)	
B	6	1	**094-0579**	1	PLATE (9-MM THK)	
B	7	1	**094-0580**	1	PLATE (10-MM THK)	
M	8	1	**094-1528**	12	WASHER (53X84X1-MM THK)	
J	9	1	**114-1540**	4	PIN-DOWEL	
J	10	1	**168-8452**	2	BALL BEARING	
	11	1	**169-5589**	1	GEAR-SUN (24-TEETH)	
	12	1	**169-5590**	1	GEAR-SUN (24-TEETH)	
	13	1	**169-5592**	3	GEAR-PLANETARY (23-TEETH)	
	14	1	**169-5593**	3	GEAR-PLANETARY (23-TEETH)	
	15	1	**169-5594**	1	GEAR-RING (65-TEETH)	
	16	1	**169-5601**	3	SHAFT-PLANETARY	
	17	1	**169-5602**	3	SHAFT-PLANETARY	
	18	1	**171-9297**	6	WASHER (34.3X62X1-MM THK)	
	19	1	**191-2569**	3	BEARING AS (CAGED ROLLER)	
	20	1	**191-2570**	6	BEARING AS (CAGED ROLLER)	
	21	1	**191-2571**	1	CARRIER-PLANETARY	
	22	1	**191-2674**	1	GEAR-SUN (25-TEETH)	
	23	1	**191-2675**	3	GEAR-PLANETARY (20-TEETH)	
	24	1	**191-2676**	1	GEAR-RING (72-TEETH)	
	25	1	**191-2677**	3	BEARING AS (CAGED ROLLER)	
	26	1	**191-2678**	1	CARRIER AS	
	27	1	**199-4503**	1	COVER	
J	28	1	**207-1571**	1	SEAL GP-DUO-CONE	
		1	**214-3570**	2	RING-TORIC	
J	29	1	**267-6797**	1	HOUSING-MOTOR	
	30	1	**267-6799**	1	CARRIER-PLANETARY	
J	31	1	**267-6800**	1	GEAR-COUPLING	
BJ	32		**267-6863**	1	SHIM (0.75-MM THK)	
BJ	33		**267-6864**	1	SHIM (0.85-MM THK)	
BJ	34		**267-6865**	1	SHIM (0.9-MM THK)	
BJ	35		**267-6866**	1	SHIM (0.95-MM THK)	
BJ	36		**267-6867**	1	SHIM (1.2-MM THK)	
BJ	37		**267-6868**	1	SHIM (1.4-MM THK)	
BJ	38		**267-6869**	1	SHIM (1.8-MM THK)	
BJ	39		**267-6870**	1	SHIM (2-MM THK)	
BJ	40		**267-6871**	1	SHIM (2.3-MM THK)	
J	41	1	**267-6879**	1	HOUSING	
	42	1	**093-1731**	2	RING-RETAINING	
	43	1	**095-0891**	6	PIN-SPRING	
	44	1	**096-0433**	3	RING-RETAINING	
M	45	1	**096-3216**	2	SETSCREW-SOCKET (M12X1.75X12-MM)	
	46	1	**171-9298**	1	SEAL-O-RING	
M	47	1	**179-8733**	16	BOLT (M20X2.5X170-MM)	
	48	1	**7M-8485**	2	SEAL-O-RING	
	49	1	**7Y-0595**	3	SPACER (58X79.6X6-MM THK)	
JM	50	1	**7Y-5217**	16	BOLT-SOCKET HEAD (M20X2.5X70-MM)	
J	51	1	**8T-3282**	16	WASHER-HARD (22X35X3.5-MM THK)	
	52	1	**8T-4123**	16	WASHER (22X35X3.5-MM THK)	
M	53	1	**9X-6032**	12	BOLT-SOCKET HEAD (M10X1.5X30-MM)	
B	54	1	**1U-8846**		SEALANT-GASKET	

267-6878 DRIVE GP-FINAL *(contd.)* i02973843

NOTE	REF NO	GRAPHIC REF	PART NUMBER	QTY	PART NAME 1 2 3 4 5 6 (PRODUCT LEVEL)	SEE PAGE
					AVAILABLE REPAIR KIT(S):	
J			**267-6885**	1	KIT-FINAL DRIVE (HOUSING)	

B-USE AS REQUIRED
J-KIT MARKED J SERVICES PART(S) MARKED J
M-METRIC PART

267-6878 DRIVE GP-FINAL *(contd.)* **i02973843**

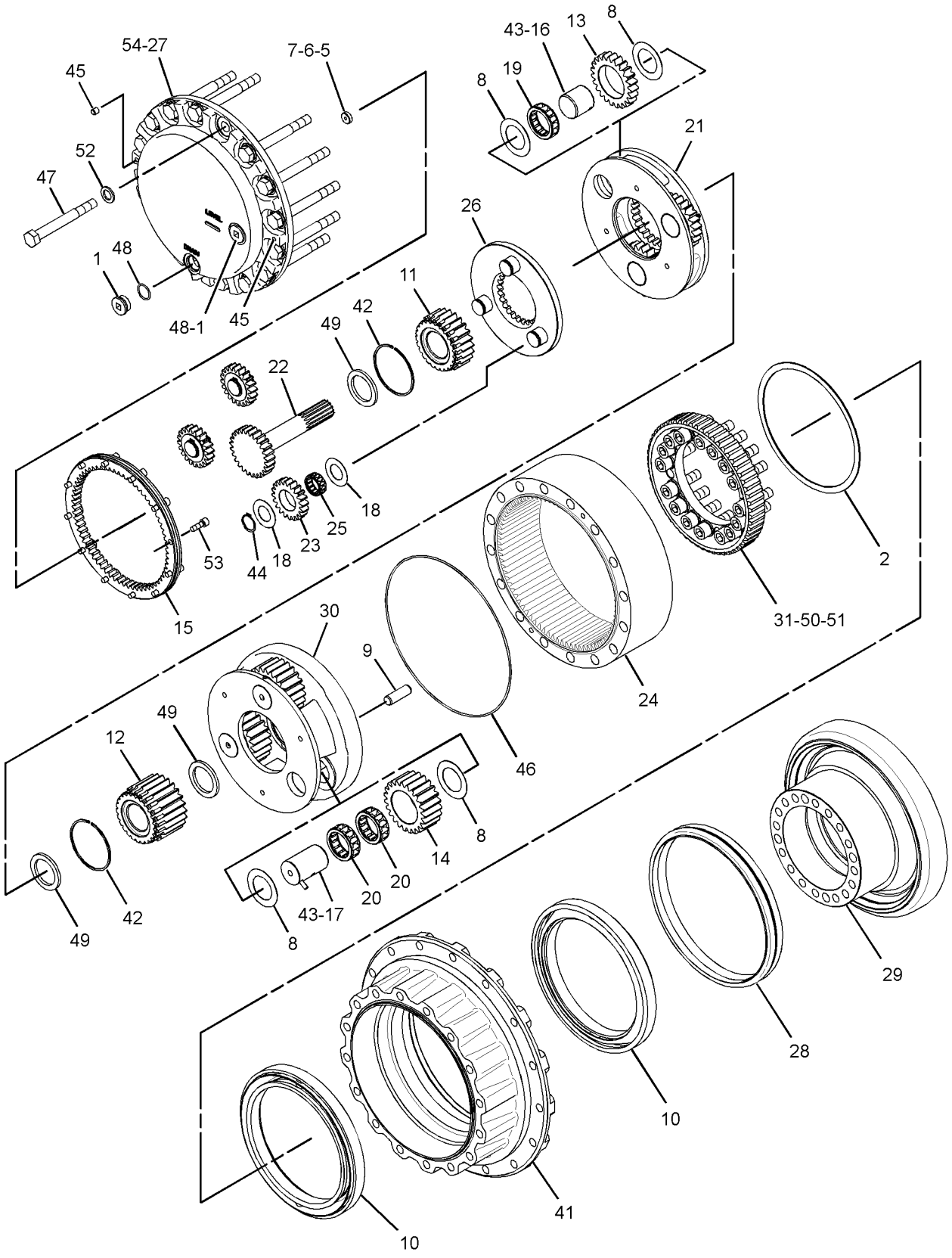

GRAPHIC #1 **<END>** g01453584

267-6913 FINAL DRIVE GP–WITH MOTOR

S/N: DFP341-UP; CJX307-UP
PART OF 199-4593 POWER TRAIN AR
ALSO FIELD INSTALLATION

SMCS-4050 **i02895204**

NOTE	REF NO	GRAPHIC REF	PART NUMBER	QTY	PART NAME 1 2 3 4 5 6 (PRODUCT LEVEL)	SEE PAGE
Y	1	1	*215-9982*	1	MOTOR & MTG GP-TRAVEL	961
Y	2	1	**267-6878**	1	FINAL DRIVE GP	437

Y-SEPARATE ILLUSTRATION

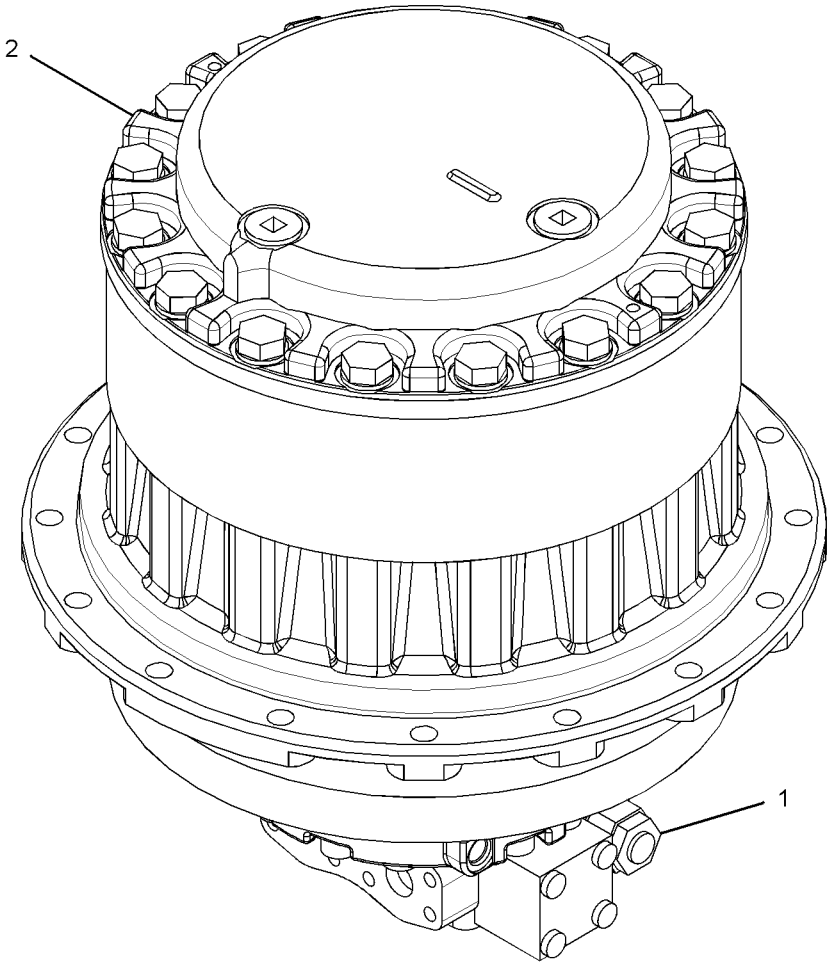

GRAPHIC #1 **<END>** g01442820

199-4593 POWER TRAIN AR

S/N: DFP1-UP; CJX1-UP

PART OF 240-3961, 240-3962 GENERAL AR

SMCS-3000, 4000 **i02988354**

NOTE	PART NUMBER	QTY	PART NAME 1 2 3 4 5 6 (PRODUCT LEVEL)	SEE PAGE
Y	*191-2692*	1	DRIVE GP-SWING (WITH MOTOR)	643
Y	*199-4695*	1	FASTENER GP-SWING & FINAL DR	646
Y	*227-6132*	2	FINAL DRIVE GP	433
			S/N: CJX1-306; DFP1-340	
Y	*267-6913*	1	FINAL DRIVE GP	440
			S/N: CJX307-UP; DFP341-UP	
Y	*145-3042*	2	SPROCKET GP	442

Y-SEPARATE ILLUSTRATION

<END>

145-3042 SPROCKET GP

S/N: DFP1-UP; CJX1-UP
NON-SEGMENTED
PART OF 199-4593 POWER TRAIN AR

SMCS-4164 **i01831999**

NOTE	REF NO	GRAPHIC REF	PART NUMBER	QTY	PART NAME 1 2 3 4 5 6 (PRODUCT LEVEL)	SEE PAGE
	1	1	**8E-9805**	1	SPROCKET-TRACK	
M	2	1	**7X-2562**	16	BOLT (M20X2.5X45MM)	

M-METRIC PART

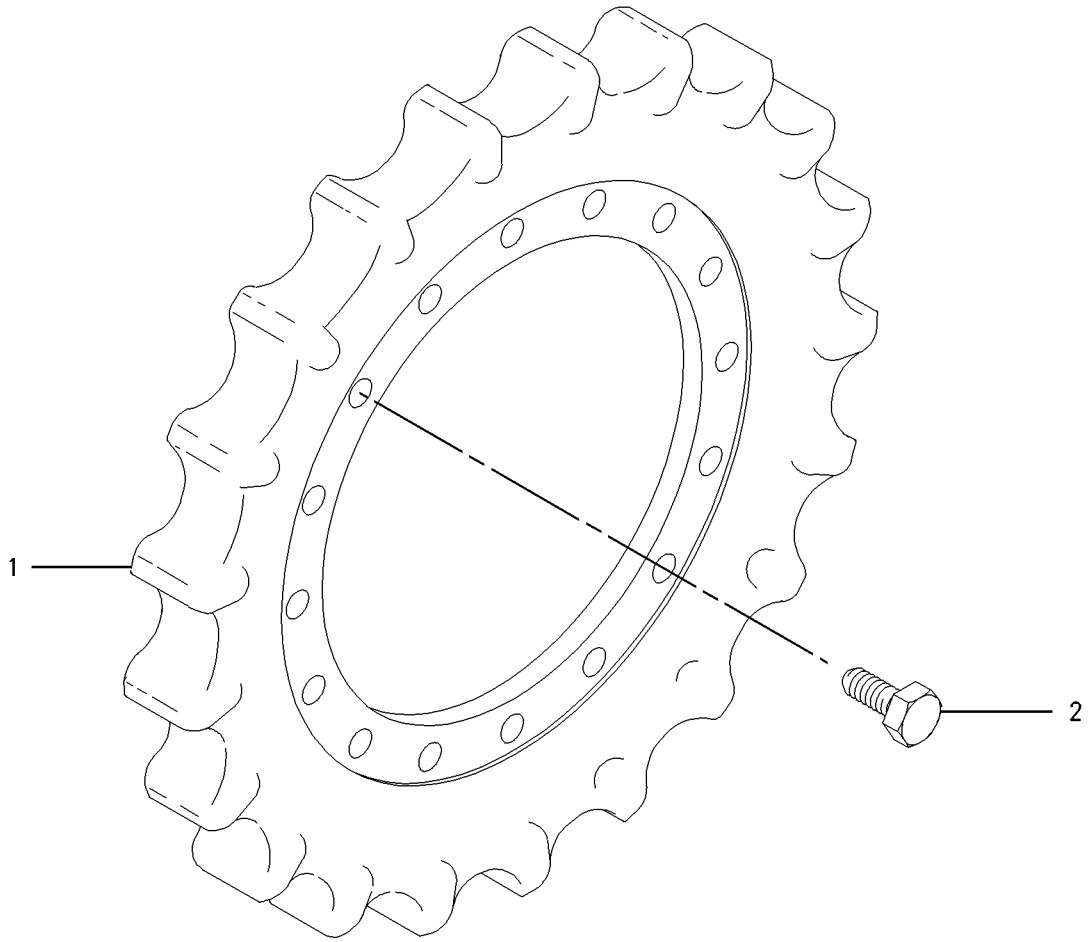

GRAPHIC #1 **<END>** g00935714

223-3040 BOX & MTG GP-STORAGE

S/N: DFP1-UP; CJX1-UP

PART OF 240-3970, 240-3971 CHASSIS AR

SMCS-7268 **i02347066**

NOTE	REF NO	GRAPHIC REF	PART NUMBER	QTY	PART NAME 1 2 3 4 5 6 (PRODUCT LEVEL)	SEE PAGE
Y	1	1	**223-3041**	1	BOX GP-STORAGE	444
M	2	1	**135-8577**	4	BOLT AS	

M-METRIC PART
Y-SEPARATE ILLUSTRATION

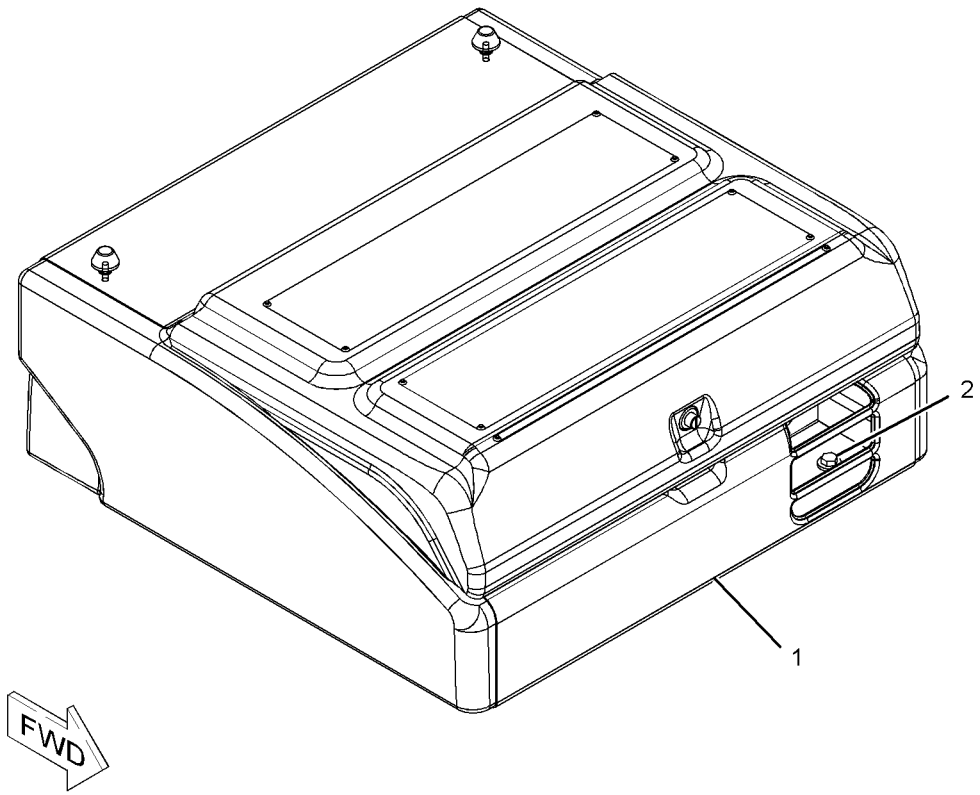

GRAPHIC #1 **<END>** g01150412

FRAME AND BODY

223-3041 BOX GP-STORAGE

S/N: DFP1-UP; CJX1-UP

PART OF 223-3040 BOX & MTG GP-STORAGE

SMCS-7268 **i02479480**

NOTE	REF NO	GRAPHIC REF	PART NUMBER	QTY	PART NAME 1 2 3 4 5 6 (PRODUCT LEVEL)	SEE PAGE
	1	1	**4I-2187**	1	SUPPORT AS	
	2	1	**236-3669**	1	LOCK AS	
	3	1	**236-3670**	1	STRIKER AS	
	4	1	**236-3671**	1	SEAL	
	5	1	**236-9435**	1	BOX AS	
	6	1	*236-9437*	1	COVER AS	
	6A	1	**3D-9143**	2	HINGE-BUTT	
	7	1	**236-9438**	1	PLUNGER AS	
	8	1	**236-9440**	1	SHEET	
	9	1	**273-7964**	2	MOUNT	
	10	1	**095-0843**	1	PIN-COTTER	
	11	1	**096-3780**	1	PIN-CLEVIS	
M	12	1	**105-3487**	4	BOLT-SOCKET HEAD (M6X1X20-MM)	
	13	1	**170-9360**	1	GROMMET	
M	15	1	**5C-9553**	3	BOLT (M6X1X16-MM)	
	16	1	**5P-1075**	4	WASHER-HARD (10.2X22.5X3-MM THK)	
	17	1	**5P-4116**	1	WASHER-HARD (8.8X20.5X2-MM THK)	
M	18	1	**8T-4133**	4	NUT (M10X1.5-THD)	
M	19	1	**8T-4200**	2	BOLT (M8X1.25X16-MM)	
	20	1	**8T-4224**	2	WASHER-HARD (8.8X16X2-MM THK)	
	21	1	**9X-8256**	7	WASHER (6.6X12X2-MM THK)	
	22	1	**278-3581**	4	CUSHION	
B	23	1	**8T-4223**	2	WASHER-HARD (13.5X25.5X3-MM THK)	

B-USE AS REQUIRED
M-METRIC PART

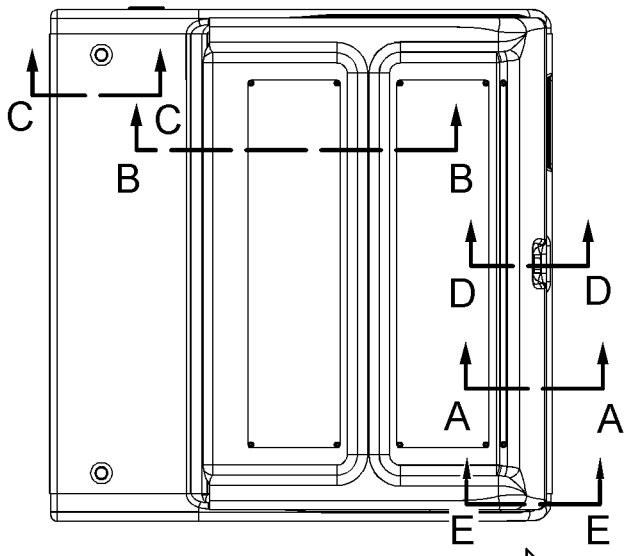

TOP VIEW

FWD

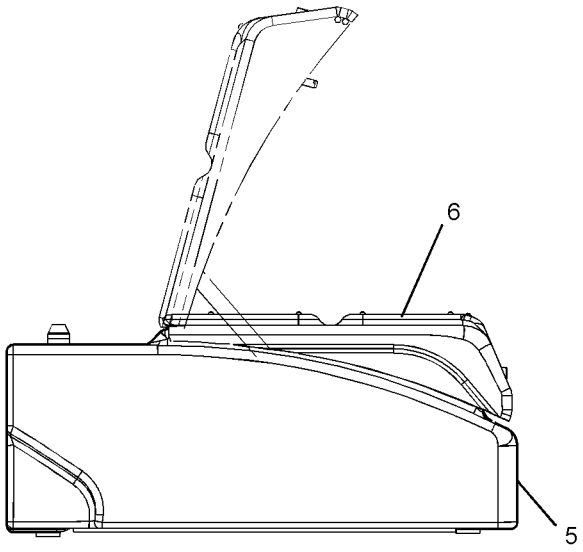

RIGHT SIDE VIEW

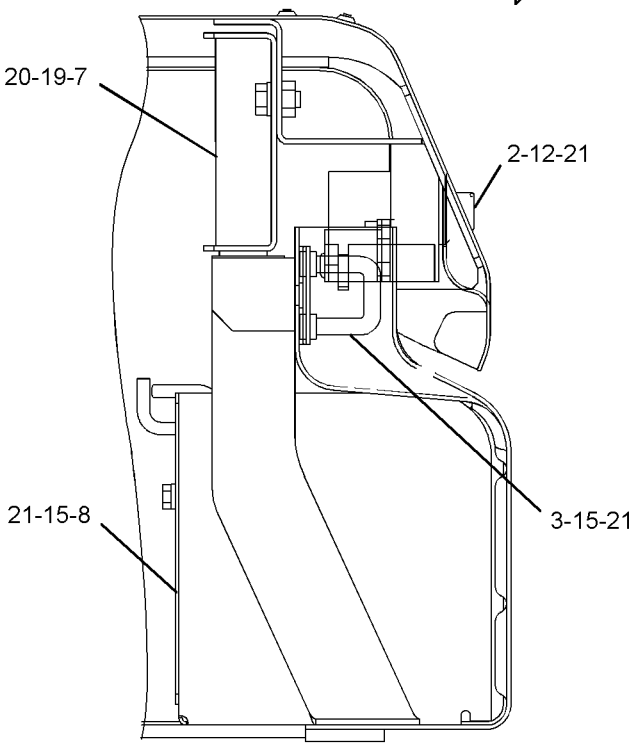

SECTION A-A

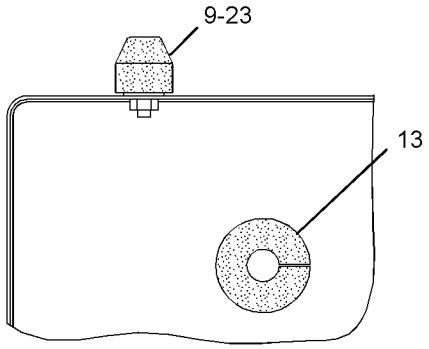

SECTION C-C

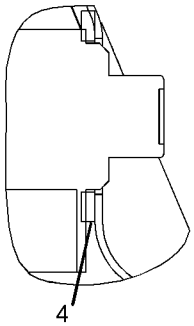

SECTION D-D

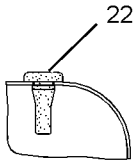

SECTION E-E

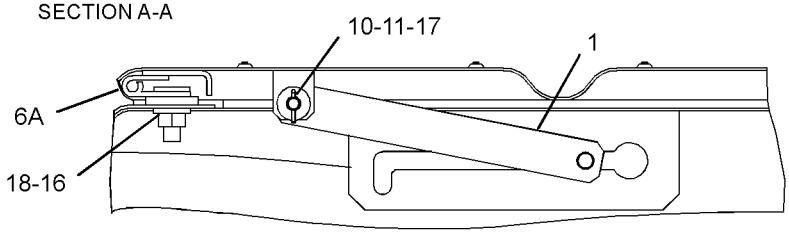

SECTION B-B

GRAPHIC #1

<END>

g01238343

248-1669 BUMPER GP–STANDARD UPPER FRAME

S/N: DFP1-UP; CJX1-UP

AN ATTACHMENT

SMCS-7156 **i02408071**

NOTE	REF NO	GRAPHIC REF	PART NUMBER	QTY	PART NAME 1 2 3 4 5 6 (PRODUCT LEVEL)	SEE PAGE
	1	1	**180-7521**	1	BUMPER AS	
	2	1	**180-7525**	2	BUMPER AS	
	3	1	**180-7529**	1	BUMPER AS	
	4	1	**180-7537**	1	BUMPER AS	
	5	1	**186-5611**	1	BUMPER AS	
	6	1	**186-5614**	1	BUMPER AS	
	7	1	**260-2286**	1	FRAME AS-UPPER	
	8	1	**8T-4223**	16	WASHER-HARD (13.5X25.5X3-MM THK)	
M	9	1	**8T-4244**	16	NUT (M12X1.75-THD)	

M-METRIC PART

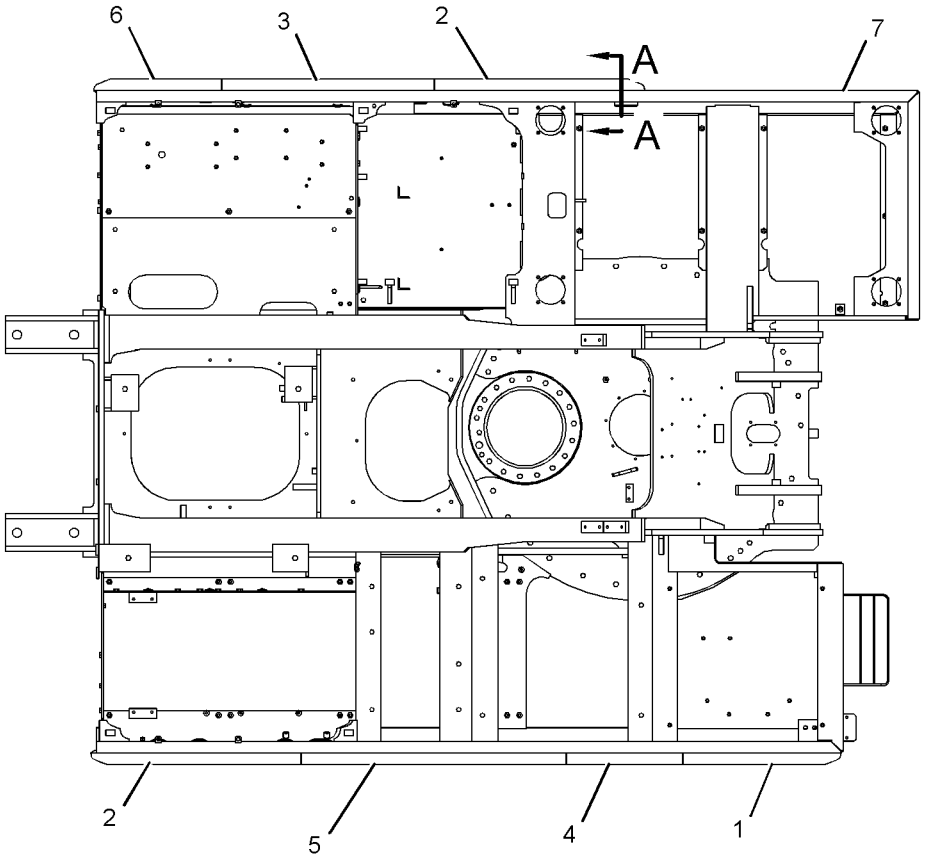

TOP VIEW

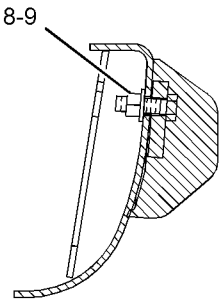

SECTION A-A

GRAPHIC #1 **<END>** g01206623

244-8139 COUNTERWEIGHT & MOUNTING GP

S/N: DFP1-UP; CJX1-UP
PART OF 240-3970, 240-3971 CHASSIS AR
TYPE 1

SMCS-7056 **i02394753**

NOTE	REF NO	GRAPHIC REF	PART NUMBER	QTY	PART NAME 1 2 3 4 5 6 (PRODUCT LEVEL)	SEE PAGE
Y	1	1	*244-8140*	1	COUNTERWEIGHT GP	454
	2	1	**248-9337**	4	SPACER (39X75X20-MM THK)	
M	3	1	**4I-0191**	4	BOLT (M36X4X181-MM)	

M-METRIC PART
Y-SEPARATE ILLUSTRATION

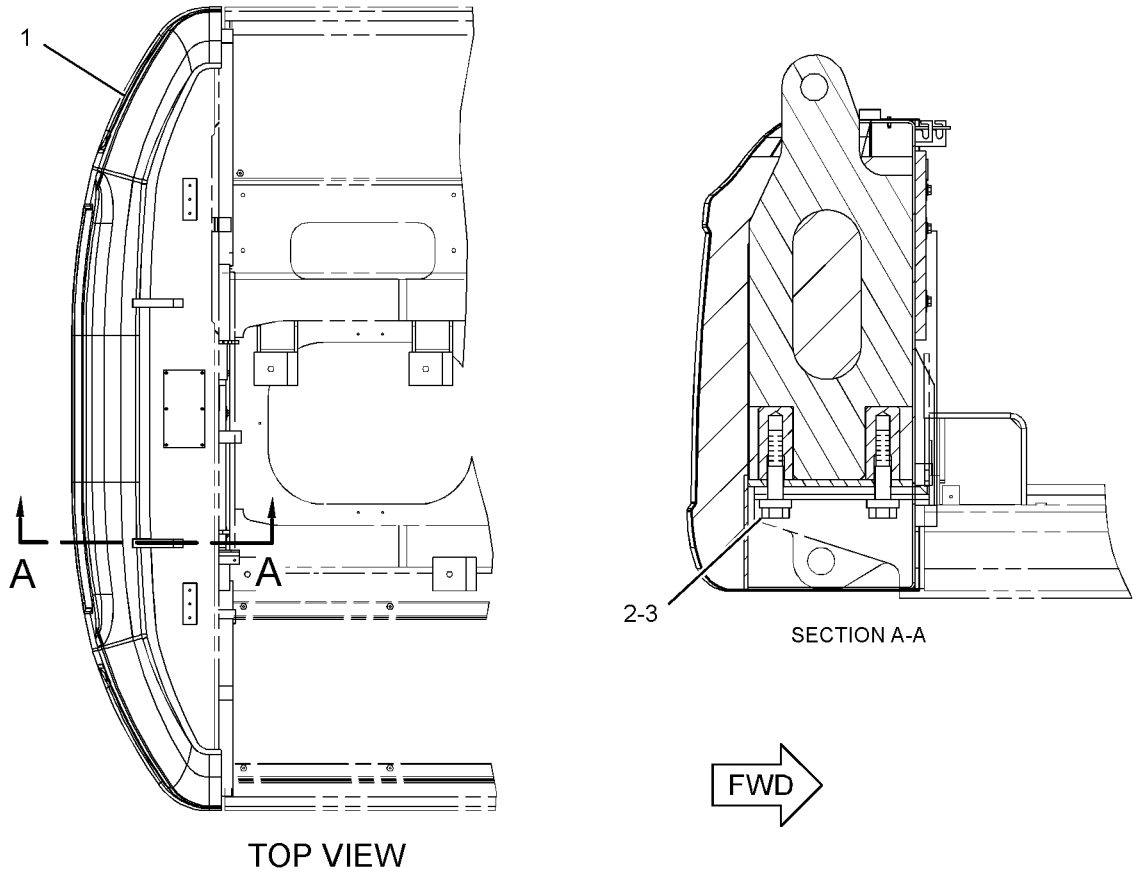

TOP VIEW

SECTION A-A

GRAPHIC #1 **<END>** g01196356

244-8139 COUNTERWEIGHT & MOUNTING GP

S/N: DFP1-UP; CJX1-UP
PART OF 240-3970, 240-3971 CHASSIS AR
TYPE 2

SMCS-7056 **i03173024**

NOTE	REF NO	GRAPHIC REF	PART NUMBER	QTY	PART NAME 1 2 3 4 5 6 (PRODUCT LEVEL)	SEE PAGE
CY	1	1	*330-1225*	1	COUNTERWEIGHT GP	466
	2	1	**248-9337**	4	SPACER (39X75X20-MM THK)	
M	3	1	**4I-0191**	4	BOLT (M36X4X181-MM)	

C-CHANGE FROM PREVIOUS TYPE
M-METRIC PART
Y-SEPARATE ILLUSTRATION

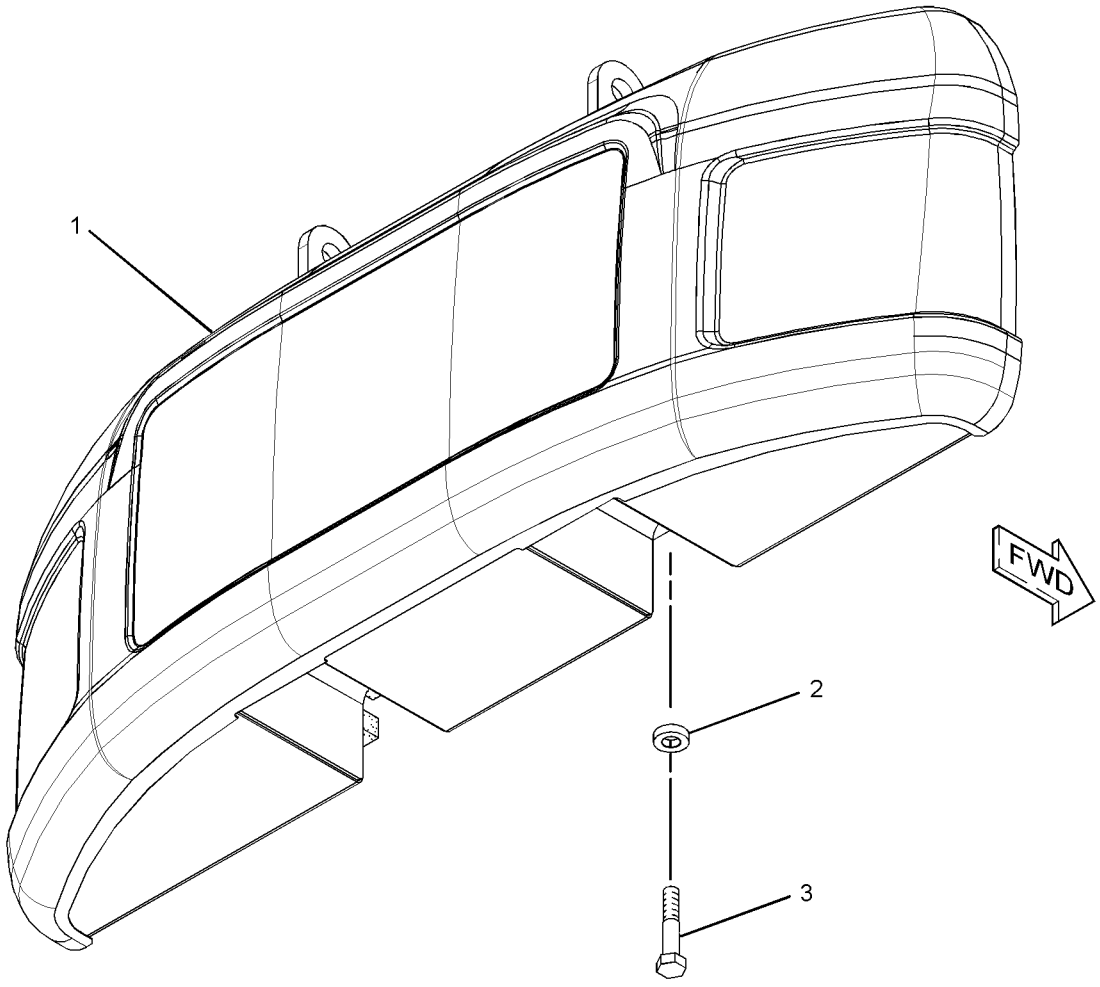

GRAPHIC #1 **<END>** g01582833

244-8143 COUNTERWEIGHT & MOUNTING GP

S/N: DFP1-UP; CJX1-UP
PART OF 290-1903 COUNTERWEIGHT AR
AN ATTACHMENT
TYPE 1

SMCS-7056 **i02406104**

NOTE	REF NO	GRAPHIC REF	PART NUMBER	QTY	PART NAME 1 2 3 4 5 6 (PRODUCT LEVEL)	SEE PAGE
	1	1	**7Y-0063**	2	FILM-INFORMATION (DO NOT LIFT)	
	2	1	**136-0139**	2	CAP	
Y	3	1	*244-8144*	1	COUNTERWEIGHT & MOUNTING GP	451
	4	1	**248-9337**	4	SPACER (39X75X20-MM THK)	
M	5	1	**4I-0191**	4	BOLT (M36X4X181-MM)	

M-METRIC PART
Y-SEPARATE ILLUSTRATION

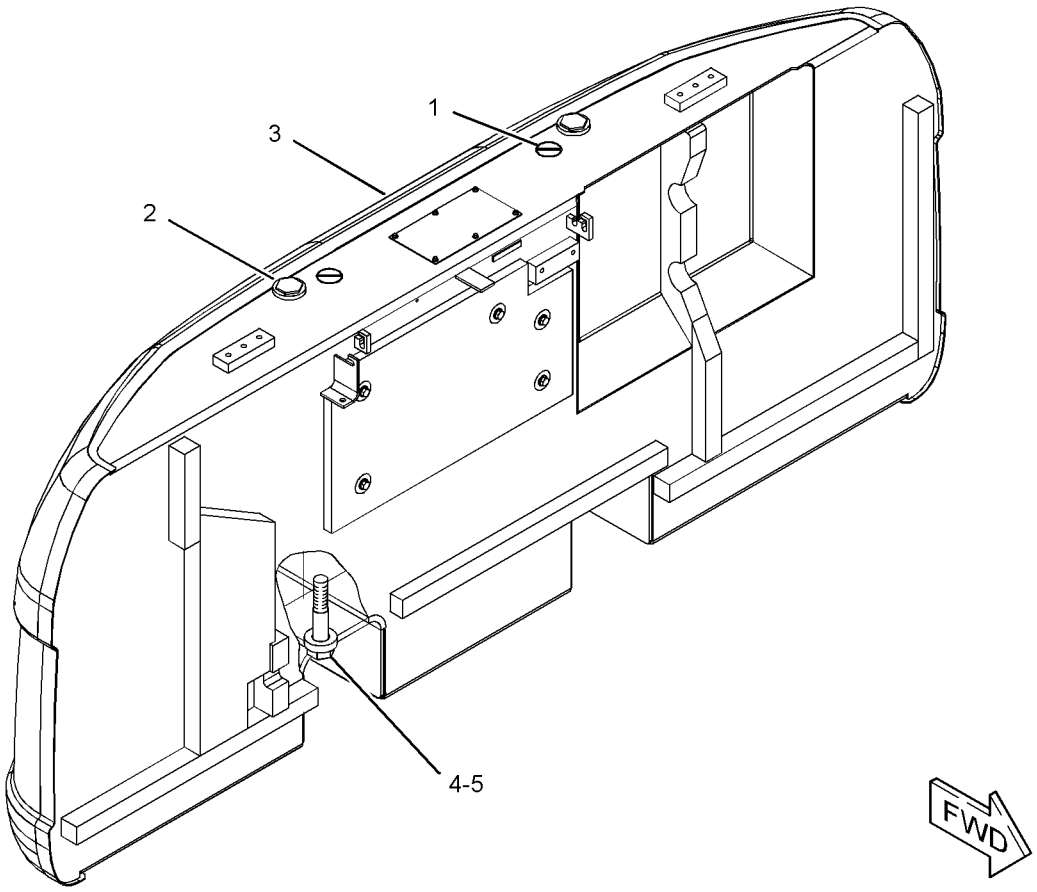

GRAPHIC #1 **<END>** g01202380

244-8143 COUNTERWEIGHT & MOUNTING GP

S/N: DFP1-UP; CJX1-UP
PART OF 290-1903 COUNTERWEIGHT AR
AN ATTACHMENT
TYPE 2

SMCS-7056 **i03133280**

NOTE	REF NO	GRAPHIC REF	PART NUMBER	QTY	PART NAME 1 2 3 4 5 6 (PRODUCT LEVEL)	SEE PAGE
	1	1	**7Y-0063**	2	FILM-INFORMATION (DO NOT LIFT)	
	2	1	**136-0139**	2	CAP	
CY	3	1	*330-1222*	1	COUNTERWEIGHT GP	465
	4	1	**248-9337**	4	SPACER (39X75X20-MM THK)	
M	5	1	**4I-0191**	4	BOLT (M36X4X181-MM)	

C-CHANGE FROM PREVIOUS TYPE
M-METRIC PART
Y-SEPARATE ILLUSTRATION

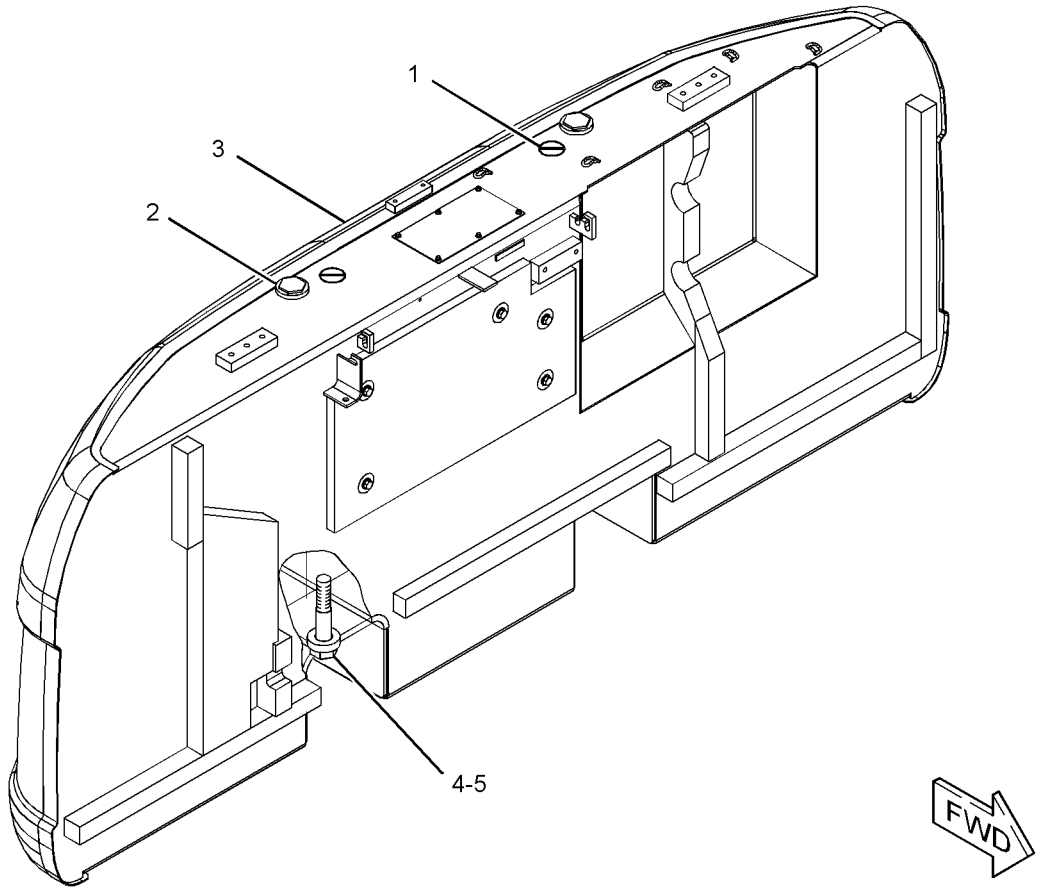

GRAPHIC #1 **<END>** g01626495

244-8144 COUNTERWEIGHT & MOUNTING GP

S/N: DFP1-UP; CJX1-UP
PART OF 244-8143 COUNTERWEIGHT & MOUNTING GP
AN ATTACHMENT

SMCS-7056 **i02406098**

NOTE	REF NO	GRAPHIC REF	PART NUMBER	QTY	PART NAME 1 2 3 4 5 6 (PRODUCT LEVEL)	SEE PAGE
	1	1	**7I-0717**	1	LINER	
	2	1	**127-7771**	1	LINER	
	3	1	**184-8722**	1	LINER	
	4	1	**236-9527**	1	INSULATION	
	5	1	**236-9528**	1	LINER	
	6	1	**236-9529**	1	LINER	
	7	1	**236-9536**	1	LINER	
	8	1	**236-9539**	1	LINER	
	9	1	**248-9315**	1	COUNTERWEIGHT AS	
		1	**192-3039**	6	SCREW-HEX FLANGE (6.3X1.8X19-MM)	
	10	1	**259-3721**	1	LINER	
	11	1	**273-7799**	1	LINER	
	12	1	**7Y-2292**	5	WASHER (13X50X2-MM THK)	
M	13	1	**8T-4179**	5	BOLT (M12X1.75X20-MM)	
	14	1	**8T-4223**	5	WASHER-HARD (13.5X25.5X3-MM THK)	

M-METRIC PART

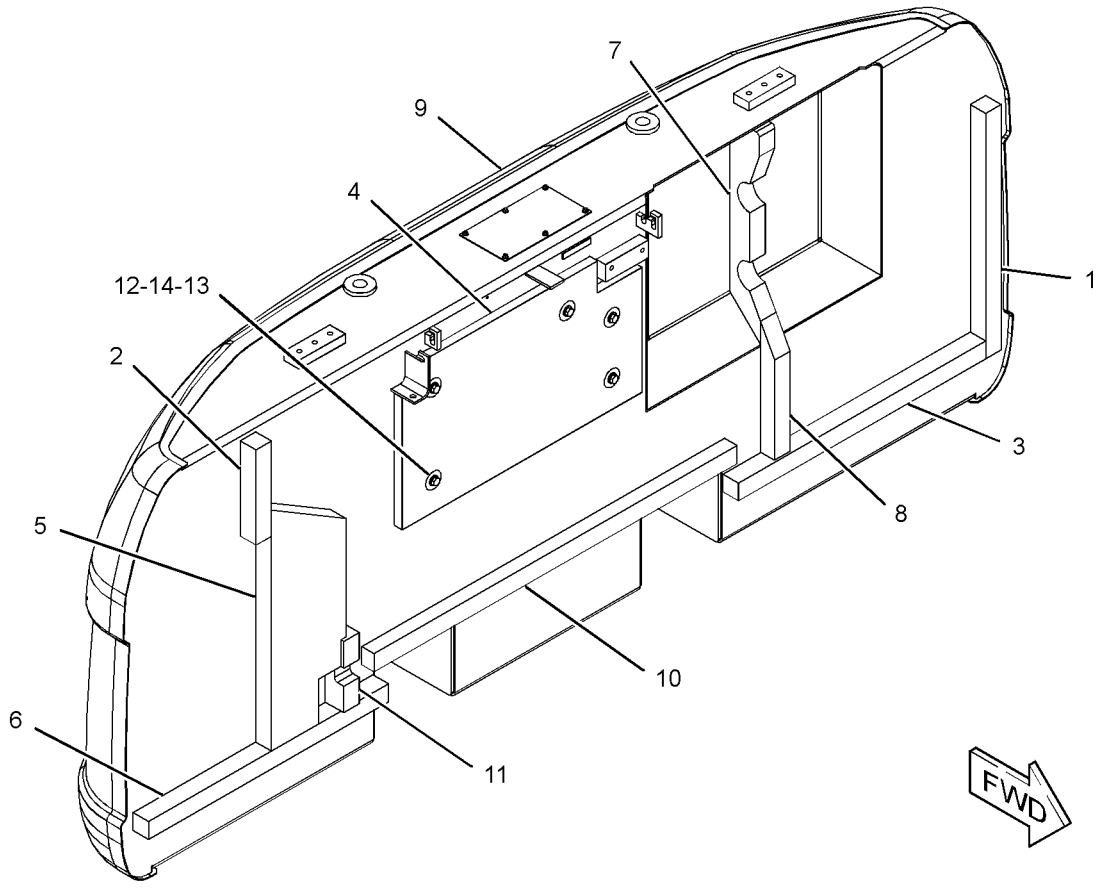

GRAPHIC #1 **<END>** g01202467

270-9650 COUNTERWEIGHT & MOUNTING GP

S/N: DFP1-UP
PART OF 262-3582 FRONT AR-LONG REACH
AN ATTACHMENT

SMCS-7056 **i02409943**

NOTE	REF NO	GRAPHIC REF	PART NUMBER	QTY	PART NAME 1 2 3 4 5 6 (PRODUCT LEVEL)	SEE PAGE
	1	1	**248-9337**	4	SPACER (39X75X20-MM THK)	
Y	2	1	*270-9651*	1	COUNTERWEIGHT GP	458
M	3	1	**4I-0191**	4	BOLT (M36X4X181-MM)	

M-METRIC PART
Y-SEPARATE ILLUSTRATION

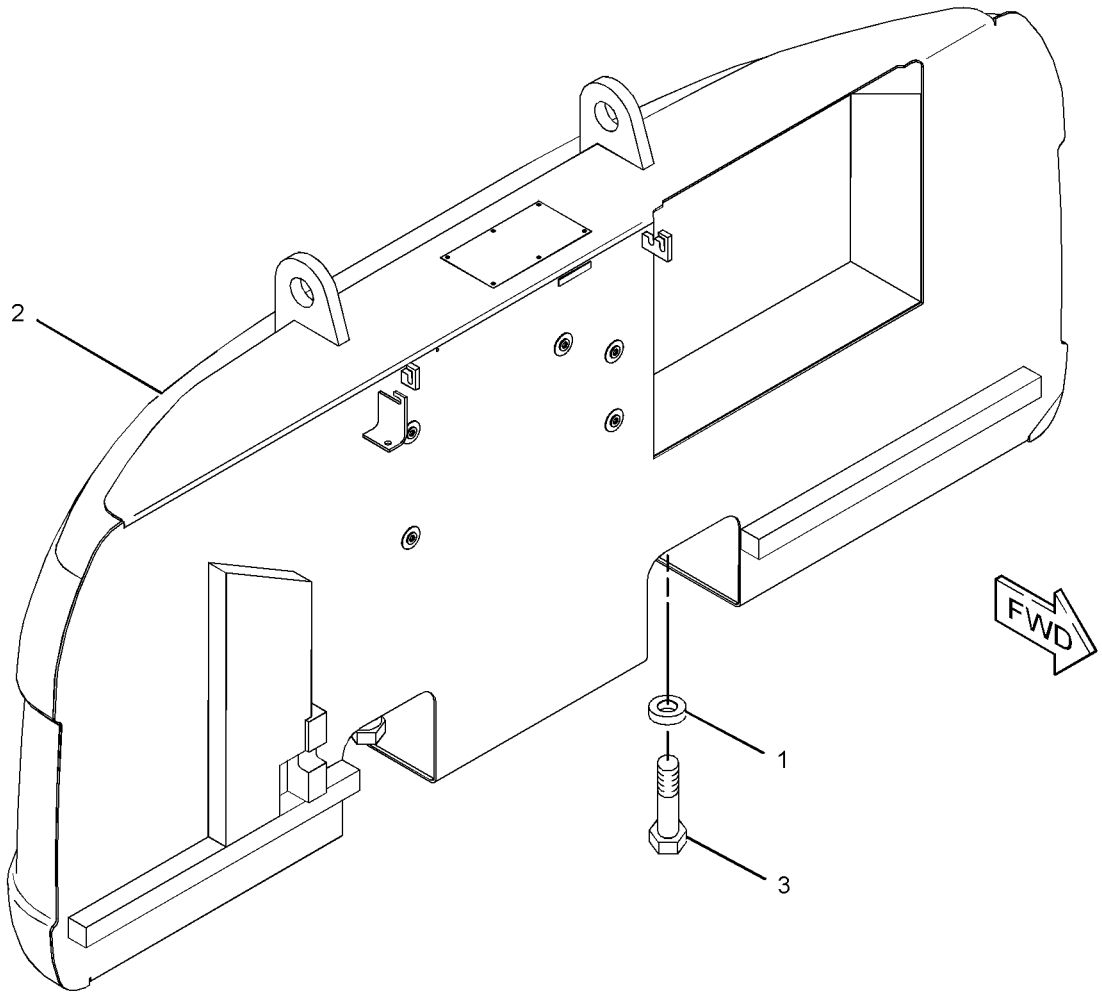

GRAPHIC #1 **<END>** g01238268

FRAME AND BODY

290-1903 COUNTERWEIGHT AR

S/N: DFP1-UP; CJX1-UP
AN ATTACHMENT

SMCS-7056 **i02611201**

NOTE	PART NUMBER	QTY	PART NAME 1 2 3 4 5 6 (PRODUCT LEVEL)	SEE PAGE
Y	*244-8143*	1	COUNTERWEIGHT & MOUNTING GP	449

Y-SEPARATE ILLUSTRATION

<END>

244-8140 COUNTERWEIGHT GP

S/N: DFP1-UP; CJX1-UP
4501-KG (9923-LB)
PART OF 244-8139 COUNTERWEIGHT & MOUNTING GP

SMCS-7056 **i02394924**

NOTE	REF NO	GRAPHIC REF	PART NUMBER	QTY	PART NAME 1 2 3 4 5 6 (PRODUCT LEVEL)	SEE PAGE
	1	1	**7I-0717**	1	LINER	
	2	1	**127-7771**	1	LINER	
	3	1	**184-8722**	1	LINER	
	4	1	**236-9527**	1	INSULATION	
	5	1	**236-9528**	1	LINER	
	6	1	**236-9529**	1	LINER	
	7	1	**236-9536**	1	LINER	
	8	1	**236-9539**	1	LINER	
	9	1	**248-9313**	1	COUNTERWEIGHT AS	
	10	1	**259-3721**	1	LINER	
	11	1	**273-7799**	1	LINER	
	12	1	**7Y-2292**	5	WASHER (13X50X2-MM THK)	
M	13	1	**8T-4179**	5	BOLT (M12X1.75X20-MM)	
	14	1	**8T-4223**	5	WASHER-HARD (13.5X25.5X3-MM THK)	

M-METRIC PART

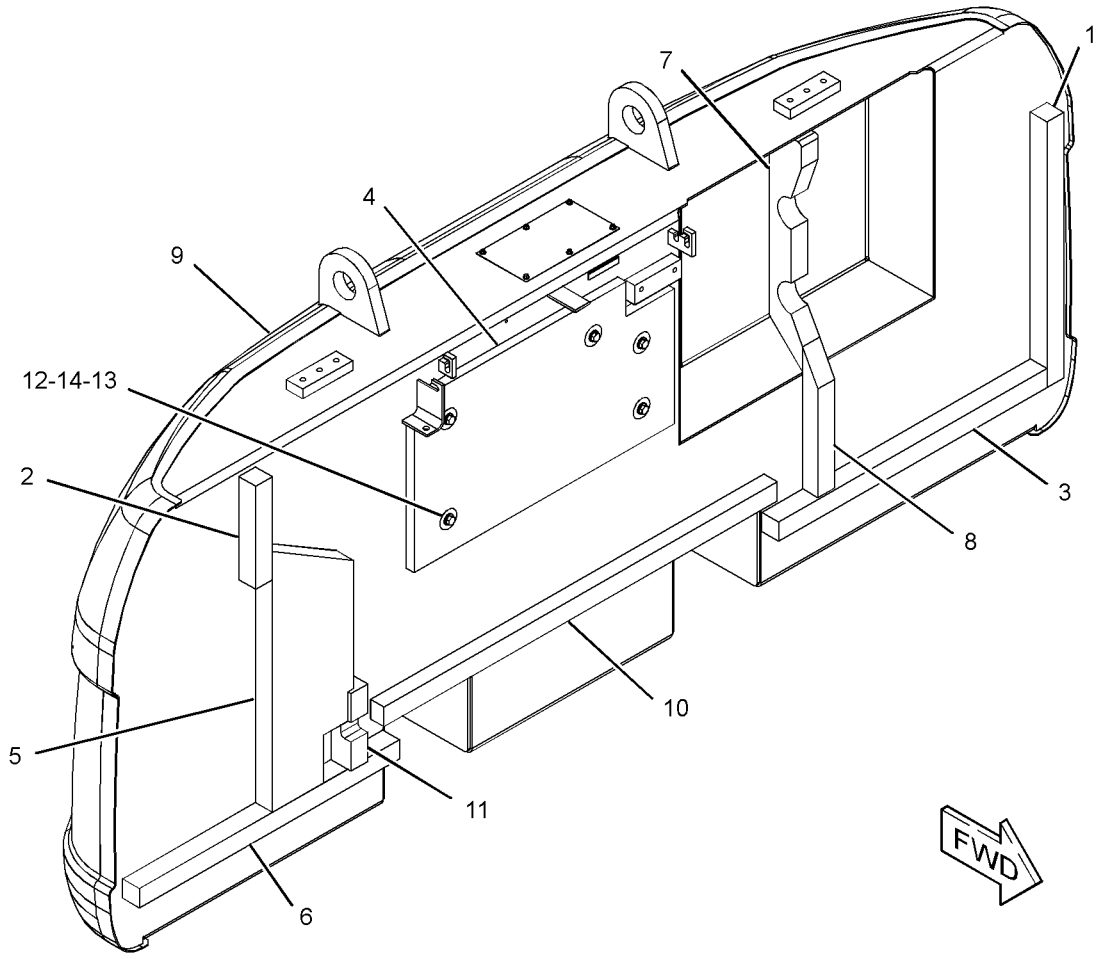

GRAPHIC #1 **<END>** g01196357

244-8141 COUNTERWEIGHT GP

S/N: DFP1-UP
AN ATTACHMENT
TYPE 1

SMCS-7056 **i02586901**

NOTE	REF NO	GRAPHIC REF	PART NUMBER	QTY	PART NAME 1 2 3 4 5 6 (PRODUCT LEVEL)	SEE PAGE
Y	1	1	*244-8142*	1	COUNTERWEIGHT GP	457
	2	1	**248-9337**	4	SPACER (39X75X20-MM THK)	
M	3	1	**4I-0191**	4	BOLT (M36X4X181-MM)	

M-METRIC PART
Y-SEPARATE ILLUSTRATION

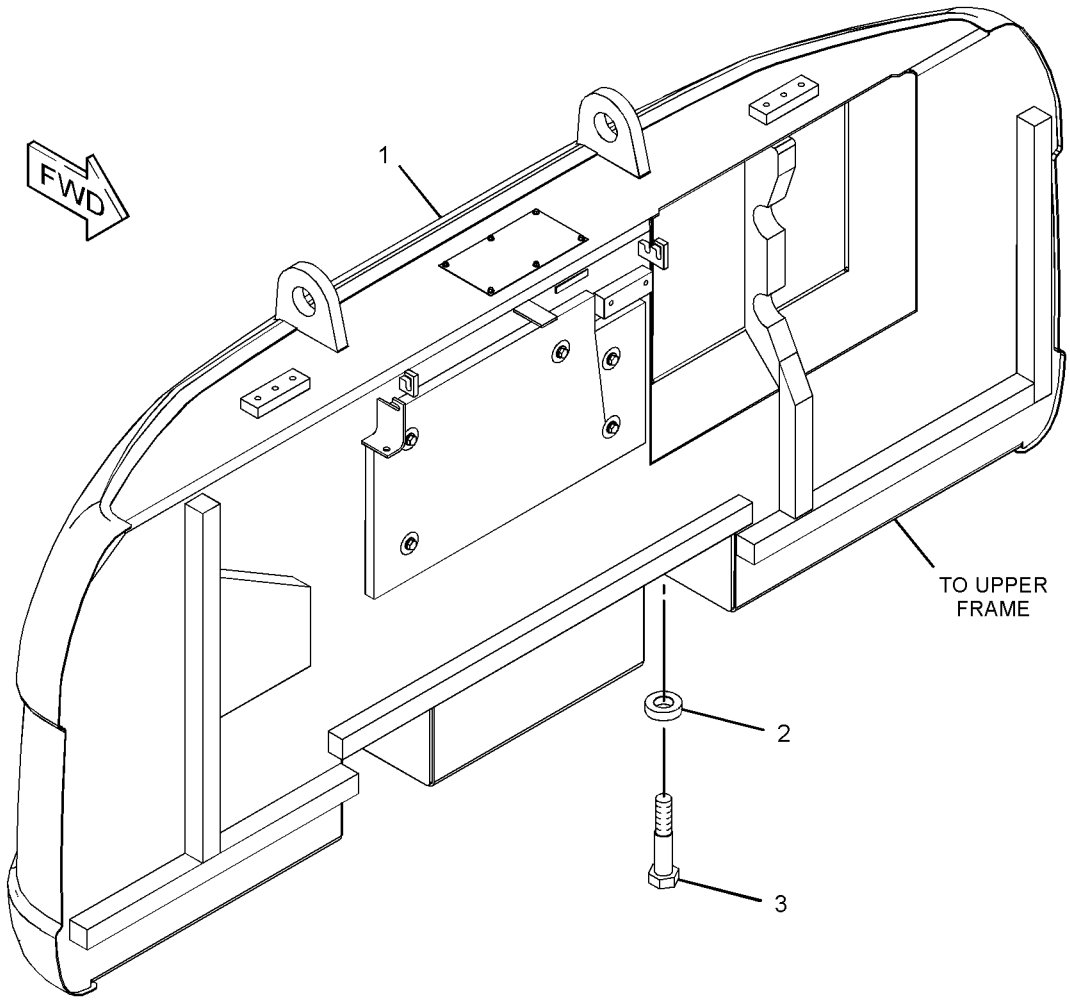

GRAPHIC #1 **<END>** g01240919

FRAME AND BODY

244-8141 COUNTERWEIGHT GP

S/N: DFP1-UP
AN ATTACHMENT
TYPE 2

SMCS-7056 **i03142160**

NOTE	REF NO	GRAPHIC REF	PART NUMBER	QTY	PART NAME 1 2 3 4 5 6 (PRODUCT LEVEL)	SEE PAGE
CY	1	1	*330-1228*	1	COUNTERWEIGHT GP	467
	2	1	**248-9337**	4	SPACER (39X75X20-MM THK)	
M	3	1	**4I-0191**	4	BOLT (M36X4X181-MM)	

C-CHANGE FROM PREVIOUS TYPE
M-METRIC PART
Y-SEPARATE ILLUSTRATION

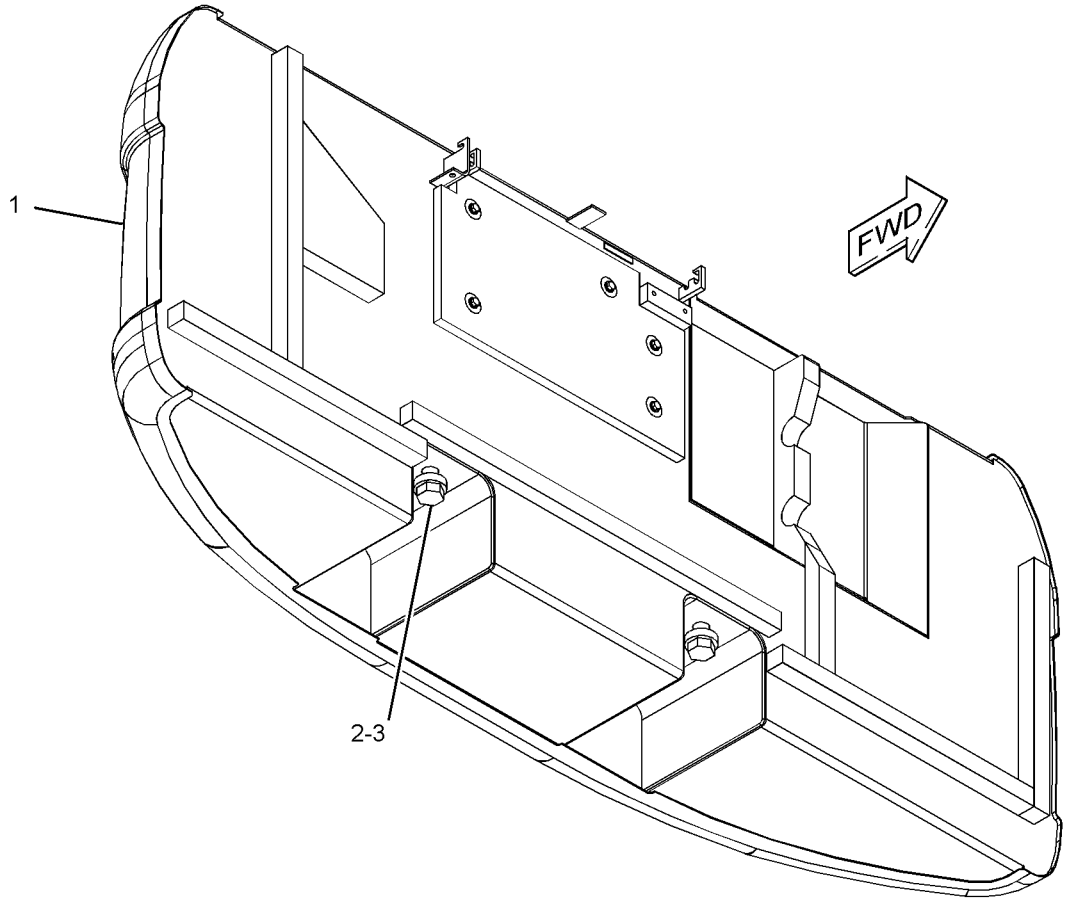

GRAPHIC #1 **<END>** g01210877

244-8142 COUNTERWEIGHT GP

S/N: DFP1-UP
4751-KG (10474.2-LG)
PART OF 244-8141 COUNTERWEIGHT GP
AN ATTACHMENT

SMCS-7056 **i02586903**

NOTE	REF NO	GRAPHIC REF	PART NUMBER	QTY	PART NAME 1 2 3 4 5 6 (PRODUCT LEVEL)	SEE PAGE
	1	1	**7I-0717**	1	LINER	
	2	1	**129-3399**	1	LINER	
	3	1	**184-8722**	1	LINER	
	4	1	**236-9527**	1	INSULATION	
	5	1	**236-9528**	1	LINER	
	6	1	**236-9529**	1	LINER	
	7	1	**236-9536**	1	LINER	
	8	1	**236-9539**	1	LINER	
	9	1	**248-9314**	1	COUNTERWEIGHT AS	
	10	1	**259-3721**	1	LINER	
	11	1	**7Y-2292**	5	WASHER (13X50X2-MM THK)	
M	12	1	**8T-4179**	5	BOLT (M12X1.75X20-MM)	
	13	1	**8T-4223**	5	WASHER-HARD (13.5X25.5X3-MM THK)	

M-METRIC PART

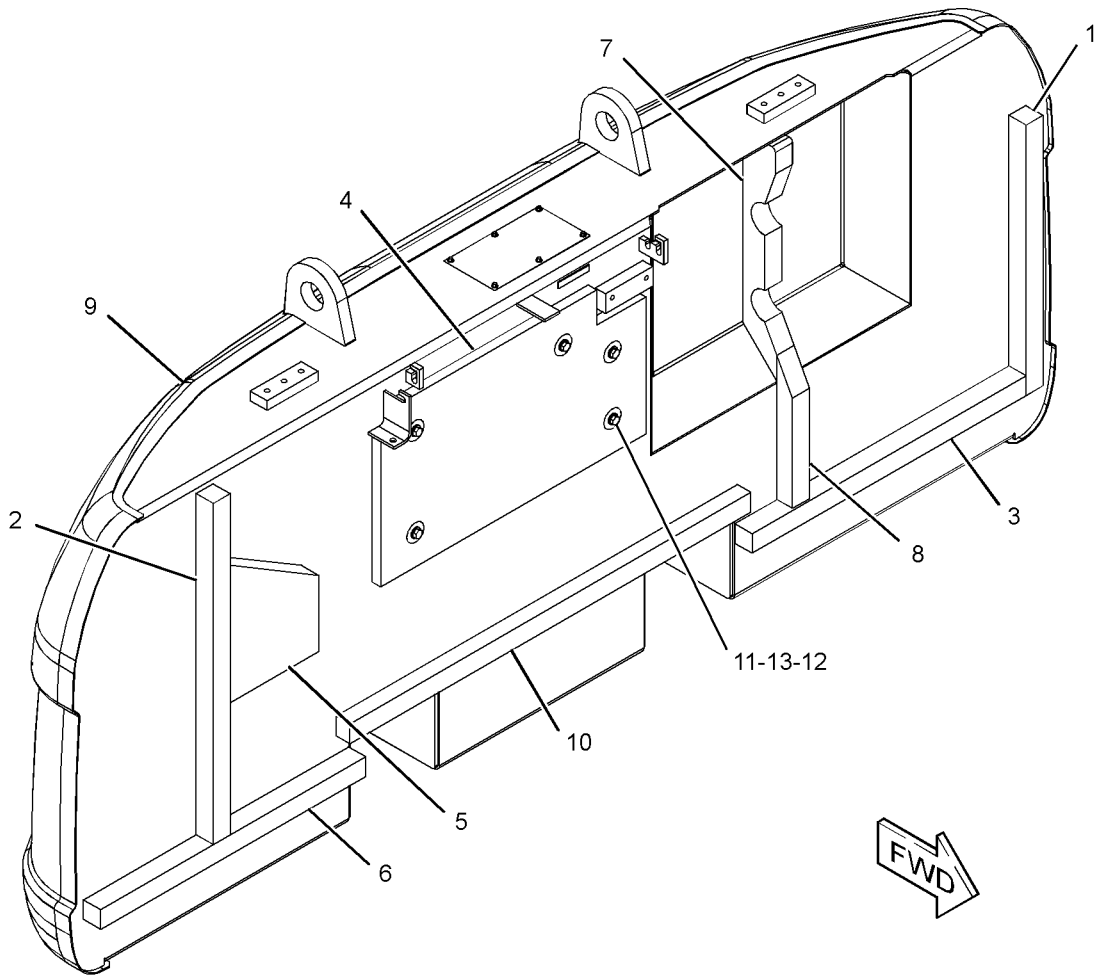

GRAPHIC #1 **<END>** g01220712

270-9651 COUNTERWEIGHT GP

S/N: DFP1-UP
6751-KG (14883-LB)
PART OF 270-9650 COUNTERWEIGHT & MOUNTING GP
AN ATTACHMENT

SMCS-7056 **i02410038**

NOTE	REF NO	GRAPHIC REF	PART NUMBER	QTY	PART NAME 1 2 3 4 5 6 (PRODUCT LEVEL)	SEE PAGE
	1	1	**7I-0717**	1	LINER	
	2	1	**127-7771**	1	LINER	
	3	1	**184-8722**	1	LINER	
	4	1	**236-9527**	1	INSULATION	
	5	1	**236-9528**	1	LINER	
	6	1	**236-9529**	1	LINER	
	7	1	**236-9536**	1	LINER	
	8	1	**236-9539**	1	LINER	
	9	1	**259-3721**	1	LINER	
	10	1	**270-9652**	1	COUNTERWEIGHT AS	
	11	1	**273-7799**	1	LINER	
	12	1	**7Y-2292**	5	WASHER (13X50X2-MM THK)	
M	13	1	**8T-4179**	5	BOLT (M12X1.75X20-MM)	
	14	1	**8T-4223**	5	WASHER-HARD (13.5X25.5X3-MM THK)	

M-METRIC PART

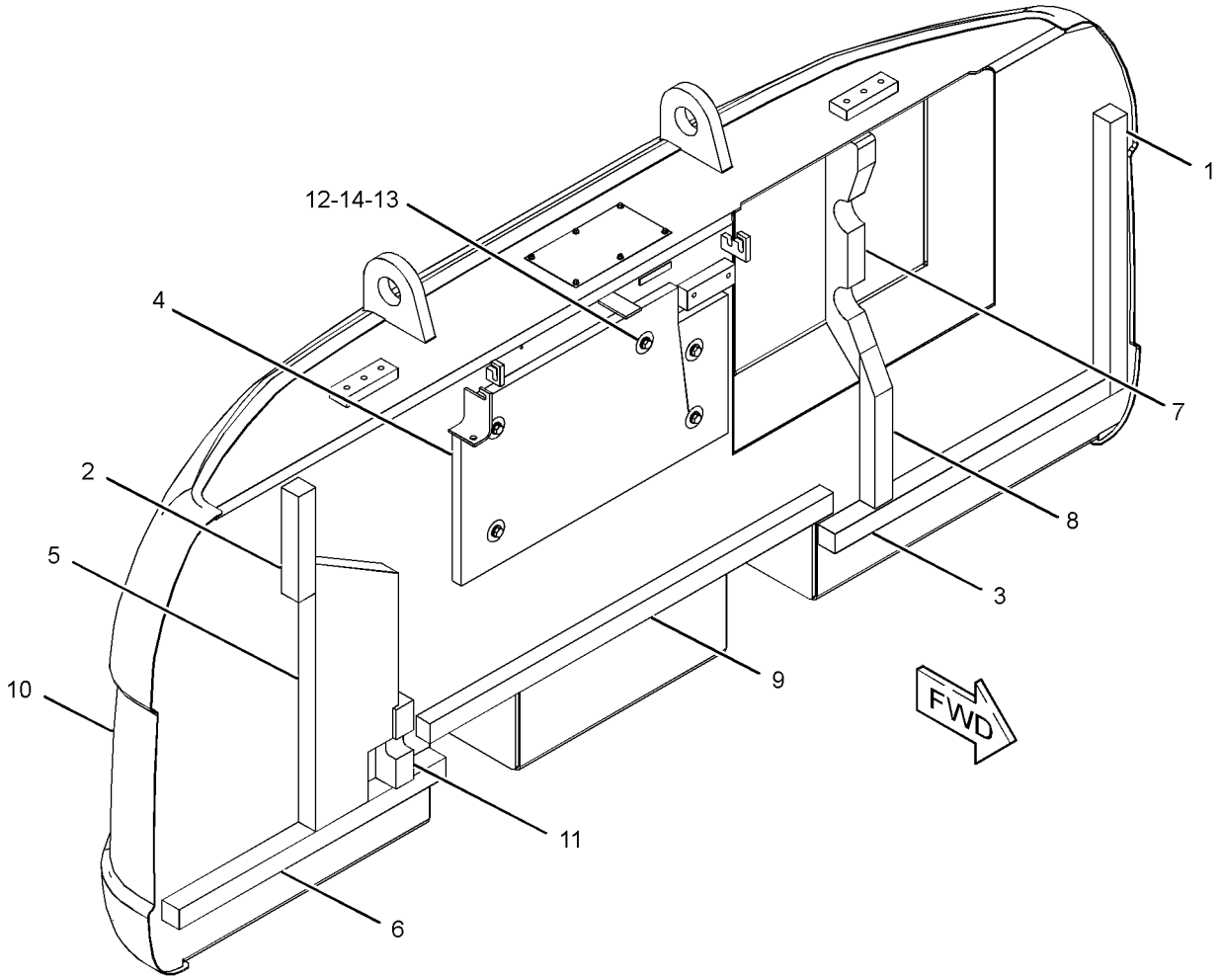

GRAPHIC #1 **<END>** g01248170

278-3920 COUNTERWEIGHT GP

S/N: DFP1-UP; CJX1-UP
AN ATTACHMENT
TYPE 1

SMCS-7056 **i03023112**

NOTE	REF NO	GRAPHIC REF	PART NUMBER	QTY	PART NAME 1 2 3 4 5 6 (PRODUCT LEVEL)	SEE PAGE
	1	1	**248-9337**	4	SPACER (39X75X20-MM THK)	
Y	2	1	*278-3921*	1	COUNTERWEIGHT GP	461
M	3	1	**4I-0191**	4	BOLT (M36X4X181-MM)	
M	4	1	**8T-4190**	8	BOLT (M16X2X25-MM)	

M-METRIC PART
Y-SEPARATE ILLUSTRATION

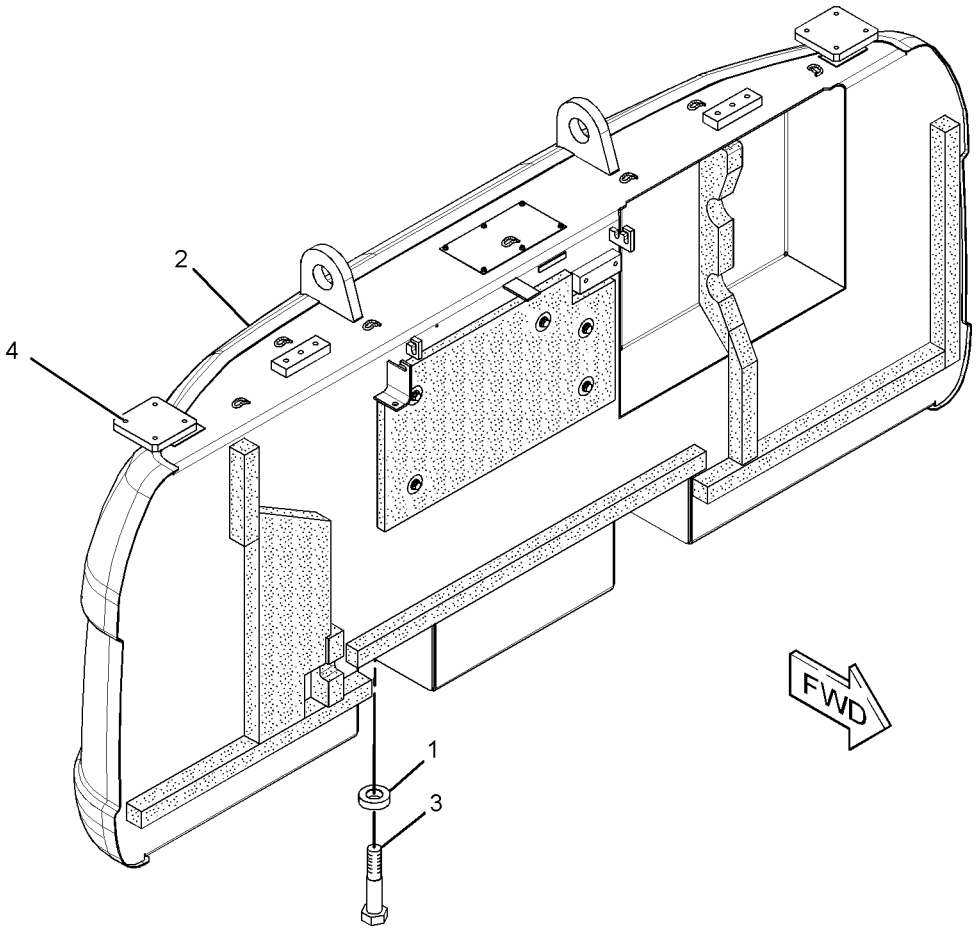

GRAPHIC #1 **<END>** g01528800

FRAME AND BODY

278-3920 COUNTERWEIGHT GP

S/N: DFP1-UP; CJX1-UP
AN ATTACHMENT
TYPE 2

SMCS-7056 **i03137737**

NOTE	REF NO	GRAPHIC REF	PART NUMBER	QTY	PART NAME 1 2 3 4 5 6 (PRODUCT LEVEL)	SEE PAGE
	1	1	**248-9337**	4	SPACER (39X75X20-MM THK)	
CY	2	1	*330-1236*	1	COUNTERWEIGHT GP	468
M	3	1	**4I-0191**	4	BOLT (M36X4X181-MM)	
M	4	1	**8T-4190**	8	BOLT (M16X2X25-MM)	

C-CHANGE FROM PREVIOUS TYPE
M-METRIC PART
Y-SEPARATE ILLUSTRATION

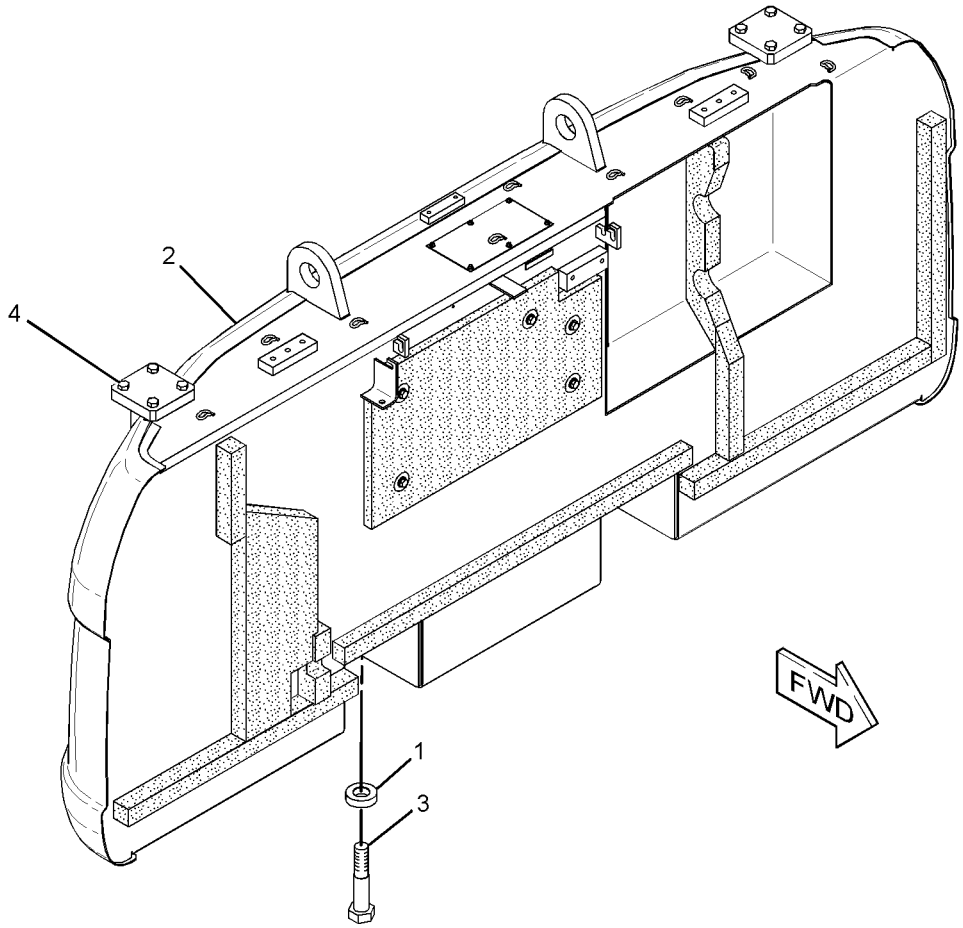

GRAPHIC #1 **<END>** g01626869

278-3921 COUNTERWEIGHT GP

S/N: DFP1-UP; CJX1-UP
4501-KG (9923-LG)
PART OF 278-3920 COUNTERWEIGHT GP
AN ATTACHMENT

SMCS-7056 **i02724063**

NOTE	REF NO	GRAPHIC REF	PART NUMBER	QTY	PART NAME 1 2 3 4 5 6 (PRODUCT LEVEL)	SEE PAGE
	1	1	**7I-0717**	1	LINER	
	2	1	**127-7771**	1	LINER	
	3	1	**184-8722**	1	LINER	
	4	1	**236-9527**	1	INSULATION	
	5	1	**236-9528**	1	LINER	
	6	1	**236-9529**	1	LINER	
	7	1	**236-9536**	1	LINER	
	8	1	**236-9539**	1	LINER	
	9	1	**259-3721**	1	LINER	
	10	1	**273-7799**	1	LINER	
	11	1	**278-4040**	1	COUNTERWEIGHT AS	
	12	1	**7Y-2292**	5	WASHER (13X50X2-MM THK)	
M	13	1	**8T-4179**	5	BOLT (M12X1.75X20-MM)	
	14	1	**8T-4223**	5	WASHER-HARD (13.5X25.5X3-MM THK)	

M-METRIC PART

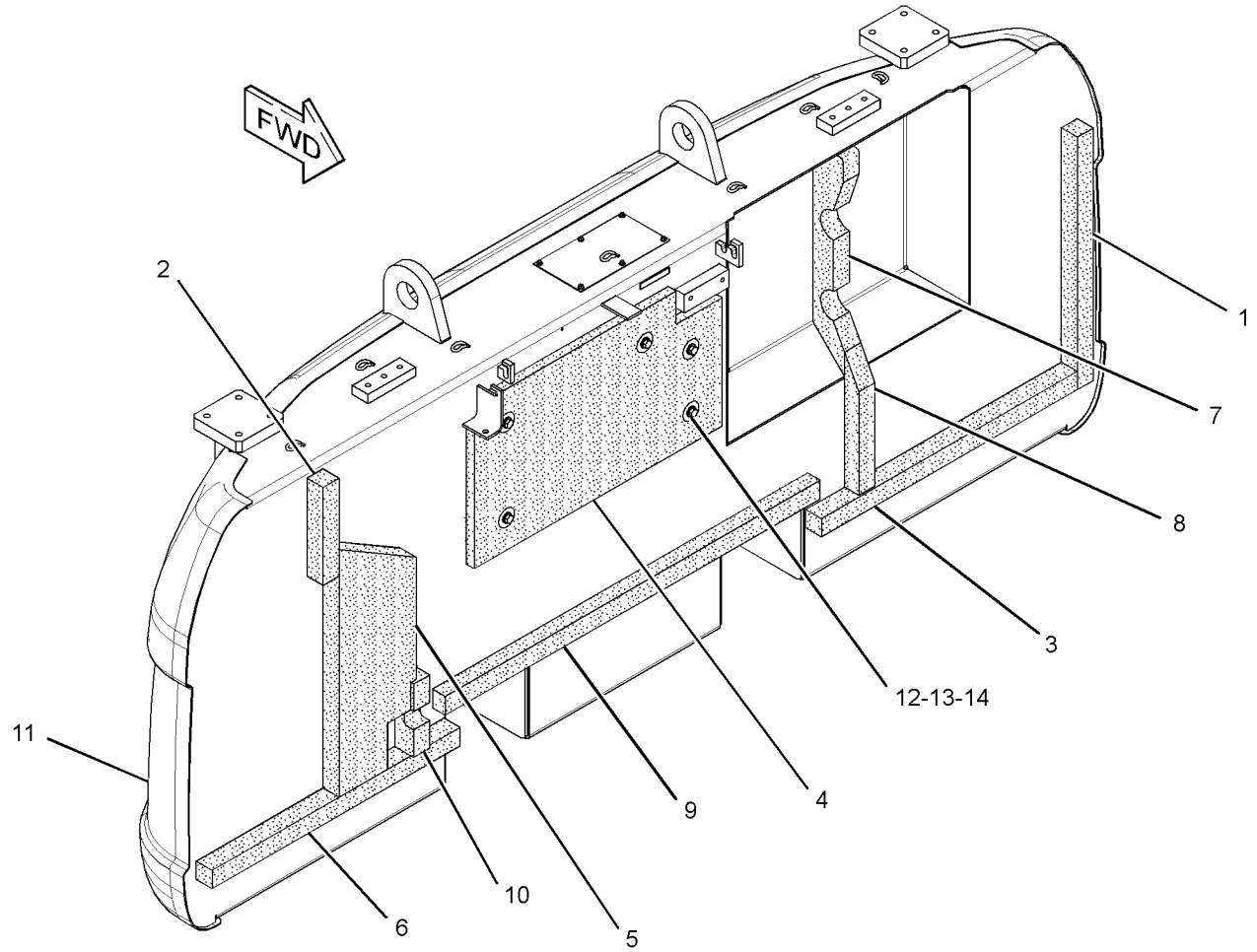

GRAPHIC #1 **<END>** g01380504

278-3922 COUNTERWEIGHT GP

S/N: DFP1-UP; CJX1-UP
AN ATTACHMENT
TYPE 1

SMCS-7056 **i02774967**

NOTE	REF NO	GRAPHIC REF	PART NUMBER	QTY	PART NAME 1 2 3 4 5 6 (PRODUCT LEVEL)	SEE PAGE
	1	1	**248-9337**	4	SPACER (39X75X20-MM THK)	
Y	2	1	*278-3923*	1	COUNTERWEIGHT GP	464
M	3	1	**4I-0191**	4	BOLT (M36X4X181-MM)	
M	4	1	**8T-4190**	8	BOLT (M16X2X25-MM)	

M-METRIC PART
Y-SEPARATE ILLUSTRATION

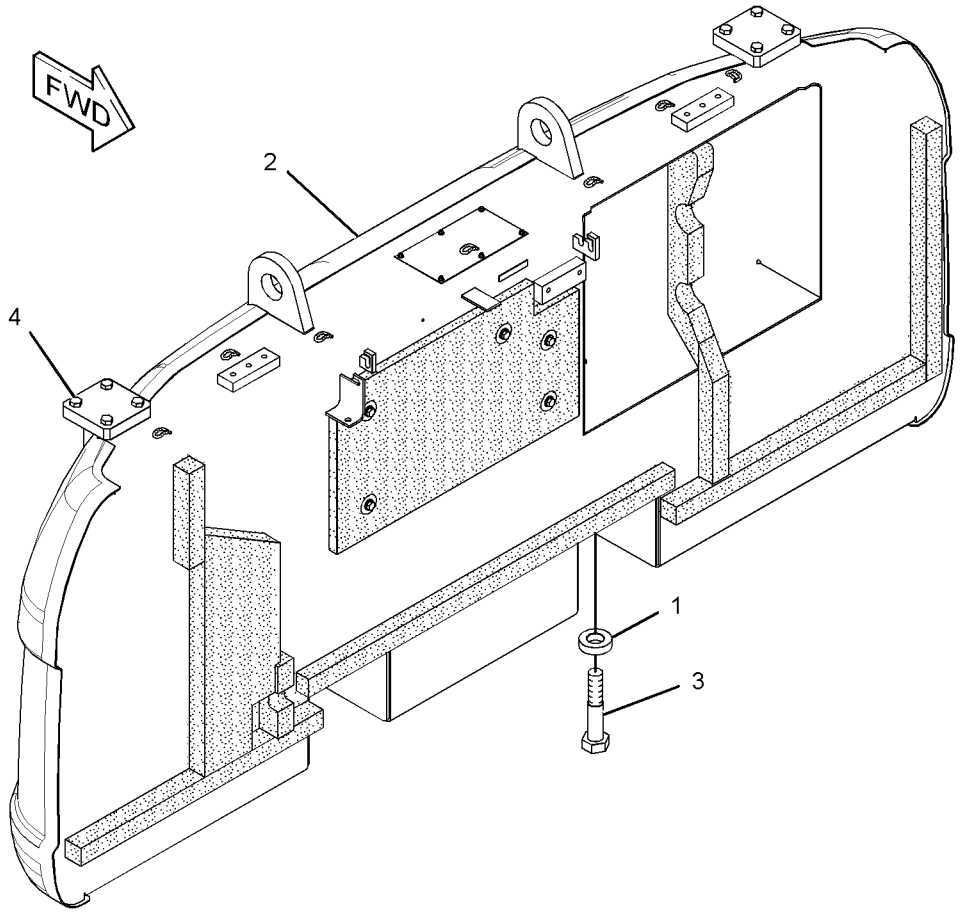

GRAPHIC #1 **<END>** g01402714

278-3922 COUNTERWEIGHT GP

S/N: DFP1-UP; CJX1-UP
AN ATTACHMENT
TYPE 2

SMCS-7056 **i03137824**

NOTE	REF NO	GRAPHIC REF	PART NUMBER	QTY	PART NAME 1 2 3 4 5 6 (PRODUCT LEVEL)	SEE PAGE
	1	1	**248-9337**	4	SPACER (39X75X20-MM THK)	
CY	2	1	*330-1239*	1	COUNTERWEIGHT GP	469
M	3	1	**4I-0191**	4	BOLT (M36X4X181-MM)	
M	4	1	**8T-4190**	8	BOLT (M16X2X25-MM)	

C-CHANGE FROM PREVIOUS TYPE
M-METRIC PART
Y-SEPARATE ILLUSTRATION

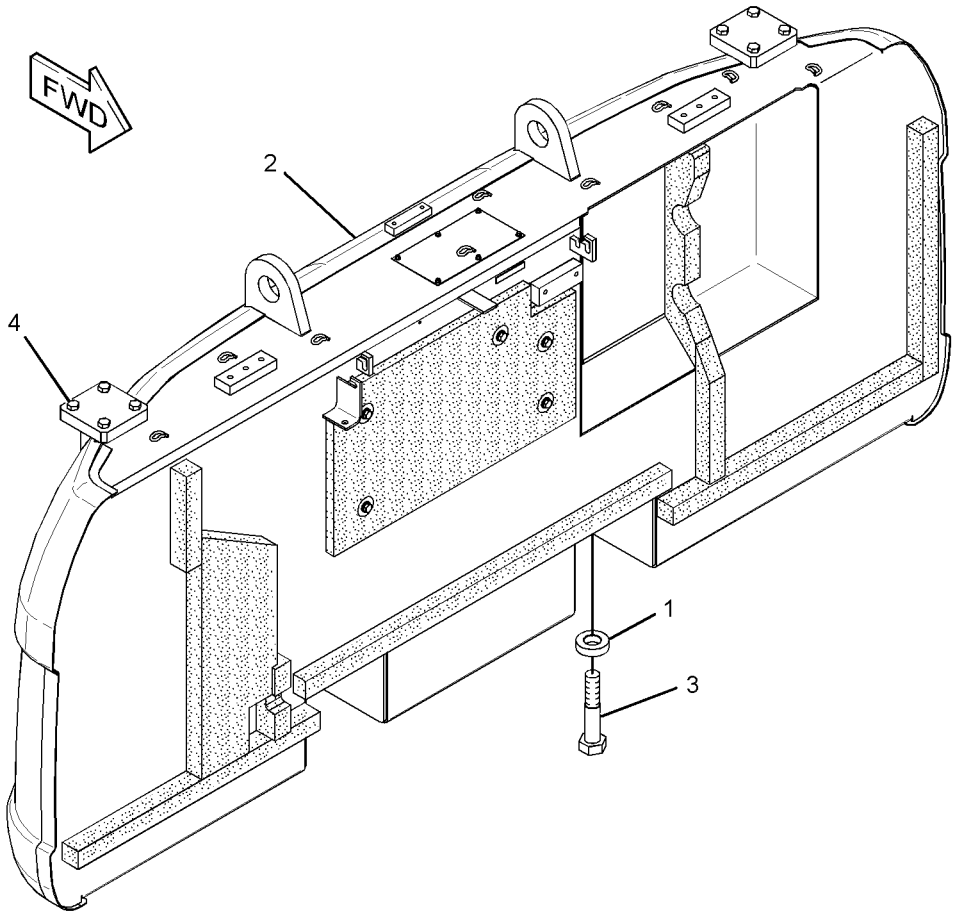

GRAPHIC #1 **<END>** g01626846

278-3923 COUNTERWEIGHT GP

S/N: DFP1-UP; CJX1-UP
4751-KG (10474.2-LB)
PART OF 278-3922 COUNTERWEIGHT GP
AN ATTACHMENT

SMCS-7056 **i02724066**

NOTE	REF NO	GRAPHIC REF	PART NUMBER	QTY	PART NAME 1 2 3 4 5 6 (PRODUCT LEVEL)	SEE PAGE
	1	1	**7I-0717**	1	LINER	
	2	1	**127-7771**	1	LINER	
	3	1	**184-8722**	1	LINER	
	4	1	**236-9527**	1	INSULATION	
	5	1	**236-9528**	1	LINER	
	6	1	**236-9529**	1	LINER	
	7	1	**236-9536**	1	LINER	
	8	1	**236-9539**	1	LINER	
	9	1	**259-3721**	1	LINER	
	10	1	**273-7799**	1	LINER	
	11	1	**278-4041**	1	COUNTERWEIGHT AS	
	12	1	**7Y-2292**	5	WASHER (13X50X2-MM THK)	
M	13	1	**8T-4179**	5	BOLT (M12X1.75X20-MM)	
	14	1	**8T-4223**	5	WASHER-HARD (13.5X25.5X3-MM THK)	

M-METRIC PART

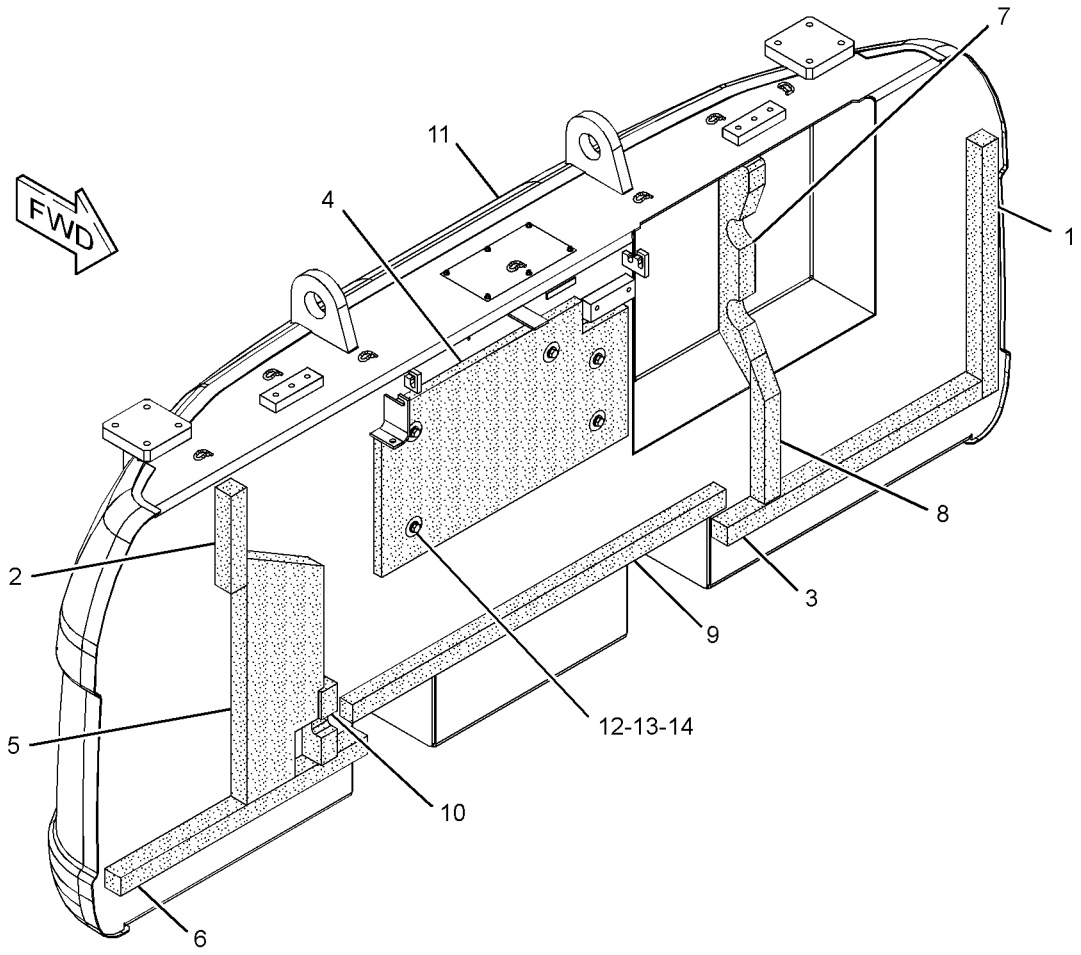

GRAPHIC #1 **<END>** g01367568

330-1222 COUNTERWEIGHT GP

S/N: DFP1-UP; CJX1-UP
4501-KG (9923-LB)
PART OF 244-8143 COUNTERWEIGHT & MOUNTING GP
AN ATTACHMENT

SMCS-7056 **i03133281**

NOTE	REF NO	GRAPHIC REF	PART NUMBER	QTY	PART NAME 1 2 3 4 5 6 (PRODUCT LEVEL)	SEE PAGE
	1	1	**7I-0717**	1	LINER	
	2	1	**127-7771**	1	LINER	
	3	1	**184-8722**	1	LINER	
	4	1	**236-9527**	1	INSULATION	
	5	1	**236-9528**	1	LINER	
	6	1	**236-9529**	1	LINER	
	7	1	**236-9536**	1	LINER	
	8	1	**236-9539**	1	LINER	
	9	1	**259-3721**	1	LINER	
	10	1	**273-7799**	1	LINER	
	11	1	**330-1223**	1	COUNTERWEIGHT AS	
	12	1	**7Y-2292**	5	WASHER (13X50X2-MM THK)	
M	13	1	**8T-4179**	5	BOLT (M12X1.75X20-MM)	
	14	1	**8T-4223**	5	WASHER-HARD (13.5X25.5X3-MM THK)	

M-METRIC PART

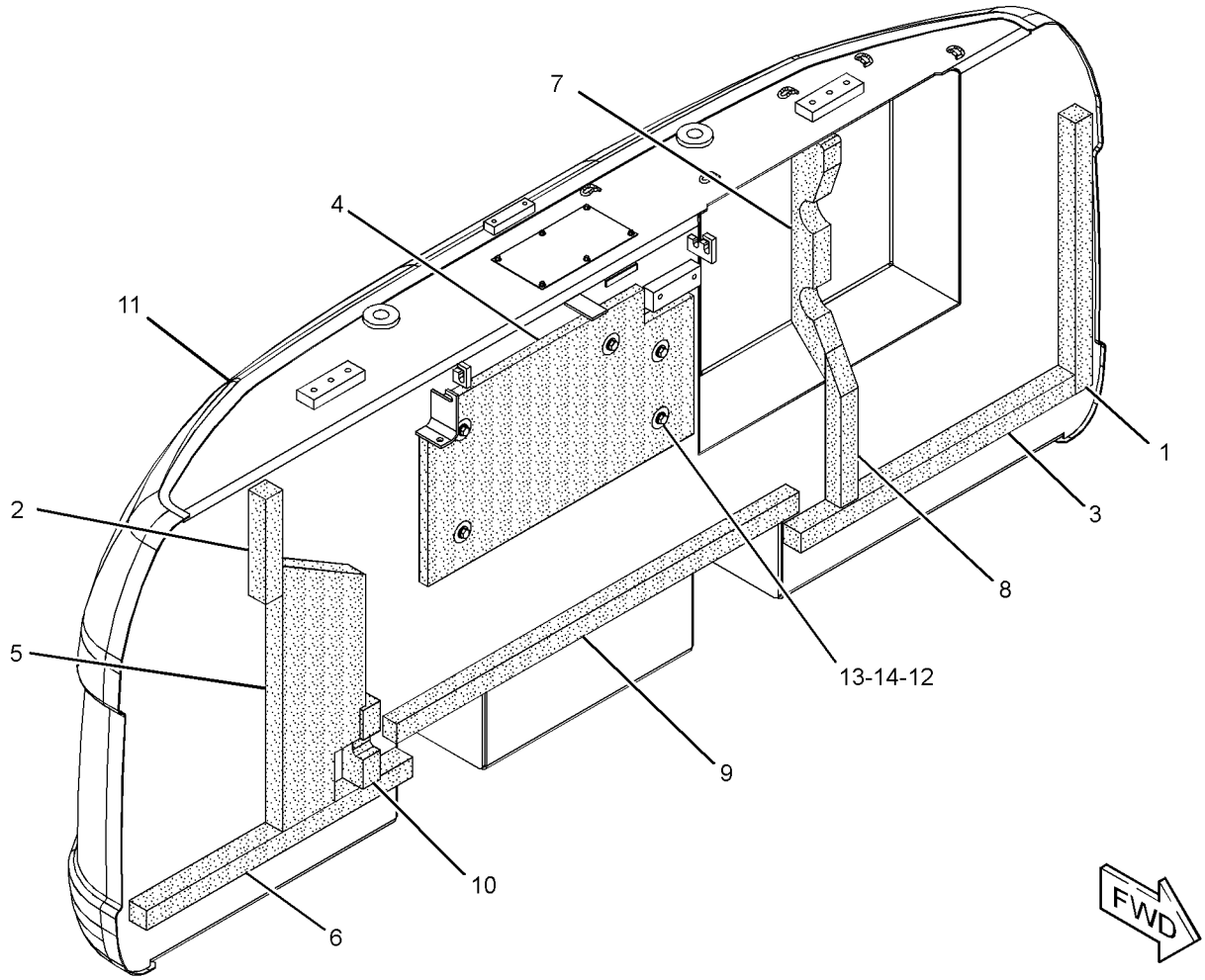

GRAPHIC #1 **<END>** g01626407

330-1225 COUNTERWEIGHT GP

S/N: DFP1-UP; CJX1-UP
4501-KG (9923-LB)
PART OF 244-8139 COUNTERWEIGHT & MOUNTING GP

SMCS-7056 **i03173025**

NOTE	REF NO	GRAPHIC REF	PART NUMBER	QTY	PART NAME 1 2 3 4 5 6 (PRODUCT LEVEL)	SEE PAGE
	1	1	**7I-0717**	1	LINER	
	2	1	**127-7771**	1	LINER	
	3	1	**184-8722**	1	LINER	
	4	1	**236-9527**	1	INSULATION	
	5	1	**236-9528**	1	LINER	
	6	1	**236-9529**	1	LINER	
	7	1	**236-9536**	1	LINER	
	8	1	**236-9539**	1	LINER	
	9	1	**259-3721**	1	LINER	
	10	1	**273-7799**	1	LINER	
	11	1	**330-1226**	1	COUNTERWEIGHT AS	
	12	1	**7Y-2292**	5	WASHER (13X50X2-MM THK)	
M	13	1	**8T-4179**	5	BOLT (M12X1.75X20-MM)	
	14	1	**8T-4223**	5	WASHER-HARD (13.5X25.5X3-MM THK)	

M-METRIC PART

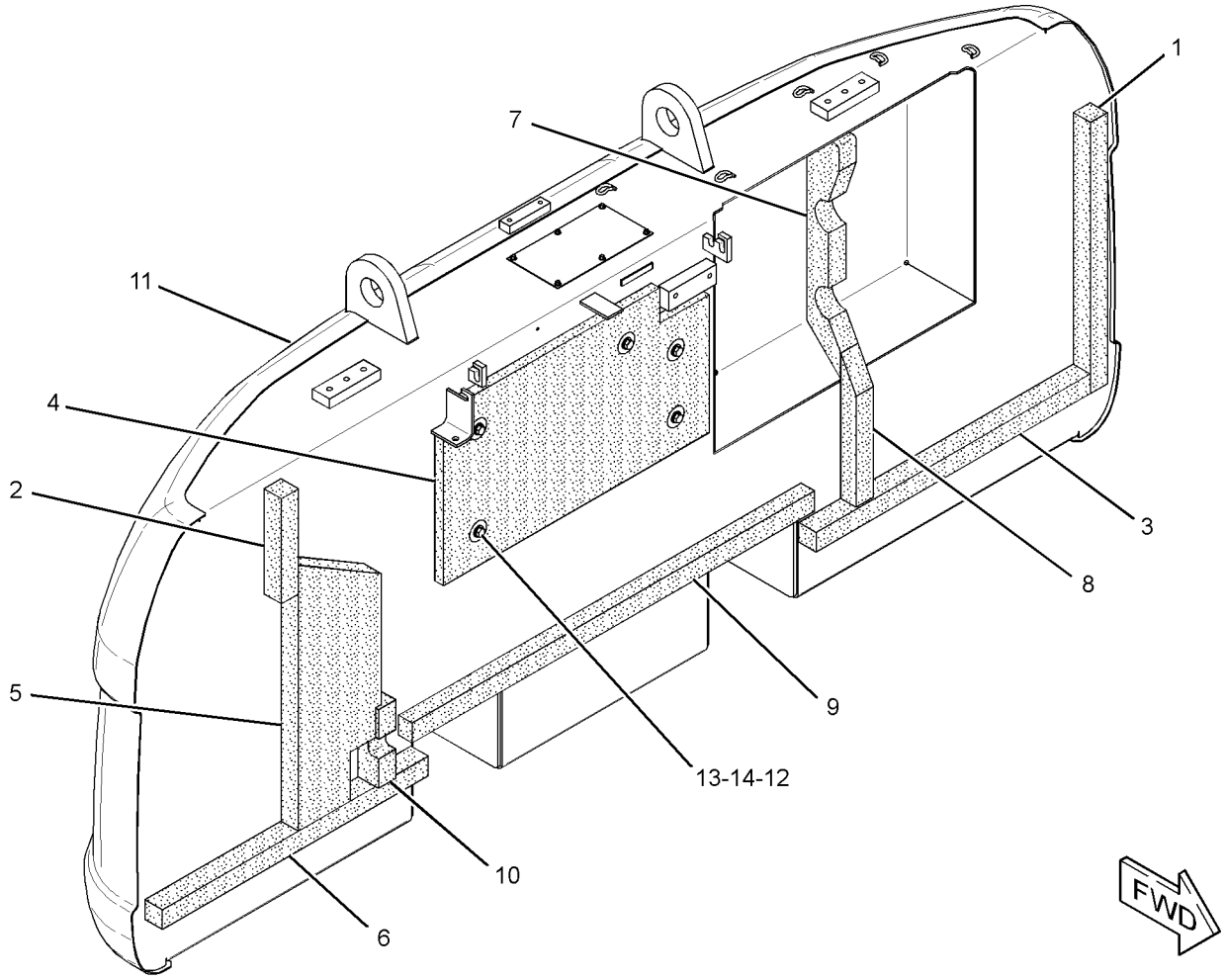

GRAPHIC #1 **<END>** g01626907

330-1228 COUNTERWEIGHT GP

S/N: DFP1-UP
4750-KG (10471.2-LB)
PART OF 244-8141 COUNTERWEIGHT GP
AN ATTACHMENT

SMCS-7056 **i03142161**

NOTE	REF NO	GRAPHIC REF	PART NUMBER	QTY	PART NAME 1 2 3 4 5 6 (PRODUCT LEVEL)	SEE PAGE
	1	1	**7I-0717**	1	LINER	
	2	1	**127-7771**	1	LINER	
	3	1	**184-8722**	1	LINER	
	4	1	**236-9527**	1	INSULATION	
	5	1	**236-9528**	1	LINER	
	6	1	**236-9529**	1	LINER	
	7	1	**236-9536**	1	LINER	
	8	1	**236-9539**	1	LINER	
	9	1	**259-3721**	1	LINER	
	10	1	**273-7799**	1	LINER	
	11	1	**330-1229**	1	COUNTERWEIGHT AS	
	12	1	**7Y-2292**	5	WASHER (13X50X2-MM THK)	
M	13	1	**8T-4179**	5	BOLT (M12X1.75X20-MM)	
	14	1	**8T-4223**	5	WASHER-HARD (13.5X25.5X3-MM THK)	

M-METRIC PART

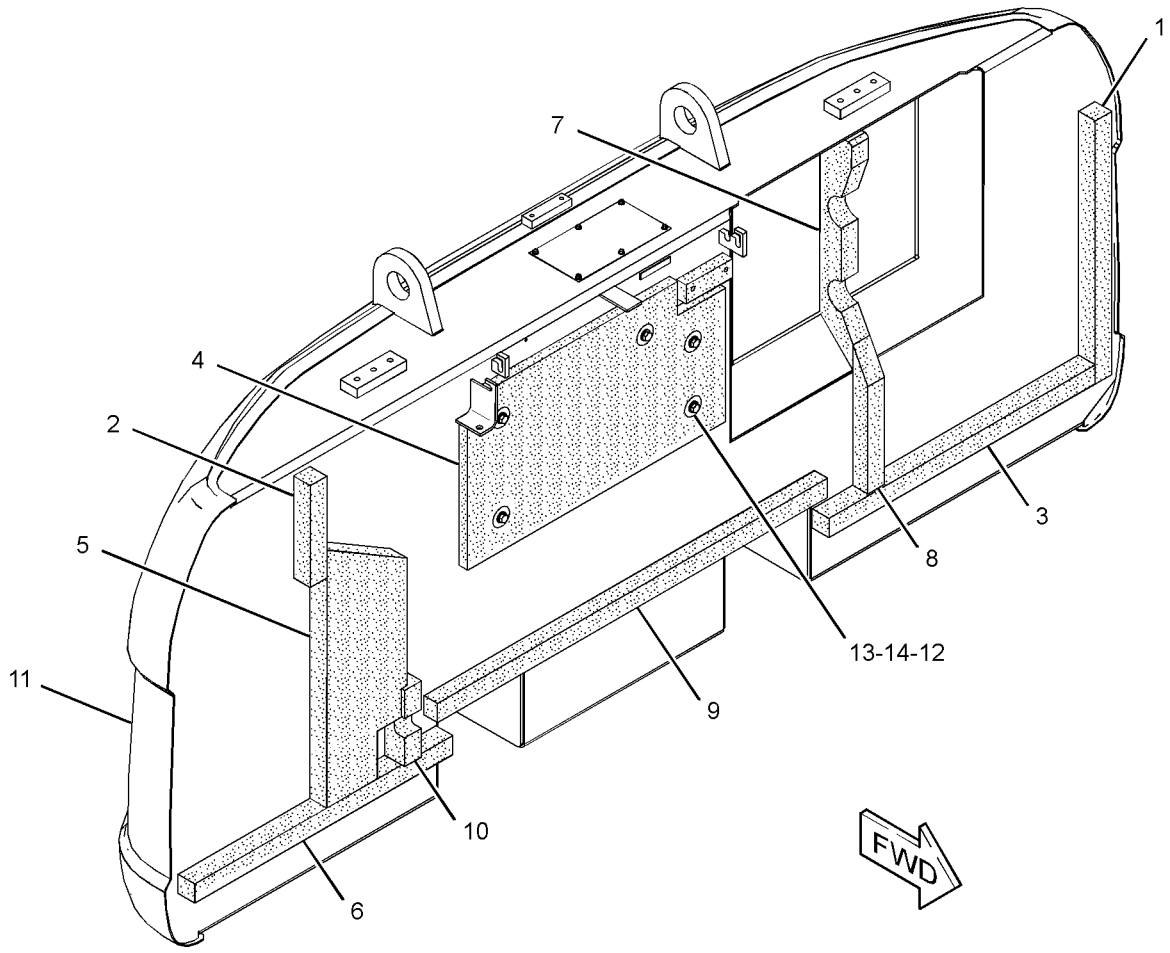

GRAPHIC #1 **<END>** g01608994

330-1236 COUNTERWEIGHT GP

S/N: DFP1-UP; CJX1-UP
4501-KG (9923-LB)
PART OF 278-3920 COUNTERWEIGHT GP
AN ATTACHMENT

SMCS-7056 **i03137738**

NOTE	REF NO	GRAPHIC REF	PART NUMBER	QTY	PART NAME 1 2 3 4 5 6 (PRODUCT LEVEL)	SEE PAGE
	1	1	**7I-0717**	1	LINER	
	2	1	**127-7771**	1	LINER	
	3	1	**184-8722**	1	LINER	
	4	1	**236-9527**	1	INSULATION	
	5	1	**236-9528**	1	LINER	
	6	1	**236-9529**	1	LINER	
	7	1	**236-9536**	1	LINER	
	8	1	**236-9539**	1	LINER	
	9	1	**259-3721**	1	LINER	
	10	1	**273-7799**	1	LINER	
	11	1	**330-1237**	1	COUNTERWEIGHT AS	
	12	1	**7Y-2292**	5	WASHER (13X50X2-MM THK)	
M	13	1	**8T-4179**	5	BOLT (M12X1.75X20-MM)	
	14	1	**8T-4223**	5	WASHER-HARD (13.5X25.5X3-MM THK)	

M-METRIC PART

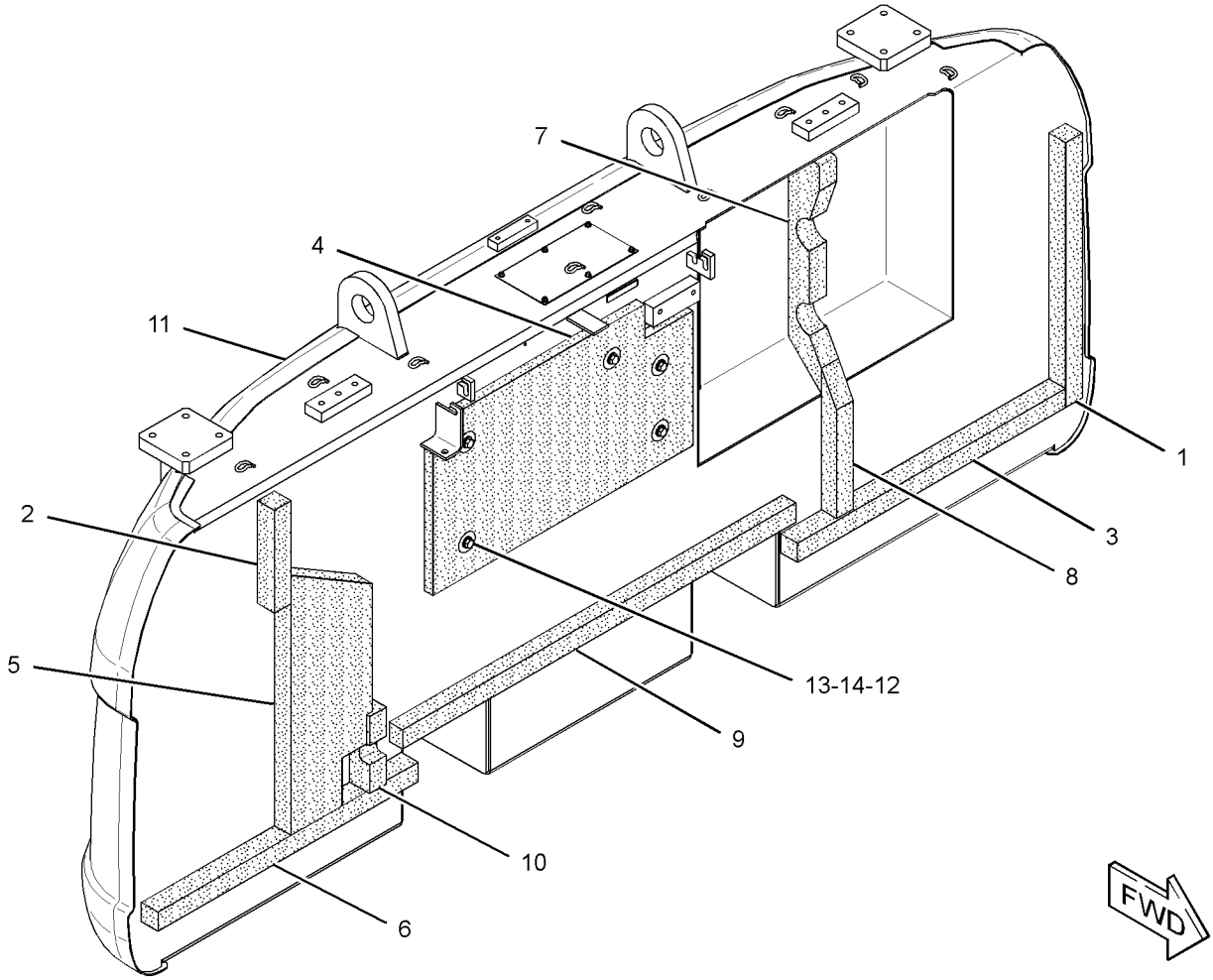

GRAPHIC #1 **<END>** g01626427

330-1239 COUNTERWEIGHT GP

S/N: DFP1-UP; CJX1-UP
4751-KG (10474.2-LB)
PART OF 278-3922 COUNTERWEIGHT GP
AN ATTACHMENT

SMCS-7056 **i03137823**

NOTE	REF NO	GRAPHIC REF	PART NUMBER	QTY	PART NAME 1 2 3 4 5 6 (PRODUCT LEVEL)	SEE PAGE
	1	1	**7I-0717**	1	LINER	
	2	1	**127-7771**	1	LINER	
	3	1	**184-8722**	1	LINER	
	4	1	**236-9527**	1	INSULATION	
	5	1	**236-9528**	1	LINER	
	6	1	**236-9529**	1	LINER	
	7	1	**236-9536**	1	LINER	
	8	1	**236-9539**	1	LINER	
	9	1	**259-3721**	1	LINER	
	10	1	**273-7799**	1	LINER	
	11	1	**330-1240**	1	COUNTERWEIGHT AS	
	12	1	**7Y-2292**	5	WASHER (13X50X2-MM THK)	
M	13	1	**8T-4179**	5	BOLT (M12X1.75X20-MM)	
	14	1	**8T-4223**	5	WASHER-HARD (13.5X25.5X3-MM THK)	

M-METRIC PART

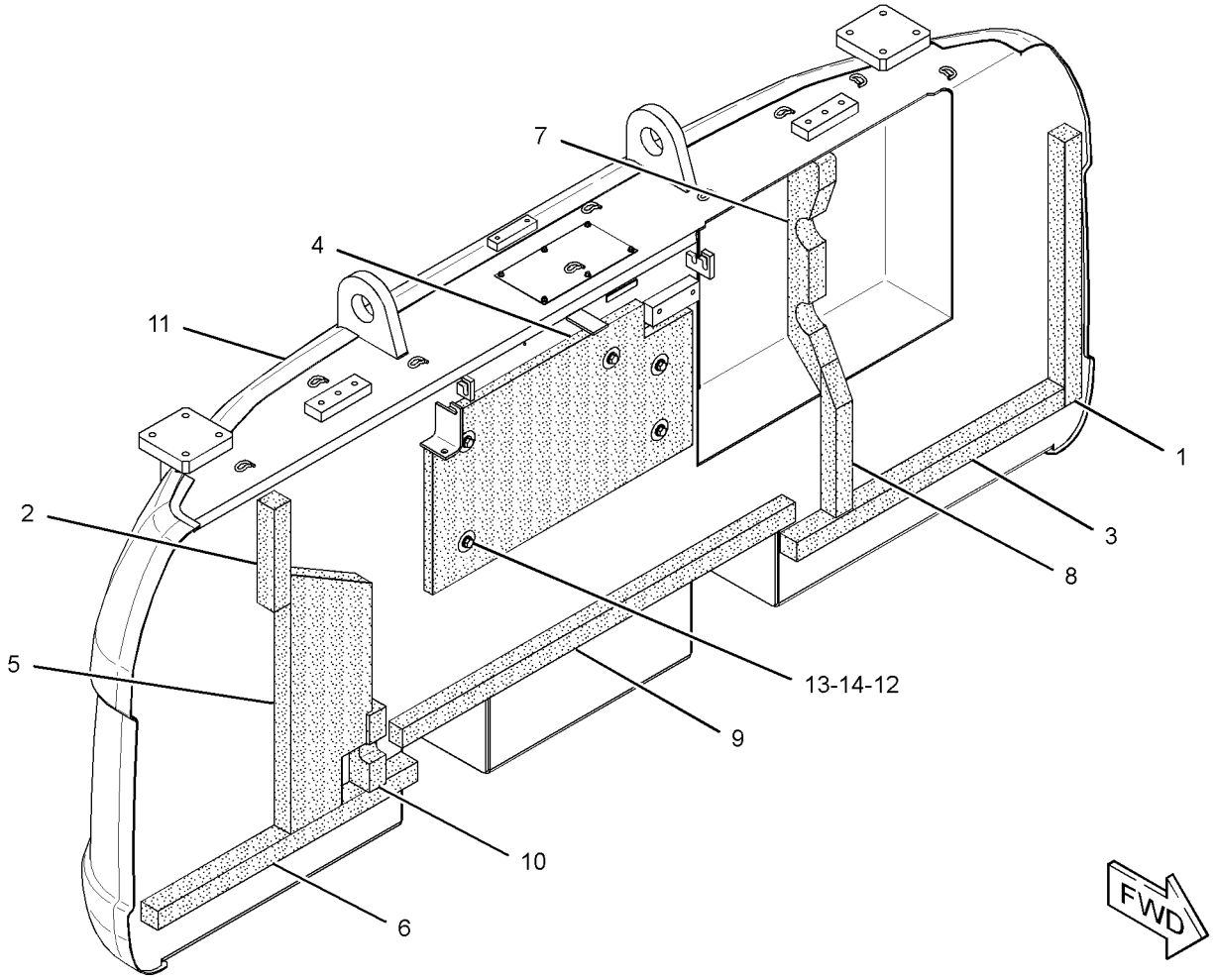

GRAPHIC #1 **<END>** g01626427

236-3382 COVER AS-SOUND SUPPRESSION–FUEL TANK

S/N: DFP1-278; CJX1-196

PART OF 223-3043 HOOD & GUARD GP

SMCS-7253, 7263, 7276, 795C **i02476717**

NOTE	REF NO	GRAPHIC REF	PART NUMBER	QTY	PART NAME 1 2 3 4 5 6 (PRODUCT LEVEL)	SEE PAGE
	1	1	**170-3015**	1	BUMPER	
	2	1	**177-5739**	1	LINER	
	3	1	**203-4927**	1	LINER	
Z	4	1		1	COVER AS	
	5	1	**236-9567**	2	SHEET-RUBBER	
	6	1	**236-9568**	1	LINER	

Z-NOT SERVICED SEPARATELY

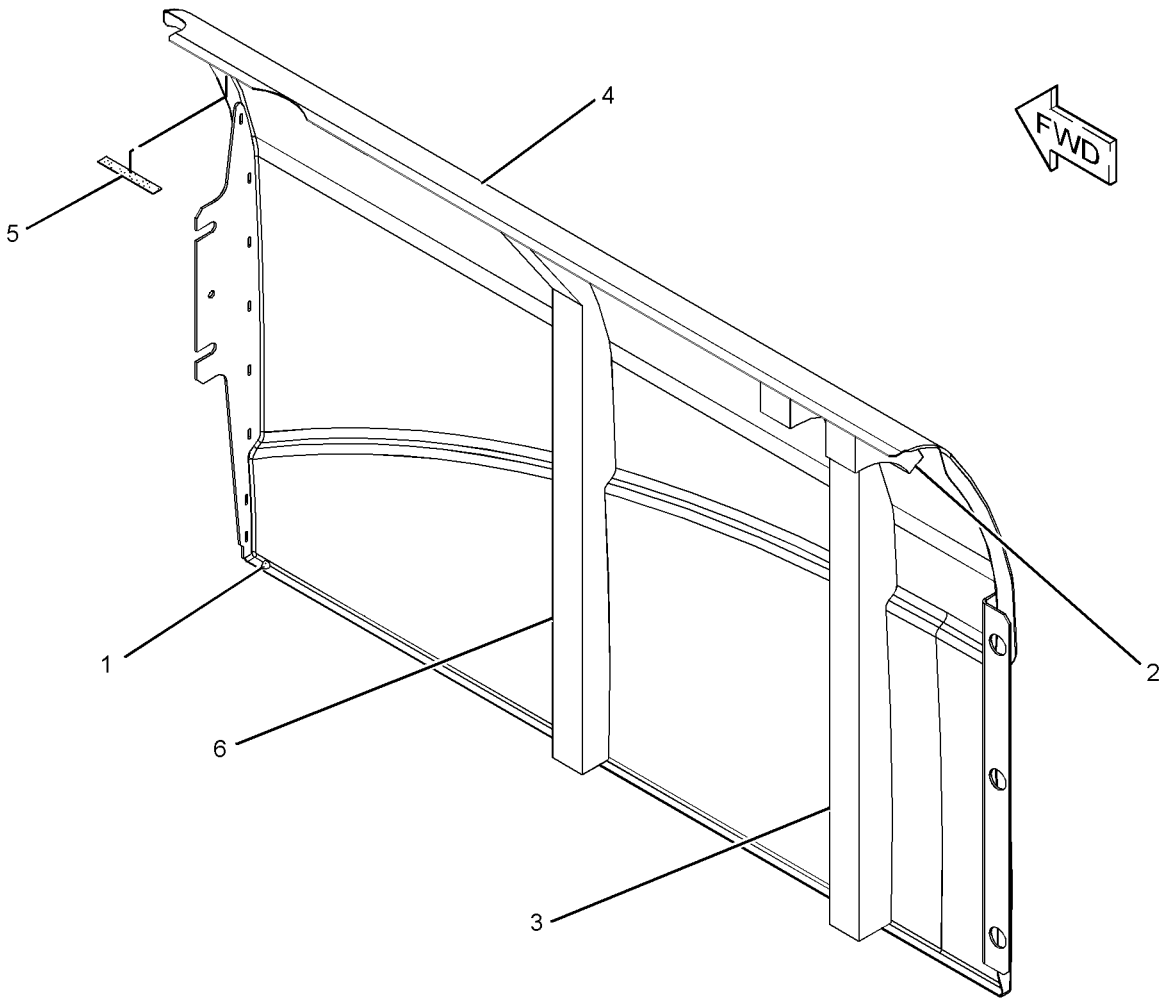

GRAPHIC #1 **<END>** g01213113

256-1677 COVER AS-SOUND SUPPRESSION

S/N: DFP1-UP; CJX1-UP

PART OF 223-3043 HOOD & GUARD GP

SMCS-7253, 7263, 7276, 795C **i02430266**

NOTE	REF NO	GRAPHIC REF	PART NUMBER	QTY	PART NAME 1 2 3 4 5 6 (PRODUCT LEVEL)	SEE PAGE
Z	1	1		1	COVER AS	
	2	1	**256-1678**	1	INSULATION	
	3	1	**256-1679**	2	INSULATION	

Z-NOT SERVICED SEPARATELY

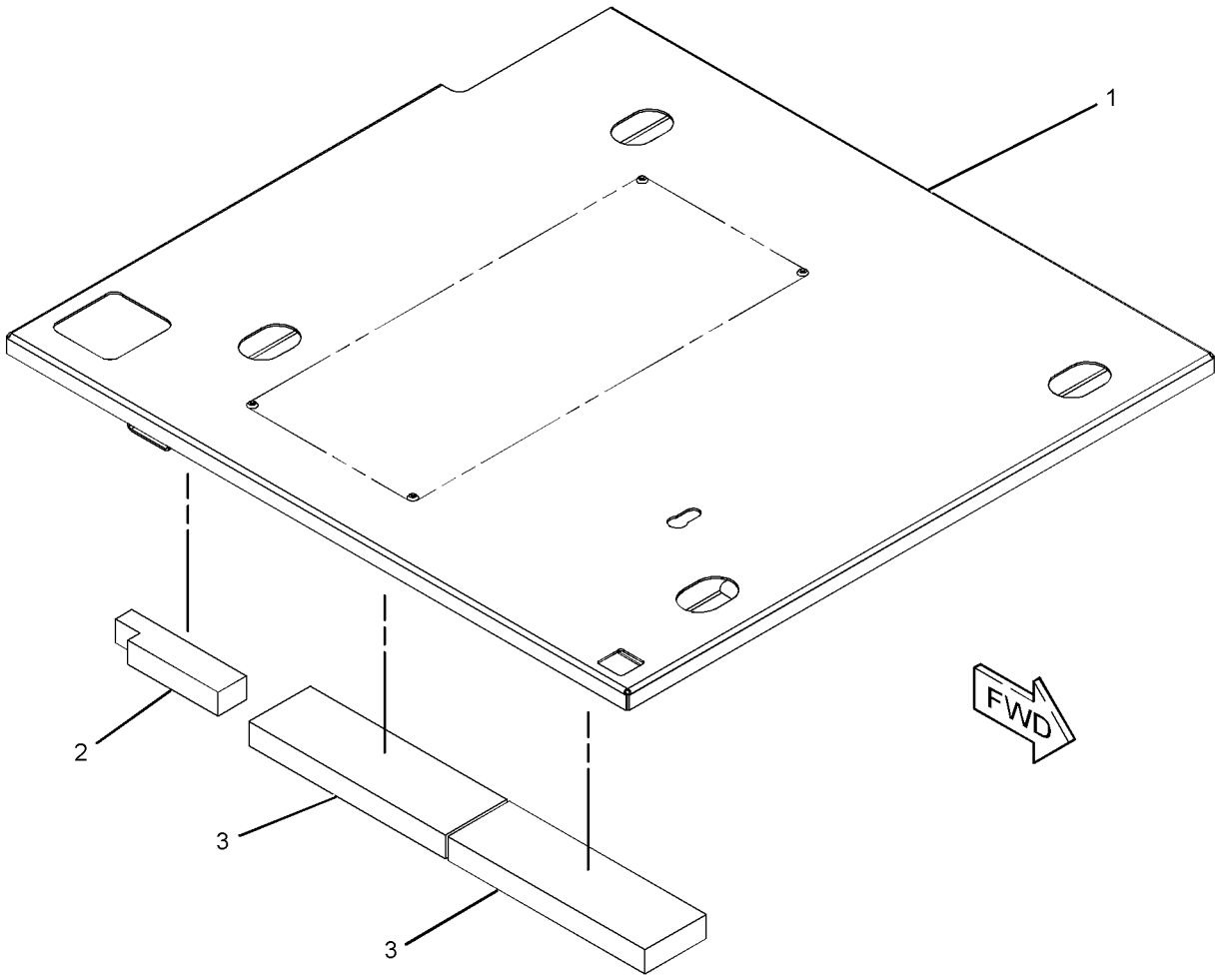

GRAPHIC #1 **<END>** g01214260

298-2972 COVER AS-SOUND SUPPRESSION–FUEL TANK

S/N: DFP279-UP; CJX197-UP

PART OF 223-3043 HOOD & GUARD GP

SMCS-7253, 7263, 7276, 795C **i02794915**

NOTE	REF NO	GRAPHIC REF	PART NUMBER	QTY	PART NAME 1 2 3 4 5 6 (PRODUCT LEVEL)	SEE PAGE
	1	1	**170-3015**	1	BUMPER	
	2	1	**177-5739**	1	LINER	
	3	1	**203-4927**	1	LINER	
	4	1	**236-9567**	2	SHEET-RUBBER	
	5	1	**236-9568**	1	LINER	

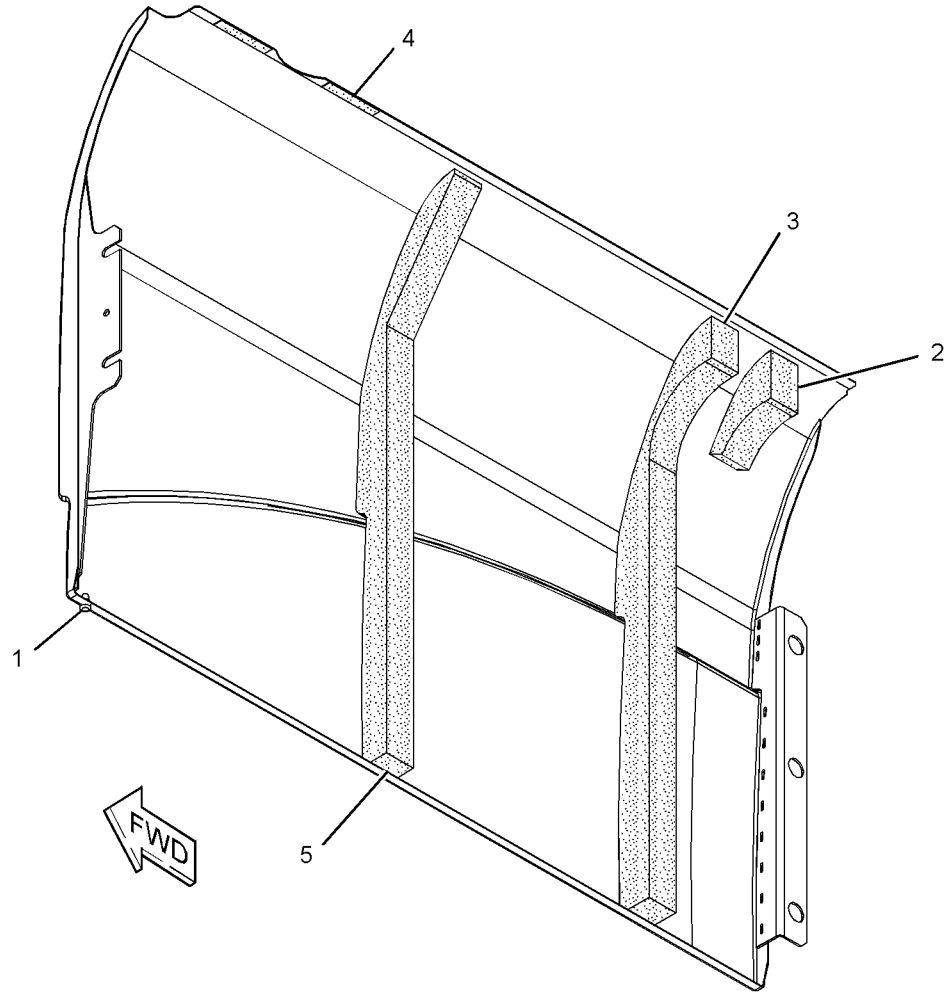

GRAPHIC #1 **<END>** g01381871

330-1430 COVER AS-SOUND SUPPRESSION

S/N: DFP1-UP; CJX1-UP

PART OF 223-3043 HOOD & GUARD GP

SMCS-7253, 7263, 7276, 795C **i03142162**

NOTE	REF NO	GRAPHIC REF	PART NUMBER	QTY	PART NAME 1 2 3 4 5 6 (PRODUCT LEVEL)	SEE PAGE
	1	1	**170-3015**	1	BUMPER	
	2	1	**177-5739**	1	LINER	
	3	1	**203-4927**	1	LINER	
	4	1	**236-9567**	2	SHEET-RUBBER	
	5	1	**236-9568**	1	LINER	

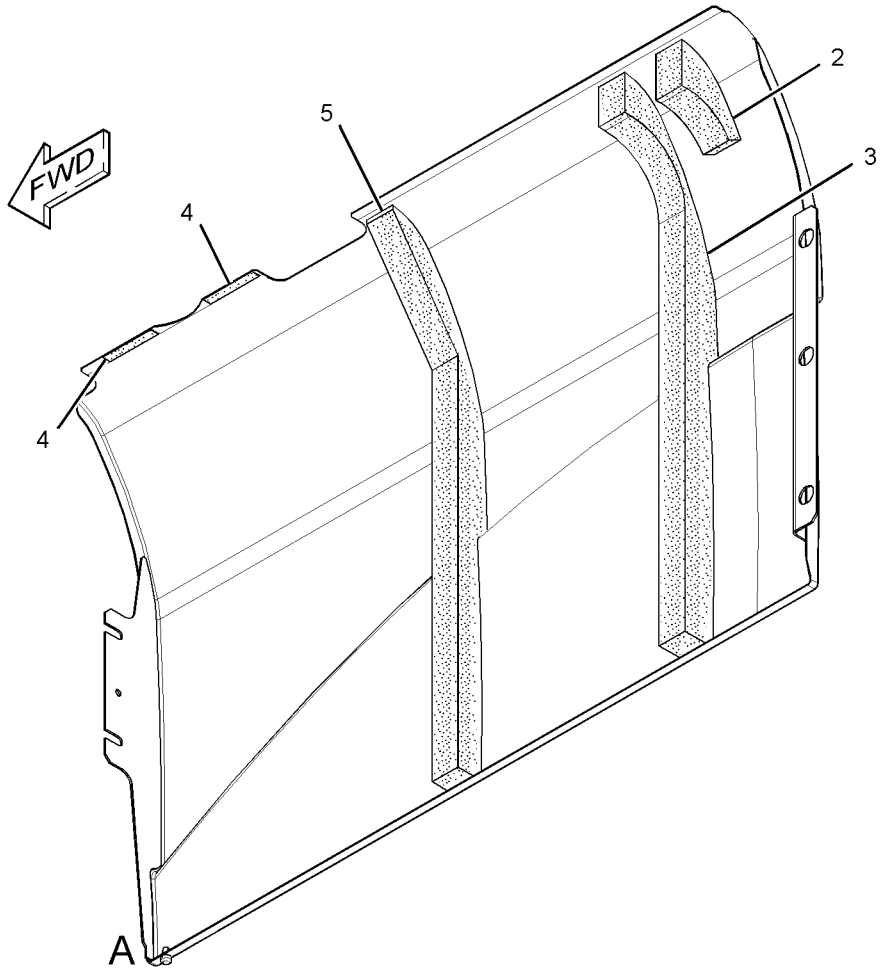

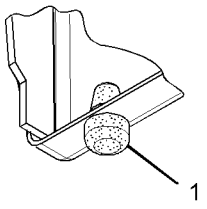

VIEW OF AREA A

GRAPHIC #1 **<END>** g01618993

236-3397 DOOR GP-ACCESS–RH

S/N: DFP1-278; CJX1-196

PART OF 223-3043 HOOD & GUARD GP

SMCS-7273 **i02767823**

NOTE	REF NO	GRAPHIC REF	PART NUMBER	QTY	PART NAME 1 2 3 4 5 6 (PRODUCT LEVEL)	SEE PAGE
M	1	1	**099-6418**	4	NUT (M6X1-THD)	
	2	1	**203-5282**	1	INSULATION	
	3	1	**203-5283**	1	INSULATION	
	4	1	*236-3398*	1	DOOR AS-ACCESS	
		1	**165-2976**	2	HINGE	
	5	1	**244-7895**	1	LINER	
J	6	1	**298-2942**	1	LOCK AS	

J-REQUIRES 5P8500 KEY
M-METRIC PART

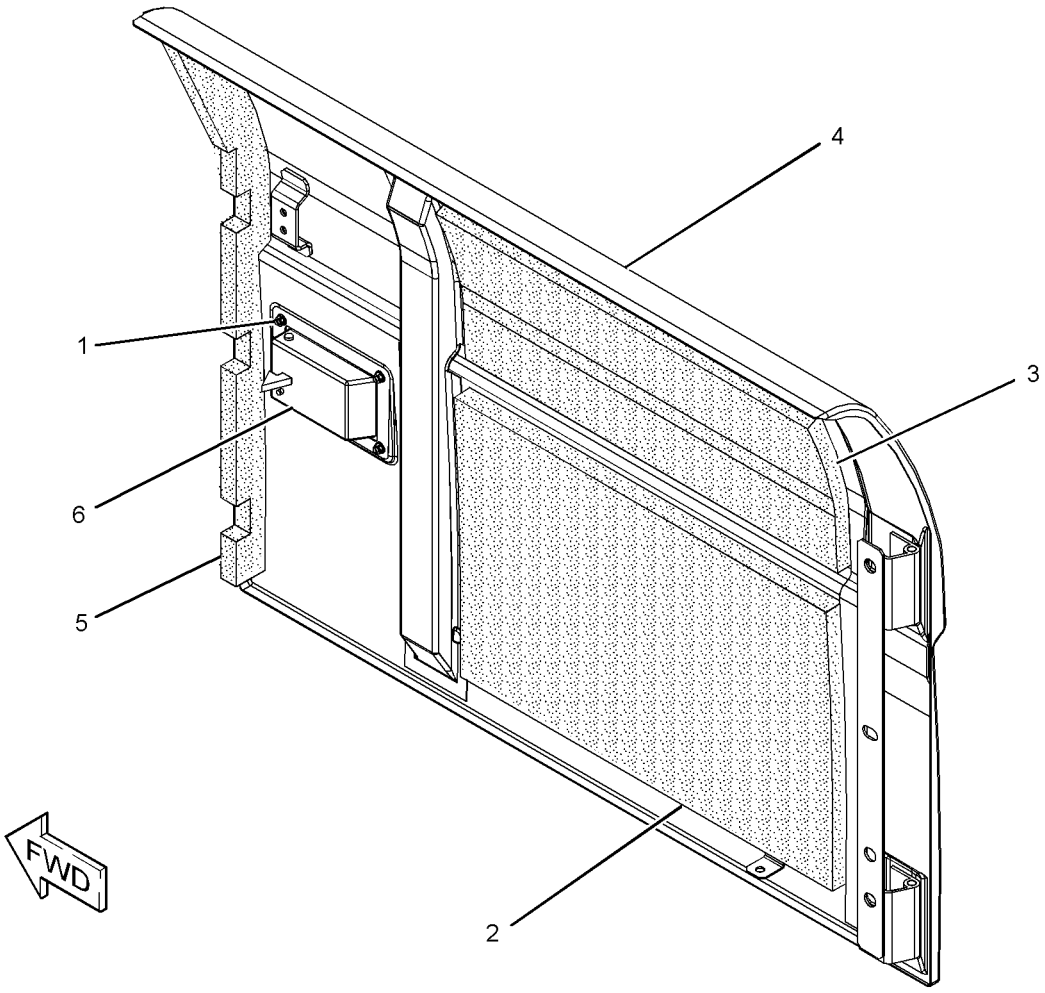

GRAPHIC #1 **<END>** g01182616

236-3751 DOOR GP-ACCESS–RADIATOR, LH

S/N: DFP1-278; CJX1-196

PART OF 223-3043 HOOD & GUARD GP

SMCS-7273 **i03257929**

NOTE	REF NO	GRAPHIC REF	PART NUMBER	QTY	PART NAME 1 2 3 4 5 6 (PRODUCT LEVEL)	SEE PAGE
M	1	1	**099-6418**	4	NUT (M6X1-THD)	
	2	1	**122-4101**	1	RUBBER	
	3	1	**177-6395**	1	LINER	
	4	1	**208-4289**	1	CUSHION	
	5	1	*236-3752*	1	DOOR AS-ACCESS	
	5A	1	**165-2976**	2	HINGE	
	6	1	**262-2468**	1	INSULATION	
J	7	1	**298-2942**	1	LOCK AS	

J-REQUIRES CORPORATE KEY
M-METRIC PART

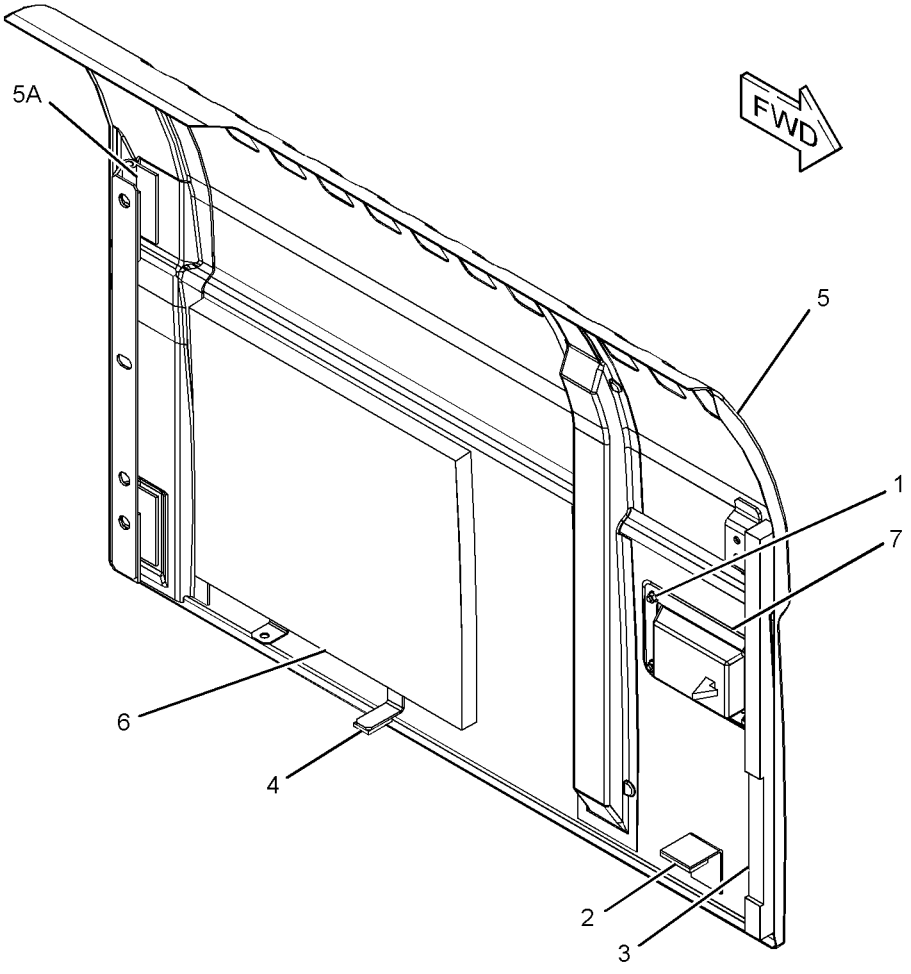

GRAPHIC #1 **<END>** g01249906

236-9590 DOOR GP-ACCESS–RADIATOR

S/N: DFP1-UP; CJX1-UP
PART OF 236-3395 HOOD AR
AN ATTACHMENT

SMCS-7273 **i02767827**

NOTE	REF NO	GRAPHIC REF	PART NUMBER	QTY	PART NAME 1 2 3 4 5 6 (PRODUCT LEVEL)	SEE PAGE
M	1	1	**099-6418**	4	NUT (M6X1-THD)	
	2	1	**122-4101**	1	RUBBER	
	3	1	**177-6395**	1	LINER	
	4	1	**208-4289**	1	CUSHION	
	5	1	*236-9591*	1	DOOR AS-ACCESS	
	5A	1	**165-2976**	2	HINGE	
	6	1	**298-2942**	1	LOCK AS	

M-METRIC PART

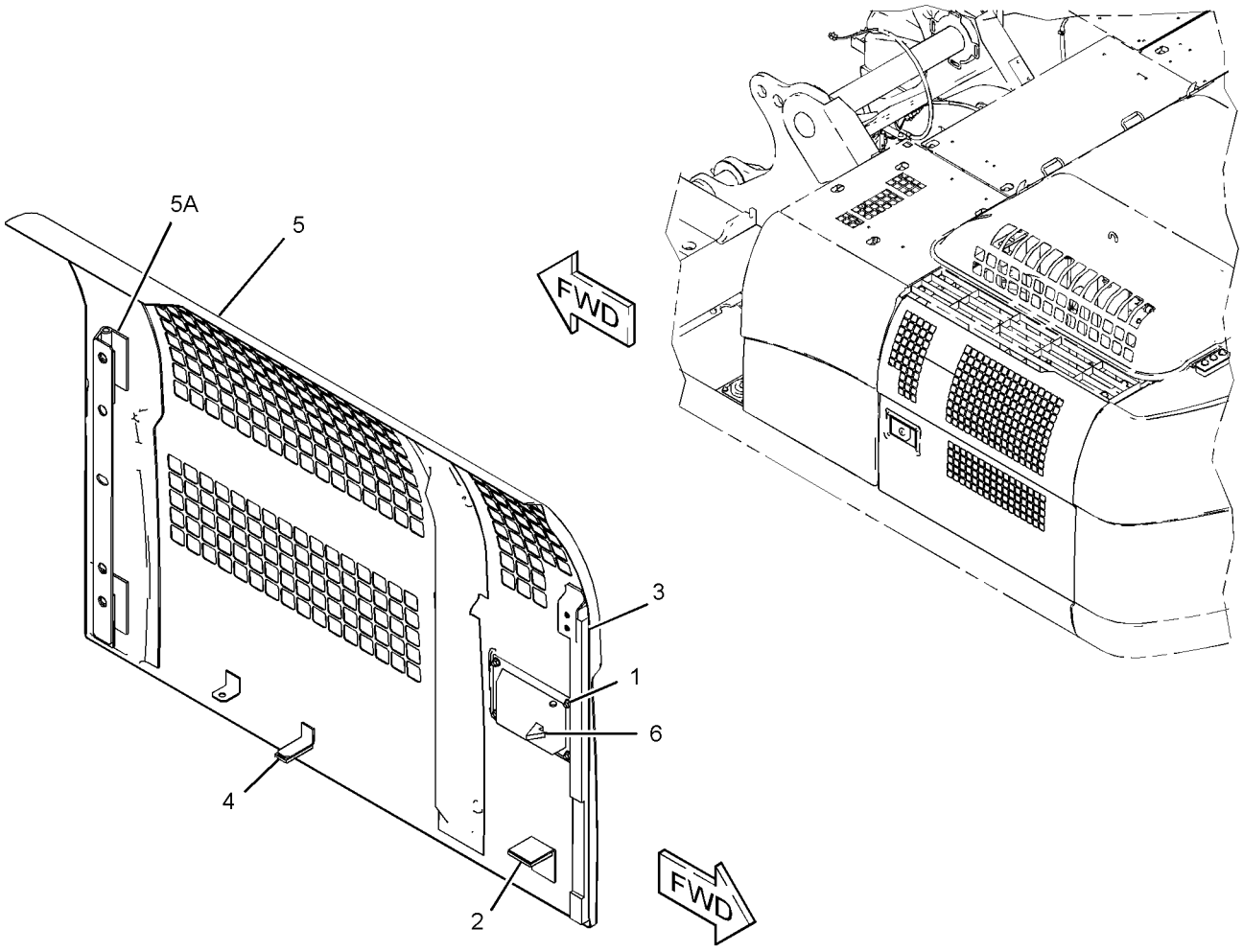

GRAPHIC #1 **<END>** g01246775

FRAME AND BODY

262-2400 DOOR GP-ACCESS–AIR CLEANER

S/N: DFP1-278; CJX1-196

PART OF 223-3043 HOOD & GUARD GP

SMCS-7273 **i02875850**

NOTE	REF NO	GRAPHIC REF	PART NUMBER	QTY	PART NAME 1 2 3 4 5 6 (PRODUCT LEVEL)	SEE PAGE
	1	1	**236-3747**	1	INSULATION	
	2	1	**250-5054**	1	LINER	
	3	1	**262-2401**	1	INSULATION	
	4	1	*262-2402*	1	DOOR AS-ACCESS	
			165-2976	2	HINGE	
	5	1	**208-4289**	1	CUSHION	

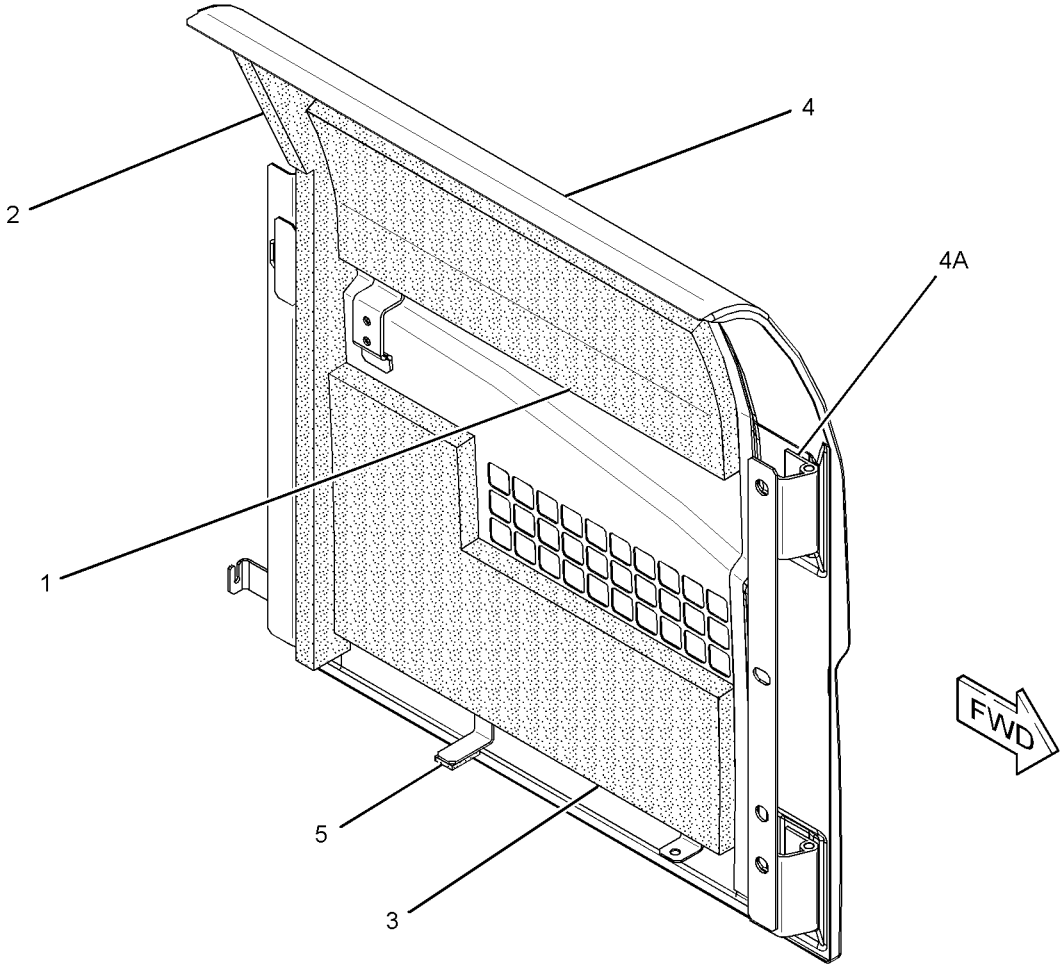

GRAPHIC #1 **<END>** g01586103

289-6898 DOOR GP-ACCESS–RADIATOR, LH

S/N: DFP279-UP; CJX197-UP

PART OF 223-3043 HOOD & GUARD GP

SMCS-7273 **i02794912**

NOTE	REF NO	GRAPHIC REF	PART NUMBER	QTY	PART NAME 1 2 3 4 5 6 (PRODUCT LEVEL)	SEE PAGE
M	1	1	**099-6418**	4	NUT (M6X1-THD)	
	2	1	**122-4101**	1	RUBBER	
	3	1	**177-6395**	1	LINER	
	4	1	**208-4289**	1	CUSHION	
	5	1	**262-2468**	1	INSULATION	
	6	1	*289-6899*	1	DOOR AS-SIDE	
		1	**165-2976**	2	HINGE	
J	7	1	**298-2942**	1	LOCK AS	

J-REQUIRES CORPORATE KEY
M-METRIC PART

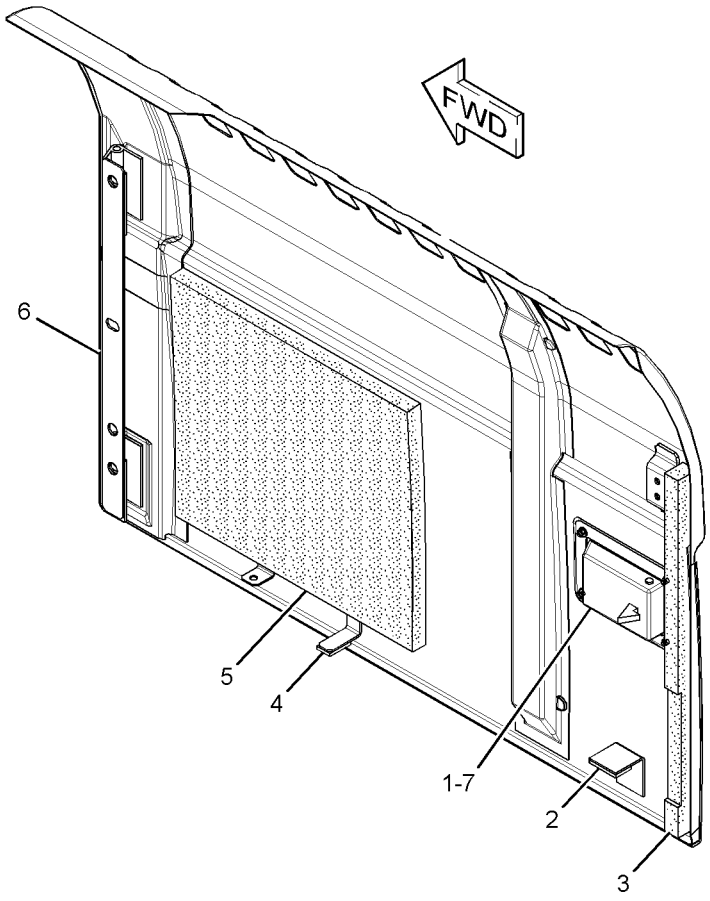

GRAPHIC #1 **<END>** g01398253

289-6902 DOOR GP-ACCESS–RADIATOR

S/N: DFP1-UP; CJX1-UP
PART OF 236-3395 HOOD AR
AN ATTACHMENT

SMCS-7273 **i02780613**

NOTE	REF NO	GRAPHIC REF	PART NUMBER	QTY	PART NAME 1 2 3 4 5 6 (PRODUCT LEVEL)	SEE PAGE
M	1	1	**099-6418**	4	NUT (M6X1-THD)	
	2	1	**122-4101**	1	RUBBER	
	3	1	**177-6395**	1	LINER	
	4	1	**208-4289**	1	CUSHION	
	5	1	*289-6901*	1	DOOR AS-ACCESS	
		1	**165-2976**	2	HINGE	
J	6	1	**298-2942**	1	LOCK AS	

J-REQUIRES CORPORATE KEY
M-METRIC PART

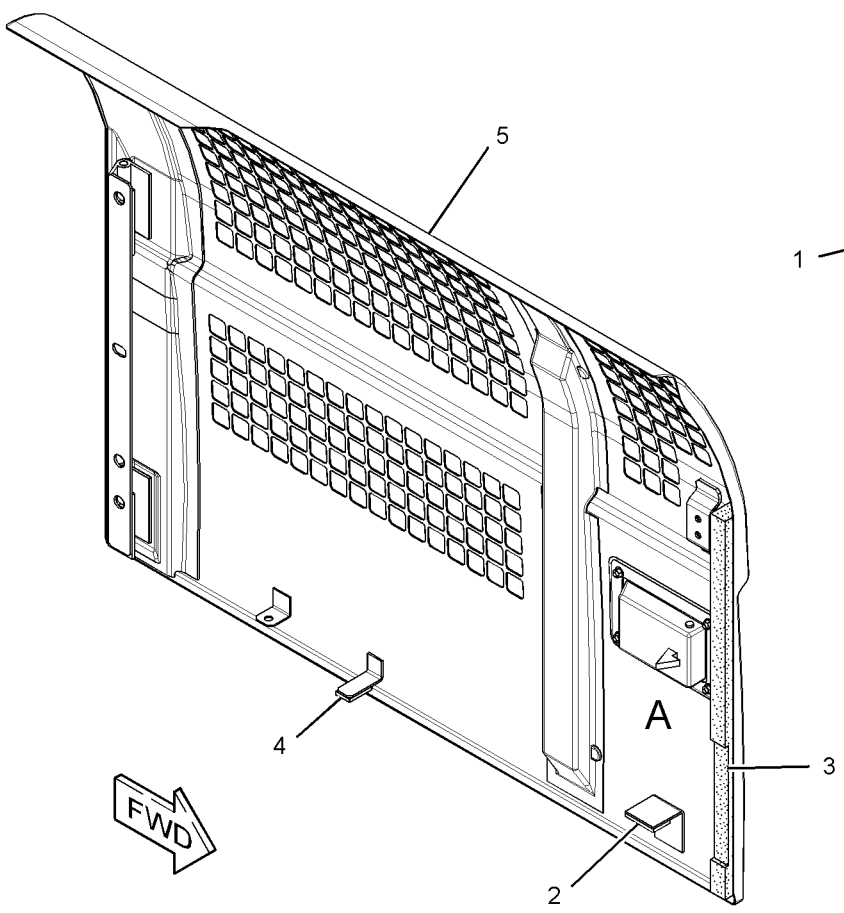

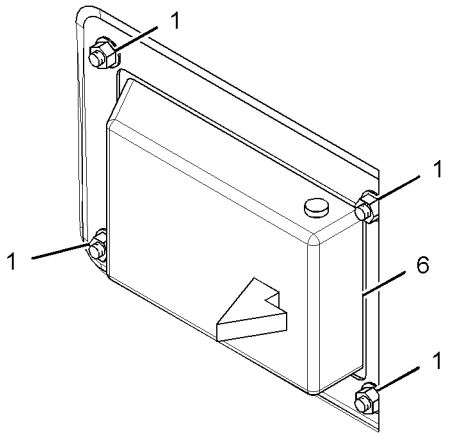

VIEW OF AREA A

GRAPHIC #1 **<END>** g01408848

289-6903 DOOR GP-ACCESS–PUMP COMPARTMENT

S/N: DFP279-UP; CJX197-UP

PART OF 223-3043 HOOD & GUARD GP

SMCS-7273 **i02794913**

NOTE	REF NO	GRAPHIC REF	PART NUMBER	QTY	PART NAME 1 2 3 4 5 6 (PRODUCT LEVEL)	SEE PAGE
M	1	1	**099-6418**	4	NUT (M6X1-THD)	
	2	1	**203-5282**	1	INSULATION	
	3	1	**203-5283**	1	INSULATION	
	4	1	**244-7895**	1	LINER	
J	5	1	**298-2942**	1	LOCK AS	
	6	1	*289-6904*	1	DOOR AS-SIDE	
	6A	1	**165-2976**	2	HINGE	
	7	1	**184-8862**	1	COVER	

J-REQUIRES CORPORATE KEY
M-METRIC PART

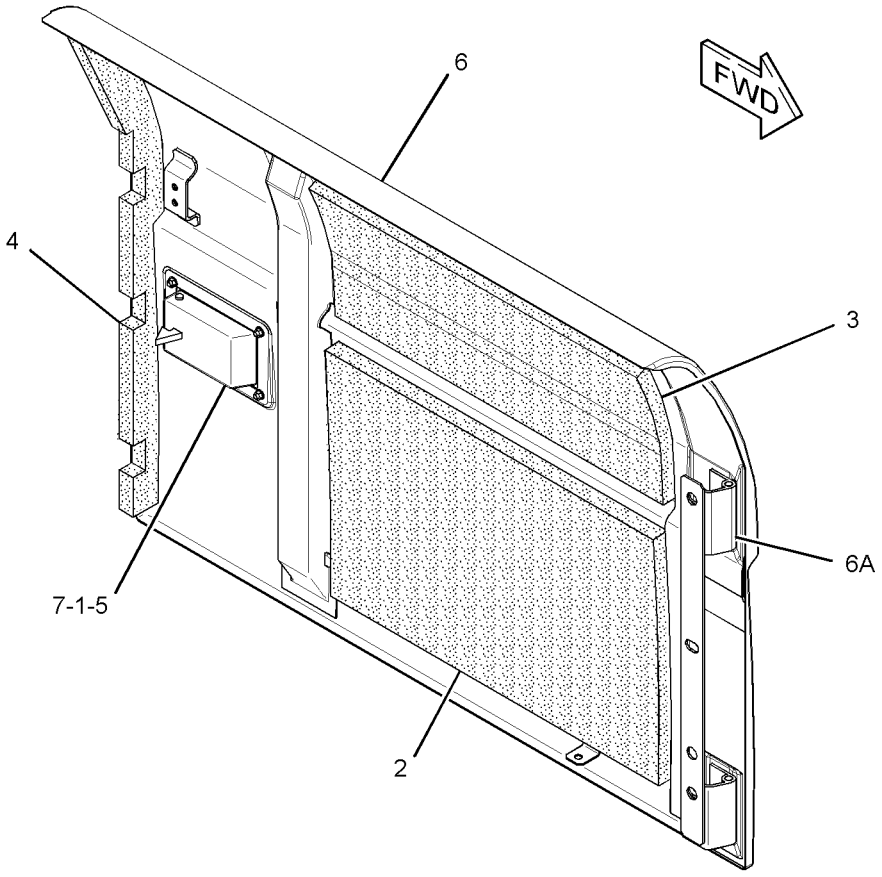

GRAPHIC #1 **<END>** g01385918

298-2968 DOOR GP-ACCESS–AIR CLEANER

S/N: DFP279-UP; CJX197-UP

PART OF 223-3043 HOOD & GUARD GP

SMCS-7273 **i02794914**

NOTE	REF NO	GRAPHIC REF	PART NUMBER	QTY	PART NAME 1 2 3 4 5 6 (PRODUCT LEVEL)	SEE PAGE
	1	1	**208-4289**	1	CUSHION	
	2	1	**236-3747**	1	INSULATION	
	3	1	**250-5054**	1	LINER	
	4	1	**262-2401**	1	INSULATION	
	5	1	*298-2969*	1	DOOR AS-SIDE	
	5A	1	**165-2976**	2	HINGE	

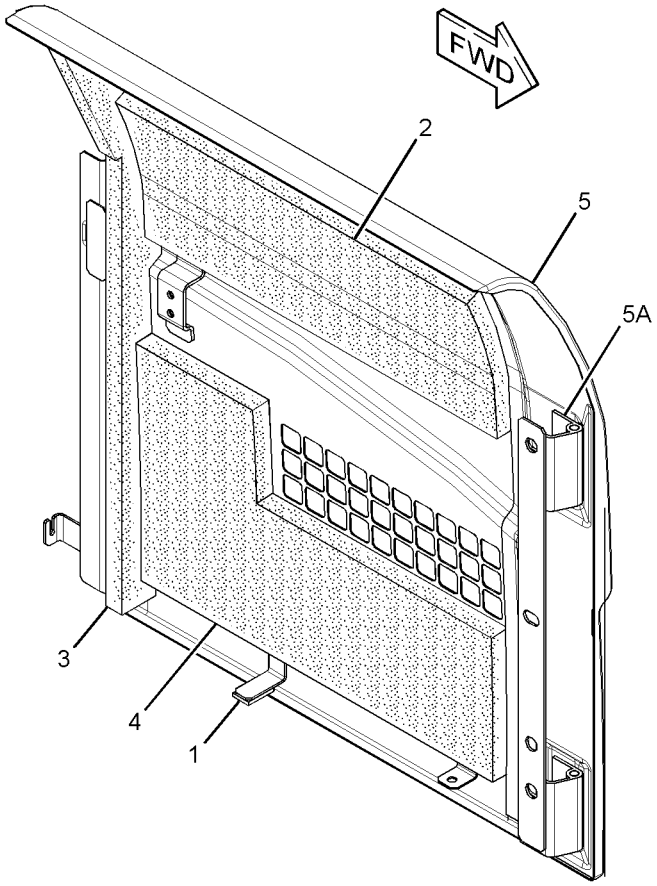

GRAPHIC #1 **<END>** g01398272

FRAME AND BODY

223-3042 FENDER & COVER GP

S/N: DFP1-UP; CJX1-UP

PART OF 240-3970, 240-3971 CHASSIS AR

SMCS-7252 **i02347079**

NOTE	REF NO	GRAPHIC REF	PART NUMBER	QTY	PART NAME 1 2 3 4 5 6 (PRODUCT LEVEL)	SEE PAGE
M	1	1	**135-8573**	2	BOLT AS	
	2	1	**236-3702**	2	SPACER (15X35X11-MM THK)	
	3	1	**236-3703**	2	WASHER (25X35X4-MM THK)	
	4	1	**236-9570**	1	COVER AS	
	5	1	**259-3543**	1	STEP AS	
	6	1	**5P-1075**	2	WASHER-HARD (10.2X22.5X3-MM THK)	
M	7	1	**8T-4195**	2	BOLT (M10X1.5X30-MM)	

M-METRIC PART

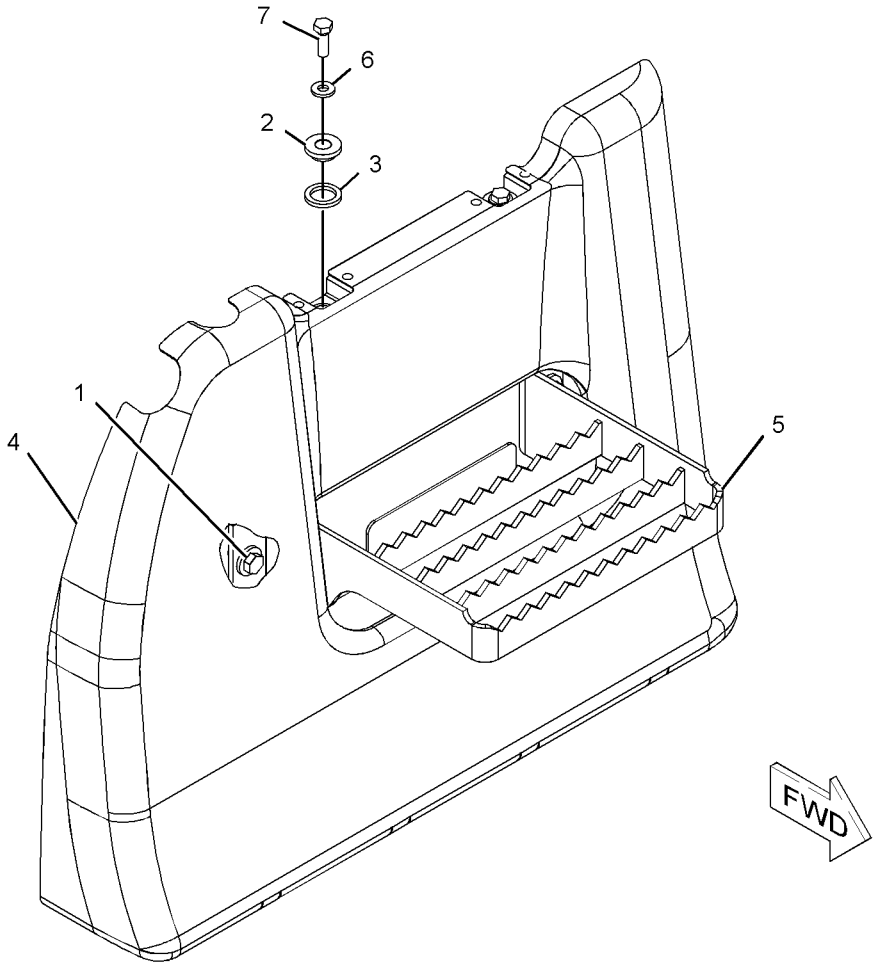

GRAPHIC #1 **<END>** g01150323

330-1166 FENDER & COVER GP

S/N: DFP1-UP; CJX1-UP
PART OF 330-1353 MIRROR AR-REAR VIEW
AN ATTACHMENT

SMCS-7252 **i03127885**

NOTE	REF NO	GRAPHIC REF	PART NUMBER	QTY	PART NAME 1 2 3 4 5 6 (PRODUCT LEVEL)	SEE PAGE
	1	1	**330-1167**	1	COVER AS	
		1	**278-3818**	1	LINER	

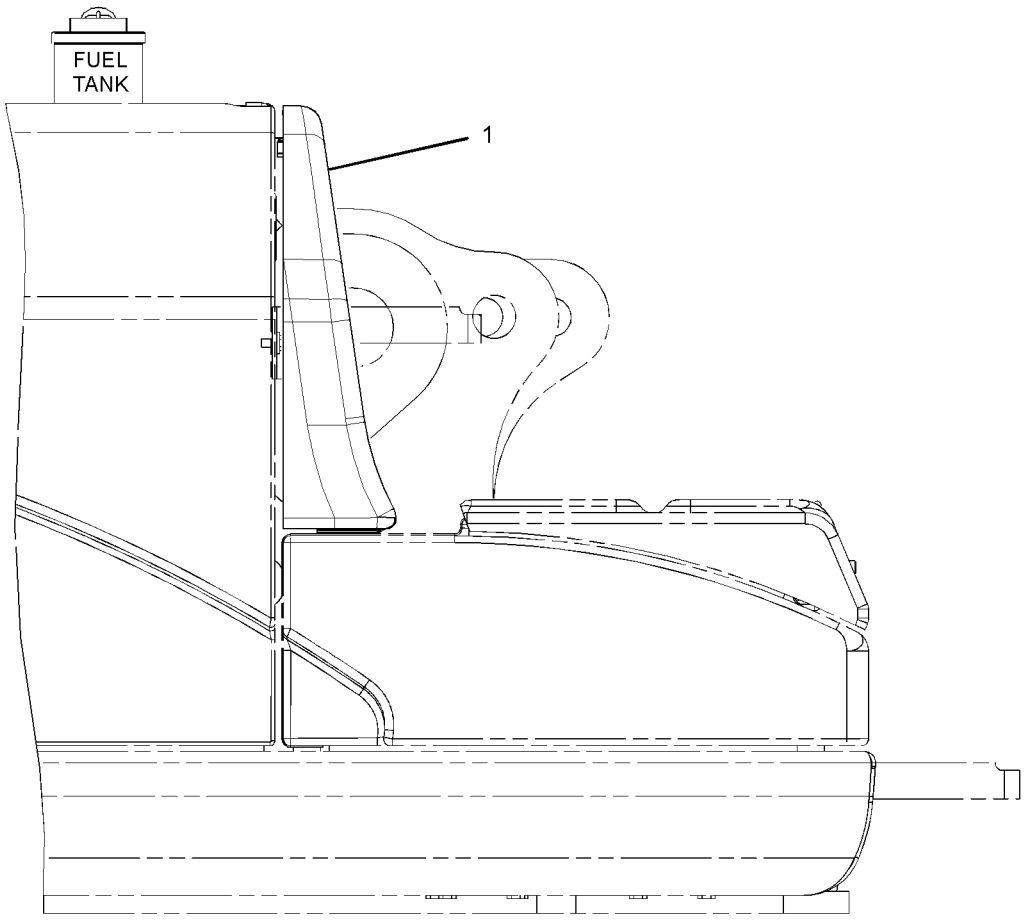

RIGHT SIDE VIEW

GRAPHIC #1

<END>

g01619313

FRAME AND BODY

241-7151 FRAME GP-UPPER

S/N: DFP1-UP; CJX1-UP

PART OF 240-3970, 240-3971 CHASSIS AR

SMCS-7051 **i03248660**

NOTE	REF NO	GRAPHIC REF	PART NUMBER	QTY	PART NAME 1 2 3 4 5 6 (PRODUCT LEVEL)	SEE PAGE
	1	1	**4I-4621**	2	PIN AS	
B	2	1	**093-0084**	4	SHIM (1-MM THK)	
	3	1	**093-0349**	3	WASHER (22X60X6-MM THK)	
	4	1	**093-0364**	1	SPACER (103X140X12-MM THK)	
B	5	1	**113-2127**	2	SHIM (0.5-MM THK)	
	6	1	**203-7464**	2	SHIM (5-MM THK)	
	7	1	**203-7465**	4	SHIM (3-MM THK)	
	8	1	**241-7152**	1	FRAME AS-UPPER	
	8A	1	**7Y-0633**	1	BOSS	
	8B	1	**163-3729**	1	STEP AS	
J	9	1	**245-7900**	1	CAP	
J	10	1	**245-7901**	1	CAP	
	11	1	**260-2390**	1	PIN AS	
B	12	1	**308-8778**	1	SHIM (1-MM THK)	
B	13	1	**308-8779**	2	SHIM (1-MM THK)	
B	14	1	**308-8780**	1	SHIM (1-MM THK)	
	15	1	**093-0366**	2	SPACER (93X130X12-MM THK)	
	16	1	**8T-4123**	3	WASHER (22X35X3.5-MM THK)	
M	17	1	**8T-4780**	3	BOLT (M20X2.5X30-MM)	

B-USE AS REQUIRED
J-USE ON MACHINE WITHOUT LOWER WIPER
M-METRIC PART

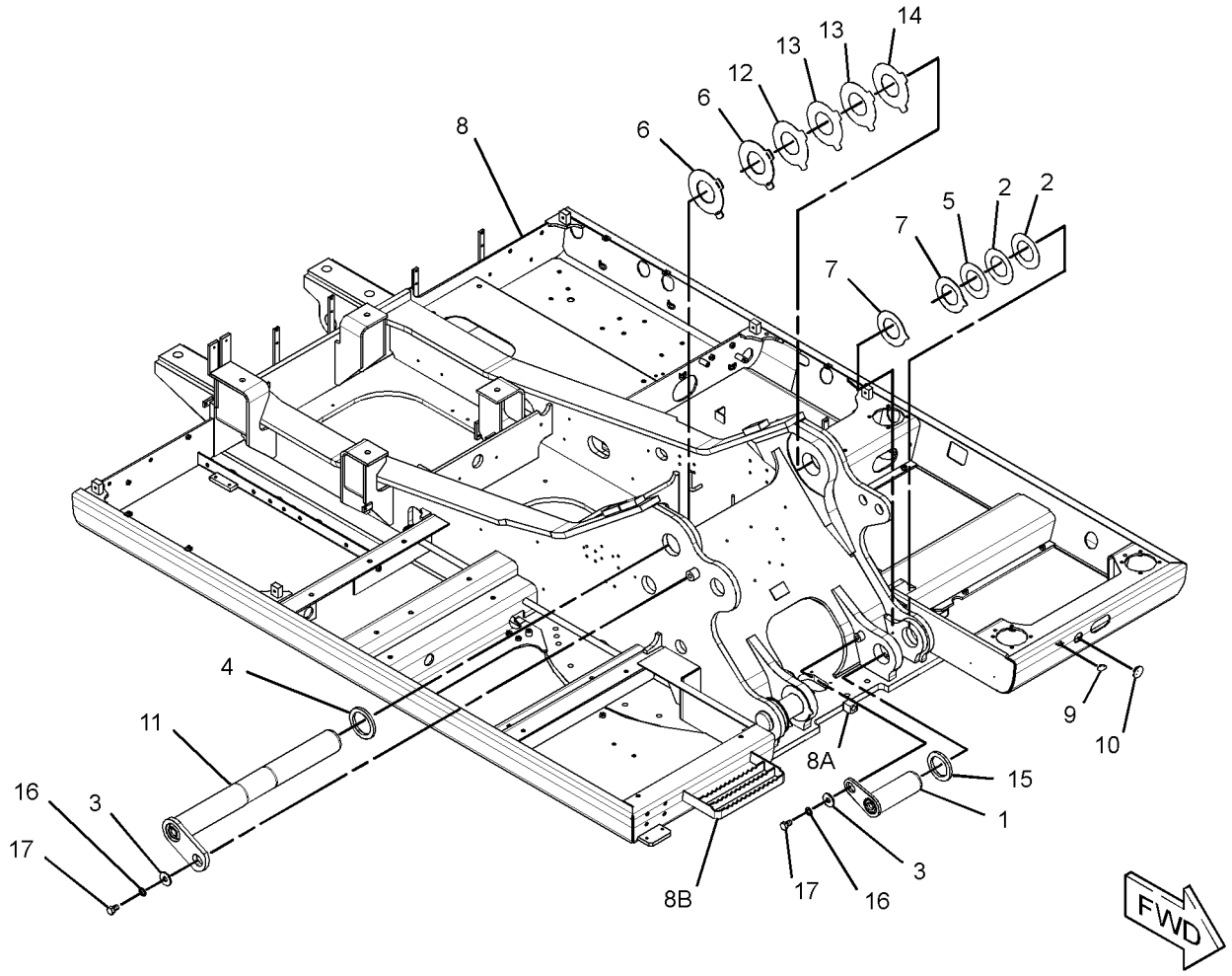

GRAPHIC #1 **<END>** g01627895

199-4698 GEAR & BEARING GP-SWING

S/N: DFP1-UP; CJX1-UP

PART OF 227-6085 GEAR & BEARING GP-SWING

SMCS-7063 **i02499876**

NOTE	REF NO	GRAPHIC REF	PART NUMBER	QTY	PART NAME 1 2 3 4 5 6 (PRODUCT LEVEL)	SEE PAGE
	1	1	**3B-8489**	1	FITTING-GREASE	
E	2	1	**110-7183**		SEAL (418-CM)	
E	2A	1	**110-7183**		SEAL (420-CM)	

E-ORDER BY THE CENTIMETER

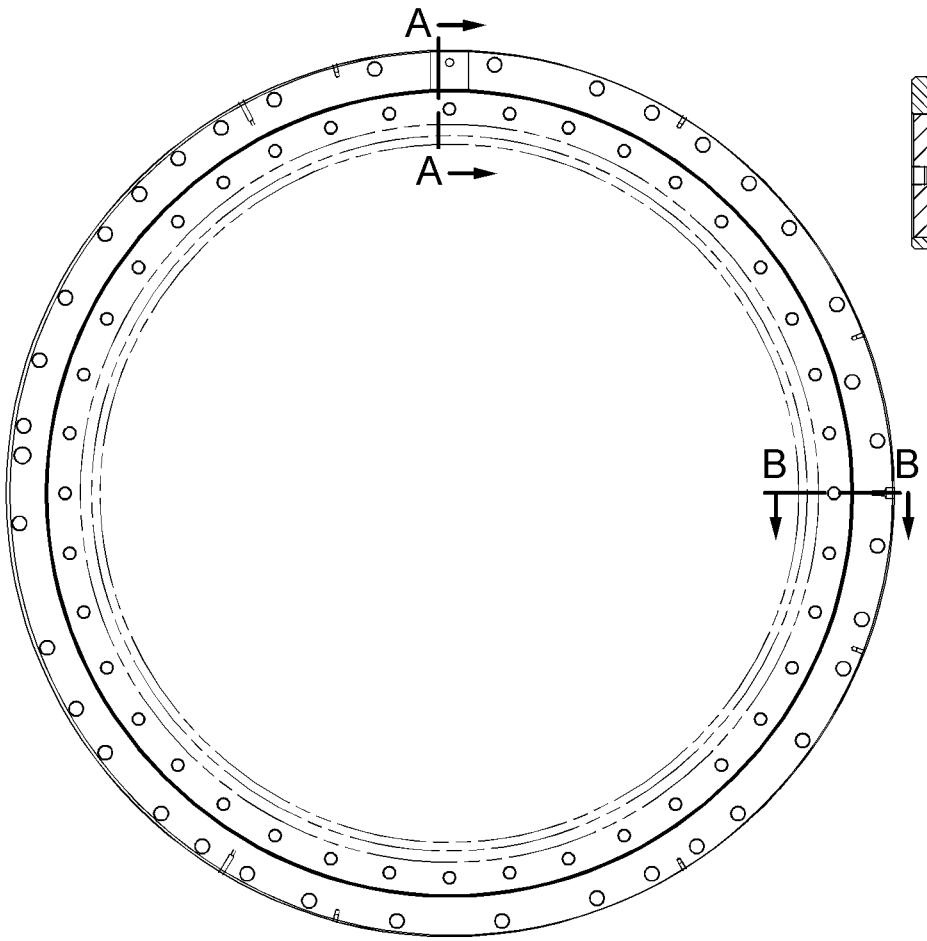

TOP VIEW

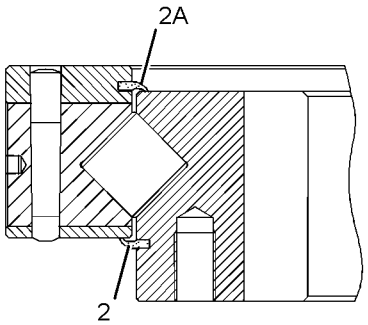

SECTION A-A

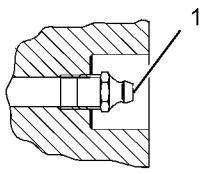

SECTION B-B

GRAPHIC #1 **<END>** g01249911

227-6085 GEAR & BEARING GP-SWING

S/N: DFP1-UP; CJX1-UP

PART OF 227-6158 GEAR & BEARING GP-SWING

SMCS-7063 **i02267142**

NOTE	PART NUMBER	QTY	PART NAME 1 2 3 4 5 6 (PRODUCT LEVEL)	SEE PAGE
Y	*227-6086*	1	GEAR & BEARING GP-SWING	488
			—OR—	
Y	*199-4698*	1	GEAR & BEARING GP-SWING	486

Y-SEPARATE ILLUSTRATION

<END>

227-6086 GEAR & BEARING GP-SWING

S/N: DFP1-UP; CJX1-UP

PART OF 227-6085 GEAR & BEARING GP-SWING

SMCS-7063 **i02998450**

NOTE	REF NO	GRAPHIC REF	PART NUMBER	QTY	PART NAME 1 2 3 4 5 6 (PRODUCT LEVEL)	SEE PAGE
Z	1	1		62	SEPARATOR-BEARING	
Z	2	1		58	SEPARATOR-BEARING	
Z	3	1		1	RACE AS	
	4	1	**227-6072**	1	SEAL-DUST	
Z	5	1		120	ROLLER	
Z	6	1		1	RACE-BEARING	
	7	1	**3B-8489**	1	FITTING-GREASE	
E	8	1	**148-4685**		SEAL (409-CM)	

E-ORDER BY THE CENTIMETER
Z-NOT SERVICED SEPARATELY

227-6086 **GEAR & BEARING GP-SWING** *(contd.)* **i02998450**

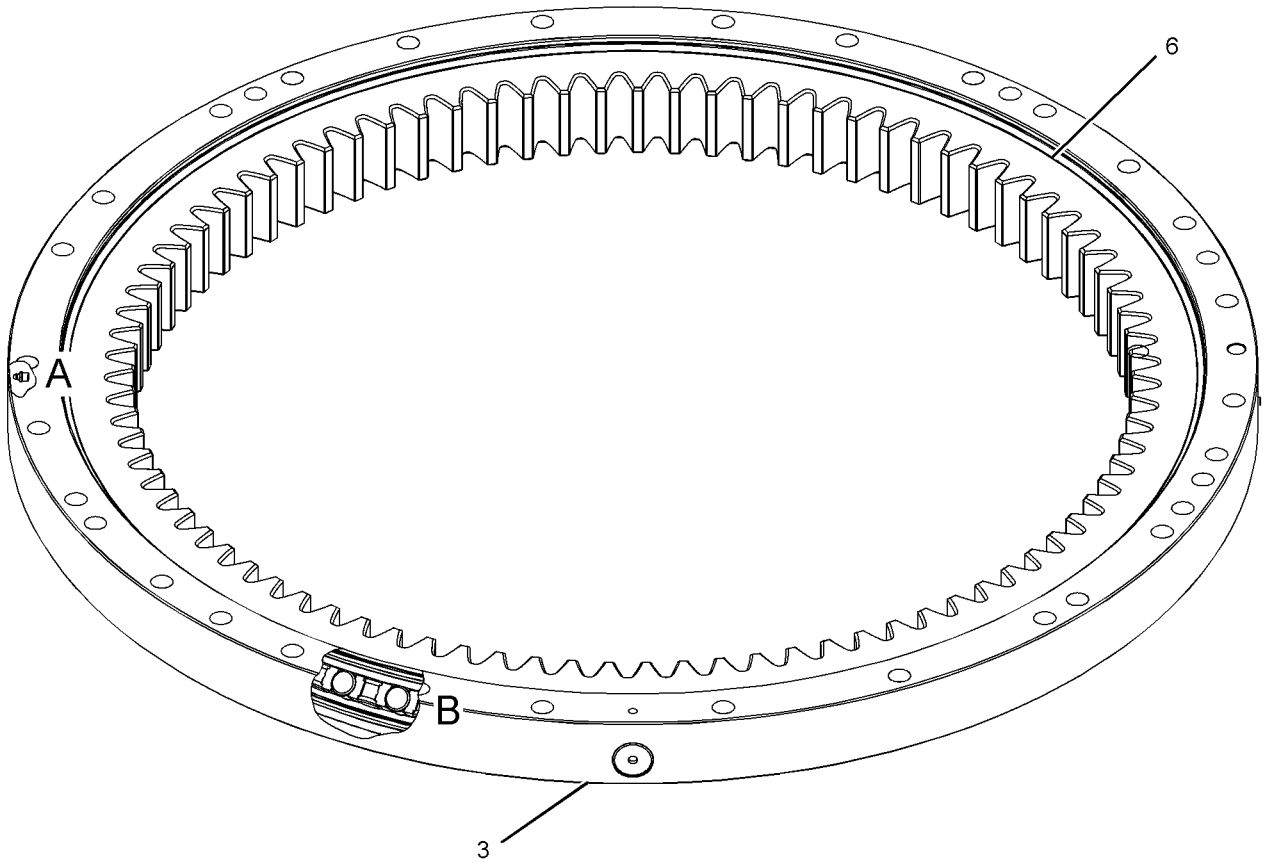

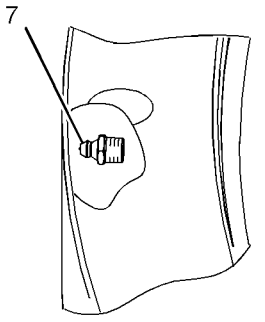

VIEW OF AREA A

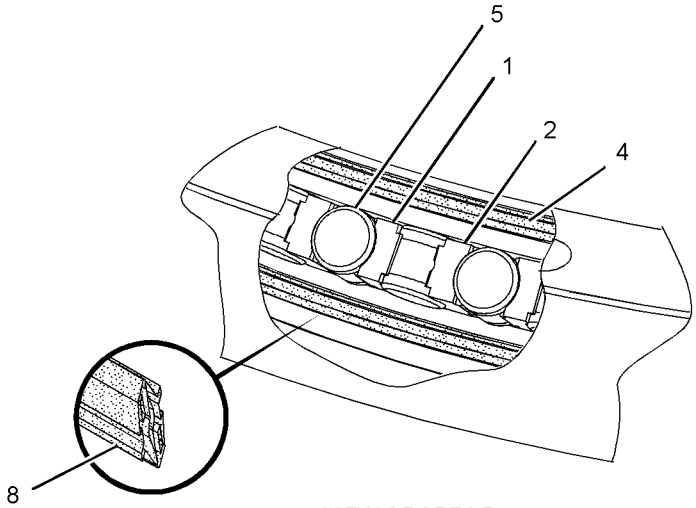

VIEW OF AREA B

GRAPHIC #1 **<END>** g01520756

227-6158 GEAR & BEARING GP-SWING

S/N: DFP1-UP; CJX1-UP

PART OF 240-3984, 240-3985 FRAME AR-UNDERCARRIAGE

SMCS-7063 **i03063084**

NOTE	REF NO	GRAPHIC REF	PART NUMBER	QTY	PART NAME 1 2 3 4 5 6 (PRODUCT LEVEL)	SEE PAGE
	1	1,2	**5K-9243**	2	ELBOW-FLARED	
	2	1	**7Y-1647**	1	GASKET	
	3	2	**7Y-1650**	1	CLAMP-HOSE	
	4	1	**199-4601**	1	TUBE AS	
Y	5	2	**227-6085**	1	GEAR & BEARING GP-SWING	487
	6	2	**227-6105**	1	BOOT	
	7	2	**227-6106**	1	RETAINER	
	8	2	**093-0020**	32	SPACER (25X44X6-MM THK)	
	9	2	**096-4902**	1	DOWEL	
	10	1	**148-4703**	1	COVER	
	11	1	**148-4704**	1	GASKET	
	12	2	**3B-8489**	1	FITTING-GREASE	
	13	2	**4N-9170**	2	CLIP	
M	14	2	**6V-8133**	36	BOLT (M24X3X80-MM)	
	15	2	**7Y-0336**	36	SPACER (24.5X44X24-MM THK)	
	16	1	**7Y-1648**	1	STRIP	
M	17	2	**8T-0669**	32	BOLT (M24X3X130-MM)	
	18	1,2	**8T-4121**	14	WASHER-HARD (11X21X2.5-MM THK)	
M	19	1	**8T-4133**	2	NUT (M10X1.5-THD)	
M	20	1,2	**8T-4136**	12	BOLT (M10X1.5X25-MM)	
M	21	2	**8T-4199**	2	BOLT (M8X1.25X12-MM)	
B	22	2	**1U-8846**		SEALANT-GASKET	

B-USE AS REQUIRED
M-METRIC PART
Y-SEPARATE ILLUSTRATION

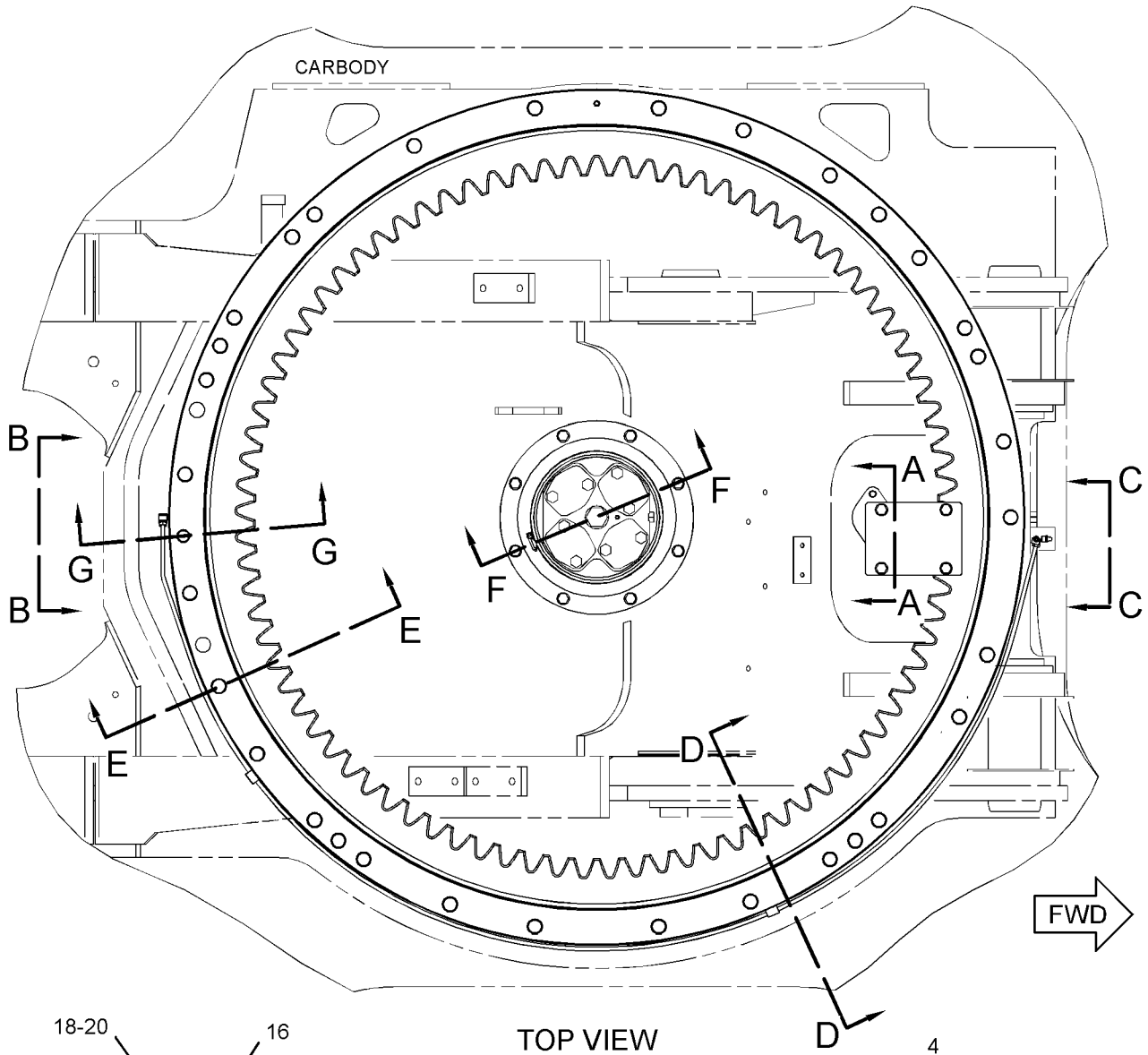

TOP VIEW

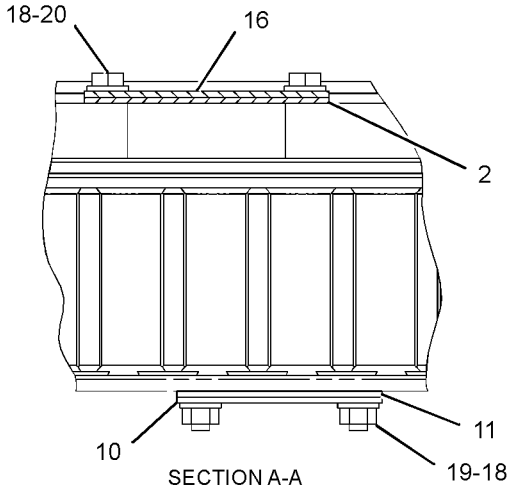

SECTION A-A

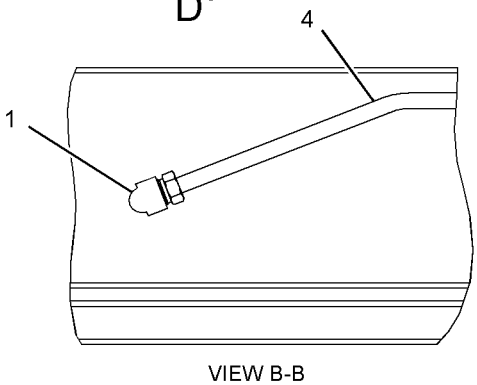

VIEW B-B

REFER TO ALL ILLUSTRATIONS OF THIS GROUP FOR AUXILIARY VIEWS

GRAPHIC #1

g01238945

227-6158 **GEAR & BEARING GP-SWING** *(contd.)* **i03063084**

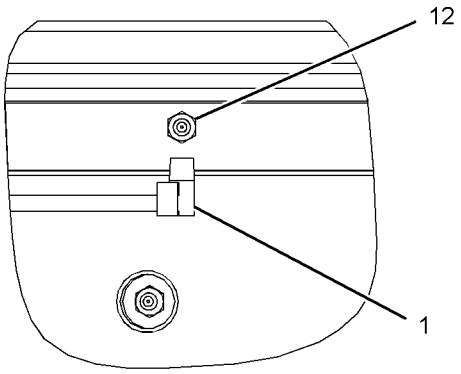

VIEW C-C

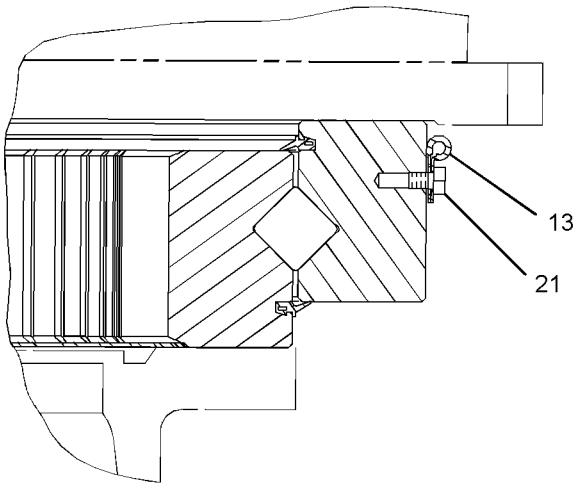

SECTION D-D

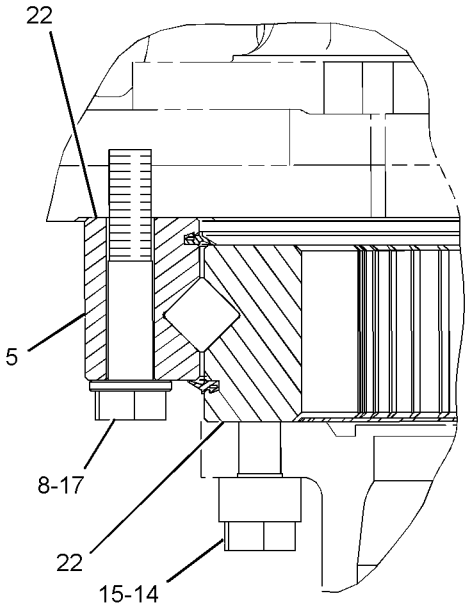

SECTION E-E

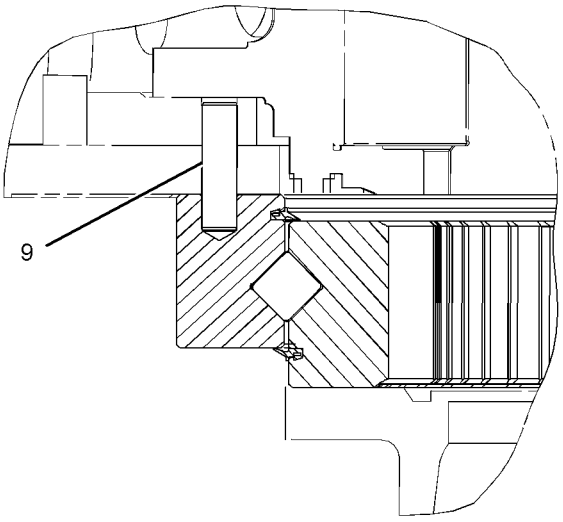

SECTION G-G

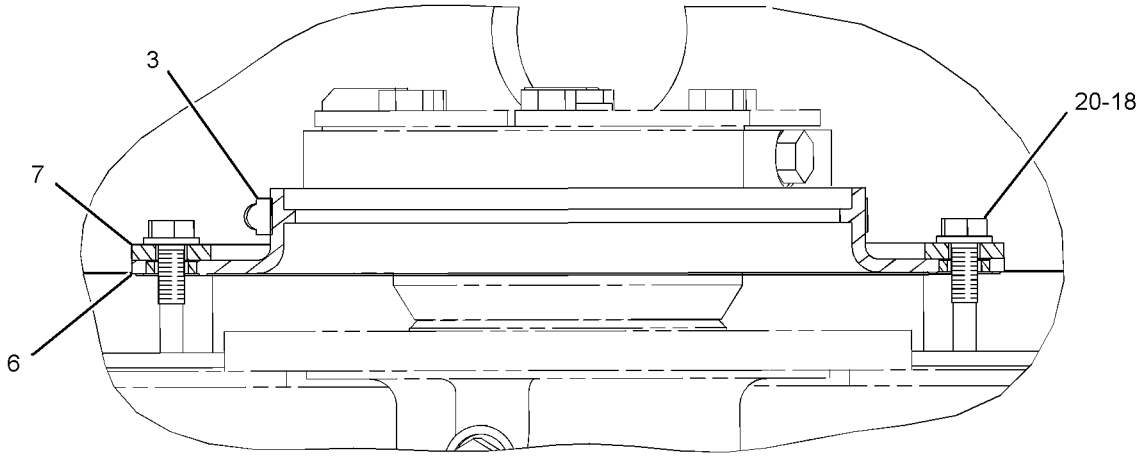

SECTION F-F

GRAPHIC #2 **<END>** g01238955

244-8150 GUARD GP-BOTTOM

S/N: DFP1-UP; CJX1-UP

PART OF 240-3970, 240-3971 CHASSIS AR

SMCS-7153 **i02394961**

NOTE	REF NO	GRAPHIC REF	PART NUMBER	QTY	PART NAME 1 2 3 4 5 6 (PRODUCT LEVEL)	SEE PAGE
M	1	1	**135-8576**	38	BOLT AS-LOCKING (M12X1.75X30-MM)	
	2	1	**184-8784**	1	SHEET	
	3	1	**223-3103**	1	SHEET	
	4	1	**223-3104**	1	SHEET	
	5	1	**236-3637**	2	PLATE AS	
	6	1	**248-9069**	1	SHEET	
	7	1	**248-9070**	1	SHEET	
	8	1	**262-2376**	1	SHEET	
	9	1	**262-2377**	1	SHEET AS	

M-METRIC PART

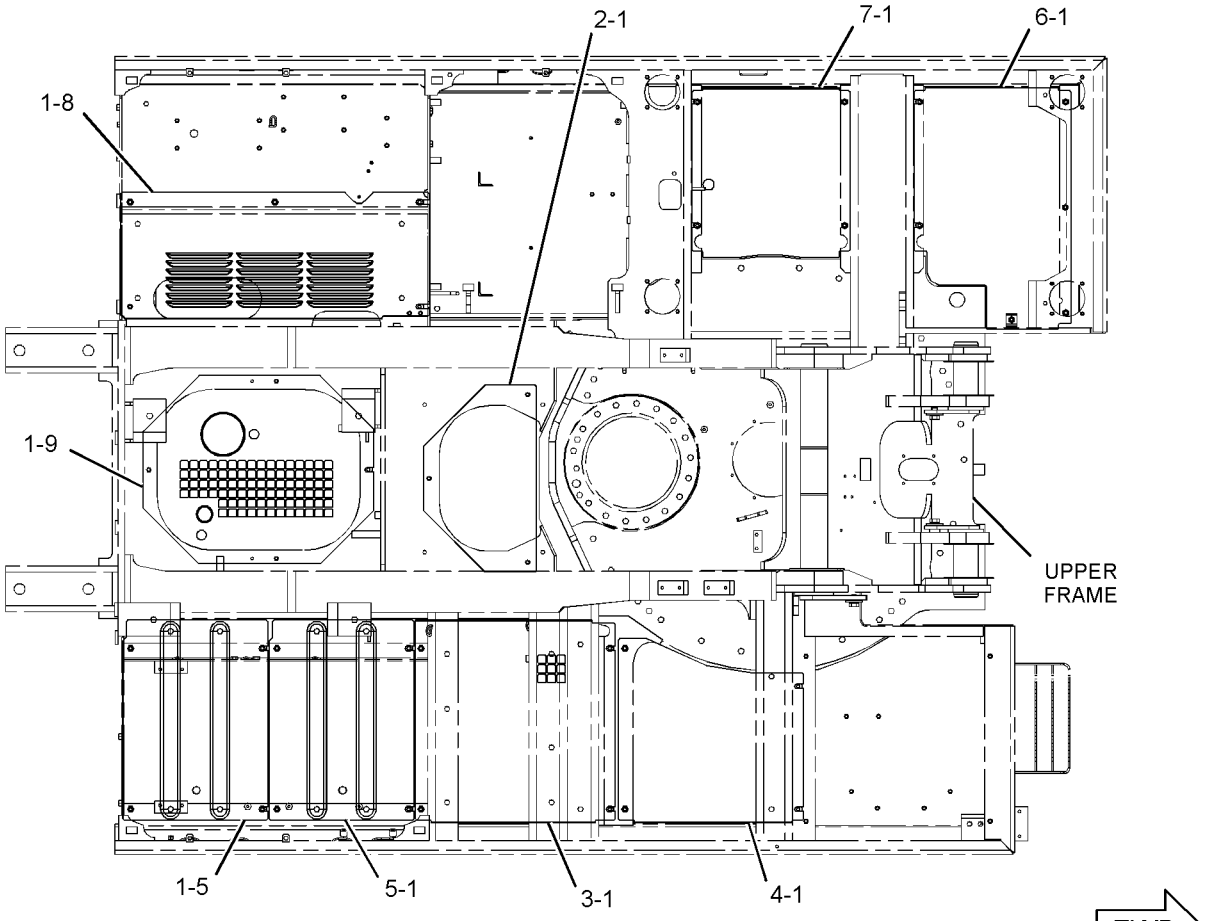

TOP VIEW

GRAPHIC #1 **<END>** g01220863

244-8151 GUARD GP-BOTTOM–HEAVY-DUTY

S/N: DFP1-UP; CJX1-UP

AN ATTACHMENT

SMCS-7153 **i02406214**

NOTE	REF NO	GRAPHIC REF	PART NUMBER	QTY	PART NAME 1 2 3 4 5 6 (PRODUCT LEVEL)	SEE PAGE
M	1	1	**135-8576**	4	BOLT AS-LOCKING (M12X1.75X30-MM)	
	2	1	**184-8795**	1	PLATE AS	
	3	1	**236-3639**	1	PLATE AS	
	4	1	**236-3641**	1	PLATE AS	
	5	1	**259-3861**	1	PLATE AS	
	6	1	**259-3863**	1	PLATE AS	
	7	1	**262-2379**	1	PLATE AS	
	8	1	**262-2382**	1	PLATE AS	
		1	**099-7857**	1	HINGE	
	9	1	**262-2384**	1	PLATE AS	

M-METRIC PART

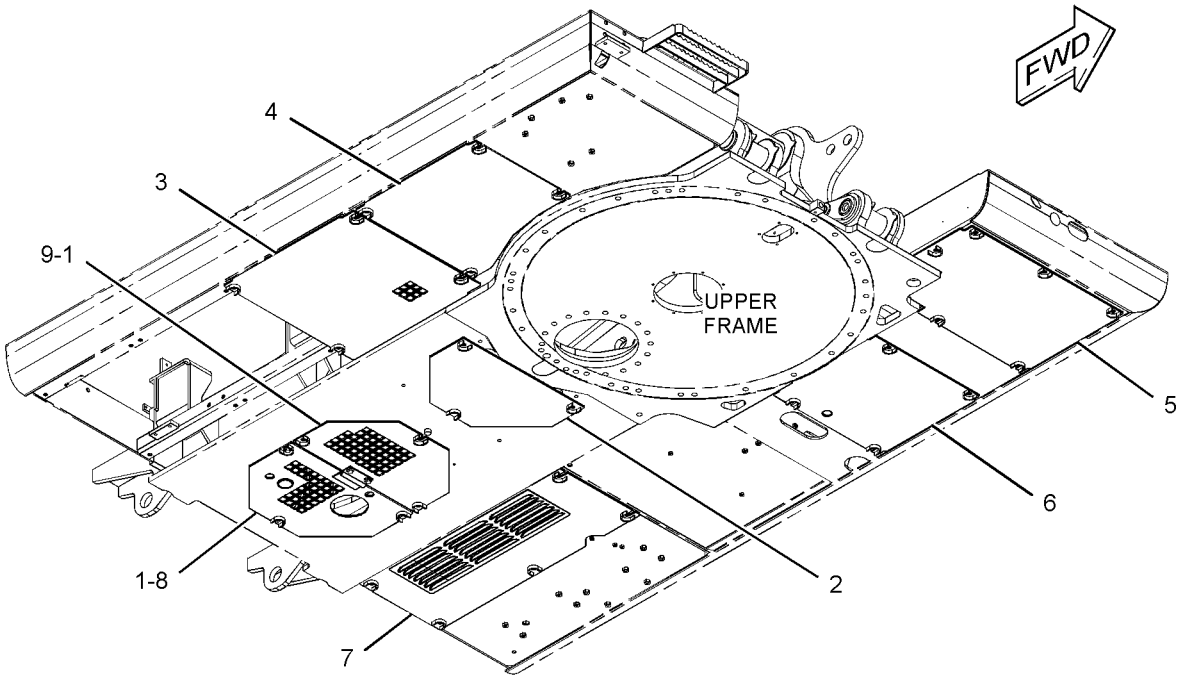

GRAPHIC #1 **<END>** g01202334

262-2486 GUARD GP-BOTTOM

S/N: DFP1-UP; CJX1-UP
PART OF 229-1786, 229-1787 COOLING AR-HIGH AMBIENT TEMP
AN ATTACHMENT

SMCS-7153 **i02399266**

NOTE	REF NO	GRAPHIC REF	PART NUMBER	QTY	PART NAME 1 2 3 4 5 6 (PRODUCT LEVEL)	SEE PAGE
M	1	1	**135-8576**	8	BOLT AS-LOCKING (M12X1.75X30-MM)	
	2	1	**262-2487**	1	PLATE AS	
		1	**099-7857**	1	HINGE	
	3	1	**262-2489**	1	PLATE AS	

M-METRIC PART

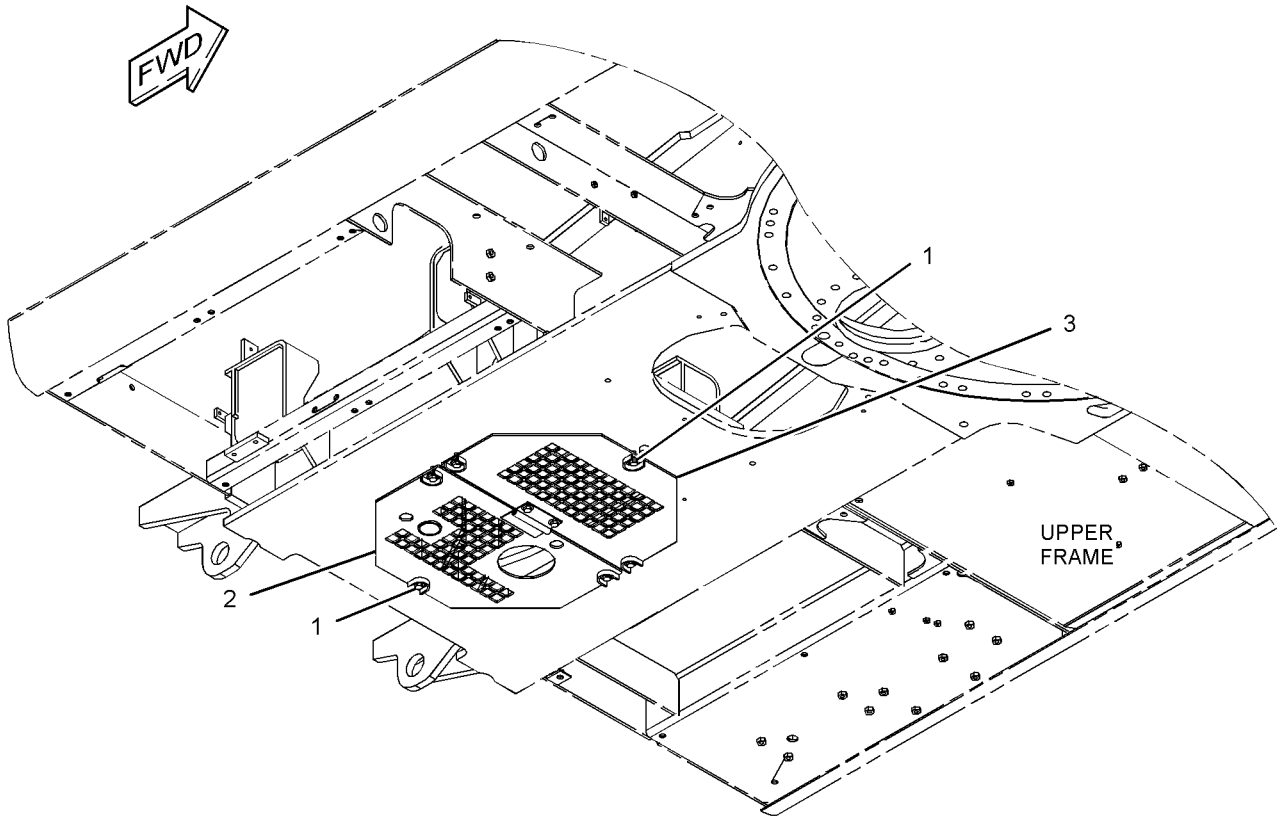

GRAPHIC #1 **<END>** g01245634

FRAME AND BODY

134-8853 GUARD GP-SWIVEL

S/N: DFP1-UP; CJX1-UP

AN ATTACHMENT

SMCS-7183 **i01313219**

NOTE	REF NO	GRAPHIC REF	PART NUMBER	QTY	PART NAME 1 2 3 4 5 6 (PRODUCT LEVEL)	SEE PAGE
	1	1	**134-8854**	1	PLATE AS	
	2	1	**130-4276**	4	PLATE	
M	3	1	**8T-4140**	8	BOLT (M16X2.0X60MM)	
	4	1	**3E-9411**	8	WASHER-HARD (6MM THK)	

M-METRIC PART

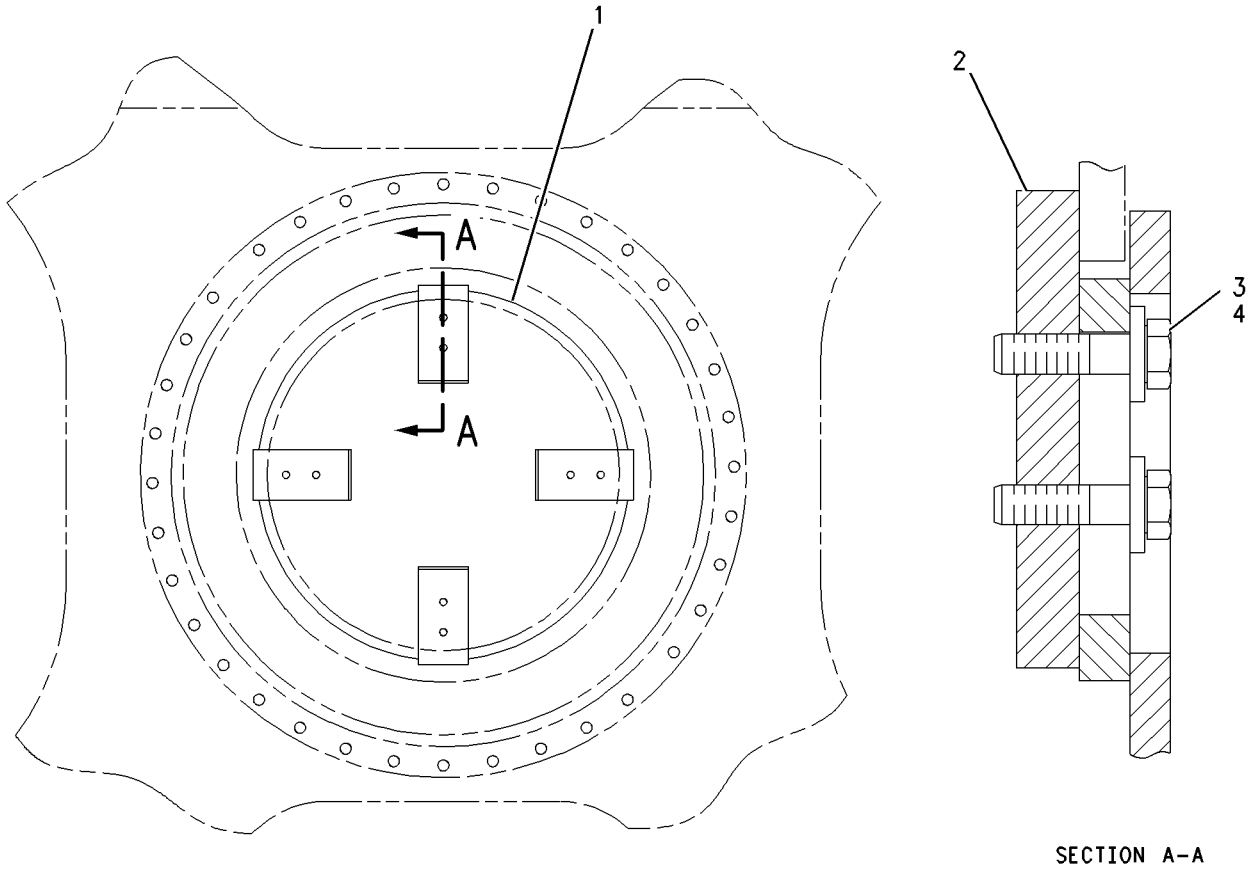

SECTION A-A

GRAPHIC #1 **<END>** g00702882

256-1644 HANDRAIL GP

S/N: DFP1-UP; CJX1-UP

PART OF 240-3970, 240-3971 CHASSIS AR

SMCS-7256 **i02346775**

NOTE	REF NO	GRAPHIC REF	PART NUMBER	QTY	PART NAME 1 2 3 4 5 6 (PRODUCT LEVEL)	SEE PAGE
M	1	1	**135-8573**	2	BOLT AS	
M	2	1	**135-8578**	3	BOLT AS	
	3	1	**177-5879**	2	CLAMP	
	4	1	**177-5880**	4	SLEEVE	
	5	1	**262-2209**	1	HANDRAIL AS	
M	6	1	**8T-4192**	2	BOLT (M12X1.75X25-MM)	
	7	1	**8T-4223**	2	WASHER-HARD (13.5X25.5X3-MM THK)	

M-METRIC PART

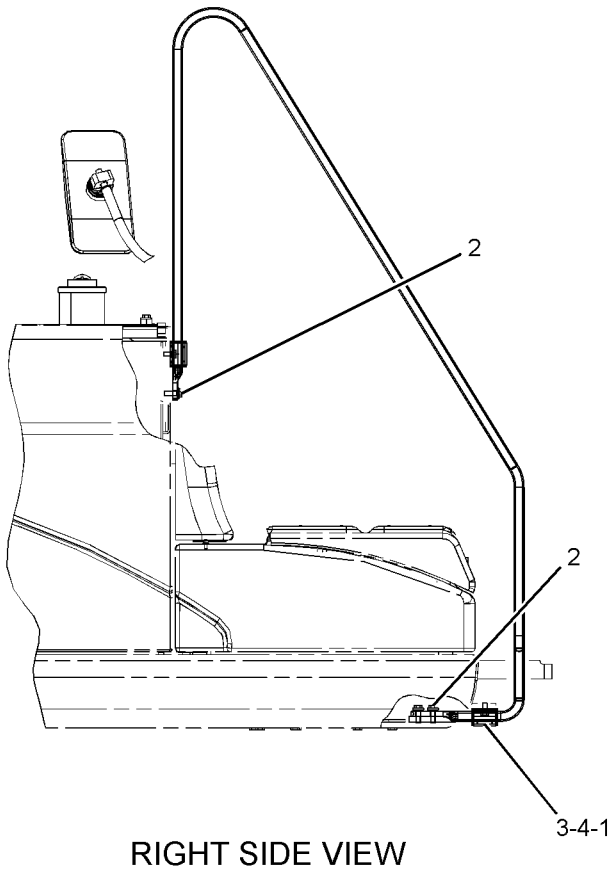

RIGHT SIDE VIEW

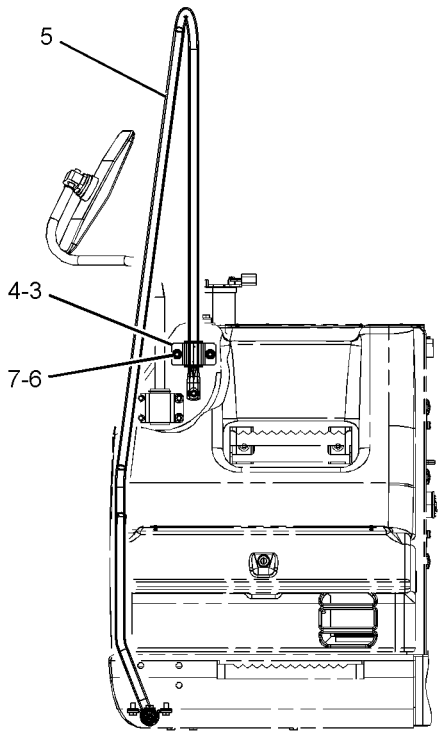

FRONT VIEW

GRAPHIC #1 **<END>** g01226096

FRAME AND BODY

223-3043 HOOD & GUARD GP

S/N: DFP1-278; CJX1-196

PART OF 240-3970, 240-3971 CHASSIS AR

SMCS-7251, 7276 **i02576948**

NOTE	REF NO	GRAPHIC REF	PART NUMBER	QTY	PART NAME 1 2 3 4 5 6 (PRODUCT LEVEL)	SEE PAGE
	1	2	**1R-9958**	1	FASTENER	
	2	2	**4I-0117**	1	FASTENER	
	3	2	**4I-0118**	2	HOOK AS	
	4	2,3	**4I-0232**	2	STRIKER	
	5	3	**4I-8019**	3	SUPPORT	
	6	3	**6I-6033**	3	STOP	
	7	3	**7I-1418**	3	SUPPORT AS	
	8	2	**7Y-2853**	3	SPACER (13X38X5-MM THK)	
	9	3	**087-3908**	2	SHIM (1-MM THK)	
	10	3	**087-3909**	2	SHIM (2-MM THK)	
	11	3	**122-3979**	1	BAND	
	12	3	**122-3980**	1	ROD	
	13	3	**122-4120**	3	ROD	
M	14	1,2,3	**135-8573**	77	BOLT AS	
M	15	2,3	**135-8575**	36	BOLT AS-LOCKING (M12X1.75X30-MM)	
M	16	3	**135-8578**	8	BOLT AS	
Y	17	3	**273-7802**	1	SHEET AS-SOUND SUPPRESSION	530
	18	2	**170-3016**	6	SPACER (19X32X2-MM THK)	
	19	2	**203-4889**	1	SPRING	
	20	2	**203-4890**	1	SPRING	
	21	2	**212-5185**	1	SUPPORT AS	
	22	2	**236-3304**	1	SUPPORT AS	
	23	2	**236-3313**	1	SUPPORT AS	
	24	2	**236-3328**	1	SUPPORT	
Y	25	3	**236-3329**	1	SUPPORT AS-ENCLOSURE	535
	26	2	**236-3345**	1	SUPPORT AS	
	27	3	**289-6798**	1	SUPPORT AS	
	28	2	**236-3354**	1	SUPPORT AS	
	29	2	**236-3358**	1	SUPPORT AS	
	30	2	**236-3363**	1	COVER AS	
	31	2	**236-3365**	1	COVER AS	
	32	1	**236-3367**	1	SHEET AS	
	33	2	**236-3370**	1	SHEET AS	
Y	34	3	**236-3382**	1	COVER AS-SOUND SUPPRESSION (FUEL TANK)	470
Y	35	1	**236-3387**	1	SHEET AS-SOUND SUPPRESSION	523
Y	36	3	**236-3397**	1	DOOR GP-ACCESS (PUMP COMPARTMENT)	474
Y	37	3	**236-3751**	1	DOOR GP-ACCESS (RADIATOR, LH)	475
Y	38	3	**236-9540**	1	HOOD GP-ENGINE	517
	39	2	**237-8476**	1	SUPPORT AS	
Y	40	1	**244-7912**	1	SHEET AS-SOUND SUPPRESSION	524
Y	41	1	**244-7917**	1	SHEET AS-SOUND SUPPRESSION	525
Y	42	1	**244-7922**	1	SHEET AS-SOUND SUPPRESSION	526
	43	1	**248-9312**	1	SHEET AS	
	44	2	**250-5022**	1	SUPPORT AS	
	45	1	**250-5024**	1	SUPPORT AS	
	46	3	**250-5197**	1	SUPPORT AS	
Y	47	1	**256-1670**	1	SUPPORT AS-ENCLOSURE	536
Y	48	2	**256-1677**	1	COVER AS-SOUND SUPPRESSION	471
	49	2	**256-1696**	1	SUPPORT	
Y	50	1	**256-1698**	1	SHEET AS-SOUND SUPPRESSION	528
Y	51	3	**262-2400**	1	DOOR GP-ACCESS (AIR CLEANER)	477
	52	1	**262-2472**	1	SHEET AS	
		1	**262-2481**	1	LINER	
	53	2	**262-2491**	1	SHEET AS-SOUND SUPPRESSION	
		2	**236-3396**	1	INSULATION	
	54	2	**262-2494**	1	SHEET AS	

223-3043 **HOOD & GUARD GP** *(contd.)* **i02576948**

NOTE	REF NO	GRAPHIC REF	PART NUMBER	QTY	PART NAME 1 2 3 4 5 6 (PRODUCT LEVEL)	SEE PAGE
		2	**262-2495**	1	INSULATION	
	55	3	**3B-4618**	3	PIN-COTTER	
M	56	3	**105-3487**	6	BOLT-SOCKET HEAD (M6X1X20-MM)	
	57	3	**114-6285**	2	BAR	
M	58	3	**5C-9553**	8	BOLT (M6X1X16-MM)	
	59	2	**5P-1076**	1	WASHER-HARD (13.5X30X4-MM THK)	
	60	3	**5P-4115**	16	WASHER-HARD (7.2X19X2-MM THK)	
	61	2	**7J-5925**	1	PIN-COTTER	
	62	2	**7Y-2854**	3	SPACER (24X38X3-MM THK)	
	63	2	**7Y-2916**	1	PIN-CLEVIS	
	64	3	**8T-4121**	3	WASHER-HARD (11X21X2.5-MM THK)	
M	65	3	**8T-4138**	10	BOLT (M6X1X20-MM)	
M	66	2	**8T-4189**	8	BOLT (M8X1.25X20-MM)	
	67	2	**8T-4223**	2	WASHER-HARD (13.5X25.5X3-MM THK)	
	68	2	**8T-4224**	8	WASHER-HARD (8.8X16X2-MM THK)	
	69	3	**9X-8256**	8	WASHER (6.6X12X2-MM THK)	
	70	1	**273-7678**	1	SHEET AS	
		1	**273-7681**	1	INSULATION	

M-METRIC PART
Y-SEPARATE ILLUSTRATION

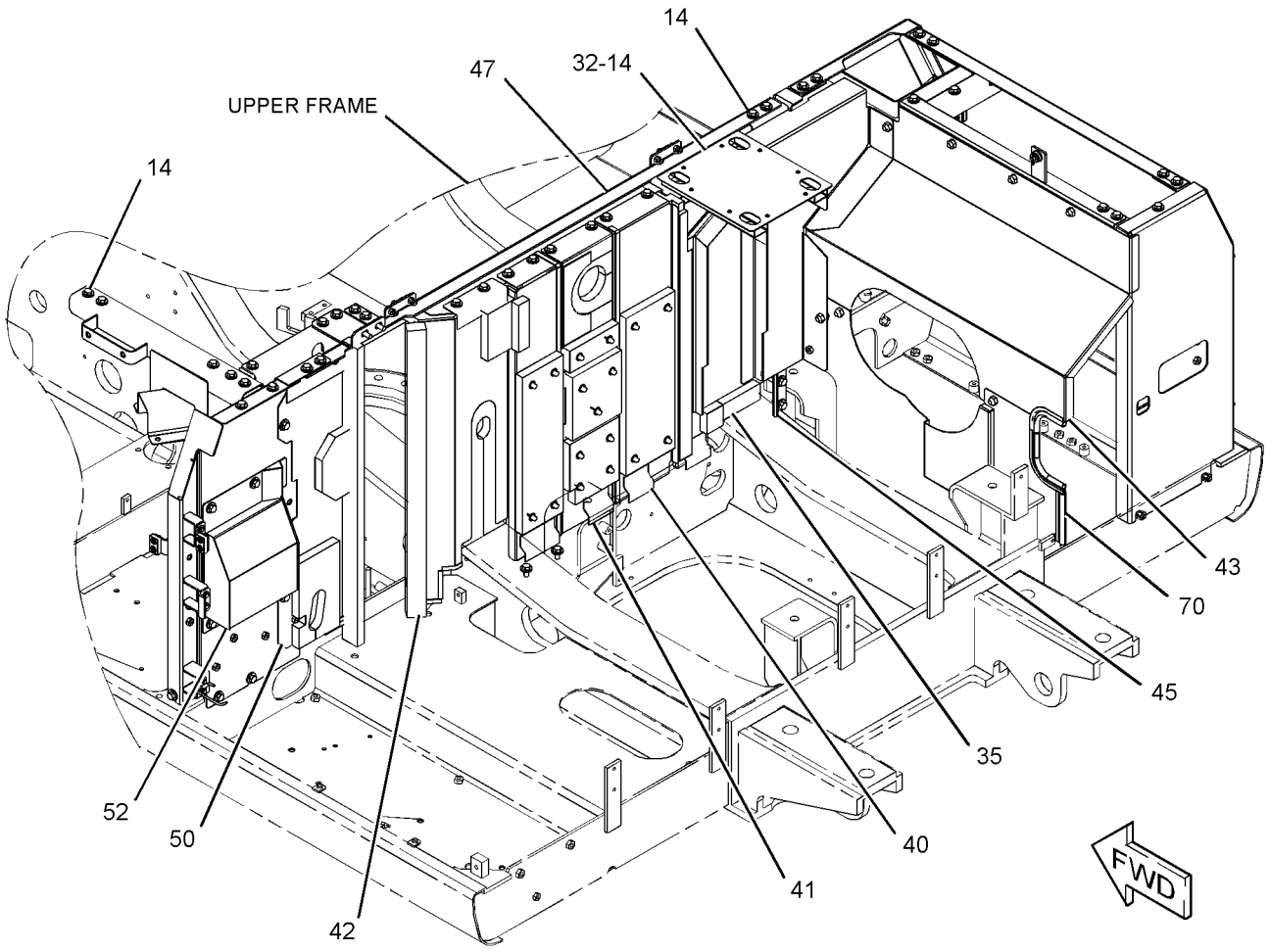

GRAPHIC #1 g01292057

223-3043 **HOOD & GUARD GP** *(contd.)* **i02576948**

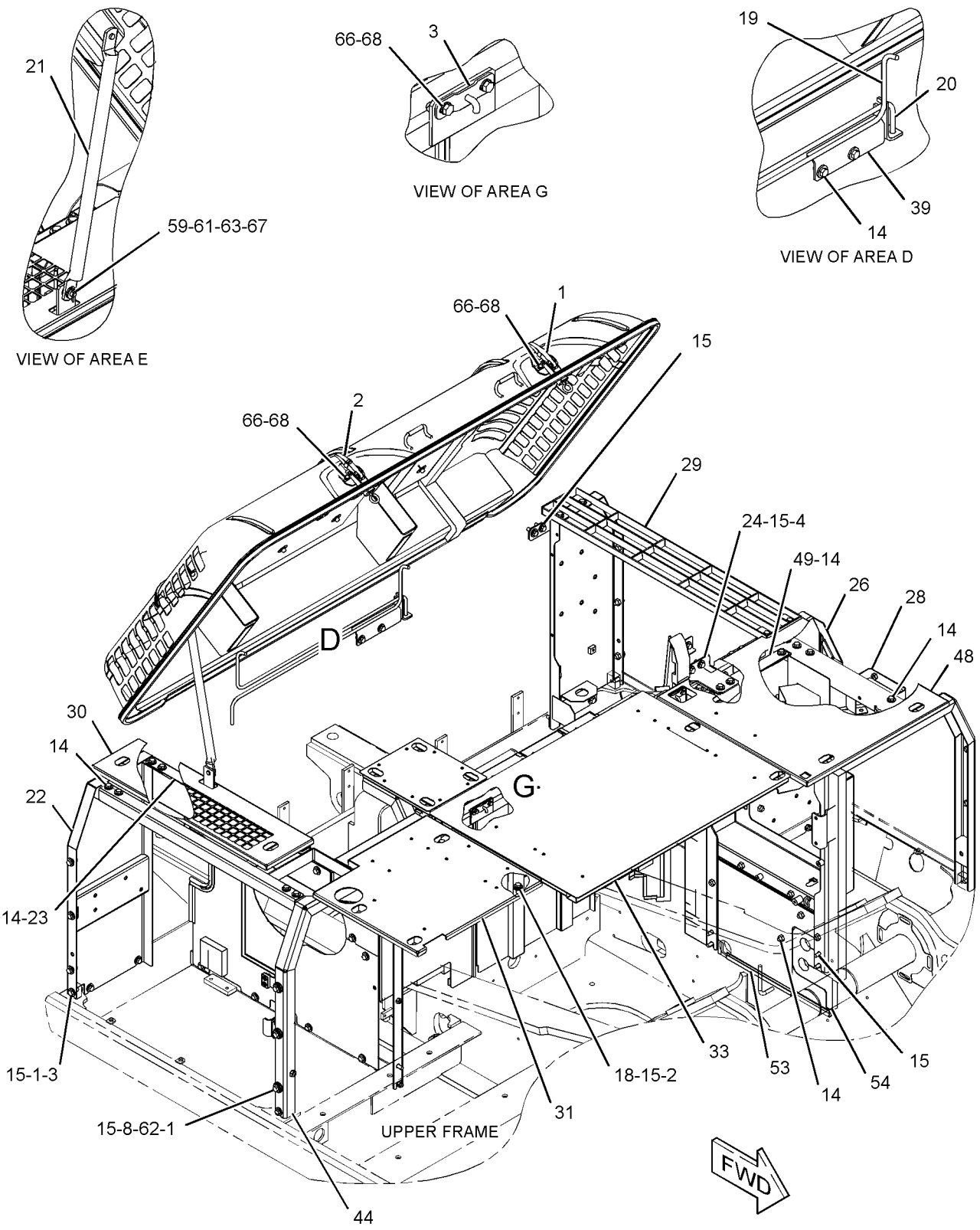

GRAPHIC #2

g01292056

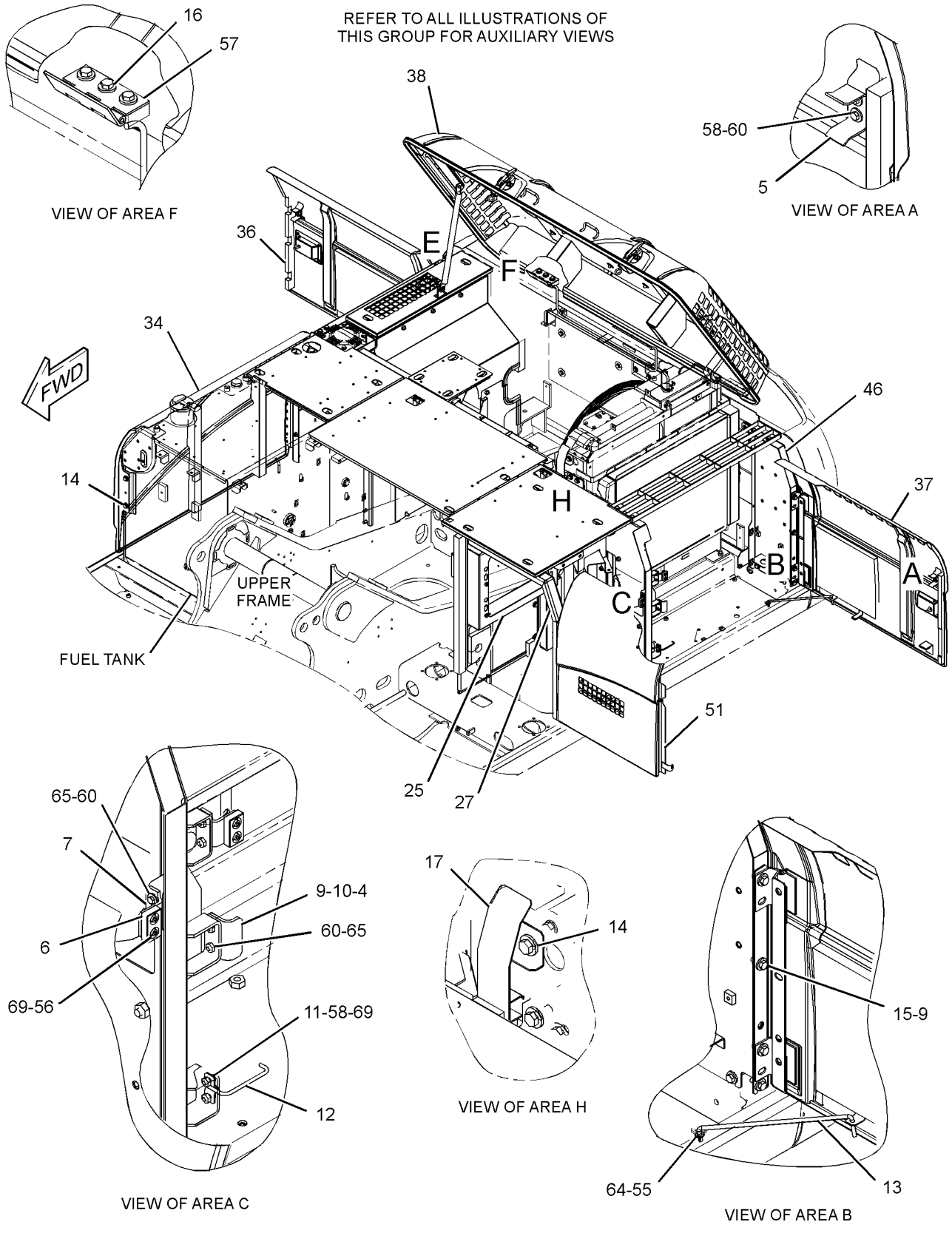

GRAPHIC #3 **<END>** g01292058

FRAME AND BODY

223-3043 HOOD & GUARD GP

S/N: DFP279-UP; CJX197-UP

PART OF 240-3970, 240-3971 CHASSIS AR

SMCS-7251, 7276 **i02794910**

NOTE	REF NO	GRAPHIC REF	PART NUMBER	QTY	PART NAME 1 2 3 4 5 6 (PRODUCT LEVEL)	SEE PAGE
	1	2	**1R-9958**	1	FASTENER	
	2	2	**4I-0117**	1	FASTENER	
	3	2	**4I-0118**	2	HOOK AS	
	4	2,3	**4I-0232**	2	STRIKER	
	5	3	**4I-8019**	3	SUPPORT	
	6	3	**6I-6033**	3	STOP	
	7	3	**7I-1418**	3	SUPPORT AS	
	8	2	**7Y-2853**	3	SPACER (13X38X5-MM THK)	
	9	3	**087-3908**	2	SHIM (1-MM THK)	
	10	3	**087-3909**	2	SHIM (2-MM THK)	
	11	3	**122-3979**	1	BAND	
	12	3	**122-3980**	1	ROD	
	13	3	**122-4120**	3	ROD	
M	14	1,2,3	**135-8573**	77	BOLT AS	
M	15	2,3	**135-8575**	36	BOLT AS-LOCKING (M12X1.75X30-MM)	
M	16	3	**135-8578**	8	BOLT AS	
Y	17	3	**273-7802**	1	SHEET AS-SOUND SUPPRESSION	530
	18	2	**170-3016**	6	SPACER (19X32X2-MM THK)	
	19	2	**203-4889**	1	SPRING	
	20	2	**203-4890**	1	SPRING	
	21	2	**212-5185**	1	SUPPORT AS	
	22	2	**236-3304**	1	SUPPORT AS	
	23	2	**236-3313**	1	SUPPORT AS	
	24	2	**236-3328**	1	SUPPORT	
Y	25	3	**236-3329**	1	SUPPORT AS-ENCLOSURE	535
	26	2	**236-3345**	1	SUPPORT AS	
	27	3	**289-6798**	1	SUPPORT AS	
	28	2	**236-3354**	1	SUPPORT AS	
	29	2	**236-3358**	1	SUPPORT AS	
	30	2	**236-3363**	1	COVER AS	
	31	2	**236-3365**	1	COVER AS	
	32	1	**236-3367**	1	SHEET AS	
	33	2	**236-3370**	1	SHEET AS	
Y	34	3	**298-2972**	1	COVER AS-SOUND SUPPRESSION (FUEL TANK)	472
Y	35	1	**236-3387**	1	SHEET AS-SOUND SUPPRESSION	523
CY	36	3	**289-6903**	1	DOOR GP-ACCESS (PUMP COMPARTMENT)	480
CY	37	3	**289-6898**	1	DOOR GP-ACCESS	478
Y	38	3	**236-9540**	1	HOOD GP-ENGINE	517
	39	2	**237-8476**	1	SUPPORT AS	
Y	40	1	**244-7912**	1	SHEET AS-SOUND SUPPRESSION	524
Y	41	1	**244-7917**	1	SHEET AS-SOUND SUPPRESSION	525
Y	42	1	**244-7922**	1	SHEET AS-SOUND SUPPRESSION	526
	43	1	**248-9312**	1	SHEET AS	
	44	2	**250-5022**	1	SUPPORT AS	
	45	1	**250-5024**	1	SUPPORT AS	
	46	3	**250-5197**	1	SUPPORT AS	
Y	47	1	**256-1670**	1	SUPPORT AS-ENCLOSURE	536
Y	48	2	**256-1677**	1	COVER AS-SOUND SUPPRESSION	471
	49	2	**256-1696**	1	SUPPORT	
Y	50	1	**256-1698**	1	SHEET AS-SOUND SUPPRESSION	528
Y	51	3	**298-2968**	1	DOOR GP-ACCESS (AIR CLEANER)	481
	52	1	**262-2472**	1	SHEET AS	
		1	**262-2481**	1	LINER	
	53	2	**262-2491**	1	SHEET AS-SOUND SUPPRESSION	
		2	**236-3396**	1	INSULATION	
	54	2	**262-2494**	1	SHEET AS	

223-3043 **HOOD & GUARD GP** *(contd.)* **i02794910**

NOTE	REF NO	GRAPHIC REF	PART NUMBER	QTY	PART NAME 1 2 3 4 5 6 (PRODUCT LEVEL)	SEE PAGE
		2	**262-2495**	1	INSULATION	
	55	3	**3B-4618**	3	PIN-COTTER	
M	56	3	**105-3487**	6	BOLT-SOCKET HEAD (M6X1X20-MM)	
	57	3	**114-6285**	2	BAR	
M	58	3	**5C-9553**	8	BOLT (M6X1X16-MM)	
	59	2	**5P-1076**	1	WASHER-HARD (13.5X30X4-MM THK)	
	60	3	**5P-4115**	16	WASHER-HARD (7.2X19X2-MM THK)	
	61	2	**7J-5925**	1	PIN-COTTER	
	62	2	**7Y-2854**	3	SPACER (24X38X3-MM THK)	
	63	2	**7Y-2916**	1	PIN-CLEVIS	
	64	3	**8T-4121**	3	WASHER-HARD (11X21X2.5-MM THK)	
M	65	3	**8T-4138**	10	BOLT (M6X1X20-MM)	
M	66	2	**8T-4189**	8	BOLT (M8X1.25X20-MM)	
	67	2	**8T-4223**	2	WASHER-HARD (13.5X25.5X3-MM THK)	
	68	2	**8T-4224**	8	WASHER-HARD (8.8X16X2-MM THK)	
	69	3	**9X-8256**	8	WASHER (6.6X12X2-MM THK)	
	70	1	**273-7678**	1	SHEET AS	
		1	**273-7681**	1	INSULATION	

C-CHANGE FROM PREVIOUS TYPE
M-METRIC PART
Y-SEPARATE ILLUSTRATION

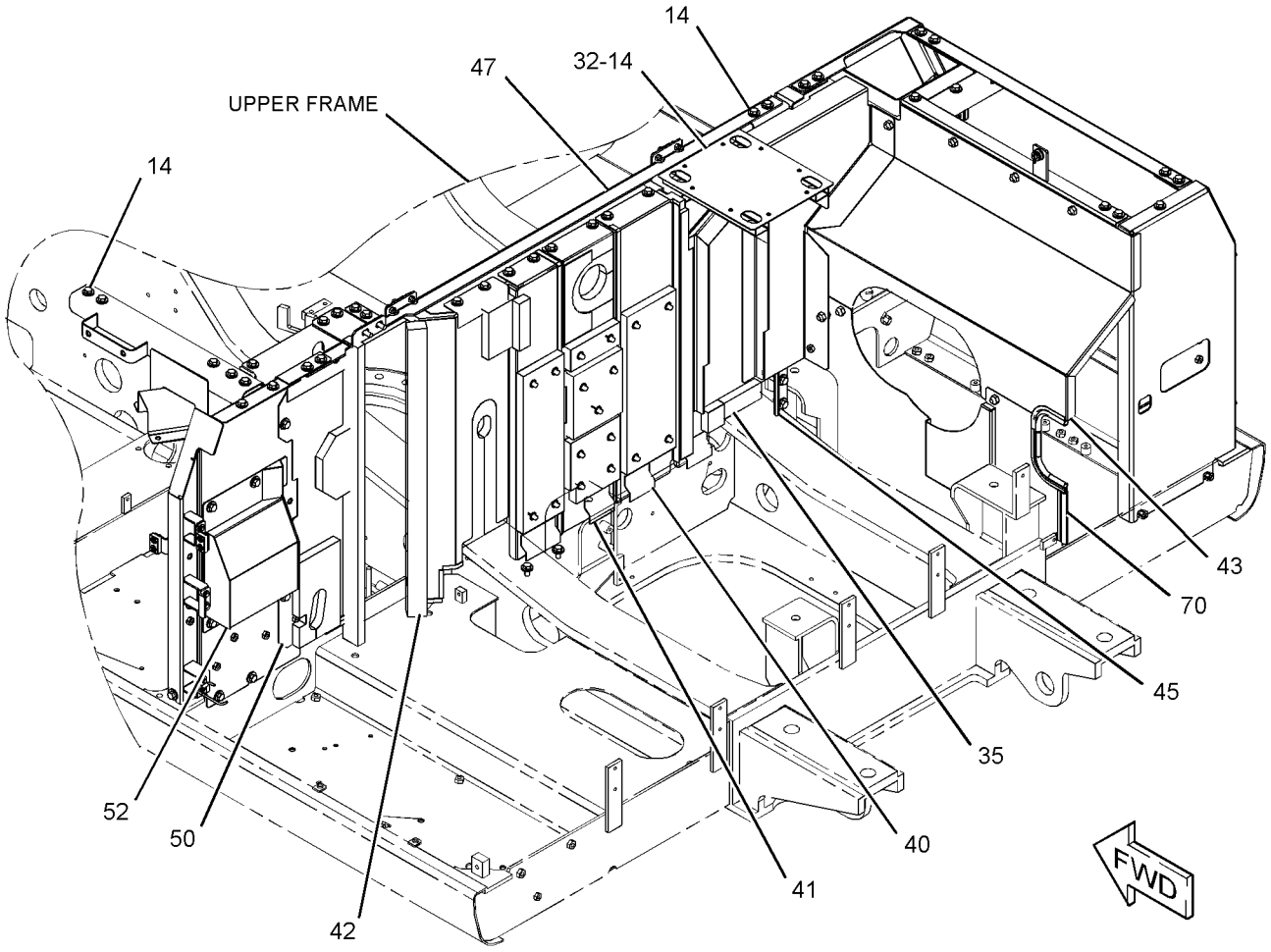

GRAPHIC #1 g01292057

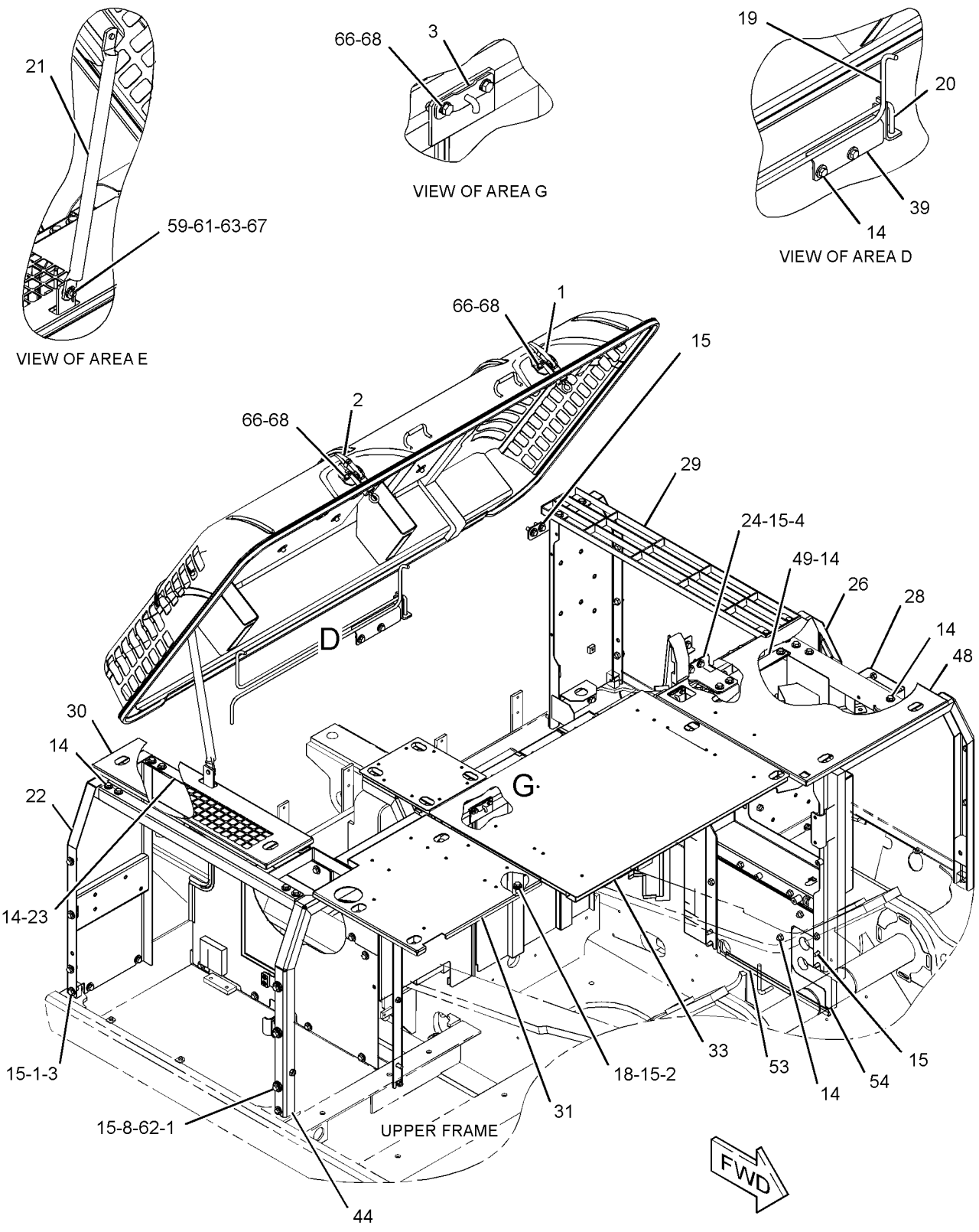

GRAPHIC #2

g01292056

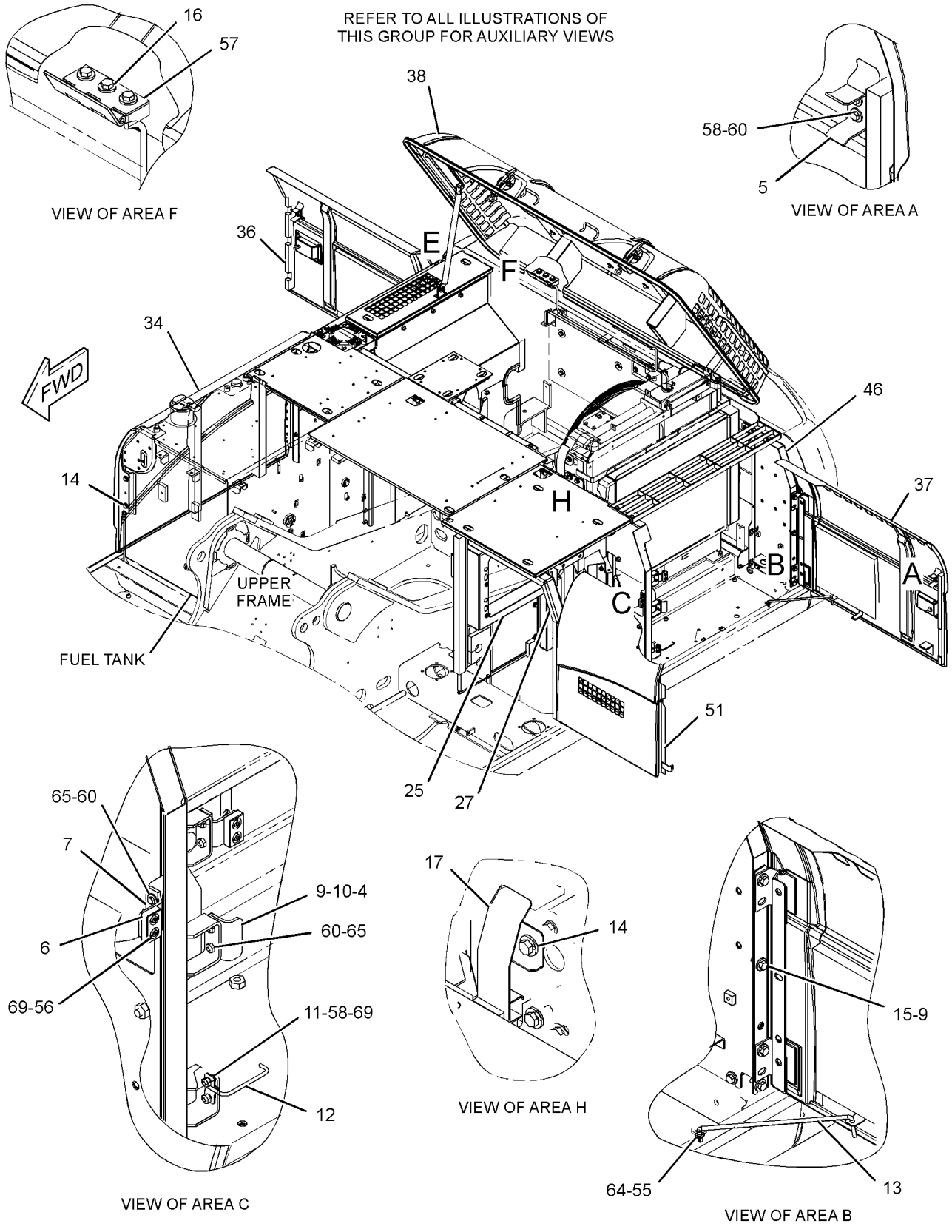

GRAPHIC #3 **<END>** g01292058

FRAME AND BODY

223-3043 HOOD & GUARD GP

S/N: DFP1-UP; CJX1-UP

PART OF 240-3970, 240-3971 CHASSIS AR

SMCS-7251, 7276 **i03142163**

NOTE	REF NO	GRAPHIC REF	PART NUMBER	QTY	PART NAME 1 2 3 4 5 6 (PRODUCT LEVEL)	SEE PAGE
	1	3	**1R-9958**	1	FASTENER	
	2	3	**4I-0117**	1	FASTENER	
	3	3	**4I-0118**	2	HOOK AS	
	4	2	**4I-0232**	2	STRIKER	
	5	2	**4I-8019**	3	SUPPORT	
	6	2	**6I-6033**	3	STOP	
	7	2	**7I-1418**	3	SUPPORT AS	
	8	3	**7Y-2853**	3	SPACER (13X38X5-MM THK)	
	9	2	**087-3908**	2	SHIM (1-MM THK)	
	10	2	**087-3909**	2	SHIM (2-MM THK)	
	11	2	**122-3979**	1	BAND	
	12	2	**122-3980**	1	ROD	
	13	2	**122-4120**	3	ROD	
M	14	1,2,3	**135-8573**	77	BOLT AS	
M	15	1,2,3	**135-8575**	36	BOLT AS-LOCKING (M12X1.75X30-MM)	
M	16	2	**135-8578**	8	BOLT AS	
Y	17	2	**273-7802**	1	SHEET AS-SOUND SUPPRESSION	530
	18	3	**170-3016**	6	SPACER (19X32X2-MM THK)	
	19	3	**203-4889**	1	SPRING	
	20	3	**203-4890**	1	SPRING	
	21	3	**212-5185**	1	SUPPORT AS	
	22	3	**236-3304**	1	SUPPORT AS	
	23	3	**236-3313**	1	SUPPORT AS	
	24	3	**236-3328**	1	SUPPORT	
Y	25	2	**236-3329**	1	SUPPORT AS-ENCLOSURE	535
	26	1,2	**236-3345**	1	SUPPORT AS	
	27	2	**289-6798**	1	SUPPORT AS	
	28	3	**236-3354**	1	SUPPORT AS	
C	29	3	**330-1387**	1	SUPPORT AS	
	30	3	**236-3363**	1	COVER AS	
C	31	3	**330-1450**	1	COVER AS	
	32	1	**236-3367**	1	SHEET AS	
	33	3	**236-3370**	1	SHEET AS	
CY	34	2	**330-1430**	1	COVER AS-SOUND SUPPRESSION	473
Y	35	1	**236-3387**	1	SHEET AS-SOUND SUPPRESSION	523
Y	36	2	**289-6903**	1	DOOR GP-ACCESS (PUMP COMPARTMENT)	480
Y	37	2	**289-6898**	1	DOOR GP-ACCESS	478
Y	38	2	**236-9540**	1	HOOD GP-ENGINE	517
	39	3	**237-8476**	1	SUPPORT AS	
Y	40	1	**244-7912**	1	SHEET AS-SOUND SUPPRESSION	524
Y	41	1	**244-7917**	1	SHEET AS-SOUND SUPPRESSION	525
Y	42	1	**244-7922**	1	SHEET AS-SOUND SUPPRESSION	526
	43	1	**248-9312**	1	SHEET AS	
	44	3	**250-5022**	1	SUPPORT AS	
	45	1	**250-5024**	1	SUPPORT AS	
C	46	2	**330-1388**	1	SUPPORT AS	
Y	47	1	**256-1670**	1	SUPPORT AS-ENCLOSURE	536
Y	48	3	**256-1677**	1	COVER AS-SOUND SUPPRESSION	471
	49	3	**256-1696**	1	SUPPORT	
Y	50	1	**256-1698**	1	SHEET AS-SOUND SUPPRESSION	528
Y	51	2	**298-2968**	1	DOOR GP-ACCESS (AIR CLEANER)	481
	52	1	**262-2472**	1	SHEET AS	
		1	**262-2481**	1	LINER	
	53	3	**262-2491**	1	SHEET AS-SOUND SUPPRESSION	
		3	**236-3396**	1	INSULATION	
	54	3	**262-2494**	1	SHEET AS	

223-3043 **HOOD & GUARD GP** *(contd.)* **i03142163**

NOTE	REF NO	GRAPHIC REF	PART NUMBER	QTY	PART NAME 1 2 3 4 5 6 (PRODUCT LEVEL)	SEE PAGE
		3	**262-2495**	1	INSULATION	
	55	2	**3B-4618**	3	PIN-COTTER	
M	56	2	**105-3487**	6	BOLT-SOCKET HEAD (M6X1X20-MM)	
	57	2	**114-6285**	2	BAR	
M	58	2	**5C-9553**	8	BOLT (M6X1X16-MM)	
	59	3	**5P-1076**	1	WASHER-HARD (13.5X30X4-MM THK)	
	60	2	**5P-4115**	16	WASHER-HARD (7.2X19X2-MM THK)	
	61	3	**7J-5925**	1	PIN-COTTER	
	62	3	**7Y-2854**	3	SPACER (24X38X3-MM THK)	
	63	3	**7Y-2916**	1	PIN-CLEVIS	
	64	2	**8T-4121**	3	WASHER-HARD (11X21X2.5-MM THK)	
M	65	2	**8T-4138**	10	BOLT (M6X1X20-MM)	
M	66	3	**8T-4189**	8	BOLT (M8X1.25X20-MM)	
	67	3	**8T-4223**	2	WASHER-HARD (13.5X25.5X3-MM THK)	
	68	3	**8T-4224**	8	WASHER-HARD (8.8X16X2-MM THK)	
	69	2	**9X-8256**	8	WASHER (6.6X12X2-MM THK)	
	70	1	**273-7678**	1	SHEET AS	
		1	**273-7681**	1	INSULATION	

C-CHANGE FROM PREVIOUS TYPE
M-METRIC PART
Y-SEPARATE ILLUSTRATION

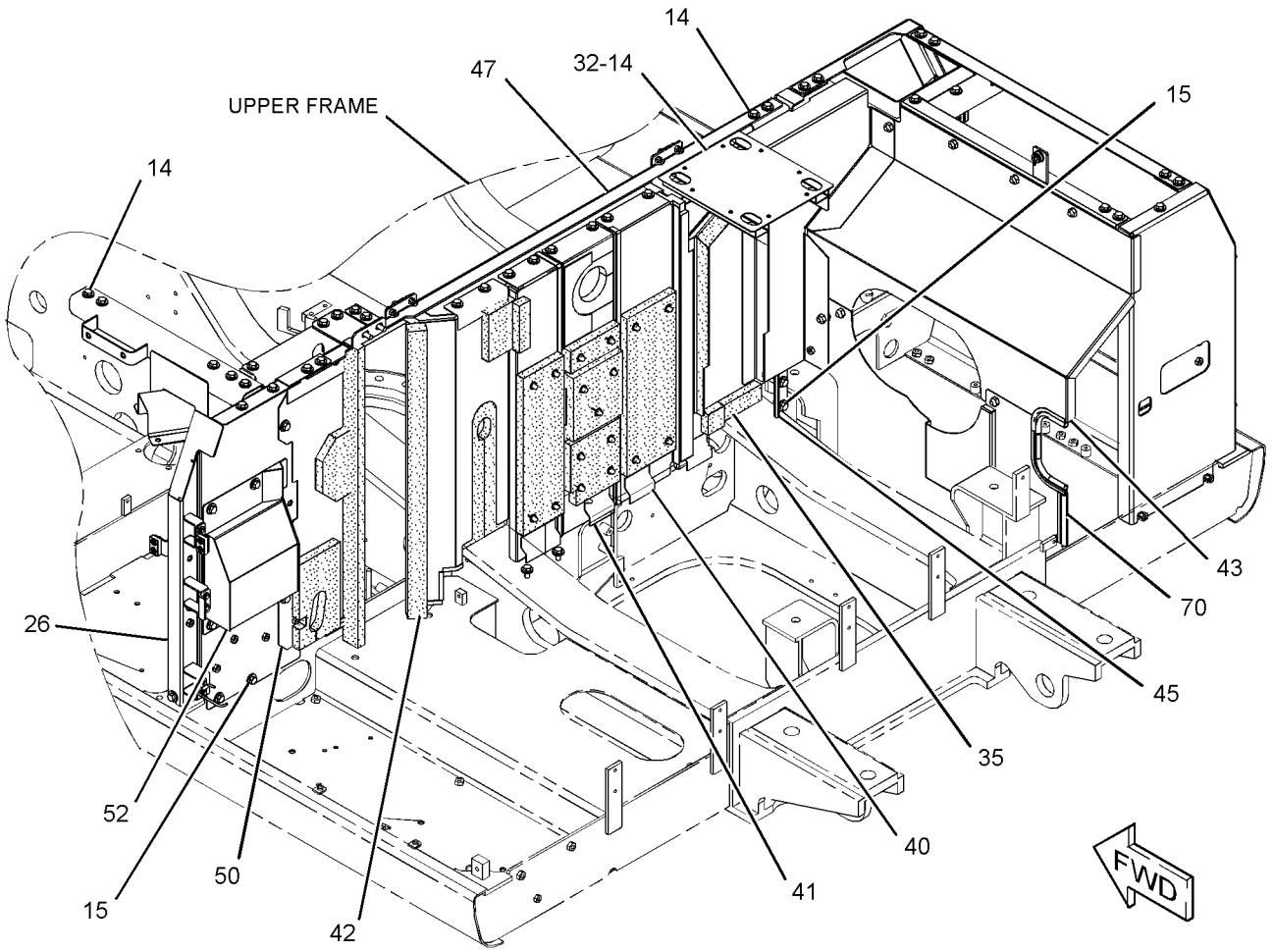

GRAPHIC #1 g01620032

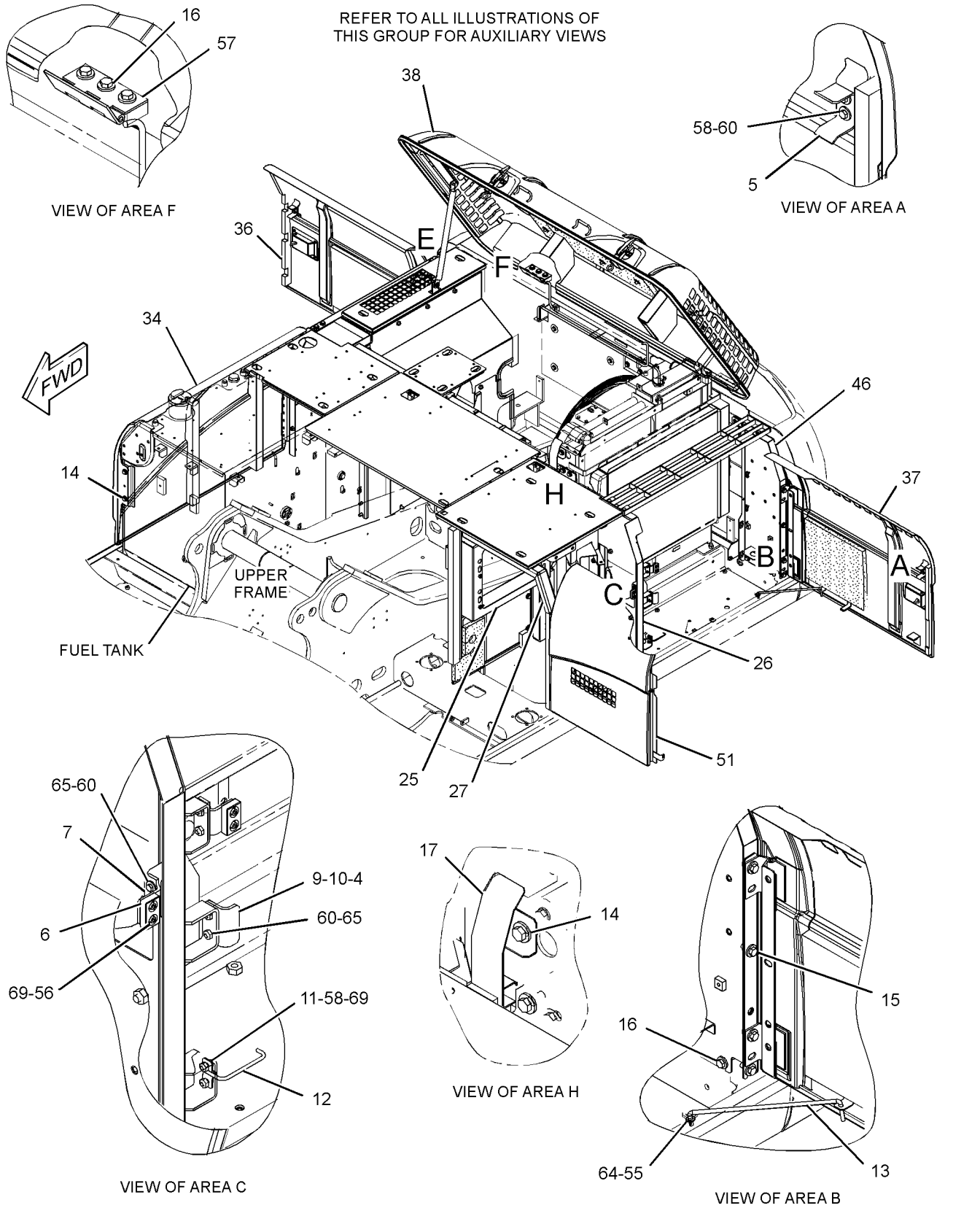

GRAPHIC #2

g01619753

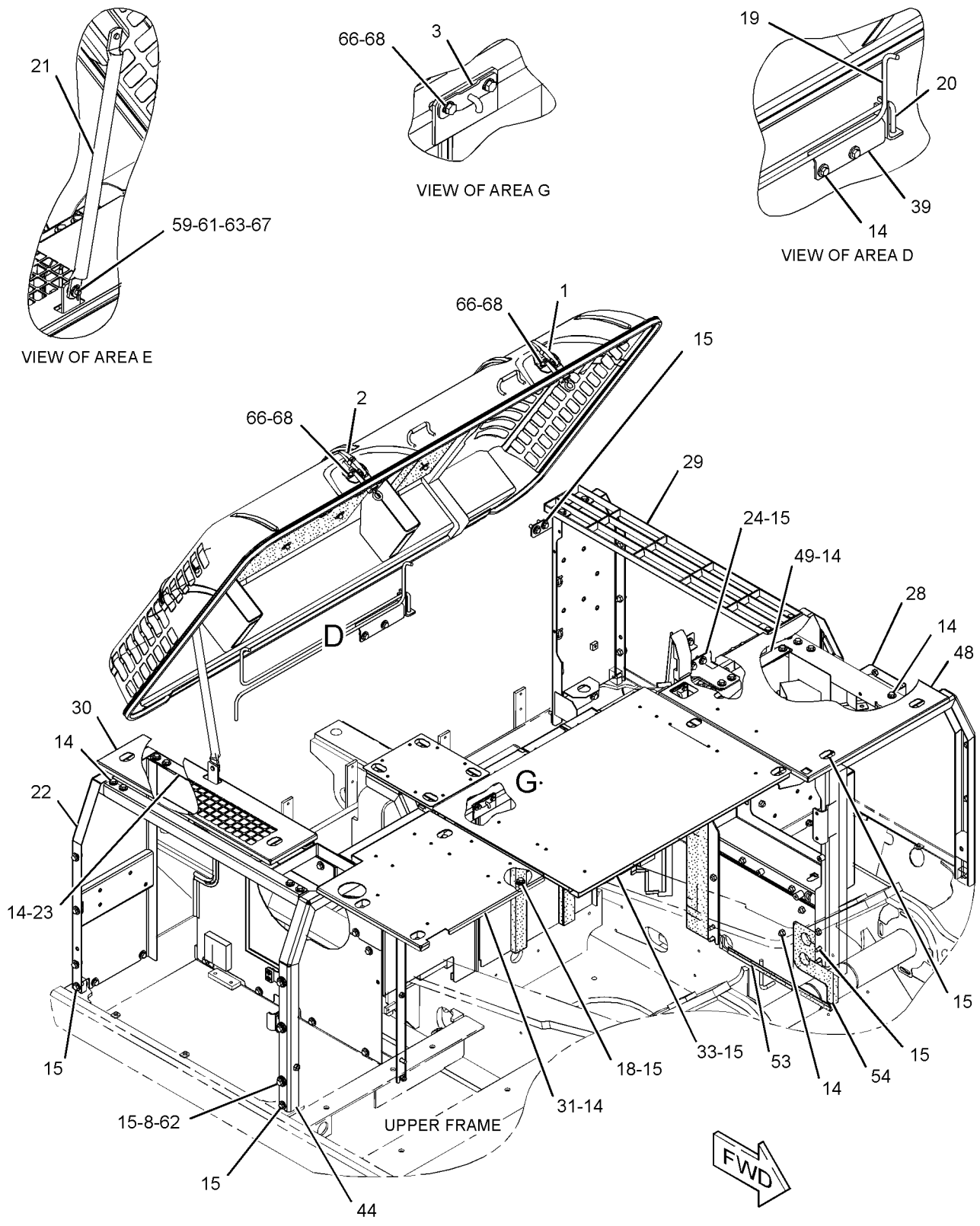

GRAPHIC #3 **<END>** g01619752

236-3395 HOOD AR–PERFORATED

S/N: DFP1-UP; CJX1-UP
PART OF 229-1787 COOLING AR-HIGH AMBIENT TEMP
AN ATTACHMENT
TYPE 1

SMCS-7251 **i02496918**

NOTE	REF NO	GRAPHIC REF	PART NUMBER	QTY	PART NAME 1 2 3 4 5 6 (PRODUCT LEVEL)	SEE PAGE
Y	1	1	**236-9590**	1	DOOR GP-ACCESS (RADIATOR)	476
Y	2	1	**262-2464**	1	HOOD GP-ENGINE	518

Y-SEPARATE ILLUSTRATION

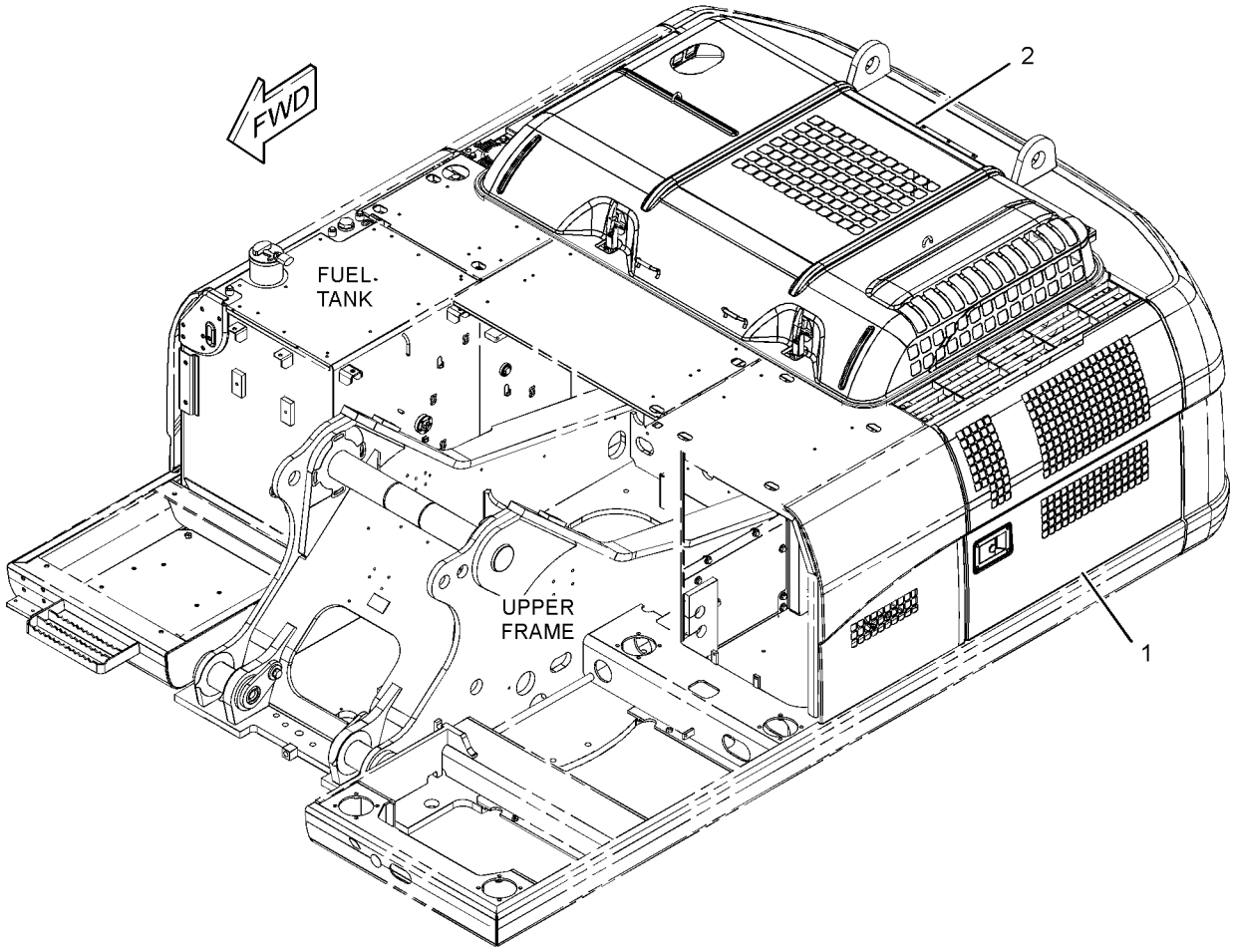

GRAPHIC #1 **<END>** g01246965

236-3395 HOOD AR–PERFORATED

S/N: DFP1-UP; CJX1-UP
PART OF 229-1787 COOLING AR-HIGH AMBIENT TEMP
AN ATTACHMENT
TYPE 2

SMCS-7251 **i02780612**

NOTE	REF NO	GRAPHIC REF	PART NUMBER	QTY	PART NAME 1 2 3 4 5 6 (PRODUCT LEVEL)	SEE PAGE
CY	1	1	**289-6902**	1	DOOR GP-ACCESS (RADIATOR)	479
Y	2	1	**262-2464**	1	HOOD GP-ENGINE	518

C-CHANGE FROM PREVIOUS TYPE
Y-SEPARATE ILLUSTRATION

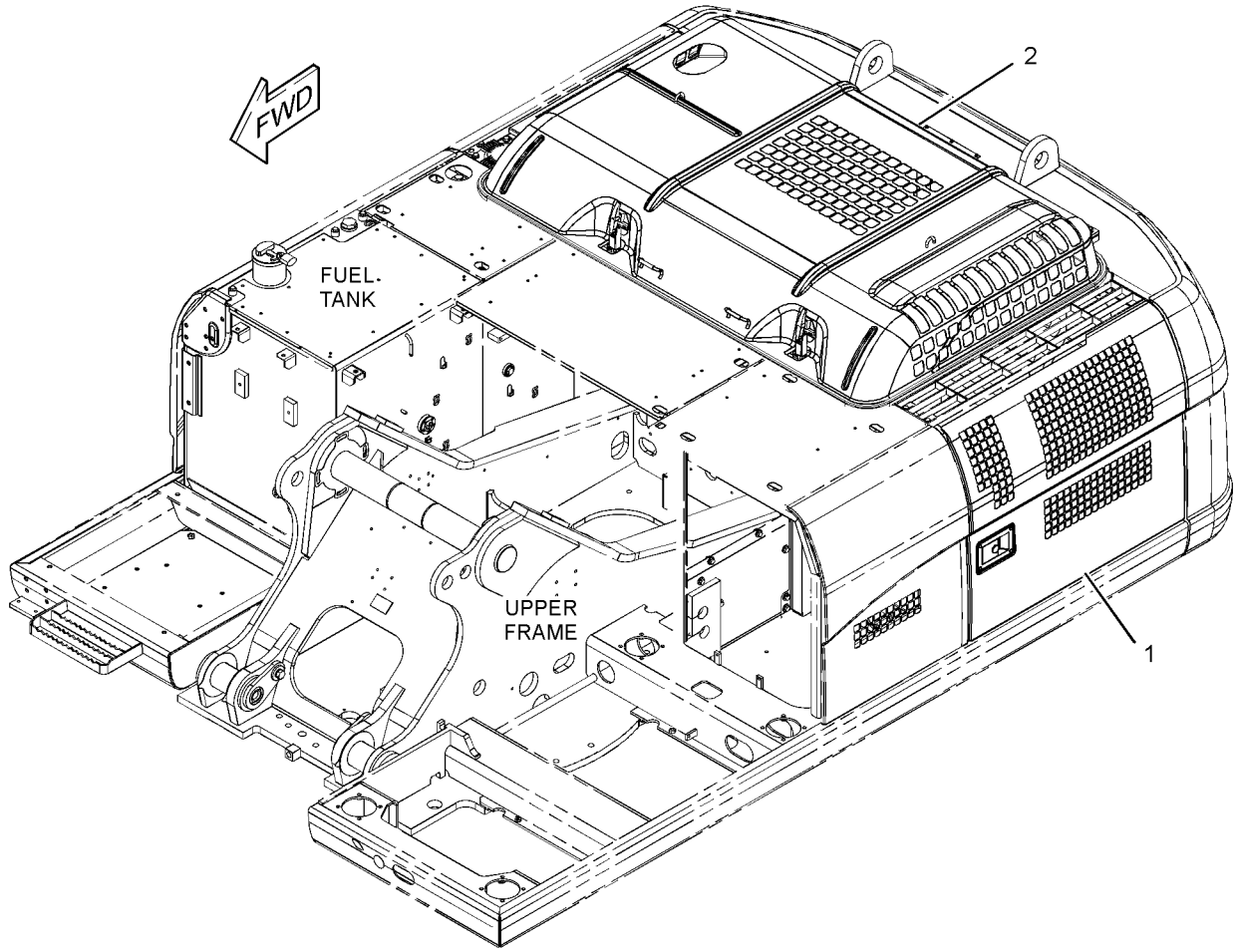

GRAPHIC #1 **<END>** g01246965

223-3045 HOOD GP–PRECLEANER

S/N: DFP1-UP; CJX1-UP
PART OF 229-1794 AIR CLEANER AR
AN ATTACHMENT

SMCS-7251 **i02400212**

NOTE	REF NO	GRAPHIC REF	PART NUMBER	QTY	PART NAME 1 2 3 4 5 6 (PRODUCT LEVEL)	SEE PAGE
	1	1	**237-8480**	1	SUPPORT AS	
	2	1	**256-1725**	1	SUPPORT	
	3	1	**256-1774**	1	COVER AS	
		1	**256-1678**	1	INSULATION	
		1	**256-1679**	2	INSULATION	
	4	1	**262-2509**	1	SHEET AS	

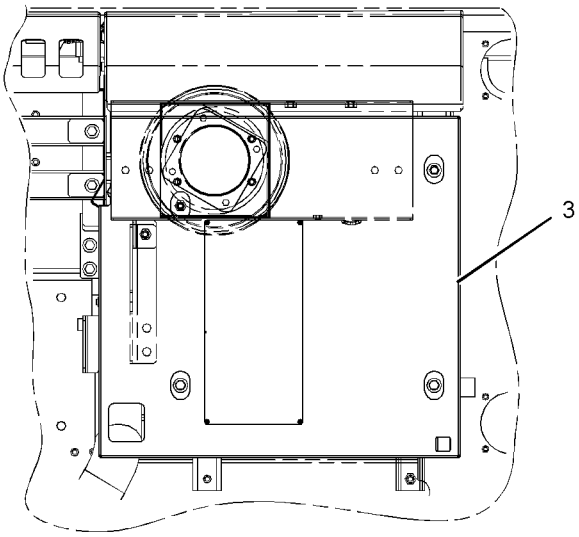

TOP VIEW

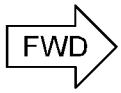

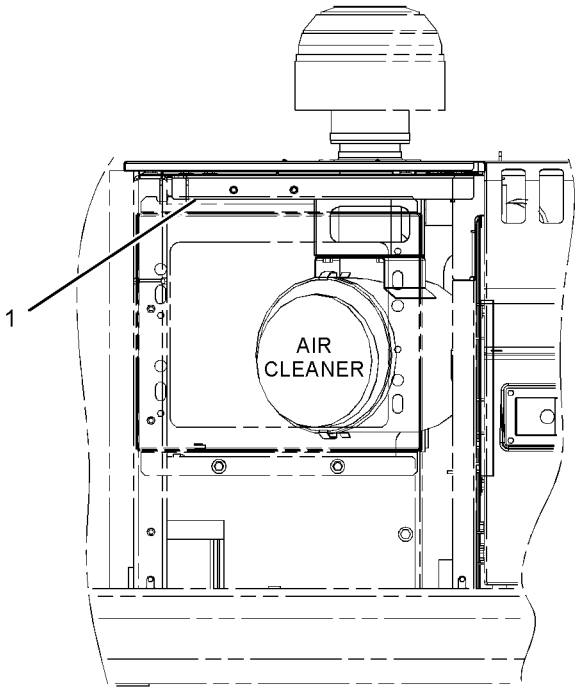

LEFT SIDE VIEW

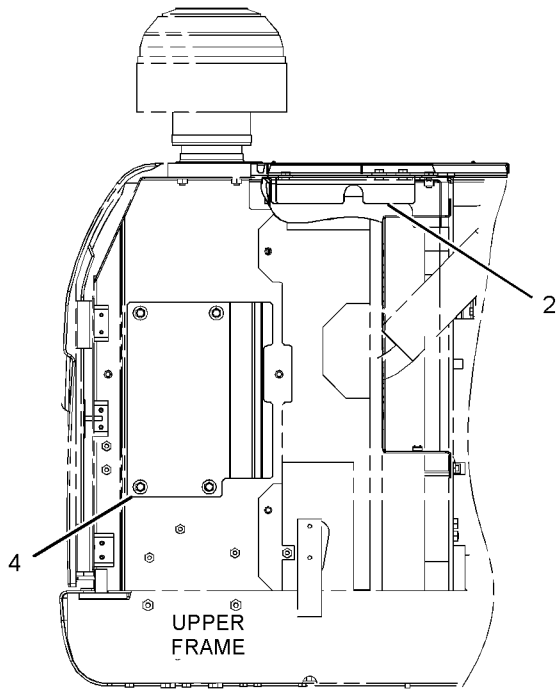

REAR VIEW

GRAPHIC #1 **<END>** g01201755

298-2885 HOOD GP–ACCUGRADE READY

S/N: DFP1-UP; CJX1-UP
PART OF 290-1778 CONVERSION AR-MACHINE
AN ATTACHMENT
TYPE 1

SMCS-7251 **i03167525**

NOTE	REF NO	GRAPHIC REF	PART NUMBER	QTY	PART NAME 1 2 3 4 5 6 (PRODUCT LEVEL)	SEE PAGE
	1	1	**298-2884**	1	SUPPORT AS	
Y	2	1	**298-2886**	1	HOOD GP-ENGINE	519
	3	1	**298-2889**	1	COVER AS	

Y-SEPARATE ILLUSTRATION

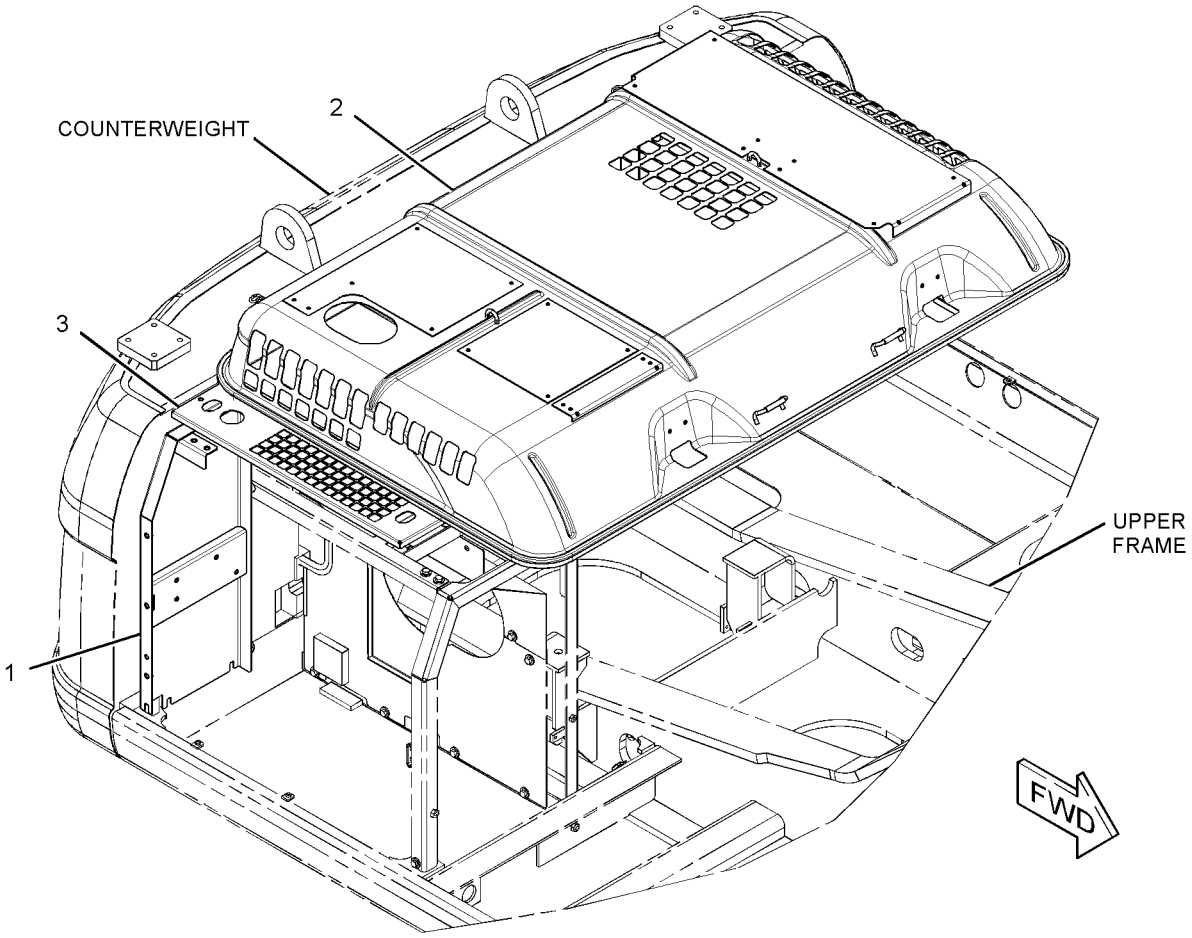

GRAPHIC #1 **<END>** g01369510

298-2885 HOOD GP–ACCUGRADE READY

S/N: DFP1-UP; CJX1-UP
PART OF 290-1778 CONVERSION AR-MACHINE
AN ATTACHMENT
TYPE 2

SMCS-7251 **i03162241**

NOTE	REF NO	GRAPHIC REF	PART NUMBER	QTY	PART NAME 1 2 3 4 5 6 (PRODUCT LEVEL)	SEE PAGE
	1	1	**298-2884**	1	SUPPORT AS	
CY	2	1	**333-5017**	1	HOOD GP-ENGINE	521
	3	1	**298-2889**	1	COVER AS	

C-CHANGE FROM PREVIOUS TYPE
Y-SEPARATE ILLUSTRATION

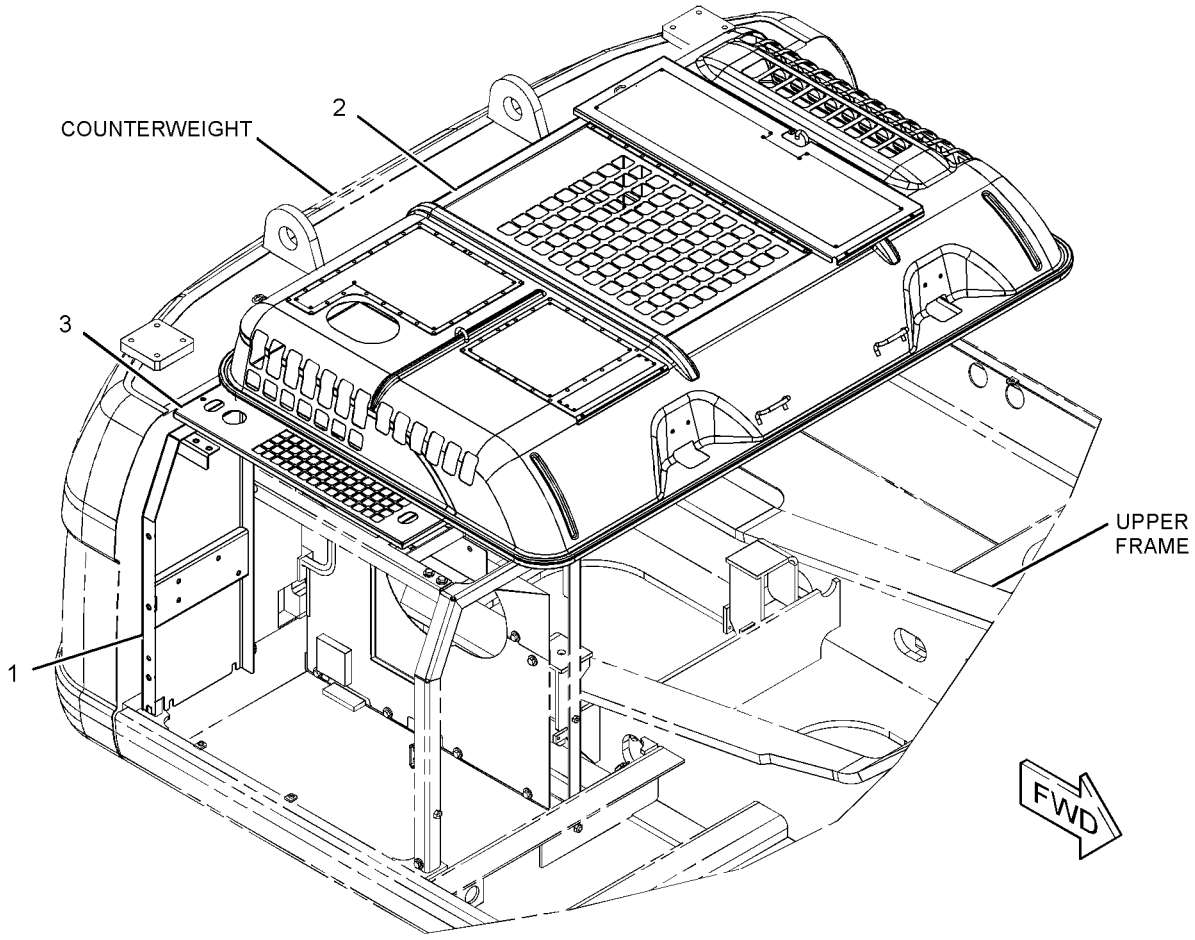

GRAPHIC #1 **<END>** g01622915

223-3044 HOOD GP-ENGINE—PERFORATED

S/N: DFP1-UP; CJX1-UP
PART OF 229-1786 COOLING AR-HIGH AMBIENT TEMP
AN ATTACHMENT

SMCS-7251 **i02397765**

NOTE	REF NO	GRAPHIC REF	PART NUMBER	QTY	PART NAME 1 2 3 4 5 6 (PRODUCT LEVEL)	SEE PAGE
Y	1	1	**262-2464**	1	HOOD GP-ENGINE	518

Y-SEPARATE ILLUSTRATION

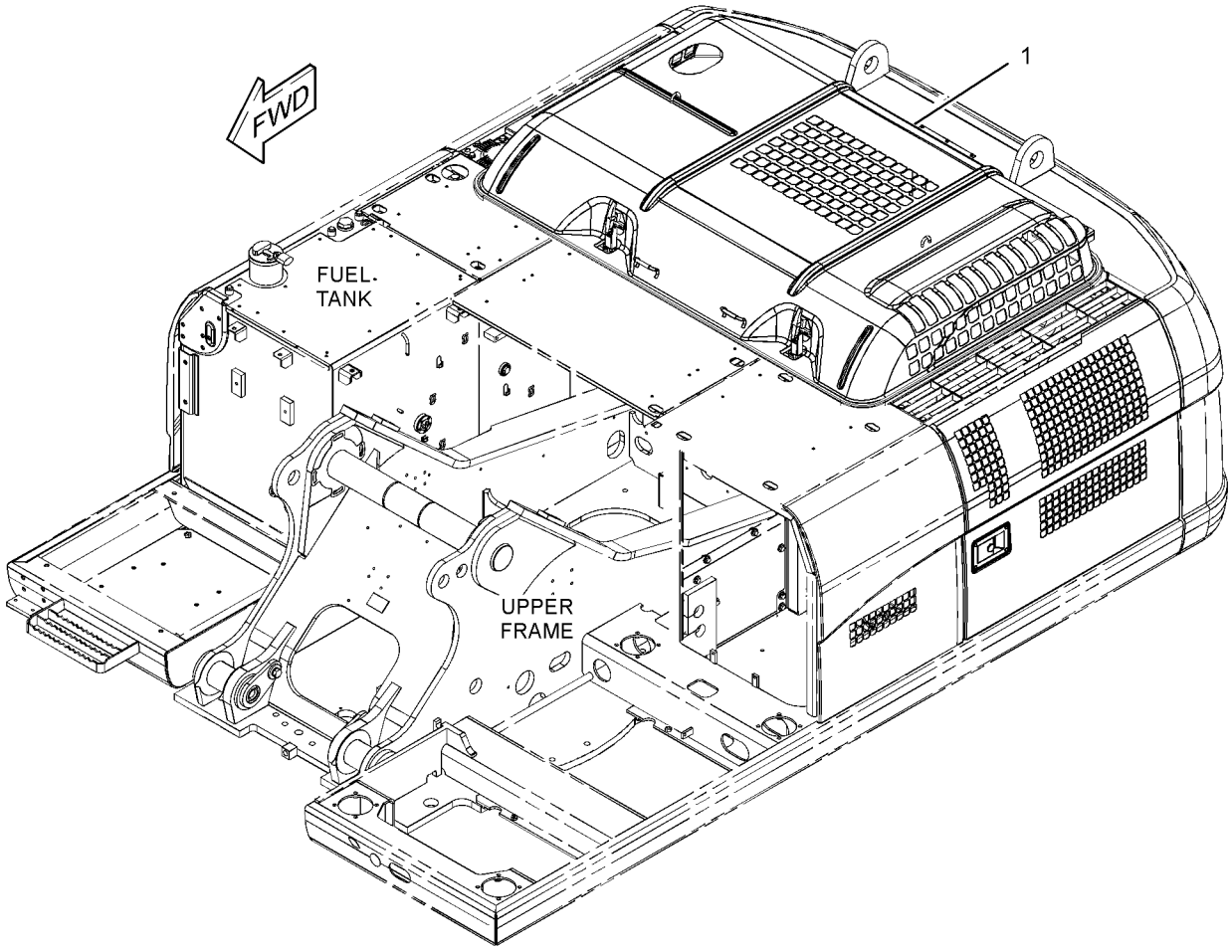

GRAPHIC #1 **<END>** g01248408

FRAME AND BODY

236-9540 HOOD GP-ENGINE

S/N: DFP1-UP; CJX1-UP

PART OF 223-3043 HOOD & GUARD GP

SMCS-7251 **i02528629**

NOTE	REF NO	GRAPHIC REF	PART NUMBER	QTY	PART NAME 1 2 3 4 5 6 (PRODUCT LEVEL)	SEE PAGE
	1	1	**4I-7924**	16	WASHER (4.5X40X1.2-MM THK)	
	2	1	**6P-2216**	16	CAP	
	3	1	**096-4129**	2	CUSHION	
	4	1	*236-9541*	1	HOOD AS-ENGINE	
		1	**114-6289**	2	HINGE	
	5	1	**236-9543**	1	LINER	
	6	1	**236-9544**	1	LINER	
	7	1	**236-9545**	1	LINER	
	8	1	**236-9546**	1	LINER	
	9	1	**262-2178**	1	LINER	
	10	1	**262-2442**	1	INSULATION	
	11	1	**262-2443**	1	INSULATION	
	12	1	**8T-0328**	4	WASHER-HARD (5.5X10X1-MM THK)	
M	13	1	**8T-6693**	4	SCREW-MACHINE (M5X0.8X16-MM)	
D	14	1	**101-9848**		SEAL (6.7-M)	

D-ORDER BY THE METER
M-METRIC PART

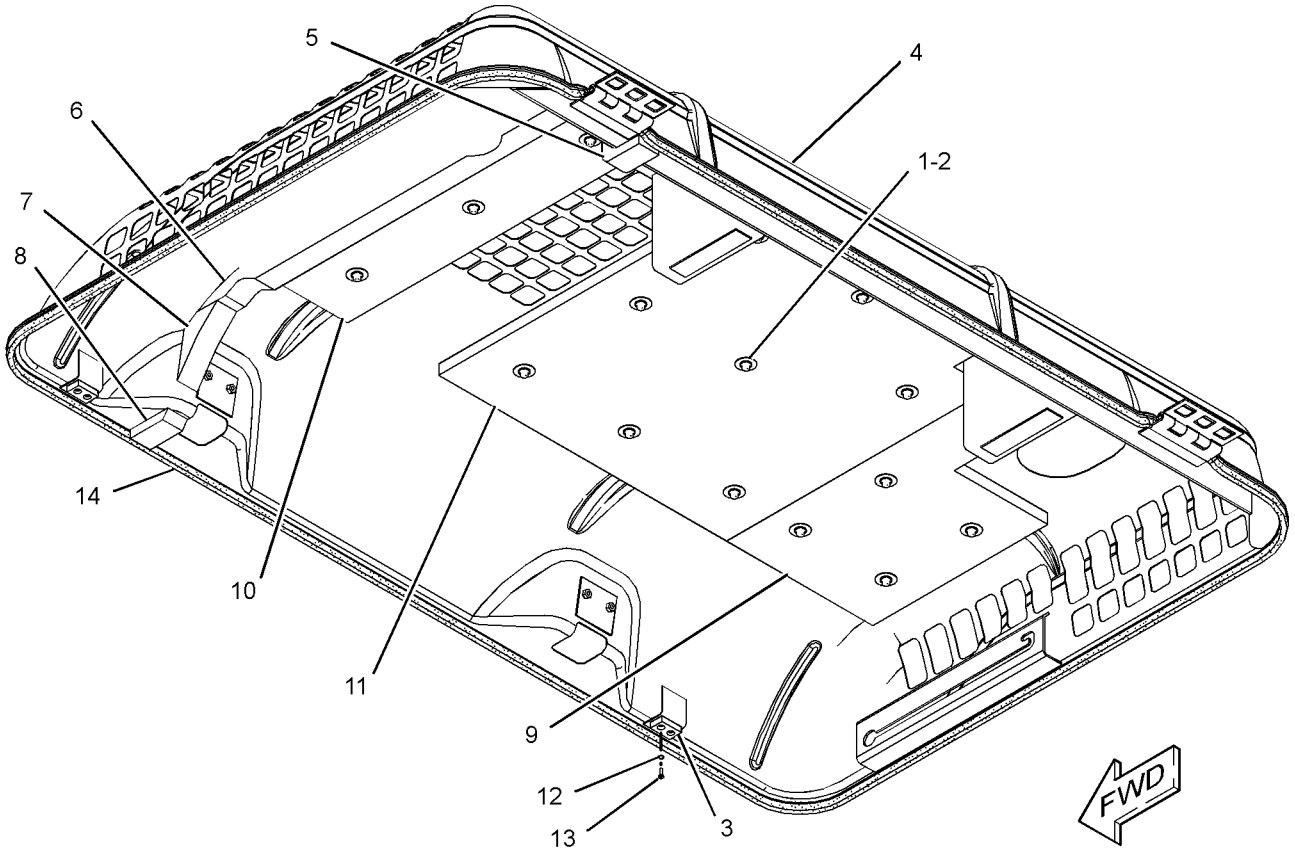

GRAPHIC #1 **<END>** g01189740

262-2464 HOOD GP-ENGINE

S/N: DFP1-UP; CJX1-UP
PART OF 236-3395 HOOD AR, 223-3044 HOOD GP-ENGINE
AN ATTACHMENT

SMCS-7251 **i02397768**

NOTE	REF NO	GRAPHIC REF	PART NUMBER	QTY	PART NAME 1 2 3 4 5 6 (PRODUCT LEVEL)	SEE PAGE
	1	1	**4I-7924**	8	WASHER (4.5X40X1.2-MM THK)	
	2	1	**6P-2216**	8	CAP	
	3	1	**096-4129**	2	CUSHION	
	4	1	**236-9543**	1	LINER	
	5	1	**236-9544**	1	LINER	
	6	1	**236-9545**	1	LINER	
	7	1	**236-9546**	1	LINER	
	8	1	**262-2178**	1	LINER	
	9	1	**262-2442**	1	INSULATION	
	10	1	*262-2465*	1	HOOD AS-ENGINE	
		1	**114-6289**	2	HINGE	
	11	1	**8T-0328**	4	WASHER-HARD (5.5X10X1-MM THK)	
M	12	1	**8T-6693**	4	SCREW-MACHINE (M5X0.8X16-MM)	
D	13	1	**101-9848**		SEAL (1-M)	

D-ORDER BY THE METER
M-METRIC PART

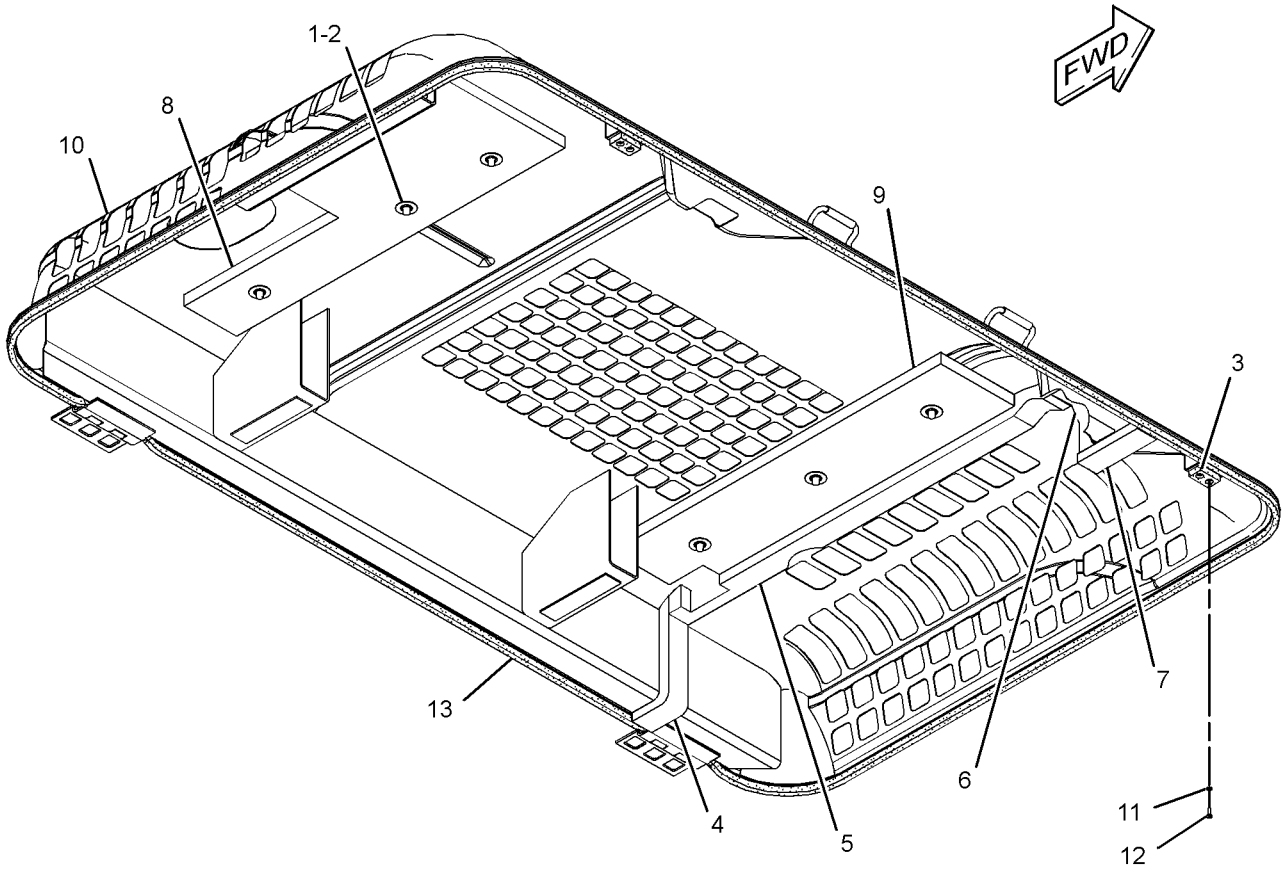

GRAPHIC #1 **<END>** g01245716

298-2886 HOOD GP-ENGINE

S/N: DFP1-UP; CJX1-UP
PART OF 298-2885 HOOD GP
AN ATTACHMENT

SMCS-7251 **i02892899**

NOTE	REF NO	GRAPHIC REF	PART NUMBER	QTY	PART NAME 1 2 3 4 5 6 (PRODUCT LEVEL)	SEE PAGE
	1	1	**4I-7924**	16	WASHER (4.5X40X1.2-MM THK)	
	2	1	**6P-2216**	16	CAP	
	3	1	**096-4129**	2	CUSHION	
	4	1	**236-9543**	1	LINER	
	5	1	**236-9544**	1	LINER	
	6	1	**236-9545**	1	LINER	
	7	1	**236-9546**	1	LINER	
	8	1	**262-2178**	1	LINER	
	9	1	**262-2442**	1	INSULATION	
	10	1	**262-2443**	1	INSULATION	
	12	1	**8T-0328**	4	WASHER-HARD (5.5X10X1-MM THK)	
M	13	1	**8T-6693**	4	SCREW-MACHINE (M5X0.8X16-MM)	
D	14	1	**101-9848**		SEAL (6.7-M)	
E	15	1	**184-8580**		SEAL (30-CM EACH)	
E	15A	1	**184-8580**		SEAL (35-CM)	

D-ORDER BY THE METER
E-ORDER BY THE CENTIMETER
M-METRIC PART

298-2886 HOOD GP-ENGINE *(contd.)* **i02892899**

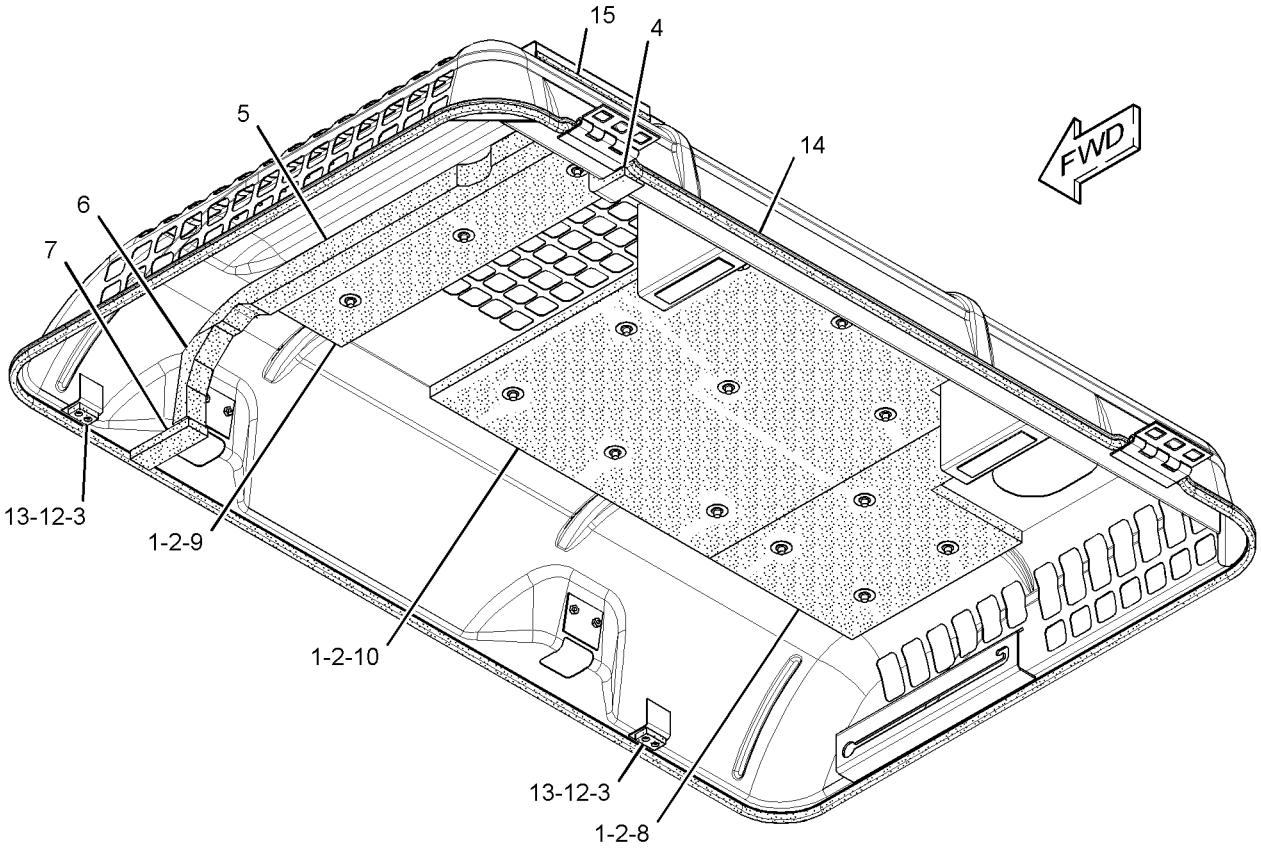

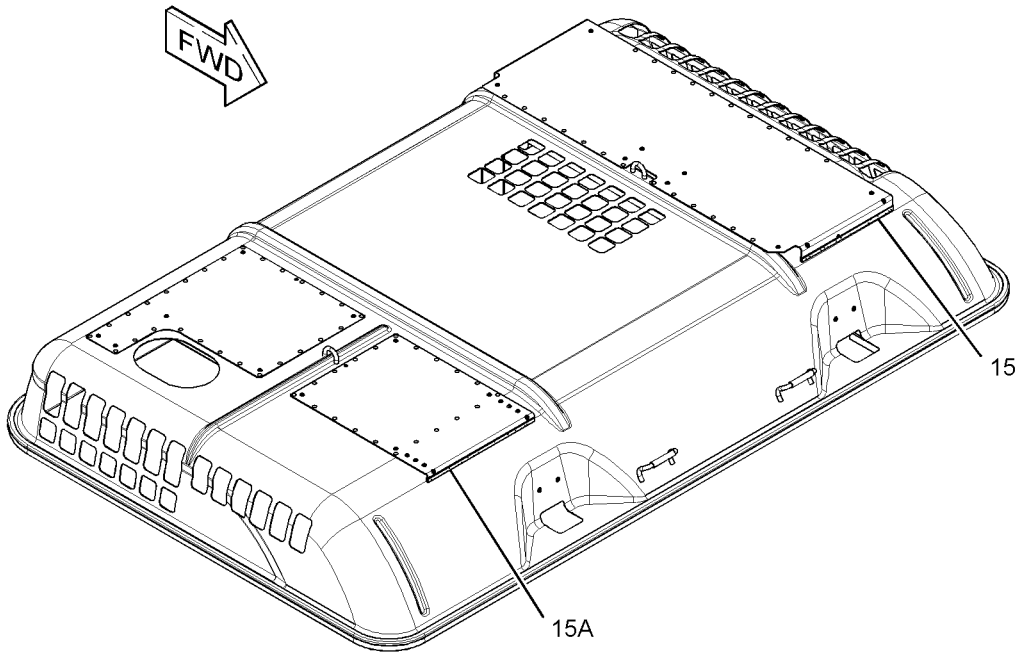

GRAPHIC #1 **<END>** g01504029

333-5017 HOOD GP-ENGINE

S/N: DFP1-UP; CJX1-UP
PART OF 298-2885 HOOD GP
AN ATTACHMENT

SMCS-7251 **i03162244**

NOTE	REF NO	GRAPHIC REF	PART NUMBER	QTY	PART NAME 1 2 3 4 5 6 (PRODUCT LEVEL)	SEE PAGE
	1	1	**4I-7924**	8	WASHER (4.5X40X1.2-MM THK)	
	2	1	**6P-2216**	8	CAP	
	3	1	**096-4129**	2	CUSHION	
	4	1	**236-9543**	1	LINER	
	5	1	**236-9544**	1	LINER	
	6	1	**236-9545**	1	LINER	
	7	1	**236-9546**	1	LINER	
	8	1	**262-2178**	1	LINER	
	9	1	**262-2442**	1	INSULATION	
	10	1	*333-5018*	1	HOOD AS-ENGINE	
	10A	1	**114-6289**	2	HINGE	
	10B	1	**146-4936**	2	HANDLE AS	
	11	1	**8T-0328**	4	WASHER-HARD (5.5X10X1-MM THK)	
M	12	1	**8T-6693**	4	SCREW-MACHINE (M5X0.8X16-MM)	
D	13	1	**101-9848**		SEAL (6.7-M)	
E	14	1	**184-8580**		SEAL (70-CM)	

D-ORDER BY THE METER
E-ORDER BY THE CENTIMETER
M-METRIC PART

333-5017 HOOD GP-ENGINE *(contd.)* **i03162244**

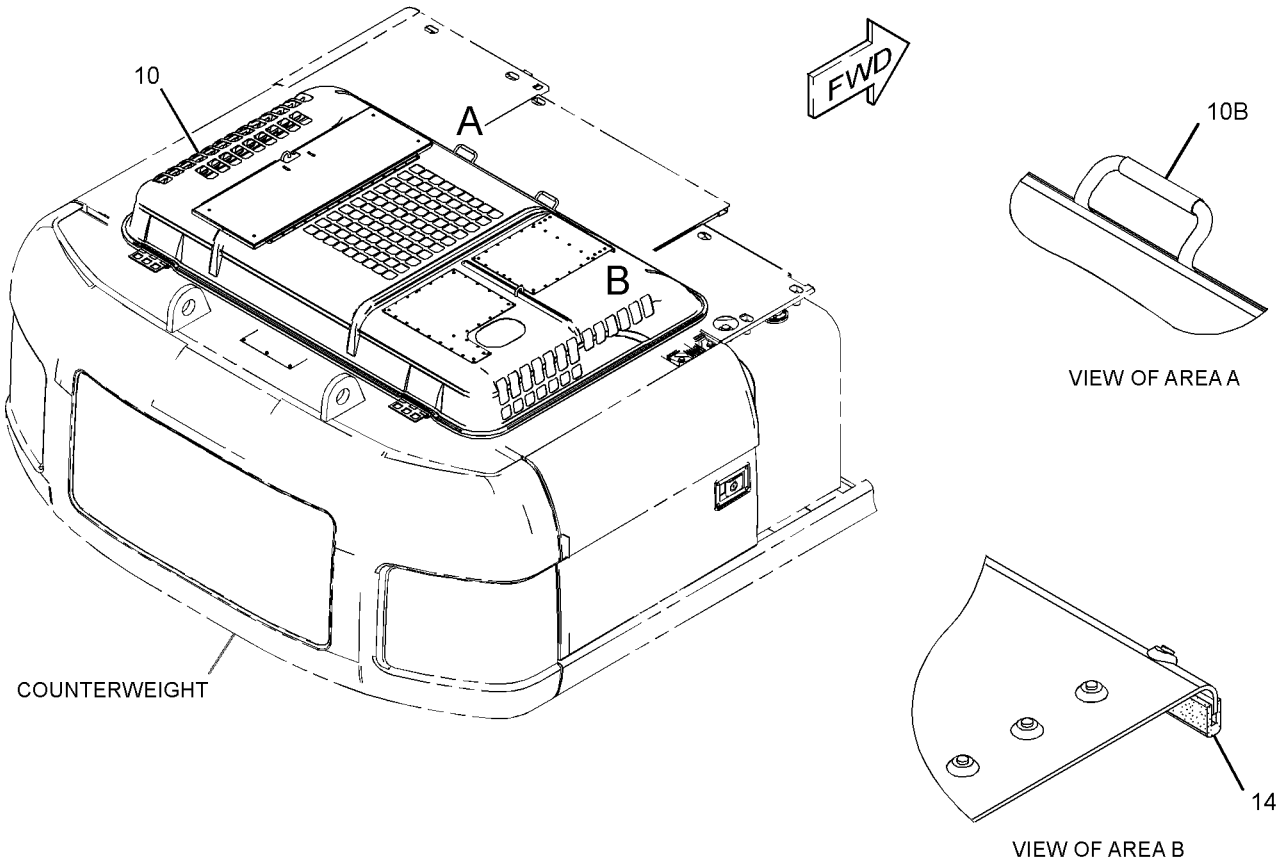

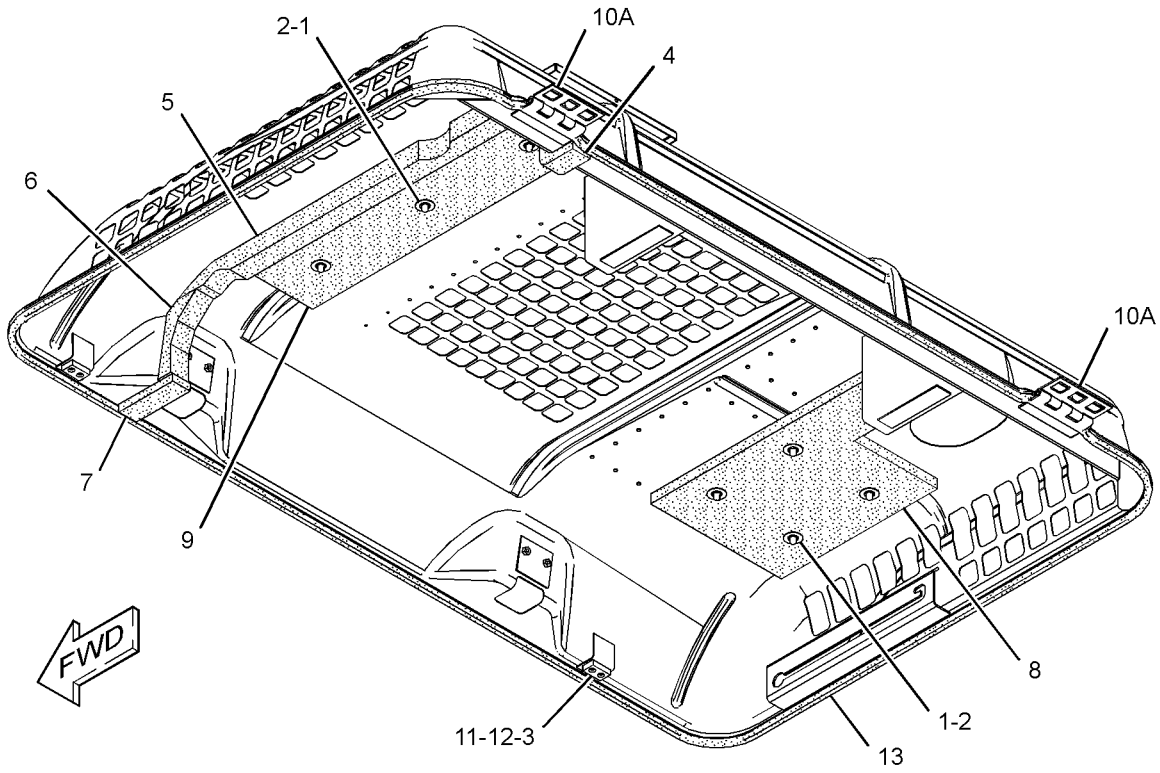

GRAPHIC #1 **<END>** g01623276

FRAME AND BODY

236-3387 SHEET AS-SOUND SUPPRESSION

S/N: DFP1-UP; CJX1-UP

PART OF 223-3043 HOOD & GUARD GP

SMCS-1801, 7076, 7251, 7267 **i02349112**

NOTE	REF NO	GRAPHIC REF	PART NUMBER	QTY	PART NAME 1 2 3 4 5 6 (PRODUCT LEVEL)	SEE PAGE
	1	1	**236-3388**	1	INSULATION	
	2	1	*236-3389*	1	SHEET AS	
	3	1	**250-5108**	1	INSULATION	
	4	1	**250-5109**	1	INSULATION	
	5	1	**256-1681**	1	INSULATION	

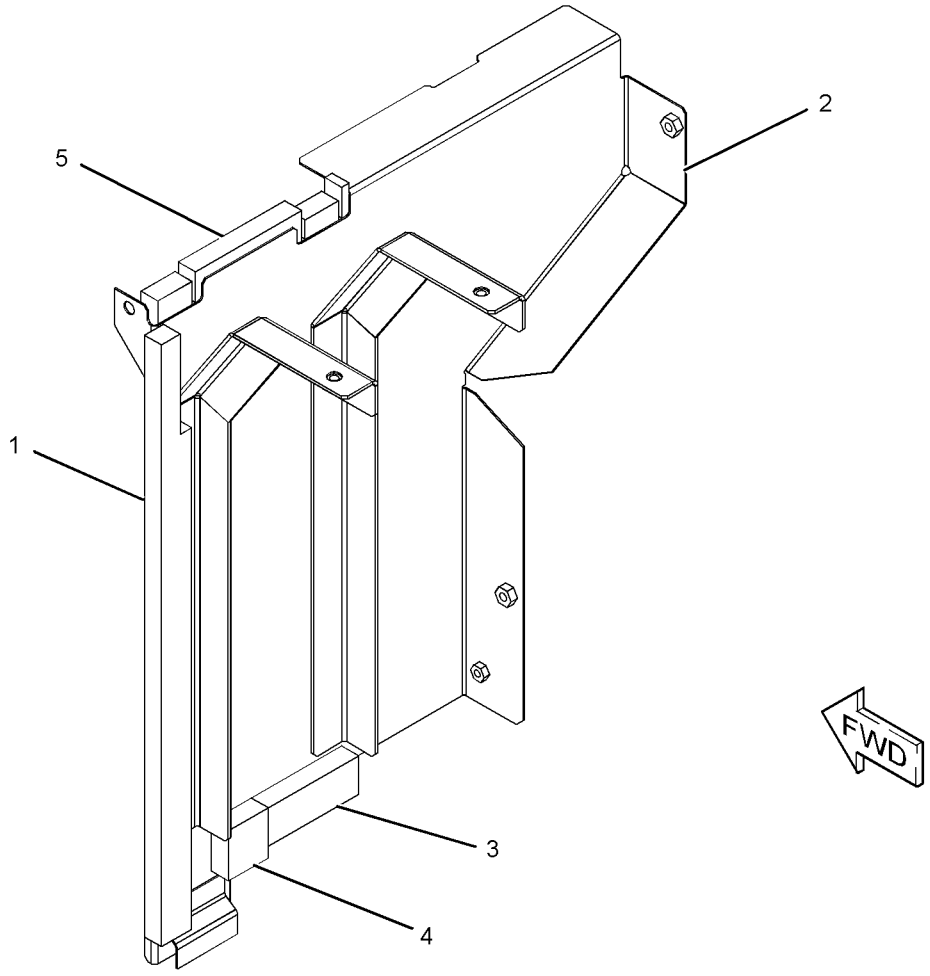

GRAPHIC #1 **<END>** g01182481

244-7912 SHEET AS-SOUND SUPPRESSION

S/N: DFP1-UP; CJX1-UP

PART OF 223-3043 HOOD & GUARD GP

SMCS-1801, 7076, 7251, 7267 **i02349129**

NOTE	REF NO	GRAPHIC REF	PART NUMBER	QTY	PART NAME 1 2 3 4 5 6 (PRODUCT LEVEL)	SEE PAGE
	1	1	**6P-2216**	4	CAP	
	2	1	*244-7913*	1	SHEET AS	
	3	1	**244-7915**	1	INSULATION	
	4	1	**244-7916**	1	INSULATION	
	5	1	**256-1682**	1	INSULATION	

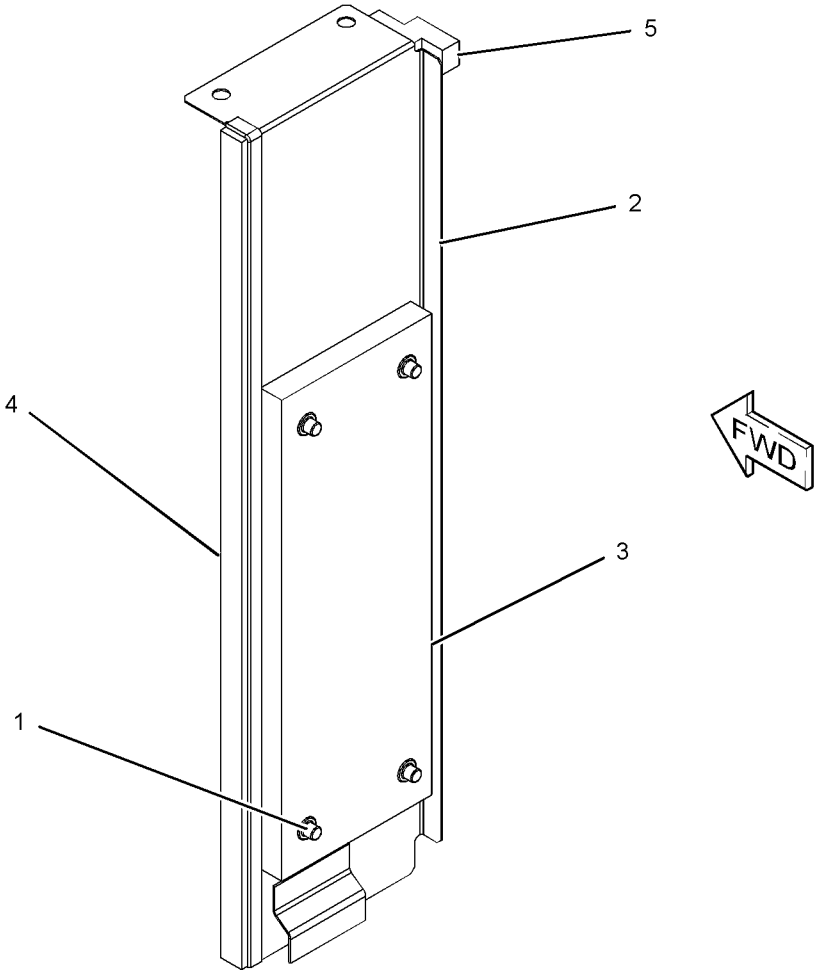

GRAPHIC #1

<END>

g01182580

244-7917 SHEET AS-SOUND SUPPRESSION

S/N: DFP1-UP; CJX1-UP

PART OF 223-3043 HOOD & GUARD GP

SMCS-1801, 7076, 7251, 7267 **i02457495**

NOTE	REF NO	GRAPHIC REF	PART NUMBER	QTY	PART NAME 1 2 3 4 5 6 (PRODUCT LEVEL)	SEE PAGE
	1	1	**6P-2216**	9	CAP	
	2	1	**236-3399**	1	INSULATION	
Z	3	1		1	SHEET AS	
	4	1	**244-7921**	1	LINER	
	5	1	**256-1686**	1	INSULATION	
	6	1	**256-1687**	1	INSULATION	

Z-NOT SERVICED SEPARATELY

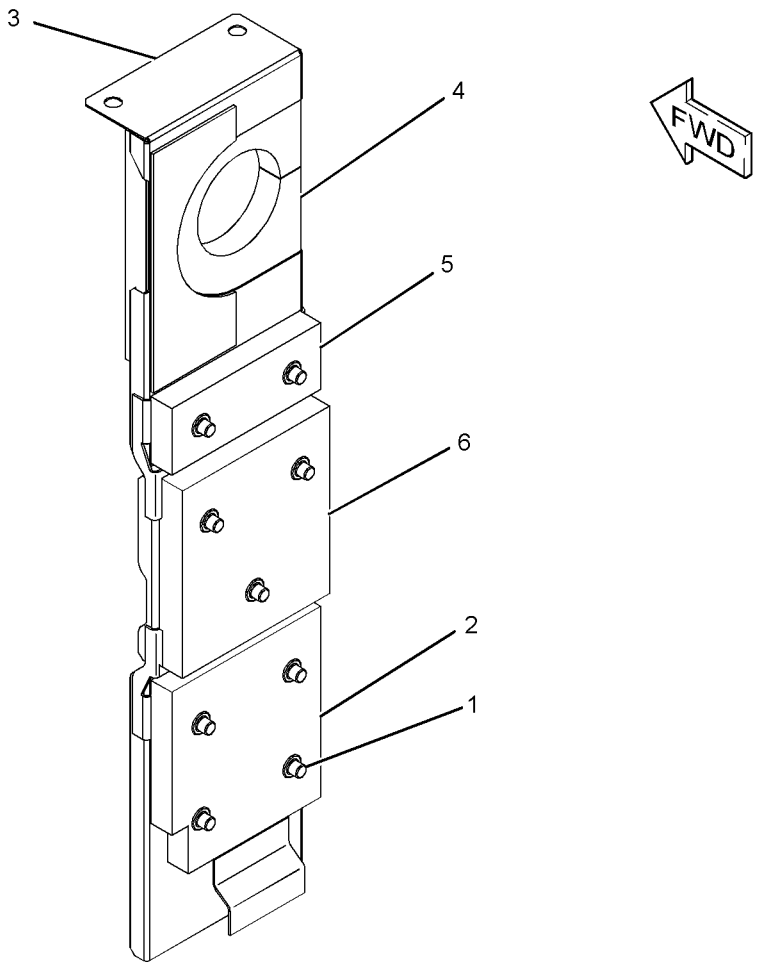

GRAPHIC #1 **<END>** g01214265

244-7922 SHEET AS-SOUND SUPPRESSION

S/N: DFP1-UP; CJX1-UP

PART OF 223-3043 HOOD & GUARD GP

SMCS-1801, 7076, 7251, 7267 **i02350008**

NOTE	REF NO	GRAPHIC REF	PART NUMBER	QTY	PART NAME 1 2 3 4 5 6 (PRODUCT LEVEL)	SEE PAGE
	1	1	**6P-2216**	4	CAP	
	2	1	**236-9575**	1	INSULATION	
	3	1	**244-7916**	1	INSULATION	
	4	1	**256-1710**	1	INSULATION	
	5	1	**256-1689**	1	INSULATION	
	6	1	**256-1691**	1	INSULATION	
	7	1	**256-1692**	1	INSULATION	
	8	1	**256-1693**	1	INSULATION	
	9	1	**256-1708**	1	INSULATION	
E	10	1	**184-8580**		SEAL (4.5-CM)	
E	10A	1	**184-8580**		SEAL (8.8-CM)	
E	10B	1	**184-8580**		SEAL (5.7-CM)	

E-ORDER BY THE CENTIMETER

244-7922 SHEET AS-SOUND SUPPRESSION *(contd.)* **i02350008**

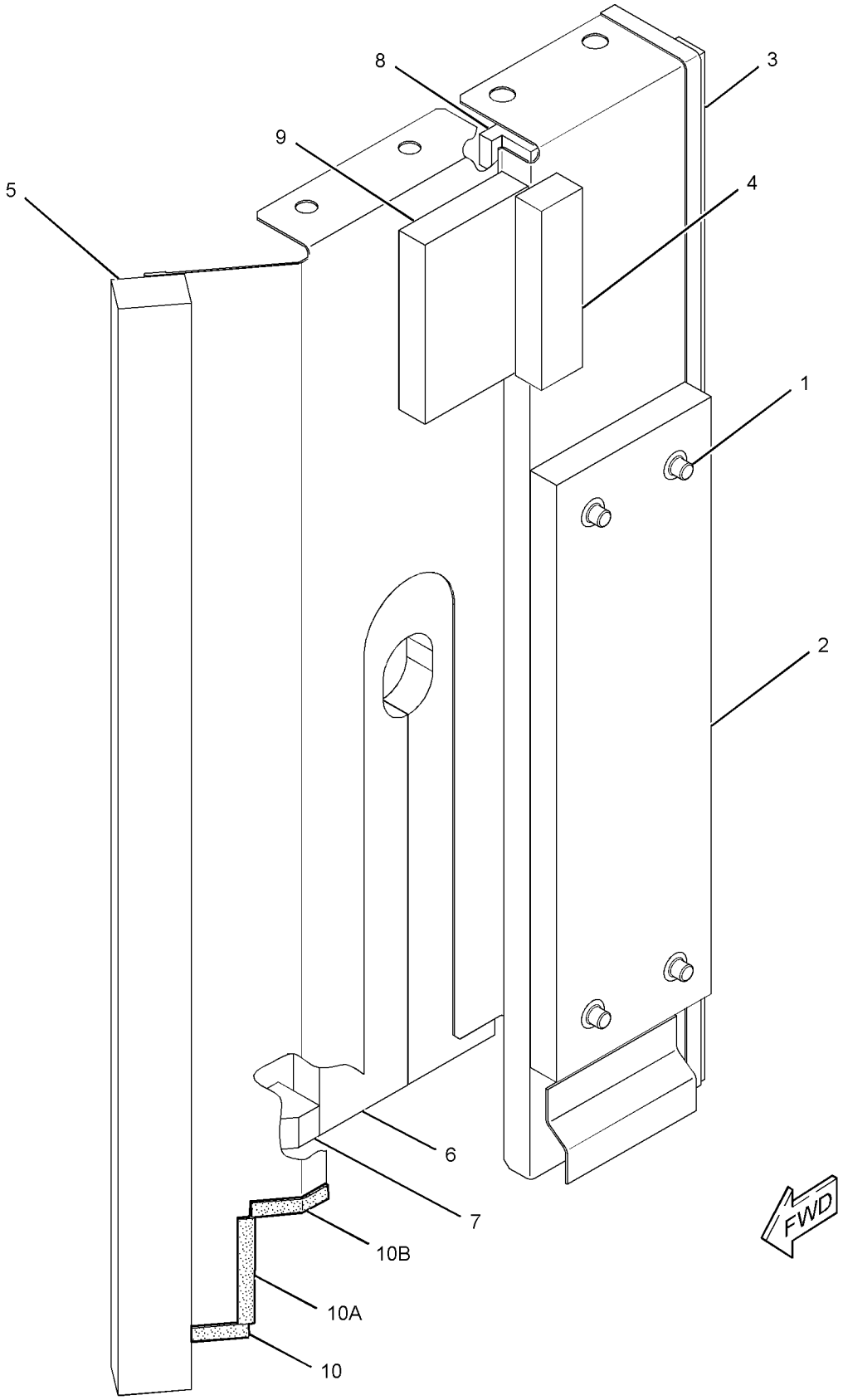

GRAPHIC #1 **<END>** g01179776

256-1698 SHEET AS-SOUND SUPPRESSION

S/N: DFP1-UP; CJX1-UP

PART OF 223-3043 HOOD & GUARD GP

SMCS-1801, 7076, 7251, 7267 **i02469425**

NOTE	REF NO	GRAPHIC REF	PART NUMBER	QTY	PART NAME 1 2 3 4 5 6 (PRODUCT LEVEL)	SEE PAGE
Z	1	1		1	SHEET AS	
	2	1	**256-1702**	1	LINER	
	3	1	**256-1703**	1	LINER	
	4	1	**256-1704**	1	LINER	
D	5	1	**5P-8309**		SEAL (0.07-M)	

D-ORDER BY THE METER
Z-NOT SERVICED SEPARATELY

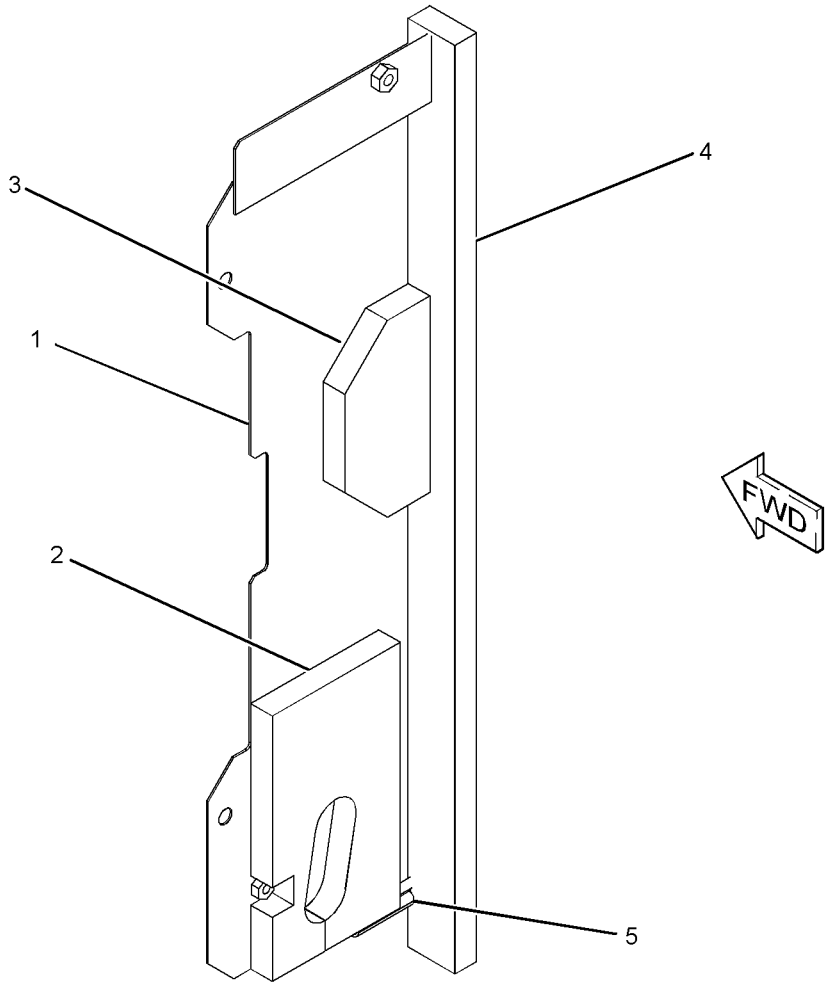

GRAPHIC #1

<END>

g01231486

262-2497 SHEET AS-SOUND SUPPRESSION

S/N: DFP1-UP; CJX1-UP
PART OF 251-0440 BATTERY & WIRING GP
AN ATTACHMENT

SMCS-1801, 7076, 7251, 7267 **i03087861**

NOTE	REF NO	GRAPHIC REF	PART NUMBER	QTY	PART NAME 1 2 3 4 5 6 (PRODUCT LEVEL)	SEE PAGE
	1	1	**262-2498**	1	LINER	
	2	1	**262-2499**	1	LINER	

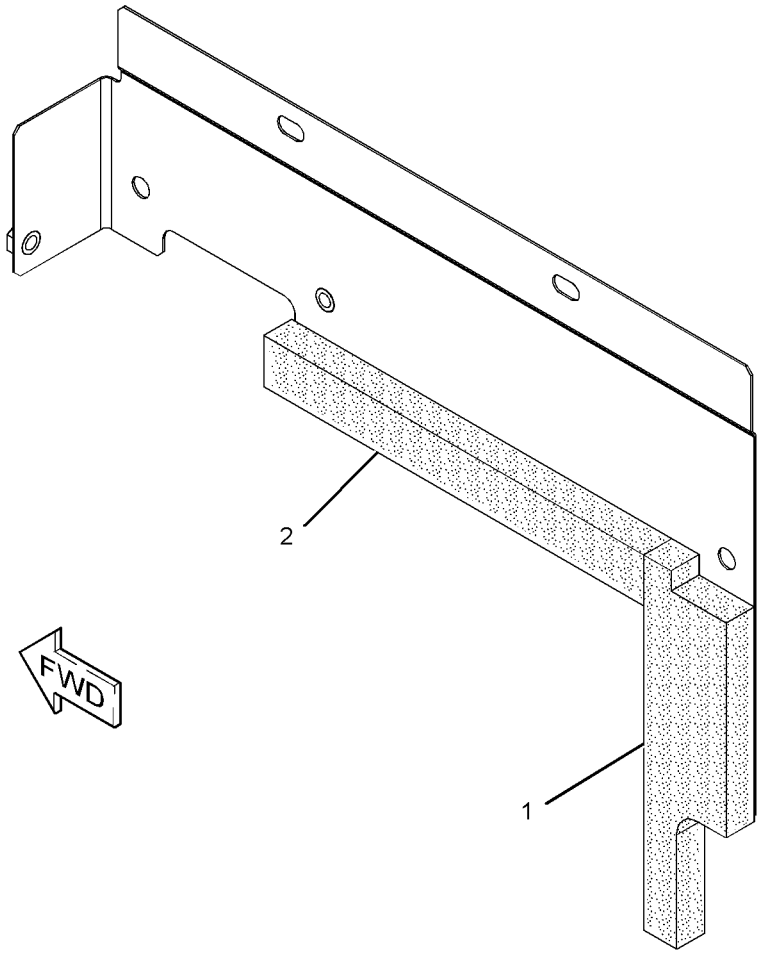

GRAPHIC #1 **<END>** g01523715

273-7802 SHEET AS-SOUND SUPPRESSION

S/N: DFP1-UP; CJX1-UP

PART OF 223-3043 HOOD & GUARD GP

SMCS-1801, 7076, 7251, 7267 **i02424762**

NOTE	REF NO	GRAPHIC REF	PART NUMBER	QTY	PART NAME 1 2 3 4 5 6 (PRODUCT LEVEL)	SEE PAGE
	1	1	**273-7803**	1	LINER	
	2	1	**273-7804**	1	LINER	
Z	3	1		1	SHEET AS	

Z-NOT SERVICED SEPARATELY

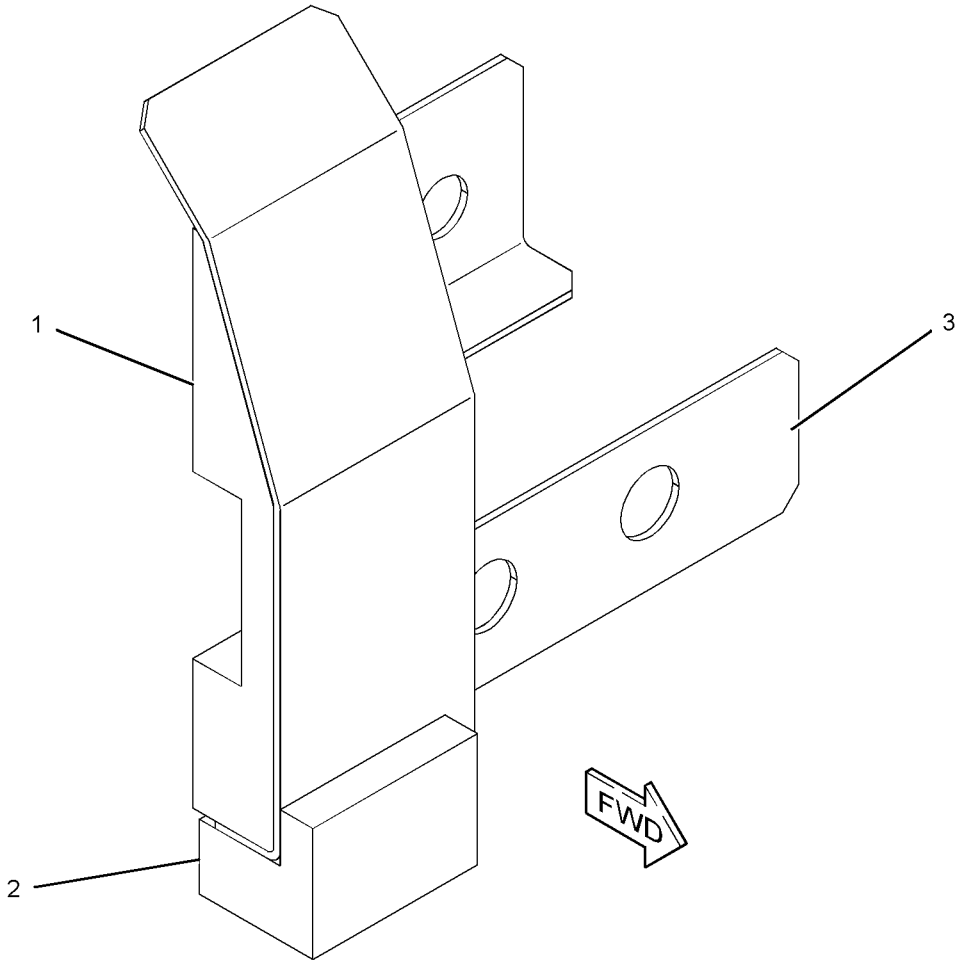

GRAPHIC #1 **<END>** g01217771

FRAME AND BODY

235-7764 STEP GP

S/N: DFP1-UP; CJX1-UP
PART OF 314-3575, 314-3846 SPECIAL AR, 240-4013, 329-6585 TRACK AR, 240-3990, 329-6586 TRACK GP
FOR USE WITH TRACK SHOES UP TO 800-MM (31.5-IN) WIDE
AN ATTACHMENT

SMCS-7254 **i03255291**

NOTE	REF NO	GRAPHIC REF	PART NUMBER	QTY	PART NAME 1 2 3 4 5 6 (PRODUCT LEVEL)	SEE PAGE
	1	1	**235-7765**	2	STEP	
M	2	1	**8T-7338**	4	BOLT (M16X2X45-MM)	
	3	1	**9X-8257**	4	WASHER (17.5X30X3.5-MM THK)	

M-METRIC PART

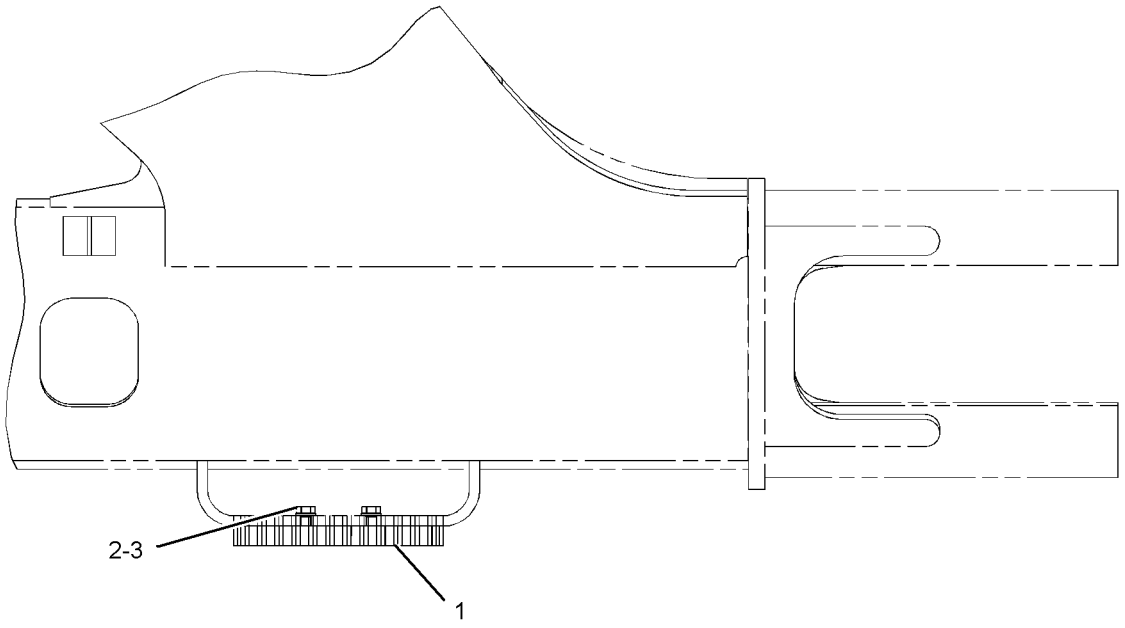

TOP VIEW

GRAPHIC #1 **<END>** g01150668

308-8881 STEP GP

S/N: DFP1-UP; CJX1-UP
PART OF 314-3576 SPECIAL AR
AN ATTACHMENT

SMCS-7254 **i02843488**

NOTE	REF NO	GRAPHIC REF	PART NUMBER	QTY	PART NAME 1 2 3 4 5 6 (PRODUCT LEVEL)	SEE PAGE
	1	1	**308-8882**	2	STEP AS	
M	2	1	**7X-2553**	4	BOLT (M16X2X40-MM)	
	3	1	**9X-8257**	4	WASHER (17.5X30X3.5-MM THK)	

M-METRIC PART

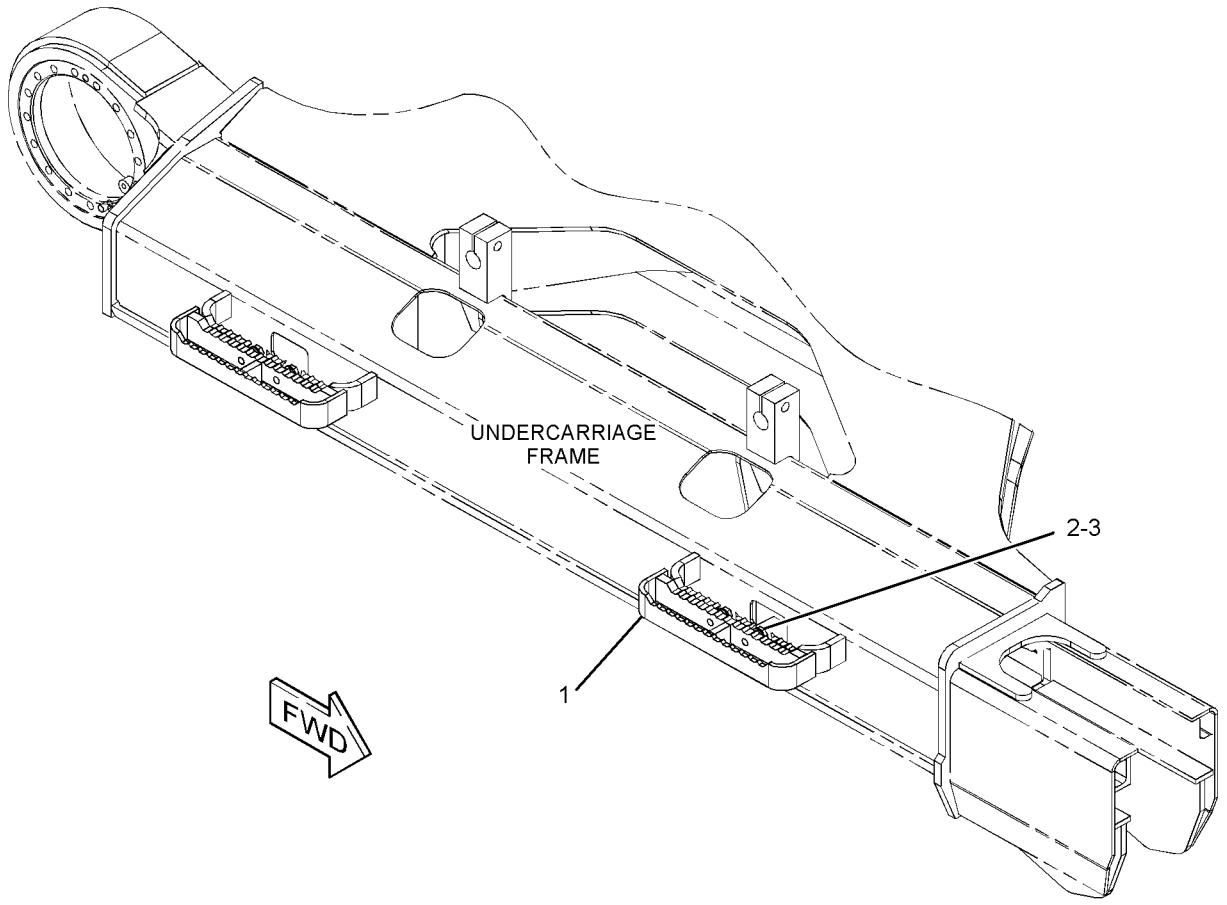

GRAPHIC #1 **<END>** g01421202

223-3055 STORAGE GP-VANDALISM GUARD

S/N: DFP1-UP; CJX1-UP
PART OF 229-1777, 229-1778 GUARD AR-VANDALISM
AN ATTACHMENT

SMCS-7315 **i02397790**

NOTE	REF NO	GRAPHIC REF	PART NUMBER	QTY	PART NAME 1 2 3 4 5 6 (PRODUCT LEVEL)	SEE PAGE
M	1	2	**135-8573**	4	BOLT AS	
	2	2	**170-3015**	3	BUMPER	
	3	1	**236-9556**	1	SHEET AS	
	3A	2	**7Y-2881**	1	HINGE	
E		1	**237-5586**		SEAL (79-CM)	
	4	2	**241-1933**	1	BOLT AS-SPECIAL	
	5	2	**241-1938**	1	CABLE	
	6	2	**262-2507**	1	SHEET AS	
	7	2	**5P-7958**	2	SLEEVE-CABLE SPLICE	
D	8	1	**5P-8309**		SEAL (0.14-M)	

D-ORDER BY THE METER
E-ORDER BY THE CENTIMETER
M-METRIC PART

REFER TO ALL ILLUSTRATIONS OF THIS GROUP FOR AUXILIARY VIEWS

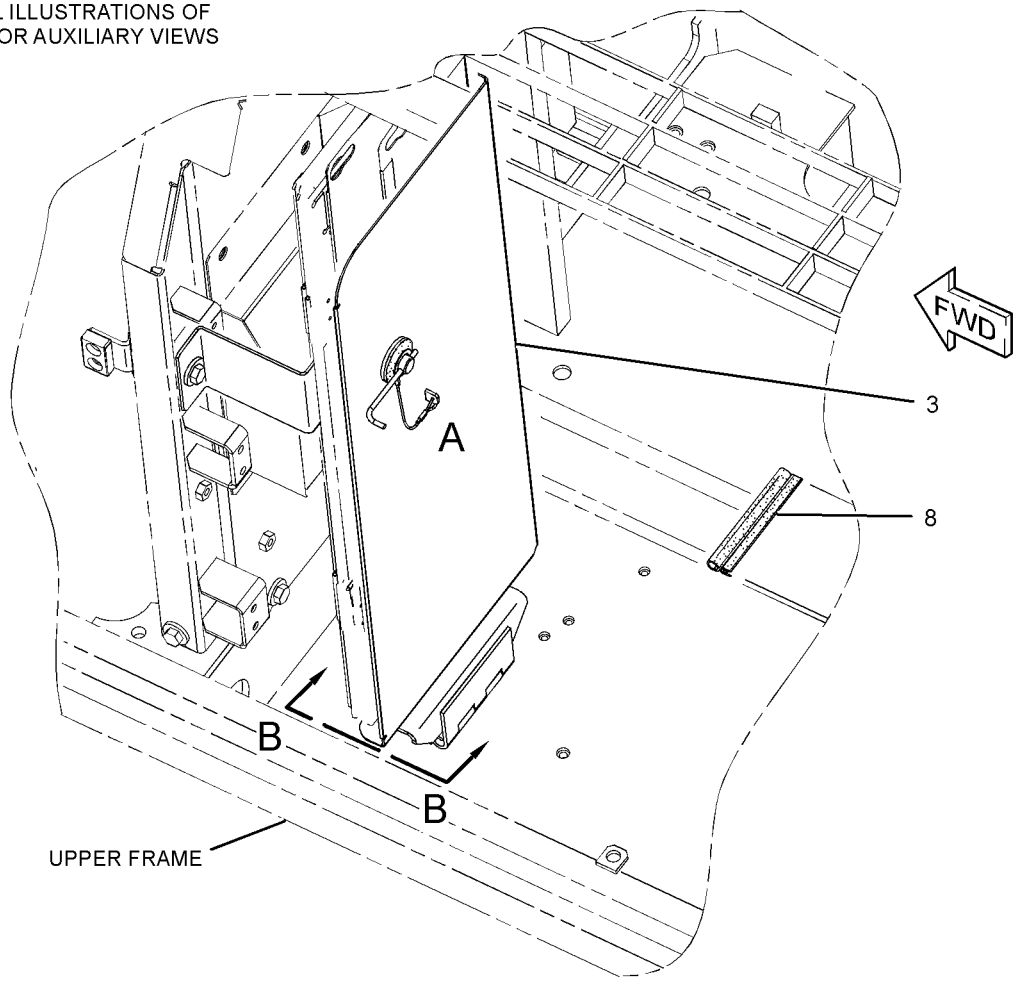

GRAPHIC #1 g01234382

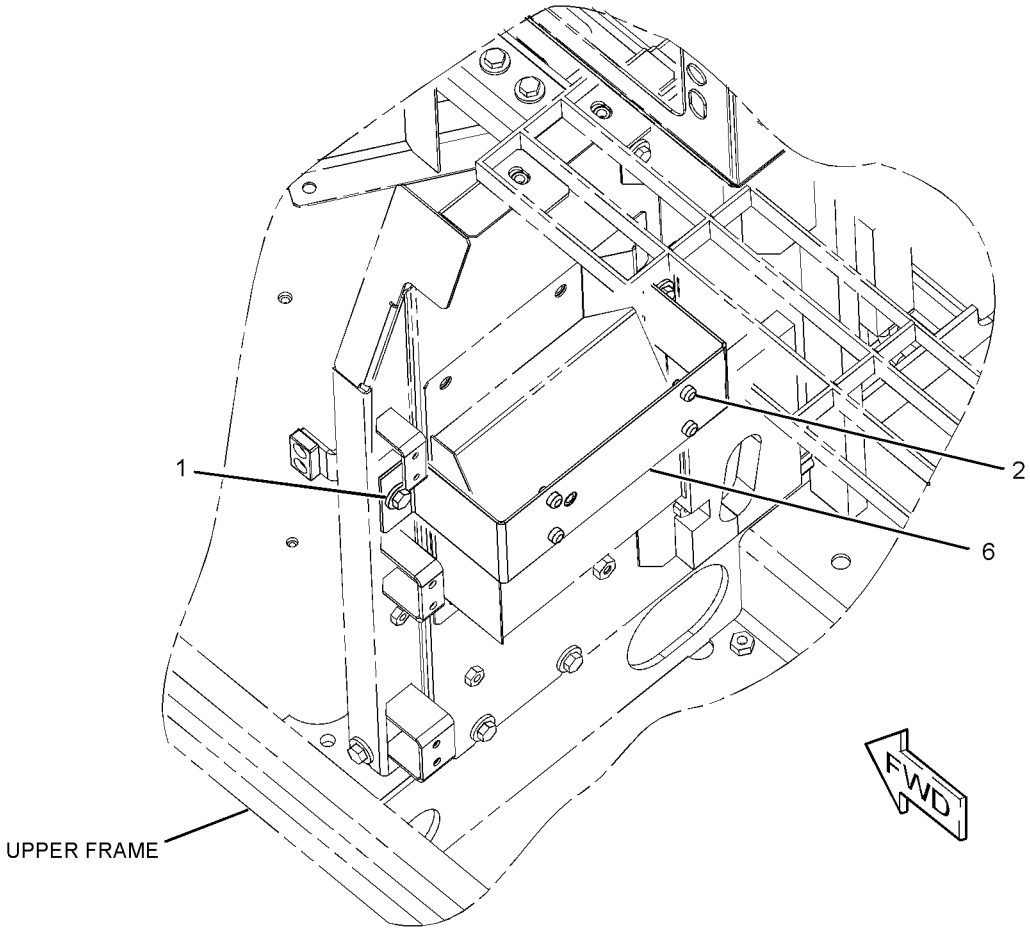

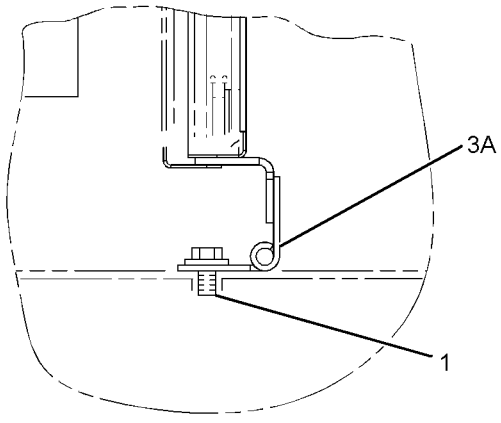

VIEW B-B

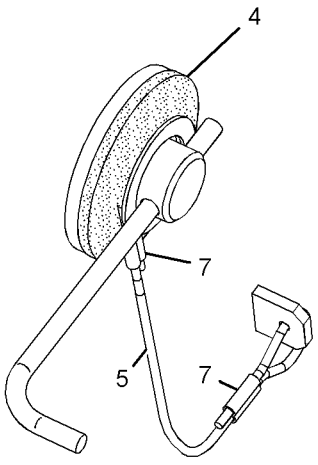

VIEW OF AREA A

GRAPHIC #2 **<END>** g01234500

236-3329 SUPPORT AS-ENCLOSURE

S/N: DFP1-UP; CJX1-UP

PART OF 223-3043 HOOD & GUARD GP

SMCS-0635, 1801, 7076, 7251, 7263, 7267, 7272, 7276 **i02613219**

NOTE	REF NO	GRAPHIC REF	PART NUMBER	QTY	PART NAME 1 2 3 4 5 6 (PRODUCT LEVEL)	SEE PAGE
	1	1	**236-3330**	1	INSULATION	
D	2	1	**101-9848**		SEAL (0.5-M EACH)	
	3	1	**250-5101**	1	INSULATION	

D-ORDER BY THE METER

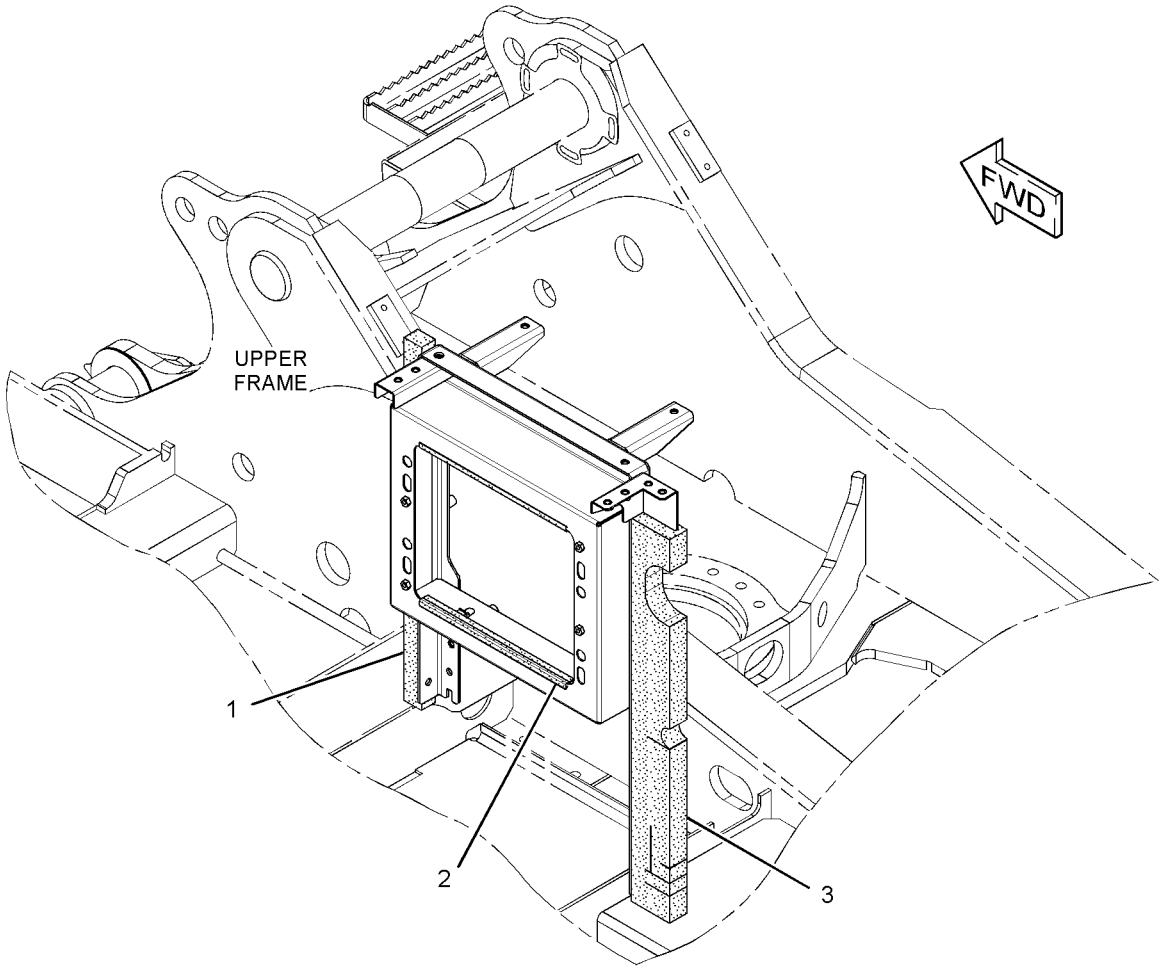

GRAPHIC #1 **<END>** g01357220

256-1670 SUPPORT AS-ENCLOSURE

S/N: DFP1-UP; CJX1-UP

PART OF 223-3043 HOOD & GUARD GP

SMCS-0635, 1801, 7076, 7251, 7263, 7267, 7272, 7276 **i02430968**

NOTE	REF NO	GRAPHIC REF	PART NUMBER	QTY	PART NAME 1 2 3 4 5 6 (PRODUCT LEVEL)	SEE PAGE
Z	1	1		1	SUPPORT AS	
	2	1	**256-1671**	1	INSULATION	
	3	1	**256-1672**	1	INSULATION	

Z-NOT SERVICED SEPARATELY

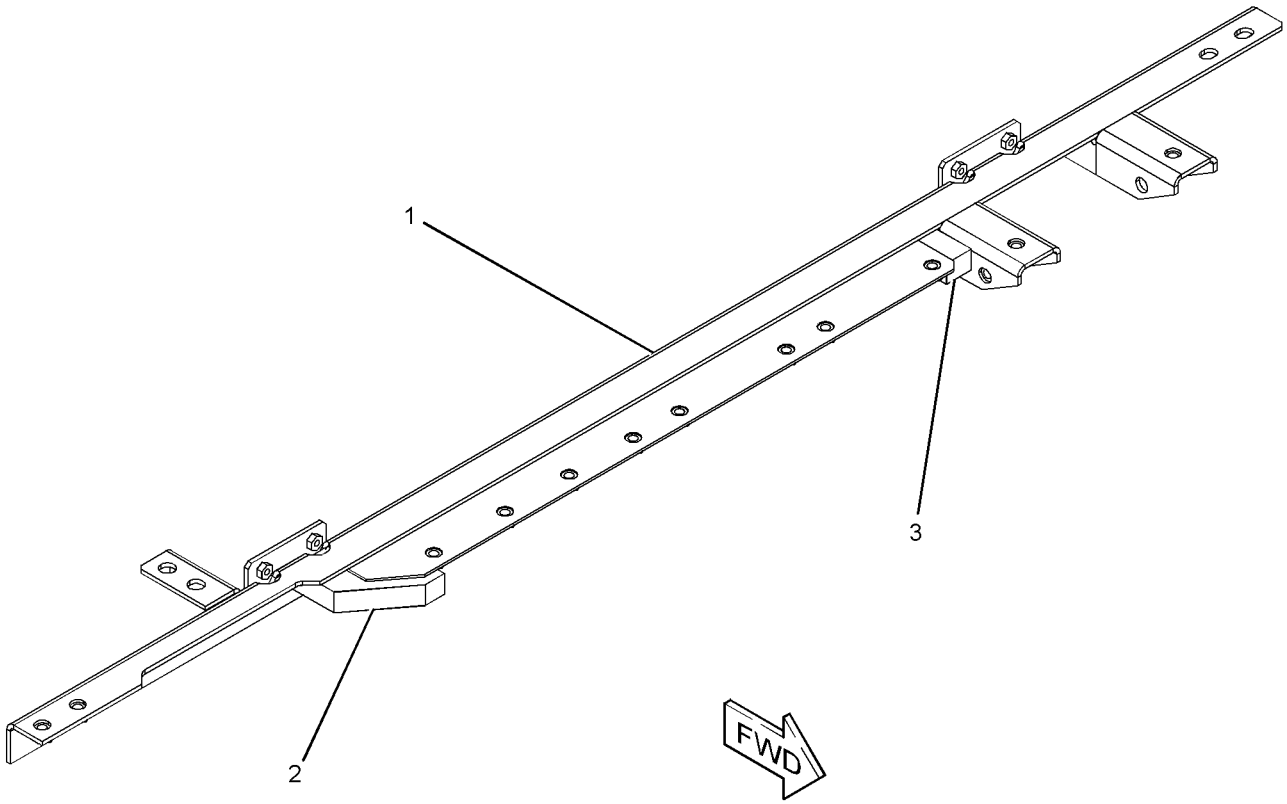

GRAPHIC #1 **<END>** g01182576

239-4373 ADJUSTMENT GP-HYDRAULIC TRACK

S/N: DFP1-UP; CJX1-UP

PART OF 239-4418 TRACK ADJUSTER & RECOIL GP

SMCS-4157 **i02861264**

NOTE	REF NO	GRAPHIC REF	PART NUMBER	QTY	PART NAME 1 2 3 4 5 6 (PRODUCT LEVEL)	SEE PAGE
	1	1	**2S-5926**	1	VALVE-RELIEF	
	2	1	**7I-7734**	1	RING-BACKUP	
	3	1	**095-2927**	1	VALVE-FILL	
	4	1	**176-4888**	2	RING-BACKUP	
	5	1	**176-4889**	2	RING-BACKUP	
	6	1	**176-4890**	1	SEAL-LIP TYPE	
	7	1	**176-4891**	1	PISTON AS	
	8	1	**239-4374**	1	ROD	
	9	1	**239-4375**	1	CYLINDER	
	10	1	**248-7175**	2	SEAL-O-RING	
	11	1	**095-1703**	1	SEAL-O-RING	

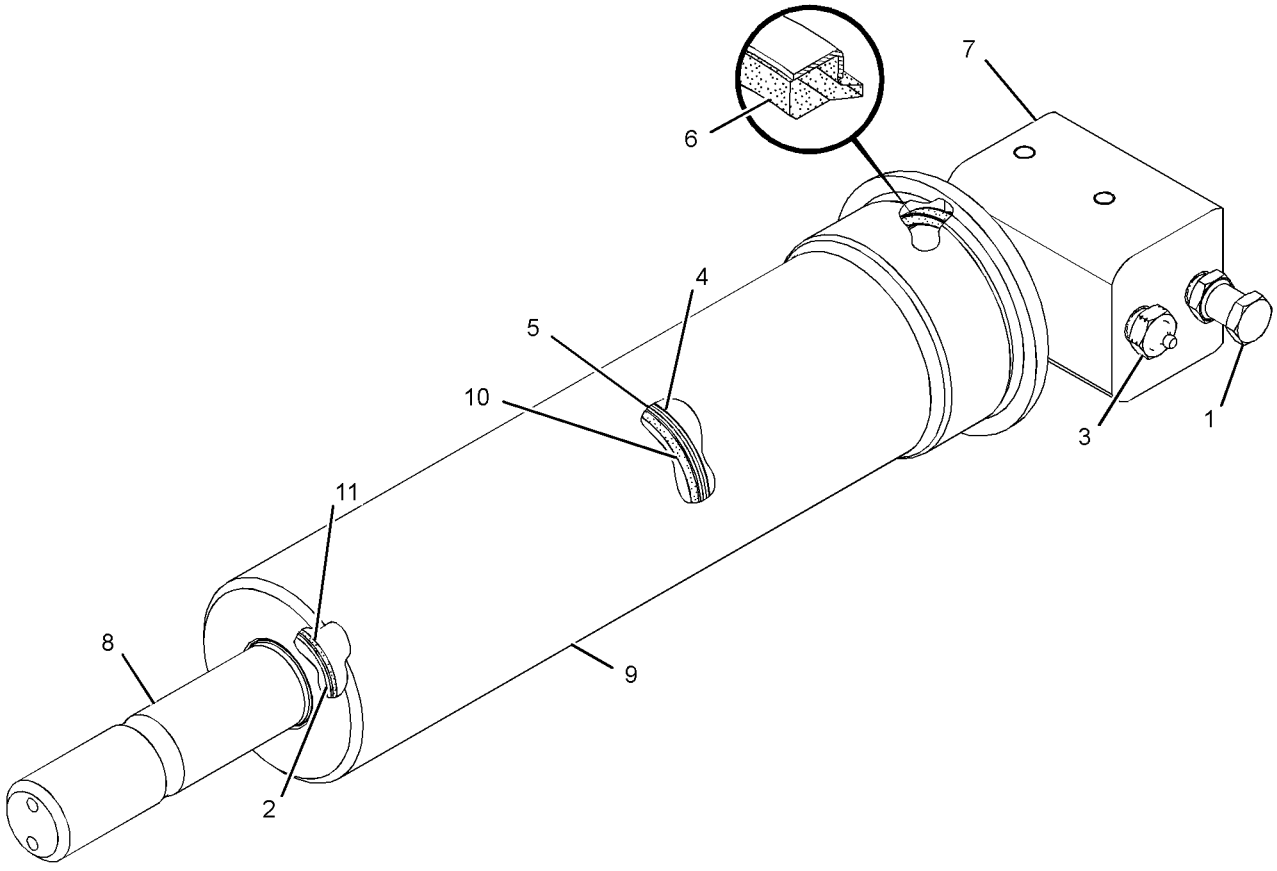

GRAPHIC #1 **<END>** g01219150

UNDERCARRIAGE

240-3984 FRAME AR-UNDERCARRIAGE

S/N: CJX1-UP

PART OF 240-3961 GENERAL AR

SMCS-4151 **i02725032**

NOTE	PART NUMBER	QTY	PART NAME 1 2 3 4 5 6 (PRODUCT LEVEL)	SEE PAGE
Y	*227-6158*	1	GEAR & BEARING GP-SWING	490
Y	*254-3017*	2	GUARD GP-TRACK GUIDE	539
Y	*178-0809*	1	GUARD GP-TRAVEL MOTOR	544
Y	*239-4363*	1	IDLER GP-FRONT	547
Y	*7I-7721*	1	ROLLER AR-TRACK & CARRIER	552
	236-8464	1	FRAME AS-UNDERCARRIAGE	

Y-SEPARATE ILLUSTRATION

<END>

240-3985 FRAME AR-UNDERCARRIAGE—LONG UNDERCARRIAGE

S/N: DFP1-UP

PART OF 240-3962 GENERAL AR

SMCS-4151 **i02586893**

NOTE	PART NUMBER	QTY	PART NAME 1 2 3 4 5 6 (PRODUCT LEVEL)	SEE PAGE
Y	*227-6158*	1	GEAR & BEARING GP-SWING	490
Y	*254-3017*	2	GUARD GP-TRACK GUIDE	539
Y	*178-0809*	1	GUARD GP-TRAVEL MOTOR	544
Y	*239-4363*	1	IDLER GP-FRONT	547
Y	*7I-7722*	1	ROLLER AR-TRACK & CARRIER	553
	236-8465	1	FRAME AS-UNDERCARRIAGE	

Y-SEPARATE ILLUSTRATION

<END>

254-3017 GUARD GP-TRACK GUIDE

S/N: DFP1-UP; CJX1-UP

PART OF 240-3984, 240-3985 FRAME AR-UNDERCARRIAGE

SMCS-4177 **i02395553**

NOTE	REF NO	GRAPHIC REF	PART NUMBER	QTY	PART NAME 1 2 3 4 5 6 (PRODUCT LEVEL)	SEE PAGE
	1	1	**8V-1715**	4	SPACER (20.5X35X12-MM THK)	
	2	1	**260-2276**	1	GUARD AS-TRACK GUIDE	
M	3	1	**7X-2563**	4	BOLT (M20X2.5X60-MM)	
	4	1	**8T-4123**	4	WASHER (22X35X3.5-MM THK)	

M-METRIC PART

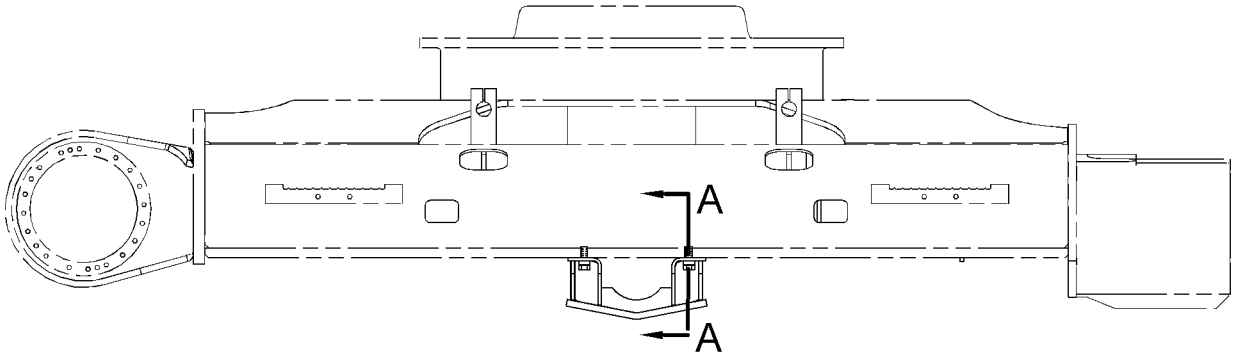

RIGHT SIDE VIEW

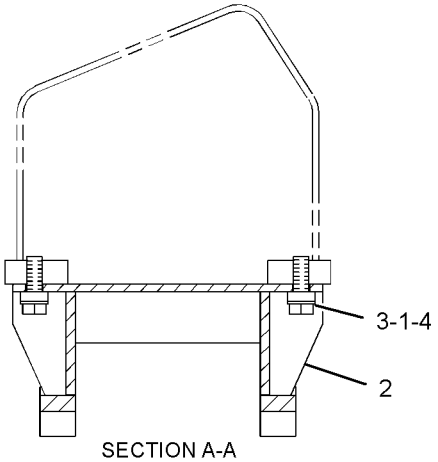

SECTION A-A

GRAPHIC #1 **<END>** g01198648

UNDERCARRIAGE

254-3018 GUARD GP-TRACK GUIDE–SPROCKET

S/N: CJX1-UP
AN ATTACHMENT

SMCS-4177 **i02408404**

NOTE	REF NO	GRAPHIC REF	PART NUMBER	QTY	PART NAME 1 2 3 4 5 6 (PRODUCT LEVEL)	SEE PAGE
	1	1	**260-2277**	2	GUARD AS-TRACK GUIDE	
M	2	1	**8T-5460**	12	BOLT (M20X2.5X40-MM)	
	3	1	**8T-4123**	12	WASHER (22X35X3.5-MM THK)	

QUANTITIES SHOWN ARE THOSE REQUIRED FOR BOTH LH AND RH SIDES
M-METRIC PART

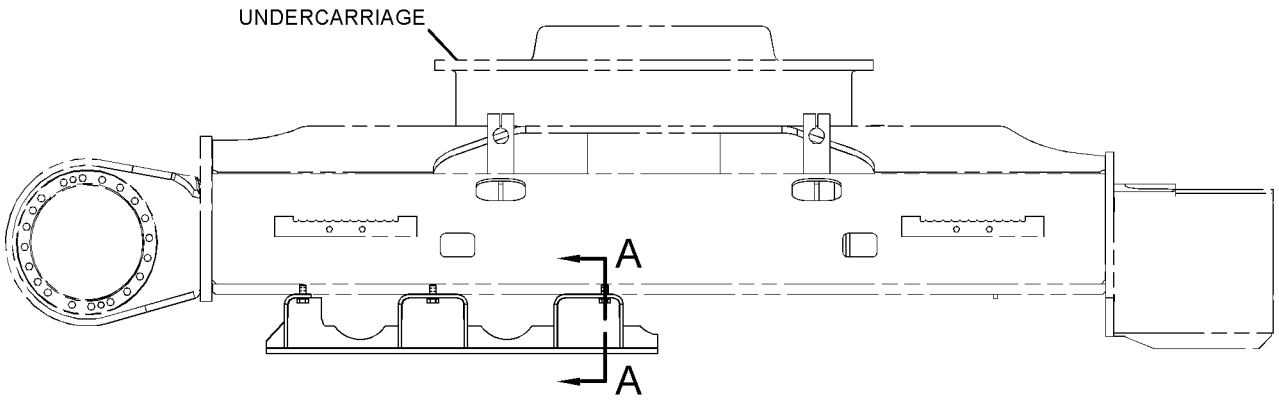

RIGHT SIDE VIEW

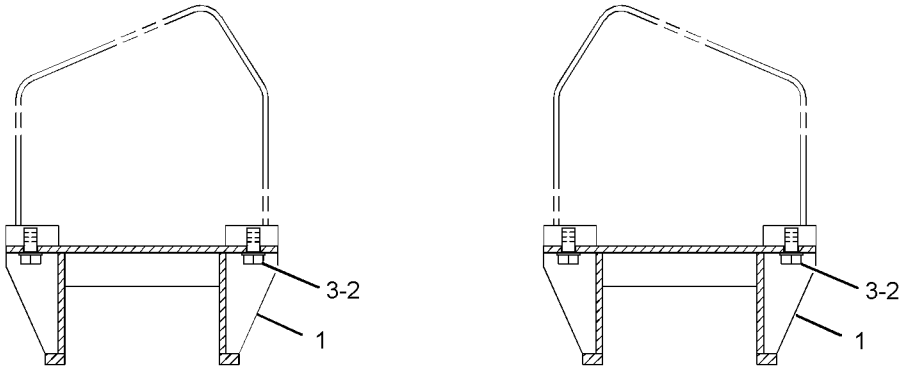

SECTION A-A

GRAPHIC #1 **<END>** g01246953

254-3019 GUARD GP-TRACK GUIDE–SPROCKET

S/N: DFP1-UP
AN ATTACHMENT

SMCS-4177 **i02408406**

NOTE	REF NO	GRAPHIC REF	PART NUMBER	QTY	PART NAME 1 2 3 4 5 6 (PRODUCT LEVEL)	SEE PAGE
	1	1	**260-2278**	2	GUARD AS-TRACK GUIDE	
M	2	1	**8T-5460**	16	BOLT (M20X2.5X40-MM)	
	3	1	**8T-4123**	16	WASHER (22X35X3.5-MM THK)	

QUANTITIES SHOWN ARE THOSE REQUIRED FOR BOTH LH AND RH SIDES
M-METRIC PART

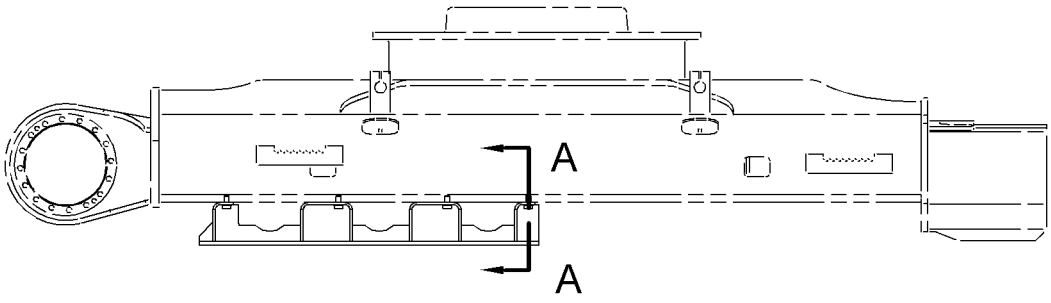

RIGHT SIDE VIEW

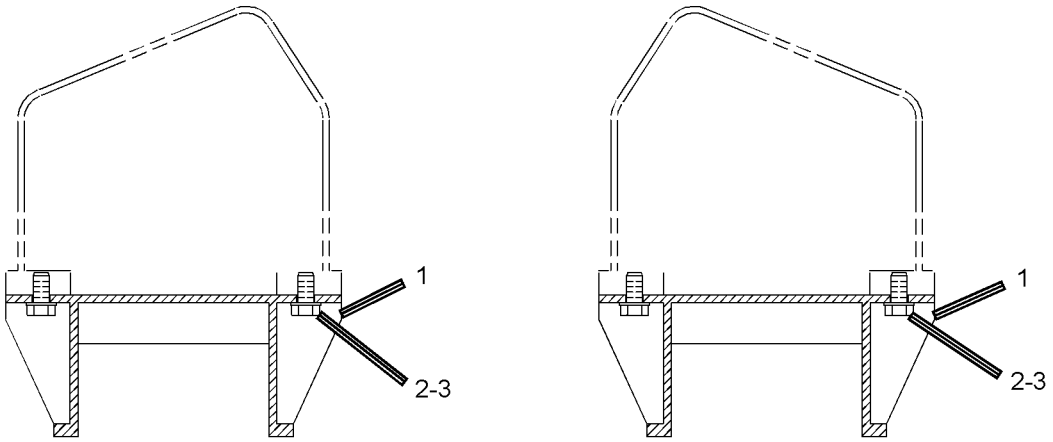

SECTION A-A

GRAPHIC #1 **<END>** g01240225

UNDERCARRIAGE

254-3020 GUARD GP-TRACK GUIDE—FULL LENGTH

S/N: CJX1-UP

AN ATTACHMENT

SMCS-4177 **i02408410**

NOTE	REF NO	GRAPHIC REF	PART NUMBER	QTY	PART NAME 1 2 3 4 5 6 (PRODUCT LEVEL)	SEE PAGE
	1	1	**260-2277**	4	GUARD AS-TRACK GUIDE	
M	2	1	**8T-5460**	24	BOLT (M20X2.5X40-MM)	
	3	1	**8T-4123**	24	WASHER (22X35X3.5-MM THK)	

QUANTITIES SHOWN ARE THOSE REQUIRED FOR BOTH LH AND RH SIDES
M-METRIC PART

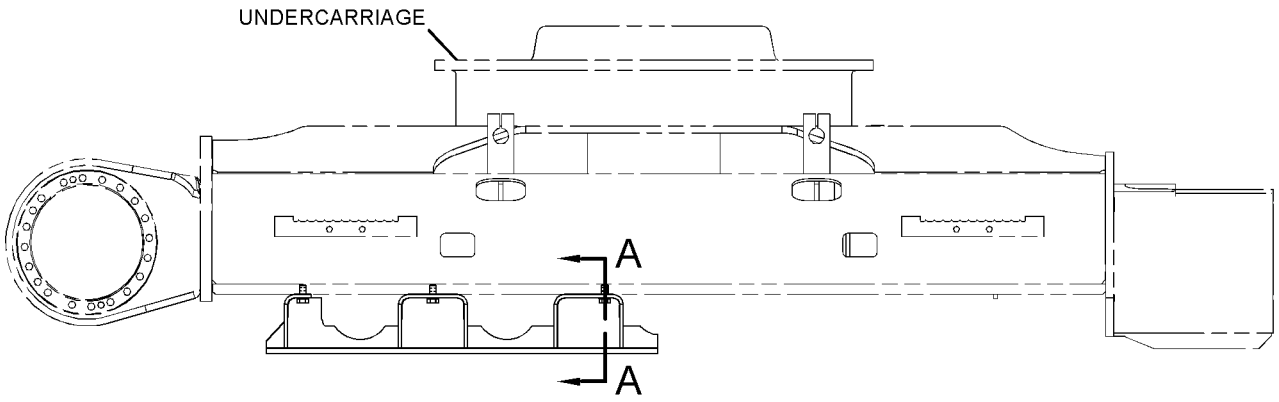

RIGHT SIDE VIEW

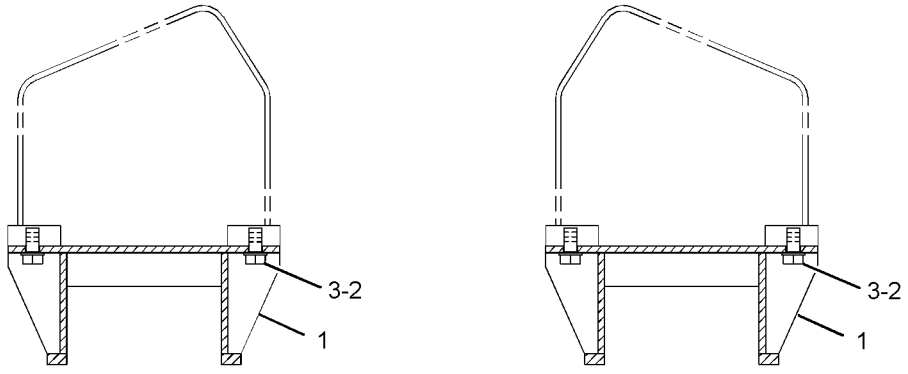

SECTION A-A

GRAPHIC #1 **<END>** g01247106

254-3021 GUARD GP-TRACK GUIDE—FULL LENGTH

S/N: DFP1-UP

AN ATTACHMENT

SMCS-4177 **i02408412**

NOTE	REF NO	GRAPHIC REF	PART NUMBER	QTY	PART NAME 1 2 3 4 5 6 (PRODUCT LEVEL)	SEE PAGE
	1	1	**260-2278**	4	GUARD AS-TRACK GUIDE	
M	2	1	**8T-5460**	32	BOLT (M20X2.5X40-MM)	
	3	1	**8T-4123**	32	WASHER (22X35X3.5-MM THK)	

QUANTITIES SHOWN ARE THOSE REQUIRED FOR BOTH LH AND RH SIDES
M-METRIC PART

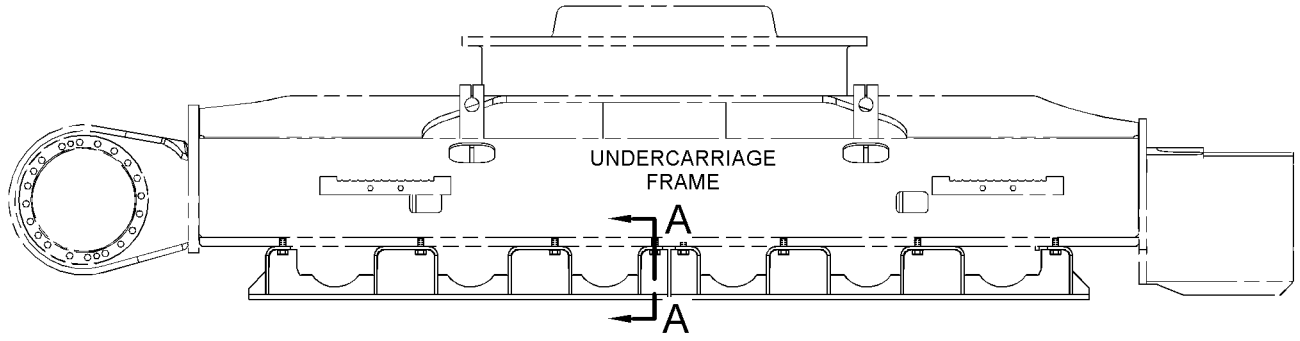

RIGHT SIDE VIEW

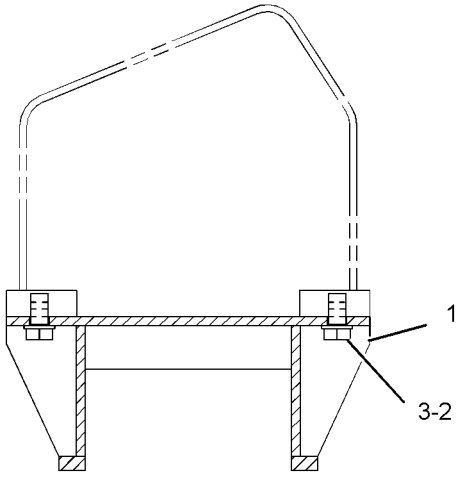

SECTION A-A

GRAPHIC #1 **<END>** g01206236

178-0809 GUARD GP-TRAVEL MOTOR

S/N: DFP1-UP; CJX1-UP

PART OF 240-3984, 240-3985 FRAME AR-UNDERCARRIAGE

SMCS-7163 **i01328324**

NOTE	REF NO	GRAPHIC REF	PART NUMBER	QTY	PART NAME 1 2 3 4 5 6 (PRODUCT LEVEL)	SEE PAGE
M	1	1	*135-8576*	8	BOLT AS-LOCKING (M12X1.75X30-MM)	
					(EACH INCLUDES)	
		1	**5P-1076**	1	WASHER-HARD (13.5X30X4-MM THK)	
M		1	**8C-8992**	1	BOLT-LOCKING (M12X1.75X30-MM)	
	2	1	**178-0810**	2	COVER	

M-METRIC PART

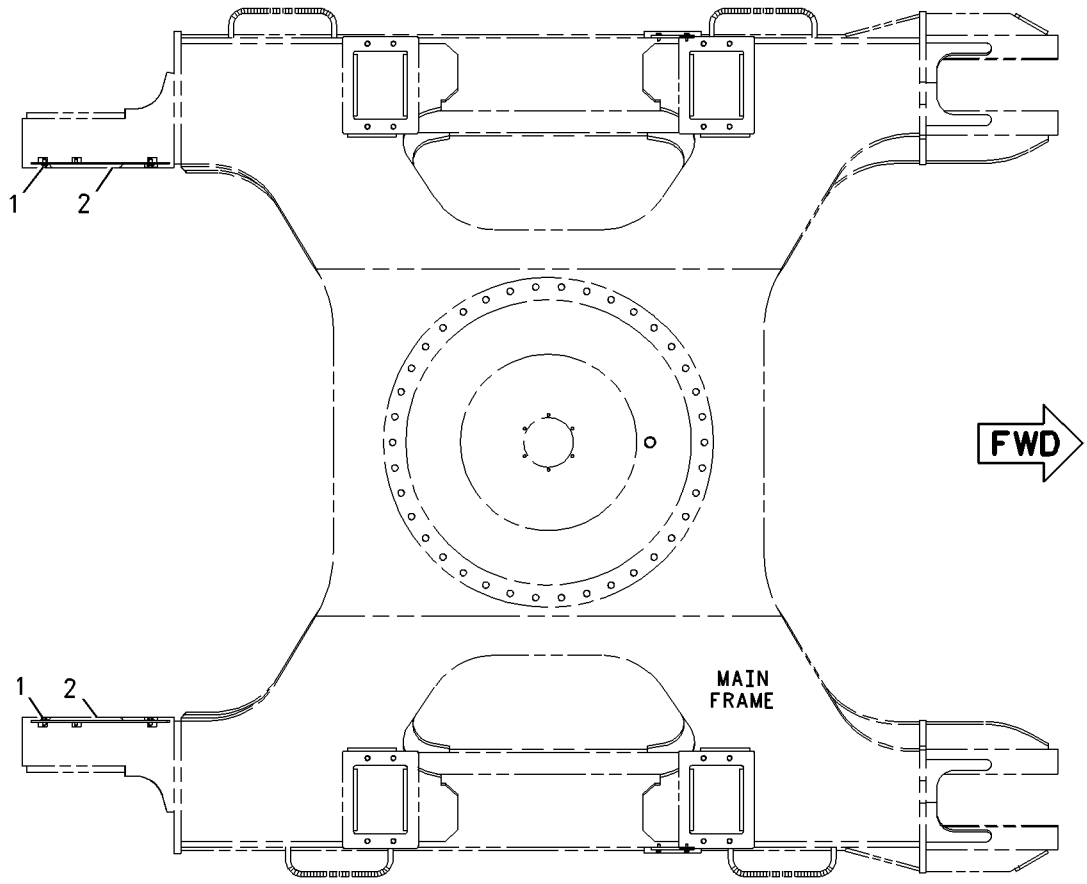

TOP VIEW

GRAPHIC #1 **<END>** g00703664

178-0895 GUARD GP-TRAVEL MOTOR

S/N: DFP1-UP; CJX1-UP
AN ATTACHMENT

SMCS-7163 **i01645726**

NOTE	REF NO	GRAPHIC REF	PART NUMBER	QTY	PART NAME 1 2 3 4 5 6 (PRODUCT LEVEL)	SEE PAGE
M	1	1	*135-8576*	8	BOLT AS-LOCKING (M12X1.75X30-MM)	
					(EACH INCLUDES)	
		1	**5P-1076**	1	WASHER-HARD (13.5X30X4-MM THK)	
M		1	**8C-8992**	1	BOLT-LOCKING (M12X1.75X30-MM)	
	2	1	**178-0896**	1	COVER AS (TRAVEL MOTOR)	
	3	1	**178-0897**	1	COVER AS (TRAVEL MOTOR)	

M-METRIC PART

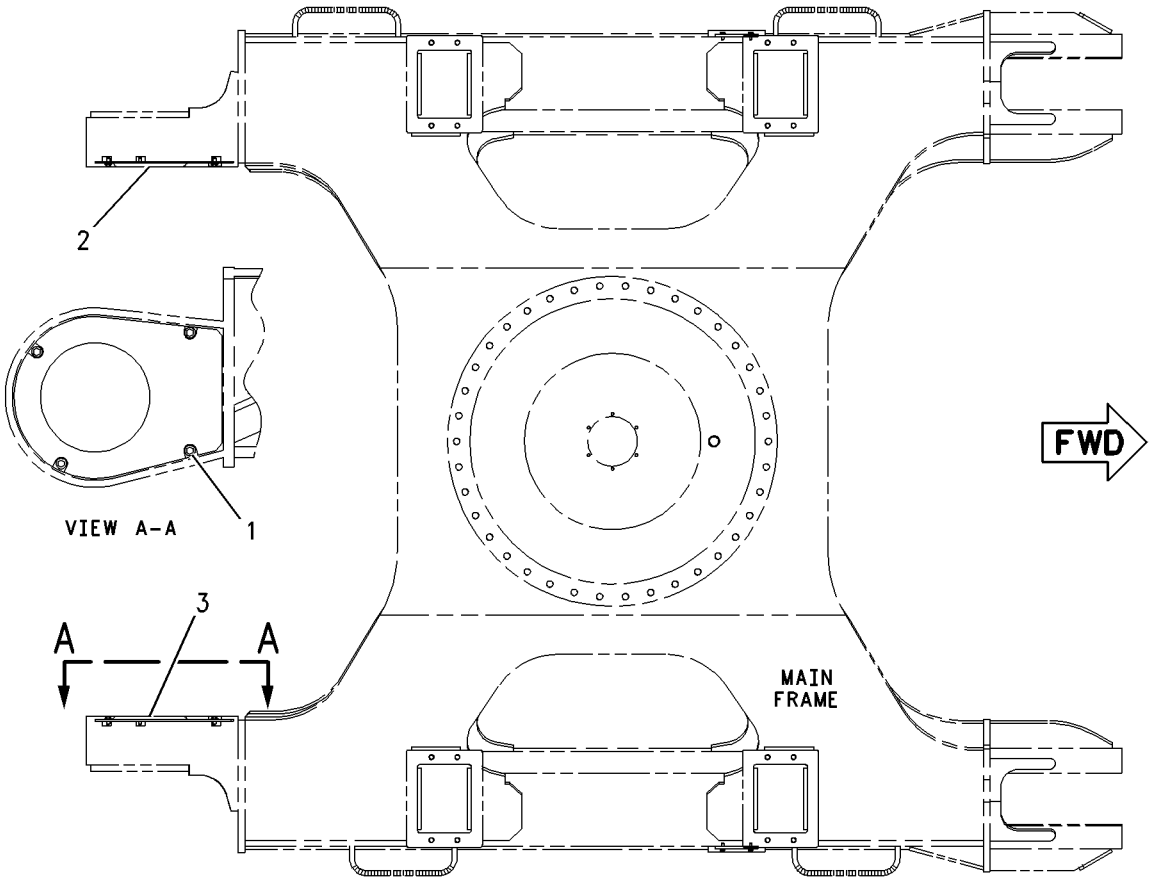

TOP VIEW

GRAPHIC #1 **<END>** g00736764

115-6337 IDLER & BEARING GP-FRONT

S/N: DFP1-UP; CJX1-UP

PART OF 239-4364, 239-4365 IDLER GP-FRONT

SMCS-4159 **i01327974**

NOTE	REF NO	GRAPHIC REF	PART NUMBER	QTY	PART NAME 1 2 3 4 5 6 (PRODUCT LEVEL)	SEE PAGE
	1	1	**115-4931**	1	IDLER & BEARING AS	
	1A	1	**6I-9587**	2	BEARING-IDLER	
	2	1	**7H-3171**	1	PLUG-PIPE	
	3	1	**109-0885**	2	SEAL GP-DUO-CONE	
	4	1	**1H-5728**	2	SEAL-O-RING	
	5	1	**9W-9455**	2	PIN	
	6	1	**6I-9597**	1	SHAFT-IDLER	
	7	1	**115-6338**	2	BEARING-FRONT IDLER	

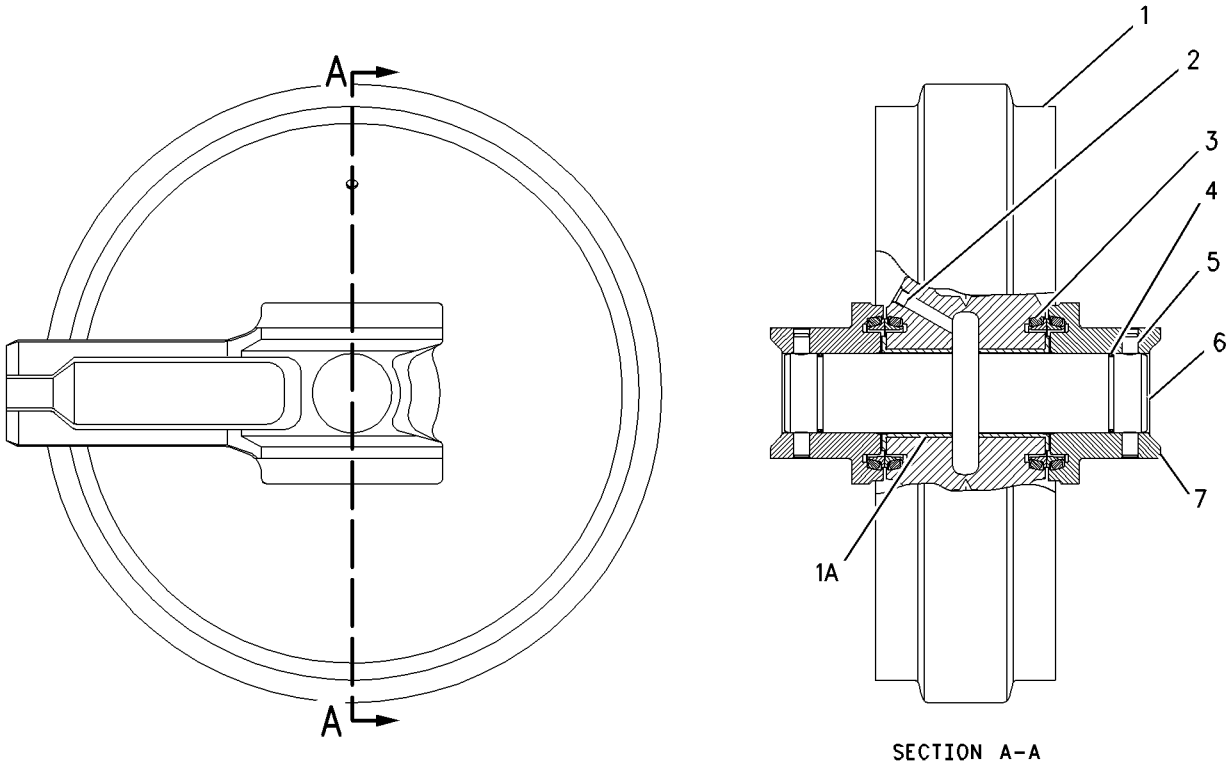

SECTION A-A

GRAPHIC #1 **<END>** g00702788

239-4363 IDLER GP-FRONT

S/N: DFP1-UP; CJX1-UP

PART OF 240-3984, 240-3985 FRAME AR-UNDERCARRIAGE

SMCS-4159 **i02702105**

NOTE	REF NO	GRAPHIC REF	PART NUMBER	QTY	PART NAME 1 2 3 4 5 6 (PRODUCT LEVEL)	SEE PAGE
Y	1	1	*239-4364*	1	IDLER GP-FRONT (RH)	548
Y	2	1	*239-4365*	1	IDLER GP-FRONT (LH)	549

Y-SEPARATE ILLUSTRATION

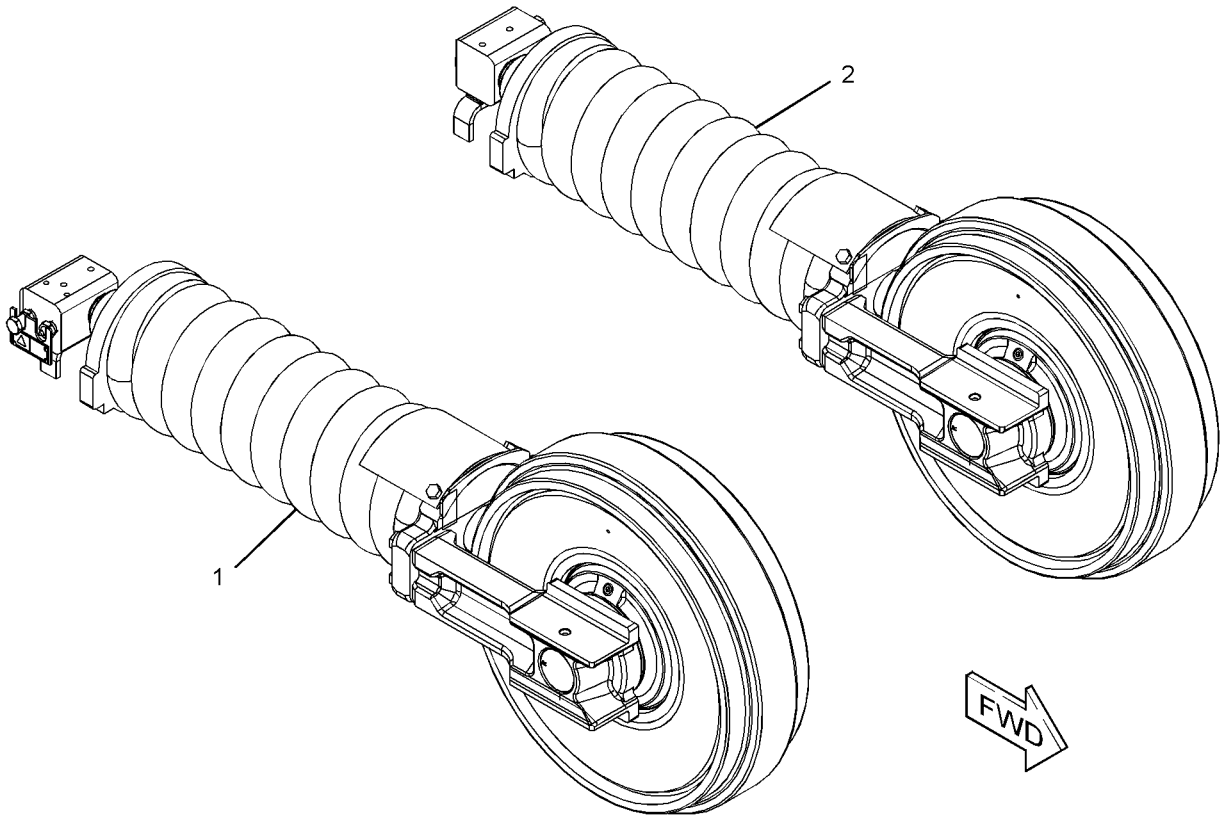

GRAPHIC #1 **<END>** g01199144

239-4364 IDLER GP-FRONT–RH

S/N: DFP1-UP; CJX1-UP

PART OF 239-4363 IDLER GP-FRONT

SMCS-4159 **i02395266**

NOTE	REF NO	GRAPHIC REF	PART NUMBER	QTY	PART NAME 1 2 3 4 5 6 (PRODUCT LEVEL)	SEE PAGE
Y	1	1	**115-6337**	1	IDLER & BEARING GP-FRONT	546
Y	2	1	*239-4366*	1	TRACK ADJUSTER & RECOIL GP (RH)	559
M	3	1	**8T-4140**	4	BOLT (M16X2X60-MM)	

M-METRIC PART
Y-SEPARATE ILLUSTRATION

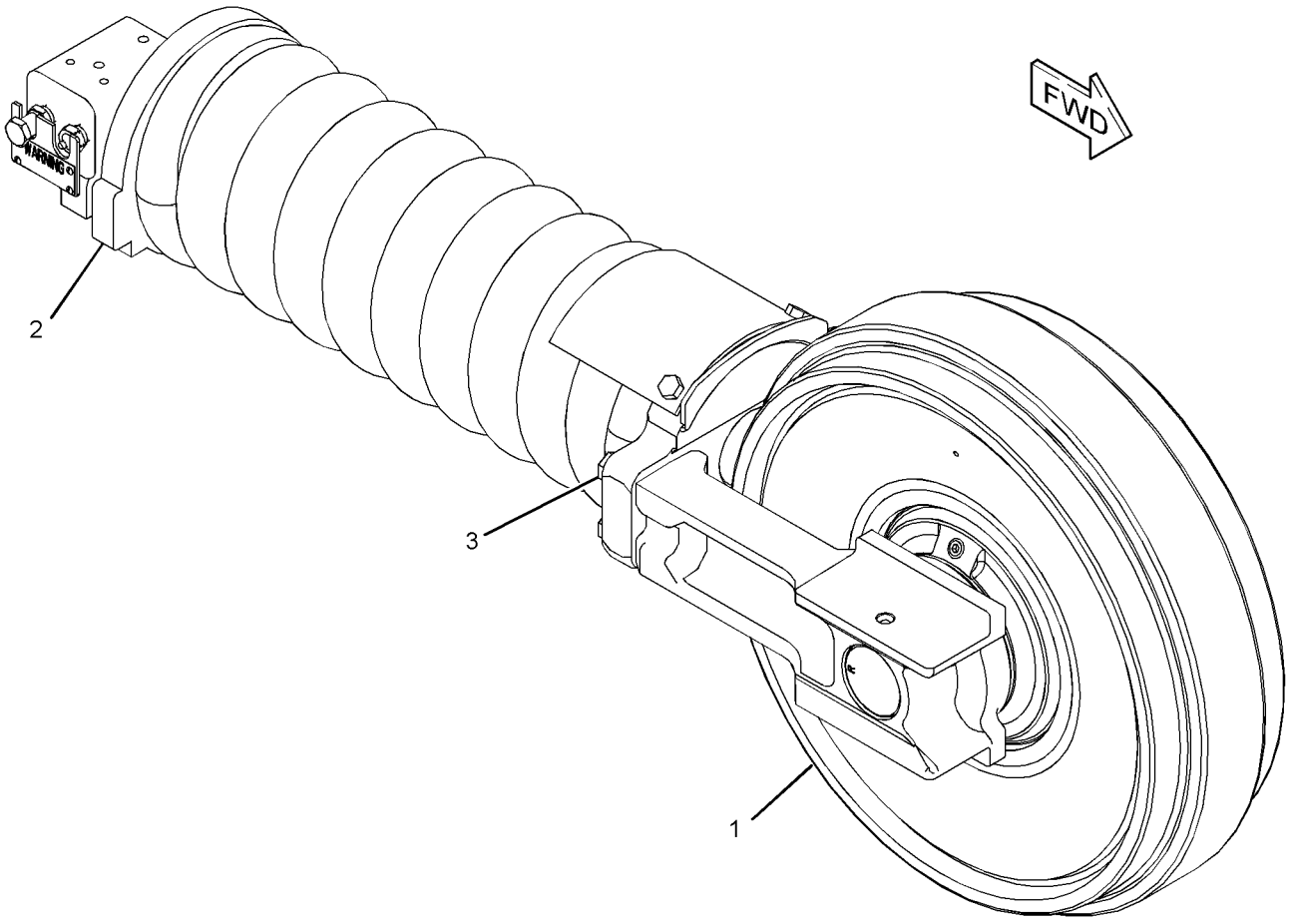

GRAPHIC #1 **<END>** g01239308

239-4365 IDLER GP-FRONT–LH

S/N: DFP1-UP; CJX1-UP

PART OF 239-4363 IDLER GP-FRONT

SMCS-4159 **i02395264**

NOTE	REF NO	GRAPHIC REF	PART NUMBER	QTY	PART NAME 1 2 3 4 5 6 (PRODUCT LEVEL)	SEE PAGE
Y	1	1	**115-6337**	1	IDLER & BEARING GP-FRONT	546
Y	2	1	*239-4367*	1	TRACK ADJUSTER & RECOIL GP (LH)	560
M	3	1	**8T-4140**	4	BOLT (M16X2X60-MM)	

M-METRIC PART
Y-SEPARATE ILLUSTRATION

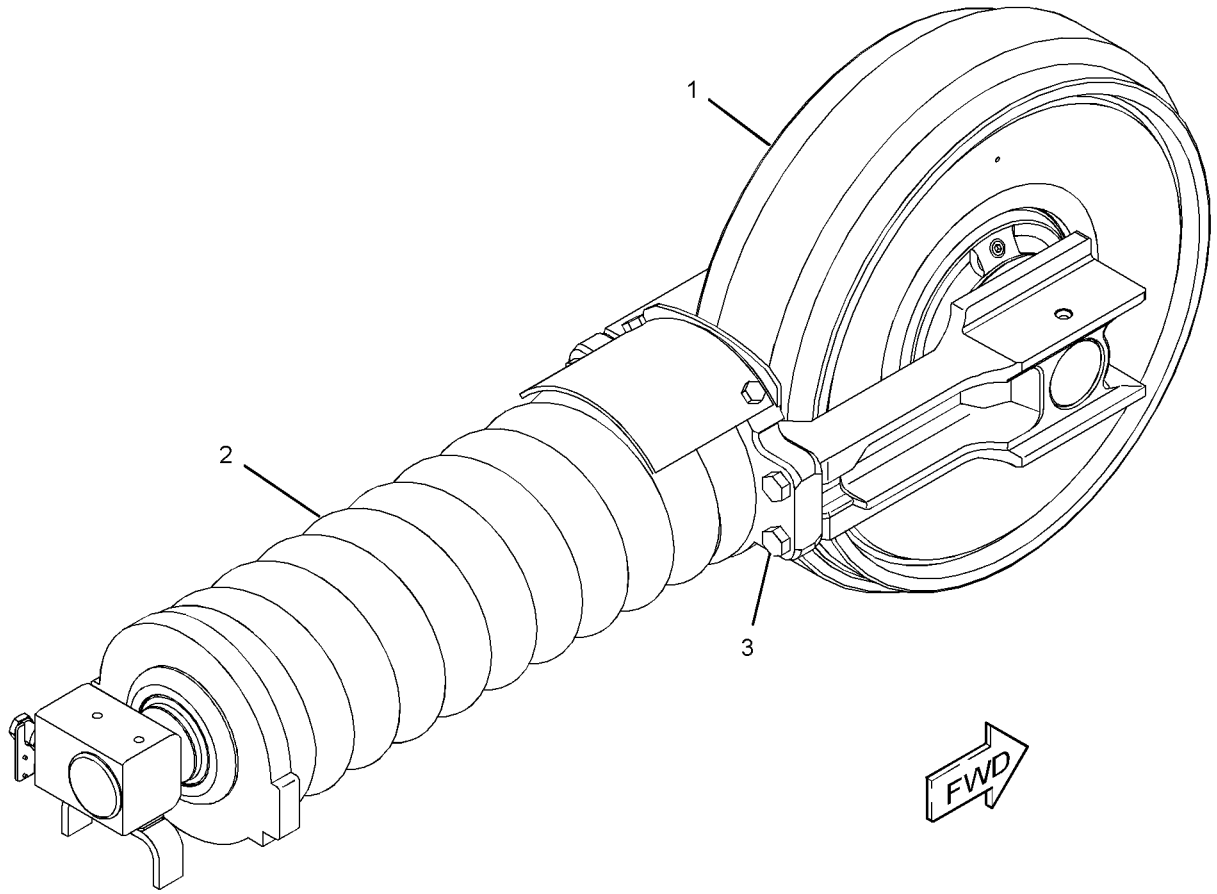

GRAPHIC #1 **<END>** g01238281

195-9343 LINK AS-TRACK

S/N: DFP1-UP; CJX1-UP
GREASED LUBRICATED TRACK
PART OF 195-9345, 195-9346, 195-9347, 332-8906 TRACK GP
AN ATTACHMENT

SMCS-4169, 4171 **i01477473**

NOTE	REF NO	GRAPHIC REF	PART NUMBER	QTY	PART NAME 1 2 3 4 5 6 (PRODUCT LEVEL)	SEE PAGE
	1	1	**9W-3138**	46	LINK-TRACK-LH	
	2	1	**095-0863**	1	COTTER	
	3	1	**8E-8586**	1	LINK-MASTER-LH	
	4	1	**190-3523**	46	BUSHING-TRACK	
	5	1	**8E-8585**	1	LINK-MASTER-RH	
	6	1	**188-3064**	1	PIN-TRACK MASTER	
	7	1	**158-4381**	2	SEAL-TRACK MASTER	
	8	1	**9W-3137**	46	LINK-TRACK-RH	
	9	1	**6Y-8186**	46	PIN-TRACK	
	10	1	**158-4380**	92	SEAL-TRACK	
	11	1	**190-3524**	1	BUSHING-MASTER	

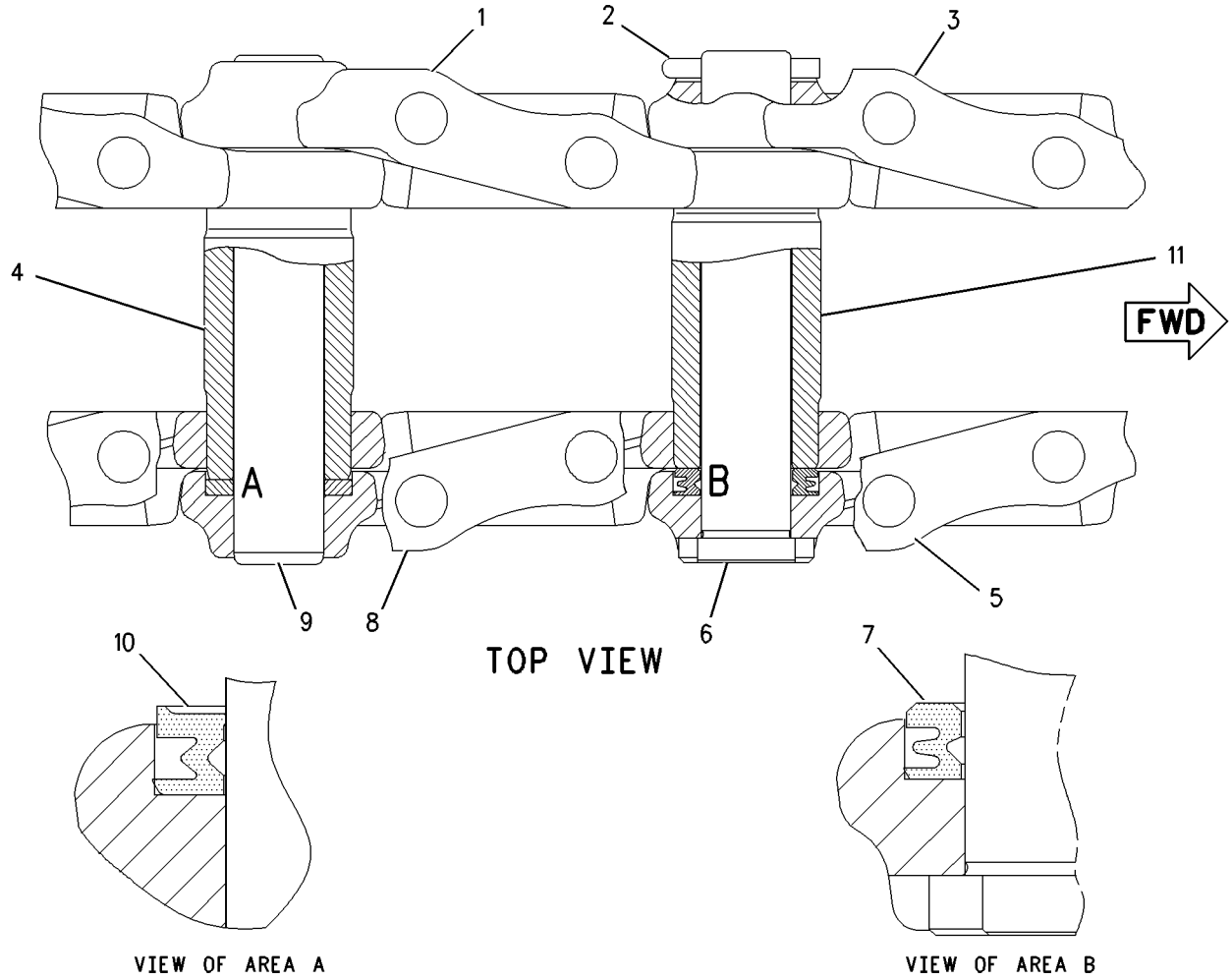

GRAPHIC #1 **<END>** g00770614

195-9344 LINK AS-TRACK

S/N: DFP1-UP
GREASED LUBRICATED TRACK
PART OF 195-9348, 195-9349, 195-9350, 197-1435, 197-1436, 332-8910 TRACK GP
AN ATTACHMENT

SMCS-4169, 4171 **i01474047**

NOTE	REF NO	GRAPHIC REF	PART NUMBER	QTY	PART NAME 1 2 3 4 5 6 (PRODUCT LEVEL)	SEE PAGE
	1	1	**9W-3138**	50	LINK-TRACK-LH	
	2	1	**095-0863**	1	COTTER	
	3	1	**8E-8586**	1	LINK-MASTER-LH	
	4	1	**190-3524**	1	BUSHING-MASTER	
	5	1	**8E-8585**	1	LINK-MASTER-RH	
	6	1	**188-3064**	1	PIN-TRACK MASTER	
	7	1	**158-4381**	2	SEAL-TRACK MASTER	
	8	1	**9W-3137**	50	LINK-TRACK-RH	
	9	1	**6Y-8186**	50	PIN-TRACK	
	10	1	**158-4380**	100	SEAL-TRACK	
	11	1	**190-3523**	50	BUSHING-TRACK	

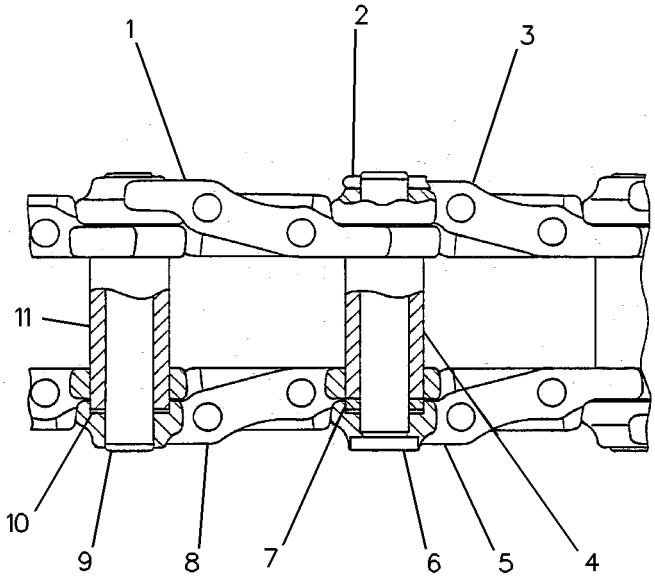

GRAPHIC #1 **<END>** g00224749

7I-7721 ROLLER AR-TRACK & CARRIER

S/N: CJX1-UP

PART OF 240-3984 FRAME AR-UNDERCARRIAGE

SMCS-4154, 4180 **i01645799**

NOTE	REF NO	GRAPHIC REF	PART NUMBER	QTY	PART NAME 1 2 3 4 5 6 (PRODUCT LEVEL)	SEE PAGE
M	1	1	**8T-5878**	4	BOLT (M24X3X80-MM)	
Y	2	1	**8E-5600**	4	ROLLER GP-TRACK CARRIER	555
YR	3	1	**163-4145**	14	ROLLER GP-TRACK-SINGLE FLANGE	556
M	4	1	**7X-2565**	56	BOLT (M20X2.5X100-MM)	
	5	1	**8T-4123**	56	WASHER (22X35X3.5-MM THK)	

QUANTITIES SHOWN ARE THOSE REQUIRED FOR BOTH LH AND RH SIDES
M-METRIC PART
R-REMFG PART MAY BE AVAILABLE
Y-SEPARATE ILLUSTRATION

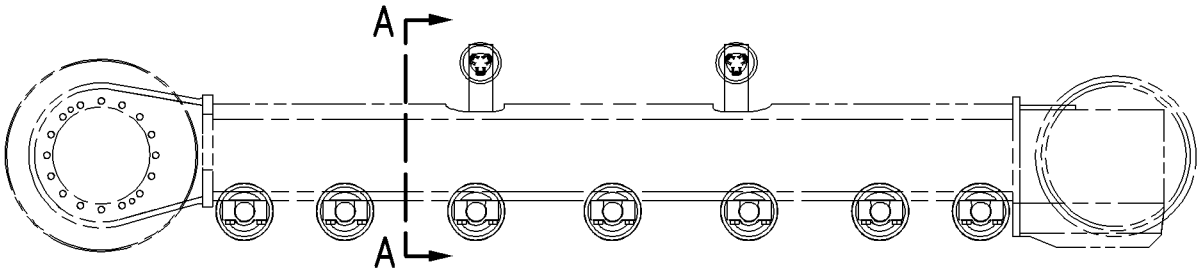

RIGHT SIDE VIEW

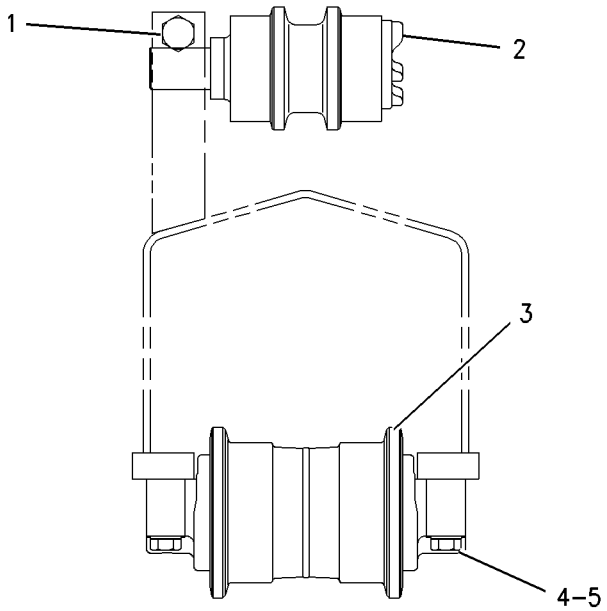

SECTION A-A

GRAPHIC #1 **<END>** g00703248

7I-7722 ROLLER AR-TRACK & CARRIER

S/N: DFP1-UP

PART OF 240-3985 FRAME AR-UNDERCARRIAGE

SMCS-4154, 4180 **i01645807**

NOTE	REF NO	GRAPHIC REF	PART NUMBER	QTY	PART NAME 1 2 3 4 5 6 (PRODUCT LEVEL)	SEE PAGE
M	1	1	**8T-5878**	4	BOLT (M24X3X80-MM)	
Y	2	1	**8E-5600**	4	ROLLER GP-TRACK CARRIER	555
YR	3	1	**163-4145**	16	ROLLER GP-TRACK-SINGLE FLANGE	556
M	4	1	**7X-2565**	64	BOLT (M20X2.5X100-MM)	
	5	1	**8T-4123**	64	WASHER (22X35X3.5-MM THK)	

QUANTITIES SHOWN ARE THOSE REQUIRED FOR BOTH LH AND RH SIDES
M-METRIC PART
R-REMFG PART MAY BE AVAILABLE
Y-SEPARATE ILLUSTRATION

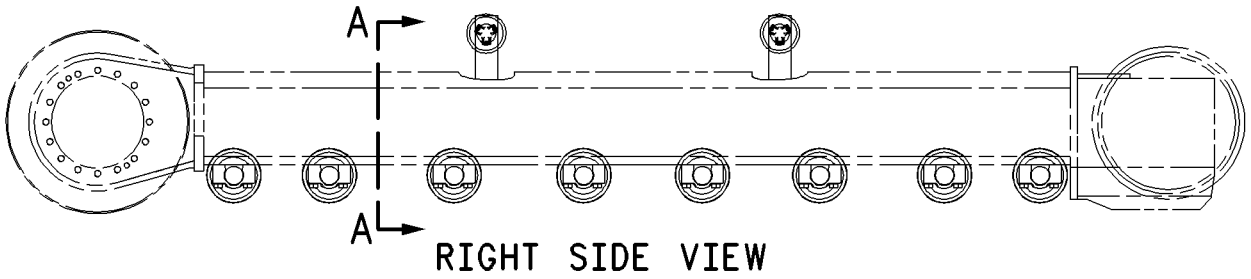

RIGHT SIDE VIEW

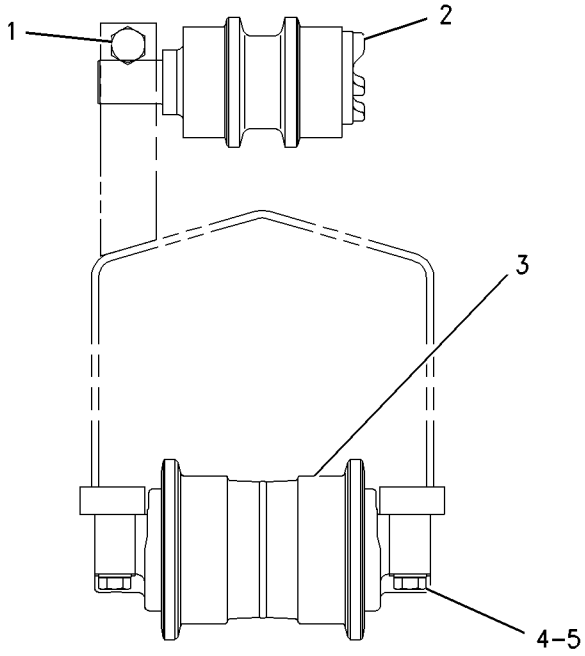

SECTION A-A

GRAPHIC #1 **<END>** g00705256

UNDERCARRIAGE

239-4329 ROLLER AR-TRACK & CARRIER

S/N: DFP1-UP

AN ATTACHMENT

SMCS-4154, 4180 **i02401726**

NOTE	REF NO	GRAPHIC REF	PART NUMBER	QTY	PART NAME 1 2 3 4 5 6 (PRODUCT LEVEL)	SEE PAGE
Y	1	1	**8E-5600**	4	ROLLER GP-TRACK CARRIER	555
Y	2	1	**197-4161**	16	ROLLER GP-TRACK-SINGLE FLANGE	557
M	3	1	**7X-2565**	64	BOLT (M20X2.5X100-MM)	
	4	1	**8T-4123**	64	WASHER (22X35X3.5-MM THK)	
M	5	1	**8T-5878**	4	BOLT (M24X3X80-MM)	

QUANTITIES SHOWN ARE THOSE REQUIRED FOR BOTH LH AND RH SIDES
M-METRIC PART
Y-SEPARATE ILLUSTRATION

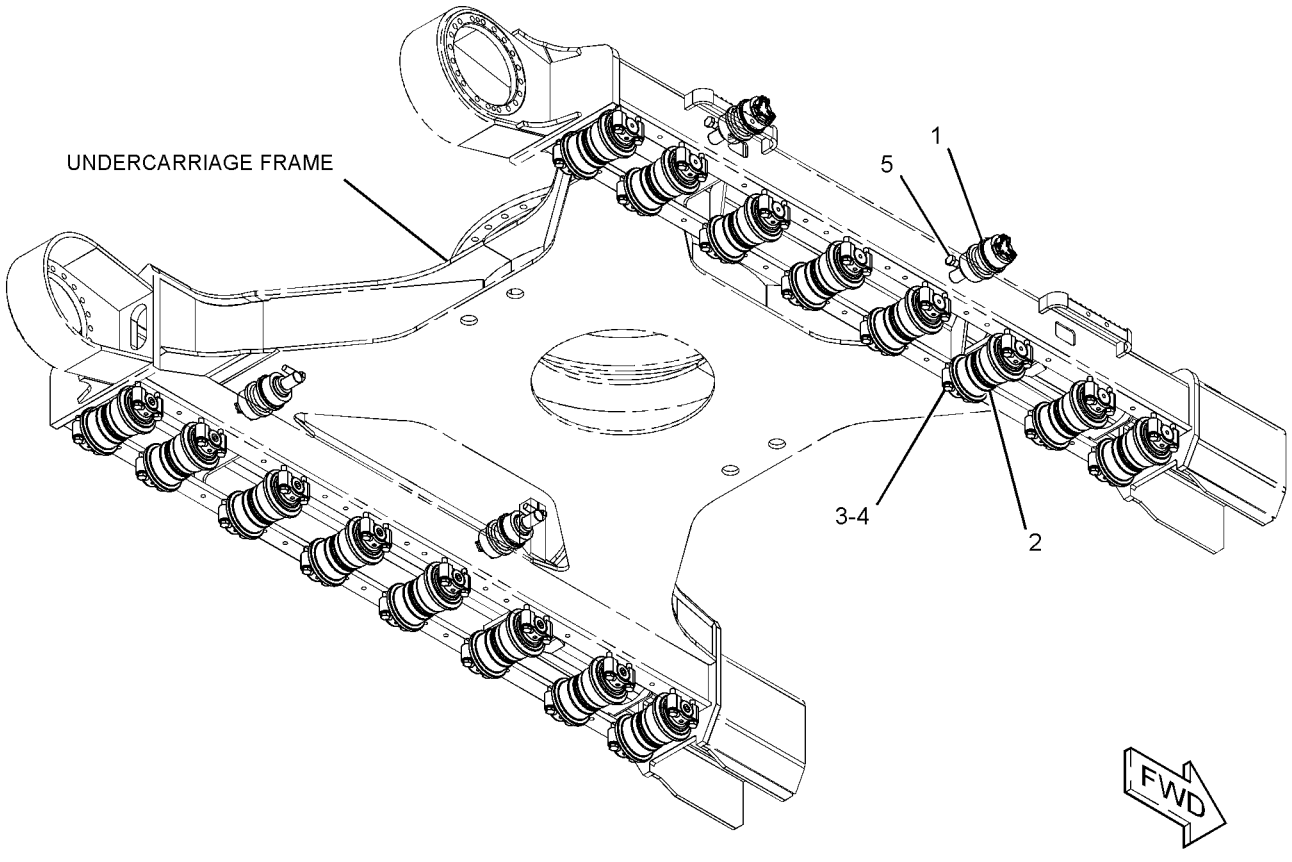

GRAPHIC #1 **<END>** g01207313

8E-5600 ROLLER GP-TRACK CARRIER

S/N: DFP1-UP; CJX1-UP

PART OF 239-4329, 7I-7721, 7I-7722 ROLLER AR-TRACK & CARRIER

ALSO AN ATTACHMENT

SMCS-4154 **i02752192**

NOTE	REF NO	GRAPHIC REF	PART NUMBER	QTY	PART NAME 1 2 3 4 5 6 (PRODUCT LEVEL)	SEE PAGE
	1	1	**8E-5601**	1	SHAFT AS-TRACK ROLLER	
		1	**8E-5604**	1	COLLAR-ROLLER END	
		1	**8E-5607**	1	SHAFT-TRACK ROLLER	
	2	1	**8E-5608**	1	SEAL GP-DUO-CONE	
	3	1	**8E-5602**	1	ROLLER & BEARING AS	
	3A	1	**8E-6792**	1	BEARING-TRACK ROLLER	
	3B	1	**8E-6793**	1	BEARING-TRACK ROLLER	
	4	1	**8E-5606**	1	RETAINER	
	5	1	**6V-7661**	1	SEAL-O-RING	
M	6	1	**8T-1159**	5	BOLT-SOCKET HEAD (M10X1.5X25-MM)	
	7	1	**8E-5605**	1	COVER-CARRIER ROLLER	
	8	1	**7H-3171**	1	PLUG-PIPE	

M-METRIC PART

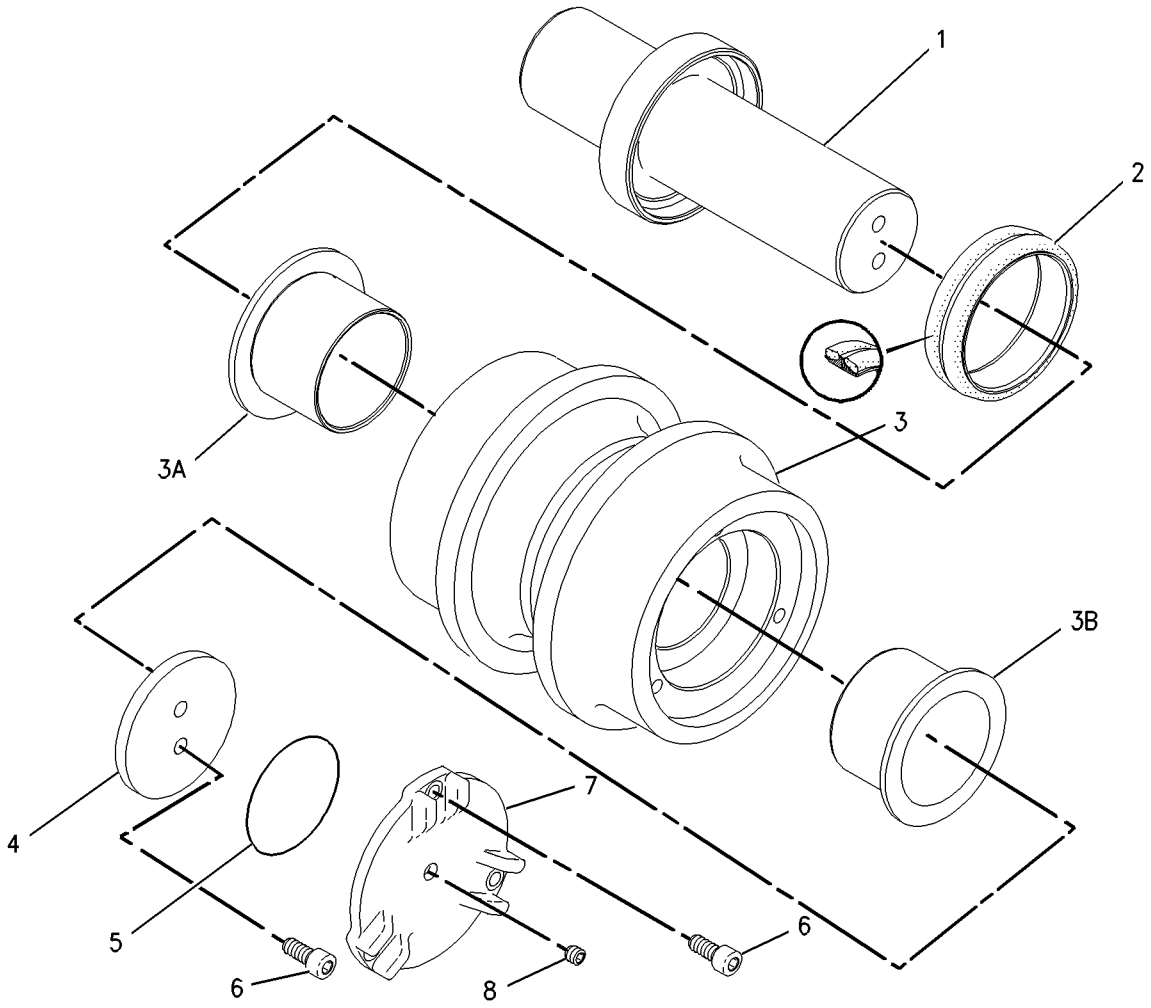

GRAPHIC #1 **<END>** g00715793

163-4145 ROLLER GP-TRACK-SINGLE FLANGE*R

S/N: DFP1-UP; CJX1-UP

SINGLE FLANGE

PART OF 7I-7721, 7I-7722 ROLLER AR-TRACK & CARRIER

SMCS-4180 **i01327136**

NOTE	REF NO	GRAPHIC REF	PART NUMBER	QTY	PART NAME 1 2 3 4 5 6 (PRODUCT LEVEL)	SEE PAGE
	1	1	**158-8096**	2	RING-RETAINING	
	2	1	**8F-6711**	2	SEAL-O-RING	
	3	1	**5G-2247**	1	STOPPER-RUBBER	
	4	1	**6I-9398**	1	ROLLER & BEARING AS	
	4A	1	**6I-9399**	2	BEARING-TRACK ROLLER	
	5	1	**6Y-0473**	1	PLUG-CLEAR	
	6	1	**9W-2201**	2	SEAL GP-DUO-CONE	
	7	1	**158-8086**	2	COLLAR-TRACK ROLLER	
	8	1	**159-9526**	1	DOWEL	
	9	1	**163-7393**	1	SHAFT-TRACK ROLLER	

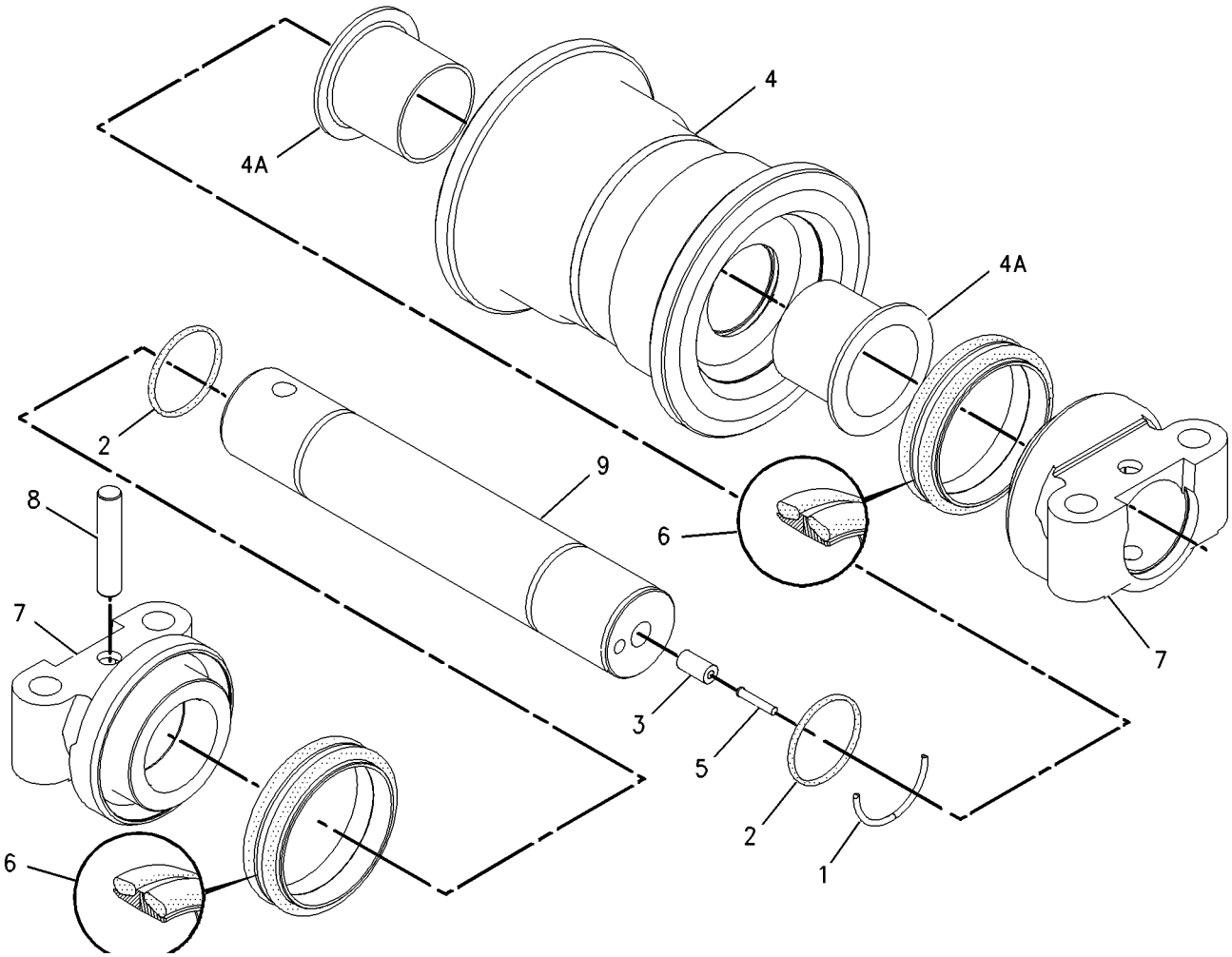

GRAPHIC #1 **<END>** g00706174

197-4161 ROLLER GP-TRACK-SINGLE FLANGE

S/N: DFP1-UP

PART OF 239-4329 ROLLER AR-TRACK & CARRIER

AN ATTACHMENT

SMCS-4180 **i02401774**

NOTE	REF NO	GRAPHIC REF	PART NUMBER	QTY	PART NAME 1 2 3 4 5 6 (PRODUCT LEVEL)	SEE PAGE
	1	1	**205-3594**	1	ROLLER & BEARING AS	
	1A	1	**6I-9399**	2	BEARING-TRACK ROLLER	
	2	1	**8F-6711**	2	SEAL-O-RING	
	3	1	**9W-2146**	1	PLUG	
	4	1	**158-8086**	2	COLLAR-TRACK ROLLER	
	5	1	**159-9526**	2	DOWEL	
	6	1	**200-6432**	1	SHAFT-TRACK ROLLER	
	7	1	**206-9212**	2	SEAL GP-DUO-CONE	
					(EACH INCLUDES)	
		1	**171-5713**	2	RING-TORIC	

197-4161 ROLLER GP-TRACK-SINGLE FLANGE *(contd.)* i02401774

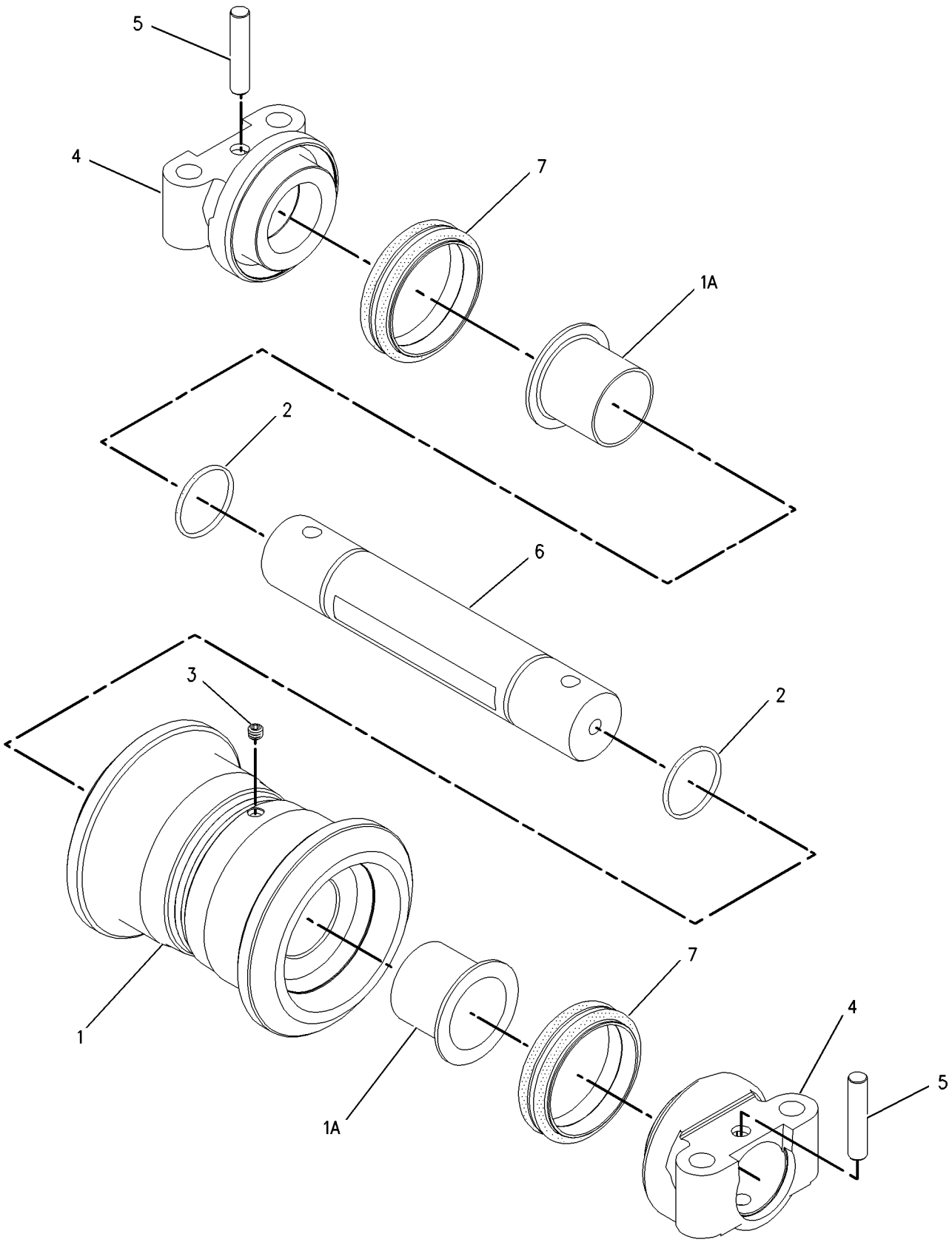

GRAPHIC #1 **<END>** g00865256

239-4366 TRACK ADJUSTER & RECOIL GP–RH

S/N: DFP1-UP; CJX1-UP

PART OF 239-4364 IDLER GP-FRONT

SMCS-4157, 4158 **i02395462**

NOTE	REF NO	GRAPHIC REF	PART NUMBER	QTY	PART NAME 1 2 3 4 5 6 (PRODUCT LEVEL)	SEE PAGE
	1	1	**168-6761**	1	PLATE AS	
		1	**4B-4158**	4	SCREW-DRIVE (3/16X0.25-IN)	
		1	**253-1346**	1	PLATE-WARNING (HIGH PRESSURE CYLINDER)	
Y	2	1	*239-4418*	1	TRACK ADJUSTER & RECOIL GP	561
	3	1	**239-4419**	1	PLATE	
M	4	1	**8T-4137**	2	BOLT (M10X1.5X20-MM)	

M-METRIC PART
Y-SEPARATE ILLUSTRATION

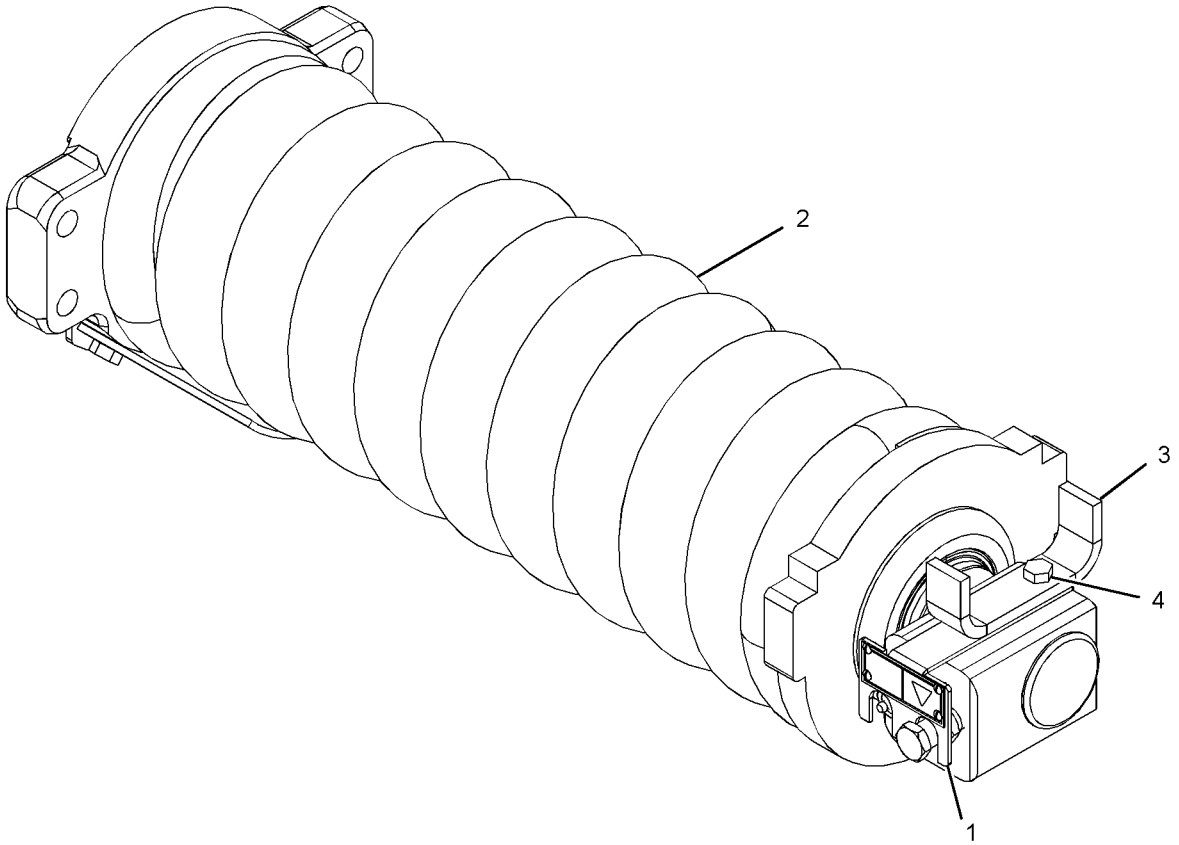

GRAPHIC #1 **<END>** g01198772

239-4367 TRACK ADJUSTER & RECOIL GP–LH

S/N: DFP1-UP; CJX1-UP

PART OF 239-4365 IDLER GP-FRONT

SMCS-4157, 4158 **i02395461**

NOTE	REF NO	GRAPHIC REF	PART NUMBER	QTY	PART NAME 1 2 3 4 5 6 (PRODUCT LEVEL)	SEE PAGE
	1	1	**168-6761**	1	PLATE AS	
		1	**4B-4158**	4	SCREW-DRIVE (3/16X0.25-IN)	
		1	**253-1346**	1	PLATE-WARNING (HIGH PRESSURE CYLINDER)	
Y	2	1	*239-4418*	1	TRACK ADJUSTER & RECOIL GP	561
	3	1	**239-4419**	1	PLATE	
M	4	1	**8T-4137**	2	BOLT (M10X1.5X20-MM)	

M-METRIC PART
Y-SEPARATE ILLUSTRATION

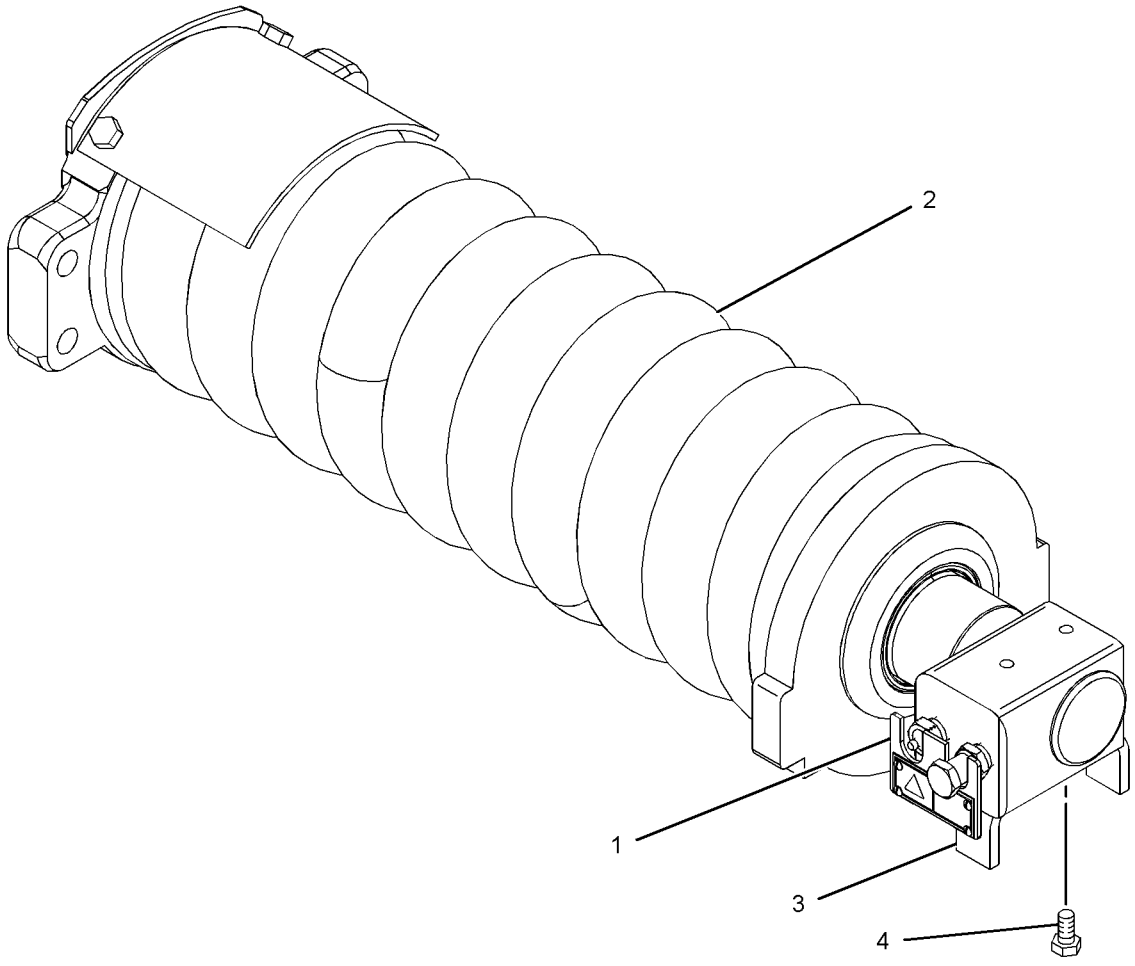

GRAPHIC #1 **<END>** g01211068

239-4418 TRACK ADJUSTER & RECOIL GP

S/N: DFP1-UP; CJX1-UP

PART OF 239-4366, 239-4367 TRACK ADJUSTER & RECOIL GP

SMCS-4157, 4158 **i02395465**

NOTE	REF NO	GRAPHIC REF	PART NUMBER	QTY	PART NAME 1 2 3 4 5 6 (PRODUCT LEVEL)	SEE PAGE
	1	1	**7I-7719**	1	STRIP	
M	2	1	**7I-7732**	1	NUT-SPECIAL (M42X4.5-THD)	
	3	1	**7I-7733**	1	WASHER (44X68X8-MM THK)	
	4	1	**176-4883**	1	COVER	
	5	1	**239-4369**	1	SPRING	
Y	6	1	*239-4373*	1	ADJUSTMENT GP-HYDRAULIC TRACK	537
	7	1	**239-4416**	1	SUPPORT	
	8	1	**239-4417**	1	PLATE	
M	9	1	**7X-2536**	2	BOLT (M8X1.25X14-MM)	
M	10	1	**8T-4179**	2	BOLT (M12X1.75X20-MM)	

M-METRIC PART
Y-SEPARATE ILLUSTRATION

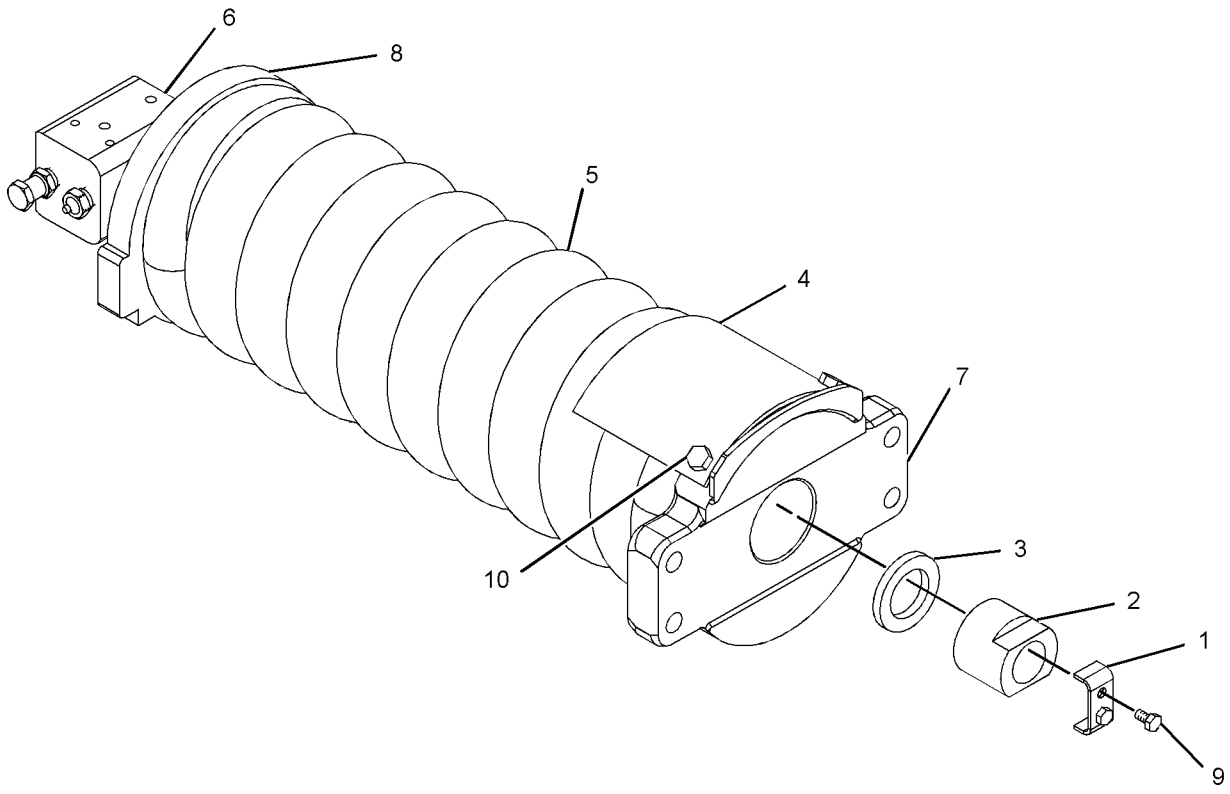

GRAPHIC #1 **<END>** g01211085

UNDERCARRIAGE

240-4013 TRACK AR–2-REQUIRED

S/N: CJX1-UP
800-MM (31.5-IN) TRIPLE GROUSER SHOE
AN ATTACHMENT

SMCS-4170 **i02443348**

NOTE	PART NUMBER	QTY	PART NAME 1 2 3 4 5 6 (PRODUCT LEVEL)	SEE PAGE
Y	*235-7764*	1	STEP GP	531
Y	*195-9347*	1	TRACK GP	565

Y-SEPARATE ILLUSTRATION

<END>

329-6585 TRACK AR–2-REQUIRED

S/N: CJX1-UP
790-MM (31.1-IN) TRIPLE GROUSER SHOE. WITH STEP
AN ATTACHMENT

SMCS-4170 **i03140140**

NOTE	PART NUMBER	QTY	PART NAME 1 2 3 4 5 6 (PRODUCT LEVEL)	SEE PAGE
Y	*235-7764*	1	STEP GP	531
Y	*332-8906*	1	TRACK GP	572

Y-SEPARATE ILLUSTRATION

<END>

195-9345 TRACK GP–2-REQUIRED

S/N: DFP1-UP; CJX1-UP
600-MM (24-IN) TRIPLE GROUSER SHOE. GREASE LUBRICATED TRACK
AN ATTACHMENT

SMCS-4170 **i01657980**

NOTE	REF NO	GRAPHIC REF	PART NUMBER	QTY	PART NAME 1 2 3 4 5 6 (PRODUCT LEVEL)	SEE PAGE
Y	1	1	**195-9343**	1	LINK AS-TRACK	550
	2	1	**6I-9453**	47	SHOE-TRACK	
M	3	1	**9W-3619**	188	BOLT-TRACK (M20X1.5X55MM)	
M	4	1	**9W-3361**	188	NUT-TRACK (M20X1.5 THD)	

M-METRIC PART
Y-SEPARATE ILLUSTRATION

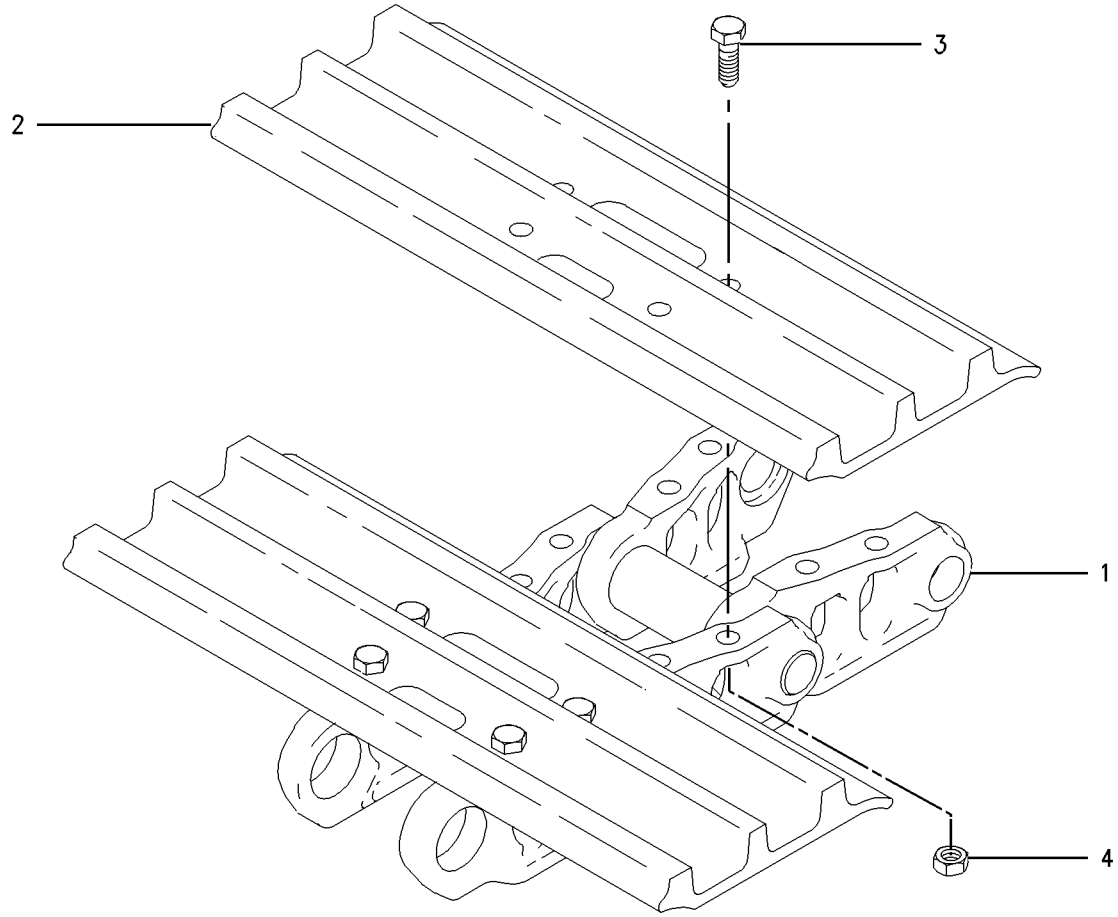

GRAPHIC #1 **<END>** g00705941

195-9346 TRACK GP–2-REQUIRED

S/N: DFP1-UP; CJX1-UP

700-MM (28-IN) TRIPLE GROUSER SHOE. GREASE LUBRICATED TRACK

AN ATTACHMENT

SMCS-4170 **i01483610**

NOTE	REF NO	GRAPHIC REF	PART NUMBER	QTY	PART NAME 1 2 3 4 5 6 (PRODUCT LEVEL)	SEE PAGE
Y	1	1	**195-9343**	1	LINK AS-TRACK	550
	2	1	**6I-9454**	47	SHOE-TRACK	
M	3	1	**9W-3619**	188	BOLT-TRACK (M20X1.5X55MM)	
M	4	1	**9W-3361**	188	NUT-TRACK (M20X1.5 THD)	

M-METRIC PART
Y-SEPARATE ILLUSTRATION

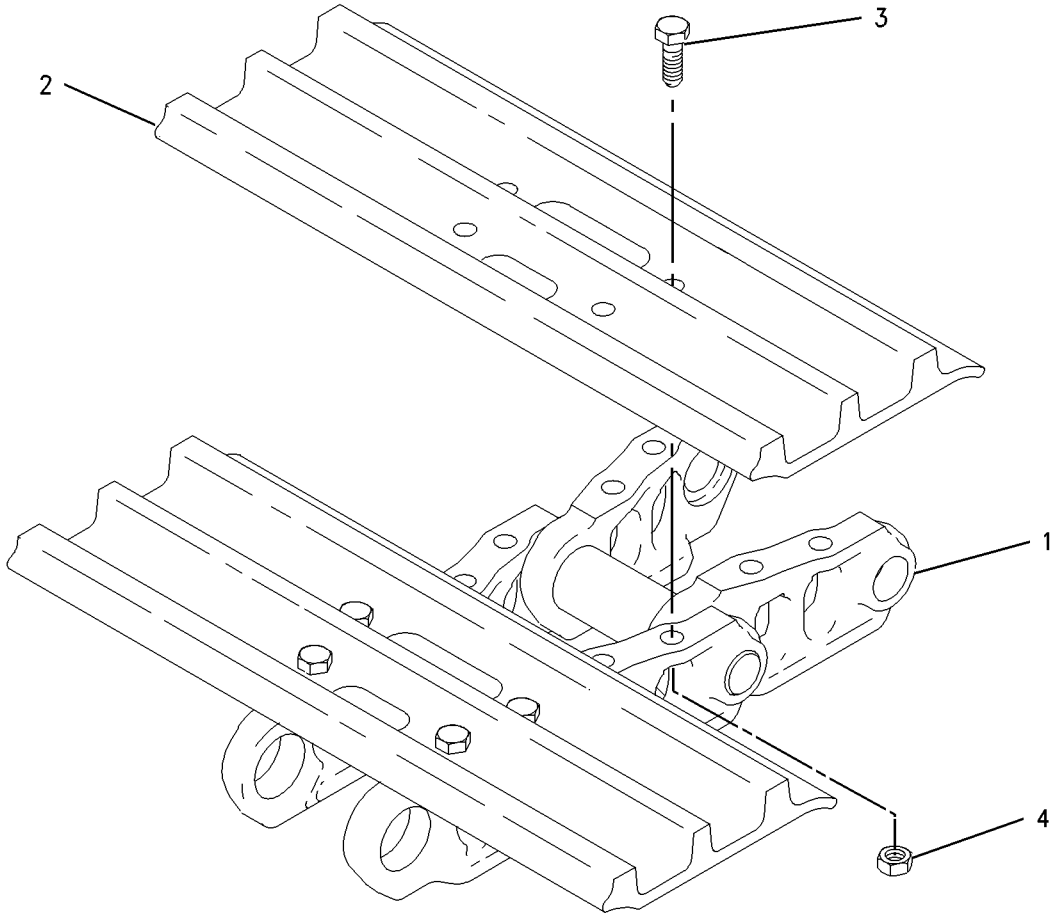

GRAPHIC #1 **<END>** g00729920

195-9347 TRACK GP–2-REQUIRED

S/N: CJX1-UP
800-MM (32-IN) TRIPLE GROUSER SHOE. GREASE LUBRICATED TRACK
PART OF 240-4013 TRACK AR
AN ATTACHMENT

SMCS-4170 **i01483612**

NOTE	REF NO	GRAPHIC REF	PART NUMBER	QTY	PART NAME 1 2 3 4 5 6 (PRODUCT LEVEL)	SEE PAGE
Y	1	1	**195-9343**	1	LINK AS-TRACK	550
	2	1	**9W-9351**	47	SHOE-TRACK	
M	3	1	**9W-3619**	188	BOLT-TRACK (M20X1.5X55MM)	
M	4	1	**9W-3361**	188	NUT-TRACK (M20X1.5 THD)	

M-METRIC PART
Y-SEPARATE ILLUSTRATION

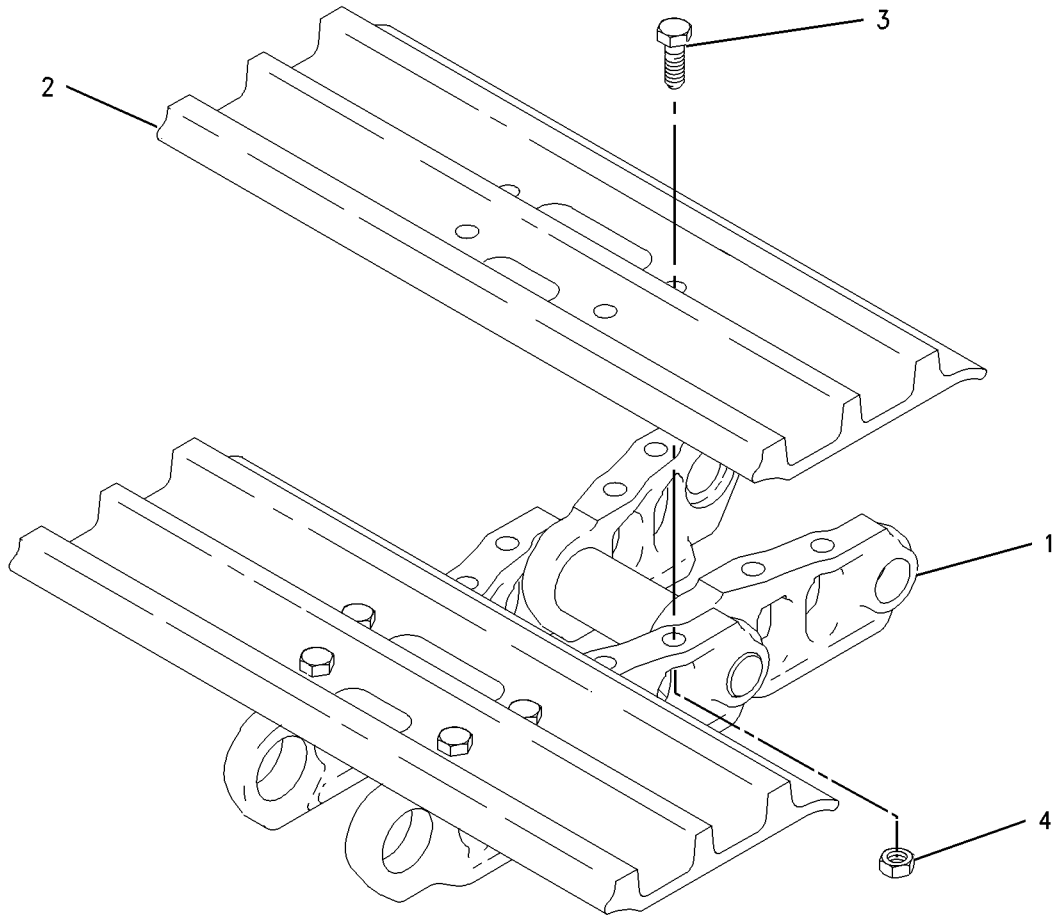

GRAPHIC #1 **<END>** g00729920

195-9348 TRACK GP–2-REQUIRED

S/N: DFP1-UP

600-MM (24-IN) TRIPLE GROUSER SHOE. GREASE LUBRICATED TRACK

AN ATTACHMENT

SMCS-4170 **i01483615**

NOTE	REF NO	GRAPHIC REF	PART NUMBER	QTY	PART NAME 1 2 3 4 5 6 (PRODUCT LEVEL)	SEE PAGE
Y	1	1	**195-9344**	1	LINK AS-TRACK	551
	2	1	**6I-9453**	51	SHOE-TRACK	
M	3	1	**9W-3619**	204	BOLT-TRACK (M20X1.5X55MM)	
M	4	1	**9W-3361**	204	NUT-TRACK (M20X1.5 THD)	

M-METRIC PART
Y-SEPARATE ILLUSTRATION

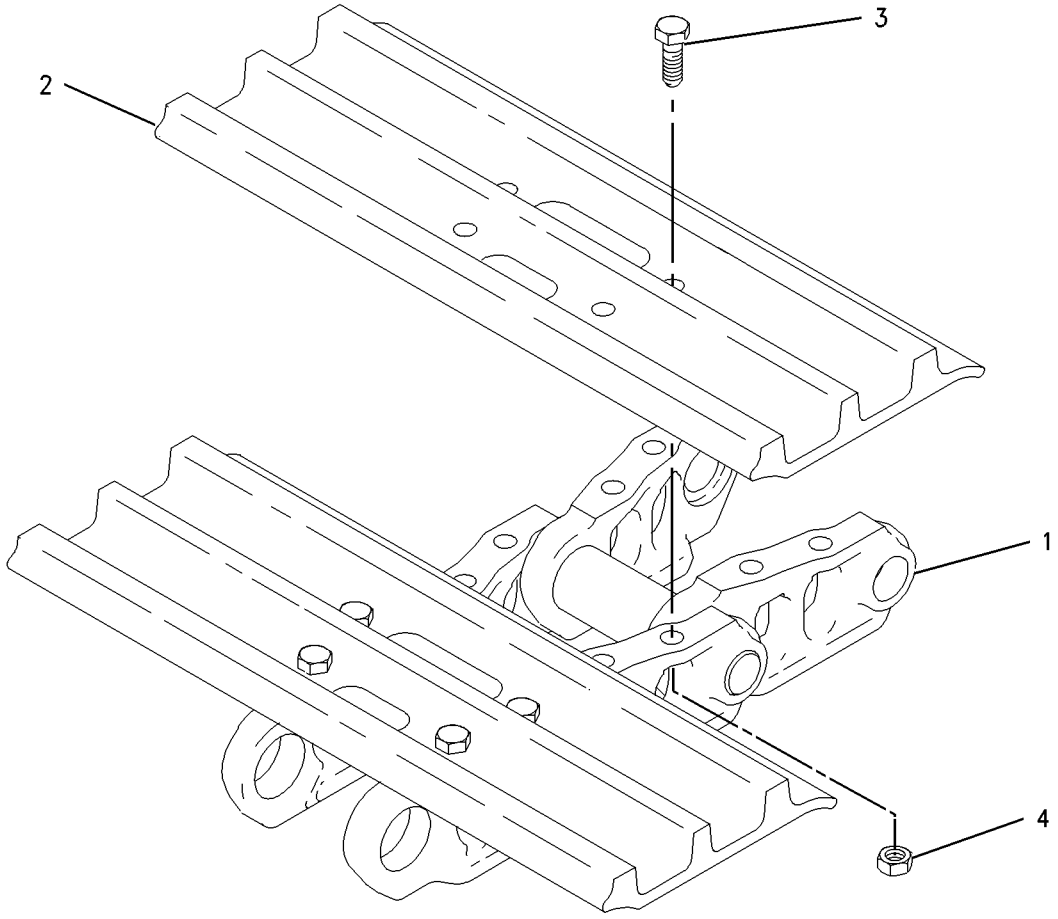

GRAPHIC #1 **<END>** g00729920

195-9349 TRACK GP–2-REQUIRED

S/N: DFP1-UP

700-MM (28-IN) TRIPLE GROUSER SHOE. GREASE LUBRICATED TRACK AN ATTACHMENT

SMCS-4170 **i01483617**

NOTE	REF NO	GRAPHIC REF	PART NUMBER	QTY	PART NAME 1 2 3 4 5 6 (PRODUCT LEVEL)	SEE PAGE
Y	1	1	**195-9344**	1	LINK AS-TRACK	551
	2	1	**6I-9454**	51	SHOE-TRACK	
M	3	1	**9W-3619**	204	BOLT-TRACK (M20X1.5X55MM)	
M	4	1	**9W-3361**	204	NUT-TRACK (M20X1.5 THD)	

M-METRIC PART
Y-SEPARATE ILLUSTRATION

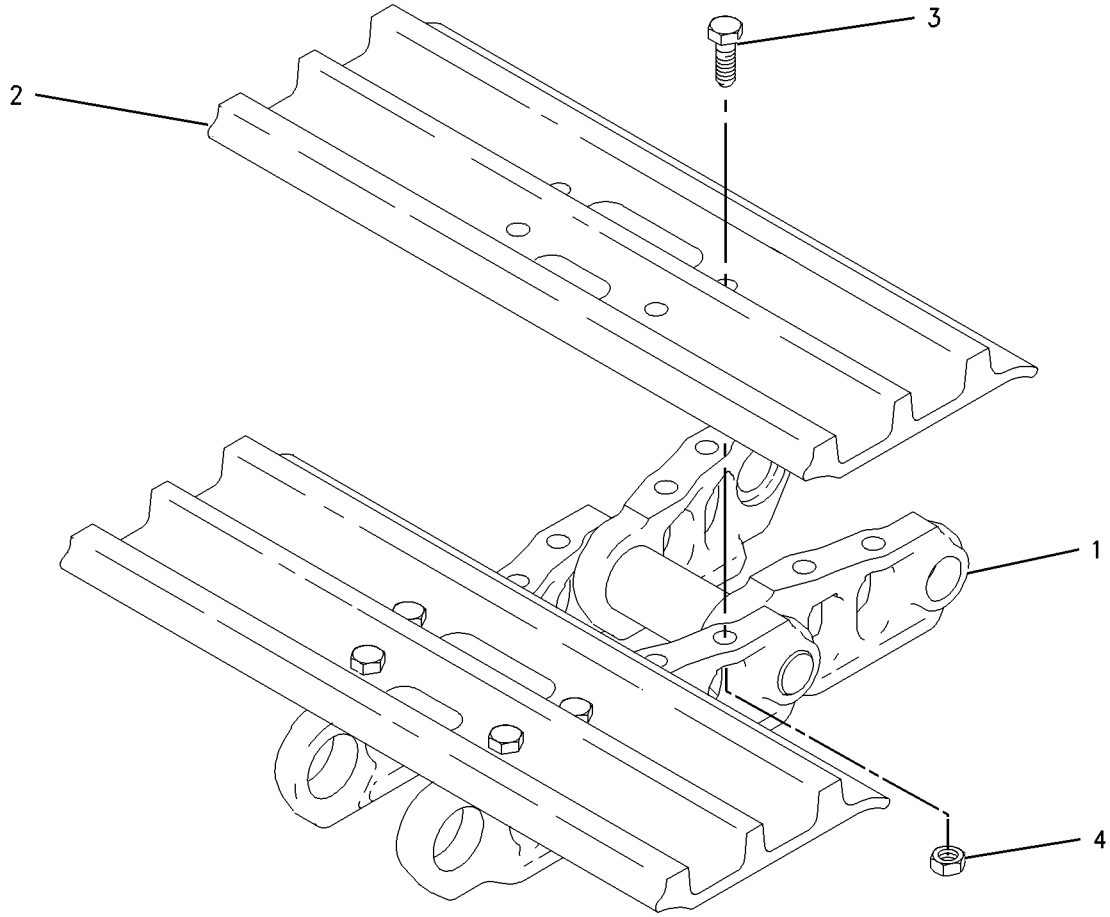

GRAPHIC #1 **<END>** g00731630

195-9350 TRACK GP–2-REQUIRED

S/N: DFP1-UP
800-MM (31.5-IN) TRIPLE GROUSER SHOE. GREASE LUBRICATED TRACK
PART OF 240-3990 TRACK GP
AN ATTACHMENT

SMCS-4170 **i01407403**

NOTE	REF NO	GRAPHIC REF	PART NUMBER	QTY	PART NAME 1 2 3 4 5 6 (PRODUCT LEVEL)	SEE PAGE
Y	1	1	**195-9344**	1	LINK AS-TRACK	551
	2	1	**9W-9351**	51	SHOE-TRACK	
M	3	1	**9W-3619**	204	BOLT-TRACK (M20X1.5X55MM)	
M	4	1	**9W-3361**	204	NUT-TRACK (M20X1.5 THD)	

M-METRIC PART
Y-SEPARATE ILLUSTRATION

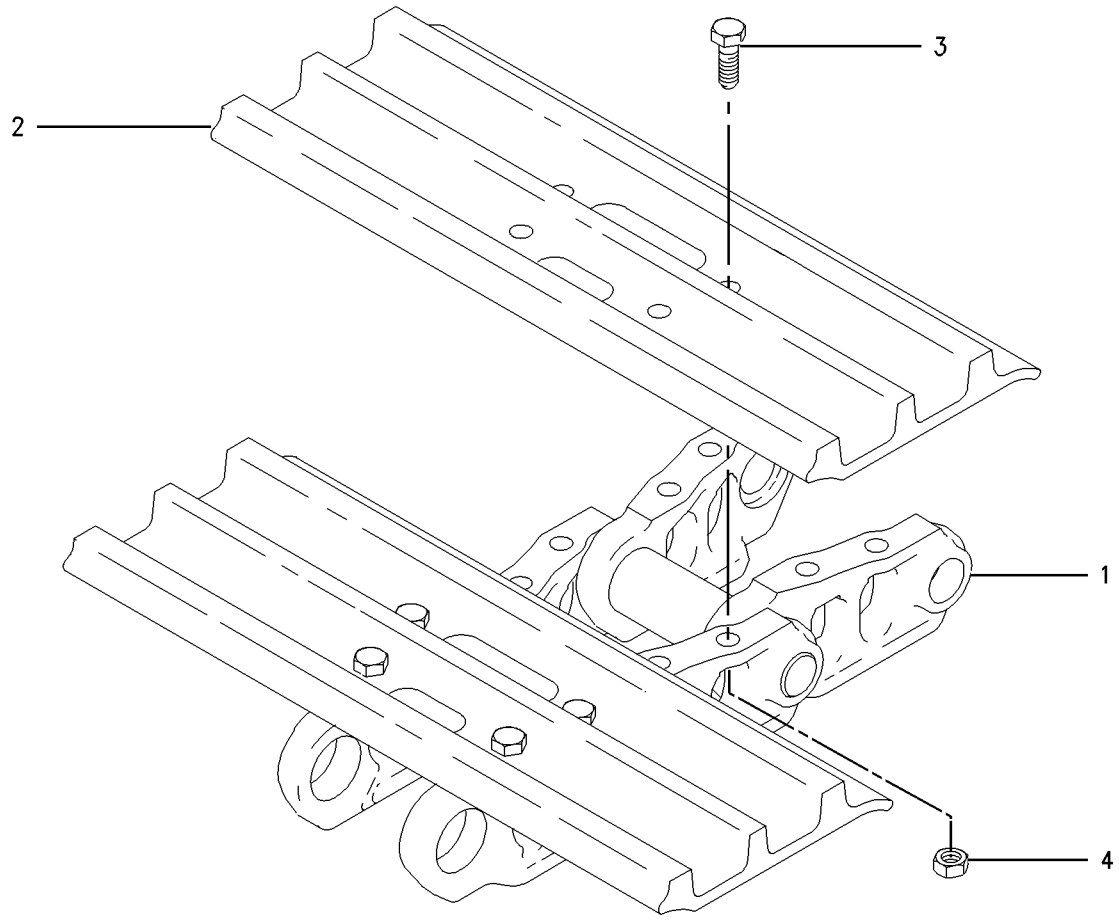

GRAPHIC #1 **<END>** g00705941

197-1435 TRACK GP–2-REQUIRED

S/N: DFP1-UP
700-MM (27.6-IN) DOUBLE GROUSER SHOE
AN ATTACHMENT

SMCS-4170 **i02397759**

NOTE	REF NO	GRAPHIC REF	PART NUMBER	QTY	PART NAME 1 2 3 4 5 6 (PRODUCT LEVEL)	SEE PAGE
Y	1	1	**195-9344**	1	LINK AS-TRACK	551
M	2	1	**6Y-0846**	204	BOLT-TRACK (M20X1.5X63-MM)	
M	3	1	**9W-3361**	204	NUT-TRACK (M20X1.5-THD)	
	4	1	**106-0616**	51	SHOE-TRACK	

M-METRIC PART
Y-SEPARATE ILLUSTRATION

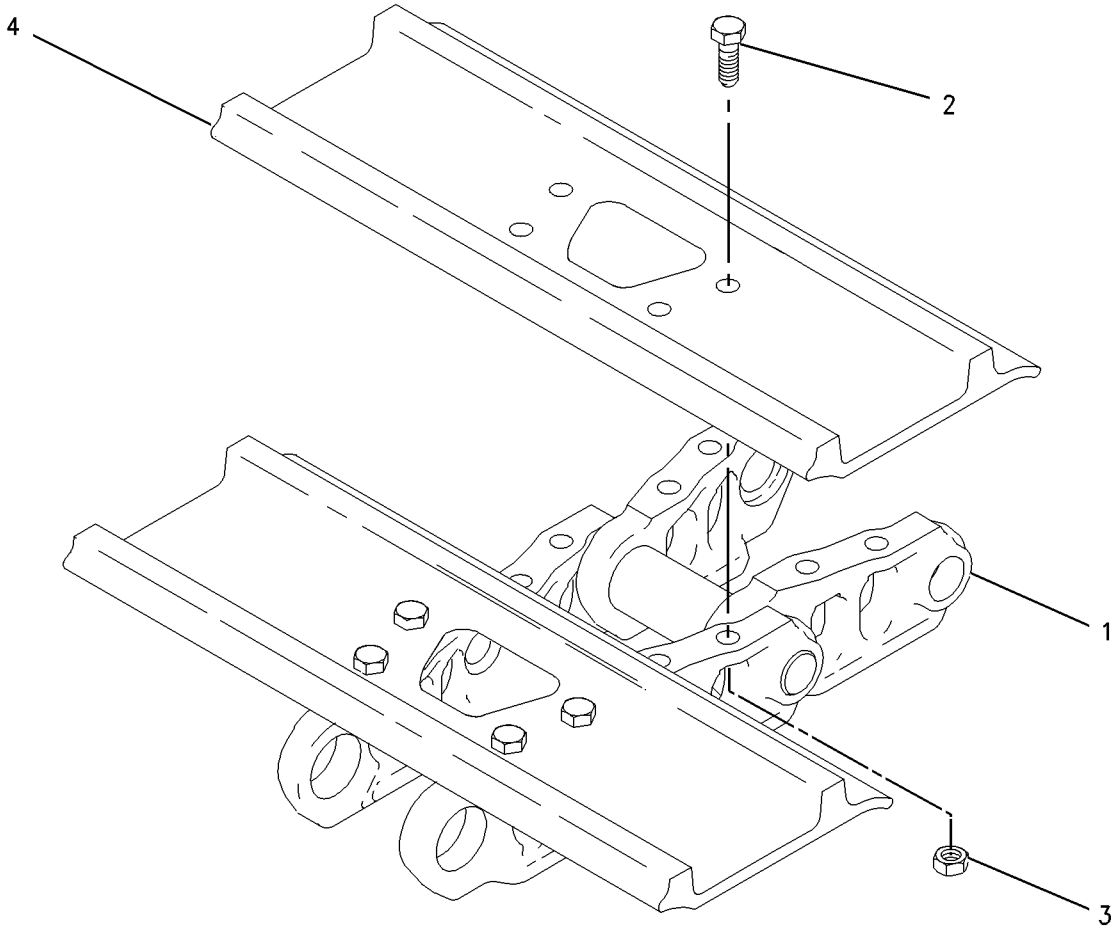

GRAPHIC #1 **<END>** g00780302

197-1436 TRACK GP–2-REQUIRED

S/N: DFP1-UP
600-MM (23.62-IN) DOUBLE GROUSER SHOE
AN ATTACHMENT

SMCS-4170 **i02397886**

NOTE	REF NO	GRAPHIC REF	PART NUMBER	QTY	PART NAME 1 2 3 4 5 6 (PRODUCT LEVEL)	SEE PAGE
M	1	1	**6Y-0846**	204	BOLT-TRACK (M20X1.5X63-MM)	
M	2	1	**9W-3361**	204	NUT-TRACK (M20X1.5-THD)	
	3	1	**106-0615**	51	SHOE-TRACK	
Y	4	1	**195-9344**	1	LINK AS-TRACK	551

M-METRIC PART
Y-SEPARATE ILLUSTRATION

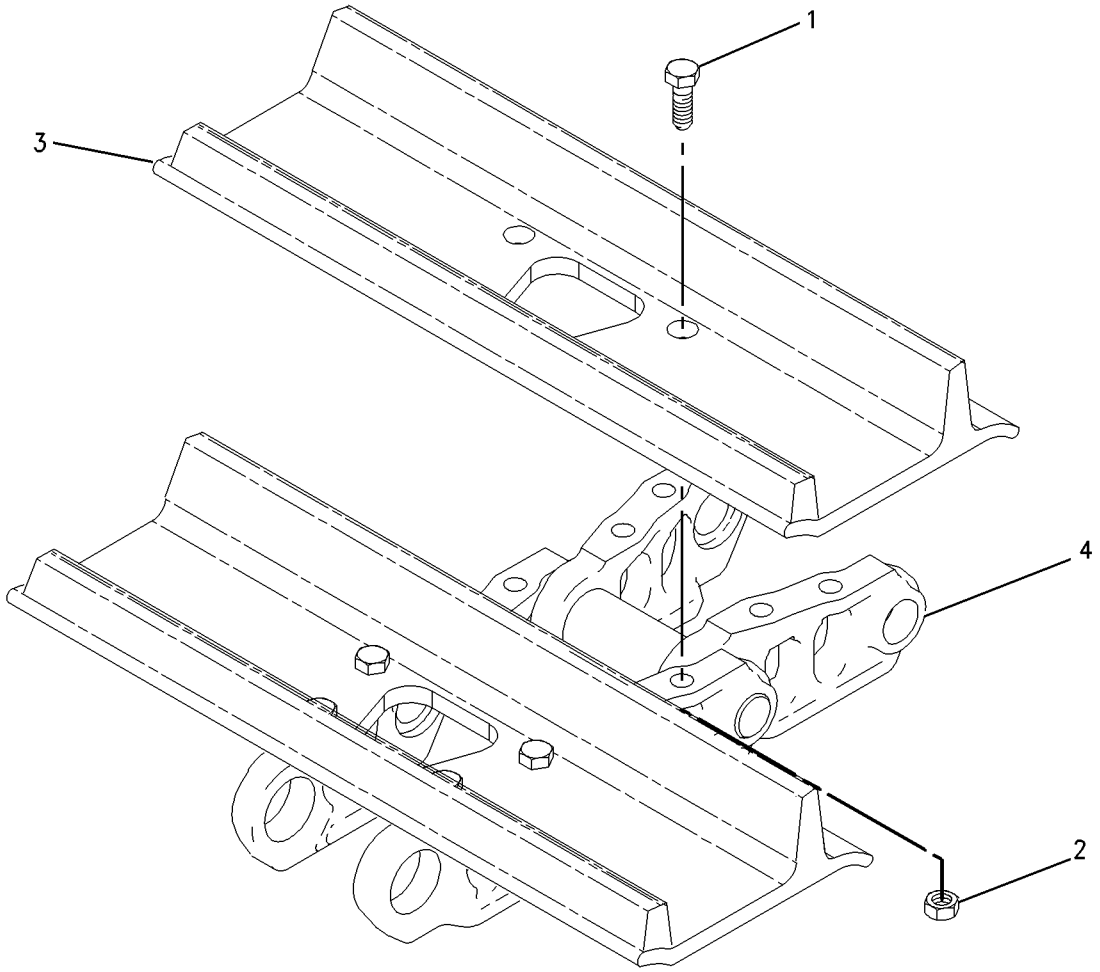

GRAPHIC #1 **<END>** g00801008

UNDERCARRIAGE

240-3990 TRACK GP—2-REQUIRED

S/N: DFP1-UP
800-MM (31.5-IN) TRIPLE GROUSER SHOE. WITH STEP
AN ATTACHMENT

SMCS-4170 **i02997298**

NOTE	PART NUMBER	QTY	PART NAME 1 2 3 4 5 6 (PRODUCT LEVEL)	SEE PAGE
Y	*235-7764*	1	STEP GP	531
Y	*195-9350*	1	TRACK GP	568
Y-SEPARATE ILLUSTRATION				

<END>

329-6586 TRACK GP—2-REQUIRED

S/N: DFP1-UP
750-MM (31.1-IN) TRIPLE GROUSER SHOE. WITH STEP
AN ATTACHMENT

SMCS-4170 **i03140081**

NOTE	PART NUMBER	QTY	PART NAME 1 2 3 4 5 6 (PRODUCT LEVEL)	SEE PAGE
Y	*235-7764*	1	STEP GP	531
Y	*332-8910*	1	TRACK GP	573
Y-SEPARATE ILLUSTRATION				

<END>

332-8906 TRACK GP–2-REQUIRED

S/N: CJX1-UP
790-MM (31.1-IN) TRIPLE GROUSER SHOE. GREASE LUBRICATED TRACK
PART OF 329-6585 TRACK AR
AN ATTACHMENT

SMCS-4170 **i03140144**

NOTE	REF NO	GRAPHIC REF	PART NUMBER	QTY	PART NAME 1 2 3 4 5 6 (PRODUCT LEVEL)	SEE PAGE
Y	1	1	**195-9343**	1	LINK AS-TRACK	550
	2	1	**332-8903**	47	SHOE-TRACK	
M	3	1	**9W-3619**	188	BOLT-TRACK (M20X1.5X55-MM)	
M	4	1	**9W-3361**	188	NUT-TRACK (M20X1.5-THD)	

M-METRIC PART
Y-SEPARATE ILLUSTRATION

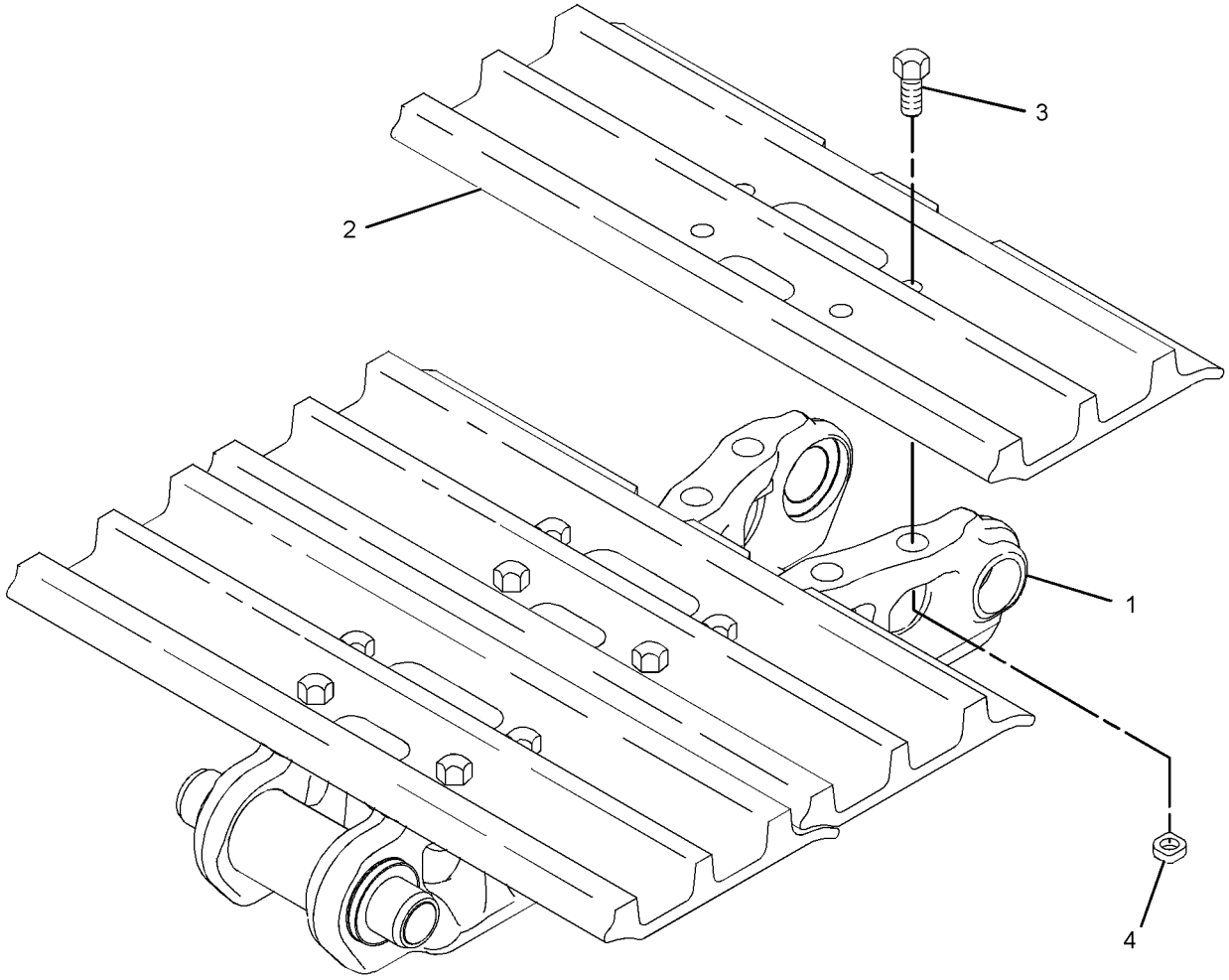

GRAPHIC #1 **<END>** g01201614

332-8910 TRACK GP–2-REQUIRED

S/N: DFP1-UP
790-MM (31.1-IN) TRIPLE GROUSER SHOE. GREASE LUBRICATED TRACK
PART OF 329-6586 TRACK GP
AN ATTACHMENT

SMCS-4170 **i03140086**

NOTE	REF NO	GRAPHIC REF	PART NUMBER	QTY	PART NAME 1 2 3 4 5 6 (PRODUCT LEVEL)	SEE PAGE
Y	1	1	**195-9344**	1	LINK AS-TRACK	551
	2	1	**332-8903**	51	SHOE-TRACK	
M	3	1	**9W-3619**	204	BOLT-TRACK (M20X1.5X55-MM)	
M	4	1	**9W-3361**	204	NUT-TRACK (M20X1.5-THD)	

M-METRIC PART
Y-SEPARATE ILLUSTRATION

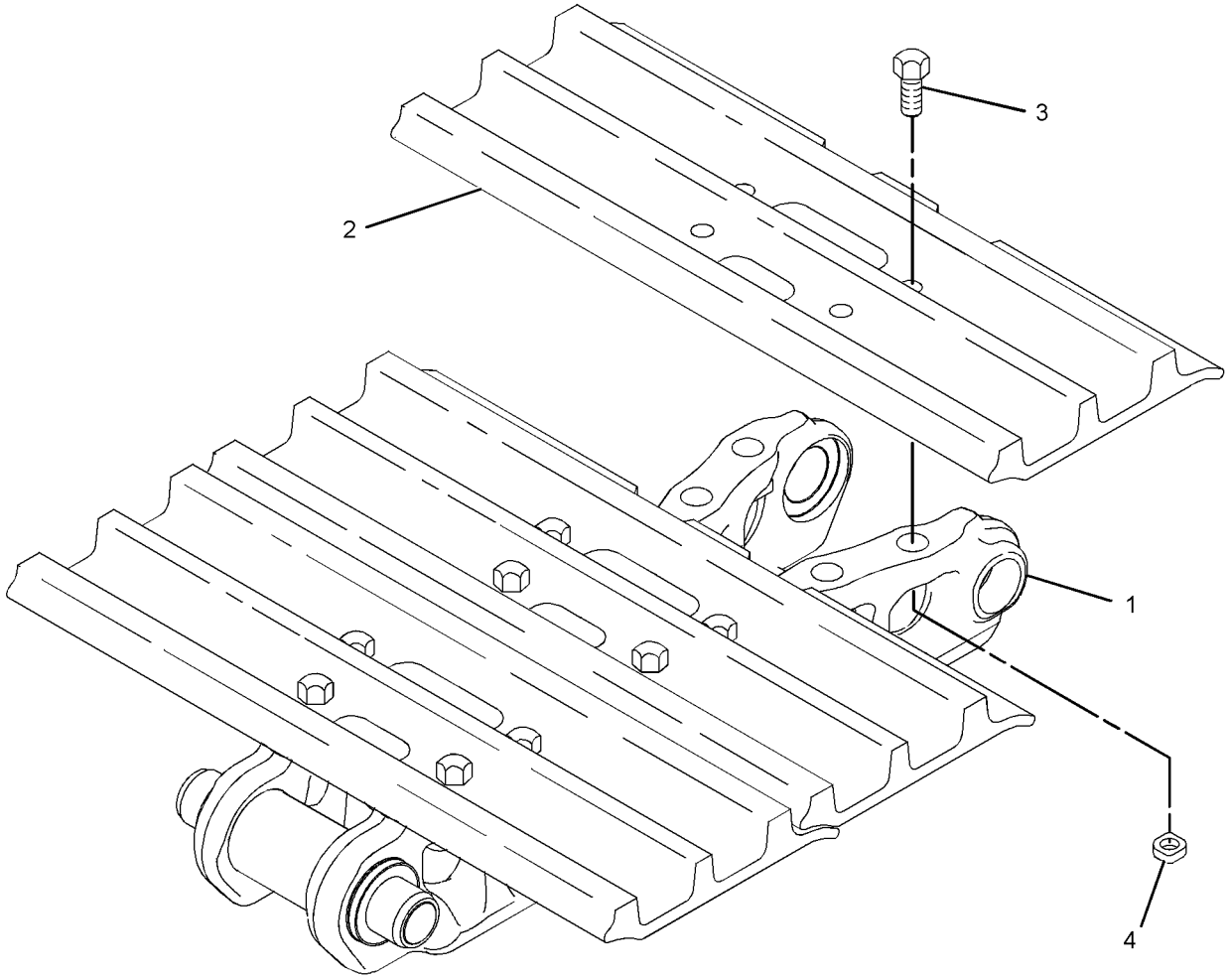

GRAPHIC #1 **<END>** g01201614

MEMORANDA

PART NUMBER INDEX

Part	Page
1	
1B-8705	23
	33
1D-4635	1251
1F-7960	209
	210
1H-3244	240
1H-3338	347
1H-5728	546
1H-8171	198
1J-9671	108
	1079
	1109
1M-6119	242
	243
	250
	251
	258
1M-6120	242
	243
	250
	251
	258
1N-5999	43
	44
1P-2807	1530
	1536
	1542
	1548
	1554
	1560
	1565
	1570
1P-3702	770
	792
	796
	799
	942
	945
	946
	1000
	1001
	1009
	1011
	1056
	1067
	1069
	1070
	1093
1P-3703	667
	670
	672
	674
	676
	678
	682
	692
	702
	704
	706
	708
	720
	722
	724
	726
	728
	730
	745
	749
	759
	770
	781
	785
	788
	792
	796
	799
	803
	938
	940
	942
	943
	945
	946
	949
	952
	955
1P-3704	672
	674
	676
	678
	682
	692
	702
	704
	706
	708
	770
	948
	949
1P-3705	682
	692
1P-4578	781
	785
	788
	792
	796
	799
	931
1P-5767	672
	674
	676
	678
	682
	692
	702
	704
	706
	708
1R-0762	158
	161
	165
	171
	175
	178
1R-1807	85
	88
1R-5998	1297
	1301
1R-9958	498
	502
	506
1S-0812	353
	354
1S-0994	1405
	1409
1S-2563	93
1S-7251	242
	250
	258
	337
	338
	363
1S-7252	242
	250
	258
	337
	338
1S-9593	779
	1125
	1126
1U-8846	25
	26
	61
	137
	138
	141
	437
	490
	644
	646
	952
	955
1W-1064	57
1W-2431	149
1W-2715	42
	46
1W-8407	35
2	
2A-4429	42
	46
2B-2404	334
2B-7561	646
2C-9259	1181
	1182
	1184
	1185
	1189
	1191
	1192
	1193
	1194
	1195
	1196
	1197
	1198
	1199
	1200
	1201
	1202
	1203
	1204
	1205
	1206
	1207
	1208
	1209
	1210
	1211
	1212
	1213
	1214
	1215
	1216
	1217
	1218
	1219
	1220
	1221
	1222
	1223
	1224
	1225
	1226
	1227
	1228
	1229
	1230
	1231
	1232
	1233
	1234
2C-9462	1247
2C-9544	1236
	1237
	1238
	1239
	1244
	▶1247
2D-1290	158
	161
	165
	171
	175
	178
2D-6642	62
	966
	969
	1058
	1061
	1111
2G-1830	363
2G-8767	242
	250
2H-3922	346
	1503
	1505
2J-3507	1246
	1247
	1250
	1251
2K-4821	240
2K-8199	66
	95
2L-8076	355
2M-0849	991

▶ **PRIMARY REFERENCE**

PART NUMBER INDEX

Part	Page
	1419
	1428
2M-4453	108
2M-6471	37
2M-9780	37
	43
	44
	85
	88
	91
	108
	170
	174
	175
	178
	179
	660
	745
	748
	934
	936
	952
	955
	966
	970
	1013
	1019
	1025
	1031
	1035
	1044
	1048
	1056
	1405
	1409
	1413
	1415
2P-1294	60
2P-2537	85
	88
2R-6806	168
2S-1647	382
	385
2S-2053	91
2S-2596	1042
	1052
	1058
	1061
2S-4078	204
	217
	219
	222
	224
	226
	228
	231
	233
	355
	781
	785
	788
	792
	796
	799
	1004
2S-5926	537
2U-2552	1281
2W-0027	68
2W-6544	25
	26
2W-6546	24
2W-7213	37
2W-7381	48
	49
2W-8147	33
2Y-5685	1368
	1370
	1379
2Y-5829	75
	76
	80
3B-0551	217
	219
	222
	224
	226
	228
	231
	233
3B-4501	287
	288
3B-4505	1348
	1352
3B-4509	743
	744
	751
	753
3B-4618	499
	503
	507
3B-8485	682
	692
3B-8489	486
	488
	490
	611
	613
	615
	617
	619
	621
	623
	625
	626
	627
	629
	630
	632
	634
	1147
	1148
	1149
	1150
	1152
	1156
	1158
	1160
	1162
	1163
	1168
	1170
	1171
	1172
	1173
	1174
	1175
	1176
	1177
3D-2824	69
	85
	88
	108
	355
	720
	722
	745
	748
	749
	759
	791
	792
	795
	796
	799
	865
	867
	869
	934
	936
	974
	996
	1086
	1099
	1100
	1102
	1103
	1104
	1105
	1106
	1108
3D-2891	583
	586
	589
	592
	596
	600
	617
	619
	621
	623
	627
3D-5102	334
3D-9143	444
3E-2310	881
	884
	892
	897
	901
	910
	914
	921
3E-2332	313
	315
3E-2338	434
	437
3E-3213	57
3E-3362	66
3E-3365	66
	351
	352
	892
3E-3368	317
3E-3371	867
	869
3E-3383	356
3E-4297	656
3E-4352	313
	315
	332
3E-4895	606
3E-5169	428
3E-6910	961
3E-7389	354
3E-7852	342
3E-7853	340
	342
3E-7855	342
3E-7857	342
3E-7858	342
3E-7860	342
3E-7861	342
3E-8017	148
	150
	153
3E-8020	1297
	1301
3E-8048	299
3E-8320	301
3E-9411	496
3E-9412	78
	79
	184
	186
	188
	190
	192
3E-9871	1503
3E-9872	1487
	1508
3E-9874	1297
	1301
3F-0379	340
	344
3F-9556	240
	348
	349
3H-0442	1058
	1061
3H-5552	37
3H-7654	78
	79
3J-1907	43
	44
	85
	88
	96

3

► PRIMARY REFERENCE

PART NUMBER INDEX

Part	Page	Part	Page	Part	Page	Part	Page
	97		871		108		940
	106		874		141		949
	139		877		158		952
	140		879		161		955
	158		881		165		958
	161		884		168		959
	165		887		170		966
	168		889		171		969
	170		891		174		976
	174		892		178		996
	217		896		313		1042
	219		897		315		1052
	222		900		334		1063
	224		901		580		1065
	226		904		644		1405
	228		906		680		1409
	231		908		710		1413
	233		910		712		1415
	236		914		714	3K-0835	353
	583		918		720		354
	586		920		722	3K-3257	337
	589		921		748		338
	592		924		754		339
	596		926		759	3K-5234	1251
	600		931		773	3K-8460	313
	603		949		775		315
	720		952		777	3L-8187	299
	722		955		779		377
	745		958		781	3P-0647	1085
	748		963		785	3P-1156	94
	773		991		788		96
	775		993		791		103
	777		1013		795	3P-1932	106
	779		1019		799	3P-9847	114
	781		1025		804		116
	785		1035		810		118
	804		1044		813		120
	805		1048		817	3R-6790	85
	810		1054		824		88
	813		1058		825	3R-8797	342
	814		1061		831	3S-2093	114
	817		1063		832		116
	818		1065		838		118
	821		1072		839		120
	823		1073		845		145
	824		1074		846		146
	825		1111		852		242
	830		1112		853		250
	831		1113		859		251
	832		1116		860		268
	837		1132		865		271
	838	3J-3679	108		867		278
	839	3J-7354	85		869		280
	844		88		891		296
	845		91		892		298
	846		106		896		299
	851		745		897		303
	852		748		900		305
	853		991		901		307
	858		993		904		309
	859		1058		906		311
	860		1061		930		333
	865		1083		934		350
	867	3K-0360	70		936		360
	869		106		938		365

► **PRIMARY REFERENCE**

PART NUMBER INDEX

Part	Page	Part	Page	Part	Page	Part	Page
	367	4B-4158	559		910	4I-2187	444
	371		560		914	4I-2885	1519
	375	4B-9783	1112		920	4I-3038	350
	377		1113	4I-0836	823	4I-3063	1297
	380		1116		830		1301
	381	4B-9880	611		837	4I-3090	1298
	388		613		844		1302
	389		615		851		1508
	392		630		858	4I-3123	1297
	394		632	4I-0995	804		1301
	396		634		881	4I-3144	1297
	398		1115		884		1301
	400	4C-9612	24		891	4I-3266	1433
	402		31		896	4I-3503	1405
	404	4D-1836	428		900		1409
	406	4D-7388	100		910		1413
	413	4F-5695	39		914		1415
	416		40		920	4I-3510	1099
	418	4F-9653	182	4I-1022	976		1100
	420	4H-6112	644	4I-1025	804		1102
	422	4I-0117	498		887		1105
	424		502		889		1106
	426		506		918		1108
	427	4I-0118	498	4I-1163	1503	4I-3569	1013
	428		502		1505		1019
	430		506	4I-1205	1297		1025
	773	4I-0191	447		1301		1035
	775		448	4I-1206	1297		1044
	777		449		1301		1048
	779		450	4I-1260	1380	4I-3615	617
	1259		452	4I-1536	▶575		619
	1261		455		578	4I-3627	630
	1386		456	4I-1539	575		632
	1388		459	4I-1631	821		634
	1393		460	4I-1671	884	4I-3628	611
	1394		462	4I-1674	720		613
	1396		463		722		615
	1398	4I-0232	498		724		621
	1399		502		726		623
	1405		506		728		627
	1409	4I-0378	217		730		630
	1428		219		732		632
	1464		222		745		634
	1485		224		748	4I-3631	630
	1486		226	4I-1704	804		632
	1487		228		887		634
	1503		231		889	4I-3695	702
	1505		233		908		704
3S-6049	242	4I-0379	158		918	4I-3941	891
	250		161		924		896
	258		165		926		900
	363		170	4I-1739	823		920
3S-6050	258		174		830	4I-3953	821
3T-3422	344		178		837	4I-3994	804
3T-5760	242	4I-0420	1489		844	4I-4270	1297
3T-7528	656		1490		851		1301
3V-2431	182	4I-0797	865		858	4I-4286	1348
3W-6399	1485		867		891		1350
	1486	4I-0800	930		896		1352
3Y-9267	1083	4I-0818	930		900		1355
		4I-0833	881		920	4I-4298	1498
			884	4I-1783	891	4I-4300	1498
4			891		896	4I-4361	1380
			896		900	4I-4392	1297
4B-2049	355		900		920		1301

▶ PRIMARY REFERENCE

PART NUMBER INDEX

Part	Page	Part	Page	Part	Page	Part	Page
4I-4618	1144		1035		821		821
	1174		1044		823		823
	1175		1048		830		830
4I-4620	1170	4I-6602	1368		837		837
	1171		1370		844		844
	1172		1372		851		851
	1173		1373		858		858
	1176	4I-6604	1180		871		877
	1177	4I-6605	1180		874		879
4I-4621	484	4I-6608	1147		891		881
4I-4809	1136	4I-6626	1180		896		884
	1138	4I-7466	644		900		891
	1140	4I-7714	1100		920		896
	1142		1102		928		900
	1170		1105	4I-9522	749		910
	1171		1106		773		914
	1172	4I-7745	720		775		920
	1173		722		777	4I-9525	749
	1174	4I-7816	934		779		804
	1176		936		804		810
	1177	4I-7856	99		810		813
4I-5020	1503	4I-7889	243		813		817
	1505		251		817		821
4I-5021	1503		363		821		823
	1505		394		823		830
4I-5049	1484		396		830		837
4I-5394	996		398		837		844
4I-5409	1		400		844		851
	▶290		402		851		858
4I-5490	996		926		858		871
4I-5639	781	4I-7924	517		877		874
	785		518		879		881
4I-5849	963		519		891		884
4I-5862	575		521		896		891
4I-5900	823	4I-8019	498		900		896
	830		502		920		900
	837		506		928		920
	844	4I-8267	576	4I-9523	804		928
	851	4I-8472	1530		810	4I-9526	749
	858		1536		813		810
4I-5906	823		1542		817		813
	830		1548		821		817
	837		1554		823		821
	844		1560		830		928
	851		1565		837	4I-9527	804
	858		1570		844		810
4I-6003	928	4I-8785	946		851		813
4I-6121	823	4I-8789	732		858		817
	830		803		871		821
	837	4I-8826	938		874		823
	844		940		877		830
	851	4I-8869	630		879		837
	858		632		881		844
4I-6136	823		634		884		851
	830	4I-8965	1063		891		858
	837		1065		896		871
	844	4I-9521	749		900		874
	851		773		904		881
	858		775		906		884
4I-6248	877		777		910		891
4I-6365	1081		779		914		896
4I-6397	1013		804		920		900
	1019		810	4I-9524	810		910
	1025		813		813		914
	1031		817		817		920

▶ **PRIMARY REFERENCE**

PART NUMBER INDEX

Part	Page
	934
	936
4I-9528	810
	813
	817
	821
	823
	830
	837
	844
	851
	858
	891
	896
	900
4J-0519	1067
	1069
	1070
4J-0520	666
	669
	1031
4J-0522	781
	785
	788
	792
	796
	799
	931
4J-0523	808
4J-0524	108
	759
4J-0527	759
	996
4J-0528	1079
	1109
4J-5267	755
	770
	1009
	1054
4J-5268	770
	938
	940
4J-5309	1013
	1019
	1025
	1035
	1044
	1048
4J-5477	762
	767
	768
	769
	773
	804
	805
	949
4J-7385	1091
	1092
4J-7386	1091
	1092
4J-7533	656
	958
	1006
	1013
	1019
	1025
	1035
	1044
	1048
	1058
	1061
	1063
	1065
4J-8998	1000
	1001
	1009
	1011
	1093
4J-9208	1246
4K-1388	85
	88
	1091
	1092
4K-8864	243
	251
	258
	363
4M-1831	340
	342
	344
4N-9170	490
4P-5524	130
	136
4P-5918	25
	26
	413
4P-7428	243
	251
	382
	385
4P-7581	243
	251
	365
	367
	382
	385
	389
	396
	398
	400
	814
	818
4P-8134	413
4P-9103	85
	88
4P-9107	85
	88
4R-9999	77
4T-0987	1058
	1061
4T-3148	1013
	1019
	1025
	1035
	1044
	1048
4T-5074	1013
	1019
	1035
	1044
	1048
4W-0253	110
4W-1203	50
4W-1204	50
4W-1413	1554
	1560
	1565
	1570
4W-2026	28
4W-2042	50
4W-2232	94
4W-3462	7
	9
	11
	12
	13
	14
	15
	▶24
4W-7592	110
4Y-9652	25
	26
5	
5A-3604	1439
	1440
	1453
	1454
	1455
	1456
	1467
	1468
	1469
	1470
	1471
	1472
5B-1866	80
	82
5B-5492	332
5C-2889	287
	288
5C-2890	347
	367
	371
	375
	402
	1505
5C-6074	355
5C-6108	202
	▶355
5C-7261	25
	26
	29
	51
	168
	243
	251
	258
	1087
	1088
	1257
	1258
	1282
	1445
	1446
	1447
	1448
	1451
	1452
	1461
	1462
	1463
	1466
	1474
	1475
	1478
	1479
5C-7793	1297
	1301
5C-7883	243
	251
5C-8138	1485
	1486
5C-8312	1490
5C-9553	299
	301
	363
	408
	409
	444
	499
	503
	507
	996
	1259
	1261
	1386
	1388
	1428
	1505
5D-1026	646
	1405
	1409
5D-4822	1373
	1381
5D-8159	111
	122
	124
	126
5F-9657	85
	88
5G-2247	556
5H-4020	931
5H-5672	981
5H-8624	931
5H-8936	1148
5I-4000	1079
	1109
5I-4001	1109
5I-4002	1079
	1109
5I-4003	1109
5I-4111	1091
	1092
5I-4174	942
	945
	946

▶ **PRIMARY REFERENCE**

PART NUMBER INDEX

Part	Page	Part	Page	Part	Page	Part	Page
5I-4189	943		770		1092		800
5I-4371	823		788	5P-3779	575	5P-7470	799
5I-4376	773		791		577	5P-7471	800
	775		792	5P-4115	301	5P-7814	313
	777		795		363		315
	779		796		499	5P-7958	533
	804		799		503		1417
5I-4387	804		803		507	5P-7970	91
5I-4396	823		938	5P-4116	168		93
	830		940		238		273
	837		949		243		332
	844	5K-9242	1148		251	5P-8066	85
	851		1152		444		88
	858	5K-9243	490	5P-4536	151		96
	881		1147		152		97
	884		1148	5P-4924	158	5P-8068	996
	910		1149		161	5P-8182	800
	914		1150		165	5P-8196	85
	918	5L-3233	129		217		88
5I-4447	944		135		219	5P-8245	28
5I-4490	942	5L-4758	603		222		55
5I-7090	1338	5N-4185	84		224		57
	1339	5P-0537	198		226	5P-8247	36
	1340	5P-0743	95		228		240
5I-7290	732	5P-0747	242		231	5P-8292	1484
5I-8270	242		250		233	5P-8309	528
	250		258	5P-4961	91		533
	258		337		145	5P-8347	106
5I-8416	▶576		338		146	5P-8444	759
	578		363	5P-5148	716	5P-8500	213
5I-8511	1063	5P-0761	242	5P-5623	238		214
	1065		250	5P-5998	350		215
5I-8516	641		258	5P-6312	334		1417
5I-8670	649		363	5P-6313	334	5P-9297	168
	651	5P-0767	646	5P-6314	334		294
5I-8708	823		1405	5P-7175	165		296
	830		1409		175		298
	837		1413		179	5P-9617	85
	844		1415	5P-7462	716		88
	851	5P-1075	444		825	5P-9890	97
	858		482		832	5P-9909	114
5I-8853	871	5P-1076	131		839		116
	874		132		846		118
5J-2383	963		334		853		120
5J-2974	1072		499		860	5Q-3659	1146
5K-8451	158		503	5P-7463	716		▶1147
	161		507		825	5Q-4212	735
	165		544		832		737
	171		545		839		739
	175		720		846		741
	178		722		853		762
	773	5P-1425	91		860		763
5K-9090	85	5P-1442	145	5P-7464	934		765
	88		146		936		767
	664		159	5P-7465	934		768
	667		162		936		769
	670		166	5P-7468	759	5Q-4213	763
	720		171		788		765
	722		175		792	5S-7349	240
	724		179		796		340
	726	5P-2369	1405		799		342
	728		1409	5P-7469	759		344
	730	5P-2424	239		788		1431
	732	5P-2568	1132		792	5S-7382	606
	759	5P-3108	1091		796	5S-9062	50

▶ **PRIMARY REFERENCE**

PART NUMBER INDEX

Part	Page
6	
6C-6760	680
	710
	712
	714
6C-8382	1368
	1370
	1373
6D-1641	1405
	1409
	1413
	1415
6D-4244	426
6D-4246	805
	1405
	1409
6D-9157	996
6E-1435	892
	897
	901
	921
6E-2163	1042
	1052
6E-2271	983
	984
	985
	986
	987
	988
	1008
	1040
	1042
	1052
6E-2274	1009
	1011
	1013
	1019
	1025
	1031
	1035
	1044
	1048
6E-2313	1054
6E-2745	973
6E-2746	973
6E-3653	1013
	1019
	1025
	1035
	1044
	1048
6E-4793	973
6E-4816	▶973
	1031
6E-5169	1013
	1019
	1025
	1035
	1044
	1048
6E-5431	1054
6E-5434	1054
6E-5438	1054
6E-5439	1054
6E-5643	1013
	1019
	1025
	1035
	1044
	1048
6E-5731	1009
	1011
	1013
	1019
	1025
	1031
	1035
	1044
	1048
6F-0253	353
	354
6F-4855	661
6F-7045	346
6F-7062	69
6G-2256	243
	251
6G-2263	243
	251
	363
6I-0723	996
6I-0724	996
6I-2503	129
	130
	135
	136
6I-2504	129
	130
	135
	136
6I-4464	130
	136
6I-5298	1334
	1335
6I-5342	1380
6I-5470	1298
	1302
6I-6033	498
	502
	506
6I-6354	1198
	1199
	1224
	1225
	1228
	1229
	1234
	1235
6I-6355	1198
	1199
	1224
	1225
	1228
	1229
	1234
	1235
6I-6356	1198
	1199
	1224
	1225
	1228
	1229
	1234
	1235
6I-6371	1250
6I-6404	1181
	1182
	1184
	1185
	1196
6I-6405	1181
	1182
	1184
	1185
	1196
6I-6406	1181
	1182
	1184
	1185
	1196
6I-6721	948
6I-6758	1079
	1109
6I-6795	1099
	1100
	1102
	1105
	1106
	1108
6I-9398	556
6I-9399	556
	557
6I-9453	563
	566
6I-9454	564
	567
6I-9587	546
6I-9597	546
6J-2680	934
	936
	991
	993
6K-0806	85
	88
	1342
	1343
6K-8178	158
	161
	165
	171
	175
	178
	243
	251
	258
	892
6L-3616	1147
	1148
	1149
	1150
	1152
6M-5062	974
6N-3827	344
6P-2216	517
	518
6P-8855	1405
6T-3631	359
	377
6T-3632	359
	377
6T-3633	359
	377
6T-9442	353
6V-0400	672
	674
	676
	678
	682
	692
	702
	704
	706
	708
	724
	726
	728
	730
	759
	770
	931
	943
	952
	955
6V-0545	788
	792
	796
	800
6V-0683	716
	825
	832
	839
	846
	853
	860
6V-0852	773
	775
	777
	779
	805
	865
	867
	869
	881
	884
	892
	897
	901
	910
	914
	921
	991
	993
6V-2317	22
	25
	26

▶ PRIMARY REFERENCE

PART NUMBER INDEX

Part	Page	Part	Page	Part	Page	Part	Page
	54		352		45		1450
	85	6V-5048	43		93		1453
	88		44		101		1454
	198		313		148		1464
	331		315		184		1467
	332		319		186		1468
	413		320		188	6V-8212	299
6V-2369	367		323		190	6V-8218	1099
6V-2606	175	6V-5049	96		192		1100
	179		97	6V-5842	22		1102
6V-2722	258		212		60		1105
	260		313	6V-5843	58		1106
	363		315	6V-6317	93		1108
6V-3265	168		318	6V-6609	328	6V-8231	1508
	1405	6V-5192	331		330	6V-8336	55
	1409		332	6V-7238	644	6V-8362	358
	1487		333		1405	6V-8363	1503
6V-3342	1152	6V-5204	960		1409		1505
6V-3538	24	6V-5210	287		1413	6V-8370	1503
	35		288		1415		1505
6V-3821	141		367	6V-7357	171	6V-8374	377
6V-3918	61		394		175	6V-8378	340
	91	6V-5215	72		178		342
	110		73		1333		344
6V-3922	1013	6V-5217	61		1405		348
	1019		74		1409		349
	1025		93		1484	6V-8397	96
	1031		96		1503		97
	1035	6V-5218	97	6V-7420	1413		158
	1044		331		1415		161
	1048	6V-5219	85	6V-7636	1297		165
6V-3938	1079		88		1301		168
	1109	6V-5223	106	6V-7658	656		170
6V-3940	23	6V-5326	1058	6V-7661	555		171
	24		1061	6V-7981	184		174
	68	6V-5393	1013		186		175
	94		1019		188		178
	96		1025		190		660
	106		1035		192		716
	313		1044	6V-8004	50		720
	315		1048	6V-8133	490		722
6V-3965	773	6V-5556	962	6V-8149	28		735
	775		1013	6V-8186	348		737
	777		1019		349		739
	779		1025	6V-8187	301		741
	805		1036	6V-8188	239		745
	865		1045		340		748
	867		1049		342		762
	869	6V-5597	1009		344		767
	881		1011	6V-8189	240		768
	884		1013	6V-8197	57		769
	892		1019	6V-8200	583		773
	897		1025		586		775
	901		1031		589		777
	910		1036		592		779
	914		1045		596		804
	921		1049		600		805
	991	6V-5645	301		947		810
	993	6V-5683	1281		951		811
6V-4298	654	6V-5696	28	6V-8202	1436		813
6V-4589	158		78		1437		814
	161		79		1438		817
	165	6V-5815	101		1439		818
	171	6V-5839	21		1440		821
	351		22		1449		823

► **PRIMARY REFERENCE**

PART NUMBER INDEX

Part	Page	Part	Page	Part	Page	Part	Page
	824		714		936		887
	825		716	6V-8625	720		889
	830		718		722		891
	831		719		759		896
	832		720		824		900
	837		722		831		904
	838		735		838		906
	839		737		845		908
	844		739		852		910
	845		741		859		914
	846		754		904		918
	851		759		906		920
	852		762		952		924
	853		763		955		926
	858		765	6V-8626	745		952
	859		767		748		955
	860		768	6V-8627	773	6V-8637	865
	865		769		804		867
	867		802		949		869
	869		805	6V-8632	891	6V-8639	824
	871		810		896		831
	874		813		900		838
	877		817	6V-8634	158		845
	879		824		161		852
	881		825		165		859
	884		831		170		865
	887		832		174		867
	889		838		178		869
	891		839	6V-8635	732		934
	892		845		770		949
	896		846		788	6V-8641	804
	897		852		791	6V-8713	745
	900		853		795		748
	901		859		799	6V-8715	170
	904		860		803		174
	906		865	6V-8636	96		178
	908		867		97	6V-8721	952
	910		869		158		955
	914		904		161	6V-8722	892
	918		906		170		897
	920		932		174		901
	921		933		182	6V-8723	158
	924		934		720		161
	926		936		722		170
	930		949		745		174
	934		952		748		773
	936		955		773		775
	949		1117		775		777
	952		1119		777		779
	955	6V-8400	781		779		805
	1065		785		804	6V-8724	96
	1116		788		810		97
6V-8398	658		791		813		158
	660		792		817		161
	680		795		824		170
	684		796		831		174
	686		799		838		745
	688		800		845		748
	690		1075		852		773
	694		1077		859		775
	696		1083		865		777
	698	6V-8467	637		867		779
	700		639		869		805
	710	6V-8553	920		877		810
	712	6V-8624	934		879		813

PART NUMBER INDEX

Part	Page	Part	Page	Part	Page	Part	Page
	817		767		936		885
	821		768	6V-9005	720		892
	824		769		722		897
	831		775		788		901
	838		777		938		910
	845		779		940		914
	852		805	6V-9007	745		921
	859	6V-8978	1099		791	6V-9836	824
	865		1100		795		831
	867		1102		799		838
	869		1105		865		845
	871		1106		867		852
	874		1108		869		859
	877	6V-8994	716		934		881
	879		735		936		884
	881		737	6V-9008	85		892
	884		739		88		897
	887		741		759		901
	889	6V-8995	716		938		904
	892		718		940		906
	897		719	6V-9023	332		910
	900		932		333		914
	906		933	6V-9168	716		921
	908	6V-9001	720		735		930
	910		722		737	6V-9837	720
	914		777		739		722
	918		779		741		805
	920		804	6V-9169	716	6V-9843	805
	924		810		718	6V-9844	952
	926		813		719		955
6V-8774	825		817		932	6V-9850	158
	832		824		933		161
	839		831	6V-9175	749		165
	846		838	6V-9491	303		170
	853		845		305		174
	860		852		307		178
6V-8781	749		859		309		720
	805		881	6V-9672	367		722
	821		887	6V-9746	720		804
	824		889		722		824
	831		891		724		831
	838		896		726		838
	845		908		728		845
	852		918		730		852
	859		920		732		859
	877		924		745		877
	879		926		749	6V-9851	754
	881	6V-9002	810		770	6V-9852	892
	884		813		791		897
	892		817		792		901
	897		824		795	6V-9853	791
	901		831		796		795
	921		838		799	6V-9855	788
6V-8782	754		845		802		791
6V-8784	792		852		803		795
	796		859		865		799
6V-8934	773		934		867	6V-9872	745
6V-8935	762		936		869		748
	767	6V-9004	792		934	6V-9876	930
	768		796		936		934
	769		799		938		936
	773		865		940	6W-6005	242
	805		867		944		250
6V-8936	660		869	6V-9748	50		258
	762		934	6V-9829	882	6Y-0473	556

► **PRIMARY REFERENCE**

PART NUMBER INDEX

Part	Page
6Y-0846	569
	570
6Y-8186	550
	551
7	
7C-0111	68
7C-1445	29
7C-1493	85
	88
7C-2475	7
	9
	11
	12
	13
	14
	15
	▶94
7C-3571	77
7C-5233	60
7C-5403	94
7C-6670	151
7C-6672	151
7C-7431	150
	153
7C-7980	33
7C-8369	50
7C-8370	50
7C-8511	1530
	1536
	1542
	1548
7C-8634	50
7D-7233	99
7E-0759	106
7E-2968	36
7E-2985	198
7E-6794	62
7E-7779	42
	46
7F-0216	85
	88
7F-0560	260
7F-8268	31
	32
7G-1060	428
7H-3171	546
	555
7I-0717	451
	454
	457
	458
	461
	464
	465
	466
	467
	468
	469
7I-0966	962
7I-0986	1120
7I-1026	1000
7I-1105	900
7I-1248	1009
	1011
	1013
	1019
	1025
	1031
	1035
	1044
	1048
7I-1418	498
	502
	506
7I-2272	583
	586
	589
	958
	959
	1014
	1020
	1026
	1036
	1045
	1049
	1054
7I-2673	135
	136
	242
	250
	281
	294
	296
	298
	1428
	1464
	1472
	1477
	1482
7I-6843	1158
7I-7131	989
7I-7403	1120
7I-7515	869
7I-7719	561
7I-7721	538
	▶552
7I-7722	538
	▶553
7I-7728	644
7I-7732	561
7I-7733	561
7I-7734	537
7I-8084	1115
	1121
	1122
7I-8102	1120
7J-0204	43
	44
7J-5925	499
	503
	507
7J-9108	684
	686
	688
	690
	694
	696
	698
	700
	745
	748
	749
	891
	892
	896
	897
	900
	901
	974
7J-9933	962
7K-1181	159
	162
	166
	171
	175
	179
	202
	204
	242
	250
	268
	271
	278
	299
	365
	371
	375
	377
	379
	380
	381
	382
	385
	388
	389
	392
	394
	396
	398
	400
	402
	404
	406
	411
	420
	422
	424
	426
	427
	428
	430
	718
	719
	735
	737
	739
	741
	745
	748
	754
	773
	775
7L-2894	340
	342
	344
7L-9061	351
	352
7M-0242	64
7M-7410	959
7M-8485	85
	88
	434
	437
	720
	722
	732
	759
	770
	777
	779
	804
	810
	813
	817
	821
	823
	830
	837
	844
	851
	858
	865
	867
	869
	871
	874
	877
	879
	881
	884
	891
	896
	900
	904
	906
	910
	914
	920
	928
	930
	932
	933
	934
	936
	952
	955
	1319
	1321
	1323
	1396
	1398
	1399
	1405
	1409
	1413
	1415

▶ PRIMARY REFERENCE

PART NUMBER INDEX

Part	Page	Part	Page	Part	Page	Part	Page
	785	7W-9737	102		1433		1259
	788	7W-9738	102	7X-2554	114		1261
	791	7W-9740	102		116		1386
	795	7W-9930	102		118		1388
	799	7X-0339	239		120	7Y-0059	1
	803	7X-0507	99	7X-2555	64		▶1417
	938		100	7X-2557	976	7Y-0063	449
	940	7X-0510	64	7X-2559	1375		450
	976	7X-0562	340	7X-2562	442	7Y-0225	644
	1006		342	7X-2563	539	7Y-0252	644
	1014		344		646	7Y-0336	490
	1020	7X-0578	1297		1180	7Y-0357	1250
	1026		1301	7X-2565	552	7Y-0358	1250
	1031		1490		553	7Y-0366	1237
	1036	7X-0579	179		554		1238
	1045	7X-0818	51	7X-2576	646		1239
	1049		918	7X-2619	418		1240
7M-9918	151	7X-1950	340		420		1241
7N-0140	334		342	7X-2621	243		1242
7N-0719	301	7X-1951	340		251		1243
	▶346	7X-1952	340		278		1244
7N-2059	334		342		280		▶1250
7N-2353	360	7X-1953	340		371	7Y-0595	434
7N-3718	296	7X-1954	340		428		437
	298	7X-1958	340		1014	7Y-0623	1368
7N-5274	258	7X-2532	64		1020		1370
7N-5683	35	7X-2533	284		1026		1373
7N-9801	362		1405		1036	7Y-0633	484
7S-6369	91		1409		1045	7Y-0752	437
	141		1431		1049	7Y-0753	437
7S-8735	149	7X-2536	561	7X-3164	680	7Y-0754	437
7T-1099	382		1338		710	7Y-1319	149
	385		1339		712	7Y-1434	644
7T-3267	344		1340		714	7Y-1647	490
7T-3268	344	7X-2539	105	7X-3373	340	7Y-1648	490
7T-3271	344		171		342	7Y-1650	490
7T-3276	344		175		344	7Y-1976	111
7T-3277	344		178	7X-4803	611		114
7T-3278	344	7X-2543	680		613		116
7T-3279	344		710		615		118
7T-3402	1252		712	7X-6315	275		120
7T-3451	340		714		276		122
	342	7X-2544	759	7X-7644	1530		124
	344	7X-2545	1009		1536		126
7T-3454	340	7X-2549	694		1542	7Y-2219	▶1178
	342		696		1548		1183
	344		698		1554		1186
7T-6799	358		719		1560		1187
7T-8890	1485		735		1565		1188
	1486		739		1570		1190
7W-3871	25		763	7X-7700	217	7Y-2292	451
	26		765		219		454
7W-3872	25		785		222		457
	26		933		224		458
7W-5340	94	7X-2550	382		226		461
7W-8813	7		385		228		464
	9		684		231		465
	11		686		233		466
	12		688	7X-7729	100		467
	13	7X-2552	781		114		468
	14		1425		116		469
	15	7X-2553	532		118	7Y-2390	1136
	▶60		1368		120		1138
7W-9028	85		1370		142		1140
	88		1373		975		1142

▶ **PRIMARY REFERENCE**

PART NUMBER INDEX

Part	Page
	1144
7Y-2853	498
	502
	506
7Y-2854	499
	503
	507
7Y-2881	533
7Y-2916	499
	503
	507
7Y-2920	1148
7Y-3470	1508
7Y-3472	1508
7Y-3474	1485
	1486
7Y-3721	770
7Y-3729	791
	795
7Y-3730	770
7Y-3731	667
	788
	791
	795
	799
7Y-3732	732
	803
	948
7Y-3919	1393
	1394
7Y-3920	1393
	1394
7Y-3950	360
	377
7Y-3951	367
7Y-3953	360
	377
7Y-3954	367
7Y-3962	291
	293
7Y-3963	291
	293
	406
7Y-3964	291
	293
7Y-3965	291
	293
	406
7Y-3967	406
7Y-4193	821
7Y-4199	823
	830
	837
	844
	851
	858
7Y-4202	965
	969
7Y-4212	965
	969
7Y-4213	965
	969
7Y-4215	965
	969
	976
7Y-4216	965
	970
7Y-4217	966
	969
7Y-4222	966
	970
7Y-4224	965
	970
7Y-4234	965
	969
7Y-4290	963
7Y-4294	963
7Y-4390	821
7Y-4538	672
	674
	676
	678
	682
	692
	702
	704
7Y-4631	611
	613
	615
7Y-4660	641
7Y-4669	641
7Y-4672	641
7Y-4673	641
7Y-4695	641
7Y-4817	989
7Y-4868	684
	686
	688
	690
	694
	696
	698
	700
	724
	726
	728
	730
	732
	755
	944
7Y-4918	641
7Y-5088	853
7Y-5215	641
7Y-5217	437
7Y-5219	1014
	1020
	1026
	1036
	1045
	1049
	1079
	1109
7Y-5221	963
7Y-5226	1058
	1061
7Y-5227	1247
7Y-5238	808
7Y-5243	1001
7Y-5247	759
7Y-5272	603
	1079
	1109
7Y-5456	242
	250
7Y-5458	356
	357
7Y-5464	356
	357
7Y-5505	367
7Y-6442	755
7Y-6447	944
7Y-6448	944
7Y-6449	944
7Y-6510	755
7Y-6511	755
7Y-6620	1144
7Y-6641	1165
7Y-6649	1165
7Y-6656	1148
7Y-6657	1148
7Y-6658	1148
7Y-6684	1168
7Y-7364	1508
7Y-7394	1401
	1402
	1403
	1480
	1482
7Y-7904	720
	722
	944
7Y-8099	1031
7Y-8109	417
7Y-8165	243
	251
	1405
	1409
	1413
	1415
7Y-8167	1405
	1409
7Y-8169	299
7Y-8379	865
	867
	869
7Y-8436	1098
7Y-8437	1098
7Y-8463	1342
	1343
7Y-8496	955
7Y-8621	1377
	1378
7Y-8622	1377
	1378
8	
8C-0563	39
8C-0564	805
8C-3206	666
	669
8C-3334	394
8C-3445	85
	88
8C-3446	85
	88
	991
	993
8C-3451	991
	993
8C-3655	344
8C-5607	284
	1431
8C-5608	267
	270
	284
	1431
8C-5918	242
	250
	258
8C-6358	260
8C-6965	1083
8C-7581	1427
8C-8451	267
	270
8C-8989	805
8C-8992	544
	545
8E-5600	552
	553
	554
	▶555
8E-5601	555
8E-5602	555
8E-5604	555
8E-5605	555
8E-5606	555
8E-5607	555
8E-5608	555
8E-6792	555
8E-6793	555
8E-8585	550
	551
8E-8586	550
	551
8E-9490	1195
8E-9805	442
8F-0212	1054
8F-1434	340
	342
	344
	348
	349
	1503
	1505
8F-6711	556
	557
8F-8733	583
	592
8H-1141	344
8H-2046	84
8H-2282	1377
	1378
8H-3481	1483
8H-5244	80
	82
8H-5303	346
8H-5306	346
8H-7521	85

▶ PRIMARY REFERENCE

PART NUMBER INDEX

Part	Page	Part	Page	Part	Page	Part	Page
	88		1214	8T-0293	69		165
8J-1256	299		1215		434		170
8J-2928	1247		1216	8T-0325	1428		174
8J-4645	976		1217	8T-0328	217		178
8J-8879	644		1218		219		1405
8J-9236	355		1219		222		1409
8L-2779	96		1220		224		1413
	97		1221		226		1415
	1085		1222		228	8T-1779	825
8L-2786	141		1223		231		832
	158		1224		233		839
	161		1225		236		846
	165		1226		299		853
	171		1227		301		860
	175		1228		340		924
	178		1229		342		926
	326		1230		344		952
	327		1231		367		955
	329		1232		418	8T-1905	773
8L-8413	242		1233		420		775
	250		1234		517		777
	258		1235		518		779
8M-2770	243	8R-1803	312		519		805
	251	8S-0934	1441		521		867
8M-2772	1147	8S-1812	355		654		869
	1148	8S-1814	355		1259		871
	1149	8S-1815	355		1261		874
	1150	8S-2634	363		1386		884
	1152	8S-4723	1441		1388		887
8M-2773	1405	8S-4724	1441		1428		889
	1409	8T-0075	804	8T-0337	1428		892
8M-5860	39		877	8T-0341	745		900
	40		879	8T-0343	1075		910
8N-0869	242		881		1077		914
	250		884	8T-0640	198		924
	363		891	8T-0643	21		926
8N-1725	242		896	8T-0644	108	8T-2525	759
	250		900	8T-0669	490	8T-2920	934
	258		910	8T-0706	1072		936
	363		914	8T-1158	1075	8T-3008	1005
8P-9770	1181		920		1077		1006
	1182	8T-0078	792		1083	8T-3282	45
	1184		796	8T-1159	182		437
	1185	8T-0100	53		555	8T-3490	118
	1189		54		1079		948
	1194		78		1109	8T-3518	260
	1195		79	8T-1447	617	8T-3519	260
	1196		106		619	8T-3597	118
	1197	8T-0114	1338	8T-1683	158	8T-3611	781
	1198		1339		161		785
	1199		1340		165	8T-3647	1314
	1200	8T-0211	658		171		1315
	1201	8T-0226	60		175	8T-3653	743
	1202	8T-0266	1312		178		744
	1203	8T-0267	996	8T-1685	791		751
	1204	8T-0269	1418		795		753
	1205		1420	8T-1687	825	8T-3666	48
	1206	8T-0276	85		832		49
	1207		88		839	8T-3957	792
	1208	8T-0285	1346		846		796
	1209	8T-0288	1121		853	8T-4121	56
	1210		1122		860		63
	1211		1123		936		99
	1212		1128	8T-1715	158		100
	1213		1130		161		111

► **PRIMARY REFERENCE**

PART NUMBER INDEX

Part	Page	Part	Page	Part	Page	Part	Page
	114		684		1011		1172
	116		686		1014		1173
	118		688		1020		1174
	120		690		1026		1175
	122		694		1031		1176
	124		696		1036		1177
	126		698		1045		1180
	133		700		1049		1237
	134		702		1079		1247
	142		704		1109		1248
	145		706		1147	8T-4127	367
	146		708		1148	8T-4131	582
	149		710		1149		585
	159		712		1150		588
	162		714		1152		591
	165		718		1259		595
	171		720		1261		599
	175		722		1316		1156
	178		745		1319		1160
	239		749		1321		1163
	243		755		1323	8T-4132	662
	251		759		1337		1158
	261		770		1338		1162
	268		773		1339		1247
	271		775		1340	8T-4133	149
	278		777		1386		159
	280		779		1388		162
	293		781		1391		165
	294		785		1392		171
	296		788		1393		175
	298		792		1394		178
	299		796		1405		243
	300		800		1409		251
	334		802		1413		258
	337		805		1415		293
	338		808		1429		294
	339		811		1433		296
	363		814		1473		298
	365		818		1487		426
	371		825		1503		444
	381		832		1505		490
	382		839	8T-4123	64		588
	385		846		434		599
	388		853		437		684
	389		860		484		694
	392		877		539		718
	394		879		540		755
	396		892		541		932
	398		897		542		981
	400		901		543		1075
	411		921		552		1077
	412		931		553		1079
	416		932		554		1083
	417		942		646		1109
	426		945		1136		1149
	428		946		1138		1150
	490		948		1140		1152
	499		949		1142		1165
	503		952		1144	8T-4134	1503
	507		955		1156		1508
	672		989		1160	8T-4136	56
	674		991		1163		63
	676		993		1168		111
	678		996		1170		122
	680		1009		1171		124

PART NUMBER INDEX

Part	Page	Part	Page	Part	Page	Part	Page
	126		1340		1388		808
	142		1386		1405		934
	145		1388		1409		936
	146		1428		1413		944
	149	8T-4137	99		1415		948
	159		100		1503		949
	162		114	8T-4138	266		977
	165		116		268		1058
	171		118		271		1061
	175		120		499		1368
	178		133		503		1370
	239		134		507		1373
	243		159		1276	8T-4140	213
	251		162		1378		214
	334		165		1405		215
	363		171		1409		299
	365		175	8T-4139	114		496
	396		179		116		548
	400		243		118		549
	411		251		120		977
	412		261		131		995
	490		268		132		1067
	583		271		662		1069
	586		293		672		1070
	589		294		674	8T-4167	646
	592		299		676		1248
	596		300		678	8T-4171	266
	600		334		680		278
	680		363		682		286
	710		388		684		301
	712		389		686		392
	714		392		688		411
	749		396		690		412
	759		398		692		1346
	788		400		694		1396
	792		417		696		1399
	796		428		698		1427
	800		559		700	8T-4172	243
	805		560		702		252
	808		773		704		825
	811		775		710		832
	814		777		712		839
	818		779		714		846
	825		802		720		853
	832		805		722		860
	839		811		724	8T-4174	1375
	846		814		726	8T-4175	977
	853		818		728		1421
	860		825		730	8T-4176	759
	892		832		732		788
	897		839		735		792
	901		846		737		796
	952		853		739		800
	955		860		741		977
	976		877		745		1428
	989		879		749	8T-4177	882
	991		921		755		885
	993		977		759		892
	1063		996		763		897
	1065		1259		765		901
	1259		1261		788		910
	1261		1316		792		914
	1337		1338		796		921
	1338		1339		800	8T-4178	720
	1339		1386		805		722

► **PRIMARY REFERENCE**

PART NUMBER INDEX

Part	Page
	781
	785
	792
	796
	926
8T-4179	286
	389
	392
	451
	454
	457
	458
	461
	464
	465
	466
	467
	468
	469
	561
	1168
	1283
	1287
	1291
	1309
8T-4182	243
	252
	363
	720
	722
	781
	785
	942
	945
	946
8T-4183	268
	271
	286
	644
	672
	674
	676
	678
	680
	682
	692
	702
	704
	710
	712
	716
	788
	792
	796
	800
	991
	993
8T-4184	672
	674
	676
	678
	682
	684
	686
	688
	690
	692
	694
	696
	698
	700
	702
	704
	706
	708
	719
	724
	726
	728
	730
	763
	765
	933
	943
	952
	955
8T-4185	149
	243
	252
	394
	398
	680
	684
	686
	688
	690
	694
	696
	698
	700
	710
	712
	714
	746
	749
	755
	773
	775
	777
	779
	892
	897
	901
	921
8T-4186	746
	949
8T-4189	105
	111
	122
	124
	126
	238
	243
	252
	334
	499
	503
	507
	871
	874
	918
	1484
8T-4190	286
	294
	296
	298
	459
	460
	462
	463
	1276
	1283
	1287
	1291
	1309
	1427
8T-4191	243
	252
	337
	338
	339
	381
	382
	385
	389
	392
	396
	416
	1147
	1148
	1149
	1150
	1337
	1340
	1393
	1394
	1405
	1409
	1413
	1415
	1433
	1473
	1487
	1505
8T-4192	144
	334
	497
	825
	832
	839
	846
	853
	860
	871
	874
	882
	885
	892
	897
	901
	910
	914
	921
	977
	1368
	1370
	1372
	1373
	1419
8T-4193	1067
	1069
	1070
	1178
	1179
	1422
8T-4194	202
	204
	654
	672
	674
	676
	678
	682
	686
	688
	690
	692
	696
	698
	700
	702
	704
	706
	708
	759
	770
	773
	775
	777
	779
	825
	832
	839
	846
	853
	860
	931
8T-4195	99
	100
	111
	122
	124
	126
	159
	162
	165
	243
	252
	394
	417
	482
	755
	825
	832
	839
	846
	853
	860
	975
	991

PART NUMBER INDEX

Part	Page	Part	Page	Part	Page	Part	Page
	993		118		686		882
	1009		120		688		885
	1011		291		690		892
	1014		299		692		897
	1020		444		694		901
	1026		1377		696		910
	1031		1378		698		914
	1036		1405		700		921
	1045		1409		702		931
	1049	8T-4205	240		704		932
	1054		301		706		933
	1319		340		708		934
	1321		342		710		936
	1323		344		712		943
	1391		1431		714		944
	1392	8T-4223	114		716		947
	1429		116		718		948
8T-4196	100		118		719		949
	149		120		720		951
	159		144		722		952
	162		202		724		955
	165		204		726		991
	171		239		728		993
	175		268		730		996
	179		271		732		1136
	382		286		735		1138
	385		287		737		1140
	583		288		739		1142
	586		382		741		1144
	589		385		746		1283
	592		389		749		1287
	596		392		755		1291
	600		444		756		1309
	743		446		757		1368
	744		451		758		1370
	746		454		759		1372
	749		457		762		1373
	751		458		763	8T-4224	25
	753		461		765		26
	756		464		767		29
	757		465		768		31
	758		466		769		32
	781		467		770		51
	785		468		773		54
	788		469		775		105
	800		497		777		111
	931		499		779		114
	947		503		781		116
	948		507		785		118
	949		583		788		120
	951		586		792		122
	976		589		796		124
8T-4198	99		592		800		126
	811		596		802		159
	814		600		803		162
	818		644		805		166
	942		654		808		171
	945		662		825		175
	946		672		830		179
8T-4199	418		674		837		240
	420		676		844		291
	490		678		851		299
8T-4200	51		680		858		334
	114		682		871		418
	116		684		874		420

► **PRIMARY REFERENCE**

PART NUMBER INDEX

Part	Page	Part	Page	Part	Page	Part	Page
	444		698	8T-4956	672		737
	499		700		674		741
	503		735		676		943
	507		737		678	8T-5092	788
	871		739		702		792
	874		741		704		796
	882		763		716		800
	885		765		718	8T-5379	1248
	892	8T-4648	682		719	8T-5460	540
	897		692		746		541
	901		716		749		542
	910		720		759		543
	915		722		762		1156
	918		947		767		1160
	921		948		768		1163
	924		949		769		1237
	991		951		781		1247
	993	8T-4779	785		788		1248
	1054		1297		792	8T-5878	552
	1257		1301		796		553
	1258	8T-4780	484		800		554
	1282		1136		802	8T-6385	644
	1314		1138		803	8T-6404	960
	1315		1140		808	8T-6411	291
	1338		1142		932	8T-6412	291
	1339		1144		933	8T-6453	85
	1340		1168		934		88
	1352		1170		936	8T-6466	244
	1355		1171		991		252
	1368		1172		993		718
	1370		1173		996		746
	1373		1174		1136		749
	1377		1175		1138		924
	1378		1176		1140		932
	1405		1177		1142		1165
	1409	8T-4896	743		1144	8T-6685	672
	1445		744	8T-4970	264		674
	1446		751		291		676
	1447		753		301		678
	1448		756		877		702
	1451		757		879		704
	1452		758		1485		706
	1461		947		1486		708
	1462		951		1487		1014
	1463	8T-4908	171	8T-4971	158		1020
	1466		175		161		1026
	1474		179		166		1036
	1475		924		1405		1045
	1478		991		1409		1049
	1479		993	8T-4984	808	8T-6693	368
	1484		1109	8T-4986	144		517
8T-4226	243	8T-4910	720		931		518
	252		722	8T-4987	144		519
	258		756	8T-5005	244		521
8T-4244	202		757		252		654
	204		758		363	8T-6703	114
	287		759		394		116
	288		803		396		118
	446		1283		398		120
	684		1287		400	8T-6759	959
	686		1291		402		989
	688		1309	8T-5035	48		1014
	690	8T-4944	960		49		1020
	694		966	8T-5041	690		1026
	696		969		700		1036

► PRIMARY REFERENCE

PART NUMBER INDEX

Part	Page
	1045
	1049
	1054
	1058
	1061
	1075
	1077
	1083
	1127
	1128
	1130
8T-6761	996
8T-6842	1530
	1536
	1542
	1548
	1554
	1560
	1565
	1570
8T-6868	1283
	1287
	1291
	1309
8T-6869	171
	175
	179
	244
	252
8T-6870	892
	897
	901
	921
	1054
8T-6912	244
	252
8T-7044	147
	148
8T-7338	531
	931
8T-7547	159
	162
	166
8T-7811	1132
8T-7852	299
8T-7877	1085
8T-7929	735
	737
	739
	741
8T-7934	149
	299
8T-7950	45
8T-7971	735
	739
	993
8T-8442	78
	79
8T-8566	344
8T-8569	340
	342
	344
8T-8737	66
	299
	324
	356
	357
	371
	389
	1424
8T-8748	353
	354
8T-8827	251
8T-9388	312
8T-9403	720
	722
	770
	942
	945
	946
8T-9655	170
	174
	178
	273
8T-9756	242
	250
	258
8T-9757	242
	250
8T-9884	340
	342
	344
8V-1715	539
	1375
8Y-6352	1295
	1305
	1307
8Y-6967	1283
	1287
	1291
	1309
8Y-9603	337
	338
9	
9B-4499	355
9B-7233	358
9F-2167	720
	722
	726
	730
	803
9F-2247	344
9F-2547	344
9F-5644	346
9G-0002	242
	250
	258
9G-0003	242
	250
9G-0005	242
	250
	258
9G-4343	367
9G-7641	303
	305
	307
	309
	►358
9G-8909	242
	250
9J-0705	973
	974
9J-0707	1085
9L-6770	240
9M-1974	22
	24
	25
	26
	61
	78
	79
	85
	88
	91
	93
	94
	96
	97
	106
	110
	198
	273
	331
	332
	333
	413
9M-2904	91
9M-3786	931
9M-5590	1075
	1077
9M-7958	202
	204
9M-8406	159
	162
	166
	171
	175
	179
	897
	901
	921
9N-0869	53
	171
	175
	273
9P-7121	217
	219
	222
	226
9S-1350	93
9S-4167	158
	159
	161
	162
	165
	170
	174
	178
9S-4180	656
	1013
	1019
	1025
	1035
	1044
	1048
9S-4181	770
	781
	785
	788
	799
9S-4182	60
	106
9S-4183	60
	759
9S-4185	106
	748
	759
	781
	785
	788
	791
	795
	799
	892
	897
	901
	934
	936
	938
	940
	966
	970
	976
9S-4188	85
	88
9S-4191	139
	140
	313
	315
	583
	586
	589
	592
	596
	748
	781
	785
	810
	813
	817
	824
	831
	838
	845
	852
	859
	892
	897
	901
	908
	918
	920
	931
	1054
	1065
	1073
	1074

► **PRIMARY REFERENCE**

PART NUMBER INDEX

Part	Page
9S-6130	217
	219
	222
	224
	226
	228
	231
	233
	781
	785
	1004
9S-8001	958
9S-8002	43
	44
9S-8003	108
	1079
	1109
9S-8004	43
	44
	106
	159
	162
	166
	168
	184
	186
	188
	190
	192
	805
	958
	1063
	1132
9S-8005	70
	106
	108
	141
	159
	162
	166
	171
	175
	179
	958
	959
	1063
	1065
9S-8006	37
	43
	44
	108
	170
	174
	178
	1056
9S-8008	69
	108
9S-9334	39
	40
	43
	44
9T-0835	976
9T-1614	1058
	1061
9T-4506	973
9T-6635	334
9W-0335	367
9W-0625	353
9W-0742	▶260
	363
9W-2146	557
9W-2201	556
9W-3137	550
	551
9W-3138	550
	551
9W-3361	563
	564
	565
	566
	567
	568
	569
	570
	572
	573
9W-3619	563
	564
	565
	566
	567
	568
	572
	573
9W-9351	565
	568
9W-9455	546
9X-0199	1503
	1505
9X-0262	313
	315
9X-1386	324
9X-1813	238
	317
	321
	347
	351
	352
9X-2026	1276
9X-2041	1297
	1301
	1325
	1327
	1329
	1331
	1347
	1358
9X-2042	368
	377
	406
	432
	1295
	1297
	1301
	1305
	1307
	1325
	1331
	1348
	1350
	1352
	1355
	1365
	1381
	1490
	1493
	1508
9X-2043	1319
9X-2044	368
	1295
	1297
	1301
	1483
	1490
	1500
	1502
	1503
	1505
	1508
9X-2045	1297
	1301
	1319
	1321
	1323
	1380
	1490
9X-2046	1321
	1323
	1423
	1483
9X-2098	54
9X-2099	25
	26
9X-2201	131
	132
9X-2205	217
	219
	222
	224
	226
	228
	231
	233
9X-2297	865
9X-2305	102
9X-2480	274
	426
	1431
9X-2616	1457
	1458
	1459
	1460
9X-3401	357
	406
	813
	817
	869
	887
	889
	892
	897
	901
	908
	918
	921
	924
	926
	996
	1424
9X-3402	299
9X-3463	287
	288
	289
	293
9X-3495	394
	396
	398
	400
	418
	420
9X-3601	641
9X-4184	354
9X-4270	340
9X-4271	340
	342
9X-4821	340
	342
9X-4822	340
9X-4824	340
	342
	344
9X-4825	340
	342
9X-6032	434
	437
	743
	744
	751
	753
	756
	757
	758
9X-6153	1281
9X-6165	267
	270
	284
	1276
	1427
	1431
9X-6582	762
	767
	768
	769
	773
	804
9X-7298	637
	639
9X-7712	39
	40
	43
	44
9X-7737	235
9X-8250	166
	179
9X-8256	159
	162
	166
	171
	175
	179

▶ PRIMARY REFERENCE

PART NUMBER INDEX

Part	Page	Part	Page	Part	Page	Part	Page
	244		972	033-5879	973	087-4405	871
	252		1067	033-6027	83		874
	264		1069	033-6036	973	087-4411	823
	266		1070		1085		830
	268		1178	033-8248	1147		837
	271		1179		1149		844
	274		1276		1150		851
	278		1283	036-9823	340		858
	286		1287		342	087-4423	865
	291		1291		344		867
	299		1298	039-2280	91		869
	301		1302	061-9455	29	087-4454	576
	368		1309	085-6444	1498		▶577
	371		1368	085-6447	1498	087-4456	▶578
	375		1370	085-6448	1498		580
	392		1373	085-6449	1380	087-4531	823
	402		1375		1498		830
	408		1421	085-6452	1298		837
	409		1422		1302		844
	411		1425	085-7356	865		851
	412		1427		867		858
	418		1433		869	087-4534	823
	420	9X-8600	217		887		830
	426		219		889		837
	444		222	085-8037	1487		844
	499		224	085-8604	630		851
	503		226		632		858
	507		228		634	087-4575	577
	877		231	085-8605	630	087-4576	577
	879		233		632	087-4577	577
	996	9X-8916	36		634	087-4587	242
	1259	9X-9510	344	085-9310	213		250
	1261	9X-9896	267		214	087-4683	350
	1333		270		215	087-4707	1075
	1346	9Y-8389	158		299	087-4710	1075
	1386		161		995		1077
	1388		165	086-0255	617		1083
	1396		170		619	087-4742	965
	1399		174	086-0297	1168		969
	1405		178	086-0321	1178	087-4743	965
	1409		198	086-0322	1178		969
	1418			086-0523	1158	087-4757	965
	1420			086-1345	621		969
	1428	**0**			623	087-4786	965
	1483				627		969
	1484	003-7764	158	086-1346	621	087-5166	1063
	1485		161		623		1065
	1486		165		627	087-5708	1075
	1487		170	087-3908	498		1077
	1490		174		502		1083
	1503		178		506	087-5709	1075
	1505		217	087-3909	498		1077
9X-8257	64		219		502	087-5760	823
	286		222		506		830
	294		224	087-4402	810		837
	296		226		813		844
	298		228		817		851
	531		231		877		858
	532		233		879	087-5762	773
	644	012-0380	347		887		775
	662	030-0167	1085		889		777
	781	030-1712	332		908		779
	785		333		918		823
	931	030-8188	168		924		830
	960	030-8194	200		926		837

▶ **PRIMARY REFERENCE**

PART NUMBER INDEX

Part	Page	Part	Page	Part	Page	Part	Page
	844		1144		126		1398
	851		1156	093-7521	653	095-0772	1352
	858		1160		659	095-0826	996
	924		1163	094-0578	434		1393
	926		1168		437		1394
087-5765	924		1170	094-0579	434	095-0843	444
	926		1171		437	095-0863	550
087-5766	877		1172	094-0580	434		551
	879		1173		437	095-0891	434
	881		1174	094-0611	644		437
	884		1175	094-0747	617		644
	924		1176		619	095-0910	1276
	926		1177	094-0876	1081		1427
087-5772	823		1247	094-1399	965	095-0929	641
	830		1248		969	095-0936	1075
	837	093-0357	1168	094-1528	434		1077
	844	093-0363	1136		437	095-0946	976
	851		1138		644	095-1260	1075
	858		1140	094-1875	582		1077
	879		1142		585		1083
087-5774	823		1144		588	095-1386	158
	830		1168		591		161
	837		1170		595		165
	844		1171		599		170
	851		1172		965		174
	858		1173		969		178
087-5776	823		1174		976	095-1388	95
087-5780	821		1175	094-1881	582	095-1519	582
087-5805	1162		1176		585		591
087-5838	1152		1177		588		661
087-5840	1147	093-0364	484		591		1120
087-5955	1136		1136		595	095-1527	582
	1138		1138		599		591
	1140		1140	094-1882	582	095-1528	582
	1142		1142		585		591
	1144	093-0366	484		588	095-1538	582
087-5966	1148	093-1291	684		591		591
087-5974	1179		686		595	095-1543	111
087-5975	1179		688		599		122
087-5976	1179		690		965		124
087-6583	871		694		969		126
	874		696		976	095-1547	1004
087-6585	918		698	094-1920	743	095-1572	965
090-8865	1375		700		744		969
091-9035	252	093-1294	949		751	095-1575	965
	382	093-1342	1158		753		969
	385	093-1344	1162	094-1931	630		1013
	394	093-1345	1156		632		1019
	398		1160		634		1025
092-6629	91		1163	095-0673	1083		1035
093-0020	490	093-1433	625	095-0707	961		1044
093-0084	484		626	095-0723	367		1048
	1144		1168	095-0728	428		1083
093-0090	1136	093-1571	621		1337	095-1576	1127
	1138		623	095-0735	1338		1128
	1140		627		1339		1130
	1142	093-1730	644		1340	095-1578	1075
093-0116	1144	093-1731	434	095-0736	217		1077
093-0332	299		437		219		1086
093-0334	299		644		222		1103
093-0349	484	093-2065	243		224		1104
	1136		251		226		1115
	1138	093-5432	111		228		1120
	1140		122		231	095-1579	658
	1142		124		233		1099

PART NUMBER INDEX

Part	Page	Part	Page	Part	Page	Part	Page
	1100		963		1025		1350
	1102	095-1601	1005		1031		1352
	1105		1006		1035		1355
	1106		1098		1044	096-2653	644
	1108	095-1602	1005		1048	096-3216	434
095-1580	1087		1006		1098		437
	1088	095-1603	1013	095-1788	582		617
095-1582	1087		1019		585		619
	1088		1025		588	096-3773	1056
095-1584	649		1035		591	096-3780	444
	650		1044		595	096-3785	965
	651		1048		599		969
	1100	095-1608	996	095-1789	1058	096-3786	965
	1106	095-1625	637		1061		969
095-1585	965		639		1063	096-3787	965
	969		989		1065		969
	1006	095-1633	641	095-2927	537	096-3788	965
095-1586	965	095-1657	1006	095-6639	981		969
	969	095-1681	656	095-7378	965	096-3872	286
	1081	095-1685	965		969		1427
	1094		969	095-7380	965	096-3884	1350
	1098	095-1698	962		969		1355
	1117		1127	095-7382	965	096-3944	976
	1118		1128		969	096-3964	617
	1119		1130	095-7383	965		619
	1124	095-1700	965		969	096-3978	965
095-1587	1099		970	095-7384	965		970
	1100		1005		969	096-3983	976
	1102		1006	095-7386	965	096-4003	965
	1105	095-1703	537		969		969
	1106	095-1716	989	095-7387	965	096-4035	111
	1108	095-1717	617		969		114
095-1590	649		619	095-7930	1393		116
	650	095-1719	621		1394		118
	651		623	096-0061	264		120
	1009		658	096-0131	1168		122
	1011	095-1720	611	096-0433	434		124
	1013		613		437		126
	1019	095-1721	630	096-0854	629	096-4129	517
	1025		632	096-1055	637		518
	1031	095-1735	996		639		519
	1035	095-1750	1117	096-1519	965		521
	1044		1119		969	096-4376	965
	1048	095-1751	1117	096-1521	965		969
	1087		1119		969	096-4377	965
	1088	095-1777	865	096-1522	965		969
	1098	095-1778	1013		969	096-4378	965
	1099		1019	096-1523	965		969
	1100		1025		969	096-4389	969
	1102		1035	096-1533	963		976
	1105		1044	096-1545	1132	096-4402	617
	1106		1048	096-1567	617		619
	1108	095-1783	1072	096-1568	617	096-4412	756
095-1594	1058	095-1785	1094	096-1570	630	096-4430	611
	1061		1098		632		613
	1063	095-1786	1099		634		615
	1065		1100	096-1571	630	096-4447	947
095-1596	649		1102		632		951
	650		1105		634	096-4449	757
	651		1106	096-1628	1081		758
095-1597	743		1108	096-2591	418	096-4480	756
	744	095-1787	1009		420		757
	756		1011	096-2617	1334		758
	757		1013		1335	096-4755	646
095-1600	947		1019	096-2622	1348	096-4840	394

PART NUMBER INDEX

Part	Page
096-4876	1158
096-4882	1368
	1370
	1373
096-4883	759
	808
096-4902	490
096-5625	630
	632
	634
096-5915	965
	969
096-5916	965
	969
096-5919	965
	969
096-5962	367
096-6166	303
	305
	307
	309
	367
	428
	1337
	1346
	1428
096-6210	611
	613
	615
	630
	632
	634
096-7803	617
	619
096-9259	64
096-9988	64
099-0139	1498
099-0596	637
	639
099-0600	637
	639
099-0699	637
	639
099-0700	637
	639
099-0707	1158
099-0724	1158
099-0822	1120
	1435
099-0823	1297
	1301
	1490
099-2374	1259
	1261
	1386
	1388
099-3506	1379
	1381
099-3607	1297
	1301
099-3629	1496
	1497
099-3645	1417
099-3649	31
	32
	824
	831
	838
	845
	852
	859
099-3669	582
	585
	588
	591
	595
	599
099-3670	582
	585
	588
	591
	595
	599
099-3671	582
	585
	588
	591
	595
	599
099-5845	1072
099-6109	582
	585
	588
	591
	595
	599
099-6110	582
	585
	588
	591
	595
	599
099-6111	582
	585
	588
	591
	595
	599
099-6112	582
	585
	588
	591
	595
	599
099-6113	582
	585
	588
	591
	595
	599
099-6115	582
	585
	588
	591
	595
	599
099-6117	582
	585
	588
	591
	595
	599
099-6118	582
	585
	588
	591
	595
	599
099-6119	582
	585
	588
	591
	595
	599
099-6120	582
	585
	588
	591
	595
	599
099-6121	582
	585
	588
	591
	595
	599
099-6122	582
	585
	588
	591
	595
	599
099-6123	582
	585
	588
	591
	595
	599
099-6124	582
	585
	588
	591
	595
	599
099-6125	582
	585
	588
	591
	595
	599
099-6126	582
	585
	588
	591
	595
	599
099-6127	582
	585
	588
	591
	595
	599
099-6128	582
	585
	588
	591
	595
	599
099-6136	1075
	1077
099-6137	1075
	1077
	1081
	1083
099-6141	1075
	1077
	1083
099-6144	1075
	1077
	1083
099-6145	1075
	1077
	1083
099-6418	474
	475
	476
	478
	479
	480
099-6607	114
	116
	118
	120
099-7127	367
099-7857	494
	495
099-8111	963
099-8232	788
	791
	795
	799
	1
100-2881	1380
100-3866	972
100-4336	775
	777
	779
101-2170	1152
101-2846	368
101-3128	273
101-7397	770
101-7398	720
	722
	803
101-7401	791
	795
	799
101-7402	759
101-7403	770
101-7404	720
	722
	770
	788
	791
	795
	799
101-8899	1348

► PRIMARY REFERENCE

PART NUMBER INDEX

Part	Page
	1350
	1352
	1355
	1359
101-8900	1348
	1350
	1352
	1355
	1365
	1490
101-9848	517
	518
	519
	521
	535
102-0889	1090
102-1157	823
	830
	837
	844
	851
	858
102-3242	1147
	1149
	1150
102-3243	1147
	1149
	1150
102-6671	141
102-7964	406
102-7965	377
	406
102-8016	367
102-8802	66
	217
	219
	222
	224
	226
	228
	231
	233
	237
	238
	243
	251
	303
	307
	324
	347
	348
	349
	351
	352
	362
	365
	428
	810
	813
	817
	887
	889
	892
	897
	901
	908
	918
	921
	924
	926
	996
102-8803	114
	243
	251
	350
	359
	388
	1317
	1413
	1415
102-8804	243
	251
	428
102-8805	51
	356
102-8806	243
	251
	311
	406
102-9863	340
	342
103-1384	804
	824
	831
	838
	845
	852
	859
	891
	896
	900
	920
103-2529	251
103-8173	1013
	1019
	1025
	1035
	1044
	1048
	1090
103-8177	1013
	1019
	1025
	1035
	1044
	1048
103-8236	650
103-8252	1086
	1103
	1104
103-8253	1086
	1103
	1104
103-8254	1086
	1103
	1104
103-8255	1086
	1103
	1104
103-8378	641
103-8379	641
103-8380	641
104-3173	1405
	1409
104-7293	983
	984
	986
	1008
	1040
	1042
	1052
104-7294	987
	988
	1040
	1042
	1052
104-7296	985
	1040
	1042
	1052
104-8771	821
104-8774	891
	896
	900
	920
104-8783	930
104-8821	823
	830
	837
	844
	851
	858
104-8838	823
	830
	837
	844
	851
	858
104-8892	▶942
	1166
	1167
104-8950	823
	830
	837
	844
	851
	858
105-1321	▶1085
	1097
105-1766	1321
	1323
105-1797	413
105-2169	1298
	1302
	1379
	1381
105-2575	621
	623
	627
105-2577	621
	627
105-2578	621
	627
105-2579	621
	623
105-2583	621
	623
	627
105-3477	770
	791
	795
	799
105-3483	770
	781
	785
105-3484	781
	785
	824
	831
	838
	845
	852
	859
105-3485	770
105-3487	444
	499
	503
	507
105-5175	377
105-7545	1530
	1554
105-7704	313
	315
105-9526	1487
105-9527	1487
105-9702	344
106-0107	303
	307
	▶356
106-0210	356
	357
106-0615	570
106-0616	569
106-6248	973
106-7149	340
	342
107-1678	1405
	1409
107-2723	781
	785
107-3157	1237
107-4749	426
107-6370	1091
	1092
107-6371	1091
	1092
107-6479	1075
	1077
	1115
107-6540	1100
	1102
	1105
	1106
107-6541	1100
	1102
	1105
	1106
107-6631	811
	814

▶ **PRIMARY REFERENCE**

PART NUMBER INDEX

Part	Page	Part	Page	Part	Page	Part	Page
	818		837		388		280
	887		844	113-0693	312		294
	889		851	113-2003	931		299
	908		858	113-2004	770		365
	918	110-5525	963	113-2127	484		371
	924	110-7183	486		1144		388
	926	110-7618	25	113-6069	58		389
107-6954	965		26	113-6170	7		392
	969	111-0988	891		9		394
107-6955	965		896		11		396
	969		900		12		398
107-6969	965		920		13		400
	969	111-4275	7		14		402
107-7694	23		9		15		416
107-7708	33		11		▶56		428
107-8618	114		12	113-6479	670	116-0128	183
	388		13		770	116-0210	367
108-1782	949		14	113-6612	940	116-2659	131
108-4282	791		▶337	113-6738	739		132
	795	111-4799	350		741	116-3526	▶1118
108-7118	952	111-4836	242	113-8490	367		1128
	955		250	113-8491	367	116-4556	7
108-7203	821		268		379		9
	871		271	113-8493	367		11
	874		294	114-0623	1117		12
	930		296		1119		13
108-7357	891		298	114-0754	637		14
	896		381		639		15
	920		389	114-0760	641		▶55
108-7372	821		392	114-1383	644	116-4663	141
108-7387	871		417	114-1398	644	116-6332	48
	874		426	114-1399	644		49
	891		428	114-1401	644	116-7408	1252
	896		1259	114-1540	437	116-7409	1252
	900		1261	114-6285	499	116-9115	1146
	920		1386		503		▶1165
108-7410	943		1388		507	116-9129	755
108-7516	887	111-4837	242	114-6289	517	116-9135	1521
	889		250		518		1525
	908		294		521	116-9140	1147
	918		396	114-8229	1058	117-3437	110
	924		417		1061	117-3643	16
	926	111-4838	242	115-2677	1149		17
108-7550	720		250		1150		18
	722		428	115-4072	58		19
	724	111-4839	242	115-4203	7		▶103
	726		250		9	117-6306	1490
	728		428		11	117-6349	1337
	730	111-6752	804		12	117-6350	1337
	732	111-9916	582		13	117-6356	1337
109-0885	546		585		14	117-7032	331
109-2665	1091		588		15	118-1727	7
109-2667	▶1091		▶1117		▶77		9
	1093		1122	115-4219	58		11
109-3207	155	111-9959	1031	115-4931	546		12
	156	111-9998	1087	115-6337	▶546		13
	157		1088		548		14
109-5152	1031	112-0083	924		549		15
	▶1092		926	115-6338	546		▶28
109-5153	1092		▶1111	115-8634	660	118-4044	1063
109-9329	64	112-0085	1111	115-8645	821		1065
109-9350	64	112-2481	1190	116-0068	1393	118-4057	965
109-9369	64		▶1251	116-0118	242	118-4074	610
110-5496	823	112-2489	1249		250		▶947
	830	112-4550	114		278	118-4086	1081

▶ PRIMARY REFERENCE

PART NUMBER INDEX

Part	Page	Part	Page	Part	Page	Part	Page
118-4087	1081	121-1371	630	122-9611	1338		382
118-5982	1170		634		1339		385
	1171	121-1372	630	122-9617	1319		406
	1172		634		1321	125-7875	251
	1173	121-1459	1098		1323		353
	1176	121-1491	958	122-9657	1405		354
	1177		959		1409		377
118-5983	1079		1013	123-2003	654		406
	1109		1019	123-2008	965	126-1757	30
118-5984	871		1025		969	126-1767	357
	▶1109		1035	123-2139	963		406
118-9573	337		1044	123-2423	1056		813
	338		1048	123-2430	824		817
	339		1054		845		869
118-9930	64		▶1119		852		887
119-1353	1073		1121		859		889
119-2325	949		1123		918		897
119-2378	948	121-1549	630		▶1112		901
119-2379	948		632	123-2485	1013		908
119-2487	▶943		634		1019		918
	1167	121-1558	965		1025		926
119-2763	770		969		1035		1424
119-2921	77	121-1611	617		1044	126-1813	650
119-2942	97	121-1729	1146		1048	126-1865	1075
119-3025	110		▶1148	123-2511	1113		1077
119-3662	251	121-1865	1339	123-2549	804		1083
119-5026	303	121-6303	877		▶1113	126-1866	1075
	305		879	123-2552	1112		1077
	307		▶1120		1113		1083
	309	121-6304	1120	123-4750	773	126-1876	630
	1398	121-7098	1405		804		632
119-5388	1075		1409	124-0506	31		634
	1077	121-7136	1312		32	126-1885	621
	1083		1405	124-1008	871		627
119-5389	1075		1409		874	126-2016	976
	1077	121-7137	1405		881	126-2075	▶653
	1083		1406		884		991
119-5391	1075		1409		891	126-2076	653
	1077		1410		896	126-5466	106
	1083	121-7138	1312		900	126-5869	106
119-5392	1075		1405		910	126-6514	1118
	1077		1409		914		1124
119-5398	1100	122-3979	498		920	126-6515	1118
	1102		502	124-1019	947		1124
	1105		506		951	126-6516	1118
	1106	122-3980	498	124-1020	947		1124
119-9447	1072		502		951	126-7574	275
120-5107	1530		506	124-1021	757		276
	1536	122-4021	202		758	127-0580	1297
	1554	122-4101	475	124-1034	756		1301
	1560		476	124-1035	804	127-0716	1190
120-5114	202		478	124-1708	▶129		▶1252
	204		479		133	127-1958	716
120-7226	1149	122-4120	498	124-3548	367	127-3913	1168
120-9027	350		502	124-3953	1508	127-6634	▶944
121-0307	85		506	124-3966	1493		1146
	88	122-5114	965	124-4009	1334	127-6673	702
121-0987	408		969		1335		704
	409	122-7797	1058	124-4010	1334	127-6780	676
	411		1061		1335		678
	412	122-9605	1405	125-1302	301	127-6797	609
121-1023	301		1413		▶347		▶755
121-1038	183	122-9608	1337	125-7874	251	127-7771	451
121-1039	183	122-9609	1337		365		454
121-1173	377	122-9610	1337		377		458

▶ **PRIMARY REFERENCE**

PART NUMBER INDEX

Part	Page	Part	Page	Part	Page	Part	Page
	461		329	134-3284	294		170
	464		330		296		174
	465	131-5818	1075		298		178
	466		1077	134-3379	276		498
	467		1083	134-4126	275		502
	468	131-5915	1081		276		506
	469	131-8826	129	134-4483	42		1418
128-2135	1283		135		46	135-8576	493
	1287	131-8828	129	134-6146	1530		494
	1291		135		1554		495
	1295	131-8829	129	134-6852	158		544
	1305		135		161		545
	1307	131-9516	739		165	135-8577	443
	1309		741		170	135-8578	497
	1325	132-0999	1249		174		498
	1327	132-1805	242		178		502
	1329		250	134-6921	891		506
	1331	132-1829	▶237		896	135-8965	1433
128-2136	1295		367		900	135-8966	1433
	1305	132-4099	1521	134-7085	▶130	135-9044	644
	1307	132-4100	1521		131	135-9054	613
128-2173	1338	132-5789	243	134-7089	131	135-9819	28
	1339		251		132	136-0139	449
	1340		299	134-7103	1152		450
128-4411	217		367	134-7258	1530	136-0812	106
	219		382		1536	136-0822	30
	222		385		1542	136-2904	644
	224		389		1548	136-2940	644
	226		392		1554	136-4183	58
	228		394		1560	136-4303	66
	231		396		1565	136-7227	200
	233		426		1570	137-0856	770
128-5626	13		1314	134-8226	93	137-1602	152
	15		1315	134-8853	▶496	137-2270	1419
	▶338		1393	134-8854	496	137-3623	656
129-1170	110		1394	134-8948	1178	137-3624	656
129-3399	457		1406	134-8950	1179	137-3625	656
129-5096	239		1409	134-8951	1180	137-3626	603
129-5714	1198		1413	135-2274	1340		656
	1199		1415	135-2543	332	137-3628	603
	1225	132-7165	135		333		656
	1228		136	135-3980	763	137-3631	603
129-6466	1503	133-2427	1136		765	137-6606	422
	1505		1138		768		424
129-7784	981		1140	135-4063	676	137-6645	327
129-7853	976		1142	135-8572	202	137-6715	42
129-7854	976	133-4995	45		204		46
129-7863	976	133-5748	716		213	137-6717	80
129-7921	976	133-5813	810		214		82
129-7925	976		813		215	137-6718	42
129-7927	976		817		242		46
129-7978	588		904		250	137-6726	141
	591		906	135-8573	202	138-3252	45
	595		930		204	138-7198	80
	599	133-5828	720		242		82
129-7979	976		722		250	138-8402	80
129-8034	654	133-6379	78		482		82
130-0252	1405		79		497	138-8403	80
	1409	133-6777	965		498		82
130-3280	131	133-6788	1128		502	138-9868	80
	132		1130		506		82
130-4276	496	133-6904	630		533	139-4081	▶62
130-5300	273		634	135-8575	158		78
130-9811	326	133-8016	1297		161		79
	328		1301		165	139-4084	62

▶ PRIMARY REFERENCE

PART NUMBER INDEX

Part	Page
139-6873	158
	161
	165
	▶235
139-7099	1285
	1289
	▶1379
139-7100	1347
	▶1348
	▶1350
139-7101	1285
	1289
	1293
	▶1490
139-7119	1494
139-7126	1297
	1301
139-7127	1297
	1301
139-8794	129
	135
139-9476	62
140-0674	1090
140-0677	1090
140-0860	242
	250
140-6188	42
	46
140-7480	1431
140-9670	42
	46
141-2759	367
	1399
141-7677	85
142-3836	1
	▶1419
142-5515	969
142-5546	1337
142-6582	676
	678
142-6742	1072
142-7764	667
142-7765	664
142-8100	7
	9
	11
	12
	13
	14
	15
	▶63
143-4254	823
	830
	837
	844
	851
	858
143-4654	84
143-8023	637
	639
143-8024	637
	639
143-8025	637
	639
143-8033	637
	639
143-8149	637
	639
143-9392	273
143-9397	1276
144-0195	1485
	1486
	1487
144-0367	142
	759
144-1636	66
	356
	810
	867
144-9691	1493
144-9692	1493
145-0162	33
145-0164	33
145-0168	33
145-0170	33
145-2237	805
145-3042	441
	▶442
145-5106	578
	▶579
145-7376	80
145-7385	80
145-7390	42
146-4936	521
146-6747	1530
	1536
	1542
	1548
	1554
	1560
	1565
	1570
147-4131	1083
147-4184	1063
147-4221	1075
147-4921	1475
	1477
147-5088	110
147-5860	965
	969
147-8211	42
	46
147-8214	42
	46
147-8218	39
147-8220	42
	46
148-2903	155
	156
	157
148-4685	488
148-4703	490
148-4704	490
148-8311	158
	161
	165
	170
	174
	178
148-8318	158
	161
	165
	170
	174
	178
148-8319	170
	174
	178
148-8321	805
148-8325	804
148-8326	745
	748
148-8327	865
	867
	869
148-8328	949
148-8329	88
148-8334	781
	785
148-8335	732
	770
	788
	791
	795
	799
	803
148-8336	158
	161
	168
	170
	174
	720
	722
	745
	748
	810
	824
	831
	838
	845
	852
	859
	865
	867
	869
	877
	879
	881
	884
	891
	896
	900
	910
	914
	920
148-8338	804
	877
	879
	881
	884
	891
	896
	900
	910
	914
	920
148-8340	824
	831
	838
	845
	852
	859
	865
	867
	869
	934
148-8341	745
	748
148-8342	891
	896
	900
148-8347	745
	791
	795
	799
	865
	867
	869
	877
	879
	881
	887
	889
	891
	896
	900
	904
	906
	908
	910
	914
	918
148-8353	720
	722
	777
	779
	804
	810
	813
	817
	824
	831
	838
	845
	852
	859
	865
	867
	869
	877
	879
	887
	889
	891
	896
	900
	904
	906
	908
	910
	914
	918
148-8354	810

▶ **PRIMARY REFERENCE**

PART NUMBER INDEX

Part	Page
	813
	817
	824
	831
	838
	845
	852
	859
	934
	936
148-8355	720
	722
	788
	938
	940
148-8357	759
	938
	940
148-8358	934
	936
148-8363	930
	934
	936
148-8364	720
	722
	759
	824
	831
	838
	845
	852
	859
	904
	906
	952
	955
148-8367	158
	161
	165
	170
	174
	178
	720
	722
	804
	824
	831
	838
	845
	852
	859
	877
148-8368	773
	804
	949
148-8370	754
148-8371	777
	779
148-8372	952
	955
148-8374	158
	161
	168
	170
	174
	773
	775
	777
	779
	804
148-8378	97
	158
	161
	168
	170
	174
	745
	748
	773
	775
	777
	779
	805
	810
	813
	817
	821
	824
	831
	838
	845
	852
	865
	867
	869
	871
	874
	877
	879
	881
	884
	887
	889
	891
	896
	900
	906
	908
	910
	914
	918
	920
	924
	926
148-8383	158
	161
	165
	170
	174
	178
148-8387	788
	791
	795
	799
148-8390	745
	748
148-8392	791
	795
148-8393	892
	897
	901
148-8395	70
	106
	108
	1063
	1065
148-8407	748
	781
	785
	810
	813
	817
	824
	831
	838
	845
	852
	859
	892
	897
	901
	908
	918
	920
	931
	1054
	1065
148-8408	759
148-8409	108
148-8411	106
	748
	759
	781
	785
	788
	791
	795
	799
	892
	897
	901
	934
	936
	938
	940
148-8413	773
148-8415	762
	767
	768
	769
	775
	777
	779
	805
148-8419	762
	767
	768
	769
	773
	805
148-8428	754
148-8433	824
	831
	838
	845
	852
	859
	879
	881
	884
	892
	897
	901
	921
148-8439	824
	831
	838
	845
	853
	860
148-8442	791
	795
148-8444	720
	722
	805
148-8457	716
	718
	719
	932
	933
149-1738	680
	710
	712
	714
	745
	748
149-5050	371
	375
	377
	402
	418
	420
149-5069	377
149-5070	377
149-5240	155
	156
	157
148-8434	805
148-8435	748
	805
	821
	824
	831
	838
	845
	852
	859
	877
	879
	881
	884
	892
	897
	901
	921
148-8439	824
	831
	838
	845
	853
	860
148-8442	791
	795
148-8444	720
	722
	805
148-8457	716
	718
	719
	932
	933
149-1738	680
	710
	712
	714
	745
	748
149-5050	371
	375
	377
	402
	418
	420
149-5069	377
149-5070	377
149-5240	155
	156
	157

► PRIMARY REFERENCE

PART NUMBER INDEX

Part	Page
149-5452	716
	735
	737
	739
	741
149-6679	735
	737
150-3024	158
	161
	165
150-3036	773
	775
	805
	867
	869
	871
	874
	884
	887
	889
	892
	900
	910
	914
	924
	926
150-4027	881
	884
	892
	897
	901
	910
	914
	921
150-4037	952
	955
150-4044	825
	832
	839
	846
	853
	860
	924
	926
	952
	955
150-4048	892
	897
	901
150-5782	976
150-5797	582
	585
	588
	591
	595
	599
150-5826	611
	615
150-5827	611
	615
150-5828	611
	615
150-5830	611
	613
	615
151-6703	1348
	1352
	1365
	1490
151-6704	1348
	1352
	1365
	1490
151-6705	1493
151-6767	1347
151-6777	1347
	1358
151-6778	1365
	1490
151-6785	1490
151-6790	1496
151-6792	1348
	1350
	1352
	1355
	▶1498
151-6793	1498
151-6813	1365
	1490
151-6815	1365
	1490
151-6831	1365
	1490
151-6832	1365
	1490
151-6841	1498
151-6844	1490
151-9461	1348
	1350
	1352
	1355
151-9497	1348
	1350
	1352
	1355
151-9557	1490
151-9576	1365
	1490
152-3952	110
153-1036	49
153-2521	▶287
	294
	296
	298
153-2523	▶288
	290
153-2620	243
	251
	428
153-2630	243
	251
153-5223	1075
	1077
	1083
153-5239	1093
153-5276	983
	984
	985
	986
	987
	988
	1008
	1040
	1042
	1052
153-5286	1031
153-5288	1013
	1019
	1025
	1031
	1035
	1044
	1048
153-5289	1013
	1019
	1025
	1031
	1035
	1044
	1048
153-5290	1013
	1019
	1025
	1031
	1035
	1044
	1048
153-5291	1013
	1019
	1025
	1031
	1035
	1044
	1048
153-5292	1013
	1019
	1025
	1031
	1035
	1044
	1048
153-5293	1013
	1019
	1025
	1031
	1035
	1044
	1048
	▶1090
153-5298	1013
	1019
	1025
	1035
	1044
	1048
153-5299	1013
	1019
	1025
	1035
	1044
	1048
153-5306	1013
	1019
	1025
	1035
	1044
	1048
153-5309	1013
	1019
	1025
	1035
	1044
	1048
153-5311	1013
	1019
	1025
	1035
	1044
	1048
153-5313	1067
	1069
	1070
	▶1093
153-6237	791
	796
	799
	865
	867
	869
	934
	936
153-6241	805
153-8467	80
153-8470	80
153-8623	582
	585
	588
	591
	595
	599
153-8644	1072
153-8645	1072
153-8748	1072
153-8753	1339
153-8762	1338
	1339
153-8763	1338
	1339
153-8798	682
	692
	719
	933
153-8800	692
153-8867	684
	686
	688
	690
	694
	696
	698
	700
	802
154-0729	619
154-0730	619

▶ **PRIMARY REFERENCE**

PART NUMBER INDEX

Part	Page	Part	Page	Part	Page	Part	Page
154-0731	619		1352		1044		1350
154-0732	619		1355		1048		1352
154-0736	632	156-6599	1297	158-8207	1013		1355
154-0737	632		1301		1019	161-3668	1508
154-0738	632	156-6600	1348		1025	161-3669	1508
154-0739	632		1350		1035	161-3670	1508
154-0749	623		1352		1044	161-3677	1508
154-0750	623		1355		1048	161-3684	1490
154-0751	623	156-6601	1490	158-8250	810	161-3685	1297
154-0752	623	156-6617	1297		▶1075		1301
154-0896	63	156-6627	1490	158-8987	▶648	161-3694	1380
154-9023	106	156-6631	1494		▶649	161-3695	1498
155-2255	394	156-6642	1404		991	161-3697	1297
	398	156-6643	1348		993		1301
155-2260	243		1350	158-9085	▶1127	161-3698	1365
	251		1352		1129		1489
	317		1355	158-9090	720		1490
	321	156-6644	1348		▶1128	161-3705	1498
	388		1350	159-0285	7	161-3717	1433
	404		1352		9	161-3732	1317
	422		1355		11		1318
	424	156-6645	1348		12	161-3734	1317
155-2265	406		1350		▶96		1318
155-2270	66		1352	159-0303	7	161-3750	▶1484
	243		1355		9	161-3751	▶1483
	251	156-6646	1503		11	161-6963	151
	303		1505		12		152
	307	156-6647	▶1493		13	161-6987	299
	324		1503		14		394
	365		1505		15		1276
	389	156-6648	1493		▶69		1427
	392	156-6656	1295	159-0918	96	162-0177	106
	422	156-6657	1295	159-4700	579		805
	424	157-0670	106	159-7667	129		1063
	428	158-4380	550		135	162-8068	7
155-2271	243		551	159-7782	989		9
	251	158-4381	550	159-7784	654		11
	428		551	159-9526	556		12
155-2272	428	158-6072	151		557		13
155-2274	303		152	160-0526	31		14
	307	158-7864	1524		32		15
	416		1527	160-5140	85		▶70
155-2276	321	158-8086	556		88	163-2478	42
155-3624	106		557	160-7689	243		46
155-7042	1508	158-8096	556		251	163-3729	484
156-5970	1125	158-8150	1013	160-8759	621	163-4145	552
	1126		1019		623		553
156-6175	278		1025		627		▶556
	392		1035	161-1703	318	163-6637	243
	394		1044	161-1704	320		251
156-6469	1496		1048	161-1705	319	163-6700	217
156-6471	1348	158-8159	1009	161-3128	367		219
	1350		1011	161-3639	1348		222
156-6472	1365		1013		1350		224
	1489		1019		1352		226
	1490		1025		1355		228
156-6473	1494		1031	161-3650	1348		231
156-6474	1498		1035		1350		233
156-6475	1498		1044		1352	163-6711	406
156-6554	1490		1048		1355	163-6758	367
156-6555	1490	158-8186	1090	161-3663	1348	163-6772	▶291
156-6562	1490	158-8206	1013		1350		1309
156-6579	1490		1019		1352	163-6795	291
156-6598	1348		1025		1355		293
	1350		1035	161-3665	1348		367

PART NUMBER INDEX

Part	Page
	404
	406
	1485
	1486
	1487
	1508
163-6803	377
163-6813	291
163-6814	291
163-7393	556
164-0210	84
164-0497	1367
	▶1375
164-0499	1317
	1318
164-0500	1317
	1318
164-0514	1350
	1352
	1355
164-0515	1348
	1350
	1352
	1355
164-0516	1498
164-0517	1498
164-0518	1498
164-0519	1350
	1352
	1355
164-0523	1297
	1301
164-0527	1297
	1301
164-0528	1297
	1301
	▶1404
164-0534	▶1368
	▶1370
164-0535	▶1372
164-0614	1340
164-0617	1340
164-0618	1484
164-0619	1484
164-0620	1484
164-0639	1483
164-0643	1378
164-0646	1295
	1305
	1307
164-0648	1490
164-0655	1295
	1305
	1307
164-0664	1404
164-0666	1496
	1497
164-4180	770
	781
	785
	788
	799
164-5552	720
	722
164-5558	823
164-5567	773
	775
	777
	779
	805
	865
	867
	869
	881
	884
	892
	897
	901
	910
	914
	921
	991
	993
164-5574	792
	796
164-5578	749
164-5590	991
	993
164-5606	792
	796
164-5608	825
	832
	839
	846
	853
	860
	936
164-5619	108
	170
	174
	178
164-5628	810
	814
	818
	887
	889
	908
	918
	924
	926
164-5629	887
	889
	908
	918
	924
	926
164-6874	865
	867
	869
	887
	889
164-6981	▶580
	823
	830
	837
	844
	851
	858
164-8474	1283
	1287
	1291
	1295
	1305
	1307
	1309
164-8977	823
	830
	837
	844
	851
	858
164-8983	823
	830
	837
	844
	851
	858
164-9640	805
164-9869	865
165-2976	474
	475
	476
	477
	478
	479
	480
	481
165-3065	1419
165-3165	664
165-3169	667
165-3173	670
165-3256	996
165-5970	▶359
	422
	424
165-9282	637
	639
165-9290	641
165-9431	1081
165-9435	1081
165-9436	1081
165-9438	1081
165-9442	1081
165-9443	1081
165-9444	1081
165-9460	1081
165-9463	1075
	1077
	1083
165-9464	1075
	1077
	1115
165-9473	▶974
	1009
165-9474	974
165-9497	1056
165-9513	1058
	1061
165-9514	1058
	1061
165-9549	892
	897
	901
	921
	▶1121
165-9551	1075
	1077
165-9552	1075
	1077
	1083
165-9553	1075
	1077
	1083
165-9554	1075
	1077
	1083
165-9595	1013
	1019
	1025
	1035
	1044
	1048
166-1482	1158
166-1486	1156
	1160
	1162
	1163
	1168
	1170
	1171
	1172
	1173
	1174
	1175
	1176
	1177
166-1487	1136
	1138
	1140
	1142
	1144
166-1488	1136
	1138
	1140
	1142
166-1494	617
	619
	621
	623
	627
	630
	632
	634
	1156
	1160
	1162
	1163
	1171
166-1495	611
	613
	615
	1156
	1160
	1163
	1168
	1170
	1172
	1173
	1176
	1177

▶ **PRIMARY REFERENCE**

PART NUMBER INDEX

Part	Page
166-1496	1136
	1138
	1140
	1142
	1144
	1170
	1171
	1172
	1173
	1174
	1175
	1176
	1177
166-1579	1149
	1150
166-1776	30
166-1781	30
166-2905	66
166-3215	1502
166-8636	209
167-2217	641
167-3437	291
167-3438	291
167-3441	▶289
	291
167-3456	291
167-3466	810
	887
	892
	897
	921
	924
167-3542	361
	367
	377
	1396
	1399
	1464
	1468
167-3543	361
	367
	1396
	1399
	1464
	1468
167-3593	367
167-7018	1297
	1301
167-7036	1497
167-7037	1497
167-7038	1352
	1355
167-7039	1348
	1350
	1352
	1355
167-7042	1297
	1301
167-7055	1372
167-7079	1503
167-7141	1375
167-7270	1530
	1536
	1542
	1548
	1554
	1560
	1565
	1570
167-8121	48
	49
167-8610	1431
167-8853	1428
167-8987	382
	385
168-0019	637
168-0765	962
168-6761	559
	560
168-7224	68
168-8452	434
	437
168-9523	670
168-9759	810
	813
	817
168-9760	663
168-9762	669
169-3104	155
	156
169-5589	434
	437
169-5590	434
	437
169-5592	434
	437
169-5593	434
	437
169-5594	434
	437
169-5601	434
	437
169-5602	434
	437
169-5608	434
169-5617	644
169-5618	644
169-5861	313
	315
169-8586	155
	156
169-8598	155
	156
170-3015	470
	472
	473
	533
170-3016	498
	502
	506
170-6888	367
170-6929	242
	250
	258
170-6993	287
	288
170-9294	▶293
170-9295	293
170-9324	303
	305
170-9336	242
	250
170-9360	444
170-9417	287
	288
170-9418	287
	288
170-9492	1487
170-9497	▶1337
	1432
170-9498	1337
170-9499	1337
170-9722	1365
	1489
	1490
170-9724	1295
	1305
	1307
170-9840	637
	639
170-9856	637
	639
170-9864	641
170-9938	637
	639
170-9941	637
	639
170-9985	963
170-9986	963
170-9996	963
171-0031	1102
171-0034	1099
	1100
	1102
	1105
	1106
	1108
171-0035	1099
	1102
	1105
	1108
171-0036	1099
	1102
	1105
	1108
171-0037	1099
	1100
	1102
	1105
	1106
	1108
171-0087	1081
171-0123	1087
	1088
171-0124	1087
	1088
171-0126	1087
	1088
171-0127	1087
	1088
171-0128	1087
	1088
171-0150	1011
171-0188	881
	884
	892
	897
	901
	910
	914
	921
	▶1122
171-0198	▶1114
	1122
171-0596	867
	869
171-2210	301
171-2637	823
	830
	837
	844
	851
	858
171-3369	114
	116
	118
	120
171-5349	324
171-5713	557
171-6718	313
	315
171-7325	1277
	1278
	1279
	1280
	1325
	1331
171-7413	1498
171-7414	1498
171-7420	1295
	1305
	1307
171-7426	1297
	1301
171-7477	1380
171-7485	1367
	▶1373
171-7503	1285
	1289
	1293
	▶1365
171-9073	145
	146
171-9114	20
	▶95
171-9280	644
171-9283	644
171-9297	434
	437
171-9298	434
	437
171-9375	644
172-0907	928
172-4432	1054
172-8732	7
	9
	11
	12
	13
	14

▶ PRIMARY REFERENCE

PART NUMBER INDEX

Part	Page
	15
	▶29
173-0143	68
173-3384	582
	585
	588
	591
	595
	599
173-3387	582
	585
	591
	595
173-3397	582
	585
	588
	591
	595
	599
173-3398	582
	585
	588
	591
	595
	599
173-3413	582
	585
	588
	591
	595
	599
173-3427	976
173-3428	976
173-3503	▶603
	654
173-3505	603
173-3506	603
173-3507	654
173-3510	654
173-3513	656
173-3515	656
173-3516	656
173-3517	656
173-3518	654
173-3529	656
173-3535	1127
173-3536	▶1094
	1127
	1128
	1130
173-4672	759
	▶1004
173-4816	759
173-5089	823
173-5549	80
173-7916	672
	674
	676
	678
	682
	692
	702
	704
173-7992	672
	676
	702
	706
	▶1071
174-3016	243
	251
174-5415	131
	132
174-7791	287
	288
174-8029	1246
	1247
174-9570	▶154
	159
	162
	165
	201
175-1367	25
	26
175-3676	66
176-1902	1405
	1409
176-1916	1319
	1321
	1323
176-1925	1373
176-1928	1368
	1370
	1373
176-1931	1485
	1486
176-1932	1487
176-1937	1297
	1301
176-1938	1297
	1301
176-1939	1297
	1301
176-1941	1404
176-1942	1297
	1301
176-1946	1295
176-1947	1295
176-1949	1381
176-1951	1498
176-1952	1498
176-1953	1498
176-1954	1498
176-1955	1498
176-1956	1498
176-1957	1498
176-1958	1285
	1289
	1293
	▶1494
176-1964	1289
	▶1352
	▶1355
	1358
176-1972	1295
	1305
	1307
176-1986	1297
	1301
176-1996	1359
176-2232	1133
	1134
	▶1149
176-2234	1134
	1135
	▶1150
176-4179	93
176-4463	823
	830
	837
	844
	851
	858
176-4469	823
	830
	837
	844
	851
	858
176-4708	823
	830
	837
	844
	851
	858
176-4746	821
176-4768	823
	830
	837
	844
	851
	858
176-4770	934
	936
176-4883	561
176-4888	537
176-4889	537
176-4890	537
176-4891	537
176-9429	7
	9
	11
	12
	13
	14
	15
	▶66
176-9430	66
177-0438	16
	17
	18
	▶150
177-0440	150
	▶151
177-2458	643
	▶960
177-2459	960
	▶962
177-2470	976
177-2471	976
177-2553	656
177-2611	617
	619
177-2619	603
177-2653	788
	791
	795
	799
	▶1095
	▶1096
177-2709	1004
177-2713	1004
177-3941	426
177-3942	426
177-3943	426
177-4814	7
	9
	11
	12
	13
	14
	15
	▶93
177-5739	470
	472
	473
177-5879	497
177-5880	497
177-6315	1419
177-6395	475
	476
	478
	479
177-6920	151
177-6972	7
	9
	11
	12
	13
	14
	15
	▶239
177-6973	22
	▶50
177-8506	767
177-8588	768
177-9778	159
	162
	165
177-9823	7
	9
	11
	12
	13
	14
	15
	▶108
178-0809	538
	▶544
178-0810	544
178-0895	▶545
178-0896	545
178-0897	545
178-2357	206
	207
	208
	209
178-5422	1319
	1321
	1323
178-5423	1319

▶ **PRIMARY REFERENCE**

PART NUMBER INDEX

Part	Page
	1321
	1323
178-5431	1485
	1486
178-5500	1487
178-5530	1325
178-5549	▶1367
178-5569	1494
178-5570	1297
	1301
178-5572	1496
	1497
178-5573	1348
	1350
	1352
	1355
	1496
	1497
178-5574	1348
	1350
	1352
	1355
	1496
	1497
	1500
178-5576	1490
178-5659	1446
	1447
	1459
	1460
178-6450	114
	116
	118
	120
178-6626	145
179-4324	299
179-5030	735
	737
	739
	741
179-5086	▶716
	1002
179-5095	682
179-5098	682
179-5203	949
179-5235	735
	737
	739
	741
	949
179-5260	684
	686
	688
	690
	694
	696
	698
	700
179-7433	871
	874
179-7434	924
179-7435	924
179-7456	924
	926
179-7500	759
179-7578	918
179-8128	206
	207
	208
	209
	210
179-8733	434
	437
179-9681	585
179-9682	595
179-9763	976
179-9806	656
180-3861	287
	288
180-7521	446
180-7525	446
180-7529	446
180-7537	446
180-7752	1136
	1138
	1140
	1142
	1144
183-1035	293
183-2823	198
183-2824	158
	161
	165
	▶198
183-2851	93
183-2854	50
183-3351	22
183-3406	313
	315
183-4365	75
	80
183-8192	149
184-3833	1004
184-3841	1004
184-3971	1500
184-3978	1500
184-3979	1500
184-3980	1500
184-8580	519
	521
	526
184-8722	451
	454
	457
	458
	461
	464
	465
	466
	467
	468
	469
184-8784	493
184-8795	494
184-8862	480
184-9114	170
184-9198	724
184-9201	728
	730
184-9202	728
	730
184-9210	881
	884
	891
	896
	900
	910
	914
	920
184-9336	810
	813
	817
184-9593	823
	830
	837
	844
	851
	858
184-9595	823
	830
	837
	844
	851
	858
185-0169	582
	585
	588
	591
	595
	599
185-0172	582
	585
	591
	595
	599
185-0194	621
	623
	627
185-0201	582
	585
	588
	591
	595
	599
185-0383	810
	813
	817
185-0400	1056
185-0407	1114
185-0423	1087
	1088
185-0462	810
	813
	817
	▶1115
185-0463	1115
185-0490	1009
	▶1056
185-2638	240
185-2639	240
185-2642	240
185-2644	240
185-2645	240
185-2647	240
185-2648	240
185-2650	240
185-2651	240
185-2653	240
185-2654	240
185-2655	240
185-2658	240
185-3159	31
	32
185-5294	239
	▶240
185-8161	1319
	1321
	1323
185-8180	1348
	1350
	1352
	1355
185-8181	1490
185-8182	1490
185-8187	1490
185-8196	1297
	1301
185-8197	1490
185-8200	1500
185-8201	1500
185-8203	▶1500
	1502
185-8204	1500
185-8205	1295
	1305
	1307
185-8206	1502
185-8209	1500
185-8214	1295
	1305
	1307
185-8221	1490
185-8280	1404
185-8281	1404
185-8284	1327
	1329
185-8286	350
	1277
	1278
	1279
	1280
185-8290	1508
185-8293	1405
	1409
185-8300	1264
	1267
	1270
	1273
	1336
	1395
185-8302	1264
	1267
	1270
	1273
185-9208	303
	305
	307
	309
186-1305	▶1510
186-3735	51
	114

▶ PRIMARY REFERENCE

PART NUMBER INDEX

Part	Page	Part	Page	Part	Page	Part	Page
	204	187-6967	754		1307		591
	217	187-7070	952	189-2690	1348		595
	219	187-7108	802		1350		976
	222	187-7109	802		1352	190-5386	1530
	224	187-8278	46		1355		1536
	226	187-8279	46	189-2693	1380		1542
	228	187-8280	46	189-2694	1380		1548
	231	187-8281	46	189-2702	1494		1554
	233	187-9851	682	189-2704	1297		1560
	237	187-9862	737		1301		1565
	238		741	189-2705	1502		1570
	307	187-9937	692	189-2711	1348	190-5791	144
	324	187-9938	692		1350	190-6186	7
	347	187-9977	680	189-2712	1500		9
	348		710	189-2716	1380		11
	349		712	189-2717	1381		12
	350		714	189-2759	▶1502		13
	351	187-9978	680	189-2768	1285		14
	352		710		1293		15
	359		712		▶1347		▶324
	362	187-9981	680	189-2793	1289	190-7673	582
	388		710		▶1358		585
	779		712	189-2796	1358		588
	1125	188-0055	714	189-2847	1379		591
	1126	188-0056	714		1381		595
186-5477	641	188-2084	648	189-2849	1379		599
186-5611	446		▶650		▶1380	190-7674	582
186-5614	446	188-2128	324	189-2853	1305		585
186-5649	1156	188-2315	1162		1307		588
	1160	188-3064	550	189-2854	1305		591
	1163		551		1307		595
186-5730	1156	188-4140	▶654	189-2855	1295		599
	1160		991		1305	190-7819	1340
	1163		993		1307	190-7826	1004
186-5732	1156	188-4142	654	189-2864	1298	190-7865	1065
	1160		▶656		1302	190-8970	201
	1163	188-4143	656	189-3396	1297	190-8977	200
186-5892	7	188-4162	963		1301		▶201
	9	188-4163	963	189-3409	1297	191-0461	16
	11	188-4164	963		1301		17
	12	188-4165	963	189-5746	324		18
	13	188-4166	963	189-8772	147		19
	14	188-4167	963	189-8777	102		▶182
	15	188-4169	963	189-8780	7	191-0522	83
	▶57	188-4170	963		9	191-0523	▶83
187-0661	1530	188-4171	963		11		182
	1536	188-4172	963		12	191-1782	170
	1542	188-4173	963		13		174
	1548	188-4174	962		14		178
	1554	188-4175	962		15	191-1783	170
	1560		▶963		▶137		174
	1565	188-4176	963		▶138		178
	1570	188-4181	630	189-9377	66	191-2513	644
187-5599	804		632	189-9763	585	191-2569	434
187-5642	904		634		588		437
	906	188-4210	976		595	191-2570	434
187-5659	934	188-4216	641		599		437
	936	188-4217	641		976	191-2571	434
187-5661	759	188-4218	641	190-0643	21		437
187-5854	791	188-6121	170	190-3523	550	191-2579	644
	795		174		551	191-2674	434
187-5855	791		178	190-3524	550		437
	795		▶200		551	191-2675	434
187-5935	770	189-2678	1295	190-4896	582		437
187-5994	770		1305		585	191-2676	434

▶ **PRIMARY REFERENCE**

PART NUMBER INDEX

Part	Page
	437
191-2677	434
	437
191-2678	434
	437
191-2692	441
	▶643
191-2693	643
	▶644
191-2694	644
191-2695	644
191-2696	644
191-2697	644
191-5619	641
191-5707	582
	585
	588
	591
	595
	599
192-0573	976
192-2981	16
	17
	18
	19
	▶101
192-3039	451
192-6832	745
	748
192-6917	728
192-6918	728
192-9971	106
192-9972	7
	9
	11
	12
	13
	14
	15
	▶106
193-0158	168
193-1736	976
193-2882	131
	132
193-5014	1178
193-5015	1178
193-6426	702
	704
193-6427	702
	704
193-6544	682
	692
193-8570	344
193-9141	331
193-9994	788
	791
	795
	799
194-0079	934
	936
194-0174	▶663
	770
194-0176	663
	▶664
194-0177	▶665
	770
194-0178	665
	▶666
194-0179	665
	▶667
194-0180	▶668
	770
194-0181	668
	▶669
194-0182	668
	▶670
194-0289	716
	735
	737
194-5226	317
	321
194-5227	321
194-6725	▶317
	323
194-8031	1346
194-8325	976
194-8359	630
	632
	634
195-0321	68
195-6025	151
195-7216	1244
	1245
	▶1249
195-9343	▶550
	563
	564
	565
	572
195-9344	▶551
	566
	567
	568
	569
	570
	573
195-9345	▶563
195-9346	▶564
195-9347	562
	▶565
195-9348	▶566
195-9349	▶567
195-9350	▶568
	571
196-0267	151
196-0354	151
196-0711	972
196-0807	759
196-1569	1368
	1370
	1373
196-1571	1368
	1370
	1373
196-1572	1368
	1370
	1373
196-1599	1368
196-1665	1405
	1409
196-1666	1336
	1395
196-3784	1083
196-6581	658
196-6582	658
196-6583	658
196-9519	33
197-0196	958
	959
197-0199	958
	959
197-0273	958
	959
197-1435	▶569
197-1436	▶570
197-2247	1071
	▶1072
197-2248	1071
	▶1073
197-2340	712
197-2362	680
197-4161	554
	▶557
197-4385	428
197-8391	158
	161
	165
	170
	174
	178
	313
	▶326
	▶327
197-8392	313
	▶328
197-8393	313
	315
	▶318
197-8394	313
	315
	▶319
197-8419	97
197-9353	68
197-9354	68
197-9386	68
198-2713	413
198-2714	7
	9
	11
	12
	13
	14
	15
	▶413
198-3899	1258
	1474
	1478
	1479
198-4610	147
199-0518	582
	591
199-1286	770
199-1609	891
	896
	900
199-1773	788
	791
	795
	799
199-1777	823
	830
199-1914	881
199-4503	434
	437
199-4593	2
	▶441
199-4601	490
199-4695	441
	▶646
199-4698	▶486
	487
199-7891	240
199-8436	240
	2
200-3247	582
	585
	588
	591
	595
200-3248	582
	585
	588
	591
	595
200-3249	582
	585
	588
	591
	595
	599
200-3254	583
	586
	592
	596
200-3255	583
	586
	589
	592
	596
	599
200-3333	976
200-3334	976
200-4495	58
200-4497	101
	▶102
200-6432	557
201-2771	1248
201-3153	339
201-4204	7
	9
	11
	12
	▶339
201-4391	1350
	1352

▶ PRIMARY REFERENCE

PART NUMBER INDEX

Part	Page	Part	Page	Part	Page	Part	Page
	1355	204-3461	282		437		▶142
201-4417	1297		▶426	207-6282	706	210-8176	▶51
	1301	204-3622	617		708		104
201-4530	1297	204-3623	630	207-6403	996	210-9935	769
	1301		634	207-6404	996	210-9966	762
201-4534	1368	204-3624	621	207-6449	938	211-7730	200
	1370		627		940	211-9120	16
	1373	204-3737	788	207-6544	938		17
201-4535	1368	204-4444	31	208-4289	475		18
	1370		32		476		19
	1373	204-8260	720		477		▶30
201-9263	1013		722		478	212-2768	158
	1019	204-8450	991		479		▶351
	1025	204-8496	759		481	212-3664	147
	1035	205-0826	307	208-9277	333		148
	1044		309		349	212-3706	182
	1048	205-1280	182	208-9282	333	212-4288	23
201-9299	656	205-1320	58	208-9283	333	212-4289	16
201-9352	1056	205-1321	16	209-0348	1479		17
	▶1097		17	209-4280	1478		18
201-9353	▶1086		18	209-5582	333		19
	1097		19		▶348		▶23
201-9378	938		▶58		349	212-4893	33
	940	205-1332	96	209-5894	965	212-5148	788
201-9379	904		97		969		799
	906	205-3594	557	209-5909	965	212-5185	498
202-0901	1428	205-6295	1297		969		502
202-0943	1428		1301	209-5917	1132		506
202-2382	57	205-8257	307	209-5920	1132	212-5419	920
202-3900	931	206-1345	413	209-5957	611	212-5491	788
202-3915	735	206-3336	1338		615		791
	739		1339	209-5992	961		795
202-3994	770		1340		▶965		799
202-4004	821	206-5162	284	209-6000	981	212-5495	788
203-0199	239	206-5208	309	209-9234	200		791
203-2287	100	206-8781	340	210-1747	313		795
203-3940	325	206-8784	342		315		799
203-4183	66	206-9212	557		▶320	212-5527	804
	95	207-0144	1285	210-3321	25	212-5596	728
203-4889	498		1289		26	212-5599	728
	502		1293		332	212-8518	7
	506		▶1489	210-5590	16		9
203-4890	498	207-0159	1367		17		11
	502		▶1377		18		12
	506	207-0160	1367		19		▶1314
203-4927	470		▶1378		▶33	213-0677	66
	472	207-0161	1377	210-5592	16		996
	473	207-0164	1377		17	213-0772	367
203-5282	474		1378		18		418
	480	207-0167	1377		19		420
203-5283	474		1378		▶68	213-3193	68
	480	207-0170	1377	210-5808	1297	213-3745	804
203-7464	484		1378		1301	213-9100	238
203-7465	484	207-0173	1377	210-5821	1413	214-3570	434
204-1611	389		1378		1415		437
	392	207-0176	1378	210-5822	1413	214-4401	660
204-1673	258	207-0216	1368		1415	214-4512	▶660
204-2677	963		1370	210-5827	1483		934
204-2755	▶1098	207-1511	339	210-5828	1483	214-4519	660
	1132		▶340	210-5829	1483	214-7567	322
204-2756	1132	207-1517	337	210-5834	1483	214-7568	182
204-2762	656		▶342	210-5836	1483		184
204-2763	603	207-1551	338	210-5837	1483		186
204-2819	961		▶344	210-5838	1483		188
	▶1132	207-1571	434	210-8175	20		190

PART NUMBER INDEX

Part	Page
	192
214-7915	1530
	1536
	1542
	1548
	1554
	1560
	1565
	1570
215-4890	791
	▶1005
215-4909	649
	650
	651
215-5037	823
	830
	837
	844
	851
	858
	▶957
215-9952	▶969
215-9961	582
	585
	588
	591
	595
	599
215-9962	582
	585
	588
	591
	595
	599
215-9982	433
	440
	▶961
216-4970	301
216-5586	37
216-6485	680
216-6599	1146
	▶1168
216-6600	1168
216-6605	▶610
	1146
216-6606	610
	▶629
216-6607	629
	▶641
216-6608	641
216-6613	641
216-6617	610
	▶948
216-6645	948
217-4893	1237
	1238
	1239
	1244
	▶1253
217-5213	39
217-5701	31
218-0404	284
218-1059	821
218-1139	788
	791
	795
	799
218-1454	802
219-0305	1373
	1375
219-3309	78
	79
219-5840	7
	9
	11
	12
	13
	14
	15
	▶147
	▶148
219-5844	▶39
	42
219-5846	▶42
	43
219-5847	▶43
	▶44
	45
219-5849	16
	17
	18
	19
	▶45
219-5855	147
	148
219-6314	284
220-8678	154
220-9090	1253
	1254
220-9093	1253
220-9094	1197
	1200
	1217
	1218
	1219
	1220
	1221
	1222
	1223
	1233
220-9103	1254
220-9104	1194
	1201
	1202
	1203
	1204
	1205
	1206
	1207
	1216
	1230
	1231
220-9105	1194
220-9106	1194
220-9128	1236
	▶1246
220-9129	1236
	▶1247
221-3494	182
221-4482	16
	17
	18
	19
	▶35
221-4807	891
	896
	900
	920
221-4872	759
221-5040	728
221-8045	1530
	1536
	1542
	1548
	1554
	1560
	1565
	1570
221-8813	▶1423
	1432
221-8859	865
	867
	869
221-8861	2
	▶277
221-8872	▶274
	1432
221-8874	274
222-0084	1095
	▶1099
222-0085	1099
	1108
222-0225	1334
	1335
222-1185	80
222-1186	80
222-4737	1013
	1019
	1025
	1035
	1044
	1048
222-5900	16
	17
	18
	19
	▶184
	▶186
	▶188
	▶190
	▶192
222-5917	413
222-5946	7
	9
	11
	12
	13
	14
	15
	▶84
222-5958	16
	▶195
222-8299	5
	▶149
222-8379	2
	▶20
223-3037	1
	▶213
	▶214
	▶215
223-3038	213
	▶216
223-3040	1
	▶443
223-3041	443
	▶444
223-3042	1
	▶482
223-3043	1
	▶498
	▶502
	▶506
223-3044	104
	▶516
223-3045	128
	▶512
223-3046	1
	▶158
	▶161
	▶165
223-3055	▶533
	1367
223-3103	493
223-3104	493
223-4296	1427
223-6768	891
	896
223-7577	331
	332
	▶349
223-9818	1530
	1536
	1542
	1548
	1554
	1560
	1565
	1570
223-9848	210
224-0554	1530
	1536
	1542
	1548
	1554
	1560
	1565
	1570
224-1943	1510
224-3247	23
224-4536	▶321
	322
224-6638	68
224-7717	1528
224-8945	1528
224-8946	1530
	1536
	1542
	1548
	1554
	1560

▶ PRIMARY REFERENCE

PART NUMBER INDEX

Part	Page	Part	Page	Part	Page	Part	Page
	1565	225-4820	1058		538	228-9254	1530
	1570		1061	227-6215	644		1536
225-0312	1530	225-4821	1058	227-6221	644		1542
	1536		1061	227-6789	1168		1548
	1542	225-4830	1058	227-6846	1317		1554
	1548		1061		1318		1560
	1554	225-4831	1058	227-6857	744		1565
	1560		1061		753		1570
	1565	225-4832	1058	227-6859	743	229-0887	1530
	1570		1061		751		1536
225-0313	1528	225-4833	1058	227-6861	947		1542
225-0417	582		1061		951		1548
	585	225-4843	949	227-6868	658		1554
	591		▶1061	227-6869	658		1560
	595	225-4844	1061	227-7575	367		1565
225-3305	1528	226-4664	716	227-7581	▶284		1570
225-4256	1528	226-9169	312	227-7749	2	229-0999	159
225-4257	1530	226-9258	1428		▶276		162
	1536	227-0548	671	227-7751	▶266		165
	1542		▶931		282		170
	1548	227-0565	671	227-8807	▶581		174
	1554		▶995	228-2775	99		178
	1560	227-0566	▶991	228-2780	1528	229-1009	639
	1565		▶993	228-2781	1530	229-1091	1168
	1570		995		1536	229-1092	1158
225-4541	976	227-0590	996		1542	229-1095	1168
225-4542	976	227-0620	▶661		1548	229-1744	▶1528
225-4548	989		996		1554	229-1777	▶1367
225-4549	989	227-0621	952		1560	229-1778	▶1367
225-4607	582	227-0674	955		1565	229-1784	▶194
	585	227-0722	781		1570	229-1785	194
	588		785	228-3621	48		▶202
	591	227-1200	39		49		▶204
	595		40	228-4766	63	229-1786	▶104
	599	227-3811	73	228-5614	1170	229-1787	▶104
225-4785	745	227-4531	31		1171	229-1794	▶128
	748		32		1172	229-1857	202
	▶1058	227-5480	33		1173		204
225-4787	1058	227-5904	184		1176	229-1859	▶183
	1061		186		1177		202
225-4789	1058		188	228-5615	1156		204
	1061		190		1163	229-1860	202
225-4790	1058		192		1170		204
	1061		206		1172	229-1861	202
225-4791	1058		207		1173		204
	1061		208		1176	229-2543	91
225-4792	1058	227-5942	106		1177	229-5153	33
	1061	227-6072	488	228-5617	1174	229-5154	33
225-4793	1058	227-6085	▶487		1175	229-5155	33
	1061		490	228-5654	1170	229-5156	33
225-4796	1058	227-6086	487		1171	229-6975	1239
	1061		▶488		1172		1240
225-4797	1058	227-6105	490		1173		1241
	1061	227-6106	490		1174		1245
225-4803	1058	227-6117	434		1175		▶1254
	1061	227-6118	434		1176	229-8844	53
225-4804	1006	227-6119	434		1177	229-8851	332
	1058	227-6123	434	228-5897	209		333
	1061	227-6124	434		210	229-9070	▶1485
	1063	227-6132	▶433	228-7315	1528		▶1486
	1065		441	228-7316	1542	229-9071	1
225-4818	1058	227-6133	433		1548		▶1405
	1061		▶434		1565		▶1409
	1063	227-6134	434		1570	229-9072	1
	1065	227-6158	▶490	228-9253	1528		▶1432

▶ **PRIMARY REFERENCE**

PART NUMBER INDEX

Part	Page	Part	Page	Part	Page	Part	Page
229-9075	1436	230-1340	266		1126	232-0102	▶1256
	▶1461		268	230-4013	243	232-0105	1230
229-9076	▶1445		271		251	232-0106	1230
	1448	230-1341	266		1399	232-0114	1189
	1461		268	230-5008	375		1208
229-9077	1461		271		377		1209
	1462	230-2190	72		406		1210
	▶1475	230-2860	▶111	230-5010	243		1211
229-9078	1432		114		251		1212
	▶1433	230-2865	142		388		1213
229-9079	▶1263	230-2866	142		389		1214
229-9080	▶1259	230-2867	142		392		1215
	▶1261	230-2868	142		394		1226
	1263	230-2869	114		398		1227
229-9081	1259		116		404		1232
	▶1264	230-2870	114		406	232-0343	168
229-9082	1263		116		428		▶212
	▶1359		118		1396	232-1285	40
	1390		120		1399	232-1754	78
229-9083	▶1390	230-2871	142	231-1756	300		79
229-9084	▶1386	230-2876	142		▶301	232-2095	1197
	▶1388	230-2880	114	231-1764	▶430		1200
	1390	230-2881	114		605		1217
229-9085	1390		116	231-1766	▶408		1218
	▶1413		118	231-1767	▶409		1219
	▶1415		120	231-1768	▶1396		1220
229-9086	▶1507	230-2882	114	231-1771	▶238		1221
229-9087	▶1503		116	231-1827	242		1222
	▶1505		118		250		1223
	1507		120	231-1836	▶404		1233
229-9088	▶1487	230-2884	114		405	232-2096	1197
	1507	230-2887	104	231-2295	243		1200
229-9089	1437		▶114		251		1217
	▶1462		▶116		406		1218
229-9090	▶1446		▶118		1396		1219
	1462	230-2888	114	231-3046	7		1220
	1463		116		9		1221
229-9093	▶1447		118		11		1222
	1466		120		12		1223
229-9094	▶1382	230-2890	114		13		1233
	1446		116		14	232-2105	1201
	1447		118		15		1202
229-9095	1448		120		▶168		1203
	1451	230-2892	51	231-3047	168		1204
	▶1476		105	231-3949	7		1205
229-9098	▶1283	230-2893	5		9		1206
229-9099	1283		▶105		▶331		1207
	▶1285	230-2901	105	231-3950	7		1216
229-9100	▶1287	230-4009	243		9		1231
229-9101	1287		251		11	232-2106	1201
	▶1289		299		12		1202
	1309		382		13		1203
229-9108	▶1291		385		14		1204
229-9109	1291		406		15		1205
	▶1293		428		▶141		1206
230-0185	788	230-4011	243	231-7266	7		1207
230-0483	712		251		9		1216
230-0496	684		404		11		1231
	686		406		12	232-2147	1251
	688		428		13	232-2148	1251
	694		430		14	232-2923	1191
	696		1393		15		1193
	698		1394		▶85	232-2924	1192
	763	230-4012	779		▶88	232-3717	16
	765		1125	231-7847	168		17

▶ PRIMARY REFERENCE

PART NUMBER INDEX

Part	Page
	18
	19
	▶78
	▶79
232-4102	823
	830
	837
	▶1087
232-4104	1040
232-4113	1005
	1006
232-4114	1006
233-1119	20
	▶144
233-1120	20
	▶64
233-1123	20
	▶99
	▶100
233-1125	▶71
	▶72
	104
233-1127	128
	▶131
	▶132
233-1254	149
233-1293	64
233-1296	64
233-1299	64
233-7654	85
233-7655	103
234-1035	301
234-1037	301
234-1038	301
234-1051	242
	250
234-1097	367
234-1122	428
234-1124	1396
234-1156	303
	305
	307
	309
234-1158	303
	305
234-3931	1156
	1160
	1163
234-4440	952
	955
	▶989
234-4452	582
	585
	588
	591
	595
	599
234-4453	582
	585
	588
	591
	595
	599
234-4492	720
	722
234-4493	976
234-4494	976
234-4515	▶658
	781
	785
234-4581	611
	613
	615
234-4582	611
	613
	615
234-4583	611
	613
	615
234-4584	611
	613
	615
234-4585	611
	613
	615
234-4586	611
	613
	615
234-4592	743
	744
	751
	753
234-4629	969
234-6467	1293
234-6468	1295
	1305
	1307
234-6469	1295
	1305
	1307
234-6470	1295
	1305
	1307
234-6471	1295
	1305
	1307
234-6472	1295
	1305
	1307
234-6473	1295
	1305
	1307
234-6474	1295
	1305
	1307
234-6475	1305
234-6476	1295
	1305
	1307
234-6477	1295
	1305
	1307
234-6478	1305
234-6480	1295
	1305
	1307
234-6483	1295
	1305
	1307
234-6485	1295
	1305
234-6489	1496
234-6490	1295
	1305
	1307
234-6491	1295
	1305
	1307
234-6493	1289
234-6497	1295
	1305
	1307
234-6498	1295
	1305
	1307
234-6499	1344
234-6500	▶1345
234-6501	1283
	1287
	1291
	1309
	▶1344
234-6502	1344
234-6521	1295
	1305
	1307
234-6547	1295
	1305
	1307
234-6548	1295
	1305
	1307
234-6549	1295
	1305
	1307
234-6550	1295
	1305
	1307
234-6579	1295
	1305
	1307
	1325
	1327
	1329
	1331
234-6580	1325
	1327
	1329
	1331
234-6593	1344
234-6594	1285
	1289
	1293
	▶1508
234-6602	1327
	1329
234-6603	1325
	1331
234-6604	1327
	1329
234-6605	1325
	1331
234-6606	▶1277
	1327
234-6607	▶1278
	1325
234-6608	1325
	1327
	1329
	1331
234-6609	1325
	1327
	1329
	1331
234-6610	1325
	1327
	1329
	1331
234-6611	1325
	1331
234-6612	1325
	1331
234-6613	▶350
	1325
	1331
234-6614	1325
	1331
234-6615	350
235-5527	80
	82
235-5528	78
	▶80
235-7679	617
	619
	621
	623
	625
	626
	627
	1158
	1170
	1171
	1172
	1173
	1174
	1175
	1176
	1177
235-7764	3
	▶531
	562
	571
235-7765	531
235-7769	617
	619
	621
	623
	627
235-7771	611
	613
	615
235-7772	1136
	1138
	1140
	1142
	1144
235-8134	▶7
	10
235-8135	6

▶ **PRIMARY REFERENCE**

PART NUMBER INDEX

Part	Page
	▶9
235-8200	7
	9
	11
	12
	13
	14
	15
	▶311
235-8224	16
235-8226	17
235-8854	1405
	1409
235-8856	1432
	▶1473
235-8857	1473
235-8862	1429
235-8873	1259
	1261
	1386
	1388
235-8874	1259
	1261
	1386
	1388
235-8875	1259
	1261
	1386
	1388
235-8876	1359
235-8877	1359
235-8878	1359
235-8879	1359
235-8891	1405
	1409
235-8893	1319
	1321
	1323
235-8894	1319
	1321
	1323
235-8908	1285
	1289
	▶1295
235-8909	1285
	1293
	▶1496
235-8910	1285
	1289
	1293
	▶1297
	▶1301
235-8911	1497
235-8912	1297
	1301
235-8914	1325
	1327
	1329
	1331
235-8915	1289
	▶1497
235-8916	1285
235-8917	1293
	▶1305
	▶1307
235-8922	1295
	1305
	1307
235-8923	1295
	1305
	1307
235-8926	1295
235-8928	1295
235-8929	1295
235-8930	1305
	1307
235-8932	1508
235-8933	1297
	1301
235-8950	1295
	1305
	1307
235-8951	1277
	1279
235-8952	1278
	1280
235-8965	1325
	1331
235-8966	1327
	1329
235-8969	▶1334
	1343
235-8970	▶1335
	1342
235-8971	1334
235-8972	1335
235-8974	1503
	1505
235-8995	1277
	1278
235-8996	1277
	1278
	1279
	1280
235-8997	1277
	1279
235-8998	1278
	1280
235-9001	1283
	1287
	1291
	1309
235-9006	1259
	1261
235-9012	1485
	1486
	1487
235-9014	1405
	1409
	1413
	1415
235-9015	1405
	1413
235-9020	▶1441
	1442
235-9028	▶1448
	1449
235-9651	195
	196
	197
236-2843	810
	813
	817
236-2844	810
	813
	817
236-2848	810
	813
	817
236-2946	931
236-3170	996
236-3200	773
	775
	777
	779
236-3223	808
236-3257	661
236-3258	661
236-3259	661
236-3261	865
	867
	869
236-3304	498
	502
	506
236-3313	498
	502
	506
236-3328	498
	502
	506
236-3329	498
	502
	506
	▶535
236-3330	535
236-3345	498
	502
	506
236-3354	498
	502
	506
236-3358	498
	502
236-3363	498
	502
	506
236-3365	498
	502
236-3367	498
	502
	506
236-3370	498
	502
	506
236-3382	▶470
	498
236-3387	498
	502
	506
	▶523
236-3388	523
236-3389	523
236-3395	104
	▶510
	▶511
236-3396	498
	502
	506
236-3397	▶474
	498
236-3398	474
236-3399	525
236-3637	493
236-3639	494
236-3641	494
236-3669	444
236-3670	444
236-3671	444
236-3702	482
236-3703	482
236-3747	477
	481
236-3751	▶475
	498
236-3752	475
236-4283	7
	14
	▶16
236-4284	9
	13
	▶17
236-4413	108
	▶110
236-4420	110
236-4421	110
236-4545	334
236-6220	313
	315
	▶322
236-6221	313
	315
	▶325
236-6365	1158
	1162
236-6419	1009
	1011
	1013
	1019
	1025
	1031
	1035
	1044
	1048
236-6421	1013
	1019
	1025
	1031
	1035
	1044
	1048
236-8464	538
236-8465	538
236-9435	444
236-9437	444
236-9438	444
236-9440	444
236-9527	451
	454
	457

▶ PRIMARY REFERENCE

PART NUMBER INDEX

Part	Page	Part	Page	Part	Page	Part	Page
	458	236-9545	517	238-2280	301	239-2758	1184
	461		518	238-2318	367	239-2875	1194
	464		519	238-2346	▶294	239-4329	▶554
	465		521		1133	239-4363	538
	466	236-9546	517		1134		▶547
	467		518		1135	239-4364	547
	468		519		1146		▶548
	469		521	238-2347	294	239-4365	547
236-9528	451	236-9556	533	238-2390	367		▶549
	454	236-9567	470	238-2391	367	239-4366	548
	457		472	238-2478	▶360		▶559
	458		473		432	239-4367	549
	461	236-9568	470	238-2479	360		▶560
	464		472	238-2485	▶432	239-4369	561
	465		473		605	239-4373	▶537
	466	236-9570	482	238-2501	242		561
	467	236-9575	526		250	239-4374	537
	468	236-9590	▶476		258	239-4375	537
	469		510	238-2528	242	239-4416	561
236-9529	451	236-9591	476		250	239-4417	561
	454	237-3182	▶672		258	239-4418	559
	457		▶674	238-2529	242		560
	458	237-3184	▶676		250		▶561
	461		▶678	238-2698	68	239-4419	559
	464	237-5176	106	239-0583	24		560
	465	237-5586	533	239-1134	334	239-6525	671
	466	237-8476	498		▶362		▶975
	467		502	239-1844	382	239-6598	▶606
	468		506	239-2396	158		975
	469	237-8480	512		161	239-6599	606
236-9536	451	237-9312	158		165	239-6676	▶334
	454		161		170		336
	457		165		174	239-6686	144
	458		170		178	239-6687	144
	461		174		▶323	239-6986	1530
	464		178	239-2402	209		1536
	465	238-1432	▶300		210		1542
	466		1432	239-2431	1185		1548
	467	238-1463	1396	239-2432	1185		1554
	468	238-1506	301	239-2445	1184		1560
	469	238-1570	194		1185		1565
236-9539	451		▶418	239-2562	▶1181		1570
	454		▶420	239-2563	1181	239-7352	404
	457	238-1579	418	239-2565	▶1182		406
	458		420	239-2568	▶1183		428
	461	238-1593	418	239-2569	1183	239-7356	382
	464	238-1594	▶353		▶1194		385
	465		418	239-2590	1184	239-8693	604
	466		420	239-2591	1184		▶1338
	467	238-1595	353	239-2649	1195	239-8695	604
	468	238-1596	▶354	239-2687	▶1183		605
	469		418	239-2688	1183		▶1339
236-9540	498		420		▶1195	239-8697	957
	502	238-1597	354	239-2696	▶1183		▶958
	506	238-2208	▶361	239-2697	1183	239-8774	1035
	▶517		1507		▶1196		1044
236-9541	517	238-2209	361	239-2699	▶1184		▶1100
236-9543	517	238-2210	361	239-2700	1184	239-8998	957
	518	238-2211	1464	239-2701	▶1190		▶959
	519		1468	239-2702	▶1185	239-9097	823
	521	238-2212	367		1190		830
236-9544	517	238-2216	1396	239-2703	1185		837
	518		1399	239-2733	1181		844
	519	238-2260	1398		1182		851
	521	238-2279	301	239-2738	1185		858

▶ **PRIMARY REFERENCE**

PART NUMBER INDEX

Part	Page
239-9098	823
	830
	837
	844
	851
	858
239-9117	823
	830
	837
	844
	851
	858
239-9118	823
	830
	837
	844
	852
	859
239-9954	267
	▶275
240-2912	1162
240-2913	1171
240-2914	621
	623
	627
240-3858	▶1154
240-3861	▶1154
240-3920	202
	204
240-3957	▶282
240-3961	▶2
240-3962	▶2
240-3970	▶1
	2
240-3971	▶1
	2
240-3979	1
	▶1530
	▶1536
	▶1542
	▶1548
240-3980	1
	▶1554
	▶1560
	▶1565
	▶1570
240-3984	2
	▶538
240-3985	2
	▶538
240-3990	▶571
240-3994	▶1133
240-3996	▶1134
240-3998	▶1133
240-3999	▶1135
240-4000	▶1133
240-4001	▶1166
240-4002	▶1166
240-4003	▶1166
240-4004	▶1166
240-4005	▶1167
240-4006	▶1167
240-4007	▶1167
240-4008	▶1154
240-4010	▶1155
240-4011	▶1155
	▶562
240-4023	▶1511
	▶1513
240-4024	▶1515
240-4999	▶1436
240-5001	▶1449
240-5003	▶1437
240-5036	▶1267
	1386
240-5039	▶1442
240-5056	▶1450
240-5057	1450
	▶1451
240-5058	1451
	▶1452
240-5060	▶1383
240-5061	▶1438
240-5062	1438
	▶1463
240-5063	1463
	1466
	▶1477
240-5064	▶1464
240-5065	1464
	▶1466
240-5071	▶1361
240-5073	▶1362
240-5074	1359
241-1933	533
241-1938	533
241-2296	217
	219
241-2896	74
241-3400	▶155
	195
241-4194	334
241-7151	1
	▶484
241-7152	484
241-7231	1174
	1175
241-7381	630
	632
	634
241-7382	617
	619
241-7602	7
	9
	11
	12
	13
	14
	15
	▶273
241-9264	149
242-1510	1530
	1536
	1542
	1548
	1554
	1560
	1565
	1570
242-1588	1530
242-1589	1528
242-2450	31
242-3360	152
242-3864	85
	88
242-6092	1530
	1536
	1542
	1548
	1554
	1560
	1565
	1570
242-6492	▶680
242-6494	▶762
242-6755	▶608
	1154
242-6756	608
	▶617
242-6757	608
	▶756
242-6758	▶608
	1154
242-6759	608
	▶619
242-6801	976
242-6803	976
242-6804	976
242-6856	▶607
	1133
	1134
	1146
242-6857	▶607
	1133
	1134
	1146
242-6858	607
	▶611
242-6859	▶610
	1133
	1134
242-6860	610
	▶630
242-6863	▶609
	1154
	1155
242-6864	609
	▶621
242-6865	▶607
	1133
	1134
	1135
242-6866	▶607
	1133
	1134
	1135
242-6867	607
	▶613
242-6868	▶610
	1133
	1134
	1135
242-6869	610
	▶632
242-6870	▶609
	1154
	1155
242-6871	609
	▶623
242-6872	607
	▶743
242-6873	607
	▶744
242-6875	609
	▶757
242-8768	1475
	1476
	1477
242-9230	266
243-4505	204
	243
	251
	375
	404
	406
	428
	430
	1396
	1399
243-4506	243
	251
	1399
243-4507	365
	422
	424
	428
243-4508	243
	251
	357
	371
	394
	398
	404
	416
	428
243-4509	243
	251
	388
	428
	1396
243-4510	251
	382
	385
	389
	392
	406
	428
244-1716	1346
244-1720	312
244-3168	273
244-4235	1166
	▶1170
244-4236	1170

▶ PRIMARY REFERENCE

PART NUMBER INDEX

Part	Page
244-4254	1162
244-4255	1162
244-4262	1154
	▶1156
244-4263	1156
	1160
244-4264	1156
	1160
	1163
244-4265	1156
244-4351	1133
	▶1136
244-4352	1134
	1135
	▶1138
244-4353	1133
	1134
	▶1140
244-4354	1166
	▶1171
244-4355	1167
	▶1172
244-4356	1166
	▶1173
244-4357	1167
	▶1174
244-4358	1167
	▶1175
244-4360	1156
	1160
	1162
	1163
244-4486	31
	32
244-4500	53
244-7895	474
	480
244-7912	498
	502
	506
	▶524
244-7913	524
244-7915	524
244-7916	524
	526
244-7917	498
	502
	506
	▶525
244-7921	525
244-7922	498
	502
	506
	▶526
244-8139	1
	▶447
	▶448
244-8140	447
	▶454
244-8141	▶455
	▶456
244-8142	455
	▶457
244-8143	▶449
	▶450
244-8144	449
	▶451
244-8150	1
	▶493
244-8151	▶494
244-8400	▶1008
	1009
	1011
244-8419	1001
	▶1009
245-2385	▶682
245-2386	▶684
	▶686
	▶688
	▶690
245-2387	▶718
	▶719
245-2388	▶763
245-2389	▶692
245-2390	▶694
	▶696
	▶698
	▶700
245-2391	▶932
	▶933
245-2392	▶765
245-2393	▶702
	▶704
245-2399	▶706
	▶708
245-2400	▶949
	1002
245-3259	61
245-3260	16
	17
	18
	19
	▶61
245-4630	325
245-5079	810
	813
	817
245-5122	745
245-5187	671
	▶952
245-5188	671
	▶955
245-5190	671
	▶720
	▶722
245-5191	671
	▶770
245-5192	▶724
	▶726
	1133
	1134
245-5195	▶728
	▶730
	1134
	1135
245-5197	▶945
	1166
245-5200	605
	▶773
	▶775
	▶777
	▶779
245-5210	652
	▶781
	▶785
245-5457	1530
	1536
	1542
	1548
	1554
	1560
	1565
	1570
245-6795	139
	140
245-6796	32
245-7760	367
245-7790	1295
	1305
	1307
	1325
	1327
	1329
	1331
245-7791	1359
245-7792	1359
245-7793	1359
245-7795	▶1363
245-7800	1405
	1409
245-7811	1
	▶1429
245-7812	1264
	1273
	▶1395
245-7813	1336
	1395
245-7814	1336
	1395
245-7815	1336
	1395
245-7816	1336
	1395
245-7817	1264
	1267
	1270
	1273
245-7818	1264
	1267
	1270
	1273
245-7819	1264
	1267
	1270
	1273
245-7820	1264
	1267
	1270
	1273
245-7821	1264
	1273
245-7823	1264
	1267
	1270
245-7824	1264
	1267
	1270
	1273
245-7825	1264
	1267
	1270
	1273
245-7826	1264
	1267
	1270
	1273
245-7827	1264
	1267
	1270
	1273
245-7828	1264
	1267
	1270
	1273
245-7829	1264
	1267
	1270
	1273
245-7830	1264
	1267
	1270
	1273
245-7831	1264
	1267
	1270
	1273
245-7832	1264
	1267
	1270
	1273
245-7833	1264
	1267
	1270
	1273
245-7834	1264
	1267
	1270
	1273
245-7835	1264
	1267
	1270
	1273
245-7836	1264
	1267
	1270
	1273
	▶1312
245-7837	1312
245-7838	1264
	1267
	1270
	1273
245-7839	1264
	1267
	1270
	1273
245-7842	1334
245-7844	1335

▶ **PRIMARY REFERENCE**

PART NUMBER INDEX

Part	Page
245-7846	1267
	1270
	▶1336
245-7847	1267
	1270
245-7850	1409
245-7851	1409
245-7856	1264
	1267
	1270
	1273
245-7858	1386
	1388
245-7868	1317
	1318
245-7869	1317
245-7870	1317
	1318
245-7871	1317
	1318
245-7872	1359
245-7873	1359
245-7876	1317
	1318
245-7877	1317
	1318
245-7881	▶1435
245-7882	1452
245-7883	1445
245-7884	1446
245-7885	1447
245-7886	1258
245-7887	1445
	1446
	1447
	1452
245-7888	1445
	1446
	1447
	1452
245-7889	▶1257
	1475
	1476
	1477
245-7890	▶1282
	1475
	1476
	1477
245-7891	▶1474
	1476
245-7892	1475
	▶1478
245-7895	1401
	1402
	1403
	1475
	1476
	1477
245-7896	▶1258
	1475
	1476
	1477
245-7897	1257
	1258
	1282
	1474
	1475
	1478
	1479
245-7898	1258
	1445
	1446
	1447
	1452
	1474
	1478
	1479
245-7899	1257
	1282
	1474
	1475
	1478
	1479
245-7900	484
245-7901	484
245-7903	1317
	1318
245-7904	1317
245-7905	1312
245-7906	1317
	1318
245-7909	20
	▶1316
245-7911	1317
	1318
245-7913	1405
	1409
245-7916	1433
245-7922	▶1319
	▶1321
	▶1323
	1432
245-7923	1319
	▶1325
245-7924	1319
	▶1327
245-7925	1325
	1331
245-7926	1327
	1329
245-7929	1344
245-7931	1508
245-7948	1325
	1327
	1329
	1331
245-9181	114
	116
	118
	120
245-9205	114
	116
	118
	120
245-9207	111
	122
	124
245-9208	111
	122
	124
	126
245-9209	111
	122
	124
	126
245-9211	111
245-9212	111
	122
	124
	126
245-9213	111
	122
	124
	126
245-9214	111
	122
	124
	126
245-9215	111
	122
	124
	126
245-9216	111
	122
	124
	126
245-9217	111
	122
	124
	126
245-9218	111
	122
	124
	126
245-9219	111
	122
	124
	126
245-9220	111
	122
	124
	126
245-9221	111
	122
	124
	126
245-9222	111
	122
	124
	126
245-9223	111
245-9276	111
	122
	124
245-9277	111
	122
245-9295	20
	▶120
246-2641	213
	214
	215
246-5083	31
246-9353	311
247-1876	24
247-2693	404
	406
	428
247-2694	1424
247-2695	1424
247-5284	▶267
	282
247-7393	▶652
247-7423	604
	605
	▶1517
247-7424	604
	▶1518
247-7436	1530
	1536
	1542
	1548
	1554
	1560
	1565
	1570
247-7437	1530
	1536
	1542
	1548
	1554
	1560
	1565
	1570
247-7438	1530
	1536
	1542
	1548
	1554
	1560
	1565
	1570
247-7441	1530
	1536
	1542
	1548
	1554
	1560
	1565
	1570
247-7451	▶1003
247-7458	▶199
247-7462	▶999
247-7468	1530
	1554
247-7469	1530
	1554
247-7472	1530
247-7473	1554
247-7476	1530
	1554
247-7480	1530
	1536
	1542
247-7481	1554
	1560
	1565
247-7490	1002
	▶1519
247-7495	1511

▶ PRIMARY REFERENCE

PART NUMBER INDEX

Part	Page
247-7496	1515
247-7587	1054
247-8782	976
247-8865	617
	619
247-8873	630
	632
	634
247-8874	630
	632
	634
247-8878	630
247-8885	617
	619
247-8886	617
	619
247-8887	617
	619
247-8888	617
247-8920	976
247-8991	658
247-9006	621
	623
	627
247-9228	682
247-9229	682
247-9230	684
	686
	688
247-9233	684
	686
	688
247-9236	684
	686
	688
	690
247-9239	684
	686
	688
	690
247-9242	684
	686
	688
	690
247-9251	763
247-9255	763
247-9263	763
247-9267	763
247-9294	763
	765
247-9298	684
	686
	688
	690
	694
	696
	698
	700
247-9300	684
	694
247-9301	684
	694
247-9321	949
247-9322	949
247-9324	949
247-9326	949
247-9331	682
	692
248-1669	▶446
248-1671	1136
248-1674	1136
	1142
248-1711	1166
	▶1176
248-1951	1138
248-1952	1138
248-7175	537
248-7820	1158
248-7822	1158
248-7823	1158
248-7831	1146
	▶1158
248-7832	1158
248-7835	1158
248-7836	1158
248-7854	609
	▶625
	▶626
248-7855	625
	▶637
248-7856	637
248-7857	637
	639
248-9069	493
248-9070	493
248-9296	158
	161
	170
	174
248-9312	498
	502
	506
248-9313	454
248-9314	457
248-9315	451
248-9337	447
	448
	449
	450
	452
	455
	456
	459
	460
	462
	463
248-9518	724
248-9519	724
248-9520	724
	726
	728
	730
248-9521	724
	726
	728
	730
248-9525	724
248-9526	724
248-9529	724
248-9530	724
248-9632	▶946
	1166
248-9707	745
	748
248-9722	745
	748
248-9723	745
	748
248-9724	745
	748
248-9725	745
	748
248-9726	745
	748
248-9728	745
	748
248-9732	745
248-9825	671
	▶810
	▶813
	▶817
248-9826	671
	▶821
248-9827	671
	▶823
	▶830
	▶837
	▶844
	▶851
	▶858
248-9829	671
	▶865
	▶867
	▶869
248-9830	▶934
	▶936
	995
248-9831	671
	▶759
248-9833	671
	▶808
248-9866	770
248-9870	770
248-9874	770
248-9878	770
248-9896	759
249-5523	25
	26
249-6673	91
249-9223	7
	9
	11
	12
	13
	14
	15
	▶332
	▶333
250-1440	680
	710
	712
	714
250-2446	1013
	1019
	1025
	1035
	1044
	1048
250-2447	1013
	1019
	1025
	1035
	1044
	1048
250-2503	976
250-5022	498
	502
	506
250-5024	498
	502
	506
250-5054	477
	481
250-5072	242
	250
250-5073	242
	250
250-5075	242
	250
250-5076	242
	250
250-5101	535
250-5108	523
250-5109	523
250-5197	498
	502
250-5785	25
	26
250-6183	158
	161
	165
250-6415	1182
250-6417	1179
250-6418	▶1179
	1181
	1182
	1183
	1190
250-6430	▶1180
	1184
	1185
	1187
	1189
250-6457	1180
250-7696	▶152
	153
250-8054	1517
	1518
251-0299	428
251-0303	301
251-0304	301
251-0429	1
	▶242
	▶250
251-0430	▶428
	1432
251-0432	▶367
	1432
251-0433	▶405
	1432

▶ **PRIMARY REFERENCE**

PART NUMBER INDEX

Part	Page
251-0435	405
	▶406
251-0436	▶278
	604
251-0440	▶258
	336
251-0441	▶363
251-0442	▶427
	652
251-0448	104
	▶415
251-0451	242
	250
251-0452	363
251-0454	258
251-0455	363
251-0456	363
251-0457	427
251-0464	243
	251
251-0467	243
	251
251-0482	▶411
251-0483	411
	412
251-0485	▶412
251-0526	▶280
	1432
251-0529	▶371
	604
	605
251-0530	▶389
	▶392
	604
	605
251-0538	▶1398
251-0542	▶303
	▶305
251-0543	303
	307
251-0544	284
	▶307
	▶309
251-0580	404
251-0598	371
251-0599	389
251-0602	406
251-0611	▶296
	1146
251-0612	▶298
251-0637	367
251-2537	1138
	1140
251-4162	263
252-2328	7
	9
	11
	12
	13
	14
	15
	▶31
	▶32
252-7801	46
252-9551	7
	9
	11
	12
	13
	14
	15
	▶21
253-0437	7
	9
	11
	12
	13
	14
	15
	▶22
253-0861	1530
	1536
	1542
	1548
	1554
	1560
	1565
	1570
253-1346	559
	560
253-2111	301
253-6410	684
	686
	688
	690
253-6413	763
253-6417	718
	719
253-6419	718
	932
253-6453	672
	674
253-6454	672
	674
253-6455	710
253-6497	▶710
253-6498	▶767
253-6548	767
253-6551	767
253-6557	710
253-6588	▶712
253-6589	▶768
253-6591	▶714
253-6592	▶769
253-6617	718
	719
253-6621	672
	674
253-6625	672
	674
253-6664	▶609
	1146
253-6678	692
253-6679	692
253-6680	682
	692
253-6685	680
253-6688	762
253-6691	762
253-6694	676
	678
253-6697	676
	678
253-6701	694
	696
	698
253-6704	694
	696
	698
253-6707	694
	696
	698
	700
253-6710	694
	696
	698
	700
253-6713	694
	696
	698
	700
253-6716	694
	696
	698
	700
253-6719	▶605
253-6724	765
253-6727	765
253-6730	765
253-6733	765
253-6736	765
253-6739	765
253-6742	768
253-6745	768
254-2909	1174
254-2935	1155
	▶1160
254-2938	1175
254-3017	538
	▶539
254-3018	▶540
254-3019	▶541
254-3020	▶542
254-3021	▶543
254-3052	1162
254-3053	1162
254-3080	804
	▶1054
254-3808	16
	17
	18
	19
	▶153
254-4357	184
	▶206
254-7342	7
	9
	11
	12
	13
	14
	15
	▶91
255-0420	1195
255-0421	1195
255-0425	1195
255-0475	1196
255-0478	1196
255-0479	1196
255-0493	1182
255-0496	1182
255-0497	1182
255-0499	1181
255-0500	1181
255-0502	1181
255-0939	312
255-1629	745
255-1632	808
255-1657	▶871
	▶874
	1002
255-1659	▶877
	▶879
	999
255-1661	604
	▶881
	▶884
255-1663	605
	▶887
	▶889
255-1664	605
	▶891
	▶896
	▶900
255-1665	810
	813
	817
255-1666	810
	813
	817
255-1669	881
	884
	891
	896
	900
	910
	914
	920
255-1671	871
	874
255-1693	781
	785
255-1695	781
255-1699	781
	785
255-1702	781
	785
255-1705	781

▶ PRIMARY REFERENCE

PART NUMBER INDEX

Part	Page	Part	Page	Part	Page	Part	Page
	785		132		▶595		15
255-1724	▶904	255-2899	149		▶599		▶313
	▶906	255-2906	334		976		▶315
	1002	255-2909	334	256-1644	1	257-4502	1530
255-1734	745	255-2910	334		▶497		1536
	748	255-2966	129	256-1665	158		1542
255-1736	745		130		161		1548
255-1737	745		135	256-1666	158		1554
255-1768	604		136		161		1560
	▶788	255-2994	334		170		1565
255-1769	604	255-2995	334		174		1570
	605	255-3053	20	256-1670	498	257-5015	1519
	▶791		▶133		502	257-9145	7
	▶795		▶134		506		9
255-1770	604	255-3170	1519		▶536		11
	▶799	255-3171	1519	256-1671	536		12
255-1775	605	255-3173	1519	256-1672	536		13
	▶802	255-4410	1435	256-1677	▶471		14
255-1777	▶754	255-5660	1013		498		15
255-1781	871		1019		502		▶25
	874		▶1102		506		▶26
255-1787	720	255-5661	1011	256-1678	471	258-0312	808
	722		1013		512	258-0330	1368
255-1791	720		1019	256-1679	471		1370
	722		1025		512		1373
255-1792	720		1031	256-1681	523	258-0883	161
	722		1035	256-1682	524		165
255-1793	955		1044	256-1686	525		170
255-1800	604		1048	256-1687	525		174
	▶908		▶1103	256-1689	526		178
255-1801	604	255-5662	1058	256-1691	526		▶352
	▶910		1061	256-1692	526	258-6749	804
	▶914		1063	256-1693	526		▶1123
255-1802	604		1065	256-1696	498	258-7531	239
	▶918		▶1104		502	258-8723	7
255-1803	604	255-5680	770		506		9
	▶920		▶1063	256-1698	498		11
255-1824	781	255-5683	770		502		12
	785		▶1065		506		13
255-1843	▶924	255-5713	604		▶528		14
	▶926		▶1000	256-1702	528		15
	1432	255-5716	605	256-1703	528		▶53
255-1858	865		▶1001	256-1704	528	258-9892	1314
	867	255-5726	▶1002	256-1705	243		1315
	869	255-5777	2		251	259-0652	613
255-1871	▶745		▶671	256-1707	243	259-0653	613
	▶748	255-5778	2		251	259-0654	613
	1002		▶671	256-1708	526	259-0658	658
255-1872	▶938	255-5781	999	256-1710	526	259-0659	611
	▶940		▶1067	256-1725	512		613
	1002	255-5793	▶1002	256-1774	512		615
255-1877	▶928	255-5799	▶1002	256-3830	79	259-0660	611
	1432	255-5824	▶604		▶82		613
255-1936	788	255-5825	▶604	256-3831	▶75		615
	799	255-5826	▶604		82	259-0661	611
255-1997	788	255-5827	▶605	256-3832	75		613
	791	256-0075	582	256-3834	▶76		615
	795	256-0078	591		82	259-0665	611
	799	256-0081	976	256-3835	76	259-0671	630
255-2001	745	256-0083	976	257-2186	7		632
255-2016	788	256-0088	▶582		9		634
	791		▶585		11	259-0672	630
	795		▶588		12		632
	799		976		13		634
255-2866	131	256-0089	▶591		14	259-0673	621

▶ **PRIMARY REFERENCE**

PART NUMBER INDEX

Part	Page
	623
	627
259-0674	621
	623
	627
259-0675	621
	623
	627
259-0678	621
259-0679	757
	758
259-0680	1003
	▶1129
259-0714	610
	▶951
259-0774	613
259-0775	632
259-0776	623
259-0911	743
	751
259-0912	743
	744
	751
	753
259-0913	744
	753
259-0918	981
259-0922	▶981
	996
259-3543	482
259-3721	451
	454
	457
	458
	461
	464
	465
	466
	467
	468
	469
259-3861	494
259-3863	494
259-3872	216
	▶217
259-3875	216
	▶219
259-3885	▶170
	▶174
	▶178
	199
259-3890	170
259-3915	170
	174
	178
259-4746	282
	▶1431
259-4877	406
259-4883	367
259-4884	377
	432
259-4886	394
259-4887	396
259-4914	1398
259-4938	282
	▶394
259-4940	394
	396
	398
	400
259-4965	1
	▶417
259-5053	199
	▶422
	▶424
259-5054	422
259-5071	389
	392
259-5073	389
259-5075	389
	392
259-5118	199
	▶375
259-5119	375
259-5237	▶281
	999
259-5253	▶1399
259-5254	1399
259-5323	296
259-5324	298
259-7174	▶1309
259-7177	▶1432
259-7179	▶1340
	1432
259-7180	432
259-7188	1413
	1415
259-7202	1331
259-7214	1435
259-7215	1435
259-7220	377
259-7295	▶1281
	1297
	1301
259-7345	1280
259-7346	▶1279
	1329
259-7347	▶1280
	1331
259-7348	1321
	1323
	▶1329
259-7349	1321
	1323
	▶1331
259-7350	1293
	▶1381
259-7351	1381
259-7352	1381
259-7353	1305
	1307
259-7354	1348
	1350
	1352
	1355
259-7378	1000
	1001
	▶1011
259-7380	671
	▶1069
259-7381	▶1013
	▶1019
	▶1025
	1069
259-7382	▶1031
	1067
	1069
	1070
259-7451	▶1035
	1067
259-7723	1031
	▶1040
259-7724	1013
	1035
	▶1042
259-7732	831
	838
	▶1116
259-7733	1116
259-7788	1058
	1061
259-7848	1100
	1106
259-7849	1100
	1106
259-7850	1100
	1106
259-7851	1100
	1106
259-7852	1100
	1106
259-7877	1339
260-2042	267
	270
	286
260-2046	266
260-2056	4
	6
	▶277
260-2207	▶268
	282
	283
260-2229	268
	271
	286
260-2276	539
260-2277	540
	542
260-2278	541
	543
260-2286	446
260-2288	1154
	▶1162
260-2289	1162
260-2295	1176
260-2337	1140
260-2344	1172
260-2368	1173
260-2390	484
260-2463	1160
	1163
260-2524	▶1152
	1166
260-3877	773
	775
	777
	▶1125
260-3883	779
	1125
	1126
260-4057	1148
260-6692	236
260-6945	1517
260-6946	1518
260-6948	1432
260-7524	76
260-7868	671
	▶972
260-7872	788
	791
	795
	799
260-7900	773
	775
	777
	779
260-7904	972
260-7906	972
260-7912	666
260-7923	728
260-7940	759
260-7959	788
	791
	795
	799
260-7964	781
	785
260-8025	952
260-8039	945
260-8043	788
	799
261-9367	152
262-1421	270
	▶276
262-2043	▶276
	282
262-2178	517
	518
	519
	521
262-2209	497
262-2376	493
262-2377	493
262-2379	494
262-2382	494
262-2384	494
262-2400	▶477
	498
262-2401	477
	481
262-2402	477
262-2442	517
	518
	519
	521
262-2443	517
	519
262-2464	510
	511
	516

▶ PRIMARY REFERENCE

PART NUMBER INDEX

Part	Page
	▶518
262-2465	518
262-2468	475
	478
262-2472	498
	502
	506
262-2481	498
	502
	506
262-2486	104
	▶495
262-2487	495
262-2489	495
262-2491	498
	502
	506
262-2494	498
	502
	506
262-2495	499
	503
	507
262-2497	258
	▶529
262-2498	529
262-2499	529
262-2502	258
262-2503	258
262-2507	533
262-2509	512
262-2598	158
	161
	165
262-2604	170
	174
	178
262-2879	273
262-3148	932
	933
262-3152	769
262-3155	769
262-3225	706
	708
262-3228	714
262-3582	▶1146
262-3838	1201
	1218
	1229
262-3839	1202
	1219
	1233
262-3840	1197
	1198
	1199
	1200
	1204
	1221
	1225
	1228
262-3841	1205
	1222
	1230
262-3842	1201
	1218
	1229
262-3843	1202
	1219
262-3844	1204
	1221
	1225
	1228
262-3845	1205
	1222
	1230
262-3846	1201
	1218
	1229
262-3847	1202
	1219
262-3848	1204
	1221
	1225
	1228
262-3849	1205
	1222
262-9372	217
	219
	222
	226
262-9373	217
	219
263-1825	71
263-1826	48
263-1830	71
263-1848	7
	9
	11
	12
	13
	14
	15
	▶73
	▶74
263-1849	73
263-1850	7
	9
	11
	12
	13
	14
	15
	▶48
	▶49
263-3774	▶36
	37
263-6699	299
	382
	385
263-8948	1427
263-9088	268
	271
	▶1434
263-9574	250
	258
264-1765	1171
264-2115	1189
	1208
	1209
	1210
264-2116	1189
	1208
	1209
	1210
	1211
	1212
	1213
	1214
	1215
	1226
	1227
	1232
264-4297	327
264-6157	40
264-7034	299
264-8550	▶282
264-8551	▶283
264-8555	▶4
264-8596	▶10
264-9961	1013
	1019
	1025
	1035
	1044
	1048
265-3515	111
	122
	124
	126
265-3559	116
	▶122
265-3560	116
	118
	120
265-3580	122
	124
	126
265-3592	122
265-3593	51
265-3686	118
	▶124
265-3687	124
265-3688	120
	▶126
265-8047	312
265-8059	312
265-8145	299
265-8146	299
265-9492	312
265-9642	276
265-9643	276
266-0925	▶930
	1002
266-0943	791
	795
266-0953	791
	795
266-0982	824
	831
	838
	845
	852
	859
	934
	936
266-1102	831
	838
	845
	852
	859
266-1146	830
	837
	844
	851
	858
266-1158	891
	896
	900
	920
266-1278	791
	795
	799
266-1279	791
	795
266-1303	791
	795
	799
266-1385	791
	795
266-5431	1530
	1536
	1542
	1548
	1554
	1560
	1565
	1570
266-6260	2
	▶5
266-6329	149
266-6348	149
266-7892	619
266-7964	751
	753
	758
266-7965	951
266-7967	627
266-7968	634
266-7979	▶608
	636
266-7980	▶608
	636
266-7981	608
	▶615
266-7982	▶610
	636
266-7983	610
	▶634
266-7984	▶609
	636
266-7985	609

▶ **PRIMARY REFERENCE**

PART NUMBER INDEX

Part	Page	Part	Page	Part	Page	Part	Page
	▶627		309	270-5455	286		1224
266-8012	634	267-8020	388	270-5582	1428		1231
266-8013	615	267-8024	1428	270-5589	1428		1234
266-8014	627	267-8071	1	270-5603	2	273-3425	1207
266-8026	615		▶1391		▶1425	273-3426	1216
266-8037	608		▶1392	270-5947	813		1217
	▶751	267-8072	1391		▶1077	273-3427	1203
266-8038	608		▶1393	270-5949	1077		1220
	▶753	267-8073	1393		1083		1224
266-8040	609	268-1835	▶156	270-5950	1077	273-3428	1207
	▶758		196		1083	273-3429	1216
267-0063	1152	268-1839	16	270-5953	1081		1217
267-0064	1152		17	270-7510	18	273-3430	1203
267-0065	1152		18	270-7512	19		1220
267-0066	1152		19	270-9650	▶452		1224
267-0067	1152		▶196		1146	273-3431	1207
267-0068	1152		▶197	270-9651	452	273-3433	1233
267-4495	1528	268-1964	367		▶458	273-3434	1231
267-4743	103	268-4530	1522	270-9652	458		1234
267-6785	644	268-4531	1522	271-2417	31	273-3437	1233
267-6797	437	268-6816	605		32	273-3438	1231
267-6799	437		▶1520	272-0388	32		1234
267-6800	437	268-6817	1520	272-1956	147	273-3475	1230
267-6863	437	268-6820	▶605		148	273-3500	1201
267-6864	437	268-6917	▶1144	272-4250	904		1202
267-6865	437		1146		906		1203
267-6866	437	268-6918	1144	272-4624	20		1204
267-6867	437	268-6920	▶732		▶145		1205
267-6868	437		1146		▶146		1206
267-6869	437	268-6921	732	272-4625	145		1207
267-6870	437	268-6922	732		146		1216
267-6871	437	268-6923	732	272-4800	64	273-5156	1405
267-6878	▶437	268-7022	▶803	272-6957	975		1409
	440		1146		▶976	273-5274	1490
267-6879	437	268-7183	803	273-1269	1206	273-5315	1316
267-6885	438	268-7201	1146		1223		▶1317
267-6913	▶440		▶1521	273-1270	1206		▶1318
	441	268-7202	1521		1223	273-5316	1317
267-7591	367		1525	273-1271	1206		1318
267-7592	428	268-8643	381	273-2838	32	273-5333	1364
267-7642	▶377	268-8872	1522	273-3381	1208	273-5337	1317
	605	269-0120	1522		1209		1318
267-7643	▶365	269-0121	1522		1210	273-5345	1365
	605	269-9561	605		1211		1490
267-7644	377		▶804		1212	273-5346	1365
267-7645	365	269-9700	884		1213		1490
267-7671	377		900		1214	273-5358	2
267-7672	377		914		1215		▶1364
267-7676	377	269-9786	804	273-3382	1208	273-5359	1364
267-7751	282	269-9864	804	273-3383	1211	273-5360	1364
	283	269-9919	877		1232	273-5384	1477
	▶396		879	273-3384	1212		▶1479
267-7752	283	270-0020	802	273-3385	1213	273-5386	1479
	▶398	270-2767	5	273-3386	1208	273-7678	499
	▶400		▶11	273-3387	1211		503
267-7790	396	270-2768	4	273-3388	1212		507
	398		▶12	273-3389	1213	273-7681	499
	400	270-4211	11	273-3390	1208		503
267-7961	430		15	273-3391	1211		507
267-7967	424		▶18	273-3392	1212	273-7799	451
267-7968	392	270-4212	12	273-3393	1213		454
267-7969	243		▶19	273-3423	1216		458
267-7976	303	270-5320	154		1217		461
	305	270-5433	286	273-3424	1203		464
267-7977	307		1427		1220		465

▶ PRIMARY REFERENCE

PART NUMBER INDEX

Part	Page	Part	Page	Part	Page	Part	Page
	466		900		910		▶1074
	467		910		914	277-1188	732
	468		914		920	277-1189	732
	469		920	275-1506	881	277-1190	732
273-7802	498	275-1443	824		884	277-1191	732
	502		831		891	277-1192	732
	506		838		896	277-1193	732
	▶530		845		900	278-3581	444
273-7803	530		852		910	278-3818	483
273-7804	530		859		914	278-3920	▶459
273-7964	444		881		920		▶460
273-8314	976		884	275-1534	791	278-3921	459
273-8315	976		891		795		▶461
273-8316	585		896	275-1561	808	278-3922	▶462
	588		900	275-1565	804		▶463
	595		910	275-1672	773	278-3923	462
	599		914	275-2668	1194		▶464
273-8317	585		920	275-2669	1194	278-3970	222
	588	275-1444	824	275-3697	▶1134		226
	595		831	275-3703	▶1167	278-4040	461
	599		838	275-3709	▶1154	278-4041	464
273-8318	585		845	275-3819	▶6	278-6328	1203
	588		852	275-3838	▶1134	278-6329	1203
	595		859	275-5982	1249	278-6587	748
	599		881	275-6839	1428	278-6588	748
273-8319	585		884	275-6841	382	278-6590	748
	588		891		385	278-6593	748
	595		896	275-6842	382	278-6785	881
	599		900		385		896
274-2473	▶636		910	275-6911	416		910
274-2504	662		914	275-6993	418		920
274-2543	▶662		920		420	278-6794	931
274-2544	662	275-1446	791	275-7192	2	278-8316	148
274-2545	662		795		▶382	278-9255	613
274-2547	756	275-1448	791		▶385		615
274-2698	611		795	275-7212	382	279-3161	1279
	613	275-1464	781	276-3815	7	279-4090	1217
	615		785		9	279-4091	1218
274-6343	85	275-1471	824		11	279-4092	1219
274-7395	315		831		12		1233
	▶329		838		13	279-4093	1220
274-7396	315		845		14	279-4094	1197
	▶330		852		15		1200
274-7962	1215		859		▶1315		1221
274-7964	1215	275-1473	759	276-5768	1209	279-4095	1222
275-1361	934	275-1484	824	276-5769	1210	279-4096	1223
	936		831	276-5770	1214	279-4100	1216
275-1362	991		838	276-5771	1209	279-4101	1201
	993		845	276-5772	1210	279-4102	1202
275-1411	799		852	276-5773	1214	279-4103	1203
275-1439	791		859	276-5774	1215		1231
	795	275-1487	824	276-5775	1209	279-4104	1204
	799	275-1493	904	276-5776	1210	279-4105	1205
275-1440	791		906	276-5777	1214	279-4106	1206
	795	275-1497	881	276-5781	1232	279-4107	1207
275-1442	824		891	276-5786	1232	279-4110	1208
	831		896	276-5789	1231	279-4111	1209
	838		910	277-0879	732	279-4112	1210
	845		920	277-0937	732	279-4113	1211
	852	275-1500	891	277-0952	803		1232
	859	275-1503	881	277-0953	803	279-4114	1212
	881		884	277-0954	674	279-4115	1213
	884		891		678	279-4116	1214
	891		896		704	279-4117	1215
	896		900		708	279-4614	1232

▶ **PRIMARY REFERENCE**

PART NUMBER INDEX

Part	Page
279-7609	382
	385
280-1548	88
280-1549	88
280-2072	148
280-2747	749
	792
	796
	800
280-4371	7
	9
	11
	12
	13
	14
	15
	▶97
281-2101	▶1237
281-2102	▶1201
	1239
281-2103	▶1202
	1240
281-2104	▶1203
	1240
281-2105	▶1204
	1240
281-2106	▶1205
	1241
281-2107	▶1206
	1241
281-2108	▶1207
	1241
281-2109	▶1231
	1245
281-2160	▶1208
	1242
281-2161	▶1209
	1242
281-2162	▶1210
	1242
281-2163	▶1211
	1243
281-2164	▶1212
	1243
281-2165	▶1213
	1243
281-2166	▶1214
	1244
281-2167	▶1215
	1244
281-2168	▶1232
	1245
281-3448	126
281-3486	124
281-3487	118
	120
281-3589	51
282-4541	1134
	▶1142
282-4542	1142
282-4544	1167
	▶1177
282-4545	1177
282-4547	1154
	▶1163
282-4548	1163
282-5578	▶735
	▶737
	1002
282-5615	735
282-5641	735
	737
	739
	741
282-5705	605
	▶1522
282-7047	808
282-7195	808
282-7330	759
283-1224	333
	349
283-2761	▶402
283-2762	402
283-2783	408
	409
	411
	412
	1396
	1399
283-2932	251
283-3000	392
283-3074	406
283-4426	1346
283-6118	626
	▶639
283-6119	639
283-8982	1525
283-8983	1525
284-3502	91
284-4426	1297
	1301
284-8578	1208
284-8579	1209
284-8580	1210
284-8581	1211
	1232
284-8582	1212
284-8583	1213
284-8584	1214
284-8585	1215
285-1349	999
	▶1070
285-1351	▶1044
	▶1048
	1070
285-1352	1019
	1025
	1044
	1048
	▶1052
285-1399	830
	837
	844
	851
	858
285-1465	830
	837
	844
	851
	858
285-1764	1079
285-1765	874
	▶1079
285-1766	1079
285-1767	1079
285-4470	586
	589
	596
	600
285-5635	▶1216
	1237
285-5637	1201
285-5638	1202
285-5639	1203
	1231
285-5640	1204
285-5641	1205
285-5642	1206
285-5643	1207
286-0134	282
	▶1346
286-2110	1255
286-2114	1255
286-2484	426
286-3017	312
286-4106	737
	741
286-4271	▶263
	264
286-6847	724
287-2352	1054
287-6233	▶1217
	1237
287-6234	▶1218
	1237
287-6235	▶1219
	1238
287-6236	▶1220
	1238
287-6237	▶1221
	1238
287-6238	▶1222
	1239
287-6239	▶1223
	1239
287-6240	▶1233
	1244
287-6241	▶1186
287-6242	▶1186
287-6243	▶1186
287-6244	▶1186
287-6245	▶1187
287-6246	1186
	▶1224
287-6247	1186
	▶1234
287-6248	1186
	▶1225
287-6249	1186
	▶1198
287-6250	1187
	▶1199
287-6298	1217
	1218
	1219
	1220
	1221
	1222
	1223
	1224
	1225
	1228
	1229
287-6300	1233
	1234
288-0973	137
	▶139
288-7412	686
	696
288-7413	686
	696
288-7414	686
	696
288-7415	686
	696
288-7459	▶739
	▶741
	1002
288-7501	739
288-9179	32
289-3488	▶1187
289-3489	1187
	▶1226
289-3490	▶1187
289-3491	1187
	▶1227
289-5362	759
289-5367	808
289-5564	991
	993
	▶996
289-5657	814
	818
289-5726	775
289-6798	498
	502
	506
289-6898	▶478
	502
	506
289-6899	478
289-6901	479
289-6902	▶479
	511
289-6903	▶480
	502
	506
289-6904	480
289-7836	648
	▶651
289-8194	▶659
	993
289-8195	659
289-8449	312
290-0755	6
	▶13
290-0757	10
	▶14
290-0758	5
	▶15

▶ PRIMARY REFERENCE

PART NUMBER INDEX

Part	Page
290-1727	1536
	1542
	1548
	1560
	1565
	1570
290-1728	1536
	1542
	1548
	1560
	1565
	1570
290-1729	1536
	1542
	1548
	1560
	1565
	1570
290-1759	1536
	1542
	1548
290-1760	1560
	1565
	1570
290-1762	1513
290-1763	1515
290-1778	▶2
290-1903	▶453
290-1906	1536
	1542
	1548
	1560
	1565
	1570
290-2778	72
290-2826	1226
290-2832	1189
	1226
	1227
290-2838	1227
290-2839	1227
290-2849	1226
290-2850	1227
290-2852	1226
290-2853	1227
290-5855	1216
290-5878	1236
	1239
	1240
	1241
	1245
	▶1247
290-5879	1247
290-5881	1236
	1242
	1243
	1244
	1245
	▶1248
290-5882	1248
290-5884	1248
290-5890	▶1187
290-5891	▶1188
290-5892	1187
	▶1197
290-5893	1188
	▶1200
290-5929	1224
	1234
290-5930	1198
290-5997	1191
290-6000	▶1191
	1236
290-9467	282
	283
	▶1427
291-0515	74
291-1913	312
291-2096	▶1192
	1236
291-2123	1192
291-2125	▶1193
	1236
291-6248	1193
291-6249	1191
	1193
291-6250	1191
	1193
291-6251	1193
291-7457	258
291-7459	▶388
	415
291-7460	415
	▶416
291-7547	301
291-7551	417
291-7559	1392
	▶1394
291-7560	1394
291-7561	1394
291-7700	286
291-7705	▶286
292-0276	▶282
292-0291	282
	▶312
292-0304	282
	▶1428
292-0305	299
292-0311	1346
292-7299	993
292-7561	770
292-7581	748
292-7584	748
293-0730	157
293-1135	1405
	1409
293-1136	1259
	1261
293-1137	1264
	1267
	1270
	1273
293-1138	1386
	1388
293-1140	1505
293-1184	1359
293-1256	1487
293-5677	1197
	1198
293-5678	1197
	1198
	1199
	1200
293-6883	282
293-8781	91
294-2955	1224
	1234
294-3794	688
	690
	698
	700
294-3795	688
	690
	698
	700
294-3796	688
	690
	698
	700
294-3797	688
	690
	698
	700
294-5258	1199
	1200
294-7675	138
	▶140
294-8620	212
295-1411	▶157
	197
295-1921	1428
295-2010	▶1189
295-2014	1189
295-2015	1189
295-2016	1189
295-2018	1189
295-4777	186
	▶207
295-6864	1217
295-6865	1218
295-6866	1219
	1233
295-6867	1220
295-6868	1221
295-6869	1222
295-6870	1223
295-6875	1237
295-9686	963
296-7072	952
	955
296-7138	770
296-7402	726
296-7416	730
296-8596	1191
297-0370	795
	▶1006
297-0529	▶1081
	1342
	1343
297-0532	1333
	▶1342
297-0533	1333
	▶1343
297-0547	982
	▶983
297-0549	982
	▶984
297-0551	982
	▶985
297-0553	982
	▶986
297-0557	▶982
297-0558	982
	▶987
297-0560	982
	▶988
297-5592	282
	▶299
297-5594	282
	▶312
297-6828	334
298-2884	514
	515
298-2885	2
	▶514
	▶515
298-2886	514
	▶519
298-2889	514
	515
298-2942	474
	475
	476
	478
	479
	480
298-2968	▶481
	502
	506
298-2969	481
298-2972	▶472
	502
298-3147	165
	174
	178
	▶236
298-3257	236
298-3258	236
298-4195	1373
298-4196	1375
298-4258	194
	▶1523
298-4281	3
	▶1524
298-4282	1524
	1527
299-0586	1229
299-9181	▶1228
299-9183	1228
300-7933	88
300-9550	44
	▶46
300-9715	588
300-9716	599
301-0091	363
301-0589	1276

3

▶ **PRIMARY REFERENCE**

PART NUMBER INDEX

Part	Page
301-6874	588
	599
301-8294	588
	599
302-2857	884
	900
	914
302-3163	730
302-3164	730
302-3165	726
302-3166	726
302-3167	726
302-9277	1146
	▶1525
302-9466	1074
303-2787	262
	▶1526
303-9630	174
303-9866	214
	▶221
303-9867	221
	▶222
	▶224
303-9871	221
	▶226
	▶228
303-9933	224
	228
	231
	233
303-9937	224
	228
	233
304-0677	188
	▶208
305-0324	1314
305-0325	1315
305-0326	▶1360
305-0329	1359
305-0330	1295
	1307
305-0333	1295
	1307
305-0357	1406
	1410
305-0358	1405
	1409
305-0361	1494
305-0441	1406
	1410
	1413
	1415
305-0442	1406
	1409
	1413
	1415
305-0466	▶1443
305-0467	▶1444
305-8141	35
	▶37
305-9216	1190
	▶1235
305-9217	1235
305-9227	1235
305-9228	1235
305-9232	1235
305-9233	1235
306-1366	690
306-1369	690
306-1372	690
	700
306-1395	700
306-1398	700
306-1515	737
306-1517	741
306-8349	2
	▶379
306-8350	379
306-8367	385
306-8590	380
306-8720	262
	▶381
306-8802	1398
306-9462	▶1190
307-4683	▶1190
307-4684	1190
	▶1229
307-5096	837
	844
	851
	858
307-5097	936
307-5098	936
307-5172	785
307-5173	785
307-7975	165
307-7976	165
307-7977	165
	178
307-7978	165
	178
307-7979	165
	179
307-8012	179
307-8013	178
308-8778	484
308-8779	484
308-8780	484
308-8881	3
	▶532
308-8882	532
309-1124	1242
	1243
	1244
	1245
	▶1255
309-3872	1523
309-5751	1276
309-5769	813
	817
	889
	901
	908
	918
	926
309-5789	283
	▶1276
309-5842	▶270
	283
309-5849	1425
309-5885	▶271
	283
310-0061	▶1002
310-0078	▶1333
310-0210	844
	851
	858
	▶1088
310-0390	1025
	▶1105
310-0393	1048
	▶1106
310-0394	1096
	▶1108
310-0414	817
	▶1083
310-0419	1083
310-0420	1083
310-0421	1083
310-0422	1083
310-2393	1276
310-6252	1542
	1548
	1565
	1570
310-7255	40
310-7257	40
310-9668	134
	▶135
310-9677	132
	▶136
312-0677	190
	▶209
312-2645	204
312-5525	1524
	1527
313-4620	210
313-7833	261
	▶264
314-3529	▶283
314-3530	▶283
314-3574	▶3
314-3575	▶3
314-3576	▶3
314-3586	▶336
314-3846	▶3
314-3848	3
	▶1527
314-4184	▶40
	46
315-4412	▶1124
	1130
316-8811	▶1270
	1388
316-8812	1261
	▶1273
316-8845	1264
	1267
316-8846	1264
	1267
	1270
	1273
316-8847	1264
316-8848	1264
	1267
	1270
	1273
316-8849	1264
	1267
	1270
	1273
316-8850	1264
	1267
	1270
	1273
316-8908	1373
316-8987	1439
	1440
	1453
	1454
	1455
	1456
	1457
	1458
	1459
	1460
	1467
	1468
	1469
	1470
	1471
	1472
	1480
	1481
	1482
316-8989	1422
318-5081	1346
318-6357	210
319-0677	192
	▶210
319-1335	420
319-3819	40
319-3820	40
319-3821	40
319-3822	40
319-3823	40
319-3824	40
319-4353	1423
	▶1424
319-4420	305
	309
	▶357
319-9152	1526
320-5392	264
320-5396	261
320-5525	1418
322-8716	722
	▶1130
323-0909	763
323-1763	▶1190
323-1764	1190
	▶1230
323-1765	1230
323-7770	1083
324-5761	204

▶ PRIMARY REFERENCE

PART NUMBER INDEX

Part	Page
325-8862	777
	779
326-1644	154
327-3062	1418
327-3063	1418
327-3323	215
	▶230
327-3324	230
	▶231
327-3325	230
	▶233
327-3329	▶261
	262
327-3652	▶1237
327-3653	▶1237
327-3654	▶1238
327-3655	▶1238
327-3656	▶1238
327-3657	▶1239
327-3658	▶1239
327-3659	▶1244
327-3660	▶1236
327-3661	▶1239
327-3662	▶1240
327-3663	▶1240
327-3664	▶1240
327-3665	▶1241
327-3666	▶1241
327-3667	▶1241
327-3668	▶1245
327-3669	▶1236
327-3670	▶1242
327-3671	▶1242
327-3672	▶1242
327-3673	▶1243
327-3674	▶1243
327-3675	▶1243
327-3676	▶1244
327-3677	▶1244
327-3678	▶1245
327-3679	▶1236
327-6498	▶1453
327-6499	▶1454
327-6500	▶1467
327-6501	▶1439
327-6502	▶1440
327-6503	▶1468
327-6504	1453
	▶1455
327-6505	1454
	▶1456
327-6506	1467
	▶1469
327-6507	1439
	▶1470
327-6508	1440
	▶1471
327-6509	1468
	▶1472
327-6510	1455
	▶1457
327-6511	1456
	▶1458
	1469
327-6512	▶1459
	1470
	1471
327-6513	▶1460
	1472
327-6514	▶1384
327-6515	▶1385
	1459
	1460
327-6517	1455
	1456
	▶1480
327-6520	1469
	1470
	▶1481
327-6521	1471
	1472
	▶1482
327-6540	1443
327-6541	1444
327-6550	1301
	▶1420
	1421
	1422
327-6552	▶1421
327-6553	▶1422
327-6576	1421
327-6579	1350
	1355
327-6581	1484
327-6601	1370
327-6639	1458
327-6640	1457
	1458
	1459
	1460
327-6642	1457
	1458
	1459
	1460
327-6643	1457
	1458
	1459
	1460
327-6644	1481
	1482
327-6645	▶1401
	1481
327-6646	1401
	1402
327-6647	1401
327-6648	1480
	1481
	1482
327-6649	1460
327-7483	277
327-7486	277
327-7488	276
327-7489	276
327-7490	277
327-7491	277
327-9998	380
328-0021	305
	309
328-0048	262
	▶380
328-2035	779
	▶1126
329-6569	▶1311
329-6570	▶262
	1311
329-6585	▶562
329-6586	▶571
330-1162	1417
	▶1418
330-1166	▶483
	1417
330-1167	483
330-1222	450
	▶465
330-1223	465
330-1225	448
	▶466
330-1226	466
330-1228	456
	▶467
330-1229	467
330-1236	460
	▶468
330-1237	468
330-1239	463
	▶469
330-1240	469
330-1353	1311
	▶1417
330-1387	506
330-1388	506
330-1430	▶473
	506
330-1450	506
330-2568	860
330-3408	1434
330-3409	276
330-3410	276
332-8903	572
	573
332-8906	562
	▶572
332-8910	571
	▶573
333-4157	▶1402
	1482
333-4158	1402
333-4159	1402
333-4160	1459
333-4172	1457
333-4173	▶1403
	1480
333-4174	1403
333-4175	1480
333-4178	1402
333-4179	1457
	1458
	1459
	1460
333-4180	1401
	1402
	1403
	1480
	1481
	1482
333-4181	1401
	1403
333-5017	515
	▶521
333-5018	521

▶ **PRIMARY REFERENCE**

MEMORANDA



© 2008 CATERPILLAR
ALL RIGHTS RESERVED

CAT, CATERPILLAR, THEIR RESPECTIVE LOGOS, “CATERPILLAR YELLOW” AND THE POWER EDGE TRADE DRESS, AS WELL AS CORPORATE AND PRODUCT IDENTITY USED HEREIN, ARE TRADEMARKS OF CATERPILLAR AND MAY NOT BE USED WITHOUT PERMISSION.

PRINTED IN U.S.A.

SEBP4418-10
VOLUME I
Pages 1-574

324D & 324D L Excavators

CJX1-Up
DFP1-Up