CATERPILLAR®

XEBP8360-02
January 2007

RUTHZIL TRATOR COMERCIAL DE PEÇAS LTDA 11 97083-6812 ROLANDO

325D 325D L
Track-Type Excavators

Powered by C7 Engine

SERIAL NUMBER
CJM1-Up(Vehicle)
DAP1-Up(Vehicle)
PEH1-Up(Vehicle)
KHX00132-Up(Engine)

© 2007 Caterpillar
All Rights Reserved

HOW TO USE THE PARTS MANUAL

Caterpillar Parts Manuals include illustrations of the groups or assemblies which make up the machine. These illustrations show the standard components plus many of the attachments available for the machine.

The alphabetical index located in the front part of the book should be used to determine the page number on which specific illustrations are shown. Reference to those pages will identify each of the individual serviceable parts.

Captions

The caption under each illustration identifies the part number and name of the group or assembly shown. If more than one illustration is included for any group, the caption identifies the specific machine serial numbers to which each illustration applies. In some cases it is not possible to determine the specific machine serial numbers to which different illustrations are applicable. In those cases the caption identifies the illustration as “First Type”, “Second Type”, etc. Reference to the actual group or assembly is necessary in those cases to determine which illustration should be used.

Captions provide additional information such as page numbers where illustrations of sub assemblies are shown, information regarding quantities used and other information intended to assist the user in determining parts needs.

This information indicates the effective serial number or effective date on which changes became effective.

Example :

D95.05- : Applicable on and after May 1995

↑ D indicates the nineteen hundreds.

T00.05- : Applicable on and after May 2000

↑ T indicates the two thousands.

Indented Part Names

Within each illustration is a parts list identifying each serviceable part in the illustration. When a part name is indented in this list, it means that serviceable item is a part of the serviceable item under which it is indented.

Abbreviations and Symbols

R.H.	Right Hand	Refers to the side of the machine as viewed from the operator's compartment.
L.H.	Left Hand	
L	Length	
T	Thickness	
Z	Number of Gear Teeth	
O.D.	Outside Diameter	
I.D.	Inside Diameter	
O.S.	Over Size	
U.S.	Under Size	
N/S	Not Serviced	
AS	Assembly	
NOM	Nominal	

Abbreviations of Wire Colors

RD	:Red	BR	:Brown
WH	:White	GN	:Green
OR	:Orange	BU	:Blue
YL	:Yellow	T	:Tan
PK	:Pink	DK/BU	:Dark Blue
BK	:Black	DK/GN	:Dark Green
GY	:Gray	LT/BU	:Light Blue
PU	:Purple	LT/GN	:Light Green

Note

Continuing improvement and advancement of product design may cause changes to your machine which may not be included in this publication. Each publication is reviewed and revised, as required, to update and include these changes in later editions.

Whenever a question arises regarding your Caterpillar product, or this publication, please consult your Caterpillar dealer for the latest available information.

MODEL VIEW

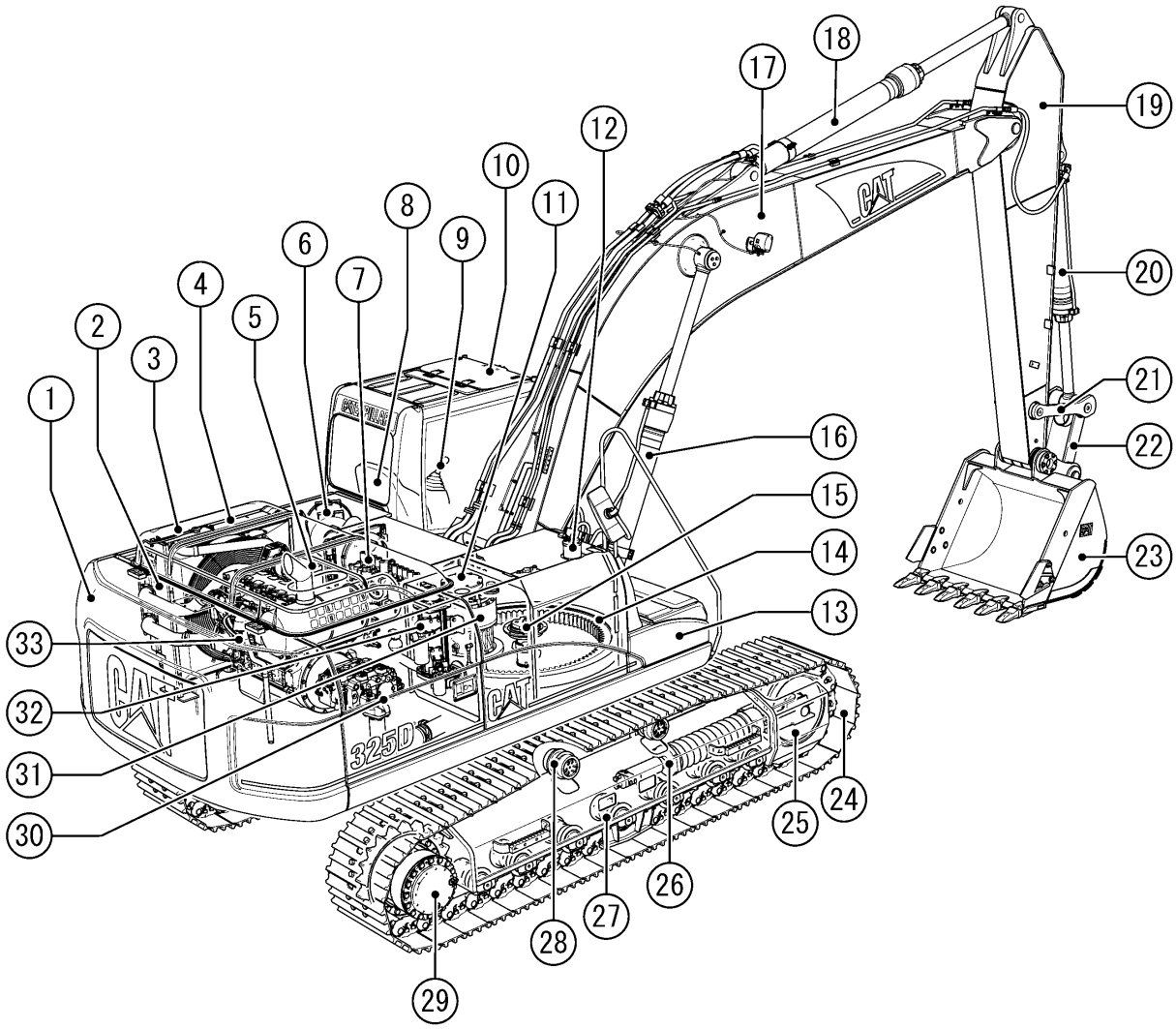

	PAGE		PAGE		PAGE
① Counterweight	314	⑫ Fuel Tank	118	㉓ Bucket	776
② Aftercooler	78	⑬ Storage Box	305	㉔ Track	356
③ Engine Hood	284	⑭ Swing Bearing	322	㉕ Idler	338
④ Radiator & Oil Cooler	76	⑮ Swivel	544	㉖ Track Adjuster	342
⑤ Battery	126	⑯ Boom Cylinder	394	㉗ Track Roller	348
⑥ Air Cleaner	90	⑰ Boom	740	㉘ Carrier Roller	348
⑦ Control Valve	562	⑱ Stick Cylinder	396	㉙ Final Drive	273
⑧ Operator Seat	690	⑲ Stick	747	㉚ Pump	376
⑨ Control Lever	545	⑳ Bucket Cylinder	402	㉛ Swing Drive	530
⑩ Cab	628	㉑ Link	762	㉜ Return Filter	372
⑪ Hydraulic Tank	365	㉒ Rod	762	㉝ Engine	11

REPLACEMENT ITEMS

The following chart provides a convenient listing of those items which require occasional replacement during normal operation or maintenance.

DESCRIPTION	PART NO.	QTY. USED	PAGE NO.
Belt			
Alternator & Air Conditioner	263-1849	1	52
Filter			
Air Conditioner Filter	245-7823	1	715
		1	719
Air Filter			
Primary Filter Assembly	6I-2503	1	91
Secondary Filter Assembly	6I-2504	1	91
Cab Air Filter	4I-1278	1	721
Engine Oil Filter	1R-1807	1	59
Fuel Filter	1R-0762	1	111
Hydraulic Oil Drain Filter	093-7521	1	370
Hydraulic Oil Pilot Filter	5I-8670	1	371
Hydraulic Tank Return Filter	179-9806	1	373
Water Separator Element	1R-0770	1	114

LIST OF ATTACHMENTS

The following chart provides a convenient listing of attachments with their reference page numbers as a quick reference for parts ordering.

Consists of:		Page
191-5537	**ADDITIONAL GEAR TRAIN FOR AUXILIARY PUMP**	387
229-9079	**AIR CONDITIONER**	710
229-1794	**AIR PREFILTER**	92
231-1771	**ALARM, TRAVEL**	249
	BOOM	
229-1757	M-BOOM, MASS 5.55M	731
229-1754	R-BOOM, REACH 6.15M	730
229-1760	R-BOOM, REACH 6.15M (Heavy Duty)	730
	BUCKET	
	EXCAVATION (X)	
239-2564	CB Family 1345MM Wide-1.1Cu.M.-Adapter Size J400	768
239-2695	CB Family 1435MM Wide-1.2Cu.M.-Adapter Size J400	768
239-2698	DB Family 1472MM Wide-1.4Cu.M.-Adapter Size J400	770
239-2701	DB Family 1559MM Wide-1.5Cu.M.-Adapter Size J400	771
	For Hammer	
229-7909	CB Family 1405MM Wide-1.3Cu.M.-Adapter Size K100	769
239-2713	CB Family 1450MM Wide-1.3Cu.M.-Adapter Size J400	769
	MASS EXCAVATION (MX)	
239-2570	CB Family 1625MM Wide-1.5Cu.M.-Adapter Size J400	770
239-2704	DB Family 1538MM Wide-1.6Cu.M.-Adapter Size J400	771
	BUCKET LINKAGE	
229-1772	CB2 FAMILY	738
240-3733	DB FAMILY	738
	CAB	
229-9096	SKYLIGHT HATCH CAB	628
223-3031	**COUNTERWEIGHT (Without Lifting Eye) (CJM1-Up, DAP1-Up)**	318
240-4022	**FILM (For Hammer) (PEH1-Up)**	808
247-7451	**FINE SWING LESS**	475
	FLOORMAT	
240-5071	BASIC	678
245-7794	COMBINED FUNCTION	680
240-5073	SINGLE FUNCTION	679

LIST OF ATTACHMENTS

	Consists of:	Page
	GUARD	
223-3049	BOTTOM, HEAVY DUTY (CJM1-Up, DAP1-Up)	312
234-4555	BUCKET CYLINDER (For Use With CB2 Family Bucket Cylinder)	419
164-0534	CAB FRONT (Full Net)	670
164-0535	CAB FRONT (Half Net)	672
178-5549	FOGS	666
171-7485	Cab Front	668
164-0497	Cab Top	667
235-7613	SIDE RUBBER BUMPER (CJM1-Up, DAP1-Up)	333
134-8883	SWIVEL (CJM1-Up, DAP1-Up)	313
	TRACK GUIDE	
195-5374	Full Length (CJM1-Up)	345
228-5517	Full Length (DAP1-Up)	344
195-5375	Track End Guide (CJM1-Up)	346
236-8326	Track End Guide (DAP1-Up, PEH1-Up)	347
184-5713	TRAVEL MOTOR, HEAVY DUTY (CJM1-Up, DAP1-Up)	355
255-5724	**HAND CONTROL PATTERN CHANGER (4 Ways)**	475
229-9083	**HEATER & DEFROSTER**	711
	HYDRAULIC SYSTEMS, AUXILIARY	
	BOOM LINE GROUPS	
	M-Boom (5.55M)	
230-0492	Drain Lines	453
230-0490	High Pressure Lines	434
230-0491	Medium Pressure Lines	442
	R-Boom (6.15M)	
230-0488	Drain Lines	452
230-0486	High Pressure Lines	432
230-0487	Medium Pressure Lines	440
	STICK LINE GROUPS	
	M2.5DB Stick	
242-6493	Drain Lines	460
237-3184	High Pressure Lines	439
242-6492	Medium Pressure Lines	450
	M3.2CB2 Stick & R3.2CB2 Stick	
253-6496	Drain Lines	454
237-3181	High Pressure Lines	436
253-6494	Medium Pressure Lines	444

LIST OF ATTACHMENTS

	Consists of:	Page
	R2.65CB2 Stick	
253-6416	Drain Lines	458
237-3183	High Pressure Lines	438
253-6500	Medium Pressure Lines	448
	R3.0CB2 Stick	
253-6499	Drain Lines	456
237-3182	High Pressure Lines	437
253-6497	Medium Pressure Lines	446
	TOOL CONTROL	
	Additional Circuit	
255-1767	Drain Lines	528.01
247-7390	Hydraulic Return Filter For Hammer	476
	Combined Function	
255-5697	2 Pump	473
255-5702	2 Pump (Medium Pressure)	474
	Single Function	
255-5696	1 Pump	472
255-5699	2 Pump	472
259-7707	**JOYSTICK**	545
	LIGHT	
	CAB WORKING (Time Delay)	
238-1628	For Use With Cab Guard	256
238-1627	Without Cab Guard	254
	LONG REACH FRONT	
	BUCKET	
7Y-6402	810MM Wide-0.45Cu.M.-Backhoe (DAP1-Up)	780
121-1807	1140MM Wide-0.6Cu.M.-Ditch Cleaning (DAP1-Up)	781
262-3585	LONG REACH FRONT (DAP1-Up)	739
234-6500	**LUNCH BOX COVER**	652
227-7581	**MACHINE SECURITY SYSTEM**	660
	OPTIONAL SEAT	
240-5064	KAB 86/E4P SEAT (With Seat Heater)	690
240-5056	KAB E1P SEAT (Vinyl)	700
240-5060	HEADREST (For KAB E1P Vinyl Seat)	709
240-5037	SEAT BELT	706

LIST OF ATTACHMENTS

	Consists of:	Page
	Product Link Japan	
275-3673	CONTROL ARRANGEMENT	220
278-3569	COVER (For Air Prefilter)	302
	RADIO	
251-0536	AM/FM	662
161-3750	**RAIN PROTECTOR, CAB FRONT**	665
	SIDECUTTER	
7Y-0366	CB FAMILY	784
112-2481	DB FAMILY	784
251-0542	**START SWITCH PANEL**	180
	STARTING, COLD WEATHER	
229-1800	FILM (32WR Hydraulic Oil Package)	809
275-3747	STARTING AID	187
	STICK	
	FOR THE MASS (5.55M) BOOM ONLY	
229-1769	M2.5DB Stick (Auxiliary)	737
229-1855	M3.2CB2 Stick (Auxiliary)	737
	FOR THE REACH (6.15M) BOOM ONLY	
229-1767	R2.0DB Stick	736
229-1765	R2.65CB2 Stick (Auxiliary)	735
229-1770	R2.65CB2 Stick (Auxiliary/Heavy Duty)	735
240-4030	R3.0CB2 Stick	734
229-1764	R3.0CB2 Stick (Auxiliary)	734
240-4029	R3.2CB2 Stick	732
229-1762	R3.2CB2 Stick (Auxiliary)	732
264-8667	R3.2CB2 Stick (Auxiliary/Heavy Duty)	733
161-3751	**SUN VISOR**	664
	TIP	
	ADAPTER SIZE J400	
8E-0837	Abrasion, Heavy Duty	787
127-0716	Long	785
6Y-5472	Long, Heavy Duty	785
8E-0838	Penetration	787
8E-0839	Sharp-Corner	788
8E-0840	Sharp-Center	788
127-0715	Short	786
8E-0836	Wide	786

LIST OF ATTACHMENTS

Consists of:		Page
	ADAPTER SIZE K100	
229-6977	Double Spike	792
229-6973	Extra Duty	790
229-6978	General Duty	789
229-6974	Penetration	790
229-6975	Penetration Plus	791
229-6976	Spike	791
229-6972	Wide	789
176-2676	**TOOL KIT**	794
	TRACK	
	DOUBLE GROUSER	
251-1848	600MM (CJM1-Up)	361
251-1850	600MM (DAP1-Up, PEH1-Up)	361
251-1849	700MM (CJM1-Up)	362
251-1851	700MM (DAP1-Up, PEH1-Up)	362
	TRIPLE GROUSER	
236-8908	600MM (DAP1-Up, PEH1-Up)	358
199-3226	700MM (CJM1-Up)	359
251-1853	700MM (DAP1-Up, PEH1-Up)	359
247-7327	800MM (CJM1-Up)	360
229-9086	**WIPER, LOWER WINDSHIELD**	653
251-0482	**12V-7A POWER SUPPLY SOCKET**	195

INDEX

Name Page

A

ACCUMULATOR GP 388
ADAPTER GP - OIL LINE 104
ADJUSTER GP - BUCKET 782
ADJUSTER KIT - LOWER SLIDE 697
ADJUSTER KIT - UPPER SLIDE 696
ADJUSTMENT GP - HYDRAULIC TRACK 342
AIR CLEANER AR 92
AIR CLEANER GP 90
93

AIR CONDITIONER & MOUNTING GP 712
AIR CONDITIONER GP 710
714

718

ALARM GP 154
ALARM GP - TRAVEL 249
ALTERNATOR GP - CHARGING 230
ARM AS - WIPER 649
ARMREST GP 685
688

B

BATTERY & WIRING GP 124
BATTERY & WIRING GP - COLD WEATH 188
BELT TIGHTENER GP 53
BLOCK GP - HYDRAULIC 374
BOOM AR 731
BOOM AR - 1 PIECE LONG 730
BOOM GP 740
BOX & MTG GP - STORAGE 305
BOX GP - STORAGE 306
BRACKET GP - ENGINE 50
BRACKET KIT - CONSOLE 698
BREATHER GP 64
BUCKET & ADJUSTER GP 772
BUCKET AR 768
BUCKET AS - DITCH CLEANING 781
BUCKET AS - EXCAVATION 776
BUCKET AS - GENERAL PURPOSE 780
BUCKET AS - MASS EXCAVATION 778
779

Name Page

BUCKET GP 780
BUMPER GP - SIDE 332

C

CAB GP 628
CAB GP (BASIC) 630
CAB GP - EXTERIOR 634
CAB GP - INTERIOR 632
CABLE AS 138
190

CAMSHAFT GP 30
CARRIER GP - SEAL 26
COMPRESSOR GP - REFRIGERANT 728
CONDENSER & MTG GP - REFRIGERANT 726
CONDENSER GP - REFRIGERANT 727
CONSOLE GP 682
686

CONSOLE GP - OPERATOR 681
CONTROL & MTG GP - ELECTRONIC 219
CONTROL & MTG GP - ENGINE ELEK 222
CONTROL & MTG GP - JOYSTICK 545
CONTROL AR 220
CONTROL AR - AUXILIARY 472
CONTROL GP 660
CONTROL GP - ELECTRONIC 218
CONTROL GP - HYDRAULIC 554
CONTROL GP - PILOT OPERATED HYD 548
552

COOLER GP - ENGINE OIL 69
COUNTERWEIGHT GP 314
COUPLING GP - PUMP 377
COVER AS 291
301

303

652

COVER GP 300
302

651

COVER GP - AIR INLET 83
COVER GP - CYLINDER BLOCK 23

INDEX

Name Page

COVER GP - FRONT HOUSING 42
COVER GP - VALVE MECHANISM 39
CRANKSHAFT GP 27
CYLINDER & LINES GP - BOOM 389
CYLINDER & LINES GP - BUCKET 392
CYLINDER & LINES GP - STICK 390
CYLINDER & SEAL GP - BOOM 394
CYLINDER & SEAL GP - BUCKET 402
CYLINDER & SEAL GP - STICK 396
CYLINDER BLOCK GP 18
CYLINDER GP - BUCKET 408
CYLINDER GP - STICK 406
CYLINDER HEAD AS 35
CYLINDER HEAD GP 32

D

DAMPER & PULLEY GP 46
DOOR AS 289
DOOR GP 287
DOOR GP - CAB 638
DRIVE GP - FAN 51
DRIVE GP - PUMP 387
DRIVE GP - SWING 530
DUCT GP - AIR 720

E

ELBOW GP - AIR INLET 85
ELECTRONICS GP 216
ENGINE AR 11
ENGINE AR - COMPLETE 12
ENGINE AR - CORE 16

F

FAN GP - SUCTION 80
FASTENER GP - FRONT HOUSING 44
FASTENER GP - LIFTING 29
FASTENER GP - SWING & FINAL DR 276
FASTENER GP - VALVE MECHANISM 40
FENDER & COVER GP 308
FILM GP 808
FILTER AR 476

Name Page

FILTER GP 114
FILTER GP - ENGINE OIL 58
FILTER GP - HYDRAULIC 370
375

FINAL DRIVE GP 273
FLOORMAT 678
FLYWHEEL GP 54
FRAME AS - UNDERCARRIAGE 334
FRAME GP - UPPER 328
FUMES DISPOSAL GP 65

G

GAUGE AS 369
GAUGE GP - OIL LEVEL (DIPSTICK) 66
GEAR & BEARING GP - SWING 322
GEAR GP - FRONT 48
GUARD AR - OVERHEAD 666
GUARD GP - BOTTOM 310
GUARD GP - BUCKET CYLINDER 419
GUARD GP - FRONT WINDOW 668
GUARD GP - OVERHEAD 667
GUARD GP - SWIVEL 313
GUARD GP - TRACK GUIDE 343
GUARD GP - TRAVEL MOTOR 354

H

HANDHOLD GP 309

INDEX

Name Page

HARNESS AS 136
148
158
164
166
178
184
193
204
208
214
266
HATCH AS 647
HATCH GP 646
HEAD GP - PUMP CONTROL 382
HEADREST AS 709
HEATER & MTG GP - CAB 716
HEATER AR - CAB 711
HOOD & GUARD GP 278
HOOD GP 298
HOOD GP - ENGINE 286
HORN GP - ELECTRIC 674
HOUSING GP - FLYWHEEL 55
HOUSING GP - FRONT 41

I

IDLER GP - FRONT 338
INJECTOR GP - FUEL 102

K

KNOB AS 549

L

LAMP GP - FLOOD 262
LEVER AS 637
684
LIFTER GP - VALVE 38

Name Page

LIFTING GP - ENGINE 28
LIGHTING GP - BOOM 258
LIGHTING GP - CAB 254
LIGHTING GP - CHASSIS 252
LINES & CONTROL GP - FRONT 504
LINES & CONTROL GP - REAR 508
LINES GP - AIR 88
LINES GP - AIR CONDITIONER 722
LINES GP - AUXILIARY HYDRAULIC 432
LINES GP - BOOM 420
LINES GP - BOOM CYLINDER 412
502
LINES GP - BUCKET CYLINDER 416
LINES GP - COOLING 74
LINES GP - DRAIN 96
452
528.01
LINES GP - ENGINE OIL 62
LINES GP - FRONT 512
LINES GP - FUEL 106
110
LINES GP - GREASE 758
LINES GP - HEATER 724
LINES GP - HYDRAULIC OIL COOLER 470
LINES GP - INJECTOR HYD PUMP 103
LINES GP - OIL DRAIN 68
LINES GP - PILOT 478
LINES GP - PUMP 468
LINES GP - STICK 426
LINES GP - STICK CYLINDER 414
LINES GP - SWING MOTOR 529
LINES GP - TRAVEL MOTOR 462
LINES GP - TURBOCHARGER OIL 63
LINES GP - WATER 72
LINK AS - TRACK 363
LINKAGE AR - BUCKET 738
LINKAGE AR - FRONT 739
LINKAGE GP - BUCKET 762
LITERATURE GP 708
LOCK GP - TRANSPORT 767

INDEX

Name Page

M

MANIFOLD GP - EXHAUST 82
MIRROR GP - REAR VIEW 673
MONITOR & MTG GP - OPERATOR 657
MONITOR GP - OPERATOR 658
MOTOR & MTG GP - SWING 534
MOTOR & MTG GP - TRAVEL 539
MOTOR AS - WINDOW WIPER 650
MOTOR GP - SWING 535
MOTOR GP - TRAVEL 540
MOUNTING GP 221
636
MOUNTING GP - ENGINE 57
MOUNTING GP - ENGINE OIL FILTER 67
MOUNTING GP - GREASE GUN 304
MOUNTING GP - PLATFORM 676
MOUNTING GP - VALVE 559
MUFFLER GP 95

P

PAN GP - OIL 56
PANEL GP - CIRCUIT BREAKER 170
PANEL GP - SWITCH 180
PISTON & ROD GP 31
PLATE & FILM GP 796
PLATFORM GP - OPERATOR 677
PLUG GP 586
PLUG GP - CONNECTOR 248
PLUG GP - CYLINDER BLOCK 24
PLUG GP - ENGINE 25
PULLEY GP 52
PUMP & MTG GP - MAIN HYDRAULIC 376
PUMP & MTG GP - UNIT INJ HYD 98
PUMP GP - ENGINE OIL 60
PUMP GP - FUEL INJECTION 101
PUMP GP - FUEL PRIMING 115
PUMP GP - GEAR 386
PUMP GP - MAIN HYDRAULIC 378
PUMP GP - UNIT INJECTOR HYD 100
PUMP GP - WATER 70

Name Page

R

RADIATOR & HYD OIL COOLER GP 76
RADIO GP - AM/FM 662
REGULATOR GP - FUEL PRESSURE 108
ROLLER AR - TRACK & CARRIER 348
ROLLER GP - TRACK CARRIER 351
ROLLER GP - TRACK - DOUBLE FLANGE 353
ROLLER GP - TRACK - SINGLE FLANGE 352

S

SCREEN GP 368
SEAL GP - CRANKSHAFT 28
SEAT BELT GP 706
SEAT GP 690
700
SEAT KIT 693
703
SENSOR GP - ENGINE 236
SENSOR GP - PRESSURE 239
246
SENSOR GP - SPEED 244
SENSOR GP - TEMPERATURE 237
SHEET AS 291
SIDECUTTER GP 784
SPRING GP - RECOIL 341
SPROCKET GP - NONSEGMENTED 272
STARTING AID GP - ETHER 250
STARTING AR - COLD WEATHER 187
STARTING MOTOR GP - ELECTRIC 223
STEP GP 337
STICK AR 733
STICK AR - HOE 732
STICK GP - HOE 747
SUPPORT AS 297
SUPPORT GP - SEAT 689
704
SUPPORT KIT - SEAT 705
SUPPORT KIT - TILT 694
SUSPENSION GP - SEAT 695
SWITCH AS 270
SWITCH AS - DISCONNECT 172

INDEX

Name Page

SWITCH AS - MAGNETIC 173
SWITCH AS - ROLLER 270
SWITCH AS - ROTARY 186
SWITCH GP - MAGNETIC 235
SWITCH GP - START 185
SWIVEL GP 544

T

TANK & FILTER GP - HYDRAULIC 366
TANK & LINES GP - HYDRAULIC 466
TANK & MTG GP - FUEL 118
TANK & MTG GP - HYDRAULIC 365
TANK GP - FUEL 119
TIMER AS 265
TIP GP 788
TIP GP - ABRASION 787
TIP GP - LONG 785
793
TIP GP - PENETRATION 787
790
TIP GP - SHORT 786
TIP GP - WIDE 786
789
TOOL AR 794
TOOL GP 795
TRACK GP 356
TURBOCHARGER GP 86

V

VALVE & MOUNTING GP 560
VALVE AR - 4 WAY 475
VALVE AR - SWING 475
VALVE AS - BALL 625
VALVE GP 580
VALVE GP - CHECK 621
VALVE GP - CONTROL 566
574
582
602
VALVE GP - CUSHION CROSSOVER RLF 612

Name Page

VALVE GP - FLOW CONTROL & RELIEF 587
VALVE GP - FUEL BYPASS 116
VALVE GP - MAIN CONTROL 562
VALVE GP - PILOT 546
550
558
592
600
VALVE GP - PILOT RELIEF 572
590
598
VALVE GP - PRESS REDUCING SOL 603
VALVE GP - PRESSURE REDUCING 610
VALVE GP - RELIEF 538
543
564
571
579
588
618
VALVE GP - SELECTOR 604
VALVE GP - SHUTTLE 623
VALVE GP - SOLENOID 581
614
VALVE GP - TRACTION CONTROL 542
VALVE MECHANISM GP 36
VISOR GP - PROTECTION - RAIN 665
VISOR GP - SUN 664

W

WASHER GP - WINDOW 656
WINDOW GP 642
WINDOW GP - CAB 645
WINDOW GP - DOOR 640
WIPER & WASHER GP - WINDOW 654
WIPER AR - WINDOW 653
WIPER GP - WINDOW 648

INDEX

Name	Page
WIRING GP	168
	192
	195
	210
WIRING GP - CAB	140
	206
WIRING GP - CONSOLE	162
	165
WIRING GP - ENGINE	232
WIRING GP - FINE SWING	176
WIRING GP - HEATER	234
WIRING GP - LOWER WIPER	194
WIRING GP - PLATFORM	156

ENGINE ARRANGEMENT

Consists of :

			Page
1	230-2893	FAN GP-SUCTION	80
1	235-8135	ENGINE AR-COMPLETE.....	12
1	272-4758	MUFFLER GP.....	95

H90550E 02

222-8378 ENGINE AR

ENGINE ARRANGEMENT

Consists of :

			Page
		ENGINE ARRANGEMENT	
1	236-4284	ENGINE AR-CORE	16
		BASIC ENGINE	
1	253-0433	BELT TIGHTENER GP	53
1	253-0437	BRACKET GP-ENGINE	50
1	4W-3462	CARRIER GP-SEAL	26
1	257-9145	COVER GP-CYLINDER BLOCK	23
1	118-1727	COVER GP-FRONT HOUSING	44
1	172-8732	COVER GP-FRONT HOUSING	43
1	252-2328	COVER GP-VALVE MECHANISM	39
1	263-1850	DAMPER & PULLEY GP	46
1	116-4556	FASTENER GP-FRONT HOUSING	44
1	252-9551	FASTENER GP-FRONT HOUSING	45
1	113-6170	FASTENER GP-LIFTING	29
1	258-8723	FASTENER GP-VALVE MECHANISM	40
1	186-5892	FLYWHEEL GP	54
1	7W-8813	HOUSING GP-FLYWHEEL	55
1	142-8100	LIFTING GP-ENGINE	28
1	176-9429	PAN GP-OIL	56
1	159-0303	PLUG GP-CYLINDER BLOCK	24

H90474E 09

235-8135 ENGINE AR-COMPLETE (1/3)
Part of 222-8378-Page11

ENGINE ARRANGEMENT

Consists of :

			Page
		BASIC ENGINE	
1	162-8068	PLUG GP-ENGINE	25
1	263-1848	PULLEY GP	52
1	115-4203	SEAL GP-CRANKSHAFT	28
		LUBRICATION SYSTEM	
1	222-5946	BREATHER GP	64
1	231-7266	FILTER GP-ENGINE OIL	58
1	254-7342	FUMES DISPOSAL GP	65
1	177-4814	GAUGE GP-OIL LEVEL (DIPSTICK)	66
1	7C-2475	LINES GP-ENGINE OIL	62
1	159-0285	LINES GP-TURBOCHARGER OIL	63
		COOLING SYSTEM	
1	192-9972	LINES GP-WATER	72
1	177-9823	PUMP GP-WATER	70
		AIR INLET AND EXHAUST SYSTEM	
1	189-8780	COVER GP-AIR INLET	83
1	231-3950	ELBOW GP-AIR INLET	85
1	219-5840	MANIFOLD GP-EXHAUST	82
		FUEL SYSTEM	
1	231-3046	LINES GP-FUEL	106

H90475E 09

235-8135 ENGINE AR-COMPLETE (2/3)
Part of 222-8378-Page11

ENGINE ARRANGEMENT

Consists of :

			Page
		ELECTRICAL AND STARTING SYSTEM	
1	177-6972	ALTERNATOR GP-CHARGING	230
1	241-7602	CONTROL & MTG GP-ENGINE ELEK	222
1	235-8200	PLUG GP-CONNECTOR	248
1	257-2186	SENSOR GP-ENGINE	236
1	190-6186	SENSOR GP-SPEED	245
1	201-4204	STARTING MOTOR GP-ELECTRIC	223
1	198-2714	WIRING GP-ENGINE	232
1	249-9223	WIRING GP-HEATER	234
		OPERATOR STATION	
1	212-8518	COMPRESSOR GP-REFRIGERANT	728

H90476E 09

235-8135 ENGINE AR-COMPLETE (3/3)
Part of 222-8378-Page11

MEMORANDA

ENGINE ARRANGEMENT

Consists of :

			Page
		BASIC ENGINE	
1	212-4289	CAMSHAFT GP	30
1	211-9120	COVER GP-FRONT HOUSING	42
1	210-5590	CRANKSHAFT GP	27
1	221-4482	CYLINDER BLOCK GP	18
1	219-5849	CYLINDER HEAD GP	32
1	205-1321	GEAR GP-FRONT	48
1	245-3260	HOUSING GP-FRONT	41
6	210-5592	PISTON & ROD GP	31
1	232-3717	VALVE MECHANISM GP	36
		LUBRICATION SYSTEM	
1	192-2981	PUMP GP-ENGINE OIL	60
		COOLING SYSTEM	
1	117-3643	COOLER GP-ENGINE OIL	69

H90469E 00

236-4284 ENGINE AR-CORE (1/2)
Part of 235-8135-Page12

ENGINE ARRANGEMENT

Consists of :

			Page
		AIR INLET AND EXHAUST SYSTEM	
1	177-0438	TURBOCHARGER GP	86
		FUEL SYSTEM	
1	191-0461	LINES GP-INJECTOR HYD PUMP.....	103
1	222-5900	PUMP & MTG GP-UNIT INJ HYD.....	98
6	268-1839	PUMP GP-FUEL INJECTION	101
		ELECTRICAL AND STARTING SYSTEM	
1	235-8226	ELECTRONICS GP-ENGINE RATINGS	

H90470E 00

236-4284 ENGINE AR-CORE (2/2)
Part of 235-8135-Page12

BASIC ENGINE

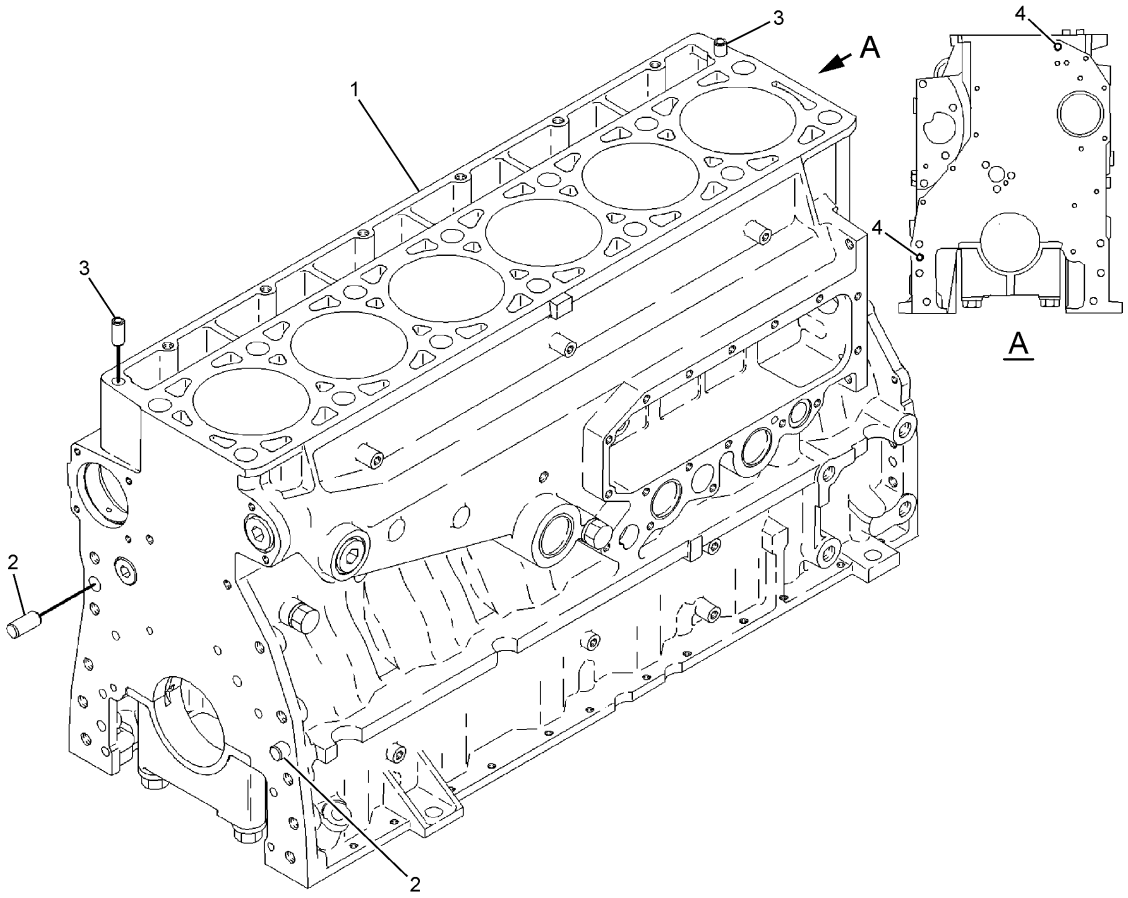

NOTE	No.	PART No.	QTY	PART NAME	NOTE	No.	PART No.	QTY	PART NAME
Y	1	221-4481	1	BLOCK GP					
	2	7N-5683	2	DOWEL					
	3	1W-8407	2	SLEEVE					
	4	6V-3538	2	DOWEL					

Y—SEE SEPARATE ILLUSTRATION

H90320E 00

221-4482 CYLINDER BLOCK GP

Part of 236-4284-Page16
221-4481-Page20

MEMORANDA

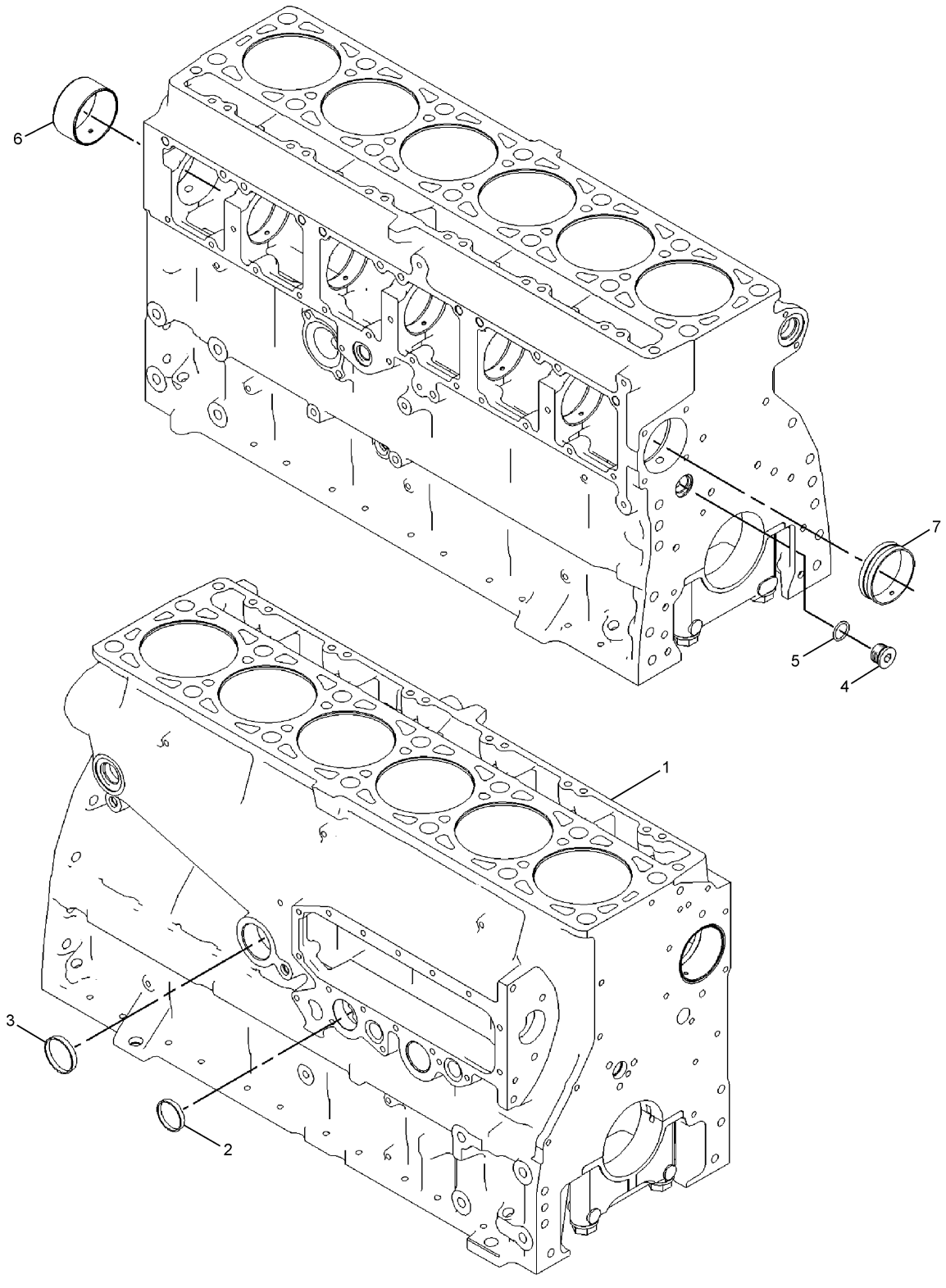

H90327E 00

221-4481 CYLINDER BLOCK GP

Part of 221-4482-Page18
221-4480-Page22

BASIC ENGINE

NOTE	No.	PART No.	QTY	PART NAME	NOTE	No.	PART No.	QTY	PART NAME
Y	1	221-4480	1	BLOCK GP					
	2	2M-6471	2	PLUG					
	3	3H-5552	1	PLUG					
	4	9S-8006	1	PLUG					
	5	2M-9780	1	SEAL-O-RING (ID=19.18mm)					
	6	216-5586	1	BEARING					
	7	2W-7213	6	BEARING					

Y—SEE SEPARATE ILLUSTRATION

H90327E 00

221-4481 CYLINDER BLOCK GP

Part of 221-4482-Page18
221-4480-Page22

BASIC ENGINE

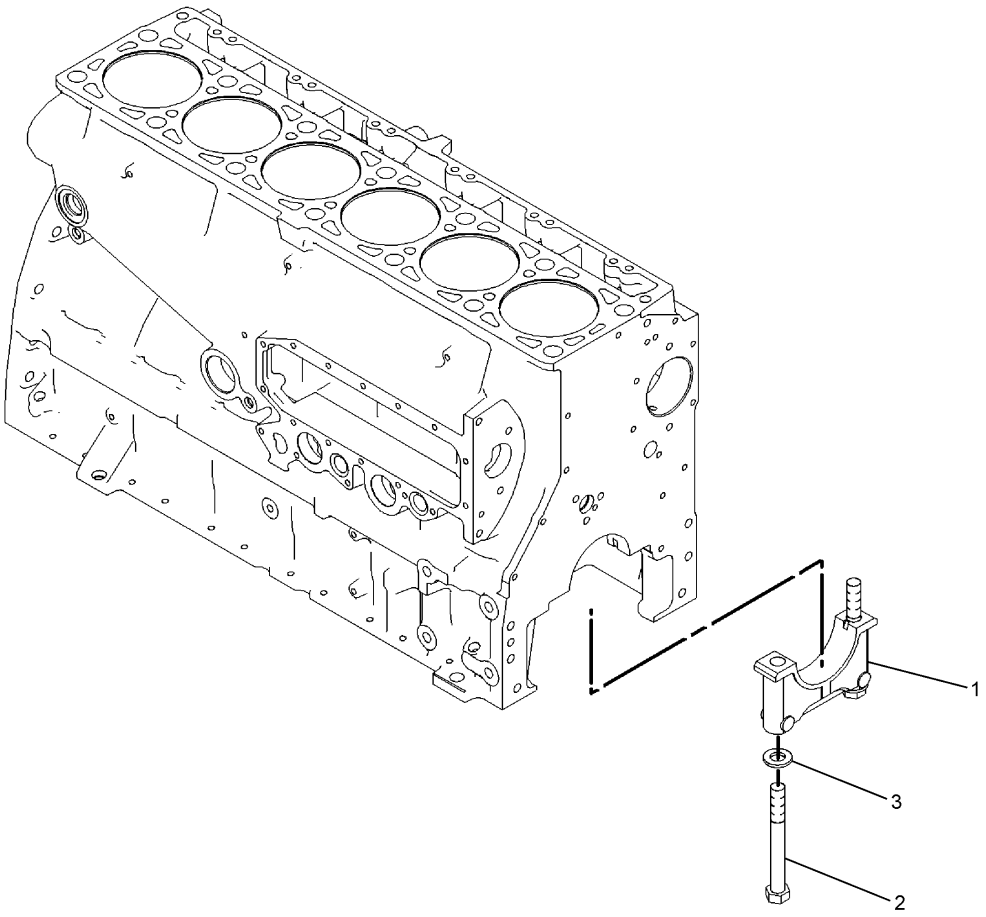

NOTE	No.	PART No.	QTY	PART NAME	NOTE	No.	PART No.	QTY	PART NAME
	1	7E-2968	7	CAP					
	2	9X-8916	14	BOLT (L=140mm)					
	3	5P-8247	14	WASHER					

H90329E 00

221-4480 CYLINDER BLOCK GP

Part of 221-4481-Page21

BASIC ENGINE

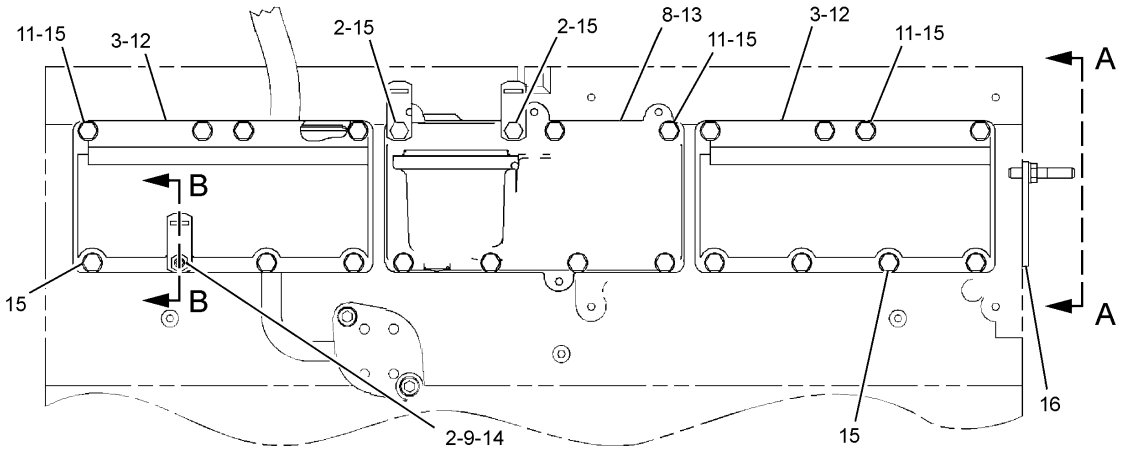

LEFT SIDE VIEW OF ENGINE

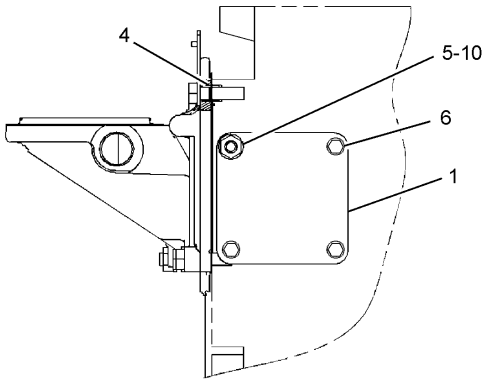

A – A

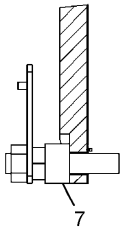

B – B

NOTE	No.	PART No.	QTY	PART NAME	NOTE	No.	PART No.	QTY	PART NAME
	1	2W-6544	1	COVER					
	2	4P-5918	3	CLIP					
	3	7W-3871	2	COVER					
	4	7W-3872	6	SLEEVE					
	5	9X-2099	1	STUD					
	6	110-7618	3	BOLT AS					
	7	175-1367	8	SPACER					
	8	249-5523	1	COVER					
	9	5C-7261	1	NUT					
	10	8T-4224	1	WASHER					
	11	9M-1974	14	WASHER					
	12	4Y-9652	2	GASKET					
	13	250-5785	1	GASKET					
	14	210-3321	1	STUD					
	15	6V-2317	23	BOLT (L=30mm)					
B	16	1U-8846		GASKET MAKER…(2ml)					

B—USE AS REQUIRED

H90302E 00

257-9145 COVER GP-CYLINDER BLOCK

Part of 235-8135-Page12

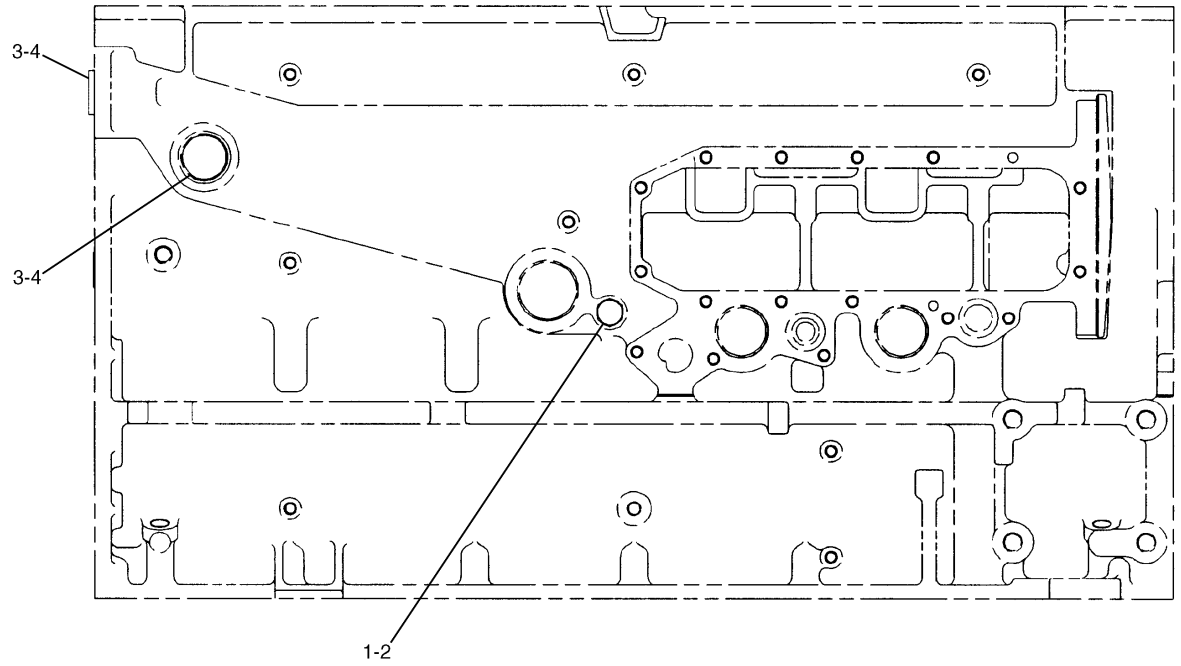

RIGHT SIDE VIEW OF ENGINE

NOTE	No.	PART No.	QTY	PART NAME	NOTE	No.	PART No.	QTY	PART NAME
	1	8T-0293	1	BOLT (L=20mm)					
	2	6F-7062	1	WASHER					
	3	9S-8008	2	PLUG					
	4	3D-2824	2	SEAL-O-RING (ID=23.47mm)					

H90415E 03

159-0303 PLUG GP-CYLINDER BLOCK
Part of 235-8135-Page12

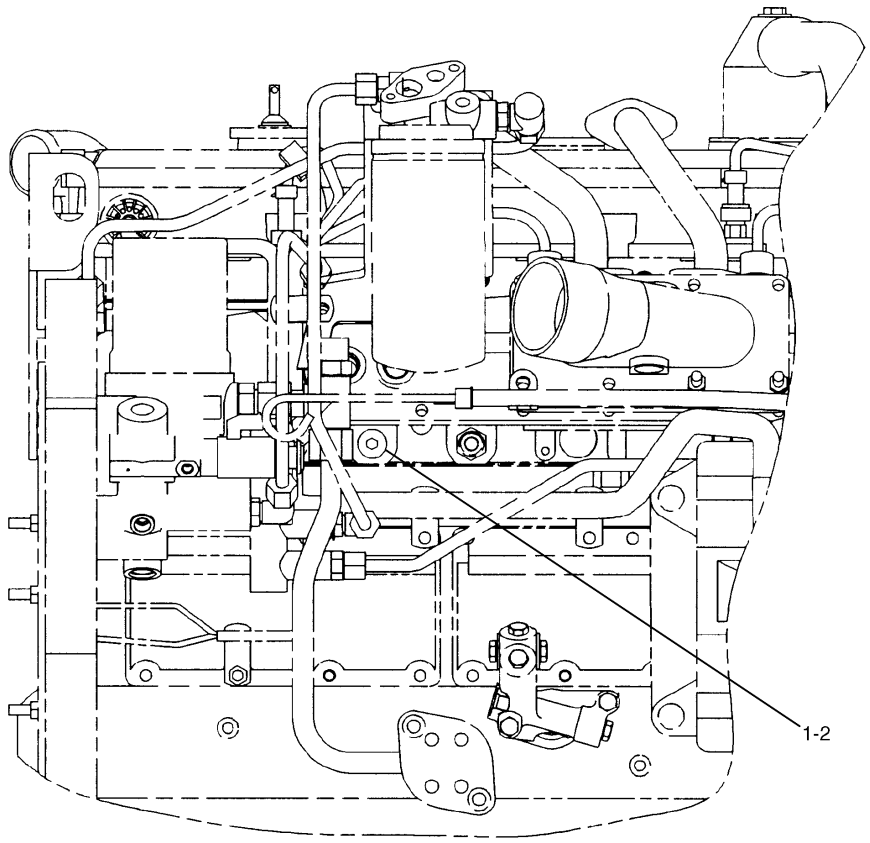

NOTE	No.	PART No.	QTY	PART NAME	NOTE	No.	PART No.	QTY	PART NAME
	1	9S-8005	1	PLUG					
	2	3K-0360	1	SEAL-O-RING (ID=16.36mm)					

H74773E 00

162-8068 PLUG GP-ENGINE
Part of 235-8135-Page13

BASIC ENGINE

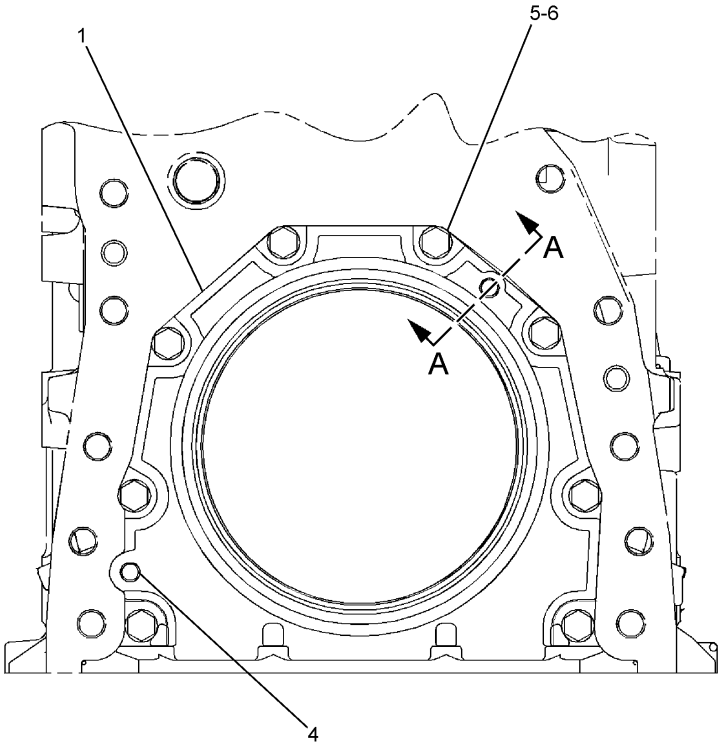

FRONT VIEW OF ENGINE

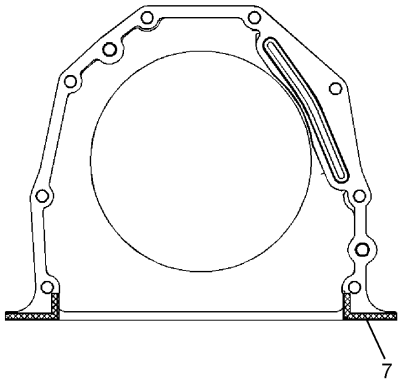

REAR VIEW OF ENGINE

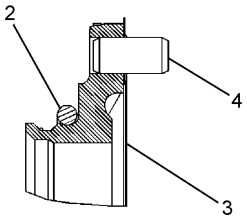

A – A

NOTE	No.	PART No.	QTY	PART NAME	NOTE	No.	PART No.	QTY	PART NAME
	1	2W-6546	1	COVER					
	2	8C-3091	1	SEAL					
	3	239-0583	1	GASKET					
	4	6V-3538	2	DOWEL					
	5	6V-3940	8	BOLT (L=25mm)					
	6	9M-1974	8	WASHER					
B	7	4C-9612		SEALANT					

B—USE AS REQUIRED

H90283E 11

4W-3462 CARRIER GP-SEAL

Part of 235-8135-Page12

BASIC ENGINE

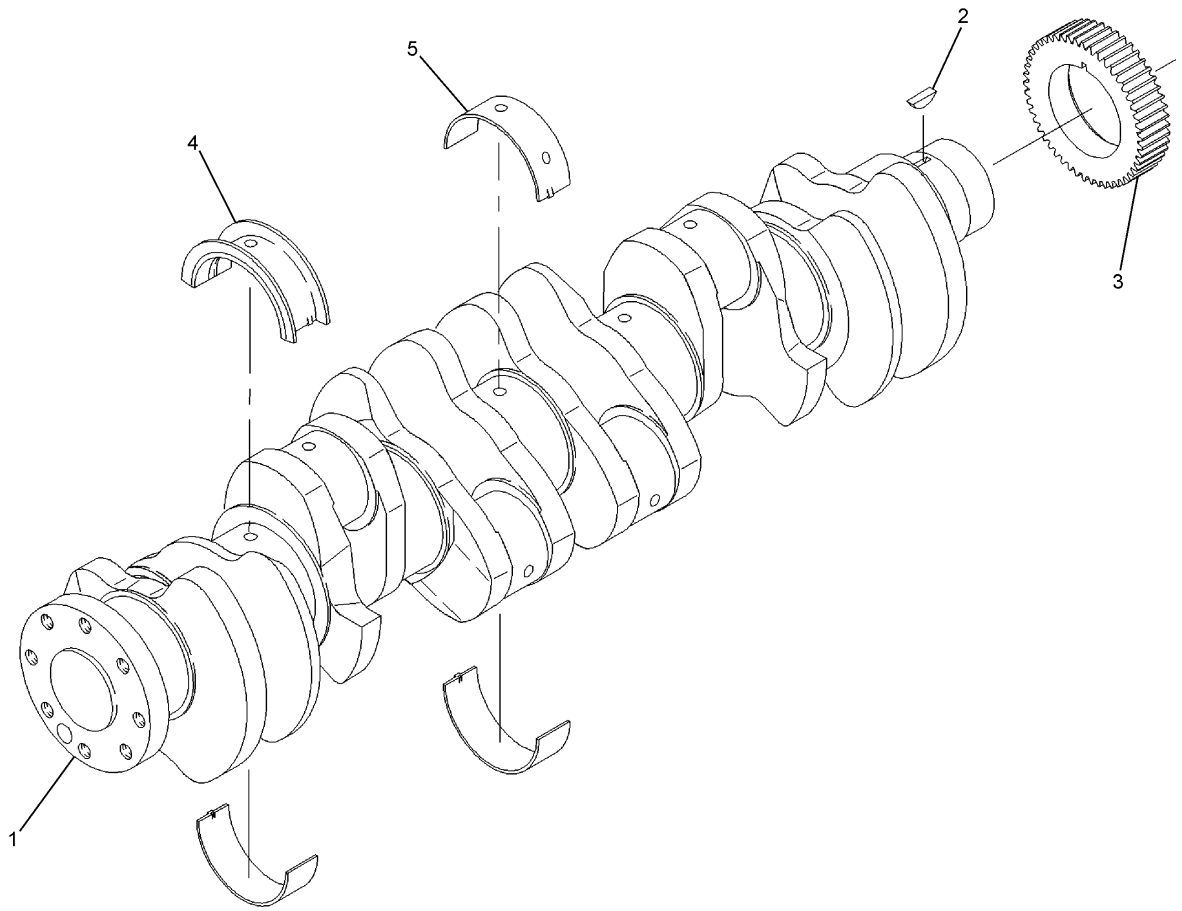

NOTE	No.	PART No.	QTY	PART NAME	NOTE	No.	PART No.	QTY	PART NAME
	1	227-5480	1	CRANKSHAFT AS					(INCLUDES PARTS MARKED J)
	2	1B-8705	1	KEY					
	3	2W-8147	1	GEAR (Z=50)					
J	4	212-4893	1	BEARING (STANDARD)					
AB		229-5153		BEARING (US=0.25mm)					
AB		229-5154		BEARING (US=0.50mm)					
AB		229-5155		BEARING (OS=0.50mm)					
AB		229-5156		BEARING (OS=0.50mm-US=0.50mm)					
J	5	107-7708	6	BEARING (MAIN)					
AB		145-0168		BEARING (OS=0.50mm)					
AB		145-0170		BEARING (OS=0.50mm-US=0.50mm)					
AB		145-0162		BEARING (US=0.25mm)					
AB		145-0164		BEARING (US=0.50mm)					
ABF		7C-7980	1	SLEEVE					
				THE FOLLOWING REPAIR KIT IS AVAILABLE:					
A		196-9519		BEARING KIT					

A—NOT PART OF THIS GROUP
B—USE AS REQUIRED
F—NOT SHOWN

H90316E 00

210-5590 CRANKSHAFT GP
Part of 236-4284-Page16

BASIC ENGINE

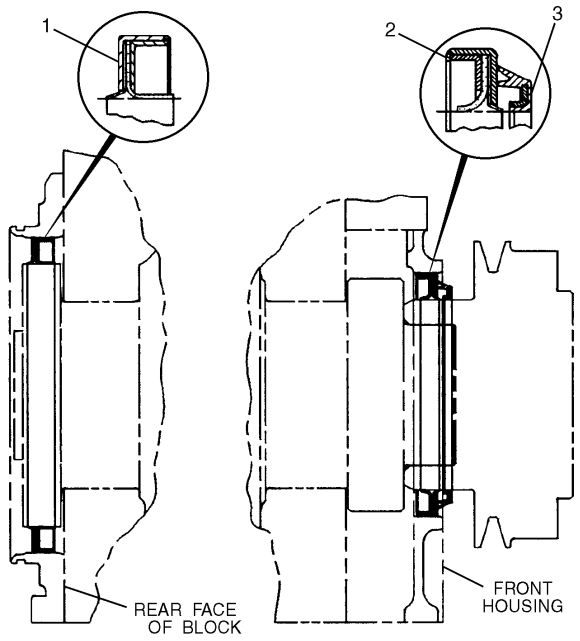

NOTE	No.	PART No.	QTY	PART NAME
	1	7C-3571	1	SEAL GP
	2	119-2921	1	SEAL GP
	3	4R-9999	1	SEAL

H85765E 03

115-4203 SEAL GP-CRANKSHAFT

Part of 235-8135-Page13

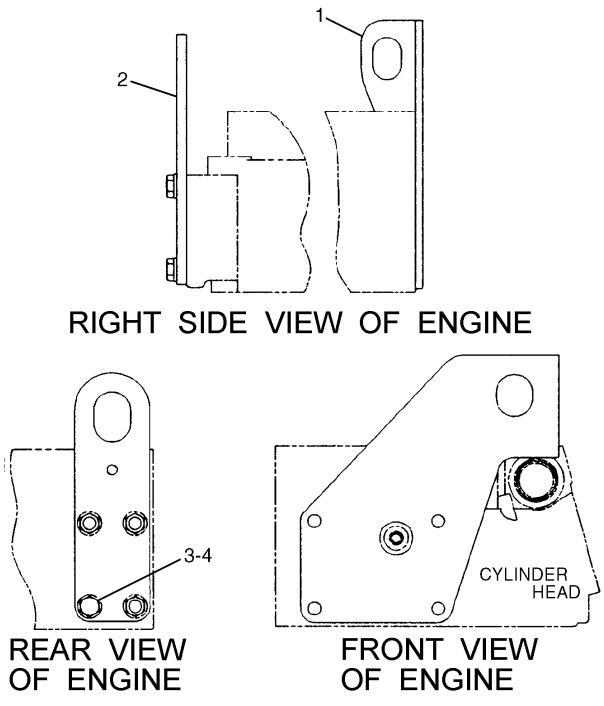

NOTE	No.	PART No.	QTY	PART NAME
	1	228-4766	1	PLATE
	2	154-0896	1	PLATE
	3	8T-4136	1	BOLT (L=25mm)
	4	8T-4121	1	WASHER

H90379E 01

142-8100 LIFTING GP-ENGINE

Part of 235-8135-Page12

BASIC ENGINE

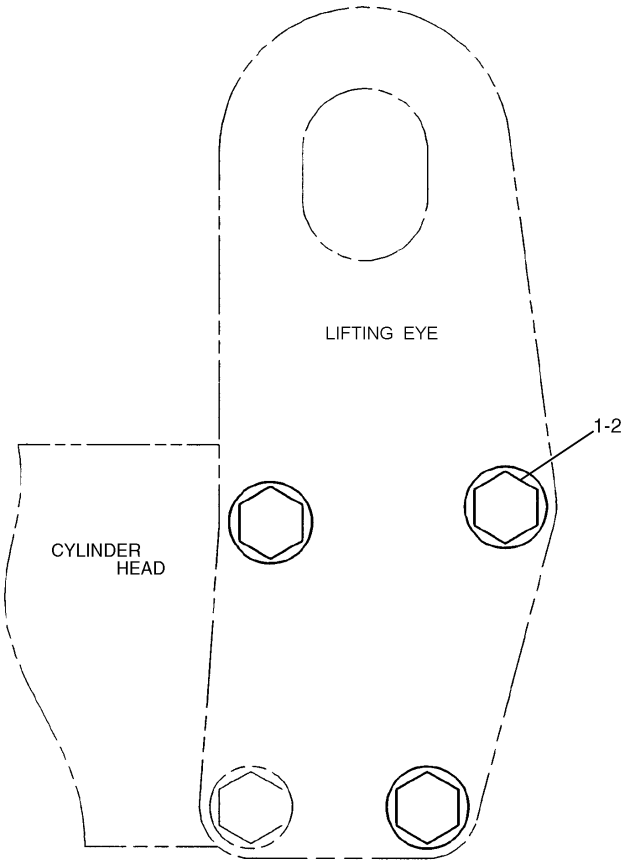

REAR VIEW OF ENGINE

NOTE	No.	PART No.	QTY	PART NAME	NOTE	No.	PART No.	QTY	PART NAME
	1	8T-4121	3	WASHER					
	2	8T-4136	3	BOLT (L=25mm)					

H90342E 01

113-6170 FASTENER GP-LIFTING

Part of 235-8135-Page12

BASIC ENGINE

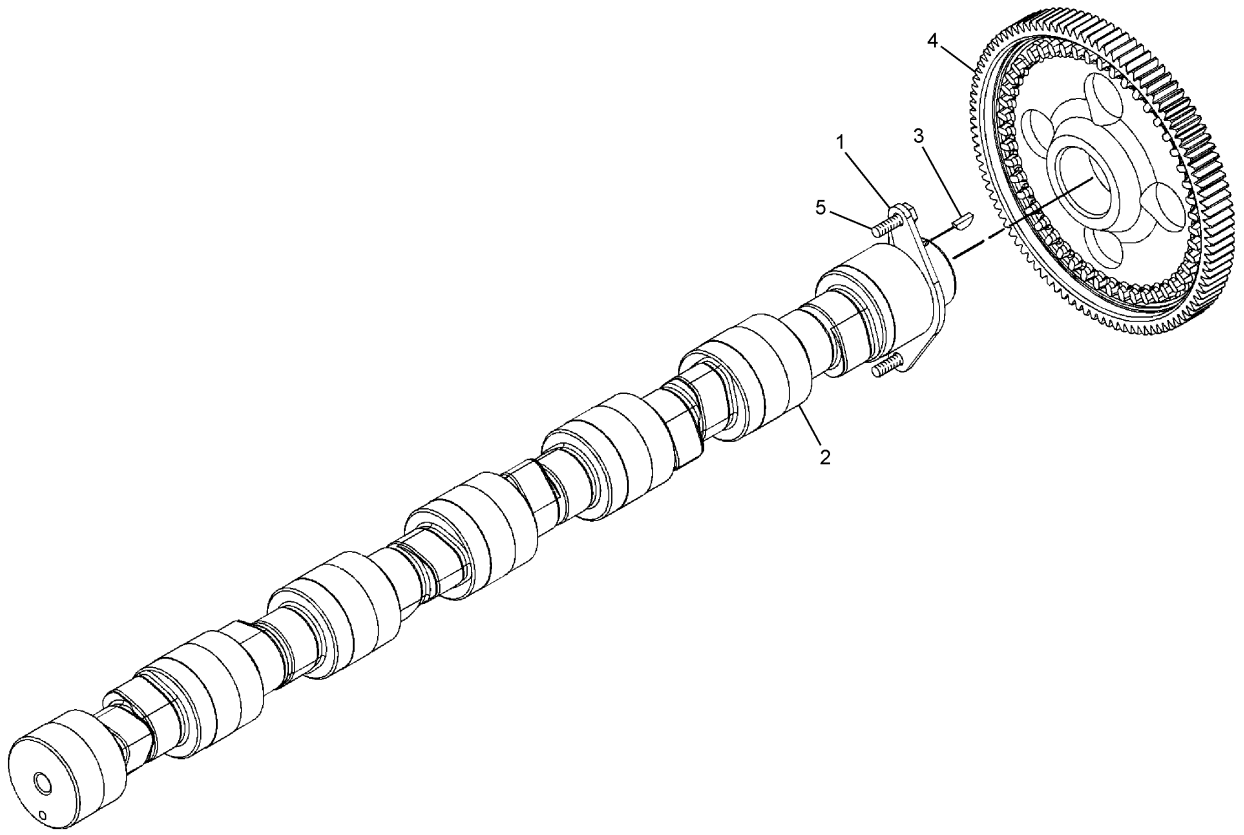

NOTE	No.	PART No.	QTY	PART NAME	NOTE	No.	PART No.	QTY	PART NAME
	1	107-7694	1	PLATE					
	2	212-4288	1	CAMSHAFT AS					
	3	1B-8705	1	KEY					
	4	224-3247	1	GEAR (Z=100)					
	5	6V-3940	2	BOLT (L=25mm)					

H90311E 00

212-4289 CAMSHAFT GP

Part of 236-4284-Page16

BASIC ENGINE

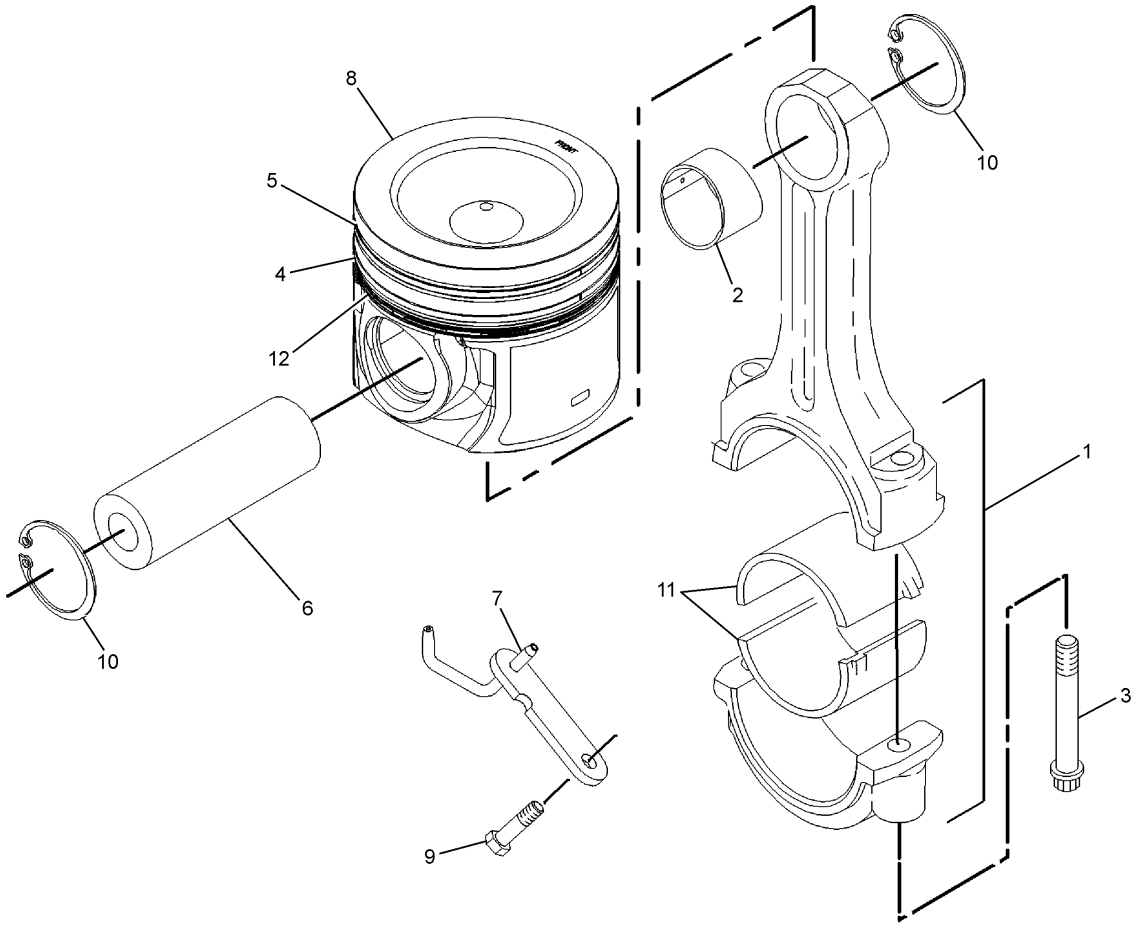

NOTE	No.	PART No.	QTY	PART NAME	NOTE	No.	PART No.	QTY	PART NAME
	1	213-3193	1	ROD AS					
	2	2W-0027	1	BEARING					
	3	195-0321	2	BOLT					
	4	197-9353	1	RING (INTERMEDIATE)					
	5	197-9386	1	RING					
	6	168-7224	1	PIN					
	7	173-0143	1	JET AS					
	8	238-2698	1	BODY AS					
	9	6V-3940	1	BOLT (L=25mm)					
	10	7C-0111	2	RETAINER					
	11	224-6638	1	BEARING (STANDARD)					
	12	197-9354	1	RING (OIL CONTROL)					

H90376E 00

210-5592 PISTON & ROD GP

Part of 236-4284-Page16

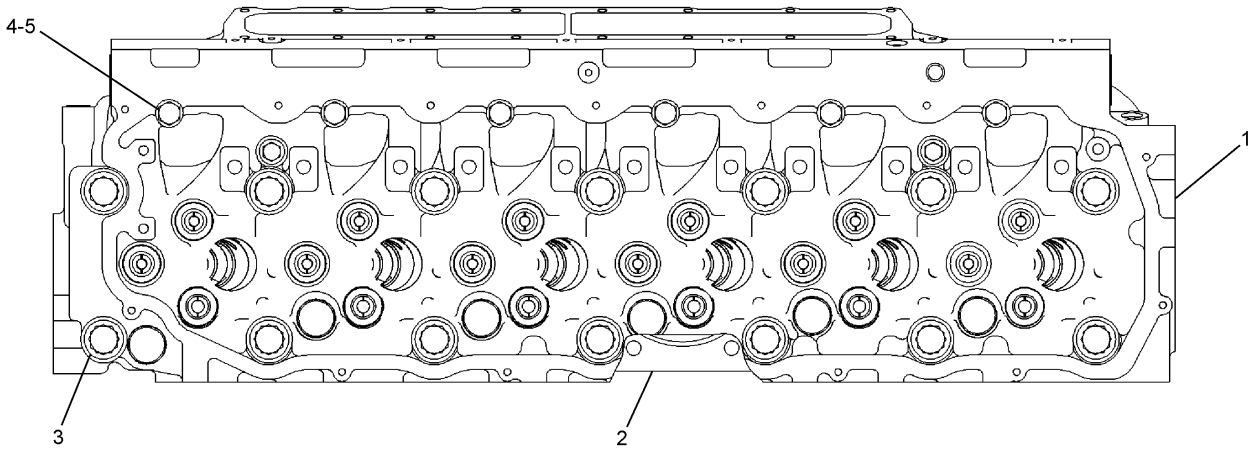

TOP VIEW OF ENGINE

NOTE	No.	PART No.	QTY	PART NAME	NOTE	No.	PART No.	QTY	PART NAME
Y	1	219-5847	1	HEAD GP					
	2	133-4995	1	GASKET					
	3	138-3252	14	BOLT					
		8T-3282	14	WASHER					
	4	8T-7950	6	BOLT (L=180mm)					
	5	6V-5839	6	WASHER					

Y—SEE SEPARATE ILLUSTRATION

H90330E 00

219-5849 CYLINDER HEAD GP

Part of 236-4284-Page16
219-5847-Page33

BASIC ENGINE

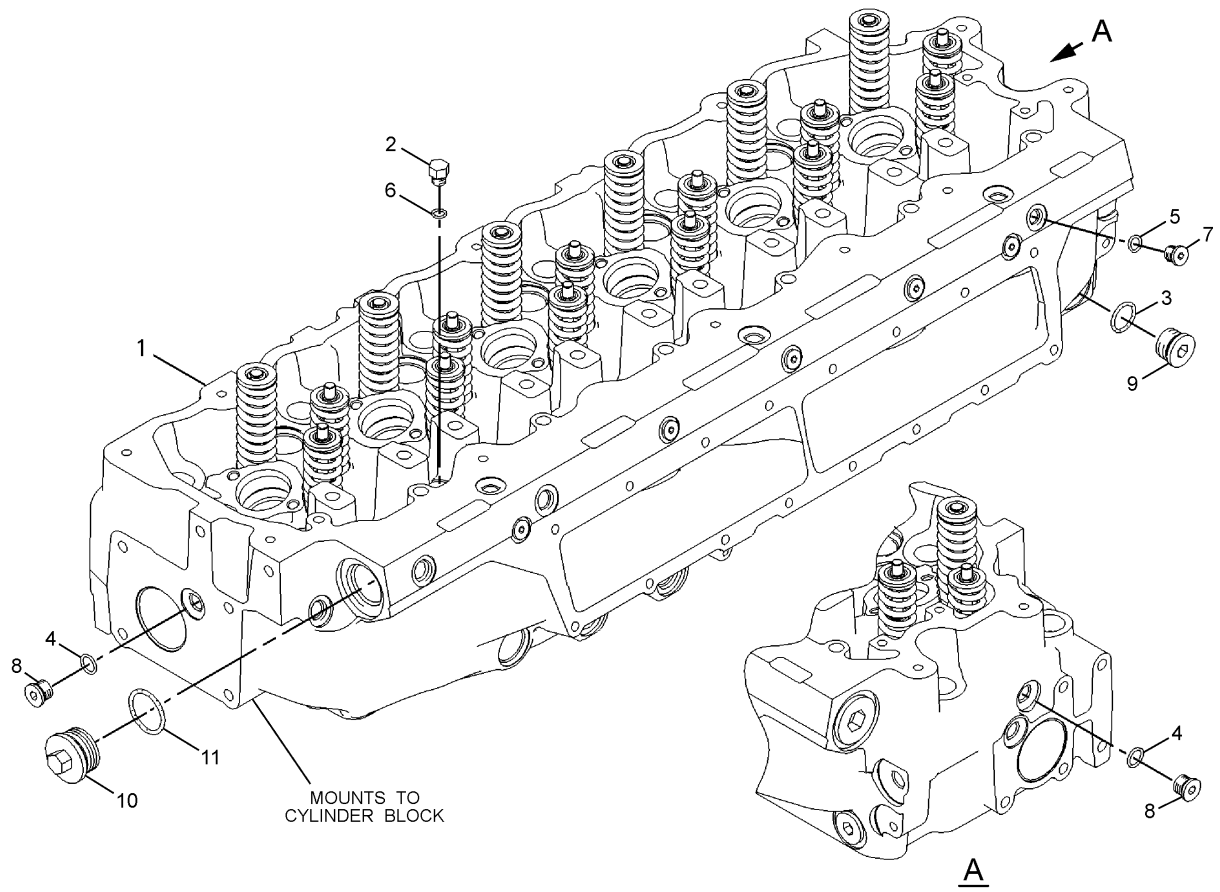

NOTE	No.	PART No.	QTY	PART NAME	NOTE	No.	PART No.	QTY	PART NAME
Y	1	219-5846	1	HEAD GP					
	2	1N-5999	2	PLUG					
	3	2M-9780	1	SEAL-O-RING (ID=19.18mm)					
	4	3J-1907	2	SEAL-O-RING (ID=11.89mm)					
	5	6V-5048	6	SEAL-O-RING (ID=8.92mm)					
	6	7J-0204	2	SEAL-O-RING (ID=7.65mm)					
	7	9S-8002	6	PLUG					
	8	9S-8004	2	PLUG					
	9	9S-8006	1	PLUG					
	10	9S-9334	1	PLUG					
	11	9X-7712	1	SEAL-O-RING (ID=29.74mm)					

Y—SEE SEPARATE ILLUSTRATION

H90331E 00

219-5847 CYLINDER HEAD GP

Part of 219-5849-Page32
219-5846-Page34

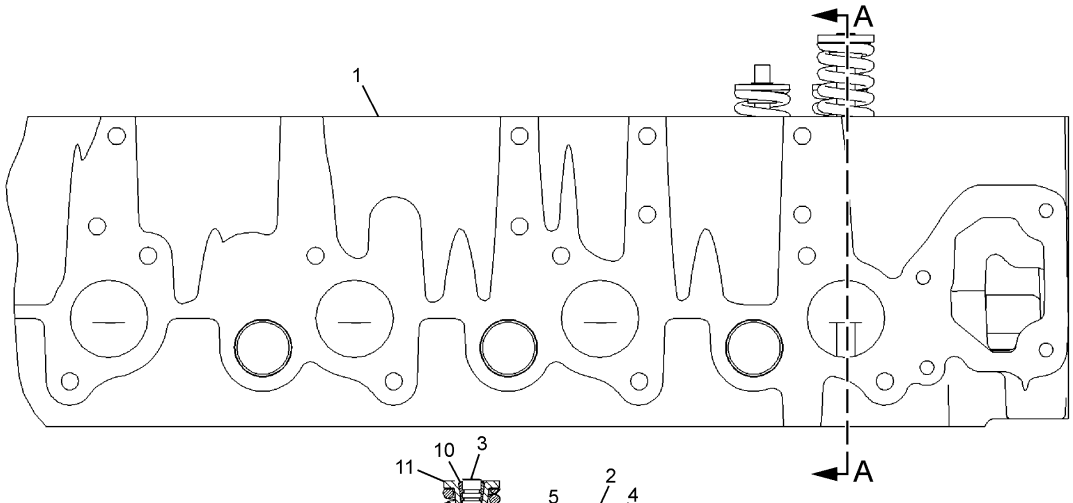

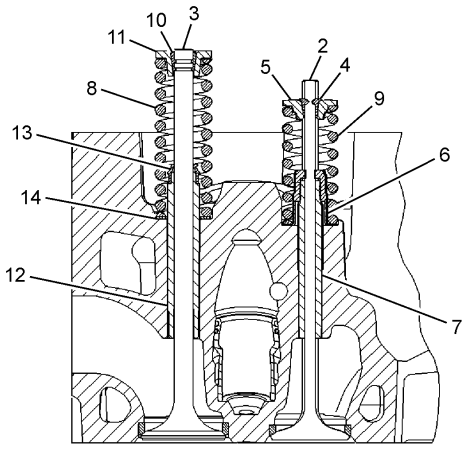

A – A

NOTE	No.	PART No.	QTY	PART NAME	NOTE	No.	PART No.	QTY	PART NAME
Y	1	219-5844	1	HEAD AS					
	2	145-7390	12	VALVE (INTAKE)					
	3	147-8211	6	VALVE (EXHAUST)					
	4	1W-2715	24	LOCK					
	5	7E-7779	12	RETAINER					
	6	147-8214	12	SEAL					
	7	140-9670	12	GUIDE					
	8	137-6718	6	SPRING					
	9	140-6188	12	SPRING					
	10	2A-4429	12	LOCK					
	11	134-4483	6	RETAINER					
	12	147-8220	6	GUIDE					
	13	163-2478	6	SEAL					
	14	137-6715	6	SEAT					

Y—SEE SEPARATE ILLUSTRATION

H90337E 00

219-5846 CYLINDER HEAD GP

Part of 219-5847-Page33
219-5844-Page35

BASIC ENGINE

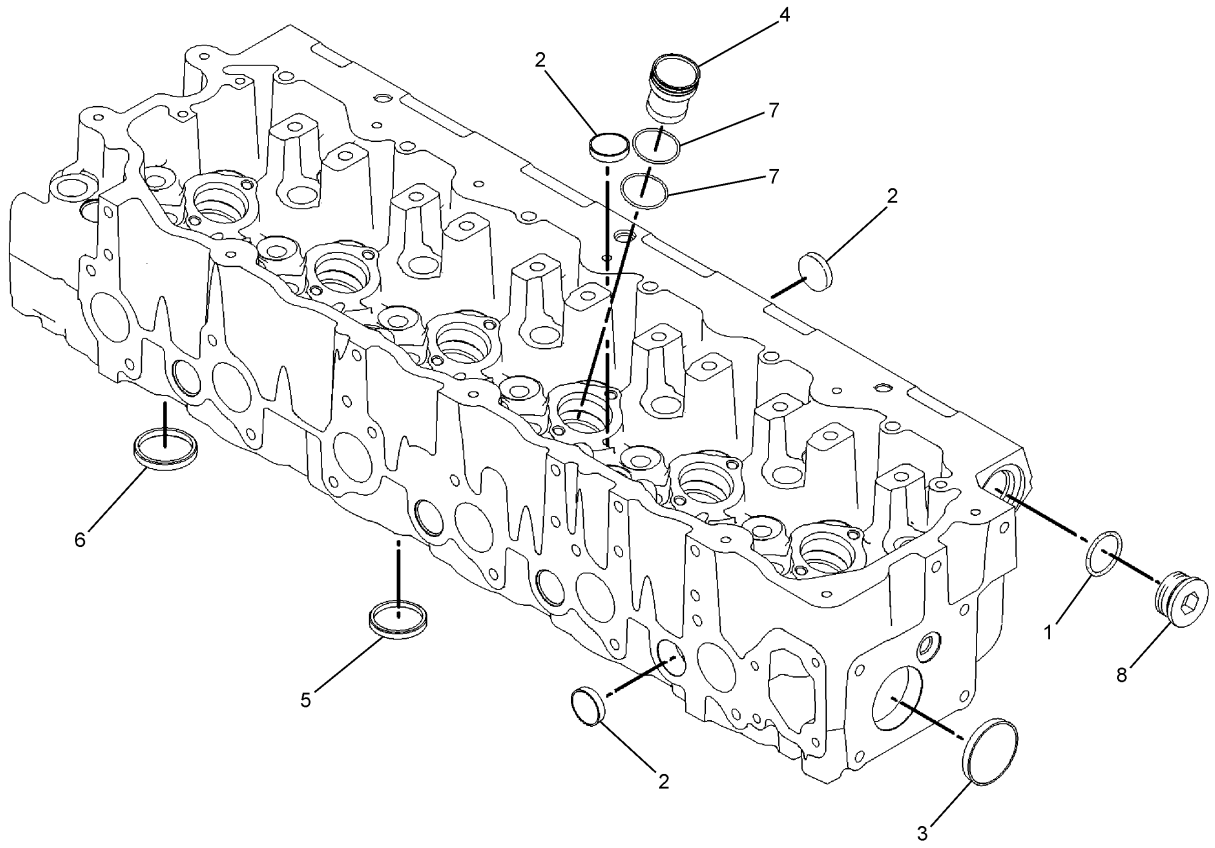

NOTE	No.	PART No.	QTY	PART NAME	NOTE	No.	PART No.	QTY	PART NAME
	1	9X-7712	1	SEAL-O-RING (ID=29.74mm)					
	2	8M-5860	12	PLUG					
	3	4F-5695	2	PLUG					
	4	227-1200	6	SLEEVE					
	5	217-5213	12	INSERT (INLET)					
	7	8C-0563	12	SEAL-O-RING (ID=31.47mm)					
	8	9S-9334	1	PLUG					

H90338E 00

219-5844 CYLINDER HEAD AS

Part of 219-5846-Page34

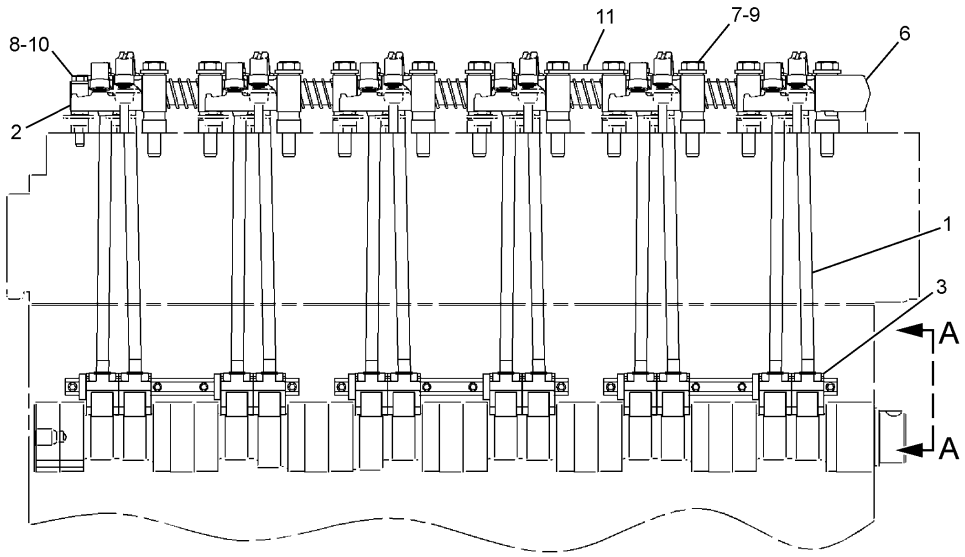

RIGHT SIDE VIEW OF ENGINE

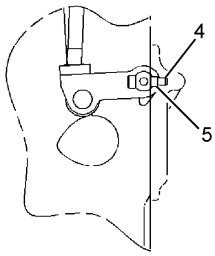

A – A

NOTE	No.	PART No.	QTY	PART NAME	NOTE	No.	PART No.	QTY	PART NAME
	1	133-6379	12	ROD					
	2	219-3309	6	BRIDGE					
Y	3	139-4081	3	LIFTER GP					
	4	8T-8442	12	BOLT (L=30mm)					
	5	3E-9412	6	DOWEL					
Y	6	235-5528	1	MECHANISM GP					
	7	6V-5696	11	BOLT (L=80mm)					
	8	9M-1974	2	WASHER					
	9	3H-7654	9	WASHER					
	10	8T-0100	2	BOLT (L=60mm)					
	11	232-1754	1	CLIP					

Y—SEE SEPARATE ILLUSTRATION

H90407E 00

232-3717 VALVE MECHANISM GP

Part of 236-4284-Page16
235-5528-Page37,139-4081-Page38

BASIC ENGINE

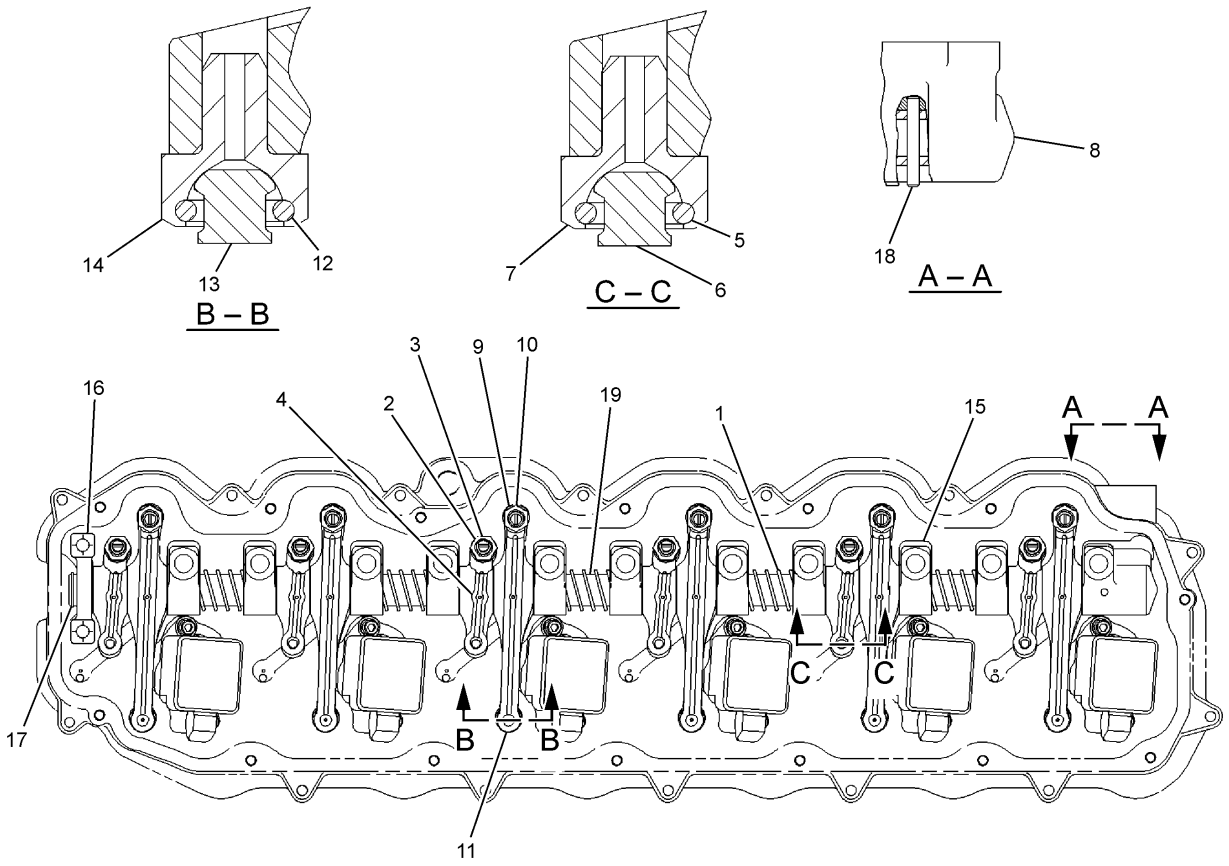

TOP VIEW OF ENGINE

NOTE	No.	PART No.	QTY	PART NAME	NOTE	No.	PART No.	QTY	PART NAME
	1	137-6717	5	SPRING		19	138-7198	1	SHAFT AS
	2	222-1185	6	ARM GP (INTAKE)			5B-1866	1	PLUG
	3	2Y-5829	1	NUT					
		183-4365	1	SCREW					
	4	153-8467	1	ARM AS					
	5	173-5549	1	SEAL-O-RING					
	6	145-7376	1	BUTTON					
	7	145-7385	1	SOCKET					
	8	138-8403	1	STAND					
	9	222-1186	6	ARM GP (EXHAUST)					
	10	2Y-5829	1	NUT					
		183-4365	1	SCREW					
	11	153-8470	1	ARM AS					
	12	173-5549	1	SEAL-O-RING					
	13	145-7376	1	BUTTON					
	14	145-7385	1	SOCKET					
	15	235-5527	10	STAND					
	16	138-8402	1	STAND					
	17	138-9868	1	RING					
	18	8H-5244	1	DOWEL					

H90412E 00

235-5528 VALVE MECHANISM GP
Part of 232-3717-Page36

BASIC ENGINE

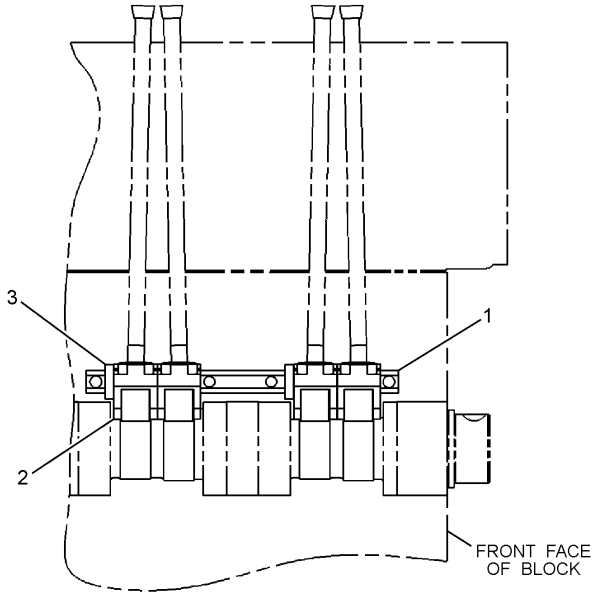

RIGHT SIDE VIEW OF ENGINE

NOTE	No.	PART No.	QTY	PART NAME
	1	139-9476	1	SHAFT AS
		2D-6642	2	BALL
	2	7E-6794	4	ARM AS
	3	139-4084	2	SPACER

H90409E 01

139-4081 LIFTER GP-VALVE

Part of 232-3717-Page36

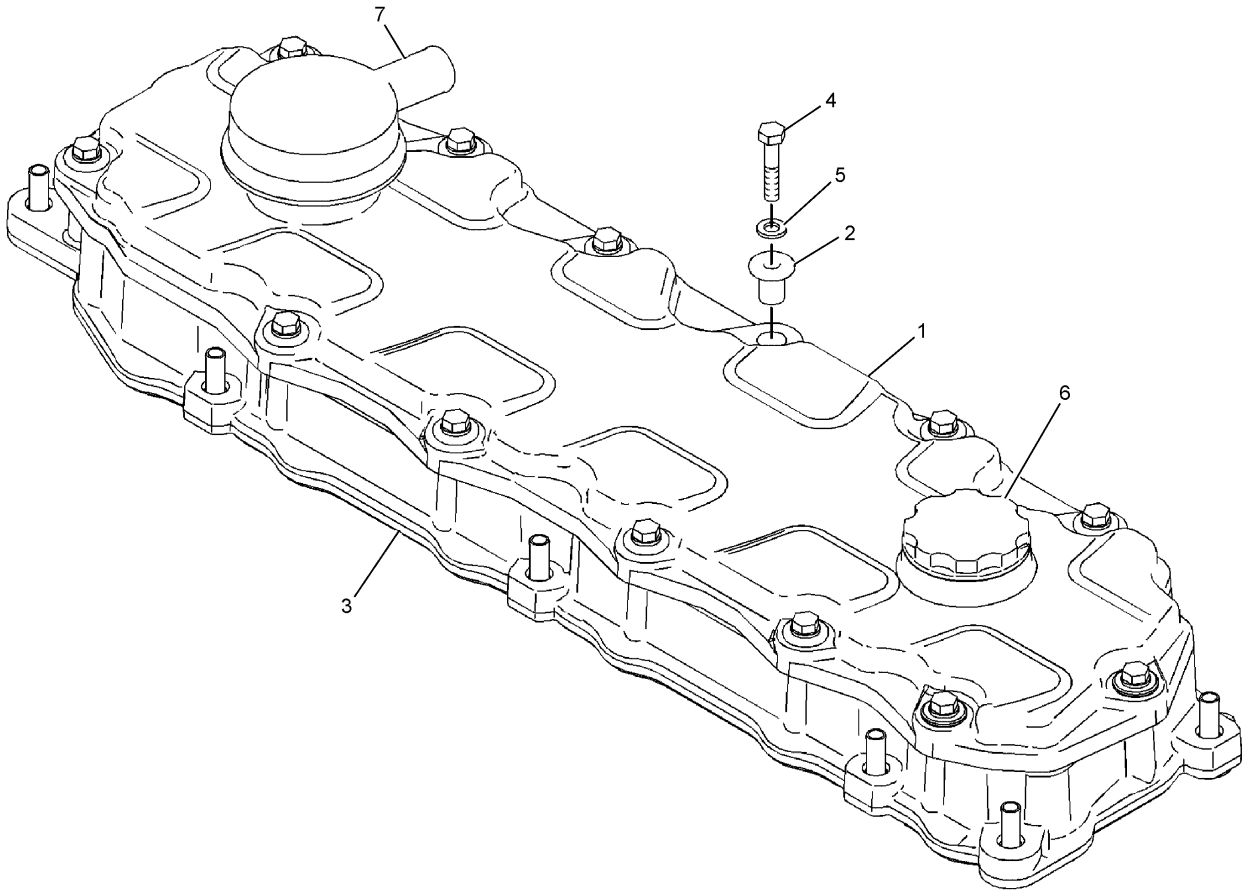

NOTE	No.	PART No.	QTY	PART NAME	NOTE	No.	PART No.	QTY	PART NAME
	1	242-2450	1	COVER GP					
▲		217-5701		SEAL…(21dm)					
	2	246-5083	13	SLEEVE					
	3	271-2417	1	COVER GP					
		244-4486	1	SEAL					
		245-6796	1	COVER AS					
	4	099-3649	13	BOLT (L=40mm)					
	5	8T-4224	13	WASHER					
	6	227-4531	1	CAP AS					
		7F-8268	1	SEAL-O-RING (ID=53.57mm)					
	7	204-4444	1	BREATHER AS					

▲—ORDER BY THE DECIMETER

H90809E 00

252-2328 COVER GP-VALVE MECHANISM

Part of 235-8135-Page12

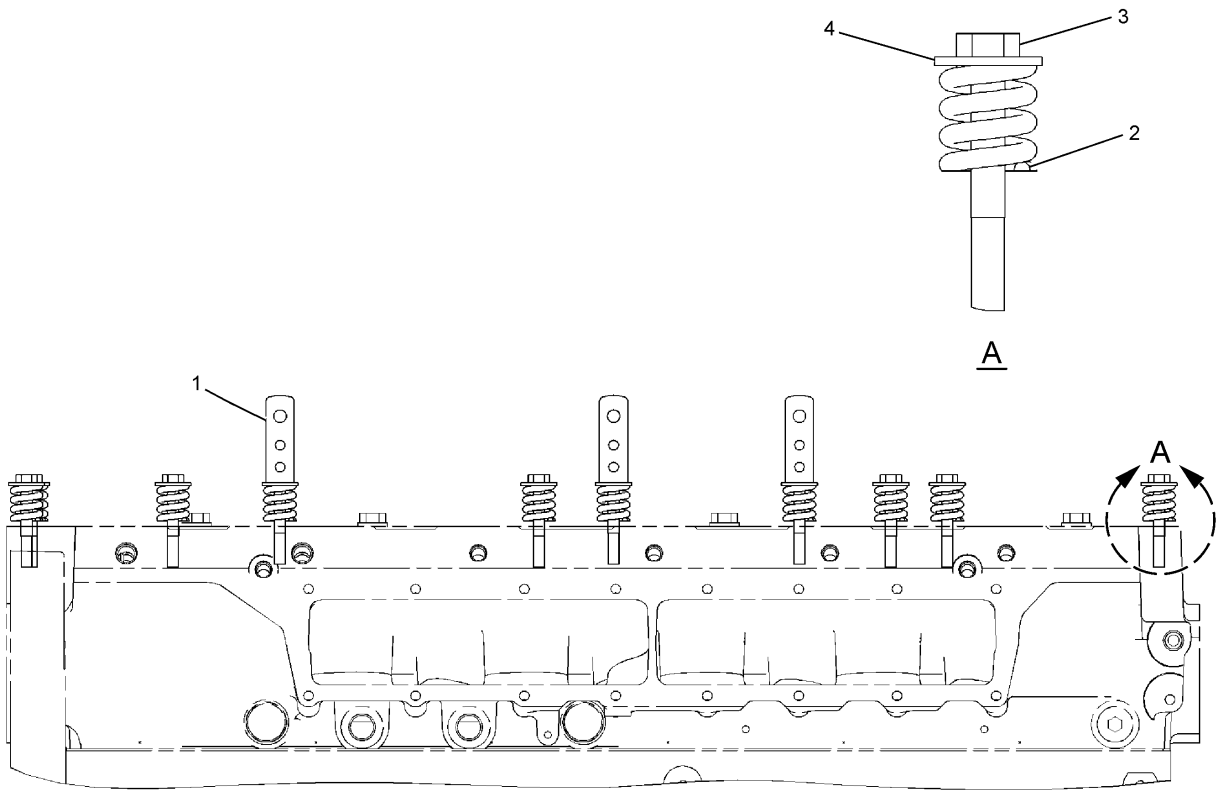

RIGHT SIDE VIEW OF ENGINE

NOTE	No.	PART No.	QTY	PART NAME	NOTE	No.	PART No.	QTY	PART NAME
	1	229-8844	3	CLIP					
	2	244-4500	11	SPRING					
	3	8T-0100	11	BOLT (L=60mm)					
	4	9N-0869	11	WASHER					

H90343E 00

258-8723 FASTENER GP-VALVE MECHANISM

Part of 235-8135-Page12

BASIC ENGINE

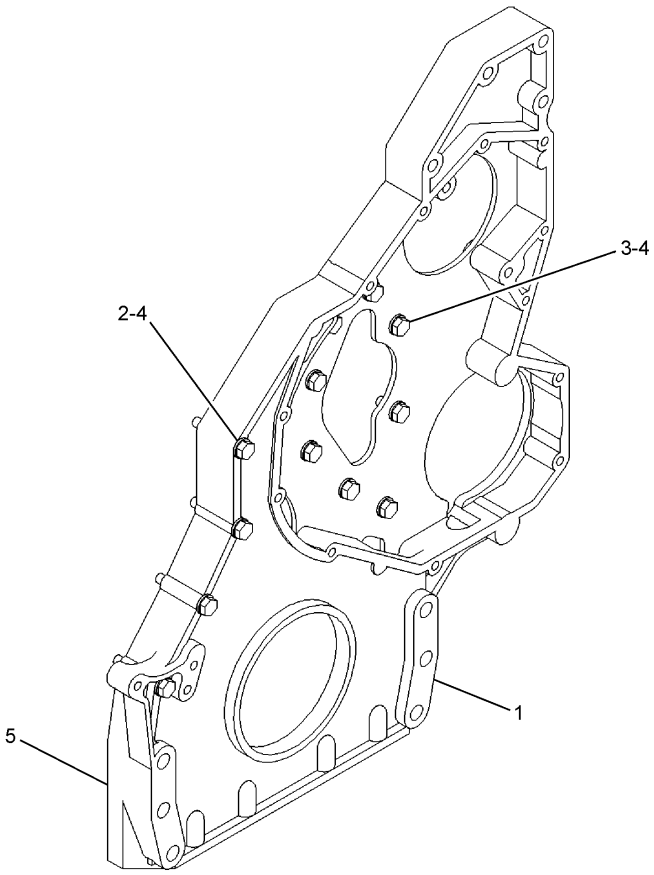

NOTE	No.	PART No.	QTY	PART NAME	NOTE	No.	PART No.	QTY	PART NAME
	1	245-3259	1	HOUSING					
	2	6V-3918	4	BOLT (L=50mm)					
	3	6V-5217	8	BOLT (L=20mm)					
	4	9M-1974	12	WASHER					
B	5	1U-8846		GASKET MAKER					

B—USE AS REQUIRED

H90357E 00

245-3260 HOUSING GP-FRONT

Part of 236-4284-Page16

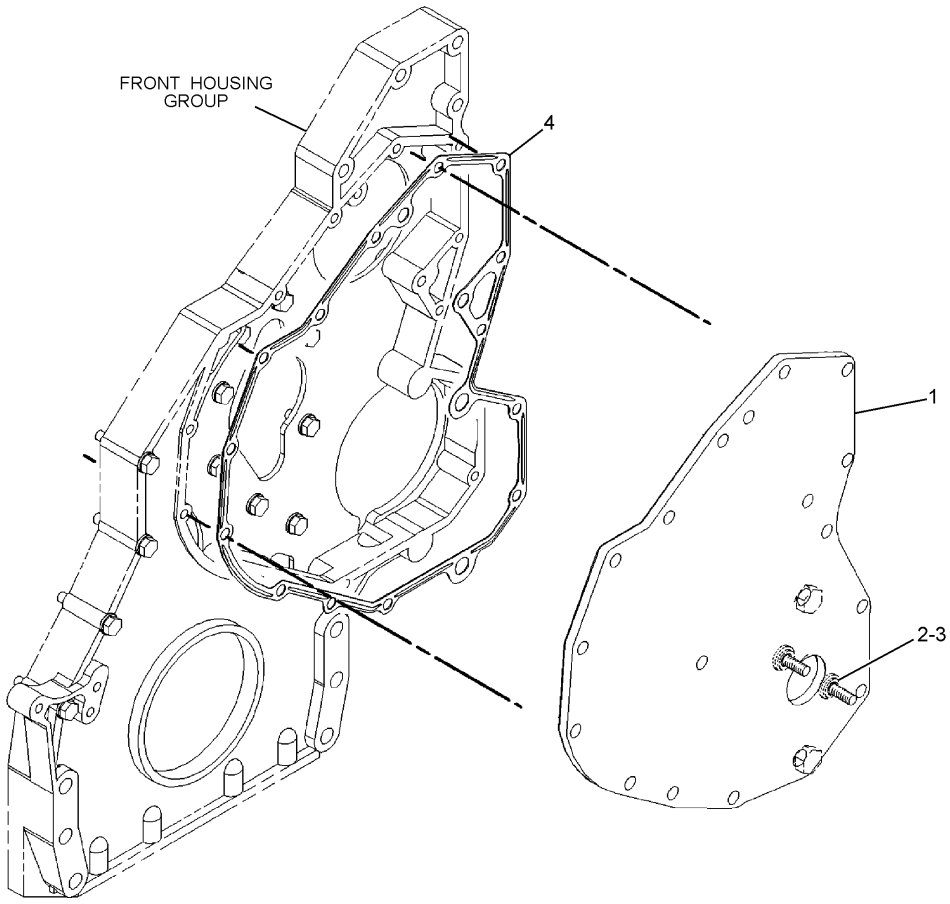

NOTE	No.	PART No.	QTY	PART NAME	NOTE	No.	PART No.	QTY	PART NAME
	1	166-1776	1	COVER AS					
	2	126-1757	2	WASHER					
	3	136-0822	2	STUD					
	4	166-1781	1	GASKET					

H90315E 00

211-9120 COVER GP-FRONT HOUSING

Part of 236-4284-Page16

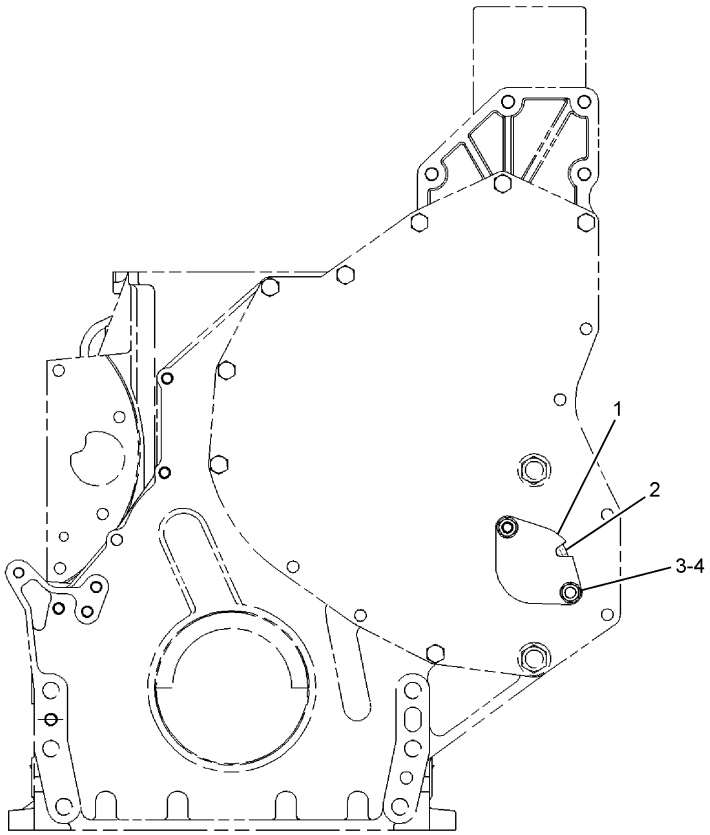

FRONT VIEW OF ENGINE

NOTE	No.	PART No.	QTY	PART NAME	NOTE	No.	PART No.	QTY	PART NAME
	1	7C-1445	1	COVER					
	2	061-9455	1	SEAL-O-RING (ID=47.22mm)					
	3	8T-4224	2	WASHER					
	4	5C-7261	2	NUT					

H90303E 00

172-8732 COVER GP-FRONT HOUSING

Part of 235-8135-Page12

BASIC ENGINE

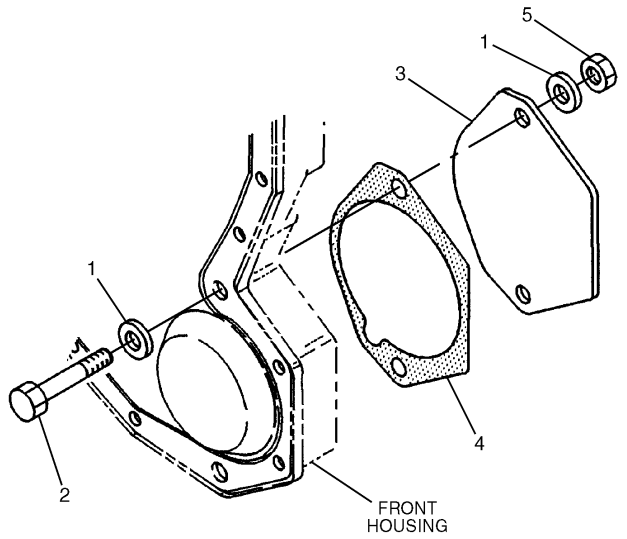

NOTE	No.	PART No.	QTY	PART NAME
	1	5P-8245	4	WASHER
	2	6V-5696	2	BOLT (L=80mm)
	3	4W-2026	1	COVER
	4	135-9819	1	SEAL
	5	6V-8149	2	NUT

H70253E 02

118-1727 COVER GP-FRONT HOUSING

Part of 235-8135-Page12

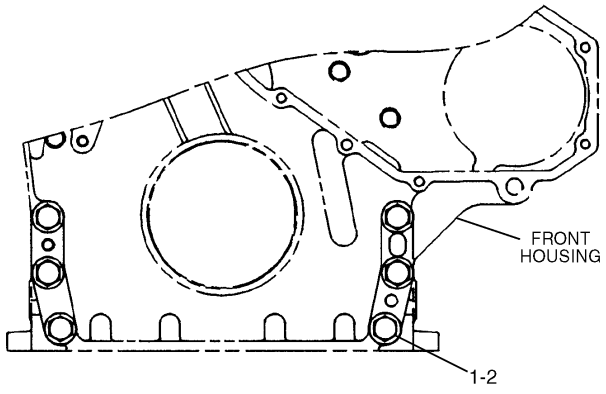

FRONT VIEW OF ENGINE

NOTE	No.	PART No.	QTY	PART NAME
	1	6V-8336	6	BOLT (L=70mm)
	2	5P-8245	6	WASHER

H90335E 01

116-4556 FASTENER GP-FRONT HOUSING

Part of 235-8135-Page12

BASIC ENGINE

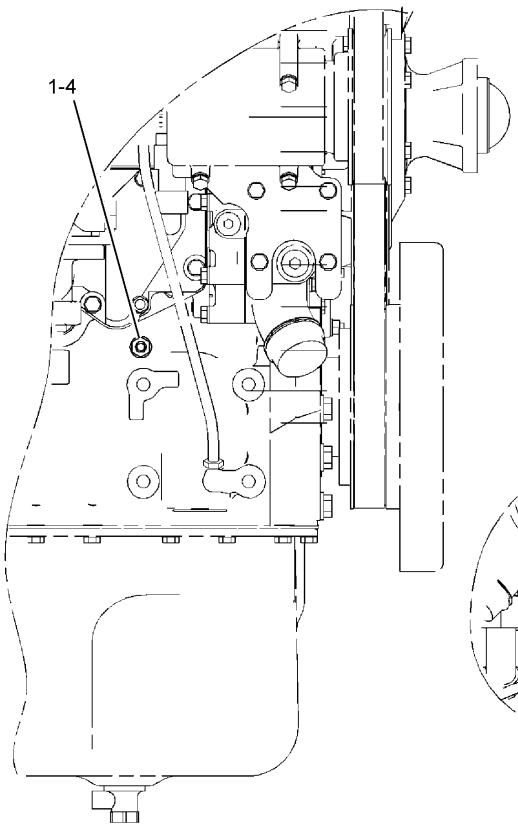

RIGHT SIDE VIEW OF ENGINE

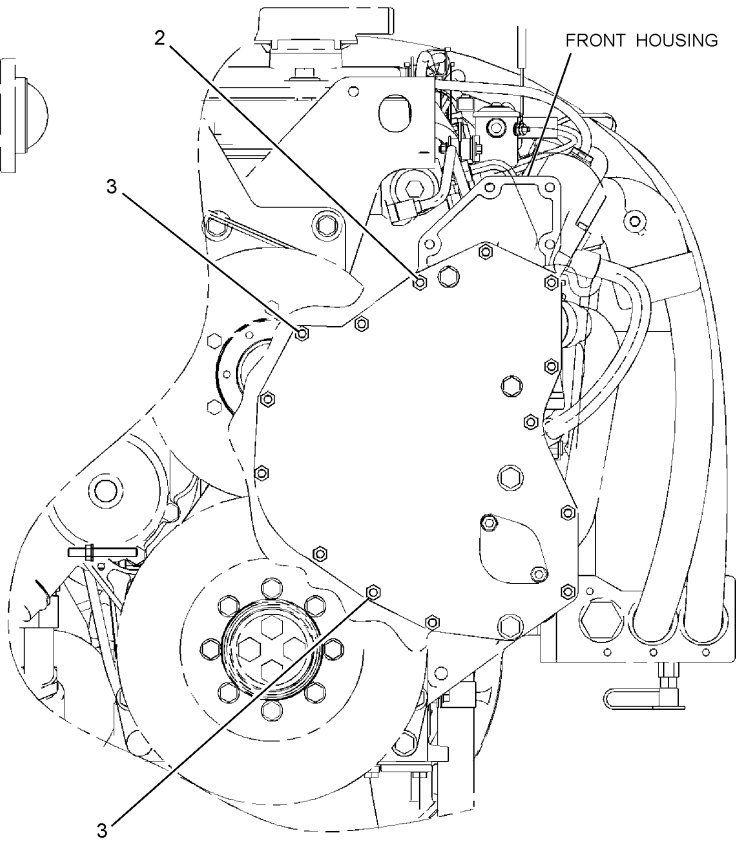

FRONT VIEW OF ENGINE

NOTE	No.	PART No.	QTY	PART NAME	NOTE	No.	PART No.	QTY	PART NAME
	1	9X-2098	1	STUD					
	2	6V-2317	12	BOLT (L=30mm)					
	3	8T-0100	2	BOLT (L=60mm)					
	4	8T-4224	1	WASHER					

H90340E 00

252-9551 FASTENER GP-FRONT HOUSING

Part of 235-8135-Page12

BASIC ENGINE

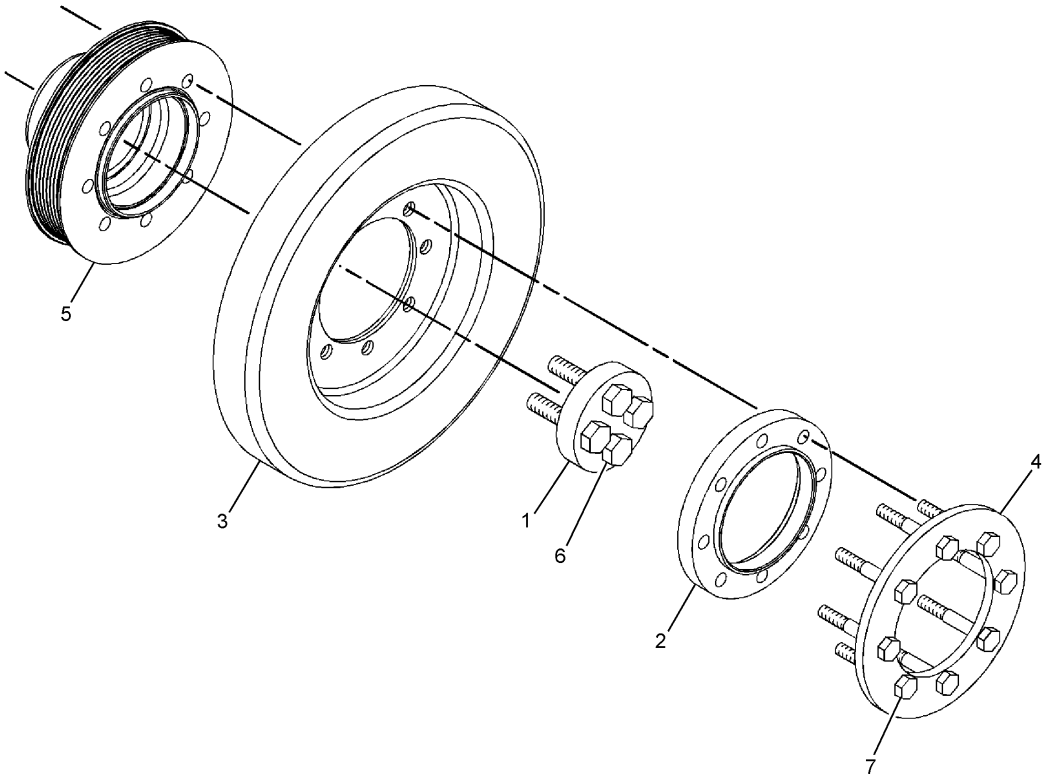

NOTE	No.	PART No.	QTY	PART NAME	NOTE	No.	PART No.	QTY	PART NAME
	1	2W-7381	1	WASHER					
	2	116-6332	1	SPACER					
	3	167-8121	1	DAMPER AS					
	4	228-3621	1	SPACER					
	5	263-1826	1	PULLEY					
	6	8T-3666	4	BOLT (L=60mm)					
	7	8T-5035	8	BOLT (L=65mm)					

H90306E 00

263-1850 DAMPER & PULLEY GP

Part of 235-8135-Page12

MEMORANDA

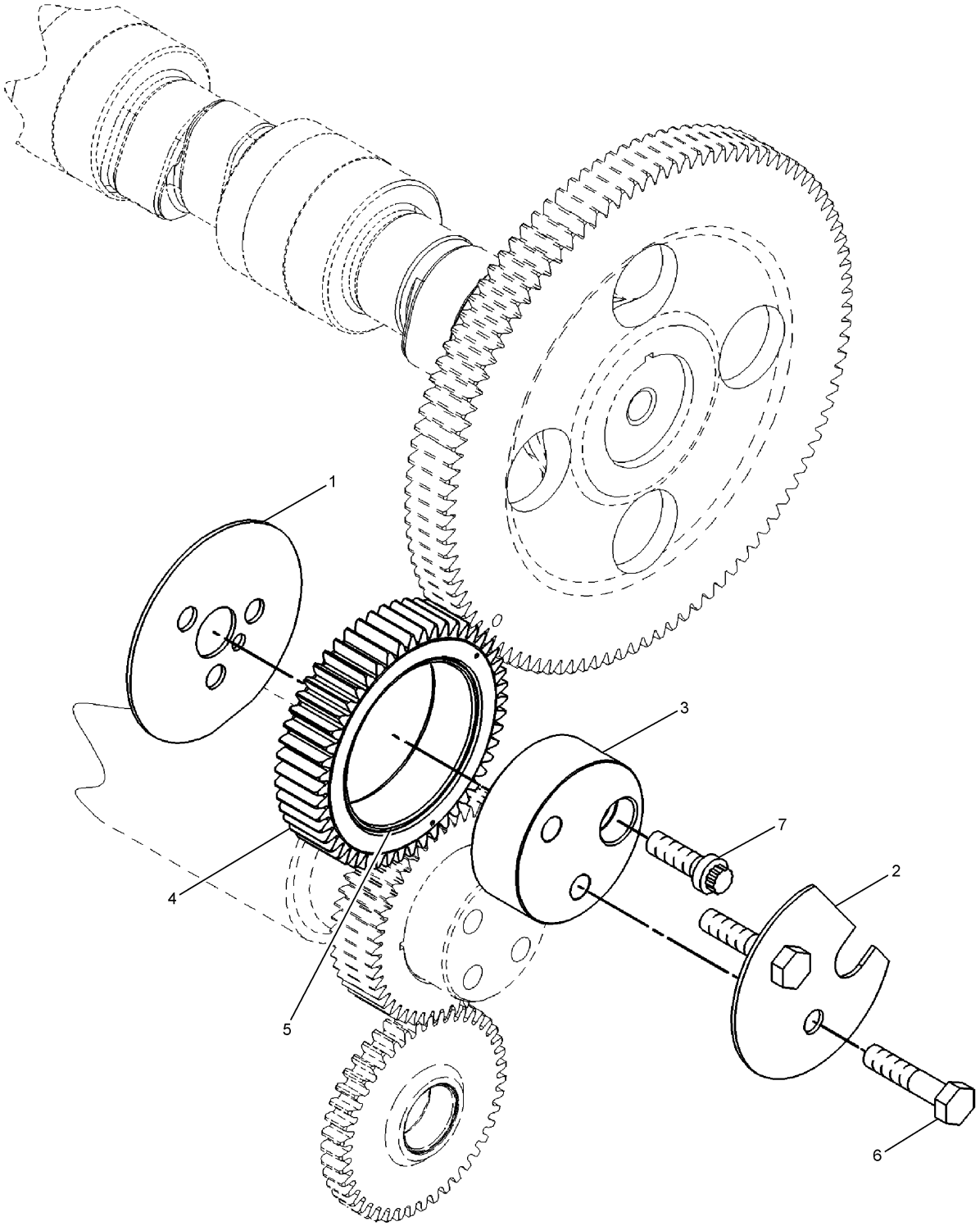

205-1321 GEAR GP-FRONT
Part of 236-4284-Page16

BASIC ENGINE

NOTE	No.	PART No.	QTY	PART NAME	NOTE	No.	PART No.	QTY	PART NAME
	1	113-6069	1	PLATE					
	2	115-4219	1	PLATE					
	3	200-4495	1	SHAFT					
	4	205-1320	1	GEAR AS					
	5	115-4072	1	BEARING					
	6	6V-5843	2	BOLT (L=45mm)					
	7	136-4183	1	BOLT (L=30mm)					

H90346E 02

205-1321 GEAR GP-FRONT

Part of 236-4284-Page16

BASIC ENGINE

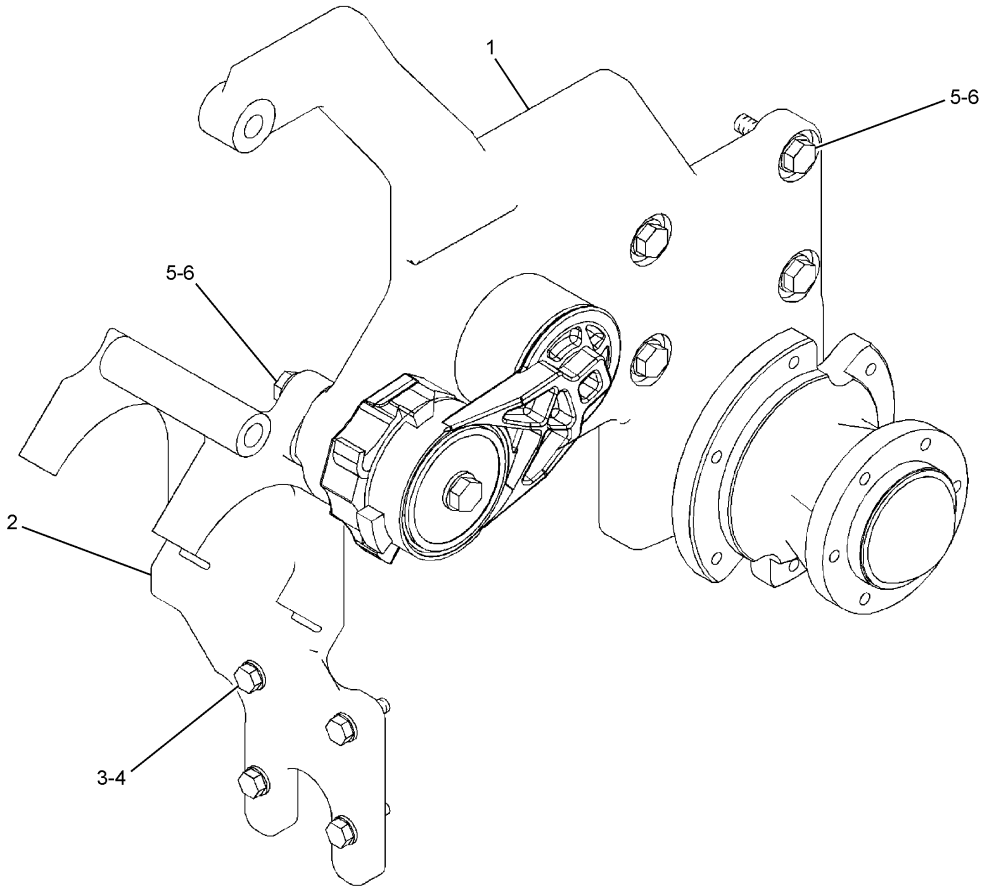

NOTE	No.	PART No.	QTY	PART NAME	NOTE	No.	PART No.	QTY	PART NAME
Y	1	177-6973	1	DRIVE GP					
	2	183-3351	1	SUPPORT					
	3	9M-1974	4	WASHER					
	4	6V-2317	4	BOLT (L=30mm)					
	5	6V-5839	6	WASHER					
	6	6V-5842	6	BOLT (L=40mm)					

Y—SEE SEPARATE ILLUSTRATION

H90278E 00

253-0437 BRACKET GP-ENGINE

Part of 235-8135-Page12
177-6973-Page51

BASIC ENGINE

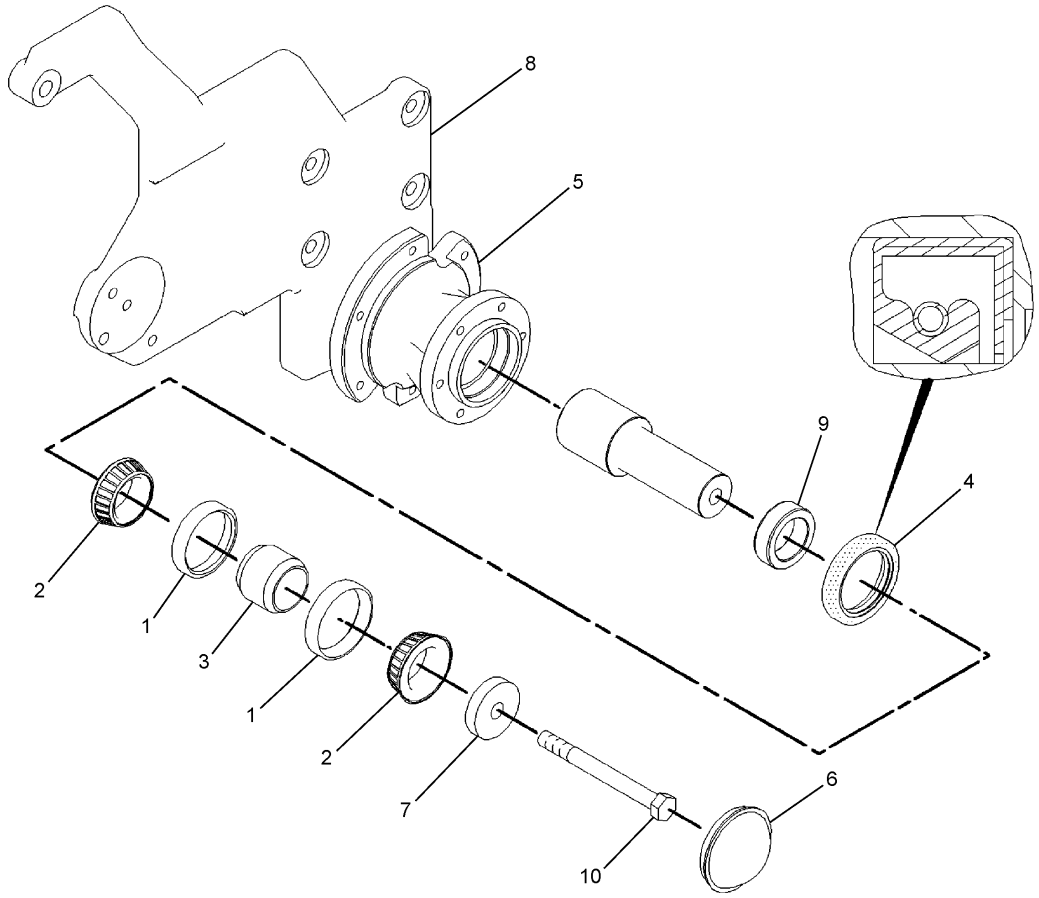

NOTE	No.	PART No.	QTY	PART NAME	NOTE	No.	PART No.	QTY	PART NAME
	1	4W-1203	2	CUP					
	2	4W-1204	2	CONE					
	3	4W-2042	1	SPACER					
	4	6V-9748	1	SEAL					
	5	7C-8369	1	HUB					
	6	7C-8370	1	CAP					
	7	7C-8634	1	PLATE					
	8	183-2854	1	BRACKET AS					
	9	5S-9062	1	SPACER					
	10	6V-8004	1	BOLT (L=120mm)					

H90279E 02

177-6973 DRIVE GP-FAN
Part of 253-0437-Page50

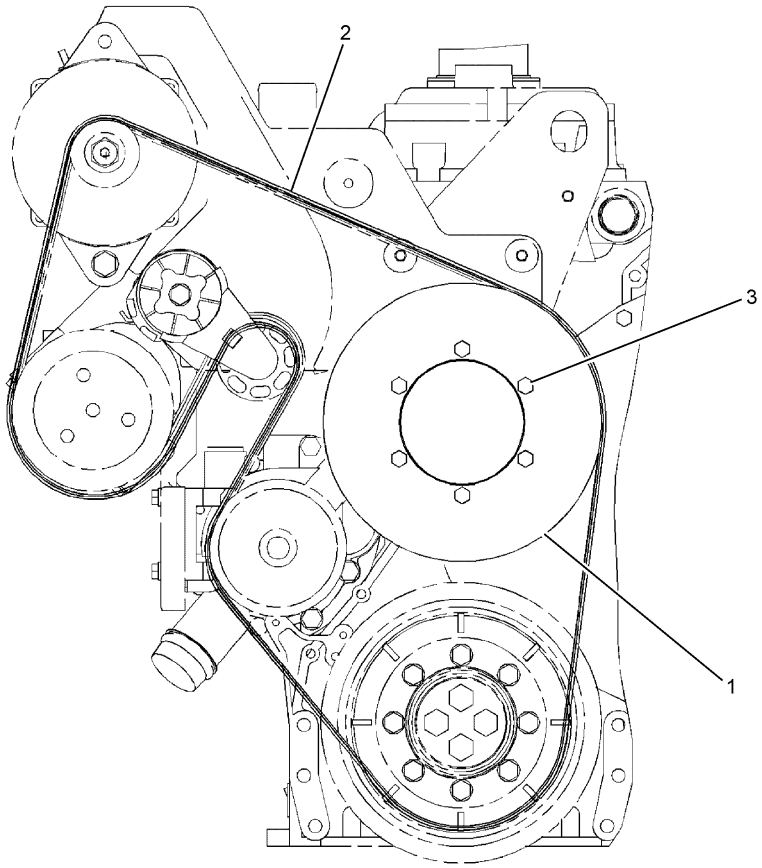

FRONT VIEW OF ENGINE

NOTE	No.	PART No.	QTY	PART NAME	NOTE	No.	PART No.	QTY	PART NAME
	1	227-3811	1	PULLEY					
	2	263-1849	1	BELT					
	3	6V-5215	6	BOLT (L=16mm)					

H90810E 00

263-1848 PULLEY GP
Part of 235-8135-Page13

BASIC ENGINE

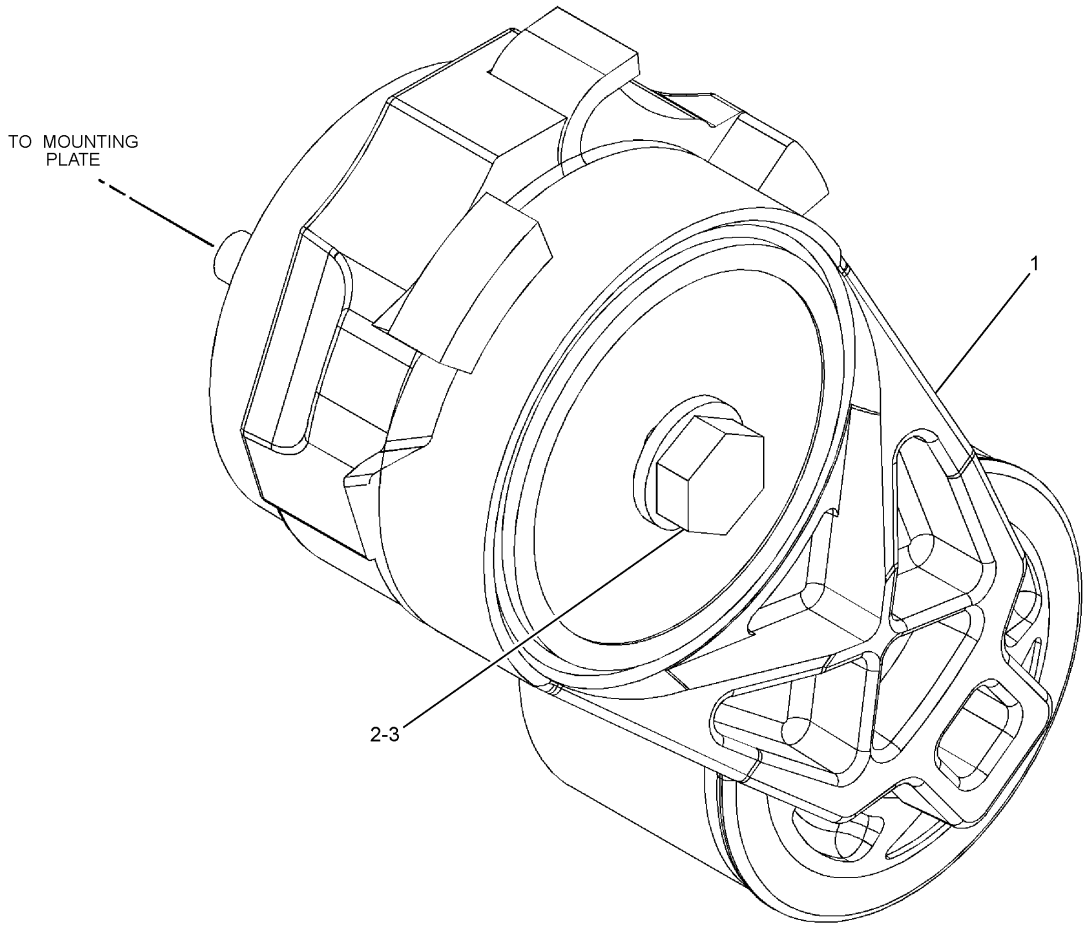

NOTE	No.	PART No.	QTY	PART NAME	NOTE	No.	PART No.	QTY	PART NAME
	1	190-0643	1	TIGHTENER					
	2	6V-5839	1	WASHER					
	3	8T-0643	1	BOLT (L=80mm)					

H90276E 00

253-0433 BELT TIGHTENER GP

Part of 235-8135-Page12

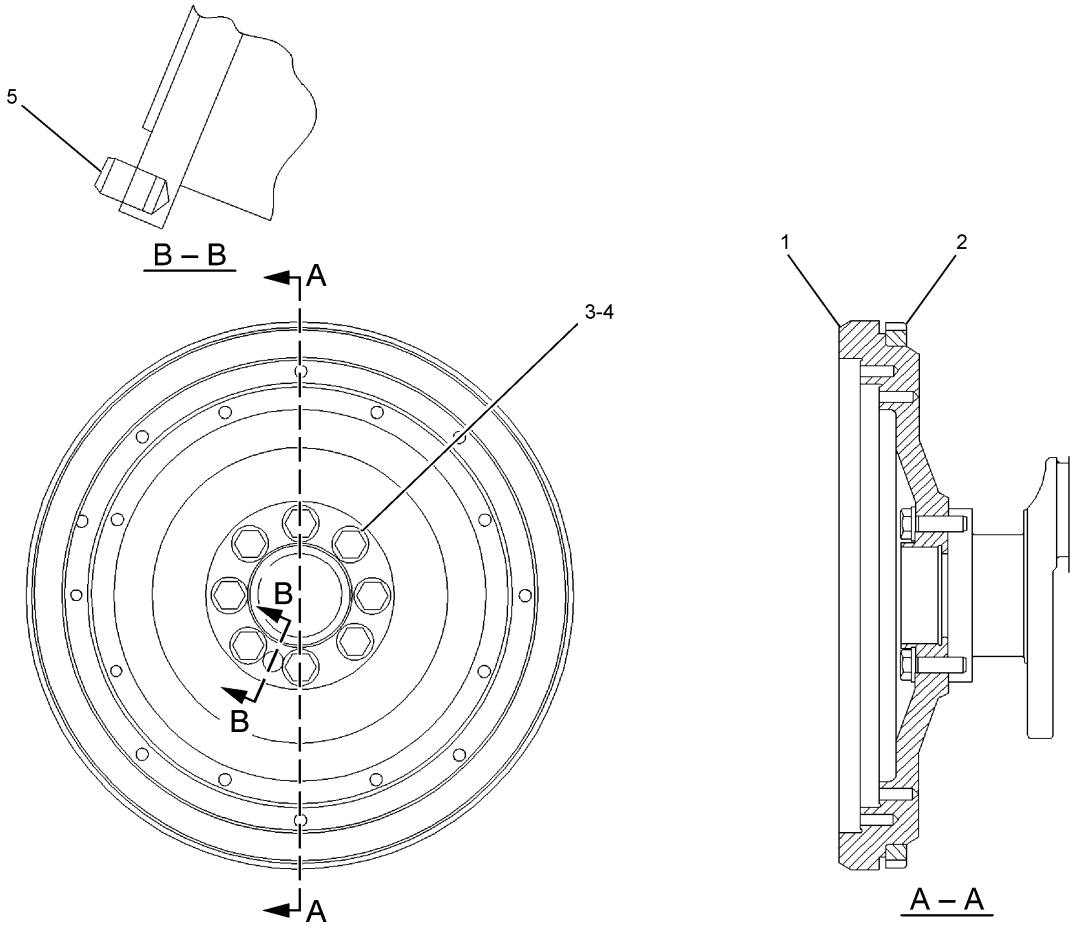

NOTE	No.	PART No.	QTY	PART NAME	NOTE	No.	PART No.	QTY	PART NAME
	1	202-2382	1	FLYWHEEL AS					
	2	1W-1064	1	GEAR (Z=126)					
	3	6V-8197	8	BOLT (L=40mm)					
	4	5P-8245	8	WASHER					
	5	3E-3213	1	PIN					

H90358E 00

186-5892 FLYWHEEL GP

Part of 235-8135-Page12

BASIC ENGINE

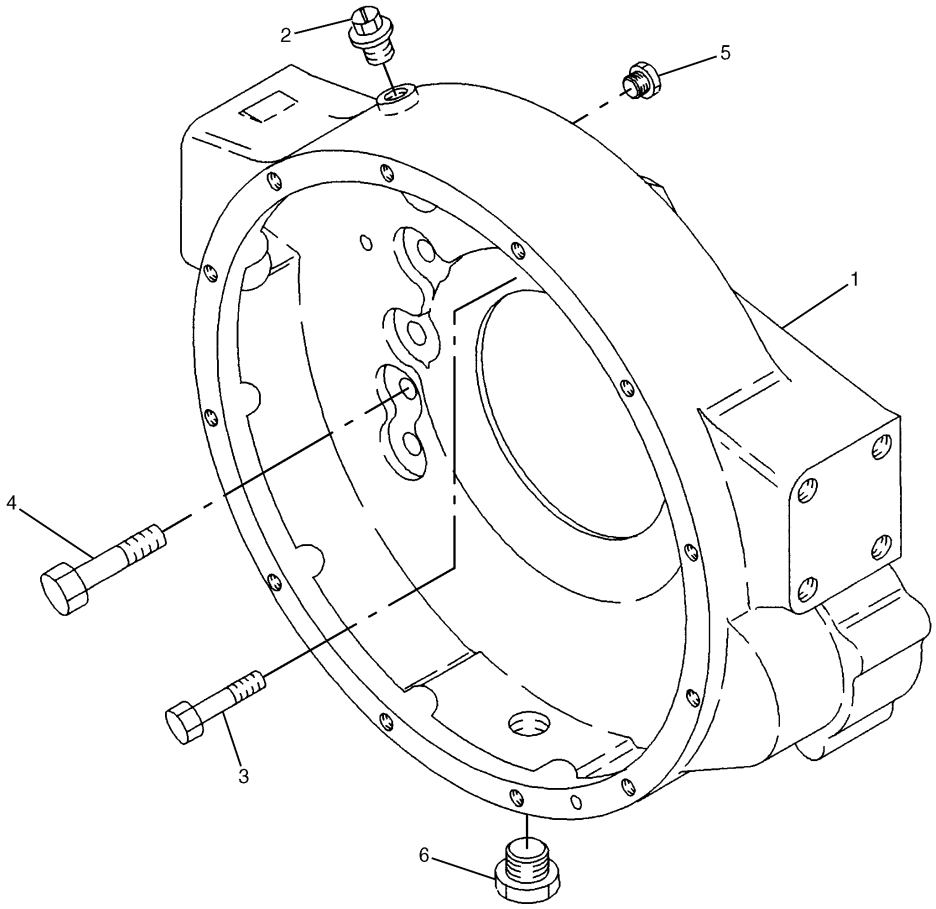

NOTE	No.	PART No.	QTY	PART NAME	NOTE	No.	PART No.	QTY	PART NAME
	1	7C-5233	1	HOUSING					
	2	2P-1294	1	PLUG					
	3	6V-5842	2	BOLT (L=40mm)					
	4	8T-0226	10	BOLT (L=45mm)					
	5	9S-4182	1	PLUG					
B	6	9S-4183	1	PLUG					

B—USE AS REQUIRED

H70238E 08

7W-8813 HOUSING GP-FLYWHEEL

Part of 235-8135-Page12

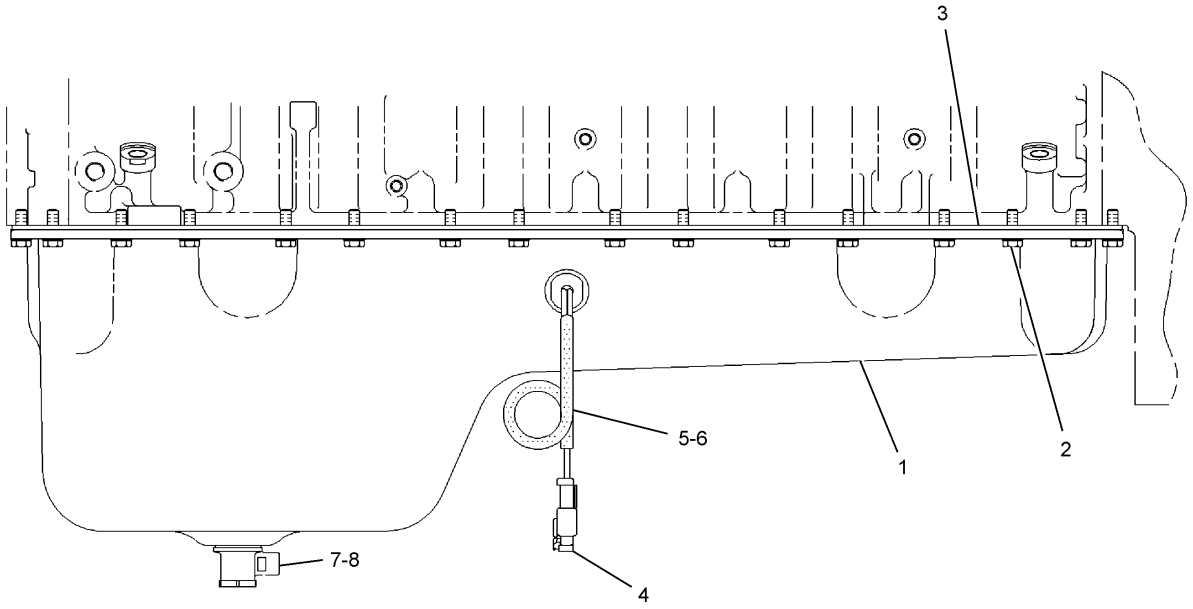

LEFT SIDE VIEW OF ENGINE

NOTE	No.	PART No.	QTY	PART NAME	NOTE	No.	PART No.	QTY	PART NAME
	1	176-9430	1	PAN AS					
	2	175-3676	36	BOLT (L=20mm)					
	3	166-2905	1	SEAL					
B	4	136-4303	1	PLUG AS					
		155-2270	1	PLUG KIT					
		3E-3362	1	WEDGE					
		8T-8737	2	PLUG					
	5	213-0677	1	SWITCH AS					
		3E-3365	1	WEDGE					
		144-1636	1	PIN					
		102-8802	1	RECEPTACLE KIT					
	6	189-9377	1	SEAL-O-RING (ID=23.47mm)					
	7	203-4183	1	VALVE AS					
	8	2K-8199	1	SEAL-O-RING (ID=28.24mm)					

B—USE AS REQUIRED

H90413E 03

176-9429 PAN GP-OIL
Part of 235-8135-Page12

BASIC ENGINE

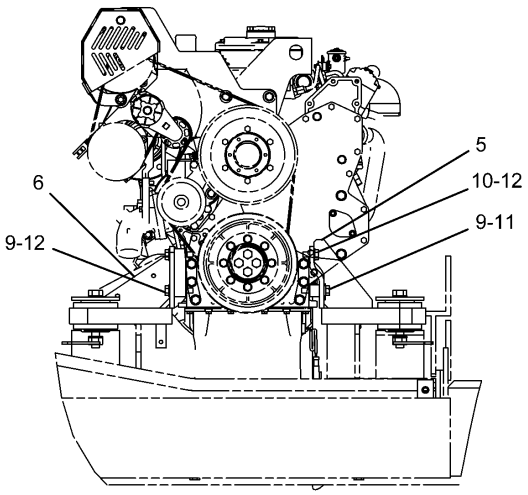

FRONT VIEW OF ENGINE

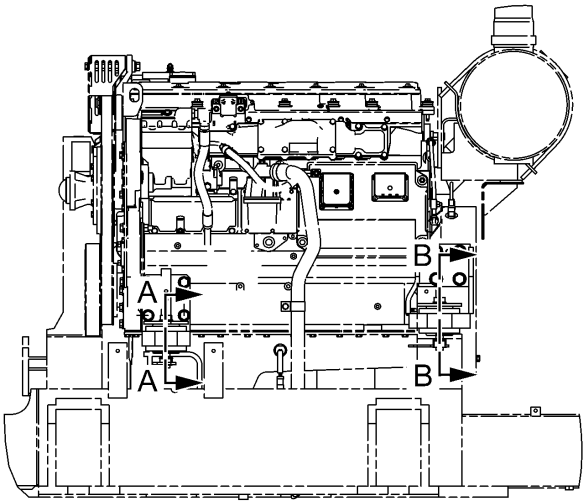

LH VIEW OF ENGINE

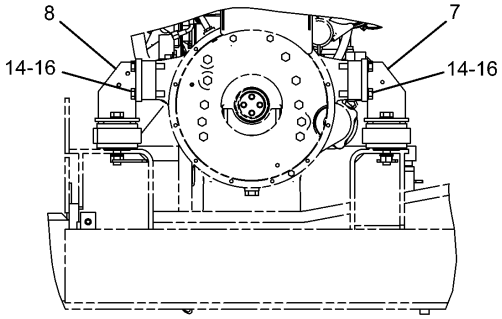

REAR VIEW OF ENGINE

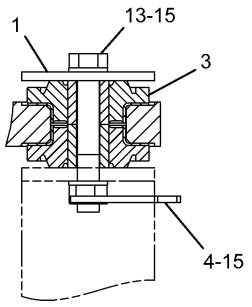

A – A

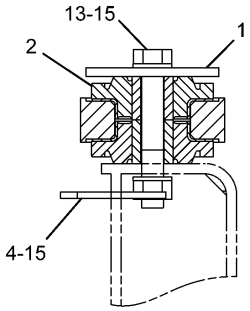

B – B

NOTE	No.	PART No.	QTY	PART NAME	NOTE	No.	PART No.	QTY	PART NAME
	1	109-9329	4	WASHER					
	2	109-9350	4	MOUNT					
	3	109-9369	4	MOUNT					
	4	118-9930	4	SUPPORT AS					
	5	233-1293	1	BRACKET AS					
	6	233-1296	1	BRACKET AS					
	7	233-1299	1	BRACKET AS					
	8	272-4800	1	BRACKET AS					
	9	096-9259	6	BOLT (L=60mm)					
	10	096-9988	2	BOLT (L=30mm)					
	11	7M-0242	2	WASHER					
	12	7X-0510	6	WASHER					
	13	7X-2532	4	BOLT (L=130mm)					
	14	7X-2555	8	BOLT (L=80mm)					
	15	8T-4123	8	WASHER					
	16	9X-8257	8	WASHER					

H91328E 02

233-1120 MOUNTING GP-ENGINE

LUBRICATION SYSTEM

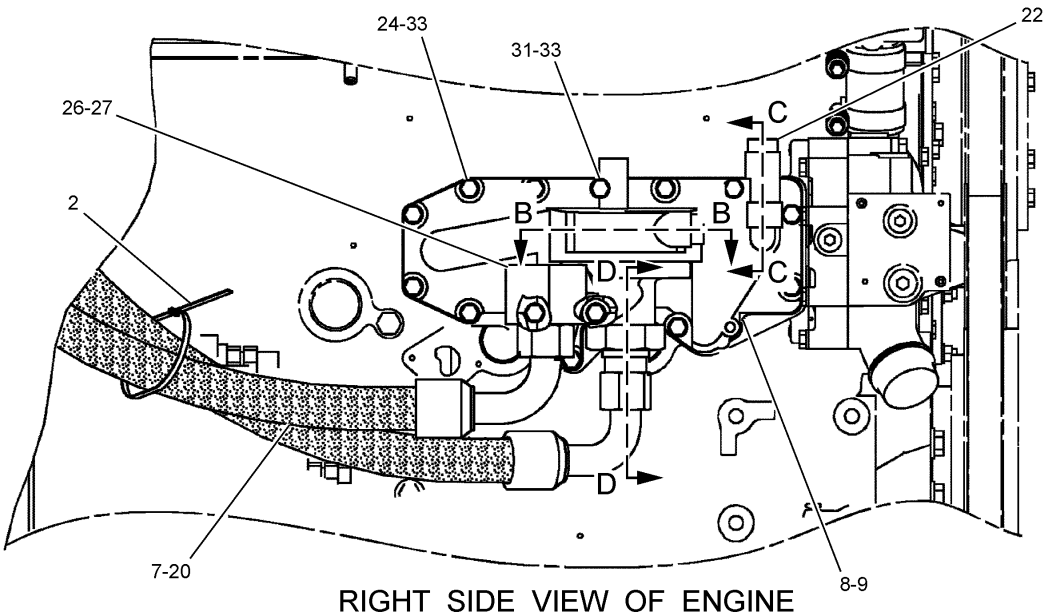

RIGHT SIDE VIEW OF ENGINE

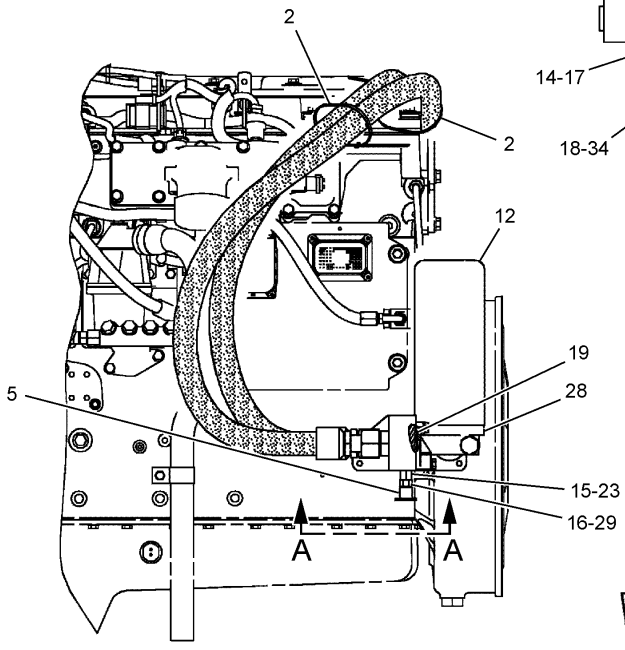

LEFT SIDE VIEW OF ENGINE

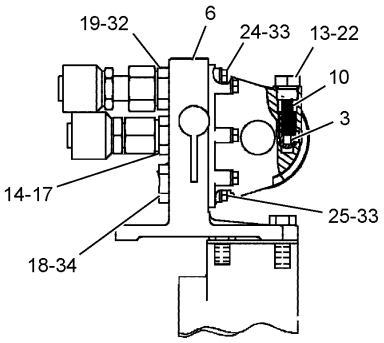

A – A

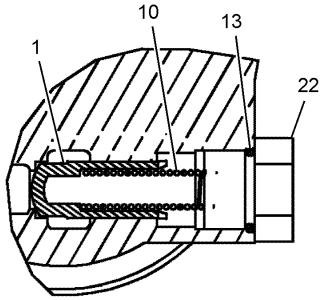

B – B

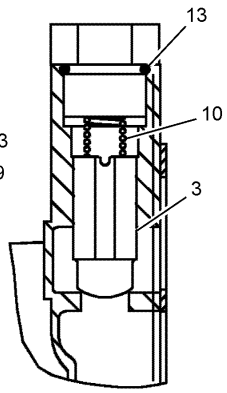

C – C

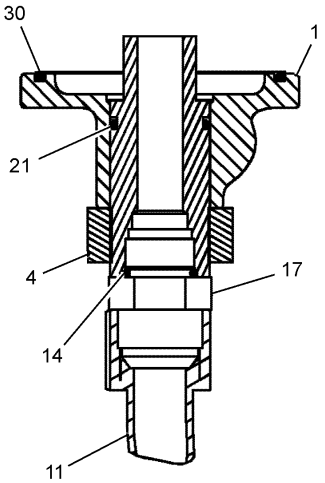

D – D

H90812E 00

231-7266 FILTER GP-ENGINE OIL
Part of 235-8135-Page13

LUBRICATION SYSTEM

NOTE	No.	PART No.	QTY	PART NAME	NOTE	No.	PART No.	QTY	PART NAME
	1	4P-9103	1	ADAPTER					
	2	6K-0806	3	STRAP					
	3	7C-1493	3	VALVE					
	4	7F-0216	1	NUT					
	5	8C-3445	1	CAP					
	6	121-0307	1	BASE					
	7	141-7677	1	HOSE AS					
	8	160-5140	1	BASE AS					
		4P-9107	1	STUD					
	9	233-7654	1	GASKET					
	10	242-3864	3	SPRING					
	11	274-6343	1	HOSE AS					
	12	1R-1807	1	FILTER AS					
	13	2M-9780	3	SEAL-O-RING (ID=19.18mm)					
	14	3D-2824	2	SEAL-O-RING (ID=23.47mm)					
	15	3J-1907	1	SEAL-O-RING (ID=11.89mm)					
	16	3J-7354	1	SEAL-O-RING (ID=8.92mm)					
	17	3R-6790	2	CONNECTOR					
	18	4K-1388	2	SEAL-O-RING (ID=26.59mm)					
	19	5F-9657	3	SEAL-O-RING (ID=36.09mm)					
	20	5K-9090	2	SEAL-O-RING (OD=27.22mm)					
	21	5P-8066	1	SEAL-O-RING (ID=32.92mm)					
	22	5P-8196	3	PLUG					
	23	5P-9617	1	ADAPTER					
	24	6V-2317	12	BOLT (L=30mm)					
	25	6V-5219	3	BOLT (L=40mm)					
	26	6V-9008	1	ELBOW					
	27	7M-8485	1	SEAL-O-RING (ID=29.74mm)					
	28	7W-9028	1	BASE AS					
		2P-2537	1	STUD					
	29	8C-3446	1	VALVE					
	30	8H-7521	1	SEAL-O-RING (ID=91.67mm)					
	31	8T-0276	4	BOLT (L=45mm)					
	32	8T-6453	1	CONNECTOR					
	33	9M-1974	19	WASHER					
	34	9S-4188	1	PLUG					

H90812E 00

231-7266 FILTER GP-ENGINE OIL

Part of 235-8135-Page13

LUBRICATION SYSTEM

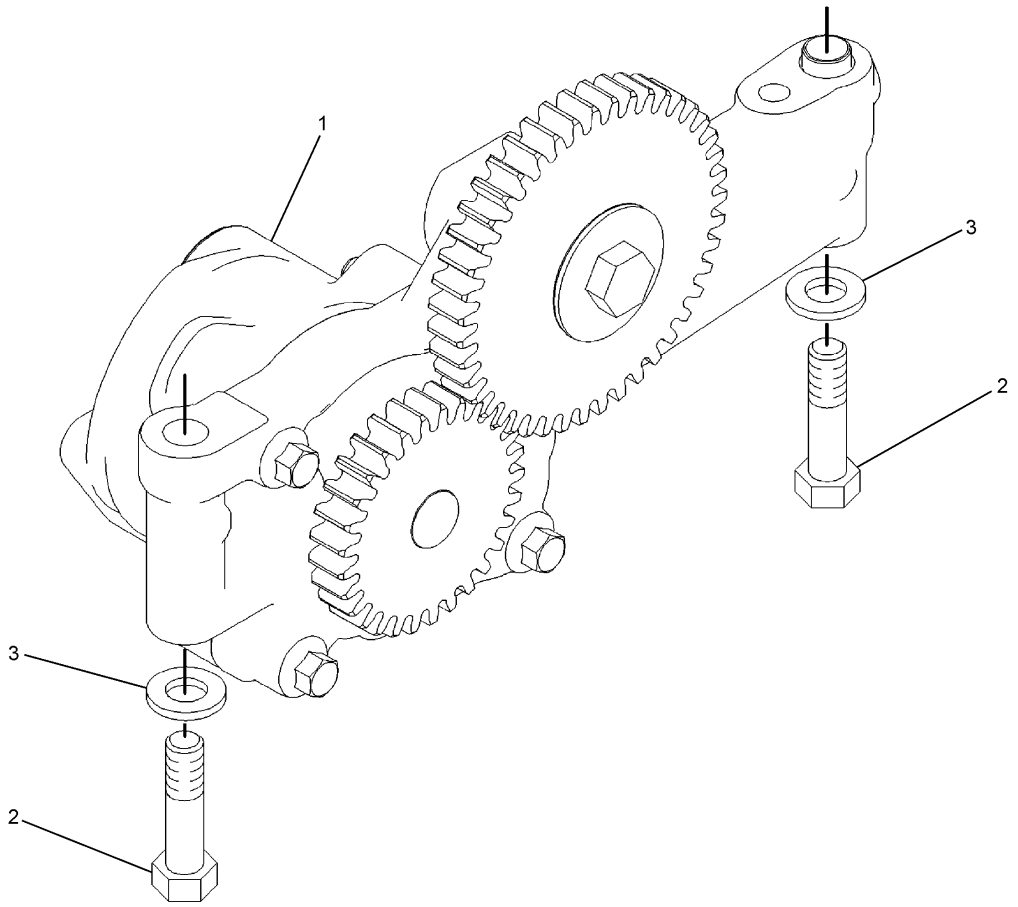

NOTE	No.	PART No.	QTY	PART NAME	NOTE	No.	PART No.	QTY	PART NAME
Y	1	200-4497	1	PUMP GP					
	2	6V-5815	2	BOLT (L=75mm)					
	3	6V-5839	2	WASHER					

Y—SEE SEPARATE ILLUSTRATION

H90383E 00

192-2981 PUMP GP-ENGINE OIL

Part of 236-4284-Page16
200-4497-Page61

LUBRICATION SYSTEM

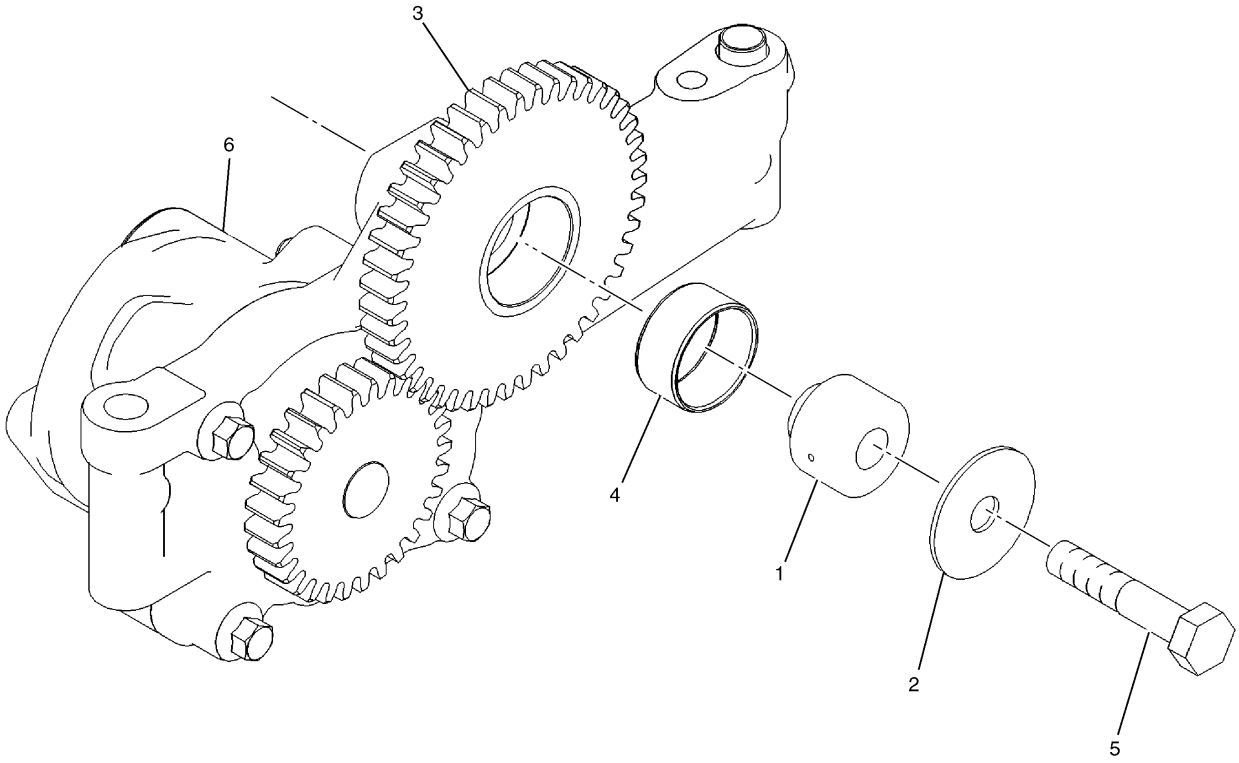

NOTE	No.	PART No.	QTY	PART NAME	NOTE	No.	PART No.	QTY	PART NAME
	1	7W-9737	1	SHAFT					
	2	7W-9738	1	WASHER					
	3	7W-9740	1	GEAR AS (Z=43)					
	4	7W-9930	1	BEARING					
	5	9X-2305	1	BOLT (L=50mm)					
	6	189-8777	1	PUMP GP					

H80655E 00

200-4497 PUMP GP-ENGINE OIL

Part of 192-2981-Page60

LUBRICATION SYSTEM

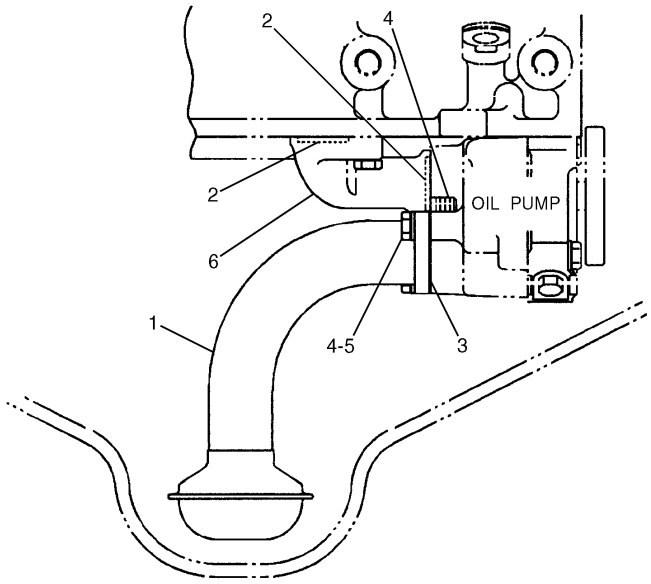

RIGHT SIDE VIEW OF ENGINE

NOTE	No.	PART No.	QTY	PART NAME
	1	7C-5403	1	TUBE AS
	2	3P-1156	2	SEAL-O-RING (ID=21.82mm)
	3	7W-5340	1	GASKET
	4	6V-3940	4	BOLT (L=25mm)
	5	9M-1974	2	WASHER
	6	4W-2232	1	ELBOW

H90382E 02

7C-2475 LINES GP-ENGINE OIL

Part of 235-8135-Page13

LUBRICATION SYSTEM

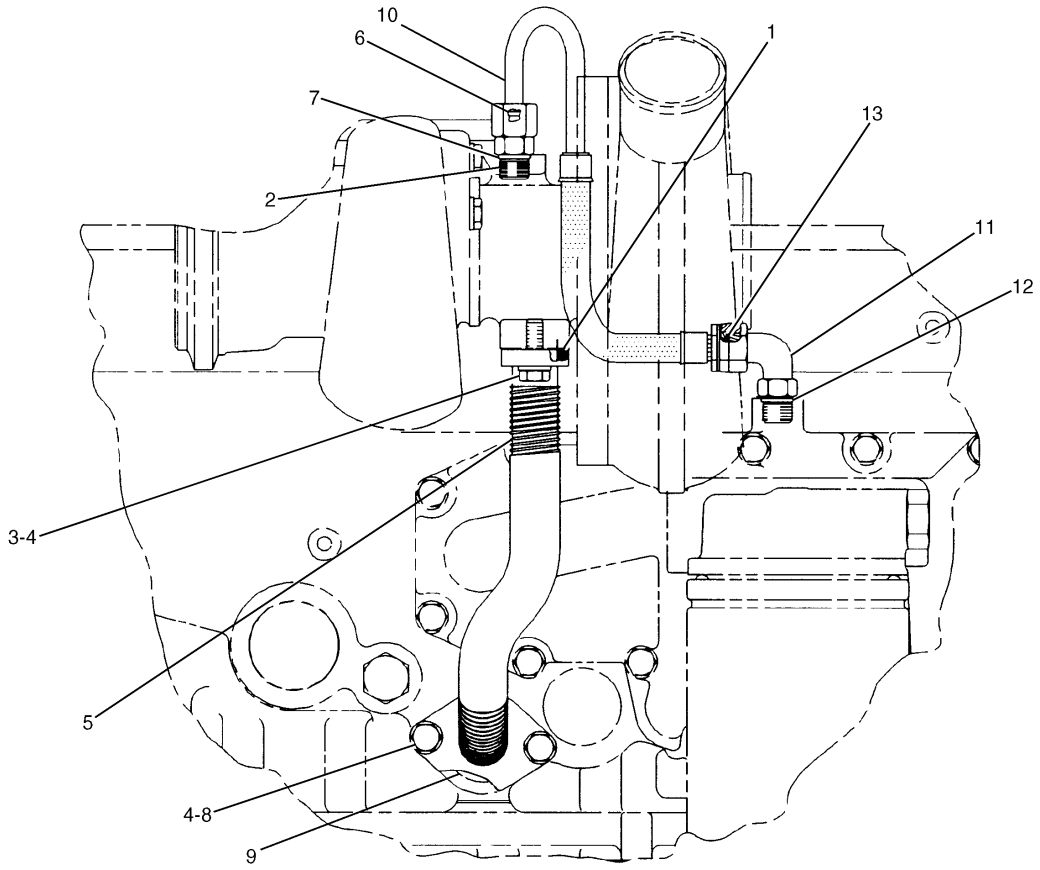

LEFT SIDE VIEW OF ENGINE

NOTE	No.	PART No.	QTY	PART NAME	NOTE	No.	PART No.	QTY	PART NAME
	1	3P-1156	1	SEAL-O-RING (ID=21.82mm)					
	2	6V-8636	1	CONNECTOR					
	3	6V-3940	2	BOLT (L=25mm)					
	4	9M-1974	4	WASHER					
	5	159-0918	1	TUBE AS					
	6	8L-2779	1	SEAL-O-RING (ID=9.25mm)					
	7	6V-5049	1	SEAL-O-RING (ID=11.89mm)					
	8	6V-5217	2	BOLT (L=20mm)					
	9	5P-8066	1	SEAL-O-RING (ID=32.92mm)					
	10	205-1332	1	HOSE AS					
	11	6V-8724	1	ELBOW					
	12	3J-1907	1	SEAL-O-RING (ID=11.89mm)					
	13	6V-8397	1	SEAL-O-RING (OD=12.83mm)					

H90395E 05

159-0285 LINES GP-TURBOCHARGER OIL
Part of 235-8135-Page13

LUBRICATION SYSTEM

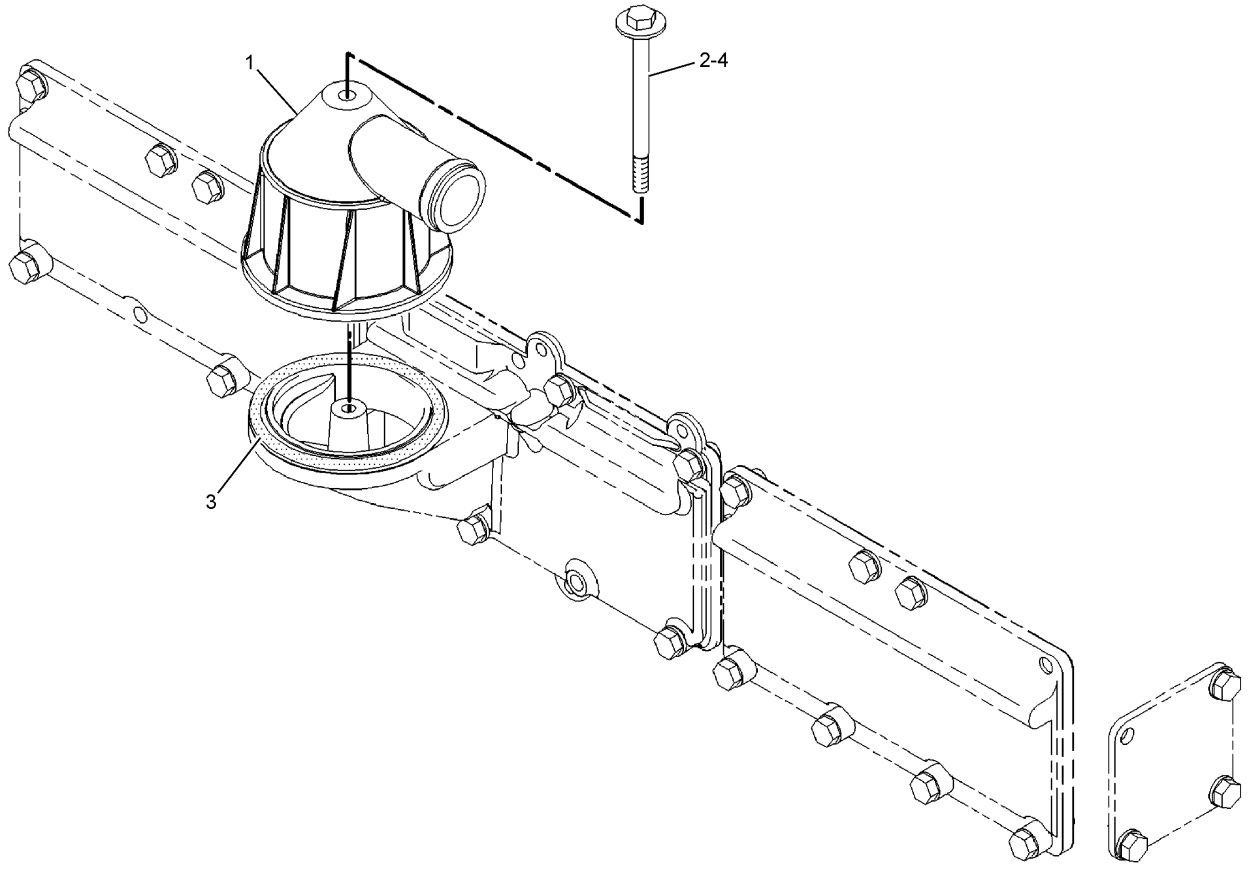

NOTE	No.	PART No.	QTY	PART NAME	NOTE	No.	PART No.	QTY	PART NAME
	1	164-0210	1	BREATHER AS					
	2	143-4654	1	BOLT (L=105mm)					
	3	8H-2046	1	SEAL-O-RING (ID=85.09mm)					
	4	9N-0869	1	WASHER					

H90811E 00

222-5946 BREATHER GP
Part of 235-8135-Page13

LUBRICATION SYSTEM

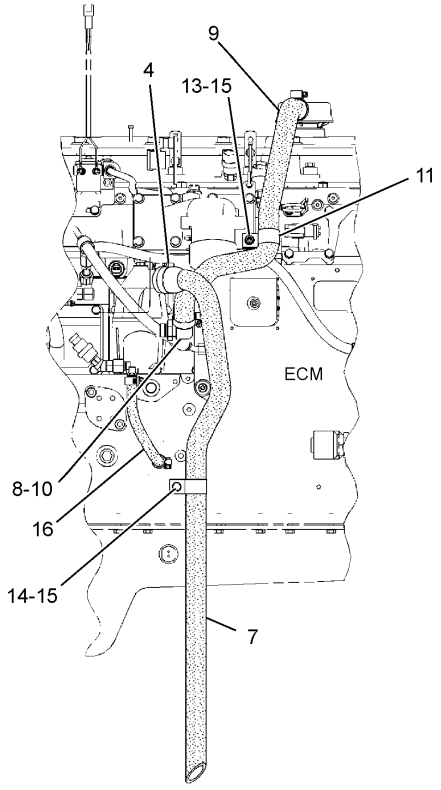

LEFT SIDE VIEW OF ENGINE

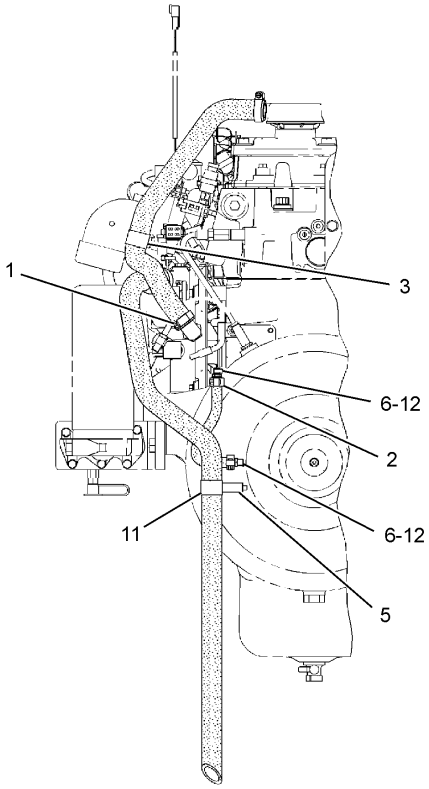

REAR VIEW OF ENGINE

NOTE	No.	PART No.	QTY	PART NAME	NOTE	No.	PART No.	QTY	PART NAME
	1	2S-3440	2	CLAMP					
	2	5P-4961	2	CLAMP					
	3	7S-6369	1	WASHER					
	4	9M-2904	1	CLAMP					
	5	039-2280	1	SPACER					
	6	092-6629	2	CONNECTOR					
	7	229-2543	1	HOSE					
	8	249-6673	1	ELBOW					
	9	252-7187	1	HOSE					
	10	2M-9780	1	SEAL-O-RING (ID=19.18mm)					
	11	2S-2053	2	CLIP					
	12	3J-7354	2	SEAL-O-RING (ID=8.92mm)					
	13	5P-7970	1	NUT					
	14	6V-3918	1	BOLT (L=50mm)					
	15	9M-1974	2	WASHER					
E	16	103-2529		HOSE…(21cm)					

E—ORDER BY THE CENTIMETER

H90364E 00

254-7342 FUMES DISPOSAL GP
Part of 235-8135-Page13

LUBRICATION SYSTEM

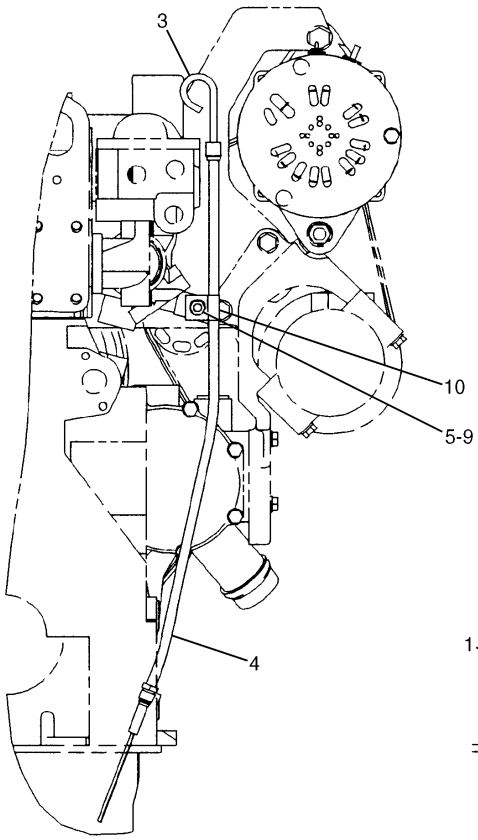

REAR VIEW OF ENGINE

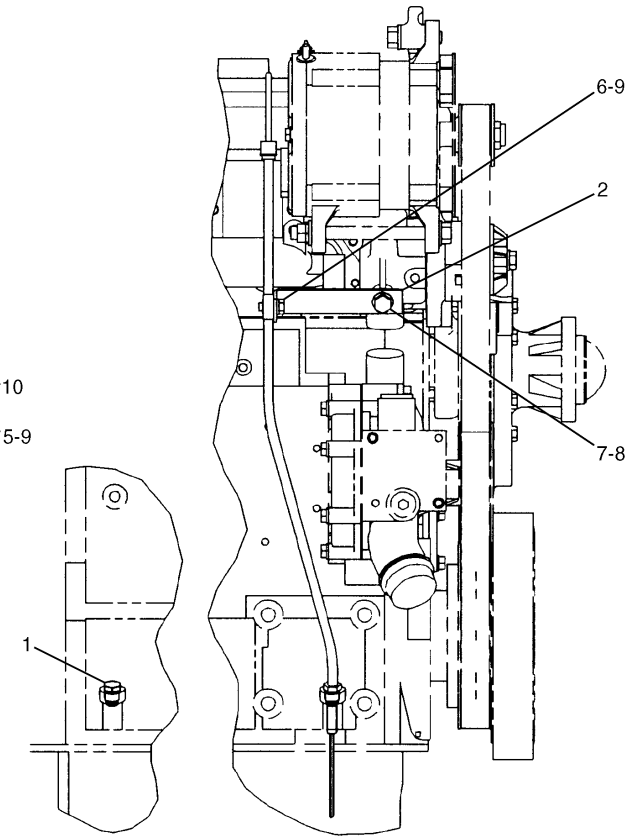

RIGHT SIDE VIEW OF ENGINE

NOTE	No.	PART No.	QTY	PART NAME	NOTE	No.	PART No.	QTY	PART NAME
	1	1S-2563	3	PLUG					
	2	134-8226	1	BRACKET					
	3	176-4179	1	GAUGE					
	4	183-2851	1	TUBE AS					
	5	5P-7970	1	NUT					
	6	6V-5217	1	BOLT (L=20mm)					
	7	6V-5839	1	WASHER					
	8	6V-6317	1	BOLT (L=20mm)					
	9	9M-1974	2	WASHER					
	10	9S-1350	1	CLIP					

H90377E 01

177-4814 GAUGE GP-OIL LEVEL (DIPSTICK)
Part of 235-8135-Page13

LUBRICATION SYSTEM

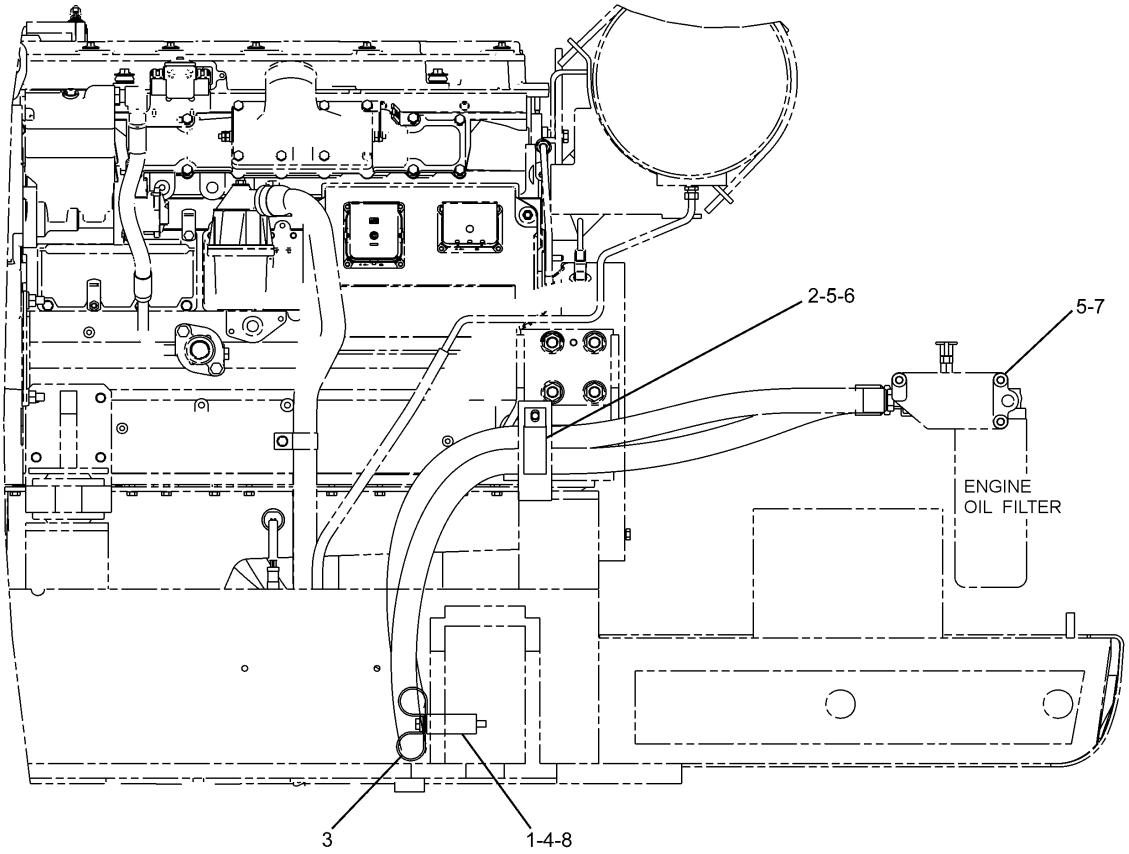

REAR VIEW

NOTE	No.	PART No.	QTY	PART NAME	NOTE	No.	PART No.	QTY	PART NAME
	1	4I-7856	1	SPACER					
	2	228-2775	1	CLIP					
	3	7D-7233	2	CLIP					
	4	7X-0507	1	WASHER					
	5	8T-4121	4	WASHER					
	6	8T-4137	1	BOLT (L=20mm)					
	7	8T-4195	3	BOLT (L=30mm)					
	8	8T-4198	1	BOLT (L=100mm)					

H89262E 02

233-1123 MOUNTING GP-ENGINE OIL FILTER

LUBRICATION SYSTEM

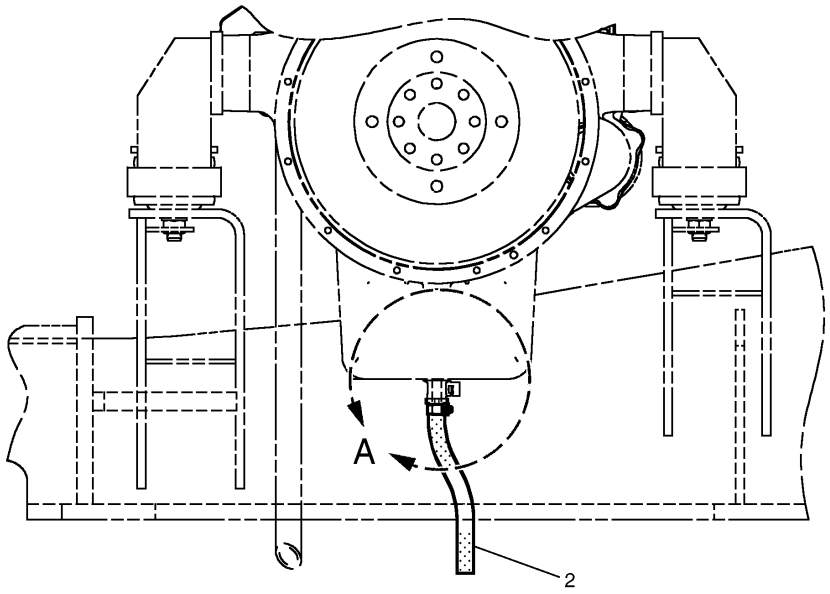

REAR VIEW OF ENGINE

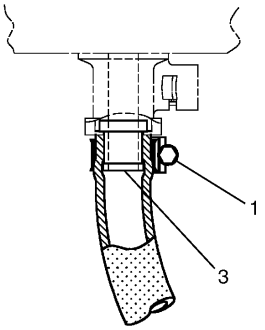

A

NOTE	No.	PART No.	QTY	PART NAME	NOTE	No.	PART No.	QTY	PART NAME
	1	095-1388	1	CLAMP					
E	2	5P-0743		HOSE…(24cm)					
	3	203-3028	1	ADAPTER					

E—ORDER BY THE CENTIMETER

H80656E 02

171-9114 LINES GP-OIL DRAIN

COOLING SYSTEM

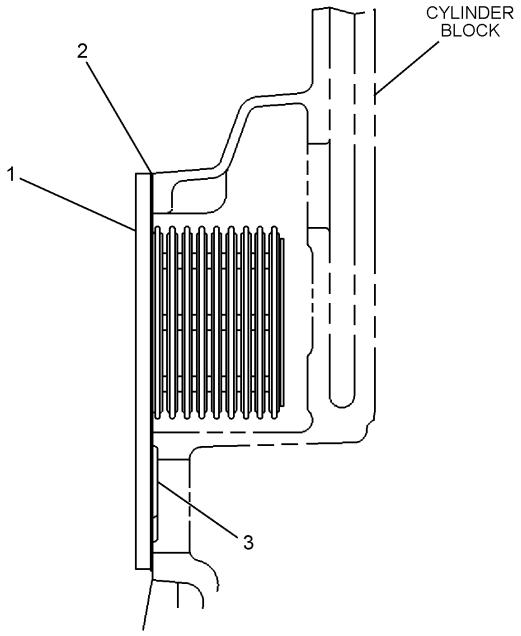

NOTE	No.	PART No.	QTY	PART NAME
	1	187-8595	1	CORE AS
	2	233-7655	1	GASKET
	3	3P-1156	2	SEAL-O-RING (ID=21.82mm)

H90313E 00

117-3643 COOLER GP-ENGINE OIL

Part of 236-4284-Page16

COOLING SYSTEM

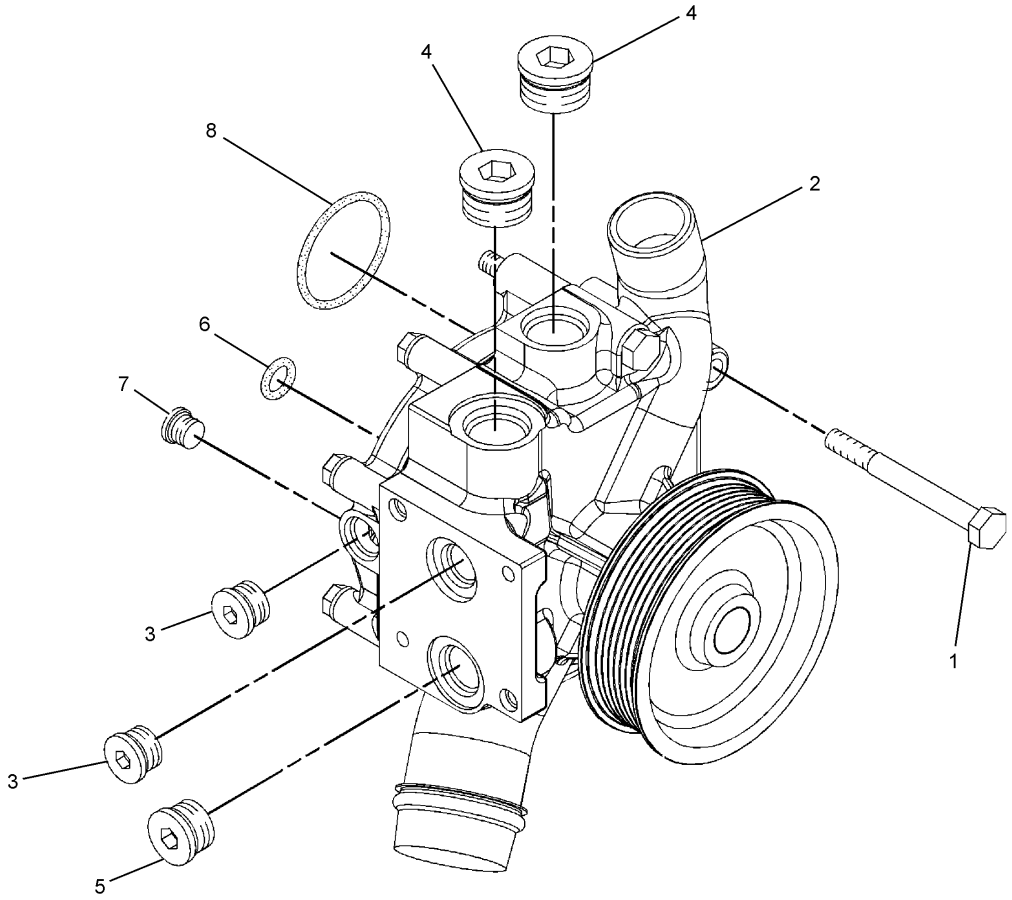

NOTE	No.	PART No.	QTY	PART NAME	NOTE	No.	PART No.	QTY	PART NAME
	1	8T-0644	4	BOLT (L=90mm)					
Y	2	236-4413	1	PUMP GP					
	3	148-8395	2	PLUG AS					
		3K-0360	1	SEAL-O-RING (ID=16.36mm)					
		9S-8005	1	PLUG					
	4	148-8409	2	PLUG AS					
		3D-2824	1	SEAL-O-RING (ID=23.47mm)					
		9S-8008	1	PLUG					
	5	164-5619	1	PLUG AS					
		2M-9780	1	SEAL-O-RING (ID=19.18mm)					
		9S-8006	1	PLUG					
	6	2M-4453	1	SEAL-O-RING (ID=12.29mm)					
	7	3J-3679	1	PLUG AS					
		1J-9671	1	SEAL-O-RING (ID=10.52mm)					
		9S-8003	1	PLUG					
	8	4J-0524	1	SEAL-O-RING (ID=47.22mm)					

Y—SEE SEPARATE ILLUSTRATION

H90419E 01

177-9823 PUMP GP-WATER
Part of 235-8135-Page13
236-4413-Page71

COOLING SYSTEM

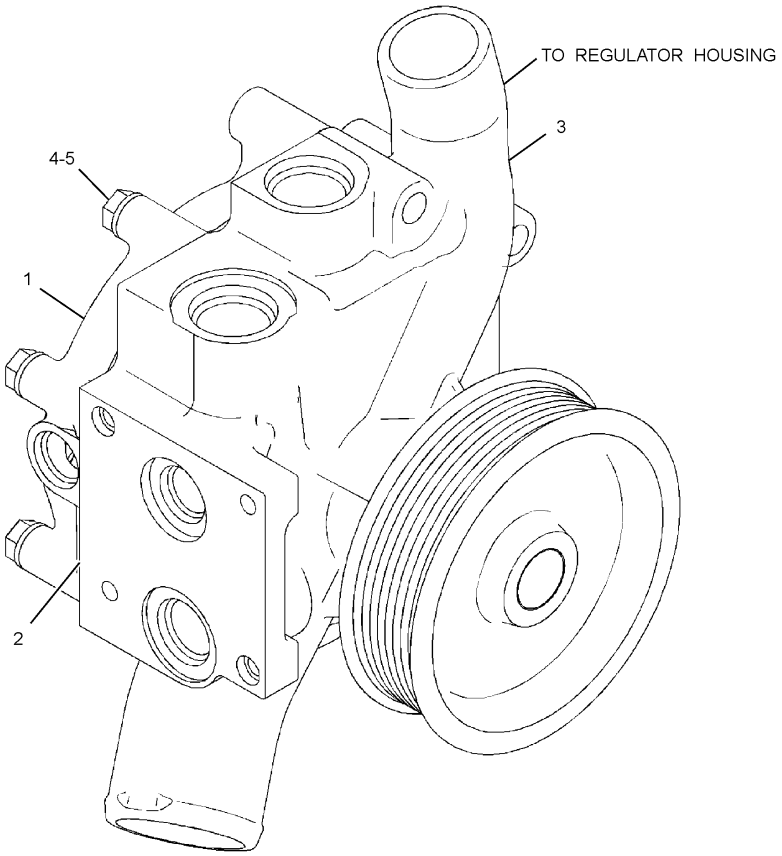

NOTE	No.	PART No.	QTY	PART NAME	NOTE	No.	PART No.	QTY	PART NAME
	1	4W-0253	1	COVER					
	2	4W-7592	1	GASKET					
	3	236-4420	1	PUMP AS					
		117-3437	1	PULLEY					
		119-3025	1	FILTER					
		129-1170	1	SHAFT AS					
		147-5088	1	SEAL AS					
		152-3952	1	IMPELLER					
		236-4421	1	HOUSING					
	4	6V-3918	4	BOLT (L=50mm)					
	5	9M-1974	4	WASHER					

H90420E 00

236-4413 PUMP GP-WATER

Part of 177-9823-Page70

COOLING SYSTEM

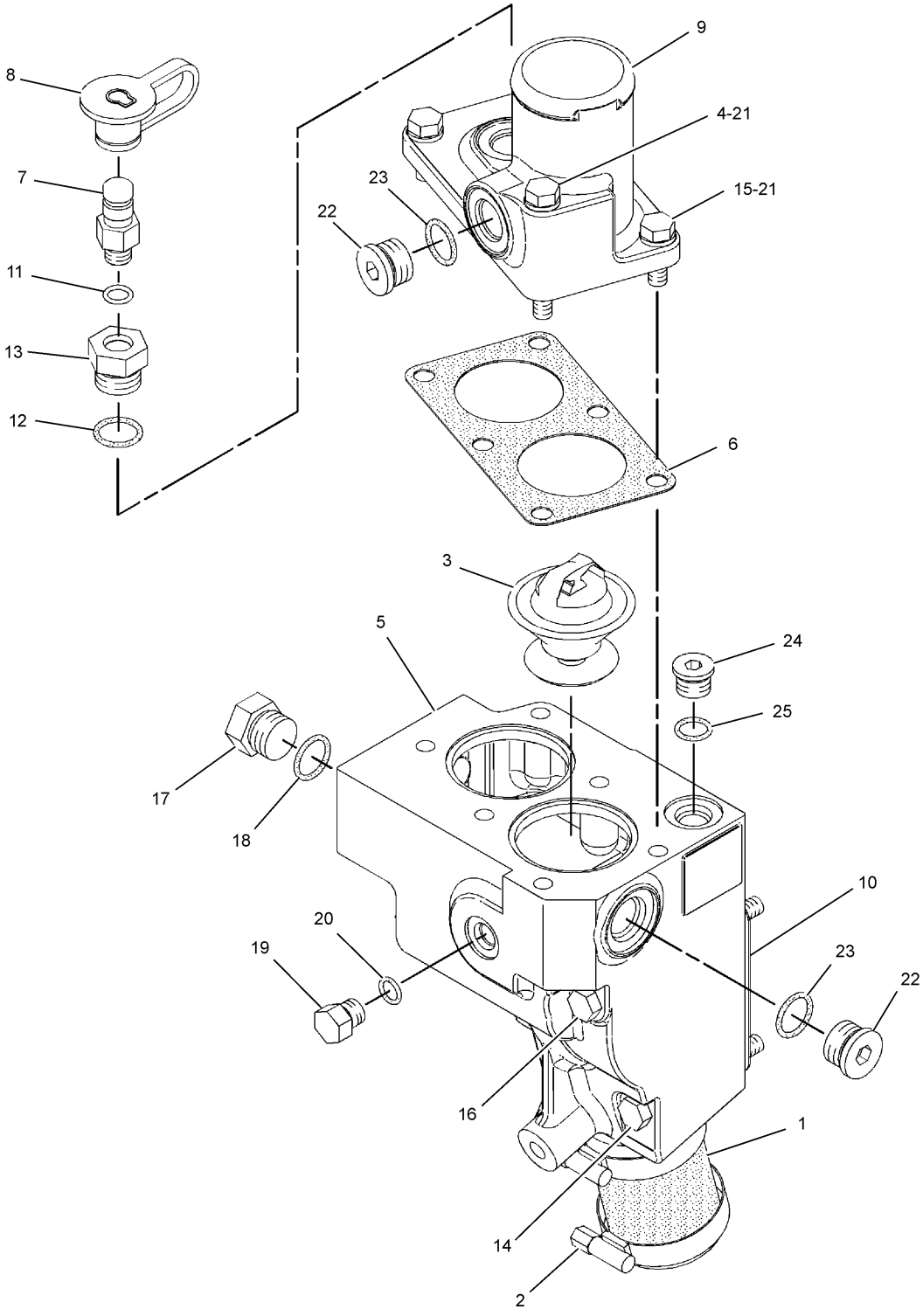

192-9972 LINES GP-WATER
Part of 235-8135-Page13

COOLING SYSTEM

NOTE	No.	PART No.	QTY	PART NAME	NOTE	No.	PART No.	QTY	PART NAME
	1	7E-0759	1	HOSE					
	2	237-5176	2	CLAMP					
	3	126-5869	1	REGULATOR					
	4	8T-0100	1	BOLT (L=60mm)					
	5	227-5942	1	HOUSING					
	6	136-0812	1	GASKET					
	7	154-9023	1	VALVE					
	8	157-0670	1	CAP					
	9	192-9971	1	PIPE					
	10	126-5466	1	GASKET					
	11	3J-7354	1	SEAL-O-RING (ID=8.92mm)					
	12	3K-0360	1	SEAL-O-RING (ID=16.36mm)					
	13	3P-1932	1	ADAPTER					
	14	5P-8347	2	BOLT (L=70mm)					
	15	6V-3940	5	BOLT (L=25mm)					
	16	6V-5223	1	BOLT (L=100mm)					
	17	148-8411	3	PLUG AS					
		9S-4185	1	PLUG					
	18	3K-0360	1	SEAL-O-RING (ID=16.36mm)					
	19	155-3624	1	PLUG AS					
		9S-4182	1	PLUG					
	20	3J-7354	1	SEAL-O-RING (ID=8.92mm)					
	21	9M-1974	6	WASHER					
	22	148-8395	2	PLUG AS					
		9S-8005	1	PLUG					
	23	3K-0360	1	SEAL-O-RING (ID=16.36mm)					
	24	162-0177	1	PLUG AS					
		9S-8004	1	PLUG					
	25	3J-1907	1	SEAL-O-RING (ID=11.89mm)					

H93276E 02

192-9972 LINES GP-WATER
Part of 235-8135-Page13

COOLING SYSTEM

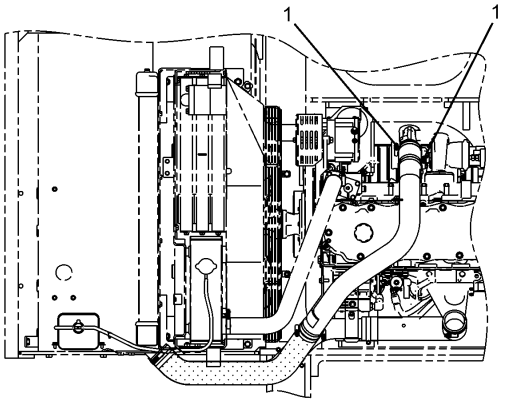

A – A

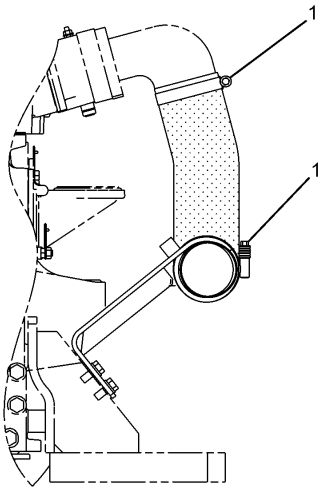

B – B

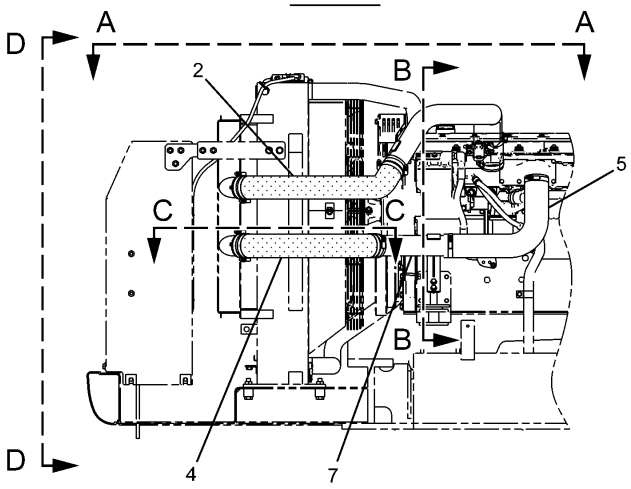

REAR VIEW

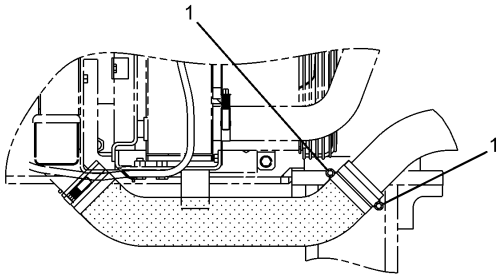

C – C

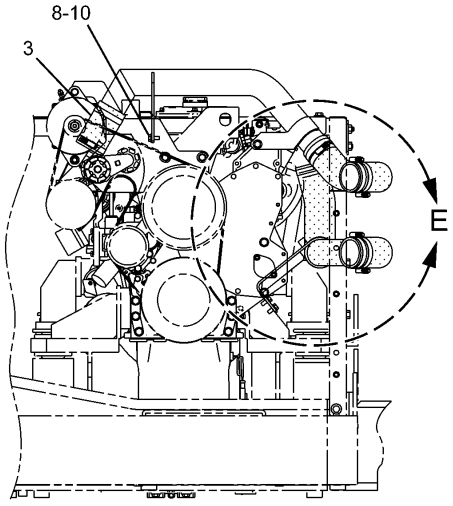

D – D

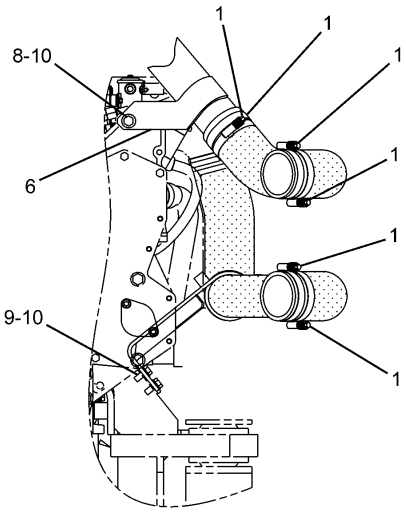

E

H91196E 04

210-8175 LINES GP-COOLING

COOLING SYSTEM

NOTE	No.	PART No.	QTY	PART NAME	NOTE	No.	PART No.	QTY	PART NAME
	1	144-0367	12	CLAMP					
	2	230-2865	1	HOSE					
	3	230-2866	1	HOSE					
	4	230-2867	1	HOSE					
	5	230-2868	1	HOSE					
	6	230-2871	1	PIPE AS					
	7	230-2876	1	PIPE AS					
	8	7X-7729	2	WASHER					
	9	8T-4121	2	WASHER					
	10	8T-4136	4	BOLT (L=25mm)					

H91196E 04

210-8175 LINES GP-COOLING

COOLING SYSTEM

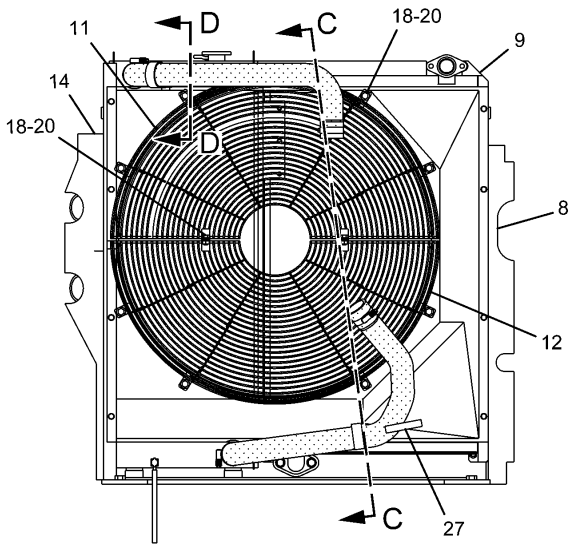

A – A

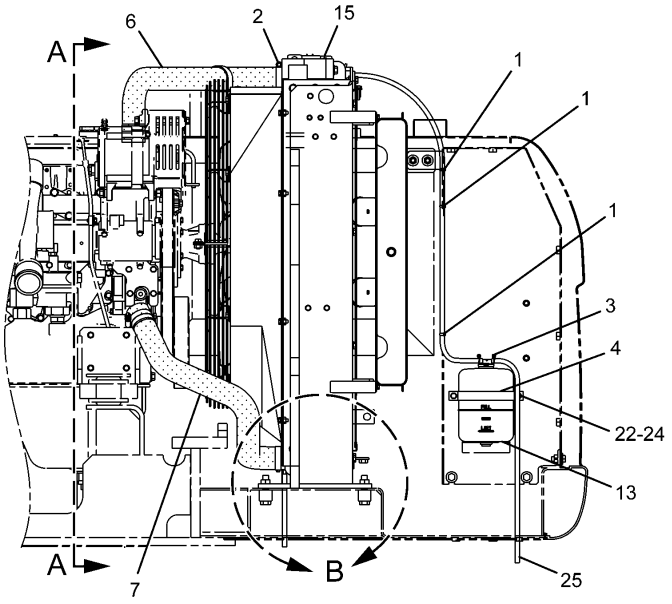

FRONT VIEW

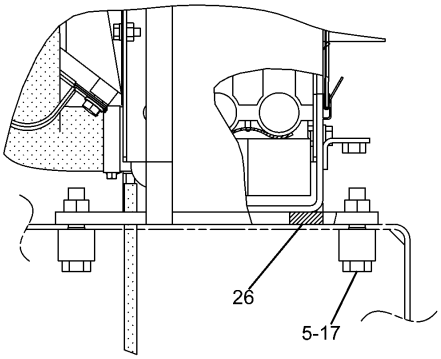

B

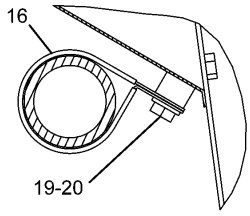

C – C

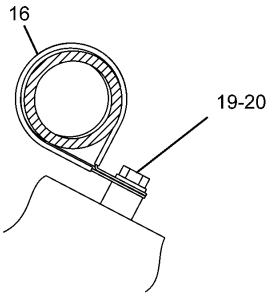

D – D

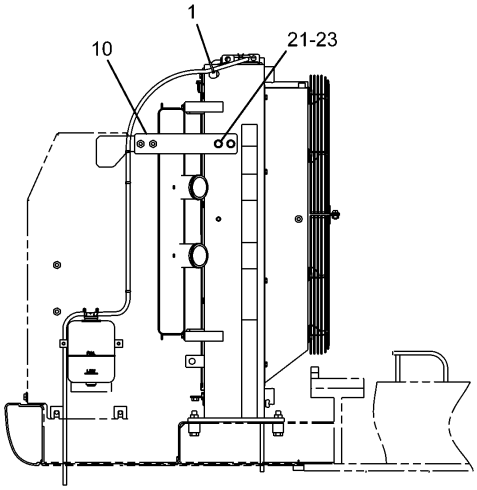

REAR VIEW

H93966E 05

245-9295 RADIATOR & HYD OIL COOLER GP
265-3688-Page78

COOLING SYSTEM

NOTE	No.	PART No.	QTY	PART NAME	NOTE	No.	PART No.	QTY	PART NAME
	1	3S-2093	4	STRAP					
	2	8T-6703	4	CLAMP					
	3	096-4035	1	CLIP					
	4	099-6607	1	BAND					
	5	178-6450	4	SPACER					
	6	281-3487	1	HOSE					
	7	230-2870	1	HOSE					
	8	230-2881	1	SEAL					
	9	230-2882	1	SEAL					
	10	230-2888	1	PLATE AS					
	11	230-2890	1	GUARD AS					
	12	245-9181	1	GUARD AS					
	13	245-9205	1	TANK AS					
		171-3369	1	CAP AS					
	14	265-3560	1	SEAL					
Y	15	265-3688	1	RADIATOR GP					
	16	3P-9847	2	CLIP					
	17	7X-2554	4	BOLT (L=70mm)					
	18	7X-7729	10	WASHER					
	19	8T-4121	2	WASHER					
	20	8T-4137	12	BOLT (L=20mm)					
	21	8T-4139	2	BOLT (L=30mm)					
	22	8T-4200	2	BOLT (L=16mm)					
	23	8T-4223	2	WASHER					
	24	8T-4224	2	WASHER					
E	25	7Y-1976		HOSE…(60cm)					
D	26	5P-9909		SEAL…(0.81m)					
D	27	5P-9909		SEAL…(0.1m)					

D—ORDER BY THE METER
E—ORDER BY THE CENTIMETER
Y—SEE SEPARATE ILLUSTRATION

H93966E 05

245-9295 RADIATOR & HYD OIL COOLER GP

265-3688-Page78

COOLING SYSTEM

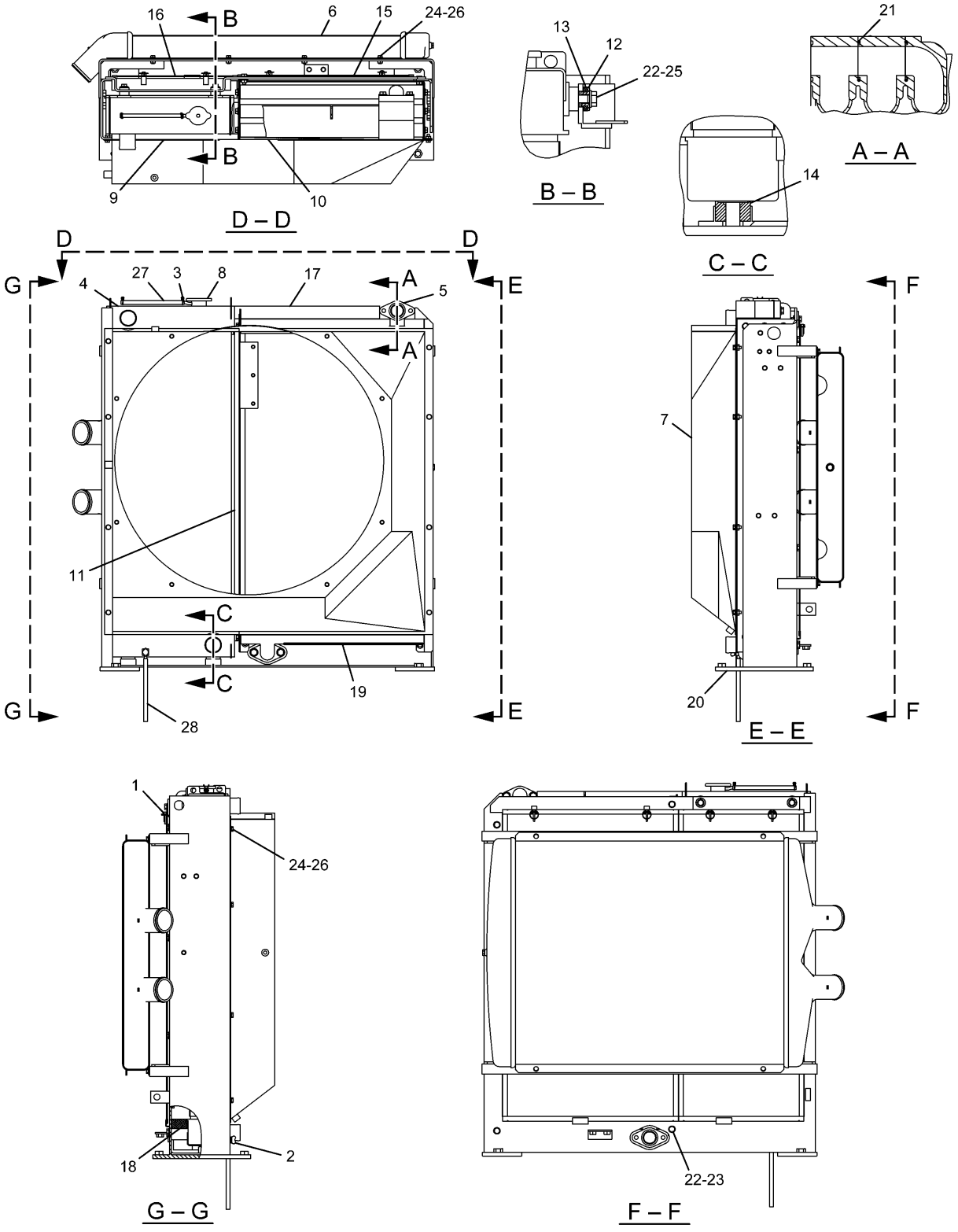

H92730E 00

265-3688 RADIATOR & HYD OIL COOLER GP

Part of 245-9295-Page77

COOLING SYSTEM

NOTE	No.	PART No.	QTY	PART NAME	NOTE	No.	PART No.	QTY	PART NAME
	1	5D-8159	4	PIN AS					
	2	093-5432	1	COCK AS					
	3	096-4035	2	CLIP					
	4	245-9207	1	CORE AS (RADIATOR)					
	5	245-9208	1	CORE AS (OIL COOLER)					
	6	245-9209	1	AFTERCOOLER AS					
	7	281-3448	1	SHROUD AS					
	8	245-9212	1	CAP AS					
	9	245-9213	2	SEAL					
	10	245-9214	2	SEAL					
	11	245-9215	1	SEAL					
	12	245-9216	2	BOSS					
	13	245-9217	2	CUSHION					
	14	245-9218	2	CUSHION					
	15	245-9219	1	SCREEN AS					
	16	245-9220	1	SCREEN AS					
	17	245-9221	1	SEAL					
	18	245-9222	1	SEAL					
	19	265-3515	1	SHEET					
	20	265-3580	1	FRAME AS					
	21	095-1543	4	SEAL-O-RING (ID=44.70mm)					
	22	8T-4121	8	WASHER					
	23	8T-4136	6	BOLT (L=25mm)					
	24	8T-4189	16	BOLT (L=20mm)					
	25	8T-4195	2	BOLT (L=30mm)					
	26	8T-4224	16	WASHER					
E	27	7Y-1976		HOSE…(140cm)					
E	28	7Y-1976		HOSE…(20cm)					

E—ORDER BY THE CENTIMETER

H92730E 00

265-3688 RADIATOR & HYD OIL COOLER GP

Part of 245-9295-Page77

COOLING SYSTEM

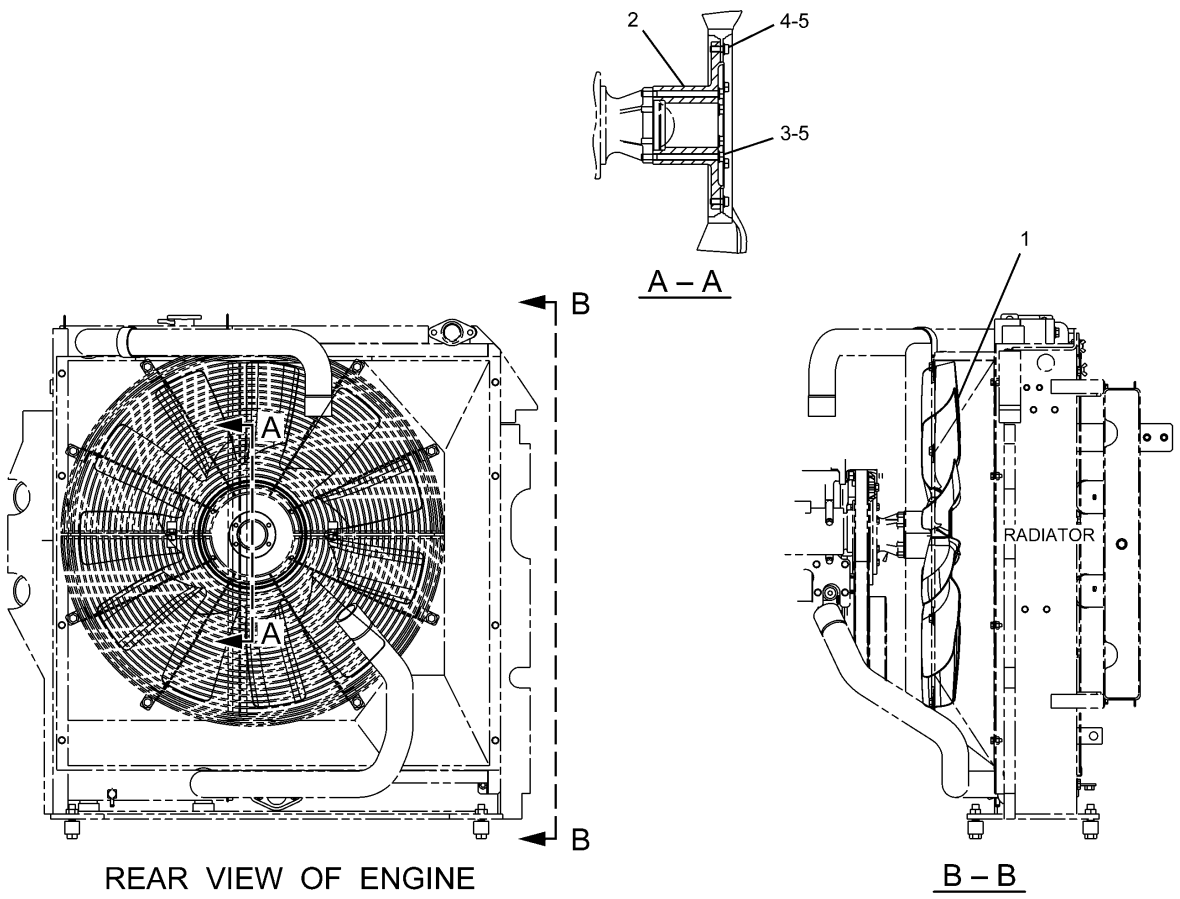

NOTE	No.	PART No.	QTY	PART NAME	NOTE	No.	PART No.	QTY	PART NAME
	1	230-2892	1	FAN AS					
	2	230-2901	1	SPACER					
	3	7X-2539	6	BOLT (L=110mm)					
	4	8T-4189	6	BOLT (L=20mm)					
	5	8T-4224	12	WASHER					

H88909E 00

230-2893 FAN GP-SUCTION
Part of 222-8378-Page11

MEMORANDA

AIR INLET AND EXHAUST SYSTEM

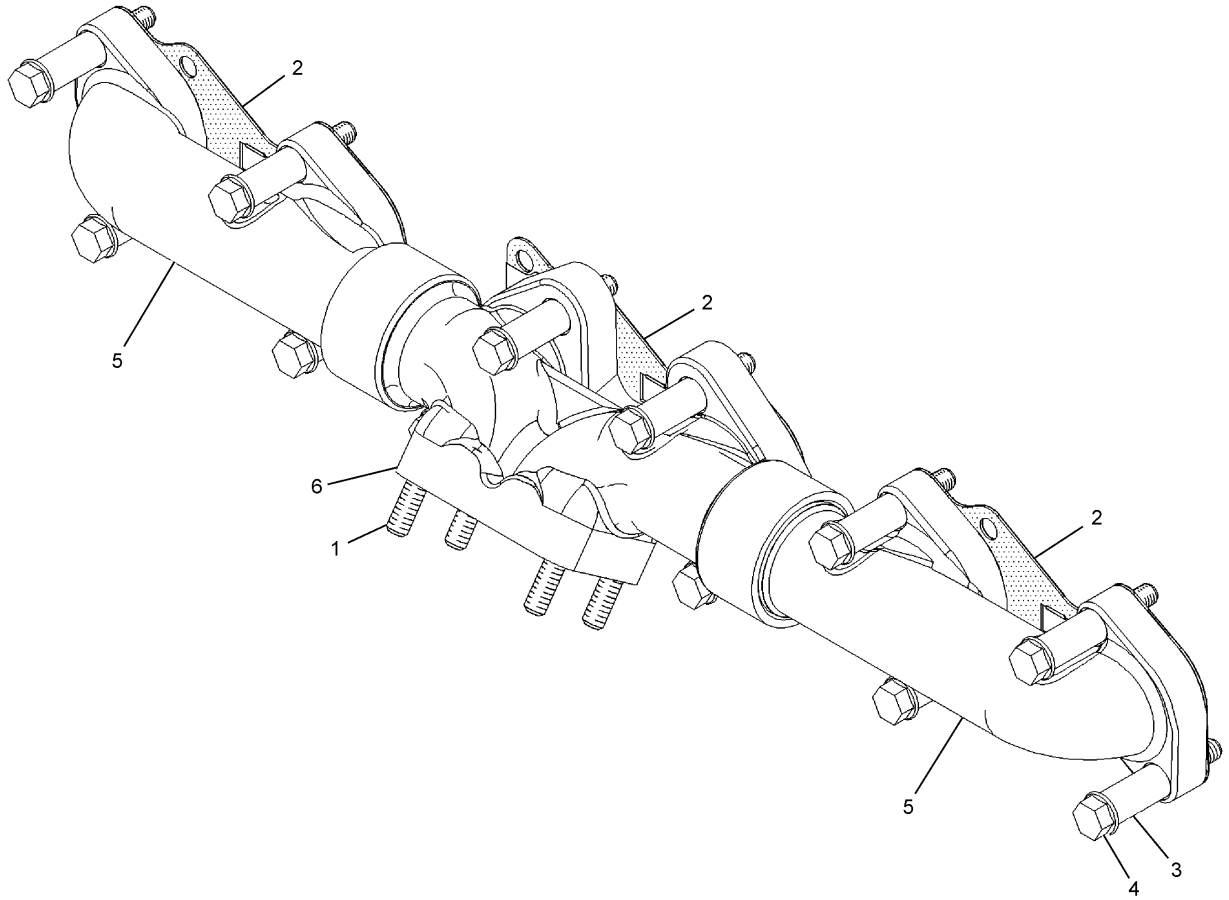

NOTE	No.	PART No.	QTY	PART NAME	NOTE	No.	PART No.	QTY	PART NAME
	1	8T-7044	4	STUD					
	2	154-8030	3	GASKET					
	3	189-8772	12	SPACER					
	4	198-4610	12	BOLT					
	5	212-3664	2	MANIFOLD					
	6	219-5855	1	MANIFOLD					

H90408E 00

219-5840 MANIFOLD GP-EXHAUST

Part of 235-8135-Page13

AIR INLET AND EXHAUST SYSTEM

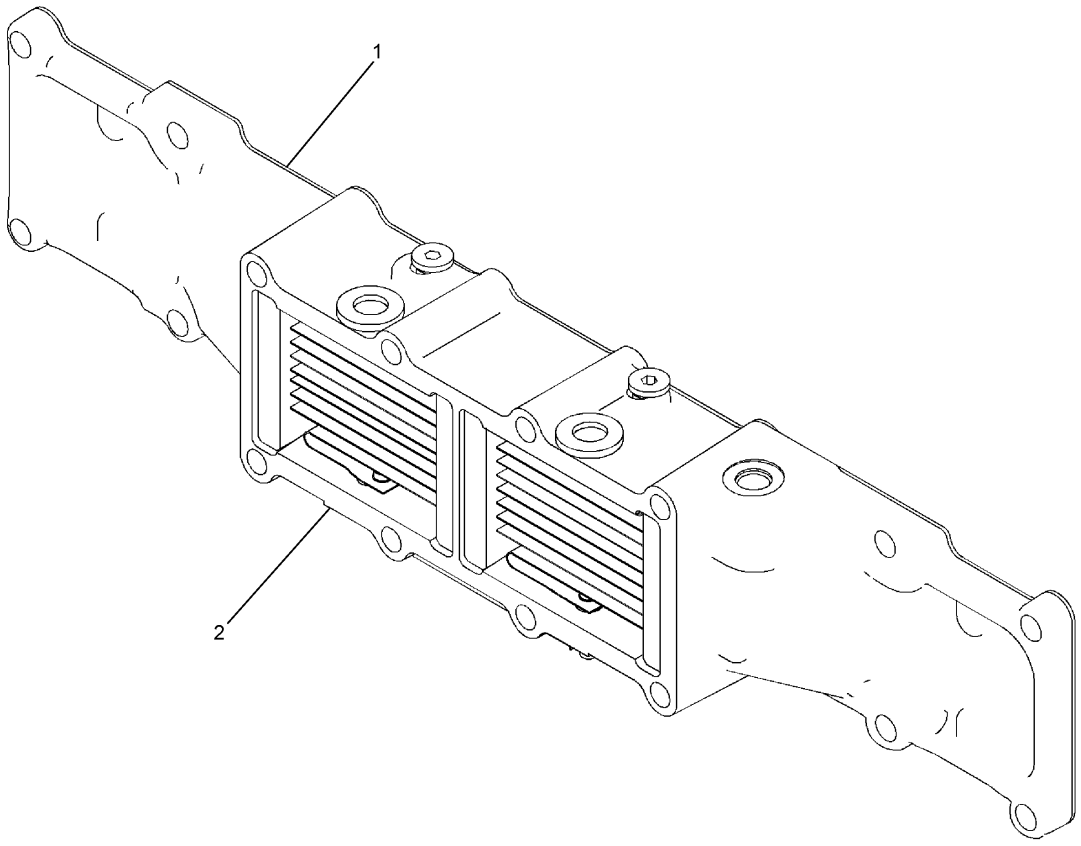

NOTE	No.	PART No.	QTY	PART NAME	NOTE	No.	PART No.	QTY	PART NAME
B	1	1U-8846		GASKET MAKER					
Y	2	189-8779	1	COVER GP					

B—USE AS REQUIRED

Y—SEE SEPARATE ILLUSTRATION

H90291E 00

189-8780 COVER GP-AIR INLET

Part of 235-8135-Page13
189-8779-Page84

AIR INLET AND EXHAUST SYSTEM

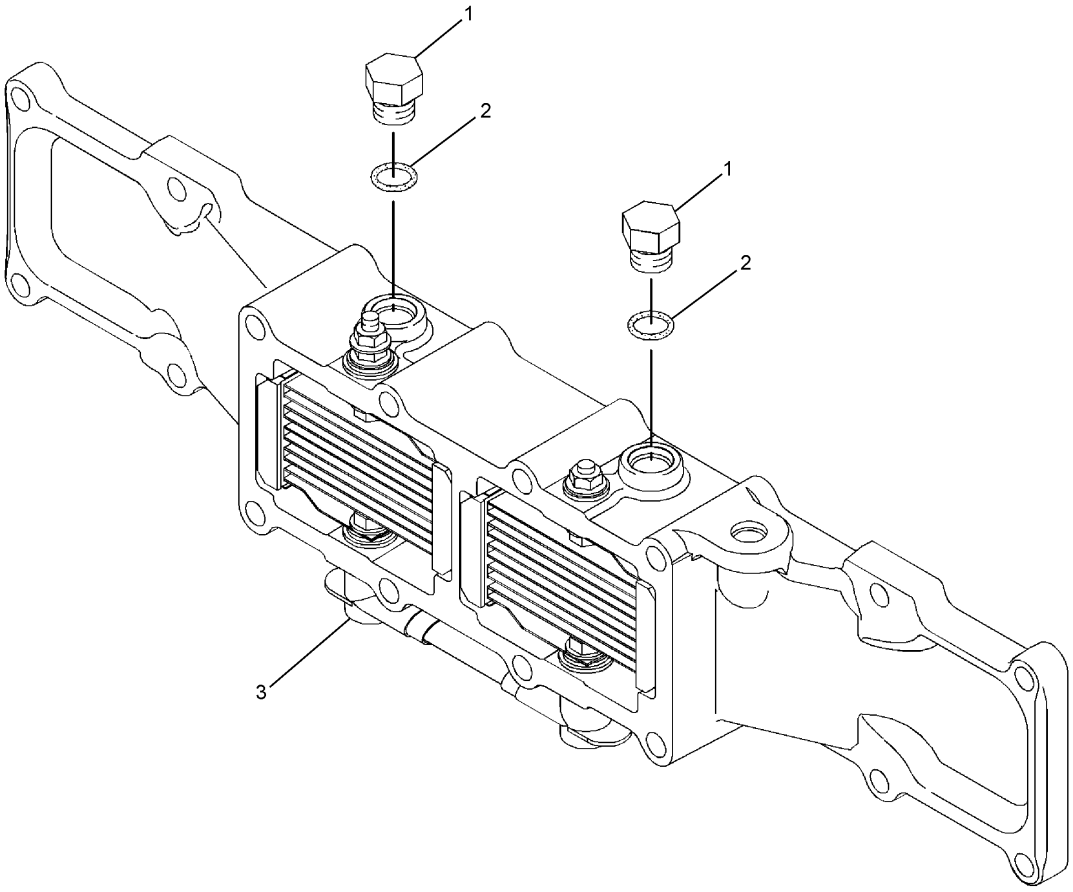

NOTE	No.	PART No.	QTY	PART NAME	NOTE	No.	PART No.	QTY	PART NAME
	1	9S-4191	2	PLUG					
	2	3J-1907	2	SEAL-O-RING (ID=11.89mm)					
	3	245-6795	1	INSULATOR					

H90300E 00

189-8779 COVER GP-AIR INLET

Part of 189-8780-Page83

AIR INLET AND EXHAUST SYSTEM

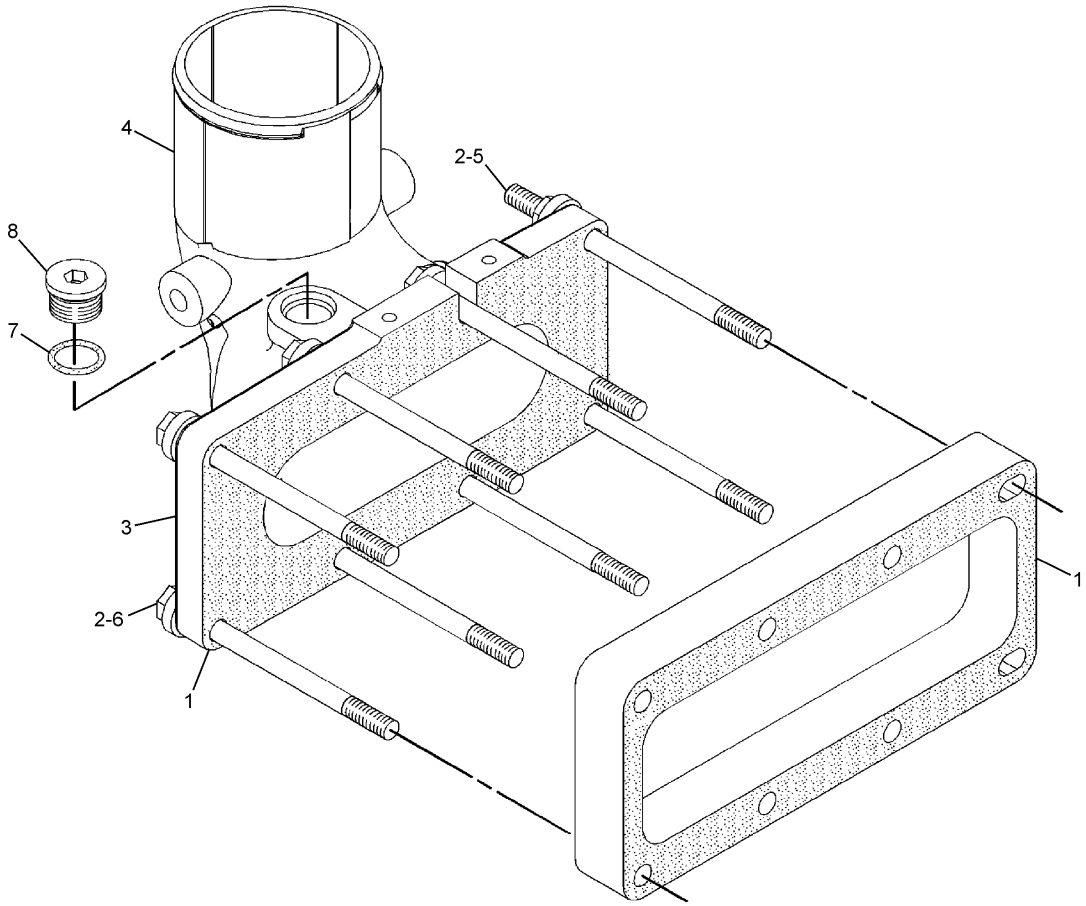

NOTE	No.	PART No.	QTY	PART NAME	NOTE	No.	PART No.	QTY	PART NAME
B	1	1U-8846		GASKET MAKER					
	2	7S-6369	8	WASHER					
	3	102-6671	1	SPACER					
	4	116-4663	1	ELBOW					
F		3K-0360	2	SEAL-O-RING (ID=16.36mm)					
F		9S-8005	2	PLUG					
	5	137-6726	1	STUD					
	6	6V-3821	7	BOLT (L=110mm)					
	7	8L-2786	1	SEAL-O-RING (ID=16.36mm)					
	8	9S-8005	1	PLUG					

B—USE AS REQUIRED

F—NOT SHOWN

H90309E 00

231-3950 ELBOW GP-AIR INLET

Part of 235-8135-Page13

AIR INLET AND EXHAUST SYSTEM

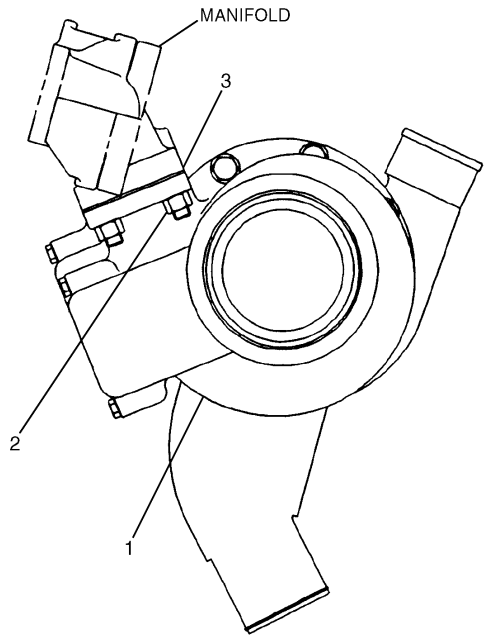

NOTE	No.	PART No.	QTY	PART NAME
Y	1	177-0440	1	TURBOCHARGER GP
	2	3E-8017	4	LOCKNUT
	3	7C-7431	1	GASKET

Y—SEE SEPARATE ILLUSTRATION

H74803E 00

177-0438 TURBOCHARGER GP

Part of 236-4284-Page17
177-0440-Page87

AIR INLET AND EXHAUST SYSTEM

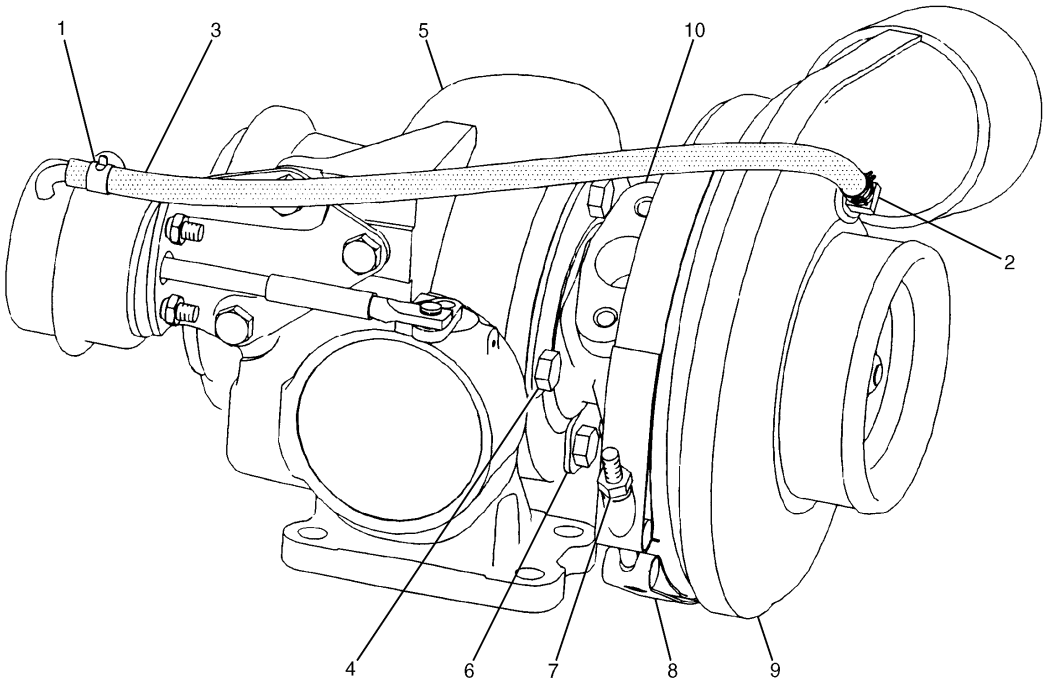

NOTE	No.	PART No.	QTY	PART NAME	NOTE	No.	PART No.	QTY	PART NAME
	1	161-6963	2	CLAMP					
	2	5P-4536	1	ELBOW					
	3	177-6920	1	HOSE					
	4	7C-6670	4	BOLT (L=13mm)					
	5	196-0354	1	HOUSING AS					
	6	7C-6672	2	PLATE (TURBINE)					
	7	7M-9918	1	NUT					
	8	158-6072	1	CLAMP					
	9	196-0267	1	COVER					
	10	195-6025	1	CARTRIDGE GP					

H74804E 00

177-0440 TURBOCHARGER GP

Part of 177-0438-Page86

AIR INLET AND EXHAUST SYSTEM

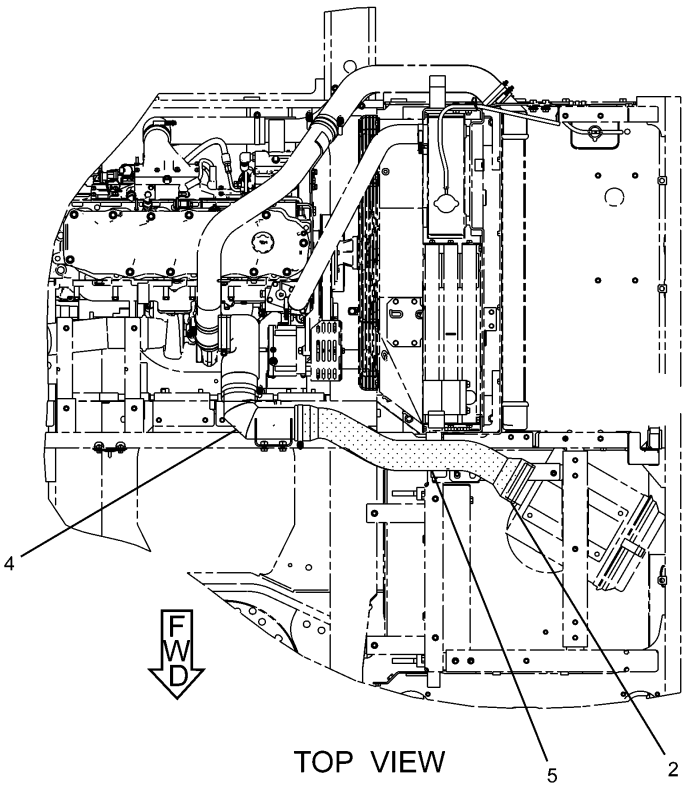

TOP VIEW

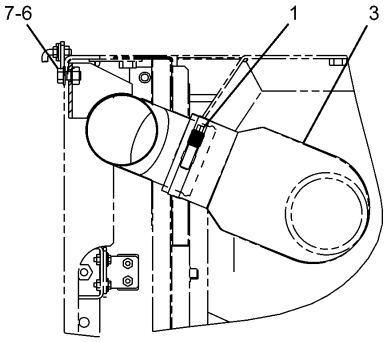

A – A

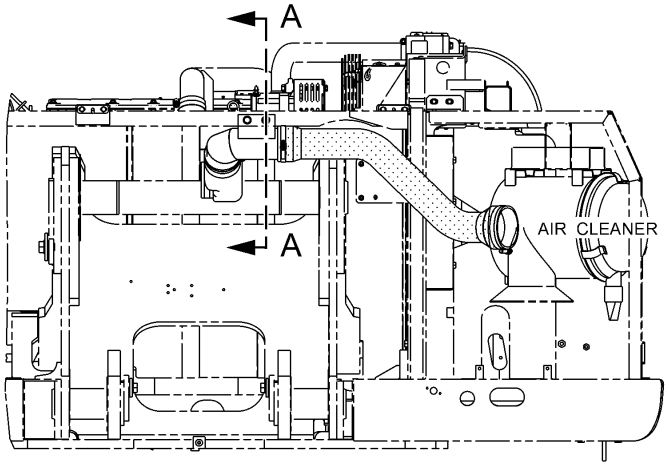

FRONT VIEW

H88922E 02

233-1119 LINES GP-AIR

AIR INLET AND EXHAUST SYSTEM

NOTE	No.	PART No.	QTY	PART NAME	NOTE	No.	PART No.	QTY	PART NAME
	1	8T-4986	3	CLAMP					
	2	8T-4987	1	CLAMP					
	3	190-5791	1	ELBOW					
	4	239-6686	1	PIPE AS					
	5	239-6687	1	HOSE					
	6	8T-4192	2	BOLT (L=25mm)					
	7	8T-4223	2	WASHER					

H88922E 02

233-1119 LINES GP-AIR

AIR INLET AND EXHAUST SYSTEM

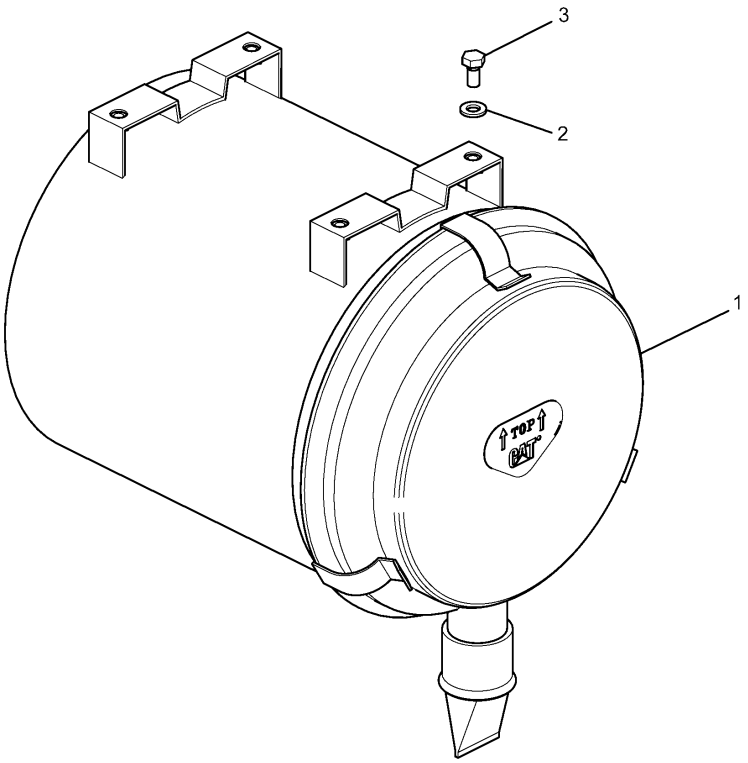

NOTE	No.	PART No.	QTY	PART NAME	NOTE	No.	PART No.	QTY	PART NAME
Y	1	124-1708	1	CLEANER GP					
	2	8T-4121	4	WASHER					
	3	8T-4137	4	BOLT (L=20mm)					

Y—SEE SEPARATE ILLUSTRATION

H91258E 00

255-3053 AIR CLEANER GP
124-1708-Page91

AIR INLET AND EXHAUST SYSTEM

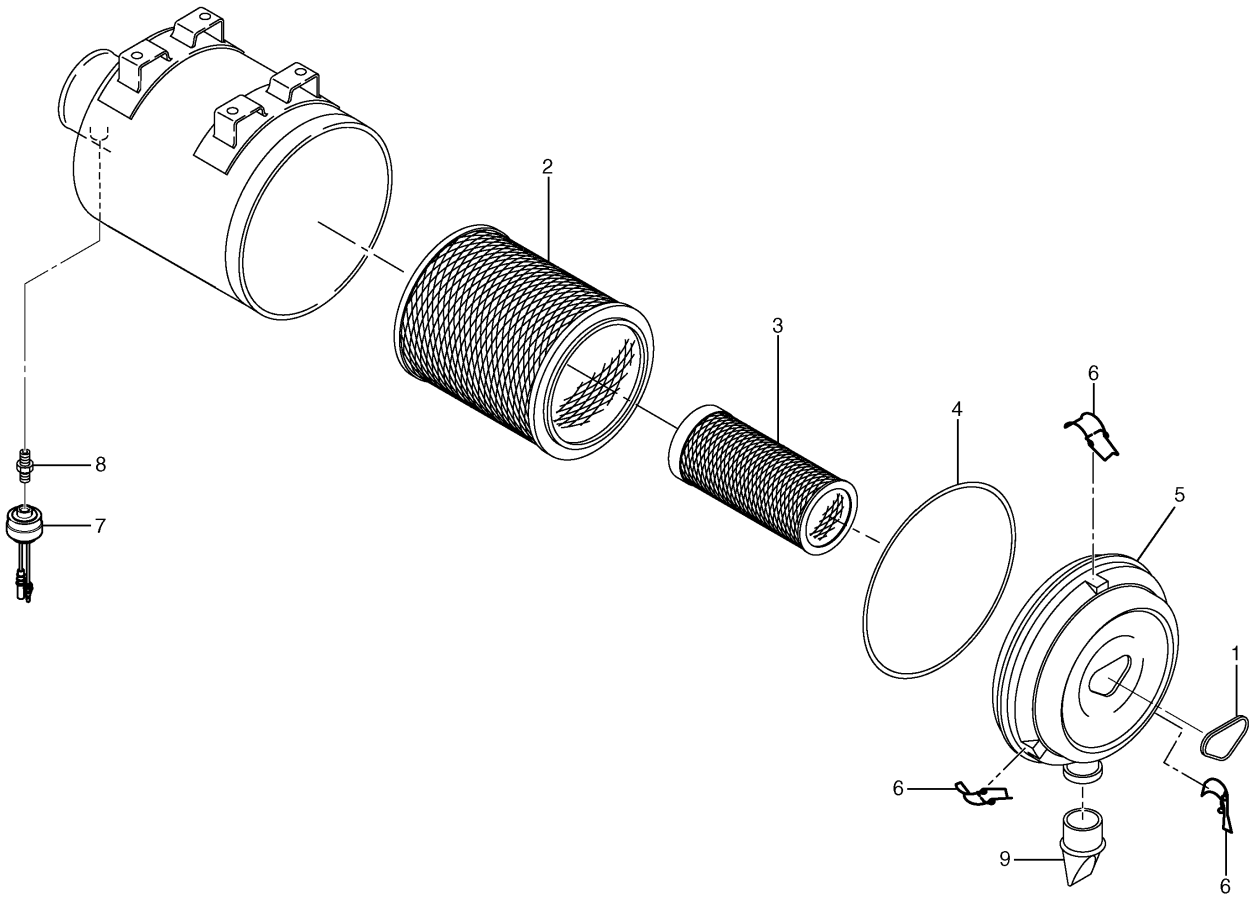

NOTE	No.	PART No.	QTY	PART NAME	NOTE	No.	PART No.	QTY	PART NAME
	1	131-8826	1	FILM					
	2	6I-2503	1	ELEMENT AS					
	3	6I-2504	1	ELEMENT AS					
	4	159-7667	1	SEAL-O-RING (ID=301.00mm)					
	5	131-8828	1	COVER AS					
	6	139-8794	3	LATCH					
	7	255-2966	1	INDICATOR AS					
	8	5L-3233	1	FITTING					
	9	131-8829	1	VALVE (VACUATOR)					

H91168E 06

124-1708 AIR CLEANER GP

Part of 255-3053-Page90

AIR INLET AND EXHAUST SYSTEM

Consists of :

			Page
1	223-3045	HOOD GP	298
1	233-1127	AIR CLEANER GP	93

H89369E 01

229-1794 AIR CLEANER AR
Precleaner
An Attachment

AIR INLET AND EXHAUST SYSTEM

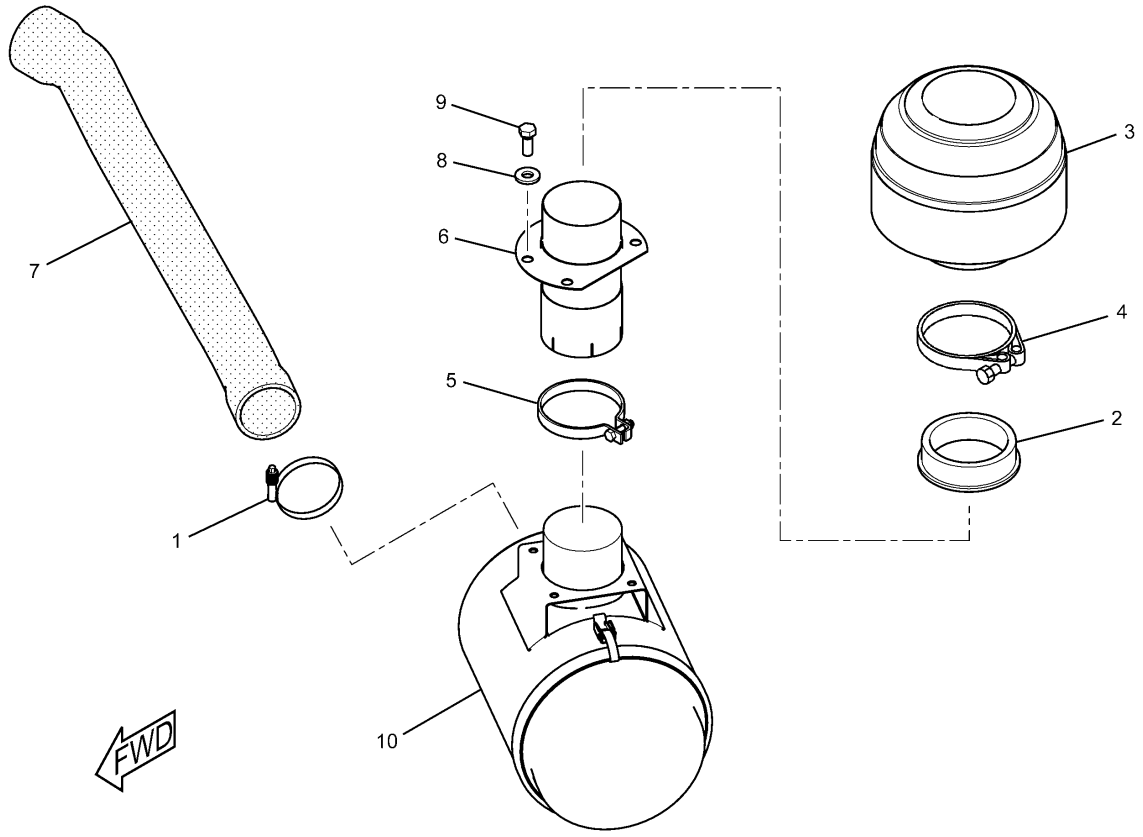

NOTE	No.	PART No.	QTY	PART NAME	NOTE	No.	PART No.	QTY	PART NAME
	1	9X-2201	1	CLAMP					
	2	116-2659	1	DAMPER					
	3	130-3280	1	PRECLEANER AS					
	4	174-5415	1	CLAMP					
	5	134-7089	1	CLAMP					
	6	193-2882	1	PIPE AS					
	7	255-2866	1	HOSE					
	8	5P-1076	4	WASHER					
	9	8T-4139	4	BOLT (L=30mm)					
Y	10	134-7085	1	CLEANER GP					

Y—SEE SEPARATE ILLUSTRATION

H89351E 02

233-1127 AIR CLEANER GP

Precleaner

Part of 229-1794-Page92
134-7085-Page94

An Attachment

AIR INLET AND EXHAUST SYSTEM

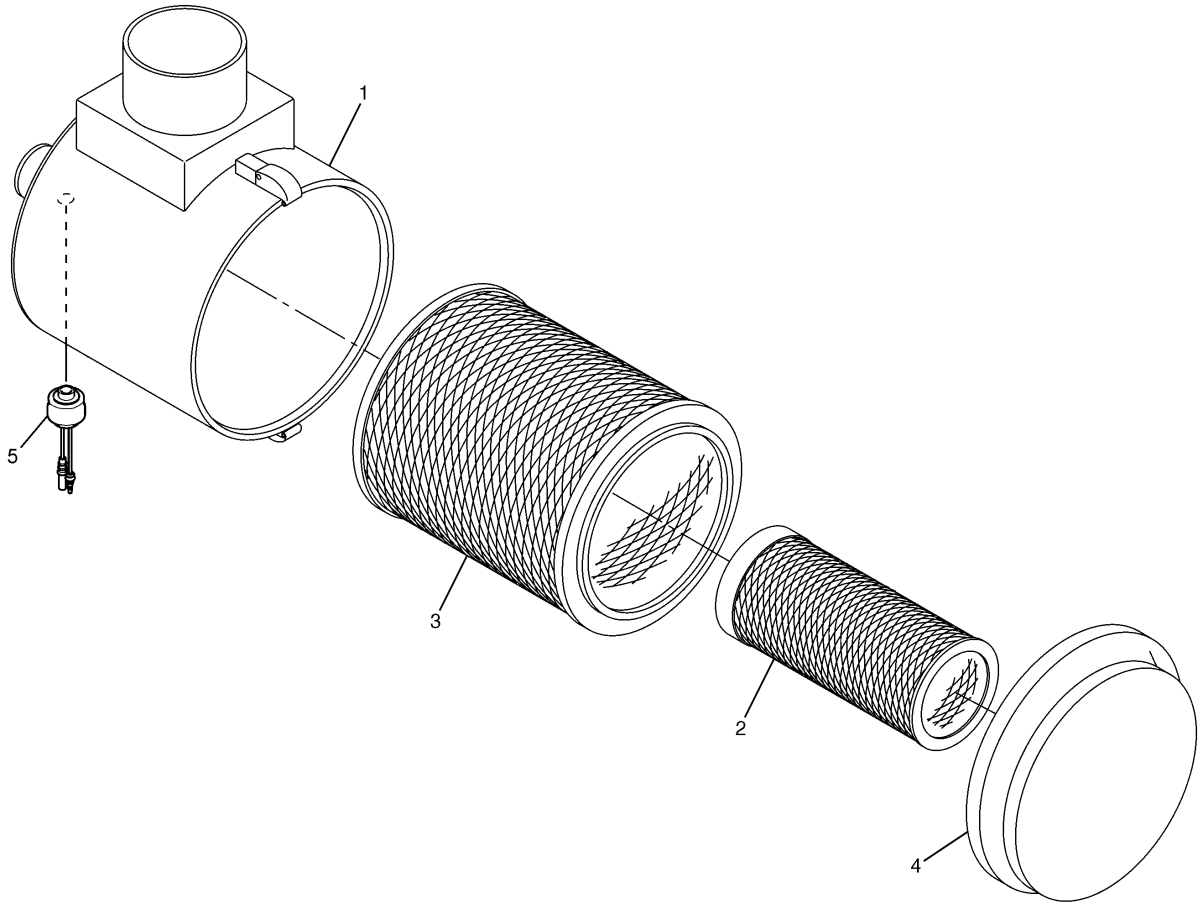

NOTE	No.	PART No.	QTY	PART NAME	NOTE	No.	PART No.	QTY	PART NAME
	1	134-7086	1	BODY AS					
	2	6I-2504	1	ELEMENT AS					
	3	6I-2503	1	ELEMENT AS					
	4	6I-4464	1	COVER AS					
		4P-5524	1	SEAL-O-RING (ID=313.00mm)					
		101-2850	1	FILM					
	5	255-2966	1	INDICATOR AS					

H89271E 04

134-7085 AIR CLEANER GP

Part of 233-1127-Page93
An Attachment

AIR INLET AND EXHAUST SYSTEM

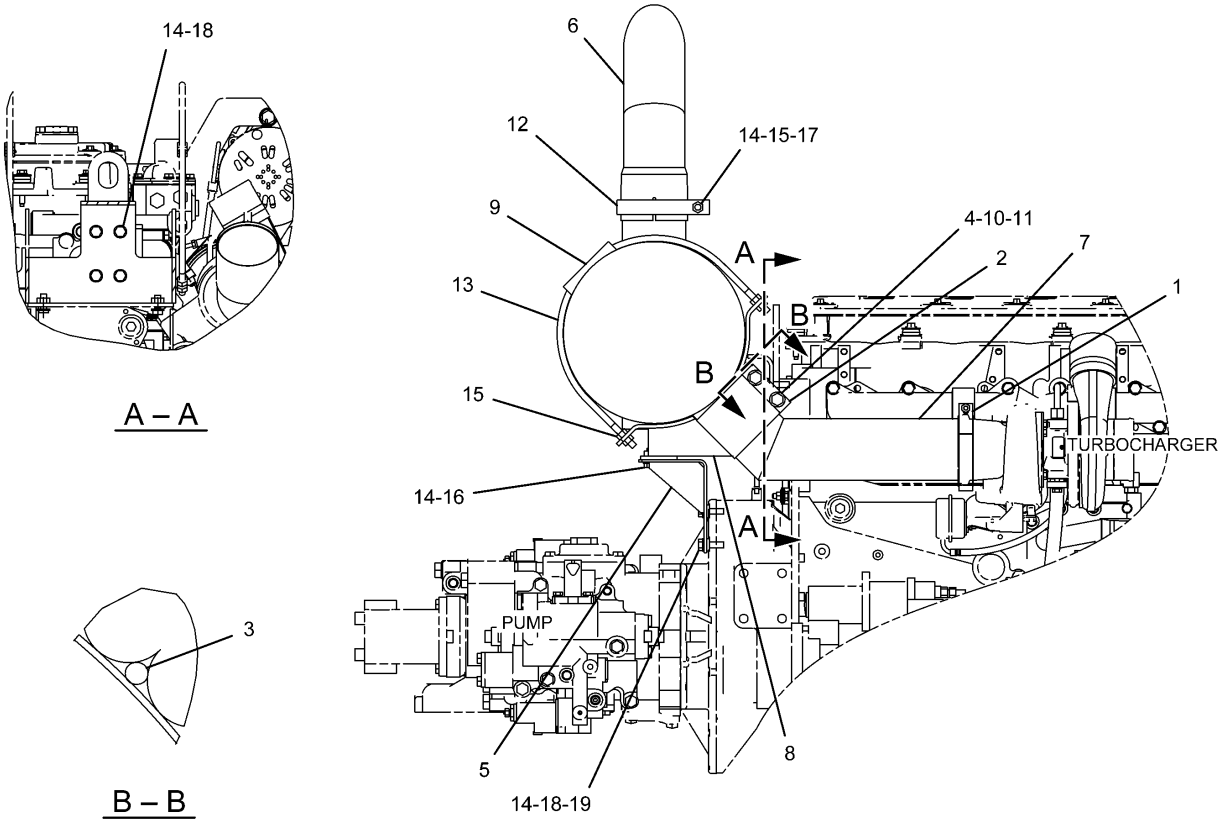

NOTE	No.	PART No.	QTY	PART NAME	NOTE	No.	PART No.	QTY	PART NAME
	1	1W-2431	1	CLAMP					
	2	7Y-1532	1	CLAMP AS					
	3	7Y-1729	1	GASKET					
	4	149-4741	2	WASHER					
	5	183-8192	1	SUPPORT AS					
	6	255-2899	1	PIPE AS					
	7	266-6329	1	PIPE AS					
	8	266-6348	1	BRACKET AS					
	9	276-0045	1	MUFFLER AS					
	10	149-0206	2	NUT					
	11	268-4770	2	BOLT (L=60mm)					
	12	7S-8735	1	CLAMP					
	13	7Y-1319	2	U-BOLT					
	14	8T-4121	10	WASHER					
	15	8T-4133	9	NUT					
	16	8T-4136	2	BOLT (L=25mm)					
	17	8T-4185	1	BOLT (L=50mm)					
	18	8T-4196	7	BOLT (L=35mm)					
	19	8T-7934	3	WASHER					

H90451E 00

272-4758 MUFFLER GP
Part of 222-8378-Page11

AIR INLET AND EXHAUST SYSTEM

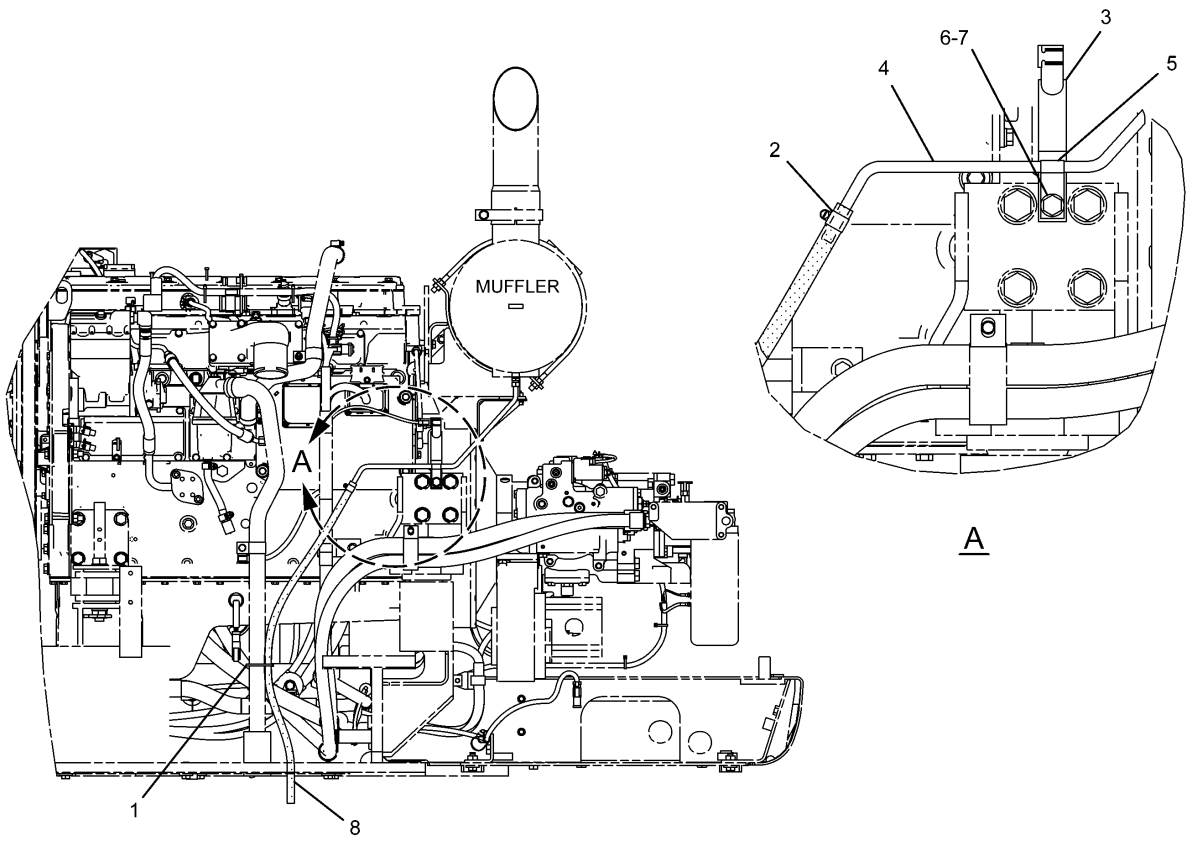

RIGHT SIDE VIEW OF ENGINE

NOTE	No.	PART No.	QTY	PART NAME	NOTE	No.	PART No.	QTY	PART NAME
	1	3S-2093	1	STRAP					
	2	5P-4961	1	CLAMP					
	3	178-6626	1	SUPPORT AS					
	4	272-4625	1	PIPE AS					
	5	171-9073	1	CLIP					
	6	8T-4121	1	WASHER					
	7	8T-4136	1	BOLT (L=25mm)					
E	8	5P-1442		HOSE…(84cm)					

E—ORDER BY THE CENTIMETER

H90617E 00

272-4624 LINES GP-DRAIN

MEMORANDA

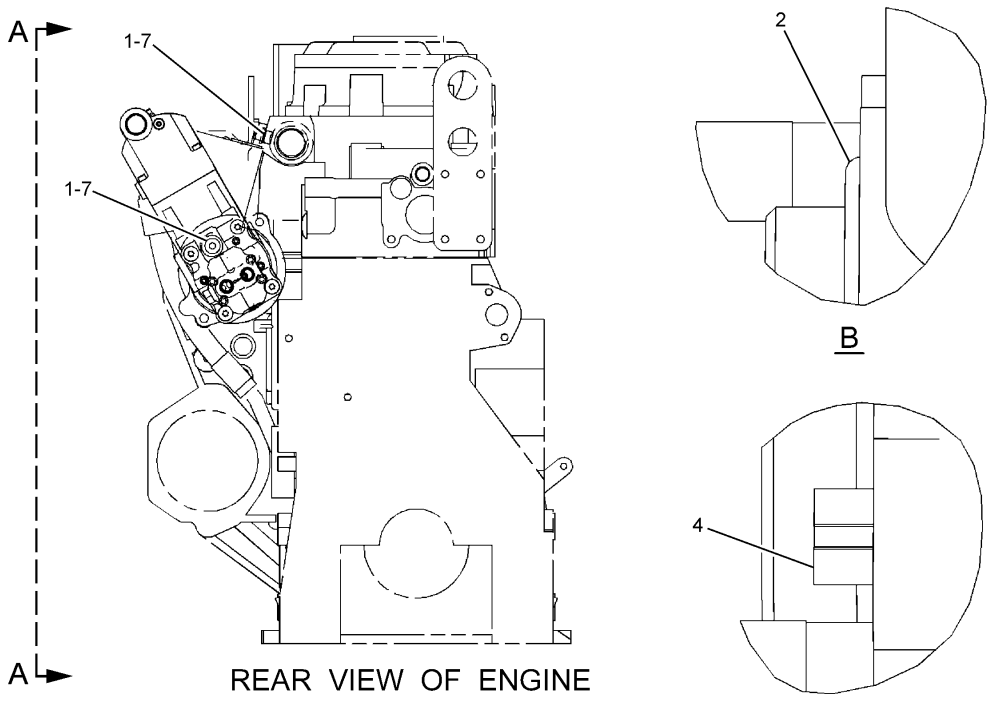

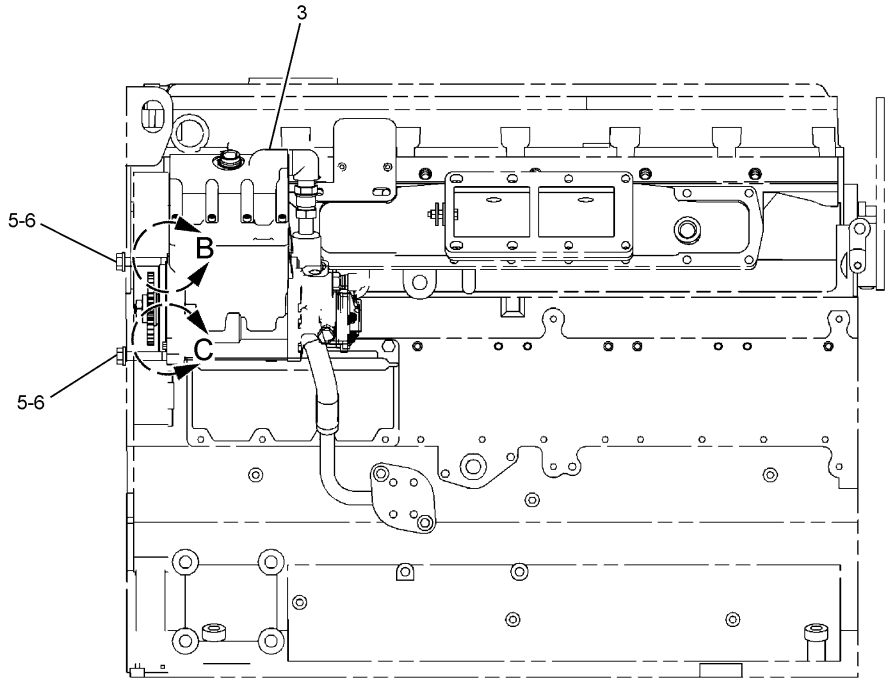

A – A

H90378E 00

222-5900 PUMP & MTG GP-UNIT INJ HYD
Part of 236-4284-Page17
254-4357-Page100

FUEL SYSTEM

NOTE	No.	PART No.	QTY	PART NAME	NOTE	No.	PART No.	QTY	PART NAME
	1	214-7568	2	SEAL-O-RING (ID=11.89mm)					
	2	227-5904	1	SEAL-O-RING (ID=104.00mm)					
Y	3	254-4357	1	PUMP GP					
	4	3E-9412	1	DOWEL					
	5	6V-5839	2	WASHER					
	6	6V-7981	2	BOLT (L=70mm)					
	7	9S-8004	2	PLUG					

Y—SEE SEPARATE ILLUSTRATION

H90378E 00

222-5900 PUMP & MTG GP-UNIT INJ HYD

Part of 236-4284-Page17
254-4357-Page100

FUEL SYSTEM

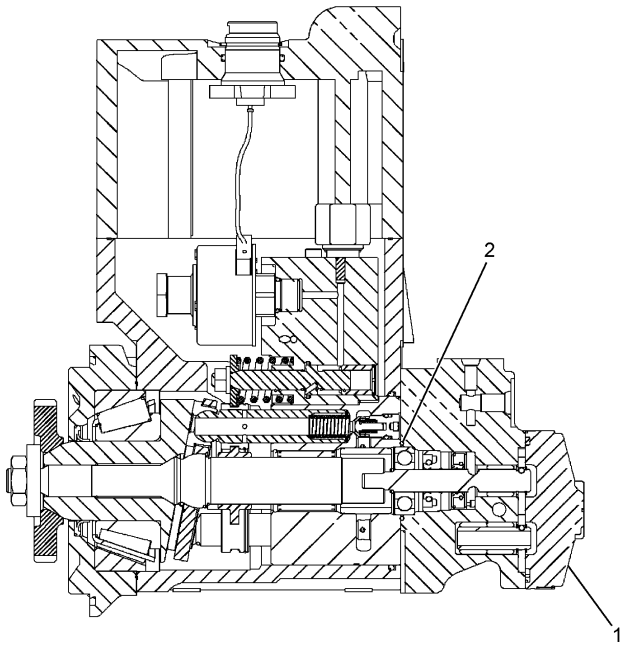

NOTE	No.	PART No.	QTY	PART NAME
	1	178-2357	1	PUMP GP
	2	179-8128	1	SEAL-O-RING (ID=31.47mm)

H90381E 00

254-4357 PUMP GP-UNIT INJECTOR HYD
Part of 222-5900-Page99

FUEL SYSTEM

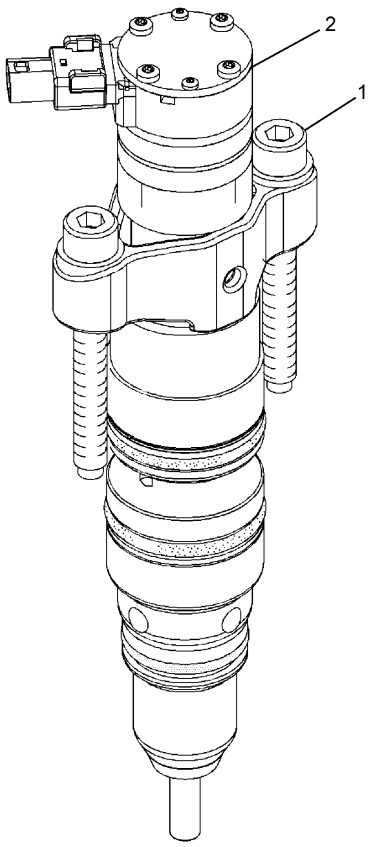

NOTE	No.	PART No.	QTY	PART NAME	NOTE	No.	PART No.	QTY	PART NAME
	1	235-9651	2	BOLT					
Y	2	268-1835	1	INJECTOR GP					

Y—SEE SEPARATE ILLUSTRATION

H90384E 00

268-1839 PUMP GP-FUEL INJECTION

Part of 236-4284-Page17
268-1835-Page102

FUEL SYSTEM

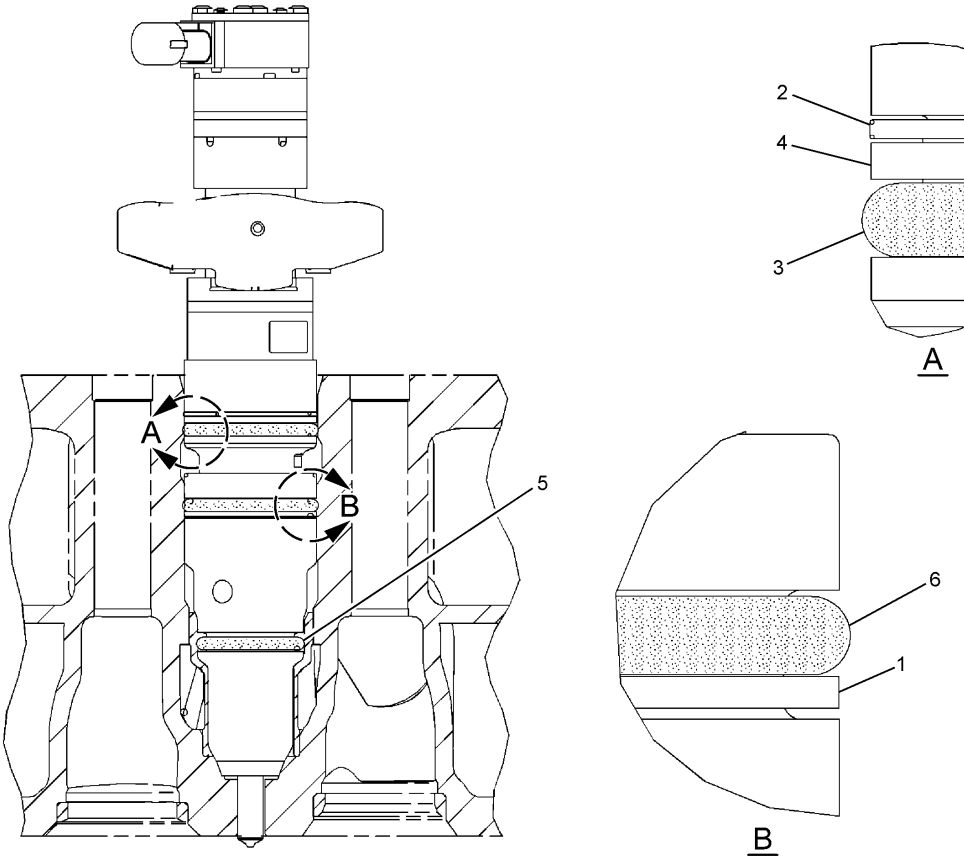

NOTE	No.	PART No.	QTY	PART NAME	NOTE	No.	PART No.	QTY	PART NAME
	1	149-5240	1	RING					
	2	169-3104	1	RING					
	3	169-8598	1	SEAL					
	4	169-8586	1	RING					
	5	109-3207	1	SEAL-O-RING (ID=23.39mm)					
	6	148-2903	1	SEAL-O-RING (ID=31.34mm)					

H90385E 00

268-1835 INJECTOR GP-FUEL
Part of 268-1839-Page101

FUEL SYSTEM

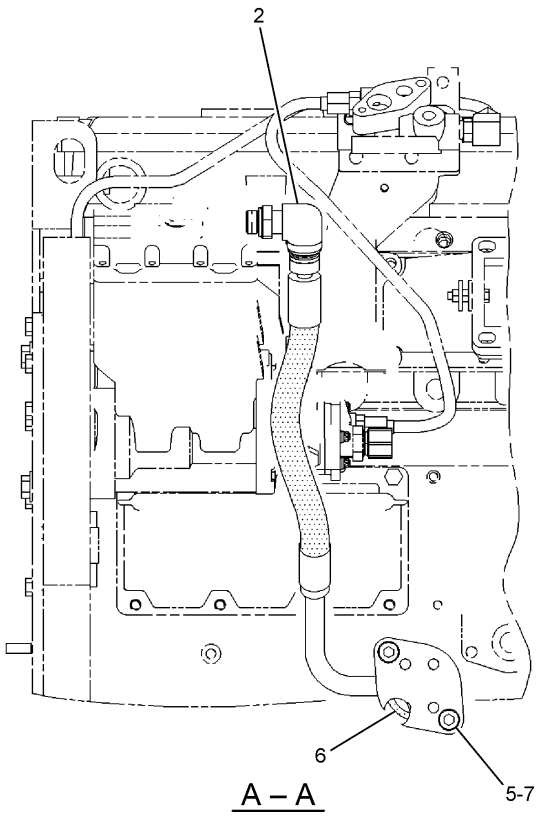

A – A

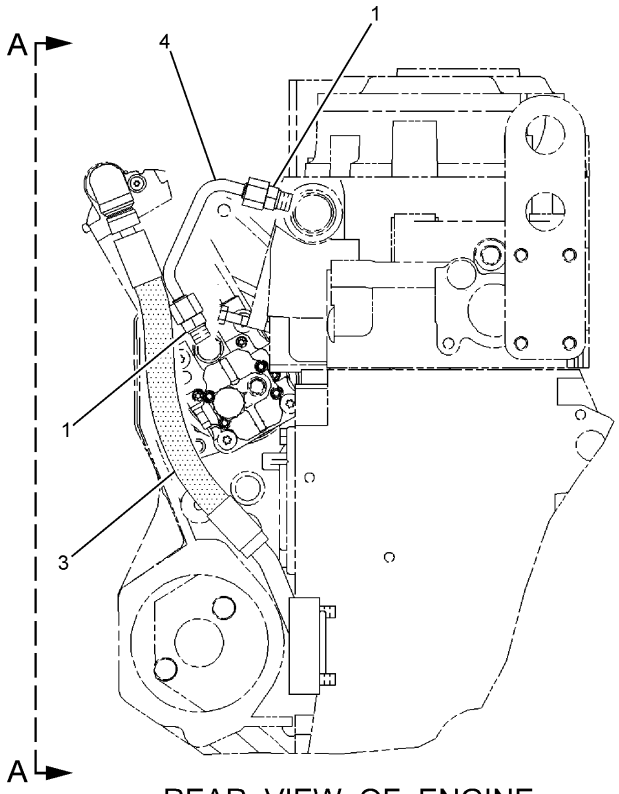

REAR VIEW OF ENGINE

NOTE	No.	PART No.	QTY	PART NAME	NOTE	No.	PART No.	QTY	PART NAME
	1	6V-8636	2	CONNECTOR					
		214-7568	2	SEAL-O-RING (ID=11.89mm)					
		221-3494	2	SEAL-O-RING (OD=12.83mm)					
Y	2	191-0523	1	ADAPTER GP					
	3	205-1280	1	HOSE AS					
	4	212-3706	1	TUBE AS					
	5	3V-2431	2	WASHER					
	6	4F-9653	1	SEAL-O-RING (ID=46.99mm)					
	7	8T-1159	2	BOLT (L=25mm)					

Y—SEE SEPARATE ILLUSTRATION

H90365E 00

191-0461 LINES GP-INJECTOR HYD PUMP

Part of 236-4284-Page17
191-0523-Page104

FUEL SYSTEM

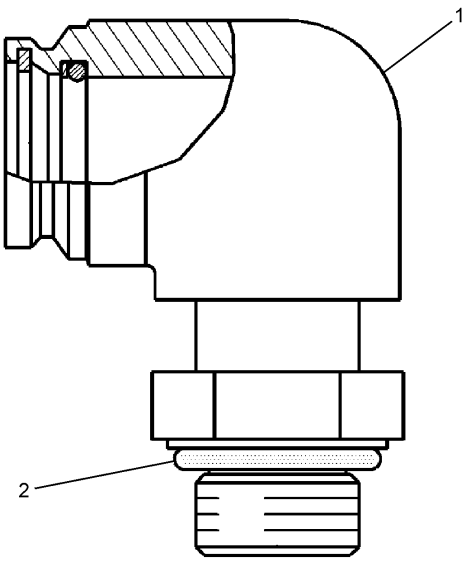

NOTE	No.	PART No.	QTY	PART NAME
	1	191-0522	1	ADAPTER
	2	033-6027	1	SEAL-O-RING (ID=19.18mm)

H90372E 00

191-0523 ADAPTER GP-OIL LINE

Part of 191-0461-Page103

MEMORANDA

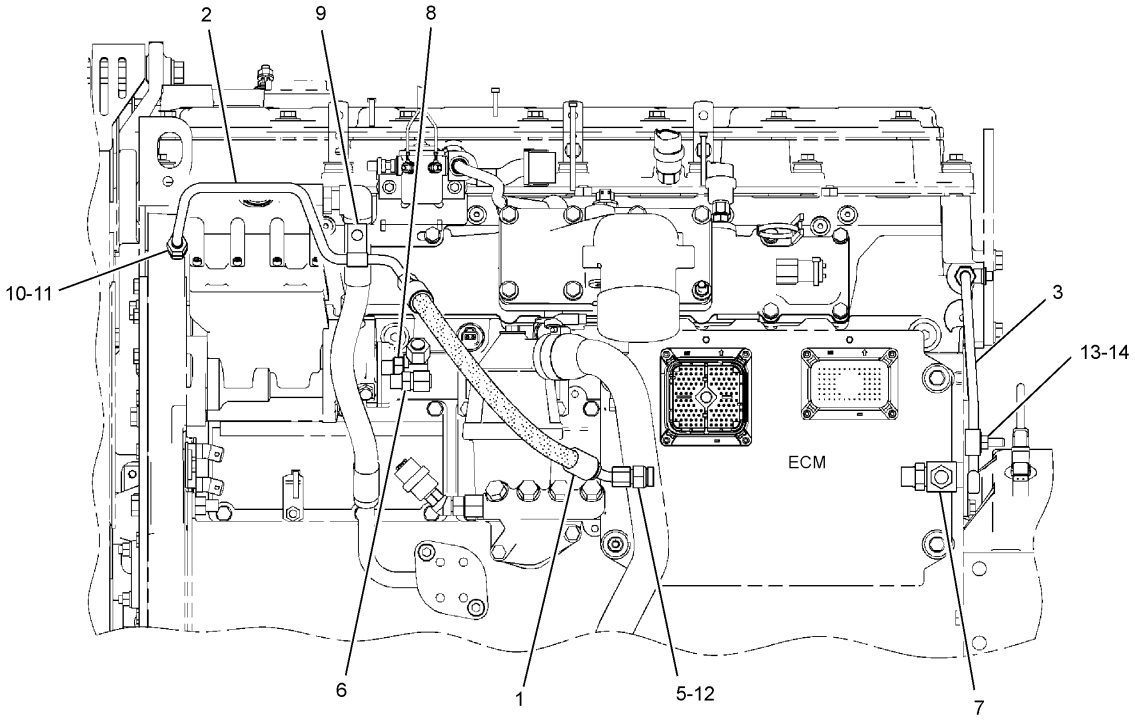

LEFT SIDE VIEW OF ENGINE

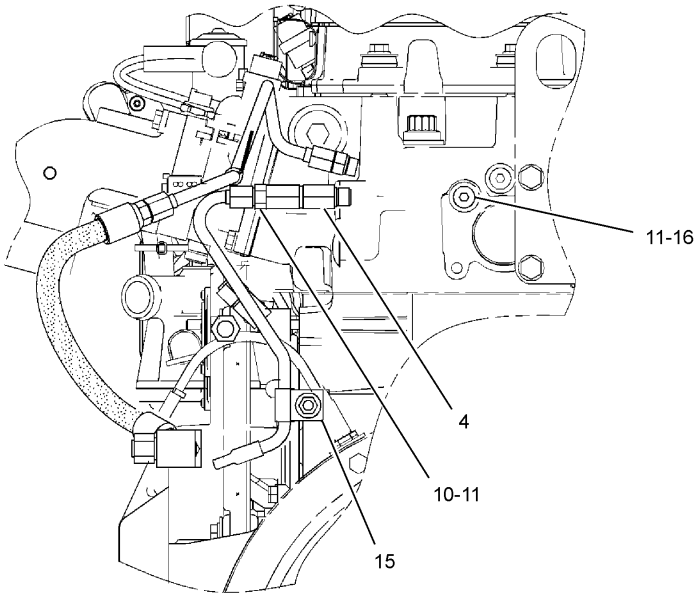

REAR VIEW OF ENGINE

H90386E 00

231-3046 LINES GP-FUEL
Part of 235-8135-Page13
232-0343-Page108

FUEL SYSTEM

NOTE	No.	PART No.	QTY	PART NAME	NOTE	No.	PART No.	QTY	PART NAME
	1	193-0158	1	HOSE AS					
	2	231-3047	1	TUBE AS					
	3	231-7847	1	TUBE AS					
Y	4	232-0343	1	REGULATOR GP					
	5	030-8188	1	CONNECTOR					
	6	148-8336	1	CONNECTOR AS					
		3J-1907	1	SEAL-O-RING (ID=11.89mm)					
		6V-8397	1	SEAL-O-RING (OD=12.83mm)					
	7	148-8374	1	ELBOW AS					
		3K-0360	1	SEAL-O-RING (ID=16.36mm)					
		6V-8397	1	SEAL-O-RING (OD=12.83mm)					
	8	148-8378	1	ELBOW AS					
		3J-1907	1	SEAL-O-RING (ID=11.89mm)					
		6V-8397	1	SEAL-O-RING (OD=12.83mm)					
	9	6V-3265	1	CLIP					
	10	2R-6806	2	CONNECTOR					
	11	3J-1907	3	SEAL-O-RING (ID=11.89mm)					
	12	3K-0360	1	SEAL-O-RING (ID=16.36mm)					
	13	5C-7261	1	NUT					
	14	5P-4116	2	WASHER					
	15	5P-9297	1	CLIP					
	16	9S-8004	1	PLUG					

Y—SEE SEPARATE ILLUSTRATION

H90386E 00

231-3046 LINES GP-FUEL

Part of 235-8135-Page13
232-0343-Page108

FUEL SYSTEM

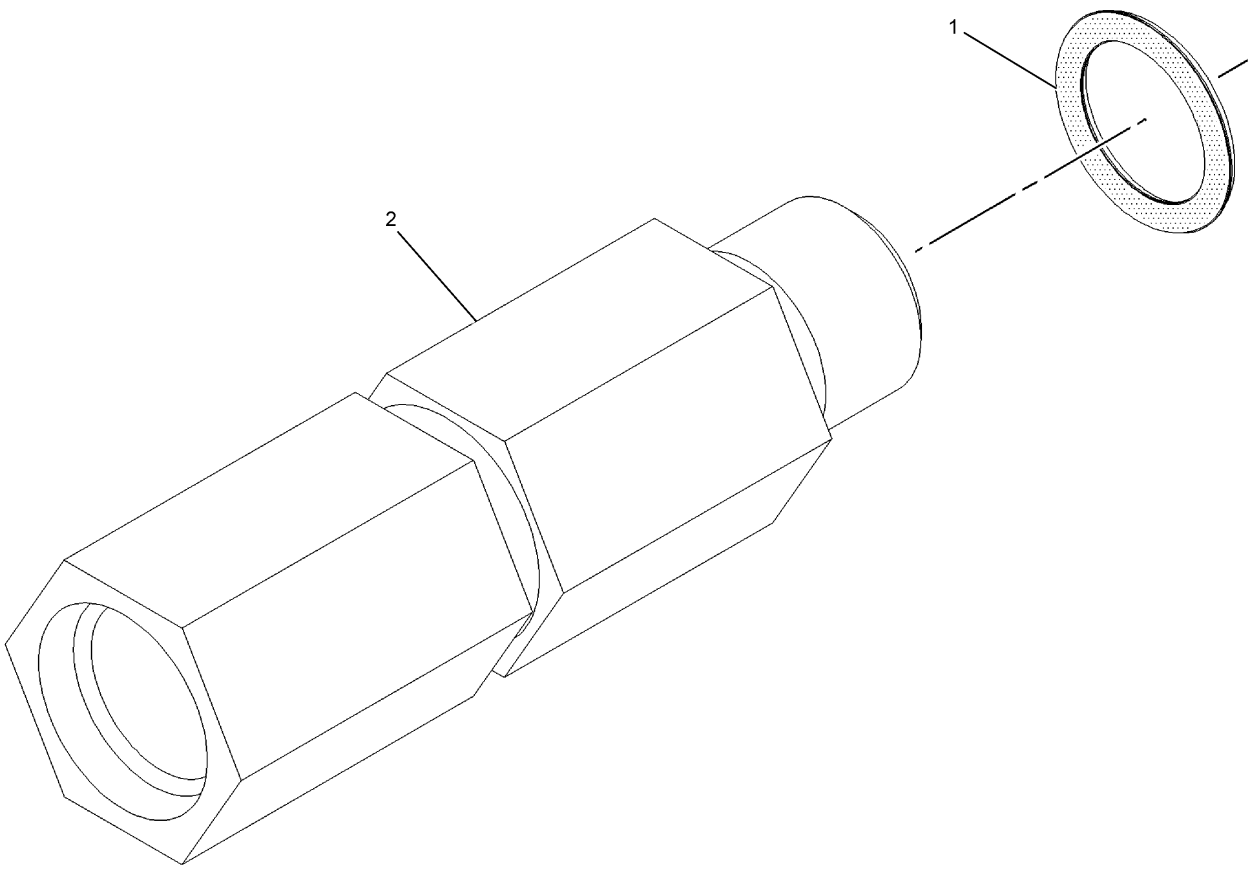

NOTE	No.	PART No.	QTY	PART NAME	NOTE	No.	PART No.	QTY	PART NAME
	1	6V-5049	1	SEAL-O-RING (ID=11.89mm)					
	2	229-8870	1	REGULATOR AS					

H90394E 00

232-0343 REGULATOR GP-FUEL PRESSURE

Part of 231-3046-Page107

MEMORANDA

FUEL SYSTEM

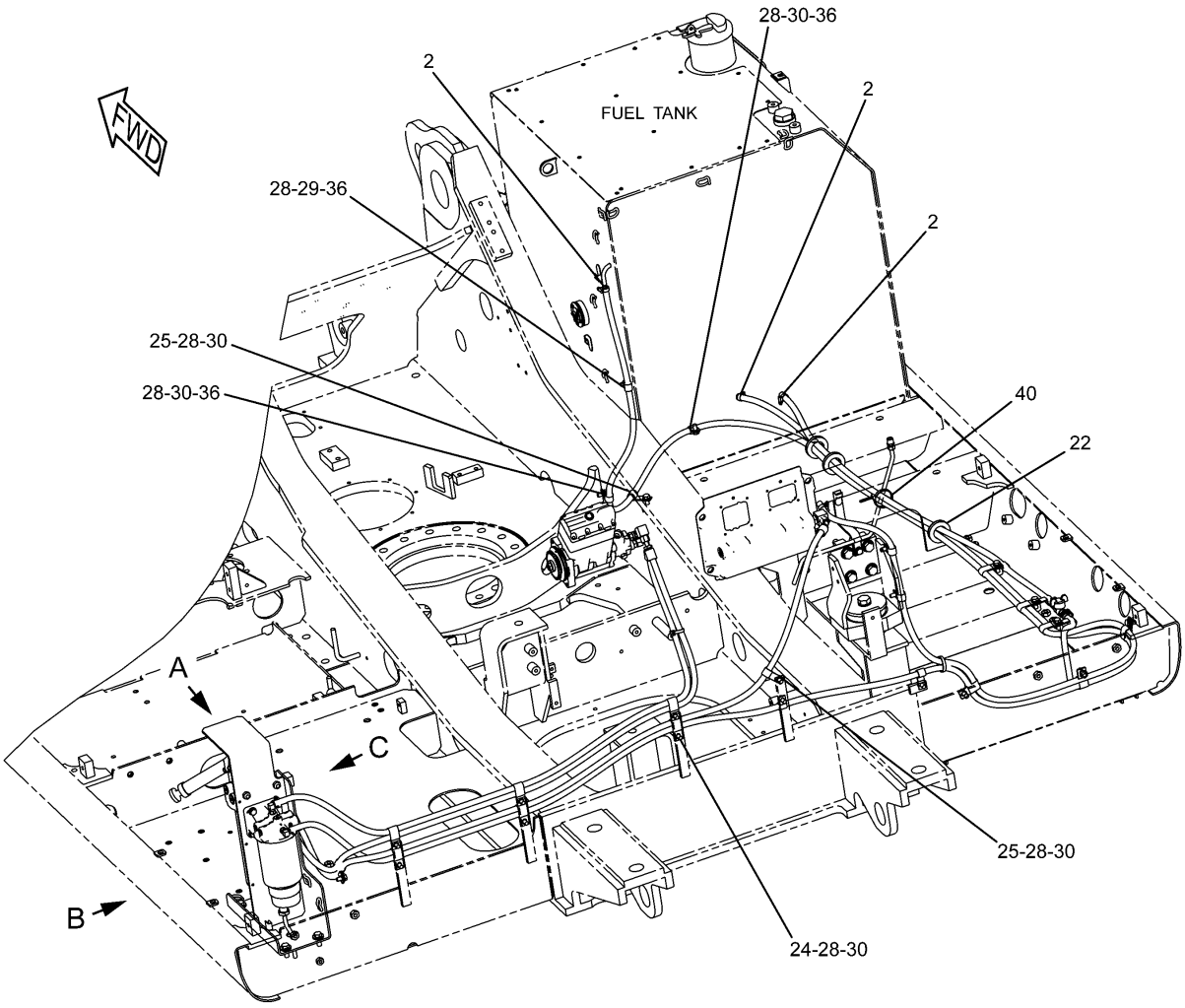

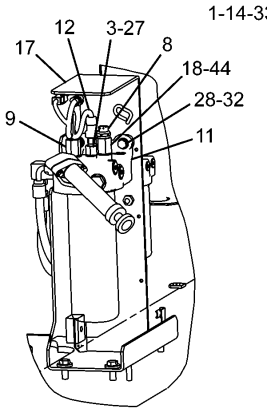

A

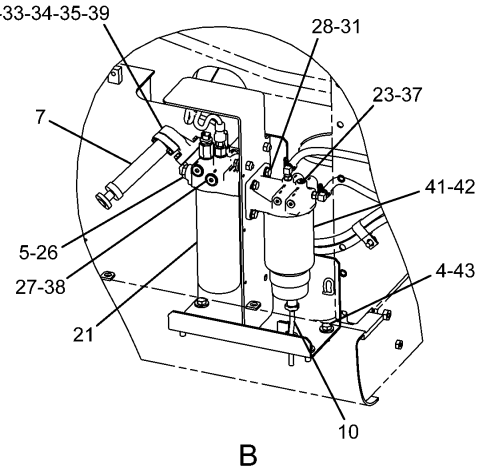

B

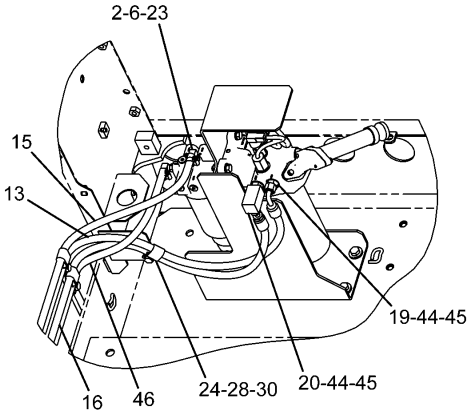

C

H91232E 09

223-3046 LINES GP-FUEL (1/2)

174-9570-Page114,183-2824-Page115,139-6873-Page116,197-8391-Page237,239-2396-Page246

FUEL SYSTEM

NOTE	No.	PART No.	QTY	PART NAME	NOTE	No.	PART No.	QTY	PART NAME
	1	9Y-8389	1	GASKET					
	2	095-1386	5	CLAMP					
	3	134-6852	1	CONNECTOR					
	4	8T-4139	4	BOLT (L=30mm)					
Y	5	139-6873	1	VALVE GP					
	6	5P-4924	2	ELBOW					
Y	7	183-2824	1	PUMP GP					
Y	8	197-8391	1	SENSOR GP					
	9	212-2768	1	SWITCH GP (PRESSURE)					
		102-8802	1	RECEPTACLE KIT					
		6V-4589	1	SEAL-O-RING (ID=19.18mm)					
		7L-9061	1	SEAL-O-RING (ID=18.72mm)					
		186-3735	2	PIN					
	10	229-0999	1	HOSE					
	11	237-9312	1	BASE AS					
		9S-4167	1	STUD					
Y	12	239-2396	1	SENSOR GP					
	13	248-9296	1	HOSE AS					
	14	250-6183	1	ADAPTER					
	15	256-1665	1	HOSE AS					
	16	256-1666	1	HOSE AS					
	17	262-2598	1	SUPPORT AS					
	18	8T-1715	1	ADAPTER					
	19	6V-8634	1	CONNECTOR					
	20	8T-1683	1	ELBOW					
	21	1R-0762	1	FILTER AS					
	22	2D-1290	3	GROMMET					
	23	3J-1907	7	SEAL-O-RING (ID=11.89mm)					
	24	5K-8451	7	CLIP					
	25	6K-8178	4	CLIP					
	26	6V-4589	1	SEAL-O-RING (ID=19.18mm)					
	27	8L-2786	3	SEAL-O-RING (ID=16.36mm)					
	28	8T-4121	20	WASHER					
	29	8T-4133	1	NUT					
	30	8T-4137	13	BOLT (L=20mm)					
	31	8T-4195	4	BOLT (L=30mm)					
	32	8T-4196	2	BOLT (L=35mm)					
	33	8T-4224	1	WASHER					
	34	8T-4971	1	BOLT (L=30mm)					
	35	8T-7547	1	BOLT (L=30mm)					
	36	9M-8406	3	CLIP					
	37	9S-8004	5	PLUG					
	38	9S-8005	2	PLUG					
	39	9X-8256	1	WASHER					
	40	7K-1181	1	STRAP					
Y	41	174-9570	1	FILTER GP					
	42	177-9778	1	BASE AS					
		9S-4167	1	STUD					
	43	5P-1076	4	WASHER					
	44	3K-0360	3	SEAL-O-RING (ID=16.36mm)					
	45	6V-8397	2	SEAL-O-RING (OD=12.83mm)					
E	46	5P-1442		HOSE…(481.5cm)					

E—ORDER BY THE CENTIMETER

Y—SEE SEPARATE ILLUSTRATION

H91232E 09

223-3046 LINES GP-FUEL (1/2)

174-9570-Page114,183-2824-Page115,139-6873-Page116,197-8391-Page237,239-2396-Page246

FUEL SYSTEM

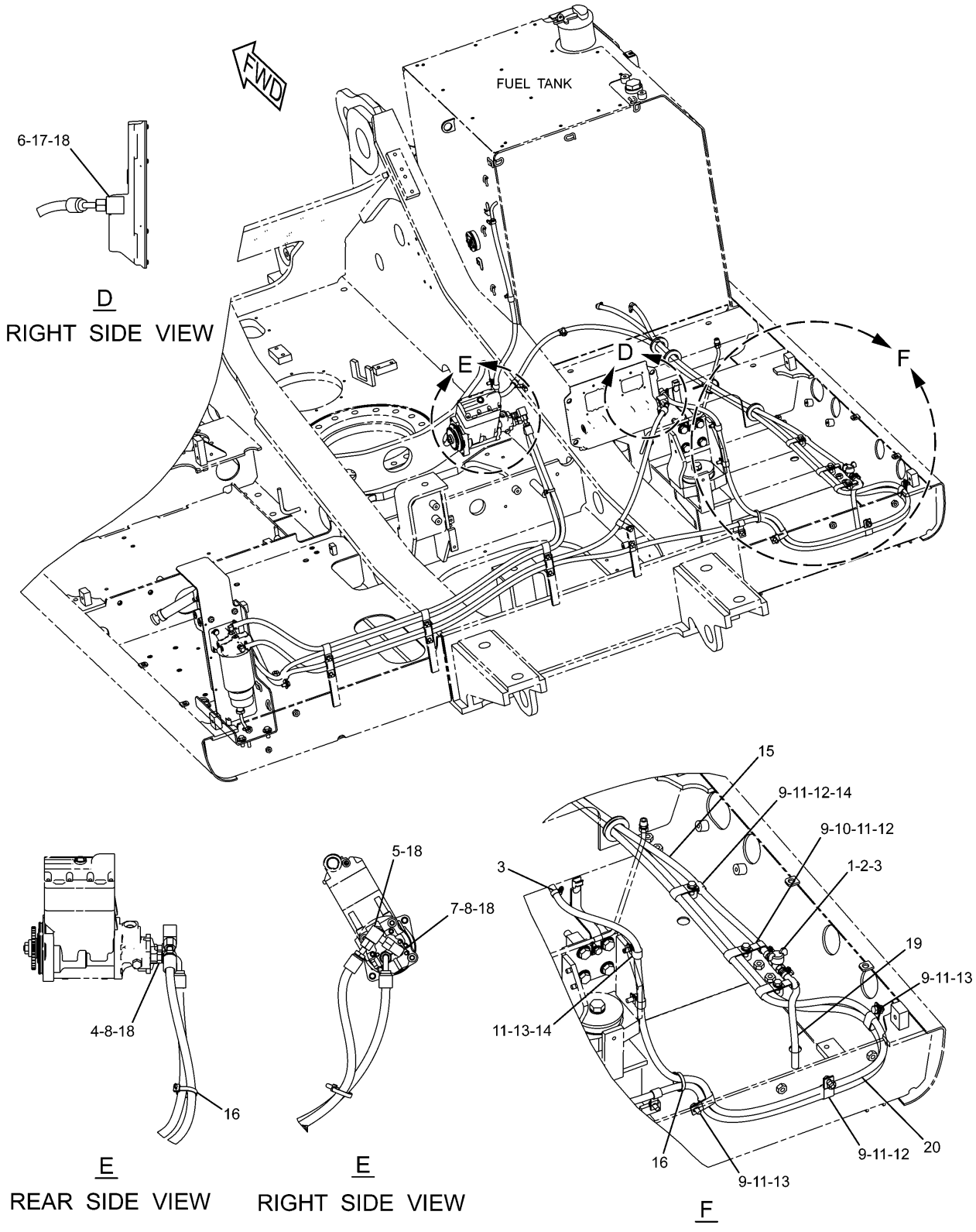

223-3046 LINES GP-FUEL (2/2)

FUEL SYSTEM

NOTE	No.	PART No.	QTY	PART NAME	NOTE	No.	PART No.	QTY	PART NAME
	1	4I-0379	1	VALVE					
	2	003-7764	2	END					
	3	095-1386	3	CLAMP					
	4	6V-8636	1	CONNECTOR					
	5	6V-9850	1	ELBOW					
	6	6V-8723	1	ELBOW					
	7	6V-8724	1	ELBOW					
	8	3J-1907	2	SEAL-O-RING (ID=11.89mm)					
	9	5K-8451	6	CLIP					
	10	6K-8178	2	CLIP					
	11	8T-4121	8	WASHER					
	12	8T-4136	4	BOLT (L=25mm)					
	13	8T-4137	4	BOLT (L=20mm)					
	14	9M-8406	3	CLIP					
E	15	5P-1442		HOSE…(147.5cm)					
	16	7K-1181	2	STRAP					
	17	3K-0360	1	SEAL-O-RING (ID=16.36mm)					
	18	6V-8397	4	SEAL-O-RING (OD=12.83mm)					
E	19	5P-1442		HOSE…(35cm)					
E	20	5P-1442		HOSE…(473.5cm)					

E—ORDER BY THE CENTIMETER

H91233E 09

223-3046 LINES GP-FUEL (2/2)

FUEL SYSTEM

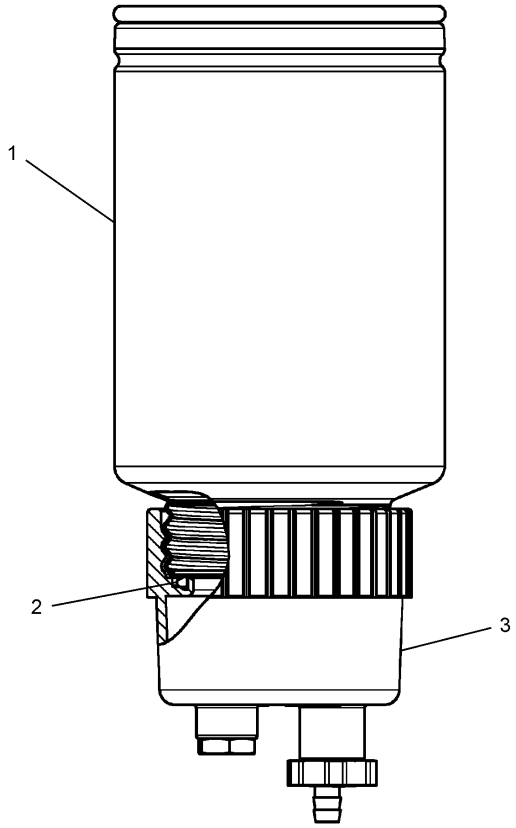

NOTE	No.	PART No.	QTY	PART NAME	NOTE	No.	PART No.	QTY	PART NAME
	1	1R-0770	1	FILTER AS					
	2	220-8678	1	SEAL					
	3	173-7126	1	BOWL AS					

H88895E 01

174-9570 FILTER GP
Part of 223-3046-Page111

FUEL SYSTEM

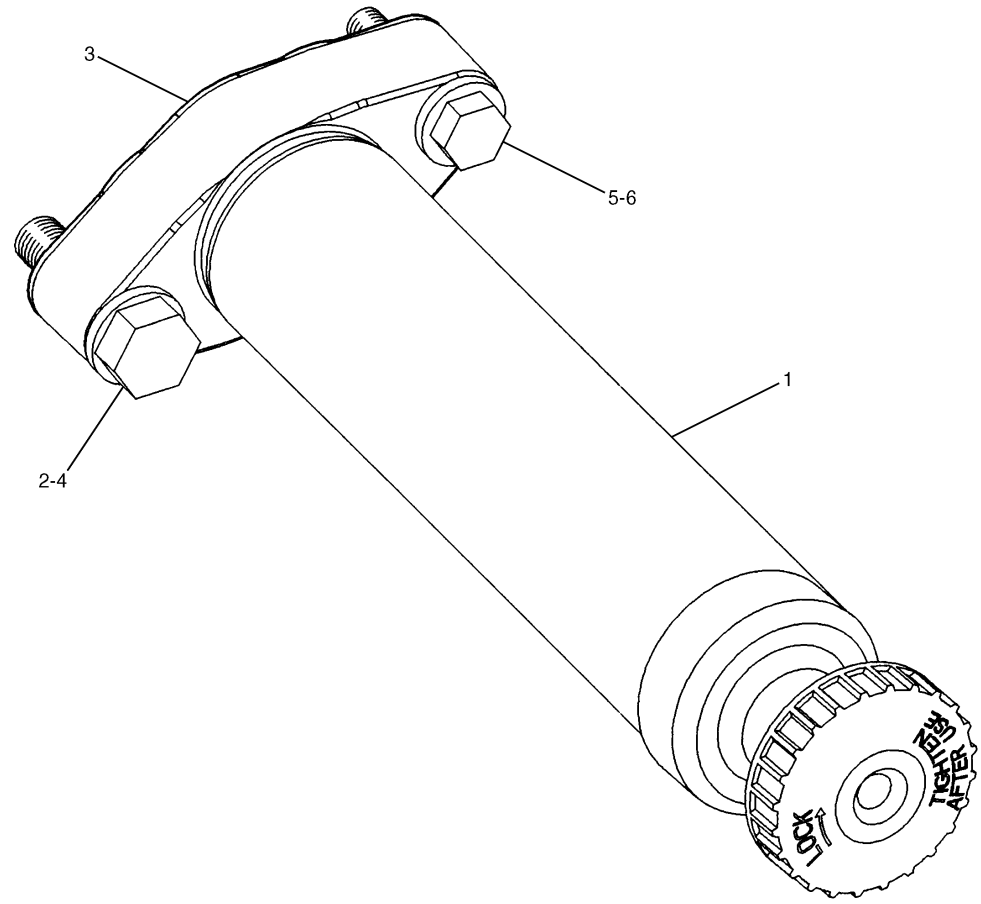

NOTE	No.	PART No.	QTY	PART NAME	NOTE	No.	PART No.	QTY	PART NAME
	1	183-2823	1	PUMP AS					
		229-3218	2	VALVE AS					
		061-7539	1	SEAL-O-RING (ID=20.22mm)					
	2	9M-1974	1	WASHER					
	3	9Y-8389	1	GASKET					
	4	6V-2317	1	BOLT (L=30mm)					
	5	5P-0537	1	WASHER					
	6	8T-0640	1	BOLT (L=30mm)					

H89205E 00

183-2824 PUMP GP-FUEL PRIMING

Part of 223-3046-Page111

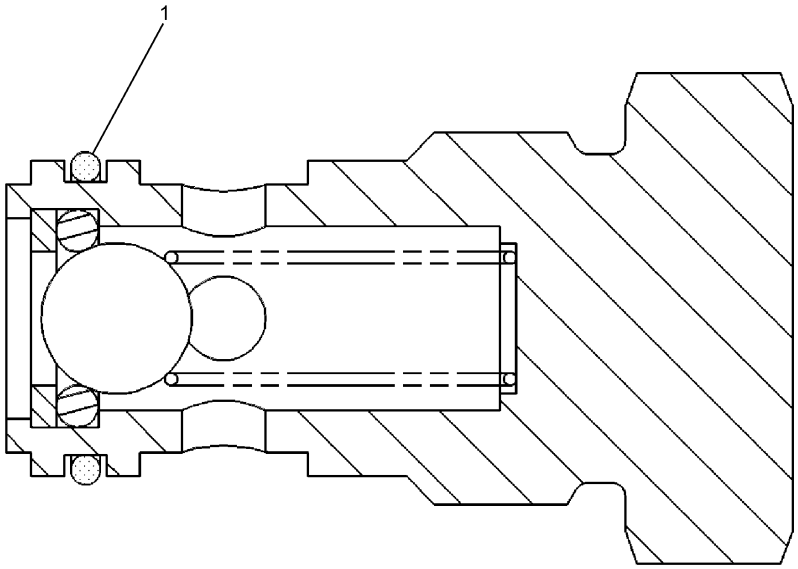

NOTE	No.	PART No.	QTY	PART NAME	NOTE	No.	PART No.	QTY	PART NAME
	1	9X-7737	1	SEAL-O-RING (ID=15.60mm)					

H90336E 01

139-6873 VALVE GP-FUEL BYPASS

Part of 223-3046-Page111

MEMORANDA

FUEL SYSTEM

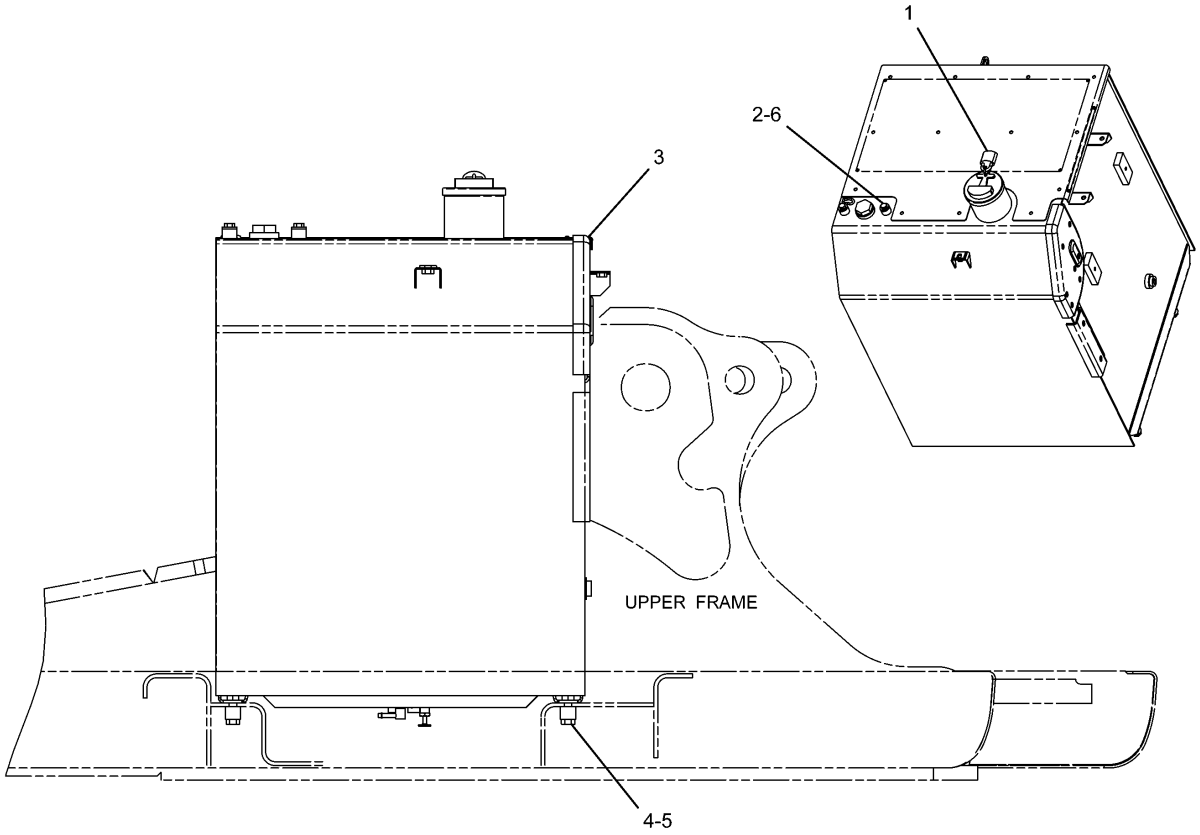

RIGHT SIDE VIEW

NOTE	No.	PART No.	QTY	PART NAME	NOTE	No.	PART No.	QTY	PART NAME
	1	246-2641	1	PADLOCK GP					
	2	5P-1076	2	WASHER					
Y	3	223-3038	1	TANK GP					
	4	085-9310	4	SPACER					
	5	8T-4140	4	BOLT (L=60mm)					
	6	8T-4179	2	BOLT (L=20mm)					

Y—SEE SEPARATE ILLUSTRATION

H89166E 02

223-3037 TANK & MTG GP-FUEL

223-3038-Page119

FUEL SYSTEM

Consists of :

			Page
1	259-3872	TANK GP-FUEL	120
		-OR-	
1	259-3875	TANK GP-FUEL	122

H89183E 02

223-3038 TANK GP-FUEL
Capacity 520 Liters
Part of 223-3037-Page118

FUEL SYSTEM

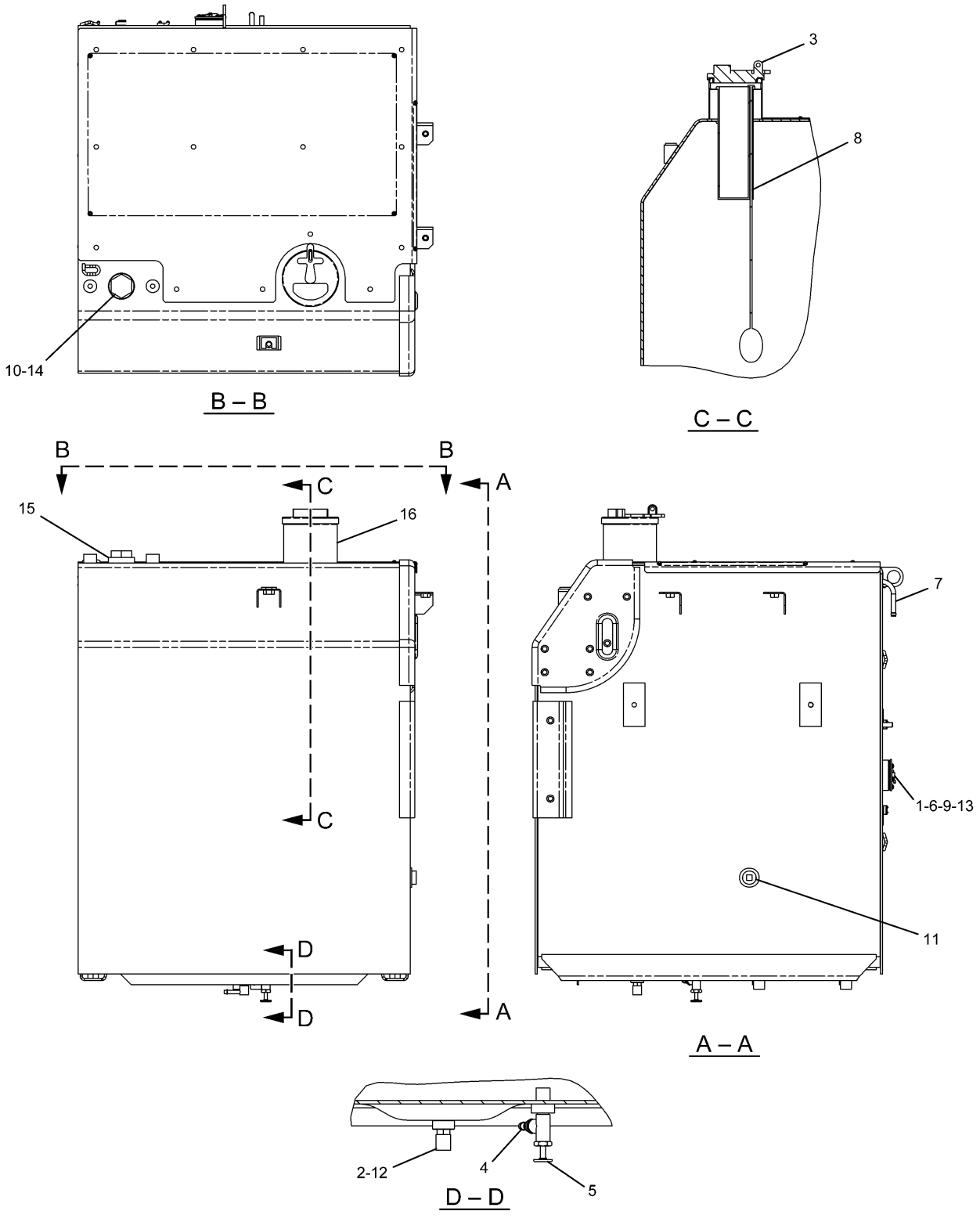

259-3872 TANK GP-FUEL
Capacity 520 Liters
Part of 223-3038-Page119

FUEL SYSTEM

NOTE	No.	PART No.	QTY	PART NAME	NOTE	No.	PART No.	QTY	PART NAME
	1	4I-0378	1	PACKING					
	2	5P-4924	1	ELBOW					
	3	7X-7700	1	CAP AS					
		9X-2205	1	FILTER KIT					
		9X-8600	1	SEAL-O-RING (ID=110.49mm)					
	4	003-7764	1	END					
	5	128-4411	1	VALVE AS					
	6	163-6700	1	SENSOR					
		8T-8729	2	PIN					
		102-8802	1	RECEPTACLE KIT					
	7	4I-0050	1	PIPE					
	8	262-9372	1	STRAINER AS					
		278-3970	1	GAUGE KIT					
	9	095-0736	5	SCREW					
	10	2S-4078	1	SEAL-O-RING (ID=37.47mm)					
	11	3B-0551	1	PLUG					
	12	3J-1907	1	SEAL-O-RING (ID=11.89mm)					
	13	8T-0328	5	WASHER					
	14	9S-6130	1	PLUG					
	15	8J-9208	1	BOSS					
	16	131-7501	1	ADAPTER AS					
		9X-2206	1	ADAPTER AS					
		7Y-8737	1	FILLER					

H89181E 00

259-3872 TANK GP-FUEL
Capacity 520 Liters
Part of 223-3038-Page119

FUEL SYSTEM

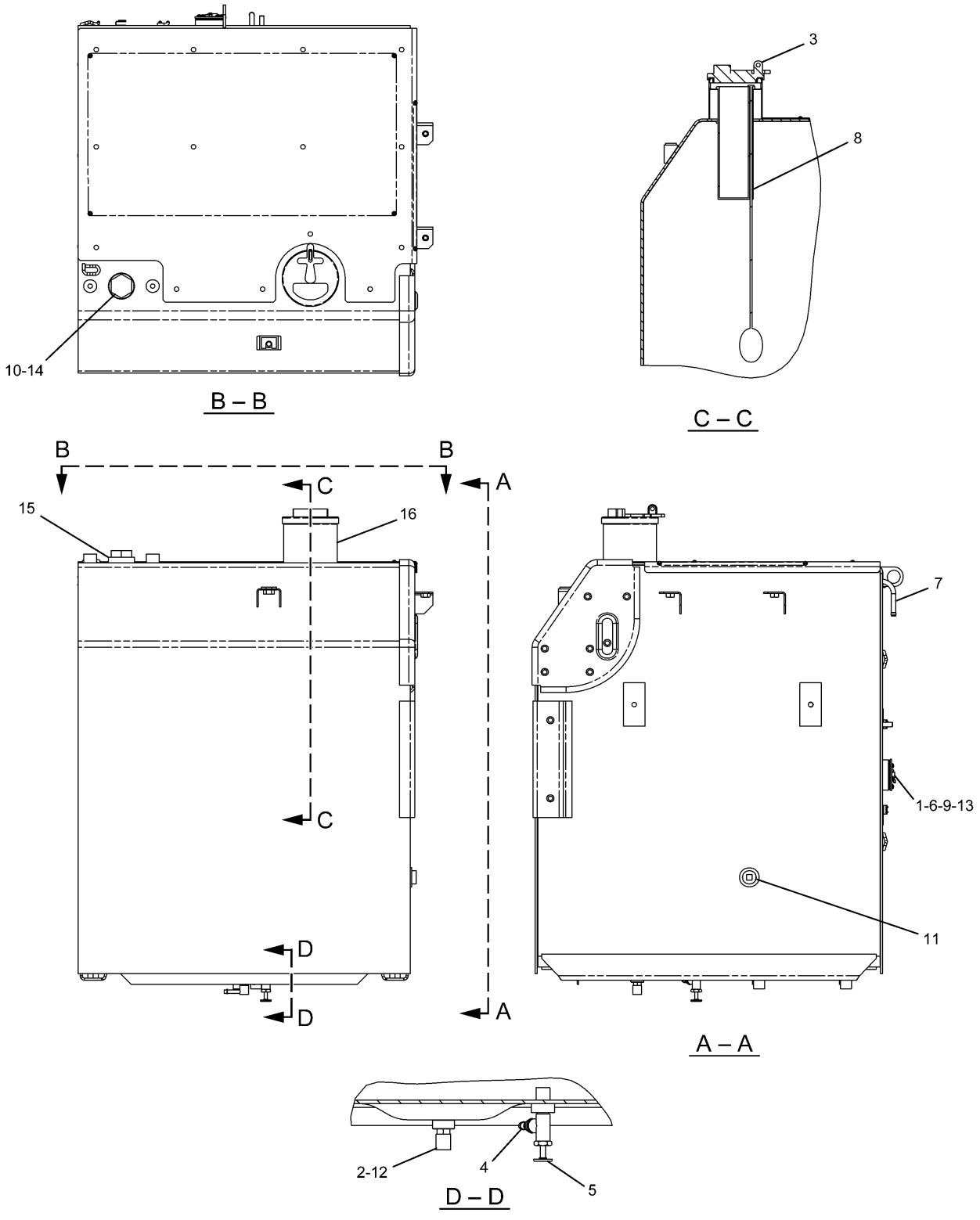

259-3875 TANK GP-FUEL
Capacity 520 Liters
Part of 223-3038-Page119

FUEL SYSTEM

NOTE	No.	PART No.	QTY	PART NAME	NOTE	No.	PART No.	QTY	PART NAME
	1	4I-0378	1	PACKING					
	2	5P-4924	1	ELBOW					
	3	7X-7700	1	CAP AS					
		9X-2205	1	FILTER KIT					
		9X-8600	1	SEAL-O-RING (ID=110.49mm)					
	4	003-7764	1	END					
	5	128-4411	1	VALVE AS					
	6	163-6700	1	SENSOR					
		8T-8729	2	PIN					
		102-8802	1	RECEPTACLE KIT					
	7	4I-0050	1	PIPE					
	8	262-9372	1	STRAINER AS					
		278-3970	1	GAUGE KIT					
	9	095-0736	5	SCREW					
	10	2S-4078	1	SEAL-O-RING (ID=37.47mm)					
	11	3B-0551	1	PLUG					
	12	3J-1907	1	SEAL-O-RING (ID=11.89mm)					
	13	8T-0328	5	WASHER					
	14	9S-6130	1	PLUG					
	15	8J-9208	1	BOSS					
	16	131-7501	1	ADAPTER AS					
		9X-2206	1	ADAPTER AS					
		7Y-8737	1	FILLER					

H89182E 00

259-3875 TANK GP-FUEL
Capacity 520 Liters
Part of 223-3038-Page119

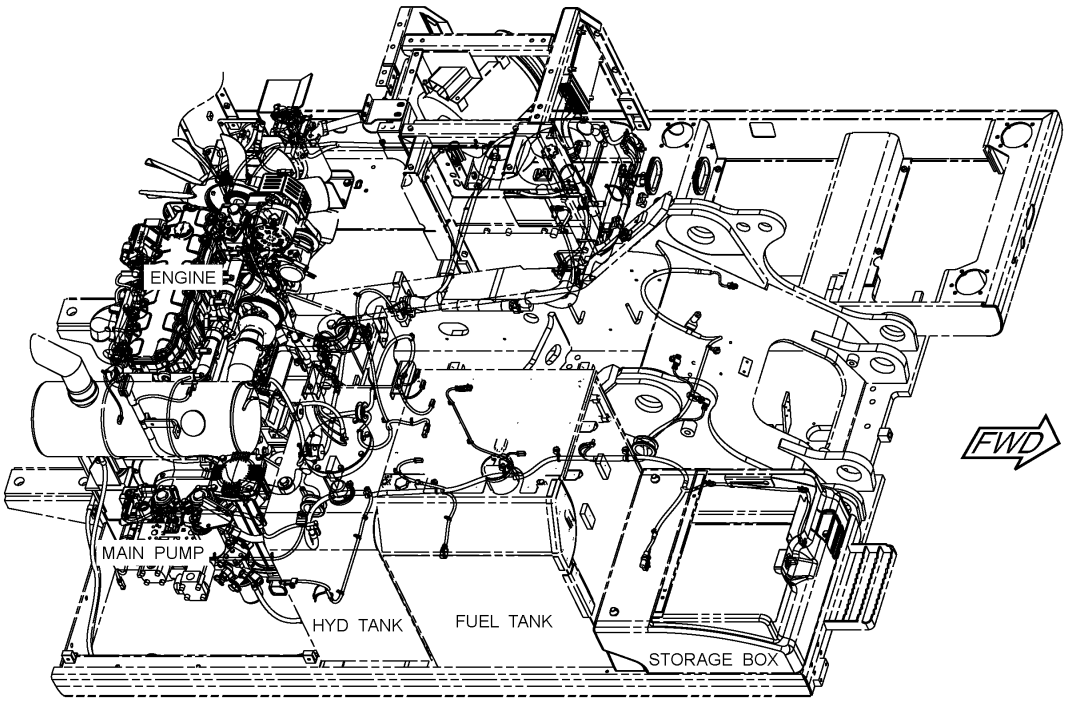

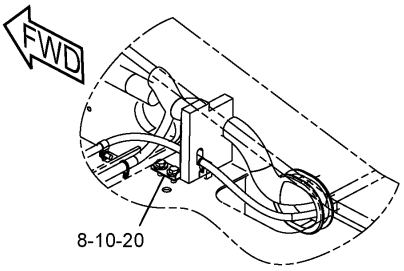

BACK THE RADIATOR

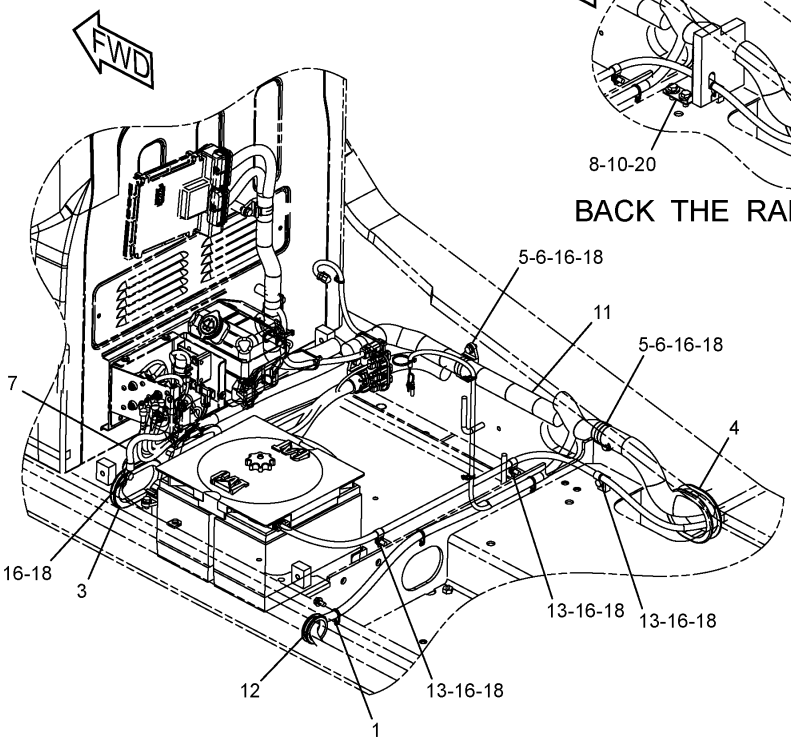

BATTERY ROOM 1

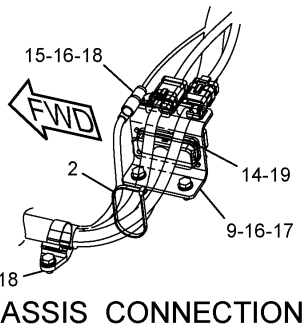

PLATF-CHASSIS CONNECTION

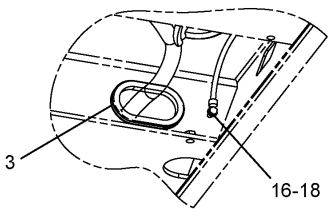

UNDER PLATFORM

H94647E 07

251-0429 BATTERY & WIRING GP (1/6)
283-2932-Page136

ELECTRICAL AND STARTING SYSTEM

NOTE	No.	PART No.	QTY	PART NAME	NOTE	No.	PART No.	QTY	PART NAME
	1	3S-2093	3	STRAP					
	2	7K-1181	1	STRAP					
	3	7Y-5456	2	GROMMET					
	4	087-4587	1	GROMMET					
	5	111-4838	3	CLIP					
	6	111-4839	3	STRAP					
	7	132-1805	1	STRAP AS					
	8	8T-4192	2	BOLT (L=25mm)					
	9	251-0467	1	BRACKET AS					
	10	256-1705	1	SHEET AS					
		256-1707	1	INSULATION					
Y	11	283-2932	1	HARNESS AS					
	12	093-2065	1	GROMMET					
	13	4K-8864	3	CLIP					
	14	5C-7883	4	BOLT					
	15	8M-2770	1	CLIP					
	16	8T-4121	11	WASHER					
	17	8T-4136	2	BOLT (L=25mm)					
	18	8T-4137	9	BOLT (L=20mm)					
	19	9X-8256	4	WASHER					
	20	5P-1076	2	WASHER					

Y—SEE SEPARATE ILLUSTRATION

H94647E 07

251-0429 BATTERY & WIRING GP (1/6)

283-2932-Page136

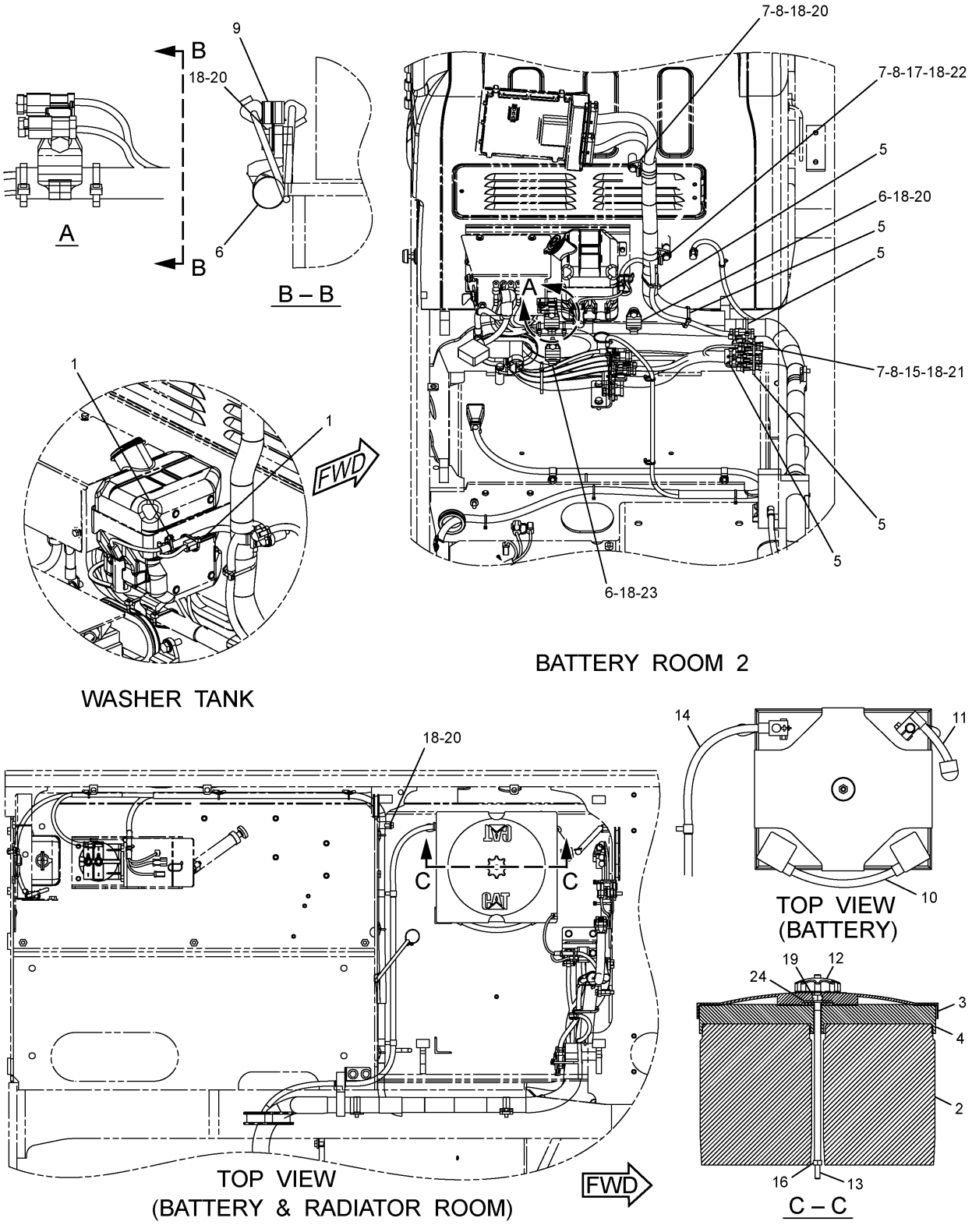

H94648E 07

251-0429 BATTERY & WIRING GP (2/6)
170-6929,231-1827-Page138,251-0451-Page139

ELECTRICAL AND STARTING SYSTEM

NOTE	No.	PART No.	QTY	PART NAME	NOTE	No.	PART No.	QTY	PART NAME
	1	3S-2093	2	STRAP					
	2	3T-5760	2	BATTERY					
	3	5I-8270	1	COVER					
	4	6W-6005	1	HOLDDOWN					
	5	7K-1181	5	STRAP					
	6	111-4837	3	CLIP					
	7	111-4838	4	CLIP					
	8	111-4839	4	STRAP					
	9	116-0118	2	CLIP					
Y	10	170-6929	1	CABLE AS					
Y	11	231-1827	1	CABLE AS					
	12	238-2501	1	KNOB					
	13	238-2528	1	ROD					
Y	14	251-0451	1	CABLE AS					
	15	4I-7889	1	SPACER					
	16	5C-7261	1	NUT					
	17	6G-2263	1	SPACER					
	18	8T-4121	7	WASHER					
	19	8T-4133	1	NUT					
	20	8T-4137	4	BOLT (L=20mm)					
	21	8T-4172	1	BOLT (L=80mm)					
	22	8T-4185	1	BOLT (L=50mm)					
	23	8T-4195	1	BOLT (L=30mm)					
	24	8T-4226	1	WASHER					

Y—SEE SEPARATE ILLUSTRATION

H94648E 07

251-0429 BATTERY & WIRING GP (2/6)

170-6929,231-1827-Page138,251-0451-Page139

ELECTRICAL AND STARTING SYSTEM

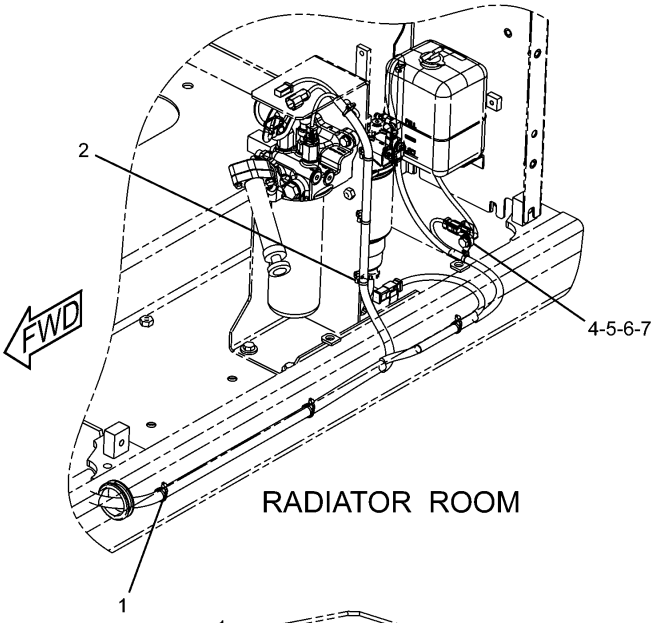

RADIATOR ROOM

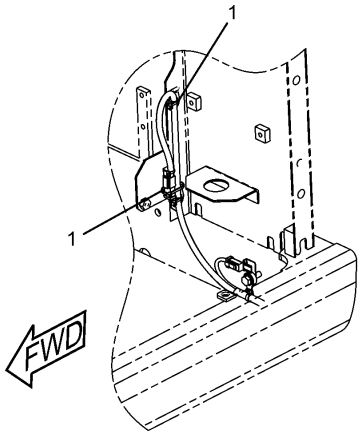

DETAIL OF ETHER CONN

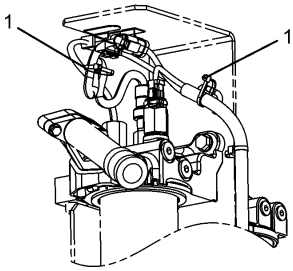

DETAIL OF FUEL PUMP

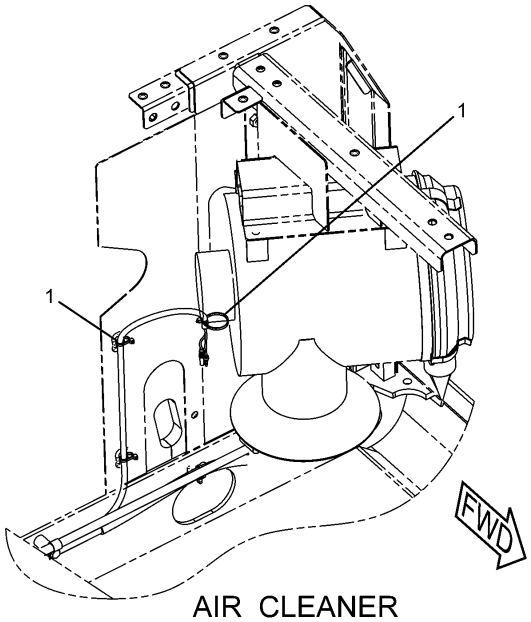

AIR CLEANER

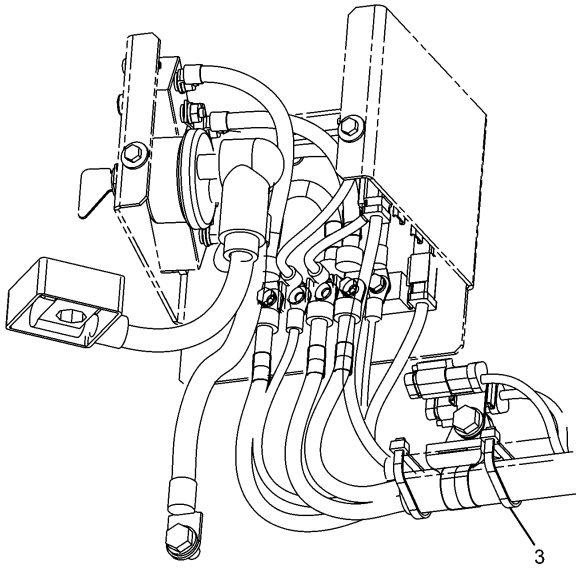

DISC BOX

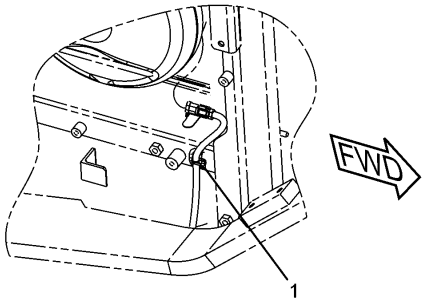

A/C CONDENSER

H94649E 07

251-0429 BATTERY & WIRING GP (3/6)

ELECTRICAL AND STARTING SYSTEM

NOTE	No.	PART No.	QTY	PART NAME	NOTE	No.	PART No.	QTY	PART NAME
	1	3S-2093	12	STRAP					
	2	7I-2673	3	STRAP					
	3	7K-1181	2	STRAP					
	4	111-4836	1	CLIP					
	5	116-0118	1	CLIP					
	6	8T-4121	1	WASHER					
	7	8T-4195	1	BOLT (L=30mm)					

H94649E 07

251-0429 BATTERY & WIRING GP (3/6)

ELECTRICAL AND STARTING SYSTEM

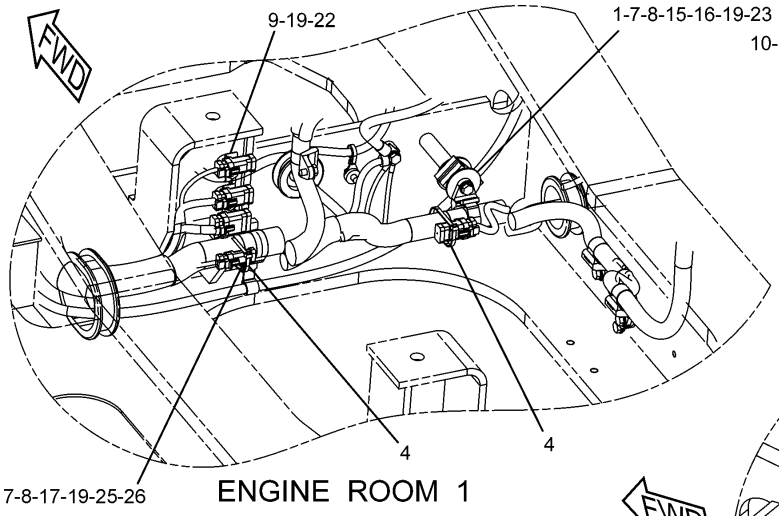

ENGINE ROOM 1

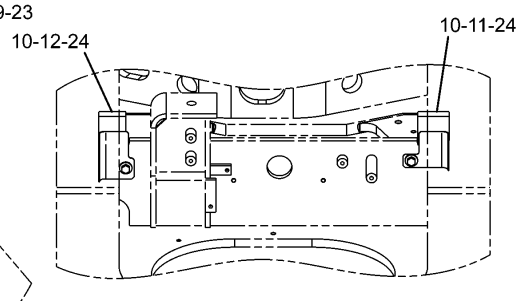

ENGINE ROOM-COVER

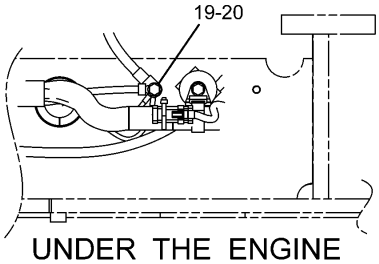

UNDER THE ENGINE

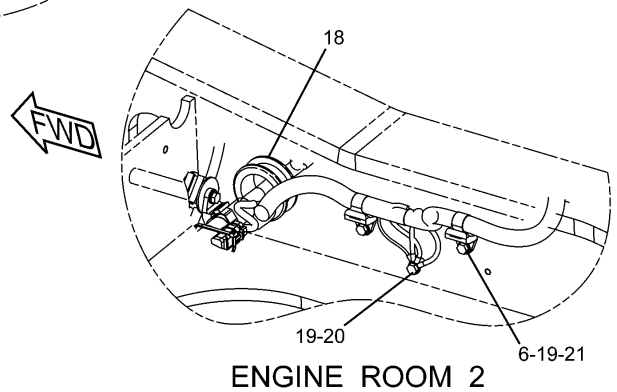

ENGINE ROOM 2

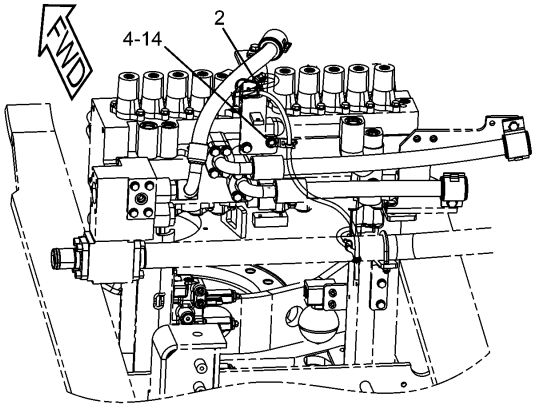

CONTROL VALVE

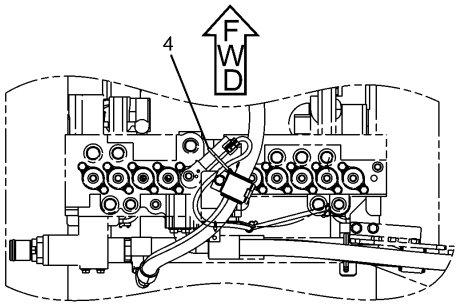

TOP VIEW
(CONTROL VALVE)

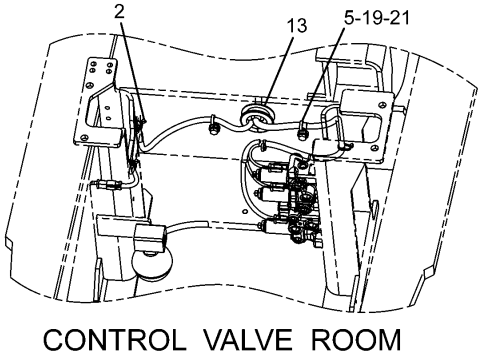

CONTROL VALVE ROOM

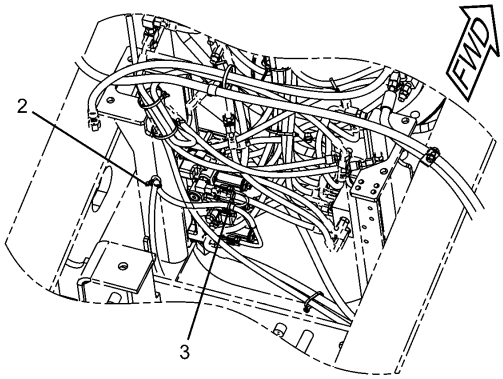

CONTROL VALVE SUPPORT

H94650E 07

251-0429 BATTERY & WIRING GP (4/6)

ELECTRICAL AND STARTING SYSTEM

NOTE	No.	PART No.	QTY	PART NAME	NOTE	No.	PART No.	QTY	PART NAME
	1	2G-8767	2	WASHER					
	2	3S-2093	4	STRAP					
	3	7I-2673	1	STRAP					
	4	7K-1181	4	STRAP					
	5	111-4836	2	CLIP					
	6	111-4837	2	CLIP					
	7	111-4838	2	CLIP					
	8	111-4839	2	STRAP					
	9	116-0118	3	CLIP					
	10	8T-4179	2	BOLT (L=20mm)					
	11	250-5072	1	SHEET AS					
		250-5073	1	INSULATION					
	12	250-5075	1	SHEET AS					
		250-5076	1	INSULATION					
	13	251-0464	1	GROMMET					
	14	4P-7428	1	CLIP					
	15	6G-2256	1	CLAMP					
	16	6G-2263	1	SPACER					
	17	6K-8178	1	CLIP					
	18	7Y-8165	1	GROMMET					
	19	8T-4121	10	WASHER					
	20	8T-4136	2	BOLT (L=25mm)					
	21	8T-4137	4	BOLT (L=20mm)					
	22	8T-4191	2	BOLT (L=16mm)					
	23	8T-6466	1	BOLT (L=60mm)					
	24	5P-1076	2	WASHER					
	25	091-9035	1	SPACER					
	26	8T-4182	1	BOLT (L=45mm)					

H94650E 07

251-0429 BATTERY & WIRING GP (4/6)

ELECTRICAL AND STARTING SYSTEM

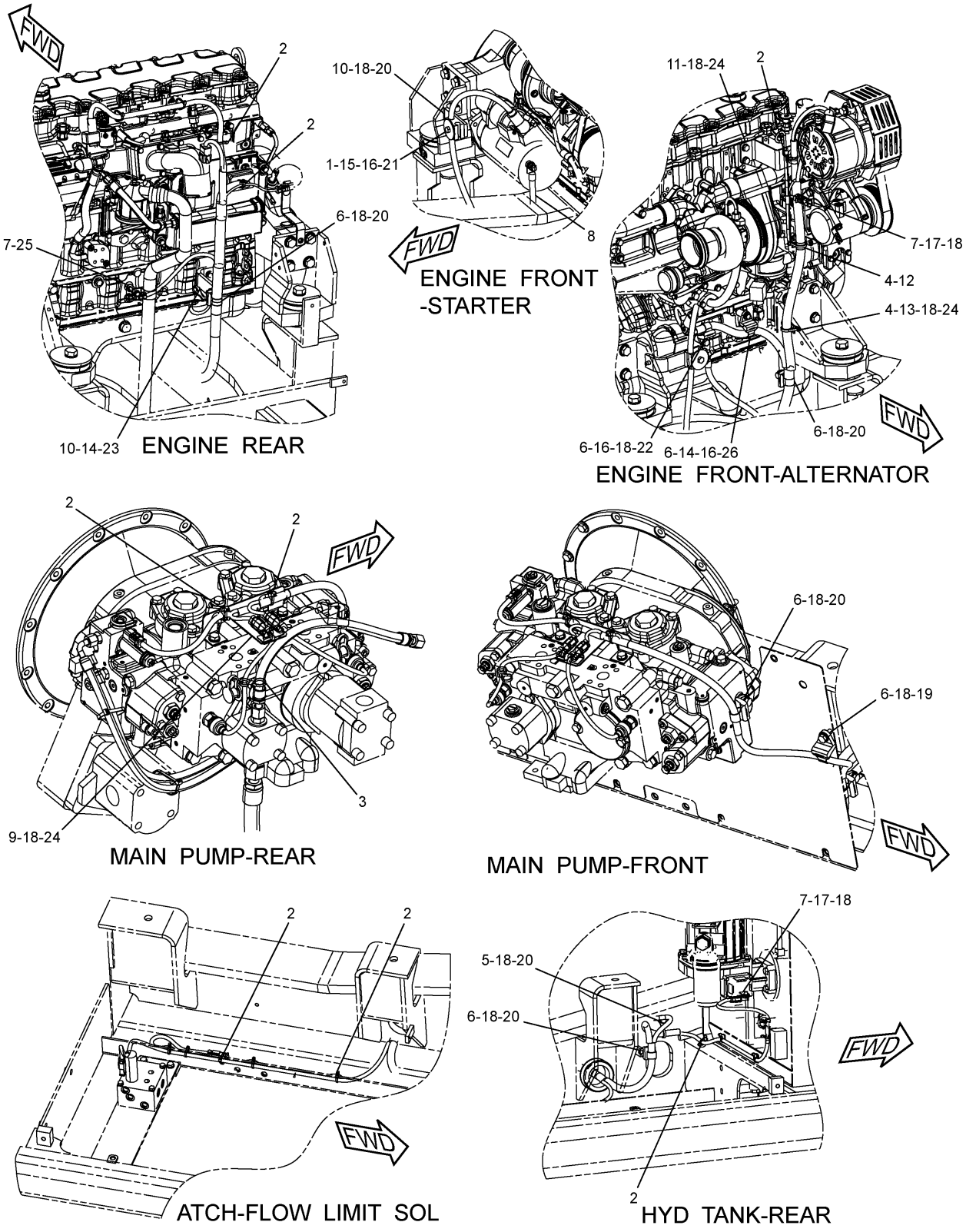

H94651E 07

251-0429 BATTERY & WIRING GP (5/6)

ELECTRICAL AND STARTING SYSTEM

NOTE	No.	PART No.	QTY	PART NAME	NOTE	No.	PART No.	QTY	PART NAME
	1	2G-8767	1	WASHER					
	2	3S-2093	16	STRAP					
	3	7I-2673	1	STRAP					
	4	7K-1181	2	STRAP					
	5	111-4836	1	CLIP					
	6	111-4837	7	CLIP					
	7	116-0118	3	CLIP					
	8	140-0860	1	STRAP AS					
	9	170-9336	1	BRACKET AS					
	10	234-1051	2	BRACKET					
	11	238-2529	1	BRACKET AS					
	12	132-5789	1	CLIP					
	13	4P-7581	1	CLIP					
	14	5P-4116	2	WASHER					
	15	6G-2256	1	CLAMP					
	16	6G-2263	3	SPACER					
	17	7X-2621	2	BOLT (L=12mm)					
	18	8T-4121	15	WASHER					
	19	8T-4136	1	BOLT (L=25mm)					
	20	8T-4137	6	BOLT (L=20mm)					
	21	8T-4182	1	BOLT (L=45mm)					
	22	8T-4185	1	BOLT (L=50mm)					
	23	8T-4189	1	BOLT (L=20mm)					
	24	8T-4191	5	BOLT (L=16mm)					
	25	8T-6869	1	BOLT (L=60mm)					
	26	8T-6912	1	BOLT (L=50mm)					

H94651E 07

251-0429 BATTERY & WIRING GP (5/6)

ELECTRICAL AND STARTING SYSTEM

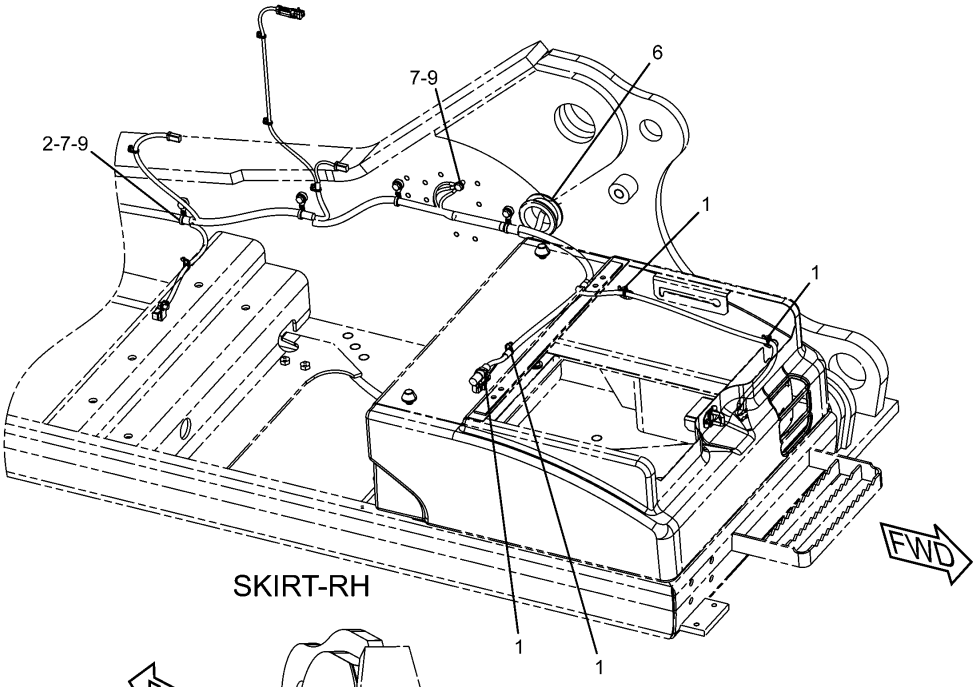

SKIRT-RH

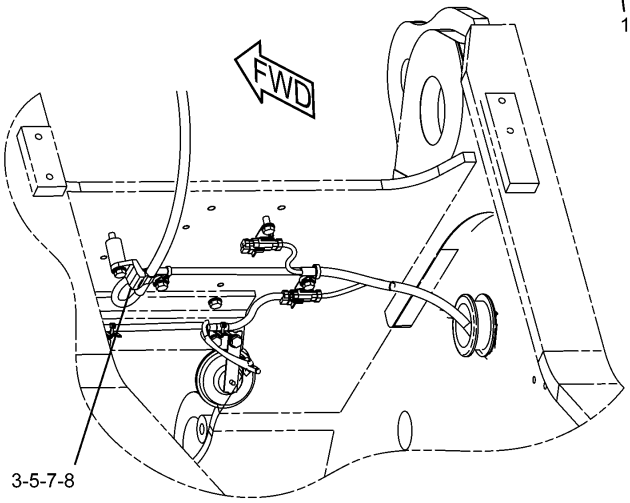

HORN AROUND

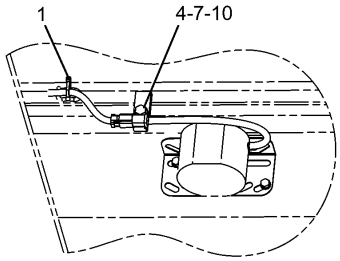

ATCH-TRAVEL ALARM

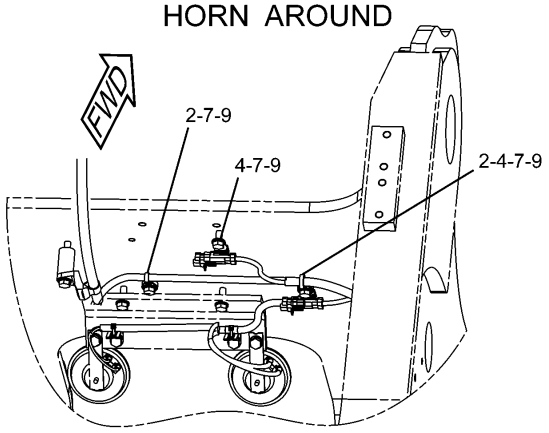

HORN AROUND 2

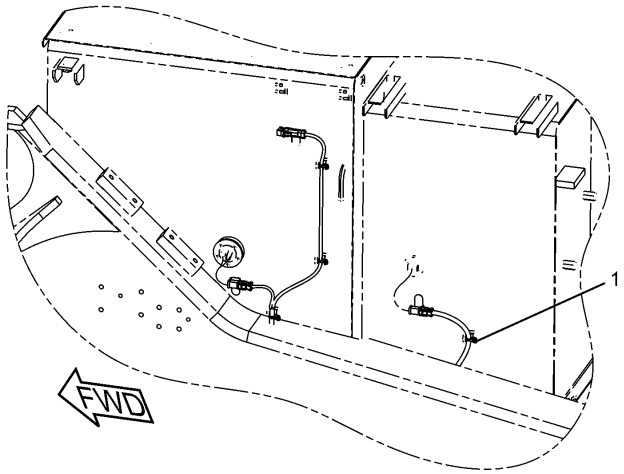

FUEL TANK & HYD TANK

H94652E 07

251-0429 BATTERY & WIRING GP (6/6)

ELECTRICAL AND STARTING SYSTEM

NOTE	No.	PART No.	QTY	PART NAME	NOTE	No.	PART No.	QTY	PART NAME
	1	3S-2093	9	STRAP					
	2	111-4836	6	CLIP					
	3	111-4837	1	CLIP					
	4	116-0118	3	CLIP					
	5	4I-7889	1	SPACER					
	6	7Y-8165	1	GROMMET					
	7	8T-4121	10	WASHER					
	8	8T-5005	1	BOLT (L=70mm)					
	9	8T-4137	8	BOLT (L=20mm)					
	10	8T-4191	1	BOLT (L=16mm)					

H94652E 07

251-0429 BATTERY & WIRING GP (6/6)

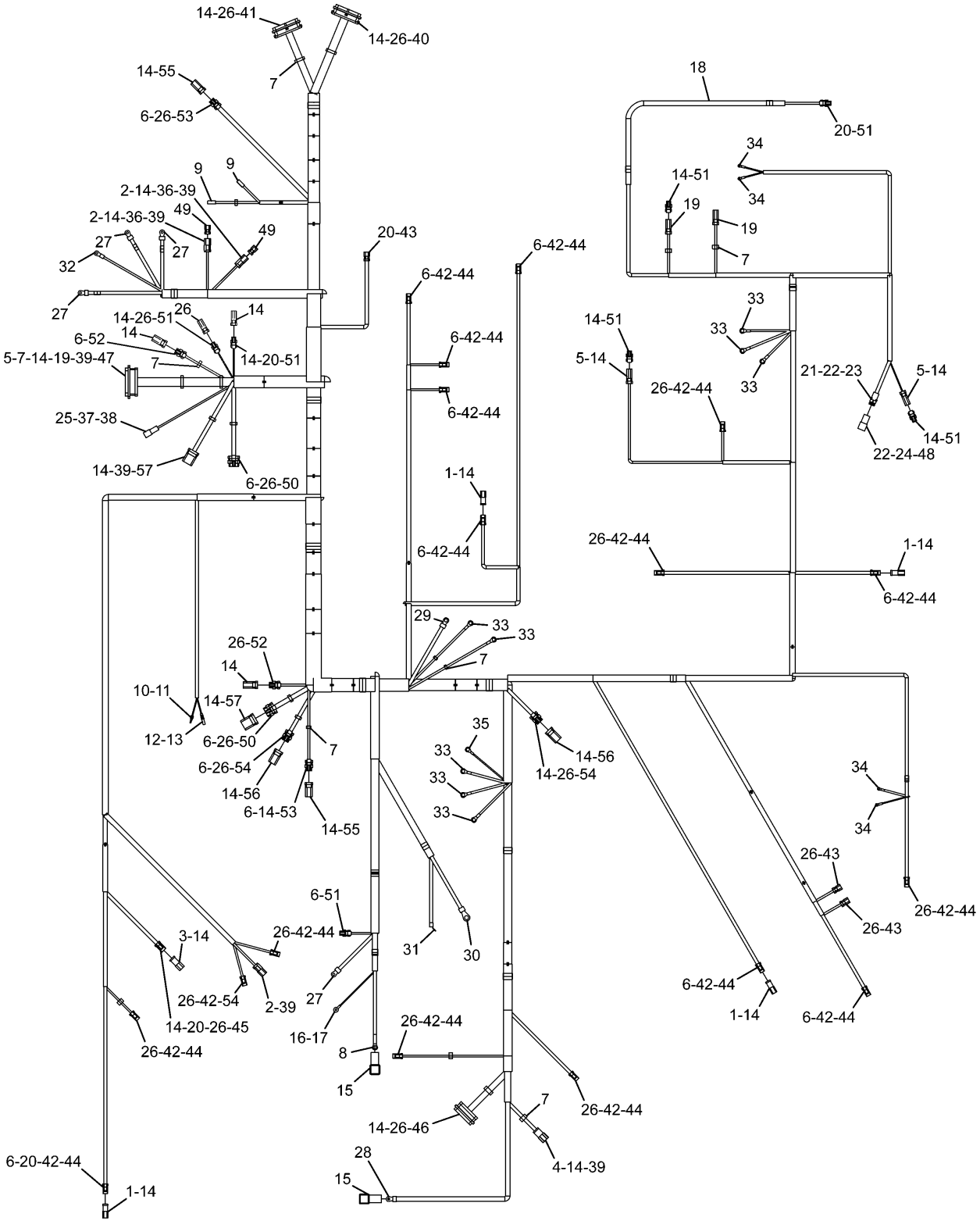

H93973E 00

283-2932 HARNESS AS

Part of 251-0429-Page125

ELECTRICAL AND STARTING SYSTEM

NOTE	No.	PART No.	QTY	PART NAME
	1	102-8802	4	RECEPTACLE KIT
	2	102-8803	3	RECEPTACLE KIT
	3	102-8804	1	RECEPTACLE KIT
	4	102-8806	1	RECEPTACLE KIT
	5	186-3735	8	PIN
	6	186-3736	47	SOCKET
	7	3S-2093	19	STRAP
	8	3T-4688	1	TERMINAL
	9	9X-0196	2	TERMINAL AS
	10	7Y-3962	1	TERMINAL
	11	7Y-3964	1	TUBE
	12	7Y-3963	1	TERMINAL
	13	7Y-3965	1	TUBE
	14	8T-8737	173	PLUG
	15	8T-8827	2	BOOT
	16	8D-7529	1	WIRE AS
	17	9X-4998	1	SOCKET
E	18	103-2529		HOSE…(75cm)
	19	9W-0852	17	PIN
	20	9W-0844	8	SOCKET
	21	116-0126	1	HOUSING
	22	116-0128	2	SEAL
	23	116-0255	2	TERMINAL
	24	121-1038	1	HOUSING
	25	121-1039	1	TERMINAL
	26	126-1768	140	SOCKET
	27	9G-4343	4	TERMINAL
	28	5P-3454	1	TERMINAL
	29	9G-4336	1	TERMINAL
	30	9G-4344	1	TERMINAL
	31	2L-8049	1	TERMINAL
	32	2L-8050	1	TERMINAL
	33	2L-8069	8	TERMINAL
	34	2L-8075	4	TERMINAL
	35	2L-8079	1	TERMINAL
	36	133-0975	2	WEDGE
	37	134-3295	1	HOUSING
	38	134-3297	1	SEAL
	39	9X-3401	57	PIN
	40	153-2620	1	PLUG AS
	41	153-2630	1	PLUG AS
	42	155-2261	17	WEDGE
	43	155-2260	3	PLUG KIT
	44	155-2270	17	PLUG KIT
	45	155-2271	1	PLUG KIT
	46	160-7689	1	PLUG AS
	47	163-6637	1	RECEPTACLE AS
	48	163-6773	2	PLUG
	49	174-3016	2	PLUG AS
	50	230-4009	2	PLUG AS
	51	230-4011	7	PLUG AS
	52	230-4013	2	PLUG AS
	53	230-5010	2	PLUG AS
	54	231-2295	2	PLUG AS
	55	243-4508	2	RECEPTACLE AS
	56	243-4509	2	RECEPTACLE AS
	57	243-4510	2	RECEPTACLE AS

E—ORDER BY THE CENTIMETER

H93973E 00

283-2932 HARNESS AS

Part of 251-0429-Page125

ELECTRICAL AND STARTING SYSTEM



NOTE	No.	PART No.	QTY	PART NAME
	1	9G-0005	1	COVER
	2	8C-5918	1	TERMINAL AS
	3	9G-0002	1	COVER
	4	8T-9756	1	TERMINAL AS

H81970E 01

170-6929 CABLE AS

Part of 251-0429-Page127,251-0440-Page189

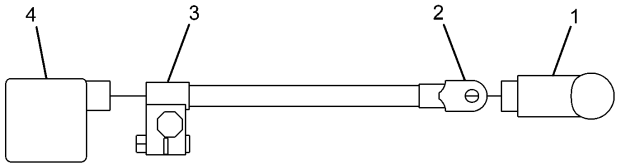

NOTE	No.	PART No.	QTY	PART NAME
	1	9G-8909	1	COVER
	2	1S-7252	1	TERMINAL
	3	8T-9757	1	TERMINAL AS
	4	9G-0003	1	COVER

H89341E 02

231-1827 CABLE AS

Part of 251-0429-Page127

ELECTRICAL AND STARTING SYSTEM

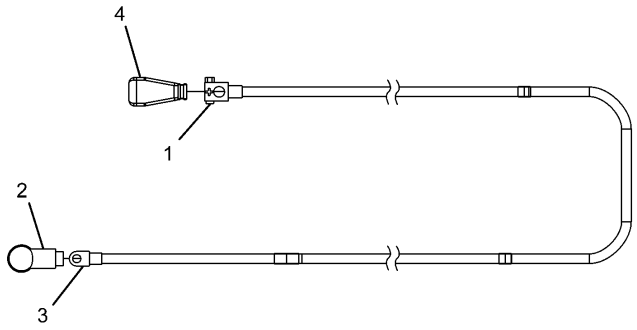

NOTE	No.	PART No.	QTY	PART NAME
	1	3S-6049	1	TERMINAL AS
		1M-6119	1	BOLT
		1M-6120	1	NUT
	2	8N-0869	1	COVER
	3	1S-7251	1	TERMINAL
	4	8N-1725	1	COVER

H94653E 01

251-0451 CABLE AS

Part of 251-0429-Page127

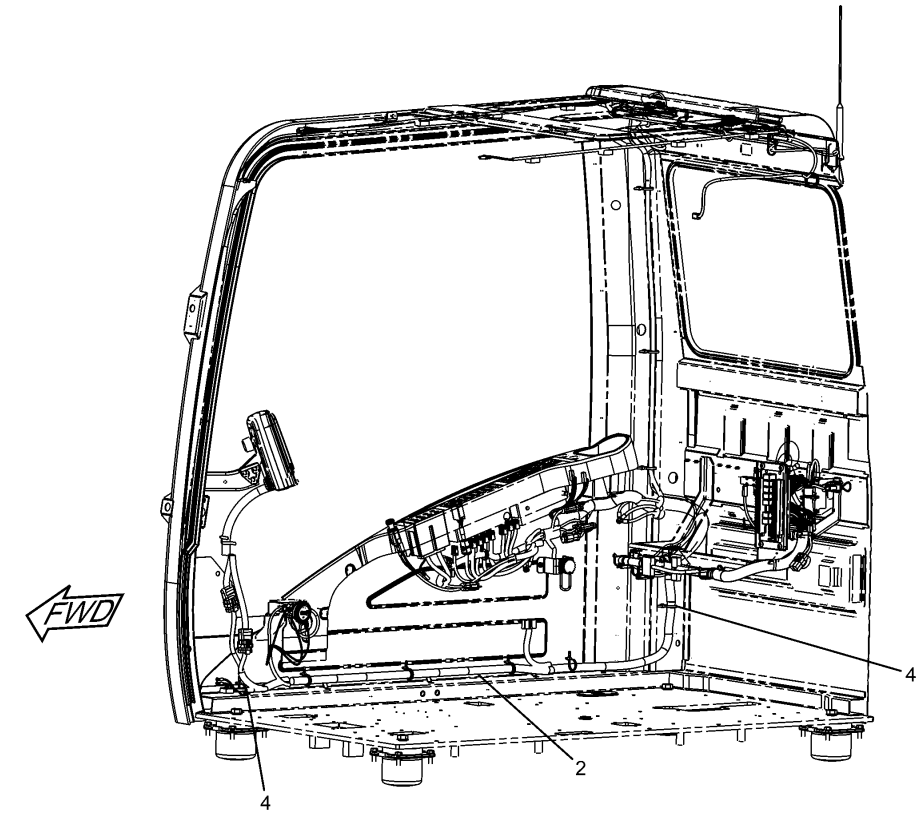

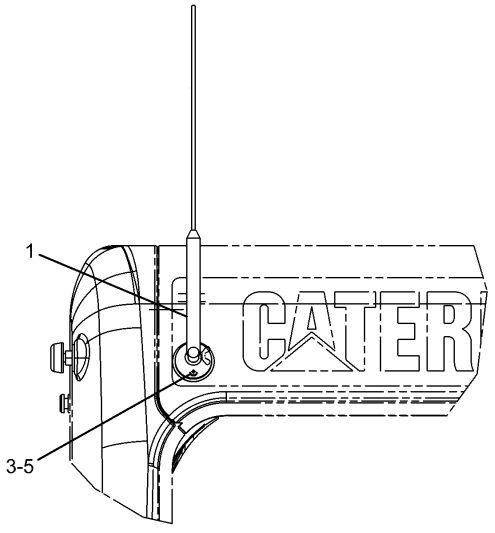

A

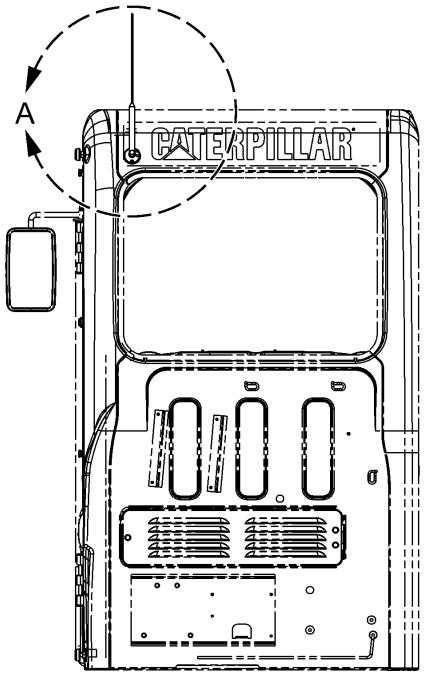

REAR VIEW

H91319E 04

251-0432 WIRING GP-CAB (1/4)
267-7591-Page148

ELECTRICAL AND STARTING SYSTEM

NOTE	No.	PART No.	QTY	PART NAME	NOTE	No.	PART No.	QTY	PART NAME
	1	259-4883	1	ANTENNA AS					
		259-5081	1	ROD					
		259-5082	1	CABLE AS					
Y	2	267-7591	1	HARNESS AS					
	3	096-6166	2	WASHER					
	4	163-6795	6	STRAP					
	5	6V-9672	2	SCREW					

Y—SEE SEPARATE ILLUSTRATION

H91319E 04

251-0432 WIRING GP-CAB (1/4)

267-7591-Page148

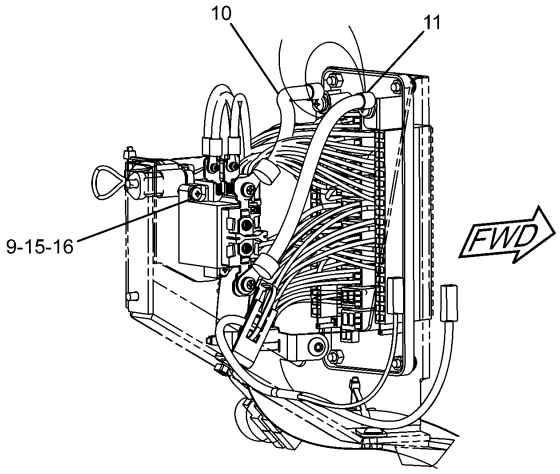

FRONT VIEW OF THE MAIN RELAY

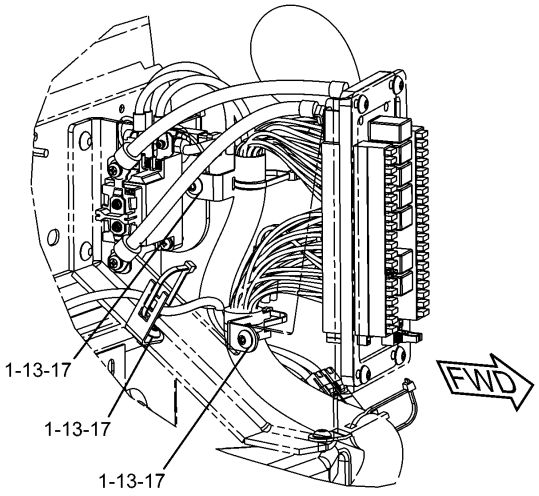

LEFT BACK VIEW

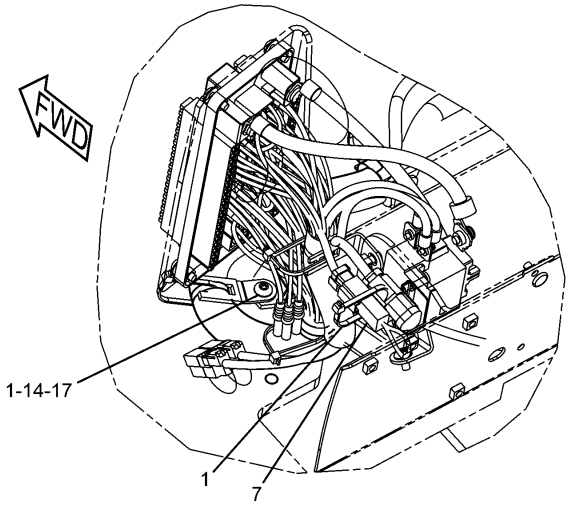

BACK VIEW OF THE FUSE BASE

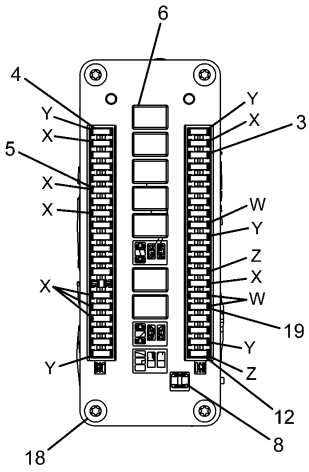

FRONT VIEW OF THE FUSE BASE

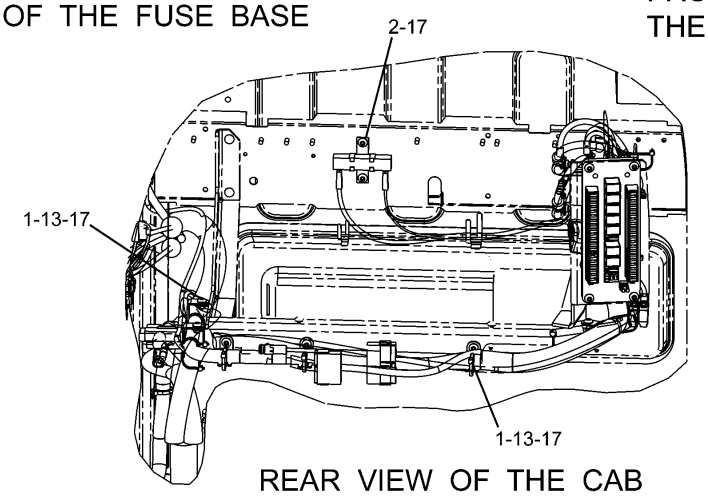

REAR VIEW OF THE CAB

H91320E 04

251-0432 WIRING GP-CAB (2/4)

ELECTRICAL AND STARTING SYSTEM

NOTE	No.	PART No.	QTY	PART NAME	NOTE	No.	PART No.	QTY	PART NAME
	1	3S-2093	10	STRAP					
	2	102-8016	1	RESISTOR AS					
	3	113-8490	22	FUSE (10A)					
	4	113-8491	5	FUSE (15A)					
	5	141-2759	8	FUSE (5A)					
	6	161-3128	7	RELAY					
	7	163-6758	1	WIRE AS					
		102-8802	1	RECEPTACLE KIT					
		186-3735	2	PIN					
	8	170-6888	1	TOOL					
	9	213-0772	1	SWITCH AS					
	10	238-2390	1	CABLE AS					
		9G-4343	2	TERMINAL					
	11	238-2391	1	CABLE AS					
		9G-4343	2	TERMINAL					
	12	124-3548	2	FUSE (30A)					
	13	132-5789	8	CLIP					
	14	4P-7581	1	CLIP					
	15	8T-0328	2	WASHER					
	16	8T-4127	2	SCREW					
	17	9X-2042	11	SCREW					
	18	9X-2044	4	SCREW					
	19	113-8493	3	FUSE (25A)					

H91320E 04

251-0432 WIRING GP-CAB (2/4)

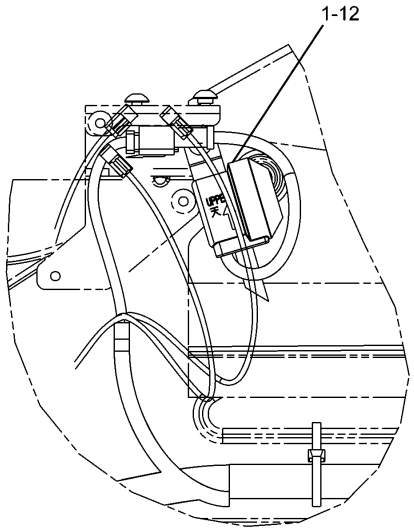

FRONT VIEW OF
THE FAULT ALARM

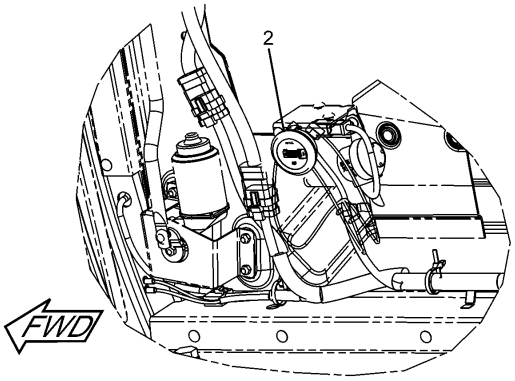

FRONT RIGHT OF THE CAB

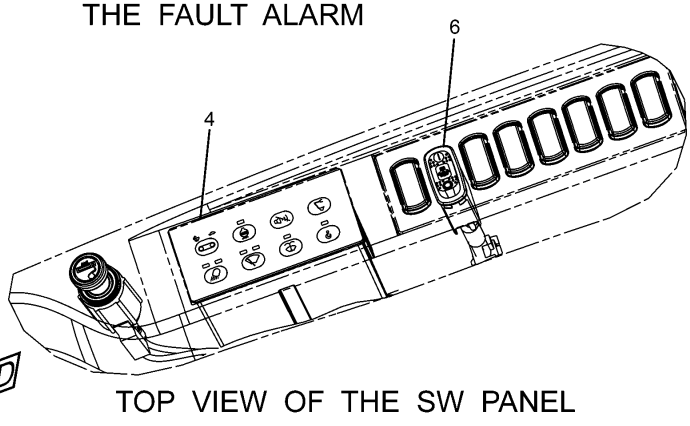

TOP VIEW OF THE SW PANEL

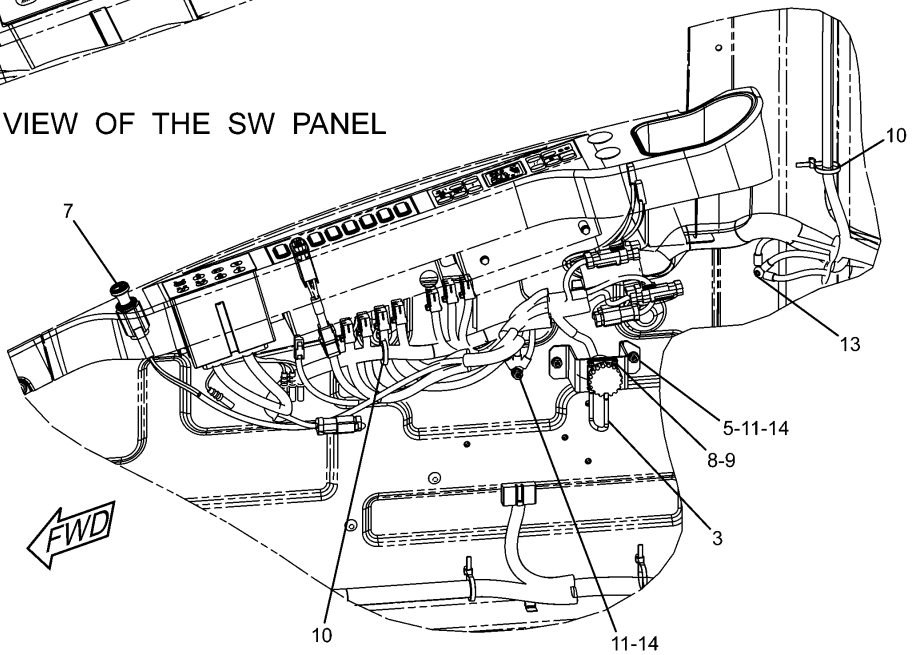

RIGHT SIDE OF THE CAB

H91321E 04

251-0432 WIRING GP-CAB (3/4)
132-1829-Page154

ELECTRICAL AND STARTING SYSTEM

NOTE	No.	PART No.	QTY	PART NAME	NOTE	No.	PART No.	QTY	PART NAME
Y	1	132-1829	1	ALARM GP					
	2	121-1241	1	METER KIT					
	3	167-3593	1	STRAP					
	4	227-7575	1	PANEL AS					
	5	234-1097	1	BRACKET					
	6	238-2212	1	SWITCH AS					
		167-3542	1	CONNECTOR					
		167-3543	5	TERMINAL					
	7	238-2318	1	LIGHTER AS					
	8	095-0723	3	SCREW					
	9	096-5962	3	WASHER					
	10	163-6795	2	STRAP					
	11	5C-2890	3	NUT					
	12	9X-2042	1	SCREW					
	13	9X-2044	1	SCREW					
	14	9X-8256	3	WASHER					

Y—SEE SEPARATE ILLUSTRATION

H91321E 04

251-0432 WIRING GP-CAB (3/4)

132-1829-Page154

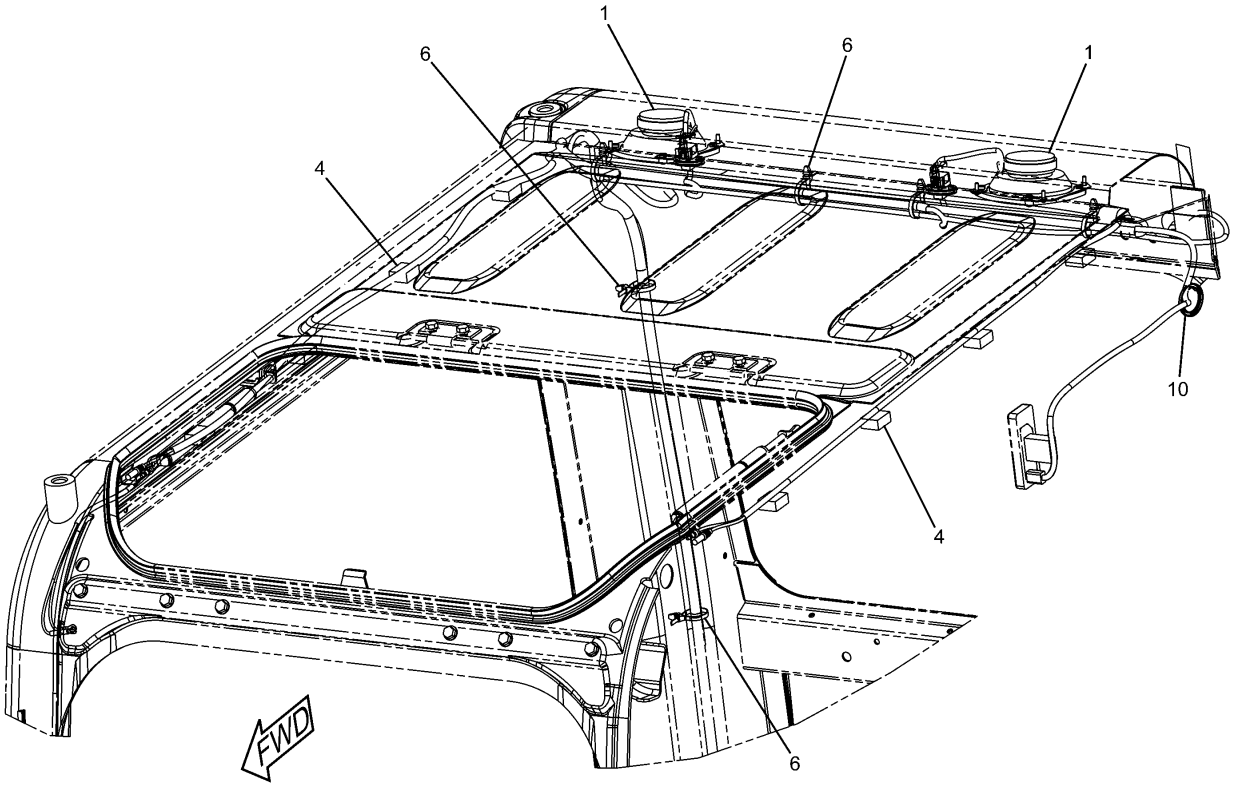

TOP VIEW OF THE CAB

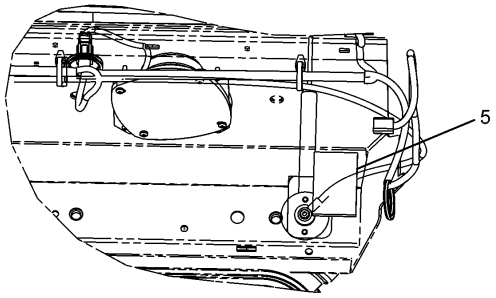

INSIDE VIEW OF THE CAB

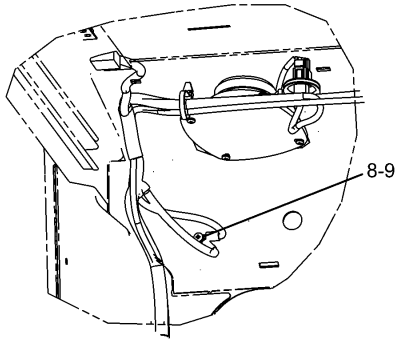

GROUND OF THE UPPER RIGHT

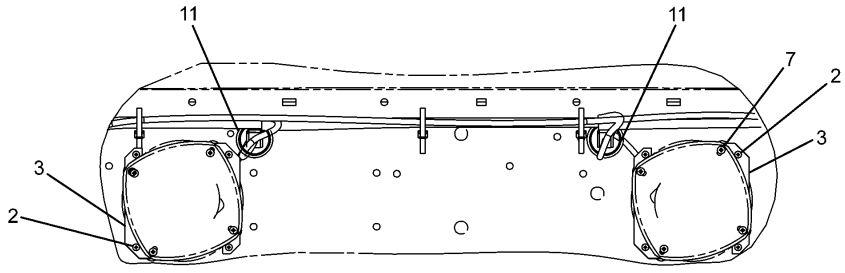

FRONT VIEW OF THE SPEAKER

H91322E 04

251-0432 WIRING GP-CAB (4/4)

ELECTRICAL AND STARTING SYSTEM

NOTE	No.	PART No.	QTY	PART NAME	NOTE	No.	PART No.	QTY	PART NAME
	1	7Y-5505	2	SPEAKER AS					
		7Y-3951	2	TERMINAL					
	2	099-7127	8	SCREW					
	3	116-0210	4	BRACKET AS					
	4	245-7760	8	INSULATION					
	5	251-0637	1	INSULATION					
	6	163-6795	6	STRAP					
	7	6V-5210	8	SCREW					
	8	8T-0328	1	WASHER					
	9	8T-6693	1	SCREW					
E	10	101-2846		GUARD…(9.5cm)					
E	11	101-2846		GUARD…(9cm × 2)					

E—ORDER BY THE CENTIMETER

H91322E 04

251-0432 WIRING GP-CAB (4/4)

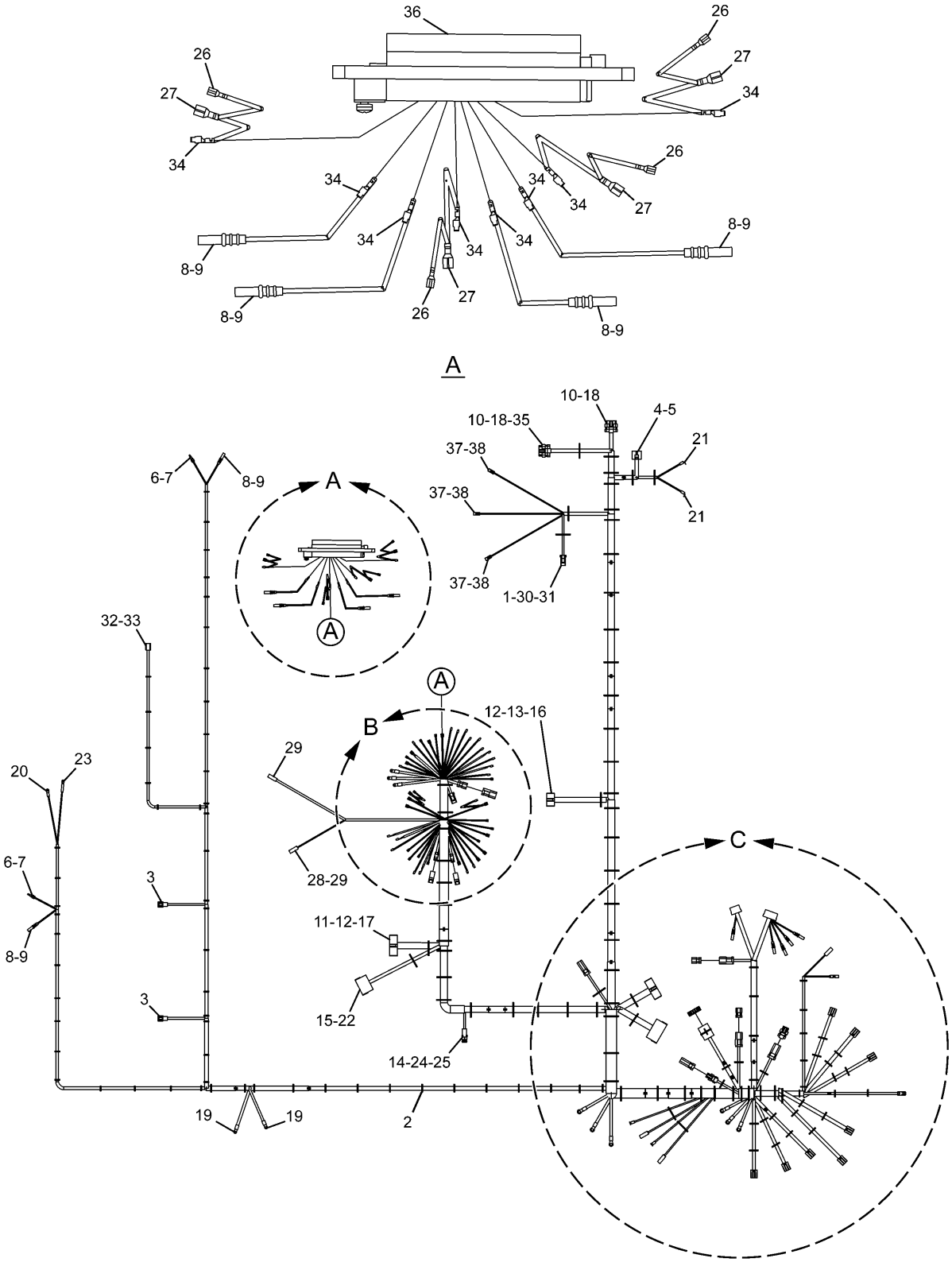

267-7591 HARNESS AS (1/3)
Part of 251-0432-Page141

ELECTRICAL AND STARTING SYSTEM

NOTE	No.	PART No.	QTY	PART NAME	NOTE	No.	PART No.	QTY	PART NAME
	1	186-3736	2	SOCKET					
	2	3S-2093	44	STRAP					
	3	7Y-3950	4	TERMINAL					
	4	7Y-3951	5	TERMINAL					
	5	7Y-3958	1	CONNECTOR					
	6	7Y-3962	2	TERMINAL					
	7	7Y-3964	2	TUBE					
	8	7Y-3963	6	TERMINAL					
	9	7Y-3965	6	TUBE					
	10	8T-8737	9	PLUG					
	11	102-7964	1	CONNECTOR					
	12	102-7965	31	TERMINAL					
	13	111-4816	1	CONNECTOR					
	14	116-0255	1	TERMINAL					
	15	121-1173	5	TERMINAL					
	16	125-4840	1	WEDGE					
	17	125-4841	1	WEDGE					
	18	126-1768	15	SOCKET					
	19	2L-8066	2	TERMINAL					
	20	2L-8075	3	TERMINAL					
	21	2L-8076	2	TERMINAL					
	22	128-8950	1	CONNECTOR					
	23	5P-2321	1	TERMINAL					
	24	134-3296	1	HOUSING					
	25	134-3297	1	SEAL					
	26	149-5070	4	TERMINAL					
	27	149-5071	4	TERMINAL					
	28	153-2602	3	CONNECTOR					
	29	153-2631	2	TERMINAL					
	30	155-2261	1	WEDGE					
	31	155-2270	1	PLUG KIT					
	32	167-3630	1	CONNECTOR					
	33	167-3631	2	TERMINAL					
	34	170-6891	8	TERMINAL					
	35	230-4009	1	PLUG AS					
	36	238-2319	1	BASE AS					
		9X-8256	2	WASHER					
		095-0742	2	SCREW					
		170-9394	40	TERMINAL					
	37	267-7629	3	CONNECTOR					
	38	267-7630	3	TERMINAL					

H91614E 01

267-7591 HARNESS AS (1/3)

Part of 251-0432-Page141

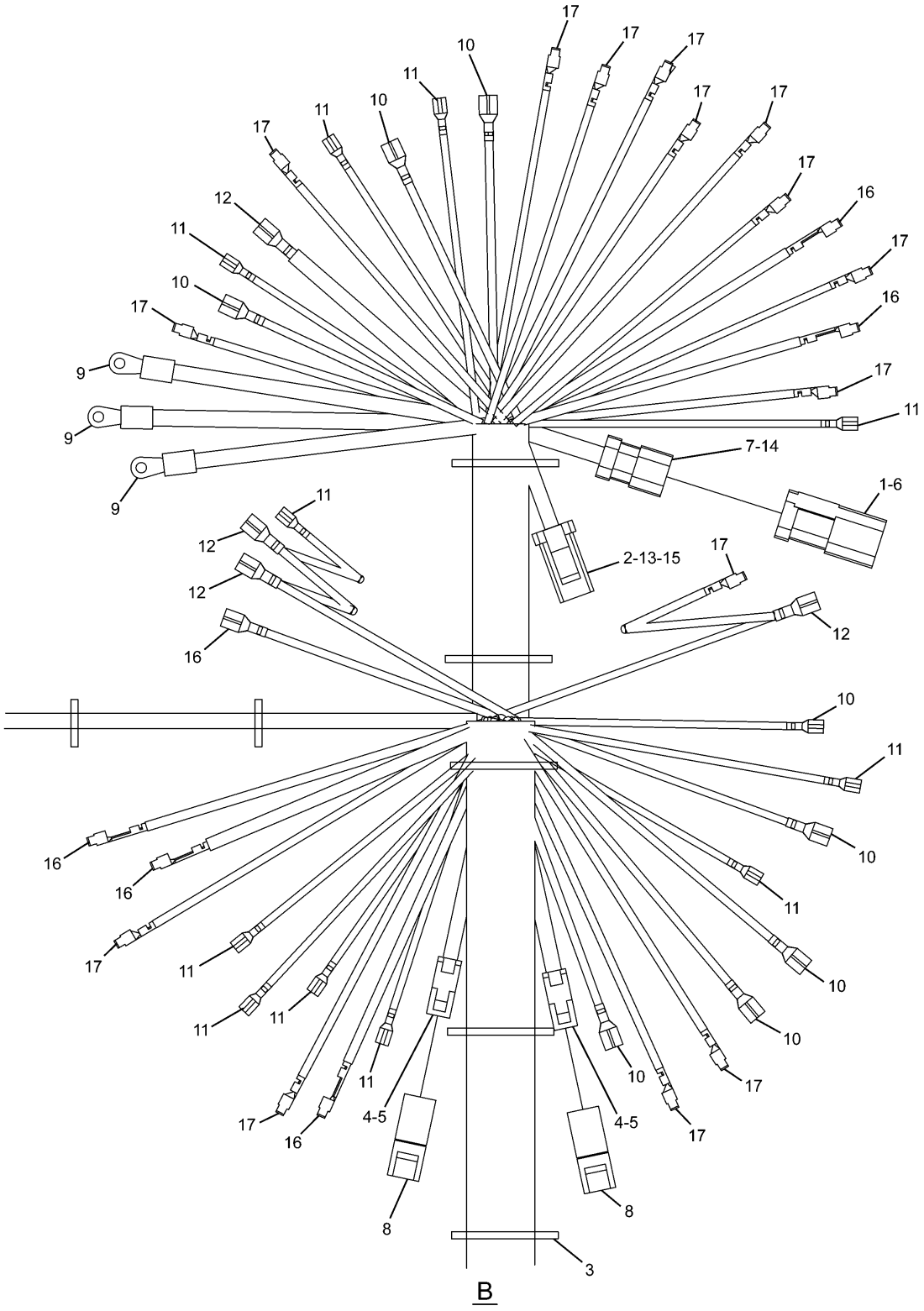

H91615E 01

267-7591 HARNESS AS (2/3)
Part of 251-0432-Page141

ELECTRICAL AND STARTING SYSTEM

NOTE	No.	PART No.	QTY	PART NAME	NOTE	No.	PART No.	QTY	PART NAME
	1	102-8803	1	RECEPTACLE KIT					
	2	186-3736	2	SOCKET					
	3	3S-2093	7	STRAP					
	4	7Y-3951	4	TERMINAL					
	5	7Y-3952	2	CONNECTOR					
	6	8T-8737	3	PLUG					
	7	9W-0844	3	SOCKET					
	8	121-1022	2	DIODE					
	9	2L-8065	3	TERMINAL					
	10	149-5069	8	TERMINAL					
	11	149-5070	12	TERMINAL					
	12	149-5071	4	TERMINAL					
	13	155-2261	1	WEDGE					
	14	155-2260	1	PLUG KIT					
	15	155-2270	1	PLUG KIT					
	16	170-6890	5	TERMINAL					
	17	170-6891	15	TERMINAL					

H91615E 01

267-7591 HARNESS AS (2/3)

Part of 251-0432-Page141

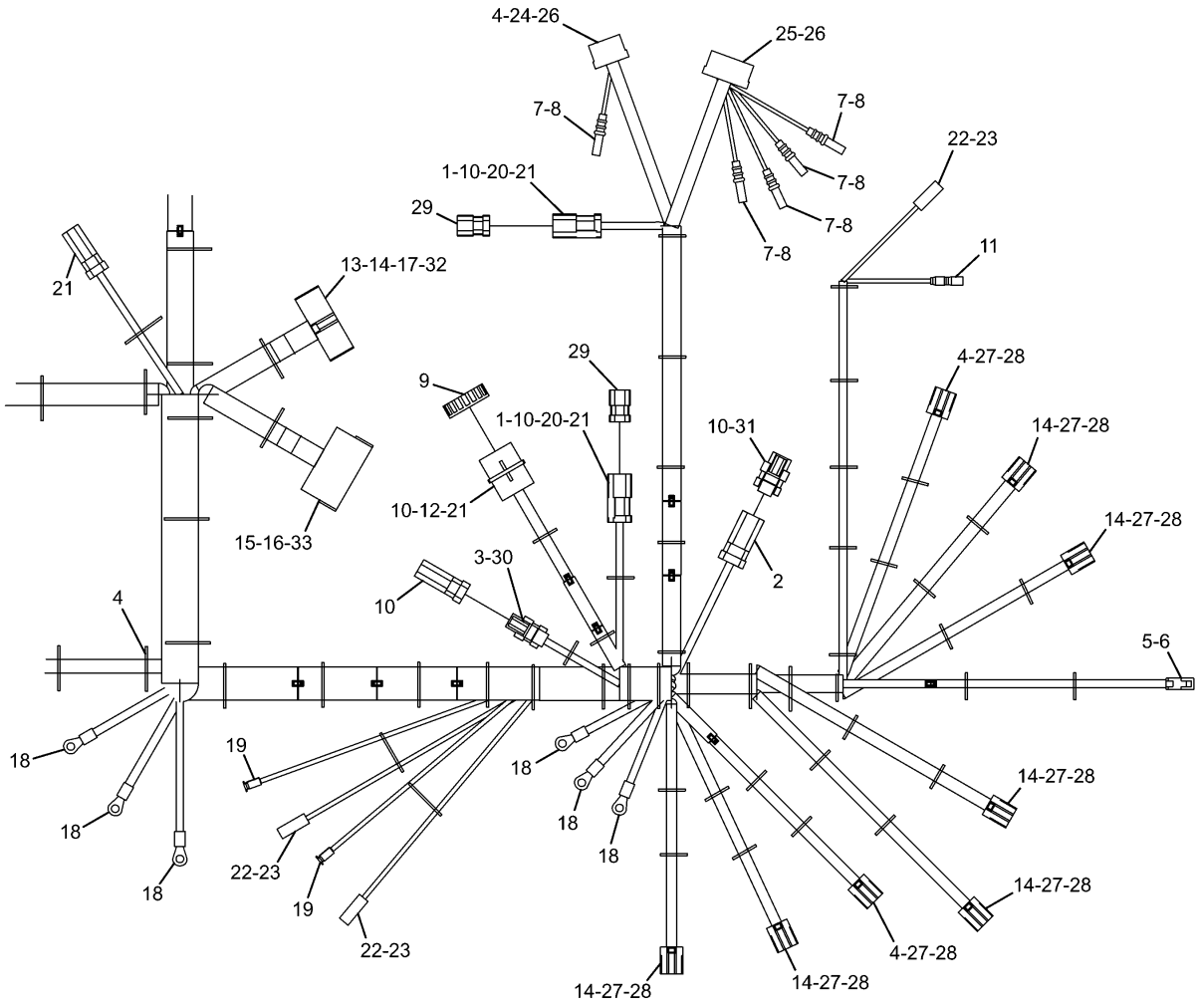

H91616E 01

267-7591 HARNESS AS (3/3)
Part of 251-0432-Page141

ELECTRICAL AND STARTING SYSTEM

NOTE	No.	PART No.	QTY	PART NAME	NOTE	No.	PART No.	QTY	PART NAME
	1	102-8803	2	RECEPTACLE KIT					
	2	186-3735	3	PIN					
	3	186-3736	2	SOCKET					
	4	3S-2093	59	STRAP					
	5	7Y-3951	2	TERMINAL					
	6	7Y-3952	1	CONNECTOR					
	7	7Y-3963	5	TERMINAL					
	8	7Y-3965	5	TUBE					
	9	8C-6354	1	CAP					
	10	8T-8737	10	PLUG					
	11	5P-6271	1	CONNECTOR AS					
	12	9W-1951	1	RECEPTACLE					
	13	102-7964	1	CONNECTOR					
	14	102-7965	48	TERMINAL					
	15	121-1168	1	CONNECTOR					
	16	121-1173	8	TERMINAL					
	17	125-4841	1	WEDGE					
	18	2L-8067	6	TERMINAL					
	19	2L-8075	1	TERMINAL					
	20	133-0975	2	WEDGE					
	21	9X-3401	12	PIN					
	22	153-2602	2	CONNECTOR					
	23	153-2631	3	TERMINAL					
	24	163-6659	1	CONNECTOR					
	25	163-6699	1	CONNECTOR					
	26	163-6790	23	TERMINAL					
	27	163-6803	8	CONNECTOR					
	28	167-3487	8	WEDGE					
	29	174-3016	2	PLUG AS					
	30	230-4011	1	PLUG AS					
	31	230-4013	1	PLUG AS					
	32	238-2363	6	TERMINAL					
	33	238-2366	10	TERMINAL					

H91616E 01

267-7591 HARNESS AS (3/3)

Part of 251-0432-Page141

ELECTRICAL AND STARTING SYSTEM

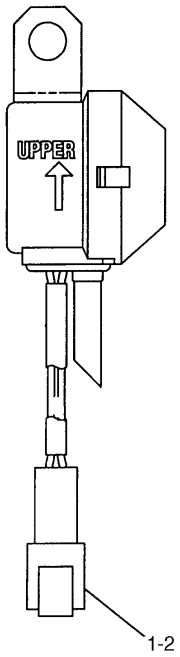

NOTE	No.	PART No.	QTY	PART NAME
	1	102-8802	1	RECEPTACLE KIT
	2	8T-8729	2	PIN

H84265E 01

132-1829 ALARM GP

Part of 251-0432-Page145

MEMORANDA

ELECTRICAL AND STARTING SYSTEM

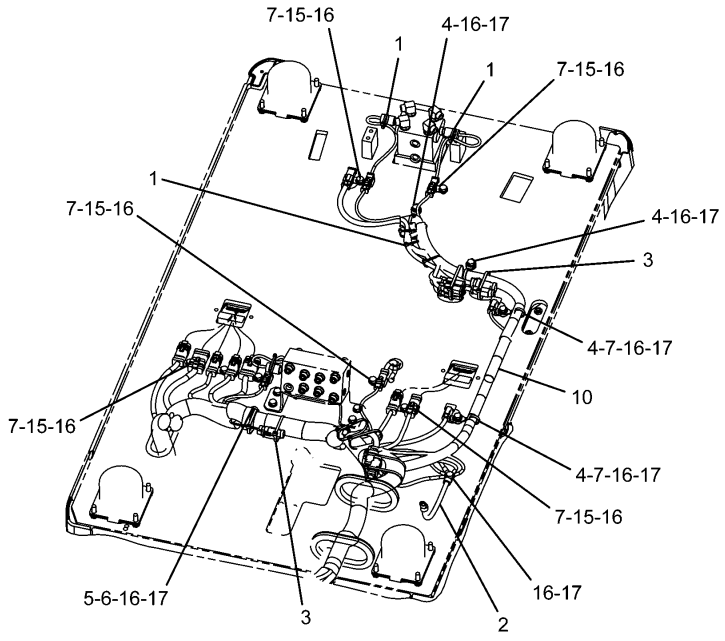

BOTTOM VIEW

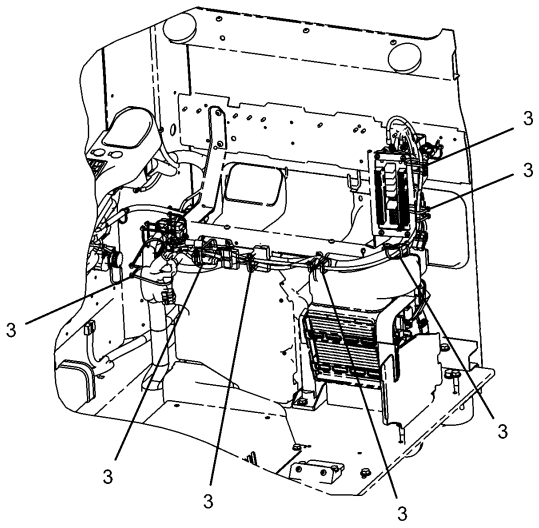

CAB LEFT SIDE

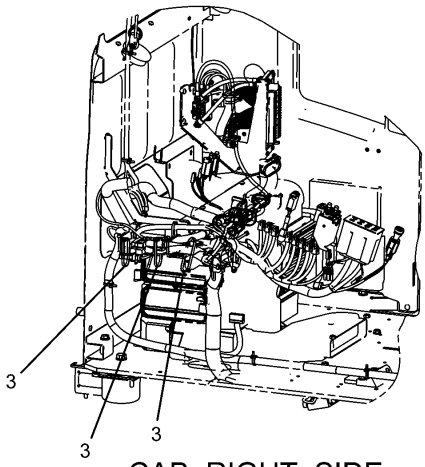

CAB RIGHT SIDE

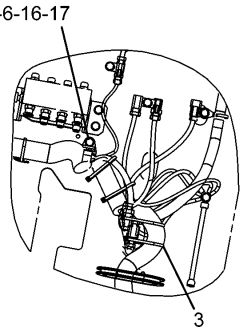

12V-7A CONVERTER

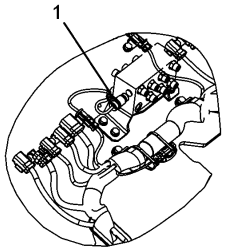

IMPLEMENT PRESS. SW

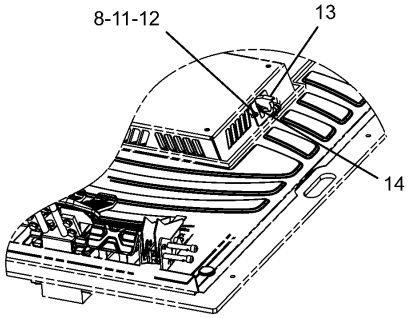

SECONDARY SHUTDOWN SW

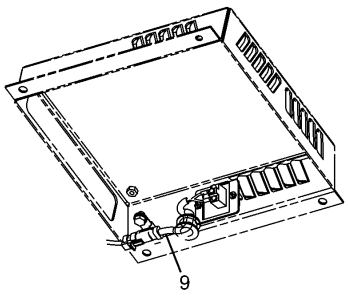

SECONDARY SHUTDOWN SW

H91235E 03

251-0430 WIRING GP-PLATFORM

267-7592-Page158,251-0299-Page160

ELECTRICAL AND STARTING SYSTEM

NOTE	No.	PART No.	QTY	PART NAME	NOTE	No.	PART No.	QTY	PART NAME
	1	3S-2093	6	STRAP					
	2	7G-1060	1	STRAP AS					
	3	7K-1181	18	STRAP					
	4	111-4836	4	CLIP					
	5	111-4838	2	CLIP					
	6	111-4839	2	STRAP					
	7	116-0118	14	CLIP					
	8	234-1122	1	COVER					
Y	9	251-0299	1	HARNESS AS					
Y	10	267-7592	1	HARNESS AS					
	11	095-0728	2	SCREW					
	12	096-6166	2	WASHER					
	13	3E-5169	1	GUARD					
	14	4D-1836	1	SWITCH					
	15	7X-2621	7	BOLT (L=12mm)					
	16	8T-4121	14	WASHER					
	17	8T-4137	7	BOLT (L=20mm)					

Y—SEE SEPARATE ILLUSTRATION

H91235E 03

251-0430 WIRING GP-PLATFORM

267-7592-Page158,251-0299-Page160

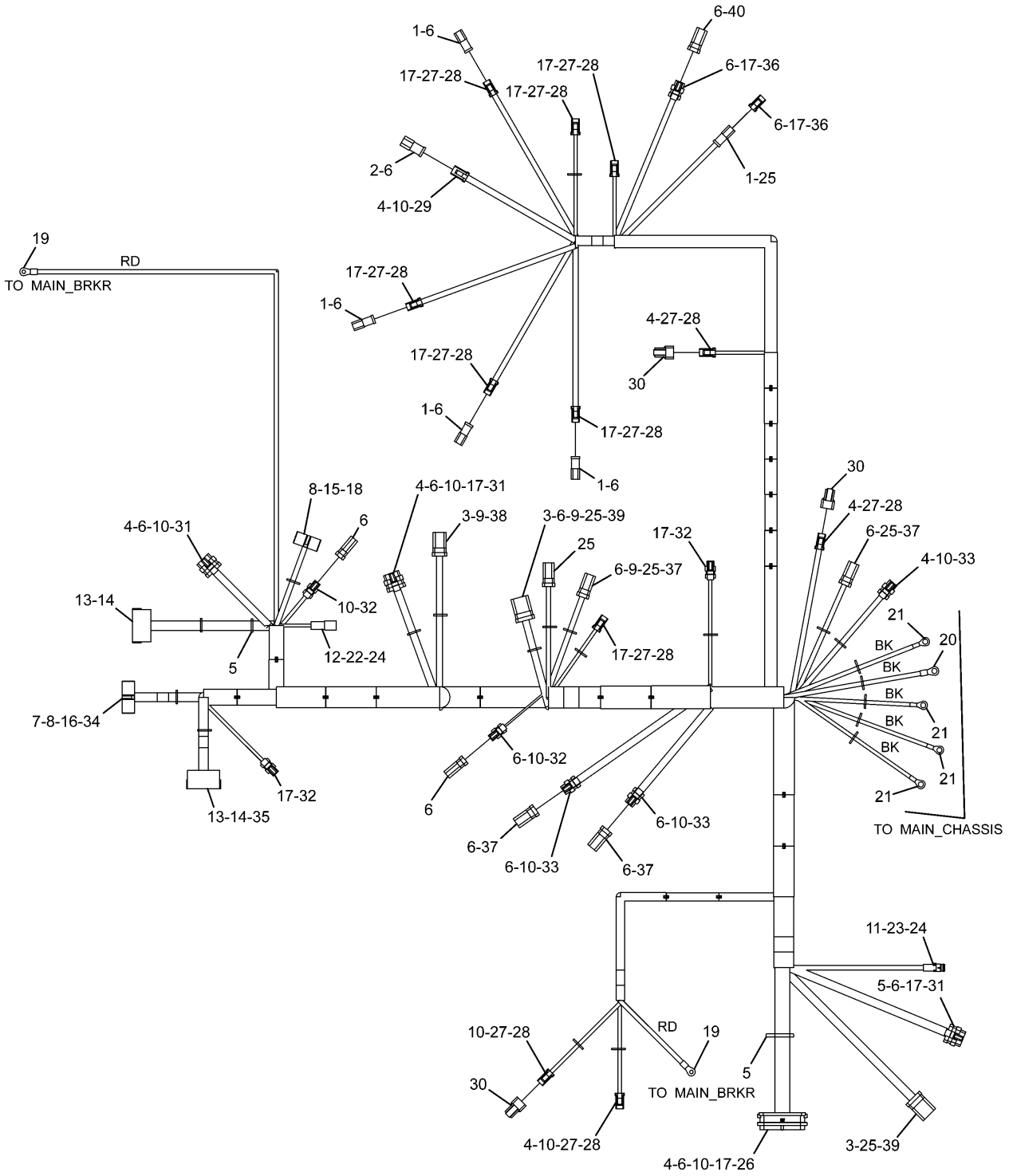

267-7592 HARNESS AS
Part of 251-0430-Page157

ELECTRICAL AND STARTING SYSTEM

NOTE	No.	PART No.	QTY	PART NAME	NOTE	No.	PART No.	QTY	PART NAME
	1	102-8802	5	RECEPTACLE KIT					
	2	102-8804	1	RECEPTACLE KIT					
	3	186-3735	13	PIN					
	4	186-3736	28	SOCKET					
	5	3S-2093	23	STRAP					
	6	8T-8737	55	PLUG					
	7	102-7964	1	CONNECTOR					
	8	102-7965	13	TERMINAL					
	9	9W-0852	7	PIN					
	10	9W-0844	40	SOCKET					
	11	116-0255	1	TERMINAL					
	12	121-1039	1	TERMINAL					
	13	121-1168	2	CONNECTOR					
	14	121-1173	33	TERMINAL					
	15	125-4766	1	CONNECTOR					
	16	125-4841	1	WEDGE					
	17	126-1768	66	SOCKET					
	18	128-8952	1	WEDGE					
	19	2L-8050	2	TERMINAL					
	20	2L-8052	1	TERMINAL					
	21	2L-8069	4	TERMINAL					
	22	134-3295	1	HOUSING					
	23	134-3296	1	HOUSING					
	24	134-3297	2	SEAL					
	25	9X-3401	25	PIN					
	26	153-2620	1	PLUG AS					
	27	155-2261	11	WEDGE					
	28	155-2270	12	PLUG KIT					
	29	155-2271	1	PLUG KIT					
	30	197-4385	3	DIODE					
	31	230-4009	3	PLUG AS					
	32	230-4011	4	PLUG AS					
	33	230-5010	3	PLUG AS					
	34	238-2363	10	TERMINAL					
	35	238-2366	6	TERMINAL					
	36	239-7352	1	PLUG AS					
	37	243-4508	4	RECEPTACLE AS					
	38	243-4509	1	RECEPTACLE AS					
	39	243-4510	2	RECEPTACLE AS					
	40	247-2693	1	RECEPTACLE AS					

H91255E 01

267-7592 HARNESS AS

Part of 251-0430-Page157

ELECTRICAL AND STARTING SYSTEM

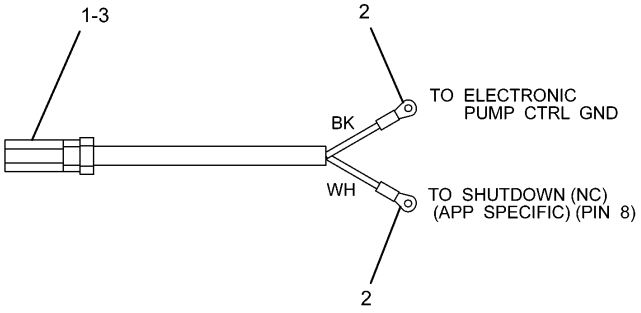

NOTE	No.	PART No.	QTY	PART NAME
	1	9X-3401	2	PIN
	2	2L-8074	2	TERMINAL
	3	243-4505	1	RECEPTACLE AS

H89431E 00

251-0299 HARNESS AS

Part of 251-0430-Page157

MEMORANDA

ELECTRICAL AND STARTING SYSTEM

Consists of :

			Page
1	231-1836	WIRING GP-CONSOLE.....	163
1	251-0435	WIRING GP-CONSOLE.....	165

H89077E 00

251-0433 WIRING GP-CONSOLE

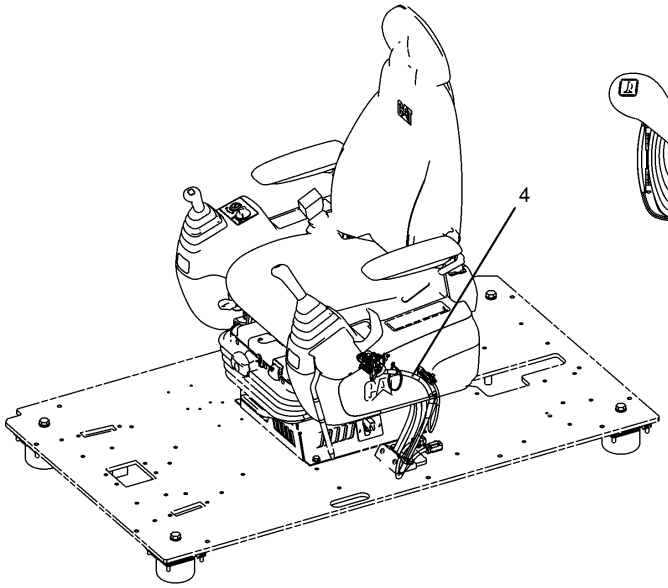

LH OF CONSOLE

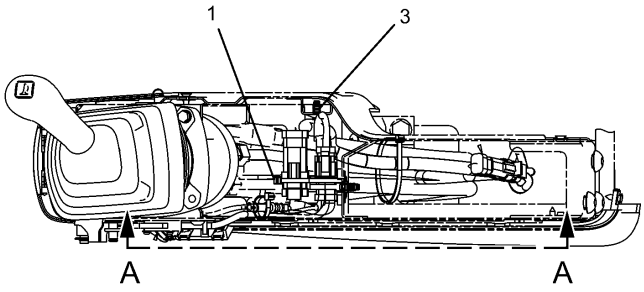

TOP VIEW OF CONSOLE (LH)

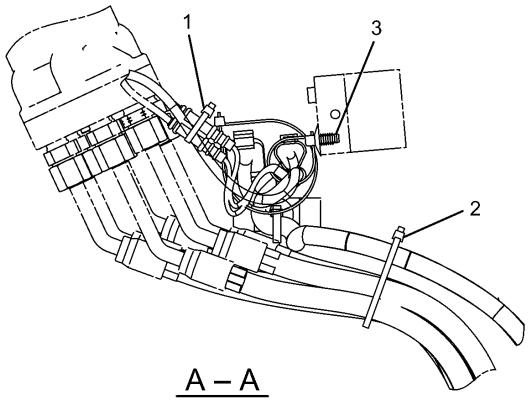

A – A

NOTE	No.	PART No.	QTY	PART NAME	NOTE	No.	PART No.	QTY	PART NAME
	1	3S-2093	2	STRAP					
	2	7K-1181	1	STRAP					
	3	163-6795	2	STRAP					
Y	4	251-0580	1	HARNESS AS					

Y—SEE SEPARATE ILLUSTRATION

H88059E 02

231-1836 WIRING GP-CONSOLE

Left Hand

Part of 251-0433-Page162
251-0580-Page164

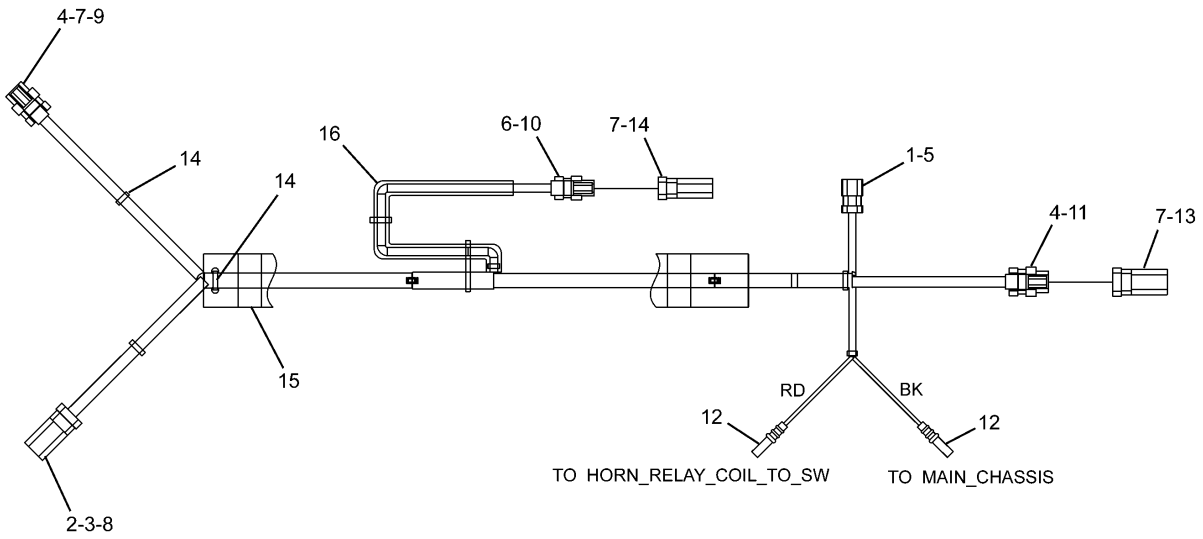

NOTE	No.	PART No.	QTY	PART NAME	NOTE	No.	PART No.	QTY	PART NAME
	1	155-2260	1	PLUG KIT					
	2	186-3735	4	PIN					
	3	9W-0852	2	PIN					
	4	126-1768	11	SOCKET					
	5	186-3736	3	SOCKET					
	6	9W-0844	2	SOCKET					
	7	8T-8737	9	PLUG					
	8	243-4508	1	RECEPTACLE AS					
	9	230-5010	1	PLUG AS					
	10	230-4011	1	PLUG AS					
	11	239-7352	1	PLUG AS					
	12	7Y-3963	2	TERMINAL					
		7Y-3965	2	TUBE					
	13	247-2693	1	RECEPTACLE AS					
	14	3S-2093	9	STRAP					
	15	251-0579	1	HOSE					
D	16	5P-5995		TUBE…(0.26m)					

D—ORDER BY THE METER

H90925E 01

251-0580 HARNESS AS

Part of 231-1836-Page163

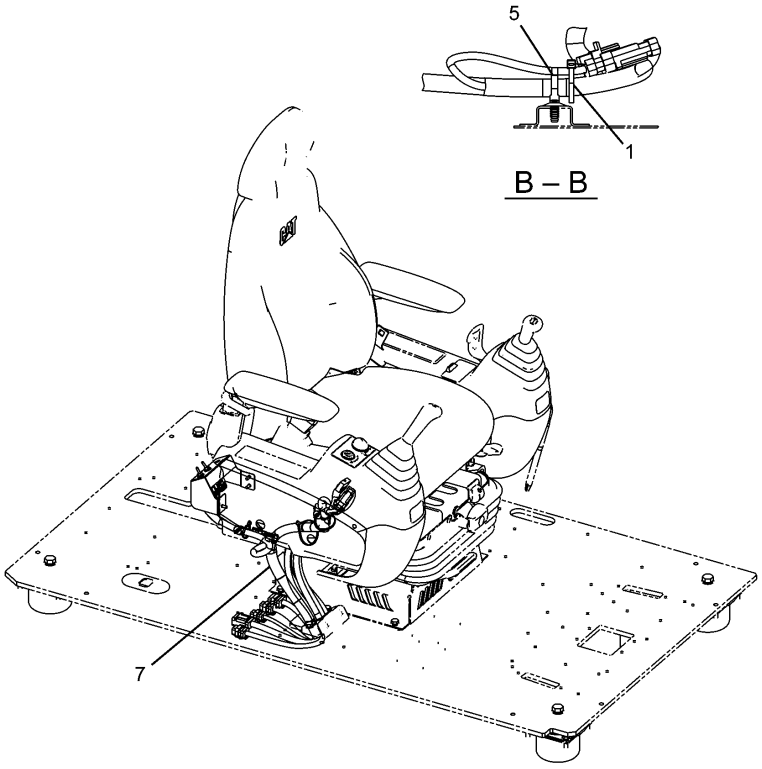

RH OF CONSOLE

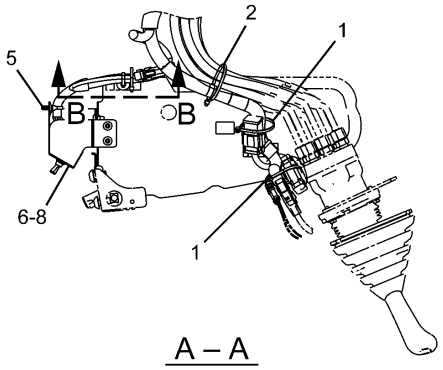

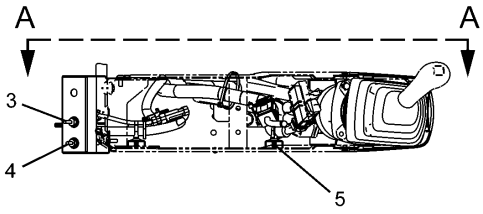

TOP VIEW OF CONSOLE (RH)

NOTE	No.	PART No.	QTY	PART NAME	NOTE	No.	PART No.	QTY	PART NAME
	1	3S-2093	3	STRAP					
	2	7K-1181	1	STRAP					
	3	163-6710	1	SWITCH AS (BACKUP)					
	4	163-6711	1	SWITCH AS (BACKUP)					
	5	163-6795	3	STRAP					
	6	251-0602	1	BRACKET					
Y	7	259-4877	1	HARNESS AS					
	8	9X-2042	3	SCREW					

Y—SEE SEPARATE ILLUSTRATION

H92431E 01

251-0435 WIRING GP-CONSOLE

Right Hand

Part of 251-0433-Page162
259-4877-Page166

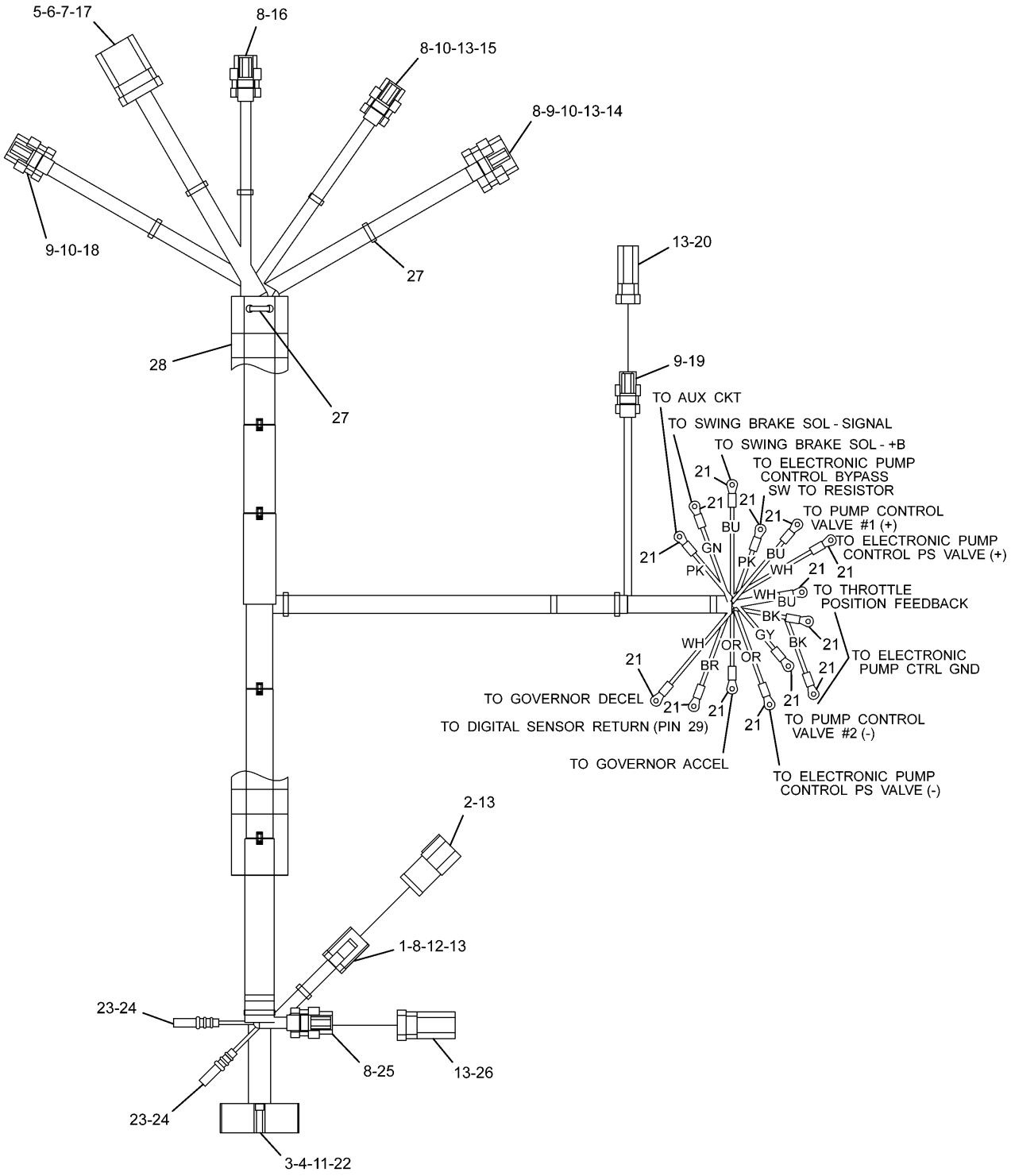

259-4877 HARNESS AS

Part of 251-0435-Page165

ELECTRICAL AND STARTING SYSTEM

NOTE	No.	PART No.	QTY	PART NAME	NOTE	No.	PART No.	QTY	PART NAME
	1	155-2265	1	PLUG KIT					
	2	102-8806	1	RECEPTACLE KIT					
	3	238-2363	7	TERMINAL					
	4	102-7965	14	TERMINAL					
	5	186-3735	9	PIN					
	6	9X-3401	2	PIN					
	7	9W-0852	1	PIN					
	8	126-1768	26	SOCKET					
	9	186-3736	9	SOCKET					
	10	9W-0844	7	SOCKET					
	11	125-4841	1	WEDGE					
	12	155-2259	1	WEDGE					
	13	8T-8737	20	PLUG					
	14	230-4009	1	PLUG AS					
	15	230-5010	1	PLUG AS					
	16	230-5008	1	PLUG AS					
	17	243-4510	1	RECEPTACLE AS					
	18	231-2295	1	PLUG AS					
	19	230-4011	1	PLUG AS					
	20	243-4505	1	RECEPTACLE AS					
	21	2L-8074	14	TERMINAL					
	22	102-7964	1	CONNECTOR					
	23	7Y-3963	2	TERMINAL					
	24	7Y-3965	2	TUBE					
	25	239-7352	1	PLUG AS					
	26	247-2693	1	RECEPTACLE AS					
	27	3S-2093	10	STRAP					
	28	251-0579	1	HOSE					

H92433E 02

259-4877 HARNESS AS

Part of 251-0435-Page165

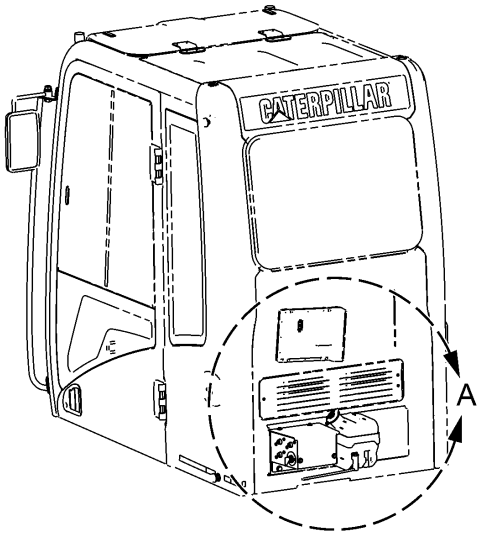

REAR VIEW OF THE CAB

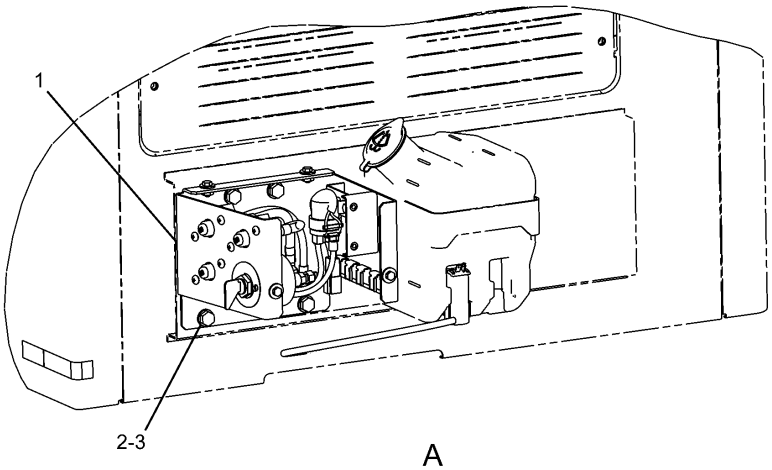

A

NOTE	No.	PART No.	QTY	PART NAME	NOTE	No.	PART No.	QTY	PART NAME
Y	1	231-1756	1	PANEL GP					
	2	8T-4121	4	WASHER					
	3	8T-4137	4	BOLT (L=20mm)					

Y—SEE SEPARATE ILLUSTRATION

H88964E 01

238-1432 WIRING GP
231-1756-Page170

MEMORANDA

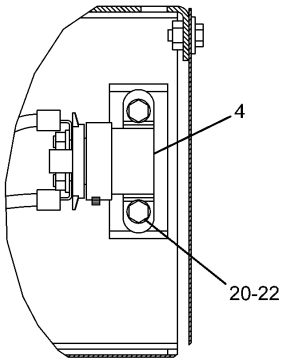

C – C

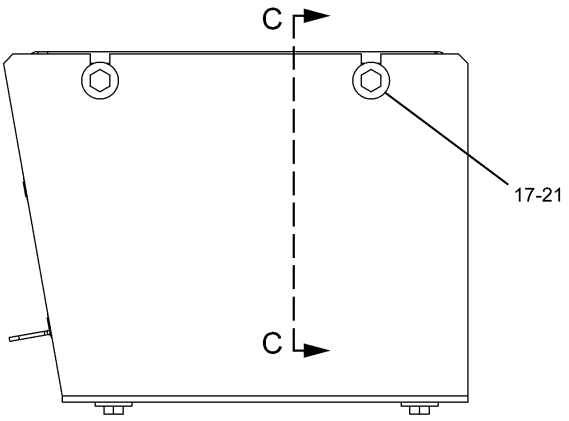

A – A

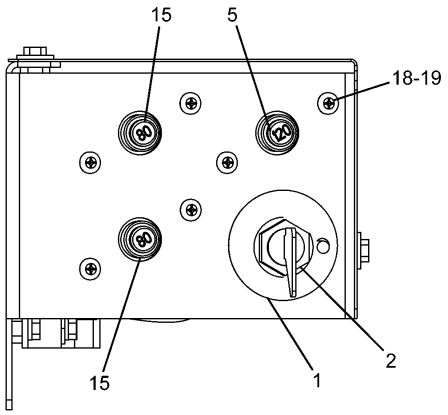

B – B

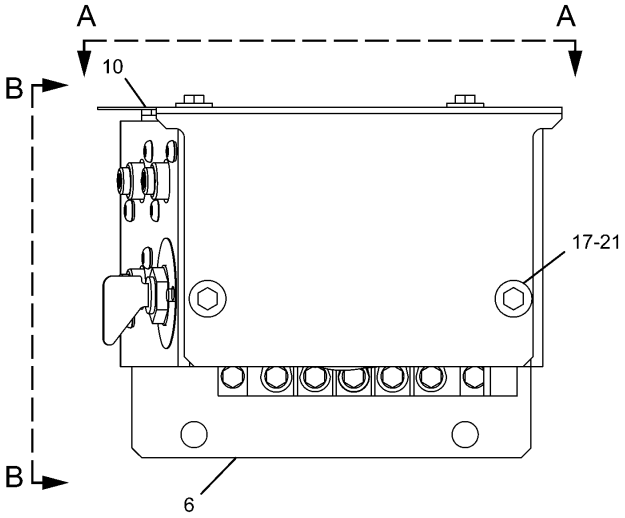

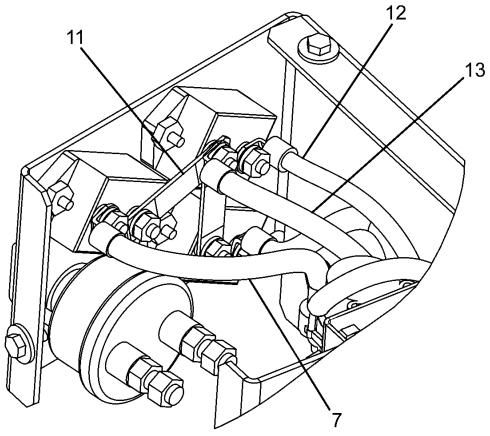

PICTORIAL VIEW
(BREAKER CABLE)

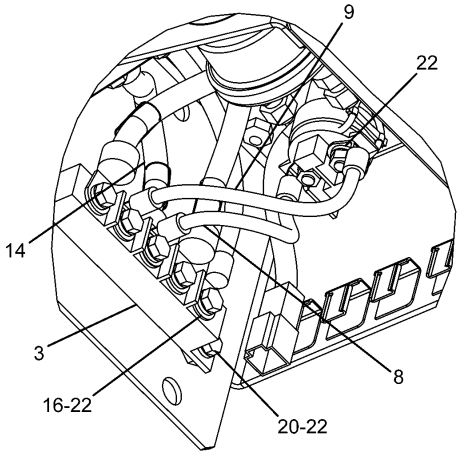

PICTORIAL VIEW
(START RELAY)

H94654E 03

231-1756 PANEL GP-CIRCUIT BREAKER
Part of 238-1432-Page168
7N-0719-Page172,125-1302-Page173

ELECTRICAL AND STARTING SYSTEM

NOTE	No.	PART No.	QTY	PART NAME	NOTE	No.	PART No.	QTY	PART NAME
	1	3E-8320	1	PLATE (INSTRUCTION)					
Y	2	7N-0719	1	SWITCH AS (DISCONNECT)					
	3	121-1023	1	BLOCK					
Y	4	125-1302	1	SWITCH AS (START RELAY)					
	5	216-4970	1	BREAKER AS					
		1H-3244	2	LOCKWASHER					
		6V-8187	2	NUT					
		8T-4205	2	WASHER					
	6	291-7547	1	BRACKET AS					
	7	234-1035	1	CABLE AS					
		9G-4343	2	TERMINAL					
	8	234-1037	1	WIRE AS					
		2L-8050	2	TERMINAL					
	9	234-1038	1	WIRE AS					
		2L-8050	2	TERMINAL					
	10	238-1506	1	COVER					
	11	238-2279	1	BUS					
	12	238-2280	1	WIRE AS					
		2L-8050	2	TERMINAL					
	13	251-0303	1	CABLE AS					
		9G-4343	2	TERMINAL					
	14	251-0304	1	CABLE AS					
		9G-4343	2	TERMINAL					
	15	171-2210	2	BREAKER AS					
		1H-3244	2	LOCKWASHER					
		6V-8187	2	NUT					
		8T-4205	2	WASHER					
	16	5C-9553	5	BOLT (L=16mm)					
	17	5P-4115	4	WASHER					
	18	6V-5645	6	SCREW					
	19	8T-0328	6	WASHER					
	20	8T-4171	4	BOLT (L=12mm)					
	21	8T-4970	4	BOLT (L=14mm)					
	22	9X-8256	11	WASHER					

Y—SEE SEPARATE ILLUSTRATION

H94654E 03

231-1756 PANEL GP-CIRCUIT BREAKER

Part of 238-1432-Page168
7N-0719-Page172,125-1302-Page173

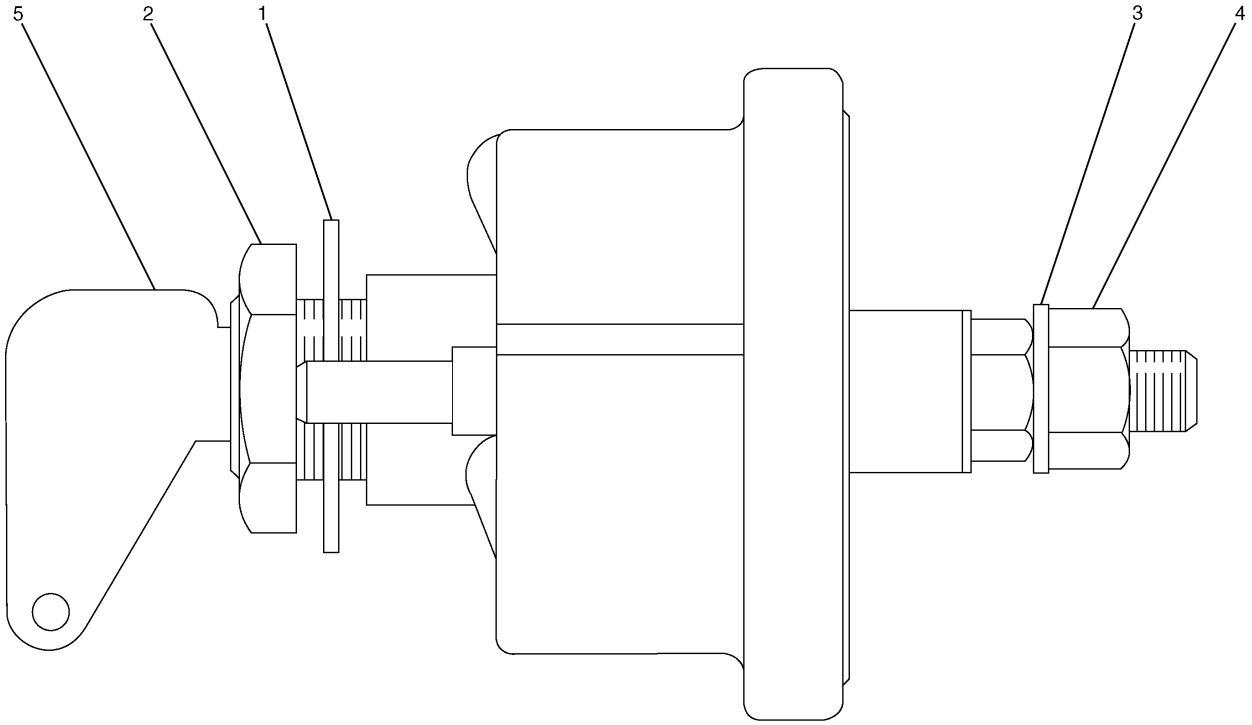

NOTE	No.	PART No.	QTY	PART NAME	NOTE	No.	PART No.	QTY	PART NAME
	1	2H-3922	1	LOCKWASHER					
	2	8H-5303	1	NUT					
	3	9F-5644	2	LOCKWASHER					
	4	6F-7045	2	NUT					
	5	8H-5306	1	KEY					

H67734E 11

7N-0719 SWITCH AS-DISCONNECT

Part of 231-1756-Page171

ELECTRICAL AND STARTING SYSTEM

Consists of :

			Page
1	175-2314	SWITCH AS-MAGNETIC	175
		-OR-	
1	175-2313	SWITCH AS-MAGNETIC	174

H68366E 01

125-1302 SWITCH AS-MAGNETIC
Part of 231-1756-Page171

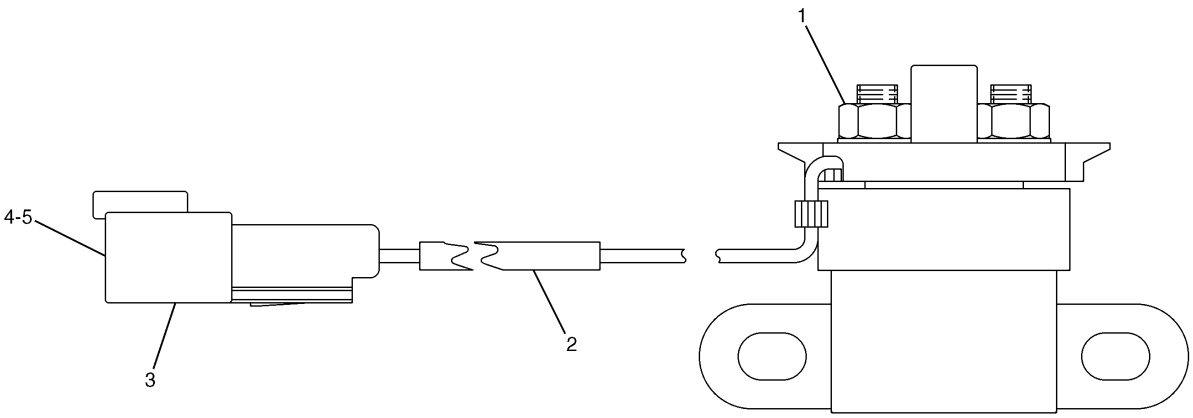

NOTE	No.	PART No.	QTY	PART NAME	NOTE	No.	PART No.	QTY	PART NAME
	1	5C-2890	2	NUT					
E	2	9X-1813		SLEEVE…(15.5cm)					
	3	102-8802	1	RECEPTACLE KIT					
	4	186-3735	2	PIN					
	5	3E-3365	1	WEDGE					

E—ORDER BY THE CENTIMETER

H68413E 00

175-2313 SWITCH AS-MAGNETIC

Part of 125-1302-Page173

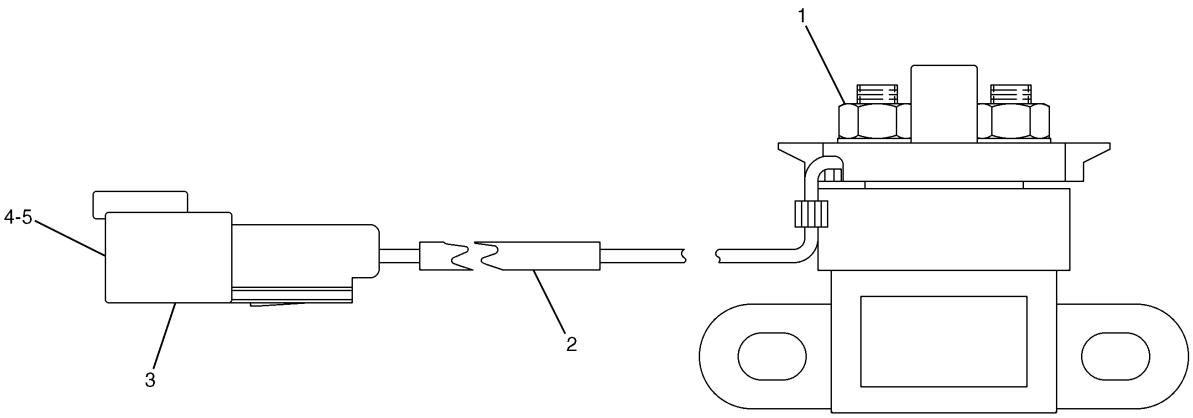

NOTE	No.	PART No.	QTY	PART NAME	NOTE	No.	PART No.	QTY	PART NAME
	1	5C-2890	2	NUT					
E	2	9X-1386		SLEEVE…(15.5cm)					
	3	102-8802	1	RECEPTACLE KIT					
	4	186-3735	2	PIN					
	5	3E-3365	1	WEDGE					

E—ORDER BY THE CENTIMETER

H68414E 00

175-2314 SWITCH AS-MAGNETIC

Part of 125-1302-Page173

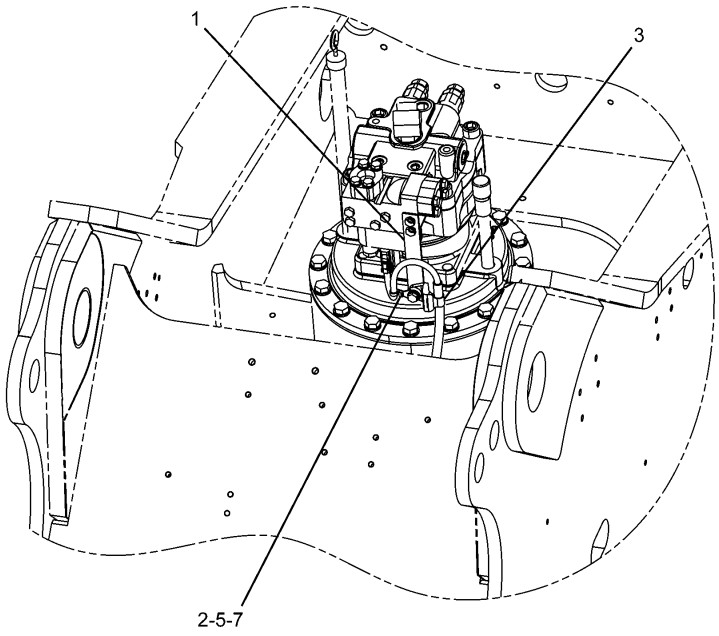

FRONT VIEW

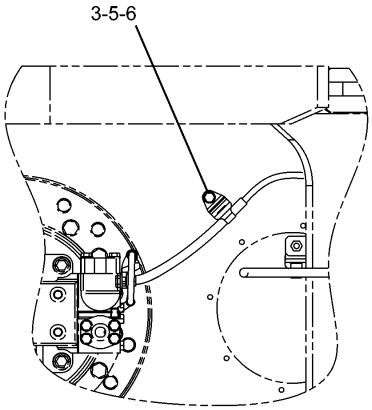

TOP VIEW

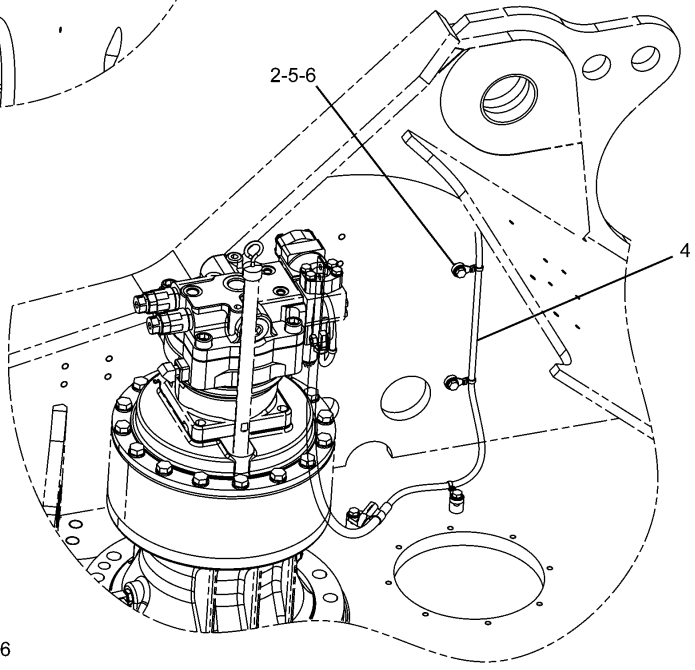

RIGHT SIDE VIEW

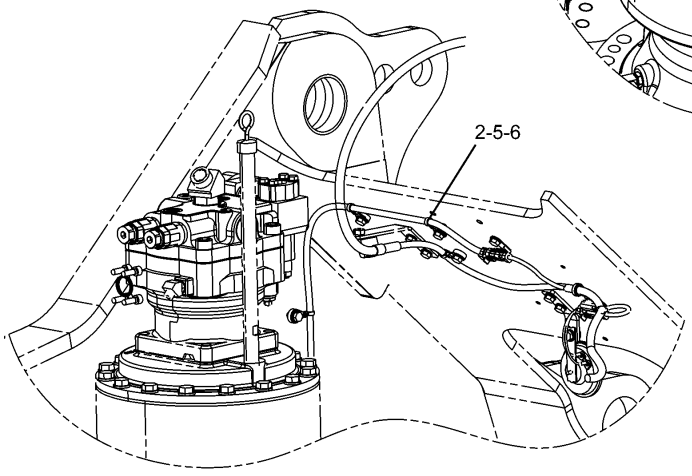

RIGHT SIDE VIEW

H89044E 02

259-4965 WIRING GP-FINE SWING
267-7675-Page178

ELECTRICAL AND STARTING SYSTEM

NOTE	No.	PART No.	QTY	PART NAME	NOTE	No.	PART No.	QTY	PART NAME
	1	7Y-8109	1	BRACKET AS					
	2	111-4836	6	CLIP					
	3	111-4837	2	CLIP					
Y	4	267-7675	1	HARNESS AS					
	5	8T-4121	7	WASHER					
	6	8T-4137	6	BOLT (L=20mm)					
	7	8T-4195	1	BOLT (L=30mm)					

Y—SEE SEPARATE ILLUSTRATION

H89044E 02

259-4965 WIRING GP-FINE SWING

267-7675-Page178

ELECTRICAL AND STARTING SYSTEM

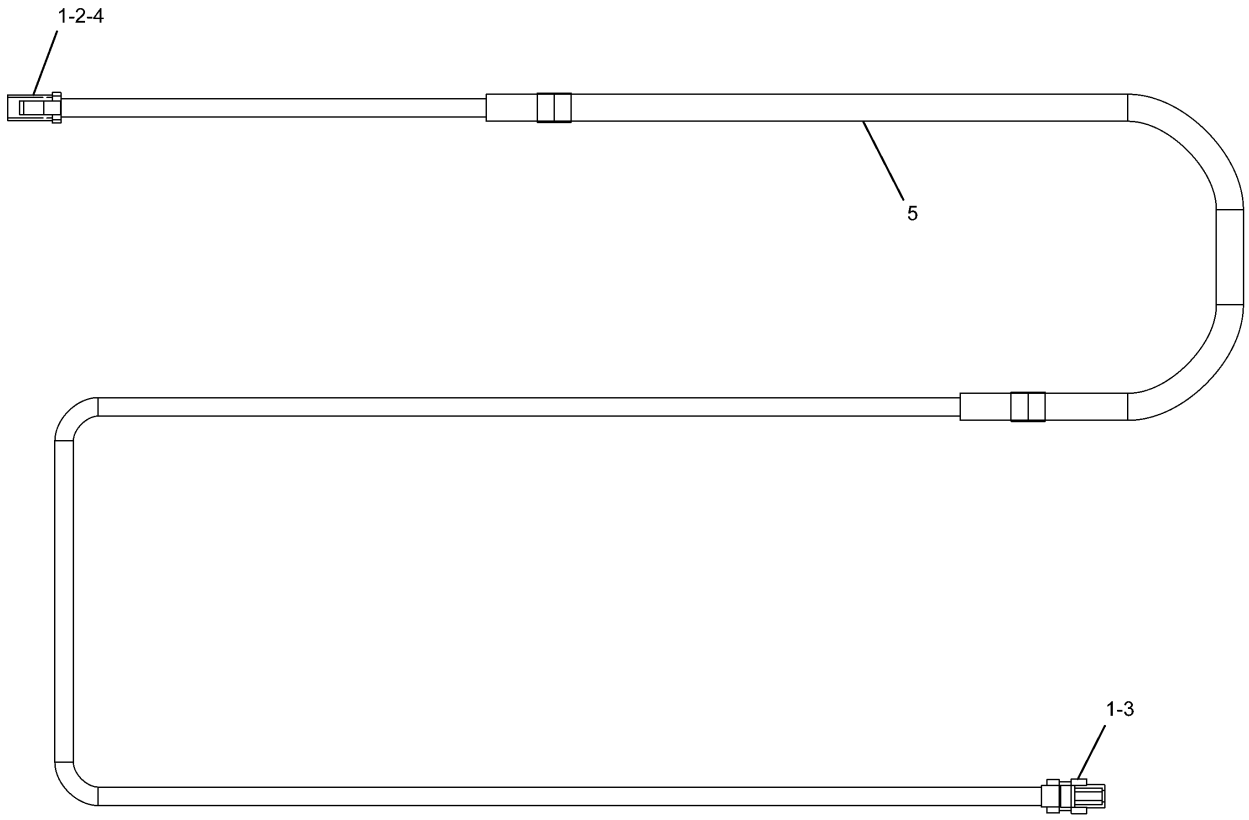

NOTE	No.	PART No.	QTY	PART NAME	NOTE	No.	PART No.	QTY	PART NAME
	1	9W-0844	4	SOCKET					
	2	155-2261	1	WEDGE					
	3	230-4011	1	PLUG AS					
	4	155-2270	1	PLUG KIT					
E	5	103-2529		HOSE…(72cm)					

E—ORDER BY THE CENTIMETER

H89442E 00

267-7675 HARNESS AS

Part of 259-4965-Page177

MEMORANDA

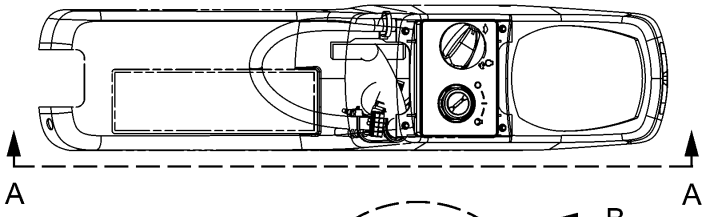

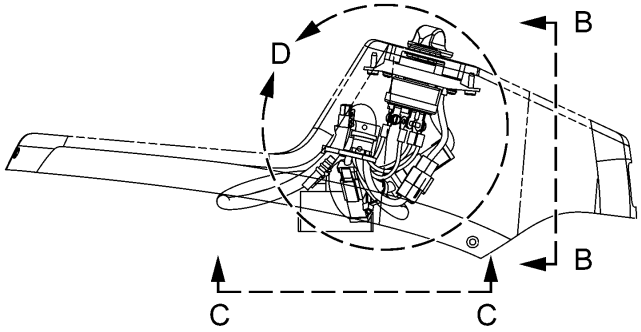

A – A

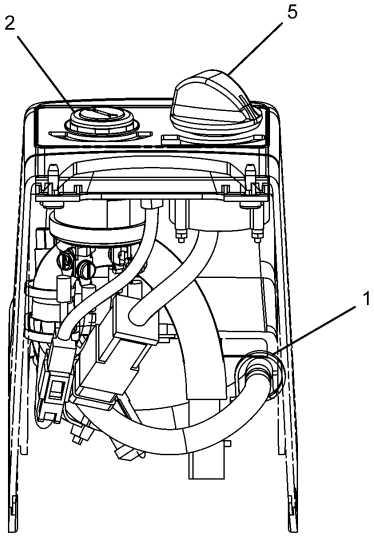

B – B

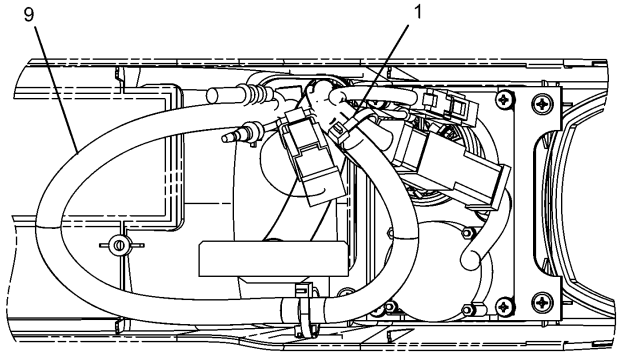

C – C

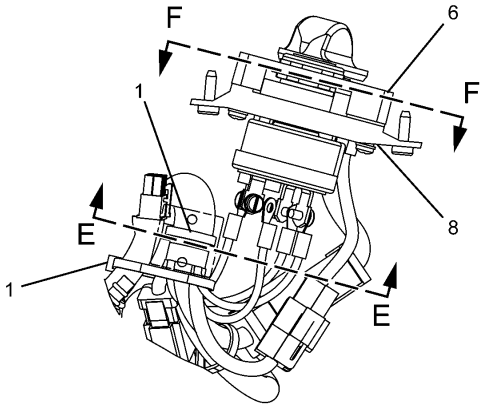

D

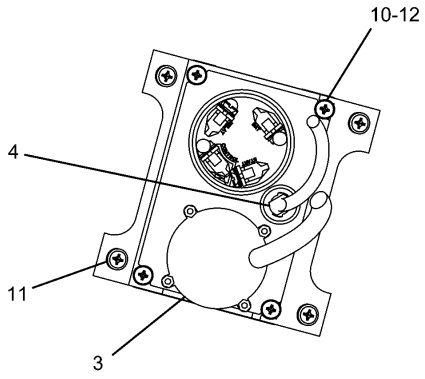

E – E

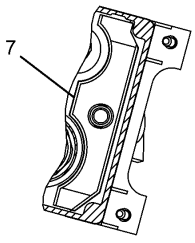

F – F

H89817E 02

251-0542 PANEL GP-SWITCH

251-0543-Page184,9G-7641-Page185,106-0107-Page186

An Attachment

ELECTRICAL AND STARTING SYSTEM

NOTE	No.	PART No.	QTY	PART NAME	NOTE	No.	PART No.	QTY	PART NAME
	1	3S-2093	4	STRAP					
Y	2	9G-7641	1	SWITCH GP (ENGINE STARTER)					
Y	3	106-0107	1	SWITCH AS (ACCELERATOR)					
	4	170-9324	1	BULB AS					
	5	185-9208	1	KNOB AS					
		124-4003	1	PLATE					
		185-9209	1	SPRING					
	6	234-1156	1	COVER					
	7	234-1158	1	COVER					
	8	267-7976	1	PANEL					
Y	9	251-0543	1	HARNESS AS					
	10	096-6166	4	WASHER					
	11	119-5026	4	SCREW					
	12	6V-9491	4	SCREW					

Y—SEE SEPARATE ILLUSTRATION

H89817E 02

251-0542 PANEL GP-SWITCH

251-0543-Page184,9G-7641-Page185,106-0107-Page186
An Attachment

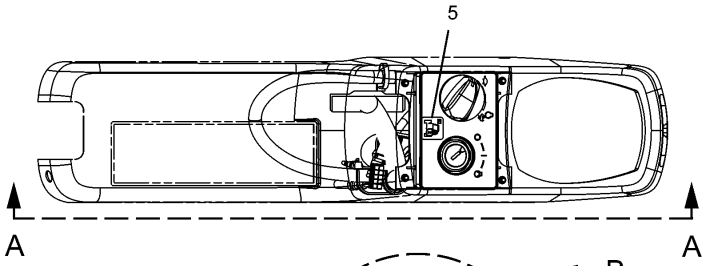

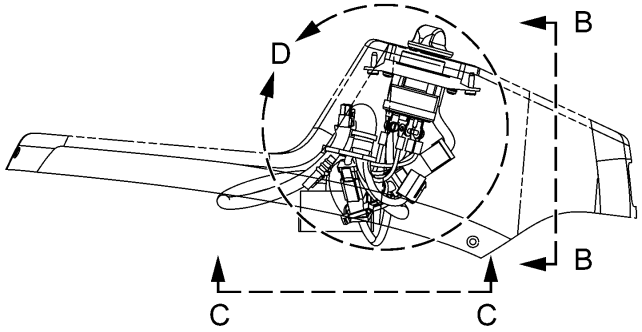

A – A

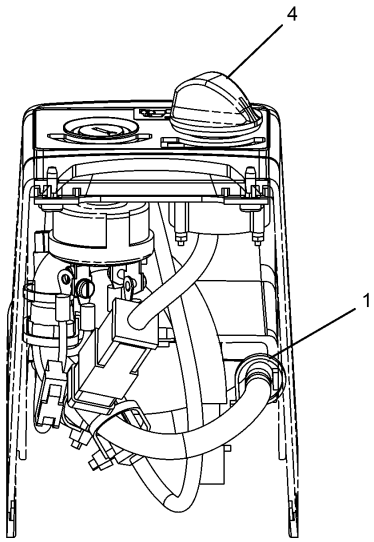

B – B

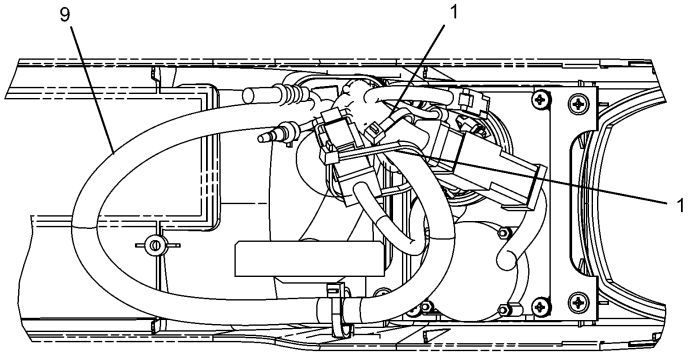

C – C

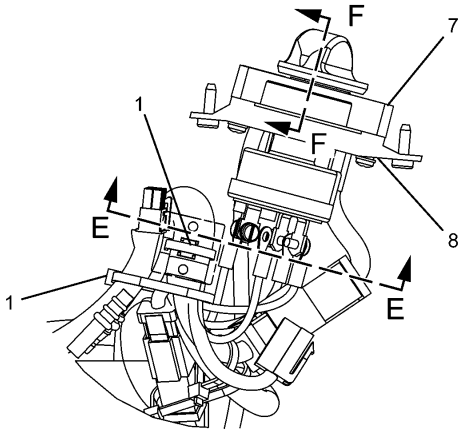

D

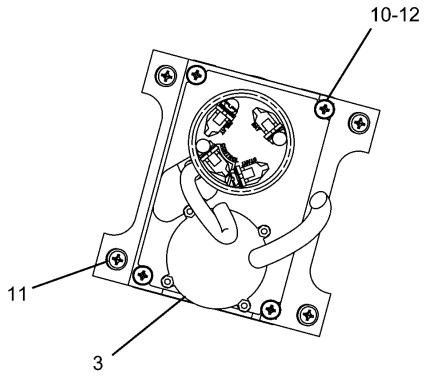

E – E

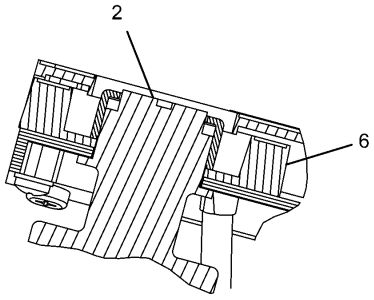

F – F

H89810E 02

251-0544 PANEL GP-SWITCH

Machine Security System
Part of 227-7581-Page661
251-0543-Page184,9G-7641-Page185,106-0107-Page186
An Attachment

ELECTRICAL AND STARTING SYSTEM

NOTE	No.	PART No.	QTY	PART NAME
	1	3S-2093	5	STRAP
Y	2	9G-7641	1	SWITCH GP (ENGINE STARTER)
Y	3	106-0107	1	SWITCH AS (ACCELERATOR)
	4	185-9208	1	KNOB AS
		124-4003	1	PLATE
		185-9209	1	SPRING
	5	205-0826	1	FILM
				(MACHINE SECURITY SYSTEM)
	6	205-8257	1	COIL AS
		200-5125	1	FILM (IGNITION SWITCH)
		198-5389	1	FILM (IGNITION SWITCH)
		102-8802	1	RECEPTACLE KIT
	7	234-1156	1	COVER
	8	267-7977	1	PANEL
Y	9	251-0543	1	HARNESS AS
	10	096-6166	4	WASHER
	11	119-5026	4	SCREW
	12	6V-9491	4	SCREW

NOTE	No.	PART No.	QTY	PART NAME

Y—SEE SEPARATE ILLUSTRATION

H89810E 02

251-0544 PANEL GP-SWITCH

Machine Security System
Part of 227-7581-Page661
251-0543-Page184,9G-7641-Page185,106-0107-Page186
An Attachment

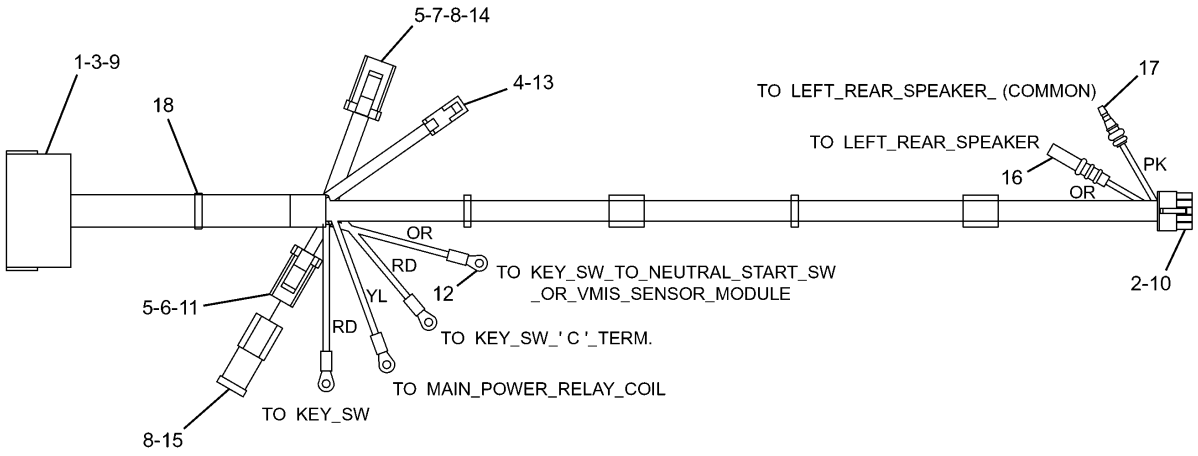

NOTE	No.	PART No.	QTY	PART NAME	NOTE	No.	PART No.	QTY	PART NAME
	1	238-2366	7	TERMINAL					
	2	153-2540	10	TERMINAL					
	3	121-1173	14	TERMINAL					
	4	7Y-3951	2	TERMINAL					
	5	126-1768	7	SOCKET					
	6	155-2261	1	WEDGE					
	7	155-2263	1	WEDGE					
	8	8T-8737	3	PLUG					
	9	121-1168	1	CONNECTOR					
	10	153-2541	1	CONNECTOR					
	11	155-2270	1	PLUG KIT					
	12	2L-8075	4	TERMINAL					
	13	7Y-3952	1	CONNECTOR					
	14	155-2274	1	PLUG KIT					
	15	102-8802	1	RECEPTACLE KIT					
	16	7Y-3963	1	TERMINAL					
		7Y-3965	1	TUBE					
	17	7Y-3962	1	TERMINAL					
		7Y-3964	1	TUBE					
	18	3S-2093	3	STRAP					

H88058E 01

251-0543 HARNESS AS

Part of 251-0542-Page181,251-0544-Page183
An Attachment

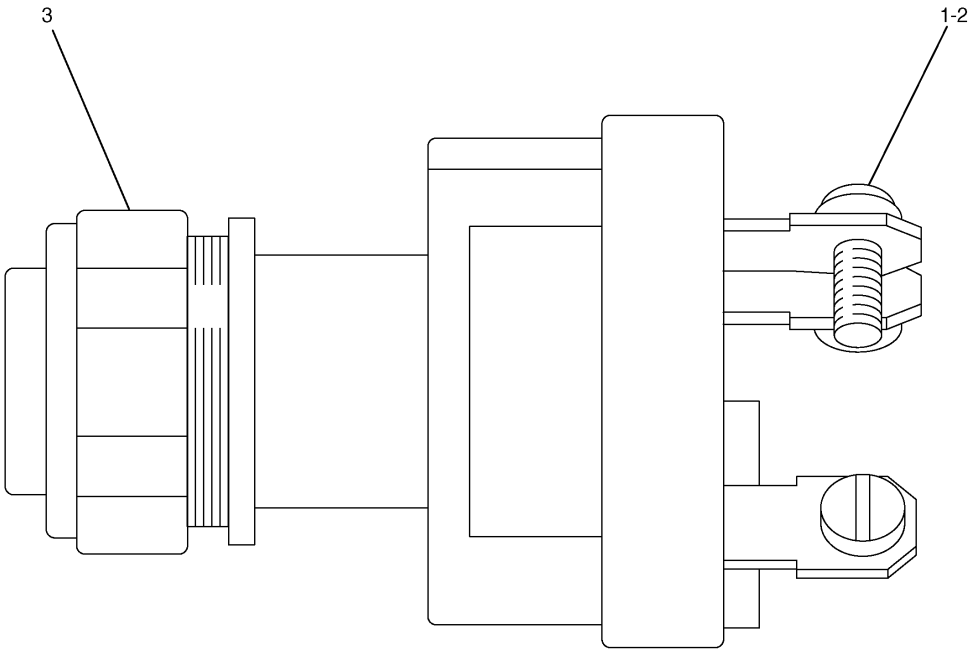

NOTE	No.	PART No.	QTY	PART NAME	NOTE	No.	PART No.	QTY	PART NAME
	1	6V-8362	4	SCREW					
	2	9B-7233	4	LOCKWASHER					
	3	7T-6799	1	NUT					

H67042E 06

9G-7641 SWITCH GP-START

Part of 251-0542-Page181,251-0544-Page183
An Attachment

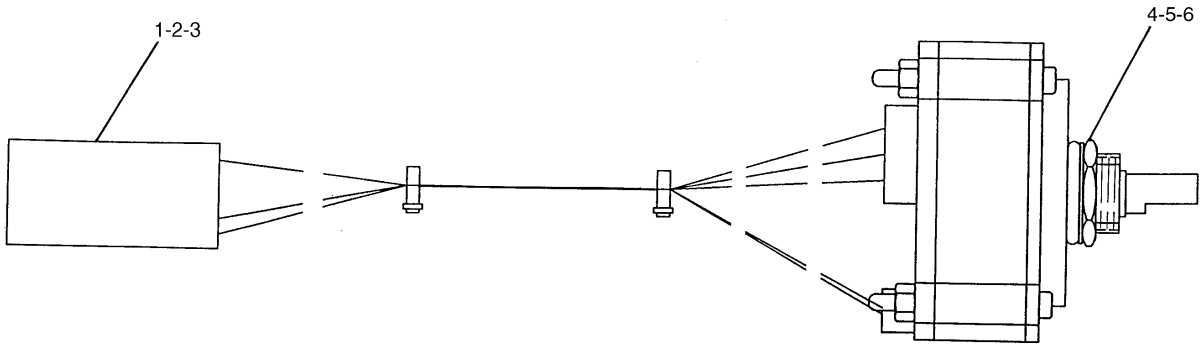

NOTE	No.	PART No.	QTY	PART NAME	NOTE	No.	PART No.	QTY	PART NAME
	1	8T-8737	1	PLUG					
	2	9X-3401	5	PIN					
	3	102-8805	1	RECEPTACLE KIT					
	4	106-0210	1	SEAL					
	5	7Y-5458	1	NUT					
	6	7Y-5464	1	WASHER					

H74274E 02

106-0107 SWITCH AS-ROTARY

Part of 251-0542-Page181,251-0544-Page183
An Attachment

ELECTRICAL AND STARTING SYSTEM

Consists of :

			Page
1	128-5626	STARTING MOTOR GP-ELECTRIC	226
1	239-6676	STARTING AID GP-ETHER	250
1	251-0440	BATTERY & WIRING GP-COLD WEATH	188

H91544E 00

275-3747 STARTING AR-COLD WEATHER
An Attachment

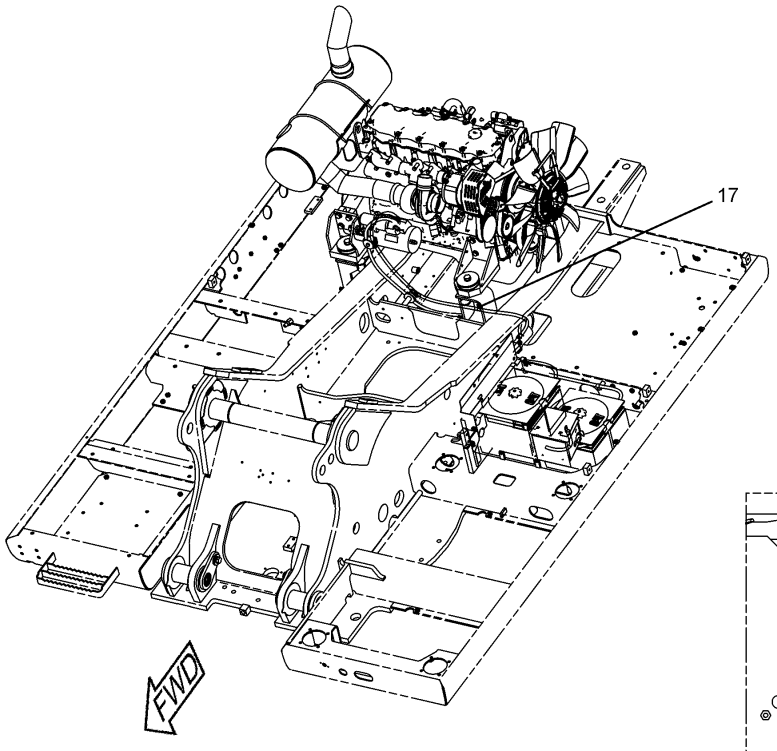

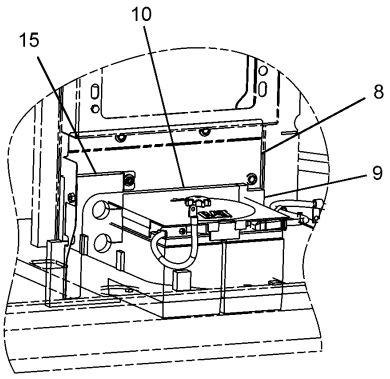

BATTERY ROOM HOOD

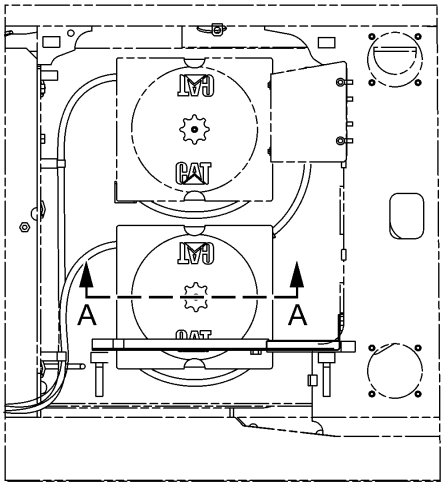

BATTERY ROOM

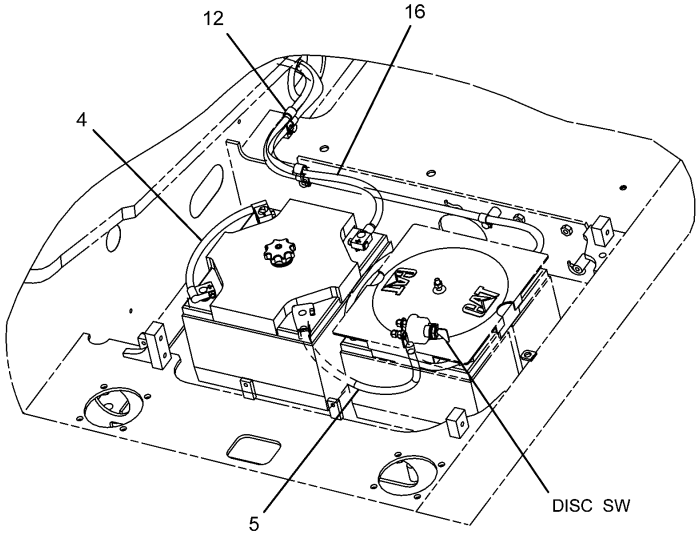

BATTERY ROOM

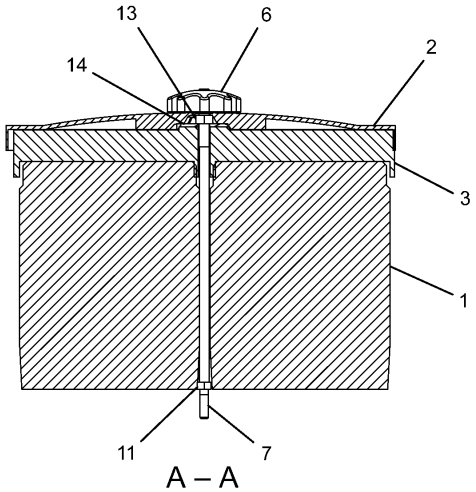

A – A

H90041E 01

251-0440 BATTERY & WIRING GP-COLD WEATH

Part of 275-3747-Page187
170-6929-Page138,193-3515,251-0454-Page190
An Attachment

ELECTRICAL AND STARTING SYSTEM

NOTE	No.	PART No.	QTY	PART NAME	NOTE	No.	PART No.	QTY	PART NAME
	1	3T-5760	2	BATTERY					
	2	5I-8270	1	COVER					
	3	6W-6005	1	HOLDDOWN					
Y	4	170-6929	1	CABLE AS					
Y	5	193-3515	1	CABLE AS					
	6	238-2501	1	KNOB					
	7	238-2528	1	ROD					
	8	262-2497	1	SHEET AS					
	9	262-2498	1	LINER					
	10	262-2499	1	LINER					
	11	5C-7261	1	NUT					
	12	6K-8178	2	CLIP					
	13	8T-4133	1	NUT					
	14	8T-4226	1	WASHER					
	15	262-2502	1	SHEET AS					
		262-2503	1	LINER					
Y	16	251-0454	1	CABLE AS					
	17	4K-8864	1	CLIP					

Y—SEE SEPARATE ILLUSTRATION

H90041E 01

251-0440 BATTERY & WIRING GP-COLD WEATH

Part of 275-3747-Page187
170-6929-Page138,193-3515,251-0454-Page190
An Attachment

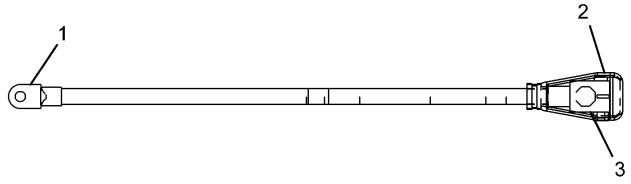

NOTE	No.	PART No.	QTY	PART NAME
	1	1S-7252	1	TERMINAL
	2	7N-5274	1	COVER
	3	3S-6050	1	TERMINAL AS
		1M-6119	1	BOLT
		1M-6120	1	NUT

H89346E 01

193-3515 CABLE AS
Part of 251-0440-Page189
An Attachment

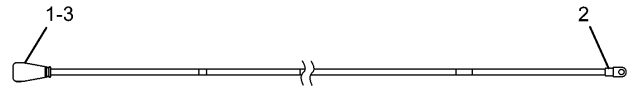

NOTE	No.	PART No.	QTY	PART NAME
	1	3S-6049	1	TERMINAL AS
		1M-6119	1	BOLT
		1M-6120	1	NUT
	2	1S-7251	1	TERMINAL
	3	8N-1725	1	COVER

H89415E 00

251-0454 CABLE AS
Part of 251-0440-Page189
An Attachment

MEMORANDA

ELECTRICAL AND STARTING SYSTEM

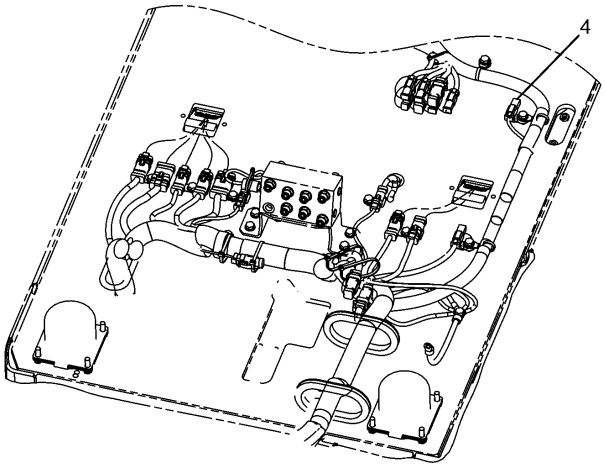

DETAIL OF UNDER PLATFORM

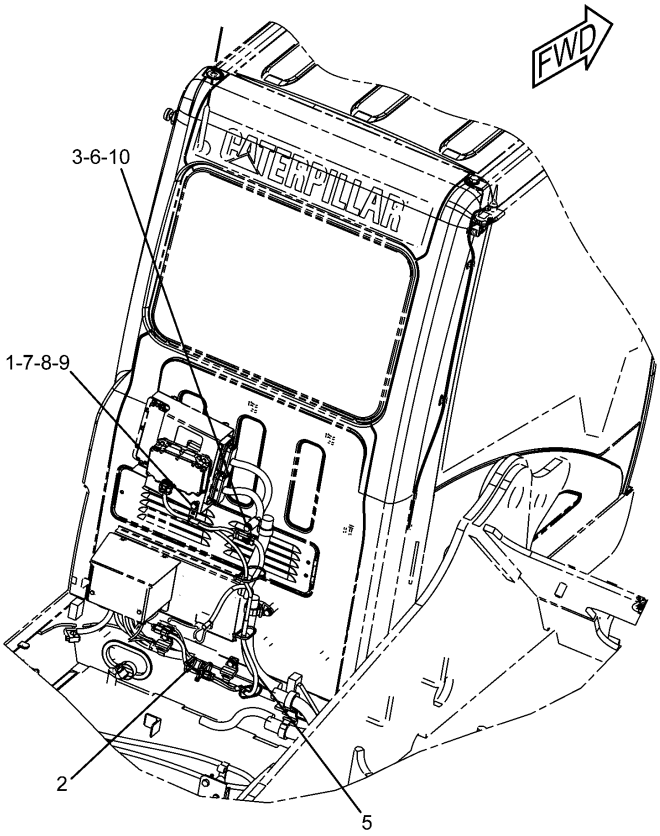

NOTE	No.	PART No.	QTY	PART NAME	NOTE	No.	PART No.	QTY	PART NAME
	1	3S-2093	1	STRAP					
	2	7K-1181	6	STRAP					
	3	116-0118	1	CLIP					
	4	145-0549	1	RECEPTACLE AS					
		102-8802	1	RECEPTACLE KIT					
		8T-8737	2	PLUG					
Y	5	275-6784	1	HARNESS AS					
	6	4I-7889	1	SPACER					
	7	4P-7581	1	CLIP					
	8	8T-4121	1	WASHER					
	9	8T-4137	1	BOLT (L=20mm)					
	10	8T-5005	1	BOLT (L=70mm)					

Y—SEE SEPARATE ILLUSTRATION

H90605E 00

275-6783 WIRING GP
Product Link Japan
Part of 275-3673-Page220
275-6784-Page193
An Attachment

ELECTRICAL AND STARTING SYSTEM

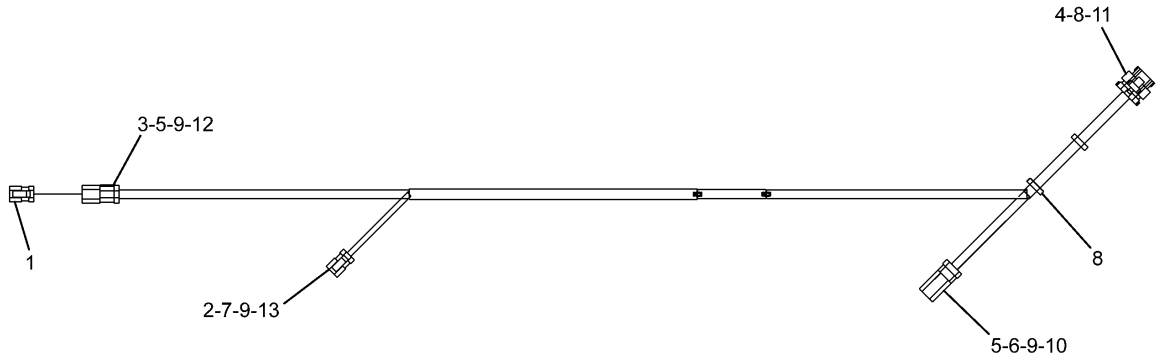

NOTE	No.	PART No.	QTY	PART NAME	NOTE	No.	PART No.	QTY	PART NAME
	1	174-3016	1	PLUG AS					
	2	155-2260	1	PLUG KIT					
	3	102-8803	1	RECEPTACLE KIT					
	4	275-6786	7	TERMINAL					
	5	9X-3401	5	PIN					
	6	186-3735	2	PIN					
	7	126-1768	2	SOCKET					
	8	3S-2093	2	STRAP					
	9	8T-8737	3	PLUG					
	10	243-4508	1	RECEPTACLE AS					
	11	275-6785	1	PLUG AS					
	12	133-0975	1	WEDGE					
	13	155-2266	1	WEDGE					

H91209E 01

275-6784 HARNESS AS
Part of 275-6783-Page192
An Attachment

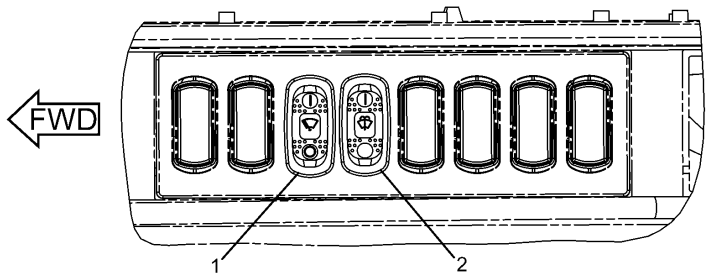

TOP VIEW

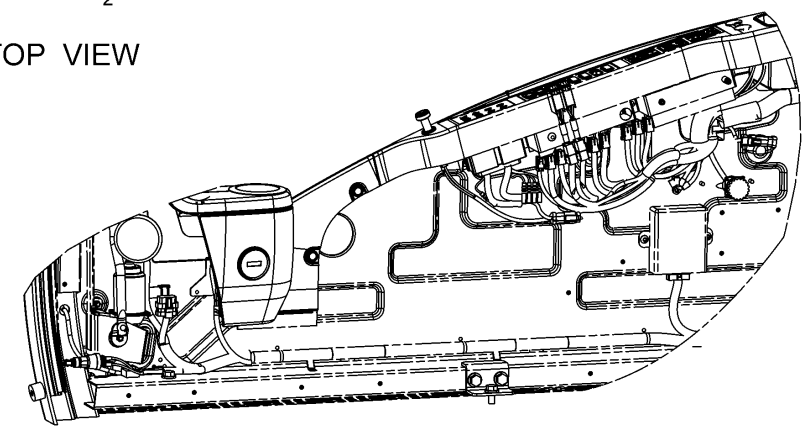

CAB SIDE PANEL

NOTE	No.	PART No.	QTY	PART NAME	NOTE	No.	PART No.	QTY	PART NAME
	1	238-2209	1	SWITCH AS (LOWER WIPER)					
		167-3542	1	CONNECTOR					
		167-3543	5	TERMINAL					
	2	238-2210	1	SWITCH AS (LOWER WASHER)					
		167-3542	1	CONNECTOR					
		167-3543	4	TERMINAL					

H88176E 01

238-2208 WIRING GP-LOWER WIPER

Part of 229-9086-Page653

An Attachment

ELECTRICAL AND STARTING SYSTEM

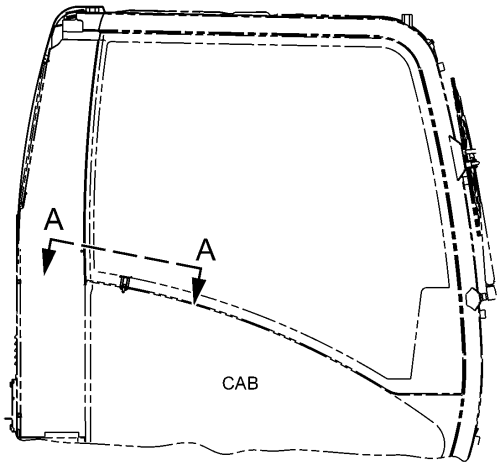

RIGHT SIDE VIEW

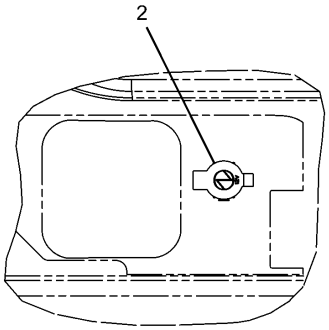

A – A

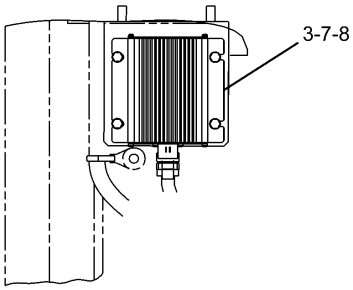

TOP VIEW OF THE CONVERTER

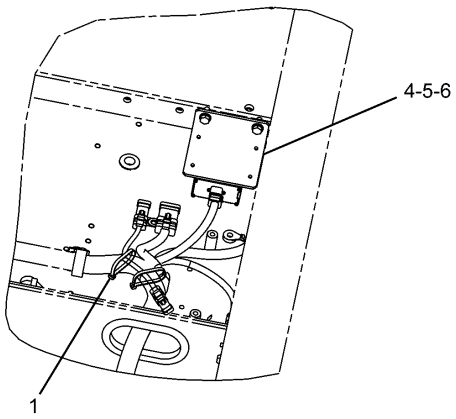

BOTTOM VIEW OF THE PLATFORM

NOTE	No.	PART No.	QTY	PART NAME	NOTE	No.	PART No.	QTY	PART NAME
	1	7K-1181	2	STRAP					
	2	121-0987	1	SOCKET					
	3	283-2783	1	CONVERTER					
	4	251-0483	1	BRACKET					
	5	8T-4121	2	WASHER					
	6	8T-4136	2	BOLT (L=25mm)					
	7	8T-4171	4	BOLT (L=12mm)					
	8	9X-8256	4	WASHER					

H93671E 01

251-0482 WIRING GP
12V-7A Power Supply
An Attachment

ELECTRICAL AND STARTING SYSTEM

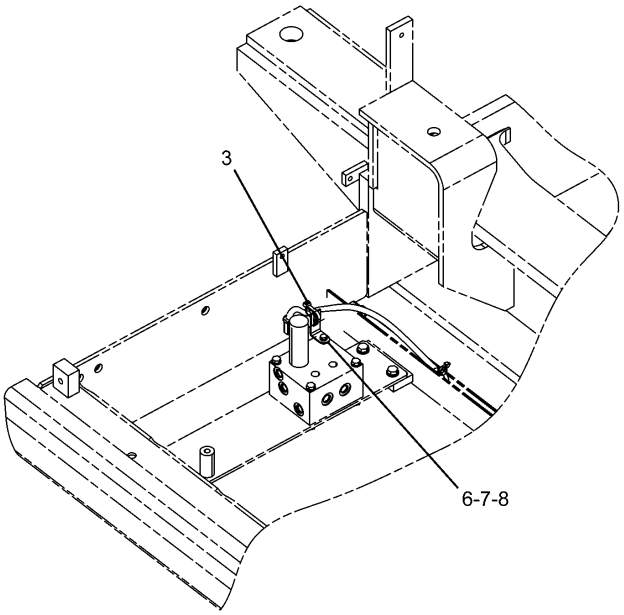

PUMP ROOM

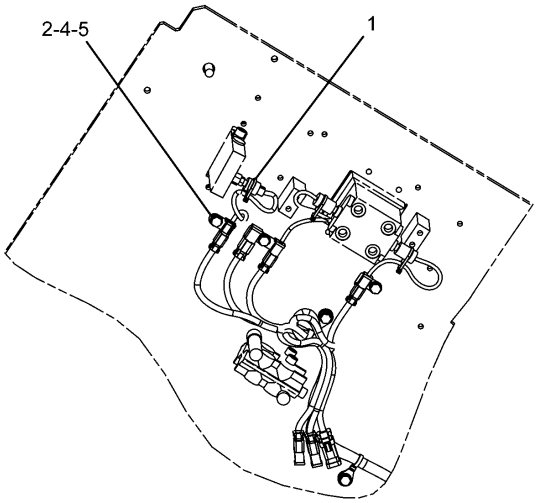

BOTTOM VIEW OF THE PLATFORM

NOTE	No.	PART No.	QTY	PART NAME	NOTE	No.	PART No.	QTY	PART NAME
	1	3S-2093	1	STRAP					
	2	116-0118	1	CLIP					
	3	7K-1181	1	STRAP					
	4	7X-2621	1	BOLT (L=12mm)					
	5	8T-4121	1	WASHER					
	6	8T-4171	1	BOLT (L=12mm)					
	7	156-6175	1	CLIP					
	8	9X-8256	1	WASHER					

H91573E 01

251-0436 WIRING GP
Part of 255-5696,255-5699-Page472
An Attachment

MEMORANDA

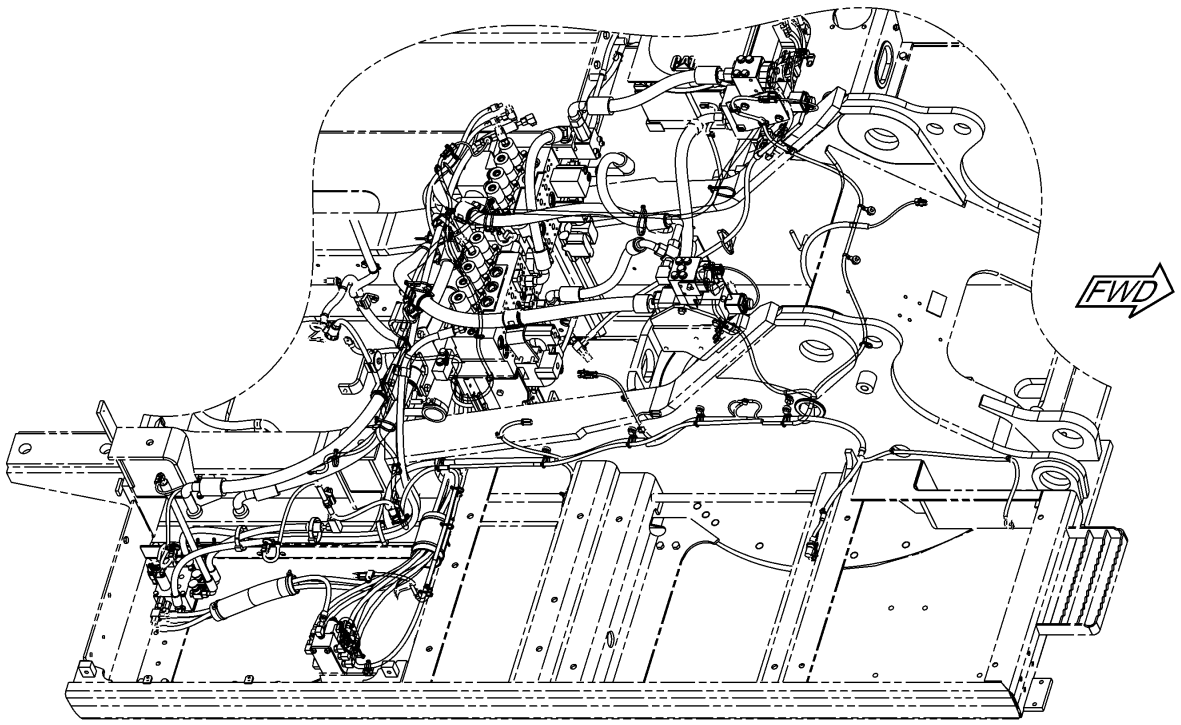

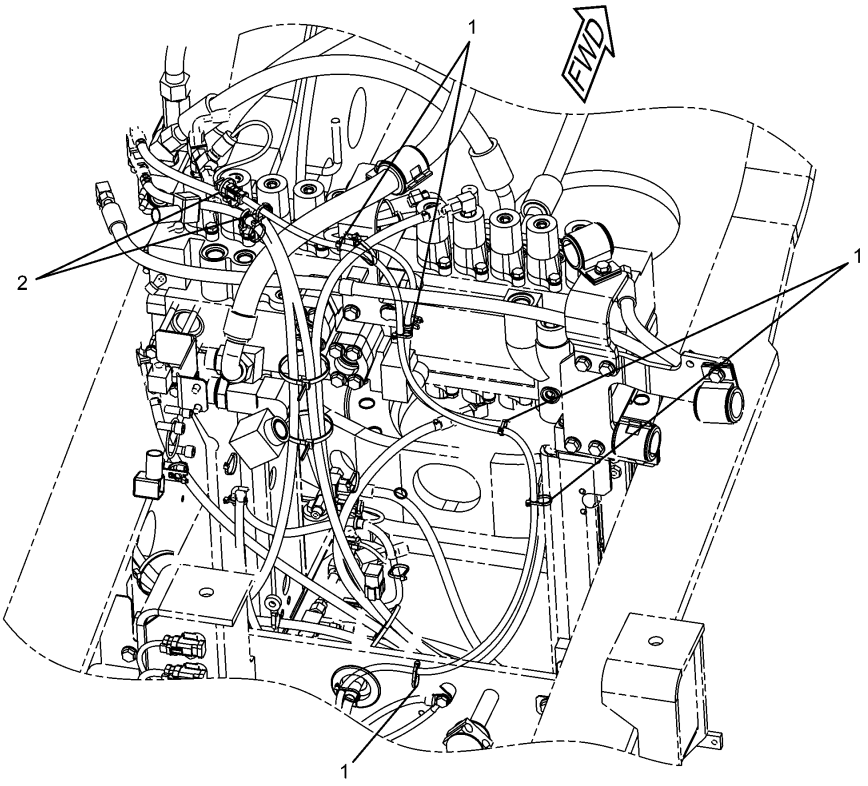

CONTROL VALVE

H93974E 02

251-0530 WIRING GP (1/3)
Part of 255-5697-Page473,255-5702-Page474
An Attachment

ELECTRICAL AND STARTING SYSTEM

NOTE	No.	PART No.	QTY	PART NAME	NOTE	No.	PART No.	QTY	PART NAME
	1	3S-2093	5	STRAP					
	2	204-1611	2	STRAP					

H93974E 02

251-0530 WIRING GP (1/3)

Part of 255-5697-Page473,255-5702-Page474
An Attachment

ELECTRICAL AND STARTING SYSTEM

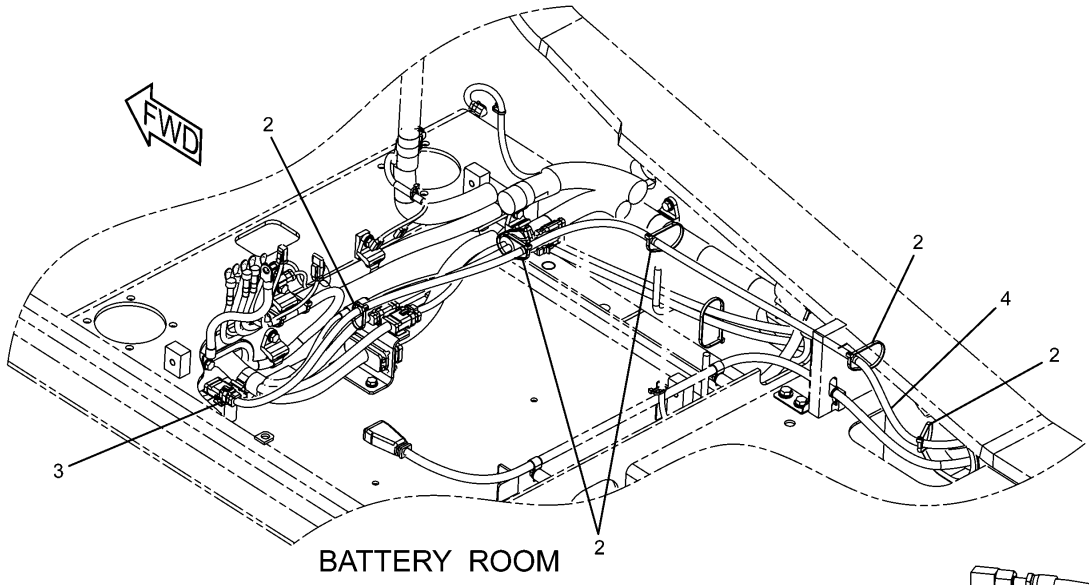

BATTERY ROOM

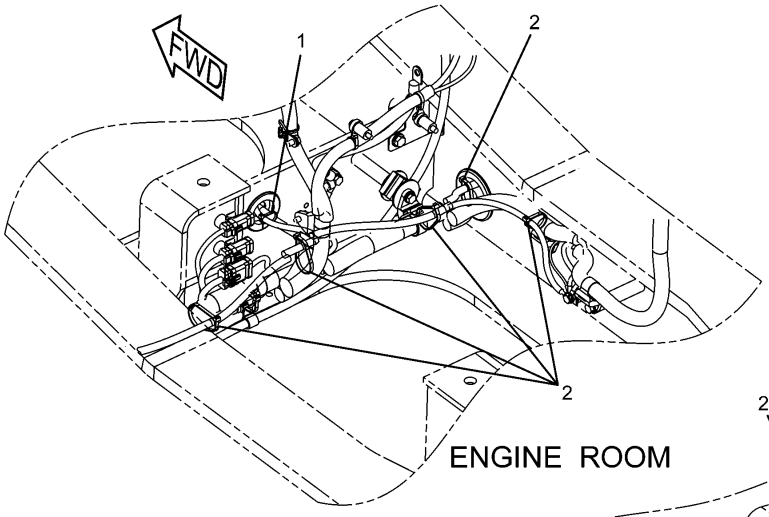

ENGINE ROOM

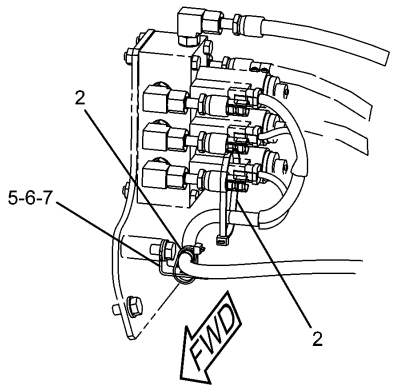

PUMP ROOM

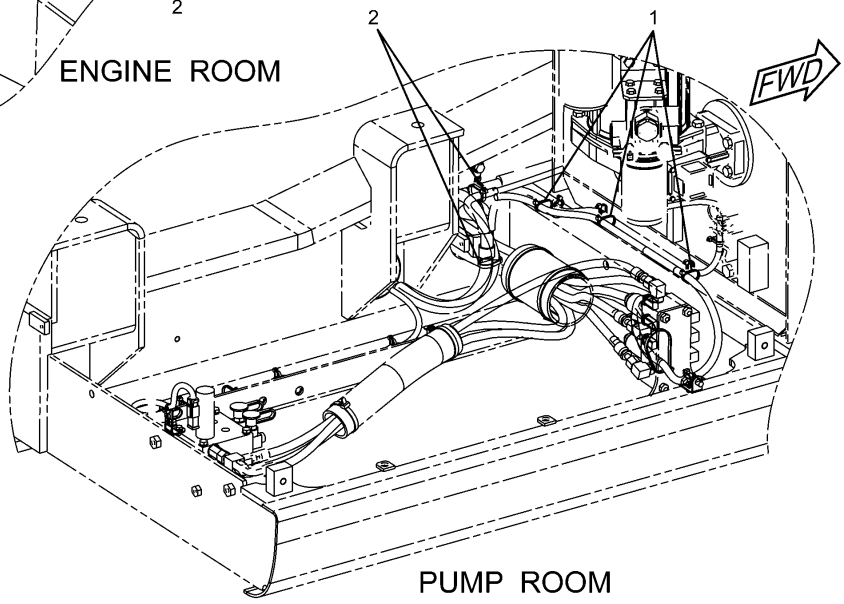

PUMP ROOM

H93975E 02

251-0530 WIRING GP (2/3)

Part of 255-5697-Page473,255-5702-Page474
267-7968-Page204
An Attachment

ELECTRICAL AND STARTING SYSTEM

NOTE	No.	PART No.	QTY	PART NAME	NOTE	No.	PART No.	QTY	PART NAME
	1	3S-2093	4	STRAP					
	2	7K-1181	14	STRAP					
	3	116-0118	1	CLIP					
Y	4	267-7968	1	HARNESS AS					
	5	132-5789	1	CLIP					
	6	8T-4121	1	WASHER					
	7	8T-4191	1	BOLT (L=16mm)					

Y—SEE SEPARATE ILLUSTRATION

H93975E 02

251-0530 WIRING GP (2/3)
Part of 255-5697-Page473,255-5702-Page474
267-7968-Page204
An Attachment

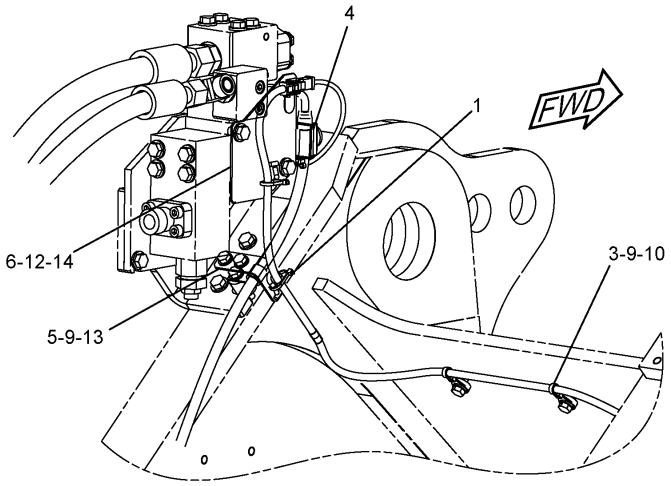

VALVE-LH

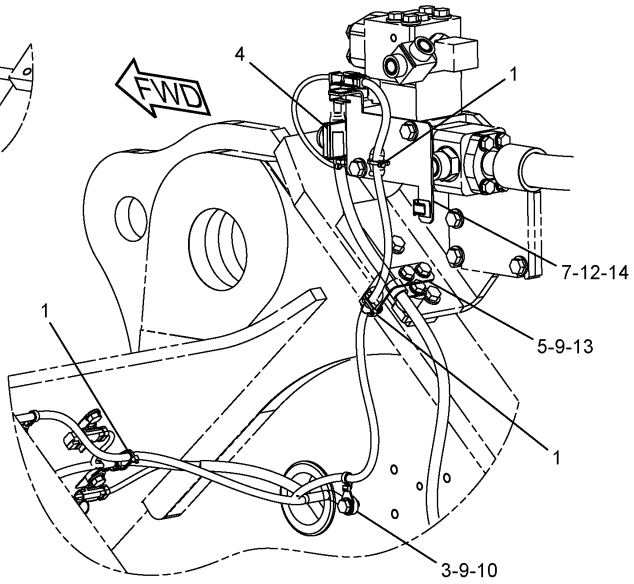

VALVE-RH

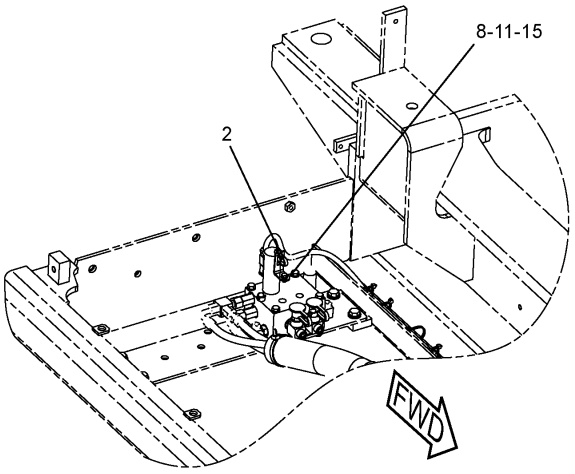

FLOW LIMIT SOL

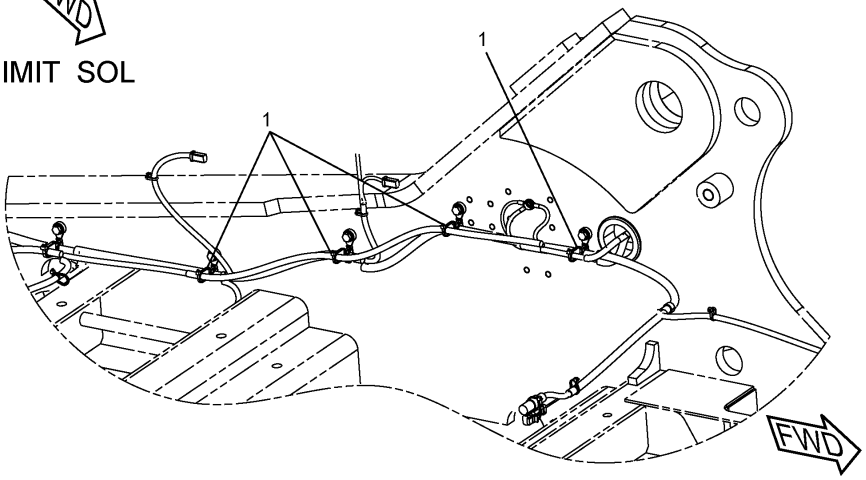

MAIN FRAME-RH

H93976E 02

251-0530 WIRING GP (3/3)
Part of 255-5697-Page473,255-5702-Page474
An Attachment

ELECTRICAL AND STARTING SYSTEM

NOTE	No.	PART No.	QTY	PART NAME	NOTE	No.	PART No.	QTY	PART NAME
	1	3S-2093	9	STRAP					
	2	7K-1181	1	STRAP					
	3	111-4836	3	CLIP					
	4	204-1611	2	STRAP					
	5	259-5071	2	BRACKET AS					
	6	283-3000	1	BRACKET AS					
	7	259-5075	1	BRACKET AS					
	8	156-6175	1	CLIP					
	9	8T-4121	7	WASHER					
	10	8T-4137	3	BOLT (L=20mm)					
	11	8T-4171	1	BOLT (L=12mm)					
	12	8T-4179	4	BOLT (L=20mm)					
	13	8T-4191	4	BOLT (L=16mm)					
	14	8T-4223	4	WASHER					
	15	9X-8256	1	WASHER					

H93976E 02

251-0530 WIRING GP (3/3)
Part of 255-5697-Page473,255-5702-Page474
An Attachment

ELECTRICAL AND STARTING SYSTEM

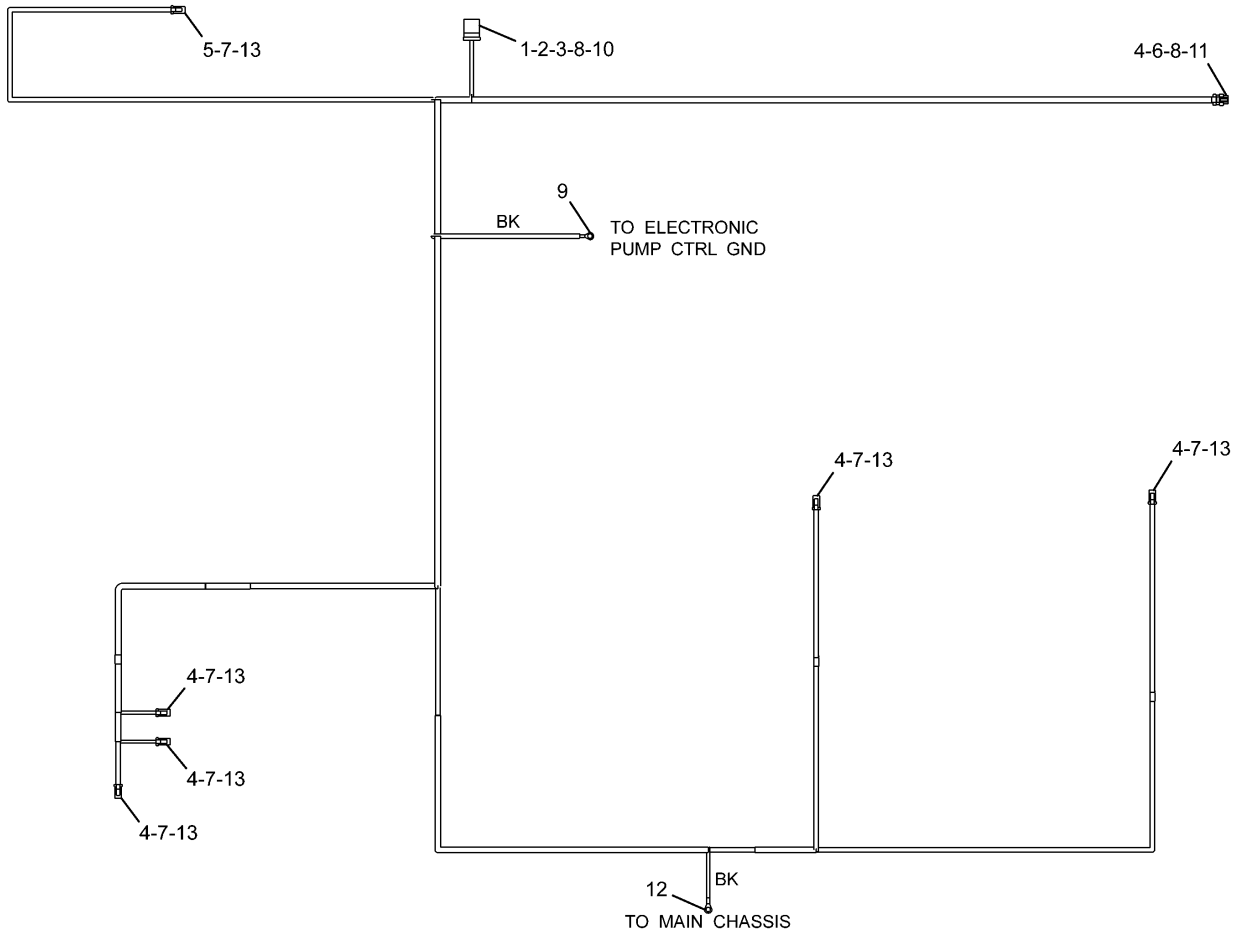

NOTE	No.	PART No.	QTY	PART NAME	NOTE	No.	PART No.	QTY	PART NAME
	1	186-3735	2	PIN					
	2	9X-3401	1	PIN					
	3	9W-0852	1	PIN					
	4	186-3736	14	SOCKET					
	5	126-1768	2	SOCKET					
	6	9W-0844	1	SOCKET					
	7	155-2261	6	WEDGE					
	8	8T-8737	9	PLUG					
	9	2L-8079	1	TERMINAL					
	10	243-4510	1	RECEPTACLE AS					
	11	230-5010	1	PLUG AS					
	12	2L-8069	1	TERMINAL					
	13	155-2270	6	PLUG KIT					

H91228E 00

267-7968 HARNESS AS
Part of 251-0530-Page201
An Attachment

MEMORANDA

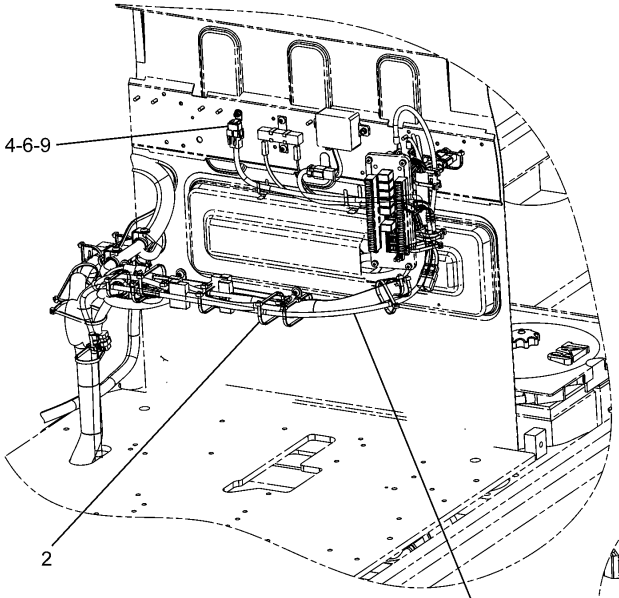

REAR PANEL IN CAB

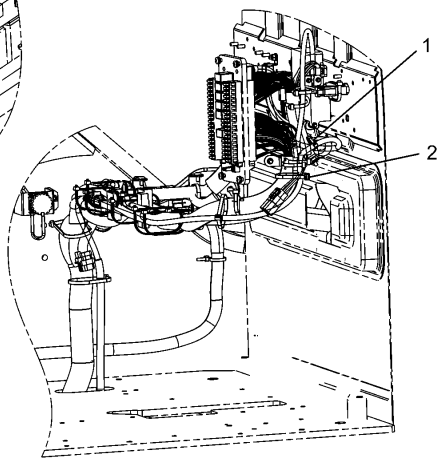

CAB LH SIDE

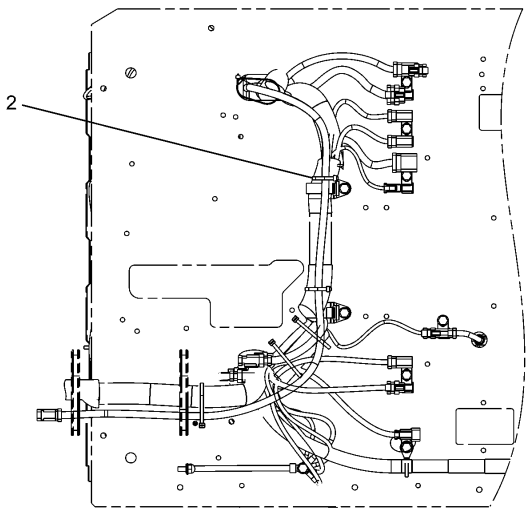

BOTTOM VIEW OF PLATFORM

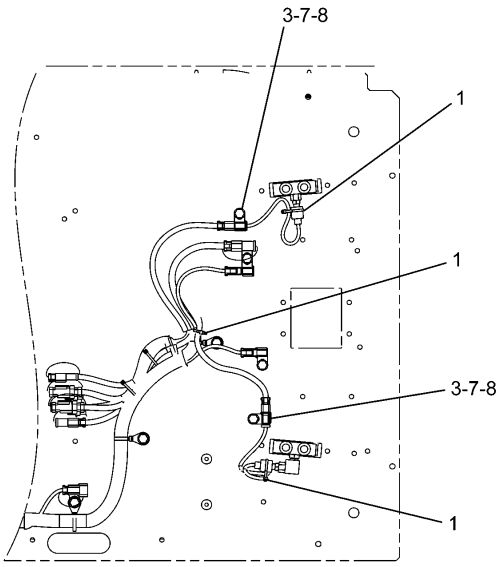

BOTTOM VIEW OF PLATFORM
(FOR MEDIUM PRESSURE LINES)

H90096E 00

251-0529 WIRING GP-CAB
Part of 255-5697-Page473,255-5702-Page474
251-0598-Page208
An Attachment

ELECTRICAL AND STARTING SYSTEM

NOTE	No.	PART No.	QTY	PART NAME	NOTE	No.	PART No.	QTY	PART NAME
	1	3S-2093	4	STRAP					
	2	7K-1181	8	STRAP					
	3	116-0118	2	CLIP					
	4	149-5050	1	RELAY					
Y	5	251-0598	1	HARNESS AS					
	6	5C-2890	1	NUT					
	7	7X-2621	2	BOLT (L=12mm)					
	8	8T-4121	2	WASHER					
	9	9X-8256	1	WASHER					

Y—SEE SEPARATE ILLUSTRATION

H90096E 00

251-0529 WIRING GP-CAB

Part of 255-5697-Page473,255-5702-Page474
251-0598-Page208
An Attachment

ELECTRICAL AND STARTING SYSTEM

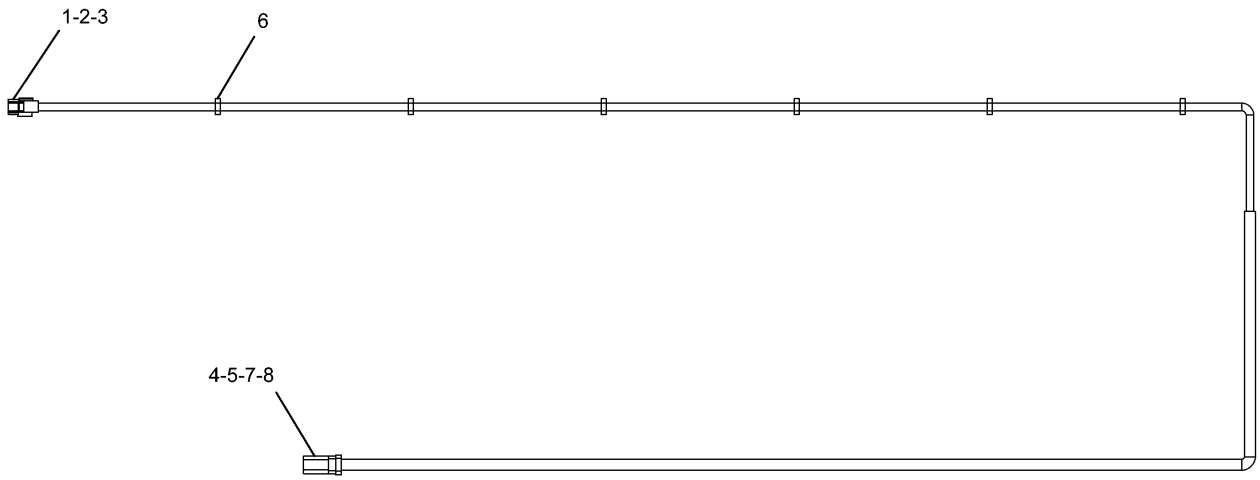

NOTE	No.	PART No.	QTY	PART NAME	NOTE	No.	PART No.	QTY	PART NAME
	1	149-5051	1	CONNECTOR					
	2	149-5070	3	TERMINAL					
	3	149-5069	2	TERMINAL					
	4	186-3735	4	PIN					
	5	9W-0852	1	PIN					
	6	3S-2093	6	STRAP					
	7	8T-8737	1	PLUG					
	8	243-4508	1	RECEPTACLE AS					

H89436E 00

251-0598 HARNESS AS
Part of 251-0529-Page207
An Attachment

MEMORANDA

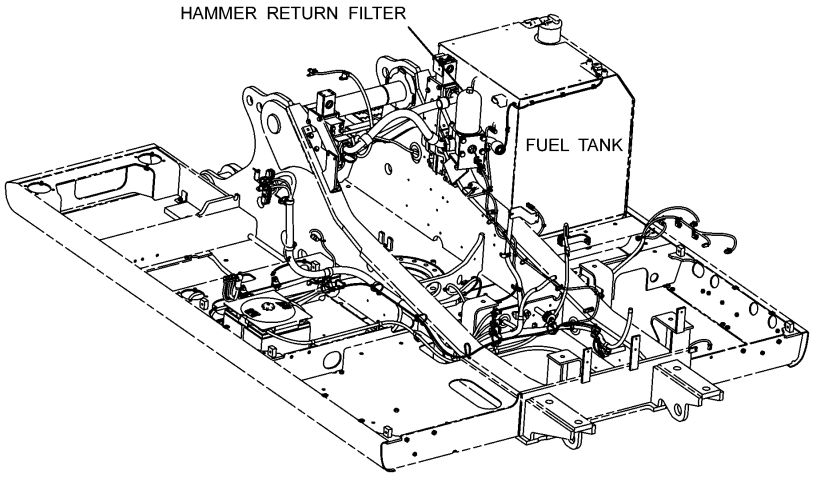

REAR VIEW

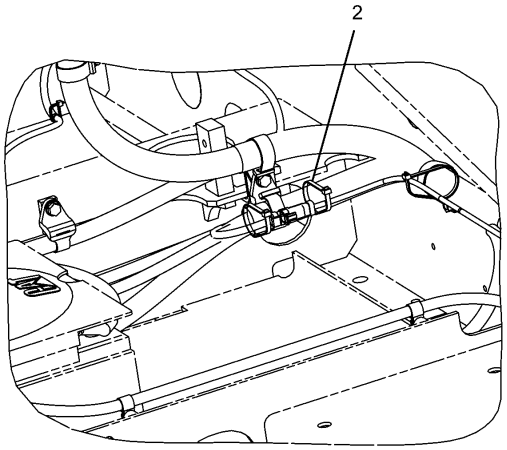

BATTERY ROOM

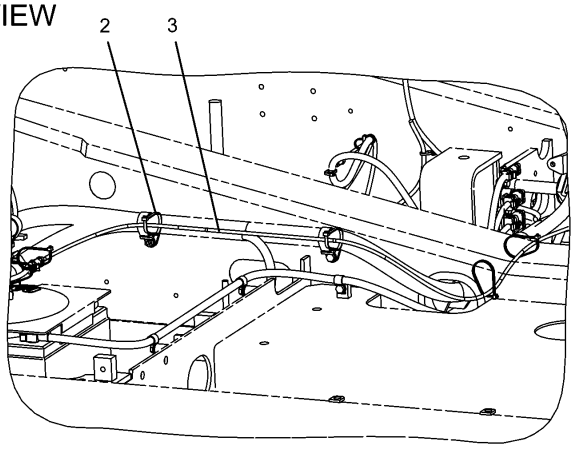

LH SIDE

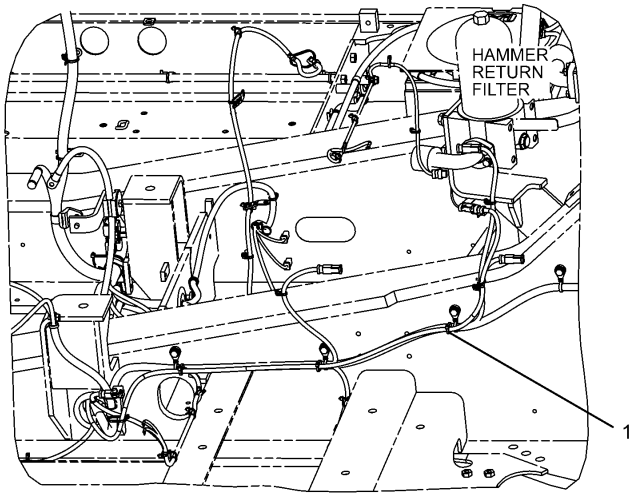

RH SIDE

H89356E 00

251-0442 WIRING GP (1/2)
Hammer Return Filter
Part of 247-7390-Page476
251-0457-Page214
An Attachment

ELECTRICAL AND STARTING SYSTEM

NOTE	No.	PART No.	QTY	PART NAME	NOTE	No.	PART No.	QTY	PART NAME
	1	3S-2093	4	STRAP					
	2	7K-1181	4	STRAP					
Y	3	251-0457	1	HARNESS AS					

Y—SEE SEPARATE ILLUSTRATION

H89356E 00

251-0442 WIRING GP (1/2)

Hammer Return Filter
Part of 247-7390-Page476
251-0457-Page214
An Attachment

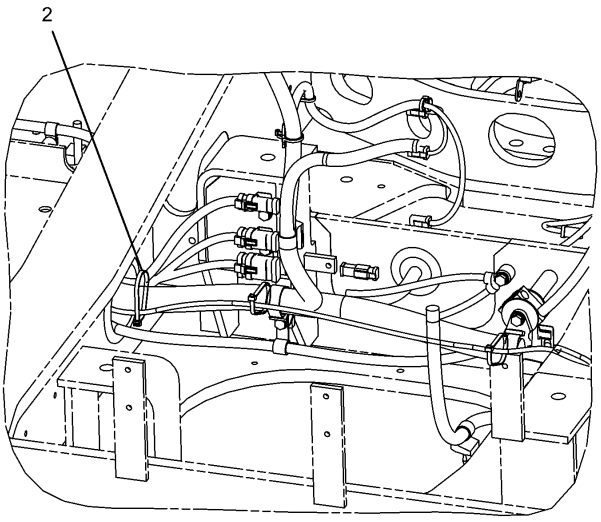

ENG ROOM

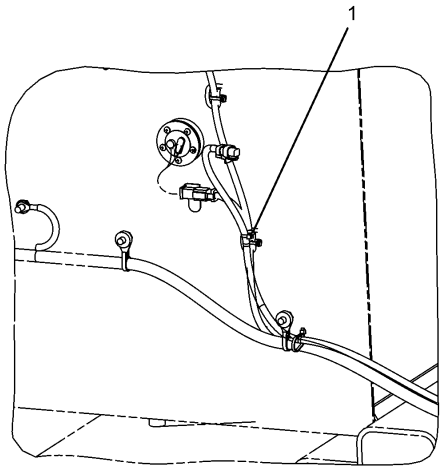

FUEL TANK LH SIDE

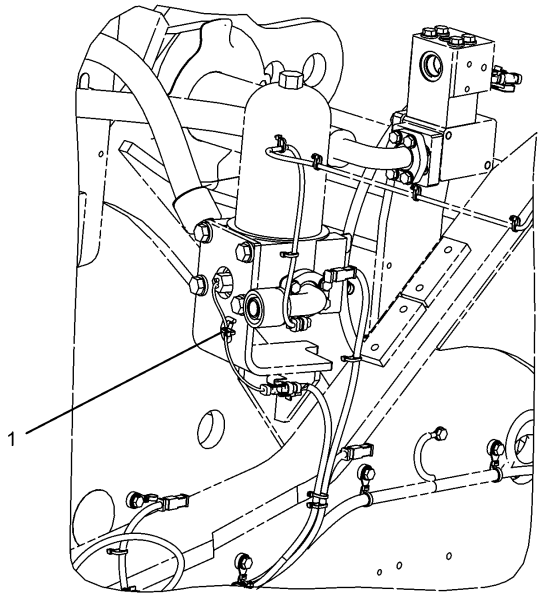

HAMMER RETURN FILTER

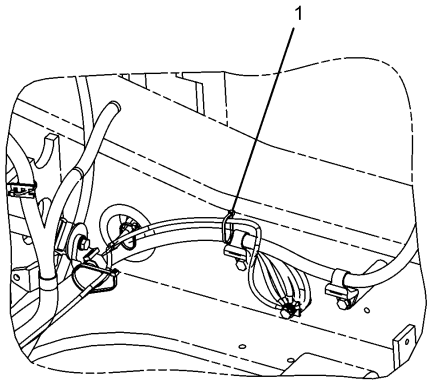

ENG ROOM RH SIDE

H89357E 00

251-0442 WIRING GP (2/2)
Hammer Return Filter
Part of 247-7390-Page476
An Attachment

ELECTRICAL AND STARTING SYSTEM

NOTE	No.	PART No.	QTY	PART NAME	NOTE	No.	PART No.	QTY	PART NAME
	1	3S-2093	4	STRAP					
	2	7K-1181	3	STRAP					

H89357E 00

251-0442 WIRING GP (2/2)

Hammer Return Filter
Part of 247-7390-Page476
An Attachment

ELECTRICAL AND STARTING SYSTEM

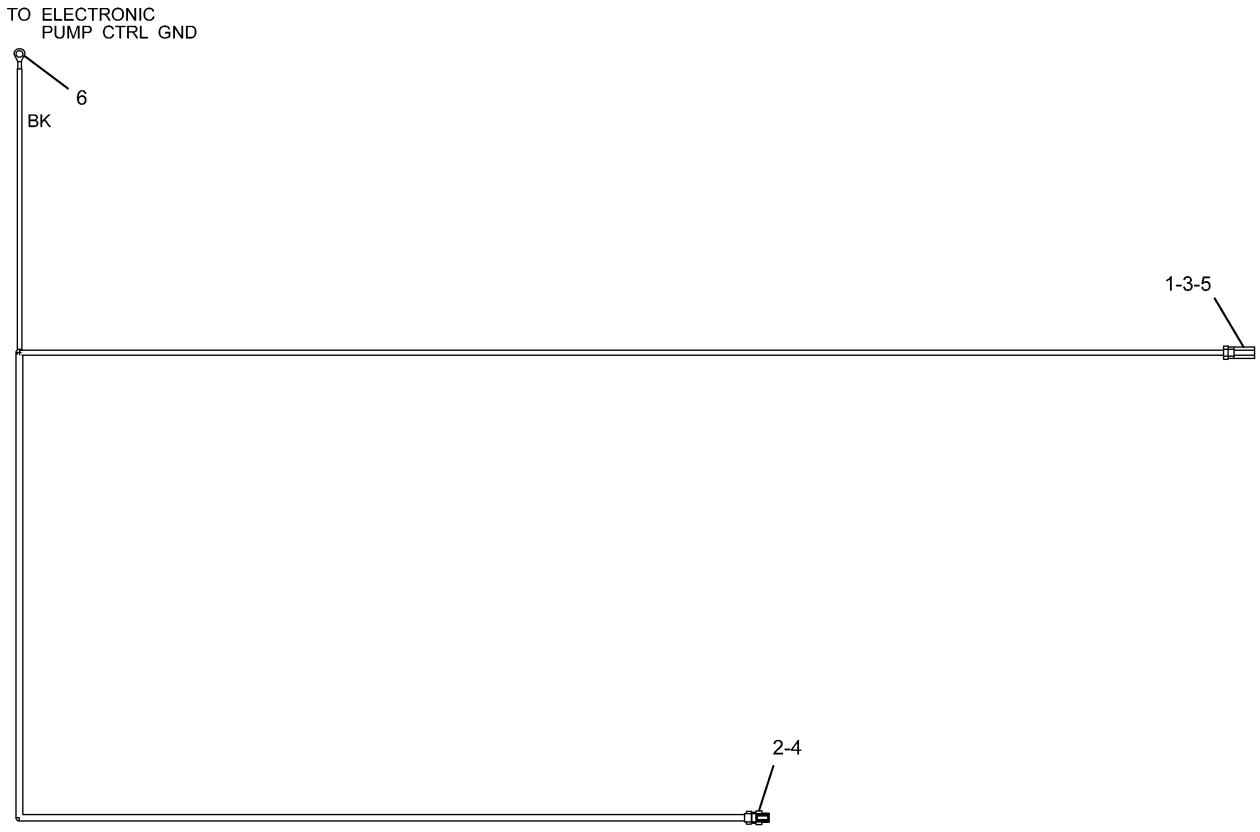

NOTE	No.	PART No.	QTY	PART NAME	NOTE	No.	PART No.	QTY	PART NAME
	1	9X-3401	1	PIN					
	2	126-1768	2	SOCKET					
	3	8T-8737	1	PLUG					
	4	230-4011	1	PLUG AS					
	5	243-4505	1	RECEPTACLE AS					
	6	2L-8079	1	TERMINAL					

H89441E 00

251-0457 HARNESS AS
Part of 251-0442-Page211
An Attachment

MEMORANDA

ELECTRICAL AND STARTING SYSTEM

Consists of :

			Page
1	270-5554	MONITOR GP-OPERATOR	658

H91203E 04

221-8861 ELECTRONICS GP

ELECTRICAL AND STARTING SYSTEM

Consists of :

			Page
1	270-5466	CONTROL GP-ELECTRONIC	218

H90122E 02

221-8875 ELECTRONICS GP

Consists of :

			Page
1	279-7622	CONTROL GP-ELECTRONIC	218

H93220E 03

270-5497 ELECTRONICS GP

Product Link Japan
Part of 275-3673-Page220
An Attachment

ELECTRICAL AND STARTING SYSTEM

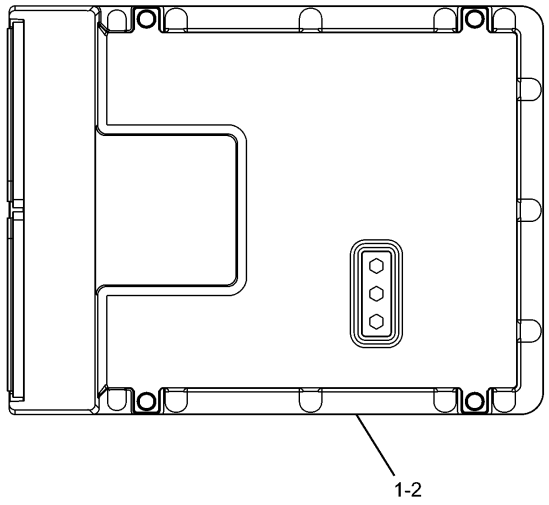

NOTE	No.	PART No.	QTY	PART NAME
	1	221-8874	1	CONTROL GP
	2	270-5465	1	SOFTWARE GP

H90031E 00

270-5466 CONTROL GP-ELECTRONIC

Part of 221-8875-Page217

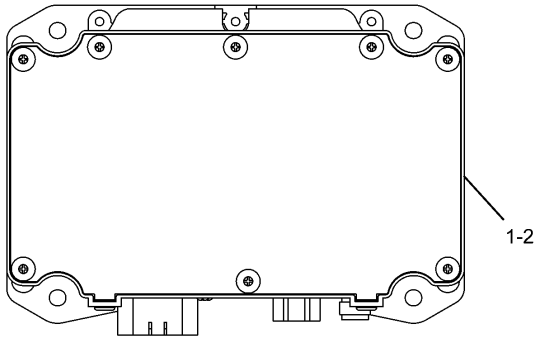

NOTE	No.	PART No.	QTY	PART NAME
	1	270-5500	1	CONTROL GP
	2	279-7623	1	SOFTWARE GP

H93221E 00

279-7622 CONTROL GP-ELECTRONIC

Product Link Japan
Part of 270-5497-Page217
An Attachment

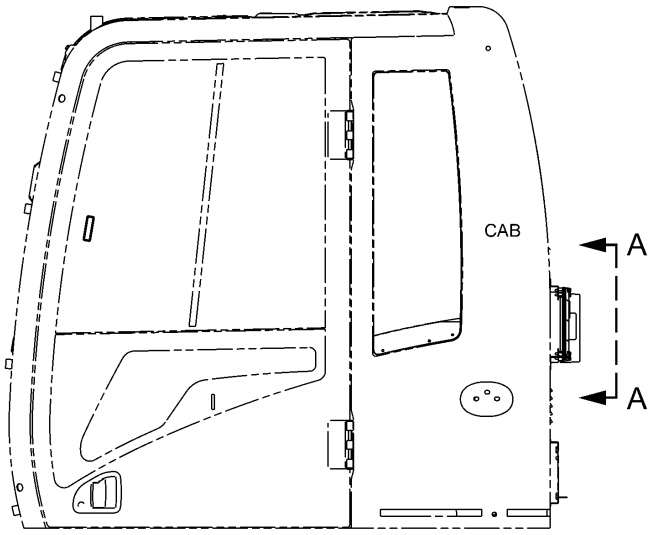

LEFT SIDE VIEW

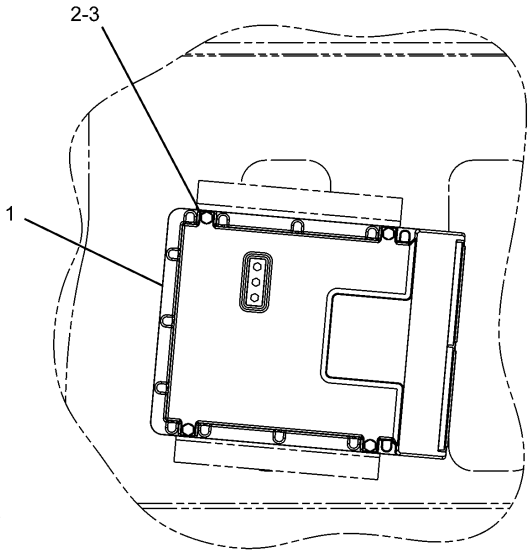

A – A

NOTE	No.	PART No.	QTY	PART NAME	NOTE	No.	PART No.	QTY	PART NAME
	1	221-8874	1	CONTROL GP					
	2	9X-2480	4	BOLT (L=45mm)					
	3	9X-8256	4	WASHER					

H88912E 01

221-8872 CONTROL & MTG GP-ELECTRONIC

ELECTRICAL AND STARTING SYSTEM

Consists of :

			Page
1	270-5497	ELECTRONICS GP	217
1	270-5528	MOUNTING GP	221
1	275-6783	WIRING GP	192
1	278-3567	COVER GP	300

H91205E 01

275-3673 CONTROL AR
Product Link Japan
An Attachment

ELECTRICAL AND STARTING SYSTEM

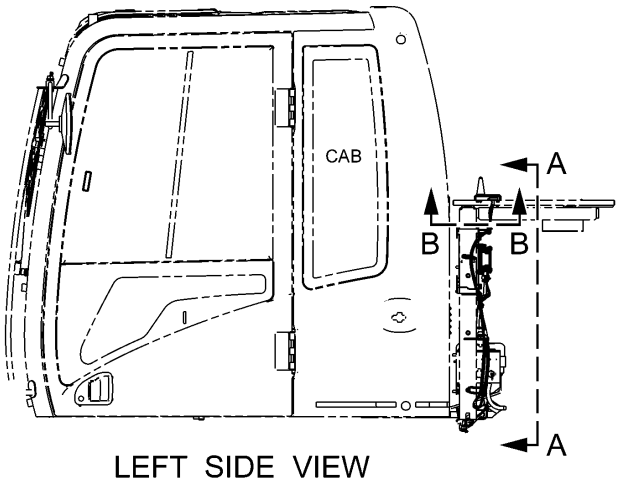

LEFT SIDE VIEW

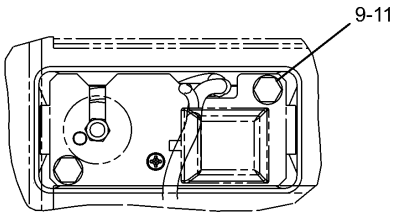

B – B

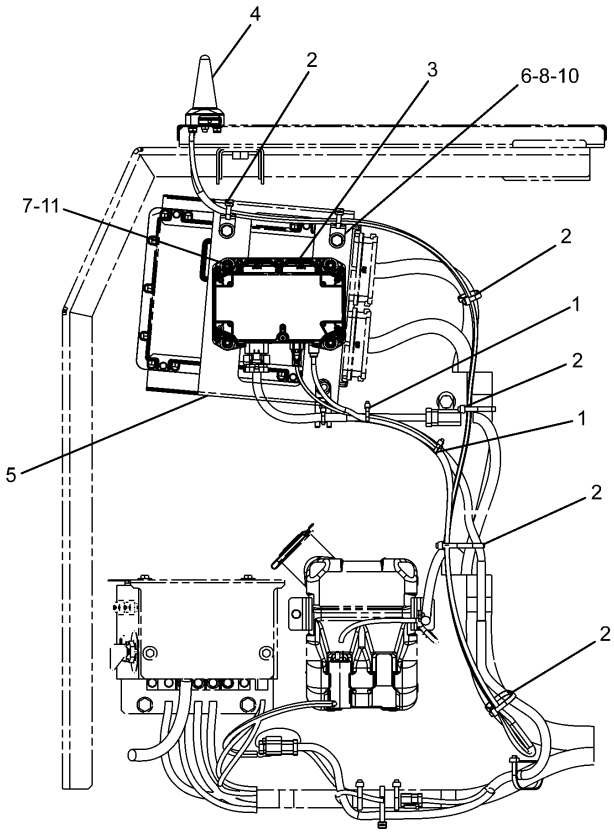

A – A

NOTE	No.	PART No.	QTY	PART NAME	NOTE	No.	PART No.	QTY	PART NAME
	1	3S-2093	2	STRAP					
	2	7K-1181	6	STRAP					
	3	270-5500	1	CONTROL GP					
	4	270-5501	1	ANTENNA AS					
	5	270-5526	1	BRACKET AS					
	6	132-5789	2	CLIP					
	7	3T-0849	4	BOLT (L=25mm)					
	8	7X-2536	2	BOLT (L=14mm)					
	9	8T-4171	2	BOLT (L=12mm)					
	10	8T-4224	2	WASHER					
	11	9X-8256	6	WASHER					

H90624E 00

270-5528 MOUNTING GP
Product Link Japan
Part of 275-3673-Page220
An Attachment

ELECTRICAL AND STARTING SYSTEM

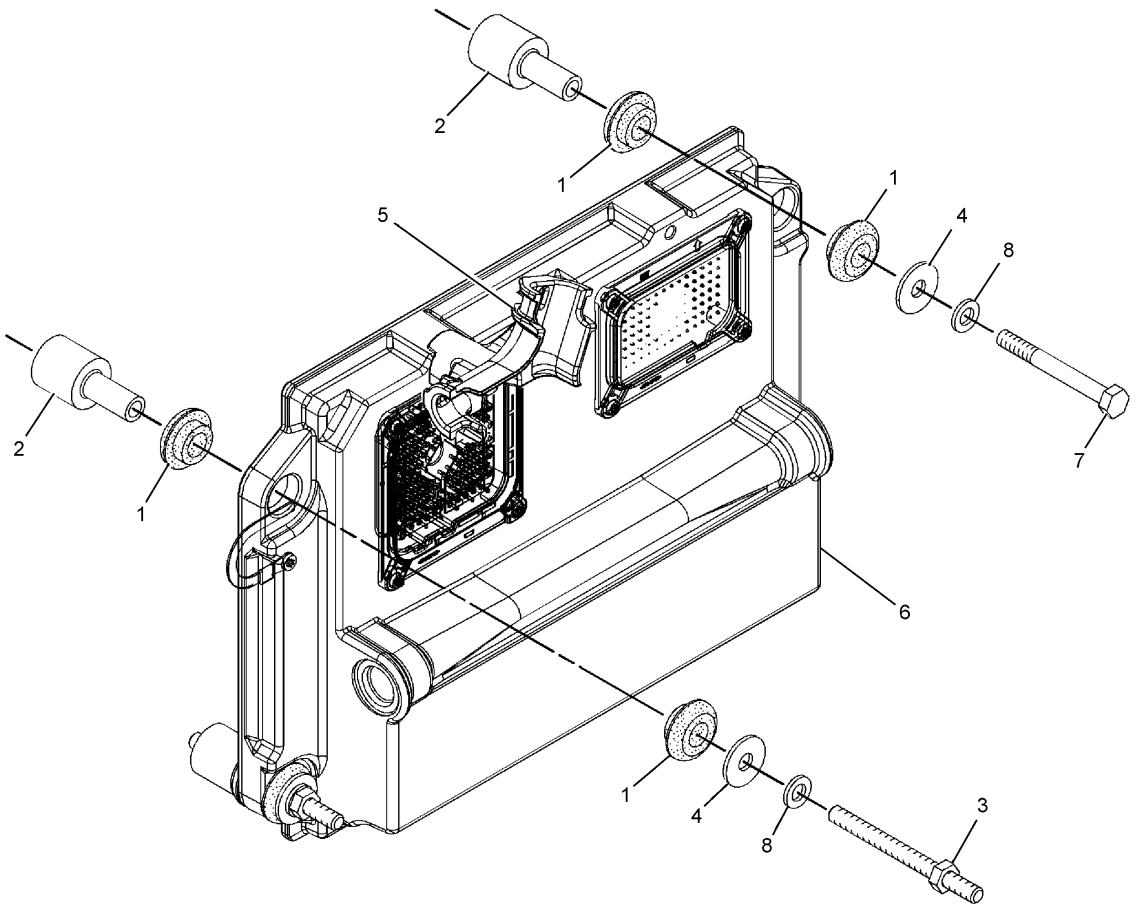

NOTE	No.	PART No.	QTY	PART NAME	NOTE	No.	PART No.	QTY	PART NAME
	1	8T-9655	8	MOUNT					
	2	101-3128	4	SPACER					
	3	143-9392	2	STUD					
	4	9N-0869	4	WASHER					
	5	244-3168	1	BRACKET AS					
	6	255-5285	1	CONTROL GP					
	7	5P-8347	2	BOLT (L=70mm)					
	8	9M-1974	4	WASHER					

H96262E 00

241-7602 CONTROL & MTG GP-ENGINE ELEK

Part of 235-8135-Page14

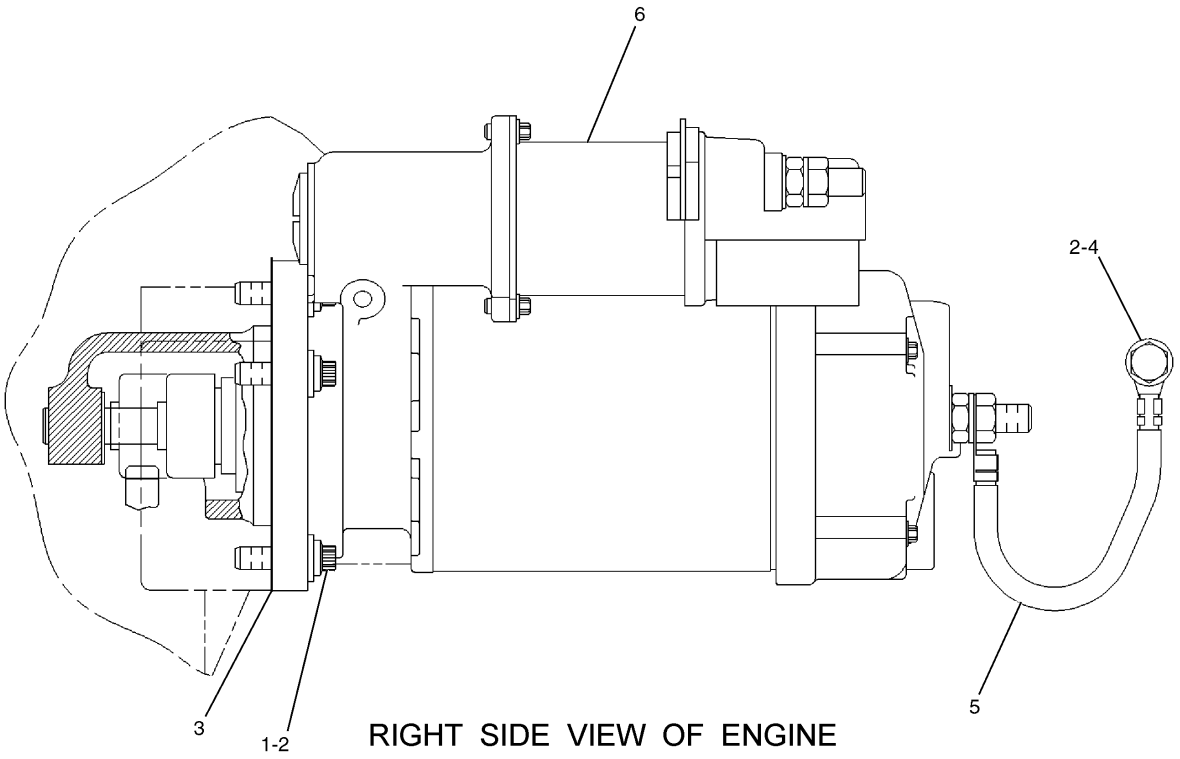

RIGHT SIDE VIEW OF ENGINE

NOTE	No.	PART No.	QTY	PART NAME	NOTE	No.	PART No.	QTY	PART NAME
	1	118-9573	3	BOLT					
	2	8T-4121	4	WASHER					
	3	3K-3257	1	GASKET					
	4	8T-4191	1	BOLT (L=16mm)					
	5	201-3153	1	WIRE AS					
Y	6	207-1511	1	MOTOR GP					

Y—SEE SEPARATE ILLUSTRATION

H90433E 02

201-4204 STARTING MOTOR GP-ELECTRIC

Part of 235-8135-Page14
207-1511-Page224

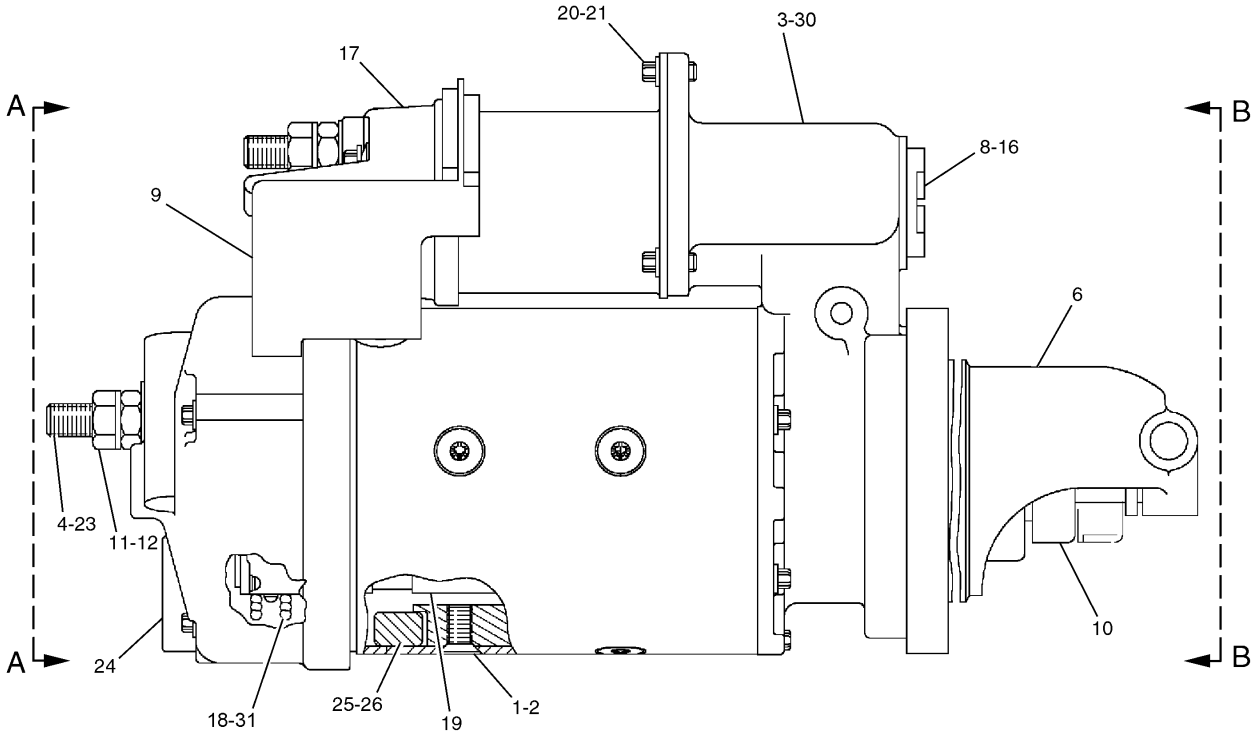

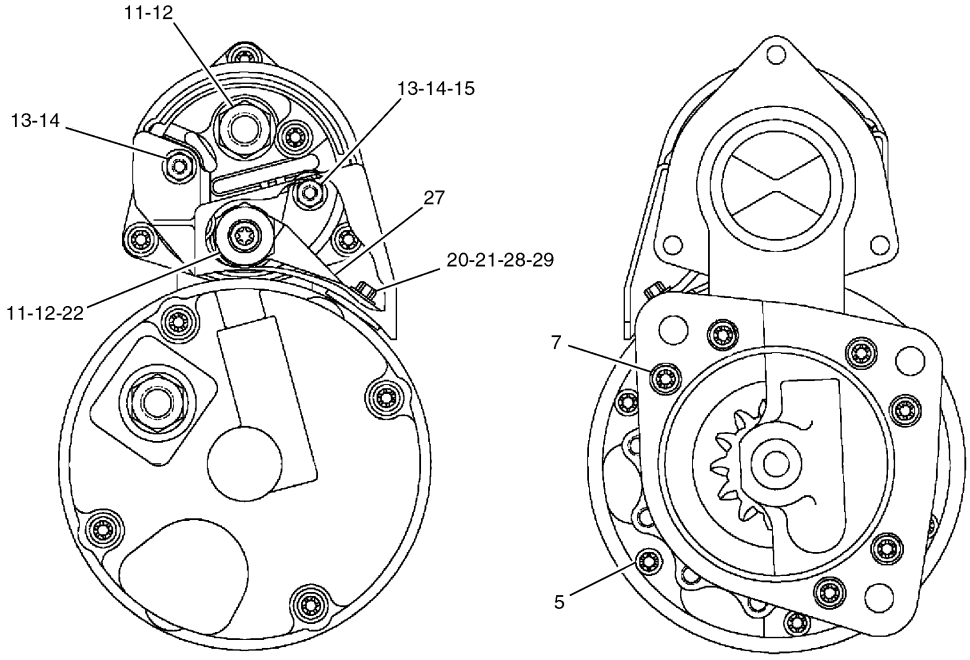

A – A

B – B

H90435E 01

207-1511 STARTING MOTOR GP-ELECTRIC
Part of 201-4204-Page223

ELECTRICAL AND STARTING SYSTEM

NOTE	No.	PART No.	QTY	PART NAME
	1	7X-1950	4	SHOE
	2	3F-0379	8	SCREW
	3	7X-1952	1	HOUSING AS
	4	8T-9884	1	INSULATOR KIT
	5	036-9823	5	BOLT
	6	7X-1954	1	HOUSING AS
	7	7X-3373	6	BOLT (L=22mm)
	8	7L-2894	1	GASKET
	9	9X-4824	1	COVER
	10	7X-1953	1	DRIVE AS
	11	7X-0562	4	WASHER
	12	6V-8188	4	NUT
	13	6V-8378	2	NUT
	14	8T-0328	2	WASHER
	15	8F-1434	1	LOCKWASHER
	16	4M-1831	1	PLUG
	17	206-8781	1	SOLENOID AS
	18	9X-4821	1	PLATE AS
	19	7X-1951	1	ARMATURE AS
	20	5S-7349	4	BOLT (L=13mm)
	21	8T-4205	4	WASHER
	22	3E-7853	1	TERMINAL
	23	102-9863	1	TERMINAL AS
	24	106-7149	1	HOUSING AS
	25	9X-4822	1	COIL AS
	26	7T-3454	1	INSULATOR
	27	9X-4271	1	CONNECTOR
	28	8T-8569	1	INSULATOR
	29	7T-3451	1	INSULATOR
				THE FOLLOWING REPAIR KITS ARE AVAILABLE:
	30	7X-1958	1	KIT (LEVER) (INCLUDES LEVER AS, SHAFT AS,GASKET,O-RING, RING,STOP & NUT)
	31	9X-4825	1	BRUSH KIT (INCLUDES BRUSH,O-RING,SCREW, & SPRING)
		9X-4270	1	KIT (BUSHING) (INCLUDES BUSHING,SEAL,O-RING,CUP, SPACER,STOP,PLUG, GASKET,WASHER,RING, & SCREW AS)

H90435E 01

207-1511 STARTING MOTOR GP-ELECTRIC

Part of 201-4204-Page223

ELECTRICAL AND STARTING SYSTEM

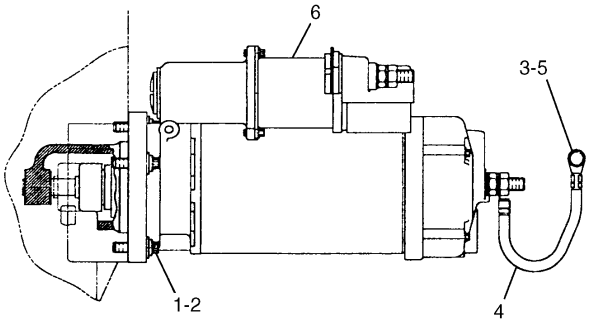

NOTE	No.	PART No.	QTY	PART NAME
	1	118-9573	3	BOLT
	2	8T-4121	3	WASHER
	3	8T-4200	1	BOLT (L=16mm)
	4	8Y-9603	1	CABLE AS
		1S-7251	1	TERMINAL
		1S-7252	1	TERMINAL
	5	8T-4224	1	WASHER
Y	6	207-1551	1	MOTOR GP

Y—SEE SEPARATE ILLUSTRATION

H84553E 02

128-5626 STARTING MOTOR GP-ELECTRIC

Part of 275-3747-Page187
207-1551-Page228
An Attachment

MEMORANDA

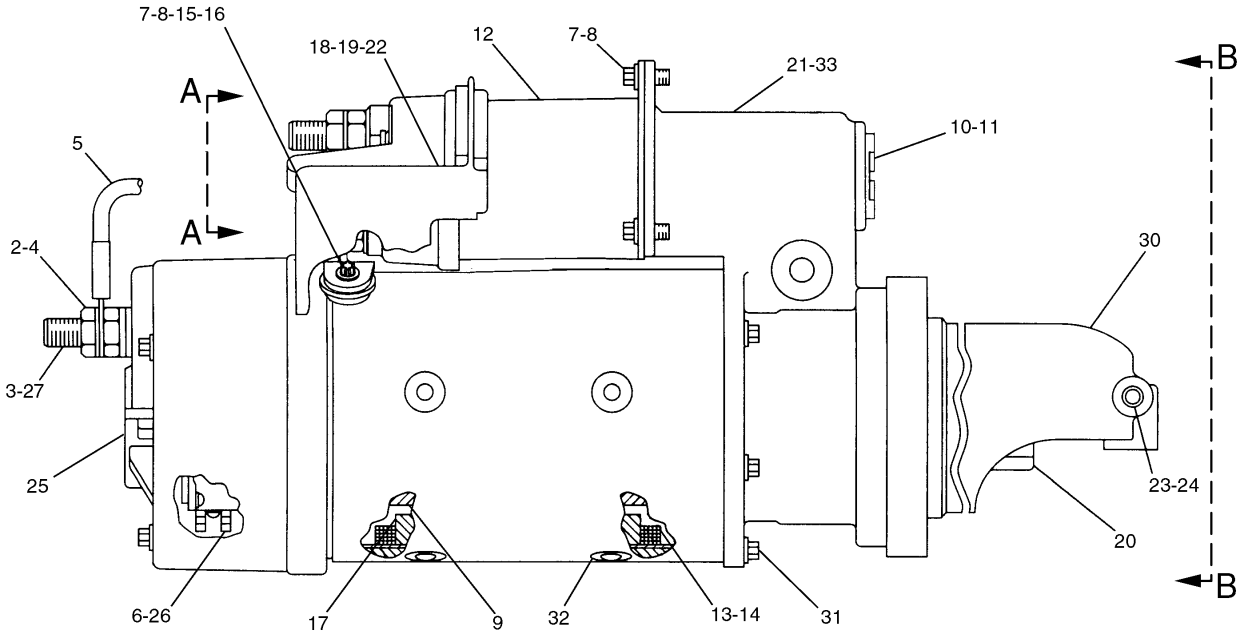

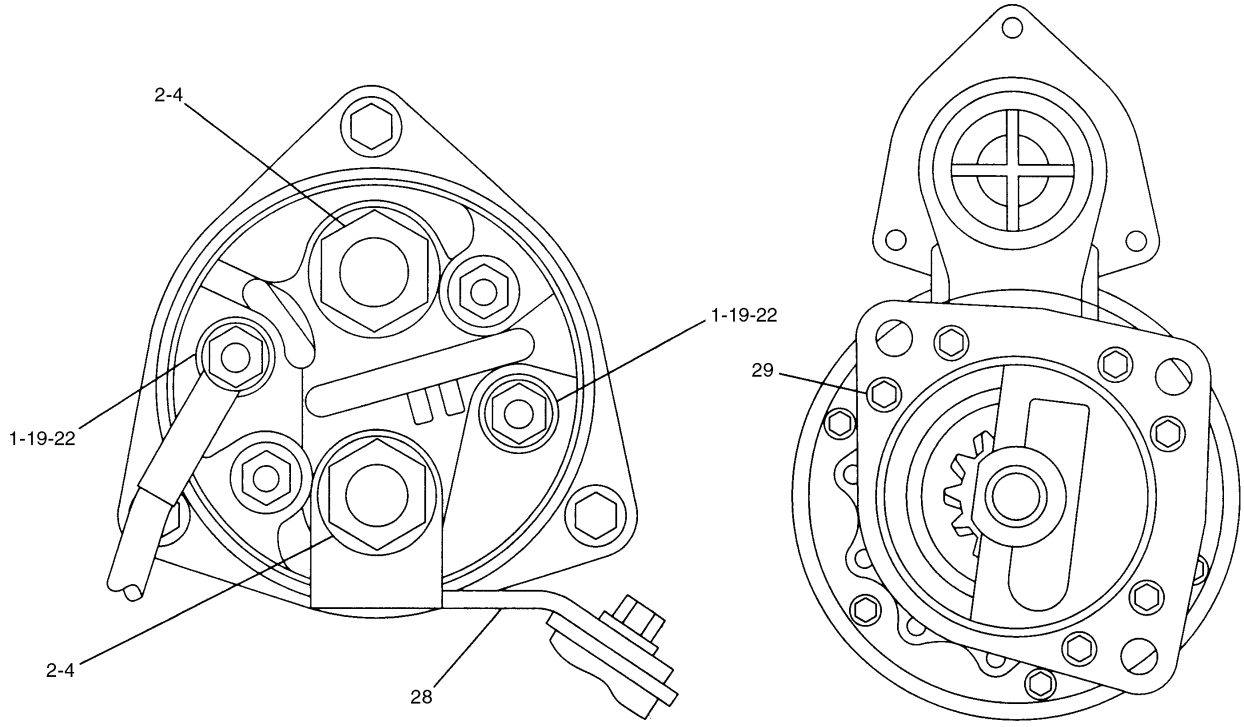

A – A

B – B

H77403E 00

207-1551 STARTING MOTOR GP-ELECTRIC
Part of 128-5626-Page226
An Attachment

ELECTRICAL AND STARTING SYSTEM

NOTE	No.	PART No.	QTY	PART NAME	NOTE	No.	PART No.	QTY	PART NAME
	1	8F-1434	2	LOCKWASHER					
	2	6V-8188	4	NUT					
	3	8T-8566	1	TERMINAL AS					
	4	7X-0562	4	WASHER					
	5	3T-3422	1	WIRE AS					
		2L-8066	1	TERMINAL					
		2L-8071	1	TERMINAL					
	6	7T-3278	1	HOLDER AS					
	7	5S-7349	4	BOLT (L=13mm)					
	8	8T-4205	4	WASHER					
	9	7T-3276	1	ARMATURE AS					
	10	4M-1831	1	PLUG					
	11	7L-2894	1	GASKET					
	12	193-8570	1	SOLENOID AS					
	13	7T-3277	1	COIL AS					
	14	7T-3454	1	INSULATOR					
	15	7T-3451	1	INSULATOR					
	16	8T-8569	1	INSULATOR					
	17	8H-1141	1	SHOE					
	18	9X-4824	1	COVER					
	19	6V-8378	3	NUT					
	20	6N-3827	1	DRIVE AS					
	21	7T-3268	1	LEVER KIT					
	22	8T-0328	3	WASHER					
	23	9F-2247	1	PLUG					
	24	9F-2547	1	WICK					
	25	7T-3279	1	HOUSING AS					
	26	8C-3655	1	BRUSH KIT					
	27	8T-9884	1	INSULATOR KIT					
	28	7T-3271	1	CONNECTOR					
	29	7X-3373	6	BOLT (L=22mm)					
	30	9X-9510	1	HOUSING AS					
	31	036-9823	5	BOLT					
	32	3F-0379	8	SCREW					
	33	105-9702	1	HOUSING AS					
				THE FOLLOWING REPAIR KIT IS AVAILABLE:					
		7T-3267	1	BUSHING KIT					

H77403E 00

207-1551 STARTING MOTOR GP-ELECTRIC

Part of 128-5626-Page226
An Attachment

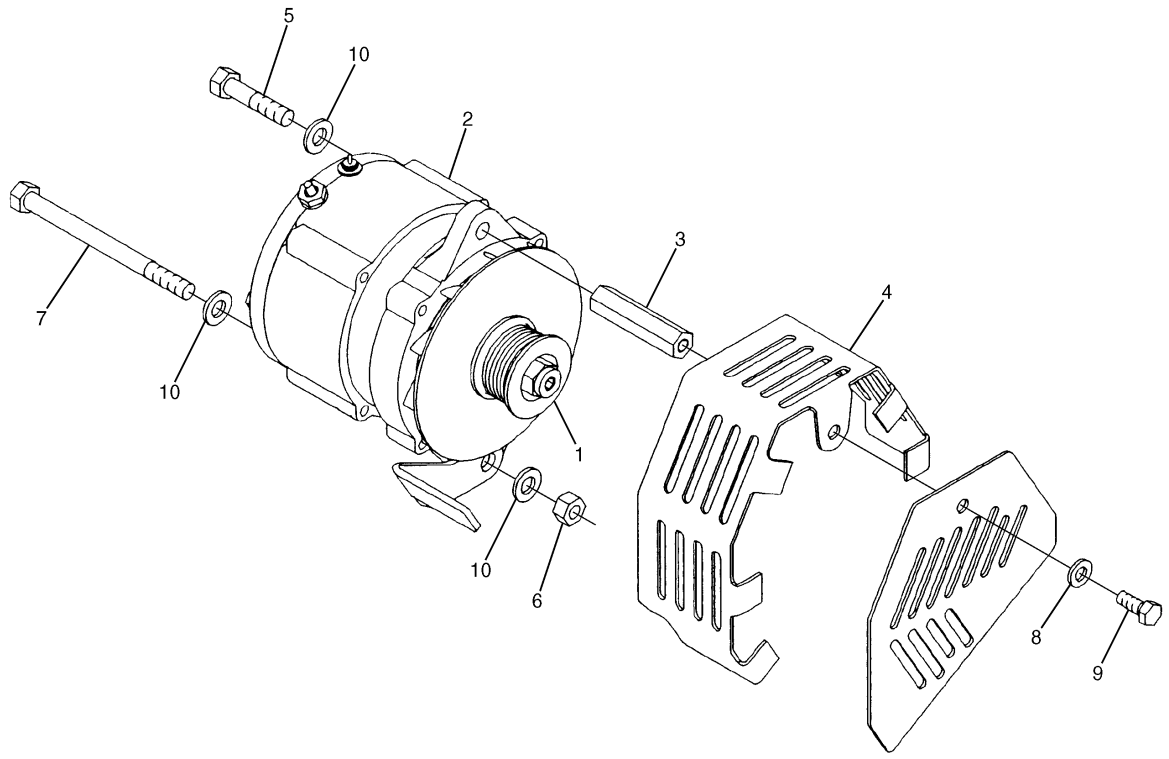

NOTE	No.	PART No.	QTY	PART NAME	NOTE	No.	PART No.	QTY	PART NAME
	1	129-5096	1	PULLEY					
Y	2	185-5294	1	ALTERNATOR GP					
	3	203-0199	1	SPACER					
	4	258-7531	1	GUARD AS					
	5	5P-2424	1	BOLT (L=57mm)					
	6	6V-8188	1	NUT					
	7	7X-0339	1	BOLT (L=159mm)					
	8	8T-4121	1	WASHER					
	9	8T-4136	1	BOLT (L=25mm)					
	10	8T-4223	3	WASHER					

Y—SEE SEPARATE ILLUSTRATION

H90287E 04

177-6972 ALTERNATOR GP-CHARGING

Part of 235-8135-Page14
185-5294-Page231

ELECTRICAL AND STARTING SYSTEM

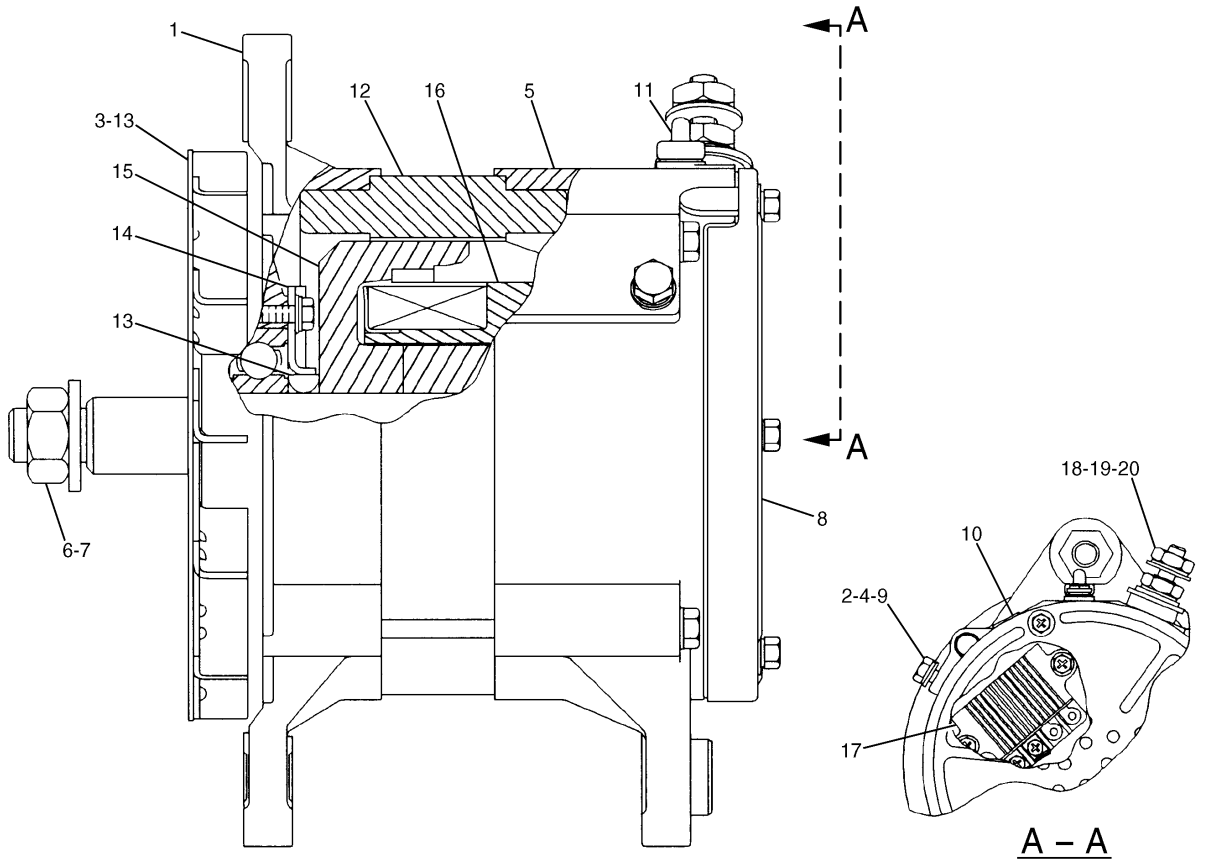

NOTE	No.	PART No.	QTY	PART NAME	NOTE	No.	PART No.	QTY	PART NAME
	1	185-2653	1	FRAME					THE FOLLOWING REPAIR
	2	5S-7349	1	BOLT (L=13mm)					KITS ARE AVAILABLE:
	3	185-2639	1	FAN AS			185-2655	1	KIT (BEARING)
	4	1H-3244	1	LOCKWASHER			199-8436	1	KIT (TERMINAL)
	5	185-2645	1	FRAME					(INCLUDES HOLDER AS,
	6	2K-4821	1	LOCKNUT					PLATE INSULATOR,PIN,
	7	5P-8247	1	WASHER					BOLT KIT,GROMMET & NUT)
	8	185-2651	1	COVER			199-7891	1	KIT (TERMINAL)
	9	8T-4205	1	WASHER					(INCLUDES INSULATORS,WASHERS
	10	185-2647	1	GROMMET					& NUTS)
	11	9L-6770	1	CAP			185-2658	1	KIT (HARDWARE)
	12	185-2642	1	STATOR AS					
	13	185-2638	2	COLLAR					
	14	185-2654	1	PLATE					
	15	185-2650	1	ROTOR AS					
	16	185-2644	1	COIL AS					
	17	185-2648	1	REGULATOR AS					
	18	6V-8189	1	NUT					
	19	8T-4224	1	WASHER					
	20	3F-9556	1	LOCKWASHER					

H90289E 03

185-5294 ALTERNATOR GP-CHARGING

Part of 177-6972-Page230

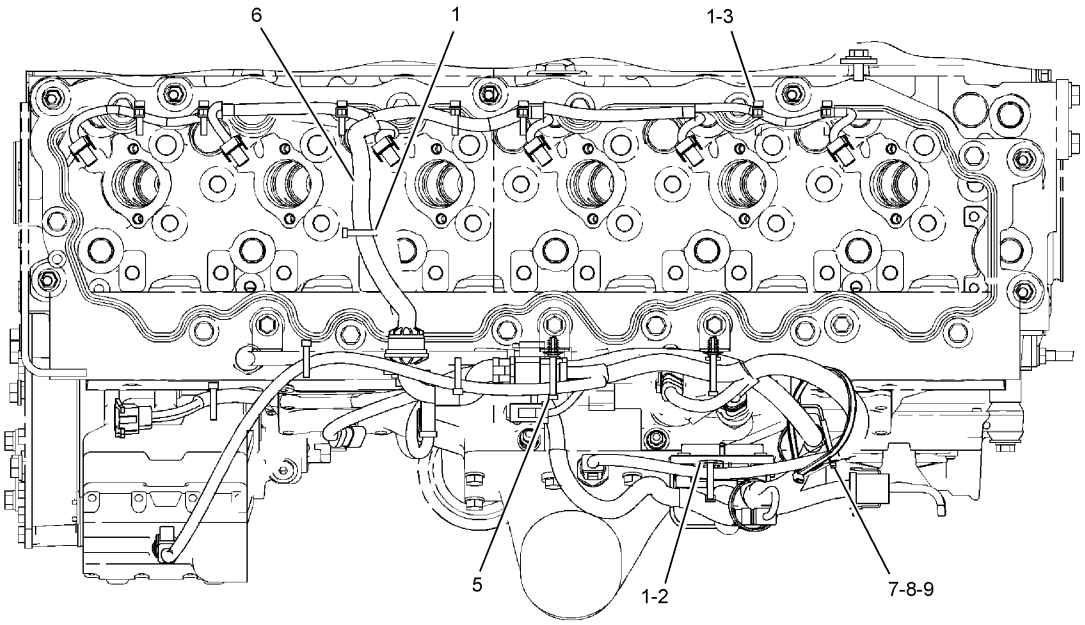

TOP VIEW OF ENGINE

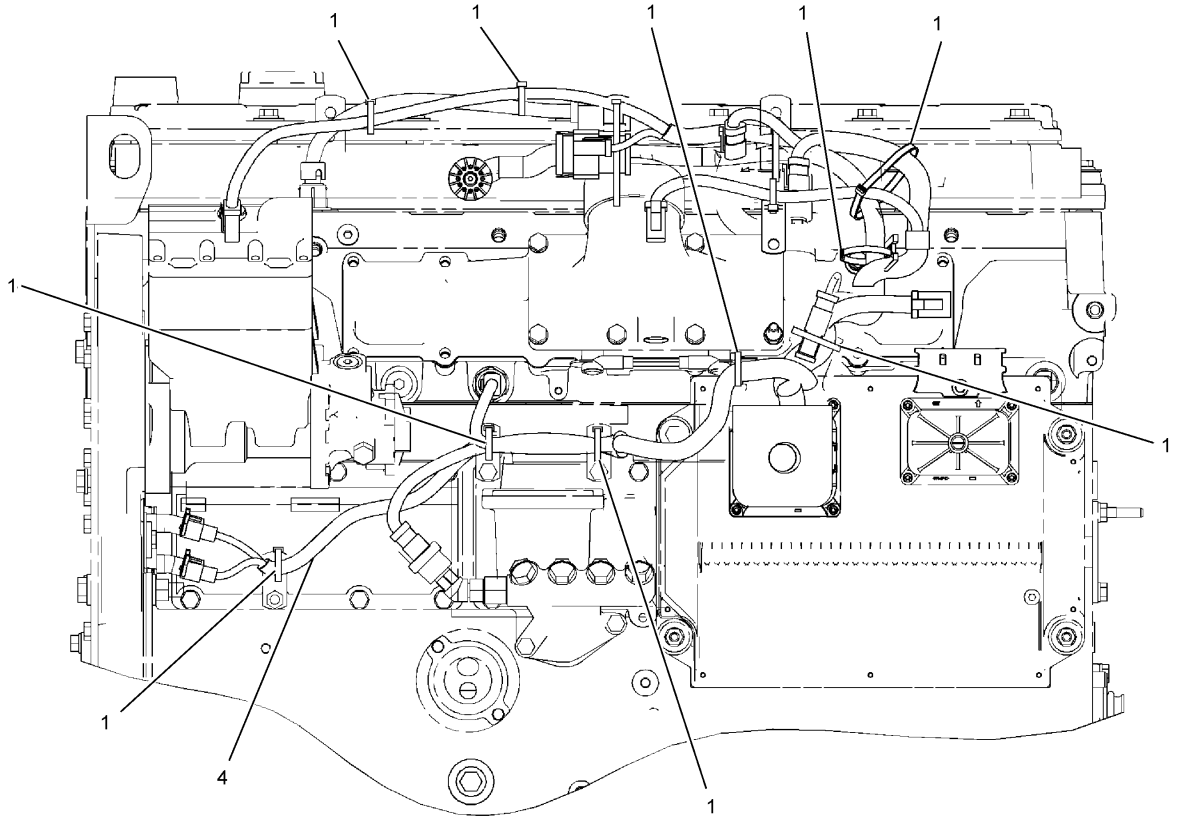

LEFT SIDE VIEW OF ENGINE

H96263E 00

198-2714 WIRING GP-ENGINE
Part of 235-8135-Page14

ELECTRICAL AND STARTING SYSTEM

NOTE	No.	PART No.	QTY	PART NAME	NOTE	No.	PART No.	QTY	PART NAME
	1	3S-2093	18	STRAP					
	2	4P-5918	1	CLIP					
	3	105-1797	7	MOUNT					
	4	198-2713	1	HARNESS AS					
		102-8802	1	RECEPTACLE KIT					
		102-8803	1	RECEPTACLE KIT					
		102-8801	1	RECEPTACLE KIT					
		8T-8737	77	PLUG					
		100-3320	1	PLUG AS					
		126-5011	1	SEAL					
		111-2416	1	PLUG AS					
		126-5011	1	SEAL					
		155-2265	1	PLUG KIT					
		155-2260	3	PLUG KIT					
		155-2270	5	PLUG KIT					
		227-4002	1	PLUG AS					
	5	206-1345	2	STRAP					
	6	222-5917	1	HARNESS AS					
		6N-7523	1	WASHER					
		135-5975	1	GROMMET					
		155-2255	1	PLUG KIT					
	7	4P-8134	1	CLIP					
	8	6V-2317	1	BOLT (L=30mm)					
	9	9M-1974	1	WASHER					

H96263E 00

198-2714 WIRING GP-ENGINE

Part of 235-8135-Page14

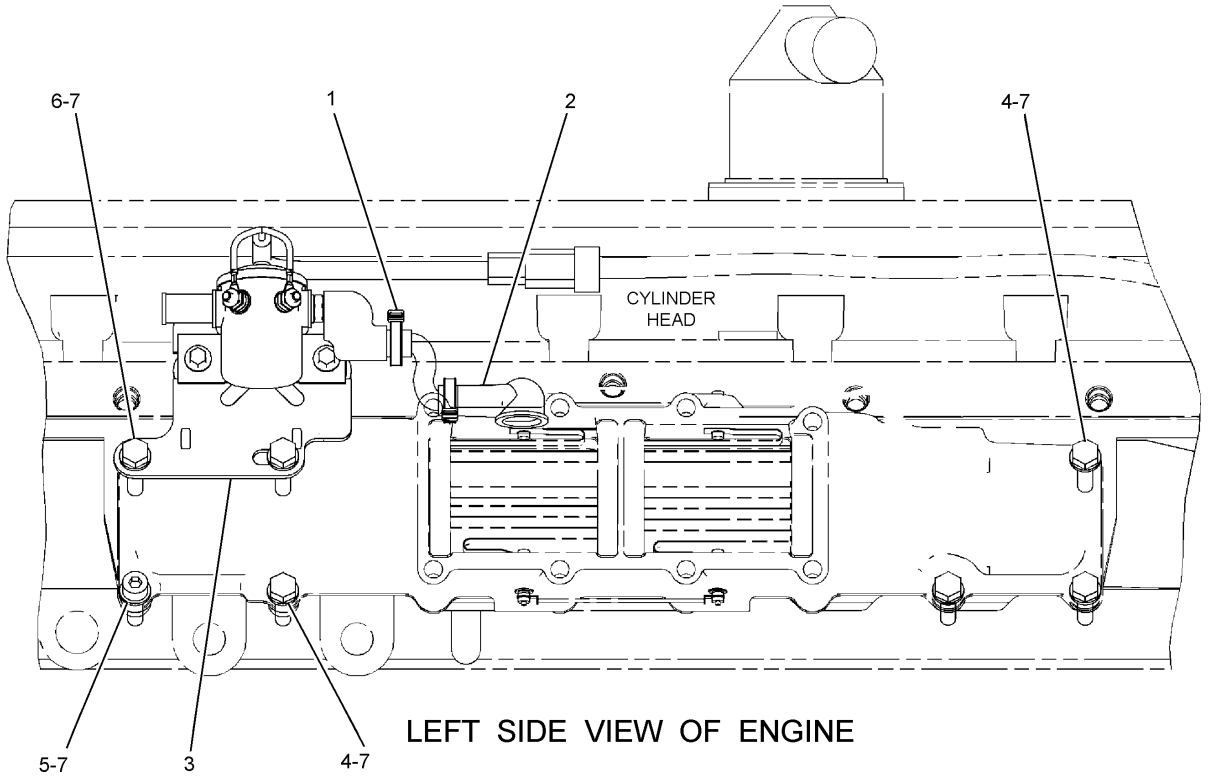

LEFT SIDE VIEW OF ENGINE

NOTE	No.	PART No.	QTY	PART NAME	NOTE	No.	PART No.	QTY	PART NAME
	1	3S-2093	2	STRAP					
	2	229-8851	1	CABLE AS					
Y	3	223-7577	1	SWITCH GP					
	4	6V-2317	4	BOLT (L=30mm)					
	5	6V-5192	1	BOLT (L=30mm)					
	6	6V-5218	2	BOLT (L=35mm)					
	7	9M-1974	7	WASHER					

Y—SEE SEPARATE ILLUSTRATION

H96264E 00

249-9223 WIRING GP-HEATER

Part of 235-8135-Page14
223-7577-Page235

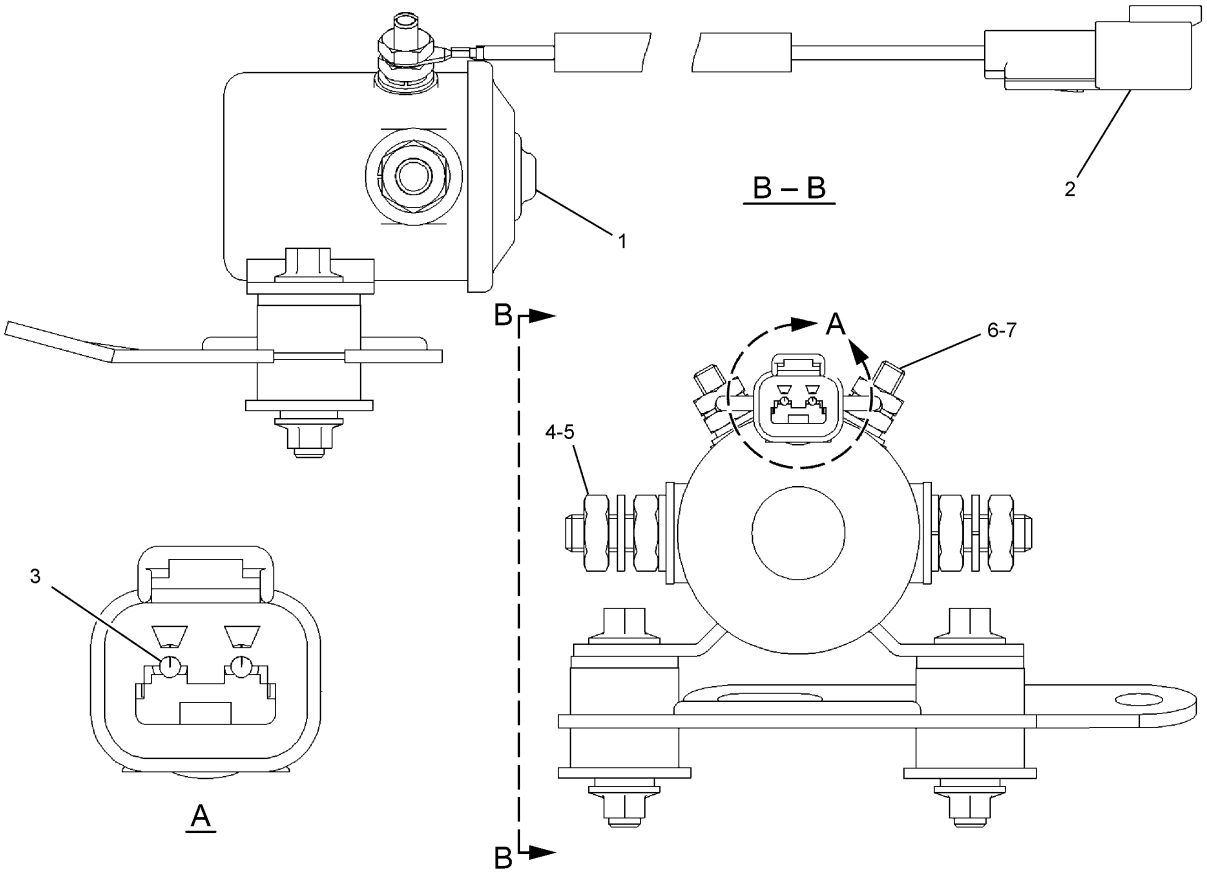

NOTE	No.	PART No.	QTY	PART NAME	NOTE	No.	PART No.	QTY	PART NAME
	1	209-5582	1	SWITCH AS					
	2	102-8802	1	RECEPTACLE KIT					
	3	186-3735	2	PIN					
	4	3F-9556	2	LOCKWASHER					
	5	6V-8186	2	NUT					
	6	6V-8378	2	NUT					
	7	8F-1434	2	LOCKWASHER					

H96265E 00

223-7577 SWITCH GP-MAGNETIC

Part of 249-9223-Page234

ELECTRICAL AND STARTING SYSTEM

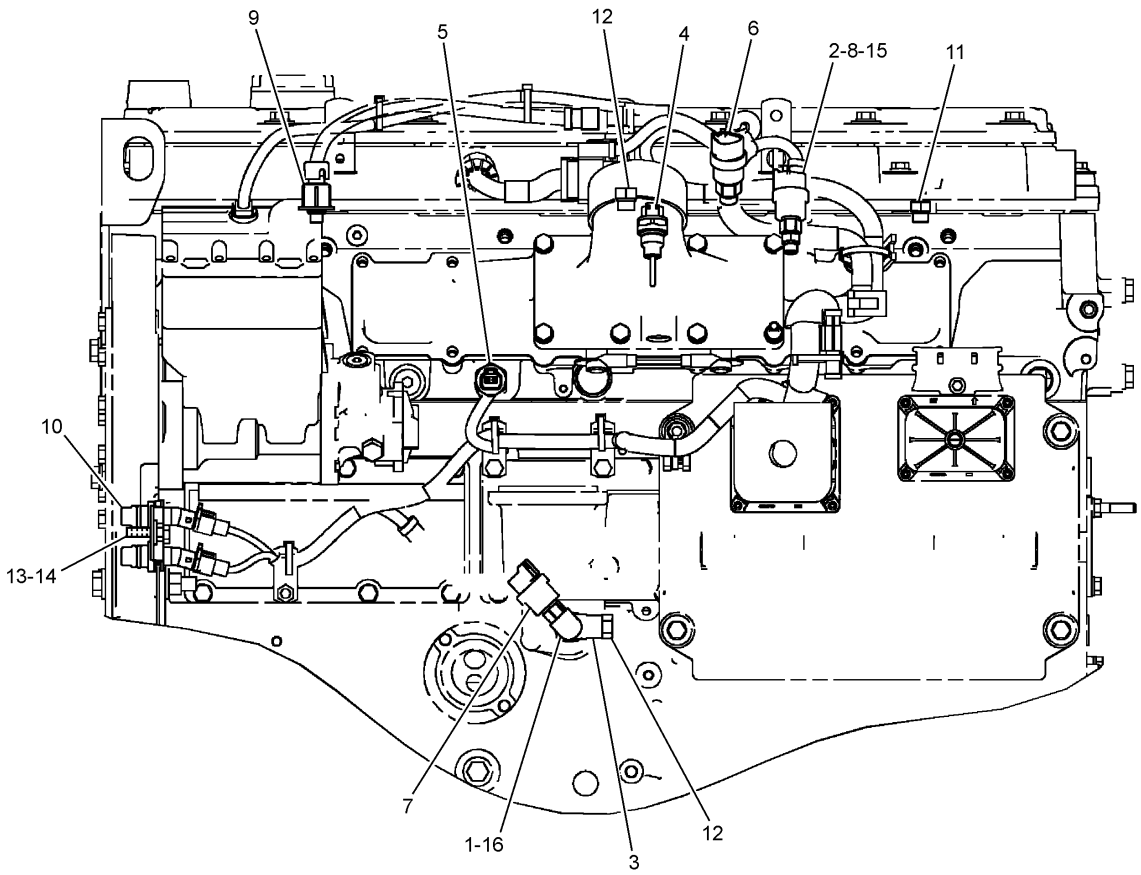

LEFT SIDE VIEW OF ENGINE

NOTE	No.	PART No.	QTY	PART NAME	NOTE	No.	PART No.	QTY	PART NAME
	1	3E-2332	1	ELBOW		12	183-3406	2	PLUG AS
	2	9X-0262	1	ADAPTER			6V-5049	1	SEAL-O-RING (ID=11.89mm)
	3	171-6718	1	TEE AS			9S-4191	1	PLUG
		3K-0360	1	SEAL-O-RING (ID=16.36mm)		13	3E-4352	1	WASHER
		105-7704	1	TEE		14	6V-3940	1	BOLT (L=25mm)
Y	4	197-8391	1	SENSOR GP		15	6V-5048	1	SEAL-O-RING (ID=8.92mm)
				(AIR INLET MANIFOLD)		16	6V-5049	1	SEAL-O-RING (ID=11.89mm)
Y	5	197-8392	1	SENSOR GP					
				(WATER,COOLANT)					
Y	6	197-8393	1	SENSOR GP					
				(ATMOSPHERIC AIR)					
Y	7	197-8394	1	SENSOR GP (ENGINE OIL)					
Y	8	210-1747	1	SENSOR GP (BOOST)					
Y	9	236-6220	1	SENSOR GP					
				(INJECTION ACTUATION)					
Y	10	236-6221	1	SENSOR GP					
				(ENGINE TIMING)					
	11	169-5861	1	PLUG AS					
		3K-8460	1	PLUG					
		5P-7814	1	SEAL-O-RING (ID=10.52mm)					

Y—SEE SEPARATE ILLUSTRATION

H96266E 00

257-2186 SENSOR GP-ENGINE

Part of 235-8135-Page14
197-8391-Page237,197-8392-Page238,197-8393-Page239,197-8394-Page240,210-1747-Page241,236-6220-Page242
,236-6221-Page244

ELECTRICAL AND STARTING SYSTEM

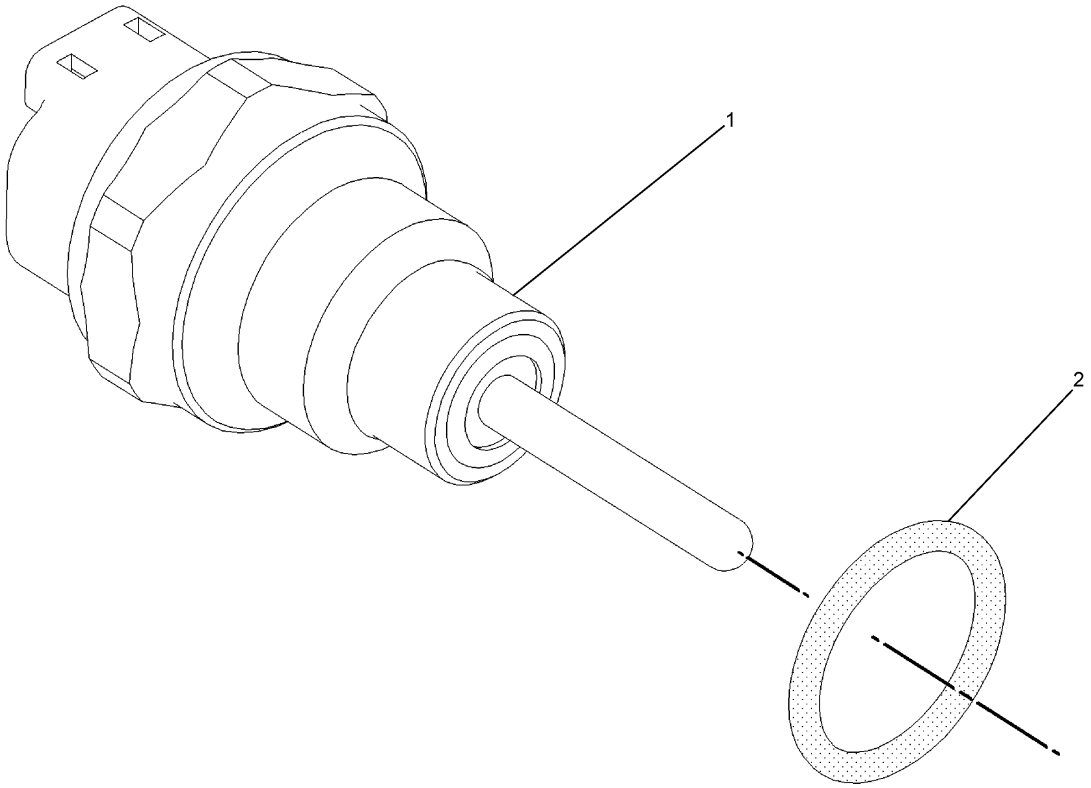

NOTE	No.	PART No.	QTY	PART NAME	NOTE	No.	PART No.	QTY	PART NAME
	1	130-9811	1	SENSOR GP					
	2	8L-2786	1	SEAL-O-RING (ID=16.36mm)					

H87784E 00

197-8391 SENSOR GP-TEMPERATURE

Part of 223-3046-Page111,257-2186-Page236

ELECTRICAL AND STARTING SYSTEM

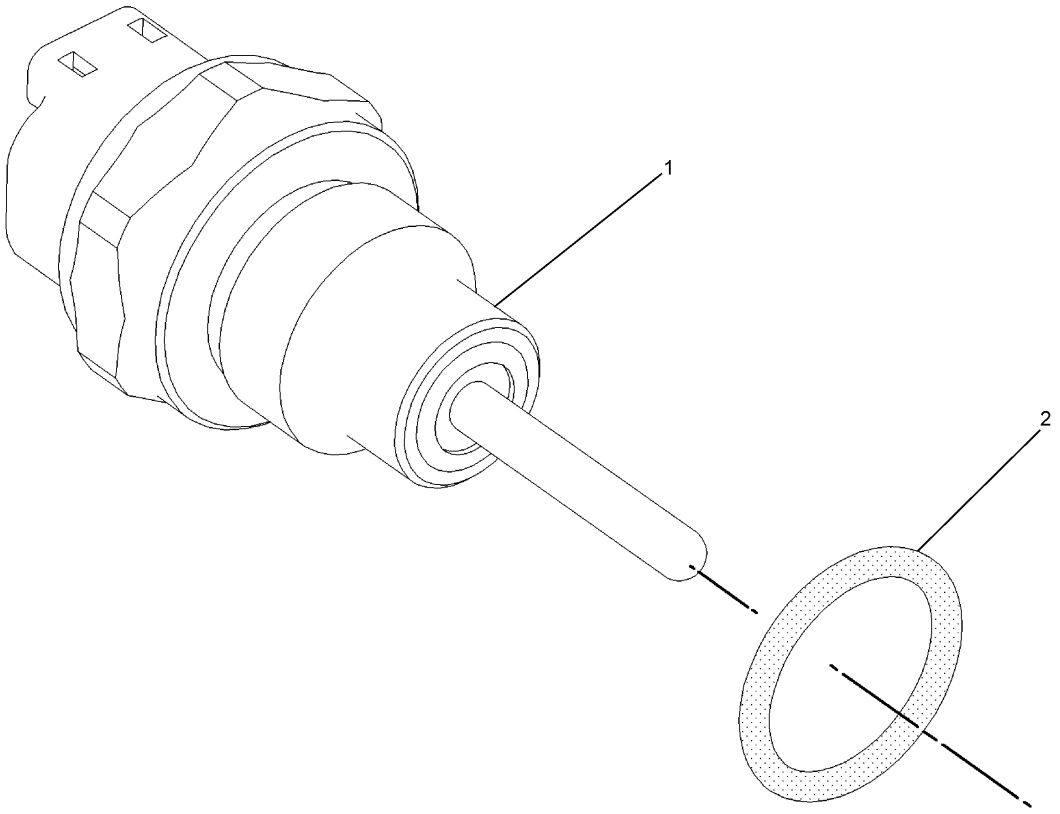

NOTE	No.	PART No.	QTY	PART NAME	NOTE	No.	PART No.	QTY	PART NAME
	1	130-9811	1	SENSOR GP					
	2	6V-6609	1	SEAL-O-RING (ID=16.36mm)					

H96267E 00

197-8392 SENSOR GP-TEMPERATURE

Part of 257-2186-Page236

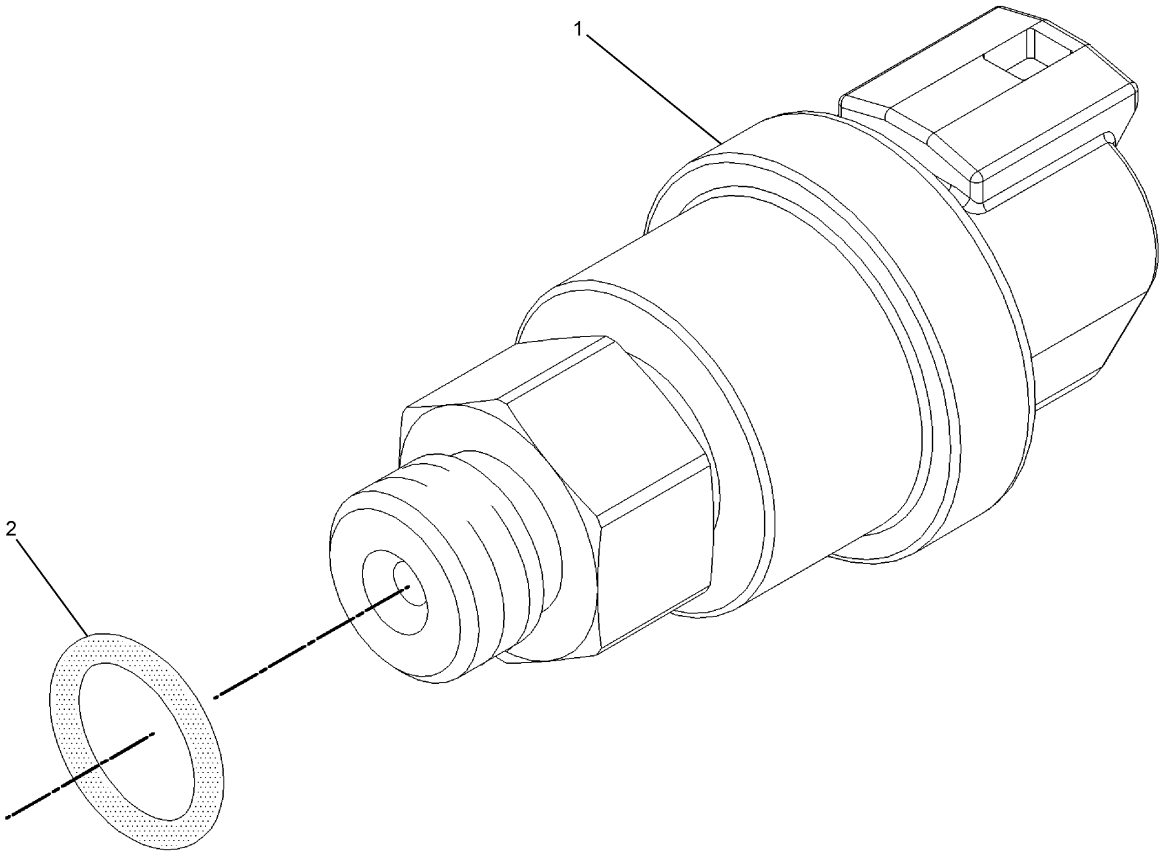

NOTE	No.	PART No.	QTY	PART NAME	NOTE	No.	PART No.	QTY	PART NAME
	1	161-1703	1	SENSOR GP					
	2	6V-5049	1	SEAL-O-RING (ID=11.89mm)					

H96268E 00

197-8393 SENSOR GP-PRESSURE

Part of 257-2186-Page236

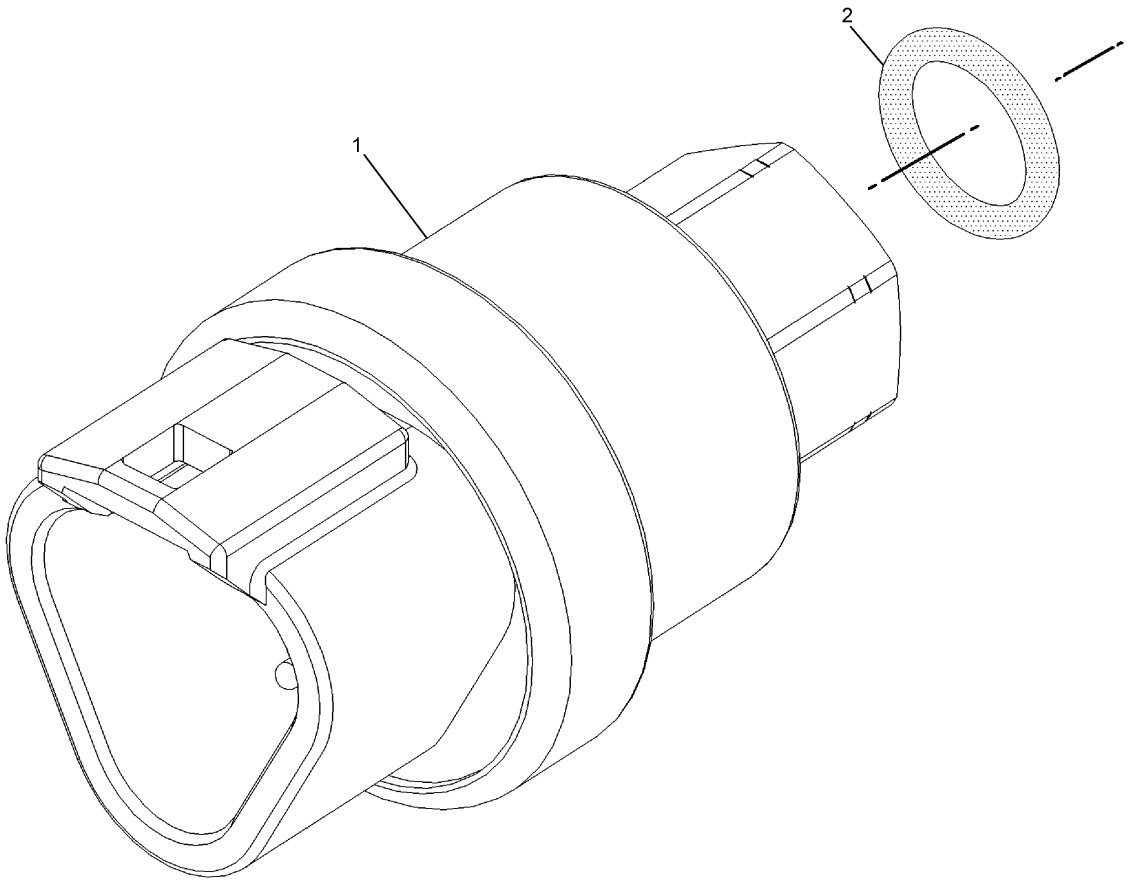

NOTE	No.	PART No.	QTY	PART NAME	NOTE	No.	PART No.	QTY	PART NAME
	1	161-1705	1	SENSOR GP					
	2	6V-5048	1	SEAL-O-RING (ID=8.92mm)					

H96269E 00

197-8394 SENSOR GP-PRESSURE

Part of 257-2186-Page236

ELECTRICAL AND STARTING SYSTEM

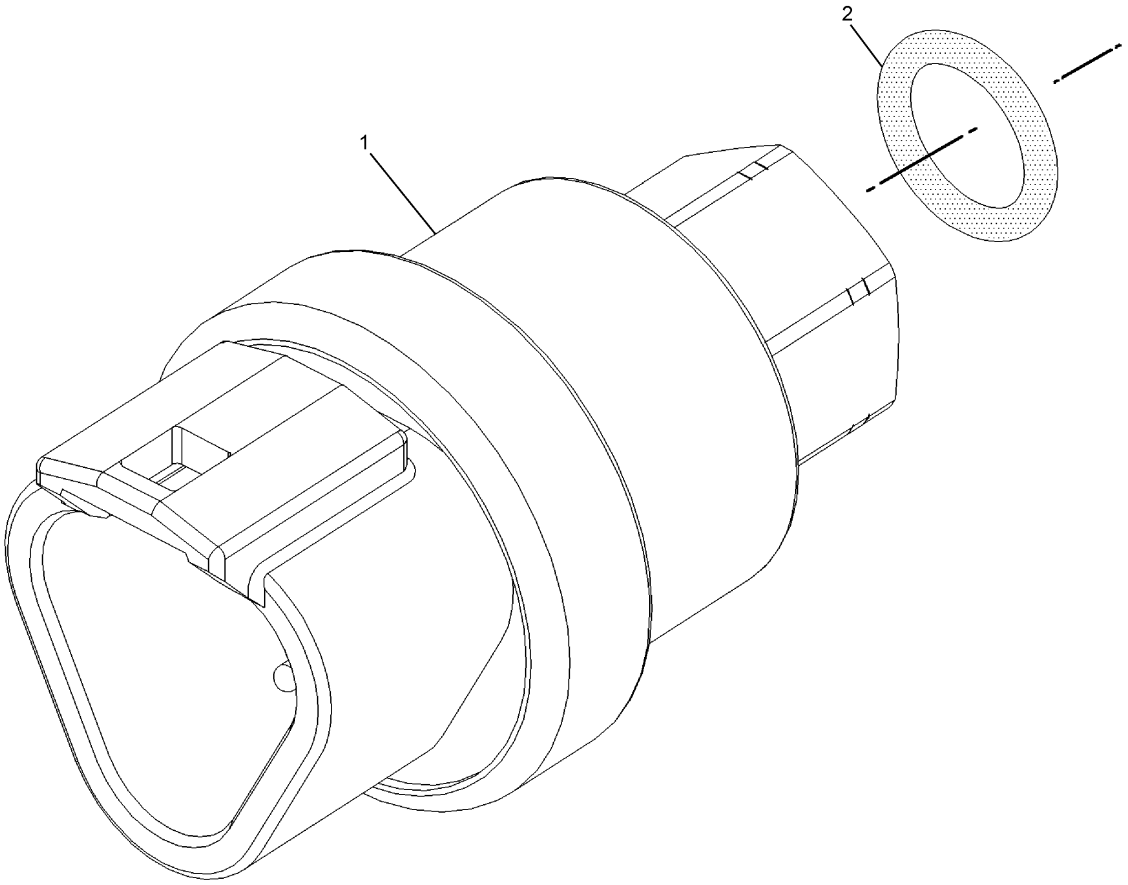

NOTE	No.	PART No.	QTY	PART NAME	NOTE	No.	PART No.	QTY	PART NAME
	1	161-1704	1	SENSOR GP					
	2	6V-5048	1	SEAL-O-RING (ID=8.92mm)					

H96270E 00

210-1747 SENSOR GP-PRESSURE

Part of 257-2186-Page236

ELECTRICAL AND STARTING SYSTEM

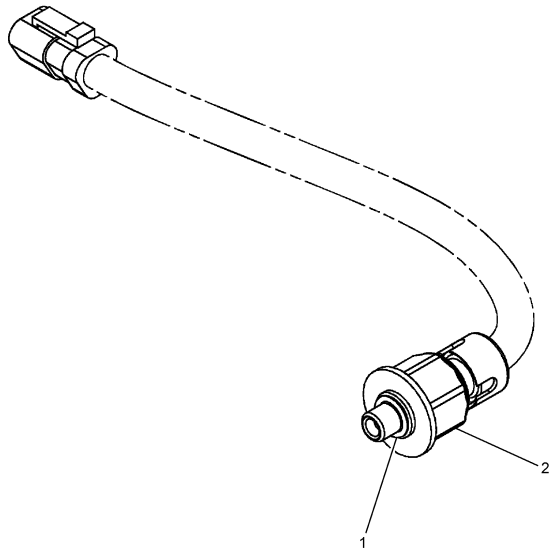

NOTE	No.	PART No.	QTY	PART NAME
	1	214-7567	1	SEAL-O-RING
Y	2	224-4536	1	SENSOR GP

Y—SEE SEPARATE ILLUSTRATION

H96271E 00

236-6220 SENSOR GP-PRESSURE

Part of 257-2186-Page236
224-4536-Page243

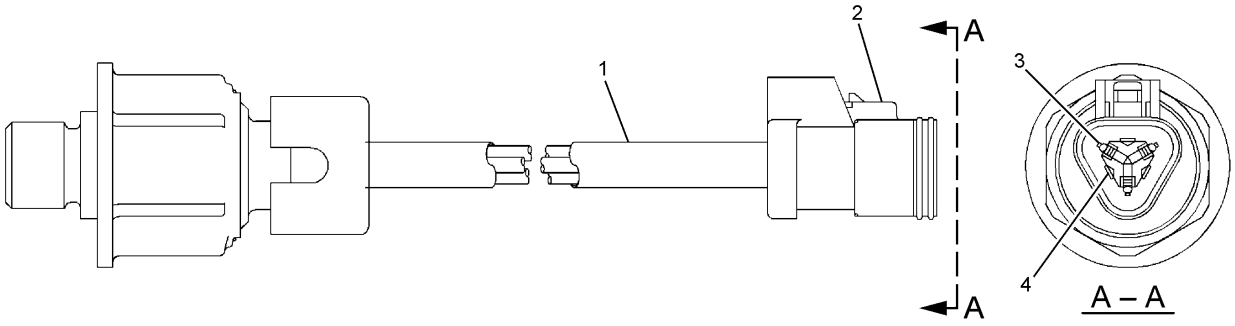

NOTE	No.	PART No.	QTY	PART NAME	NOTE	No.	PART No.	QTY	PART NAME
E	1	9X-1813		SLEEVE…(35cm)					
	2	155-2260	1	PLUG KIT					
				(INCLUDES PLUG AS & WEDGE)					
	3	194-5226	1	HARNESS AS (16-18GA WIRE)					
				(INJECTION ACTUATION)					
				-OR-					
		194-5227	1	HARNESS AS (14GA WIRE)					
				(INJECTION ACTUATION)					
	4	155-2276	1	WEDGE					

E—ORDER BY THE CENTIMETER

H96272E 00

224-4536 SENSOR GP-PRESSURE

Part of 236-6220-Page242

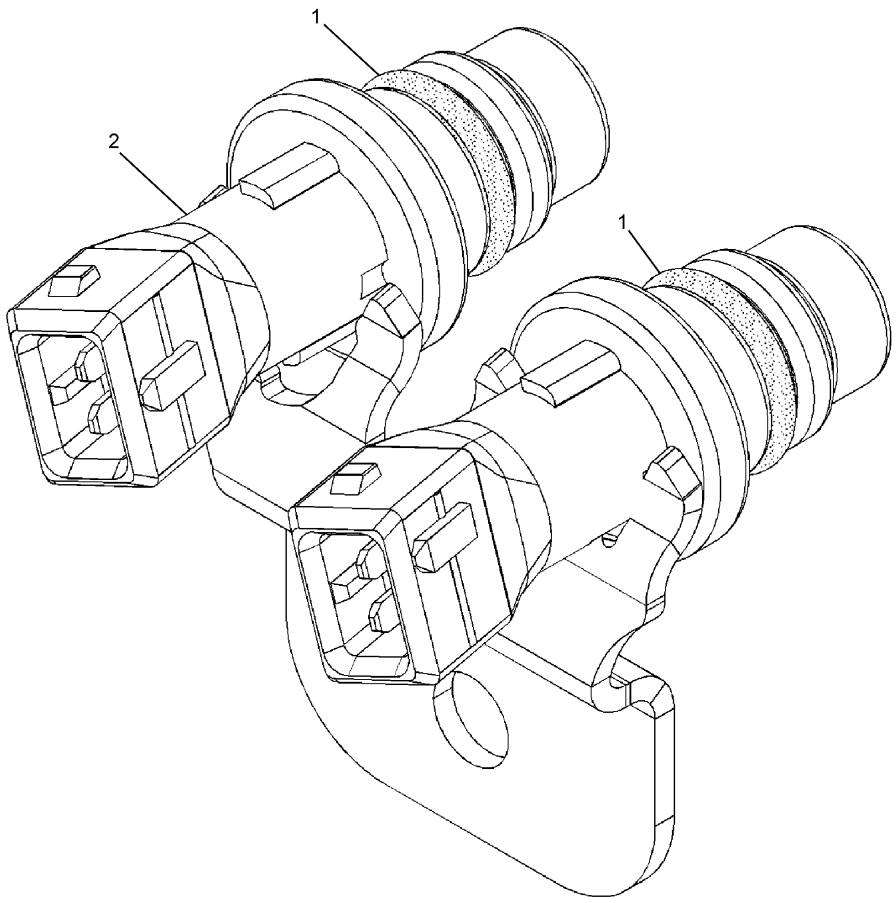

NOTE	No.	PART No.	QTY	PART NAME	NOTE	No.	PART No.	QTY	PART NAME
	1	203-3940	2	SEAL-O-RING (ID=13.94mm)					
	2	245-4630	1	SENSOR GP (TIMING)					

H96273E 00

236-6221 SENSOR GP-SPEED

Part of 257-2186-Page236

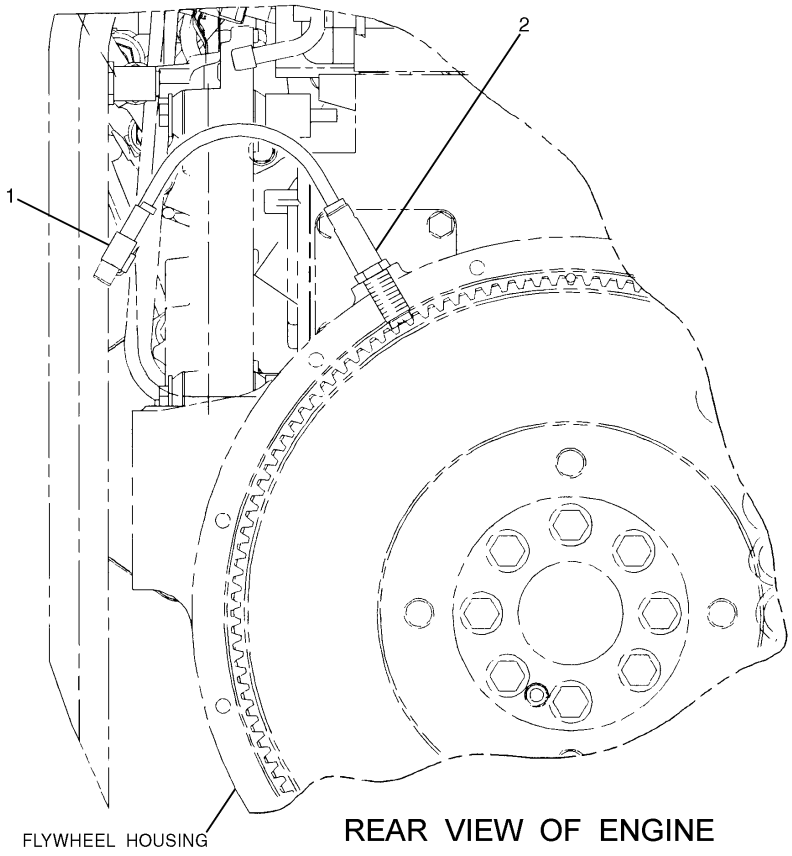

REAR VIEW OF ENGINE

NOTE	No.	PART No.	QTY	PART NAME	NOTE	No.	PART No.	QTY	PART NAME
	1	188-2128	1	PLUG AS					
		8T-8737	2	PLUG					
		155-2270	1	PLUG KIT					
				(INCLUDES PLUG AS & WEDGE)					
	2	189-5746	1	SENSOR GP					
		171-5349	1	STRAP					
		102-8802	1	RECEPTACLE KIT					
				(INCLUDES RECEPTACLE AS & WEDGE)					
		186-3735	2	PIN					
E		9X-1386		SLEEVE					

E—ORDER BY THE CENTIMETER

H90429E 01

190-6186 SENSOR GP-SPEED
Part of 235-8135-Page14

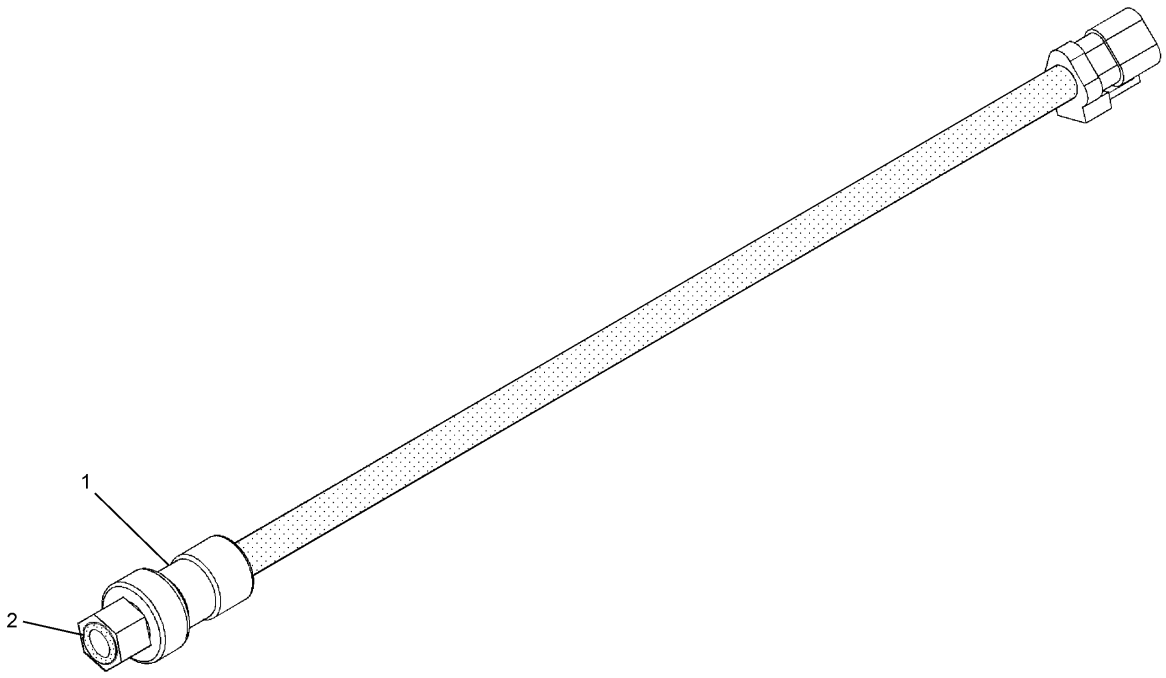

NOTE	No.	PART No.	QTY	PART NAME	NOTE	No.	PART No.	QTY	PART NAME
Y	1	194-6725	1	SENSOR GP					
	2	6V-5048	1	SEAL-O-RING (ID=8.92mm)					

Y—SEE SEPARATE ILLUSTRATION

H87854E 00

239-2396 SENSOR GP-PRESSURE

Part of 223-3046-Page111
194-6725-Page247

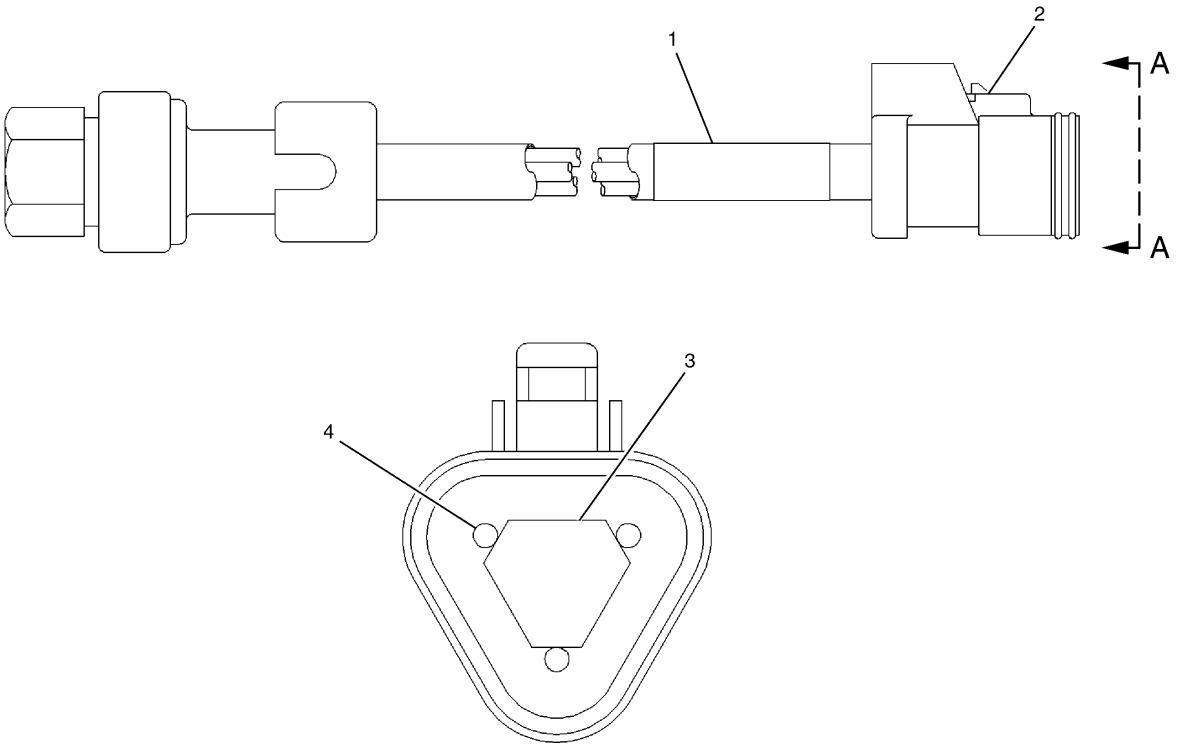

A – A

NOTE	No.	PART No.	QTY	PART NAME	NOTE	No.	PART No.	QTY	PART NAME
BE	1	9X-1813		SLEEVE…(34cm)					
	2	155-2260	1	PLUG KIT (INCLUDES PLUG AS & WEDGE)					
	3	3E-3368	1	WEDGE					
	4	180-9340	3	SOCKET					

B—USE AS REQUIRED

E—ORDER BY THE CENTIMETER

H96274E 01

194-6725 SENSOR GP-PRESSURE

Part of 239-2396-Page246

ELECTRICAL AND STARTING SYSTEM

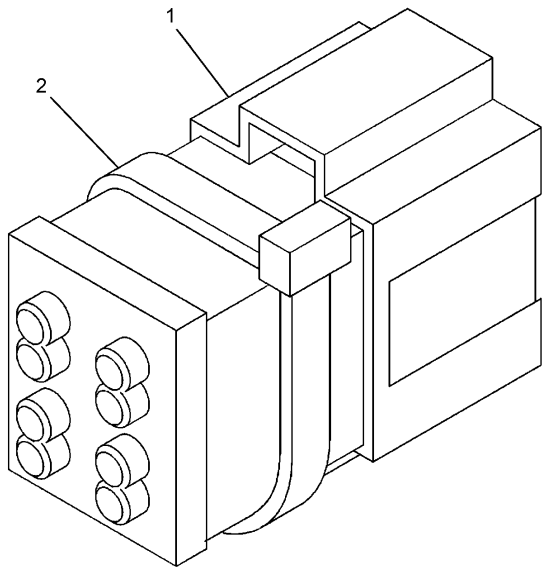

NOTE	No.	PART No.	QTY	PART NAME
	1	246-9353	1	PLUG AS
		102-8806	1	RECEPTACLE KIT
	2	3S-2093	1	STRAP

H96275E 00

235-8200 PLUG GP-CONNECTOR
Part of 235-8135-Page14

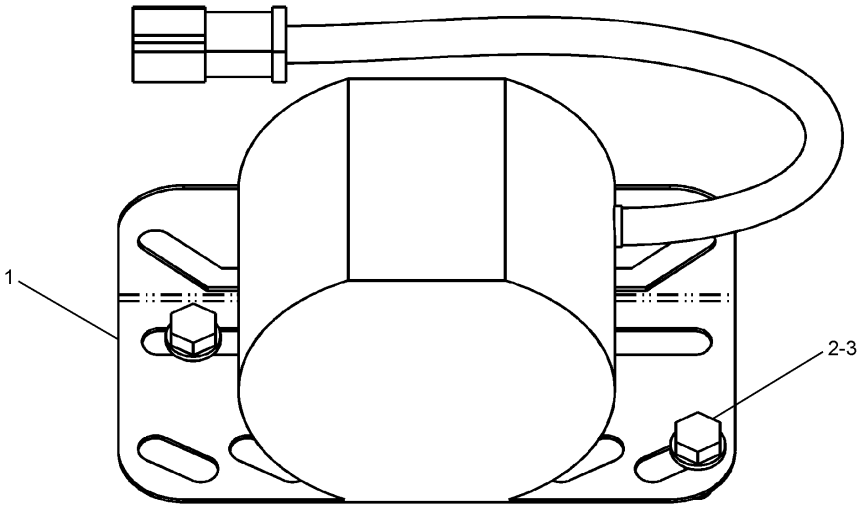

NOTE	No.	PART No.	QTY	PART NAME	NOTE	No.	PART No.	QTY	PART NAME
	1	213-9100	1	ALARM AS					
		102-8802	1	RECEPTACLE KIT					
		186-3735	2	PIN					
	2	8T-4189	2	BOLT (L=20mm)					
	3	8T-4224	2	WASHER					

H87345E 01

231-1771 ALARM GP-TRAVEL
An Attachment

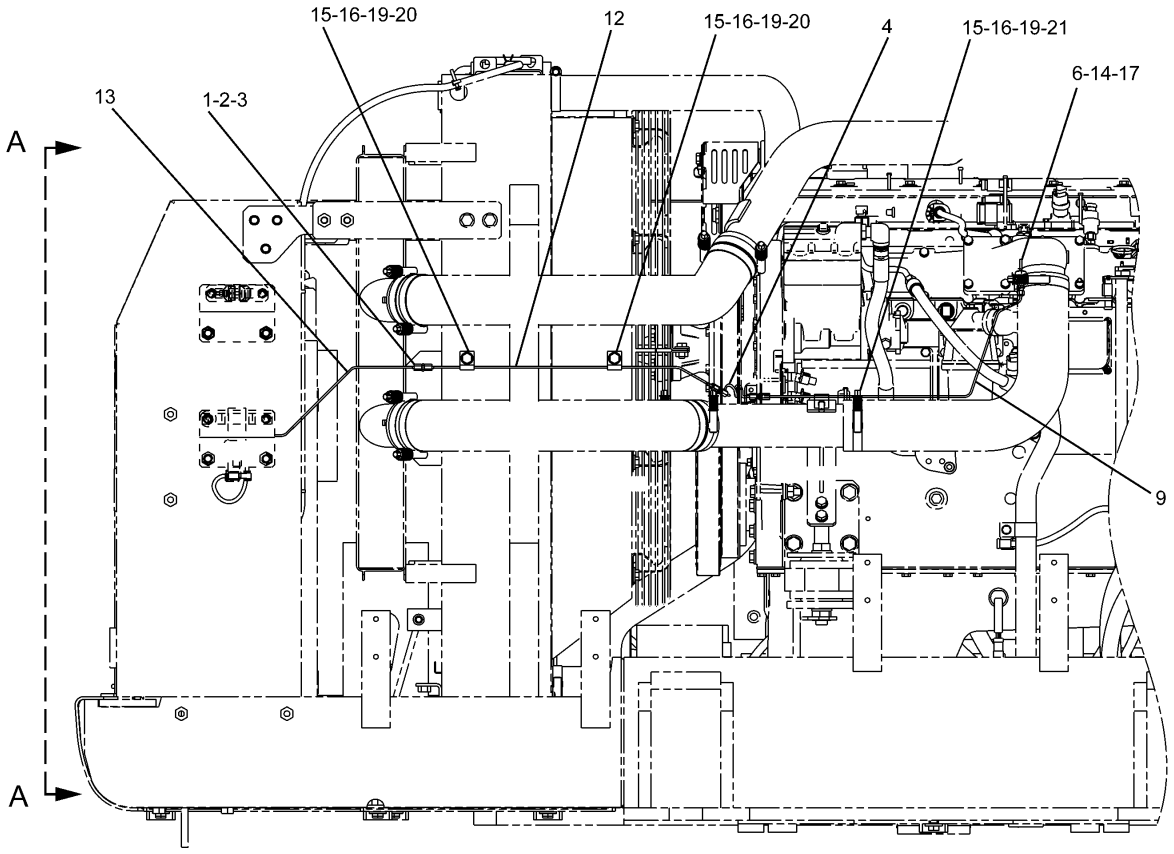

LEFT SIDE VIEW OF ENGINE

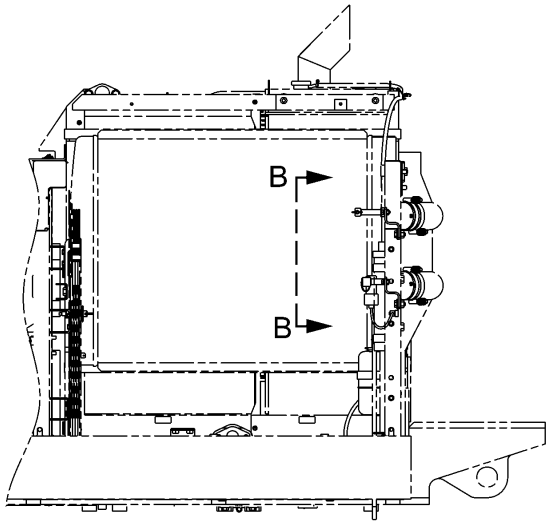

A – A

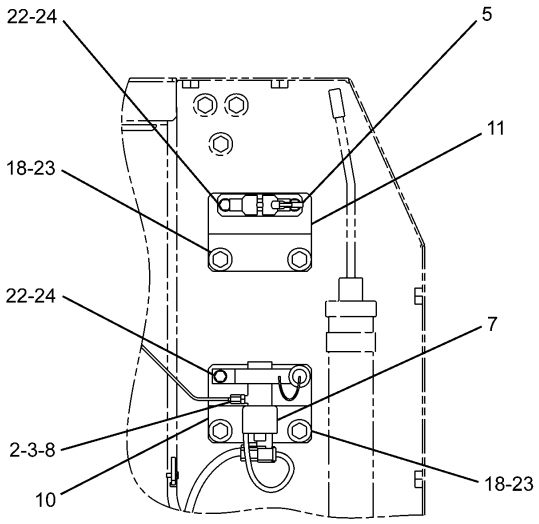

B – B

H89266E 01

239-6676 STARTING AID GP-ETHER
Part of 275-3747-Page187
An Attachment

ELECTRICAL AND STARTING SYSTEM

NOTE	No.	PART No.	QTY	PART NAME	NOTE	No.	PART No.	QTY	PART NAME
	1	5P-6312	1	UNION					
	2	5P-6313	3	NUT					
	3	5P-6314	3	SLEEVE					
	4	7N-0140	1	TUBE AS					
	5	7N-2059	1	CLAMP AS					
	6	9T-6635	1	PLUG					
	7	239-1134	1	VALVE AS					
		7N-9801	1	GASKET					
		102-8802	1	RECEPTACLE KIT					
		186-3735	2	PIN					
	8	241-4194	1	FITTING					
	9	255-2906	1	FITTING					
	10	255-2909	1	PLATE AS					
	11	255-2910	1	PLATE AS					
	12	255-2994	1	TUBE					
	13	255-2995	1	TUBE					
	14	257-5537	1	ATOMIZER AS					
	15	2B-2404	3	CLIP					
	16	3D-5102	3	GROMMET					
	17	3K-0360	1	SEAL-O-RING (ID=16.36mm)					
	18	5P-1076	4	WASHER					
	19	8T-4121	3	WASHER					
	20	8T-4136	2	BOLT (L=25mm)					
	21	8T-4137	1	BOLT (L=20mm)					
	22	8T-4189	4	BOLT (L=20mm)					
	23	8T-4192	4	BOLT (L=25mm)					
	24	8T-4224	4	WASHER					

H89266E 01

239-6676 STARTING AID GP-ETHER

Part of 275-3747-Page187
An Attachment

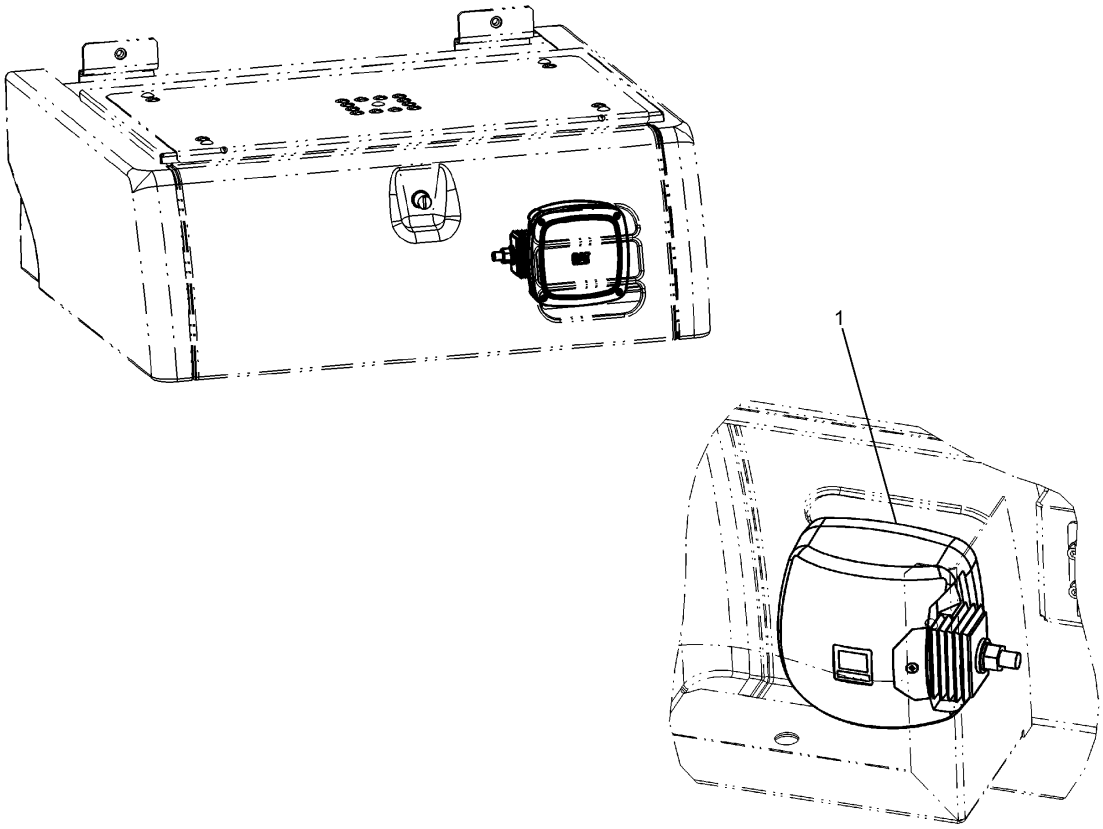

NOTE	No.	PART No.	QTY	PART NAME	NOTE	No.	PART No.	QTY	PART NAME
Y	1	153-2523	1	LAMP GP					

Y—SEE SEPARATE ILLUSTRATION

H87656E 04

4I-5409 LIGHTING GP-CHASSIS

153-2523-Page262

MEMORANDA

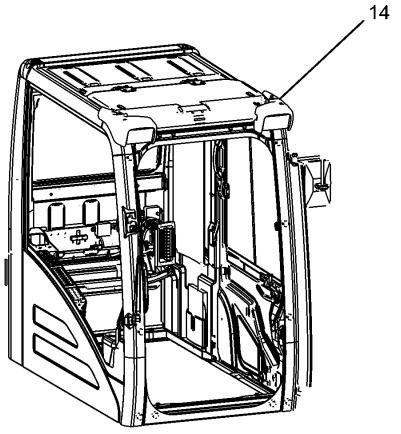

CAB-FRONT

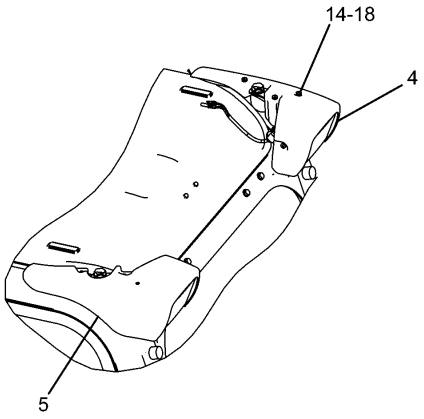

CAB-TOP

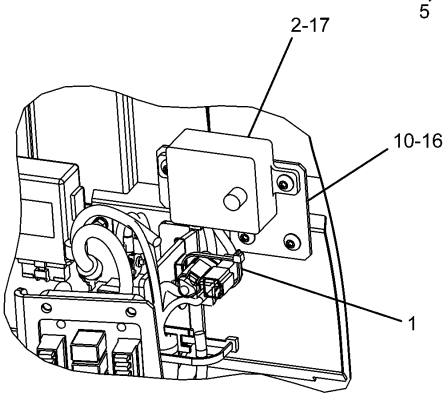

CAB REAR PANEL-INSIDE

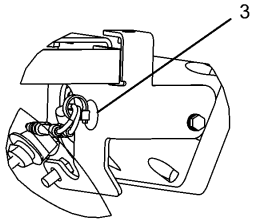

LIGHT BRACKET-REAR

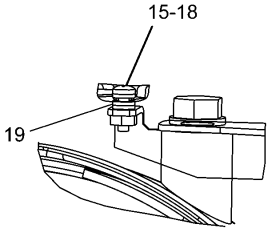

LIGHT BRACKET-LH SIDE

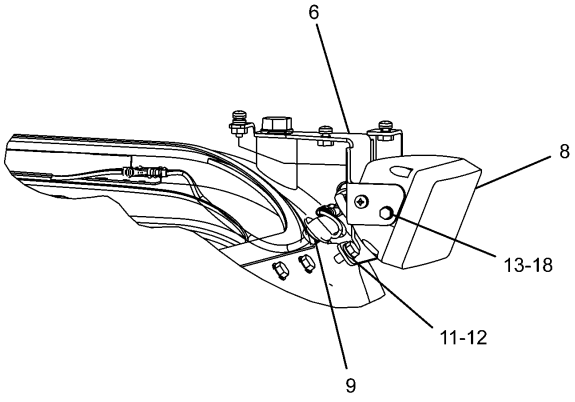

CAB LIGHT-LH SIDE

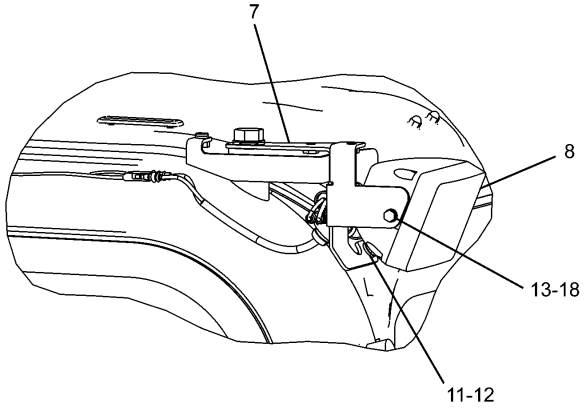

CAB LIGHT-RH SIDE

H91019E 00

238-1627 LIGHTING GP-CAB
167-3441-Page263,163-6704-Page265,167-3456-Page266
An Attachment

ELECTRICAL AND STARTING SYSTEM

NOTE	No.	PART No.	QTY	PART NAME	NOTE	No.	PART No.	QTY	PART NAME
	1	3S-2093	1	STRAP					
Y	2	163-6704	1	TIMER AS					
	3	163-6795	2	STRAP					
	4	163-6813	1	COVER					
	5	163-6814	1	COVER					
	6	167-3437	1	BRACKET AS					
	7	167-3438	1	BRACKET AS					
Y	8	167-3441	2	LAMP GP					
Y	9	167-3456	2	HARNESS AS					
	10	238-2326	1	STRIP AS					
	11	8T-4200	2	BOLT (L=16mm)					
	12	8T-4224	2	WASHER					
	13	8T-4970	4	BOLT (L=14mm)					
	14	8T-6411	3	SCREW					
	15	8T-6412	1	SCREW					
	16	9X-2042	2	SCREW					
	17	9X-2043	2	SCREW					
	18	9X-8256	8	WASHER					
B	19	9X-8256	4	WASHER					

B—USE AS REQUIRED

Y—SEE SEPARATE ILLUSTRATION

H91019E 00

238-1627 LIGHTING GP-CAB

167-3441-Page263,163-6704-Page265,167-3456-Page266
An Attachment

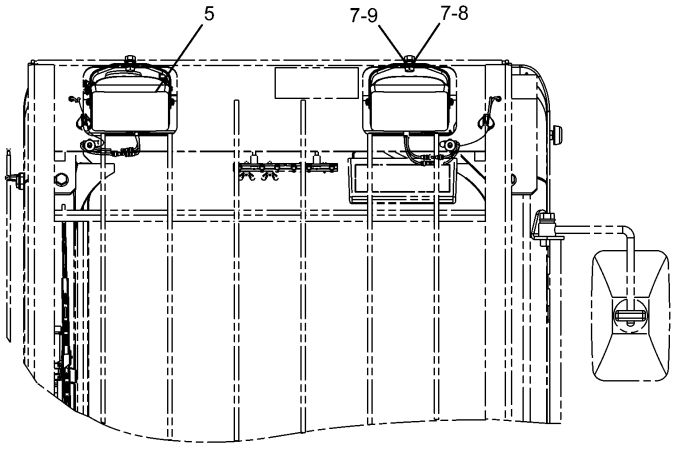

FRONT VIEW

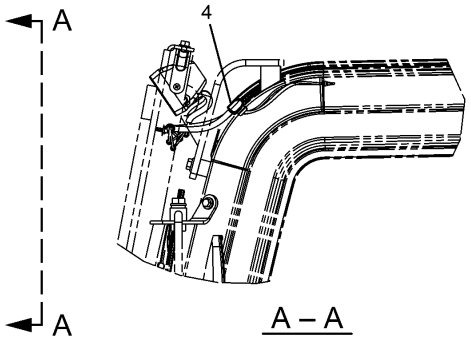

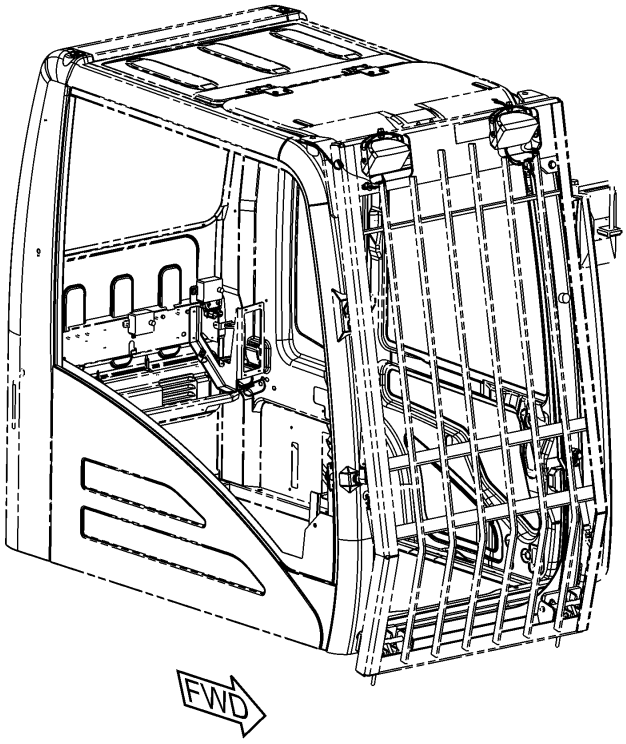

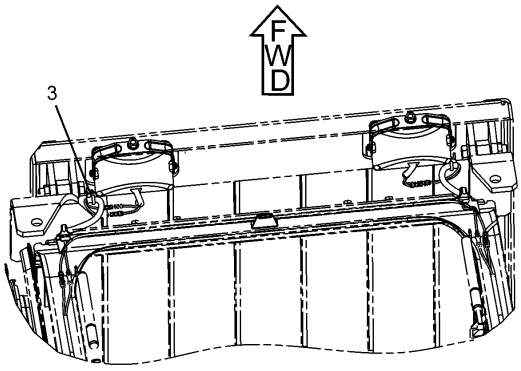

TOP VIEW

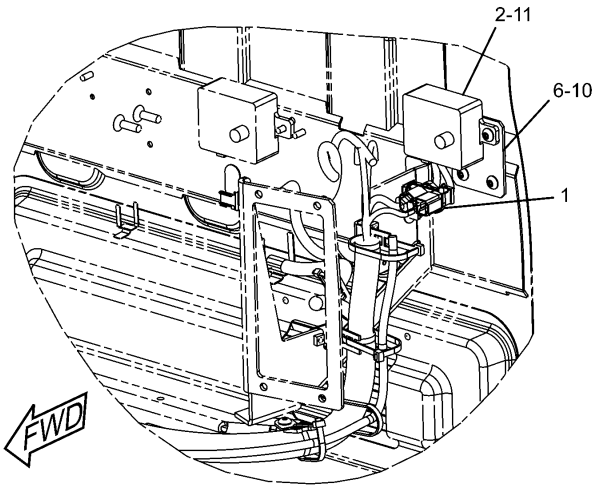

CAB REAR PANEL INSIDE

H91364E 01

238-1628 LIGHTING GP-CAB
Cab Guard
183-1035-Page263,163-6704-Page265,170-9295-Page266
An Attachment

ELECTRICAL AND STARTING SYSTEM

NOTE	No.	PART No.	QTY	PART NAME	NOTE	No.	PART No.	QTY	PART NAME
	1	3S-2093	1	STRAP					
Y	2	163-6704	1	TIMER AS					
	3	163-6795	2	STRAP					
Y	4	170-9295	2	HARNESS AS					
Y	5	183-1035	2	LAMP GP					
	6	238-2326	1	STRIP AS					
	7	8T-4121	4	WASHER					
	8	8T-4133	2	NUT					
	9	8T-4137	2	BOLT (L=20mm)					
	10	9X-2042	2	SCREW					
	11	9X-2043	2	SCREW					

Y—SEE SEPARATE ILLUSTRATION

H91364E 01

238-1628 LIGHTING GP-CAB

Cab Guard

183-1035-Page263,163-6704-Page265,170-9295-Page266

An Attachment

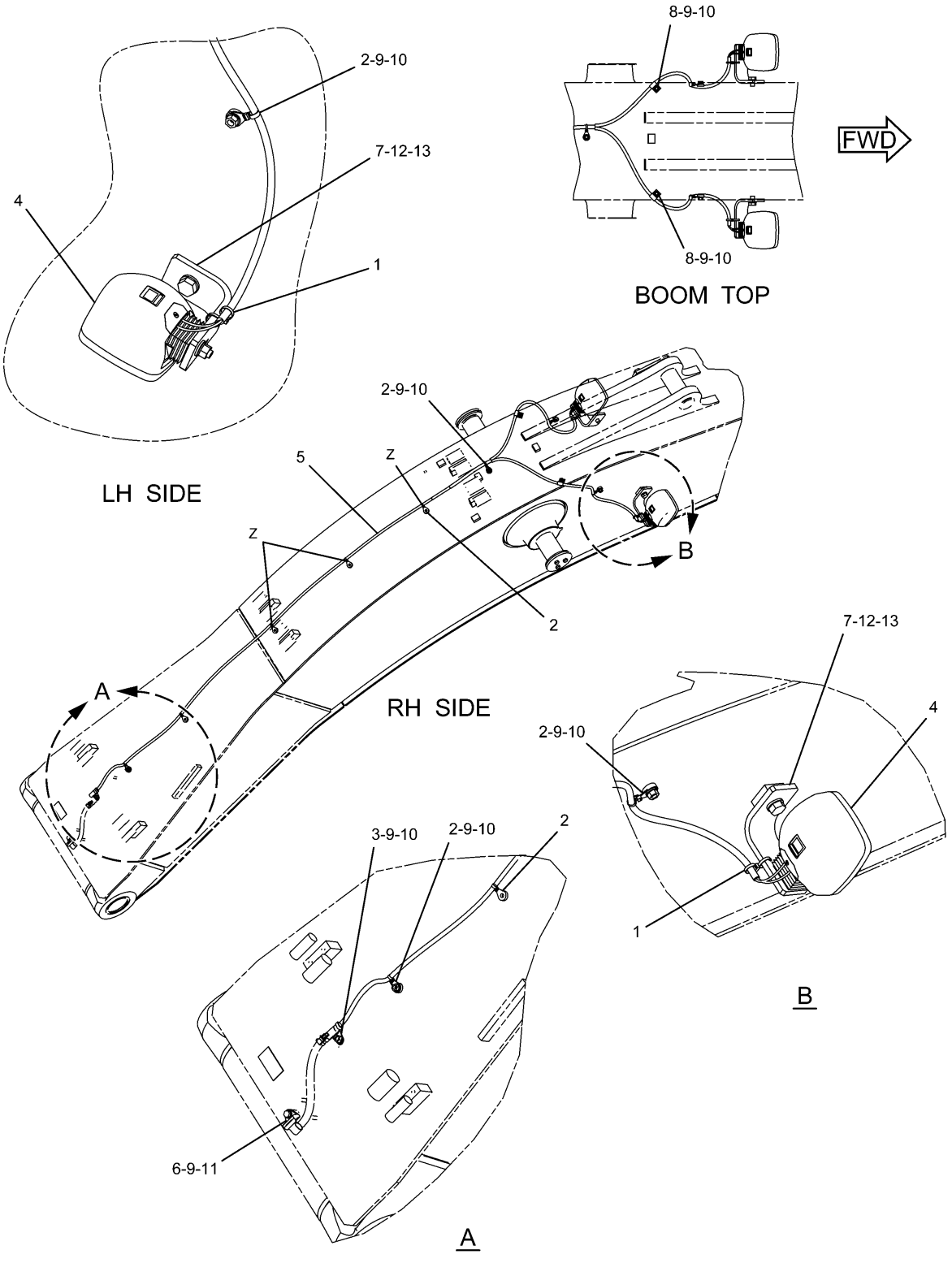

H89189E 00

238-2300 LIGHTING GP-BOOM

R-Boom, Long Reach Front
Part of 229-1754,229-1760-Page730,262-3585-Page739
153-2521-Page264,238-2302-Page267
An Attachment

ELECTRICAL AND STARTING SYSTEM

NOTE	No.	PART No.	QTY	PART NAME	NOTE	No.	PART No.	QTY	PART NAME
	1	7I-2673	2	STRAP					
	2	111-4836	8	CLIP					
	3	116-0118	1	CLIP					
Y	4	153-2521	2	LAMP GP					
Y	5	238-2302	1	HARNESS AS					
	6	111-4837	1	CLIP					
	7	134-3284	2	BRACKET					
	8	5P-9297	2	CLIP					
	9	8T-4121	8	WASHER					
	10	8T-4133	7	NUT					
	11	8T-4137	1	BOLT (L=20mm)					
	12	8T-4190	2	BOLT (L=25mm)					
	13	9X-8257	2	WASHER					

Y—SEE SEPARATE ILLUSTRATION

H89189E 00

238-2300 LIGHTING GP-BOOM

R-Boom, Long Reach Front
Part of 229-1754,229-1760-Page730,262-3585-Page739
153-2521-Page264,238-2302-Page267
An Attachment

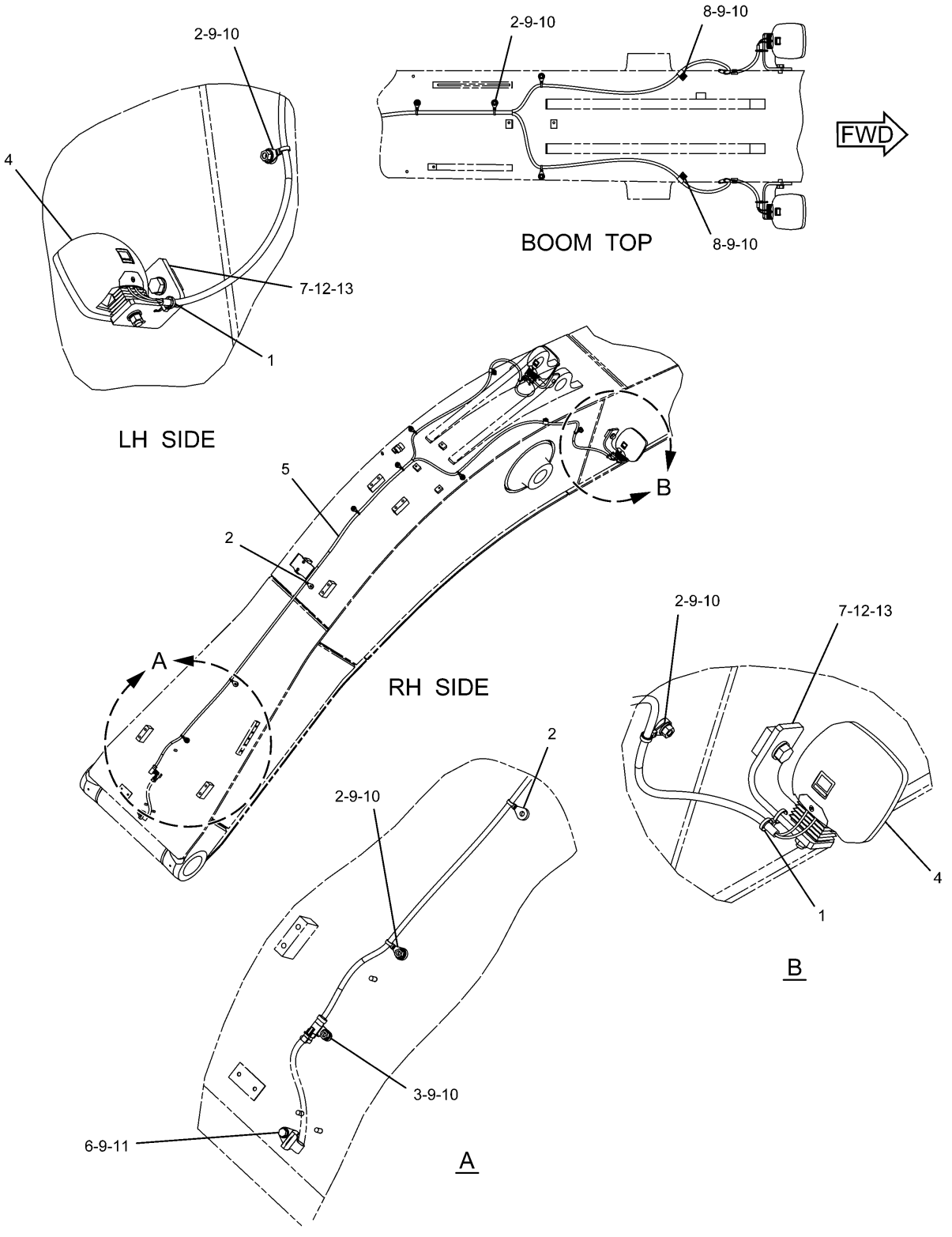

H89190E 00

238-2301 LIGHTING GP-BOOM
M-Boom
Part of 229-1757-Page731
153-2521-Page264,238-2303-Page268
An Attachment

ELECTRICAL AND STARTING SYSTEM

NOTE	No.	PART No.	QTY	PART NAME	NOTE	No.	PART No.	QTY	PART NAME
	1	7I-2673	2	STRAP					
	2	111-4836	9	CLIP					
	3	116-0118	1	CLIP					
Y	4	153-2521	2	LAMP GP					
Y	5	238-2303	1	HARNESS AS					
	6	111-4837	1	CLIP					
	7	134-3284	2	BRACKET					
	8	5P-9297	2	CLIP					
	9	8T-4121	11	WASHER					
	10	8T-4133	10	NUT					
	11	8T-4137	1	BOLT (L=20mm)					
	12	8T-4190	2	BOLT (L=25mm)					
	13	9X-8257	2	WASHER					

Y—SEE SEPARATE ILLUSTRATION

H89190E 00

238-2301 LIGHTING GP-BOOM

M-Boom
Part of 229-1757-Page731
153-2521-Page264,238-2303-Page268
An Attachment

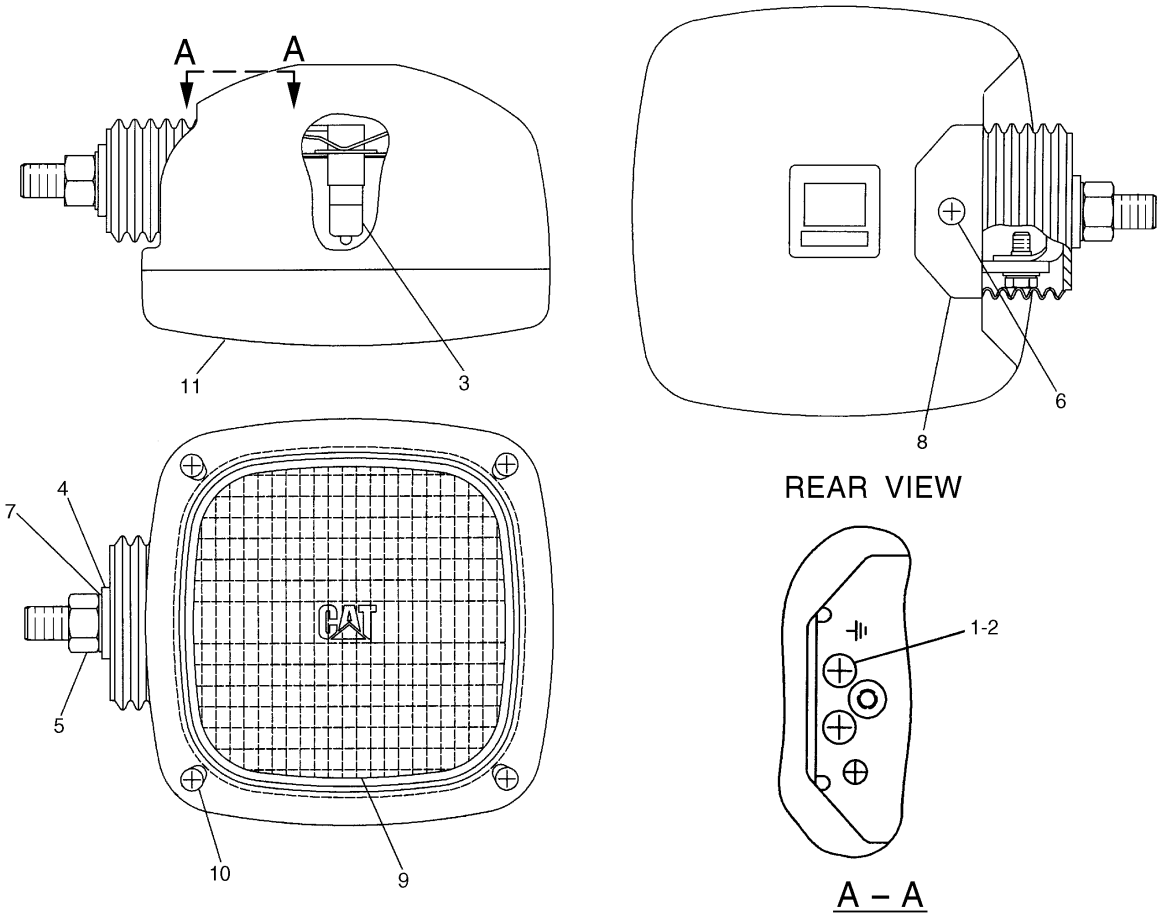

NOTE	No.	PART No.	QTY	PART NAME	NOTE	No.	PART No.	QTY	PART NAME
	1	6V-5210	2	SCREW					
	2	3B-4501	2	LOCKWASHER					
	3	9X-3463	1	BULB					
	4	8T-4223	1	WASHER					
	5	8T-4244	1	NUT					
	6	174-7791	1	SCREW					
	7	5C-2889	1	LOCKWASHER					
	8	170-6993	1	COVER					
	9	170-9417	1	LENS AS					
	10	180-3861	4	SCREW					
	11	170-9418	1	BAND					

H87354E 03

153-2523 LAMP GP-FLOOD

Part of 4I-5409-Page252

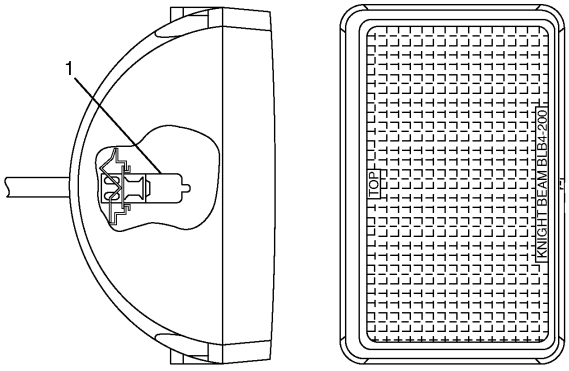

NOTE	No.	PART No.	QTY	PART NAME
	1	9X-3463	1	BULB

H81823E 03

167-3441 LAMP GP-FLOOD
Part of 238-1627-Page255
An Attachment

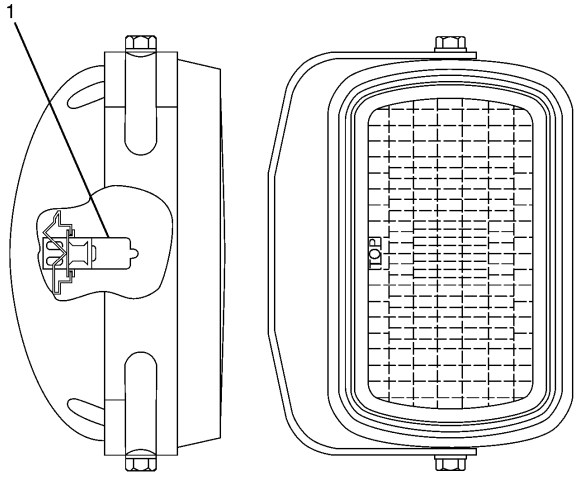

NOTE	No.	PART No.	QTY	PART NAME
	1	9X-3463	1	BULB

H81825E 01

183-1035 LAMP GP-FLOOD
Part of 238-1628-Page257
An Attachment

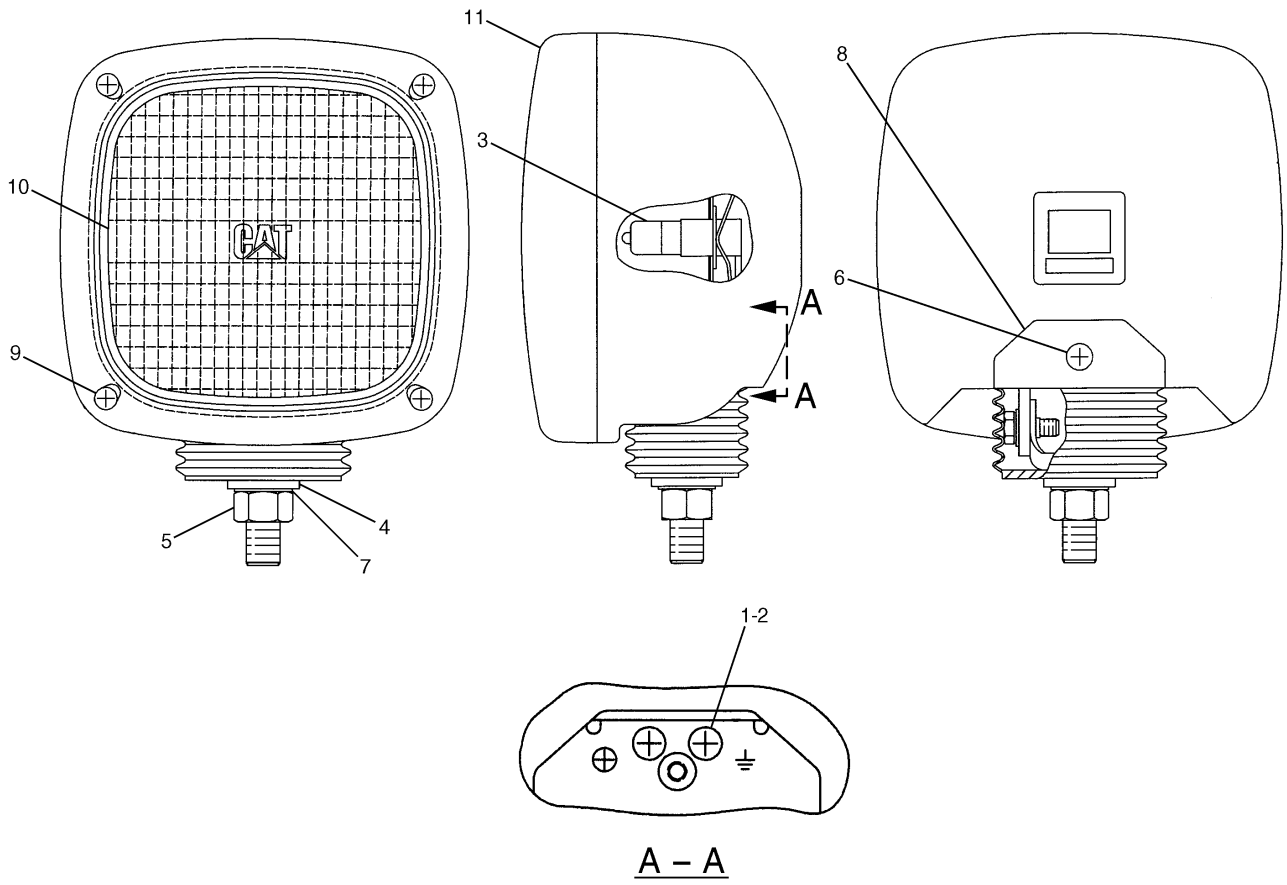

NOTE	No.	PART No.	QTY	PART NAME	NOTE	No.	PART No.	QTY	PART NAME
	1	6V-5210	2	SCREW					
	2	3B-4501	2	LOCKWASHER					
	3	9X-3463	1	BULB					
	4	8T-4223	1	WASHER					
	5	8T-4244	1	NUT					
	6	174-7791	1	SCREW					
	7	5C-2889	1	LOCKWASHER					
	8	170-6993	1	COVER					
	9	180-3861	4	SCREW					
	10	170-9417	1	LENS AS					
	11	170-9418	1	BAND					

H87353E 03

153-2521 LAMP GP-FLOOD
Part of 238-2300-Page259,238-2301-Page261
An Attachment

ELECTRICAL AND STARTING SYSTEM

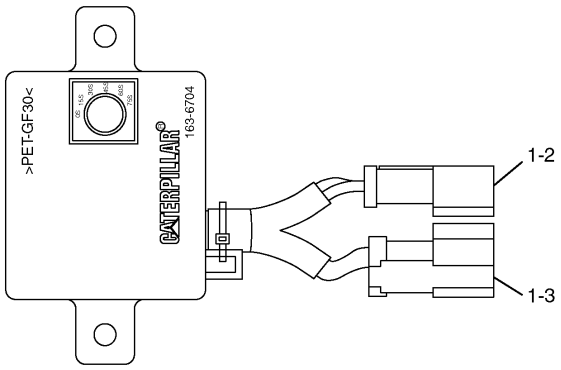

NOTE	No.	PART No.	QTY	PART NAME
	1	186-3735	5	PIN
	2	102-8802	1	RECEPTACLE KIT
	3	102-8803	1	RECEPTACLE KIT

H69865E 02

163-6704 TIMER AS

Part of 238-1627-Page255,238-1628-Page257
An Attachment

ELECTRICAL AND STARTING SYSTEM

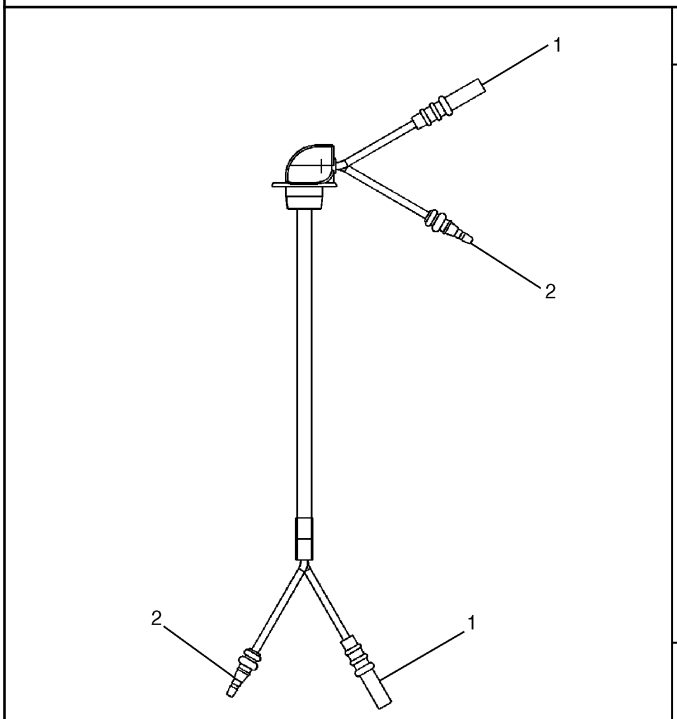

NOTE	No.	PART No.	QTY	PART NAME
	1	7Y-3963	2	TERMINAL
		7Y-3965	2	TUBE
	2	7Y-3962	2	TERMINAL
		7Y-3964	2	TUBE

H86647E 03

167-3456 HARNESS AS
Part of 238-1627-Page255
An Attachment

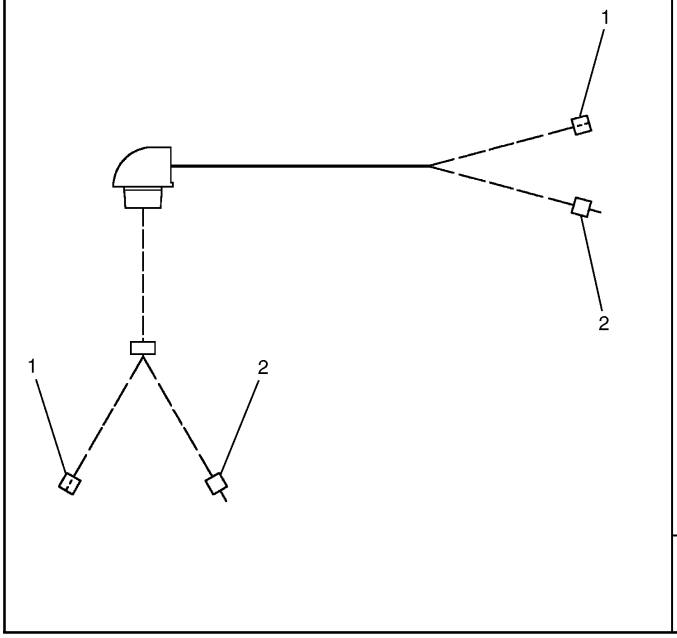

NOTE	No.	PART No.	QTY	PART NAME
	1	7Y-3963	2	TERMINAL
		7Y-3965	2	TUBE
	2	7Y-3962	2	TERMINAL
		7Y-3964	2	TUBE

H78595E 00

170-9295 HARNESS AS
Part of 238-1628-Page257
An Attachment

ELECTRICAL AND STARTING SYSTEM

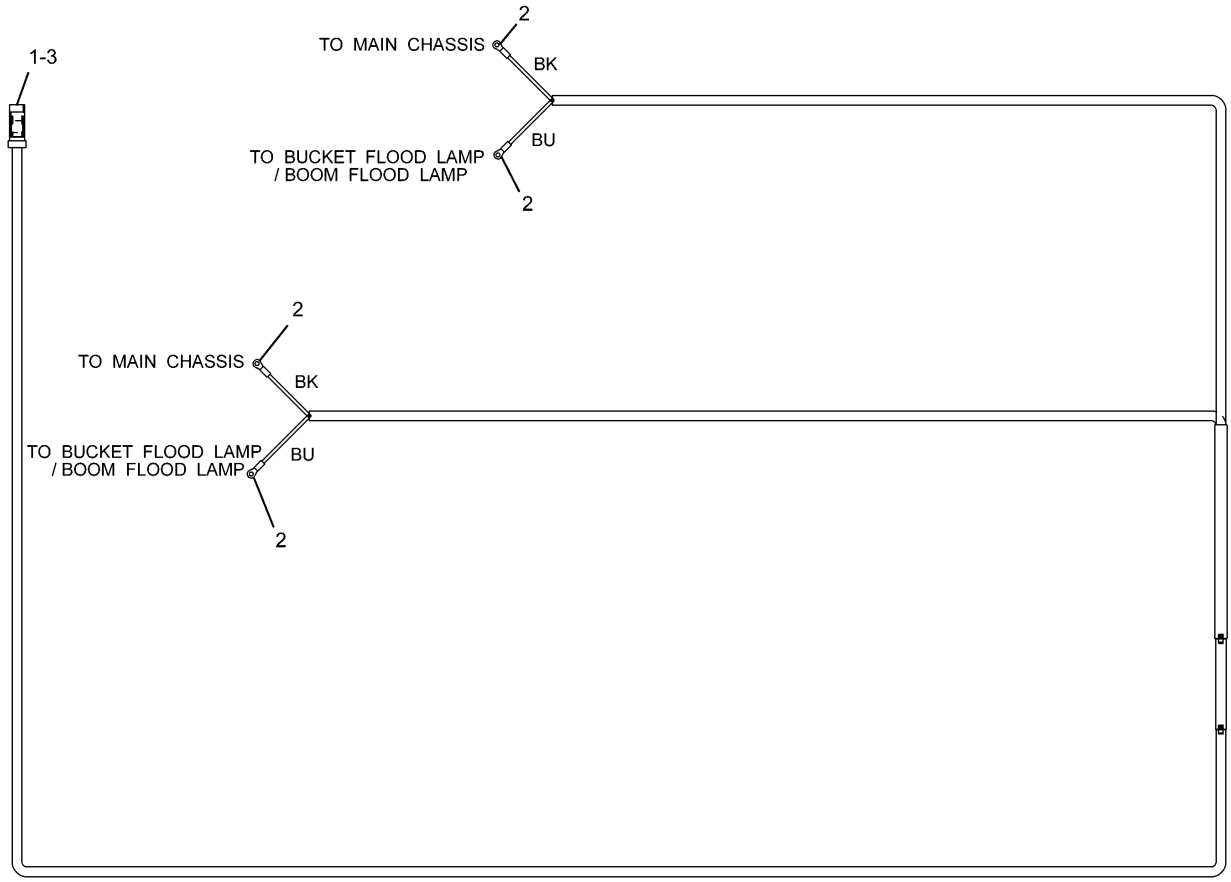

NOTE	No.	PART No.	QTY	PART NAME	NOTE	No.	PART No.	QTY	PART NAME
	1	9W-0852	2	PIN					
	2	2L-8075	4	TERMINAL					
	3	243-4505	1	RECEPTACLE AS					

H89799E 01

238-2302 HARNESS AS

Part of 238-2300-Page259

An Attachment

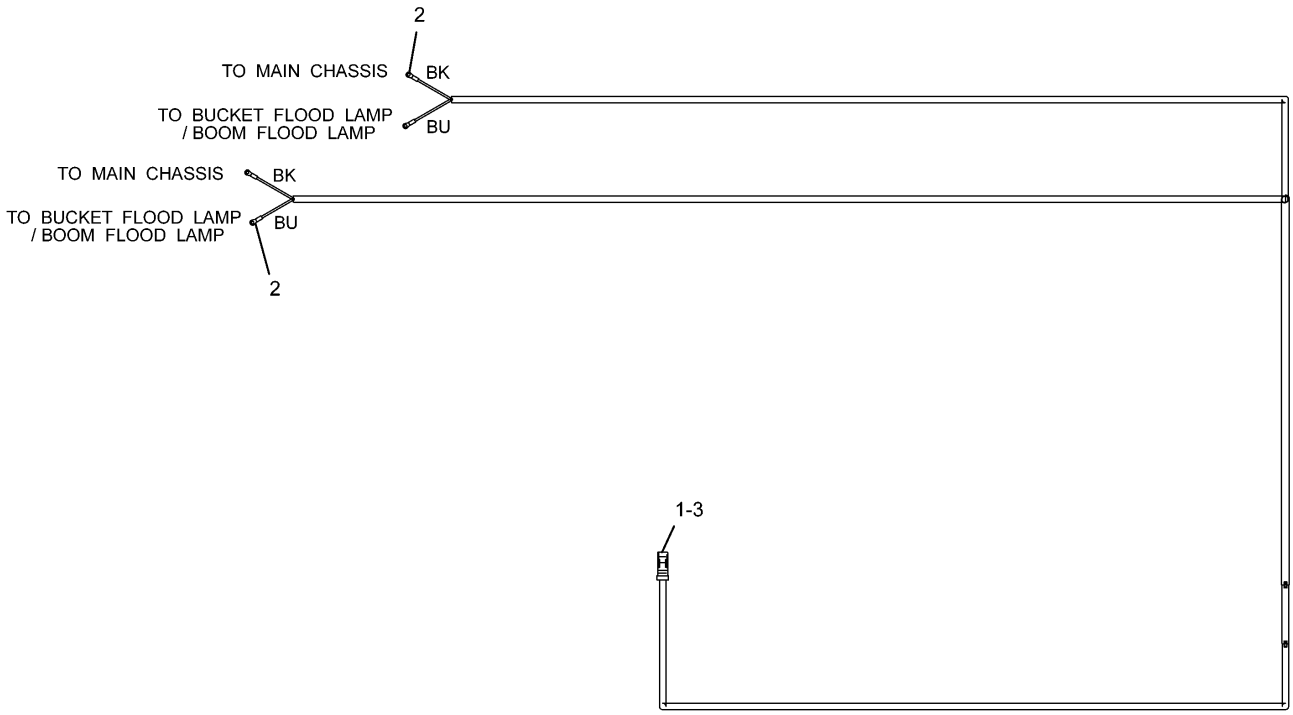

NOTE	No.	PART No.	QTY	PART NAME	NOTE	No.	PART No.	QTY	PART NAME
	1	9W-0852	2	PIN					
	2	2L-8075	4	TERMINAL					
	3	243-4505	1	RECEPTACLE AS					

H89427E 00

238-2303 HARNESS AS
Part of 238-2301-Page261
An Attachment

ELECTRICAL AND STARTING SYSTEM

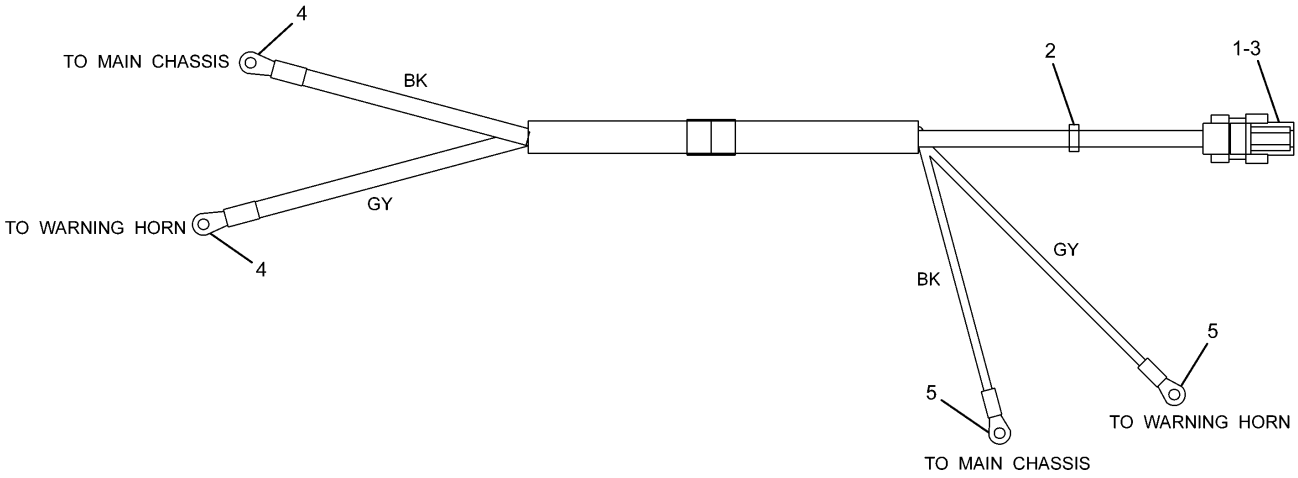

NOTE	No.	PART No.	QTY	PART NAME	NOTE	No.	PART No.	QTY	PART NAME
	1	9W-0844	2	SOCKET					
	2	3S-2093	1	STRAP					
	3	230-4011	1	PLUG AS					
	4	2L-8065	2	TERMINAL					
	5	2L-8075	2	TERMINAL					

H93544E 00

291-7560 HARNESS AS

Part of 291-7559-Page675

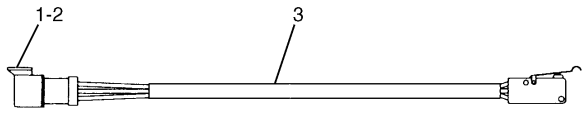

NOTE	No.	PART No.	QTY	PART NAME
	1	8T-8729	3	PIN
	2	102-8803	1	RECEPTACLE KIT
D	3	5P-5998		TUBE…(0.3m)

D—ORDER BY THE METER

H72253E 04

111-4799 SWITCH AS

Limit

Part of 234-6613-Page684

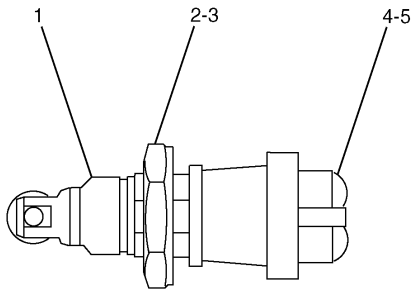

NOTE	No.	PART No.	QTY	PART NAME
	1	9X-0199	1	BOOT
	2	6V-8370	1	NUT
	3	2H-3922	1	LOCKWASHER
	4	6V-8363	2	SCREW
	5	8F-1434	2	LOCKWASHER

H74275E 01

129-6466 SWITCH AS-ROLLER

Part of 229-9087-Page655

An Attachment

MEMORANDA

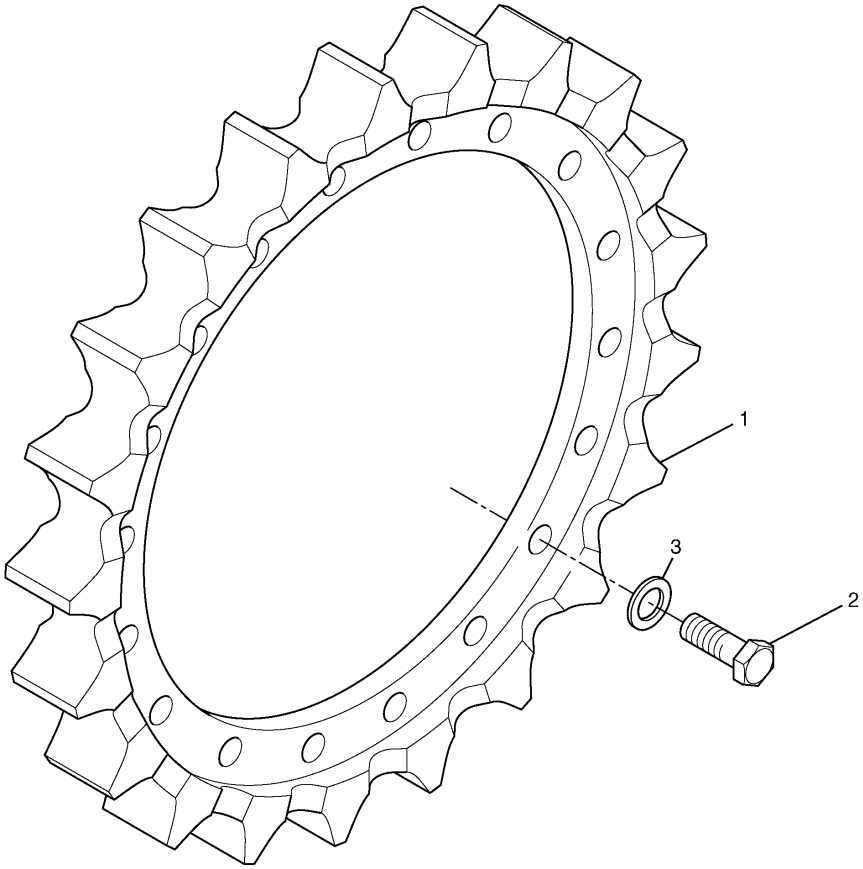

NOTE	No.	PART No.	QTY	PART NAME	NOTE	No.	PART No.	QTY	PART NAME
	1	6Y-4898	1	SPROCKET					
	2	8T-6430	18	BOLT (L=50mm)					
	3	8T-3282	18	WASHER					

H84114E 03

179-2994 SPROCKET GP-NONSEGMENTED
2 Required

POWER TRAIN

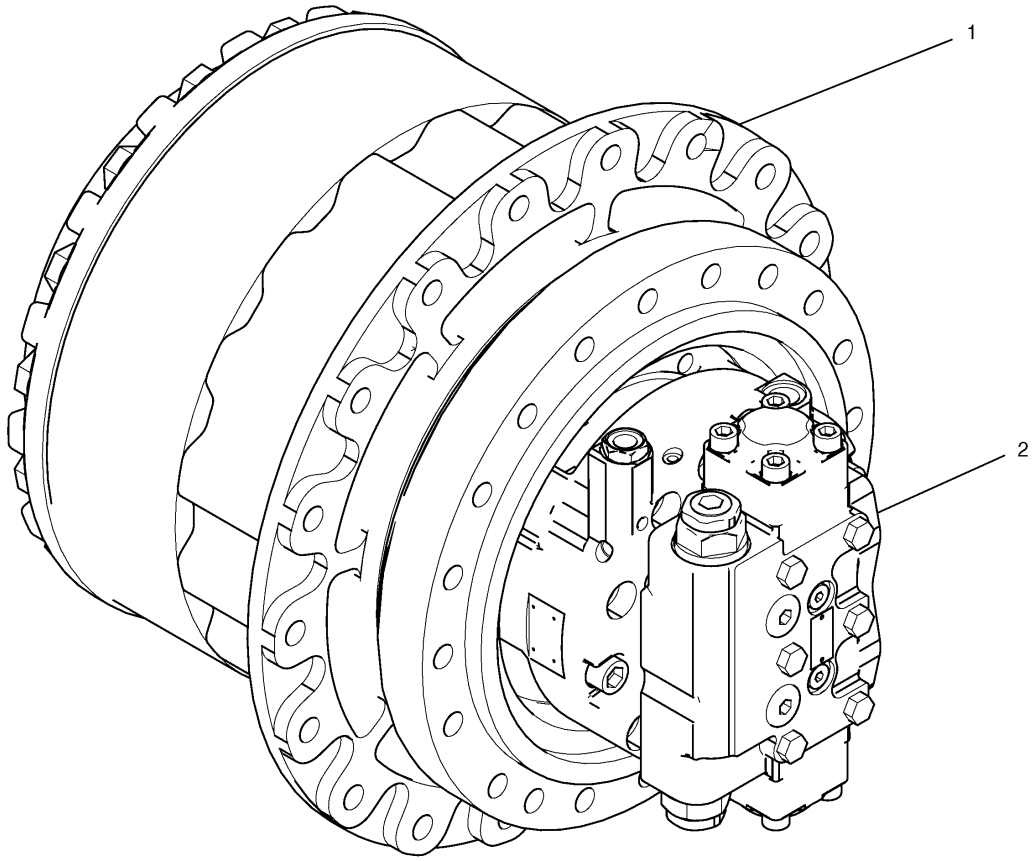

NOTE	No.	PART No.	QTY	PART NAME	NOTE	No.	PART No.	QTY	PART NAME
Y	1	227-6116	1	DRIVE GP					
Y	2	204-2674	1	MOTOR GP					

Y—SEE SEPARATE ILLUSTRATION

H84753E 00

227-6115 FINAL DRIVE GP

227-6116-Page274,204-2674-Page539

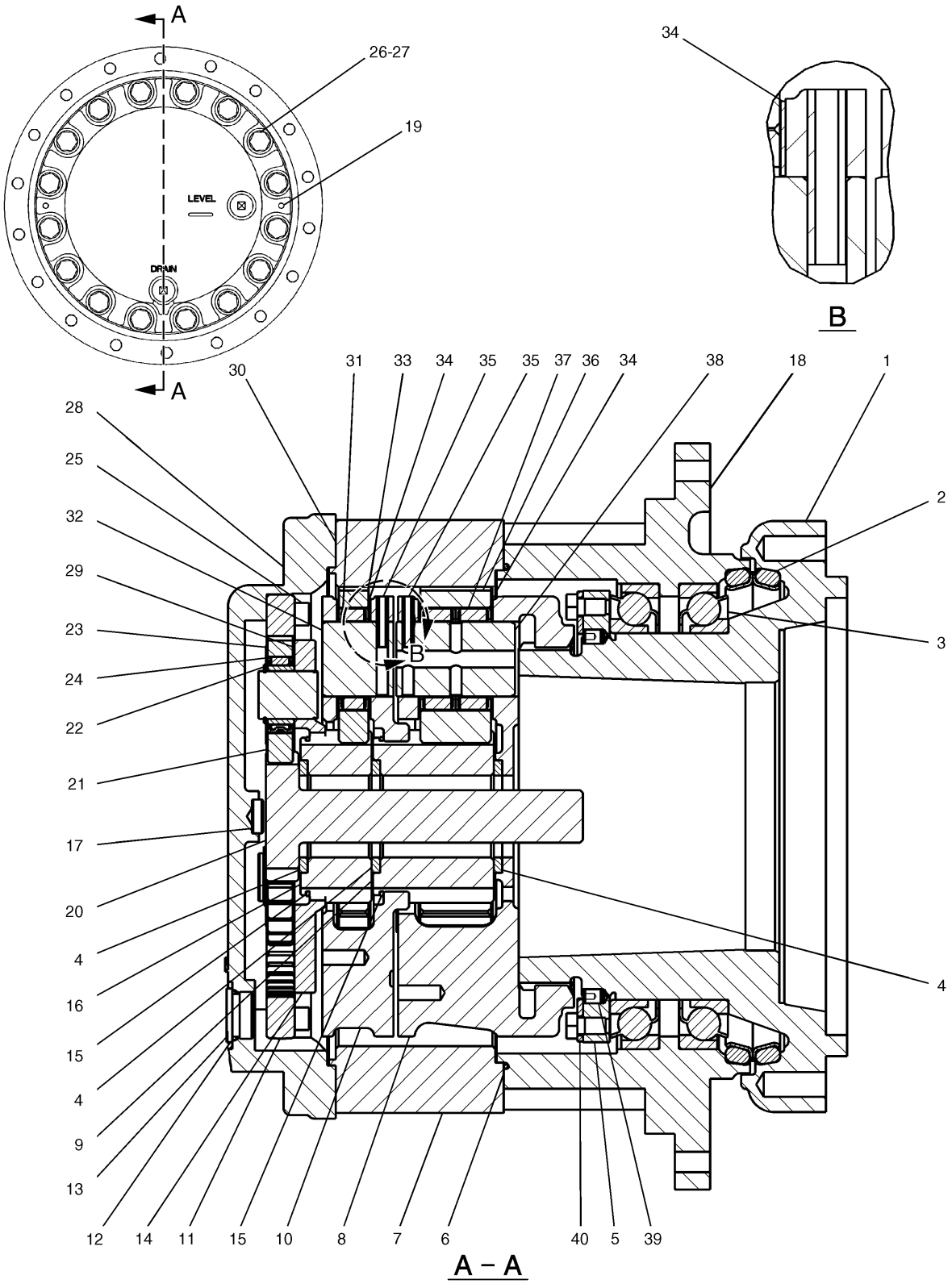

H84824E 00

227-6116 FINAL DRIVE GP
Part of 227-6115-Page273

POWER TRAIN

NOTE	No.	PART No.	QTY	PART NAME	NOTE	No.	PART No.	QTY	PART NAME
J	1	227-6117	1	HOUSING					
J	2	207-1571	1	SEAL GP					
J	3	168-8452	2	BEARING					
	4	7Y-0595	3	SPACER					
J	5	227-6118	1	STOPPER					
	6	171-9298	1	SEAL-O-RING (ID=351.00mm)					
	7	191-2676	1	GEAR (Z=72)					
	8	227-6119	1	CARRIER					
	9	169-5590	1	GEAR (Z=24)					
	10	191-2571	1	CARRIER					
	11	171-9387	1	GEAR (Z=64)					
	12	7M-8485	2	SEAL-O-RING (ID=29.74mm)					
	13	3E-2338	2	PLUG					
	14	191-2686	1	CARRIER AS					
		191-2679	3	SHAFT					
		191-2687	3	RACE					
	15	093-1731	2	RING					
	16	169-5589	1	GEAR (Z=24)					
B	17	094-0578	1	PLATE (T=8.00mm)					
B		094-0579	1	PLATE (T=9.00mm)					
B		094-0580	1	PLATE (T=10.00mm)					
J	18	169-5585	1	HOUSING					
	19	096-3216	2	SETSCREW					
	20	191-2683	1	GEAR (Z=20)					
	21	191-2684	3	GEAR (Z=21)					
	22	096-0433	3	RING					
	23	191-2689	3	WASHER					
	24	191-2685	3	BEARING AS					
	25	9X-6032	12	BOLT (L=30mm)					
	26	179-8733	16	BOLT (L=170mm)					
	27	8T-4123	16	WASHER					
	28	199-4503	1	COVER					
	29	191-2690	3	WASHER					
B	30	1U-8846		GASKET MAKER…(4ml)					
	31	191-2569	3	BEARING AS					
	32	169-5601	3	SHAFT					
	33	169-5592	3	GEAR (Z=23)					
	34	094-1528	12	WASHER					
	35	095-0891	6	PIN					
	36	169-5593	3	GEAR (Z=23)					
	37	191-2570	6	BEARING AS					
	38	169-5602	3	SHAFT					
J	39	227-6123	2	DOWEL					
J	40	227-6124	2	PLATE					
				THE FOLLOWING REPAIR					
				KIT IS AVAILABLE:					
		227-6125	1	HOUSING KIT					
				(INCLUDES PARTS MARKED J)					

B—USE AS REQUIRED

H84824E 00

227-6116 FINAL DRIVE GP

Part of 227-6115-Page273

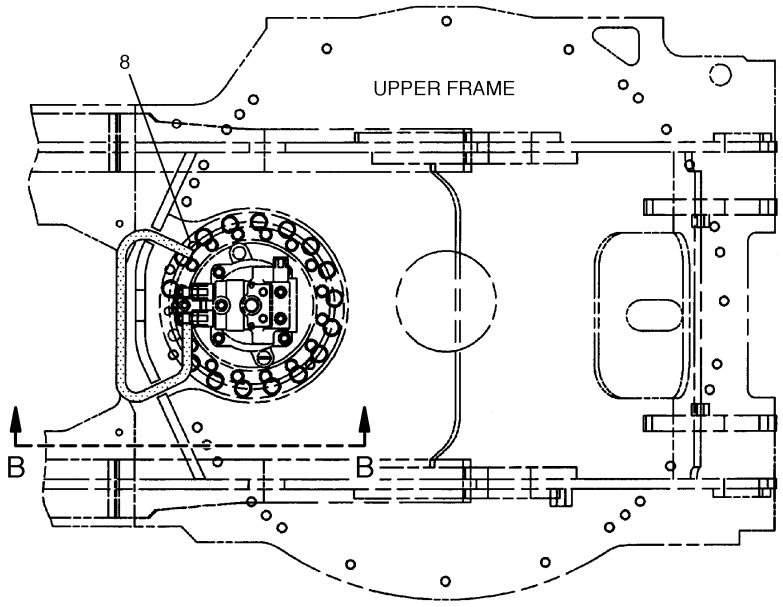

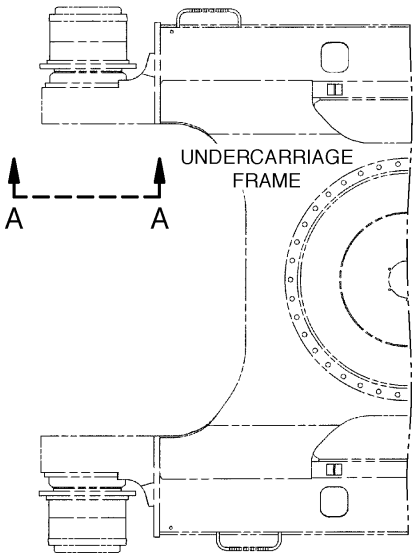

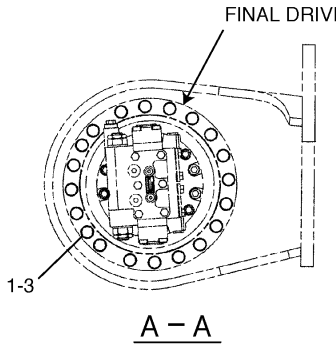

A – A

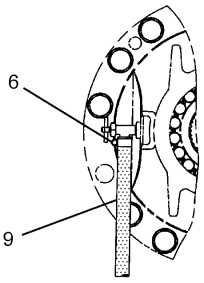

C – C

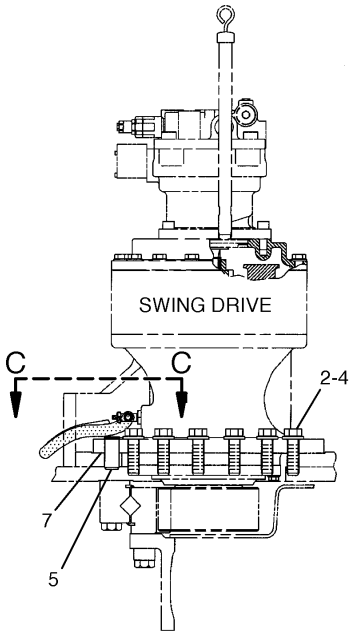

B – B

H88889E 03

171-9412 FASTENER GP-SWING & FINAL DR

FRAME AND BODY

NOTE	No.	PART No.	QTY	PART NAME	NOTE	No.	PART No.	QTY	PART NAME
	1	8T-4141	40	BOLT (L=70mm)					
	2	7X-2576	16	BOLT (L=70mm)					
	3	8T-4123	40	WASHER					
	4	8T-4167	16	WASHER					
	5	096-4755	1	PIN					
	6	5D-1026	1	CLAMP					
B	7	1U-8846		GASKET MAKER…(15ml)					
	8	2B-7561	2	CORK					
E	9	5P-0767		HOSE…(90cm)					

B—USE AS REQUIRED

E—ORDER BY THE CENTIMETER

H88889E 03

171-9412 FASTENER GP-SWING & FINAL DR

FRAME AND BODY

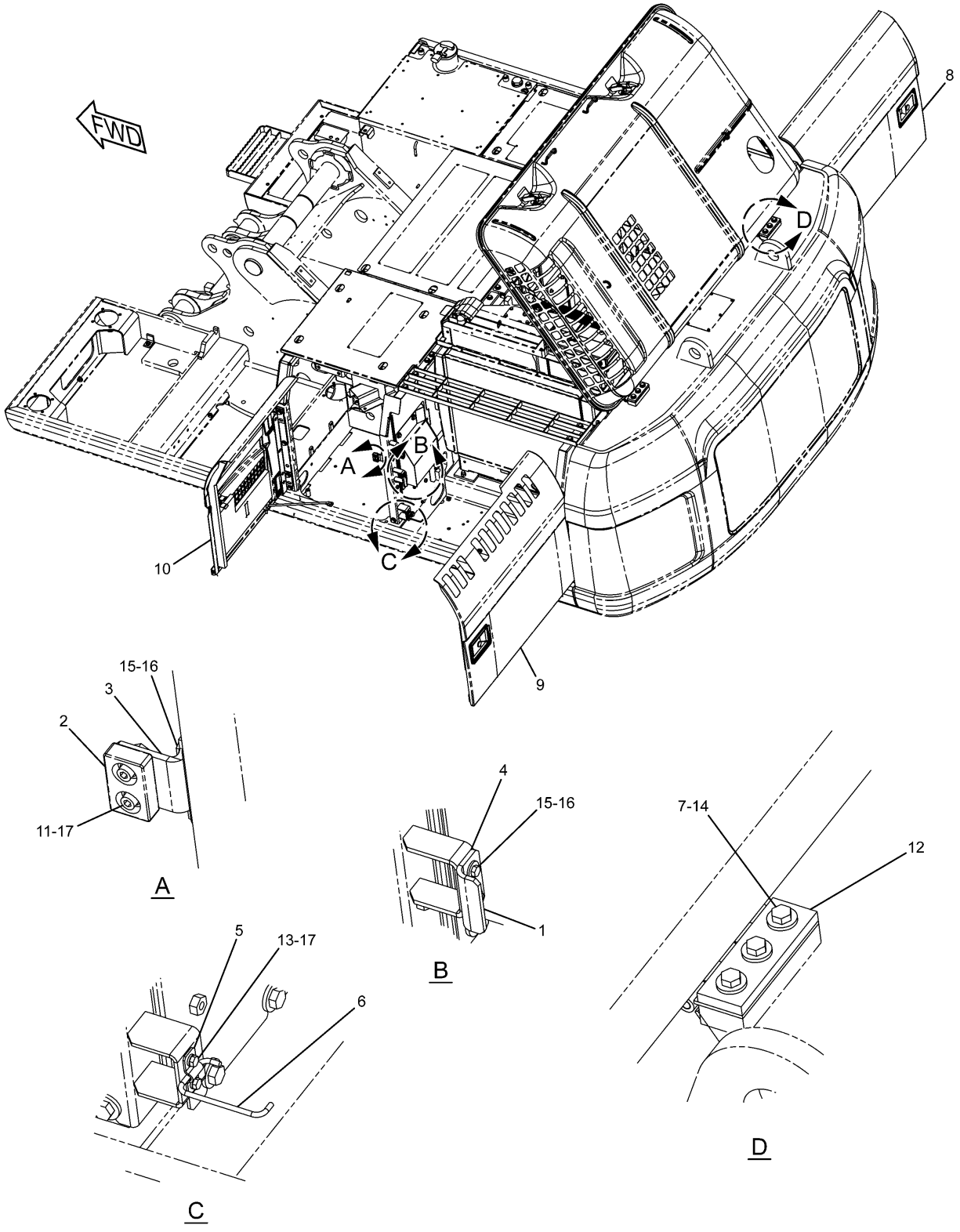

H94368E 06

223-3043 HOOD & GUARD GP (1/4)

236-3397-Page287,236-3751-Page288,262-2400-Page289

FRAME AND BODY

NOTE	No.	PART No.	QTY	PART NAME	NOTE	No.	PART No.	QTY	PART NAME
	1	4I-0232	2	STRIKER					
	2	6I-6033	3	STOPPER					
	3	7I-1418	3	SUPPORT AS					
B	4	087-3908	2	SHIM (T=1.00mm)					
B		087-3909	2	SHIM (T=2.00mm)					
	5	122-3979	1	BAND					
	6	122-3980	1	ROD					
	7	8T-4183	6	BOLT (L=40mm)					
Y	8	236-3397	1	DOOR GP					
Y	9	236-3751	1	DOOR GP					
Y	10	262-2400	1	DOOR AS					
	11	105-3487	6	BOLT (L=20mm)					
	12	114-6285	2	BAR					
	13	5C-9553	2	BOLT (L=16mm)					
	14	5P-1076	6	WASHER					
	15	5P-4115	10	WASHER					
	16	8T-4138	10	BOLT (L=20mm)					
	17	9X-8256	8	WASHER					

B—USE AS REQUIRED

Y—SEE SEPARATE ILLUSTRATION

H94368E 06

223-3043 HOOD & GUARD GP (1/4)

236-3397-Page287,236-3751-Page288,262-2400-Page289

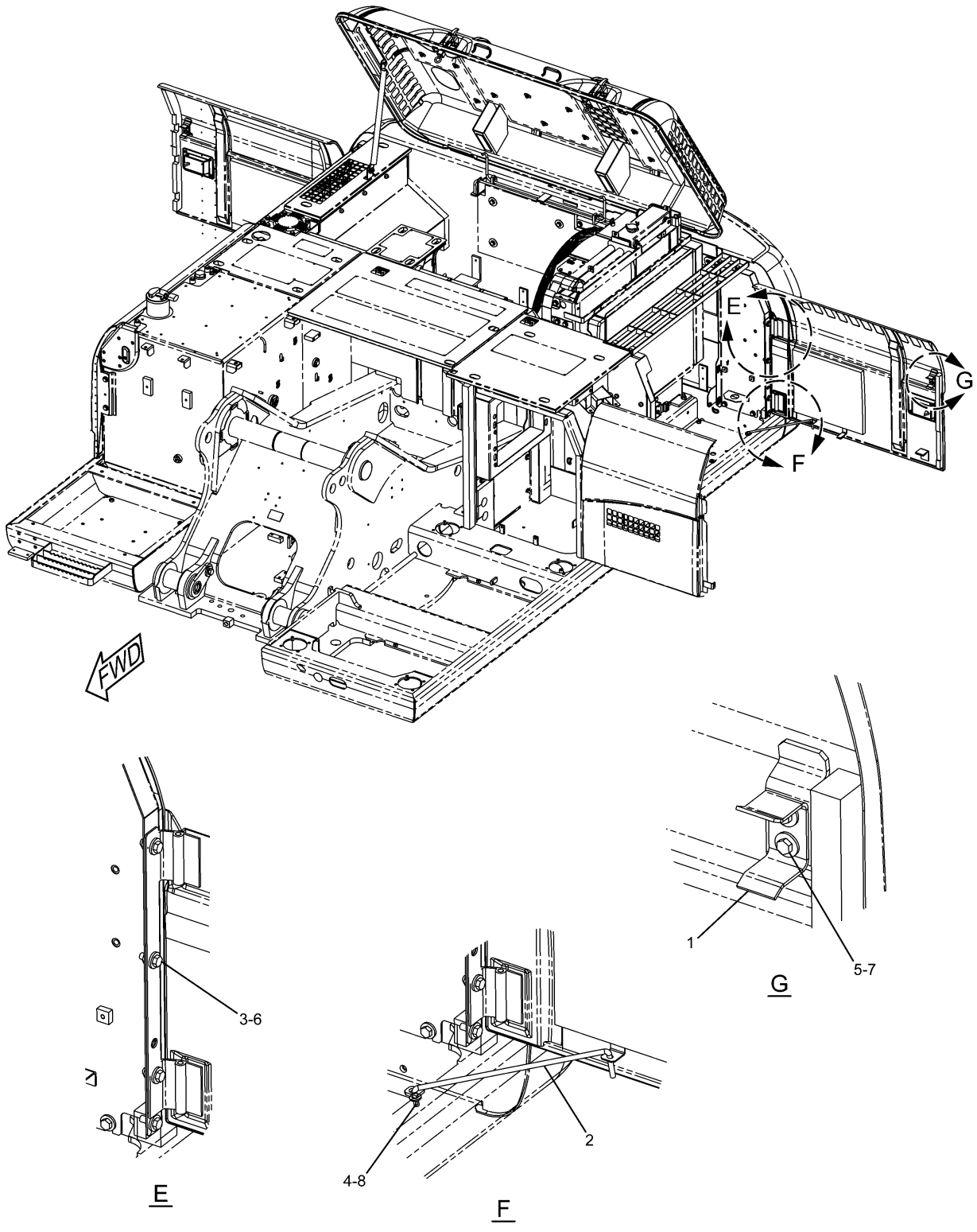

223-3043 HOOD & GUARD GP (2/4)

FRAME AND BODY

NOTE	No.	PART No.	QTY	PART NAME	NOTE	No.	PART No.	QTY	PART NAME
	1	4I-8019	3	SUPPORT					
	2	122-4120	3	ROD					
	3	8T-4139	9	BOLT (L=30mm)					
	4	3B-4618	3	COTTER					
	5	5C-9553	6	BOLT (L=16mm)					
	6	5P-1076	9	WASHER					
	7	5P-4115	6	WASHER					
	8	8T-4121	3	WASHER					

H94369E 06

223-3043 HOOD & GUARD GP (2/4)

FRAME AND BODY

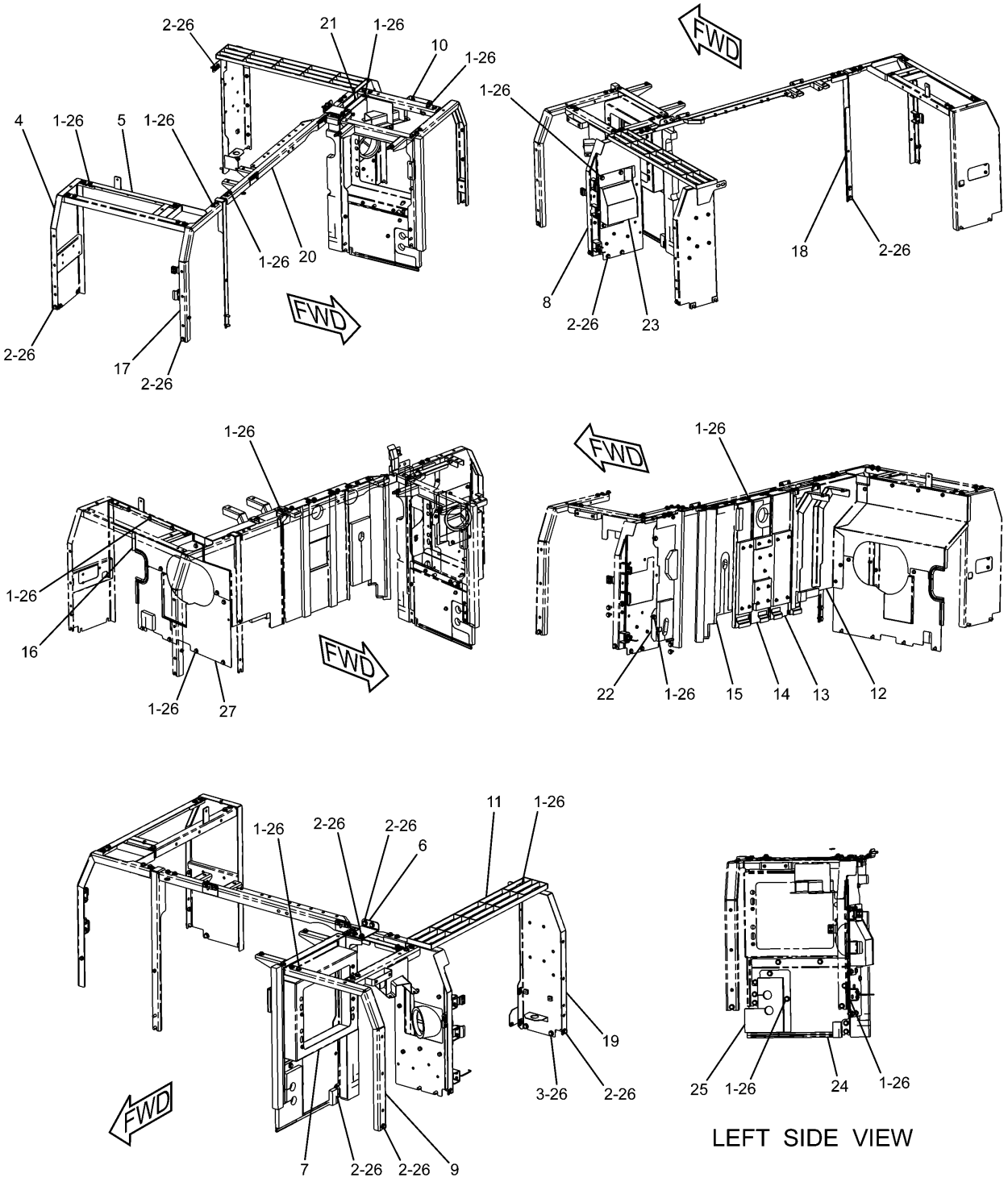

LEFT SIDE VIEW

H94370E 06

223-3043 HOOD & GUARD GP (3/4)

236-3387-Page291,244-7912,244-7917-Page292,244-7922-Page293,256-1698,262-2491-Page294,262-2494,273-7678-Page295,236-3329,256-1670-Page297

FRAME AND BODY

NOTE	No.	PART No.	QTY	PART NAME	NOTE	No.	PART No.	QTY	PART NAME
	1	8T-4192	59	BOLT (L=25mm)					
	2	8T-4139	21	BOLT (L=30mm)					
	3	8T-4183	2	BOLT (L=40mm)					
	4	236-3304	1	SUPPORT AS					
	5	236-3313	1	SUPPORT AS					
	6	236-3328	1	SUPPORT					
Y	7	236-3329	1	SUPPORT AS					
	8	236-3345	1	SUPPORT AS					
	9	236-3350	1	SUPPORT AS					
	10	236-3354	1	SUPPORT AS					
	11	236-3358	1	SUPPORT AS					
Y	12	236-3387	1	SHEET AS					
Y	13	244-7912	1	SHEET AS					
Y	14	244-7917	1	SHEET AS					
Y	15	244-7922	1	SHEET AS					
	16	248-9312	1	SHEET AS					
D		5P-8309		SEAL…(0.2m)					
	17	250-5022	1	SUPPORT AS					
	18	250-5024	1	SUPPORT AS					
	19	250-5197	1	SUPPORT AS					
Y	20	256-1670	1	SUPPORT AS					
	21	256-1696	1	SUPPORT					
Y	22	256-1698	1	SHEET AS					
	23	262-2472	1	SHEET AS					
		262-2481	1	LINER					
Y	24	262-2491	1	SHEET AS					
Y	25	262-2494	1	SHEET AS					
	26	5P-1076	82	WASHER					
Y	27	273-7678	1	SHEET AS					

D—ORDER BY THE METER

Y—SEE SEPARATE ILLUSTRATION

H94370E 06

223-3043 HOOD & GUARD GP (3/4)

236-3387-Page291,244-7912,244-7917-Page292,244-7922-Page293,256-1698,262-2491-Page294,262-2494,273-7678-Page295
,236-3329,256-1670-Page297

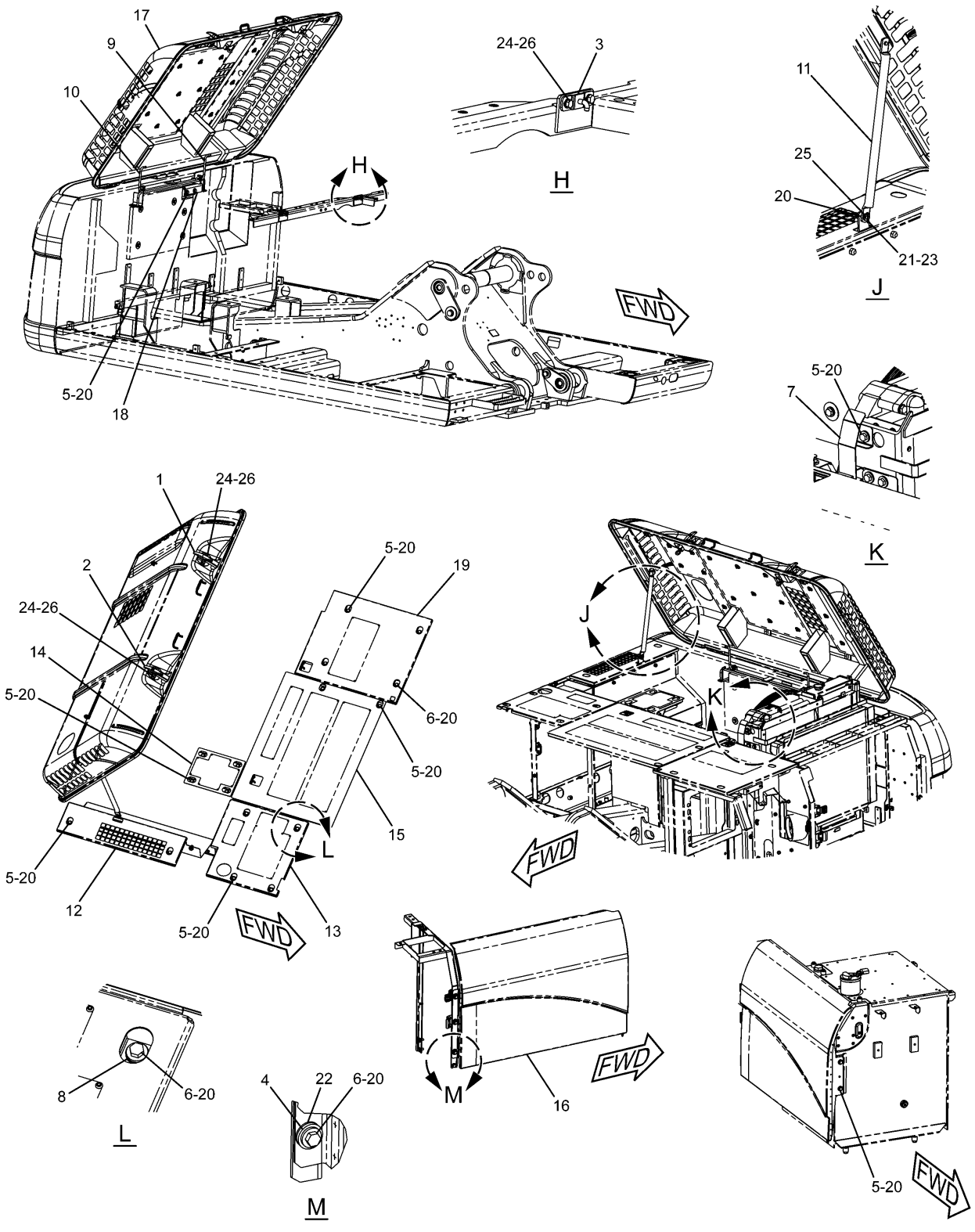

223-3043 HOOD & GUARD GP (4/4)

236-9540-Page286,236-3382-Page290,256-1677-Page291,273-7802-Page296

FRAME AND BODY

NOTE	No.	PART No.	QTY	PART NAME	NOTE	No.	PART No.	QTY	PART NAME
	1	1R-9958	1	FASTENER					
	2	4I-0117	1	FASTENER					
	3	4I-0118	2	HOOK					
	4	7Y-2853	3	SPACER					
	5	8T-4192	18	BOLT (L=25mm)					
	6	8T-4139	6	BOLT (L=30mm)					
Y	7	273-7802	1	SHEET AS					
	8	170-3016	6	SPACER					
	9	203-4889	1	SPRING					
	10	203-4890	1	SPRING					
	11	212-5185	1	SUPPORT AS					
		116-1628	1	SUPPORT AS					
		212-5186	1	TUBE					
	12	236-3363	1	COVER AS					
	13	236-3365	1	COVER AS					
	14	236-3367	1	SHEET AS					
	15	236-3370	1	SHEET AS					
Y	16	236-3382	1	DOOR AS					
Y	17	236-9540	1	HOOD GP					
	18	237-8476	1	SUPPORT AS					
Y	19	256-1677	1	COVER AS					
	20	5P-1076	25	WASHER					
	21	7J-5925	1	COTTER					
	22	7Y-2854	3	SPACER					
	23	7Y-2916	1	PIN					
	24	8T-4189	8	BOLT (L=20mm)					
	25	8T-4223	2	WASHER					
	26	8T-4224	8	WASHER					

Y—SEE SEPARATE ILLUSTRATION

H94371E 06

223-3043 HOOD & GUARD GP (4/4)

236-9540-Page286,236-3382-Page290,256-1677-Page291,273-7802-Page296

FRAME AND BODY

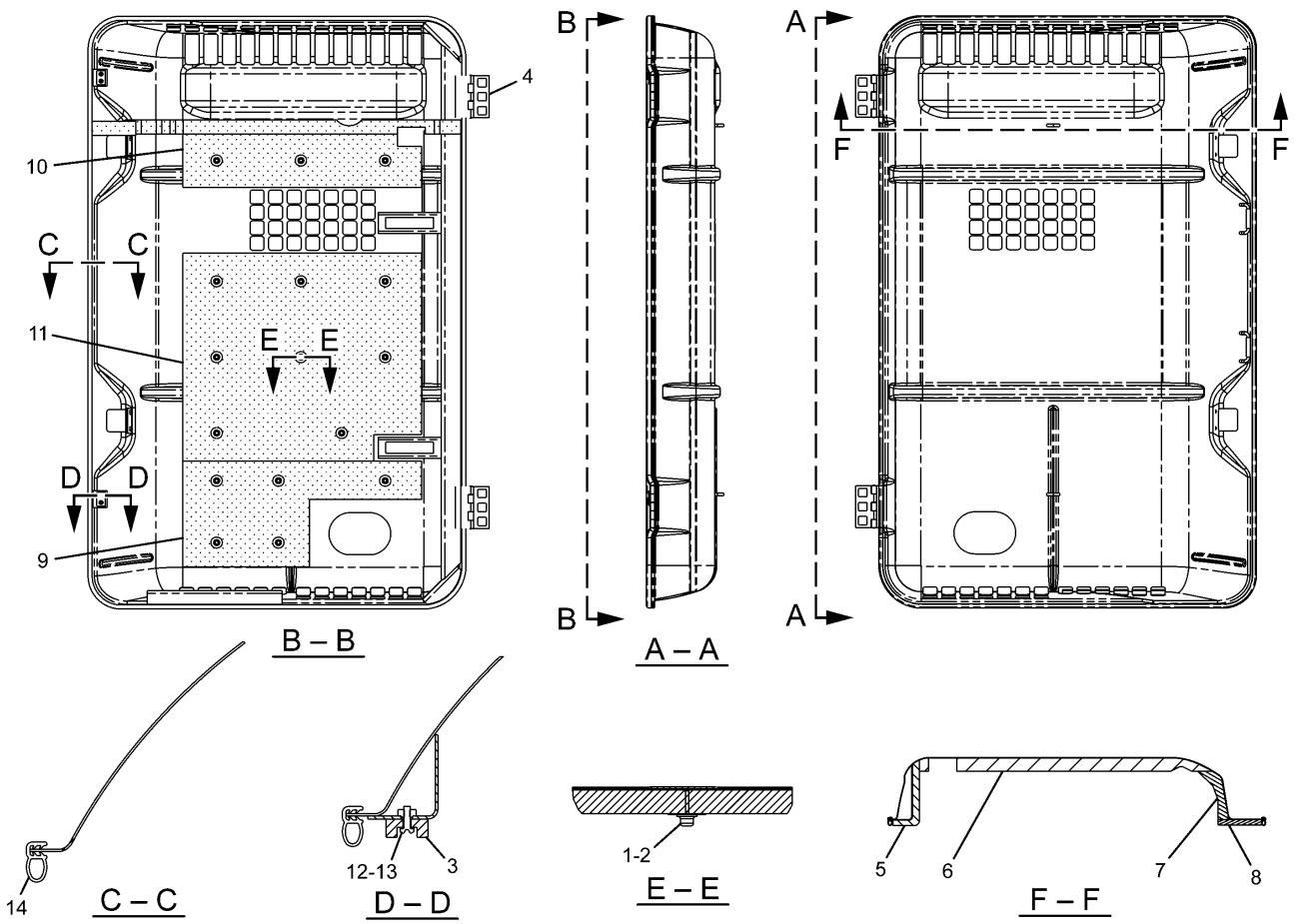

NOTE	No.	PART No.	QTY	PART NAME	NOTE	No.	PART No.	QTY	PART NAME
	1	4I-7924	16	WASHER					
	2	6P-2216	16	CAP					
	3	096-4129	2	CUSHION					
	4	114-6289	2	HINGE					
	5	236-9543	1	LINER					
	6	236-9544	1	LINER					
	7	236-9545	1	LINER					
	8	236-9546	1	LINER					
	9	262-2178	1	LINER					
	10	262-2442	1	INSULATION					
	11	262-2443	1	INSULATION					
	12	8T-0328	4	WASHER					
	13	8T-6693	4	SCREW					
D	14	101-9848		SEAL…(6.673m)					

D—ORDER BY THE METER

H91550E 04

236-9540 HOOD GP-ENGINE

Part of 223-3043-Page285

FRAME AND BODY

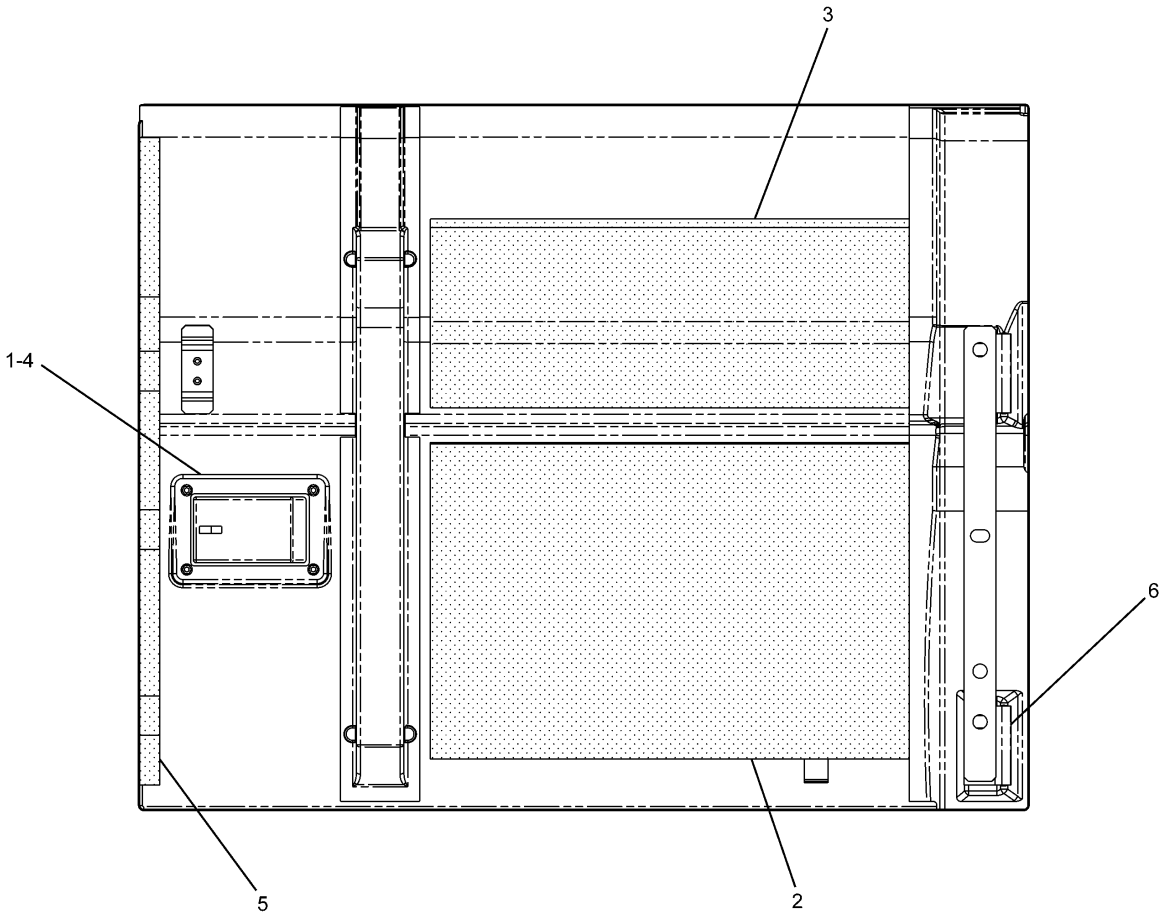

NOTE	No.	PART No.	QTY	PART NAME	NOTE	No.	PART No.	QTY	PART NAME
	1	099-6418	4	NUT					
	2	203-5282	1	INSULATION					
	3	203-5283	1	INSULATION					
	4	268-0457	1	LOCK AS					
	5	244-7895	1	LINER					
	6	165-2976	2	HINGE					

H91547E 02

236-3397 DOOR GP
Part of 223-3043-Page279

FRAME AND BODY

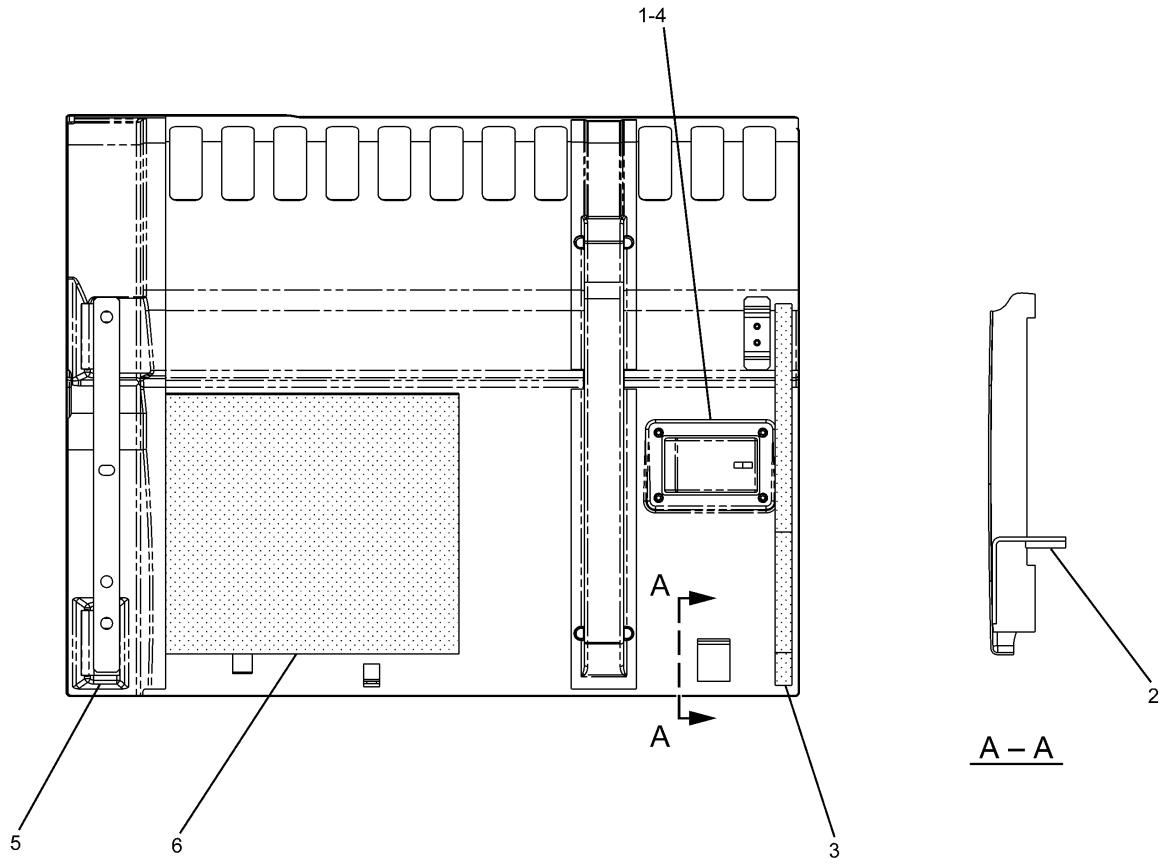

NOTE	No.	PART No.	QTY	PART NAME	NOTE	No.	PART No.	QTY	PART NAME
	1	099-6418	4	NUT					
	2	122-4101	1	RUBBER					
	3	177-6395	1	LINER					
	4	268-0457	1	LOCK AS					
	5	165-2976	2	HINGE					
	6	262-2468	1	INSULATION					

H91546E 03

236-3751 DOOR GP
Part of 223-3043-Page279

FRAME AND BODY

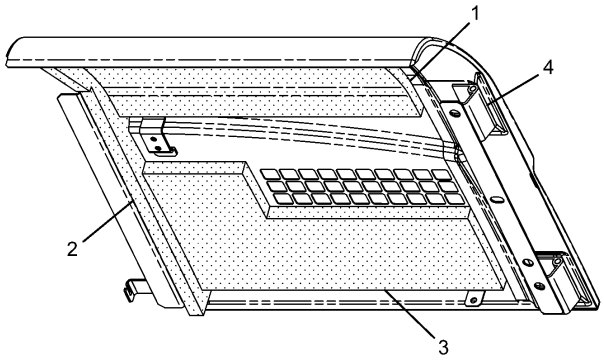

NOTE	No.	PART No.	QTY	PART NAME
	1	236-3747	1	INSULATION
	2	250-5054	1	LINER
	3	262-2401	1	INSULATION
	4	165-2976	2	HINGE

H91548E 01

262-2400 DOOR AS

Part of 223-3043-Page279

FRAME AND BODY

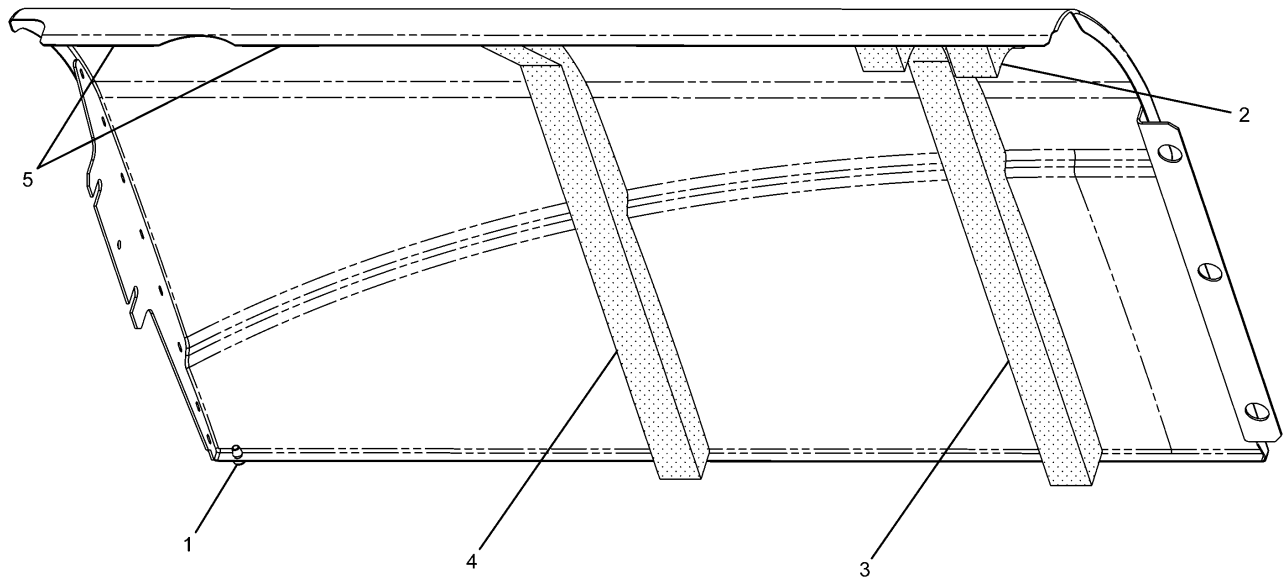

NOTE	No.	PART No.	QTY	PART NAME	NOTE	No.	PART No.	QTY	PART NAME
	1	170-3015	1	BUMPER					
	2	177-5739	1	LINER					
	3	203-4927	1	LINER					
	4	236-9568	1	LINER					
	5	236-9567	2	SHEET					

H91247E 01

236-3382 DOOR AS

Part of 223-3043-Page285

FRAME AND BODY

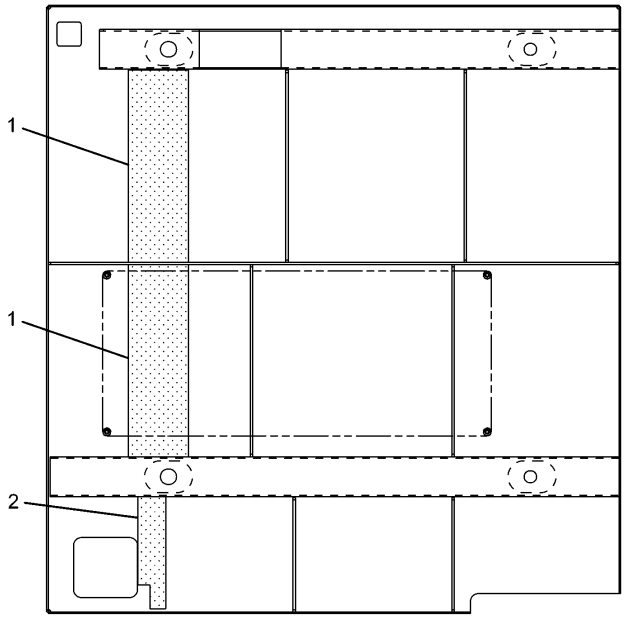

NOTE	No.	PART No.	QTY	PART NAME
	1	256-1679	2	INSULATION
	2	256-1678	1	INSULATION

H91242E 04

256-1677 COVER AS
Part of 223-3043-Page285

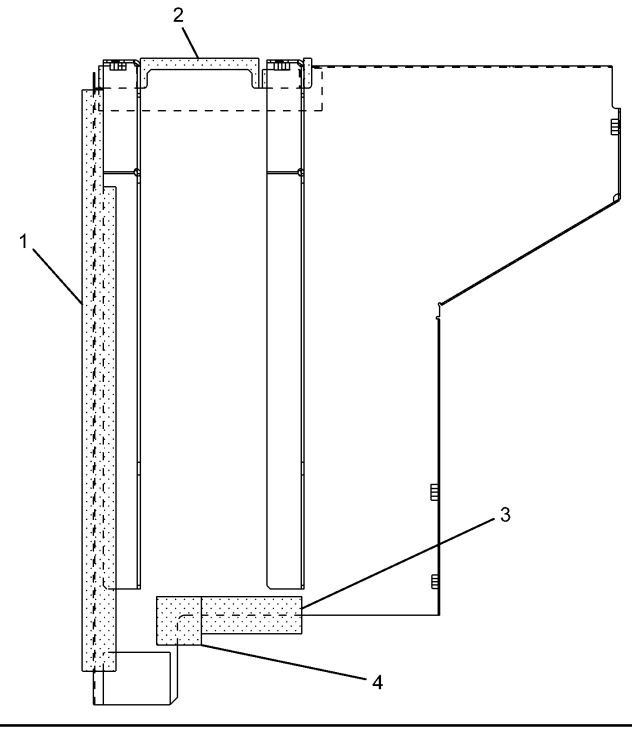

NOTE	No.	PART No.	QTY	PART NAME
	1	236-3388	1	INSULATION
	2	256-1681	1	INSULATION
	3	250-5108	1	INSULATION
	4	250-5109	1	INSULATION

H91250E 01

236-3387 SHEET AS
Part of 223-3043-Page283

FRAME AND BODY

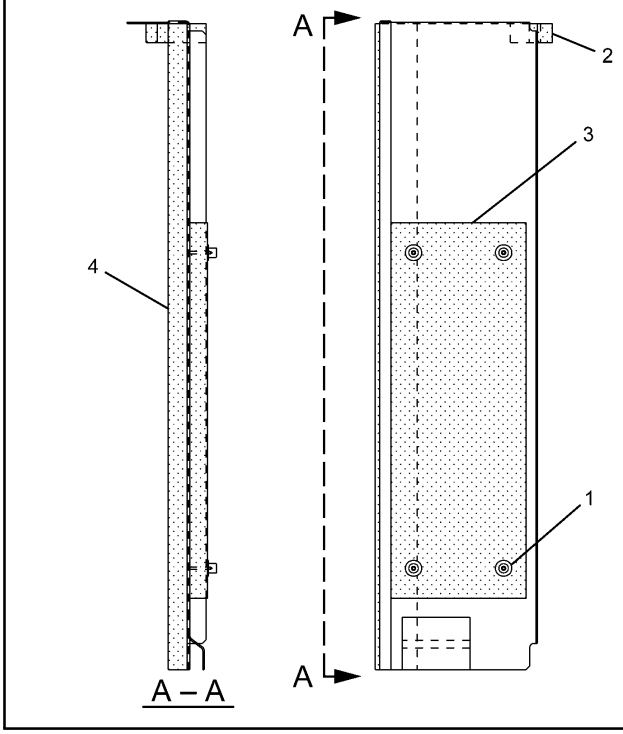

NOTE	No.	PART No.	QTY	PART NAME
	1	6P-2216	4	CAP
	2	256-1682	1	INSULATION
	3	244-7915	1	INSULATION
	4	244-7916	1	INSULATION

H91253E 00

244-7912 SHEET AS
Part of 223-3043-Page283

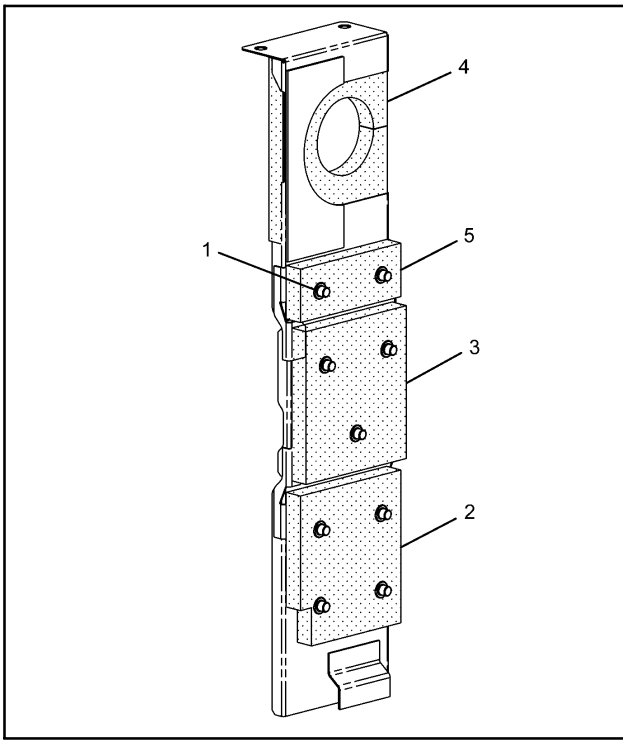

NOTE	No.	PART No.	QTY	PART NAME
	1	6P-2216	9	CAP
	2	236-3399	1	INSULATION
	3	256-1687	1	INSULATION
	4	244-7921	1	LINER
	5	256-1686	1	INSULATION

H91254E 02

244-7917 SHEET AS
Part of 223-3043-Page283

FRAME AND BODY

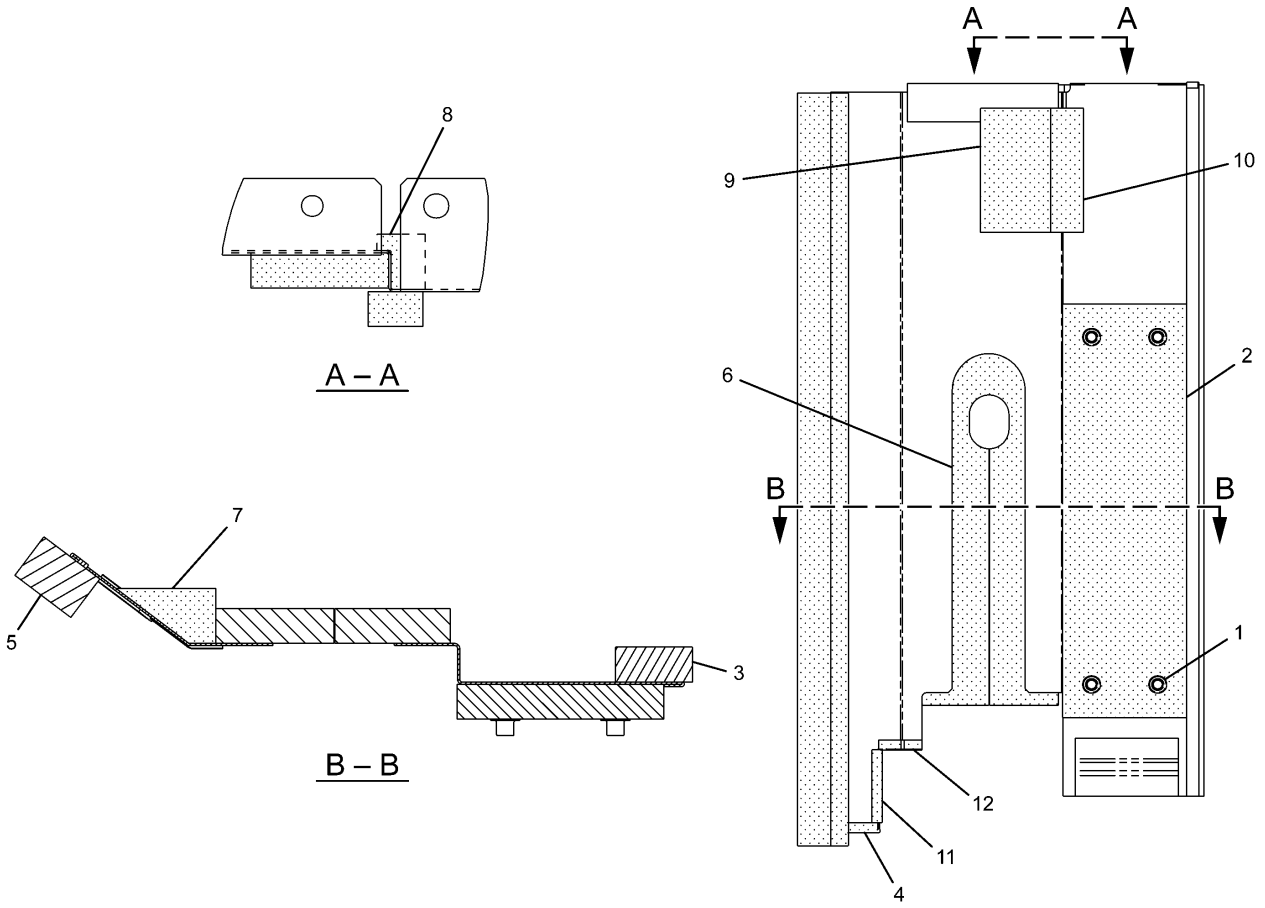

NOTE	No.	PART No.	QTY	PART NAME	NOTE	No.	PART No.	QTY	PART NAME
	1	6P-2216	4	CAP					
	2	236-9575	1	INSULATION					
	3	244-7916	1	INSULATION					
E	4	184-8580		SEAL…(4.5cm)					
	5	256-1689	1	INSULATION					
	6	256-1691	1	INSULATION					
	7	256-1692	1	INSULATION					
	8	256-1693	1	INSULATION					
	9	256-1708	1	INSULATION					
	10	256-1710	1	INSULATION					
E	11	184-8580		SEAL…(8.8cm)					
E	12	184-8580		SEAL…(5.7cm)					

E—ORDER BY THE CENTIMETER

H91256E 01

244-7922 SHEET AS
Part of 223-3043-Page283

FRAME AND BODY

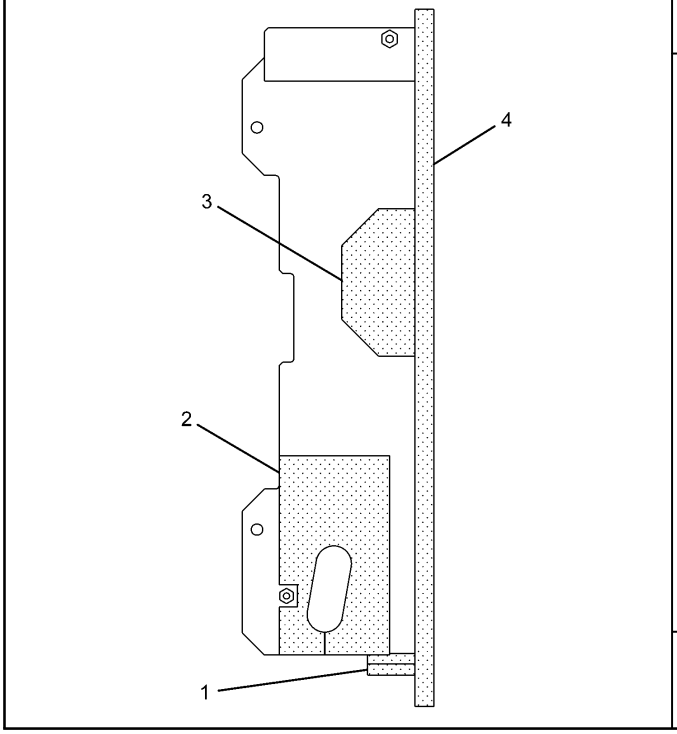

NOTE	No.	PART No.	QTY	PART NAME
D	1	5P-8309		SEAL…(0.065m)
	2	256-1702	1	LINER
	3	256-1703	1	LINER
	4	256-1704	1	LINER

D—ORDER BY THE METER

H91246E 02

256-1698 SHEET AS

Part of 223-3043-Page283

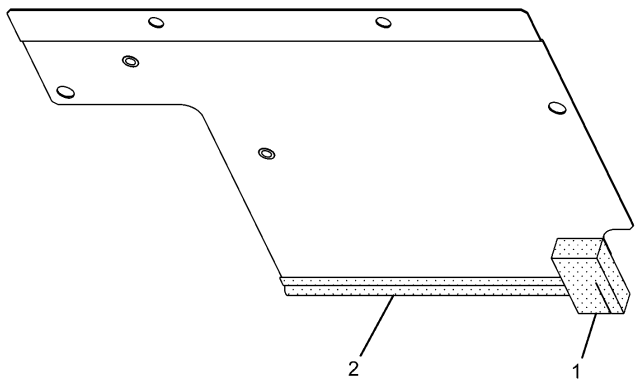

NOTE	No.	PART No.	QTY	PART NAME
	1	236-3396	1	INSULATION
D	2	5P-8309		SEAL…(0.325m)

D—ORDER BY THE METER

H91221E 01

262-2491 SHEET AS

Part of 223-3043-Page283

FRAME AND BODY

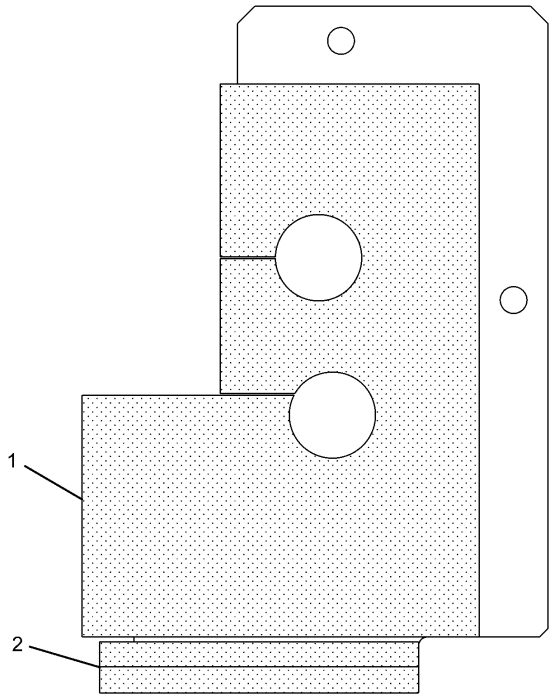

NOTE	No.	PART No.	QTY	PART NAME
	1	262-2495	1	INSULATION
D	2	5P-8309		SEAL…(0.185m)

D—ORDER BY THE METER

H91244E 01

262-2494 SHEET AS
Part of 223-3043-Page283

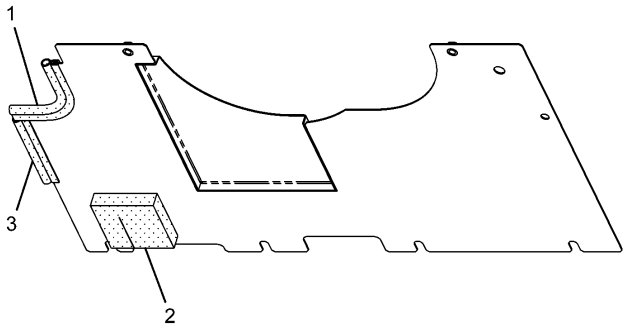

NOTE	No.	PART No.	QTY	PART NAME
D	1	5P-8309		SEAL…(0.22m)
	2	273-7681	1	INSULATION
D	3	5P-8309		SEAL…(0.16m)

D—ORDER BY THE METER

H91222E 01

273-7678 SHEET AS
Part of 223-3043-Page283

FRAME AND BODY

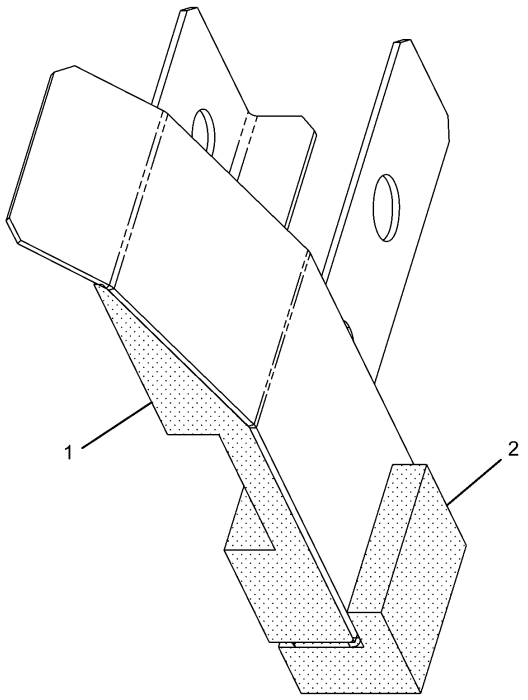

NOTE	No.	PART No.	QTY	PART NAME
	1	273-7803	1	LINER
	2	273-7804	1	LINER

H91226E 00

273-7802 SHEET AS

Part of 223-3043-Page285

FRAME AND BODY

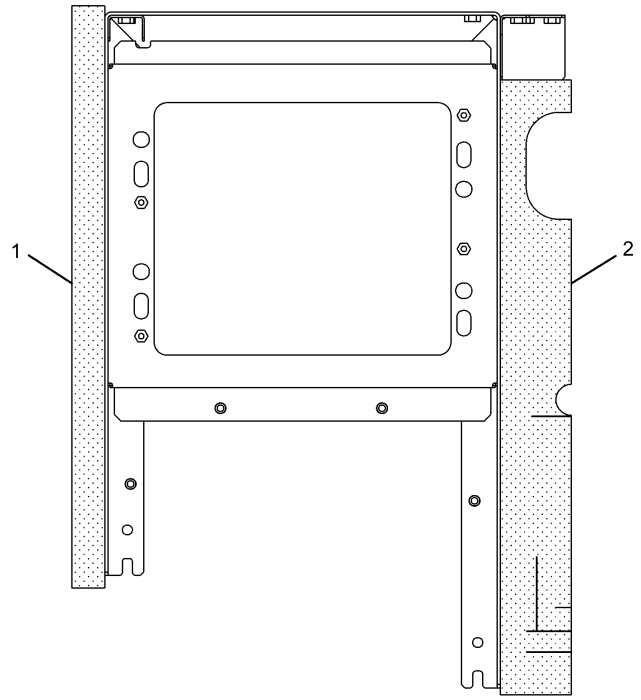

NOTE	No.	PART No.	QTY	PART NAME
	1	236-3330	1	INSULATION
	2	250-5101	1	INSULATION

H91245E 02

236-3329 SUPPORT AS

Part of 223-3043-Page283

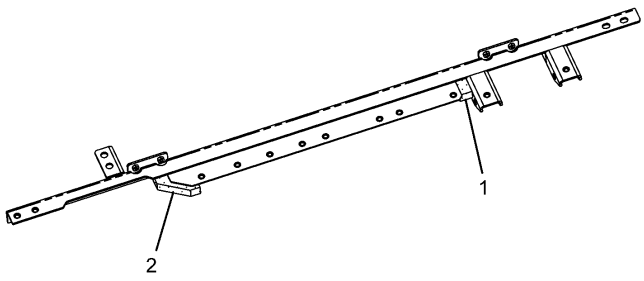

NOTE	No.	PART No.	QTY	PART NAME
	1	256-1672	1	INSULATION
	2	256-1671	1	INSULATION

H91251E 01

256-1670 SUPPORT AS

Part of 223-3043-Page283

FRAME AND BODY

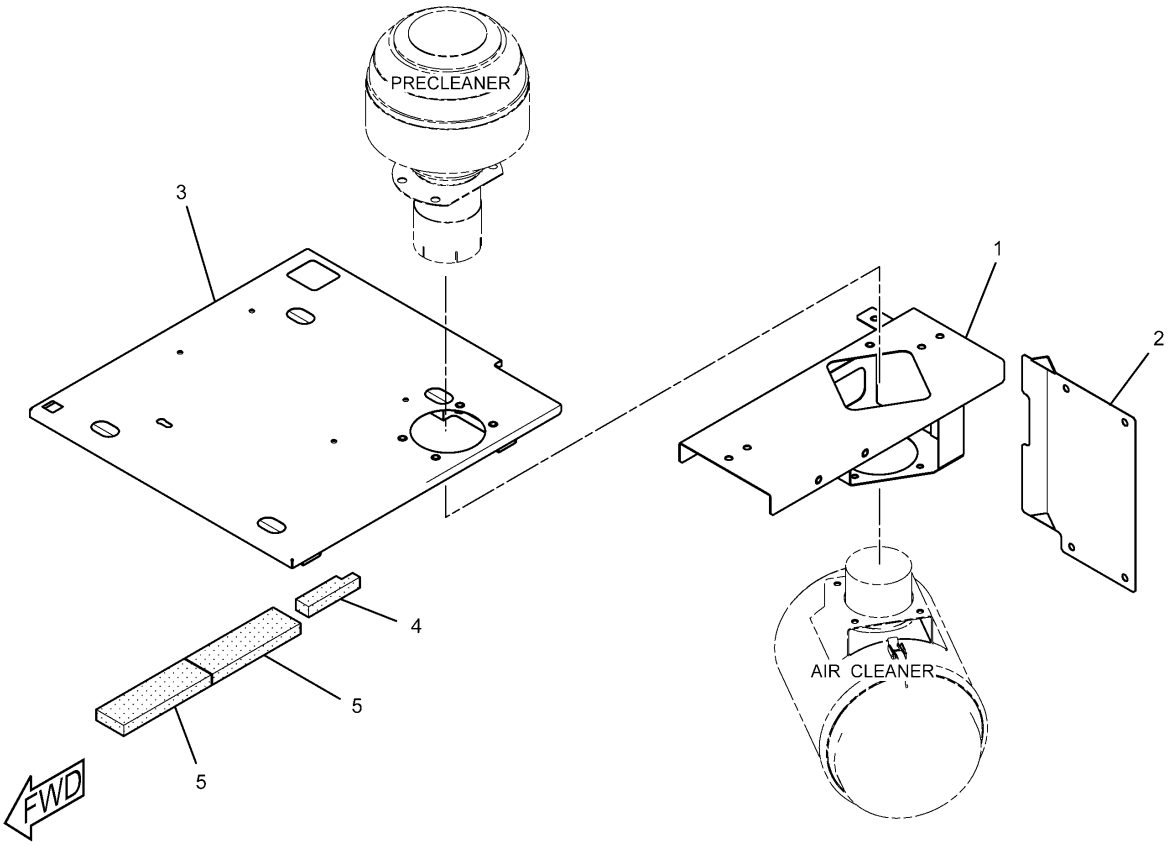

NOTE	No.	PART No.	QTY	PART NAME	NOTE	No.	PART No.	QTY	PART NAME
	1	237-8480	1	SUPPORT AS					
	2	262-2509	1	SHEET AS					
	3	256-1774	1	COVER AS					
	4	256-1678	1	INSULATION					
	5	256-1679	2	INSULATION					

H90370E 04

223-3045 HOOD GP
Precleaner
Part of 229-1794-Page92
An Attachment

MEMORANDA

FRAME AND BODY

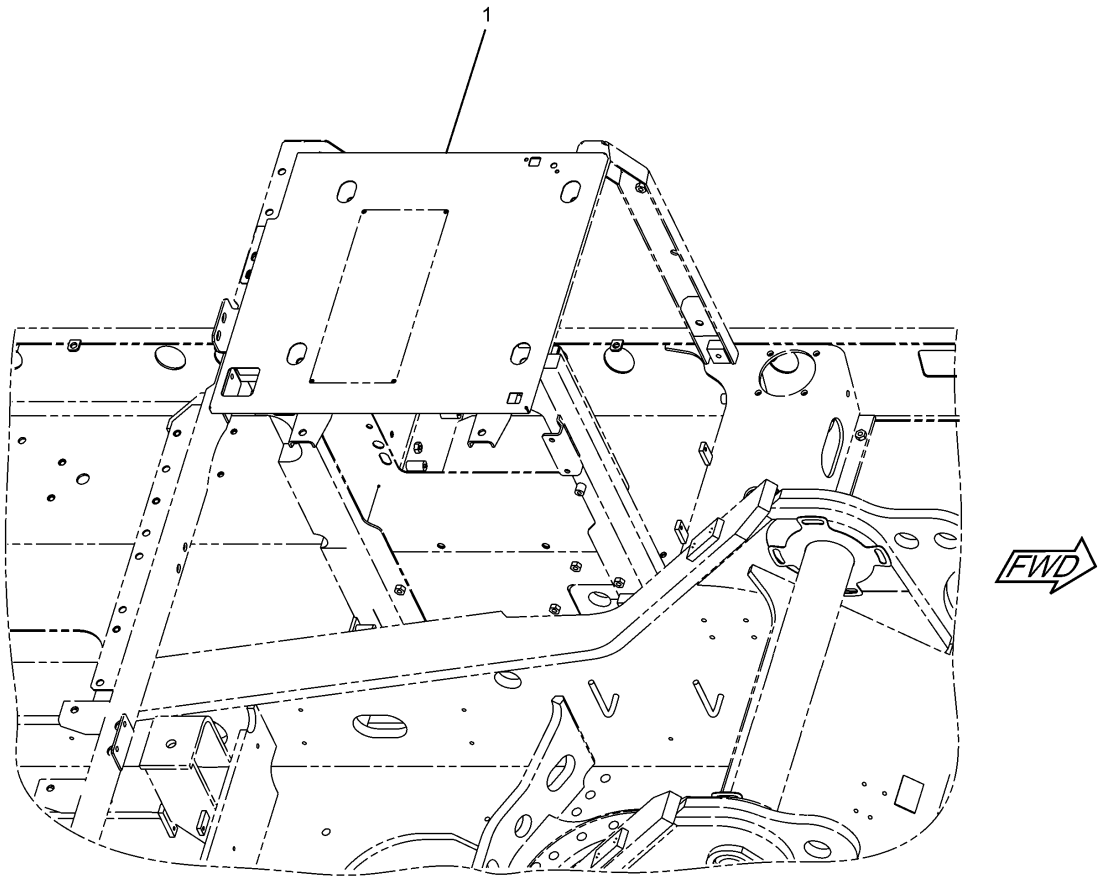

NOTE	No.	PART No.	QTY	PART NAME	NOTE	No.	PART No.	QTY	PART NAME
Y	1	278-3568	1	COVER AS					

Y—SEE SEPARATE ILLUSTRATION

H90674E 00

278-3567 COVER GP
Product Link Japan
Part of 275-3673-Page220
278-3568-Page301
An Attachment

FRAME AND BODY

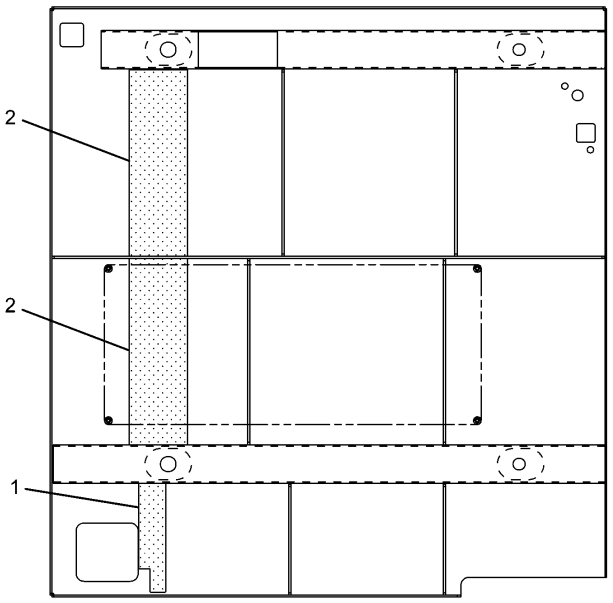

NOTE	No.	PART No.	QTY	PART NAME
	1	256-1678	1	INSULATION
	2	256-1679	2	INSULATION

H91241E 00

278-3568 COVER AS

Part of 278-3567-Page300
An Attachment

FRAME AND BODY

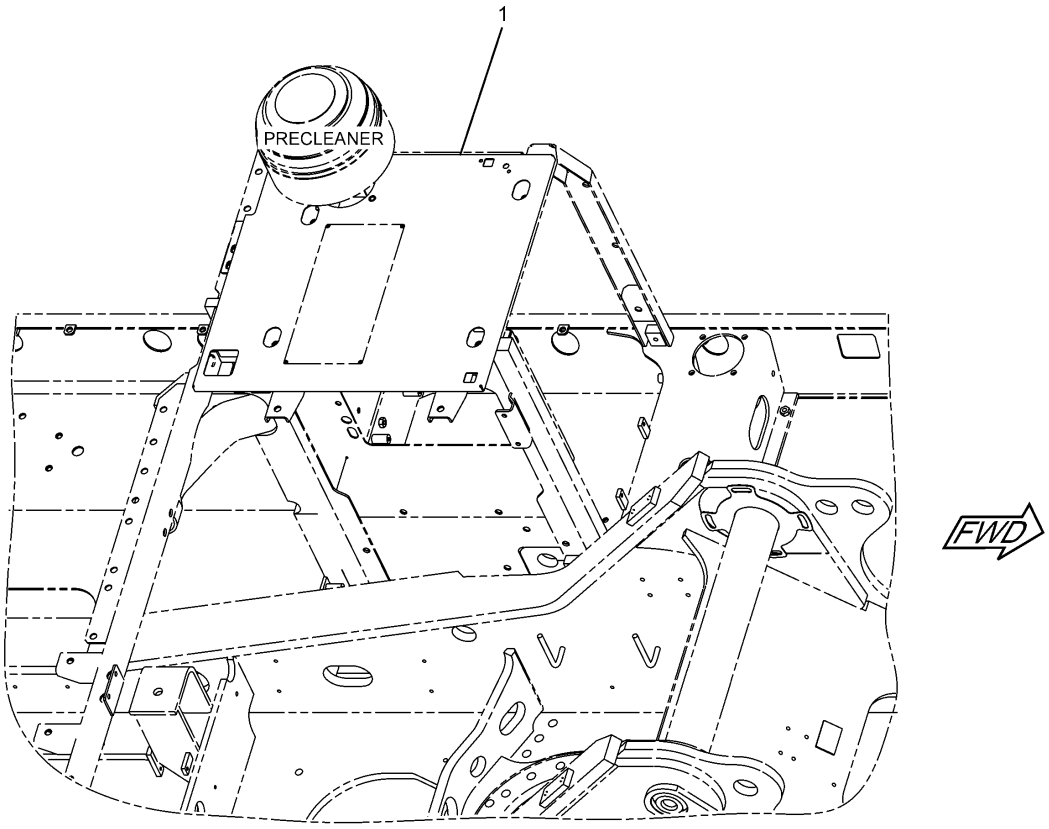

NOTE	No.	PART No.	QTY	PART NAME	NOTE	No.	PART No.	QTY	PART NAME
Y	1	278-3570	1	COVER AS					

Y—SEE SEPARATE ILLUSTRATION

H90675E 00

278-3569 COVER GP
278-3570-Page303
An Attachment

FRAME AND BODY

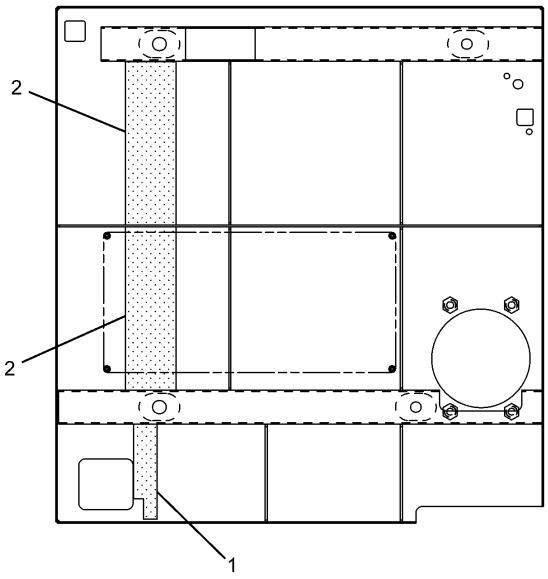

NOTE	No.	PART No.	QTY	PART NAME
	1	256-1678	1	INSULATION
	2	256-1679	2	INSULATION

H91587E 00

278-3570 COVER AS
Part of 278-3569-Page302
An Attachment

FRAME AND BODY

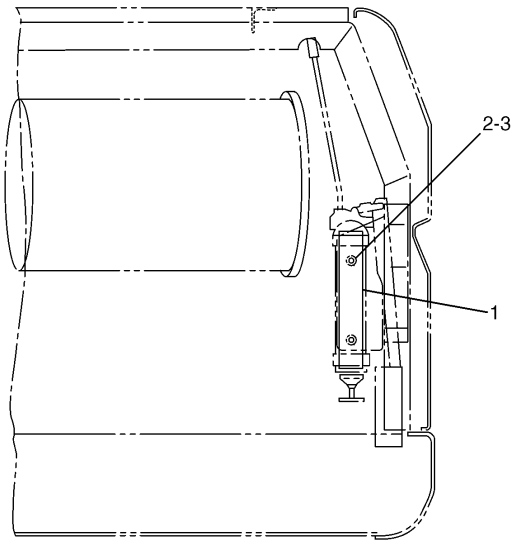

NOTE	No.	PART No.	QTY	PART NAME
	1	4I-8384	1	SUPPORT
	2	8T-4179	2	BOLT (L=20mm)
	3	8T-4223	2	WASHER

H52846E 01

7I-0800 MOUNTING GP-GREASE GUN

Part of 176-2676-Page794
An Attachment

FRAME AND BODY

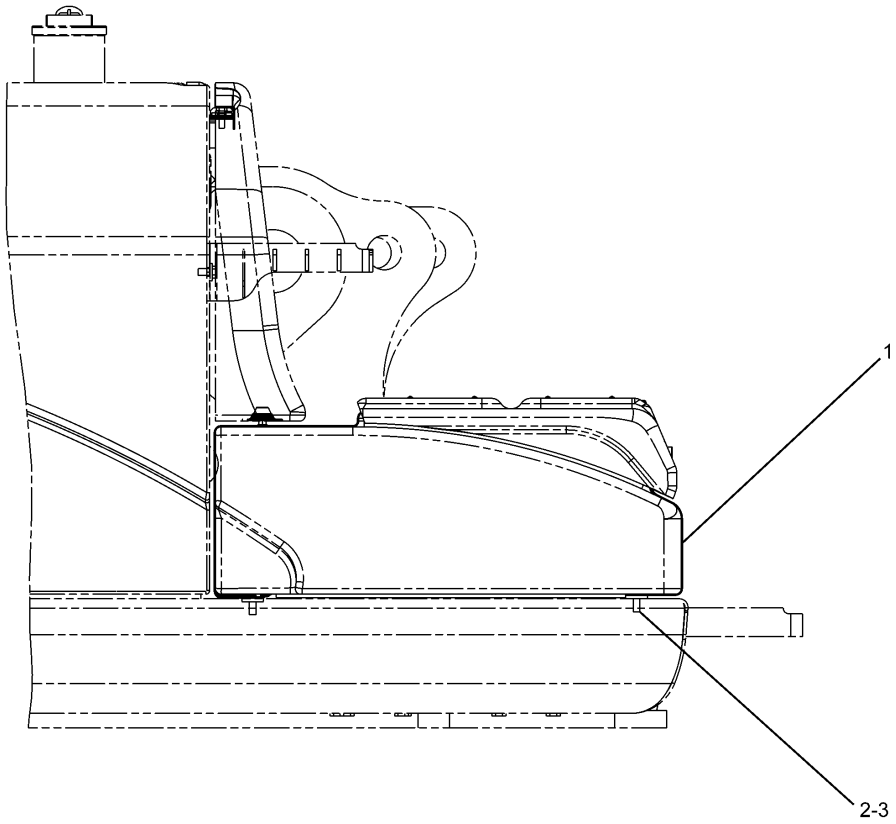

NOTE	No.	PART No.	QTY	PART NAME	NOTE	No.	PART No.	QTY	PART NAME
Y	1	223-3041	1	BOX GP					
	2	5P-1076	4	WASHER					
	3	8T-4956	4	BOLT (L=35mm)					

Y—SEE SEPARATE ILLUSTRATION

H89256E 02

223-3040 BOX & MTG GP-STORAGE

223-3041-Page306

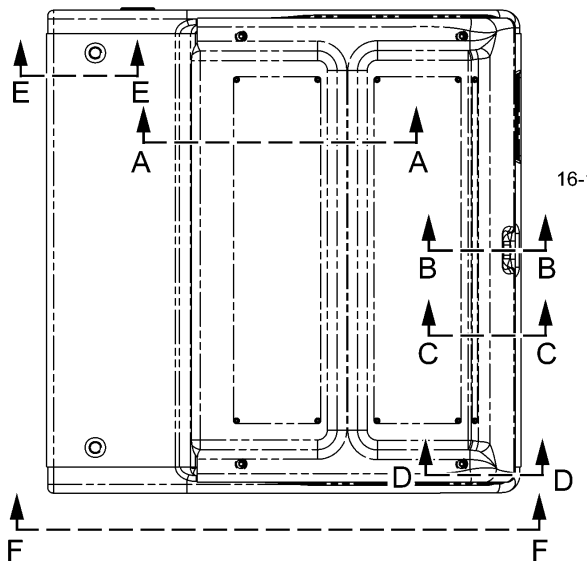

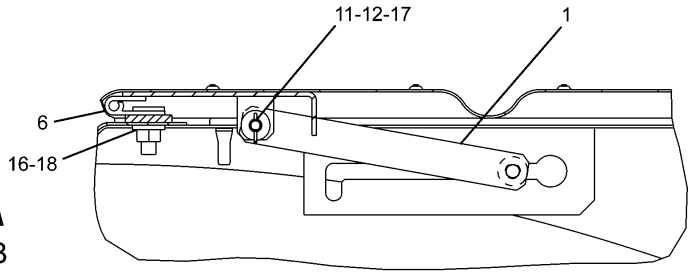

A – A

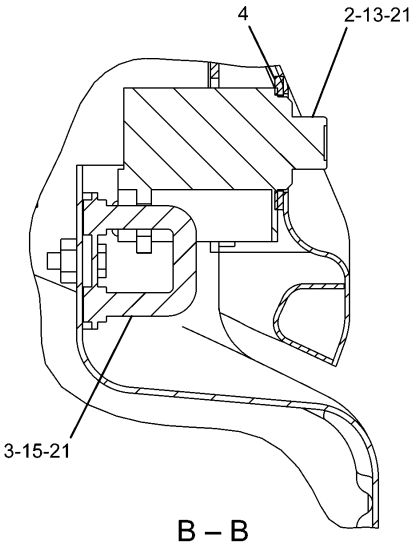

B – B

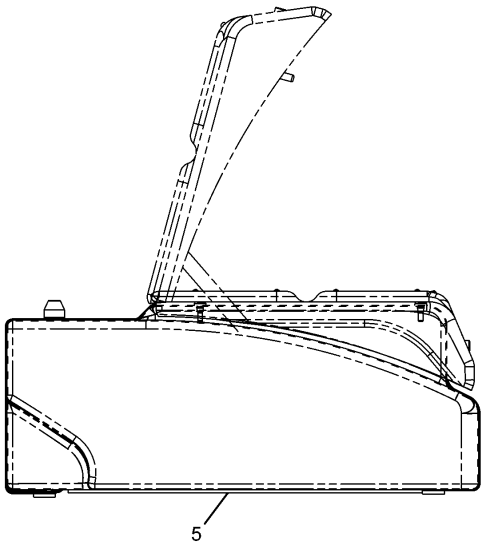

F – F

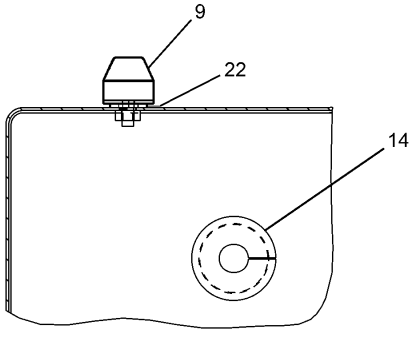

E – E

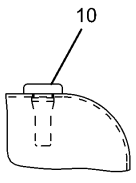

D – D

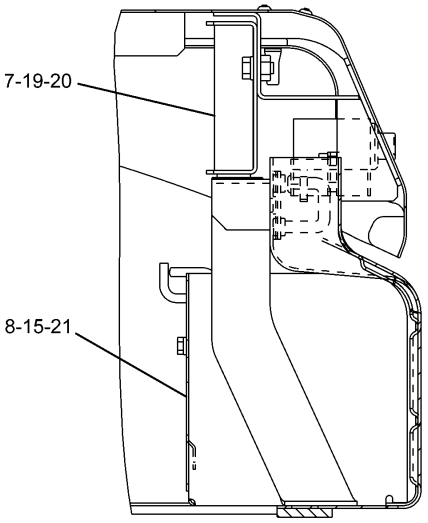

C – C

H92439E 08

223-3041 BOX GP-STORAGE

Part of 223-3040-Page305

FRAME AND BODY

NOTE	No.	PART No.	QTY	PART NAME	NOTE	No.	PART No.	QTY	PART NAME
	1	4I-2187	1	SUPPORT AS					
	2	236-3669	1	LOCK AS					
	3	236-3670	1	STRIKER AS					
	4	236-3671	1	SEAL					
	5	236-9435	1	BOX AS					
	6	3D-9143	2	HINGE					
	7	236-9438	1	PLUNGER AS					
	8	236-9440	1	SHEET					
	9	273-7964	2	MOUNT					
	10	278-3581	4	CUSHION					
	11	095-0843	1	COTTER					
	12	096-3780	1	PIN					
	13	105-3487	4	BOLT (L=20mm)					
	14	170-9360	1	GROMMET					
	15	5C-9553	3	BOLT (L=16mm)					
	16	5P-1075	4	WASHER					
	17	5P-4116	1	WASHER					
	18	8T-4133	4	NUT					
	19	8T-4200	2	BOLT (L=16mm)					
	20	8T-4224	2	WASHER					
	21	9X-8256	7	WASHER					
B	22	8T-4223	2	WASHER					

B—USE AS REQUIRED

H92439E 08

223-3041 BOX GP-STORAGE

Part of 223-3040-Page305

FRAME AND BODY

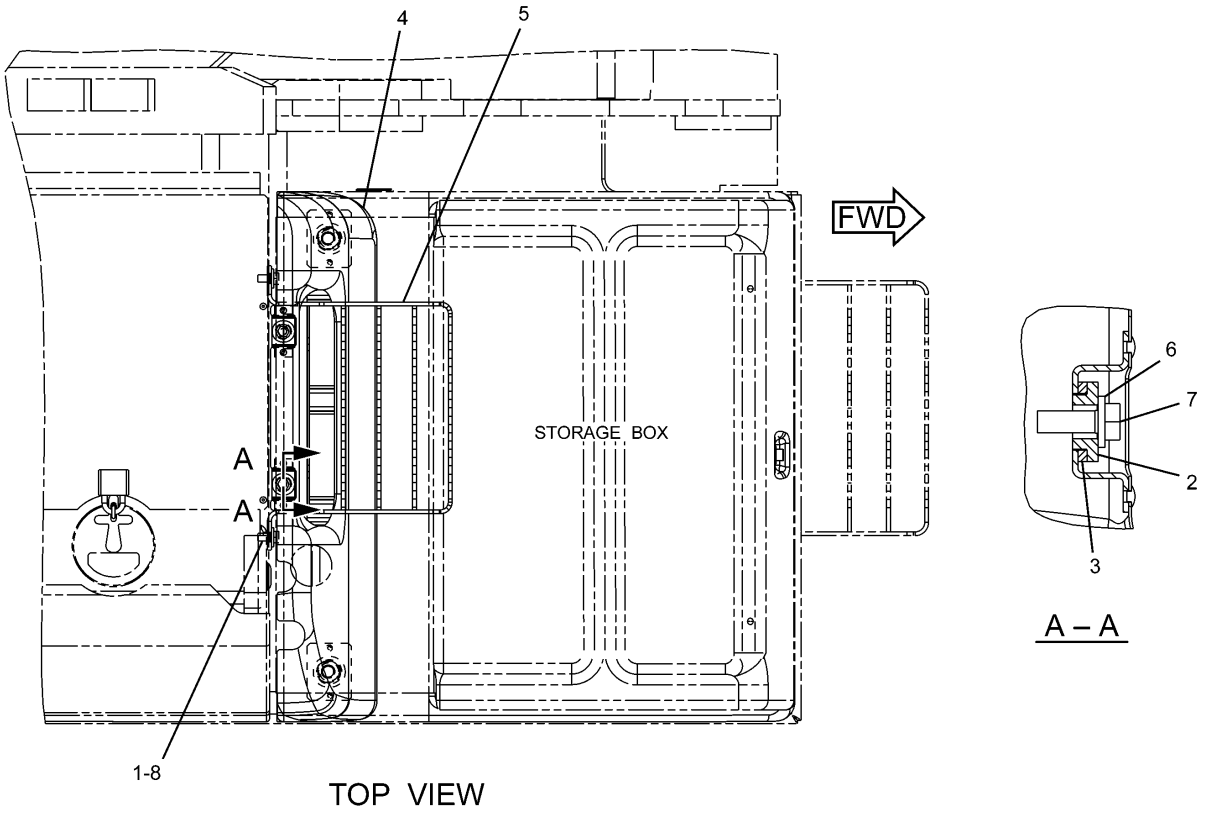

TOP VIEW

NOTE	No.	PART No.	QTY	PART NAME	NOTE	No.	PART No.	QTY	PART NAME
	1	8T-4192	2	BOLT (L=25mm)					
	2	236-3702	2	SPACER					
	3	236-3703	2	WASHER					
	4	236-9570	1	COVER AS					
		278-3818	1	LINER					
	5	259-3543	1	STEP AS					
	6	5P-1075	2	WASHER					
	7	8T-4195	2	BOLT (L=30mm)					
	8	5P-1076	2	WASHER					

H91197E 03

223-3042 FENDER & COVER GP

FRAME AND BODY

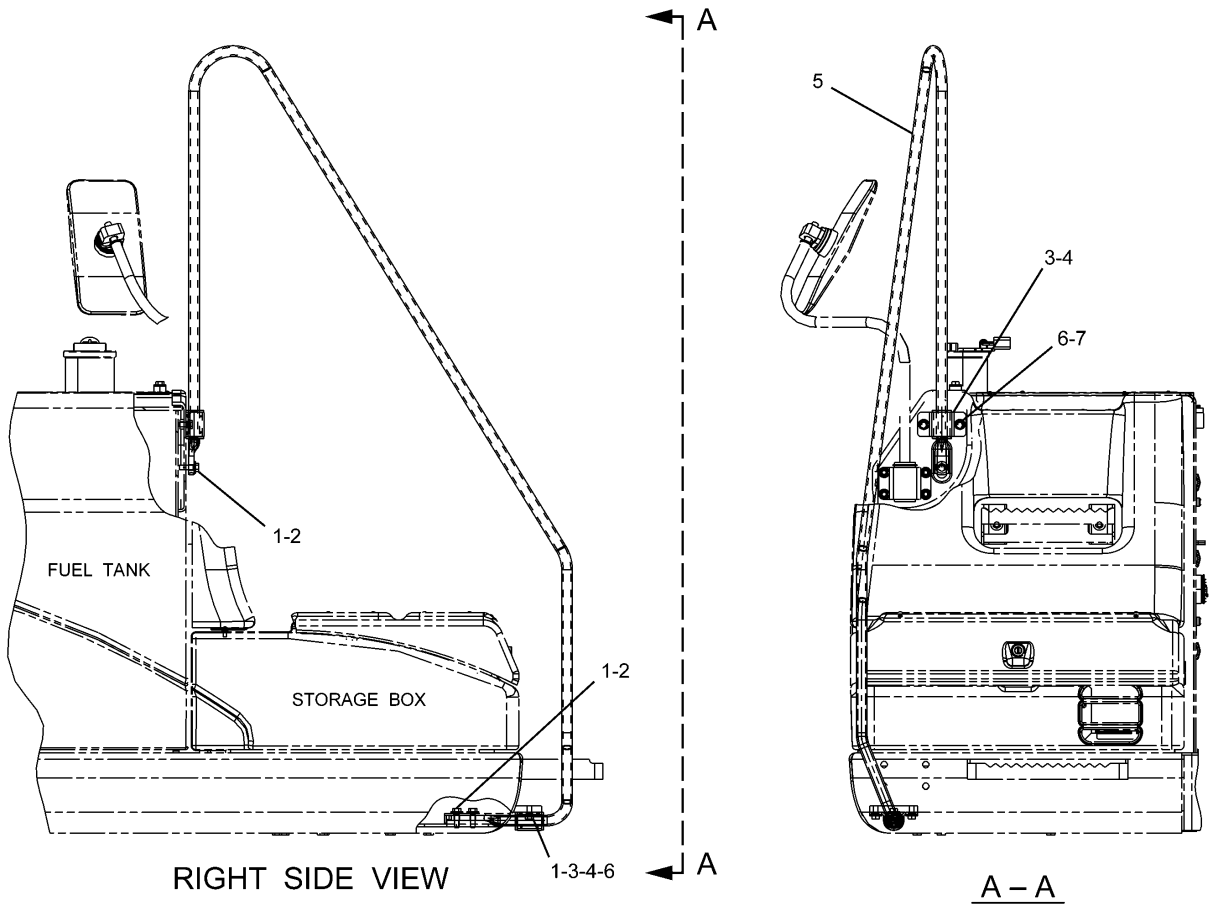

NOTE	No.	PART No.	QTY	PART NAME	NOTE	No.	PART No.	QTY	PART NAME
	1	5P-1076	5	WASHER					
	2	8T-4183	3	BOLT (L=40mm)					
	3	177-5879	2	CLAMP					
	4	177-5880	4	SLEEVE					
	5	262-2209	1	HANDHOLD AS					
	6	8T-4192	4	BOLT (L=25mm)					
	7	8T-4223	2	WASHER					

H88950E 01

256-1644 HANDHOLD GP

FRAME AND BODY

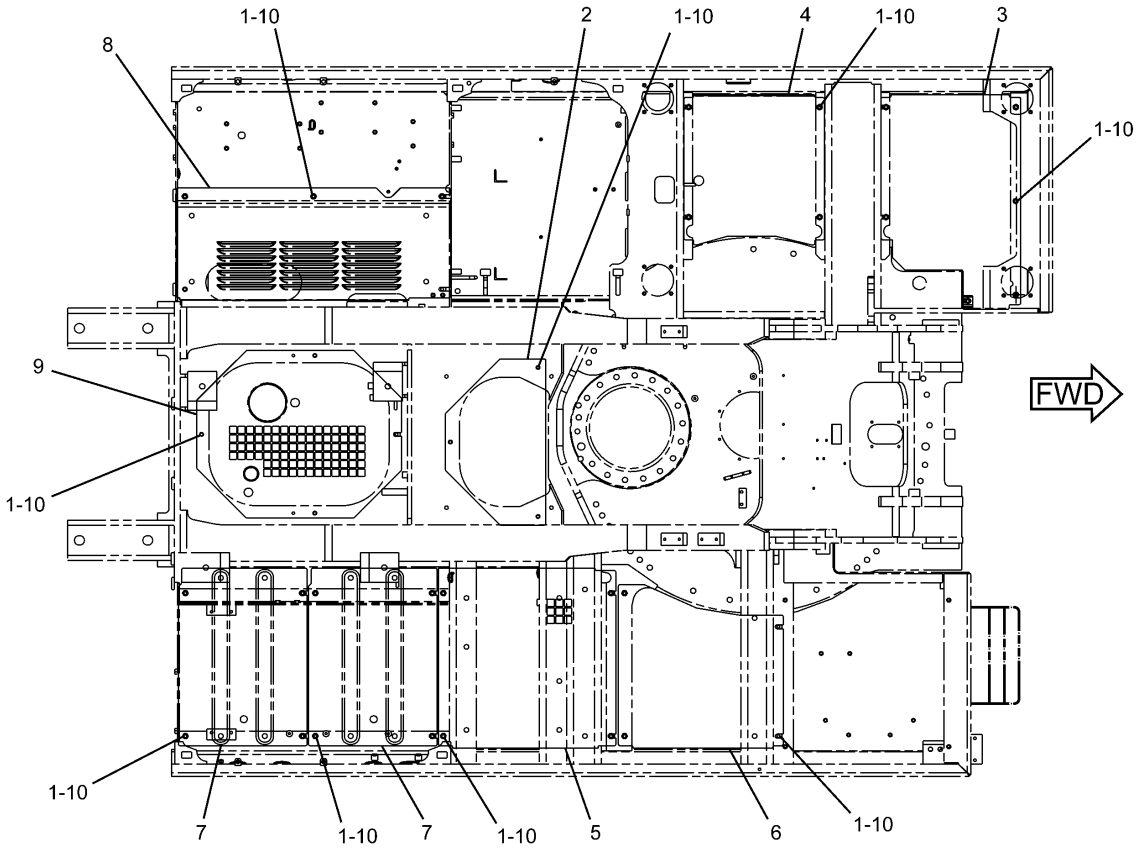

TOP VIEW

NOTE	No.	PART No.	QTY	PART NAME	NOTE	No.	PART No.	QTY	PART NAME
	1	8C-8992	38	BOLT (L=30mm)					
	2	184-8784	1	SHEET					
	3	223-3098	1	SHEET					
	4	223-3099	1	SHEET					
	5	223-3103	1	SHEET					
	6	223-3104	1	SHEET					
	7	236-3637	2	PLATE AS					
	8	262-2376	1	SHEET					
	9	262-2377	1	SHEET AS					
	10	5P-1076	38	WASHER					

H88946E 04

223-3047 GUARD GP-BOTTOM
S/N CJM 1-Up, DAP 1-Up

FRAME AND BODY

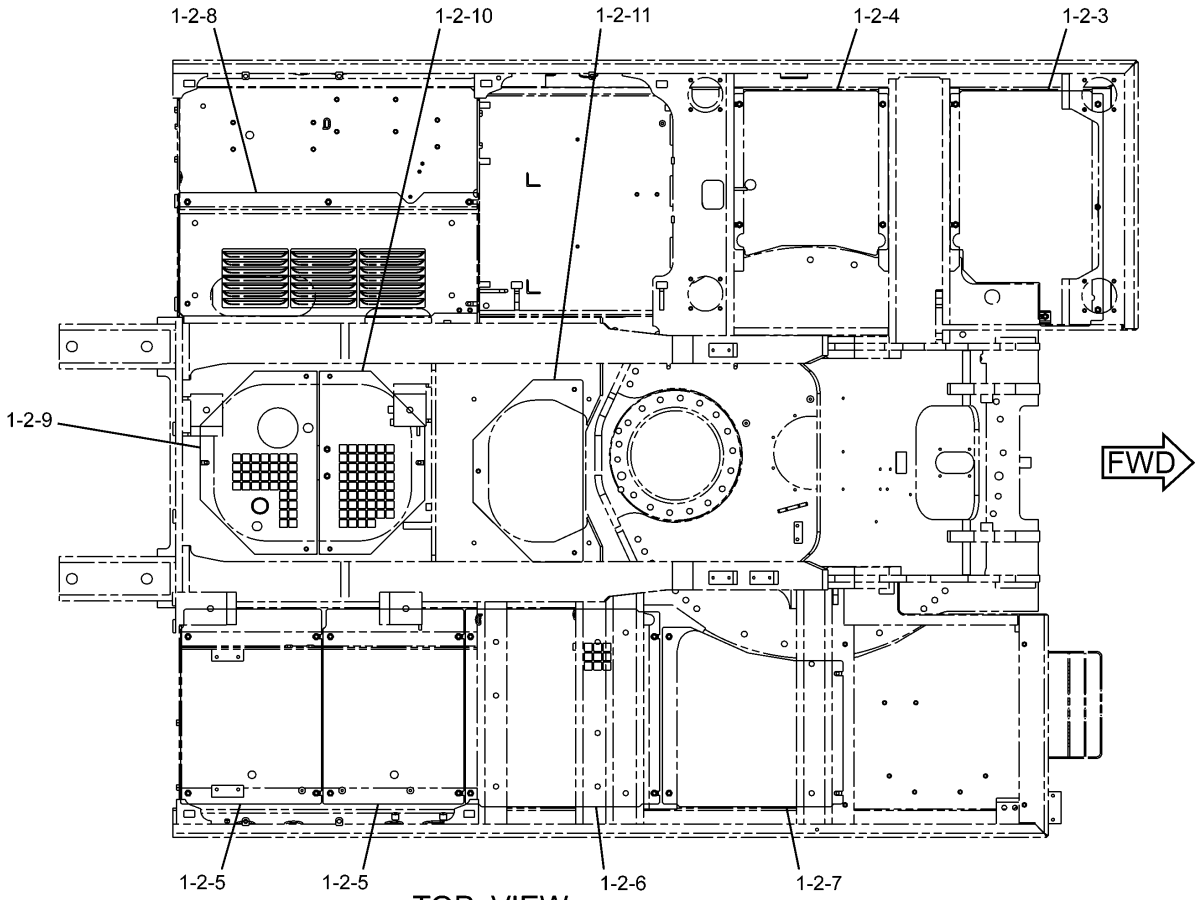

TOP VIEW

NOTE	No.	PART No.	QTY	PART NAME	NOTE	No.	PART No.	QTY	PART NAME
	1	8C-8992	42	BOLT (L=30mm)					
	2	5P-1076	42	WASHER					
	3	236-3629	1	PLATE AS					
	4	236-3631	1	PLATE AS					
	5	236-3637	2	PLATE AS					
	6	236-3639	1	PLATE AS					
	7	236-3641	1	PLATE AS					
	8	262-2379	1	PLATE AS					
	9	262-2382	1	PLATE AS					
		099-7857	1	HINGE					
	10	262-2384	1	PLATE AS					
	11	184-8795	1	PLATE AS					

H89233E 04

223-3048 GUARD GP-BOTTOM

S/N PEH 1-Up

FRAME AND BODY

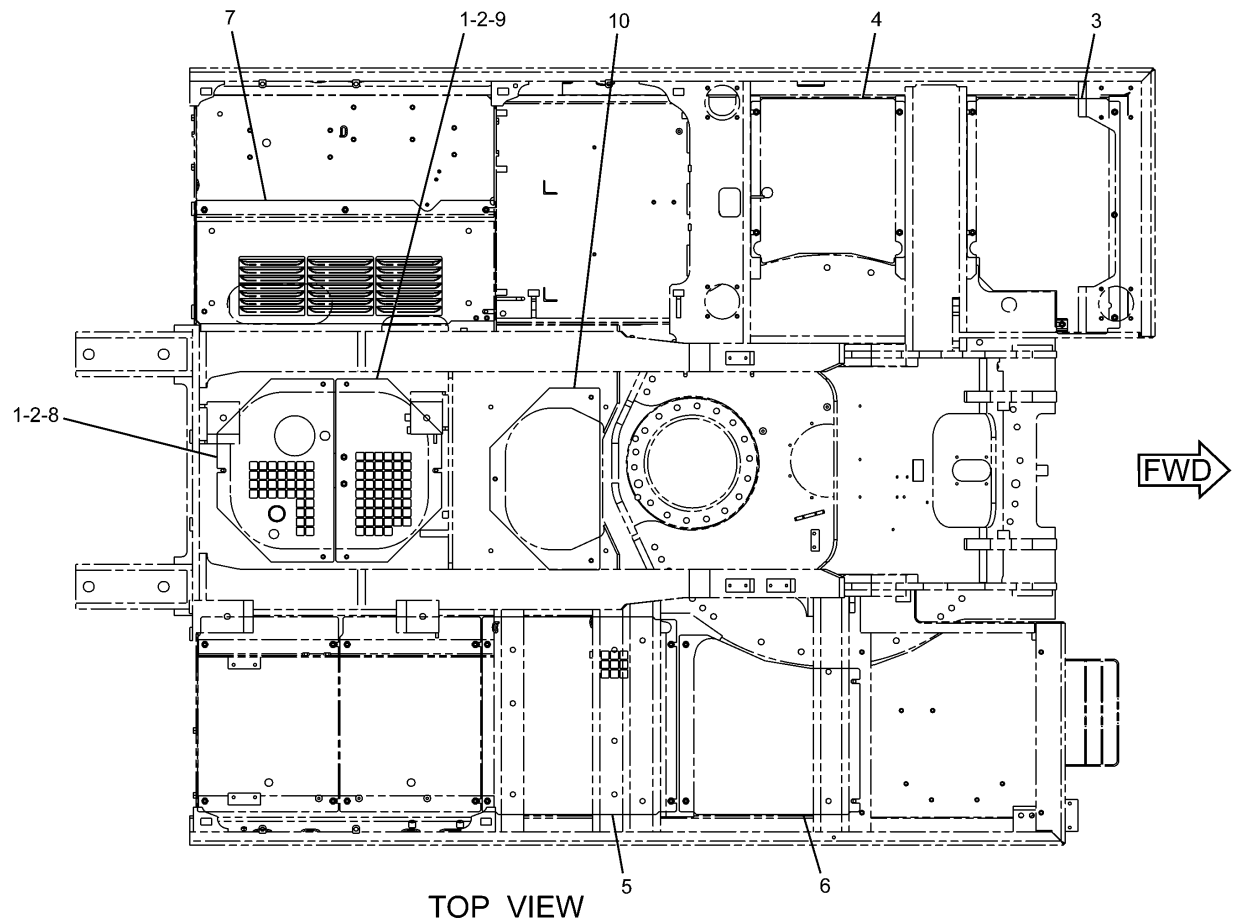

TOP VIEW

NOTE	No.	PART No.	QTY	PART NAME	NOTE	No.	PART No.	QTY	PART NAME
	1	8C-8992	4	BOLT (L=30mm)					
	2	5P-1076	4	WASHER					
	3	236-3629	1	PLATE AS					
	4	236-3631	1	PLATE AS					
	5	236-3639	1	PLATE AS					
	6	236-3641	1	PLATE AS					
	7	262-2379	1	PLATE AS					
	8	262-2382	1	PLATE AS					
		099-7857	1	HINGE					
	9	262-2384	1	PLATE AS					
	10	184-8795	1	PLATE AS					

H89234E 02

223-3049 GUARD GP-BOTTOM

Heavy Duty
S/N CJM 1-Up, DAP 1-Up
An Attachment

FRAME AND BODY

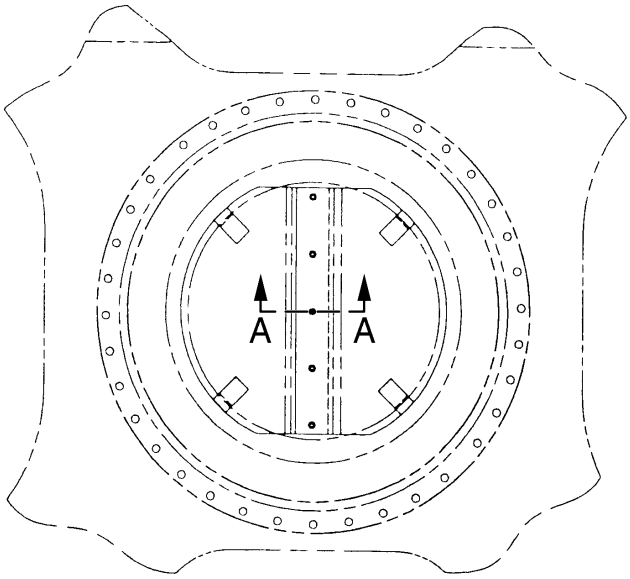

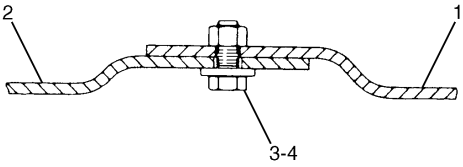

A – A

NOTE	No.	PART No.	QTY	PART NAME	NOTE	No.	PART No.	QTY	PART NAME
	1	134-8884	1	PLATE AS					
	2	134-8886	1	PLATE AS					
	3	8C-8992	5	BOLT (L=30mm)					
	4	5P-1076	5	WASHER					

H56467E 00

134-8883 GUARD GP-SWIVEL

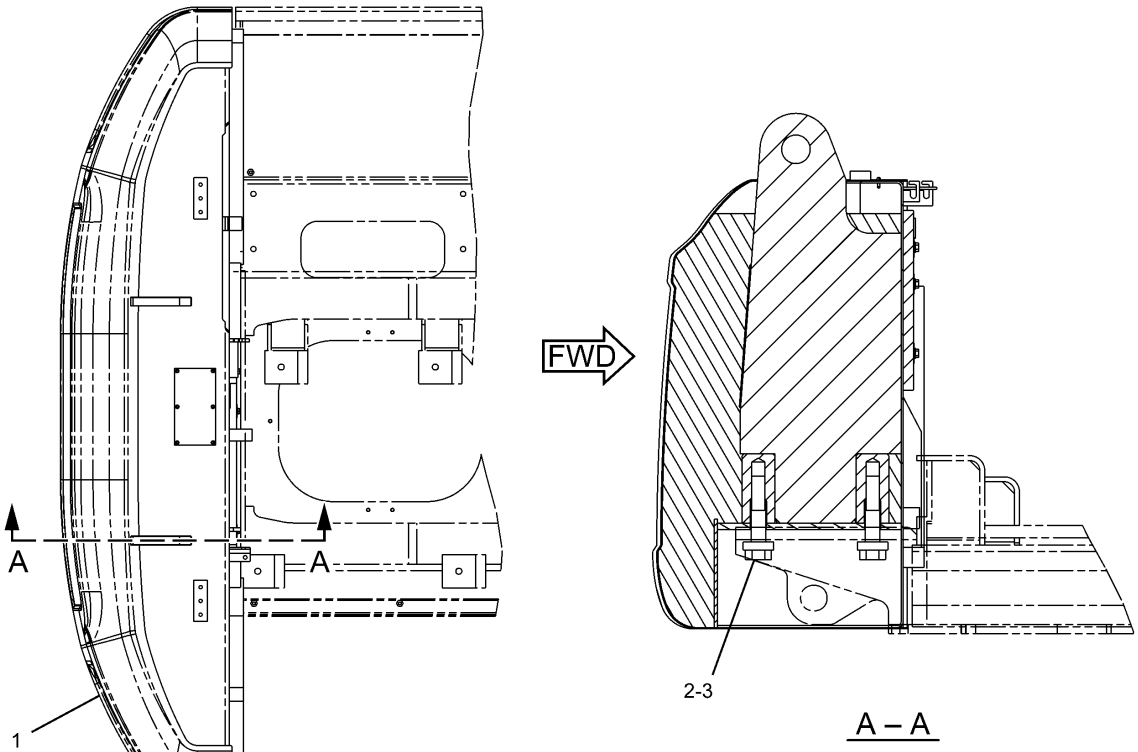

TOP VIEW

NOTE	No.	PART No.	QTY	PART NAME	NOTE	No.	PART No.	QTY	PART NAME
Y	1	223-3023	1	COUNTERWEIGHT GP					
	2	248-9337	4	SPACER					
	3	4I-0191	4	BOLT (L=181mm)					

Y—SEE SEPARATE ILLUSTRATION

H88960E 01

223-3022 COUNTERWEIGHT GP

S/N CJM 1-Up, DAP 1-Up
223-3023-Page315

FRAME AND BODY

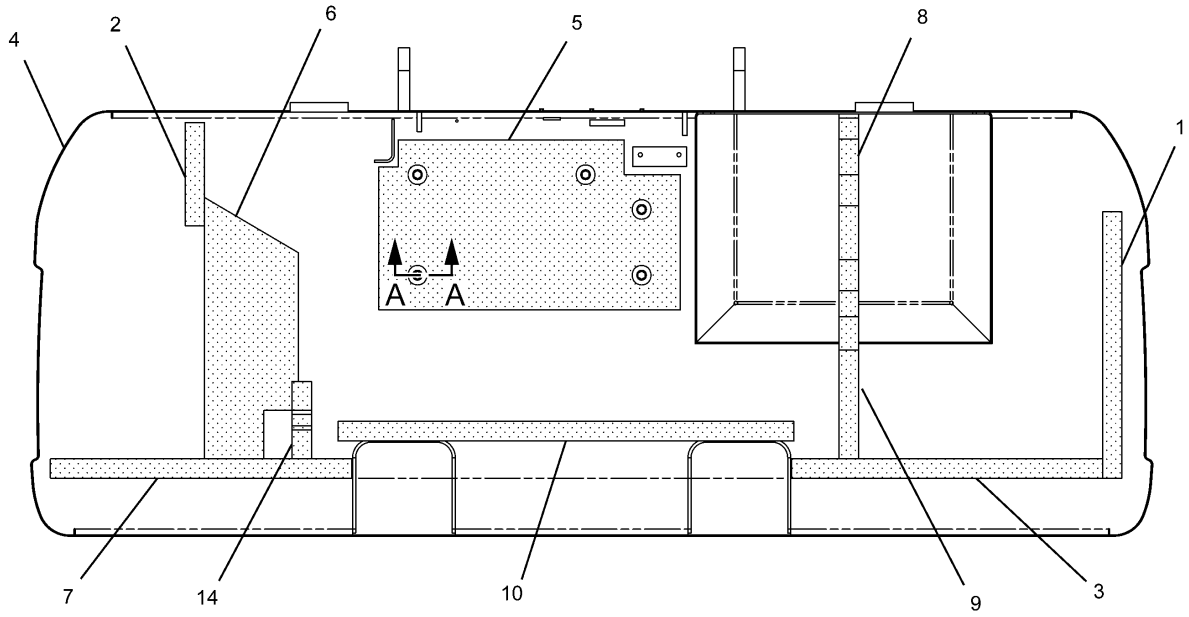

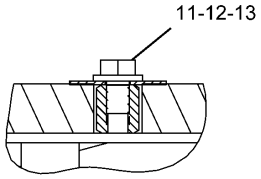

A – A

NOTE	No.	PART No.	QTY	PART NAME	NOTE	No.	PART No.	QTY	PART NAME
	1	7I-0717	1	LINER					
	2	127-7771	1	LINER					
	3	184-8722	1	LINER					
	4	223-3024	1	COUNTERWEIGHT AS					
	5	236-9527	1	INSULATION					
	6	236-9528	1	LINER					
	7	236-9529	1	LINER					
	8	236-9536	1	LINER					
	9	236-9539	1	LINER					
	10	259-3721	1	LINER					
	11	7Y-2292	5	WASHER					
	12	8T-4179	5	BOLT (L=20mm)					
	13	8T-4223	5	WASHER					
	14	273-7799	1	LINER					

H90562E 03

223-3023 COUNTERWEIGHT GP

S/N CJM 1-Up, DAP 1-Up
Part of 223-3022-Page314

FRAME AND BODY

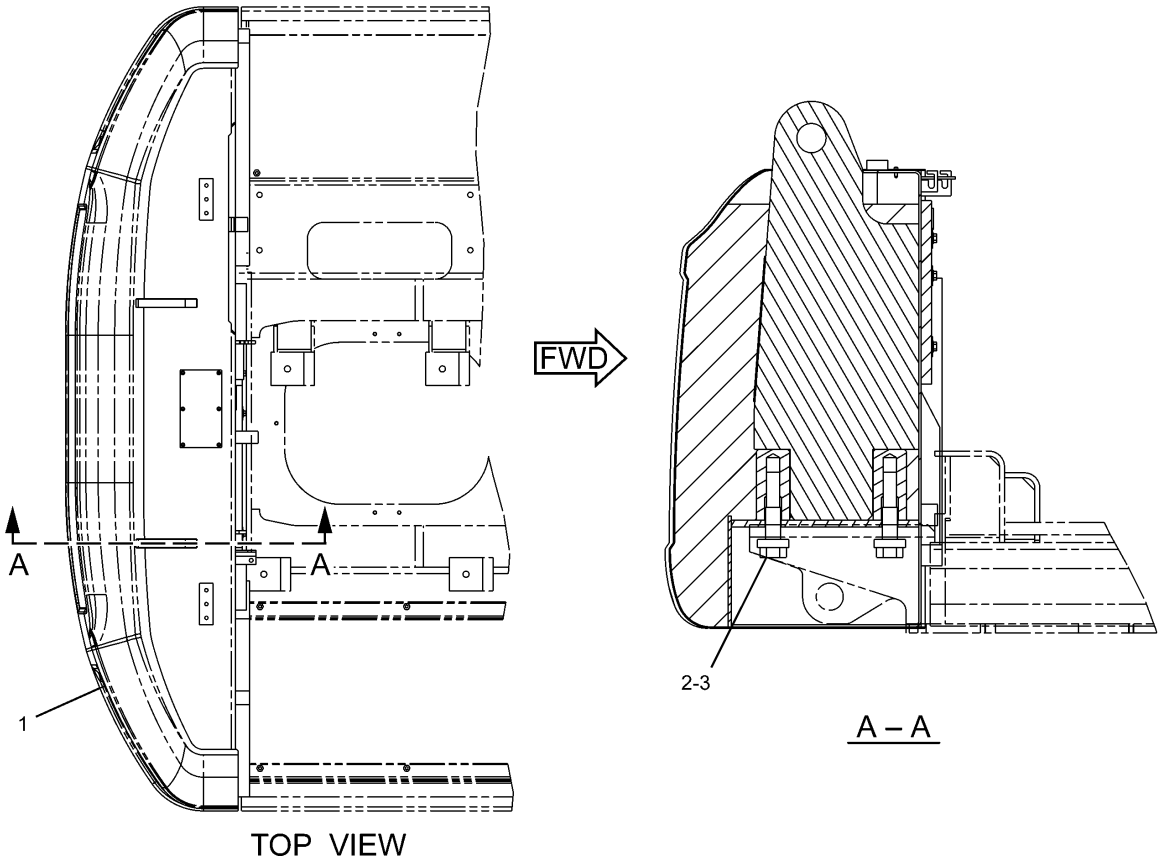

NOTE	No.	PART No.	QTY	PART NAME	NOTE	No.	PART No.	QTY	PART NAME
Y	1	223-3026	1	COUNTERWEIGHT GP					
	2	248-9337	4	SPACER					
	3	41-0191	4	BOLT (L=181mm)					

Y—SEE SEPARATE ILLUSTRATION

H88959E 01

223-3025 COUNTERWEIGHT GP
S/N PEH 1-Up
223-3026-Page317

FRAME AND BODY

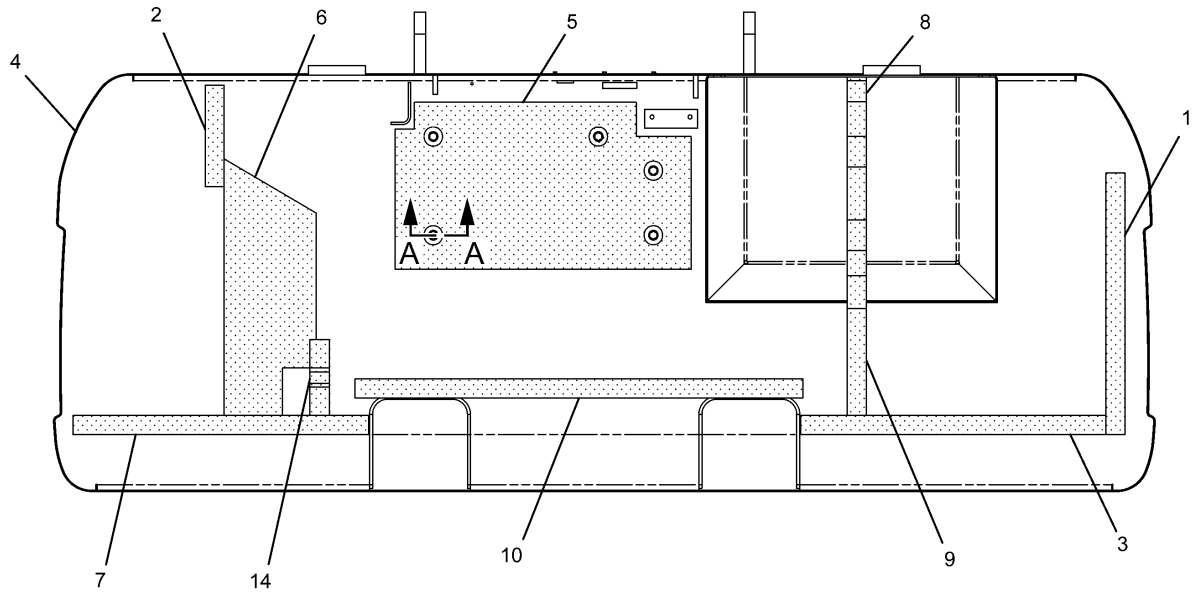

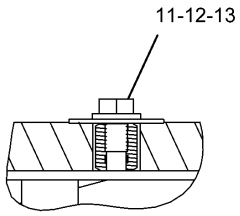

A – A

NOTE	No.	PART No.	QTY	PART NAME	NOTE	No.	PART No.	QTY	PART NAME
	1	7I-0717	1	LINER					
	2	127-7771	1	LINER					
	3	184-8722	1	LINER					
	4	223-3027	1	COUNTERWEIGHT AS					
	5	236-9527	1	INSULATION					
	6	236-9528	1	LINER					
	7	236-9529	1	LINER					
	8	236-9536	1	LINER					
	9	236-9539	1	LINER					
	10	259-3721	1	LINER					
	11	7Y-2292	5	WASHER					
	12	8T-4179	5	BOLT (L=20mm)					
	13	8T-4223	5	WASHER					
	14	273-7799	1	LINER					

H90566E 03

223-3026 COUNTERWEIGHT GP

S/N PEH 1-Up

Part of 223-3025-Page316

FRAME AND BODY

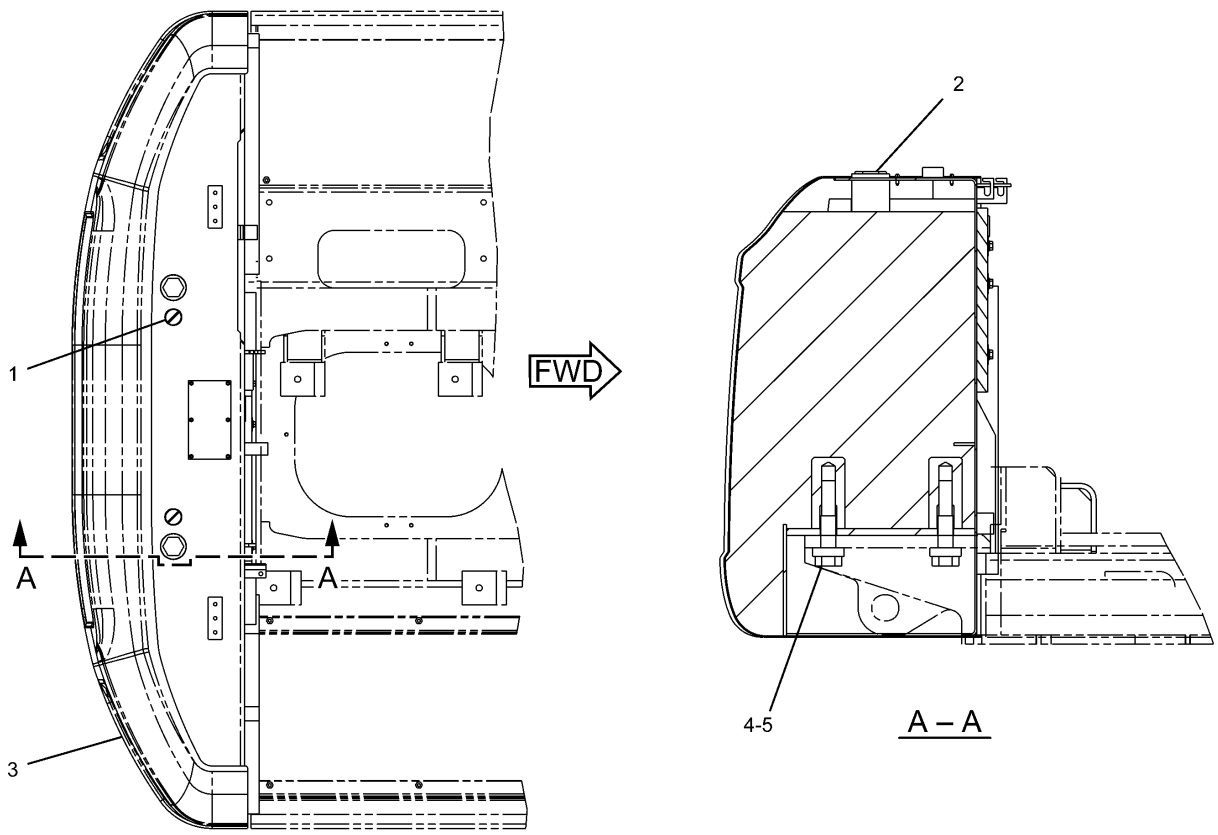

TOP VIEW

NOTE	No.	PART No.	QTY	PART NAME	NOTE	No.	PART No.	QTY	PART NAME
	1	7Y-0063	2	FILM (LIFT EYE)					
	2	087-3533	2	CAP					
Y	3	223-3032	1	COUNTERWEIGHT GP					
	4	248-9337	4	SPACER					
	5	41-0191	4	BOLT (L=181mm)					

Y—SEE SEPARATE ILLUSTRATION

H88957E 00

223-3031 COUNTERWEIGHT GP
S/N CJM 1-Up, DAP 1-Up
223-3032-Page319
An Attachment

FRAME AND BODY

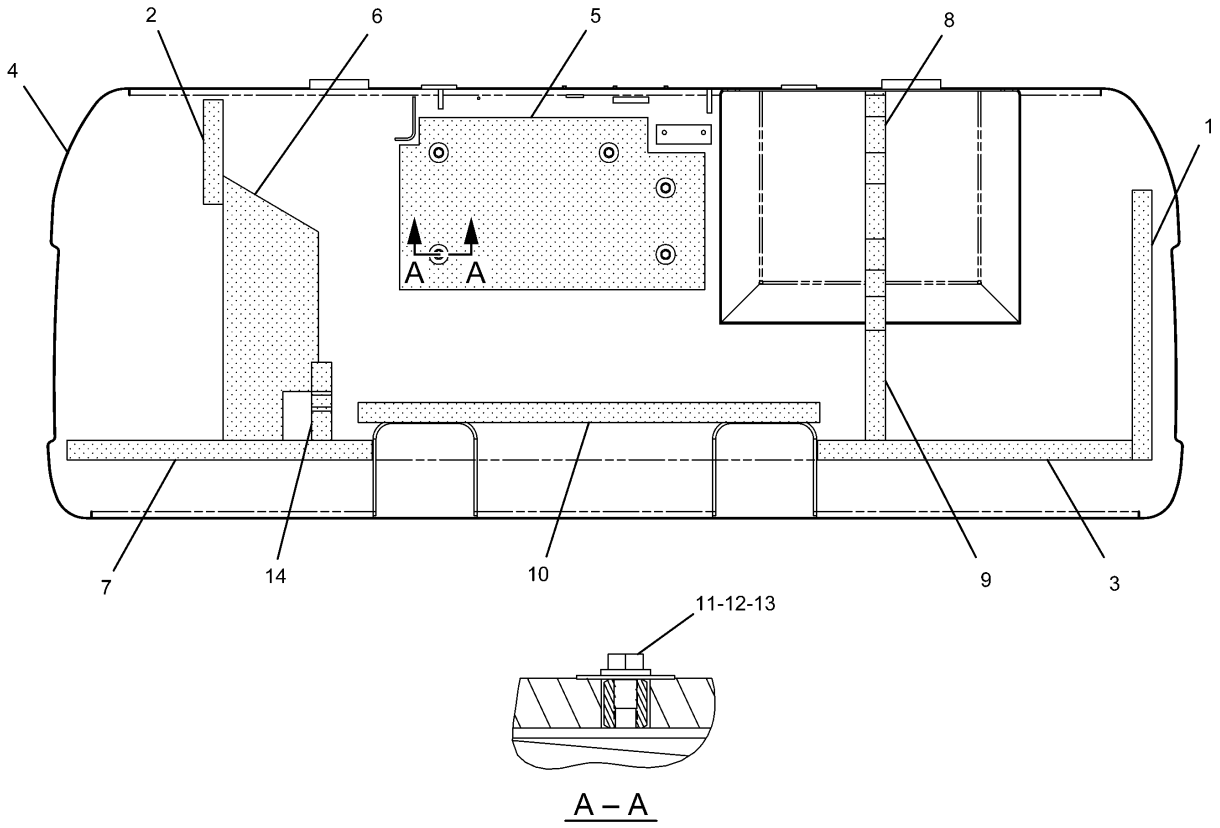

NOTE	No.	PART No.	QTY	PART NAME	NOTE	No.	PART No.	QTY	PART NAME
	1	7I-0717	1	LINER					
	2	127-7771	1	LINER					
	3	184-8722	1	LINER					
	4	223-3033	1	COUNTERWEIGHT AS					
	5	236-9527	1	INSULATION					
	6	236-9528	1	LINER					
	7	236-9529	1	LINER					
	8	236-9536	1	LINER					
	9	236-9539	1	LINER					
	10	259-3721	1	LINER					
	11	7Y-2292	5	WASHER					
	12	8T-4179	5	BOLT (L=20mm)					
	13	8T-4223	5	WASHER					
	14	273-7799	1	LINER					

H90558E 01

223-3032 COUNTERWEIGHT GP

S/N CJM 1-Up, DAP 1-Up
Part of 223-3031-Page318
An Attachment

FRAME AND BODY

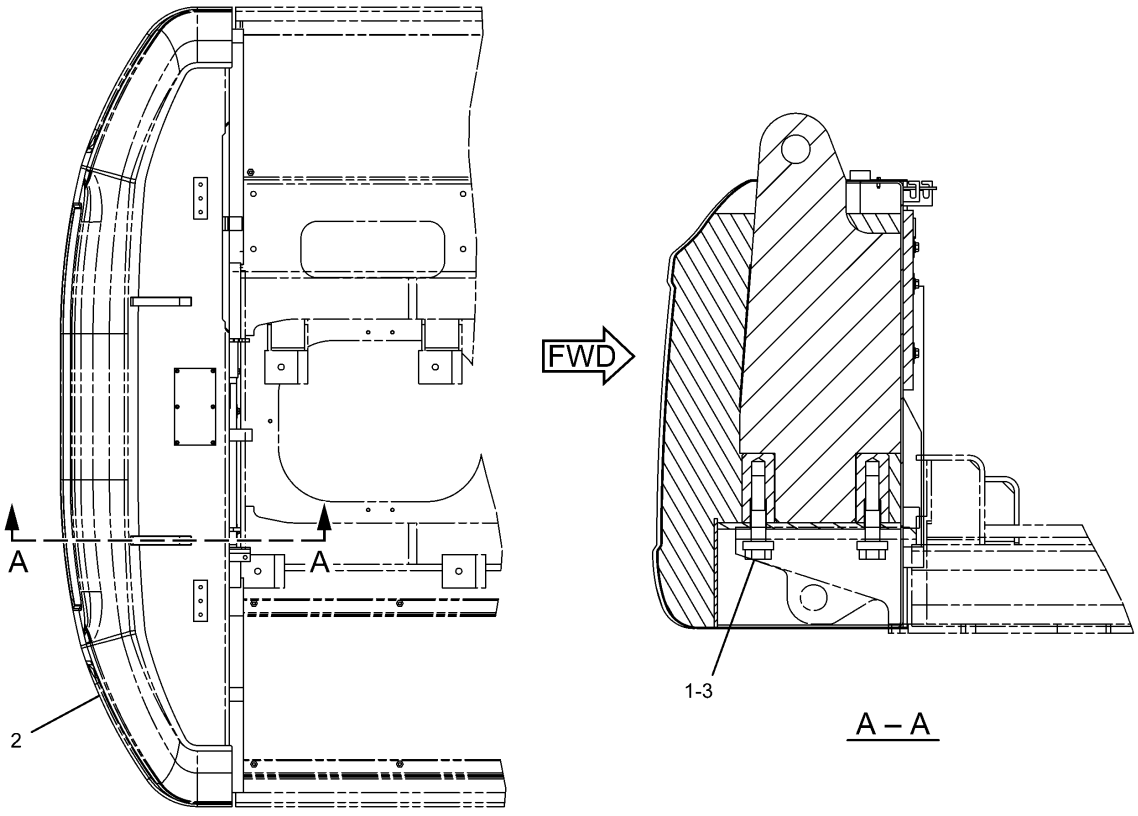

TOP VIEW

NOTE	No.	PART No.	QTY	PART NAME	NOTE	No.	PART No.	QTY	PART NAME
	1	248-9337	4	SPACER					
Y	2	268-0568	1	COUNTERWEIGHT GP					
	3	41-0191	4	BOLT (L=181mm)					

Y—SEE SEPARATE ILLUSTRATION

H90044E 00

268-0462 COUNTERWEIGHT GP

Long Reach Front
S/N DAP 1-Up
Part of 262-3585-Page739
268-0568-Page321
An Attachment

FRAME AND BODY

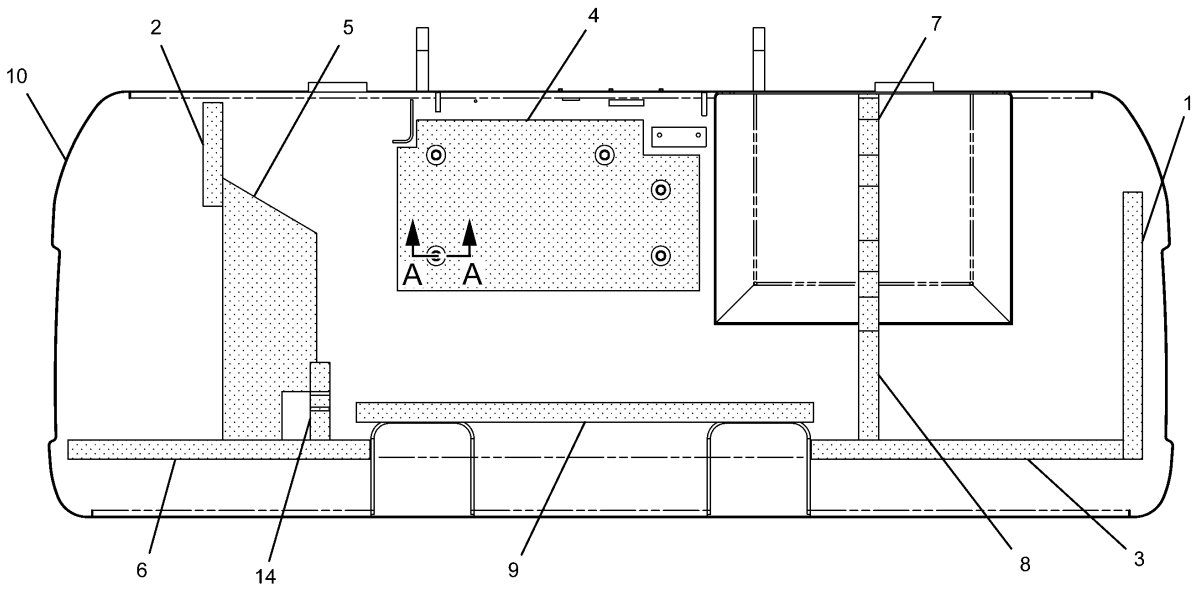

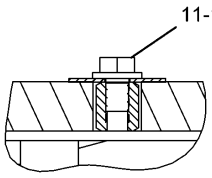

A – A

NOTE	No.	PART No.	QTY	PART NAME	NOTE	No.	PART No.	QTY	PART NAME
	1	7I-0717	1	LINER					
	2	127-7771	1	LINER					
	3	184-8722	1	LINER					
	4	236-9527	1	INSULATION					
	5	236-9528	1	LINER					
	6	236-9529	1	LINER					
	7	236-9536	1	LINER					
	8	236-9539	1	LINER					
	9	259-3721	1	LINER					
	10	268-0569	1	COUNTERWEIGHT AS					
	11	7Y-2292	5	WASHER					
	12	8T-4179	5	BOLT (L=20mm)					
	13	8T-4223	5	WASHER					
	14	273-7799	1	LINER					

H90561E 01

268-0568 COUNTERWEIGHT GP
Long Reach Front
S/N DAP 1-Up
Part of 268-0462-Page320
An Attachment

FRAME AND BODY

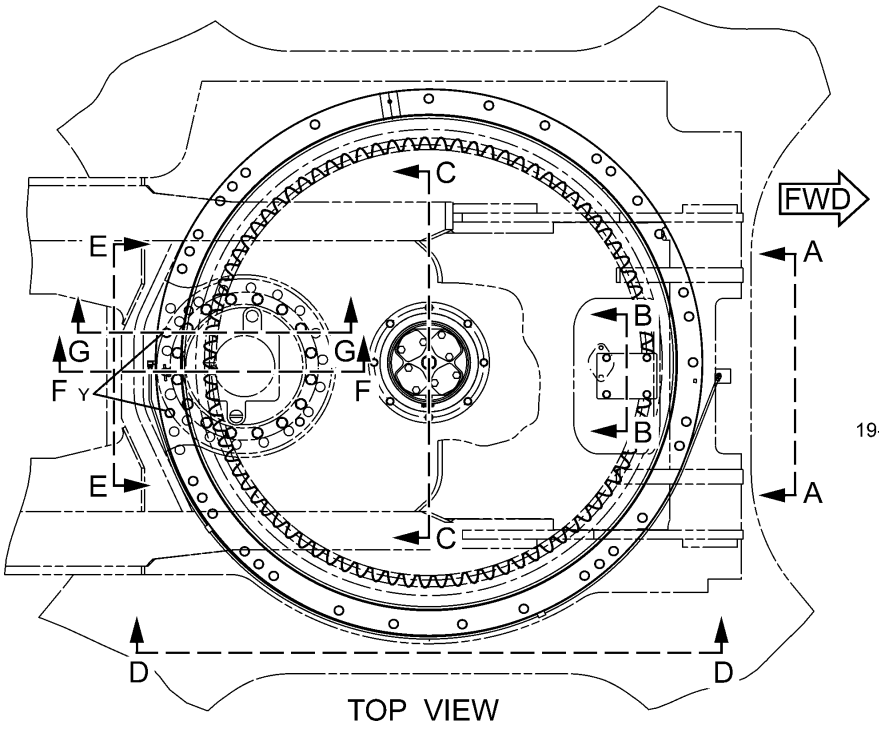

TOP VIEW

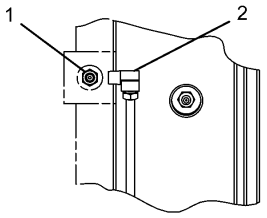

A – A

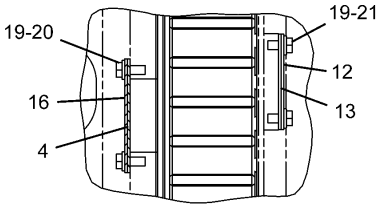

B – B

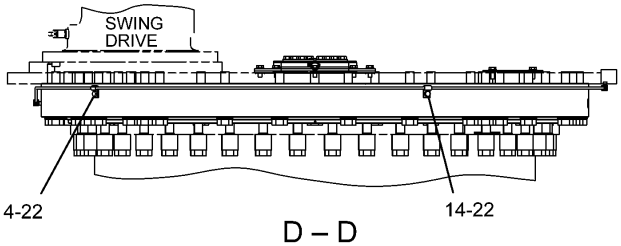

D – D

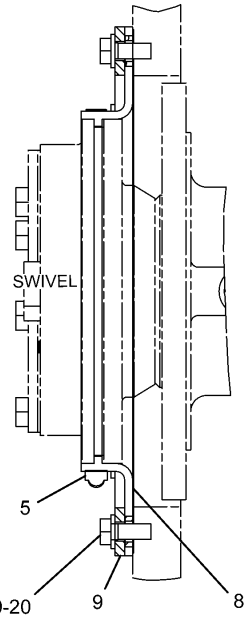

C – C

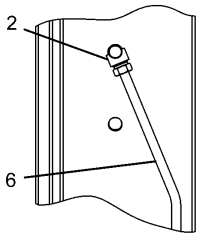

E – E

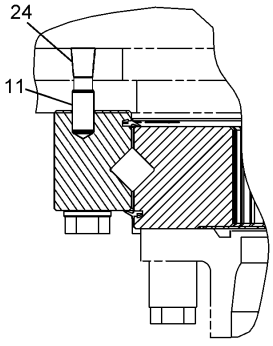

F – F

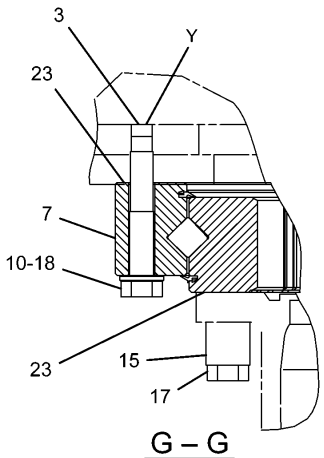

G – G

H94662E 03

227-6107 GEAR & BEARING GP-SWING

227-6087-Page324

FRAME AND BODY

NOTE	No.	PART No.	QTY	PART NAME	NOTE	No.	PART No.	QTY	PART NAME
	1	3B-8489	1	FITTING					
	2	5K-9243	2	ELBOW					
	3	6I-6441	2	CORK					
	4	7Y-1647	1	GASKET					
	5	7Y-1650	1	CLAMP					
	6	199-4522	1	TUBE AS					
Y	7	227-6087	1	GEAR GP					
	8	227-6105	1	BOOT					
	9	227-6106	1	RETAINER					
	10	093-0020	35	SPACER					
	11	096-4902	1	DOWEL					
	12	148-4703	1	COVER					
	13	148-4704	1	GASKET					
	14	4N-9170	2	CLIP					
	15	7Y-1507	42	SPACER					
	16	7Y-1648	1	STRIP					
	17	8T-0667	42	BOLT (L=100mm)					
	18	8T-0669	35	BOLT (L=130mm)					
	19	8T-4121	14	WASHER					
	20	8T-4136	12	BOLT (L=25mm)					
	21	8T-4137	2	BOLT (L=20mm)					
	22	8T-4199	2	BOLT (L=12mm)					
B	23	1U-8846		GASKET MAKER…(125ml)					
	24	2B-7561	1	CORK					

B—USE AS REQUIRED

Y—SEE SEPARATE ILLUSTRATION

H94662E 03

227-6107 GEAR & BEARING GP-SWING

227-6087-Page324

FRAME AND BODY

Consists of :

			Page
1	227-6088	GEAR & BEARING GP-SWING	326
		-OR-	
1	199-4478	GEAR & BEARING GP-SWING	325

H84776E 00

227-6087 GEAR & BEARING GP-SWING
Part of 227-6107-Page323

FRAME AND BODY

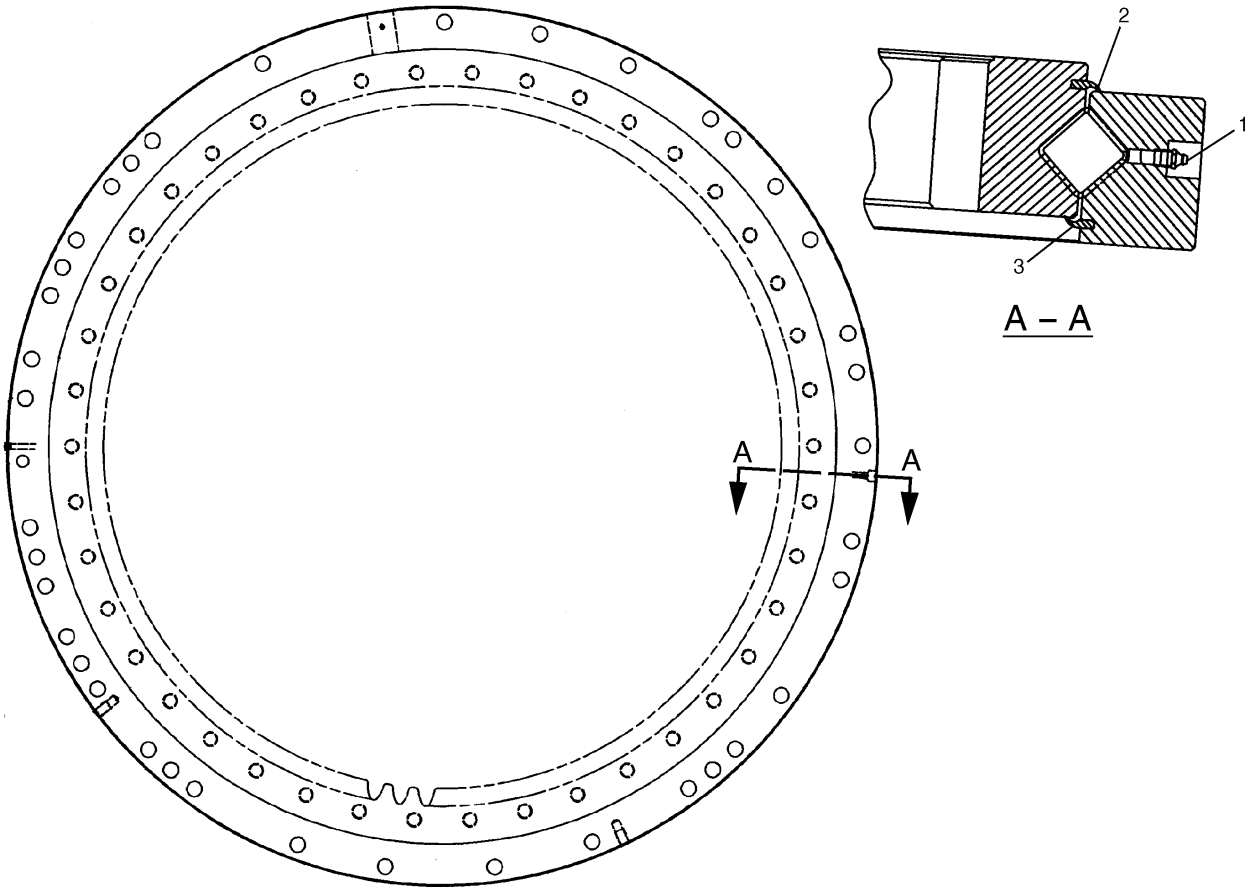

NOTE	No.	PART No.	QTY	PART NAME	NOTE	No.	PART No.	QTY	PART NAME
	1	3B-8489	1	FITTING					
E	2	110-7183		SEAL…(425cm)					
E	3	110-7183		SEAL…(424cm)					

E—ORDER BY THE CENTIMETER

H88890E 02

199-4478 GEAR & BEARING GP-SWING
Part of 227-6087-Page324

FRAME AND BODY

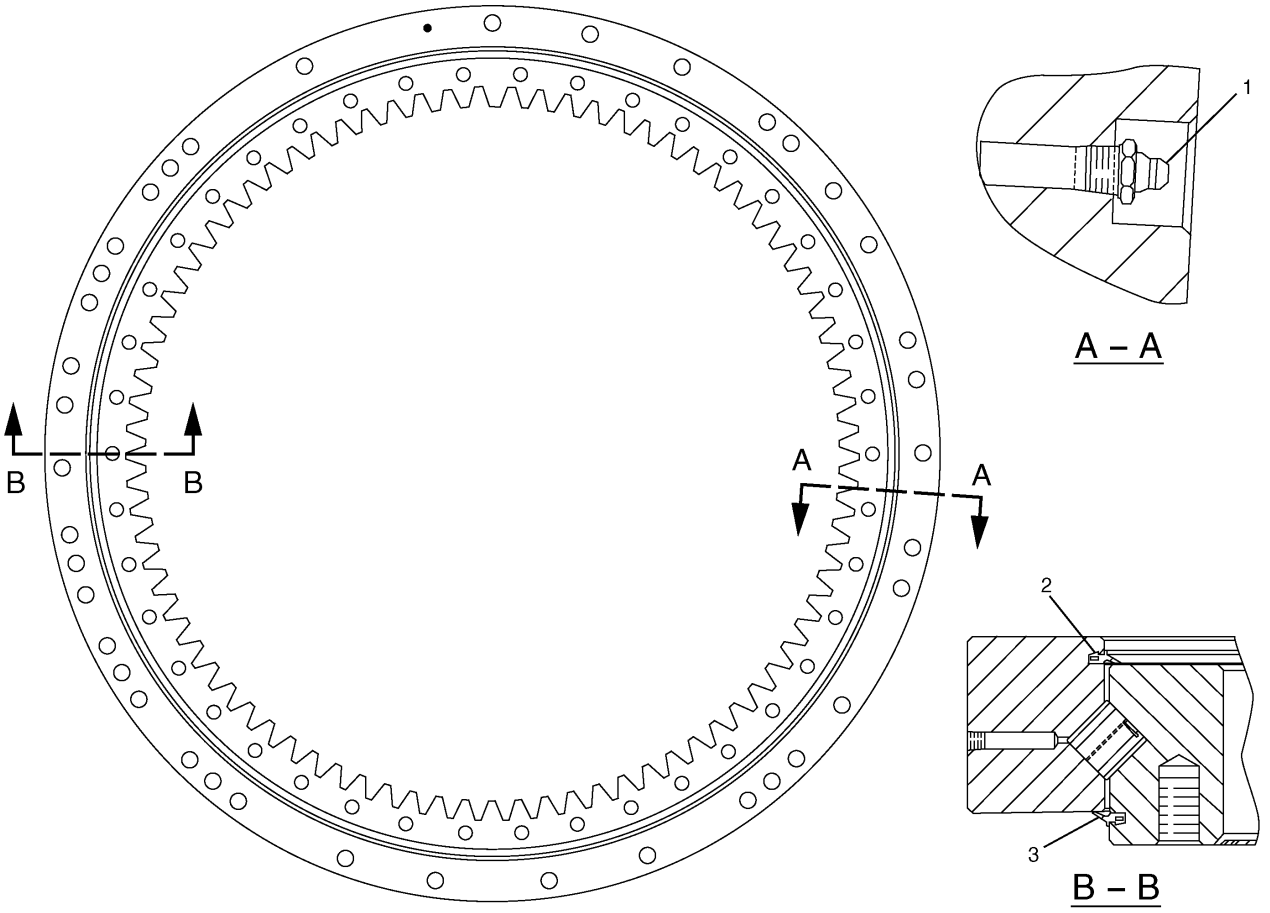

NOTE	No.	PART No.	QTY	PART NAME	NOTE	No.	PART No.	QTY	PART NAME
	1	3B-8489	1	FITTING					
	2	227-6073	1	SEAL					
E	3	148-4685		SEAL…(414 c m)					

E—ORDER BY THE CENTIMETER

H89192E 02

227-6088 GEAR & BEARING GP-SWING

Part of 227-6087-Page324

MEMORANDA

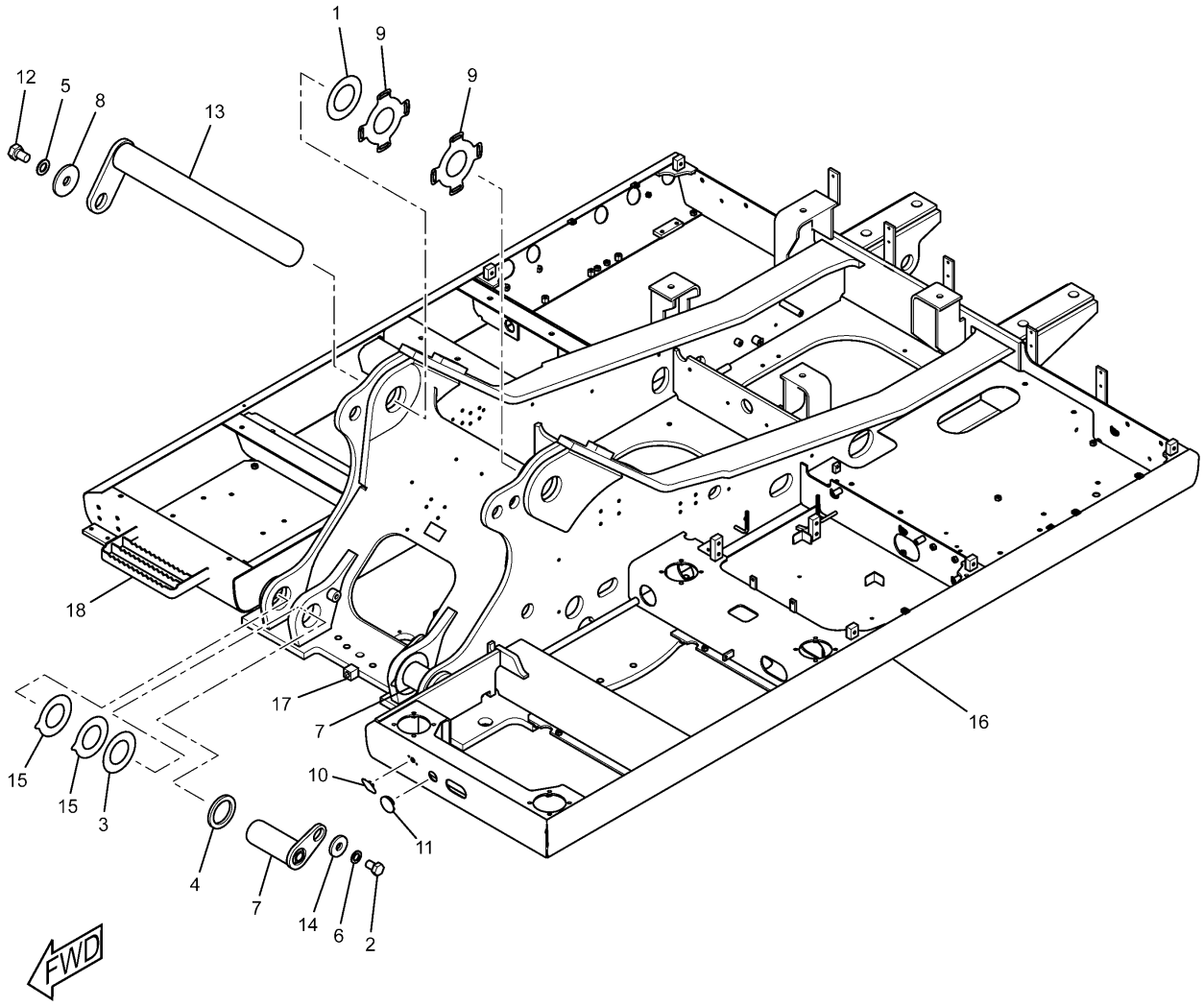

H89336E 01

228-5504 FRAME GP-UPPER
S/N CJM 1-Up, DAP 1-Up

FRAME AND BODY

NOTE	No.	PART No.	QTY	PART NAME	NOTE	No.	PART No.	QTY	PART NAME
B	1	4I-0575	2	SHIM (T=1.00mm)					
B		4I-0577	1	SHIM (T=2.00mm)					
B		133-2428	1	SHIM (T=0.50mm)					
	2	8T-4780	2	BOLT (L=30mm)					
B	3	093-0090	4	SHIM (T=1.00mm)					
B		133-2427	2	SHIM (T=0.50mm)					
	4	093-0364	2	SPACER					
	5	8T-4167	1	WASHER					
	6	8T-4123	2	WASHER					
	7	186-5663	2	PIN AS					
	8	201-2771	1	WASHER (OD=90.00mm)					
	9	212-2840	2	SHIM (T=2.00mm)					
B	10	245-7900	1	CAP					
B	11	245-7901	1	CAP					
	12	7X-2572	1	BOLT (L=35mm)					
	13	260-2385	1	PIN AS					
	14	096-6467	2	WASHER					
	15	166-1488	4	SHIM (T=2.00mm)					
	16	251-2772	1	FRAME AS					
	17	7Y-0633	1	BOSS					
	18	163-3729	1	PLATE AS					

B—USE AS REQUIRED

H89336E 01

228-5504 FRAME GP-UPPER

S/N CJM 1-Up, DAP 1-Up

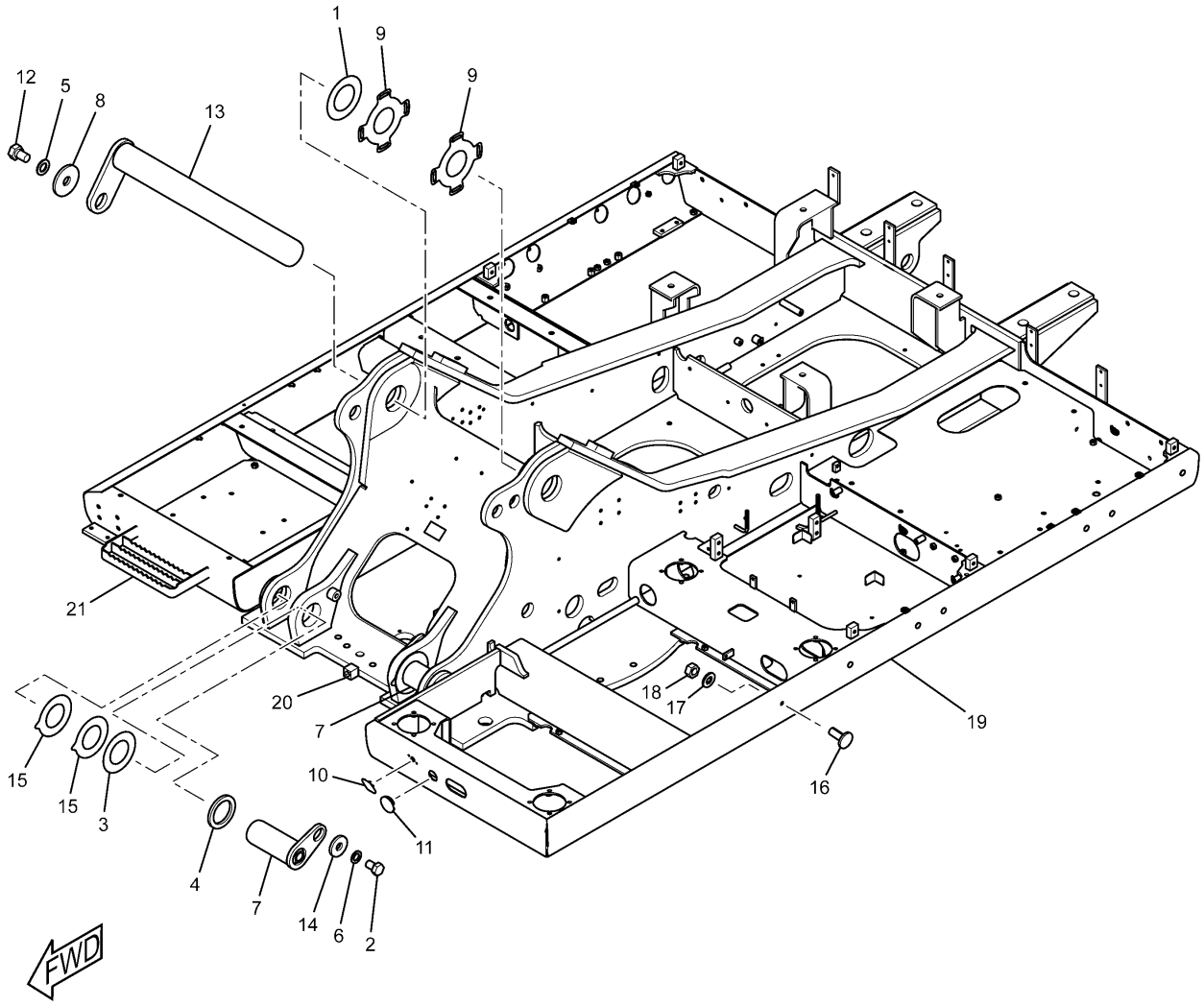

H89347E 01

228-5509 FRAME GP-UPPER
S/N PEH 1-Up

FRAME AND BODY

NOTE	No.	PART No.	QTY	PART NAME	NOTE	No.	PART No.	QTY	PART NAME
B	1	4I-0575	2	SHIM (T=1.00mm)					
B		4I-0577	1	SHIM (T=2.00mm)					
B		133-2428	1	SHIM (T=0.50mm)					
	2	8T-4780	2	BOLT (L=30mm)					
B	3	093-0090	4	SHIM (T=1.00mm)					
B		133-2427	2	SHIM (T=0.50mm)					
	4	093-0364	2	SPACER					
	5	8T-4167	1	WASHER					
	6	8T-4123	2	WASHER					
	7	186-5663	2	PIN AS					
	8	201-2771	1	WASHER (OD=90.00mm)					
	9	212-2840	2	SHIM (T=2.00mm)					
B	10	245-7900	1	CAP					
B	11	245-7901	1	CAP					
	12	7X-2572	1	BOLT (L=35mm)					
	13	260-2385	1	PIN AS					
	14	096-6467	2	WASHER					
	15	166-1488	4	SHIM (T=2.00mm)					
	16	8T-5413	17	STUD					
	17	8T-4121	17	WASHER					
	18	8T-4133	17	NUT					
	19	254-2905	1	FRAME AS					
	20	7Y-0633	1	BOSS					
	21	163-3729	1	PLATE AS					

B—USE AS REQUIRED

H89347E 01

228-5509 FRAME GP-UPPER

S/N PEH 1-Up

FRAME AND BODY

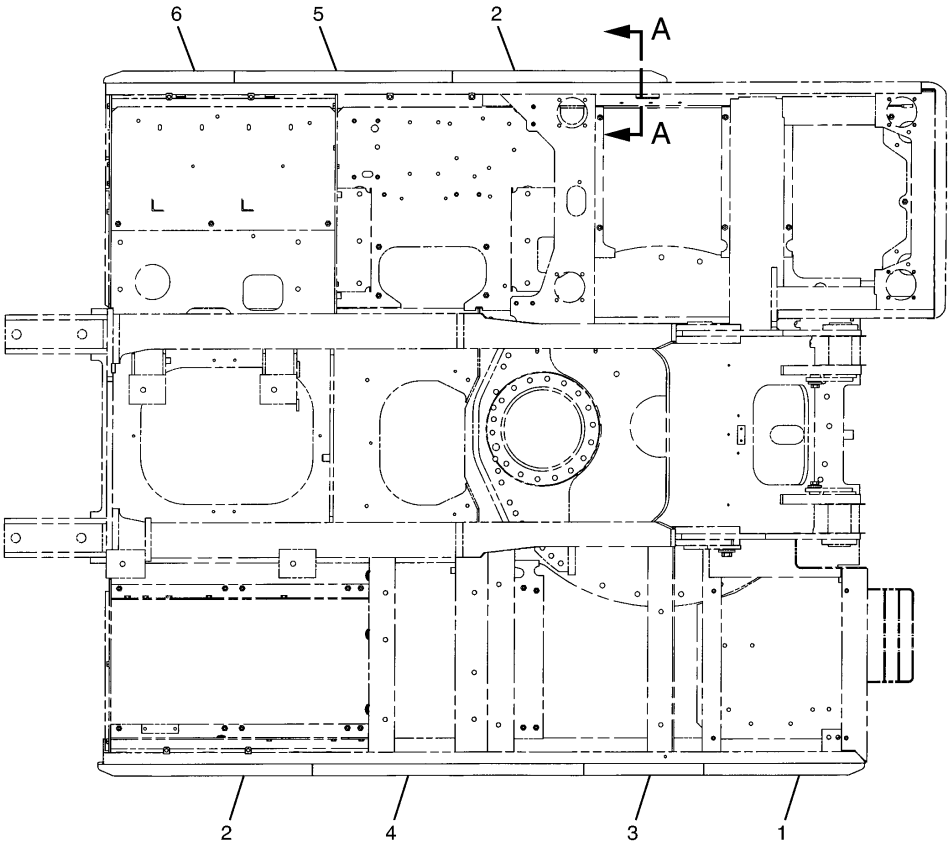

TOP VIEW

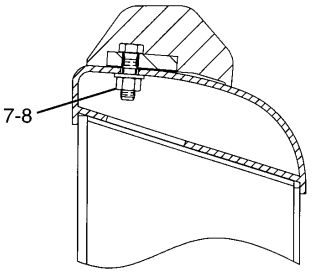

A – A

NOTE	No.	PART No.	QTY	PART NAME	NOTE	No.	PART No.	QTY	PART NAME
	1	180-7521	1	BUMPER AS					
	2	180-7525	2	BUMPER AS					
	3	180-7537	1	BUMPER AS					
	4	186-5611	1	BUMPER AS					
	5	180-7529	1	BUMPER AS					
	6	186-5614	1	BUMPER AS					
	7	8T-4223	16	WASHER					
	8	8T-4244	16	NUT					

H74384E 00

195-5405 BUMPER GP-SIDE
S/N PEH 1-Up

FRAME AND BODY

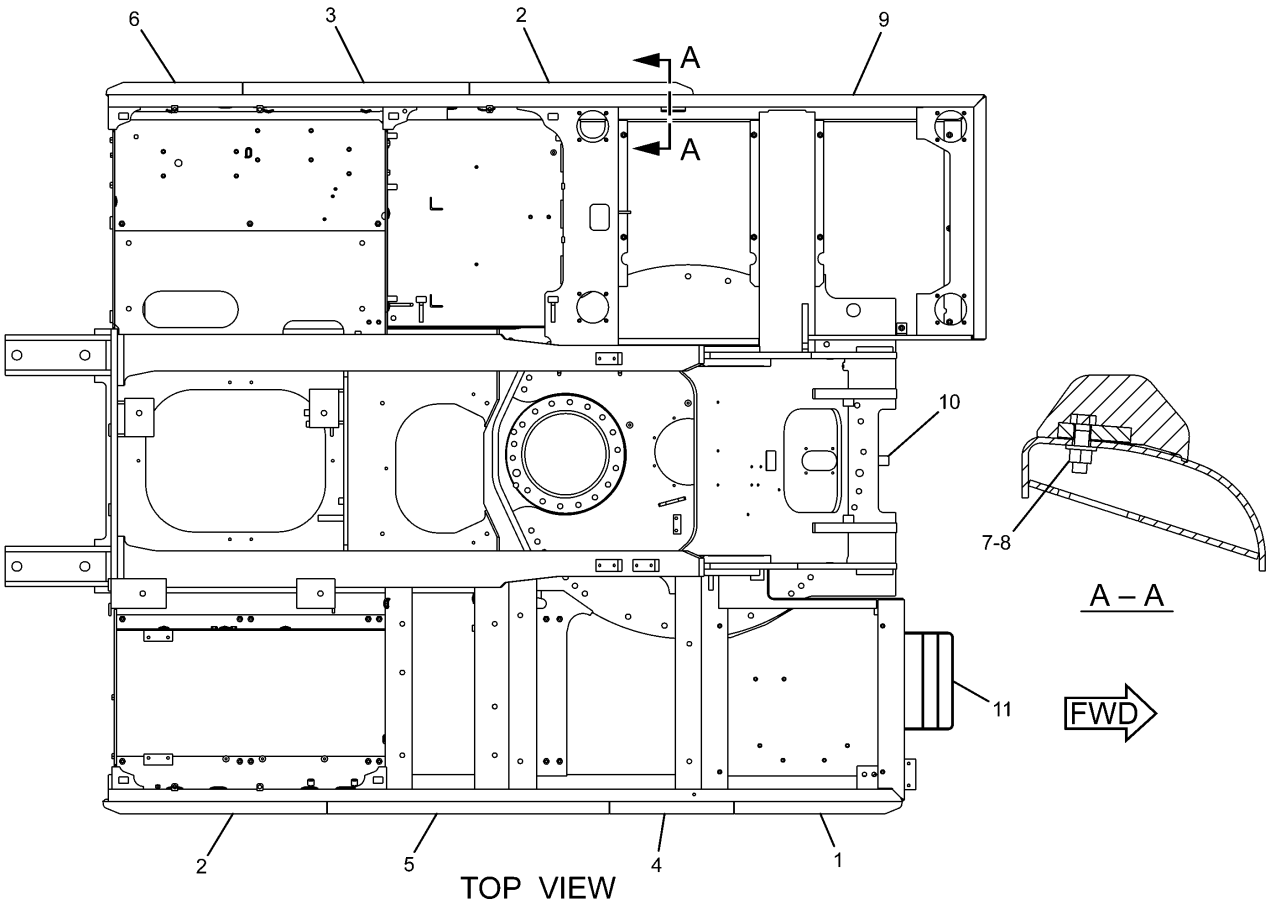

TOP VIEW

NOTE	No.	PART No.	QTY	PART NAME	NOTE	No.	PART No.	QTY	PART NAME
	1	180-7521	1	BUMPER AS					
	2	180-7525	2	BUMPER AS					
	3	180-7529	1	BUMPER AS					
	4	180-7537	1	BUMPER AS					
	5	186-5611	1	BUMPER AS					
	6	186-5614	1	BUMPER AS					
	7	8T-4223	16	WASHER					
	8	8T-4244	16	NUT					
	9	254-2905	1	FRAME AS					
	10	7Y-0633	1	BOSS					
	11	163-3729	1	PLATE AS					

H89255E 00

235-7613 BUMPER GP-SIDE
S/N CJM 1-Up, DAP 1-Up
An Attachment

FRAME AND BODY

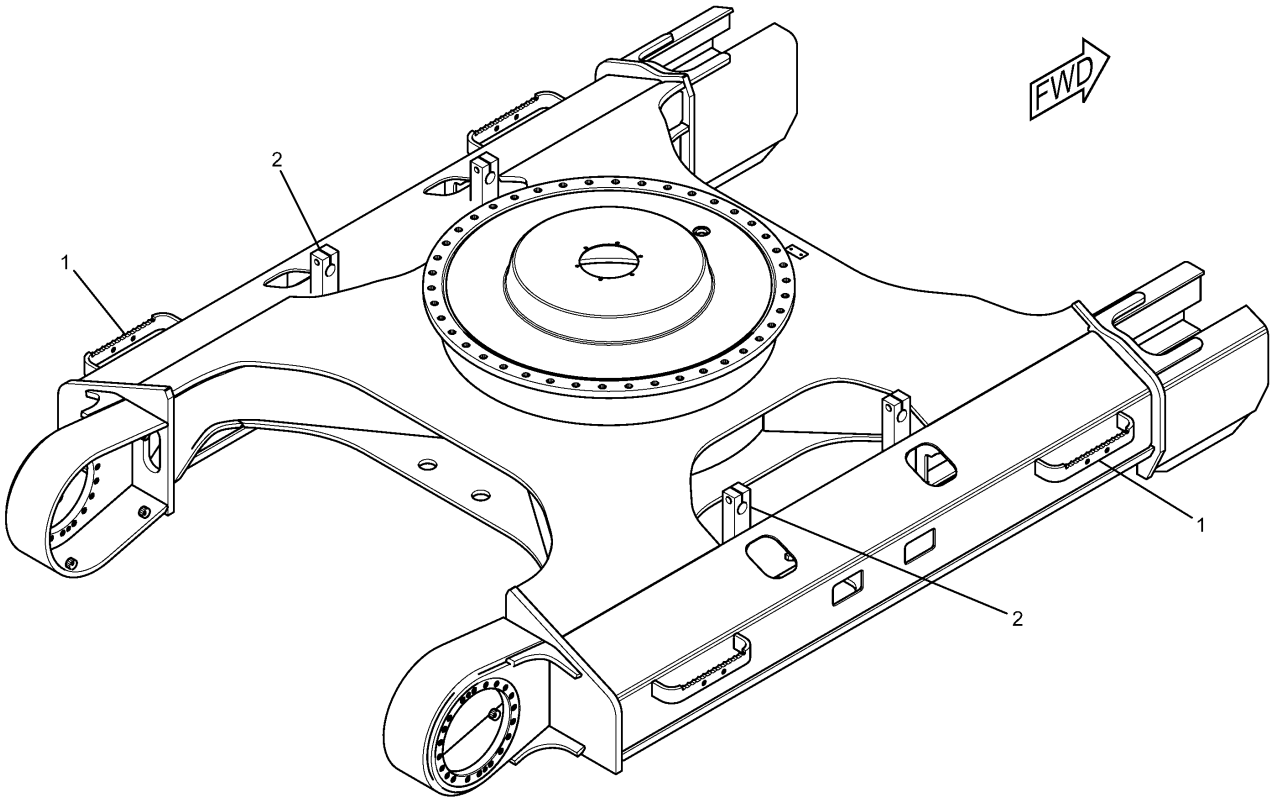

NOTE	No.	PART No.	QTY	PART NAME	NOTE	No.	PART No.	QTY	PART NAME
	1	235-7520	4	STEP					
	2	113-2317	4	BRACKET					

H89282E 00

235-7565 FRAME AS-UNDERCARRIAGE

S/N CJM 1-Up

FRAME AND BODY

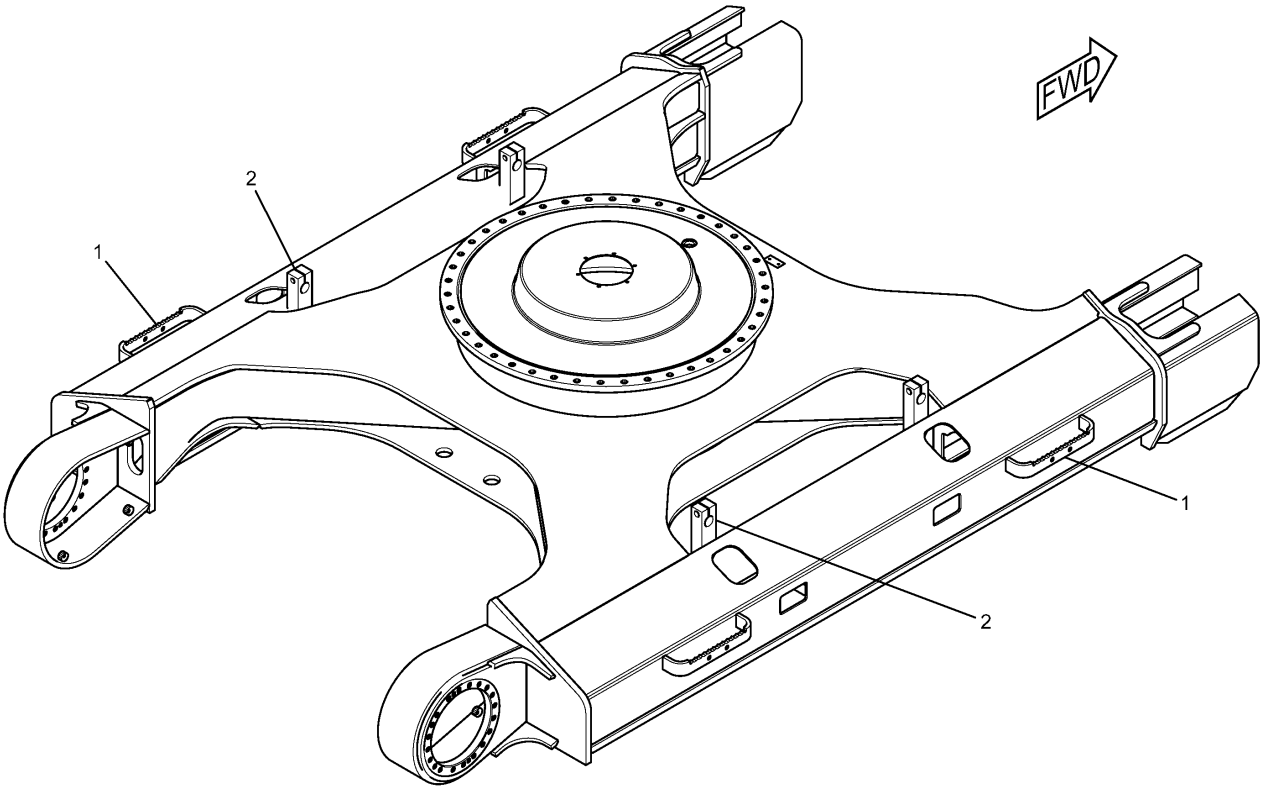

NOTE	No.	PART No.	QTY	PART NAME	NOTE	No.	PART No.	QTY	PART NAME
	1	235-7520	4	STEP					
	2	113-2317	4	BRACKET					

H89281E 01

228-5515 FRAME AS-UNDERCARRIAGE

S/N DAP 1-Up

FRAME AND BODY

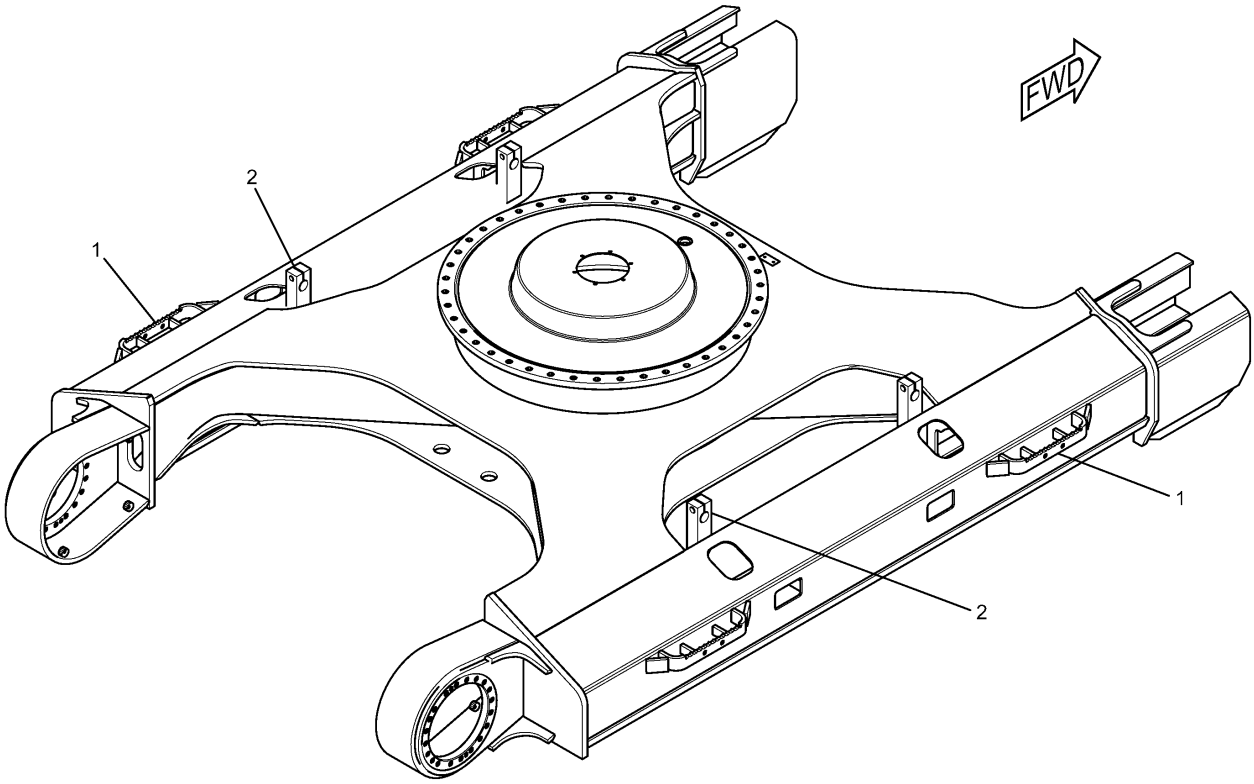

NOTE	No.	PART No.	QTY	PART NAME	NOTE	No.	PART No.	QTY	PART NAME
	1	235-7520	4	STEP					
	2	113-2317	4	BRACKET					

H90554E 02

228-5518 FRAME AS-UNDERCARRIAGE

S/N PEH 1-Up

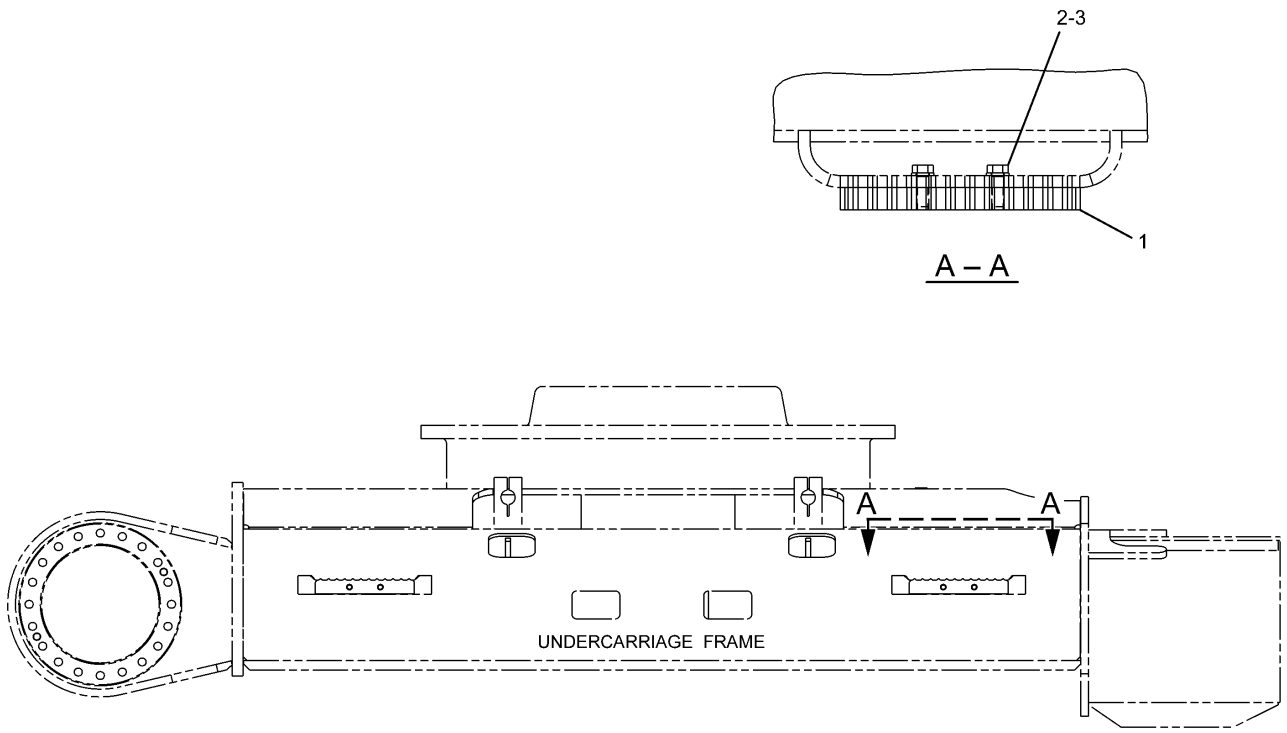

RIGHT SIDE VIEW

NOTE	No.	PART No.	QTY	PART NAME	NOTE	No.	PART No.	QTY	PART NAME
	1	235-7765	2	STEP					
	2	8T-7338	4	BOLT (L=45mm)					
	3	9X-8257	4	WASHER					

H91215E 03

235-7764 STEP GP
800MM Triple Grouser Shoe
Part of 229-1864-Page357,247-7327-Page360

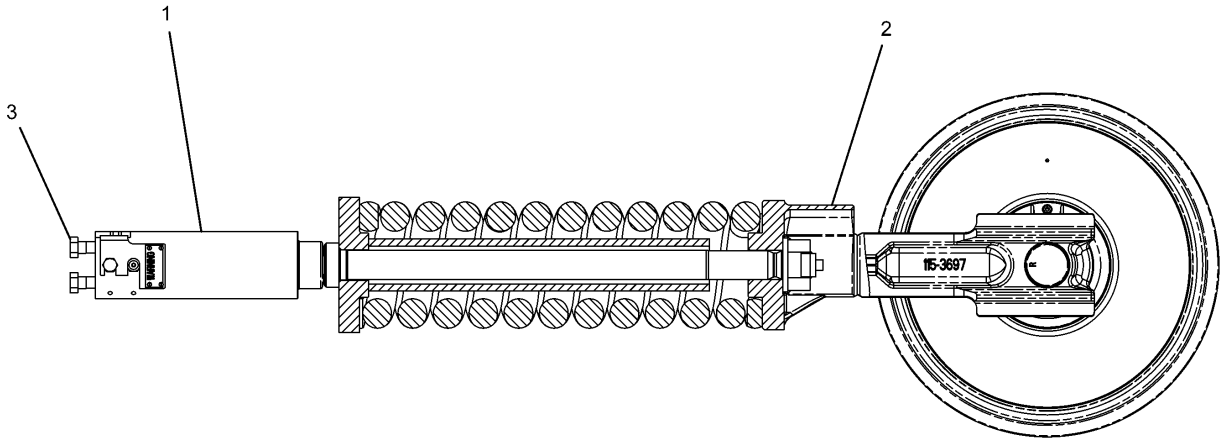

RIGHT SIDE VIEW

NOTE	No.	PART No.	QTY	PART NAME	NOTE	No.	PART No.	QTY	PART NAME
Y	1	179-2998	2	ADJUSTMENT GP					
Y	2	194-1241	2	IDLER GP					
	3	7X-2563	4	BOLT (L=60mm)					

Y—SEE SEPARATE ILLUSTRATION

H88940E 01

194-1240 IDLER GP-FRONT

194-1241-Page339,179-2998-Page342

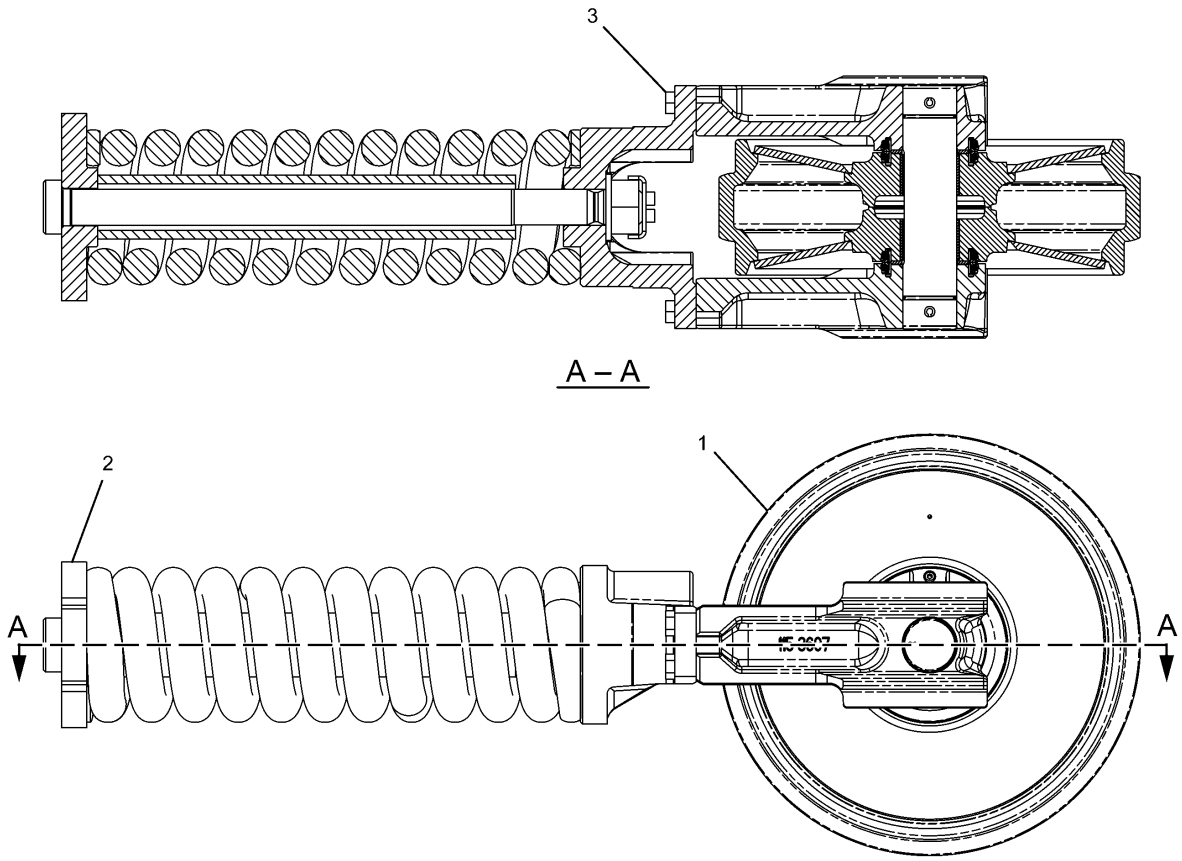

NOTE	No.	PART No.	QTY	PART NAME	NOTE	No.	PART No.	QTY	PART NAME
Y	1	115-3696	1	IDLER GP					
Y	2	194-1242	1	SPRING GP					
	3	8T-6430	4	BOLT (L=50mm)					

Y—SEE SEPARATE ILLUSTRATION

H88937E 01

194-1241 IDLER GP-FRONT

Part of 194-1240-Page338
115-3696-Page340,194-1242-Page341

FRAME AND BODY

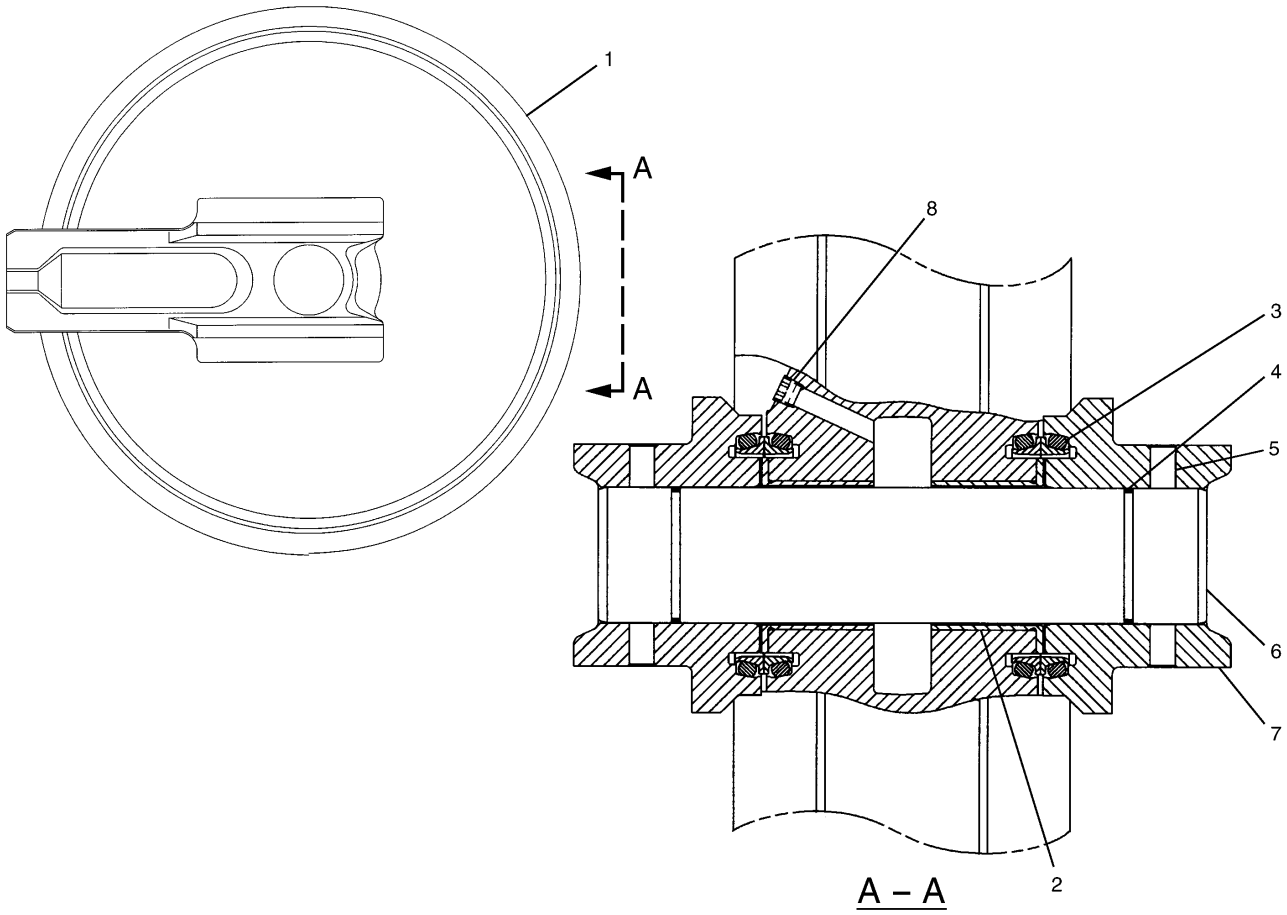

NOTE	No.	PART No.	QTY	PART NAME	NOTE	No.	PART No.	QTY	PART NAME
	1	115-7471	1	IDLER AS					
	2	6Y-2272	2	BEARING					
	3	109-0885	2	SEAL GP					
	4	8F-8882	2	SEAL-O-RING (ID=66.27mm)					
	5	6Y-2266	2	PIN					
	6	112-9951	1	SHAFT					
	7	115-3697	2	BEARING					
	8	7H-3171	1	PLUG					

H74333E 01

115-3696 IDLER GP-FRONT
Part of 194-1241-Page339

FRAME AND BODY

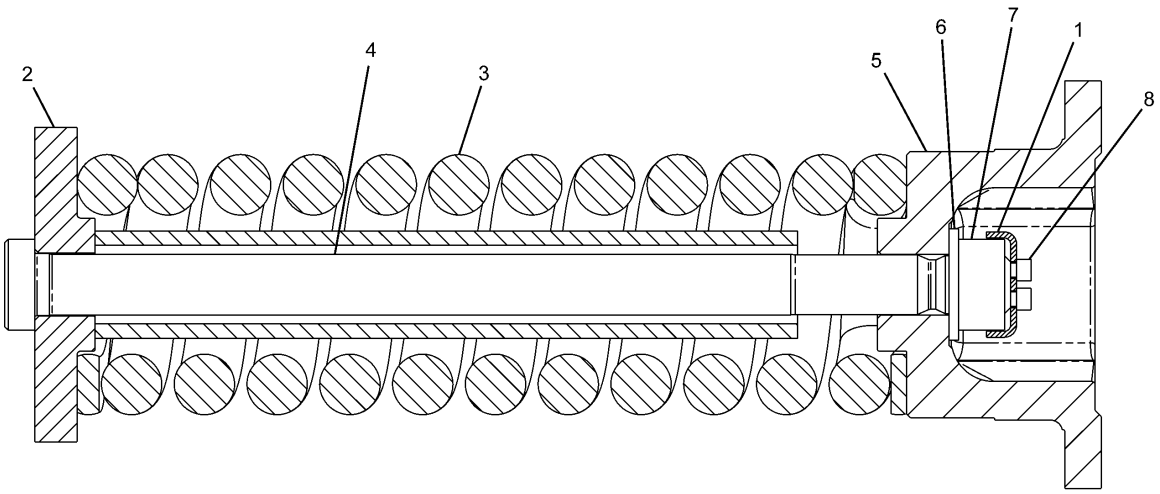

NOTE	No.	PART No.	QTY	PART NAME	NOTE	No.	PART No.	QTY	PART NAME
	1	7Y-0735	1	STRIP					
	2	194-1243	1	SUPPORT AS					
	3	194-1244	1	SPRING					
	4	194-1245	1	ROD					
	5	194-1249	1	SUPPORT					
	6	7Y-0725	1	WASHER					
	7	8C-7328	1	NUT					
	8	8T-9080	2	BOLT (L=20mm)					

H88935E 01

194-1242 SPRING GP-RECOIL

Part of 194-1241-Page339

FRAME AND BODY

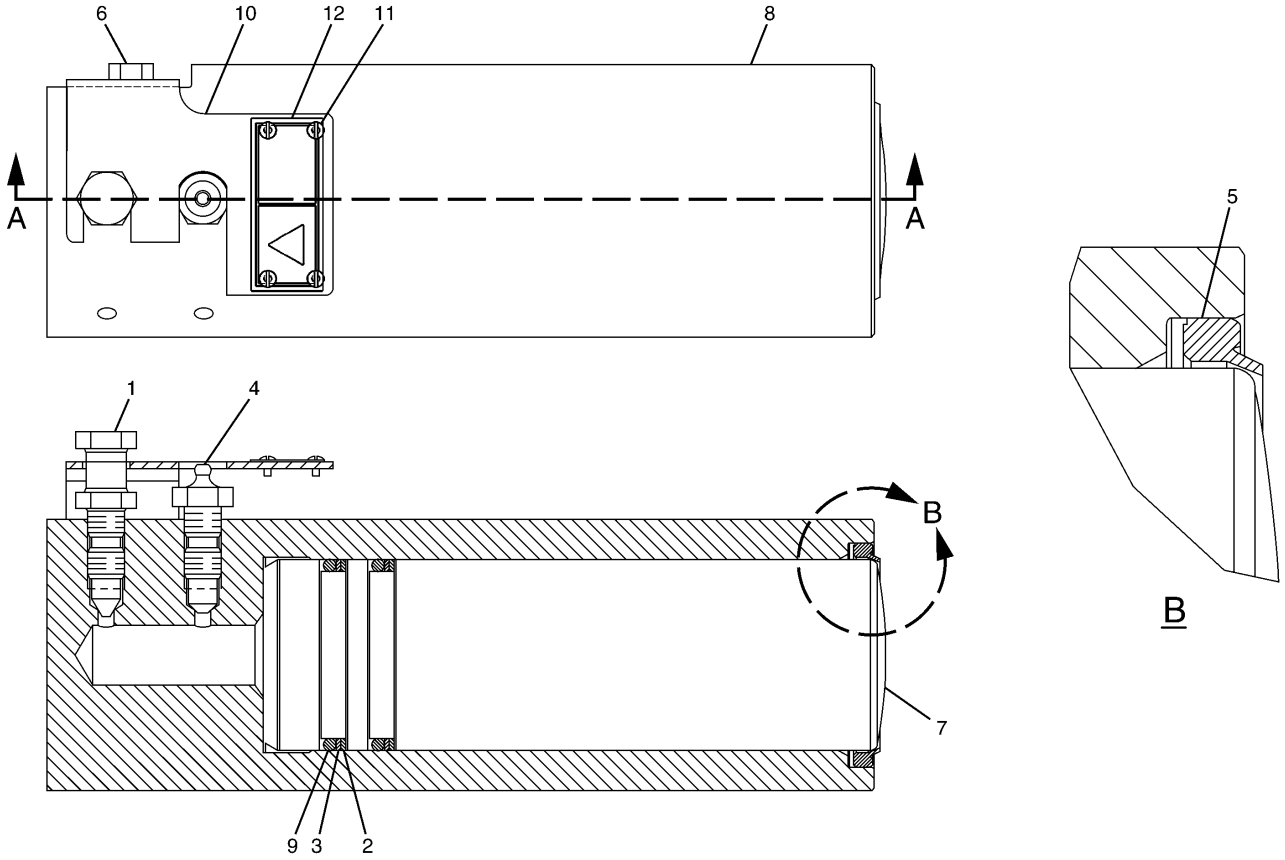

A – A

NOTE	No.	PART No.	QTY	PART NAME	NOTE	No.	PART No.	QTY	PART NAME
	1	2S-5926	1	VALVE (RELIEF)					
	2	7Y-1257	2	RING					
	3	093-1514	2	RING					
	4	095-2927	1	VALVE (FILL)					
	5	099-0121	1	SEAL					
	6	8T-4191	2	BOLT (L=16mm)					
	7	179-3007	1	PISTON					
	8	179-3008	1	CYLINDER					
	9	095-1622	2	SEAL-O-RING (ID=69.60mm)					
	10	113-2824	1	PLATE AS					
	11	4B-4158	4	SCREW					
	12	253-1346	1	PLATE (WARNING)					

H89232E 00

179-2998 ADJUSTMENT GP-HYDRAULIC TRACK

Part of 194-1240-Page338

FRAME AND BODY

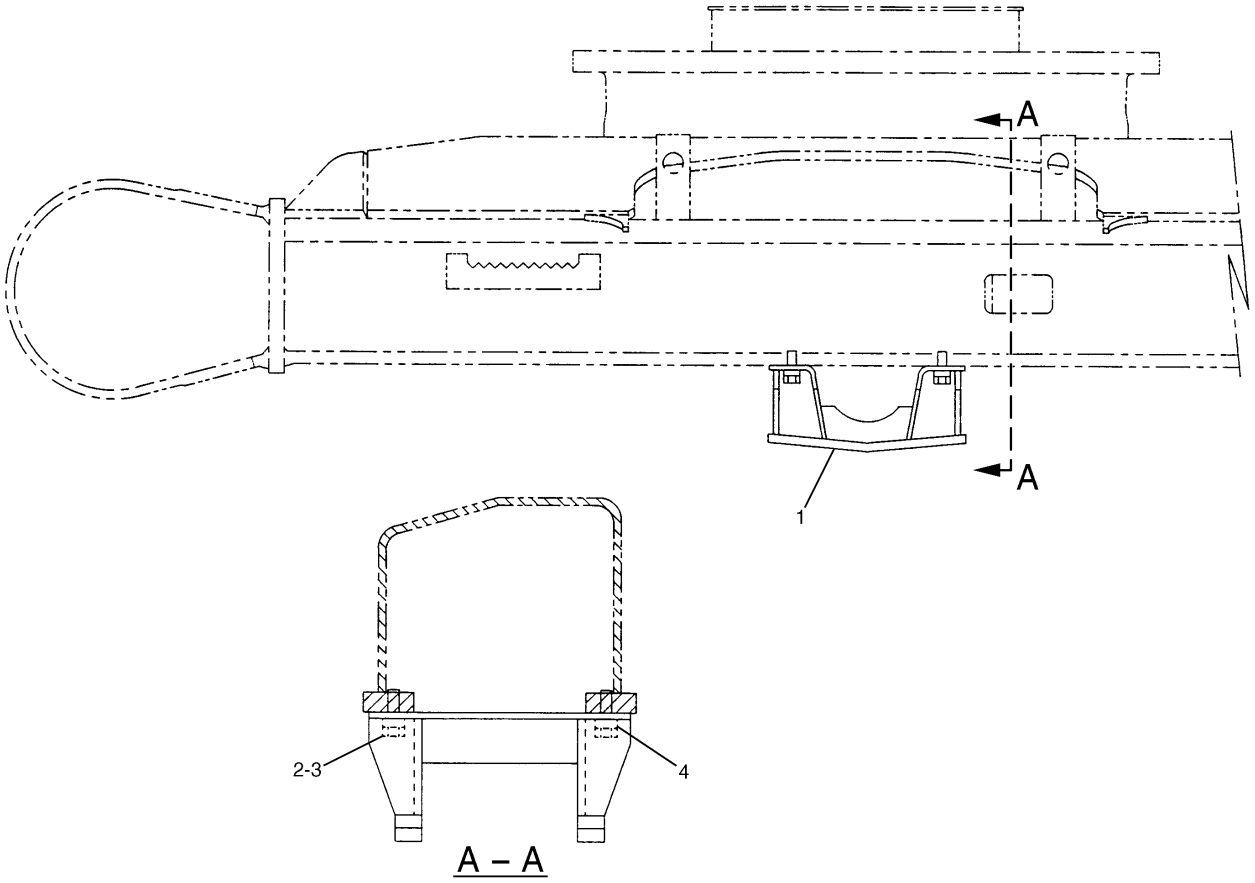

NOTE	No.	PART No.	QTY	PART NAME	NOTE	No.	PART No.	QTY	PART NAME
	1	7Y-2581	1	GUARD AS					
	2	8T-4123	4	WASHER					
	3	7X-2563	4	BOLT (L=60mm)					
	4	8V-1715	4	SPACER					

H59713E 04

7Y-2202 GUARD GP-TRACK GUIDE

2 Required

S/N CJM 1-Up, DAP 1-Up

FRAME AND BODY

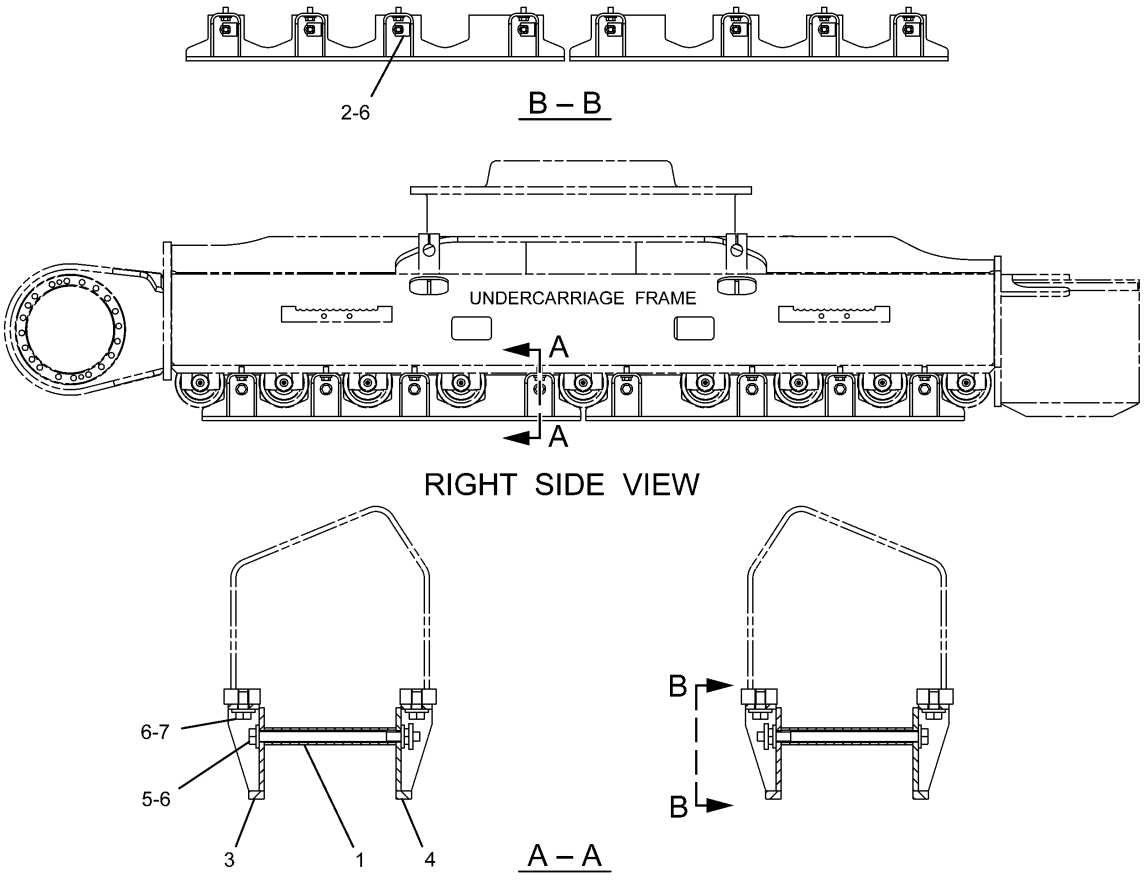

NOTE	No.	PART No.	QTY	PART NAME	NOTE	No.	PART No.	QTY	PART NAME
	1	117-5612	16	PIPE					
	2	186-5564	16	SUPPORT AS					
	3	235-7774	4	GUARD AS					
	4	235-7775	4	GUARD AS					
	5	7X-2440	16	BOLT (L=320mm)					
	6	8T-5439	64	WASHER					
	7	8T-5460	32	BOLT (L=40mm)					

H91216E 02

228-5517 GUARD GP-TRACK GUIDE
Full Length
S/N DAP 1-Up, PEH 1-Up

FRAME AND BODY

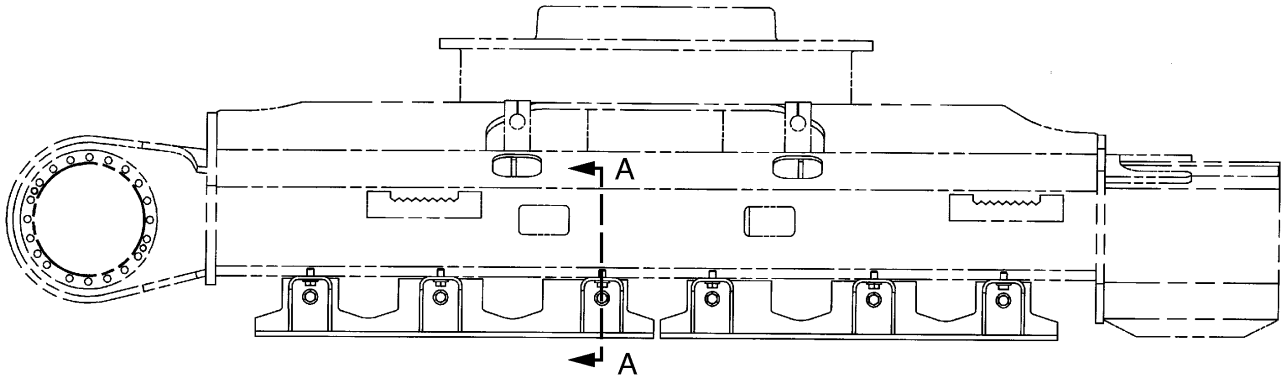

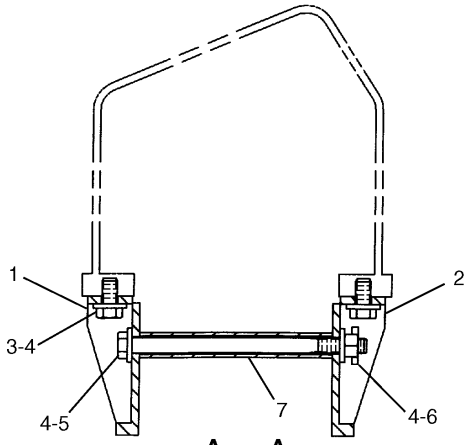

A – A

NOTE	No.	PART No.	QTY	PART NAME	NOTE	No.	PART No.	QTY	PART NAME
	1	119-4554	4	GUARD AS					
	2	119-4553	4	GUARD AS					
	3	8T-5460	24	BOLT (L=40mm)					
	4	8T-5439	48	WASHER					
	5	7X-2440	12	BOLT (L=320mm)					
	6	186-5564	12	SUPPORT AS					
	7	117-5612	12	PIPE					

H74381E 00

195-5374 GUARD GP-TRACK GUIDE

S/N CJM 1-Up
An Attachment

FRAME AND BODY

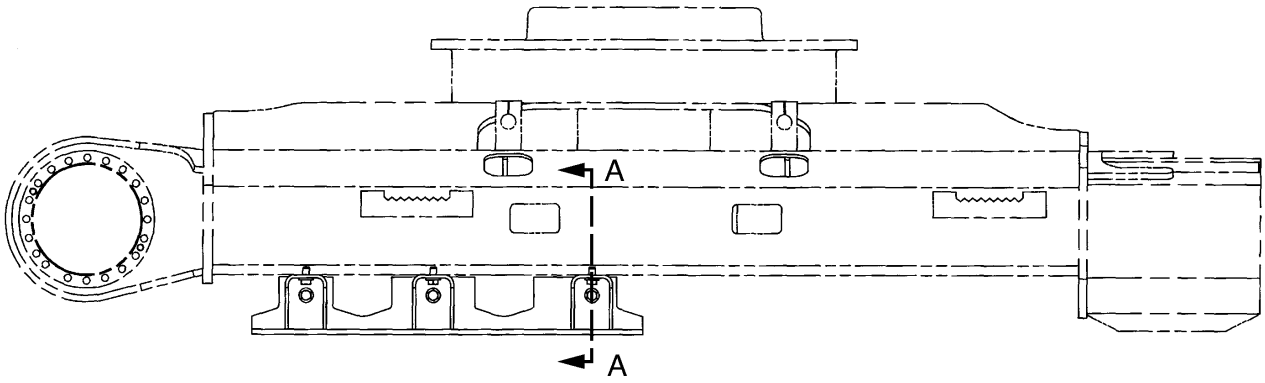

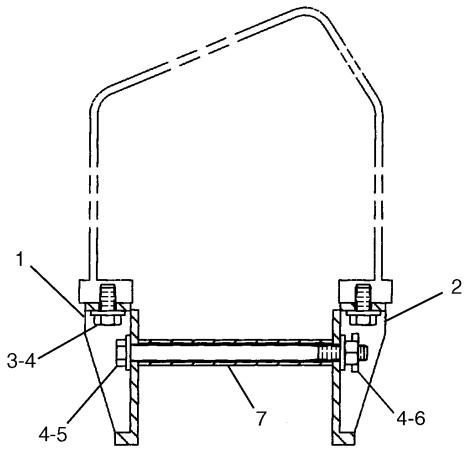

A – A

NOTE	No.	PART No.	QTY	PART NAME	NOTE	No.	PART No.	QTY	PART NAME
	1	119-4553	2	GUARD AS					
	2	119-4554	2	GUARD AS					
	3	8T-5460	12	BOLT (L=40mm)					
	4	8T-5439	24	WASHER					
	5	7X-2440	6	BOLT (L=320mm)					
	6	186-5564	6	SUPPORT AS					
	7	117-5612	6	PIPE					

H74382E 00

195-5375 GUARD GP-TRACK GUIDE
S/N CJM 1-Up
An Attachment

FRAME AND BODY

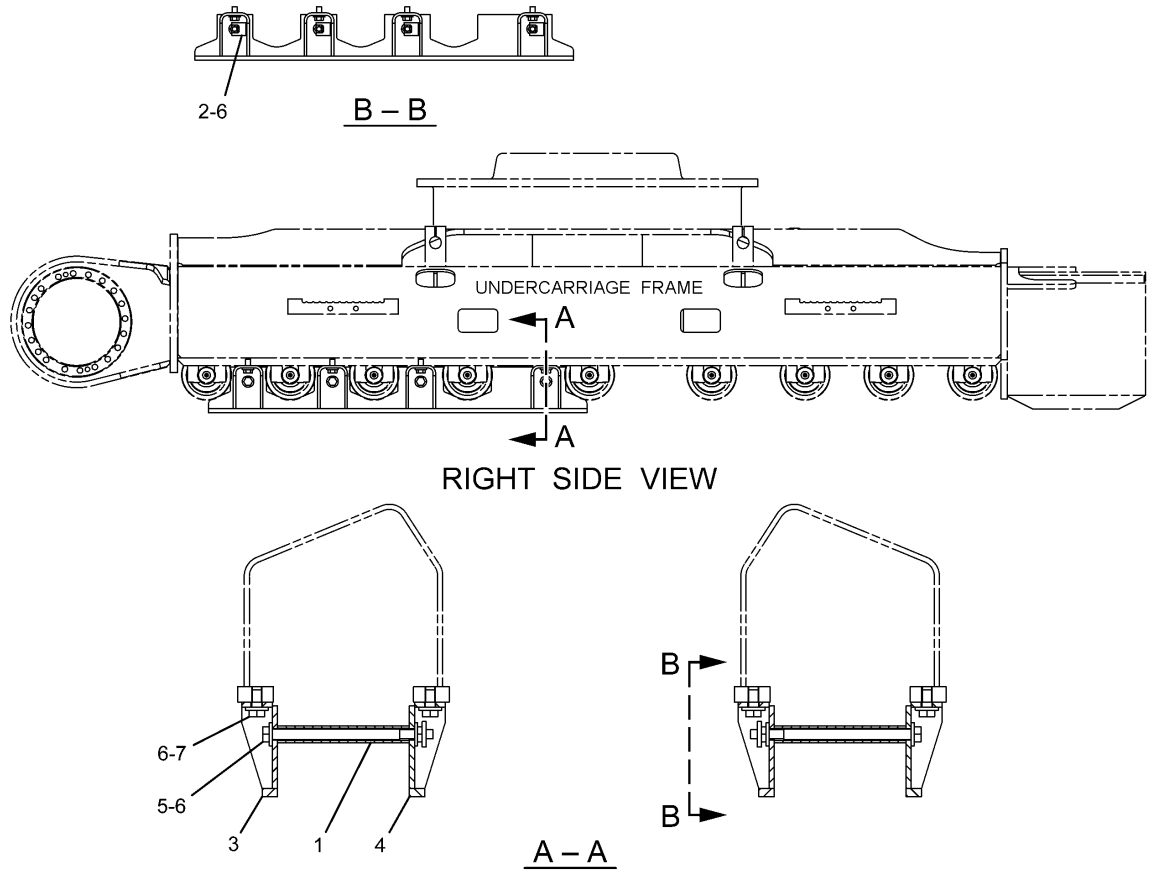

NOTE	No.	PART No.	QTY	PART NAME	NOTE	No.	PART No.	QTY	PART NAME
	1	117-5612	8	PIPE					
	2	186-5564	8	SUPPORT AS					
	3	235-7774	2	GUARD AS					
	4	235-7775	2	GUARD AS					
	5	7X-2440	8	BOLT (L=320mm)					
	6	8T-5439	32	WASHER					
	7	8T-5460	16	BOLT (L=40mm)					

H88936E 00

236-8326 GUARD GP-TRACK GUIDE

Sprocket
S/N DAP 1-Up, PEH 1-Up
An Attachment

FRAME AND BODY

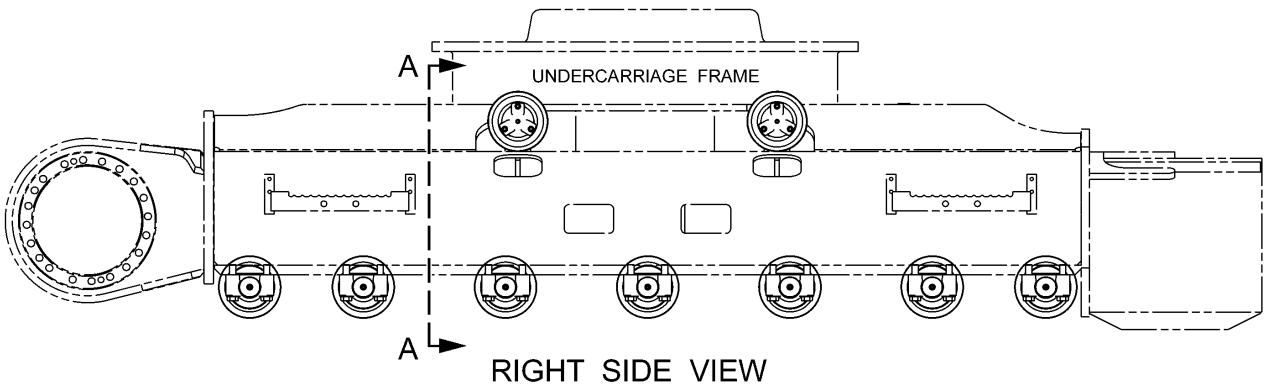

RIGHT SIDE VIEW

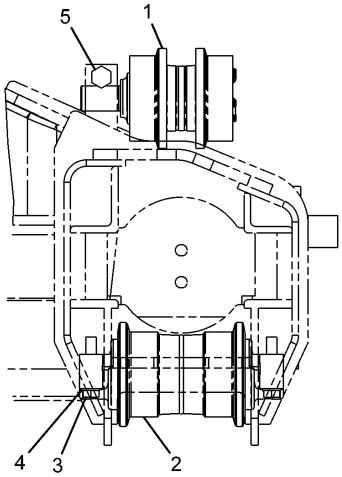

A – A

NOTE	No.	PART No.	QTY	PART NAME	NOTE	No.	PART No.	QTY	PART NAME
Y	1	6Y-5323	4	ROLLER GP					
Y	2	247-0565	14	ROLLER GP					
	3	7X-2565	56	BOLT (L=100mm)					
	4	8T-4123	56	WASHER					
	5	8T-5878	4	BOLT (L=80mm)					

Y—SEE SEPARATE ILLUSTRATION

H88947E 12

7Y-0362 ROLLER AR-TRACK & CARRIER

S/N CJM 1-Up
6Y-5323-Page351,247-0565-Page352

FRAME AND BODY

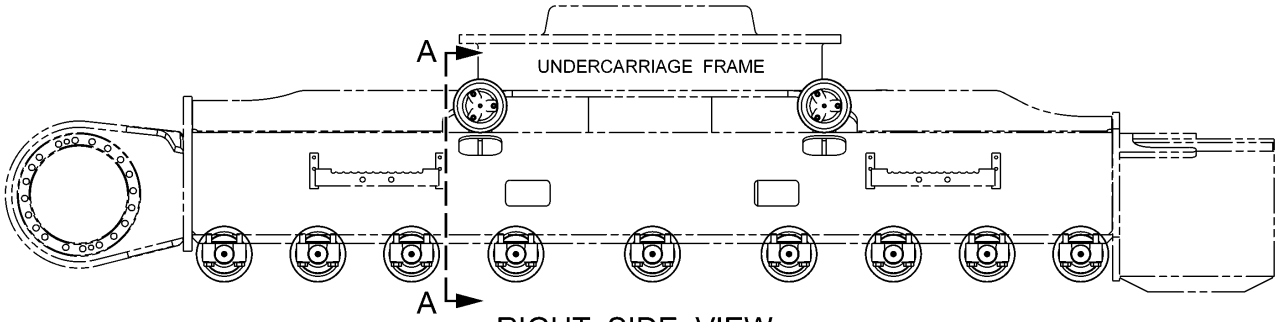

RIGHT SIDE VIEW

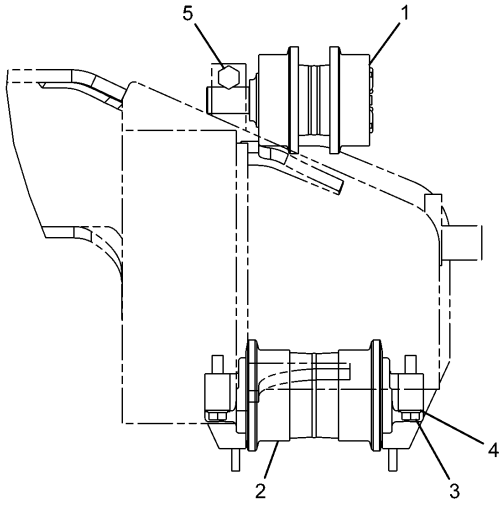

A – A

NOTE	No.	PART No.	QTY	PART NAME	NOTE	No.	PART No.	QTY	PART NAME
Y	1	6Y-5323	4	ROLLER GP					
Y	2	247-0565	18	ROLLER GP					
	3	7X-2565	72	BOLT (L=100mm)					
	4	8T-4123	72	WASHER					
	5	8T-5878	4	BOLT (L=80mm)					

Y—SEE SEPARATE ILLUSTRATION

H88973E 01

194-1250 ROLLER AR-TRACK & CARRIER

S/N DAP 1-Up
6Y-5323-Page351,247-0565-Page352

FRAME AND BODY

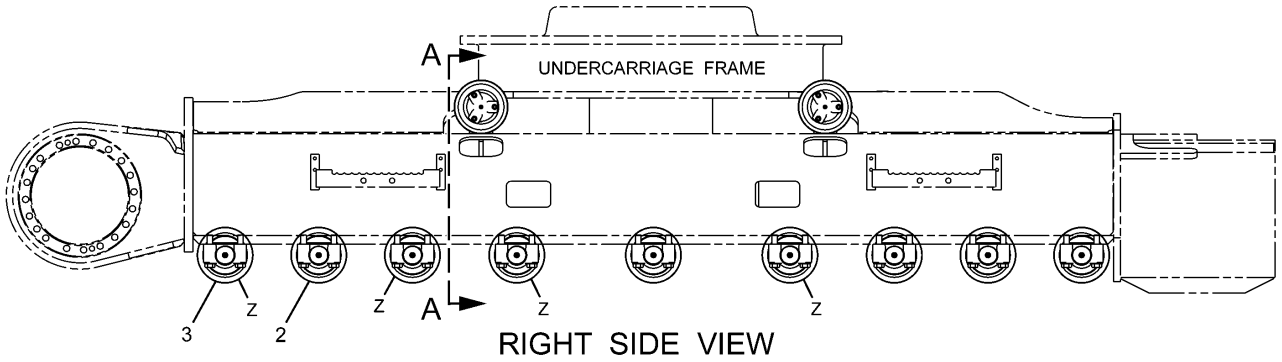

RIGHT SIDE VIEW

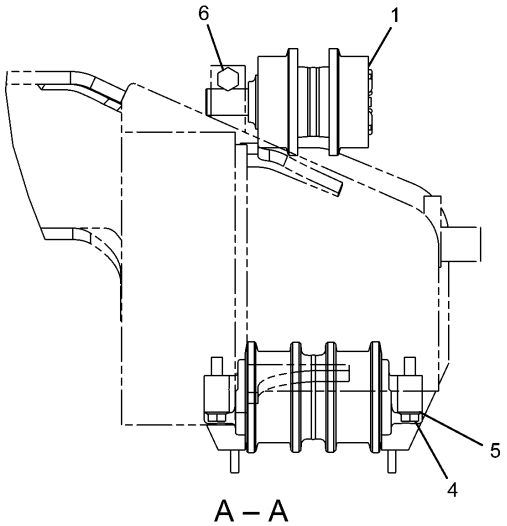

A – A

NOTE	No.	PART No.	QTY	PART NAME	NOTE	No.	PART No.	QTY	PART NAME
Y	1	6Y-5323	4	ROLLER GP					
Y	2	247-0565	10	ROLLER GP					
Y	3	247-0566	8	ROLLER GP					
	4	7X-2565	72	BOLT (L=100mm)					
	5	8T-4123	72	WASHER					
	6	8T-5878	4	BOLT (L=80mm)					

Y—SEE SEPARATE ILLUSTRATION

H89095E 01

194-1251 ROLLER AR-TRACK & CARRIER

S/N PEH 1-Up

6Y-5323-Page351,247-0565-Page352,247-0566-Page353

FRAME AND BODY

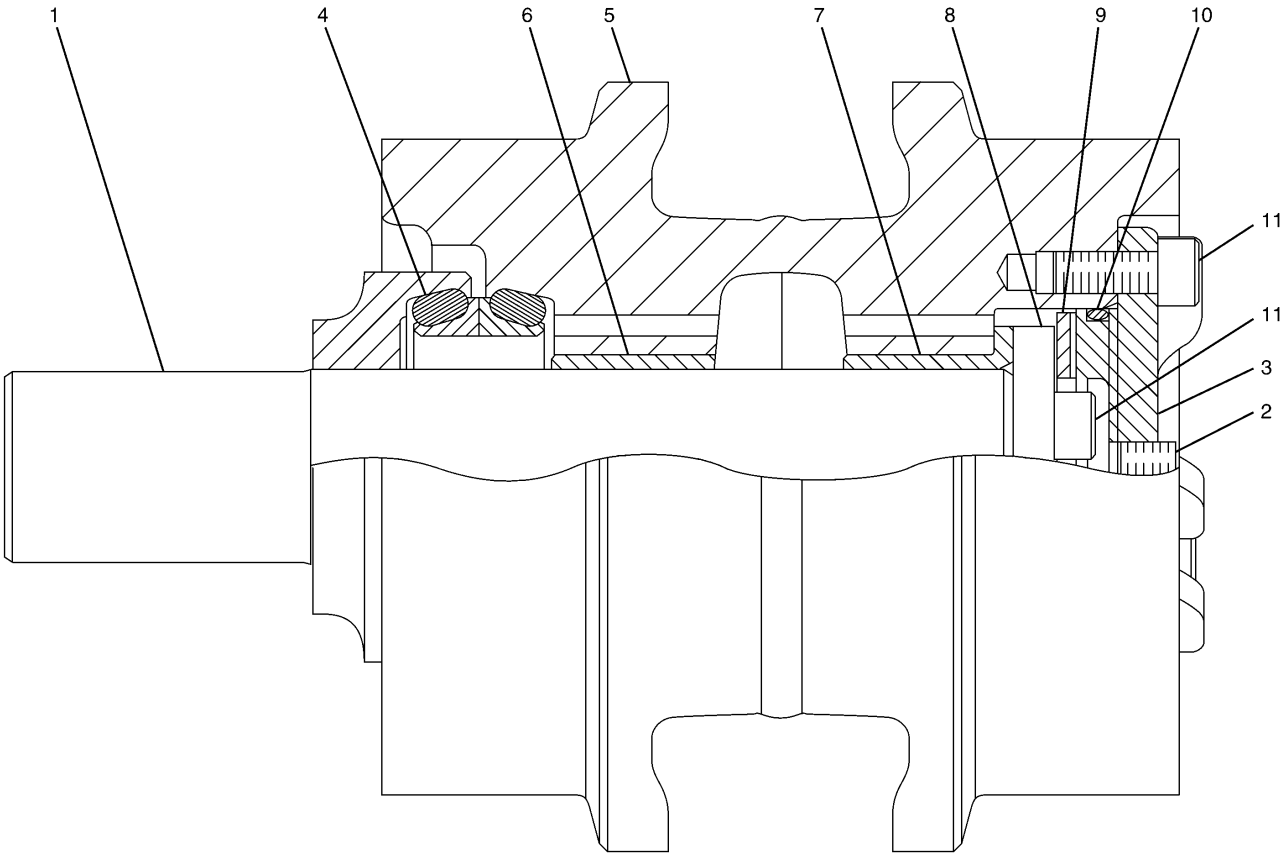

NOTE	No.	PART No.	QTY	PART NAME	NOTE	No.	PART No.	QTY	PART NAME
	1	6Y-9858	1	SHAFT AS					
	2	7H-3171	1	PLUG					
	3	6Y-8077	1	COVER					
	4	179-1292	1	SEAL GP					
	5	6Y-9859	1	ROLLER AS					
	6	6Y-9856	1	BEARING					
	7	6Y-9855	1	BEARING					
	8	6Y-8075	1	RETAINER					
	9	6Y-8076	1	WASHER					
	10	5H-8848	1	SEAL-O-RING (ID=69.44mm)					
	11	8T-1159	5	BOLT (L=25mm)					

H74696E 06

6Y-5323 ROLLER GP-TRACK CARRIER

Part of 7Y-0362-Page348,194-1250-Page349,194-1251-Page350

FRAME AND BODY

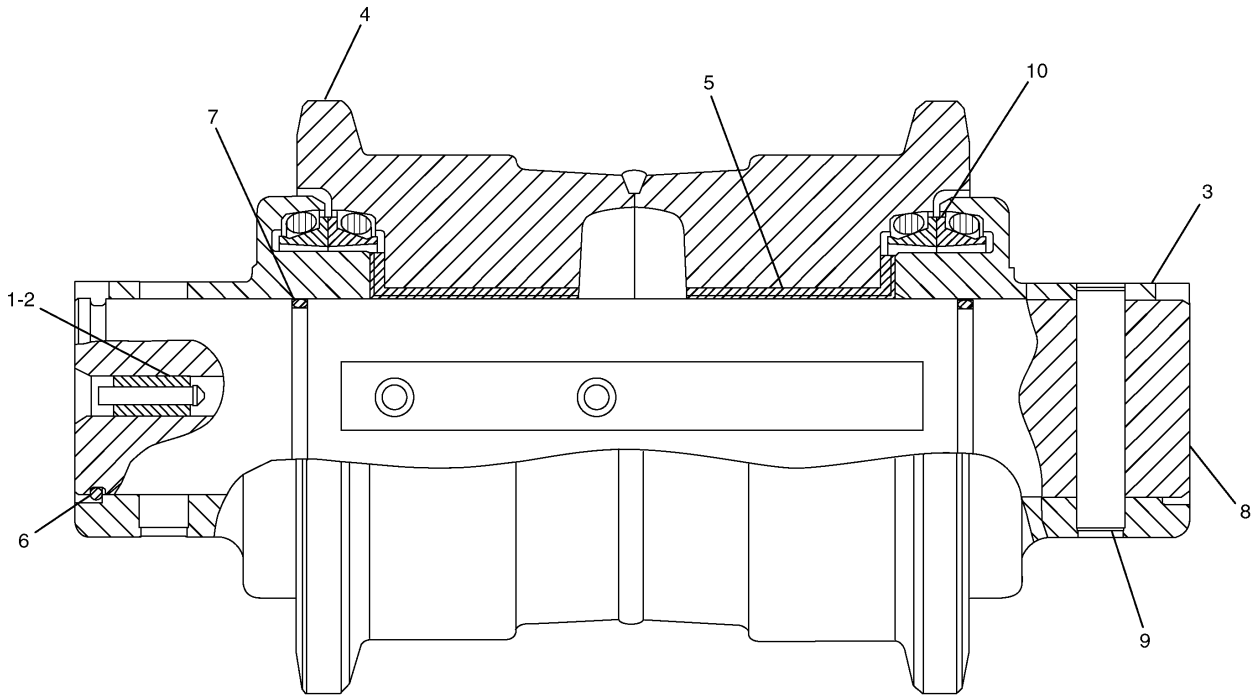

NOTE	No.	PART No.	QTY	PART NAME	NOTE	No.	PART No.	QTY	PART NAME
	1	5G-2247	1	STOPPER					
	2	6Y-0473	1	PLUG					
	3	158-8086	2	COLLAR					
	4	6Y-1056	1	ROLLER AS					
	5	6Y-1782	2	BEARING					
	6	158-8096	2	RING					
	7	8F-6711	2	SEAL-O-RING (ID=56.74mm)					
	8	247-0564	1	SHAFT					
	9	159-9526	1	DOWEL					
	10	9W-2201	2	SEAL GP					

H90439E 01

247-0565 ROLLER GP-TRACK-SINGLE FLANGE

Part of 7Y-0362-Page348,194-1250-Page349,194-1251-Page350

FRAME AND BODY

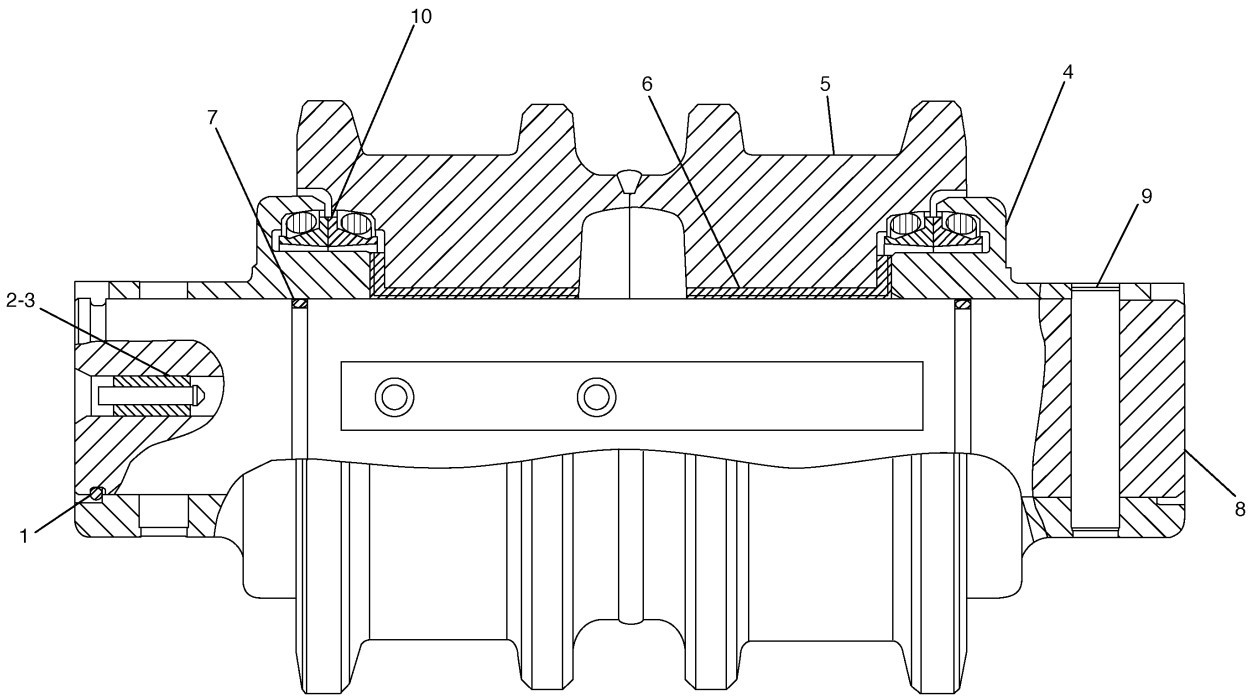

NOTE	No.	PART No.	QTY	PART NAME	NOTE	No.	PART No.	QTY	PART NAME
	1	158-8096	2	RING					
	2	5G-2247	1	STOPPER					
	3	6Y-0473	1	PLUG					
	4	158-8086	2	COLLAR					
	5	5Q-3216	1	ROLLER AS					
	6	6Y-1782	2	BEARING					
	7	8F-6711	2	SEAL-O-RING (ID=56.74mm)					
	8	247-0564	1	SHAFT					
	9	159-9526	1	DOWEL					
	10	9W-2201	2	SEAL GP					

H90440E 01

247-0566 ROLLER GP-TRACK-DOUBLE FLANGE
S/N PEH 1-Up
Part of 194-1251-Page350

FRAME AND BODY

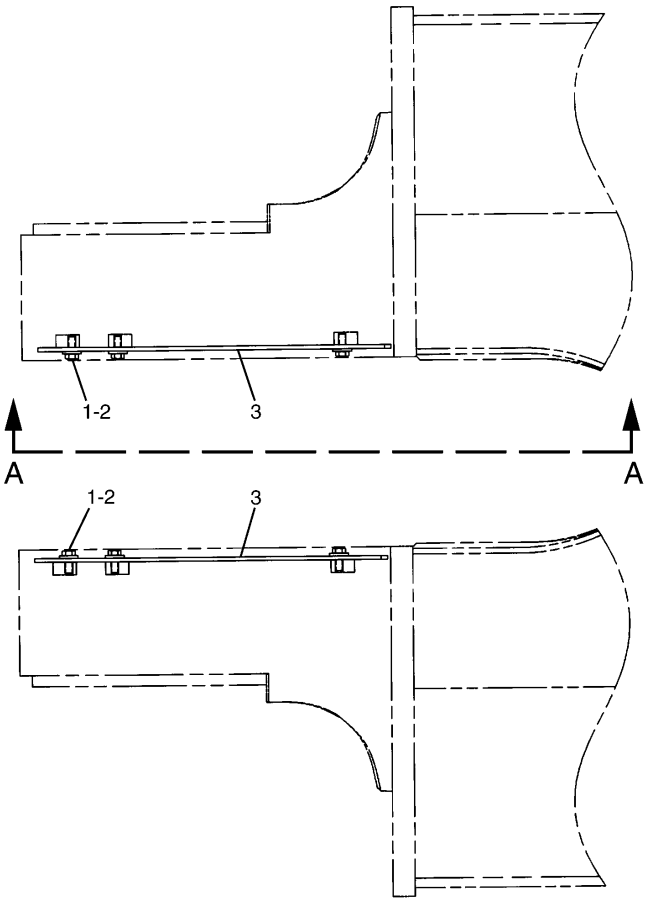

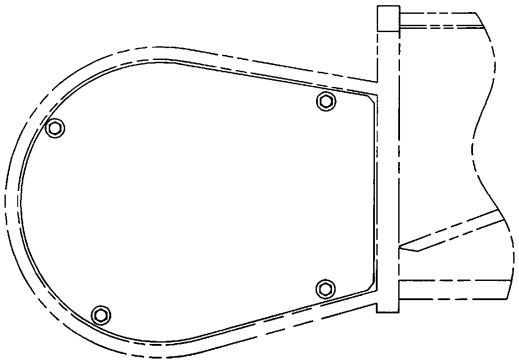

A – A

NOTE	No.	PART No.	QTY	PART NAME	NOTE	No.	PART No.	QTY	PART NAME
	1	8C-8992	8	BOLT (L=30mm)					
	2	5P-1076	8	WASHER					
	3	186-5473	2	COVER					

H74368E 01

184-5790 GUARD GP-TRAVEL MOTOR

S/N CJM 1-Up, DAP 1-Up

FRAME AND BODY

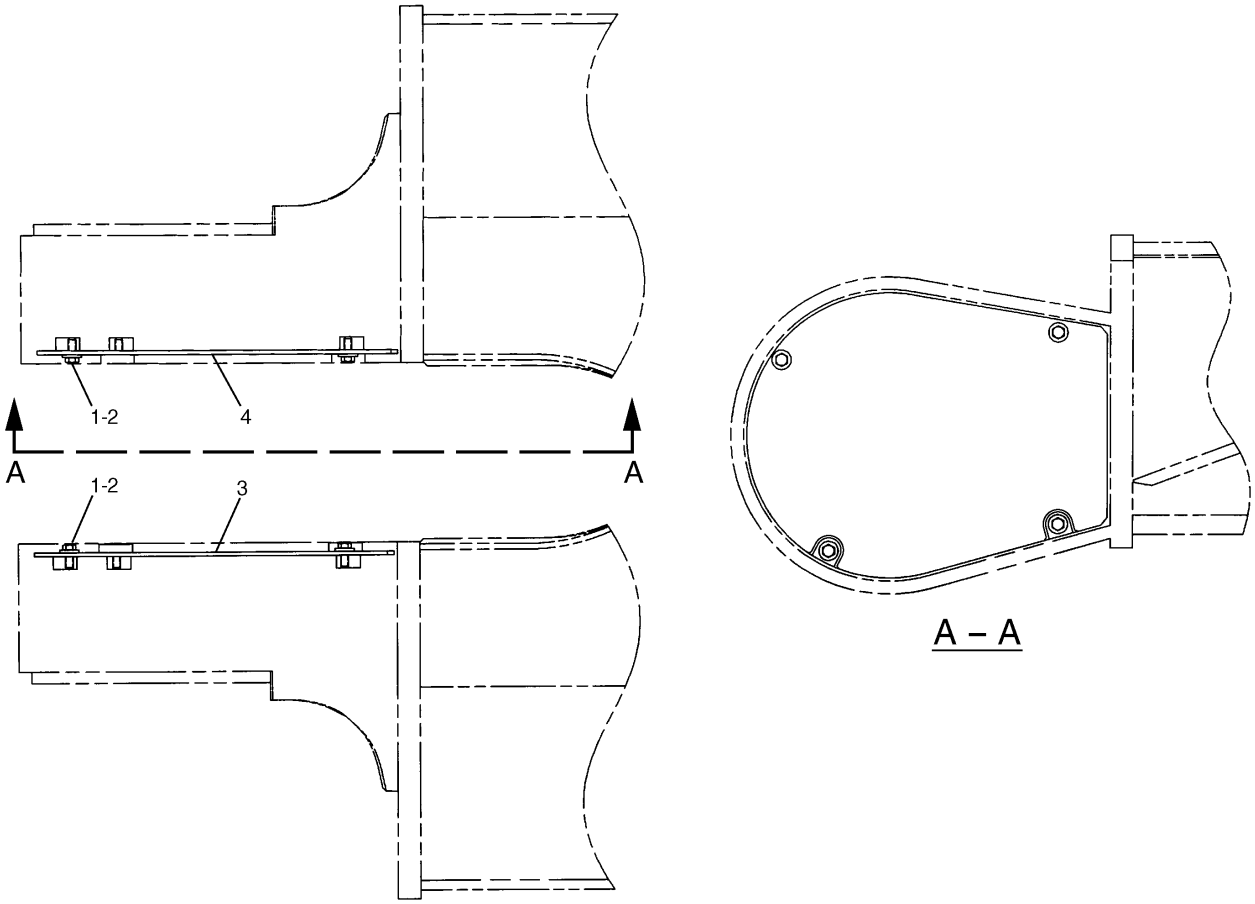

NOTE	No.	PART No.	QTY	PART NAME	NOTE	No.	PART No.	QTY	PART NAME
	1	5P-1076	8	WASHER					
	2	8C-8992	8	BOLT (L=30mm)					
	3	186-5475	1	COVER AS					
	4	186-5474	1	COVER AS					

H74367E 00

184-5713 GUARD GP-TRAVEL MOTOR

FRAME AND BODY

Consists of :

			Page
45	126-5064	SHOE	
180	9W-3361	NUT	
180	6Y-0846	BOLT	
1	201-9116	LINK AS-TRACK	363

H74373E 01

188-3239 TRACK GP
S/N CJM 1-Up

Consists of :

			Page
1	235-7764	STEP GP	337
1	236-8907	TRACK GP	357

H90128E 02

229-1864 TRACK GP
800MM Triple Grouser Shoe-2 Required
S/N DAP 1-Up, PEH 1-Up

Consists of :

			Page
200	6Y-0846	BOLT	
50	6Y-2126	SHOE	
200	9W-3361	NUT	
1	236-8893	LINK AS-TRACK	364

H90129E 01

236-8907 TRACK GP
800MM Triple Grouser Shoe
S/N DAP 1-Up, PEH 1-Up
Part of 229-1864-Page357

FRAME AND BODY

Consists of :

			Page
200	6Y-0846	BOLT	
200	9W-3361	NUT	
50	126-5064	SHOE	
1	236-8893	LINK AS-TRACK	364

H90134E 01

236-8908 TRACK GP
600MM Triple Grouser Shoe-2 Required
S/N DAP 1-Up, PEH 1-Up
An Attachment

Consists of :

			Page
45	126-5065	SHOE	
180	9W-3361	NUT	
180	6Y-0846	BOLT	
1	201-9116	LINK AS-TRACK	363

H74390E 01

199-3226 TRACK GP
S/N CJM 1-Up
An Attachment

Consists of :

			Page
200	6Y-0846	BOLT	
200	9W-3361	NUT	
50	126-5065	SHOE	
1	236-8893	LINK AS-TRACK	364

H90135E 01

251-1853 TRACK GP
700MM Triple Grouser Shoe-2 Required
S/N DAP 1-Up, PEH 1-Up
An Attachment

FRAME AND BODY

Consists of :

			Page
1	235-7764	STEP GP	337
1	236-8888	TRACK GP	360

H90133E 01

247-7327 TRACK GP
800MM Triple Grouser Shoe-2 Required
S/N CJM 1-Up
An Attachment

Consists of :

			Page
180	6Y-0846	BOLT	
180	9W-3361	NUT	
1	201-9116	LINK AS-TRACK	363
45	236-8886	SHOE	

H90132E 00

236-8888 TRACK GP
800MM Triple Grouser Shoe
S/N CJM 1-Up
Part of 247-7327-Page360
An Attachment

Consists of :

			Page
180	6Y-0846	BOLT	
45	8E-8812	SHOE	
180	9W-3361	NUT	
1	201-9116	LINK AS-TRACK	363

H90136E 00

251-1848 TRACK GP
600MM Double Grouser Shoe-2 Required
S/N CJM 1-Up
An Attachment

Consists of :

			Page
200	6Y-0846	BOLT	
50	8E-8812	SHOE	
200	9W-3361	NUT	
1	236-8893	LINK AS-TRACK	364

H90130E 00

251-1850 TRACK GP
600MM Double Grouser Shoe-2 Required
S/N DAP 1-Up, PEH 1-Up
An Attachment

Consists of :

			Page
180	6Y-0846	BOLT	
45	8E-8814	SHOE	
180	9W-3361	NUT	
1	201-9116	LINK AS-TRACK	363

H90137E 00

251-1849 TRACK GP
700MM Double Grouser Shoe-2 Required
S/N CJM 1-Up
An Attachment

Consists of :

			Page
200	6Y-0846	BOLT	
50	8E-8814	SHOE	
200	9W-3361	NUT	
1	236-8893	LINK AS-TRACK	364

H90131E 00

251-1851 TRACK GP
700MM Double Grouser Shoe-2 Required
S/N DAP 1-Up, PEH 1-Up
An Attachment

FRAME AND BODY

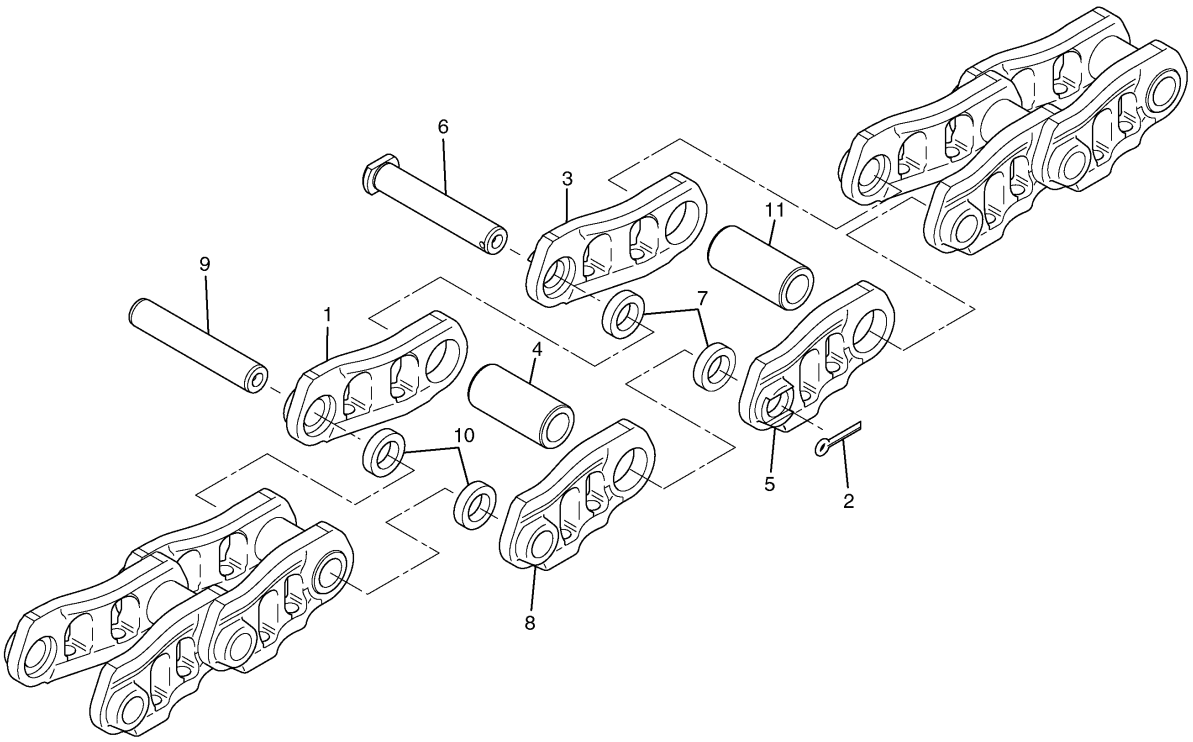

NOTE	No.	PART No.	QTY	PART NAME	NOTE	No.	PART No.	QTY	PART NAME
	1	6Y-1608	44	LINK					
	2	095-7944	1	COTTER					
	3	115-1854	1	LINK					
	4	201-0826	1	BUSHING					
	5	115-1853	1	LINK					
	6	188-3065	1	PIN					
	7	179-3427	2	SEAL					
	8	6Y-1607	44	LINK					
	9	6Y-0851	44	PIN					
	10	179-3425	88	SEAL					
	11	201-0825	44	BUSHING					

H74394E 00

201-9116 LINK AS-TRACK

S/N CJM 1-Up

Part of 188-3239-Page356,199-3226-Page359,236-8888-Page360,251-1848-Page361,251-1849-Page362

FRAME AND BODY

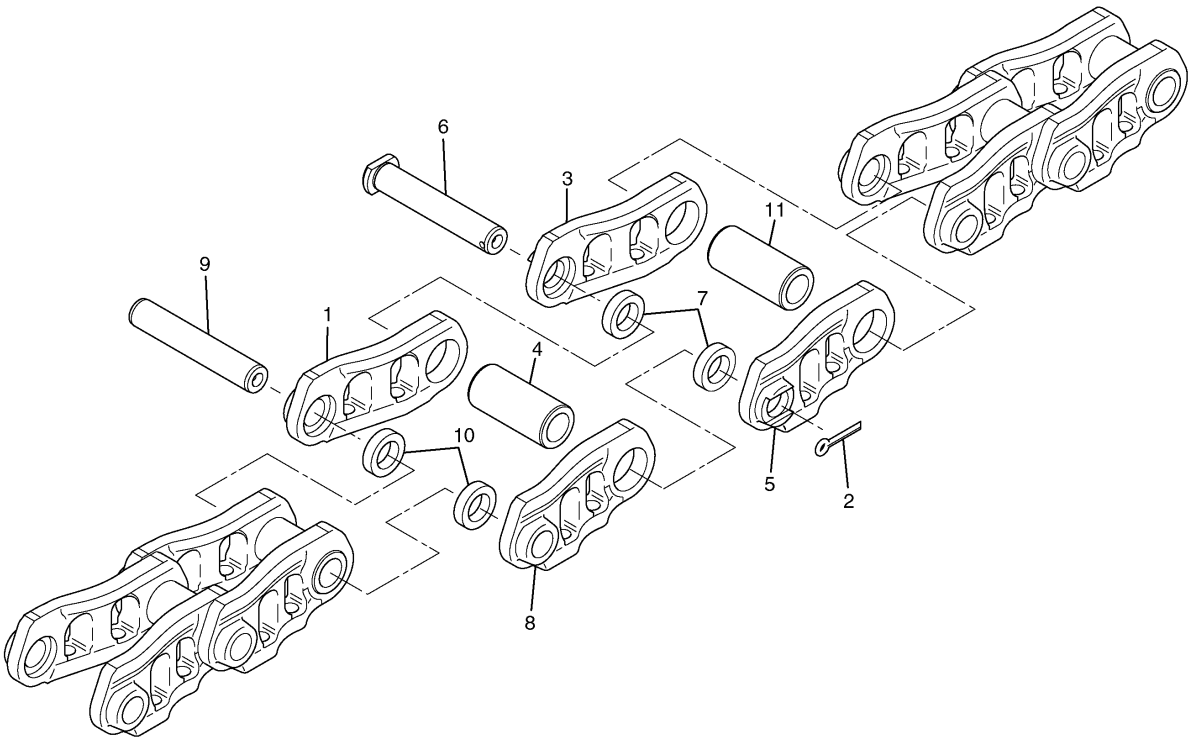

NOTE	No.	PART No.	QTY	PART NAME	NOTE	No.	PART No.	QTY	PART NAME
	1	6Y-1608	49	LINK					
	2	095-7944	1	COTTER					
	3	115-1854	1	LINK					
	4	201-0826	1	BUSHING					
	5	115-1853	1	LINK					
	6	188-3065	1	PIN					
	7	179-3427	2	SEAL					
	8	6Y-1607	49	LINK					
	9	6Y-0851	49	PIN					
	10	179-3425	98	SEAL					
	11	201-0825	49	BUSHING					

H90127E 01

236-8893 LINK AS-TRACK

S/N DAP 1-Up, PEH 1-Up

Part of 236-8907-Page357,236-8908-Page358,251-1853-Page359,251-1850-Page361,251-1851-Page362

HYDRAULIC SYSTEM

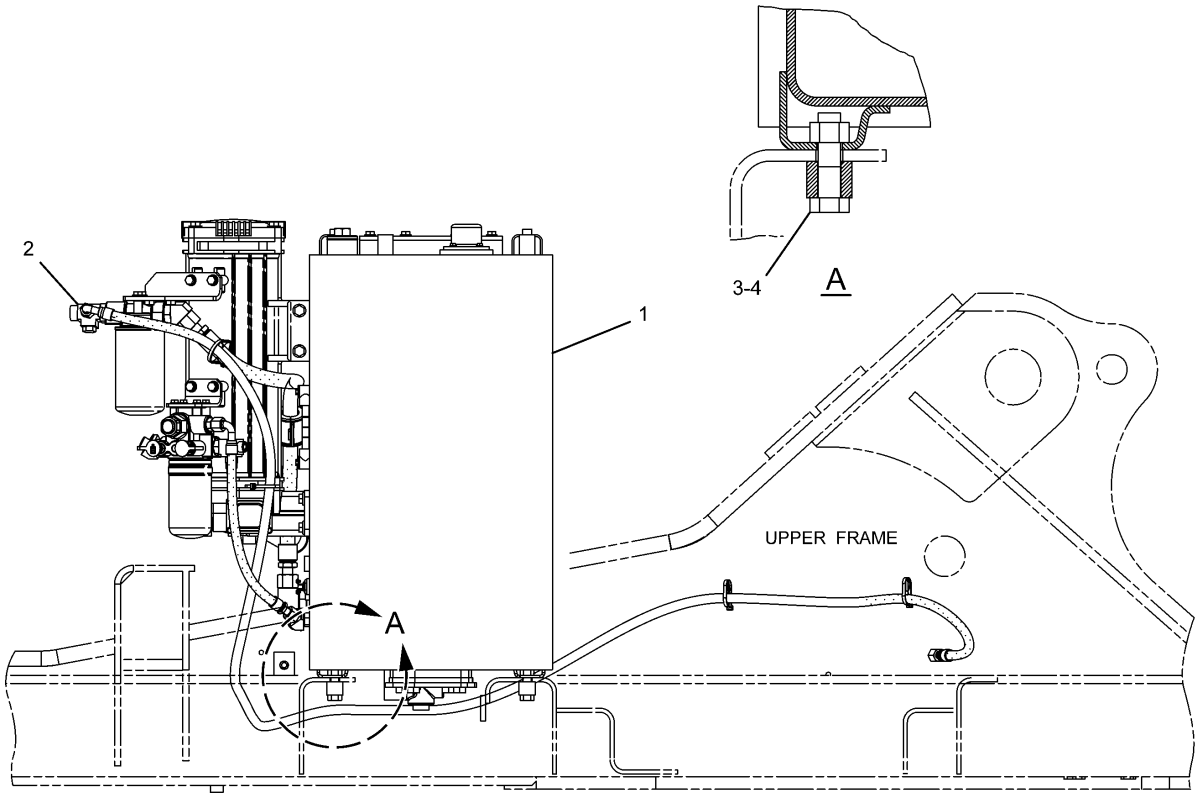

RIGHT SIDE VIEW

NOTE	No.	PART No.	QTY	PART NAME	NOTE	No.	PART No.	QTY	PART NAME
Y	1	227-0566	1	TANK GP					
Y	2	248-9830	1	TANK GP (LINES)					
	3	085-9310	6	SPACER					
	4	8T-4140	6	BOLT (L=60mm)					

Y—SEE SEPARATE ILLUSTRATION

H89165E 01

227-0565 TANK & MTG GP-HYDRAULIC

227-0566-Page366,248-9830-Page466

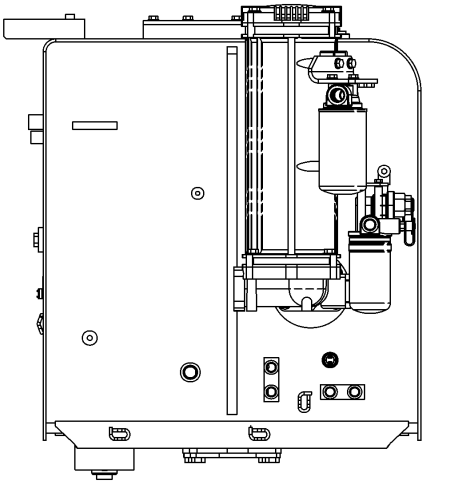

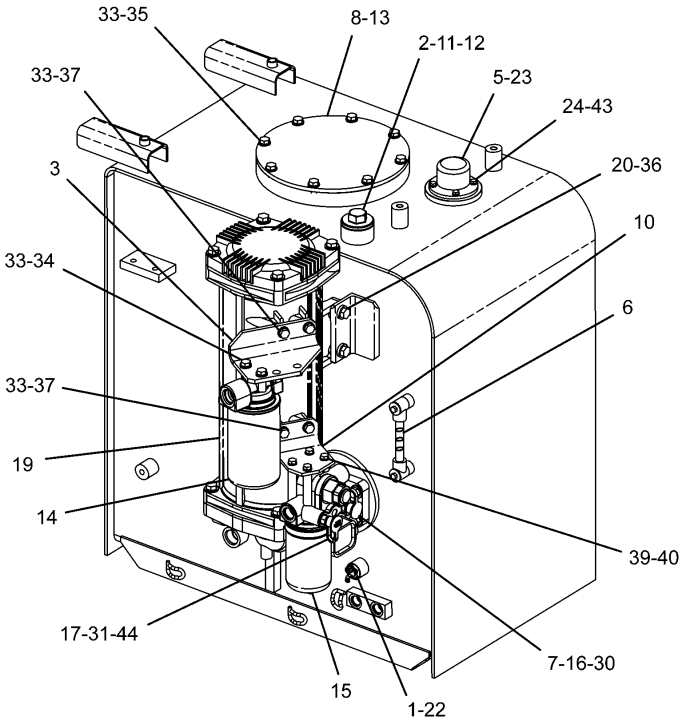

PICTORIAL VIEW

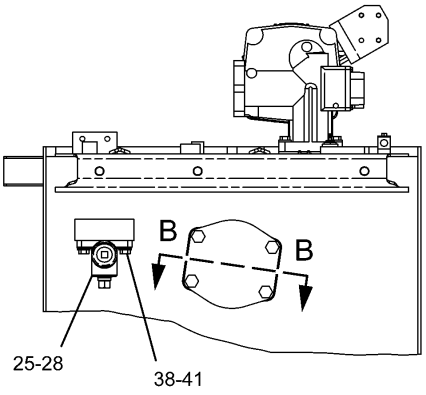

A – A

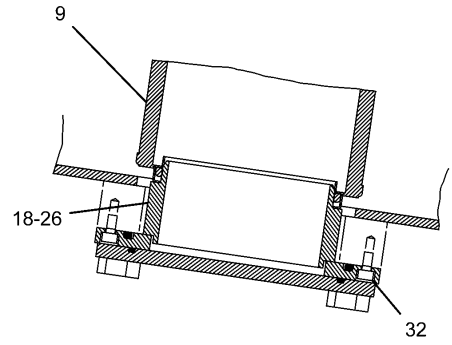

B – B

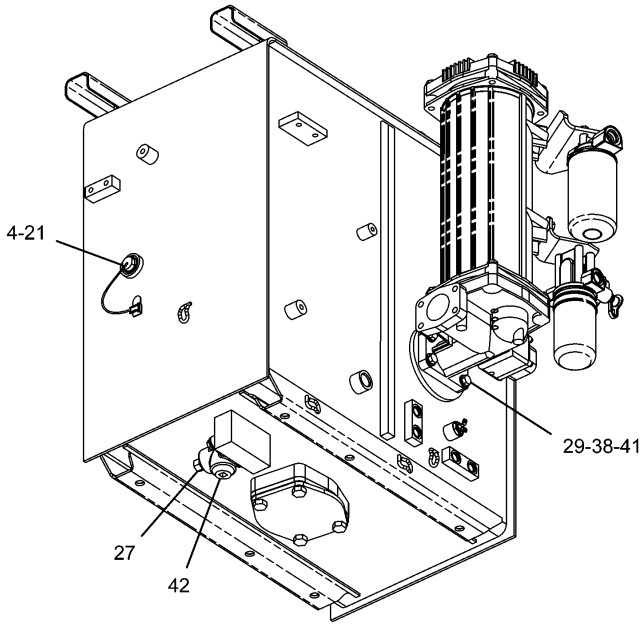

PICTORIAL VIEW

H90098E 02

227-0566 TANK & FILTER GP-HYDRAULIC

Capacity 260 Liters
Part of 227-0565-Page365
259-0922-Page368,227-0620-Page369,126-2075-Page370,158-8987-Page371,188-4140-Page372

HYDRAULIC SYSTEM

NOTE	No.	PART No.	QTY	PART NAME	NOTE	No.	PART No.	QTY	PART NAME
	1	4I-5394	1	SENDER					
		4I-5394	2	SENDER					
		095-0826	2	LOCKWASHER					
	2	095-1608	1	SEAL-O-RING (ID=44.70mm)					
	3	204-8450	1	SUPPORT AS					
	4	213-0677	1	SWITCH AS					
		102-8802	1	RECEPTACLE KIT					
		9X-3401	2	PIN					
	5	227-0590	1	BREATHER GP					
Y	6	227-0620	1	GAUGE AS					
	7	3J-1907	1	SEAL-O-RING (ID=11.89mm)					
	8	236-3170	1	COVER AS					
Y	9	259-0922	1	SCREEN GP					
	10	275-1362	1	BRACKET					
	11	207-6403	1	PLUG					
	12	207-6404	1	WASHER					
	13	095-1735	1	SEAL-O-RING (ID=229.30mm)					
Y	14	126-2075	1	FILTER GP					
Y	15	158-8987	1	FILTER GP					
	16	6V-3965	1	NIPPLE AS					
	17	8C-3446	1	VALVE					
	18	165-3256	1	PIPE AS					
Y	19	188-4140	1	FILTER GP					
	20	2M-0849	2	WASHER					
	21	3D-2824	1	SEAL-O-RING (ID=23.47mm)					
	22	3K-0360	1	SEAL-O-RING (ID=16.36mm)					
	23	4J-0527	1	SEAL-O-RING (ID=56.74mm)					
	24	5C-9553	4	BOLT (L=16mm)					
	25	5P-8068	1	SEAL-O-RING (ID=37.47mm)					
	26	6D-9157	1	SEAL-O-RING (ID=142.24mm)					
	27	6I-0723	1	PLUG					
	28	6I-0724	1	ADAPTER					
	29	6J-2680	1	SEAL-O-RING (ID=69.44mm)					
	30	6V-0852	1	CAP					
	31	8C-3451	1	CAP					
	32	8T-0267	2	BOLT (L=12mm)					
	33	8T-4121	14	WASHER					
	34	8T-4136	2	BOLT (L=25mm)					
	35	8T-4137	8	BOLT (L=20mm)					
	36	8T-4183	2	BOLT (L=40mm)					
	37	8T-4195	4	BOLT (L=30mm)					
	38	8T-4223	6	WASHER					
	39	8T-4224	4	WASHER					
	40	8T-4908	4	BOLT (L=25mm)					
	41	8T-4956	6	BOLT (L=35mm)					
	42	8T-6761	1	PLUG					
	43	9X-8256	4	WASHER					
	44	3J-7354	1	SEAL-O-RING (ID=8.92mm)					

Y—SEE SEPARATE ILLUSTRATION

H90098E 02

227-0566 TANK & FILTER GP-HYDRAULIC

Capacity 260 Liters

Part of 227-0565-Page365

259-0922-Page368,227-0620-Page369,126-2075-Page370,158-8987-Page371,188-4140-Page372

HYDRAULIC SYSTEM

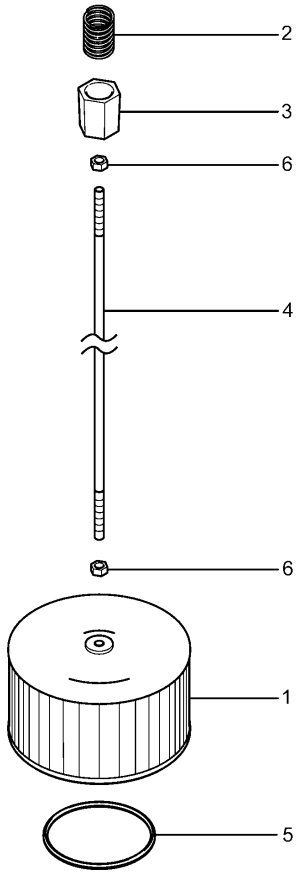

NOTE	No.	PART No.	QTY	PART NAME	NOTE	No.	PART No.	QTY	PART NAME
	1	209-6000	1	SCREEN AS					
	2	095-6639	1	SPRING					
	3	259-0918	1	GUIDE					
	4	129-7784	1	ROD					
	5	5H-5672	1	SEAL-O-RING (ID=113.67mm)					
	6	8T-4133	2	NUT					

H89283E 00

259-0922 SCREEN GP
Part of 227-0566-Page367

HYDRAULIC SYSTEM

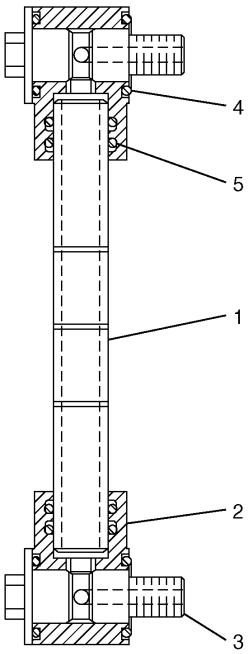

NOTE	No.	PART No.	QTY	PART NAME
	1	236-3257	1	PIPE
	2	236-3258	2	BLOCK
	3	236-3259	2	BOLT
	4	095-1519	4	SEAL-O-RING (ID=15.80mm)
	5	6F-4855	4	SEAL-O-RING (ID=13.94mm)

H85416E 01

227-0620 GAUGE AS
Part of 227-0566-Page367

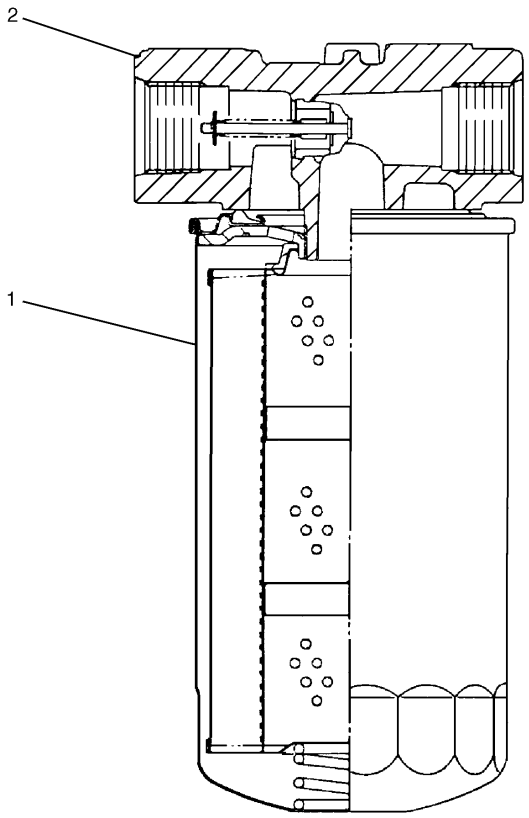

NOTE	No.	PART No.	QTY	PART NAME	NOTE	No.	PART No.	QTY	PART NAME
	1	093-7521	1	FILTER					
	2	126-2076	1	HEAD AS					

H84895E 01

126-2075 FILTER GP-HYDRAULIC

Basic

Part of 227-0566-Page367

HYDRAULIC SYSTEM

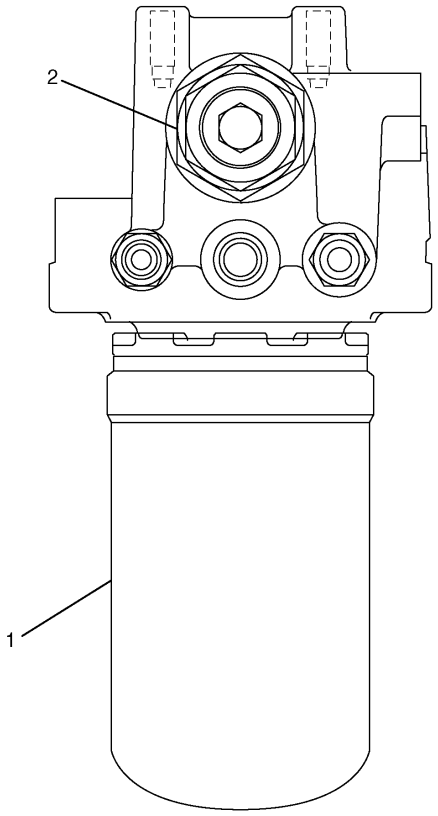

NOTE	No.	PART No.	QTY	PART NAME	NOTE	No.	PART No.	QTY	PART NAME
	1	5I-8670	1	FILTER AS					
Y	2	215-4909	1	VALVE GP					

Y—SEE SEPARATE ILLUSTRATION

H96259E 06

158-8987 FILTER GP-HYDRAULIC

Part of 227-0566-Page367
215-4909-Page618

HYDRAULIC SYSTEM

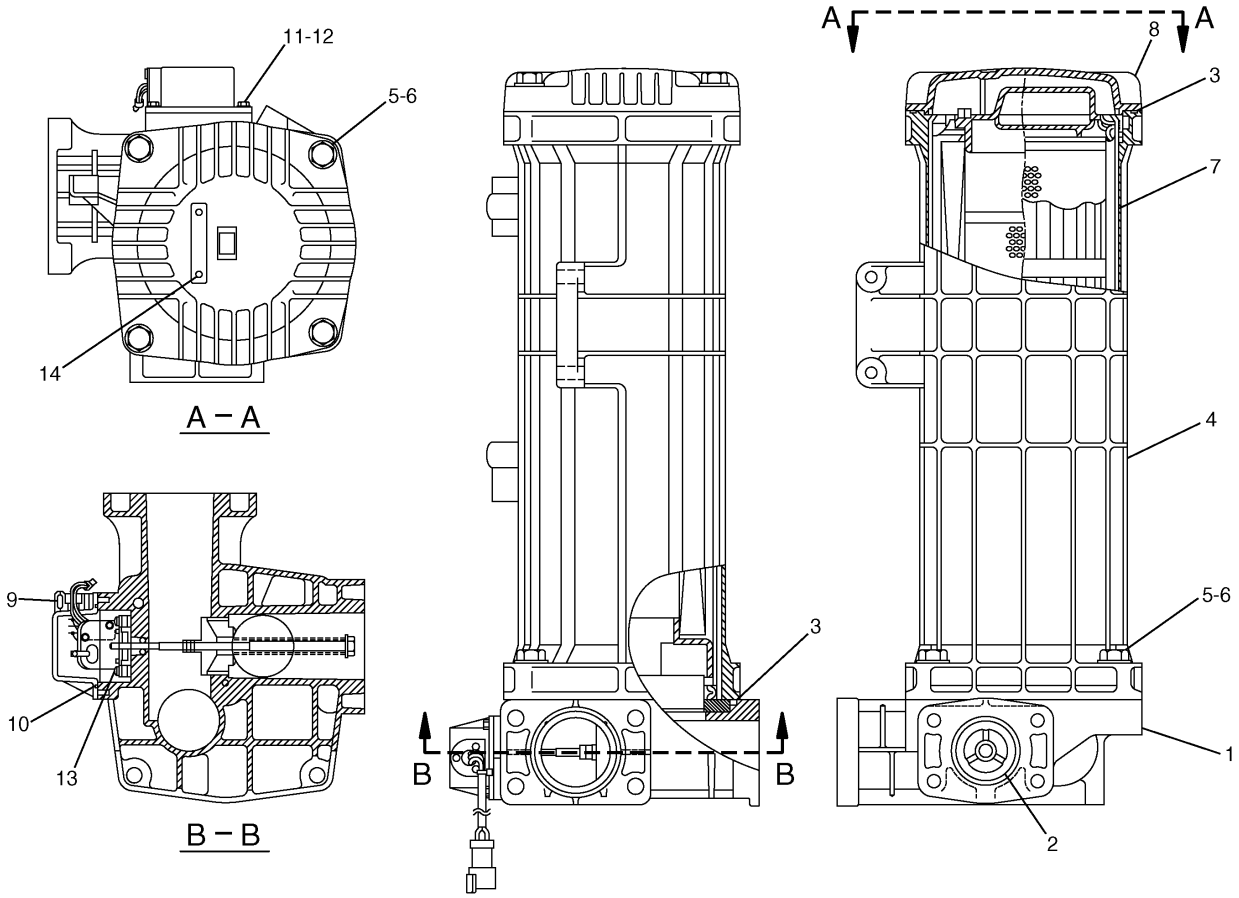

NOTE	No.	PART No.	QTY	PART NAME	NOTE	No.	PART No.	QTY	PART NAME
Y	1	173-3503	1	BLOCK GP					
	2	129-8034	1	VALVE AS					
	3	123-2003	2	SEAL-O-RING (ID=185.00mm)					
	4	173-3507	1	HOUSING AS					
	5	8T-4194	8	BOLT (L=50mm)					
	6	8T-4223	8	WASHER					
Y	7	188-4142	1	FILTER GP					
	8	173-3510	1	COVER					
	9	173-3518	1	INDICATOR AS					
	10	159-7784	1	SEAL-O-RING					
	11	6V-4298	4	BOLT (L=16mm)					
	12	8T-0328	4	WASHER					
	13	8T-6693	4	SCREW					
	14	116-3522	2	SCREW					

Y—SEE SEPARATE ILLUSTRATION

H77741E 01

188-4140 FILTER GP-HYDRAULIC

Part of 227-0566-Page367
188-4142-Page373,173-3503-Page374

HYDRAULIC SYSTEM

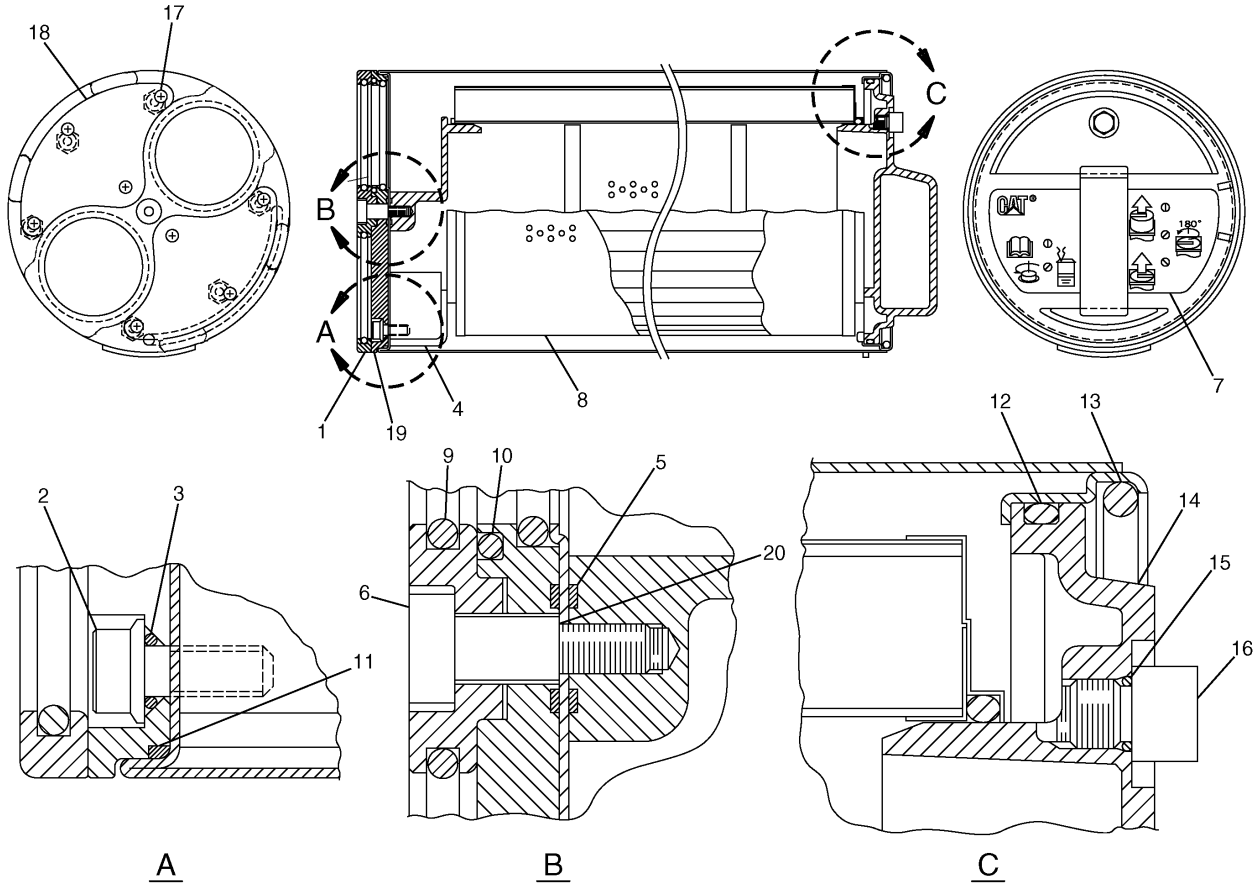

NOTE	No.	PART No.	QTY	PART NAME	NOTE	No.	PART No.	QTY	PART NAME
	1	204-2762	1	PLATE					THE FOLLOWING REPAIR
J	2	173-3529	6	BOLT (L=15mm)					KIT IS AVAILABLE:
J	3	3T-7528	6	SEAL-O-RING (ID=5.80mm)			201-9299	1	SERVICE KIT
	4	173-3513	1	BASE					(INCLUDES PARTS MARKED J)
J	5	3E-4297	2	SEAL-O-RING (ID=10.00mm)					
	6	137-3626	1	BOLT					
	7	188-4143	1	FILM (INSTRUCTION)					
	8	179-9806	1	ELEMENT					
J	9	137-3623	4	SEAL-O-RING (ID=55.60mm)					
J	10	6V-7658	2	SEAL-O-RING (ID=59.40mm)					
J	11	177-2553	1	SEAL-O-RING (ID=149.50mm)					
J	12	095-1681	1	SEAL-O-RING (ID=144.40mm)					
	13	173-3515	1	RING					
	14	173-3516	1	HANDLE					
J	15	4J-7533	1	SEAL-O-RING (ID=6.07mm)					
J	16	9S-4180	1	PLUG					
J	17	137-3624	8	SCREW					
J	18	137-3625	2	PAD					
	19	173-3517	1	PLATE					
J	20	137-3628	1	SHIM (T=0.10mm)					

H77561E 02

188-4142 FILTER GP-HYDRAULIC

Part of 188-4140-Page372

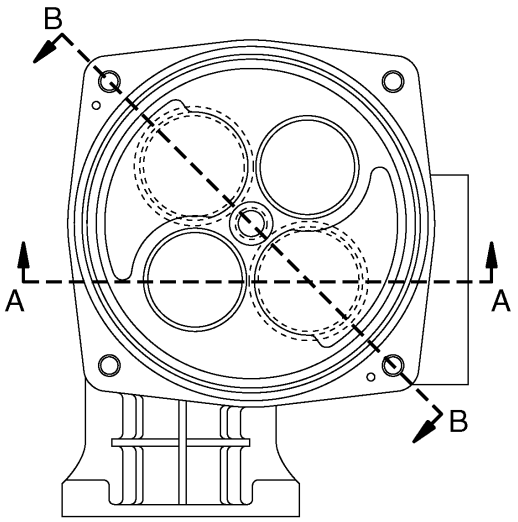

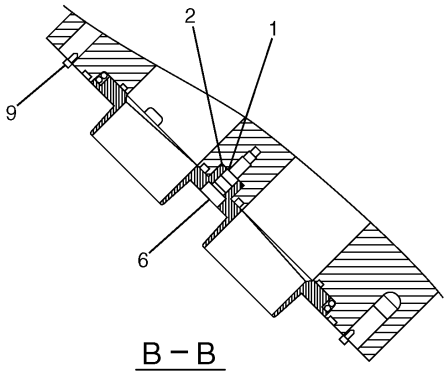

B – B

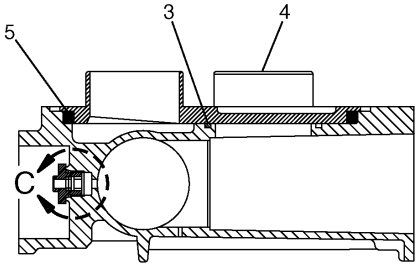

A – A

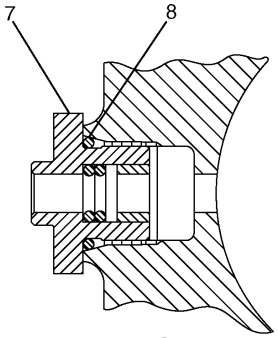

C

NOTE	No.	PART No.	QTY	PART NAME	NOTE	No.	PART No.	QTY	PART NAME
	1	137-3628	1	SHIM (T=0.10mm)					
	2	5L-4758	1	SEAL-O-RING (ID=14.00mm)					
	3	177-2619	2	PACKING					
	4	173-3505	1	PLATE					
	5	137-3631	1	PACKING					
	6	137-3626	1	BOLT					
	7	173-3506	1	PLUG AS					
	8	3J-1907	1	SEAL-O-RING (ID=11.89mm)					
	9	7Y-5272	2	PIN					

H77736E 01

173-3503 BLOCK GP-HYDRAULIC
Part of 188-4140-Page372

HYDRAULIC SYSTEM

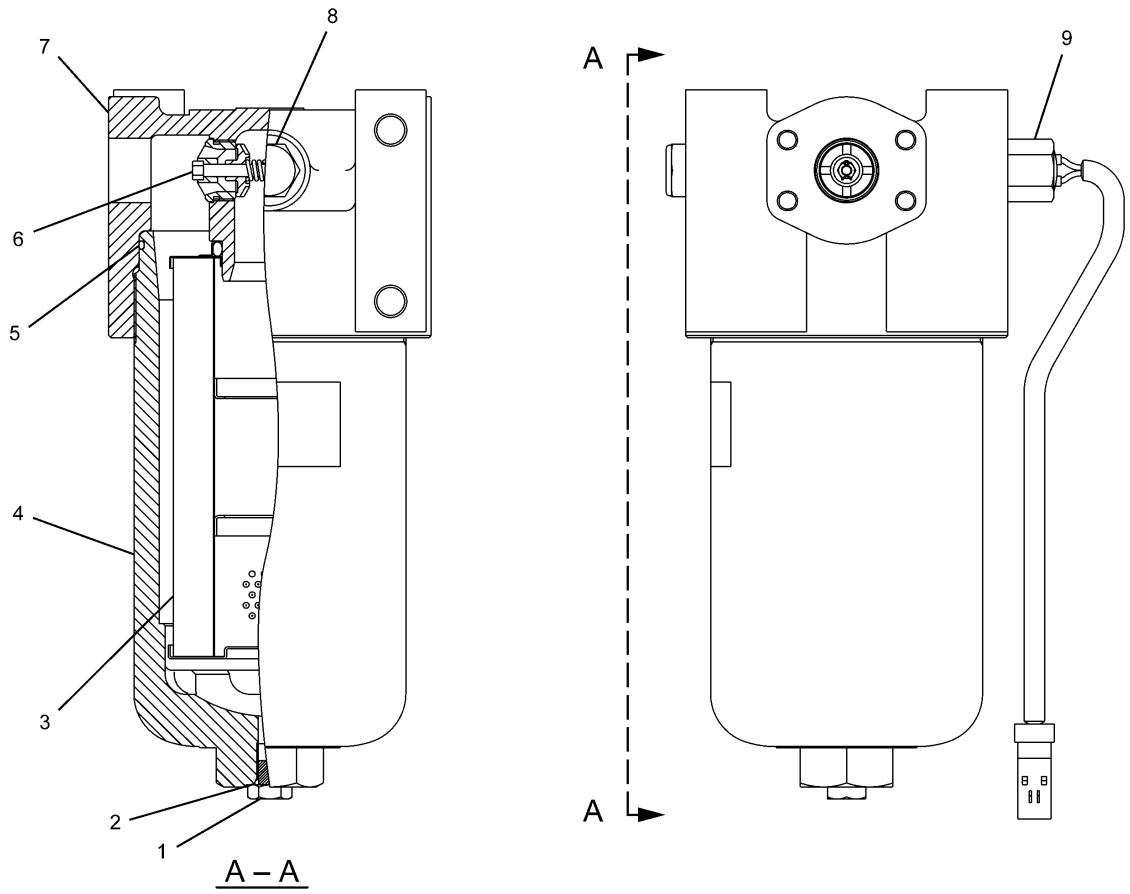

NOTE	No.	PART No.	QTY	PART NAME	NOTE	No.	PART No.	QTY	PART NAME
	1	196-6583	1	PLUG					
	2	095-1579	1	SEAL-O-RING (ID=10.80mm)					
	3	196-6581	1	ELEMENT					
	4	227-6868	1	CASE					
	5	095-1719	1	SEAL-O-RING (ID=124.40mm)					
	6	196-6582	1	VALVE					
	7	247-8991	1	HEAD					
	8	227-6869	1	PLUG AS					
	9	259-0658	1	INDICATOR					
		6V-8398	1	SEAL-O-RING (OD=16.03mm)					
		8T-0211	1	SEAL-O-RING (ID=17.80mm)					

H88906E 01

234-4515 FILTER GP-HYDRAULIC
Part of 255-1799-Page527
An Attachment

HYDRAULIC SYSTEM

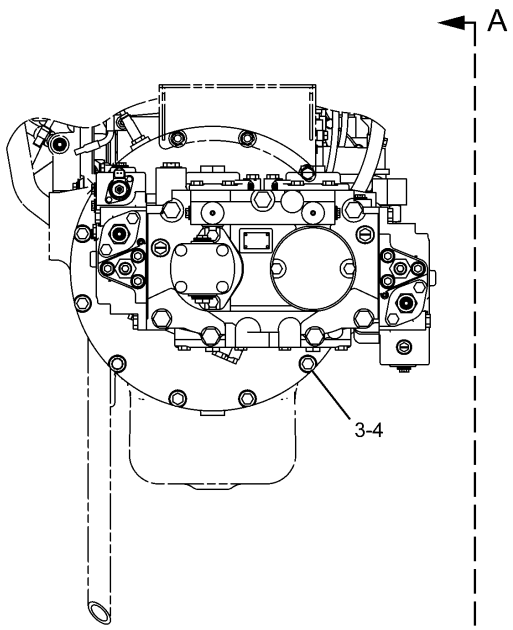

RIGHT SIDE VIEW

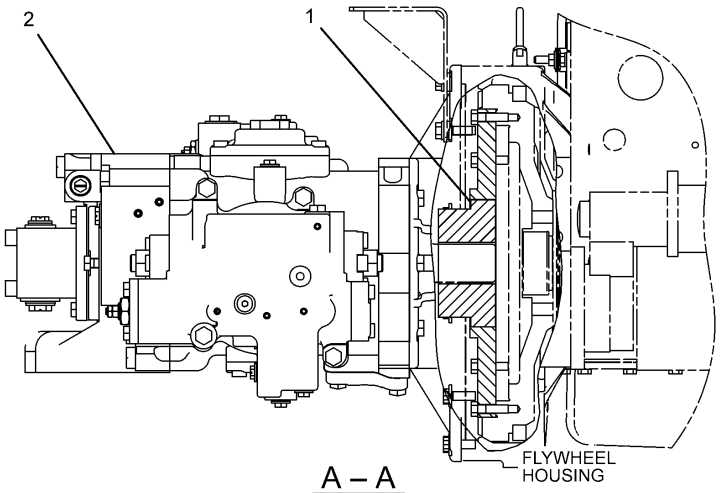

A – A

NOTE	No.	PART No.	QTY	PART NAME	NOTE	No.	PART No.	QTY	PART NAME
Y	1	239-6598	1	COUPLING GP					
Y	2	272-6959	1	PUMP GP					
	3	7X-7729	9	WASHER					
	4	8T-4195	9	BOLT (L=30mm)					

Y—SEE SEPARATE ILLUSTRATION

H89798E 03

233-1115 PUMP & MTG GP-MAIN HYDRAULIC

239-6598-Page377,272-6959-Page378

HYDRAULIC SYSTEM

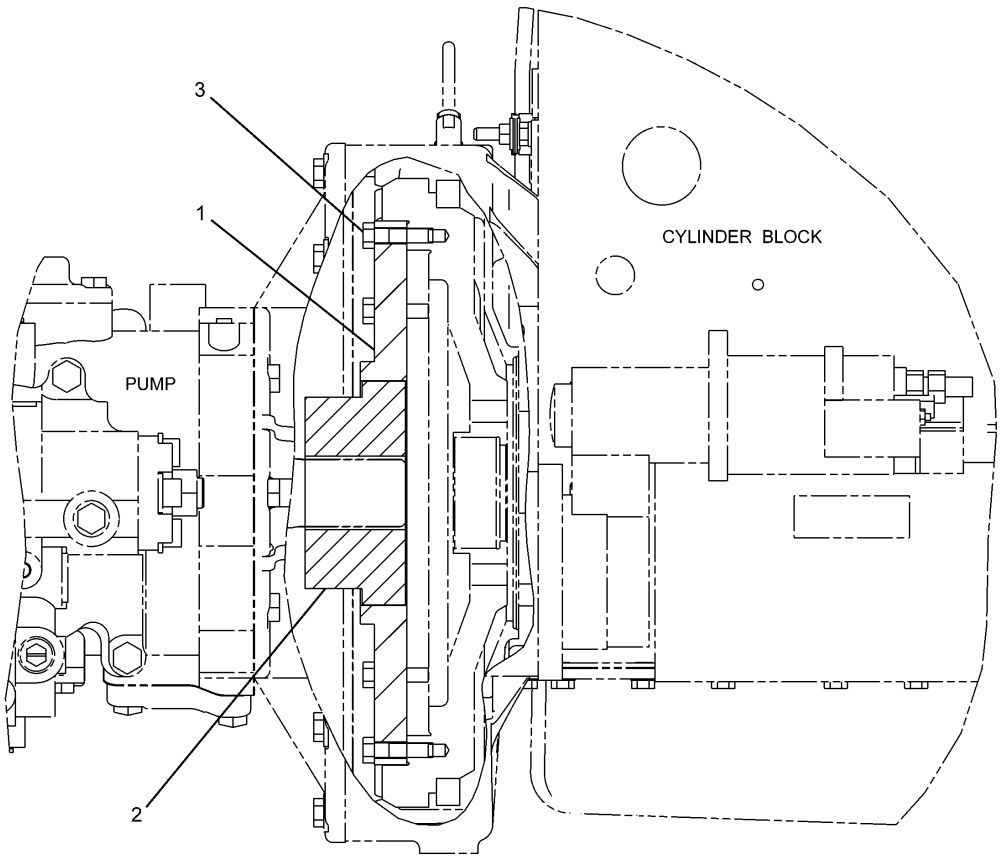

NOTE	No.	PART No.	QTY	PART NAME	NOTE	No.	PART No.	QTY	PART NAME
	1	154-5558	1	FLANGE					
	2	239-6599	1	HUB					
	3	5S-7382	8	BOLT (L=35mm)					

H89226E 01

239-6598 COUPLING GP-PUMP

Part of 233-1115-Page376

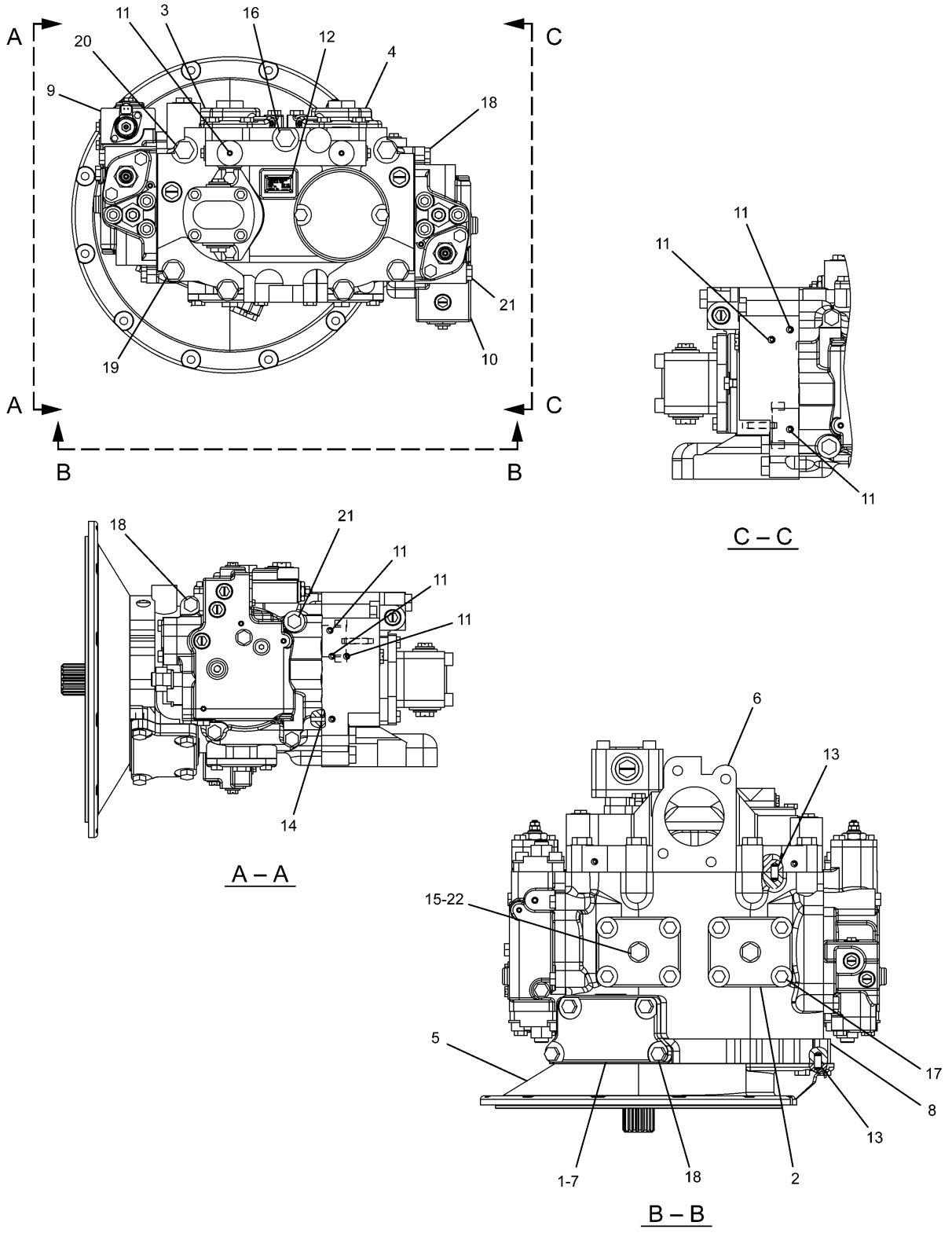

272-6959 PUMP GP-MAIN HYDRAULIC (1/2)
Part of 233-1115-Page376
256-0074-Page382,256-0077-Page384

HYDRAULIC SYSTEM

NOTE	No.	PART No.	QTY	PART NAME	NOTE	No.	PART No.	QTY	PART NAME
	1	129-7863	1	COVER					
	2	150-5782	2	COVER					
	3	177-2470	1	COVER					
	4	177-2471	1	COVER					
	5	179-9763	1	FLANGE					
	6	200-3333	1	BLOCK					
	7	234-4493	1	GASKET					
	8	247-8782	1	BODY					
Y	9	256-0074	1	HEAD GP					
Y	10	256-0077	1	HEAD GP					
	11	094-1882	13	PLUG					
	12	095-7419	4	SCREW					
	13	129-7979	4	DOWEL					
	14	189-9763	6	SEAL-O-RING (ID=9.80mm)					
	15	3K-0360	2	SEAL-O-RING (ID=16.36mm)					
	16	7X-2557	1	BOLT (L=140mm)					
	17	8T-4136	8	BOLT (L=25mm)					
	18	8T-4139	10	BOLT (L=30mm)					
	19	8T-4140	4	BOLT (L=60mm)					
	20	8T-4175	2	BOLT (L=90mm)					
	21	8T-4176	2	BOLT (L=90mm)					
	22	9S-4185	2	PLUG					

Y—SEE SEPARATE ILLUSTRATION

H90443E 01

272-6959 PUMP GP-MAIN HYDRAULIC (1/2)

Part of 233-1115-Page376
256-0074-Page382,256-0077-Page384

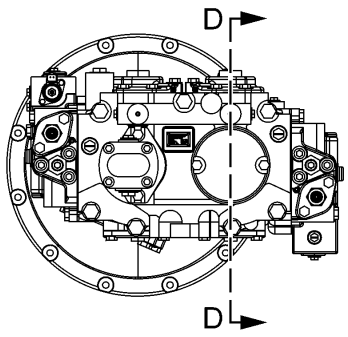

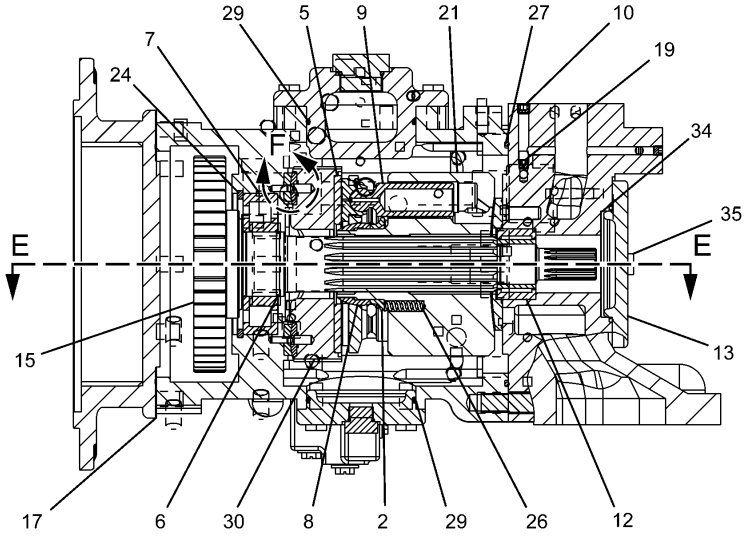

D – D

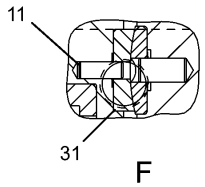

F

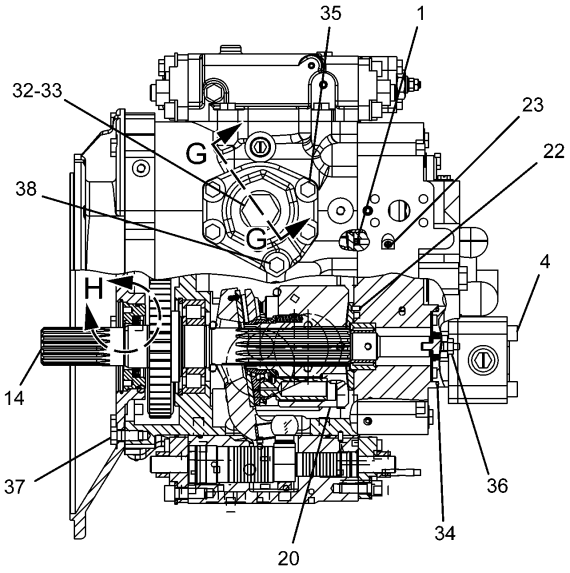

E – E

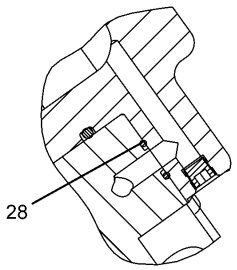

G – G

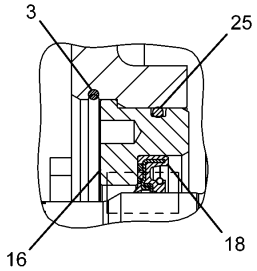

H

H90444E 01

272-6959 PUMP GP-MAIN HYDRAULIC (2/2)

Part of 233-1115-Page376
126-2016-Page386

HYDRAULIC SYSTEM

NOTE	No.	PART No.	QTY	PART NAME	NOTE	No.	PART No.	QTY	PART NAME
	1	4I-1022	2	ORIFICE					
	2	7Y-4215	2	SPACER					
	3	096-3983	1	RING					
Y	4	126-2016	1	PUMP GP					
	5	129-7853	2	PLATE					
	6	129-7921	2	RING					
	7	129-7927	2	BEARING					
	8	173-3427	2	GUIDE					
	9	188-4210	2	PISTON AS					
	10	190-4896	2	PLUG					
	11	192-0573	4	PIN					
	12	194-8325	2	BEARING SET					
	13	200-3334	1	COVER					
	14	225-4541	1	SHAFT					
	15	225-4542	1	SHAFT					
	16	225-4611	1	CASE					
	17	234-4494	1	GASKET					
	18	234-4498	1	SEAL					
	19	247-8920	2	ORIFICE					
	20	256-0081	1	BARREL AS					
	21	256-0083	1	BARREL AS					
	22	094-1875	6	DOWEL					
	23	094-1882	3	PLUG					
	24	095-0946	2	RING					
	25	096-3944	1	SEAL-O-RING (ID=94.40mm)					
	26	096-4389	18	SPRING					
	27	177-8740	1	SEAL-O-RING (ID=285.60mm)					
	28	189-9763	2	SEAL-O-RING (ID=9.80mm)					
	29	193-1736	4	SEAL-O-RING (ID=79.40mm)					
	30	242-6801	2	SWASHPLATE AS					
	31	242-6804	4	BEARING					
	32	7M-8485	2	SEAL-O-RING (ID=29.74mm)					
	33	8J-4645	2	PLUG					
	34	8T-3338	2	SEAL-O-RING (ID=84.40mm)					
	35	8T-4136	10	BOLT (L=25mm)					
	36	8T-4137	2	BOLT (L=20mm)					
	37	8T-4192	10	BOLT (L=25mm)					
	38	8T-4196	2	BOLT (L=35mm)					

Y—SEE SEPARATE ILLUSTRATION

H90444E 01

272-6959 PUMP GP-MAIN HYDRAULIC (2/2)

Part of 233-1115-Page376
126-2016-Page386

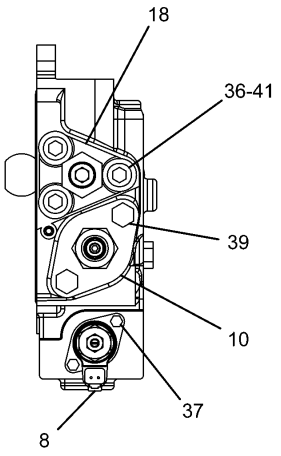

A – A

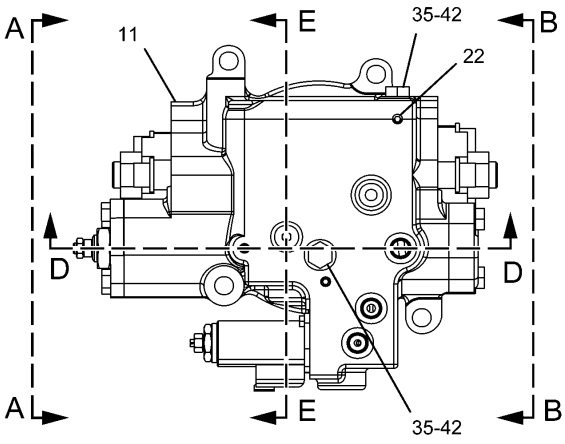

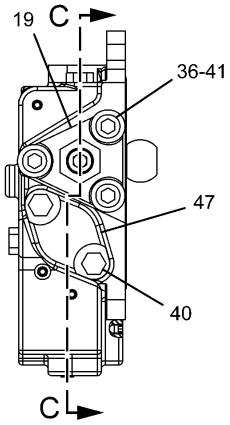

B – B

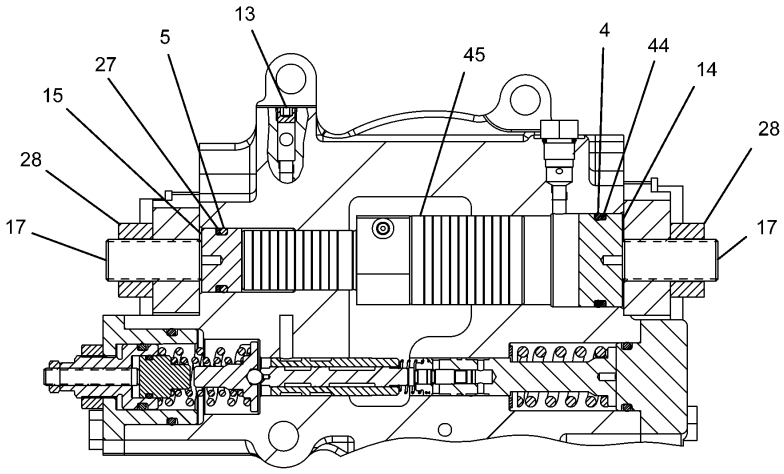

C – C

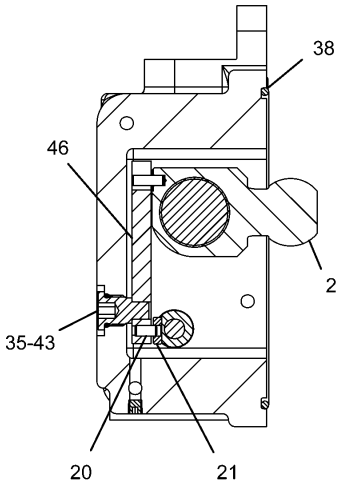

E – E

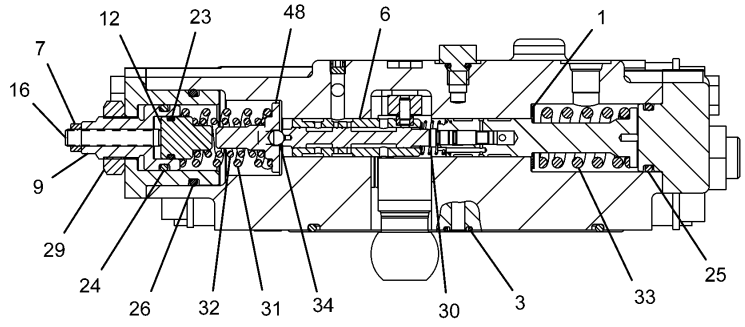

D – D

H90417E 03

256–0074 HEAD GP–PUMP CONTROL

Part of 272–6959–Page379
111–9916–Page603

HYDRAULIC SYSTEM

NOTE	No.	PART No.	QTY	PART NAME
B	1	099-3669	2	SHIM (T=1.00mm)
B		099-6109	2	SHIM (T=1.05mm)
B		099-6110	2	SHIM (T=1.10mm)
B		099-6111	2	SHIM (T=1.15mm)
B		099-6112	2	SHIM (T=1.20mm)
B		099-6113	2	SHIM (T=1.25mm)
B		099-6115	2	SHIM (T=1.30mm)
B		099-6117	2	SHIM (T=1.35mm)
B		099-6118	2	SHIM (T=1.40mm)
B		099-6119	2	SHIM (T=1.45mm)
B		099-6120	2	SHIM (T=1.50mm)
B		099-6121	2	SHIM (T=1.55mm)
B		099-6122	2	SHIM (T=1.60mm)
B		099-6123	2	SHIM (T=1.65mm)
B		099-6124	2	SHIM (T=1.70mm)
B		099-6125	2	SHIM (T=1.75mm)
B		099-6126	2	SHIM (T=1.80mm)
B		099-6127	2	SHIM (T=1.85mm)
B		099-6128	2	SHIM (T=1.90mm)
B		099-3670	2	SHIM (T=1.95mm)
	2	185-0201	1	PIN AS
		129-7978	1	DOWEL
	3	189-9763	3	SEAL-O-RING (ID=9.80mm)
	4	190-7673	1	SEAL-O-RING (ID=37.70mm)
	5	190-7674	1	SEAL-O-RING (ID=23.70mm)
	6	191-5707	1	SPOOL AS
	7	200-3254	1	NUT
Y	8	111-9916	1	VALVE GP
	9	173-3387	1	ADJUSTER
	10	173-3398	1	COVER
	11	179-9681	1	BODY AS
	12	185-0172	1	RETAINER
	13	190-4896	1	PLUG
	14	215-9961	1	STOPPER
	15	215-9962	1	STOPPER
	16	225-0417	1	SETSCREW
	17	225-4607	2	SETSCREW
	18	234-4452	1	COVER
	19	234-4453	1	COVER
	20	094-1875	1	DOWEL
	21	094-1881	1	PLATE
	22	094-1882	11	PLUG
	23	095-1519	1	SEAL-O-RING (ID=15.80mm)
	24	095-1527	1	SEAL-O-RING (ID=24.70mm)
	25	095-1528	1	SEAL-O-RING (ID=25.70mm)
	26	095-1538	1	SEAL-O-RING (ID=38.70mm)
	27	095-1788	1	RING
	28	8T-4131	2	NUT
	29	200-3255	1	NUT
	30	099-3671	1	SPRING
	31	209-5891	1	SPRING
	32	209-5892	1	SPRING
	33	209-5893	1	SPRING
	34	3D-2891	1	BALL
	35	3J-1907	3	SEAL-O-RING (ID=11.89mm)
	36	6V-8200	6	BOLT (L=35mm)
	37	7I-2272	2	BOLT (L=12mm)
	38	8F-8733	1	SEAL-O-RING (ID=151.99mm)
	39	8T-4136	2	BOLT (L=25mm)
	40	8T-4196	2	BOLT (L=35mm)
	41	8T-4223	6	WASHER
	42	9S-4191	2	PLUG
	43	150-5797	1	PIN
	44	153-8623	1	RING
	45	173-3384	1	PISTON
	46	173-3397	1	LEVER
	47	173-3413	1	COVER
	48	185-0169	1	GUIDE

B—USE AS REQUIRED

Y—SEE SEPARATE ILLUSTRATION

H90417E 03

256-0074 HEAD GP-PUMP CONTROL

Part of 272-6959-Page379
111-9916-Page603

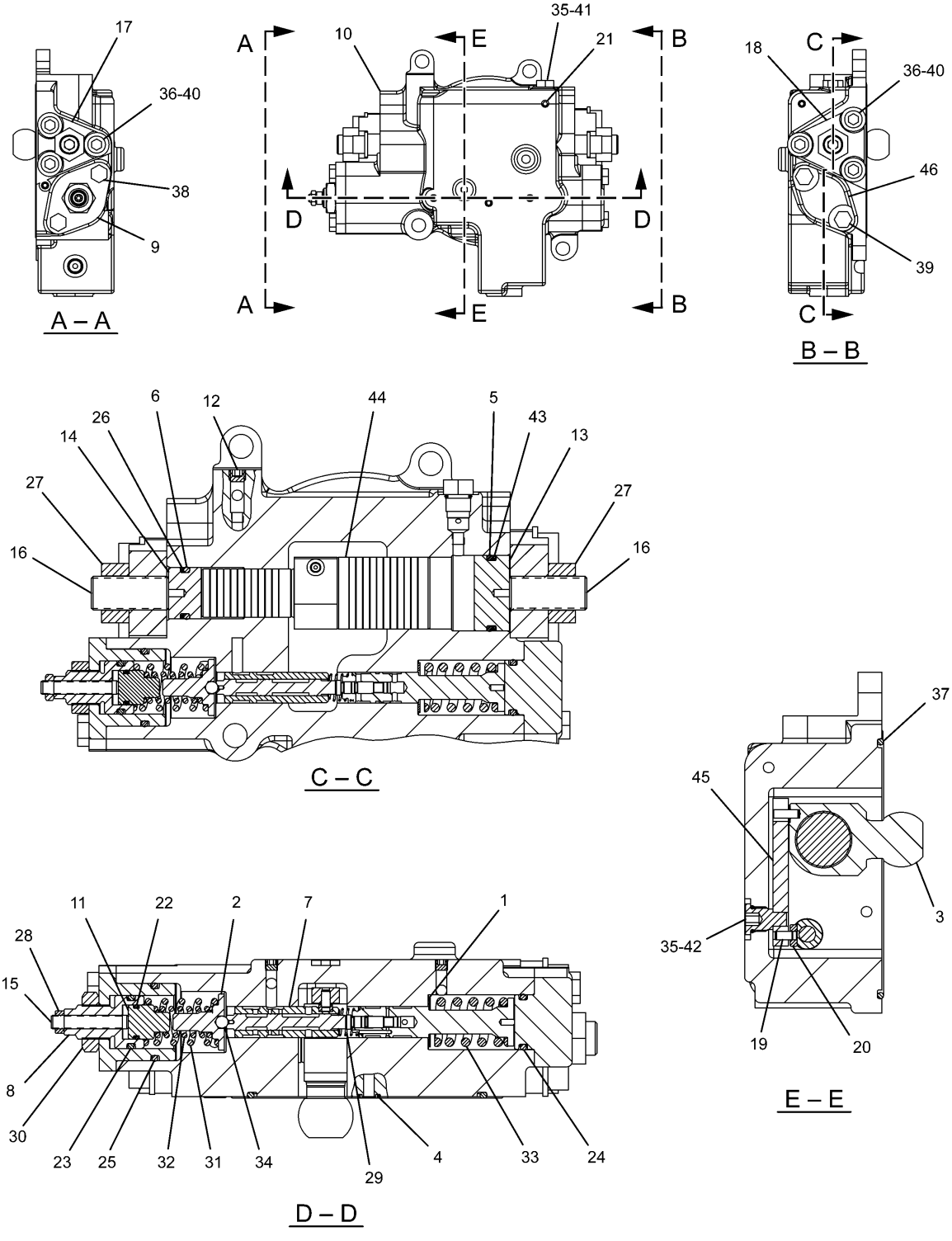

H90411E 03

256–0077 HEAD GP–PUMP CONTROL
Part of 272–6959–Page379

HYDRAULIC SYSTEM

NOTE	No.	PART No.	QTY	PART NAME	NOTE	No.	PART No.	QTY	PART NAME
B	1	099-3669	2	SHIM (T=1.00mm)		34	3D-2891	1	BALL
B		099-6109	2	SHIM (T=1.05mm)		35	3J-1907	2	SEAL-O-RING (ID=11.89mm)
B		099-6110	2	SHIM (T=1.10mm)		36	6V-8200	6	BOLT (L=35mm)
B		099-6111	2	SHIM (T=1.15mm)		37	8F-8733	1	SEAL-O-RING (ID=151.99mm)
B		099-6112	2	SHIM (T=1.20mm)		38	8T-4136	2	BOLT (L=25mm)
B		099-6113	2	SHIM (T=1.25mm)		39	8T-4196	2	BOLT (L=35mm)
B		099-6115	2	SHIM (T=1.30mm)		40	8T-4223	6	WASHER
B		099-6117	2	SHIM (T=1.35mm)		41	9S-4191	1	PLUG
B		099-6118	2	SHIM (T=1.40mm)		42	150-5797	1	PIN
B		099-6119	2	SHIM (T=1.45mm)		43	153-8623	1	RING
B		099-6120	2	SHIM (T=1.50mm)		44	173-3384	1	PISTON
B		099-6121	2	SHIM (T=1.55mm)		45	173-3397	1	LEVER
B		099-6122	2	SHIM (T=1.60mm)		46	173-3413	1	COVER
B		099-6123	2	SHIM (T=1.65mm)					
B		099-6124	2	SHIM (T=1.70mm)					
B		099-6125	2	SHIM (T=1.75mm)					
B		099-6126	2	SHIM (T=1.80mm)					
B		099-6127	2	SHIM (T=1.85mm)					
B		099-6128	2	SHIM (T=1.90mm)					
B		099-3670	2	SHIM (T=1.95mm)					
	2	185-0169	1	GUIDE					
	3	185-0201	1	PIN AS					
		129-7978	1	DOWEL					
	4	199-0518	3	SEAL-O-RING (ID=6.80mm)					
	5	190-7673	1	SEAL-O-RING (ID=37.70mm)					
	6	190-7674	1	SEAL-O-RING (ID=23.70mm)					
	7	191-5707	1	SPOOL AS					
	8	173-3387	1	ADJUSTER					
	9	173-3398	1	COVER					
	10	256-0078	1	BODY AS					
	11	185-0172	1	RETAINER					
	12	190-4896	1	PLUG					
	13	215-9961	1	STOPPER					
	14	215-9962	1	STOPPER					
	15	225-0417	1	SETSCREW					
	16	225-4607	2	SETSCREW					
	17	234-4452	1	COVER					
	18	234-4453	1	COVER					
	19	094-1875	1	DOWEL					
	20	094-1881	1	PLATE					
	21	094-1882	7	PLUG					
	22	095-1519	1	SEAL-O-RING (ID=15.80mm)					
	23	095-1527	1	SEAL-O-RING (ID=24.70mm)					
	24	095-1528	1	SEAL-O-RING (ID=25.70mm)					
	25	095-1538	1	SEAL-O-RING (ID=38.70mm)					
	26	095-1788	1	RING					
	27	8T-4131	2	NUT					
	28	200-3254	1	NUT					
	29	099-3671	1	SPRING					
	30	200-3255	1	NUT					
	31	209-5891	1	SPRING					
	32	209-5892	1	SPRING					
	33	209-5893	1	SPRING					

B—USE AS REQUIRED

H90411E 03

256-0077 HEAD GP-PUMP CONTROL

Part of 272-6959-Page379

HYDRAULIC SYSTEM

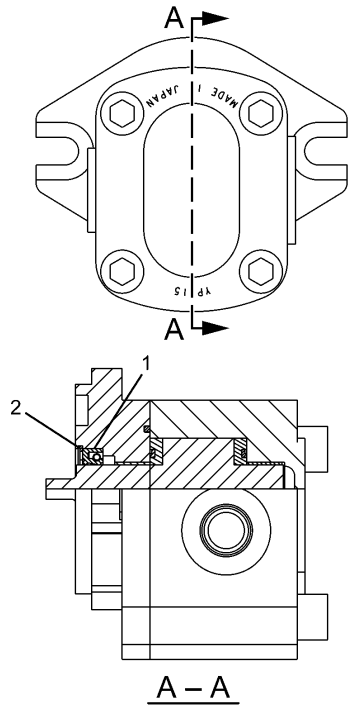

NOTE	No.	PART No.	QTY	PART NAME
	1	250-2503	1	SEAL KIT
	2	9T-0835	1	RING

H90268E 03

126-2016 PUMP GP-GEAR

Part of 272-6959-Page381

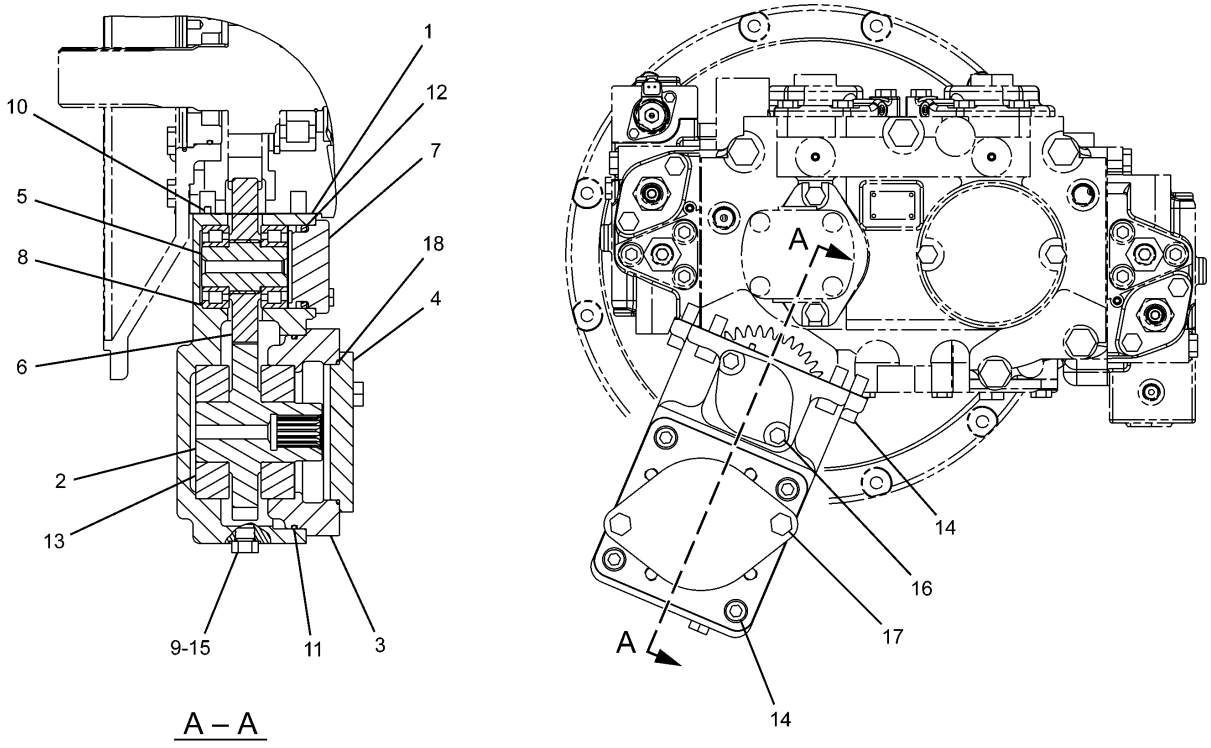

NOTE	No.	PART No.	QTY	PART NAME	NOTE	No.	PART No.	QTY	PART NAME
	1	129-7857	1	GASKET					
	2	173-3406	1	SHAFT					
	3	173-3436	1	COVER					
	4	177-2585	1	COVER					
	5	191-5539	1	SHAFT					
	6	191-5540	1	GEAR (Z=18)					
	7	191-5541	1	COVER					
	8	191-5601	2	BEARING					
	9	9S-4191	1	PLUG					
	10	094-1875	2	DOWEL					
	11	095-1680	1	SEAL-O-RING (ID=139.40mm)					
	12	096-0121	1	SEAL-O-RING (ID=51.60mm)					
	13	099-2096	2	BEARING					
	14	101-7402	8	BOLT (L=30mm)					
	15	3J-1907	1	SEAL-O-RING (ID=11.89mm)					
	16	8T-4189	2	BOLT (L=20mm)					
	17	8T-4192	2	BOLT (L=25mm)					
	18	8T-5049	1	SEAL-O-RING (ID=101.27mm)					

H88910E 03

191-5537 DRIVE GP-PUMP
An Attachment

Consists of :

Page

1	3K-0360	SEAL-O-RING (ID=16.36mm)
1	087-4456	ACCUMULATOR GP

H69979E 00

164-6981 ACCUMULATOR GP

Part of 248-9827-Page483

HYDRAULIC SYSTEM

Consists of :

			Page
1	225-4584	CYLINDER & SEAL GP-BOOM	394
1	225-4585	LINES GP-BOOM CYLINDER	412

H89372E 01

225-4582 CYLINDER & LINES GP-BOOM

Left Hand
Part of 229-1754,229-1760-Page730,229-1757-Page731,262-3585-Page739
An Attachment

Consists of :

			Page
1	225-4584	CYLINDER & SEAL GP-BOOM	394
1	225-4586	LINES GP-BOOM CYLINDER	413

H89378E 01

225-4583 CYLINDER & LINES GP-BOOM

Right Hand
Part of 229-1754,229-1760-Page730,229-1757-Page731,262-3585-Page739
An Attachment

HYDRAULIC SYSTEM

Consists of :

			Page
1	225-4588	CYLINDER & SEAL GP-STICK	396
1	225-4589	LINES GP-STICK CYLINDER	414

H89381E 01

225-4587 CYLINDER & LINES GP-STICK
Long Reach Front
Part of 229-1754-Page730,229-1757-Page731
An Attachment

Consists of :

			Page
1	225-4589	LINES GP-STICK CYLINDER	414
1	259-0778	CYLINDER & SEAL GP-STICK	398

H89380E 00

259-0777 CYLINDER & LINES GP-STICK
Part of 229-1760-Page730
An Attachment

HYDRAULIC SYSTEM

Consists of :

			Page
1	216-6606	CYLINDER & SEAL GP-STICK	400
1	216-6617	LINES GP-STICK CYLINDER	415

H84490E 00

216-6605 CYLINDER & LINES GP-STICK

S/N DAP 1-Up
Part of 262-3585-Page739
An Attachment

HYDRAULIC SYSTEM

Consists of :

			Page
1	225-4591	CYLINDER & SEAL GP-BUCKET	402
1	225-4592	LINES GP-BUCKET CYLINDER	416

H89370E 01

225-4590 CYLINDER & LINES GP-BUCKET

CB Family
Part of 229-1772-Page738
An Attachment

Consists of :

			Page
1	225-4580	CYLINDER & SEAL GP-BUCKET	404
1	239-1627	LINES GP-BUCKET CYLINDER	417

H89371E 01

225-4579 CYLINDER & LINES GP-BUCKET

DB Family
Part of 240-3733-Page738
An Attachment

HYDRAULIC SYSTEM

Consists of :

			Page
1	248-7854	CYLINDER & SEAL GP-BUCKET	405
1	127-6797	LINES GP-BUCKET CYLINDER	418

H88060E 00

253-6664 CYLINDER & LINES GP-BUCKET
Long Reach Front
S/N DAP 1-Up
Part of 262-3585-Page739
An Attachment

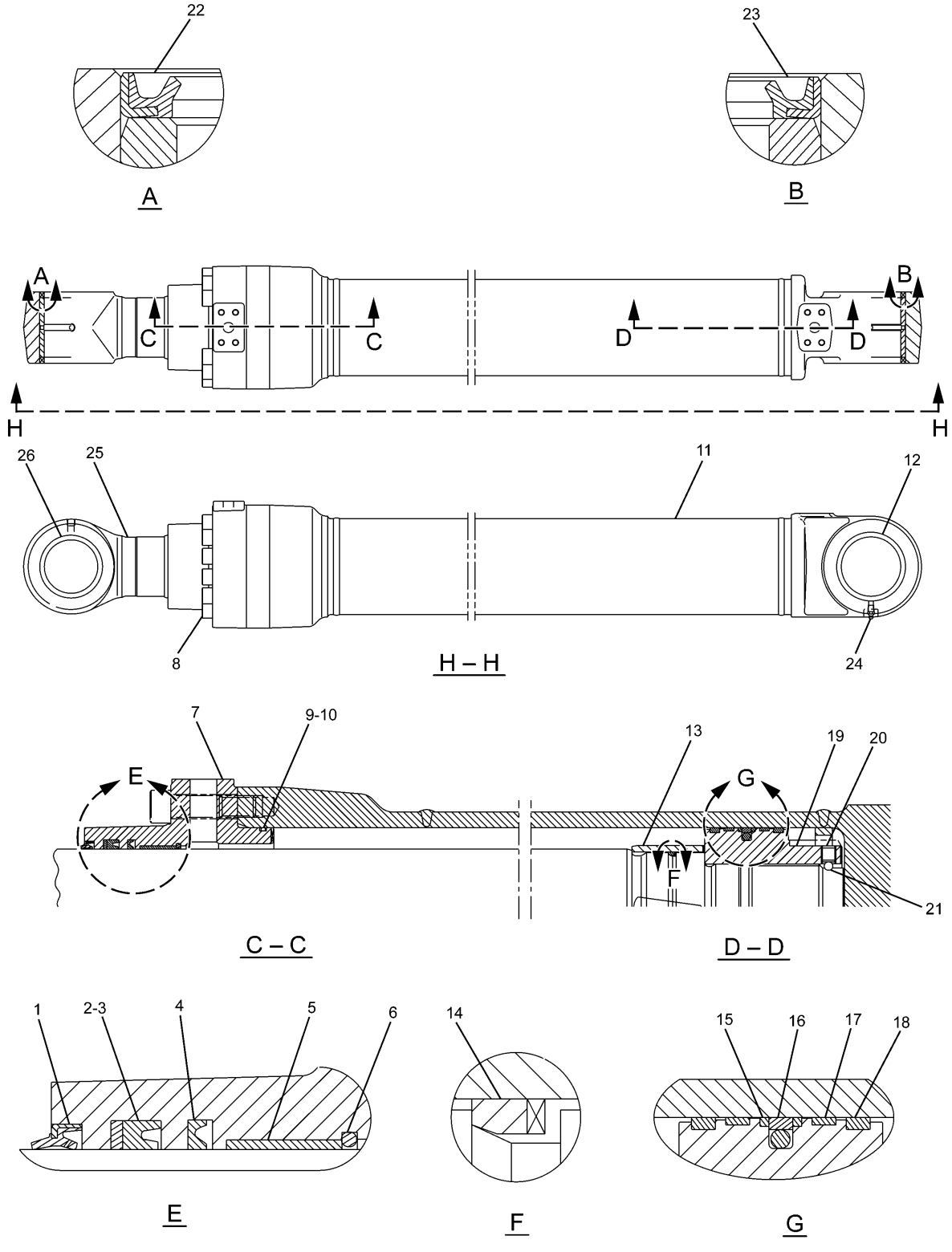

H89278E 01

225-4584 CYLINDER & SEAL GP-BOOM
Part of 225-4582,225-4583-Page389
An Attachment

HYDRAULIC SYSTEM

NOTE	No.	PART No.	QTY	PART NAME	NOTE	No.	PART No.	QTY	PART NAME
J	1	133-6904	1	SEAL					
J	2	121-1372	1	RING					
J	3	121-1371	1	SEAL					
J	4	204-3623	1	SEAL					
	5	096-5625	1	BEARING					
	6	094-1931	1	RING					
	7	194-8349	1	HEAD					
	8	4I-3628	12	BOLT (L=80mm)					
J	9	095-1721	1	SEAL-O-RING (ID=134.40mm)					
J	10	4I-3627	1	RING					
	11	234-4567	1	CYLINDER AS					
	12	228-5654	1	BEARING					
	13	4I-8869	1	STOP					
J	14	126-1876	1	RING					
J	15	4I-3631	2	RING					
J	16	096-1570	1	SEAL AS					
J	17	247-8874	2	RING					
J	18	096-1571	2	RING					
	19	247-8873	1	PISTON					
	20	096-6210	1	SETSCREW					
	21	4B-9880	1	BALL					
	22	166-1495	2	SEAL					
	23	9X-4597	2	SEAL					
	24	3B-8489	1	FITTING					
	25	234-4568	1	ROD AS					
	26	235-7771	1	BEARING					
				THE FOLLOWING REPAIR KIT IS AVAILABLE:					
		234-4566	1	SEAL KIT (INCLUDES PARTS MARKED J)					

H89278E 01

225-4584 CYLINDER & SEAL GP-BOOM

Part of 225-4582,225-4583-Page389
An Attachment

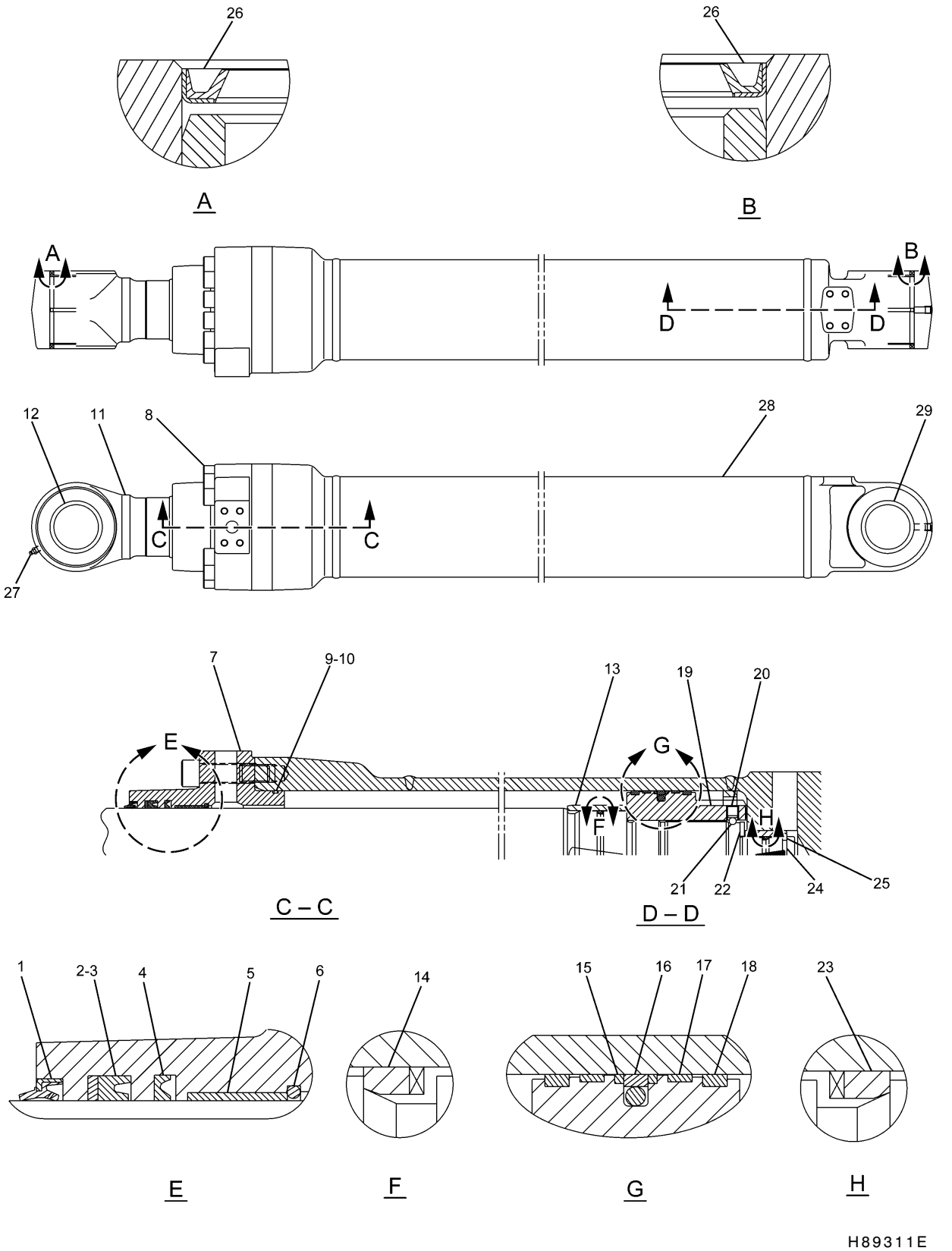

H89311E 01

225–4588 CYLINDER & SEAL GP–STICK
Long Reach Front
Part of 225–4587–Page390
An Attachment

HYDRAULIC SYSTEM

NOTE	No.	PART No.	QTY	PART NAME
J	1	133-6909	1	SEAL
J	2	194-8355	1	RING
J	3	194-8354	1	SEAL
J	4	209-6009	1	SEAL
	5	099-5572	1	BEARING
	6	099-5573	1	RING
	7	194-8353	1	HEAD
	8	9X-2404	12	BOLT (L=90mm)
J	9	095-1723	1	SEAL-O-RING (ID=144.40mm)
J	10	114-0706	1	RING
	11	234-4578	1	ROD AS
	12	235-7770	1	BEARING
	13	121-1548	1	STOP
J	14	194-8356	1	RING
J	15	114-0711	2	RING
J	16	114-0710	1	SEAL AS
J	17	234-4574	2	RING
J	18	114-0713	2	RING
	19	234-4573	1	PISTON
	20	096-6210	1	SETSCREW
	21	4B-9880	1	BALL
	22	085-8605	1	RING
J	23	194-8359	1	RING
	24	121-1549	1	STOP
	25	085-8604	2	RING
	26	166-1494	4	SEAL
	27	3B-8489	1	FITTING
	28	234-4577	1	CYLINDER AS
	29	235-7770	1	BEARING
				THE FOLLOWING REPAIR KIT IS AVAILABLE:
		234-4576	1	SEAL KIT (INCLUDES PARTS MARKED J)

H89311E 01

225-4588 CYLINDER & SEAL GP-STICK

Long Reach Front
Part of 225-4587-Page390
An Attachment

HYDRAULIC SYSTEM

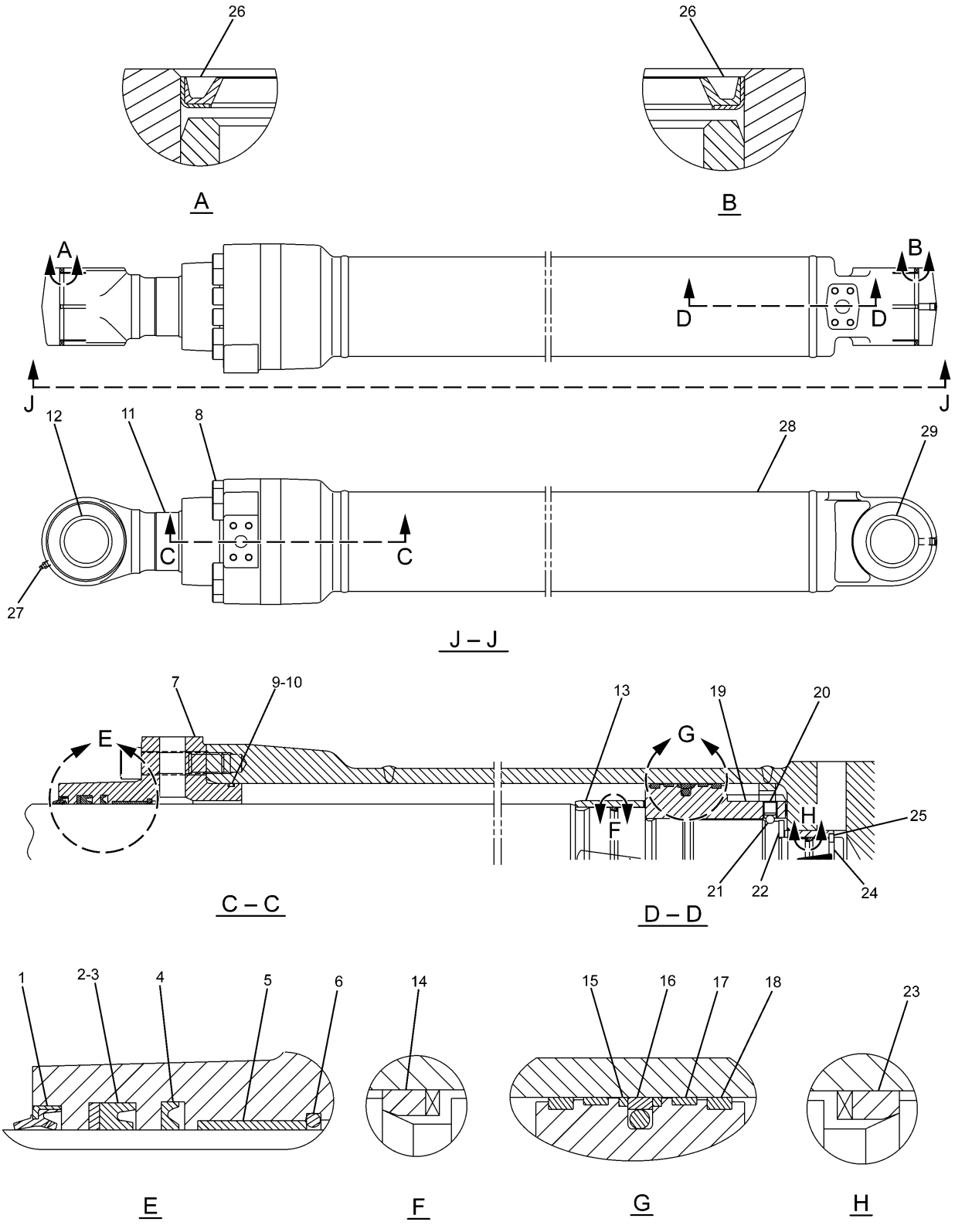

H89316E 00

259–0778 CYLINDER & SEAL GP–STICK

Part of 259–0777–Page390

An Attachment

HYDRAULIC SYSTEM

NOTE	No.	PART No.	QTY	PART NAME	NOTE	No.	PART No.	QTY	PART NAME
J	1	133-6909	1	SEAL					
J	2	194-8355	1	RING					
J	3	194-8354	1	SEAL					
J	4	209-6009	1	SEAL					
	5	099-5572	1	BEARING					
	6	099-5573	1	RING					
	7	194-8353	1	HEAD					
	8	9X-2404	12	BOLT (L=90mm)					
J	9	095-1723	1	SEAL-O-RING (ID=144.40mm)					
J	10	114-0706	1	RING					
	11	234-4577	1	CYLINDER AS					
	12	235-7770	1	BEARING					
	13	121-1548	1	STOP					
J	14	231-6805	1	RING					
J	15	114-0711	2	RING					
J	16	114-0710	1	SEAL AS					
J	17	234-4574	2	RING					
J	18	114-0713	2	RING					
	19	234-4573	1	PISTON					
	20	096-6210	1	SETSCREW					
	21	4B-9880	1	BALL					
	22	085-8605	1	RING					
J	23	194-8359	1	RING					
	24	121-1549	1	STOP					
	25	085-8604	2	RING					
	26	166-1494	4	SEAL					
	27	3B-8489	1	FITTING					
	28	234-4578	1	ROD AS					
	29	235-7770	1	BEARING					
				THE FOLLOWING REPAIR KIT IS AVAILABLE:					
		259-0779	1	SEAL KIT (INCLUDES PARTS MARKED J)					

H89316E 00

259-0778 CYLINDER & SEAL GP-STICK

Part of 259-0777-Page390

An Attachment

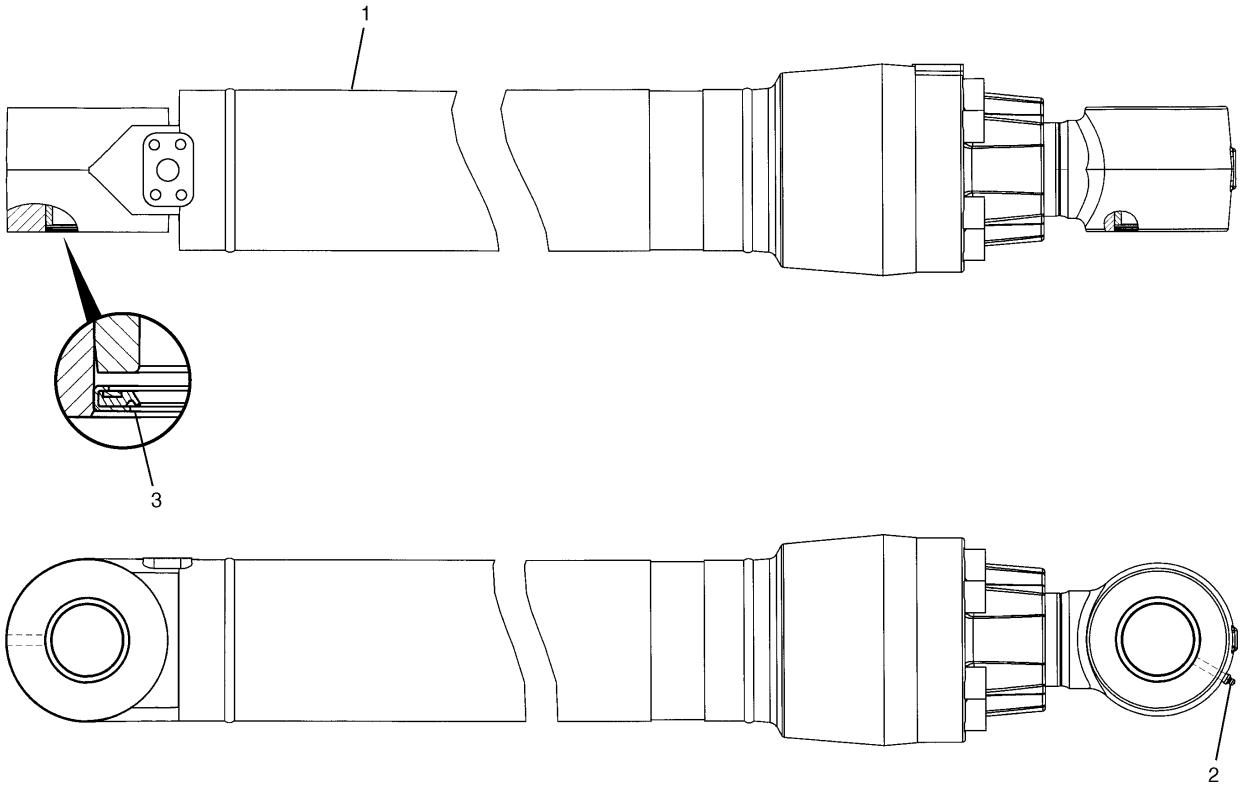

NOTE	No.	PART No.	QTY	PART NAME	NOTE	No.	PART No.	QTY	PART NAME
Y	1	216-6607	1	CYLINDER GP					
	2	3B-8489	1	FITTING					
	3	096-0854	4	SEAL					

Y—SEE SEPARATE ILLUSTRATION

H84494E 00

216-6606 CYLINDER & SEAL GP-STICK

S/N DAP 1-Up
Part of 216-6605-Page391
216-6607-Page406
An Attachment

MEMORANDA

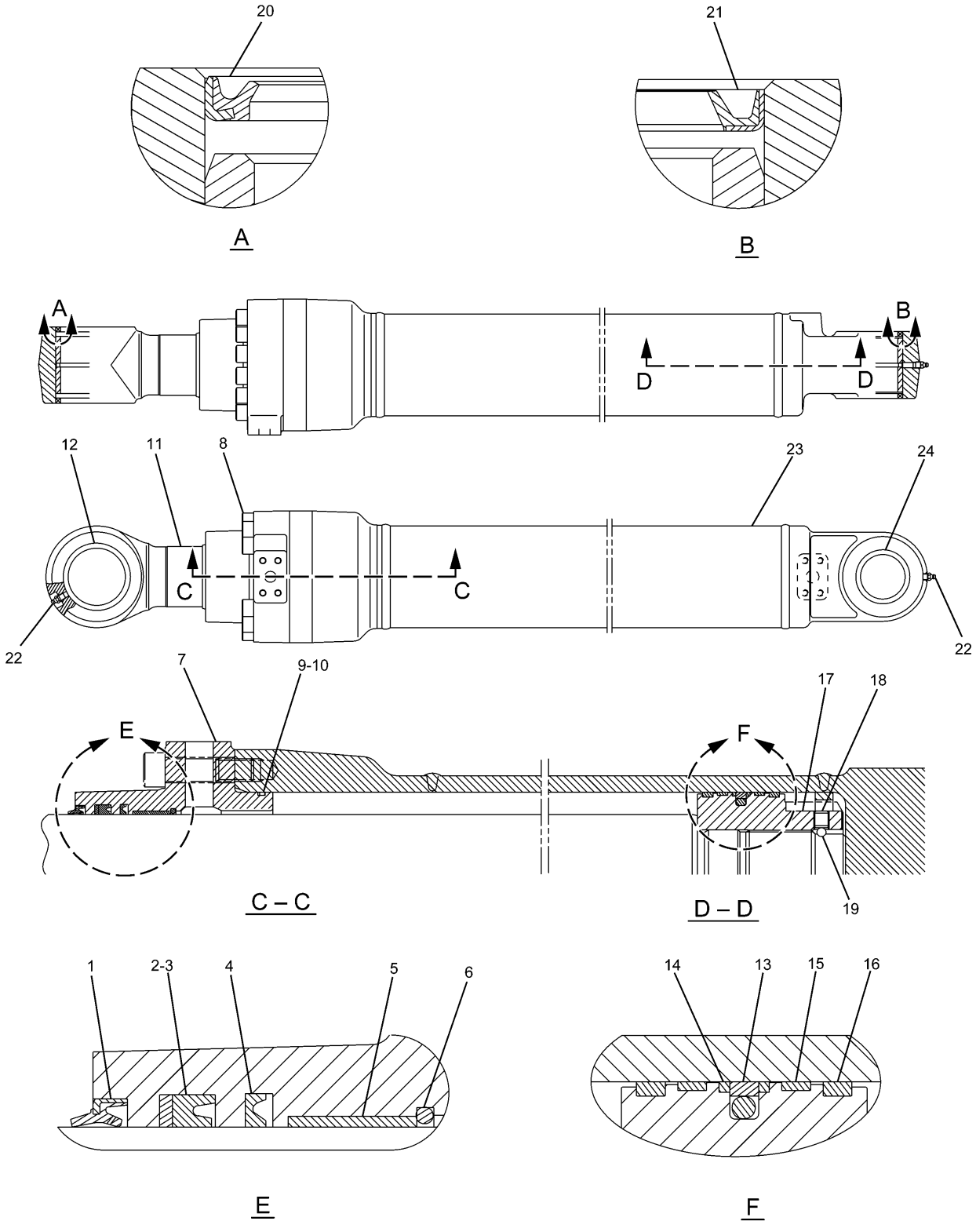

H89322E 01

225-4591 CYLINDER & SEAL GP-BUCKET
CB Family
Part of 225-4590-Page392
An Attachment

HYDRAULIC SYSTEM

NOTE	No.	PART No.	QTY	PART NAME	NOTE	No.	PART No.	QTY	PART NAME
J	1	150-5828	1	SEAL					
J	2	150-5827	1	RING					
J	3	150-5826	1	SEAL					
J	4	209-5957	1	SEAL					
	5	096-4430	1	BEARING					
	6	7Y-4631	1	RING					
	7	234-4580	1	HEAD					
	8	4I-3628	12	BOLT (L=80mm)					
J	9	095-1720	1	SEAL-O-RING (ID=129.40mm)					
J	10	234-4581	1	RING					
	11	234-4589	1	ROD AS					
	12	228-5615	1	BEARING					
J	13	234-4583	1	SEAL AS					
J	14	234-4584	2	RING					
J	15	234-4585	2	RING					
J	16	234-4586	2	RING					
	17	234-4582	1	PISTON					
	18	096-6210	1	SETSCREW					
	19	4B-9880	1	BALL					
	20	166-1495	2	SEAL					
	21	235-7679	2	SEAL					
	22	3B-8489	2	FITTING					
	23	234-4588	1	CYLINDER AS					
	24	235-7769	1	BEARING					
				THE FOLLOWING REPAIR KIT IS AVAILABLE:					
		234-4587	1	SEAL KIT (INCLUDES PARTS MARKED J)					

H89322E 01

225-4591 CYLINDER & SEAL GP-BUCKET

CB Family
Part of 225-4590-Page392
An Attachment

HYDRAULIC SYSTEM

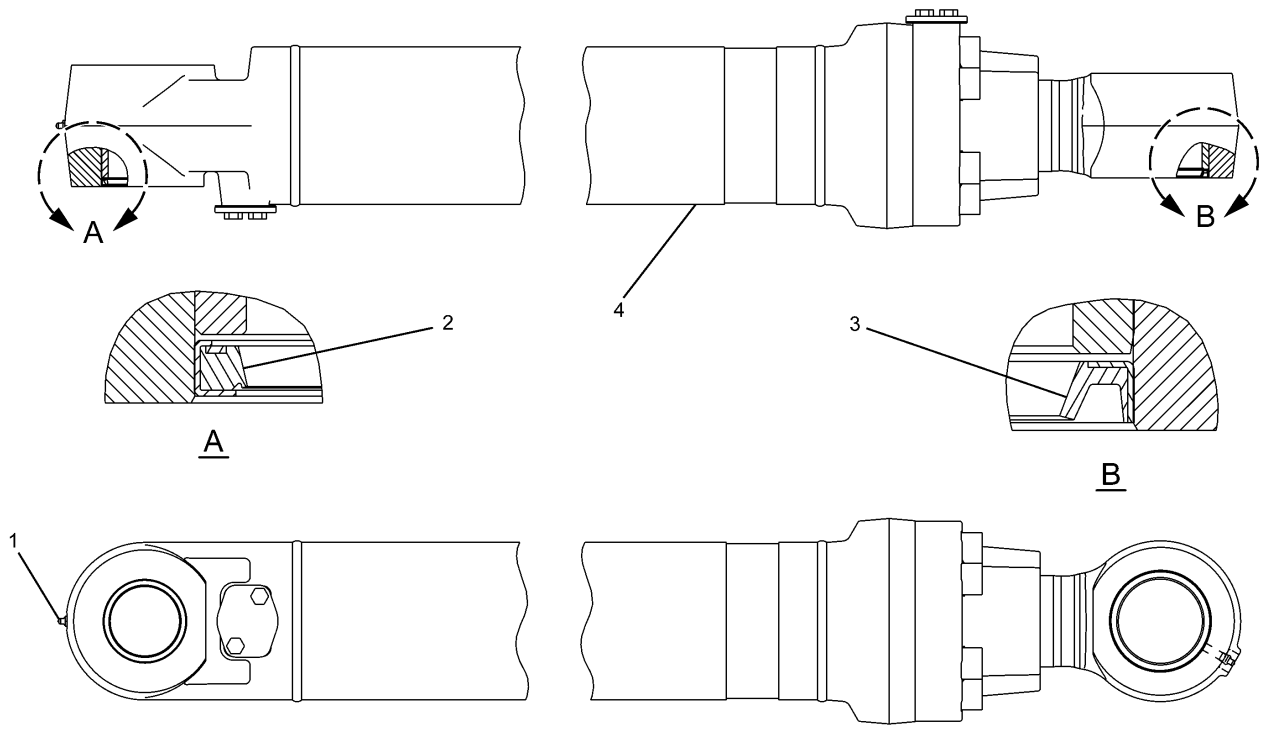

NOTE	No.	PART No.	QTY	PART NAME	NOTE	No.	PART No.	QTY	PART NAME
	1	3B-8489	2	FITTING					
	2	166-1494	2	SEAL					
	3	166-1496	2	SEAL					
Y	4	225-4581	1	CYLINDER GP					

Y—SEE SEPARATE ILLUSTRATION

H89273E 01

225-4580 CYLINDER & SEAL GP-BUCKET

DB Family
Part of 225-4579-Page392
225-4581-Page408
An Attachment

HYDRAULIC SYSTEM

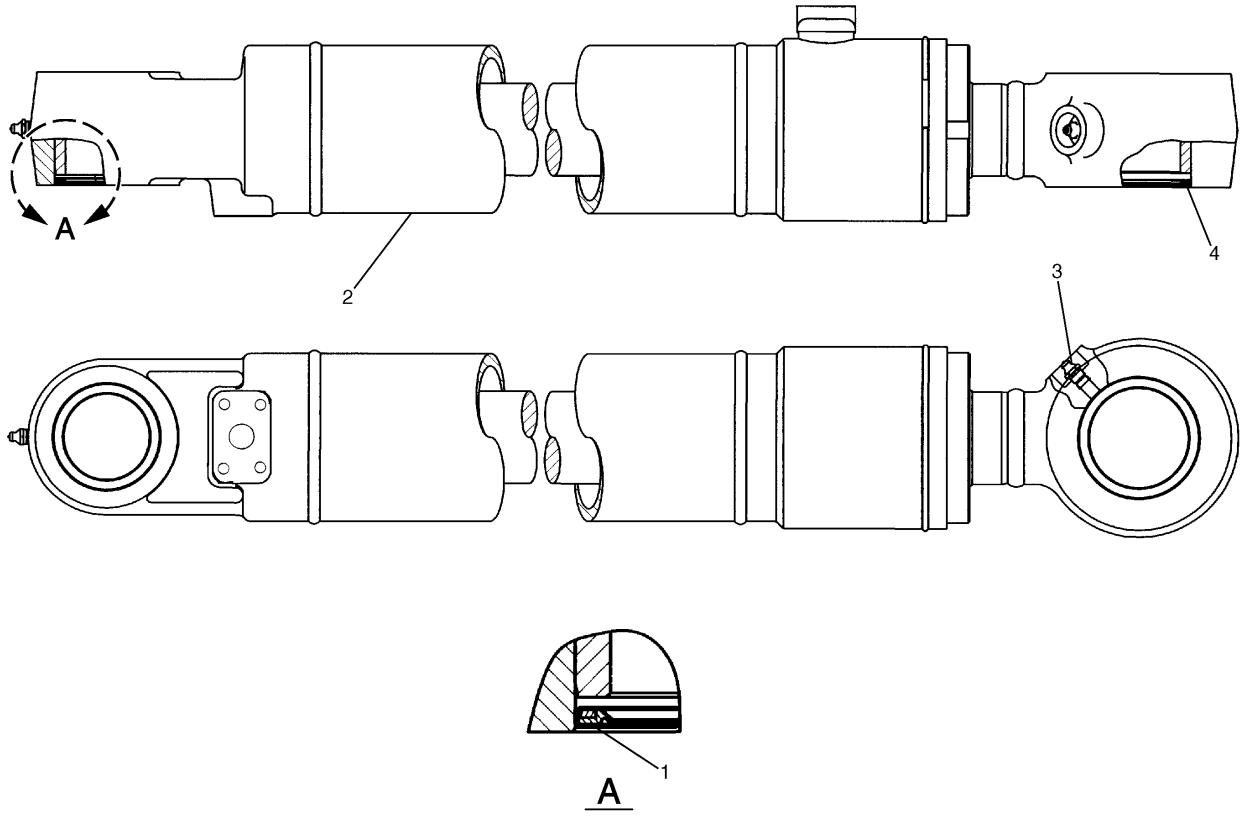

NOTE	No.	PART No.	QTY	PART NAME	NOTE	No.	PART No.	QTY	PART NAME
	1	093-1433	2	SEAL					
Y	2	248-7855	1	CYLINDER GP					
	3	3B-8489	2	FITTING					
	4	235-7679	2	SEAL					

Y—SEE SEPARATE ILLUSTRATION

H87137E 00

248-7854 CYLINDER & SEAL GP-BUCKET

S/N DAP 1-Up
Part of 253-6664-Page393
248-7855-Page410
An Attachment

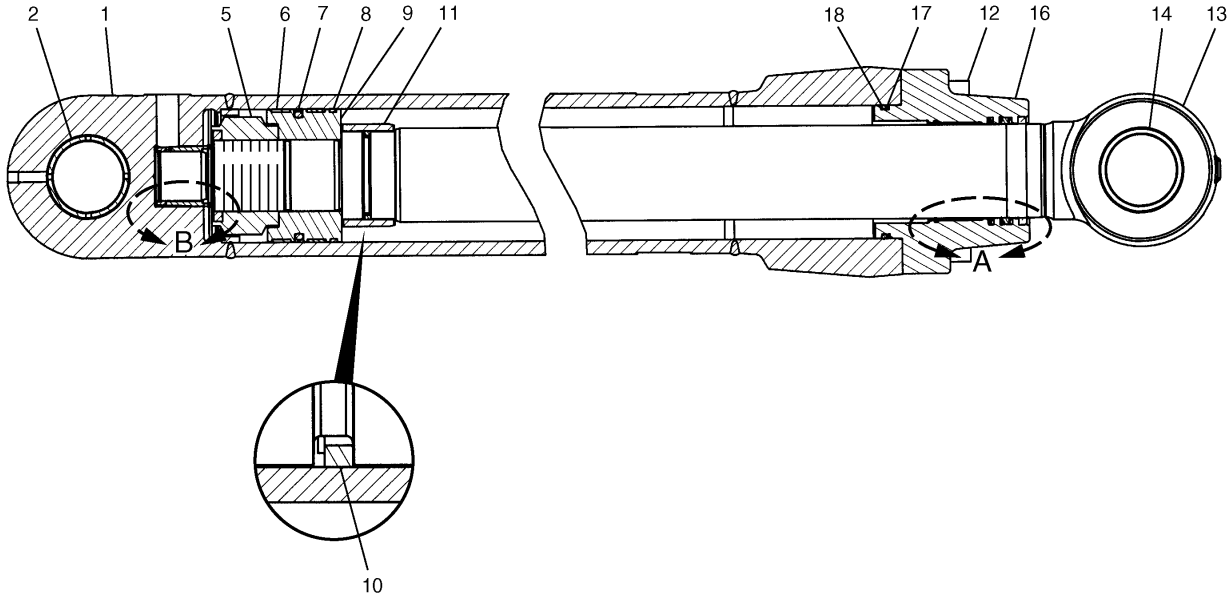

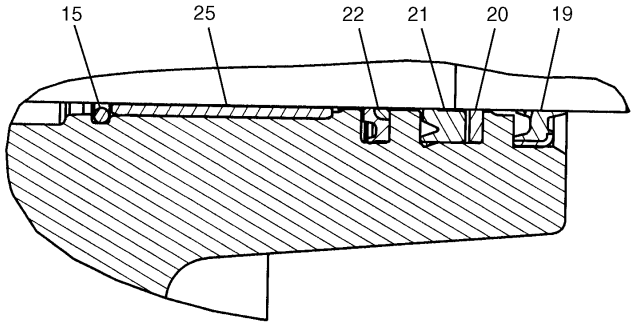

A

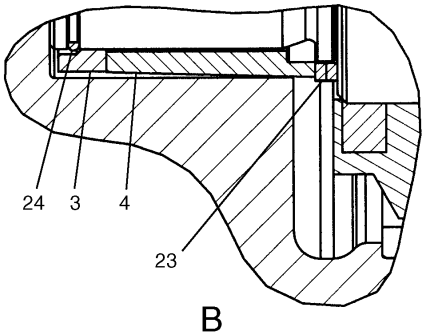

B

H91609E 01

216-6607 CYLINDER GP-STICK
S/N DAP 1-Up
Part of 216-6606-Page400
An Attachment

HYDRAULIC SYSTEM

NOTE	No.	PART No.	QTY	PART NAME
	1	216-6608	1	CYLINDER AS
	2	236-6273	1	BEARING
	3	103-8379	1	RING
	4	103-8380	1	STOP
	5	7Y-4695	1	LOCKNUT
J	6	188-4217	2	RING
J	7	9X-3601	1	SEAL AS
J	8	188-4218	1	RING
	9	188-4216	1	PISTON
J	10	5I-8516	1	RING
	11	7Y-4918	1	STOP
	12	7Y-5215	8	BOLT (L=90mm)
	13	216-6613	1	ROD AS
	14	236-6273	1	BEARING
	15	7Y-4672	1	RING
	16	7Y-4660	1	HEAD
J	17	7Y-4673	1	RING
J	18	095-1633	1	SEAL-O-RING (ID=139.60mm)
J	19	165-9290	1	SEAL
J	20	7Y-4669	1	RING
J	21	170-9864	1	SEAL
J	22	128-9265	1	SEAL
	23	095-0929	2	RING
	24	103-8378	1	RING
	25	114-0760	1	BEARING
				THE FOLLOWING REPAIR KIT IS AVAILABLE:
		191-5619	1	SEAL KIT (INCLUDES PARTS MARKED J)

NOTE	No.	PART No.	QTY	PART NAME

H91609E 01

216-6607 CYLINDER GP-STICK

S/N DAP 1-Up
Part of 216-6606-Page400
An Attachment

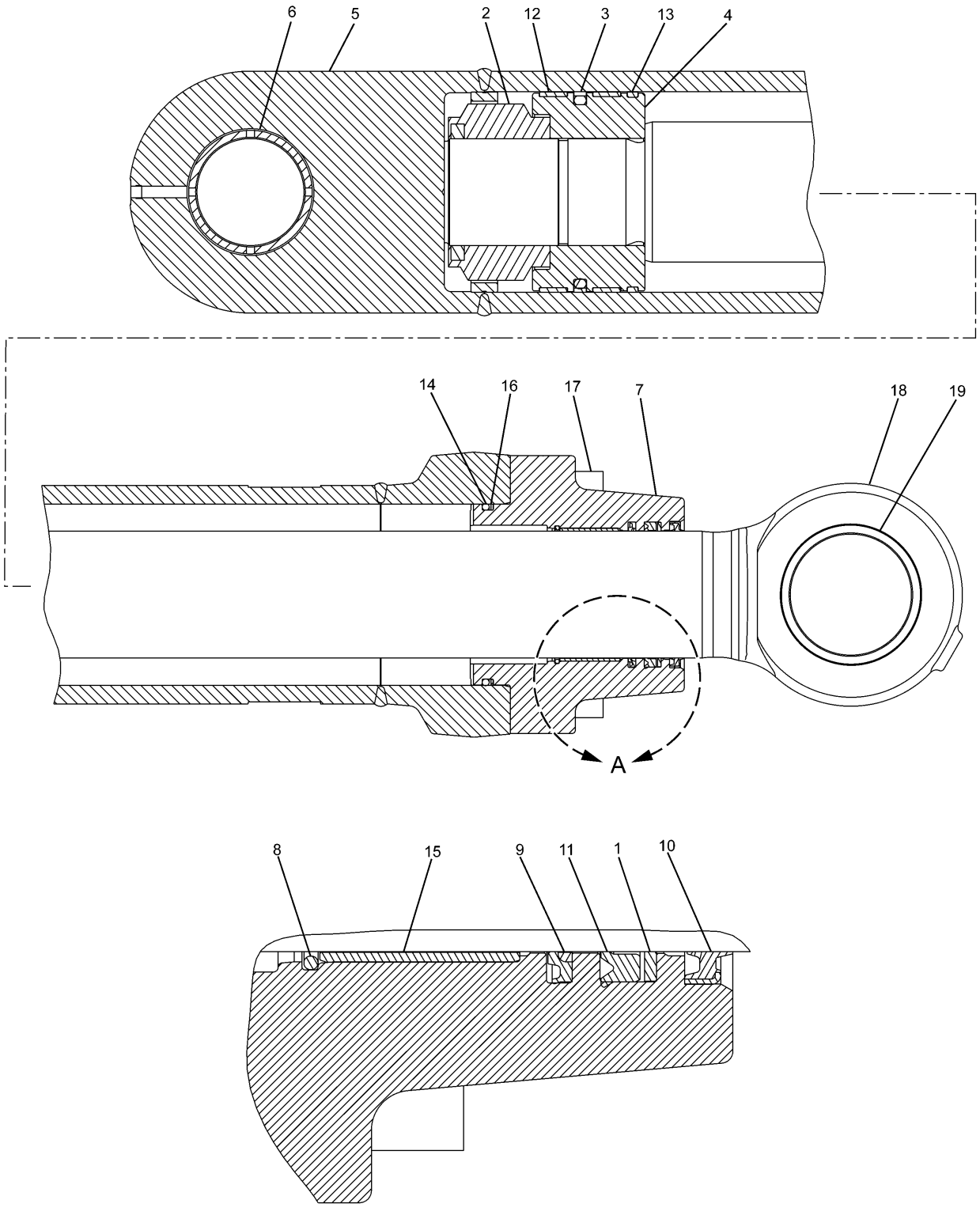

H89324E 01

225-4581 CYLINDER GP-BUCKET
DB Family
Part of 225-4580-Page404
An Attachment

HYDRAULIC SYSTEM

NOTE	No.	PART No.	QTY	PART NAME	NOTE	No.	PART No.	QTY	PART NAME
J	1	7Y-4669	1	RING					
	2	7Y-4695	1	LOCKNUT					
J	3	9X-3601	1	SEAL AS					
	4	188-4216	1	PISTON					
	5	242-6781	1	CYLINDER AS					
	6	235-7770	1	BEARING					
	7	7Y-4660	1	HEAD					
	8	7Y-4672	1	RING					
J	9	128-9265	1	SEAL					
J	10	165-9290	1	SEAL					
J	11	170-9864	1	SEAL					
J	12	188-4217	2	RING					
J	13	188-4218	1	RING					
J	14	095-1633	1	SEAL-O-RING (ID=139.60mm)					
	15	114-0760	1	BEARING					
J	16	7Y-4673	1	RING					
	17	7Y-5215	8	BOLT (L=90mm)					
	18	242-6787	1	ROD AS					
	19	228-5617	1	BEARING					
				THE FOLLOWING REPAIR KIT IS AVAILABLE:					
		191-5619	1	SEAL KIT (INCLUDES PARTS MARKED J)					

H89324E 01

225-4581 CYLINDER GP-BUCKET

DB Family

Part of 225-4580-Page404

An Attachment

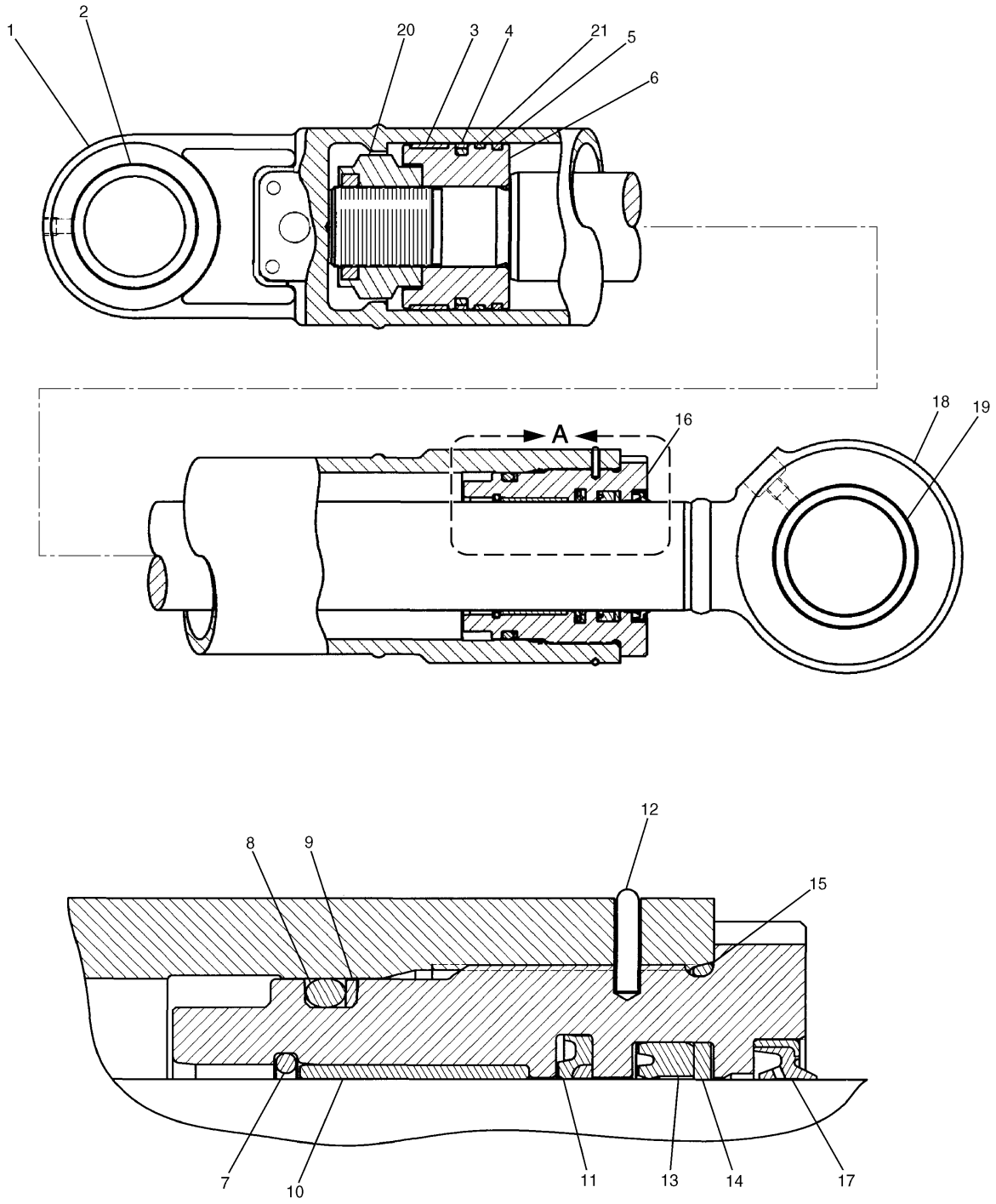

H87960E 00

248-7855 CYLINDER GP-BUCKET
S/N DAP 1-Up
Part of 248-7854-Page405
An Attachment

HYDRAULIC SYSTEM

NOTE	No.	PART No.	QTY	PART NAME	NOTE	No.	PART No.	QTY	PART NAME
	1	170-9938	1	CYLINDER AS					
	2	229-1009	1	BEARING					
J	3	143-8024	1	RING					
J	4	9X-7298	1	SEAL AS					
J	5	143-8025	1	RING					
	6	143-8023	1	PISTON					
	7	099-0700	1	RING					
J	8	095-1625	1	SEAL-O-RING (ID=89.60mm)					
J	9	099-0699	1	RING					
	10	114-0754	1	BEARING					
J	11	170-9840	1	SEAL					
	12	099-0600	1	RING					
J	13	170-9856	1	SEAL					
J	14	096-1055	1	RING					
J	15	6V-8467	1	SEAL-O-RING (ID=99.40mm)					
	16	099-0596	1	HEAD					
J	17	165-9282	1	SEAL					
	18	248-7856	1	ROD AS					
	19	248-7857	1	BEARING					
	20	143-8149	1	LOCKNUT					
J	21	143-8033	1	RING					
				THE FOLLOWING REPAIR KIT IS AVAILABLE:					
		170-9941	1	SEAL KIT (INCLUDES PARTS MARKED J)					

H87960E 00

248-7855 CYLINDER GP-BUCKET

S/N DAP 1-Up
Part of 248-7854-Page405
An Attachment

HYDRAULIC SYSTEM

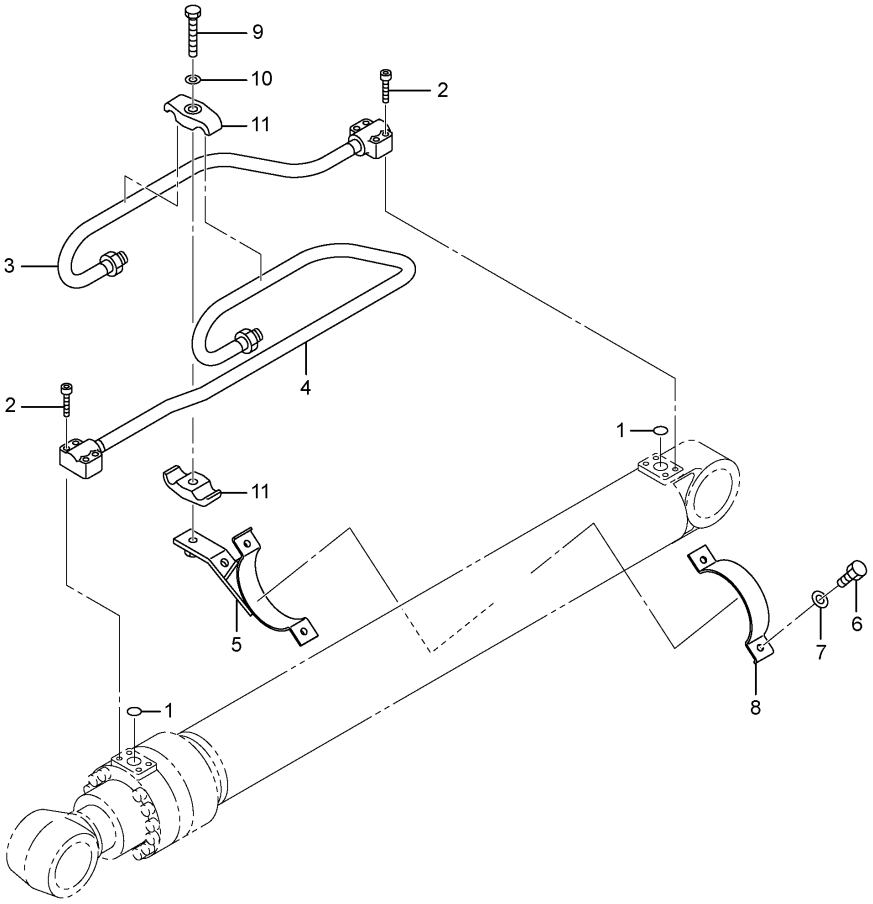

NOTE	No.	PART No.	QTY	PART NAME	NOTE	No.	PART No.	QTY	PART NAME
	1	095-1597	2	SEAL-O-RING (ID=29.70mm)					
	2	9X-6032	8	BOLT (L=30mm)					
	3	227-6882	1	TUBE AS					
	4	234-4570	1	TUBE AS					
	5	114-0700	1	SUPPORT AS					
	6	8T-4196	2	BOLT (L=35mm)					
	7	8T-4896	2	WASHER					
	8	099-8292	1	SUPPORT					
	9	8T-3653	1	BOLT (L=80mm)					
	10	3B-4509	1	LOCKWASHER					
	11	094-1920	2	CLAMP					

H89276E 01

225-4585 LINES GP-BOOM CYLINDER

Left Hand

Part of 225-4582-Page389

An Attachment

HYDRAULIC SYSTEM

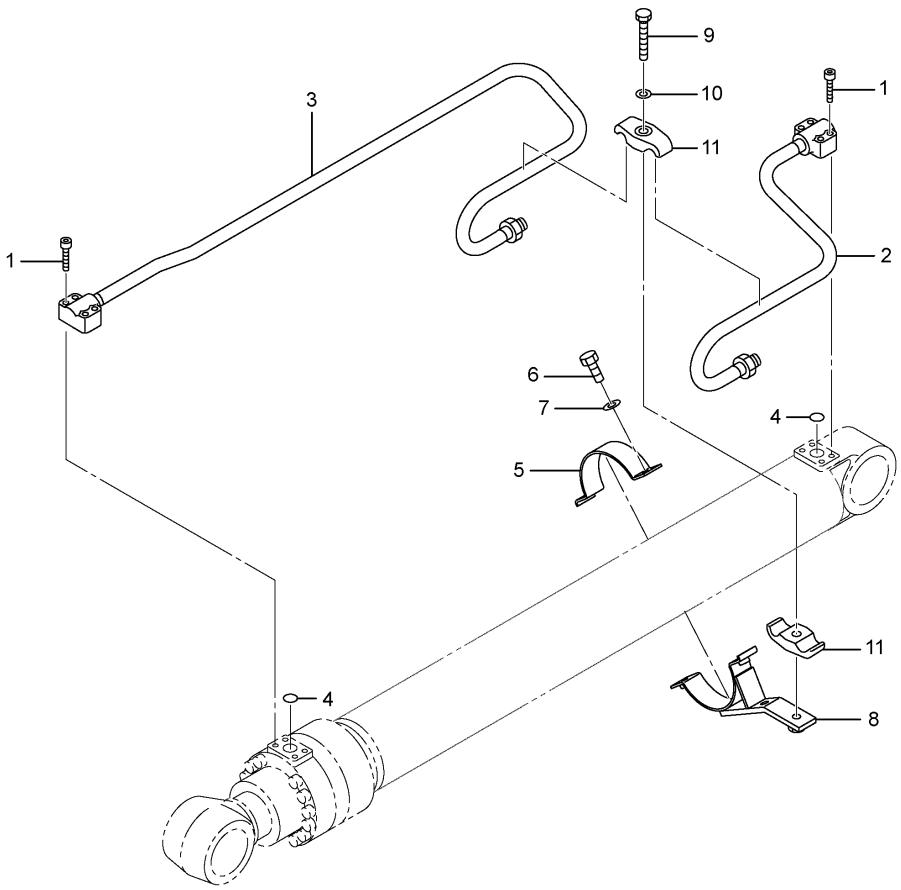

NOTE	No.	PART No.	QTY	PART NAME	NOTE	No.	PART No.	QTY	PART NAME
	1	9X-6032	8	BOLT (L=30mm)					
	2	227-6880	1	TUBE AS					
	3	234-4569	1	TUBE AS					
	4	095-1597	2	SEAL-O-RING (ID=29.70mm)					
	5	099-8292	1	SUPPORT					
	6	8T-4196	2	BOLT (L=35mm)					
	7	8T-4896	2	WASHER					
	8	114-0700	1	SUPPORT AS					
	9	8T-3653	1	BOLT (L=80mm)					
	10	3B-4509	1	LOCKWASHER					
	11	094-1920	2	CLAMP					

H89277E 01

225-4586 LINES GP-BOOM CYLINDER

Right Hand
Part of 225-4583-Page389
An Attachment

HYDRAULIC SYSTEM

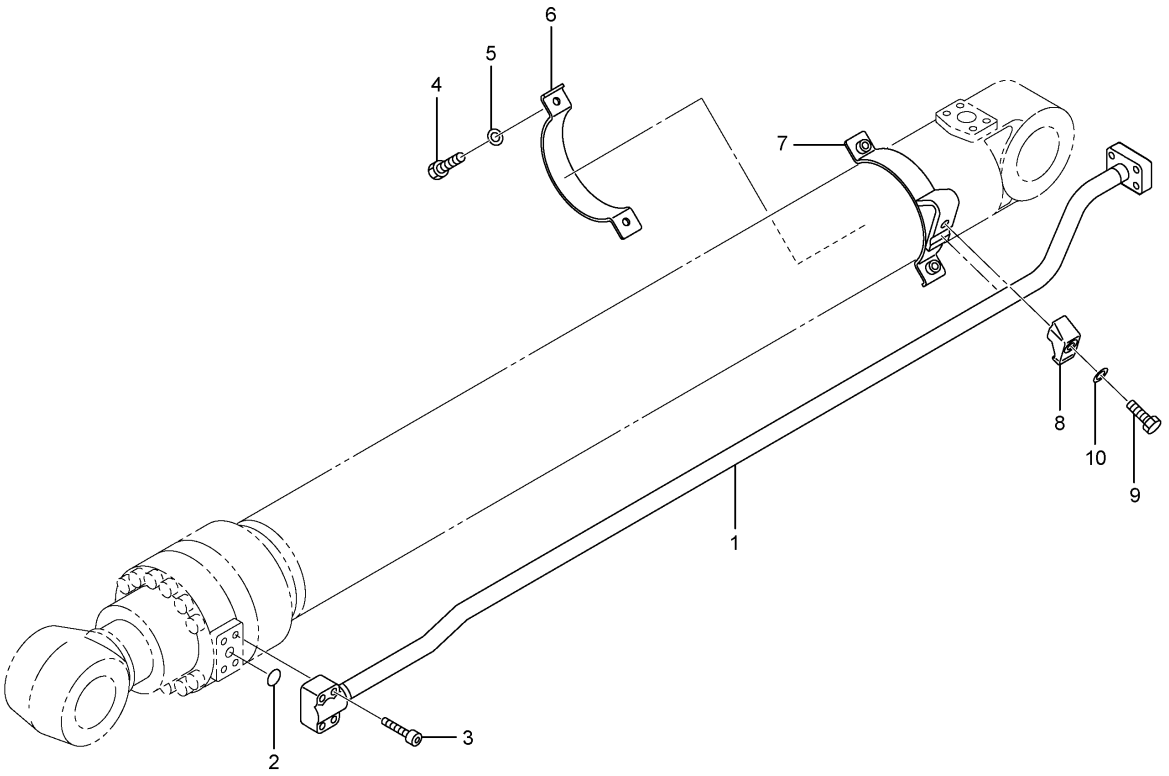

NOTE	No.	PART No.	QTY	PART NAME	NOTE	No.	PART No.	QTY	PART NAME
	1	234-4579	1	TUBE AS					
	2	095-1600	1	SEAL-O-RING (ID=33.70mm)					
	3	6V-8200	4	BOLT (L=35mm)					
	4	8T-4196	2	BOLT (L=35mm)					
	5	8T-4896	2	WASHER					
	6	124-0914	1	SUPPORT					
	7	194-8380	1	SUPPORT AS					
	8	096-4447	1	CLAMP					
	9	8T-4910	1	BOLT (L=60mm)					
	10	8T-4223	1	WASHER					

H89272E 01

225-4589 LINES GP-STICK CYLINDER

Part of 225-4587,259-0777-Page390
An Attachment

HYDRAULIC SYSTEM

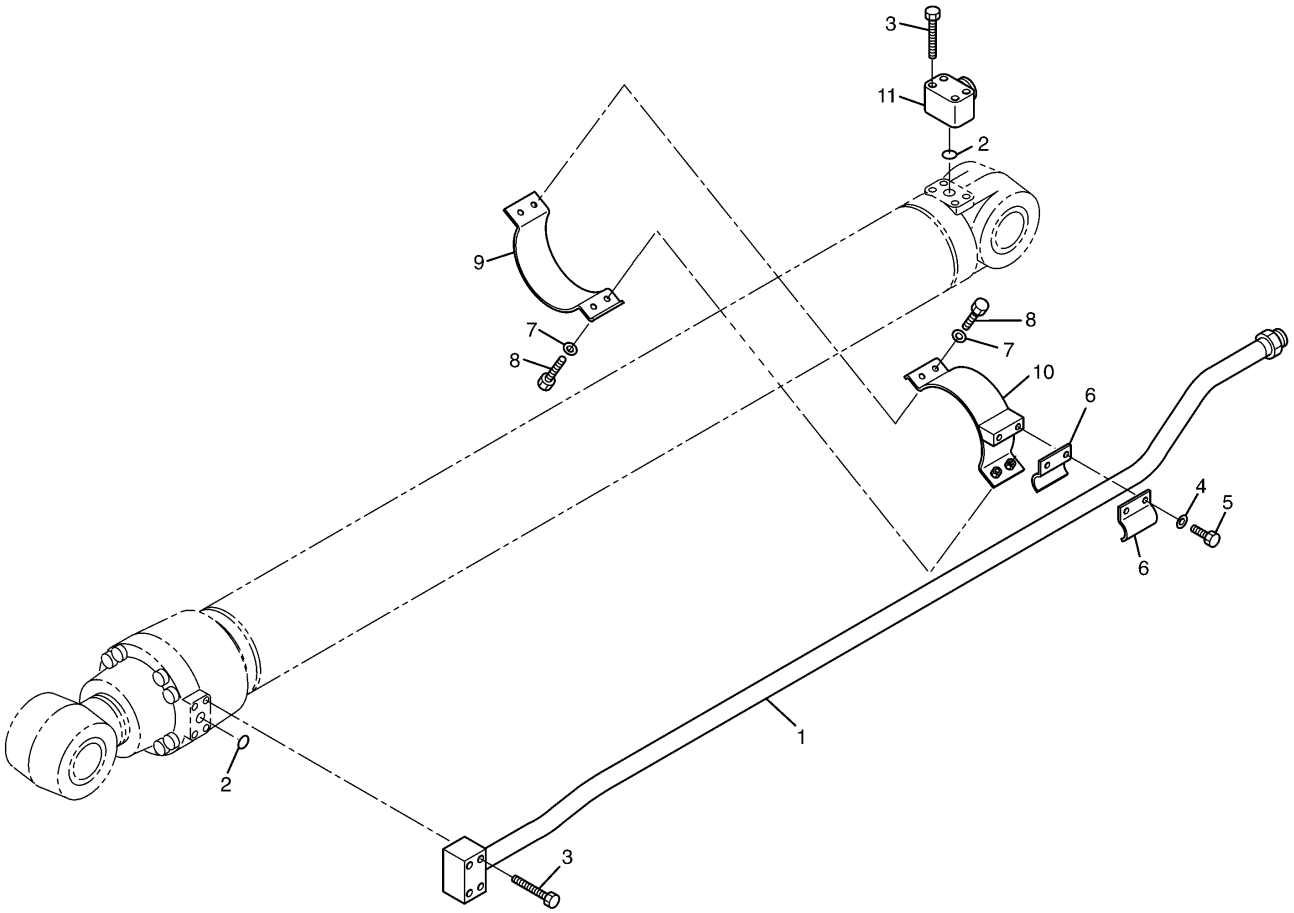

NOTE	No.	PART No.	QTY	PART NAME	NOTE	No.	PART No.	QTY	PART NAME
	1	216-6645	1	TUBE AS					
	2	1P-3704	2	SEAL					
	3	8T-4648	8	BOLT (L=70mm)					
	4	8T-4223	2	WASHER					
	5	8T-4139	2	BOLT (L=30mm)					
	6	7Y-3732	2	CLIP					
	7	8T-4121	4	WASHER					
	8	8T-4196	4	BOLT (L=35mm)					
	9	119-2379	1	SUPPORT AS					
	10	119-2378	1	SUPPORT AS					
	11	6I-6721	1	ELBOW					

H84500E 00

216-6617 LINES GP-STICK CYLINDER

S/N DAP 1-Up
Part of 216-6605-Page391
An Attachment

HYDRAULIC SYSTEM

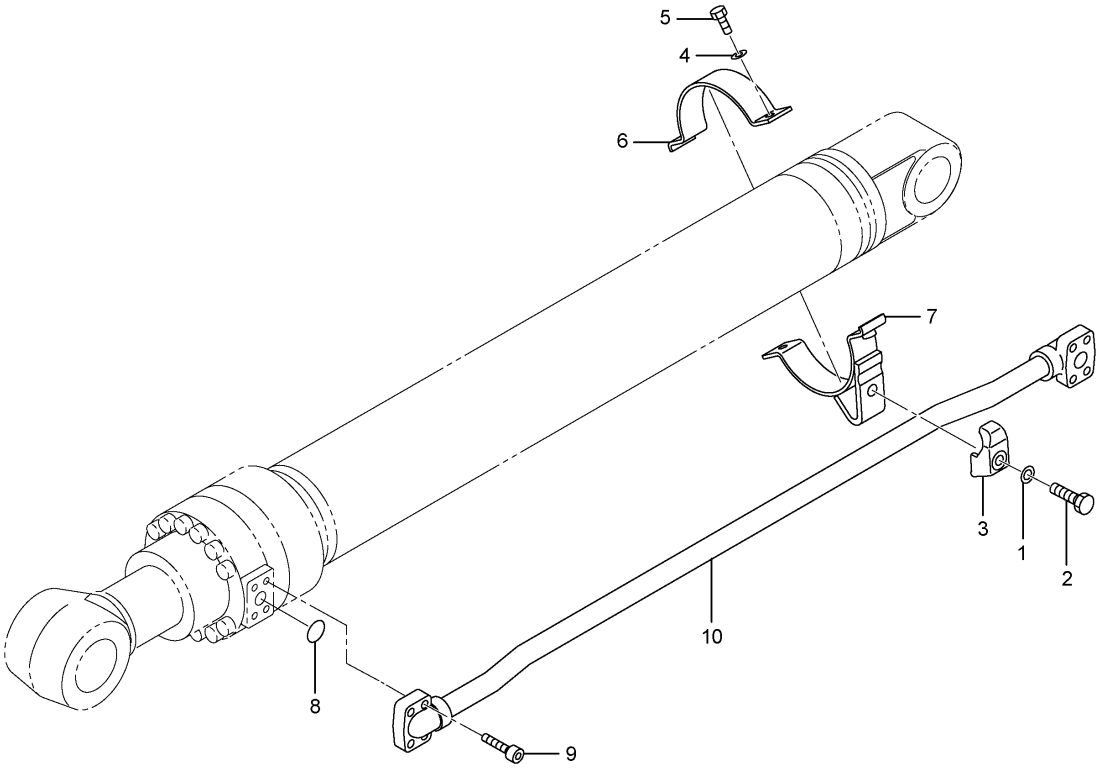

NOTE	No.	PART No.	QTY	PART NAME	NOTE	No.	PART No.	QTY	PART NAME
	1	8T-4223	1	WASHER					
	2	8T-4910	1	BOLT (L=60mm)					
	3	096-4480	1	CLAMP					
	4	8T-4896	2	WASHER					
	5	8T-4196	2	BOLT (L=35mm)					
	6	234-4592	1	SUPPORT					
	7	234-4591	1	SUPPORT AS					
	8	095-1597	1	SEAL-O-RING (ID=29.70mm)					
	9	9X-6032	4	BOLT (L=30mm)					
	10	259-0647	1	TUBE AS					

H89275E 01

225-4592 LINES GP-BUCKET CYLINDER

CB Family

Part of 225-4590-Page392

An Attachment

HYDRAULIC SYSTEM

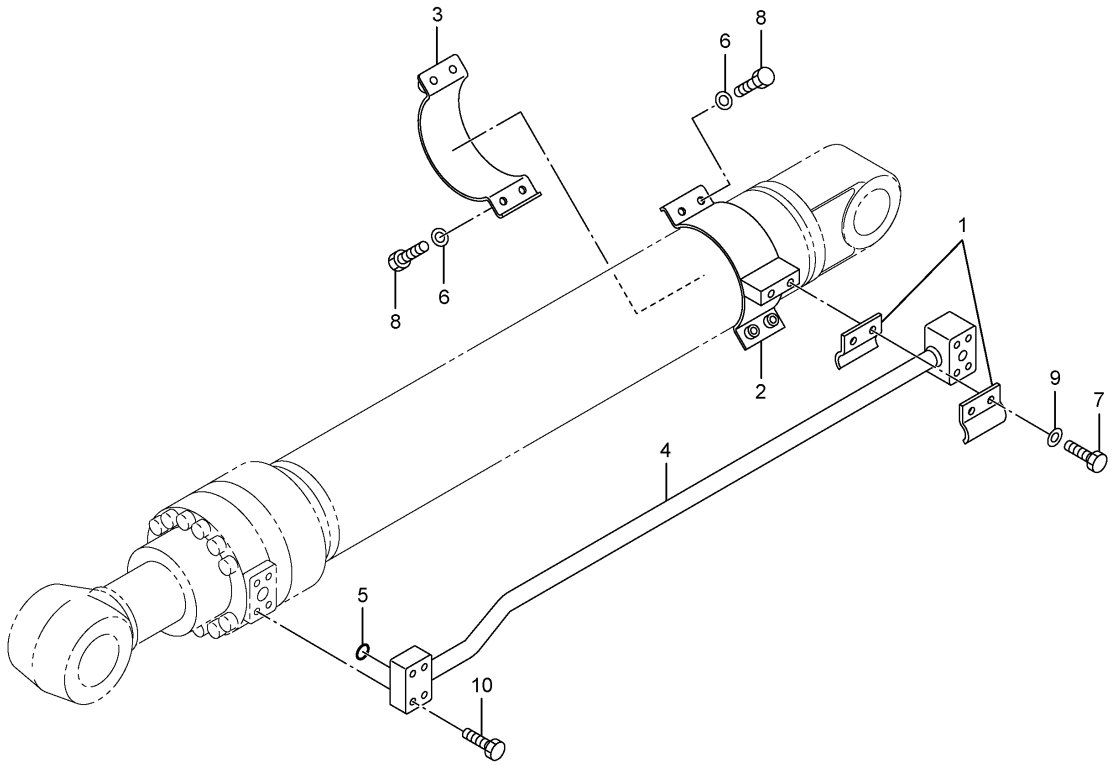

NOTE	No.	PART No.	QTY	PART NAME	NOTE	No.	PART No.	QTY	PART NAME
	1	7Y-3732	2	CLIP					
	2	119-2378	1	SUPPORT AS					
	3	119-2379	1	SUPPORT AS					
	4	239-1986	1	TUBE AS					
	5	1P-3703	1	SEAL					
	6	8T-4121	4	WASHER					
	7	8T-4139	2	BOLT (L=30mm)					
	8	8T-4196	4	BOLT (L=35mm)					
	9	8T-4223	2	WASHER					
	10	8T-4910	4	BOLT (L=60mm)					

H89274E 01

239-1627 LINES GP-BUCKET CYLINDER

DB Family
Part of 225-4579-Page392
An Attachment

HYDRAULIC SYSTEM

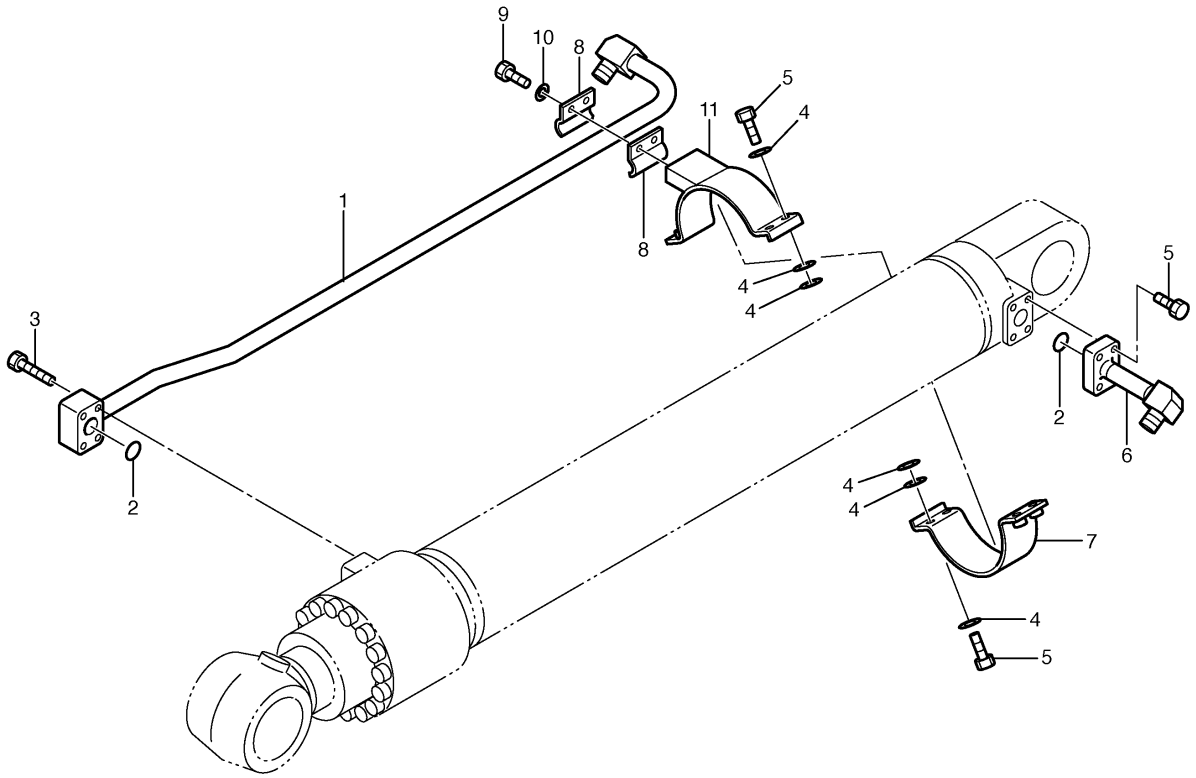

NOTE	No.	PART No.	QTY	PART NAME	NOTE	No.	PART No.	QTY	PART NAME
	1	116-9129	1	TUBE AS					
	2	4J-5267	2	SEAL-O-RING (ID=24.99mm)					
	3	8T-4185	4	BOLT (L=50mm)					
	4	8T-4121	12	WASHER					
	5	8T-4195	8	BOLT (L=30mm)					
	6	7Y-6442	1	TUBE AS					
	7	7Y-6510	1	SUPPORT AS					
	8	7Y-4868	2	CLIP					
	9	8T-4139	2	BOLT (L=30mm)					
	10	8T-4223	2	WASHER					
	11	7Y-6511	1	SUPPORT AS					

H53090E 00

127-6797 LINES GP-BUCKET CYLINDER

Long Reach Front
S/N DAP 1-Up
Part of 253-6664-Page393
An Attachment

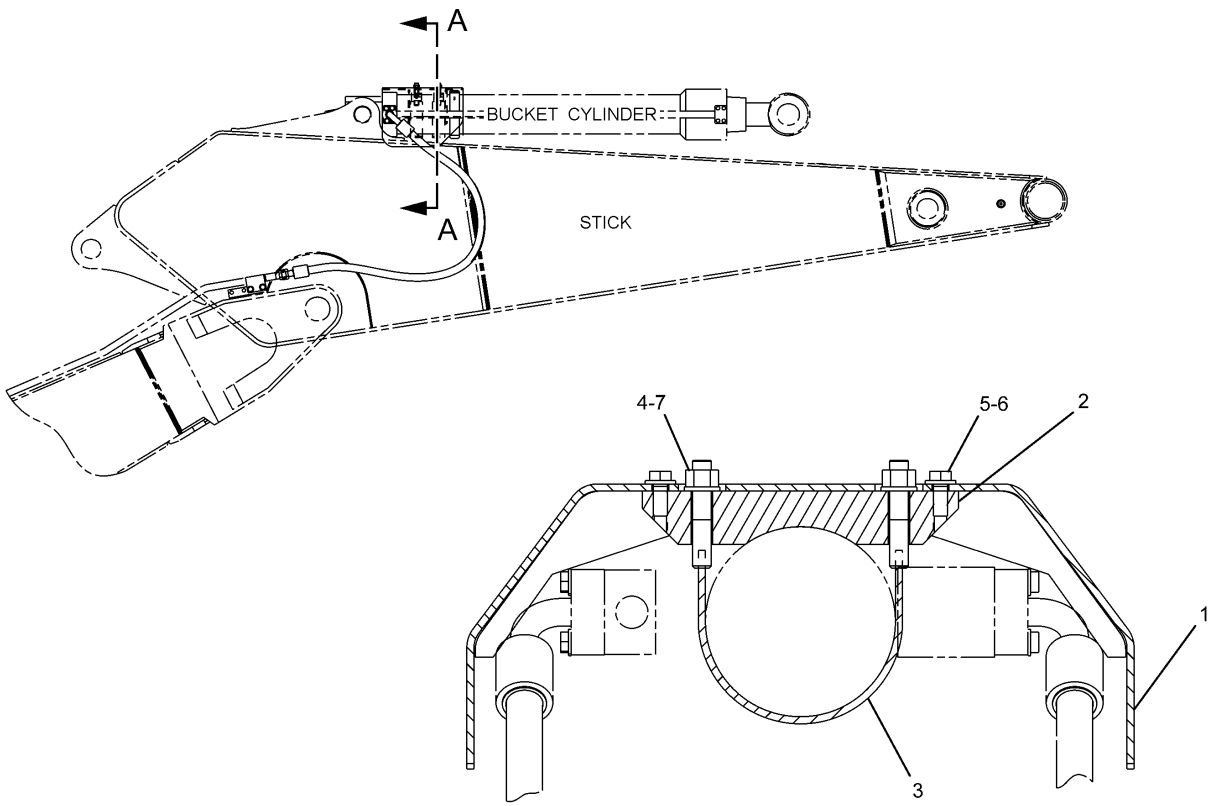

A – A

NOTE	No.	PART No.	QTY	PART NAME	NOTE	No.	PART No.	QTY	PART NAME
	1	234-4556	1	GUARD AS					
	2	234-4559	2	SUPPORT					
	3	234-4560	2	SUPPORT AS					
	4	8T-4132	4	NUT					
	5	8T-4139	4	BOLT (L=30mm)					
	6	8T-4223	4	WASHER					
	7	9X-8257	4	WASHER					

H89267E 01

234-4555 GUARD GP-BUCKET CYLINDER
An Attachment

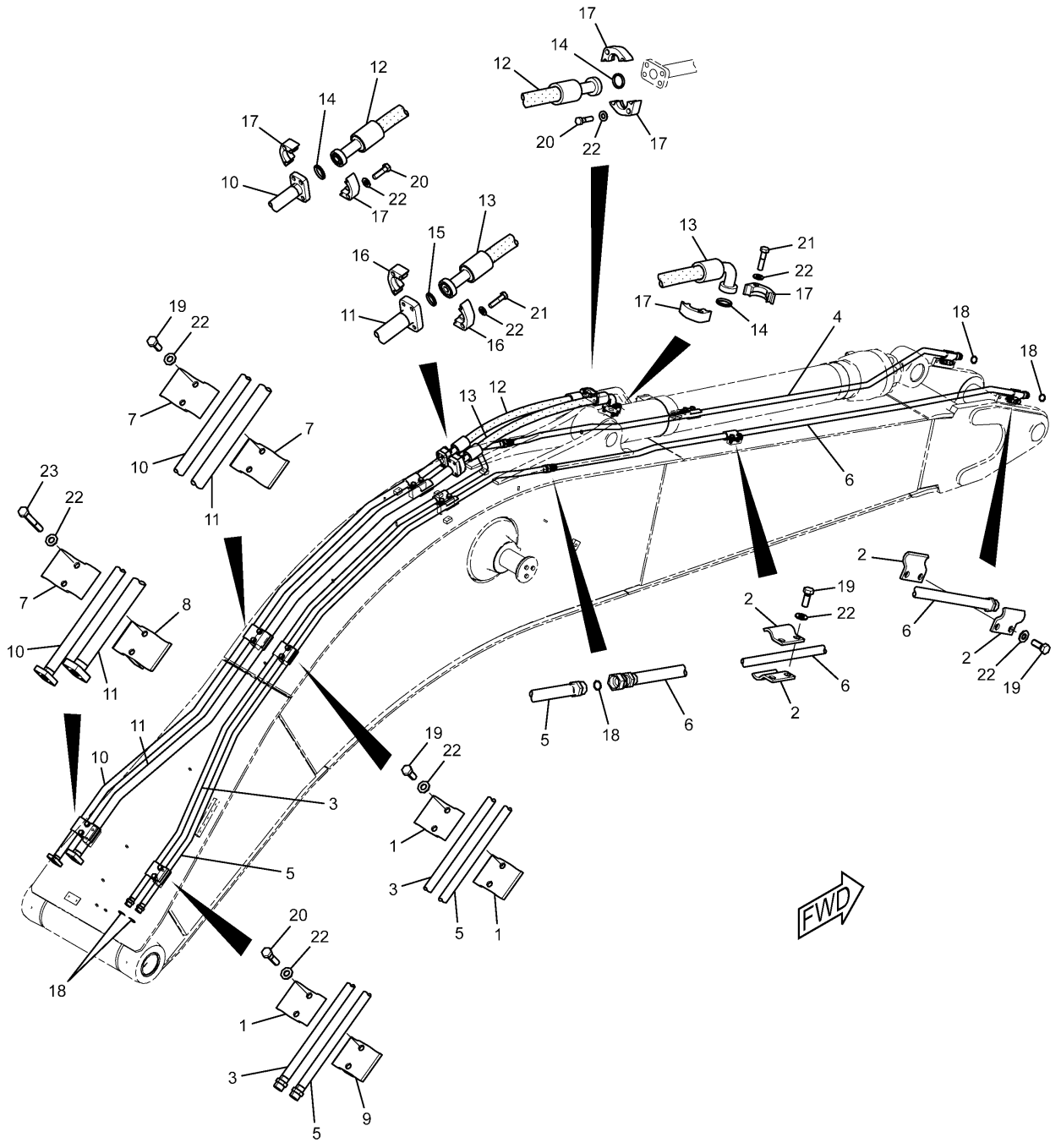

227-0550 LINES GP-BOOM

R-Boom

Part of 229-1754,229-1760-Page730

An Attachment

HYDRAULIC SYSTEM

NOTE	No.	PART No.	QTY	PART NAME	NOTE	No.	PART No.	QTY	PART NAME
	1	4I-1674	5	CLIP					
	2	7Y-4868	8	CLIP					
	3	187-6817	1	TUBE AS					
	4	187-6818	1	TUBE AS					
	5	187-6819	1	TUBE AS					
	6	187-6820	1	TUBE AS					
	7	187-6993	5	CLIP					
	8	202-3763	1	CLIP AS					
	9	202-3764	1	CLIP AS					
	10	236-2977	1	TUBE AS					
	11	236-2978	1	TUBE AS					
	12	236-3005	1	HOSE AS					
	13	236-3009	1	HOSE AS					
	14	1P-3703	3	SEAL					
	15	1P-3704	1	SEAL					
	16	1P-5767	2	FLANGE					
	17	6V-0400	6	FLANGE					
	18	6V-9746	6	SEAL-O-RING (OD=22.50mm)					
	19	8T-4139	16	BOLT (L=30mm)					
	20	8T-4184	10	BOLT (L=45mm)					
	21	8T-4194	8	BOLT (L=50mm)					
	22	8T-4223	36	WASHER					
	23	8T-6868	2	BOLT (L=80mm)					

H90362E 02

227-0550 LINES GP-BOOM

R-Boom

Part of 229-1754,229-1760-Page730

An Attachment

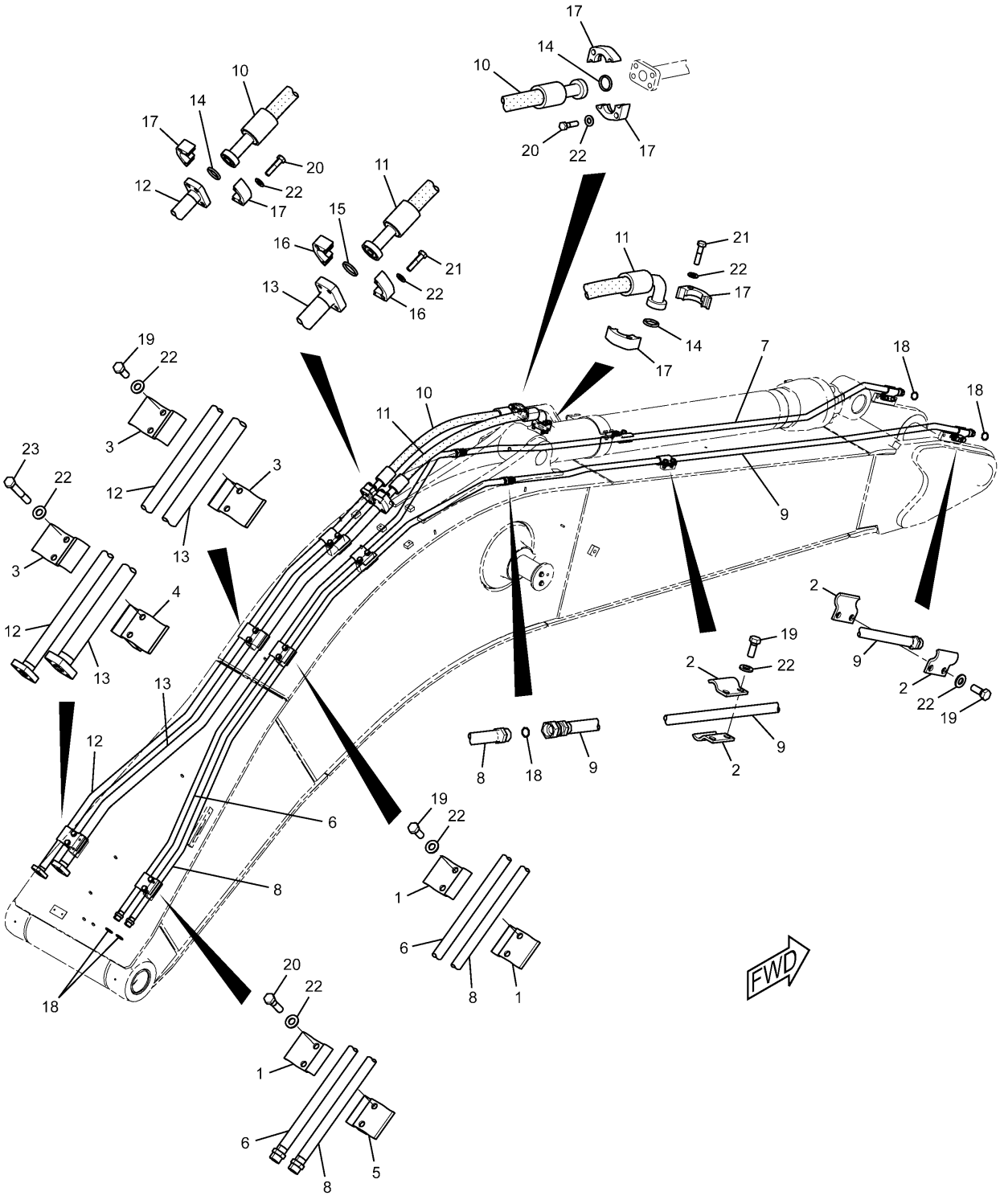

H90363E 01

227-0551 LINES GP-BOOM

M-Boom

Part of 229-1757-Page731

An Attachment

HYDRAULIC SYSTEM

NOTE	No.	PART No.	QTY	PART NAME	NOTE	No.	PART No.	QTY	PART NAME
	1	4I-1674	5	CLIP					
	2	7Y-4868	8	CLIP					
	3	187-6993	5	CLIP					
	4	202-3763	1	CLIP AS					
	5	202-3764	1	CLIP AS					
	6	202-3875	1	TUBE AS					
	7	202-3876	1	TUBE AS					
	8	202-3877	1	TUBE AS					
	9	202-3878	1	TUBE AS					
	10	236-3005	1	HOSE AS					
	11	236-3009	1	HOSE AS					
	12	255-1813	1	TUBE AS					
	13	255-1814	1	TUBE AS					
	14	1P-3703	3	SEAL					
	15	1P-3704	1	SEAL					
	16	1P-5767	2	FLANGE					
	17	6V-0400	6	FLANGE					
	18	6V-9746	6	SEAL-O-RING (OD=22.50mm)					
	19	8T-4139	16	BOLT (L=30mm)					
	20	8T-4184	10	BOLT (L=45mm)					
	21	8T-4194	8	BOLT (L=50mm)					
	22	8T-4223	36	WASHER					
	23	8T-6868	2	BOLT (L=80mm)					

H90363E 01

227-0551 LINES GP-BOOM

M-Boom

Part of 229-1757-Page731

An Attachment

HYDRAULIC SYSTEM

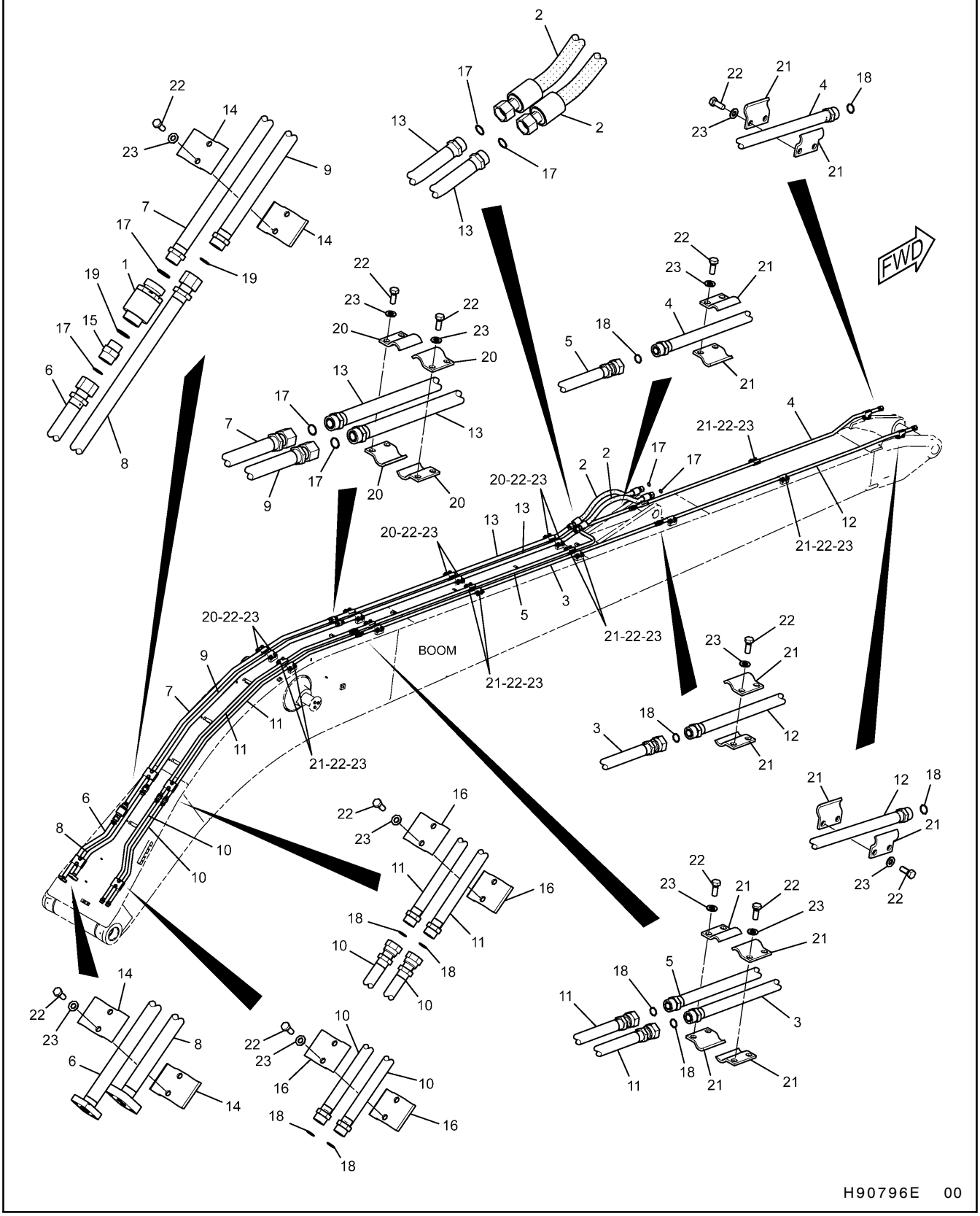

268-6783 LINES GP-BOOM
Long Reach Front
S/N DAP 1-Up
Part of 262-3585-Page739
An Attachment

HYDRAULIC SYSTEM

NOTE	No.	PART No.	QTY	PART NAME	NOTE	No.	PART No.	QTY	PART NAME
	1	4I-8789	1	VALVE GP					
	2	5I-7290	2	HOSE AS					
	3	7Y-6506	1	TUBE AS					
	4	7Y-6507	1	TUBE AS					
	5	116-9118	1	TUBE AS					
	6	268-6784	1	TUBE AS					
	7	268-6785	1	TUBE AS					
	8	268-6786	1	TUBE AS					
	9	277-0878	1	TUBE AS					
	10	277-0879	2	TUBE AS					
	11	277-0880	2	TUBE AS					
	12	277-0881	1	TUBE AS					
	13	277-0937	2	TUBE AS					
	14	108-7550	4	CLIP					
	15	6V-8635	1	CONNECTOR					
	16	4I-1674	4	CLIP					
	17	5K-9090	8	SEAL-O-RING (OD=27.22mm)					
	18	6V-9746	10	SEAL-O-RING (OD=22.50mm)					
	19	7M-8485	2	SEAL-O-RING (ID=29.74mm)					
	20	7Y-3732	16	CLIP					
	21	7Y-4868	28	CLIP					
	22	8T-4139	52	BOLT (L=30mm)					
	23	8T-4223	52	WASHER					

H90796E 00

268-6783 LINES GP-BOOM

Long Reach Front
S/N DAP 1-Up
Part of 262-3585-Page739
An Attachment

HYDRAULIC SYSTEM

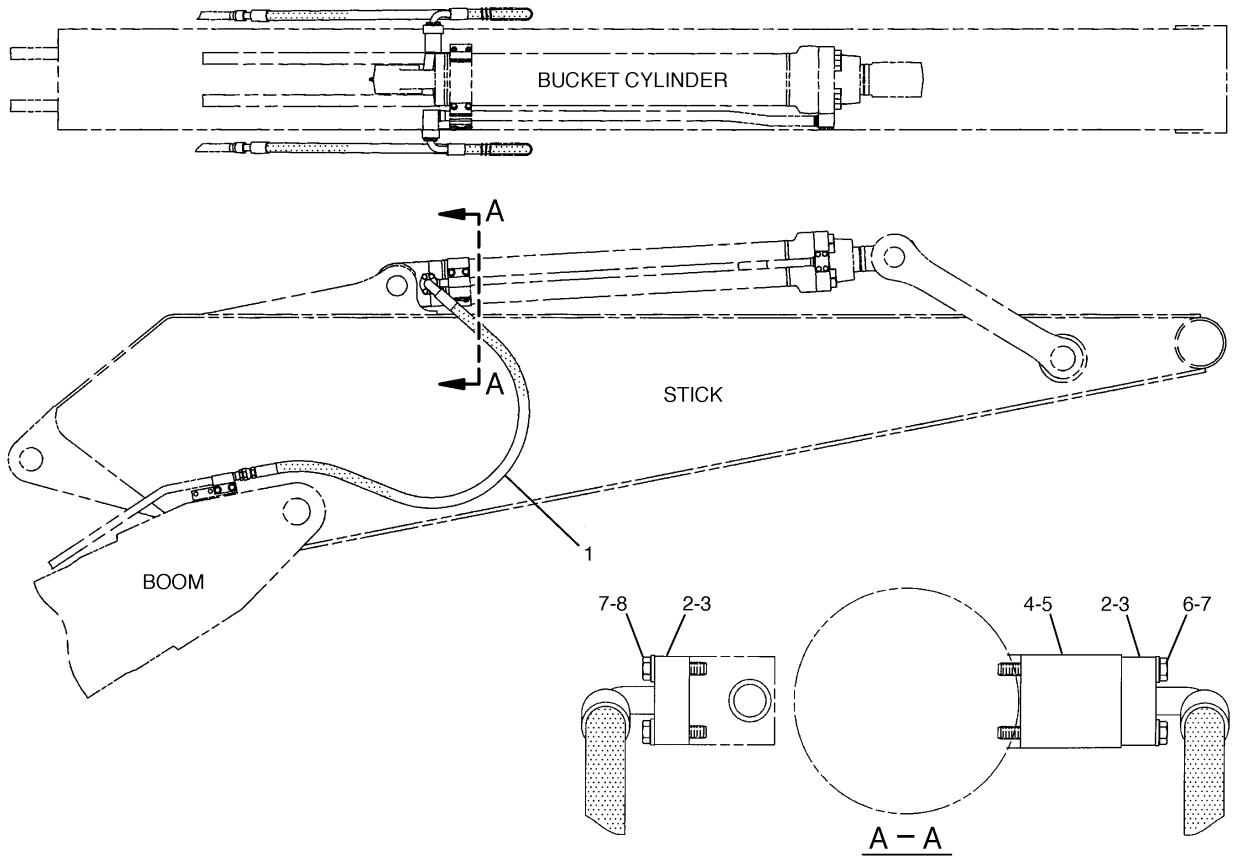

NOTE	No.	PART No.	QTY	PART NAME	NOTE	No.	PART No.	QTY	PART NAME
	1	5I-4359	2	HOSE AS					
	2	8T-9403	4	FLANGE					
	3	1P-3702	2	SEAL					
	4	5I-4188	1	BLOCK					
	5	1P-3703	1	SEAL					
	6	8T-5436	4	BOLT (L=130mm)					
	7	8T-4121	8	WASHER					
	8	8T-4182	4	BOLT (L=45mm)					

H74718E 00

196-0536 LINES GP-STICK

Part of 229-1762,240-4029-Page732,264-8667-Page733,229-1855-Page737
An Attachment

HYDRAULIC SYSTEM

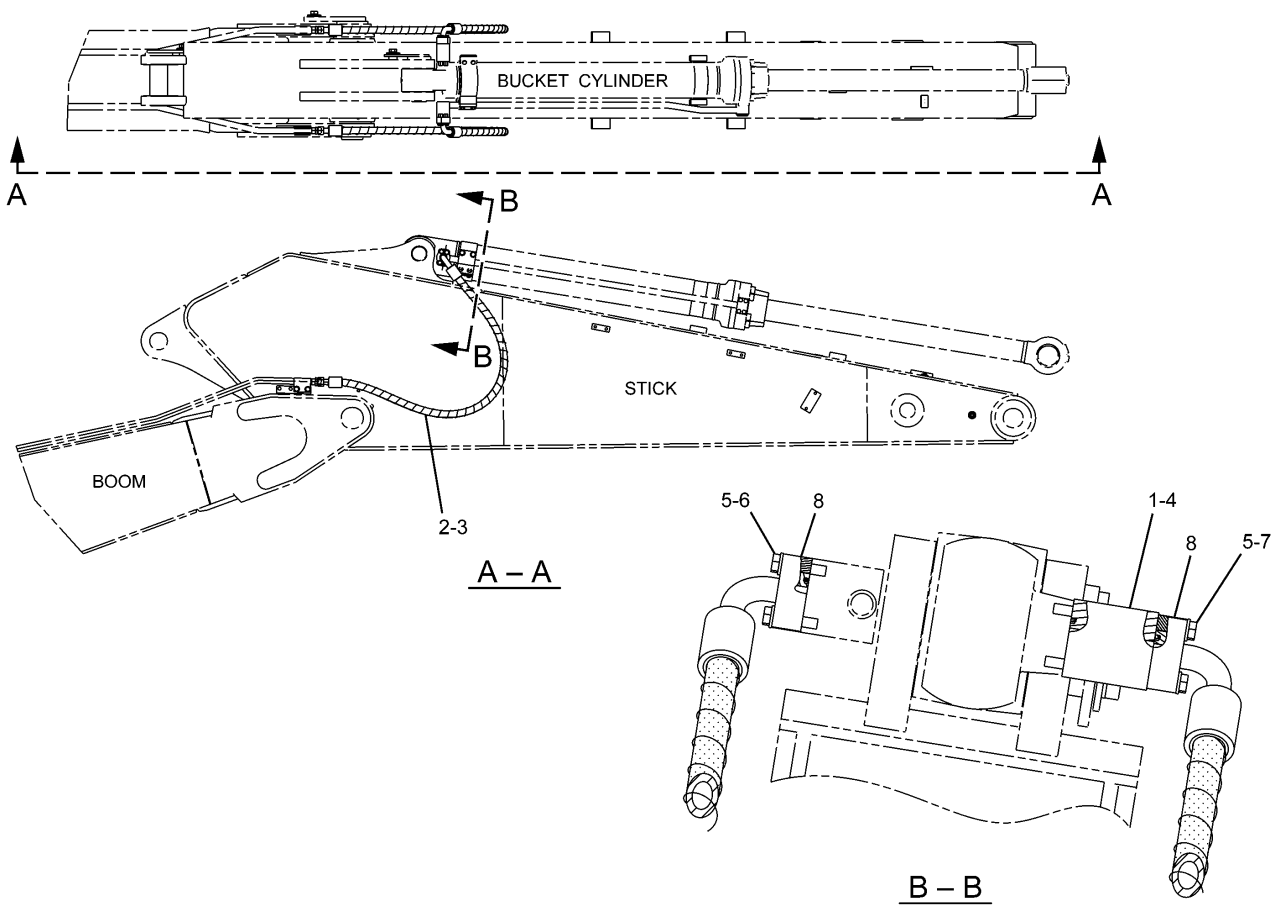

NOTE	No.	PART No.	QTY	PART NAME	NOTE	No.	PART No.	QTY	PART NAME
	1	5I-4188	1	BLOCK					
	2	5I-4494	2	HOSE AS					
	3	1P-3702	2	SEAL					
	4	1P-3703	1	SEAL					
	5	8T-4121	8	WASHER					
	6	8T-4182	4	BOLT (L=45mm)					
	7	8T-5436	4	BOLT (L=130mm)					
	8	8T-9403	4	FLANGE					

H89024E 01

236-2968 LINES GP-STICK
Part of 229-1764,240-4030-Page734
An Attachment

HYDRAULIC SYSTEM

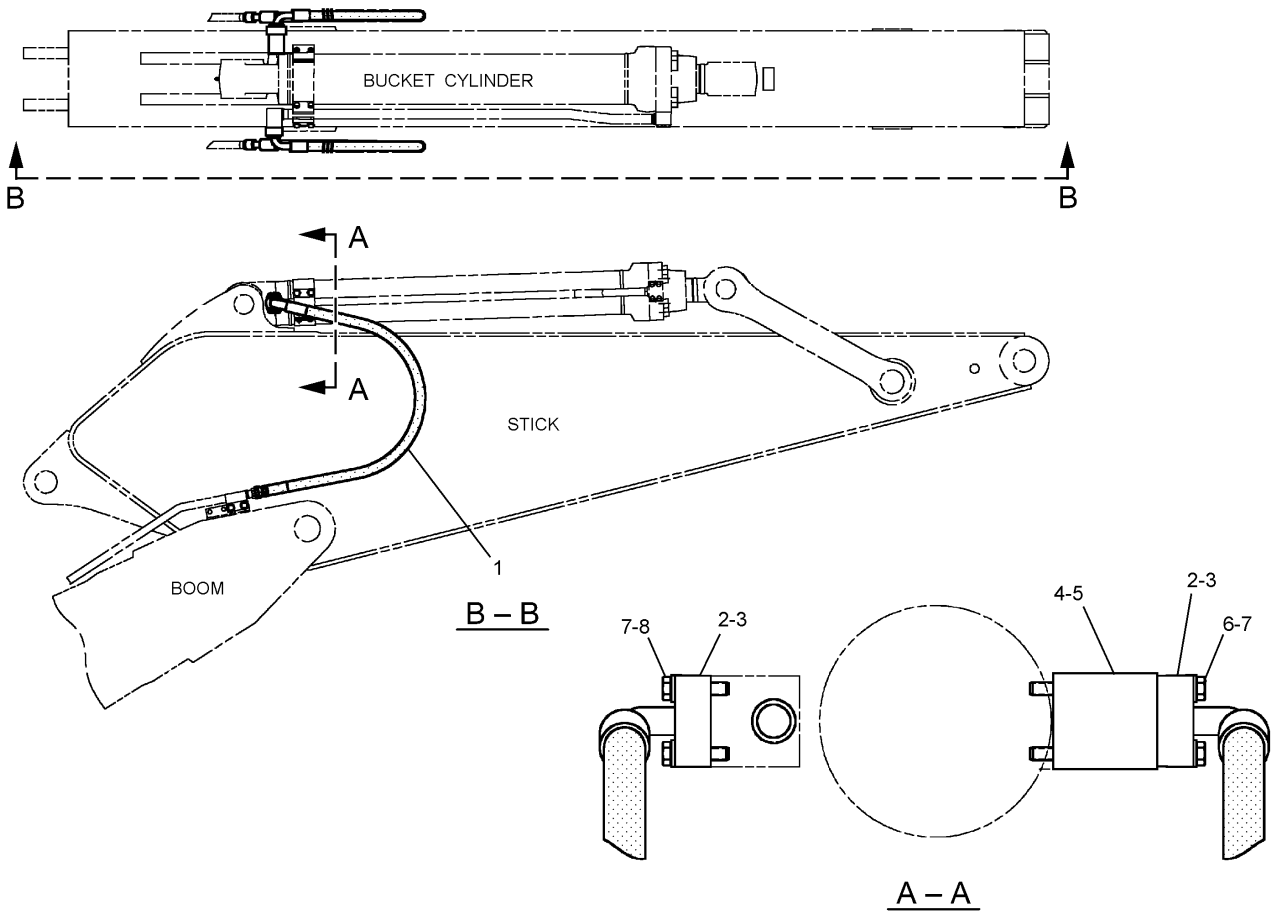

NOTE	No.	PART No.	QTY	PART NAME	NOTE	No.	PART No.	QTY	PART NAME
	1	4I-8785	2	HOSE AS					
	2	8T-9403	4	FLANGE					
	3	1P-3702	2	SEAL					
	4	5I-4188	1	BLOCK					
	5	1P-3703	1	SEAL					
	6	8T-5436	4	BOLT (L=130mm)					
	7	8T-4121	8	WASHER					
	8	8T-4182	4	BOLT (L=45mm)					

H88891E 00

196-0537 LINES GP-STICK
Part of 229-1765,229-1770-Page735
An Attachment

HYDRAULIC SYSTEM

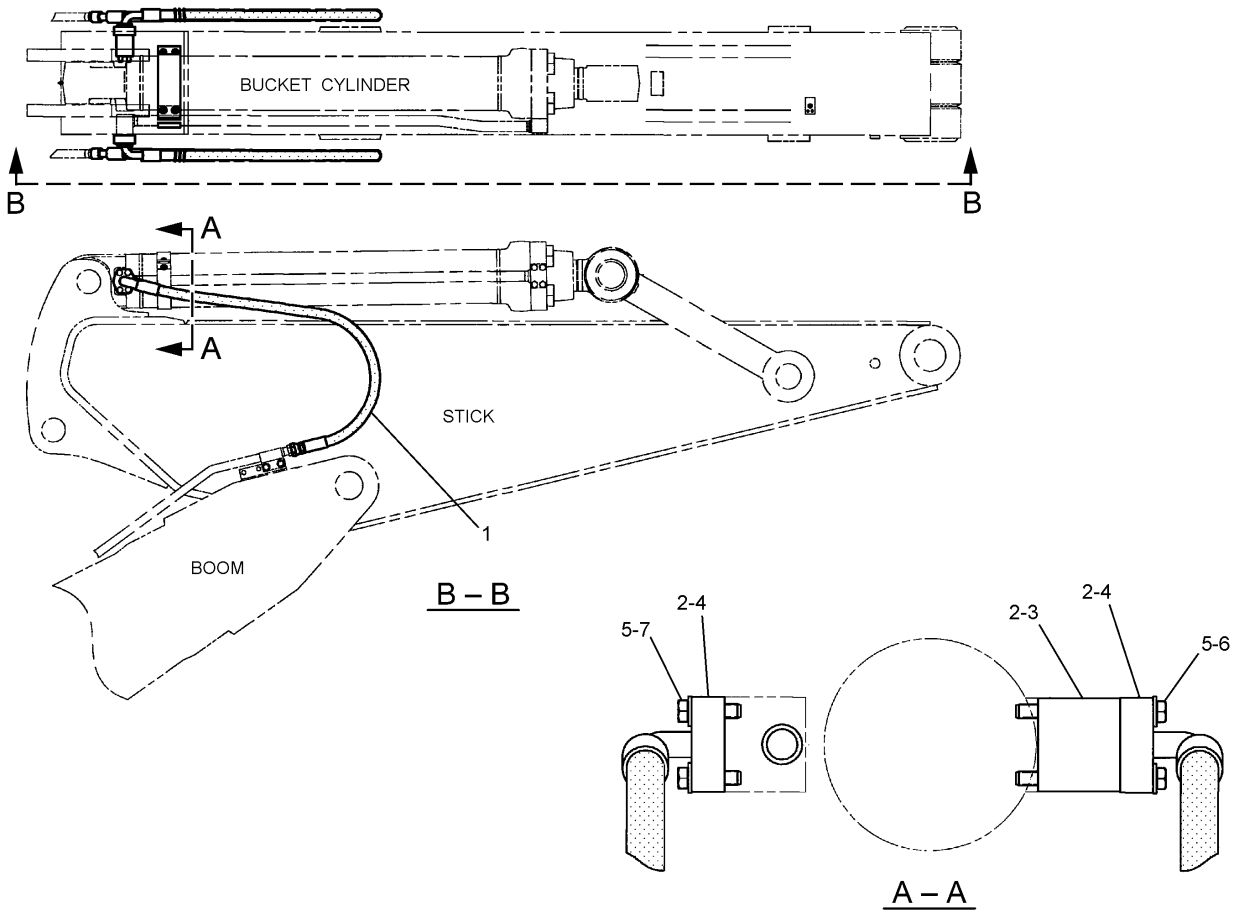

NOTE	No.	PART No.	QTY	PART NAME	NOTE	No.	PART No.	QTY	PART NAME
	1	5I-4216	2	HOSE AS					
	2	1P-3703	3	SEAL					
	3	5I-4189	1	BLOCK					
	4	6V-0400	4	FLANGE					
	5	8T-4223	8	WASHER					
	6	8T-5041	4	BOLT (L=120mm)					
	7	8T-4184	4	BOLT (L=45mm)					

H88892E 01

196-0538 LINES GP-STICK

Part of 229-1767-Page736
An Attachment

HYDRAULIC SYSTEM

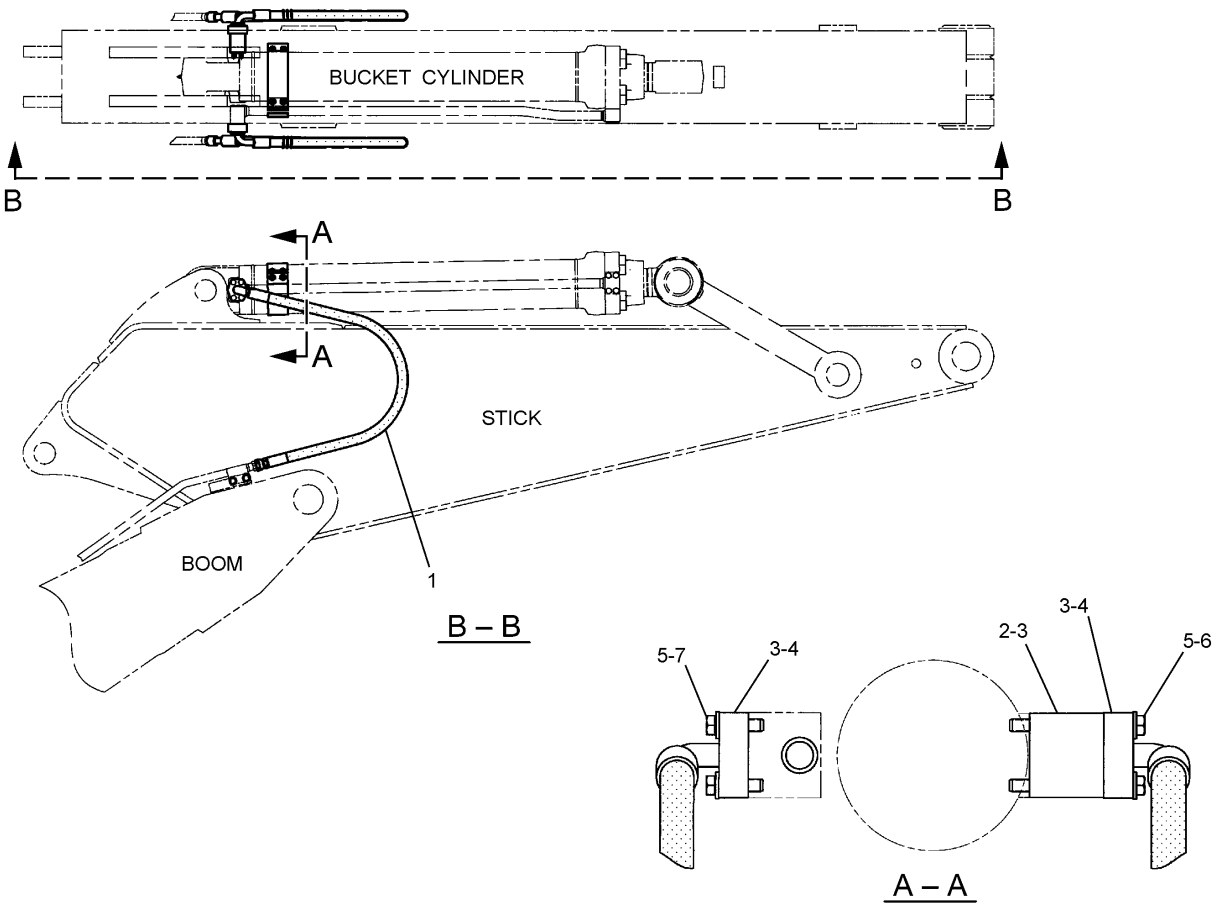

NOTE	No.	PART No.	QTY	PART NAME	NOTE	No.	PART No.	QTY	PART NAME
	1	5I-4216	2	HOSE AS					
	2	5I-4189	1	BLOCK					
	3	1P-3703	3	SEAL					
	4	6V-0400	4	FLANGE					
	5	8T-4223	8	WASHER					
	6	8T-5041	4	BOLT (L=120mm)					
	7	8T-4184	4	BOLT (L=45mm)					

H88893E 01

196-0541 LINES GP-STICK

Part of 229-1769-Page737
An Attachment

HYDRAULIC SYSTEM

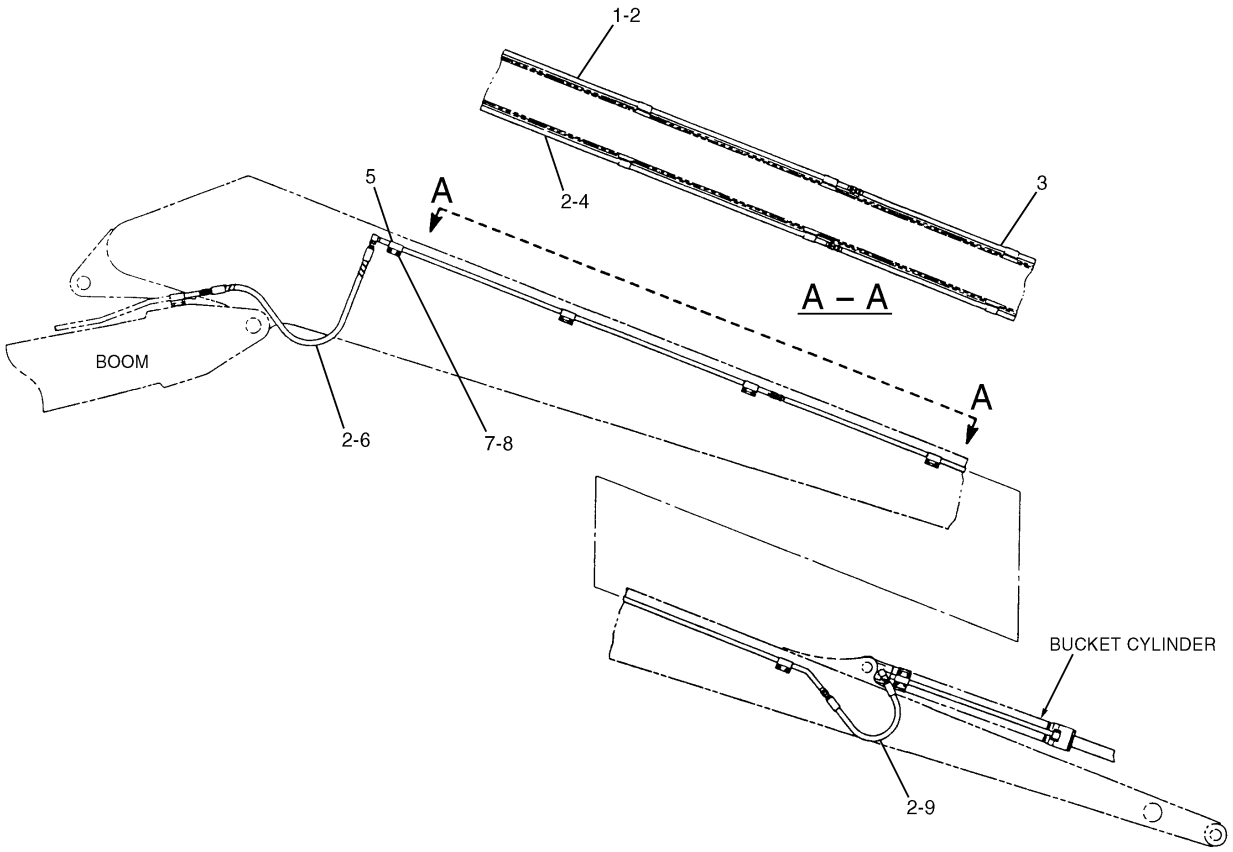

NOTE	No.	PART No.	QTY	PART NAME	NOTE	No.	PART No.	QTY	PART NAME
	1	7Y-6447	1	TUBE AS					
	2	6V-9746	10	SEAL-O-RING (OD=22.50mm)					
	3	7Y-6449	2	TUBE AS					
	4	7Y-6448	1	TUBE AS					
	5	7Y-4868	20	CLIP					
	6	5I-4447	2	HOSE AS					
E		5P-0200		HOSE…(152cm)					
		5P-1027	2	SLEEVE					
E		6V-0756		GUARD…(210cm)					
		7X-1451	2	STEM AS (STRAIGHT)					
	7	8T-4139	20	BOLT (L=30mm)					
	8	8T-4223	20	WASHER					
	9	7Y-7904	2	HOSE AS					
E		5P-0200		HOSE…(73cm)					
		5P-1027	2	SLEEVE					
		7X-1451	2	STEM AS (STRAIGHT)					

E—ORDER BY THE CENTIMETER

H54811E 00

127-6634 LINES GP-STICK

Long Reach Front
S/N DAP 1-Up
Part of 262-3585-Page739
An Attachment

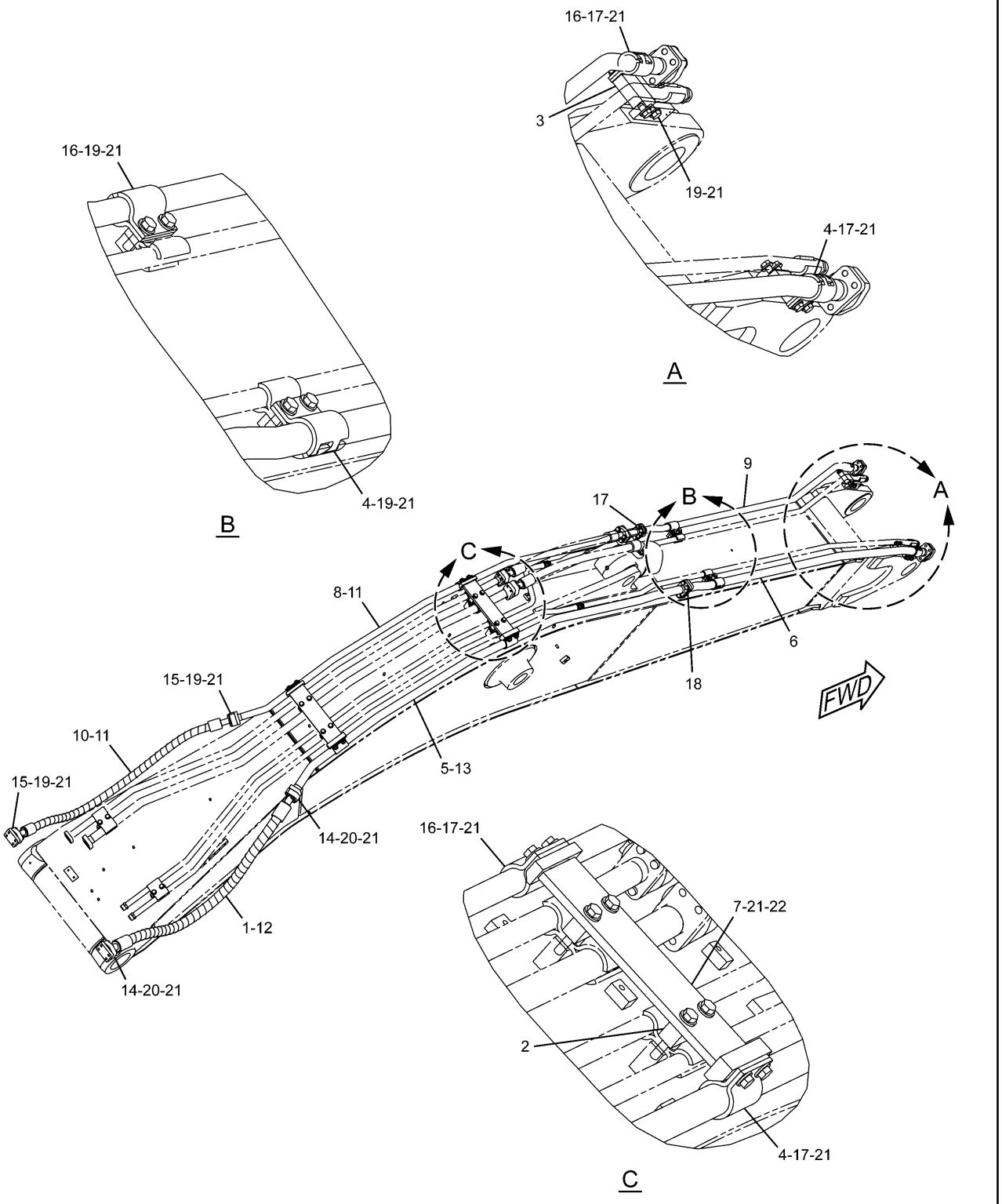

230–0486 LINES GP–AUXILIARY HYDRAULIC
An Attachment

HYDRAULIC SYSTEM

NOTE	No.	PART No.	QTY	PART NAME	NOTE	No.	PART No.	QTY	PART NAME
	1	113-6677	1	HOSE AS					
	2	151-2494	4	BAR					
	3	153-8798	2	PLATE					
	4	173-7916	8	CLAMP					
	5	187-9845	1	TUBE AS					
	6	187-9846	1	TUBE AS					
	7	230-0494	2	SUPPORT AS					
	8	237-3116	1	TUBE AS					
	9	237-3117	1	TUBE AS					
	10	282-5760	1	HOSE AS					
	11	1P-3703	3	SEAL					
	12	1P-3704	2	SEAL					
	13	1P-3705	1	SEAL					
	14	1P-5767	4	FLANGE					
	15	6V-0400	4	FLANGE					
	16	7Y-4538	8	CLAMP					
	17	8T-4139	16	BOLT (L=30mm)					
	18	8T-4183	4	BOLT (L=40mm)					
	19	8T-4184	16	BOLT (L=45mm)					
	20	8T-4194	8	BOLT (L=50mm)					
	21	8T-4223	44	WASHER					
	22	8T-6868	8	BOLT (L=80mm)					

H92742E 03

230-0486 LINES GP-AUXILIARY HYDRAULIC
An Attachment

HYDRAULIC SYSTEM

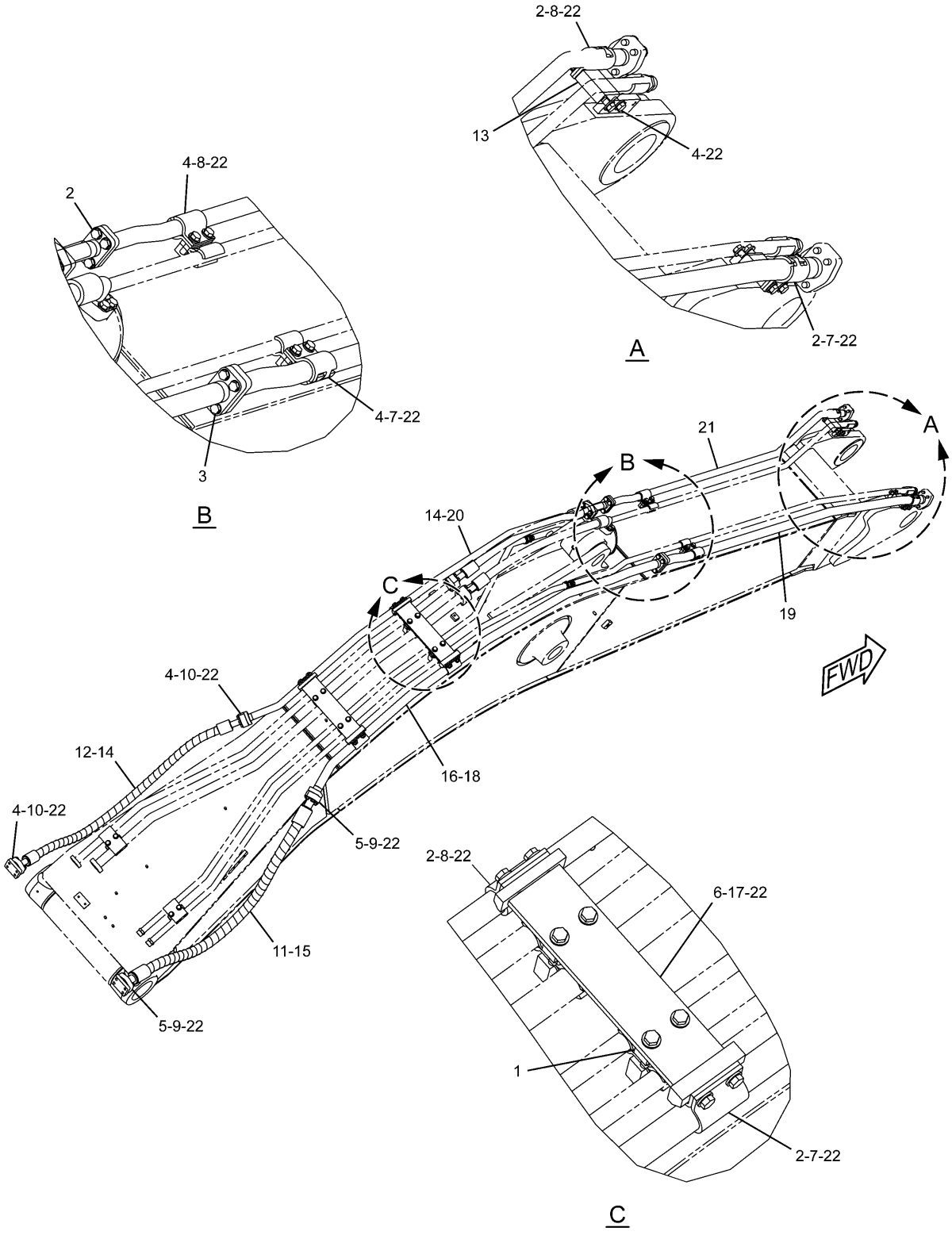

H92743E 01

230–0490 LINES GP–AUXILIARY HYDRAULIC
An Attachment

HYDRAULIC SYSTEM

NOTE	No.	PART No.	QTY	PART NAME	NOTE	No.	PART No.	QTY	PART NAME
	1	151-2494	4	BAR					
	2	8T-4139	16	BOLT (L=30mm)					
	3	8T-4183	4	BOLT (L=40mm)					
	4	8T-4184	16	BOLT (L=45mm)					
	5	8T-4194	8	BOLT (L=50mm)					
	6	8T-6868	8	BOLT (L=80mm)					
	7	173-7916	8	CLAMP					
	8	7Y-4538	8	CLAMP					
	9	1P-5767	4	FLANGE					
	10	6V-0400	4	FLANGE					
	11	113-6677	1	HOSE AS					
	12	282-5760	1	HOSE AS					
	13	153-8798	2	PLATE					
	14	1P-3703	3	SEAL					
	15	1P-3704	2	SEAL					
	16	1P-3705	1	SEAL					
	17	230-0494	2	SUPPORT AS					
	18	197-2348	1	TUBE AS					
	19	197-2349	1	TUBE AS					
	20	247-9310	1	TUBE AS					
	21	247-9311	1	TUBE AS					
	22	8T-4223	44	WASHER					

H92743E 01

230-0490 LINES GP-AUXILIARY HYDRAULIC
An Attachment

HYDRAULIC SYSTEM

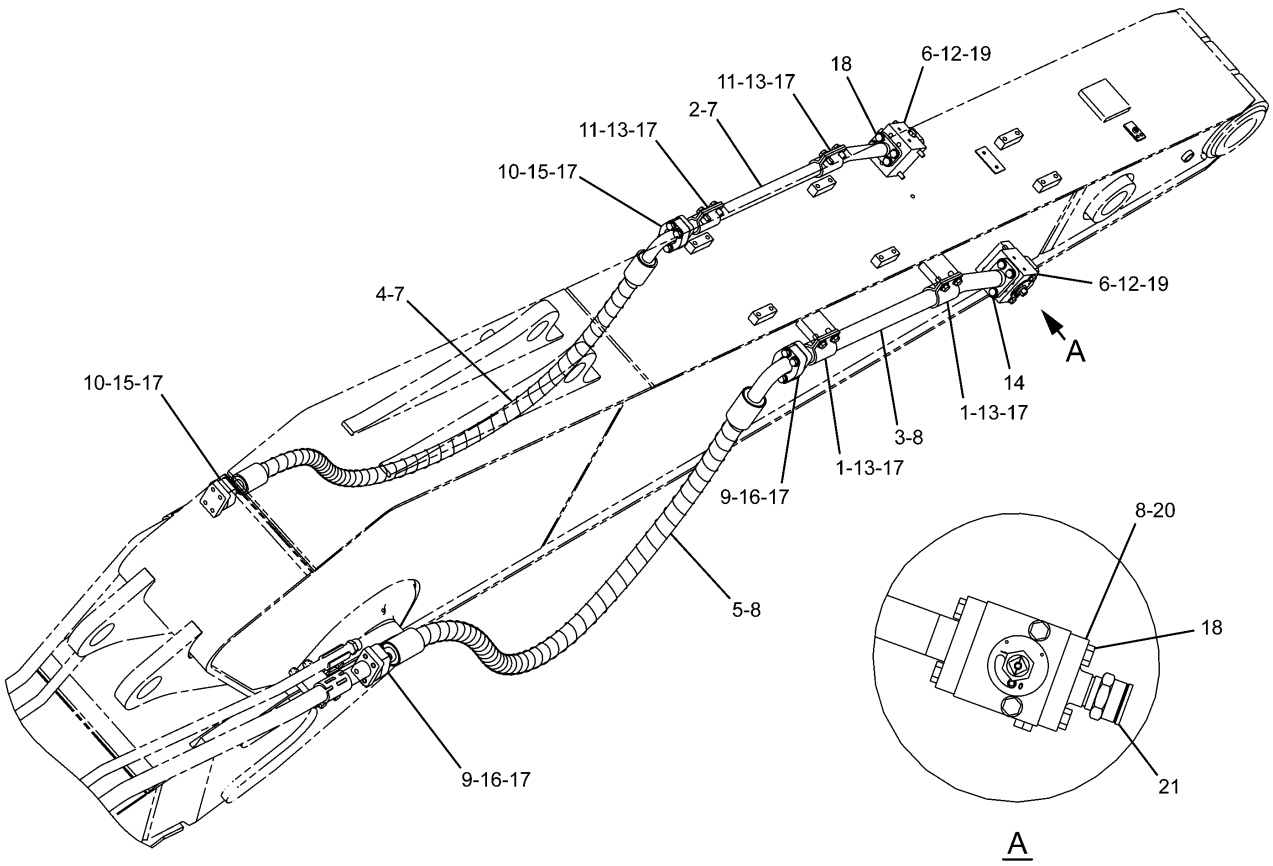

NOTE	No.	PART No.	QTY	PART NAME	NOTE	No.	PART No.	QTY	PART NAME
	1	173-7916	4	CLAMP	B	21	096-1421	2	CAP AS
	2	253-6453	1	TUBE AS					
	3	253-6454	1	TUBE AS					
	4	253-6558	1	HOSE AS					
	5	253-6562	1	HOSE AS					
Y	6	277-0954	2	VALVE AS					
	7	1P-3703	3	SEAL					
	8	1P-3704	5	SEAL					
	9	1P-5767	4	FLANGE					
	10	6V-0400	4	FLANGE					
	11	7Y-4538	4	CLAMP					
	12	8T-4121	4	WASHER					
	13	8T-4139	8	BOLT (L=30mm)					
	14	8T-4183	4	BOLT (L=40mm)					
	15	8T-4184	8	BOLT (L=45mm)					
	16	8T-4194	8	BOLT (L=50mm)					
	17	8T-4223	24	WASHER					
	18	8T-4956	12	BOLT (L=35mm)					
	19	8T-6685	4	BOLT (L=110mm)					
	20	135-4063	2	FLANGE					

B—USE AS REQUIRED

Y—SEE SEPARATE ILLUSTRATION

H92285E 03

237-3181 LINES GP-AUXILIARY HYDRAULIC

277-0954-Page625
An Attachment

HYDRAULIC SYSTEM

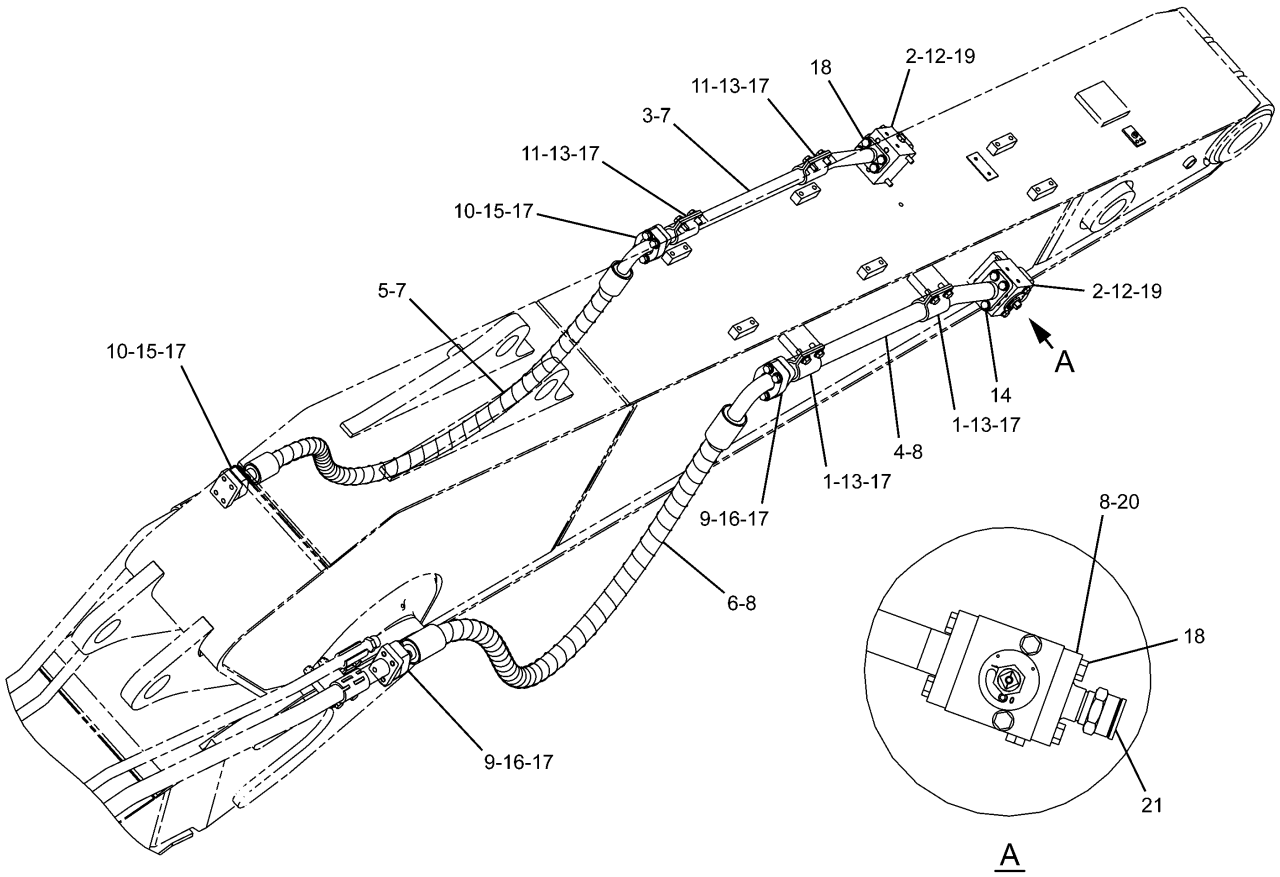

NOTE	No.	PART No.	QTY	PART NAME	NOTE	No.	PART No.	QTY	PART NAME
	1	173-7916	4	CLAMP	B	21	096-1421	2	CAP AS
Y	2	277-0954	2	VALVE AS					
	3	253-6453	1	TUBE AS					
	4	253-6454	1	TUBE AS					
	5	253-6621	1	HOSE AS					
	6	253-6625	1	HOSE AS					
	7	1P-3703	3	SEAL					
	8	1P-3704	5	SEAL					
	9	1P-5767	4	FLANGE					
	10	6V-0400	4	FLANGE					
	11	7Y-4538	4	CLAMP					
	12	8T-4121	4	WASHER					
	13	8T-4139	8	BOLT (L=30mm)					
	14	8T-4183	4	BOLT (L=40mm)					
	15	8T-4184	8	BOLT (L=45mm)					
	16	8T-4194	8	BOLT (L=50mm)					
	17	8T-4223	24	WASHER					
	18	8T-4956	12	BOLT (L=35mm)					
	19	8T-6685	4	BOLT (L=110mm)					
	20	135-4063	2	FLANGE					

B—USE AS REQUIRED

Y—SEE SEPARATE ILLUSTRATION

H92744E 02

237-3182 LINES GP-AUXILIARY HYDRAULIC

277-0954-Page625
An Attachment

HYDRAULIC SYSTEM

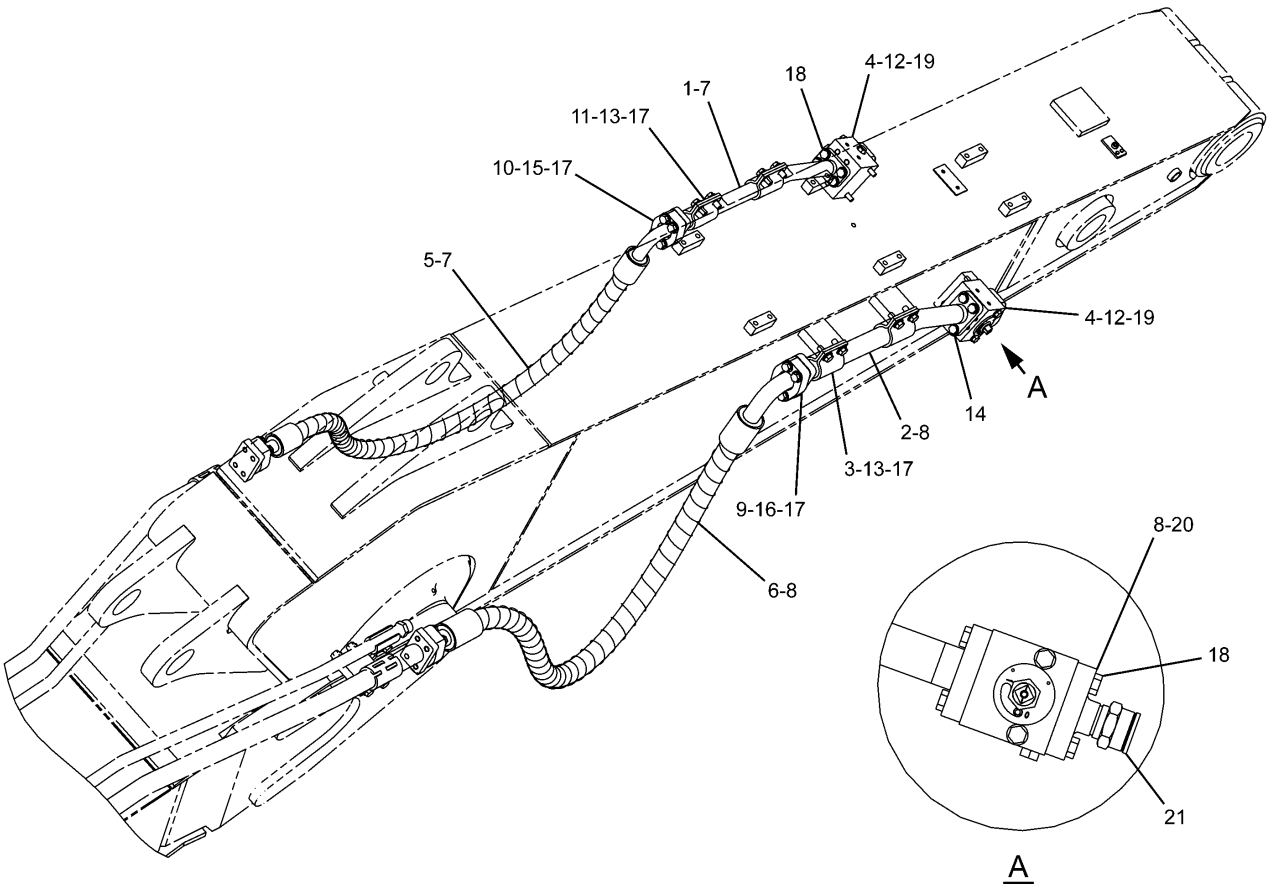

NOTE	No.	PART No.	QTY	PART NAME	NOTE	No.	PART No.	QTY	PART NAME
	1	127-6780	1	TUBE AS	B	21	096-1421	2	CAP AS
	2	142-6582	1	TUBE AS					
	3	173-7916	4	CLAMP					
Y	4	277-0954	2	VALVE AS					
	5	212-5326	1	HOSE AS					
	6	253-6682	1	HOSE AS					
	7	1P-3703	3	SEAL					
	8	1P-3704	5	SEAL					
	9	1P-5767	4	FLANGE					
	10	6V-0400	4	FLANGE					
	11	7Y-4538	4	CLAMP					
	12	8T-4121	4	WASHER					
	13	8T-4139	8	BOLT (L=30mm)					
	14	8T-4183	4	BOLT (L=40mm)					
	15	8T-4184	8	BOLT (L=45mm)					
	16	8T-4194	8	BOLT (L=50mm)					
	17	8T-4223	24	WASHER					
	18	8T-4956	12	BOLT (L=35mm)					
	19	8T-6685	4	BOLT (L=110mm)					
	20	135-4063	2	FLANGE					

B—USE AS REQUIRED

Y—SEE SEPARATE ILLUSTRATION

H92745E 03

237-3183 LINES GP-AUXILIARY HYDRAULIC

277-0954-Page625
An Attachment

HYDRAULIC SYSTEM

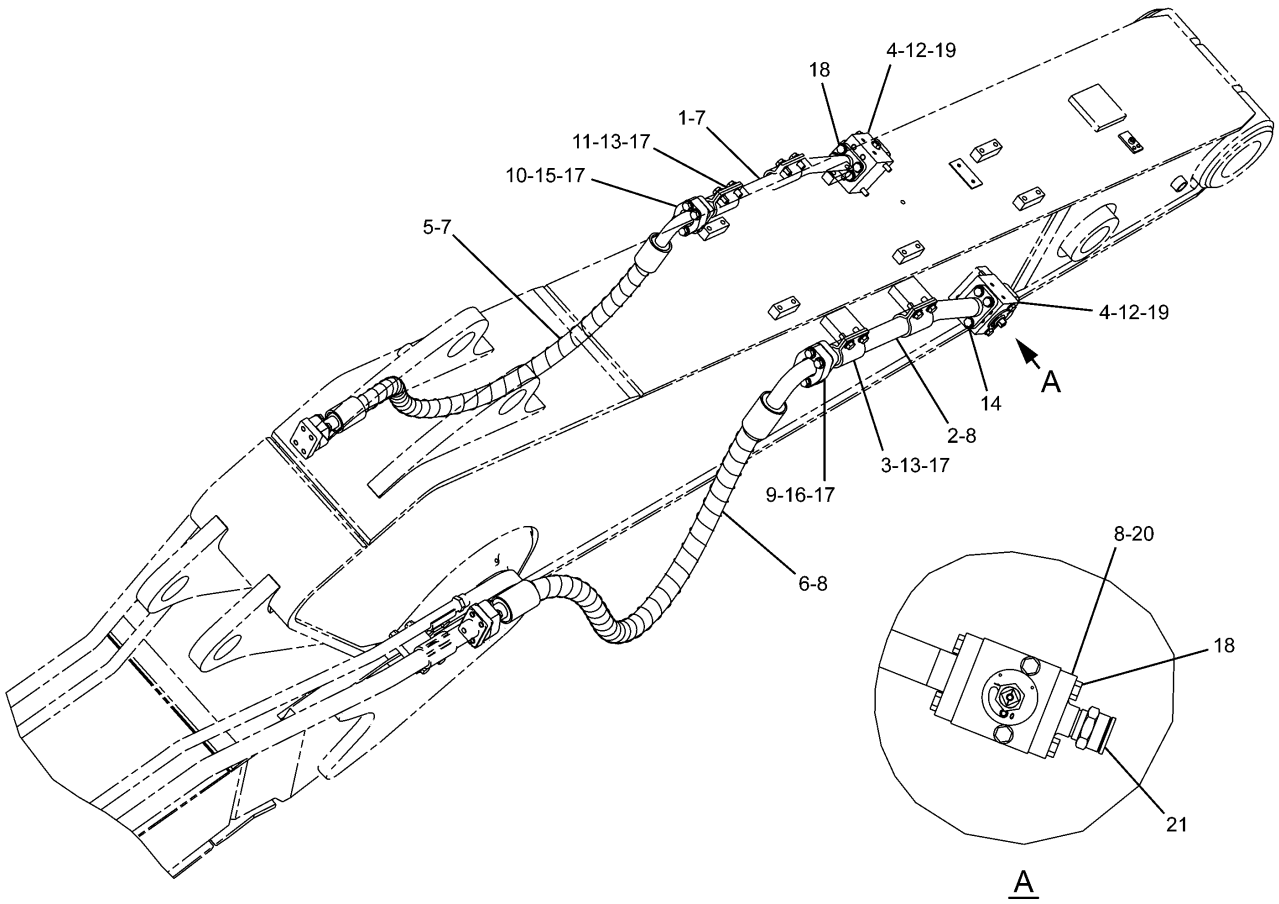

NOTE	No.	PART No.	QTY	PART NAME	NOTE	No.	PART No.	QTY	PART NAME
	1	127-6780	1	TUBE AS	B	21	096-1421	2	CAP AS
	2	142-6582	1	TUBE AS					
	3	173-7916	4	CLAMP					
Y	4	277-0954	2	VALVE AS					
	5	253-6694	1	HOSE AS					
	6	253-6697	1	HOSE AS					
	7	1P-3703	3	SEAL					
	8	1P-3704	5	SEAL					
	9	1P-5767	4	FLANGE					
	10	6V-0400	4	FLANGE					
	11	7Y-4538	4	CLAMP					
	12	8T-4121	4	WASHER					
	13	8T-4139	8	BOLT (L=30mm)					
	14	8T-4183	4	BOLT (L=40mm)					
	15	8T-4184	8	BOLT (L=45mm)					
	16	8T-4194	8	BOLT (L=50mm)					
	17	8T-4223	24	WASHER					
	18	8T-4956	12	BOLT (L=35mm)					
	19	8T-6685	4	BOLT (L=110mm)					
	20	135-4063	2	FLANGE					

B—USE AS REQUIRED

Y—SEE SEPARATE ILLUSTRATION

H92663E 01

237-3184 LINES GP-AUXILIARY HYDRAULIC

277-0954-Page625
An Attachment

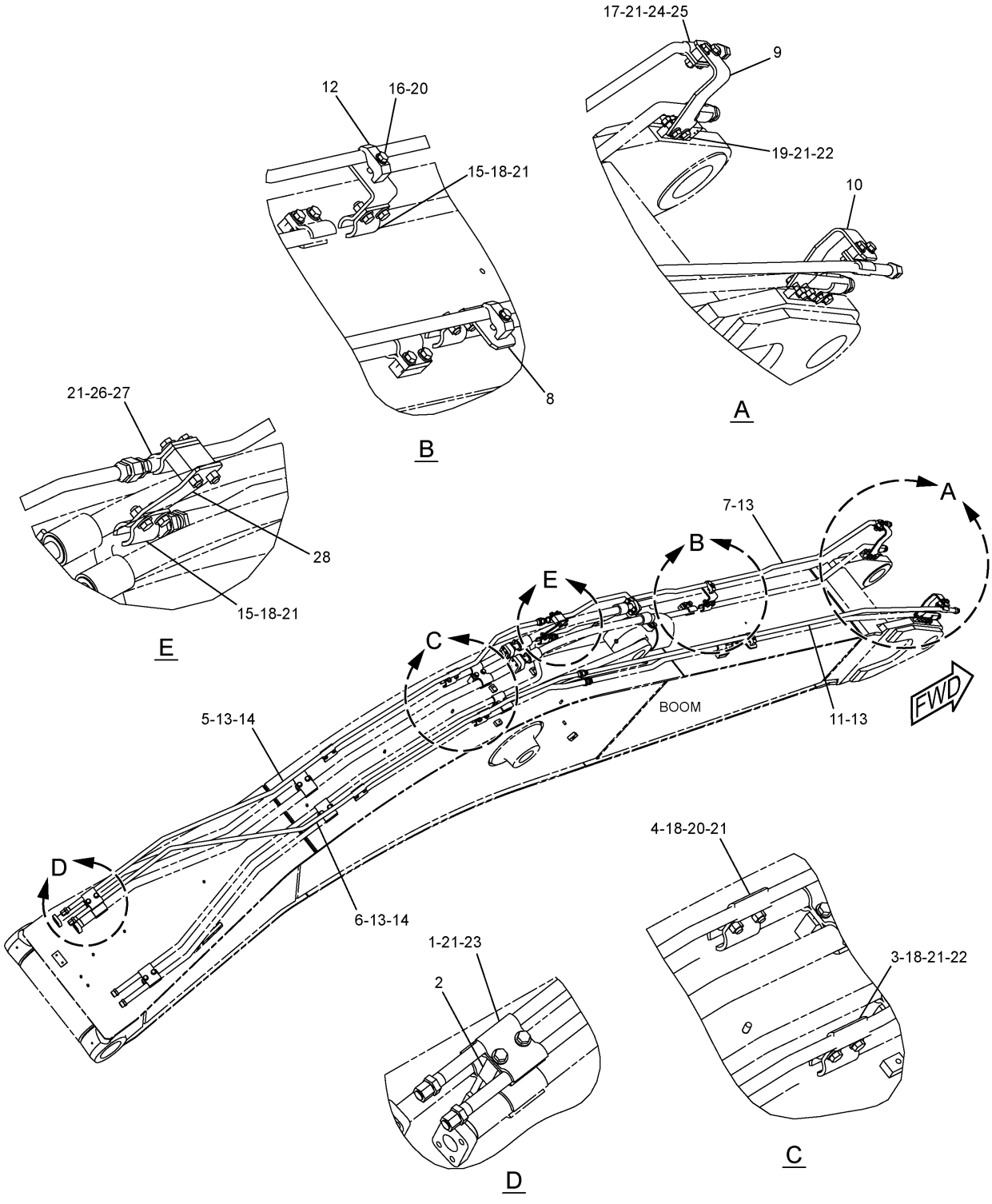

H93991E 06

230–0487 LINES GP–AUXILIARY HYDRAULIC
An Attachment

HYDRAULIC SYSTEM

NOTE	No.	PART No.	QTY	PART NAME	NOTE	No.	PART No.	QTY	PART NAME
	1	153-8867	2	CLIP					
	2	157-9338	1	PLATE					
	3	173-7895	4	CLIP					
	4	179-5260	4	CLIP					
	5	230-0497	1	TUBE AS					
	6	230-0500	1	TUBE AS					
	7	237-3122	1	TUBE AS					
	8	247-9298	2	CLIP AS					
	9	288-7414	1	PLATE					
	10	288-7415	1	PLATE					
	11	247-9312	1	TUBE AS					
	12	093-1291	2	CLAMP					
	13	6V-8398	4	SEAL-O-RING (OD=16.03mm)					
	14	7J-9108	2	SEAL-O-RING (OD=19.28mm)					
	15	7Y-4868	3	CLIP					
	16	8T-4121	2	WASHER					
	17	8T-4194	4	BOLT (L=50mm)					
	18	8T-4139	14	BOLT (L=30mm)					
	19	8T-4184	4	BOLT (L=45mm)					
	20	8T-4185	2	BOLT (L=50mm)					
	21	8T-4223	26	WASHER					
	22	8T-4244	12	NUT					
	23	8T-7930	2	BOLT (L=160mm)					
	24	288-7412	2	CLIP AS					
	25	288-7413	2	CLIP AS					
	26	8T-6868	2	BOLT (L=80mm)					
	27	149-1738	2	CLIP					
	28	288-7614	1	CLIP AS					

H93991E 06

230-0487 LINES GP-AUXILIARY HYDRAULIC
An Attachment

HYDRAULIC SYSTEM

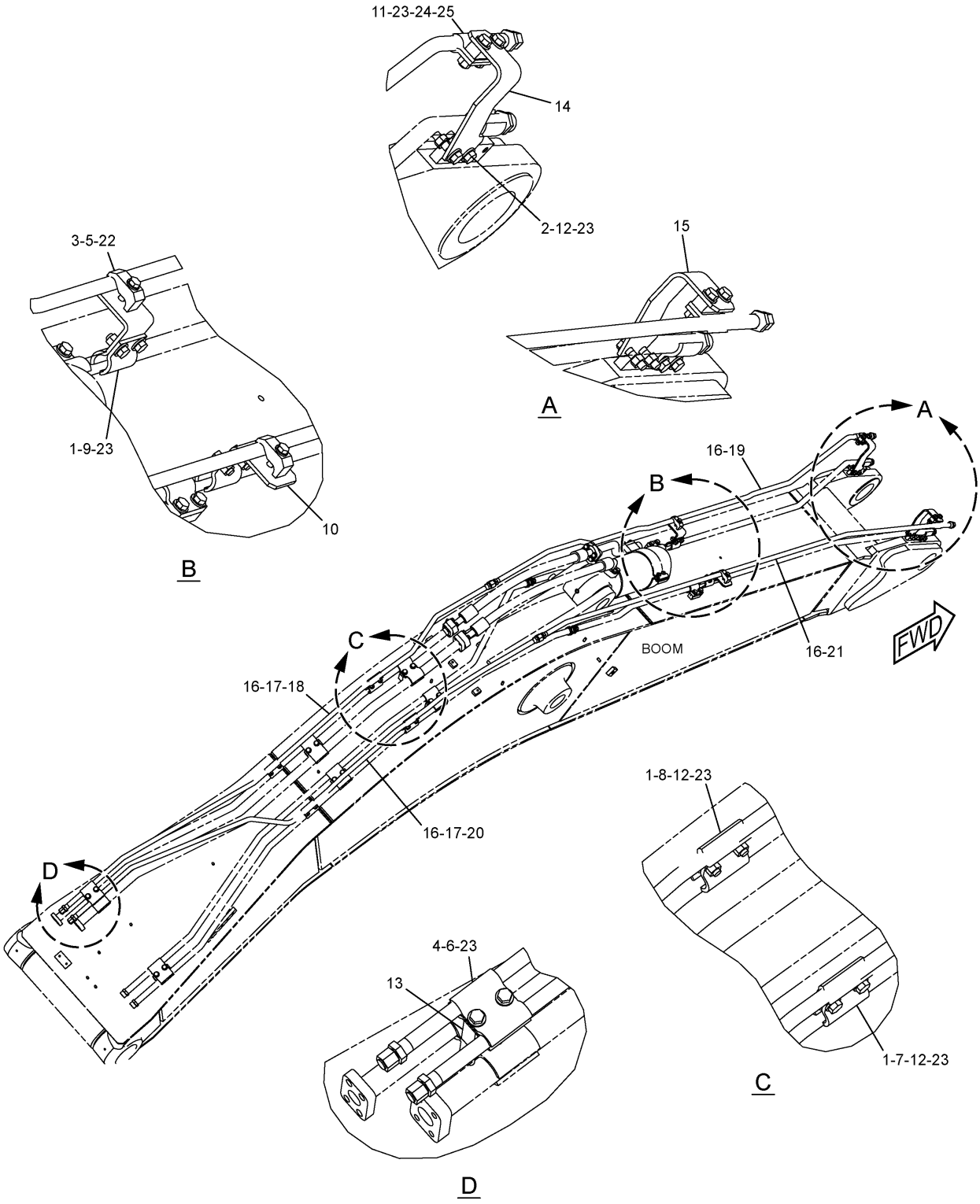

H93992E 01

230–0491 LINES GP–AUXILIARY HYDRAULIC
An Attachment

HYDRAULIC SYSTEM

NOTE	No.	PART No.	QTY	PART NAME	NOTE	No.	PART No.	QTY	PART NAME
	1	8T-4139	12	BOLT (L=30mm)					
	2	8T-4184	4	BOLT (L=45mm)					
	3	8T-4185	2	BOLT (L=50mm)					
	4	8T-7930	2	BOLT (L=160mm)					
	5	093-1291	2	CLAMP					
	6	153-8867	2	CLIP					
	7	173-7895	4	CLIP					
	8	179-5260	4	CLIP					
	9	7Y-4868	2	CLIP					
	10	247-9298	2	CLIP AS					
	11	8T-4194	4	BOLT (L=50mm)					
	12	8T-4244	12	NUT					
	13	157-9338	1	PLATE					
	14	288-7414	1	PLATE					
	15	288-7415	1	PLATE					
	16	6V-8398	4	SEAL-O-RING (OD=16.03mm)					
	17	7J-9108	2	SEAL-O-RING (OD=19.28mm)					
	18	253-6649	1	TUBE AS					
	19	253-6652	1	TUBE AS					
	20	253-6655	1	TUBE AS					
	21	253-6658	1	TUBE AS					
	22	8T-4121	2	WASHER					
	23	8T-4223	22	WASHER					
	24	288-7412	2	CLIP AS					
	25	288-7413	2	CLIP AS					

H93992E 01

230-0491 LINES GP-AUXILIARY HYDRAULIC
An Attachment

HYDRAULIC SYSTEM

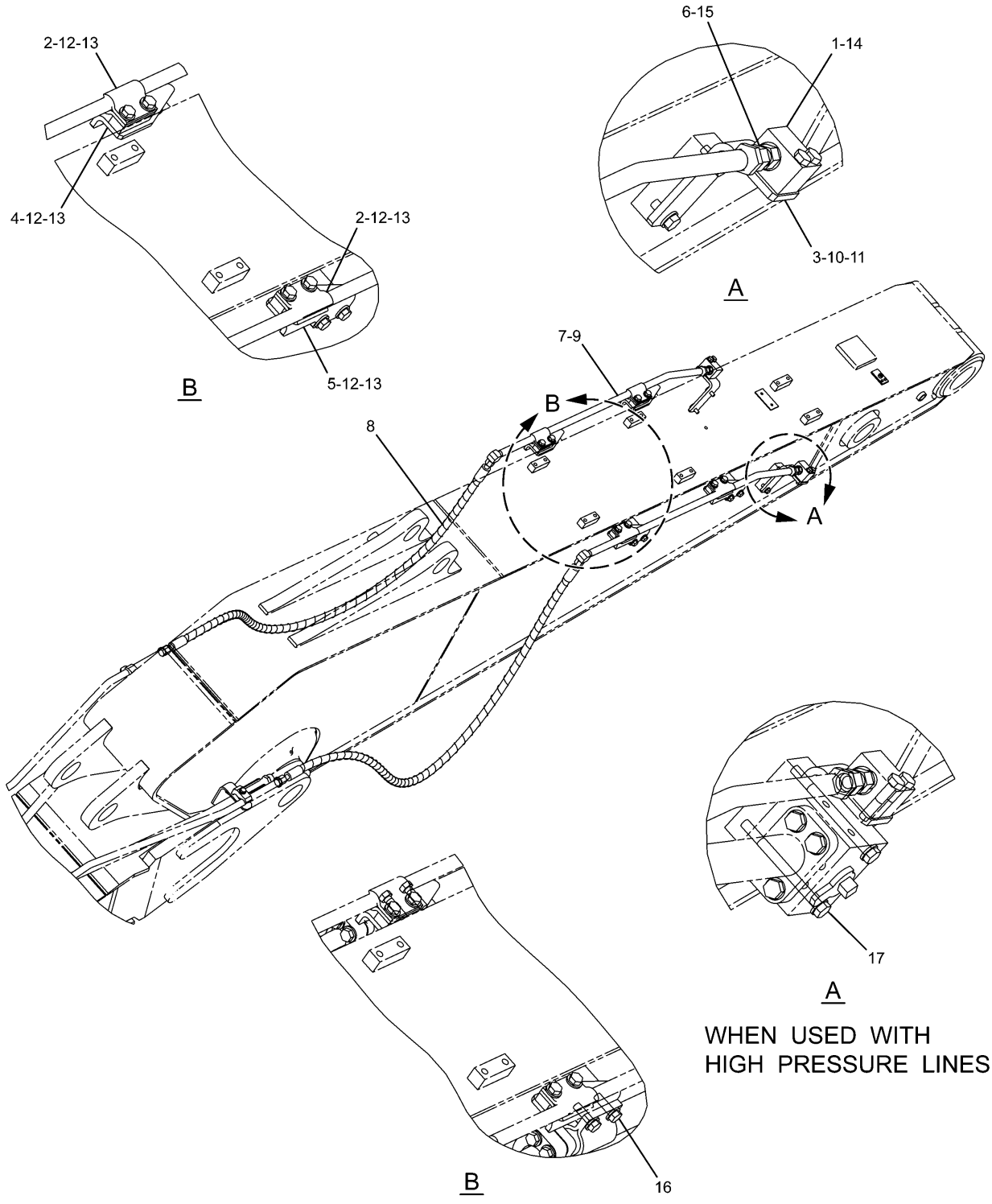

H90567E 01

253-6494 LINES GP-AUXILIARY HYDRAULIC
An Attachment

HYDRAULIC SYSTEM

NOTE	No.	PART No.	QTY	PART NAME	NOTE	No.	PART No.	QTY	PART NAME
	1	6C-6760	2	MANIFOLD					
	2	149-1738	8	CLIP					
	3	187-9977	2	PLATE					
	4	187-9978	2	SUPPORT AS					
	5	187-9981	2	SUPPORT AS					
	6	7X-3164	2	ADAPTER					
	7	253-6455	2	TUBE AS					
	8	253-6566	2	HOSE AS					
	9	6V-8398	4	SEAL-O-RING (OD=16.03mm)					
	10	8T-4121	4	WASHER					
	11	8T-4136	4	BOLT (L=25mm)					
	12	8T-4139	16	BOLT (L=30mm)					
	13	8T-4223	16	WASHER					
	14	8T-4185	4	BOLT (L=50mm)					
	15	3K-0360	2	SEAL-O-RING (ID=16.36mm)					
	16	8T-4183	8	BOLT (L=40mm)					
	17	7X-2543	4	BOLT (L=120mm)					

H90567E 01

253-6494 LINES GP-AUXILIARY HYDRAULIC
An Attachment

HYDRAULIC SYSTEM

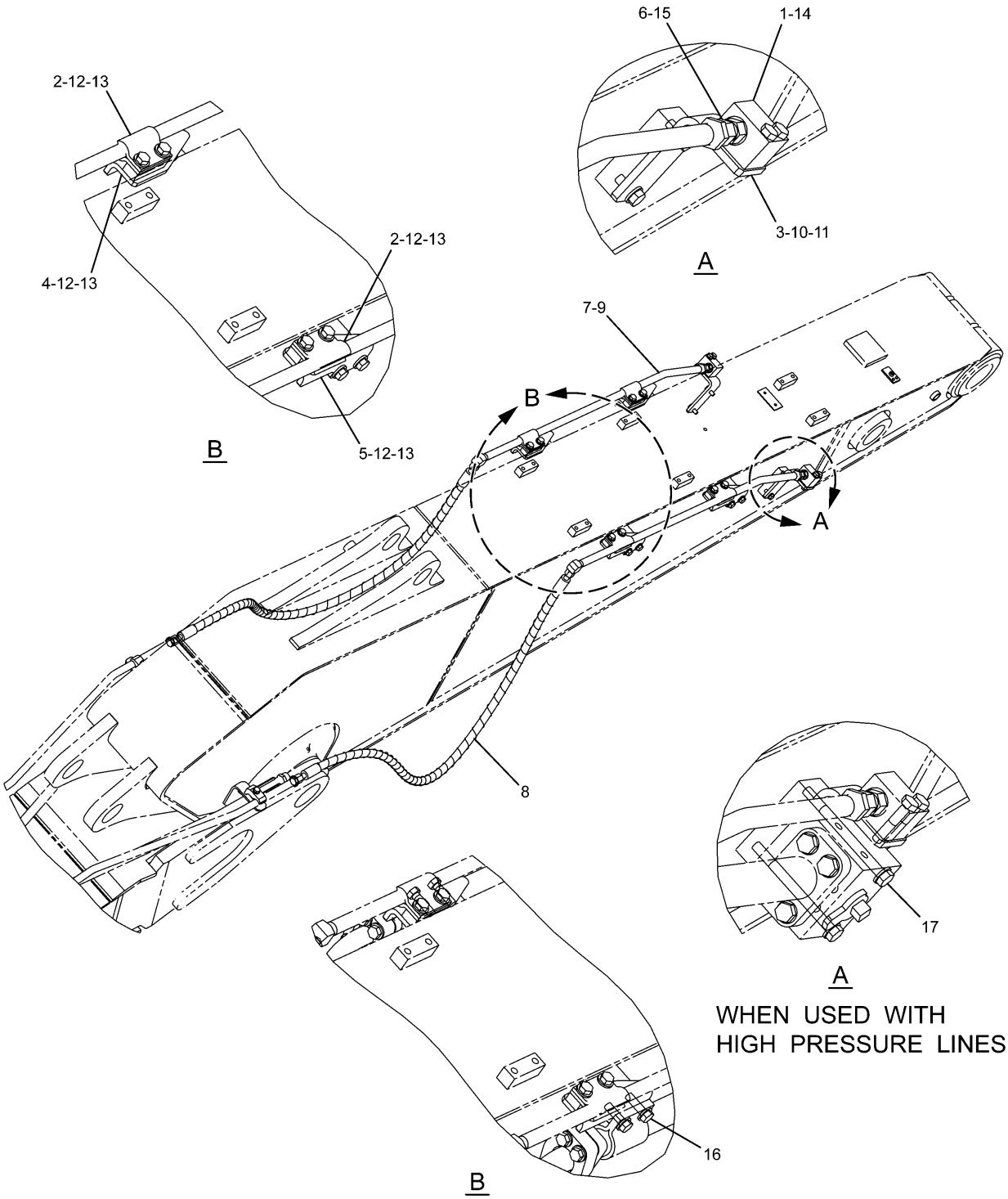

H90568E 01

253-6497 LINES GP-AUXILIARY HYDRAULIC
An Attachment

HYDRAULIC SYSTEM

NOTE	No.	PART No.	QTY	PART NAME	NOTE	No.	PART No.	QTY	PART NAME
	1	6C-6760	2	MANIFOLD					
	2	149-1738	8	CLIP					
	3	187-9977	2	PLATE					
	4	187-9978	2	SUPPORT AS					
	5	187-9981	2	SUPPORT AS					
	6	7X-3164	2	ADAPTER					
	7	253-6455	2	TUBE AS					
	8	253-6557	2	HOSE AS					
	9	6V-8398	4	SEAL-O-RING (OD=16.03mm)					
	10	8T-4121	4	WASHER					
	11	8T-4136	4	BOLT (L=25mm)					
	12	8T-4139	16	BOLT (L=30mm)					
	13	8T-4223	16	WASHER					
	14	8T-4185	4	BOLT (L=50mm)					
	15	3K-0360	2	SEAL-O-RING (ID=16.36mm)					
	16	8T-4183	8	BOLT (L=40mm)					
	17	7X-2543	4	BOLT (L=120mm)					

H90568E 01

253-6497 LINES GP-AUXILIARY HYDRAULIC
An Attachment

HYDRAULIC SYSTEM

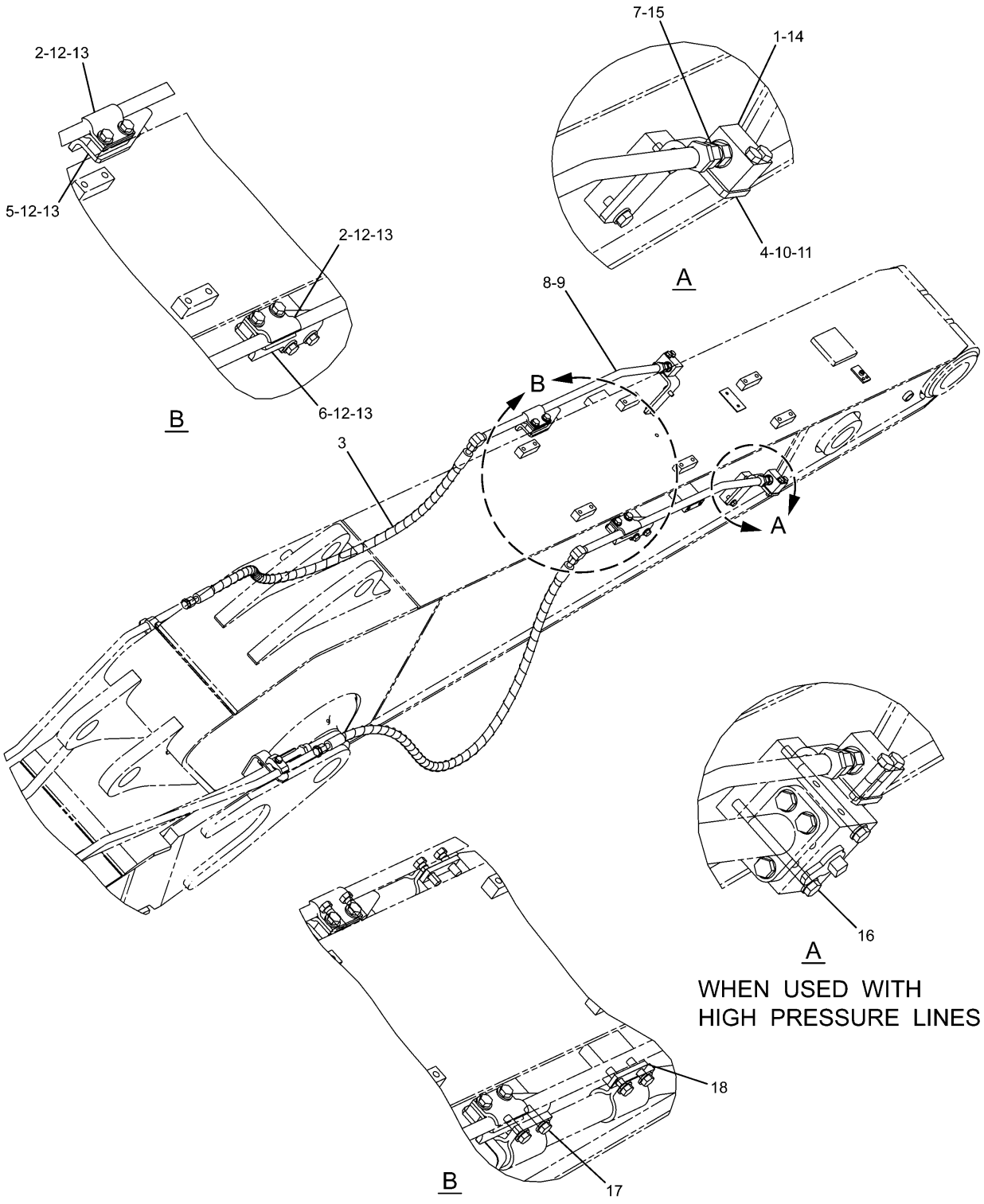

H90569E 01

253-6500 LINES GP-AUXILIARY HYDRAULIC
An Attachment

HYDRAULIC SYSTEM

NOTE	No.	PART No.	QTY	PART NAME	NOTE	No.	PART No.	QTY	PART NAME
	1	6C-6760	2	MANIFOLD					
	2	149-1738	4	CLIP					
	3	177-8572	2	HOSE AS					
	4	187-9977	2	PLATE					
	5	187-9978	1	SUPPORT AS					
	6	187-9981	1	SUPPORT AS					
	7	7X-3164	2	ADAPTER					
	8	253-6685	2	TUBE AS					
	9	6V-8398	4	SEAL-O-RING (OD=16.03mm)					
	10	8T-4121	4	WASHER					
	11	8T-4136	4	BOLT (L=25mm)					
	12	8T-4139	8	BOLT (L=30mm)					
	13	8T-4223	8	WASHER					
	14	8T-4185	4	BOLT (L=50mm)					
	15	3K-0360	2	SEAL-O-RING (ID=16.36mm)					
	16	7X-2543	4	BOLT (L=120mm)					
	17	8T-4183	8	BOLT (L=40mm)					
	18	197-2362	2	PLATE					

H90569E 01

253-6500 LINES GP-AUXILIARY HYDRAULIC
An Attachment

HYDRAULIC SYSTEM

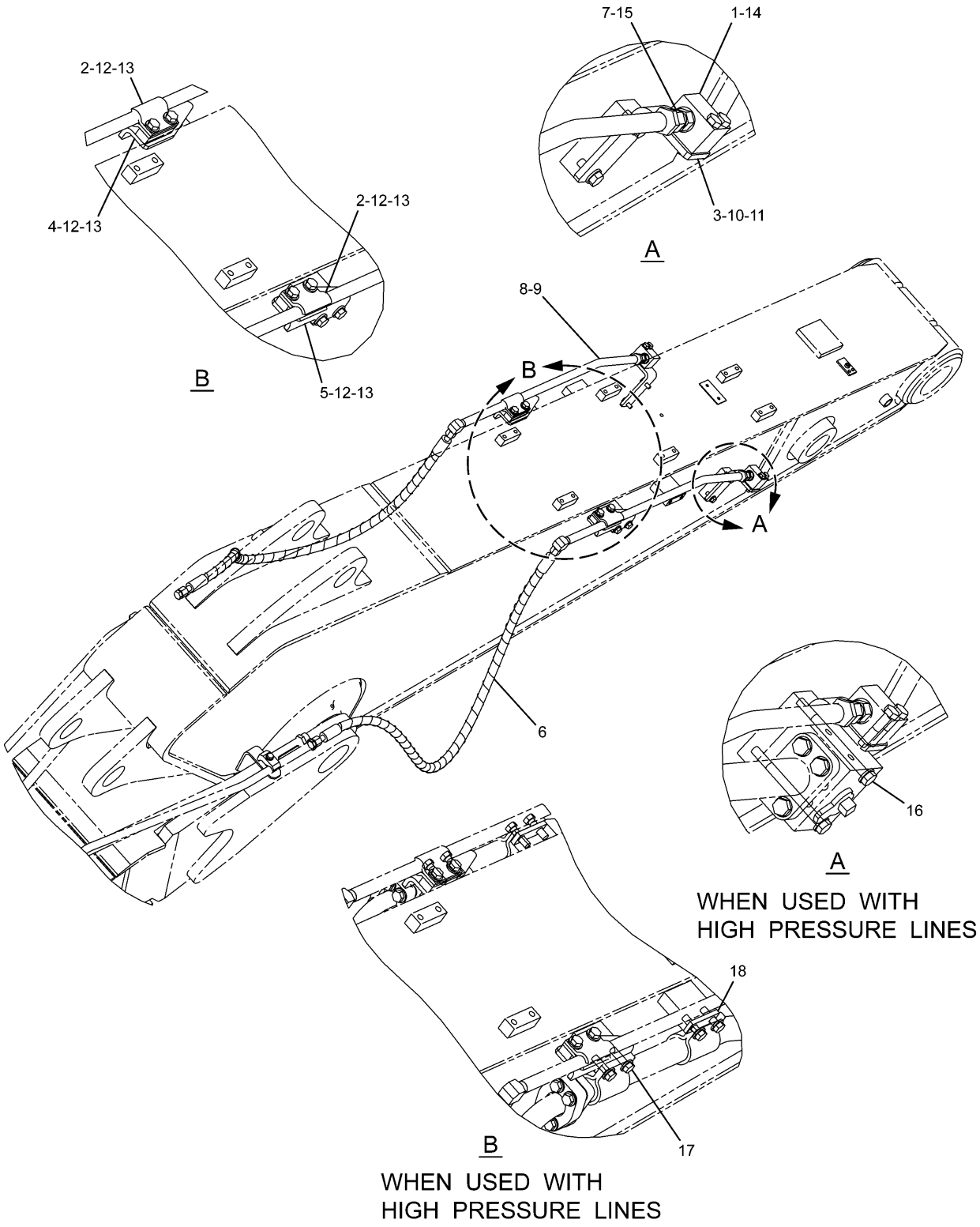

H90565E 01

242-6492 LINES GP-AUXILIARY HYDRAULIC
An Attachment

HYDRAULIC SYSTEM

NOTE	No.	PART No.	QTY	PART NAME	NOTE	No.	PART No.	QTY	PART NAME
	1	6C-6760	2	MANIFOLD					
	2	149-1738	4	CLIP					
	3	187-9977	2	PLATE					
	4	187-9978	1	SUPPORT AS					
	5	187-9981	1	SUPPORT AS					
	6	216-6485	2	HOSE AS					
	7	7X-3164	2	ADAPTER					
	8	253-6685	2	TUBE AS					
	9	6V-8398	4	SEAL-O-RING (OD=16.03mm)					
	10	8T-4121	4	WASHER					
	11	8T-4136	4	BOLT (L=25mm)					
	12	8T-4139	8	BOLT (L=30mm)					
	13	8T-4223	8	WASHER					
	14	8T-4185	4	BOLT (L=50mm)					
	15	3K-0360	2	SEAL-O-RING (ID=16.36mm)					
	16	7X-2543	4	BOLT (L=120mm)					
	17	8T-4183	8	BOLT (L=40mm)					
	18	197-2362	2	PLATE					

H90565E 01

242-6492 LINES GP-AUXILIARY HYDRAULIC
An Attachment

HYDRAULIC SYSTEM

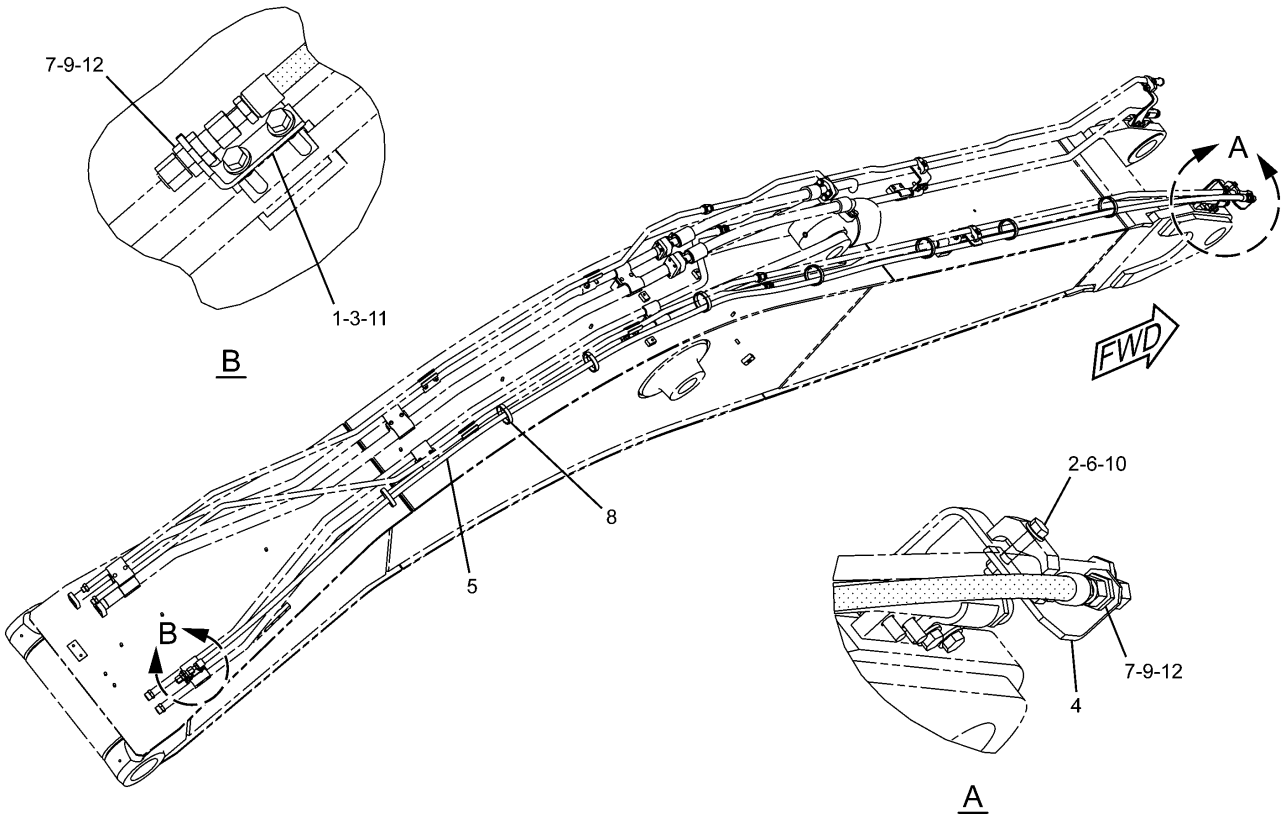

NOTE	No.	PART No.	QTY	PART NAME	NOTE	No.	PART No.	QTY	PART NAME
	1	8T-4194	2	BOLT (L=50mm)					
	2	8T-6466	1	BOLT (L=60mm)					
	3	253-6417	1	BRACKET					
	4	253-6419	1	BRACKET					
	5	253-6614	1	HOSE AS					
	6	8T-4133	1	NUT					
	7	6V-9169	2	NUT					
	8	7K-1181	8	STRAP					
	9	6V-8995	2	UNION					
	10	8T-4121	1	WASHER					
	11	8T-4223	2	WASHER					
	12	6V-8398	4	SEAL-O-RING (OD=16.03mm)					

H89090E 04

230-0488 LINES GP-DRAIN

S/N CJM 1-(T06.08), DAP 1-(T06.08), PEH 1-(T06.08)
An Attachment

HYDRAULIC SYSTEM

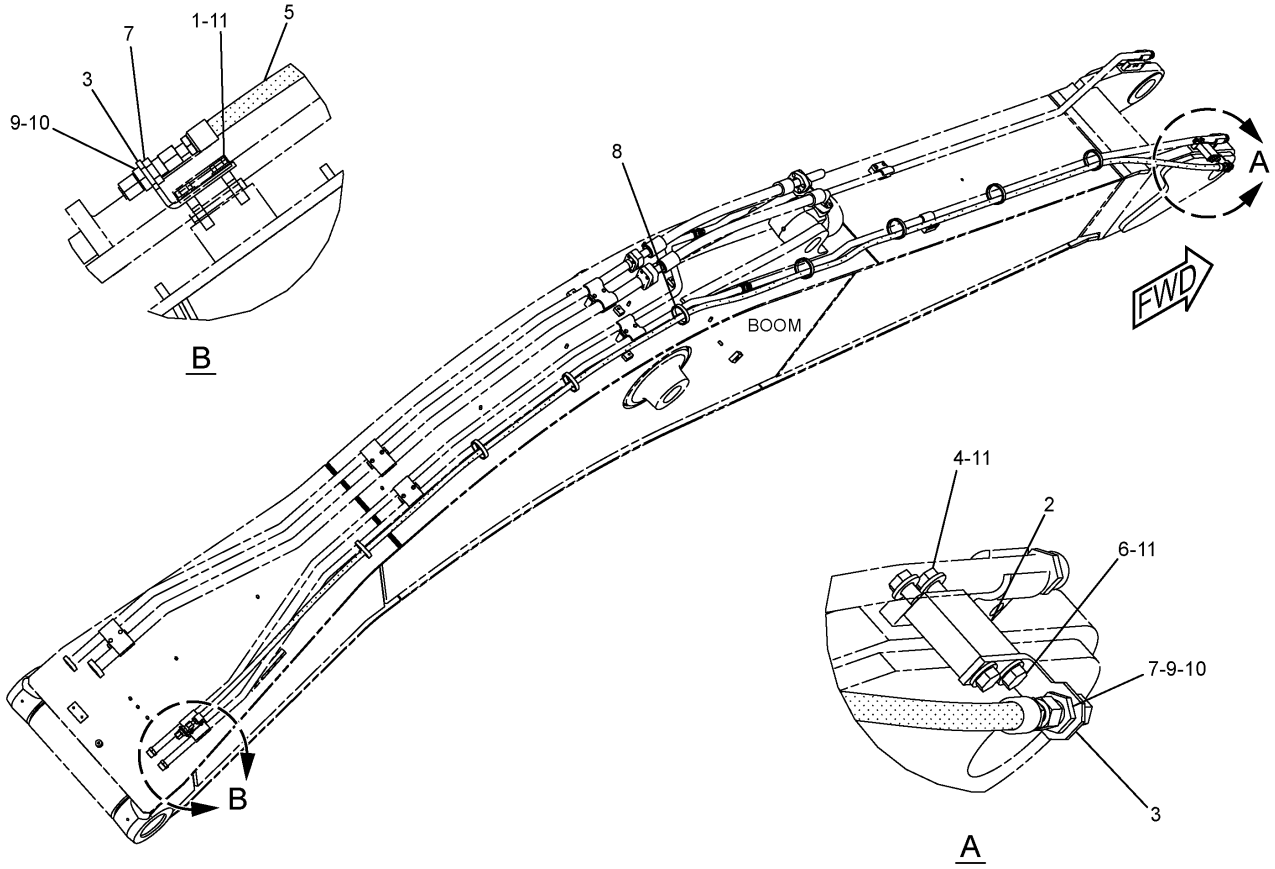

NOTE	No.	PART No.	QTY	PART NAME	NOTE	No.	PART No.	QTY	PART NAME
	1	8T-4194	2	BOLT (L=50mm)					
	2	153-8798	1	PLATE					
	3	253-6417	2	BRACKET					
	4	8T-4184	2	BOLT (L=45mm)					
	5	253-6614	1	HOSE AS					
	6	8T-4956	2	BOLT (L=35mm)					
	7	6V-9169	2	NUT					
	8	7K-1181	8	STRAP					
	9	6V-8995	2	UNION					
	10	6V-8398	4	SEAL-O-RING (OD=16.03mm)					
	11	8T-4223	6	WASHER					

H94663E 05

230-0488 LINES GP-DRAIN

S/N CJM (T06.09)-Up, DAP (T06.09)-Up, PEH (T06.09)-Up
An Attachment

MEMORANDA

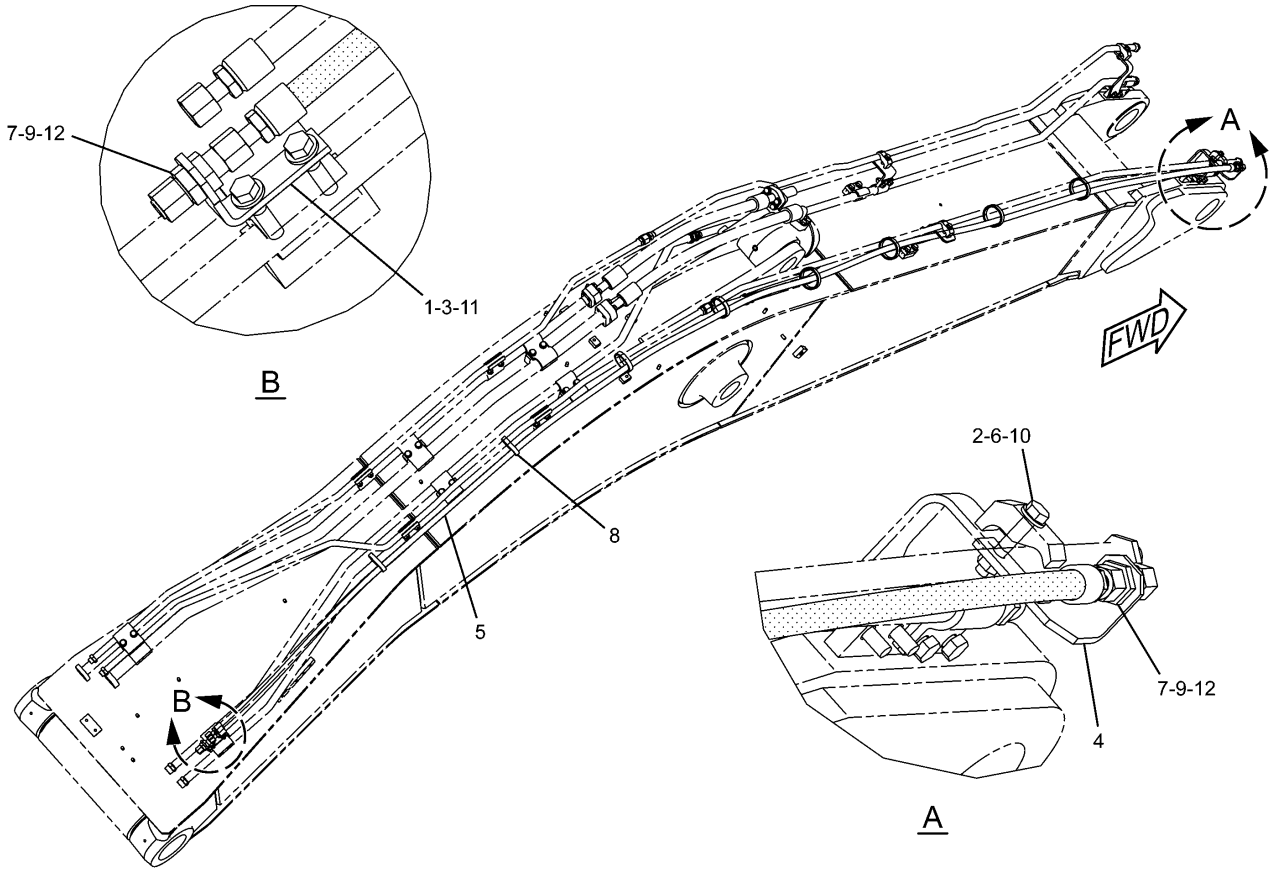

NOTE	No.	PART No.	QTY	PART NAME	NOTE	No.	PART No.	QTY	PART NAME
	1	8T-4194	2	BOLT (L=50mm)					
	2	8T-6466	1	BOLT (L=60mm)					
	3	253-6417	1	BRACKET					
	4	253-6419	1	BRACKET					
	5	262-3164	1	HOSE AS					
	6	8T-4133	1	NUT					
	7	6V-9169	2	NUT					
	8	7K-1181	8	STRAP					
	9	6V-8995	2	UNION					
	10	8T-4121	1	WASHER					
	11	8T-4223	2	WASHER					
	12	6V-8398	4	SEAL-O-RING (OD=16.03mm)					

H89035E 00

230-0492 LINES GP-DRAIN

S/N CJM 1-(T06.08), DAP 1-(T06.08), PEH 1-(T06.08)
An Attachment

HYDRAULIC SYSTEM

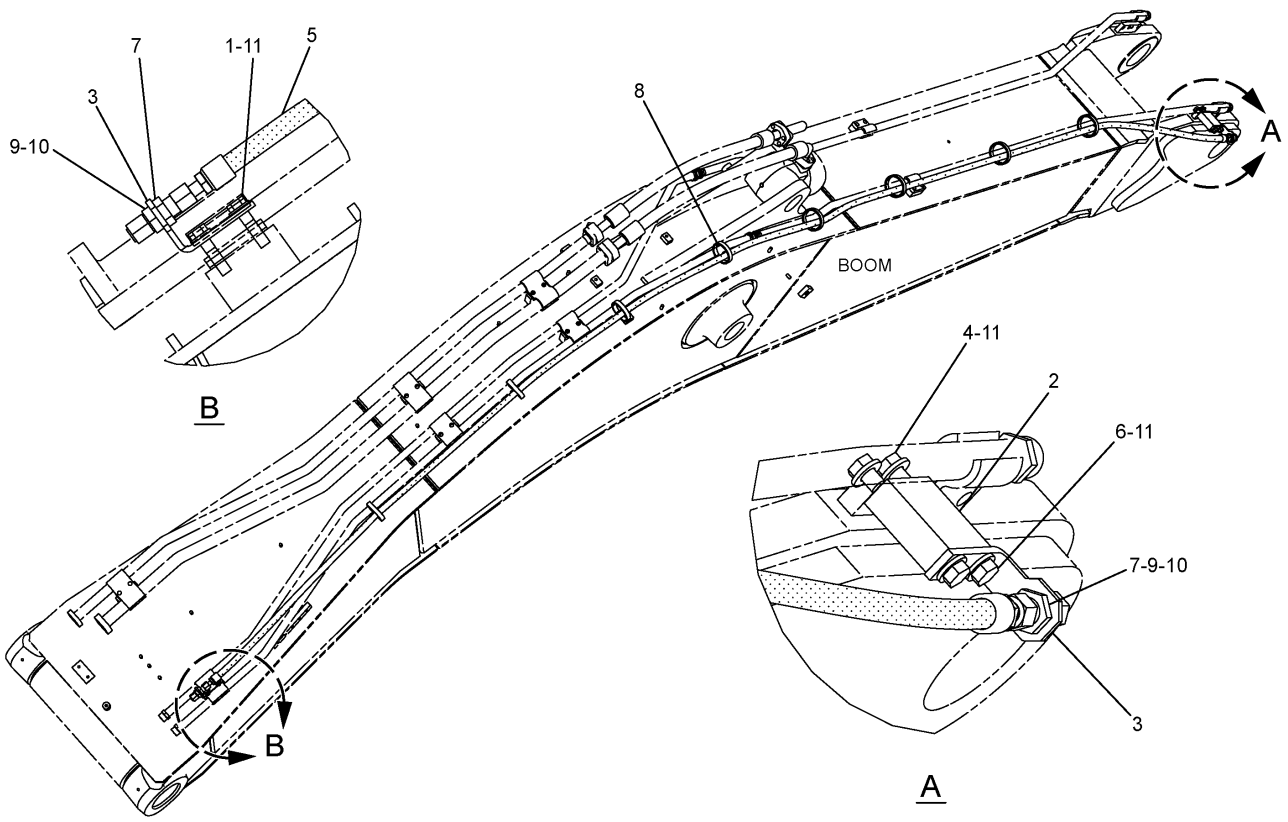

NOTE	No.	PART No.	QTY	PART NAME	NOTE	No.	PART No.	QTY	PART NAME
	1	8T-4194	2	BOLT (L=50mm)					
	2	153-8798	1	PLATE					
	3	253-6417	2	BRACKET					
	4	8T-4184	2	BOLT (L=45mm)					
	5	262-3164	1	HOSE AS					
	6	8T-4956	2	BOLT (L=35mm)					
	7	6V-9169	2	NUT					
	8	7K-1181	8	STRAP					
	9	6V-8995	2	UNION					
	10	6V-8398	4	SEAL-O-RING (OD=16.03mm)					
	11	8T-4223	2	WASHER					

H94664E 01

230-0492 LINES GP-DRAIN

S/N CJM (T06.09)-Up, DAP (T06.09)-Up, PEH (T06.09)-Up
An Attachment

MEMORANDA

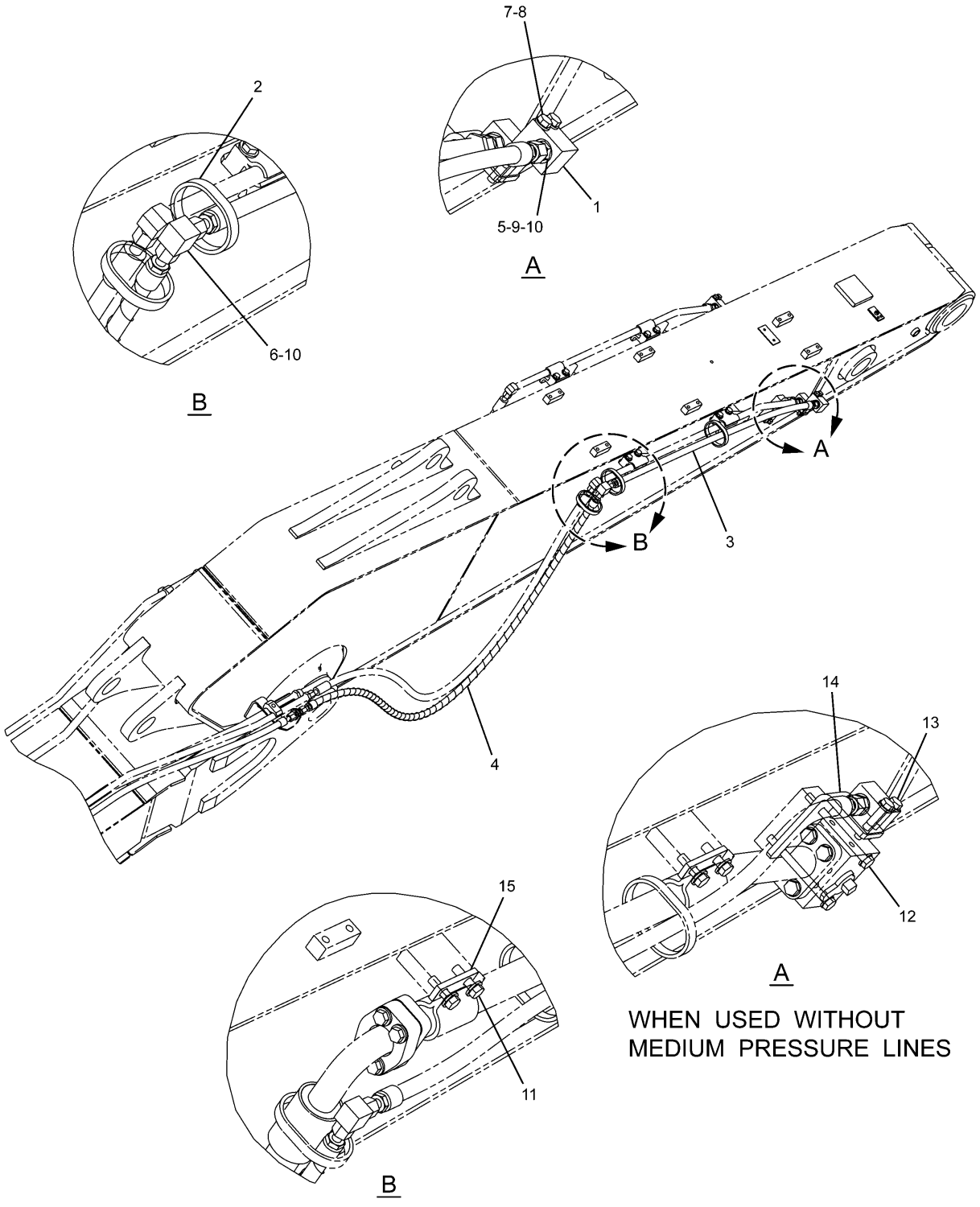

H89221E 01

253-6496 LINES GP-DRAIN
An Attachment

HYDRAULIC SYSTEM

NOTE	No.	PART No.	QTY	PART NAME	NOTE	No.	PART No.	QTY	PART NAME
	1	6C-6760	1	MANIFOLD					
	2	7K-1181	3	STRAP					
	3	253-6438	1	HOSE AS					
	4	253-6666	1	HOSE AS					
	5	6V-8639	1	CONNECTOR					
	6	6V-9808	1	UNION					
	7	8T-4121	2	WASHER					
	8	8T-4198	2	BOLT (L=100mm)					
	9	3K-0360	1	SEAL-O-RING (ID=16.36mm)					
	10	6V-8398	3	SEAL-O-RING (OD=16.03mm)					
	11	6V-7611	4	BOLT (L=40mm)					
	12	7X-2543	2	BOLT (L=120mm)					
	13	8T-6466	2	BOLT (L=60mm)					
	14	187-9977	1	PLATE					
	15	210-9907	2	PLATE					

H89221E 01

253-6496 LINES GP-DRAIN
An Attachment

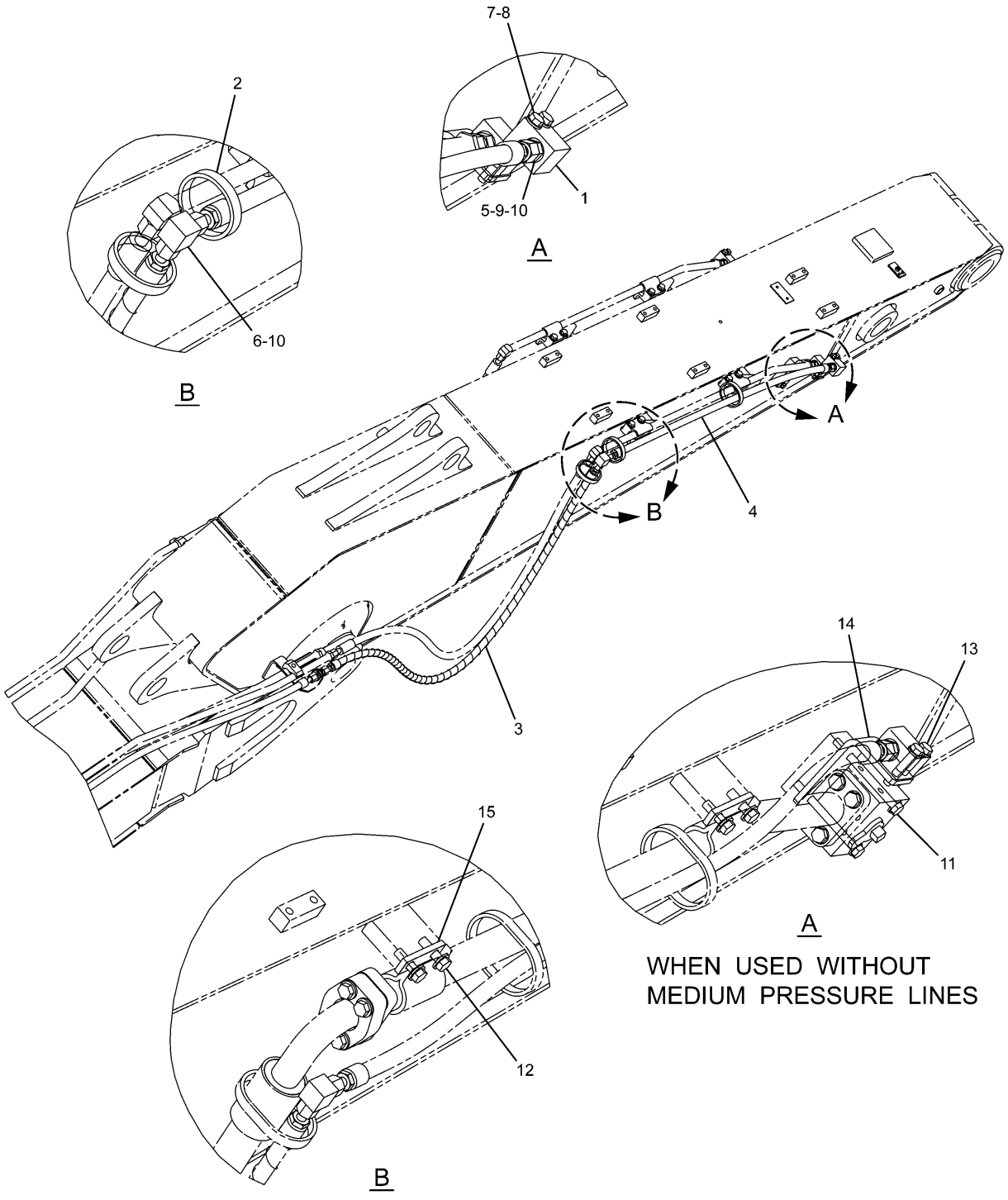

H89222E 01

253-6499 LINES GP-DRAIN
An Attachment

HYDRAULIC SYSTEM

NOTE	No.	PART No.	QTY	PART NAME	NOTE	No.	PART No.	QTY	PART NAME
	1	6C-6760	1	MANIFOLD					
	2	7K-1181	3	STRAP					
	3	253-6426	1	HOSE AS					
	4	253-6438	1	HOSE AS					
	5	6V-8639	1	CONNECTOR					
	6	6V-9808	1	UNION					
	7	8T-4121	2	WASHER					
	8	8T-4198	2	BOLT (L=100mm)					
	9	3K-0360	1	SEAL-O-RING (ID=16.36mm)					
	10	6V-8398	3	SEAL-O-RING (OD=16.03mm)					
	11	7X-2543	2	BOLT (L=120mm)					
	12	8T-4183	4	BOLT (L=40mm)					
	13	8T-6466	2	BOLT (L=60mm)					
	14	187-9977	1	PLATE					
	15	210-9907	2	PLATE					

H89222E 01

253-6499 LINES GP-DRAIN
An Attachment

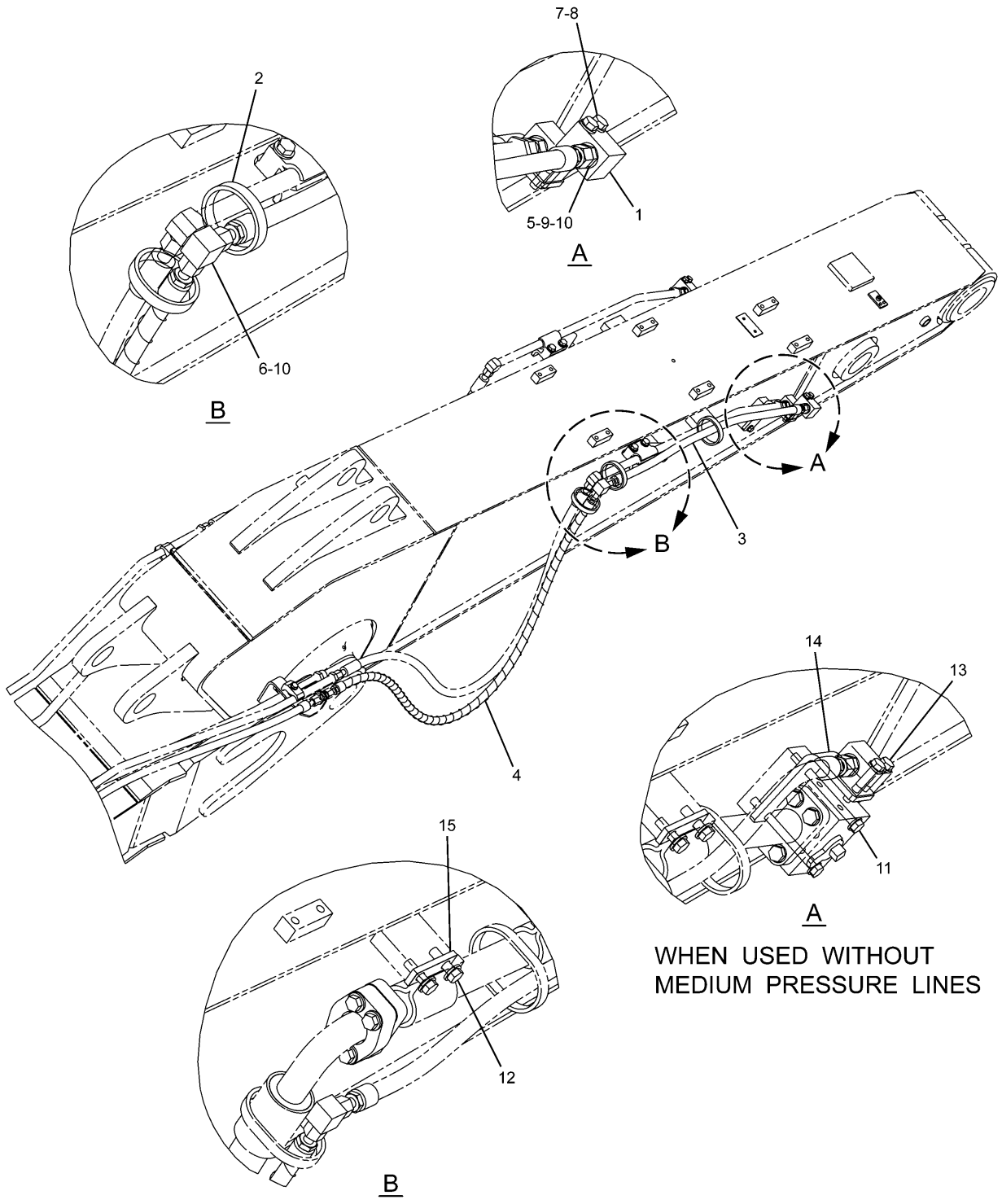

H89223E 01

253-6416 LINES GP-DRAIN
An Attachment

HYDRAULIC SYSTEM

NOTE	No.	PART No.	QTY	PART NAME	NOTE	No.	PART No.	QTY	PART NAME
	1	6C-6760	1	MANIFOLD					
	2	7K-1181	3	STRAP					
	3	253-6754	1	HOSE AS					
	4	253-6757	1	HOSE AS					
	5	6V-8639	1	CONNECTOR					
	6	6V-9808	1	UNION					
	7	8T-4121	2	WASHER					
	8	8T-4198	2	BOLT (L=100mm)					
	9	3K-0360	1	SEAL-O-RING (ID=16.36mm)					
	10	6V-8398	3	SEAL-O-RING (OD=16.03mm)					
	11	7X-2543	2	BOLT (L=120mm)					
	12	8T-4183	4	BOLT (L=40mm)					
	13	8T-6466	2	BOLT (L=60mm)					
	14	187-9977	1	PLATE					
	15	210-9907	2	PLATE					

H89223E 01

253-6416 LINES GP-DRAIN
An Attachment

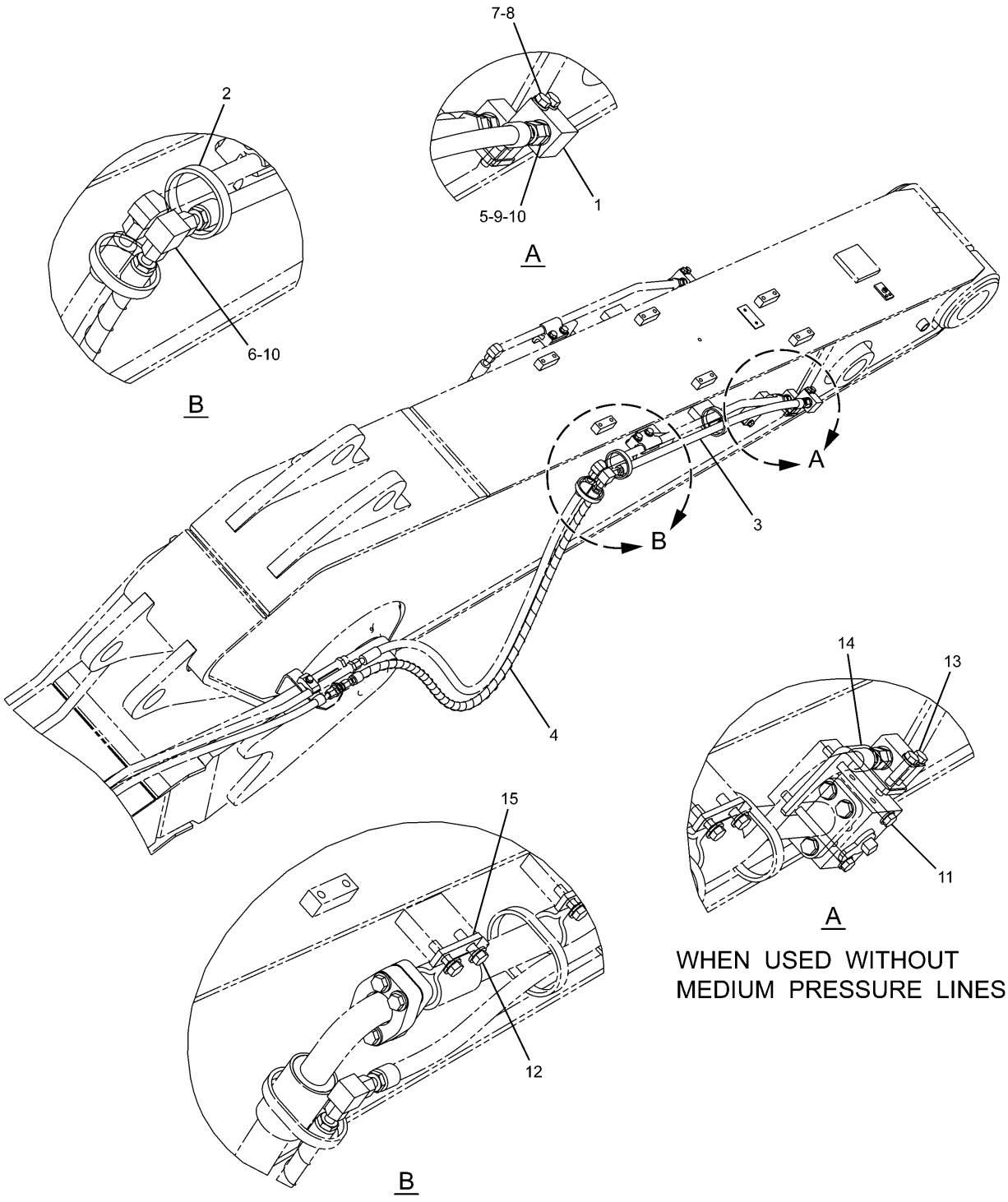

WHEN USED WITHOUT
MEDIUM PRESSURE LINES

WHEN USED WITHOUT
MEDIUM PRESSURE LINES

H89225E 00

242-6493 LINES GP-DRAIN
An Attachment

HYDRAULIC SYSTEM

NOTE	No.	PART No.	QTY	PART NAME	NOTE	No.	PART No.	QTY	PART NAME
	1	6C-6760	1	MANIFOLD					
	2	7K-1181	3	STRAP					
	3	253-6754	1	HOSE AS					
	4	262-3161	1	HOSE AS					
	5	6V-8639	1	CONNECTOR					
	6	6V-9808	1	UNION					
	7	8T-4121	2	WASHER					
	8	8T-4198	2	BOLT (L=100mm)					
	9	3K-0360	1	SEAL-O-RING (ID=16.36mm)					
	10	6V-8398	3	SEAL-O-RING (OD=16.03mm)					
	11	7X-2543	2	BOLT (L=120mm)					
	12	8T-4183	4	BOLT (L=40mm)					
	13	8T-6466	2	BOLT (L=60mm)					
	14	187-9977	1	PLATE					
	15	210-9907	2	PLATE					

H89225E 00

242-6493 LINES GP-DRAIN
An Attachment

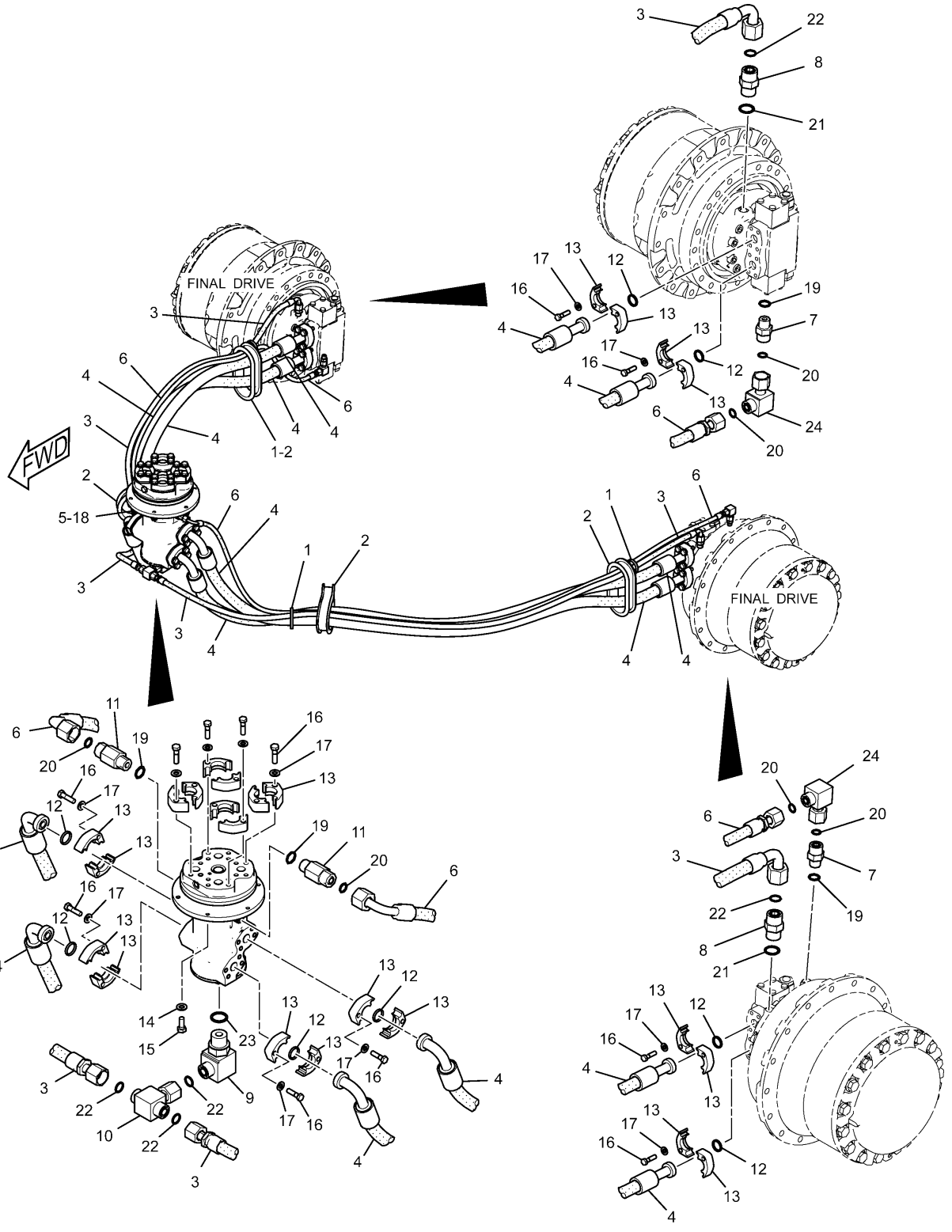

227-0542 LINES GP-TRAVEL MOTOR
S/N CJM 1-Up
234-4440-Page544

HYDRAULIC SYSTEM

NOTE	No.	PART No.	QTY	PART NAME	NOTE	No.	PART No.	QTY	PART NAME
	1	7K-1181	4	STRAP					
	2	108-7118	4	GROMMET					
	3	108-7433	2	HOSE AS					
	4	227-0621	4	HOSE AS					
Y	5	234-4440	1	SWIVEL GP					
	6	179-7616	2	HOSE AS					
	7	6V-8636	2	CONNECTOR					
	8	6V-8639	2	CONNECTOR					
	9	6V-8721	1	ELBOW					
	10	6V-9844	1	TEE					
	11	8T-1779	2	CONNECTOR					
	12	1P-3703	8	SEAL					
	13	6V-0400	24	FLANGE					
	14	8T-4121	6	WASHER					
	15	8T-4136	6	BOLT (L=25mm)					
	16	8T-4184	48	BOLT (L=45mm)					
	17	8T-4223	48	WASHER					
B	18	1U-8846		GASKET MAKER…(2ml)					
	19	3J-1907	4	SEAL-O-RING (ID=11.89mm)					
	20	6V-8397	6	SEAL-O-RING (OD=12.83mm)					
	21	3K-0360	2	SEAL-O-RING (ID=16.36mm)					
	22	6V-8398	5	SEAL-O-RING (OD=16.03mm)					
	23	2M-9780	1	SEAL-O-RING (ID=19.18mm)					
	24	6V-9850	2	ELBOW					

B—USE AS REQUIRED

Y—SEE SEPARATE ILLUSTRATION

H89492E 00

227-0542 LINES GP-TRAVEL MOTOR

S/N CJM 1-Up

234-4440-Page544

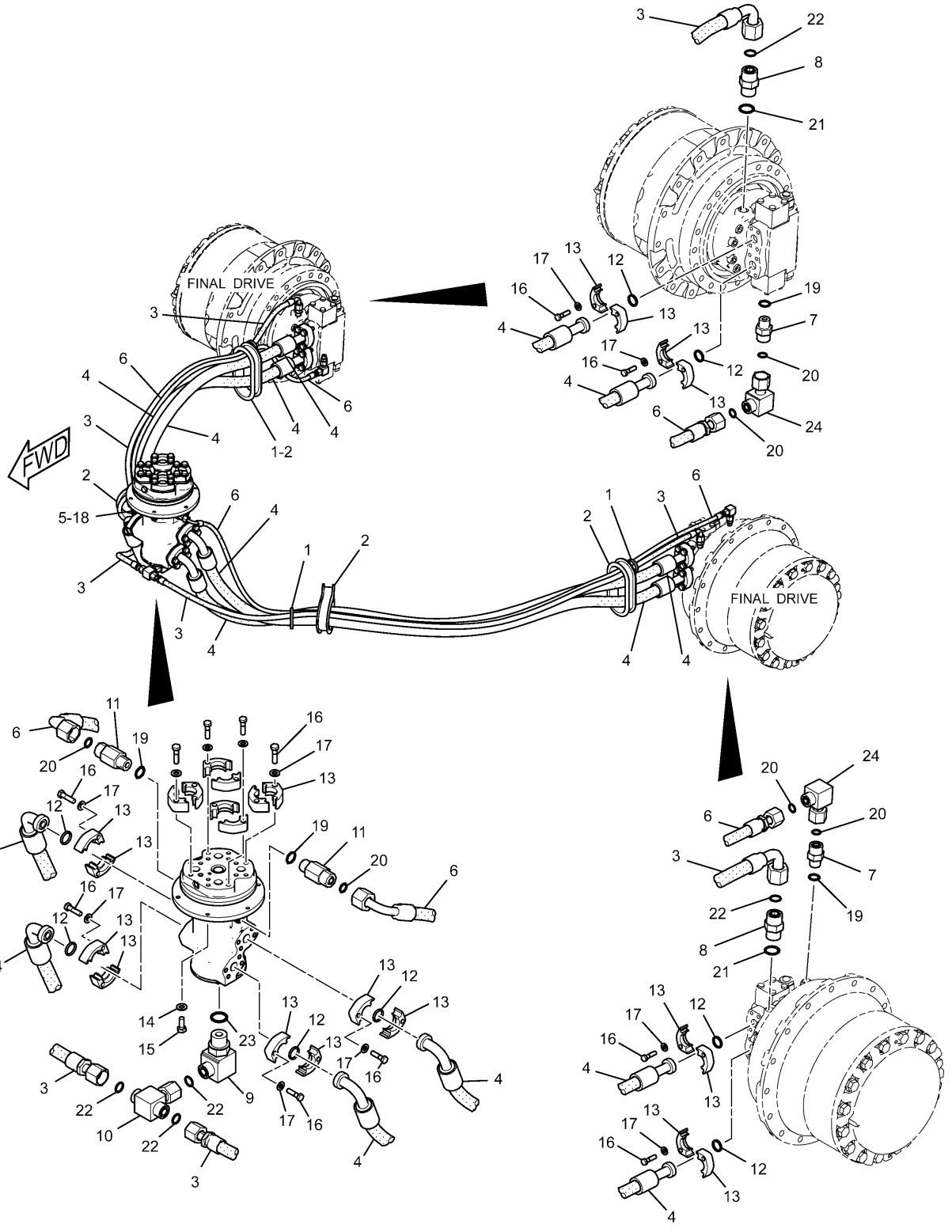

227-0543 LINES GP-TRAVEL MOTOR
S/N DAP 1-Up, PEH 1-Up
234-4440-Page544

HYDRAULIC SYSTEM

NOTE	No.	PART No.	QTY	PART NAME	NOTE	No.	PART No.	QTY	PART NAME
	1	7K-1181	4	STRAP					
	2	108-7118	4	GROMMET					
	3	236-3134	2	HOSE AS					
	4	227-0674	4	HOSE AS					
Y	5	234-4440	1	SWIVEL GP					
	6	5I-8853	2	HOSE AS					
	7	6V-8636	2	CONNECTOR					
	8	6V-8639	2	CONNECTOR					
	9	6V-8721	1	ELBOW					
	10	6V-9844	1	TEE					
	11	8T-1779	2	CONNECTOR					
	12	1P-3703	8	SEAL					
	13	6V-0400	24	FLANGE					
	14	8T-4121	6	WASHER					
	15	8T-4136	6	BOLT (L=25mm)					
	16	8T-4184	48	BOLT (L=45mm)					
	17	8T-4223	48	WASHER					
B	18	1U-8846		GASKET MAKER…(2ml)					
	19	3J-1907	4	SEAL-O-RING (ID=11.89mm)					
	20	6V-8397	6	SEAL-O-RING (OD=12.83mm)					
	21	3K-0360	2	SEAL-O-RING (ID=16.36mm)					
	22	6V-8398	5	SEAL-O-RING (OD=16.03mm)					
	23	2M-9780	1	SEAL-O-RING (ID=19.18mm)					
	24	6V-9850	2	ELBOW					

B—USE AS REQUIRED

Y—SEE SEPARATE ILLUSTRATION

H89494E 01

227-0543 LINES GP-TRAVEL MOTOR

S/N DAP 1-Up, PEH 1-Up
234-4440-Page544

HYDRAULIC SYSTEM

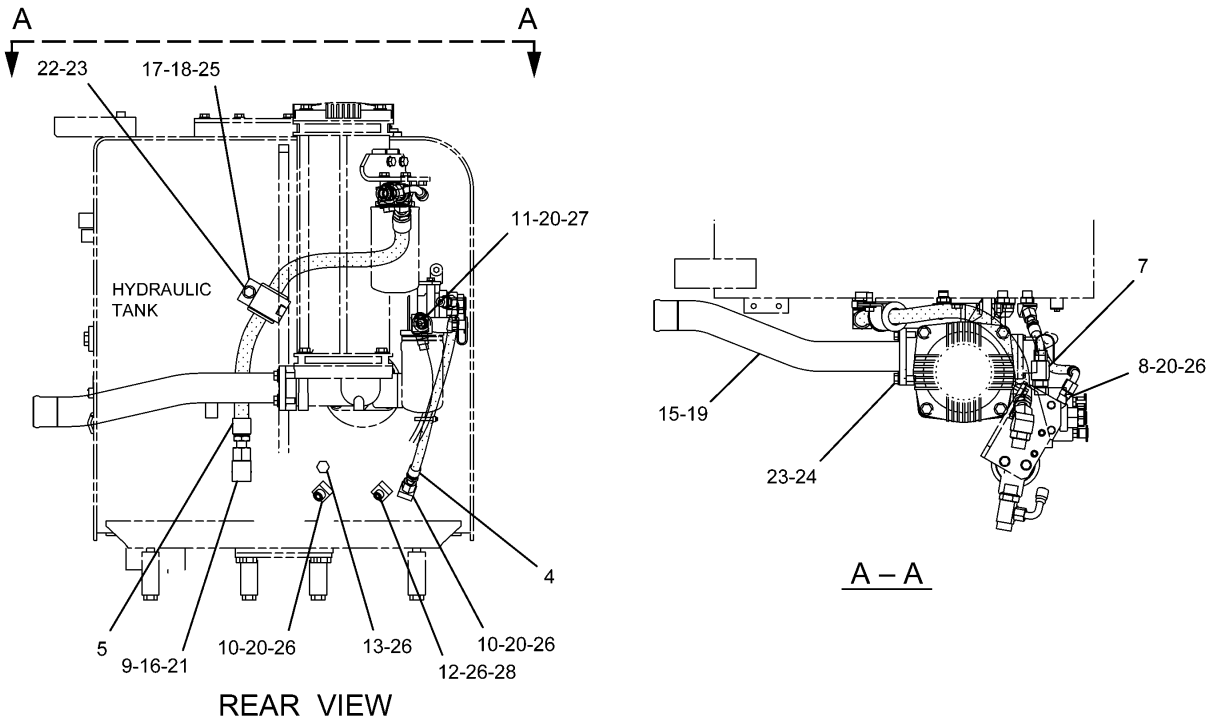

REAR VIEW

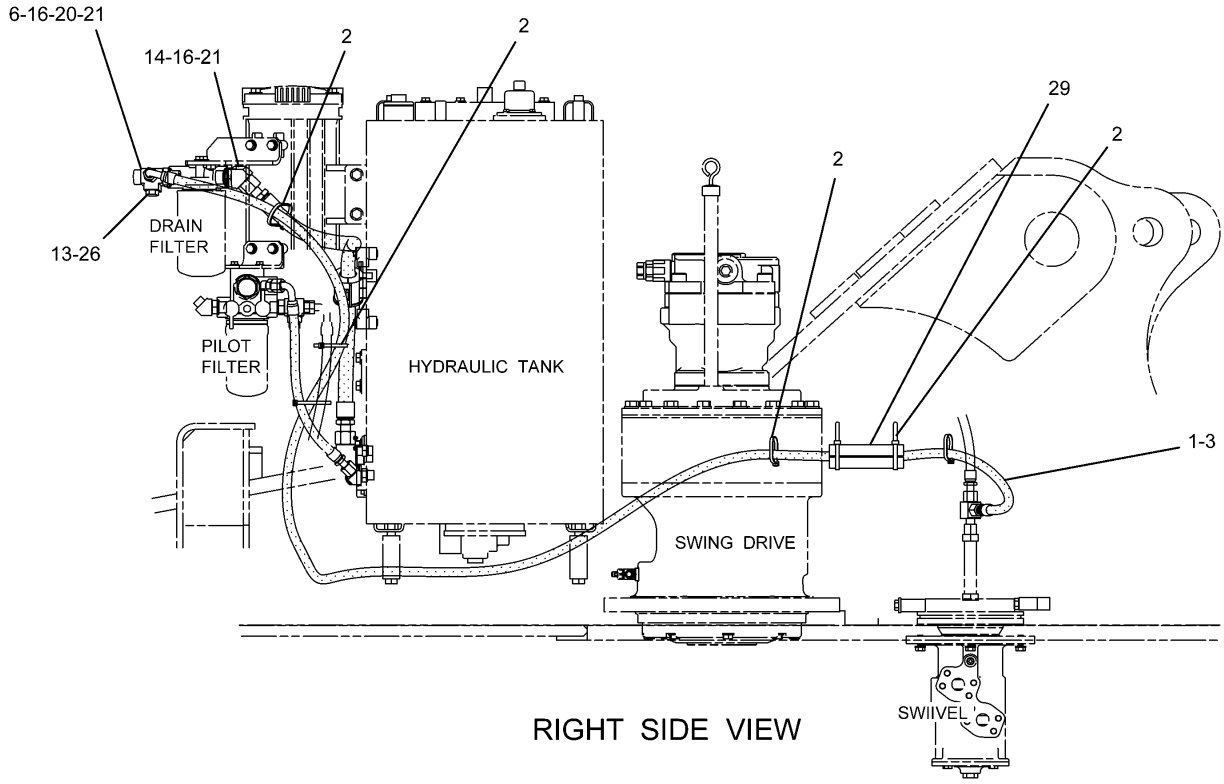

RIGHT SIDE VIEW

H91162E 03

248-9830 TANK & LINES GP-HYDRAULIC
Part of 227-0565-Page365

HYDRAULIC SYSTEM

NOTE	No.	PART No.	QTY	PART NAME
	1	4I-9527	2	BAND (R3,GREEN)
	2	7K-1181	7	STRAP
	3	4I-7816	1	HOSE AS
	4	275-1361	1	HOSE AS
	5	176-4770	1	HOSE AS
	6	194-0079	1	FITTING
	7	214-4512	1	TEE AS
		2M-9780	1	SEAL-O-RING (ID=19.18mm)
		6V-8397	1	SEAL-O-RING (OD=12.83mm)
		6V-8398	1	SEAL-O-RING (OD=16.03mm)
	8	6V-8639	1	CONNECTOR
	9	6V-9007	1	ELBOW
	10	6V-9002	2	ELBOW
	11	6V-8624	1	ELBOW
	12	6V-9876	1	ELBOW
	13	9S-4185	2	PLUG
	14	6V-9004	1	ELBOW
	15	187-5659	1	PIPE AS
	16	3D-2824	3	SEAL-O-RING (ID=23.47mm)
	17	5P-7464	1	CLIP
	18	5P-7465	1	CLIP
	19	6J-2680	1	SEAL-O-RING (ID=69.44mm)
	20	6V-8398	5	SEAL-O-RING (OD=16.03mm)
	21	6V-9746	3	SEAL-O-RING (OD=22.50mm)
	22	8T-4139	1	BOLT (L=30mm)
	23	8T-4223	5	WASHER
	24	8T-4956	4	BOLT (L=35mm)
	25	8T-2920	1	GROMMET
	26	3K-0360	6	SEAL-O-RING (ID=16.36mm)
	27	2M-9780	1	SEAL-O-RING (ID=19.18mm)
	28	6V-8397	1	SEAL-O-RING (OD=12.83mm)
	29	266-0982	1	GUARD

H91162E 03

248-9830 TANK & LINES GP-HYDRAULIC

Part of 227-0565-Page365

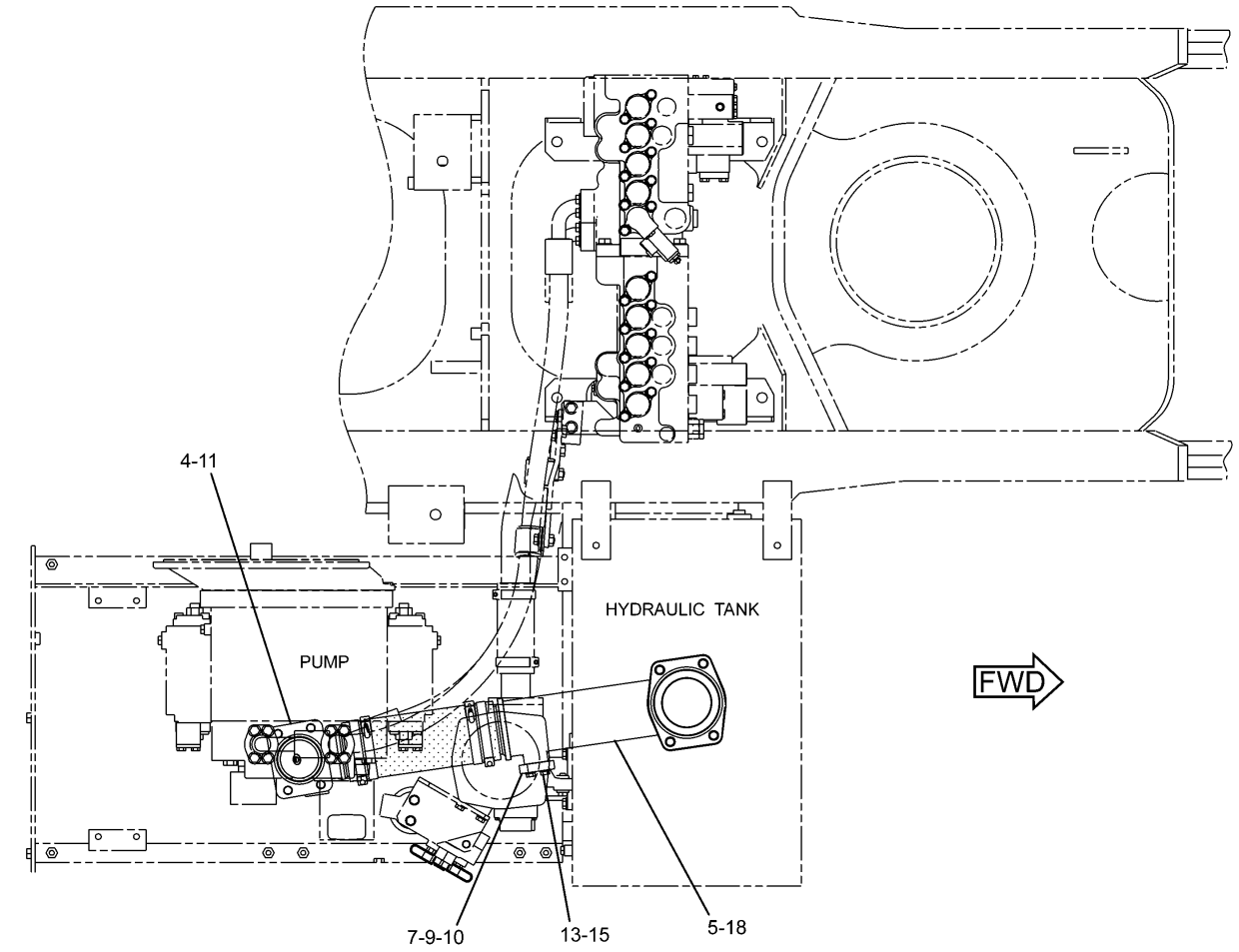

TOP VIEW

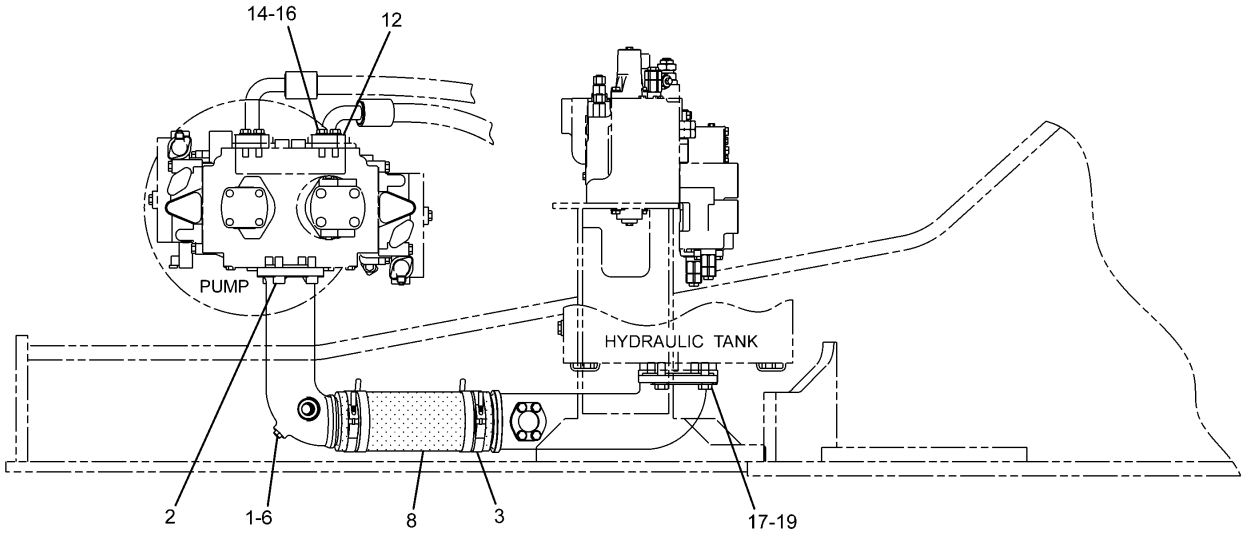

RIGHT SIDE VIEW

H94658E 05

227-0548 LINES GP-PUMP

HYDRAULIC SYSTEM

NOTE	No.	PART No.	QTY	PART NAME	NOTE	No.	PART No.	QTY	PART NAME
	1	3J-1907	1	SEAL-O-RING (ID=11.89mm)					
	2	113-2003	4	BOLT (L=40mm)					
	3	8T-4986	4	CLAMP					
	4	236-2946	1	PIPE AS					
	5	278-6794	1	PIPE AS					
	6	9S-4191	1	PLUG					
	7	1P-4578	2	FLANGE					
	8	202-3900	1	HOSE					
	9	4J-0522	1	SEAL-O-RING (ID=37.69mm)					
	10	5H-4020	1	COVER					
	11	5H-8624	1	SEAL-O-RING (ID=94.62mm)					
	12	6V-0400	4	FLANGE					
	13	8T-4121	4	WASHER					
	14	8T-4194	8	BOLT (L=50mm)					
	15	8T-4196	4	BOLT (L=35mm)					
	16	8T-4223	8	WASHER					
	17	8T-7338	4	BOLT (L=45mm)					
	18	9M-3786	1	SEAL-O-RING (ID=139.07mm)					
	19	9X-8257	4	WASHER					

H94658E 05

227-0548 LINES GP-PUMP

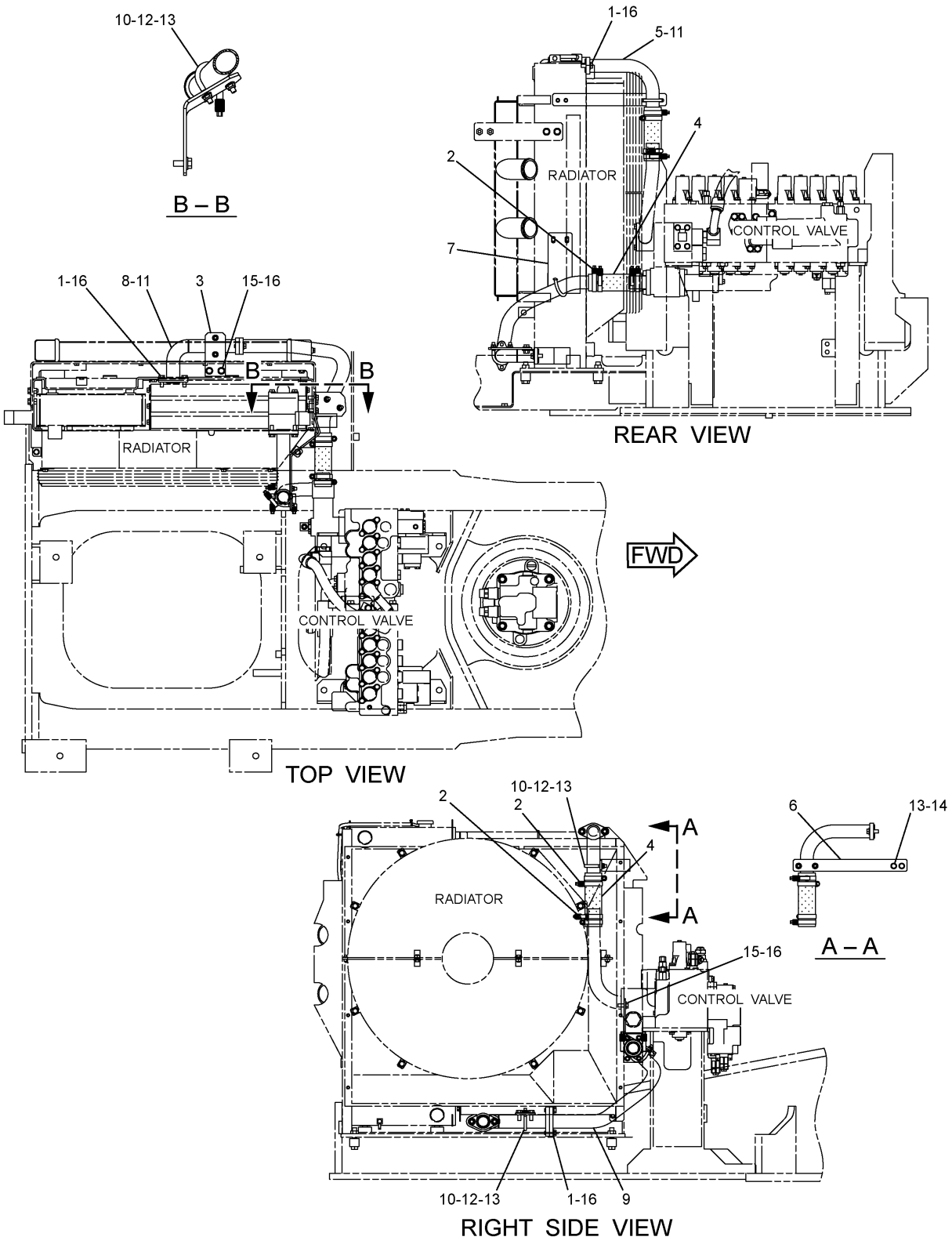

H93980E 05

248-9833 LINES GP-HYDRAULIC OIL COOLER

HYDRAULIC SYSTEM

NOTE	No.	PART No.	QTY	PART NAME	NOTE	No.	PART No.	QTY	PART NAME
	1	8T-4956	6	BOLT (L=35mm)					
	2	8T-4984	8	CLAMP					
	3	236-3223	1	SUPPORT					
	4	258-0312	2	HOSE					
	5	255-1632	1	PIPE AS					
	6	282-7195	1	SUPPORT					
	7	282-7047	1	SUPPORT					
	8	275-1561	1	PIPE AS					
	9	289-5367	1	PIPE AS					
	10	096-4883	6	NUT					
	11	4J-0523	3	SEAL-O-RING (ID=44.04mm)					
	12	7Y-5238	3	U-BOLT					
	13	8T-4121	8	WASHER					
	14	8T-4136	2	BOLT (L=25mm)					
	15	8T-4139	4	BOLT (L=30mm)					
	16	8T-4223	10	WASHER					

H93980E 05

248-9833 LINES GP-HYDRAULIC OIL COOLER

HYDRAULIC SYSTEM

Consists of :

			Page
1	239-8693	CONTROL GP-HYDRAULIC	554
1	247-7420	FILM GP	810
1	251-0436	WIRING GP	196
1	255-1758	LINES GP-FRONT	512
1	255-1800	LINES GP-PILOT	487
1	255-1801	LINES GP-PILOT	488

H90397E 01

255-5696 CONTROL AR-AUXILIARY
Single Function/1 Pump
An Attachment

Consists of :

			Page
1	239-8693	CONTROL GP-HYDRAULIC	554
1	247-7420	FILM GP	810
1	251-0436	WIRING GP	196
1	255-1661	LINES GP-PILOT	490
1	255-1760	LINES GP-FRONT	516
1	255-1800	LINES GP-PILOT	487
1	255-5713	VALVE & MOUNTING GP	560

H90400E 01

255-5699 CONTROL AR-AUXILIARY
An Attachment

Consists of :

			Page
1	239-8695	CONTROL GP-HYDRAULIC	556
1	247-7416	FILM GP	811
1	251-0529	WIRING GP-CAB	206
1	251-0530	WIRING GP	198
1	255-1759	LINES GP-FRONT	520
1	255-1802	LINES GP-PILOT	492
1	255-1803	LINES GP-PILOT	494
1	255-5713	VALVE & MOUNTING GP	560

H90398E 01

Consists of :

			Page
1	239-8695	CONTROL GP-HYDRAULIC	556
1	247-7420	FILM GP	810
1	251-0529	WIRING GP-CAB	206
1	251-0530	WIRING GP	198
1	255-1663	LINES GP-PILOT	496
1	255-1664	LINES GP-PILOT	498
1	255-1759	LINES GP-FRONT	520
1	255-1765	LINES GP-FRONT	524
1	255-5716	VALVE & MOUNTING GP	561

H90401E 02

255-5702 CONTROL AR-AUXILIARY
Combined Function/2 Pumps (Medium Pressure)
An Attachment

HYDRAULIC SYSTEM

Consists of :

			Page
1	247-7491	FILM GP	812
1	255-1656	LINES GP-PILOT	500

H90028E 01

255-5724 VALVE AR-4 WAY
An Attachment

Consists of :

			Page
1	259-0680	LINES GP-SWING MOTOR	529

H89079E 00

247-7451 VALVE AR-SWING
FINE SWING LESS
An Attachment

HYDRAULIC SYSTEM

Consists of :

			Page
1	251-0442	WIRING GP	210
1	255-1799	LINES GP-FRONT	526

H90029E 00

247-7390 FILTER AR
An Attachment

MEMORANDA

HYDRAULIC SYSTEM

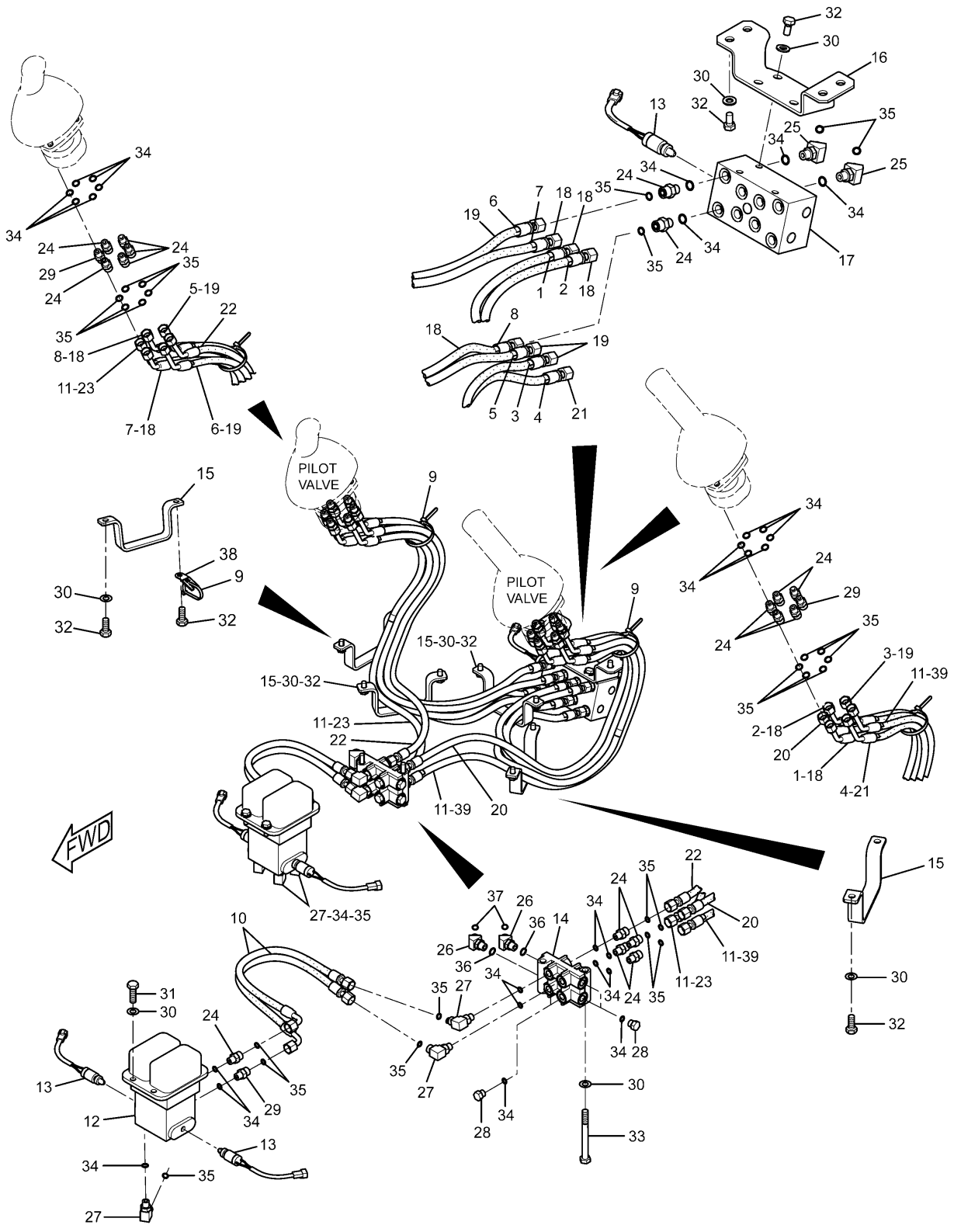

248-9825 LINES GP-PILOT

Cab

270-5947-Page592,185-0462-Page624

HYDRAULIC SYSTEM

NOTE	No.	PART No.	QTY	PART NAME	NOTE	No.	PART No.	QTY	PART NAME
	1	4I-9521	2	BAND (L1,RED)					
	2	4I-9522	2	BAND (L2,YELLOW)					
	3	4I-9523	2	BAND (L3,BLUE)					
	4	4I-9524	2	BAND (L4,BROWN)					
	5	4I-9525	2	BAND (R1,ORANGE)					
	6	4I-9526	2	BAND (R2,WHITE)					
	7	4I-9527	2	BAND (R3,GREEN)					
	8	4I-9528	2	BAND (R4,PURPLE)					
	9	7K-1181	3	STRAP					
	10	087-4402	2	HOSE AS (NOM 06, L=480mm)					
	11	133-5813	4	BAND (P,GRAY)					
Y	12	270-5947	1	VALVE GP					
	13	167-3466	3	SWITCH AS (PRESSURE)					
		102-8802	1	RECEPTACLE KIT					
		9X-3401	2	PIN					
	14	168-9759	1	BLOCK					
	15	184-9336	4	SUPPORT					
	16	185-0383	1	BRACKET					
Y	17	185-0462	1	VALVE GP					
	18	236-2843	4	HOSE AS (NOM 06, L=1200mm)					
	19	236-2844	3	HOSE AS (NOM 06, L=1200mm)					
	20	236-2848	1	HOSE AS (NOM 06, L=1090mm)					
	21	245-5079	1	HOSE AS (NOM 06, L=1210mm)					
	22	255-1665	1	HOSE AS (NOM 06, L=1050mm)					
	23	255-1666	1	HOSE AS (NOM 06, L=1130mm)					
	24	6V-8636	23	CONNECTOR					
	25	6V-9001	8	ELBOW					
	26	6V-9002	2	ELBOW					
	27	6V-8724	6	ELBOW					
	28	9S-4191	4	PLUG					
	29	107-6631	3	CONNECTOR					
	30	8T-4121	20	WASHER					
	31	8T-4136	4	BOLT (L=25mm)					
	32	8T-4137	15	BOLT (L=20mm)					
	33	8T-4198	2	BOLT (L=100mm)					
	34	3J-1907	44	SEAL-O-RING (ID=11.89mm)					
	35	6V-8397	40	SEAL-O-RING (OD=12.83mm)					
	36	3K-0360	2	SEAL-O-RING (ID=16.36mm)					
	37	6V-8398	2	SEAL-O-RING (OD=16.03mm)					
	38	4P-7581	1	CLIP					
	39	289-5657	1	HOSE AS (NOM 06, L=1090mm)					

Y—SEE SEPARATE ILLUSTRATION

H94290E 04

248-9825 LINES GP-PILOT

Cab

270-5947-Page592,185-0462-Page624

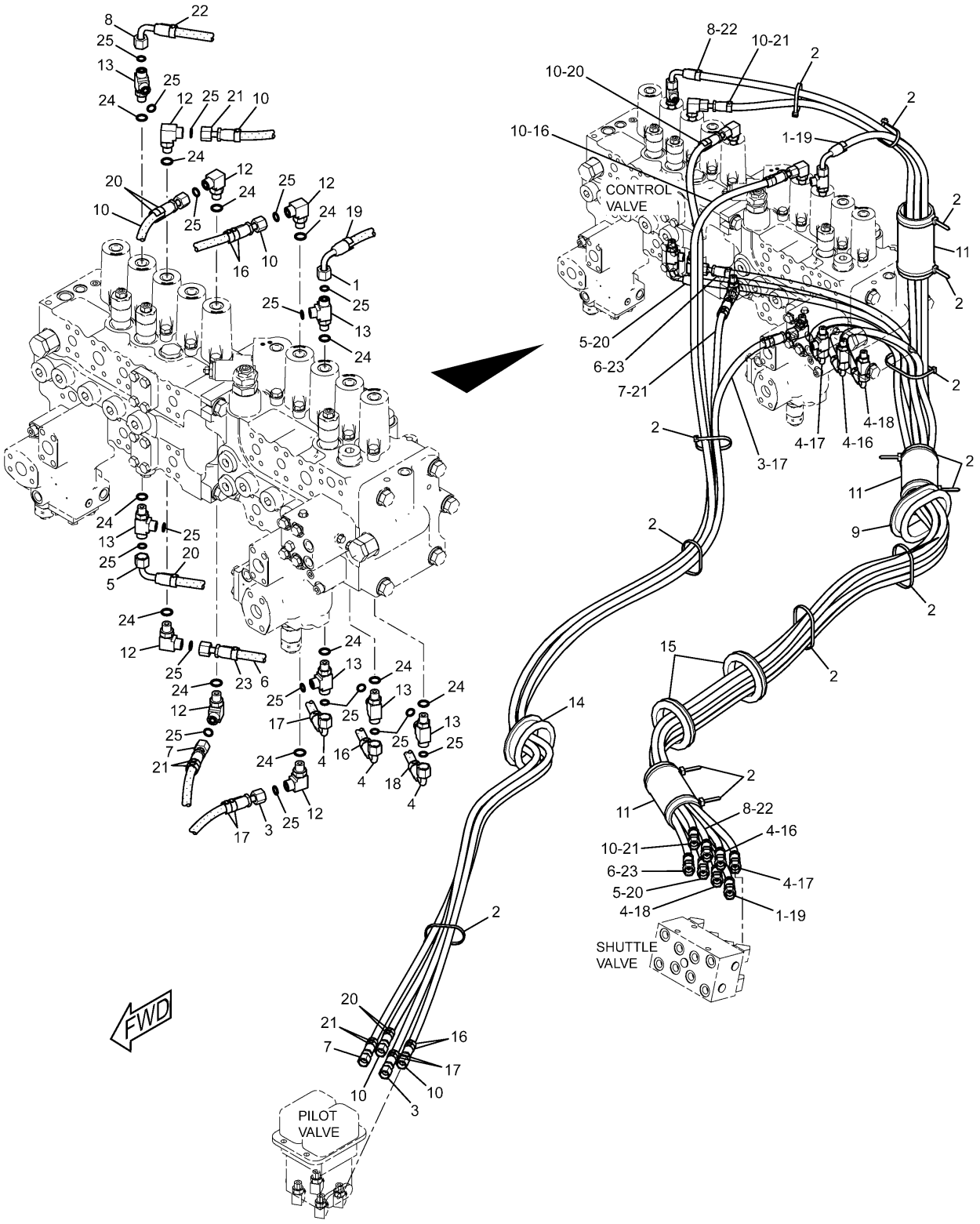

248-9826 LINES GP-PILOT
Control Valve

HYDRAULIC SYSTEM

NOTE	No.	PART No.	QTY	PART NAME	NOTE	No.	PART No.	QTY	PART NAME
	1	4I-1631	1	HOSE AS (NOM 06, L=2850mm)					
	2	7K-1181	14	STRAP					
	3	7Y-4193	1	HOSE AS (NOM 06, L=2500mm)					
	4	7Y-4390	3	HOSE AS (NOM 06, L=2400mm)					
	5	087-5780	1	HOSE AS (NOM 06, L=2550mm)					
	6	104-8771	1	HOSE AS (NOM 06, L=2430mm)					
	7	108-7203	1	HOSE AS (NOM 06, L=2600mm)					
	8	108-7372	1	HOSE AS (NOM 06, L=2950mm)					
	9	202-4004	1	GROMMET					
	10	218-1059	3	HOSE AS (NOM 06, L=2920mm)					
	11	115-8645	3	GUARD					
	12	6V-8724	6	ELBOW					
	13	6V-8781	6	TEE					
	14	176-4746	1	GROMMET					
	15	4I-3953	2	GROMMET					
	16	4I-9521	6	BAND (L1,RED)					
	17	4I-9522	6	BAND (L2,YELLOW)					
	18	4I-9523	2	BAND (L3,BLUE)					
	19	4I-9524	2	BAND (L4,BROWN)					
	20	4I-9525	6	BAND (R1,ORANGE)					
	21	4I-9526	6	BAND (R2,WHITE)					
	22	4I-9527	2	BAND (R3,GREEN)					
	23	4I-9528	2	BAND (R4,PURPLE)					
	24	3J-1907	12	SEAL-O-RING (ID=11.89mm)					
	25	6V-8397	18	SEAL-O-RING (OD=12.83mm)					

H89489E 01

248-9826 LINES GP-PILOT
Control Valve

HYDRAULIC SYSTEM

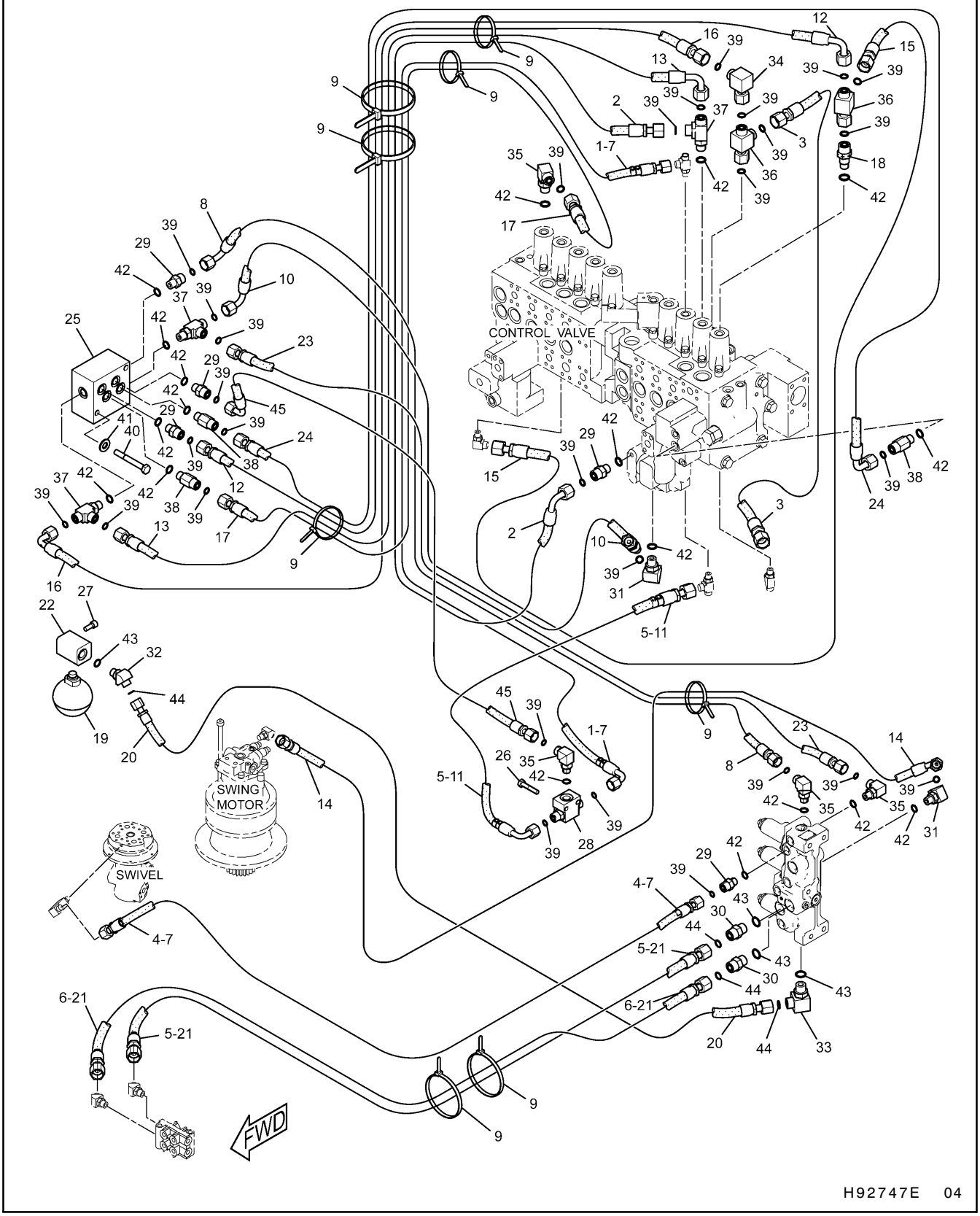

248-9827 LINES GP-PILOT (1/2)

Control Valve

S/N CJM 1-00165, DAP 1-00210, PEH 1-00224

164-6981-Page388,232-4102-Page610,123-2430-Page623

HYDRAULIC SYSTEM

NOTE	No.	PART No.	QTY	PART NAME	NOTE	No.	PART No.	QTY	PART NAME
	1	4I-0836	1	HOSE AS (NOM 06, L=1200mm)					
	2	4I-1739	1	HOSE AS (NOM 06, L=1020mm)					
	3	4I-5900	1	HOSE AS (NOM 06, L=900mm)					
	4	4I-6136	1	HOSE AS (NOM 06, L=1500mm)					
	5	4I-9522	6	BAND (L2,YELLOW)					
	6	4I-9523	2	BAND (L3,BLUE)					
	7	4I-9524	6	BAND (L4,BROWN)					
	8	5I-4396	1	HOSE AS (NOM 06, L=400mm)					
	9	7K-1181	8	STRAP					
	10	087-4411	1	HOSE AS (NOM 06, L=450mm)					
	11	087-4531	1	HOSE AS (NOM 06, L=600mm)					
	12	087-4534	1	HOSE AS (NOM 06, L=1190mm)					
	13	087-5774	1	HOSE AS (NOM 06, L=1060mm)					
	14	104-8821	1	HOSE AS (NOM 06, L=860mm)					
	15	104-8950	1	HOSE AS (NOM 06, L=1200mm)					
	16	110-5496	1	HOSE AS (NOM 06, L=1330mm)					
	17	143-4254	1	HOSE AS (NOM 06, L=1160mm)					
	18	5I-4371	1	STOPPER					
Y	19	164-6981	1	ACCUMULATOR GP					
	20	164-8977	1	HOSE AS (NOM 08, L=410mm)					
	21	173-5089	2	HOSE AS (NOM 08, L=2250mm)					
	22	176-4469	1	BLOCK					
	23	176-4768	1	HOSE AS (NOM 06, L=320mm)					
	24	184-9595	1	HOSE AS (NOM 06, L=1330mm)					
E		7I-7439		GUARD···(131cm)					
Y	25	232-4102	1	VALVE GP					
	26	099-3649	2	BOLT (L=40mm)					
	27	105-3484	2	BOLT (L=25mm)					
Y	28	123-2430	1	VALVE GP					
	29	6V-8636	5	CONNECTOR					
	30	6V-8639	2	CONNECTOR					
	31	6V-9001	2	ELBOW					
	32	6V-9002	1	ELBOW					
	33	6V-8625	1	ELBOW					
	34	6V-9850	1	ELBOW					
	35	6V-8724	4	ELBOW					
	36	6V-9836	2	TEE					
	37	6V-8781	3	TEE					
	38	8T-1779	3	CONNECTOR					
	39	6V-8397	29	SEAL-O-RING (OD=12.83mm)					
	40	8T-4172	2	BOLT (L=80mm)					
	41	8T-4223	2	WASHER					
	42	3J-1907	18	SEAL-O-RING (ID=11.89mm)					
	43	3K-0360	4	SEAL-O-RING (ID=16.36mm)					
	44	6V-8398	4	SEAL-O-RING (OD=16.03mm)					
	45	104-8838	1	HOSE AS (NOM 06, L=720mm)					

E—ORDER BY THE CENTIMETER

Y—SEE SEPARATE ILLUSTRATION

H92747E 04

248-9827 LINES GP-PILOT (1/2)

Control Valve

S/N CJM 1-00165, DAP 1-00210, PEH 1-00224

164-6981-Page388,232-4102-Page610,123-2430-Page623

HYDRAULIC SYSTEM

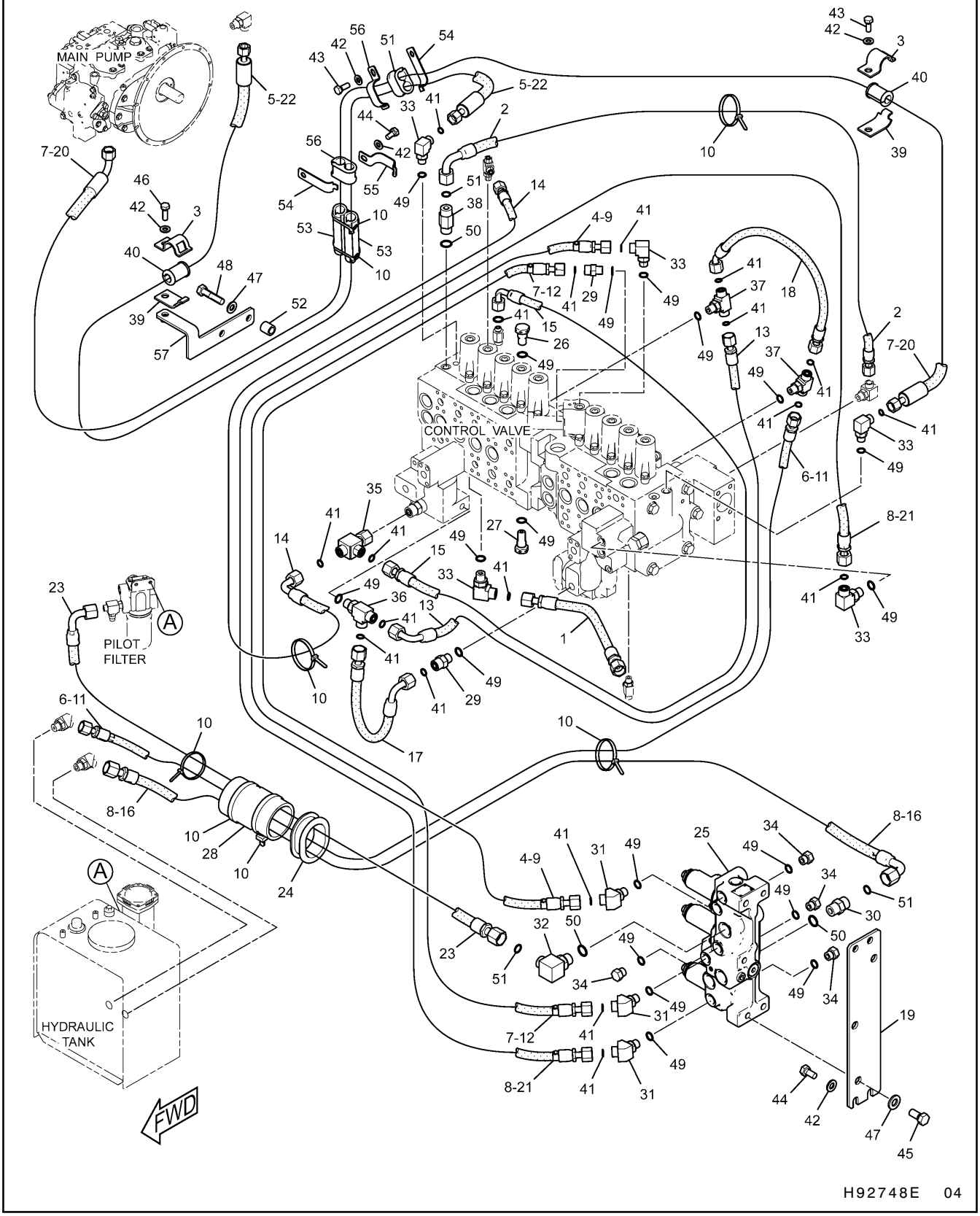

248-9827 LINES GP-PILOT (2/2)
Control Valve
S/N CJM 1-00165, DAP 1-00210, PEH 1-00224
215-5037-Page604

HYDRAULIC SYSTEM

NOTE	No.	PART No.	QTY	PART NAME
	1	4I-5906	1	HOSE AS (NOM 06, L=600mm)
	2	4I-6121	1	HOSE AS (NOM 08, L=1000mm)
	3	5P-7462	2	CLIP
	4	4I-9521	2	BAND (L1,RED)
	5	4I-9523	2	BAND (L3,BLUE)
	6	4I-9525	2	BAND (R1,ORANGE)
	7	4I-9527	4	BAND (R3,GREEN)
	8	4I-9528	4	BAND (R4,PURPLE)
	9	5I-8708	1	HOSE AS (NOM 06, L=950mm)
	10	7K-1181	8	STRAP
	11	7Y-4199	1	HOSE AS (NOM 06, L=1800mm)
	12	087-5760	1	HOSE AS (NOM 06, L=1030mm)
	13	087-5762	1	HOSE AS (NOM 06, L=440mm)
	14	087-5772	1	HOSE AS (NOM 06, L=1000mm)
	15	087-5776	1	HOSE AS (NOM 06, L=1470mm)
	16	102-1157	1	HOSE AS (NOM 08, L=1250mm)
	17	087-4531	1	HOSE AS (NOM 06, L=600mm)
	18	164-8983	1	HOSE AS (NOM 06, L=720mm)
	19	176-4463	1	PLATE
	20	275-1487	1	HOSE AS (NOM 06, L=1850mm)
	21	184-9593	1	HOSE AS (NOM 06, L=1300mm)
E		7I-7439		GUARD…(128cm)
	22	275-1484	1	HOSE AS (NOM 06, L=1910mm)
	23	199-1777	1	HOSE AS (NOM 08, L=1830mm)
	24	176-4708	1	GROMMET
Y	25	215-5037	1	VALVE GP
	26	239-9117	1	PLUG
	27	239-9118	1	PLUG
	28	103-1384	1	GUARD
	29	6V-8636	2	CONNECTOR
	30	6V-8639	1	CONNECTOR
	31	6V-9001	3	ELBOW
	32	6V-8625	1	ELBOW
	33	6V-8724	5	ELBOW
	34	9S-4191	4	PLUG
	35	6V-9836	1	TEE
	36	6V-8781	1	TEE
	37	6V-8774	2	TEE
	38	8T-1687	1	CONNECTOR
	39	5P-7463	2	CLIP
	40	6V-0683	2	GROMMET
	41	6V-8397	19	SEAL-O-RING (OD=12.83mm)
	42	8T-4121	8	WASHER
	43	8T-4136	2	BOLT (L=25mm)
	44	8T-4137	5	BOLT (L=20mm)
	45	8T-4192	3	BOLT (L=25mm)
	46	8T-4195	1	BOLT (L=30mm)
	47	8T-4223	5	WASHER
	48	8T-4194	2	BOLT (L=50mm)
	49	3J-1907	19	SEAL-O-RING (ID=11.89mm)
	50	3K-0360	3	SEAL-O-RING (ID=16.36mm)
	51	6V-8398	3	SEAL-O-RING (OD=16.03mm)
	52	171-2637	2	BOSS
	53	266-0982	2	GUARD
	54	275-1442	2	CLIP
	55	275-1443	2	CLIP
	56	275-1444	2	GROMMET
	57	275-1471	1	SUPPORT AS

E—ORDER BY THE CENTIMETER

Y—SEE SEPARATE ILLUSTRATION

H92748E 04

248-9827 LINES GP-PILOT (2/2)

Control Valve

S/N CJM 1-00165, DAP 1-00210, PEH 1-00224

215-5037-Page604

HYDRAULIC SYSTEM

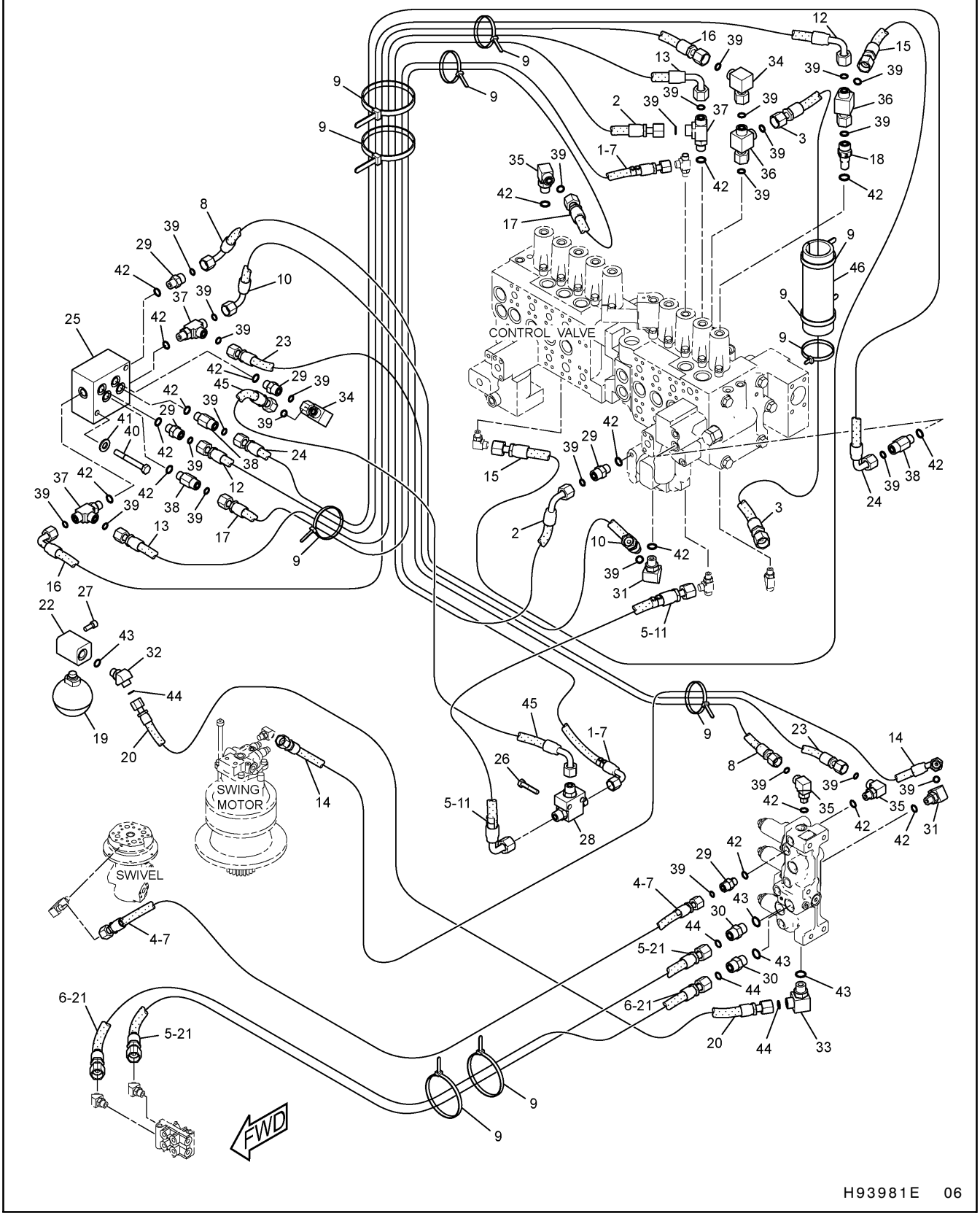

248-9827 LINES GP-PILOT (1/2)

Control Valve

S/N CJM 00166-Up, DAP 00211-Up, PEH 00225-Up

164-6981-Page388,232-4102-Page610,259-7732-Page623.01

HYDRAULIC SYSTEM

NOTE	No.	PART No.	QTY	PART NAME	NOTE	No.	PART No.	QTY	PART NAME
	1	4I-0836	1	HOSE AS (NOM 06, L=1200mm)					
	2	4I-1739	1	HOSE AS (NOM 06, L=1020mm)					
	3	4I-5900	1	HOSE AS (NOM 06, L=900mm)					
	4	4I-6136	1	HOSE AS (NOM 06, L=1500mm)					
	5	4I-9522	6	BAND (L2,YELLOW)					
	6	4I-9523	2	BAND (L3,BLUE)					
	7	4I-9524	6	BAND (L4,BROWN)					
	8	5I-4396	1	HOSE AS (NOM 06, L=400mm)					
	9	7K-1181	11	STRAP					
	10	087-4411	1	HOSE AS (NOM 06, L=450mm)					
	11	087-4531	1	HOSE AS (NOM 06, L=600mm)					
	12	087-4534	1	HOSE AS (NOM 06, L=1190mm)					
	13	087-5774	1	HOSE AS (NOM 06, L=1060mm)					
	14	104-8821	1	HOSE AS (NOM 06, L=860mm)					
	15	104-8950	1	HOSE AS (NOM 06, L=1200mm)					
	16	110-5496	1	HOSE AS (NOM 06, L=1330mm)					
	17	143-4254	1	HOSE AS (NOM 06, L=1160mm)					
	18	285-1465	1	CONNECTOR					
Y	19	164-6981	1	ACCUMULATOR GP					
	20	164-8977	1	HOSE AS (NOM 08, L=410mm)					
	21	173-5089	2	HOSE AS (NOM 08, L=2250mm)					
	22	176-4469	1	BLOCK					
	23	176-4768	1	HOSE AS (NOM 06, L=320mm)					
	24	184-9595	1	HOSE AS (NOM 06, L=1330mm)					
E		7I-7439		GUARD···(131cm)					
Y	25	232-4102	1	VALVE GP					
	26	099-3649	2	BOLT (L=40mm)					
	27	105-3484	2	BOLT (L=25mm)					
Y	28	259-7732	1	VALVE GP					
	29	6V-8636	5	CONNECTOR					
	30	6V-8639	2	CONNECTOR					
	31	6V-9001	2	ELBOW					
	32	6V-9002	1	ELBOW					
	33	6V-8625	1	ELBOW					
	34	6V-9850	2	ELBOW					
	35	6V-8724	3	ELBOW					
	36	6V-9836	2	TEE					
	37	6V-8781	3	TEE					
	38	8T-1779	3	CONNECTOR					
	39	6V-8397	27	SEAL-O-RING (OD=12.83mm)					
	40	8T-4172	2	BOLT (L=80mm)					
	41	8T-4223	2	WASHER					
	42	3J-1907	17	SEAL-O-RING (ID=11.89mm)					
	43	3K-0360	4	SEAL-O-RING (ID=16.36mm)					
	44	6V-8398	4	SEAL-O-RING (OD=16.03mm)					
	45	104-8838	1	HOSE AS (NOM 06, L=720mm)					
	46	266-0982	1	GUARD					

E—ORDER BY THE CENTIMETER

Y—SEE SEPARATE ILLUSTRATION

H93981E 06

248-9827 LINES GP-PILOT (1/2)

Control Valve

S/N CJM 00166-Up, DAP 00211-Up, PEH 00225-Up

164-6981-Page388,232-4102-Page610,259-7732-Page623.01

HYDRAULIC SYSTEM

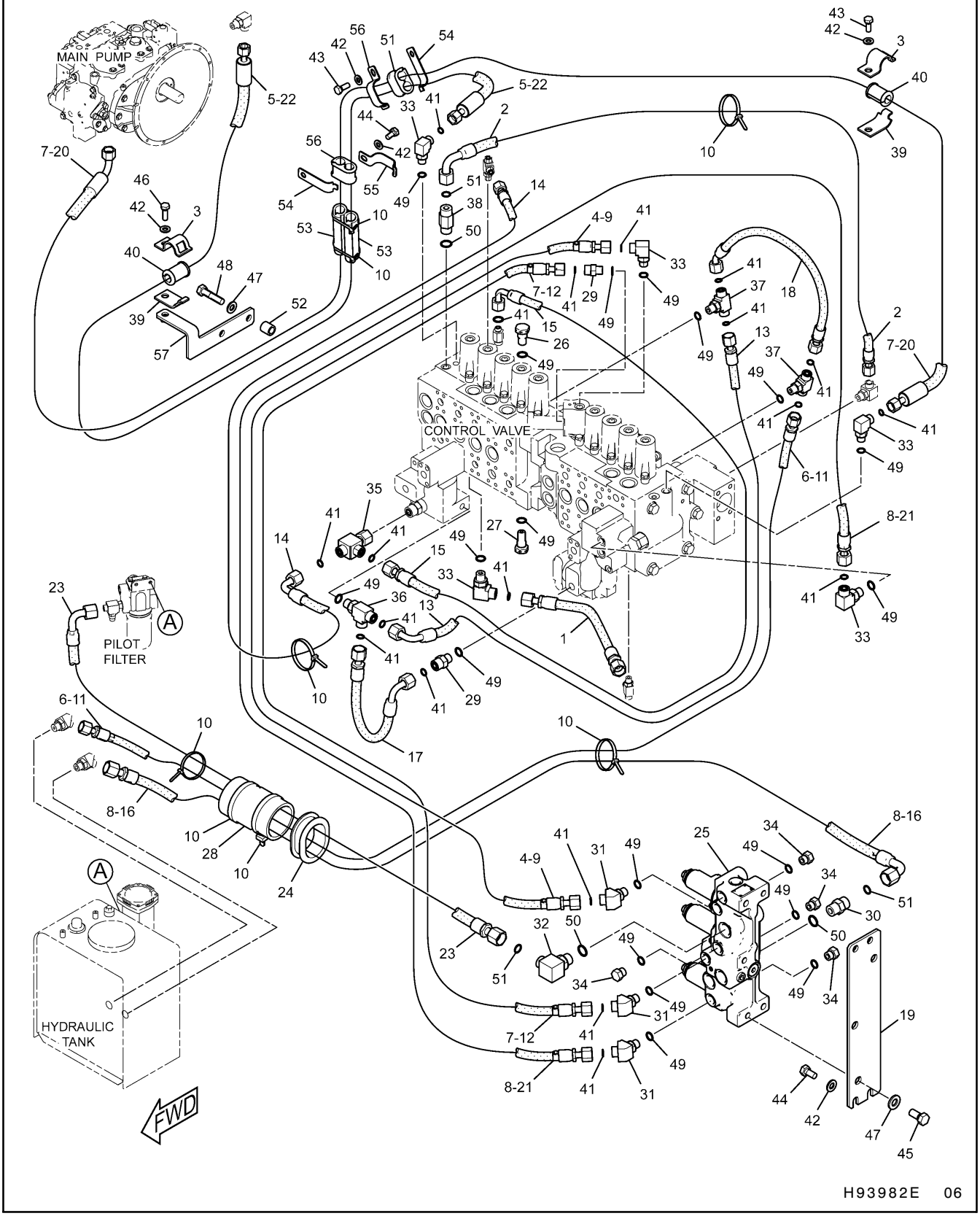

248-9827 LINES GP-PILOT (2/2)
Control Valve
S/N CJM 00166-Up, DAP 00211-Up, PEH 00225-Up
215-5037-Page604

HYDRAULIC SYSTEM

NOTE	No.	PART No.	QTY	PART NAME
	1	4I-5906	1	HOSE AS (NOM 06, L=600mm)
	2	4I-6121	1	HOSE AS (NOM 08, L=1000mm)
	3	5P-7462	2	CLIP
	4	4I-9521	2	BAND (L1,RED)
	5	4I-9523	2	BAND (L3,BLUE)
	6	4I-9525	2	BAND (R1,ORANGE)
	7	4I-9527	4	BAND (R3,GREEN)
	8	4I-9528	4	BAND (R4,PURPLE)
	9	5I-8708	1	HOSE AS (NOM 06, L=950mm)
	10	7K-1181	8	STRAP
	11	7Y-4199	1	HOSE AS (NOM 06, L=1800mm)
	12	087-5760	1	HOSE AS (NOM 06, L=1030mm)
	13	087-5762	1	HOSE AS (NOM 06, L=440mm)
	14	087-5772	1	HOSE AS (NOM 06, L=1000mm)
	15	087-5774	1	HOSE AS (NOM 06, L=1060mm)
	16	102-1157	1	HOSE AS (NOM 08, L=1250mm)
	17	087-4531	1	HOSE AS (NOM 06, L=600mm)
	18	164-8983	1	HOSE AS (NOM 06, L=720mm)
	19	176-4463	1	PLATE
	20	275-1487	1	HOSE AS (NOM 06, L=1850mm)
	21	184-9593	1	HOSE AS (NOM 06, L=1300mm)
E		7I-7439		GUARD…(128cm)
	22	275-1484	1	HOSE AS (NOM 06, L=1910mm)
	23	199-1777	1	HOSE AS (NOM 08, L=1830mm)
	24	176-4708	1	GROMMET
Y	25	215-5037	1	VALVE GP
	26	239-9117	1	PLUG
	27	239-9118	1	PLUG
	28	103-1384	1	GUARD
	29	6V-8636	2	CONNECTOR
	30	6V-8639	1	CONNECTOR
	31	6V-9001	3	ELBOW
	32	6V-8625	1	ELBOW
	33	6V-8724	5	ELBOW
	34	9S-4191	4	PLUG
	35	6V-9836	1	TEE
	36	6V-8781	1	TEE
	37	6V-8774	2	TEE
	38	8T-1687	1	CONNECTOR
	39	5P-7463	2	CLIP
	40	6V-0683	2	GROMMET
	41	6V-8397	19	SEAL-O-RING (OD=12.83mm)
	42	8T-4121	8	WASHER
	43	8T-4136	2	BOLT (L=25mm)
	44	8T-4137	5	BOLT (L=20mm)
	45	8T-4192	3	BOLT (L=25mm)
	46	8T-4195	1	BOLT (L=30mm)
	47	8T-4223	5	WASHER
	48	8T-4194	2	BOLT (L=50mm)
	49	3J-1907	19	SEAL-O-RING (ID=11.89mm)
	50	3K-0360	3	SEAL-O-RING (ID=16.36mm)
	51	6V-8398	3	SEAL-O-RING (OD=16.03mm)
	52	171-2637	2	BOSS
	53	266-0982	2	GUARD
	54	275-1442	2	CLIP
	55	275-1443	2	CLIP
	56	275-1444	2	GROMMET
	57	275-1471	1	SUPPORT AS

E—ORDER BY THE CENTIMETER

Y—SEE SEPARATE ILLUSTRATION

H93982E 06

248-9827 LINES GP-PILOT (2/2)

Control Valve

S/N CJM 00166-Up, DAP 00211-Up, PEH 00225-Up

215-5037-Page604

HYDRAULIC SYSTEM

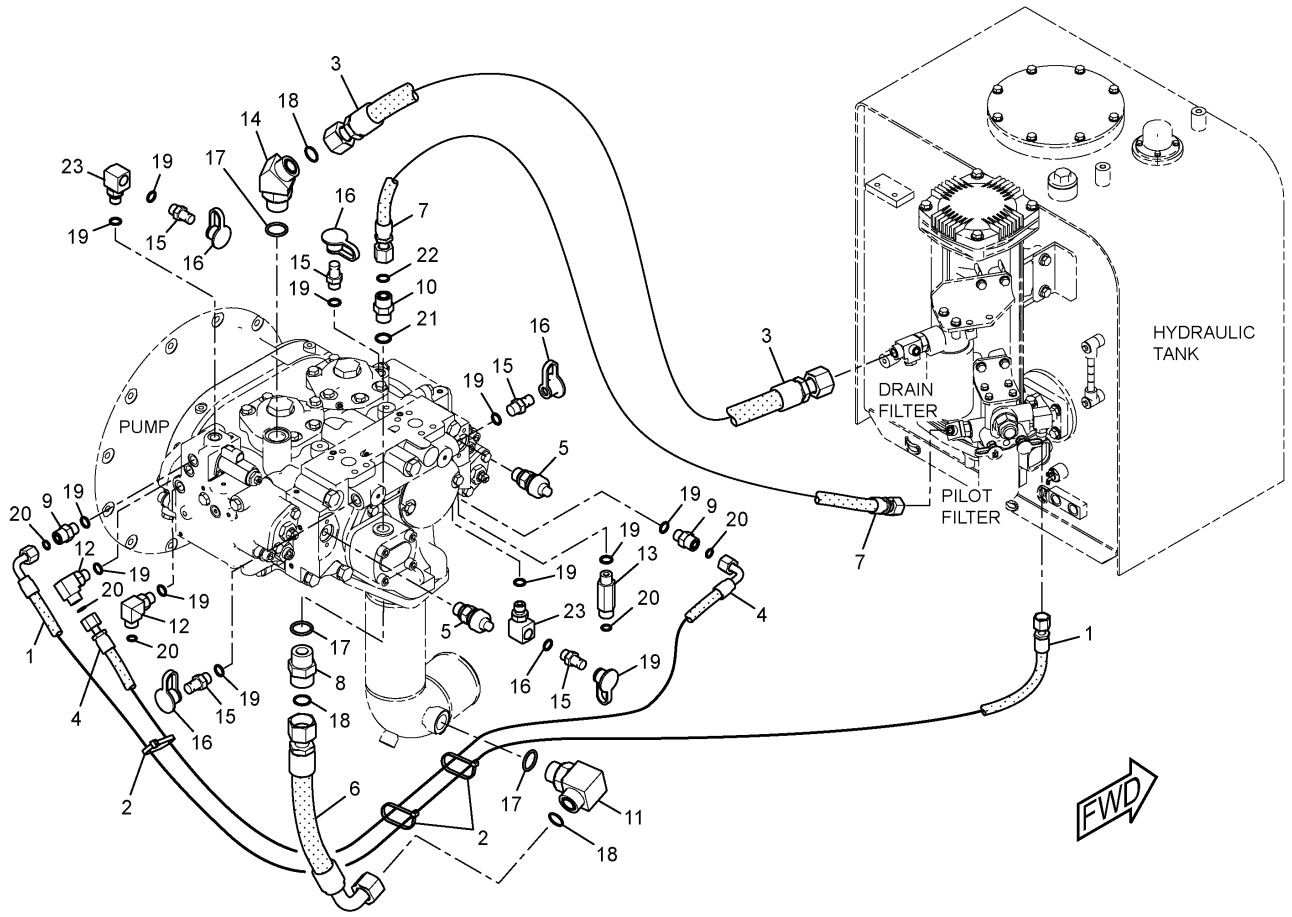

NOTE	No.	PART No.	QTY	PART NAME	NOTE	No.	PART No.	QTY	PART NAME
	1	4I-0797	1	HOSE AS (NOM 06, L=1350mm)		19	3J-1907	12	SEAL-O-RING (ID=11.89mm)
	2	7K-1181	3	STRAP		20	6V-8397	5	SEAL-O-RING (OD=12.83mm)
	3	087-4423	1	HOSE AS (NOM 12, L=420mm)		21	3K-0360	1	SEAL-O-RING (ID=16.36mm)
	4	7Y-8379	1	HOSE AS (NOM 06, L=800mm)		22	6V-8398	1	SEAL-O-RING (OD=16.03mm)
	5	221-8859	2	SENSOR AS		23	085-7356	2	FITTING
		3K-0360	1	SEAL-O-RING (ID=16.36mm)					
		9X-3401	3	PIN					
	6	236-3261	1	HOSE AS (NOM 12, L=390mm)					
	7	255-1858	1	HOSE AS (NOM 08, L=550mm)					
	8	6V-8637	1	CONNECTOR					
	9	6V-8636	2	CONNECTOR					
	10	6V-8639	1	CONNECTOR					
	11	6V-9007	1	ELBOW					
	12	6V-8724	2	ELBOW					
	13	9X-2297	1	CONNECTOR					
	14	6V-9004	1	ELBOW					
	15	6V-3965	5	NIPPLE AS					
	16	6V-0852	5	CAP					
	17	3D-2824	3	SEAL-O-RING (ID=23.47mm)					
	18	6V-9746	3	SEAL-O-RING (OD=22.50mm)					

H94659E 04

248-9829 LINES GP-PILOT
Pump

HYDRAULIC SYSTEM

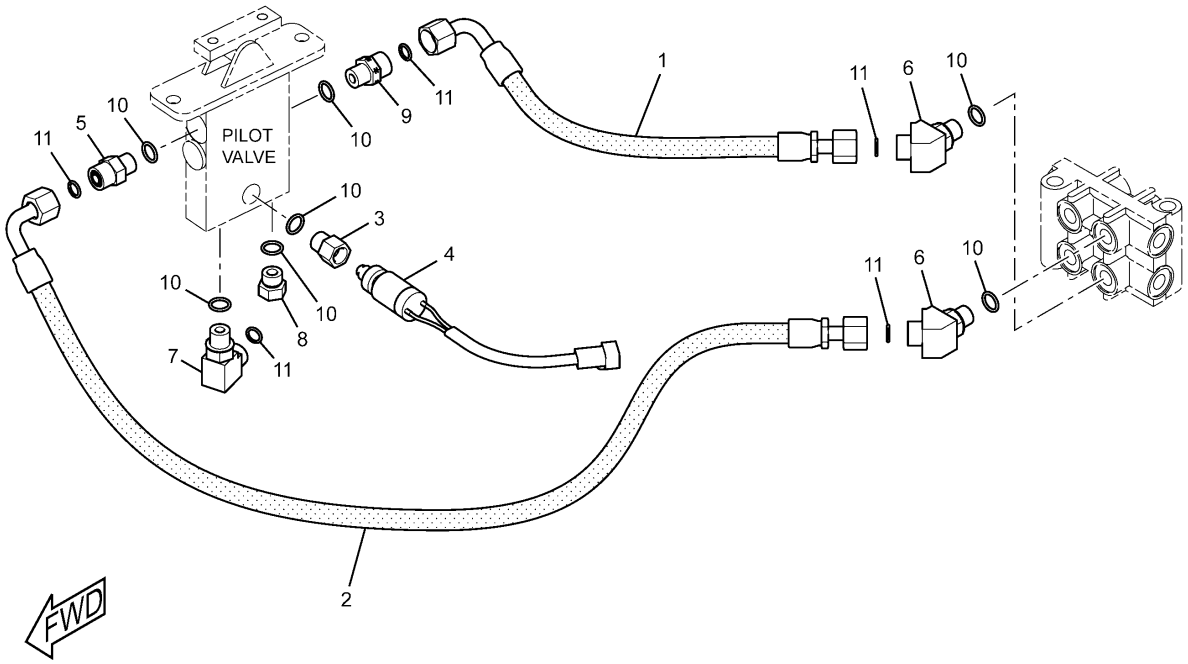

NOTE	No.	PART No.	QTY	PART NAME	NOTE	No.	PART No.	QTY	PART NAME
	1	4I-1671	1	HOSE AS (NOM 06, L=370mm)					
	2	087-4402	1	HOSE AS (NOM 06, L=480mm)					
	3	108-7516	1	FITTING					
	4	167-3466	1	SWITCH AS (PRESSURE)					
		102-8802	1	RECEPTACLE KIT					
		9X-3401	2	PIN					
	5	6V-8636	1	CONNECTOR					
	6	6V-9001	2	ELBOW					
	7	6V-8724	1	ELBOW					
	8	9S-4191	1	PLUG					
	9	107-6631	1	CONNECTOR					
	10	3J-1907	7	SEAL-O-RING (ID=11.89mm)					
	11	6V-8397	5	SEAL-O-RING (OD=12.83mm)					

H91329E 01

255-1800 LINES GP-PILOT

Part of 255-5696,255-5699-Page472

An Attachment

HYDRAULIC SYSTEM

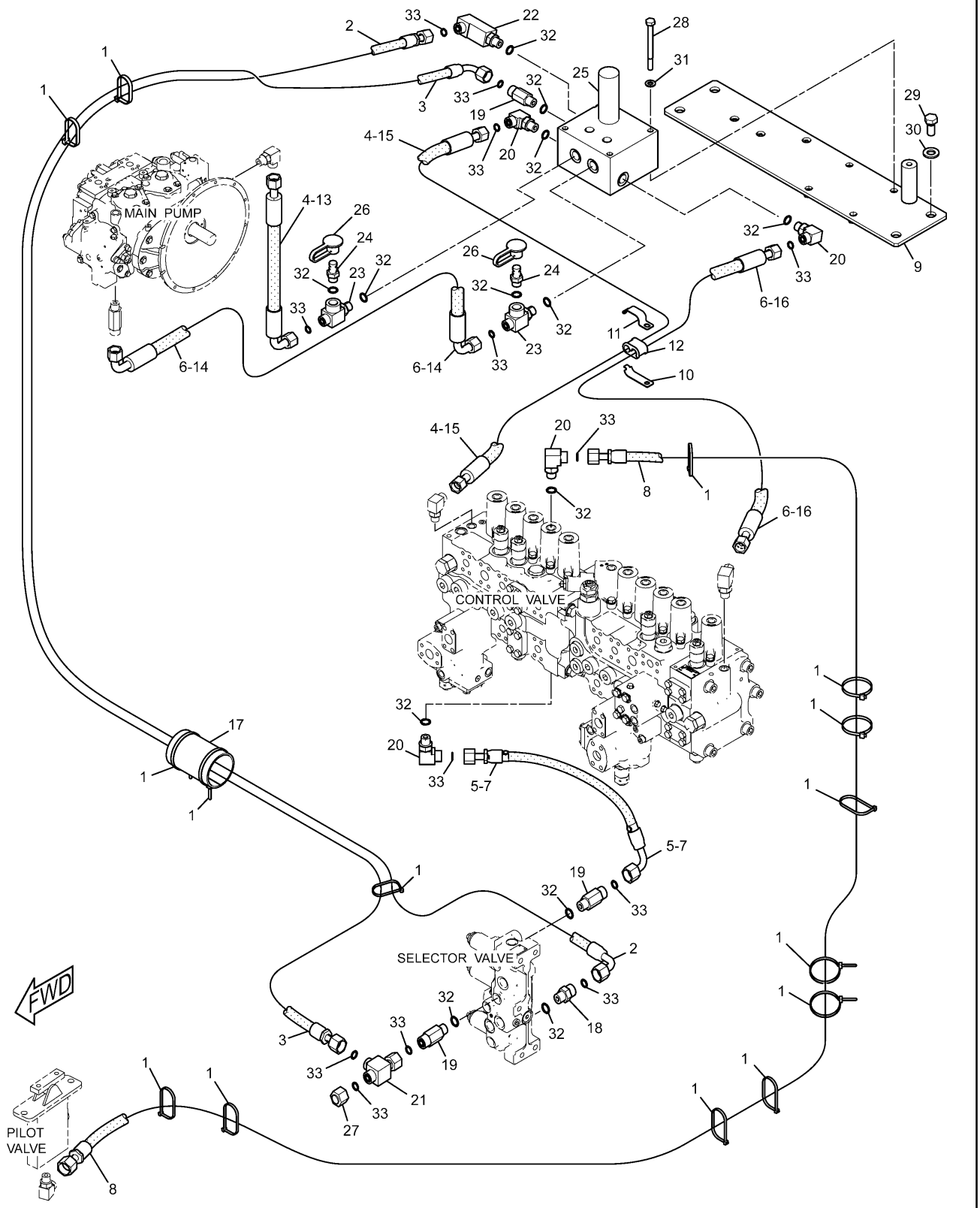

255-1801 LINES GP-PILOT

Part of 255-5696-Page472
171-0188-Page602
An Attachment

HYDRAULIC SYSTEM

NOTE	No.	PART No.	QTY	PART NAME	NOTE	No.	PART No.	QTY	PART NAME
	1	7K-1181	15	STRAP					
	2	4I-0833	1	HOSE AS (NOM 06, L=1850mm)					
	3	4I-0995	1	HOSE AS (NOM 06, L=2000mm)					
	4	4I-9523	4	BAND (L3,BLUE)					
	5	4I-9524	2	BAND (L4,BROWN)					
	6	4I-9527	4	BAND (R3,GREEN)					
	7	5I-4396	1	HOSE AS (NOM 06, L=400mm)					
	8	184-9210	1	HOSE AS (NOM 06, L=3600mm)					
	9	255-1669	1	SUPPORT AS					
	10	275-1442	1	CLIP					
	11	275-1443	1	CLIP					
	12	275-1444	1	GROMMET					
	13	275-1497	1	HOSE AS (NOM 06, L=520mm)					
	14	278-6785	1	HOSE AS (NOM 06, L=660mm)					
	15	275-1503	1	HOSE AS (NOM 06, L=1750mm)					
	16	275-1506	1	HOSE AS (NOM 06, L=2550mm)					
	17	124-1008	1	GUARD					
	18	6V-8636	1	CONNECTOR					
	19	8T-0075	3	CONNECTOR					
	20	6V-8724	4	ELBOW					
	21	6V-9836	1	TEE					
	22	8T-1905	1	ELBOW					
	23	3E-2310	2	TEE					
	24	6V-3965	2	NIPPLE AS					
Y	25	171-0188	1	VALVE GP					
	26	6V-0852	2	CAP					
	27	6V-9829	1	CAP AS					
	28	8T-4177	4	BOLT (L=90mm)					
	29	8T-4192	4	BOLT (L=25mm)					
	30	8T-4223	4	WASHER					
	31	8T-4224	4	WASHER					
	32	3J-1907	13	SEAL-O-RING (ID=11.89mm)					
	33	6V-8397	13	SEAL-O-RING (OD=12.83mm)					

Y—SEE SEPARATE ILLUSTRATION

H91237E 01

255-1801 LINES GP-PILOT

Part of 255-5696-Page472
171-0188-Page602
An Attachment

HYDRAULIC SYSTEM

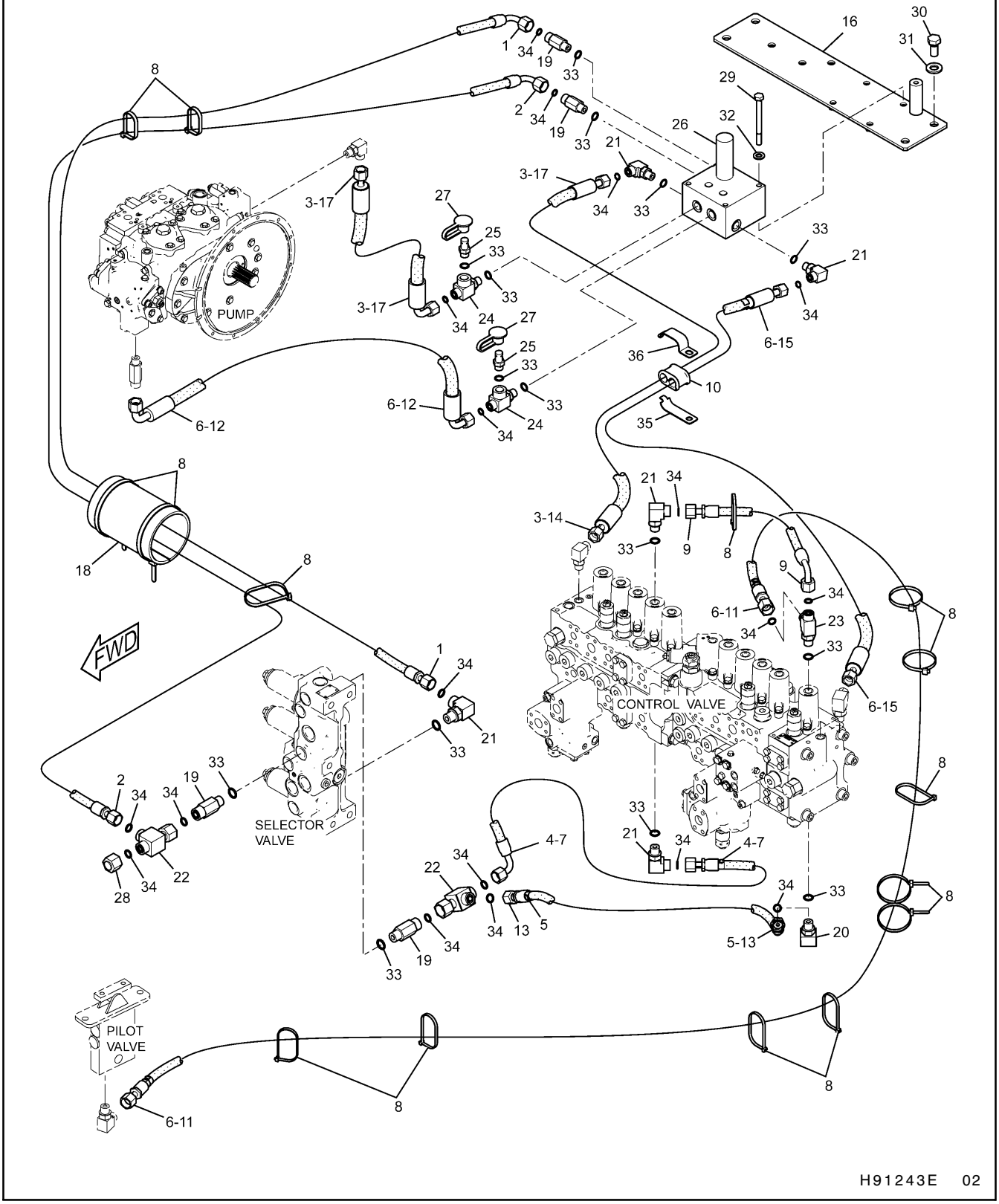

255-1661 LINES GP-PILOT

Part of 255-5699-Page472
171-0188-Page602
An Attachment

HYDRAULIC SYSTEM

NOTE	No.	PART No.	QTY	PART NAME	NOTE	No.	PART No.	QTY	PART NAME
	1	4I-0833	1	HOSE AS (NOM 06, L=1850mm)					
	2	4I-0995	1	HOSE AS (NOM 06, L=2000mm)					
	3	4I-9523	4	BAND (L3,BLUE)					
	4	4I-9524	2	BAND (L4,BROWN)					
	5	4I-9525	2	BAND (R1,ORANGE)					
	6	4I-9527	8	BAND (R3,GREEN)					
	7	5I-4396	1	HOSE AS (NOM 06, L=400mm)					
	8	7K-1181	15	STRAP					
	9	087-5766	1	HOSE AS (NOM 06, L=680mm)					
	10	275-1444	1	GROMMET					
	11	184-9210	1	HOSE AS (NOM 06, L=3600mm)					
	12	278-6785	1	HOSE AS (NOM 06, L=660mm)					
	13	199-1914	1	HOSE AS (NOM 06, L=370mm)					
	14	275-1503	1	HOSE AS (NOM 06, L=1750mm)					
	15	275-1506	1	HOSE AS (NOM 06, L=2550mm)					
	16	255-1669	1	SUPPORT AS					
	17	275-1497	1	HOSE AS (NOM 06, L=520mm)					
	18	124-1008	1	GUARD					
	19	8T-0075	4	CONNECTOR					
	20	6V-9001	1	ELBOW					
	21	6V-8724	5	ELBOW					
	22	6V-9836	2	TEE					
	23	6V-8781	1	TEE					
	24	3E-2310	2	TEE					
	25	6V-3965	2	NIPPLE AS					
Y	26	171-0188	1	VALVE GP					
	27	6V-0852	2	CAP					
	28	6V-9829	1	CAP AS					
	29	8T-4177	4	BOLT (L=90mm)					
	30	8T-4192	4	BOLT (L=25mm)					
	31	8T-4223	4	WASHER					
	32	8T-4224	4	WASHER					
	33	3J-1907	15	SEAL-O-RING (ID=11.89mm)					
	34	6V-8397	18	SEAL-O-RING (OD=12.83mm)					
	35	275-1442	1	CLIP					
	36	275-1443	1	CLIP					

Y—SEE SEPARATE ILLUSTRATION

H91243E 02

255-1661 LINES GP-PILOT

Part of 255-5699-Page472
171-0188-Page602
An Attachment

HYDRAULIC SYSTEM

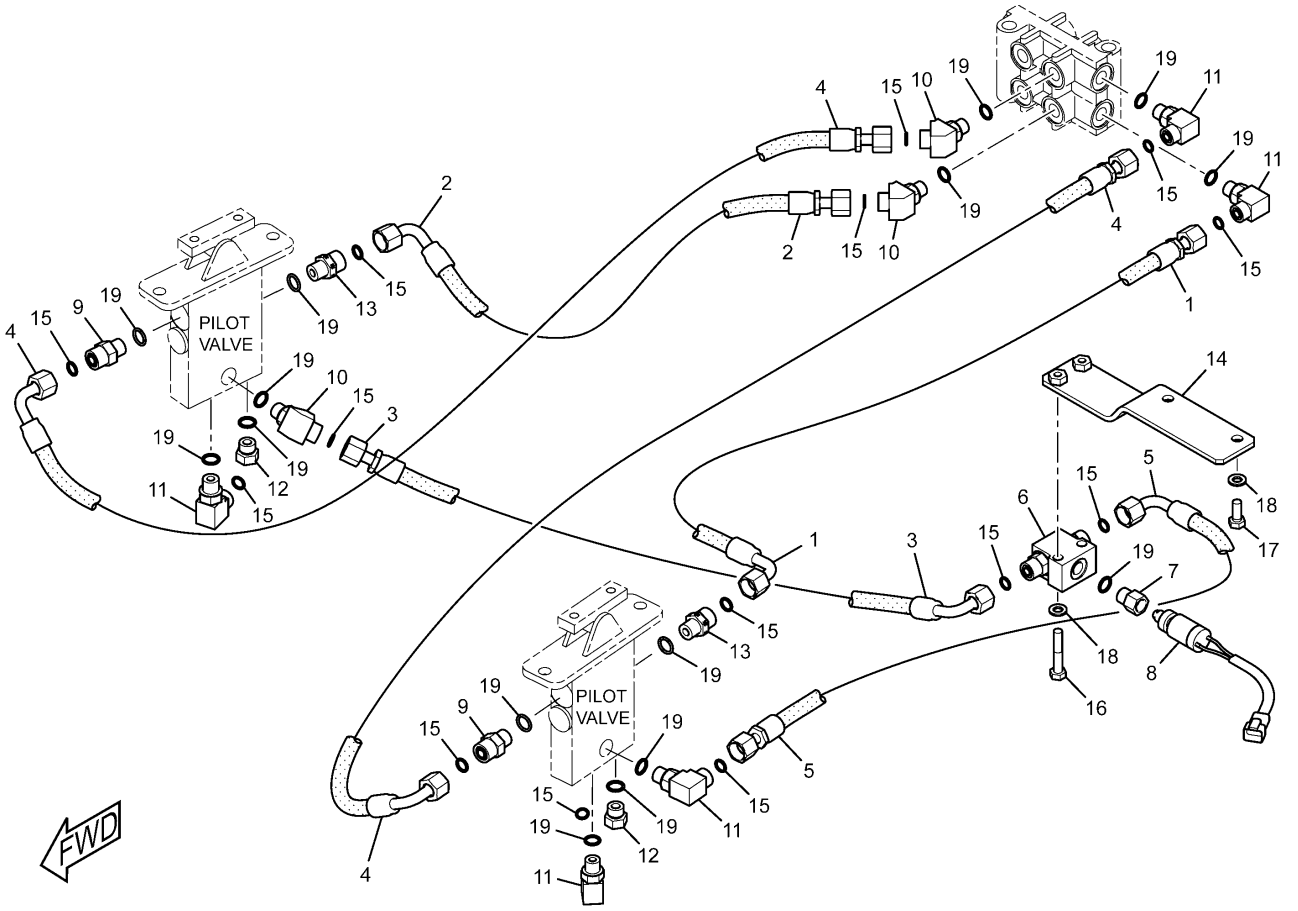

NOTE	No.	PART No.	QTY	PART NAME	NOTE	No.	PART No.	QTY	PART NAME
	1	4I-1025	1	HOSE AS (NOM 06, L=300mm)		19	3J-1907	15	SEAL-O-RING (ID=11.89mm)
	2	4I-1671	1	HOSE AS (NOM 06, L=370mm)					
	3	5I-4396	1	HOSE AS (NOM 06, L=400mm)					
	4	087-4402	2	HOSE AS (NOM 06, L=480mm)					
	5	087-6585	1	HOSE AS (NOM 06, L=350mm)					
Y	6	123-2430	1	VALVE GP					
	7	108-7516	1	FITTING					
	8	167-3466	1	SWITCH AS (PRESSURE)					
		102-8802	1	RECEPTACLE KIT					
		9X-3401	2	PIN					
	9	6V-8636	2	CONNECTOR					
	10	6V-9001	3	ELBOW					
	11	6V-8724	5	ELBOW					
	12	9S-4191	2	PLUG					
	13	107-6631	2	CONNECTOR					
	14	179-7578	1	SUPPORT AS					
	15	6V-8397	14	SEAL-O-RING (OD=12.83mm)					
	16	7X-0818	2	BOLT (L=45mm)					
	17	8T-4189	2	BOLT (L=20mm)					
	18	8T-4224	4	WASHER					

Y—SEE SEPARATE ILLUSTRATION

H91331E 01

255-1802 LINES GP-PILOT

Combined Function/2 Pumps
Part of 255-5697-Page473
123-2430-Page623
An Attachment

MEMORANDA

HYDRAULIC SYSTEM

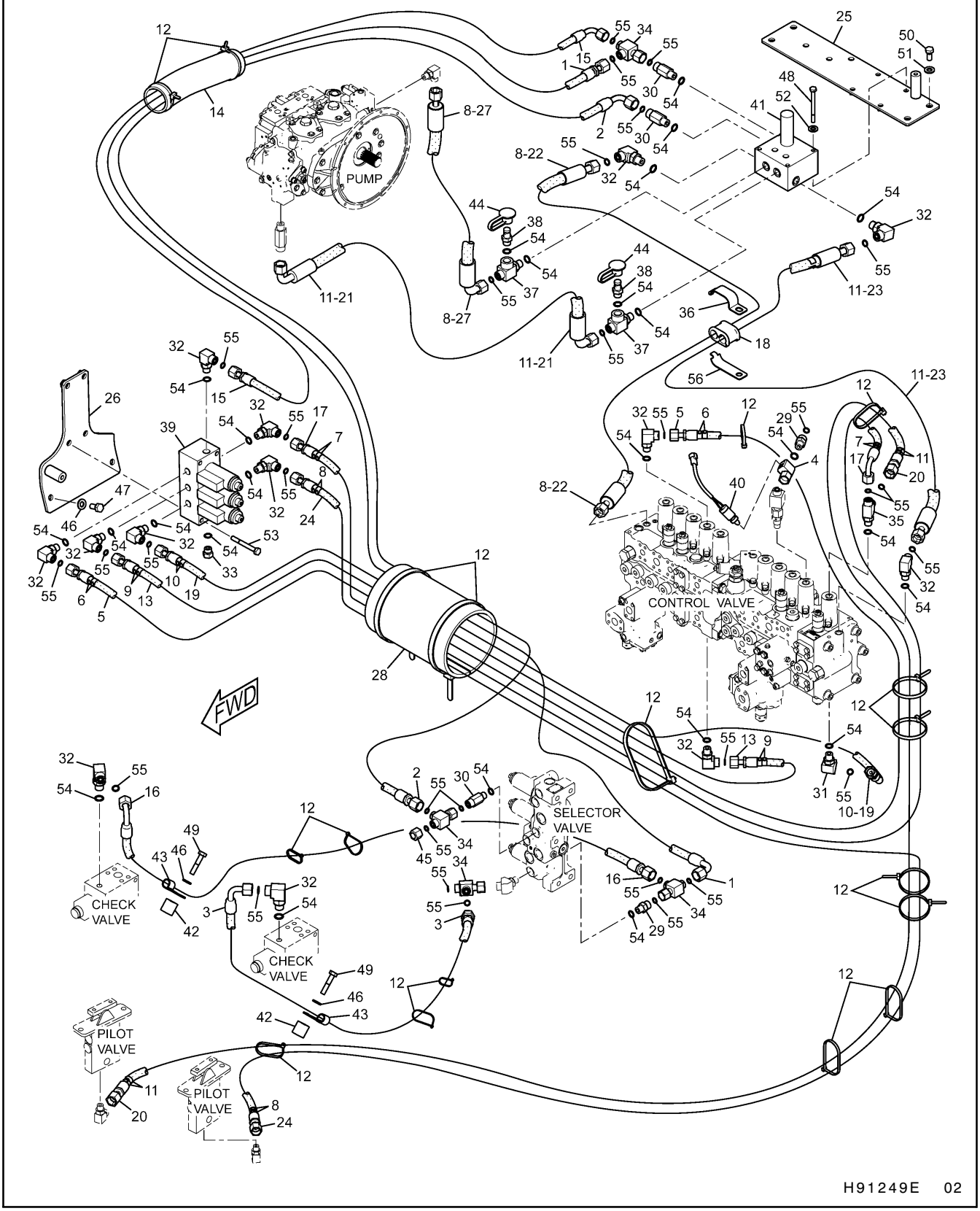

255-1803 LINES GP-PILOT

Part of 255-5697-Page473
171-0188-Page602,165-9549-Page617
An Attachment

HYDRAULIC SYSTEM

NOTE	No.	PART No.	QTY	PART NAME
	1	4I-0833	1	HOSE AS (NOM 06, L=1850mm)
	2	4I-0995	1	HOSE AS (NOM 06, L=2000mm)
	3	4I-1783	1	HOSE AS (NOM 06, L=1500mm)
	4	4I-3941	1	FITTING AS
	5	104-8774	1	HOSE AS (NOM 06, L=2200mm)
	6	4I-9521	4	BAND (L1,RED)
	7	4I-9522	4	BAND (L2,YELLOW)
	8	4I-9523	8	BAND (L3,BLUE)
	9	4I-9524	4	BAND (L4,BROWN)
	10	4I-9525	4	BAND (R1,ORANGE)
	11	4I-9527	8	BAND (R3,GREEN)
	12	7K-1181	18	STRAP
	13	221-4807	1	HOSE AS (NOM 06, L=1750mm)
	14	103-1384	1	GUARD
	15	4I-1739	1	HOSE AS (NOM 06, L=1020mm)
	16	111-0988	1	HOSE AS (NOM 06, L=1950mm)
	17	108-7387	1	HOSE AS (NOM 06, L=2250mm)
	18	275-1444	1	GROMMET
	19	108-7357	1	HOSE AS (NOM 06, L=1950mm)
	20	184-9210	1	HOSE AS (NOM 06, L=3600mm)
	21	278-6785	1	HOSE AS (NOM 06, L=660mm)
	22	275-1503	1	HOSE AS (NOM 06, L=1750mm)
	23	275-1506	1	HOSE AS (NOM 06, L=2550mm)
	24	212-5419	1	HOSE AS (NOM 06, L=4300mm)
	25	255-1669	1	SUPPORT AS
	26	266-1158	1	SUPPORT AS
	27	275-1497	1	HOSE AS (NOM 06, L=520mm)
	28	124-1008	1	GUARD
	29	6V-8636	2	CONNECTOR
	30	8T-0075	3	CONNECTOR
	31	6V-9001	1	ELBOW
	32	6V-8724	13	ELBOW
	33	9S-4191	1	PLUG
	34	6V-9836	4	TEE
	35	6V-8781	1	TEE
	36	275-1443	1	CLIP
	37	3E-2310	2	TEE
	38	6V-3965	2	NIPPLE AS
Y	39	165-9549	1	VALVE GP
	40	167-3466	1	SWITCH AS (PRESSURE)
		102-8802	1	RECEPTACLE KIT
		9X-3401	2	PIN
Y	41	171-0188	1	VALVE GP
	42	6E-1435	2	SPACER
	43	6K-8178	2	CLIP
	44	6V-0852	2	CAP
	45	6V-9829	1	CAP AS
	46	8T-4121	4	WASHER
	47	8T-4137	2	BOLT (L=20mm)
	48	8T-4177	4	BOLT (L=90mm)
	49	8T-4185	2	BOLT (L=50mm)
	50	8T-4192	4	BOLT (L=25mm)
	51	8T-4223	4	WASHER
	52	8T-4224	4	WASHER
	53	8T-6870	4	BOLT (L=70mm)
	54	3J-1907	25	SEAL-O-RING (ID=11.89mm)
	55	6V-8397	31	SEAL-O-RING (OD=12.83mm)
	56	275-1442	1	CLIP

Y—SEE SEPARATE ILLUSTRATION

H91249E 02

255-1803 LINES GP-PILOT

Part of 255-5697-Page473
171-0188-Page602,165-9549-Page617
An Attachment

HYDRAULIC SYSTEM

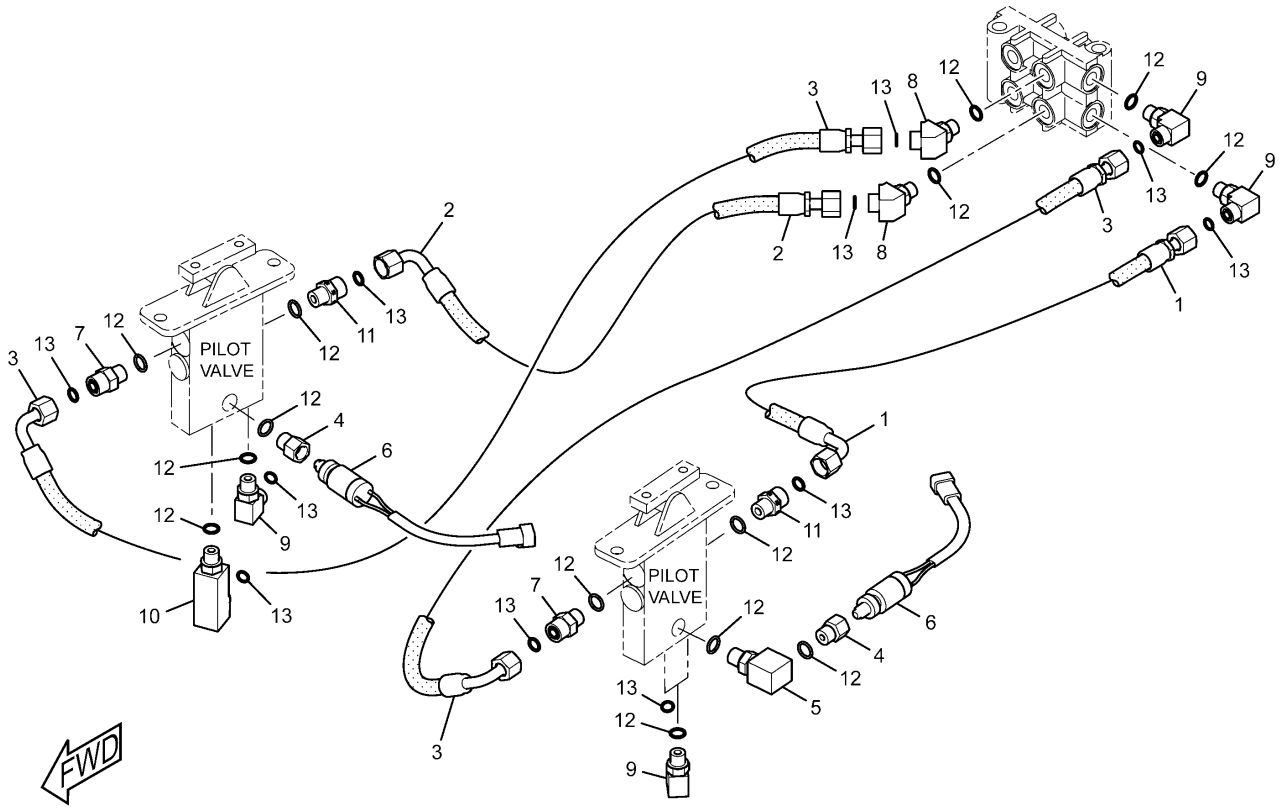

NOTE	No.	PART No.	QTY	PART NAME	NOTE	No.	PART No.	QTY	PART NAME
	1	4I-1025	1	HOSE AS (NOM 06, L=300mm)					
	2	4I-1671	1	HOSE AS (NOM 06, L=370mm)					
	3	087-4402	2	HOSE AS (NOM 06, L=480mm)					
	4	108-7516	2	FITTING					
	5	085-7356	1	FITTING					
	6	167-3466	2	SWITCH AS (PRESSURE)					
		102-8802	1	RECEPTACLE KIT					
		9X-3401	2	PIN					
	7	6V-8636	2	CONNECTOR					
	8	6V-9001	2	ELBOW					
	9	6V-8724	5	ELBOW					
	10	8T-1905	1	ELBOW					
	11	107-6631	2	CONNECTOR					
	12	3J-1907	15	SEAL-O-RING (ID=11.89mm)					
	13	6V-8397	12	SEAL-O-RING (OD=12.83mm)					

H91330E 01

255-1663 LINES GP-PILOT

Combined Function/2 Pumps (Medium Pressure)
Part of 255-5702-Page474
An Attachment

MEMORANDA

HYDRAULIC SYSTEM

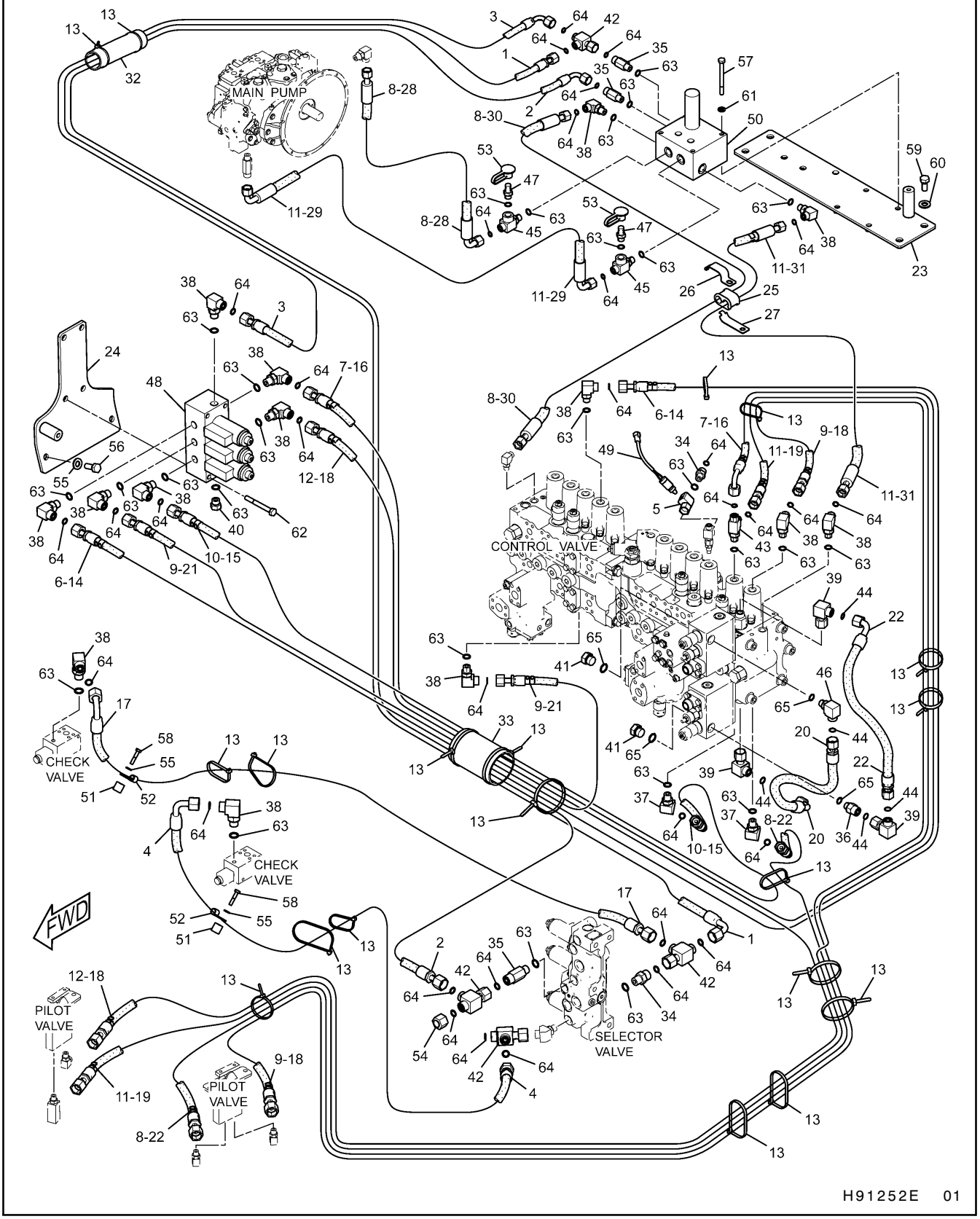

255-1664 LINES GP-PILOT

Part of 255-5702-Page474
171-0188-Page602,165-9549-Page617
An Attachment

HYDRAULIC SYSTEM

NOTE	No.	PART No.	QTY	PART NAME	NOTE	No.	PART No.	QTY	PART NAME
	1	4I-0833	1	HOSE AS (NOM 06, L=1850mm)		52	6K-8178	2	CLIP
	2	4I-0995	1	HOSE AS (NOM 06, L=2000mm)		53	6V-0852	2	CAP
	3	4I-1739	1	HOSE AS (NOM 06, L=1020mm)	B	54	6V-9829	1	CAP AS
	4	4I-1783	1	HOSE AS (NOM 06, L=1500mm)		55	8T-4121	4	WASHER
	5	4I-3941	1	FITTING AS		56	8T-4136	2	BOLT (L=25mm)
	6	4I-9521	4	BAND (L1,RED)		57	8T-4177	4	BOLT (L=90mm)
	7	4I-9522	4	BAND (L2,YELLOW)		58	8T-4185	2	BOLT (L=50mm)
	8	4I-9523	8	BAND (L3,BLUE)		59	8T-4192	4	BOLT (L=25mm)
	9	4I-9524	8	BAND (L4,BROWN)		60	8T-4223	4	WASHER
	10	4I-9525	4	BAND (R1,ORANGE)		61	8T-4224	4	WASHER
	11	4I-9527	8	BAND (R3,GREEN)		62	8T-6870	4	BOLT (L=70mm)
	12	4I-9528	4	BAND (R4,PURPLE)		63	3J-1907	27	SEAL-O-RING (ID=11.89mm)
	13	7K-1181	19	STRAP		64	6V-8397	33	SEAL-O-RING (OD=12.83mm)
	14	104-8774	1	HOSE AS (NOM 06, L=2200mm)		65	3K-0360	4	SEAL-O-RING (ID=16.36mm)
	15	108-7357	1	HOSE AS (NOM 06, L=1950mm)					
	16	108-7387	1	HOSE AS (NOM 06, L=2250mm)					
	17	111-0988	1	HOSE AS (NOM 06, L=1950mm)					
	18	134-6921	2	HOSE AS (NOM 06, L=3950mm)					
	19	184-9210	1	HOSE AS (NOM 06, L=3600mm)					
	20	199-1609	2	HOSE AS (NOM 10, L=430mm)					
	21	221-4807	1	HOSE AS (NOM 06, L=1750mm)					
	22	223-6768	1	HOSE AS (NOM 06, L=3250mm)					
	23	255-1669	1	SUPPORT AS					
	24	266-1158	1	SUPPORT AS					
	25	275-1442	1	CLIP					
	26	275-1443	1	CLIP					
	27	275-1444	1	GROMMET					
	28	275-1497	1	HOSE AS (NOM 06, L=520mm)					
	29	278-6785	1	HOSE AS (NOM 06, L=660mm)					
	30	275-1503	1	HOSE AS (NOM 06, L=1750mm)					
	31	275-1506	1	HOSE AS (NOM 06, L=2550mm)					
	32	103-1384	1	GUARD					
	33	124-1008	1	GUARD					
	34	6V-8636	2	CONNECTOR					
	35	8T-0075	3	CONNECTOR					
	36	6V-8632	1	CONNECTOR					
	37	6V-9001	2	ELBOW					
	38	6V-8724	14	ELBOW					
	39	6V-9852	3	ELBOW					
	40	9S-4191	1	PLUG					
	41	9S-4185	2	PLUG					
	42	6V-9836	4	TEE					
	43	6V-8781	1	TEE					
	44	7J-9108	5	SEAL-O-RING (OD=19.28mm)					
	45	3E-2310	2	TEE					
	46	6V-8722	1	ELBOW					
	47	6V-3965	2	NIPPLE AS					
Y	48	165-9549	1	VALVE GP					
	49	167-3466	1	SWITCH AS (PRESSURE)					
		102-8802	1	RECEPTACLE KIT					
		9X-3401	2	PIN					
Y	50	171-0188	1	VALVE GP					
	51	6E-1435	2	SPACER					

B—USE AS REQUIRED

Y—SEE SEPARATE ILLUSTRATION

H91252E 01

255-1664 LINES GP-PILOT

Part of 255-5702-Page474
171-0188-Page602,165-9549-Page617
An Attachment

HYDRAULIC SYSTEM

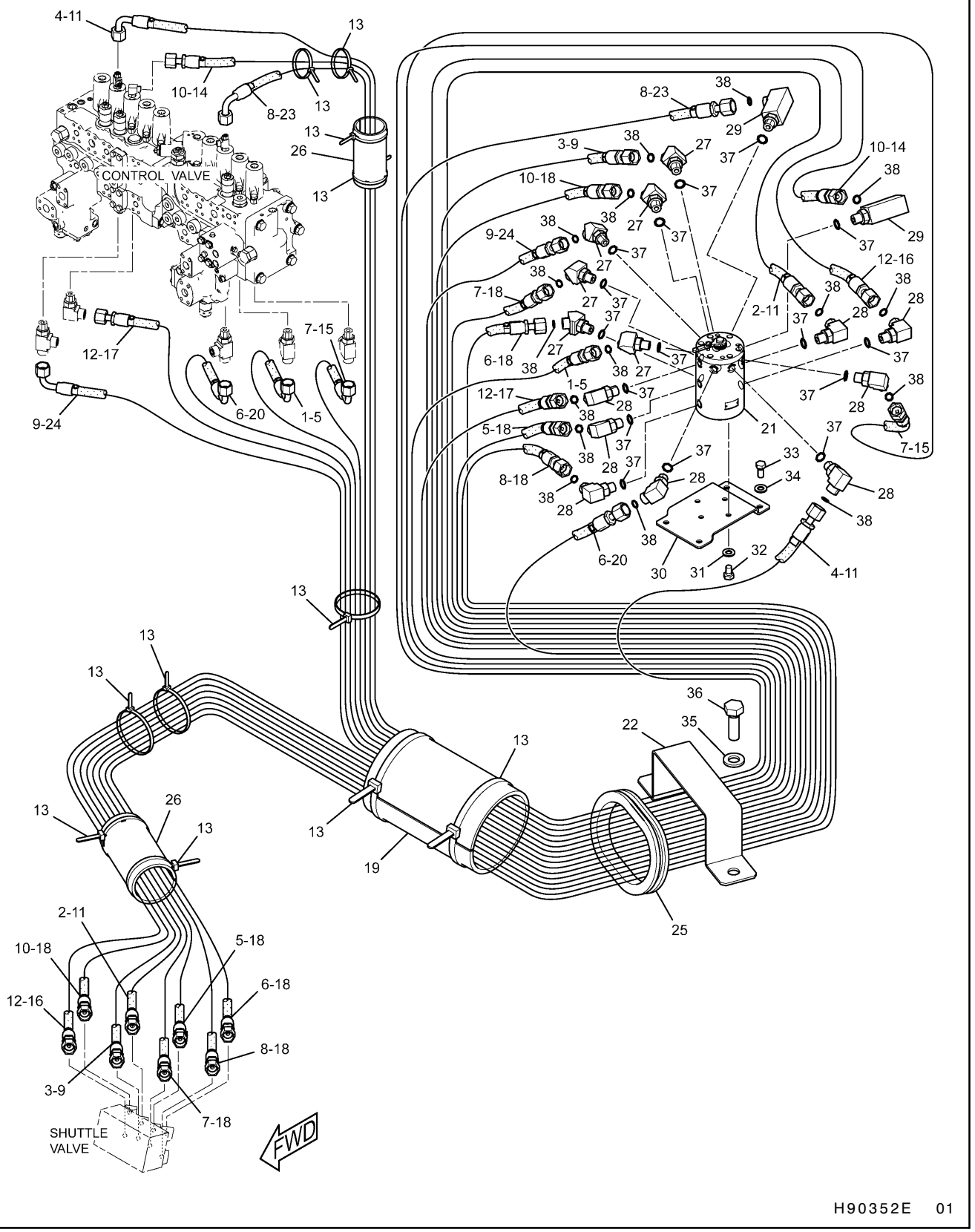

255-1656 LINES GP-PILOT

4 Way Valve
Part of 255-5724-Page475
165-9470-Page600
An Attachment

HYDRAULIC SYSTEM

NOTE	No.	PART No.	QTY	PART NAME	NOTE	No.	PART No.	QTY	PART NAME
	1	4I-0995	1	HOSE AS (NOM 06, L=2000mm)					
	2	4I-3981	1	HOSE AS (NOM 06, L=2750mm)					
	3	4I-6003	1	HOSE AS (NOM 06, L=2650mm)					
	4	4I-8799	1	HOSE AS (NOM 06, L=2900mm)					
	5	4I-9521	4	BAND (L1,RED)					
	6	4I-9522	4	BAND (L2,YELLOW)					
	7	4I-9523	4	BAND (L3,BLUE)					
	8	4I-9524	4	BAND (L4,BROWN)					
	9	4I-9525	4	BAND (R1,ORANGE)					
	10	4I-9526	4	BAND (R2,WHITE)					
	11	4I-9527	4	BAND (R3,GREEN)					
	12	4I-9528	4	BAND (R4,PURPLE)					
	13	7K-1181	11	STRAP					
	14	7Y-4173	1	HOSE AS (NOM 06, L=2800mm)					
	15	087-5303	1	HOSE AS (NOM 06, L=2300mm)					
	16	104-8768	1	HOSE AS (NOM 06, L=2700mm)					
	17	104-8783	1	HOSE AS (NOM 06, L=2150mm)					
	18	108-7203	5	HOSE AS (NOM 06, L=2600mm)					
	19	124-1008	1	GUARD					
	20	134-6918	1	HOSE AS (NOM 06, L=2150mm)					
Y	21	165-9470	1	VALVE GP					
	22	176-4366	1	SUPPORT					
	23	179-7616	1	HOSE AS (NOM 06, L=2500mm)					
	24	218-1336	1	HOSE AS (NOM 06, L=2230mm)					
	25	255-1671	1	GROMMET					
	26	115-8645	2	GUARD					
	27	6V-9001	6	ELBOW					
	28	6V-8724	8	ELBOW					
	29	8T-1905	2	ELBOW					
	30	176-4684	1	SUPPORT					
	31	8T-4121	4	WASHER					
	32	8T-4191	4	BOLT (L=16mm)					
	33	8T-4192	4	BOLT (L=25mm)					
	34	8T-4223	4	WASHER					
	35	8T-4224	2	WASHER					
	36	8T-4908	2	BOLT (L=25mm)					
	37	3J-1907	16	SEAL-O-RING (ID=11.89mm)					
	38	6V-8397	16	SEAL-O-RING (OD=12.83mm)					

Y—SEE SEPARATE ILLUSTRATION

H90352E 01

255-1656 LINES GP-PILOT

4 Way Valve
Part of 255-5724-Page475
165-9470-Page600
An Attachment

HYDRAULIC SYSTEM

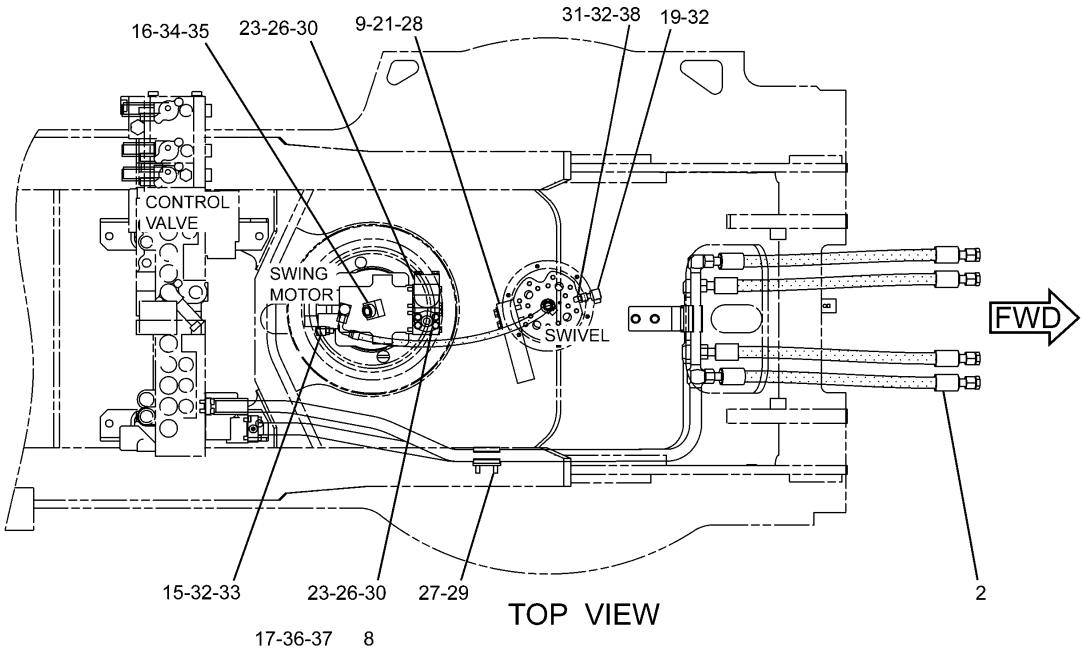

TOP VIEW

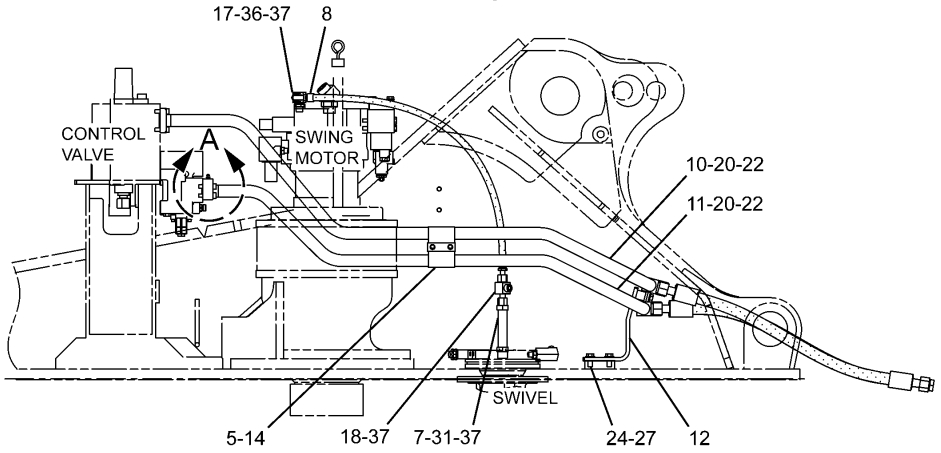

RIGHT SIDE VIEW

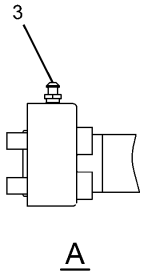

A

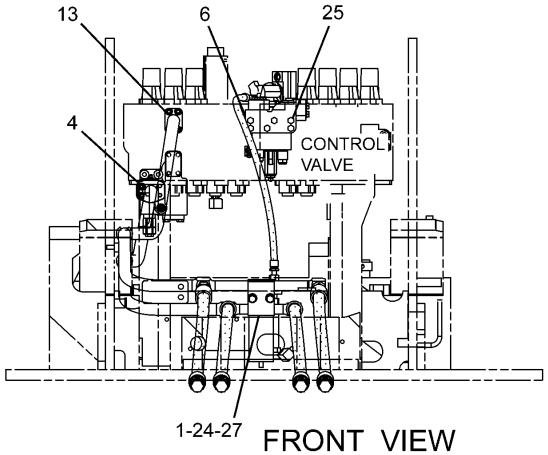

FRONT VIEW

H92749E 02

245-5178 LINES GP-BOOM CYLINDER
158-9090-Page614

HYDRAULIC SYSTEM

NOTE	No.	PART No.	QTY	PART NAME	NOTE	No.	PART No.	QTY	PART NAME
	1	4I-1674	2	CLIP					
	2	7Y-7904	4	HOSE AS					
	3	9F-2167	1	SCREW					
	4	101-7398	4	BOLT (L=40mm)					
	5	108-7550	1	CLIP					
Y	6	158-9090	1	VALVE GP					
	7	4I-7745	1	CONNECTOR					
	8	204-8260	1	HOSE AS					
	9	234-4492	1	SUPPORT					
	10	255-1785	1	TUBE AS					
	11	255-1786	1	TUBE AS					
	12	255-1787	1	SUPPORT AS					
	13	101-7404	4	BOLT (L=30mm)					
	14	133-5828	1	SUPPORT AS					
	15	6V-9001	1	ELBOW					
	16	6V-9005	1	ELBOW					
	17	6V-8625	1	ELBOW					
	18	6V-9837	1	TEE					
	19	6V-9850	1	ELBOW					
	20	1P-3703	2	SEAL					
	21	5P-1076	2	WASHER					
	22	6V-9746	4	SEAL-O-RING (OD=22.50mm)					
	23	8T-4121	8	WASHER					
	24	8T-4139	4	BOLT (L=30mm)					
	25	8T-4178	6	BOLT (L=90mm)					
	26	8T-4182	8	BOLT (L=45mm)					
	27	8T-4223	6	WASHER					
	28	8T-4648	2	BOLT (L=70mm)					
	29	8T-4910	2	BOLT (L=60mm)					
	30	8T-9403	4	FLANGE					
	31	3D-2824	1	SEAL-O-RING (ID=23.47mm)					
	32	3J-1907	2	SEAL-O-RING (ID=11.89mm)					
	33	6V-8397	3	SEAL-O-RING (OD=12.83mm)					
	34	5K-9090	1	SEAL-O-RING (OD=27.22mm)					
	35	7M-8485	1	SEAL-O-RING (ID=29.74mm)					
	36	3K-0360	1	SEAL-O-RING (ID=16.36mm)					
	37	6V-8398	4	SEAL-O-RING (OD=16.03mm)					
	38	6V-8636	1	CONNECTOR					

Y—SEE SEPARATE ILLUSTRATION

H92749E 02

245-5178 LINES GP-BOOM CYLINDER

158-9090-Page614

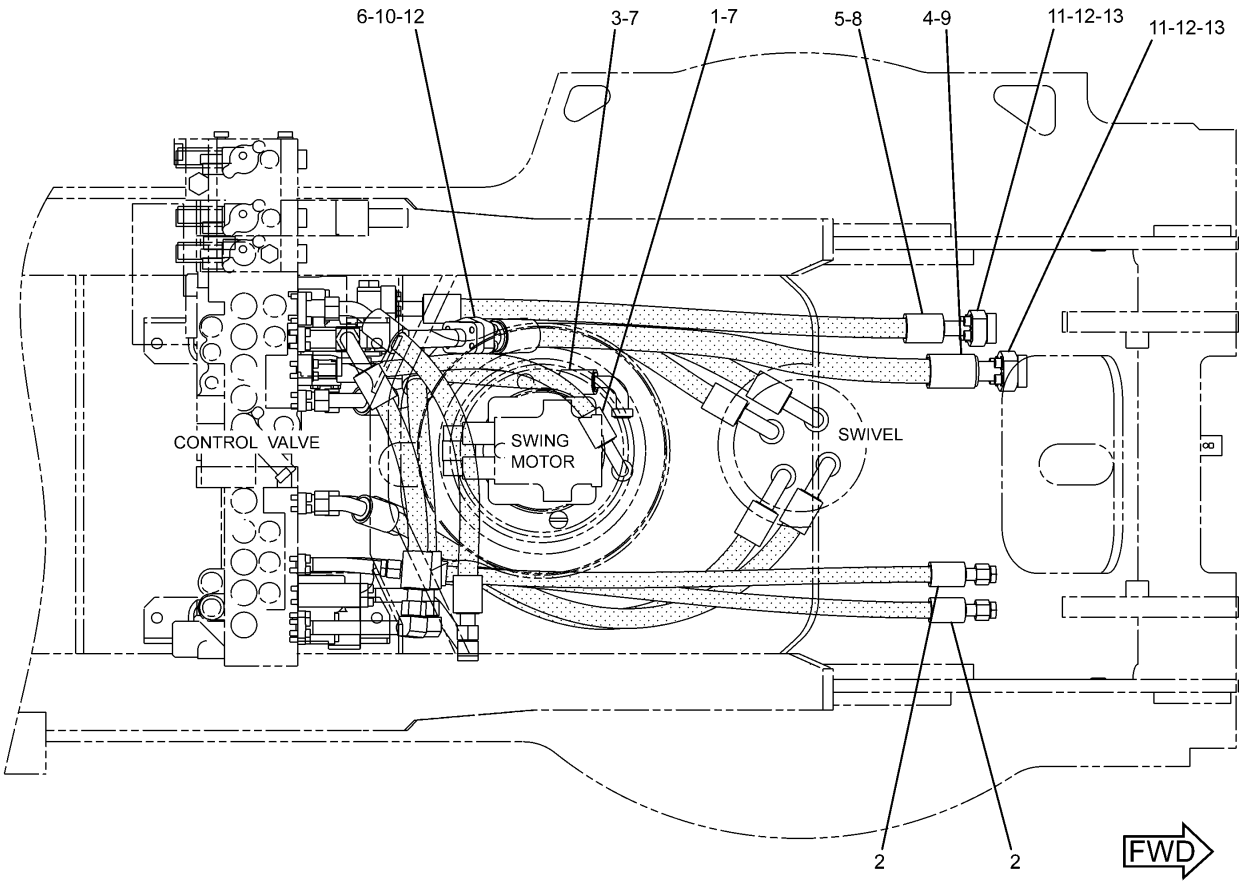

TOP VIEW

H91230E 01

245-5179 LINES & CONTROL GP-FRONT (1/2)

HYDRAULIC SYSTEM

NOTE	No.	PART No.	QTY	PART NAME	NOTE	No.	PART No.	QTY	PART NAME
	1	187-5994	1	HOSE AS					
	2	199-1620	2	HOSE AS					
	3	202-3994	1	HOSE AS					
	4	202-4038	1	HOSE AS					
	5	248-9882	1	HOSE AS					
	6	101-7397	4	BOLT (L=50mm)					
	7	1P-3702	4	SEAL					
	8	1P-3703	2	SEAL					
	9	1P-3704	2	SEAL					
	10	1P-5767	4	FLANGE					
	11	6V-0400	2	FLANGE					
	12	8T-4223	12	WASHER					
	13	8T-4184	8	BOLT (L=45mm)					

H91230E 01

245-5179 LINES & CONTROL GP-FRONT (1/2)

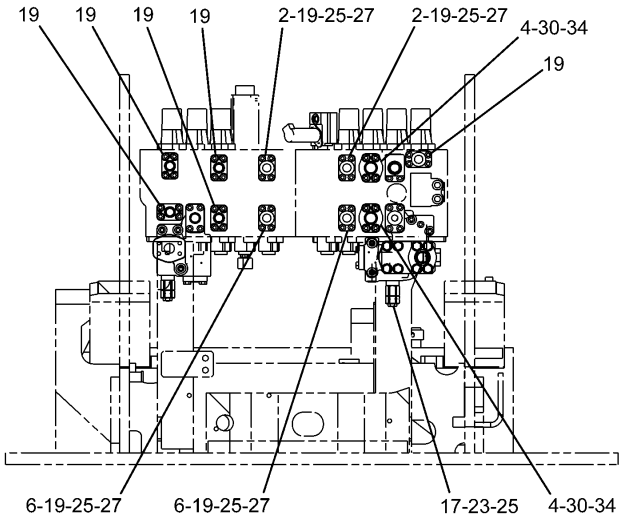

B – B

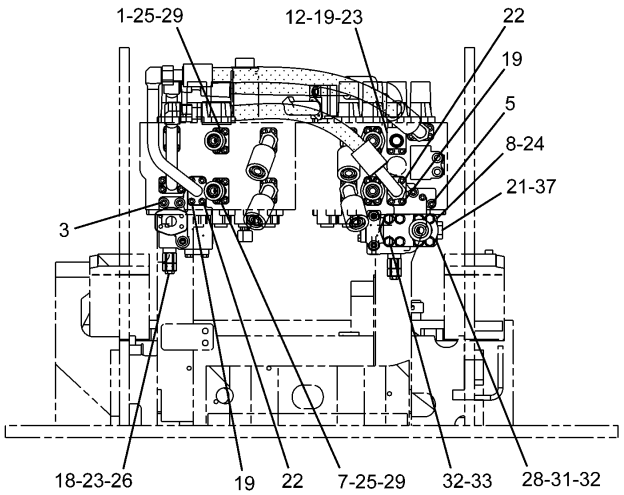

A – A

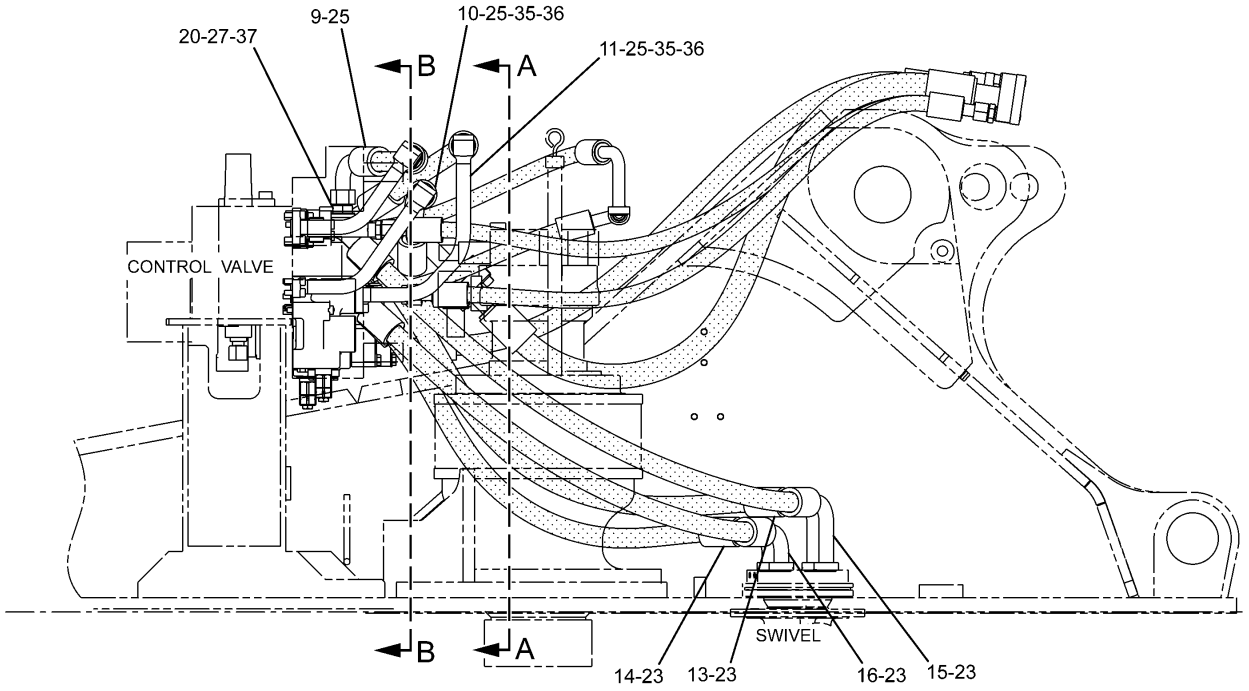

RIGHT SIDE VIEW

H91231E 01

245-5179 LINES & CONTROL GP-FRONT (2/2)

255-5680-Page594,255-5683-Page596

HYDRAULIC SYSTEM

NOTE	No.	PART No.	QTY	PART NAME	NOTE	No.	PART No.	QTY	PART NAME
	1	7Y-3721	1	TUBE AS					
	2	7Y-3730	2	FLANGE					
	3	101-7403	2	BOLT (L=80mm)					
	4	105-3477	8	BOLT (L=45mm)					
	5	105-3483	2	BOLT (L=70mm)					
	6	113-6479	2	FLANGE					
	7	137-0856	1	TUBE AS					
	8	187-5935	1	BLOCK					
	9	168-9760	1	HOSE AS					
	10	168-9761	1	HOSE AS					
	11	168-9762	1	HOSE AS					
	12	218-1127	1	TUBE AS					
	13	248-9866	1	HOSE AS					
	14	248-9870	1	HOSE AS					
	15	248-9874	1	HOSE AS					
	16	248-9878	1	HOSE AS					
Y	17	255-5680	1	VALVE GP					
Y	18	255-5683	1	VALVE GP					
	19	101-7404	42	BOLT (L=30mm)					
	20	6V-8635	1	CONNECTOR					
	21	9S-4181	1	PLUG					
	22	199-1286	6	BOLT (L=150mm)					
	23	1P-3703	7	SEAL					
	24	1P-3704	1	SEAL					
	25	4J-5267	10	SEAL-O-RING (ID=24.99mm)					
	26	4J-5268	1	SEAL-O-RING (ID=13.94mm)					
	27	5K-9090	5	SEAL-O-RING (OD=27.22mm)					
	28	6V-0400	2	FLANGE					
	29	6V-9746	2	SEAL-O-RING (OD=22.50mm)					
	30	8T-4121	8	WASHER					
	31	113-2004	4	BOLT (L=45mm)					
	32	8T-4223	8	WASHER					
	33	105-3485	4	BOLT					
	34	8T-9403	4	FLANGE					
	35	1P-4577	4	FLANGE					
	36	4J-0520	2	SEAL-O-RING (ID=32.92mm)					
	37	7M-8485	2	SEAL-O-RING (ID=29.74mm)					

Y—SEE SEPARATE ILLUSTRATION

H91231E 01

245-5179 LINES & CONTROL GP-FRONT (2/2)

255-5680-Page594,255-5683-Page596

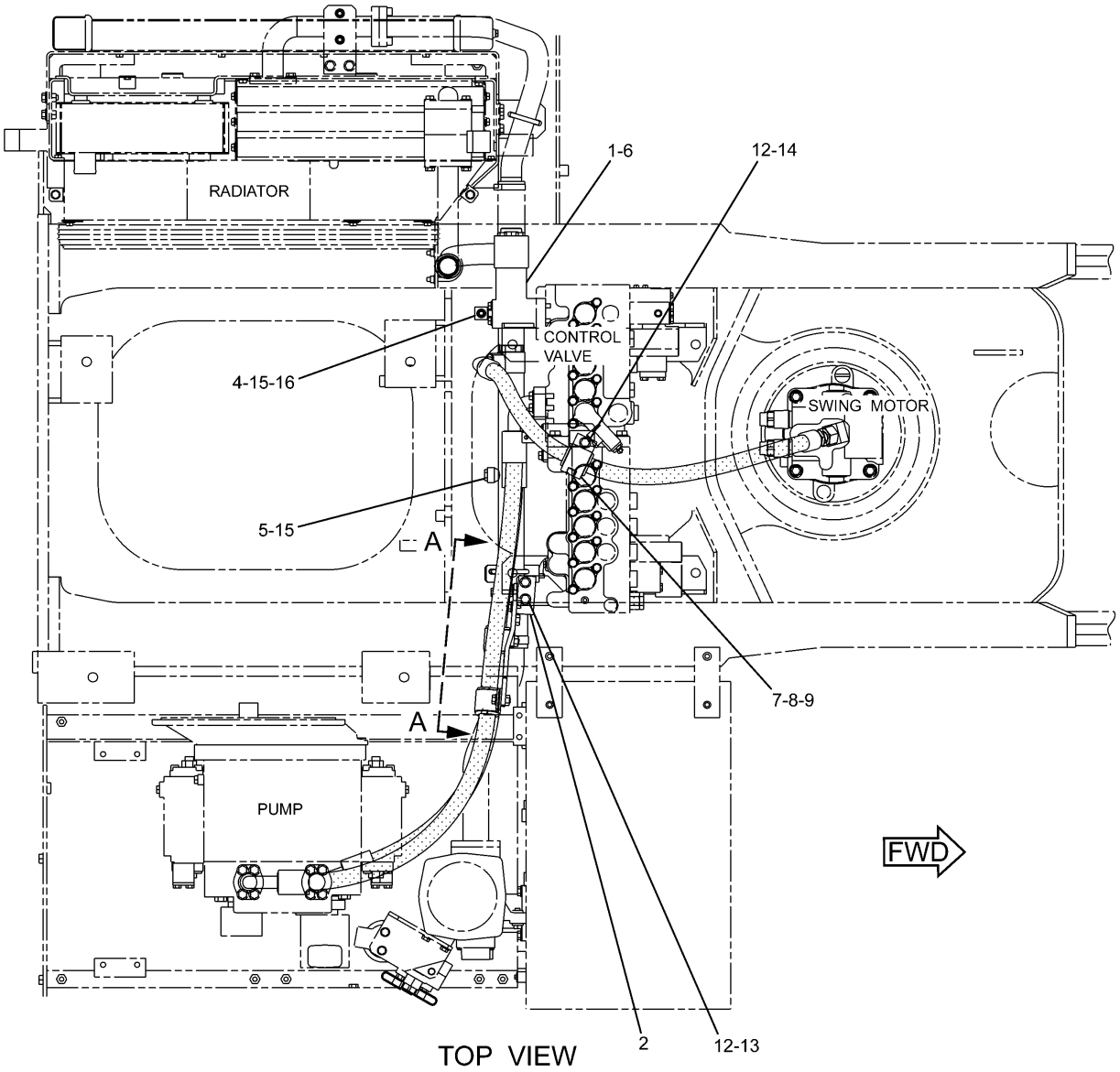

TOP VIEW

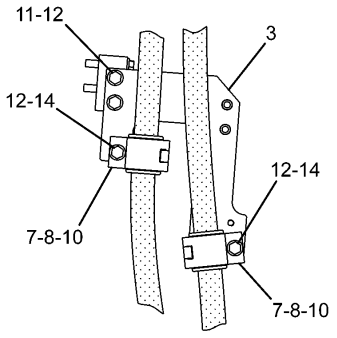

A – A

H93983E 03

248-9831 LINES & CONTROL GP-REAR (1/2)
173-4672-Page621

HYDRAULIC SYSTEM

NOTE	No.	PART No.	QTY	PART NAME	NOTE	No.	PART No.	QTY	PART NAME
Y	1	173-4672	1	VALVE GP					
	2	204-8496	1	PLATE					
	3	275-1473	1	SUPPORT AS					
	4	6V-8625	1	ELBOW					
	5	9S-4185	1	PLUG					
	6	4J-0524	1	SEAL-O-RING (ID=47.22mm)					
	7	5P-7468	3	CLIP					
	8	5P-7469	3	CLIP					
	9	5P-8444	1	GROMMET					
	10	8T-2525	2	GROMMET					
	11	8T-4139	2	BOLT (L=30mm)					
	12	8T-4223	7	WASHER					
	13	8T-4648	2	BOLT (L=70mm)					
	14	8T-4956	3	BOLT (L=35mm)					
	15	3K-0360	2	SEAL-O-RING (ID=16.36mm)					
	16	6V-8398	1	SEAL-O-RING (OD=16.03mm)					

Y—SEE SEPARATE ILLUSTRATION

H93983E 03

248-9831 LINES & CONTROL GP-REAR (1/2)

173-4672-Page621

HYDRAULIC SYSTEM

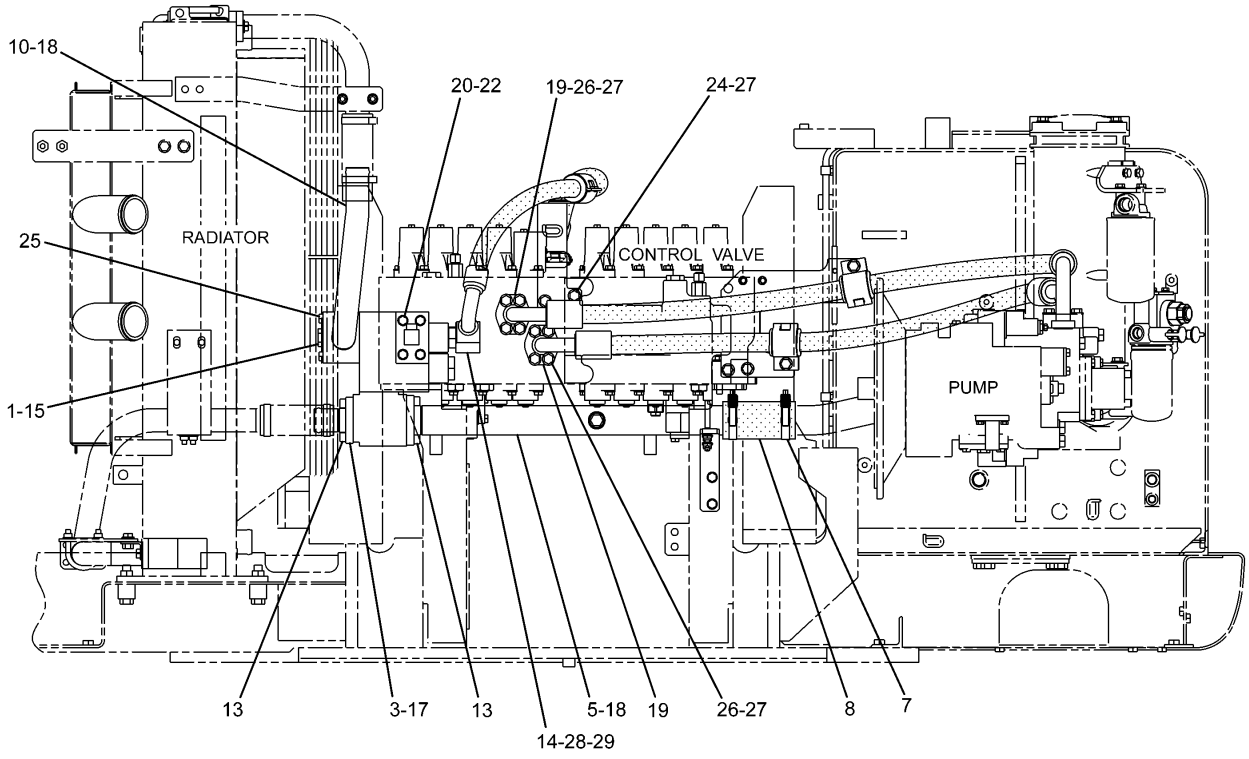

REAR VIEW

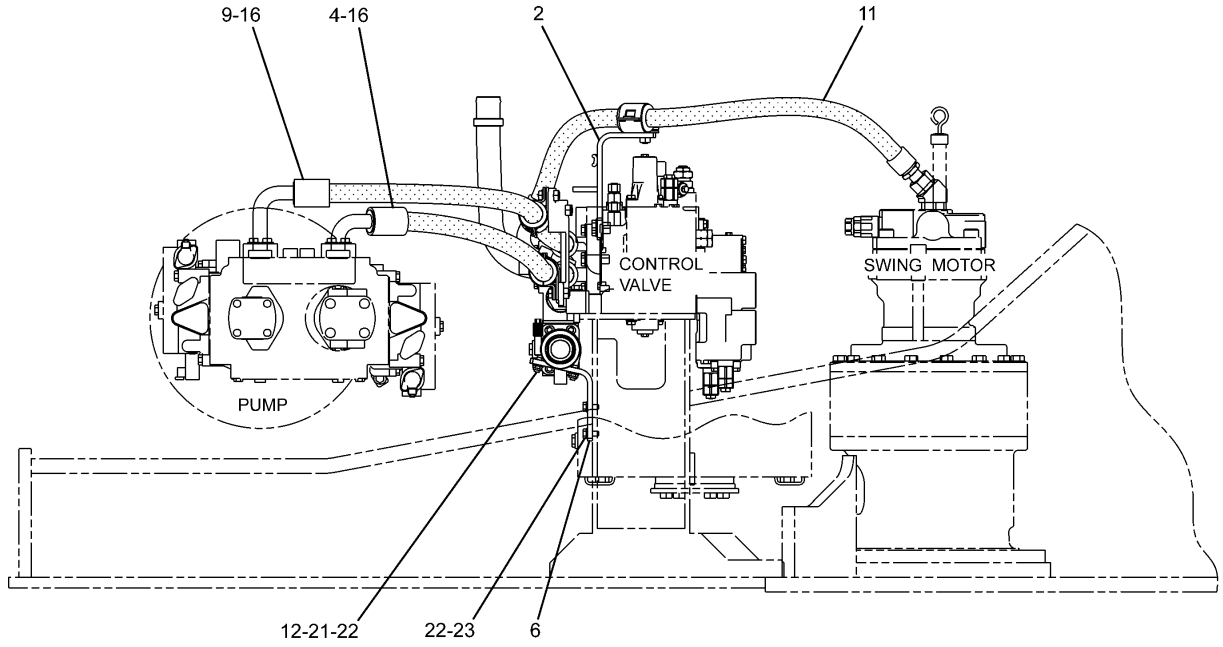

RIGHT SIDE VIEW

H93984E 03

248-9831 LINES & CONTROL GP-REAR (2/2)

HYDRAULIC SYSTEM

NOTE	No.	PART No.	QTY	PART NAME	NOTE	No.	PART No.	QTY	PART NAME
	1	3D-2824	1	SEAL-O-RING (ID=23.47mm)					
	2	173-4816	1	SUPPORT AS					
	3	289-5362	1	PIPE AS					
	4	179-7500	1	HOSE AS					
	5	187-5661	1	PIPE AS					
	6	196-0807	1	PLATE					
	7	144-0367	2	CLAMP					
	8	221-4872	1	HOSE					
	9	248-9896	1	HOSE AS					
	10	282-7330	1	PIPE AS					
	11	260-7940	1	HOSE AS					
	12	096-4883	2	NUT					
	13	101-7402	8	BOLT (L=30mm)					
	14	6V-9008	1	ELBOW					
	15	9S-4183	1	PLUG					
	16	1P-3703	4	SEAL					
	17	4J-0524	1	SEAL-O-RING (ID=47.22mm)					
	18	4J-0527	2	SEAL-O-RING (ID=56.74mm)					
	19	6V-0400	4	FLANGE					
	20	7X-2544	4	BOLT (L=140mm)					
	21	7Y-5247	1	U-BOLT					
	22	8T-4121	8	WASHER					
	23	8T-4136	2	BOLT (L=25mm)					
	24	8T-4139	2	BOLT (L=30mm)					
	25	8T-4176	4	BOLT (L=90mm)					
	26	8T-4194	8	BOLT (L=50mm)					
	27	8T-4223	10	WASHER					
	28	5K-9090	1	SEAL-O-RING (OD=27.22mm)					
	29	7M-8485	1	SEAL-O-RING (ID=29.74mm)					

H93984E 03

248-9831 LINES & CONTROL GP-REAR (2/2)

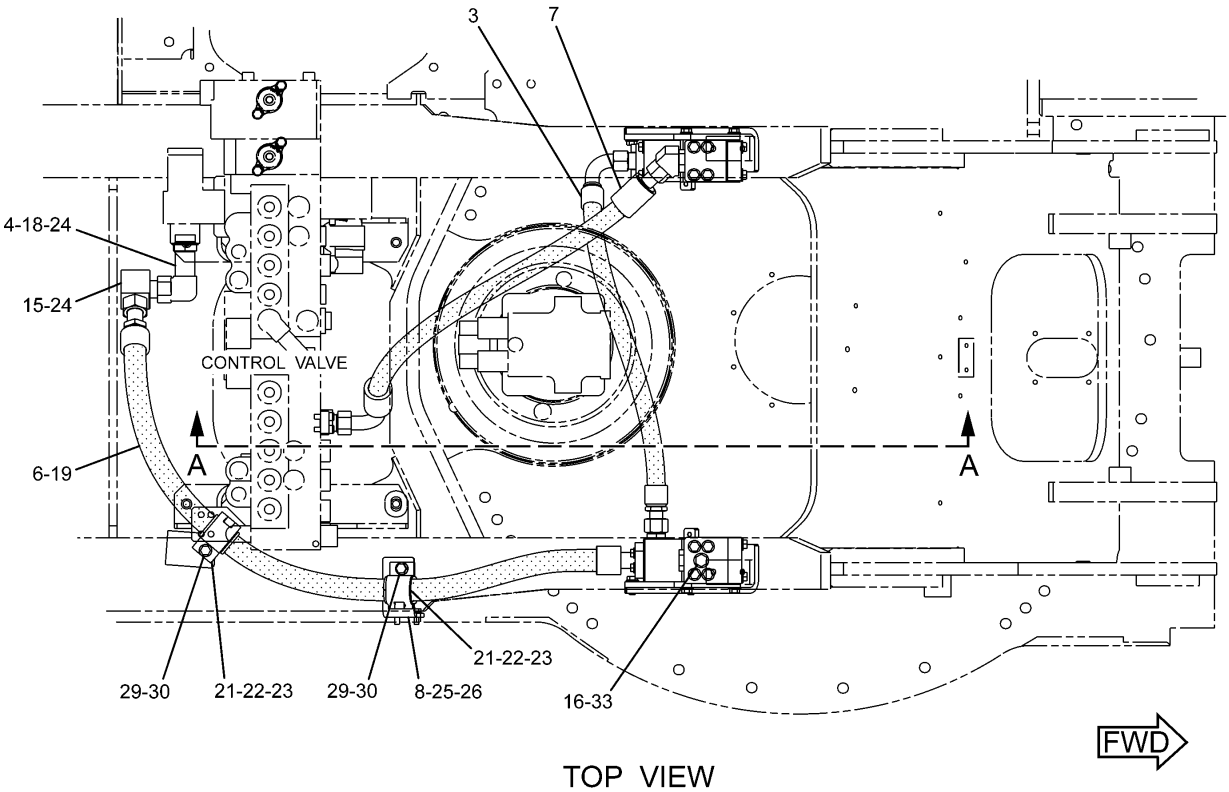

TOP VIEW

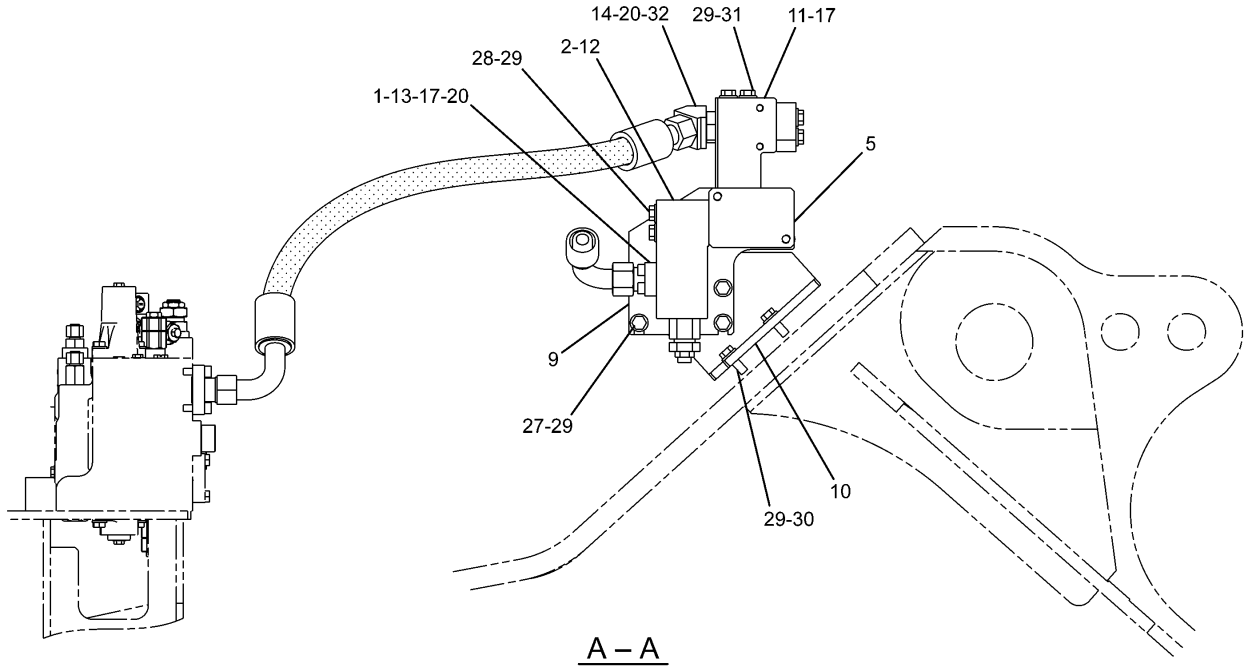

A – A

H90162E 00

255-1758 LINES GP-FRONT (1/2)

Part of 255-5696-Page472
177-2653-Page619
An Attachment

HYDRAULIC SYSTEM

NOTE	No.	PART No.	QTY	PART NAME	NOTE	No.	PART No.	QTY	PART NAME
	1	7Y-3731	1	FLANGE					
Y	2	177-2653	1	VALVE GP					
	3	193-9994	1	HOSE AS					
	4	199-1773	1	ELBOW					
	5	212-5148	1	BLOCK					
	6	212-5495	1	HOSE AS					
	7	230-0185	1	HOSE AS					
	8	260-7872	1	SUPPORT AS					
	9	260-7959	1	BRACKET					
	10	260-7960	1	SUPPORT					
	11	260-8043	1	BLOCK					
	12	099-8232	1	SEAL-O-RING (ID=28.24mm)					
	13	101-7404	4	BOLT (L=30mm)					
	14	6V-9005	1	ELBOW					
	15	6V-9855	1	ELBOW					
	16	9S-4185	1	PLUG					
	17	1P-3703	2	SEAL					
	18	2S-4078	1	SEAL-O-RING (ID=37.47mm)					
	19	4J-0522	1	SEAL-O-RING (ID=37.69mm)					
	20	5K-9090	2	SEAL-O-RING (OD=27.22mm)					
	21	5P-7468	2	CLIP					
	22	5P-7469	2	CLIP					
	23	6V-0545	2	GROMMET					
	24	6V-8400	2	SEAL-O-RING (ID=30.01mm)					
	25	8T-4121	2	WASHER					
	26	8T-4136	2	BOLT (L=25mm)					
	27	8T-4139	3	BOLT (L=30mm)					
	28	8T-4176	4	BOLT (L=90mm)					
	29	8T-4223	15	WASHER					
	30	8T-4956	4	BOLT (L=35mm)					
	31	8T-5092	4	BOLT (L=150mm)					
	32	7M-8485	1	SEAL-O-RING (ID=29.74mm)					
	33	3K-0360	1	SEAL-O-RING (ID=16.36mm)					

Y—SEE SEPARATE ILLUSTRATION

H90162E 00

255-1758 LINES GP-FRONT (1/2)

Part of 255-5696-Page472
177-2653-Page619
An Attachment

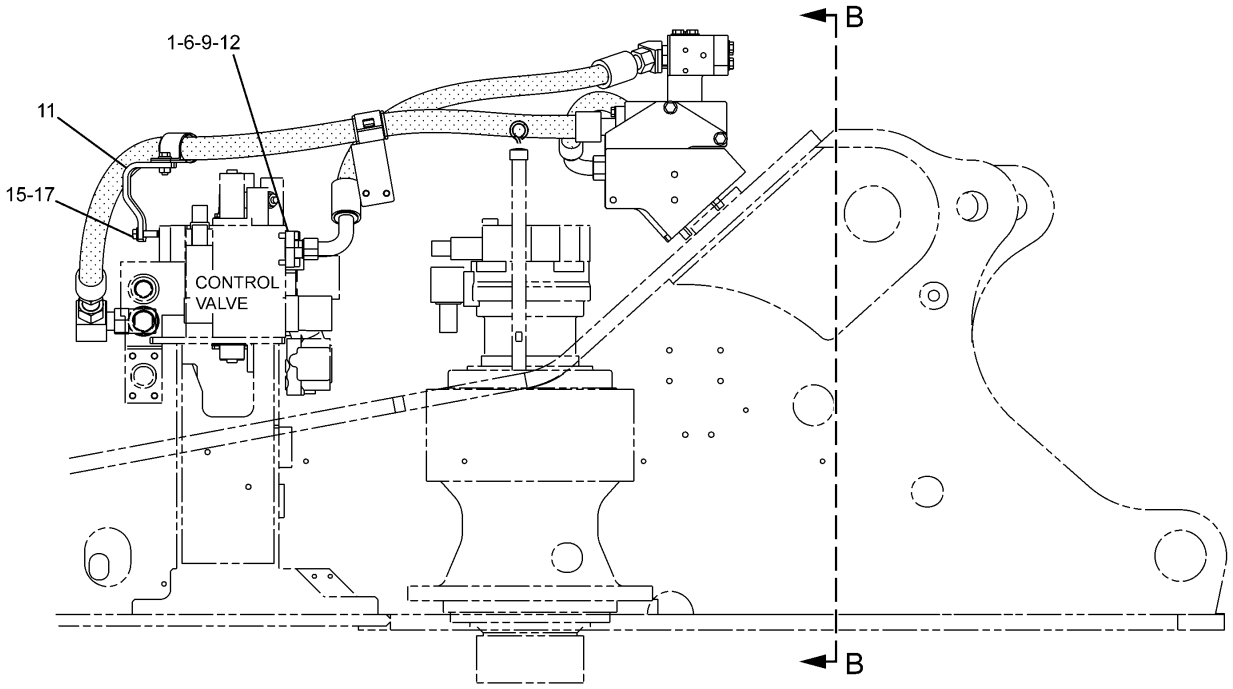

RIGHT SIDE VIEW

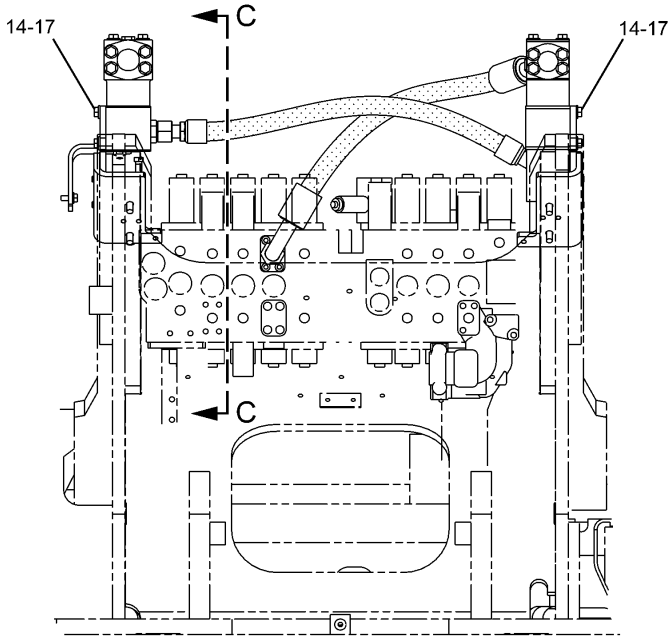

B – B

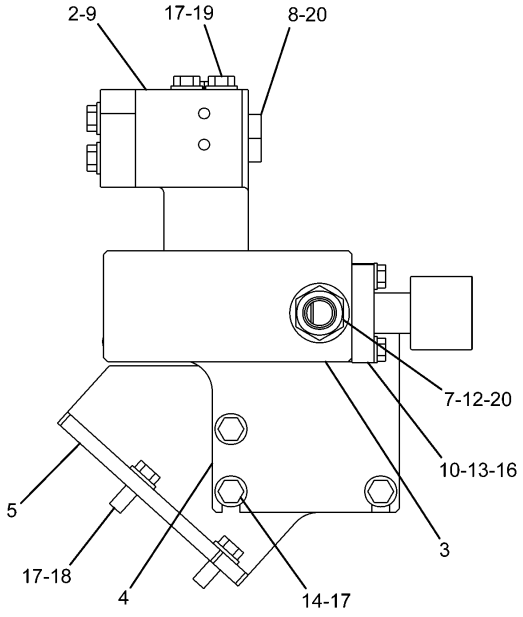

C – C

H90163E 00

255-1758 LINES GP-FRONT (2/2)
Part of 255-5696-Page472
An Attachment

HYDRAULIC SYSTEM

NOTE	No.	PART No.	QTY	PART NAME	NOTE	No.	PART No.	QTY	PART NAME
	1	204-3737	1	FLANGE					
	2	218-1139	1	BLOCK					
	3	255-1936	1	BLOCK					
	4	260-7959	1	BRACKET					
	5	260-8034	1	SUPPORT					
	6	101-7404	4	BOLT (L=30mm)					
	7	6V-8635	1	CONNECTOR					
	8	9S-4181	1	PLUG					
	9	1P-3703	2	SEAL					
	10	1P-4578	2	FLANGE					
	11	212-5491	1	SUPPORT AS					
	12	5K-9090	2	SEAL-O-RING (OD=27.22mm)					
	13	8T-4121	4	WASHER					
	14	8T-4139	7	BOLT (L=30mm)					
	15	8T-4183	2	BOLT (L=40mm)					
	16	8T-4196	4	BOLT (L=35mm)					
	17	8T-4223	15	WASHER					
	18	8T-4956	2	BOLT (L=35mm)					
	19	8T-5092	4	BOLT (L=150mm)					
	20	7M-8485	2	SEAL-O-RING (ID=29.74mm)					

H90163E 00

255-1758 LINES GP-FRONT (2/2)

Part of 255-5696-Page472
An Attachment

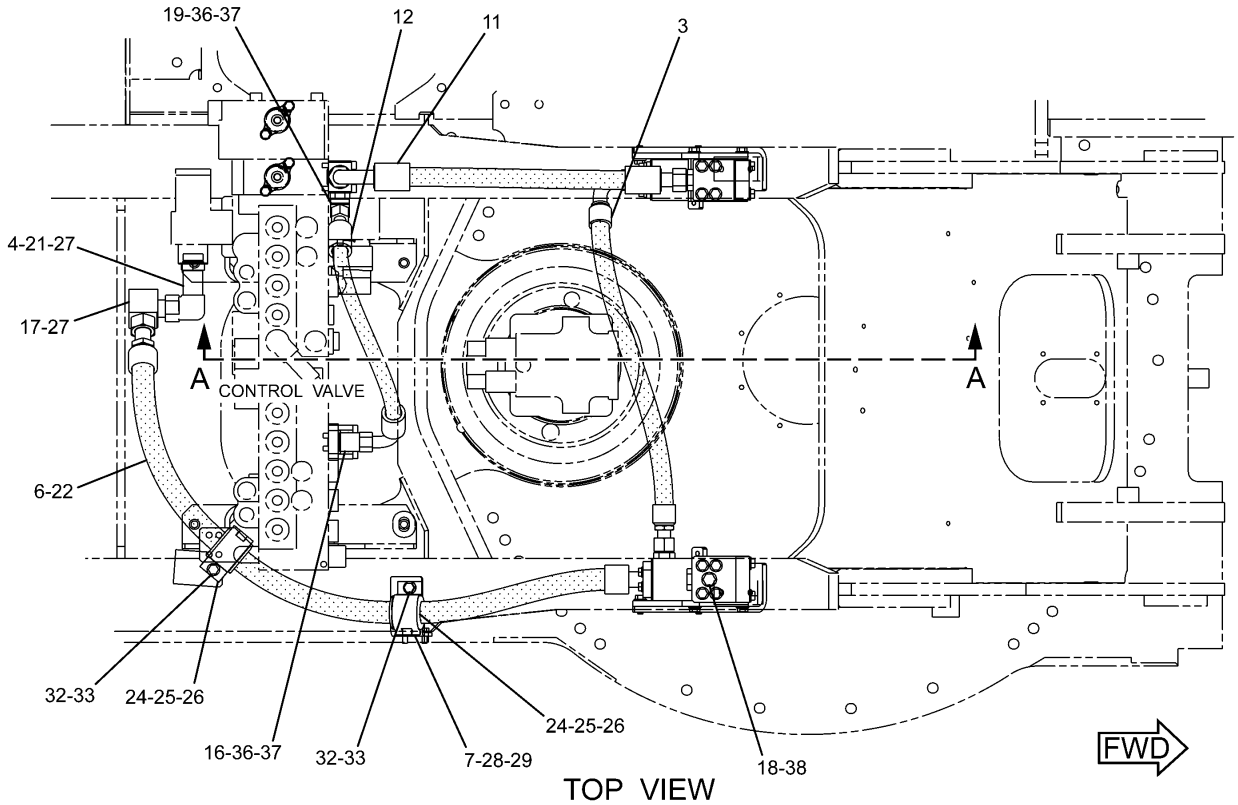

TOP VIEW

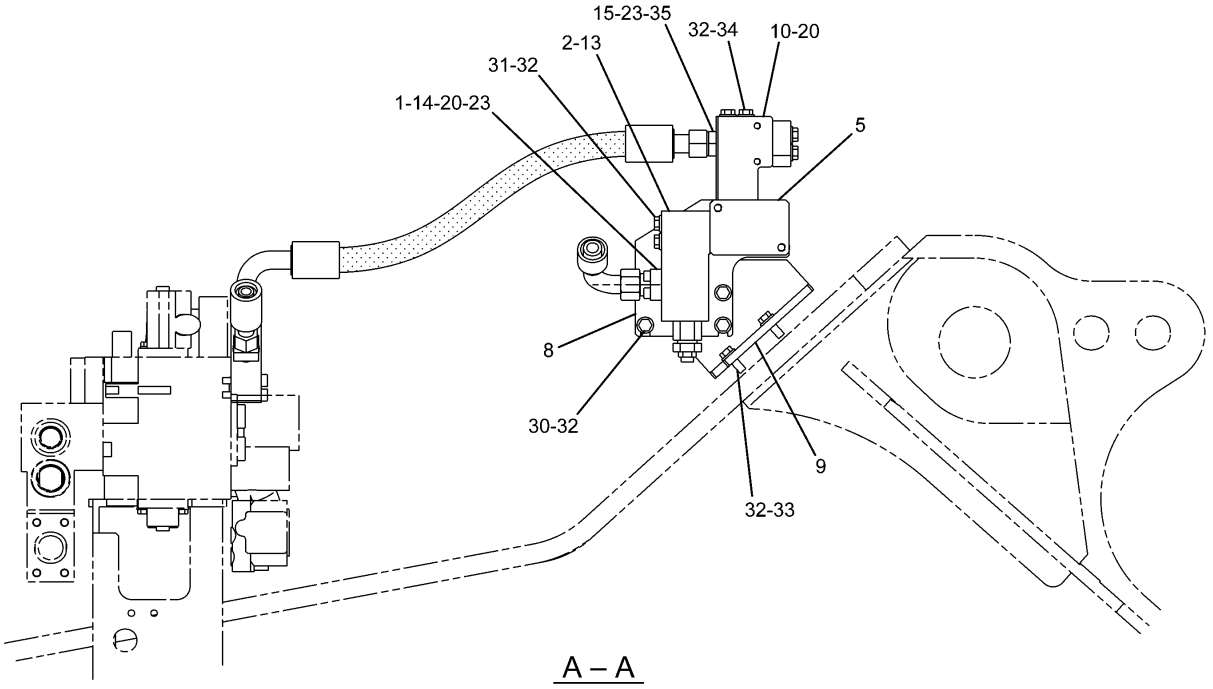

A – A

H91332E 02

255-1760 LINES GP-FRONT (1/2)
Part of 255-5699-Page472
177-2653-Page619
An Attachment

HYDRAULIC SYSTEM

NOTE	No.	PART No.	QTY	PART NAME	NOTE	No.	PART No.	QTY	PART NAME
	1	7Y-3731	1	FLANGE					
Y	2	177-2653	1	VALVE GP					
	3	193-9994	1	HOSE AS					
	4	199-1773	1	ELBOW					
	5	212-5148	1	BLOCK					
	6	212-5495	1	HOSE AS					
	7	260-7872	1	SUPPORT AS					
	8	260-7959	1	BRACKET					
	9	260-7960	1	SUPPORT					
	10	260-8043	1	BLOCK					
	11	266-0997	1	HOSE AS					
	12	266-1303	1	HOSE AS					
	13	099-8232	1	SEAL-O-RING (ID=28.24mm)					
	14	101-7404	4	BOLT (L=30mm)					
	15	6V-8635	1	CONNECTOR					
	16	6V-9007	1	ELBOW					
	17	6V-9855	1	ELBOW					
	18	9S-4185	1	PLUG					
	19	6V-9004	1	ELBOW					
	20	1P-3703	2	SEAL					
	21	2S-4078	1	SEAL-O-RING (ID=37.47mm)					
	22	4J-0522	1	SEAL-O-RING (ID=37.69mm)					
	23	5K-9090	2	SEAL-O-RING (OD=27.22mm)					
	24	5P-7468	2	CLIP					
	25	5P-7469	2	CLIP					
	26	6V-0545	2	GROMMET					
	27	6V-8400	2	SEAL-O-RING (ID=30.01mm)					
	28	8T-4121	2	WASHER					
	29	8T-4136	2	BOLT (L=25mm)					
	30	8T-4139	3	BOLT (L=30mm)					
	31	8T-4176	4	BOLT (L=90mm)					
	32	8T-4223	15	WASHER					
	33	8T-4956	4	BOLT (L=35mm)					
	34	8T-5092	4	BOLT (L=150mm)					
	35	7M-8485	1	SEAL-O-RING (ID=29.74mm)					
	36	3D-2824	2	SEAL-O-RING (ID=23.47mm)					
	37	6V-9746	2	SEAL-O-RING (OD=22.50mm)					
	38	3K-0360	1	SEAL-O-RING (ID=16.36mm)					

Y—SEE SEPARATE ILLUSTRATION

H91332E 02

255-1760 LINES GP-FRONT (1/2)

Part of 255-5699-Page472
177-2653-Page619
An Attachment

HYDRAULIC SYSTEM

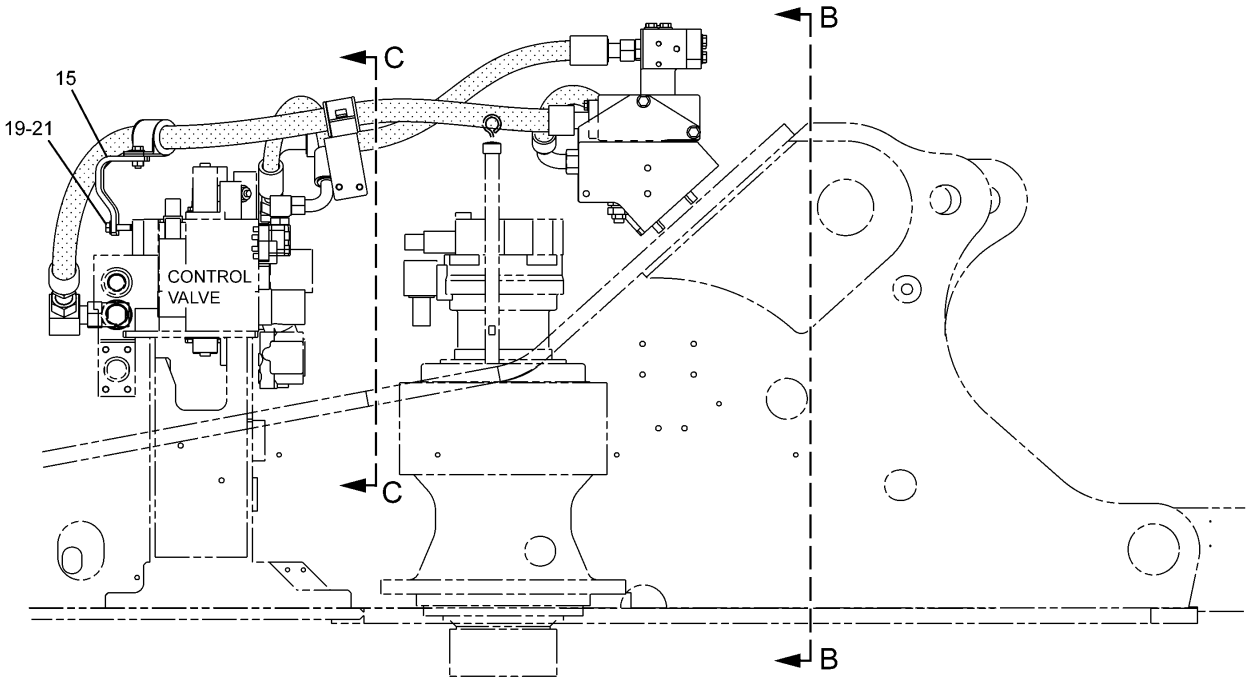

RIGHT SIDE VIEW

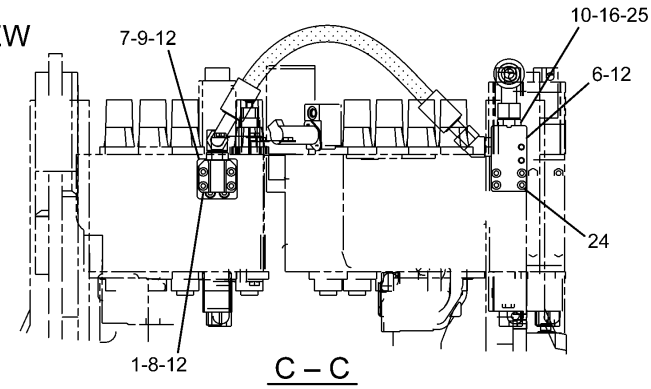

C – C

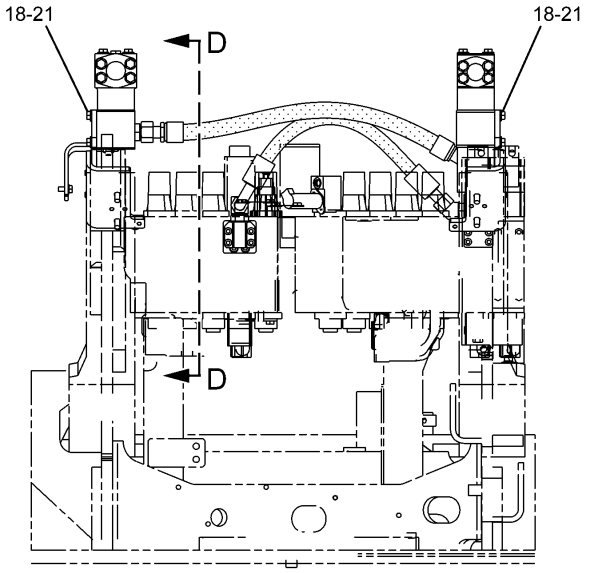

B – B

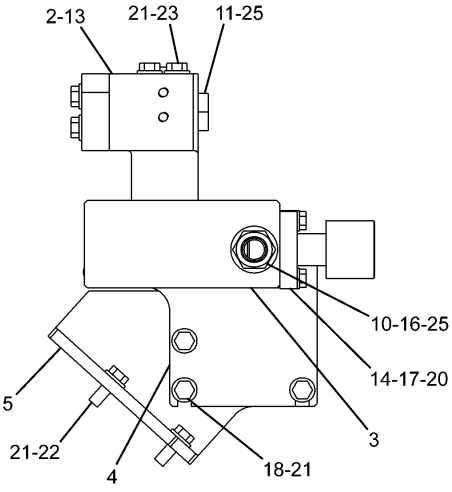

D – D

H91333E 02

255-1760 LINES GP-FRONT (2/2)
Part of 255-5699-Page472
An Attachment

HYDRAULIC SYSTEM

NOTE	No.	PART No.	QTY	PART NAME	NOTE	No.	PART No.	QTY	PART NAME
	1	105-3477	4	BOLT (L=45mm)					
	2	218-1139	1	BLOCK					
	3	255-1936	1	BLOCK					
	4	260-7959	1	BRACKET					
	5	260-8034	1	SUPPORT					
	6	266-1278	1	BLOCK					
	7	266-1279	1	FLANGE					
	8	275-1439	1	BLOCK					
	9	101-7401	4	BOLT (L=20mm)					
	10	6V-8635	2	CONNECTOR					
	11	9S-4181	1	PLUG					
	12	1P-3702	3	SEAL					
	13	1P-3703	1	SEAL					
	14	1P-4578	2	FLANGE					
	15	212-5491	1	SUPPORT AS					
	16	5K-9090	2	SEAL-O-RING (OD=27.22mm)					
	17	8T-4121	4	WASHER					
	18	8T-4139	7	BOLT (L=30mm)					
	19	8T-4183	2	BOLT (L=40mm)					
	20	8T-4196	4	BOLT (L=35mm)					
	21	8T-4223	15	WASHER					
	22	8T-4956	2	BOLT (L=35mm)					
	23	8T-5092	4	BOLT (L=150mm)					
	24	280-2747	4	BOLT (L=60mm)					
	25	7M-8485	3	SEAL-O-RING (ID=29.74mm)					

H91333E 02

255-1760 LINES GP-FRONT (2/2)

Part of 255-5699-Page472
An Attachment

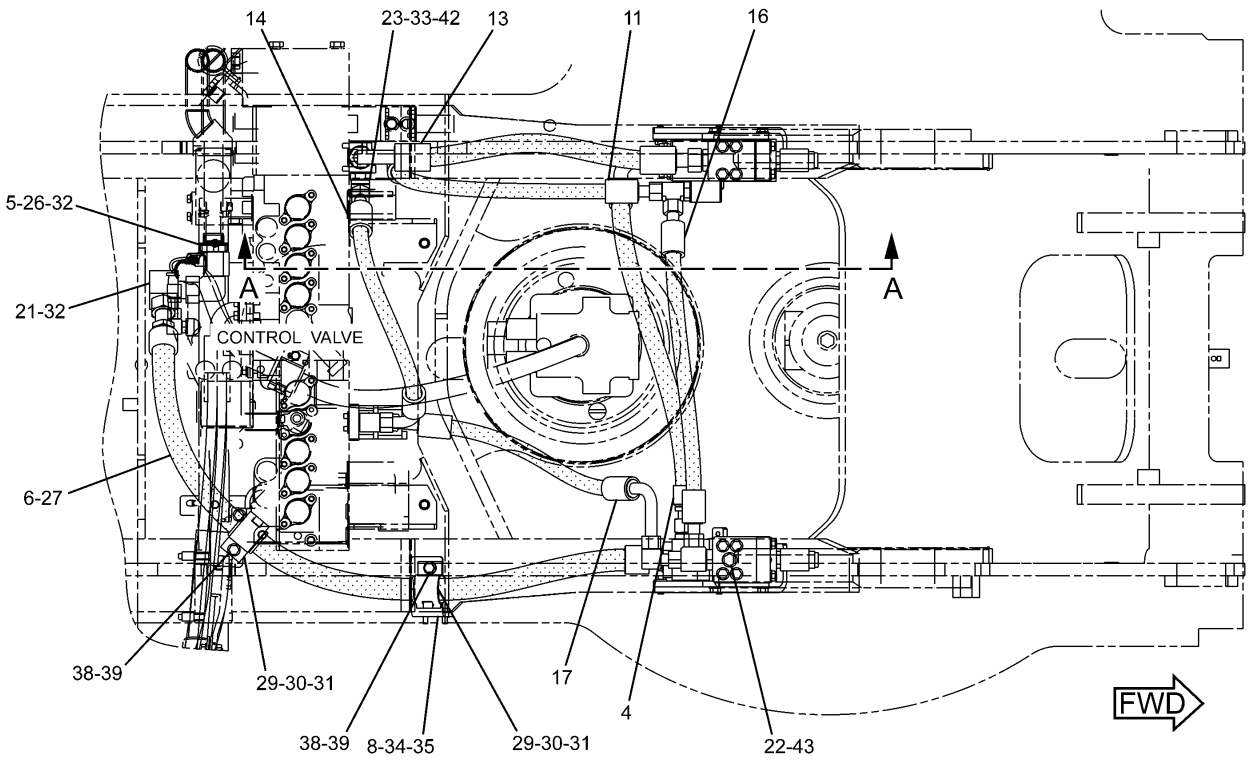

TOP VIEW

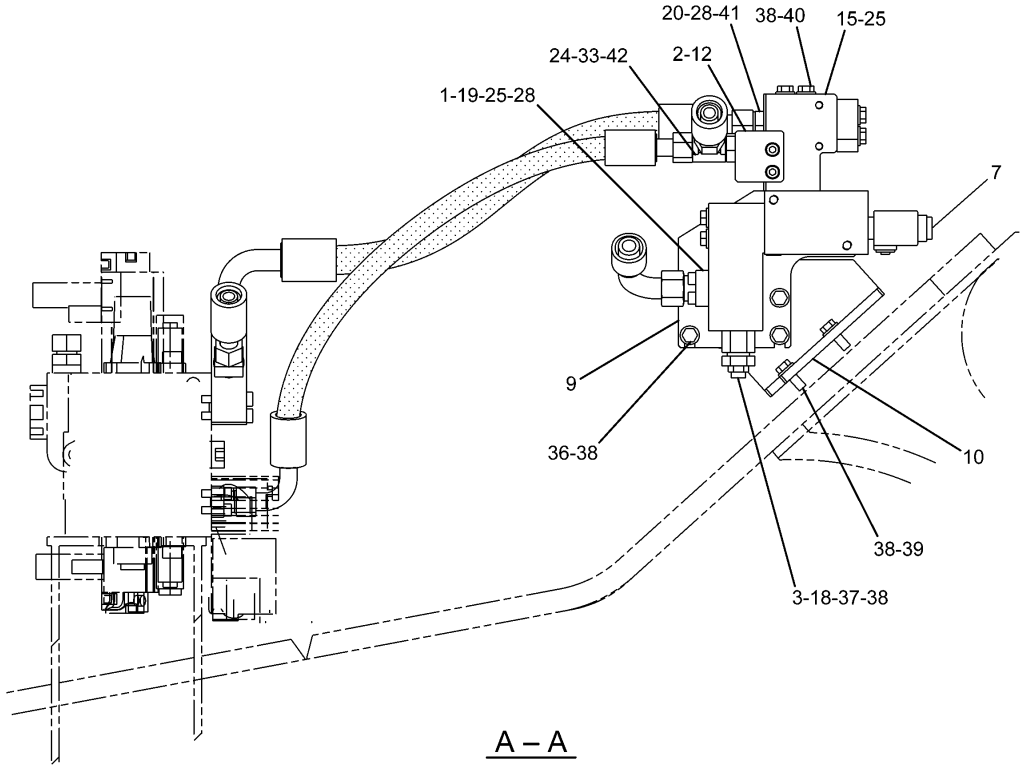

A – A

H91336E 02

255-1759 LINES GP-FRONT (1/2)
Part of 255-5697-Page473,255-5702-Page474
177-2653-Page619,215-4890-Page622
An Attachment

HYDRAULIC SYSTEM

NOTE	No.	PART No.	QTY	PART NAME	NOTE	No.	PART No.	QTY	PART NAME
	1	7Y-3731	1	FLANGE					
	2	105-3477	2	BOLT (L=45mm)					
Y	3	177-2653	1	VALVE GP					
	4	193-9994	1	HOSE AS					
	5	199-1773	1	ELBOW					
	6	212-5495	1	HOSE AS					
Y	7	215-4890	1	VALVE GP					
	8	260-7872	1	SUPPORT AS					
	9	260-7959	1	BRACKET					
	10	260-7960	1	SUPPORT					
	11	266-0943	1	HOSE AS					
	12	266-0953	1	BLOCK					
	13	266-0997	1	HOSE AS					
	14	266-1303	1	HOSE AS					
	15	275-1446	1	BLOCK					
	16	275-1448	1	HOSE AS					
	17	275-1452	1	HOSE AS					
	18	099-8232	1	SEAL-O-RING (ID=28.24mm)					
	19	101-7404	4	BOLT (L=30mm)					
	20	6V-8635	1	CONNECTOR					
	21	6V-9855	1	ELBOW					
	22	9S-4185	1	PLUG					
	23	6V-9004	1	ELBOW					
	24	6V-8784	1	TEE					
	25	1P-3703	2	SEAL					
	26	2S-4078	1	SEAL-O-RING (ID=37.47mm)					
	27	4J-0522	1	SEAL-O-RING (ID=37.69mm)					
	28	5K-9090	2	SEAL-O-RING (OD=27.22mm)					
	29	5P-7468	2	CLIP					
	30	5P-7469	2	CLIP					
	31	6V-0545	2	GROMMET					
	32	6V-8400	2	SEAL-O-RING (ID=30.01mm)					
	33	6V-9746	3	SEAL-O-RING (OD=22.50mm)					
	34	8T-4121	2	WASHER					
	35	8T-4136	2	BOLT (L=25mm)					
	36	8T-4139	3	BOLT (L=30mm)					
	37	8T-4176	4	BOLT (L=90mm)					
	38	8T-4223	15	WASHER					
	39	8T-4956	4	BOLT (L=35mm)					
	40	8T-5092	4	BOLT (L=150mm)					
	41	7M-8485	1	SEAL-O-RING (ID=29.74mm)					
	42	3D-2824	2	SEAL-O-RING (ID=23.47mm)					
	43	3K-0360	1	SEAL-O-RING (ID=16.36mm)					

Y—SEE SEPARATE ILLUSTRATION

H91336E 02

255-1759 LINES GP-FRONT (1/2)

Part of 255-5697-Page473,255-5702-Page474
177-2653-Page619,215-4890-Page622
An Attachment

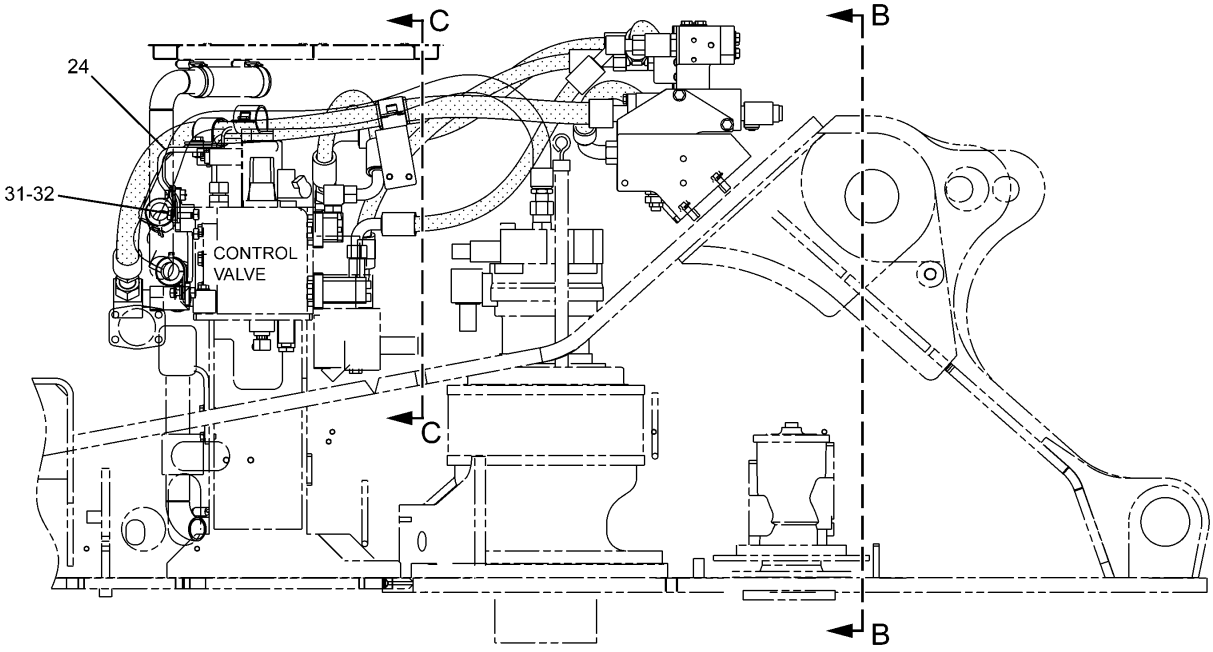

RIGHT SIDE VIEW

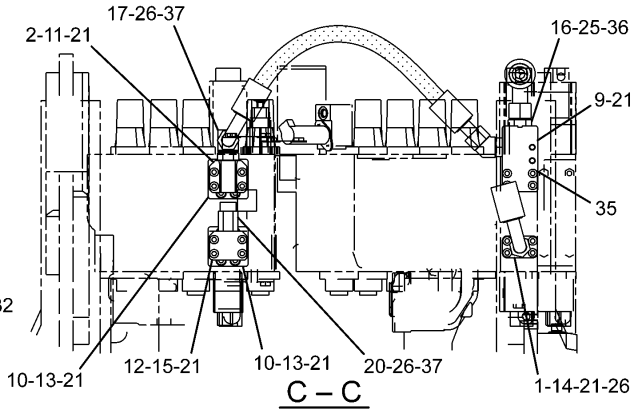

C – C

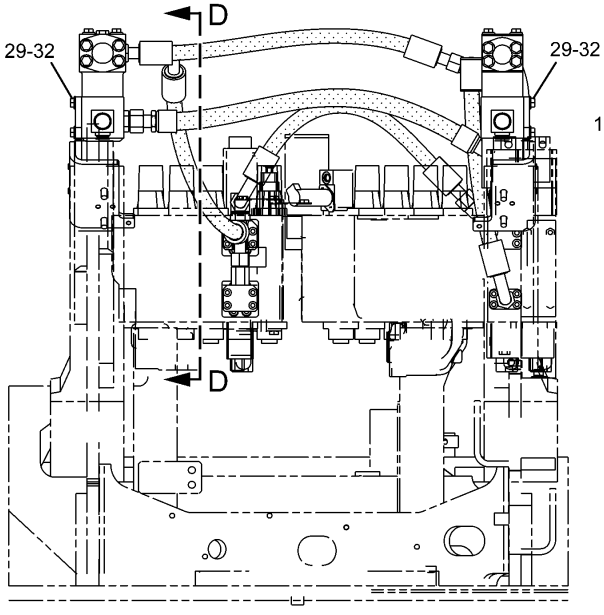

B – B

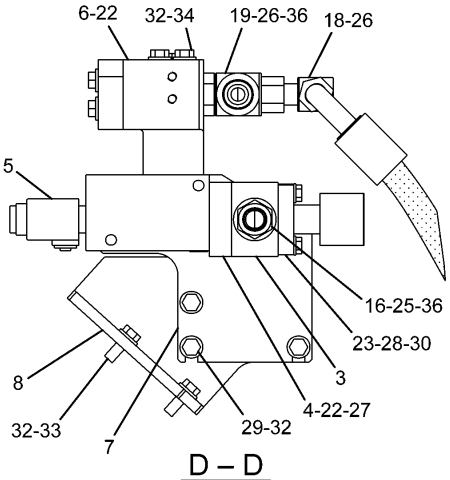

D – D

H91337E 02

255-1759 LINES GP-FRONT (2/2)
Part of 255-5697-Page473,255-5702-Page474
215-4890-Page622
An Attachment

HYDRAULIC SYSTEM

NOTE	No.	PART No.	QTY	PART NAME	NOTE	No.	PART No.	QTY	PART NAME
	1	7Y-3729	1	FLANGE					
	2	105-3477	4	BOLT (L=45mm)					
	3	187-5854	1	BLOCK					
	4	187-5855	1	FLANGE					
Y	5	215-4890	1	VALVE GP					
	6	218-1139	1	BLOCK					
	7	260-7959	1	BRACKET					
	8	260-8034	1	SUPPORT					
	9	266-1278	1	BLOCK					
	10	266-1279	2	FLANGE					
	11	275-1439	1	BLOCK					
	12	275-1440	1	BLOCK					
	13	101-7401	8	BOLT (L=20mm)					
	14	101-7404	4	BOLT (L=30mm)					
	15	108-4282	4	BOLT (L=100mm)					
	16	6V-8635	2	CONNECTOR					
	17	6V-9007	1	ELBOW					
	18	6V-9853	1	ELBOW					
	19	8T-1685	1	TEE					
	20	8T-0078	1	CONNECTOR					
	21	1P-3702	6	SEAL					
	22	1P-3703	3	SEAL					
	23	1P-4578	2	FLANGE					
	24	212-5491	1	SUPPORT AS					
	25	5K-9090	2	SEAL-O-RING (OD=27.22mm)					
	26	6V-9746	6	SEAL-O-RING (OD=22.50mm)					
	27	8T-3957	4	BOLT (L=30mm)					
	28	8T-4121	4	WASHER					
	29	8T-4139	7	BOLT (L=30mm)					
	30	8T-4178	4	BOLT (L=90mm)					
	31	8T-4183	2	BOLT (L=40mm)					
	32	8T-4223	15	WASHER					
	33	8T-4956	2	BOLT (L=35mm)					
	34	8T-5092	4	BOLT (L=150mm)					
	35	280-2747	4	BOLT (L=60mm)					
	36	7M-8485	3	SEAL-O-RING (ID=29.74mm)					
	37	3D-2824	2	SEAL-O-RING (ID=23.47mm)					

Y—SEE SEPARATE ILLUSTRATION

H91337E 02

255-1759 LINES GP-FRONT (2/2)

Part of 255-5697-Page473,255-5702-Page474
215-4890-Page622
An Attachment

HYDRAULIC SYSTEM

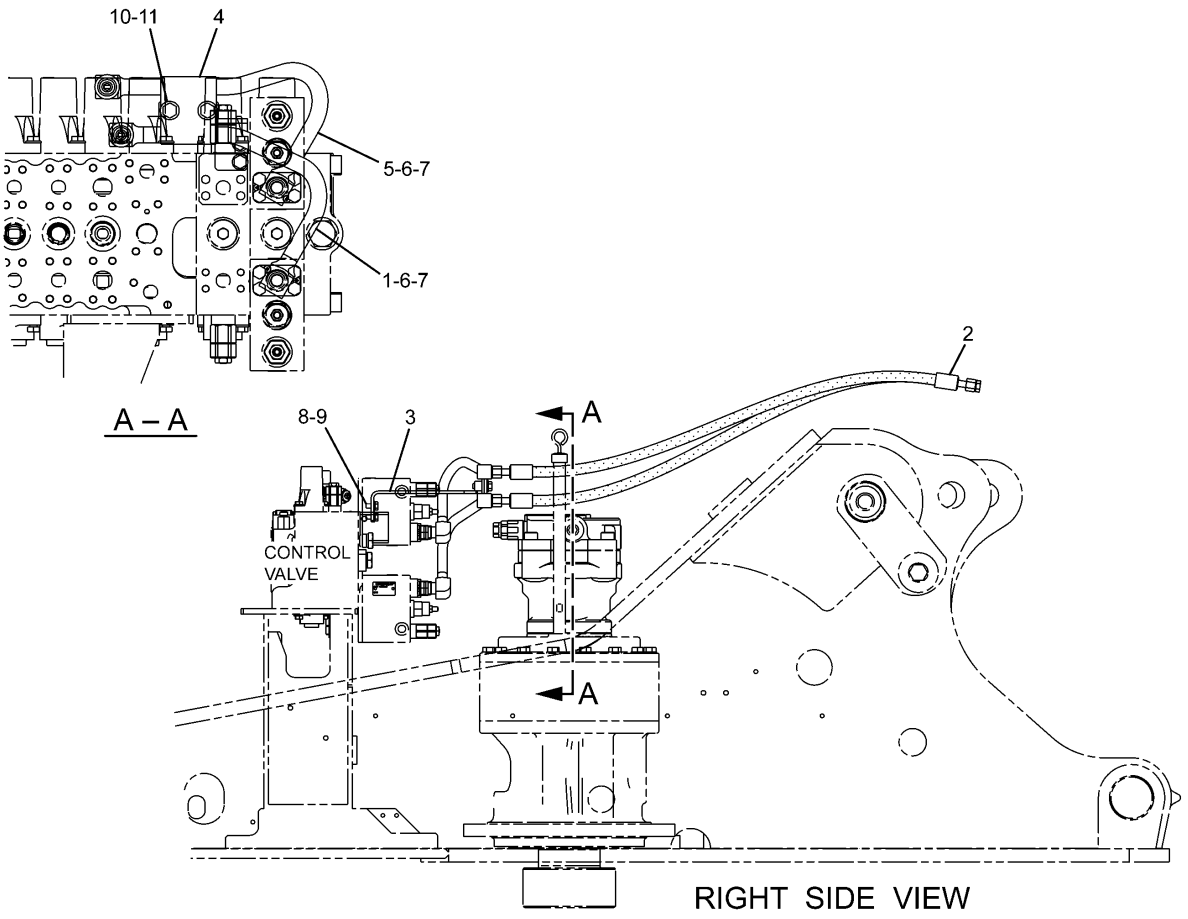

NOTE	No.	PART No.	QTY	PART NAME	NOTE	No.	PART No.	QTY	PART NAME
	1	187-7109	1	TUBE AS					
	2	202-4025	2	HOSE AS					
	3	270-0020	1	SUPPORT AS					
	4	153-8867	2	CLIP					
	5	187-7108	1	TUBE AS					
	6	6V-8398	2	SEAL-O-RING (OD=16.03mm)					
	7	6V-9746	2	SEAL-O-RING (OD=22.50mm)					
	8	8T-4121	2	WASHER					
	9	8T-4137	2	BOLT (L=20mm)					
	10	8T-4223	2	WASHER					
	11	8T-4956	2	BOLT (L=35mm)					

H90270E 01

255-1765 LINES GP-FRONT

Part of 255-5702-Page474
An Attachment

MEMORANDA

HYDRAULIC SYSTEM

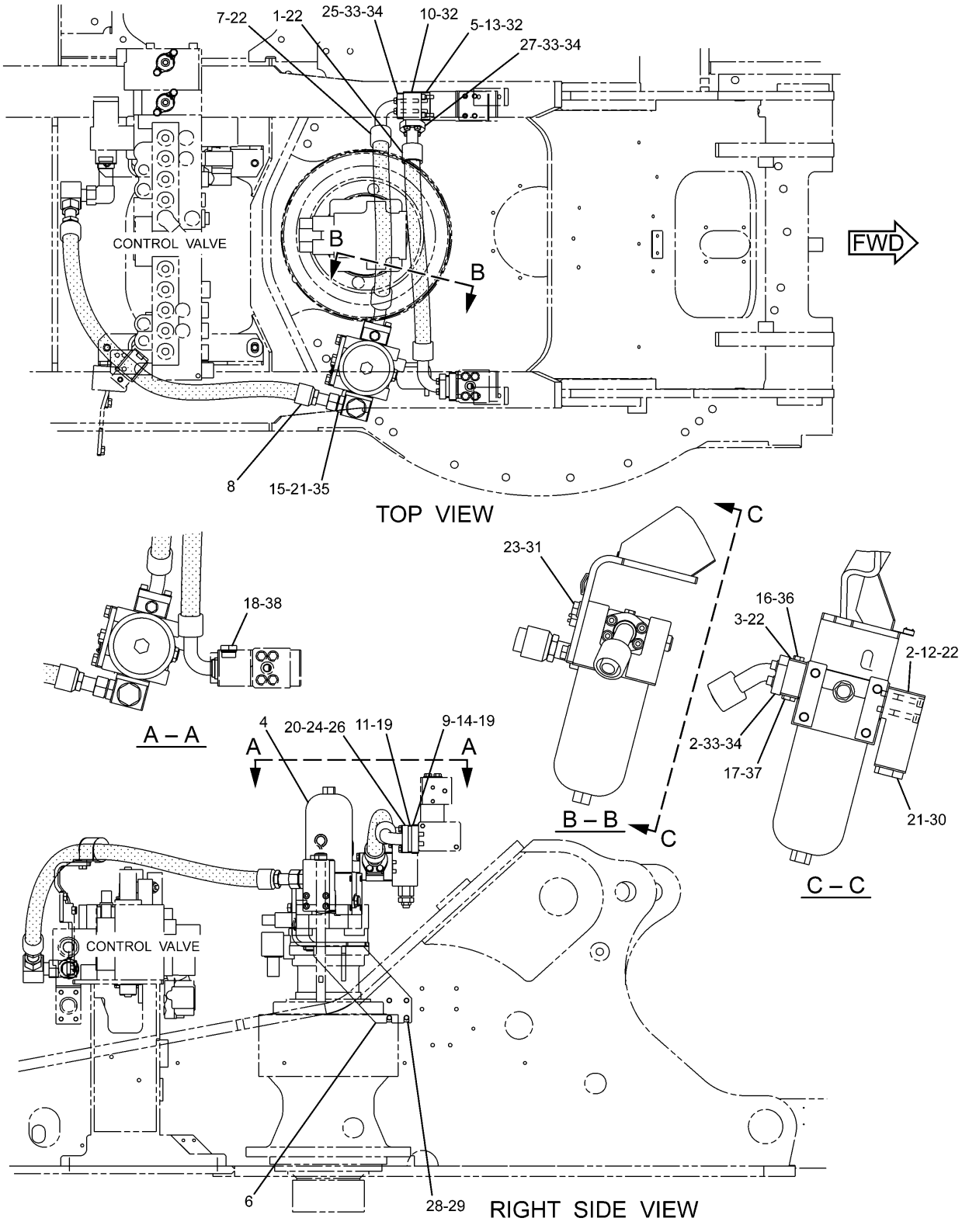

255-1799 LINES GP-FRONT
Part of 247-7390-Page476
234-4515-Page375
An Attachment

HYDRAULIC SYSTEM

NOTE	No.	PART No.	QTY	PART NAME	NOTE	No.	PART No.	QTY	PART NAME
	1	4I-5639	1	HOSE AS					
	2	105-3483	8	BOLT (L=70mm)					
	3	227-0722	1	BLOCK					
Y	4	234-4515	1	FILTER GP					
	5	255-1693	1	BLOCK					
	6	255-1695	1	SUPPORT AS					
	7	255-1699	1	HOSE AS					
	8	255-1702	1	HOSE AS					
	9	255-1705	1	BLOCK					
	10	255-1824	1	BLOCK					
	11	260-7964	1	SPACER					
	12	275-1464	1	BLOCK					
	13	105-3484	4	BOLT (L=25mm)					
	14	107-2723	4	BOLT (L=20mm)					
	15	8T-3611	1	CONNECTOR					
	16	9S-4191	1	PLUG					
	17	9S-4185	1	PLUG					
	18	9S-4181	1	PLUG					
	19	1P-3703	2	SEAL					
	20	1P-4578	2	FLANGE					
	21	2S-4078	2	SEAL-O-RING (ID=37.47mm)					
	22	4J-0522	6	SEAL-O-RING (ID=37.69mm)					
	23	7X-2552	4	BOLT (L=30mm)					
	24	8T-4121	4	WASHER					
	25	8T-4178	4	BOLT (L=90mm)					
	26	8T-4182	4	BOLT (L=45mm)					
	27	8T-4196	4	BOLT (L=35mm)					
	28	8T-4223	4	WASHER					
	29	8T-4956	4	BOLT (L=35mm)					
	30	9S-6130	1	PLUG					
	31	9X-8257	4	WASHER					
	32	1P-3703	2	SEAL					
	33	1P-4578	6	FLANGE					
	34	8T-4121	12	WASHER					
	35	6V-8400	1	SEAL-O-RING (ID=30.01mm)					
	36	3J-1907	1	SEAL-O-RING (ID=11.89mm)					
	37	3K-0360	1	SEAL-O-RING (ID=16.36mm)					
	38	7M-8485	1	SEAL-O-RING (ID=29.74mm)					

Y—SEE SEPARATE ILLUSTRATION

H90345E 01

255-1799 LINES GP-FRONT

Part of 247-7390-Page476
234-4515-Page375
An Attachment

HYDRAULIC SYSTEM

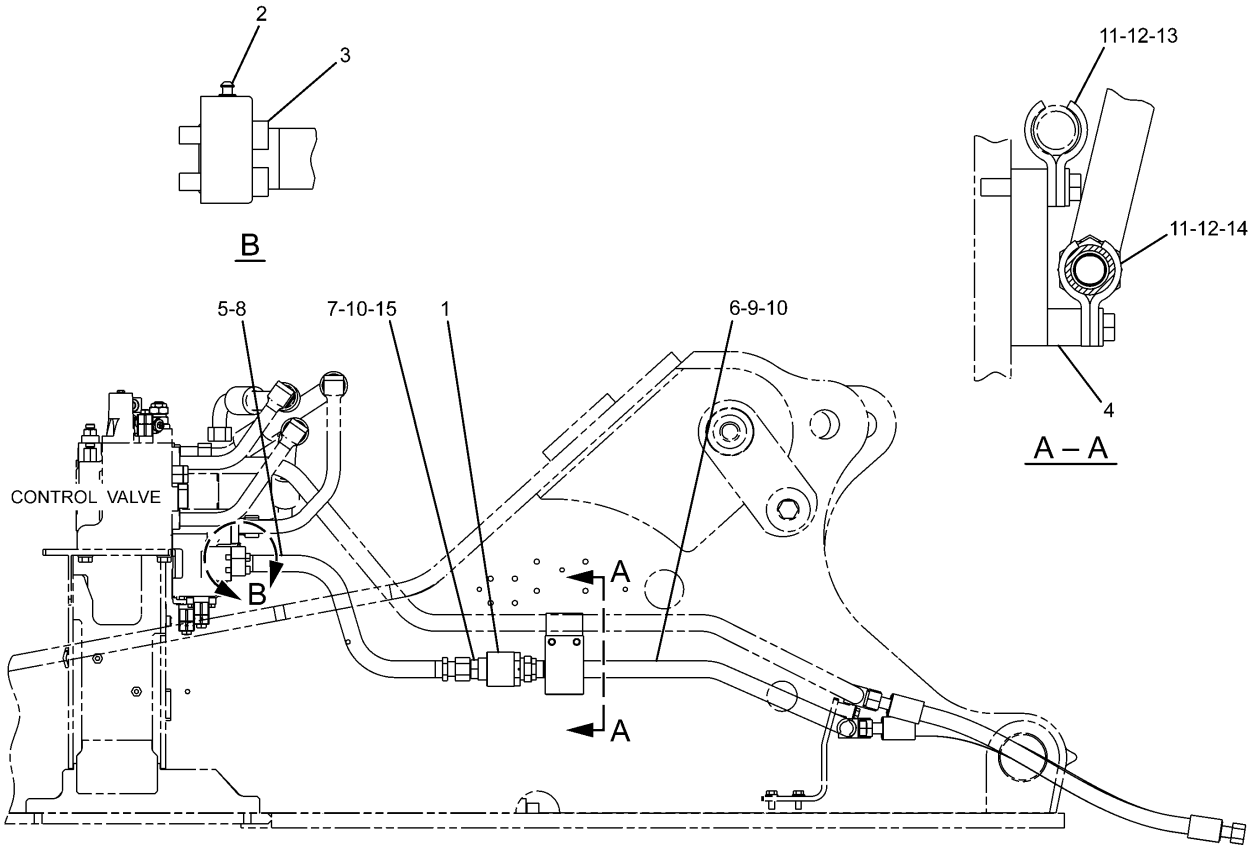

RIGHT SIDE VIEW

NOTE	No.	PART No.	QTY	PART NAME	NOTE	No.	PART No.	QTY	PART NAME
	1	4I-8789	1	VALVE GP					
	2	9F-2167	1	SCREW					
	3	101-7398	4	BOLT (L=40mm)					
	4	268-7183	1	PLATE AS					
	5	277-0781	1	TUBE AS					
	6	277-0782	1	TUBE AS					
	7	6V-8635	1	CONNECTOR					
	8	1P-3703	1	SEAL					
	9	6V-9746	2	SEAL-O-RING (OD=22.50mm)					
	10	7M-8485	2	SEAL-O-RING (ID=29.74mm)					
	11	7Y-3732	4	CLIP					
	12	8T-4223	4	WASHER					
	13	8T-4910	2	BOLT (L=60mm)					
	14	8T-4956	2	BOLT (L=35mm)					
	15	5K-9090	1	SEAL-O-RING (OD=27.22mm)					

H90445E 00

268-6868 LINES GP-FRONT
Long Reach Front
S/N DAP 1-Up
Part of 262-3585-Page739
An Attachment

HYDRAULIC SYSTEM

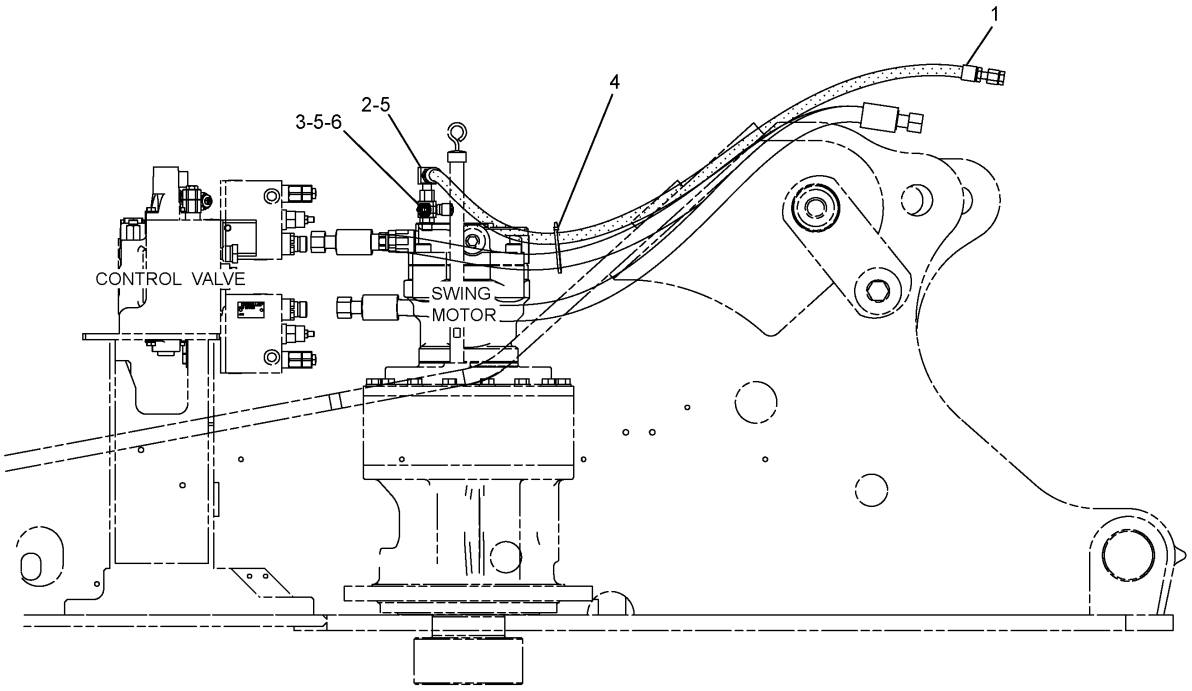

RIGHT SIDE VIEW

NOTE	No.	PART No.	QTY	PART NAME	NOTE	No.	PART No.	QTY	PART NAME
	1	187-6967	1	HOSE AS					
	2	6V-9851	1	ELBOW					
	3	6V-8782	1	TEE					
	4	7K-1181	1	STRAP					
	5	6V-8398	3	SEAL-O-RING (OD=16.03mm)					
	6	3K-0360	1	SEAL-O-RING (ID=16.36mm)					

H95173E 00

255-1767 LINES GP-DRAIN
An Attachment

MEMORANDA

HYDRAULIC SYSTEM

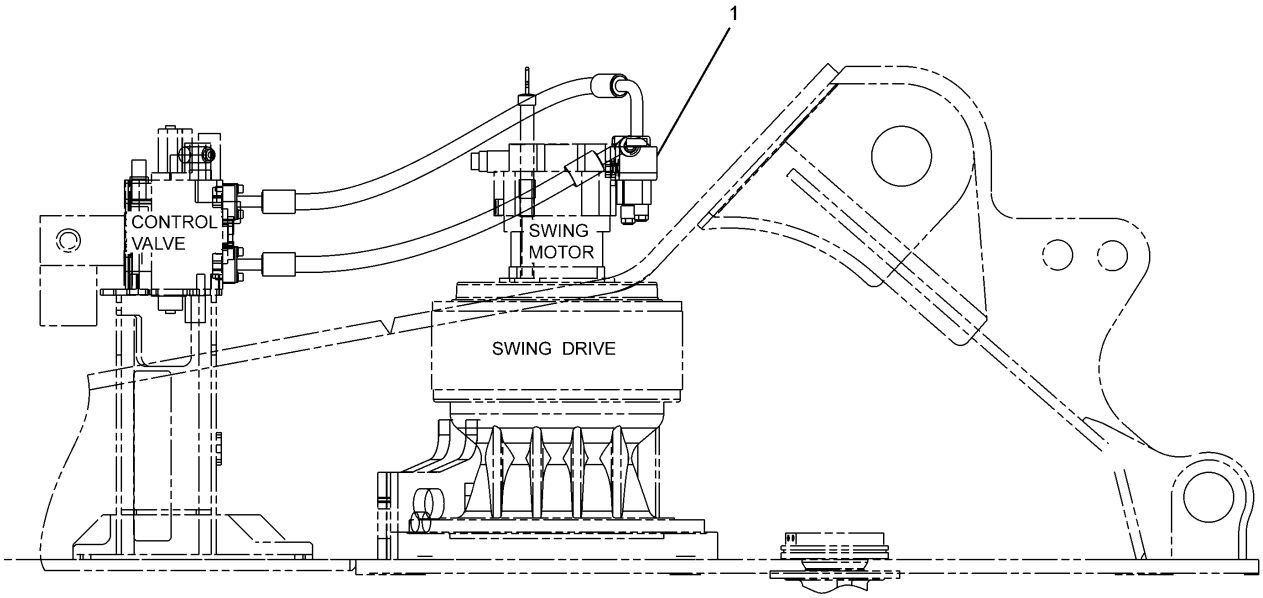

RIGHT SIDE VIEW

NOTE	No.	PART No.	QTY	PART NAME	NOTE	No.	PART No.	QTY	PART NAME
Y	1	158-9085	1	VALVE GP					

Y—SEE SEPARATE ILLUSTRATION

H89020E 00

259-0680 LINES GP-SWING MOTOR

Part of 247-7451-Page475
158-9085-Page612
An Attachment

HYDRAULIC SYSTEM

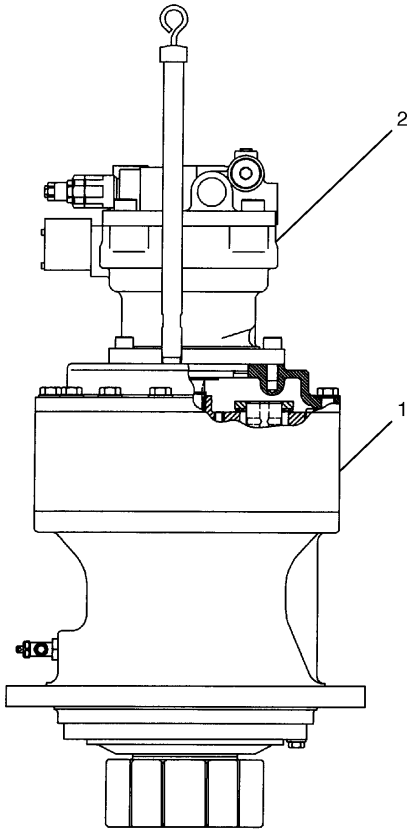

NOTE	No.	PART No.	QTY	PART NAME	NOTE	No.	PART No.	QTY	PART NAME
Y	1	191-2693	1	DRIVE GP					
Y	2	179-9774	1	MOTOR GP					

Y—SEE SEPARATE ILLUSTRATION

H84757E 01

199-4487 DRIVE GP-SWING

191-2693-Page532,179-9774-Page534

MEMORANDA

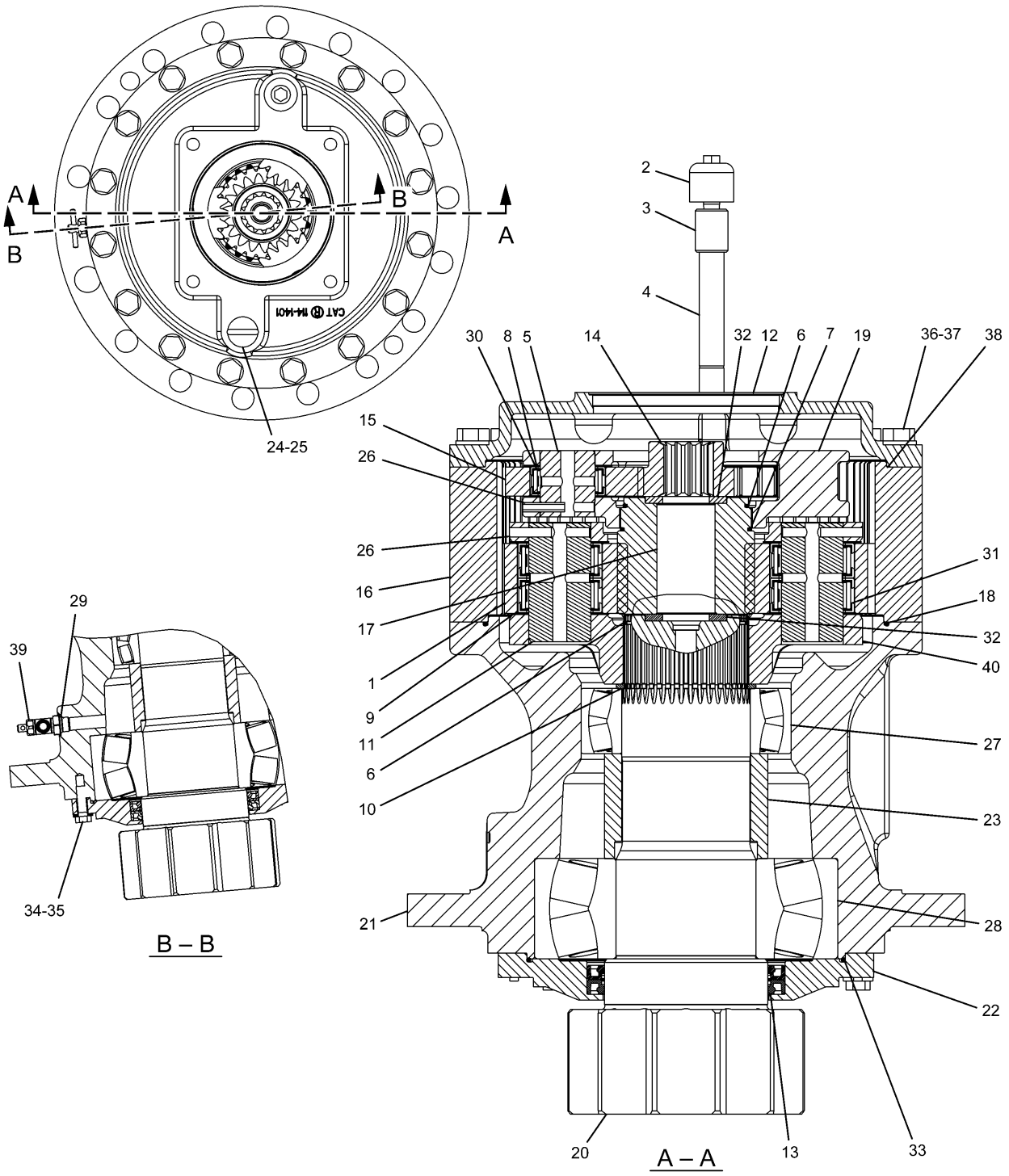

191-2693 DRIVE GP-SWING
Part of 199-4487-Page530

HYDRAULIC SYSTEM

NOTE	No.	PART No.	QTY	PART NAME	NOTE	No.	PART No.	QTY	PART NAME
	1	4I-7466	4	GEAR (Z=23)					
	2	227-6221	1	BREATHER AS					
		4H-6112	1	BREATHER AS					
	3	227-6215	1	BOSS					
	4	267-6785	1	NIPPLE					
	5	7Y-0225	3	SHAFT					
	6	093-1730	2	RING					
	7	093-1731	1	RING					
	8	094-0611	6	WASHER					
	9	094-1528	8	WASHER					
	10	096-2653	1	RING					
	11	114-1383	4	SHAFT					
	12	114-1401	1	COVER					
	13	135-9044	2	SEAL					
	14	169-5617	1	GEAR (Z=18)					
	15	169-5618	3	GEAR (Z=27)					
	16	171-9280	1	GEAR (Z=72)					
	17	171-9283	1	GEAR (Z=24)					
	18	171-9375	1	SEAL-O-RING (ID=340.99mm)					
	19	191-2579	1	CARRIER					
	20	191-2694	1	SHAFT					
	21	191-2695	1	HOUSING					
	22	191-2696	1	CAGE					
	23	191-2697	1	SPACER					
	24	114-1399	1	PIPE					
	25	114-1398	1	GAUGE					
	26	095-0891	7	PIN					
	27	136-2904	1	BEARING					
	28	136-2940	1	BEARING					
	29	3K-0360	1	SEAL-O-RING (ID=16.36mm)					
	30	7Y-0252	3	BEARING					
	31	7Y-0339	8	BEARING					
	32	7Y-1434	2	SPACER					
	33	8J-8879	1	SEAL-O-RING (ID=266.29mm)					
	34	8T-4183	8	BOLT (L=40mm)					
	35	8T-4223	8	WASHER					
	36	8T-6385	16	BOLT (L=180mm)					
	37	9X-8257	16	WASHER					
B	38	1U-8846		GASKET MAKER…(6ml)					
	39	6V-7238	1	VALVE					
	40	7I-7728	1	CARRIER					

B—USE AS REQUIRED

H89793E 04

191-2693 DRIVE GP-SWING

Part of 199-4487-Page530

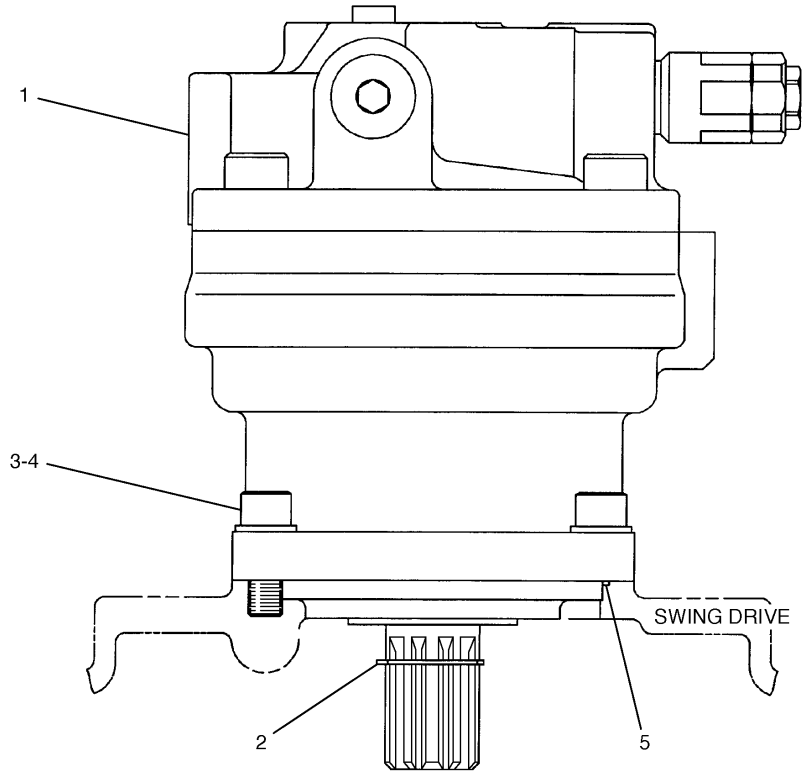

NOTE	No.	PART No.	QTY	PART NAME	NOTE	No.	PART No.	QTY	PART NAME
Y	1	179-9775	1	MOTOR GP					
	2	6V-5204	1	RING					
	3	9X-8257	4	WASHER					
	4	8T-4944	4	BOLT (L=40mm)					
	5	8T-6404	1	SEAL-O-RING (ID=158.42mm)					

Y—SEE SEPARATE ILLUSTRATION

H74569E 01

179-9774 MOTOR & MTG GP-SWING

Part of 199-4487-Page530
179-9775-Page535

HYDRAULIC SYSTEM

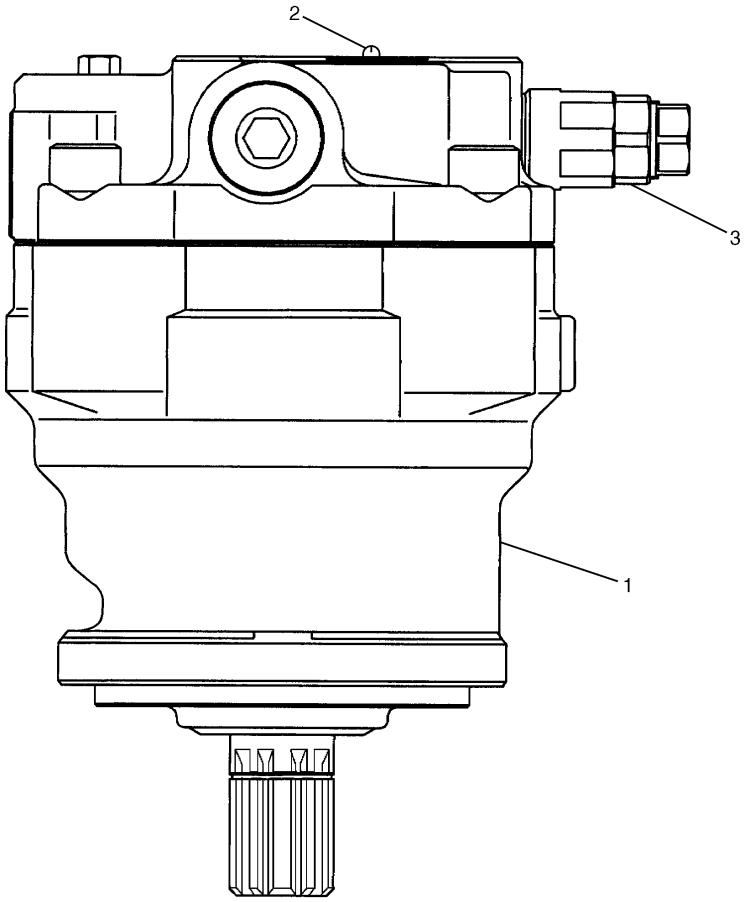

NOTE	No.	PART No.	QTY	PART NAME	NOTE	No.	PART No.	QTY	PART NAME
Y	1	188-4175	1	MOTOR GP					
	2	5B-9304	2	SCREW					
Y	3	184-3830	2	VALVE GP					

Y—SEE SEPARATE ILLUSTRATION

H88901E 02

179-9775 MOTOR GP-SWING

Part of 179-9774-Page534
188-4175-Page536,184-3830-Page538

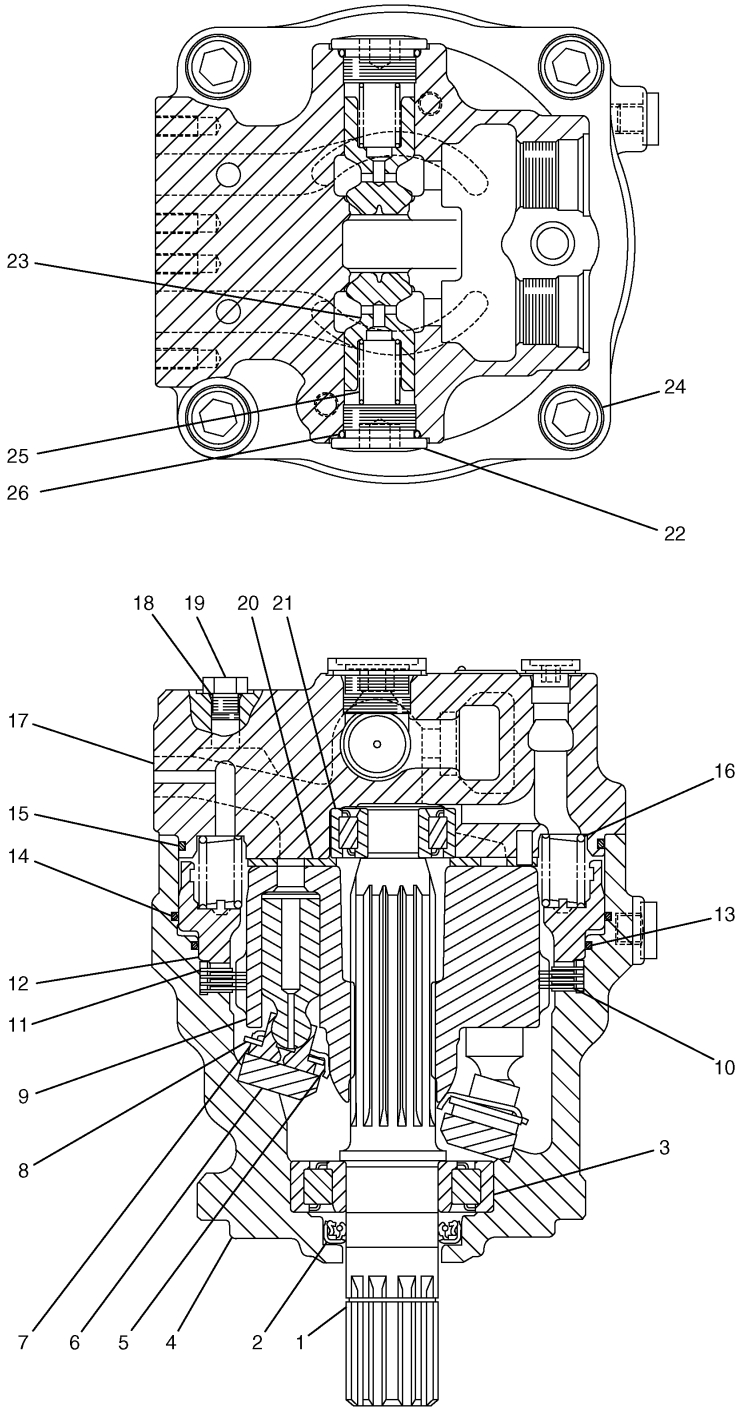

H88903E 01

188-4175 MOTOR GP-SWING
Part of 179-9775-Page535

HYDRAULIC SYSTEM

NOTE	No.	PART No.	QTY	PART NAME	NOTE	No.	PART No.	QTY	PART NAME
	1	188-4163	1	SHAFT					
J	2	096-1533	1	SEAL					
	3	188-4170	1	BEARING					
	4	188-4169	1	BODY					
	5	188-4165	1	PLATE					
	6	188-4167	1	PLATE					
	7	188-4161	1	PISTON AS					
	8	188-4166	1	PLATE					
	9	188-4164	1	BARREL					
	10	188-4172	3	PLATE					
	11	188-4173	4	PLATE					
	12	7Y-4290	1	PISTON					
J	13	5J-2383	1	SEAL-O-RING (ID=190.09mm)					
J	14	7Y-4294	1	SEAL-O-RING (ID=209.14mm)					
J	15	4I-5849	1	SEAL-O-RING (ID=199.86mm)					
	16	123-2139	20	SPRING					
	17	188-4162	1	HEAD GP					
		099-8111	2	PIN					
J	18	3J-1907	2	SEAL-O-RING (ID=11.89mm)					
	19	110-5525	2	PLUG					
	20	188-4168	1	PLATE					
	21	188-4171	1	BEARING					
	22	170-9996	2	PLUG					
	23	170-9985	2	VALVE					
	24	7Y-5221	4	BOLT (L=45mm)					
	25	170-9986	2	SPRING					
J	26	095-1600	2	SEAL-O-RING (ID=33.70mm)					
				THE FOLLOWING REPAIR KIT IS AVAILABLE:					
		188-4176	1	SEAL KIT (INCLUDES PARTS MARKED J)					

H88903E 01

188-4175 MOTOR GP-SWING

Part of 179-9775-Page535

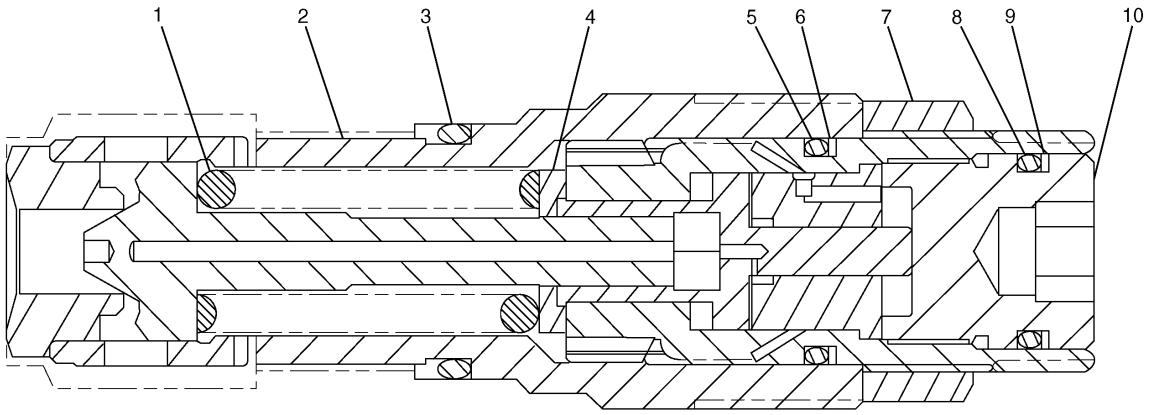

NOTE	No.	PART No.	QTY	PART NAME	NOTE	No.	PART No.	QTY	PART NAME
	1	191-3201	1	SPRING					
	2	168-0713	1	BODY AS					
	3	095-1698	1	SEAL-O-RING (ID=29.40mm)					
	4	168-0763	1	RETAINER					
	5	6V-5556	1	SEAL-O-RING (ID=25.07mm)					
	6	7I-0966	1	RING					
	7	168-0764	1	LOCKNUT					
	8	7J-9933	1	SEAL-O-RING (ID=21.89mm)					
	9	168-0765	1	RING					
	10	168-0766	1	PLUG					

H84995E 00

184-3830 VALVE GP-RELIEF

Direct Operated

Part of 179-9775-Page535

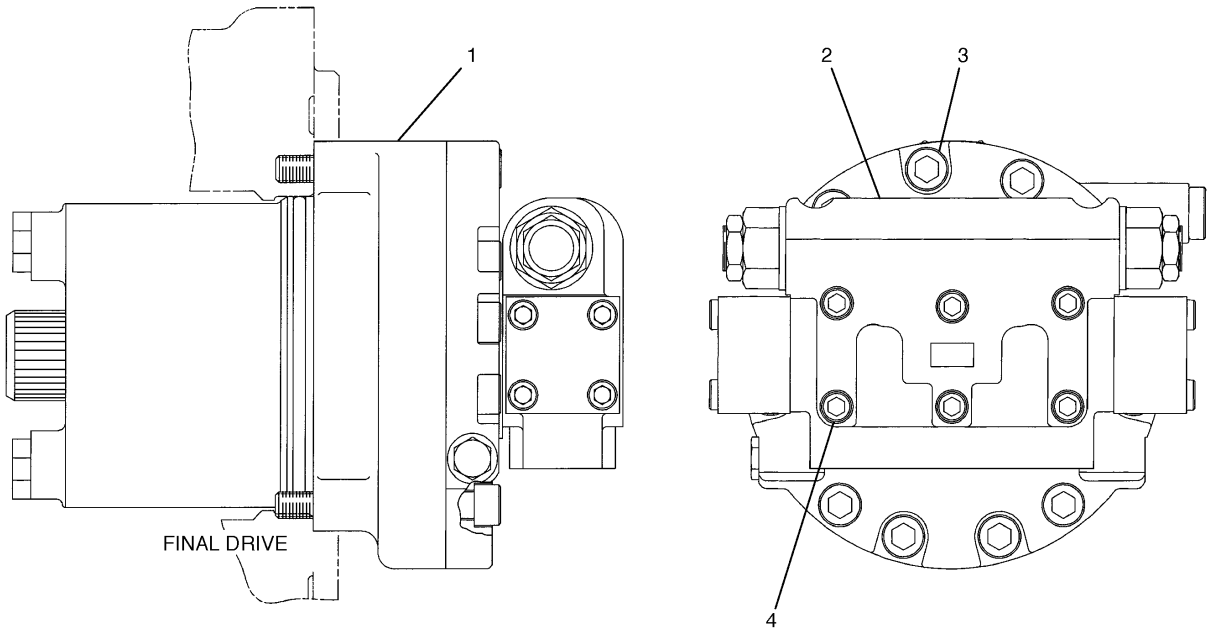

NOTE	No.	PART No.	QTY	PART NAME	NOTE	No.	PART No.	QTY	PART NAME
Y	1	215-9952	1	MOTOR GP					
Y	2	204-2819	1	VALVE GP					
	3	095-0707	3	BOLT (L=120mm)					
	4	3E-6910	6	BOLT (L=70mm)					

Y—SEE SEPARATE ILLUSTRATION

H84151E 04

204-2674 MOTOR & MTG GP-TRAVEL

Part of 227-6115-Page273
215-9952-Page540,204-2819-Page542

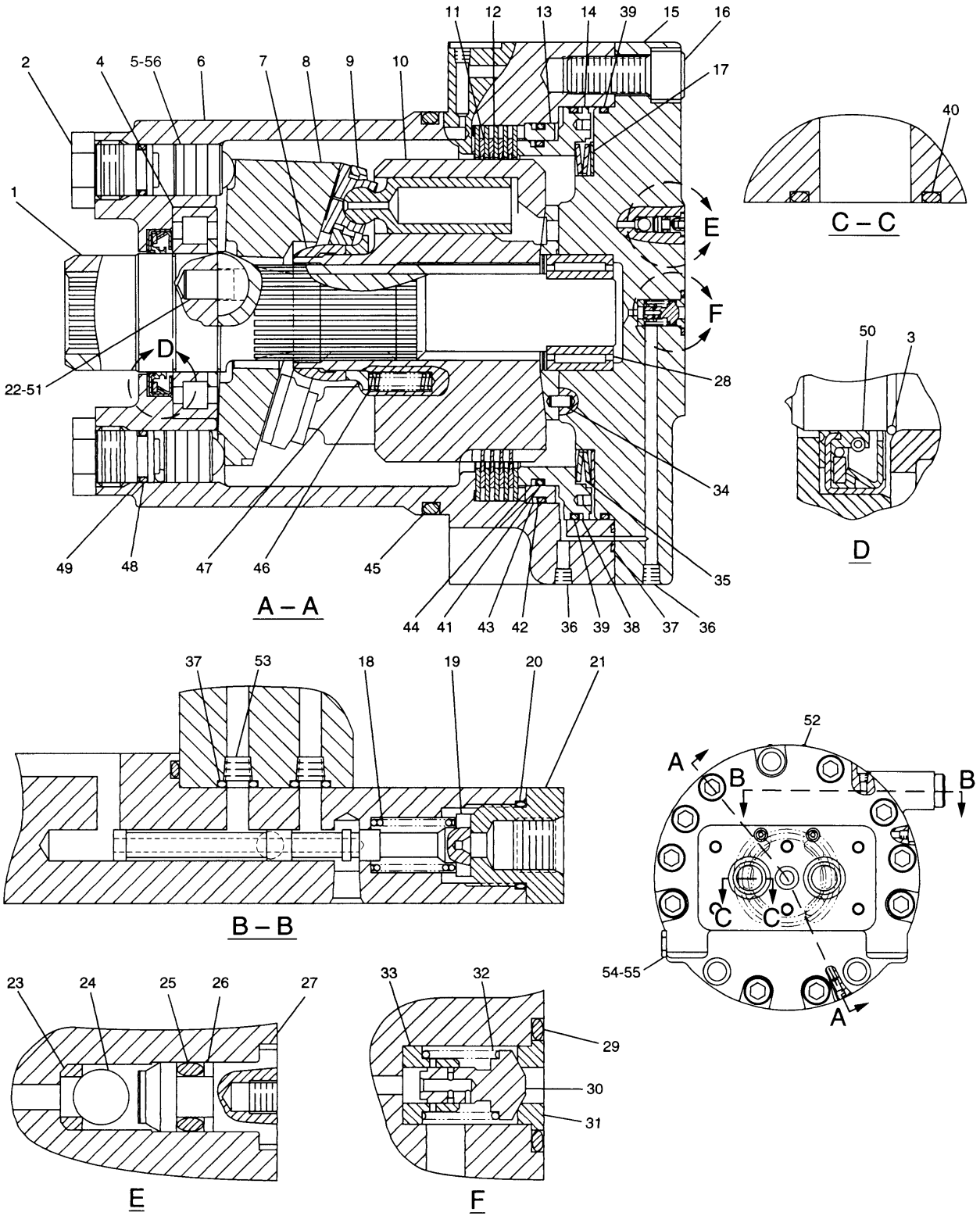

H87076E 01

215-9952 MOTOR GP-TRAVEL
Part of 204-2674-Page539

HYDRAULIC SYSTEM

NOTE	No.	PART No.	QTY	PART NAME
	1	209-5894	1	SHAFT
	2	087-4743	2	STOPPER
	3	094-1399	1	RING
	4	7Y-4212	1	BEARING
	5	087-4757	2	PISTON
	6	107-6969	1	BODY
	7	122-5114	1	GUIDE
	8	209-5909	1	PLATE
	9	147-5860	1	PISTON AS
	10	234-4629	1	BARREL AS
	11	107-6954	4	PLATE
	12	107-6955	5	PLATE
	13	096-1523	1	GUIDE
	14	7Y-4213	1	PISTON
	15	7Y-4202	1	HEAD
	16	8T-4944	10	BOLT (L=40mm)
B	17	096-1521	1	SHIM (T=1.00mm)
B		096-3785	1	SHIM (T=1.20mm)
B		096-3786	1	SHIM (T=1.40mm)
B		096-3787	1	SHIM (T=1.60mm)
B		096-3788	1	SHIM (T=1.80mm)
B		096-1522	1	SHIM (T=2.00mm)
	18	096-3978	1	SPRING
	19	7Y-4216	1	SPOOL
J	20	2M-9780	1	SEAL-O-RING (ID=19.18mm)
	21	087-4786	1	ADAPTER
	22	121-1558	2	PIN
	23	096-5916	2	SEAT
	24	2D-6642	2	BALL
J	25	095-1572	2	SEAL-O-RING (ID=4.80mm)
J	26	096-5919	2	RING
	27	096-5915	2	RETAINER
	28	096-4003	1	BEARING SET
J	29	095-1585	1	SEAL-O-RING (ID=17.80mm)
	30	087-4742	1	VALVE
	31	096-1519	1	SEAT
	32	095-7380	1	SPRING
	33	095-7382	1	RETAINER
	34	094-1875	1	DOWEL
	35	095-7378	1	WASHER SET
	36	094-1882	11	PLUG
J	37	095-1575	3	SEAL-O-RING (ID=7.80mm)
J	38	096-4378	1	RING
J	39	096-4377	2	SEAL-O-RING (ID=190.00mm)
J	40	095-1700	2	SEAL-O-RING (ID=34.40mm)
J	41	095-7384	1	SEAL-O-RING (ID=160.00mm)
J	42	095-7383	1	SEAL-O-RING (ID=174.00mm)
J	43	095-7386	1	RING
J	44	095-7387	1	RING
J	45	095-1685	1	SEAL-O-RING (ID=179.30mm)
	46	096-4389	9	SPRING
	47	7Y-4215	1	SPACER
J	48	095-1586	2	SEAL-O-RING (ID=19.80mm)
J	49	7Y-4217	2	RING
J	50	096-4376	1	SEAL
	51	123-2008	2	KEY
	52	095-7419	4	SCREW
	53	7Y-4224	2	ORIFICE
J	54	3K-0360	1	SEAL-O-RING (ID=16.36mm)
	55	9S-4185	1	PLUG
	56	142-5515	2	RING
				THE FOLLOWING REPAIR
				KIT IS AVAILABLE:
		7Y-4222	1	SEAL KIT
				(INCLUDES PARTS MARKED J)

B—USE AS REQUIRED

H87076E 01

215-9952 MOTOR GP-TRAVEL

Part of 204-2674-Page539

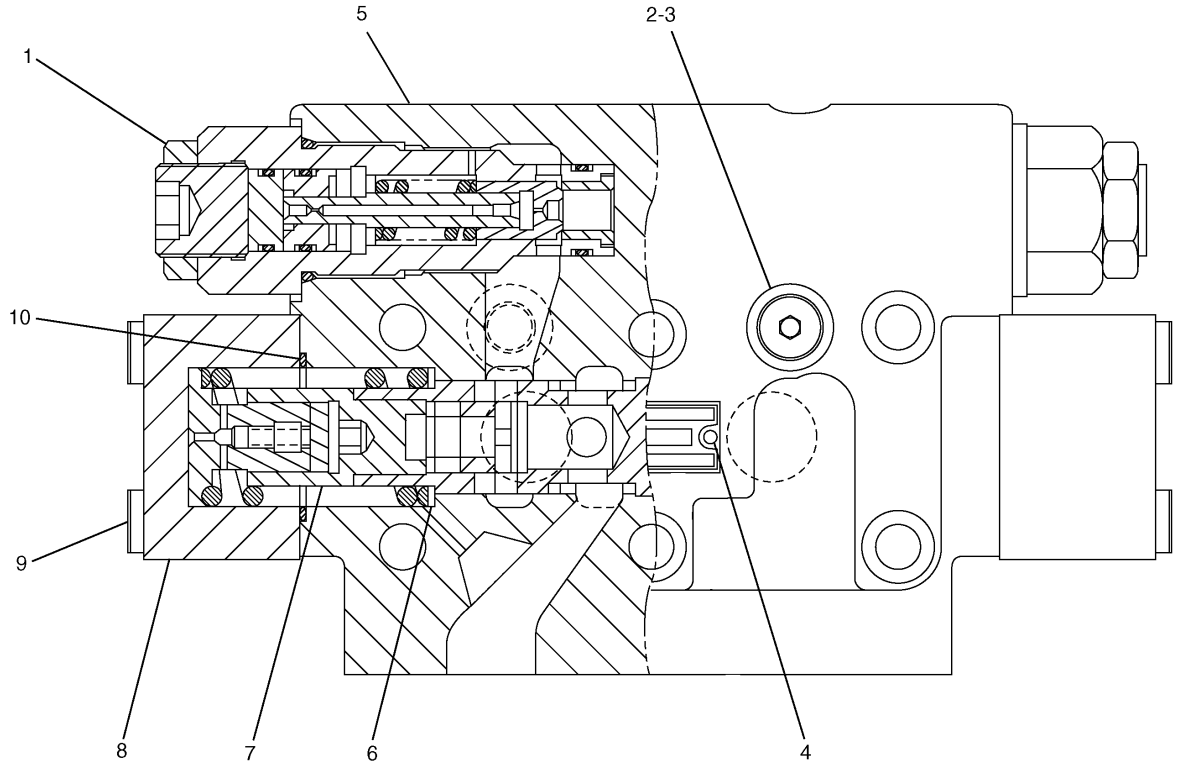

NOTE	No.	PART No.	QTY	PART NAME	NOTE	No.	PART No.	QTY	PART NAME
Y	1	204-2755	2	VALVE GP					
	2	9S-8004	2	PLUG					
	3	3J-1907	2	SEAL-O-RING (ID=11.89mm)					
	4	5B-9304	2	SCREW					
	5	209-5917	1	VALVE GP					
	6	096-1545	2	WASHER					
	7	209-5920	2	SPRING					
	8	204-2756	2	COVER					
	9	8T-7811	8	BOLT (L=50mm)					
	10	5P-2568	2	SEAL-O-RING (ID=44.12mm)					

Y—SEE SEPARATE ILLUSTRATION

H84990E 02

204-2819 VALVE GP-TRACTION CONTROL

Part of 204-2674-Page539
204-2755-Page543

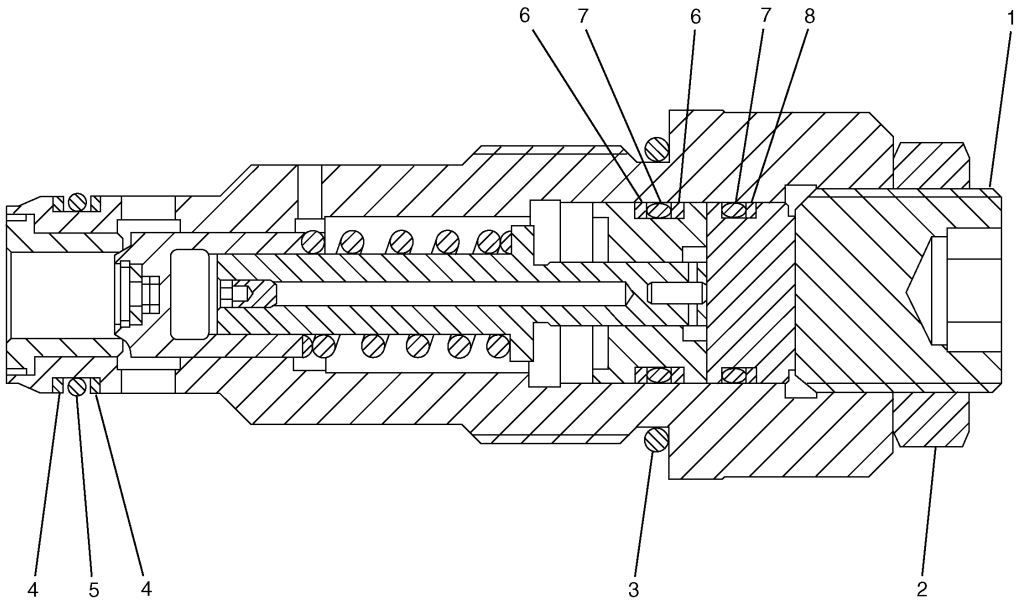

NOTE	No.	PART No.	QTY	PART NAME	NOTE	No.	PART No.	QTY	PART NAME
	1	7Y-8436	1	SCREW					
	2	7Y-8437	1	NUT					
	3	095-1601	1	SEAL-O-RING (ID=34.70mm)					
	4	095-1587	2	SEAL-O-RING (ID=20.80mm)					
	5	095-1590	1	SEAL-O-RING (ID=21.80mm)					
	6	121-1459	2	RING					
	7	095-1586	2	SEAL-O-RING (ID=19.80mm)					
	8	095-1785	1	RING					

H84550E 00

204-2755 VALVE GP-RELIEF

Part of 204-2819-Page542

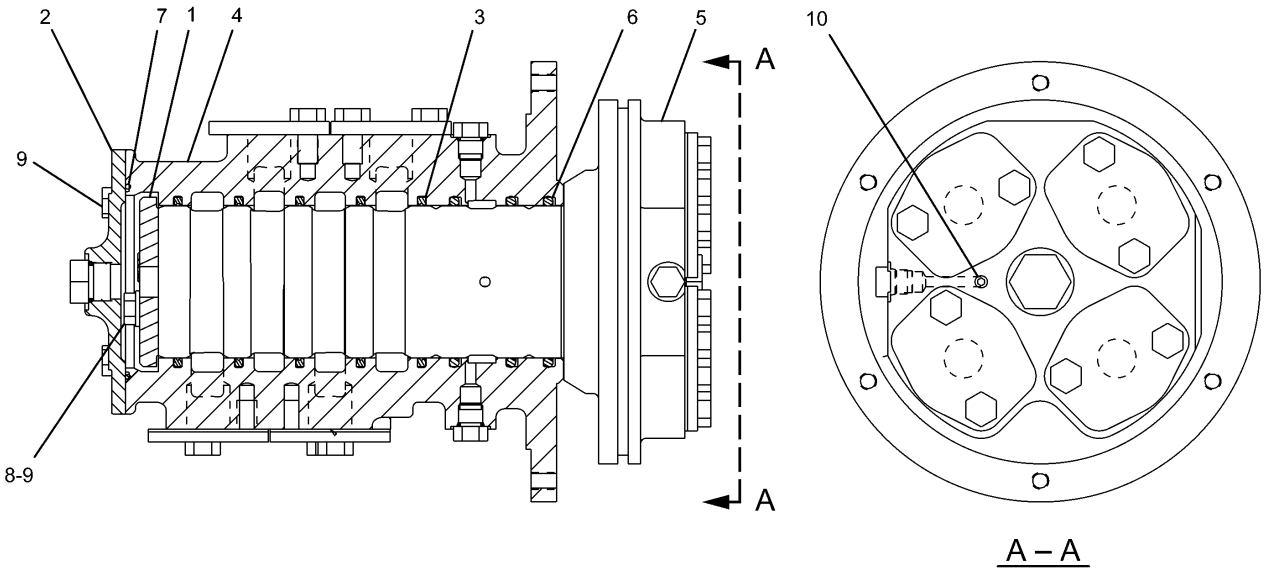

NOTE	No.	PART No.	QTY	PART NAME	NOTE	No.	PART No.	QTY	PART NAME
	1	7I-7131	1	RETAINER					
	2	7Y-4817	1	COVER					
	3	159-7782	5	SEAL					
	4	225-4548	1	HOUSING					
	5	225-4549	1	ROTOR					
	6	095-1625	3	SEAL-O-RING (ID=89.60mm)					
	7	095-1716	1	SEAL-O-RING (ID=109.40mm)					
	8	8T-4121	2	WASHER					
	9	8T-4136	6	BOLT (L=25mm)					
	10	8T-6759	1	PLUG					

H89321E 02

234-4440 SWIVEL GP

Part of 227-0542-Page463,227-0543-Page465

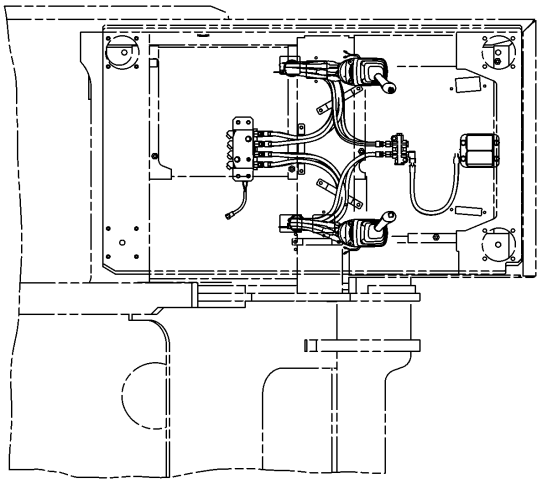

TOP VIEW

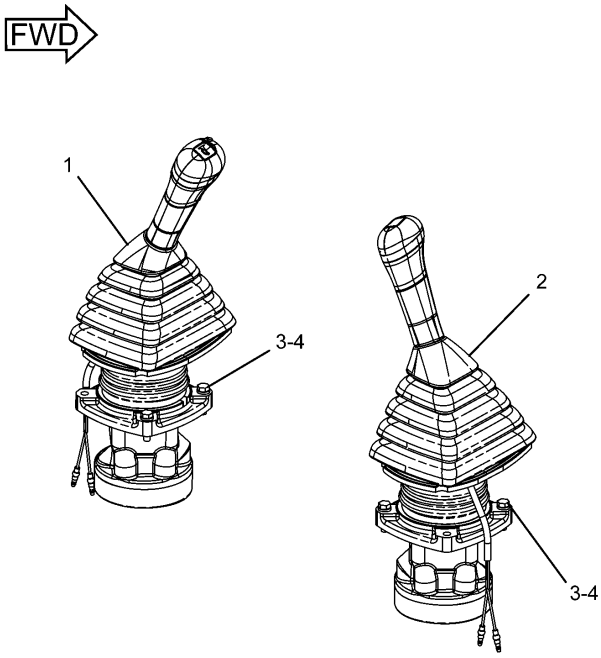

PICTORIAL VIEW

NOTE	No.	PART No.	QTY	PART NAME	NOTE	No.	PART No.	QTY	PART NAME
Y	1	270-5951	1	VALVE GP (WORKING CONTROL)					
Y	2	270-5952	1	VALVE GP (WORKING CONTROL)					
	3	6V-7357	6	BOLT (L=25mm)					
	4	9X-8256	6	WASHER					

Y—SEE SEPARATE ILLUSTRATION

H92597E 01

259-7707 CONTROL & MTG GP-JOYSTICK

270-5951-Page546,270-5952-Page547
An Attachment

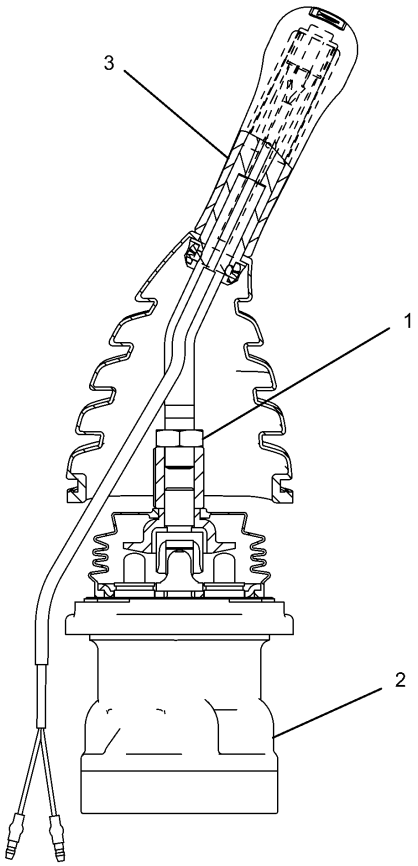

NOTE	No.	PART No.	QTY	PART NAME	NOTE	No.	PART No.	QTY	PART NAME
	1	7Y-8463	1	NUT					
Y	2	285-1327	1	VALVE GP					
Y	3	235-8969	1	CONTROL GP					

Y—SEE SEPARATE ILLUSTRATION

H92598E 00

270-5951 VALVE GP-PILOT

Left Unit
Part of 259-7707-Page545
235-8969-Page548,285-1327-Page550
An Attachment

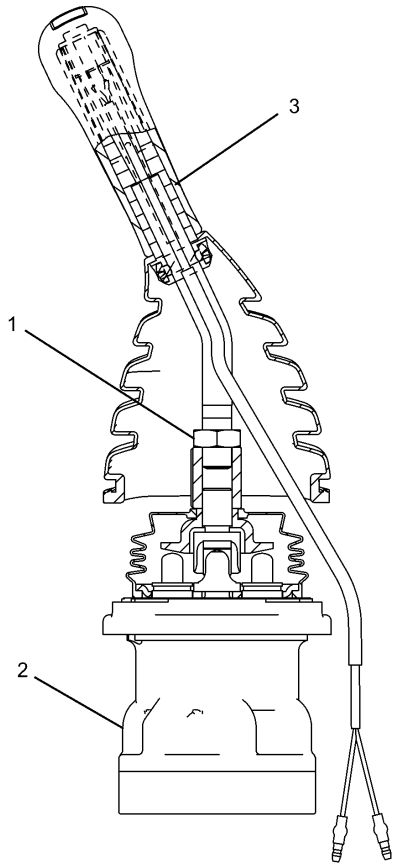

NOTE	No.	PART No.	QTY	PART NAME	NOTE	No.	PART No.	QTY	PART NAME
	1	7Y-8463	1	NUT					
Y	2	285-1327	1	VALVE GP					
Y	3	235-8970	1	CONTROL GP					

Y—SEE SEPARATE ILLUSTRATION

H92601E 00

270-5952 VALVE GP-PILOT

Right Unit
Part of 259-7707-Page545
235-8970-Page548,285-1327-Page550
An Attachment

HYDRAULIC SYSTEM

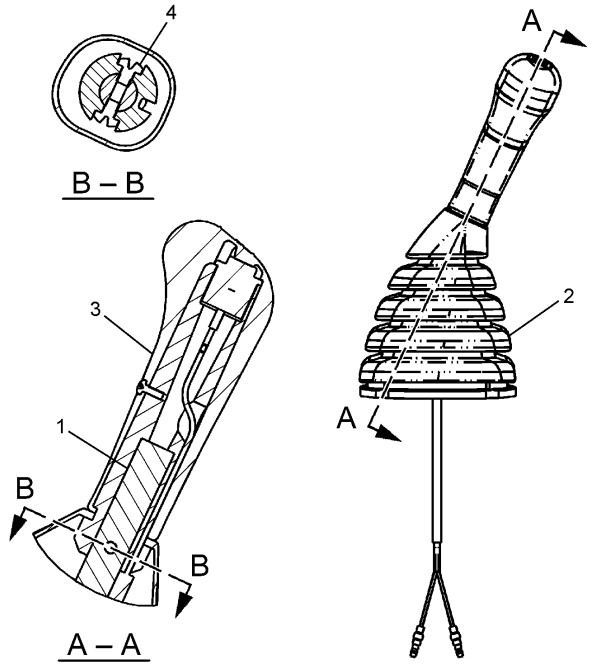

NOTE	No.	PART No.	QTY	PART NAME
	1	124-4010	1	LEVER
	2	235-8971	1	BOOT
Y	3	245-7842	1	KNOB AS
	4	096-2617	2	SCREW

Y—SEE SEPARATE ILLUSTRATION

H87373E 03

235-8969 CONTROL GP-PILOT OPERATED HYD
Part of 270-5951-Page546
245-7842-Page549
An Attachment

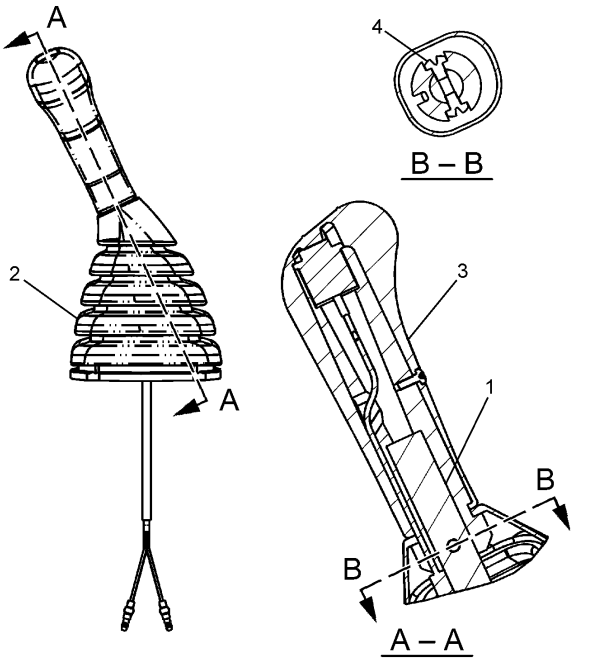

NOTE	No.	PART No.	QTY	PART NAME
	1	124-4010	1	LEVER
	2	235-8972	1	BOOT
Y	3	245-7844	1	KNOB AS
	4	096-2617	2	SCREW

Y—SEE SEPARATE ILLUSTRATION

H87366E 03

235-8970 CONTROL GP-PILOT OPERATED HYD
Part of 270-5952-Page547
245-7844-Page549
An Attachment

HYDRAULIC SYSTEM

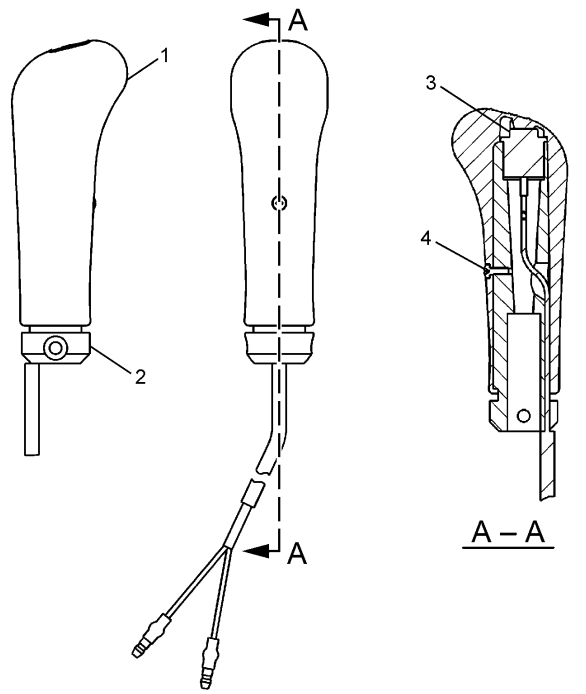

NOTE	No.	PART No.	QTY	PART NAME
	1	245-7843	1	KNOB
	2	124-4009	1	SHAFT
	3	222-0225	1	SWITCH AS
	4	6I-5298	1	SCREW

H87384E 00

245-7842 KNOB AS
Part of 235-8969-Page548
An Attachment

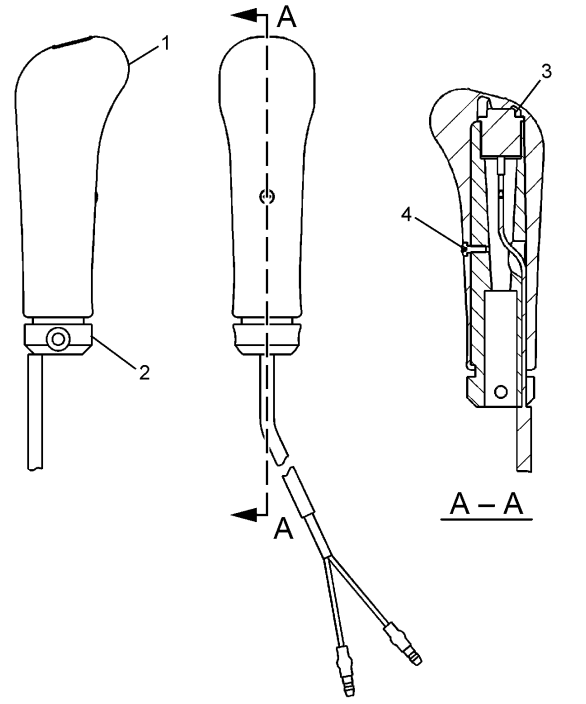

NOTE	No.	PART No.	QTY	PART NAME
	1	245-7845	1	KNOB
	2	124-4009	1	SHAFT
	3	222-0225	1	SWITCH AS
	4	6I-5298	1	SCREW

H87391E 00

245-7844 KNOB AS
Part of 235-8970-Page548
An Attachment

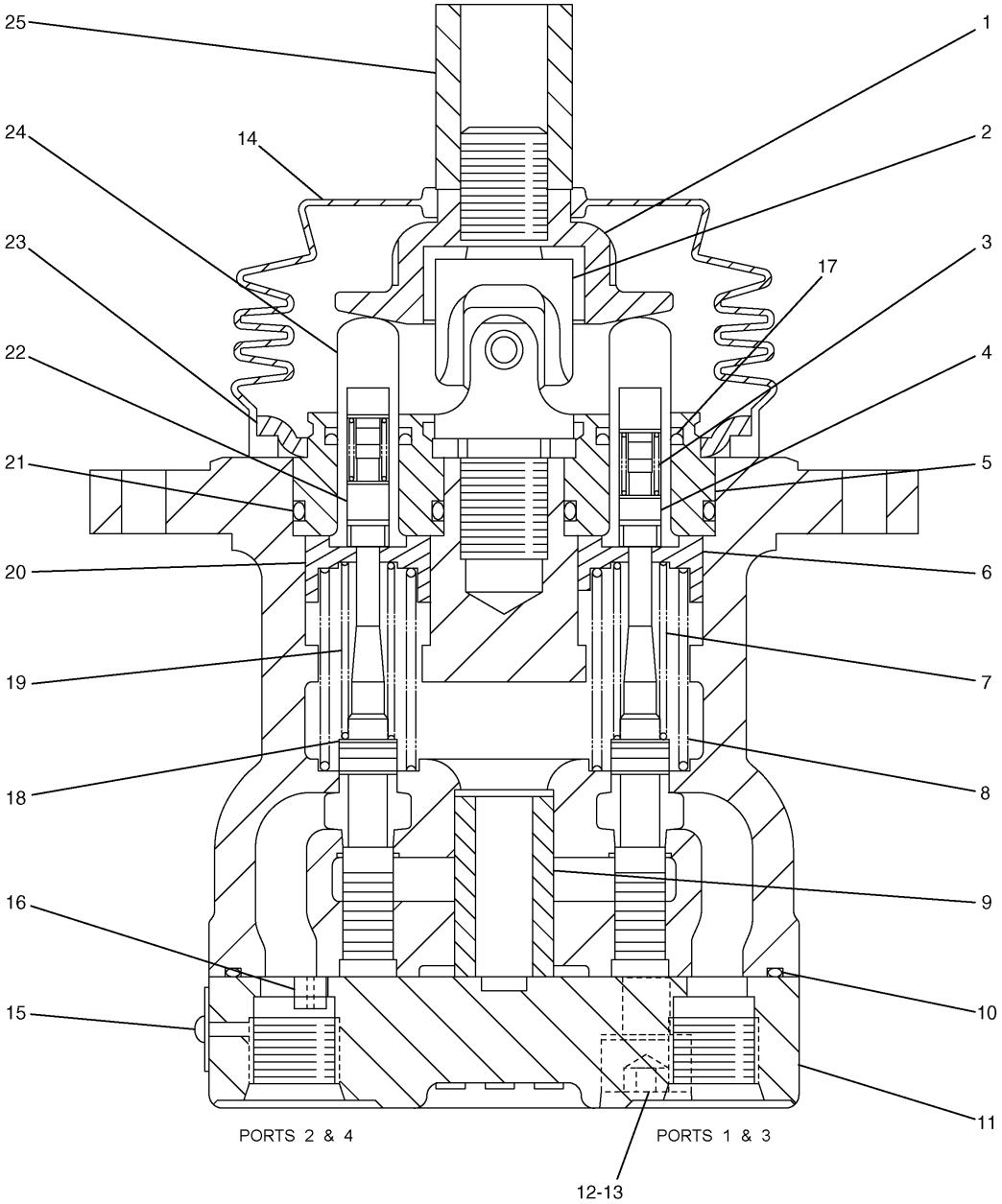

H92602E 00

285-1327 VALVE GP-PILOT
Part of 270-5951-Page546,270-5952-Page547
An Attachment

HYDRAULIC SYSTEM

NOTE	No.	PART No.	QTY	PART NAME	NOTE	No.	PART No.	QTY	PART NAME
	1	165-9431	1	PLATE					
	2	4I-6365	1	JOINT					
	3	118-4087	4	SPRING					
	4	165-9444	2	SEAT					
	5	096-1628	4	PLUG					
	6	165-9436	2	SEAT					
	7	165-9460	2	SPRING					
	8	270-5953	4	SPRING					
	9	165-9439	1	BUSHING					
	10	165-9448	1	SEAL-O-RING (ID=84.50mm)					
	11	168-0794	1	PLATE					
	12	096-4498	2	WASHER					
	13	6V-8337	2	BOLT (L=35mm)					
	14	171-0087	1	BELLOW					
	15	5B-9304	2	SCREW					
	16	7Y-0468	1	PIN					
	17	094-0876	4	SEAL					
B	18	099-6137	4	WASHER (T=0.2mm)					
	19	165-9442	2	SPRING					
	20	165-9435	2	SEAT					
	21	095-1586	4	SEAL-O-RING (ID=19.80mm)					
	22	165-9443	2	SEAT					
	23	165-9438	1	PLATE					
	24	118-4086	4	ROD					
	25	131-5915	1	NUT					

B—USE AS REQUIRED

H92602E 00

285-1327 VALVE GP-PILOT

Part of 270-5951-Page546,270-5952-Page547

An Attachment

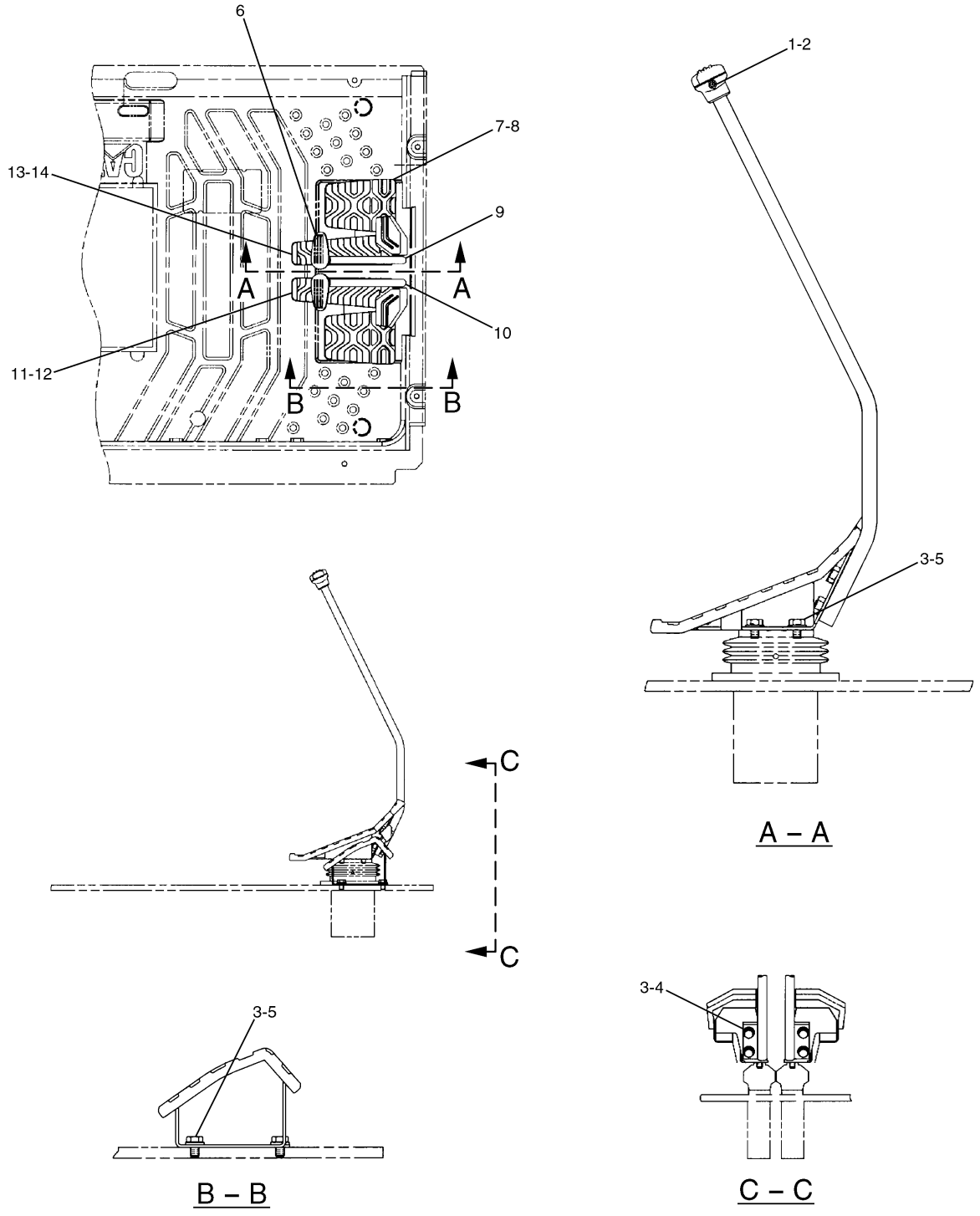

170–9497 CONTROL GP–PILOT OPERATED HYD

HYDRAULIC SYSTEM

NOTE	No.	PART No.	QTY	PART NAME	NOTE	No.	PART No.	QTY	PART NAME
	1	096-6166	2	WASHER					
	2	095-0728	2	SCREW					
	3	8T-4121	12	WASHER					
	4	8T-4136	4	BOLT (L=25mm)					
	5	8T-4191	8	BOLT (L=16mm)					
	6	142-5546	2	KNOB					
	7	117-6356	2	STEP AS					
	8	122-9610	2	STEP					
	9	170-9499	1	LEVER AS (LH)					
	10	170-9498	1	LEVER AS (RH)					
	11	122-9608	1	PEDAL					
	12	117-6350	1	PEDAL AS (RH)					
	13	122-9609	1	PEDAL					
	14	117-6349	1	PEDAL AS (LH)					

H70098E 02

170-9497 CONTROL GP-PILOT OPERATED HYD

HYDRAULIC SYSTEM

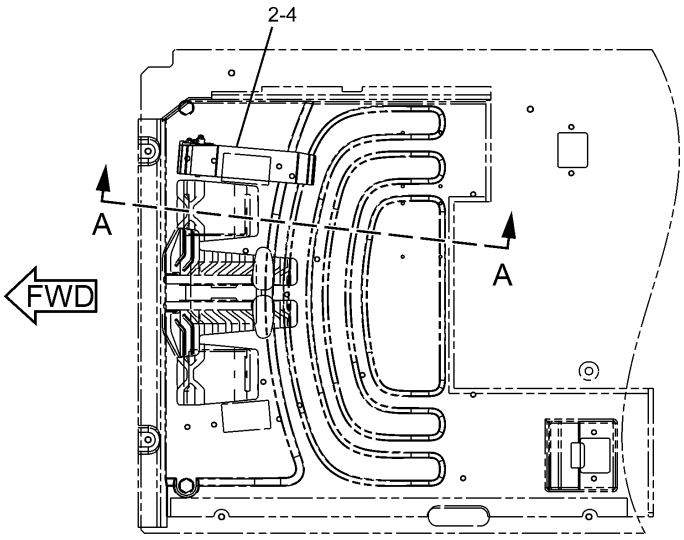

TOP VIEW

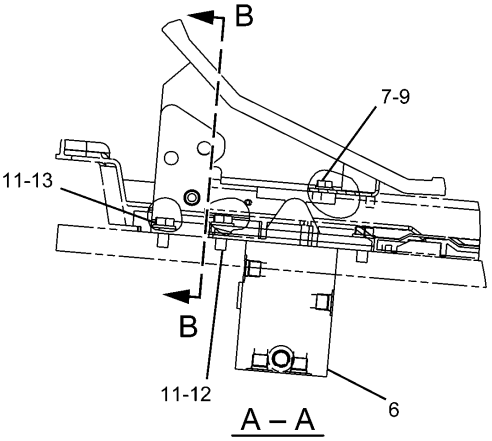

A – A

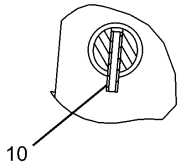

C – C

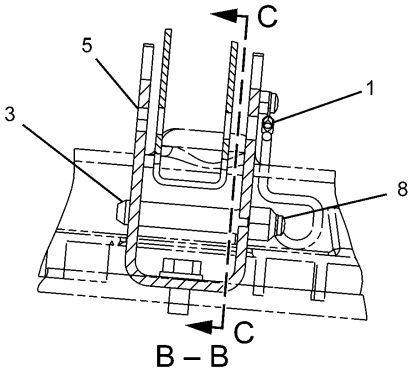

B – B

NOTE	No.	PART No.	QTY	PART NAME	NOTE	No.	PART No.	QTY	PART NAME
	1	5I-7090	1	CHAIN AS					
	2	122-9611	1	PEDAL					
	3	128-2173	1	PIN					
	4	153-8762	1	PEDAL AS					
	5	153-8763	1	SUPPORT AS					
Y	6	206-3336	1	VALVE GP					
	7	8T-4224	2	WASHER					
	8	095-0735	2	SCREW					
	9	7X-2536	2	BOLT (L=14mm)					
	10	8T-0114	1	PIN					
	11	8T-4121	3	WASHER					
	12	8T-4136	2	BOLT (L=25mm)					
	13	8T-4137	1	BOLT (L=20mm)					

Y—SEE SEPARATE ILLUSTRATION

H88485E 01

239-8693 CONTROL GP-HYDRAULIC

Single Function/1 Pump
Part of 255-5696,255-5699-Page472
206-3336-Page558
An Attachment

MEMORANDA

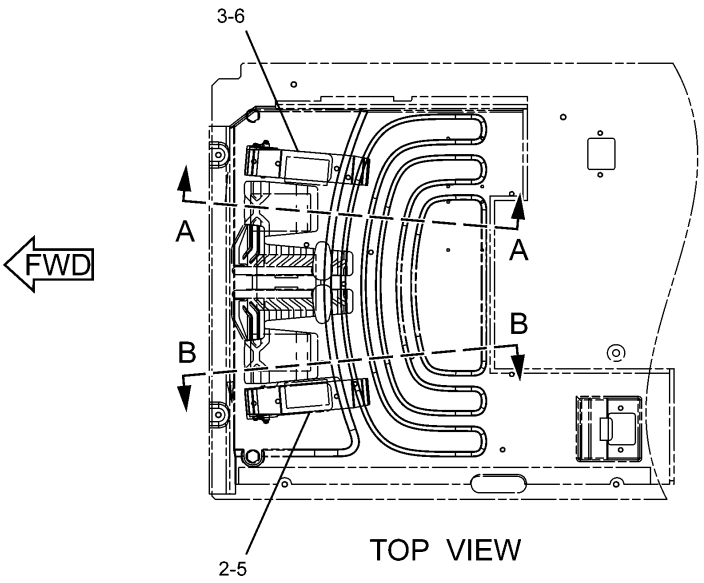

TOP VIEW

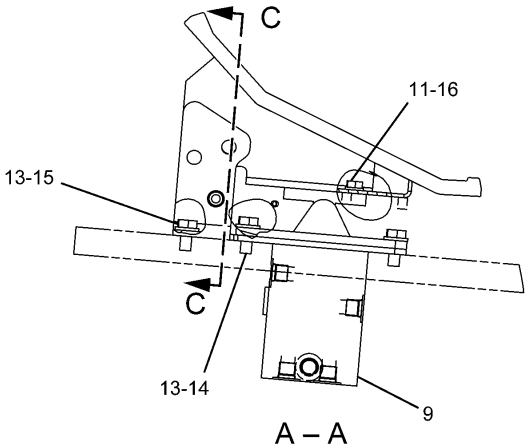

A – A

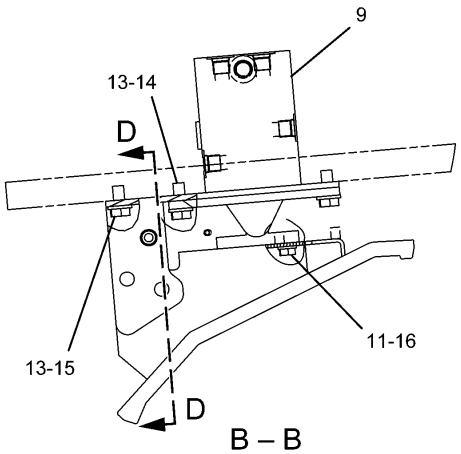

B – B

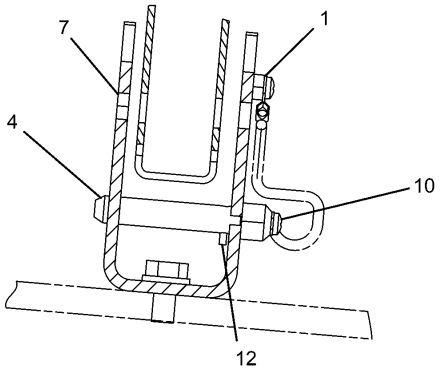

C – C

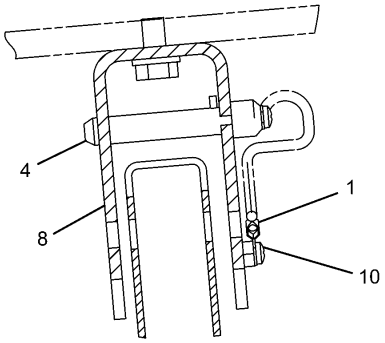

D – D

H89801E 02

239-8695 CONTROL GP-HYDRAULIC
Part of 255-5697-Page473,255-5702-Page474
206-3336-Page558
An Attachment

HYDRAULIC SYSTEM

NOTE	No.	PART No.	QTY	PART NAME	NOTE	No.	PART No.	QTY	PART NAME
	1	5I-7090	2	CHAIN AS					
	2	121-1865	1	PEDAL					
	3	122-9611	1	PEDAL					
	4	128-2173	2	PIN					
	5	153-8753	1	PEDAL AS					
	6	153-8762	1	PEDAL AS					
	7	153-8763	1	SUPPORT AS					
	8	259-7877	1	SUPPORT AS					
Y	9	206-3336	2	VALVE GP					
	10	095-0735	4	SCREW					
	11	7X-2536	4	BOLT (L=14mm)					
	12	8T-0114	2	PIN					
	13	8T-4121	6	WASHER					
	14	8T-4136	4	BOLT (L=25mm)					
	15	8T-4137	2	BOLT (L=20mm)					
	16	8T-4224	4	WASHER					

Y—SEE SEPARATE ILLUSTRATION

H89801E 02

239-8695 CONTROL GP-HYDRAULIC

Part of 255-5697-Page473,255-5702-Page474
206-3336-Page558
An Attachment

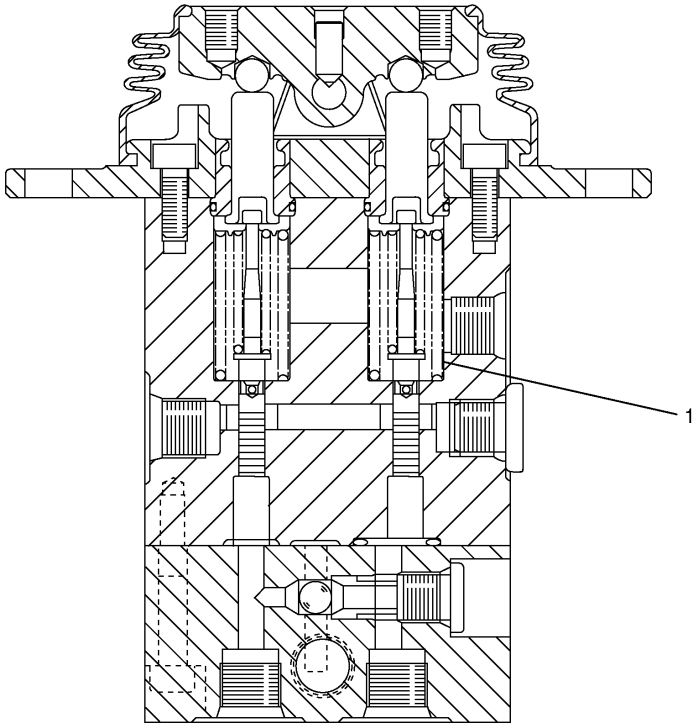

NOTE	No.	PART No.	QTY	PART NAME	NOTE	No.	PART No.	QTY	PART NAME
	1	190-7819	2	SPRING					

H78639E 00

206-3336 VALVE GP-PILOT

Part of 239-8693-Page554,239-8695-Page557
An Attachment

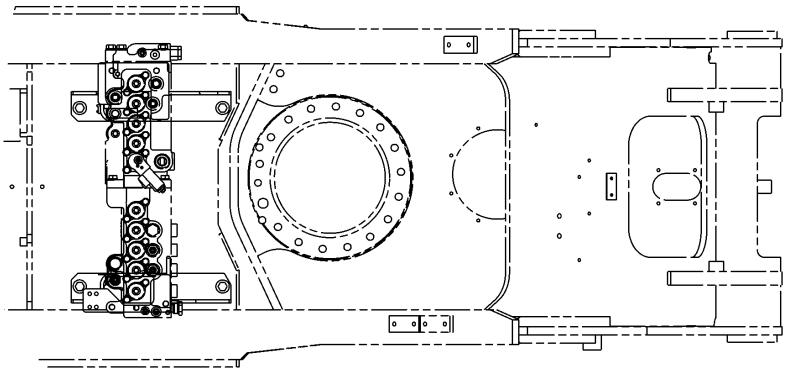

TOP VIEW

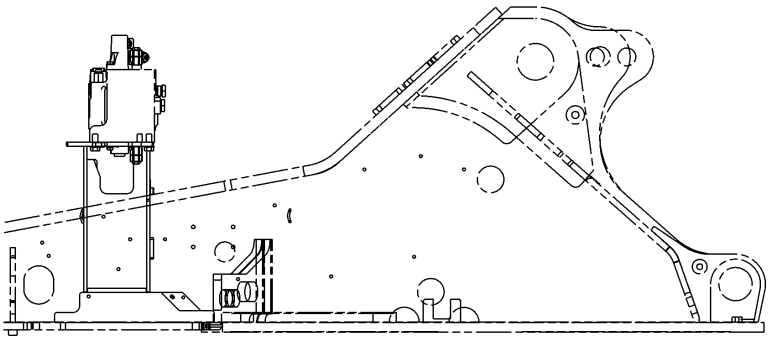

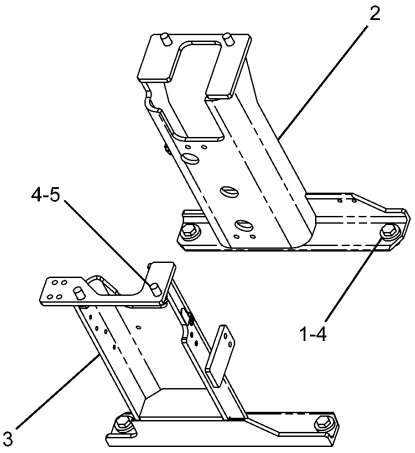

PICTORIAL VIEW
(VIEW FROM FRONT SIDE)

NOTE	No.	PART No.	QTY	PART NAME	NOTE	No.	PART No.	QTY	PART NAME
	1	196-0711	4	WASHER					
	2	260-7904	1	SUPPORT AS					
	3	260-7906	1	SUPPORT AS					
	4	100-3866	8	BOLT (L=40mm)					
	5	9X-8257	4	WASHER					

H89270E 00

260-7868 MOUNTING GP-VALVE

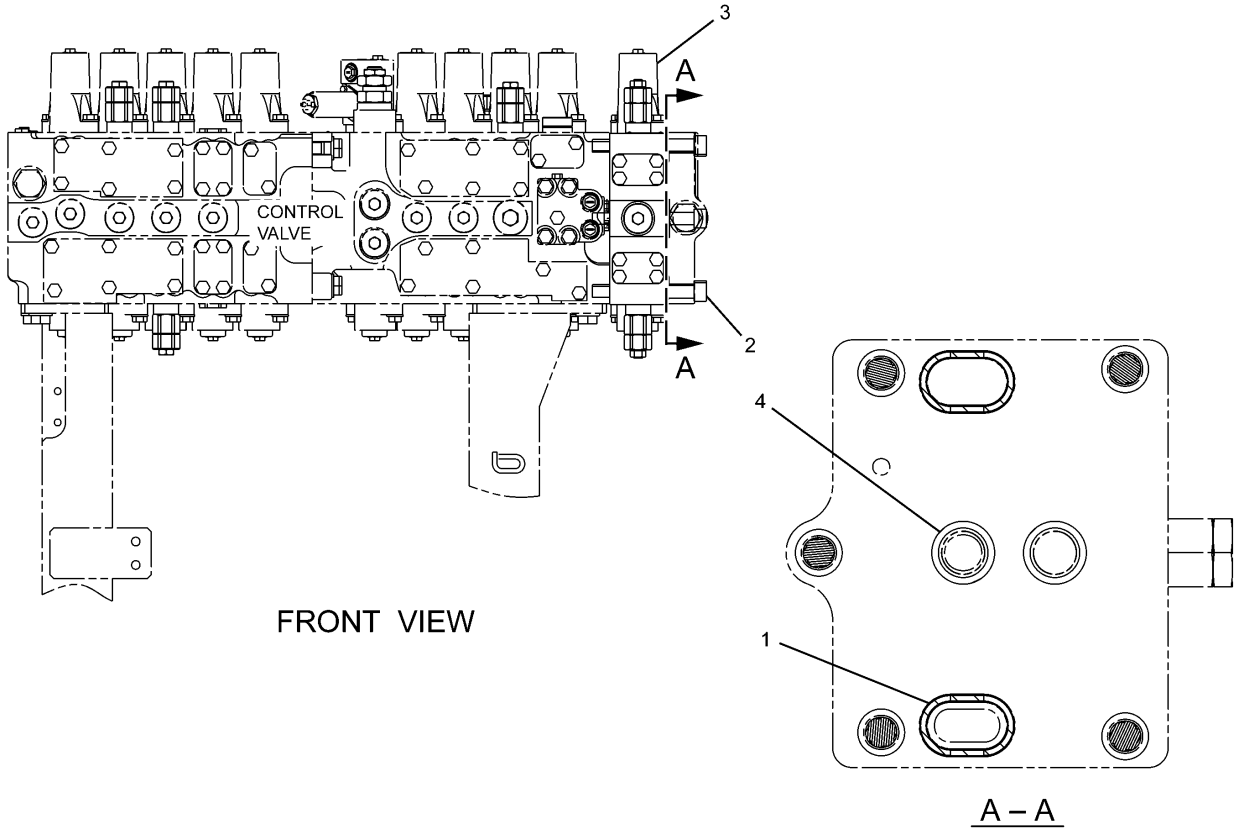

FRONT VIEW

A – A

NOTE	No.	PART No.	QTY	PART NAME	NOTE	No.	PART No.	QTY	PART NAME
	1	4J-8998	2	SEAL-O-RING (ID=36.09mm)					
	2	7I-1026	5	BOLT (L=130mm)					
Y	3	259-7378	1	VALVE GP					
	4	1P-3702	2	SEAL					

Y—SEE SEPARATE ILLUSTRATION

H88948E 00

255-5713 VALVE & MOUNTING GP

Part of 255-5699-Page472,255-5697-Page473
259-7378-Page582
An Attachment

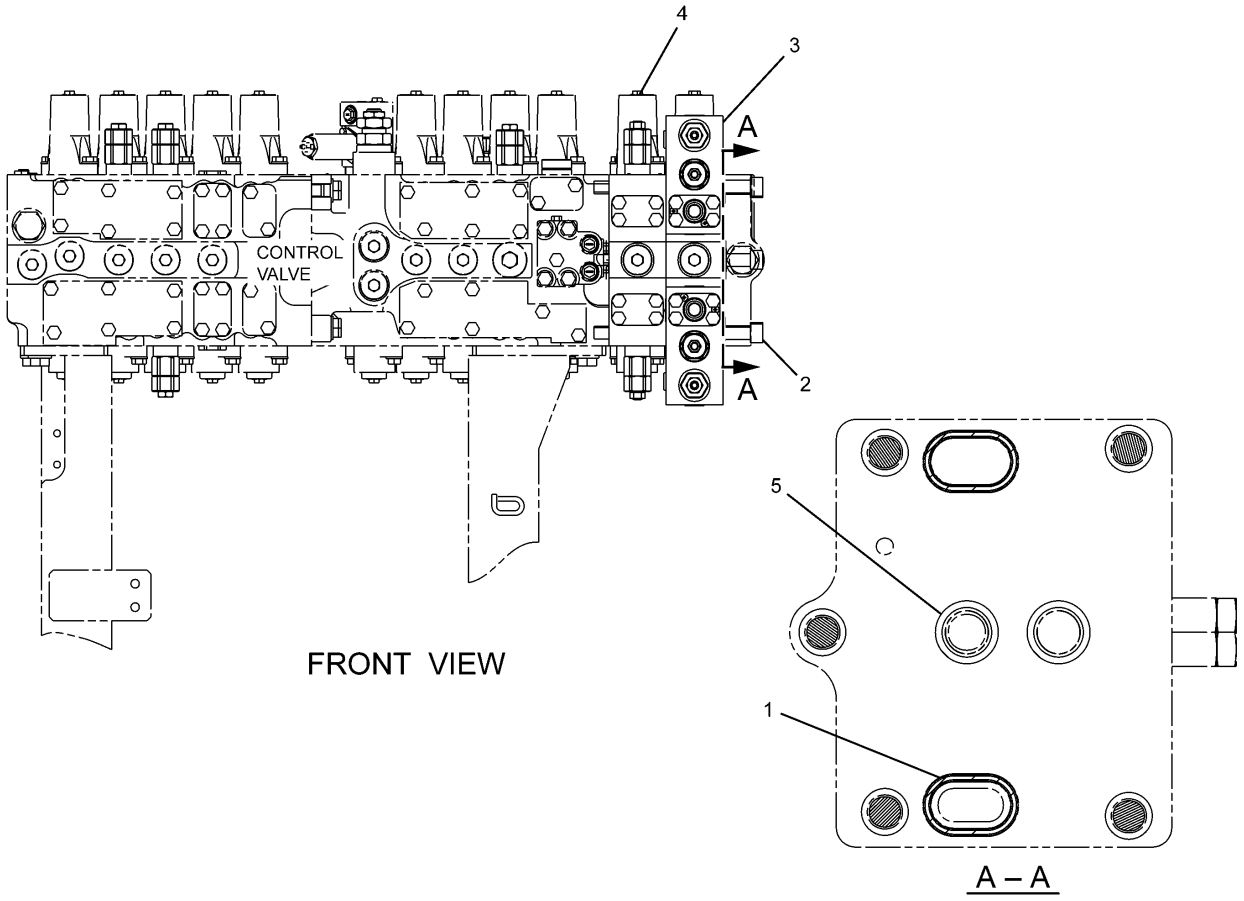

FRONT VIEW

NOTE	No.	PART No.	QTY	PART NAME	NOTE	No.	PART No.	QTY	PART NAME
	1	4J-8998	2	SEAL-O-RING (ID=36.09mm)					
	2	7Y-5243	5	BOLT (L=200mm)					
Y	3	244-8419	1	VALVE GP					
Y	4	259-7378	1	VALVE GP					
	5	1P-3702	2	SEAL					

Y—SEE SEPARATE ILLUSTRATION

H88949E 00

255-5716 VALVE & MOUNTING GP

Part of 255-5702-Page474
259-7378-Page582,244-8419-Page584
An Attachment

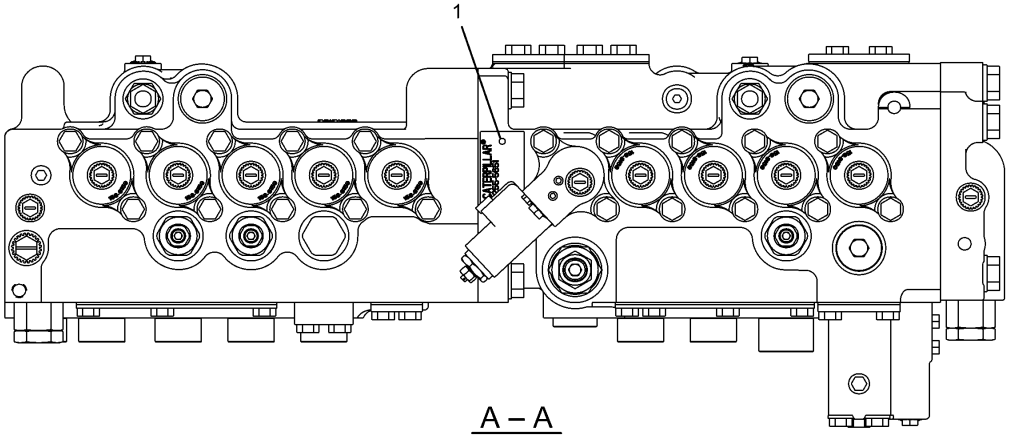

A – A

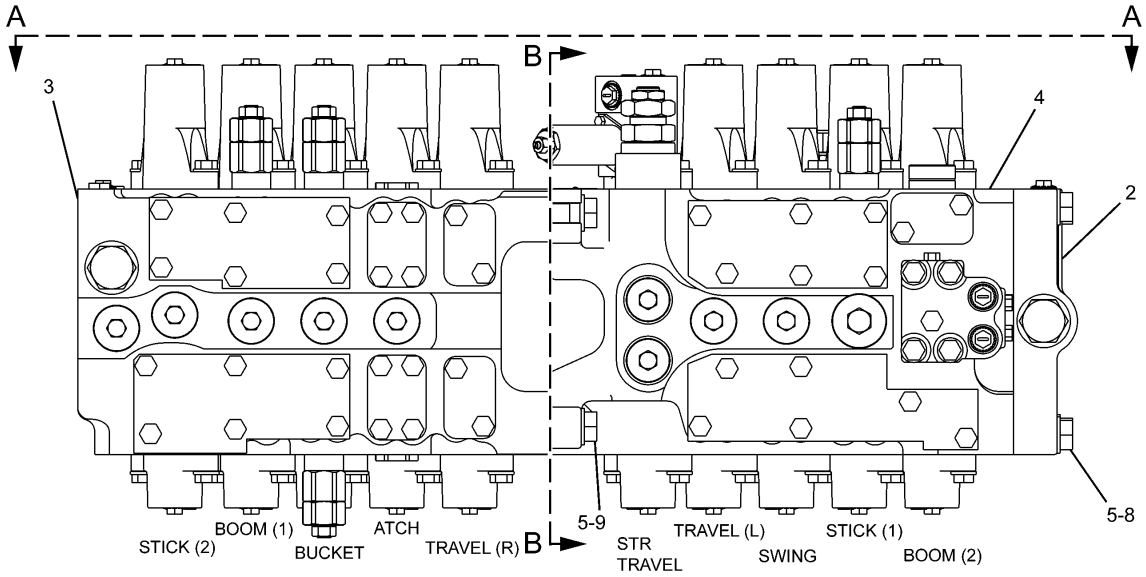

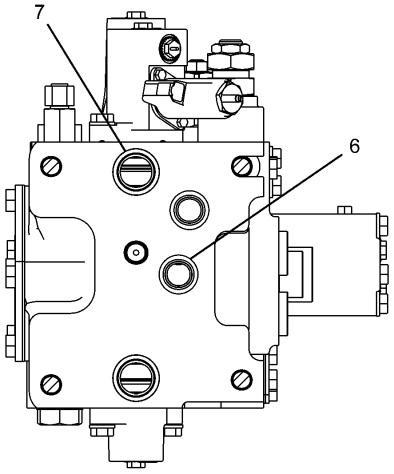

B – B

H88954E 00

255-5651 VALVE GP-MAIN CONTROL

153-5313-Page564,255-5652-Page566,255-5653-Page574

HYDRAULIC SYSTEM

NOTE	No.	PART No.	QTY	PART NAME	NOTE	No.	PART No.	QTY	PART NAME
	1	4B-4158	2	SCREW					
Y	2	153-5313	1	VALVE GP					
Y	3	255-5652	1	VALVE GP					
Y	4	255-5653	1	VALVE GP					
	5	9X-8257	9	WASHER					
	6	1P-3702	2	SEAL					
	7	4J-0519	2	SEAL-O-RING (ID=31.34mm)					
	8	8T-4140	5	BOLT (L=60mm)					
	9	8T-4193	4	BOLT (L=50mm)					

Y—SEE SEPARATE ILLUSTRATION

H88954E 00

255-5651 VALVE GP-MAIN CONTROL

153-5313-Page564,255-5652-Page566,255-5653-Page574

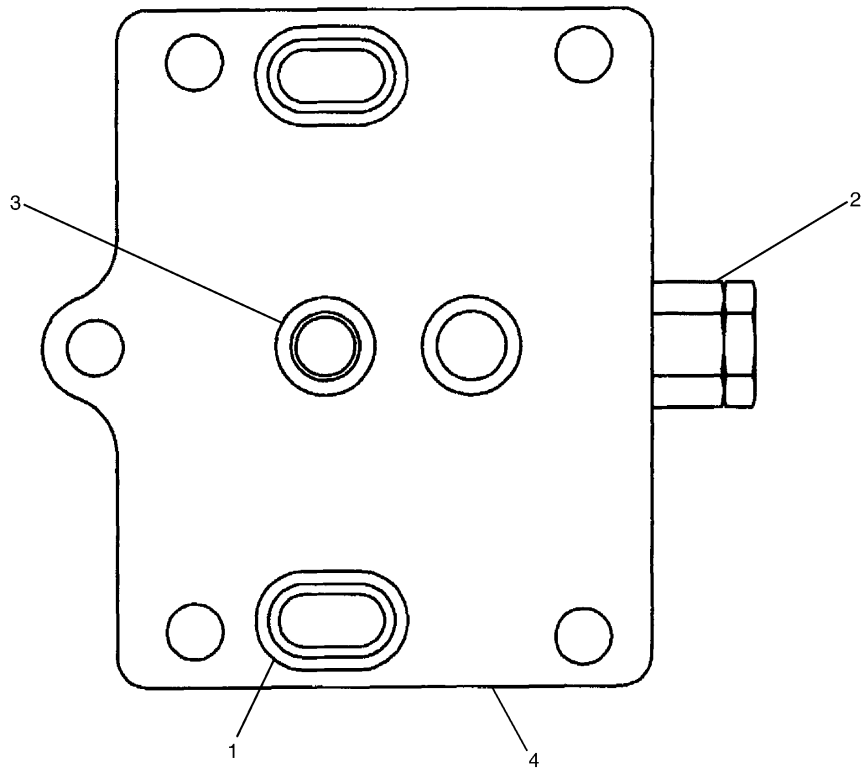

NOTE	No.	PART No.	QTY	PART NAME	NOTE	No.	PART No.	QTY	PART NAME
	1	4J-8998	2	SEAL-O-RING (ID=36.09mm)					
Y	2	109-2667	1	VALVE GP					
	3	1P-3702	2	SEAL					
	4	153-5239	1	COVER					

Y—SEE SEPARATE ILLUSTRATION

H81334E 02

153-5313 VALVE GP-RELIEF

Part of 255-5651-Page563
109-2667-Page565

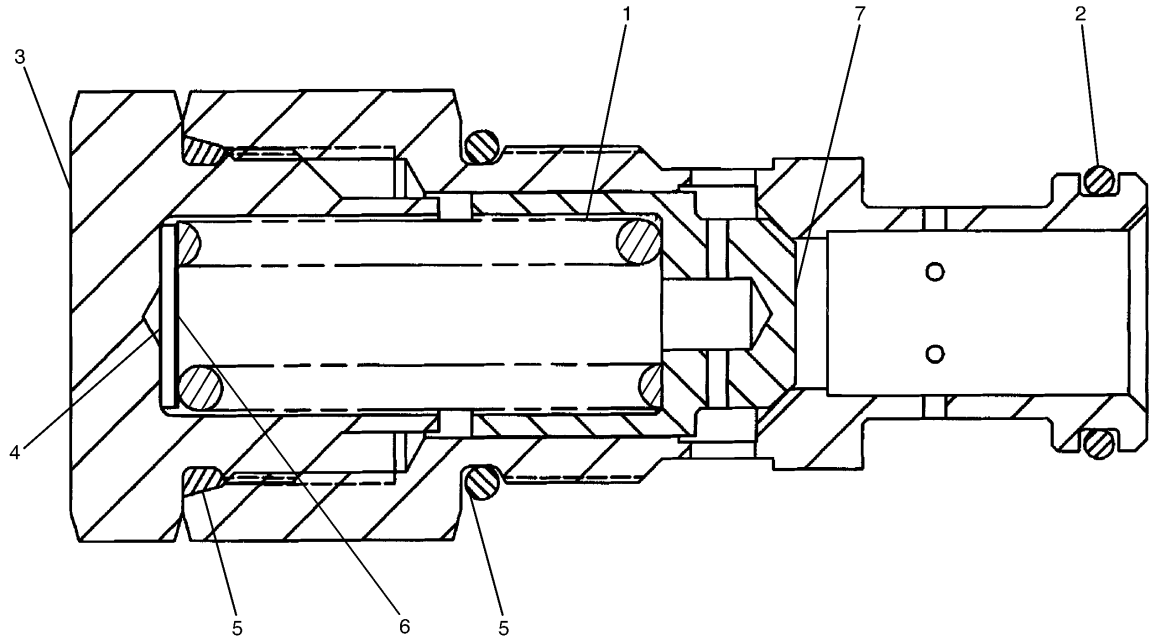

NOTE	No.	PART No.	QTY	PART NAME	NOTE	No.	PART No.	QTY	PART NAME
	1	107-6370	1	SPRING					
	2	5P-3108	1	SEAL-O-RING (ID=20.30mm)					
	3	5I-4111	1	PLUG					
B	4	4J-7386	5	SHIM (T=0.254mm)					
	5	4K-1388	2	SEAL-O-RING (ID=26.59mm)					
B	6	4J-7385	1	SHIM (T=1.219mm)					
	7	107-6371	1	VALVE					

B—USE AS REQUIRED

H67278E 00

109-2667 VALVE GP-RELIEF

Direct Operated

Part of 153-5313-Page564

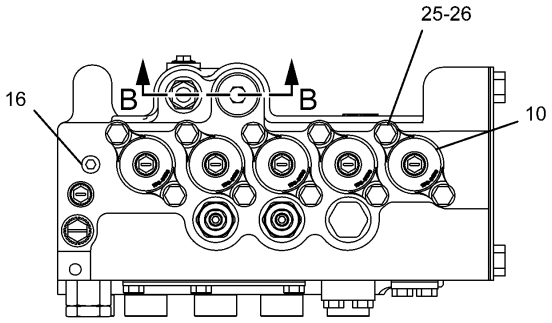

A – A

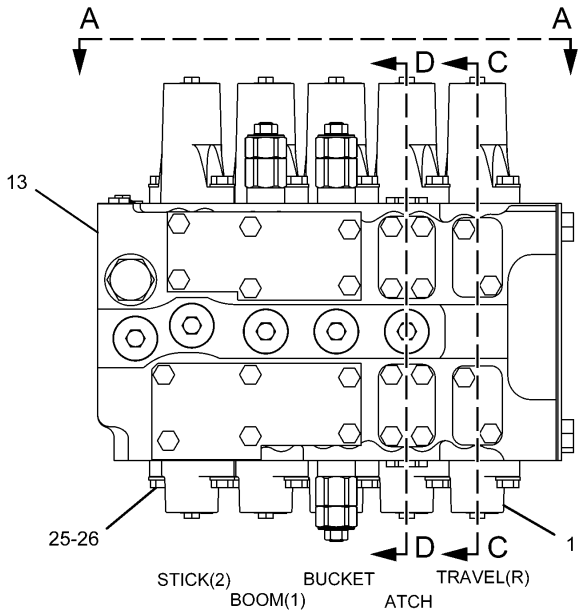

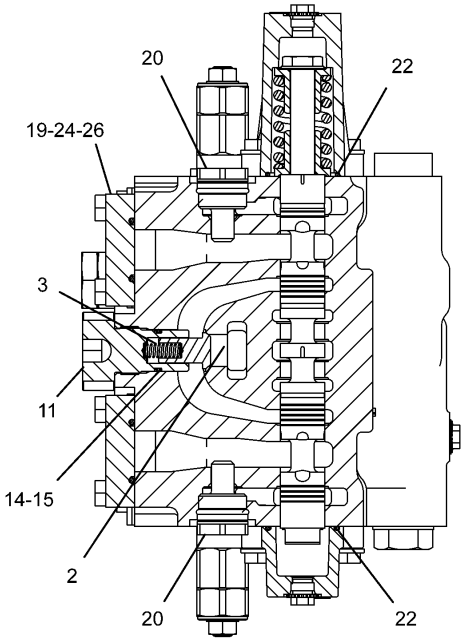

D – D

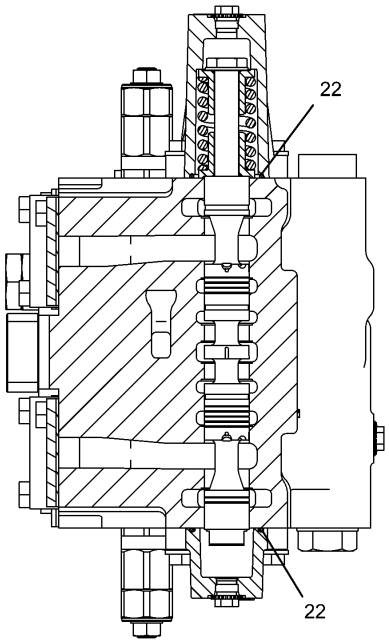

C – C

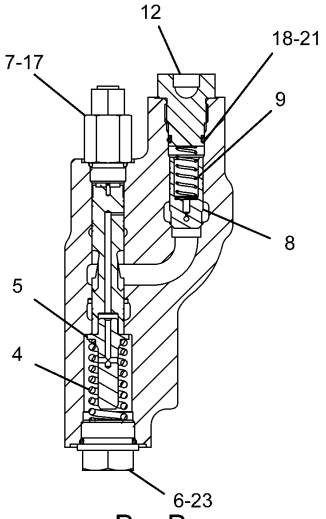

B – B

H90100E 01

255-5652 VALVE GP-CONTROL (1/2)

Part of 255-5651-Page563
239-8826-Page570

HYDRAULIC SYSTEM

NOTE	No.	PART No.	QTY	PART NAME	NOTE	No.	PART No.	QTY	PART NAME
	1	6E-2274	5	COVER					
	2	6E-5731	1	VALVE					
	3	7I-1248	1	SPRING					
	4	153-5288	1	SPRING					
	5	153-5289	1	GUIDE					
	6	153-5290	1	PLUG					
	7	153-5291	1	CONNECTOR					
	8	153-5292	1	VALVE					
	9	153-5293	1	SPRING					
	10	158-8159	5	HOUSING					
	11	236-6419	1	PLUG					
	12	236-6421	1	PLUG					
Y	13	239-8826	1	VALVE GP					
	14	095-1590	1	SEAL-O-RING (ID=21.80mm)					
	15	095-1787	1	RING					
	16	111-9959	1	PLUG					
	17	2M-9780	1	SEAL-O-RING (ID=19.18mm)					
	18	4I-6397	1	RING					
	19	4J-0520	2	SEAL-O-RING (ID=32.92mm)					
	20	6E-4816	2	PLUG GP					
	21	6V-3922	1	SEAL-O-RING (ID=18.72mm)					
	22	6V-5597	4	SEAL-O-RING (ID=40.94mm)					
	23	7M-8485	1	SEAL-O-RING (ID=29.74mm)					
	24	7Y-8099	2	COVER					
	25	8T-4121	20	WASHER					
	26	8T-4195	28	BOLT (L=30mm)					

Y—SEE SEPARATE ILLUSTRATION

H90100E 01

255-5652 VALVE GP-CONTROL (1/2)

Part of 255-5651-Page563
239-8826-Page570

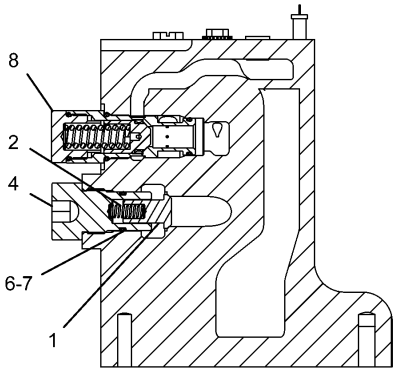

H – H

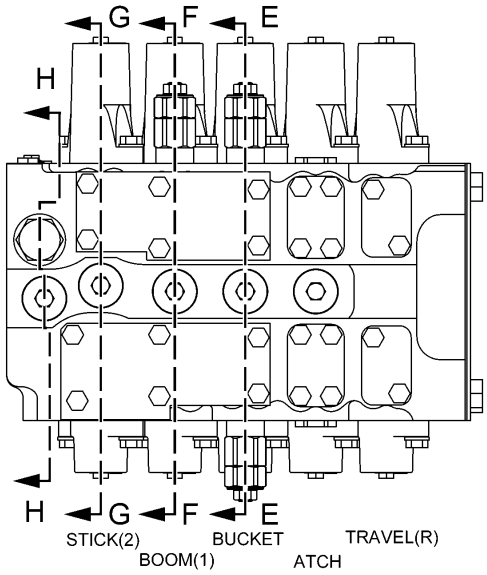

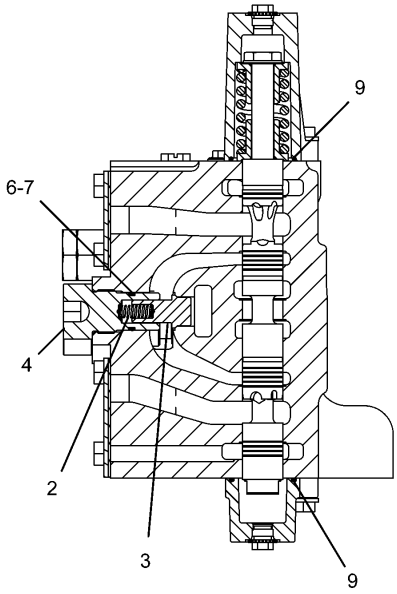

G – G

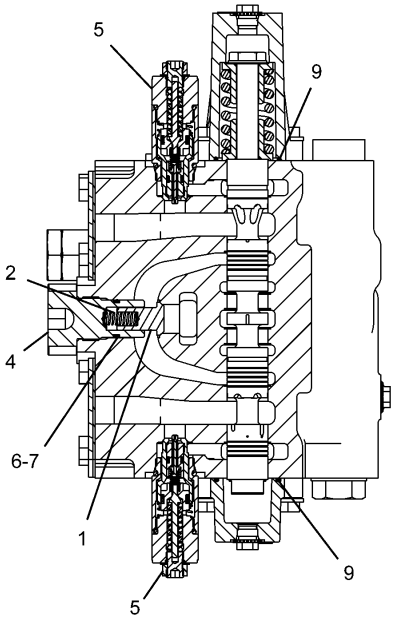

E – E

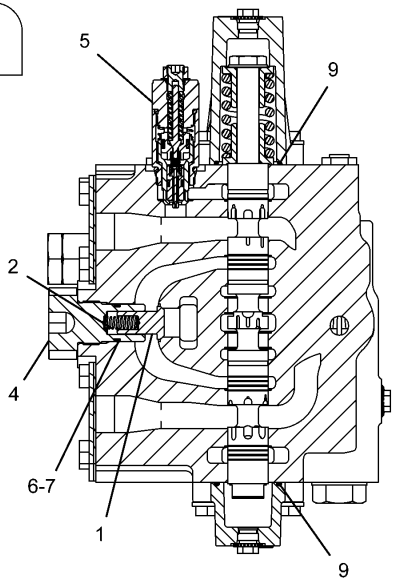

F – F

H90101E 01

255-5652 VALVE GP-CONTROL (2/2)

Part of 255-5651-Page563
109-5152-Page571,255-5661-Page572

HYDRAULIC SYSTEM

NOTE	No.	PART No.	QTY	PART NAME	NOTE	No.	PART No.	QTY	PART NAME
	1	6E-5731	3	VALVE					
	2	7I-1248	4	SPRING					
	3	153-5286	1	VALVE					
	4	236-6419	4	PLUG					
Y	5	255-5661	3	VALVE GP					
	6	095-1590	4	SEAL-O-RING (ID=21.80mm)					
	7	095-1787	4	RING					
Y	8	109-5152	1	VALVE GP					
	9	6V-5597	6	SEAL-O-RING (ID=40.94mm)					

Y—SEE SEPARATE ILLUSTRATION

H90101E 01

255-5652 VALVE GP-CONTROL (2/2)

Part of 255-5651-Page563
109-5152-Page571,255-5661-Page572

HYDRAULIC SYSTEM

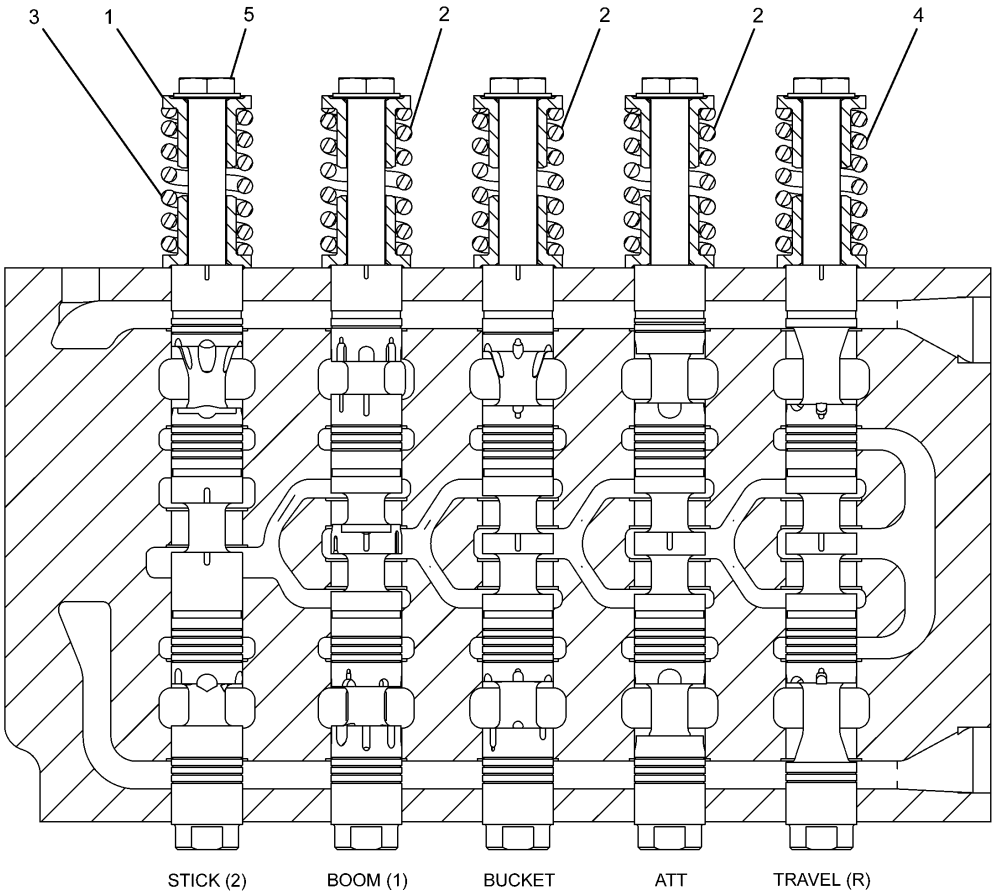

NOTE	No.	PART No.	QTY	PART NAME	NOTE	No.	PART No.	QTY	PART NAME
	1	6E-2271	10	RETAINER					
	2	104-7293	3	SPRING					
	3	104-7294	1	SPRING					
	4	104-7296	1	SPRING					
	5	153-5276	5	BOLT					

H91198E 01

239-8826 VALVE GP-CONTROL

Part of 255-5652-Page567

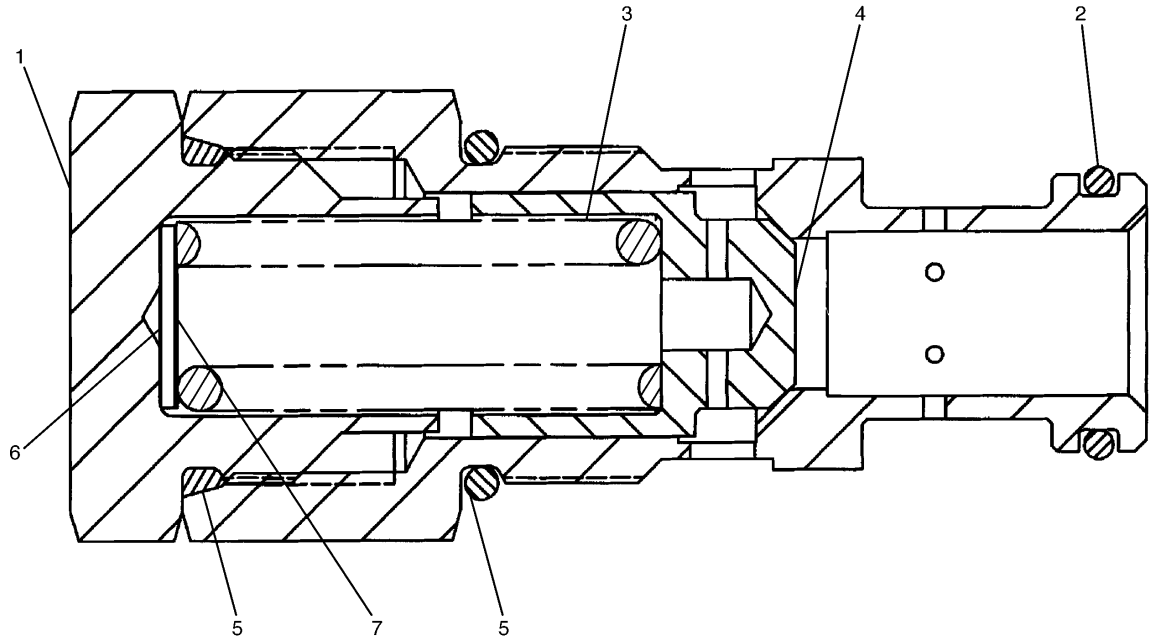

NOTE	No.	PART No.	QTY	PART NAME	NOTE	No.	PART No.	QTY	PART NAME
	1	5I-4111	1	PLUG					
	2	5P-3108	1	SEAL-O-RING (ID=20.30mm)					
	3	107-6370	1	SPRING					
	4	107-6371	1	VALVE					
	5	4K-1388	2	SEAL-O-RING (ID=26.59mm)					
B	6	4J-7385	1	SHIM (T=1.219mm)					
B	7	4J-7386	1	SHIM (T=0.254mm)					

B—USE AS REQUIRED

H67279E 00

109-5152 VALVE GP-RELIEF

Direct Operated

Part of 255-5652-Page569

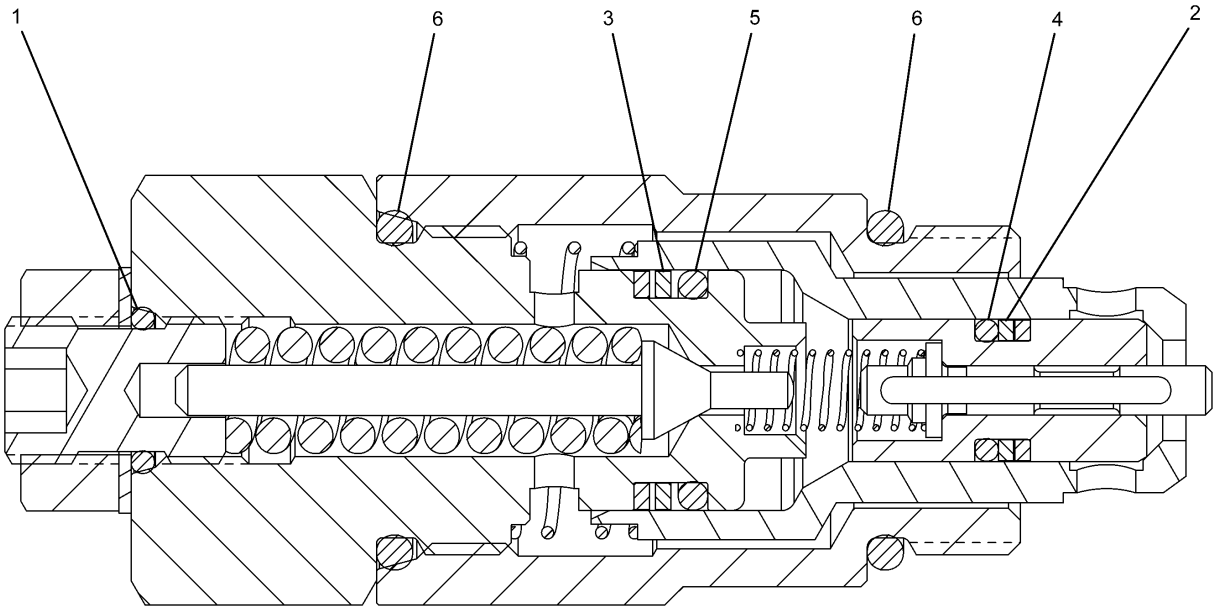

NOTE	No.	PART No.	QTY	PART NAME	NOTE	No.	PART No.	QTY	PART NAME
	1	095-1578	1	SEAL-O-RING (ID=9.80mm)					
	2	103-8252	2	RING					
	3	103-8253	2	RING					
	4	103-8254	1	SEAL-O-RING (ID=7.80mm)					
	5	103-8255	1	SEAL-O-RING (ID=14.80mm)					
	6	3D-2824	2	SEAL-O-RING (ID=23.47mm)					

H89460E 00

255-5661 VALVE GP-PILOT RELIEF

Part of 255-5652-Page569,255-5653-Page575,259-7378-Page582

MEMORANDA

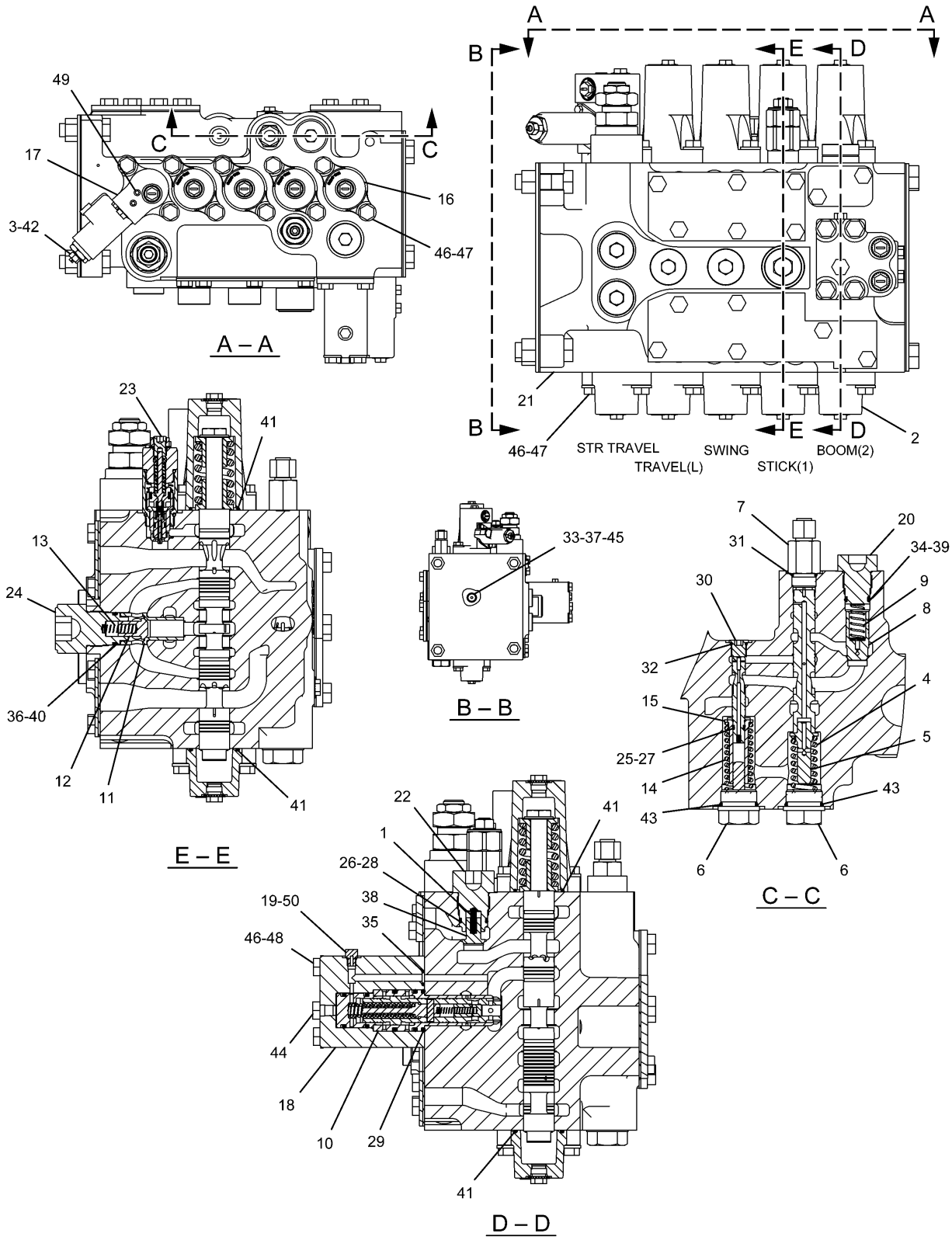

255-5653 VALVE GP-CONTROL (1/2)

Part of 255-5651-Page563
255-5661-Page572,239-8825-Page578,153-5295-Page580,121-1491-Page581

HYDRAULIC SYSTEM

NOTE	No.	PART No.	QTY	PART NAME	NOTE	No.	PART No.	QTY	PART NAME
	1	4T-3148	1	SPRING					
	2	6E-2274	5	COVER					
Y	3	121-1491	1	VALVE GP					
	4	153-5288	1	SPRING					
	5	153-5289	1	GUIDE					
	6	153-5290	2	PLUG					
	7	153-5291	1	CONNECTOR					
	8	153-5292	1	VALVE					
	9	153-5293	1	SPRING					
Y	10	153-5295	1	VALVE GP					
	11	153-5298	1	SLEEVE					
	12	153-5299	1	VALVE					
	13	153-5306	1	SPRING					
	14	153-5311	1	SPRING					
	15	158-8150	1	VALVE GP					
	16	158-8159	4	HOUSING					
	17	158-8206	1	HOUSING					
	18	165-9595	1	COVER					
	19	9S-4180	3	PLUG					
	20	236-6421	1	PLUG					
Y	21	239-8825	1	VALVE GP					
	22	250-2446	1	PLUG					
Y	23	255-5661	1	VALVE GP					
	24	264-9961	1	PLUG					
	25	095-1575	1	SEAL-O-RING (ID=7.80mm)					
	26	095-1590	1	SEAL-O-RING (ID=21.80mm)					
	27	095-1778	1	RING					
	28	095-1787	1	RING					
	29	103-8173	1	SEAL-O-RING (ID=31.70mm)					
	30	123-2485	1	PLUG					
	31	2M-9780	1	SEAL-O-RING (ID=19.18mm)					
	32	3J-1907	1	SEAL-O-RING (ID=11.89mm)					
	33	4I-3569	1	RING					
	34	4I-6397	1	RING					
	35	4J-5309	1	SEAL-O-RING (ID=9.19mm)					
	36	4T-5074	1	RING					
	37	6E-3653	1	PLUG					
	38	6E-5643	1	VALVE					
	39	6V-3922	1	SEAL-O-RING (ID=18.72mm)					
	40	6V-5556	1	SEAL-O-RING (ID=25.07mm)					
	41	6V-5597	4	SEAL-O-RING (ID=40.94mm)					
	42	7I-2272	2	BOLT (L=12mm)					
	43	7M-8485	2	SEAL-O-RING (ID=29.74mm)					
	44	7X-2621	1	BOLT (L=12mm)					
	45	7Y-5219	1	SEAL-O-RING (ID=12.37mm)					
	46	8T-4121	24	WASHER					
	47	8T-4195	20	BOLT (L=30mm)					
	48	8T-6685	4	BOLT (L=110mm)					
	49	8T-6759	2	PLUG					
	50	4J-7533	3	SEAL-O-RING (ID=6.07mm)					

Y—SEE SEPARATE ILLUSTRATION

H90103E 01

255-5653 VALVE GP-CONTROL (1/2)

Part of 255-5651-Page563
255-5661-Page572,239-8825-Page578,153-5295-Page580,121-1491-Page581

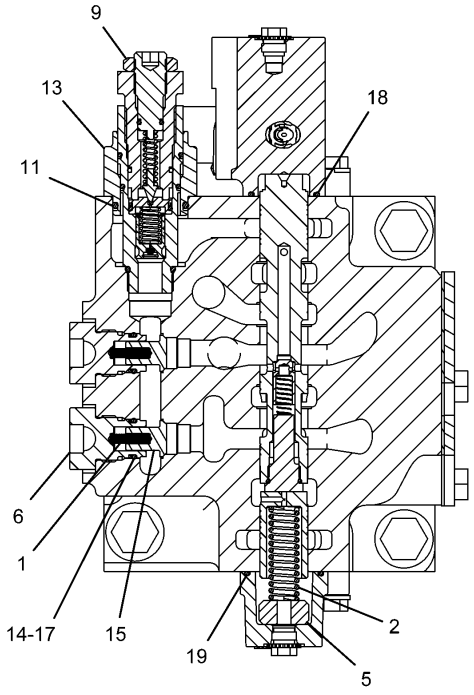

H – H

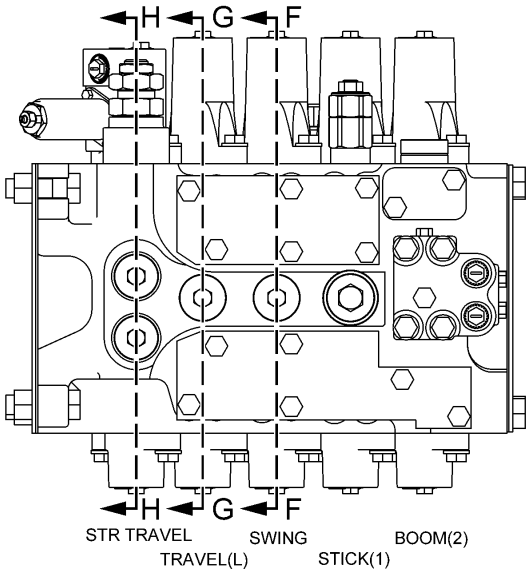

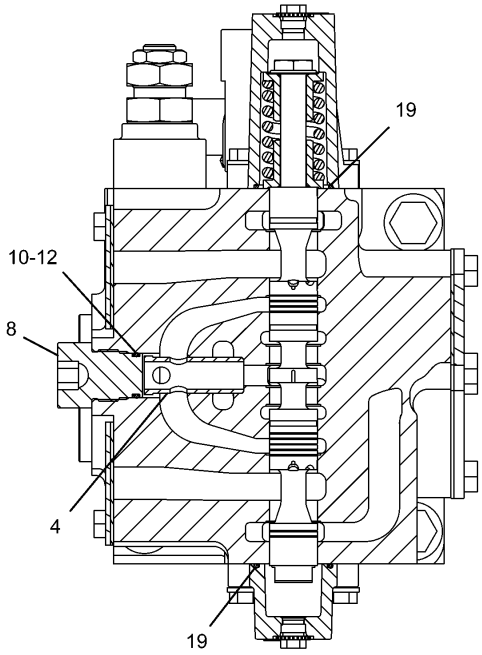

G – G

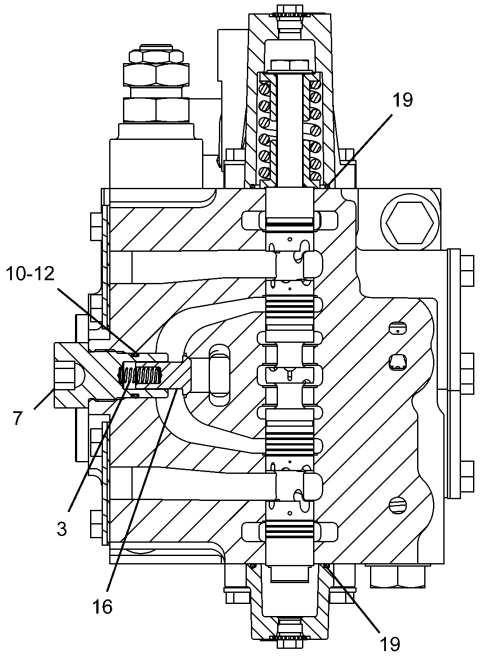

F – F

H90104E 01

255-5653 VALVE GP-CONTROL (2/2)

Part of 255-5651-Page563
255-5660-Page579

HYDRAULIC SYSTEM

NOTE	No.	PART No.	QTY	PART NAME	NOTE	No.	PART No.	QTY	PART NAME
	1	4T-3148	2	SPRING					
	2	6E-5169	1	SPRING					
	3	7I-1248	1	SPRING					
	4	153-5309	1	SLEEVE					
	5	158-8207	1	STOPPER					
	6	201-9263	2	PLUG					
	7	236-6419	1	PLUG					
	8	250-2447	1	PLUG					
Y	9	255-5660	1	VALVE GP					
	10	095-1590	2	SEAL-O-RING (ID=21.80mm)					
	11	095-1603	1	SEAL-O-RING (ID=37.70mm)					
	12	095-1787	2	RING					
	13	103-8177	1	ADAPTER					
	14	4I-6397	2	RING					
	15	6E-5643	2	VALVE					
	16	6E-5731	1	VALVE					
	17	6V-3922	2	SEAL-O-RING (ID=18.72mm)					
	18	6V-5393	1	SEAL-O-RING (ID=36.17mm)					
	19	6V-5597	5	SEAL-O-RING (ID=40.94mm)					

Y—SEE SEPARATE ILLUSTRATION

H90104E 01

255-5653 VALVE GP-CONTROL (2/2)

Part of 255-5651-Page563
255-5660-Page579

HYDRAULIC SYSTEM

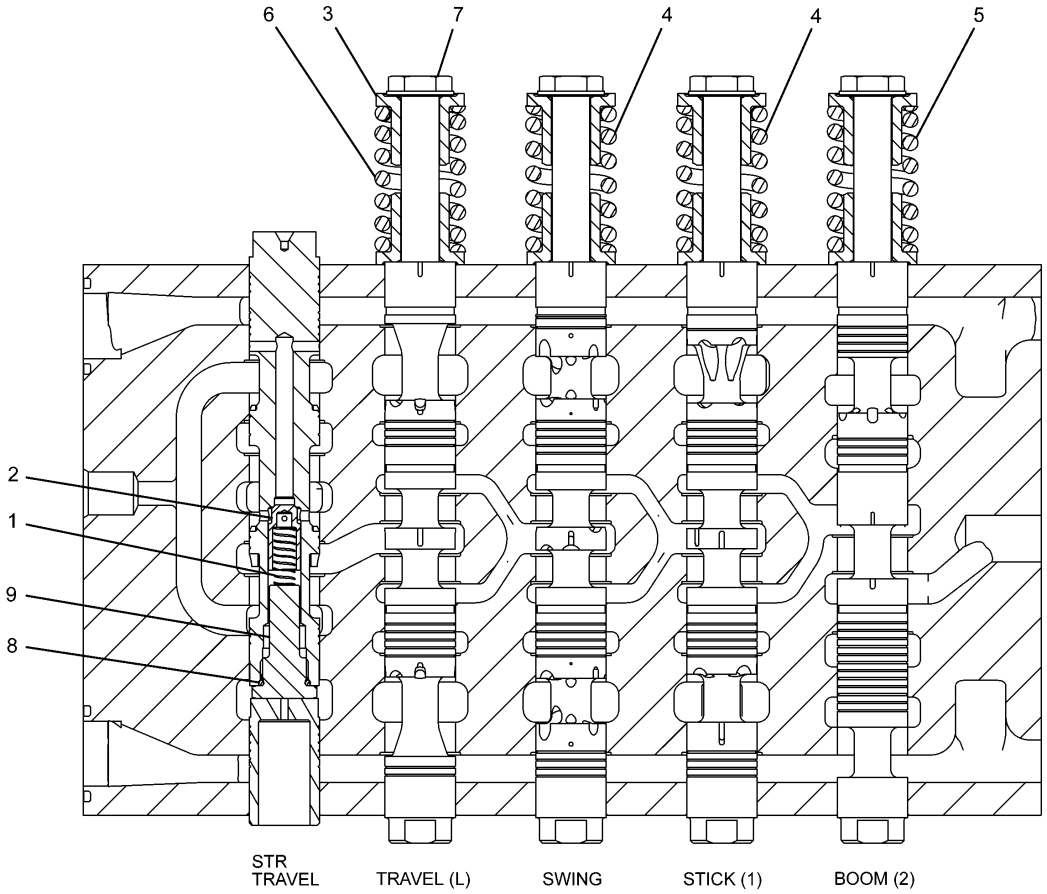

NOTE	No.	PART No.	QTY	PART NAME	NOTE	No.	PART No.	QTY	PART NAME
	1	2S-2596	1	SPRING					
	2	6E-2163	1	VALVE					
	3	6E-2271	8	RETAINER					
	4	104-7293	2	SPRING					
	5	104-7294	1	SPRING					
	6	104-7296	1	SPRING					
	7	153-5276	4	BOLT					
	8	3K-0360	1	SEAL-O-RING (ID=16.36mm)					
	9	158-8135	1	GUIDE					

H91199E 02

239-8825 VALVE GP-CONTROL

Part of 255-5653-Page575

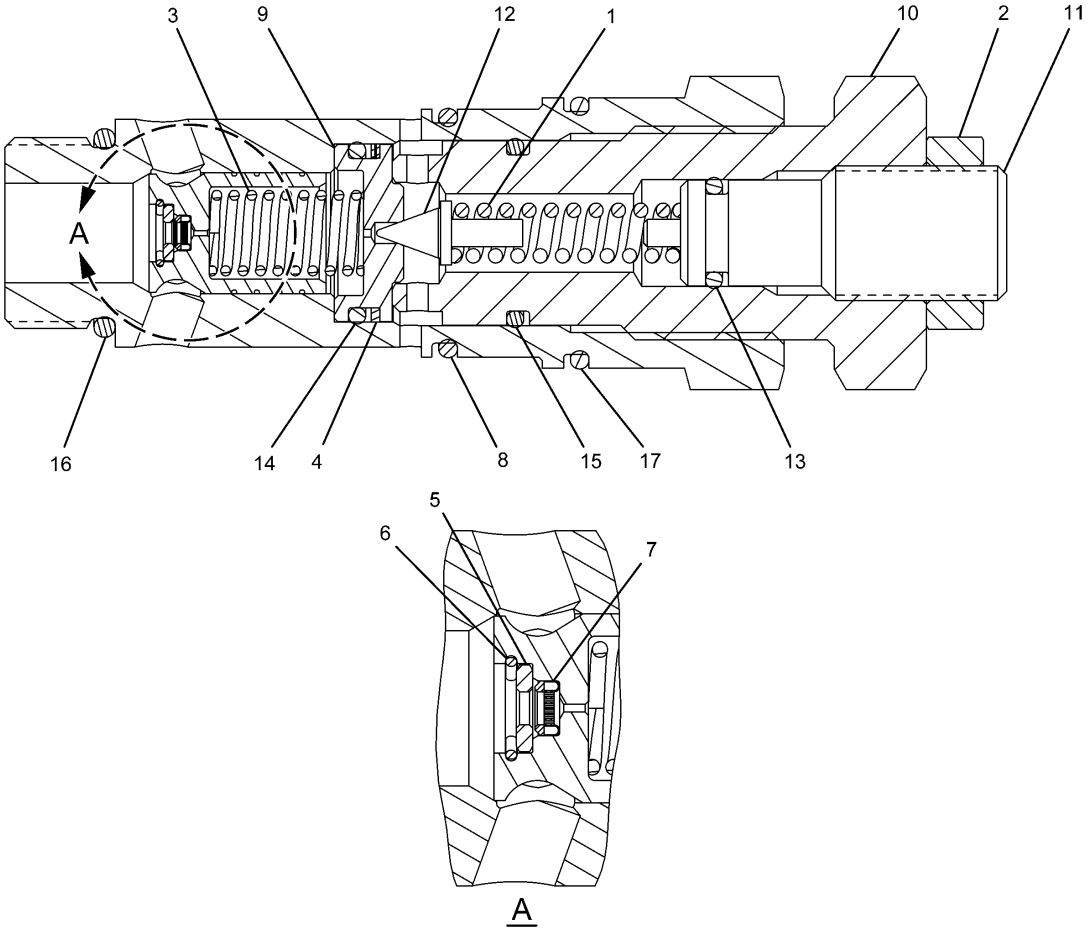

NOTE	No.	PART No.	QTY	PART NAME	NOTE	No.	PART No.	QTY	PART NAME
	1	4I-3510	1	SPRING					
	2	4I-7714	1	NUT					
	3	6I-6795	1	SPRING					
	4	095-1786	1	RING					
	5	107-6540	1	COLLAR					
	6	107-6541	1	RING					
	7	119-5398	1	FILTER					
	8	6V-8978	1	SEAL-O-RING (ID=29.82mm)					
	9	171-0034	1	SEAT					
	10	171-0035	1	HOLDER					
	11	171-0036	1	ADJUSTER					
	12	171-0037	1	VALVE					
	13	095-1579	1	SEAL-O-RING (ID=10.80mm)					
	14	095-1587	1	SEAL-O-RING (ID=20.80mm)					
	15	095-1590	1	SEAL-O-RING (ID=21.80mm)					
	16	3D-2824	1	SEAL-O-RING (ID=23.47mm)					
	17	6V-8218	1	SEAL-O-RING (ID=32.99mm)					

H89454E 00

255-5660 VALVE GP-RELIEF

Part of 255-5653-Page577

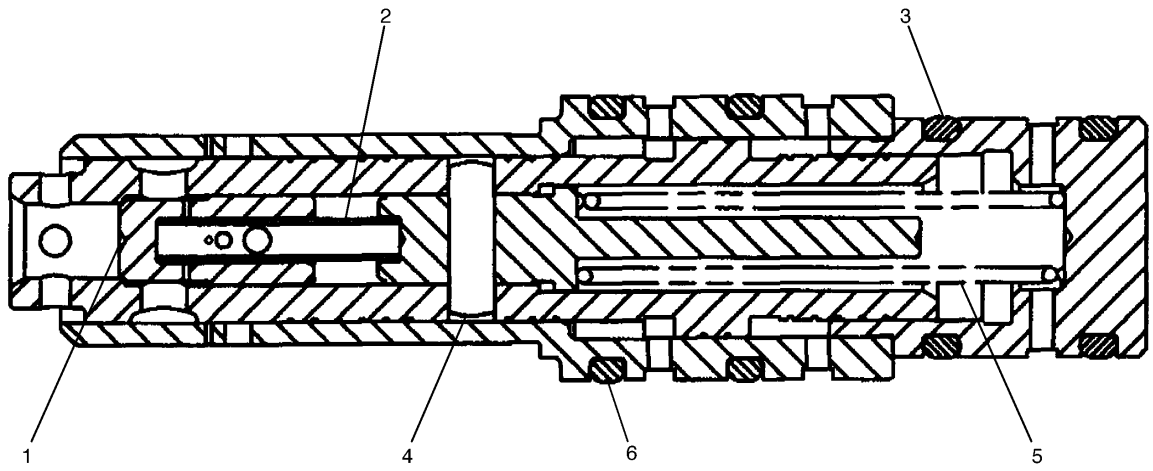

NOTE	No.	PART No.	QTY	PART NAME	NOTE	No.	PART No.	QTY	PART NAME
	1	140-0674	1	VALVE					
	2	158-8186	1	SPRING					
	3	102-0889	2	SEAL-O-RING (ID=25.70mm)					
	4	140-0677	1	PIN					
	5	158-8177	1	SPRING					
	6	103-8173	2	SEAL-O-RING (ID=31.70mm)					

H71000E 03

153-5295 VALVE GP
Part of 255-5653-Page575

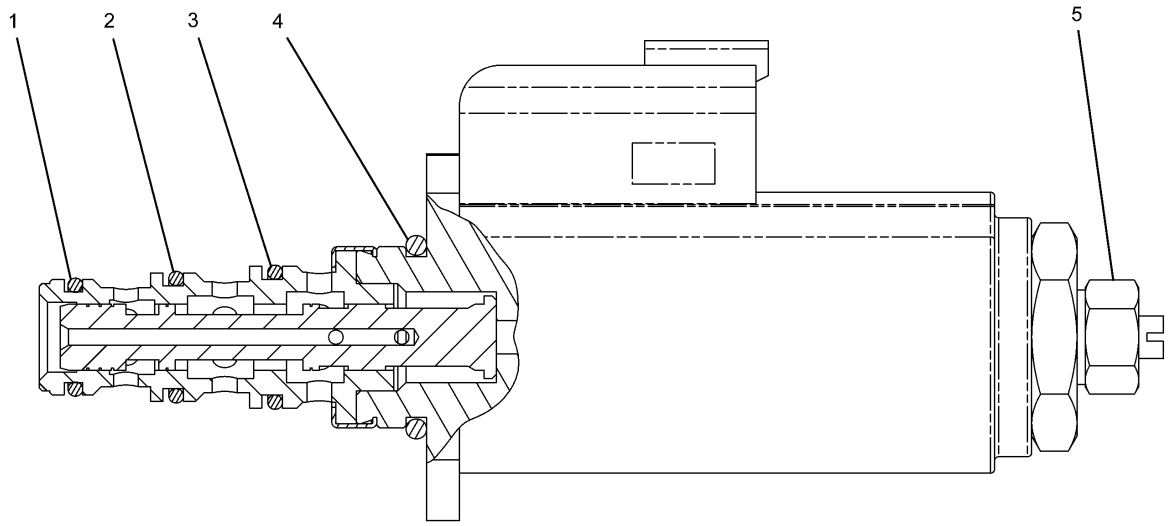

NOTE	No.	PART No.	QTY	PART NAME	NOTE	No.	PART No.	QTY	PART NAME
	1	095-1750	1	SEAL-O-RING (ID=10.82mm)					
	2	6V-8398	1	SEAL-O-RING (OD=16.03mm)					
	3	095-1751	1	SEAL-O-RING (ID=14.00mm)					
	4	095-1586	1	SEAL-O-RING (ID=19.80mm)					
	5	114-0623	1	NUT AS					

H89481E 06

121-1491 VALVE GP-SOLENOID

Part of 255-5653-Page575,239-8697-Page607,239-8998-Page609,165-9549-Page617

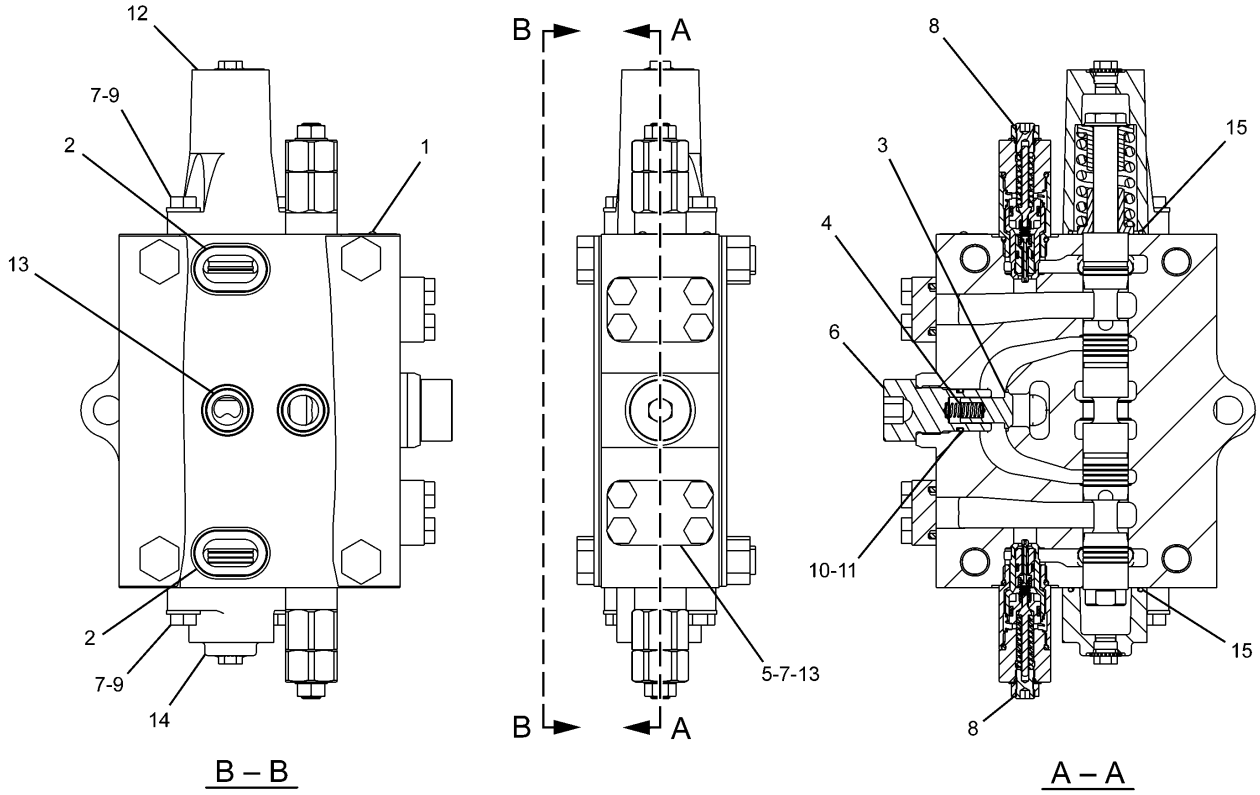

NOTE	No.	PART No.	QTY	PART NAME	NOTE	No.	PART No.	QTY	PART NAME
	1	4B-4158	2	SCREW					
	2	4J-8998	2	SEAL-O-RING (ID=36.09mm)					
	3	6E-5731	1	VALVE					
	4	7I-1248	1	SPRING					
	5	171-0150	2	COVER					
	6	236-6419	1	PLUG					
	7	8T-4195	12	BOLT (L=30mm)					
Y	8	255-5661	2	VALVE GP					
	9	8T-4121	4	WASHER					
	10	095-1590	1	SEAL-O-RING (ID=21.80mm)					
	11	095-1787	1	RING					
	12	158-8159	1	HOUSING					
	13	1P-3702	4	SEAL					
	14	6E-2274	1	COVER					
	15	6V-5597	2	SEAL-O-RING (ID=40.94mm)					

Y—SEE SEPARATE ILLUSTRATION

H91381E 01

259-7378 VALVE GP-CONTROL

Part of 255-5713-Page560,255-5716-Page561
255-5661-Page572
An Attachment

MEMORANDA

HYDRAULIC SYSTEM

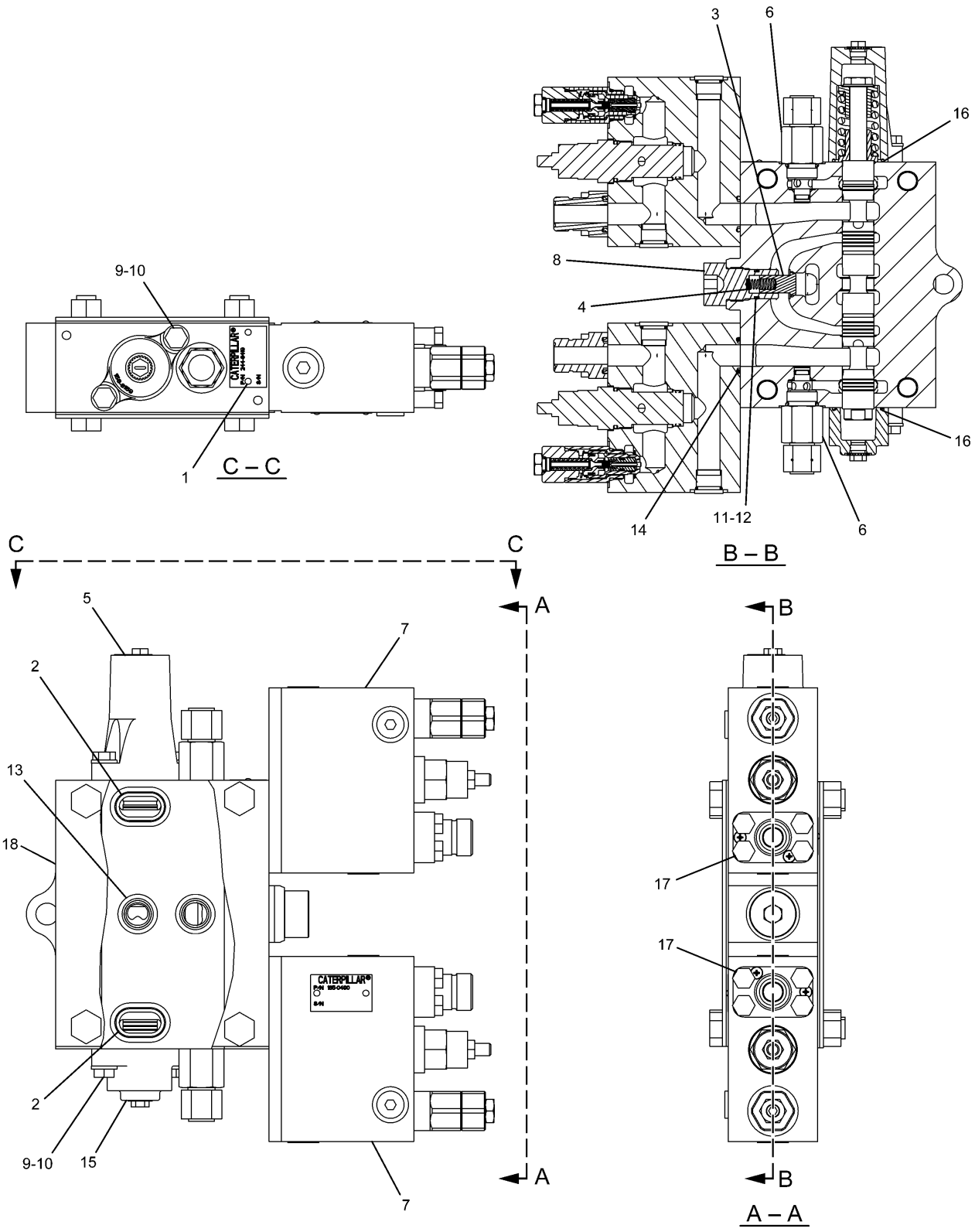

244-8419 VALVE GP-CONTROL
Part of 255-5716-Page561
165-9473-Page586,185-0490-Page587
An Attachment

HYDRAULIC SYSTEM

NOTE	No.	PART No.	QTY	PART NAME	NOTE	No.	PART No.	QTY	PART NAME
	1	4B-4158	2	SCREW					
	2	4J-8998	2	SEAL-O-RING (ID=36.09mm)					
	3	6E-5731	1	VALVE					
	4	7I-1248	1	SPRING					
	5	158-8159	1	HOUSING					
Y	6	165-9473	2	PLUG GP					
Y	7	185-0490	2	VALVE GP					
	8	236-6419	1	PLUG					
	9	8T-4121	4	WASHER					
	10	8T-4195	4	BOLT (L=30mm)					
	11	095-1590	1	SEAL-O-RING (ID=21.80mm)					
	12	095-1787	1	RING					
	13	1P-3702	2	SEAL					
	14	4J-5267	2	SEAL-O-RING (ID=24.99mm)					
	15	6E-2274	1	COVER					
	16	6V-5597	2	SEAL-O-RING (ID=40.94mm)					
	17	7X-2545	8	BOLT (L=150mm)					
	18	244-8400	1	VALVE GP					

Y—SEE SEPARATE ILLUSTRATION

H89514E 00

244-8419 VALVE GP-CONTROL

Part of 255-5716-Page561
165-9473-Page586,185-0490-Page587
An Attachment

HYDRAULIC SYSTEM

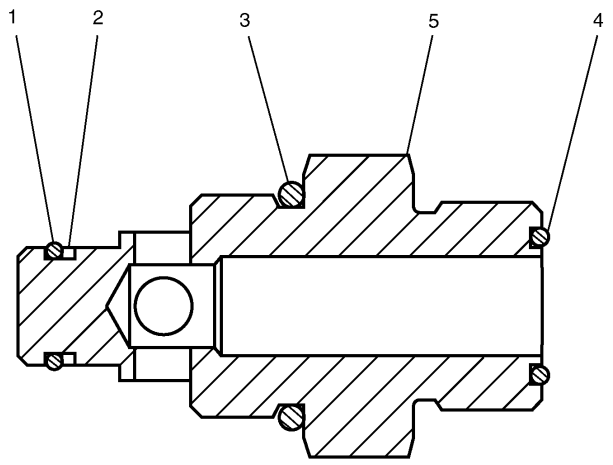

NOTE	No.	PART No.	QTY	PART NAME
	1	6M-5062	1	SEAL-O-RING (ID=10.82mm)
	2	9J-0705	1	RING
	3	3D-2824	1	SEAL-O-RING (ID=23.47mm)
	4	7J-9108	1	SEAL-O-RING (OD=19.28mm)
	5	165-9474	1	PLUG

H67658E 01

165-9473 PLUG GP
Part of 244-8419-Page585
An Attachment

HYDRAULIC SYSTEM

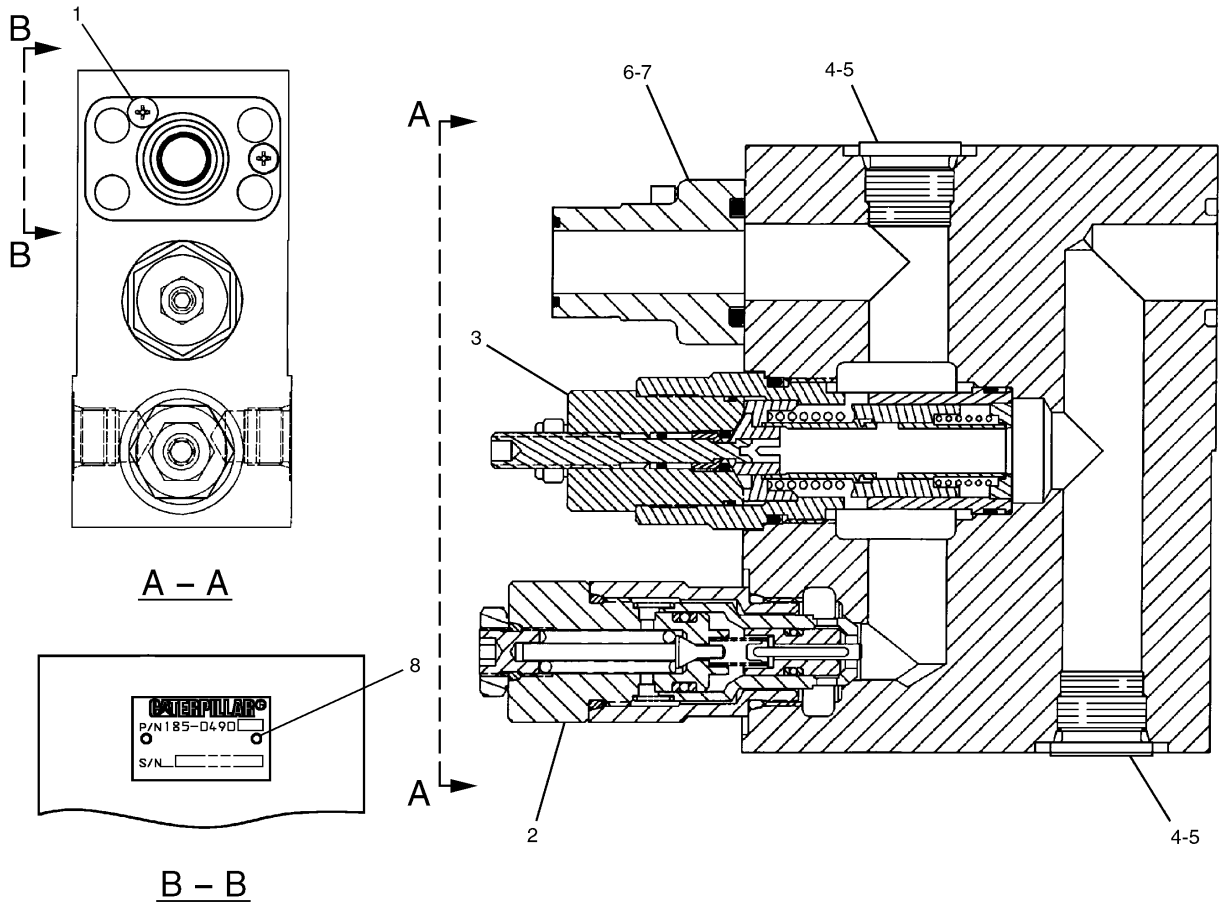

NOTE	No.	PART No.	QTY	PART NAME	NOTE	No.	PART No.	QTY	PART NAME
	1	096-3773	2	SCREW					
Y	2	201-9352	1	VALVE GP					
	3	165-9497	1	VALVE GP					
		185-0400	1	SEAL KIT					
	4	9S-8006	2	PLUG					
	5	2M-9780	2	SEAL-O-RING (ID=19.18mm)					
	6	123-2423	1	FLANGE					
	7	1P-3702	1	SEAL					
	8	4B-4158	2	SCREW					

Y—SEE SEPARATE ILLUSTRATION

H75996E 02

185-0490 VALVE GP-FLOW CONTROL & RELIEF

Part of 244-8419-Page585
201-9352-Page588
An Attachment

HYDRAULIC SYSTEM

Consists of :

			Page
1	105-1321	VALVE GP-RELIEF	589
		-OR-	
1	201-9353	VALVE GP-PILOT RELIEF	590

H74578E 00

201-9352 VALVE GP-RELIEF
Part of 185-0490-Page587
An Attachment

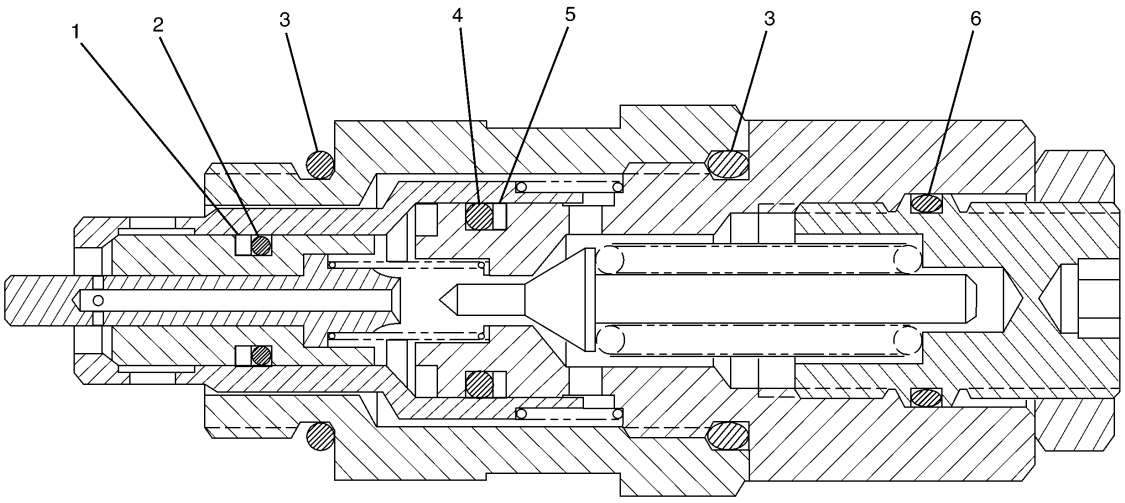

NOTE	No.	PART No.	QTY	PART NAME	NOTE	No.	PART No.	QTY	PART NAME
	1	030-0167	1	RING					
	2	8L-2779	1	SEAL-O-RING (ID=9.25mm)					
	3	033-6036	2	SEAL-O-RING (ID=23.47mm)					
	4	3P-0647	1	SEAL-O-RING (ID=13.94mm)					
	5	9J-0707	1	RING					
	6	8T-7877	1	SEAL-O-RING (ID=17.40mm)					

H74537E 01

105-1321 VALVE GP-RELIEF

Part of 201-9352-Page588
An Attachment

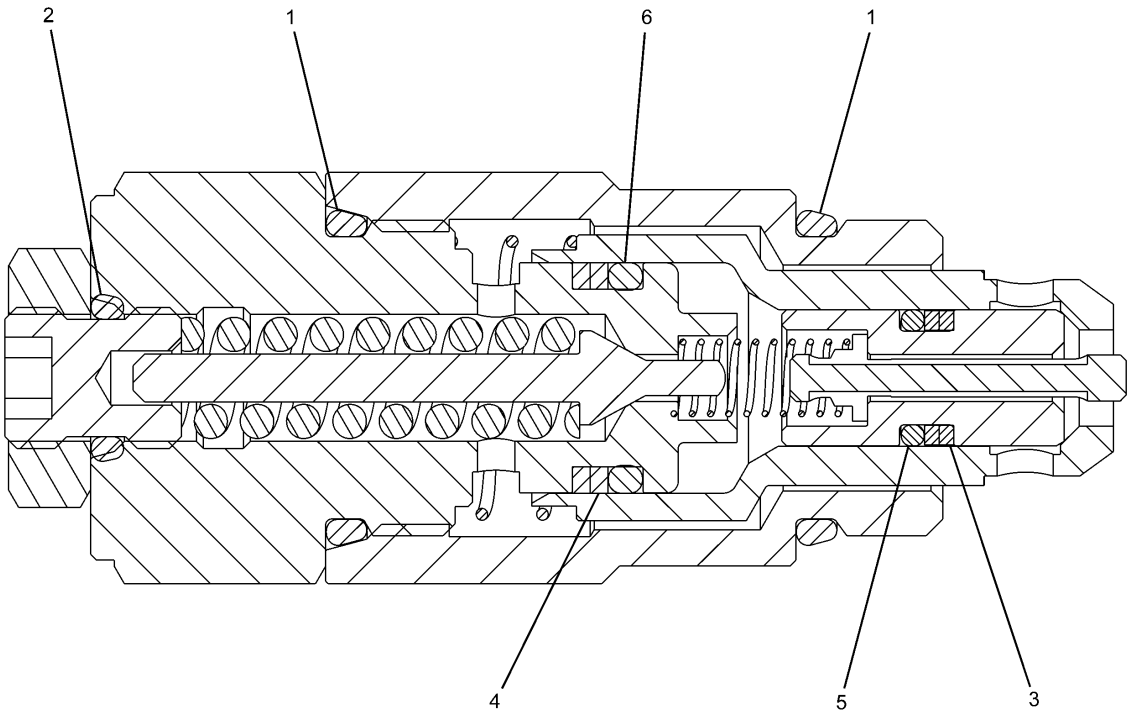

NOTE	No.	PART No.	QTY	PART NAME	NOTE	No.	PART No.	QTY	PART NAME
	1	3D-2824	2	SEAL-O-RING (ID=23.47mm)					
	2	095-1578	1	SEAL-O-RING (ID=9.80mm)					
	3	103-8252	2	RING					
	4	103-8253	2	RING					
	5	103-8254	1	SEAL-O-RING (ID=7.80mm)					
	6	103-8255	1	SEAL-O-RING (ID=14.80mm)					

H88905E 01

201-9353 VALVE GP-PILOT RELIEF

Part of 201-9352-Page588
An Attachment

MEMORANDA

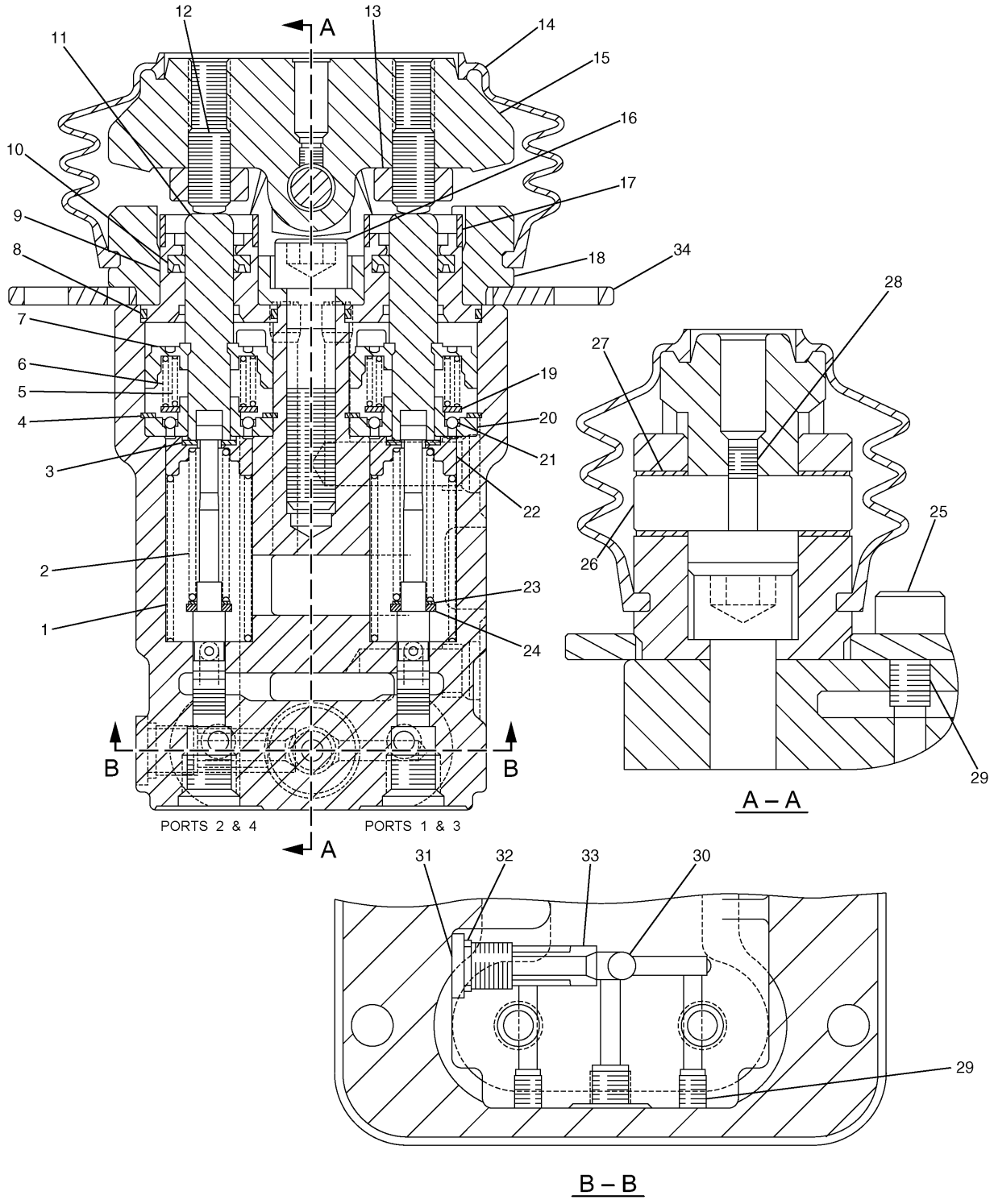

270–5947 VALVE GP–PILOT
Part of 248–9825–Page479

HYDRAULIC SYSTEM

NOTE	No.	PART No.	QTY	PART NAME	NOTE	No.	PART No.	QTY	PART NAME
	1	270-5950	4	SPRING					
	2	131-5818	4	SPRING					
	3	099-6136	8	WASHER					
	4	095-0936	4	RING					
	5	126-1865	4	SPRING					
	6	126-1866	4	SPRING					
	7	270-5949	4	PISTON					
	8	6V-8400	4	SEAL-O-RING (ID=30.01mm)					
	9	165-9554	4	PLUG					
	10	119-5389	4	PACKING					
	11	165-9552	4	PUSHROD					
	12	087-4710	4	SETSCREW					
	13	8T-4133	4	NUT					
	14	087-5709	2	BELLOW					
	15	087-5708	2	PEDAL					
	16	8T-0343	2	BOLT (L=55mm)					
	17	119-5388	4	CAP					
	18	165-9463	2	COVER					
	19	119-5391	4	SEAT					
	20	119-5392	4	BUSHING					
	21	153-5223	12	BALL					
	22	165-9551	4	SEAT					
	23	099-6137	4	WASHER					
	24	099-6141	4	WASHER					
	25	8T-1158	2	BOLT (L=20mm)					
	26	099-6145	2	CAMSHAFT					
	27	099-6144	4	BUSHING					
	28	095-1260	2	SETSCREW					
	29	8T-6759	6	PLUG					
	30	9M-5590	2	BALL					
	31	107-6479	2	PLUG					
	32	095-1578	2	SEAL-O-RING (ID=9.80mm)					
	33	165-9464	2	SEAT					
	34	165-9553	1	COVER					

H92135E 00

270-5947 VALVE GP-PILOT

Part of 248-9825-Page479

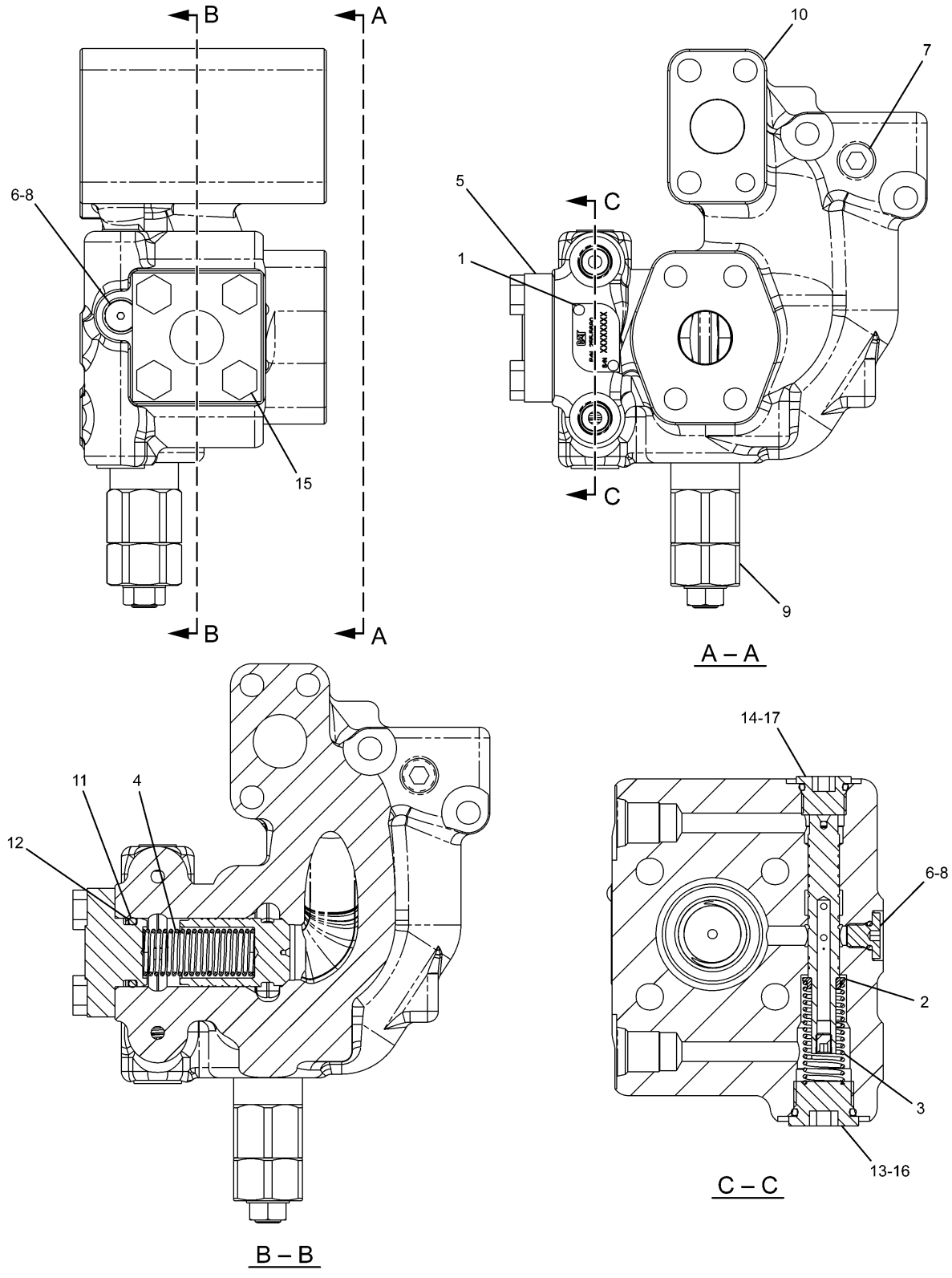

255-5680 VALVE GP-PILOT

Part of 245-5179-Page507
255-5662-Page598

HYDRAULIC SYSTEM

NOTE	No.	PART No.	QTY	PART NAME	NOTE	No.	PART No.	QTY	PART NAME
	1	4B-4158	2	SCREW					
	2	4I-8965	1	GUIDE					
	3	5I-8511	1	SPRING					
	4	087-5166	1	SPRING					
	5	118-4044	1	COVER					
	6	4J-7533	2	SEAL-O-RING (ID=6.07mm)					
	7	147-4184	1	PLUG					
	8	225-4804	2	PLUG					
Y	9	255-5662	1	VALVE GP					
	10	255-5883	1	VALVE GP					
	11	095-1594	1	SEAL-O-RING (ID=25.70mm)					
	12	095-1789	1	RING					
	13	9S-8005	1	PLUG					
	14	9S-8004	1	PLUG					
	15	8T-4136	4	BOLT (L=25mm)					
	16	3K-0360	1	SEAL-O-RING (ID=16.36mm)					
	17	3J-1907	1	SEAL-O-RING (ID=11.89mm)					

Y—SEE SEPARATE ILLUSTRATION

H91388E 01

255-5680 VALVE GP-PILOT

Part of 245-5179-Page507
255-5662-Page598

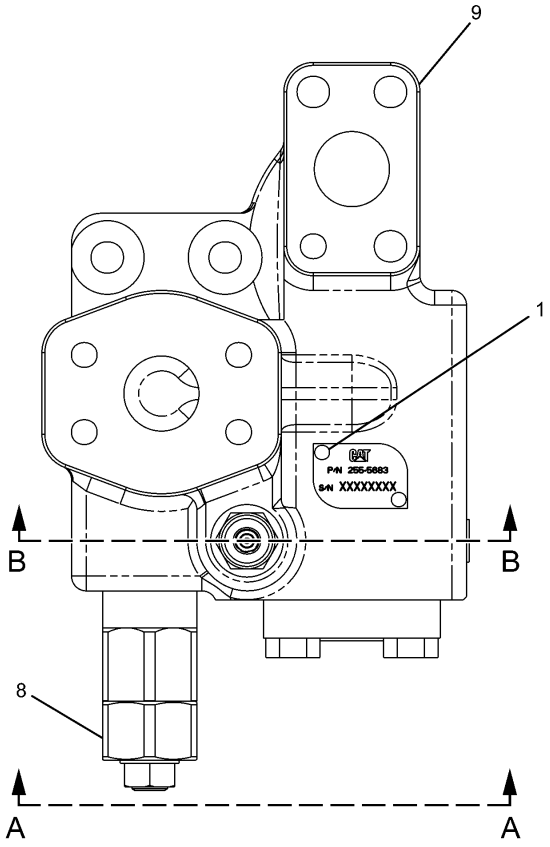

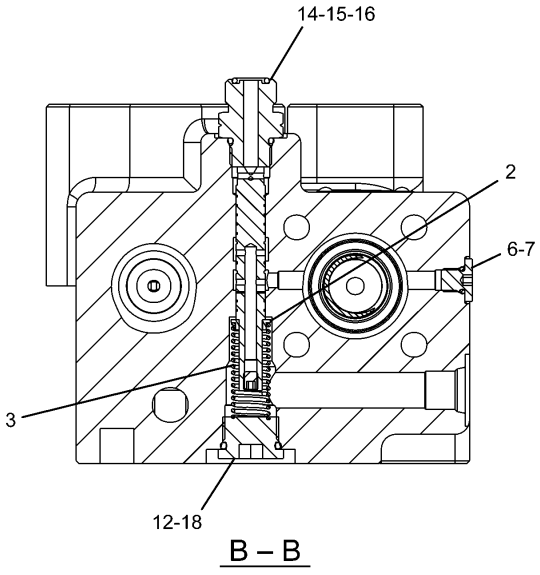

B – B

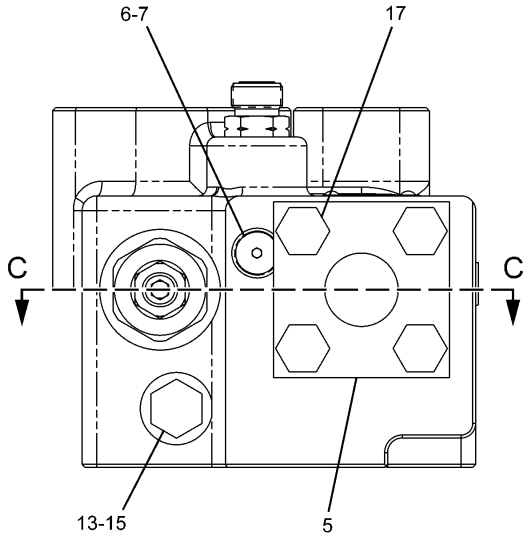

A – A

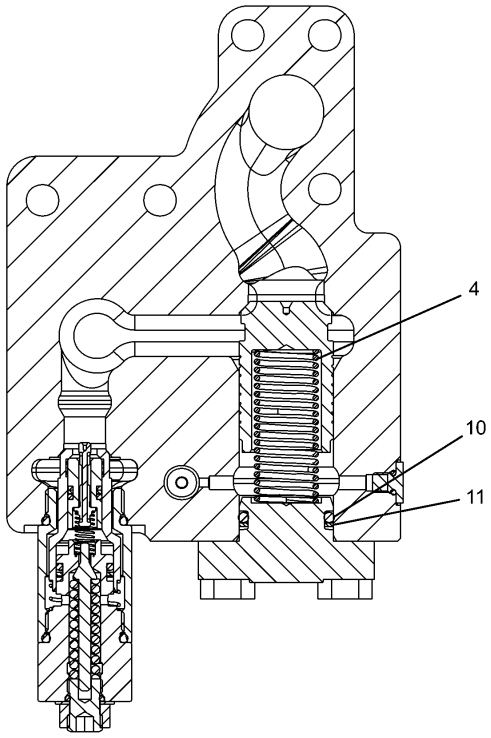

C – C

H91389E 01

255-5683 VALVE GP-PILOT

Part of 245-5179-Page507
255-5662-Page598

HYDRAULIC SYSTEM

NOTE	No.	PART No.	QTY	PART NAME	NOTE	No.	PART No.	QTY	PART NAME
	1	4B-4158	2	SCREW					
	2	4I-8965	1	GUIDE					
	3	5I-8511	1	SPRING					
	4	087-5166	1	SPRING					
	5	118-4044	1	COVER					
	6	4J-7533	2	SEAL-O-RING (ID=6.07mm)					
	7	225-4804	2	PLUG					
Y	8	255-5662	1	VALVE GP					
	9	255-5882	1	VALVE GP					
	10	095-1594	1	SEAL-O-RING (ID=25.70mm)					
	11	095-1789	1	RING					
	12	9S-8005	1	PLUG					
	13	9S-4191	1	PLUG					
	14	190-7865	1	CONNECTOR					
	15	3J-1907	2	SEAL-O-RING (ID=11.89mm)					
	16	6V-8397	1	SEAL-O-RING (OD=12.83mm)					
	17	8T-4136	4	BOLT (L=25mm)					
	18	3K-0360	1	SEAL-O-RING (ID=16.36mm)					

Y—SEE SEPARATE ILLUSTRATION

H91389E 01

255-5683 VALVE GP-PILOT

Part of 245-5179-Page507
255-5662-Page598

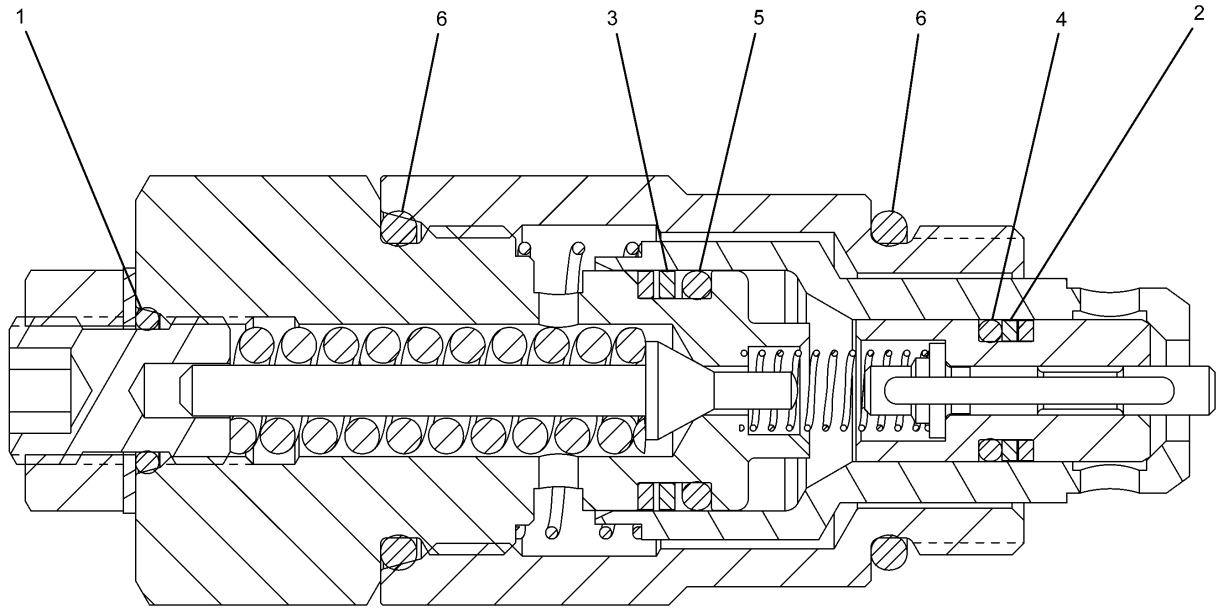

NOTE	No.	PART No.	QTY	PART NAME	NOTE	No.	PART No.	QTY	PART NAME
	1	095-1578	1	SEAL-O-RING (ID=9.80mm)					
	2	103-8252	2	RING					
	3	103-8253	2	RING					
	4	103-8254	1	SEAL-O-RING (ID=7.80mm)					
	5	103-8255	1	SEAL-O-RING (ID=14.80mm)					
	6	3D-2824	2	SEAL-O-RING (ID=23.47mm)					

H89459E 00

255-5662 VALVE GP-PILOT RELIEF

Part of 255-5680-Page595,255-5683-Page597

MEMORANDA

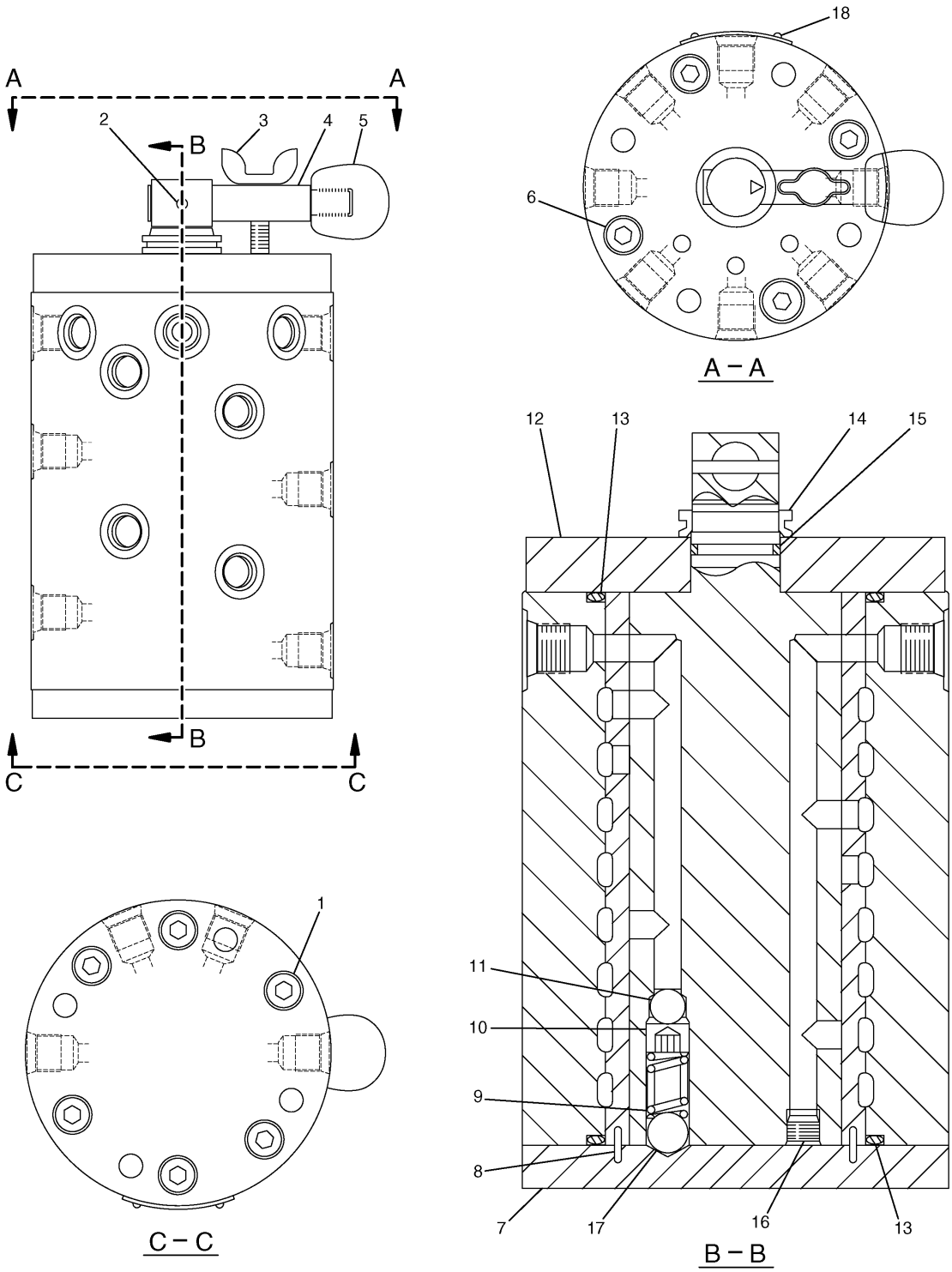

H67326E 01

165-9470 VALVE GP-PILOT
Part of 255-1656-Page501
An Attachment

HYDRAULIC SYSTEM

NOTE	No.	PART No.	QTY	PART NAME	NOTE	No.	PART No.	QTY	PART NAME
	1	6V-8202	6	BOLT (L=16mm)					
	2	085-7083	1	PIN					
	3	085-7084	1	BOLT					
	4	085-7080	1	LEVER					
	5	085-7079	1	GRIP					
	6	6V-3938	4	BOLT (L=20mm)					
	7	171-0185	1	COVER					
	8	085-7081	4	NEEDLE					
	9	171-0184	1	SPRING					
	10	8T-9533	1	SETSCREW					
	11	006-6803	1	BALL					
	12	171-0183	1	COVER					
	13	095-1710	2	SEAL-O-RING (ID=79.40mm)					
	14	6I-6923	1	SEAL					
	15	095-1590	1	SEAL-O-RING (ID=21.80mm)					
	16	095-0965	7	PLUG					
	17	1F-0425	1	BALL					
	18	126-9993	2	SCREW					

H67326E 01

165-9470 VALVE GP-PILOT

Part of 255-1656-Page501
An Attachment

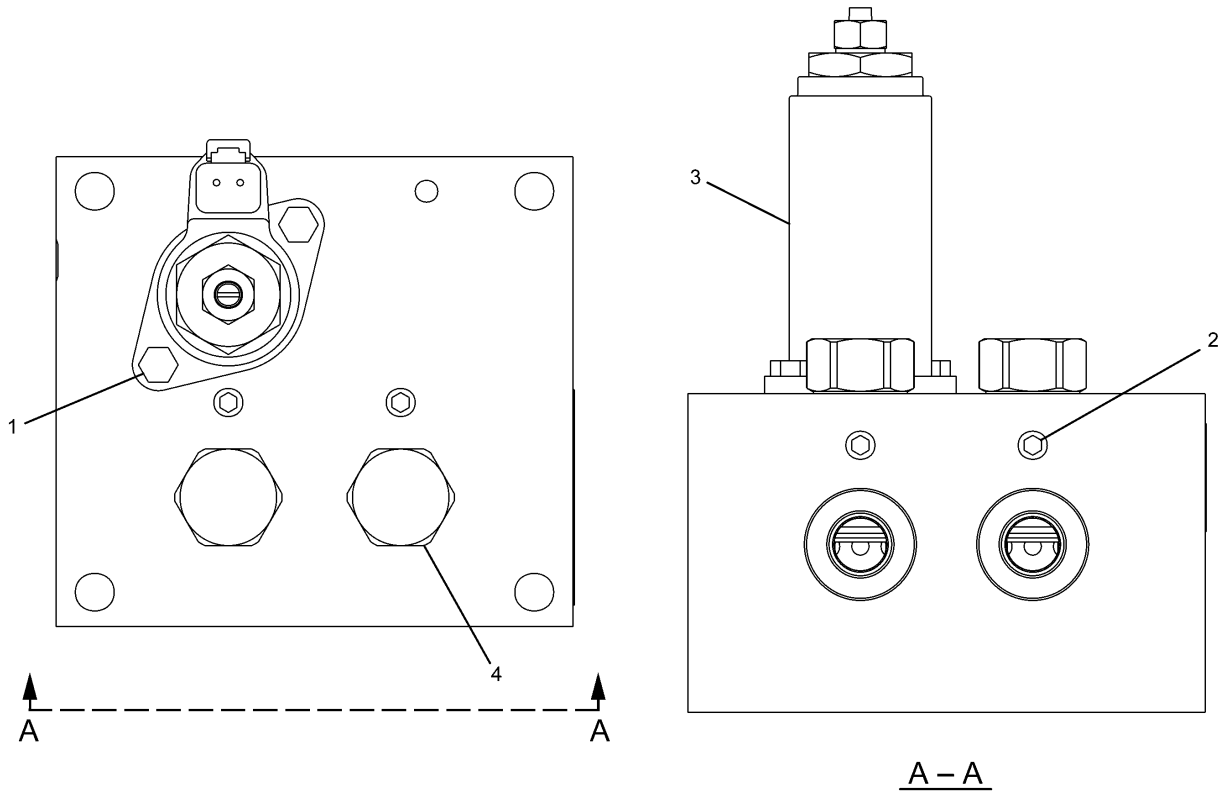

NOTE	No.	PART No.	QTY	PART NAME	NOTE	No.	PART No.	QTY	PART NAME
	1	8T-0288	2	BOLT (L=12mm)					
	2	7I-8084	6	PLUG					
Y	3	111-9916	1	VALVE GP					
	4	171-0198	2	VALVE GP					
		185-0407	1	SEAL KIT					

Y—SEE SEPARATE ILLUSTRATION

H91450E 02

171-0188 VALVE GP-CONTROL

Part of 255-1801-Page489,255-1661-Page491,255-1803-Page495,255-1664-Page499
111-9916-Page603
An Attachment

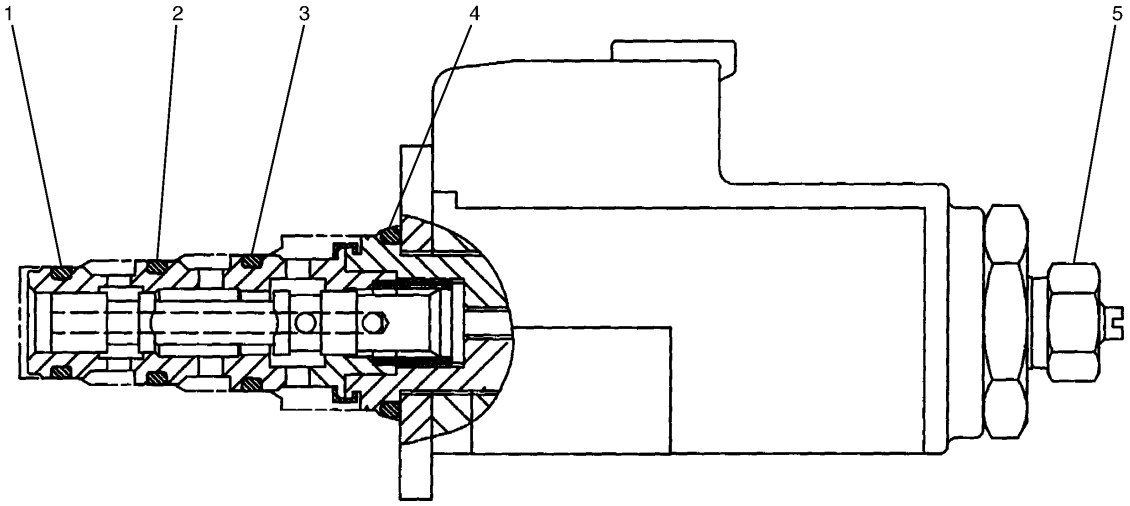

NOTE	No.	PART No.	QTY	PART NAME	NOTE	No.	PART No.	QTY	PART NAME
	1	6M-5062	1	SEAL-O-RING (ID=10.82mm)					
	2	4K-2039	1	SEAL-O-RING (ID=12.42mm)					
	3	5L-4758	1	SEAL-O-RING (ID=14.00mm)					
	4	095-1586	1	SEAL-O-RING (ID=19.80mm)					
	5	114-0623	1	NUT AS					

H67281E 02

111-9916 VALVE GP-PRESS REDUCING SOL

Part of 256-0074-Page383,171-0188-Page602

HYDRAULIC SYSTEM

Consists of :

			Page
1	239-8697	VALVE GP-SELECTOR.....	606
		-OR-	
1	239-8998	VALVE GP-SELECTOR.....	608

H87213E 02

215-5037 VALVE GP-SELECTOR
Part of 248-9827-Page485

MEMORANDA

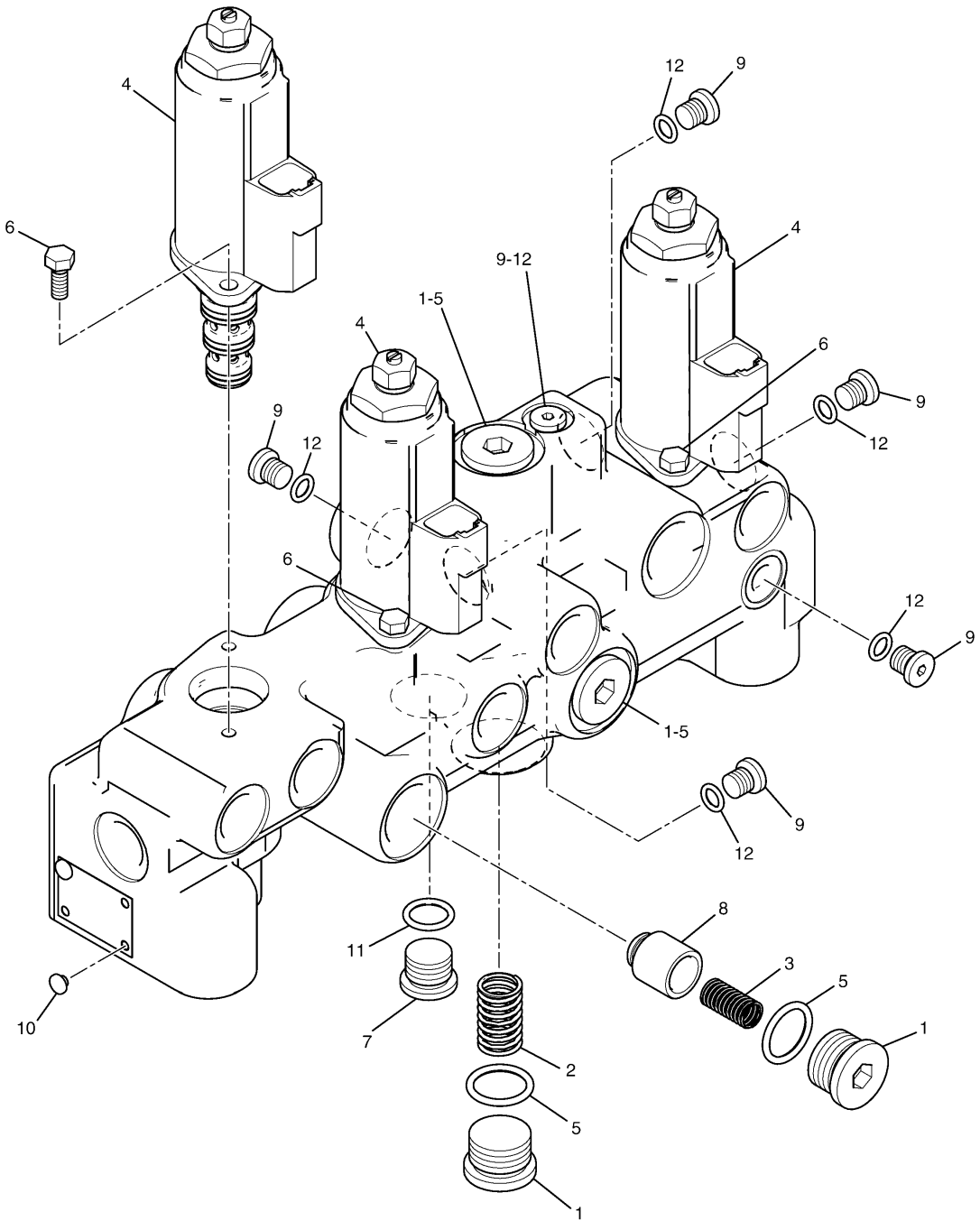

239-8697 VALVE GP-SELECTOR
Part of 215-5037-Page604
121-1491-Page581

HYDRAULIC SYSTEM

NOTE	No.	PART No.	QTY	PART NAME	NOTE	No.	PART No.	QTY	PART NAME
	1	9S-8005	4	PLUG					
	2	197-0273	1	SPRING					
	3	197-0199	1	SPRING					
Y	4	121-1491	3	VALVE GP					
	5	3K-0360	4	SEAL-O-RING (ID=16.36mm)					
	6	7I-2272	6	BOLT (L=12mm)					
	7	9S-8004	1	PLUG					
	8	197-0196	1	VALVE					
	9	9S-8001	6	PLUG					
	10	4B-4158	2	SCREW					
	11	3J-1907	1	SEAL-O-RING (ID=11.89mm)					
	12	4J-7533	6	SEAL-O-RING (ID=6.07mm)					

Y—SEE SEPARATE ILLUSTRATION

H87214E 00

239-8697 VALVE GP-SELECTOR

Part of 215-5037-Page604
121-1491-Page581

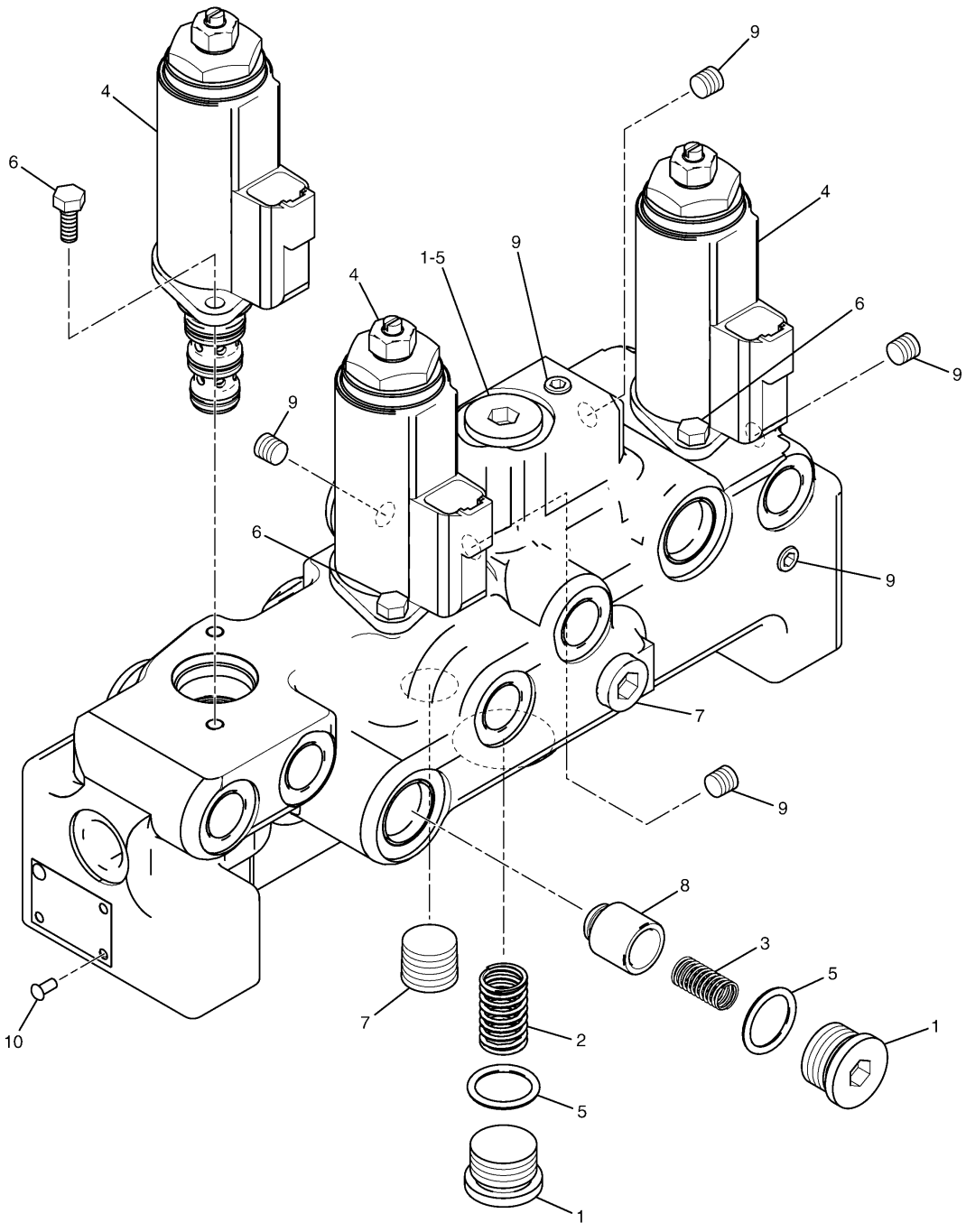

239-8998 VALVE GP-SELECTOR
Part of 215-5037-Page604
121-1491-Page581

HYDRAULIC SYSTEM

NOTE	No.	PART No.	QTY	PART NAME	NOTE	No.	PART No.	QTY	PART NAME
	1	9S-8005	3	PLUG					
	2	197-0273	1	SPRING					
	3	197-0199	1	SPRING					
Y	4	121-1491	3	VALVE GP					
	5	3K-0360	3	SEAL-O-RING (ID=16.36mm)					
	6	7I-2272	6	BOLT (L=12mm)					
	7	7M-7410	2	PLUG					
	8	197-0196	1	VALVE					
	9	8T-6759	6	PLUG					
	10	4B-4158	2	SCREW					

Y—SEE SEPARATE ILLUSTRATION

H87218E 00

239-8998 VALVE GP-SELECTOR

Part of 215-5037-Page604
121-1491-Page581

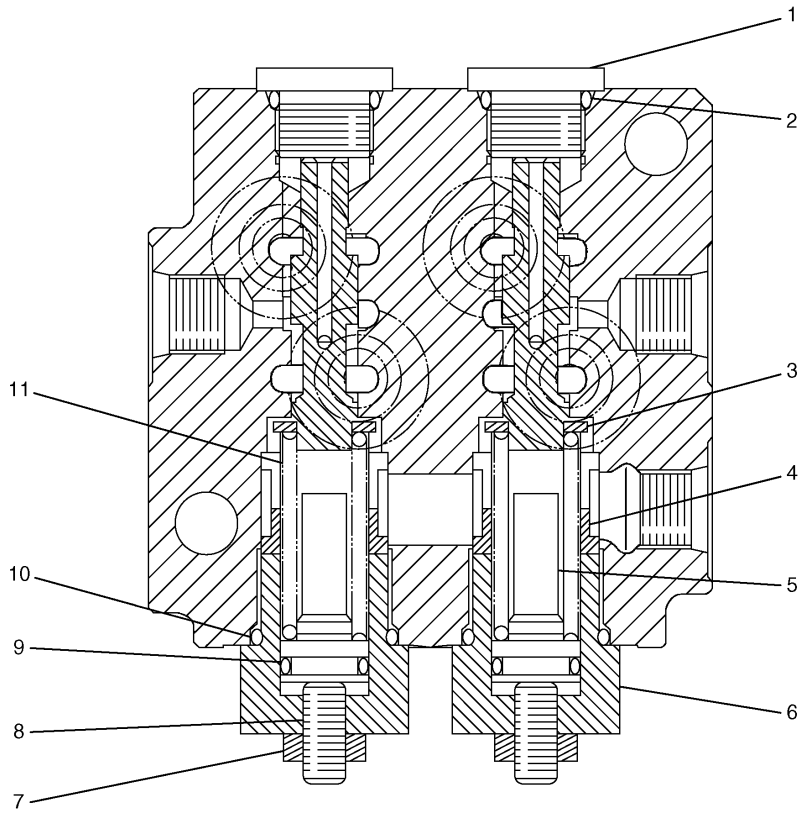

NOTE	No.	PART No.	QTY	PART NAME	NOTE	No.	PART No.	QTY	PART NAME
	1	111-9998	2	PLUG					
	2	095-1582	2	SEAL-O-RING (ID=13.80mm)					
	3	171-0127	2	SEAT					
	4	185-0423	2	STOPPER					
	5	171-0126	2	SEAT					
	6	171-0123	2	PLUG					
	7	5C-7261	2	NUT					
	8	171-0124	2	SETSCREW					
	9	095-1580	2	SEAL-O-RING (ID=11.80mm)					
	10	095-1590	2	SEAL-O-RING (ID=21.80mm)					
	11	171-0128	2	SPRING					

H85396E 00

232-4102 VALVE GP-PRESSURE REDUCING

Part of 248-9827-Page483

MEMORANDA

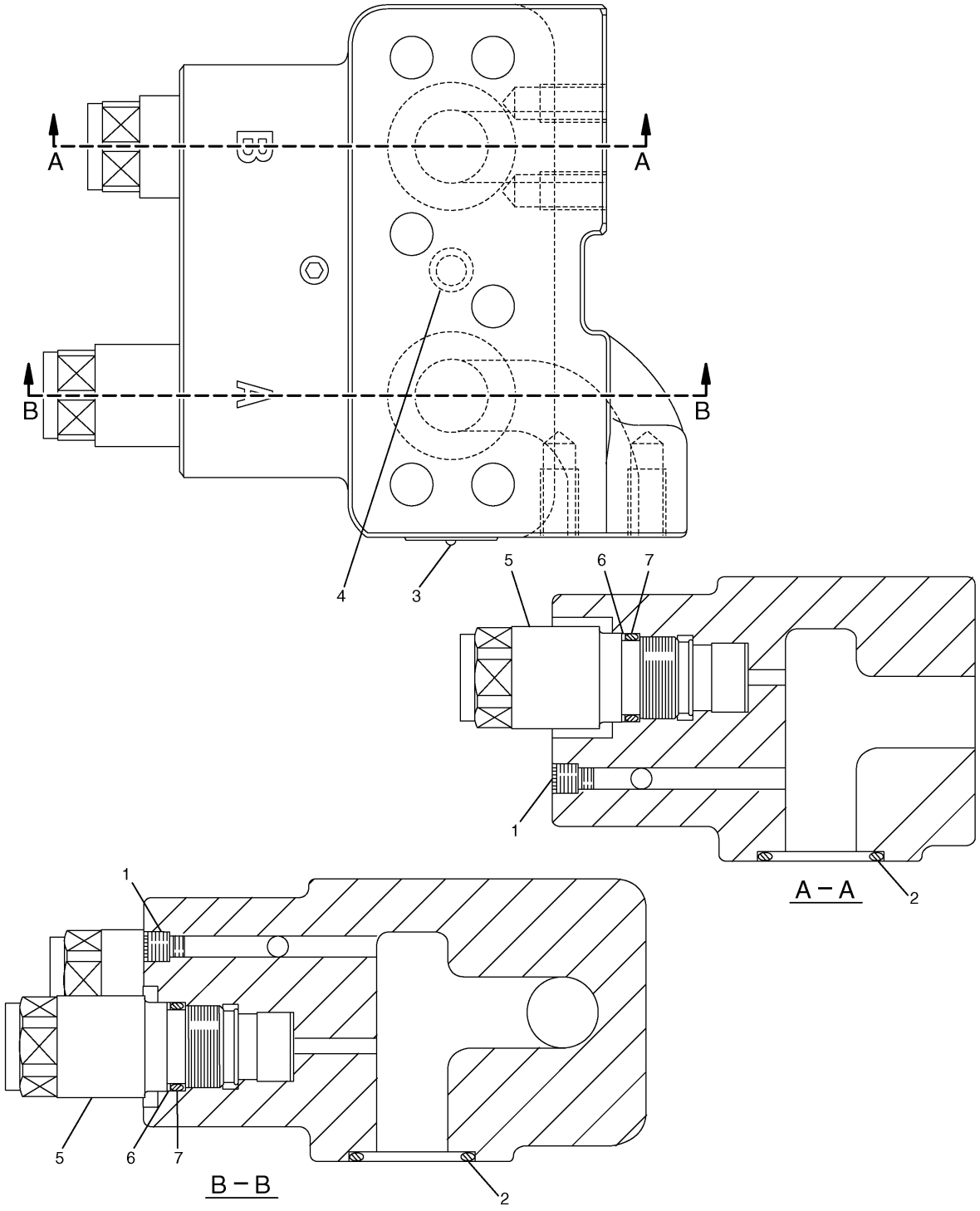

H67322E 01

158-9085 VALVE GP-CUSHION CROSSOVER RLF
Part of 259-0680-Page529
An Attachment

HYDRAULIC SYSTEM

NOTE	No.	PART No.	QTY	PART NAME	NOTE	No.	PART No.	QTY	PART NAME
	1	8T-6759	4	PLUG					
	2	095-1698	2	SEAL-O-RING (ID=29.40mm)					
	3	5B-9304	2	SCREW					
	4	095-1576	1	SEAL-O-RING (ID=8.80mm)					
	5	173-3536	2	VALVE GP					
	6	095-1785	1	RING					
	7	095-1586	1	SEAL-O-RING (ID=19.80mm)					

H67322E 01

158-9085 VALVE GP-CUSHION CROSSOVER RLF

Part of 259-0680-Page529
An Attachment

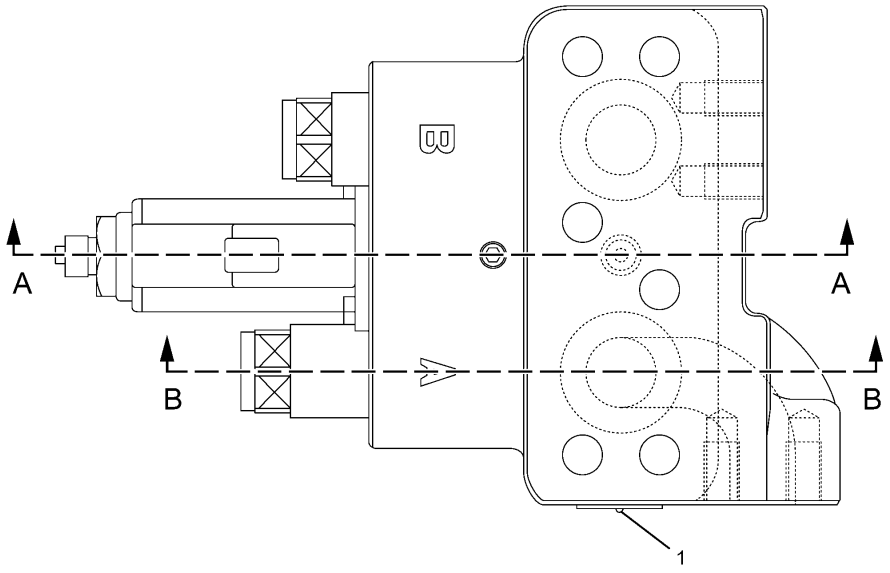

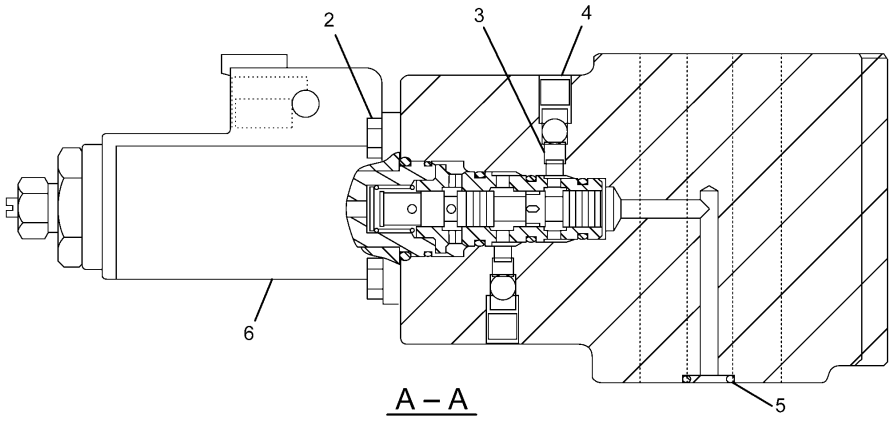

A – A

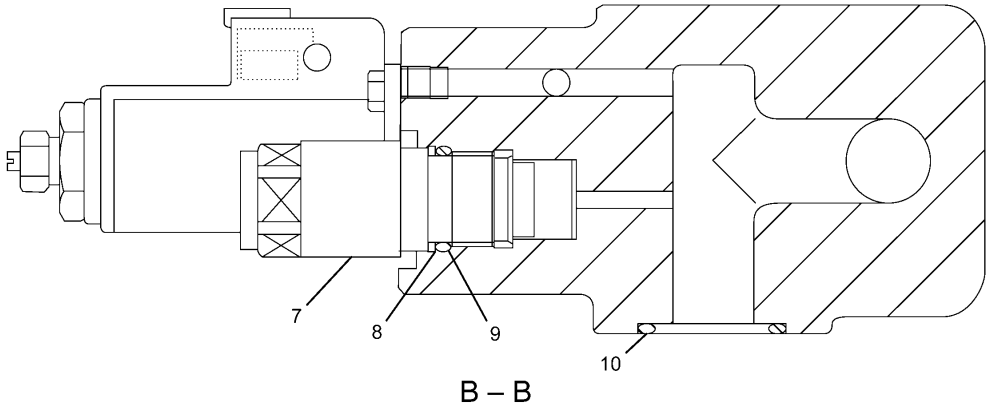

B – B

H88897E 01

158-9090 VALVE GP-SOLENOID

Part of 245-5178-Page503
116-3526-Page616

HYDRAULIC SYSTEM

NOTE	No.	PART No.	QTY	PART NAME	NOTE	No.	PART No.	QTY	PART NAME
	1	5B-9304	2	SCREW					
	2	8T-0288	2	BOLT (L=12mm)					
	3	133-6788	2	ORIFICE					
	4	8T-6759	6	PLUG					
	5	095-1576	1	SEAL-O-RING (ID=8.80mm)					
Y	6	116-3526	1	VALVE GP					
	7	173-3536	2	VALVE GP					
	8	095-1785	1	RING					
	9	095-1586	1	SEAL-O-RING (ID=19.80mm)					
	10	095-1698	2	SEAL-O-RING (ID=29.40mm)					

Y—SEE SEPARATE ILLUSTRATION

H88897E 01

158-9090 VALVE GP-SOLENOID

Part of 245-5178-Page503
116-3526-Page616

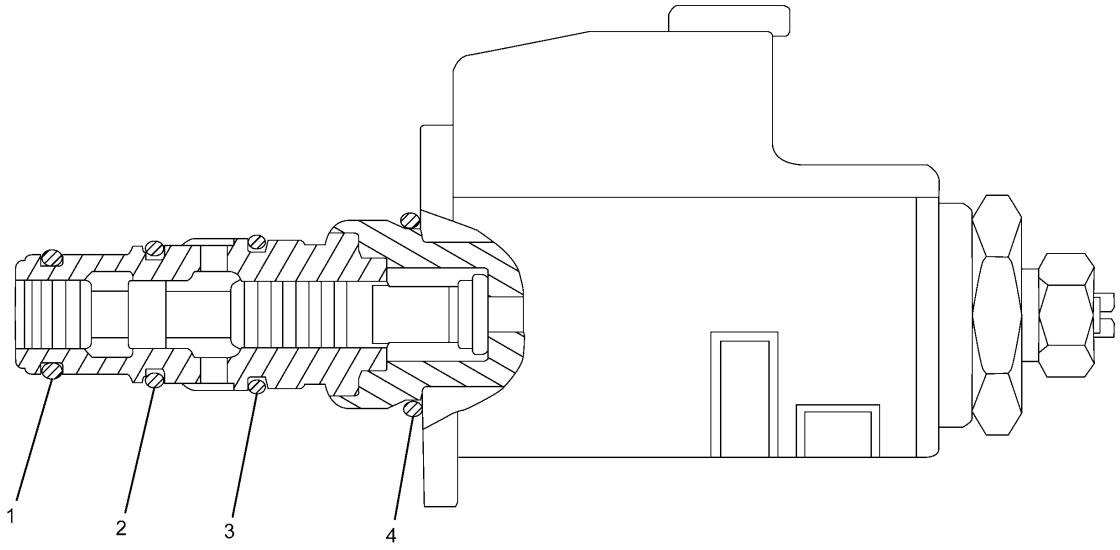

NOTE	No.	PART No.	QTY	PART NAME	NOTE	No.	PART No.	QTY	PART NAME
	1	126-6514	1	SEAL-O-RING (ID=10.82mm)					
	2	126-6515	1	SEAL-O-RING (ID=12.42mm)					
	3	126-6516	1	SEAL-O-RING (ID=14.00mm)					
	4	095-1586	1	SEAL-O-RING (ID=19.80mm)					

H88821E 01

116-3526 VALVE GP-SOLENOID

Part of 158-9090-Page615

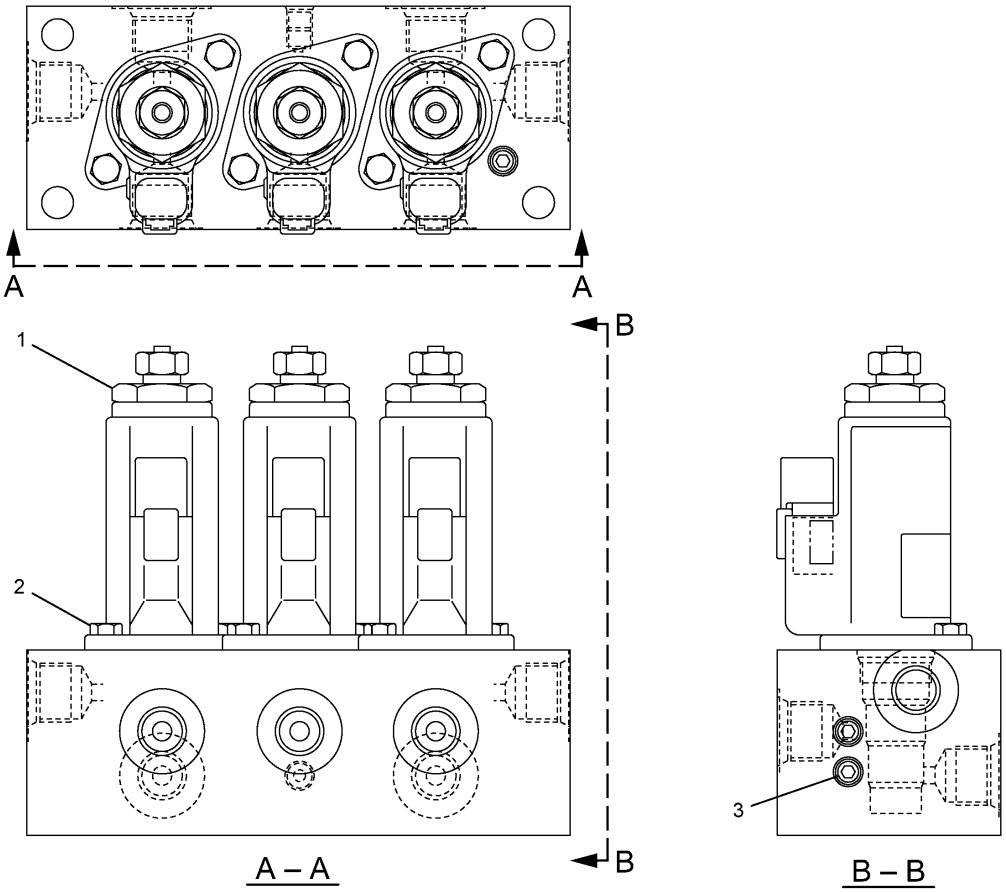

NOTE	No.	PART No.	QTY	PART NAME	NOTE	No.	PART No.	QTY	PART NAME
Y	1	121-1491	3	VALVE GP					
	2	8T-0288	6	BOLT (L=12mm)					
	3	7I-8084	4	PLUG					

Y—SEE SEPARATE ILLUSTRATION

H90190E 03

165-9549 VALVE GP-SOLENOID

Part of 255-1803-Page495,255-1664-Page499
121-1491-Page581
An Attachment

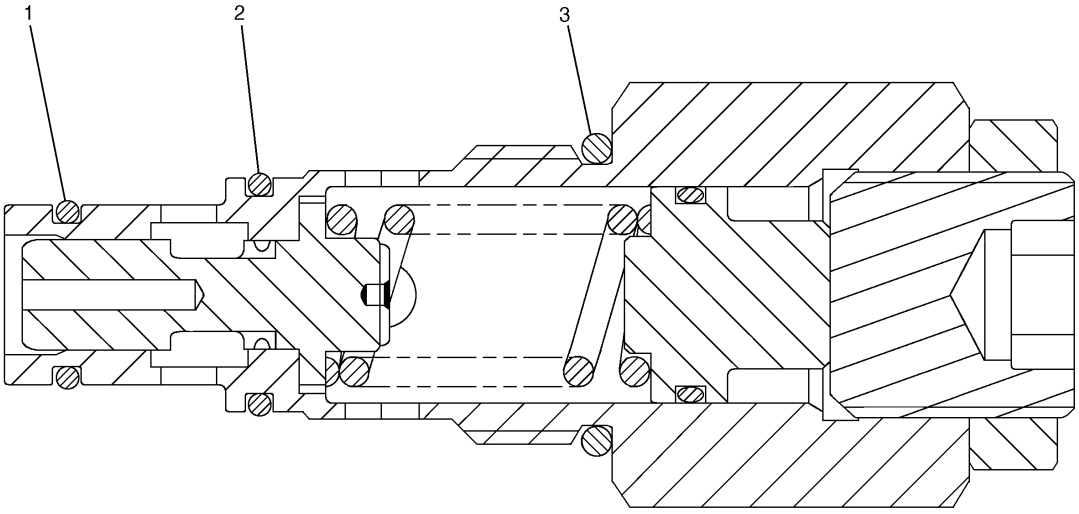

NOTE	No.	PART No.	QTY	PART NAME	NOTE	No.	PART No.	QTY	PART NAME
	1	095-1584	1	SEAL-O-RING (ID=15.80mm)					
	2	095-1590	1	SEAL-O-RING (ID=21.80mm)					
	3	095-1596	1	SEAL-O-RING (ID=28.70mm)					

H81796E 00

215-4909 VALVE GP-RELIEF

Direct Operated

Part of 158-8987-Page371

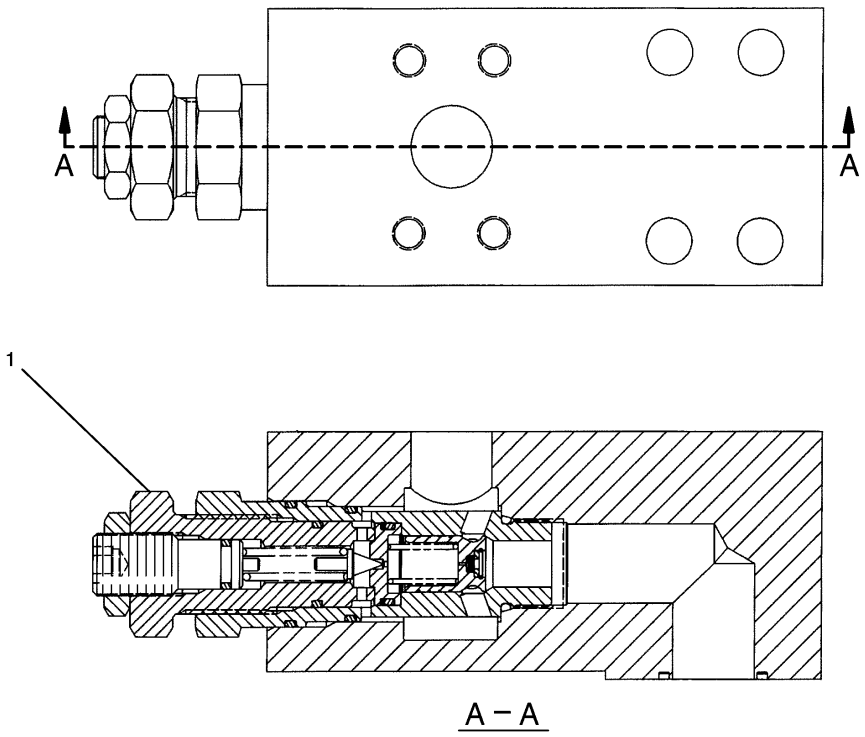

A – A

NOTE	No.	PART No.	QTY	PART NAME	NOTE	No.	PART No.	QTY	PART NAME
Y	1	222-0084	1	VALVE GP					

Y—SEE SEPARATE ILLUSTRATION

H81788E 01

177-2653 VALVE GP-RELIEF

Part of 255-1758-Page513,255-1760-Page517,255-1759-Page521
222-0084-Page620
An Attachment

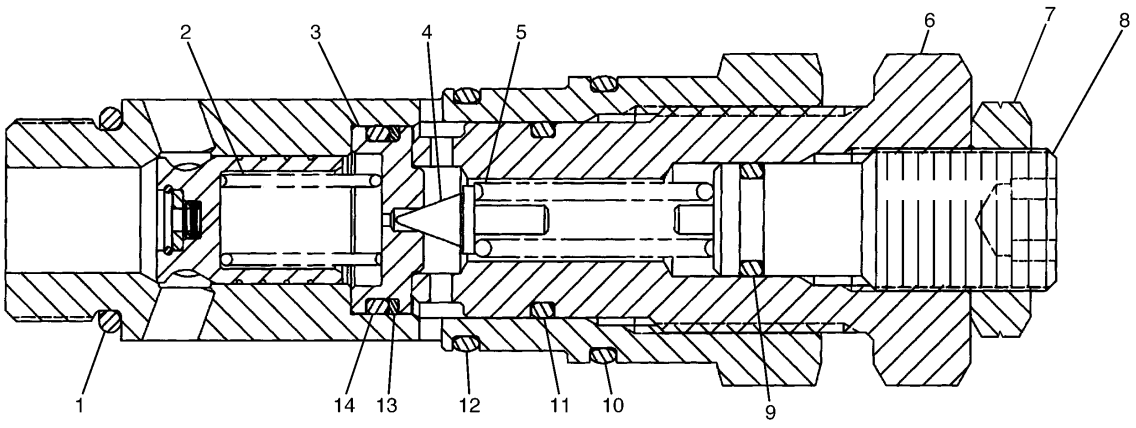

NOTE	No.	PART No.	QTY	PART NAME	NOTE	No.	PART No.	QTY	PART NAME
	1	3D-2824	1	SEAL-O-RING (ID=23.47mm)					
	2	6I-6795	1	SPRING					
	3	171-0034	1	SEAT					
	4	171-0037	1	VALVE					
	5	4I-3510	1	SPRING					
	6	171-0035	1	HOLDER					
	7	222-0085	1	NUT					
	8	171-0036	1	ADJUSTER					
	9	095-1579	1	SEAL-O-RING (ID=10.80mm)					
	10	6V-8218	1	SEAL-O-RING (ID=32.99mm)					
	11	095-1590	1	SEAL-O-RING (ID=21.80mm)					
	12	6V-8978	1	SEAL-O-RING (ID=29.82mm)					
	13	095-1786	1	RING					
	14	095-1587	1	SEAL-O-RING (ID=20.80mm)					

H81813E 00

222-0084 VALVE GP-RELIEF

Pilot Operated
Part of 177-2653-Page619
An Attachment

HYDRAULIC SYSTEM

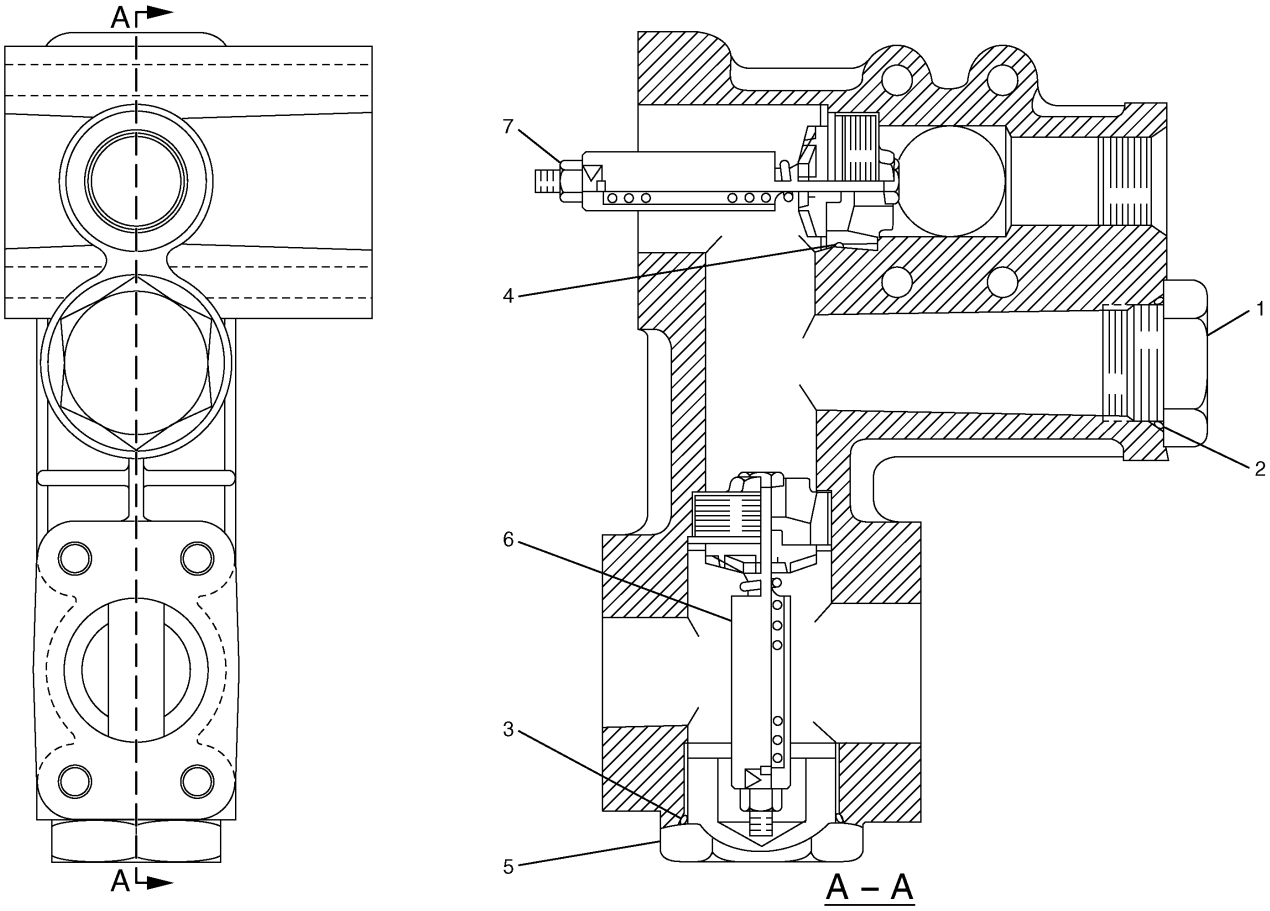

NOTE	No.	PART No.	QTY	PART NAME	NOTE	No.	PART No.	QTY	PART NAME
	1	9S-6130	1	PLUG					
	2	2S-4078	1	SEAL-O-RING (ID=37.47mm)					
	3	095-1547	1	SEAL-O-RING (ID=49.70mm)					
	4	184-3841	1	RING					
	5	190-7826	1	PLUG					
	6	177-2713	1	VALVE AS					
	7	184-3833	1	VALVE AS					

H73542E 03

173-4672 VALVE GP-CHECK

Part of 248-9831-Page509

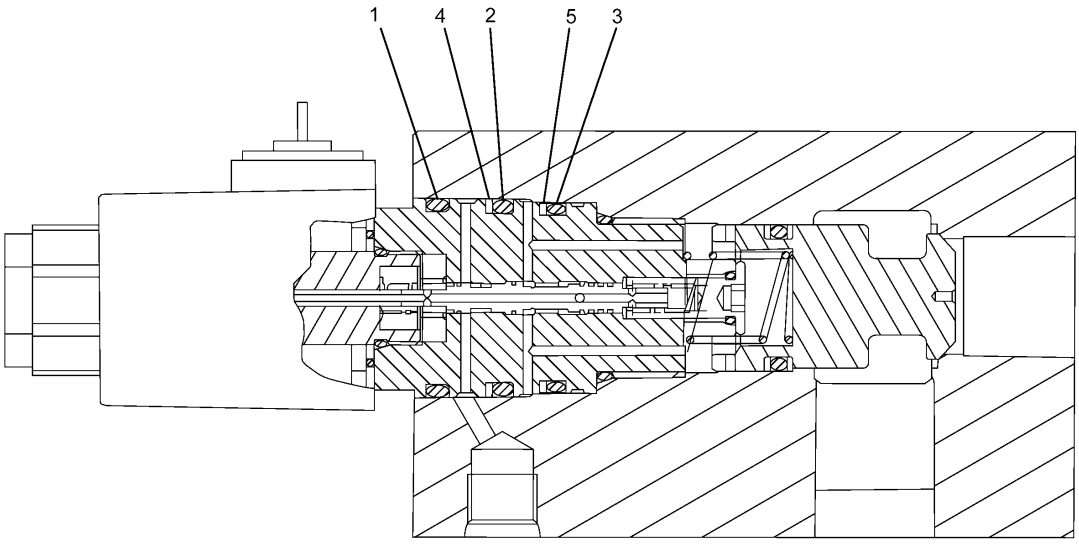

NOTE	No.	PART No.	QTY	PART NAME	NOTE	No.	PART No.	QTY	PART NAME
	1	095-1602	1	SEAL-O-RING (ID=35.70mm)					
	2	095-1601	1	SEAL-O-RING (ID=34.70mm)					
	3	095-1700	1	SEAL-O-RING (ID=34.40mm)					
	4	232-4113	1	RING					
	5	8T-3008	1	RING					

H88665E 02

215-4890 VALVE GP-CHECK

Part of 255-1759-Page521
An Attachment

HYDRAULIC SYSTEM

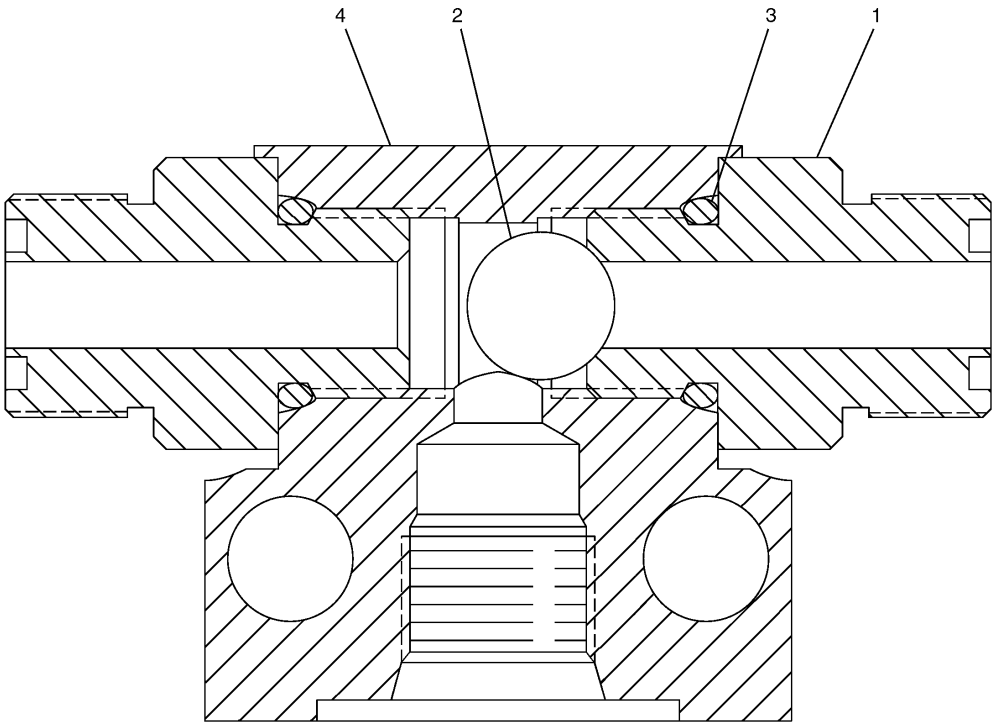

NOTE	No.	PART No.	QTY	PART NAME	NOTE	No.	PART No.	QTY	PART NAME
	1	123-2552	2	CONNECTOR					
	2	4B-9783	1	BALL					
	3	3J-1907	2	SEAL-O-RING (ID=11.89mm)					
	4	123-2431	1	BODY					

H67282E 00

123-2430 VALVE GP-SHUTTLE

Part of 248-9827-Page483,255-1802-Page492

HYDRAULIC SYSTEM

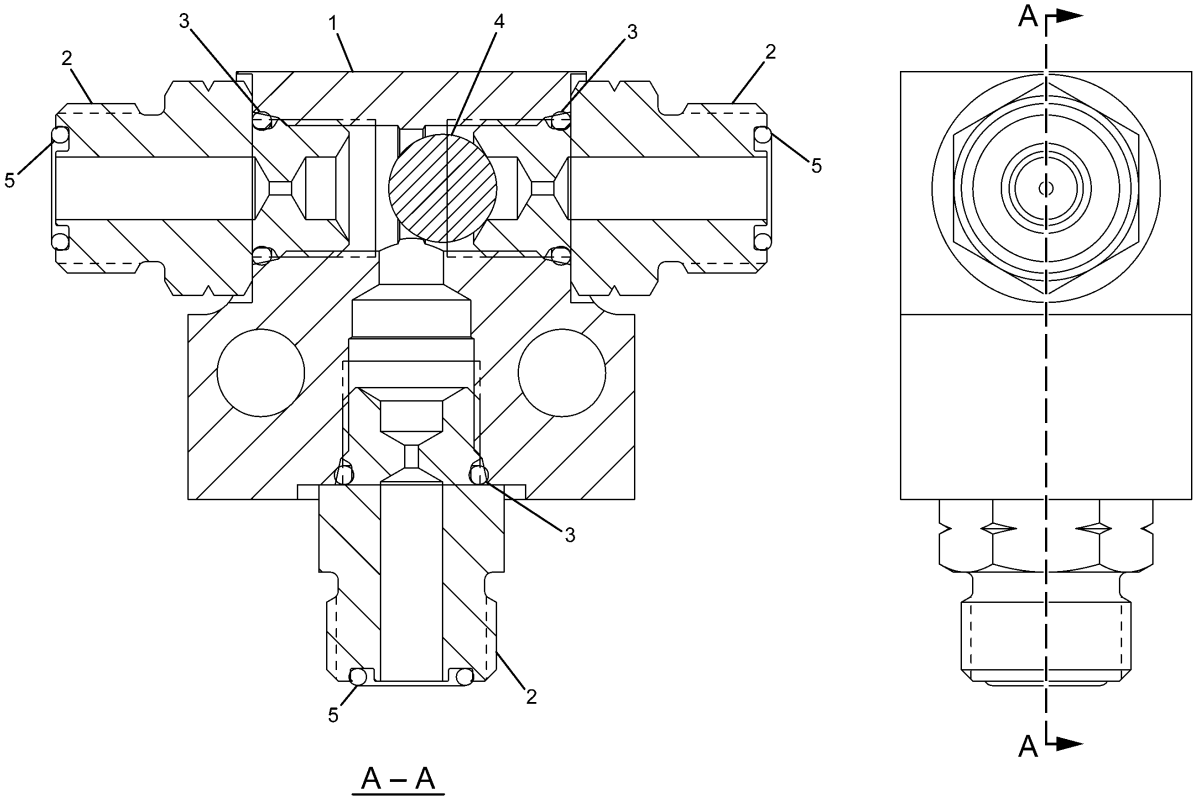

NOTE	No.	PART No.	QTY	PART NAME	NOTE	No.	PART No.	QTY	PART NAME
	1	123-2431	1	BODY					
	2	259-7733	3	CONNECTOR					
	3	3J-1907	3	SEAL-O-RING (ID=11.89mm)					
	4	4B-9783	1	BALL					
	5	6V-8397	3	SEAL-O-RING (OD=12.83mm)					

H93366E 00

259-7732 VALVE GP-SHUTTLE

S/N CJM 00166-Up, DAP 00211-Up, PEH 00225-Up
Part of 248-9827-Page485.02

MEMORANDA

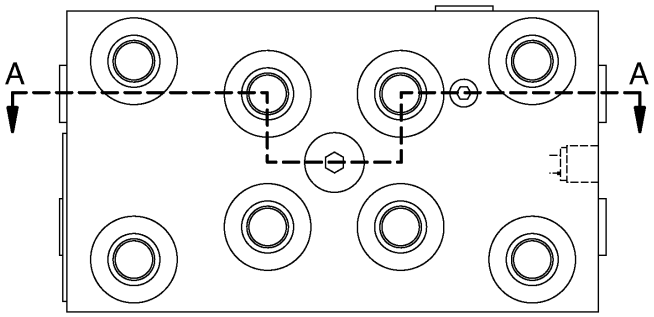

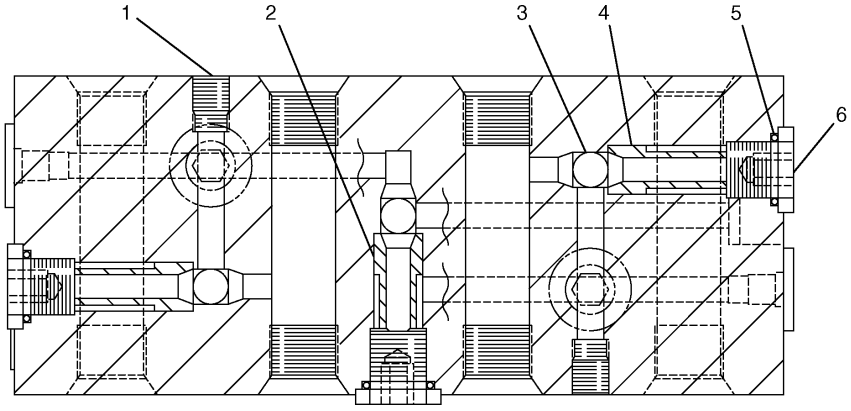

A – A

NOTE	No.	PART No.	QTY	PART NAME	NOTE	No.	PART No.	QTY	PART NAME
	1	7I-8084	4	PLUG					
	2	185-0463	1	SEAT					
	3	4B-9880	7	BALL					
	4	165-9464	6	SEAT					
	5	095-1578	7	SEAL-O-RING (ID=9.80mm)					
	6	107-6479	7	PLUG					

H77601E 01

185-0462 VALVE GP-SHUTTLE

Part of 248-9825-Page479

HYDRAULIC SYSTEM

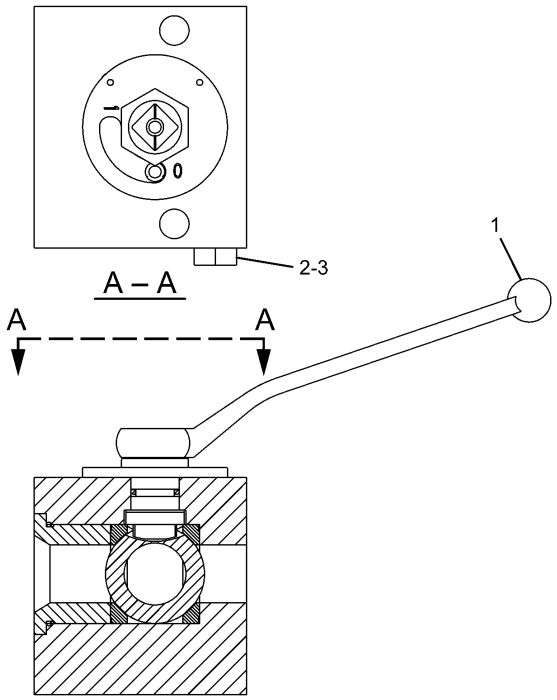

NOTE	No.	PART No.	QTY	PART NAME
	1	119-1353	1	HANDLE
	2	3J-1907	1	SEAL-O-RING (ID=11.89mm)
	3	9S-4191	1	PLUG

H95449E 00

277-0954 VALVE AS-BALL

Part of 237-3181-Page436,237-3182-Page437,237-3183-Page438,237-3184-Page439
An Attachment

MEMORANDA

MEMORANDA

OPERATOR STATION

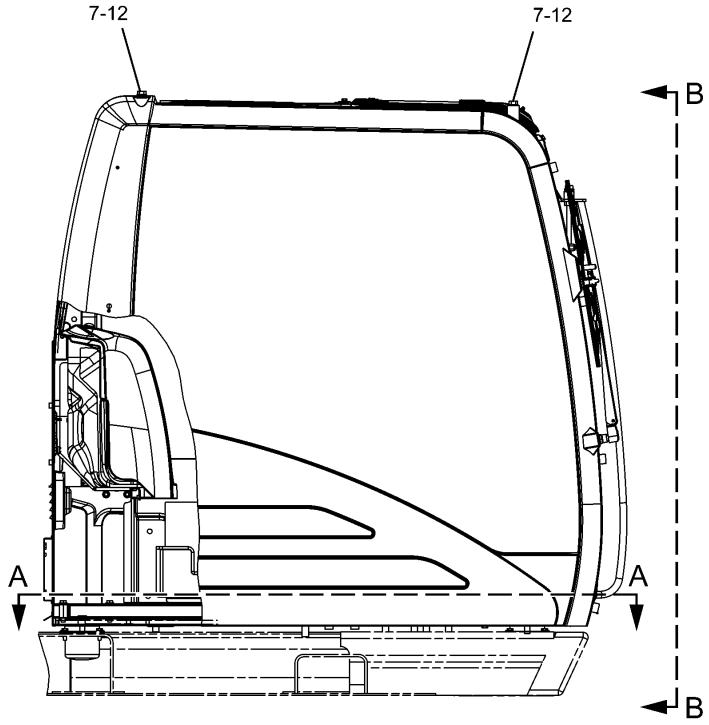

RIGHT SIDE VIEW

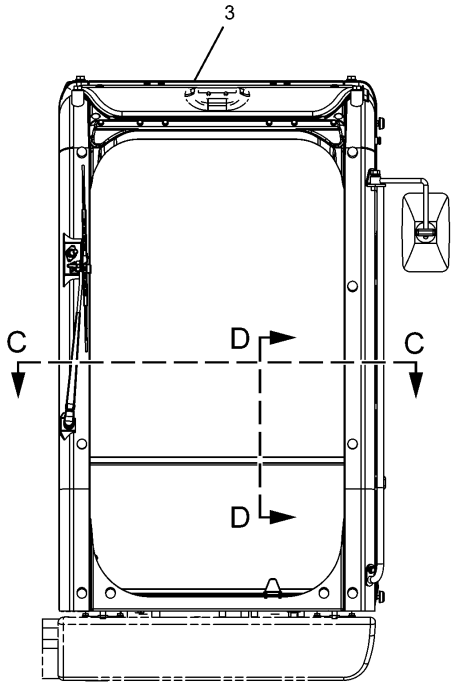

B – B

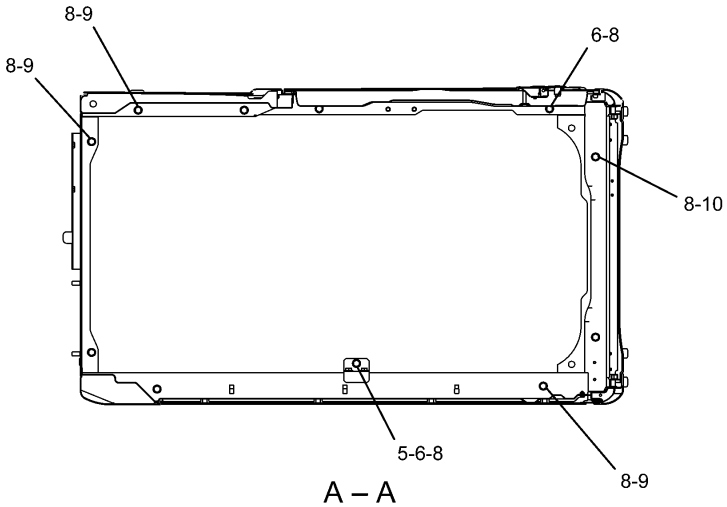

A – A

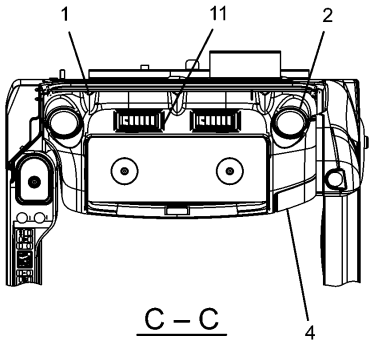

C – C

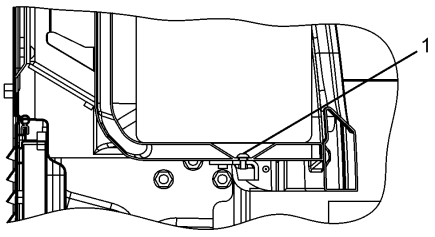

D – D

H90583E 03

229-9096 CAB GP
229-9097-Page630,234-6501-Page651
An Attachment

OPERATOR STATION

NOTE	No.	PART No.	QTY	PART NAME	NOTE	No.	PART No.	QTY	PART NAME
	1	128-2135	5	SCREW					
	2	164-8474	2	LOUVER AS					
Y	3	229-9097	1	CAB GP					
Y	4	234-6501	1	COVER GP					
	5	235-9001	1	SUPPORT					
	6	8T-4179	5	BOLT (L=20mm)					
	7	8T-4190	4	BOLT (L=25mm)					
	8	8T-4223	13	WASHER					
	9	8T-4910	6	BOLT (L=60mm)					
	10	8T-6868	2	BOLT (L=80mm)					
	11	8Y-6967	2	LOUVER AS					
	12	9X-8257	6	WASHER					

Y—SEE SEPARATE ILLUSTRATION

H90583E 03

229-9096 CAB GP

229-9097-Page630,234-6501-Page651

An Attachment

OPERATOR STATION

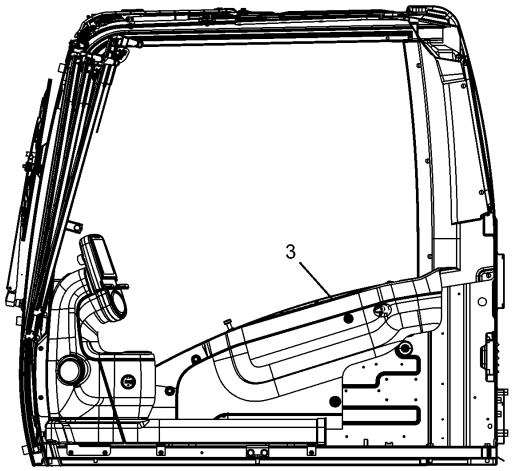

D – D

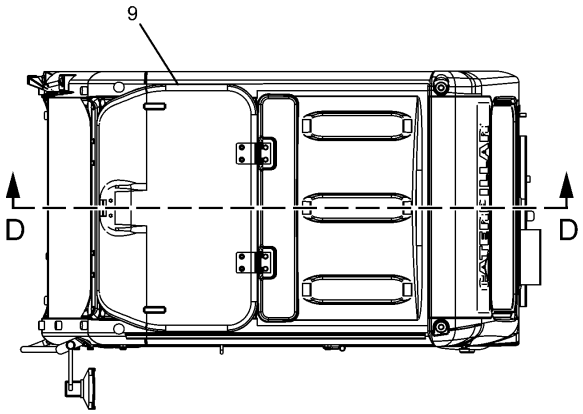

B – B

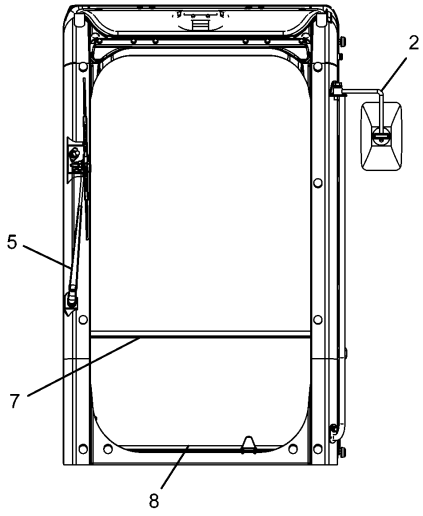

A – A

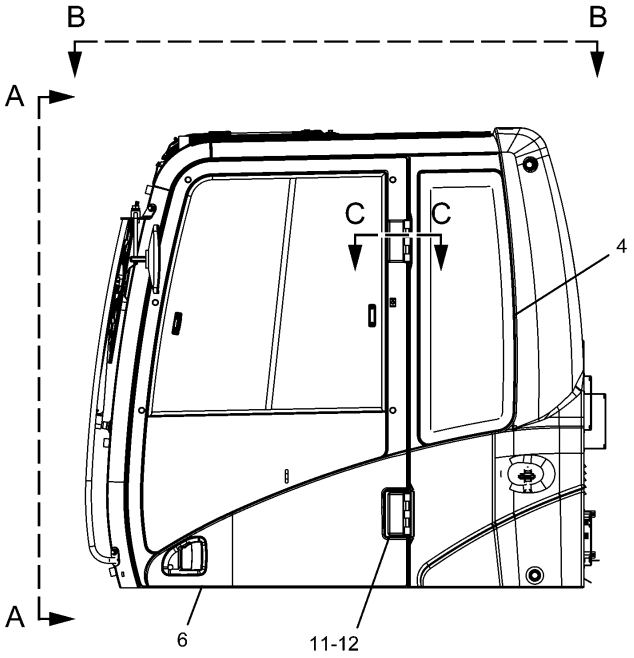

LEFT SIDE VIEW

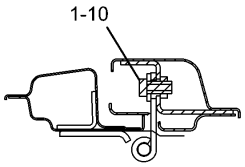

C – C

H88941E 02

229-9097 CAB GP (BASIC)

Part of 229-9096-Page629
235-8908-Page632,235-8910-Page634,139-7100-Page638,139-7101-Page642,176-1958-Page644,235-8909-Page645
,139-7099-Page646,234-6594-Page648
An Attachment

OPERATOR STATION

NOTE	No.	PART No.	QTY	PART NAME	NOTE	No.	PART No.	QTY	PART NAME
	1	185-8182	6	BOLT (L=20mm)					
Y	2	235-8910	1	CAB GP					
Y	3	235-8908	1	CAB GP					
Y	4	235-8909	1	WINDOW GP					
Y	5	234-6594	1	WIPER GP					
Y	6	139-7100	1	DOOR GP					
Y	7	139-7101	1	WINDOW GP					
Y	8	176-1958	1	WINDOW GP					
Y	9	139-7099	1	HATCH GP					
	10	185-8187	6	WASHER					
	11	151-6777	2	HINGE					
	12	9X-2041	6	SCREW					

Y—SEE SEPARATE ILLUSTRATION

H88941E 02

229-9097 CAB GP (BASIC)

Part of 229-9096-Page629
235-8908-Page632,235-8910-Page634,139-7100-Page638,139-7101-Page642,176-1958-Page644,235-8909-Page645
,139-7099-Page646,234-6594-Page648
An Attachment

OPERATOR STATION

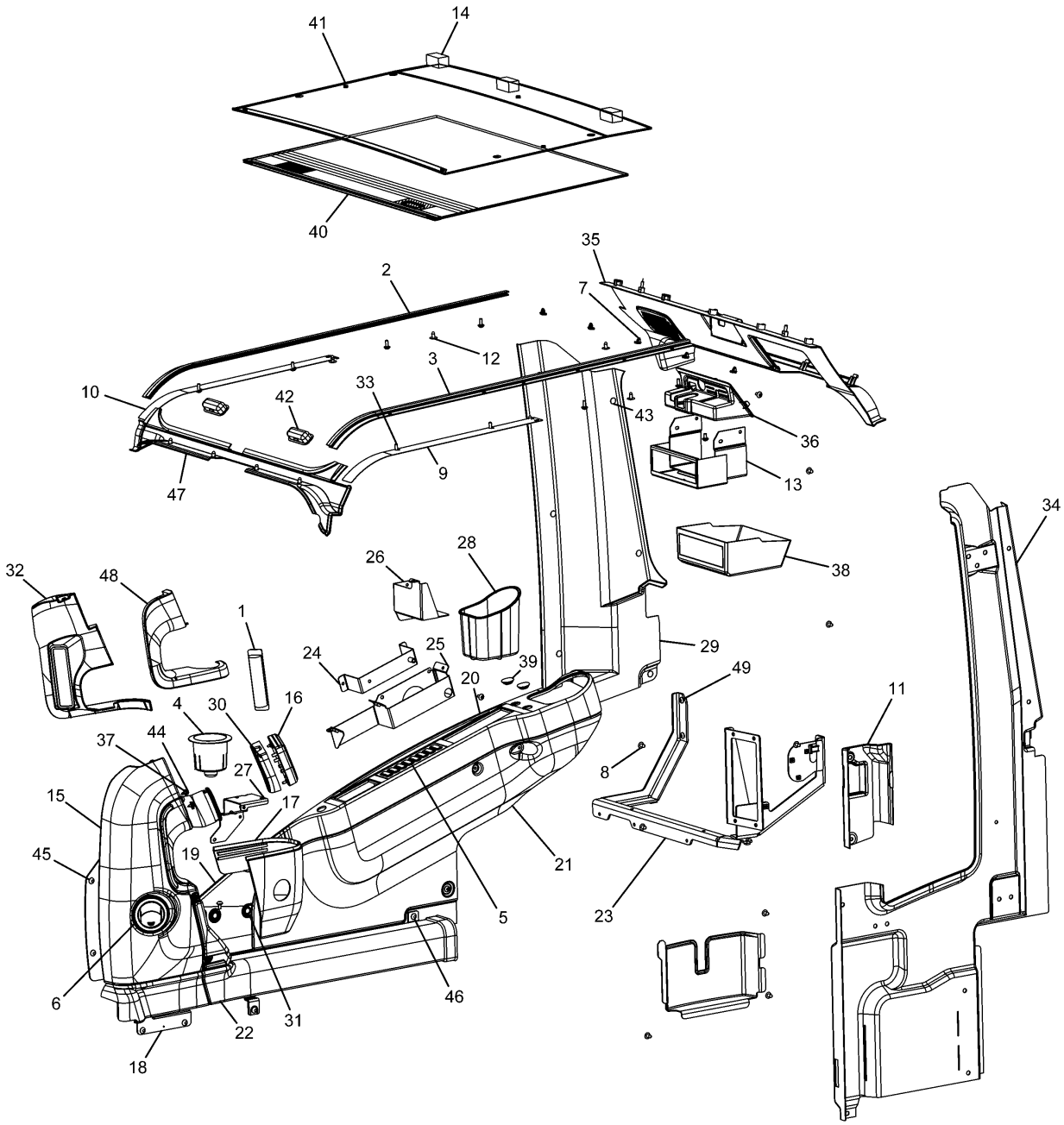

H91590E 03

235-8908 CAB GP-INTERIOR
Part of 229-9097-Page631
An Attachment

OPERATOR STATION

NOTE	No.	PART No.	QTY	PART NAME	NOTE	No.	PART No.	QTY	PART NAME
	1	8Y-6352	1	LOUVER AS					
	2	156-6656	1	RAIL					
	3	156-6657	1	RAIL					
	4	164-0646	1	CUP					
	5	164-0655	1	PANEL					
	6	164-8474	2	LOUVER AS					
	7	170-9724	5	CLIP					
	8	171-7420	6	CLIP					
	9	176-1946	1	PLATE					
	10	176-1947	1	PLATE					
	11	176-1972	1	COVER					
	12	185-8205	5	CLIP					
	13	185-8214	1	BRACKET AS					
	14	189-2678	3	SPACER					
	15	234-6468	1	COVER AS					
		259-7353	4	CLIP					
	16	234-6470	1	COVER					
	17	234-6471	1	COVER					
	18	234-6472	1	COVER					
	19	234-6473	1	COVER					
	20	234-6474	1	COVER					
	21	234-6475	1	COVER					
	22	234-6476	1	DUCT					
	23	234-6477	1	BRACKET AS					
	24	234-6478	1	BRACKET AS					
	25	234-6480	1	BRACKET AS					
	26	234-6483	1	BRACKET AS					
	27	234-6485	1	BRACKET AS					
	28	234-6490	1	CUP					
	29	234-6491	1	COVER					
	30	234-6497	1	COVER					
	31	234-6498	3	RIVET					
	32	234-6521	1	COVER					
	33	9X-2044	8	SCREW					
	34	234-6548	1	COVER					
	35	234-6549	1	COVER					
	36	234-6550	1	COVER					
	37	234-6579	2	NUT					
	38	235-8922	1	COVER					
	39	235-8923	2	CAP					
	40	235-8926	1	VISOR					
	41	235-8928	1	LINER					
	42	235-8929	2	HANDLE					
	43	235-8950	12	CLIP					
	44	245-7790	2	SCREW					
	45	128-2135	13	SCREW					
	46	128-2136	1	SCREW					
	47	189-2855	1	COVER					
	48	234-6469	1	COVER					
	49	9X-2042	23	SCREW					

H91590E 03

235-8908 CAB GP-INTERIOR

Part of 229-9097-Page631
An Attachment

OPERATOR STATION

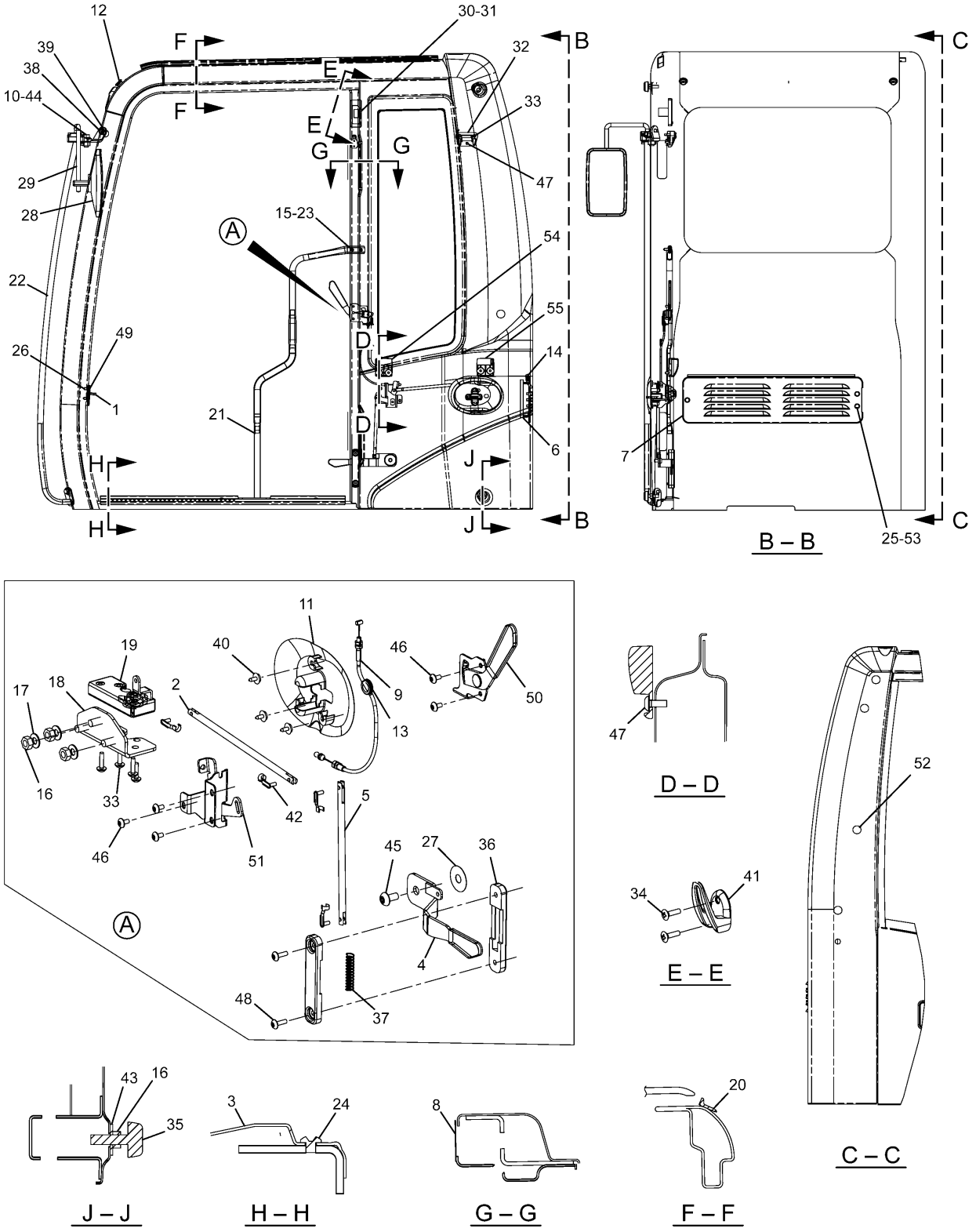

235–8910 CAB GP–EXTERIOR

Skylight

Part of 229–9097–Page631

259–7295–Page636,164–0528,176–1939–Page637

An Attachment

OPERATOR STATION

NOTE	No.	PART No.	QTY	PART NAME	NOTE	No.	PART No.	QTY	PART NAME
	1	156-6599	1	STRIKER		54	139-7126	1	HOLDER
	2	161-3685	1	ROD		55	139-7127	1	HOLDER
	3	161-3697	1	GUARD					
	4	164-0523	1	LEVER AS					
	5	164-0527	1	ROD					
E	6	6I-5470		SEAL…(150cm)					
	7	167-7018	1	COVER AS					
	8	167-7042	2	SEAL					
	9	171-7426	1	CABLE AS					
	10	9X-8257	1	WASHER					
	11	176-1942	1	COVER					
	12	178-5570	2	GROMMET					
	13	185-8196	1	GROMMET					
	14	189-2704	1	SEAL					
	15	189-2864	2	SCREW					
	16	189-3396	5	NUT					
	17	4B-4278	3	WASHER					
	18	201-4530	1	BRACKET AS					
	19	205-6295	1	LATCH AS					
	20	210-5808	1	SEAL					
	21	235-8912	1	HANDLE AS					
	22	235-8933	1	HANDLE AS					
	23	085-6452	2	WASHER					
	24	099-0823	3	SCREW					
	25	8T-4200	3	BOLT (L=16mm)					
	26	127-0580	2	SCREW					
	27	133-8016	1	PACKING					
	28	156-6617	1	MIRROR					
Y	29	259-7295	1	MOUNTING GP					
	30	176-1986	1	LIGHT					
	31	201-4417	1	BULB					
	32	4I-4270	1	HOLDER					
	33	3E-8020	6	SCREW					
	34	095-0755	2	SCREW					
	35	4I-1205	2	BUMPER					
	36	4I-1206	2	GUIDE					
	37	4I-3063	1	SPRING					
	38	8T-4137	2	BOLT (L=20mm)					
	39	4I-3144	2	WASHER					
	40	4I-4392	3	CLIP					
	41	5C-7793	1	HOOK					
	42	6V-7636	4	PIN AS					
	43	7X-0578	2	WASHER					
	44	8T-4779	1	BOLT (L=35mm)					
	45	9X-2041	1	SCREW					
	46	9X-2042	5	SCREW					
	47	9X-2044	5	SCREW					
	48	9X-2045	2	SCREW					
	49	1R-5998	2	LOCKWASHER					
Y	50	164-0528	1	LEVER AS					
Y	51	176-1939	1	LEVER AS					
	52	4I-3090	4	SEAL					
	53	8T-4224	3	WASHER					

E—ORDER BY THE CENTIMETER

Y—SEE SEPARATE ILLUSTRATION

H89490E 06

235-8910 CAB GP-EXTERIOR

Skylight

Part of 229-9097-Page631

259-7295-Page636,164-0528,176-1939-Page637

An Attachment

OPERATOR STATION

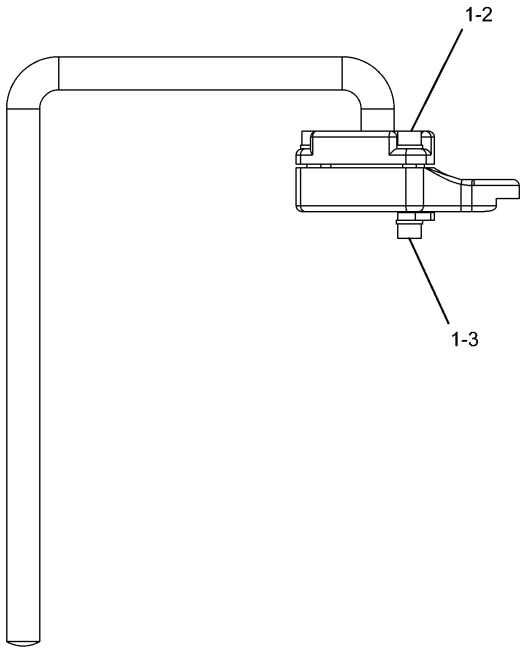

NOTE	No.	PART No.	QTY	PART NAME
	1	2U-2552	5	LOCKWASHER
	2	6V-5683	3	BOLT (L=16mm)
	3	9X-6153	2	BOLT (L=10mm)

H89491E 00

259-7295 MOUNTING GP

Mirror

Part of 235-8910-Page635

An Attachment

OPERATOR STATION

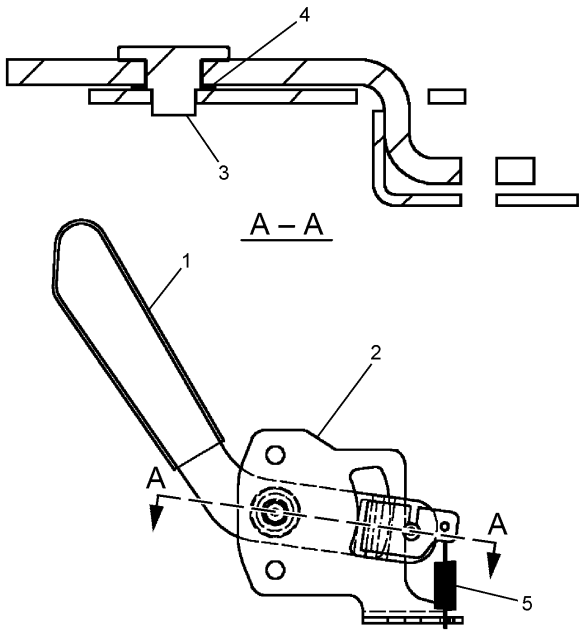

NOTE	No.	PART No.	QTY	PART NAME
	1	156-6642	1	LEVER AS
	2	164-0664	1	BRACKET
	3	176-1941	1	PIN
	4	185-8280	1	WASHER
	5	185-8281	1	SPRING

H87920E 02

164-0528 LEVER AS
Part of 235-8910-Page635
An Attachment

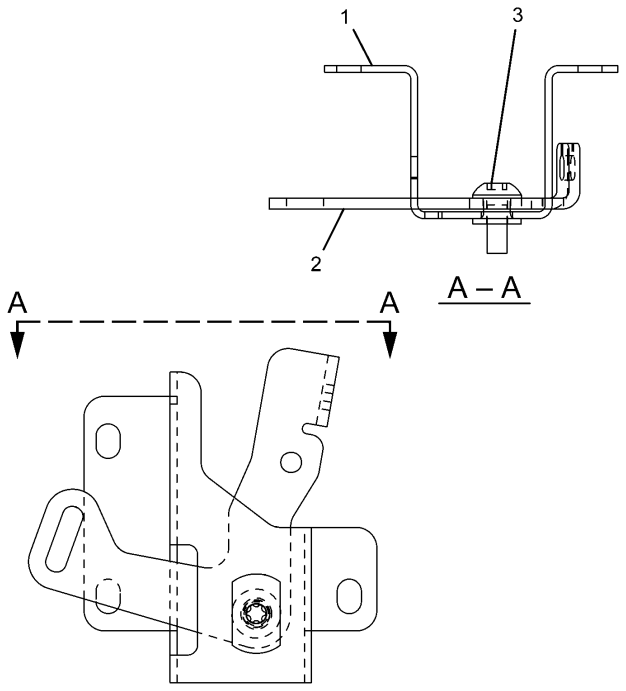

NOTE	No.	PART No.	QTY	PART NAME
	1	176-1937	1	BRACKET AS
	2	176-1938	1	LEVER
	3	9X-2044	1	SCREW

H91144E 01

176-1939 LEVER AS
Part of 235-8910-Page635
An Attachment

OPERATOR STATION

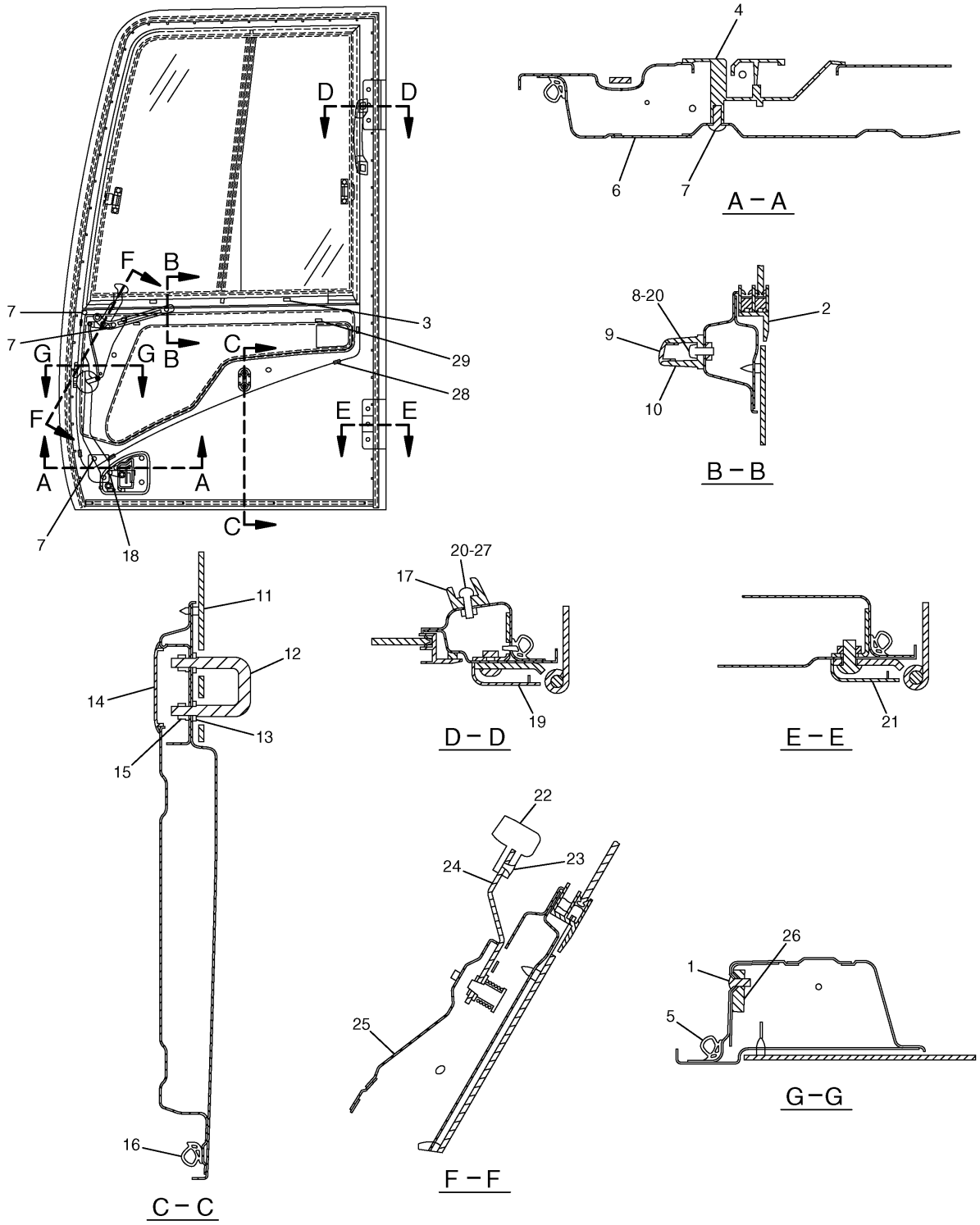

H84160E 05

139–7100 DOOR GP–CAB
Part of 229–9097–Page631
151–6792–Page640
An Attachment

OPERATOR STATION

NOTE	No.	PART No.	QTY	PART NAME	NOTE	No.	PART No.	QTY	PART NAME
	1	185-8180	3	SCREW					
Y	2	151-6792	1	WINDOW GP					
	3	151-9461	4	SPACER					
	4	156-6645	1	HANDLE AS					
		201-4391	1	CLIP					
	5	161-3663	1	SEAL AS					
		151-9497	45	CLIP					
	6	161-3699	1	COVER					
	7	9X-2042	10	SCREW					
	8	095-0742	2	SCREW					
	9	151-6704	2	CAP					
	10	151-6703	1	HANDLE					
	11	156-6471	1	GLASS					
	12	156-6598	1	HOOK					
	13	8T-4224	2	WASHER					
	14	167-7039	1	GROMMET					
	15	096-3884	2	NUT					
	16	161-3665	1	SEAL					
	17	189-2690	1	HANDLE					
	18	164-0515	1	JOINT					
	19	156-6643	1	COVER					
	20	095-0827	4	LOCKWASHER					
	21	156-6644	1	COVER					
	22	4I-4286	1	KNOB					
	23	096-2622	2	SCREW					
	24	161-3639	1	HANDLE AS					
	25	161-3650	1	COVER AS					
	26	156-6600	1	LOCK AS					
		164-0514	1	CLIP					
		164-0519	1	CLIP					
	27	8T-6412	2	SCREW					
	28	178-5573	4	SPACER					
	29	178-5574	2	SPACER					

Y—SEE SEPARATE ILLUSTRATION

H84160E 05

139-7100 DOOR GP-CAB

Part of 229-9097-Page631
151-6792-Page640
An Attachment

OPERATOR STATION

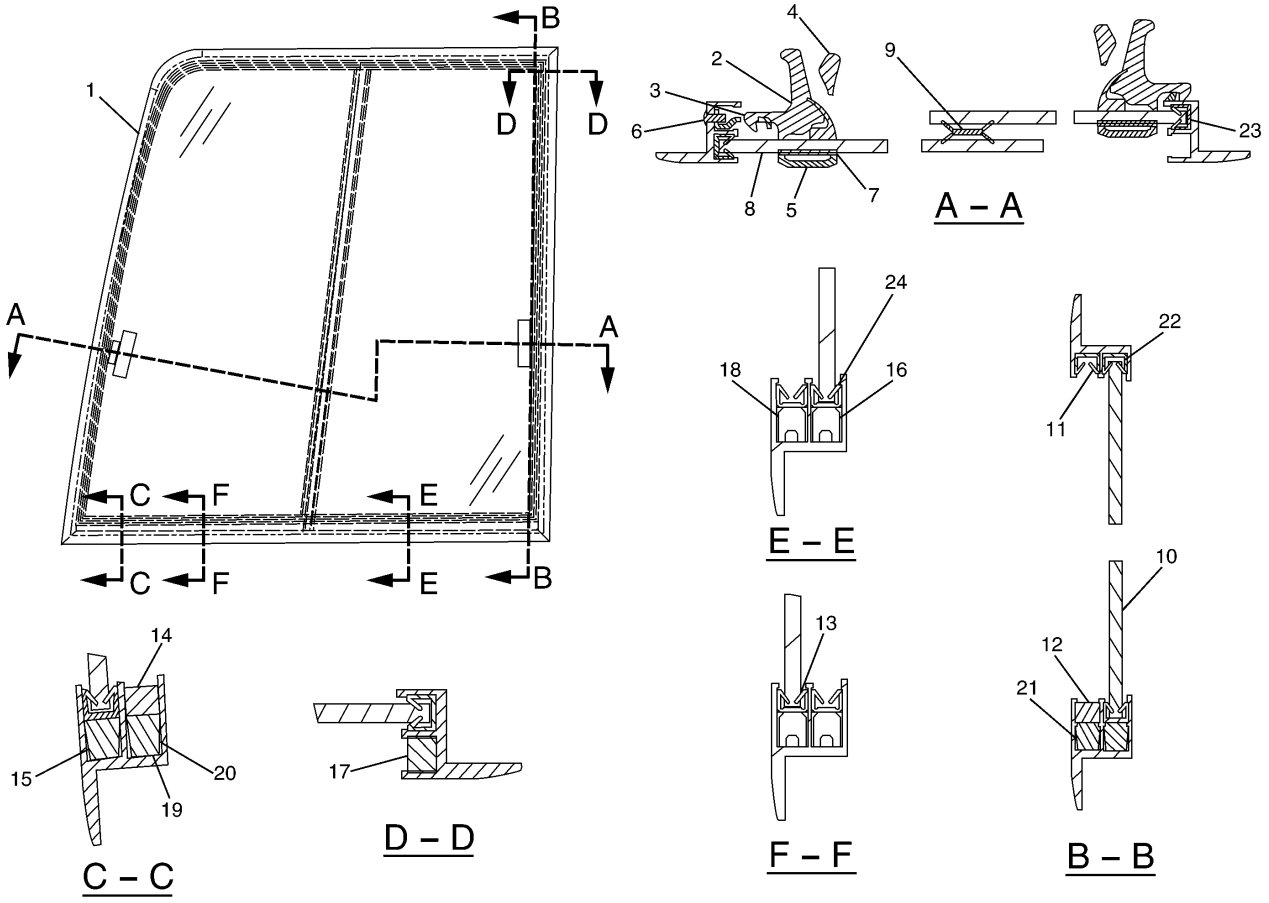

NOTE	No.	PART No.	QTY	PART NAME	NOTE	No.	PART No.	QTY	PART NAME
	1	151-6793	1	FRAME AS		19	176-1952	1	SPACER
		41-4300	1	CATCH		20	176-1953	1	STOPPER
		099-0139	3	RIVET		21	176-1954	1	RUBBER
	2	085-6444	2	LOCK AS		22	176-1955	1	SEAL
	3	085-6445	1	LOCK		23	176-1956	1	SEAL
	4	085-6446	1	LOCK		24	176-1957	1	SEAL
	5	085-6447	1	RETAINER					
	6	085-6448	1	SCREW					
	7	085-6449	1	PACKING					
	8	156-6475	1	GLASS					
	9	161-3705	1	SEAL					
	10	156-6474	1	GLASS					
	11	151-6841	1	SEAL					
	12	164-0516	1	RUBBER					
	13	161-3695	1	SEAL					
	14	164-0518	1	RUBBER					
	15	171-7413	1	SPACER					
	16	171-7414	1	SPACER					
	17	164-0517	1	RUBBER					
	18	176-1951	1	SPACER					

H78640E 03

151-6792 WINDOW GP-DOOR
Part of 139-7100-Page639
An Attachment

MEMORANDA

OPERATOR STATION

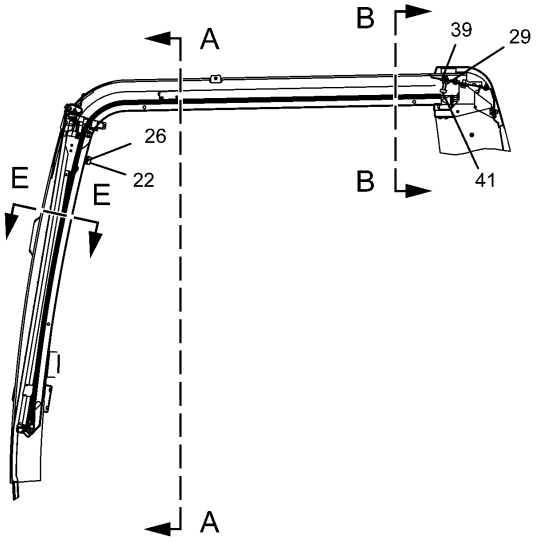

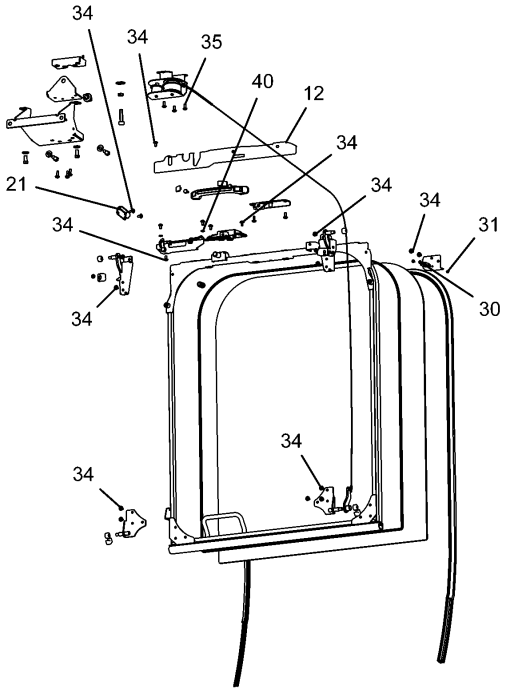

PICTORIAL VIEW

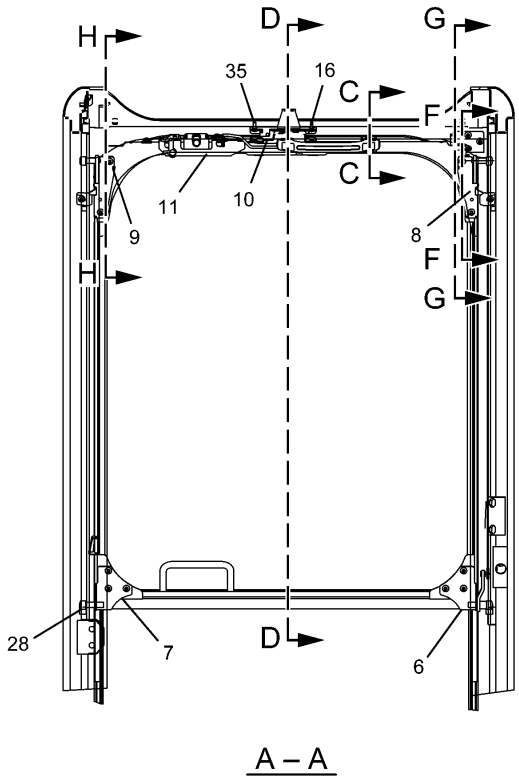

A – A

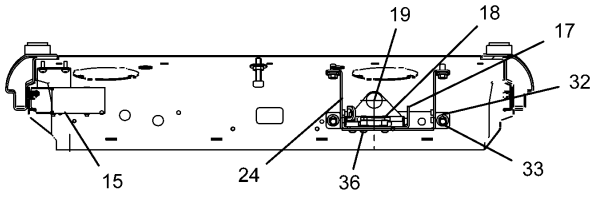

B – B

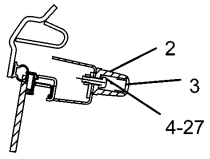

C – C

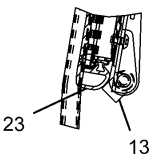

D – D

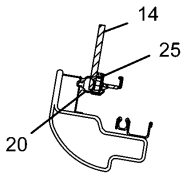

E – E

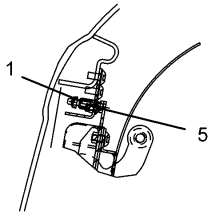

F – F

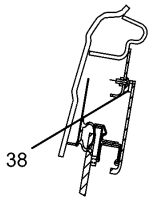

G – G

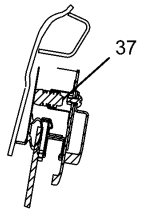

H – H

H91596E 05

139–7101 WINDOW GP
Part of 229–9097–Page631
An Attachment

OPERATOR STATION

NOTE	No.	PART No.	QTY	PART NAME	NOTE	No.	PART No.	QTY	PART NAME
	1	117-6306	1	SWITCH					
	2	151-6703	1	HANDLE					
	3	151-6704	2	CAP					
	4	095-0827	2	LOCKWASHER					
	5	151-6785	1	BRACKET AS					
	6	151-6813	1	BRACKET AS					
	7	151-6815	1	BRACKET AS					
	8	273-5345	1	LINK AS					
	9	273-5346	1	LINK AS					
	10	151-6831	1	LOCK AS					
	11	151-6832	1	LEVER AS					
	12	151-6844	1	COVER					
	13	151-9557	2	STOPPER					
	14	156-6472	1	GLASS					
	15	156-6554	1	CABLE AS					
	16	156-6555	1	STRIKER AS					
	17	156-6562	1	BRACKET					
	18	273-5274	1	CATCH AS					
	19	156-6579	1	STOPPER					
	20	156-6601	1	SEAL AS					
	21	156-6627	1	STOPPER AS					
	22	161-3684	2	STOPPER					
	23	161-3698	1	SEAL					
	24	164-0648	1	BRACKET AS					
	25	170-9722	1	CUSHION					
	26	099-0823	2	SCREW					
	27	8T-6412	2	SCREW					
	28	151-9576	4	ROLLER					
	29	185-8197	1	NUT					
	30	185-8181	2	SCREW					
	31	185-8183	1	NUT					
	32	185-8187	4	WASHER					
	33	185-8182	4	BOLT (L=20mm)					
	34	9X-2042	20	SCREW					
	35	9X-2044	5	SCREW					
	36	9X-2045	3	SCREW					
	37	185-8221	1	STOPPER					
	38	4I-0420	1	STRIP					
	39	7X-0578	1	WASHER					
	40	9X-8256	2	WASHER					
	41	178-5576	1	STOPPER					

H91596E 05

139-7101 WINDOW GP

Part of 229-9097-Page631
An Attachment

OPERATOR STATION

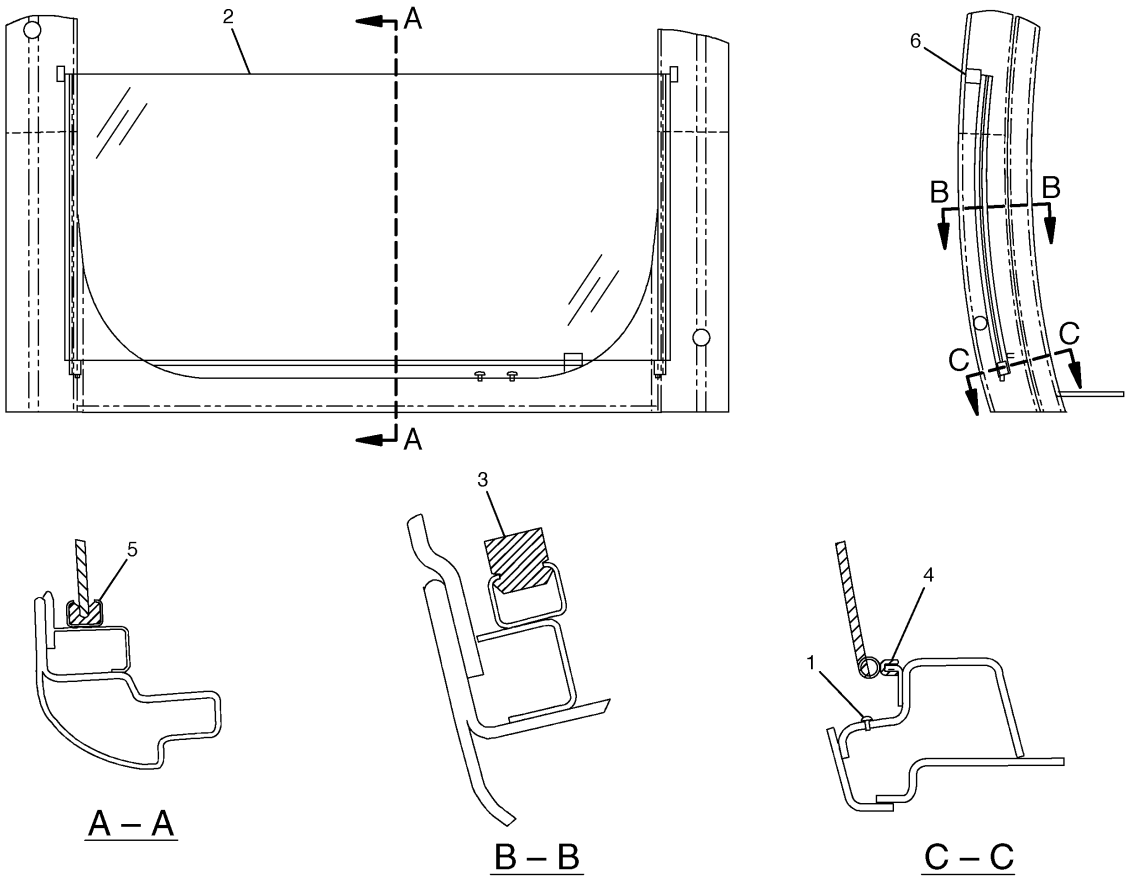

NOTE	No.	PART No.	QTY	PART NAME	NOTE	No.	PART No.	QTY	PART NAME
	1	139-7119	2	PLUG					
	2	156-6473	1	GLASS					
	3	156-6631	2	STOPPER					
	4	161-3683	1	SEAL					
	5	178-5569	2	SEAL					
	6	189-2702	2	SEAL					

H74712E 01

176-1958 WINDOW GP

Lower

Part of 229-9097-Page631

An Attachment

OPERATOR STATION

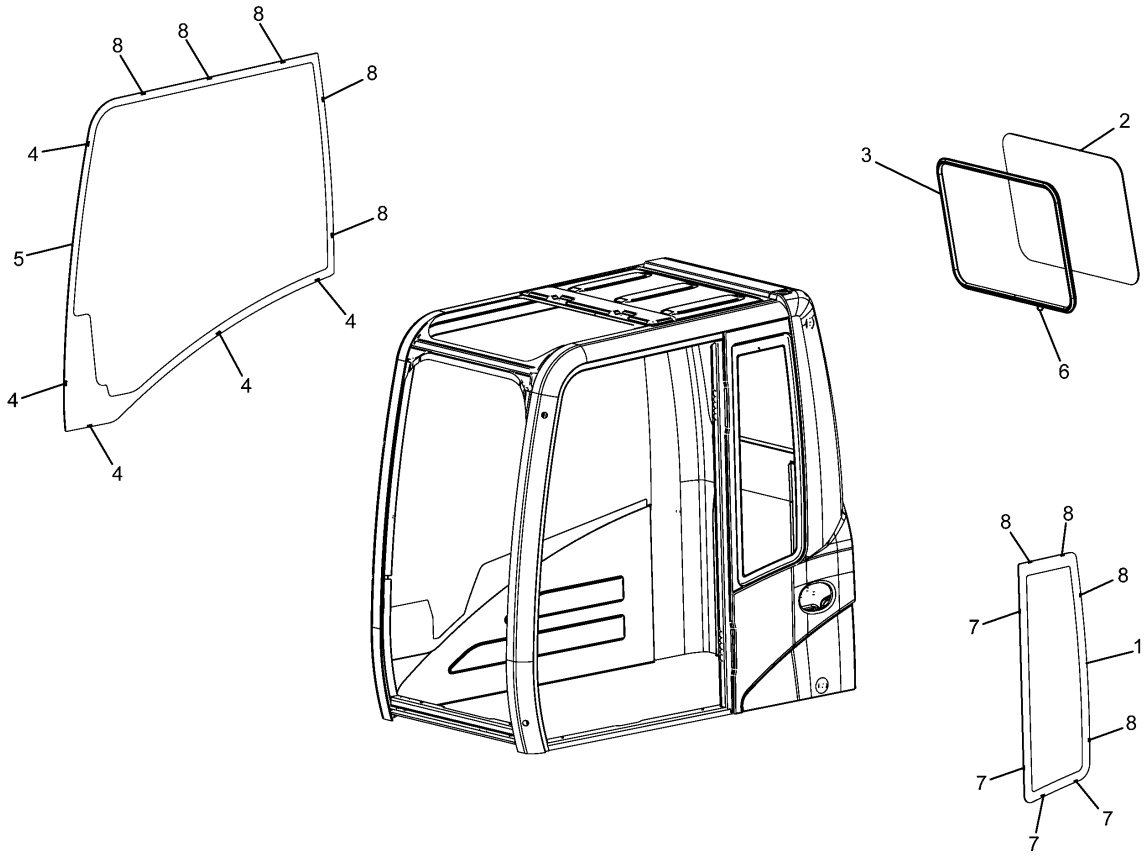

NOTE	No.	PART No.	QTY	PART NAME	NOTE	No.	PART No.	QTY	PART NAME
	1	151-6790	1	GLASS					
	2	156-6469	1	GLASS					
	3	164-0666	1	SEAL					
	4	178-5572	5	SPACER					
	5	234-6489	1	GLASS					
	6	099-3629	1	RING					
	7	178-5573	4	SPACER					
	8	178-5574	9	SPACER					

H87567E 00

235-8909 WINDOW GP-CAB

Part of 229-9097-Page631
An Attachment

OPERATOR STATION

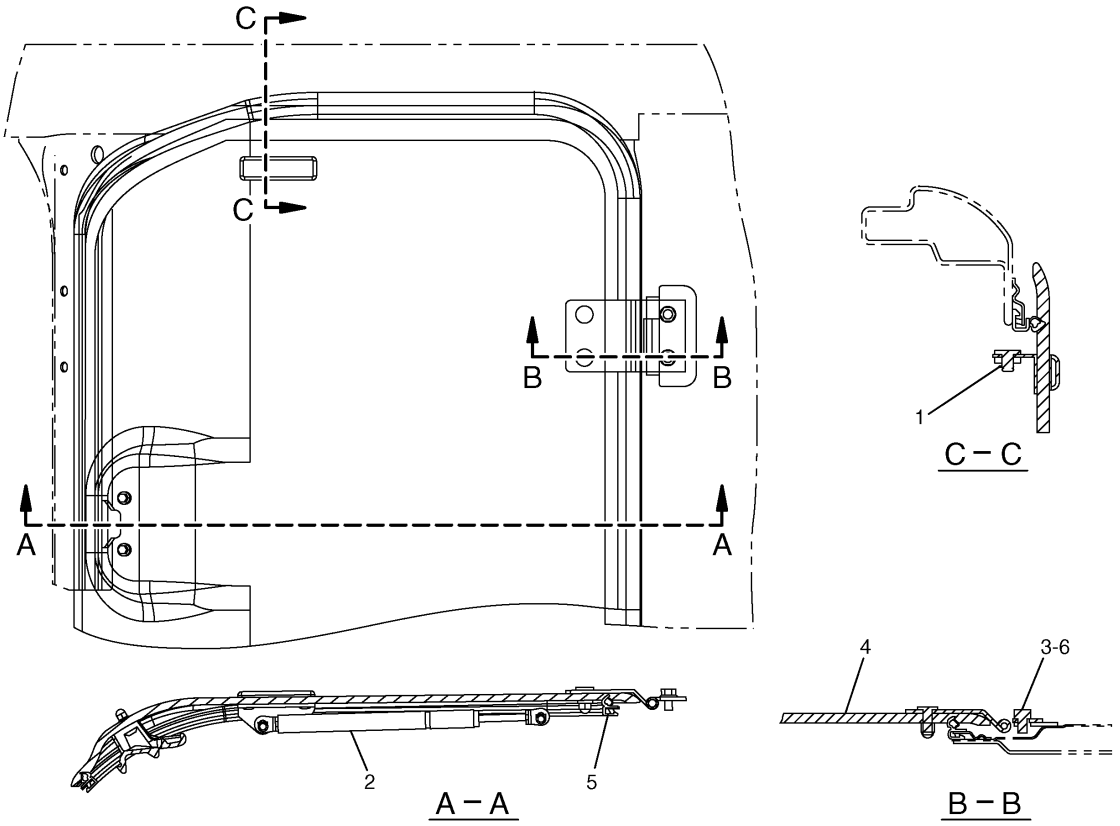

NOTE	No.	PART No.	QTY	PART NAME	NOTE	No.	PART No.	QTY	PART NAME
	1	2Y-5685	4	RING					
	2	099-3506	2	SPRING AS					
	3	8T-4200	4	BOLT (L=16mm)					
Y	4	189-2849	1	HATCH AS					
	5	189-2847	1	SEAL					
	6	8T-4224	4	WASHER					

Y—SEE SEPARATE ILLUSTRATION

H71324E 03

139-7099 HATCH GP

Part of 229-9097-Page631
189-2849-Page647
An Attachment

OPERATOR STATION

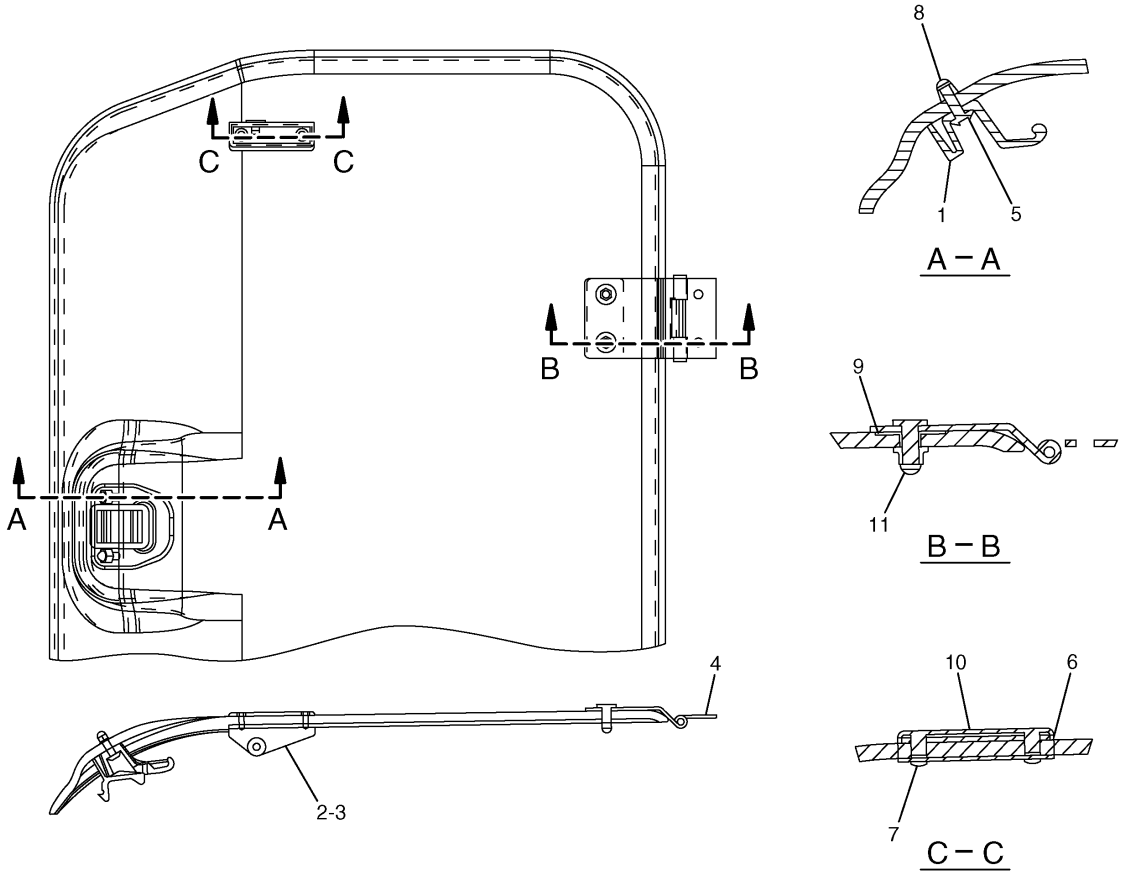

NOTE	No.	PART No.	QTY	PART NAME	NOTE	No.	PART No.	QTY	PART NAME
	1	161-3694	1	CATCH					
	2	189-2693	1	BRACKET AS (RH)					
	3	189-2694	1	BRACKET AS (LH)					
	4	189-2716	2	HINGE AS					
	5	9X-2045	2	SCREW					
	6	085-6449	2	PACKING					
	7	100-2881	4	SCREW					
	8	171-7477	2	NUT					
	9	41-1260	2	PACKING					
	10	41-4361	2	RETAINER					
	11	61-5342	4	NUT					

H71325E 00

189-2849 HATCH AS
Part of 139-7099-Page646
An Attachment

OPERATOR STATION

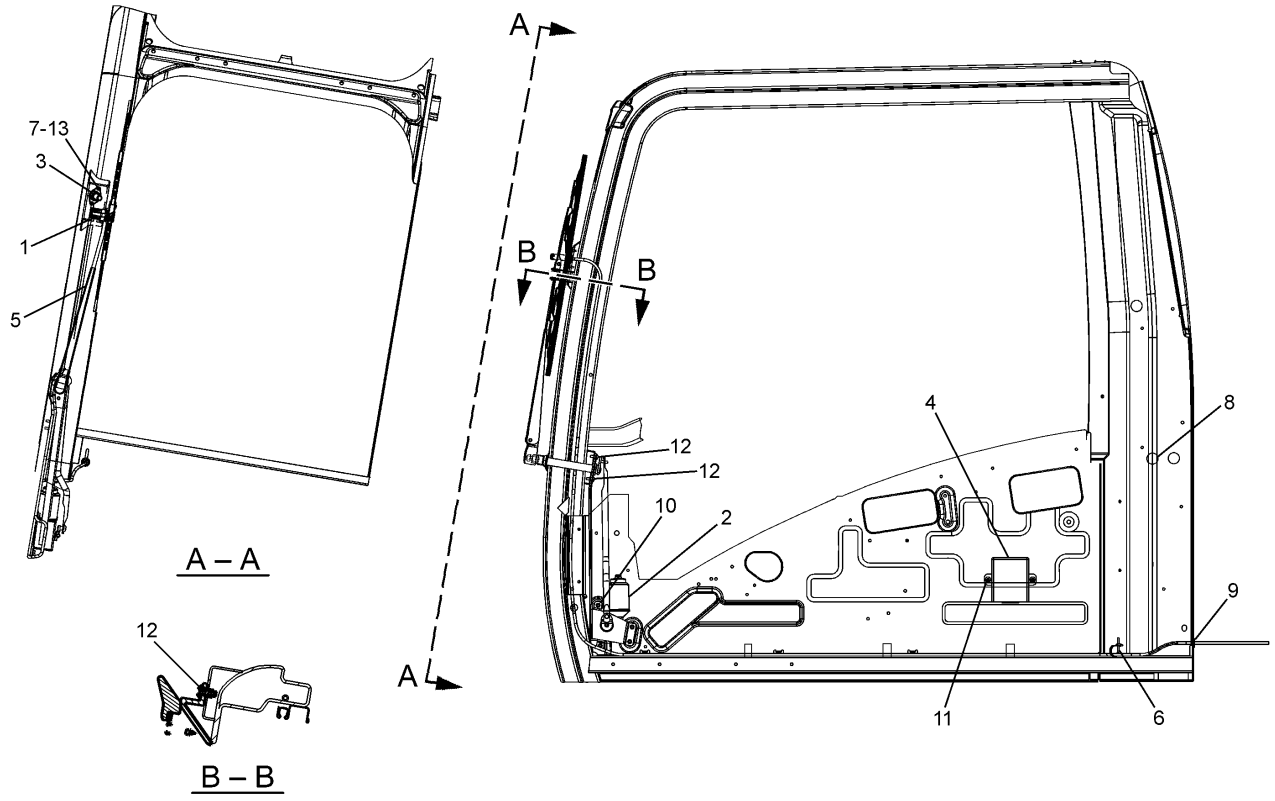

NOTE	No.	PART No.	QTY	PART NAME	NOTE	No.	PART No.	QTY	PART NAME
	1	161-3677	1	HOLDER					
Y	2	245-7931	1	MOTOR AS					
	3	235-8932	1	NOZZLE AS					
	4	155-7042	1	RELAY AS					
Y	5	161-3668	1	ARM AS					
	6	163-6795	1	STRAP					
	7	095-0728	2	SCREW					
	8	4I-3090	1	SEAL					
	9	7Y-7364	1	GROMMET					
	10	8T-4134	4	NUT					
	11	9X-2042	2	SCREW					
	12	9X-2044	3	SCREW					
	13	096-6166	2	WASHER					

Y—SEE SEPARATE ILLUSTRATION

H88476E 02

234-6594 WIPER GP-WINDOW

Part of 229-9097-Page631
161-3668-Page649,245-7931-Page650
An Attachment

OPERATOR STATION

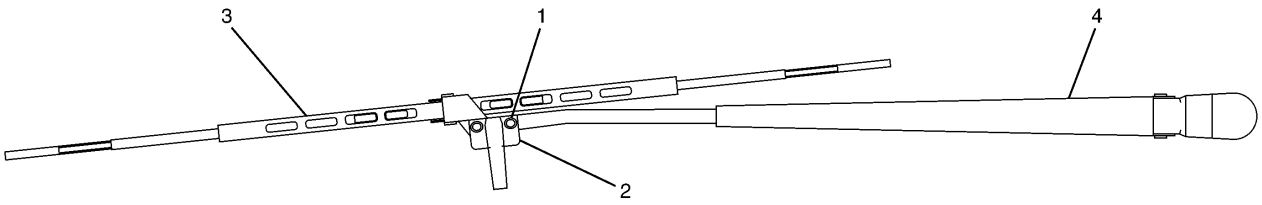

NOTE	No.	PART No.	QTY	PART NAME	NOTE	No.	PART No.	QTY	PART NAME
	1	185-8290	1	SCREW KIT					
	2	161-3669	1	GUIDE					
	3	161-3670	1	BLADE AS					
	4	161-3671	1	ARM AS					

H77606E 02

161-3668 ARM AS-WIPER

Part of 234-6594-Page648
An Attachment

OPERATOR STATION

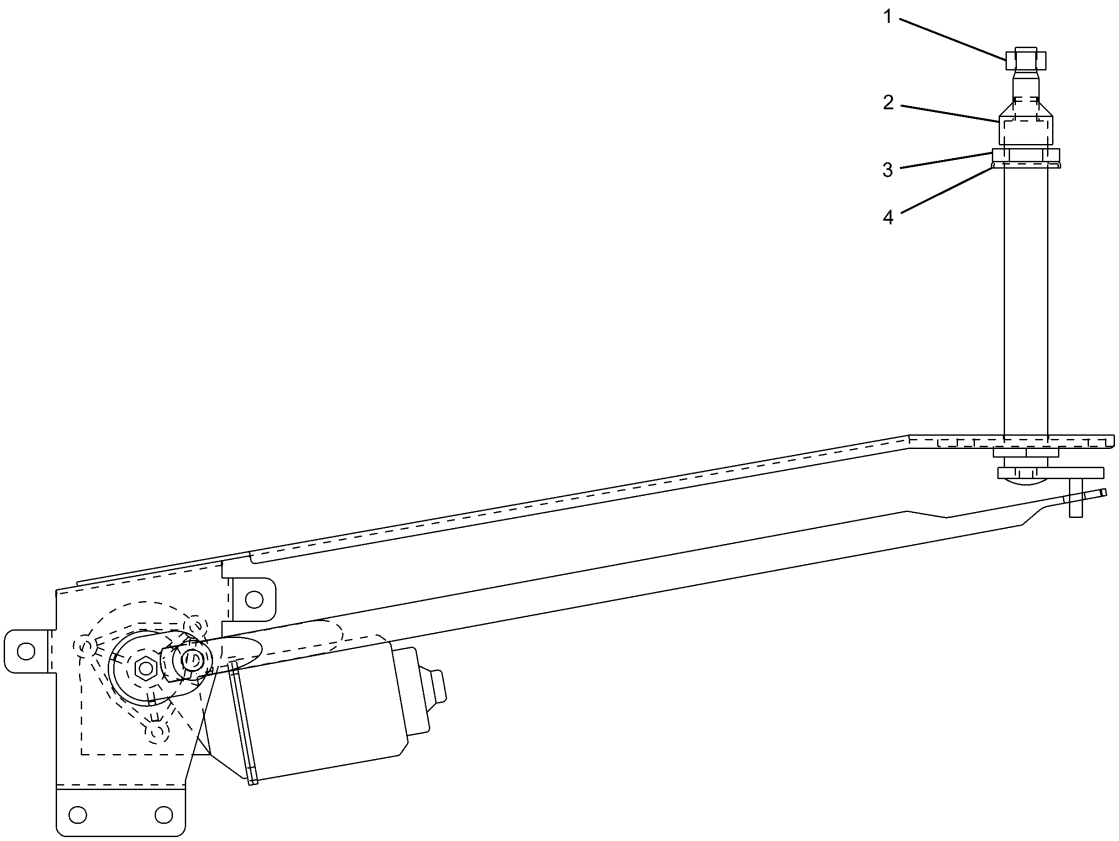

NOTE	No.	PART No.	QTY	PART NAME	NOTE	No.	PART No.	QTY	PART NAME
	1	6V-8231	1	NUT					
	2	7Y-3472	1	CAP					
	3	7Y-3470	1	NUT					
	4	124-3953	1	WASHER					

H88676E 00

245-7931 MOTOR AS-WINDOW WIPER

Part of 234-6594-Page648
An Attachment

OPERATOR STATION

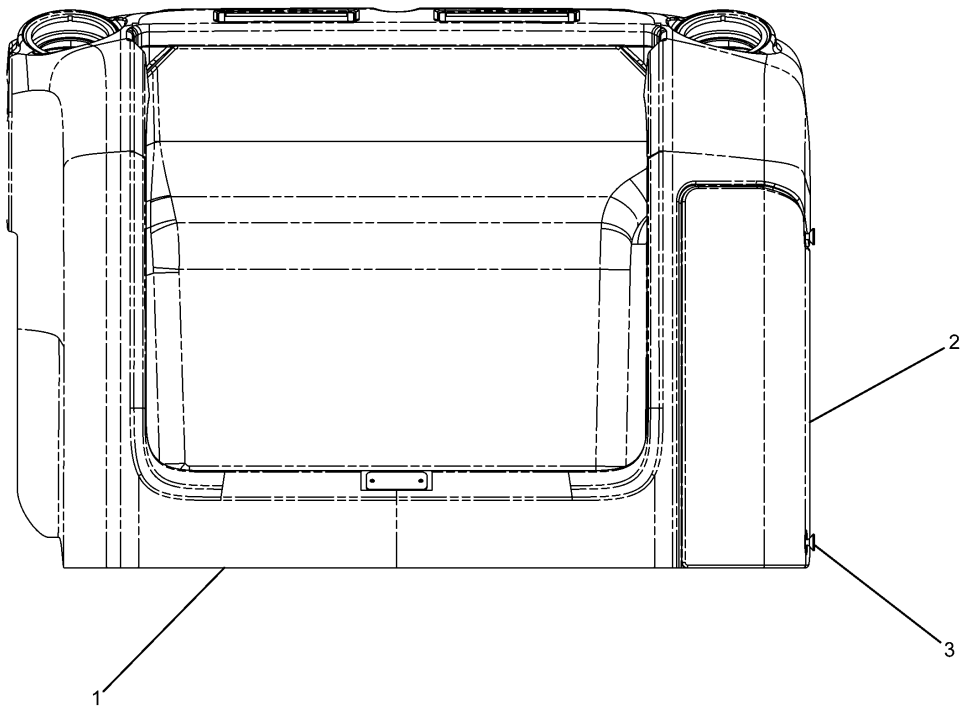

NOTE	No.	PART No.	QTY	PART NAME	NOTE	No.	PART No.	QTY	PART NAME
	1	234-6499	1	COVER AS					
	2	234-6502	1	COVER					
	3	245-7929	2	CLIP					

H87659E 05

234-6501 COVER GP
Part of 229-9096-Page629
An Attachment

OPERATOR STATION

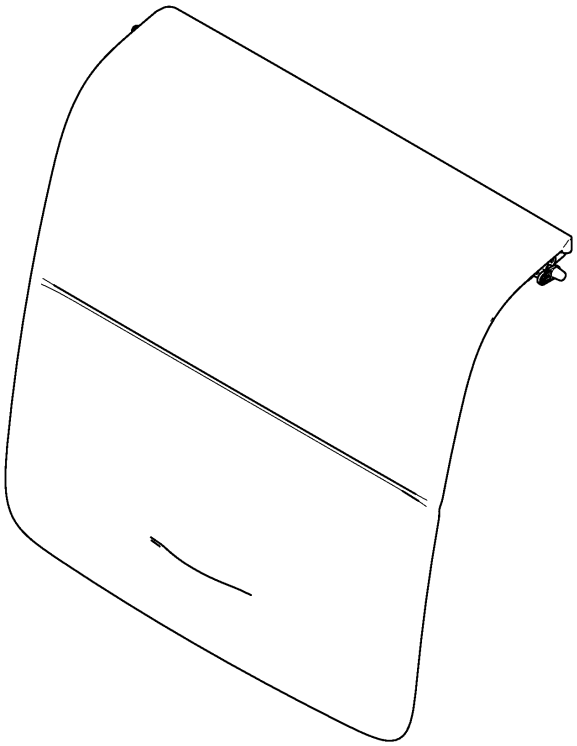

NOTE	No.	PART No.	QTY	PART NAME	NOTE	No.	PART No.	QTY	PART NAME

H88770E 05

234-6500 COVER AS
An Attachment

OPERATOR STATION

Consists of :

			Page
1	229-9087	WIPER & WASHER GP-WINDOW	654
1	229-9088	WASHER GP-WINDOW	656
1	238-2208	WIRING GP-LOWER WIPER	194

H87747E 01

229-9086 WIPER AR-WINDOW
Lower/Skylight Hatch Cab
An Attachment

OPERATOR STATION

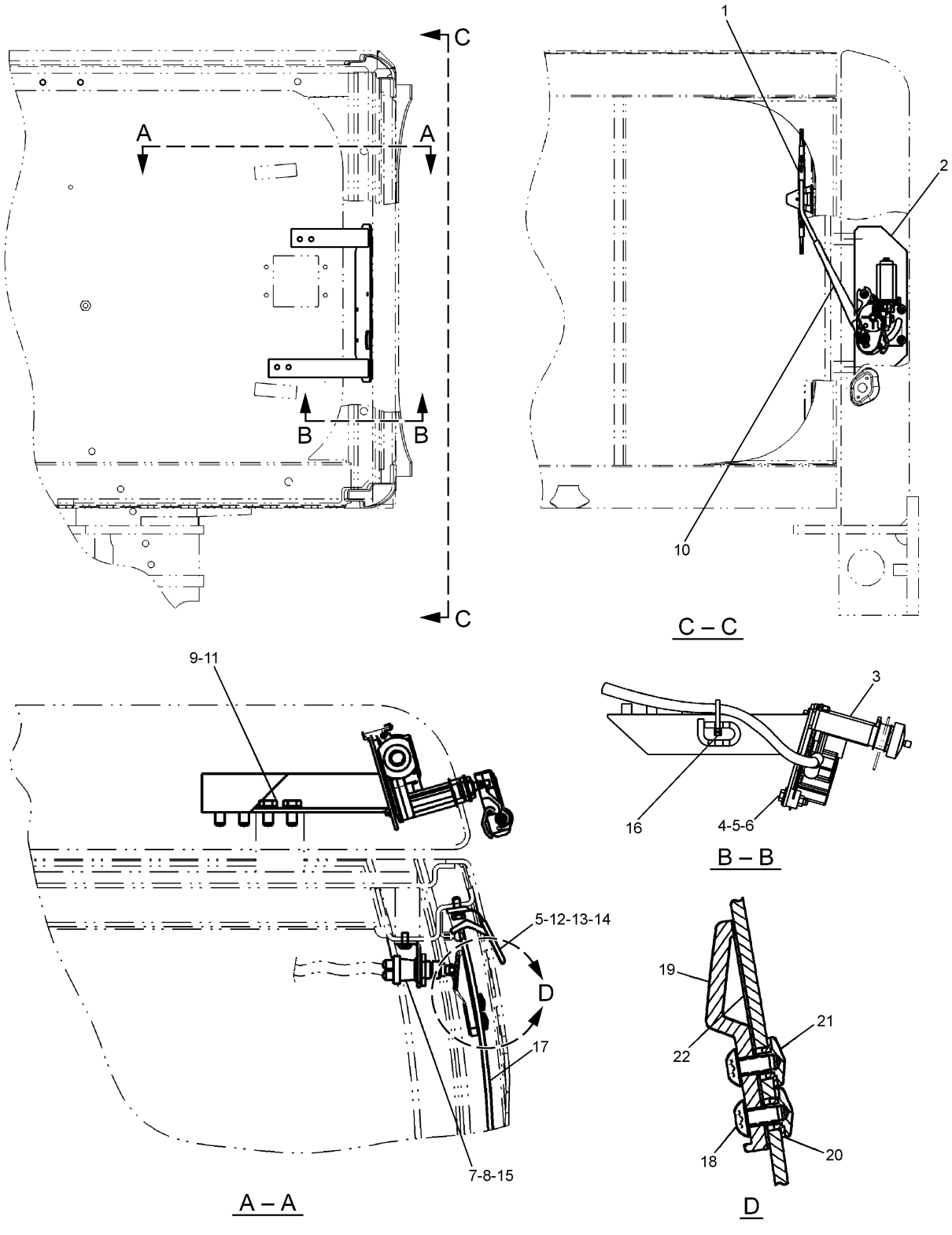

H87564E 02

229–9087 WIPER & WASHER GP–WINDOW

Lower/Skylight Hatch Cab
Part of 229–9086–Page653
129–6466–Page270
An Attachment

OPERATOR STATION

NOTE	No.	PART No.	QTY	PART NAME	NOTE	No.	PART No.	QTY	PART NAME
	1	4I-5021	1	BLADE AS					
	2	235-8974	1	BRACKET AS					
	3	167-7079	1	MOTOR AS					
	4	6V-7357	3	BOLT (L=25mm)					
	5	9X-8256	5	WASHER					
	6	8T-4134	3	NUT					
	7	9X-2044	2	SCREW					
	8	156-6646	1	BRACKET					
	9	8T-4121	4	WASHER					
	10	4I-5020	1	ARM AS					
	11	8T-4137	4	BOLT (L=20mm)					
	12	4I-1163	1	BRACKET					
	13	5C-9553	2	BOLT (L=16mm)					
	14	8H-3481	2	LOCKWASHER					
Y	15	129-6466	1	SWITCH AS					
	16	3S-2093	1	STRAP					
	17	156-6647	1	GLASS AS					
	18	9X-2042	2	SCREW					
	19	124-3966	1	STOPPER					
	20	144-9691	2	PACKING					
	21	144-9692	2	RETAINER					
	22	151-6705	1	PACKING					

Y—SEE SEPARATE ILLUSTRATION

H87564E 02

229-9087 WIPER & WASHER GP-WINDOW

Lower/Skylight Hatch Cab
Part of 229-9086-Page653
129-6466-Page270
An Attachment

OPERATOR STATION

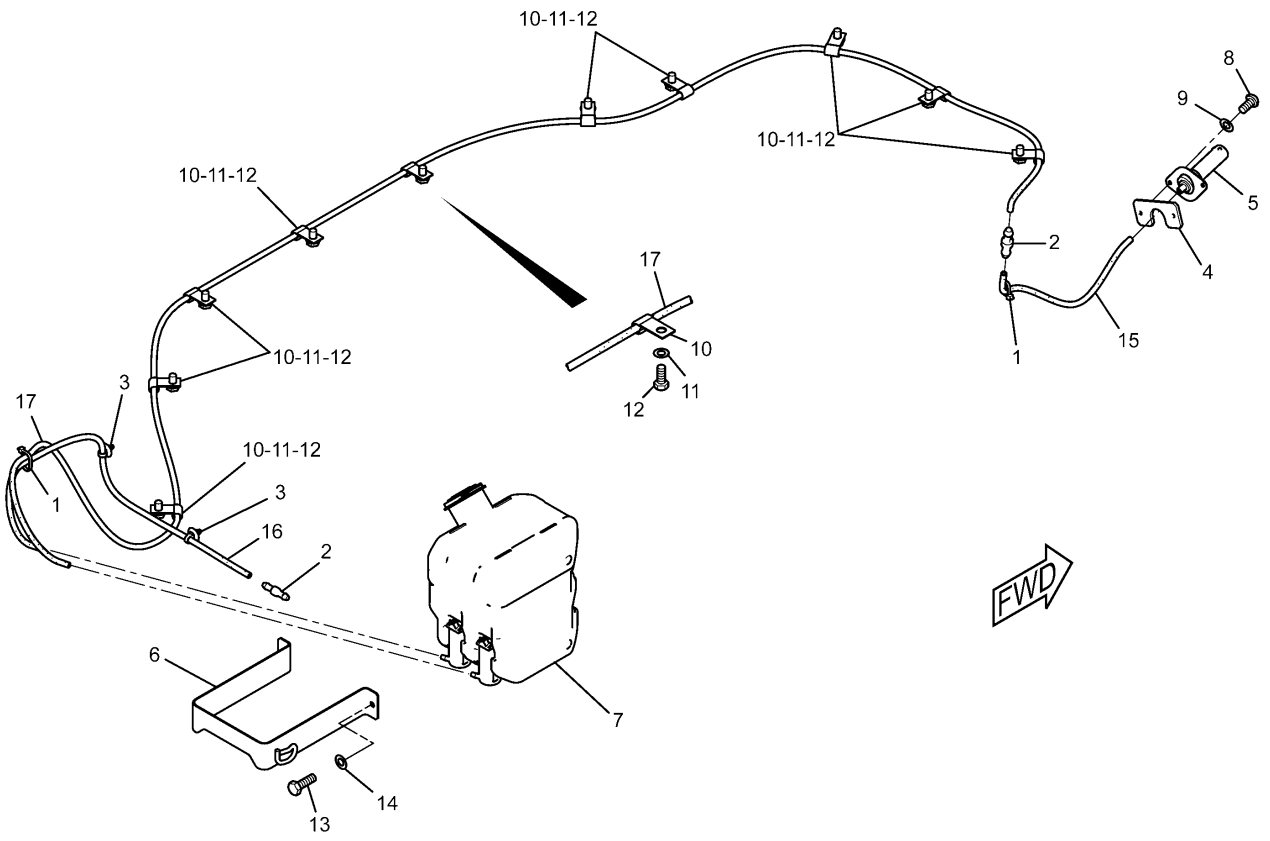

NOTE	No.	PART No.	QTY	PART NAME	NOTE	No.	PART No.	QTY	PART NAME
	1	3S-2093	2	STRAP					
	2	7Y-3474	2	VALVE AS					
	3	163-6795	2	STRAP					
	4	170-9492	1	PLATE					
	5	178-5500	1	NOZZLE AS					
		085-8037	1	NOZZLE					
		105-9526	1	ADAPTER					
		105-9527	1	PACKING					
	6	235-9012	1	SUPPORT AS					
	7	176-1932	1	TANK AS					
	8	095-0728	2	SCREW					
	9	096-6166	2	WASHER					
	10	6V-3265	10	CLIP					
	11	8T-4121	10	WASHER					
	12	8T-4191	10	BOLT (L=16mm)					
	13	8T-4970	2	BOLT (L=14mm)					
	14	9X-8256	2	WASHER					
E	15	144-0195		HOSE…(30cm)					
E	16	144-0195		HOSE…(70cm)					
E	17	144-0195		HOSE…(290cm)					

E—ORDER BY THE CENTIMETER

H91452E 07

229-9088 WASHER GP-WINDOW
Lower
Part of 229-9086-Page653
An Attachment

OPERATOR STATION

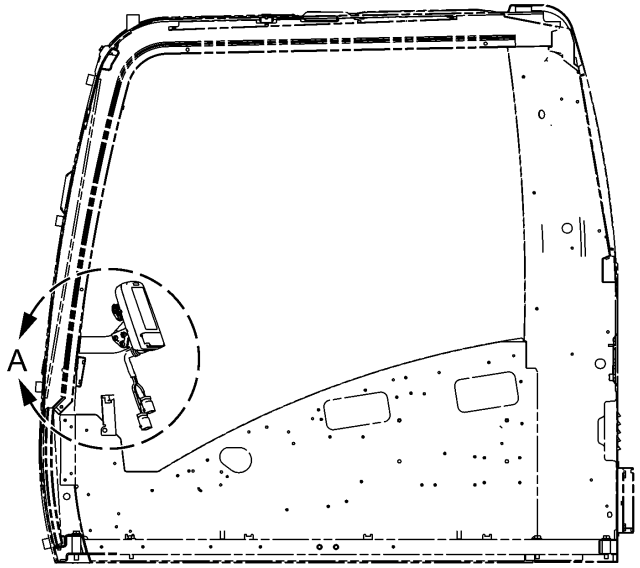

LEFT SIDE VIEW

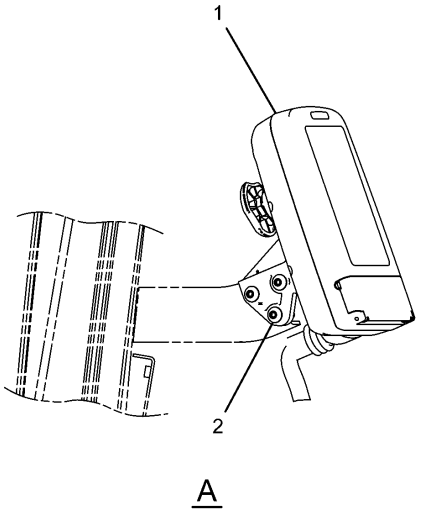

NOTE	No.	PART No.	QTY	PART NAME	NOTE	No.	PART No.	QTY	PART NAME
Y	1	260-2193	1	MONITOR GP					
	2	9X-2046	3	SCREW					

Y—SEE SEPARATE ILLUSTRATION

H89482E 03

221-8813 MONITOR & MTG GP-OPERATOR

260-2193-Page658

OPERATOR STATION

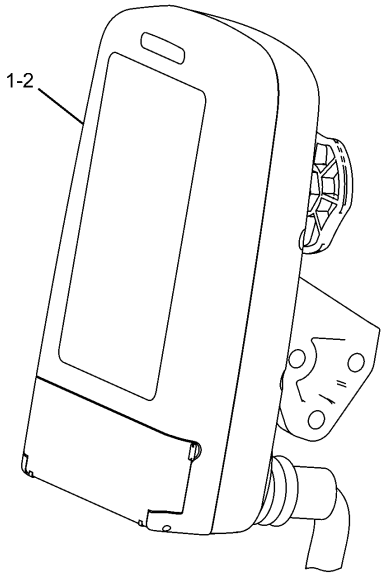

NOTE	No.	PART No.	QTY	PART NAME
Y	1	260-2193	1	MONITOR GP
	2	270-5555	1	SOFTWARE GP

Y—SEE SEPARATE ILLUSTRATION

H91202E 00

270-5554 MONITOR GP-OPERATOR

Part of 221-8861-Page216
260-2193-Page658

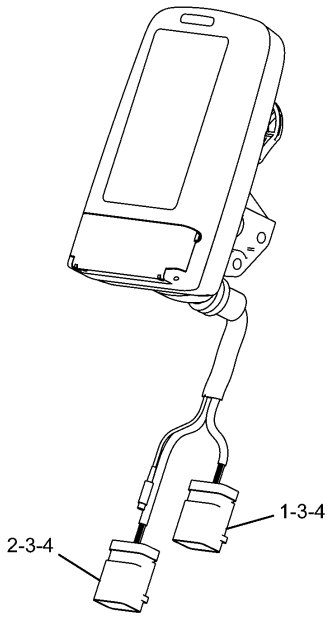

NOTE	No.	PART No.	QTY	PART NAME
	1	247-2694	1	RECEPTACLE AS
	2	247-2695	1	RECEPTACLE AS
	3	9X-3401	17	PIN
	4	8T-8737	7	PLUG

H89483E 00

260-2193 MONITOR GP-OPERATOR

Part of 221-8813-Page657,270-5554-Page658

MEMORANDA

OPERATOR STATION

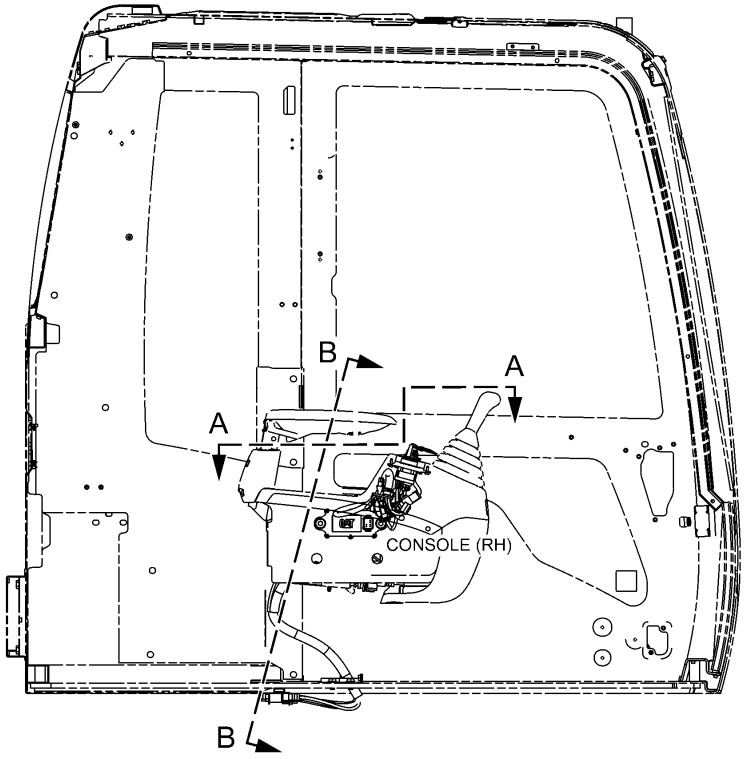

RH SIDE VIEW OF CAB

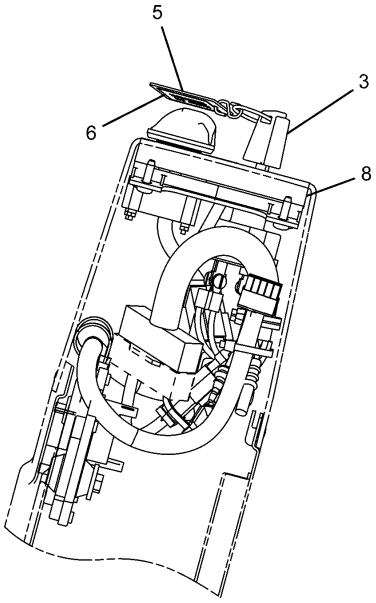

B – B

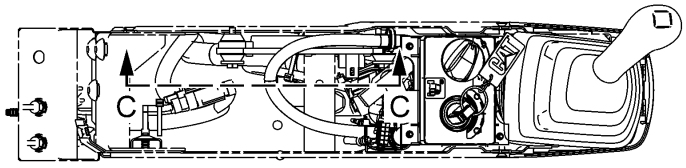

A – A

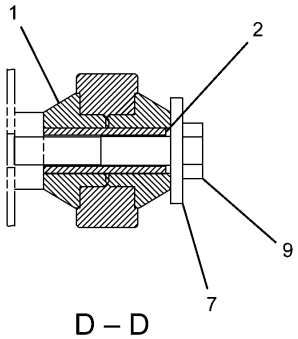

D – D

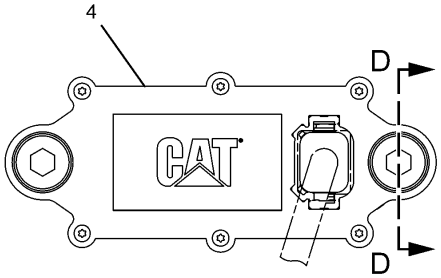

C – C

H89184E 01

227-7581 CONTROL GP
Machine Security System
251-0544-Page182
An Attachment

OPERATOR STATION

NOTE	No.	PART No.	QTY	PART NAME	NOTE	No.	PART No.	QTY	PART NAME
	1	8C-5607	4	MOUNT					
	2	8C-5608	2	SPACER					
	3	206-5162	2	KEY AS					
B		206-5165	1	KEY AS					
	4	218-0404	1	CONTROL GP					
		6V-6715	1	SCREW					
		8C-3095	1	SEAL-O-RING (ID=2.57mm)					
	5	219-6314	2	TAG					
	6	219-6607	2	LABEL					
	7	9X-6165	2	WASHER					
Y	8	251-0544	1	PANEL GP					
	9	7X-2533	2	BOLT (L=35mm)					

B—USE AS REQUIRED

Y—SEE SEPARATE ILLUSTRATION

H89184E 01

227-7581 CONTROL GP

Machine Security System
251-0544-Page182
An Attachment

OPERATOR STATION

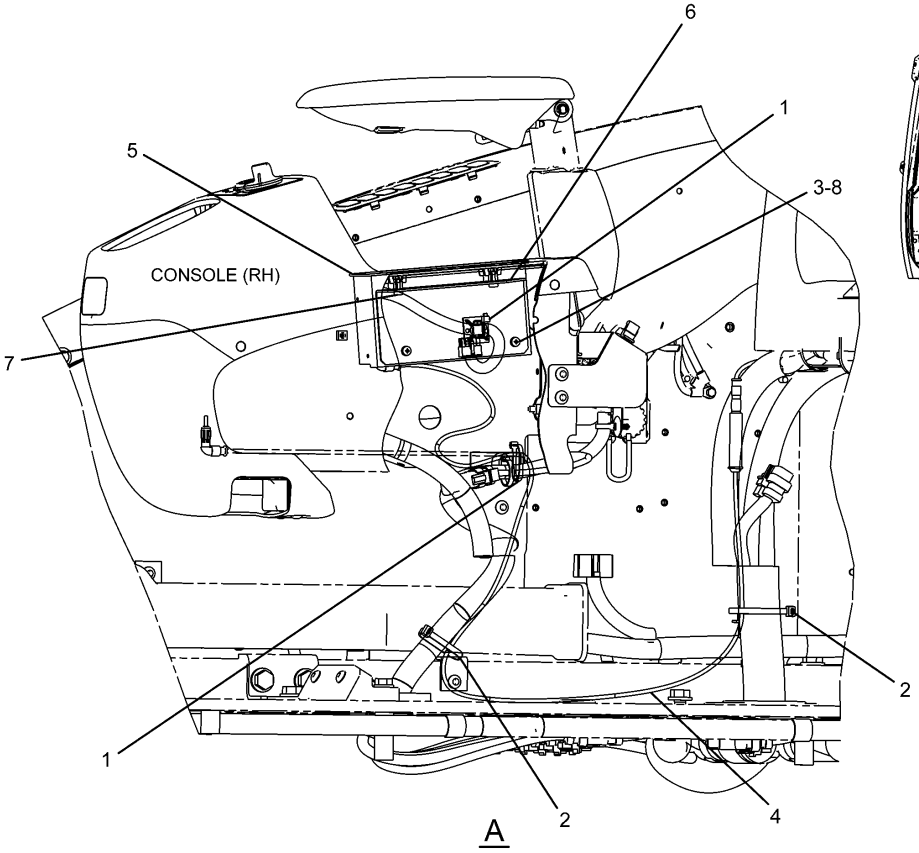

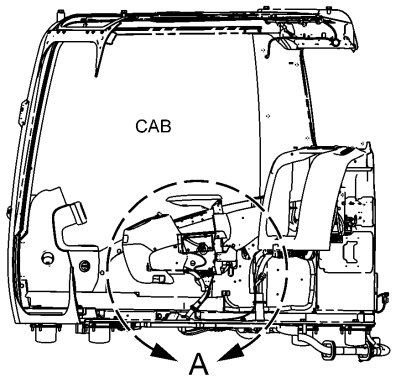

LEFT SIDE VIEW

NOTE	No.	PART No.	QTY	PART NAME	NOTE	No.	PART No.	QTY	PART NAME
	1	3S-2093	2	STRAP					
	2	7K-1181	2	STRAP					
	3	095-0736	2	SCREW					
	4	238-2260	1	CABLE					
	5	251-0537	1	RADIO					
	6	259-4914	1	BRACKET AS					
	7	119-5026	2	SCREW					
	8	8T-0328	2	WASHER					

H91219E 01

251-0536 RADIO GP-AM/FM
An Attachment

MEMORANDA

OPERATOR STATION

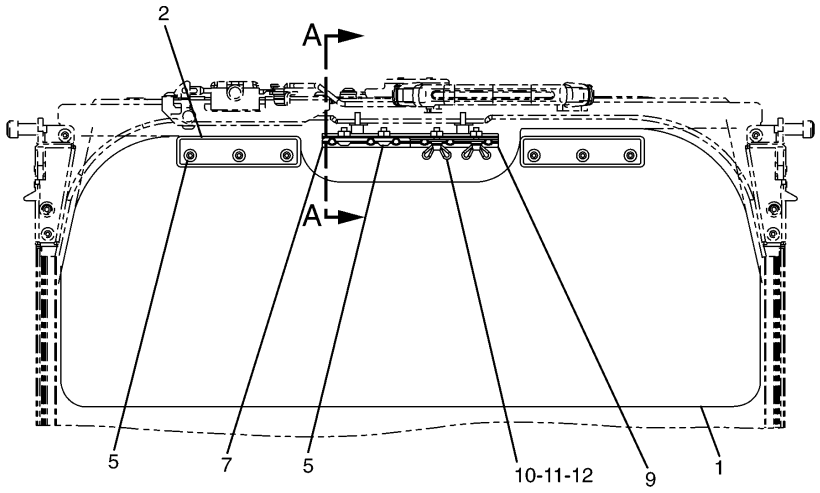

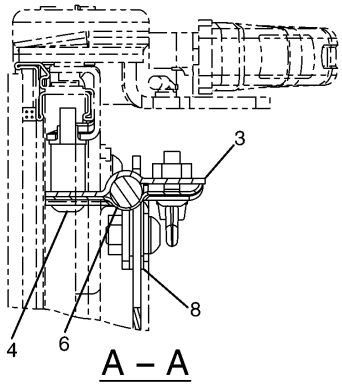

A – A

NOTE	No.	PART No.	QTY	PART NAME	NOTE	No.	PART No.	QTY	PART NAME
	1	210-5836	1	VISOR					
	2	210-5837	2	STRIP					
	3	164-0639	1	BRACKET AS					
	4	9X-2046	2	SCREW					
	5	9X-2044	8	SCREW					
	6	210-5834	1	BRACKET AS					
	7	210-5828	1	PLATE					
	8	210-5838	4	PACKING					
	9	210-5827	1	PLATE					
	10	210-5829	2	BOLT					
	11	8H-3481	2	LOCKWASHER					
	12	9X-8256	2	WASHER					

H78643E 04

161-3751 VISOR GP-SUN
An Attachment

OPERATOR STATION

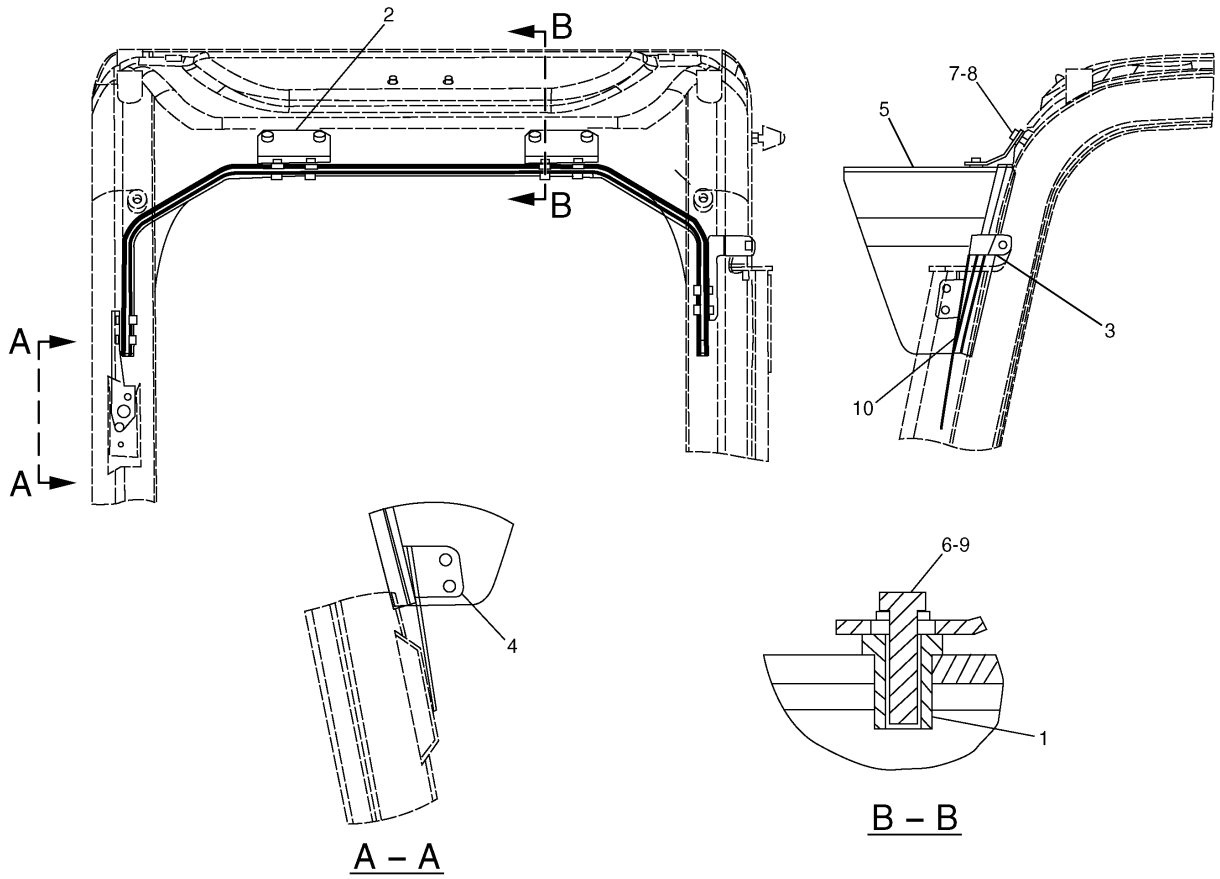

NOTE	No.	PART No.	QTY	PART NAME	NOTE	No.	PART No.	QTY	PART NAME
	1	4I-5049	8	NUT					
	2	164-0618	2	BRACKET					
	3	164-0619	1	BRACKET					
	4	164-0620	1	BRACKET					
	5	164-0621	1	VISOR					
	6	6V-7357	8	BOLT (L=25mm)					
	7	8T-4189	4	BOLT (L=20mm)					
	8	8T-4224	4	WASHER					
	9	9X-8256	8	WASHER					
D	10	5P-8292		SEAL…(1.4m)					

D—ORDER BY THE METER

H72014E 03

161-3750 VISOR GP-PROTECTION-RAIN
An Attachment

OPERATOR STATION

Consists of :

			Page
1	164-0497	GUARD GP-OVERHEAD	667
1	171-7485	GUARD GP-FRONT WINDOW	668

H68609E 00

178-5549 GUARD AR-OVERHEAD
An Attachment

OPERATOR STATION

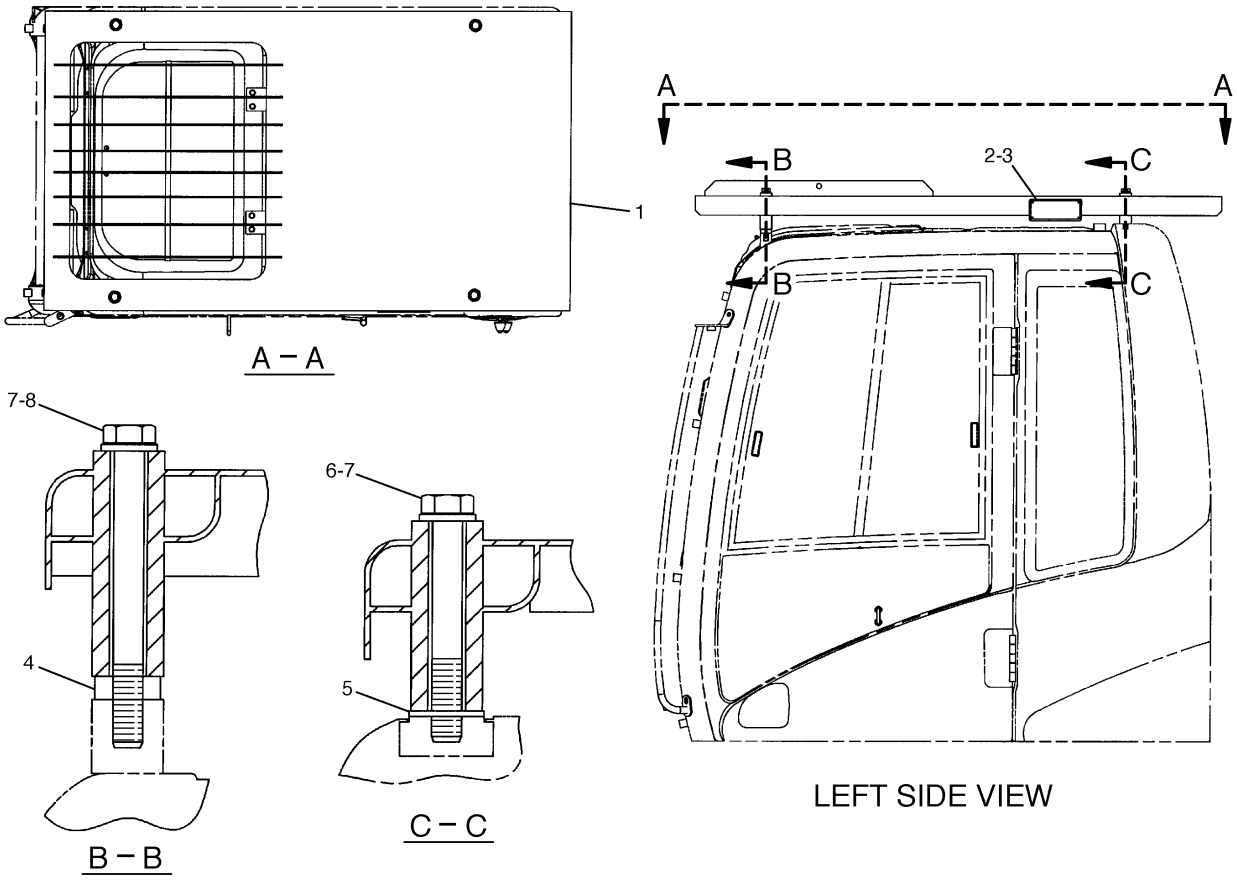

NOTE	No.	PART No.	QTY	PART NAME	NOTE	No.	PART No.	QTY	PART NAME
	1	167-7141	1	GUARD AS					
	2	116-1517	1	PLATE (WARNING)					
	3	4B-4158	4	SCREW					
	4	8V-1715	2	SPACER					
	5	090-8865	2	SPACER					
	6	8T-4174	2	BOLT (L=120mm)					
	7	9X-8257	4	WASHER					
	8	7X-2559	2	BOLT (L=160mm)					

H89135E 01

164-0497 GUARD GP-OVERHEAD
Part of 178-5549-Page666
An Attachment

OPERATOR STATION

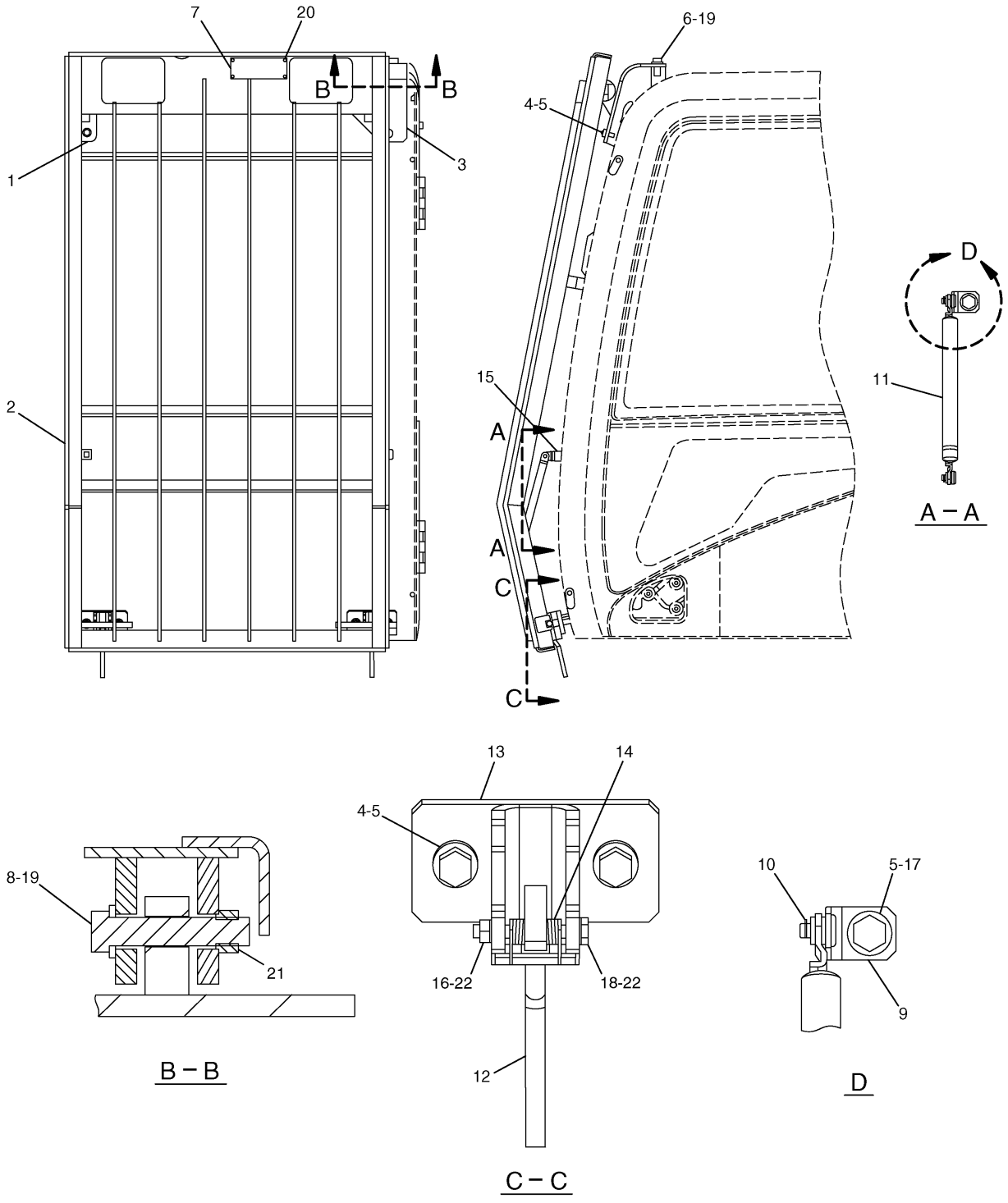

171-7485 GUARD GP-FRONT WINDOW
Part of 178-5549-Page666
An Attachment

OPERATOR STATION

NOTE	No.	PART No.	QTY	PART NAME	NOTE	No.	PART No.	QTY	PART NAME
	1	196-1571	1	SUPPORT AS					
	2	171-7486	1	GUARD AS					
	3	196-1569	1	SUPPORT AS					
	4	8T-4139	6	BOLT (L=30mm)					
	5	8T-4223	8	WASHER					
	6	7X-2553	2	BOLT (L=40mm)					
	7	124-8758	1	PLATE (WARNING)					
	8	201-4534	2	PIN					
	9	176-1928	2	BRACKET AS					
	10	5D-4822	4	RING					
	11	176-1925	2	SPRING AS					
	12	196-1572	2	LATCH AS					
	13	258-0330	2	BRACKET AS					
	14	6C-8382	2	SPRING					
	15	4I-6602	8	BOSS					
	16	096-4882	2	NUT					
	17	8T-4192	2	BOLT (L=25mm)					
	18	201-4535	2	PIN					
	19	9X-8257	4	WASHER					
	20	4B-4158	4	SCREW					
	21	7Y-0623	2	NUT					
	22	8T-4224	4	WASHER					

H89136E 05

171-7485 GUARD GP-FRONT WINDOW

Part of 178-5549-Page666
An Attachment

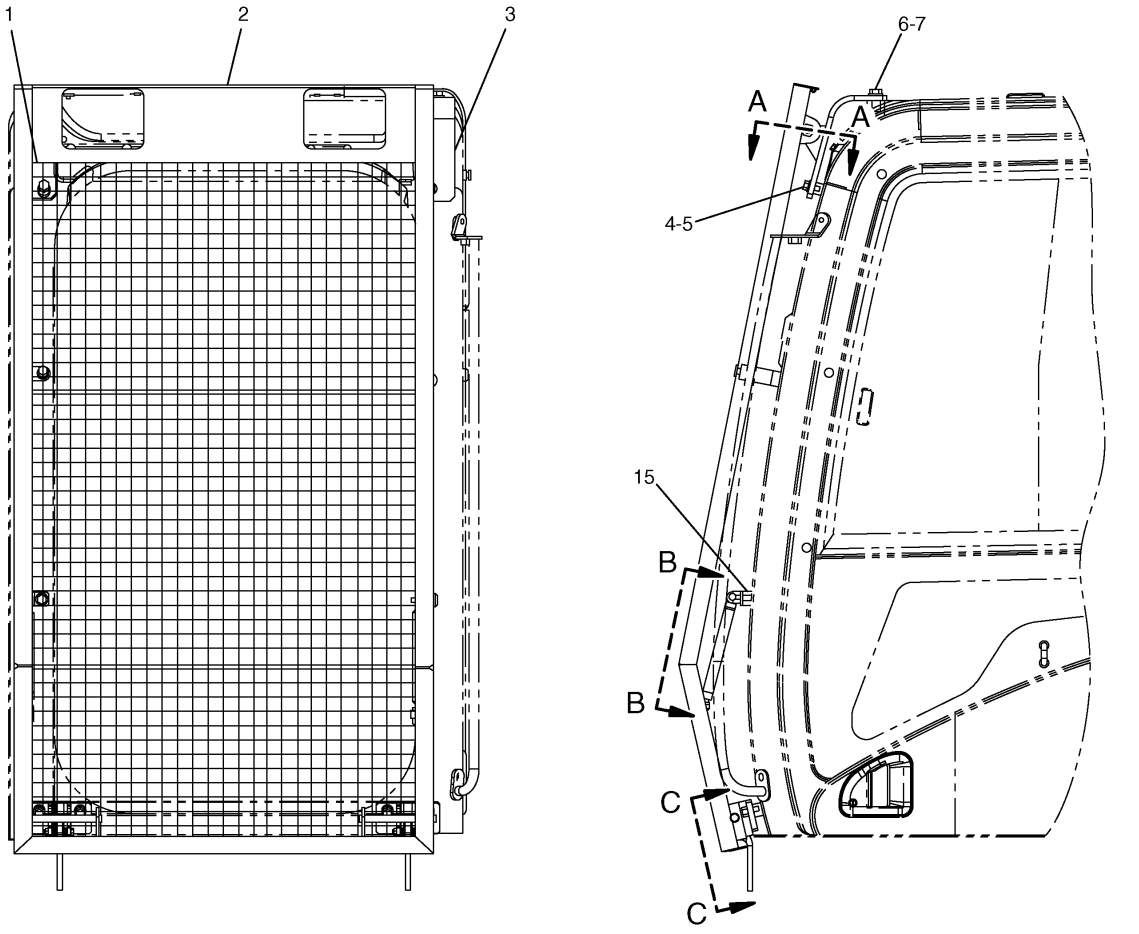

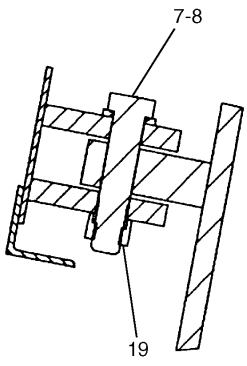

A – A

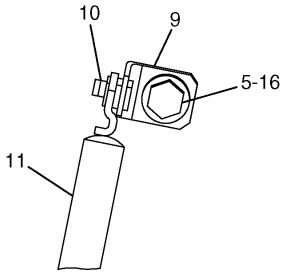

B – B

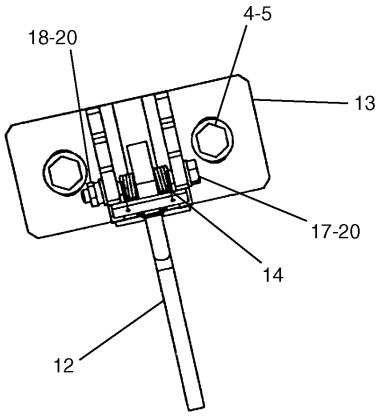

C – C

H88095E 06

164-0534 GUARD GP-FRONT WINDOW
An Attachment

OPERATOR STATION

NOTE	No.	PART No.	QTY	PART NAME	NOTE	No.	PART No.	QTY	PART NAME
	1	196-1571	1	SUPPORT AS					
	2	196-1599	1	FRAME AS					
	3	196-1569	1	SUPPORT AS					
	4	8T-4139	6	BOLT (L=30mm)					
	5	8T-4223	8	WASHER					
	6	7X-2553	2	BOLT (L=40mm)					
	7	9X-8257	4	WASHER					
	8	201-4534	2	PIN					
	9	176-1928	2	BRACKET AS					
	10	5D-4822	4	RING					
	11	207-0216	2	SPRING AS					
	12	196-1572	2	LATCH AS					
	13	258-0330	2	BRACKET AS					
	14	6C-8382	2	SPRING					
	15	4I-6602	8	BOSS					
	16	8T-4192	2	BOLT (L=25mm)					
	17	201-4535	2	PIN					
	18	096-4882	2	NUT					
	19	7Y-0623	2	NUT					
	20	8T-4224	4	WASHER					

H88095E 06

164-0534 GUARD GP-FRONT WINDOW
An Attachment

OPERATOR STATION

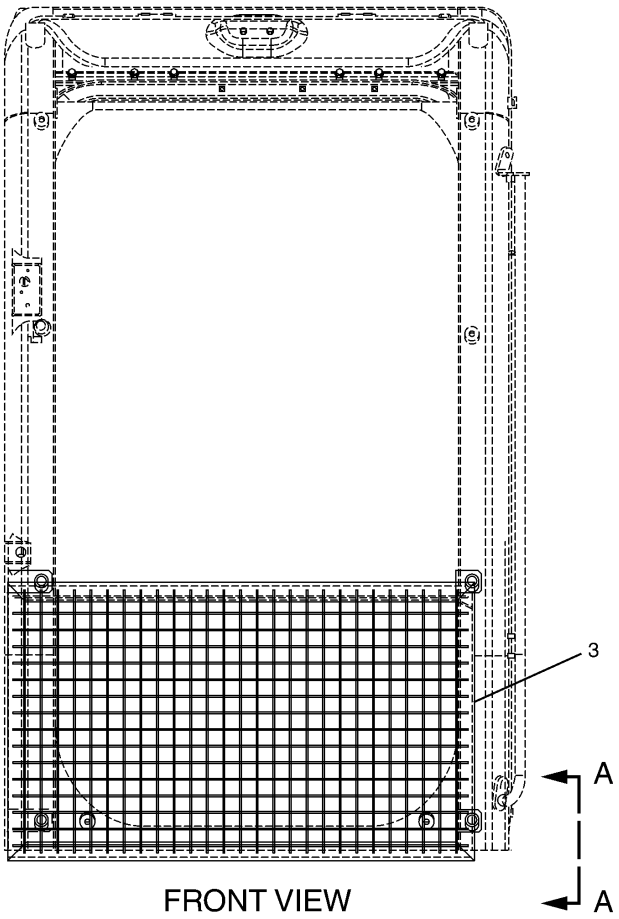

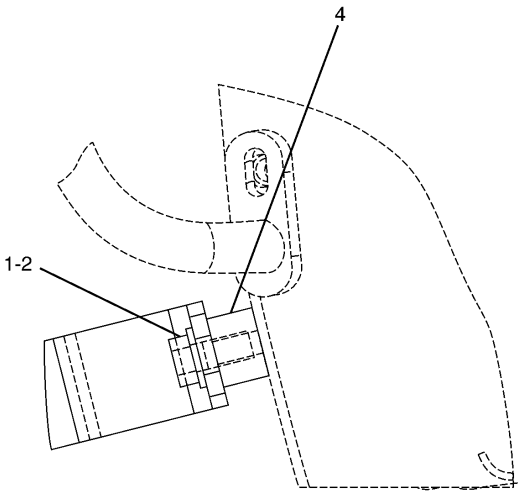

A – A

NOTE	No.	PART No.	QTY	PART NAME	NOTE	No.	PART No.	QTY	PART NAME
	1	8T-4192	4	BOLT (L=25mm)					
	2	8T-4223	4	WASHER					
	3	167-7055	1	FRAME AS					
	4	4I-6602	4	BOSS					

H74610E 02

164-0535 GUARD GP-FRONT WINDOW
An Attachment

OPERATOR STATION

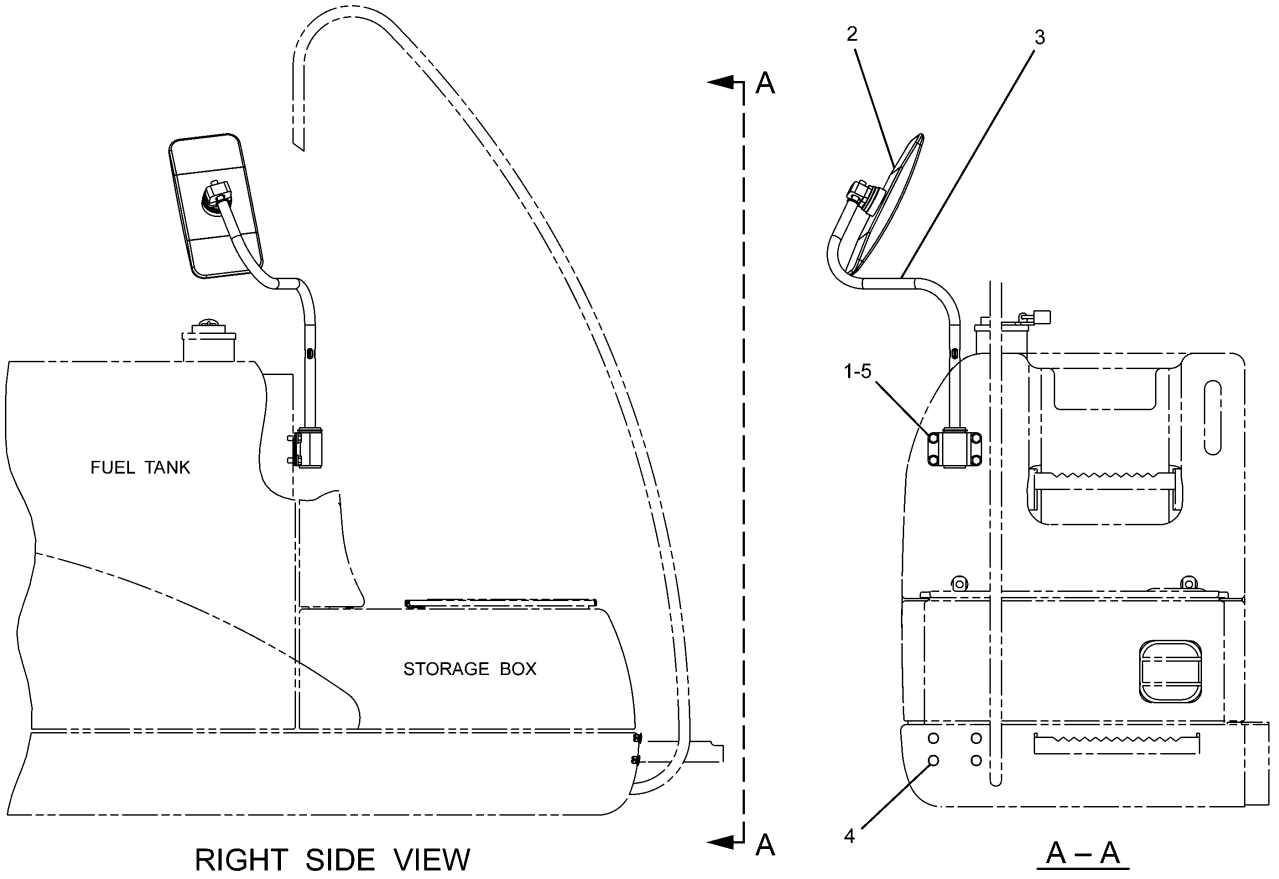

NOTE	No.	PART No.	QTY	PART NAME	NOTE	No.	PART No.	QTY	PART NAME
	1	2M-0849	4	WASHER					
	2	137-2270	1	MIRROR					
	3	165-3065	1	BAR AS					
	4	177-6315	4	PLUG					
	5	8T-4192	4	BOLT (L=25mm)					

H88913E 08

142-3836 MIRROR GP-REAR VIEW

OPERATOR STATION

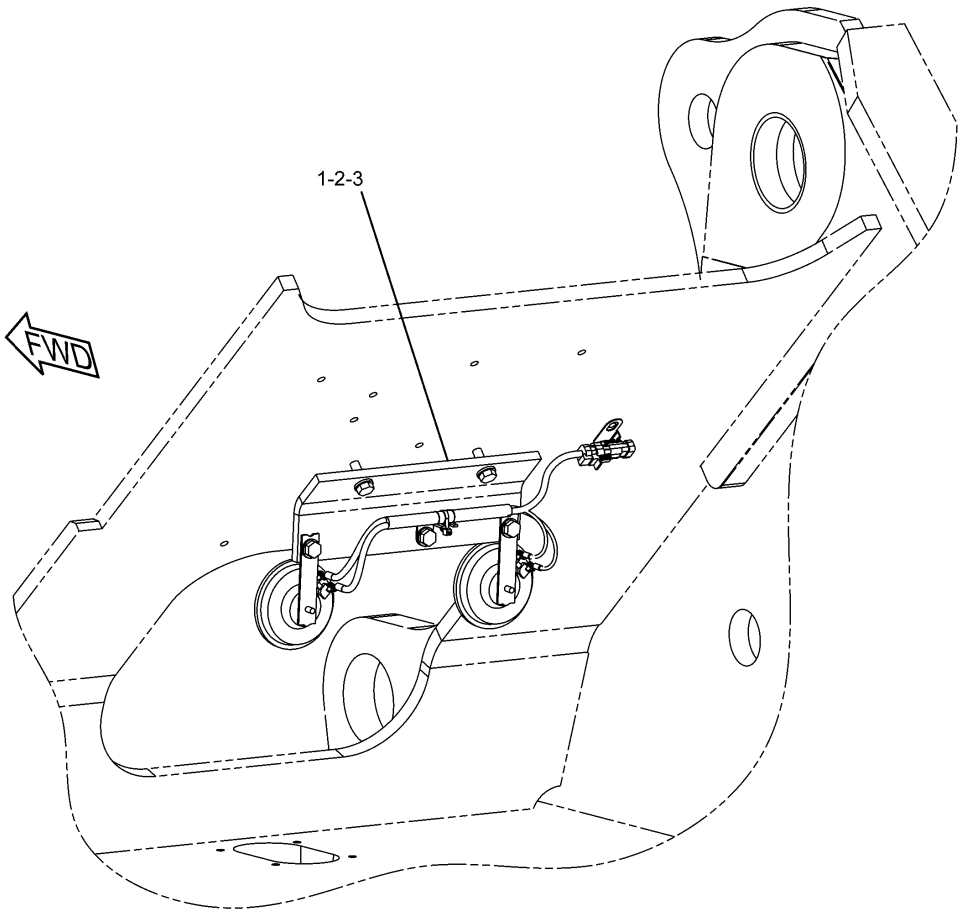

NOTE	No.	PART No.	QTY	PART NAME	NOTE	No.	PART No.	QTY	PART NAME
Y	1	291-7559	1	HORN GP					
	2	8T-4121	2	WASHER					
	3	8T-4195	2	BOLT (L=30mm)					

Y—SEE SEPARATE ILLUSTRATION

H93537E 01

267-8071 HORN GP-ELECTRIC

291-7559-Page675

OPERATOR STATION

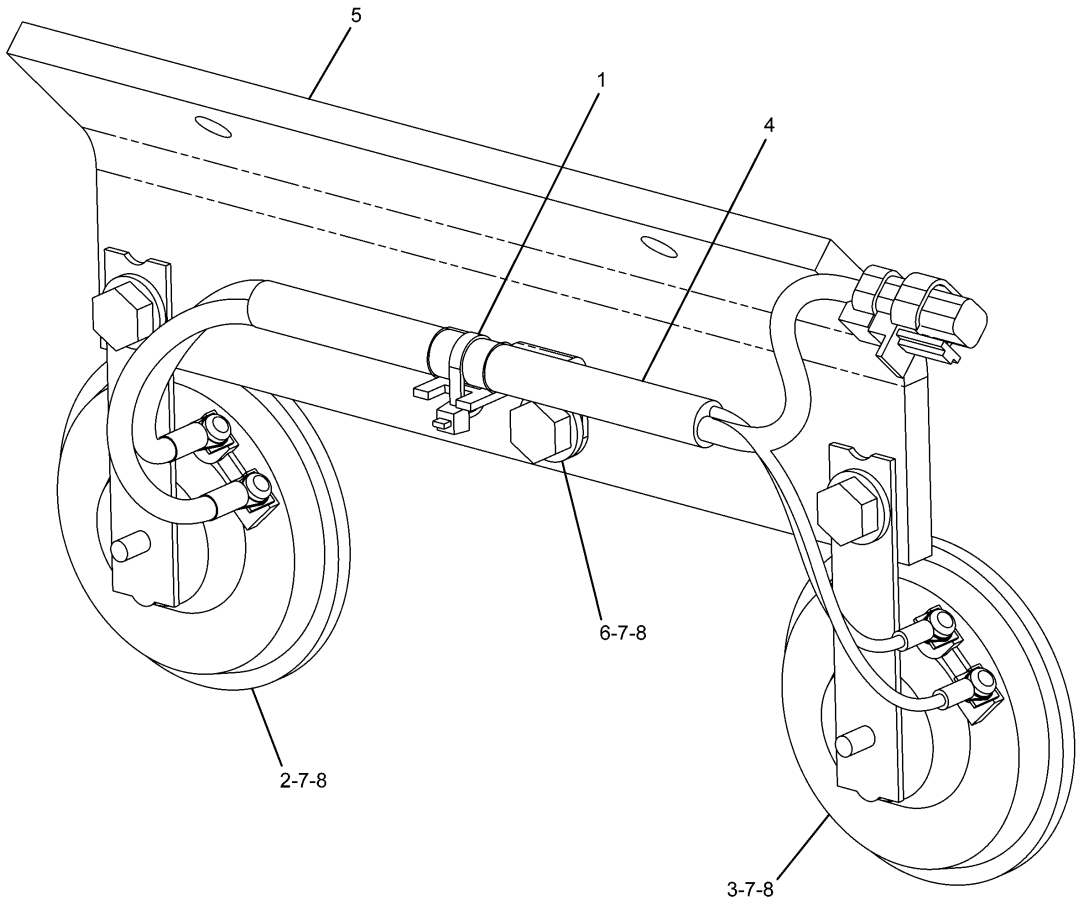

NOTE	No.	PART No.	QTY	PART NAME	NOTE	No.	PART No.	QTY	PART NAME
	1	3S-2093	1	STRAP					
	2	7Y-3919	1	HORN AS					
		095-0826	2	LOCKWASHER					
		095-7930	2	SCREW					
	3	7Y-3920	1	HORN AS					
		095-0826	2	LOCKWASHER					
		095-7930	2	SCREW					
Y	4	291-7560	1	HARNESS AS					
	5	291-7561	1	BRACKET					
	6	132-5789	1	CLIP					
	7	8T-4121	3	WASHER					
	8	8T-4191	3	BOLT (L=16mm)					

Y—SEE SEPARATE ILLUSTRATION

H93540E 00

291-7559 HORN GP-ELECTRIC

Part of 267-8071-Page674
291-7560-Page269

OPERATOR STATION

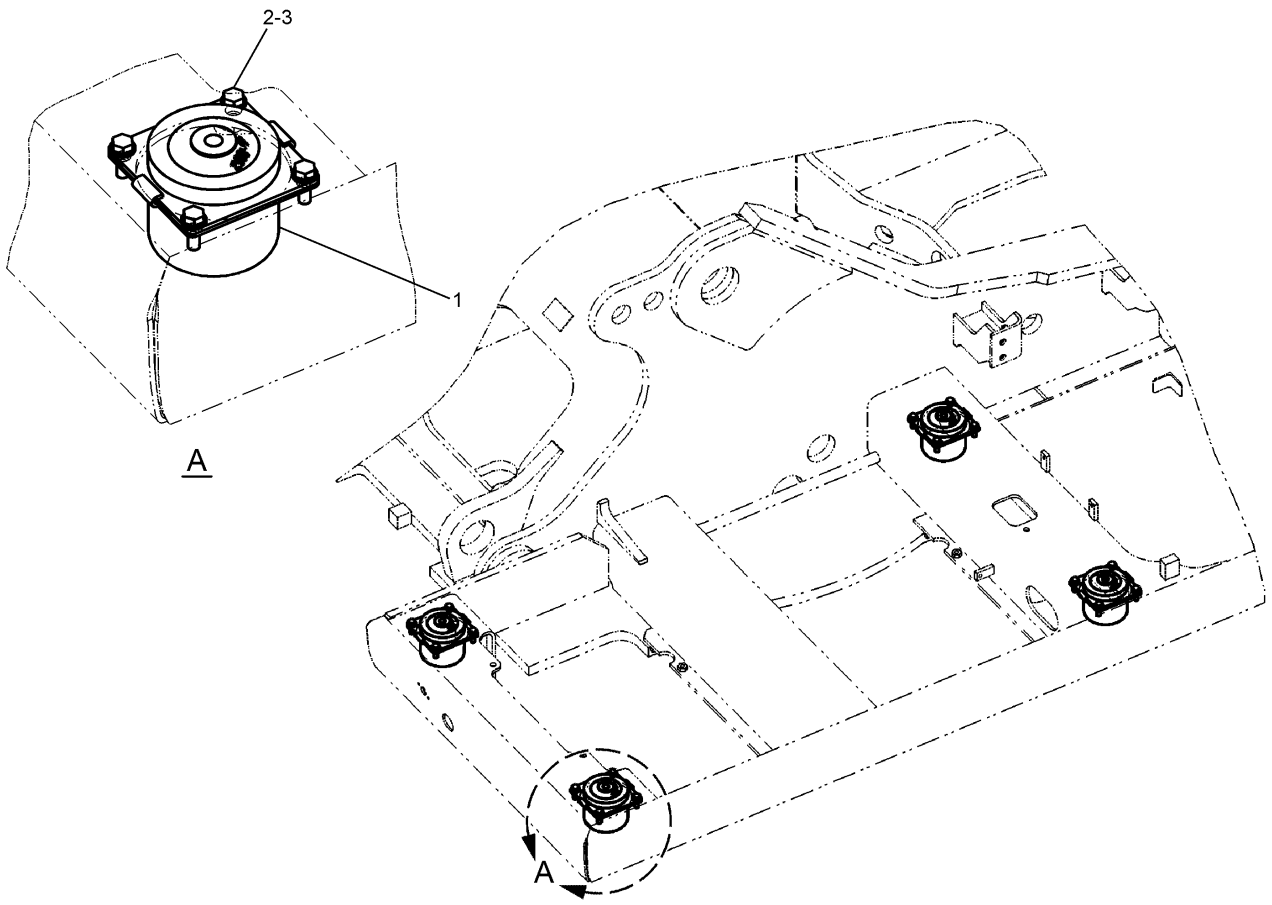

NOTE	No.	PART No.	QTY	PART NAME	NOTE	No.	PART No.	QTY	PART NAME
	1	235-8862	4	MOUNT AS					
	2	8T-4121	16	WASHER					
	3	8T-4195	16	BOLT (L=30mm)					

H87527E 00

245-7811 MOUNTING GP-PLATFORM

OPERATOR STATION

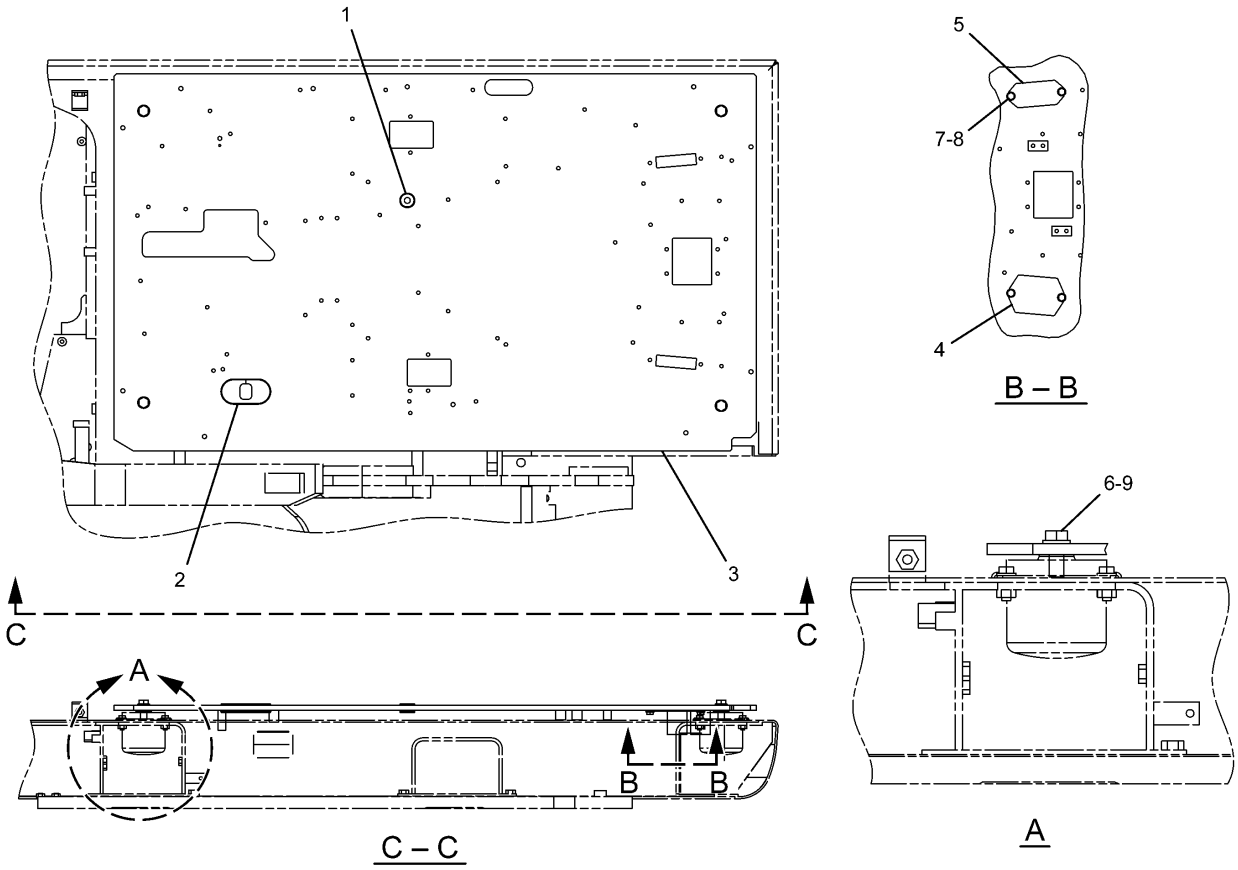

NOTE	No.	PART No.	QTY	PART NAME	NOTE	No.	PART No.	QTY	PART NAME
	1	135-8965	1	GROMMET					
	2	135-8966	1	GROMMET					
	3	245-7916	1	PLATFORM AS					
	4	161-3717	1	STRIP					
	5	41-3266	1	STRIP					
	6	7X-2553	4	BOLT (L=40mm)					
	7	8T-4121	4	WASHER					
	8	8T-4191	4	BOLT (L=16mm)					
	9	9X-8257	4	WASHER					

H90249E 04

229-9078 PLATFORM GP-OPERATOR

OPERATOR STATION

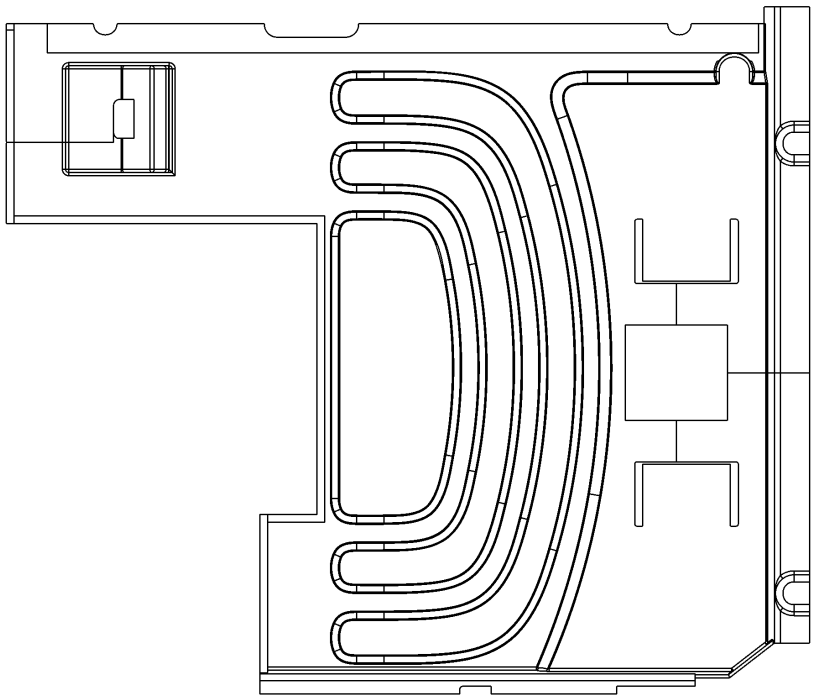

NOTE	No.	PART No.	QTY	PART NAME	NOTE	No.	PART No.	QTY	PART NAME

H88771E 03

240–5071 FLOORMAT
An Attachment

OPERATOR STATION

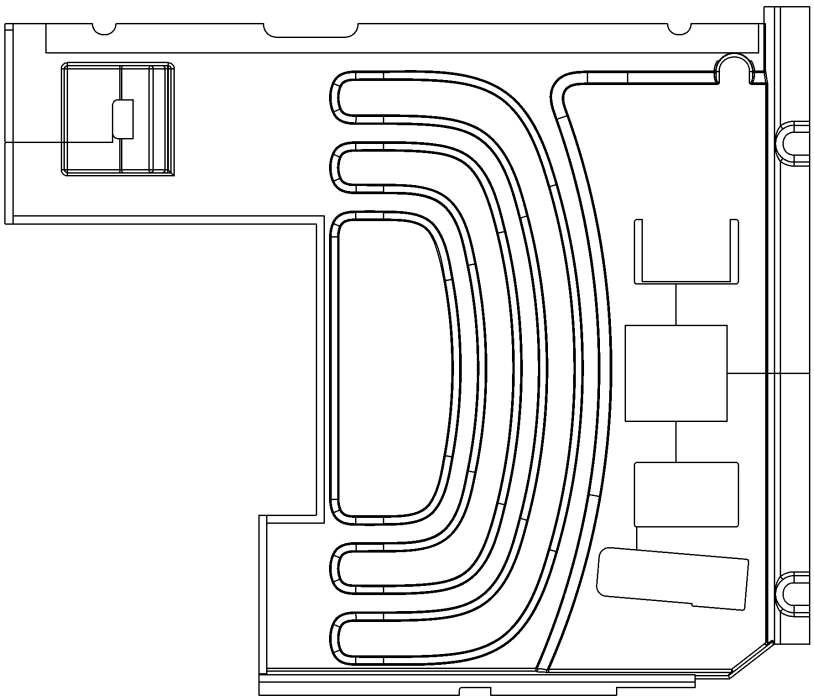

NOTE	No.	PART No.	QTY	PART NAME	NOTE	No.	PART No.	QTY	PART NAME

H89340E 04

240–5073 FLOORMAT
An Attachment

OPERATOR STATION

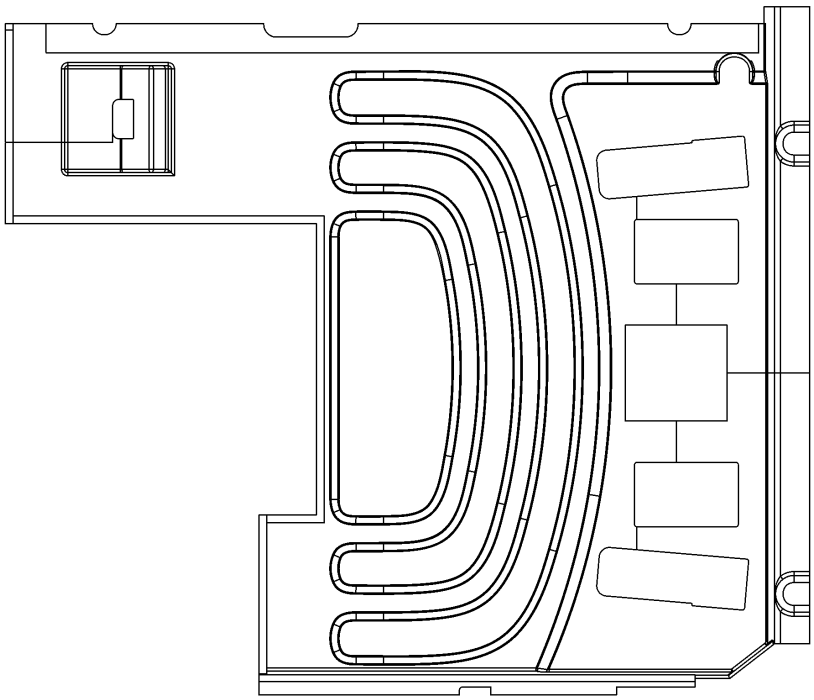

NOTE	No.	PART No.	QTY	PART NAME	NOTE	No.	PART No.	QTY	PART NAME

H89339E 03

245-7794 FLOORMAT
An Attachment

OPERATOR STATION

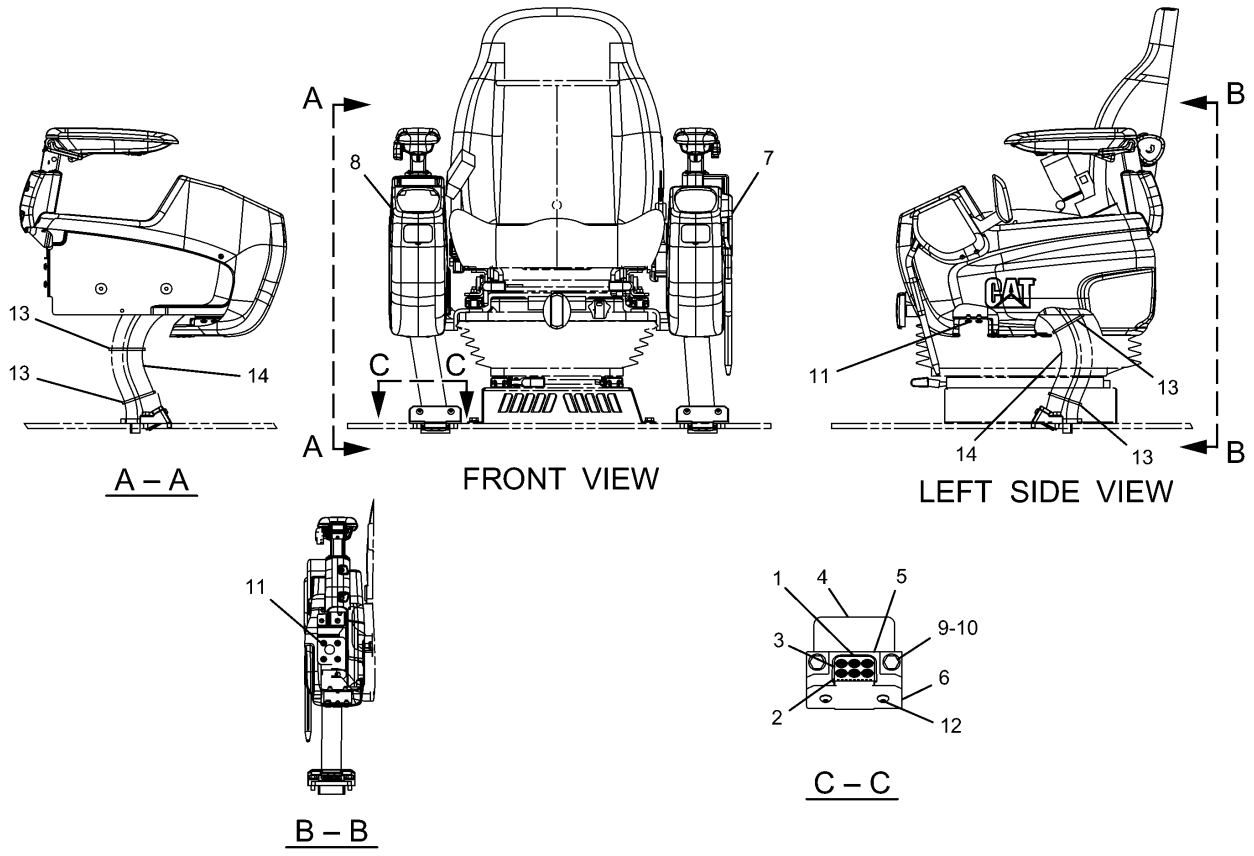

NOTE	No.	PART No.	QTY	PART NAME	NOTE	No.	PART No.	QTY	PART NAME
	1	176-1916	2	GROMMET					
	2	178-5422	2	GROMMET					
	3	178-5423	2	GROMMET					
	4	185-8161	2	INSULATOR					
	5	235-8893	2	SUPPORT					
	6	235-8894	2	SUPPORT					
Y	7	259-7349	1	CONSOLE GP					
Y	8	259-7348	1	CONSOLE GP					
	9	8T-4121	4	WASHER					
	10	8T-4195	4	BOLT (L=30mm)					
	11	9X-2043	16	SCREW					
	12	9X-2045	4	SCREW					
	13	7K-1181	4	STRAP					
	14	122-9617	2	GUARD					

Y—SEE SEPARATE ILLUSTRATION

H90257E 01

245-7922 CONSOLE GP-OPERATOR

259-7349-Page682,259-7348-Page686

OPERATOR STATION

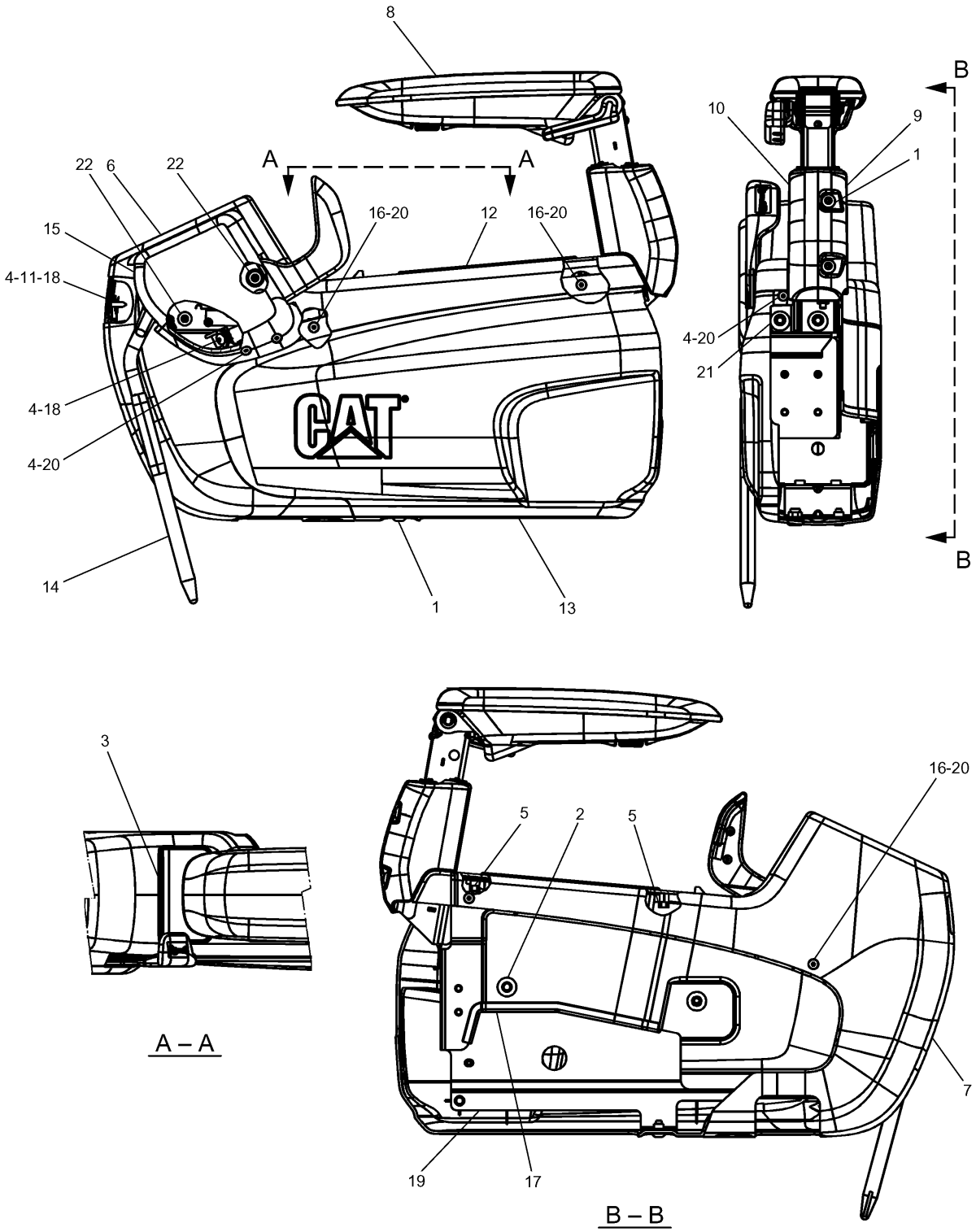

259-7349 CONSOLE GP
Left Hand
Part of 245-7922-Page681
234-6613-Page684,259-7347-Page685

OPERATOR STATION

NOTE	No.	PART No.	QTY	PART NAME	NOTE	No.	PART No.	QTY	PART NAME
	1	128-2135	5	SCREW					
	2	171-7325	3	SCREW					
	3	259-7202	1	ASHTRAY					
	4	234-6579	6	NUT					
	5	234-6580	4	CAP					
	6	234-6603	1	COVER					
	7	234-6605	1	COVER					
Y	8	259-7347	1	ARMREST GP					
	9	234-6608	1	COVER					
	10	234-6609	1	COVER					
	11	234-6610	1	COVER					
	12	234-6611	1	CASE					
	13	234-6612	1	COVER					
Y	14	234-6613	1	LEVER AS					
	15	234-6614	1	COVER					
	16	235-8914	4	NUT					
	17	235-8965	1	GUARD					
	18	245-7790	3	SCREW					
	19	245-7925	1	SUPPORT AS					
	20	245-7948	7	SCREW					
	21	9X-2041	3	SCREW					
	22	9X-2042	2	SCREW					

Y—SEE SEPARATE ILLUSTRATION

H90478E 00

259-7349 CONSOLE GP

Left Hand

Part of 245-7922-Page681
234-6613-Page684,259-7347-Page685

OPERATOR STATION

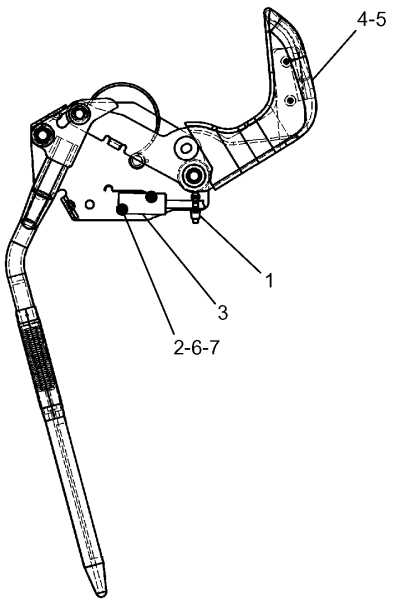

NOTE	No.	PART No.	QTY	PART NAME
	1	3S-2093	1	STRAP
	2	4I-3038	2	WASHER
Y	3	111-4799	1	SWITCH AS
	4	185-8286	2	SCREW
	5	234-6615	1	KNOB
	6	087-4683	2	LOCKWASHER
	7	120-9027	2	SCREW

Y—SEE SEPARATE ILLUSTRATION

H87487E 04

234-6613 LEVER AS

Part of 259-7349-Page683
111-4799-Page270

OPERATOR STATION

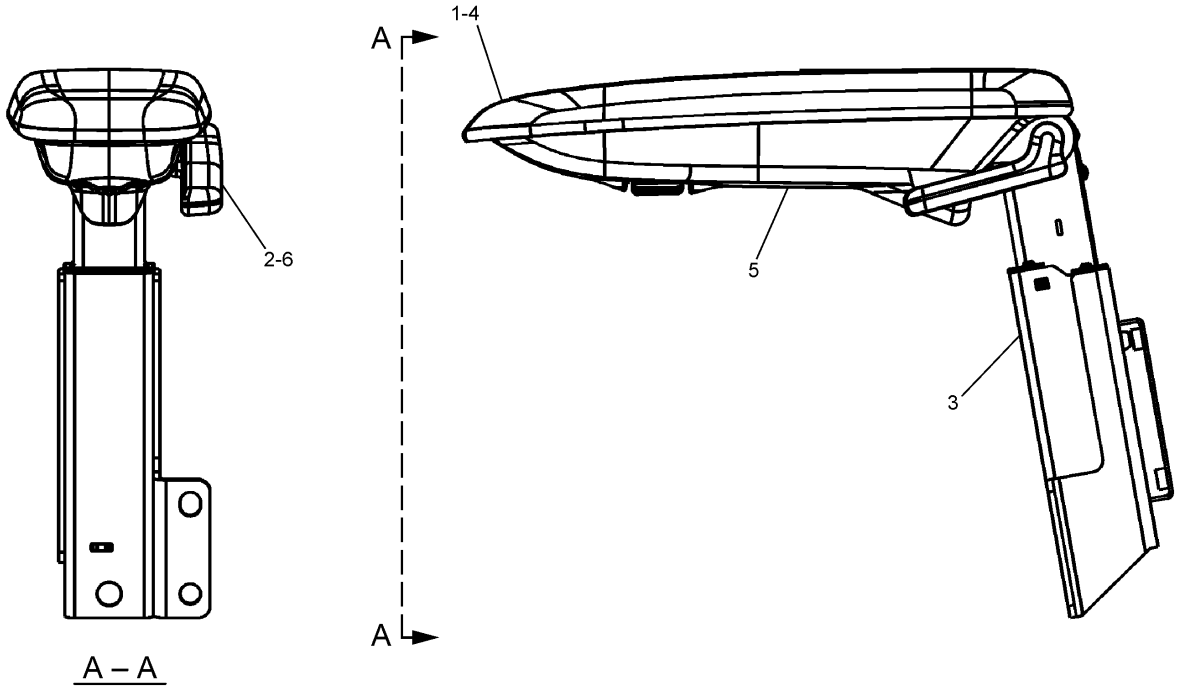

NOTE	No.	PART No.	QTY	PART NAME	NOTE	No.	PART No.	QTY	PART NAME
	1	171-7325	3	SCREW					
	2	185-8286	2	SCREW					
	3	235-8952	1	SUPPORT AS					
	4	259-7345	1	CUSHION					
	5	235-8996	1	COVER					
	6	235-8998	1	KNOB					

H90361E 00

259-7347 ARMREST GP

Part of 259-7349-Page683

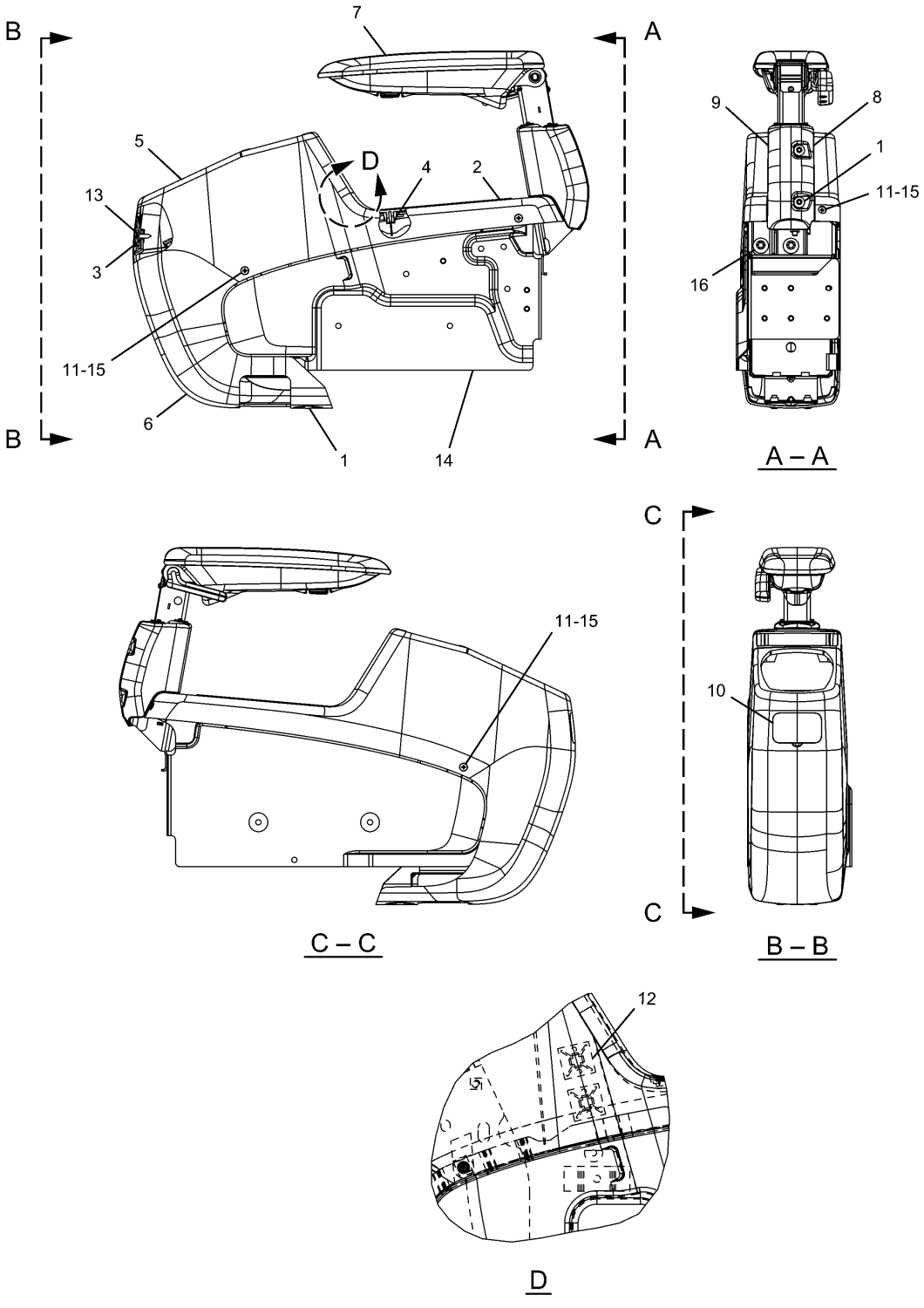

H90477E 00

259-7348 CONSOLE GP
Right Hand
Part of 245-7922-Page681
259-7346-Page688

OPERATOR STATION

NOTE	No.	PART No.	QTY	PART NAME	NOTE	No.	PART No.	QTY	PART NAME
	1	128-2135	4	SCREW					
	2	185-8284	1	COVER					
	3	234-6579	2	NUT					
	4	234-6580	2	CAP					
	5	234-6602	1	COVER					
	6	234-6604	1	COVER					
Y	7	259-7346	1	ARMREST GP					
	8	234-6608	1	COVER					
	9	234-6609	1	COVER					
	10	234-6610	1	COVER					
	11	235-8914	4	NUT					
	12	235-8966	2	BASE					
	13	245-7790	2	SCREW					
	14	245-7926	1	SUPPORT AS					
	15	245-7948	4	SCREW					
	16	9X-2041	3	SCREW					

Y—SEE SEPARATE ILLUSTRATION

H90477E 00

259-7348 CONSOLE GP

Right Hand

Part of 245-7922-Page681

259-7346-Page688

OPERATOR STATION

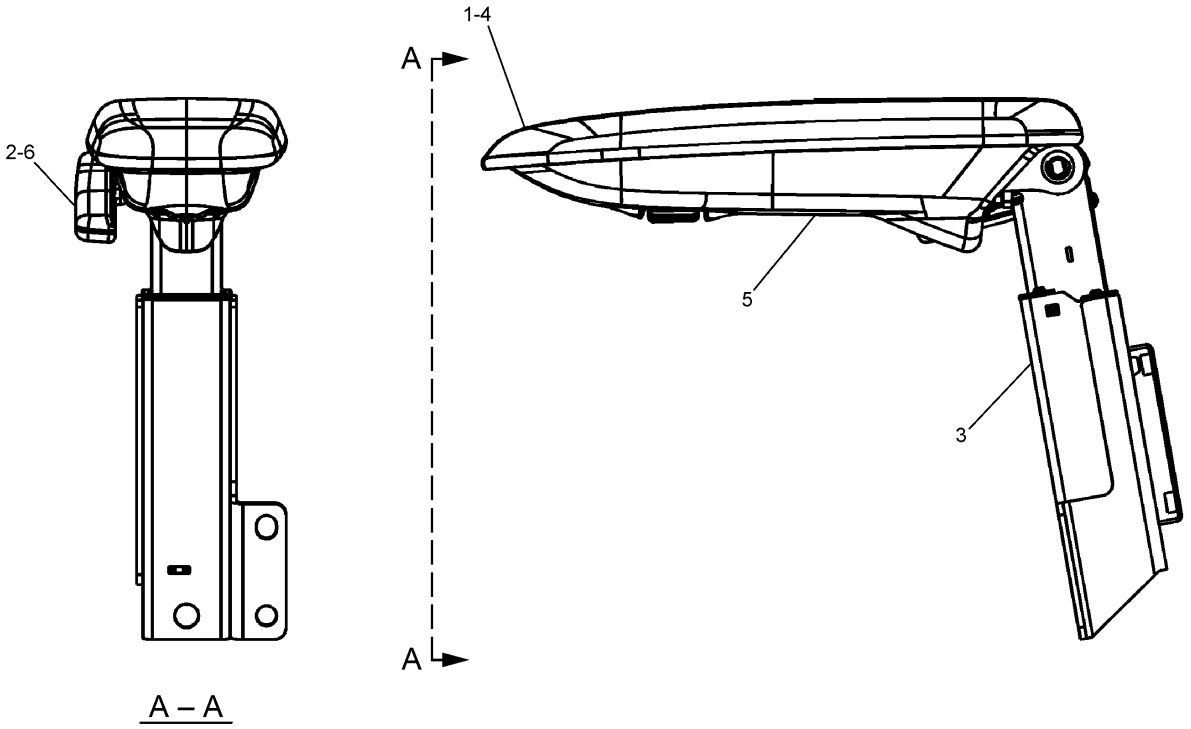

NOTE	No.	PART No.	QTY	PART NAME	NOTE	No.	PART No.	QTY	PART NAME
	1	171-7325	3	SCREW					
	2	185-8286	2	SCREW					
	3	235-8951	1	SUPPORT AS					
	4	259-7345	1	CUSHION					
	5	235-8996	1	COVER					
	6	235-8997	1	KNOB					

H90360E 00

259-7346 ARMREST GP
Part of 259-7348-Page687

OPERATOR STATION

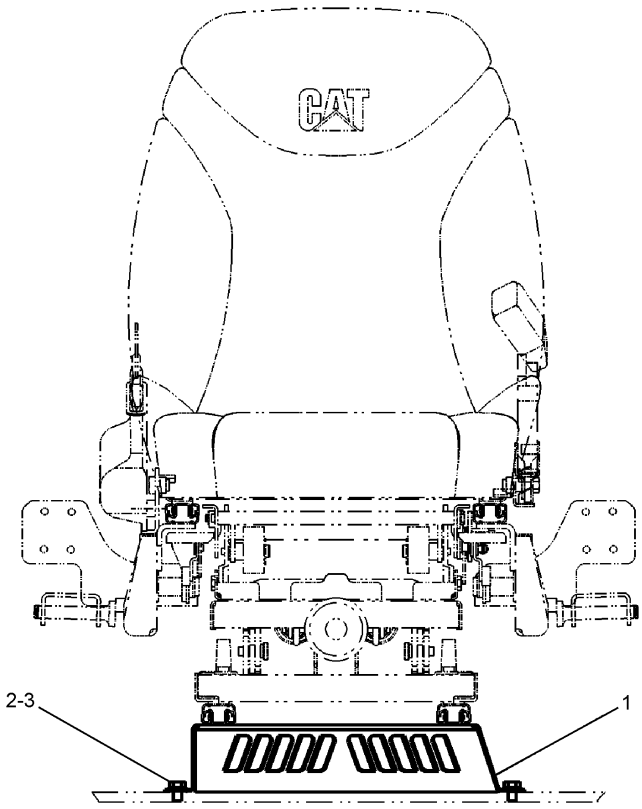

FRONT VIEW

NOTE	No.	PART No.	QTY	PART NAME	NOTE	No.	PART No.	QTY	PART NAME
	1	235-8857	1	SUPPORT AS					
	2	8T-4121	4	WASHER					
	3	8T-4191	4	BOLT (L=16mm)					

H87531E 01

235-8856 SUPPORT GP-SEAT

OPERATOR STATION

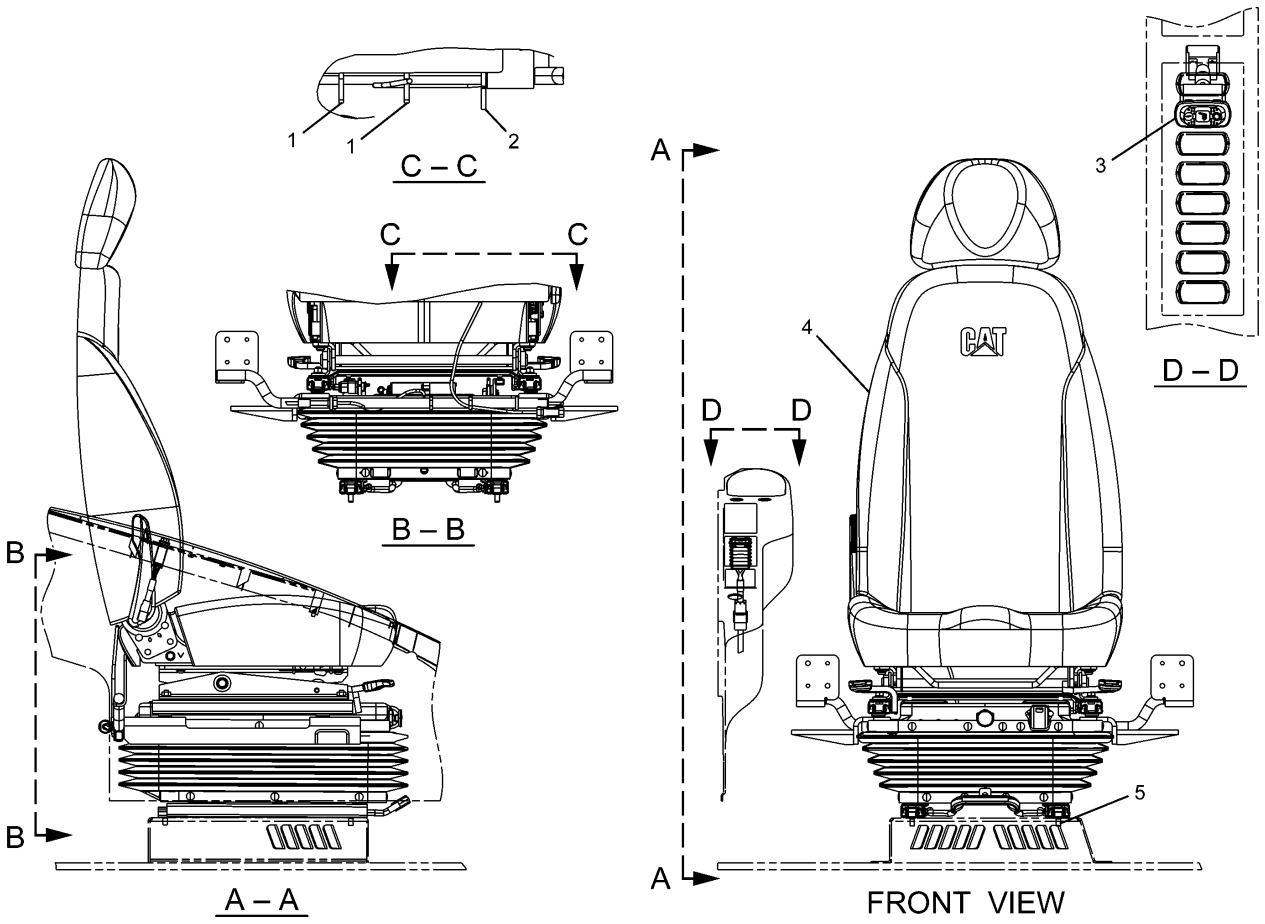

NOTE	No.	PART No.	QTY	PART NAME	NOTE	No.	PART No.	QTY	PART NAME
	1	3S-2093	2	STRAP					
	2	7I-2673	1	STRAP					
	3	238-2211	1	SWITCH AS					
		167-3542	1	CONNECTOR					
		167-3543	4	TERMINAL					
Y	4	240-5065	1	SEAT GP					
	5	6V-8202	4	BOLT (L=16mm)					

Y—SEE SEPARATE ILLUSTRATION

H91211E 05

240-5064 SEAT GP

240-5065-Page691

An Attachment

OPERATOR STATION

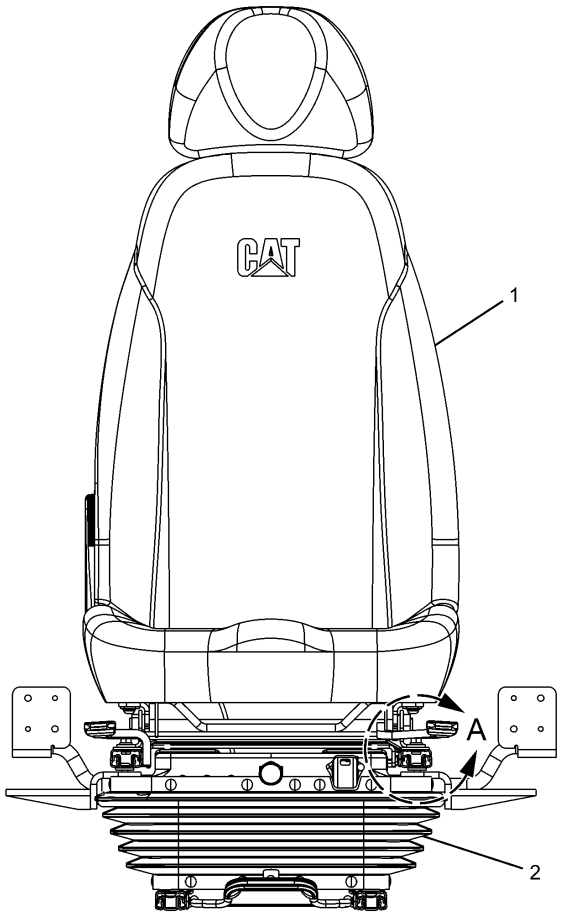

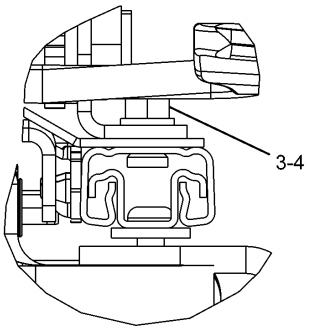

A

NOTE	No.	PART No.	QTY	PART NAME	NOTE	No.	PART No.	QTY	PART NAME
Y	1	229-9093	1	SEAT GP					
Y	2	240-5063	1	SUSPENSION GP					
	3	5C-7261	4	NUT					
	4	8T-4224	4	WASHER					

Y—SEE SEPARATE ILLUSTRATION

H91446E 05

240-5065 SEAT GP

Part of 240-5064-Page690
229-9093-Page692,240-5063-Page695
An Attachment

OPERATOR STATION

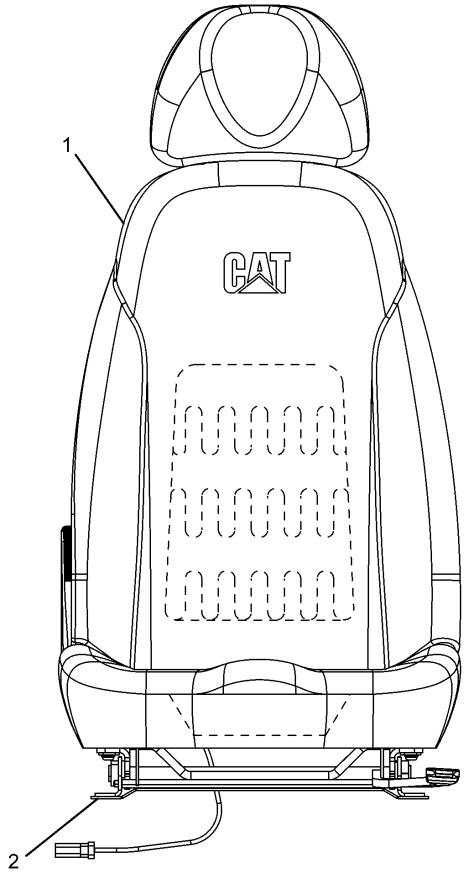

NOTE	No.	PART No.	QTY	PART NAME	NOTE	No.	PART No.	QTY	PART NAME
Y	1	245-7885	1	SEAT KIT					
Y	2	245-7888	1	SUPPORT KIT					

Y—SEE SEPARATE ILLUSTRATION

H88079E 03

229-9093 SEAT GP

Part of 240-5065-Page691
245-7885-Page693,245-7888-Page694
An Attachment

OPERATOR STATION

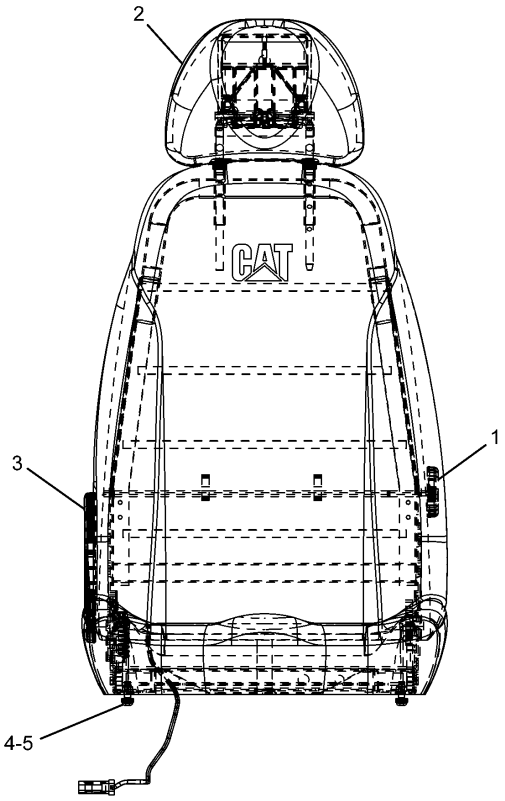

NOTE	No.	PART No.	QTY	PART NAME	NOTE	No.	PART No.	QTY	PART NAME
	1	178-5659	1	HANDLE KIT (ADJUSTER)					
	2	229-9094	1	HEADREST AS					
	3	245-7887	1	LEVER KIT					
	4	245-7898	4	SCREW					
	5	8T-4224	4	WASHER					

H88068E 00

245-7885 SEAT KIT
Part of 229-9093-Page692
An Attachment

OPERATOR STATION

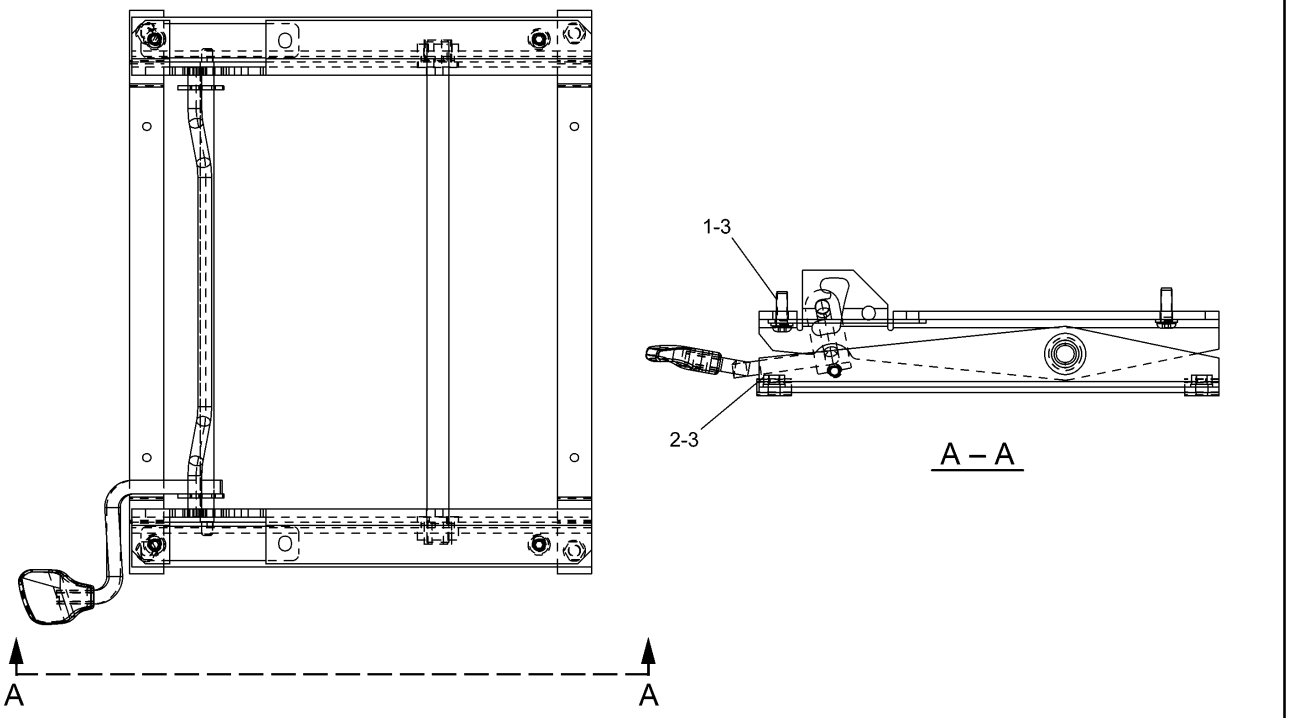

NOTE	No.	PART No.	QTY	PART NAME	NOTE	No.	PART No.	QTY	PART NAME
	1	245-7898	4	SCREW					
	2	5C-7261	4	NUT					
	3	8T-4224	8	WASHER					

H88069E 00

245-7888 SUPPORT KIT-TILT
Part of 229-9093-Page692,240-5058-Page702
An Attachment

OPERATOR STATION

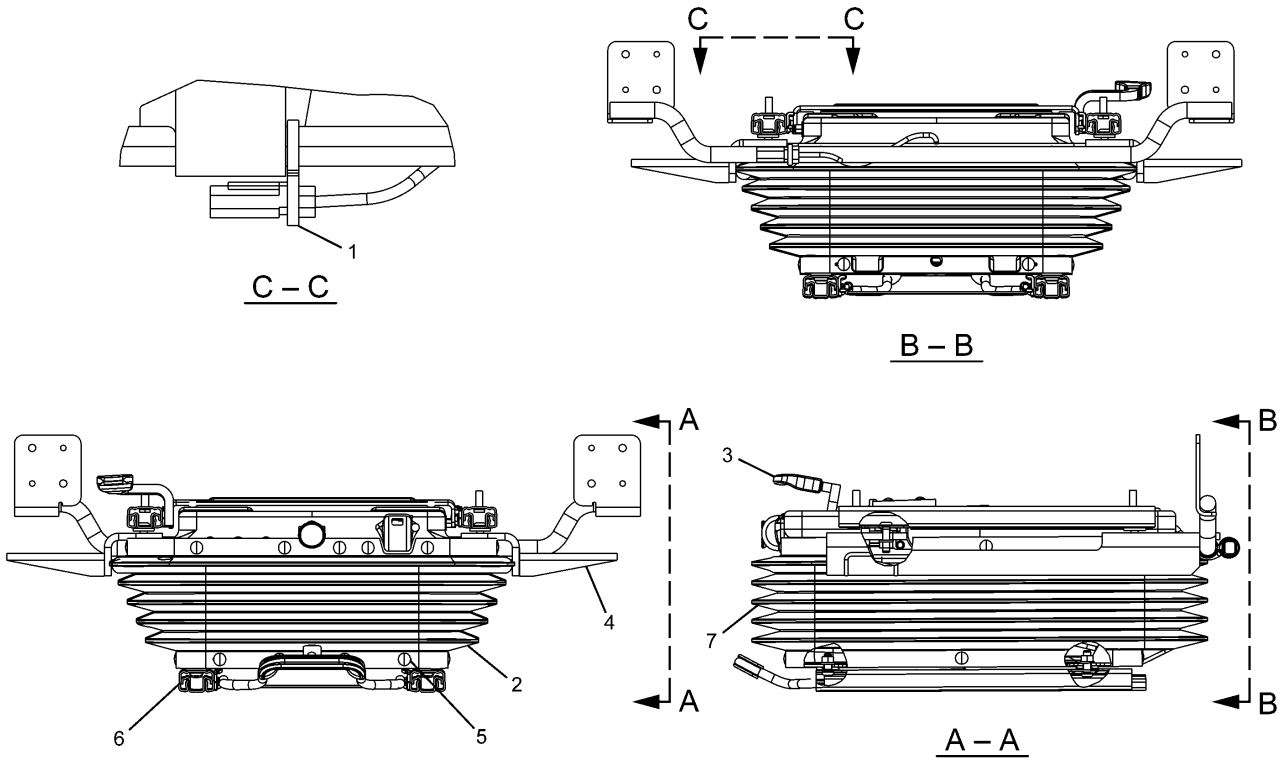

NOTE	No.	PART No.	QTY	PART NAME	NOTE	No.	PART No.	QTY	PART NAME
	1	71-2673	1	STRAP					
	2	242-8768	1	COVER AS					
		147-4921	1	CLIP KIT					
Y	3	245-7889	1	ADJUSTER KIT					
Y	4	245-7890	1	BRACKET KIT					
	5	245-7895	1	CLIP KIT					
Y	6	245-7896	1	ADJUSTER KIT					
	7	273-5384	1	SUSPENSION SEAT KIT					

Y—SEE SEPARATE ILLUSTRATION

H91449E 06

240-5063 SUSPENSION GP-SEAT

Part of 240-5065-Page691
245-7889-Page696,245-7896-Page697,245-7890-Page698
An Attachment

OPERATOR STATION

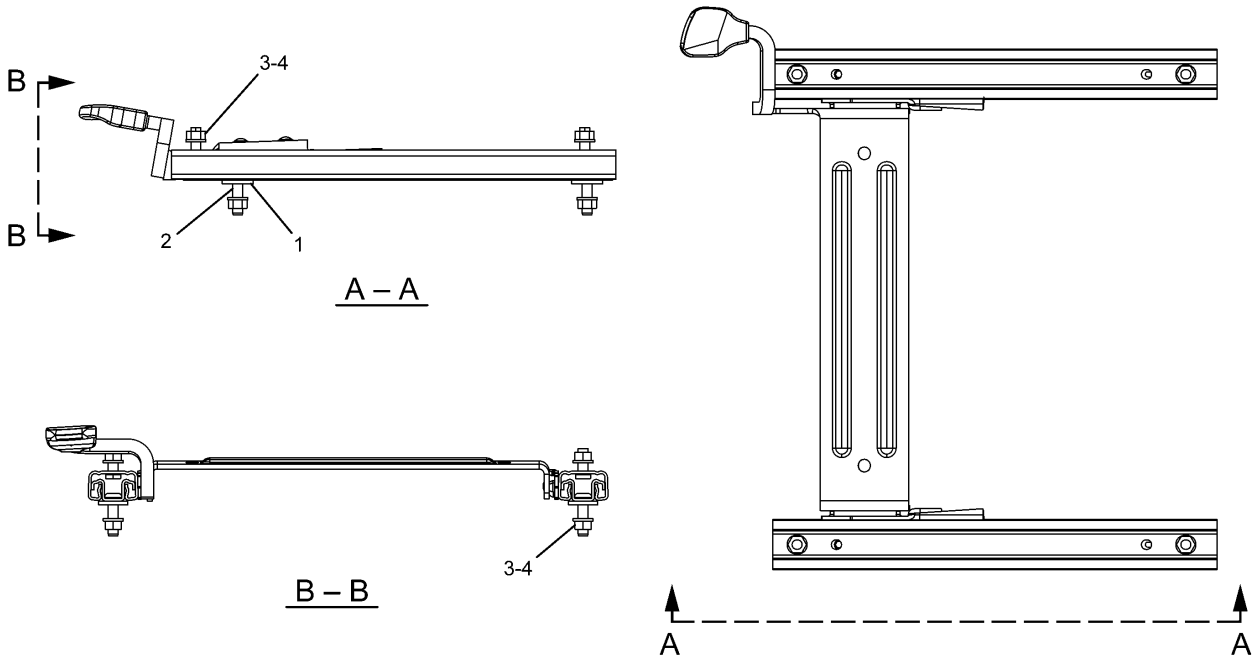

NOTE	No.	PART No.	QTY	PART NAME	NOTE	No.	PART No.	QTY	PART NAME
	1	245-7897	4	PLATE					
	2	245-7899	4	SCREW					
	3	5C-7261	8	NUT					
	4	8T-4224	8	WASHER					

H88074E 00

245-7889 ADJUSTER KIT-UPPER SLIDE

Part of 240-5063-Page695,229-9095-Page704
An Attachment

OPERATOR STATION

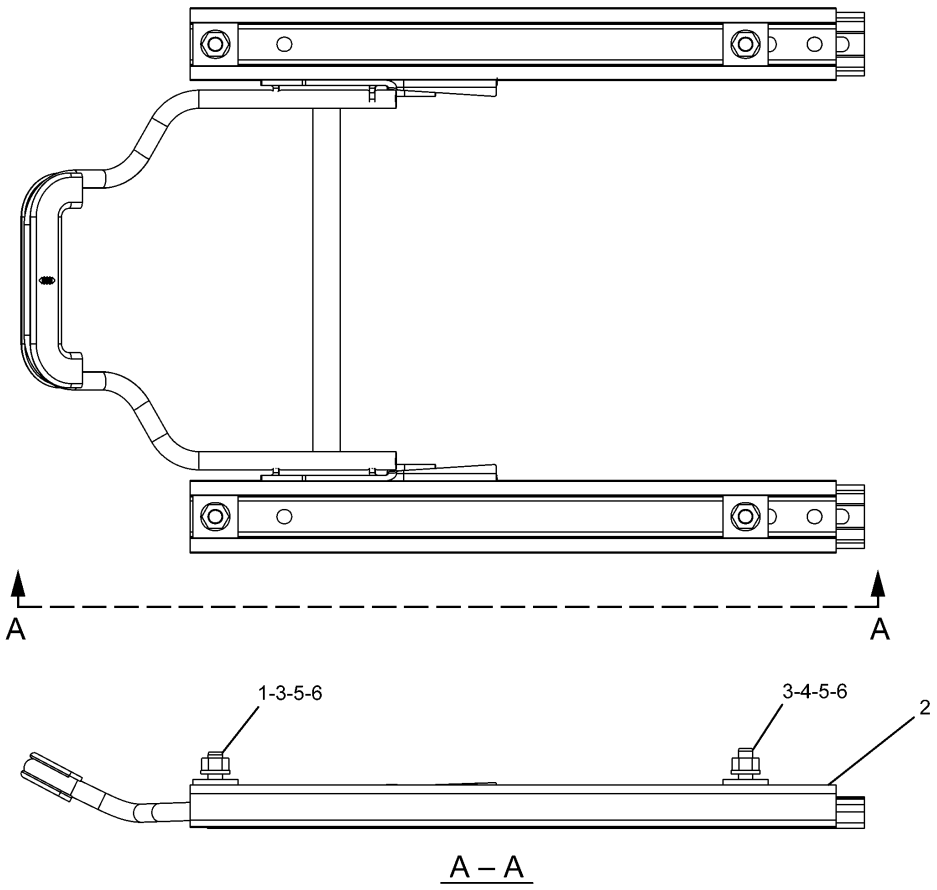

NOTE	No.	PART No.	QTY	PART NAME	NOTE	No.	PART No.	QTY	PART NAME
	1	198-3899	2	SCREW					
	2	245-7886	2	PLATE					
	3	245-7897	4	PLATE					
	4	245-7898	2	SCREW					
	5	5C-7261	4	NUT					
	6	8T-4224	4	WASHER					

H91454E 01

245-7896 ADJUSTER KIT-LOWER SLIDE
Part of 240-5063-Page695,229-9095-Page704
An Attachment

OPERATOR STATION

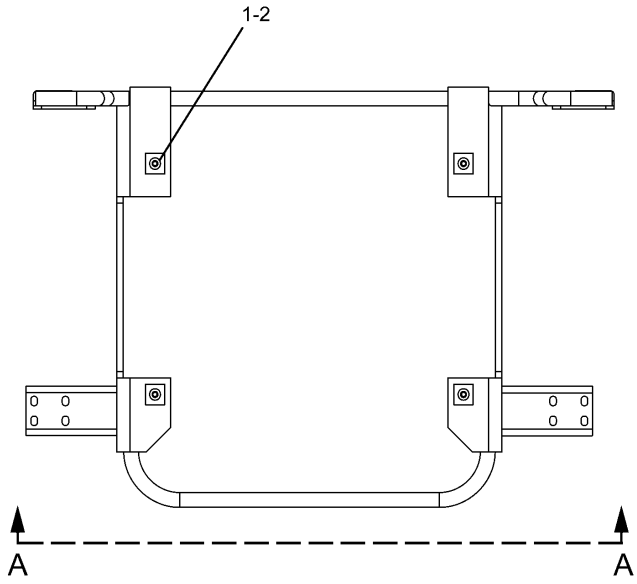

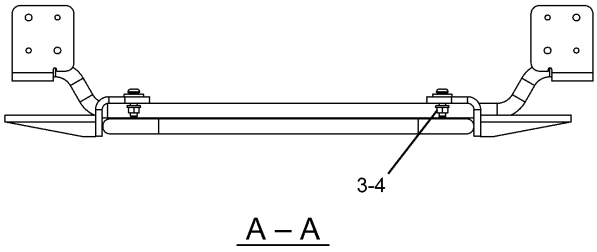

A – A

NOTE	No.	PART No.	QTY	PART NAME	NOTE	No.	PART No.	QTY	PART NAME
	1	245-7897	4	PLATE					
	2	245-7899	4	SCREW					
	3	5C-7261	4	NUT					
	4	8T-4224	4	WASHER					

H88076E 00

245-7890 BRACKET KIT-CONSOLE

Part of 240-5063-Page695,229-9095-Page704
An Attachment

MEMORANDA

OPERATOR STATION

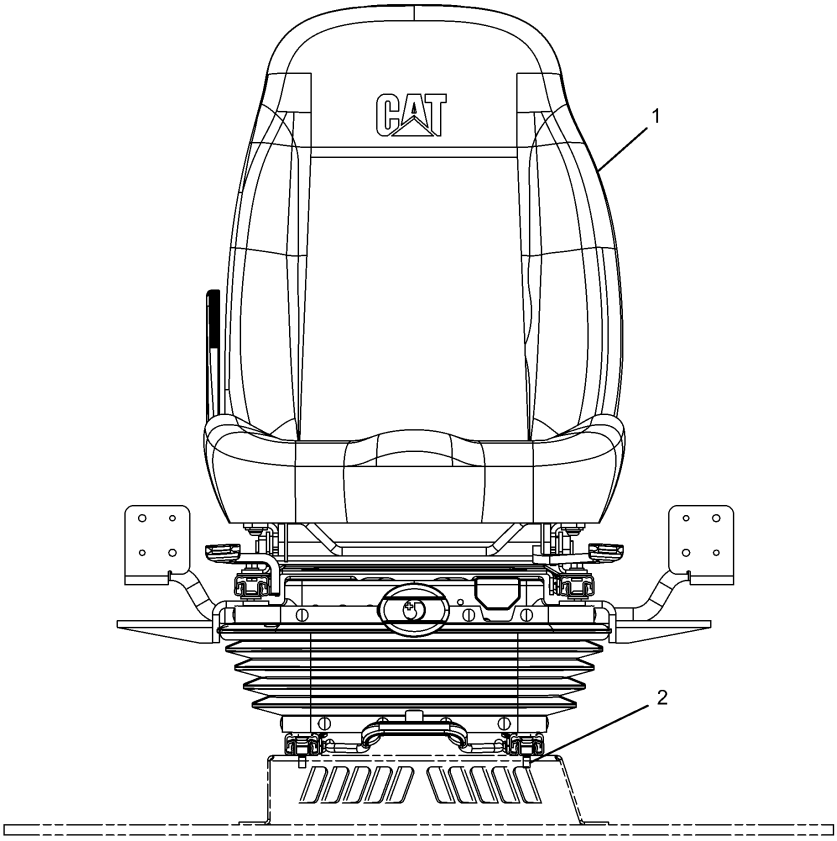

NOTE	No.	PART No.	QTY	PART NAME	NOTE	No.	PART No.	QTY	PART NAME
Y	1	240-5057	1	SEAT GP					
	2	6V-8202	4	BOLT (L=16mm)					

Y—SEE SEPARATE ILLUSTRATION

H88965E 01

240-5056 SEAT GP
240-5057-Page701
An Attachment

OPERATOR STATION

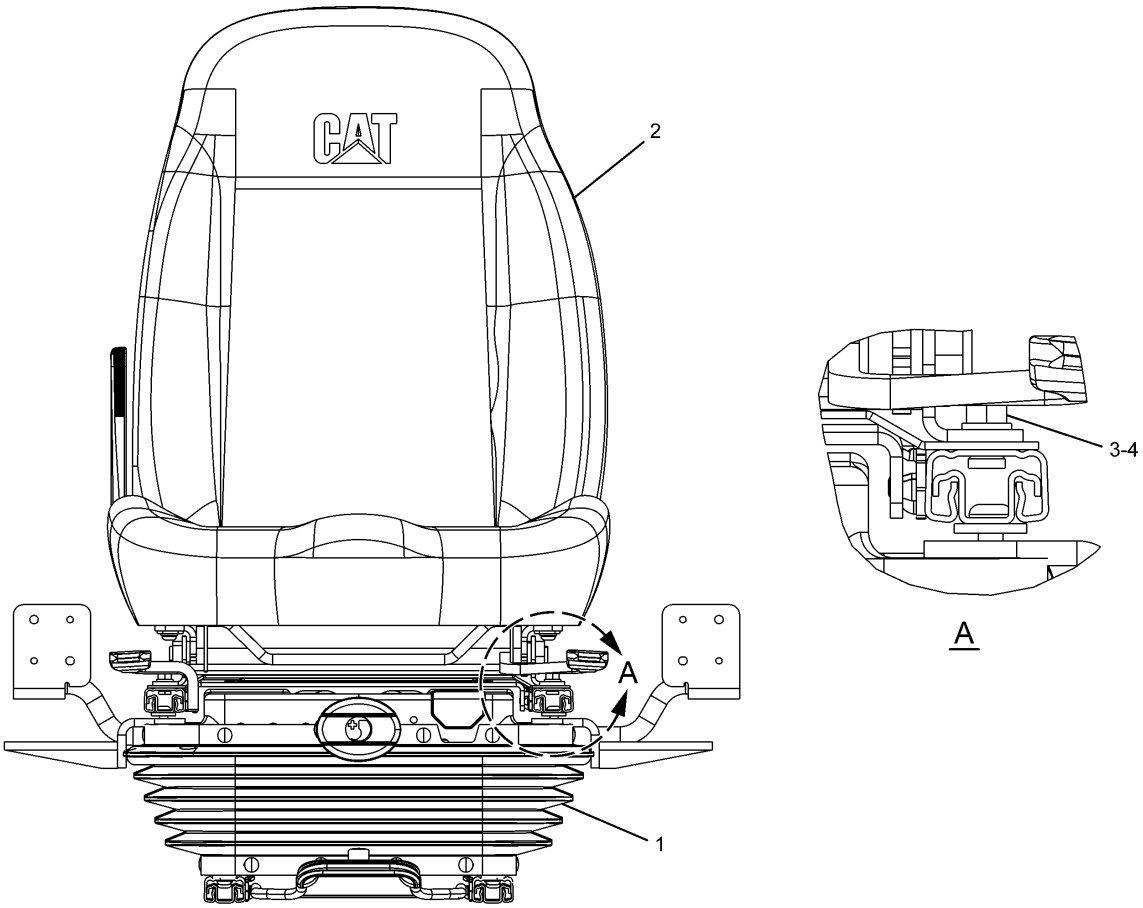

NOTE	No.	PART No.	QTY	PART NAME	NOTE	No.	PART No.	QTY	PART NAME
Y	1	229-9095	1	SUPPORT GP					
Y	2	240-5058	1	SEAT GP					
	3	5C-7261	4	NUT					
	4	8T-4224	4	WASHER					

Y—SEE SEPARATE ILLUSTRATION

H91447E 02

240-5057 SEAT GP

Part of 240-5056-Page700
240-5058-Page702,229-9095-Page704
An Attachment

OPERATOR STATION

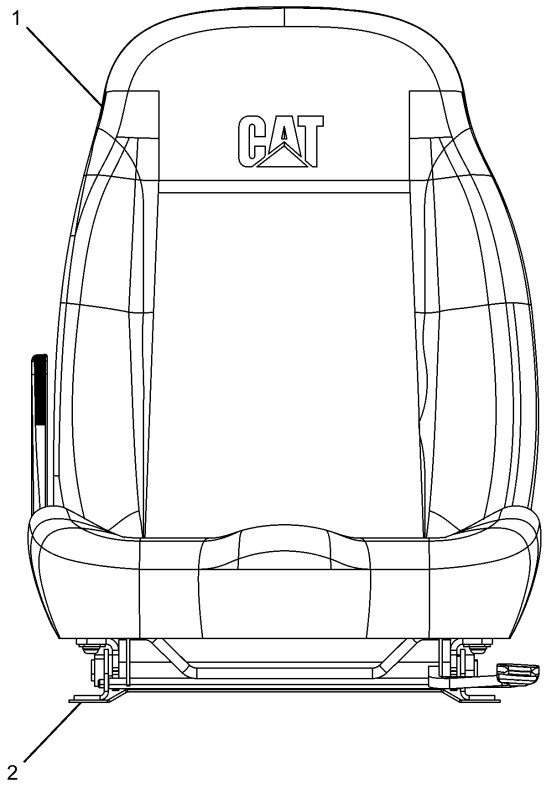

NOTE	No.	PART No.	QTY	PART NAME	NOTE	No.	PART No.	QTY	PART NAME
Y	1	245-7882	1	SEAT KIT					
Y	2	245-7888	1	SUPPORT KIT					

Y—SEE SEPARATE ILLUSTRATION

H89155E 01

240-5058 SEAT GP

Part of 240-5057-Page701
245-7888-Page694,245-7882-Page703
An Attachment

OPERATOR STATION

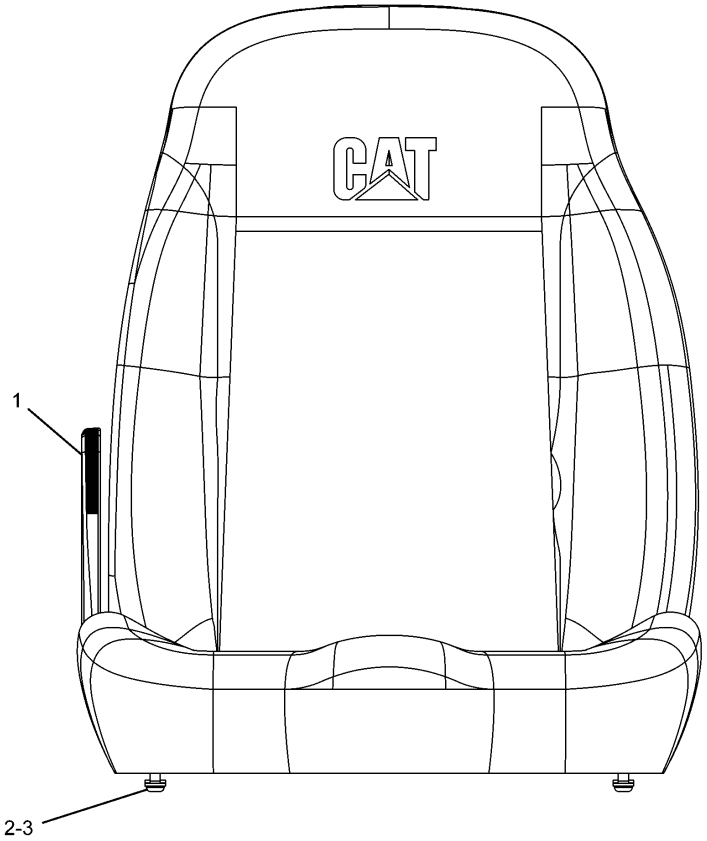

NOTE	No.	PART No.	QTY	PART NAME	NOTE	No.	PART No.	QTY	PART NAME
	1	245-7887	1	LEVER KIT					
	2	245-7898	4	SCREW					
	3	8T-4224	4	WASHER					

H89164E 00

245-7882 SEAT KIT
Part of 240-5058-Page702
An Attachment

OPERATOR STATION

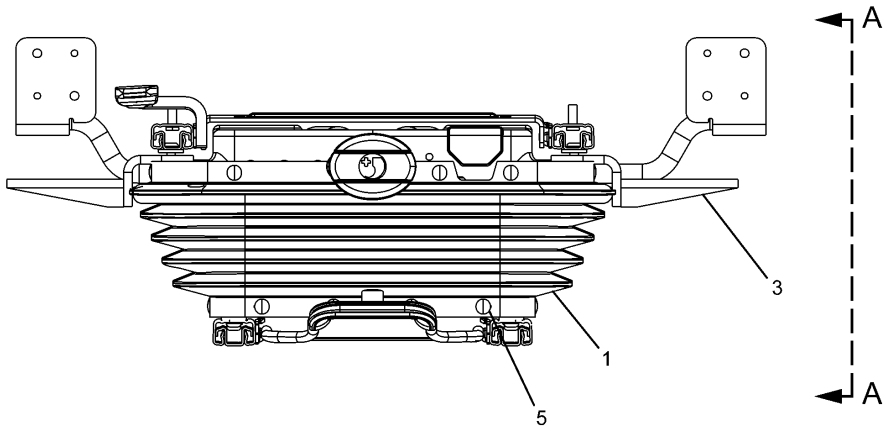

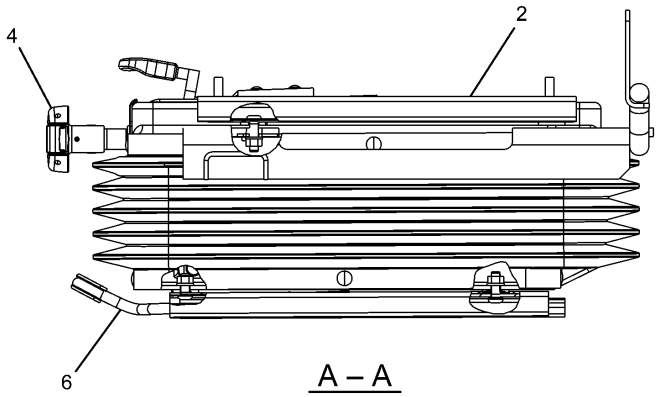

A – A

NOTE	No.	PART No.	QTY	PART NAME	NOTE	No.	PART No.	QTY	PART NAME
	1	242-8768	1	COVER AS					
		147-4921	1	CLIP KIT					
Y	2	245-7889	1	ADJUSTER KIT					
Y	3	245-7890	1	BRACKET KIT					
Y	4	245-7891	1	SUPPORT KIT					
	5	245-7895	1	CLIP KIT					
Y	6	245-7896	1	ADJUSTER KIT					

Y—SEE SEPARATE ILLUSTRATION

H91448E 02

229-9095 SUPPORT GP-SEAT

Part of 240-5057-Page701
245-7889-Page696,245-7896-Page697,245-7890-Page698,245-7891-Page705
An Attachment

OPERATOR STATION

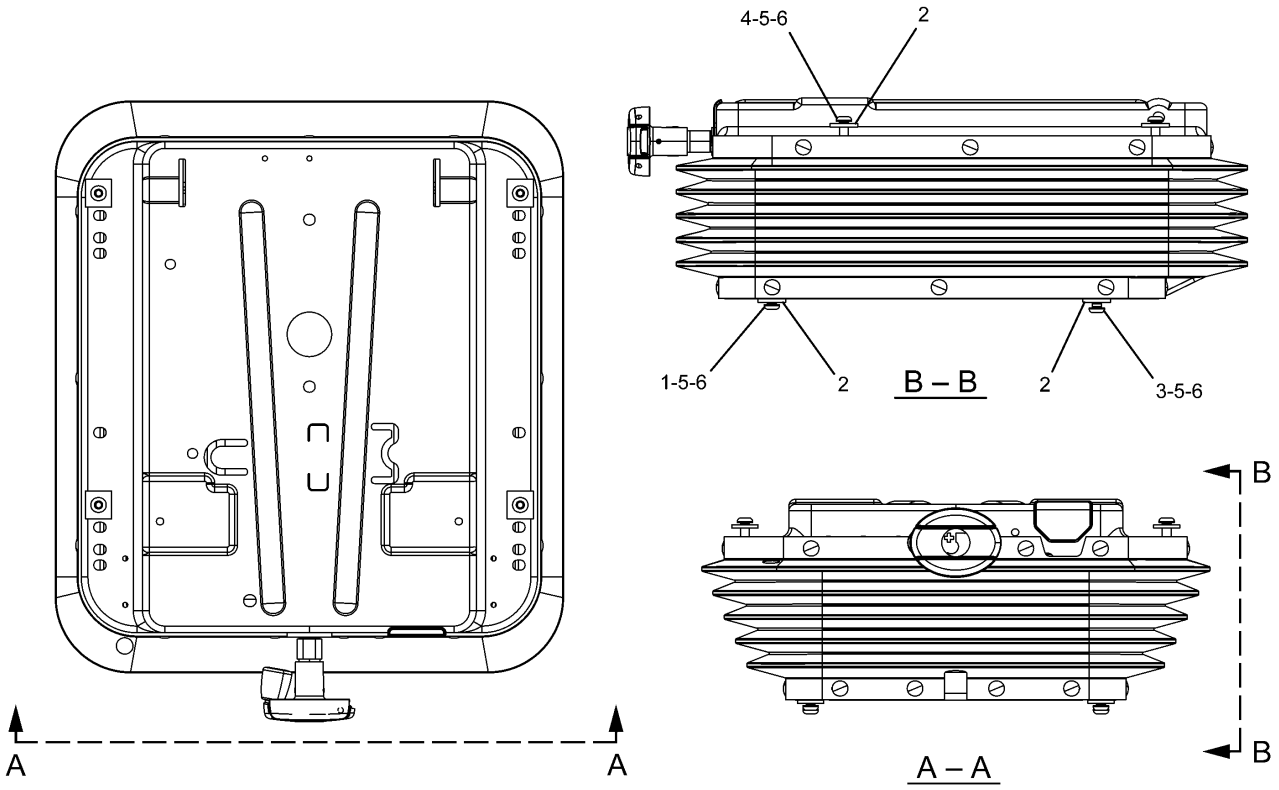

NOTE	No.	PART No.	QTY	PART NAME	NOTE	No.	PART No.	QTY	PART NAME
	1	198-3899	2	SCREW					
	2	245-7897	8	PLATE					
	3	245-7898	2	SCREW					
	4	245-7899	4	SCREW					
	5	5C-7261	8	NUT					
	6	8T-4224	8	WASHER					

H88970E 00

245-7891 SUPPORT KIT-SEAT

Part of 229-9095-Page704
An Attachment

OPERATOR STATION

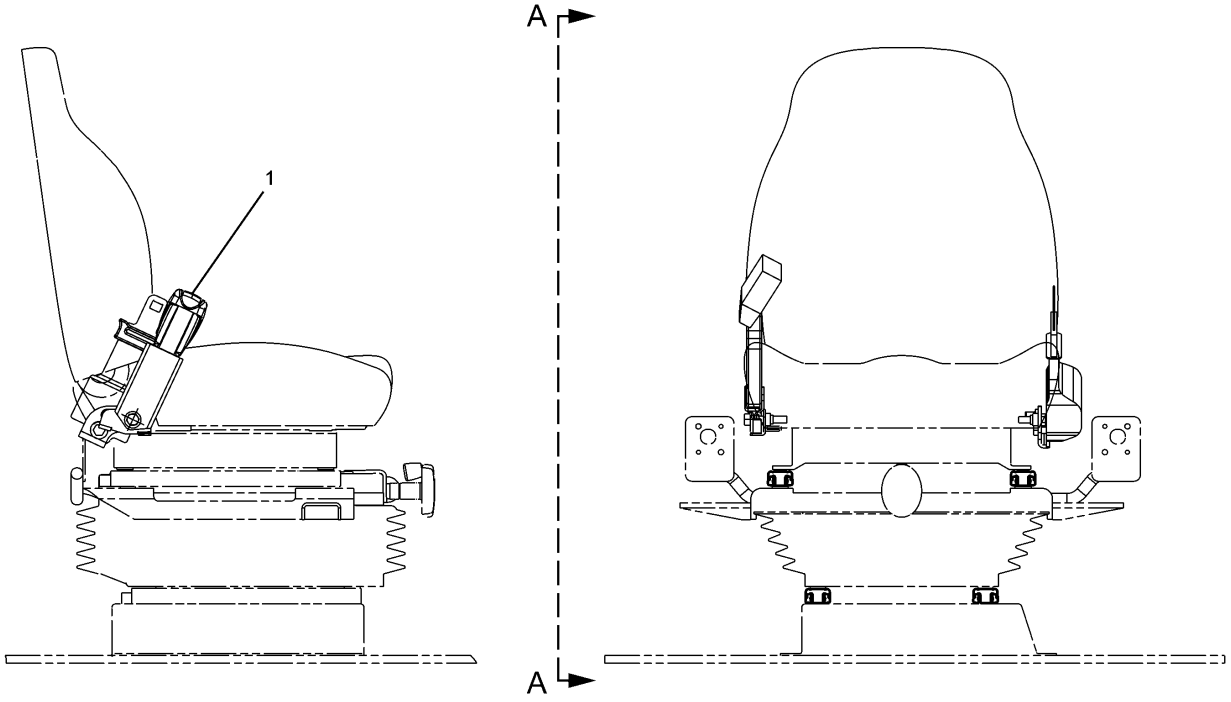

NOTE	No.	PART No.	QTY	PART NAME	NOTE	No.	PART No.	QTY	PART NAME
Y	1	240-5038	1	BELT GP					

Y—SEE SEPARATE ILLUSTRATION

H88764E 02

240-5037 SEAT BELT GP
240-5038-Page707
An Attachment

OPERATOR STATION

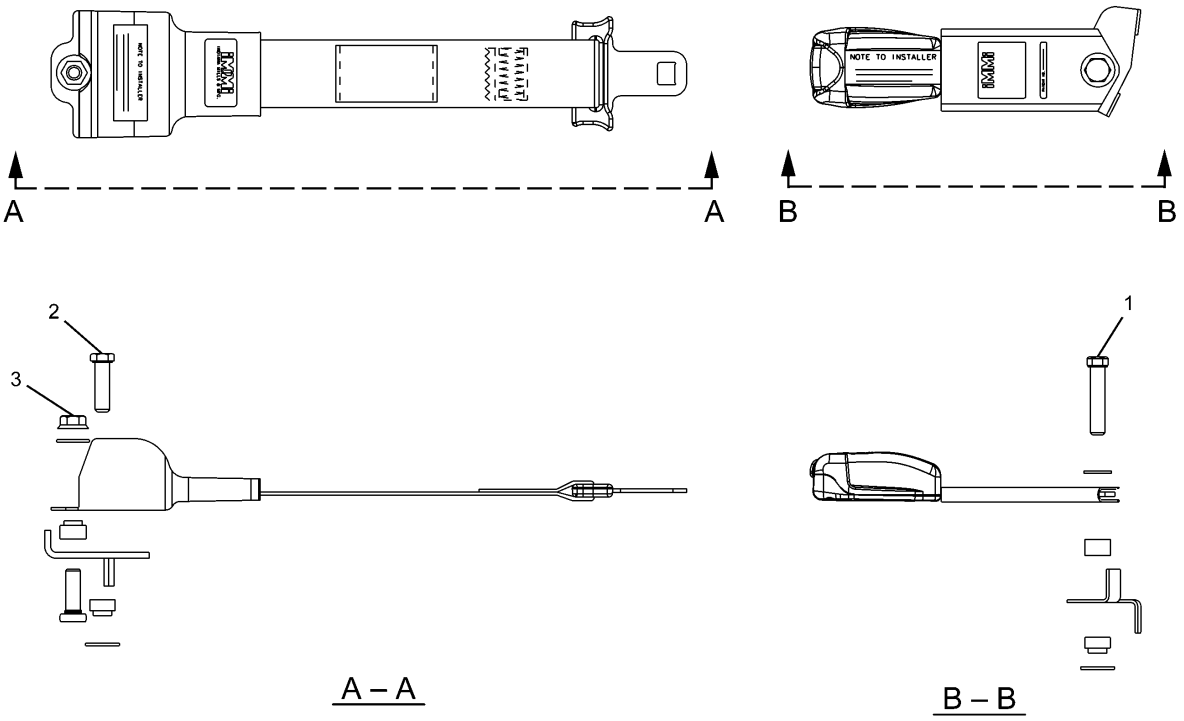

NOTE	No.	PART No.	QTY	PART NAME	NOTE	No.	PART No.	QTY	PART NAME
	1	8S-4724	1	BOLT (L=57mm)					
	2	8S-4723	1	BOLT (L=38mm)					
	3	8S-0934	1	LOCKNUT					

H88765E 03

240-5038 SEAT BELT GP
Part of 240-5037-Page706
An Attachment

OPERATOR STATION

Consists of :

Page

2	5P-7958	SLEEVE
1	099-3645	CABLE
2	278-1585	KEY

H92032E 01

275-3667 LITERATURE GP

OPERATOR STATION

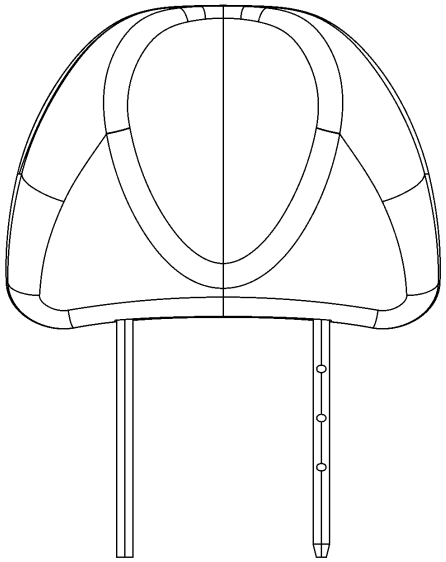

NOTE	No.	PART No.	QTY	PART NAME

H88976E 01

240-5060 HEADREST AS
An Attachment

OPERATOR STATION

Consists of :

			Page
1	229-9080	AIR CONDITIONER & MOUNTING GP.....	712
1	229-9082	DUCT GP-AIR.....	720

H88768E 02

229-9079 AIR CONDITIONER GP
An Attachment

OPERATOR STATION

Consists of :

			Page
1	229-9082	DUCT GP-AIR	720
1	229-9084	HEATER & MTG GP-CAB	716
1	229-9085	LINES GP-HEATER	724

H89368E 01

229-9083 HEATER AR-CAB
An Attachment

OPERATOR STATION

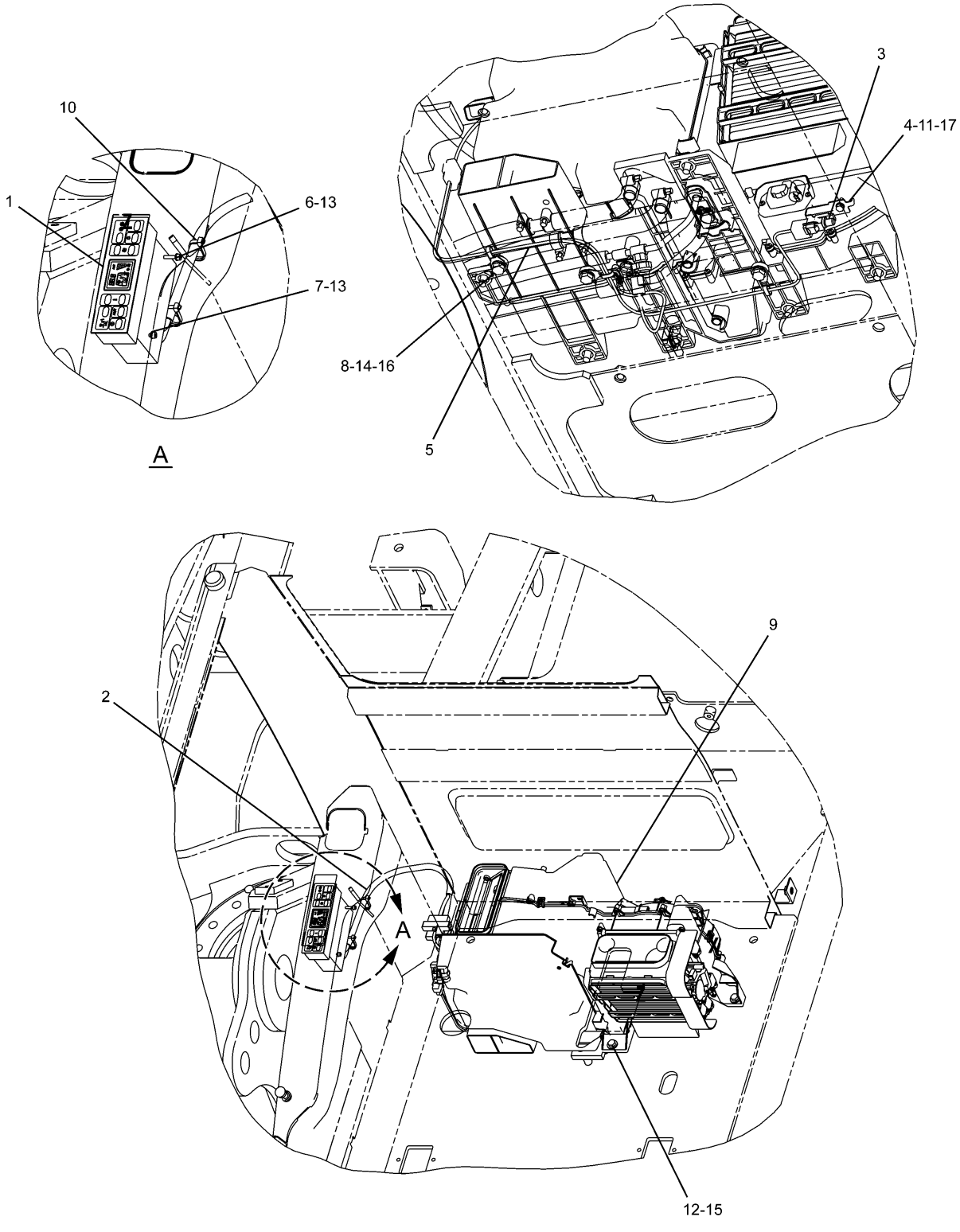

H88766E 03

229-9080 AIR CONDITIONER & MOUNTING GP

Part of 229-9079-Page710
229-9081-Page714
An Attachment

OPERATOR STATION

NOTE	No.	PART No.	QTY	PART NAME	NOTE	No.	PART No.	QTY	PART NAME
	1	235-8872	1	PANEL AS					
	2	235-8873	1	HARNESS AS					
	3	235-8874	1	SENSOR					
	4	235-8875	1	BRACKET					
	5	235-9006	1	HARNESS AS					
	6	096-5969	1	BOLT (L=25mm)					
	7	099-2374	1	BOLT (L=12mm)					
	8	111-4836	3	CLIP					
Y	9	229-9081	1	CONDITIONER GP					
	10	3S-2093	2	STRAP					
	11	5C-9553	1	BOLT (L=16mm)					
	12	7X-7729	7	WASHER					
	13	8T-0328	2	WASHER					
	14	8T-4121	3	WASHER					
	15	8T-4136	7	BOLT (L=25mm)					
	16	8T-4137	3	BOLT (L=20mm)					
	17	9X-8256	1	WASHER					

Y—SEE SEPARATE ILLUSTRATION

H88766E 03

229-9080 AIR CONDITIONER & MOUNTING GP

Part of 229-9079-Page710
229-9081-Page714
An Attachment

OPERATOR STATION

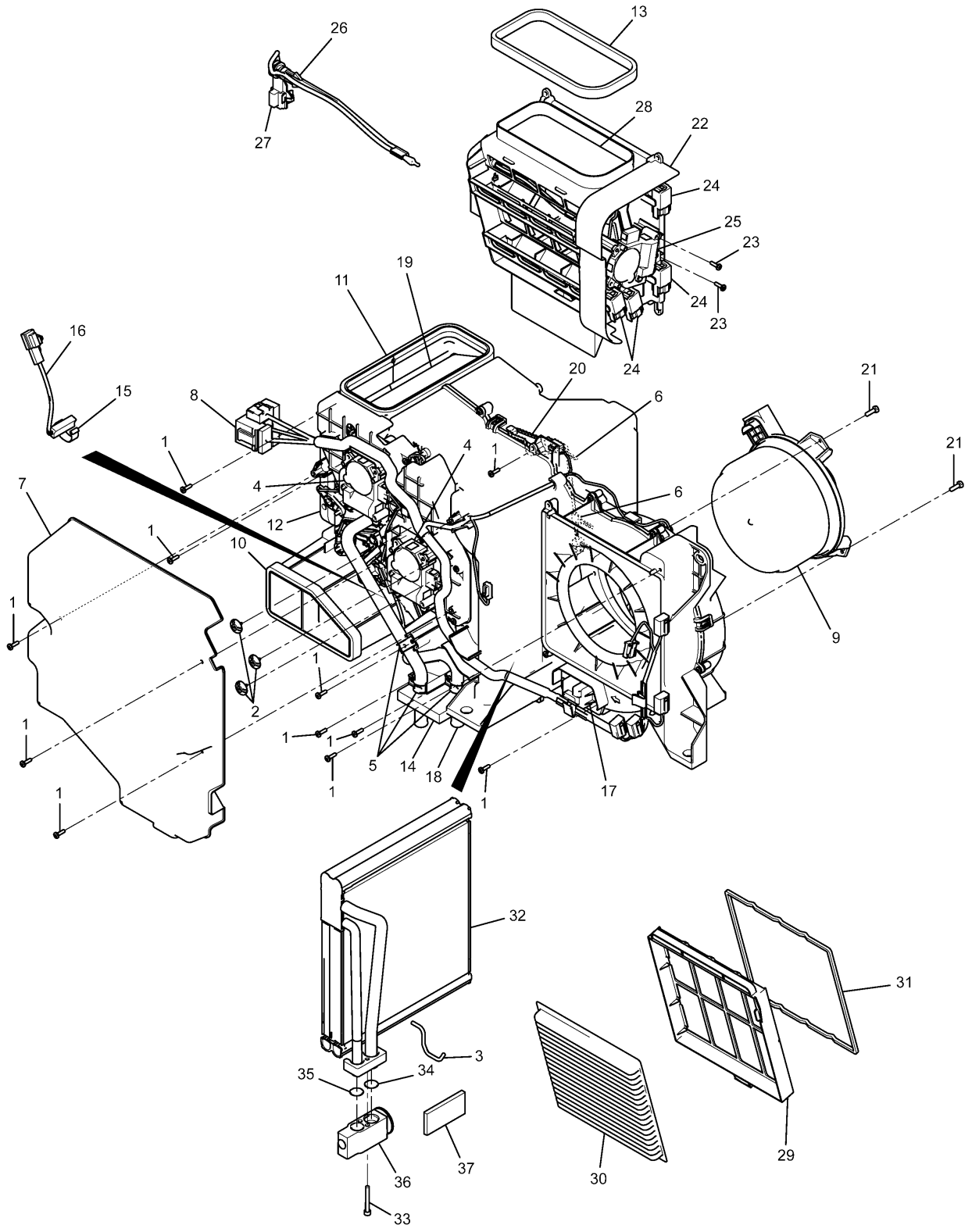

229-9081 AIR CONDITIONER GP
Part of 229-9080-Page713
An Attachment

OPERATOR STATION

NOTE	No.	PART No.	QTY	PART NAME	NOTE	No.	PART No.	QTY	PART NAME
	1	185-8300	35	SCREW					
	2	185-8302	3	SCREW AS					
	3	245-7838	1	PACKING					
	4	245-7817	2	MOTOR AS					
	5	245-7818	3	CLIP					
	6	245-7819	2	CLIP					
	7	245-7820	1	COVER					
	8	245-7821	1	HARNESS AS					
	9	245-7839	1	MOTOR AS					
	10	245-7825	1	INSULATOR					
	11	245-7826	1	INSULATOR					
	12	245-7827	1	INSULATOR					
	13	245-7828	1	INSULATOR					
	14	245-7829	1	PACKING					
	15	245-7830	1	CLIP					
	16	245-7831	1	SENSOR AS					
	17	245-7832	1	CONTROL AS					
	18	245-7833	1	CORE AS					
	19	245-7834	1	DAMPER AS					
	20	245-7835	1	SENSOR AS					
	21	245-7856	3	SCREW AS					
	22	245-7812	1	BOX AS					
	23	185-8300	6	SCREW					
	24	196-1666	4	RELAY					
	25	245-7813	1	MOTOR AS					
	26	245-7814	1	BRACKET					
	27	245-7815	1	SENSOR AS					
	28	245-7816	1	DAMPER AS					
	29	293-1137	1	FILTER AS					
	30	245-7823	1	FILTER					
	31	245-7824	1	PACKING					
	32	245-7836	1	CORE AS					
	33	8T-0266	2	BOLT (L=40mm)					
	34	121-7136	1	SEAL-O-RING (ID=13.40mm)					
	35	121-7138	1	SEAL-O-RING (ID=6.70mm)					
	36	245-7837	1	VALVE AS					
	37	245-7905	1	INSULATOR					

H94660E 06

229-9081 AIR CONDITIONER GP

Part of 229-9080-Page713
An Attachment

OPERATOR STATION

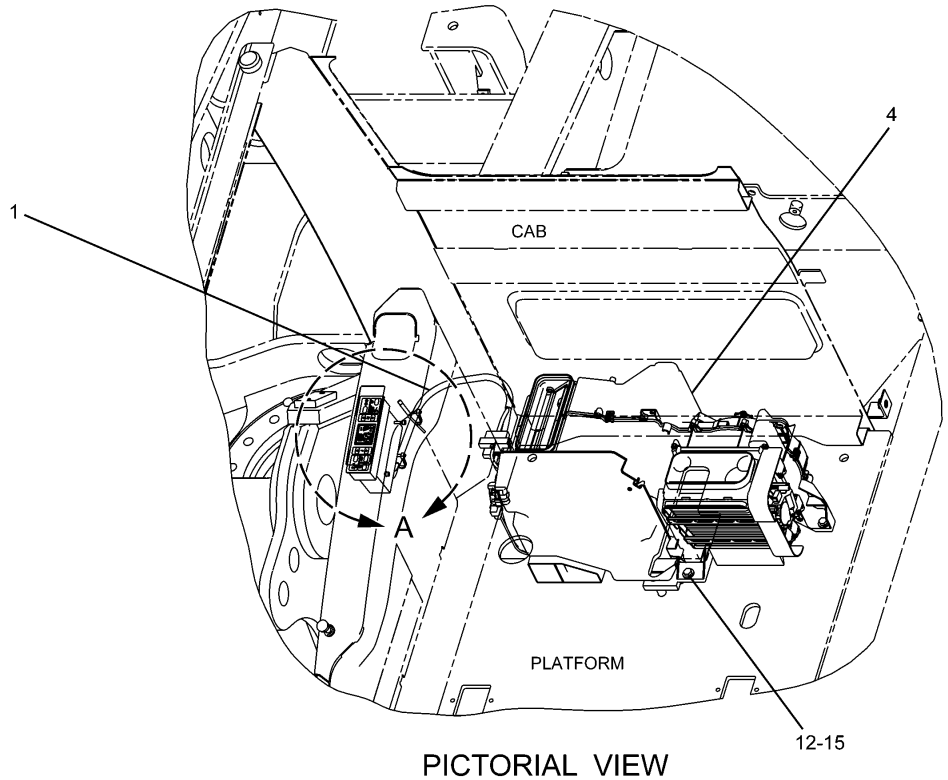

PICTORIAL VIEW
(VIEW FROM FRONT SIDE)

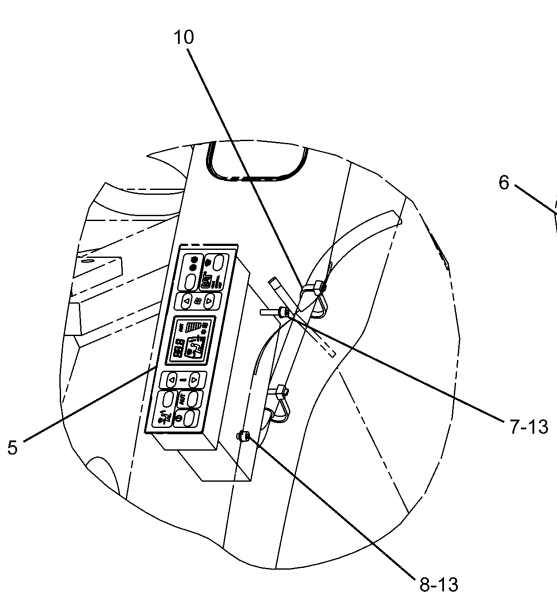

A

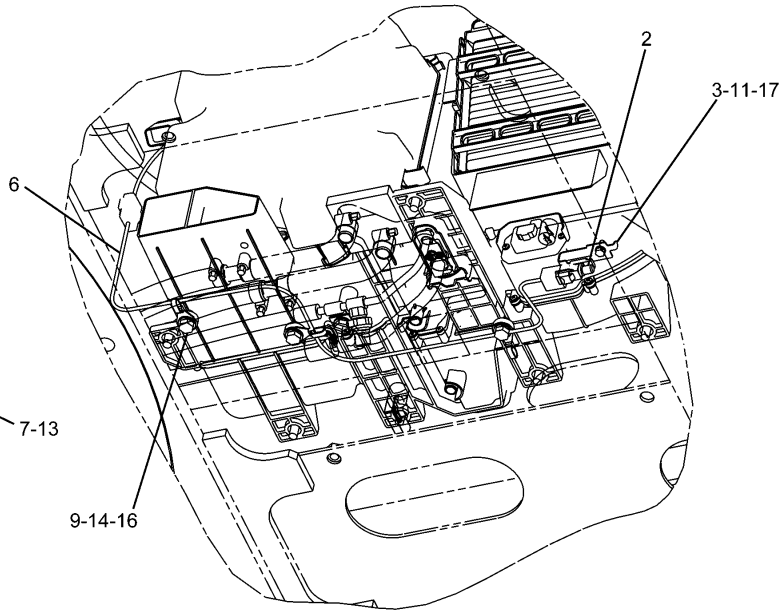

PICTORIAL VIEW
(VIEW FROM FRONT SIDE)

H89269E 00

229-9084 HEATER & MTG GP-CAB
Part of 229-9083-Page711
240-5036-Page718
An Attachment

OPERATOR STATION

NOTE	No.	PART No.	QTY	PART NAME	NOTE	No.	PART No.	QTY	PART NAME
	1	235-8873	1	HARNESS AS					
	2	235-8874	1	SENSOR					
	3	235-8875	1	BRACKET					
Y	4	240-5036	1	CONDITIONER GP					
	5	245-7848	1	PANEL AS					
	6	245-7858	1	HARNESS AS					
	7	096-5969	1	BOLT (L=25mm)					
	8	099-2374	1	BOLT (L=12mm)					
	9	111-4836	3	CLIP					
	10	3S-2093	2	STRAP					
	11	5C-9553	1	BOLT (L=16mm)					
	12	7X-7729	7	WASHER					
	13	8T-0328	2	WASHER					
	14	8T-4121	3	WASHER					
	15	8T-4136	7	BOLT (L=25mm)					
	16	8T-4137	3	BOLT (L=20mm)					
	17	9X-8256	1	WASHER					

Y—SEE SEPARATE ILLUSTRATION

H89269E 00

229-9084 HEATER & MTG GP-CAB

Part of 229-9083-Page711
240-5036-Page718
An Attachment

OPERATOR STATION

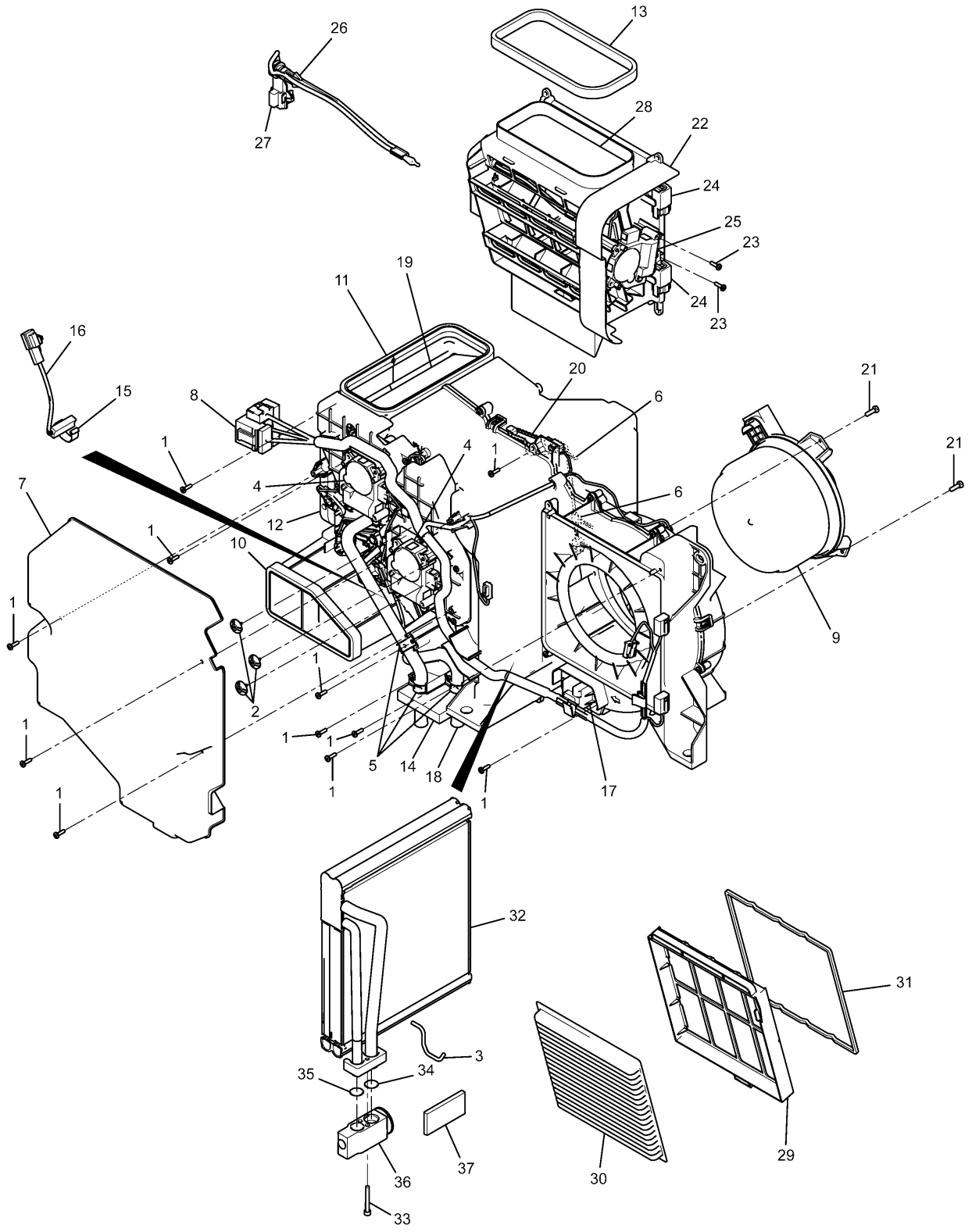

240-5036 AIR CONDITIONER GP
Part of 229-9084-Page717
An Attachment

OPERATOR STATION

NOTE	No.	PART No.	QTY	PART NAME	NOTE	No.	PART No.	QTY	PART NAME
	1	185-8300	35	SCREW					
	2	185-8302	3	SCREW AS					
	3	245-7838	1	PACKING					
	4	245-7817	2	MOTOR AS					
	5	245-7818	3	CLIP					
	6	245-7819	2	CLIP					
	7	245-7820	1	COVER					
	8	245-7847	1	HARNESS AS					
	9	245-7839	1	MOTOR AS					
	10	245-7825	1	INSULATOR					
	11	245-7826	1	INSULATOR					
	12	245-7827	1	INSULATOR					
	13	245-7828	1	INSULATOR					
	14	245-7829	1	PACKING					
	15	245-7830	1	CLIP					
	16	245-7831	1	SENSOR AS					
	17	245-7832	1	CONTROL AS					
	18	245-7833	1	CORE AS					
	19	245-7834	1	DAMPER AS					
	20	245-7835	1	SENSOR AS					
	21	245-7856	3	SCREW AS					
	22	245-7846	1	BOX AS					
	23	185-8300	4	SCREW					
	24	196-1666	2	RELAY					
	25	245-7813	1	MOTOR AS					
	26	245-7814	1	BRACKET					
	27	245-7815	1	SENSOR AS					
	28	245-7816	1	DAMPER AS					
	29	293-1137	1	FILTER AS					
	30	245-7823	1	FILTER					
	31	245-7824	1	PACKING					
	32	245-7836	1	CORE AS					
	33	8T-0266	2	BOLT (L=40mm)					
	34	121-7136	1	SEAL-O-RING (ID=13.40mm)					
	35	121-7138	1	SEAL-O-RING (ID=6.70mm)					
	36	245-7837	1	VALVE AS					
	37	245-7905	1	INSULATOR					

H94344E 03

240-5036 AIR CONDITIONER GP
Part of 229-9084-Page717
An Attachment

OPERATOR STATION

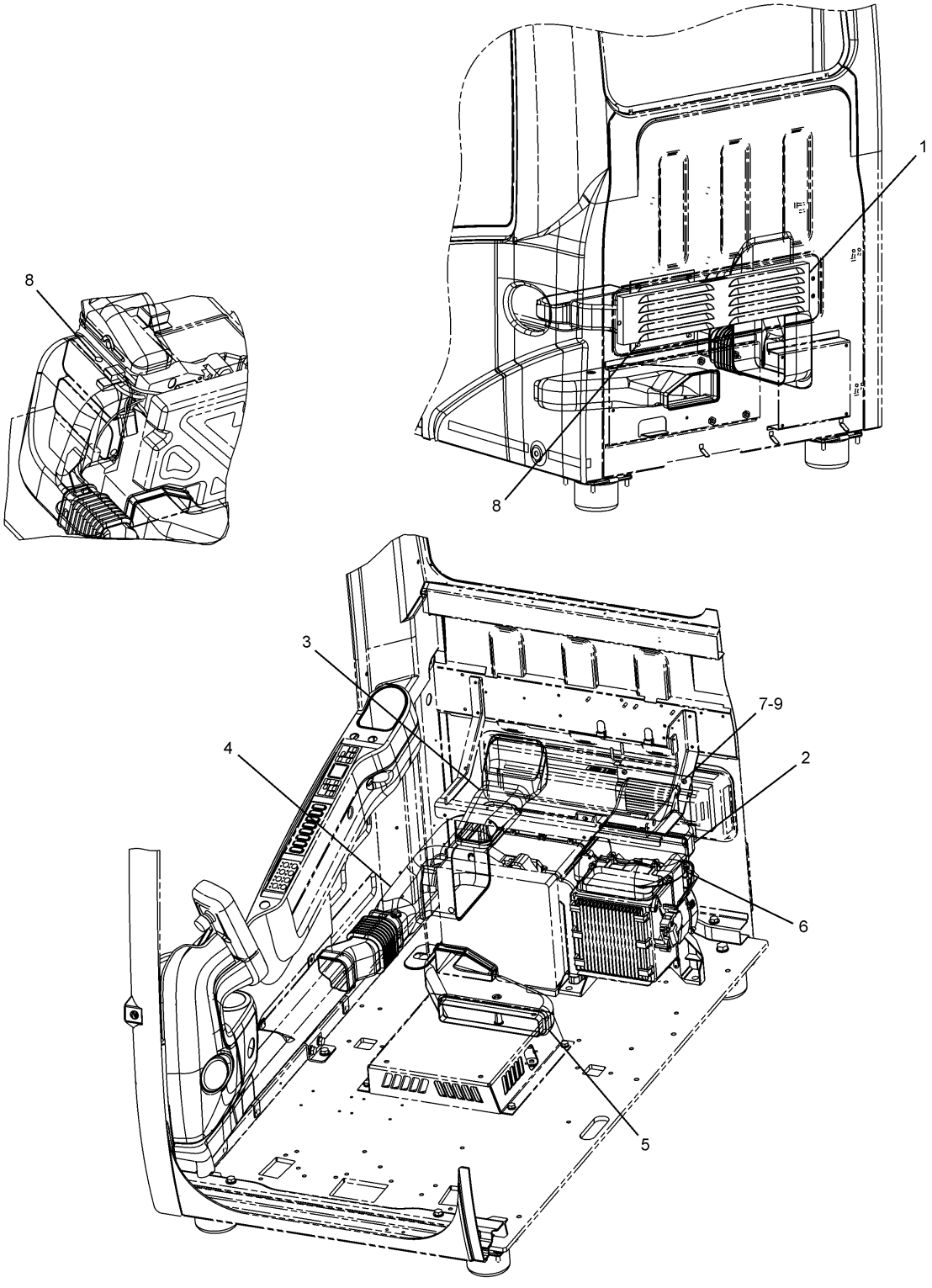

H88767E 04

229–9082 DUCT GP–AIR

Part of 229–9079–Page710,229–9083–Page711
An Attachment

OPERATOR STATION

NOTE	No.	PART No.	QTY	PART NAME	NOTE	No.	PART No.	QTY	PART NAME
	1	41-1278	1	FILTER					
	2	235-8876	1	DUCT AS					
		245-7872	1	INSULATOR					
	3	235-8877	1	DUCT AS					
		245-7792	1	INSULATOR					
	4	235-8878	1	DUCT AS					
		245-7793	1	INSULATOR					
	5	235-8879	1	DUCT AS					
		245-7873	1	INSULATOR					
	6	240-5074	1	DUCT AS					
		245-7791	1	INSULATOR					
	7	095-0742	2	SCREW					
	8	176-1996	5	CLIP					
	9	095-0827	2	LOCKWASHER					

H88767E 04

229-9082 DUCT GP-AIR

Part of 229-9079-Page710,229-9083-Page711
An Attachment

OPERATOR STATION

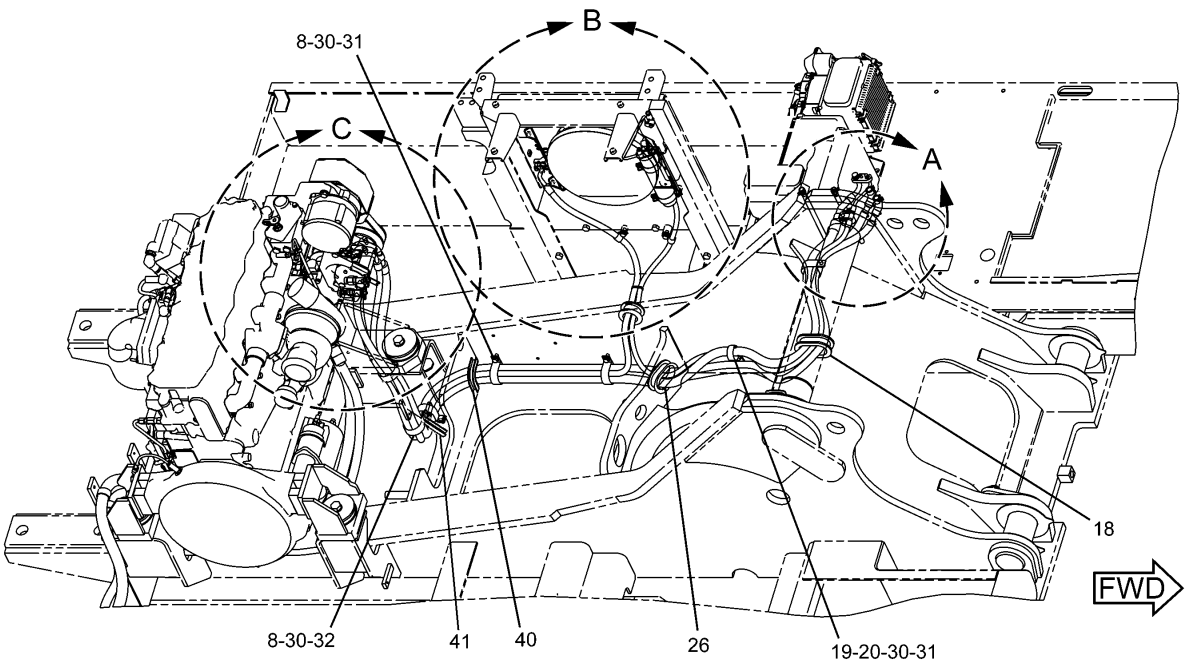

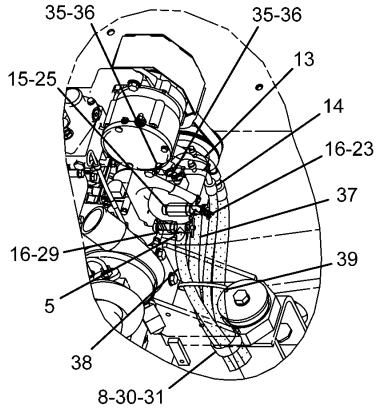

C

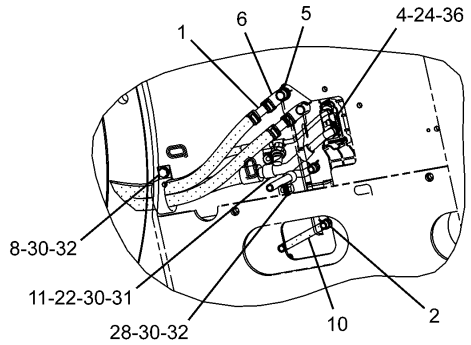

A

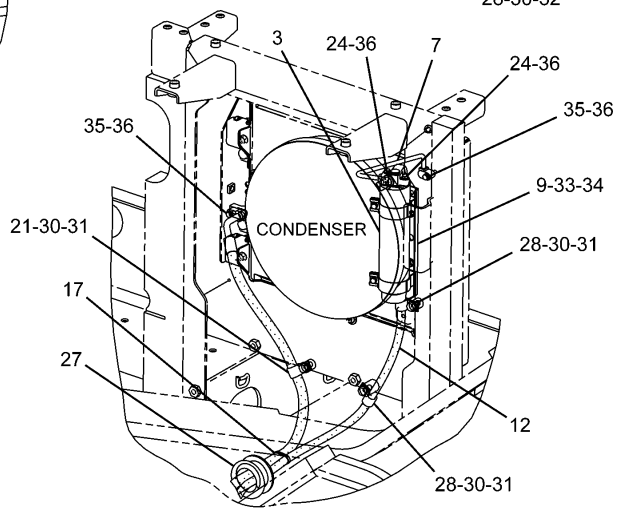

B

H94661E 07

229-9071 LINES GP-AIR CONDITIONER

OPERATOR STATION

NOTE	No.	PART No.	QTY	PART NAME
	1	122-9605	2	JOINT
	2	122-9657	2	CLAMP
	3	176-1902	1	RECEIVER AS
	4	235-8891	1	PLATE
	5	235-9014	8	CLAMP
	6	235-9015	2	HOSE
	7	245-7913	1	TUBE AS
		121-7138	2	SEAL-O-RING (ID=6.70mm)
	8	104-3173	6	CLIP
	9	121-7098	1	BRACKET AS
		8T-4138	2	BOLT (L=20mm)
		9X-8256	2	WASHER
	10	130-0252	2	HOSE
	11	1S-0994	1	CLIP
	12	235-8854	1	HOSE AS
		121-7138	2	SEAL-O-RING (ID=6.70mm)
		196-1665	1	SWITCH AS
		185-8293	1	SEAL-O-RING (ID=10.60mm)
	13	245-7800	1	HOSE AS
		121-7136	2	SEAL-O-RING (ID=13.40mm)
		245-7851	1	PLUG
	14	245-7912	1	HOSE AS
		121-7137	2	SEAL-O-RING (ID=10.80mm)
		245-7850	1	PLUG
	15	2M-9780	1	SEAL-O-RING (ID=19.18mm)
	16	3K-0360	3	SEAL-O-RING (ID=16.36mm)
	17	3S-2093	1	STRAP
	18	4I-3503	1	GROMMET
	19	5P-2369	1	CLIP
	20	6D-1641	1	CLIP
	21	6D-4246	1	CLIP
	22	6V-3265	1	CLIP
	23	6V-7238	2	VALVE
	24	6V-7357	3	BOLT (L=25mm)
	25	273-5156	1	ADAPTER
	26	7Y-8165	1	GROMMET
	27	7Y-8167	1	GROMMET
	28	8M-2773	3	CLIP
	29	8T-1715	1	ADAPTER
	30	8T-4121	12	WASHER
	31	8T-4137	9	BOLT (L=20mm)
	32	8T-4191	3	BOLT (L=16mm)
	33	8T-4200	2	BOLT (L=16mm)
	34	8T-4224	2	WASHER
	35	8T-4971	4	BOLT (L=30mm)
	36	9X-8256	7	WASHER
E	37	5P-0767		HOSE…(310cm)
E	38	5P-0767		HOSE…(310cm)
	39	7K-1181	1	STRAP
E	40	107-1678		GUARD…(13cm)
E	41	293-1135		GUARD…(15cm)

E—ORDER BY THE CENTIMETER

H94661E 07

229-9071 LINES GP-AIR CONDITIONER

OPERATOR STATION

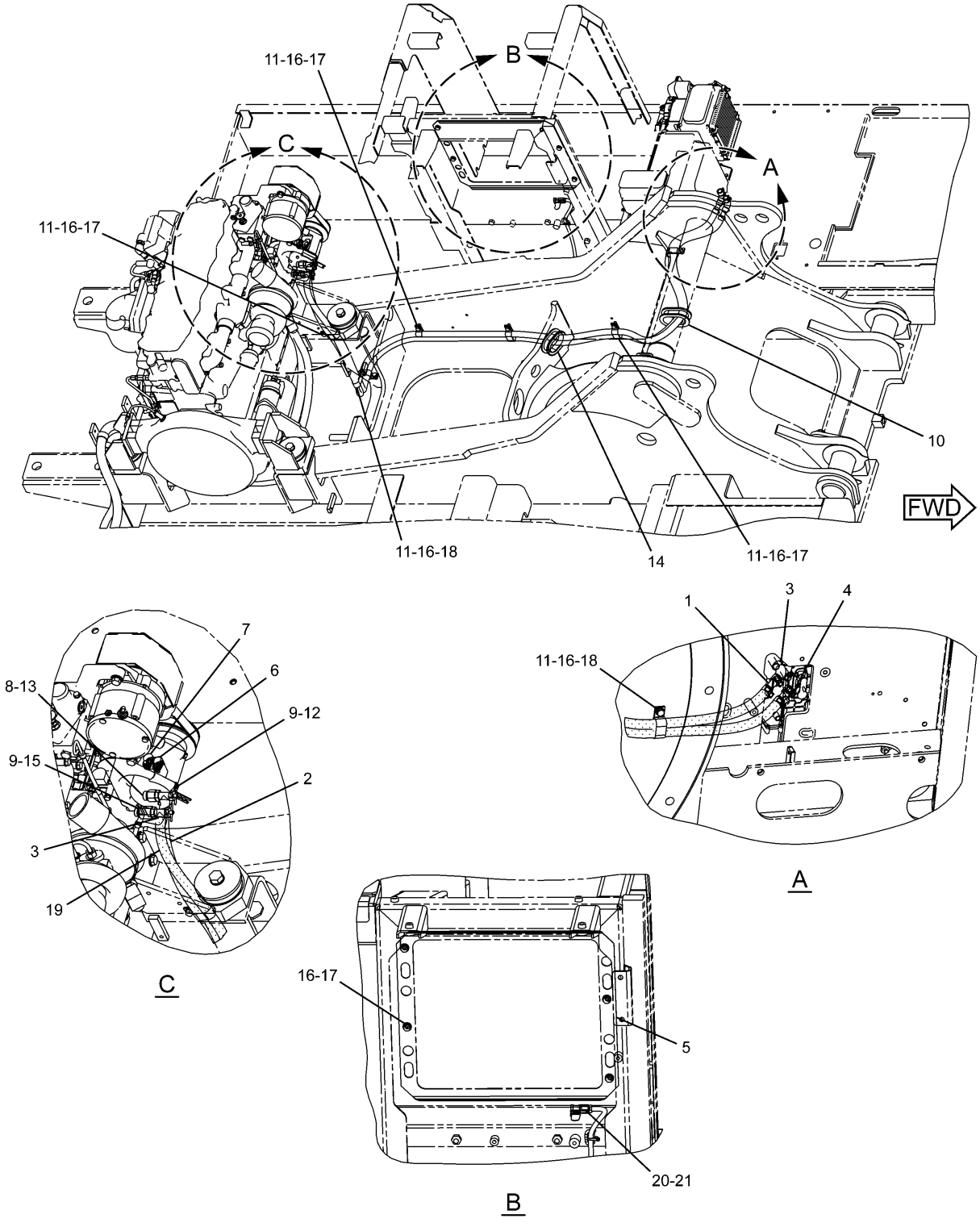

H89096E 01

229-9085 LINES GP-HEATER
Part of 229-9083-Page711
An Attachment

OPERATOR STATION

NOTE	No.	PART No.	QTY	PART NAME	NOTE	No.	PART No.	QTY	PART NAME
	1	122-9605	2	JOINT					
E	2	5P-0767		HOSE…(310cm)					
	3	235-9014	8	CLAMP					
	4	235-9015	2	HOSE					
	5	259-7188	1	COVER					
	6	210-5821	1	CAP AS					
	7	210-5822	1	CAP AS					
	8	2M-9780	1	SEAL-O-RING (ID=19.18mm)					
	9	3K-0360	3	SEAL-O-RING (ID=16.36mm)					
	10	4I-3503	1	GROMMET					
	11	6D-1641	7	CLIP					
	12	6V-7238	2	VALVE					
	13	6V-7420	1	ADAPTER					
	14	7Y-8165	1	GROMMET					
	15	8T-1715	1	ADAPTER					
	16	8T-4121	11	WASHER					
	17	8T-4137	9	BOLT (L=20mm)					
	18	8T-4191	2	BOLT (L=16mm)					
E	19	5P-0767		HOSE…(310cm)					
	20	102-8803	1	RECEPTACLE KIT					
	21	8T-8737	3	PLUG					

E—ORDER BY THE CENTIMETER

H89096E 01

229-9085 LINES GP-HEATER

Part of 229-9083-Page711
An Attachment

OPERATOR STATION

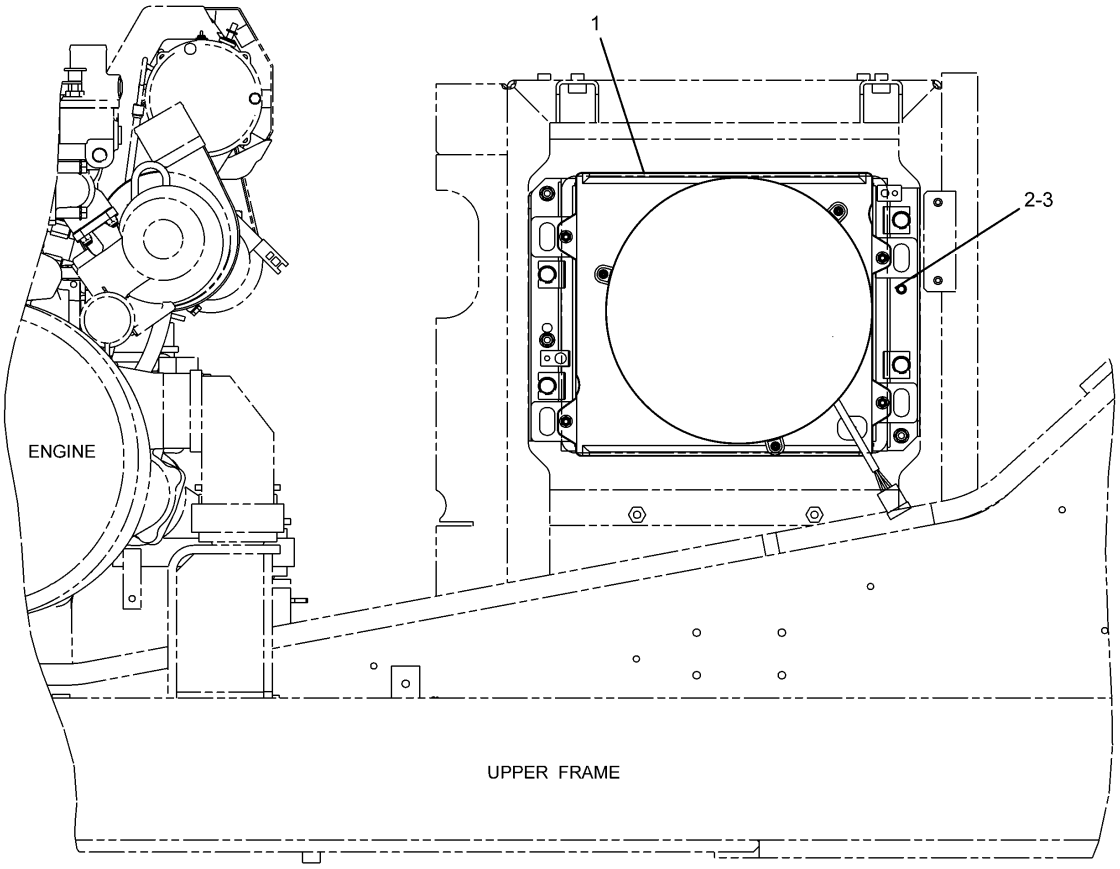

RIGHT SIDE VIEW

NOTE	No.	PART No.	QTY	PART NAME	NOTE	No.	PART No.	QTY	PART NAME
Y	1	273-5315	1	CONDENSER GP					
	2	8T-4121	4	WASHER					
	3	8T-4137	4	BOLT (L=20mm)					

Y—SEE SEPARATE ILLUSTRATION

H91210E 01

245-7909 CONDENSER & MTG GP-REFRIGERANT

273-5315-Page727

OPERATOR STATION

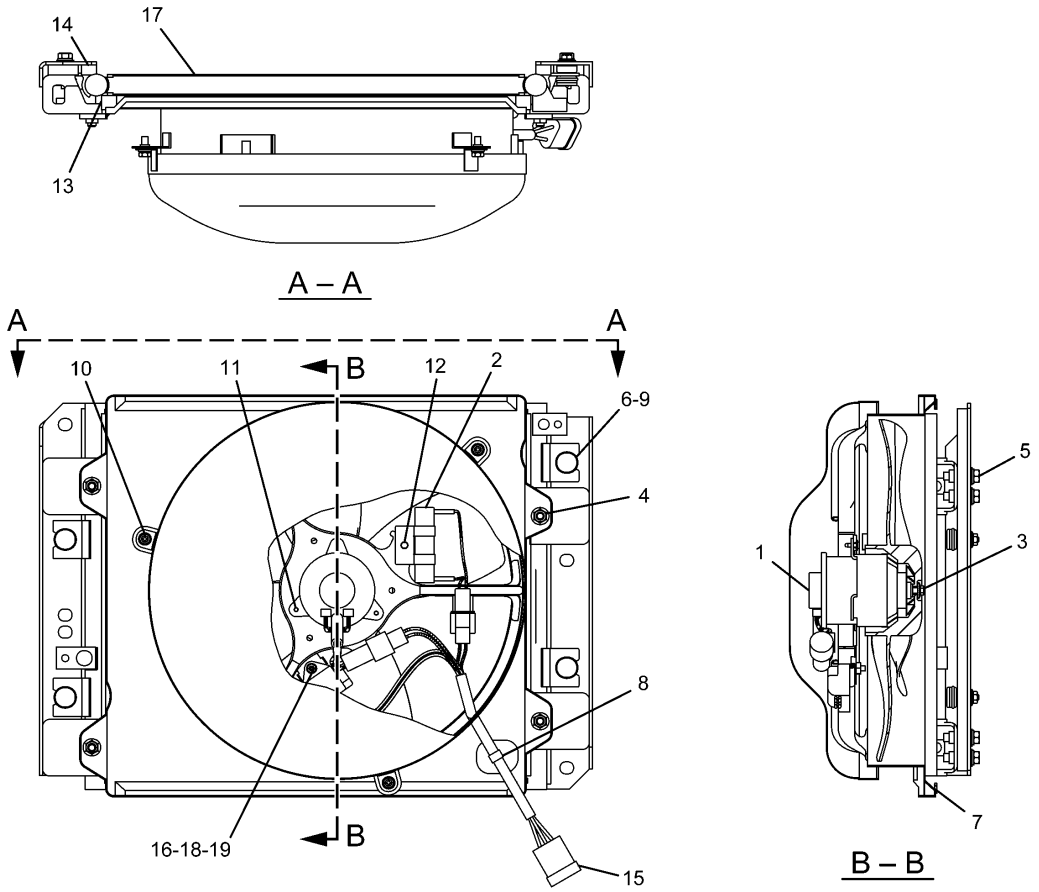

NOTE	No.	PART No.	QTY	PART NAME	NOTE	No.	PART No.	QTY	PART NAME
	1	161-3732	1	MOTOR AS		19	096-0192	1	LOCKWASHER
	2	161-3734	1	RESISTOR AS					
	3	164-0499	1	NUT					
	4	164-0500	4	NUT					
	5	227-6846	8	BOLT AS					
	6	245-7868	4	BUSHING AS					
	7	245-7869	2	PACKING					
	8	245-7870	1	STRAP					
	9	245-7871	4	NUT					
	10	245-7876	3	BOLT AS					
	11	245-7877	3	SCREW AS					
	12	245-7903	1	BOLT AS					
	13	245-7904	2	PACKING					
	14	245-7906	2	PACKING					
	15	273-5316	1	HARNESS AS					
		102-8803	1	RECEPTACLE KIT					
		9W-0852	2	PIN					
	16	8T-0325	1	BOLT (L=14mm)					
	17	245-7911	1	CONDENSER AS					
	18	8T-0328	1	WASHER					

H91146E 00

273-5315 CONDENSER GP-REFRIGERANT

Part of 245-7909-Page726

OPERATOR STATION

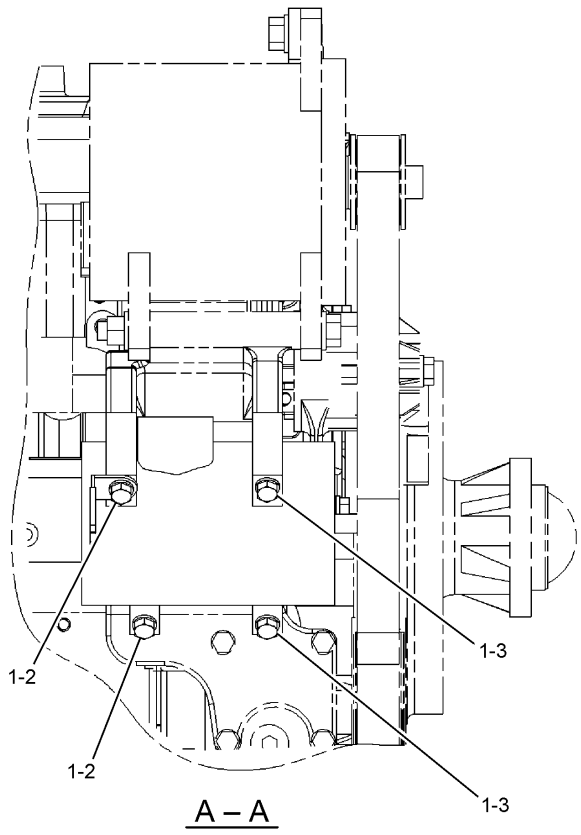

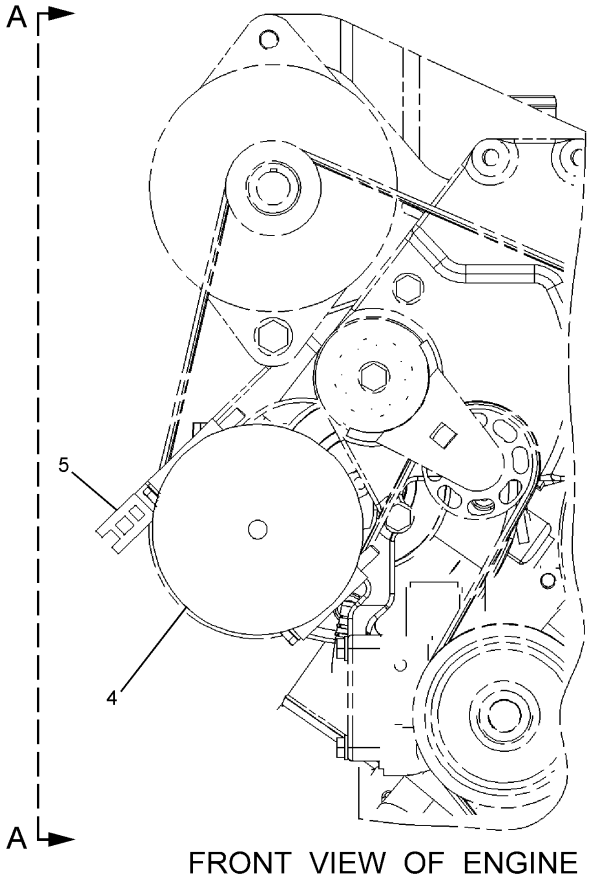

FRONT VIEW OF ENGINE

NOTE	No.	PART No.	QTY	PART NAME	NOTE	No.	PART No.	QTY	PART NAME
	1	8T-4224	4	WASHER					
	2	8T-3647	2	BOLT (L=80mm)					
	3	185-8160	2	BOLT (L=80mm)					
	4	245-7779	1	COMPRESSOR GP					
		236-6267	1	COIL AS					
		102-8802	1	RECEPTACLE KIT (INCLUDES RECEPTACLE AS & WEDGE)					
		186-3735	2	PIN					
B		236-6455	1	WASHER					
B		236-6456	1	WASHER					
B		236-6457	1	WASHER					
B		236-6458	1	WASHER					
	5	132-5789	1	CLIP					

B—USE AS REQUIRED

H96276E 03

212-8518 COMPRESSOR GP-REFRIGERANT

Part of 235-8135-Page14

MEMORANDA

Consists of :

			Page
1	180-7816	LINES GP-GREASE	758
1	225-4582	CYLINDER & LINES GP-BOOM	389
1	225-4583	CYLINDER & LINES GP-BOOM	389
1	225-4587	CYLINDER & LINES GP-STICK	390
1	227-0550	LINES GP-BOOM	420
1	228-5521	BOOM GP	740
1	238-2300	LIGHTING GP-BOOM	258

H89385E 03

229-1754 BOOM AR-1 PIECE LONG
R-Boom
An Attachment

Consists of :

			Page
1	180-7816	LINES GP-GREASE	758
1	225-4582	CYLINDER & LINES GP-BOOM	389
1	225-4583	CYLINDER & LINES GP-BOOM	389
1	227-0550	LINES GP-BOOM	420
1	228-5522	BOOM GP	742
1	238-2300	LIGHTING GP-BOOM	258
1	259-0777	CYLINDER & LINES GP-STICK	390

H89388E 03

229-1760 BOOM AR-1 PIECE LONG
R-Boom (Heavy Duty)
An Attachment

IMPLEMENTS

Consists of :

			Page
1	184-5543	LINES GP-GREASE	759
1	225-4582	CYLINDER & LINES GP-BOOM	389
1	225-4583	CYLINDER & LINES GP-BOOM	389
1	225-4587	CYLINDER & LINES GP-STICK	390
1	227-0551	LINES GP-BOOM	422
1	235-7614	BOOM GP	744
1	238-2301	LIGHTING GP-BOOM	260

H89390E 02

229-1757 BOOM AR
M-Boom
An Attachment

IMPLEMENTS

Consists of :

			Page
1	196-0536	LINES GP-STICK	426
1	235-7616	STICK GP-HOE	747

H89065E 00

240-4029 STICK AR-HOE
An Attachment

Consists of :

			Page
1	196-0536	LINES GP-STICK	426
1	228-5526	STICK GP-HOE	748

H89071E 02

229-1762 STICK AR-HOE
An Attachment

IMPLEMENTS

Consists of :

			Page
1	196-0536	LINES GP-STICK.....	426
1	273-6770	STICK GP-HOE	749

H90450E 00

264-8667 STICK AR
An Attachment

IMPLEMENTS

Consists of :

			Page
1	236-2968	LINES GP-STICK	427
1	244-4359	STICK GP-HOE	750

H89074E 00

240-4030 STICK AR-HOE
An Attachment

Consists of :

			Page
1	228-5523	STICK GP-HOE	751
1	236-2968	LINES GP-STICK	427

H89070E 02

229-1764 STICK AR-HOE
An Attachment

Consists of :

			Page
1	196-0537	LINES GP-STICK	428
1	228-5524	STICK GP-HOE	752

H89072E 02

229-1765 STICK AR-HOE
An Attachment

Consists of :

			Page
1	196-0537	LINES GP-STICK	428
1	228-5525	STICK GP-HOE	753

H89067E 02

229-1770 STICK AR-HOE
An Attachment

IMPLEMENTS

Consists of :

			Page
1	196-0538	LINES GP-STICK	429
1	235-7617	STICK GP-HOE	754

H89069E 01

229-1767 STICK AR-HOE
An Attachment

Consists of :

			Page
1	196-0536	LINES GP-STICK	426
1	235-7618	STICK GP-HOE	755

H89064E 02

229-1855 STICK AR-HOE
An Attachment

Consists of :

			Page
1	196-0541	LINES GP-STICK	430
1	235-7619	STICK GP-HOE	756

H89073E 01

229-1769 STICK AR-HOE
An Attachment

IMPLEMENTS

Consists of :

			Page
1	225-4590	CYLINDER & LINES GP-BUCKET.....	392
1	228-5528	LINKAGE GP-BUCKET.....	762

H89383E 01

229-1772 LINKAGE AR-BUCKET
CB Family
An Attachment

Consists of :

			Page
1	225-4579	CYLINDER & LINES GP-BUCKET.....	392
1	236-8416	LINKAGE GP-BUCKET.....	764

H89384E 01

240-3733 LINKAGE AR-BUCKET
DB Family
An Attachment

Consists of :

			Page
1	116-9115	LOCK GP-TRANSPORT	767
1	116-9133	LINES GP-GREASE	760
1	121-1729	LINES GP-GREASE	761
1	127-6634	LINES GP-STICK	431
1	216-6599	STICK GP-HOE	757
1	216-6605	CYLINDER & LINES GP-STICK	391
1	225-4582	CYLINDER & LINES GP-BOOM	389
1	225-4583	CYLINDER & LINES GP-BOOM	389
1	238-2300	LIGHTING GP-BOOM	258
1	248-7837	LINKAGE GP-BUCKET	766
1	253-6664	CYLINDER & LINES GP-BUCKET	393
1	268-0462	COUNTERWEIGHT GP	320
1	268-6780	BOOM GP	746
1	268-6783	LINES GP-BOOM	424
1	268-6868	LINES GP-FRONT	528
1	268-6870	FILM GP	813

H91566E 01

262-3585 LINKAGE AR-FRONT
Long Reach Front
S/N DAP 1-Up
An Attachment

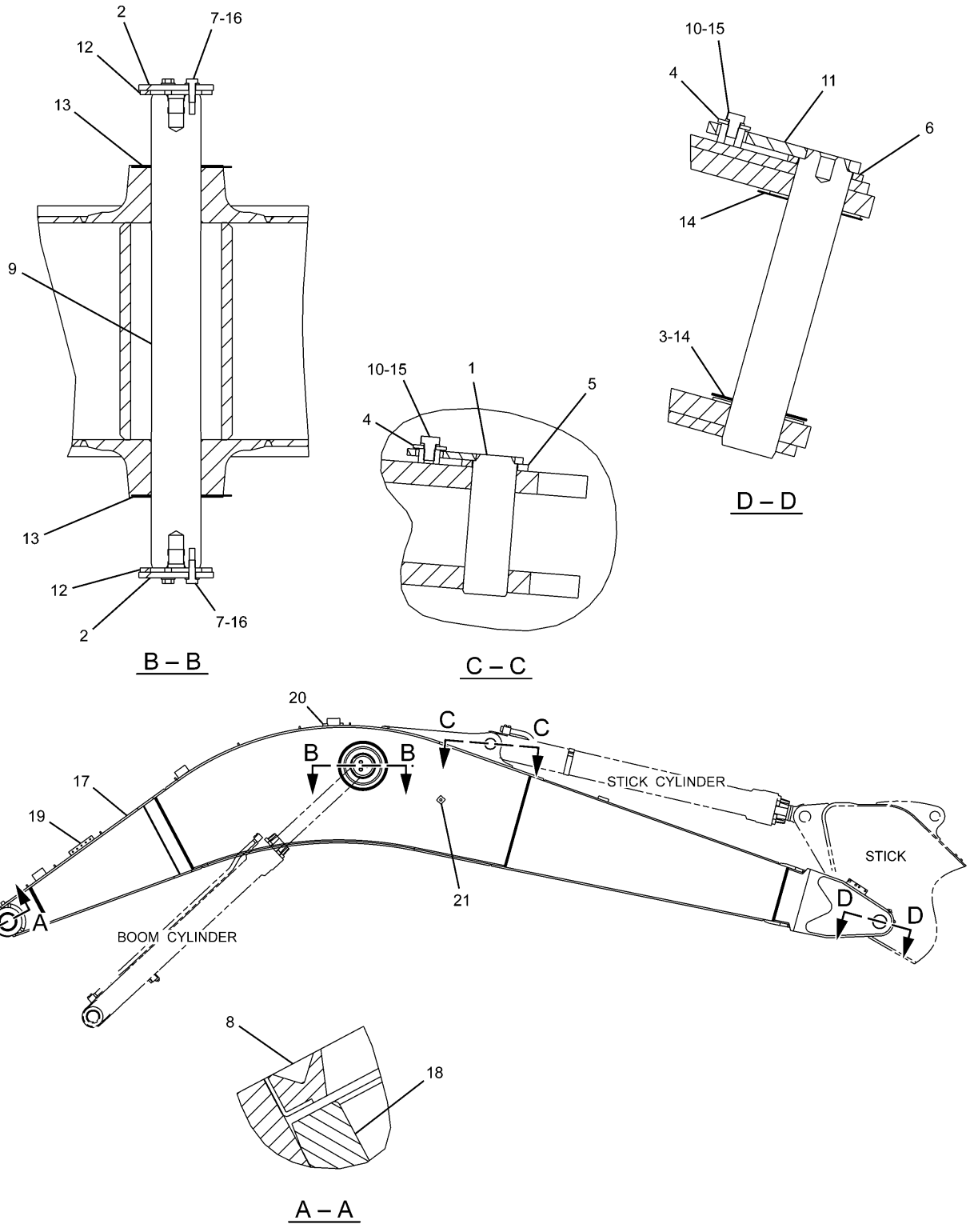

H88971E 00

228-5521 BOOM GP
Part of 229-1754-Page730
An Attachment

IMPLEMENTS

NOTE	No.	PART No.	QTY	PART NAME	NOTE	No.	PART No.	QTY	PART NAME
	1	4I-4618	1	PIN AS					
	2	7Y-2390	2	PLATE					
B	3	093-0090	1	SHIM (T=1.00mm)					
B		133-2427	1	SHIM (T=0.50mm)					
	4	093-0349	2	WASHER					
	5	093-0363	1	SPACER					
	6	093-0364	1	SPACER					
	7	8T-4956	6	BOLT (L=35mm)					
	8	166-1497	2	SEAL					
	9	186-5637	1	PIN					
	10	8T-4780	2	BOLT (L=30mm)					
	11	234-3803	1	PIN AS					
	12	087-5955	2	SPACER					
	13	166-1487	2	SHIM (T=2.00mm)					
	14	166-1488	2	SHIM (T=2.00mm)					
	15	8T-4123	2	WASHER					
	16	8T-4223	6	WASHER					
	17	234-3799	1	BOOM AS					
	18	234-3811	2	BEARING					
	19	113-2276	1	MANIFOLD					
	20	087-5841	4	PLATE					
	21	7Y-2579	2	BAR					

B—USE AS REQUIRED

H88971E 00

228-5521 BOOM GP

Part of 229-1754-Page730
An Attachment

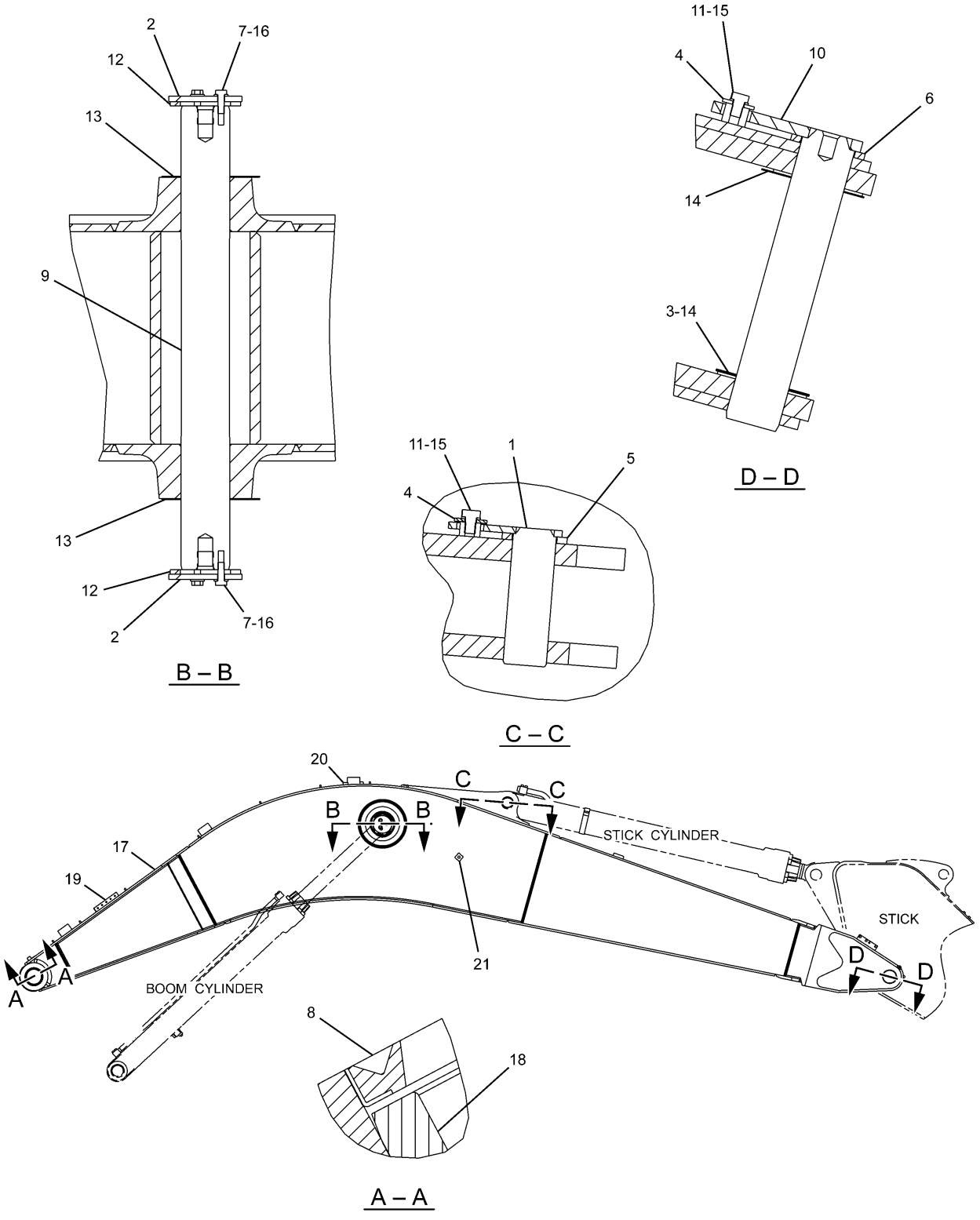

H88972E 00

228-5522 BOOM GP
Part of 229-1760-Page730
An Attachment

IMPLEMENTS

NOTE	No.	PART No.	QTY	PART NAME	NOTE	No.	PART No.	QTY	PART NAME
	1	4I-4618	1	PIN AS					
	2	7Y-2390	2	PLATE					
B	3	093-0090	1	SHIM (T=1.00mm)					
B		133-2427	1	SHIM (T=0.50mm)					
	4	093-0349	2	WASHER					
	5	093-0363	1	SPACER					
	6	093-0364	1	SPACER					
	7	8T-4956	6	BOLT (L=35mm)					
	8	166-1497	2	SEAL					
	9	186-5637	1	PIN					
	10	234-3803	1	PIN AS					
	11	8T-4780	2	BOLT (L=30mm)					
	12	087-5955	2	SPACER					
	13	166-1487	2	SHIM (T=2.00mm)					
	14	166-1488	2	SHIM (T=2.00mm)					
	15	8T-4123	2	WASHER					
	16	8T-4223	6	WASHER					
	17	235-7766	1	BOOM AS					
	18	234-3811	2	BEARING					
	19	113-2276	1	MANIFOLD					
	20	087-5841	4	PLATE					
	21	7Y-2579	2	BAR					

B—USE AS REQUIRED

H88972E 00

228-5522 BOOM GP

Part of 229-1760-Page730

An Attachment

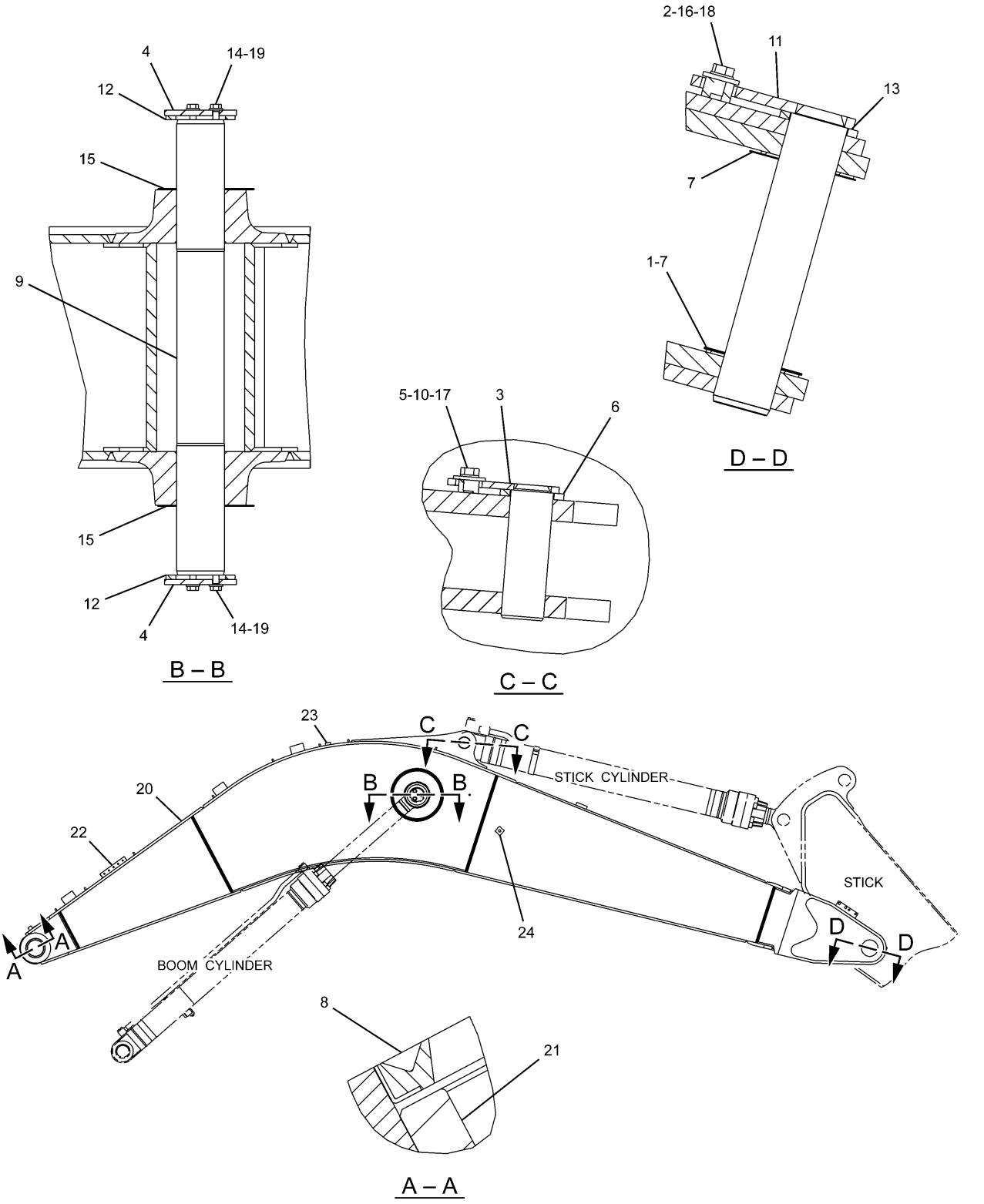

H88974E 00

235-7614 BOOM GP
Part of 229-1757-Page731
An Attachment

IMPLEMENTS

NOTE	No.	PART No.	QTY	PART NAME	NOTE	No.	PART No.	QTY	PART NAME
B	1	4I-0575	1	SHIM (T=1.00mm)					
B		133-2428	1	SHIM (T=0.50mm)					
	2	4I-3183	1	WASHER					
	3	4I-4618	1	PIN AS					
	4	7Y-2390	2	PLATE					
	5	093-0349	1	WASHER					
	6	093-0363	1	SPACER					
	7	166-1489	2	SHIM (T=2.00mm)					
	8	166-1497	2	SEAL					
	9	186-5637	1	PIN					
	10	8T-4780	1	BOLT (L=30mm)					
	11	254-2885	1	PIN AS					
	12	087-5955	2	SPACER					
	13	103-5245	1	SPACER					
	14	8T-4956	6	BOLT (L=35mm)					
	15	166-1487	2	SHIM (T=2.00mm)					
	16	7X-2573	1	BOLT (L=40mm)					
	17	8T-4123	1	WASHER					
	18	8T-4167	1	WASHER					
	19	8T-4223	6	WASHER					
	20	254-2880	1	BOOM AS					
	21	234-3811	2	BEARING					
	22	113-2276	1	MANIFOLD					
	23	087-5841	4	PLATE					
	24	7Y-2579	2	BAR					

B—USE AS REQUIRED

H88974E 00

235-7614 BOOM GP
Part of 229-1757-Page731
An Attachment

IMPLEMENTS

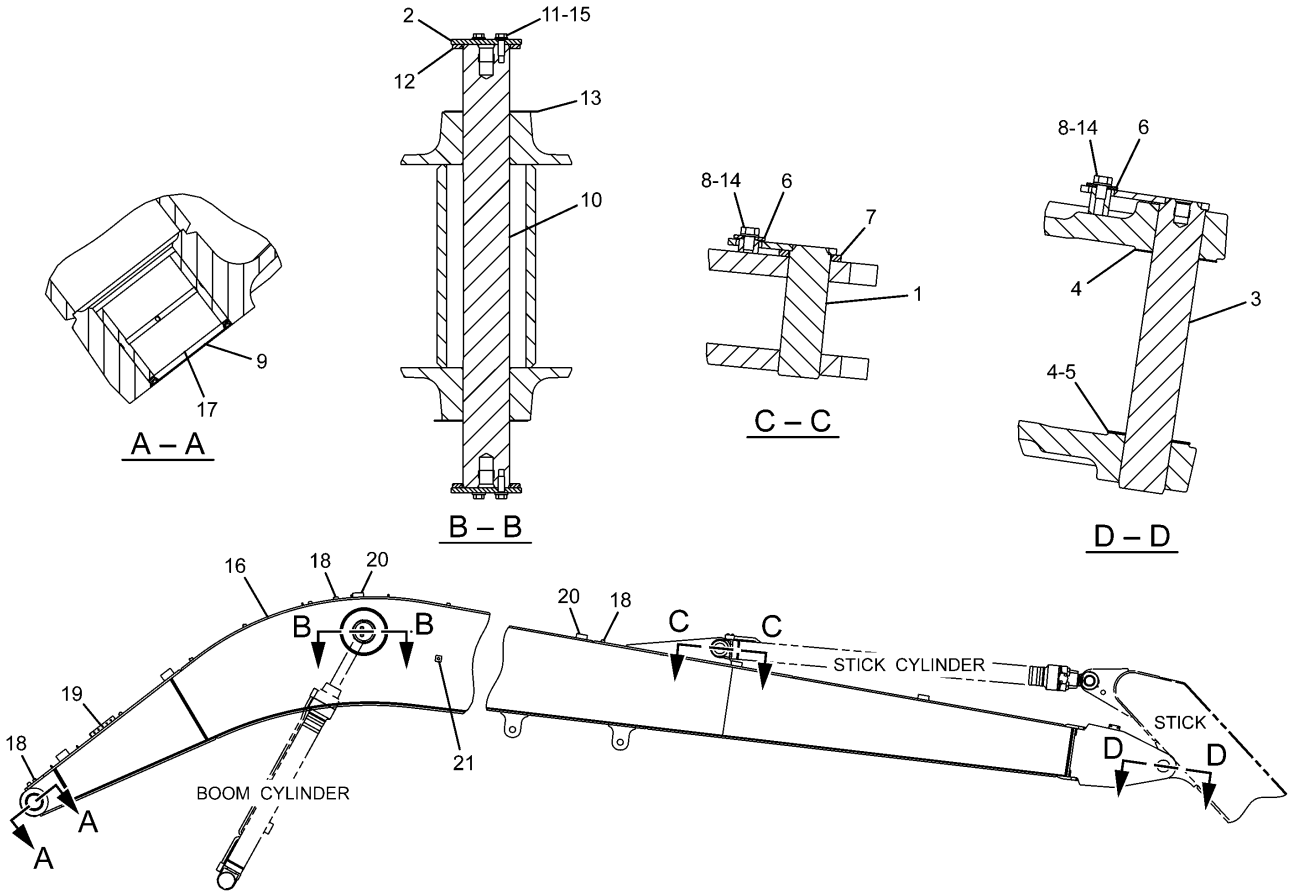

NOTE	No.	PART No.	QTY	PART NAME	NOTE	No.	PART No.	QTY	PART NAME
	1	4I-4618	1	PIN AS		16	268-6781	1	BOOM AS
	2	7Y-2390	2	PLATE		17	234-3811	2	BEARING
	3	7Y-6620	1	PIN AS		18	087-5841	9	PLATE
	4	093-0116	2	SHIM (T=2.00mm)		19	7Y-2580	1	MANIFOLD
B	5	093-0084	1	SHIM (T=1.00mm)		20	7Y-4594	20	PLATE
B		113-2127	1	SHIM (T=0.50mm)		21	7Y-2579	2	BAR
	6	093-0349	2	WASHER					
	7	093-0363	1	SPACER					
	8	8T-4780	2	BOLT (L=30mm)					
	9	166-1497	2	SEAL					
	10	186-5637	1	PIN					
	11	8T-4956	6	BOLT (L=35mm)					
	12	087-5955	2	SPACER					
	13	166-1487	2	SHIM (T=2.00mm)					
	14	8T-4123	2	WASHER					
	15	8T-4223	6	WASHER					

B—USE AS REQUIRED

H90703E 00

268-6780 BOOM GP

Long Reach Front
S/N DAP 1-Up
Part of 262-3585-Page739
An Attachment

IMPLEMENTS

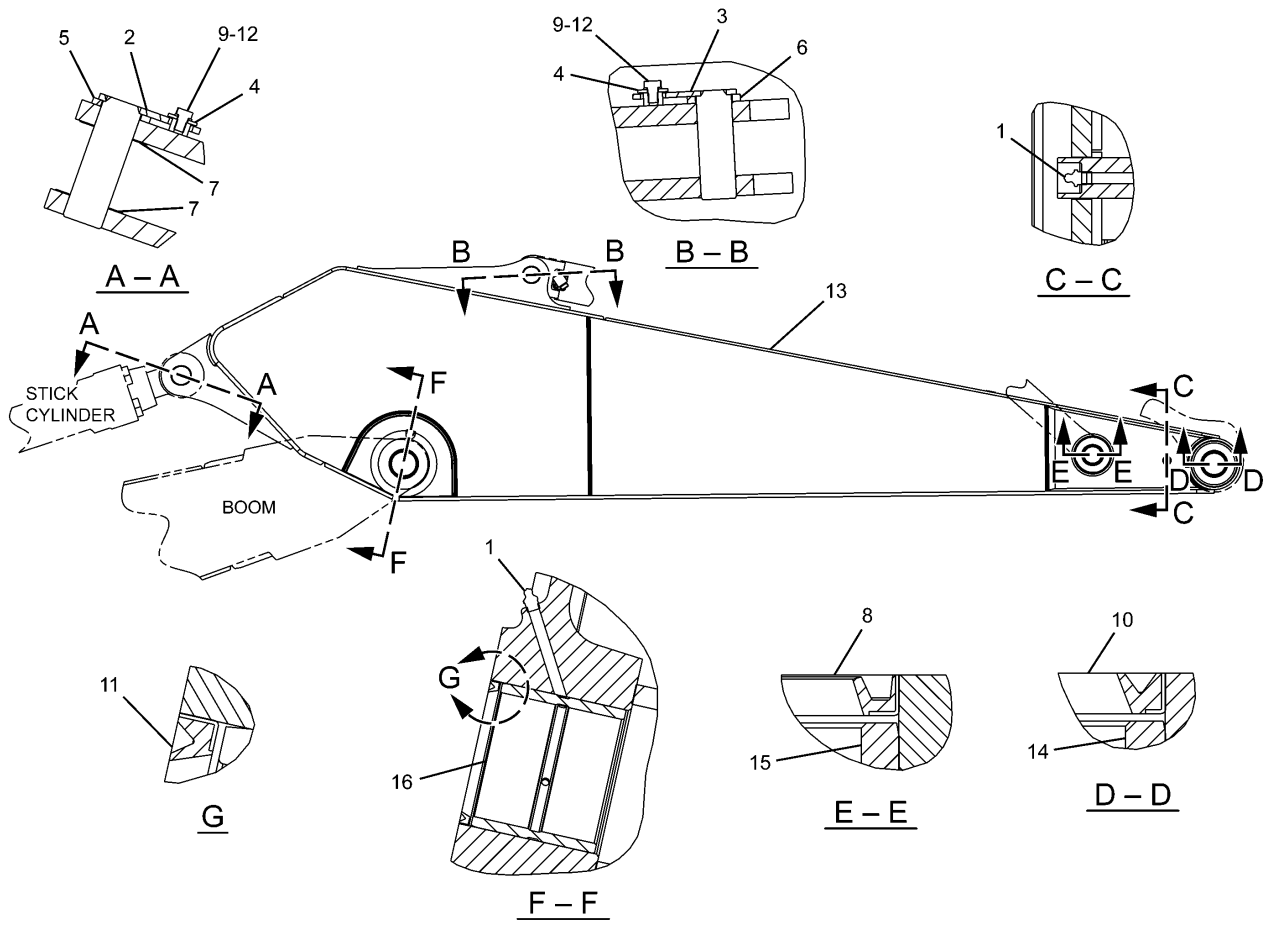

NOTE	No.	PART No.	QTY	PART NAME	NOTE	No.	PART No.	QTY	PART NAME
	1	3B-8489	3	FITTING					
	2	4I-4618	1	PIN AS					
	3	4I-4620	1	PIN AS					
	4	093-0349	2	WASHER					
	5	093-0363	1	SPACER					
	6	118-5982	1	SPACER					
	7	166-1486	2	SHIM (T=2.00mm)					
	8	235-7679	2	SEAL					
	9	8T-4780	2	BOLT (L=30mm)					
	10	166-1495	2	SEAL					
	11	166-1496	2	SEAL					
	12	8T-4123	2	WASHER					
	13	248-1742	1	STICK AS					
	14	228-5615	2	BEARING					
	15	228-5614	2	BEARING					
	16	228-5654	2	BEARING					

H88981E 00

235-7616 STICK GP-HOE
Part of 240-4029-Page732
An Attachment

IMPLEMENTS

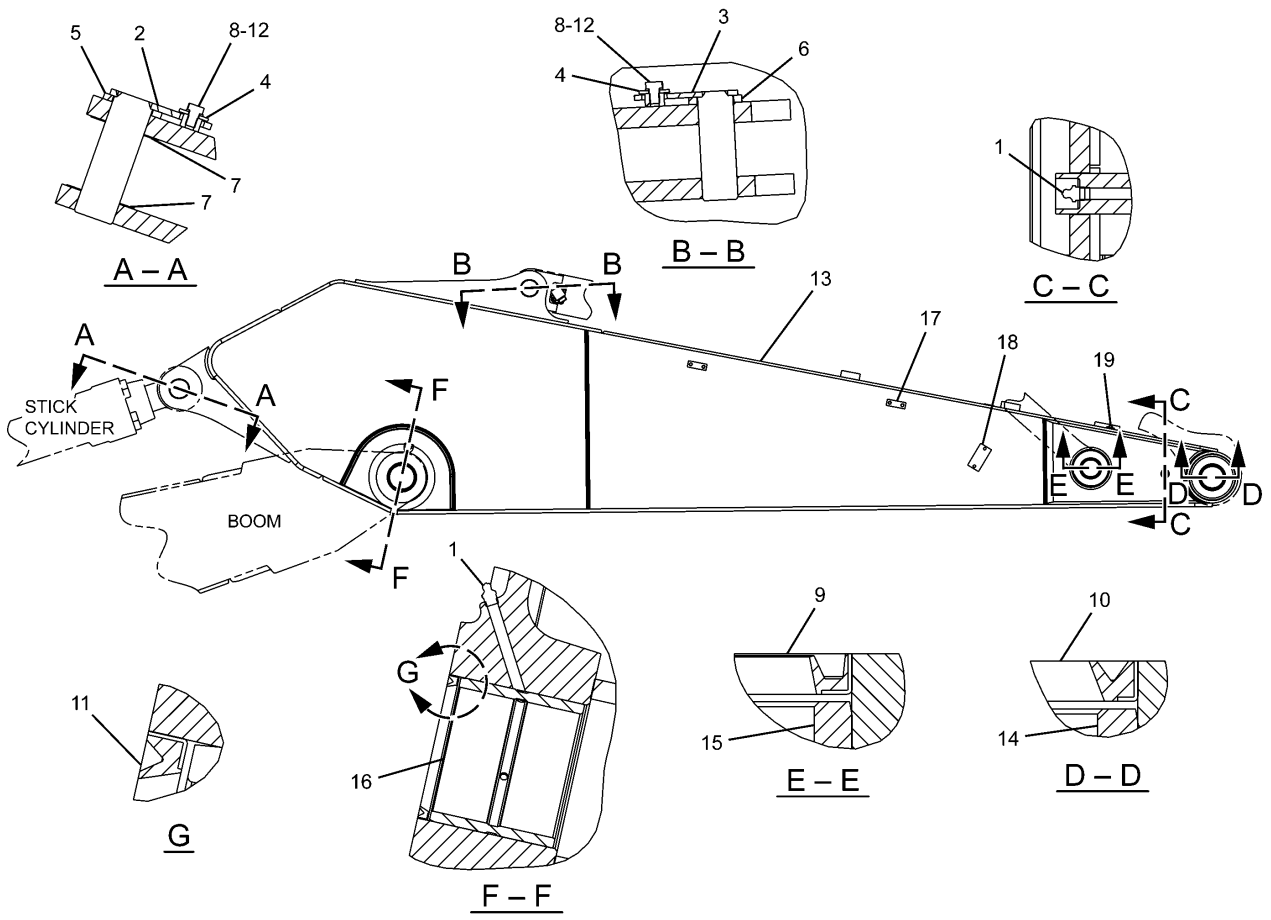

NOTE	No.	PART No.	QTY	PART NAME	NOTE	No.	PART No.	QTY	PART NAME
	1	3B-8489	3	FITTING					
	2	4I-4618	1	PIN AS					
	3	4I-4620	1	PIN AS					
	4	093-0349	2	WASHER					
	5	093-0363	1	SPACER					
	6	118-5982	1	SPACER					
	7	166-1486	2	SHIM (T=2.00mm)					
	8	8T-4780	2	BOLT (L=30mm)					
	9	235-7679	2	SEAL					
	10	166-1495	2	SEAL					
	11	166-1496	2	SEAL					
	12	8T-4123	2	WASHER					
	13	235-7590	1	STICK AS					
	14	228-5615	2	BEARING					
	15	228-5614	2	BEARING					
	16	228-5654	2	BEARING					
	17	188-0046	4	PLATE					
	18	121-1760	2	PLATE					
	19	7V-2882	1	PLATE AS					

H88982E 00

228-5526 STICK GP-HOE
Part of 229-1762-Page732
An Attachment

IMPLEMENTS

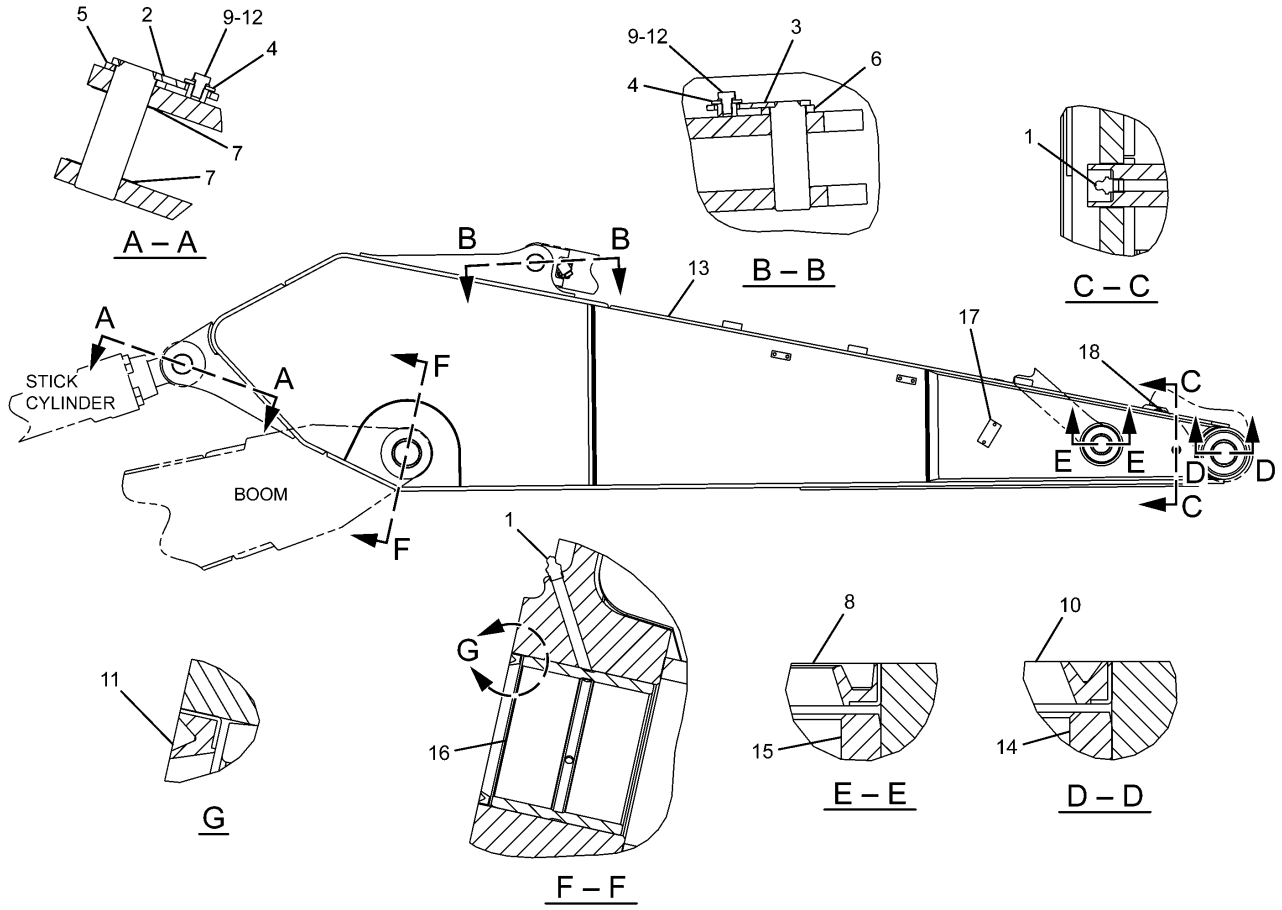

NOTE	No.	PART No.	QTY	PART NAME	NOTE	No.	PART No.	QTY	PART NAME
	1	3B-8489	3	FITTING					
	2	4I-4618	1	PIN AS					
	3	4I-4620	1	PIN AS					
	4	093-0349	2	WASHER					
	5	093-0363	1	SPACER					
	6	118-5982	1	SPACER					
	7	166-1486	2	SHIM (T=2.00mm)					
	8	235-7679	2	SEAL					
	9	8T-4780	2	BOLT (L=30mm)					
	10	166-1495	2	SEAL					
	11	166-1496	2	SEAL					
	12	8T-4123	2	WASHER					
	13	273-6771	1	STICK AS					
	14	228-5615	2	BEARING					
	15	228-5614	2	BEARING					
	16	228-5654	2	BEARING					
	17	121-1760	2	PLATE					
	18	7V-2882	1	PLATE AS					

H90449E 00

273-6770 STICK GP-HOE
Part of 264-8667-Page733
An Attachment

IMPLEMENTS

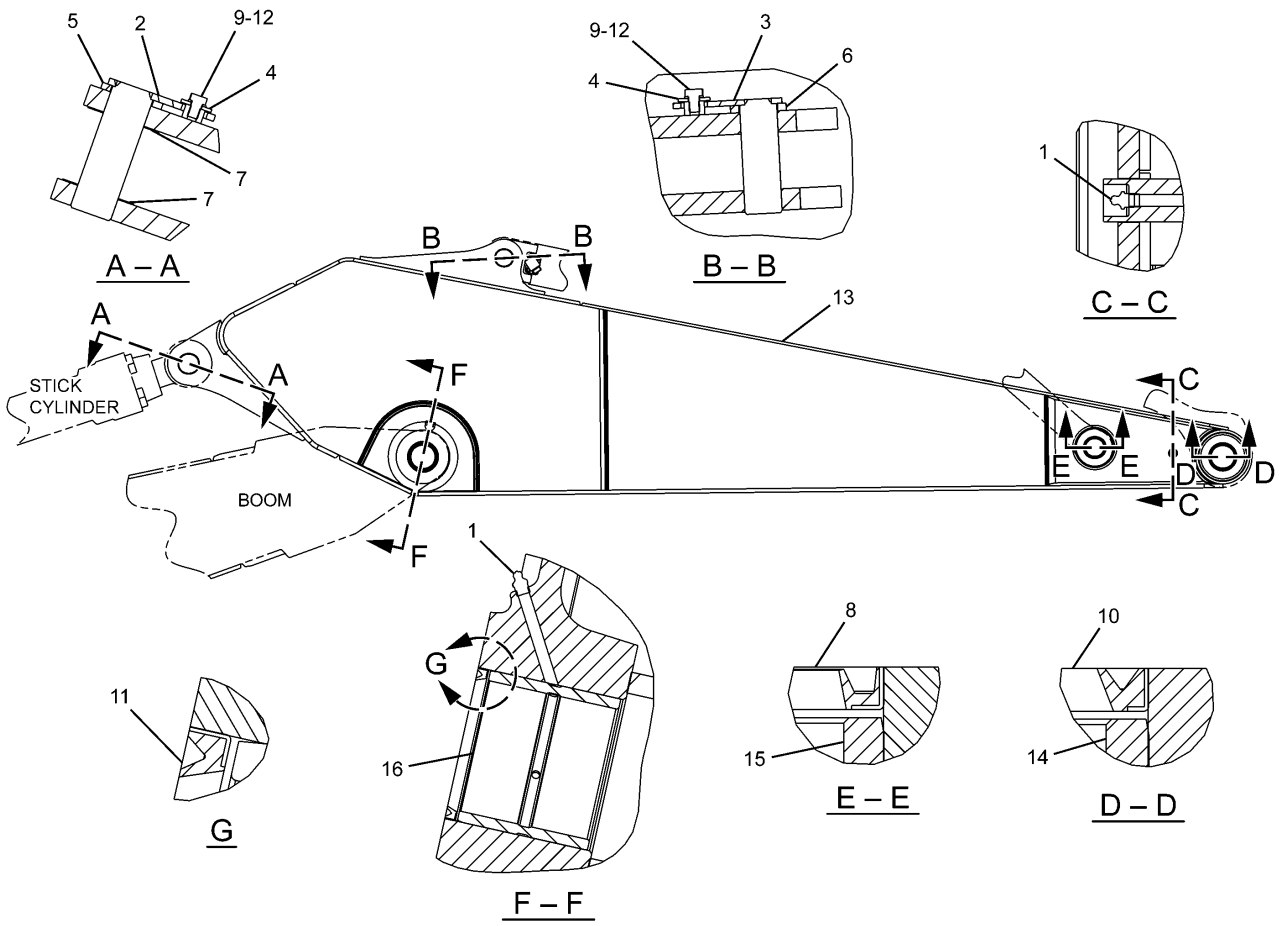

NOTE	No.	PART No.	QTY	PART NAME	NOTE	No.	PART No.	QTY	PART NAME
	1	3B-8489	3	FITTING					
	2	4I-4618	1	PIN AS					
	3	4I-4620	1	PIN AS					
	4	093-0349	2	WASHER					
	5	093-0363	1	SPACER					
	6	118-5982	1	SPACER					
	7	166-1486	2	SHIM (T=2.00mm)					
	8	235-7679	2	SEAL					
	9	8T-4780	2	BOLT (L=30mm)					
	10	166-1495	2	SEAL					
	11	166-1496	2	SEAL					
	12	8T-4123	2	WASHER					
	13	248-1743	1	STICK AS					
	14	228-5615	2	BEARING					
	15	228-5614	2	BEARING					
	16	228-5654	2	BEARING					

H88983E 00

244-4359 STICK GP-HOE
Part of 240-4030-Page734
An Attachment

IMPLEMENTS

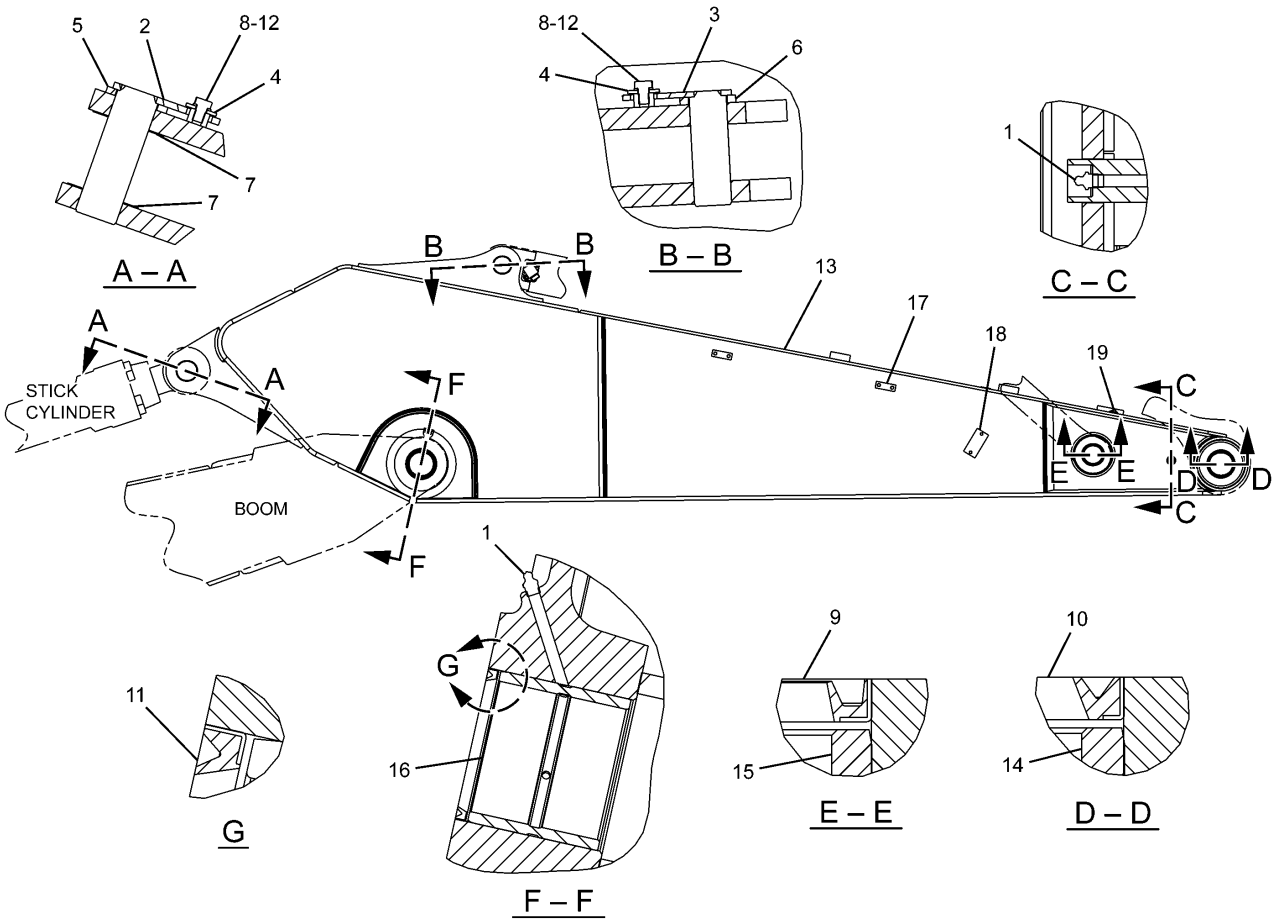

NOTE	No.	PART No.	QTY	PART NAME	NOTE	No.	PART No.	QTY	PART NAME
	1	3B-8489	3	FITTING					
	2	4I-4618	1	PIN AS					
	3	4I-4620	1	PIN AS					
	4	093-0349	2	WASHER					
	5	093-0363	1	SPACER					
	6	118-5982	1	SPACER					
	7	166-1486	2	SHIM (T=2.00mm)					
	8	8T-4780	2	BOLT (L=30mm)					
	9	235-7679	2	SEAL					
	10	166-1495	2	SEAL					
	11	166-1496	2	SEAL					
	12	8T-4123	2	WASHER					
	13	228-5653	1	STICK AS					
	14	228-5615	2	BEARING					
	15	228-5614	2	BEARING					
	16	228-5654	2	BEARING					
	17	188-0046	4	PLATE					
	18	121-1760	2	PLATE					
	19	7V-2882	1	PLATE AS					

H88984E 00

228-5523 STICK GP-HOE

Part of 229-1764-Page734
An Attachment

IMPLEMENTS

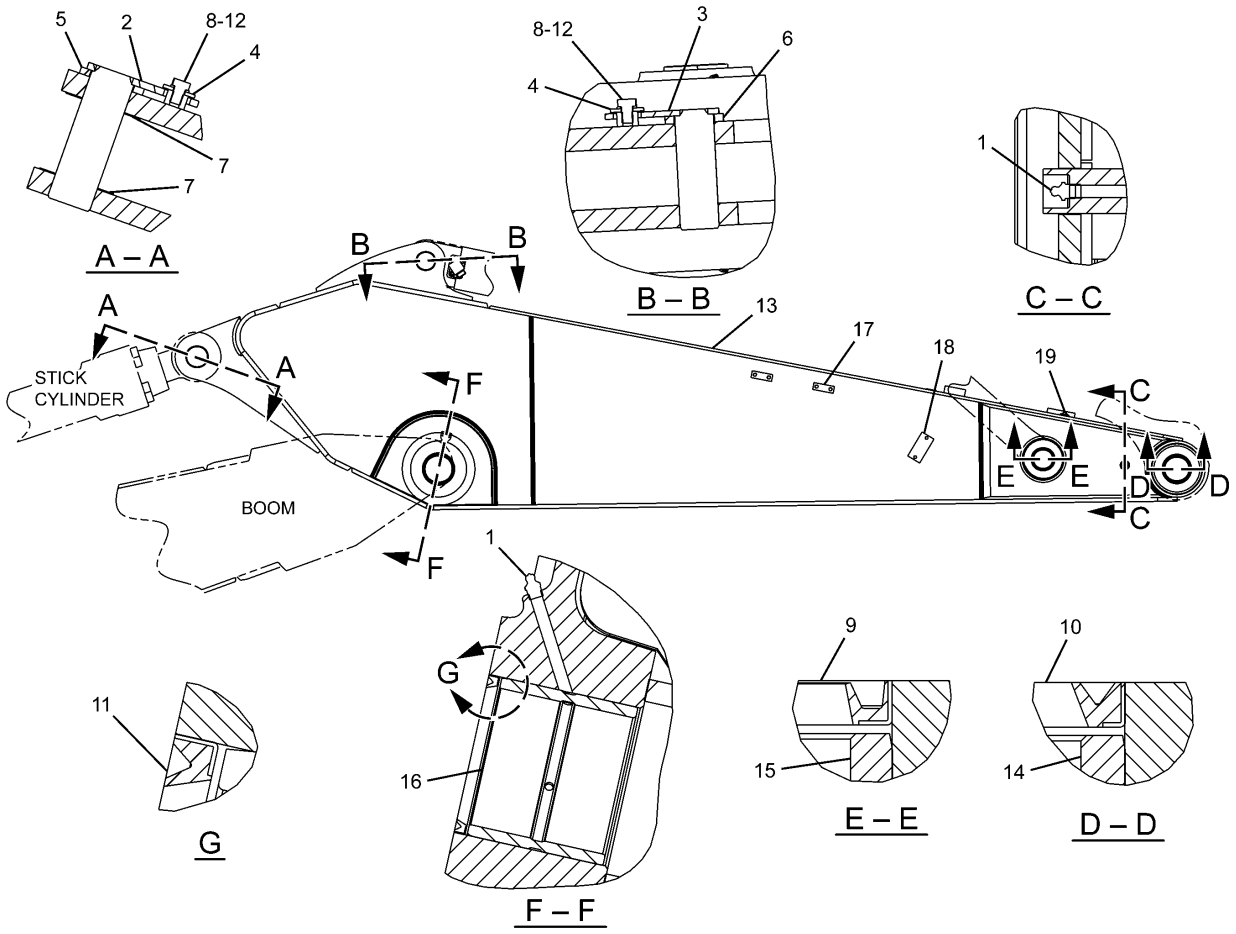

NOTE	No.	PART No.	QTY	PART NAME	NOTE	No.	PART No.	QTY	PART NAME
	1	3B-8489	3	FITTING					
	2	4I-4618	1	PIN AS					
	3	4I-4620	1	PIN AS					
	4	093-0349	2	WASHER					
	5	093-0363	1	SPACER					
	6	118-5982	1	SPACER					
	7	166-1486	2	SHIM (T=2.00mm)					
	8	8T-4780	2	BOLT (L=30mm)					
	9	235-7679	2	SEAL					
	10	166-1495	2	SEAL					
	11	166-1496	2	SEAL					
	12	8T-4123	2	WASHER					
	13	234-3771	1	STICK AS					
	14	228-5615	2	BEARING					
	15	228-5614	2	BEARING					
	16	228-5654	2	BEARING					
	17	188-0046	4	PLATE					
	18	121-1760	2	PLATE					
	19	7V-2882	1	PLATE AS					

H88985E 00

228-5524 STICK GP-HOE
Part of 229-1765-Page735
An Attachment

IMPLEMENTS

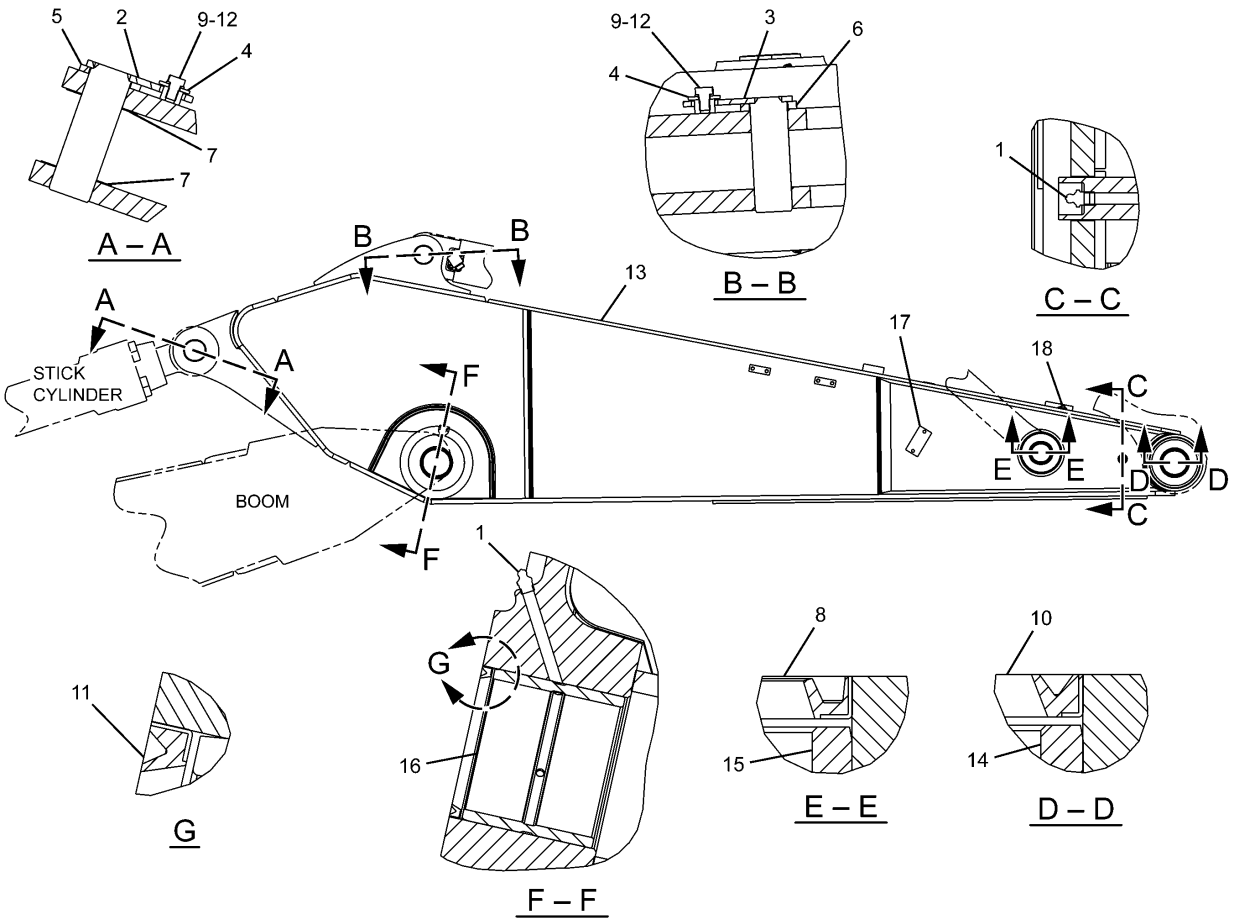

NOTE	No.	PART No.	QTY	PART NAME	NOTE	No.	PART No.	QTY	PART NAME
	1	3B-8489	3	FITTING					
	2	4I-4618	1	PIN AS					
	3	4I-4620	1	PIN AS					
	4	093-0349	2	WASHER					
	5	093-0363	1	SPACER					
	6	118-5982	1	SPACER					
	7	166-1486	2	SHIM (T=2.00mm)					
	8	235-7679	2	SEAL					
	9	8T-4780	2	BOLT (L=30mm)					
	10	166-1495	2	SEAL					
	11	166-1496	2	SEAL					
	12	8T-4123	2	WASHER					
	13	235-7709	1	STICK AS					
	14	228-5615	2	BEARING					
	15	228-5614	2	BEARING					
	16	228-5654	2	BEARING					
	17	121-1760	2	PLATE					
	18	7V-2882	1	PLATE AS					

H88988E 00

228-5525 STICK GP-HOE

Part of 229-1770-Page735
An Attachment

IMPLEMENTS

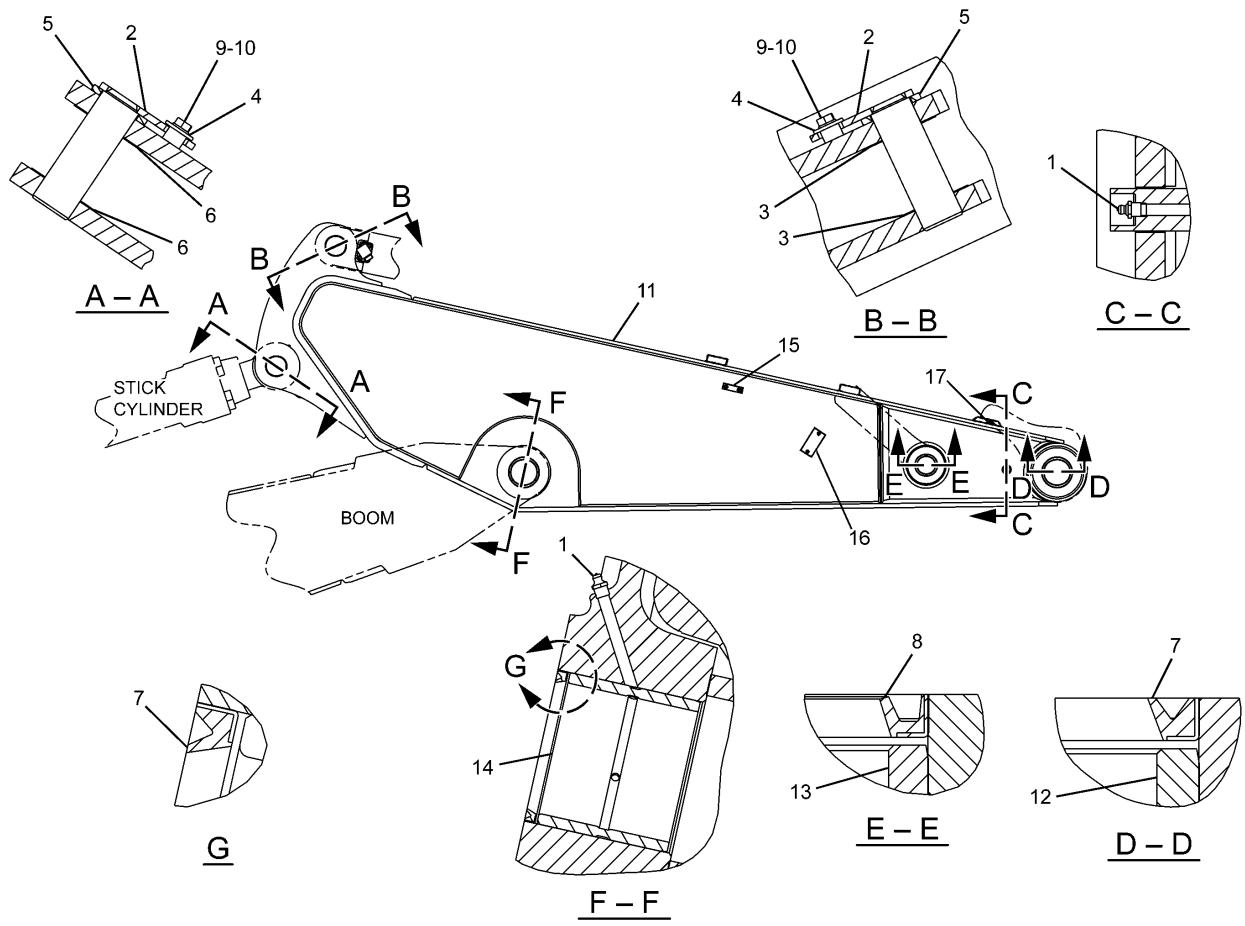

NOTE	No.	PART No.	QTY	PART NAME	NOTE	No.	PART No.	QTY	PART NAME
	1	3B-8489	3	FITTING					
	2	4I-4618	2	PIN AS					
	3	093-0115	2	SHIM (T=2.00mm)					
	4	093-0349	2	WASHER					
	5	093-0363	2	SPACER					
	6	166-1486	2	SHIM (T=2.00mm)					
	7	166-1496	4	SEAL					
	8	235-7679	2	SEAL					
	9	8T-4780	2	BOLT (L=30mm)					
	10	8T-4123	2	WASHER					
	11	251-2516	1	STICK AS					
	12	228-5617	2	BEARING					
	13	241-7231	2	BEARING					
	14	228-5654	2	BEARING					
	15	188-0046	2	PLATE					
	16	121-1760	2	PLATE					
	17	7V-2882	1	PLATE AS					

H93235E 00

235-7617 STICK GP-HOE

Part of 229-1767-Page736
An Attachment

IMPLEMENTS

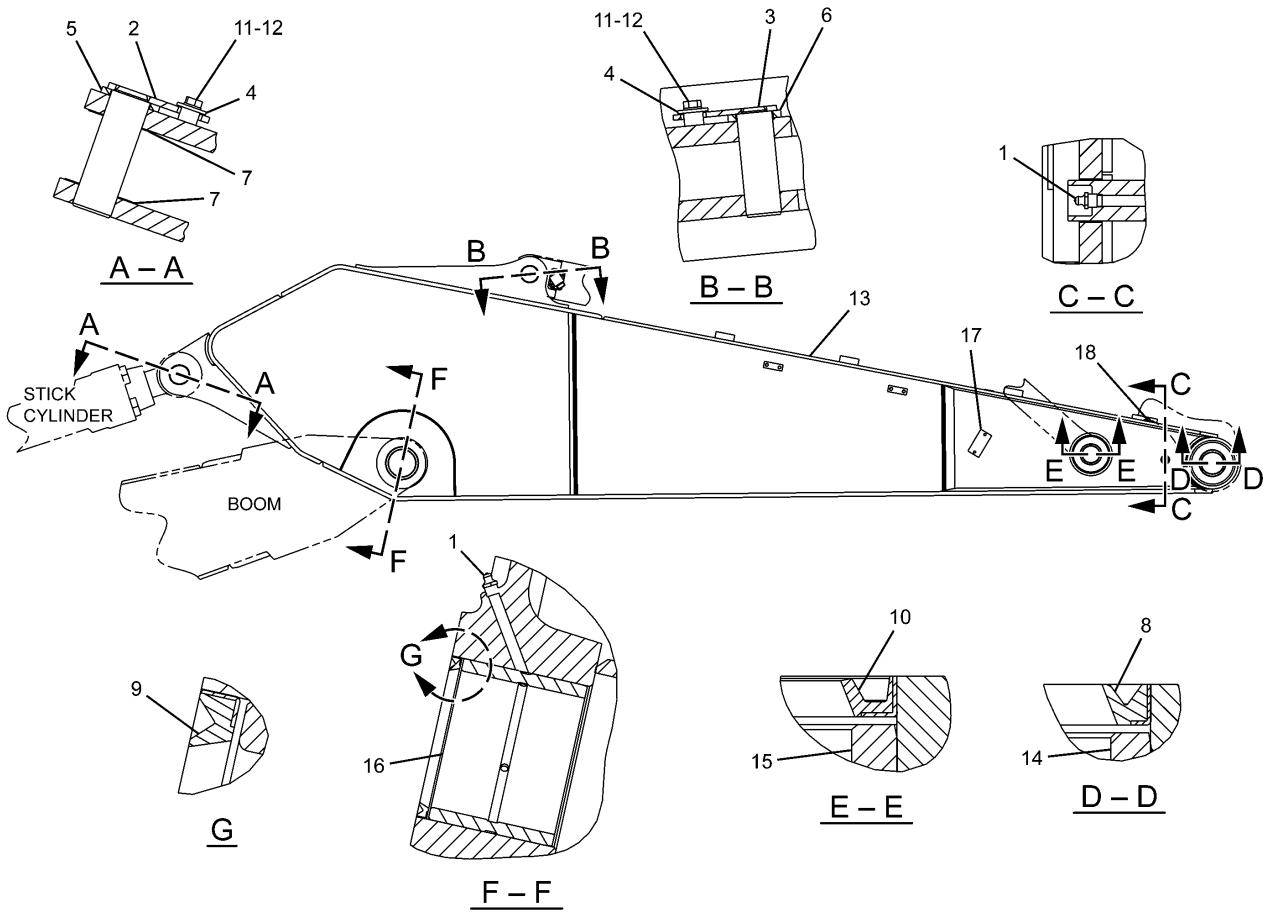

NOTE	No.	PART No.	QTY	PART NAME	NOTE	No.	PART No.	QTY	PART NAME
	1	3B-8489	3	FITTING					
	2	4I-4618	1	PIN AS					
	3	4I-4620	1	PIN AS					
	4	093-0349	2	WASHER					
	5	093-0363	1	SPACER					
	6	118-5982	1	SPACER					
	7	166-1486	2	SHIM (T=2.00mm)					
	8	166-1495	2	SEAL					
	9	166-1497	2	SEAL					
	10	235-7679	2	SEAL					
	11	8T-4780	2	BOLT (L=30mm)					
	12	8T-4123	2	WASHER					
	13	251-2680	1	STICK AS					
	14	228-5615	2	BEARING					
	15	228-5614	2	BEARING					
	16	278-9256	2	BEARING					
	17	121-1760	2	PLATE					
	18	7V-2882	1	PLATE AS					

H88991E 01

235-7618 STICK GP-HOE

Part of 229-1855-Page737
An Attachment

IMPLEMENTS

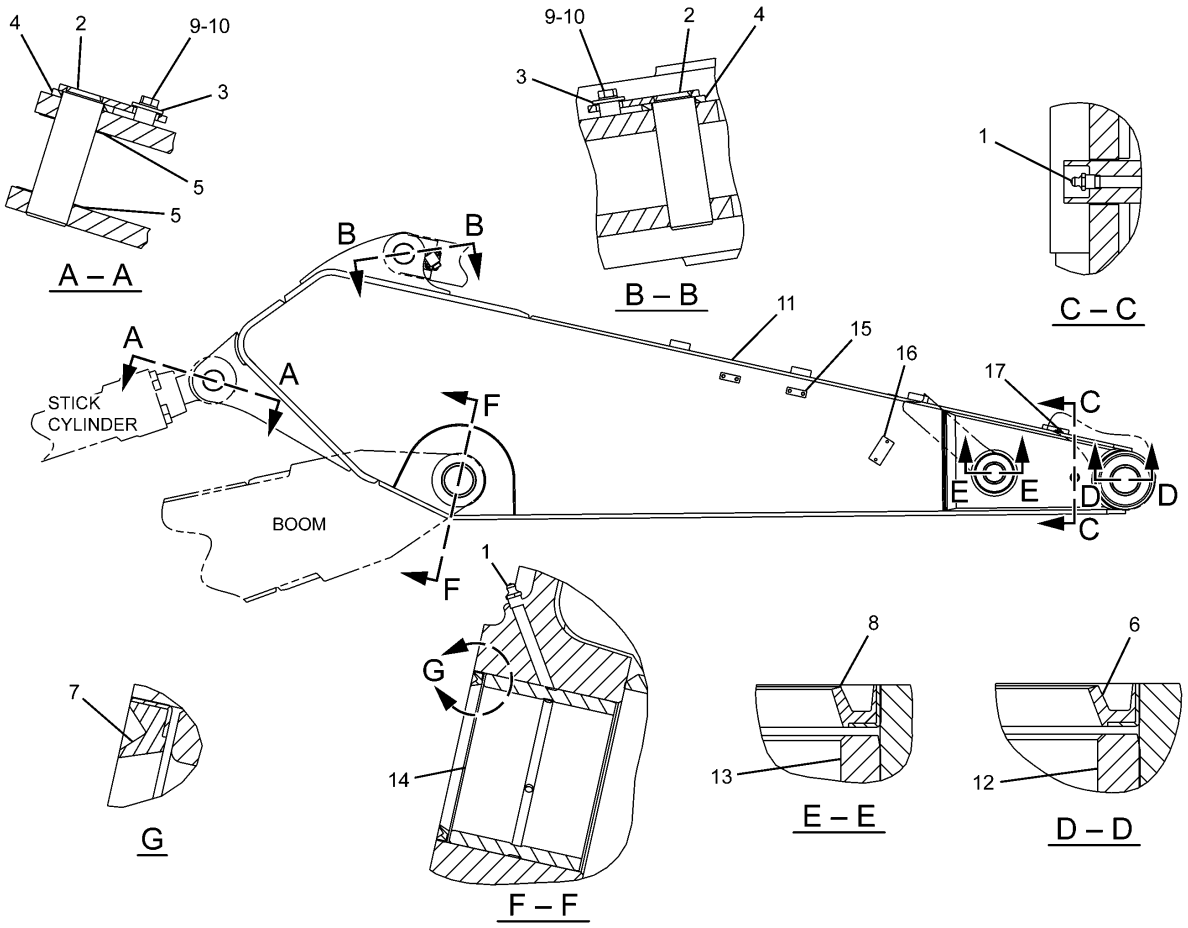

NOTE	No.	PART No.	QTY	PART NAME	NOTE	No.	PART No.	QTY	PART NAME
	1	3B-8489	3	FITTING					
	2	4I-4618	2	PIN AS					
	3	093-0349	2	WASHER					
	4	093-0363	2	SPACER					
	5	166-1486	2	SHIM (T=2.00mm)					
	6	166-1496	2	SEAL					
	7	166-1497	2	SEAL					
	8	235-7679	2	SEAL					
	9	8T-4780	2	BOLT (L=30mm)					
	10	8T-4123	2	WASHER					
	11	251-2563	1	STICK AS					
	12	228-5617	2	BEARING					
	13	241-7231	2	BEARING					
	14	278-9256	2	BEARING					
	15	188-0046	4	PLATE					
	16	121-1760	2	PLATE					
	17	7V-2882	1	PLATE AS					

H88992E 01

235-7619 STICK GP-HOE
Part of 229-1769-Page737
An Attachment

IMPLEMENTS

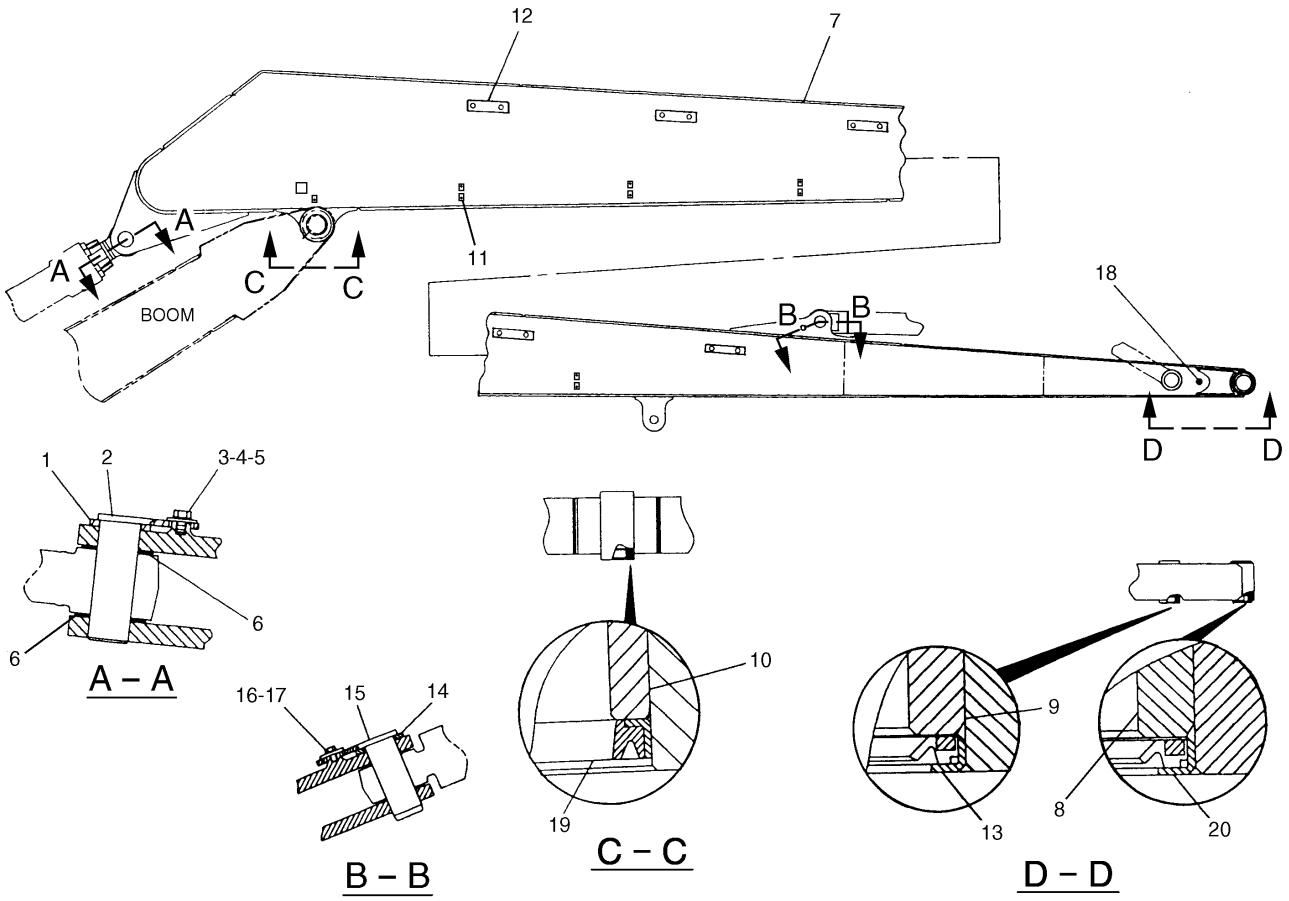

NOTE	No.	PART No.	QTY	PART NAME	NOTE	No.	PART No.	QTY	PART NAME
	1	093-0363	1	SPACER					
	2	7Y-6684	1	PIN AS					
	3	8T-4780	1	BOLT (L=30mm)					
	4	093-0349	1	WASHER					
	5	8T-4123	1	WASHER					
	6	166-1486	2	SHIM (T=2.00mm)					
	7	237-3111	1	STICK AS					
	8	229-1091	2	BEARING					
	9	229-1095	2	BEARING					
	10	244-4277	2	BEARING					
	11	087-5841	11	PLATE					
	12	7Y-2522	10	PLATE					
	13	093-1433	2	SEAL					
	14	093-0357	1	WASHER					
	15	127-3913	1	PIN AS					
	16	8T-4179	1	BOLT (L=20mm)					
	17	086-0297	1	WASHER					
	18	3B-8489	1	FITTING					
	19	166-1495	2	SEAL					
	20	096-0131	2	SEAL					

H91082E 01

216-6599 STICK GP-HOE
S/N DAP 1-Up
Part of 262-3585-Page739
An Attachment

IMPLEMENTS

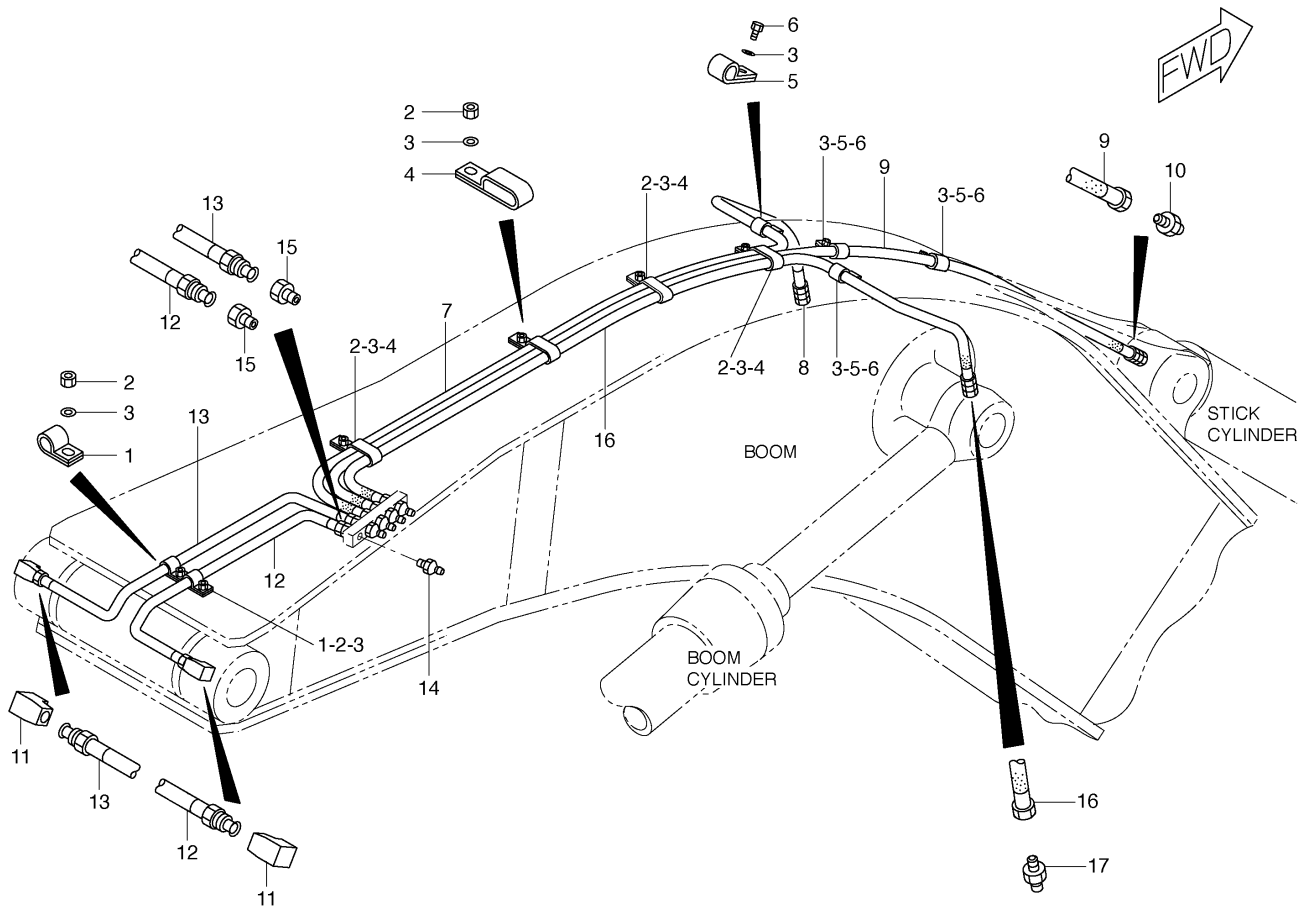

NOTE	No.	PART No.	QTY	PART NAME	NOTE	No.	PART No.	QTY	PART NAME
	1	8M-2772	2	CLIP					
	2	8T-4133	6	NUT					
	3	8T-4121	10	WASHER					
	4	166-1579	4	CLIP					
	5	033-8248	4	CLIP					
	6	8T-4191	4	BOLT (L=16mm)					
	7	203-7239	1	HOSE AS					
	8	105-6431	1	CONNECTOR					
	9	120-7224	1	HOSE AS					
	10	105-6431	1	CONNECTOR					
	11	5K-9243	2	ELBOW					
	12	186-5559	1	TUBE AS					
	13	186-5560	1	TUBE AS					
	14	3B-8489	5	FITTING					
	15	6L-3616	2	CONNECTOR					
	16	115-2677	1	HOSE AS					
	17	105-6431	1	CONNECTOR					

H74651E 02

180-7816 LINES GP-GREASE

Part of 229-1754,229-1760-Page730
An Attachment

IMPLEMENTS

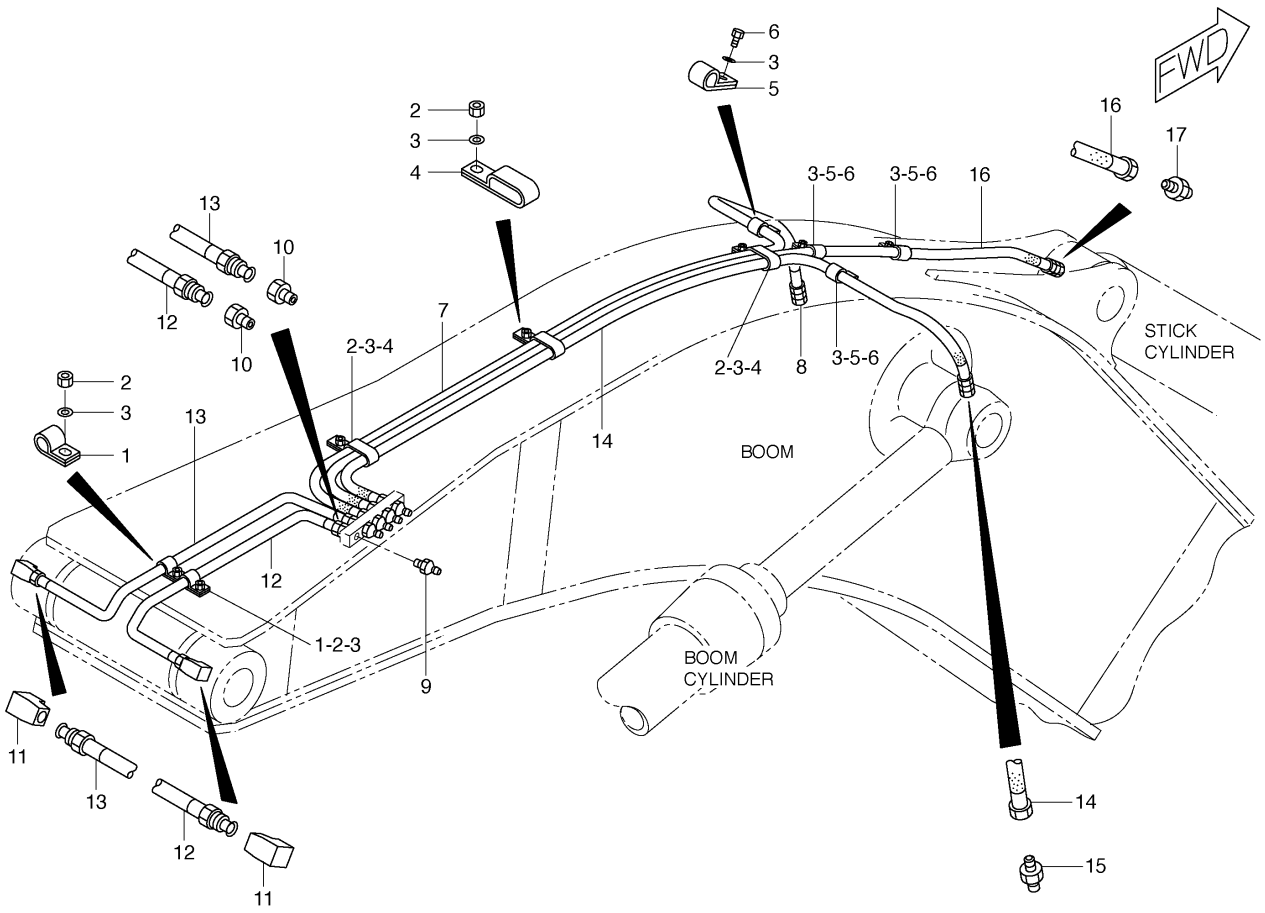

NOTE	No.	PART No.	QTY	PART NAME	NOTE	No.	PART No.	QTY	PART NAME
	1	8M-2772	2	CLIP					
	2	8T-4133	5	NUT					
	3	8T-4121	9	WASHER					
	4	166-1579	3	CLIP					
	5	033-8248	4	CLIP					
	6	8T-4191	4	BOLT (L=16mm)					
	7	121-8460	1	HOSE AS					
	8	105-6431	1	CONNECTOR					
	9	3B-8489	5	FITTING					
	10	6L-3616	2	CONNECTOR					
	11	5K-9243	2	ELBOW					
	12	186-5559	1	TUBE AS					
	13	186-5560	1	TUBE AS					
	14	201-2868	1	HOSE AS					
	15	105-6431	1	CONNECTOR					
	16	121-8662	1	HOSE AS					
	17	105-6431	1	CONNECTOR					

H74654E 01

184-5543 LINES GP-GREASE

Part of 229-1757-Page731
An Attachment

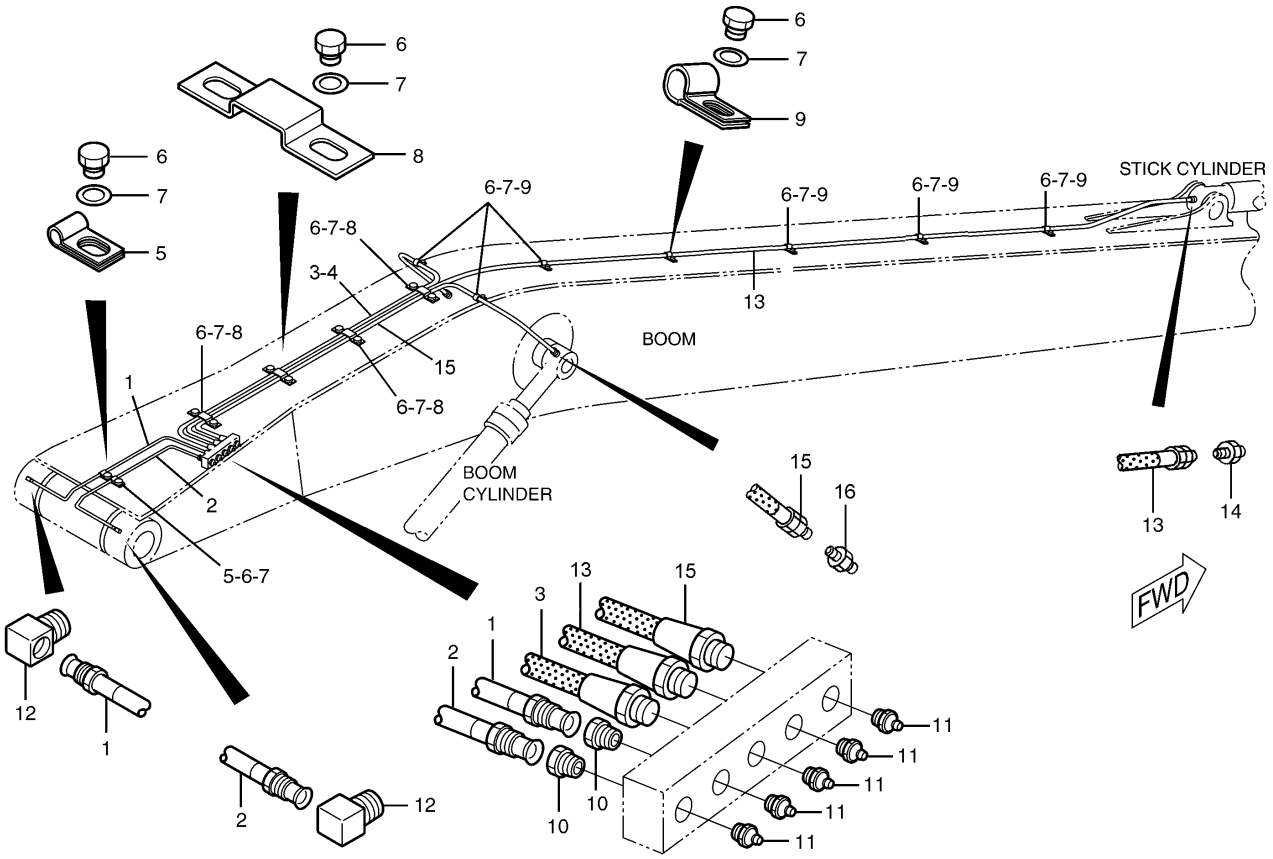

NOTE	No.	PART No.	QTY	PART NAME	NOTE	No.	PART No.	QTY	PART NAME
	1	7Y-2662	1	TUBE AS					
	2	7Y-2663	1	TUBE AS					
	3	087-5857	1	HOSE AS					
	4	105-6431	1	CONNECTOR					
	5	8M-2772	2	CLIP					
	6	8T-4191	17	BOLT (L=16mm)					
	7	8T-4121	17	WASHER					
	8	087-5840	4	PLATE					
	9	033-8248	7	CLIP					
	10	6L-3616	2	CONNECTOR					
	11	3B-8489	5	FITTING					
	12	5K-9243	2	ELBOW					
	13	116-9140	1	HOSE AS					
	14	105-6431	1	CONNECTOR					
	15	7Y-2664	1	HOSE AS					
	16	105-6431	1	CONNECTOR					

H90441E 00

116-9133 LINES GP-GREASE

Boom/Long Reach Front
S/N DAP 1-Up
Part of 262-3585-Page739
An Attachment

IMPLEMENTS

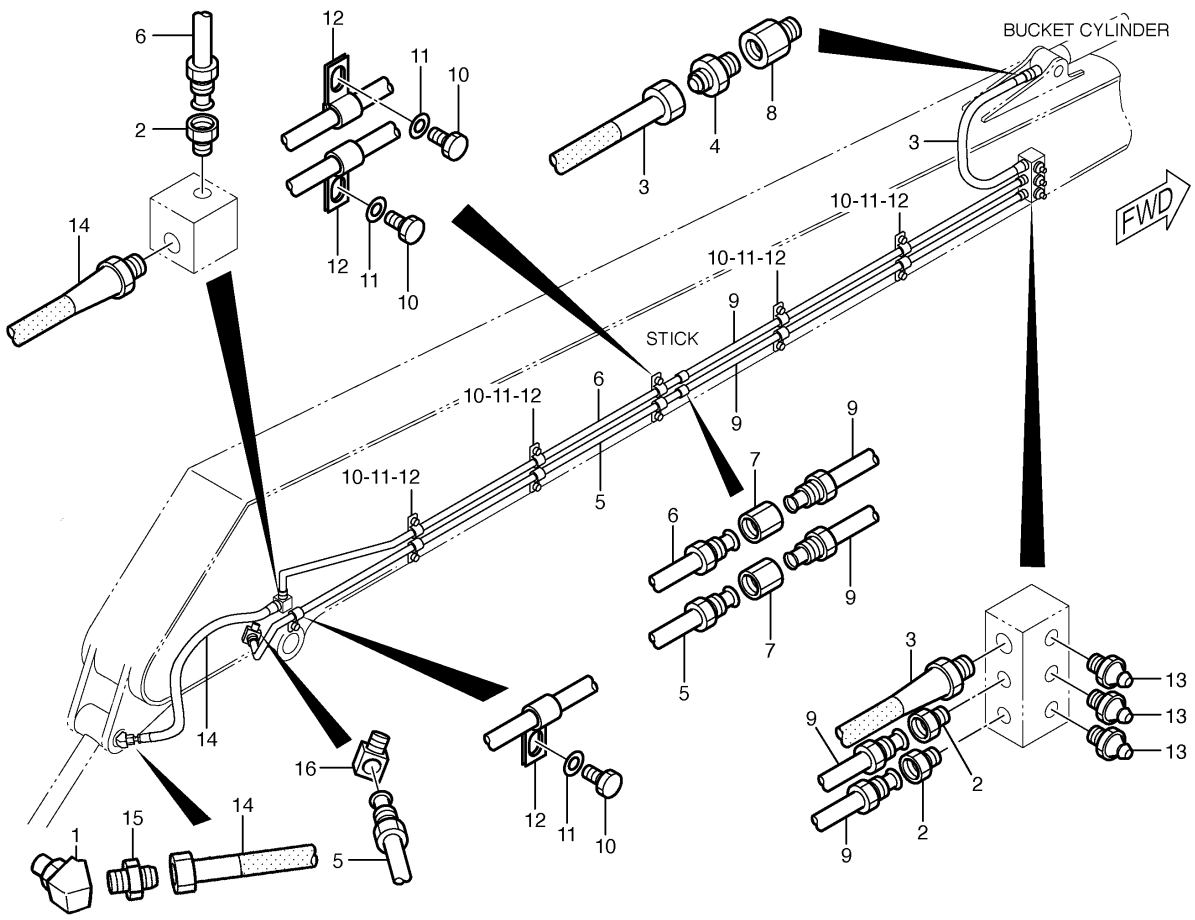

NOTE	No.	PART No.	QTY	PART NAME	NOTE	No.	PART No.	QTY	PART NAME
	1	260-4057	1	ELBOW					
	2	6L-3616	3	CONNECTOR					
	3	087-5966	1	HOSE AS					
	4	105-6431	1	CONNECTOR					
	5	7Y-6656	1	TUBE AS					
	6	7Y-6657	1	TUBE AS					
	7	5K-9242	2	UNION					
	8	5H-8936	1	ADAPTER					
	9	7Y-6658	2	TUBE AS					
	10	8T-4191	11	BOLT (L=16mm)					
	11	8T-4121	11	WASHER					
	12	8M-2772	11	CLIP					
	13	3B-8489	3	FITTING					
	14	7Y-2920	1	HOSE AS					
	15	105-6431	1	CONNECTOR					
	16	5K-9243	1	ELBOW					

H89045E 01

121-1729 LINES GP-GREASE

Stick/Long Reach Front
S/N DAP 1-Up
Part of 262-3585-Page739
An Attachment

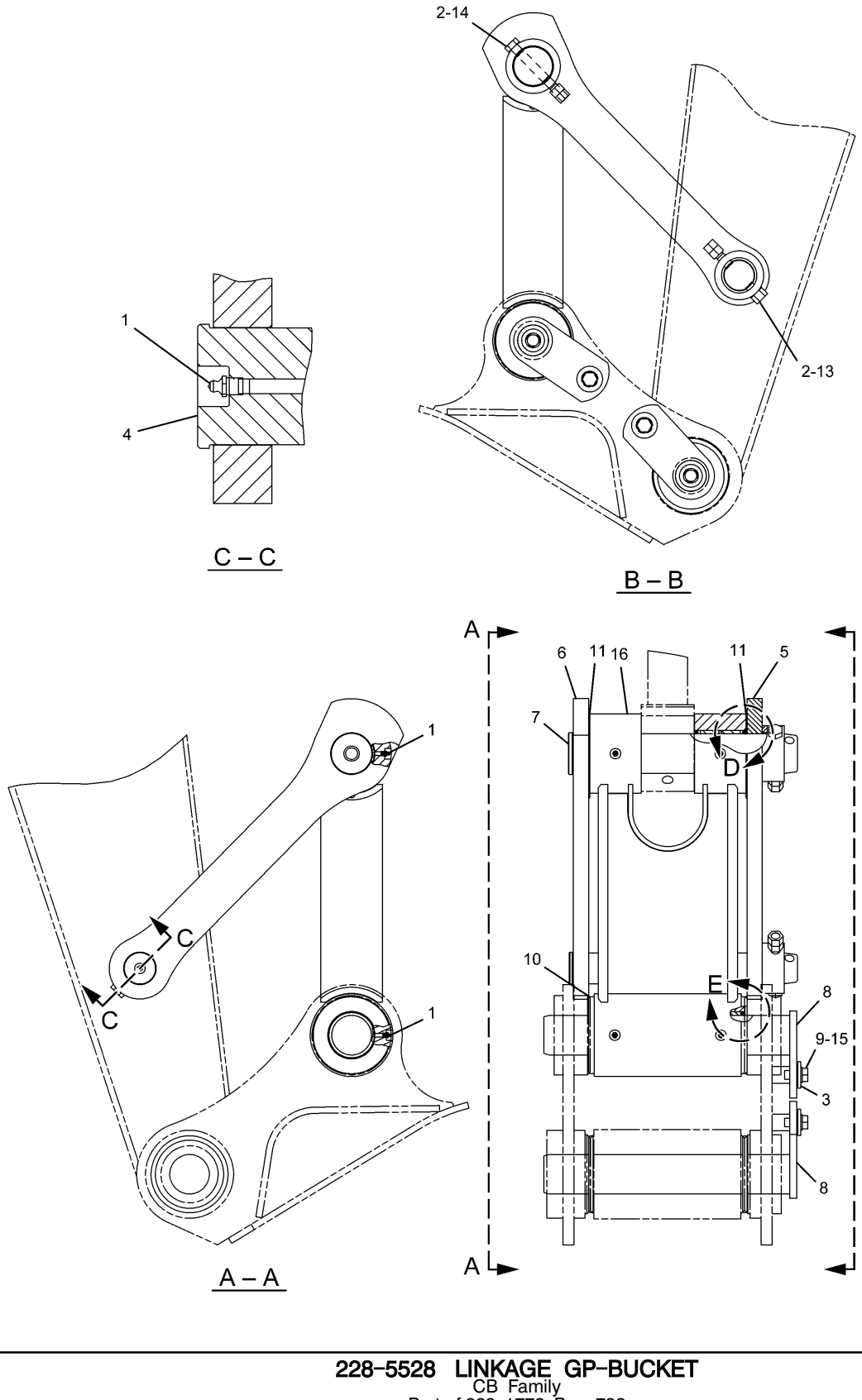

H90556E 02

228–5528 LINKAGE GP–BUCKET
CB Family
Part of 229–1772–Page738
An Attachment

IMPLEMENTS

NOTE	No.	PART No.	QTY	PART NAME	NOTE	No.	PART No.	QTY	PART NAME
	1	3B-8489	5	FITTING					
	2	8T-4131	4	NUT					
	3	093-0349	2	WASHER					
	4	186-5662	1	PIN					
	5	234-3927	1	LINK AS					
	6	234-3928	1	LINK					
	7	234-3930	1	PIN					
	8	234-3931	2	PIN AS					
	9	8T-5460	2	BOLT (L=40mm)					
	10	093-1345	4	SEAL-O-RING (ID=155.00mm)					
	11	166-1487	2	SHIM (T=2.00mm)					
	12	166-1495	6	SEAL					
	13	186-5649	1	BOLT (L=160mm)					
	14	189-3925	1	BOLT (L=170mm)					
	15	8T-4123	2	WASHER					
	16	248-1842	1	LINK AS					
	17	228-5615	4	BEARING					

H90556E 02

228-5528 LINKAGE GP-BUCKET

CB Family

Part of 229-1772-Page738

An Attachment

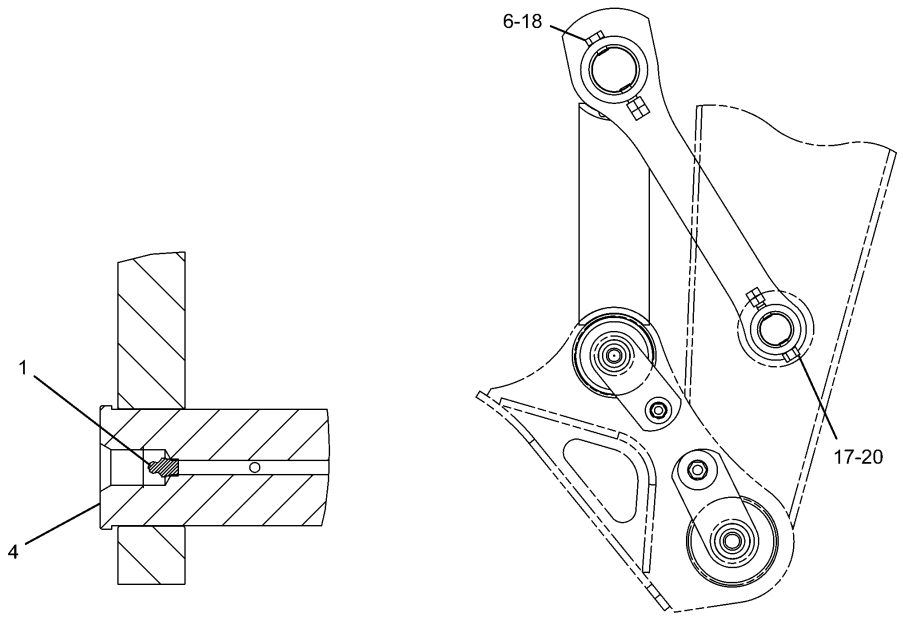

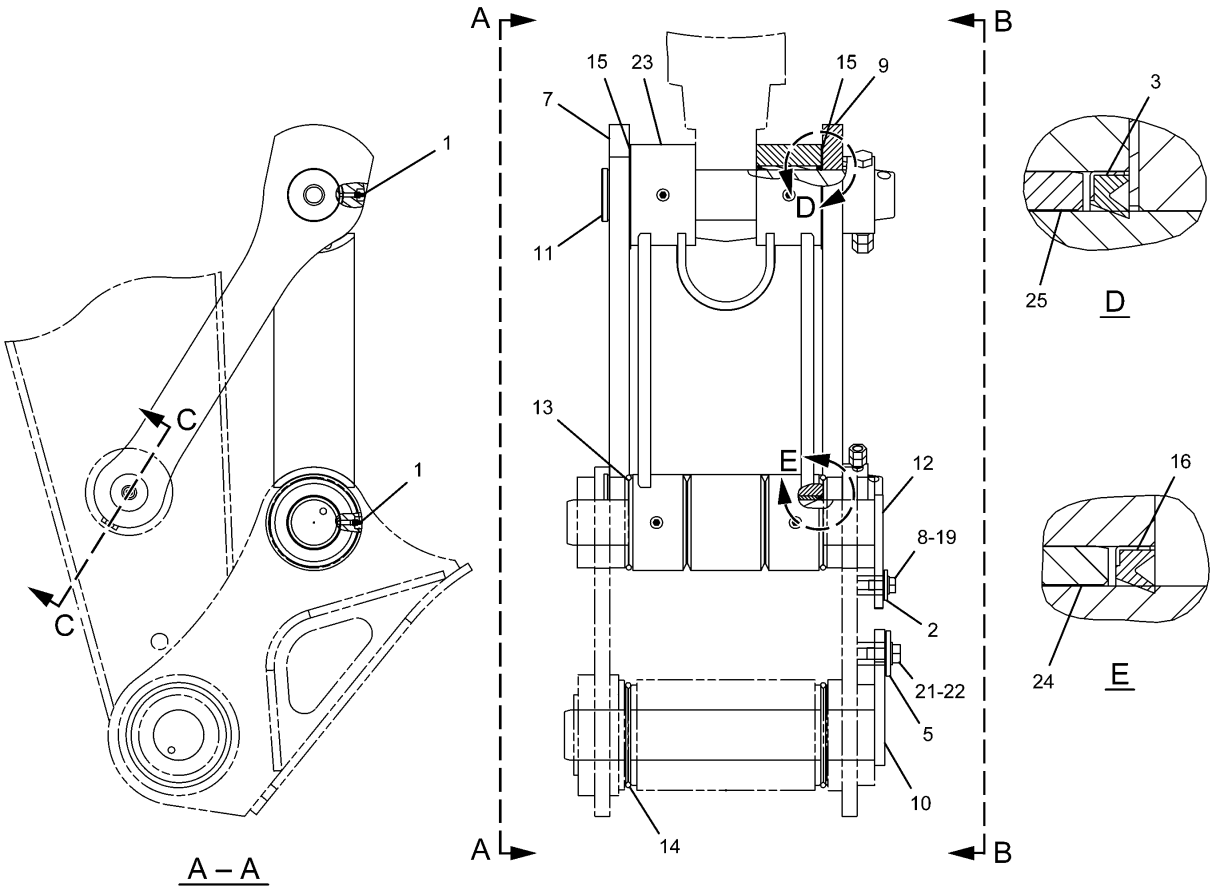

H88951E 01

236–8416 LINKAGE GP–BUCKET
DB Family
Part of 240–3733–Page738
An Attachment

IMPLEMENTS

NOTE	No.	PART No.	QTY	PART NAME	NOTE	No.	PART No.	QTY	PART NAME
	1	3B-8489	5	FITTING					
	2	093-0349	1	WASHER					
	3	166-1496	4	SEAL					
	4	189-3922	1	PIN					
	5	201-2771	1	WASHER (OD=90.00mm)					
	6	201-2836	1	BOLT (L=200mm)					
	7	241-7129	1	LINK					
	8	8T-5460	1	BOLT (L=40mm)					
	9	241-7150	1	LINK AS					
	10	251-2552	1	PIN AS					
	11	251-2557	1	PIN					
	12	251-2558	1	PIN AS					
	13	093-1345	2	SEAL-O-RING (ID=155.00mm)					
	14	093-1349	2	SEAL-O-RING (ID=175.00mm)					
	15	166-1488	2	SHIM (T=2.00mm)					
	16	166-1495	2	SEAL					
	17	186-5649	1	BOLT (L=160mm)					
	18	8T-4001	2	NUT					
	19	8T-4123	1	WASHER					
	20	8T-4131	2	NUT					
	21	8T-4167	1	WASHER					
	22	8T-5379	1	BOLT (L=50mm)					
	23	241-7140	1	LINK AS					
	24	228-5615	2	BEARING					
	25	241-7280	2	BEARING					

H88951E 01

236-8416 LINKAGE GP-BUCKET

DB Family

Part of 240-3733-Page738

An Attachment

IMPLEMENTS

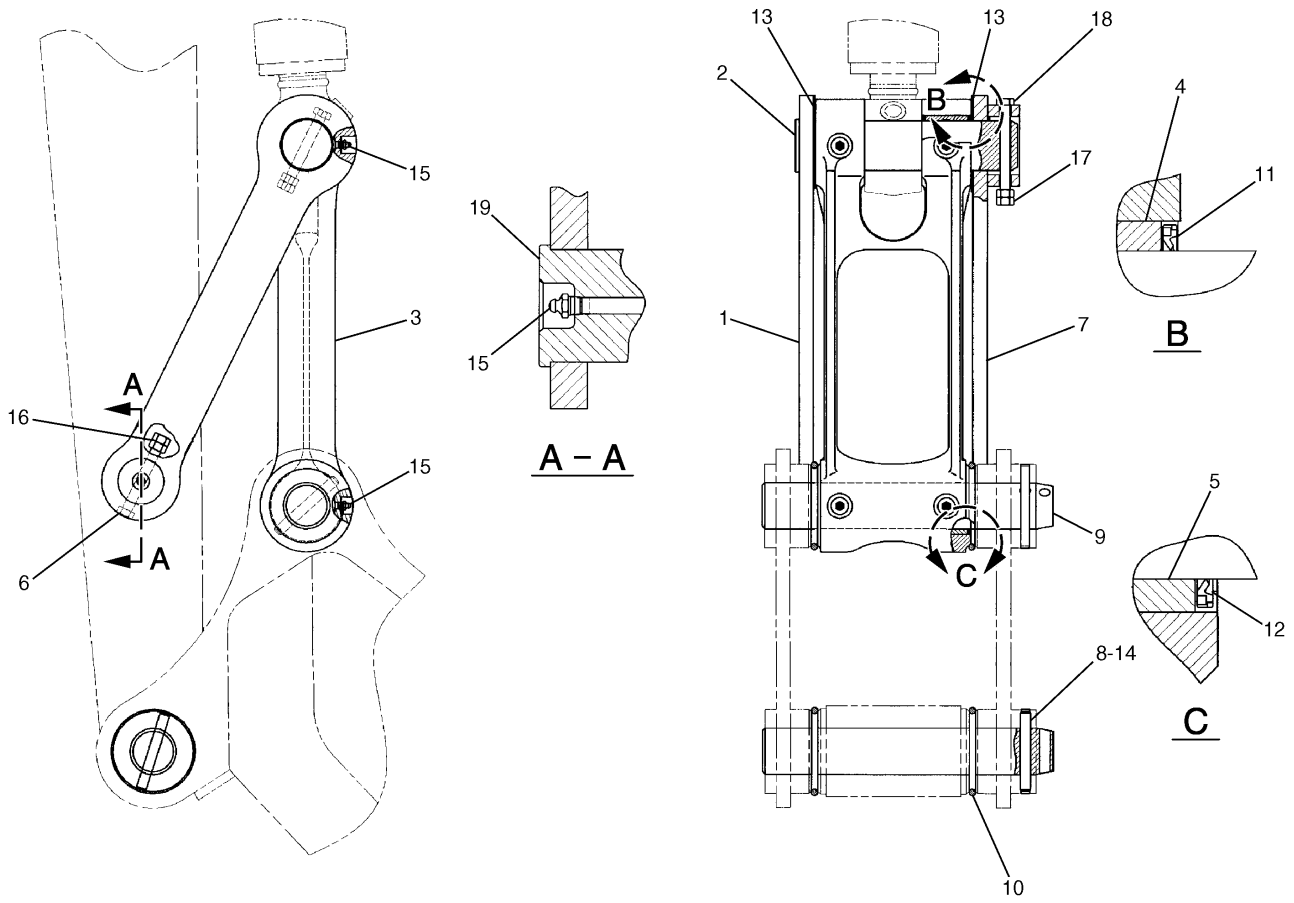

NOTE	No.	PART No.	QTY	PART NAME	NOTE	No.	PART No.	QTY	PART NAME
	1	248-7822	1	LINK					
	2	248-7820	1	PIN					
	3	248-7838	1	LINK AS					
	4	248-7835	2	BEARING					
	5	229-1092	2	BEARING					
	6	099-0707	1	BOLT (L=115mm)					
	7	248-7823	1	LINK AS					
	8	134-7178	2	PIN					
	9	086-0523	2	PIN					
	10	093-1342	4	SEAL-O-RING (ID=96.00mm)					
	11	235-7679	4	SEAL					
	12	248-7836	2	SEAL					
	13	166-1482	2	SHIM (T=2.00mm)					
	14	134-7179	2	RING					
	15	3B-8489	5	FITTING					
	16	096-4876	2	NUT					
	17	8T-4132	2	NUT					
	18	186-5644	1	BOLT (L=150mm)					
	19	7I-6843	1	PIN					

H87156E 00

248-7837 LINKAGE GP-BUCKET

S/N DAP 1-Up
Part of 262-3585-Page739
An Attachment

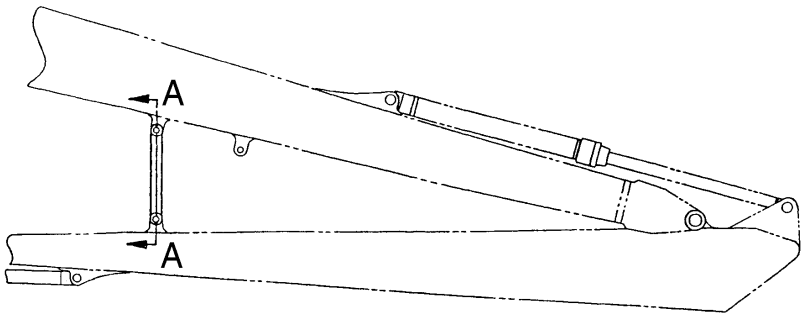

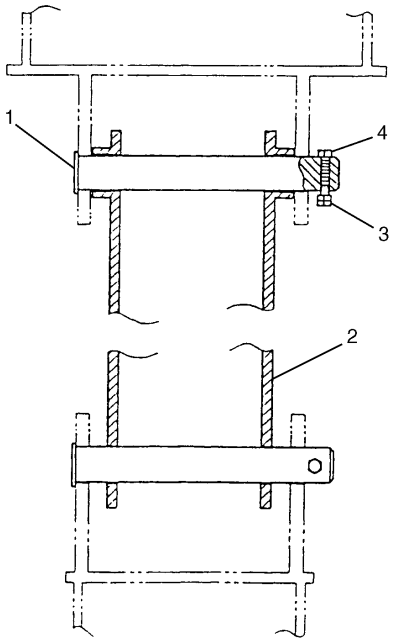

A – A

NOTE	No.	PART No.	QTY	PART NAME	NOTE	No.	PART No.	QTY	PART NAME
	1	7Y-6649	2	PIN					
	2	7Y-6641	1	ROD AS					
	3	8T-4133	4	NUT					
	4	8T-6466	2	BOLT (L=60mm)					

H53284E 00

116-9115 LOCK GP-TRANSPORT

Long Reach Front
S/N DAP 1-Up
Part of 262-3585-Page739
An Attachment

IMPLEMENTS

Consists of :

			Page
1	7Y-0366	SIDECUTTER GP	784
5	127-0716	TIP GP-LONG	785
1	239-2565	BUCKET & ADJUSTER GP	772

H89303E 01

239-2564 BUCKET AR
An Attachment

Consists of :

			Page
1	7Y-0366	SIDECUTTER GP	784
5	127-0716	TIP GP-LONG	785
1	239-2696	BUCKET & ADJUSTER GP	772

H89304E 01

239-2695 BUCKET AR
An Attachment

Consists of :

			Page
1	7Y-0366	SIDECUTTER GP	784
6	127-0716	TIP GP-LONG	785
1	239-2714	BUCKET & ADJUSTER GP	773

H89305E 01

239-2713 BUCKET AR
An Attachment

Consists of :

			Page
1	7Y-0366	SIDECUTTER GP	784
6	229-6978	TIP GP	789
1	229-7910	BUCKET & ADJUSTER GP	773

H89306E 01

229-7909 BUCKET AR
An Attachment

IMPLEMENTS

Consists of :

			Page
1	7Y-0366	SIDECUTTER GP	784
6	127-0716	TIP GP-LONG	785
1	239-2571	BUCKET & ADJUSTER GP	774

H89307E 00

239-2570 BUCKET AR
An Attachment

Consists of :

			Page
1	112-2481	SIDECUTTER GP	784
5	127-0716	TIP GP-LONG	785
1	239-2699	BUCKET & ADJUSTER GP	774

H89308E 01

239-2698 BUCKET AR
An Attachment

Consists of :

			Page
1	112-2481	SIDECUTTER GP	784
5	127-0716	TIP GP-LONG	785
1	239-2702	BUCKET & ADJUSTER GP	775

H89309E 01

239-2701 BUCKET AR
An Attachment

Consists of :

			Page
1	112-2481	SIDECUTTER GP	784
6	127-0716	TIP GP-LONG	785
1	239-2705	BUCKET & ADJUSTER GP	775

H89310E 00

239-2704 BUCKET AR
An Attachment

IMPLEMENTS

Consists of :

			Page
1	250-6415	BUCKET AS-EXCAVATION	776
1	250-6418	ADJUSTER GP-BUCKET	782

H89293E 02

239-2565 BUCKET & ADJUSTER GP
Part of 239-2564-Page768
An Attachment

Consists of :

			Page
1	239-2697	BUCKET AS-EXCAVATION	776
1	250-6418	ADJUSTER GP-BUCKET	782

H89294E 01

239-2696 BUCKET & ADJUSTER GP
Part of 239-2695-Page768
An Attachment

Consists of :

			Page
1	250-6418	ADJUSTER GP-BUCKET	782
1	250-6444	BUCKET AS-EXCAVATION	777

H89295E 02

239-2714 BUCKET & ADJUSTER GP
Part of 239-2713-Page769
An Attachment

Consists of :

			Page
1	229-7911	BUCKET AS-EXCAVATION	777
1	250-6418	ADJUSTER GP-BUCKET	782

H89296E 01

229-7910 BUCKET & ADJUSTER GP
Part of 229-7909-Page769
An Attachment

Consists of :

			Page
1	239-2572	BUCKET AS-MASS EXCAVATION	778
1	250-6418	ADJUSTER GP-BUCKET	782

H89297E 00

239-2571 BUCKET & ADJUSTER GP

Part of 239-2570-Page770
An Attachment

Consists of :

			Page
1	239-2700	BUCKET AS-EXCAVATION	778
1	250-6430	ADJUSTER GP-BUCKET	783

H89298E 01

239-2699 BUCKET & ADJUSTER GP

Part of 239-2698-Page770
An Attachment

Consists of :

			Page
1	239-2703	BUCKET AS-EXCAVATION	779
1	250-6430	ADJUSTER GP-BUCKET	783

H89300E 01

239-2702 BUCKET & ADJUSTER GP
Part of 239-2701-Page771
An Attachment

Consists of :

			Page
1	239-2706	BUCKET AS-MASS EXCAVATION	779
1	250-6430	ADJUSTER GP-BUCKET	783

H89302E 00

239-2705 BUCKET & ADJUSTER GP
Part of 239-2704-Page771
An Attachment

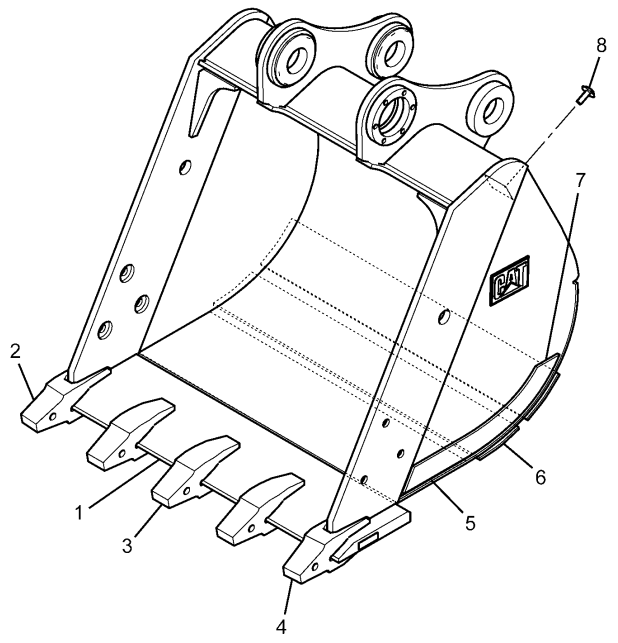

NOTE	No.	PART No.	QTY	PART NAME
	1	255-0493	1	EDGE AS
	2	6I-6406	1	ADAPTER
	3	6I-6404	3	ADAPTER
	4	6I-6405	1	ADAPTER
	5	255-0497	1	PLATE
	6	255-0496	2	PLATE
	7	239-2733	2	PLATE
B	8	4B-4158	4	SCREW

B—USE AS REQUIRED

H91341E 01

250-6415 BUCKET AS-EXCAVATION

CB Family
1345MM Wide--1.1Cu.M.-Adapter Size J400
Part of 239-2565-Page772
An Attachment

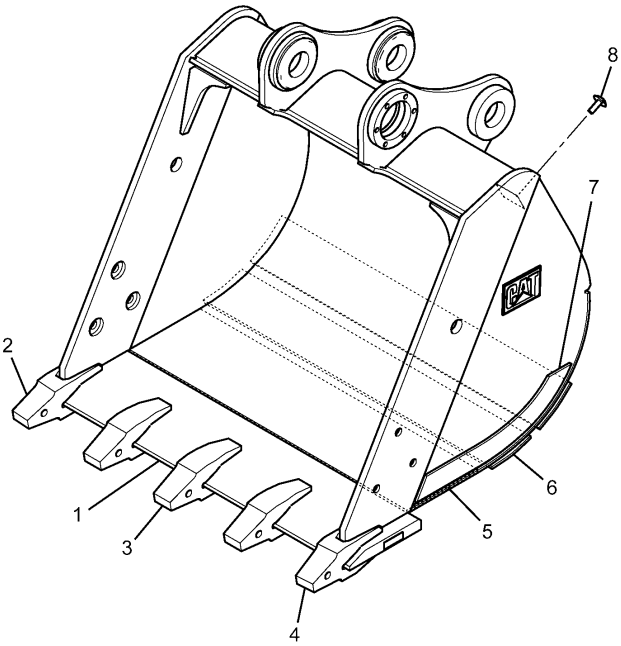

NOTE	No.	PART No.	QTY	PART NAME
	1	255-0475	1	EDGE AS
	2	6I-6406	1	ADAPTER
	3	6I-6404	3	ADAPTER
	4	6I-6405	1	ADAPTER
	5	255-0479	1	PLATE
	6	255-0478	2	PLATE
	7	239-2733	2	PLATE
B	8	4B-4158	4	SCREW

B—USE AS REQUIRED

H91343E 02

239-2697 BUCKET AS-EXCAVATION

CB Family
1435MM Wide--1.2Cu.M.-Adapter Size J400
Part of 239-2696-Page772
An Attachment

IMPLEMENTS

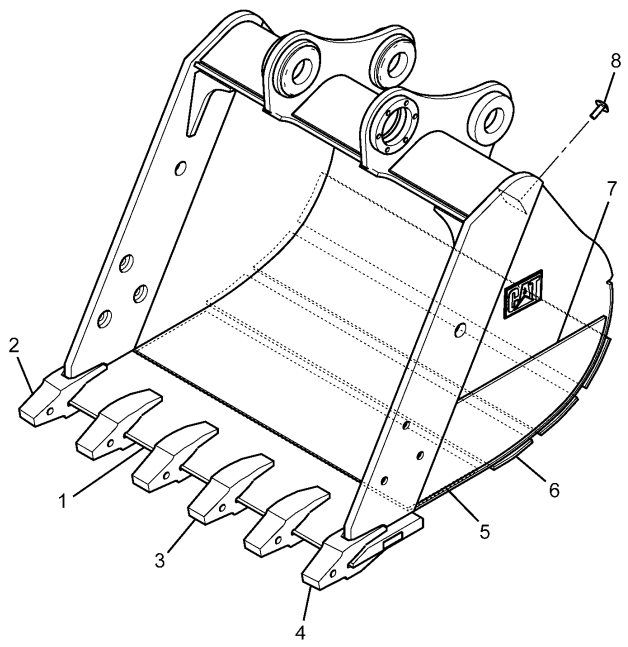

NOTE	No.	PART No.	QTY	PART NAME
	1	275-2673	1	EDGE AS
	2	6I-6406	1	ADAPTER
	3	6I-6404	4	ADAPTER
	4	6I-6405	1	ADAPTER
	5	209-8009	1	PLATE
	6	275-2672	3	PLATE
	7	229-8017	2	PLATE
B	8	4B-4158	4	SCREW

B—USE AS REQUIRED

H91344E 01

250-6444 BUCKET AS-EXCAVATION

1450MM Wide--1.3Cu.M.-Adapter Size J400
Part of 239-2714-Page773
An Attachment

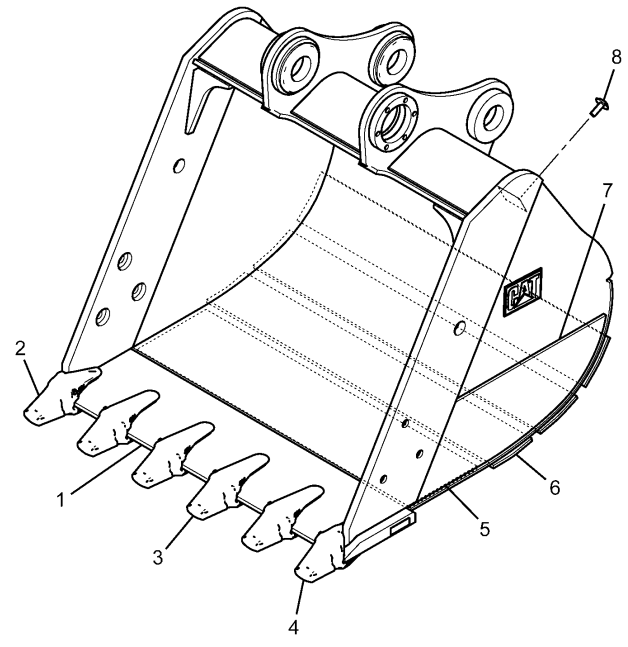

NOTE	No.	PART No.	QTY	PART NAME
	1	275-2715	1	EDGE AS
	2	220-9106	1	ADAPTER
	3	220-9104	4	ADAPTER
	4	220-9105	1	ADAPTER
	5	209-8009	1	PLATE
	6	275-2672	3	PLATE
	7	229-8017	2	PLATE
B	8	4B-4158	4	SCREW

B—USE AS REQUIRED

H91345E 02

229-7911 BUCKET AS-EXCAVATION

1405MM Wide--1.3Cu.M.-Adapter Size K100
Part of 229-7910-Page773
An Attachment

IMPLEMENTS

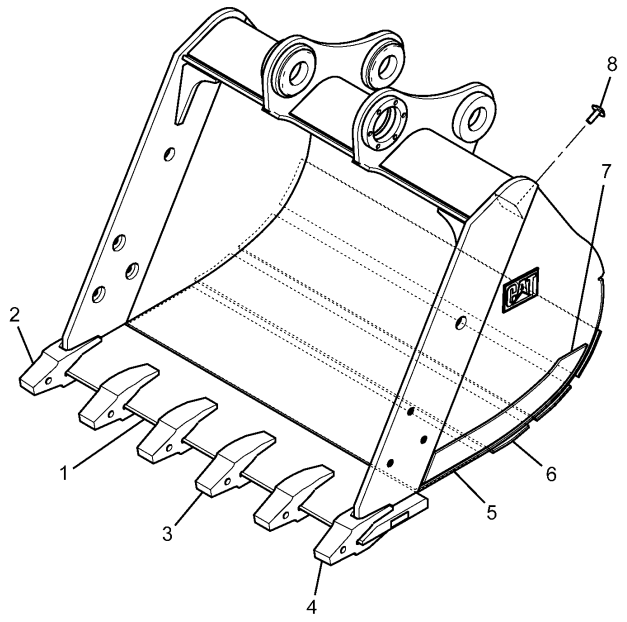

NOTE	No.	PART No.	QTY	PART NAME
	1	255-0510	1	EDGE AS
	2	6I-6406	1	ADAPTER
	3	6I-6404	4	ADAPTER
	4	6I-6405	1	ADAPTER
	5	255-0508	1	PLATE
	6	255-0509	3	PLATE
	7	250-6364	2	PLATE
B	8	4B-4158	4	SCREW

B—USE AS REQUIRED

H91346E 01

239-2572 BUCKET AS-MASS EXCAVATION

CB Family
1625MM Wide--1.5Cu.M.-Adapter Size J400
Part of 239-2571-Page774
An Attachment

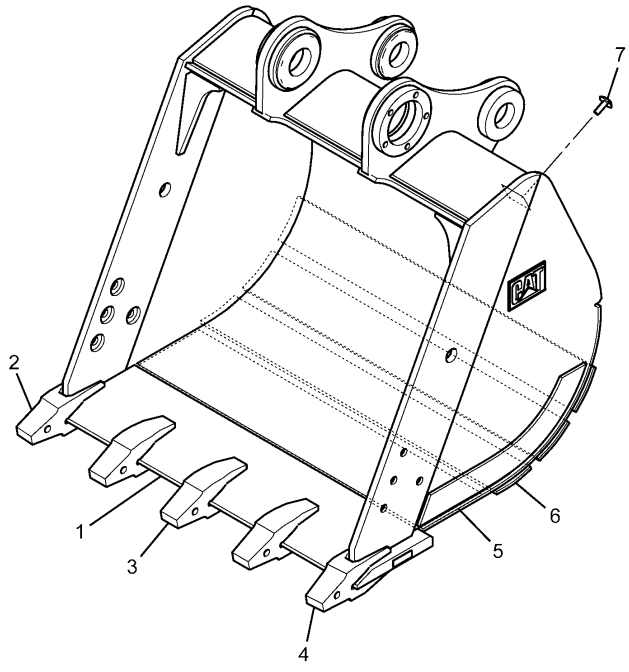

NOTE	No.	PART No.	QTY	PART NAME
	1	239-2758	1	EDGE AS
	2	6I-6406	1	ADAPTER
	3	6I-6404	3	ADAPTER
	4	6I-6405	1	ADAPTER
	5	239-2590	1	PLATE
	6	239-2591	3	PLATE
B	7	4B-4158	4	SCREW

B—USE AS REQUIRED

H89290E 01

239-2700 BUCKET AS-EXCAVATION

DB Family
1472MM Wide--1.4Cu.M.-Adapter Size J400
Part of 239-2699-Page774
An Attachment

IMPLEMENTS

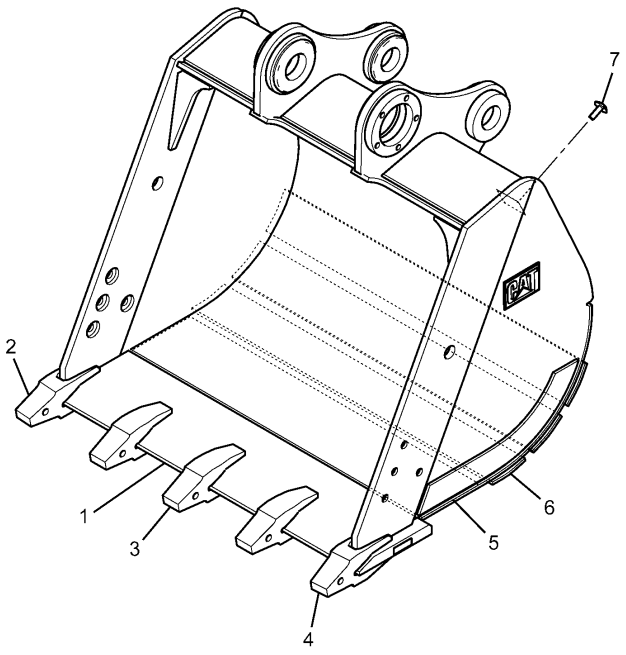

NOTE	No.	PART No.	QTY	PART NAME
	1	239-2738	1	EDGE AS
	2	6I-6406	1	ADAPTER
	3	6I-6404	3	ADAPTER
	4	6I-6405	1	ADAPTER
	5	239-2431	1	PLATE
	6	239-2432	3	PLATE
B	7	4B-4158	4	SCREW

B—USE AS REQUIRED

H89291E 01

239-2703 BUCKET AS-EXCAVATION

DB Family
1559MM Wide--1.5Cu.M.-Adapter Size J400
Part of 239-2702-Page775
An Attachment

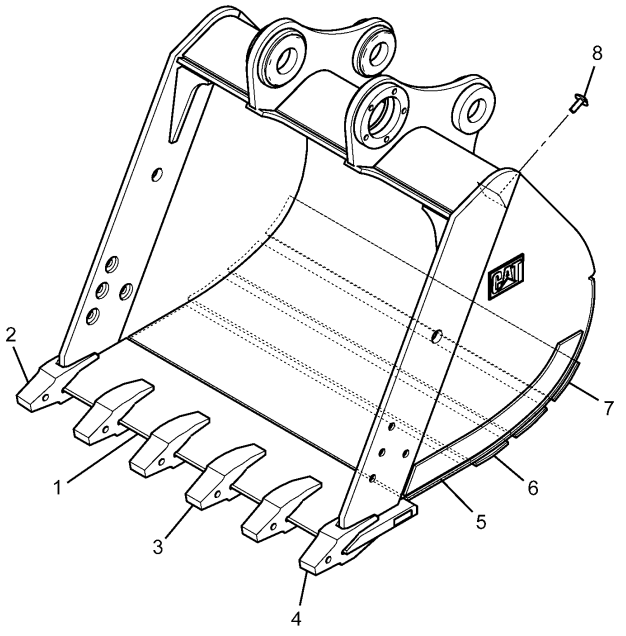

NOTE	No.	PART No.	QTY	PART NAME
	1	255-0370	1	EDGE AS
	2	6I-6406	1	ADAPTER
	3	6I-6404	4	ADAPTER
	4	6I-6405	1	ADAPTER
	5	239-2479	1	PLATE
	6	229-7893	2	PLATE
	7	229-7894	1	PLATE
B	8	4B-4158	4	SCREW

B—USE AS REQUIRED

H89292E 00

239-2706 BUCKET AS-MASS EXCAVATION

DB Family
1538MM Wide--1.6Cu.M.-Adapter Size J400
Part of 239-2705-Page775
An Attachment

IMPLEMENTS

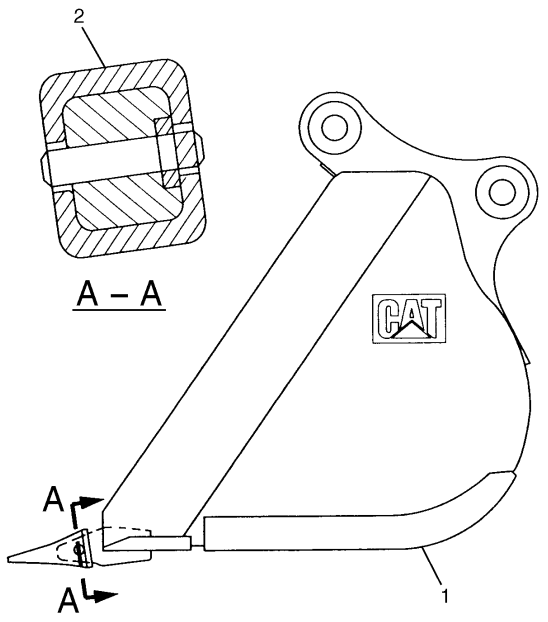

NOTE	No.	PART No.	QTY	PART NAME
Y	1	7Y-6660	1	BUCKET AS
Y	2	9J-3169	5	TIP GP

Y—SEE SEPARATE ILLUSTRATION

H54614E 03

7Y-6402 BUCKET GP

General Purpose (0.45 Long Reach)
S/N DAP 1-Up
7Y-6660-Page780,9J-3169-Page793
An Attachment

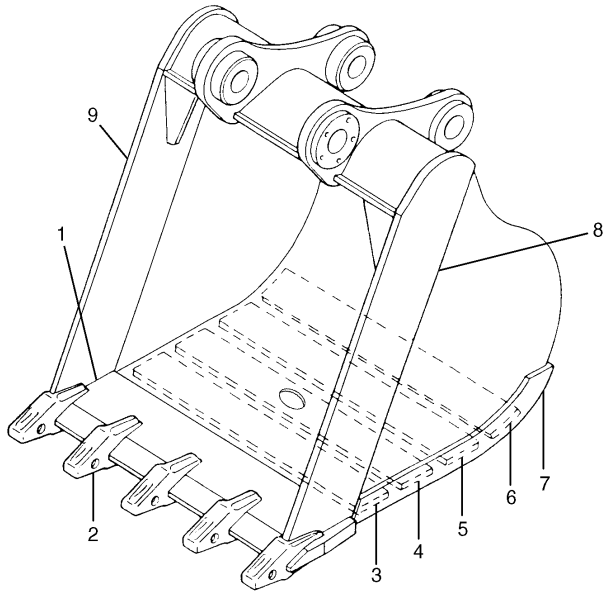

NOTE	No.	PART No.	QTY	PART NAME
	1	7Y-6664	1	EDGE AS
	2	7Y-0254	5	ADAPTER
	3	7Y-6665	1	PLATE
	4	7Y-6666	1	PLATE
	5	7Y-6667	1	PLATE
	6	7Y-6668	1	PLATE
	7	7Y-6673	2	PLATE
	8	7Y-6671	1	PLATE
	9	7Y-6674	1	PLATE

H54615E 02

7Y-6660 BUCKET AS-GENERAL PURPOSE

Long Reach Front
810MM Wide--0.45Cu.M.-Adapter Size J250
S/N DAP 1-Up
Part of 7Y-6402-Page780
An Attachment

IMPLEMENTS

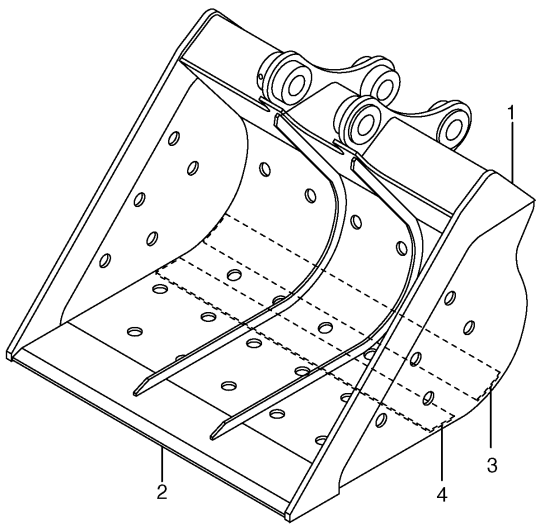

NOTE	No.	PART No.	QTY	PART NAME
	1	121-1809	2	PLATE
	2	7Y-6601	1	EDGE
	3	121-1813	1	PLATE
	4	127-6792	1	PLATE

H54620E 02

121-1807 BUCKET AS-DITCH CLEANING

1140MM Wide--0.6Cu.M.
S/N DAP 1-Up
An Attachment

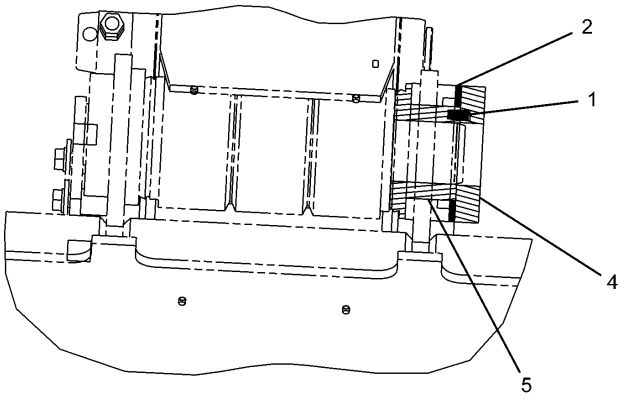

A – A

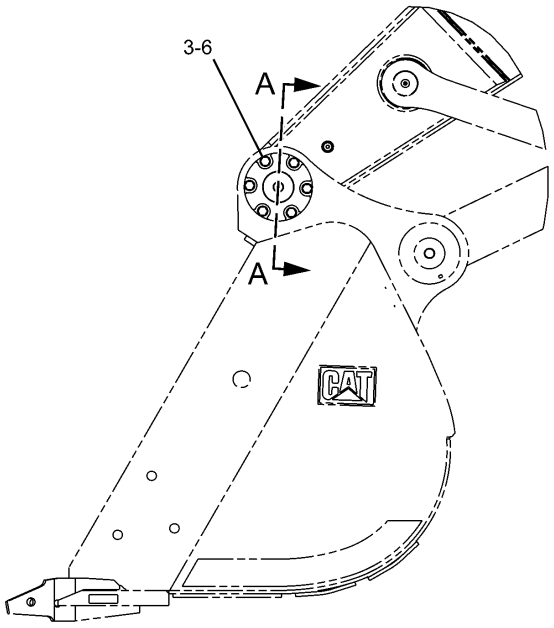

NOTE	No.	PART No.	QTY	PART NAME	NOTE	No.	PART No.	QTY	PART NAME
	1	087-5974	1	PIN					
B	2	087-5975	4	SHIM (T=0.50mm)					
B		087-5976	6	SHIM (T=1.00mm)					
	3	9X-8257	6	WASHER					
	4	134-8950	1	PLATE					
	5	250-6417	1	FLANGE					
	6	8T-4193	6	BOLT (L=50mm)					

B—USE AS REQUIRED

H88907E 00

250-6418 ADJUSTER GP-BUCKET

CB Family

Part of 239-2565,239-2696-Page772,229-7910,239-2714-Page773,239-2571-Page774

An Attachment

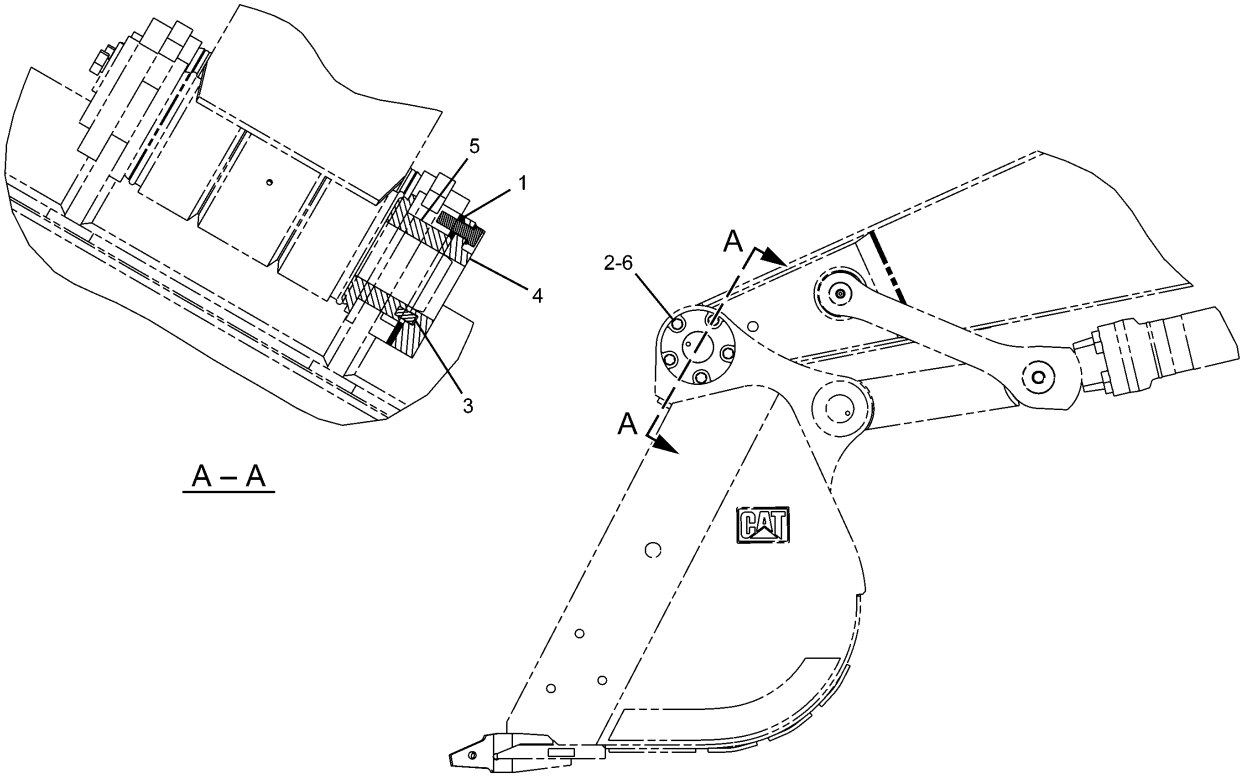

NOTE	No.	PART No.	QTY	PART NAME	NOTE	No.	PART No.	QTY	PART NAME
B	1	4I-6604	4	SHIM (T=0.50mm)					
B		4I-6605	6	SHIM (T=1.00mm)					
	2	8T-4123	5	WASHER					
	3	4I-6626	1	PIN					
	4	134-8951	1	PLATE					
	5	250-6457	1	FLANGE					
	6	7X-2563	5	BOLT (L=60mm)					

B—USE AS REQUIRED

H88908E 00

250-6430 ADJUSTER GP-BUCKET

DB Family

Part of 239-2699-Page774,239-2702,239-2705-Page775

An Attachment

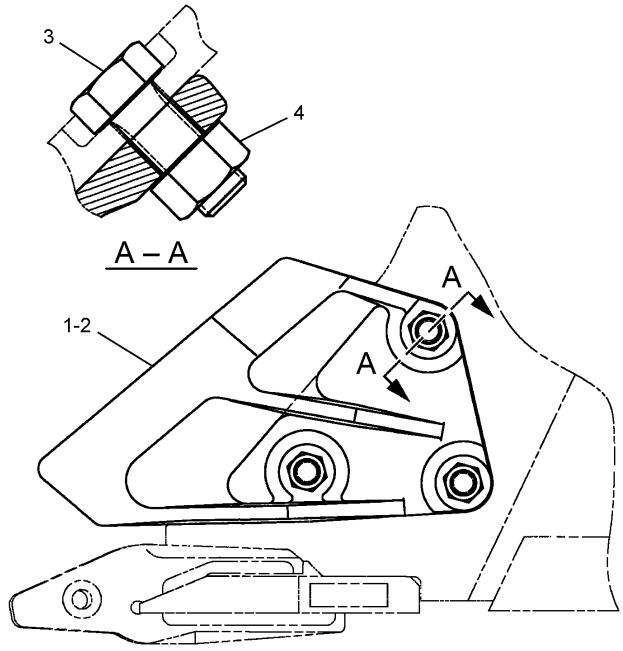

NOTE	No.	PART No.	QTY	PART NAME
	1	7Y-0357	1	SIDECUTTER (RH)
	2	7Y-0358	1	SIDECUTTER (LH)
	3	6I-6371	6	BOLT (L=64mm)
	4	2J-3507	6	NUT

H88894E 05

7Y-0366 SIDECUTTER GP

C Family

Part of 239-2564,239-2695-Page768,229-7909,239-2713-Page769,239-2570-Page770

An Attachment

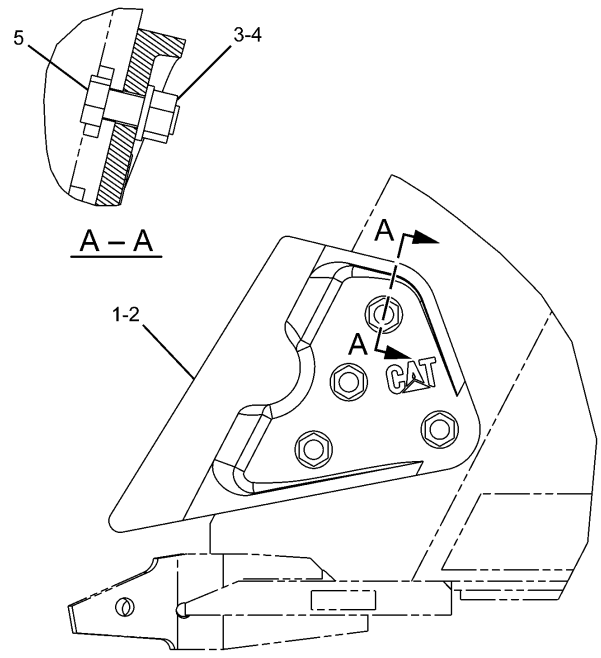

NOTE	No.	PART No.	QTY	PART NAME
	1	232-2147	1	SIDECUTTER (RH)
	2	232-2148	1	SIDECUTTER (LH)
	3	2J-3507	8	NUT
	4	3K-5234	8	WASHER
	5	6I-6371	8	BOLT (L=64mm)

H88904E 02

112-2481 SIDECUTTER GP

Part of 239-2698-Page770,239-2701,239-2704-Page771

An Attachment

IMPLEMENTS

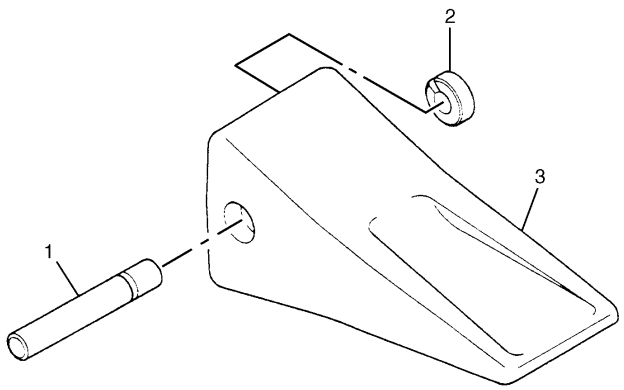

NOTE	No.	PART No.	QTY	PART NAME
	1	116-7408	1	PIN
	2	116-7409	1	RETAINER AS
	3	7T-3402	1	TIP

H65611E 00

127-0716 TIP GP-LONG

Adapter Size J400
Part of 239-2564,239-2695-Page768,239-2713-Page769,239-2570,239-2698-Page770,239-2701,239-2704-Page771
An Attachment

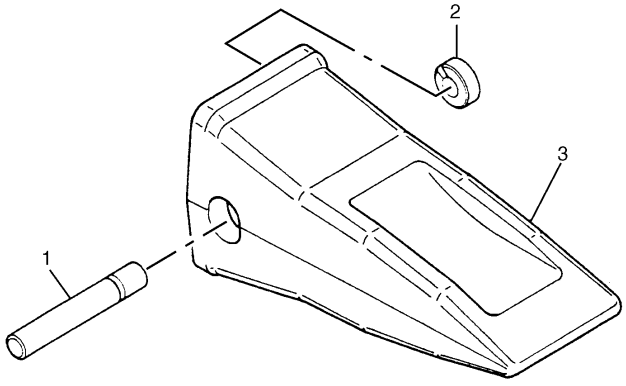

NOTE	No.	PART No.	QTY	PART NAME
	1	116-7408	1	PIN
	2	116-7409	1	RETAINER AS
	3	8E-4402	1	TIP

H53774E 01

6Y-5472 TIP GP-LONG

Heavy Duty
Adapter Size J400
An Attachment

IMPLEMENTS

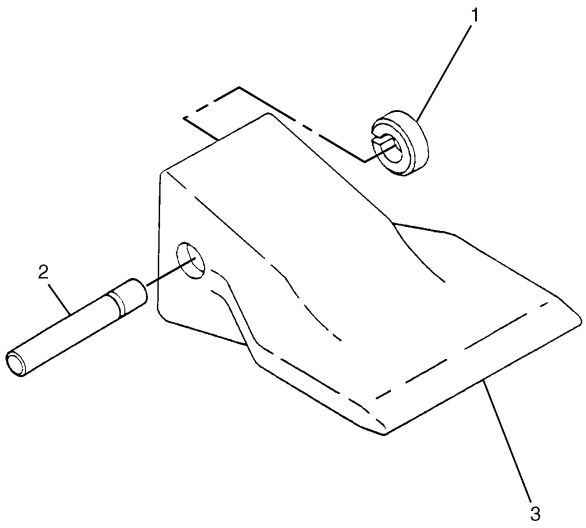

NOTE	No.	PART No.	QTY	PART NAME
	1	116-7409	1	RETAINER AS
	2	116-7408	1	PIN
	3	107-3400	1	TIP

H58870E 04

8E-0836 TIP GP-WIDE
Adapter Size J400
An Attachment

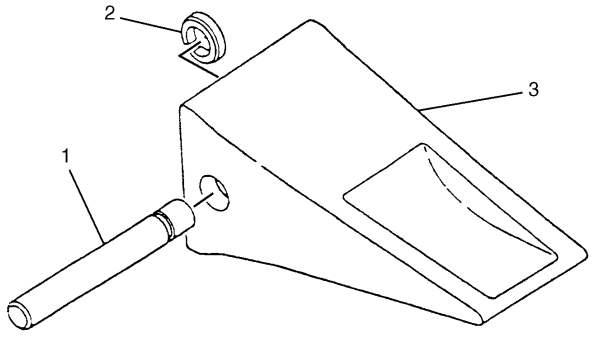

NOTE	No.	PART No.	QTY	PART NAME
	1	116-7408	1	PIN
	2	116-7409	1	RETAINER AS
	3	7T-3401	1	TIP

H65610E 00

127-0715 TIP GP-SHORT
Adapter Size J400
An Attachment

IMPLEMENTS

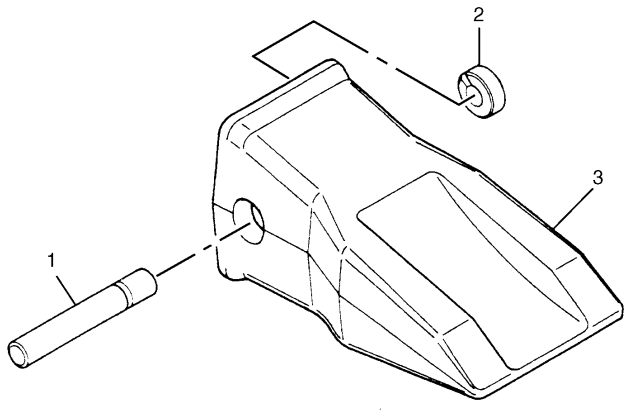

NOTE	No.	PART No.	QTY	PART NAME
	1	116-7408	1	PIN
	2	116-7409	1	RETAINER AS
	3	7T-3403	1	TIP

H53778E 03

8E-0837 TIP GP-ABRASION

Heavy Duty
Adapter Size J400
An Attachment

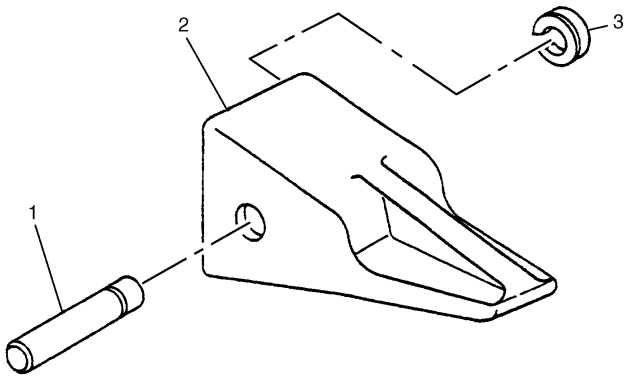

NOTE	No.	PART No.	QTY	PART NAME
	1	116-7408	1	PIN
	2	6Y-7409	1	TIP
	3	116-7409	1	RETAINER AS

H53779E 03

8E-0838 TIP GP-PENETRATION

Adapter Size J400
An Attachment

IMPLEMENTS

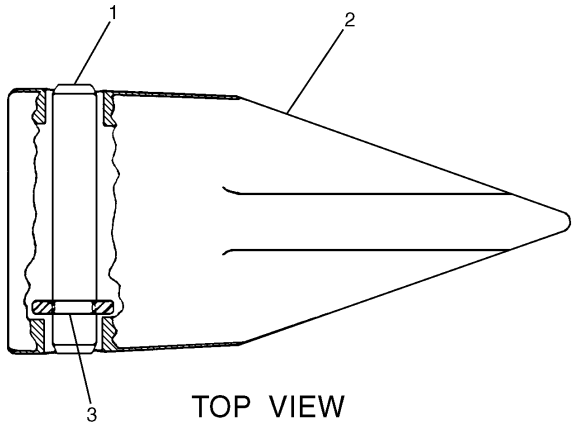

TOP VIEW

NOTE	No.	PART No.	QTY	PART NAME
	1	116-7408	1	PIN
	2	6Y-5409	1	TIP
	3	116-7409	1	RETAINER AS

H53781E 03

8E-0840 TIP GP
Sharp Center
Adapter Size J400
An Attachment

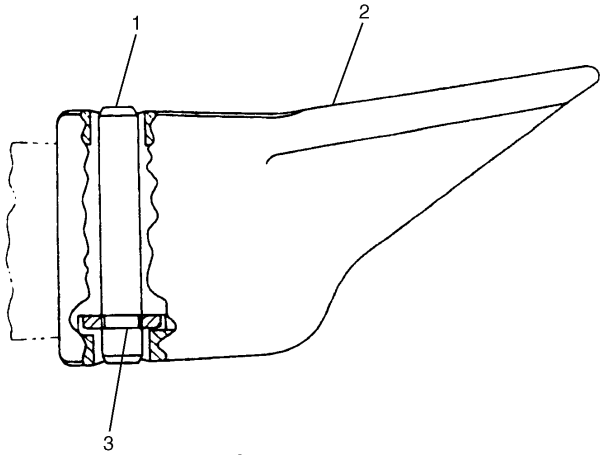

TOP VIEW

NOTE	No.	PART No.	QTY	PART NAME
	1	116-7408	1	PIN
	2	6Y-5408	1	TIP
	3	116-7409	1	RETAINER AS

H53780E 03

8E-0839 TIP GP
Sharp Corner
Adapter Size J400
An Attachment

IMPLEMENTS

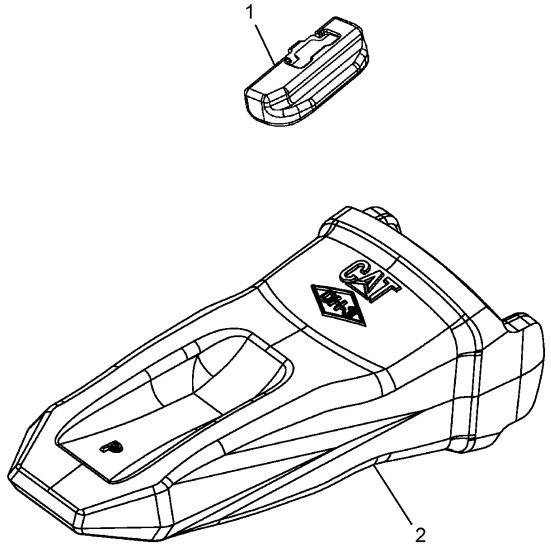

NOTE	No.	PART No.	QTY	PART NAME
	1	220-9090	1	RETAINER
	2	220-9109	1	TIP

H90065E 00

229-6978 TIP GP
Adapter Size K100
Part of 229-7909-Page769
An Attachment

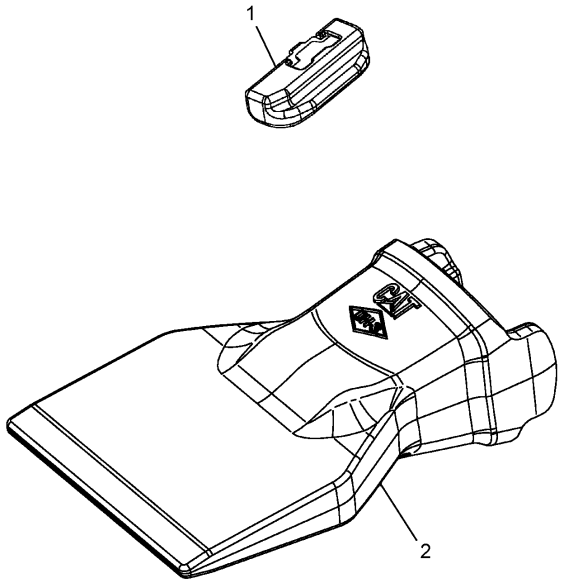

NOTE	No.	PART No.	QTY	PART NAME
	1	220-9090	1	RETAINER
	2	223-8100	1	TIP

H90073E 00

229-6972 TIP GP-WIDE
Adapter Size K100
An Attachment

IMPLEMENTS

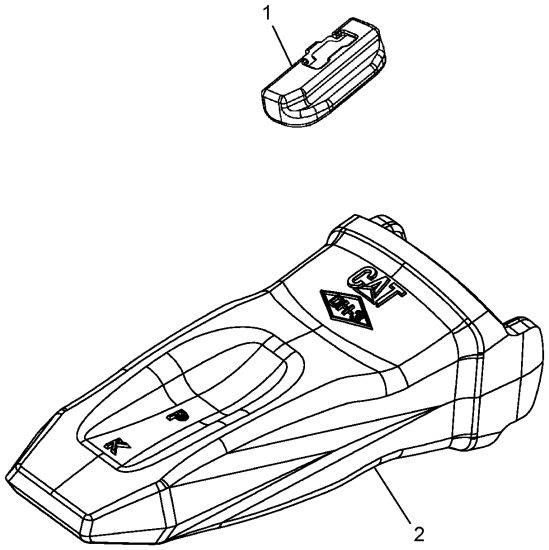

NOTE	No.	PART No.	QTY	PART NAME
	1	220-9090	1	RETAINER
	2	220-9101	1	TIP

H90074E 00

229-6973 TIP GP
Adapter Size K100
An Attachment

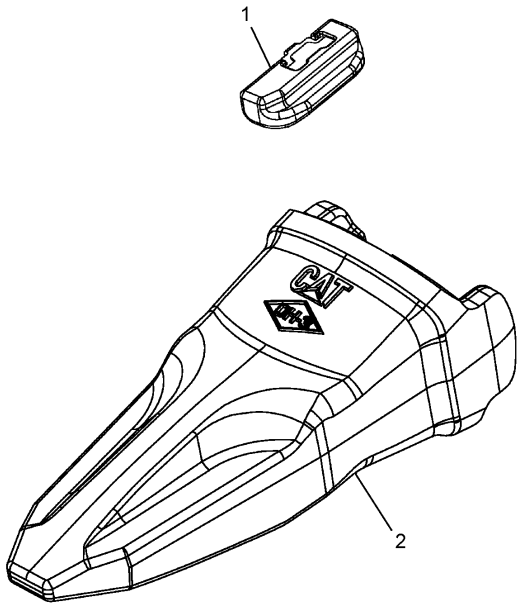

NOTE	No.	PART No.	QTY	PART NAME
	1	220-9090	1	RETAINER
	2	220-9102	1	TIP

H90092E 00

229-6974 TIP GP-PENETRATION
Adapter Size K100
An Attachment

IMPLEMENTS

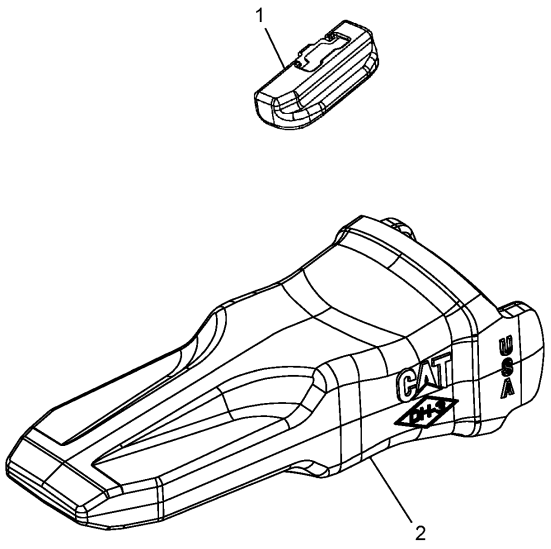

NOTE	No.	PART No.	QTY	PART NAME
	1	220-9090	1	RETAINER
	2	220-9103	1	TIP

H90053E 00

229-6975 TIP GP
Adapter Size K100
An Attachment

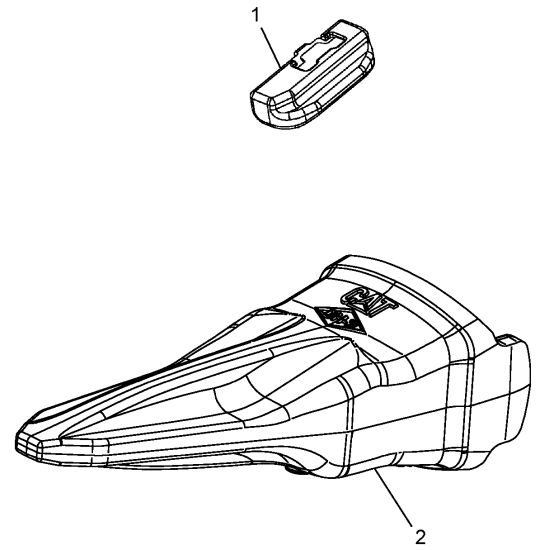

NOTE	No.	PART No.	QTY	PART NAME
	1	220-9090	1	RETAINER
	2	220-9107	1	TIP

H90049E 00

229-6976 TIP GP
Adapter Size K100
An Attachment

IMPLEMENTS

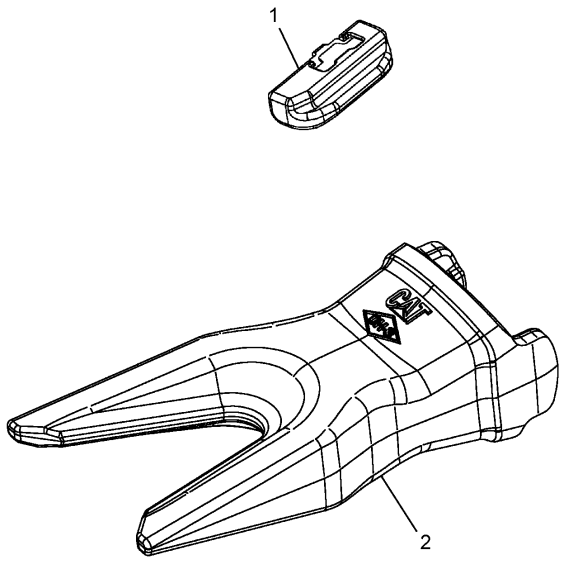

NOTE	No.	PART No.	QTY	PART NAME
	1	220-9090	1	RETAINER
	2	220-9108	1	TIP

H90048E 00

229-6977 TIP GP
Adapter Size K100
An Attachment

IMPLEMENTS

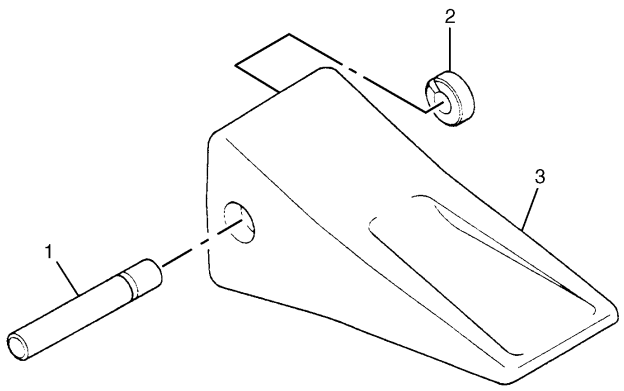

NOTE	No.	PART No.	QTY	PART NAME
	1	8E-6258	1	PIN
	2	8E-6259	1	RETAINER AS
	3	1U-3252	1	TIP

H78935E 06

9J-3169 TIP GP-LONG
Adapter Size J250
S/N DAP 1-Up
Part of 7Y-6402-Page780
An Attachment

SERVICE EQUIPMENT AND SUPPLIES

Consists of :

			Page
1	7I-0800	MOUNTING GP-GREASE GUN	304
1	176-2677	TOOL GP	795

H67456E 00

176-2676 TOOL AR
An Attachment

SERVICE EQUIPMENT AND SUPPLIES

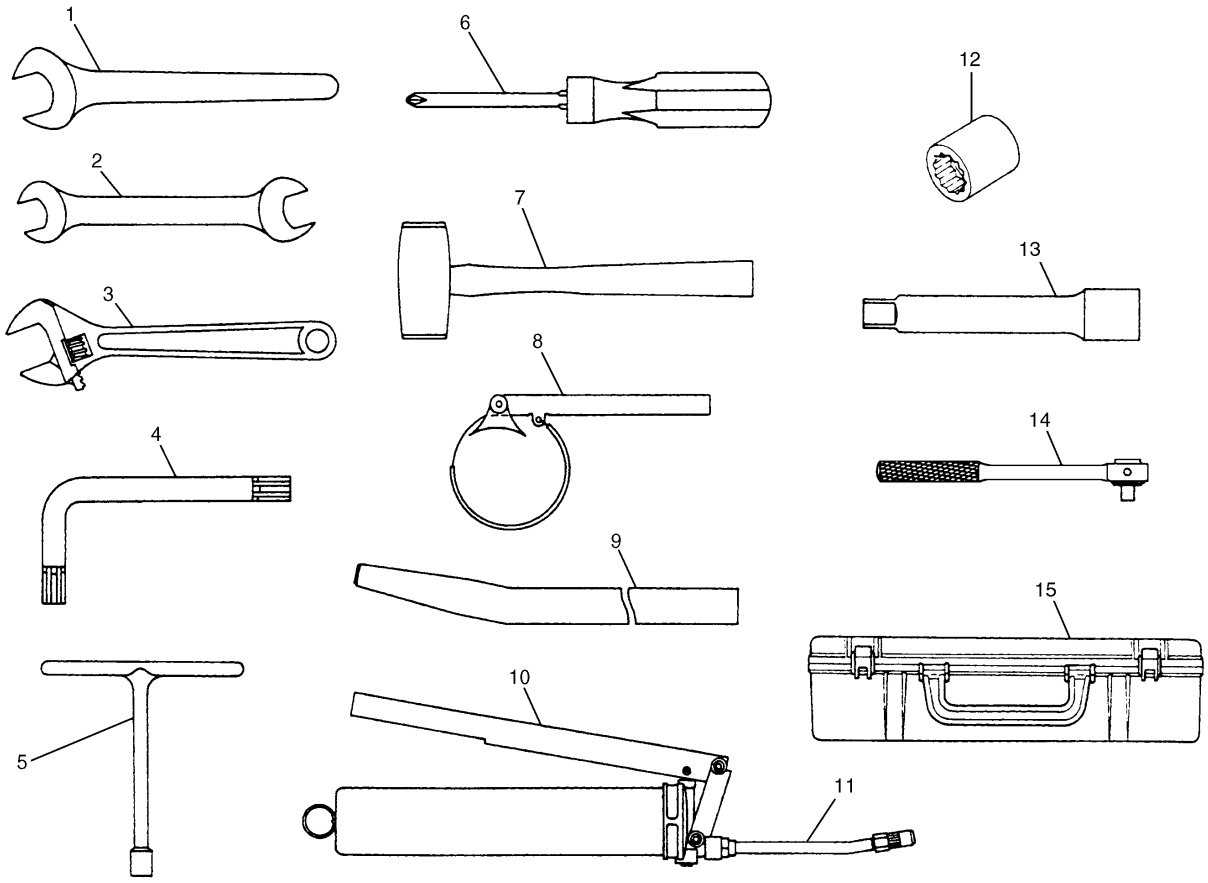

NOTE	No.	PART No.	QTY	PART NAME	NOTE	No.	PART No.	QTY	PART NAME
	1	095-1056	1	WRENCH (36MM)		12	095-1066	1	SOCKET (13MM)
		095-1057	1	WRENCH (41MM)			099-3249	1	SOCKET (18MM)
	2	099-3246	1	WRENCH (21MM × 24MM)			095-1070	1	SOCKET (22MM)
	3	7I-6395	1	WRENCH (200MM)		13	099-3250	1	EXTENSION
	4	4I-2604	1	WRENCH (6MM)		14	095-1852	1	RATCHET
		4I-2605	1	WRENCH (10MM)		15	7Y-0070	1	TOOLBOX
	5	7Y-6108	1	WRENCH (11MM)					
	6	095-1855	1	SCREWDRIVER					
	7	095-1857	1	HAMMER					
	8	2P-8250	1	WRENCH AS					
		1P-0551	1	PIN					
		2P-8253	1	STRAP					
		6H-7378	1	RING					
	9	093-7638	1	BAR					
	10	099-7464	1	GREASE GUN					
	11	199-7371	1	TUBE AS					
A		4Y-0426	1	GREASE (BELLOWS)					
A		3Y-7597	1	GREASE (FOR WINTER TIME)					
A		1P-0808	1	GREASE (PAPER TUBE)					

A—NOT PART OF THIS GROUP

H81149E 01

176-2677 TOOL GP

Part of 176-2676-Page794

An Attachment

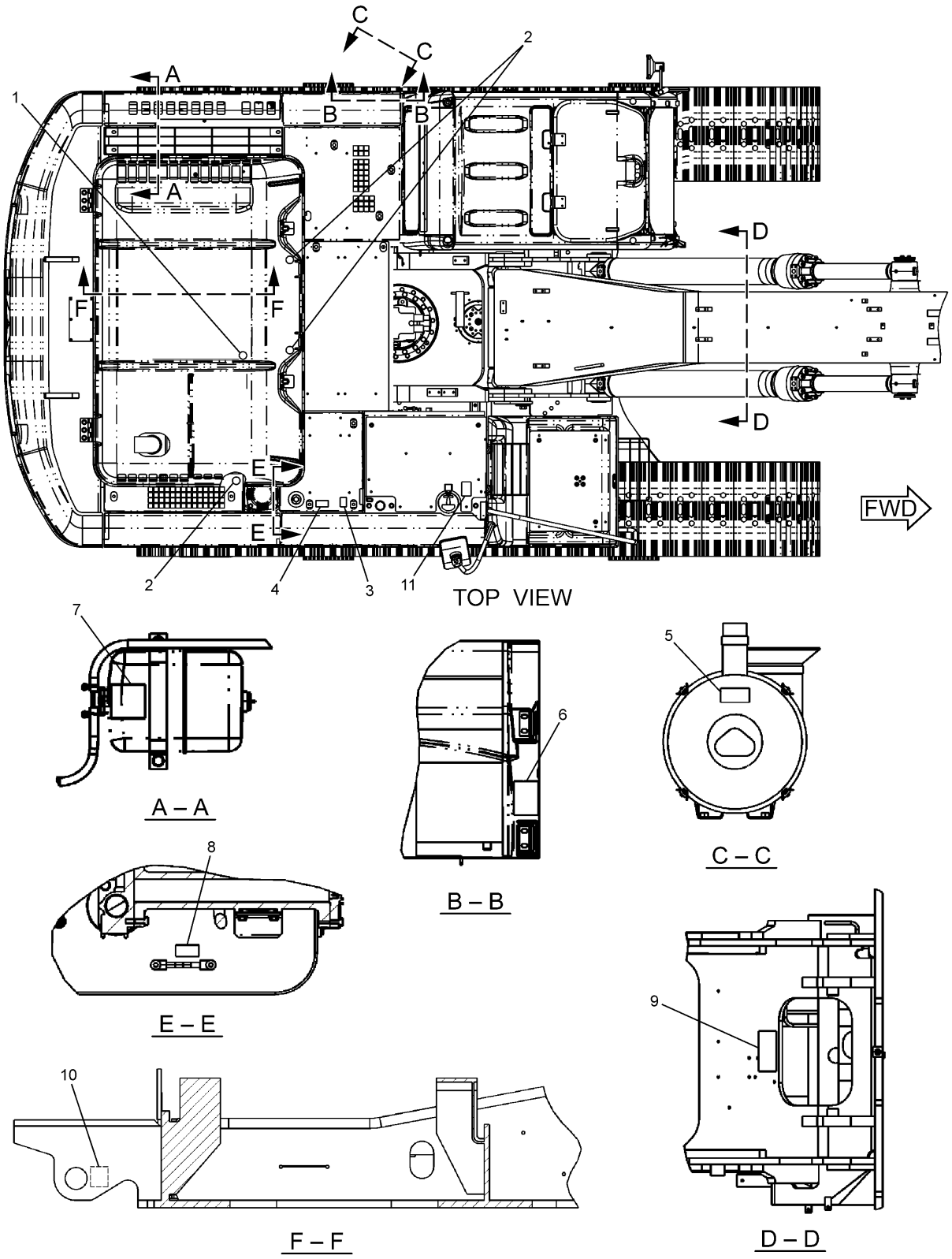

229–1740 PLATE & FILM GP (1/3)
S/N CJM 1–00159,00161,00163,00165

SERVICE EQUIPMENT AND SUPPLIES

NOTE	No.	PART No.	QTY	PART NAME	NOTE	No.	PART No.	QTY	PART NAME
	1	167-7270	1	FILM (NO STEP)					
	2	120-5107	3	FILM (INSTRUCTION)					
	3	186-1131	1	FILM					
		186-1133	1	FILM					
	4	160-6822	1	FILM (WARNING)					
	5	224-8946	1	FILM (WARNING)					
	6	3Y-8905	1	FILM (WARNING)					
	7	134-7258	1	FILM (ELC)					
	8	242-1510	1	FILM (INSTRUCTION)					
	9	247-7439	1	FILM (NOTICE)					
	10	7X-7644	2	FILM (TIE DOWN)					
	11	291-9334	1	FILM (DIESEL FUEL)					

H95599E 08

229-1740 PLATE & FILM GP (1/3)
S/N CJM 1-00159,00161,00163,00165

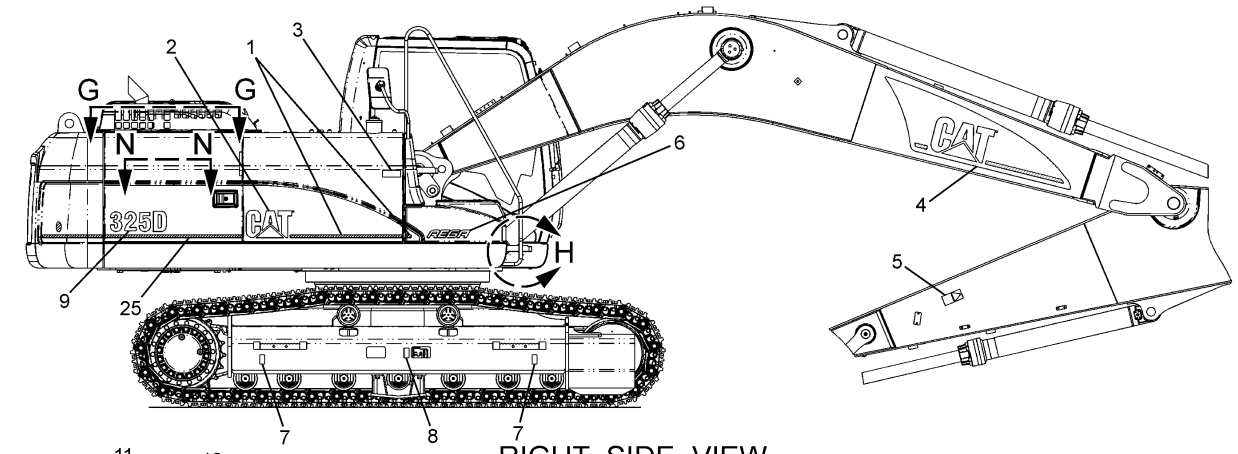

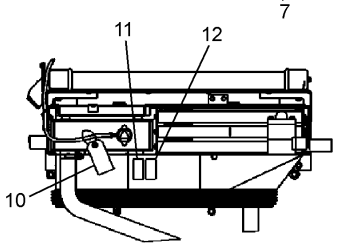

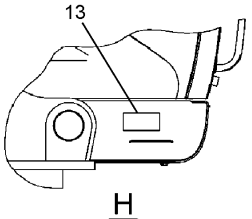

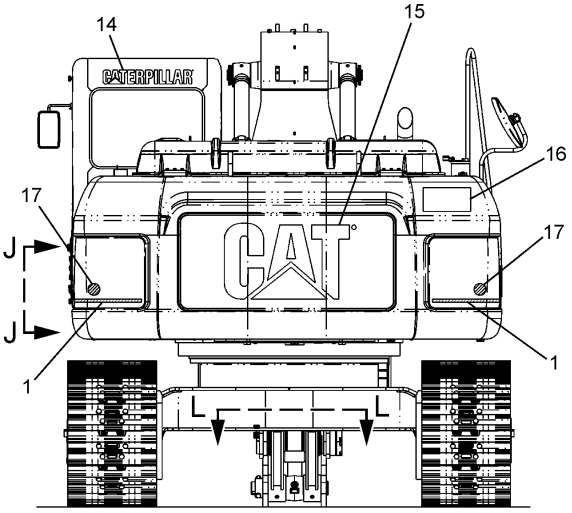

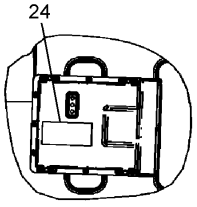

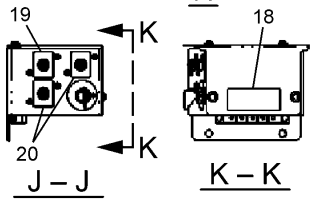

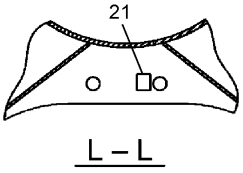

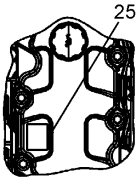

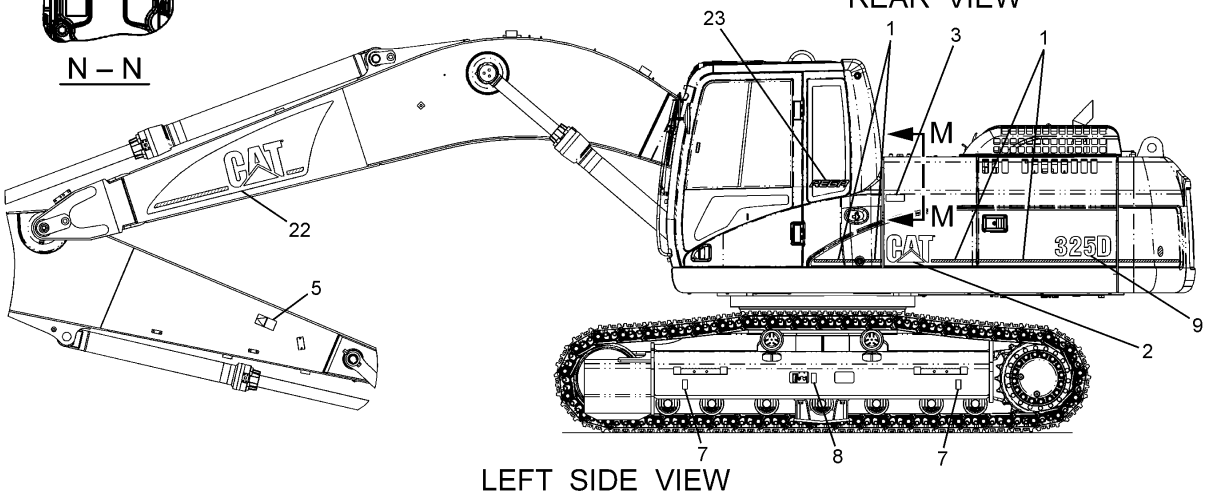

H95600E 08

229–1740 PLATE & FILM GP (2/3)
S/N CJM 1–00159,00161,00163,00165

SERVICE EQUIPMENT AND SUPPLIES

NOTE	No.	PART No.	QTY	PART NAME	NOTE	No.	PART No.	QTY	PART NAME
E	1	134-6146		FILM (STRIPE)…(500cm)					
	2	105-7545	2	FILM (CAT)					
	3	253-0861	2	FILM (CAT POWER))					
	4	247-7468	1	FILM (CAT)					
	5	160-6853	2	FILM (DANGER)					
	6	186-1147	1	FILM (REGA)					
	7	1P-2807	4	FILM (LIFT)					
	8	160-6832	2	FILM (WARNING)					
	9	247-7433	2	FILM (325D)					
	10	235-0346	1	TAG (ELC)					
	11	160-6822	1	FILM (WARNING)					
	12	160-6841	1	FILM (WARNING)					
Z	13		1	PLATE (PIN)					
	14	257-4502	1	FILM (CAT)					
	15	247-7436	1	FILM (CAT)					
	16	160-6884	1	FILM (DANGER)					
	17	190-5386	2	FILM (SAFETY)					
	18	7I-6508	1	FILM (NOTICE)					
	19	247-7437	1	FILM (CIRCUIT BREAKER)					
	20	247-7438	2	FILM (CIRCUIT BREAKER)					
	21	7X-7644	2	FILM (TIE DOWN)					
	22	247-7469	1	FILM (CAT)					
	23	257-4503	1	FILM (REGA)					
Z	24		1	FILM (CONTROL)					
	25	275-3849	1	FILM (INFORMATION)					

E—ORDER BY THE CENTIMETER

Z—NOT SERVICED

H95600E 08

229–1740 PLATE & FILM GP (2/3)

S/N CJM 1–00159,00161,00163,00165

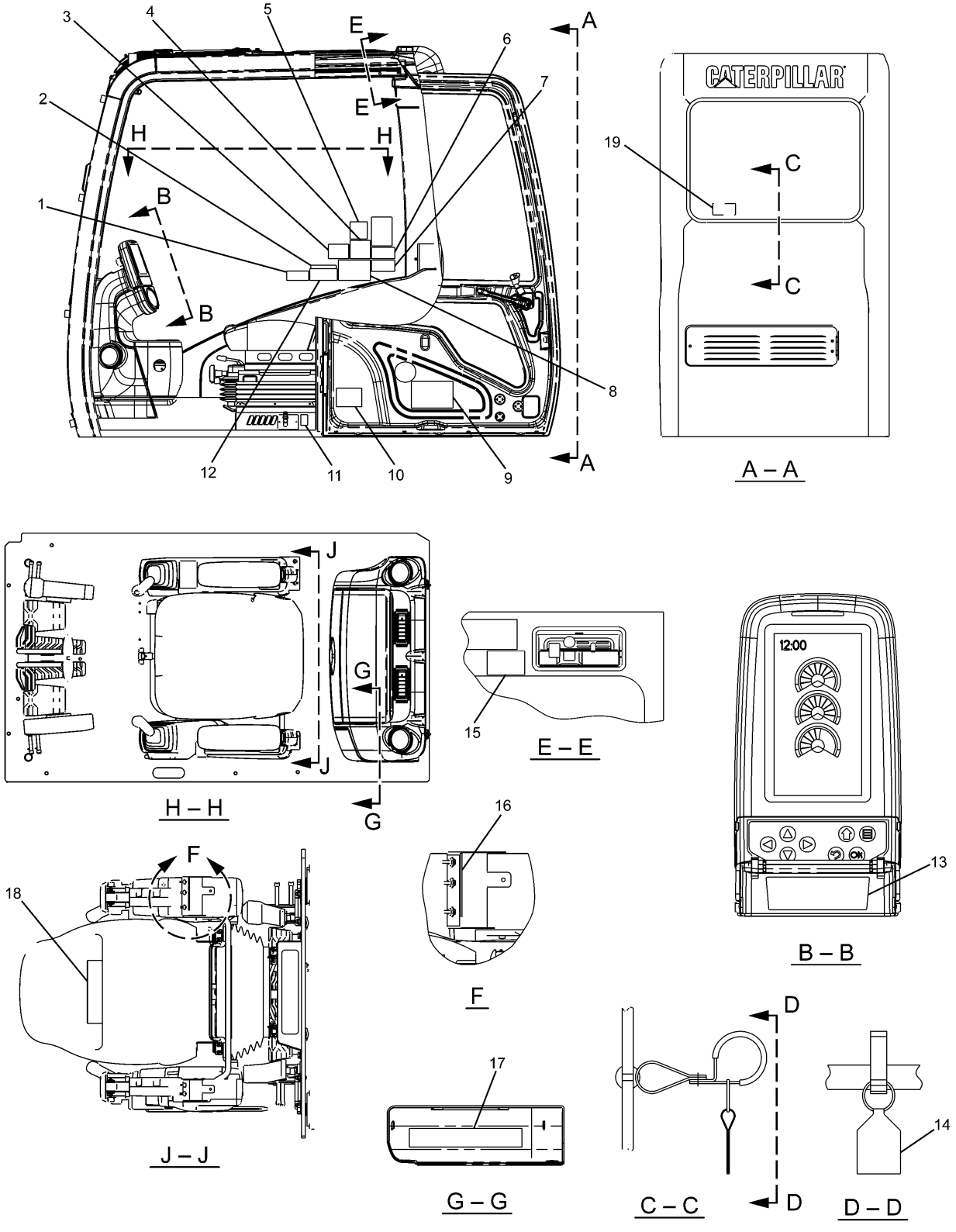

229–1740 PLATE & FILM GP (3/3)
S/N CJM 1–00159,00161,00163,00165

SERVICE EQUIPMENT AND SUPPLIES

NOTE	No.	PART No.	QTY	PART NAME	NOTE	No.	PART No.	QTY	PART NAME
	1	186-1214	1	FILM (NOTICE)					
	2	71-1533	1	PLATE (INSTRUCTION)					
	3	127-5272	1	FILM (WARNING)					
	4	127-5295	1	FILM (WARNING)					
	5	219-3148	1	FILM (NOTICE)					
	6	266-5431	1	FILM (WARNING)					
	7	221-8045	1	FILM (WARNING)					
	8	244-5747	1	FILM (WARNING)					
	9	209-2864	1	FILM (LUBRICANT CHART)					
	10	247-7443	1	FILM (REGISTRATION)					
	11	214-7915	1	FILM (ENGINE SHUT OFF)					
	12	41-2885	1	CASE					
	13	245-5475	1	FILM (INSTRUCTION)					
	14	8T-6842	1	FILM (ALTERNATE EXIT)					
	15	186-1149	1	FILM (WARNING)					
	16	245-5457	1	FILM (INSTRUCTION)					
	17	247-7441	1	FILM (FUSE PANEL)					
	18	257-4506	1	CASE					
	19	187-0661	1	FILM (ALTERNATE EXIT)					

H95601E 08

229-1740 PLATE & FILM GP (3/3)
S/N CJM 1-00159,00161,00163,00165

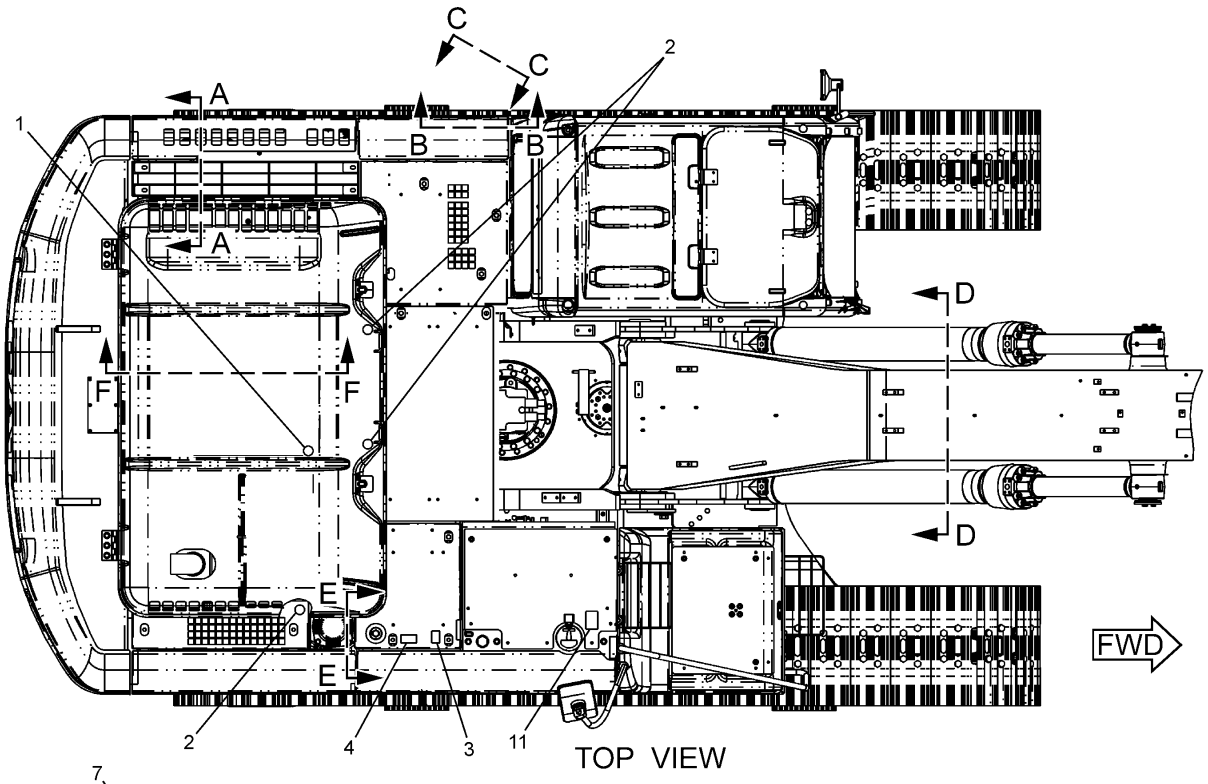

TOP VIEW

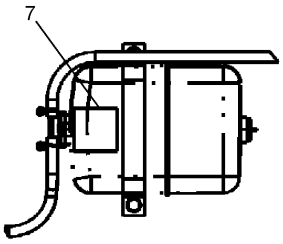

A – A

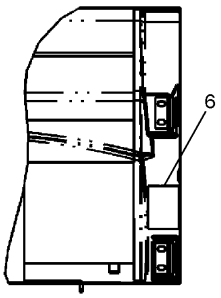

B – B

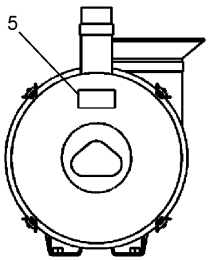

C – C

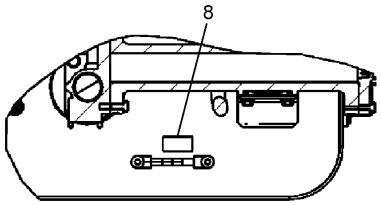

E – E

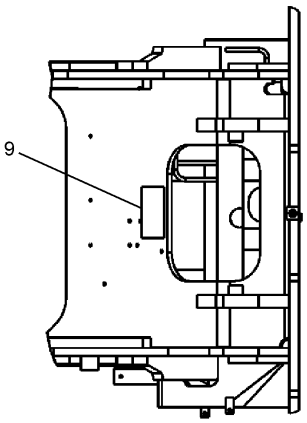

D – D

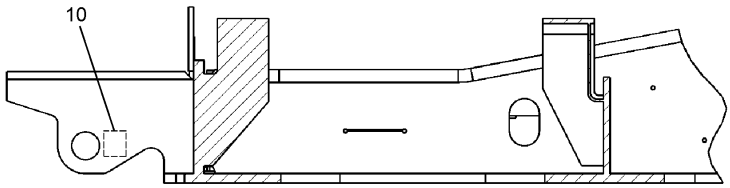

F – F

H95262E 99

229–1740 PLATE & FILM GP (1/3)
S/N CJM 00160,00162,00164,00166–Up

SERVICE EQUIPMENT AND SUPPLIES

NOTE	No.	PART No.	QTY	PART NAME	NOTE	No.	PART No.	QTY	PART NAME
	1	167-7270	1	FILM (NO STEP)					
	2	120-5107	3	FILM (INSTRUCTION)					
	3	186-1131	1	FILM					
		186-1133	1	FILM					
	4	160-6822	1	FILM (WARNING)					
	5	224-8946	1	FILM (WARNING)					
	6	3Y-8905	1	FILM (WARNING)					
	7	134-7258	1	FILM (ELC)					
	8	242-1510	1	FILM (INSTRUCTION)					
	9	247-7439	1	FILM (NOTICE)					
	10	7X-7644	2	FILM (TIE DOWN)					
	11	291-9334	1	FILM (DIESEL FUEL)					

H95262E 99

229-1740 PLATE & FILM GP (1/3)
S/N CJM 00160,00162,00164,00166-Up

SERVICE EQUIPMENT AND SUPPLIES

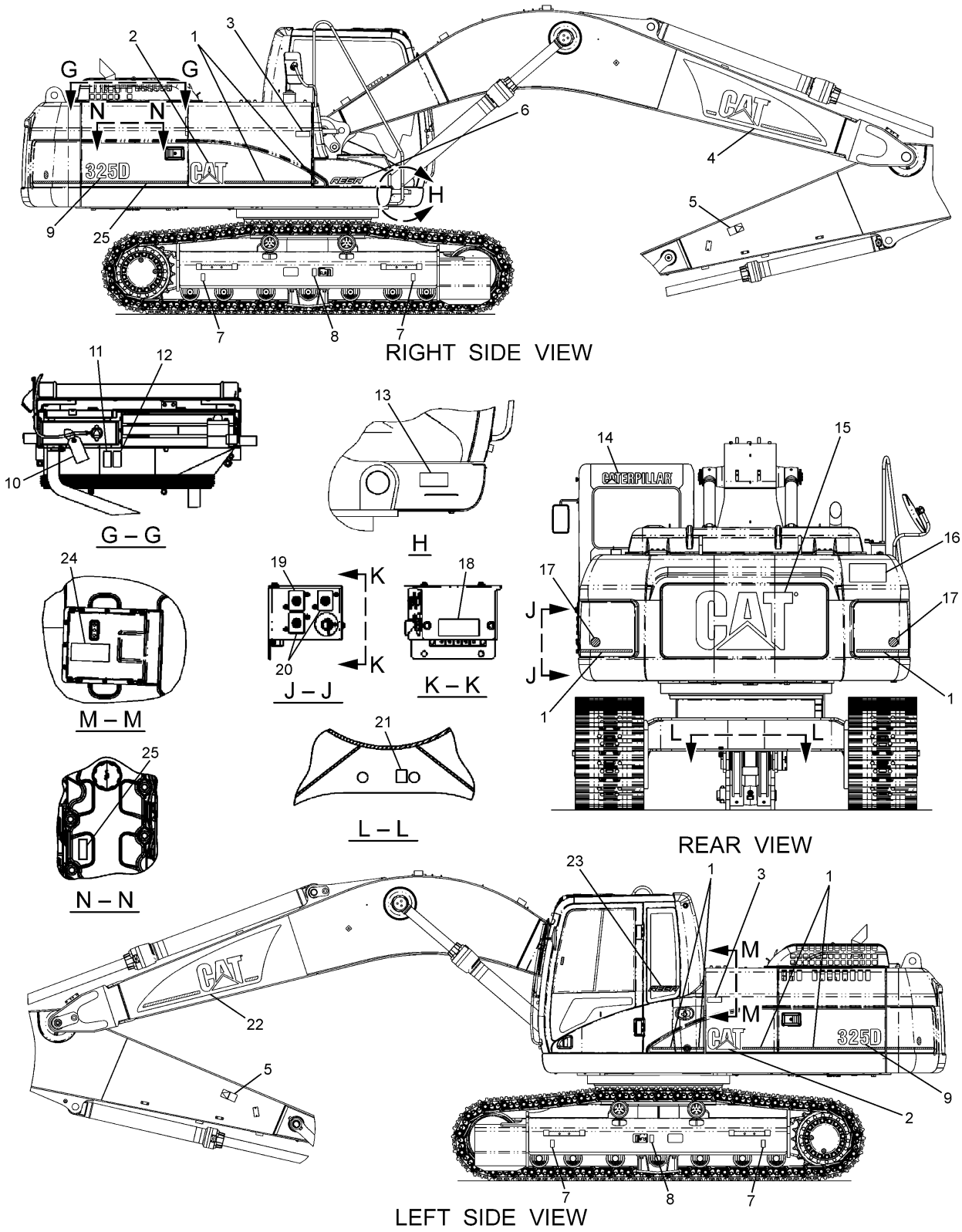

H95263E 99

229–1740 PLATE & FILM GP (2/3)
S/N CJM 00160,00162,00164,00166–Up

SERVICE EQUIPMENT AND SUPPLIES

NOTE	No.	PART No.	QTY	PART NAME	NOTE	No.	PART No.	QTY	PART NAME
E	1	134-6146		FILM (STRIPE)…(500cm)					
	2	105-7545	2	FILM (CAT)					
	3	253-0861	2	FILM (CAT POWER))					
	4	247-7468	1	FILM (CAT)					
	5	160-6853	2	FILM (DANGER)					
	6	186-1147	1	FILM (REGA)					
	7	1P-2807	4	FILM (LIFT)					
	8	160-6832	2	FILM (WARNING)					
	9	247-7433	2	FILM (325D)					
	10	235-0346	1	TAG (ELC)					
	11	160-6822	1	FILM (WARNING)					
	12	160-6841	1	FILM (WARNING)					
Z	13		1	PLATE (PIN)					
	14	257-4502	1	FILM (CAT)					
	15	247-7436	1	FILM (CAT)					
	16	160-6884	1	FILM (DANGER)					
	17	190-5386	2	FILM (SAFETY)					
	18	7I-6508	1	FILM (NOTICE)					
	19	247-7437	1	FILM (CIRCUIT BREAKER)					
	20	247-7438	2	FILM (CIRCUIT BREAKER)					
	21	7X-7644	2	FILM (TIE DOWN)					
	22	247-7469	1	FILM (CAT)					
	23	257-4503	1	FILM (REGA)					
Z	24		1	FILM (CONTROL)					
	25	298-3451	1	FILM (MLIT EMISSION)					

E—ORDER BY THE CENTIMETER

Z—NOT SERVICED

H95263E 99

229-1740 PLATE & FILM GP (2/3)

S/N CJM 00160,00162,00164,00166-Up

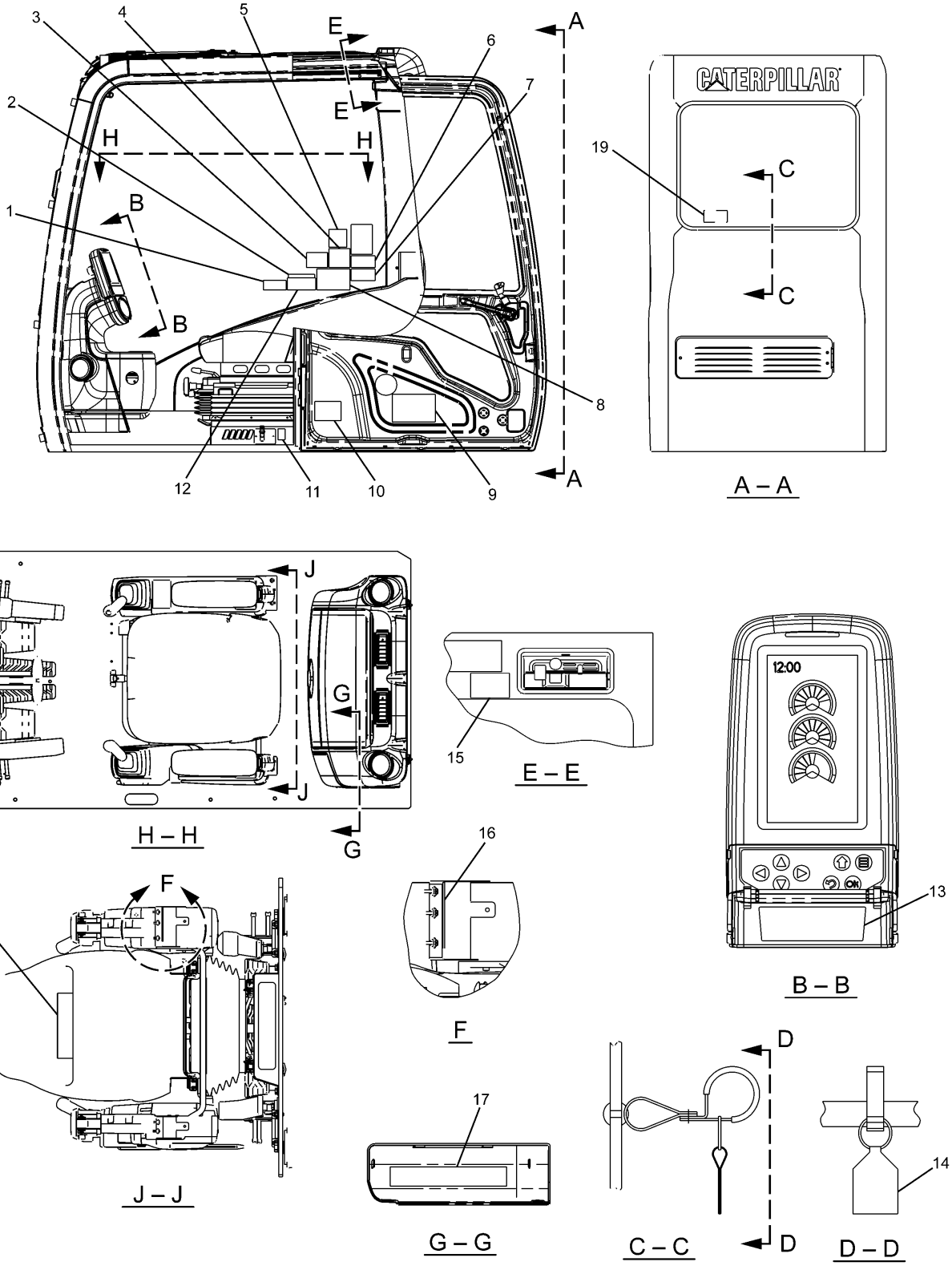

H95264E 99

229–1740 PLATE & FILM GP (3/3)
S/N CJM 00160,00162,00164,00166–Up

SERVICE EQUIPMENT AND SUPPLIES

NOTE	No.	PART No.	QTY	PART NAME	NOTE	No.	PART No.	QTY	PART NAME
	1	186-1214	1	FILM (NOTICE)					
	2	71-1533	1	PLATE (INSTRUCTION)					
	3	127-5272	1	FILM (WARNING)					
	4	127-5295	1	FILM (WARNING)					
	5	219-3148	1	FILM (NOTICE)					
	6	266-5431	1	FILM (WARNING)					
	7	221-8045	1	FILM (WARNING)					
	8	244-5747	1	FILM (WARNING)					
	9	209-2864	1	FILM (LUBRICANT CHART)					
	10	247-7443	1	FILM (REGISTRATION)					
	11	214-7915	1	FILM (ENGINE SHUT OFF)					
	12	41-2885	1	CASE					
	13	245-5475	1	FILM (INSTRUCTION)					
	14	8T-6842	1	FILM (ALTERNATE EXIT)					
	15	186-1149	1	FILM (WARNING)					
	16	245-5457	1	FILM (INSTRUCTION)					
	17	247-7441	1	FILM (FUSE PANEL)					
	18	257-4506	1	CASE					
	19	187-0661	1	FILM (ALTERNATE EXIT)					

H95264E 99

229-1740 PLATE & FILM GP (3/3)
S/N CJM 00160,00162,00164,00166-Up

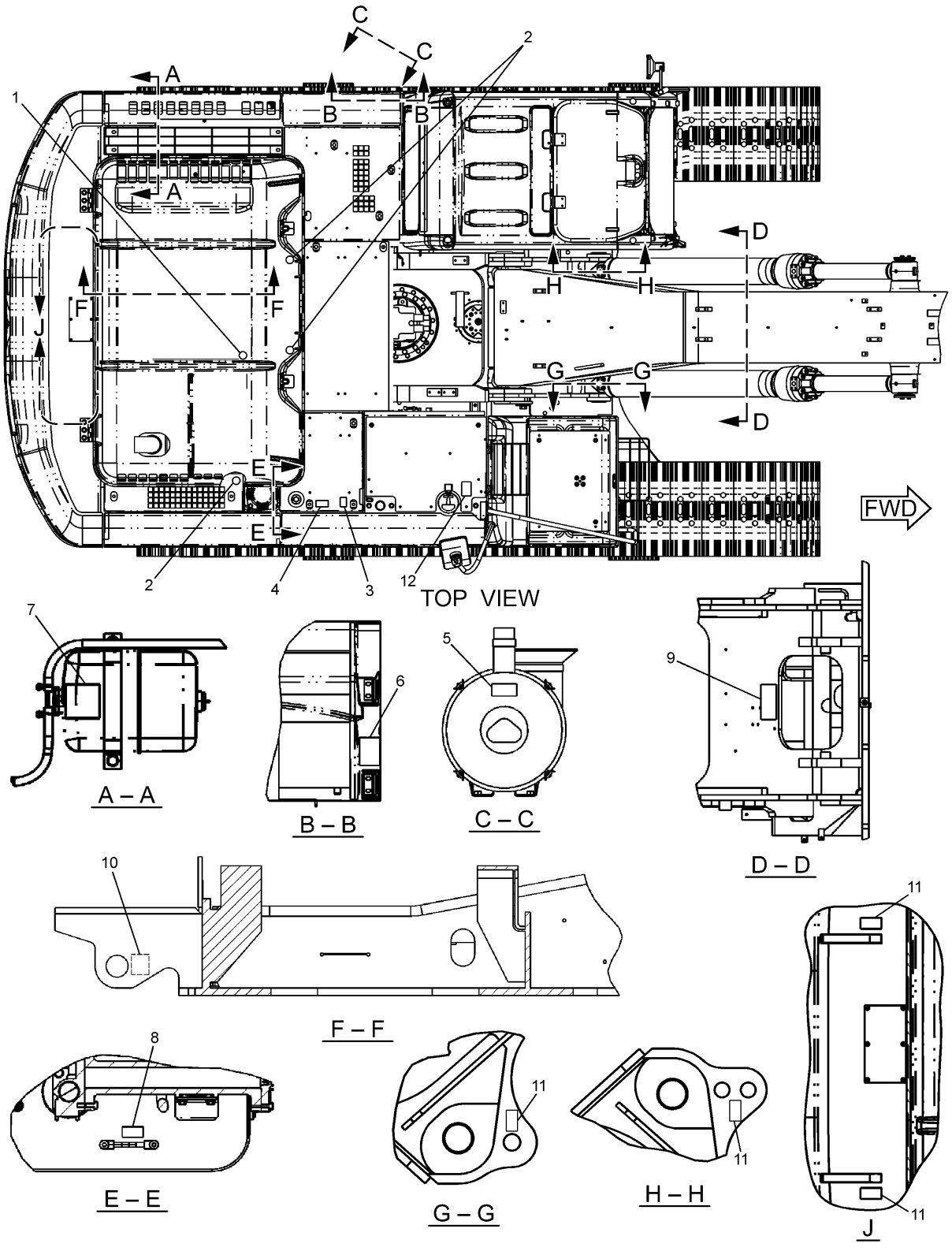

H95602E 08

229–1741 PLATE & FILM GP (1/3)
S/N DAP 1–00206,00209, PEH 1–00220,00224,00225

SERVICE EQUIPMENT AND SUPPLIES

NOTE	No.	PART No.	QTY	PART NAME	NOTE	No.	PART No.	QTY	PART NAME
	1	167-7270	1	FILM (NO STEP)					
	2	120-5107	3	FILM (INSTRUCTION)					
	3	186-1131	1	FILM					
		186-1133	1	FILM					
	4	160-6822	1	FILM (WARNING)					
	5	224-8946	1	FILM (WARNING)					
	6	3Y-8905	1	FILM (WARNING)					
	7	134-7258	1	FILM (ELC)					
	8	242-1510	1	FILM (INSTRUCTION)					
	9	247-7439	1	FILM (NOTICE) {for DAP}					
		264-8750	1	FILM (NOTICE) {for PEH}					
	10	7X-7644	2	FILM (TIE DOWN)					
	11	1P-2807	4	FILM (LIFT) {for PEH}					
	12	291-9334	1	FILM (DIESEL FUEL)					

H95602E 08

229-1741 PLATE & FILM GP (1/3)
S/N DAP 1-00206,00209, PEH 1-00220,00224,00225

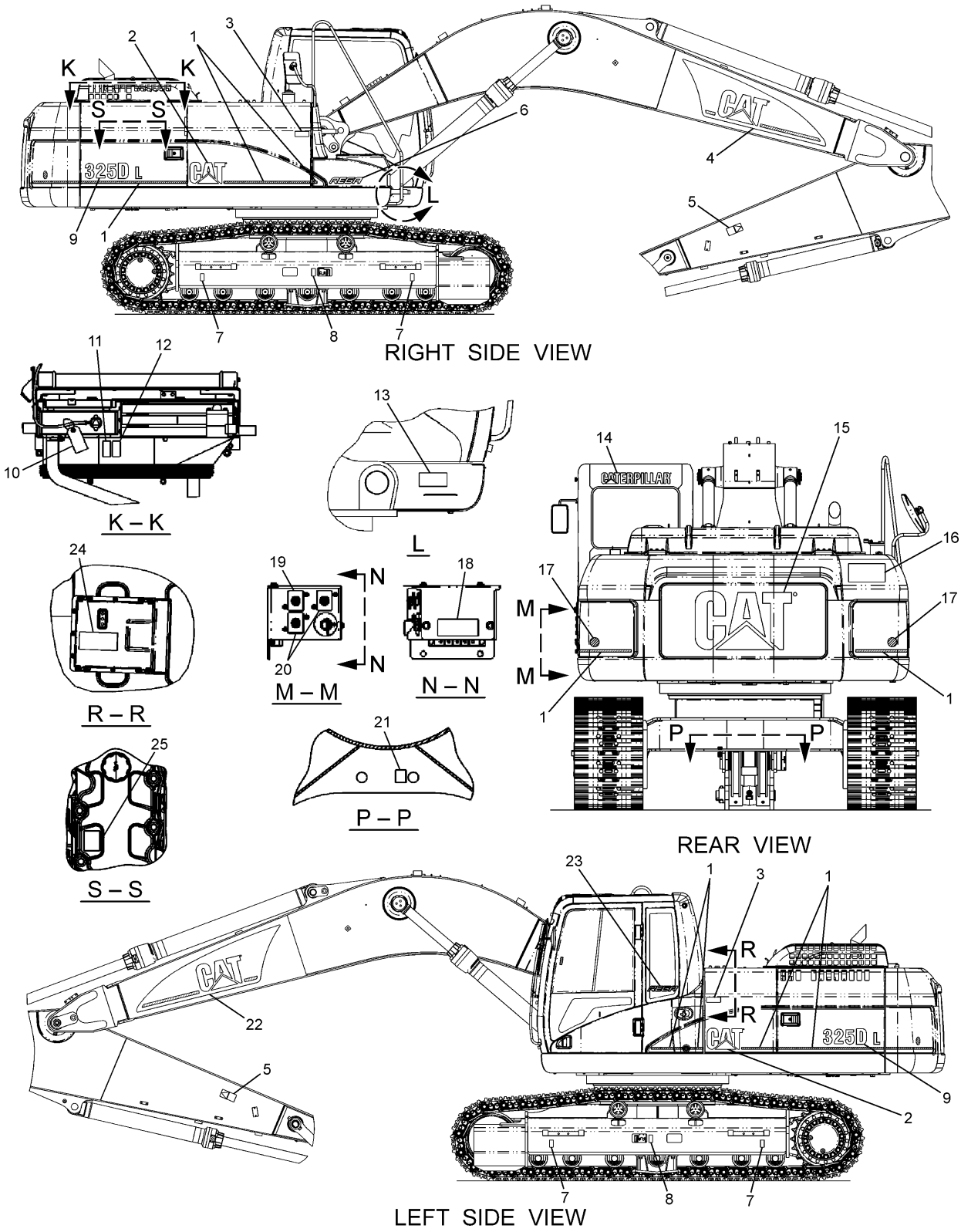

H95603E 08

229–1741 PLATE & FILM GP (2/3)
S/N DAP 1–00206,00209, PEH 1–00220,00224,00225

SERVICE EQUIPMENT AND SUPPLIES

NOTE	No.	PART No.	QTY	PART NAME	NOTE	No.	PART No.	QTY	PART NAME
E	1	134-6146		FILM (STRIPE)…(500cm)					
	2	105-7545	2	FILM (CAT)					
	3	253-0861	2	FILM (CAT POWER))					
	4	247-7468	1	FILM (CAT)					
	5	160-6853	2	FILM (DANGER)					
	6	186-1147	1	FILM (REGA)					
	7	1P-2807	4	FILM (LIFT) {for DAP}					
	8	160-6832	2	FILM (WARNING)					
	9	247-7434	2	FILM (325DL)					
	10	235-0346	1	TAG (ELC)					
	11	160-6822	1	FILM (WARNING)					
	12	160-6841	1	FILM (WARNING)					
Z	13		1	PLATE (PIN)					
	14	257-4502	1	FILM (CAT)					
	15	247-7436	1	FILM (CAT)					
	16	160-6884	1	FILM (DANGER)					
	17	190-5386	2	FILM (SAFETY)					
	18	7I-6508	1	FILM (NOTICE)					
	19	247-7437	1	FILM (CIRCUIT BREAKER)					
	20	247-7438	2	FILM (CIRCUIT BREAKER)					
	21	7X-7644	2	FILM (TIE DOWN)					
	22	247-7469	1	FILM (CAT)					
	23	257-4503	1	FILM (REGA)					
Z	24		1	FILM (CONTROL)					
	25	275-3849	1	FILM (INFORMATION)					

E—ORDER BY THE CENTIMETER

Z—NOT SERVICED

H95603E 08

229-1741 PLATE & FILM GP (2/3)

S/N DAP 1-00206,00209, PEH 1-00220,00224,00225

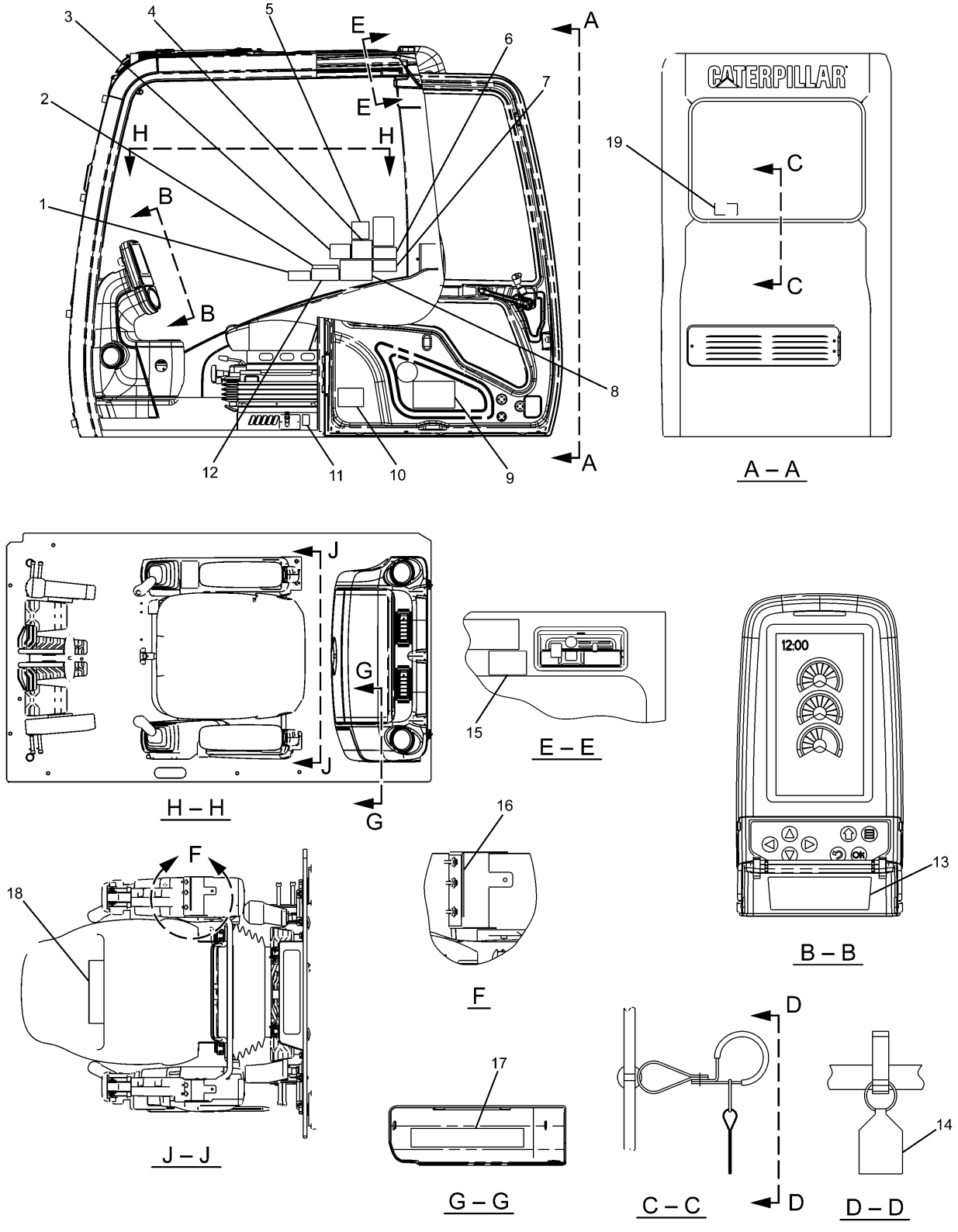

229–1741 PLATE & FILM GP (3/3)
S/N DAP 1–00206,00209, PEH 1–00220,00224,00225

SERVICE EQUIPMENT AND SUPPLIES

NOTE	No.	PART No.	QTY	PART NAME	NOTE	No.	PART No.	QTY	PART NAME
	1	186-1214	1	FILM (NOTICE)					
	2	71-1533	1	PLATE (INSTRUCTION)					
	3	127-5272	1	FILM (WARNING)					
	4	127-5295	1	FILM (WARNING)					
	5	219-3148	1	FILM (NOTICE)					
	6	266-5431	1	FILM (WARNING)					
	7	221-8045	1	FILM (WARNING)					
	8	244-5747	1	FILM (WARNING)					
	9	209-2864	1	FILM (LUBRICANT CHART)					
	10	247-7444	1	FILM (REGISTRATION)					
	11	214-7915	1	FILM (ENGINE SHUT OFF)					
	12	41-2885	1	CASE					
	13	245-5475	1	FILM (INSTRUCTION)					
	14	8T-6842	1	FILM (ALTERNATE EXIT)					
	15	186-1149	1	FILM (WARNING)					
	16	245-5457	1	FILM (INSTRUCTION)					
	17	247-7441	1	FILM (FUSE PANEL)					
	18	257-4506	1	CASE					
	19	187-0661	1	FILM (ALTERNATE EXIT)					

H95604E 08

229-1741 PLATE & FILM GP (3/3)

S/N DAP 1-00206,00209, PEH 1-00220,00224,00225

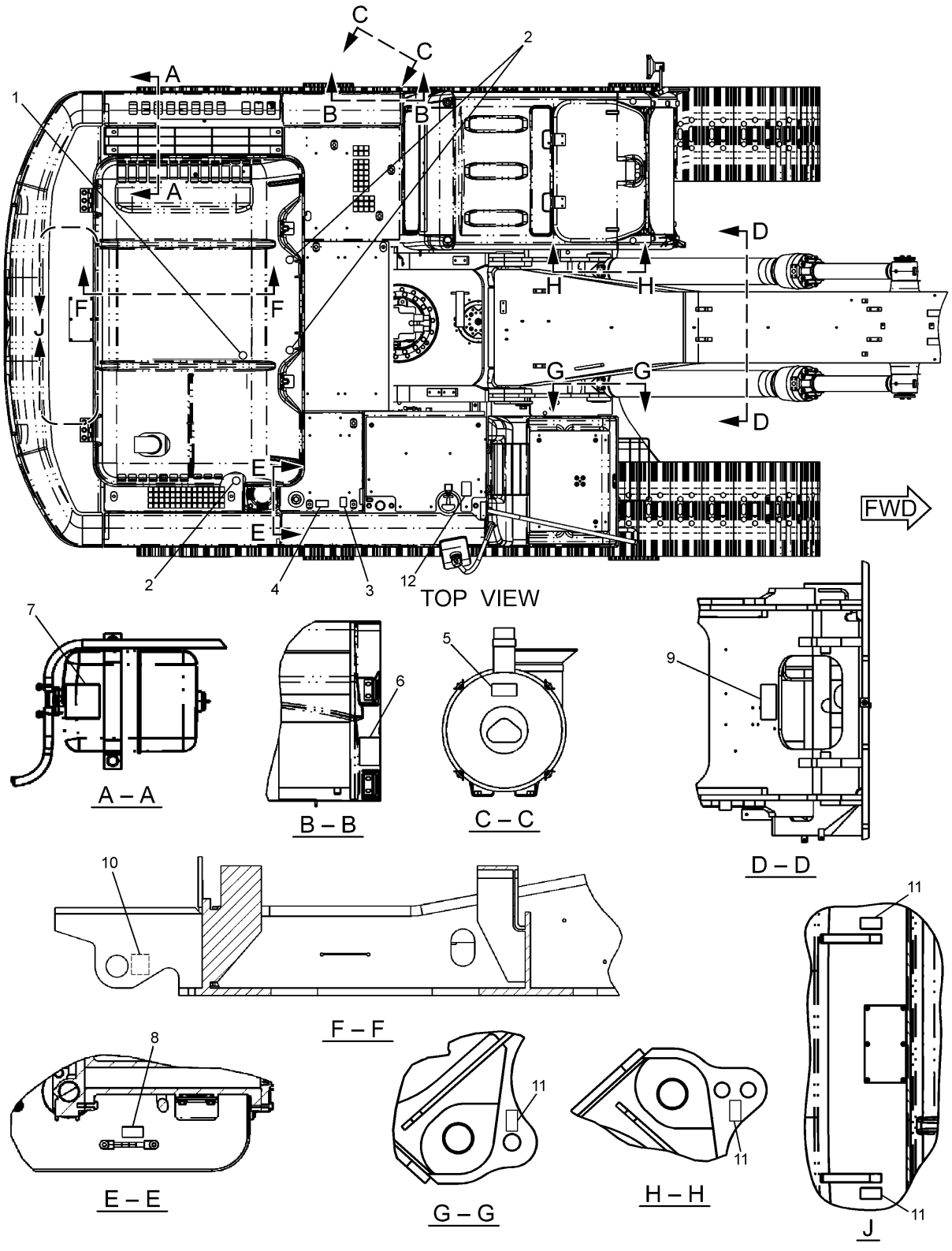

H95265E 99

229–1741 PLATE & FILM GP (1/3)

適用号機 DAP 00207,00208,00210–Up, PEH 00221,00222,00223,00226–Up

SERVICE EQUIPMENT AND SUPPLIES

NOTE	No.	PART No.	QTY	PART NAME	NOTE	No.	PART No.	QTY	PART NAME
	1	167-7270	1	FILM (NO STEP)					
	2	120-5107	3	FILM (INSTRUCTION)					
	3	186-1131	1	FILM					
		186-1133	1	FILM					
	4	160-6822	1	FILM (WARNING)					
	5	224-8946	1	FILM (WARNING)					
	6	3Y-8905	1	FILM (WARNING)					
	7	134-7258	1	FILM (ELC)					
	8	242-1510	1	FILM (INSTRUCTION)					
	9	247-7439	1	FILM (NOTICE) {for DAP}					
		264-8750	1	FILM (NOTICE) {for PEH}					
	10	7X-7644	2	FILM (TIE DOWN)					
	11	1P-2807	4	FILM (LIFT) {for PEH}					
	12	291-9334	1	FILM (DIESEL FUEL)					

H95265E 99

229-1741 PLATE & FILM GP (1/3)

適用号機 DAP 00207,00208,00210-Up, PEH 00221,00222,00223,00226-Up

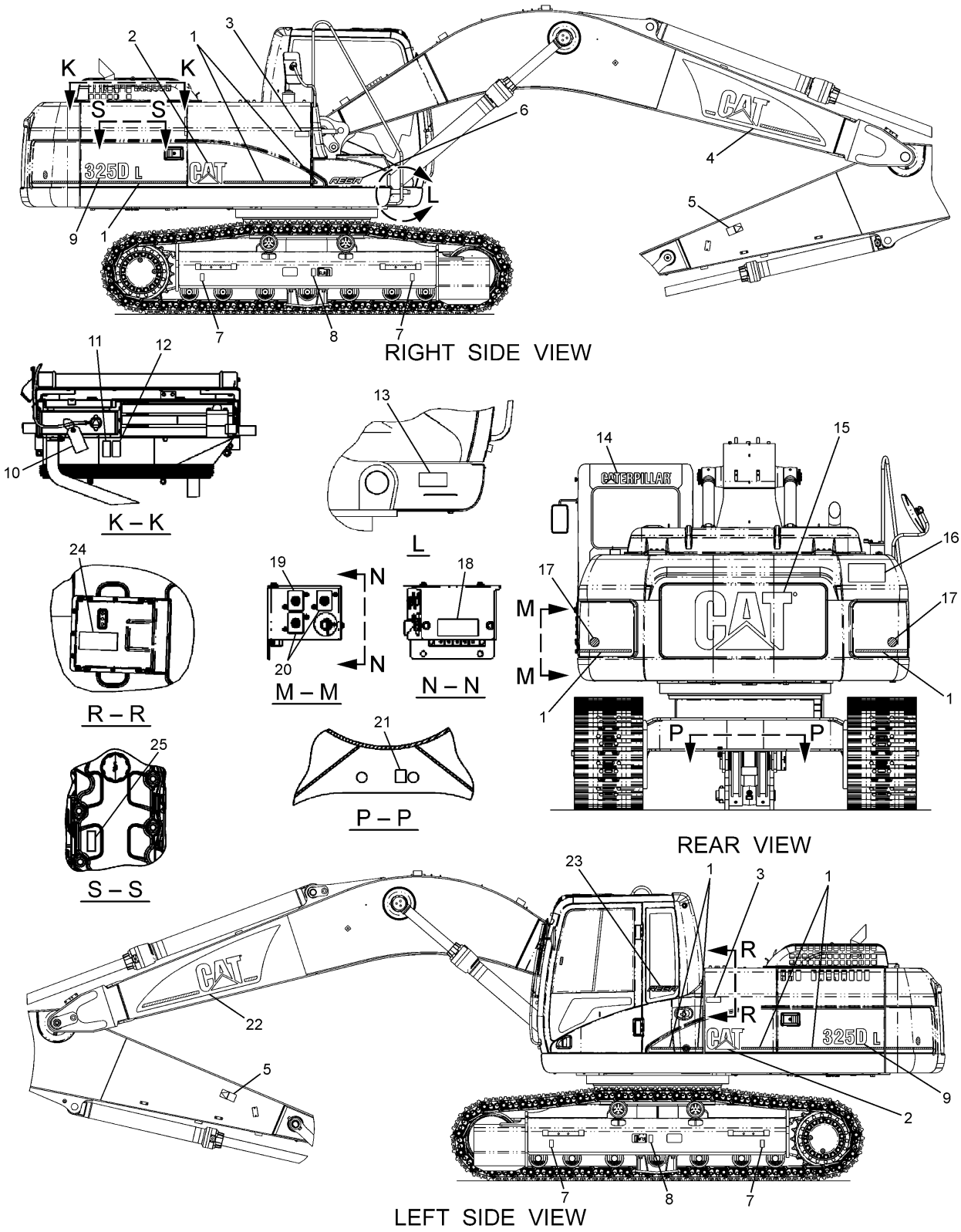

H95266E 99

229–1741 PLATE & FILM GP (2/3)

適用号機 DAP 00207,00208,00210–Up, PEH 00221,00222,00223,00226–Up

SERVICE EQUIPMENT AND SUPPLIES

NOTE	No.	PART No.	QTY	PART NAME	NOTE	No.	PART No.	QTY	PART NAME
E	1	134-6146		FILM (STRIPE)…(500cm)					
	2	105-7545	2	FILM (CAT)					
	3	253-0861	2	FILM (CAT POWER))					
	4	247-7468	1	FILM (CAT)					
	5	160-6853	2	FILM (DANGER)					
	6	186-1147	1	FILM (REGA)					
	7	1P-2807	4	FILM (LIFT) {for DAP}					
	8	160-6832	2	FILM (WARNING)					
	9	247-7434	2	FILM (325DL)					
	10	235-0346	1	TAG (ELC)					
	11	160-6822	1	FILM (WARNING)					
	12	160-6841	1	FILM (WARNING)					
Z	13		1	PLATE (PIN)					
	14	257-4502	1	FILM (CAT)					
	15	247-7436	1	FILM (CAT)					
	16	160-6884	1	FILM (DANGER)					
	17	190-5386	2	FILM (SAFETY)					
	18	7I-6508	1	FILM (NOTICE)					
	19	247-7437	1	FILM (CIRCUIT BREAKER)					
	20	247-7438	2	FILM (CIRCUIT BREAKER)					
	21	7X-7644	2	FILM (TIE DOWN)					
	22	247-7469	1	FILM (CAT)					
	23	257-4503	1	FILM (REGA)					
Z	24		1	FILM (CONTROL)					
	25	298-3451	1	FILM (MLIT EMISSION)					

E—ORDER BY THE CENTIMETER

Z—NOT SERVICED

H95266E 99

229-1741 PLATE & FILM GP (2/3)

適用号機 DAP 00207,00208,00210-Up, PEH 00221,00222,00223,00226-Up

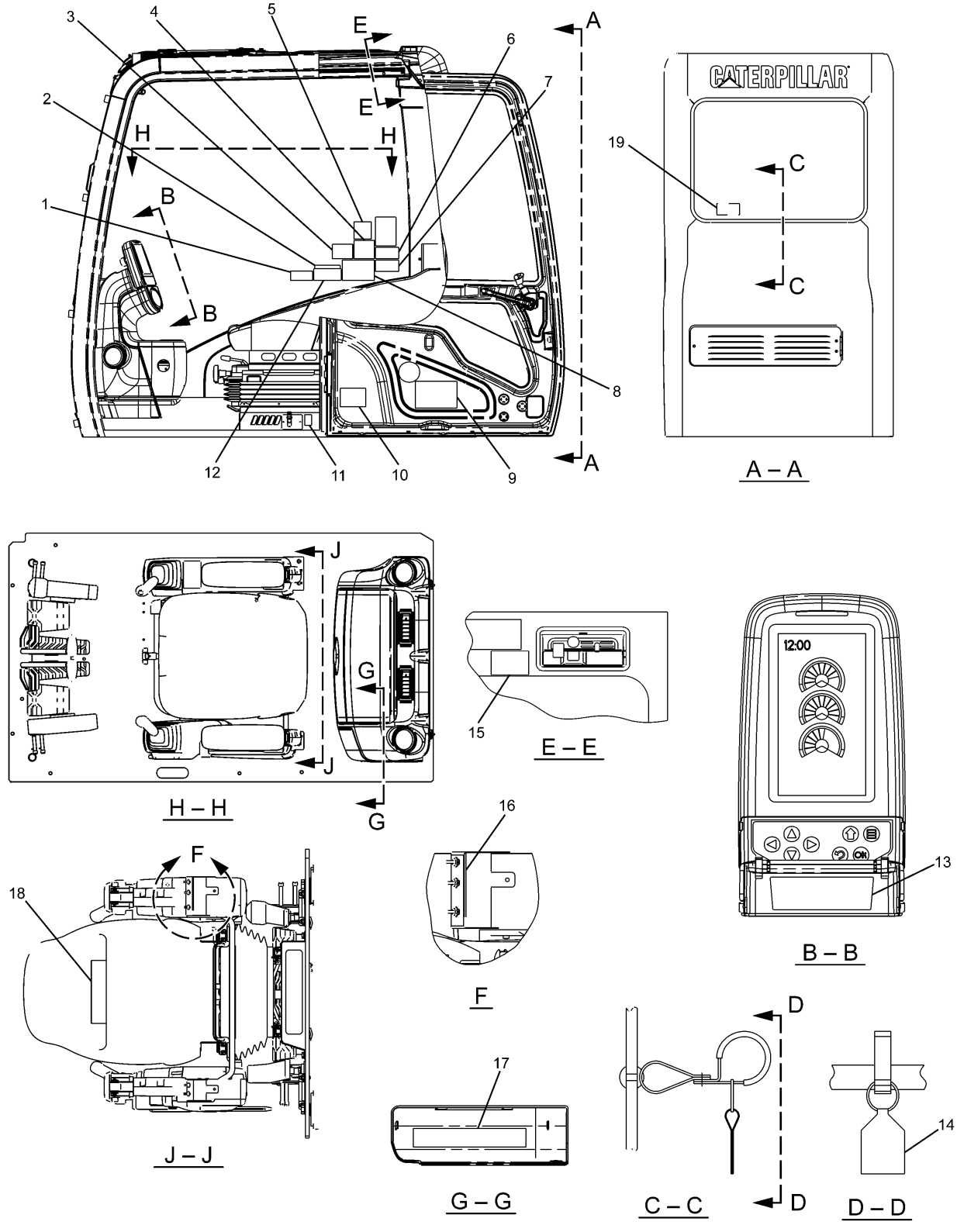

229–1741 PLATE & FILM GP (3/3)

適用号機 DAP 00207,00208,00210–Up, PEH 00221,00222,00223,00226–Up

SERVICE EQUIPMENT AND SUPPLIES

NOTE	No.	PART No.	QTY	PART NAME	NOTE	No.	PART No.	QTY	PART NAME
	1	186-1214	1	FILM (NOTICE)					
	2	71-1533	1	PLATE (INSTRUCTION)					
	3	127-5272	1	FILM (WARNING)					
	4	127-5295	1	FILM (WARNING)					
	5	219-3148	1	FILM (NOTICE)					
	6	266-5431	1	FILM (WARNING)					
	7	221-8045	1	FILM (WARNING)					
	8	244-5747	1	FILM (WARNING)					
	9	209-2864	1	FILM (LUBRICANT CHART)					
	10	247-7444	1	FILM (REGISTRATION)					
	11	214-7915	1	FILM (ENGINE SHUT OFF)					
	12	41-2885	1	CASE					
	13	245-5475	1	FILM (INSTRUCTION)					
	14	8T-6842	1	FILM (ALTERNATE EXIT)					
	15	186-1149	1	FILM (WARNING)					
	16	245-5457	1	FILM (INSTRUCTION)					
	17	247-7441	1	FILM (FUSE PANEL)					
	18	257-4506	1	CASE					
	19	187-0661	1	FILM (ALTERNATE EXIT)					

H95267E 99

229-1741 PLATE & FILM GP (3/3)

適用号機 DAP 00207,00208,00210-Up, PEH 00221,00222,00223,00226-Up

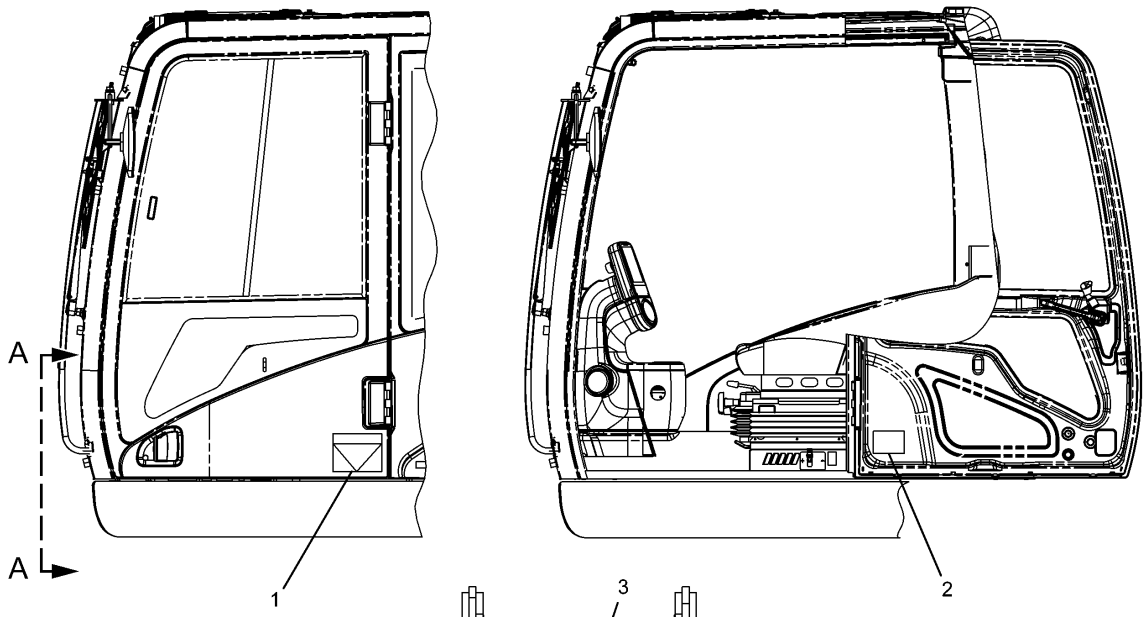

A – A

NOTE	No.	PART No.	QTY	PART NAME	NOTE	No.	PART No.	QTY	PART NAME
	1	127-5278	1	FILM (HAMMER)					
	2	264-8749	1	FILM (REGISTRATION)					
	3	264-8750	1	FILM (NOTICE)					

H90032E 00

240-4022 FILM GP
S/N PEH 1-Up
An Attachment

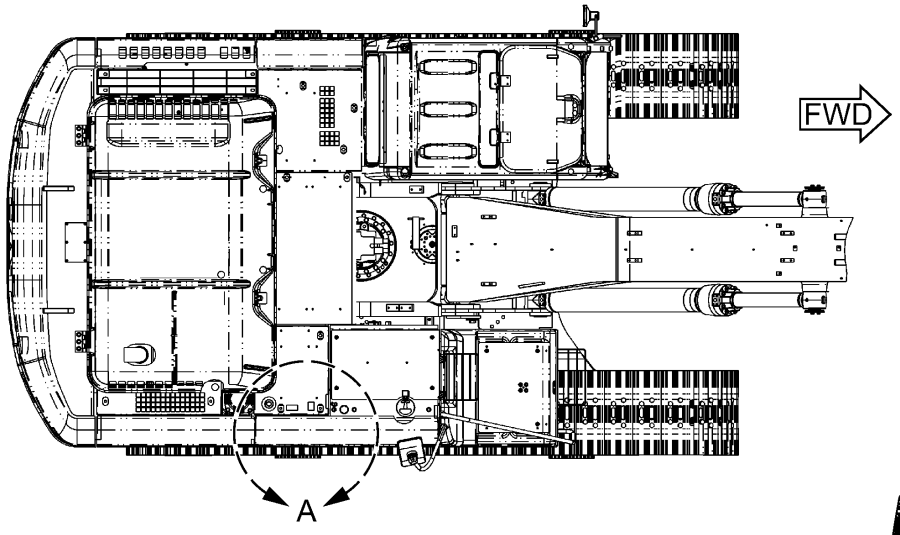

TOP VIEW

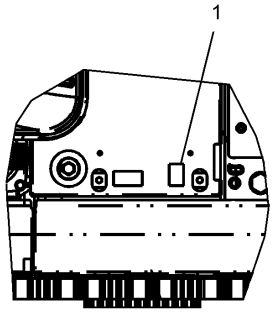

A

NOTE	No.	PART No.	QTY	PART NAME	NOTE	No.	PART No.	QTY	PART NAME
	1	186-1133	1	FILM					

H90541E 00

229-1800 FILM GP
An Attachment

SERVICE EQUIPMENT AND SUPPLIES

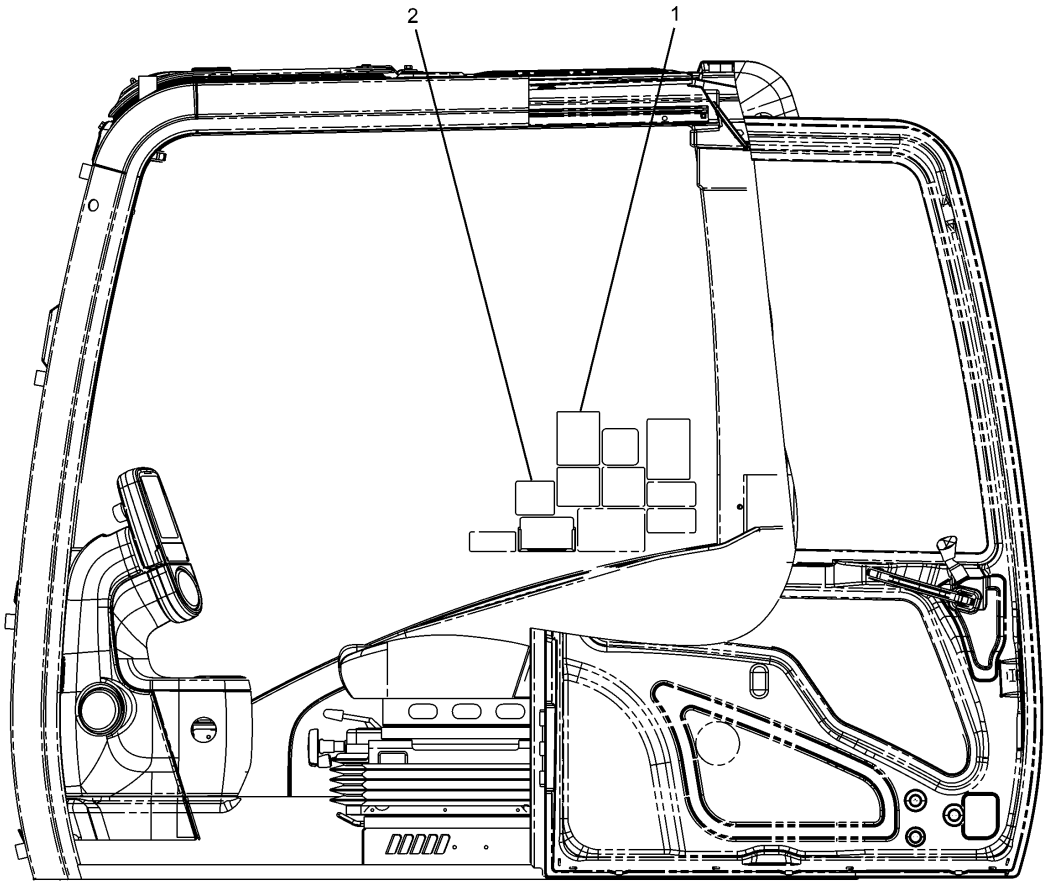

NOTE	No.	PART No.	QTY	PART NAME	NOTE	No.	PART No.	QTY	PART NAME
	1	118-6054	1	FILM (NOTICE)					
	2	260-6945	1	FILM (CONTROLS)					

H89264E 00

247-7420 FILM GP

Part of 255-5696,255-5699-Page472,255-5702-Page474

An Attachment

SERVICE EQUIPMENT AND SUPPLIES

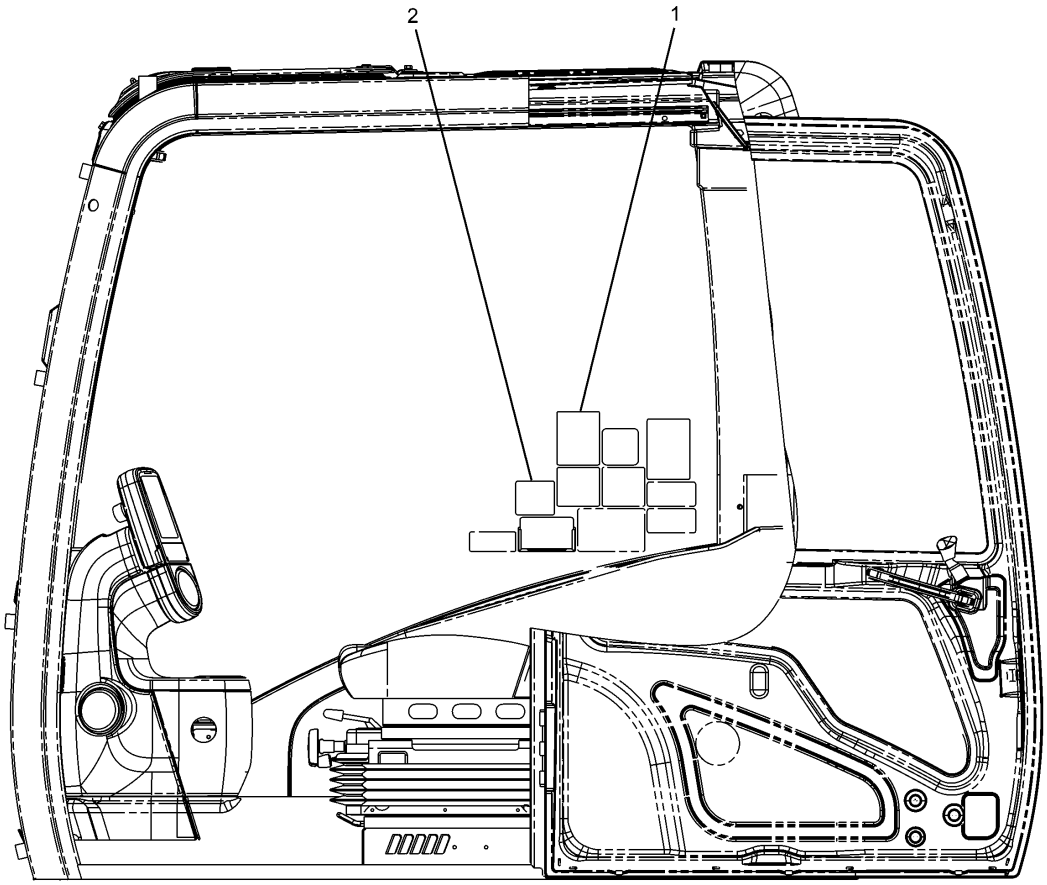

NOTE	No.	PART No.	QTY	PART NAME	NOTE	No.	PART No.	QTY	PART NAME
	1	118-6054	1	FILM (NOTICE)					
	2	260-6946	1	FILM (CONTROLS)					

H89263E 00

247-7416 FILM GP
Combined Function/2 Pumps
Part of 255-5697-Page473
An Attachment

SERVICE EQUIPMENT AND SUPPLIES

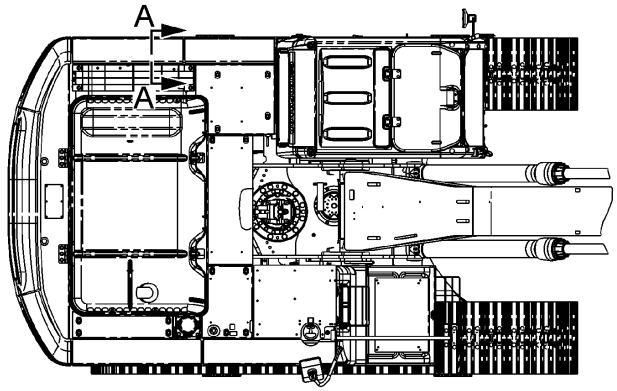

TOP VIEW

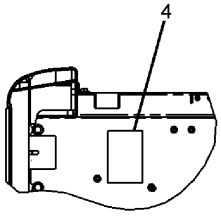

A – A

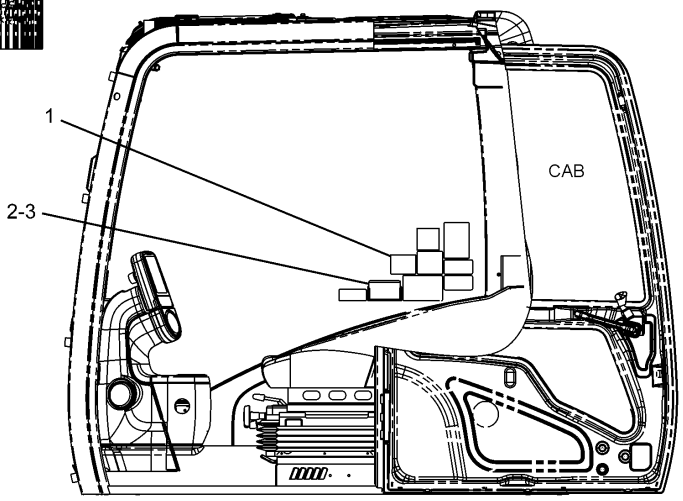

NOTE	No.	PART No.	QTY	PART NAME	NOTE	No.	PART No.	QTY	PART NAME
	1	120-5054	1	FILM (WARNING)					
	2	102-4861	1	PLATE					
	3	102-4862	1	PLATE (KOB,JIS/SCM)					
	4	176-2687	1	FILM (INSTRUCTION)					

H94074E 03

247-7491 FILM GP
4 Way Valve
Part of 255-5724-Page475
An Attachment

SERVICE EQUIPMENT AND SUPPLIES

Consists of :

Page

1	116-9135	FILM (TRANSPORT)
1	132-4099	FILM (CAT)
1	132-4100	FILM (CAT)
1	186-1156	FILM (LUBRICANT CHART)
1	277-1255	FILM (REGISTRATION)

H91564E 00

268-6870 FILM GP
Long Reach Front
S/N DAP 1-Up
Part of 262-3585-Page739
An Attachment

PART NUMBER INDEX

Part.No	Page
1	
1B-8705	27
	30
1F-0425	601
1H-3244	171
	231
1J-9671	70
1M-6119	139
	190
1M-6120	139
	190
1N-5999	33
1P-0551	795
1P-0808	795
1P-2807	799
	801.04
	803
	805
	807.02
	807.04
1P-3702	426
	427
	428
	505
	519
	523
	560
	561
	563
	564
	582
	585
	587
1P-3703	417
	421
	423
	426
	427
	428
	429
	430
	433
	435
	436
	437
	438
	439
	463
	465
	503
	505
	507
	511
	513
	515
	517
	519
	521
	523
	527
	528
1P-3704	415
	421
	423
	433
	435
	436
	437
	438
	439
	505
	507
1P-3705	433
	435
	436
	437
	438
	439
	505
	507
1P-4577	507
1P-4578	469
	515
	519
	523
	527
1P-5767	421
	423
	433
	435
	436
	437
	438
	439
	505
1R-0762	111
1R-0770	114
1R-1807	59
1R-5998	635
1R-9958	285
1S-0994	723
1S-2563	66
1S-7251	139
	190
	226
1S-7252	138
	190
	226
1U-3252	793
1U-8846	23
	41
	83
	85
	275
	277
	323
	463
	465
	533
1W-1064	54
1W-2431	95
1W-2715	34
1W-8407	18
2	
2A-4429	34
2B-2404	251
2B-7561	277
	323
2D-1290	111
2D-6642	38
	541
2G-8767	131
	133
2H-3922	172

PART NUMBER INDEX

Part.No	Page
	270
2J-3507	784
2K-4821	231
2K-8199	56
2L-8049	137
2L-8050	137
	159
	171
2L-8052	159
2L-8065	151
	269
2L-8066	149
	229
2L-8067	153
2L-8069	137
	159
	204
2L-8071	229
2L-8074	160
	167
2L-8075	137
	149
	153
	184
	267
	268
	269
2L-8076	149
2L-8079	137
	204
	214
2M-0849	367
	673
2M-4453	70
2M-6471	21
2M-9780	21
	33
	59
	65
	70
	463
	465
	467
	541
	567
	575
	587
	723
	725
2P-1294	55
2P-2537	59
2P-8250	795
2P-8253	795
2R-6806	107
2S-2053	65
2S-2596	578
2S-3440	65
2S-4078	121
	123
	513
	517
	521
	527
	621
2S-5926	342
2U-2552	636
2W-0027	31
2W-6544	23
2W-6546	26
2W-7213	21
2W-7381	46
2W-8147	27
2Y-5685	646
2Y-5829	37
3	
3B-0551	121
	123
3B-4501	262
	264
3B-4509	412
	413
3B-4618	281
3B-8489	323
	325
	326
	395
	397
	399
	400
	403
	404
	405
	747
	748
	749
	750
	751
	752
	753
	754
	755
	756
	757
	758
	759
	760
	761
	763
	765
	766
3D-2824	24
	59
	70
	367
	467
	486
	503
	511
	517
	521
	523
	572
	579
	586
	590
	598
	620
3D-2891	383
	385

PART NUMBER INDEX

Part.No	Page	Part.No	Page	Part.No	Page
3D-5102	251		387		367
3D-9143	307		463		379
3E-2310	489		465		388
	491		469		445
	495		479		447
	499		481		449
3E-2332	236		483		451
3E-2338	275		485		455
3E-3213	54		485.02		457
3E-3362	56		485.04		459
3E-3365	56		486		461
	174		487		463
	175		489		465
3E-3368	247		491		467
3E-4297	373		492		479
3E-4352	236		495		483
3E-5169	157		496		485
3E-6910	539		499		485.02
3E-7853	225		501		485.04
3E-8017	86		503		486
3E-8020	635		527		499
3E-8320	171		537		503
3E-9412	36		542		509
	99		575		513
3F-0379	225		595		517
	229		597		521
3F-9556	231		607		527
	235		623		528.01
3H-5552	21		623.01		533
3H-7654	36		625		541
3J-1907	33	3J-3679	70		578
	59	3J-7354	59		595
	63		65		597
	73		73		607
	84		367		609
	107	3K-0360	25		723
	111		70		725
	113		73	3K-3257	223
	121		85	3K-5234	784
	123		107	3K-8460	236
	367		111	3P-0647	589
	374		113	3P-1156	62
	383		236		63
	385		251		69

PART NUMBER INDEX

Part.No	Page
3P-1932	73
3P-9847	77
3R-6790	59
3S-2093	77
	96
	125
	127
	129
	131
	133
	135
	137
	143
	149
	151
	153
	157
	159
	163
	164
	165
	167
	181
	183
	184
	192
	193
	196
	199
	201
	203
	207
	208
	211
	213
	221
	233
	234
	248
	255
	257
	269
	655
	656
	662
	675
	684
	690
	713
	717
	723
3S-6049	139
	190
3S-6050	190
3T-0849	221
3T-3422	229
3T-4688	137
3T-5760	127
	189
3T-7528	373
3V-2431	103
3Y-7597	795
3Y-8905	797
	801.02
	803
	807.02

PART NUMBER INDEX

Part.No	Page
4I-1205	635
4I-1206	635
4I-1260	647
4I-1278	721
4I-1631	481
4I-1671	487
	492
	496
4I-1674	421
	423
	425
	503
4I-1739	483
	485.02
	495
	499
4I-1783	495
	499
4I-2187	307
4I-2604	795
4I-2605	795
4I-2885	801
	801.06
	807
	807.06
4I-3038	684
4I-3063	635
4I-3090	635
	648
4I-3144	635
4I-3183	745
4I-3266	677
4I-3503	723
	725
4I-3510	579
	620
4I-3569	575
4I-3627	395
4I-3628	395
	403
4I-3631	395
4I-3941	495
	499
4I-3953	481
4I-3981	501
4I-4270	635
4I-4286	639
4I-4300	640
4I-4361	647
4I-4392	635
4I-4618	741
	743
	745
	746
	747
	748
	749
	750
	751
	752
	753
	754
	755
	756
4I-4620	747
	748
	749
	750
	751
	752
	753
	755
4I-5020	655
4I-5021	655
4I-5049	665
4I-5394	367
4I-5409	252
4I-5639	527
4I-5849	537
4I-5900	483
	485.02
4I-5906	485
	485.04
4I-6003	501
4I-6121	485
	485.04
4I-6136	483
	485.02
4I-6365	551
4I-6397	567
	575
	577
4I-6602	669
	671
	672
4I-6604	783
4I-6605	783
4I-6626	783
4I-7466	533
4I-7714	579
4I-7745	503
4I-7816	467
4I-7856	67
4I-7889	127
	135
	192
4I-7924	286
4I-8019	281
4I-8384	304
4I-8785	428
4I-8789	425
	528
4I-8799	501
4I-8869	395
4I-8965	595
	597
4I-9521	479
	481
	485
	485.04
	495
	499
	501
4I-9522	479
	481
	483
	485.02
	495
	499
	501
4I-9523	479
	481

PART NUMBER INDEX

Part.No	Page
	483
	485
	485.02
	485.04
	489
	491
	495
	499
	501
4I-9524	479
	481
	483
	485.02
	489
	491
	495
	499
	501
4I-9525	479
	481
	485
	485.04
	491
	495
	499
	501
4I-9526	479
	481
	501
4I-9527	467
	479
	481
	485
	485.04
	489
	491
	495
	499
	501
4I-9528	479
	481
	485
	485.04
	499
4J-0519	563
4J-0520	507
	567
4J-0522	469
	513
	517
	521
	527
4J-0523	471
4J-0524	70
	509
	511
4J-0527	367
	511
4J-5267	418
	507
	585
4J-5268	507
4J-5309	575
4J-7385	565
	571
4J-7386	565
	571
4J-7533	373
	575
	595
	597
	607
4J-8998	560
	561
	564
	582
	585
4K-1388	59
	565
	571
4K-2039	603
4K-8864	125
	189
4M-1831	225
	229
4N-9170	323
4P-5524	94
4P-5918	23
	233
4P-7428	131
4P-7581	133
	143
	192
	479
4P-8134	233
4P-9103	59
4P-9107	59
4R-9999	28
4T-3148	575
	577
4T-5074	575
4W-0253	71
4W-1203	51
4W-1204	51
4W-2026	44
4W-2042	51
4W-2232	62
4W-3462	12
	26
4W-7592	71
4Y-0426	795
4Y-9652	23
5B-1866	37
5B-9304	535
	542
	551
	613
	615
5C-2889	262
	264
5C-2890	145
	174
	175
	207
5C-7261	23
	43
	107

5

PART NUMBER INDEX

Part.No	Page	Part.No	Page	Part.No	Page
	127		485.02	5P-0743	68
	189		489	5P-0767	277
	610		491		723
	691		492		725
	694	5I-4447	431	5P-1027	431
	696	5I-4494	427	5P-1075	307
	697	5I-7090	554		308
	698		557	5P-1076	93
	701	5I-7290	425		111
	705	5I-8270	127		118
5C-7793	635		189		125
5C-7883	125	5I-8511	595		131
5C-9553	171		597		251
	279	5I-8516	407		279
	281	5I-8670	371		281
	307	5I-8708	485		283
	367		485.04		285
	655	5I-8853	465		305
	713	5J-2383	537		308
	717	5K-8451	111		309
5D-1026	277		113		310
5D-4822	669	5K-9090	59		311
	671		425		312
5D-8159	79		503		313
5F-9657	59		507		354
5G-2247	352		511		355
	353		513		503
5H-4020	469		515	5P-1442	96
5H-5672	368		517		111
5H-8624	469		519		113
5H-8848	351		521	5P-2321	149
5H-8936	761		523	5P-2369	723
5I-4111	565		528	5P-2424	230
	571	5K-9242	761	5P-2568	542
5I-4188	426	5K-9243	323	5P-3108	565
	427		758		571
	428		759	5P-3454	137
5I-4189	429		760	5P-4115	171
	430		761		279
5I-4216	429	5L-3233	91		281
	430	5L-4758	374	5P-4116	107
5I-4359	426		603		133
5I-4371	483	5P-0200	431		307
5I-4396	483	5P-0537	115	5P-4536	87

PART NUMBER INDEX

Part.No	Page
5P-4924	111
	121
	123
5P-4961	65
	96
5P-5995	164
5P-5998	270
5P-6271	153
5P-6312	251
5P-6313	251
5P-6314	251
5P-7462	485
	485.04
5P-7463	485
	485.04
5P-7464	467
5P-7465	467
5P-7468	509
	513
	517
	521
5P-7469	509
	513
	517
	521
5P-7814	236
5P-7958	708
5P-7970	65
	66
5P-8066	59
	63
5P-8068	367
5P-8196	59
5P-8245	44
	54
5P-8247	22
	231
5P-8292	665
5P-8309	283
	294
	295
5P-8347	73
	222
5P-8444	509
5P-9297	107
	259
	261
5P-9617	59
5P-9909	77
5Q-3216	353
5S-7349	225
	229
	231
5S-7382	377
5S-9062	51

6

Part.No	Page
6C-6760	445
	447
	449
	451
	455
	457
	459
	461
6C-8382	669
	671
6D-1641	723
	725
6D-4246	723
6D-9157	367
6E-1435	495
	499
6E-2163	578
6E-2271	570
	578
6E-2274	567
	575
	582
	585
6E-3653	575
6E-4816	567
6E-5169	577
6E-5643	575
	577
6E-5731	567
	569
	577
	582
	585
6F-4855	369
6F-7045	172
6F-7062	24
6G-2256	131
	133
6G-2263	127
	131
	133
6H-7378	795
6I-0723	367
6I-0724	367
6I-2503	91
	94
6I-2504	91
	94
6I-4464	94
6I-5298	549
6I-5342	647
6I-5470	635
6I-6033	279
6I-6371	784
6I-6404	776
	777
	778
	779
6I-6405	776
	777
	778
	779
6I-6406	776
	777
	778
	779
6I-6441	323
6I-6721	415
6I-6795	579
	620
6I-6923	601
6J-2680	367
	467

PART NUMBER INDEX

Part.No	Page
6K-0806	59
6K-8178	111
	113
	131
	189
	495
	499
6L-3616	758
	759
	760
	761
6M-5062	586
	603
6N-3827	229
6N-7523	233
6P-2216	286
	292
	293
6V-0400	421
	423
	429
	430
	433
	435
	436
	437
	438
	439
	463
	465
	469
	505
	507
	511
6V-0545	513
	517
	521
6V-0683	485
	485.04
6V-0756	431
6V-0852	367
	486
	489
	491
	495
	499
6V-2317	23
	45
	50
	59
	115
	233
	234
6V-3265	107
	656
	723
6V-3538	18
	26
6V-3821	85
6V-3918	41
	65
	71
6V-3922	567
	575
	577
6V-3938	601
6V-3940	26
	30
	31
	62
	63
	73
	236
6V-3965	367
	486
	489
	491
	495
	499
6V-4298	372
6V-4589	111
6V-5048	33
	236
	240
	241
	246
6V-5049	63
	108
	236
	239
6V-5192	234
6V-5204	534
6V-5210	147
	262
	264
6V-5215	52
6V-5217	41
	63
	66
6V-5218	234
6V-5219	59
6V-5223	73
6V-5393	577
6V-5556	538
	575
6V-5597	567
	569
	575
	577
	582
	585
6V-5645	171
6V-5683	636
6V-5696	36
	44
6V-5815	60
6V-5839	32
	50
	53
	60
	66
	99
6V-5842	50
	55
6V-5843	49
6V-6317	66
6V-6609	238
6V-6715	661
6V-7238	533
	723
	725
6V-7357	545

PART NUMBER INDEX

Part.No	Page	Part.No	Page	Part.No	Page
	655		485	6V-8400	513
	665		485.02		517
	723		485.04		521
6V-7420	725		486		527
6V-7611	455		487		593
6V-7636	635		489	6V-8467	411
6V-7658	373		491	6V-8624	467
6V-7981	99		492	6V-8625	483
6V-8004	51		495		485
6V-8149	44		496		485.02
6V-8186	235		499		485.04
6V-8187	171		501		503
6V-8188	225		503		509
	229		597	6V-8632	499
	230		623.01	6V-8634	111
6V-8189	231	6V-8398	375	6V-8635	425
6V-8197	54		441		507
6V-8200	383		443		515
	385		445		517
	414		447		519
6V-8202	601		449		521
	690		451		523
	700		452		528
6V-8218	579		452.01	6V-8636	63
	620		453		103
6V-8231	650		453.01		113
6V-8336	44		455		463
6V-8337	551		457		465
6V-8362	185		459		479
6V-8363	270		461		483
6V-8370	270		463		485
6V-8378	225		465		485.02
	229		467		485.04
	235		479		486
6V-8397	63		483		487
	107		485		489
	111		485.02		492
	113		485.04		495
	463		486		496
	465		503		499
	467		509		503
	479		524	6V-8637	486
	481		528.01	6V-8639	455
	483		581		457

PART NUMBER INDEX

Part.No	Page	Part.No	Page	Part.No	Page
	459		620		431
	461	6V-8995	452		467
	463		452.01		486
	465		453		503
	467		453.01		507
	483	6V-9001	479		517
	485		483		521
	485.02		485		523
	485.04		485.02		524
	486		485.04		528
6V-8721	463		487	6V-9748	51
	465		491	6V-9808	455
6V-8722	499		492		457
6V-8723	113		495		459
6V-8724	63		496		461
	113		499	6V-9829	489
	479		501		491
	481		503		495
	483	6V-9002	467		499
	485		479	6V-9836	483
	485.02		483		485
	485.04		485.02		485.02
	486	6V-9004	467		485.04
	487		486		489
	489		517		491
	491		521		495
	492	6V-9005	503		499
	495		513	6V-9837	503
	496	6V-9007	467	6V-9844	463
	499		486		465
	501		517	6V-9850	113
6V-8774	485		523		463
	485.04	6V-9008	59		465
6V-8781	481		511		483
	483	6V-9169	452		485.02
	485		452.01		503
	485.02		453	6V-9851	528.01
	485.04		453.01	6V-9852	499
	491	6V-9491	181	6V-9853	523
	495		183	6V-9855	513
	499	6V-9672	141		517
6V-8782	528.01	6V-9746	421		521
6V-8784	521		423	6V-9876	467
6V-8978	579		425	6W-6005	127

PART NUMBER INDEX

Part.No	Page
	189
6Y-0473	352
	353
6Y-0846	356
	357
	358
	359
	360
	361
	362
6Y-0851	363
	364
6Y-1056	352
6Y-1607	363
	364
6Y-1608	363
	364
6Y-1782	352
	353
6Y-2126	357
6Y-2266	340
6Y-2272	340
6Y-4898	272
6Y-5323	348
	349
	350
	351
6Y-5408	788
6Y-5409	788
6Y-5472	785
6Y-7409	787
6Y-8075	351
6Y-8076	351
6Y-8077	351
6Y-9855	351
6Y-9856	351
6Y-9858	351
6Y-9859	351
7	
7C-0111	31
7C-1445	43
7C-1493	59
7C-2475	13
	62
7C-3571	28
7C-5233	55
7C-5403	62
7C-6670	87
7C-6672	87
7C-7431	86
7C-7980	27
7C-8369	51
7C-8370	51
7C-8634	51
7D-7233	67
7E-0759	73
7E-2968	22
7E-6794	38
7E-7779	34
7F-0216	59
7F-8268	39
7G-1060	157
7H-3171	340
	351
7I-0717	315
	317
	319
	321
7I-0800	304
	794
7I-0966	538
7I-1026	560
7I-1248	567
	569
	577
	582
	585
7I-1418	279
7I-1533	801
	801.06
	807
	807.06
7I-2272	383
	575
	607
7I-2673	129
	131
	133
	259
	261
	690
	695
7I-6395	795
7I-6508	799
	801.04
	805
	807.04
7I-6843	766
7I-7131	544
7I-7439	483
	485
	485.02
	485.04
7I-7728	533
7I-8084	602
	617
	624
7J-0204	33
7J-5925	285
7J-9108	441
	443
	499
	586
7J-9933	538
7K-1181	111
	113
	125
	127
	129
	131
	133
	157
	163
	165
	192
	195
	196
	201

PART NUMBER INDEX

Part.No	Page	Part.No	Page	Part.No	Page
	203		513	7W-3871	23
	207		515	7W-3872	23
	211		517	7W-5340	62
	213		519	7W-8813	12
	221		521		55
	452		523	7W-9028	59
	452.01		527	7W-9737	61
	453		528	7W-9738	61
	453.01		567	7W-9740	61
	455		575	7W-9930	61
	457	7M-9918	87	7X-0339	230
	459	7N-0140	251	7X-0507	67
	461	7N-0719	171	7X-0510	57
	463		172	7X-0562	225
	465	7N-2059	251		229
	467	7N-5274	190	7X-0578	635
	479	7N-5683	18		643
	481	7N-9801	251	7X-0818	492
	483	7S-6369	65	7X-1451	431
	485		85	7X-1950	225
	485.02	7S-8735	95	7X-1951	225
	485.04	7T-3267	229	7X-1952	225
	486	7T-3268	229	7X-1953	225
	489	7T-3271	229	7X-1954	225
	491	7T-3276	229	7X-1958	225
	495	7T-3277	229	7X-2440	344
	499	7T-3278	229		345
	501	7T-3279	229		346
	528.01	7T-3401	786		347
	662	7T-3402	785	7X-2532	57
	681	7T-3403	787	7X-2533	661
	723	7T-3451	225	7X-2536	221
7L-2894	225		229		554
	229	7T-3454	225		557
7L-9061	111		229	7X-2539	80
7M-0242	57	7T-6799	185	7X-2543	445
7M-7410	609	7V-2882	748		447
7M-8485	59		749		449
	275		751		451
	381		752		455
	425		753		457
	503		754		459
	507		755		461
	511		756	7X-2544	511

PART NUMBER INDEX

Part.No	Page
7X-2545	585
7X-2552	527
7X-2553	669
	671
	677
7X-2554	77
7X-2555	57
7X-2557	379
7X-2559	667
7X-2563	338
	343
	783
7X-2565	348
	349
	350
7X-2572	329
	331
7X-2573	745
7X-2576	277
7X-2621	133
	157
	196
	207
	575
7X-3164	445
	447
	449
	451
7X-3373	225
	229
7X-7644	797
	799
	801.02
	801.04
	803
	805
	807.02
	807.04
7X-7700	121
	123
7X-7729	75
	77
	376
	713
	717
7Y-0063	318
7Y-0070	795
7Y-0225	533
7Y-0252	533
7Y-0254	780
7Y-0339	533
7Y-0357	784
7Y-0358	784
7Y-0362	348
7Y-0366	768
	769
	770
	784
7Y-0468	551
7Y-0595	275
7Y-0623	669
	671
7Y-0633	329
	331
	333
7Y-0725	341
7Y-0735	341
7Y-1257	342
7Y-1319	95
7Y-1434	533
7Y-1507	323
7Y-1532	95
7Y-1647	323
7Y-1648	323
7Y-1650	323
7Y-1729	95
7Y-1976	77
	79
7Y-2202	343
7Y-2292	315
	317
	319
	321
7Y-2390	741
	743
	745
	746
7Y-2522	757
7Y-2579	741
	743
	745
	746
7Y-2580	746
7Y-2581	343
7Y-2662	760
7Y-2663	760
7Y-2664	760
7Y-2853	285
7Y-2854	285
7Y-2916	285
7Y-2920	761
7Y-3470	650
7Y-3472	650
7Y-3474	656
7Y-3721	507
7Y-3729	523
7Y-3730	507
7Y-3731	513
	517
	521
7Y-3732	415
	417
	425
	528
7Y-3919	675
7Y-3920	675
7Y-3950	149
7Y-3951	147
	149
	151
	153
	184
7Y-3952	151
	153
	184
7Y-3958	149
7Y-3962	137
	149
	184
	266
7Y-3963	137
	149

PART NUMBER INDEX

Part.No	Page
	153
	164
	167
	184
	266
7Y-3964	137
	149
	184
	266
7Y-3965	137
	149
	153
	164
	167
	184
	266
7Y-4173	501
7Y-4193	481
7Y-4199	485
	485.04
7Y-4202	541
7Y-4212	541
7Y-4213	541
7Y-4215	381
	541
7Y-4216	541
7Y-4217	541
7Y-4222	541
7Y-4224	541
7Y-4290	537
7Y-4294	537
7Y-4390	481
7Y-4538	433
	435
	436
	437
	438
	439
7Y-4594	746
7Y-4631	403
7Y-4660	407
	409
7Y-4669	407
	409
7Y-4672	407
	409
7Y-4673	407
	409
7Y-4695	407
	409
7Y-4817	544
7Y-4868	418
	421
	423
	425
	431
	441
	443
7Y-4918	407
7Y-5215	407
	409
7Y-5219	575
7Y-5221	537
7Y-5238	471
7Y-5243	561
7Y-5247	511
7Y-5272	374
7Y-5456	125
7Y-5458	186
7Y-5464	186
7Y-5505	147
7Y-6108	795
7Y-6402	780
7Y-6442	418
7Y-6447	431
7Y-6448	431
7Y-6449	431
7Y-6506	425
7Y-6507	425
7Y-6510	418
7Y-6511	418
7Y-6601	781
7Y-6620	746
7Y-6641	767
7Y-6649	767
7Y-6656	761
7Y-6657	761
7Y-6658	761
7Y-6660	780
7Y-6664	780
7Y-6665	780
7Y-6666	780
7Y-6667	780
7Y-6668	780
7Y-6671	780
7Y-6673	780
7Y-6674	780
7Y-6684	757
7Y-7364	648
7Y-7904	431
	503
7Y-8099	567
7Y-8109	177
7Y-8165	131
	135
	723
	725
7Y-8167	723
7Y-8379	486
7Y-8436	543
7Y-8437	543
7Y-8463	546
	547
7Y-8737	121
	123

8

Part.No	Page
8C-0563	35
8C-3091	26
8C-3095	661
8C-3445	59
8C-3446	59
	367
8C-3451	367
8C-3655	229
8C-5607	661
8C-5608	661
8C-5918	138
8C-6354	153
8C-7328	341

PART NUMBER INDEX

Part.No	Page	Part.No	Page	Part.No	Page
8C-8992	310	8M-2772	758		713
	311		759		717
	312		760		727
	313		761	8T-0343	593
	354	8M-2773	723	8T-0640	115
	355	8M-5860	35	8T-0643	53
8D-7529	137	8N-0869	139	8T-0644	70
8E-0836	786	8N-1725	139	8T-0667	323
8E-0837	787		190	8T-0669	323
8E-0838	787	8S-0934	707	8T-1158	593
8E-0839	788	8S-4723	707	8T-1159	103
8E-0840	788	8S-4724	707		351
8E-4402	785	8T-0075	489	8T-1683	111
8E-6258	793		491	8T-1685	523
8E-6259	793		495	8T-1687	485
8E-8812	361		499		485.04
8E-8814	362	8T-0078	523	8T-1715	111
8F-1434	225	8T-0100	36		723
	229		40		725
	235		45	8T-1779	463
	270		73		465
8F-6711	352	8T-0114	554		483
	353		557		485.02
8F-8733	383	8T-0211	375	8T-1905	489
	385	8T-0226	55		496
8F-8882	340	8T-0266	715		501
8H-1141	229		719	8T-2525	509
8H-2046	64	8T-0267	367	8T-2920	467
8H-3481	655	8T-0276	59	8T-3008	622
	664	8T-0288	602	8T-3282	32
8H-5244	37		615		272
8H-5303	172		617	8T-3338	381
8H-5306	172	8T-0293	24	8T-3611	527
8H-7521	59	8T-0325	727	8T-3647	728
8J-4645	381	8T-0328	121	8T-3653	412
8J-8879	533		123		413
8J-9208	121		143	8T-3666	46
	123		147	8T-3957	523
8L-2779	63		171	8T-4001	765
	589		225	8T-4121	28
8L-2786	85		229		29
	111		286		67
	237		372		75
8M-2770	125		662		77

PART NUMBER INDEX

Part.No	Page	Part.No	Page	Part.No	Page
	79		445		677
	90		447		681
	95		449		689
	96		451		713
	111		452		717
	113		453		723
	125		455		725
	127		457		726
	129		459		758
	131		461		759
	133		463		760
	135		465		761
	157		469	8T-4123	57
	168		471		275
	177		479		277
	192		485		329
	195		485.04		331
	196		495		343
	201		499		348
	203		501		349
	207		503		350
	223		507		741
	226		511		743
	230		513		745
	251		515		746
	257		517		747
	259		519		748
	261		521		749
	281		523		750
	323		524		751
	331		527		752
	367		544		753
	415		553		754
	417		554		755
	418		557		756
	426		567		757
	427		575		763
	428		582		765
	436		585		783
	437		655	8T-4127	143
	438		656	8T-4131	383
	439		674		385
	441		675		763
	443		676		765

PART NUMBER INDEX

Part.No	Page
8T-4132	419
	766
8T-4133	95
	111
	127
	189
	257
	259
	261
	307
	331
	368
	452
	453
	593
	758
	759
	767
8T-4134	648
	655
8T-4136	28
	29
	75
	79
	95
	96
	113
	125
	131
	133
	195
	230
	251
	323
	367
	379
	381
	383
	385
	445
	447
	449
	451
	463
	465
	471
	479
	485
	485.04
	499
	511
	513
	517
	521
	544
	553
	554
	557
	595
	597
	713
	717
8T-4137	67
	77
	90
	111
	113
	125
	127
	131
	133
	135
	157
	168
	177
	192
	203
	251
	257
	259
	261
	323
	367
	381
	479
	485
	485.04
	495
	524
	554
	557
	635
	655
	713
	717
	723
	725
	726
8T-4138	279
	723
8T-4139	77
	93
	111
	281
	283
	285
	379
	415
	417
	418
	419
	421
	423
	425
	431
	433
	435
	436
	437
	438
	439
	441
	443
	445
	447
	449
	451
	467
	471
	503
	509
	511

PART NUMBER INDEX

Part.No	Page	Part.No	Page	Part.No	Page
	513		315		441
	515		317		443
	517		319		452.01
	519		321		453.01
	521		629		463
	523		757		465
	669	8T-4182	131		505
	671		133	8T-4185	95
8T-4140	118		426		127
	365		427		133
	379		428		418
	563		503		441
8T-4141	277		527		443
8T-4167	277	8T-4183	279		445
	329		283		447
	331		309		449
	745		367		451
	765		433		495
8T-4171	171		435		499
	195		436	8T-4189	79
	196		437		80
	203		438		133
	221		439		249
8T-4172	127		445		251
	483		447		285
	485.02		449		387
8T-4174	667		451		492
8T-4175	379		457		665
8T-4176	379		459	8T-4190	259
	511		461		261
	513		515		629
	517		519	8T-4191	131
	521		523		133
8T-4177	489		533		135
	491	8T-4184	421		201
	495		423		203
	499		429		223
8T-4178	503		430		342
	523		433		501
	527		435		553
8T-4179	118		436		656
	131		437		675
	203		438		677
	304		439		689

PART NUMBER INDEX

Part.No	Page
	723
	725
	758
	759
	760
	761
8T-4192	89
	125
	251
	283
	285
	308
	309
	381
	387
	485
	485.04
	489
	491
	495
	499
	501
	669
	671
	672
	673
8T-4193	563
	782
8T-4194	372
	421
	423
	433
	435
	436
	437
	438
	439
	441
	443
	452
	452.01
	453
	453.01
	469
	485
	485.04
	511
8T-4195	67
	79
	111
	127
	129
	177
	308
	367
	376
	418
	485
	485.04
	567
	575
	582
	585
	674
	676
	681
8T-4196	95
	111
	381
	383
	385
	412
	413
	414
	415
	416
	417
	469
	515
	519
	527
8T-4198	67
	455
	457
	459
	461
	479
8T-4199	323
	485
8T-4200	77
	226
	255
	307
	635
	646
	723
8T-4205	171
	225
	229
	231
8T-4223	77
	89
	203
	230
	262
	264
	285
	304
	307
	309
	315
	317
	319
	321
	332
	333
	367
	372
	383
	385
	414
	415
	416
	417
	418
	419
	421
	423
	425
	429
	430
	431
	433

PART NUMBER INDEX

Part.No	Page	Part.No	Page	Part.No	Page
	435		629		698
	436		669		701
	437		671		703
	438		672		705
	439		741		723
	441		743		728
	443		745	8T-4226	127
	445		746		189
	447	8T-4224	23	8T-4244	262
	449		39		264
	451		43		332
	452		45		333
	452.01		77		441
	453		79		443
	453.01		80	8T-4648	415
	463		111		503
	465		221		509
	467		226	8T-4779	635
	469		231	8T-4780	329
	471		249		331
	483		251		741
	485		255		743
	485.02		285		745
	485.04		307		746
	489		367		747
	491		489		748
	495		491		749
	499		492		750
	501		495		751
	503		499		752
	505		501		753
	507		554		754
	509		557		755
	511		635		756
	513		639		757
	515		646	8T-4896	412
	517		665		413
	519		669		414
	521		671		416
	523		691	8T-4908	367
	524		693		501
	527		694	8T-4910	414
	528		696		416
	533		697		417

PART NUMBER INDEX

Part.No	Page	Part.No	Page	Part.No	Page
	503	8T-5092	513		439
	528		515		575
	629		517	8T-6693	147
8T-4944	534		519		286
	541		521		372
8T-4956	305		523	8T-6703	77
	367	8T-5379	765	8T-6759	544
	436	8T-5413	331		575
	437	8T-5436	426		593
	438		427		609
	439		428		613
	452.01	8T-5439	344		615
	453.01		345	8T-6761	367
	467		346	8T-6842	801
	471		347		801.06
	509	8T-5460	344		807
	513		345		807.06
	515		346	8T-6868	421
	517		347		423
	519		763		433
	521		765		435
	523	8T-5878	348		441
	524		349		629
	527		350	8T-6869	133
	528	8T-6385	533	8T-6870	495
	741	8T-6404	534		499
	743	8T-6411	255	8T-6912	133
	745	8T-6412	255	8T-7044	82
	746		639	8T-7338	337
8T-4970	171		643		469
	255	8T-6430	272	8T-7547	111
	656		339	8T-7811	542
8T-4971	111	8T-6453	59	8T-7877	589
	723	8T-6466	131	8T-7930	441
8T-4984	471		452		443
8T-4986	89		453	8T-7934	95
	469		455	8T-7950	32
8T-4987	89		457	8T-8442	36
8T-5005	135		459	8T-8566	229
	192		461	8T-8569	225
8T-5035	46		767		229
8T-5041	429	8T-6685	436	8T-8729	121
	430		437		123
8T-5049	387		438		154

PART NUMBER INDEX

Part.No	Page
	270
8T-8737	56
	137
	149
	151
	153
	159
	164
	167
	184
	186
	192
	193
	204
	208
	214
	233
	245
	658
	725
8T-8827	137
8T-9080	341
8T-9403	426
	427
	428
	503
	507
8T-9533	601
8T-9655	222
8T-9756	138
8T-9757	138
8T-9884	225
	229
8V-1715	343
	667
8Y-6352	633
8Y-6967	629
8Y-9603	226

9

Part.No	Page
9B-7233	185
9F-2167	503
9F-2247	229
9F-2547	229
9F-5644	172
9G-0002	138
9G-0003	138
9G-0005	138
9G-4336	137
9G-4343	137
	143
	171
9G-4344	137
9G-7641	181
	183
	185
9G-8909	138
9J-0705	586
9J-0707	589
9J-3169	780
	793
9L-6770	231
9M-1974	23
	26
	36
	41
	50
	59
	62
	63
	65
	66
	71
	73
	115
	222
	233
	234
9M-2904	65
9M-3786	469
9M-5590	593
9M-8406	111
	113
9N-0869	40
	64
	222
9S-1350	66
9S-4167	111
9S-4180	373
	575
9S-4181	507
	515
	519
	527
9S-4182	55
	73
9S-4183	55
	511
9S-4185	73
	379
	467
	499
	509
	513
	517
	521
	527
	541
9S-4188	59
9S-4191	84
	236
	383
	385
	387
	469
	479
	485
	485.04
	487
	492
	495
	499
	527
	597
	625
9S-6130	121
	123
	527
	621

PART NUMBER INDEX

Part.No	Page
9S-8001	607
9S-8002	33
9S-8003	70
9S-8004	33
	73
	99
	107
	111
	542
	595
	607
9S-8005	25
	70
	73
	85
	111
	595
	597
	607
	609
9S-8006	21
	33
	70
	587
9S-8008	24
	70
9S-9334	33
	35
9T-0835	386
9T-6635	251
9W-0844	137
	151
	159
	164
	167
	178
	204
	269
9W-0852	137
	159
	164
	167
	204
	208
	267
	268
	727
9W-1951	153
9W-2201	352
	353
9W-3361	356
	357
	358
	359
	360
	361
	362
9X-0196	137
9X-0199	270
9X-0262	236
9X-1386	175
	245
9X-1813	174
	243
	247
9X-2041	631
	635
	683
	687
9X-2042	143
	145
	165
	255
	257
	633
	635
	639
	643
	648
	655
	683
9X-2043	255
	257
	681
9X-2044	143
	145
	633
	635
	637
	643
	648
	655
	664
9X-2045	635
	643
	647
	681
9X-2046	657
	664
9X-2098	45
9X-2099	23
9X-2201	93
9X-2205	121
	123
9X-2206	121
	123
9X-2297	486
9X-2305	61
9X-2404	397
	399
9X-2480	219
9X-3401	137
	153
	159
	160
	167
	186
	193
	204
	214
	367
	479
	486
	487
	492
	495
	496
	499
	658
9X-3463	262
	263
	264

PART NUMBER INDEX

Part.No	Page
9X-3601	407
	409
9X-4270	225
9X-4271	225
9X-4597	395
9X-4821	225
9X-4822	225
9X-4824	225
	229
9X-4825	225
9X-4998	137
9X-6032	275
	412
	413
	416
9X-6153	636
9X-6165	661
9X-7298	411
9X-7712	33
	35
9X-7737	116
9X-8256	111
	125
	145
	149
	171
	195
	196
	203
	207
	219
	221
	255
	279
	307
	367
	545
	643
	655
	656
	664
	665
	713
	717
	723
9X-8257	57
	259
	261
	337
	419
	469
	527
	533
	534
	559
	563
	629
	635
	667
	669
	671
	677
	782
9X-8600	121
	123
9X-8916	22
9X-9510	229
9Y-8389	111
	115

0

Part.No	Page
003-7764	113
	121
	123
006-6803	601
030-0167	589
030-8188	107
033-6027	104
033-6036	589
033-8248	758
	759
	760
036-9823	225
	229
039-2280	65
061-7539	115
061-9455	43
085-6444	640
085-6445	640
085-6446	640
085-6447	640
085-6448	640
085-6449	640
	647
085-6452	635
085-7079	601
085-7080	601
085-7081	601
085-7083	601
085-7084	601
085-7356	486
	496
085-8037	656
085-8604	397
	399
085-8605	397
	399
085-9310	118
	365
086-0297	757
086-0523	766
087-3533	318
087-3908	279
087-3909	279
087-4402	479
	487
	492
	496
087-4411	483
	485.02
087-4423	486
087-4456	388
087-4531	483
	485
	485.02
	485.04
087-4534	483
	485.02
087-4587	125
087-4683	684

PART NUMBER INDEX

Part.No	Page
087-4710	593
087-4742	541
087-4743	541
087-4757	541
087-4786	541
087-5166	595
	597
087-5303	501
087-5708	593
087-5709	593
087-5760	485
	485.04
087-5762	485
	485.04
087-5766	491
087-5772	485
	485.04
087-5774	483
	485.02
	485.04
087-5776	485
087-5780	481
087-5840	760
087-5841	741
	743
	745
	746
	757
087-5857	760
087-5955	741
	743
	745
	746
087-5966	761
087-5974	782
087-5975	782
087-5976	782
087-6585	492
090-8865	667
091-9035	131
092-6629	65
093-0020	323
093-0084	746
093-0090	329
	331
	741
	743
093-0115	754
093-0116	746
093-0349	741
	743
	745
	746
	747
	748
	749
	750
	751
	752
	753
	754
	755
	756
	757
	763
	765
093-0357	757
093-0363	741
	743
	745
	746
	747
	748
	749
	750
	751
	752
	753
	754
	755
	756
	757
093-0364	329
	331
	741
	743
093-1291	441
	443
093-1342	766
093-1345	763
	765
093-1349	765
093-1433	405
	757
093-1514	342
093-1730	533
093-1731	275
	533
093-2065	125
093-5432	79
093-7521	370
093-7638	795
094-0578	275
094-0579	275
094-0580	275
094-0611	533
094-0876	551
094-1399	541
094-1528	275
	533
094-1875	381
	383
	385
	387
	541
094-1881	383
	385
094-1882	379
	381
	383
	385
	541
094-1920	412
	413
094-1931	395
095-0707	539
095-0723	145
095-0728	157
	553
	648
	656
095-0735	554

PART NUMBER INDEX

Part.No	Page	Part.No	Page	Part.No	Page
	557	095-1578	572		622
095-0736	121		590	095-1602	622
	123		593	095-1603	577
	662		598	095-1608	367
095-0742	149		624	095-1622	342
	639	095-1579	375	095-1625	411
	721		579		544
095-0755	635		620	095-1633	407
095-0826	367	095-1580	610		409
	675	095-1582	610	095-1680	387
095-0827	639	095-1584	618	095-1681	373
	643	095-1585	541	095-1685	541
	721	095-1586	541	095-1698	538
095-0843	307		543		613
095-0891	275		551		615
	533		581	095-1700	541
095-0929	407		603		622
095-0936	593		613	095-1710	601
095-0946	381		615	095-1716	544
095-0965	601		616	095-1719	375
095-1056	795	095-1587	543	095-1720	403
095-1057	795		579	095-1721	395
095-1066	795		620	095-1723	397
095-1070	795	095-1590	543		399
095-1260	593		567	095-1735	367
095-1386	111		569	095-1750	581
	113		575	095-1751	581
095-1388	68		577	095-1778	575
095-1519	369		579	095-1785	543
	383		582		613
	385		585		615
095-1527	383		601	095-1786	579
	385		610		620
095-1528	383		618	095-1787	567
	385		620		569
095-1538	383	095-1594	595		575
	385		597		577
095-1543	79	095-1596	618		582
095-1547	621	095-1597	412		585
095-1572	541		413	095-1788	383
095-1575	541		416		385
	575	095-1600	414	095-1789	595
095-1576	613		537		597
	615	095-1601	543	095-1852	795

PART NUMBER INDEX

Part.No	Page	Part.No	Page	Part.No	Page
095-1855	795	096-3788	541		331
095-1857	795	096-3884	639	096-9259	57
095-2927	342	096-3944	381	096-9988	57
095-6639	368	096-3978	541	099-0121	342
095-7378	541	096-3983	381	099-0139	640
095-7380	541	096-4003	541	099-0596	411
095-7382	541	096-4035	77	099-0600	411
095-7383	541		79	099-0699	411
095-7384	541	096-4129	286	099-0700	411
095-7386	541	096-4376	541	099-0707	766
095-7387	541	096-4377	541	099-0823	635
095-7419	379	096-4378	541		643
	541	096-4389	381	099-2096	387
095-7930	675		541	099-2374	713
095-7944	363	096-4430	403		717
	364	096-4447	414	099-3246	795
096-0121	387	096-4480	416	099-3249	795
096-0131	757	096-4498	551	099-3250	795
096-0192	727	096-4755	277	099-3506	646
096-0433	275	096-4876	766	099-3629	645
096-0854	400	096-4882	669	099-3645	708
096-1055	411		671	099-3649	39
096-1421	436	096-4883	471		483
	437		511		485.02
	438	096-4902	323	099-3669	383
	439	096-5625	395		385
096-1519	541	096-5915	541	099-3670	383
096-1521	541	096-5916	541		385
096-1522	541	096-5919	541	099-3671	383
096-1523	541	096-5962	145		385
096-1533	537	096-5969	713	099-5572	397
096-1545	542		717		399
096-1570	395	096-6166	141	099-5573	397
096-1571	395		157		399
096-1628	551		181	099-6109	383
096-2617	548		183		385
096-2622	639		553	099-6110	383
096-2653	533		648		385
096-3216	275		656	099-6111	383
096-3773	587	096-6210	395		385
096-3780	307		397	099-6112	383
096-3785	541		399		385
096-3786	541		403	099-6113	383
096-3787	541	096-6467	329		385

PART NUMBER INDEX

Part.No	Page
099-6115	383
	385
099-6117	383
	385
099-6118	383
	385
099-6119	383
	385
099-6120	383
	385
099-6121	383
	385
099-6122	383
	385
099-6123	383
	385
099-6124	383
	385
099-6125	383
	385
099-6126	383
	385
099-6127	383
	385
099-6128	383
	385
099-6136	593
099-6137	551
	593
099-6141	593
099-6144	593
099-6145	593
099-6418	287
	288
099-6607	77
099-7127	147
099-7464	795
099-7857	311
	312
099-8111	537
099-8232	513
	517
	521
099-8292	412

1

Part.No	Page
	413
100-2881	647
100-3320	233
100-3866	559
101-2846	147
101-2850	94
101-3128	222
101-7397	505
101-7398	503
	528
101-7401	519
	523
101-7402	387
	511
101-7403	507
101-7404	503
	507
	513
	515
	517
	521
	523
101-9848	286
102-0889	580
102-1157	485
	485.04
102-4861	812
102-4862	812
102-6671	85
102-7964	149
	153
	159
	167
102-7965	149
	153
	159
	167
102-8016	143
102-8801	233
102-8802	56

Part.No	Page
	111
	121
	123
	137
	143
	154
	159
	174
	175
	183
	184
	192
	233
	235
	245
	249
	251
	265
	367
	479
	487
	492
	495
	496
	499
	728
102-8803	137
	151
	153
	193
	233
	265
	270
	725
	727
102-8804	137
	159
102-8805	186
102-8806	137
	167
	248
102-9863	225
103-1384	485
	485.04

PART NUMBER INDEX

Part.No	Page
	495
	499
103-2529	65
	137
	178
103-5245	745
103-8173	575
	580
103-8177	577
103-8252	572
	590
	598
103-8253	572
	590
	598
103-8254	572
	590
	598
103-8255	572
	590
	598
103-8378	407
103-8379	407
103-8380	407
104-3173	723
104-7293	570
	578
104-7294	570
	578
104-7296	570
	578
104-8768	501
104-8771	481
104-8774	495
	499
104-8783	501
104-8821	483
	485.02
104-8838	483
	485.02
104-8950	483
	485.02
105-1321	588
	589
105-1797	233
105-3477	507
	519
	521
	523
105-3483	507
	527
105-3484	483
	485.02
	527
105-3485	507
105-3487	279
	307
105-6431	758
	759
	760
	761
105-7545	799
	801.04
	805
	807.04
105-7704	236
105-9526	656
105-9527	656
105-9702	229
106-0107	181
	183
	186
106-0210	186
106-7149	225
107-1678	723
107-2723	527
107-3400	786
107-6370	565
	571
107-6371	565
	571
107-6479	593
	624
107-6540	579
107-6541	579
107-6631	479
	487
	492
	496
107-6954	541
107-6955	541
107-6969	541
107-7694	30
107-7708	27
108-4282	523
108-7118	463
	465
108-7203	481
	501
108-7357	495
	499
108-7372	481
108-7387	495
	499
108-7433	463
108-7516	487
	492
	496
108-7550	425
	503
109-0885	340
109-2667	564
	565
109-3207	102
109-5152	569
	571
109-9329	57
109-9350	57
109-9369	57
110-5496	483
	485.02
110-5525	537
110-7183	325
110-7618	23
111-0988	495
	499
111-2416	233
111-4799	270
	684
111-4816	149
111-4836	129
	131

PART NUMBER INDEX

Part.No	Page	Part.No	Page	Part.No	Page
	133	113-6170	12	116-0118	127
	135		29		129
	157	113-6479	507		131
	177	113-6677	433		133
	203		435		135
	259	113-8490	143		157
	261	113-8491	143		192
	713	113-8493	143		196
	717	114-0623	581		201
111-4837	127		603		207
	131	114-0700	412		259
	133		413		261
	135	114-0706	397	116-0126	137
	177		399	116-0128	137
	259	114-0710	397	116-0210	147
	261		399	116-0255	137
111-4838	125	114-0711	397		149
	127		399		159
	131	114-0713	397	116-1517	667
	157		399	116-1628	285
111-4839	125	114-0754	411	116-2659	93
	127	114-0760	407	116-3522	372
	131		409	116-3526	615
	157	114-1383	533		616
111-9916	383	114-1398	533	116-4556	12
	602	114-1399	533		44
	603	114-1401	533	116-4663	85
111-9959	567	114-6285	279	116-6332	46
111-9998	610	114-6289	286	116-7408	785
112-2481	770	115-1853	363		786
	771		364		787
	784	115-1854	363		788
112-9951	340		364	116-7409	785
113-2003	469	115-2677	758		786
113-2004	507	115-3696	339		787
113-2127	746		340		788
113-2276	741	115-3697	340	116-9115	739
	743	115-4072	49		767
	745	115-4203	13	116-9118	425
113-2317	334		28	116-9129	418
	335	115-4219	49	116-9133	739
	336	115-7471	340		760
113-2824	342	115-8645	481	116-9135	813
113-6069	49		501	116-9140	760

PART NUMBER INDEX

Part.No	Page	Part.No	Page	Part.No	Page
117-3437	71	119-5388	593		751
117-3643	16	119-5389	593		752
	69	119-5391	593		753
117-5612	344	119-5392	593		754
	345	119-5398	579		755
	346	120-5054	812		756
	347	120-5107	797	121-1807	781
117-6306	643		801.02	121-1809	781
117-6349	553		803	121-1813	781
117-6350	553		807.02	121-1865	557
117-6356	553	120-7224	758	121-7098	723
118-1727	12	120-9027	684	121-7136	715
	44	121-0307	59		719
118-4044	595	121-0987	195		723
	597	121-1022	151	121-7137	723
118-4086	551	121-1023	171	121-7138	715
118-4087	551	121-1038	137		719
118-5982	747	121-1039	137		723
	748		159	121-8460	759
	749	121-1168	153	121-8662	759
	750		159	122-3979	279
	751		184	122-3980	279
	752	121-1173	149	122-4101	288
	753		153	122-4120	281
	755		159	122-5114	541
118-6054	810		184	122-9605	723
	811	121-1241	145		725
118-9573	223	121-1371	395	122-9608	553
	226	121-1372	395	122-9609	553
118-9930	57	121-1459	543	122-9610	553
119-1353	625	121-1491	575	122-9611	554
119-2378	415		581		557
	417		607	122-9617	681
119-2379	415		609	122-9657	723
	417		617	123-2003	372
119-2921	28	121-1548	397	123-2008	541
119-3025	71		399	123-2139	537
119-4553	345	121-1549	397	123-2423	587
	346		399	123-2430	483
119-4554	345	121-1558	541		492
	346	121-1729	739		623
119-5026	181		761	123-2431	623
	183	121-1760	748		623.01
	662		749	123-2485	575

PART NUMBER INDEX

Part.No	Page
123-2552	623
124-0914	414
124-1008	489
	491
	495
	499
	501
124-1708	90
	91
124-3548	143
124-3953	650
124-3966	655
124-4003	181
	183
124-4009	549
124-4010	548
124-8758	669
125-1302	171
	173
125-4766	159
125-4840	149
125-4841	149
	153
	159
	167
126-1757	42
126-1768	137
	149
	159
	164
	167
	184
	193
	204
	214
126-1865	593
126-1866	593
126-1876	395
126-2016	381
	386
126-2075	367
	370
126-2076	370
126-5011	233
126-5064	356
	358
126-5065	359
126-5466	73
126-5869	73
126-6514	616
126-6515	616
126-6516	616
126-9993	601
127-0580	635
127-0715	786
127-0716	768
	769
	770
	771
	785
127-3913	757
127-5272	801
	801.06
	807
	807.06
127-5278	808
127-5295	801
	801.06
	807
	807.06
127-6634	431
	739
127-6780	438
	439
127-6792	781
127-6797	393
	418
127-7771	315
	317
	319
	321
128-2135	629
	633
	683
	687
128-2136	633
128-2173	554
	557
128-4411	121
	123
128-5626	187
	226
128-8950	149
128-8952	159
128-9265	407
	409
129-1170	71
129-5096	230
129-6466	270
	655
129-7784	368
129-7853	381
129-7857	387
129-7863	379
129-7921	381
129-7927	381
129-7978	383
	385
129-7979	379
129-8034	372
130-0252	723
130-3280	93
130-9811	237
	238
131-5818	593
131-5915	551
131-7501	121
	123
131-8826	91
131-8828	91
131-8829	91
132-1805	125
132-1829	145
	154
132-4099	813
132-4100	813
132-5789	133
	143
	201
	221
	675
	728

PART NUMBER INDEX

Part.No	Page
133-0975	137
	153
	193
133-2427	329
	331
	741
	743
133-2428	329
	331
	745
133-4995	32
133-5813	479
133-5828	503
133-6379	36
133-6788	615
133-6904	395
133-6909	397
	399
133-8016	635
134-3284	259
	261
134-3295	137
	159
134-3296	149
	159
134-3297	137
	149
	159
134-4483	34
134-6146	799
	801.04
	805
	807.04
134-6852	111
134-6918	501
134-6921	499
134-7085	93
	94
134-7086	94
134-7089	93
134-7178	766
134-7179	766
134-7258	797
	801.02
	803
	807.02
134-8226	66
134-8883	313
134-8884	313
134-8886	313
134-8950	782
134-8951	783
135-4063	436
	437
	438
	439
135-5975	233
135-8965	677
135-8966	677
135-9044	533
135-9819	44
136-0812	73
136-0822	42
136-2904	533
136-2940	533
136-4183	49
136-4303	56
137-0856	507
137-2270	673
137-3623	373
137-3624	373
137-3625	373
137-3626	373
	374
137-3628	373
	374
137-3631	374
137-6715	34
137-6717	37
137-6718	34
137-6726	85
138-3252	32
138-7198	37
138-8402	37
138-8403	37
138-9868	37
139-4081	36
	38
139-4084	38
139-6873	111
	116
139-7099	631
	646
139-7100	631
	638
139-7101	631
	642
139-7119	644
139-7126	635
139-7127	635
139-8794	91
139-9476	38
140-0674	580
140-0677	580
140-0860	133
140-6188	34
140-9670	34
141-2759	143
141-7677	59
142-3836	673
142-5515	541
142-5546	553
142-6582	438
	439
142-8100	12
	28
143-4254	483
	485.02
143-4654	64
143-8023	411
143-8024	411
143-8025	411
143-8033	411
143-8149	411
143-9392	222
144-0195	656
144-0367	75
	511
144-1636	56
144-9691	655
144-9692	655
145-0162	27

PART NUMBER INDEX

Part.No	Page
145-0164	27
145-0168	27
145-0170	27
145-0549	192
145-7376	37
145-7385	37
145-7390	34
147-4184	595
147-4921	695
	704
147-5088	71
147-5860	541
147-8211	34
147-8214	34
147-8220	34
148-2903	102
148-4685	326
148-4703	323
148-4704	323
148-8336	107
148-8374	107
148-8378	107
148-8395	70
	73
148-8409	70
148-8411	73
149-0206	95
149-1738	441
	445
	447
	449
	451
149-4741	95
149-5050	207
149-5051	208
149-5069	151
	208
149-5070	149
	151
	208
149-5071	149
	151
149-5240	102
150-5782	379
150-5797	383
	385
150-5826	403
150-5827	403
150-5828	403
151-2494	433
	435
151-6703	639
	643
151-6704	639
	643
151-6705	655
151-6777	631
151-6785	643
151-6790	645
151-6792	639
	640
151-6793	640
151-6813	643
151-6815	643
151-6831	643
151-6832	643
151-6841	640
151-6844	643
151-9461	639
151-9497	639
151-9557	643
151-9576	643
152-3952	71
153-2521	259
	261
	264
153-2523	252
	262
153-2540	184
153-2541	184
153-2602	149
	153
153-2620	137
	159
153-2630	137
153-2631	149
	153
153-5223	593
153-5239	564
153-5276	570
	578
153-5286	569
153-5288	567
	575
153-5289	567
	575
153-5290	567
	575
153-5291	567
	575
153-5292	567
	575
153-5293	567
	575
153-5295	575
	580
153-5298	575
153-5299	575
153-5306	575
153-5309	577
153-5311	575
153-5313	563
	564
153-8467	37
153-8470	37
153-8623	383
	385
153-8753	557
153-8762	554
	557
153-8763	554
	557
153-8798	433
	435
	452.01
	453.01
153-8867	441
	443
	524
154-0896	28
154-5558	377
154-8030	82

PART NUMBER INDEX

Part.No	Page
154-9023	73
155-2255	233
155-2259	167
155-2260	137
	151
	164
	193
	233
	243
	247
155-2261	137
	149
	151
	159
	178
	184
	204
155-2263	184
155-2265	167
	233
155-2266	193
155-2270	56
	137
	149
	151
	159
	178
	184
	204
	233
	245
155-2271	137
	159
155-2274	184
155-2276	243
155-3624	73
155-7042	648
156-6175	196
	203
156-6469	645
156-6471	639
156-6472	643
156-6473	644
156-6474	640
156-6475	640
156-6554	643
156-6555	643
156-6562	643
156-6579	643
156-6598	639
156-6599	635
156-6600	639
156-6601	643
156-6617	635
156-6627	643
156-6631	644
156-6642	637
156-6643	639
156-6644	639
156-6645	639
156-6646	655
156-6647	655
156-6656	633
156-6657	633
157-0670	73
157-9338	441
	443
158-6072	87
158-8086	352
	353
158-8096	352
	353
158-8135	578
158-8150	575
158-8159	567
	575
	582
	585
158-8177	580
158-8186	580
158-8206	575
158-8207	577
158-8987	367
	371
158-9085	529
	612
158-9090	503
	614
159-0285	13
	63
159-0303	12
	24
159-0918	63
159-7667	91
159-7782	544
159-7784	372
159-9526	352
	353
160-5140	59
160-6822	797
	799
	801.02
	801.04
	803
	805
	807.02
	807.04
160-6832	799
	801.04
	805
	807.04
160-6841	799
	801.04
	805
	807.04
160-6853	799
	801.04
	805
	807.04
160-6884	799
	801.04
	805
	807.04
160-7689	137
161-1703	239
161-1704	241
161-1705	240
161-3128	143
161-3639	639
161-3650	639
161-3663	639
161-3665	639

PART NUMBER INDEX

Part.No	Page
161-3668	648
	649
161-3669	649
161-3670	649
161-3671	649
161-3677	648
161-3683	644
161-3684	643
161-3685	635
161-3694	647
161-3695	640
161-3697	635
161-3698	643
161-3699	639
161-3705	640
161-3717	677
161-3732	727
161-3734	727
161-3750	665
161-3751	664
161-6963	87
162-0177	73
162-8068	13
	25
163-2478	34
163-3729	329
	331
	333
163-6637	137
163-6659	153
163-6699	153
163-6700	121
	123
163-6704	255
	257
	265
163-6710	165
163-6711	165
163-6758	143
163-6773	137
163-6790	153
163-6795	141
	145
	147
	163
	165
	255
	257
	648
	656
163-6803	153
163-6813	255
163-6814	255
164-0210	64
164-0497	666
	667
164-0499	727
164-0500	727
164-0514	639
164-0515	639
164-0516	640
164-0517	640
164-0518	640
164-0519	639
164-0523	635
164-0527	635
164-0528	635
	637
164-0534	670
164-0535	672
164-0618	665
164-0619	665
164-0620	665
164-0621	665
164-0639	664
164-0646	633
164-0648	643
164-0655	633
164-0664	637
164-0666	645
164-5619	70
164-6981	388
	483
	485.02
164-8474	629
	633
164-8977	483
	485.02
164-8983	485
	485.04
165-2976	287
	288
	289
165-3065	673
165-3256	367
165-9282	411
165-9290	407
	409
165-9431	551
165-9435	551
165-9436	551
165-9438	551
165-9439	551
165-9442	551
165-9443	551
165-9444	551
165-9448	551
165-9460	551
165-9463	593
165-9464	593
	624
165-9470	501
	600
165-9473	585
	586
165-9474	586
165-9497	587
165-9549	495
	499
	617
165-9551	593
165-9552	593
165-9553	593
165-9554	593
165-9595	575
166-1482	766
166-1486	747
	748
	749
	750
	751
	752

PART NUMBER INDEX

Part.No	Page	Part.No	Page	Part.No	Page
	753		743	168-0763	538
	754		745	168-0764	538
	755		746	168-0765	538
	756		755	168-0766	538
	757		756	168-0794	551
166-1487	741	166-1579	758	168-7224	31
	743		759	168-8452	275
	745	166-1776	42	168-9759	479
	746	166-1781	42	168-9760	507
	763	166-2905	56	168-9761	507
166-1488	329	167-3437	255	168-9762	507
	331	167-3438	255	169-3104	102
	741	167-3441	255	169-5585	275
	743		263	169-5589	275
	765	167-3456	255	169-5590	275
166-1489	745		266	169-5592	275
166-1494	397	167-3466	479	169-5593	275
	399		487	169-5601	275
	404		492	169-5602	275
166-1495	395		495	169-5617	533
	403		496	169-5618	533
	747		499	169-5861	236
	748	167-3487	153	169-8586	102
	749	167-3542	145	169-8598	102
	750		194	170-3015	290
	751		690	170-3016	285
	752	167-3543	145	170-6888	143
	753		194	170-6890	151
	755		690	170-6891	149
	757	167-3593	145		151
	763	167-3630	149	170-6929	127
	765	167-3631	149		138
166-1496	404	167-7018	635		189
	747	167-7039	639	170-6993	262
	748	167-7042	635		264
	749	167-7055	672	170-9295	257
	750	167-7079	655		266
	751	167-7141	667	170-9324	181
	752	167-7270	797	170-9336	133
	753		801.02	170-9360	307
	754		803	170-9394	149
	756		807.02	170-9417	262
	765	167-8121	46		264
166-1497	741	168-0713	538	170-9418	262

PART NUMBER INDEX

Part.No	Page	Part.No	Page	Part.No	Page
	264	171-5349	245	173-3515	373
170-9492	656	171-6718	236	173-3516	373
170-9497	552	171-7325	683	173-3517	373
170-9498	553		685	173-3518	372
170-9499	553		688	173-3529	373
170-9722	643	171-7413	640	173-3536	613
170-9724	633	171-7414	640		615
170-9840	411	171-7420	633	173-4672	509
170-9856	411	171-7426	635		621
170-9864	407	171-7477	647	173-4816	511
	409	171-7485	666	173-5089	483
170-9938	411		668		485.02
170-9941	411	171-7486	669	173-5549	37
170-9985	537	171-9073	96	173-7126	114
170-9986	537	171-9114	68	173-7895	441
170-9996	537	171-9280	533		443
171-0034	579	171-9283	533	173-7916	433
	620	171-9298	275		435
171-0035	579	171-9375	533		436
	620	171-9387	275		437
171-0036	579	171-9412	276		438
	620	172-8732	12		439
171-0037	579		43	174-3016	137
	620	173-0143	31		153
171-0087	551	173-3384	383		193
171-0123	610		385	174-5415	93
171-0124	610	173-3387	383	174-7791	262
171-0126	610		385		264
171-0127	610	173-3397	383	174-9570	111
171-0128	610		385		114
171-0150	582	173-3398	383	175-1367	23
171-0183	601		385	175-2313	173
171-0184	601	173-3406	387		174
171-0185	601	173-3413	383	175-2314	173
171-0188	489		385		175
	491	173-3427	381	175-3676	56
	495	173-3436	387	176-1902	723
	499	173-3503	372	176-1916	681
	602		374	176-1925	669
171-0198	602	173-3505	374	176-1928	669
171-2210	171	173-3506	374		671
171-2637	485	173-3507	372	176-1932	656
	485.04	173-3510	372	176-1937	637
171-3369	77	173-3513	373	176-1938	637

PART NUMBER INDEX

Part.No	Page	Part.No	Page	Part.No	Page
176-1939	635	177-2553	373		342
	637	177-2585	387	179-3007	342
176-1941	637	177-2619	374	179-3008	342
176-1942	635	177-2653	513	179-3425	363
176-1946	633		517		364
176-1947	633		521	179-3427	363
176-1951	640		619		364
176-1952	640	177-2713	621	179-5260	441
176-1953	640	177-4814	13		443
176-1954	640		66	179-7500	511
176-1955	640	177-5739	290	179-7578	492
176-1956	640	177-5879	309	179-7616	463
176-1957	640	177-5880	309		501
176-1958	631	177-6315	673	179-8128	100
	644	177-6395	288	179-8733	275
176-1972	633	177-6920	87	179-9681	383
176-1986	635	177-6972	14	179-9763	379
176-1996	721		230	179-9774	530
176-2676	794	177-6973	50		534
176-2677	794		51	179-9775	534
	795	177-8572	449		535
176-2687	812	177-8740	381	179-9806	373
176-4179	66	177-9778	111	180-3861	262
176-4366	501	177-9823	13		264
176-4463	485		70	180-7521	332
	485.04	178-2357	100		333
176-4469	483	178-5422	681	180-7525	332
	485.02	178-5423	681		333
176-4684	501	178-5500	656	180-7529	332
176-4708	485	178-5549	666		333
	485.04	178-5569	644	180-7537	332
176-4746	481	178-5570	635		333
176-4768	483	178-5572	645	180-7816	730
	485.02	178-5573	639		758
176-4770	467		645	180-9340	247
176-9429	12	178-5574	639	183-1035	257
	56		645		263
176-9430	56	178-5576	643	183-2823	115
177-0438	17	178-5659	693	183-2824	111
	86	178-6450	77		115
177-0440	86	178-6626	96	183-2851	66
	87	179-1292	351	183-2854	51
177-2470	379	179-2994	272	183-3351	50
177-2471	379	179-2998	338	183-3406	236

PART NUMBER INDEX

Part.No	Page
183-4365	37
183-8192	95
184-3830	535
	538
184-3833	621
184-3841	621
184-5543	731
	759
184-5713	355
184-5790	354
184-8580	293
184-8722	315
	317
	319
	321
184-8784	310
184-8795	311
	312
184-9210	489
	491
	495
	499
184-9336	479
184-9593	485
	485.04
184-9595	483
	485.02
185-0169	383
	385
185-0172	383
	385
185-0201	383
	385
185-0383	479
185-0400	587
185-0407	602
185-0423	610
185-0462	479
	624
185-0463	624
185-0490	585
	587
185-2638	231
185-2639	231
185-2642	231
185-2644	231
185-2645	231
185-2647	231
185-2648	231
185-2650	231
185-2651	231
185-2653	231
185-2654	231
185-2655	231
185-2658	231
185-5294	230
	231
185-8160	728
185-8161	681
185-8180	639
185-8181	643
185-8182	631
	643
185-8183	643
185-8187	631
	643
185-8196	635
185-8197	643
185-8205	633
185-8214	633
185-8221	643
185-8280	637
185-8281	637
185-8284	687
185-8286	684
	685
	688
185-8290	649
185-8293	723
185-8300	715
	719
185-8302	715
	719
185-9208	181
	183
185-9209	181
	183
186-1131	797
	801.02
	803
	807.02
186-1133	797
	801.02
	803
	807.02
	809
186-1147	799
	801.04
	805
	807.04
186-1149	801
	801.06
	807
	807.06
186-1156	813
186-1214	801
	801.06
	807
	807.06
186-3735	111
	137
	143
	153
	159
	164
	167
	174
	175
	193
	204
	208
	235
	245
	249
	251
	265
	728
186-3736	137
	149
	151
	153
	159

PART NUMBER INDEX

Part.No	Page	Part.No	Page	Part.No	Page
	164	187-6967	528.01	188-4167	537
	167	187-6993	421	188-4168	537
	204		423	188-4169	537
186-5473	354	187-7108	524	188-4170	537
186-5474	355	187-7109	524	188-4171	537
186-5475	355	187-8595	69	188-4172	537
186-5559	758	187-9845	433	188-4173	537
	759	187-9846	433	188-4175	535
186-5560	758	187-9977	445		536
	759		447	188-4176	537
186-5564	344		449	188-4210	381
	345		451	188-4216	407
	346		455		409
	347		457	188-4217	407
186-5611	332		459		409
	333		461	188-4218	407
186-5614	332	187-9978	445		409
	333		447	189-2678	633
186-5637	741		449	189-2690	639
	743		451	189-2693	647
	745	187-9981	445	189-2694	647
	746		447	189-2702	644
186-5644	766		449	189-2704	635
186-5649	763		451	189-2716	647
	765	188-0046	748	189-2847	646
186-5662	763		751	189-2849	646
186-5663	329		752		647
	331		754	189-2855	633
186-5892	12		756	189-2864	635
	54	188-2128	245	189-3396	635
187-0661	801	188-3065	363	189-3922	765
	801.06		364	189-3925	763
	807	188-3239	356	189-5746	245
	807.06	188-4140	367	189-8772	82
187-5659	467		372	189-8777	61
187-5661	511	188-4142	372	189-8779	83
187-5854	523		373		84
187-5855	523	188-4143	373	189-8780	13
187-5935	507	188-4161	537		83
187-5994	505	188-4162	537	189-9377	56
187-6817	421	188-4163	537	189-9763	379
187-6818	421	188-4164	537		381
187-6819	421	188-4165	537		383
187-6820	421	188-4166	537	190-0643	53

PART NUMBER INDEX

Part.No	Page
190-4896	381
	383
	385
190-5386	799
	801.04
	805
	807.04
190-5791	89
190-6186	14
	245
190-7673	383
	385
190-7674	383
	385
190-7819	558
190-7826	621
190-7865	597
191-0461	17
	103
191-0522	104
191-0523	103
	104
191-2569	275
191-2570	275
191-2571	275
191-2579	533
191-2676	275
191-2679	275
191-2683	275
191-2684	275
191-2685	275
191-2686	275
191-2687	275
191-2689	275
191-2690	275
191-2693	530
	532
191-2694	533
191-2695	533
191-2696	533
191-2697	533
191-3201	538
191-5537	387
191-5539	387
191-5540	387
191-5541	387
191-5601	387
191-5619	407
	409
191-5707	383
	385
192-0573	381
192-2981	16
	60
192-9971	73
192-9972	13
	72
193-0158	107
193-1736	381
193-2882	93
193-3515	189
	190
193-8570	229
193-9994	513
	517
	521
194-0079	467
194-1240	338
194-1241	338
	339
194-1242	339
	341
194-1243	341
194-1244	341
194-1245	341
194-1249	341
194-1250	349
194-1251	350
194-5226	243
194-5227	243
194-6725	246
	247
194-8325	381
194-8349	395
194-8353	397
	399
194-8354	397
	399
194-8355	397
	399
194-8356	397
194-8359	397
	399
194-8380	414
195-0321	31
195-5374	345
195-5375	346
195-5405	332
195-6025	87
196-0267	87
196-0354	87
196-0536	426
	732
	733
	737
196-0537	428
	735
196-0538	429
	736
196-0541	430
	737
196-0711	559
196-0807	511
196-1569	669
	671
196-1571	669
	671
196-1572	669
	671
196-1599	671
196-1665	723
196-1666	715
	719
196-6581	375
196-6582	375
196-6583	375
196-9519	27
197-0196	607
	609
197-0199	607
	609
197-0273	607

PART NUMBER INDEX

Part.No	Page
	609
197-2348	435
197-2349	435
197-2362	449
	451
197-4385	159
197-8391	111
	236
	237
197-8392	236
	238
197-8393	236
	239
197-8394	236
	240
197-9353	31
197-9354	31
197-9386	31
198-2713	233
198-2714	14
	232
198-3899	697
	705
198-4610	82
198-5389	183
199-0518	385
199-1286	507
199-1609	499
199-1620	505
199-1773	513
	517
	521
199-1777	485
	485.04
199-1914	491
199-3226	359
199-4478	324
	325
199-4487	530
199-4503	275
199-4522	323
199-7371	795
199-7891	231
199-8436	231

2

Part.No	Page
200-3254	383
	385
200-3255	383
	385
200-3333	379
200-3334	381
200-4495	49
200-4497	60
	61
200-5125	183
201-0825	363
	364
201-0826	363
	364
201-2771	329
	331
	765
201-2836	765
201-2868	759
201-3153	223
201-4204	14
	223
201-4391	639
201-4417	635
201-4530	635
201-4534	669
	671
201-4535	669
	671
201-9116	356
	359
	360
	361
	362
	363
201-9263	577
201-9299	373
201-9352	587
	588
201-9353	588
	590
202-2382	54

Part.No	Page
202-3763	421
	423
202-3764	421
	423
202-3875	423
202-3876	423
202-3877	423
202-3878	423
202-3900	469
202-3994	505
202-4004	481
202-4025	524
202-4038	505
203-0199	230
203-3028	68
203-3940	244
203-4183	56
203-4889	285
203-4890	285
203-4927	290
203-5282	287
203-5283	287
203-7239	758
204-1611	199
	203
204-2674	273
	539
204-2755	542
	543
204-2756	542
204-2762	373
204-2819	539
	542
204-3623	395
204-3737	515
204-4444	39
204-8260	503
204-8450	367
204-8496	509
205-0826	183
205-1280	103
205-1320	49
205-1321	16
	48

PART NUMBER INDEX

Part.No	Page	Part.No	Page	Part.No	Page
205-1332	63		31	213-3193	31
205-6295	635	210-5808	635	213-9100	249
205-8257	183	210-5821	725	214-4512	467
206-1345	233	210-5822	725	214-7567	242
206-3336	554	210-5827	664	214-7568	99
	557	210-5828	664		103
	558	210-5829	664	214-7915	801
206-5162	661	210-5834	664		801.06
206-5165	661	210-5836	664		807
206-8781	225	210-5837	664		807.06
207-0216	671	210-5838	664	215-4890	521
207-1511	223	210-8175	74		523
	224	210-9907	455		622
207-1551	226		457	215-4909	371
	228		459		618
207-1571	275		461	215-5037	485
207-6403	367	211-9120	16		485.04
207-6404	367		42		604
209-2864	801	212-2768	111	215-9952	539
	801.06	212-2840	329		540
	807		331	215-9961	383
	807.06	212-3664	82		385
209-5582	235	212-3706	103	215-9962	383
209-5891	383	212-4288	30		385
	385	212-4289	16	216-4970	171
209-5892	383		30	216-5586	21
	385	212-4893	27	216-6485	451
209-5893	383	212-5148	513	216-6599	739
	385		517		757
209-5894	541	212-5185	285	216-6605	391
209-5909	541	212-5186	285		739
209-5917	542	212-5326	438	216-6606	391
209-5920	542	212-5419	495		400
209-5957	403	212-5491	515	216-6607	400
209-6000	368		519		406
209-6009	397		523	216-6608	407
	399	212-5495	513	216-6613	407
209-8009	777		517	216-6617	391
210-1747	236		521		415
	241	212-8518	14	216-6645	415
210-3321	23		728	217-5213	35
210-5590	16	213-0677	56	217-5701	39
	27		367	218-0404	661
210-5592	16	213-0772	143	218-1059	481

PART NUMBER INDEX

Part.No	Page
218-1127	507
218-1139	515
	519
	523
218-1336	501
219-3148	801
	801.06
	807
	807.06
219-3309	36
219-5840	13
	82
219-5844	34
	35
219-5846	33
	34
219-5847	32
	33
219-5849	16
	32
219-5855	82
219-6314	661
219-6607	661
220-8678	114
220-9090	789
	790
	791
	792
220-9101	790
220-9102	790
220-9103	791
220-9104	777
220-9105	777
220-9106	777
220-9107	791
220-9108	792
220-9109	789
221-3494	103
221-4480	21
	22
221-4481	18
	20
221-4482	16
	18
221-4807	495
	499
221-4872	511
221-8045	801
	801.06
	807
	807.06
221-8813	657
221-8859	486
221-8861	216
221-8872	219
221-8874	218
	219
221-8875	217
222-0084	619
	620
222-0085	620
222-0225	549
222-1185	37
222-1186	37
222-5900	17
	98
222-5917	233
222-5946	13
	64
222-8378	11
223-3022	314
223-3023	314
	315
223-3024	315
223-3025	316
223-3026	316
	317
223-3027	317
223-3031	318
223-3032	318
	319
223-3033	319
223-3037	118
223-3038	118
	119
223-3040	305
223-3041	305
	306
223-3042	308
223-3043	278
	280
	282
	284
223-3045	92
	298
223-3046	110
	112
223-3047	310
223-3048	311
223-3049	312
223-3098	310
223-3099	310
223-3103	310
223-3104	310
223-6768	499
223-7577	234
	235
223-8100	789
224-3247	30
224-4536	242
	243
224-6638	31
224-8946	797
	801.02
	803
	807.02
225-0417	383
	385
225-4541	381
225-4542	381
225-4548	544
225-4549	544
225-4579	392
	738
225-4580	392
	404
225-4581	404
	408
225-4582	389
	730
	731
	739

PART NUMBER INDEX

Part.No	Page	Part.No	Page	Part.No	Page
225-4583	389	227-1200	35		742
	730	227-3811	52	228-5523	734
	731	227-4002	233		751
	739	227-4531	39	228-5524	735
225-4584	389	227-5480	27		752
	394	227-5904	99	228-5525	735
225-4585	389	227-5942	73		753
	412	227-6073	326	228-5526	732
225-4586	389	227-6087	323		748
	413		324	228-5528	738
225-4587	390	227-6088	324		762
	730		326	228-5614	747
	731	227-6105	323		748
225-4588	390	227-6106	323		749
	396	227-6107	322		750
225-4589	390	227-6115	273		751
	414	227-6116	273		752
225-4590	392		274		753
	738	227-6117	275		755
225-4591	392	227-6118	275	228-5615	403
	402	227-6119	275		747
225-4592	392	227-6123	275		748
	416	227-6124	275		749
225-4607	383	227-6125	275		750
	385	227-6215	533		751
225-4611	381	227-6221	533		752
225-4804	595	227-6846	727		753
	597	227-6868	375		755
227-0542	462	227-6869	375		763
227-0543	464	227-6880	413		765
227-0548	468	227-6882	412	228-5617	409
227-0550	420	227-7575	145		754
	730	227-7581	660		756
227-0551	422	228-2775	67	228-5653	751
	731	228-3621	46	228-5654	395
227-0565	365	228-4766	28		747
227-0566	365	228-5504	328		748
	366	228-5509	330		749
227-0590	367	228-5515	335		750
227-0620	367	228-5517	344		751
	369	228-5518	336		752
227-0621	463	228-5521	730		753
227-0674	465		740		754
227-0722	527	228-5522	730	229-0999	111

PART NUMBER INDEX

Part.No	Page	Part.No	Page	Part.No	Page
229-1009	411	229-7893	779	230-0490	434
229-1091	757	229-7894	779	230-0491	442
229-1092	766	229-7909	769	230-0492	453
229-1095	757	229-7910	769		453.01
229-1740	796		773	230-0494	433
	798	229-7911	773		435
	800		777	230-0497	441
	801.01	229-8017	777	230-0500	441
	801.03	229-8844	40	230-2865	75
	801.05	229-8851	234	230-2866	75
229-1741	802	229-8870	108	230-2867	75
	804	229-9071	722	230-2868	75
	806	229-9078	677	230-2870	77
	807.01	229-9079	710	230-2871	75
	807.03	229-9080	710	230-2876	75
	807.05		712	230-2881	77
229-1754	730	229-9081	713	230-2882	77
229-1757	731		714	230-2888	77
229-1760	730	229-9082	710	230-2890	77
229-1762	732		711	230-2892	80
229-1764	734		720	230-2893	11
229-1765	735	229-9083	711		80
229-1767	736	229-9084	711	230-2901	80
229-1769	737		716	230-4009	137
229-1770	735	229-9085	711		149
229-1772	738		724		159
229-1794	92	229-9086	653		167
229-1800	809	229-9087	653	230-4011	137
229-1855	737		654		153
229-1864	357	229-9088	653		159
229-2543	65		656		164
229-3218	115	229-9093	691		167
229-5153	27		692		178
229-5154	27	229-9094	693		214
229-5155	27	229-9095	701		269
229-5156	27		704	230-4013	137
229-6972	789	229-9096	628		153
229-6973	790	229-9097	629	230-5008	167
229-6974	790		630	230-5010	137
229-6975	791	230-0185	513		159
229-6976	791	230-0486	432		164
229-6977	792	230-0487	440		167
229-6978	769	230-0488	452		204
	789		452.01	231-1756	168

PART NUMBER INDEX

Part.No	Page	Part.No	Page	Part.No	Page
	170	234-1122	157		399
231-1771	249	234-1156	181	234-4578	397
231-1827	127		183		399
	138	234-1158	181	234-4579	414
231-1836	162	234-3771	752	234-4580	403
	163	234-3799	741	234-4581	403
231-2295	137	234-3803	741	234-4582	403
	167		743	234-4583	403
231-3046	13	234-3811	741	234-4584	403
	106		743	234-4585	403
231-3047	107		745	234-4586	403
231-3950	13		746	234-4587	403
	85	234-3927	763	234-4588	403
231-6805	399	234-3928	763	234-4589	403
231-7266	13	234-3930	763	234-4591	416
	58	234-3931	763	234-4592	416
231-7847	107	234-4440	463	234-4629	541
232-0343	107		465	234-6468	633
	108		544	234-6469	633
232-1754	36	234-4452	383	234-6470	633
232-2147	784		385	234-6471	633
232-2148	784	234-4453	383	234-6472	633
232-3717	16		385	234-6473	633
	36	234-4492	503	234-6474	633
232-4102	483	234-4493	379	234-6475	633
	485.02	234-4494	381	234-6476	633
	610	234-4498	381	234-6477	633
232-4113	622	234-4515	375	234-6478	633
233-1115	376		527	234-6480	633
233-1119	88	234-4555	419	234-6483	633
233-1120	57	234-4556	419	234-6485	633
233-1123	67	234-4559	419	234-6489	645
233-1127	92	234-4560	419	234-6490	633
	93	234-4566	395	234-6491	633
233-1293	57	234-4567	395	234-6497	633
233-1296	57	234-4568	395	234-6498	633
233-1299	57	234-4569	413	234-6499	651
233-7654	59	234-4570	412	234-6500	652
233-7655	69	234-4573	397	234-6501	629
234-1035	171		399		651
234-1037	171	234-4574	397	234-6502	651
234-1038	171		399	234-6521	633
234-1051	133	234-4576	397	234-6548	633
234-1097	145	234-4577	397	234-6549	633

PART NUMBER INDEX

Part.No	Page	Part.No	Page	Part.No	Page
234-6550	633		755		717
234-6579	633	235-7619	737	235-8874	713
	683		756		717
	687	235-7679	403	235-8875	713
234-6580	683		405		717
	687		747	235-8876	721
234-6594	631		748	235-8877	721
	648		749	235-8878	721
234-6602	687		750	235-8879	721
234-6603	683		751	235-8891	723
234-6604	687		752	235-8893	681
234-6605	683		753	235-8894	681
234-6608	683		754	235-8908	631
	687		755		632
234-6609	683		756	235-8909	631
	687		766		645
234-6610	683	235-7709	753	235-8910	631
	687	235-7764	337		634
234-6611	683		357	235-8912	635
234-6612	683		360	235-8914	683
234-6613	683	235-7765	337		687
	684	235-7766	743	235-8922	633
234-6614	683	235-7769	403	235-8923	633
234-6615	684	235-7770	397	235-8926	633
235-0346	799		399	235-8928	633
	801.04		409	235-8929	633
	805	235-7771	395	235-8932	648
	807.04	235-7774	344	235-8933	635
235-5527	37		347	235-8950	633
235-5528	36	235-7775	344	235-8951	688
	37		347	235-8952	685
235-7520	334	235-8135	11	235-8965	683
	335		12	235-8966	687
	336		13	235-8969	546
235-7565	334		14		548
235-7590	748	235-8200	14	235-8970	547
235-7613	333		248		548
235-7614	731	235-8226	17	235-8971	548
	744	235-8854	723	235-8972	548
235-7616	732	235-8856	689	235-8974	655
	747	235-8857	689	235-8996	685
235-7617	736	235-8862	676		688
	754	235-8872	713	235-8997	688
235-7618	737	235-8873	713	235-8998	685

PART NUMBER INDEX

Part.No	Page	Part.No	Page	Part.No	Page
235-9001	629		291	236-6455	728
235-9006	713	236-3388	291	236-6456	728
235-9012	656	236-3396	294	236-6457	728
235-9014	723	236-3397	279	236-6458	728
	725		287	236-8326	347
235-9015	723	236-3399	292	236-8416	738
	725	236-3629	311		764
235-9651	101		312	236-8886	360
236-2843	479	236-3631	311	236-8888	360
236-2844	479		312	236-8893	357
236-2848	479	236-3637	310		358
236-2946	469		311		359
236-2968	427	236-3639	311		361
	734		312		362
236-2977	421	236-3641	311		364
236-2978	421		312	236-8907	357
236-3005	421	236-3669	307	236-8908	358
	423	236-3670	307	236-9435	307
236-3009	421	236-3671	307	236-9438	307
	423	236-3702	308	236-9440	307
236-3134	465	236-3703	308	236-9527	315
236-3170	367	236-3747	289		317
236-3223	471	236-3751	279		319
236-3257	369		288		321
236-3258	369	236-4284	12	236-9528	315
236-3259	369		16		317
236-3261	486		17		319
236-3304	283	236-4413	70		321
236-3313	283		71	236-9529	315
236-3328	283	236-4420	71		317
236-3329	283	236-4421	71		319
	297	236-6220	236		321
236-3330	297		242	236-9536	315
236-3345	283	236-6221	236		317
236-3350	283		244		319
236-3354	283	236-6267	728		321
236-3358	283	236-6273	407	236-9539	315
236-3363	285	236-6419	567		317
236-3365	285		569		319
236-3367	285		577		321
236-3370	285		582	236-9540	285
236-3382	285		585		286
	290	236-6421	567	236-9543	286
236-3387	283		575	236-9544	286

PART NUMBER INDEX

Part.No	Page	Part.No	Page	Part.No	Page
236-9545	286	238-2363	153	239-2701	771
236-9546	286		159	239-2702	771
236-9567	290		167		775
236-9568	290	238-2366	153	239-2703	775
236-9570	308		159		779
236-9575	293		184	239-2704	771
237-3111	757	238-2390	143	239-2705	771
237-3116	433	238-2391	143		775
237-3117	433	238-2501	127	239-2706	775
237-3122	441		189		779
237-3181	436	238-2528	127	239-2713	769
237-3182	437		189	239-2714	769
237-3183	438	238-2529	133		773
237-3184	439	238-2698	31	239-2733	776
237-5176	73	239-0583	26	239-2738	779
237-8476	285	239-1134	251	239-2758	778
237-8480	298	239-1627	392	239-6598	376
237-9312	111		417		377
238-1432	168	239-1986	417	239-6599	377
238-1506	171	239-2396	111	239-6676	187
238-1627	254		246		250
238-1628	256	239-2431	779	239-6686	89
238-2208	194	239-2432	779	239-6687	89
	653	239-2479	779	239-7352	159
238-2209	194	239-2564	768		164
238-2210	194	239-2565	768		167
238-2211	690		772	239-8693	472
238-2212	145	239-2570	770		554
238-2260	662	239-2571	770	239-8695	473
238-2279	171		774		474
238-2280	171	239-2572	774		556
238-2300	258		778	239-8697	604
	730	239-2590	778		606
	739	239-2591	778	239-8825	575
238-2301	260	239-2695	768		578
	731	239-2696	768	239-8826	567
238-2302	259		772		570
	267	239-2697	772	239-8998	604
238-2303	261		776		608
	268	239-2698	770	239-9117	485
238-2318	145	239-2699	770		485.04
238-2319	149		774	239-9118	485
238-2326	255	239-2700	774		485.04
	257		778	240-3733	738

PART NUMBER INDEX

Part.No	Page
240-4022	808
240-4029	732
240-4030	734
240-5036	717
	718
240-5037	706
240-5038	706
	707
240-5056	700
240-5057	700
	701
240-5058	701
	702
240-5060	709
240-5063	691
	695
240-5064	690
240-5065	690
	691
240-5071	678
240-5073	679
240-5074	721
241-4194	251
241-7129	765
241-7140	765
241-7150	765
241-7231	754
	756
241-7280	765
241-7602	14
	222
242-1510	797
	801.02
	803
	807.02
242-2450	39
242-3864	59
242-6492	450
242-6493	460
242-6781	409
242-6787	409
242-6801	381
242-6804	381
242-8768	695
	704
243-4505	160
	167
	214
	267
	268
243-4508	137
	159
	164
	193
	208
243-4509	137
	159
243-4510	137
	159
	167
	204
244-3168	222
244-4277	757
244-4359	734
	750
244-4486	39
244-4500	40
244-5747	801
	801.06
	807
	807.06
244-7895	287
244-7912	283
	292
244-7915	292
244-7916	292
	293
244-7917	283
	292
244-7921	292
244-7922	283
	293
244-8400	585
244-8419	561
	584
245-3259	41
245-3260	16
	41
245-4630	244
245-5079	479
245-5178	502
245-5179	504
	506
245-5457	801
	801.06
	807
	807.06
245-5475	801
	801.06
	807
	807.06
245-6795	84
245-6796	39
245-7760	147
245-7779	728
245-7790	633
	683
	687
245-7791	721
245-7792	721
245-7793	721
245-7794	680
245-7800	723
245-7811	676
245-7812	715
245-7813	715
	719
245-7814	715
	719
245-7815	715
	719
245-7816	715
	719
245-7817	715
	719
245-7818	715
	719
245-7819	715
	719
245-7820	715
	719
245-7821	715

PART NUMBER INDEX

Part.No	Page	Part.No	Page	Part.No	Page
245-7823	715	245-7851	723	245-7899	696
	719	245-7856	715		698
245-7824	715		719		705
	719	245-7858	717	245-7900	329
245-7825	715	245-7868	727		331
	719	245-7869	727	245-7901	329
245-7826	715	245-7870	727		331
	719	245-7871	727	245-7903	727
245-7827	715	245-7872	721	245-7904	727
	719	245-7873	721	245-7905	715
245-7828	715	245-7876	727		719
	719	245-7877	727	245-7906	727
245-7829	715	245-7882	702	245-7909	726
	719		703	245-7911	727
245-7830	715	245-7885	692	245-7912	723
	719		693	245-7913	723
245-7831	715	245-7886	697	245-7916	677
	719	245-7887	693	245-7922	681
245-7832	715		703	245-7925	683
	719	245-7888	692	245-7926	687
245-7833	715		694	245-7929	651
	719		702	245-7931	648
245-7834	715	245-7889	695		650
	719		696	245-7948	683
245-7835	715		704		687
	719	245-7890	695	245-9181	77
245-7836	715		698	245-9205	77
	719		704	245-9207	79
245-7837	715	245-7891	704	245-9208	79
	719		705	245-9209	79
245-7838	715	245-7895	695	245-9212	79
	719		704	245-9213	79
245-7839	715	245-7896	695	245-9214	79
	719		697	245-9215	79
245-7842	548		704	245-9216	79
	549	245-7897	696	245-9217	79
245-7843	549		697	245-9218	79
245-7844	548		698	245-9219	79
	549		705	245-9220	79
245-7845	549	245-7898	693	245-9221	79
245-7846	719		694	245-9222	79
245-7847	719		697	245-9295	76
245-7848	717		703	246-2641	118
245-7850	723		705	246-5083	39

PART NUMBER INDEX

Part.No	Page
246-9353	248
247-0564	352
	353
247-0565	348
	349
	350
	352
247-0566	350
	353
247-2693	159
	164
	167
247-2694	658
247-2695	658
247-7327	360
247-7390	476
247-7416	473
	811
247-7420	472
	474
	810
247-7433	799
	801.04
247-7434	805
	807.04
247-7436	799
	801.04
	805
	807.04
247-7437	799
	801.04
	805
	807.04
247-7438	799
	801.04
	805
	807.04
247-7439	797
	801.02
	803
	807.02
247-7441	801
	801.06
	807
247-7443	801
	801.06
247-7444	807
	807.06
247-7451	475
247-7468	799
	801.04
	805
	807.04
247-7469	799
	801.04
	805
	807.04
247-7491	475
	812
247-8782	379
247-8873	395
247-8874	395
247-8920	381
247-8991	375
247-9298	441
	443
247-9310	435
247-9311	435
247-9312	441
248-1742	747
248-1743	750
248-1842	763
248-7820	766
248-7822	766
248-7823	766
248-7835	766
248-7836	766
248-7837	739
	766
248-7838	766
248-7854	393
	405
248-7855	405
	410
248-7856	411
248-7857	411
248-9296	111
248-9312	283
248-9337	314
	316
	318
	320
248-9825	478
248-9826	480
248-9827	482
	484
	485.01
	485.03
248-9829	486
248-9830	365
	466
248-9831	508
	510
248-9833	470
248-9866	507
248-9870	507
248-9874	507
248-9878	507
248-9882	505
248-9896	511
249-5523	23
249-6673	65
249-9223	14
	234
250-2446	575
250-2447	577
250-2503	386
250-5022	283
250-5024	283
250-5054	289
250-5072	131
250-5073	131
250-5075	131
250-5076	131
250-5101	297
250-5108	291
250-5109	291
250-5197	283
250-5785	23
250-6183	111
250-6364	778

PART NUMBER INDEX

Part.No	Page	Part.No	Page	Part.No	Page
250-6415	772	251-0464	131		45
	776	251-0467	125	253-0433	12
250-6417	782	251-0482	195		53
250-6418	772	251-0483	195	253-0437	12
	773	251-0529	206		50
	774		473	253-0861	799
	782		474		801.04
250-6430	774	251-0530	198		805
	775		200		807.04
	783		202	253-1346	342
250-6444	773		473	253-6416	458
	777		474	253-6417	452
250-6457	783	251-0536	662		452.01
251-0299	157	251-0537	662		453
	160	251-0542	180		453.01
251-0303	171	251-0543	181	253-6419	452
251-0304	171		183		453
251-0429	124		184	253-6426	457
	126	251-0544	182	253-6438	455
	128		661		457
	130	251-0579	164	253-6453	436
	132		167		437
	134	251-0580	163	253-6454	436
251-0430	156		164		437
251-0432	140	251-0598	207	253-6455	445
	142		208		447
	144	251-0602	165	253-6494	444
	146	251-0637	147	253-6496	454
251-0433	162	251-1848	361	253-6497	446
251-0435	162	251-1849	362	253-6499	456
	165	251-1850	361	253-6500	448
251-0436	196	251-1851	362	253-6557	447
	472	251-1853	359	253-6558	436
251-0440	187	251-2516	754	253-6562	436
	188	251-2552	765	253-6566	445
251-0442	210	251-2557	765	253-6614	452
	212	251-2558	765		452.01
	476	251-2563	756	253-6621	437
251-0451	127	251-2680	755	253-6625	437
	139	251-2772	329	253-6649	443
251-0454	189	252-2328	12	253-6652	443
	190		39	253-6655	443
251-0457	211	252-7187	65	253-6658	443
	214	252-9551	12	253-6664	393

PART NUMBER INDEX

Part.No	Page	Part.No	Page	Part.No	Page
	739	255-1693	527	255-2994	251
253-6666	455	255-1695	527	255-2995	251
253-6682	438	255-1699	527	255-3053	90
253-6685	449	255-1702	527	255-5285	222
	451	255-1705	527	255-5651	562
253-6694	439	255-1758	472	255-5652	563
253-6697	439		512		566
253-6754	459		514		568
	461	255-1759	473	255-5653	563
253-6757	459		474		574
254-2880	745		520		576
254-2885	745		522	255-5660	577
254-2905	331	255-1760	472		579
	333		516	255-5661	569
254-4357	99		518		572
	100	255-1765	474		575
254-7342	13		524		582
	65	255-1767	528.01	255-5662	595
255-0370	779	255-1785	503		597
255-0475	776	255-1786	503		598
255-0478	776	255-1787	503	255-5680	507
255-0479	776	255-1799	476		594
255-0493	776		526	255-5683	507
255-0496	776	255-1800	472		596
255-0497	776		487	255-5696	472
255-0508	778	255-1801	472	255-5697	473
255-0509	778		488	255-5699	472
255-0510	778	255-1802	473	255-5702	474
255-1632	471		492	255-5713	472
255-1656	475	255-1803	473		473
	500		494		560
255-1661	472	255-1813	423	255-5716	474
	490	255-1814	423		561
255-1663	474	255-1824	527	255-5724	475
	496	255-1858	486	255-5882	597
255-1664	474	255-1936	515	255-5883	595
	498		519	256-0074	379
255-1665	479	255-2866	93		382
255-1666	479	255-2899	95	256-0077	379
255-1669	489	255-2906	251		384
	491	255-2909	251	256-0078	385
	495	255-2910	251	256-0081	381
	499	255-2966	91	256-0083	381
255-1671	501		94	256-1644	309

PART NUMBER INDEX

Part.No	Page
256-1665	111
256-1666	111
256-1670	283
	297
256-1671	297
256-1672	297
256-1677	285
	291
256-1678	291
	298
	301
	303
256-1679	291
	298
	301
	303
256-1681	291
256-1682	292
256-1686	292
256-1687	292
256-1689	293
256-1691	293
256-1692	293
256-1693	293
256-1696	283
256-1698	283
	294
256-1702	294
256-1703	294
256-1704	294
256-1705	125
256-1707	125
256-1708	293
256-1710	293
256-1774	298
257-2186	14
	236
257-4502	799
	801.04
	805
	807.04
257-4503	799
	801.04
	805
	807.04
257-4506	801
	801.06
	807
	807.06
257-5537	251
257-9145	12
	23
258-0312	471
258-0330	669
	671
258-7531	230
258-8723	12
	40
259-0647	416
259-0658	375
259-0680	475
	529
259-0777	390
	730
259-0778	390
	398
259-0779	399
259-0918	368
259-0922	367
	368
259-3543	308
259-3721	315
	317
	319
	321
259-3872	119
	120
259-3875	119
	122
259-4877	165
	166
259-4883	141
259-4914	662
259-4965	176
259-5071	203
259-5075	203
259-5081	141
259-5082	141
259-7188	725
259-7202	683
259-7295	635
	636
259-7345	685
	688
259-7346	687
	688
259-7347	683
	685
259-7348	681
	686
259-7349	681
	682
259-7353	633
259-7378	560
	561
	582
259-7707	545
259-7732	485.02
	623.01
259-7733	623.01
259-7877	557
260-2193	657
	658
260-2385	329
	331
260-4057	761
260-6945	810
260-6946	811
260-7868	559
260-7872	513
	517
	521
260-7904	559
260-7906	559
260-7940	511
260-7959	513
	515
	517
	519
	521
	523
260-7960	513

PART NUMBER INDEX

Part.No	Page	Part.No	Page	Part.No	Page
	517	263-1826	46	267-7592	157
	521	263-1848	13		158
260-7964	527		52	267-7629	149
260-8034	515	263-1849	52	267-7630	149
	519	263-1850	12	267-7675	177
	523		46		178
260-8043	513	264-8667	733	267-7968	201
	517	264-8749	808		204
262-2178	286	264-8750	803	267-7976	181
262-2209	309		807.02	267-7977	183
262-2376	310		808	267-8071	674
262-2377	310	264-9961	575	268-0457	287
262-2379	311	265-3515	79		288
	312	265-3560	77	268-0462	320
262-2382	311	265-3580	79		739
	312	265-3688	77	268-0568	320
262-2384	311		78		321
	312	266-0943	521	268-0569	321
262-2400	279	266-0953	521	268-1835	101
	289	266-0982	467		102
262-2401	289		485	268-1839	17
262-2442	286		485.02		101
262-2443	286		485.04	268-4770	95
262-2468	288	266-0997	517	268-6780	739
262-2472	283		521		746
262-2481	283	266-1158	495	268-6781	746
262-2491	283		499	268-6783	424
	294	266-1278	519		739
262-2494	283		523	268-6784	425
	295	266-1279	519	268-6785	425
262-2495	295		523	268-6786	425
262-2497	189	266-1303	517	268-6868	528
262-2498	189		521		739
262-2499	189	266-5431	801	268-6870	739
262-2502	189		801.06		813
262-2503	189		807	268-7183	528
262-2509	298		807.06	270-0020	524
262-2598	111	266-6329	95	270-5465	218
262-3161	461	266-6348	95	270-5466	217
262-3164	453	267-6785	533		218
	453.01	267-7591	141	270-5497	217
262-3585	739		148		220
262-9372	121		150	270-5500	218
	123		152		221

PART NUMBER INDEX

Part.No	Page	Part.No	Page	Part.No	Page
270-5501	221		296		491
270-5526	221	273-7803	296		495
270-5528	220	273-7804	296		499
	221	273-7964	307	275-1506	489
270-5554	216	274-6343	59		491
	658	275-1361	467		495
270-5555	658	275-1362	367		499
270-5947	479	275-1439	519	275-1561	471
	592		523	275-2672	777
270-5949	593	275-1440	523	275-2673	777
270-5950	593	275-1442	485	275-2715	777
270-5951	545		485.04	275-3667	708
	546		489	275-3673	220
270-5952	545		491	275-3747	187
	547		495	275-3849	799
270-5953	551		499		805
271-2417	39	275-1443	485	275-6783	192
272-4624	96		485.04		220
272-4625	96		489	275-6784	192
272-4758	11		491		193
	95		495	275-6785	193
272-4800	57		499	275-6786	193
272-6959	376	275-1444	485	276-0045	95
	378		485.04	277-0781	528
	380		489	277-0782	528
273-5156	723		491	277-0878	425
273-5274	643		495	277-0879	425
273-5315	726		499	277-0880	425
	727	275-1446	521	277-0881	425
273-5316	727	275-1448	521	277-0937	425
273-5345	643	275-1452	521	277-0954	436
273-5346	643	275-1464	527		437
273-5384	695	275-1471	485		438
273-6770	733		485.04		439
	749	275-1473	509		625
273-6771	749	275-1484	485	277-1255	813
273-7678	283		485.04	278-1585	708
	295	275-1487	485	278-3567	220
273-7681	295		485.04		300
273-7799	315	275-1497	489	278-3568	300
	317		491		301
	319		495	278-3569	302
	321		499	278-3570	302
273-7802	285	275-1503	489		303

PART NUMBER INDEX

Part.No	Page
278-3581	307
278-3818	308
278-3970	121
	123
278-6785	489
	491
	495
	499
278-6794	469
278-9256	755
	756
279-7622	217
	218
279-7623	218
280-2747	519
	523
281-3448	79
281-3487	77
282-5760	433
	435
282-7047	471
282-7195	471
282-7330	511
283-2783	195
283-2932	125
	136
283-3000	203
285-1327	546
	547
	550
285-1465	485.02
288-7412	441
	443
288-7413	441
	443
288-7414	441
	443
288-7415	441
	443
288-7614	441
289-5362	511
289-5367	471
289-5657	479
291-7547	171
291-7559	674
	675
291-7560	269
	675
291-7561	675
291-9334	797
	801.02
	803
	807.02
293-1135	723
293-1137	715
	719
298-3451	801.04
	807.04

CATERPILLAR®

Printed in U.S.A.