SEBP5382
September 2008

RUTHZIL TRATOR COMERCIAL DE PEÇAS LTDA 11 97083-6812 ROLANDO

Parts Manual

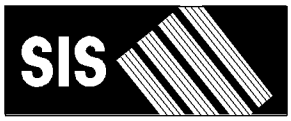

See "General Information" for New Parts Manual Features.

329D & 329D L Excavators

MNB1-Up (Machine)
WDK1-Up (Machine)
KHX1-Up (Engine)

Powered By C7 Engine

Product and Dealer Information

Note: For product identification plate locations, see the section “Product Identification Information” in the Operation and Maintenance Manual.

Delivery Date: _____

Product Information

Model: _____

Product Identification Number: _____

Engine Serial Number: _____

Transmission Serial Number: _____

Generator Serial Number: _____

Attachment Serial Numbers: _____

Attachment Information: _____

Customer Equipment Number: _____

Dealer Equipment Number: _____

Dealer Information

Name: _____ Branch: _____

Address: _____

_____

_____

	Dealer Contact	Phone Number	Hours
Sales:	_____	_____	_____
Parts:	_____	_____	_____
Service:	_____	_____	_____

MEMORANDA

TABLE OF CONTENTS

Name	Page
GENERAL INFORMATION	A5
REPAIR ALTERNATIVES	A8
SUPPLEMENTAL COOLANT ADDITIVES	A9
MAINTENANCE PARTS	A10
INDEX	A13
MACHINE ARRANGEMENT	1
CHASSIS AR	1
CONVERSION AR-MACHINE	2
GENERAL AR	2
SPECIAL AR	3
SPECIAL AR-HEAVY LIFT	4
SPECIAL AR-SUPER LONG REACH	4
ENGINE ARRANGEMENT	5
ENGINE AR	5
ENGINE AR-COMPLETE	7
ENGINE AR-CORE	13
INSTALLATION AR-ENGINE	17
BASIC ENGINE	18
BELT TENSIONER GP	18
BRACKET GP-ENGINE	19
CAMSHAFT GP	20
CARRIER GP-SEAL	21
COVER GP-CYLINDER BLOCK	22
COVER GP-FRONT HOUSING	24
COVER GP-VALVE MECHANISM	27
CRANKSHAFT GP	28
CYLINDER BLOCK GP	30
CYLINDER HEAD AS	34
CYLINDER HEAD GP	36
DAMPER & PULLEY GP	40
DRIVE GP-FAN	41
FASTENER GP-CYLINDER HEAD	44
FASTENER GP-FRONT COVER	45
FASTENER GP-FRONT HOUSING	46
FASTENER GP-LIFTING	47
FLYWHEEL GP	48
GEAR GP-FRONT	49
HOUSING GP-FLYWHEEL	51
HOUSING GP-FRONT	52
LIFTER GP-VALVE	53
LIFTING GP-ENGINE	54
MOUNTING GP-ENGINE	55
PAN GP-OIL	57
PISTON & ROD GP	58
PLUG GP-CYLINDER BLOCK	60
PLUG GP-ENGINE	61
PULLEY GP	62
ROCKER ARM GP	64
SEAL GP-CRANKSHAFT	66
VALVE MECHANISM GP	67
LUBRICATION SYSTEM	72
ADAPTER GP-OIL LINE	72
BREATHER GP	73
FILTER GP-ENGINE OIL	74
FUMES DISPOSAL GP	77
GAUGE GP-OIL LEVEL (DIPSTICK)	79
LINES GP-ENGINE OIL	80
LINES GP-ENGINE OIL DRAIN	81
LINES GP-TURBOCHARGER OIL	82
PUMP GP-ENGINE OIL	84
COOLING SYSTEM	86
COOLER GP-ENGINE OIL	86
COOLING AR-HIGH AMBIENT TEMP	87
FAN GP-SUCTION	88
LINES GP-WATER	89
PUMP GP-WATER	91
RADIATOR & HYD OIL COOLER GP	93
AIR INLET AND EXHAUST SYSTEM	101
AIR CLEANER AR	101
AIR CLEANER GP	102
COVER GP-AIR INLET	106
STARTING AID GP	107
ELBOW GP-AIR INLET	108
LINES GP-AIR	109
LINES GP-MUFFLER DRAIN	112
MANIFOLD GP-EXHAUST	113
MUFFLER GP	114
TURBOCHARGER GP	115
FUEL SYSTEM	119
FILTER GP-WATER SEP & FUEL	119
INJECTOR GP-FUEL	120
LINES GP-FUEL	122
LINES GP-INJECTOR HYD PUMP	131
PUMP & MOTOR GP-REFUELING	132
PUMP & MTG GP-UNIT INJ HYD	133
PUMP AR-FUEL TRANSFER	143
PUMP GP-FUEL INJECTION	144
PUMP GP-FUEL PRIMING	146
PUMP GP-FUEL PRM & PRIM FILTER	148
PUMP GP-FUEL PRM & WATER SEP	149
PUMP GP-REFUELING	150
PUMP GP-UNIT INJECTOR HYD	152
REGULATOR GP-FUEL PRESSURE	158
TANK & MTG GP-FUEL	159
TANK GP-FUEL	160
VALVE GP-FUEL BYPASS	165
VALVE GP-FUEL SHUTOFF	166

TABLE OF CONTENTS

Name	Page
ELECTRICAL AND STARTING SYSTEM	167
ALARM GP	167
ALARM GP-TRAVEL	168
ALTERNATOR GP-CHARGING	169
BATTERY & WIRING GP	172
BLOCK GP-JUNCTION	182
CAMERA & MOUNTING GP	183
CAMERA & WIRING GP	184
CAMERA GP	185
CONTROL & MTG GP-COMMUNICATION	188
CONTROL & MTG GP-ENGINE ELEK	191
CONTROL & MTG GP-MACHINE	192
CONTROL GP-COMMUNICATION	193
ELECTRONICS GP-COMMUNICATION	193
ELECTRONICS GP-MACHINE	193
ELECTRONICS GP-MONITOR	194
FASTENER GP-WIRING HARNESS	195
GRADE CONTROL AR-SATELLITE	200
INSTALLATION AR-COMMUNICATION	200
INSTALLATION GP-SECURITY	201
KIT-BRACKET	203
LAMP GP-FLOOD	204
LIGHTING GP-CHASSIS	207
LIGHTING GP-FLOOD	208
MOUNTING GP-GRADE CONTROL	214
PANEL & MTG GP-CIRCUIT BREAKER	215
PANEL GP-CIRCUIT BREAKER	216
PANEL GP-SWITCH	218
PLUG GP-CONNECTOR	222
RECEIVER GP-SATELLITE	223
SENSOR AR-GRADE	223
SENSOR GP-ENGINE	224
SENSOR GP-LIQUID LEVEL	226
SENSOR GP-PRESSURE	228
SENSOR GP-SPEED	235
SENSOR GP-TEMPERATURE	237
STARTING AID GP	240
STARTING AID GP-ETHER	241
STARTING AR-COLD WEATHER	243
STARTING MOTOR GP-ELECTRIC	244
SWITCH GP-DISCONNECT	250
SWITCH GP-MAGNETIC	251
SWITCH GP-POSITION	253
SWITCH GP-PRESSURE	254
SWITCH GP-PUSH BUTTON	255
SWITCH GP-ROTARY	257
SWITCH GP-START	258
SWITCH GP-TOGGLE	259
SWITCH GP-WIPER	261
VALVE GP-ETHER STARTING	262
WIRING GP-AUX START RECEPTACLE	263
WIRING GP-AUXILIARY CONTROL	265
WIRING GP-BOOM FLOAT	270
WIRING GP-CAB	272
WIRING GP-CAMERA	286
WIRING GP-CHASSIS	287
WIRING GP-COMBINED FLOW	291
WIRING GP-COMMUNICATION	293
WIRING GP-CONSOLE	299
WIRING GP-CONVERTER	303
WIRING GP-ENGINE	305
WIRING GP-FAN	307
WIRING GP-FINE SWING	309
WIRING GP-FUEL SYSTEM	310
WIRING GP-GRADE CONTROL	314
WIRING GP-HAMMER	315
WIRING GP-MEDIUM PRESSURE	316
WIRING GP-PLATFORM	317
WIRING GP-QUICK COUPLER	319
WIRING GP-COUPLER	321
WIRING GP-RADIO	322
POWER TRAIN	324
DRIVE GP-FINAL	324
FINAL DRIVE GP	327
POWER TRAIN AR	328
SPROCKET GP	329
FRAME AND BODY	330
BOX & MTG GP-STORAGE	330
BOX GP-STORAGE	331
COUNTERWEIGHT & MOUNTING GP	333
COUNTERWEIGHT AR	335
COUNTERWEIGHT GP	336
COVER AS-SOUND SUPPRESSION	346
DOOR GP-ACCESS	348
FENDER & COVER GP	352
FRAME GP-UPPER	354
GEAR & BEARING GP-SWING	357
GUARD GP-BOTTOM	362
GUARD GP-SWIVEL	365
HANDRAIL GP	367
HOOD & GUARD GP	368
HOOD AR	372
HOOD GP	373
HOOD GP-ENGINE	376
SHEET AS-SOUND SUPPRESSION	380
STEP GP	388
STORAGE GP-VANDALISM GUARD	390
SUPPORT AS-ENCLOSURE	392
UNDERCARRIAGE	394
ADJUSTMENT GP-HYDRAULIC TRACK	394
FRAME AR-UNDERCARRIAGE	395
FRAME AS-UNDERCARRIAGE	396
GUARD GP-TRACK GUIDE	397

TABLE OF CONTENTS

Name	Page
GUARD GP-TRAVEL MOTOR	402
IDLER GP-FRONT	404
LINK AS-TRACK	407
ROLLER AR-TRACK & CARRIER	409
ROLLER GP-TRACK CARRIER	412
ROLLER GP-TRACK-SINGLE FLANGE	413
SPRING GP-RECOIL	415
TRACK AR	416
TRACK GP	417
HYDRAULIC SYSTEM	432
ACCUMULATOR GP-HYDRAULIC	432
ACTUATOR GP-PUMP	438
BASE GP-OIL FILTER	446
CONTROL AR-AUXILIARY	447
CONTROL AR-COUPLER	450
COUPLING GP-PUMP	451
CYLINDER & LINES GP-BOOM	452
CYLINDER & LINES GP-BUCKET	453
CYLINDER & LINES GP-STICK	455
CYLINDER & SEAL GP-BOOM	457
CYLINDER & SEAL GP-BUCKET	465
CYLINDER & SEAL GP-STICK	475
CYLINDER AR-HYDRAULIC	481
CYLINDER GP-BUCKET	482
CYLINDER GP-STICK	490
DRIVE GP-SWING	494
FASTENER GP-SWING & FINAL DR	497
FILTER & VALVE GP-PILOT	499
FILTER AR-HYDRAULIC	500
FILTER GP-OIL	501
GAUGE GP-SIGHT	507
HOSE GP-HYDRAULIC	508
HYDRAULIC AR	516
LINES GP-AUXILIARY HYDRAULIC	517
LINES GP-BOOM	541
LINES GP-BOOM CYLINDER	553
LINES GP-BUCKET CYLINDER	560
LINES GP-CONTROL	567
LINES GP-COUPLER	570
LINES GP-FRONT	576
LINES GP-HYDRAULIC OIL COOLER	611
LINES GP-PILOT	613
LINES GP-PUMP	678
LINES GP-RETURN	681
LINES GP-STICK	685
LINES GP-STICK CYLINDER	687
LINES GP-SWING DRIVE DRAIN	692
LINES GP-TRAVEL MOTOR	693
MANIFOLD GP-CONTROL	697
MOTOR & MTG GP-SWING	700
MOTOR & MTG GP-TRAVEL	701
MOTOR GP-SWING	702
MOTOR GP-TRAVEL	705
MOUNTING GP-MAIN CONTROL VALVE	708
PLUG GP-CONTROL VALVE	709
PUMP & MTG GP-AUXILIARY	711
PUMP & MTG GP-MAIN HYDRAULIC	712
PUMP GP-GEAR	713
PUMP GP-MAIN HYDRAULIC	714
SCREEN GP-HYDRAULIC	719
SWIVEL GP	720
TANK & FILTER GP-HYDRAULIC	722
TANK & MTG GP-HYDRAULIC	724
TANK GP-HYDRAULIC	725
VALVE & MTG GP-CONTROL	728
VALVE AR-ALT PATTERN CONTROL	730
VALVE AR-CHECK & RELIEF	730
VALVE AR-LOAD CONTROL	730
VALVE AR-CHECK & RELIEF	731
VALVE AR-SWING	731
VALVE GP-CHECK	732
VALVE GP-CONTROL	736
VALVE GP-COUPLER	757
VALVE GP-FLOW CONTROL & RELIEF	759
VALVE GP-LOAD CONTROL	761
VALVE GP-MAIN CONTROL	770
VALVE GP-MANUAL	772
VALVE GP-PILOT	773
VALVE GP-PILOT RELIEF	779
VALVE GP-PRESSURE REDUCING	781
VALVE GP-PRIORITY	783
VALVE GP-RELIEF	784
VALVE GP-SELECTOR	801
VALVE GP-SHUTTLE	803
VALVE GP-SOLENOID	808
VALVE GP-SOLENOID & RELIEF	817
VALVE GP-SWING CUSHION	819
VALVE GP-TRAVEL COUNTERBALANCE	824
IMPLEMENTS	825
BOOM AR-1 PIECE LONG	825
BOOM AR-1 PIECE SHORT	826
BOOM GP-1 PIECE	828
BOOM GP	830
BOOM GP-1 PIECE	832
BOOM GP-REACH	834
LINES GP-GREASE	838
LINKAGE AR-BUCKET	844
LINKAGE GP-BUCKET	846
LOCK GP-TRANSPORT	858
MOUNTING GP-LINES	859
STICK AR-HOE	860
STICK GP-HOE	863
WORK TOOLS	875
ADJUSTER GP-BUCKET	875

TABLE OF CONTENTS

Name	Page
BUCKET & ADJUSTER GP	877
BUCKET AR-EXCAVATION	885
BUCKET AS-EXCAVATION	886
BUCKET AS-HEAVY DUTY	887
BUCKET AS-MASS EXCAVATOR	889
SIDECUTTER GP	890
TIP GP-LONG	891
TIP-LEVELING EDGE	892
OPERATOR STATION	893
ADJUSTER GP-SEAT	893
AIR CONDITIONER & MOUNTING GP	895
AIR CONDITIONER AR	897
AIR CONDITIONER GP	898
ANTENNA & MOUNTING GP	904
ARMREST GP	905
BRACKET GP-MIRROR	907
BRACKET GP-MOUNTING	908
CAB GP	909
CAMERA & MIRROR AR	935
COIL GP-EVAPORATOR	936
COMPRESSOR GP-REFRIGERANT	938
CONDENSER & MTG GP-REFRIGERANT	939
CONDENSER GP-REFRIGERANT	940
CONSOLE GP-OPERATOR	941
CONTROL & MTG GP-JOYSTICK	947
CONTROL GP-FOOT	948
CONTROL GP-HANDLE	949
CONTROL GP-HEAT & AIR COND	951
CONTROL GP-HYDRAULIC PEDAL	952
CONTROL GP-JOYSTICK	957
COVER GP-CAB	959
COVER GP-STORAGE	960
DISPLAY GP-MONITOR	961
DOOR & MTG GP-CAB	962
DOOR GP-CAB	963
DUCT GP-CAB AIR	969
FLOOR MAT	970
FLOOR MAT GP	971
FRAME GP-UPPER FRONT WINDOW	976
GUARD AR-OVERHEAD	978
GUARD AR-VANDALISM	978
GUARD GP-FRONT WINDOW	979
GUARD GP-OVERHEAD	984
GUARD GP-VANDALISM	986
HATCH GP-ROOF	988
HEADREST AS-SEAT	991
HEATER & MTG GP-CAB	995
HEATER AR-CAB	997
HORN GP-ELECTRIC	998
HOUSING GP-AIR CONDITIONER	1000
INSTALLATION GP-RADIO	1001
KIT-CONSOLE ADJUSTMENT	1004
KIT-SEAT SUSPENSION	1005
LEVER GP-AIR & TEMP CONTROL	1008
LINES GP-AIR CONDITIONER	1009
LINES GP-HEATER	1013
LITERATURE GP	1015
MIRROR AR-REAR VIEW	1015
MIRROR GP	1016
MIRROR GP-REAR VIEW	1017
MONITOR & MTG GP-OPERATOR	1021
MONITOR GP-OPERATOR	1022
MOUNTING GP-ANTENNA	1023
MOUNTING GP-MONITOR	1025
MOUNTING GP-PLATFORM	1026
MOUNTING GP-RADIO	1028
OPERATOR AR	1029
PEDAL AR-AUXILIARY	1029
PLATFORM GP-OPERATOR	1030
SCREEN GP-SUN	1031
SEAT & MOUNTING GP	1032
SEAT BELT GP	1037
SEAT GP	1043
SEAT GP-SUSPENSION	1059
SUPPORT GP-SEAT	1071
SUSPENSION GP-SEAT	1073
VISOR GP-CAB	1081
VISOR GP-PROTECTION	1082
WASHER GP-WINDOW	1083
WINDOW AS-FRONT	1086
WINDOW GP-CAB	1087
WINDOW GP-DOOR	1095
WIPER & WASHER GP-WINDOW	1097
WIPER AR-WINDOW	1099
WIPER GP-WINDOW	1100
SERVICE EQUIPMENT AND SUPPLIES	1102
FILM GP	1102
PLATE & FILM GP	1115
PART NUMBER INDEX	B1

GENERAL INFORMATION

1. MACHINE IDENTIFICATION

Caterpillar machines are identified by Product Identification Numbers (PIN). Some components included in a machine may be identified by Serial Numbers (S/N). Typical components that will be serialized include engines, transmissions, bulldozers, and rippers. The machine and engine are further identified by arrangement numbers and in some cases modification numbers. These numbers are shown on the product identification plate(s) and on the master plate in the operator's compartment.

Caterpillar dealers need all of these numbers to determine accurate parts identification.

SIS *New Feature*

Effective First Quarter 2001 the Caterpillar Product Identification Number (PIN) changed from 8 to 17 characters. In an effort to provide uniform equipment identification, Caterpillar and other construction equipment manufacturers are moving to comply with the latest version of the product identification numbering standard. Non-road machine PINs are defined by ISO 10261. The new PIN format will apply to all Caterpillar machines and generator sets. The PIN plates and frame marking will display the 17 character PIN. The new format will look like the following:

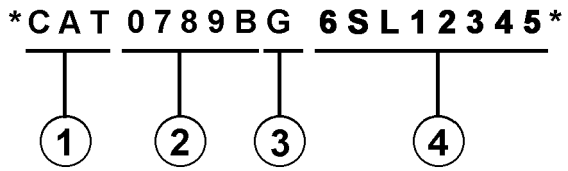

Where:

1. Caterpillar's World Manufacturing Code (characters 1-3)

2. Machine Descriptor (characters 4-8)

3. Check Character (character 9)

4. Machine Indicator Section (MIS) or Product Sequence Number (characters 10-17). These were previously referred to as the Serial Number.

Machines and generator sets produced before First Quarter 2001 will maintain their 8 character PIN format.

Components such as engines, transmissions, axles, etc. and work tools will continue to use an 8 character Serial Number (S/N).

2. ORDERING PARTS

WARNING

When replacement parts are required for this product Caterpillar recommends using Caterpillar replacement parts or parts with equivalent specifications including, but not limited to, physical dimensions, type, strength and material.

Failure to heed this warning can lead to premature failures, product damage, personal injury or death.

Quality Caterpillar replacement parts are available from Caterpillar dealers throughout the world. Their parts inventories are up to date and include all parts normally required to protect your investment in Caterpillar machines. Dealers may offer repair kits or remanufactured parts to allow selection of the most effective repair alternative for a particular situation. When ordering parts, your order should specify the quantity, part number, part name, and the serial number/product identification number of the machine for which the parts are needed.

3. PARTS MANUAL ORGANIZATION

Product information in this manual is presented as "information elements" that represent all of the components for the specific model. Engine Arrangement and Seat Group are examples of information elements. The information elements are organized alphabetically by part name and secondarily by part number within each major section of the manual.

4. TABLE OF CONTENTS

A table of contents (TOC) is found at the beginning of the manual. The TOC lists each section of the manual with a complete list of all information elements organized as they appear in the manual. Page numbers are provided for quick reference to detailed parts identification illustrations and serviceable consist lists.

5. MAINTENANCE PARTS INDEX

The Maintenance Parts Index, located near the beginning of the manual, references most frequently used maintenance part numbers, providing description, quantity, usage and page number. This information is organized alphabetically by part description.

6. INDEX

The index located near the front of the manual is an alphabetical listing of all information elements included in the manual. Page numbers are provided for quick reference to detailed parts identification illustrations and serviceable consist lists.

7. PART NUMBER INDEX

A numerical index listing all part numbers and the corresponding page number(s) appears at the back of the manual.

8. CAPTIONS

Captions located at the beginning of each information element identify the part number and part name along with additional descriptive information. PIN and S/N information found in each caption should be used to select correct information for a specific machine. Field replacement options, identification of optional attachment components, and where used ("part of") information is also provided.

The first line of a caption is shown in larger type font to indicate the beginning of an information element. Captions for additional pages that may be required to illustrate an information element will be shown in standard type font and will include the term *(contd.)* .

9. NON-SERVICED PARTS

In some instances it is necessary to display non-serviced parts that are a link to a lower level serviceable consist lists. These non-serviced part numbers are shown in *italic* type indicating that they are not available.

10. PARTS LIST REFERENCE NUMBERS

Numbers shown in the Ref No column correspond to numbers used in the associated graphic(s). An alphabetic suffix may be added to a reference number to identify lower level consist items. Numbers shown in the Graphic Ref column refer to the graphic number identifier displayed in the lower left corner of each illustration. The Graphic Ref number may be used in combination with the item Ref No to determine the correct part number. There may be intentional omission of a Ref No in a consist list as information is updated to reflect the latest serviceable part numbers.

11. INDENTED PART NAMES

When a part name is indented in a parts list, it is part of (included in) the group or assembly under which it is indented.

12. ILLUSTRATION REFERENCE LETTERS

When necessary, illustrations contain reference letters (A, B, C etc.) that are intended to track lines and harnesses from one point to another. They are also used to show where to reconnect illustrations that have been separated.

13. ABBREVIATIONS AND SYMBOLS

O.D. – Outside Diameter
I.D. – Inside Diameter
A – Not Part Of This Group
B – Use As Required
C – Change From Previous Type
D – Order By The Meter
E – Order By The Centimeter
F – Not Shown
G – Order By The Inch
I – Refer To Hydraulic Information System
M – Metric Part
R – Remfg Part May Be Available
Y – Separate Illustration
Z – Not Serviced Separately

SIS *New Feature*

14. DESCRIPTION OF TYPE CHANGES

Type - A type is defined as any configuration change that requires an additional Information Element for an Arrangement, Group, or Assembly. If serial number breaks for types are not available, a type # (Type 1, Type 2, etc.) will be displayed in the caption. These "type" changes are identified with a "C" note (change from previous type) in the Parts List. Only the "types" that apply to this Parts Manual will be included. Additional types may exist causing "C" notes to appear on an Information Element when no other types are shown.

15.<END>

This symbol indicates the end of an information element.

NOTE:

Continuing improvement and advancement of product design may cause changes to your machine which may not be included in this publication. Whenever a question arises regarding your caterpillar product or this publication, please consult your caterpillar dealer for the latest available information.

FRAME AND BODY

8E-3299 PLATFORM GP-CAB

PIN 3SK1-99999

SMCS-7253 100090751

NOTE	REF NO	GRAPHIC REF	PART NUMBER	QTY	PART NAME 1 2 3 4 5 6 (PRODUCT LEVEL)	SEE PAGE
	*	1	3T-3953	1	PLATE AS	
	2	1	6E-2992	25	BOLT (3/8-16X.750IN)	
	3	1	6F-1976	41	WASHER-HARD (38MM THK)	
	4	1	9F-1444	2	SUPPORT AS-FOOT	
	5	1	7P-2229	19	BOLT (1/2-13X1IN)	
		1	6F-	19	WASHER-HARD (41MM THK)	
	6	1	8E-8136		COVER AS-LH	
		1	9F-2978	5	NUT-WELD (3/8-16 THD)	
		1	1P-0188	1	CLIP	
	7	1	7S-3411	4	COVER	
	8	1	9J-0488	18	SCREW-HEAD (3/8-16X.875IN)	
	9	1	-4474	1	COVER	
		1	8E-897		GASKET	
	10	1	8E-3249	1		
		1	8E-3250	1	GASKET	
	11	1	3T-3638	1	HANDHOLD	
	12	1	8E-8978	1	COVER AS	
		1	9F-2978	8	NUT-WELD (3/8-16 THD)	
		1	8E-8978	1	GASKET	
	13	1	7T-0131	1	FLOORPLATE AS	
		1	1F-0748	4	NUT-WELD (1/2-13 THD)	
	14	1	7V-8067	1	PLUG-BUTTON	
	15	1	7T-0136	1	PLATE AS	
		1	9F-2978	5	NUT-WELD (3/8-16 THD)	
	16	1	7T-8066	1	COVER	
		1	7T-8779	1	GASKET	
	17	1	3T-3861	1	PLATE AS	
	18	1	6T-8264	4	BOLT (1/4-20X.625IN)	
M		1	9T-4205	4	WASHER-HARD (28MM THK)	
	19	1	6L-8494	1	FLOOR MAT	
	20	1	8E-8846	1	MODULE AS-OPERATOR	
	21	1	3T-3834	1	HANDHOLD	
	22	1	9P-8671	2	PLUG	
	23	2	6T-8264	4	BOLT (1/4-20X.625IN)	
M		2	9T-4205	4	WASHER-HARD (28MM THK)	
	24	2	6B-3062	17	BOLT (3/8-16X.750IN)	
	26	2	6F-1976	21	WASHER-HARD (38MM THK)	
	26	2	7T-0135	1	SEAL	
	27	2	7X-0975	2	BOLT (3/4-10X5IN)	
		2	7X-0682	2	WASHER-HARD (64MM THK)	
	28	2	3T-3452	2	PLATE	
	29	2	3T-8290	1	PLATE AS	
		2	7S-8828	8	SPACER	
	30	2	3T-8281	1	SEAL	
	31	2	7S-8817	1	GASKET	
	32	2	7S-8816	1	COVER AS	
		2	2R-3276	2	WASHER	
		2	6P-8926	2	SCREW-KNURLED	
	33	2	9W-3429	1	COVER	
	34	2	8E-8697	1	COVER	
	35	2	6D-3931	8	SCREW-SOCKET HEAD	
	36	2	9W-3142	8	MOUNTING	
	37	2	9W-9027	2	PLATE	
	38	2	7X-0990	2	BOLT (7/8-9X5IN)	
		2	7X-0672	2	WASHER-HARD	
	39	2	4L-8454	4	BOLT (3/8-16X1.0IN)	
	40	2	3T-4788	1	COVER	

12 FRAME AND BODY 1 of 4 SELP4570-01

FRAME AND BODY

8E-3299 PLATFORM GP-CAB (contd.) 100090751

NOTE	REF NO	GRAPHIC REF	PART NUMBER	QTY	PART NAME 1 2 3 4 5 6 (PRODUCT LEVEL)	SEE PAGE
	41	2	6E-2516	1	COVER	
	42	2	7T-0134	1	PLATE	
	43	2	7T-0138	1	GASKET	
	44	2	7S-8724	1	GASKET	
	45	2	7S-8723	1	COVER	
	46	2	6V-1950	2	PLUG-BUTTON	

M-METRIC PART

SELP4570-01 2 of 4 FRAME AND BODY 13

FRAME AND BODY

8E-3299 PLATFORM GP-CAB (contd.) 100090751

TOP VIEW

GRAPHIC #1 g00036729

14 FRAME AND BODY 3 of 4 SELP4570-01

FRAME AND BODY

8E-3299 PLATFORM GP-CAB (contd.) 100090751

SECTION A-A VIEW D-D SECTION G-G

SECTION B-B VIEW E-E SECTION H-H

SECTION C-C SECTION F-F SECTION J-J

GRAPHIC #2 g00105874

SELP4570-01 4 of 4 FRAME AND BODY 16

REPAIR ALTERNATIVES

REMANUFACTURED COMPONENTS

As an option when making repairs consider Caterpillar Remanufactured Components. Components that are available through the Caterpillar Remanufactured Program are identified three ways in the parts book:

- with the letter R in the note field of the parts list
- with an R* at the beginning of the first line of the caption
- with an *R at the end of the first line of the caption

Typical components included in the Remanufacturing Program include:

ALTERNATORS
CONNECTING RODS
CRANKSHAFTS - UNDERSIZE
CRANKSHAFTS - UPGRADE TO NEW
CYLINDER HEADS
ELECTRONIC CONTROL MODULES (ECM)
ELECTRONIC SENSORS
FUEL INJECTORS
FUEL NOZZLES
FUEL PUMPS
GOVERNORS
OIL PUMPS
PISTONS
SHORT BLOCKS
STARTERS
TURBOCHARGERS - COMPLETE
TURBOCHARGER CARTRIDGES
WATER PUMPS

Caterpillar Remanufactured engines for many engine arrangements are also available.

SUPPLEMENTAL COOLANT ADDITIVES

CUSTOMER BENEFITS:

Protects against cavitation, foam, erosion, corrosion, and scale buildup in cooling systems.

- Provides measured coolant conditioner.

DESCRIPTION:

Additives deplete from the coolant with normal operation. For this reason, Supplemental Coolant Additives (SCA) must be added to all heavy duty coolants at regular intervals. In addition, when not using a fully formulated, pre-charged antifreeze, like Caterpillar's DEAC, an initial charge of SCA must be added to the cooling system. The amount of SCA added to the system is dependent on the capacity of the system.

The SCA for initial fill is provided as a liquid. SCA's for maintenance intervals are available in liquid form and as a spin-on element. (No Spin-on available for 3600 Family of Engines)

NOTE:

The amount of SCA added at initial fill is not the same as the amount added at maintenance intervals.

The coolant additive elements can be used with any ethylene or propylene glycol type antifreeze which meets ASTM D4985 or ASTM D5345 Specifications.

NOTE:

For use with standard heavy duty coolant only, not for use with Extended Life Coolant.

PARTS NEEDED:

Cooling System Capacity		Liquid SCA at Initial Fill	Liquid SCA at Maintenance*	Spin-on SCA Maintenance Element*
Liters	Gallons			
22-30	(6-8)	3P-2044 (1)	6V-3542 (1)	111-2370 (1)
30-38	(8-10)	3P-2044 (1) 6V-3542 (1)	111-2372 (1)	111-2369 (1)
38-49	(10-13)	3P-2044 (1) 8T-1589 (1)	111-2372 (1)	111-2369 (1)
49-64	(13-17)	3P-2044 (2)	8T-1589 (1)	9N-3368 (1)
64-83	(17-22)	3P-2044 (2) 8T-1589 (1)	111-2372 (1) 6V-3542 (1)	111-2371 (1)
83-114	(22-30)	3P-2044 (3) 8T-1589 (1)	3P-2044 (1)	9N-3718 (1)
114-163	(30-43)	3P-2044 (5)	3P-2044 (1) 6V-3542 (1)	111-2371 (2)
163-242	(43-64)	3P-2044 (8)	3P-2044 (2)	9N-3718 (2)

** Normal maintenance period is 250 hrs. See your Operation and Maintenance Manual for complete coolant maintenance instructions.*

( ) Indicates quantity required.

MAINTENANCE PARTS

DESCRIPTION	PART NUMBER	QTY	WHERE USED	PAGE
AIR INLET AND EXHAUST SYSTEM				
FILTER ELEMENT AS-AIR (PRIMARY)	6I-2503	1	AIR CLEANER GP	104
		1	AIR CLEANER GP	105
FILTER ELEMENT AS-AIR (PRIMARY) (ULTRA HIGH EFFICIENCY)	132-7165	1	AIR CLEANER GP	104
		1	AIR CLEANER GP	105
FILTER ELEMENT AS-AIR (SECONDARY)	6I-2504	1	AIR CLEANER GP	104
		1	AIR CLEANER GP	105
BASIC ENGINE				
BELT-SERPENTINE (FAN PULLEY)	230-2190	1	PULLEY GP	62
	241-2896	1	PULLEY GP	63
BREATHER AS (CRANKCASE)	204-4444	1	COVER GP-VALVE MECHANISM	27
CAP AS-ENGINE OIL FILLER	227-4531	1	COVER GP-VALVE MECHANISM	27
ELEMENT (BREATHER) (CRANKCASE)	185-3159	1	COVER GP-VALVE MECHANISM	27
SEAL-VALVE COVER (VALVE COVER)	272-0388	1	COVER GP-VALVE MECHANISM	27
COOLING SYSTEM				
CAP AS (COOLANT RECOVERY)	171-3369	1	RADIATOR & HYD OIL COOLER GP	93
		1	RADIATOR & HYD OIL COOLER GP	95
CAP AS-RADIATOR	245-9212	1	RADIATOR & HYD OIL COOLER GP	97
		1	RADIATOR & HYD OIL COOLER GP	99
GASKET-WATER REGULATOR (TEMPERATURE REGULATOR HOUSING)	136-0812	1	LINES GP-WATER	89
HOSE-RADIATOR (LOWER)	230-2870	1	RADIATOR & HYD OIL COOLER GP	93
		1	RADIATOR & HYD OIL COOLER GP	95
HOSE-RADIATOR (UPPER)	281-3487	1	RADIATOR & HYD OIL COOLER GP	93
		1	RADIATOR & HYD OIL COOLER GP	95
REGULATOR-WATER TEMPERATURE (94-DEG C) (COOLANT)	126-5869	1	LINES GP-WATER	89

MAINTENANCE PARTS

DESCRIPTION	PART NUMBER	QTY	WHERE USED	PAGE
ELECTRICAL AND STARTING SYSTEM				
BATTERY (12-VOLT, MAINTENANCE FREE)	263-9574	2	BATTERY & WIRING GP	172
		2	BATTERY & WIRING GP	180
CIRCUIT BREAKER AS (120-AMPERE) (HEATER)	216-4970	1	PANEL GP-CIRCUIT BREAKER	216
CIRCUIT BREAKER AS (80-AMPERE) (ALTERNATOR)	171-2210	1	PANEL GP-CIRCUIT BREAKER	216
CIRCUIT BREAKER AS (80-AMPERE) (MAIN)	171-2210	1	PANEL GP-CIRCUIT BREAKER	216
FUSE (10-AMPERE)	113-8490	22	WIRING GP-CAB	272
FUSE (15-AMPERE)	113-8491	5	WIRING GP-CAB	272
		1	WIRING GP-CAB	284
FUSE (25-AMPERE)	113-8493	3	WIRING GP-CAB	272
FUSE (30-AMPERE)	124-3548	2	WIRING GP-CAB	272
FUSE (5-AMPERE)	141-2759	8	WIRING GP-CAB	272
KEY (BATTERY DISCONNECT)	8H-5306	1	SWITCH GP-DISCONNECT	250
KEY AS-ELECTRONIC (SECURITY)	206-5162	2	INSTALLATION GP-SECURITY	201
LAMP AS (24-VOLT, 3-WATT)	170-9324	1	PANEL GP-SWITCH	218
LAMP-HALOGEN (24-VOLT, 65-WATT)	9X-3463	1	LAMP GP-FLOOD	204
		1	LAMP GP-FLOOD	205
		1	LAMP GP-FLOOD	206
		1	LIGHTING GP-FLOOD	210
FUEL SYSTEM				
CAP AS-FILLER (FUEL TANK)	7X-7700	1	TANK GP-FUEL	161
		1	TANK GP-FUEL	163
FILTER AS-WATER SEP & FUEL (PRIMARY)	326-1644	1	FILTER GP-WATER SEP & FUEL	119
FILTER-FUEL (ADVANCED EFFICIENCY)	1R-0762	1	LINES GP-FUEL	122
FILTER-FUEL (ADVANCED EFFICIENCY) (SECONDARY)	1R-0762	1	LINES GP-FUEL	127
GASKET (FUEL FILTER)	9Y-8389	1	LINES GP-FUEL	127
GASKET (FUEL PRIMING PUMP)	9Y-8389	1	LINES GP-FUEL	122
		1	PUMP GP-FUEL PRIMING	146
KEY (FUEL TANK FILL CAP)	5P-8500	1	TANK & MTG GP-FUEL	159
STRAINER AS-FUEL	229-1860	1	PUMP GP-REFUELING	150
STRAINER AS-FUEL (FLOAT GAUGE)	303-9933	1	TANK GP-FUEL	161
		1	TANK GP-FUEL	163

MAINTENANCE PARTS

DESCRIPTION	PART NUMBER	QTY	WHERE USED	PAGE
HYDRAULIC SYSTEM				
BREATHER (SWING DRIVE)	4H-6112	1	DRIVE GP-SWING	494
BREATHER GP (HYDRAULIC TANK)	227-0590	1	TANK GP-HYDRAULIC	725
FILTER ELEMENT AS-OIL (HYDRAULIC RETURN)	179-9806	1	FILTER GP-OIL	503
FILTER ELEMENT-HYDRAULIC (HYDRAULIC)	196-6581	1	FILTER GP-OIL	505
FILTER-OIL (ADVANCED EFFICIENCY) (HYDRAULIC)	5I-8670	1	FILTER & VALVE GP-PILOT	499
FILTER-OIL (ADVANCED EFFICIENCY) (HYDRAULIC, CASE DRAIN)	093-7521	1	FILTER GP-OIL	506
PLUG-OIL DRAIN	6I-0723	1	TANK GP-HYDRAULIC	725
SCREEN AS (HYDRAULIC TANK)	209-6000	1	SCREEN GP-HYDRAULIC	719
SEAL-RECTANGULAR	1P-3704	2	LINES GP-AUXILIARY HYDRAULIC	521
	1P-3705	1	LINES GP-AUXILIARY HYDRAULIC	521
LUBRICATION SYSTEM				
BREATHER AS (CRANKCASE)	164-0210	1	BREATHER GP	73
FILTER AS-ENGINE OIL (ADVANCED EFFICIENCY)	1R-1807	1	FILTER GP-ENGINE OIL	74
OPERATOR STATION				
BLADE AS-WIPER (275-MM) (LOWER)	4I-5021	1	WIPER & WASHER GP-WINDOW	1097
BLADE AS-WIPER (600-MM) (UPPER)	161-3670	1	WIPER GP-WINDOW	1100
CAP AS (WINDOW WASHER)	178-5431	1	WASHER GP-WINDOW	1083
FILTER ELEMENT-CAB AIR	293-1184	1	DUCT GP-CAB AIR	969
FILTER ELEMENT-CAB AIR (AIR CONDITIONER)	245-7823	1	AIR CONDITIONER GP	898
		1	AIR CONDITIONER GP	901
LAMP (24-VOLT, 10-WATT) (DOME)	201-4417	1	CAB GP	927
LAMP AS-DOME	176-1986	1	CAB GP	927
RECEIVER DRYER AS (REFRIGERANT)	176-1902	1	LINES GP-AIR CONDITIONER	1009
SEAT BELT GP	327-6540	1	SEAT BELT GP	1041
	327-6541	1	SEAT BELT GP	1042
SEAT BELT GP (RETRACTABLE, 3-IN)	235-9020	1	SEAT BELT GP	1039
SEAT BELT GP (RETRACTABLE, 46-MM)	273-5446	1	SEAT BELT GP	1038

INDEX

Name	Page

A

ACCUMULATOR GP-HYDRAULIC–CHARGED 432, 433, 434, 435, 436, 437
ACTUATOR GP-PUMP–DRIVE 438
ACTUATOR GP-PUMP–DRIVEN 442
ADAPTER GP-OIL LINE 72
ADJUSTER GP-BUCKET 875, 876
ADJUSTER GP-SEAT (UPPER SLIDE) 1073, 1074, 1075
ADJUSTER GP-SEAT–LOWER SLIDE 894
ADJUSTER GP-SEAT–UPPER SLIDE 893
ADJUSTMENT GP-HYDRAULIC TRACK 394
AFTERCOOLER AS 97, 99
AIR CLEANER AR–WITH PRECLEANER 101
AIR CLEANER GP 102, 103, 104, 105
AIR CONDITIONER & MOUNTING GP 895
AIR CONDITIONER AR 897
AIR CONDITIONER GP 898, 901
ALARM GP 167
ALARM GP-TRAVEL 168
ALTERNATOR GP-CHARGING 169, 170
ANTENNA & MOUNTING GP–PRODUCT LINK 904
ARMREST GP–LH 906
ARMREST GP–RH 905
ATOMIZER GP-ETHER 241

B

BASE GP-OIL FILTER–HYDRAULIC 446
BATTERY & WIRING GP 172
BATTERY & WIRING GP–COLD WEATHER 180
BATTERY (12-VOLT, MAINTENANCE FREE) 172, 180
BEARING GP-MAIN 28
BELT TENSIONER GP 18
BELT-SERPENTINE (FAN PULLEY) 62, 63
BLADE AS-WIPER (275-MM) (LOWER) 1097
BLADE AS-WIPER (600-MM) (UPPER) 1100
BLOCK GP-JUNCTION–BATTERY 182
BOOM AR-1 PIECE LONG 825
BOOM AR-1 PIECE LONG–ACCUGRADE READY, HIGH AMBIENT 826
BOOM AR-1 PIECE LONG–HEAVY-DUTY, HIGH AMBIENT TEMPERATURE 826
BOOM AR-1 PIECE LONG–HIGH TEMPERATURE 825
BOOM AR-1 PIECE SHORT 826
BOOM AR-1 PIECE SHORT–HIGH TEMPERATURE 827
BOOM GP 830
BOOM GP-1 PIECE 828
BOOM GP-1 PIECE–ACCUGRADE 832
BOOM GP-REACH 834
BOOM GP-REACH–HEAVY DUTY 836
BOX & MTG GP-STORAGE 330
BOX GP-STORAGE 331
BRACKET GP-ENGINE 19
BRACKET GP-MIRROR 907
BRACKET GP-MOUNTING 1073, 1074
BRACKET GP-MOUNTING (SUSPENSION SEAT) 1075
BRACKET GP-MOUNTING–SUSPENSION SEAT 908
BREATHER (SWING DRIVE) 494
BREATHER AS (CRANKCASE) 27, 73
BREATHER GP 73
BREATHER GP (HYDRAULIC TANK) 725
BUCKET & ADJUSTER GP–DB-FAMILY 883
BUCKET & ADJUSTER GP–EXCAVATION, CB-FAMILY 877, 878
BUCKET & ADJUSTER GP–EXCAVATION, DB-FAMILY 880, 881
BUCKET & ADJUSTER GP–EXTREME EXCAVATION, CB-FAMILY 883
BUCKET & ADJUSTER GP–HEAVY-DUTY, DB-FAMILY 883, 884
BUCKET & ADJUSTER GP–MASS EXCAVATION, CB-FAMILY 879
BUCKET & ADJUSTER GP–MASS EXCAVATION, DB-FAMILY 882
BUCKET AR-EXCAVATION–DB-FAMILY 885
BUCKET AS-EXCAVATION–CB-FAMILY 886
BUCKET AS-HEAVY DUTY–DB-FAMILY 887, 888
BUCKET AS-MASS EXCAVATOR–CB-FAMILY . . . 889

C

CAB GP 909

INDEX

Name	Page
	911
	913
	915
	917
	919
	921
	923
	933
CAB GP–EXTERIOR	927
CAB GP–INTERIOR	925
	931
CAMERA & MIRROR AR	935
CAMERA & MOUNTING GP	183
CAMERA & WIRING GP	184
CAMERA GP	185
	186
CAMSHAFT GP	20
CAP AS (COOLANT RECOVERY)	93
	95
CAP AS (WINDOW WASHER)	1083
CAP AS-ENGINE OIL FILLER	27
CAP AS-FILLER (FUEL TANK)	161
	163
CAP AS-RADIATOR	97
	99
CARRIER GP-SEAL	21
CHASSIS AR	1
CIRCUIT BREAKER AS (120-AMPERE) (HEATER)	216
CIRCUIT BREAKER AS (80-AMPERE) (ALTERNATOR)	216
CIRCUIT BREAKER AS (80-AMPERE) (MAIN)	216
COIL AS (1-WAY/2-WAY FLOW)	818
COIL GP-EVAPORATOR	936
COMPRESSOR & MTG GP-REFRIG	938
COMPRESSOR GP-REFRIGERANT	938
CONDENSER & MTG GP-REFRIGERANT	939
CONDENSER GP-REFRIGERANT	940
CONSOLE GP-OPERATOR	941
CONSOLE GP-OPERATOR–LH	945
CONSOLE GP-OPERATOR–RH	943
CONTROL & MTG GP-COMMUNICATION– PRODUCT LINK 121SR	189
CONTROL & MTG GP-COMMUNICATION– PRODUCT LINK 321SR	188
CONTROL & MTG GP-ENGINE ELEK	191
CONTROL & MTG GP-JOYSTICK	947
CONTROL & MTG GP-MACHINE	192
CONTROL AR-AUXILIARY– 1-PUMP, 2-WAY, PEDAL	448
CONTROL AR-AUXILIARY– 1-PUMP/2-PUMP, 1-WAY/2-WAY FLW	449
CONTROL AR-AUXILIARY– 2-PUMP, 1-WAY FLOW, FOOT SW	447
CONTROL AR-AUXILIARY– 2-PUMP, 1-WAY, 1-HYD PEDAL	448
CONTROL AR-AUXILIARY– COMBINED FCTN, 2-HYD PEDALS	447
CONTROL AR-AUXILIARY–FOOT SWITCH	449
CONTROL AR-AUXILIARY– MEDIUM PRESSURE	449
CONTROL AR-AUXILIARY– SYSTEM 1, 1-WAY, 1-PUMP	447
CONTROL AR-AUXILIARY–SYSTEM 11, COMBINED FN, MEDIUM PRESSURE	448
CONTROL AR-COUPLER	450
CONTROL GP-COMMUNICATION– PRODUCT LINK 121SR	193
CONTROL GP-FOOT–LH	948
CONTROL GP-HANDLE–JOYSTICK, LH	949
CONTROL GP-HANDLE–JOYSTICK, RH	950
CONTROL GP-HEAT & AIR COND–AIR INLET	951
CONTROL GP-HYDRAULIC PEDAL	953
	954
	955
CONTROL GP-HYDRAULIC PEDAL–TRAVEL	952
CONTROL GP-JOYSTICK–LH	958
CONTROL GP-JOYSTICK–RH	957
CONTROL GP-UNPROGRAMMED	192
CONTROL GP-UNPROGRAMMED (ENGINE)	191
CONVERSION AR-MACHINE– ACCUGRADE READY	2
COOLER GP-ENGINE OIL	86
COOLING AR-HIGH AMBIENT TEMP	87
CORE AS-ENGINE OIL COOLER	86
CORE AS-HEATER	898
	901
CORE AS-OIL COOLER (HYDRAULIC)	97
	99
CORE AS-RADIATOR	97
	99
COUNTERWEIGHT & MOUNTING GP	333
	334
COUNTERWEIGHT AR	335
COUNTERWEIGHT GP	336
	337
	338
	339
	340
	341
	342
	343
	344
	345
COUPLING GP-PUMP	451
COVER AS-SOUND SUPPRESSION	346
	347
COVER GP-AIR INLET– STARTING AID HEATER	106

INDEX

Name	Page
COVER GP-CAB–REAR	959
COVER GP-CYLINDER BLOCK	22
COVER GP-FRONT HOUSING	24
	25
	26
COVER GP-STORAGE	960
COVER GP-VALVE MECHANISM	27
CRANKSHAFT GP	28
CYLINDER & LINES GP-BOOM–LH	452
	453
CYLINDER & LINES GP-BOOM–RH	452
	453
CYLINDER & LINES GP-BUCKET	453
	454
CYLINDER & LINES GP-BUCKET–COLD WEATHER	455
CYLINDER & LINES GP-STICK	455
	456
CYLINDER & SEAL GP-BOOM	457
	459
	461
	463
CYLINDER & SEAL GP-BUCKET	465
	466
	468
	470
	471
	472
CYLINDER & SEAL GP-BUCKET–COLD WEATHER	474
CYLINDER & SEAL GP-STICK	475
	476
	479
CYLINDER AR-HYDRAULIC–COLD WEATHER, CB2-FAMILY	481
CYLINDER AR-HYDRAULIC–COLD WEATHER, DB-FAMILY	481
CYLINDER BLOCK GP	30
	31
	32
CYLINDER GP-BUCKET	482
	484
	486
	488
CYLINDER GP-STICK	490
	492
CYLINDER HEAD AS	34
CYLINDER HEAD GP	36
	37
	38

D

Name	Page
DAMPER & PULLEY GP	40
DISPLAY GP-MONITOR (CD700)	961
DISPLAY GP-MONITOR–CD700	961
DOOR & MTG GP-CAB	962
DOOR GP-ACCESS–AIR CLEANER	351
DOOR GP-ACCESS–PUMP COMPARTMENT	350
DOOR GP-ACCESS–RADIATOR	349
DOOR GP-ACCESS–RADIATOR, LH	348
DOOR GP-CAB	963
	965
	968
DRIVE GP-FAN	41
	42
DRIVE GP-FINAL–WITHOUT MOTOR	324
DRIVE GP-SWING	496
DRIVE GP-SWING–WITHOUT MOTOR	494
DUCT GP-CAB AIR	969

E

Name	Page
ELBOW GP-AIR INLET	108
ELECTRONICS GP-COMMUNICATION–PRODUCT LINK 300	193
ELECTRONICS GP-MACHINE	193
ELECTRONICS GP-MACHINE–HIGH POWER	194
ELECTRONICS GP-MONITOR	194
ELEMENT (BREATHER) (CRANKCASE)	27
ENGINE AR	6
ENGINE AR–TIER II, HIGH POWER	5
ENGINE AR-COMPLETE	7
	8
	9
	10
	11
	12
ENGINE AR-CORE	13
	14
	15
	16

F

Name	Page
FAN GP-SUCTION	88
FASTENER GP-CYLINDER HEAD	44
FASTENER GP-FRONT COVER	45
FASTENER GP-FRONT HOUSING	46
FASTENER GP-LIFTING	47
FASTENER GP-SWING & FINAL DR	497
FASTENER GP-WIRING HARNESS	195
FASTENER GP-WIRING HARNESS–FOOT SWITCH	199
FASTENER GP-WIRING HARNESS–HEAVY LIFT	198
FASTENER GP-WIRING HARNESS–STRAIGHT TRAVEL	197
FENDER & COVER GP	352
	353

INDEX

Name	Page
FILM GP	1111, 1112, 1114
FILM GP– ALT PATTERN CONTROL, WARNING	1105
FILM GP– CONTROL PATTERN CHANGE, 4-WAY	1106
FILM GP–FUEL TRANSFER PUMP	1110
FILM GP– HAMMER CONTROL, FOOT SWITCH	1104
FILM GP–OPERATOR CONTROLS	1102
FILM GP–OPERATOR CONTROLS, NOTICE	1103
FILM GP–QUICK COUPLER	1108, 1109
FILM GP– WORK AREA VISUAL SYSTEM, REAR	1113
FILM-CERTIFICATION (OPS GUARD, READ OMM)	984
FILM-CERTIFICATION (OPS GUARD, READ OMM, ENGLISH)	982
FILM-IDENTIFICATION (FUEL)	312
FILM-INFORMATION (24-VOLT)	1115, 1120
FILM-INFORMATION (DO NOT LIFT)	338
FILM-INSTRUCTION (HYDRAULIC OIL RETURN FILTER)	503
FILM-INSTRUCTION (MACHINE SECURITY, CONSOLE)	220
FILM-INSTRUCTION (PULL RING, ALTERNATE EXIT)	1115, 1120
FILM-INSTRUCTION (REFUELING PUMP)	150
FILM-INSTRUCTION (TOP, AIR CLEANER COVER)	104
FILM-WARNING (HIGH PRESSURE CYLINDER)	436
FILM-WARNING (HOT SURFACE, HANDS CLEAR)	1115, 1120
FILM-WARNING (NO WELD, NO DRILL, READ OMM)	982
FILM-WARNING (PRODUCT LINK RADIO, INTL)	189
FILM-WARNING (PRODUCT LINK RADIO, U.S.)	189
FILTER & VALVE GP-PILOT–HYDRAULIC OIL	499
FILTER AR-HYDRAULIC–HAMMER	500
FILTER AS-ENGINE OIL (ADVANCED EFFICIENCY)	74
FILTER AS-WATER SEP & FUEL (PRIMARY)	119
FILTER ELEMENT AS-AIR (PRIMARY)	104, 105
FILTER ELEMENT AS-AIR (PRIMARY) (ULTRA HIGH EFFICIENCY)	104, 105
FILTER ELEMENT AS-AIR (SECONDARY)	104, 105
FILTER ELEMENT AS-OIL (HYDRAULIC RETURN)	503
FILTER ELEMENT-CAB AIR	969
FILTER ELEMENT-CAB AIR (AIR CONDITIONER)	898, 901
FILTER ELEMENT-HYDRAULIC (HYDRAULIC)	505
FILTER GP-ENGINE OIL	74
FILTER GP-OIL–HYDRAULIC	505
FILTER GP-OIL–HYDRAULIC RETURN	501, 503
FILTER GP-OIL–HYDRAULIC, CASE DRAIN	506
FILTER GP-WATER SEP & FUEL	119
FILTER-FUEL (ADVANCED EFFICIENCY)	122
FILTER-FUEL (ADVANCED EFFICIENCY) (SECONDARY)	127
FILTER-OIL (ADVANCED EFFICIENCY) (HYDRAULIC)	499
FILTER-OIL (ADVANCED EFFICIENCY) (HYDRAULIC, CASE DRAIN)	506
FINAL DRIVE GP	324
FINAL DRIVE GP–WITH MOTOR	327
FLOOR MAT	970
FLOOR MAT GP	971, 972, 973, 974, 975
FLYWHEEL GP	48
FRAME AR-UNDERCARRIAGE	395
FRAME AS-UNDERCARRIAGE	396
FRAME GP-UPPER	354, 356
FRAME GP-UPPER FRONT WINDOW	976
FUMES DISPOSAL GP	77
FUSE (10-AMPERE)	272
FUSE (15-AMPERE)	272, 284
FUSE (25-AMPERE)	272
FUSE (30-AMPERE)	272
FUSE (5-AMPERE)	272

G

GASKET (FUEL FILTER)	127
GASKET (FUEL PRIMING PUMP)	122, 146
GASKET-WATER REGULATOR (TEMPERATURE REGULATOR HOUSING)	89
GAUGE GP-OIL LEVEL (DIPSTICK)	79
GAUGE GP-SIGHT–HYDRAULIC OIL LEVEL	507
GAUGE-OIL LEVEL (SWING DRIVE)	494

INDEX

Name	Page
GEAR & BEARING GP-SWING	357, 358, 359, 360
GEAR GP-FRONT	49
GENERAL AR	2
GRADE CONTROL AR-SATELLITE–ACCUGRADE	200
GUARD AR-OVERHEAD–FOG	978
GUARD AR-VANDALISM	978
GUARD AR-VANDALISM–WITH SUN VISOR	978
GUARD GP-BOTTOM	362, 363, 364
GUARD GP-FRONT WINDOW	982
GUARD GP-FRONT WINDOW–FULL	979
GUARD GP-FRONT WINDOW–LOWER	981
GUARD GP-OVERHEAD	984
GUARD GP-SWIVEL	365, 366
GUARD GP-TRACK GUIDE	397, 398, 399, 401
GUARD GP-TRACK GUIDE–FULL LENGTH	400
GUARD GP-TRAVEL MOTOR	402, 403
GUARD GP-VANDALISM–CAB	986, 987

H

Name	Page
HANDRAIL GP	367
HARNESS AS-AUXILIARY	265, 268, 285
HARNESS AS-CAB	272, 280
HARNESS AS-CHASSIS	173
HARNESS AS-CHASSIS (HORN)	999
HARNESS AS-CONSOLE	220
HARNESS AS-CONSOLE (LH)	299
HARNESS AS-CONSOLE (RH)	218, 301
HARNESS AS-CONTROL	284, 287, 291, 297, 308
HARNESS AS-CONTROL (BODY TILT SENSOR, GPS RECEIVER)	287
HARNESS AS-CONTROL (DISPLAY, GPS RADIO)	287
HARNESS AS-CONTROL (FAN CLUTCH)	290
HARNESS AS-CONTROL (PRODUCT LINK)	293
HARNESS AS-CONTROL (PRODUCT LINK, ANTENNA)	293, 295
HARNESS AS-ENGINE (ELECTRONIC CONTROL MODULE)	305
HARNESS AS-ENGINE (FUEL INJECTION)	305
HARNESS AS-HEATER	995
HARNESS AS-HEATER & AIR COND	895, 898, 901
HARNESS AS-HEATER & AIR COND (CONTROL PANEL SWITCHES)	895, 995
HARNESS AS-LIGHTING	211
HARNESS AS-LIGHTING (CAB FLOODLIGHT)	208
HARNESS AS-LIGHTING (CAB FLOODLIGHTS, FRONT)	210
HARNESS AS-LIGHTING (MASS BOOM)	213
HARNESS AS-MONITOR (HIGH MOUNT)	1025
HARNESS AS-MONITOR (LOW MOUNT)	1025
HARNESS AS-MOTOR (CONDENSER FAN)	940
HARNESS AS-MOTOR (SWING MOTOR CONTROL)	309
HARNESS AS-OPERATOR CONTROLS	948
HARNESS AS-PLATFORM	317
HARNESS AS-PUMP (FUEL)	312
HARNESS AS-PUMP (REFUELING)	310
HARNESS AS-QUICK COUPLER	282
HARNESS AS-RADIO	322, 1001
HARNESS AS-SOLENOID	319
HARNESS AS-SOLENOID (1-WAY/2-WAY FLOW)	276
HARNESS AS-SOLENOID (QUICK COUPLER)	270
HARNESS AS-SWITCH	255, 256
HARNESS AS-SWITCH (SECONDARY SHUTDOWN)	317
HARNESS AS-VALVE	316
HARNESS AS-WIRING	203, 285, 310
HARNESS AS-WIRING (CAB)	282
HARNESS AS-WIRING (LIGHT BAR)	1025
HARNESS AS-WIRING (QUICK COUPLER SWITCH)	260
HARNESS AS-WIRING (SERVICE CONNECTOR)	293, 295
HATCH GP-ROOF	988, 989, 990
HEAD GP-MOTOR	703

INDEX

Name	Page
HEADREST AS-SEAT	992, 993, 994
HEADREST AS-SEAT–CLOTH	991
HEATER & MTG GP-CAB	995
HEATER AR-CAB	997
HOOD & GUARD GP	368
HOOD AR–PERFORATED	372
HOOD GP–ACCUGRADE READY	375
HOOD GP–PRECLEANER	373
HOOD GP-ENGINE	376, 377, 378
HORN GP-ELECTRIC	998, 999
HOSE GP-HYDRAULIC–CONTROL VALVE, BOOM	513
HOSE GP-HYDRAULIC–CONTROL VALVE, STICK	508, 510
HOSE GP-HYDRAULIC–FRONT	509, 511, 512, 514, 515
HOSE-RADIATOR (LOWER)	93, 95
HOSE-RADIATOR (UPPER)	93, 95
HOUSING GP-AIR CONDITIONER–INLET AIR	1000
HOUSING GP-FLYWHEEL	51
HOUSING GP-FRONT	52
HYDRAULIC AR	516

I

IDLER GP-FRONT	404, 405, 406
INDICATOR AS (HYDRAULIC RETURN FILTER)	501
INDICATOR AS-AIR FILTER CHANGE (AIR RESTRICTION)	104, 105
INJECTOR GP-FUEL	120, 121
INSTALLATION AR-COMMUNICATION–PRODUCT LINK 121SR	200
INSTALLATION AR-COMMUNICATION–PRODUCT LINK 321SR	200
INSTALLATION AR-ENGINE	17
INSTALLATION GP-RADIO	1001, 1003
INSTALLATION GP-SECURITY	201

K

KEY (BATTERY DISCONNECT)	250
KEY (FUEL TANK FILL CAP)	159
KEY AS-ELECTRONIC (SECURITY)	201
KIT-BRACKET–PRODUCT LINK 321SR	203
KIT-CONSOLE ADJUSTMENT	1004
KIT-SEAT SUSPENSION	1006, 1007
KIT-SEAT SUSPENSION–SEAT HEIGHT	1005

L

LAMP (24-VOLT, 10-WATT) (DOME)	927
LAMP AS (24-VOLT, 3-WATT)	218
LAMP AS-DOME	927
LAMP GP-FLOOD	204, 205, 206, 210
LAMP-HALOGEN (24-VOLT, 65-WATT)	204, 205, 206, 210
LEVER GP-AIR & TEMP CONTROL	1008
LIFTER GP-VALVE	53
LIFTING GP-ENGINE	54
LIGHTING GP-CHASSIS–FRONT, RH	207
LIGHTING GP-FLOOD–BOOM	211
LIGHTING GP-FLOOD–CAB	208
LIGHTING GP-FLOOD–CAB GUARD	210
LIGHTING GP-FLOOD–MASS BOOM	213
LINES GP-AIR	109, 111
LINES GP-AIR CONDITIONER	1009
LINES GP-AUXILIARY HYDRAULIC	527, 531, 533, 535, 537, 539
LINES GP-AUXILIARY HYDRAULIC–MASS BOOM	521, 523
LINES GP-AUXILIARY HYDRAULIC–REACH	529
LINES GP-AUXILIARY HYDRAULIC–REACH BOOM	517, 519
LINES GP-AUXILIARY HYDRAULIC–REACH, MASS	525
LINES GP-BOOM	547
LINES GP-BOOM–1-PIECE LONG BOOM	541
LINES GP-BOOM–1-PIECE SHORT BOOM	543
LINES GP-BOOM CYLINDER	553
LINES GP-BOOM CYLINDER–LH	558

INDEX

Name	Page
LINES GP-BOOM CYLINDER–LOAD CONTROL	555
LINES GP-BOOM CYLINDER–RH	554, 559
LINES GP-BOOM–DRAIN, MASS BOOM	546
LINES GP-BOOM–DRAIN, REACH BOOM	545
LINES GP-BOOM–REACH BOOM, STICK LOAD CONTROL	549
LINES GP-BOOM–STICK LOAD CONTROL VALVE	551
LINES GP-BUCKET CYLINDER	560, 561, 562, 563, 564, 565, 566
LINES GP-CONTROL–CONTROL VALVE, REAR	567
LINES GP-COUPLER	572, 573, 574, 575
LINES GP-COUPLER–MASS BOOM	571
LINES GP-COUPLER–REACH BOOM	570
LINES GP-ENGINE OIL	80
LINES GP-ENGINE OIL DRAIN	81
LINES GP-FRONT–AUXILIARY	591, 594, 596
LINES GP-FRONT–BOOM CYLINDER	578, 610
LINES GP-FRONT–COMBINED FUNCTION	587
LINES GP-FRONT–CONTROL VALVE, FRONT	580
LINES GP-FRONT–HAMMER	604
LINES GP-FRONT–MEDIUM FLOW	602
LINES GP-FRONT–QUICK COUPLER	576, 606
LINES GP-FRONT–SYSTEM 1, 1-WAY, 1-PUMP	583
LINES GP-FRONT–SYSTEM 11, COMBINED FN, MEDIUM PRESSURE	600
LINES GP-FUEL	122, 125, 127
LINES GP-GREASE	840, 842
LINES GP-GREASE–BOOM	838
LINES GP-GREASE–STICK	839
LINES GP-HEATER	1013
LINES GP-HYDRAULIC OIL COOLER	611
LINES GP-INJECTOR HYD PUMP	131
LINES GP-MUFFLER DRAIN	112
LINES GP-PILOT–4-WAY PATTERN	628
LINES GP-PILOT–ALT PATTERN CONTROL, 2-WAY	630
LINES GP-PILOT–AUXILIARY	638, 662
LINES GP-PILOT–AUXILIARY SYSTEM	635
LINES GP-PILOT–BOOM LOWERING CONTROL	664
LINES GP-PILOT–COMB FCTN, MED PRESS, 2-PEDALS	644
LINES GP-PILOT–COMBINED FCTN, 2-HYD PEDALS	658
LINES GP-PILOT–CONTROL VALVE	617, 675
LINES GP-PILOT–CONTROL VALVE, PUMP	619
LINES GP-PILOT–CONTROL VALVE, TRAVEL VALVE	667
LINES GP-PILOT–DRAIN, HEAVY LIFT	677
LINES GP-PILOT–HEAVY LIFT	633
LINES GP-PILOT–JOYSTICK, PEDALS	613
LINES GP-PILOT–LOAD CONTROL, STICK	648
LINES GP-PILOT–MEDIUM PRESSURE	673
LINES GP-PILOT–PEDAL CONTROLS	642, 656
LINES GP-PILOT–PEDAL, RH	650
LINES GP-PILOT–PUMP	626
LINES GP-PILOT–PUMP CONTROL	652
LINES GP-PILOT–SYSTEM 16, 1-WAY, 2-PUMP	669
LINES GP-PILOT–THIRD PEDAL, PILOT VALVE	665
LINES GP-PUMP–MEDIUM FLOW	679
LINES GP-PUMP–SUPPLY	678
LINES GP-RETURN	681
LINES GP-RETURN–LOAD CONTROL, BOOM CYLINDER	683
LINES GP-STICK	686
LINES GP-STICK CYLINDER	688, 691
LINES GP-STICK CYLINDER–LONG REACH	687
LINES GP-STICK CYLINDER–LOWERING CONTROL	689
LINES GP-STICK–LONG REACH	685
LINES GP-SWING DRIVE DRAIN	692
LINES GP-TRAVEL MOTOR	693
LINES GP-TRAVEL MOTOR–LONG UNDERCARRIAGE	695
LINES GP-TURBOCHARGER OIL	82
LINES GP-WATER	89
LINK AS-TRACK	407, 408
LINKAGE AR-BUCKET–CB2-FAMILY	844, 845
LINKAGE AR-BUCKET–CB2-FAMILY, WITH LIFTING EYE	845
LINKAGE AR-BUCKET–DB-FAMILY	844

INDEX

Name	Page
	845
LINKAGE GP-BUCKET	852
LINKAGE GP-BUCKET–CB2-FAMILY	846
	854
	856
LINKAGE GP-BUCKET–DB-FAMILY	848
	850
LITERATURE GP	1015
LOCK GP-TRANSPORT	858

M

MANIFOLD GP-CONTROL–PILOT OIL SUPPLY	697
	698
	699
MANIFOLD GP-EXHAUST	113
MIRROR AR-REAR VIEW	1015
MIRROR GP	1016
MIRROR GP-REAR VIEW	1018
	1019
	1020
MIRROR GP-REAR VIEW–FRONT, RH	1017
MODULE GP-INTERFACE (KEY)	201
MONITOR & MTG GP-OPERATOR	1021
MONITOR GP-OPERATOR	1022
MOTOR & MTG GP-SWING	700
MOTOR & MTG GP-TRAVEL	701
MOTOR AS (WIPER)	1100
MOTOR GP-SWING	702
	703
MOTOR GP-TRAVEL	705
MOUNTING GP-ANTENNA	1023
MOUNTING GP-ENGINE	55
MOUNTING GP-GRADE CONTROL–ACCUGRADE	214
MOUNTING GP-LINES	859
MOUNTING GP-MAIN CONTROL VALVE	708
MOUNTING GP-MONITOR–ACCUGRADE	1025
MOUNTING GP-PLATFORM	1026
MOUNTING GP-RADIO–GRADE CONTROL	1028
MUFFLER GP	114

O

OPERATOR AR	1029

P

PADLOCK GP	159
PAN GP-OIL	57
PANEL & MTG GP-CIRCUIT BREAKER	215
PANEL GP-CIRCUIT BREAKER	216
PANEL GP-SWITCH–ENGINE SPEED, START	218
	220
PEDAL AR-AUXILIARY–THIRD PEDAL, STRAIGHT TRAVEL	1029
PISTON & ROD GP	58
	59
PLATE & FILM GP	1115
	1120
PLATE-IDENTIFICATION (CAT)	889
PLATE-INSTRUCTION (BATTERY)	216
PLATFORM GP-OPERATOR	1030
PLUG GP-CONNECTOR	222
PLUG GP-CONTROL VALVE	709
	710
PLUG GP-CYLINDER BLOCK	60
PLUG GP-ENGINE	61
PLUG-OIL DRAIN	725
POWER TRAIN AR	328
PROBE AS-LIQUID LEVEL (WATER SEPARATOR)	226
PULLEY GP	62
	63
PUMP & MOTOR GP-REFUELING	132
PUMP & MTG GP-AUXILIARY	711
PUMP & MTG GP-MAIN HYDRAULIC	712
PUMP & MTG GP-UNIT INJ HYD	133
	135
	137
	139
	141
PUMP AR-FUEL TRANSFER	143
PUMP GP-ENGINE OIL	84
	85
PUMP GP-FUEL INJECTION	144
	145
PUMP GP-FUEL PRIMING	146
	147
PUMP GP-FUEL PRM & PRIM FILTER–WITH WATER SEPARATOR	148
PUMP GP-FUEL PRM & WATER SEP	149
PUMP GP-FUEL TRANSFER	152
	153
	154
	155
	156
PUMP GP-GEAR (PILOT)	714
PUMP GP-GEAR–AUXILIARY	713
PUMP GP-MAIN HYDRAULIC	714
PUMP GP-REFUELING	150
PUMP GP-UNIT INJECTOR HYD	152
	153
	154
	155
	156
PUMP GP-WATER	91
	92

INDEX

Name	Page
R	
RADIATOR & HYD OIL COOLER GP	93, 95, 97, 99
RECEIVER DRYER AS (REFRIGERANT)	1009
RECEIVER GP-SATELLITE–DUAL GNSS, MS990	223
REGULATOR AS-VOLTAGE (24-VOLT) (ALTERNATOR)	170
REGULATOR GP-FUEL PRESSURE	158
REGULATOR-PRESSURE (FUEL TRANSFER PUMP)	148
REGULATOR-WATER TEMPERATURE (94-DEG C) (COOLANT)	89
RELAY (24-VOLT) (1-WAY/2-WAY SOLENOID)	276
RELAY (24-VOLT) (BOOM FLOODLIGHT)	272
RELAY (24-VOLT) (CAB FLOODLIGHT)	272
RELAY (24-VOLT) (CHASSIS LIGHT)	272
RELAY (24-VOLT) (ETHER)	272
RELAY (24-VOLT) (HORN)	272
RELAY (24-VOLT) (NEUTRAL START)	272
RELAY (24-VOLT) (PRIMING PUMP)	280
RELAY (24-VOLT) (QUICK COUPLER LOCK ON)	282
RELAY (24-VOLT) (QUICK COUPLER LOCK PRIORITY)	282
RELAY (24-VOLT) (QUICK COUPLER LOCK)	282
RELAY (24-VOLT) (REFUELING PUMP, START)	310
RELAY (24-VOLT) (REFUELING PUMP, STOP)	310
RELAY (24-VOLT) (SPEAKERS)	322
RELAY (24-VOLT) (START CONTROL)	297
RELAY (24-VOLT) (TRAVEL ALARM)	272
RELAY (BLOWER)	951, 1000
RELAY (COMPRESSOR CLUTCH)	951, 1000
RELAY (CONDENSER)	1000
RELAY (CONDENSER, HIGH)	1000
RELAY AS (WIPER)	1100
ROCKER ARM GP	64, 65
ROCKER ARM GP (EXHAUST)	69
ROCKER ARM GP (INTAKE)	69
ROLLER AR-TRACK & CARRIER	409, 410, 411
ROLLER GP-TRACK CARRIER	412
ROLLER GP-TRACK-SINGLE FLANGE	413, 414

Name	Page
S	
SCREEN AS (HYDRAULIC TANK)	719
SCREEN GP-HYDRAULIC–TANK	719
SCREEN GP-SUN	1031
SEAL GP-CRANKSHAFT	66
SEAL-RECTANGULAR	521
SEAL-VALVE COVER (VALVE COVER)	27
SEAT & MOUNTING GP–AIR SUSPENSION	1034
SEAT & MOUNTING GP–HIGH BACK, TILT	1033, 1035, 1036
SEAT & MOUNTING GP–LOW BACK WITH TILT	1032
SEAT BELT GP	1041, 1042
SEAT BELT GP (RETRACTABLE, 3-IN)	1039
SEAT BELT GP (RETRACTABLE, 46-MM)	1038
SEAT BELT GP–RETRACTABLE	1037, 1041, 1042
SEAT BELT GP–RETRACTABLE, 3-IN	1039
SEAT BELT GP–RETRACTABLE, 46-MM	1038, 1040
SEAT GP	1048, 1049, 1056, 1068, 1069
SEAT GP–HIGH BACK, TILT	1044, 1057
SEAT GP–HIGH BACK, WITH HEATER	1045, 1058
SEAT GP–LOW BACK WITH TILT	1043
SEAT GP–LOW BACK, TILT	1046, 1047, 1050, 1052, 1054
SEAT GP–LOW BACK, VINYL	1051, 1053, 1055
SEAT GP-SUSPENSION–AIR SUSP, HIGH BACK, WITH HTR	1062, 1064
SEAT GP-SUSPENSION–AIR SUSPENSION	1061
SEAT GP-SUSPENSION–HIGH BACK, TILT	1060, 1068, 1069
SEAT GP-SUSPENSION–HIGH BACK, WITH HEATER	1066, 1070
SEAT GP-SUSPENSION–LOW BACK, TILT	1059, 1065, 1067

INDEX

Name	Page
SENDER AS (HYDRAULIC OIL PRESSURE)	505
SENDER AS-TEMPERATURE (HYDRAULIC OIL)	725
SENSOR AR-GRADE–ANGLE SENSOR	223
SENSOR AS (AMBIENT AIR TEMP)	898
	901
SENSOR AS-LIQUID LEVEL (WATER SEPARATOR)	226
SENSOR AS-POSITION (ANGLE)	223
SENSOR AS-POSITION (ANGLE, PITCH)	223
SENSOR AS-PRESSURE	230
SENSOR AS-PRESSURE (CLENCH)	596
SENSOR AS-PRESSURE (MAIN HYDRAULIC PUMP)	626
SENSOR AS-TEMPERATURE (AIR)	951
	1000
SENSOR AS-TEMPERATURE (COOLANT)	898
	901
SENSOR GP-ENGINE	224
SENSOR GP-FUEL LEVEL	161
	163
SENSOR GP-LIQUID LEVEL	226
SENSOR GP-LIQUID LEVEL (WATER IN FUEL)	227
SENSOR GP-LIQUID LEVEL–WATER IN FUEL	227
SENSOR GP-PRESSURE	229
	230
	231
	232
	233
	234
SENSOR GP-PRESSURE (ATMOSPHERIC AIR)	224
SENSOR GP-PRESSURE (BOOST)	224
SENSOR GP-PRESSURE (ENGINE OIL)	224
SENSOR GP-PRESSURE (FUEL)	122
	127
SENSOR GP-PRESSURE (INJECTION ACTUATION)	224
SENSOR GP-PRESSURE–FUEL	228
	234
SENSOR GP-SPEED	235
	236
SENSOR GP-SPEED (ENGINE TIMING) (ENGINE TIMING)	224
SENSOR GP-SPEED (ENGINE)	235
SENSOR GP-TEMPERATURE	238
	239
SENSOR GP-TEMPERATURE (AMBIENT)	290
SENSOR GP-TEMPERATURE (FUEL)	122
	127
	237
SENSOR GP-TEMPERATURE–FUEL	237
SENSOR-TEMPERATURE (AMBIENT AIR)	895
	995
SHEET AS-SOUND SUPPRESSION	380
	381
	382
	383
	385
	386
	387
SIDECUTTER GP	890
SOFTWARE GP-COMMUNICATION (PRODUCT LINK 121SR)	193
SOFTWARE GP-COMMUNICATION (PRODUCT LINK 300)	193
SOFTWARE GP-MONITOR	194
SOLENOID AS-STARTING MOTOR (24-VOLT) (STARTER)	248
SPECIAL AR	3
SPECIAL AR-HEAVY LIFT	4
SPECIAL AR-SUPER LONG REACH	4
SPRING AS-GAS	982
SPRING GP-RECOIL	415
SPROCKET GP	329
STARTING AID GP	107
	240
STARTING AID GP-ETHER	241
STARTING AR-COLD WEATHER	243
STARTING MOTOR GP-ELECTRIC	244
	245
	246
	248
STEP AS	356
STEP GP	388
	389
STICK AR-HOE	860
	861
STICK AR-HOE–MASS	861
STICK AR-HOE–REACH, ACCUGRADE READY	862
STICK GP-HOE	863
	865
	867
	868
	869
	870
	871
	872
	873
STICK GP-HOE–ACCUGRADE	874
STORAGE GP-VANDALISM GUARD	390
STRAINER AS-FUEL	150
STRAINER AS-FUEL (FLOAT GAUGE)	161
	163
SUN VISOR	1081
SUPPORT AS-ENCLOSURE	392
	393

INDEX

Name	Page
SUPPORT GP-SEAT	1071, 1072
SUSPENSION GP-SEAT	1067, 1068, 1069, 1070, 1073, 1074, 1076, 1077, 1078, 1079, 1080
SUSPENSION GP-SEAT–AIR	1075
SWITCH (WINDOW LOWER LIMIT)	1087
SWITCH AS (NORMALLY CLOSED)	256
SWITCH AS (NORMALLY OPEN)	255
SWITCH AS (REFUELING PUMP, STOP)	256
SWITCH AS-FOOT (WORK TOOL)	948
SWITCH AS-LIMIT (HYDRAULIC LOCKOUT)	253
SWITCH AS-LIQUID LEVEL	57
SWITCH AS-LIQUID LEVEL (FUEL TANK SHUTOFF)	150
SWITCH AS-LIQUID LEVEL (HYDRAULIC OIL)	725
SWITCH AS-MAGNETIC (24-VOLT) (MAIN RELAY)	272, 310
SWITCH AS-PRESSURE (ACTION INPUT, MEDIUM PRESSURE)	642
SWITCH AS-PRESSURE (ACTION INPUT, WORK TOOL)	650
SWITCH AS-PRESSURE (AUXILIARY, COMBINED FUNCTION)	642
SWITCH AS-PRESSURE (IMPLEMENT, SWING)	613
SWITCH AS-PRESSURE (PILOT, BOOM UP)	645, 656, 659
SWITCH AS-PRESSURE (REFRIGERANT)	1009
SWITCH AS-PRESSURE (THIRD PEDAL, STRAIGHT TRAVEL)	665
SWITCH AS-PRESSURE (TRAVEL, LH)	613
SWITCH AS-PRESSURE (TRAVEL, RH)	613
SWITCH AS-PUSH BUTTON (HORN)	949
SWITCH AS-PUSH BUTTON (MANUAL LOW IDLE)	950
SWITCH AS-ROCKER (FINE SWING)	272
SWITCH AS-ROCKER (HEATED SEAT)	1062, 1066
SWITCH AS-ROCKER (LOWER WASHER)	261
SWITCH AS-ROCKER (RADIO MUTE)	1001
SWITCH AS-ROCKER (WIPER, LOWER)	261
SWITCH AS-ROLLER (WIPER, LOWER)	1097
SWITCH AS-TOGGLE (AUTO/MANUAL ENG SPEED CONTROL)	301
SWITCH AS-TOGGLE (MANUAL ENGINE SPEED CONTROL)	301
SWITCH AS-TOGGLE (QUICK COUPLER)	260, 282
SWITCH AS-TOGGLE (SECONDARY SHUTDOWN)	317
SWITCH GP-DISCONNECT (BATTERY)	216
SWITCH GP-DISCONNECT–BATTERY	250
SWITCH GP-MAGNETIC	252
SWITCH GP-MAGNETIC (24-VOLT) (AIR INLET HEATER RELAY)	240
SWITCH GP-MAGNETIC–START RELAY	251
SWITCH GP-POSITION–HYDRAULIC LOCKOUT	253
SWITCH GP-PRESSURE (FUEL)	122, 127
SWITCH GP-PRESSURE–FUEL	254
SWITCH GP-PUSH BUTTON–REFUELING PUMP, START	255
SWITCH GP-PUSH BUTTON–REFUELING PUMP, STOP	256
SWITCH GP-PUSHBUTTON (REFUELING PUMP, START)	255
SWITCH GP-ROTARY (THROTTLE POSITION)	218, 220
SWITCH GP-ROTARY–THROTTLE POSITION	257
SWITCH GP-START–ENGINE, KEY	258
SWITCH GP-TOGGLE (12-VOLT, 24-VOLT SPEAKER)	322
SWITCH GP-TOGGLE (QUICK COUPLER)	282
SWITCH GP-TOGGLE–FUEL PRIMING PUMP	259
SWITCH GP-TOGGLE–QUICK COUPLER	260
SWITCH GP-WIPER–LOWER	261
SWIVEL GP	720

T

TANK & FILTER GP-HYDRAULIC	722
TANK & MTG GP-FUEL	159
TANK & MTG GP-HYDRAULIC	724
TANK GP-FUEL	160, 161, 163
TANK GP-HYDRAULIC	725
TIP GP-LONG	891
TIP-LEVELING EDGE–K-100	892
TRACK AR–2-REQUIRED	416
TRACK GP–2-REQUIRED	417, 418, 419, 420

INDEX

Name	Page
	421
	422
	423
	424
	425
	426
	427
	428
	429
	430
	431
TURBOCHARGER GP	115
	116
	117
	118

V

VALVE & MTG GP-CONTROL–AUXILIARY	728
	729
VALVE AR-ALT PATTERN CONTROL–2-WAY	730
VALVE AR-ALT PATTERN CONTROL–4-WAY	730
VALVE AR-CHECK & RELIEF	730
VALVE AR-CHECK & RELIEF– STICK LOWERING CONTROL	731
VALVE AR-LOAD CONTROL	730
VALVE AR-SWING	731
VALVE GP-CHECK	610
	734
VALVE GP-CHECK (SOLENOID CONTROLLED) (1-WAY FLOW)	587
VALVE GP-CHECK (SOLENOID CONTROLLED) (1-WAY/2-WAY, CHECK)	587
VALVE GP-CHECK–1-WAY/2-WAY, CHECK	733
VALVE GP-CHECK–OIL COOLER BYPASS	732
VALVE GP-CONTROL	753
	756
VALVE GP-CONTROL–AUXILIARY	746
VALVE GP-CONTROL–HEAVY LIFT	748
VALVE GP-CONTROL–MEDIUM FLOW	739
VALVE GP-CONTROL–MEDIUM PRESSURE	736
VALVE GP-CONTROL–REAR	741
VALVE GP-CONTROL– REAR, WITHOUT HOUSINGS	737
VALVE GP-CONTROL– WITHOUT COVERS, HOUSINGS	738
VALVE GP-COUPLER–QUICK COUPLER	757
VALVE GP-ETHER STARTING	262
VALVE GP-FLOW CONTROL & RELIEF	759
VALVE GP-FUEL BYPASS	165
VALVE GP-FUEL SHUTOFF	166
VALVE GP-LOAD CONTROL– BOOM CYLINDER	761
VALVE GP-LOAD CONTROL– BOOM DRIFT RED, LINE RELIEF	768
VALVE GP-LOAD CONTROL– STICK CYLINDER	764
VALVE GP-LOAD CONTROL– STICK DRIFT RED, LINE RELIEF	766
VALVE GP-MAIN CONTROL	770
VALVE GP-MAIN CONTROL– INCREASED LIFT	771
VALVE GP-MANUAL	772
VALVE GP-PILOT	953
	954
VALVE GP-PILOT (THIRD PEDAL, STRAIGHT TRAVEL)	955
VALVE GP-PILOT– ALT PATTERN CONTROL, 2-WAY	773
VALVE GP-PILOT–JOYSTICK	775
VALVE GP-PILOT RELIEF	779
	780
VALVE GP-PILOT RELIEF (HYDRAULIC FILTER)	499
VALVE GP-PILOT–TRAVEL	777
VALVE GP-PRESSURE REDUCING (QUICK COUPLER)	757
VALVE GP-PRESSURE REDUCING– BOOM, SWING PRIORITY	781
VALVE GP-PRIORITY–SWING	783
VALVE GP-RELIEF	784
	787
	791
	795
	796
	797
	819
	824
VALVE GP-RELIEF (LINE)	594
	746
	761
	766
	768
VALVE GP-RELIEF (LINE) (STICK CYLINDER)	764
VALVE GP-RELIEF–LINE	790
	792
	793
	794
VALVE GP-RELIEF–MAIN, HEAVY LIFT	798
VALVE GP-RELIEF– NEGATIVE FLOW CONTROL	785
	786
VALVE GP-RELIEF–PILOT OPERATED	800
VALVE GP-RELIEF–SWING MOTOR	789
VALVE GP-RELIEF–WITH BLOCK	788
VALVE GP-SELECTOR– ALT PATTERN CONTROL, 4-WAY	801
VALVE GP-SHUTTLE	803
	804
	806

INDEX

Name	Page
	807
VALVE GP-SHUTTLE–1-PUMP/2-PUMP	805
VALVE GP-SOLENOID	809
	811
	812
VALVE GP-SOLENOID & MANIFOLD (QUICK COUPLER)	576
VALVE GP-SOLENOID & RELIEF	818
VALVE GP-SOLENOID & RELIEF (1-WAY/2-WAY FLOW)	596
VALVE GP-SOLENOID & RELIEF–1-WAY/2-WAY FLOW	817
VALVE GP-SOLENOID (24-VOLT) (FINE SWING)	822
VALVE GP-SOLENOID (AUXILIARY, COMBINED FUNCTION) (1-PUMP/2-PUMP, 1-WAY/2-WAY FLW)	645
	659
VALVE GP-SOLENOID (HEAVY LIFT)	633
VALVE GP-SOLENOID (HYDRAULIC LOCKOUT)	698
	699
VALVE GP-SOLENOID (NEG FLOW CONT, PROPN RED VALVE)	635
	639
	645
	652
	659
	670
VALVE GP-SOLENOID (PRESSURE REDUCING)	815
VALVE GP-SOLENOID (PRESSURE REDUCING) (2-PUMP, 1-WAY FLOW)	662
	669
VALVE GP-SOLENOID (PRESSURE REDUCING) (ROTATOR MOTOR)	673
VALVE GP-SOLENOID (PUMP CONTROL)	438
VALVE GP-SOLENOID (QUICK COUPLER PIN)	813
VALVE GP-SOLENOID (QUICK COUPLER)	757
VALVE GP-SOLENOID (STRAIGHT TRAVEL)	741
	748
VALVE GP-SOLENOID (SWING BRAKE RELEASE)	698
	699
VALVE GP-SOLENOID (TRAVEL SPEED)	698
	699
VALVE GP-SOLENOID (WORK TOOL, 4-FUNCTION)	814
VALVE GP-SOLENOID (WORK TOOL, 4-FUNCTION) (1-PUMP/2-PUMP, 1-WAY/2-WAY FLW)	638
VALVE GP-SOLENOID–COMBINED FCTN, MEDIUM PRESSURE	811
VALVE GP-SOLENOID–FINE SWING	816
VALVE GP-SOLENOID–HEAVY LIFT	810
VALVE GP-SOLENOID–PRESSURE REDUCING	808
	815
VALVE GP-SOLENOID–QUICK COUPLER	813
VALVE GP-SOLENOID–WORK TOOL, 4-FUNCTION	814
VALVE GP-SWING CUSHION	819
	821
VALVE GP-SWING CUSHION–FINE SWING	820
	822
VALVE GP-TRAVEL COUNTERBALANCE	824
VALVE GP-UNLOADING (STICK)	741
	748
VALVE MECHANISM GP	67
	68
	69
	71
VALVE-FILL	394
VALVE-RELIEF	394
VISOR GP-CAB	1081
VISOR GP-PROTECTION–RAIN	1082

W

WASHER GP-WINDOW	1083
WASHER GP-WINDOW–LOWER	1084
WATER SEP & FUEL PRM PUMP GP	149
WINDOW AS-FRONT–UPPER	1086
WINDOW GP-CAB	1094
WINDOW GP-CAB–FRONT, LOWER	1090
WINDOW GP-CAB–FRONT, UPPER	1087
WINDOW GP-CAB–LOWER	1091
WINDOW GP-CAB–SIDE, REAR	1093
WINDOW GP-DOOR	1095
WIPER & WASHER GP-WINDOW–LOWER	1097
WIPER AR-WINDOW	1099
WIPER GP-WINDOW–FRONT, UPPER	1100
WIRING GP-AUX START RECEPTACLE–JUMP START	263
WIRING GP-AUXILIARY CONTROL	268
WIRING GP-AUXILIARY CONTROL–SYSTEM 17, COMBINED FUNCTION	265
WIRING GP-BOOM FLOAT–COUPLER	270
WIRING GP-CAB	272
WIRING GP-CAB–1-WAY/2-WAY FLOW	276
WIRING GP-CAB–ACCUGRADE READY	284
WIRING GP-CAB–COUPLER	282
WIRING GP-CAB–PRIMING PUMP	280
WIRING GP-CAB–REAR VISION CAMERA	285
WIRING GP-CAMERA–REAR VISION CAMERA	286
WIRING GP-CHASSIS	287
WIRING GP-CHASSIS–FAN CLUTCH	290
WIRING GP-COMBINED FLOW	291

INDEX

Name	Page	Name	Page
WIRING GP-COMMUNICATION	297		
WIRING GP-COMMUNICATION–PRODUCT LINK 121SR	295		
WIRING GP-COMMUNICATION–PRODUCT LINK 321SR	293		
WIRING GP-CONSOLE	300		
WIRING GP-CONSOLE–LH	299		
WIRING GP-CONSOLE–RH	301		
WIRING GP-CONVERTER	303 304		
WIRING GP-COUPLER	321		
WIRING GP-ENGINE	305		
WIRING GP-FAN–FAN CLUTCH	307 308		
WIRING GP-FINE SWING	309		
WIRING GP-FUEL SYSTEM–PRIMING PUMP	312		
WIRING GP-FUEL SYSTEM–REFUELING	310		
WIRING GP-GRADE CONTROL	314		
WIRING GP-HAMMER–RETURN FILTER	315		
WIRING GP-MEDIUM PRESSURE	316		
WIRING GP-PLATFORM	317		
WIRING GP-QUICK COUPLER	319		
WIRING GP-RADIO	322		

MACHINE ARRANGEMENT

314-3652 CHASSIS AR

S/N: WDK1-UP

PART OF 314-3641 GENERAL AR

SMCS-7000 **i03110606**

NOTE	PART NUMBER	QTY	PART NAME 1 2 3 4 5 6 (PRODUCT LEVEL)	SEE PAGE
Y	*251-0429*	1	BATTERY & WIRING GP	172
Y	*223-3040*	1	BOX & MTG GP-STORAGE	330
Y	*223-3022*	1	COUNTERWEIGHT GP	336
Y	*223-3042*	1	FENDER & COVER GP	352
Y	*228-5504*	1	FRAME GP-UPPER	354
Y	*223-3047*	1	GUARD GP-BOTTOM	362
Y	*256-1644*	1	HANDRAIL GP	367
Y	*223-3043*	1	HOOD & GUARD GP	368
Y	*267-8071*	1	HORN GP-ELECTRIC	998
Y	*4I-5409*	1	LIGHTING GP-CHASSIS (FRONT, RH)	207
Y	*229-9071*	1	LINES GP-AIR CONDITIONER	1009
Y	*223-3046*	1	LINES GP-FUEL	122
Y	*7Y-0059*	1	LITERATURE GP	1015
Y	*142-3836*	1	MIRROR GP-REAR VIEW (FRONT, RH)	1017
Y	*245-7811*	1	MOUNTING GP-PLATFORM	1026
Y	*229-9072*	1	OPERATOR AR	1029
Y	*314-3660*	1	PLATE & FILM GP	1115
Y	*223-3037*	1	TANK & MTG GP-FUEL	159
Y	*259-4965*	1	WIRING GP-FINE SWING	309

Y-SEPARATE ILLUSTRATION

<END>

314-3653 CHASSIS AR

S/N: MNB1-UP

PART OF 314-3642 GENERAL AR

SMCS-7000 **i03110607**

NOTE	PART NUMBER	QTY	PART NAME 1 2 3 4 5 6 (PRODUCT LEVEL)	SEE PAGE
Y	*251-0429*	1	BATTERY & WIRING GP	172
Y	*223-3040*	1	BOX & MTG GP-STORAGE	330
Y	*223-3022*	1	COUNTERWEIGHT GP	336
Y	*223-3042*	1	FENDER & COVER GP	352
Y	*228-5504*	1	FRAME GP-UPPER	354
Y	*223-3047*	1	GUARD GP-BOTTOM	362
Y	*256-1644*	1	HANDRAIL GP	367
Y	*223-3043*	1	HOOD & GUARD GP	368
Y	*267-8071*	1	HORN GP-ELECTRIC	998
Y	*4I-5409*	1	LIGHTING GP-CHASSIS (FRONT, RH)	207
Y	*229-9071*	1	LINES GP-AIR CONDITIONER	1009
Y	*223-3046*	1	LINES GP-FUEL	122
Y	*7Y-0059*	1	LITERATURE GP	1015
Y	*142-3836*	1	MIRROR GP-REAR VIEW (FRONT, RH)	1017
Y	*245-7811*	1	MOUNTING GP-PLATFORM	1026
Y	*229-9072*	1	OPERATOR AR	1029
Y	*314-3661*	1	PLATE & FILM GP	1120
Y	*223-3037*	1	TANK & MTG GP-FUEL	159
Y	*259-4965*	1	WIRING GP-FINE SWING	309

Y-SEPARATE ILLUSTRATION

<END>

MACHINE ARRANGEMENT

290-1778 CONVERSION AR-MACHINE–ACCUGRADE READY

S/N: MNB1-UP; WDK1-UP

FOR USE WITH 275-3699–PAGE 826, 275-3704–PAGE 862, 275-3711–PAGE 845, 278-3924–PAGE 333, 278-3926–PAGE 334

AN ATTACHMENT

SMCS-7000 **i02892214**

NOTE	PART NUMBER	QTY	PART NAME 1 2 3 4 5 6 (PRODUCT LEVEL)	SEE PAGE
Y	*273-5358*	1	FLOOR MAT GP	975
Y	*298-2885*	1	HOOD GP	375
Y	*270-5603*	1	MOUNTING GP-ANTENNA (ACCUGRADE)	1023
Y	*306-8349*	1	WIRING GP-CAB (ACCUGRADE READY)	284
Y	*275-7192*	1	WIRING GP-CHASSIS	287
Y-SEPARATE ILLUSTRATION				

<END>

314-3641 GENERAL AR

S/N: WDK1-UP

SMCS-7000 **i03110603**

NOTE	PART NUMBER	QTY	PART NAME 1 2 3 4 5 6 (PRODUCT LEVEL)	SEE PAGE
Y	*314-3652*	1	CHASSIS AR	1
Y	*221-8875*	1	ELECTRONICS GP-MACHINE	193
Y	*221-8861*	1	ELECTRONICS GP-MONITOR	194
Y	*266-6261*	1	ENGINE AR	6
Y	*229-1746*	1	FRAME AR-UNDERCARRIAGE	395
Y	*255-5707*	1	HYDRAULIC AR	516
Y	*222-8379*	1	INSTALLATION AR-ENGINE	17
Y	*171-9410*	1	POWER TRAIN AR	328
Y-SEPARATE ILLUSTRATION				

<END>

314-3642 GENERAL AR

S/N: MNB1-UP

SMCS-7000 **i03110605**

NOTE	PART NUMBER	QTY	PART NAME 1 2 3 4 5 6 (PRODUCT LEVEL)	SEE PAGE
Y	*314-3653*	1	CHASSIS AR	1
Y	*221-8875*	1	ELECTRONICS GP-MACHINE	193
Y	*221-8861*	1	ELECTRONICS GP-MONITOR	194
Y	*266-6261*	1	ENGINE AR	6
Y	*229-1747*	1	FRAME AR-UNDERCARRIAGE	395
Y	*255-5708*	1	HYDRAULIC AR	516
Y	*222-8379*	1	INSTALLATION AR-ENGINE	17
Y	*171-9410*	1	POWER TRAIN AR	328
Y-SEPARATE ILLUSTRATION				

<END>

MACHINE ARRANGEMENT

298-4286 SPECIAL AR

S/N: MNB1-UP; WDK1-UP
CHINA
FOR USE WITH 600-MM (23.6-IN) TRACK SHOES
AN ATTACHMENT

SMCS-7000 **i02842543**

NOTE	PART NUMBER	QTY	PART NAME 1 2 3 4 5 6 (PRODUCT LEVEL)	SEE PAGE
Y	*298-4281*	1	FILM GP	1111
	305-0395	1	HANDLE AS	

Y-SEPARATE ILLUSTRATION

<END>

298-4287 SPECIAL AR

S/N: MNB1-UP; WDK1-UP
CHINA
FOR USE WITH 700-MM (27.5-IN) TRACK SHOES
AN ATTACHMENT

SMCS-7000 **i02843434**

NOTE	PART NUMBER	QTY	PART NAME 1 2 3 4 5 6 (PRODUCT LEVEL)	SEE PAGE
Y	*298-4281*	1	FILM GP	1111
Y	*235-7764*	2	STEP GP	388
	305-0395	1	HANDLE AS	

Y-SEPARATE ILLUSTRATION

<END>

298-4288 SPECIAL AR

S/N: MNB1-UP; WDK1-UP
CHINA
FOR USE WITH 800-MM (31.5-IN) TRACK SHOES
AN ATTACHMENT

SMCS-7000 **i02843491**

NOTE	PART NUMBER	QTY	PART NAME 1 2 3 4 5 6 (PRODUCT LEVEL)	SEE PAGE
Y	*298-4281*	1	FILM GP	1111
Y	*308-8881*	2	STEP GP	389
	305-0395	1	HANDLE AS	

Y-SEPARATE ILLUSTRATION

<END>

MACHINE ARRANGEMENT

247-7392 SPECIAL AR-HEAVY LIFT

S/N: MNB1-UP; WDK1-UP

AN ATTACHMENT

SMCS-7000 **i02489499**

NOTE	PART NUMBER	QTY	PART NAME 1 2 3 4 5 6 (PRODUCT LEVEL)	SEE PAGE
Y	*259-5237*	1	FASTENER GP-WIRING HARNESS (HEAVY LIFT)	198
Y	*255-1659*	1	LINES GP-PILOT (HEAVY LIFT)	633
Y	**259-7424**	1	VALVE GP-MAIN CONTROL (HEAVY LIFT)	771

Y-SEPARATE ILLUSTRATION

<END>

262-3586 SPECIAL AR-SUPER LONG REACH

S/N: MNB1-UP

CANNOT BE USED WITH 247-7392—PAGE 4

AN ATTACHMENT

SMCS-7000 **i03021454**

NOTE	PART NUMBER	QTY	PART NAME 1 2 3 4 5 6 (PRODUCT LEVEL)	SEE PAGE
Y	*268-6780*	1	BOOM GP	830
Y	*268-0462*	1	COUNTERWEIGHT GP	339
Y	*225-4582*	1	CYLINDER & LINES GP-BOOM (LH)	452
Y	*225-4583*	1	CYLINDER & LINES GP-BOOM (RH)	452
Y	*253-6664*	1	CYLINDER & LINES GP-BUCKET	454
Y	*216-6605*	1	CYLINDER & LINES GP-STICK	455
Y	*302-9279*	1	FILM GP (SUPER LONG REACH)	1112
Y	*238-2300*	1	LIGHTING GP-FLOOD (BOOM)	211
Y	*268-6783*	1	LINES GP-BOOM	547
Y	*268-6868*	1	LINES GP-FRONT	610
Y	*116-9133*	1	LINES GP-GREASE (BOOM)	838
Y	*121-1729*	1	LINES GP-GREASE (STICK)	839
Y	*306-1503*	1	LINES GP-PILOT (DRAIN, HEAVY LIFT)	677
Y	*127-6634*	1	LINES GP-STICK	685
Y	*248-7831*	1	LINKAGE GP-BUCKET	852
Y	*116-9115*	1	LOCK GP-TRANSPORT	858
Y	*216-6599*	1	STICK GP-HOE	863

Y-SEPARATE ILLUSTRATION

<END>

ENGINE ARRANGEMENT

264-8556 ENGINE AR—TIER II, HIGH POWER

S/N: MNB1-UP; WDK1-UP

AN ATTACHMENT

SMCS-1000 **i02889060**

NOTE	PART NUMBER	QTY	PART NAME 1 2 3 4 5 6 (PRODUCT LEVEL)	SEE PAGE
Y	*260-2050*	1	ELECTRONICS GP-MACHINE (HIGH POWER)	194
Y	**290-0754**	1	ENGINE AR-COMPLETE	10

Y-SEPARATE ILLUSTRATION

ENGINE ARRANGEMENT

266-6261 ENGINE AR

S/N: MNB1-UP; WDK1-UP

PART OF 314-3641, 314-3642 GENERAL AR

SMCS-1000 **i02988353**

NOTE	PART NUMBER	QTY	PART NAME 1 2 3 4 5 6 (PRODUCT LEVEL)	SEE PAGE
Y	*290-0756*	1	ENGINE AR-COMPLETE	12
Y	*230-2893*	1	FAN GP-SUCTION	88
Y	*222-8299*	1	MUFFLER GP	114

Y-SEPARATE ILLUSTRATION

ENGINE ARRANGEMENT

224-9842 ENGINE AR-COMPLETE

S/N: KHX1-UP

PART OF 275-3734 ENGINE AR-COMPLETE

AN ATTACHMENT

SMCS-1000 **i03177971**

NOTE	PART NUMBER	QTY	PART NAME 1 2 3 4 5 6 (PRODUCT LEVEL)	SEE PAGE
Y	*177-6972*	1	ALTERNATOR GP-CHARGING	169
Y	*253-0433*	1	BELT TENSIONER GP	18
Y	*253-0437*	1	BRACKET GP-ENGINE	19
Y	*222-5946*	1	BREATHER GP	73
Y	*4W-3462*	1	CARRIER GP-SEAL	21
Y	*276-3815*	1	COMPRESSOR GP-REFRIGERANT	938
Y	*241-7602*	1	CONTROL & MTG GP-ENGINE ELEK	191
Y	*257-9145*	1	COVER GP-CYLINDER BLOCK	22
Y	*118-1727*	1	COVER GP-FRONT HOUSING (ACCESSORY DRIVE)	24
Y	*172-8732*	1	COVER GP-FRONT HOUSING	25
Y	*252-2328*	1	COVER GP-VALVE MECHANISM	27
Y	*263-1850*	1	DAMPER & PULLEY GP	40
Y	*231-3950*	1	ELBOW GP-AIR INLET	108
Y	*227-5946*	1	ENGINE AR-CORE	13
Y	*258-8723*	1	FASTENER GP-CYLINDER HEAD	44
Y	*252-9551*	1	FASTENER GP-FRONT COVER	45
Y	*116-4556*	1	FASTENER GP-FRONT HOUSING	46
Y	*113-6170*	1	FASTENER GP-LIFTING	47
Y	*231-7266*	1	FILTER GP-ENGINE OIL	74
Y	*186-5892*	1	FLYWHEEL GP	48
Y	*254-7342*	1	FUMES DISPOSAL GP	77
Y	*177-4814*	1	GAUGE GP-OIL LEVEL (DIPSTICK) (ENGINE)	79
Y	*7W-8813*	1	HOUSING GP-FLYWHEEL	51
Y	*142-8100*	1	LIFTING GP-ENGINE	54
Y	*7C-2475*	1	LINES GP-ENGINE OIL	80
Y	*231-3046*	1	LINES GP-FUEL	125
Y	*280-4371*	1	LINES GP-TURBOCHARGER OIL	82
Y	*192-9972*	1	LINES GP-WATER	89
Y	*219-5840*	1	MANIFOLD GP-EXHAUST	113
Y	*176-9429*	1	PAN GP-OIL	57
Y	*235-8200*	1	PLUG GP-CONNECTOR (ENGINE HARNESS, PROT COVER)	222
Y	*159-0303*	1	PLUG GP-CYLINDER BLOCK	60
Y	*162-8068*	1	PLUG GP-ENGINE	61
Y	*263-1848*	1	PULLEY GP	63
Y	*177-9823*	1	PUMP GP-WATER	91
Y	*115-4203*	1	SEAL GP-CRANKSHAFT	66
Y	*257-2186*	1	SENSOR GP-ENGINE (ELECTRONIC)	224
Y	*190-6186*	1	SENSOR GP-SPEED	235
Y	*189-8780*	1	COVER GP-AIR INLET	106
Y	*249-9223*	1	STARTING AID GP (WIRING)	240
Y	*111-4275*	1	STARTING MOTOR GP-ELECTRIC	244
			S/N: KHX3500-10522	
Y	*128-5626*	1	STARTING MOTOR GP-ELECTRIC (COLD WEATHER)	245
			S/N: KHX10523-UP	
Y	*198-2714*	1	WIRING GP-ENGINE	305
			PLEASE USE THE GASKET KIT LINK IN SIS OR CONTACT YOUR LOCAL DEALER FOR THE LATEST GASKET KIT INFORMATION	

Y-SEPARATE ILLUSTRATION

ENGINE ARRANGEMENT

264-8597 ENGINE AR-COMPLETE

S/N: MNB1-UP

AN ATTACHMENT

SMCS-1000 **i03022754**

NOTE	PART NUMBER	QTY	PART NAME 1 2 3 4 5 6 (PRODUCT LEVEL)	SEE PAGE
Y	**290-0755**	1	ENGINE AR-COMPLETE	11

Y-SEPARATE ILLUSTRATION

ENGINE ARRANGEMENT

275-3734 ENGINE AR-COMPLETE

S/N: MNB1-UP

AN ATTACHMENT

SMCS-1000 **i02628525**

NOTE	PART NUMBER	QTY	PART NAME 1 2 3 4 5 6 (PRODUCT LEVEL)	SEE PAGE
Y	*260-2050*	1	ELECTRONICS GP-MACHINE	194
Y	*224-9842*	1	ENGINE AR-COMPLETE	7

Y-SEPARATE ILLUSTRATION

ENGINE ARRANGEMENT

290-0754 ENGINE AR-COMPLETE

S/N: KHX1-UP
161 BRAKE KW (216 BHP) AT 1800 RPM
PART OF 264-8556 ENGINE AR
AN ATTACHMENT

SMCS-1000 **i02707187**

NOTE	PART NUMBER	QTY	PART NAME 1 2 3 4 5 6 (PRODUCT LEVEL)	SEE PAGE
Y	*177-6972*	1	ALTERNATOR GP-CHARGING	169
Y	*253-0433*	1	BELT TENSIONER GP	18
Y	*253-0437*	1	BRACKET GP-ENGINE	19
Y	*222-5946*	1	BREATHER GP	73
Y	*4W-3462*	1	CARRIER GP-SEAL	21
Y	*276-3815*	1	COMPRESSOR GP-REFRIGERANT	938
Y	*241-7602*	1	CONTROL & MTG GP-ENGINE ELEK	191
Y	*189-8780*	1	COVER GP-AIR INLET	106
Y	*257-9145*	1	COVER GP-CYLINDER BLOCK	22
Y	*118-1727*	1	COVER GP-FRONT HOUSING (ACCESSORY DRIVE)	24
Y	*172-8732*	1	COVER GP-FRONT HOUSING	25
Y	*252-2328*	1	COVER GP-VALVE MECHANISM	27
Y	*263-1850*	1	DAMPER & PULLEY GP	40
Y	*231-3950*	1	ELBOW GP-AIR INLET	108
Y	*270-4213*	1	ENGINE AR-CORE	16
Y	*258-8723*	1	FASTENER GP-CYLINDER HEAD	44
Y	*116-4556*	1	FASTENER GP-FRONT HOUSING	46
Y	*252-9551*	1	FASTENER GP-FRONT COVER	45
Y	*113-6170*	1	FASTENER GP-LIFTING	47
Y	*231-7266*	1	FILTER GP-ENGINE OIL	74
Y	*186-5892*	1	FLYWHEEL GP	48
Y	*254-7342*	1	FUMES DISPOSAL GP	77
Y	*177-4814*	1	GAUGE GP-OIL LEVEL (DIPSTICK)	79
Y	*7W-8813*	1	HOUSING GP-FLYWHEEL	51
Y	*142-8100*	1	LIFTING GP-ENGINE	54
Y	*7C-2475*	1	LINES GP-ENGINE OIL	80
Y	*231-3046*	1	LINES GP-FUEL	125
Y	*280-4371*	1	LINES GP-TURBOCHARGER OIL	82
Y	*192-9972*	1	LINES GP-WATER	89
Y	*219-5840*	1	MANIFOLD GP-EXHAUST	113
Y	*176-9429*	1	PAN GP-OIL	57
Y	*235-8200*	1	PLUG GP-CONNECTOR (ENGINE HARNESS, PROT COVER)	222
Y	*159-0303*	1	PLUG GP-CYLINDER BLOCK	60
Y	*162-8068*	1	PLUG GP-ENGINE	61
Y	*263-1848*	1	PULLEY GP	63
Y	*177-9823*	1	PUMP GP-WATER	91
Y	*115-4203*	1	SEAL GP-CRANKSHAFT	66
Y	*257-2186*	1	SENSOR GP-ENGINE (ELECTRONIC)	224
Y	*190-6186*	1	SENSOR GP-SPEED	235
Y	*249-9223*	1	STARTING AID GP (WIRING)	240
Y	*111-4275*	1	STARTING MOTOR GP-ELECTRIC	244
Y	*198-2714*	1	WIRING GP-ENGINE	305
			PLEASE USE THE GASKET KIT LINK IN SIS OR CONTACT YOUR LOCAL DEALER FOR THE LATEST GASKET KIT INFORMATION	

Y-SEPARATE ILLUSTRATION

ENGINE ARRANGEMENT

290-0755 ENGINE AR-COMPLETE

S/N: KHX10523-UP
PART OF 264-8597 ENGINE AR-COMPLETE
AN ATTACHMENT

SMCS-1000 **i02981190**

NOTE	PART NUMBER	QTY	PART NAME 1 2 3 4 5 6 (PRODUCT LEVEL)	SEE PAGE
Y	*177-6972*	1	ALTERNATOR GP-CHARGING	169
Y	*253-0433*	1	BELT TENSIONER GP	18
Y	*253-0437*	1	BRACKET GP-ENGINE	19
Y	*222-5946*	1	BREATHER GP	73
Y	*4W-3462*	1	CARRIER GP-SEAL	21
Y	*276-3815*	1	COMPRESSOR GP-REFRIGERANT	938
Y	*241-7602*	1	CONTROL & MTG GP-ENGINE ELEK	191
Y	*257-9145*	1	COVER GP-CYLINDER BLOCK	22
Y	*118-1727*	1	COVER GP-FRONT HOUSING (ACCESSORY DRIVE)	24
Y	*172-8732*	1	COVER GP-FRONT HOUSING	25
Y	*252-2328*	1	COVER GP-VALVE MECHANISM	27
Y	*263-1850*	1	DAMPER & PULLEY GP	40
Y	*231-3950*	1	ELBOW GP-AIR INLET	108
Y	*236-4284*	1	ENGINE AR-CORE	14
Y	*258-8723*	1	FASTENER GP-CYLINDER HEAD	44
Y	*252-9551*	1	FASTENER GP-FRONT COVER	45
Y	*116-4556*	1	FASTENER GP-FRONT HOUSING	46
Y	*113-6170*	1	FASTENER GP-LIFTING	47
Y	*231-7266*	1	FILTER GP-ENGINE OIL	74
Y	*186-5892*	1	FLYWHEEL GP	48
Y	*254-7342*	1	FUMES DISPOSAL GP	77
Y	*177-4814*	1	GAUGE GP-OIL LEVEL (DIPSTICK)	79
Y	*7W-8813*	1	HOUSING GP-FLYWHEEL	51
Y	*142-8100*	1	LIFTING GP-ENGINE	54
Y	*7C-2475*	1	LINES GP-ENGINE OIL	80
Y	*231-3046*	1	LINES GP-FUEL	125
Y	*280-4371*	1	LINES GP-TURBOCHARGER OIL	82
Y	*192-9972*	1	LINES GP-WATER	89
Y	*219-5840*	1	MANIFOLD GP-EXHAUST	113
Y	*176-9429*	1	PAN GP-OIL	57
Y	*235-8200*	1	PLUG GP-CONNECTOR (ENGINE HARNESS, PROT COVER)	222
Y	*159-0303*	1	PLUG GP-CYLINDER BLOCK	60
Y	*162-8068*	1	PLUG GP-ENGINE	61
Y	*263-1848*	1	PULLEY GP	63
Y	*177-9823*	1	PUMP GP-WATER	91
Y	*115-4203*	1	SEAL GP-CRANKSHAFT	66
Y	*257-2186*	1	SENSOR GP-ENGINE (ELECTRONIC)	224
Y	*190-6186*	1	SENSOR GP-SPEED	235
Y	*189-8780*	1	COVER GP-AIR INLET	106
Y	*249-9223*	1	STARTING AID GP (WIRING)	240
Y	*128-5626*	1	STARTING MOTOR GP-ELECTRIC (COLD WEATHER)	245
Y	*198-2714*	1	WIRING GP-ENGINE	305
			PLEASE USE THE GASKET KIT LINK IN SIS OR CONTACT YOUR LOCAL DEALER FOR THE LATEST GASKET KIT INFORMATION	

Y-SEPARATE ILLUSTRATION

ENGINE ARRANGEMENT

290-0756 ENGINE AR-COMPLETE

S/N: KHX1-UP
147 BRAKE KW (197 BHP) AT 1800 RPM
PART OF 266-6261 ENGINE AR

SMCS-1000 **i02988668**

NOTE	PART NUMBER	QTY	PART NAME 1 2 3 4 5 6 (PRODUCT LEVEL)	SEE PAGE
Y	*177-6972*	1	ALTERNATOR GP-CHARGING	169
Y	*253-0433*	1	BELT TENSIONER GP	18
Y	*253-0437*	1	BRACKET GP-ENGINE	19
Y	*222-5946*	1	BREATHER GP	73
Y	*4W-3462*	1	CARRIER GP-SEAL	21
Y	*276-3815*	1	COMPRESSOR GP-REFRIGERANT	938
Y	*241-7602*	1	CONTROL & MTG GP-ENGINE ELEK	191
Y	*257-9145*	1	COVER GP-CYLINDER BLOCK	22
Y	*118-1727*	1	COVER GP-FRONT HOUSING (ACCESSORY DRIVE)	24
Y	*172-8732*	1	COVER GP-FRONT HOUSING	25
Y	*252-2328*	1	COVER GP-VALVE MECHANISM	27
Y	*263-1850*	1	DAMPER & PULLEY GP	40
Y	*231-3950*	1	ELBOW GP-AIR INLET	108
Y	*270-4212*	1	ENGINE AR-CORE	15
Y	*258-8723*	1	FASTENER GP-CYLINDER HEAD	44
Y	*252-9551*	1	FASTENER GP-FRONT COVER	45
Y	*116-4556*	1	FASTENER GP-FRONT HOUSING	46
Y	*113-6170*	1	FASTENER GP-LIFTING	47
Y	*231-7266*	1	FILTER GP-ENGINE OIL	74
Y	*186-5892*	1	FLYWHEEL GP	48
Y	*254-7342*	1	FUMES DISPOSAL GP	77
Y	*177-4814*	1	GAUGE GP-OIL LEVEL (DIPSTICK) (ENGINE)	79
Y	*7W-8813*	1	HOUSING GP-FLYWHEEL	51
Y	*142-8100*	1	LIFTING GP-ENGINE	54
Y	*7C-2475*	1	LINES GP-ENGINE OIL	80
Y	*231-3046*	1	LINES GP-FUEL	125
Y	*280-4371*	1	LINES GP-TURBOCHARGER OIL	82
Y	*192-9972*	1	LINES GP-WATER	89
Y	*219-5840*	1	MANIFOLD GP-EXHAUST	113
Y	*176-9429*	1	PAN GP-OIL	57
Y	*235-8200*	1	PLUG GP-CONNECTOR (ENGINE HARNESS, PROT COVER)	222
Y	*159-0303*	1	PLUG GP-CYLINDER BLOCK	60
Y	*162-8068*	1	PLUG GP-ENGINE	61
Y	*263-1848*	1	PULLEY GP	63
Y	*177-9823*	1	PUMP GP-WATER	91
Y	*115-4203*	1	SEAL GP-CRANKSHAFT	66
Y	*257-2186*	1	SENSOR GP-ENGINE (ELECTRONIC)	224
Y	*190-6186*	1	SENSOR GP-SPEED	235
Y	*189-8780*	1	COVER GP-AIR INLET	106
Y	*249-9223*	1	STARTING AID GP (WIRING)	240
Y	*111-4275*	1	STARTING MOTOR GP-ELECTRIC	244
Y	*198-2714*	1	WIRING GP-ENGINE	305
			PLEASE USE THE GASKET KIT LINK IN SIS OR CONTACT YOUR LOCAL DEALER FOR THE LATEST GASKET KIT INFORMATION	

Y-SEPARATE ILLUSTRATION

ENGINE ARRANGEMENT

227-5946 ENGINE AR-CORE

S/N: KHX1-UP

PART OF 224-9842 ENGINE AR-COMPLETE

AN ATTACHMENT

SMCS-1000 **i02537315**

NOTE	PART NUMBER	QTY	PART NAME 1 2 3 4 5 6 (PRODUCT LEVEL)	SEE PAGE
Y	*212-4289*	1	CAMSHAFT GP	20
Y	*117-3643*	1	COOLER GP-ENGINE OIL	86
Y	*211-9120*	1	COVER GP-FRONT HOUSING	26
Y	*210-5590*	1	CRANKSHAFT GP	28
Y	*221-4482*	1	CYLINDER BLOCK GP	30
Y	*219-5849*	1	CYLINDER HEAD GP	37
Y	*205-1321*	1	GEAR GP-FRONT	49
Y	*245-3260*	1	HOUSING GP-FRONT	52
Y	*191-0461*	1	LINES GP-INJECTOR HYD PUMP	131
Y	*212-3652*	6	PISTON & ROD GP	59
Y	*222-5900*	1	PUMP & MTG GP-UNIT INJ HYD	133
Y	*192-2981*	1	PUMP GP-ENGINE OIL	84
Y	*222-5958*	6	PUMP GP-FUEL INJECTION	
			S/N: KHX1-304	
Y	*268-1839*	6	PUMP GP-FUEL INJECTION	144
			S/N: KHX305-UP	
Y	*177-0438*	1	TURBOCHARGER GP	115
			S/N: KHX1-2240	
Y	*254-3808*	1	TURBOCHARGER GP	118
			S/N: KHX2241-UP	
Y	*232-3717*	1	VALVE MECHANISM GP	67
	228-9392	1	ELECTRONICS GP-ENGINE RATINGS	

Y-SEPARATE ILLUSTRATION

ENGINE ARRANGEMENT

236-4284 ENGINE AR-CORE

S/N: KHX10523-UP

PART OF 290-0755 ENGINE AR-COMPLETE

AN ATTACHMENT

SMCS-1000 **i02546785**

NOTE	PART NUMBER	QTY	PART NAME 1 2 3 4 5 6 (PRODUCT LEVEL)	SEE PAGE
Y	*212-4289*	1	CAMSHAFT GP	20
Y	*117-3643*	1	COOLER GP-ENGINE OIL	86
Y	*211-9120*	1	COVER GP-FRONT HOUSING	26
Y	*210-5590*	1	CRANKSHAFT GP	28
Y	*221-4482*	1	CYLINDER BLOCK GP	30
Y	*219-5849*	1	CYLINDER HEAD GP	37
Y	*205-1321*	1	GEAR GP-FRONT	49
Y	*245-3260*	1	HOUSING GP-FRONT	52
Y	*191-0461*	1	LINES GP-INJECTOR HYD PUMP	131
Y	*210-5592*	6	PISTON & ROD GP	58
Y	*222-5900*	1	PUMP & MTG GP-UNIT INJ HYD	133
Y	*192-2981*	1	PUMP GP-ENGINE OIL	84
Y	*268-1839*	6	PUMP GP-FUEL INJECTION	144
Y	*254-3808*	1	TURBOCHARGER GP	118
Y	*232-3717*	1	VALVE MECHANISM GP	67
	235-8226	1	ELECTRONICS GP-ENGINE RATINGS	

Y-SEPARATE ILLUSTRATION

ENGINE ARRANGEMENT

270-4212 ENGINE AR-CORE

S/N: KHX1-UP

PART OF 290-0756 ENGINE AR-COMPLETE

SMCS-1000 **i02615777**

NOTE	PART NUMBER	QTY	PART NAME 1 2 3 4 5 6 (PRODUCT LEVEL)	SEE PAGE
Y	*212-4289*	1	CAMSHAFT GP	20
Y	*117-3643*	1	COOLER GP-ENGINE OIL	86
Y	*211-9120*	1	COVER GP-FRONT HOUSING	26
Y	*210-5590*	1	CRANKSHAFT GP	28
Y	*221-4482*	1	CYLINDER BLOCK GP	30
Y	*219-5849*	1	CYLINDER HEAD GP	37
Y	*205-1321*	1	GEAR GP-FRONT	49
Y	*245-3260*	1	HOUSING GP-FRONT	52
Y	*191-0461*	1	LINES GP-INJECTOR HYD PUMP	131
Y	*210-5592*	6	PISTON & ROD GP	58
Y	*222-5900*	1	PUMP & MTG GP-UNIT INJ HYD	133
Y	*192-2981*	1	PUMP GP-ENGINE OIL	84
Y	*268-1839*	6	PUMP GP-FUEL INJECTION	144
Y	*254-3808*	1	TURBOCHARGER GP	118
			S/N: KHX2241-UP	
Y	*232-3717*	1	VALVE MECHANISM GP	67
	270-7512	1	ELECTRONICS GP-ENGINE RATINGS	

Y-SEPARATE ILLUSTRATION

ENGINE ARRANGEMENT

270-4213 ENGINE AR-CORE

S/N: KHX1-UP
PART OF 290-0754 ENGINE AR-COMPLETE
AN ATTACHMENT

SMCS-1000 **i02637676**

NOTE	PART NUMBER	QTY	PART NAME 1 2 3 4 5 6 (PRODUCT LEVEL)	SEE PAGE
Y	*212-4289*	1	CAMSHAFT GP	20
Y	*117-3643*	1	COOLER GP-ENGINE OIL	86
Y	*211-9120*	1	COVER GP-FRONT HOUSING	26
Y	*210-5590*	1	CRANKSHAFT GP	28
Y	*221-4482*	1	CYLINDER BLOCK GP	30
Y	*219-5849*	1	CYLINDER HEAD GP	37
Y	*205-1321*	1	GEAR GP-FRONT	49
Y	*245-3260*	1	HOUSING GP-FRONT	52
Y	*191-0461*	1	LINES GP-INJECTOR HYD PUMP	131
Y	*212-3652*	6	PISTON & ROD GP	59
Y	*222-5900*	1	PUMP & MTG GP-UNIT INJ HYD	133
Y	*192-2981*	1	PUMP GP-ENGINE OIL	84
Y	*268-1839*	6	PUMP GP-FUEL INJECTION	144
Y	*177-0438*	1	TURBOCHARGER GP	115
			S/N: KHX1-2240	
Y	*254-3808*	1	TURBOCHARGER GP	118
			S/N: KHX2241-UP	
Y	*232-3717*	1	VALVE MECHANISM GP	67
	270-7514	1	ELECTRONICS GP-ENGINE RATINGS	

Y-SEPARATE ILLUSTRATION

ENGINE ARRANGEMENT

222-8379 INSTALLATION AR-ENGINE

S/N: MNB1-UP; WDK1-UP

PART OF 314-3641, 314-3642 GENERAL AR

SMCS-1000 **i02500923**

NOTE	PART NUMBER	QTY	PART NAME 1 2 3 4 5 6 (PRODUCT LEVEL)	SEE PAGE
Y	*255-3053*	1	AIR CLEANER GP	103
Y	*245-7909*	1	CONDENSER & MTG GP-REFRIGERANT	939
Y	*233-1123*	1	MOUNTING GP-LINES (ENGINE OIL FILTER)	859
Y	*233-1119*	1	LINES GP-AIR	111
Y	*210-8175*	1	LINES GP-AIR	109
Y	*171-9114*	1	LINES GP-ENGINE OIL DRAIN	81
Y	*272-4624*	1	LINES GP-MUFFLER DRAIN	112
Y	*233-1120*	1	MOUNTING GP-ENGINE	55
Y	*245-9295*	1	RADIATOR & HYD OIL COOLER GP	95

Y-SEPARATE ILLUSTRATION

253-0433 BELT TENSIONER GP

S/N: KHX4087-UP

PART OF 224-9842, 290-0754, 290-0755, 290-0756 ENGINE AR-COMPLETE

ALSO AN ATTACHMENT

SMCS-1357, 1358, 1397 **i02298308**

NOTE	REF NO	GRAPHIC REF	PART NUMBER	QTY	PART NAME 1 2 3 4 5 6 (PRODUCT LEVEL)	SEE PAGE
	1	1	**190-0643**	1	BELT TENSIONER GP	
	2	1	**6V-5839**	1	WASHER (11X21X2.5-MM THK)	
M	3	1	**8T-0643**	1	BOLT (M10X1.5X80-MM)	

M-METRIC PART

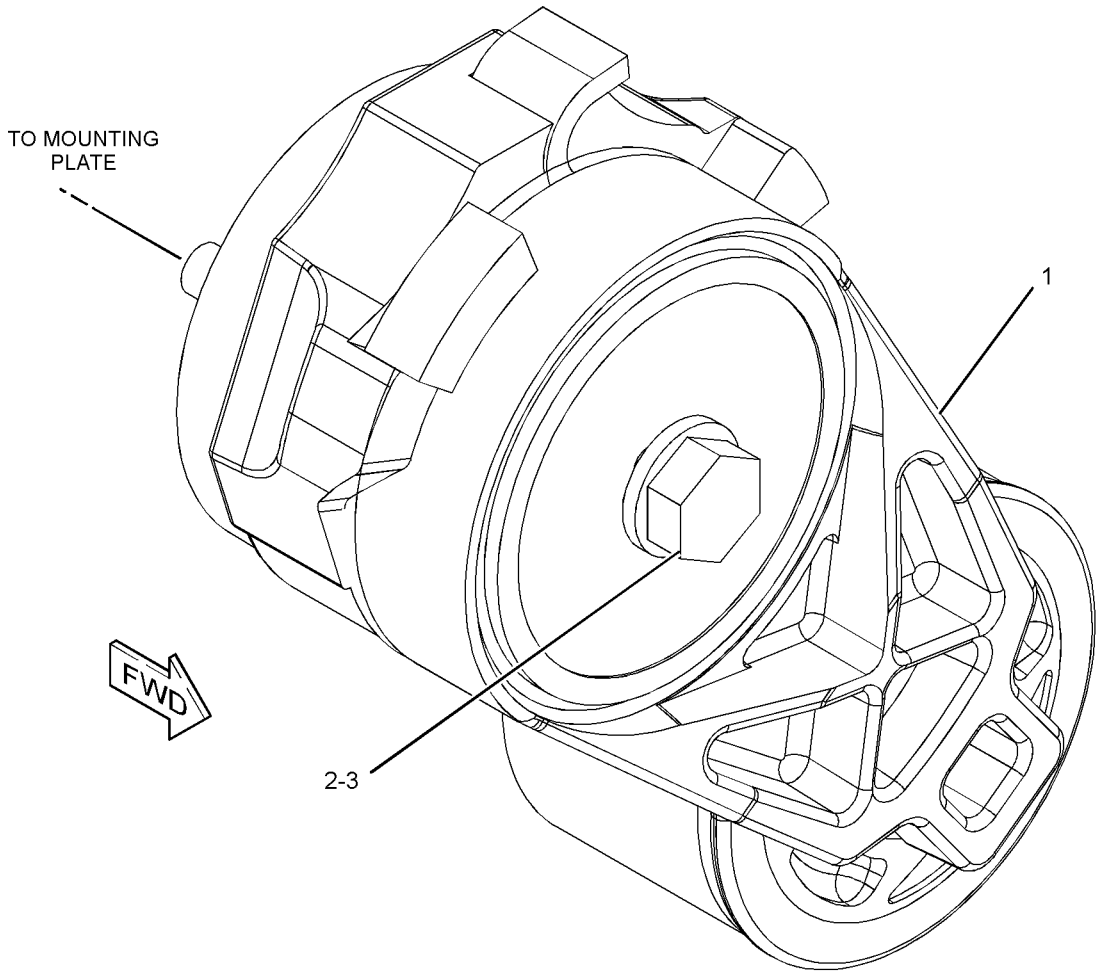

GRAPHIC #1 **<END>** g01152745

253-0437 BRACKET GP-ENGINE

S/N: KHX4087-UP

PART OF 224-9842, 290-0754, 290-0755, 290-0756 ENGINE AR-COMPLETE

ALSO AN ATTACHMENT

SMCS-1000 **i02353052**

NOTE	REF NO	GRAPHIC REF	PART NUMBER	QTY	PART NAME 1 2 3 4 5 6 (PRODUCT LEVEL)	SEE PAGE
Y	1	1	**177-6973**	1	DRIVE GP-FAN	41
	2	1	**183-3351**	1	SUPPORT-COMPRESSOR	
M	4	1	**6V-2317**	4	BOLT (M8X1.25X30-MM)	
	5	1	**6V-5839**	6	WASHER (11X21X2.5-MM THK)	
M	6	1	**6V-5842**	6	BOLT (M10X1.5X40-MM)	
	7	1	**9M-1974**	4	WASHER-HARD (8.8X16X2-MM THK)	

M-METRIC PART
Y-SEPARATE ILLUSTRATION

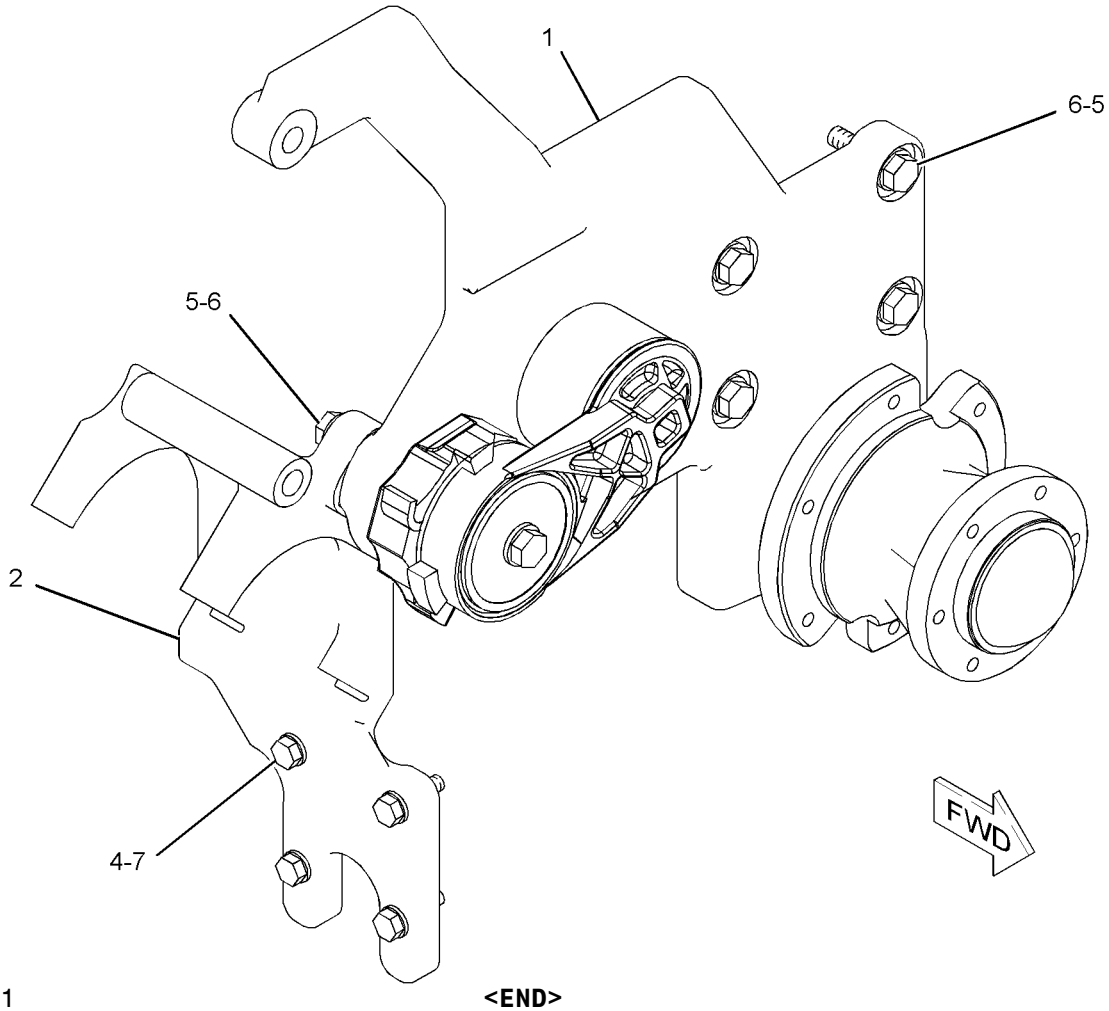

GRAPHIC #1 **<END>** g01152056

BASIC ENGINE

212-4289 CAMSHAFT GP

S/N: KHX1-UP

PART OF 227-5946, 236-4284, 270-4212, 270-4213 ENGINE AR-CORE

ALSO AN ATTACHMENT

SMCS-1210 **i02355591**

NOTE	REF NO	GRAPHIC REF	PART NUMBER	QTY	PART NAME 1 2 3 4 5 6 (PRODUCT LEVEL)	SEE PAGE
	1	1	**107-7694**	1	PLATE-THRUST	
	2	1	**212-4288**	1	CAMSHAFT AS	
	2A	1	**1B-8705**	1	KEY-WOODRUFF	
	2B	1	**224-3247**	1	GEAR (100-TEETH)	
M	3	1	**6V-3940**	2	BOLT (M8X1.25X25-MM)	

M-METRIC PART

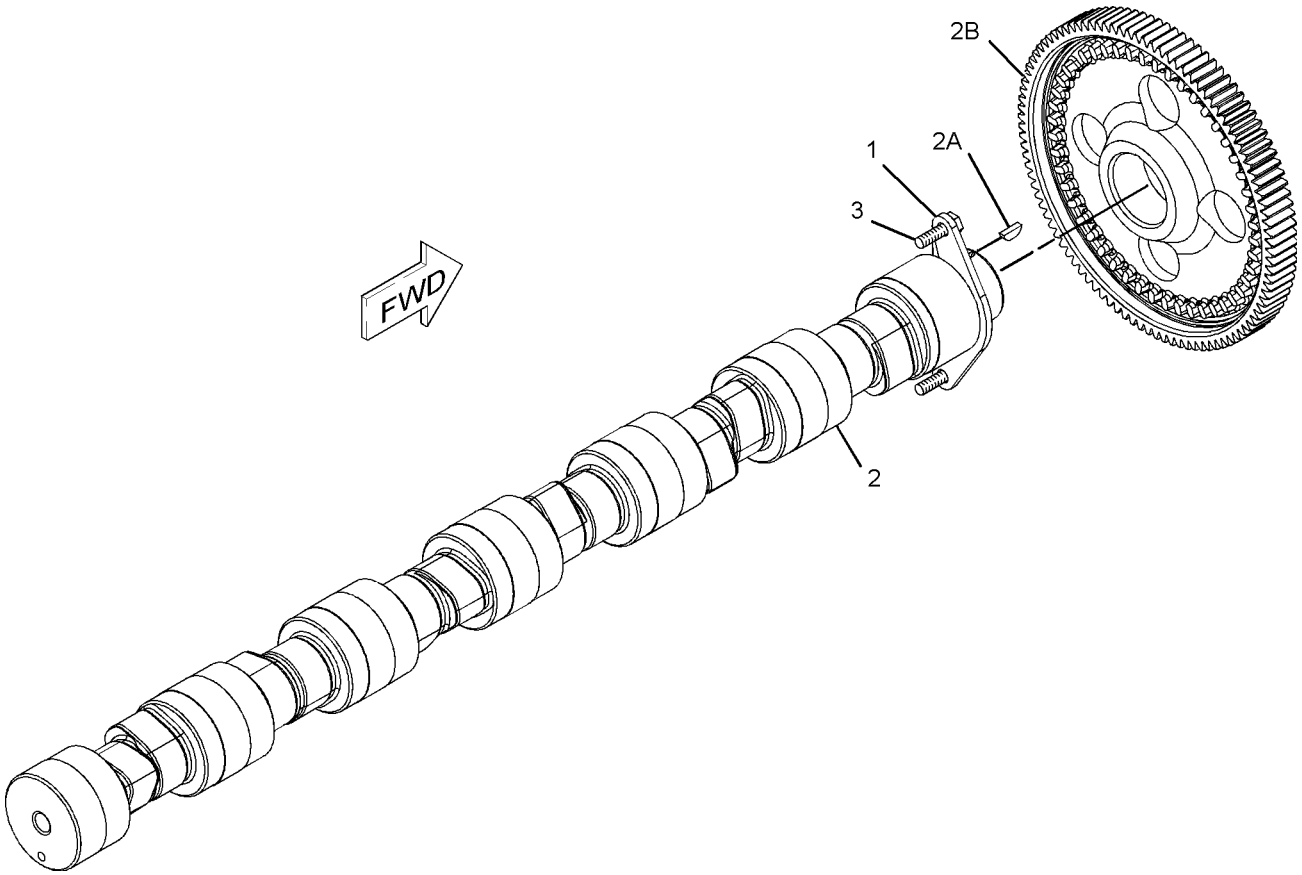

GRAPHIC #1 **<END>** g01099239

4W-3462 CARRIER GP-SEAL

S/N: KHX4087-UP
PART OF 224-9842, 290-0754, 290-0755, 290-0756 ENGINE AR-COMPLETE
ALSO AN ATTACHMENT

SMCS-1161 **i02482036**

NOTE	REF NO	GRAPHIC REF	PART NUMBER	QTY	PART NAME 1 2 3 4 5 6 (PRODUCT LEVEL)	SEE PAGE
	1	1	**2W-6546**	1	COVER	
	2	1	**247-1876**	1	SEAL	
	3	1	**239-0583**	1	GASKET	
	4	1	**6V-3538**	2	DOWEL	
M	5	1	**6V-3940**	8	BOLT (M8X1.25X25-MM)	
	6	1	**9M-1974**	8	WASHER-HARD (8.8X16X2-MM THK)	
BF		1	**4C-9612**		SEALANT-SILICONE	

B-USE AS REQUIRED
F-NOT SHOWN
M-METRIC PART

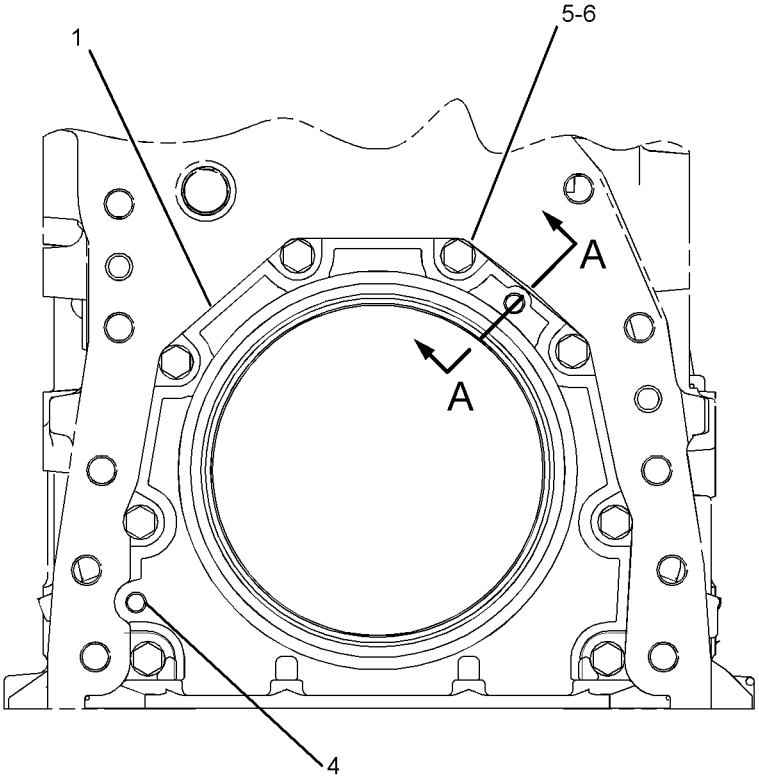

FRONT VIEW

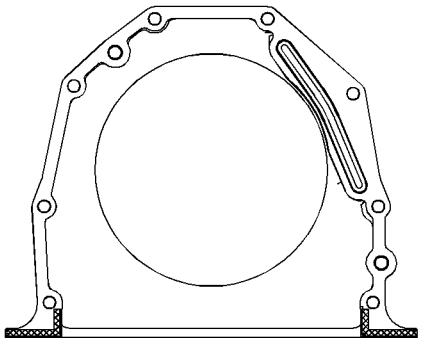

REAR VIEW

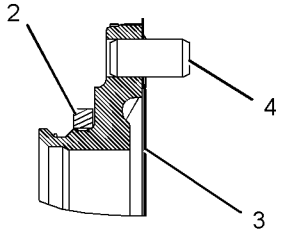

SECTION A-A

GRAPHIC #1 **<END>** g01239787

BASIC ENGINE

257-9145 COVER GP-CYLINDER BLOCK

S/N: KHX4087-UP

PART OF 224-9842, 290-0754, 290-0755, 290-0756 ENGINE AR-COMPLETE

ALSO AN ATTACHMENT

SMCS-1201 **i02553845**

NOTE	REF NO	GRAPHIC REF	PART NUMBER	QTY	PART NAME 1 2 3 4 5 6 (PRODUCT LEVEL)	SEE PAGE
	1	1	**2W-6544**	1	COVER	
	2	1	**4P-5918**	3	CLIP	
	3	1	**7W-3871**	2	COVER-SIDE	
	4	1	**7W-3872**	6	SLEEVE	
M	5	1	**9X-2099**	1	STUD (M8X1.25X52.75-MM)	
	6	1	**110-7618**	3	BOLT AS (M8X1.25X16-MM)	
	7	1	**175-1367**	8	SPACER (8.8X16X10-MM THK)	
	8	1	**249-5523**	1	COVER-SIDE	
CM	9	1	**5C-7261**	3	NUT (M8X1.25-THD)	
	10	1	**8T-4224**	1	WASHER-HARD (8.8X16X2-MM THK)	
C	11	1	**9M-1974**	16	WASHER-HARD (8.8X16X2-MM THK)	
	12	1	**4Y-9652**	2	GASKET (SIDE COVER)	
	13	1	**250-5785**	1	GASKET (SIDE COVER)	
C	14	1	**210-3321**	2	STUD (M8X1.25-THD)	
CM	15	1	**6V-2317**	21	BOLT (M8X1.25X30-MM)	
BF			**1U-8846**		SEALANT-GASKET (2-ML)	

B-USE AS REQUIRED
C-CHANGE FROM PREVIOUS TYPE
F-NOT SHOWN
M-METRIC PART

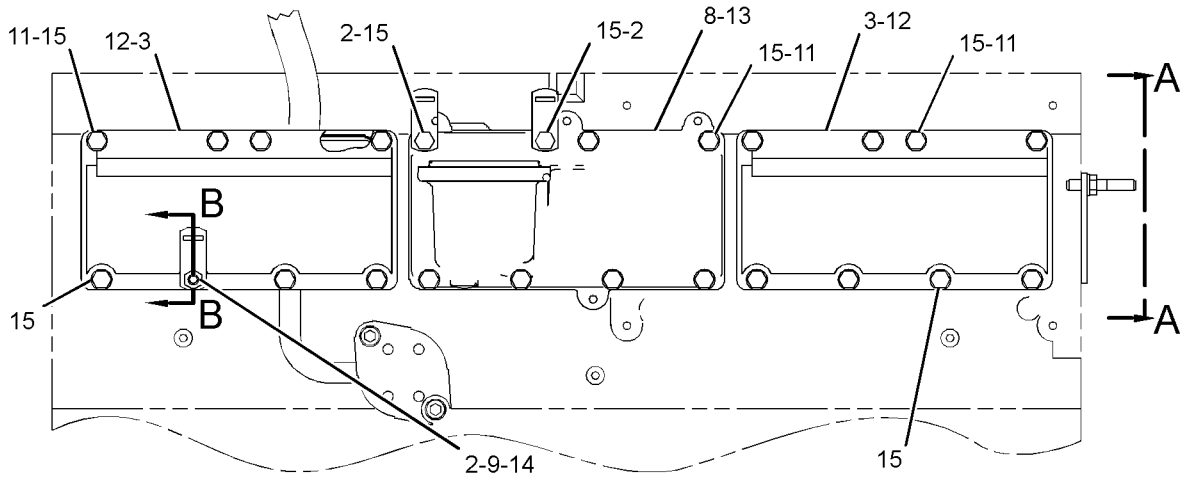

LEFT SIDE VIEW

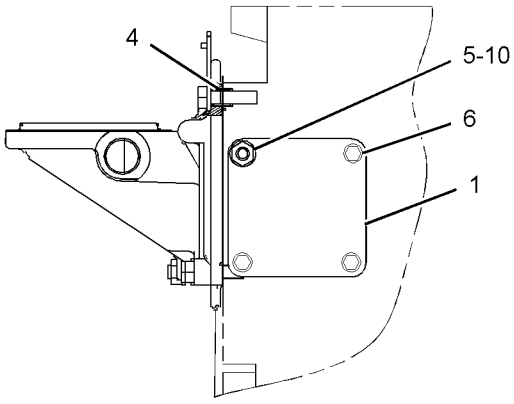

VIEW A-A

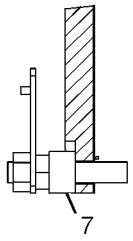

SECTION B-B

GRAPHIC #1

<END>

g01280609

118-1727 COVER GP-FRONT HOUSING

S/N: KHX4087-UP

PART OF 224-9842, 290-0754, 290-0755, 290-0756 ENGINE AR-COMPLETE

ALSO AN ATTACHMENT

SMCS-1150 **i01339642**

NOTE	REF NO	GRAPHIC REF	PART NUMBER	QTY	PART NAME 1 2 3 4 5 6 (PRODUCT LEVEL)	SEE PAGE
	1	1	**5P-8245**	4	WASHER-HARD (13.5X25.5X3-MM THK)	
M	2	1	**6V-5696**	2	BOLT (M12X1.75X80-MM)	
	3	1	**4W-2026**	1	COVER	
	4	1	**135-9819**	1	SEAL-INTEGRAL	
M	5	1	**6V-8149**	2	NUT (M12X1.75-THD)	

M-METRIC PART

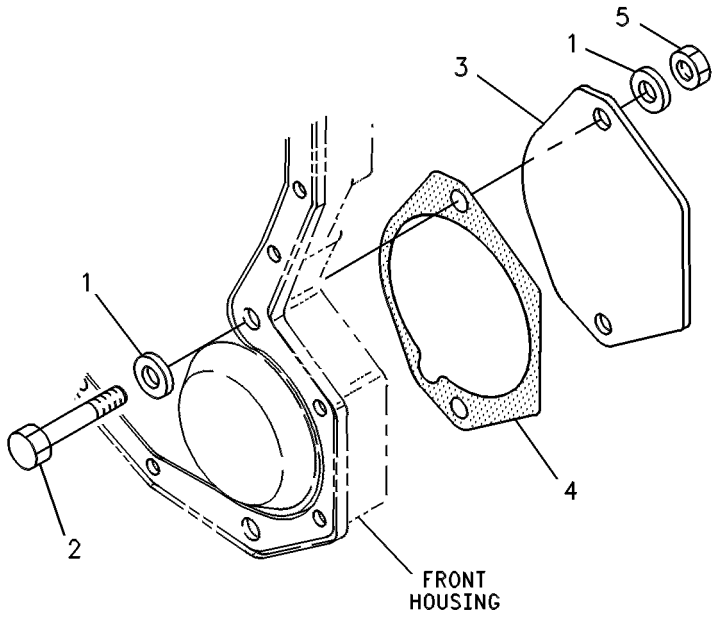

GRAPHIC #1 **<END>** g00245495

172-8732 COVER GP-FRONT HOUSING

S/N: KHX4087-UP

PART OF 224-9842, 290-0754, 290-0755, 290-0756 ENGINE AR-COMPLETE

ALSO AN ATTACHMENT

SMCS-1150 **i02352999**

NOTE	REF NO	GRAPHIC REF	PART NUMBER	QTY	PART NAME 1 2 3 4 5 6 (PRODUCT LEVEL)	SEE PAGE
	1	1	**7C-1445**	1	COVER (TURNING TOOL)	
	2	1	**061-9455**	1	SEAL-O-RING	
	3	1	**8T-4224**	2	WASHER-HARD (8.8X16X2-MM THK)	
M	4	1	**5C-7261**	2	NUT (M8X1.25-THD)	

M-METRIC PART

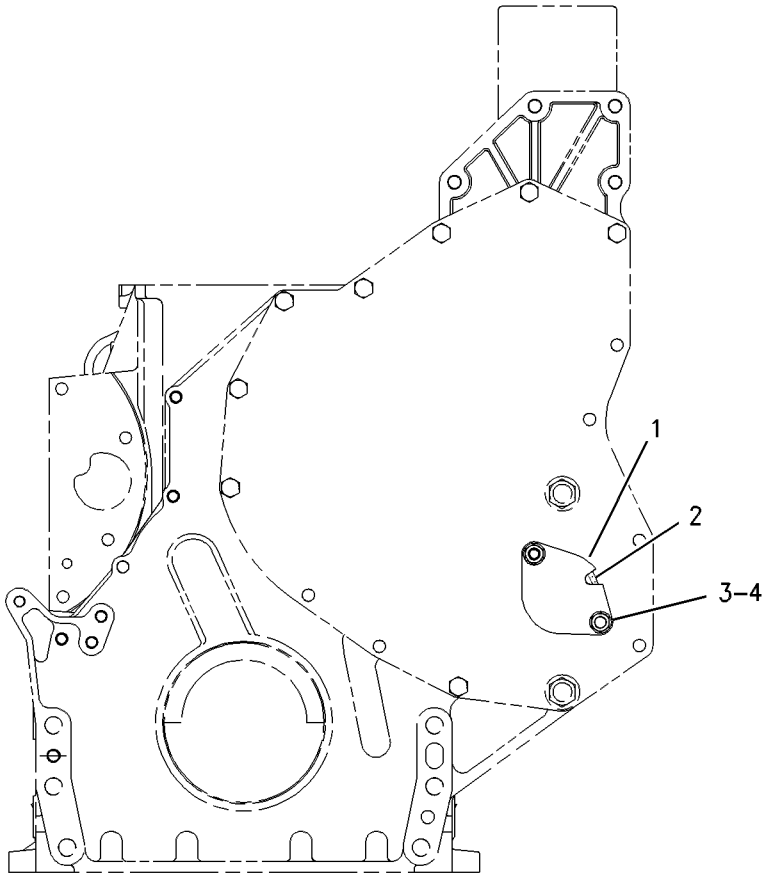

FRONT VIEW

GRAPHIC #1 **<END>** g00596335

211-9120 COVER GP-FRONT HOUSING

S/N: KHX1-UP

PART OF 227-5946, 236-4284, 270-4212, 270-4213 ENGINE AR-CORE

ALSO AN ATTACHMENT

SMCS-1150 **i02355588**

NOTE	REF NO	GRAPHIC REF	PART NUMBER	QTY	PART NAME 1 2 3 4 5 6 (PRODUCT LEVEL)	SEE PAGE
	1	1	**166-1776**	1	COVER AS-FRONT	
	1A	1	**126-1757**	2	WASHER (10.85X19.3X1.27-MM THK)	
	1B	1	**136-0822**	2	STUD	
	2	1	**166-1781**	1	GASKET	

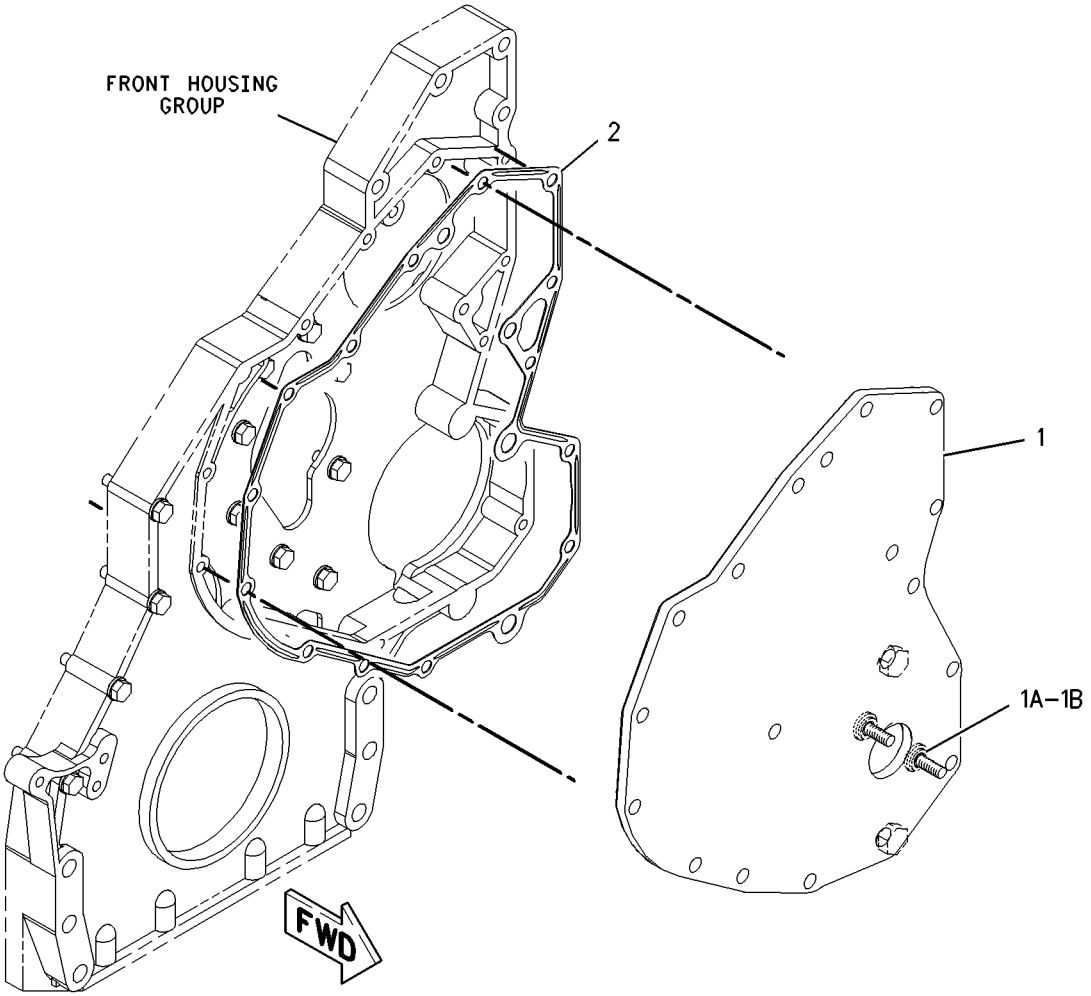

GRAPHIC #1 **<END>** g00849279

252-2328 COVER GP-VALVE MECHANISM

S/N: KHX4087-UP
FRONT AND REAR ENGINE OIL FILL
PART OF 224-9842, 290-0754, 290-0755, 290-0756 ENGINE AR-COMPLETE
ALSO AN ATTACHMENT

SMCS-1107 **i02554679**

NOTE	REF NO	GRAPHIC REF	PART NUMBER	QTY	PART NAME 1 2 3 4 5 6 (PRODUCT LEVEL)	SEE PAGE
	1	1	**271-2417**	1	COVER GP-VALVE MECHANISM (BASE)	
		1	**245-6796**	1	COVER AS-BASE	
	1A	1	**244-4486**	1	SEAL-COVER (VALVE MECHANISM BASE)	
C	2	1	**273-2838**	13	SLEEVE-SPACER	
C	3	1	**288-9179**	1	COVER GP-VALVE MECHANISM	
C	3A	1	**272-0388**	1	SEAL-VALVE COVER (VALVE COVER)	
M	4	1	**099-3649**	13	BOLT (M8X1.25X40-MM)	
	5	1	**8T-4224**	13	WASHER-HARD (8.8X16X2-MM THK)	
	6	1	**227-4531**	1	CAP AS-ENGINE OIL FILLER	
		1	**7F-8268**	1	SEAL-O-RING	
	7	1	**204-4444**	1	BREATHER AS (CRANKCASE)	
		1	**124-0506**	1	SEAL (CRANKCASE BREATHER)	
		1	**160-0526**	1	SEAL-O-RING	
		1	**185-3159**	1	ELEMENT (BREATHER) (CRANKCASE)	

C-CHANGE FROM PREVIOUS TYPE
M-METRIC PART

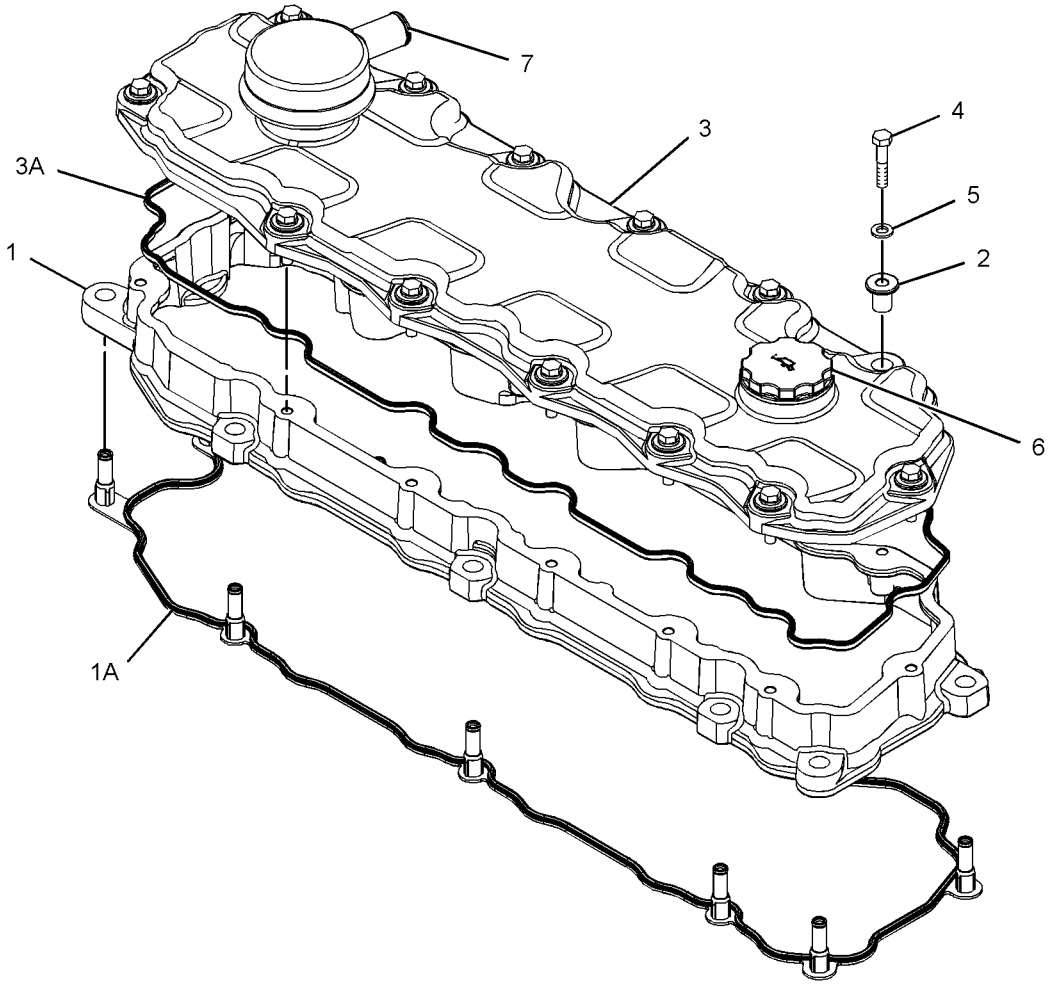

GRAPHIC #1 **<END>** g01271004

BASIC ENGINE

210-5590 CRANKSHAFT GP

S/N: KHX1-UP

PART OF 227-5946, 236-4284, 270-4212, 270-4213 ENGINE AR-CORE

ALSO AN ATTACHMENT

SMCS-1202 **i02355564**

NOTE	REF NO	GRAPHIC REF	PART NUMBER	QTY	PART NAME 1 2 3 4 5 6 (PRODUCT LEVEL)	SEE PAGE
	1	1	**227-5480**	1	CRANKSHAFT AS	
	1A	1	**1B-8705**	1	KEY-WOODRUFF	
	1B	1	**2W-8147**	1	GEAR (50-TEETH)	
J	2	1	**212-4893**	1	BEARING-THRUST (STANDARD)	
AB		1	**229-5153**		BEARING-THRUST (0.25-MM US)	
AB		1	**229-5154**		BEARING-THRUST (0.5-MM US)	
AB		1	**229-5155**		BEARING-THRUST (0.5-MM OS)	
AB		1	**229-5156**		BEARING-THRUST (0.5-MM US - 0.5-MM OS)	
J	3	1	**107-7708**	6	BEARING-MAIN (STANDARD)	
AB		1	**145-0168**		BEARING-MAIN (0.5-MM OS)	
AB		1	**145-0170**		BEARING-MAIN (0.5-MM US - 0.5-MM OS)	
AB		1	**145-0162**		BEARING-MAIN (0.25-MM US)	
AB		1	**145-0164**		BEARING-MAIN (0.5-MM US)	
ABF		1	**7C-7980**	1	SLEEVE-OIL SEAL	
					(THIS WEAR SLEEVE IS USED ONLY TO SALVAGE (REPAIR) THE REAR SEAL SURFACE OF THE CRANKSHAFT)	
					AVAILABLE REPAIR KIT(S):	
AJ			**196-9519**		BEARING GP-MAIN	

A-NOT PART OF THIS GROUP
B-USE AS REQUIRED
F-NOT SHOWN
J-KIT MARKED J SERVICES PARTS MARKED J

210-5590 **CRANKSHAFT GP** *(contd.)* **i02355564**

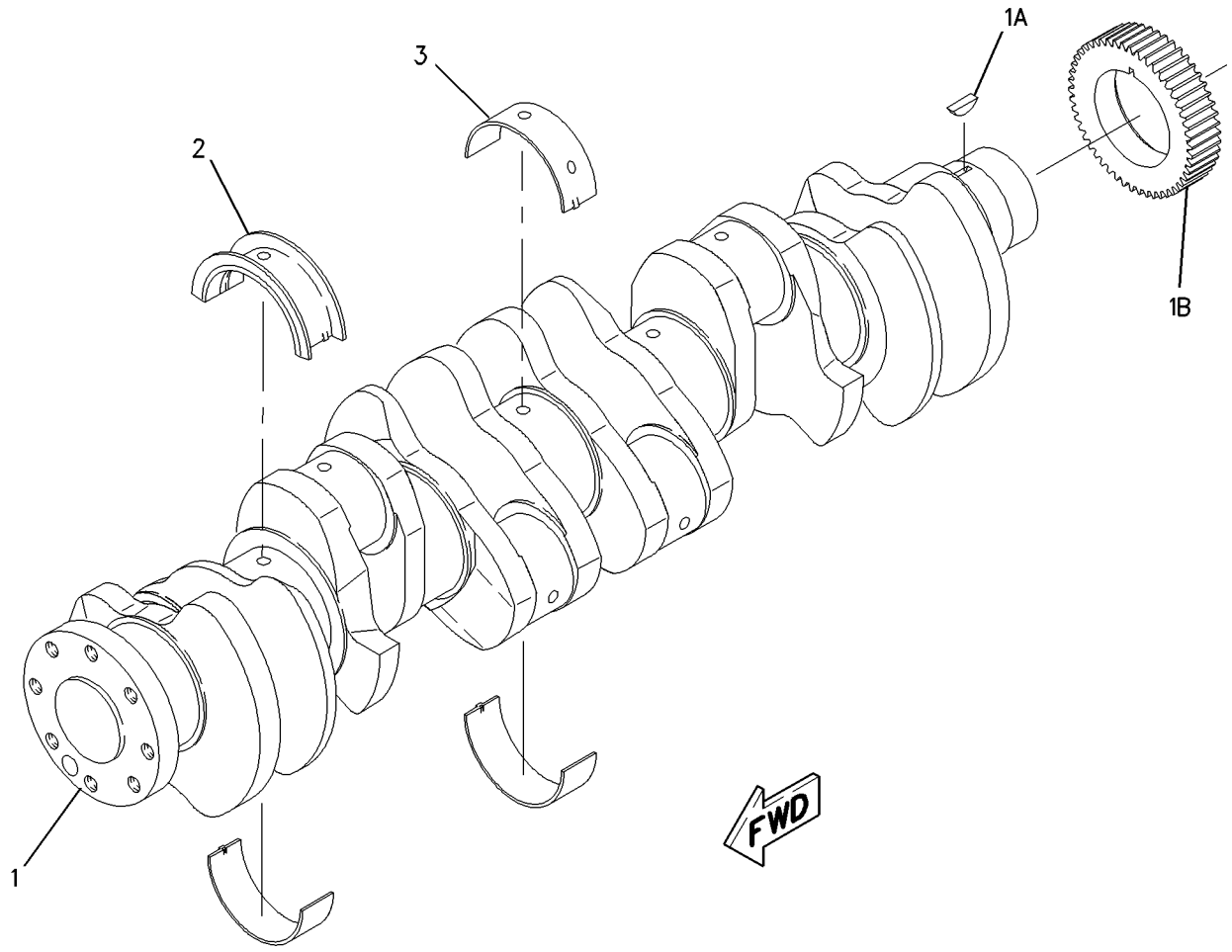

GRAPHIC #1 **<END>** g00977492

BASIC ENGINE

221-4482 CYLINDER BLOCK GP

S/N: KHX1-UP

PART OF 227-5946, 236-4284, 270-4212, 270-4213 ENGINE AR-CORE

ALSO AN ATTACHMENT

SMCS-1201 **i02690903**

NOTE	REF NO	GRAPHIC REF	PART NUMBER	QTY	PART NAME 1 2 3 4 5 6 (PRODUCT LEVEL)	SEE PAGE
CY	1	1	**305-8141**	1	CYLINDER BLOCK GP	32
	2	1	**7N-5683**	2	DOWEL	
	3	1	**1W-8407**	2	SLEEVE	
	4	1	**6V-3538**	2	DOWEL	

C-CHANGE FROM PREVIOUS TYPE
Y-SEPARATE ILLUSTRATION

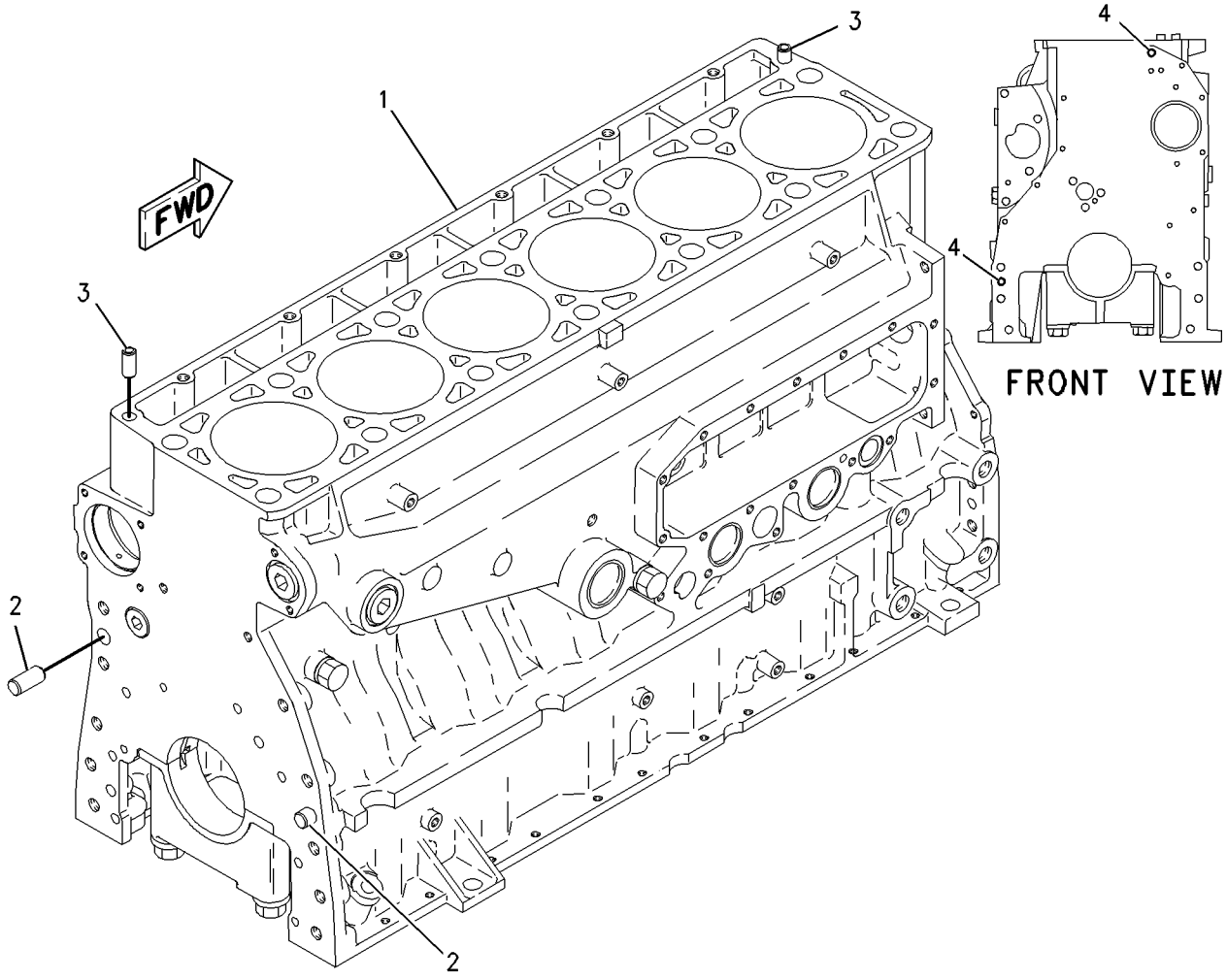

GRAPHIC #1 **<END>** g00800849

263-3774 CYLINDER BLOCK GP

S/N: KHX4087-UP
PART OF 305-8141 CYLINDER BLOCK GP
ALSO AN ATTACHMENT

SMCS-1201 **i02696321**

NOTE	REF NO	GRAPHIC REF	PART NUMBER	QTY	PART NAME 1 2 3 4 5 6 (PRODUCT LEVEL)	SEE PAGE
	1	1	**7E-2968**	7	CAP-CRANKSHAFT BEARING	
M	2	1	**9X-8916**	14	BOLT (M16X2X140-MM)	
	3	1	**5P-8247**	14	WASHER-HARD (17X32X3.5-MM THK)	

M-METRIC PART

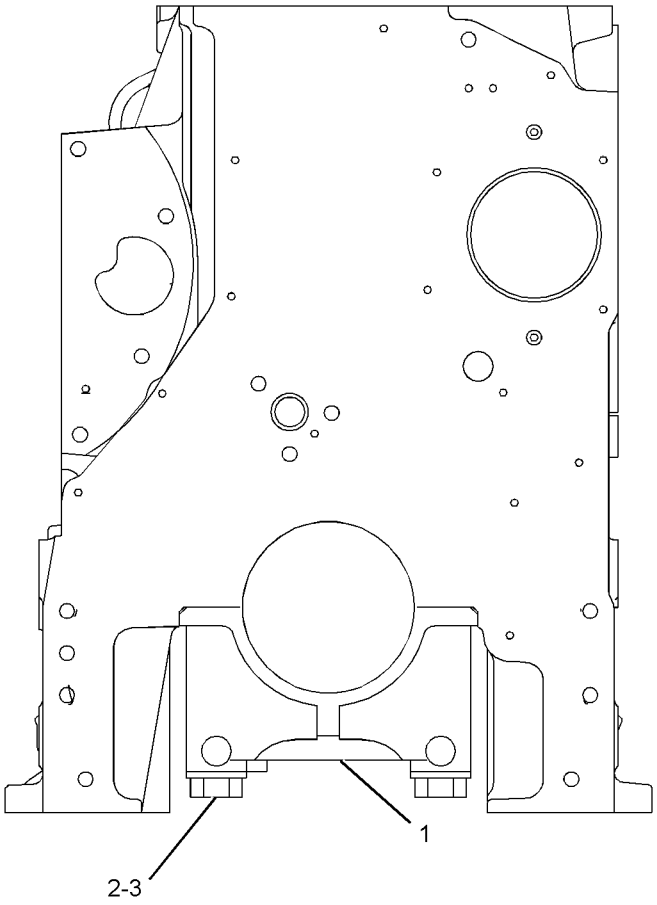

FRONT VIEW

GRAPHIC #1

<END>

g01352581

BASIC ENGINE

305-8141 CYLINDER BLOCK GP

S/N: KHX4087-UP

PART OF 221-4482 CYLINDER BLOCK GP

ALSO AN ATTACHMENT

SMCS-1201 **i02690913**

NOTE	REF NO	GRAPHIC REF	PART NUMBER	QTY	PART NAME 1 2 3 4 5 6 (PRODUCT LEVEL)	SEE PAGE
Y	1	1	*263-3774*	1	CYLINDER BLOCK GP	31
	2	1	**2M-6471**	2	PLUG-CUP	
	3	1	**3H-5552**	1	PLUG-CUP	
	4	1	**9S-8006**	1	PLUG-O-RING	
	5	1	**2M-9780**	1	SEAL-O-RING	
	6	1	**216-5586**	1	BEARING-SLEEVE (CAMSHAFT)	
	7	1	**2W-7213**	6	BEARING-SLEEVE (CAMSHAFT)	

Y-SEPARATE ILLUSTRATION

305-8141 **CYLINDER BLOCK GP** *(contd.)* **i02690913**

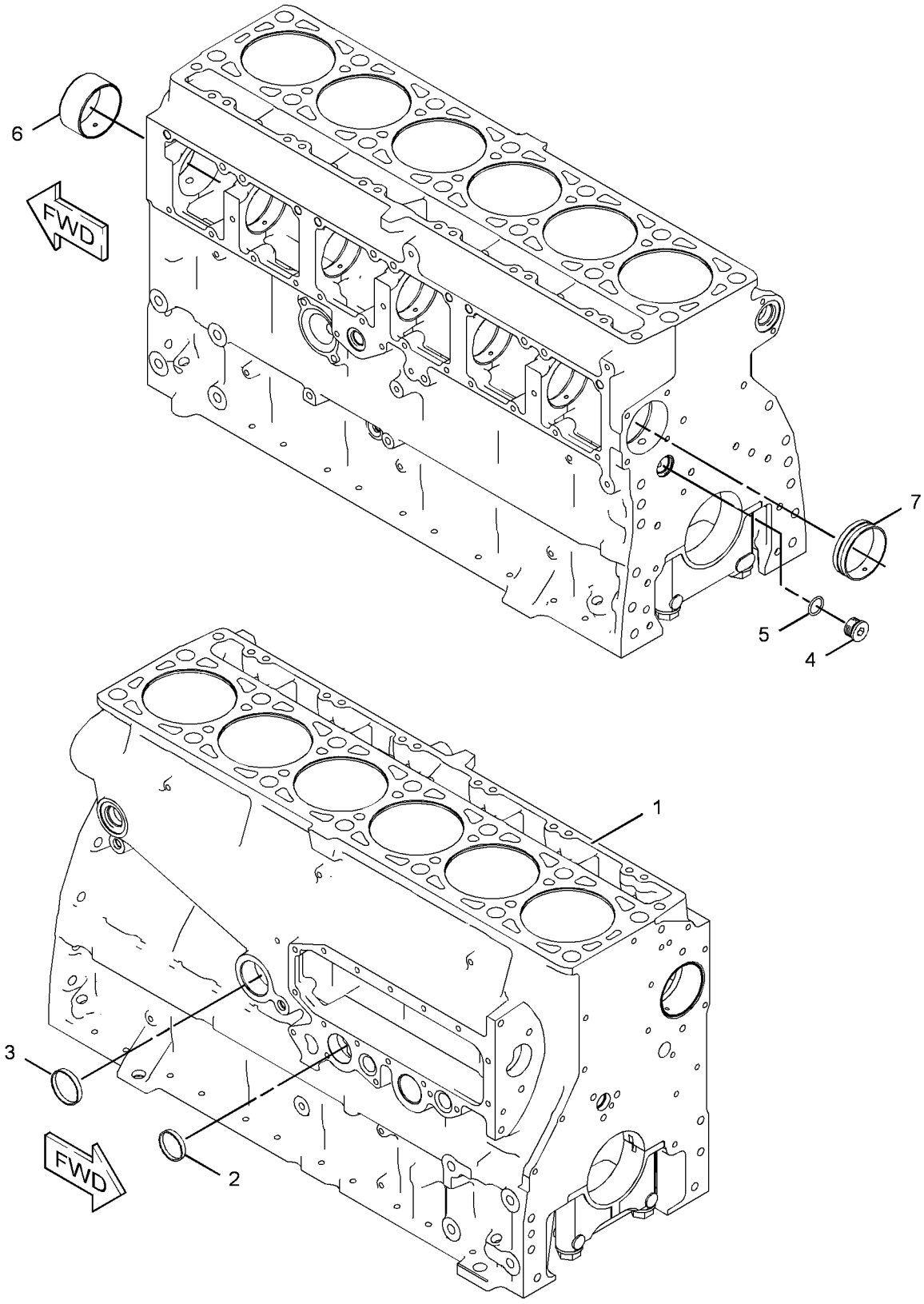

GRAPHIC #1 **<END>** g01348114

BASIC ENGINE

314-4184 CYLINDER HEAD AS

S/N: KHX4087-UP

PART OF 300-9550 CYLINDER HEAD GP

ALSO AN ATTACHMENT

SMCS-1100 **i03163345**

NOTE	REF NO	GRAPHIC REF	PART NUMBER	QTY	PART NAME 1 2 3 4 5 6 (PRODUCT LEVEL)	SEE PAGE
	1	1	**8M-5860**	12	PLUG-CUP	
	2	1	**4F-5695**	2	PLUG-CUP	
	3	1	**227-1200**	6	SLEEVE-INJECTOR	
	4	1	**232-1285**	6	INSERT-VALVE SEAT	
AB		1	**319-3822**		SEAT-VALVE (EXHAUST 0.13-MM OS OD)	
AB		1	**319-3823**		SEAT-VALVE (EXHAUST 0.25-MM OS OD)	
AB		1	**319-3824**		SEAT-VALVE (EXHAUST 0.51-MM OS OD)	
	5	1	**264-6157**	12	INSERT-VALVE SEAT	
AB		1	**319-3819**		SEAT-VALVE (INLET 0.13-MM OS OD)	
AB		1	**319-3820**		SEAT-VALVE (INLET 0.25-MM OS OD)	
AB		1	**319-3821**		SEAT-VALVE (INLET 0.51-MM OS OD)	
	6	1	**310-7255**	6	SEAL-O-RING	
	7	1	**310-7257**	6	SEAL-O-RING	
	8	1	**9X-7712**	1	SEAL-O-RING	
	9	1	**9S-9334**	1	PLUG-O-RING	

A-NOT PART OF THIS GROUP
B-USE AS REQUIRED

314-4184 **CYLINDER HEAD AS** *(contd.)* **i03163345**

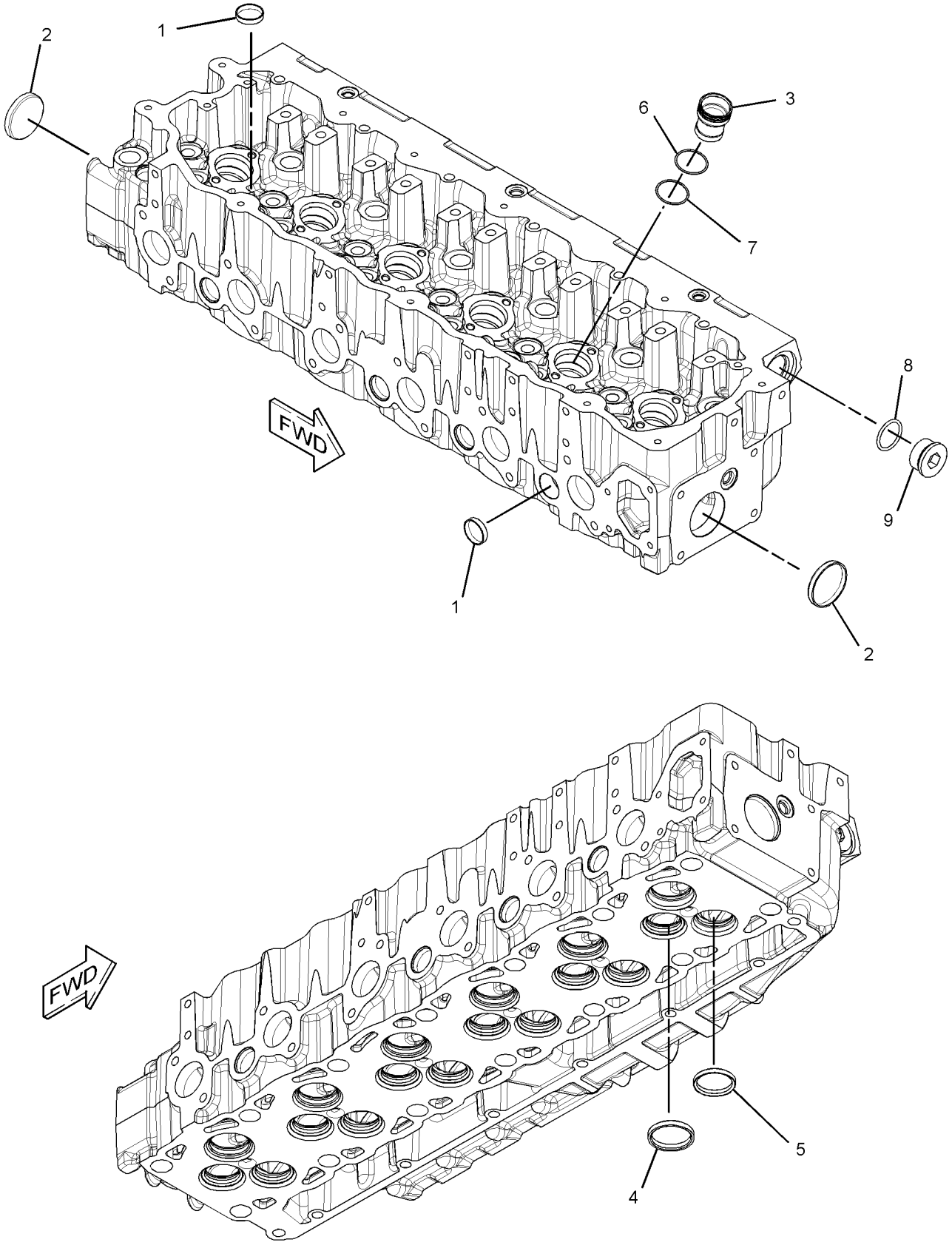

GRAPHIC #1 **<END>** g01622741

BASIC ENGINE

219-5847 CYLINDER HEAD GP*R

S/N: KHX4087-UP
PART OF 219-5849 CYLINDER HEAD GP
ALSO AN ATTACHMENT

SMCS-1100 **i02901858**

NOTE	REF NO	GRAPHIC REF	PART NUMBER	QTY	PART NAME 1 2 3 4 5 6 (PRODUCT LEVEL)	SEE PAGE
CYR	1	1	**300-9550**	1	CYLINDER HEAD GP	38
	2	1	**1N-5999**	2	PLUG-O-RING	
	3	1	**2M-9780**	1	SEAL-O-RING	
	4	1	**3J-1907**	2	SEAL-O-RING	
	5	1	**6V-5048**	6	SEAL-O-RING	
	6	1	**7J-0204**	2	SEAL-O-RING	
	7	1	**9S-8002**	6	PLUG-O-RING	
	8	1	**9S-8004**	2	PLUG-O-RING	
	9	1	**9S-8006**	1	PLUG-O-RING	
	10	1	**9S-9334**	1	PLUG-O-RING	
	11	1	**9X-7712**	1	SEAL-O-RING	

C-CHANGE FROM PREVIOUS TYPE
R-REMFG PART MAY BE AVAILABLE
Y-SEPARATE ILLUSTRATION

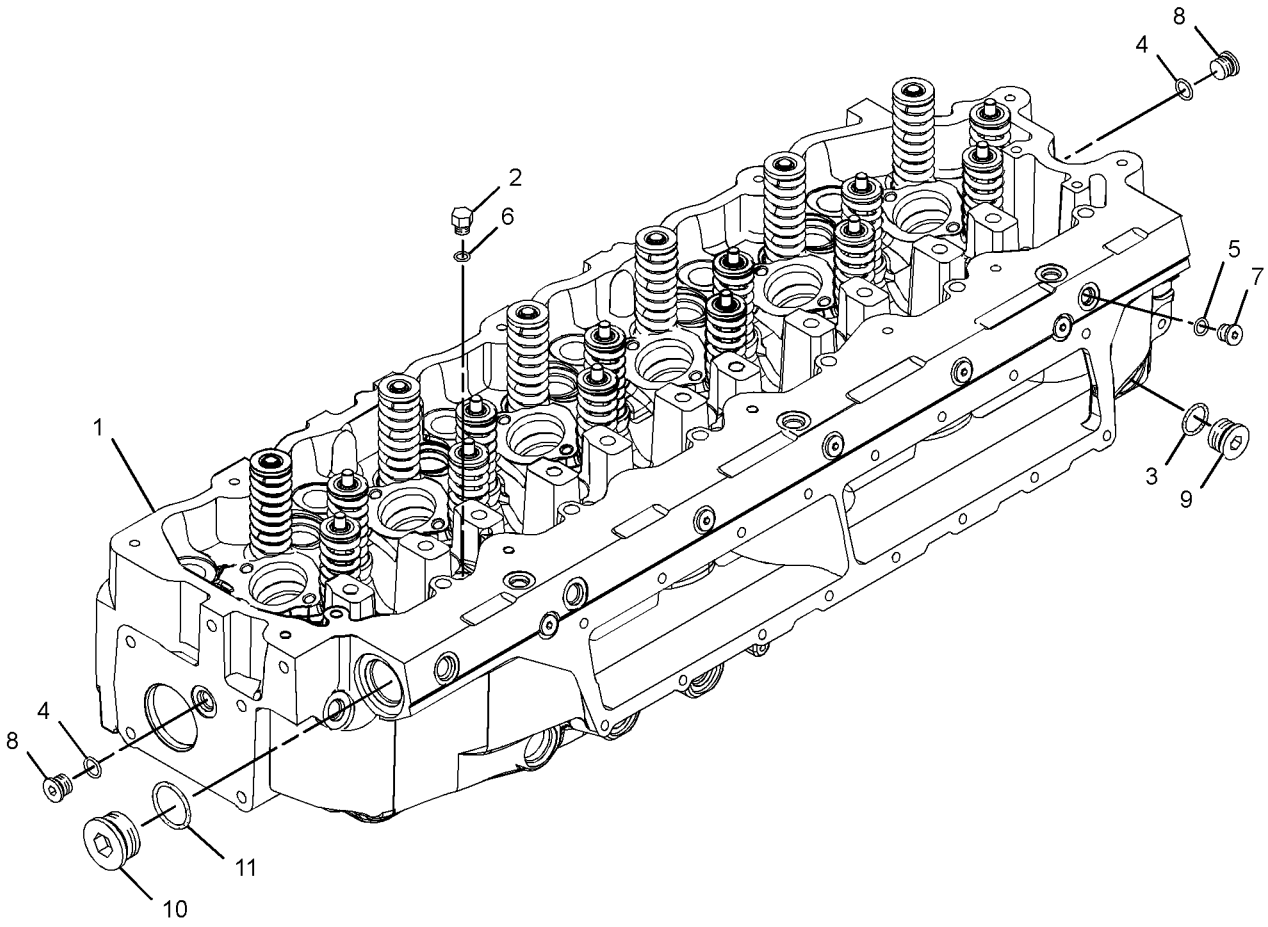

GRAPHIC #1 **<END>** g01445079

219-5849 CYLINDER HEAD GP

S/N: KHX1-UP

PART OF 227-5946, 236-4284, 270-4212, 270-4213 ENGINE AR-CORE

ALSO AN ATTACHMENT

SMCS-1100 **i02355592**

NOTE	REF NO	GRAPHIC REF	PART NUMBER	QTY	PART NAME 1 2 3 4 5 6 (PRODUCT LEVEL)	SEE PAGE
Y	1	1	*219-5847*	1	CYLINDER HEAD GP	36
	2	1	**133-4995**	1	GASKET-CYLINDER HEAD	
	3	1	**138-3252**	14	BOLT-12 POINT HEAD	
		1	**8T-3282**	14	WASHER-HARD (22X35X3.5-MM THK)	
M	4	1	**8T-7950**	6	BOLT (M10X1.5X180-MM)	
	5	1	**6V-5839**	6	WASHER (11X21X2.5-MM THK)	

M-METRIC PART
Y-SEPARATE ILLUSTRATION

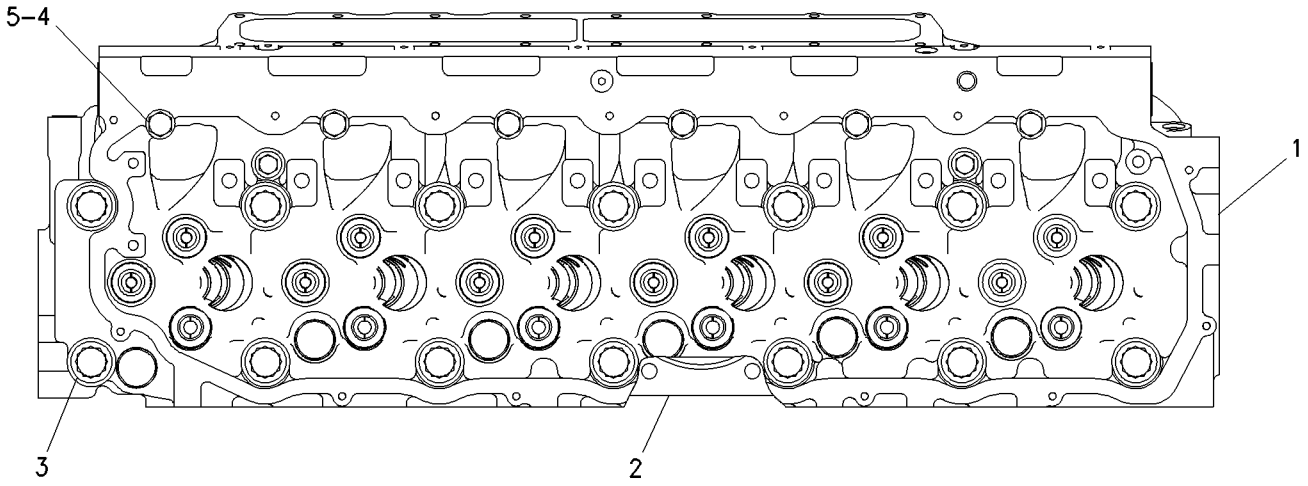

TOP VIEW

GRAPHIC #1 **<END>** g00760746

BASIC ENGINE

300-9550 CYLINDER HEAD GP*R

S/N: KHX4087-UP

PART OF 219-5847 CYLINDER HEAD GP

ALSO AN ATTACHMENT

SMCS-1100 **i03162504**

NOTE	REF NO	GRAPHIC REF	PART NUMBER	QTY	PART NAME 1 2 3 4 5 6 (PRODUCT LEVEL)	SEE PAGE
	1	1	**1W-2715**	24	LOCK-RETAINER	
	2	1	**2A-4429**	12	LOCK-RETAINER	
	3	1	**137-6715**	6	SEAT-VALVE SPRING	
	4	1	**137-6718**	6	SPRING-VALVE (EXHAUST)	
	5	1	**140-6188**	12	SPRING-VALVE (INLET)	
	6	1	**147-8214**	12	SEAL-VALVE STEM (INLET)	
	7	1	**147-8220**	6	GUIDE-VALVE (STANDARD)	
AB		1	**187-8278**		GUIDE-VALVE (0.13-MM OS OD)	
AB		1	**187-8279**		GUIDE-VALVE (0.51-MM OS OD)	
	8	1	**163-2478**	6	SEAL-VALVE STEM (EXHAUST)	
	9	1	**252-7801**	12	VALVE-INLET	
Y	10	1	*314-4184*	1	CYLINDER HEAD AS	34
	11	1	**134-4483**	6	RETAINER-SPRING	
	12	1	**140-9670**	12	GUIDE-VALVE (STANDARD)	
AB		1	**187-8280**		GUIDE-VALVE (0.13-MM OS OD)	
AB		1	**187-8281**		GUIDE-VALVE (0.51-MM OS OD)	
	13	1	**147-8211**	6	VALVE-EXHAUST	
	14	1	**7E-7779**	12	RETAINER-SPRING	

A-NOT PART OF THIS GROUP
B-USE AS REQUIRED
Y-SEPARATE ILLUSTRATION

300-9550 **CYLINDER HEAD GP** *(contd.)* **i03162504**

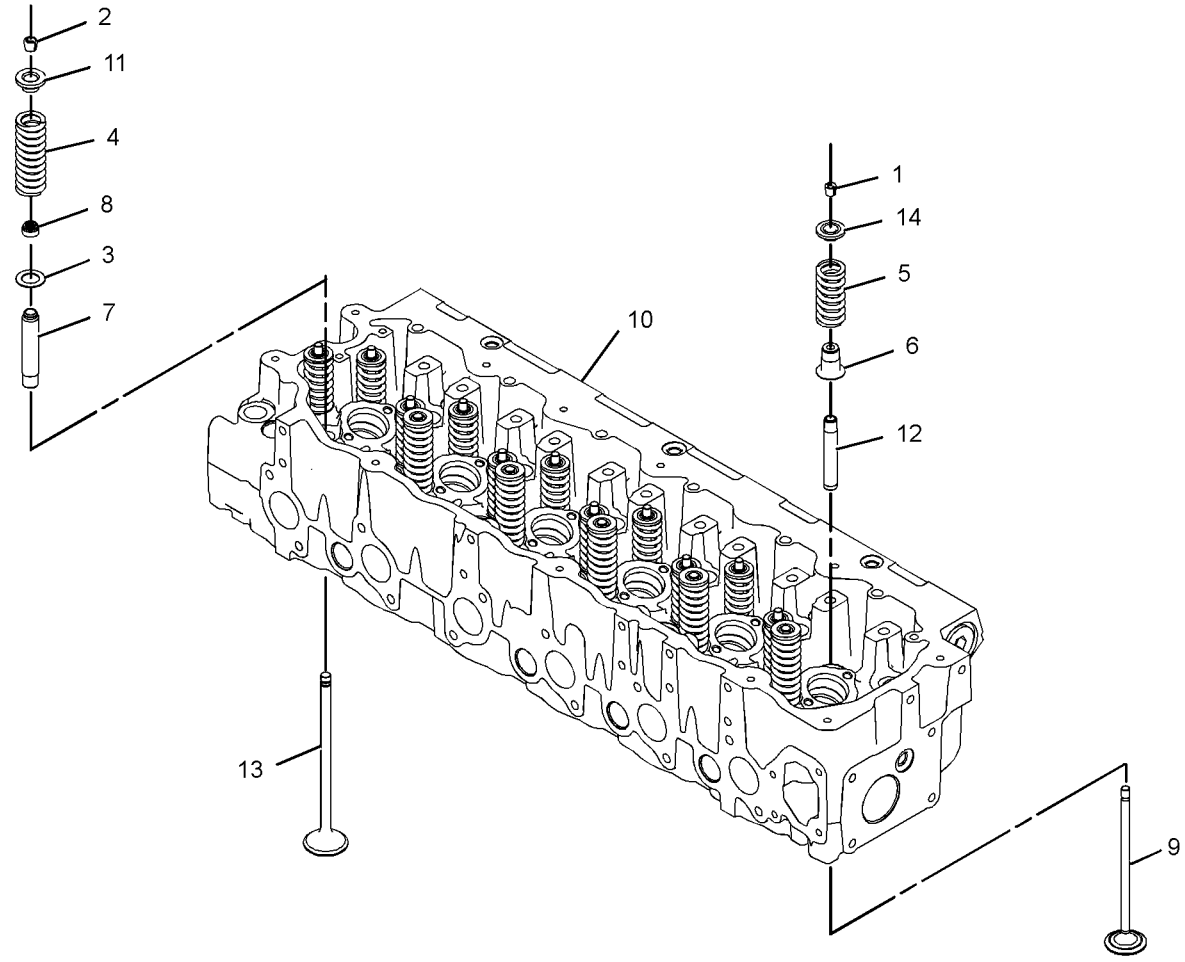

GRAPHIC #1 **<END>** g01384206

263-1850 DAMPER & PULLEY GP

S/N: KHX4087-UP

PART OF 224-9842, 290-0754, 290-0755, 290-0756 ENGINE AR-COMPLETE

ALSO AN ATTACHMENT

SMCS-1205 **i02585779**

NOTE	REF NO	GRAPHIC REF	PART NUMBER	QTY	PART NAME 1 2 3 4 5 6 (PRODUCT LEVEL)	SEE PAGE
	1	1	**2W-7381**	1	PLATE-CLAMP	
	2	1	**116-6332**	1	SPACER	
	3	1	**167-8121**	1	DAMPER AS	
	4	1	**228-3621**	1	SPACER (101.5X167X8-MM THK)	
C	5	1	**153-1036**	1	PULLEY-CRANKSHAFT	
M	6	1	**8T-3666**	4	BOLT (M14X2X60-MM)	
M	7	1	**8T-5035**	8	BOLT (M10X1.5X65-MM)	

C-CHANGE FROM PREVIOUS TYPE
M-METRIC PART

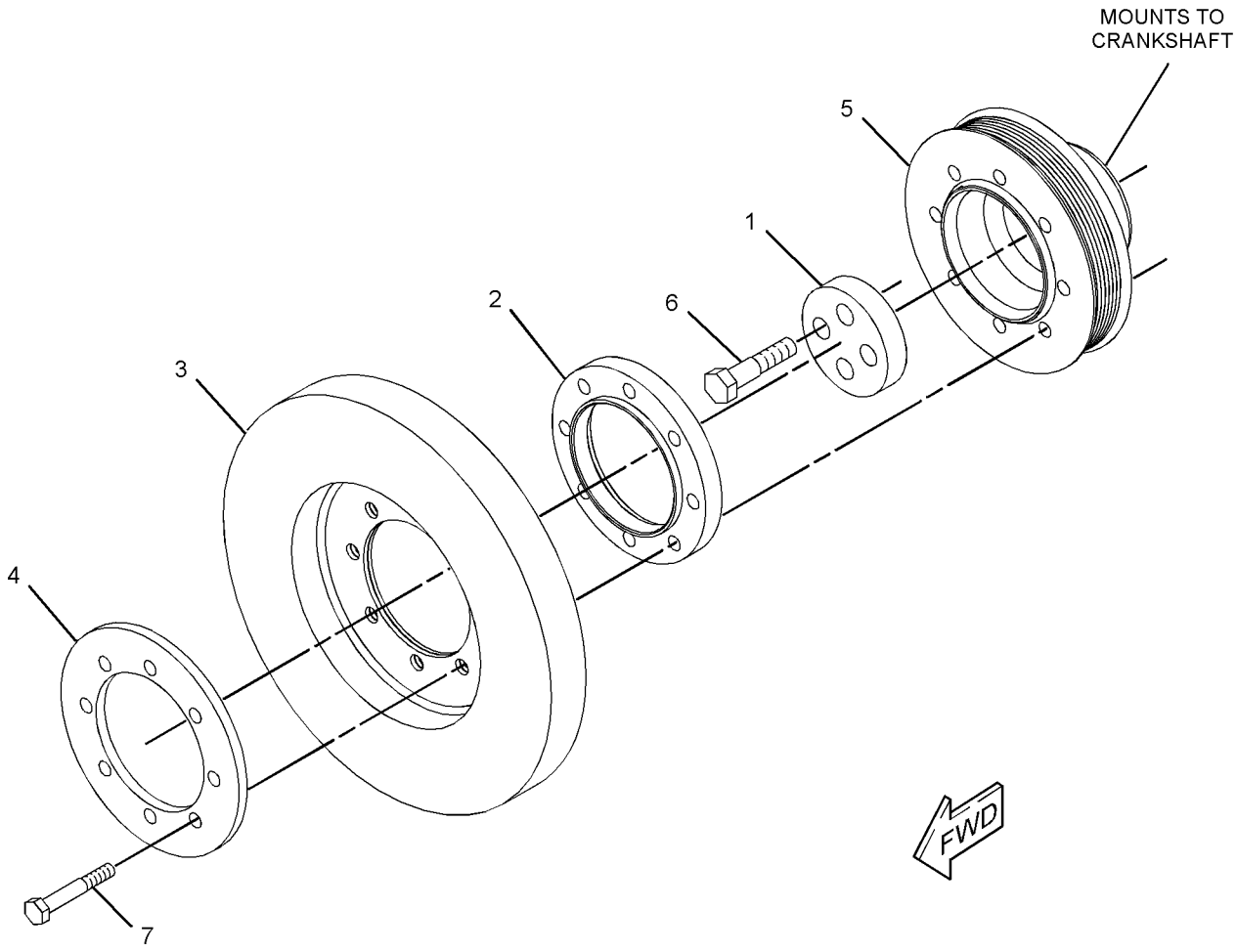

GRAPHIC #1 **<END>** g01218896

BASIC ENGINE

177-6973 DRIVE GP-FAN

S/N: KHX4087-UP
PART OF 253-0437 BRACKET GP-ENGINE
ALSO AN ATTACHMENT

SMCS-1359 **i01555717**

NOTE	REF NO	GRAPHIC REF	PART NUMBER	QTY	PART NAME 1 2 3 4 5 6 (PRODUCT LEVEL)	SEE PAGE
	1	1	**4W-1203**	2	CUP-ROLLER BEARING	
	2	1	**4W-1204**	2	CONE-ROLLER BEARING	
	3	1	**4W-2042**	1	SPACER (35.3X45.5X38.331MM THK)	
	4	1	**6V-9748**	1	SEAL-LIP	
	5	1	**7C-8369**	1	HUB	
	6	1	**7C-8370**	1	CAP	
	7	1	**7C-8634**	1	PLATE	
	8	1	**183-2854**	1	BRACKET AS	
	9	1	**5S-9062**	1	SPACER (35.032X50.8X15.88MM THK)	
M	10	1	**6V-8004**	1	BOLT (M12X1.75X120MM)	

M-METRIC PART

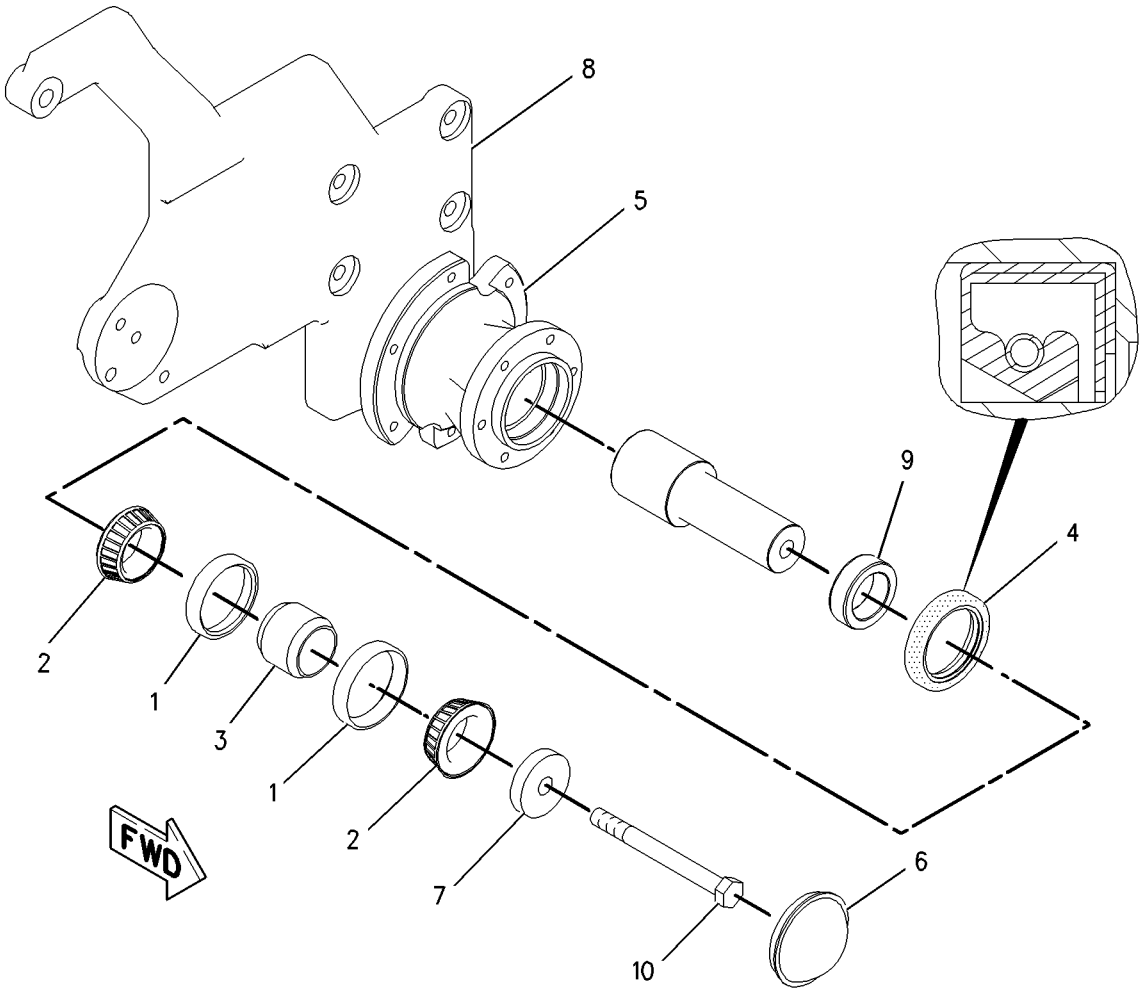

GRAPHIC #1 **<END>** g00808648

BASIC ENGINE

210-8176 DRIVE GP-FAN

S/N: MNB1-UP; WDK1-UP
PART OF 229-1787 COOLING AR-HIGH AMBIENT TEMP
AN ATTACHMENT

SMCS-1359 **i02896763**

NOTE	REF NO	GRAPHIC REF	PART NUMBER	QTY	PART NAME 1 2 3 4 5 6 (PRODUCT LEVEL)	SEE PAGE
	1	1	**8T-4224**	15	WASHER-HARD (8.8X16X2-MM THK)	
	2	1	**265-3593**	1	PLATE AS	
	3	1	**281-3589**	1	DRIVE AS-FAN	
		1	**102-8805**	1	KIT-RECEPTACLE (6-PIN)	
					(INCLUDES RECEPTACLE AS & WEDGE)	
		1	**186-3735**	6	PIN-CONNECTOR (16-GA TO 18-GA)	
	4	1	**230-2892**	1	FAN AS (11-BLADE)	
M	5	1	**8T-4200**	3	BOLT (M8X1.25X16-MM)	
M	6	1	**5C-7261**	6	NUT (M8X1.25-THD)	
M	7	1	**7X-0818**	6	BOLT (M8X1.25X45-MM)	

M-METRIC PART

210-8176 **DRIVE GP-FAN** *(contd.)* **i02896763**

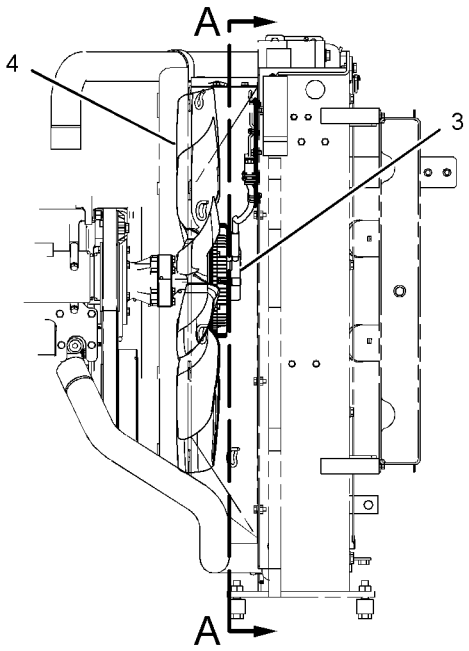

FRONT VIEW

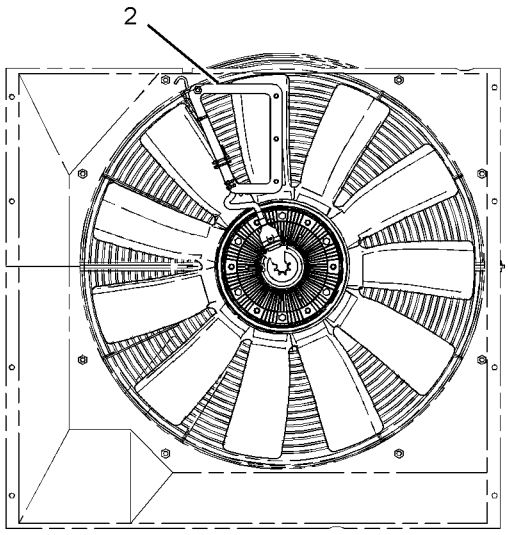

LEFT SIDE VIEW

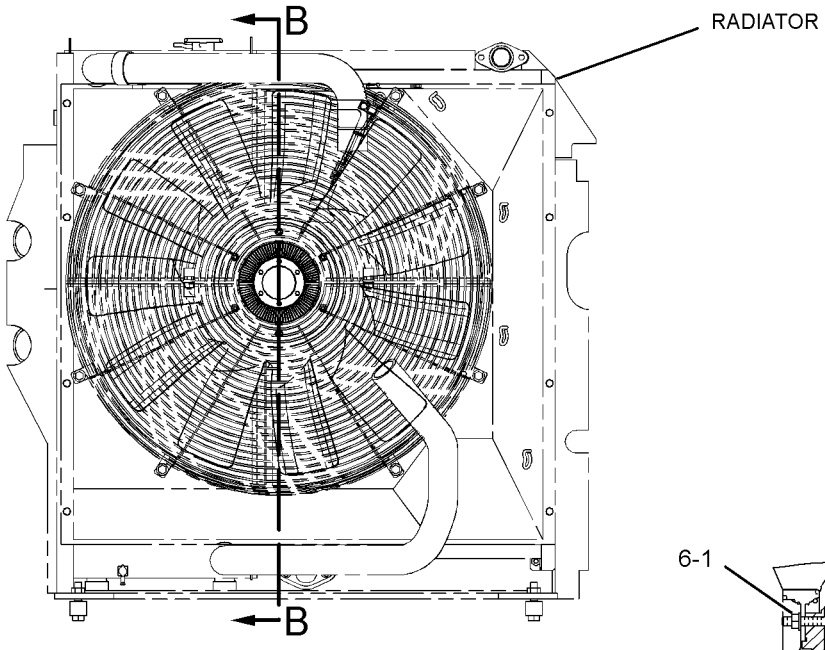

RIGHT SIDE VIEW

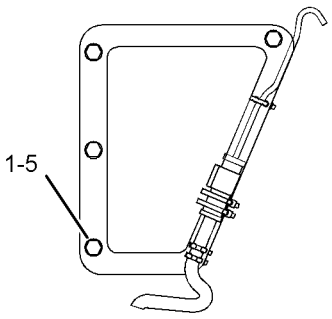

VIEW A-A

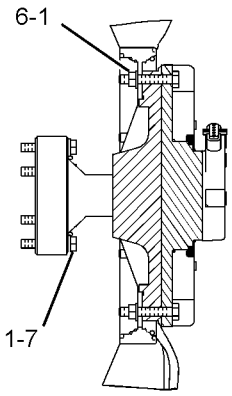

SECTION B-B

GRAPHIC #1 **<END>** g01236524

BASIC ENGINE

258-8723 FASTENER GP-CYLINDER HEAD

S/N: KHX4087-UP

PART OF 224-9842, 290-0754, 290-0755, 290-0756 ENGINE AR-COMPLETE

ALSO AN ATTACHMENT

SMCS-1100 **i02353343**

NOTE	REF NO	GRAPHIC REF	PART NUMBER	QTY	PART NAME 1 2 3 4 5 6 (PRODUCT LEVEL)	SEE PAGE
	1	1	**229-8844**	3	CLIP	
	2	1	**244-4500**	11	SPRING	
M	3	1	**8T-0100**	11	BOLT (M8X1.25X60-MM)	
	4	1	**9N-0869**	11	WASHER-HARD (8.8X25.5X2-MM THK)	

M-METRIC PART

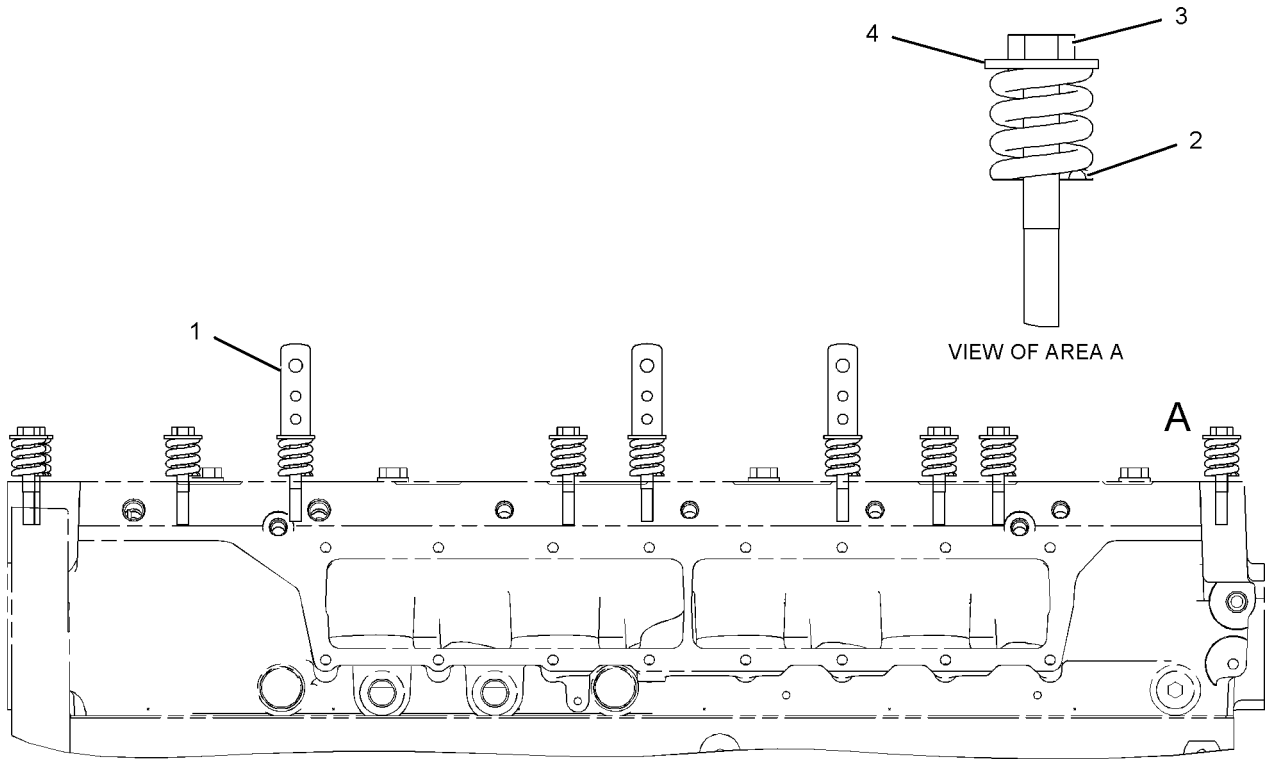

RIGHT SIDE VIEW

GRAPHIC #1 **<END>** g01125046

252-9551 FASTENER GP-FRONT COVER

S/N: KHX4087-UP

PART OF 224-9842, 290-0754, 290-0755, 290-0756 ENGINE AR-COMPLETE

ALSO AN ATTACHMENT

SMCS-1151, 1166 **i02213913**

NOTE	REF NO	GRAPHIC REF	PART NUMBER	QTY	PART NAME 1 2 3 4 5 6 (PRODUCT LEVEL)	SEE PAGE
M	1	1	**9X-2098**	1	STUD-TAPERLOCK (BOLT)	
M	2	1	**6V-2317**	12	BOLT (M8X1.25X30-MM)	
M	3	1	**8T-0100**	2	BOLT (M8X1.25X60-MM)	
	4	1	**8T-4224**	1	WASHER-HARD (8.8X16X2-MM THK)	

M-METRIC PART

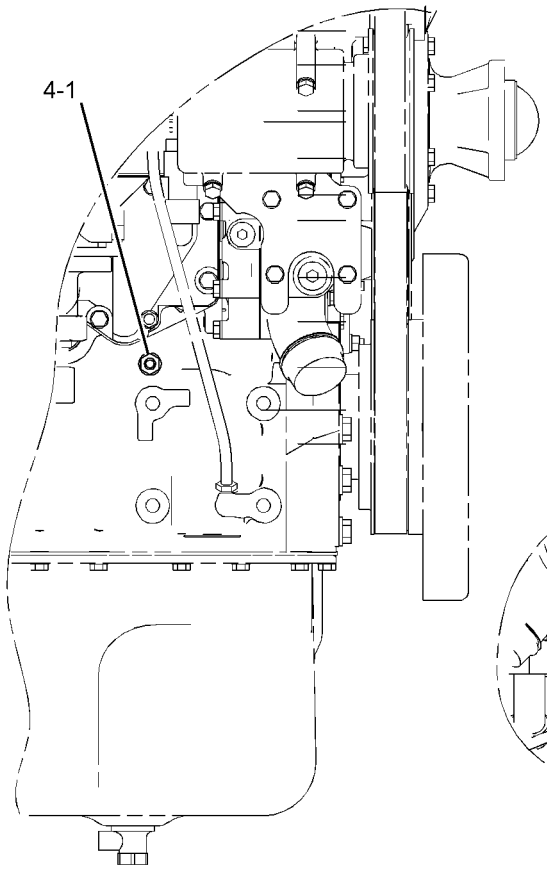

RIGHT SIDE VIEW

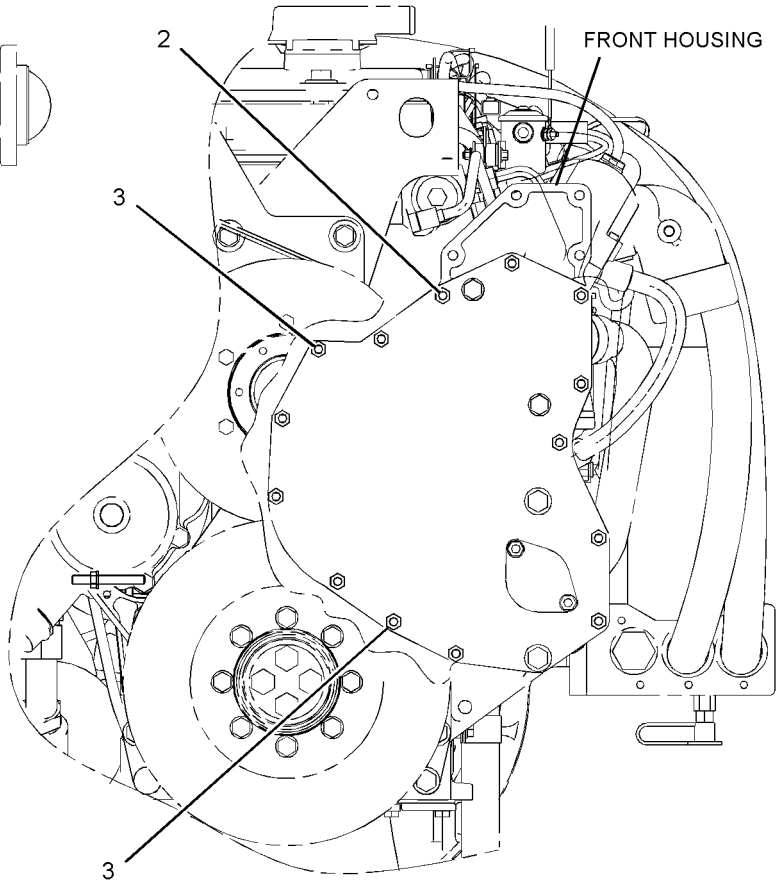

FRONT VIEW

GRAPHIC #1 **<END>** g01121644

116-4556 FASTENER GP-FRONT HOUSING

S/N: KHX4087-UP

PART OF 224-9842, 290-0754, 290-0755, 290-0756 ENGINE AR-COMPLETE

ALSO AN ATTACHMENT

SMCS-1162 **i01516753**

NOTE	REF NO	GRAPHIC REF	PART NUMBER	QTY	PART NAME 1 2 3 4 5 6 (PRODUCT LEVEL)	SEE PAGE
M	1	1	**6V-8336**	6	BOLT (M12X1.75X70-MM)	
		1	**5P-8245**	6	WASHER-HARD (13.5X25.5X3-MM THK)	

M-METRIC PART

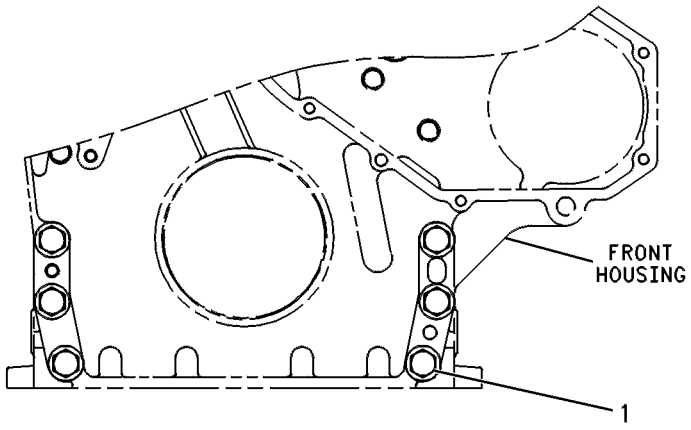

FRONT VIEW

GRAPHIC #1 **<END>** g00244671

113-6170 FASTENER GP-LIFTING

S/N: KHX4087-UP

PART OF 224-9842, 290-0754, 290-0755, 290-0756 ENGINE AR-COMPLETE

ALSO AN ATTACHMENT

SMCS-1122 **i01515859**

NOTE	REF NO	GRAPHIC REF	PART NUMBER	QTY	PART NAME 1 2 3 4 5 6 (PRODUCT LEVEL)	SEE PAGE
	1	1	**8T-4121**	3	WASHER-HARD (11X21X2.5-MM THK)	
M	2	1	**8T-4136**	3	BOLT (M10X1.5X25-MM)	

M-METRIC PART

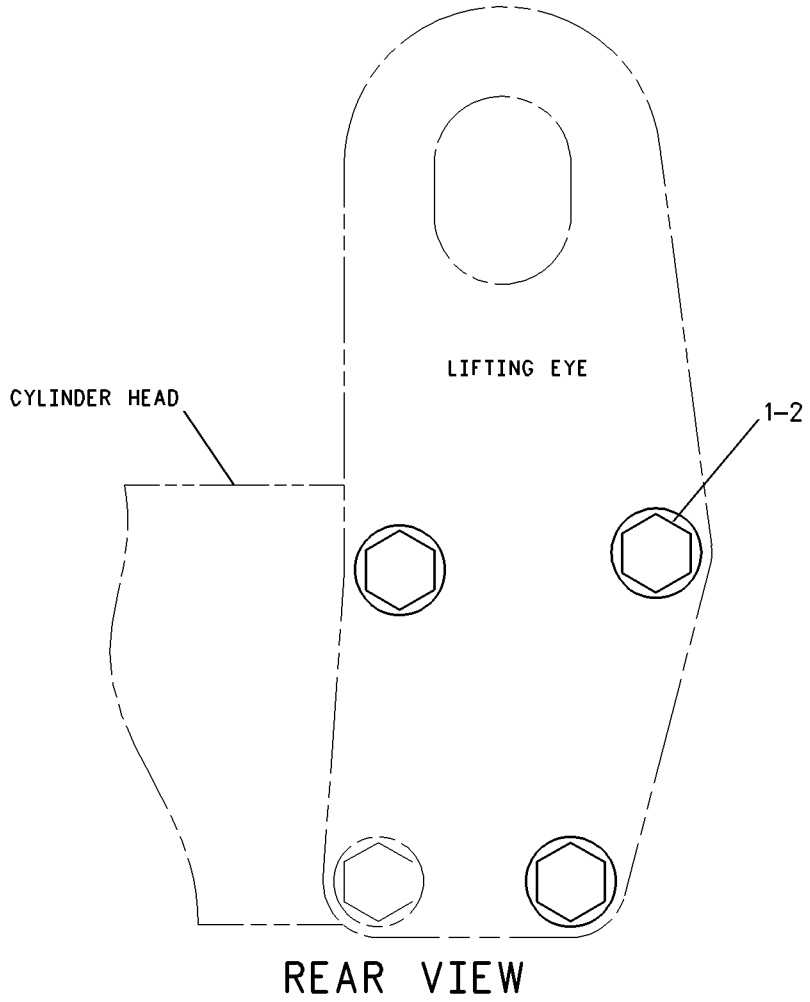

GRAPHIC #1 **<END>** g00786762

186-5892 FLYWHEEL GP

S/N: KHX4087-UP

PART OF 224-9842, 290-0754, 290-0755, 290-0756 ENGINE AR-COMPLETE

ALSO AN ATTACHMENT

SMCS-1156 **i02293843**

NOTE	REF NO	GRAPHIC REF	PART NUMBER	QTY	PART NAME 1 2 3 4 5 6 (PRODUCT LEVEL)	SEE PAGE
	1	1	**202-2382**	1	FLYWHEEL AS	
	1A	1	**1W-1064**	1	GEAR-FLYWHEEL RING (126-TEETH)	
M	2	1	**6V-8197**	8	BOLT (M12X1.75X40-MM)	
	3	1	**5P-8245**	8	WASHER-HARD (13.5X25.5X3-MM THK)	
	4	1	**3E-3213**	1	PIN-SPRING	

M-METRIC PART

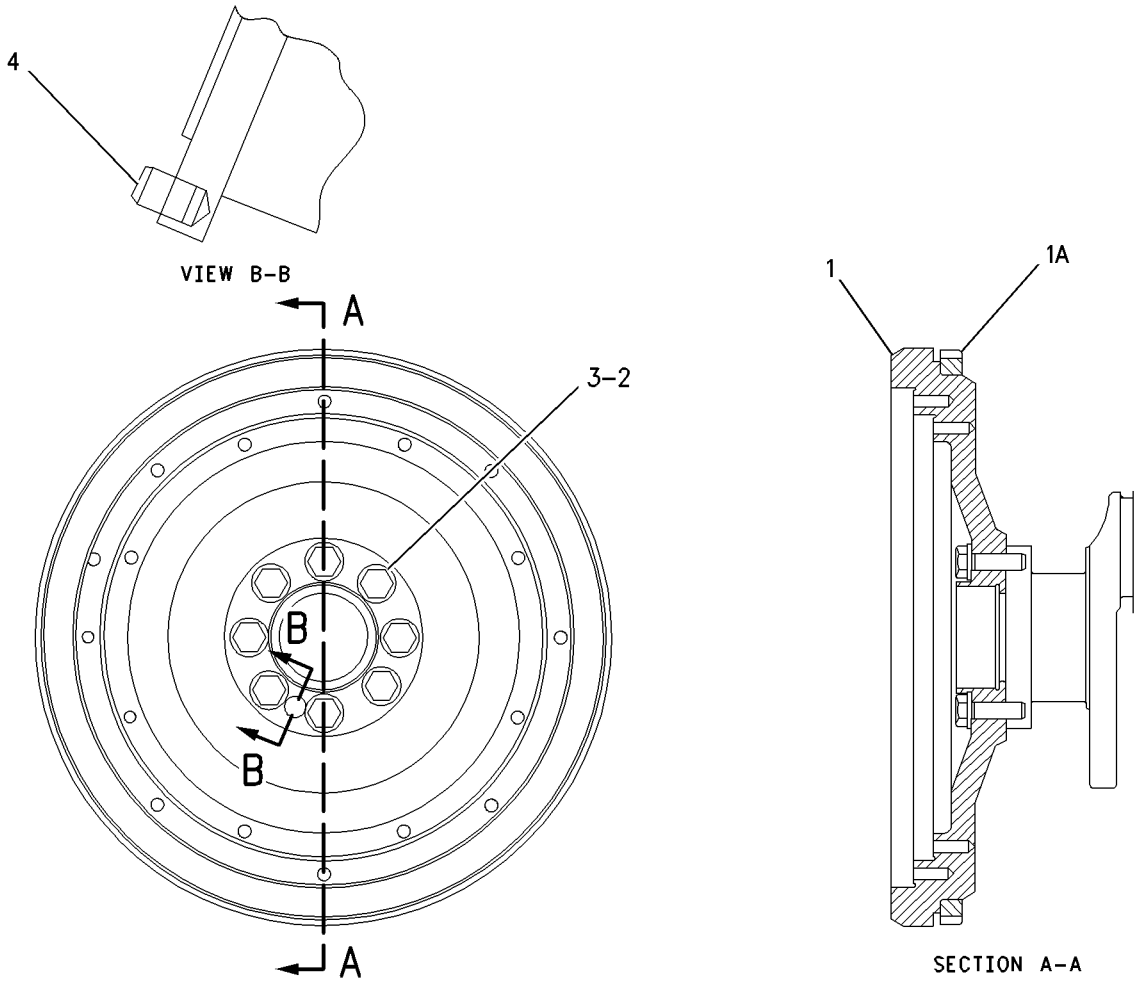

GRAPHIC #1 **<END>** g00764000

205-1321 GEAR GP-FRONT

S/N: KHX1-UP

PART OF 227-5946, 236-4284, 270-4212, 270-4213 ENGINE AR-CORE

ALSO AN ATTACHMENT

SMCS-1151, 1162, 1206 **i01773939**

NOTE	REF NO	GRAPHIC REF	PART NUMBER	QTY	PART NAME 1 2 3 4 5 6 (PRODUCT LEVEL)	SEE PAGE
	1	1	**113-6069**	1	PLATE-THRUST	
	2	1	**115-4219**	1	PLATE-RETAINING	
	3	1	**200-4495**	1	SHAFT-IDLER	
	4	1	**205-1320**	1	GEAR AS-IDLER (50 TEETH)	
	4A	1	**115-4072**	1	BEARING	
M	5	1	**136-4183**	1	BOLT-12 POINT HEAD (M10X1.5X30MM)	
M	6	1	**6V-5843**	2	BOLT (M10X1.50X45MM)	

M-METRIC PART

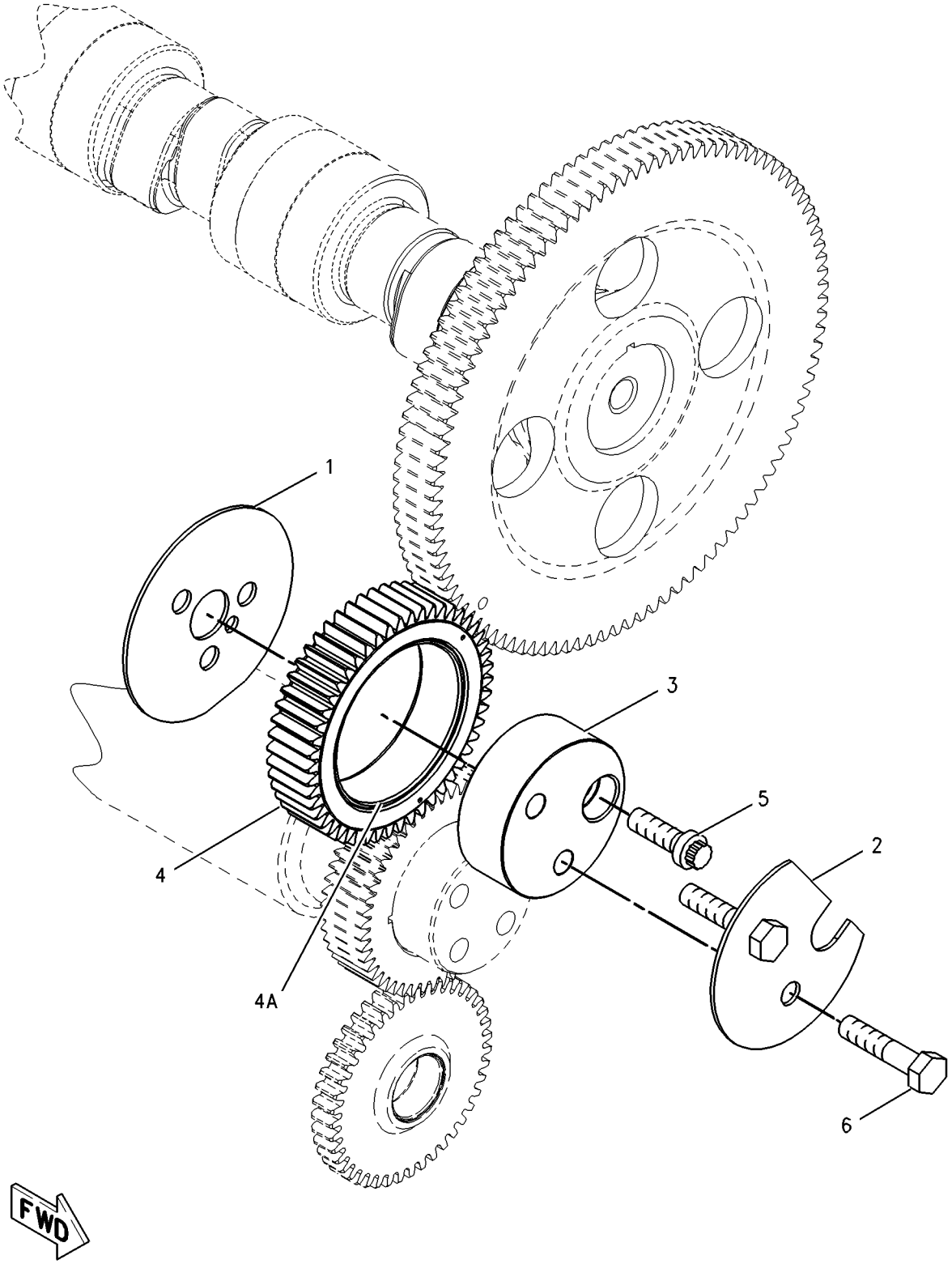

GRAPHIC #1 **<END>** g00870175

7W-8813 HOUSING GP-FLYWHEEL

S/N: KHX4087-UP

PART OF 224-9842, 290-0754, 290-0755, 290-0756 ENGINE AR-COMPLETE

ALSO AN ATTACHMENT

SMCS-1157 **i02353640**

NOTE	REF NO	GRAPHIC REF	PART NUMBER	QTY	PART NAME 1 2 3 4 5 6 (PRODUCT LEVEL)	SEE PAGE
	1	1	**7C-5233**	1	HOUSING-FLYWHEEL	
	2	1	**2P-1294**	1	PLUG-SEAL	
M	3	1	**6V-5842**	2	BOLT (M10X1.5X40-MM)	
M	4	1	**8T-0226**	10	BOLT (M14X2X45-MM)	
	5	1	**9S-4182**	1	PLUG-O-RING (STRAIGHT THREAD O-RING)	
B	6	1	**9S-4183**	1	PLUG-O-RING	

B-USE AS REQUIRED
M-METRIC PART

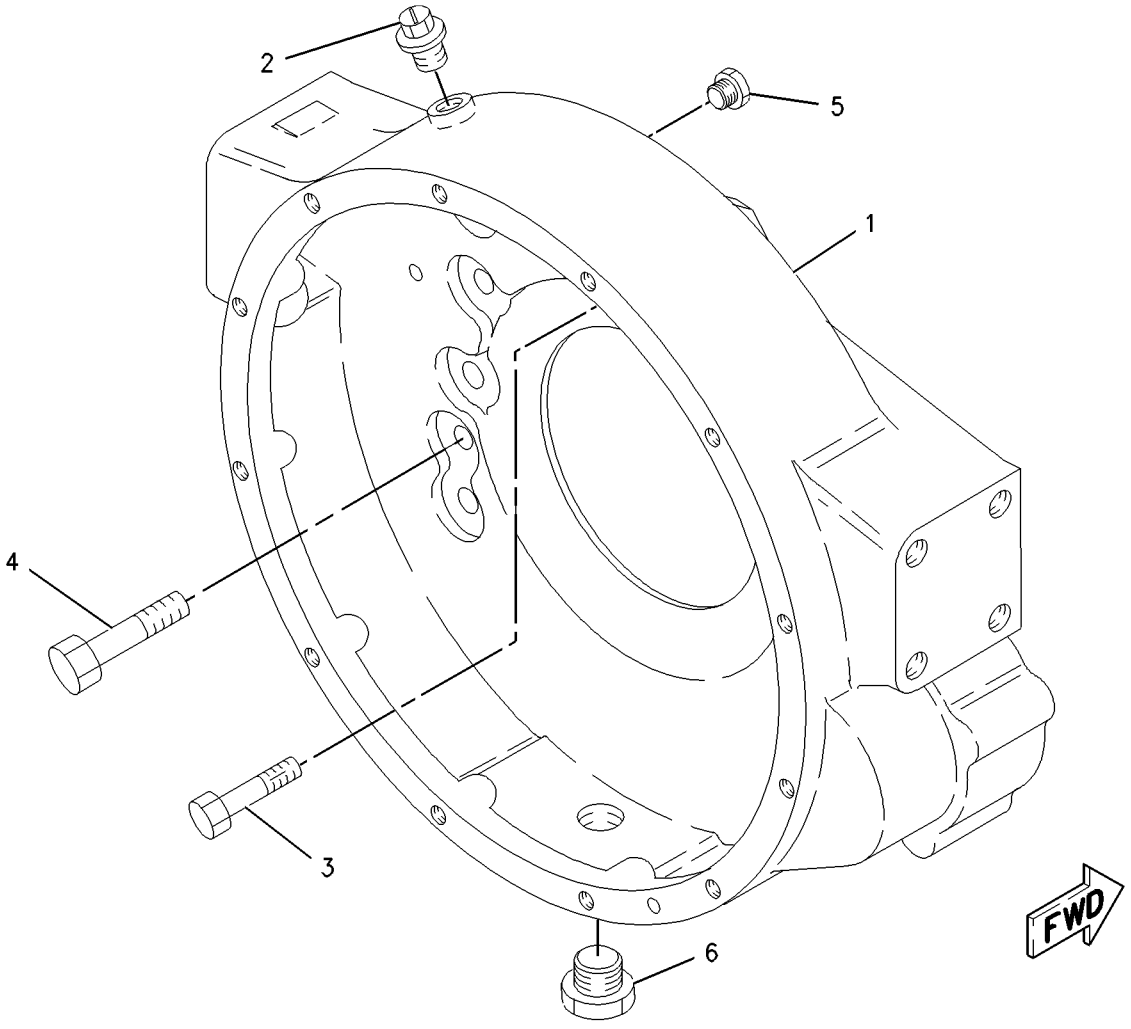

GRAPHIC #1 **<END>** g00893275

245-3260 HOUSING GP-FRONT

S/N: KHX1-UP

PART OF 227-5946, 236-4284, 270-4212, 270-4213 ENGINE AR-CORE

ALSO AN ATTACHMENT

SMCS-1151, 1162, 1206 **i02355632**

NOTE	REF NO	GRAPHIC REF	PART NUMBER	QTY	PART NAME 1 2 3 4 5 6 (PRODUCT LEVEL)	SEE PAGE
	1	1	**245-3259**	1	HOUSING-FRONT	
M	2	1	**6V-3918**	4	BOLT (M8X1.25X50-MM)	
M	3	1	**6V-5217**	8	BOLT (M8X1.25X20-MM)	
	4	1	**9M-1974**	12	WASHER-HARD (8.8X16X2-MM THK)	
B	5	1	**1U-8846**		SEALANT-GASKET	

B-USE AS REQUIRED
M-METRIC PART

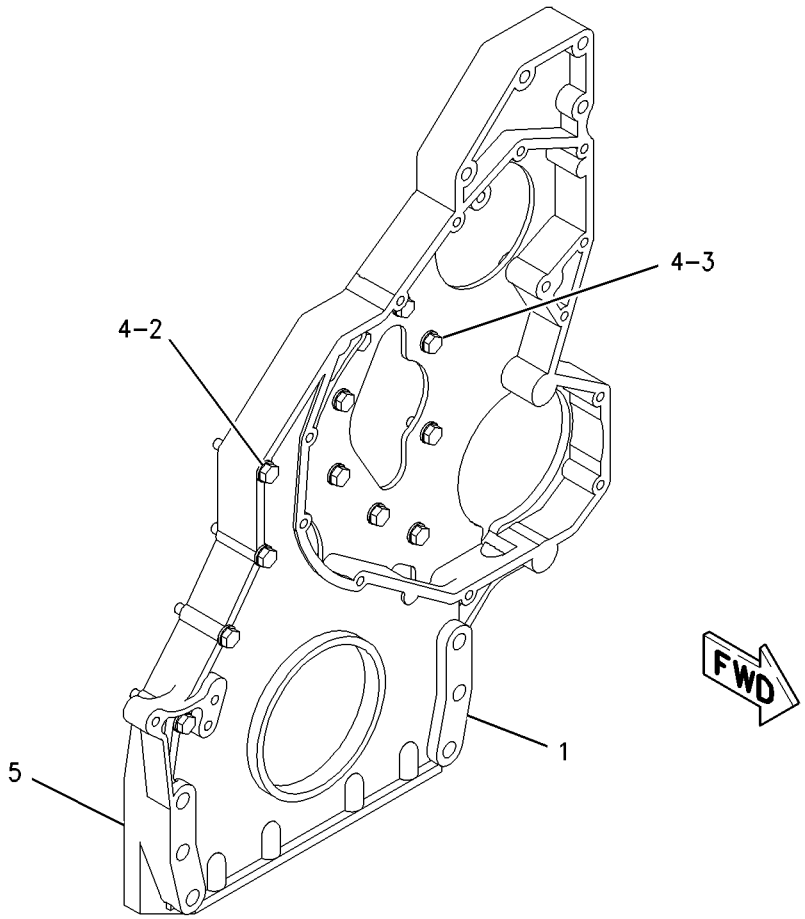

GRAPHIC #1 **<END>** g00713985

139-4081 LIFTER GP-VALVE

S/N: KHX1-UP
PART OF 232-3717 VALVE MECHANISM GP
ALSO AN ATTACHMENT

SMCS-1209 **i01517939**

NOTE	REF NO	GRAPHIC REF	PART NUMBER	QTY	PART NAME 1 2 3 4 5 6 (PRODUCT LEVEL)	SEE PAGE
	1	1	**139-9476**	1	SHAFT AS-LIFTER	
		1	**2D-6642**	2	BALL	
	2	1	**7E-6794**	4	ARM AS-LIFTER	
	3	1	**139-4084**	2	SPACER	

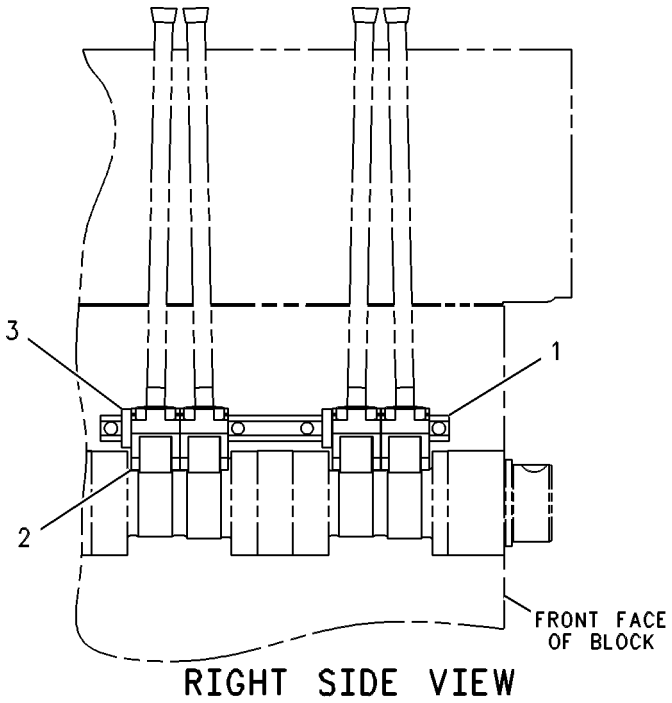

RIGHT SIDE VIEW

GRAPHIC #1 **<END>** g00288708

142-8100 LIFTING GP-ENGINE

S/N: KHX4087-UP

PART OF 224-9842, 290-0754, 290-0755, 290-0756 ENGINE AR-COMPLETE

ALSO AN ATTACHMENT

SMCS-1122 **i01970139**

NOTE	REF NO	GRAPHIC REF	PART NUMBER	QTY	PART NAME 1 2 3 4 5 6 (PRODUCT LEVEL)	SEE PAGE
	1	1	**228-4766**	1	PLATE-LIFTING	
	2	1	**154-0896**	1	PLATE-LIFTING	
M	3	1	**8T-4136**	1	BOLT (M10X1.5X25-MM)	
	4	1	**8T-4121**	1	WASHER-HARD (11X21X2.5-MM THK)	

M-METRIC PART

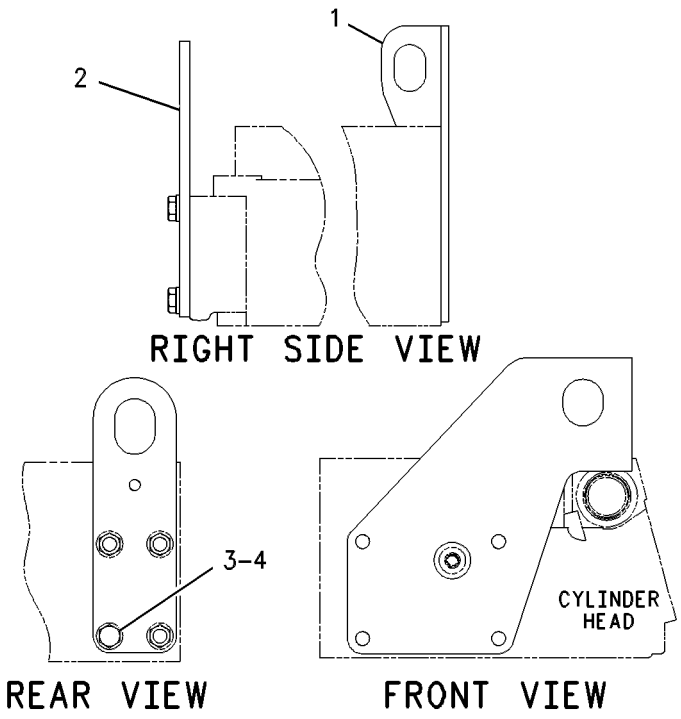

GRAPHIC #1 **<END>** g00597754

233-1120 MOUNTING GP-ENGINE

S/N: MNB1-UP; WDK1-UP

PART OF 222-8379 INSTALLATION AR-ENGINE

SMCS-1152 **i02533036**

NOTE	REF NO	GRAPHIC REF	PART NUMBER	QTY	PART NAME 1 2 3 4 5 6 (PRODUCT LEVEL)	SEE PAGE
	1	1	**109-9329**	4	WASHER (21.5X120X8-MM THK)	
	2	1	**109-9350**	4	MOUNT-FLEXIBLE	
	3	1	**109-9369**	4	MOUNT-FLEXIBLE	
	4	1	**118-9930**	4	SUPPORT AS	
	5	1	**233-1293**	1	BRACKET AS (FRONT, LH)	
	6	1	**233-1296**	1	BRACKET AS (FRONT, RH)	
	7	1	**233-1299**	1	BRACKET AS (REAR, RH)	
	8	1	**272-4800**	1	BRACKET AS (REAR, LH)	
M	9	1	**096-9259**	6	BOLT (M14X2X60-MM)	
M	10	1	**096-9988**	2	BOLT (M14X2X30-MM)	
	11	1	**7M-0242**	2	WASHER-HARD (15.1X25.4X5-MM THK)	
	12	1	**7X-0510**	6	WASHER-HARD (15.5X29X3-MM THK)	
M	13	1	**7X-2532**	4	BOLT (M20X2.5X130-MM)	
M	14	1	**7X-2555**	8	BOLT (M16X2X80-MM)	
	15	1	**8T-4123**	8	WASHER (22X35X3.5-MM THK)	
	16	1	**9X-8257**	8	WASHER (17.5X30X3.5-MM THK)	

M-METRIC PART

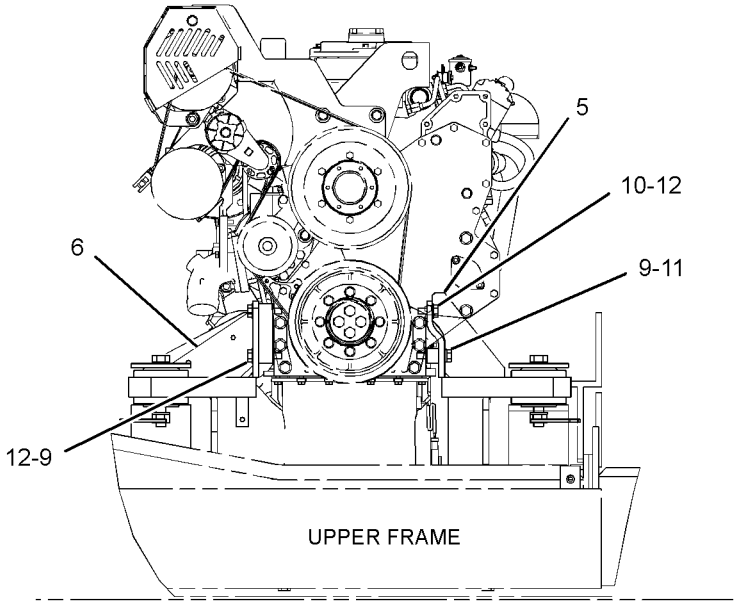

LEFT SIDE VIEW

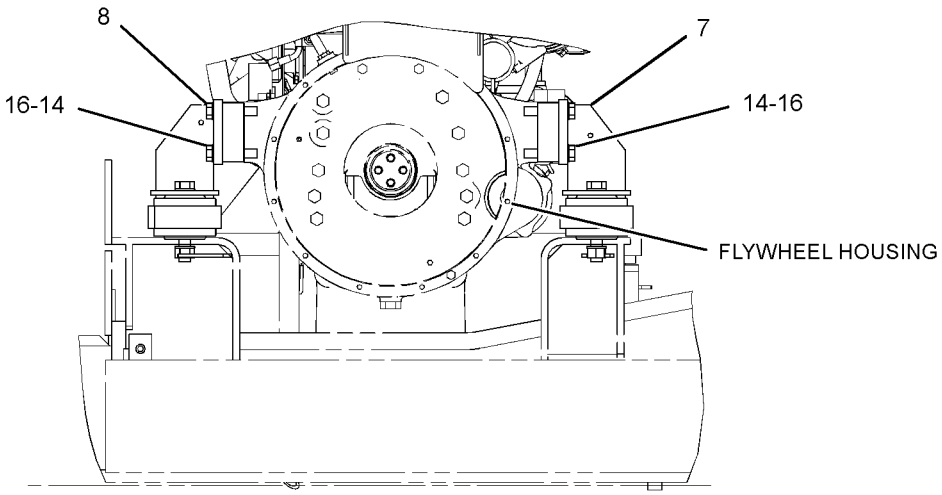

RIGHT SIDE VIEW

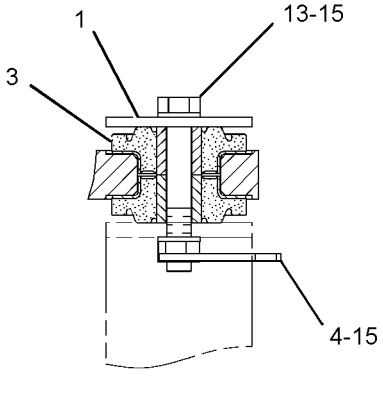

SECTION A-A

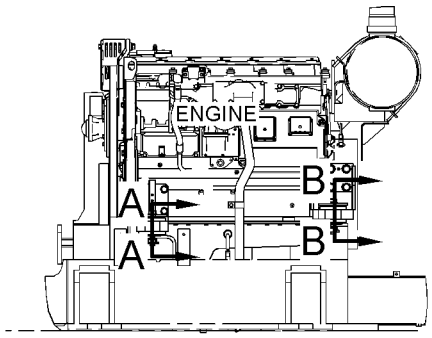

REAR VIEW

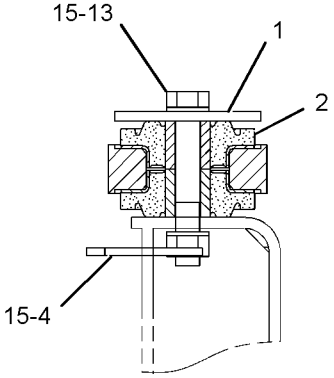

SECTION B-B

GRAPHIC #1

<END>

g01185786

176-9429 PAN GP-OIL

S/N: KHX4087-UP

PART OF 224-9842, 290-0754, 290-0755, 290-0756 ENGINE AR-COMPLETE

ALSO AN ATTACHMENT

SMCS-1302 **i01736372**

NOTE	REF NO	GRAPHIC REF	PART NUMBER	QTY	PART NAME 1 2 3 4 5 6 (PRODUCT LEVEL)	SEE PAGE
	1	1	**176-9430**	1	PAN AS-OIL	
M	2	1	**175-3676**	36	BOLT (M8X1.25X19.5-MM)	
	3	1	**166-2905**	1	SEAL-INTEGRAL	
B	4	1	**136-4303**	1	PLUG AS-CONNECTOR (2-PIN)	
		1	**155-2270**	1	KIT-CONNECTING PLUG (2-PIN)	
					(INCLUDES PLUG AS AND WEDGE)	
		1	**3E-3362**	1	WEDGE-PLUG LOCK (2-PIN)	
		1	**8T-8737**	2	PLUG-SEAL	
	5	1	**213-0677**	1	SWITCH AS-LIQUID LEVEL	
		1	**3E-3365**	1	WEDGE-RECEPTACLE LOCK (2-PIN)	
		1	**144-1636**	1	PIN-CONNECTOR (14-GA TO 18-GA)	
		1	**102-8802**	1	KIT-RECEPTACLE (2-PIN)	
					(INCLUDES RECEPTACLE AS & WEDGE)	
	6	1	**189-9377**	1	SEAL-O-RING	
	7	1	**203-4183**	1	VALVE AS	
	8	1	**2K-8199**	1	SEAL-O-RING	

B-USE AS REQUIRED
M-METRIC PART

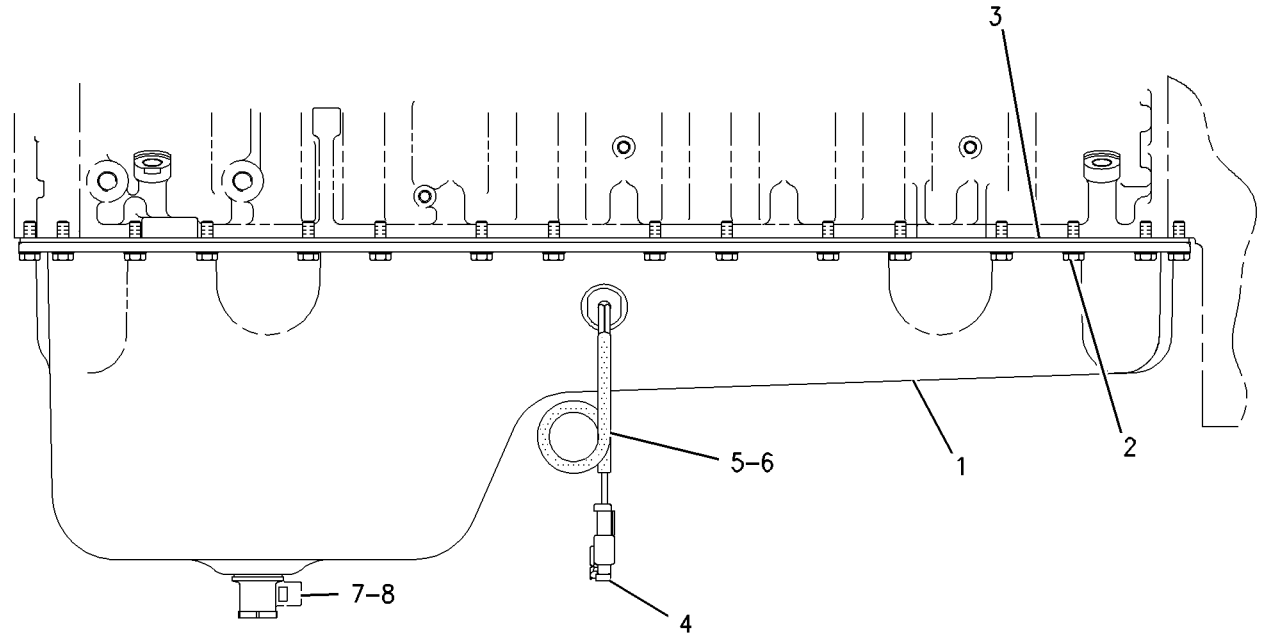

LEFT SIDE VIEW

GRAPHIC #1 **<END>** g00825659

BASIC ENGINE

210-5592 PISTON & ROD GP

S/N: KHX1-UP
PART OF 236-4284, 270-4212 ENGINE AR-CORE
ALSO AN ATTACHMENT

SMCS-1225 **i02355585**

NOTE	REF NO	GRAPHIC REF	PART NUMBER	QTY	PART NAME 1 2 3 4 5 6 (PRODUCT LEVEL)	SEE PAGE
R	1	1	**213-3193**	1	ROD AS-CONNECTING (NON-DRILLED)	
	1A	1	**2W-0027**	1	BEARING (EYE END)	
	1B	1	**195-0321**	2	BOLT	
	2	1	**224-6638**	1	BEARING-CONNECTING ROD (STANDARD)	
	3	1	**197-9354**	1	RING-PISTON (OIL CONTROL)	
	4	1	**197-9353**	1	RING-PISTON (INTERMEDIATE)	
	5	1	**197-9386**	1	RING-PISTON (TOP)	
	6	1	**168-7224**	1	PIN-PISTON	
	7	1	**173-0143**	1	JET AS-PISTON COOLING	
	8	1	**238-2698**	1	BODY AS	
M	9	1	**6V-3940**	1	BOLT (M8X1.25X25-MM)	
	10	1	**7C-0111**	2	RETAINER-PIN	

M-METRIC PART
R-REMFG PART MAY BE AVAILABLE

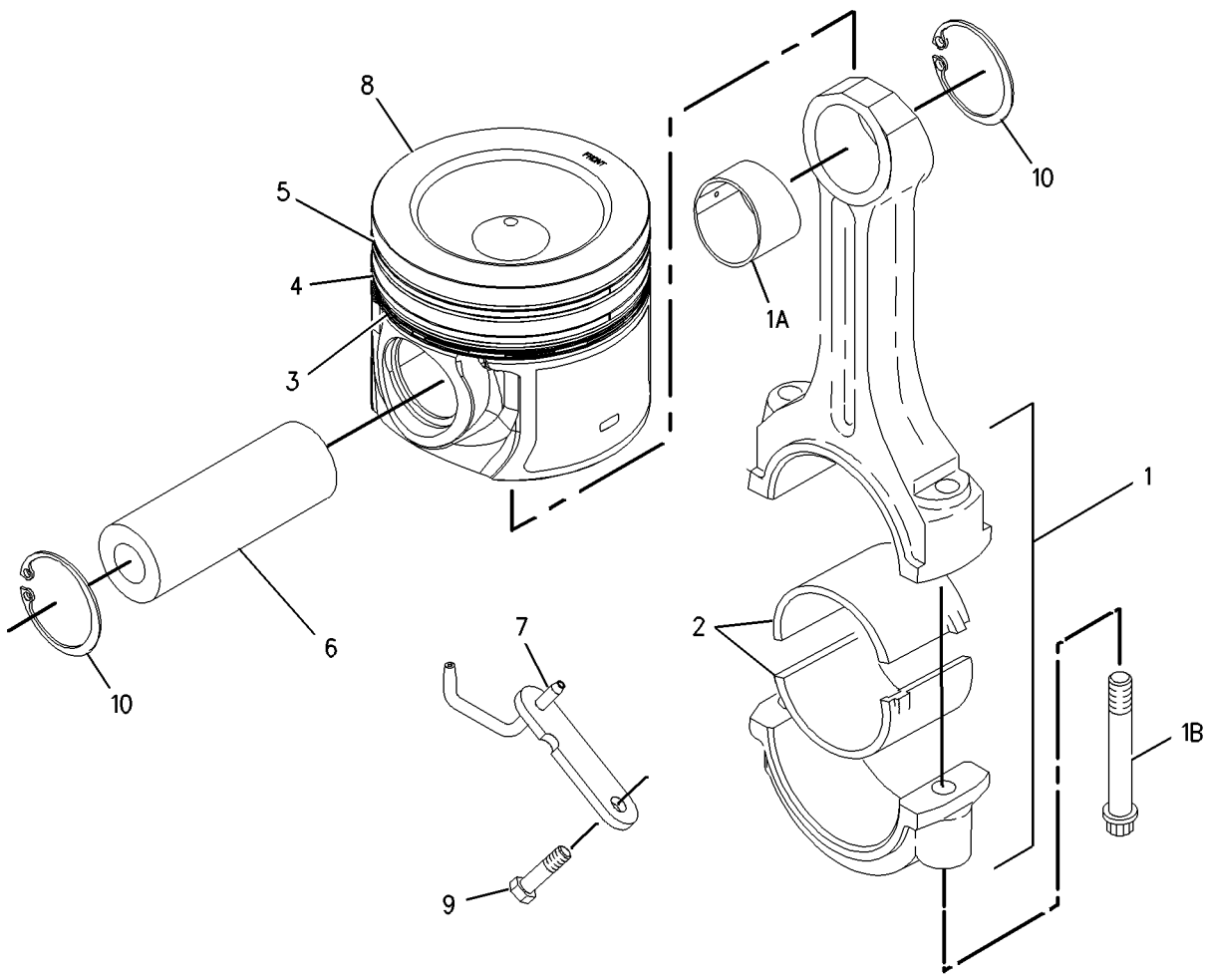

GRAPHIC #1 **<END>** g00903037

212-3652 PISTON & ROD GP

S/N: KHX1-UP
PART OF 227-5946, 270-4213 ENGINE AR-CORE
AN ATTACHMENT

SMCS-1225 **i02421064**

NOTE	REF NO	GRAPHIC REF	PART NUMBER	QTY	PART NAME 1 2 3 4 5 6 (PRODUCT LEVEL)	SEE PAGE
R	1	1	**213-3193**	1	ROD AS-CONNECTING (NON-DRILLED)	
	1A	1	**2W-0027**	1	BEARING (EYE END)	
	1B	1	**195-0321**	2	BOLT	
	2	1	**224-6638**	1	BEARING-CONNECTING ROD (STANDARD)	
AB		1	**7C-6976**		BEARING-CONNECTING ROD (0.25-MM US)	
AB		1	**7C-6977**		BEARING-CONNECTING ROD (0.5-MM US)	
	3	1	**238-2706**	1	RING-PISTON-OIL	
	4	1	**197-9353**	1	RING-PISTON (INTERMEDIATE)	
	5	1	**197-9386**	1	RING-PISTON (TOP)	
	6	1	**197-9371**	1	PIN-PISTON	
	7	1	**280-2748**	1	TUBE AS-OIL JET	
	8	1	**238-2720**	1	BODY AS-PISTON	
M	9	1	**6V-3940**	1	BOLT (M8X1.25X25-MM)	
	10	1	**197-9372**	2	RETAINER-PIN	

A-NOT PART OF THIS GROUP
B-USE AS REQUIRED
M-METRIC PART
R-REMFG PART MAY BE AVAILABLE

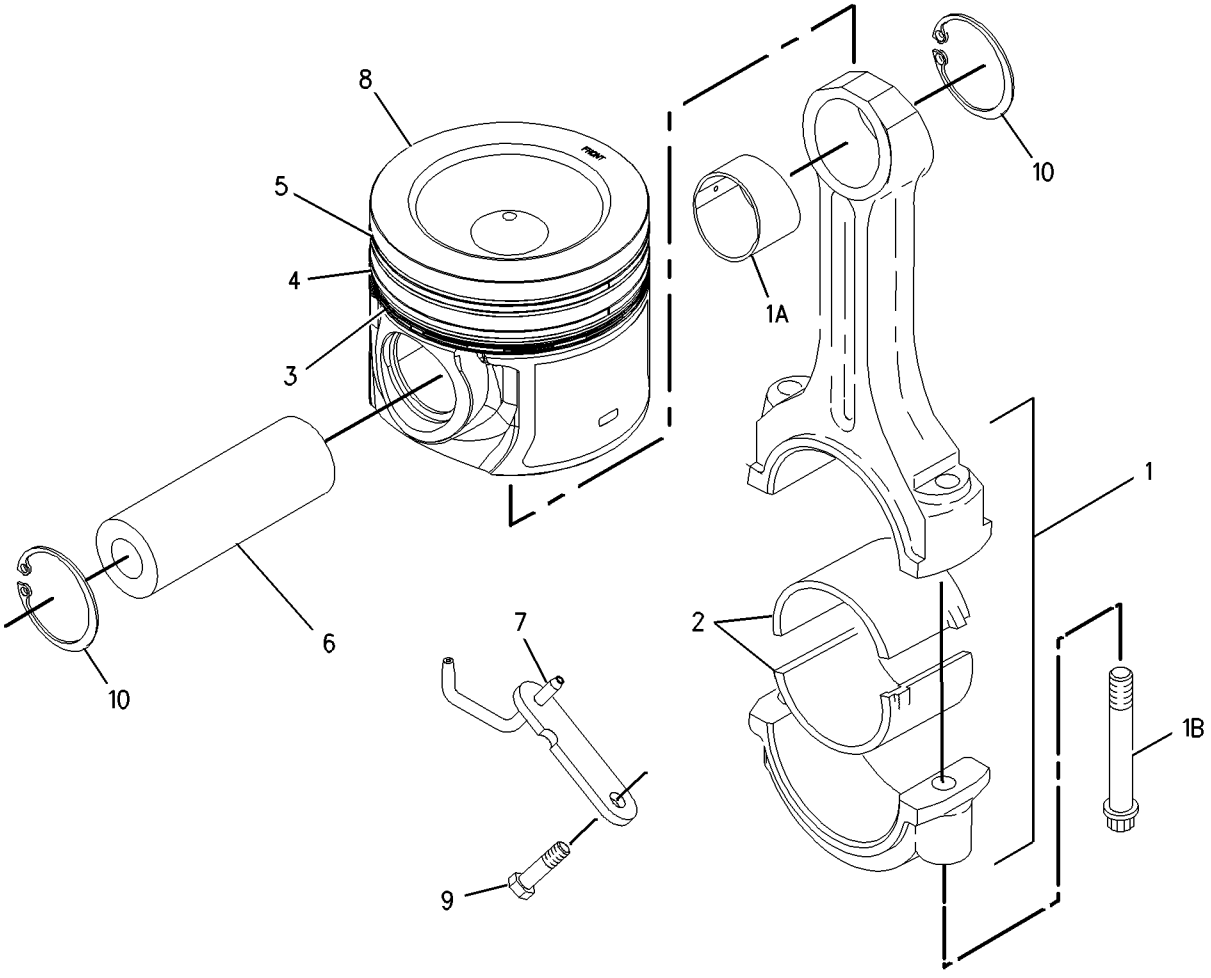

GRAPHIC #1 **<END>** g00903037

159-0303 PLUG GP-CYLINDER BLOCK

S/N: KHX4087-UP

PART OF 224-9842, 290-0754, 290-0755, 290-0756 ENGINE AR-COMPLETE

ALSO AN ATTACHMENT

SMCS-1201 **i01521631**

NOTE	REF NO	GRAPHIC REF	PART NUMBER	QTY	PART NAME 1 2 3 4 5 6 (PRODUCT LEVEL)	SEE PAGE
M	1	1	**8T-0293**	1	BOLT (M12X1.75X20-MM)	
	2	1	**6F-7062**	1	WASHER (12.7X19.05X1.83-MM THK)	
	3	1	**9S-8008**	2	PLUG-O-RING	
	4	1	**3D-2824**	2	SEAL-O-RING	

M-METRIC PART

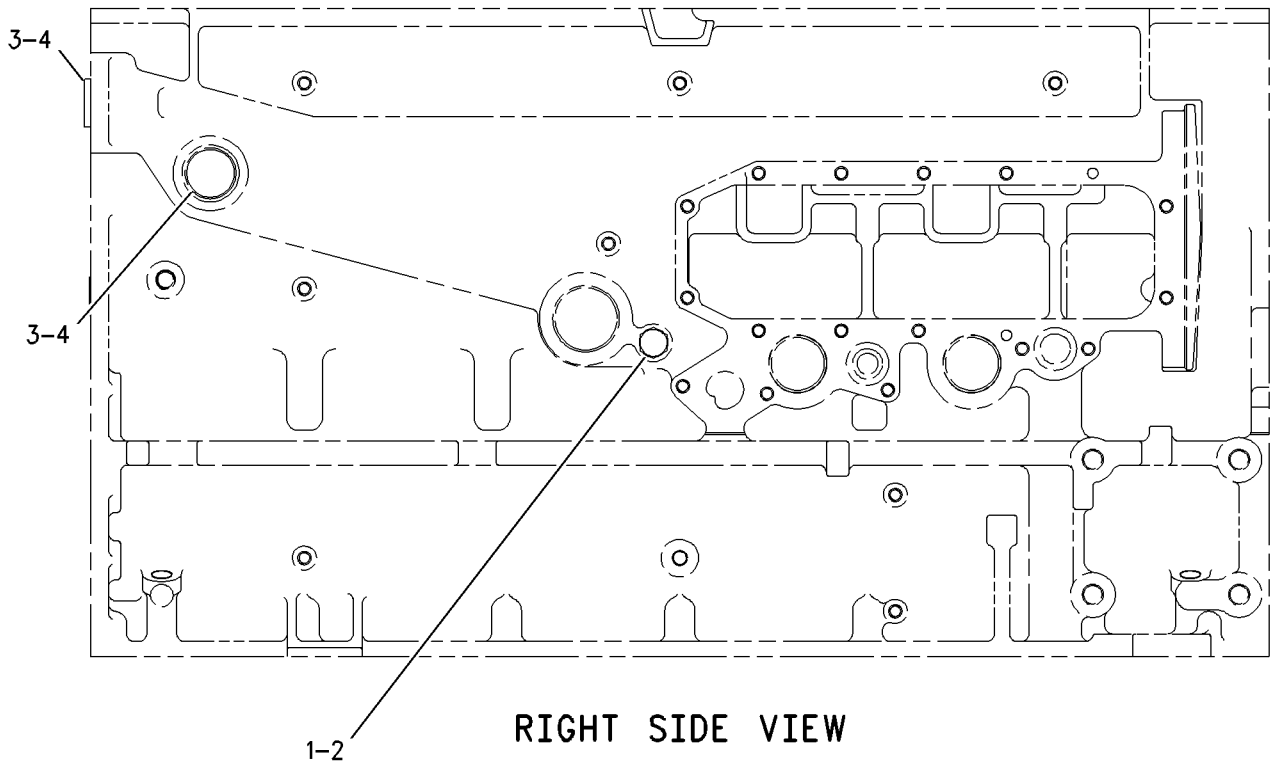

RIGHT SIDE VIEW

GRAPHIC #1 **<END>** g00677138

162-8068 PLUG GP-ENGINE

S/N: KHX4087-UP

PART OF 224-9842, 290-0754, 290-0755, 290-0756 ENGINE AR-COMPLETE

ALSO AN ATTACHMENT

SMCS-1000 **i02940608**

NOTE	REF NO	GRAPHIC REF	PART NUMBER	QTY	PART NAME 1 2 3 4 5 6 (PRODUCT LEVEL)	SEE PAGE
	1	1	*148-8395*	1	PLUG AS	
		1	**9S-8005**	1	PLUG-O-RING	
		1	**3K-0360**	1	SEAL-O-RING	

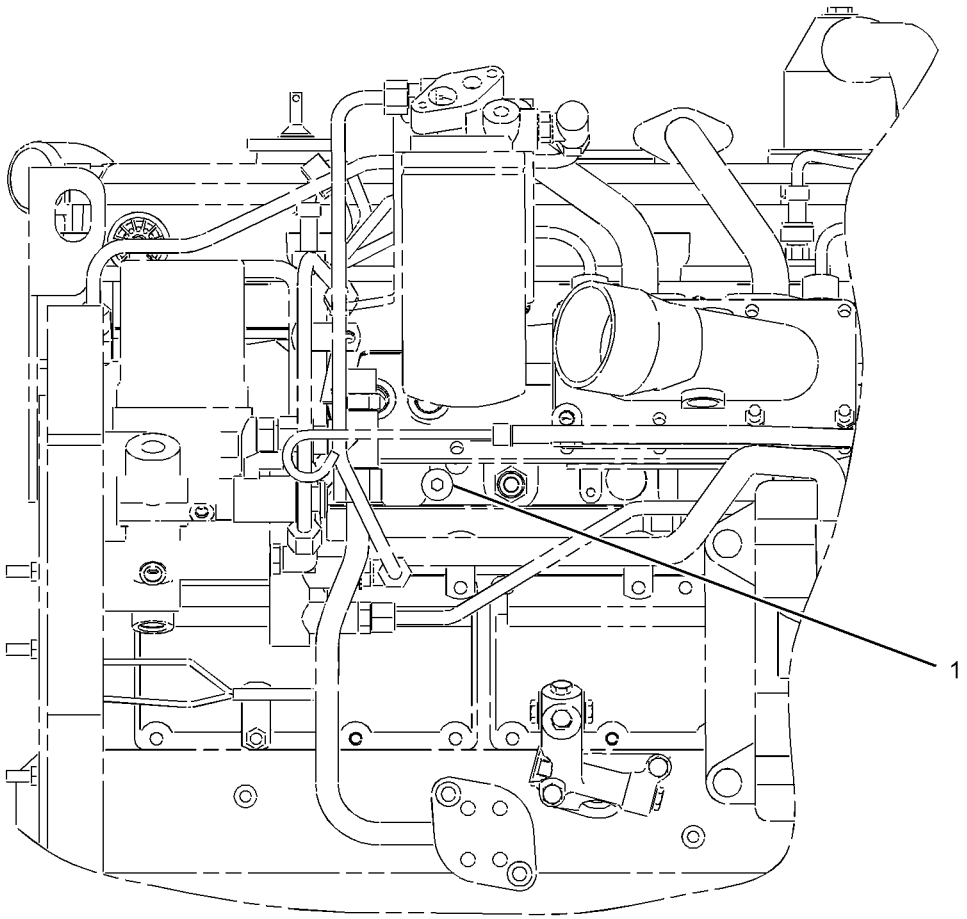

LEFT SIDE VIEW

GRAPHIC #1 **<END>** g01457732

BASIC ENGINE

233-1125 PULLEY GP

S/N: MNB1-UP; WDK1-UP
PART OF 229-1787 COOLING AR-HIGH AMBIENT TEMP
AN ATTACHMENT

SMCS-1205, 1207, 1358, 1384, 1425 **i02998728**

NOTE	REF NO	GRAPHIC REF	PART NUMBER	QTY	PART NAME 1 2 3 4 5 6 (PRODUCT LEVEL)	SEE PAGE
C	1	1	**290-2778**	1	PULLEY-FAN	
C	2	1	**230-2190**	1	BELT-SERPENTINE (FAN PULLEY)	
CM	3	1	**6V-5215**	6	BOLT (M8X1.25X16-MM)	

C-CHANGE FROM PREVIOUS TYPE
M-METRIC PART

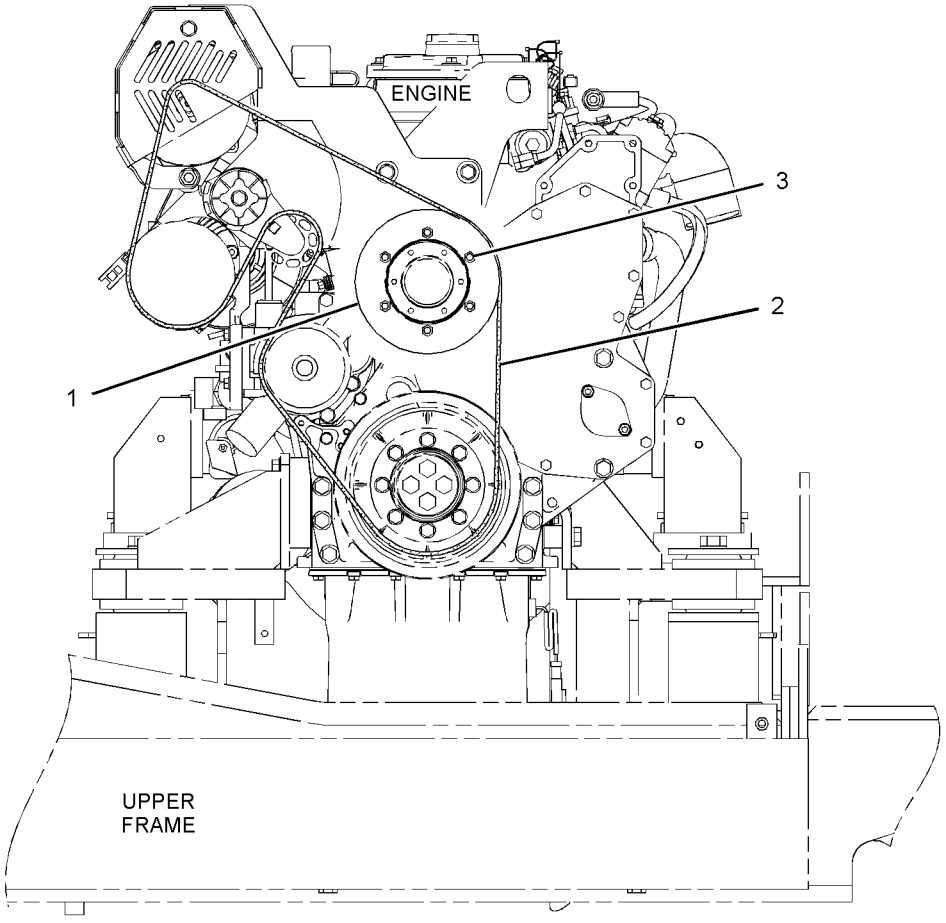

LEFT SIDE VIEW

GRAPHIC #1 **<END>** g01521441

BASIC ENGINE

263-1848 PULLEY GP

S/N: KHX4087-UP

PART OF 224-9842, 290-0754, 290-0755, 290-0756 ENGINE AR-COMPLETE

ALSO AN ATTACHMENT

SMCS-1205, 1207, 1358, 1384, 1425 **i02585657**

NOTE	REF NO	GRAPHIC REF	PART NUMBER	QTY	PART NAME 1 2 3 4 5 6 (PRODUCT LEVEL)	SEE PAGE
C	1	1	**291-0515**	1	PULLEY-FAN	
C	2	1	**241-2896**	1	BELT-SERPENTINE (FAN PULLEY)	
CM	3	1	**6V-5217**	6	BOLT (M8X1.25X20-MM)	

C-CHANGE FROM PREVIOUS TYPE
M-METRIC PART

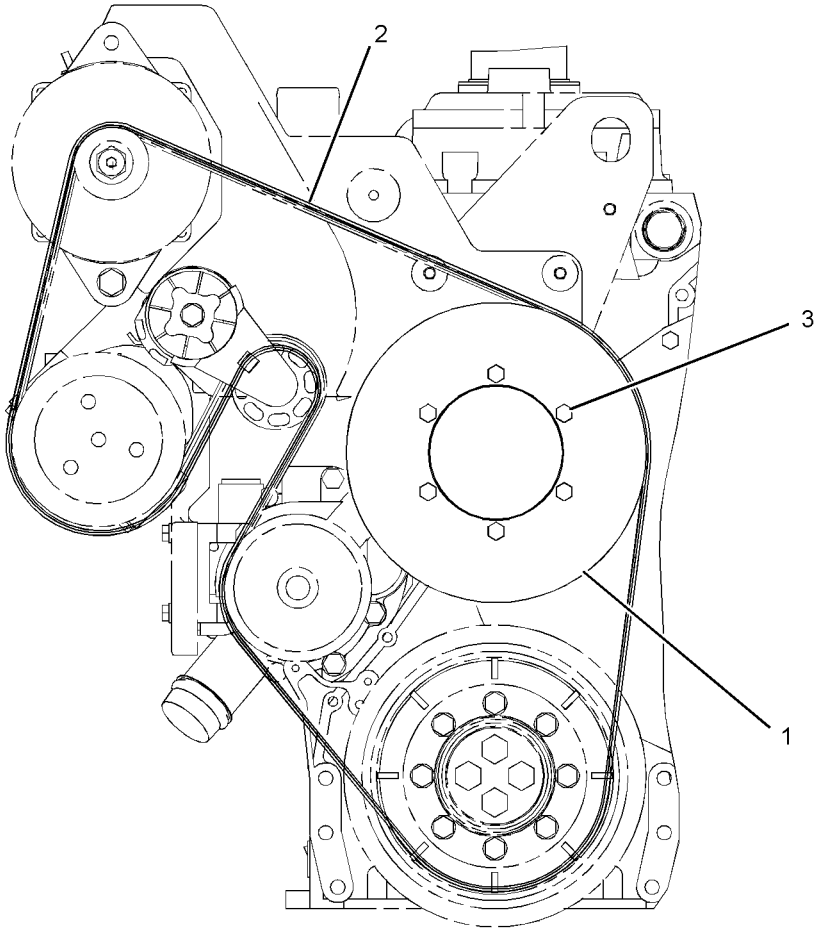

FRONT VIEW

GRAPHIC #1 **<END>** g01178921

BASIC ENGINE

256-3831 ROCKER ARM GP

S/N: KHX4087-UP
EXHAUST
PART OF 256-3830 VALVE MECHANISM GP
ALSO AN ATTACHMENT

SMCS-1123 **i02555031**

NOTE	REF NO	GRAPHIC REF	PART NUMBER	QTY	PART NAME 1 2 3 4 5 6 (PRODUCT LEVEL)	SEE PAGE
R	1	1	**256-3832**	1	ROCKER ARM AS (EXHAUST)	
CM	2	1	**183-4365**	1	SCREW-ADJUSTMENT (M10X1.15-THD)	
M	3	1	**2Y-5829**	1	NUT (M10X1.5-THD)	

C-CHANGE FROM PREVIOUS TYPE
M-METRIC PART
R-REMFG PART MAY BE AVAILABLE

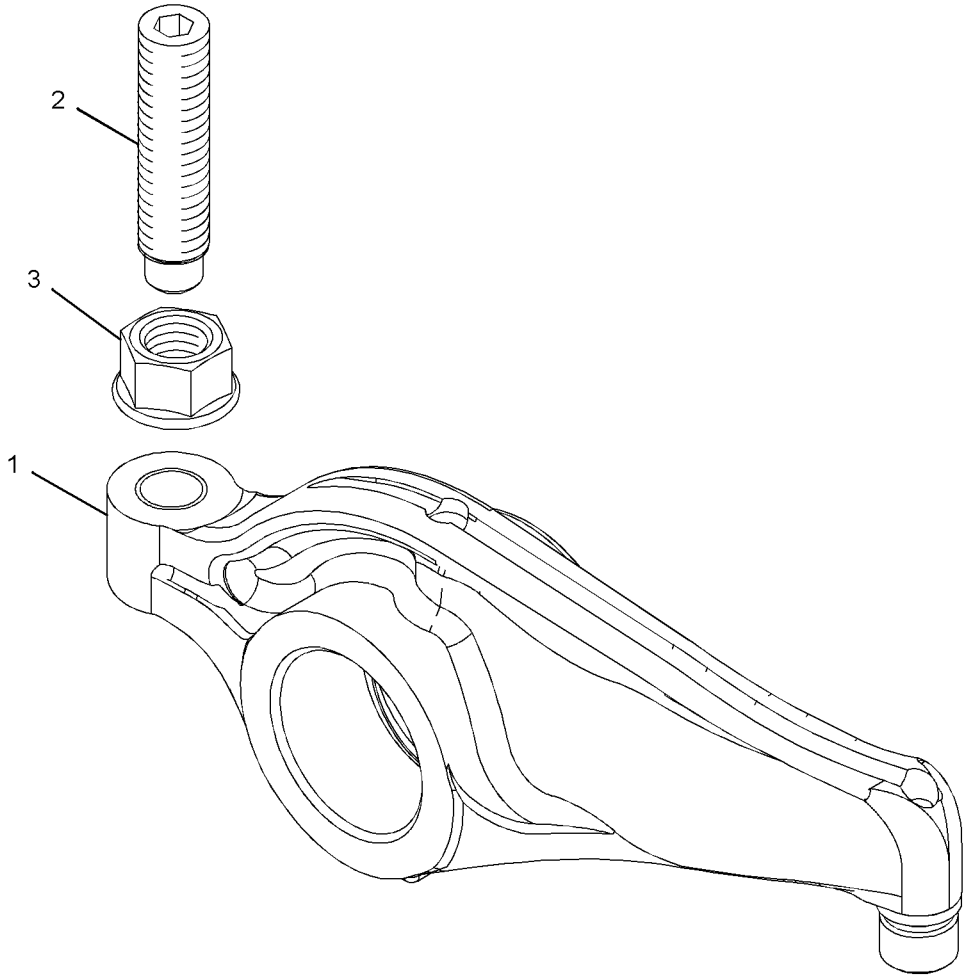

GRAPHIC #1 **<END>** g01293346

256-3834 ROCKER ARM GP

S/N: KHX4087-UP
INTAKE
PART OF 256-3830 VALVE MECHANISM GP
ALSO AN ATTACHMENT

SMCS-1123 **i02990080**

NOTE	REF NO	GRAPHIC REF	PART NUMBER	QTY	PART NAME 1 2 3 4 5 6 (PRODUCT LEVEL)	SEE PAGE
M	1	1	**260-7524**	1	SCREW-VALVE ADJUSTMENT (M10X1.5-THD)	
R	2	1	**256-3835**	1	ROCKER ARM AS (INLET)	
M	3	1	**2Y-5829**	1	NUT (M10X1.5-THD)	

M-METRIC PART
R-REMFG PART MAY BE AVAILABLE

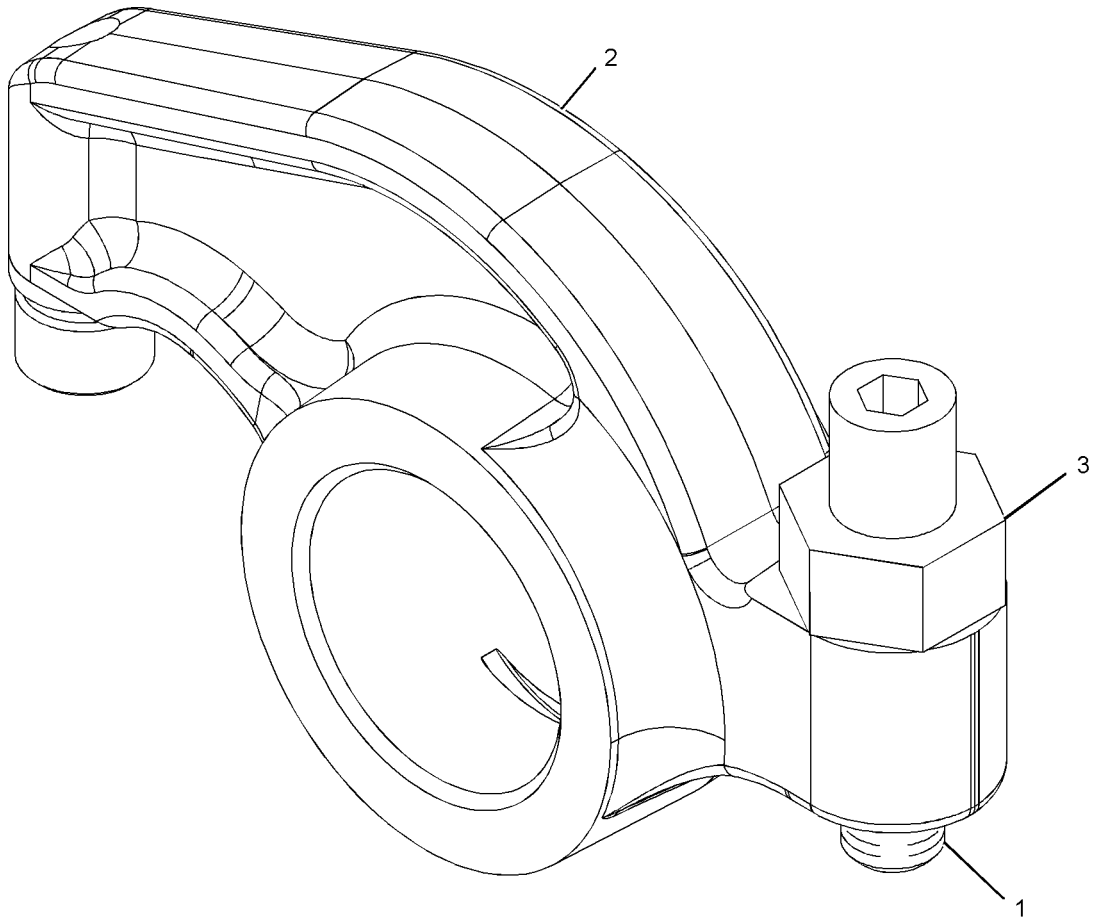

GRAPHIC #1 **<END>** g01056688

115-4203 SEAL GP-CRANKSHAFT

S/N: KHX4087-UP
PART OF 224-9842, 290-0754, 290-0755, 290-0756 ENGINE AR-COMPLETE
ALSO AN ATTACHMENT

SMCS-1160, 1161 **i01518048**

NOTE	REF NO	GRAPHIC REF	PART NUMBER	QTY	PART NAME 1 2 3 4 5 6 (PRODUCT LEVEL)	SEE PAGE
	1	1	**7C-3571**	1	SEAL GP-CRANKSHAFT (REAR)	
	2	1	**119-2921**	1	SEAL GP-CRANKSHAFT (FRONT)	
	3	1	**4R-9999**	1	EXCLUDER-CRANKSHAFT SEAL	

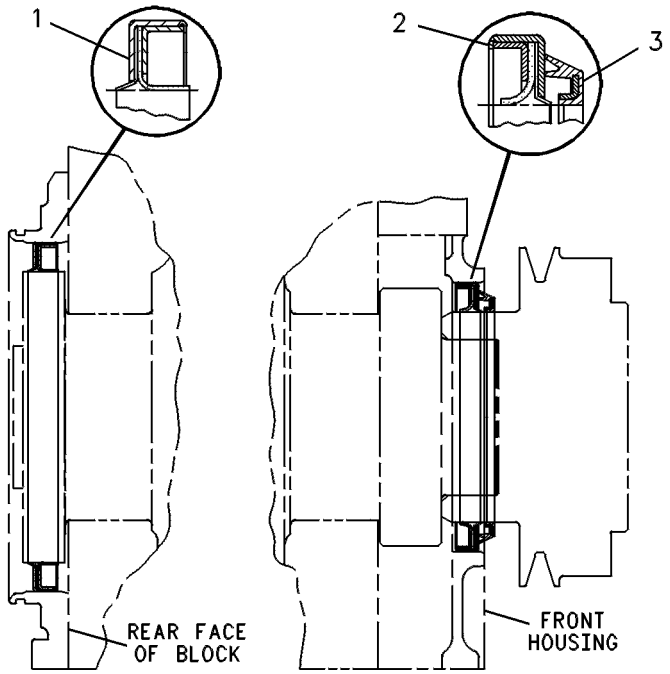

GRAPHIC #1 **<END>** g00131231

232-3717 VALVE MECHANISM GP

S/N: KHX2463-UP

PART OF 227-5946, 236-4284, 270-4212, 270-4213 ENGINE AR-CORE

ALSO AN ATTACHMENT

SMCS-1209 **i02554994**

NOTE	REF NO	GRAPHIC REF	PART NUMBER	QTY	PART NAME 1 2 3 4 5 6 (PRODUCT LEVEL)	SEE PAGE
	1	1	**133-6379**	12	ROD-VALVE PUSH	
	2	1	**219-3309**	6	BRIDGE-VALVE	
Y	3	1	*139-4081*	3	LIFTER GP-VALVE	53
M	4	1	**8T-8442**	12	BOLT-SOCKET HEAD (M6X1X30-MM)	
	5	1	**3E-9412**	6	DOWEL	
CY	6	1	**256-3830**	1	VALVE MECHANISM GP	71
M	7	1	**6V-5696**	11	BOLT (M12X1.75X80-MM)	
	8	1	**9M-1974**	2	WASHER-HARD (8.8X16X2-MM THK)	
	9	1	**3H-7654**	9	WASHER-HARD (13.5X22.5X3-MM THK)	
M	10	1	**8T-0100**	2	BOLT (M8X1.25X60-MM)	
	11	1	**232-1754**	1	CLIP	

C-CHANGE FROM PREVIOUS TYPE
M-METRIC PART
Y-SEPARATE ILLUSTRATION

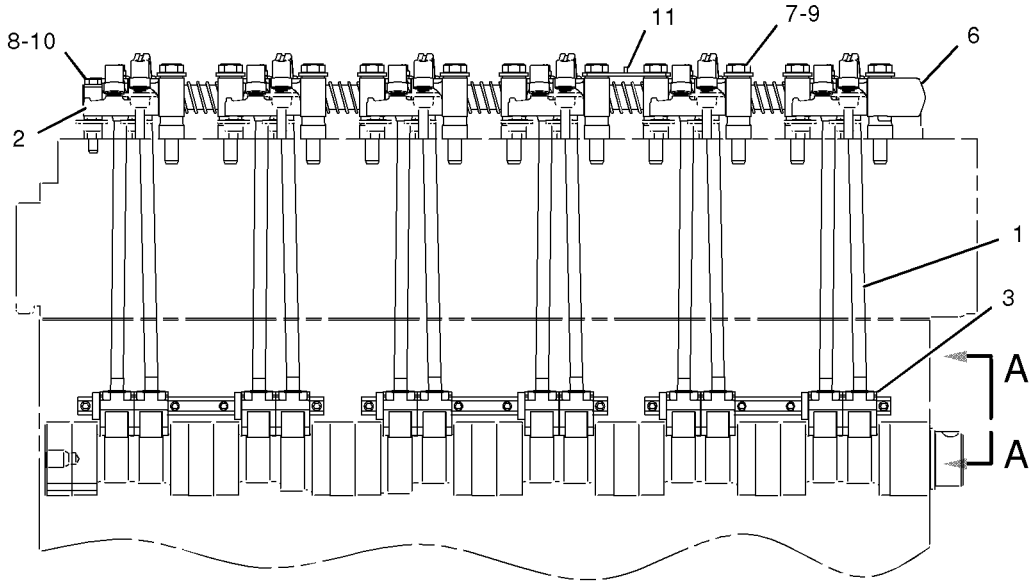

RIGHT SIDE VIEW

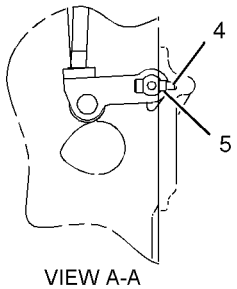

VIEW A-A

GRAPHIC #1

<END>

g01028897

BASIC ENGINE

232-3717 VALVE MECHANISM GP

S/N: KHX1-2462

PART OF 270-4212 ENGINE AR-CORE

SMCS-1209 **i02355624**

NOTE	REF NO	GRAPHIC REF	PART NUMBER	QTY	PART NAME 1 2 3 4 5 6 (PRODUCT LEVEL)	SEE PAGE
	1	1	**133-6379**	12	ROD-VALVE PUSH	
	2	1	**219-3309**	6	BRIDGE-VALVE	
Y	3	1	*139-4081*	3	LIFTER GP-VALVE	53
M	4	1	**8T-8442**	12	BOLT-SOCKET HEAD (M6X1X30-MM)	
	5	1	**3E-9412**	6	DOWEL	
Y	6	1	*235-5528*	1	VALVE MECHANISM GP	69
M	7	1	**6V-5696**	11	BOLT (M12X1.75X80-MM)	
	8	1	**9M-1974**	2	WASHER-HARD (8.8X16X2-MM THK)	
	9	1	**3H-7654**	9	WASHER-HARD (13.5X22.5X3-MM THK)	
M	10	1	**8T-0100**	2	BOLT (M8X1.25X60-MM)	
	11	1	**232-1754**	1	CLIP	

M-METRIC PART
Y-SEPARATE ILLUSTRATION

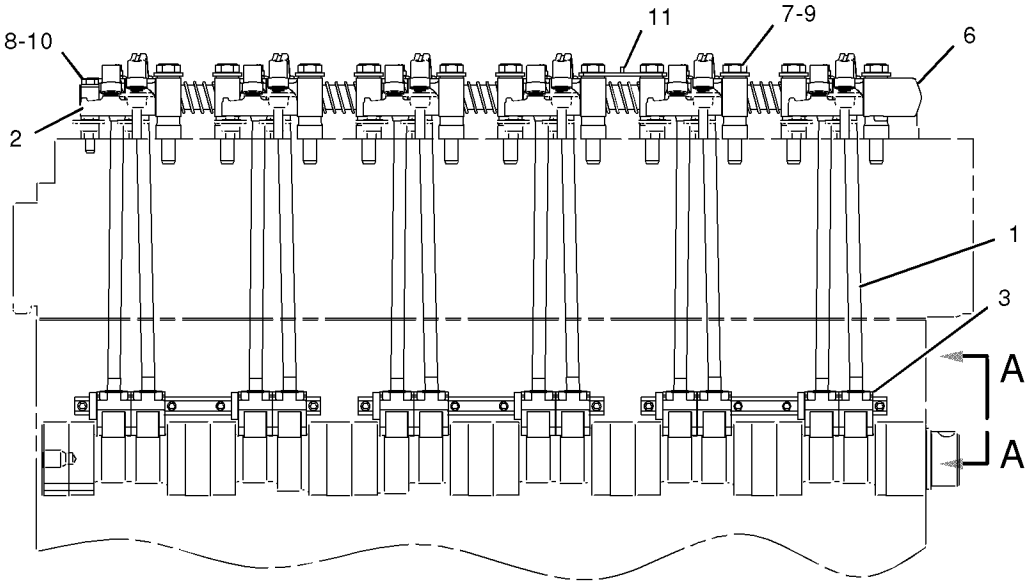

RIGHT SIDE VIEW

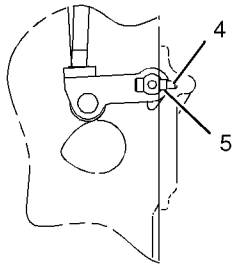

VIEW A-A

GRAPHIC #1

<END>

g01028897

235-5528 VALVE MECHANISM GP

S/N: KHX1-UP

PART OF 232-3717 VALVE MECHANISM GP

SMCS-1209 **i02246615**

NOTE	REF NO	GRAPHIC REF	PART NUMBER	QTY	PART NAME 1 2 3 4 5 6 (PRODUCT LEVEL)	SEE PAGE
	1	1	**137-6717**	5	SPRING	
	2	1	*222-1185*	6	ROCKER ARM GP (INTAKE)	
					(EACH INCLUDES)	
M	2A	1	**2Y-5829**	1	NUT (M10X1.5-THD)	
M		1	**183-4365**	1	SCREW-ADJUSTMENT (M10X1.15-THD)	
R	2B	1	**153-8467**	1	ROCKER ARM AS	
	2C	1	**173-5549**	1	SEAL-O-RING	
	2D	1	**145-7376**	1	INSERT	
	2E	1	**145-7385**	1	SOCKET	
	3	1	**138-8403**	1	STAND	
	4	1	*222-1186*	6	ROCKER ARM GP (EXHAUST)	
					(EACH INCLUDES)	
M	4A	1	**2Y-5829**	1	NUT (M10X1.5-THD)	
M		1	**183-4365**	1	SCREW-ADJUSTMENT (M10X1.15-THD)	
R	4B	1	**153-8470**	1	ROCKER ARM AS	
	4C	1	**173-5549**	1	SEAL-O-RING	
	4D	1	**145-7376**	1	INSERT	
	4E	1	**145-7385**	1	SOCKET	
	5	1	**235-5527**	10	STAND	
	6	1	**138-8402**	1	STAND (END)	
	7	1	**138-9868**	1	RING-RETAINING	
	8	1	**8H-5244**	1	DOWEL	
	9	1	**138-7198**	1	SHAFT AS	
		1	**5B-1866**	1	PLUG-CUP	

M-METRIC PART
R-REMFG PART MAY BE AVAILABLE

235-5528 **VALVE MECHANISM GP** *(contd.)* **i02246615**

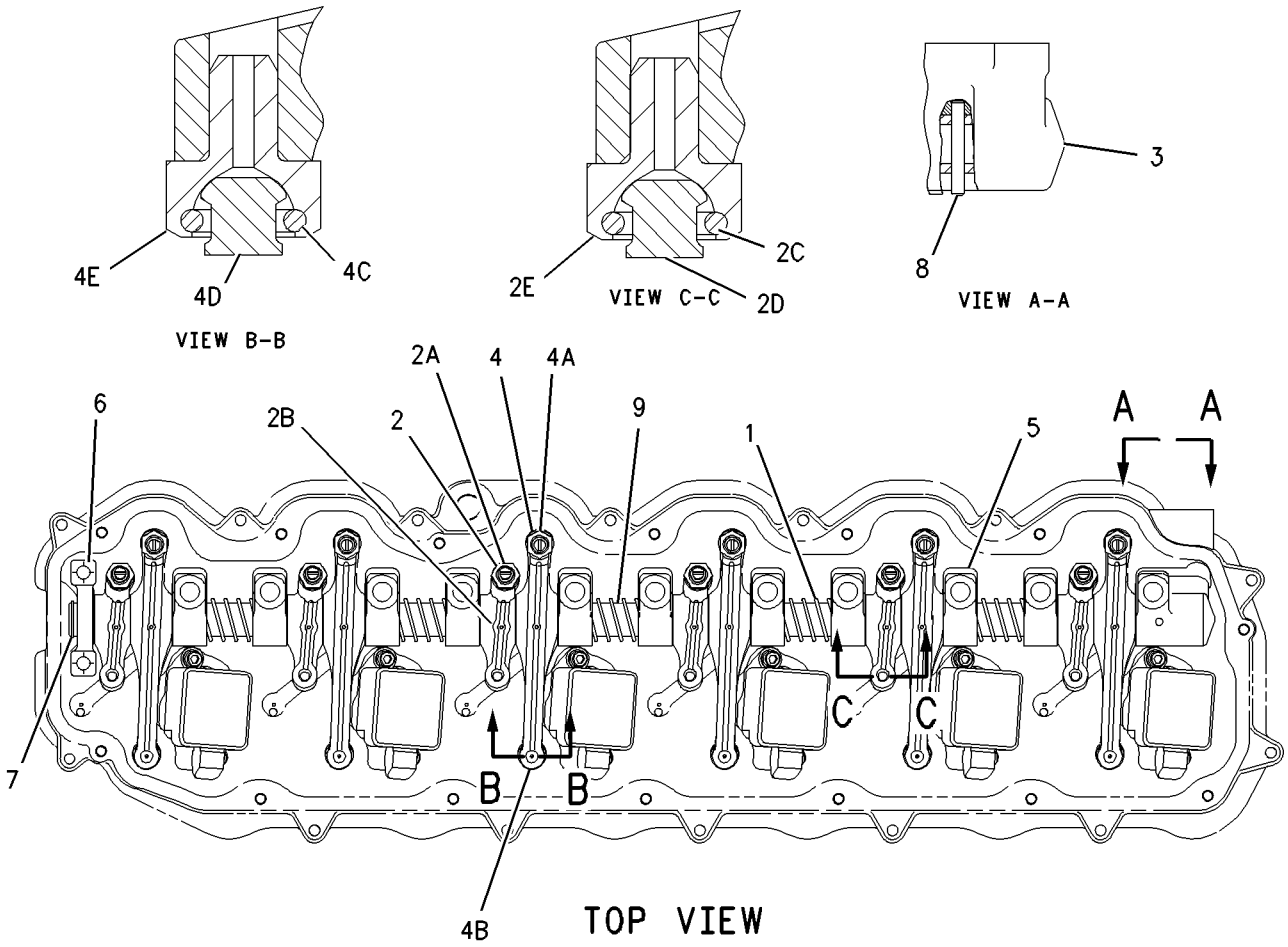

GRAPHIC #1 **<END>** g00901133

256-3830 VALVE MECHANISM GP

S/N: KHX4087-UP
PART OF 232-3717 VALVE MECHANISM GP
ALSO AN ATTACHMENT

SMCS-1209 **i02555004**

NOTE	REF NO	GRAPHIC REF	PART NUMBER	QTY	PART NAME 1 2 3 4 5 6 (PRODUCT LEVEL)	SEE PAGE
	1	1	**137-6717**	5	SPRING	
Y	2	1	*256-3834*	6	ROCKER ARM GP (INLET)	65
	3	1	**138-8403**	1	STAND	
Y	4	1	*256-3831*	6	ROCKER ARM GP (EXHAUST)	64
	5	1	**235-5527**	10	STAND	
	6	1	**138-8402**	1	STAND	
	7	1	**138-9868**	1	RING-RETAINING	
	8	1	**8H-5244**	1	DOWEL	
	9	1	**138-7198**	1	SHAFT AS	
	9A	1	**5B-1866**	1	PLUG-CUP	

Y-SEPARATE ILLUSTRATION

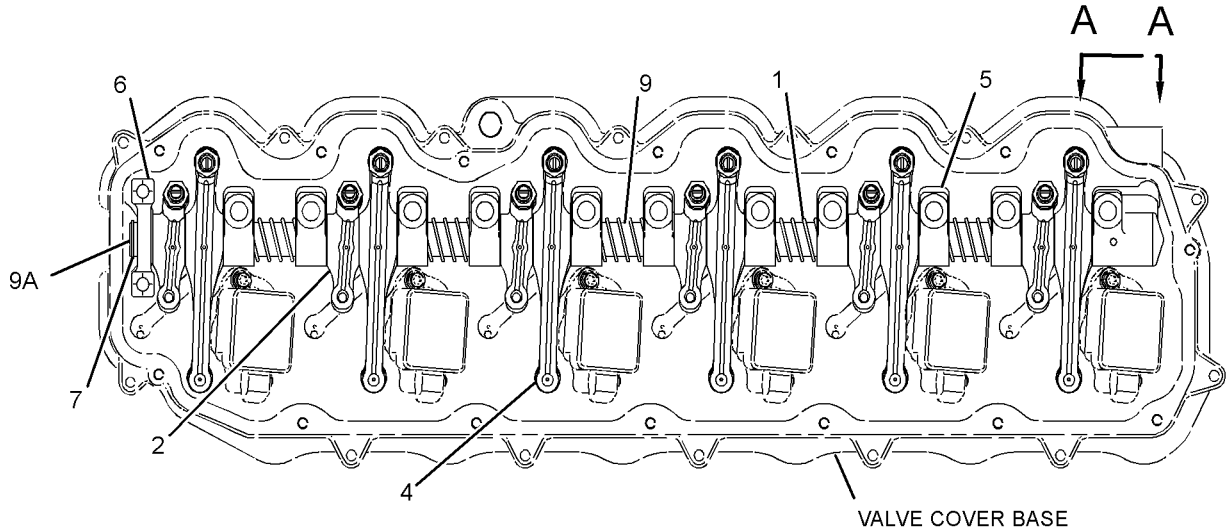

TOP VIEW OF ENGINE

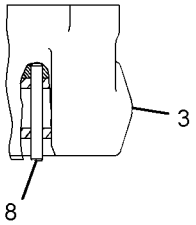

VIEW A-A

GRAPHIC #1 **<END>** g01300505

191-0523 ADAPTER GP-OIL LINE

S/N: KHX1-UP
PART OF 191-0461 LINES GP-INJECTOR HYD PUMP
ALSO AN ATTACHMENT

SMCS-1307 **i02356173**

NOTE	REF NO	GRAPHIC REF	PART NUMBER	QTY	PART NAME 1 2 3 4 5 6 (PRODUCT LEVEL)	SEE PAGE
	1	1	**191-0522**	1	ADAPTER	
	2	1	**033-6027**	1	SEAL-O-RING	

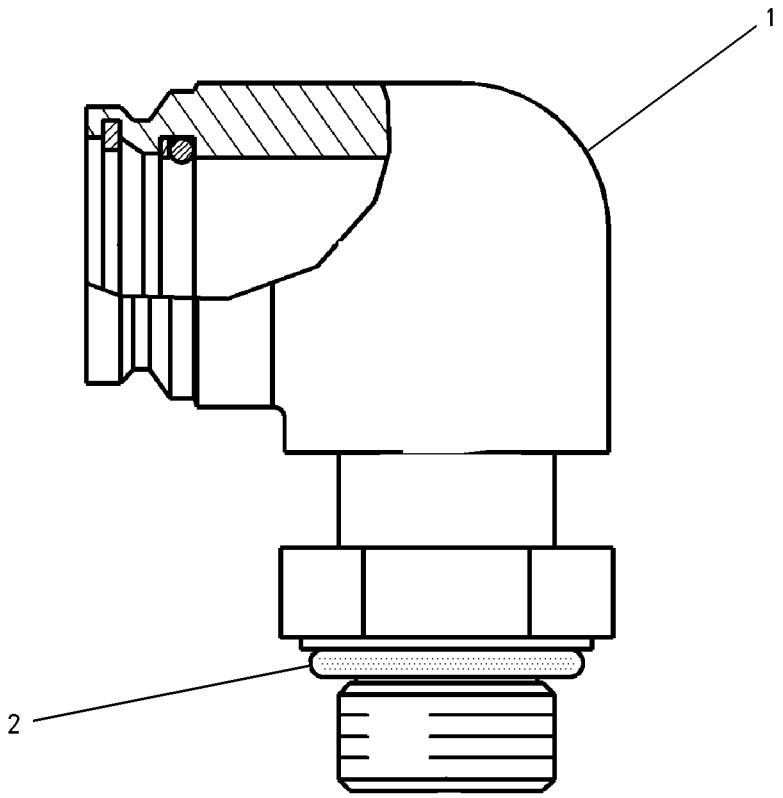

GRAPHIC #1 **<END>** g00807476

222-5946 BREATHER GP

S/N: KHX4087-UP

PART OF 224-9842, 290-0754, 290-0755, 290-0756 ENGINE AR-COMPLETE

ALSO AN ATTACHMENT

SMCS-1317 **i02869430**

NOTE	REF NO	GRAPHIC REF	PART NUMBER	QTY	PART NAME 1 2 3 4 5 6 (PRODUCT LEVEL)	SEE PAGE
	1	1	**164-0210**	1	BREATHER AS (CRANKCASE)	
M	2	1	**143-4654**	1	BOLT (M8X1.25X105-MM)	
	3	1	**8H-2046**	1	SEAL-O-RING (CRANKCASE BREATHER)	
	4	1	**5N-4185**	1	WASHER-SPECIAL	

M-METRIC PART

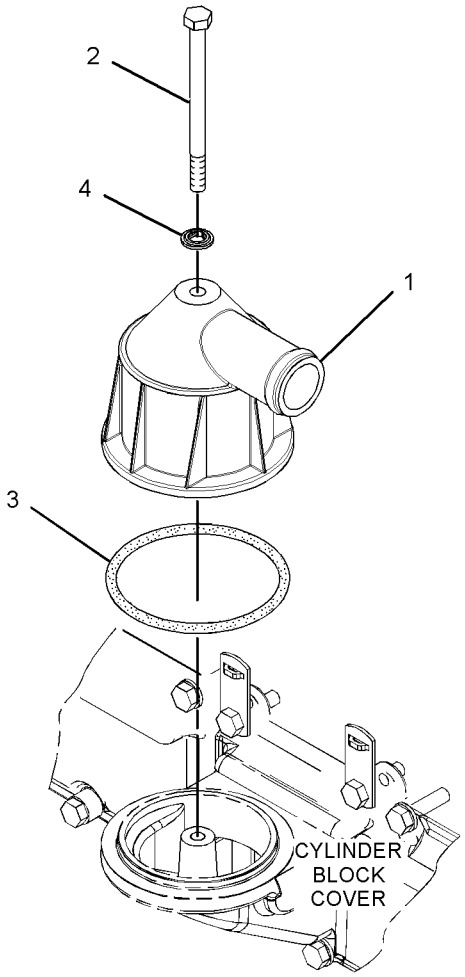

GRAPHIC #1 **<END>** g01426131

LUBRICATION SYSTEM

231-7266 FILTER GP-ENGINE OIL

S/N: KHX4087-UP

PART OF 224-9842, 290-0754, 290-0755, 290-0756 ENGINE AR-COMPLETE

ALSO AN ATTACHMENT

SMCS-1308 **i02814484**

NOTE	REF NO	GRAPHIC REF	PART NUMBER	QTY	PART NAME 1 2 3 4 5 6 (PRODUCT LEVEL)	SEE PAGE
	1	1	**4P-9103**	1	ADAPTER-BASE	
	2	2	**6K-0806**	2	STRAP-CABLE	
	3	1,2	**7C-1493**	3	VALVE AS-BYPASS (ENGINE OIL FILTER BASE)	
	4	1	**7F-0216**	1	NUT-JAM	
	5	2	**8C-3445**	1	CAP-DUST	
	6	2	**121-0307**	1	BASE	
	7	1	**160-5140**	1	BASE AS-OIL FILTER (ENGINE)	
		1	**4P-9107**	1	STUD-HOLLOW	
	8	1	**300-7933**	1	GASKET	
	9	1,2	**242-3864**	3	SPRING	
I	10	1	**280-1548**	1	HOSE AS	
I	11	1	**280-1549**	1	HOSE AS	
	12	2	**1R-1807**	1	FILTER AS-ENGINE OIL (ADVANCED EFFICIENCY)	
	13	1,2	**2M-9780**	3	SEAL-O-RING	
	14	1,2	**3D-2824**	2	SEAL-O-RING	
	15	2	**3J-1907**	1	SEAL-O-RING	
	16	2	**3J-7354**	1	SEAL-O-RING	
	17	1,2	**3R-6790**	2	CONNECTOR-PORT	
	18	2	**4K-1388**	1	SEAL-O-RING	
	19	2	**5F-9657**	3	SEAL-O-RING	
	20	1	**5K-9090**	1	SEAL-O-RING	
	21	1	**5P-8066**	1	SEAL-O-RING	
M	22	1,2	**5P-8196**	3	PLUG	
	23	2	**5P-9617**	1	ADAPTER	
M	24	1,2	**6V-2317**	12	BOLT (M8X1.25X30-MM)	
M	25	2	**6V-5219**	3	BOLT (M8X1.25X40-MM)	
	26	1	**6V-9008**	1	ELBOW	
	27	1	**7M-8485**	1	SEAL-O-RING	
	28	2	**7W-9028**	1	BASE AS-OIL FILTER (ENGINE)	
		2	**2P-2537**	1	STUD-HOLLOW	
	29	2	**8C-3446**	1	VALVE-FLUID SAMPLING (ENGINE OIL)	
	30	1	**8H-7521**	1	SEAL-O-RING	
M	31	1	**8T-0276**	4	BOLT (M8X1.25X45-MM)	
	32	2	*148-8329*	1	CONNECTOR AS	
		2	**4K-1388**	1	SEAL-O-RING	
		2	**5K-9090**	1	SEAL-O-RING	
		2	**8T-6453**	1	CONNECTOR	
	33	1,2	**9M-1974**	19	WASHER-HARD (8.8X16X2-MM THK)	
	34	2	**9S-4188**	1	PLUG	

I-REFER TO HYDRAULIC INFORMATION SYSTEM
M-METRIC PART

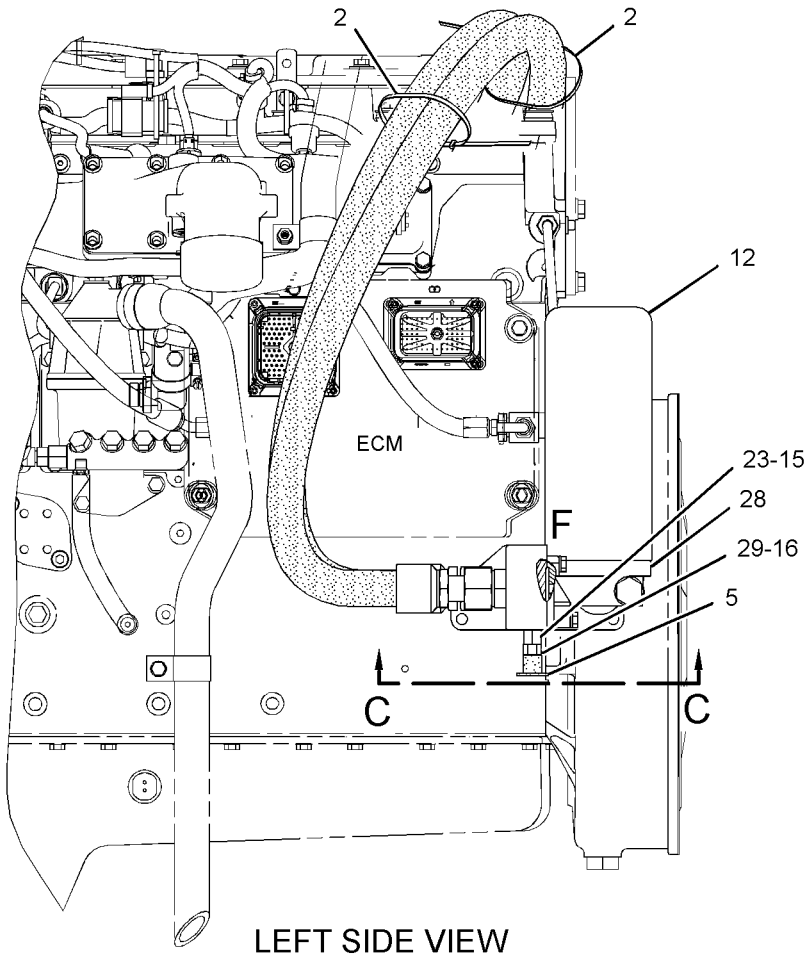

LEFT SIDE VIEW

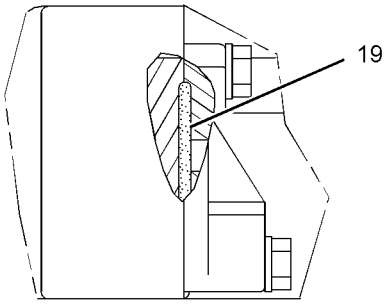

VIEW OF AREA F

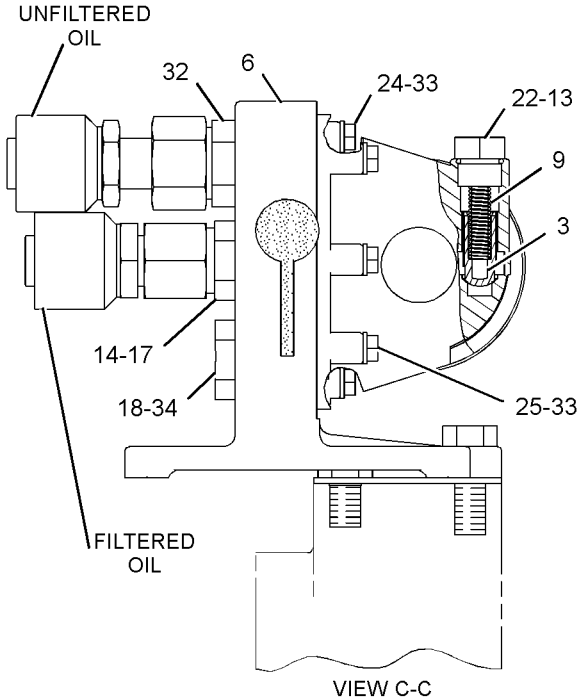

VIEW C-C

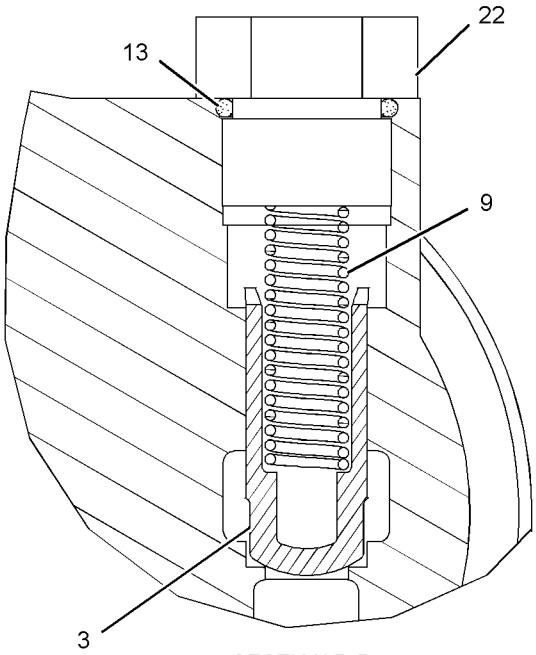

SECTION D-D
(ROTATED 90° CCW)

GRAPHIC #1

g01255810

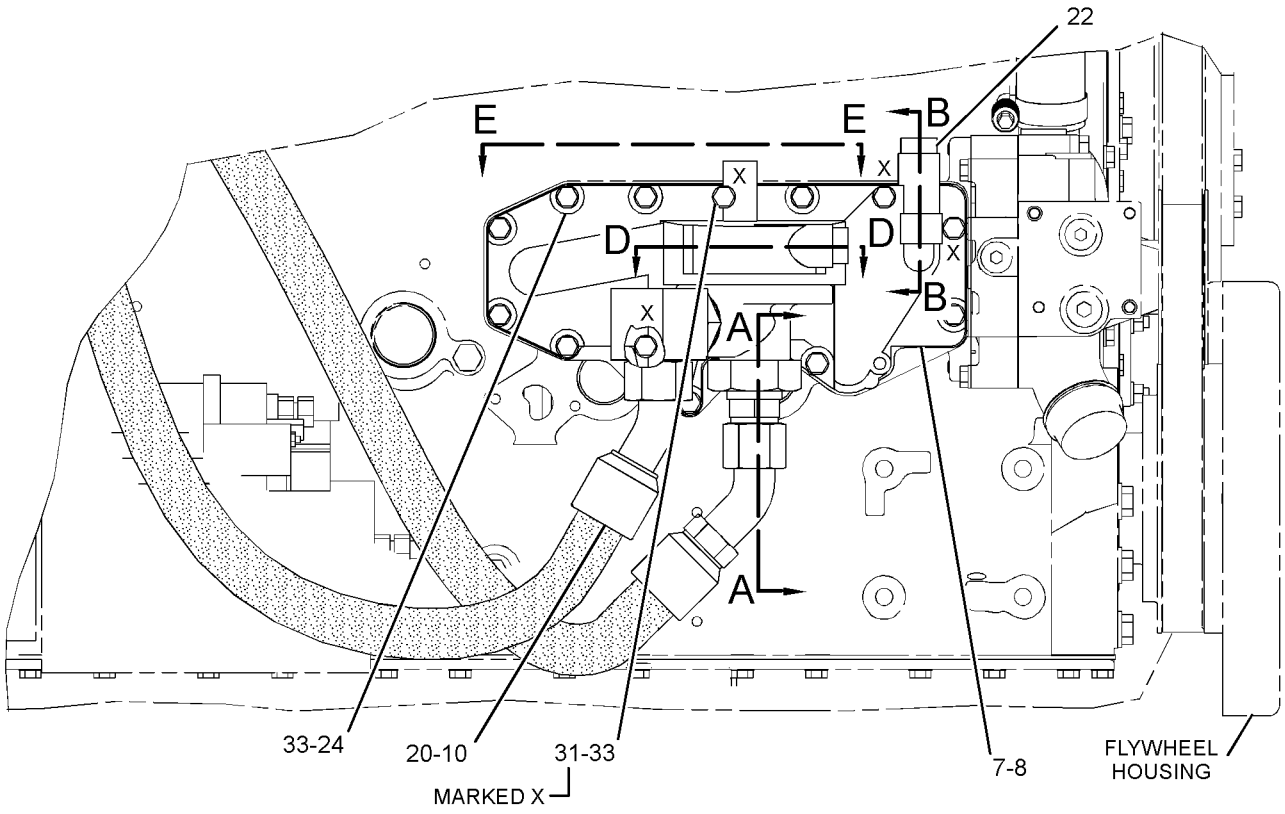

RIGHT SIDE VIEW

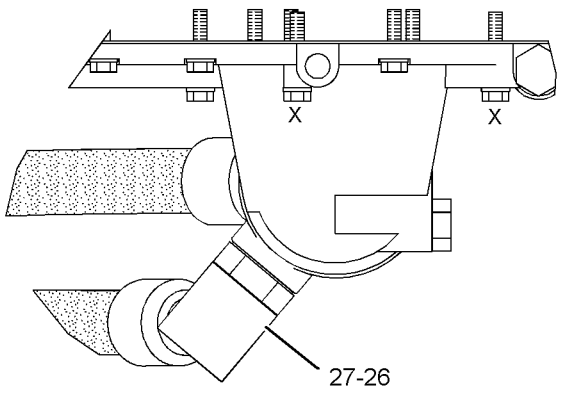

VIEW E-E

REFER TO ALL ILLUSTRATIONS OF THIS GROUP FOR AUXILIARY VIEWS

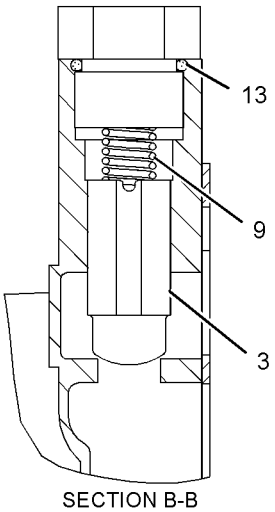

SECTION B-B

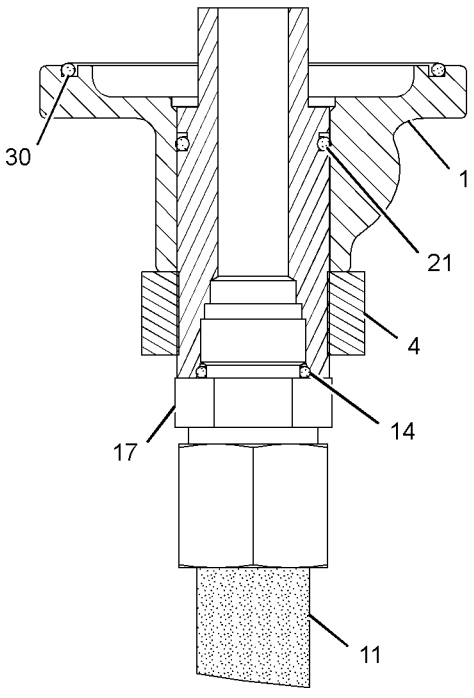

SECTION A-A

GRAPHIC #2

<END>

g01255812

254-7342 FUMES DISPOSAL GP

S/N: KHX4087-UP

PART OF 224-9842, 290-0754, 290-0755, 290-0756 ENGINE AR-COMPLETE

ALSO AN ATTACHMENT

SMCS-1317 **i02940617**

NOTE	REF NO	GRAPHIC REF	PART NUMBER	QTY	PART NAME 1 2 3 4 5 6 (PRODUCT LEVEL)	SEE PAGE
	1	1	**5P-4961**	2	CLAMP-HOSE	
	2	1	**7S-6369**	1	WASHER (0.344X0.75X0.188-IN THK)	
	3	1	**9M-2904**	1	CLAMP-HOSE	
	4	1	**284-3502**	2	CLAMP-BAND	
	5	1	**039-2280**	1	SPACER (9X16X36-MM)	
	6	1	**092-6629**	2	CONNECTOR	
	7	1	**229-2543**	1	HOSE (FUMES DISPOSAL, LOWER)	
	8	1	**249-6673**	1	ELBOW	
	9	1	**293-8781**	1	HOSE (FUMES DISPOSAL, UPPER)	
	10	1	**2M-9780**	1	SEAL-O-RING	
	11	1	**2S-2053**	2	CLIP	
	12	1	**3J-7354**	2	SEAL-O-RING	
M	13	1	**5P-7970**	1	NUT (M8X1.25-THD)	
M	14	1	**6V-3918**	1	BOLT (M8X1.25X50-MM)	
	15	1	**9M-1974**	2	WASHER-HARD (8.8X16X2-MM THK)	
E	16	1	**5P-1425**		HOSE (27-CM)	

E-ORDER BY THE CENTIMETER
M-METRIC PART

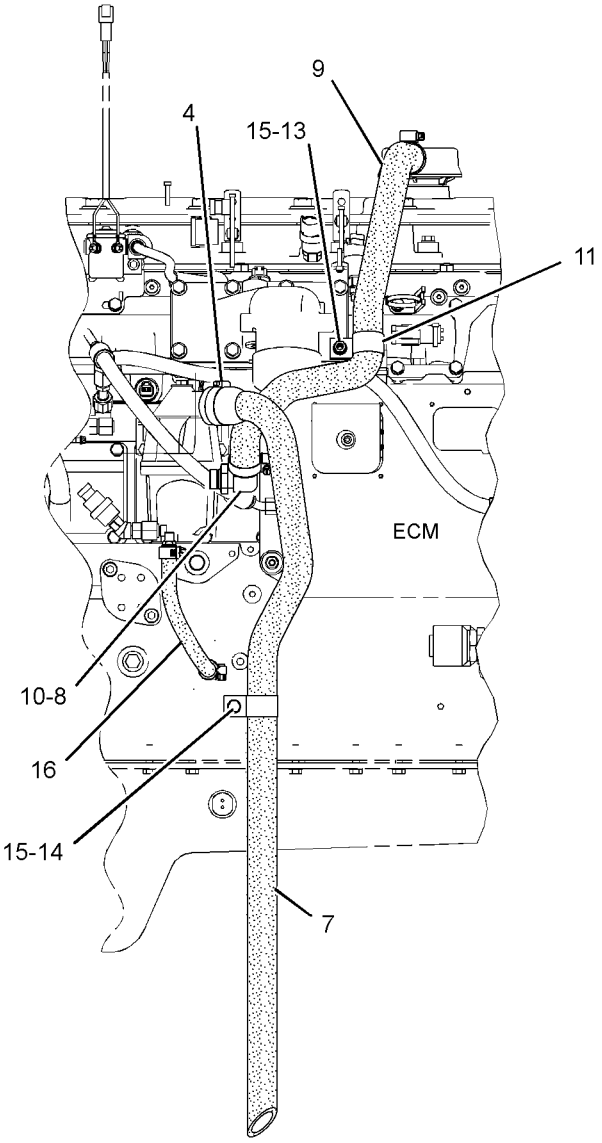

LEFT SIDE VIEW

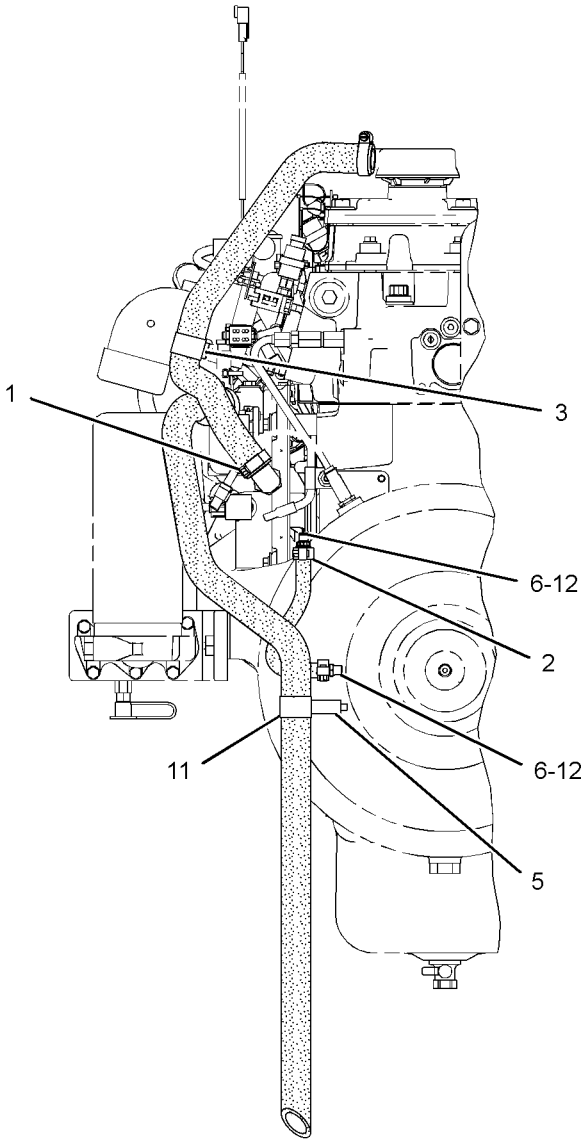

REAR VIEW

GRAPHIC #1 **<END>** g01152747

177-4814 GAUGE GP-OIL LEVEL (DIPSTICK)

S/N: KHX4087-UP

PART OF 224-9842, 290-0754, 290-0755, 290-0756 ENGINE AR-COMPLETE

ALSO AN ATTACHMENT

SMCS-1326 **i01518777**

NOTE	REF NO	GRAPHIC REF	PART NUMBER	QTY	PART NAME 1 2 3 4 5 6 (PRODUCT LEVEL)	SEE PAGE
	1	1	**1S-2563**	3	PLUG	
	2	1	**134-8226**	1	BRACKET	
	3	1	**176-4179**	1	GAUGE AS-OIL LEVEL	
	4	1	**183-2851**	1	TUBE AS-OIL GAUGE	
M	5	1	**5P-7970**	1	NUT (M8X1.25-THD)	
M	6	1	**6V-5217**	1	BOLT (M8X1.25X20-MM)	
	7	1	**6V-5839**	1	WASHER (11X21X2.5-MM THK)	
M	8	1	**6V-6317**	1	BOLT (M10X1.5X20-MM)	
	9	1	**9M-1974**	2	WASHER-HARD (8.8X16X2-MM THK)	
	10	1	**9S-1350**	1	CLIP	

M-METRIC PART

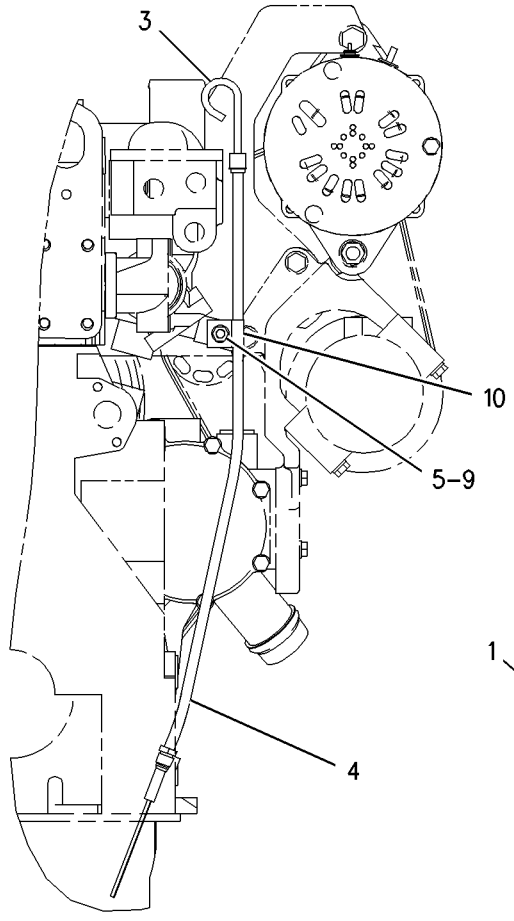

REAR VIEW

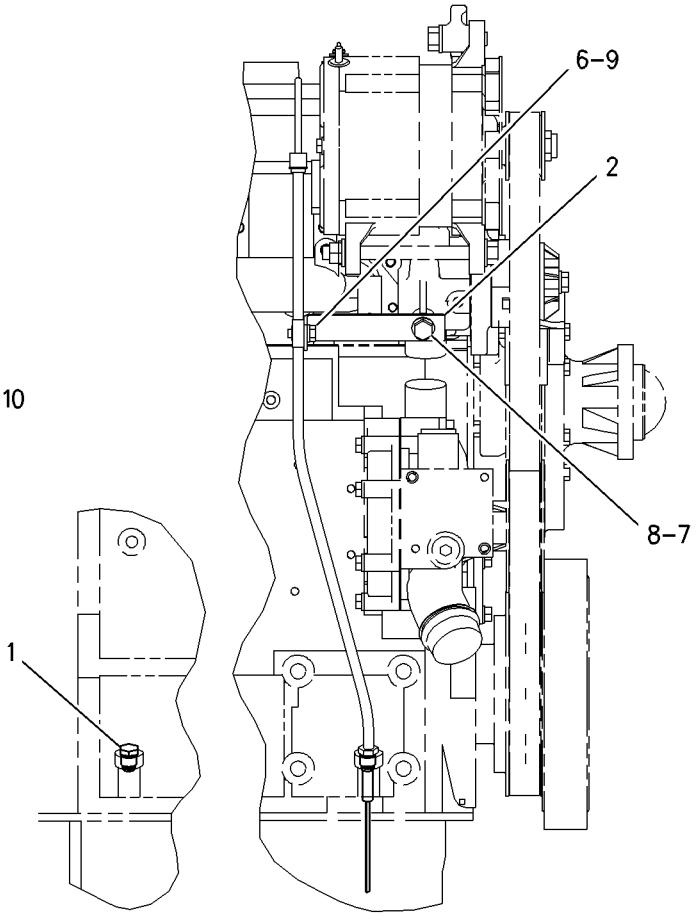

RIGHT SIDE VIEW

GRAPHIC #1 **<END>** g00777544

7C-2475 LINES GP-ENGINE OIL

S/N: KHX4087-UP

PART OF 224-9842, 290-0754, 290-0755, 290-0756 ENGINE AR-COMPLETE

ALSO AN ATTACHMENT

SMCS-1307 **i01743393**

NOTE	REF NO	GRAPHIC REF	PART NUMBER	QTY	PART NAME 1 2 3 4 5 6 (PRODUCT LEVEL)	SEE PAGE
	1	1	**7C-5403**	1	TUBE AS	
	2	1	**7W-5340**	1	GASKET	
	3	1	**9M-1974**	2	WASHER-HARD (8.8X16X2-MM THK)	
M	4	1	**6V-3940**	4	BOLT (M8X1.25X25-MM)	
	5	1	**4W-2232**	1	ELBOW-OUTLET	
	6	1	**3P-1156**	2	SEAL-O-RING	

M-METRIC PART

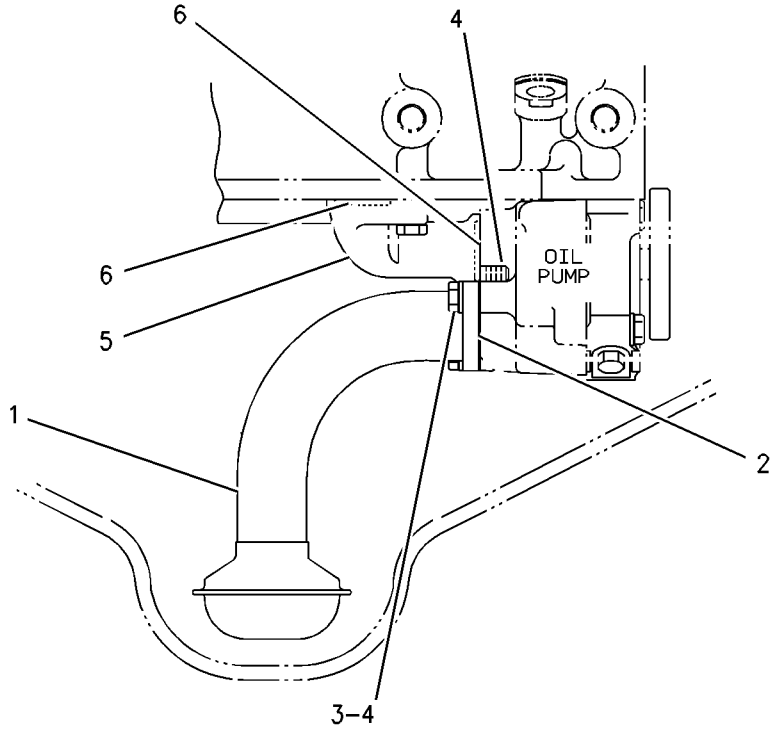

RIGHT SIDE VIEW

GRAPHIC #1 **<END>** g00891413

171-9114 LINES GP-ENGINE OIL DRAIN

S/N: MNB1-UP; WDK1-UP

PART OF 222-8379 INSTALLATION AR-ENGINE

SMCS-1307 **i01591863**

NOTE	REF NO	GRAPHIC REF	PART NUMBER	QTY	PART NAME 1 2 3 4 5 6 (PRODUCT LEVEL)	SEE PAGE
	1	1	**095-1388**	1	CLAMP-HOSE	
E	2	1	**5P-0743**		HOSE (24CM)	
	3	1	**2K-8199**	1	SEAL-O-RING	
	4	1	**203-4183**	1	VALVE AS	

E-ORDER BY THE CENTIMETER

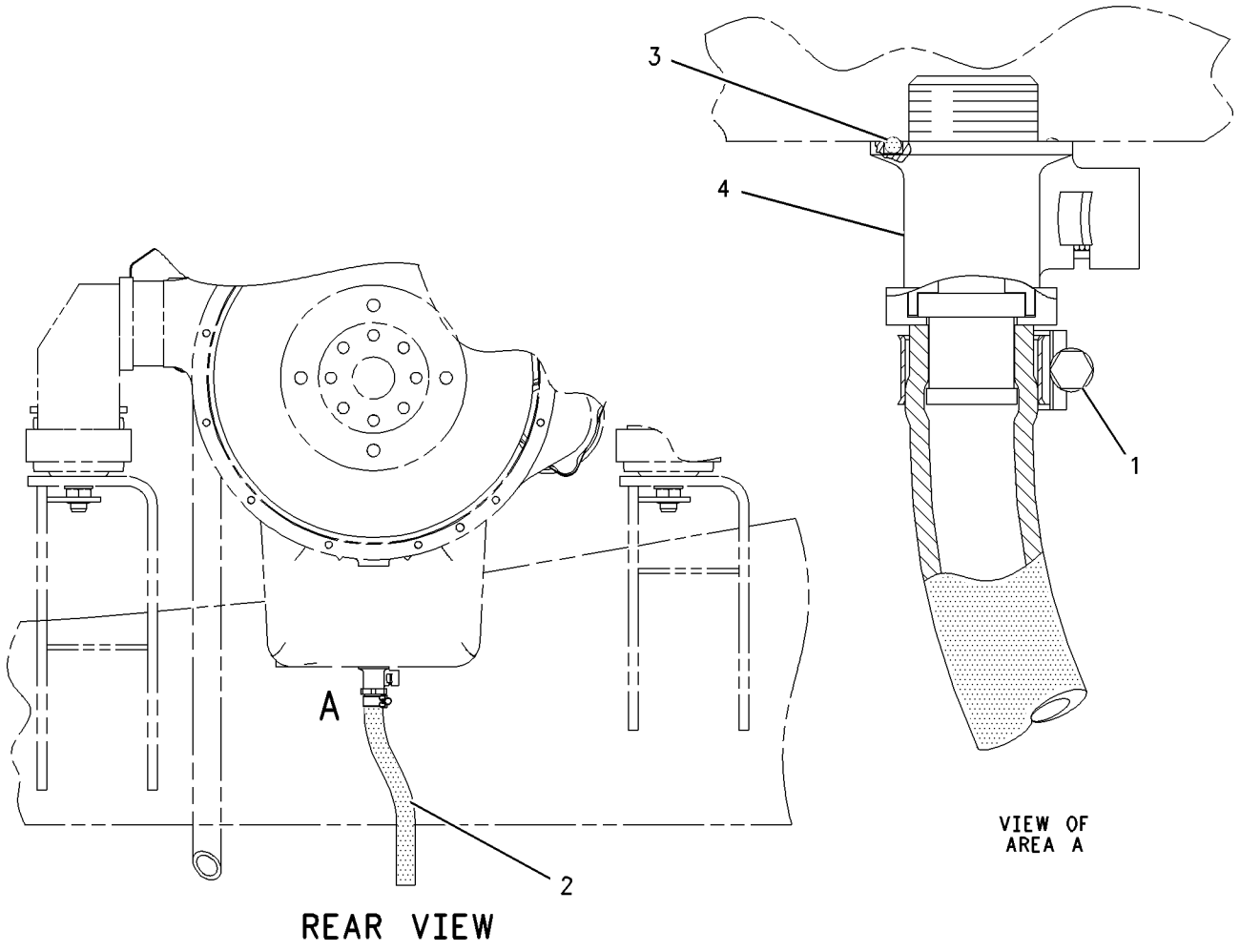

GRAPHIC #1 **<END>** g00825719

LUBRICATION SYSTEM

280-4371 LINES GP-TURBOCHARGER OIL

S/N: KHX4087-UP

PART OF 224-9842, 290-0754, 290-0755, 290-0756 ENGINE AR-COMPLETE

ALSO AN ATTACHMENT

SMCS-1052 **i02443627**

NOTE	REF NO	GRAPHIC REF	PART NUMBER	QTY	PART NAME 1 2 3 4 5 6 (PRODUCT LEVEL)	SEE PAGE
	1	1	**119-2942**	1	ADAPTER	
	2	1	**197-8419**	1	GASKET	
	3	1	**205-1332**	1	HOSE AS	
	4	1	**252-9620**	1	TUBE AS	
	5	1	*148-8378*	1	ELBOW AS	
	5A	1	**3J-1907**	1	SEAL-O-RING	
	5B	1	**6V-8397**	1	SEAL-O-RING	
		1	**6V-8724**	1	ELBOW (90-DEG)	
	6	1	**5P-8066**	1	SEAL-O-RING	
	7	1	**5P-9890**	1	SEAL-O-RING	
	8	1	**6V-5049**	1	SEAL-O-RING	
M	9	1	**6V-5218**	4	BOLT (M8X1.25X35-MM)	
	10	1	**6V-8636**	1	CONNECTOR	
	11	1	**8L-2779**	1	SEAL-O-RING	
	12	1	**9M-1974**	2	WASHER-HARD (8.8X16X2-MM THK)	

M-METRIC PART

280-4371 **LINES GP-TURBOCHARGER OIL** *(contd.)* **i02443627**

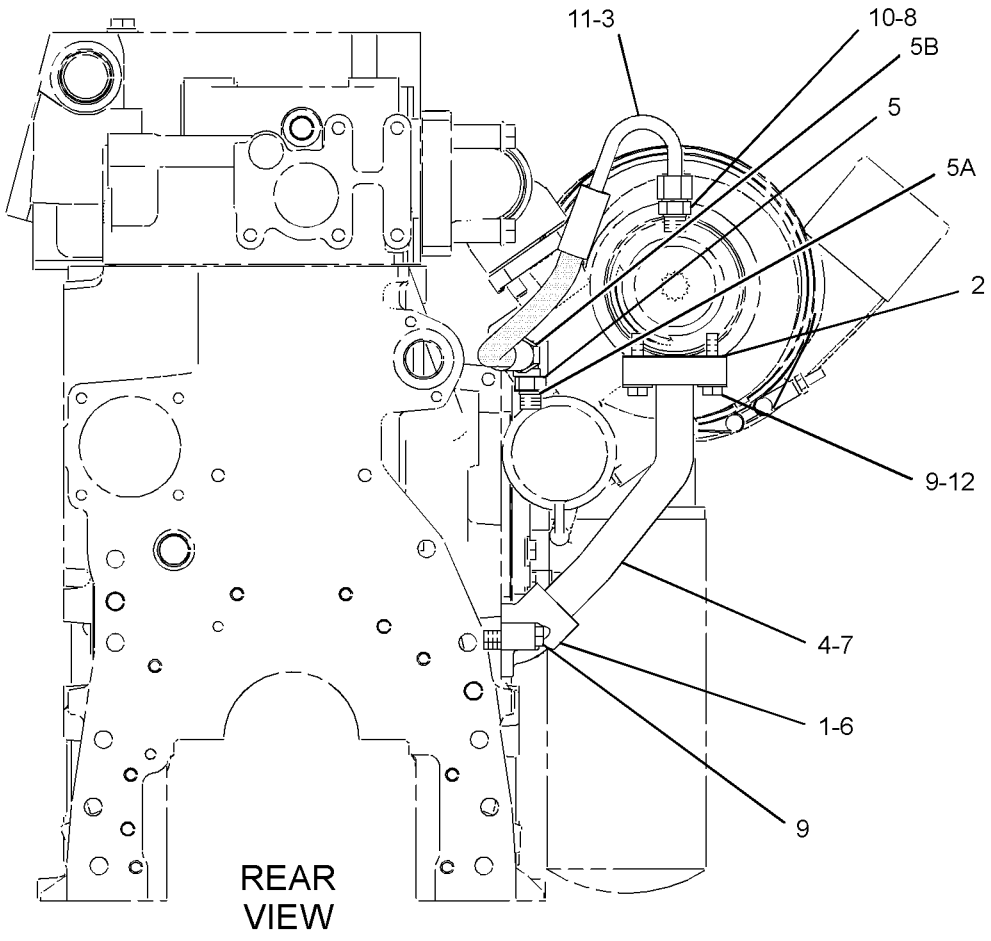

GRAPHIC #1 **<END>** g01214641

LUBRICATION SYSTEM

192-2981 PUMP GP-ENGINE OIL

S/N: KHX1-UP

PART OF 227-5946, 236-4284, 270-4212, 270-4213 ENGINE AR-CORE

ALSO AN ATTACHMENT

SMCS-1304, 1315 **i02355493**

NOTE	REF NO	GRAPHIC REF	PART NUMBER	QTY	PART NAME 1 2 3 4 5 6 (PRODUCT LEVEL)	SEE PAGE
Y	1	1	*200-4497*	1	PUMP GP-ENGINE OIL	85
M	2	1	**6V-5815**	2	BOLT (M10X1.5X75-MM)	
	3	1	**6V-5839**	2	WASHER (11X21X2.5-MM THK)	

M-METRIC PART
Y-SEPARATE ILLUSTRATION

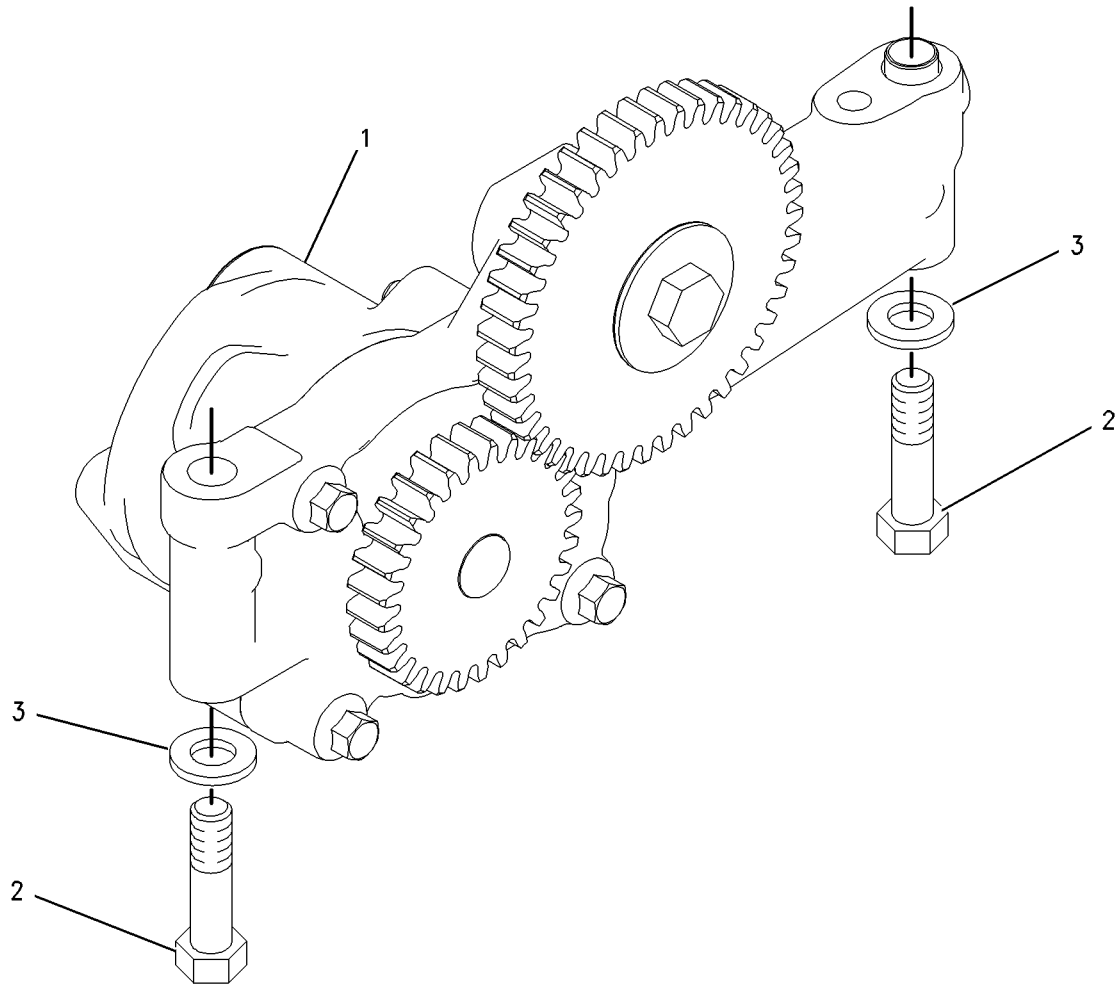

GRAPHIC #1 **<END>** g00775811

200-4497 PUMP GP-ENGINE OIL

S/N: KHX1-UP

PART OF 192-2981 PUMP GP-ENGINE OIL

ALSO AN ATTACHMENT

SMCS-1304, 1315 **i01582169**

NOTE	REF NO	GRAPHIC REF	PART NUMBER	QTY	PART NAME 1 2 3 4 5 6 (PRODUCT LEVEL)	SEE PAGE
	1	1	**7W-9737**	1	SHAFT-OIL PUMP	
	2	1	**7W-9738**	1	WASHER (10.5X38X1.6MM THK)	
	3	1	**7W-9740**	1	GEAR AS-IDLER (43 TEETH)	
	3A	1	**7W-9930**	1	BEARING-SLEEVE	
M	4	1	**9X-2305**	1	BOLT-LOCKING (M10X1.5 THD)	
	5	1	**189-8777**	1	PUMP GP-GEROTOR	

M-METRIC PART

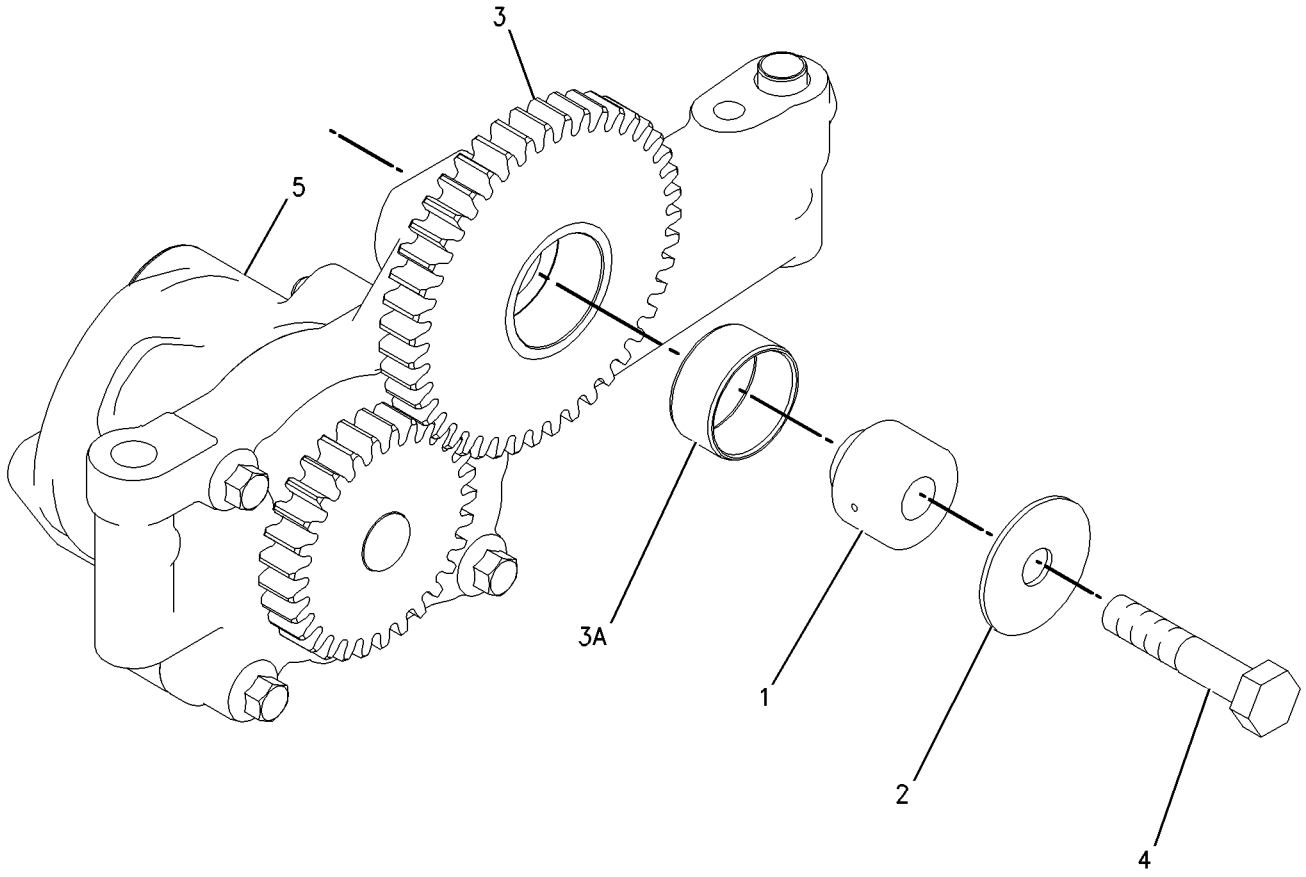

GRAPHIC #1 **<END>** g00775788

COOLING SYSTEM

117-3643 COOLER GP-ENGINE OIL

S/N: KHX1-UP

PART OF 227-5946, 236-4284, 270-4212, 270-4213 ENGINE AR-CORE

ALSO AN ATTACHMENT

SMCS-1378 **i02835828**

NOTE	REF NO	GRAPHIC REF	PART NUMBER	QTY	PART NAME 1 2 3 4 5 6 (PRODUCT LEVEL)	SEE PAGE
R	1	1	**267-4743**	1	CORE AS-ENGINE OIL COOLER	
	2	1	**233-7655**	1	GASKET	
	3	1	**3P-1156**	2	SEAL-O-RING	

R-REMFG PART MAY BE AVAILABLE

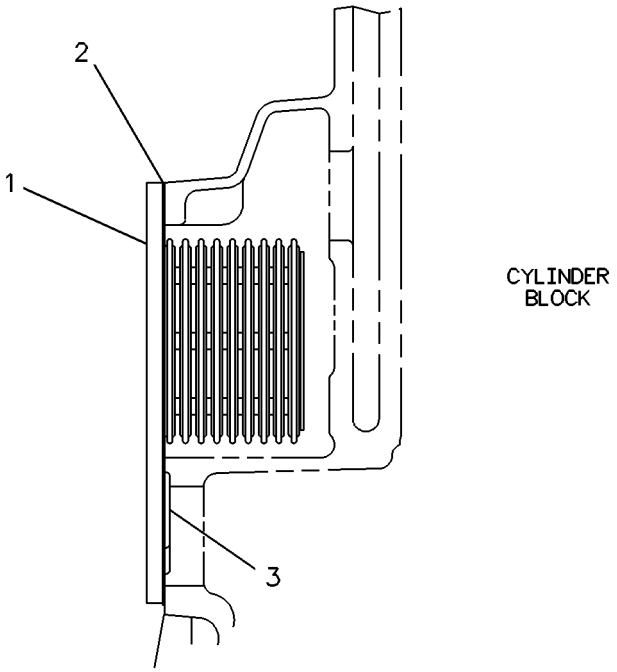

GRAPHIC #1 **<END>** g00117316

COOLING SYSTEM

229-1787 COOLING AR-HIGH AMBIENT TEMP

S/N: MNB1-UP; WDK1-UP
AN ATTACHMENT

SMCS-1350 **i02399666**

NOTE	PART NUMBER	QTY	PART NAME 1 2 3 4 5 6 (PRODUCT LEVEL)	SEE PAGE
Y	*210-8176*	1	DRIVE GP-FAN	42
Y	*262-2486*	1	GUARD GP-BOTTOM	364
Y	*236-3395*	1	HOOD AR (PERFORATED)	372
Y	*233-1125*	1	PULLEY GP	62
Y	*230-2887*	1	RADIATOR & HYD OIL COOLER GP	93
Y	*251-0448*	1	WIRING GP-FAN (FAN CLUTCH)	307

Y-SEPARATE ILLUSTRATION

<END>

COOLING SYSTEM

230-2893 FAN GP-SUCTION

S/N: MNB1-UP; WDK1-UP
PART OF 266-6261 ENGINE AR

SMCS-1356 **i02349091**

NOTE	REF NO	GRAPHIC REF	PART NUMBER	QTY	PART NAME 1 2 3 4 5 6 (PRODUCT LEVEL)	SEE PAGE
	1	1	**230-2892**	1	FAN AS (11-BLADES)	
	2	1	**230-2901**	1	SPACER-FAN	
M	3	1	**7X-2539**	6	BOLT (M8X1.25X110-MM)	
M	4	1	**8T-4189**	6	BOLT (M8X1.25X20-MM)	
	5	1	**8T-4224**	12	WASHER-HARD (8.8X16X2-MM THK)	

M-METRIC PART

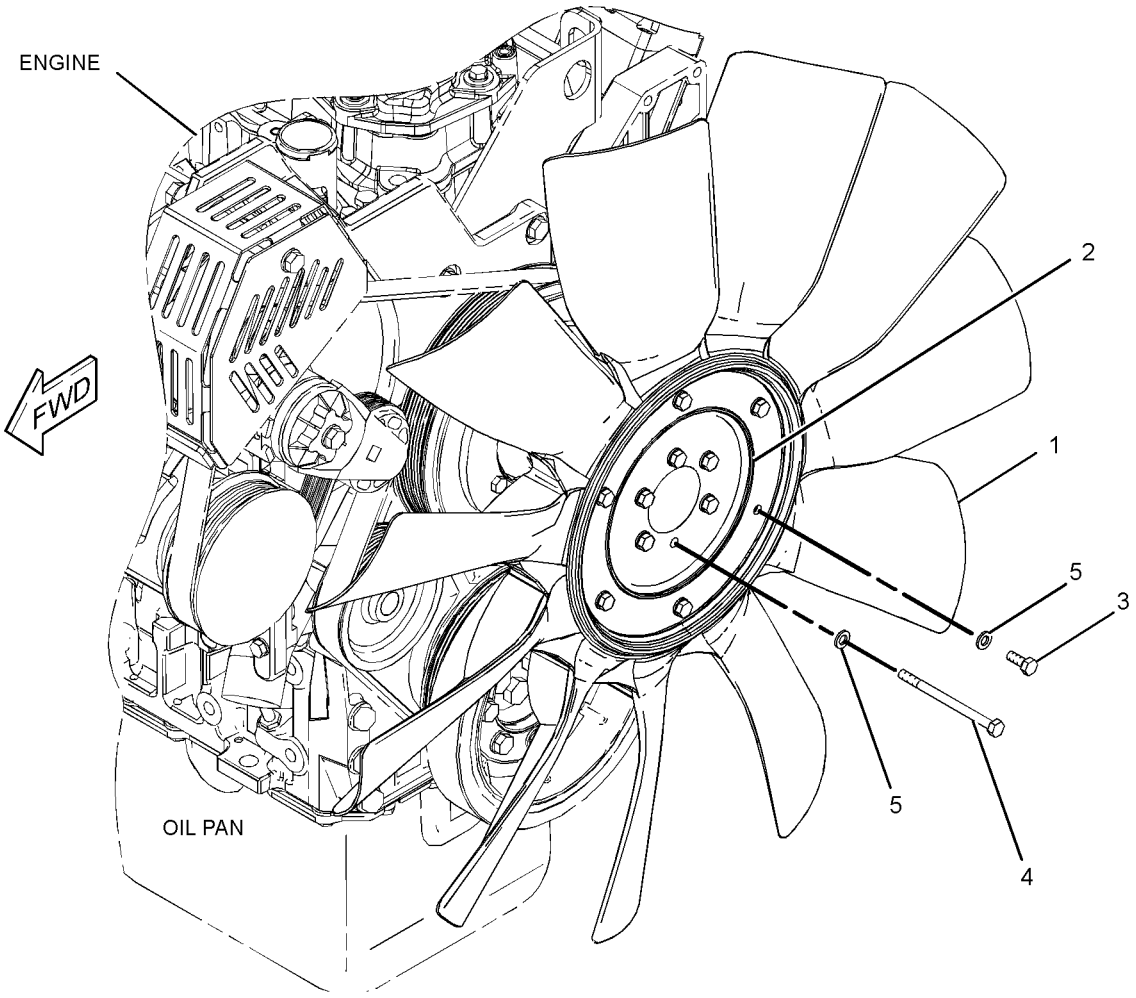

GRAPHIC #1 **<END>** g01186015

COOLING SYSTEM

192-9972 LINES GP-WATER

S/N: KHX4087-UP
PROVIDES COOLANT SAMPLING VALVE
PART OF 224-9842, 290-0754, 290-0755, 290-0756 ENGINE AR-COMPLETE
ALSO AN ATTACHMENT

SMCS-1355, 1380 **i02353611**

NOTE	REF NO	GRAPHIC REF	PART NUMBER	QTY	PART NAME 1 2 3 4 5 6 (PRODUCT LEVEL)	SEE PAGE
	1	1	**7E-0759**	1	HOSE	
	3	1	**237-5176**	2	CLAMP-BAND	
	4	1	**126-5869**	1	REGULATOR-WATER TEMPERATURE (94-DEG C) (COOLANT)	
	5	1	**227-5942**	1	HOUSING-WATER REGULATOR	
	6	1	**136-0812**	1	GASKET-WATER REGULATOR (TEMPERATURE REGULATOR HOUSING)	
	7	1	**154-9023**	1	VALVE-SAMPLING (WATER, COOLANT)	
	8	1	**157-0670**	1	CAP-DUST (COOLANT SAMPLING VALVE)	
	9	1	**192-9971**	1	PIPE	
	10	1	**126-5466**	1	GASKET	
	11	1	**3J-7354**	1	SEAL-O-RING	
	12	1	**3K-0360**	1	SEAL-O-RING	
	13	1	**3P-1932**	1	ADAPTER	
M	14	1	**5P-8347**	2	BOLT (M8X1.25X70-MM)	
M	15	1	**6V-3940**	5	BOLT (M8X1.25X25-MM)	
M	16	1	**6V-5223**	1	BOLT (M8X1.25X100-MM)	
	17	1	*148-8411*	3	PLUG AS	
					(EACH INCLUDES)	
	17A	1	**3K-0360**	1	SEAL-O-RING	
		1	**9S-4185**	1	PLUG-O-RING	
	18	1	*155-3624*	1	PLUG AS	
	18A	1	**3J-7354**	1	SEAL-O-RING	
		1	**9S-4182**	1	PLUG-O-RING	
M	19	1	**8T-0100**	1	BOLT (M8X1.25X60-MM)	
	20	1	**162-0177**	1	PLUG AS	
	20A	1	**3J-1907**	1	SEAL-O-RING	
		1	**9S-8004**	1	PLUG-O-RING	
	21	1	**9M-1974**	6	WASHER-HARD (8.8X16X2-MM THK)	
	22	1	*148-8395*	2	PLUG AS	
					(EACH INCLUDES)	
	22A	1	**3K-0360**	1	SEAL-O-RING	
		1	**9S-8005**	1	PLUG-O-RING	

M-METRIC PART

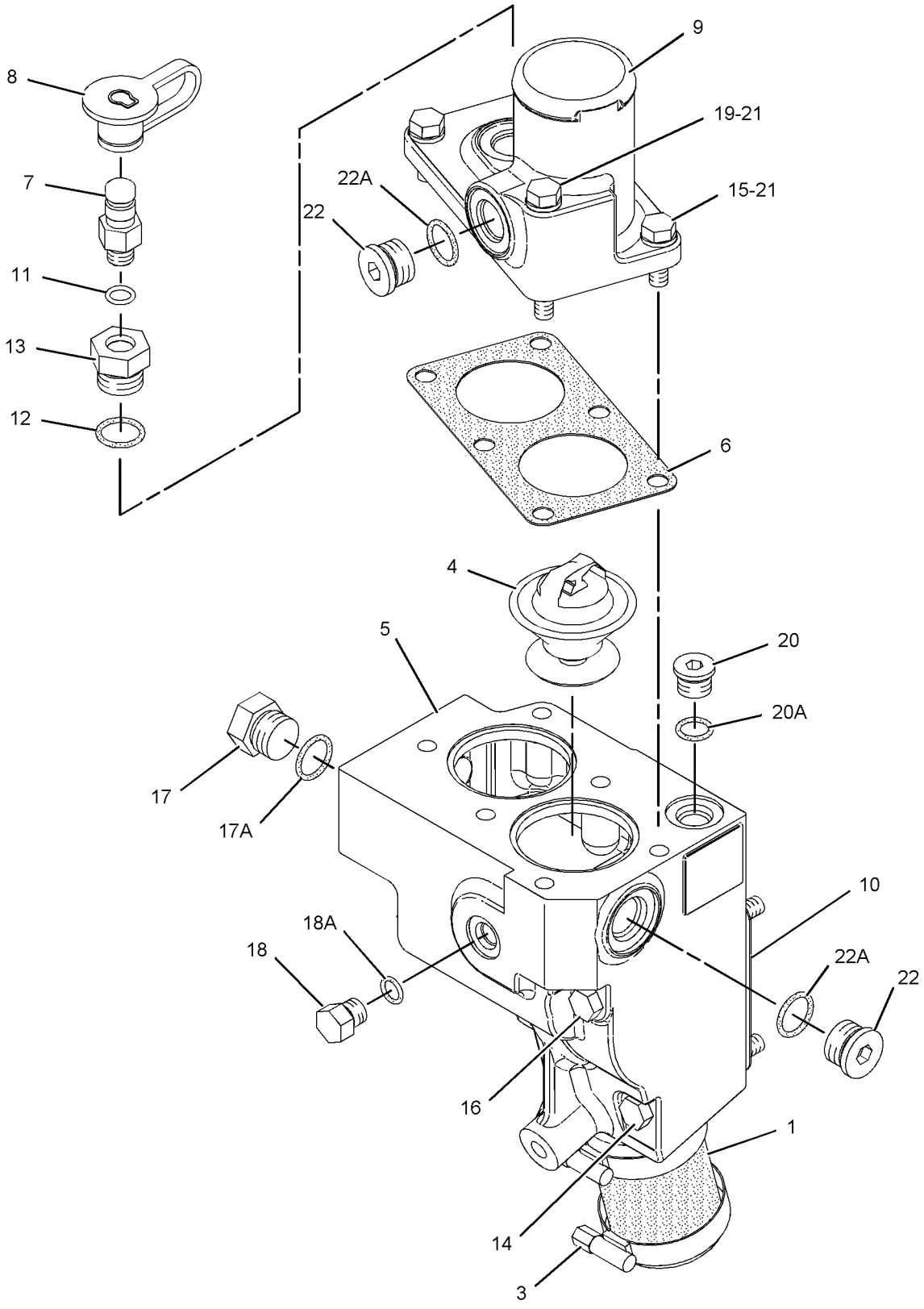

GRAPHIC #1 **<END>** g01105138

177-9823 PUMP GP-WATER

S/N: KHX4087-UP

PART OF 224-9842, 290-0754, 290-0755, 290-0756 ENGINE AR-COMPLETE

ALSO AN ATTACHMENT

SMCS-1361 **i02134811**

NOTE	REF NO	GRAPHIC REF	PART NUMBER	QTY	PART NAME 1 2 3 4 5 6 (PRODUCT LEVEL)	SEE PAGE
CYR	2	1	**236-4413**	1	PUMP GP-WATER	92
C	3	1	*148-8395*	2	PLUG AS	
					(EACH INCLUDES)	
		1	**3K-0360**	1	SEAL-O-RING	
		1	**9S-8005**	1	PLUG-O-RING	
C	4	1	*148-8409*	2	PLUG AS	
					(EACH INCLUDES)	
		1	**3D-2824**	1	SEAL-O-RING	
		1	**9S-8008**	1	PLUG-O-RING	
C	5	1	**164-5619**	1	PLUG AS	
		1	**2M-9780**	1	SEAL-O-RING	
		1	**9S-8006**	1	PLUG-O-RING	
	6	1	**2M-4453**	1	SEAL-O-RING	
C	7	1	*3J-3679*	1	PLUG AS	
		1	**1J-9671**	1	SEAL-O-RING	
		1	**9S-8003**	1	PLUG	
	8	1	**4J-0524**	1	SEAL-O-RING	
M	9	1	**8T-0644**	4	BOLT (M10X1.5X90-MM)	

C-CHANGE FROM PREVIOUS TYPE
M-METRIC PART
R-REMFG PART MAY BE AVAILABLE
Y-SEPARATE ILLUSTRATION

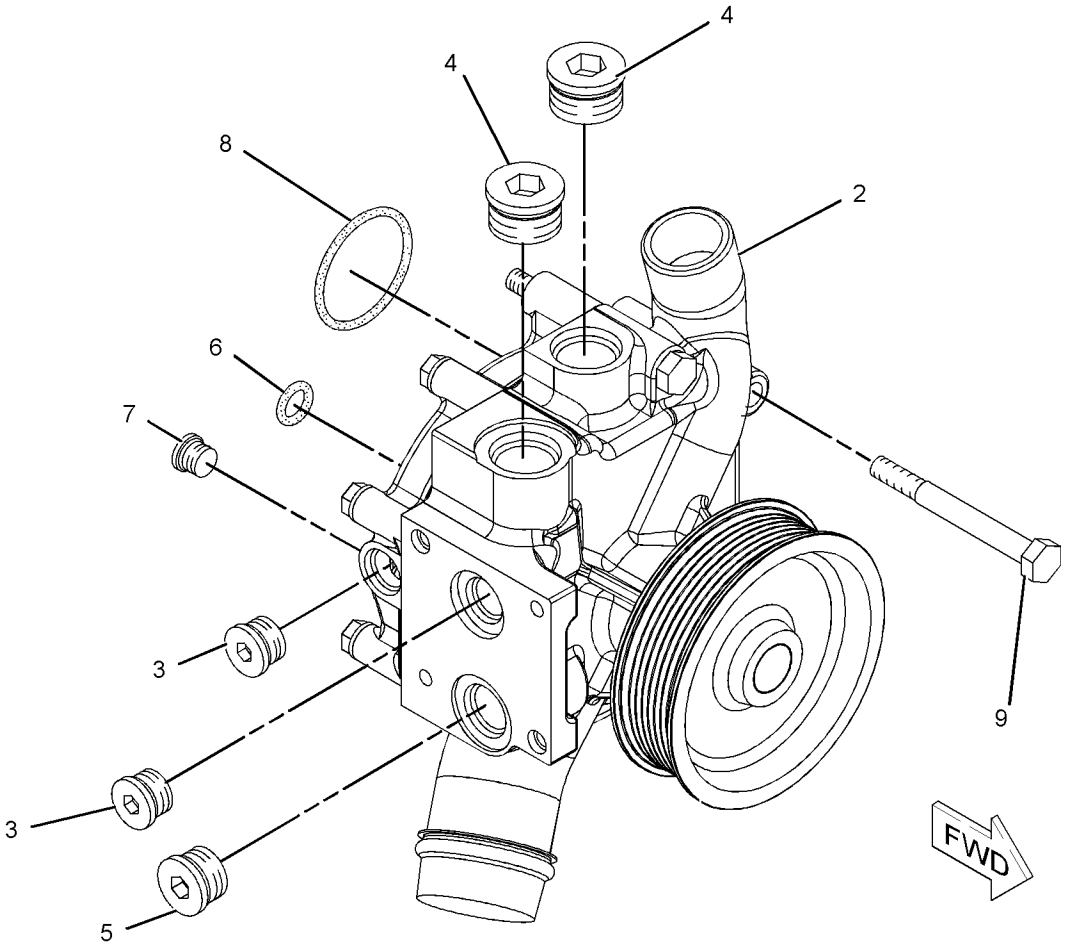

GRAPHIC #1 **<END>** g01086091

COOLING SYSTEM

236-4413 PUMP GP-WATER*R

S/N: KHX4087-UP
PART OF 177-9823 PUMP GP-WATER
ALSO AN ATTACHMENT

SMCS-1361 **i02134845**

NOTE	REF NO	GRAPHIC REF	PART NUMBER	QTY	PART NAME 1 2 3 4 5 6 (PRODUCT LEVEL)	SEE PAGE
	1	1	**4W-0253**	1	COVER	
	2	1	**4W-7592**	1	GASKET	
R	3	1	**236-4420**	1	PUMP AS-WATER	
		1	**117-3437**	1	PULLEY	
		1	**119-3025**	1	PLUG-FELT (PUMP)	
		1	**129-1170**	1	SHAFT AS	
		1	**147-5088**	1	SEAL AS-WATER PUMP	
		1	**152-3952**	1	IMPELLER-PUMP	
		1	**236-4421**	1	HOUSING-PUMP	
M	4	1	**6V-3918**	4	BOLT (M8X1.25X50-MM)	
	5	1	**9M-1974**	4	WASHER-HARD (8.8X16X2-MM THK)	

M-METRIC PART
R-REMFG PART MAY BE AVAILABLE

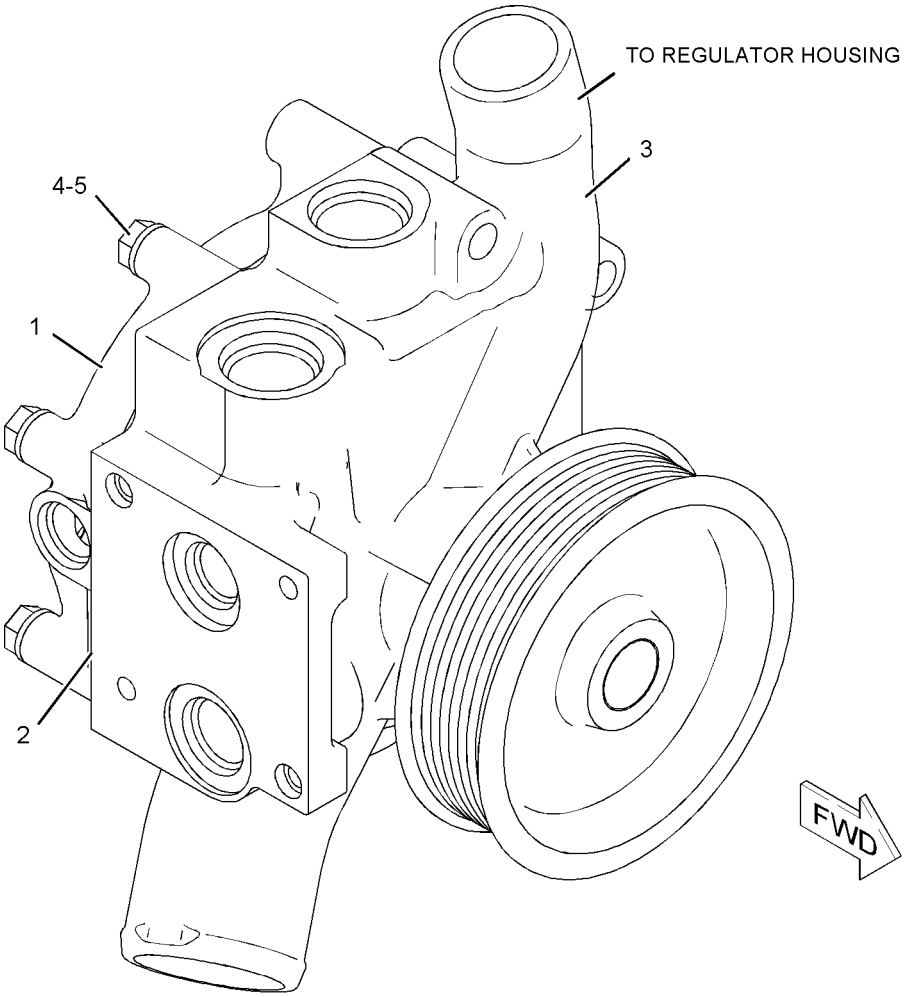

GRAPHIC #1 **<END>** g01040531

230-2887 RADIATOR & HYD OIL COOLER GP

S/N: MNB1-UP; WDK1-UP
PART OF 229-1787 COOLING AR-HIGH AMBIENT TEMP
AN ATTACHMENT

SMCS-1351 **i02781841**

NOTE	REF NO	GRAPHIC REF	PART NUMBER	QTY	PART NAME 1 2 3 4 5 6 (PRODUCT LEVEL)	SEE PAGE
	1	1	**3S-2093**	4	STRAP-CABLE	
	2	1	**8T-6703**	4	CLAMP-HOSE	
	3	1	**096-4035**	1	CLIP	
	4	1	**099-6607**	1	BAND	
D	5	1	**5P-9909**		SEAL (0.9-M)	
	6	1	**178-6450**	4	SPACER (17X35X30-MM THK)	
	7	1	**281-3487**	1	HOSE-RADIATOR (UPPER)	
	8	1	**230-2870**	1	HOSE-RADIATOR (LOWER)	
	9	1	**230-2881**	1	SEAL	
	10	1	**230-2882**	1	SEAL	
	11	1	**230-2888**	1	PLATE AS	
M		1	**8T-3597**	2	NUT-WELD (M12X1.75-THD)	
	12	1	**230-2890**	1	GUARD AS-RADIATOR (UPPER)	
	13	1	**245-9181**	1	GUARD AS-RADIATOR (LOWER)	
M		1	**8T-3490**	2	NUT-WELD (M10X1.5-THD)	
	14	1	**245-9205**	1	TANK AS-COOLANT (RECOVERY)	
		1	**171-3369**	1	CAP AS (COOLANT RECOVERY)	
CY	15	1	**265-3686**	1	RADIATOR & HYD OIL COOLER GP	97
	16	1	**265-3560**	1	SEAL	
C	17	1	**3P-9847**	2	CLIP	
M	18	1	**7X-2554**	4	BOLT (M16X2X70-MM)	
	19	1	**7X-7729**	10	WASHER (11X25X3-MM THK)	
C	20	1	**8T-4121**	2	WASHER-HARD (11X21X2.5-MM THK)	
CM	21	1	**8T-4137**	12	BOLT (M10X1.5X20-MM)	
M	22	1	**8T-4139**	2	BOLT (M12X1.75X30-MM)	
M	23	1	**8T-4200**	2	BOLT (M8X1.25X16-MM)	
	24	1	**8T-4223**	2	WASHER-HARD (13.5X25.5X3-MM THK)	
	25	1	**8T-4224**	2	WASHER-HARD (8.8X16X2-MM THK)	
E	26	1	**7Y-1976**		HOSE-WATER (60-CM)	

C-CHANGE FROM PREVIOUS TYPE
D-ORDER BY THE METER
E-ORDER BY THE CENTIMETER
M-METRIC PART
Y-SEPARATE ILLUSTRATION

230-2887 **RADIATOR & HYD OIL COOLER GP** *(contd.)* **i02781841**

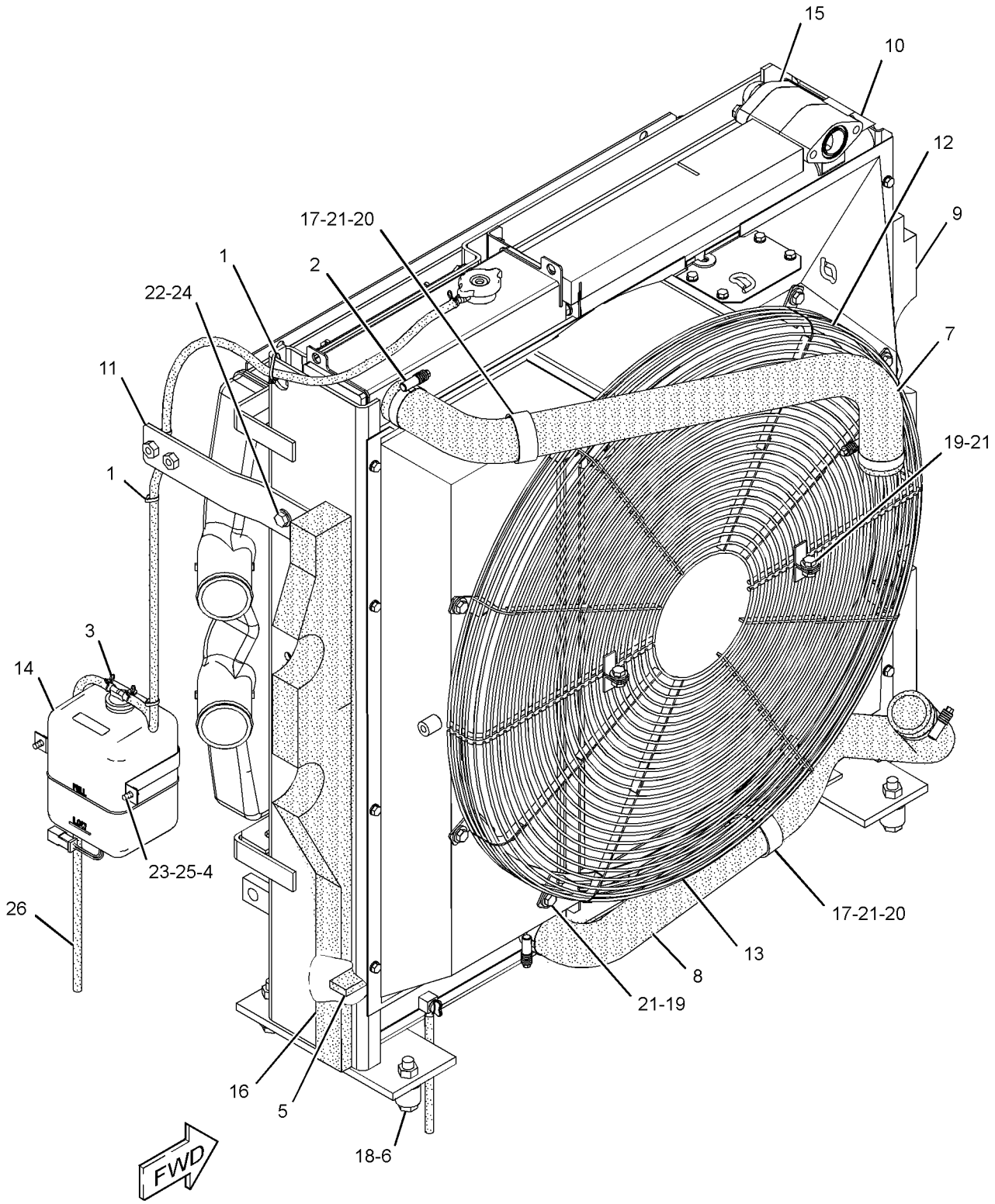

GRAPHIC #1 **<END>** g01390512

245-9295 RADIATOR & HYD OIL COOLER GP

S/N: MNB1-UP; WDK1-UP

PART OF 222-8379 INSTALLATION AR-ENGINE

SMCS-1351 **i02781837**

NOTE	REF NO	GRAPHIC REF	PART NUMBER	QTY	PART NAME 1 2 3 4 5 6 (PRODUCT LEVEL)	SEE PAGE
	1	1	**3S-2093**	4	STRAP-CABLE	
	2	1	**8T-6703**	4	CLAMP-HOSE	
	3	1	**096-4035**	1	CLIP	
	4	1	**099-6607**	1	BAND	
	5	1	**178-6450**	4	SPACER (17X35X30-MM THK)	
	6	1	**230-2870**	1	HOSE-RADIATOR (LOWER)	
	7	1	**230-2881**	1	SEAL	
	8	1	**230-2882**	1	SEAL	
	9	1	**230-2888**	1	PLATE AS	
	10	1	**230-2890**	1	GUARD AS-RADIATOR (UPPER)	
	11	1	**245-9181**	1	GUARD AS-RADIATOR (LOWER)	
	12	1	**245-9205**	1	TANK AS-COOLANT (RECOVERY)	
	12A	1	**171-3369**	1	CAP AS (COOLANT RECOVERY)	
	13	1	**265-3560**	1	SEAL	
Y	14	1	**265-3688**	1	RADIATOR & HYD OIL COOLER GP	99
	15	1	**281-3487**	1	HOSE-RADIATOR (UPPER)	
	16	1	**3P-9847**	2	CLIP	
M	17	1	**7X-2554**	4	BOLT (M16X2X70-MM)	
	18	1	**7X-7729**	10	WASHER (11X25X3-MM THK)	
	19	1	**8T-4121**	2	WASHER-HARD (11X21X2.5-MM THK)	
M	20	1	**8T-4137**	12	BOLT (M10X1.5X20-MM)	
M	21	1	**8T-4139**	2	BOLT (M12X1.75X30-MM)	
M	22	1	**8T-4200**	2	BOLT (M8X1.25X16-MM)	
	23	1	**8T-4223**	2	WASHER-HARD (13.5X25.5X3-MM THK)	
	24	1	**8T-4224**	2	WASHER-HARD (8.8X16X2-MM THK)	
E	25	1	**7Y-1976**		HOSE-WATER (60-CM)	
D	26	1	**5P-9909**		SEAL (0.9-M)	

D-ORDER BY THE METER
E-ORDER BY THE CENTIMETER
M-METRIC PART
Y-SEPARATE ILLUSTRATION

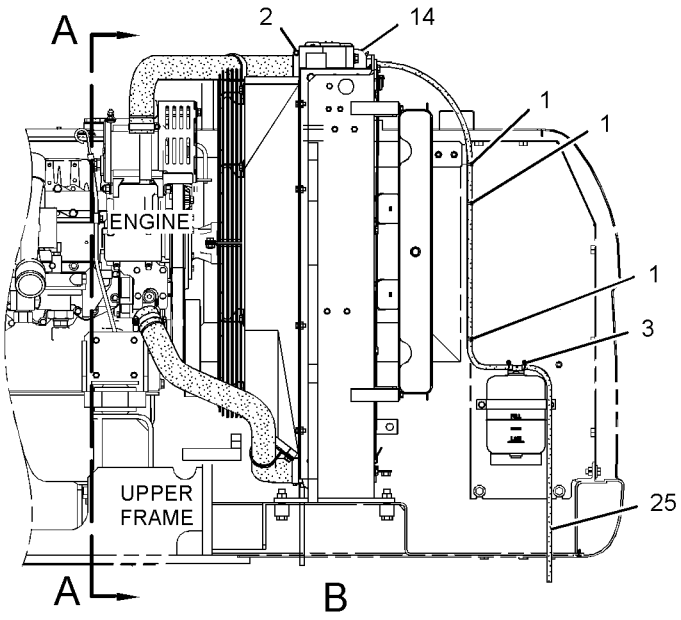

FRONT VIEW

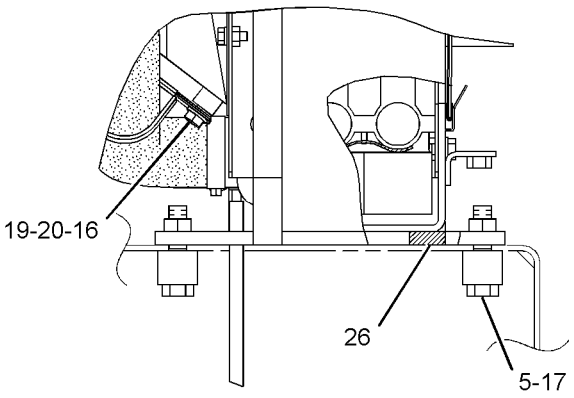

VIEW OF AREA B

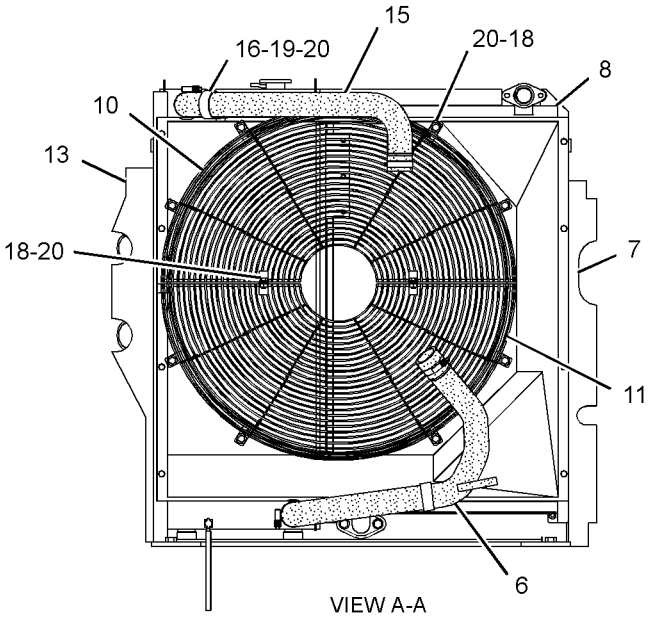

VIEW A-A

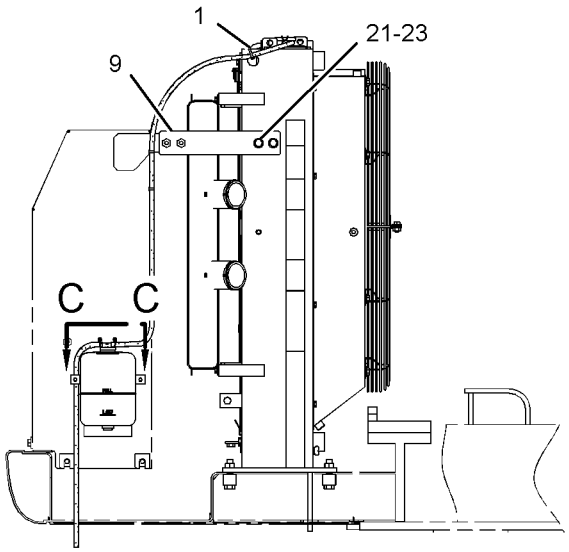

REAR VIEW

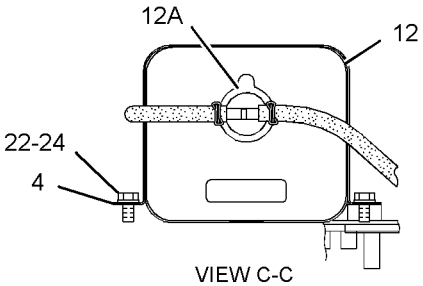

VIEW C-C

GRAPHIC #1 **<END>** g01272012

265-3686 RADIATOR & HYD OIL COOLER GP

S/N: MNB1-UP; WDK1-UP
PART OF 230-2887 RADIATOR & HYD OIL COOLER GP
AN ATTACHMENT

SMCS-1351 **i02662841**

NOTE	REF NO	GRAPHIC REF	PART NUMBER	QTY	PART NAME 1 2 3 4 5 6 (PRODUCT LEVEL)	SEE PAGE
	1	1	**5D-8159**	4	PIN AS	
M	2	1	**093-5432**	1	VALVE AS-DRAIN (COOLANT)	
	3	1	**096-4035**	2	CLIP	
	4	1	**245-9207**	1	CORE AS-RADIATOR	
	5	1	**245-9208**	1	CORE AS-OIL COOLER (HYDRAULIC)	
	6	1	**245-9209**	1	AFTERCOOLER AS	
	7	1	**245-9212**	1	CAP AS-RADIATOR	
	8	1	**245-9213**	2	SEAL	
	9	1	**245-9214**	2	SEAL	
	10	1	**245-9215**	1	SEAL	
	11	1	**245-9216**	2	BOSS	
	12	1	**245-9217**	2	CUSHION-RUBBER	
	13	1	**245-9218**	2	CUSHION-RUBBER	
	14	1	**245-9219**	1	SCREEN AS-HYDRAULIC OIL COOLER	
	15	1	**245-9220**	1	SCREEN AS-RADIATOR	
	16	1	**245-9221**	1	SEAL	
	17	1	**245-9222**	1	SEAL	
	18	1	**245-9276**	2	SEAL	
	19	1	**265-3515**	1	SHEET-RUBBER	
	20	1	**265-3580**	1	FRAME AS	
	21	1	**265-3687**	1	SHROUD AS-RADIATOR	
	22	1	**281-3486**	1	PLATE AS	
	23	1	**095-1543**	4	SEAL-O-RING	
	24	1	**8T-4121**	8	WASHER-HARD (11X21X2.5-MM THK)	
M	25	1	**8T-4136**	6	BOLT (M10X1.5X25-MM)	
M	26	1	**8T-4189**	20	BOLT (M8X1.25X20-MM)	
M	27	1	**8T-4195**	2	BOLT (M10X1.5X30-MM)	
	28	1	**8T-4224**	20	WASHER-HARD (8.8X16X2-MM THK)	
E	29	1	**7Y-1976**		HOSE-WATER (140-CM)	
E	29A	1	**7Y-1976**		HOSE-WATER (20-CM)	

E-ORDER BY THE CENTIMETER
M-METRIC PART

265-3686 RADIATOR & HYD OIL COOLER GP *(contd.)* i02662841

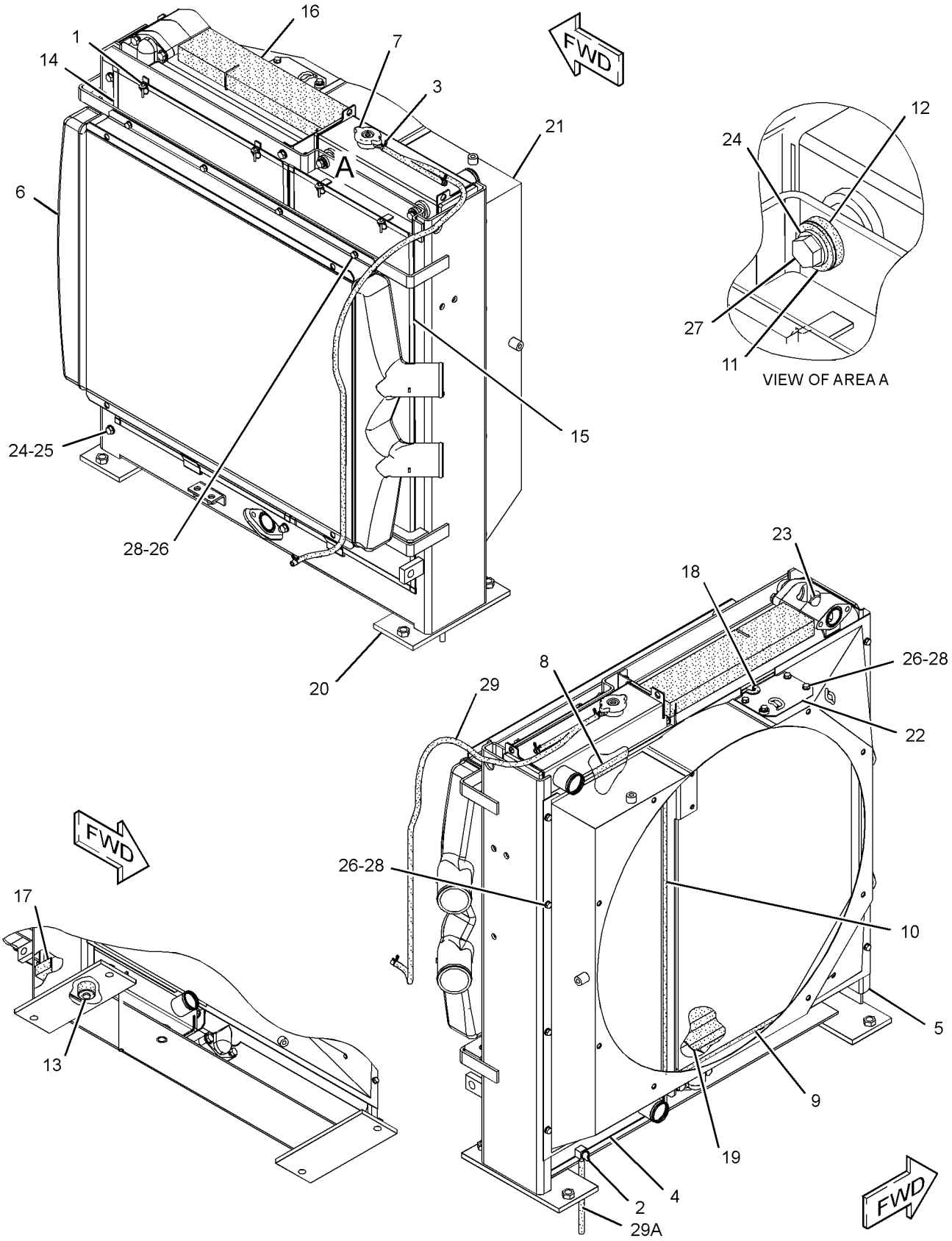

GRAPHIC #1 **<END>** g01274007

265-3688 RADIATOR & HYD OIL COOLER GP

S/N: MNB1-UP; WDK1-UP

PART OF 245-9295 RADIATOR & HYD OIL COOLER GP

SMCS-1351 **i02662840**

NOTE	REF NO	GRAPHIC REF	PART NUMBER	QTY	PART NAME 1 2 3 4 5 6 (PRODUCT LEVEL)	SEE PAGE
	1	1	**5D-8159**	4	PIN AS	
M	2	1	**093-5432**	1	VALVE AS-DRAIN (COOLANT)	
	3	1	**096-4035**	2	CLIP	
	4	1	**245-9207**	1	CORE AS-RADIATOR	
	5	1	**245-9208**	1	CORE AS-OIL COOLER (HYDRAULIC)	
	6	1	**245-9209**	1	AFTERCOOLER AS	
	7	1	**245-9212**	1	CAP AS-RADIATOR	
	8	1	**245-9213**	2	SEAL	
	9	1	**245-9214**	2	SEAL	
	10	1	**245-9215**	1	SEAL	
	11	1	**245-9216**	2	BOSS	
	12	1	**245-9217**	2	CUSHION-RUBBER	
	13	1	**245-9218**	2	CUSHION-RUBBER	
	14	1	**245-9219**	1	SCREEN AS-HYDRAULIC OIL COOLER	
	15	1	**245-9220**	1	SCREEN AS-RADIATOR	
	16	1	**245-9221**	1	SEAL	
	17	1	**245-9222**	1	SEAL	
	18	1	**265-3515**	1	SHEET-RUBBER	
	19	1	**265-3580**	1	FRAME AS	
	20	1	**281-3448**	1	SHROUD AS-RADIATOR	
	21	1	**095-1543**	4	SEAL-O-RING	
	22	1	**8T-4121**	8	WASHER-HARD (11X21X2.5-MM THK)	
M	23	1	**8T-4136**	6	BOLT (M10X1.5X25-MM)	
M	24	1	**8T-4189**	16	BOLT (M8X1.25X20-MM)	
M	25	1	**8T-4195**	2	BOLT (M10X1.5X30-MM)	
	26	1	**8T-4224**	16	WASHER-HARD (8.8X16X2-MM THK)	
E	27	1	**7Y-1976**		HOSE-WATER (140-CM)	
E	27A	1	**7Y-1976**		HOSE-WATER (20-CM)	

E-ORDER BY THE CENTIMETER
M-METRIC PART

265-3688 RADIATOR & HYD OIL COOLER GP *(contd.)* i02662840

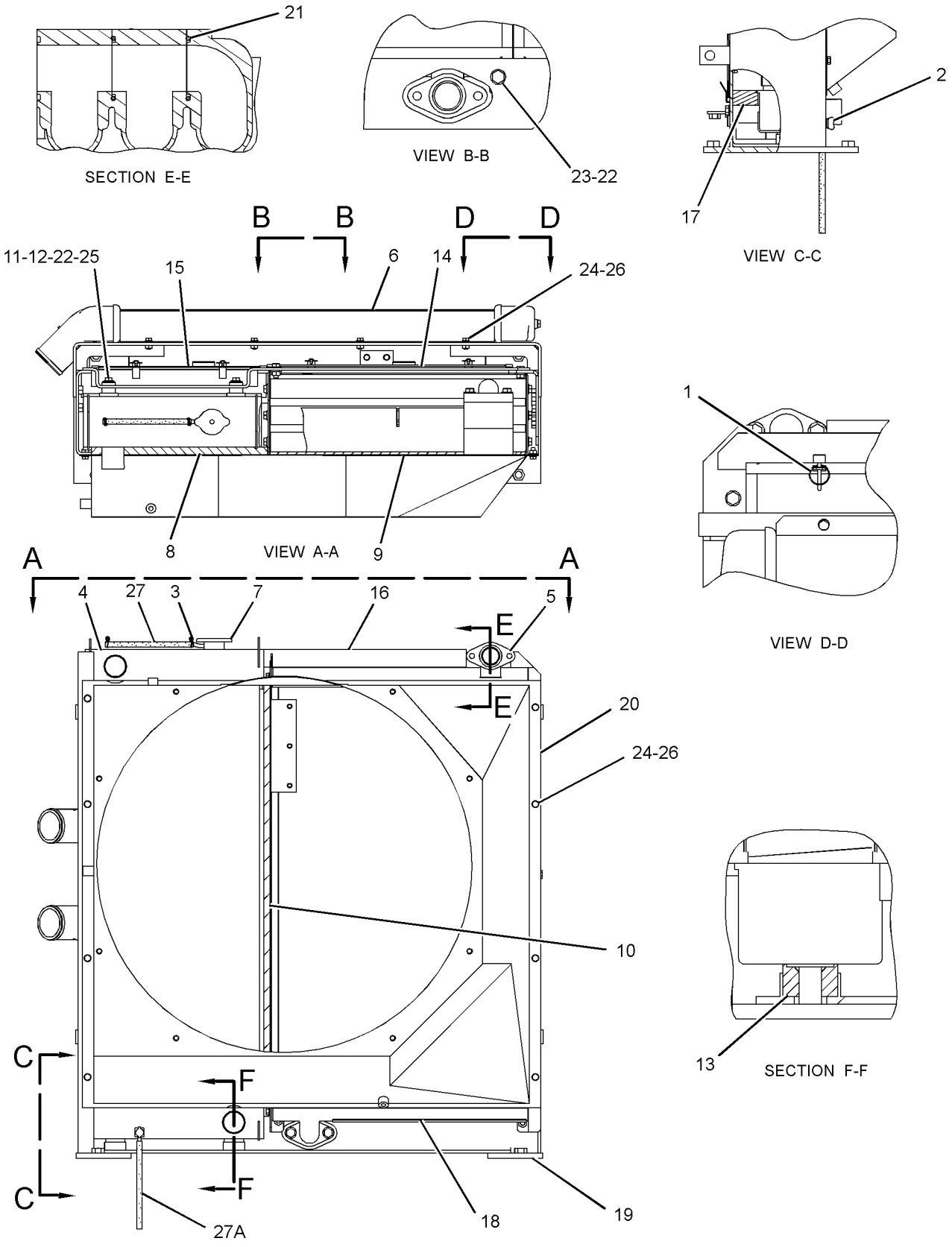

GRAPHIC #1 **<END>** g01272832

AIR INLET AND EXHAUST SYSTEM

229-1794 AIR CLEANER AR—WITH PRECLEANER

S/N: MNB1-UP; WDK1-UP

AN ATTACHMENT

SMCS-1051 **i02399791**

NOTE	PART NUMBER	QTY	PART NAME 1 2 3 4 5 6 (PRODUCT LEVEL)	SEE PAGE
Y	*233-1127*	1	AIR CLEANER GP	102
Y	*223-3045*	1	HOOD GP (PRECLEANER)	373

Y-SEPARATE ILLUSTRATION

<END>

AIR INLET AND EXHAUST SYSTEM

233-1127 AIR CLEANER GP

S/N: MNB1-UP; WDK1-UP
PART OF 229-1794 AIR CLEANER AR
AN ATTACHMENT

SMCS-1051, 1054 **i03011893**

NOTE	REF NO	GRAPHIC REF	PART NUMBER	QTY	PART NAME 1 2 3 4 5 6 (PRODUCT LEVEL)	SEE PAGE
	1	1	**9X-2201**	1	CLAMP-HOSE	
	2	1	**116-2659**	1	DAMPER	
	3	1	**130-3280**	1	PRECLEANER AS	
		1	**174-5415**	1	CLAMP	
CY	4	1	**310-9677**	1	AIR CLEANER GP	105
	5	1	**134-7089**	1	CLAMP	
	6	1	**193-2882**	1	PIPE AS	
	7	1	**255-2866**	1	HOSE	
	8	1	**5P-1076**	4	WASHER-HARD (13.5X30X4-MM THK)	
M	9	1	**8T-4139**	4	BOLT (M12X1.75X30-MM)	

C-CHANGE FROM PREVIOUS TYPE
M-METRIC PART
Y-SEPARATE ILLUSTRATION

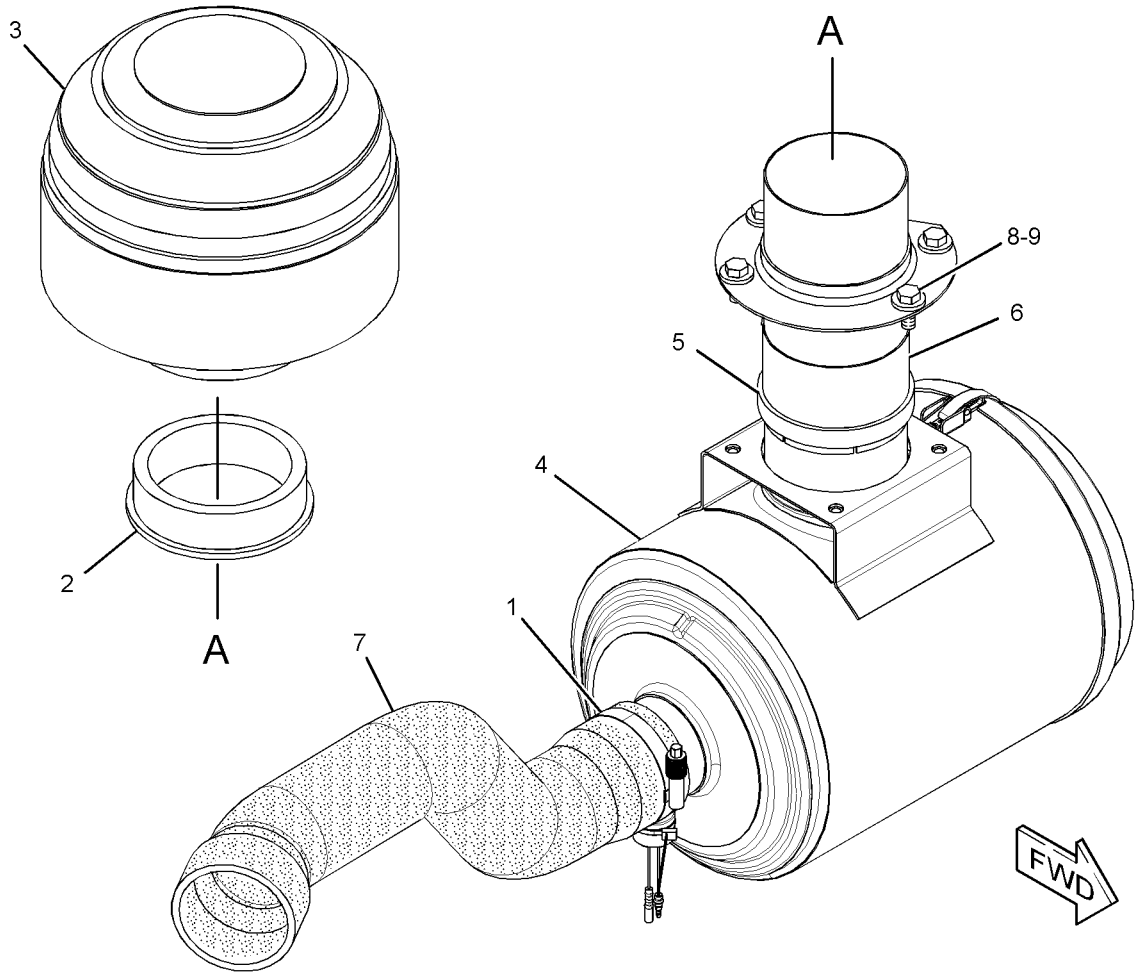

GRAPHIC #1 **<END>** g01525717

AIR INLET AND EXHAUST SYSTEM

255-3053 AIR CLEANER GP

S/N: MNB1-UP; WDK1-UP

PART OF 222-8379 INSTALLATION AR-ENGINE

SMCS-1051, 1054 **i03081162**

NOTE	REF NO	GRAPHIC REF	PART NUMBER	QTY	PART NAME 1 2 3 4 5 6 (PRODUCT LEVEL)	SEE PAGE
CY	1	1	**310-9668**	1	AIR CLEANER GP	104
	2	1	**8T-4121**	4	WASHER-HARD (11X21X2.5-MM THK)	
M	3	1	**8T-4137**	4	BOLT (M10X1.5X20-MM)	

C-CHANGE FROM PREVIOUS TYPE
M-METRIC PART
Y-SEPARATE ILLUSTRATION

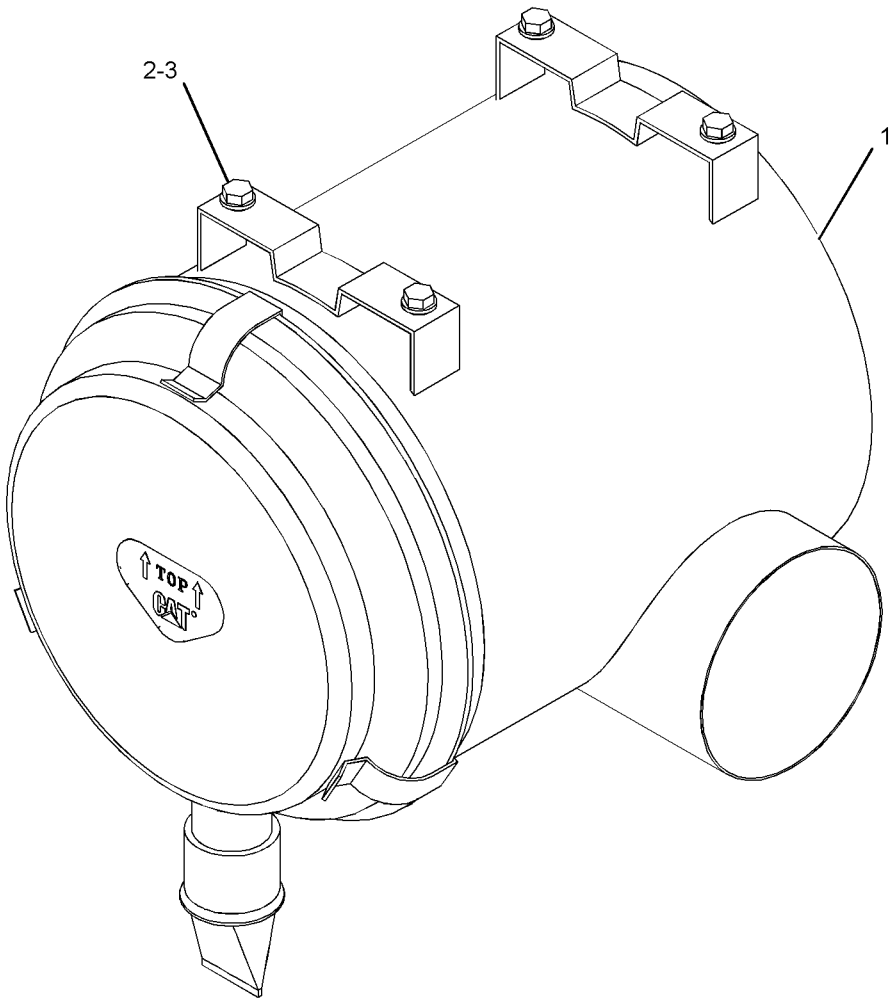

GRAPHIC #1 **<END>** g01210958

310-9668 AIR CLEANER GP

S/N: MNB1-UP; WDK1-UP

PART OF 255-3053 AIR CLEANER GP

SMCS-1051, 1054 **i03081165**

NOTE	REF NO	GRAPHIC REF	PART NUMBER	QTY	PART NAME 1 2 3 4 5 6 (PRODUCT LEVEL)	SEE PAGE
	1	1	**5L-3233**	1	FITTING	
	2	1	**6I-2503**	1	FILTER ELEMENT AS-AIR (PRIMARY)	
					—OR—	
		1	**132-7165**	1	FILTER ELEMENT AS-AIR (PRIMARY) (ULTRA HIGH EFFICIENCY)	
	3	1	**6I-2504**	1	FILTER ELEMENT AS-AIR (SECONDARY)	
	4	1	**7I-2673**	1	STRAP-CABLE	
	5	1	**131-8826**	1	FILM-INSTRUCTION (TOP, AIR CLEANER COVER)	
	6	1	**131-8828**	1	COVER AS	
	6A	1	**139-8794**	3	LATCH	
	7	1	**131-8829**	1	VALVE-VACUATOR	
	8	1	**159-7667**	1	SEAL-O-RING	
	9	1	**255-2966**	1	INDICATOR AS-AIR FILTER CHANGE (AIR RESTRICTION)	

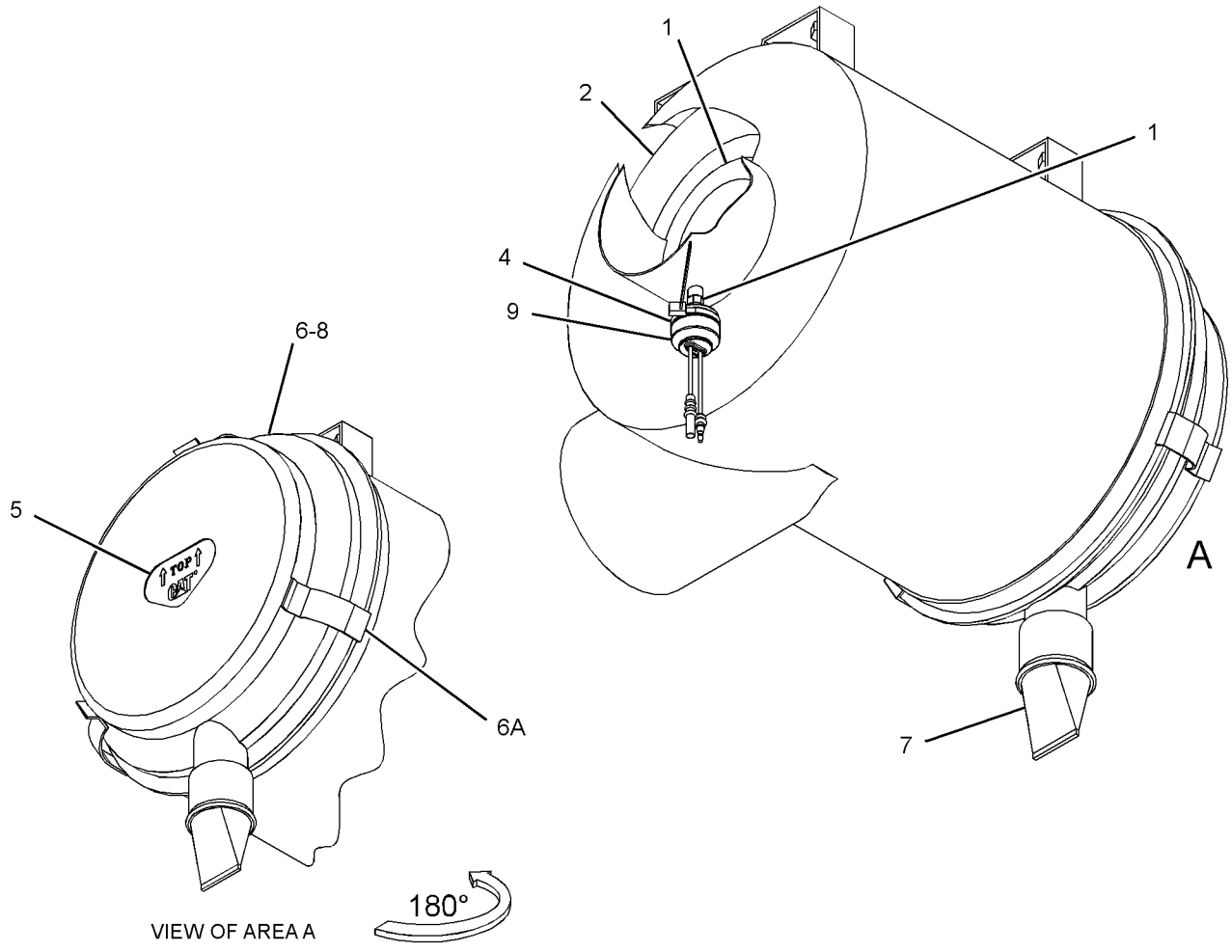

GRAPHIC #1 **<END>** g01532601

AIR INLET AND EXHAUST SYSTEM

310-9677 AIR CLEANER GP

S/N: MNB1-UP; WDK1-UP
PART OF 233-1127 AIR CLEANER GP
AN ATTACHMENT

SMCS-1051, 1054 **i03011897**

NOTE	REF NO	GRAPHIC REF	PART NUMBER	QTY	PART NAME 1 2 3 4 5 6 (PRODUCT LEVEL)	SEE PAGE
	1	1	**7I-2673**	1	STRAP-CABLE	
	2	1	**6I-2504**	1	FILTER ELEMENT AS-AIR (SECONDARY)	
	3	1	**6I-2503**	1	FILTER ELEMENT AS-AIR (PRIMARY)	
					—OR—	
F			**132-7165**	1	FILTER ELEMENT AS-AIR (PRIMARY) (ULTRA HIGH EFFICIENCY)	
	4	1	**6I-4464**	1	COVER AS-AIR CLEANER	
		1	**4P-5524**	1	SEAL-O-RING	
	5	1	**255-2966**	1	INDICATOR AS-AIR FILTER CHANGE (AIR RESTRICTION)	

F-NOT SHOWN

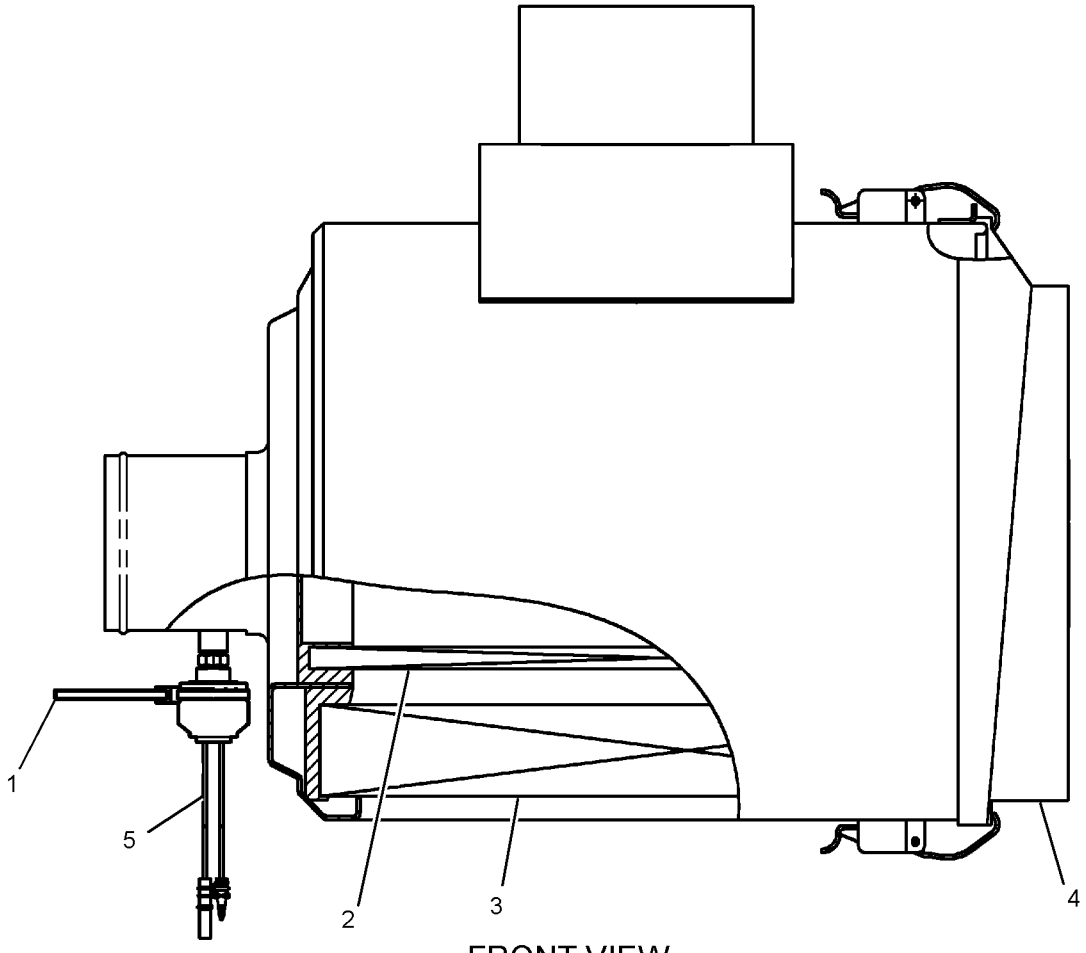

FRONT VIEW

GRAPHIC #1 **<END>** g01525733

189-8780 COVER GP-AIR INLET—STARTING AID HEATER

S/N: KHX4087-UP

PART OF 224-9842, 290-0754, 290-0755, 290-0756 ENGINE AR-COMPLETE

ALSO AN ATTACHMENT

SMCS-1051 **i02691337**

NOTE	REF NO	GRAPHIC REF	PART NUMBER	QTY	PART NAME 1 2 3 4 5 6 (PRODUCT LEVEL)	SEE PAGE
CY	1	1	**294-7675**	1	STARTING AID GP (WITH HEATER)	107
B	2	1	**1U-8846**		SEALANT-GASKET	

B-USE AS REQUIRED
C-CHANGE FROM PREVIOUS TYPE
Y-SEPARATE ILLUSTRATION

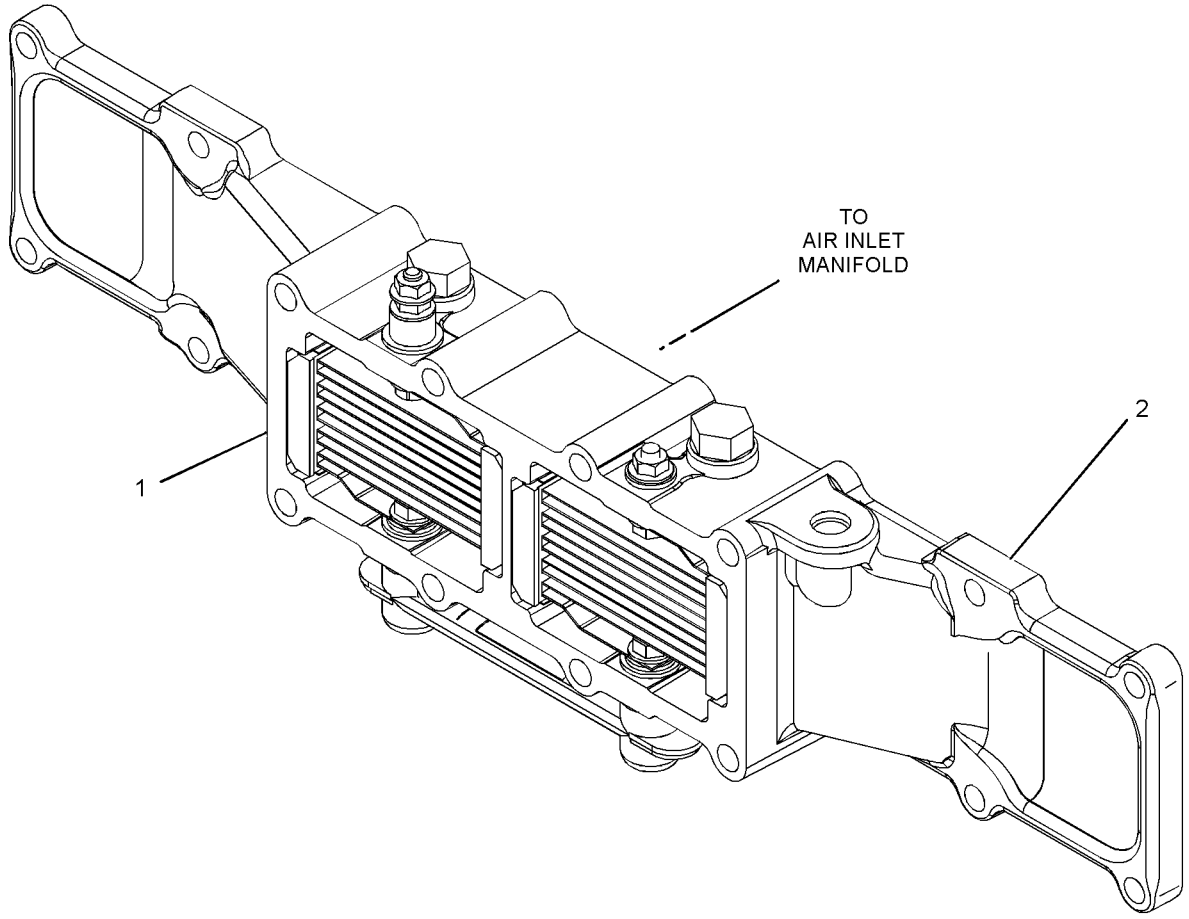

GRAPHIC #1 **<END>** g01350757

294-7675 STARTING AID GP

S/N: KHX4087-UP
PART OF 189-8780 COVER GP-AIR INLET
ALSO AN ATTACHMENT

SMCS-1051 **i02674862**

NOTE	REF NO	GRAPHIC REF	PART NUMBER	QTY	PART NAME 1 2 3 4 5 6 (PRODUCT LEVEL)	SEE PAGE
	1	1	**9S-4191**	2	PLUG-O-RING	
	2	1	**3J-1907**	2	SEAL-O-RING	
	3	1	**245-6795**	1	INSULATOR	

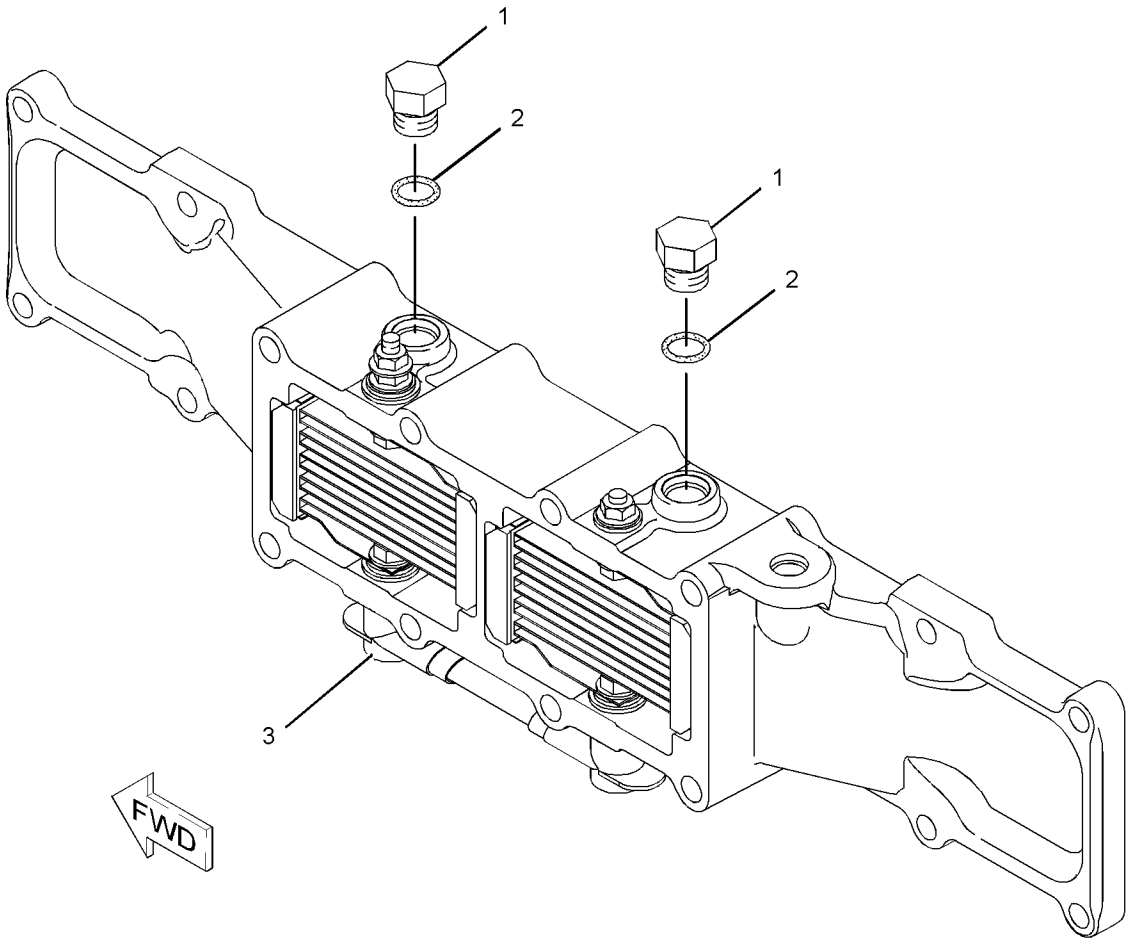

GRAPHIC #1 **<END>** g01071181

AIR INLET AND EXHAUST SYSTEM

231-3950 ELBOW GP-AIR INLET

S/N: KHX4087-UP

PART OF 224-9842, 290-0754, 290-0755, 290-0756 ENGINE AR-COMPLETE

ALSO AN ATTACHMENT

SMCS-1058 **i02352192**

NOTE	REF NO	GRAPHIC REF	PART NUMBER	QTY	PART NAME 1 2 3 4 5 6 (PRODUCT LEVEL)	SEE PAGE
B	1	1	**1U-8846**		SEALANT-GASKET	
	2	1	**7S-6369**	8	WASHER (0.344X0.75X0.188-IN THK)	
	3	1	**102-6671**	1	SPACER	
	4	1	**116-4663**	1	ELBOW	
F		1	**3K-0360**	2	SEAL-O-RING	
F		1	**9S-8005**	2	PLUG-O-RING	
M	5	1	**137-6726**	1	STUD (M8X1.25X132.75-MM OAL)	
M	6	1	**6V-3821**	7	BOLT (M8X1.25X110-MM)	
	7	1	**8L-2786**	1	SEAL-O-RING	
	8	1	**9S-8005**	1	PLUG-O-RING	

B-USE AS REQUIRED
F-NOT SHOWN
M-METRIC PART

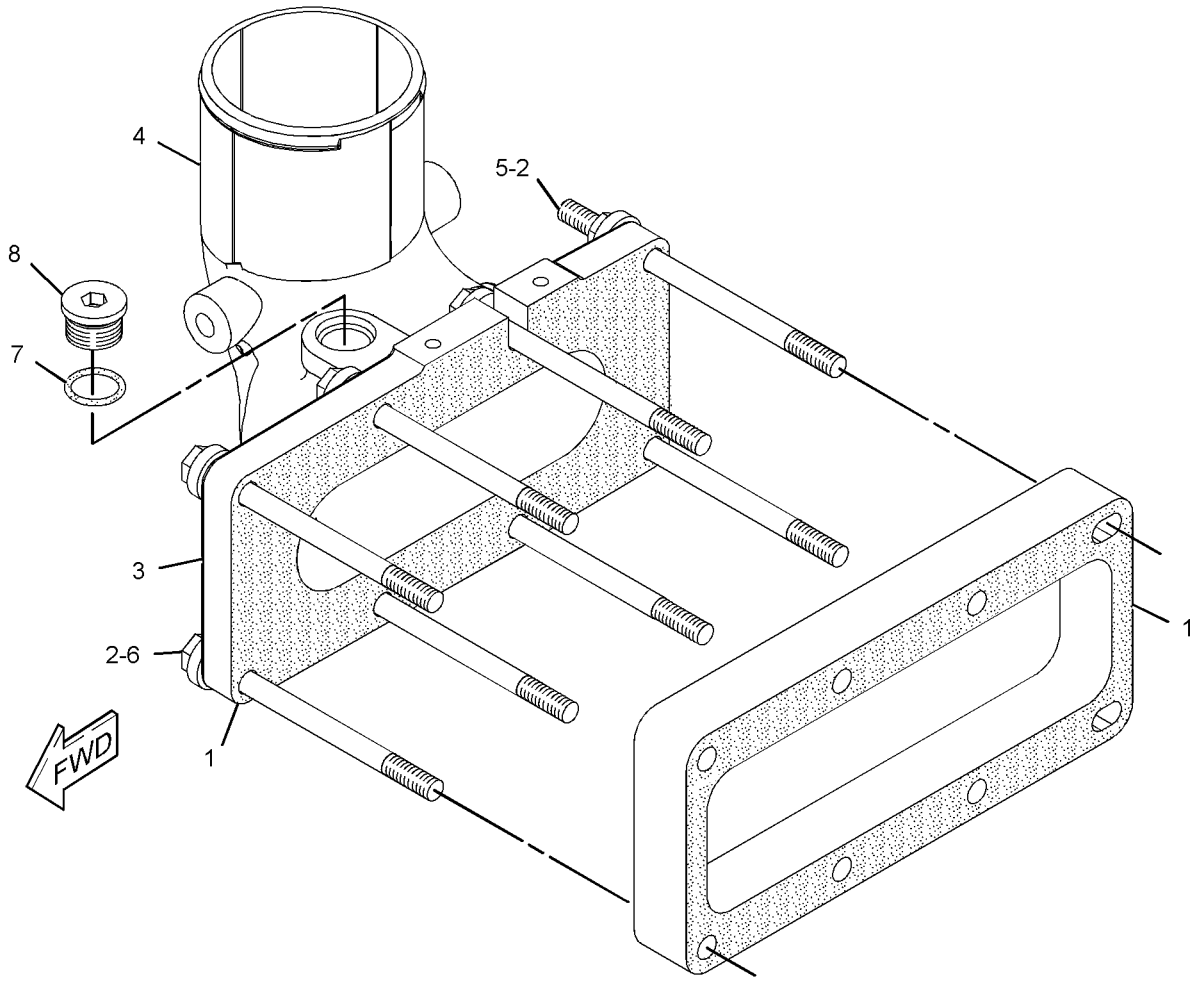

GRAPHIC #1 **<END>** g01158926

AIR INLET AND EXHAUST SYSTEM

210-8175 LINES GP-AIR

S/N: MNB1-UP; WDK1-UP

PART OF 222-8379 INSTALLATION AR-ENGINE

SMCS-1071 **i02467709**

NOTE	REF NO	GRAPHIC REF	PART NUMBER	QTY	PART NAME 1 2 3 4 5 6 (PRODUCT LEVEL)	SEE PAGE
	1	1	**144-0367**	12	CLAMP-HOSE	
	2	1	**230-2865**	1	HOSE	
	3	1	**230-2866**	1	HOSE	
	4	1	**230-2867**	1	HOSE	
	5	1	**230-2868**	1	HOSE	
	6	1	**230-2871**	1	TUBE AS	
	7	1	**230-2876**	1	TUBE AS	
	8	1	**7X-7729**	2	WASHER (11X25X3-MM THK)	
	9	1	**8T-4121**	2	WASHER-HARD (11X21X2.5-MM THK)	
M	10	1	**8T-4136**	4	BOLT (M10X1.5X25-MM)	

M-METRIC PART

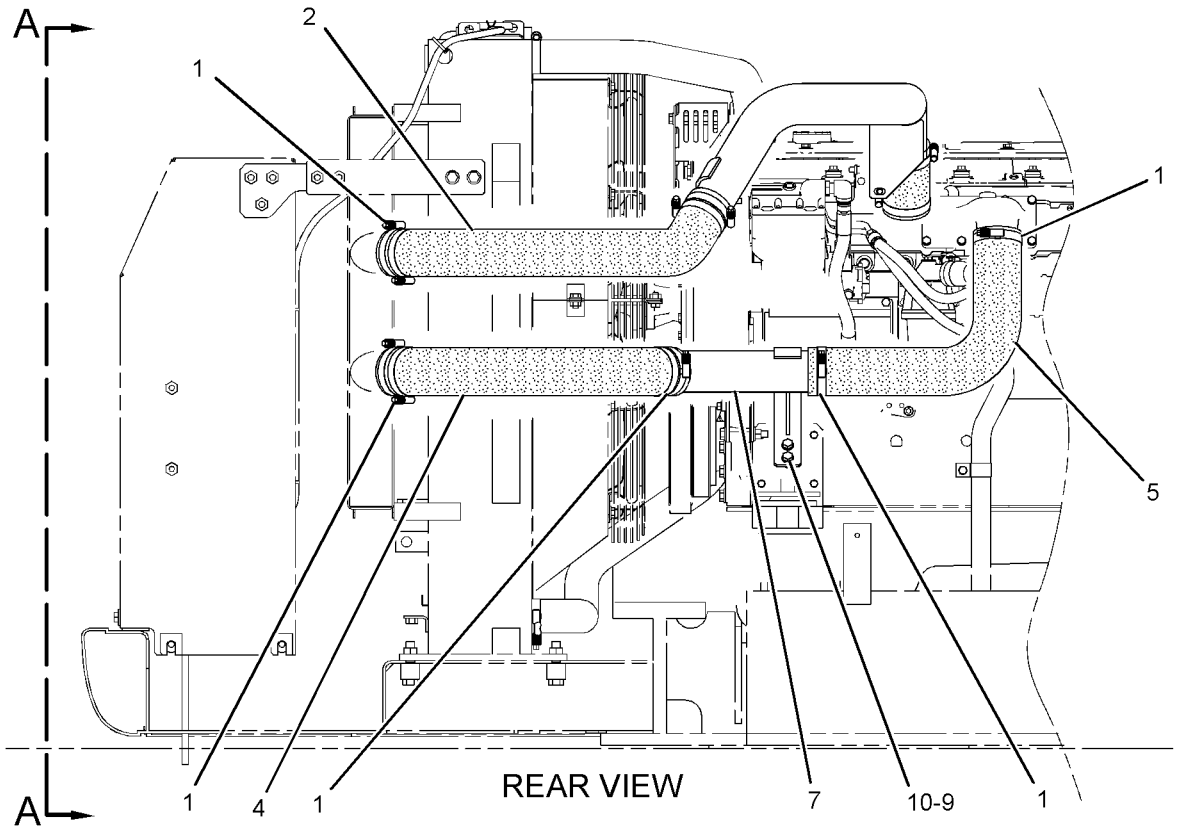

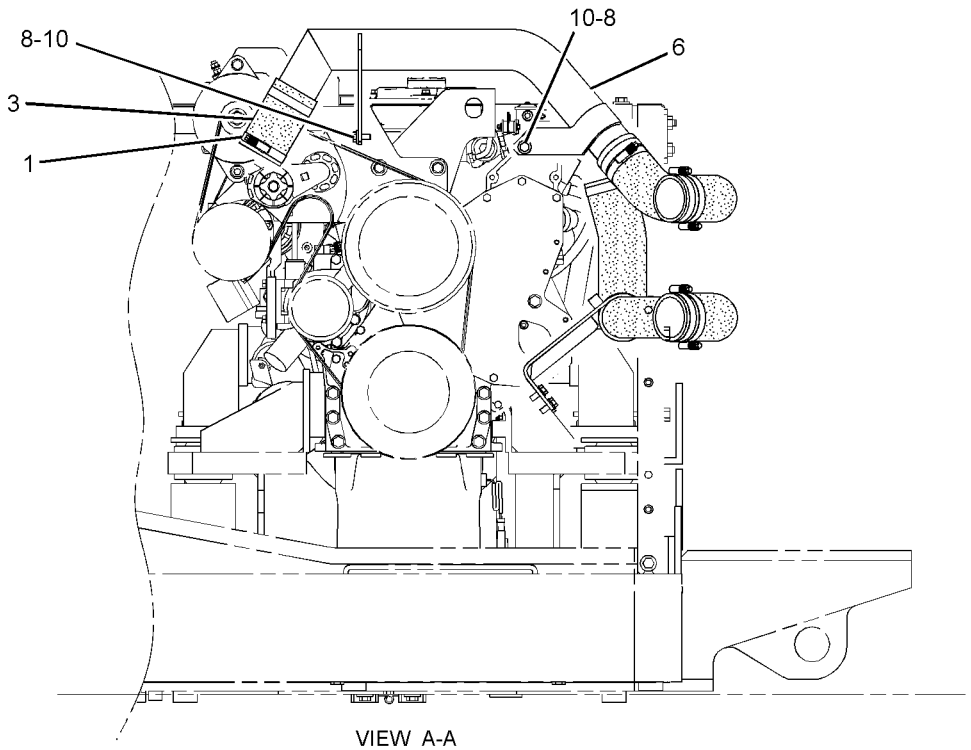

VIEW A-A

GRAPHIC #1 **<END>** g01248686

AIR INLET AND EXHAUST SYSTEM

233-1119 LINES GP-AIR

S/N: MNB1-UP; WDK1-UP

PART OF 222-8379 INSTALLATION AR-ENGINE

SMCS-1071 **i02346496**

NOTE	REF NO	GRAPHIC REF	PART NUMBER	QTY	PART NAME 1 2 3 4 5 6 (PRODUCT LEVEL)	SEE PAGE
	1	1	**8T-4986**	3	CLAMP-HOSE	
	2	1	**8T-4987**	1	CLAMP-HOSE	
	3	1	**190-5791**	1	ELBOW	
	4	1	**239-6686**	1	TUBE AS	
	5	1	**239-6687**	1	HOSE	
M	6	1	**8T-4192**	2	BOLT (M12X1.75X25-MM)	
	7	1	**8T-4223**	2	WASHER-HARD (13.5X25.5X3-MM THK)	

M-METRIC PART

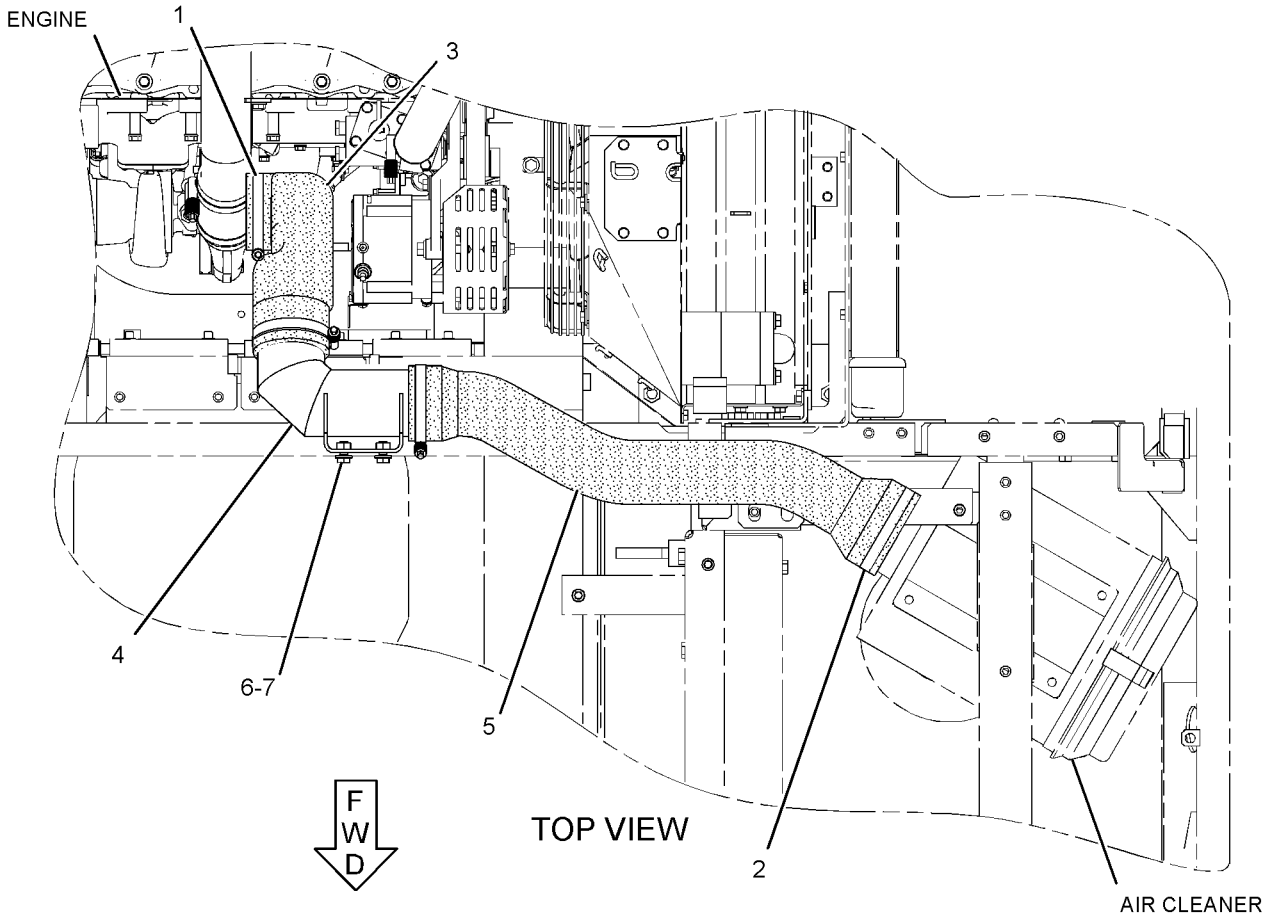

GRAPHIC #1 **<END>** g01156032

AIR INLET AND EXHAUST SYSTEM

272-4624 LINES GP-MUFFLER DRAIN

S/N: MNB1-UP; WDK1-UP

PART OF 222-8379 INSTALLATION AR-ENGINE

SMCS-1062 **i03140192**

NOTE	REF NO	GRAPHIC REF	PART NUMBER	QTY	PART NAME 1 2 3 4 5 6 (PRODUCT LEVEL)	SEE PAGE
	1	1	**3S-2093**	1	STRAP-CABLE	
	2	1	**5P-4961**	1	CLAMP-HOSE	
	3	1	**272-4625**	1	TUBE AS	
	4	1	**171-9073**	1	CLIP	
C	5	1	**8T-4121**	3	WASHER-HARD (11X21X2.5-MM THK)	
M	6	1	**8T-4136**	1	BOLT (M10X1.5X25-MM)	
E	7	1	**5P-1442**		HOSE (84-CM)	

C-CHANGE FROM PREVIOUS TYPE
E-ORDER BY THE CENTIMETER
M-METRIC PART

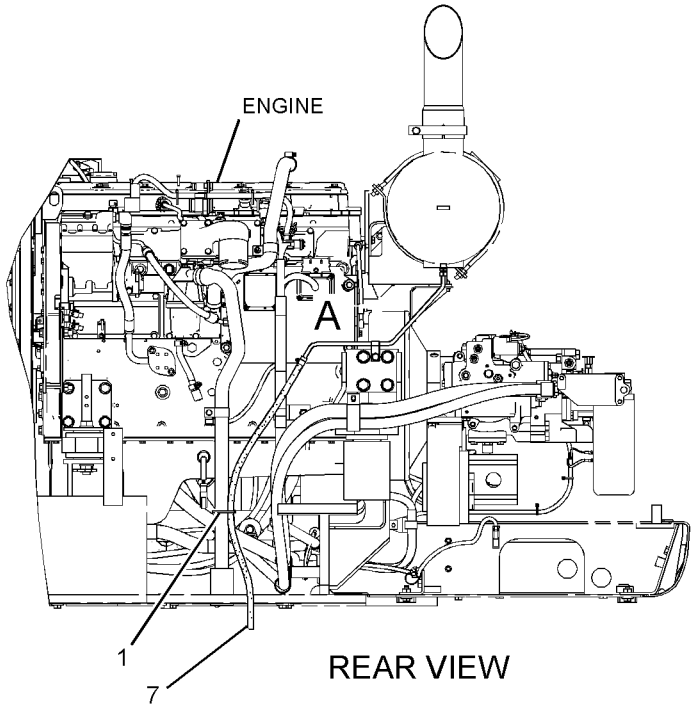

REAR VIEW

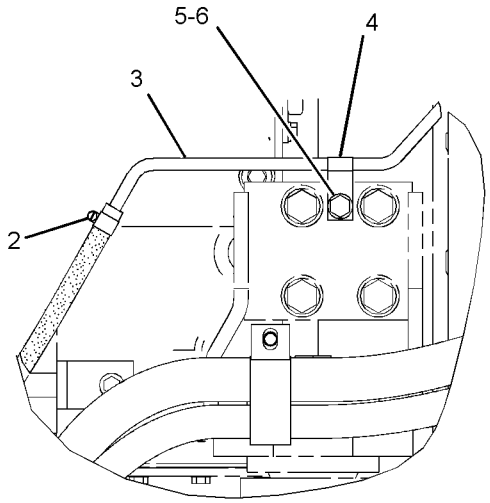

VIEW OF AREA A

GRAPHIC #1 **<END>** g01586114

219-5840 MANIFOLD GP-EXHAUST

S/N: KHX4087-UP

PART OF 224-9842, 290-0754, 290-0755, 290-0756 ENGINE AR-COMPLETE

ALSO AN ATTACHMENT

SMCS-1059 **i02516662**

NOTE	REF NO	GRAPHIC REF	PART NUMBER	QTY	PART NAME 1 2 3 4 5 6 (PRODUCT LEVEL)	SEE PAGE
M	1	1	**8T-7044**	4	STUD-TAPERLOCK (M10X1.5X40-MM)	
	2	1	**212-3664**	2	MANIFOLD-EXHAUST (END)	
	3	1	**219-5855**	1	MANIFOLD-EXHAUST (CENTER)	
	4	1	**272-1956**	6	GASKET	
C	5	1	**280-2072**	12	SPACER	
C	6	1	**278-8316**	12	STUD-TAPERLOCK	
CM	7	1	**3E-8017**	12	LOCKNUT (M10X1.5-MM-THD)	
C	8	1	**6V-5839**	12	WASHER (11X21X2.5-MM THK)	

C-CHANGE FROM PREVIOUS TYPE
M-METRIC PART

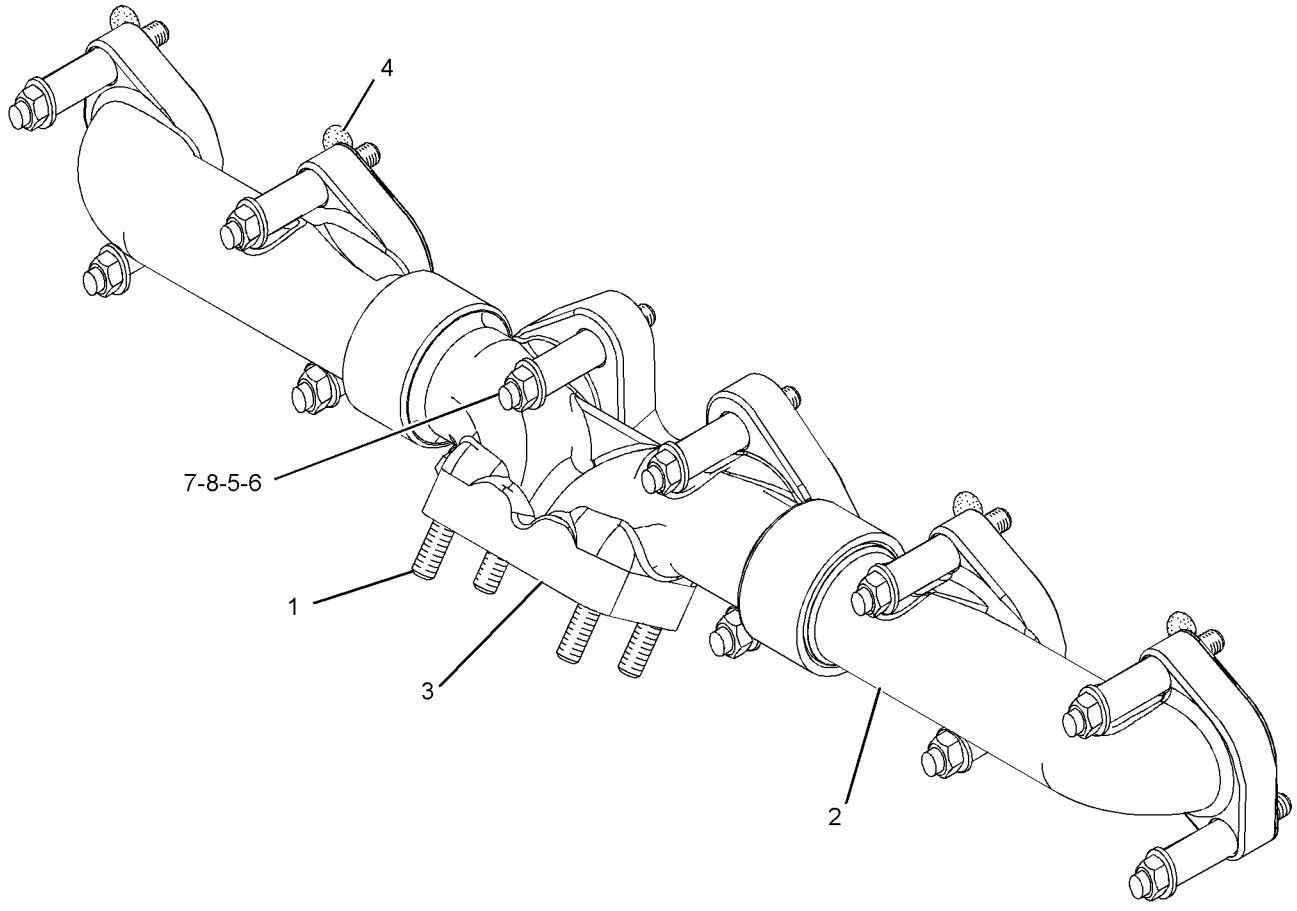

GRAPHIC #1 **<END>** g01259088

AIR INLET AND EXHAUST SYSTEM

222-8299 MUFFLER GP

S/N: MNB1-UP; WDK1-UP
PART OF 266-6261 ENGINE AR

SMCS-1062 **i02976039**

NOTE	REF NO	GRAPHIC REF	PART NUMBER	QTY	PART NAME 1 2 3 4 5 6 (PRODUCT LEVEL)	SEE PAGE
	1	1	**1W-2431**	1	CLAMP-BAND	
	2	1	**183-8192**	1	SUPPORT AS	
	3	1	**233-1254**	1	MUFFLER AS	
	4	1	**241-9264**	1	CLAMP-MUFFLER	
	5	1	**255-2899**	1	PIPE AS-TAIL	
	6	1	**266-6329**	1	PIPE AS-EXHAUST	
	7	1	**266-6348**	1	BRACKET AS	
	8	1	**7S-8735**	1	CLAMP	
	9	1	**7Y-1319**	2	U-BOLT	
	10	1	**8T-4121**	10	WASHER-HARD (11X21X2.5-MM THK)	
M	11	1	**8T-4133**	9	NUT (M10X1.5-THD)	
M	12	1	**8T-4136**	2	BOLT (M10X1.5X25-MM)	
M	13	1	**8T-4185**	1	BOLT (M10X1.5X50-MM)	
M	14	1	**8T-4196**	7	BOLT (M10X1.5X35-MM)	
	15	1	**8T-7934**	3	WASHER-HARD (11X21X5-MM THK)	

M-METRIC PART

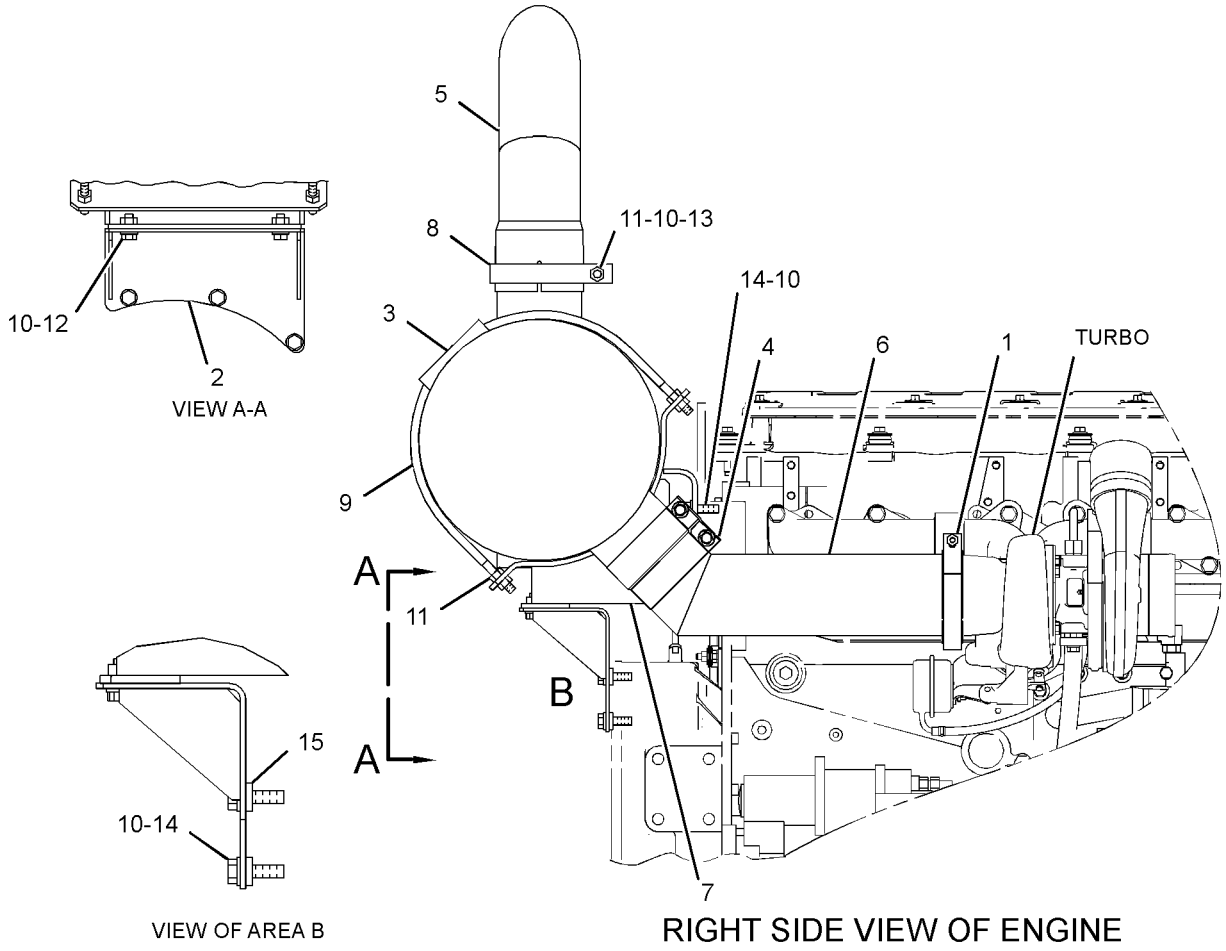

GRAPHIC #1 **<END>** g01526792

AIR INLET AND EXHAUST SYSTEM

177-0438 TURBOCHARGER GP

S/N: KHX1-2240

PART OF 227-5946, 270-4212, 270-4213 ENGINE AR-CORE

ALSO AN ATTACHMENT

SMCS-1052, 1053 **i01518994**

NOTE	REF NO	GRAPHIC REF	PART NUMBER	QTY	PART NAME 1 2 3 4 5 6 (PRODUCT LEVEL)	SEE PAGE
Y	1	1	**177-0440**	1	TURBOCHARGER GP	116
M	2	1	**3E-8017**	4	LOCKNUT (M10X1.5)	
	3	1	**7C-7431**	1	GASKET-TURBOCHARGER	

M-METRIC PART
Y-SEPARATE ILLUSTRATION

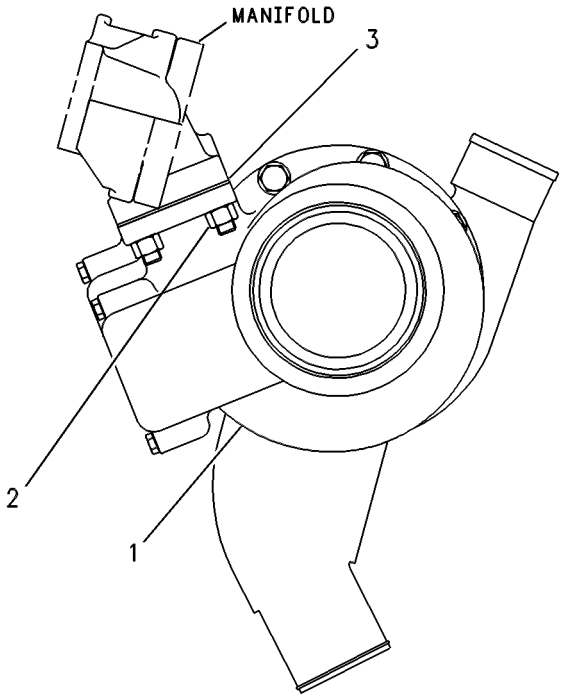

GRAPHIC #1 **<END>** g00258686

177-0440 TURBOCHARGER GP*R

S/N: KHX1-2240
BASIC
PART OF 177-0438 TURBOCHARGER GP
ALSO AN ATTACHMENT

SMCS-1052, 1053 **i01519001**

NOTE	REF NO	GRAPHIC REF	PART NUMBER	QTY	PART NAME 1 2 3 4 5 6 (PRODUCT LEVEL)	SEE PAGE
	1	1	**161-6963**	2	CLAMP	
	2	1	**5P-4536**	1	ELBOW	
	3	1	**177-6920**	1	HOSE	
M	4	1	**7C-6670**	4	BOLT (M8X1.25X12.5-MM)	
	5	1	**196-0354**	1	HOUSING AS-TURBINE	
	6	1	**7C-6672**	2	PLATE-CLAMP (TURBINE)	
	7	1	**7M-9918**	1	LOCKNUT (1/4-28-THD)	
	8	1	**158-6072**	1	CLAMP AS (COMPRESSOR)	
	9	1	**196-0267**	1	COVER-COMPRESSOR	
	10	1	**195-6025**	1	CARTRIDGE GP-TURBOCHARGER	

M-METRIC PART

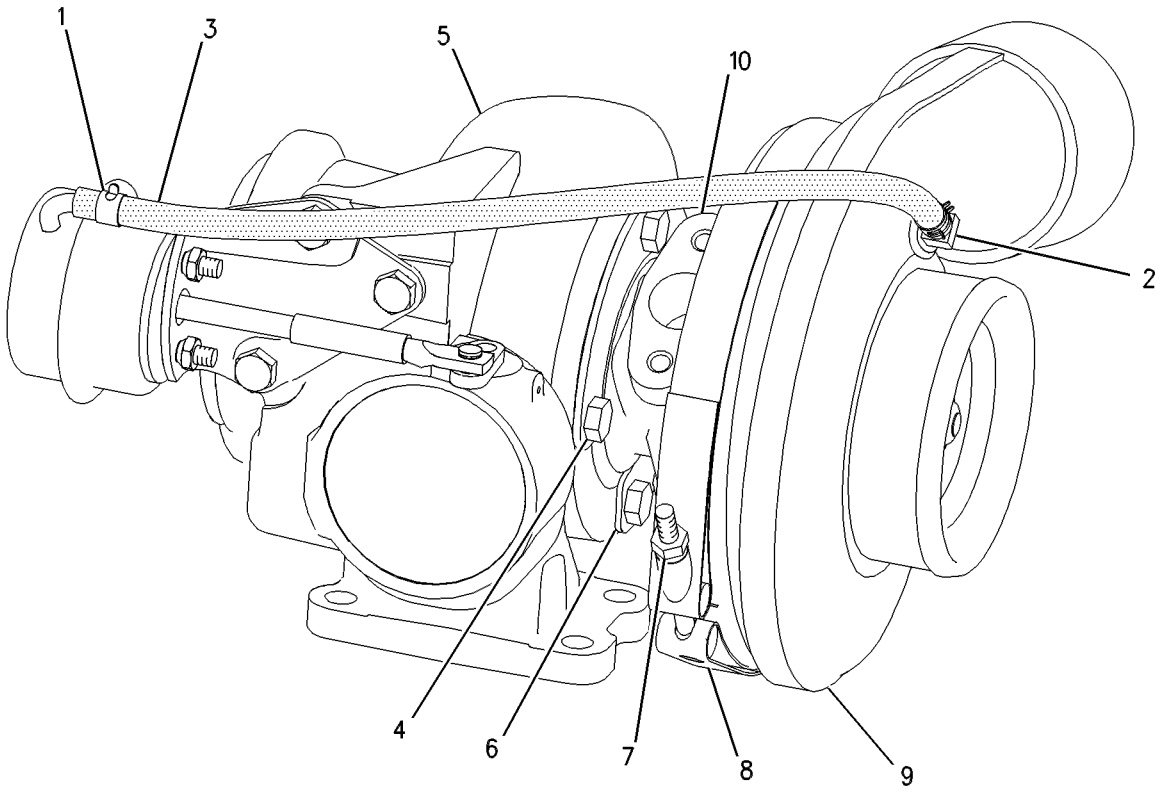

GRAPHIC #1 **<END>** g00606204

AIR INLET AND EXHAUST SYSTEM

250-7696 TURBOCHARGER GP

S/N: KHX4087-UP
PART OF 254-3808 TURBOCHARGER GP
ALSO AN ATTACHMENT

SMCS-1052, 1053 **i02978162**

NOTE	REF NO	GRAPHIC REF	PART NUMBER	QTY	PART NAME 1 2 3 4 5 6 (PRODUCT LEVEL)	SEE PAGE
	1	1	**137-1602**	1	CLAMP AS (TURBINE)	
	2	1	**158-6072**	1	CLAMP AS (COMPRESSOR)	
	3	1	**161-6963**	2	CLAMP	
	4	1	**261-9367**	1	CARTRIDGE GP-TURBOCHARGER	
	5	1	**5P-4536**	1	ELBOW	
E	6	1	**242-3360**		HOSE (47-CM)	

E-ORDER BY THE CENTIMETER

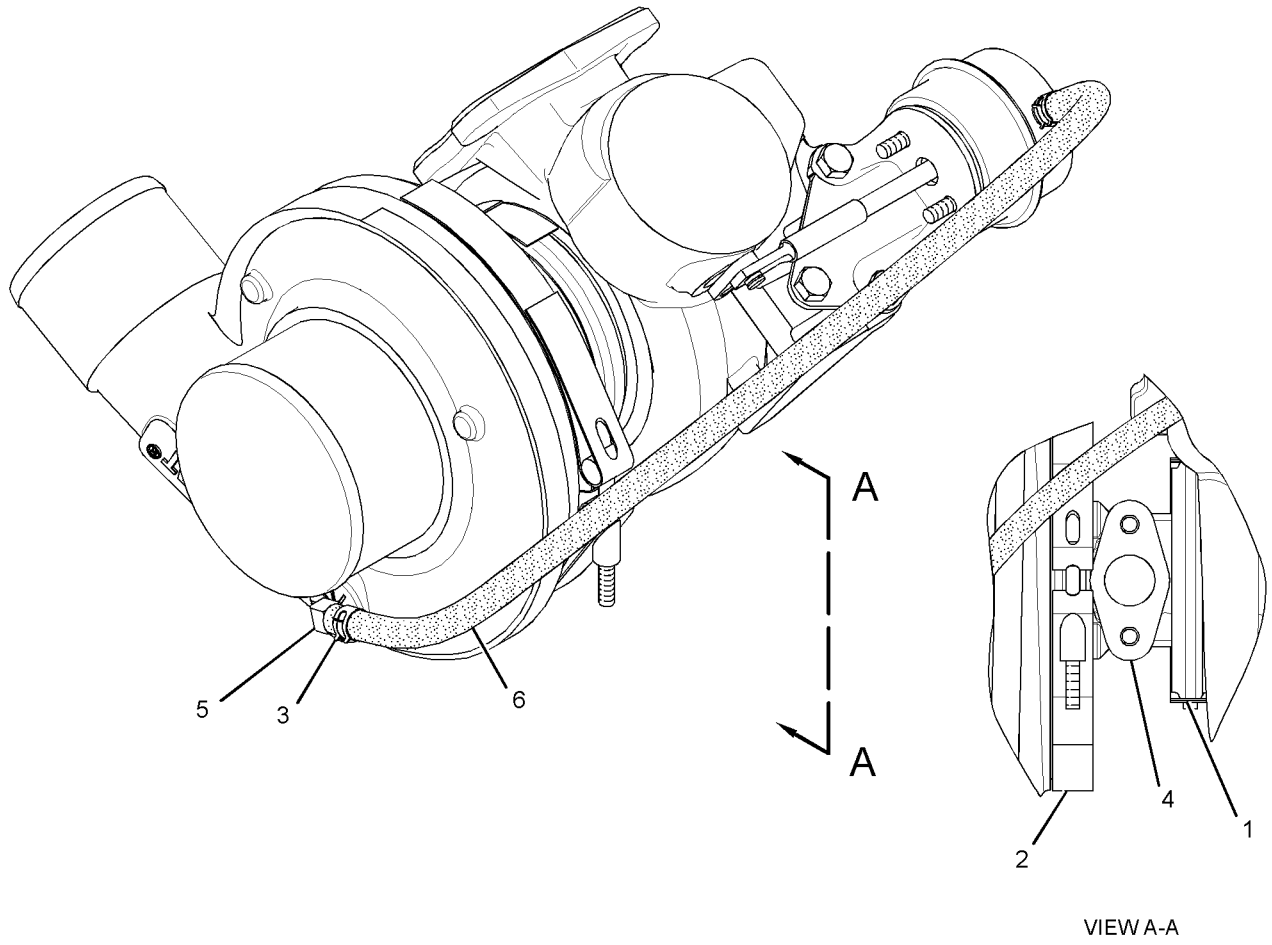

VIEW A-A

GRAPHIC #1 **<END>** g01336968

AIR INLET AND EXHAUST SYSTEM

254-3808 TURBOCHARGER GP

S/N: KHX4087-UP

PART OF 227-5946, 236-4284, 270-4212, 270-4213 ENGINE AR-CORE

ALSO AN ATTACHMENT

SMCS-1052, 1053 **i02659465**

NOTE	REF NO	GRAPHIC REF	PART NUMBER	QTY	PART NAME 1 2 3 4 5 6 (PRODUCT LEVEL)	SEE PAGE
	1	1	**7C-7431**	1	GASKET	
Y	2	1	**250-7696**	1	TURBOCHARGER GP	117
M	3	1	**3E-8017**	4	LOCKNUT (M10X1.5-THD)	

M-METRIC PART
Y-SEPARATE ILLUSTRATION

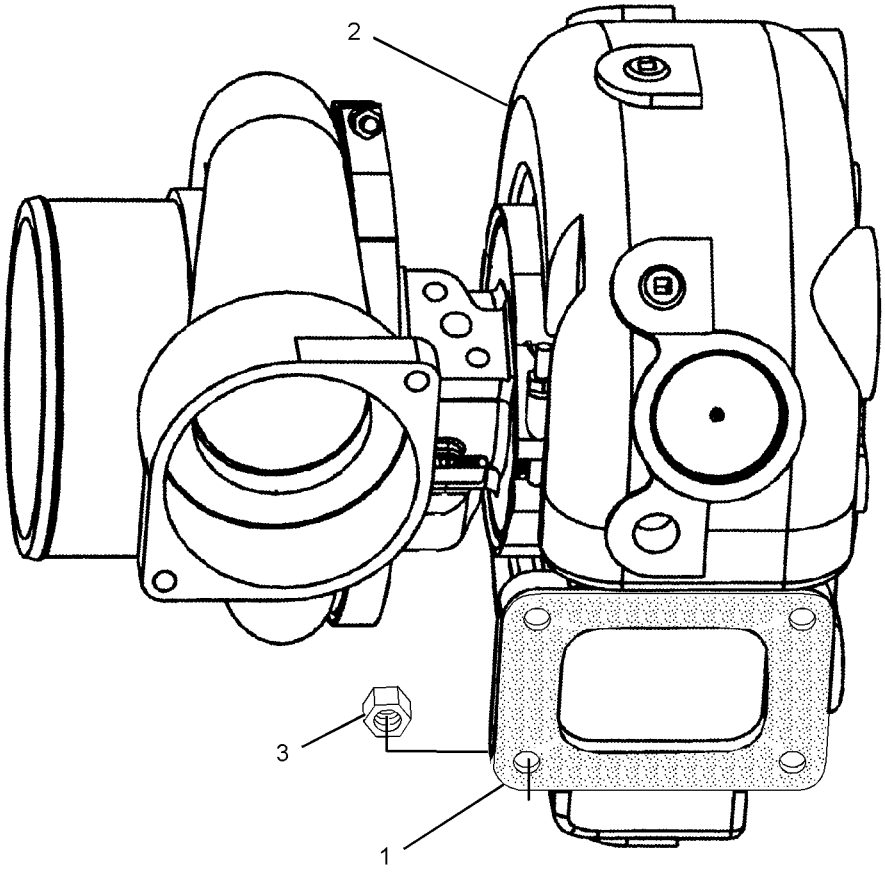

GRAPHIC #1 **<END>** g01256932

FUEL SYSTEM

174-9570 FILTER GP-WATER SEP & FUEL

S/N: MNB1-UP; WDK1-UP

PART OF 223-3046 LINES GP-FUEL, 190-8977 PUMP GP-FUEL PRM & WATER SEP

ALSO AN ATTACHMENT

SMCS-1261, 1263 **i03181950**

NOTE	REF NO	GRAPHIC REF	PART NUMBER	QTY	PART NAME 1 2 3 4 5 6 (PRODUCT LEVEL)	SEE PAGE
	1	1	**326-1644**	1	FILTER AS-WATER SEP & FUEL (PRIMARY)	
	1A	1	**220-8678**	1	SEAL-RING (FUEL, WATER SEPARATOR)	
	2	1	**270-5320**	1	BOWL AS (FUEL, WATER SEPARATOR)	

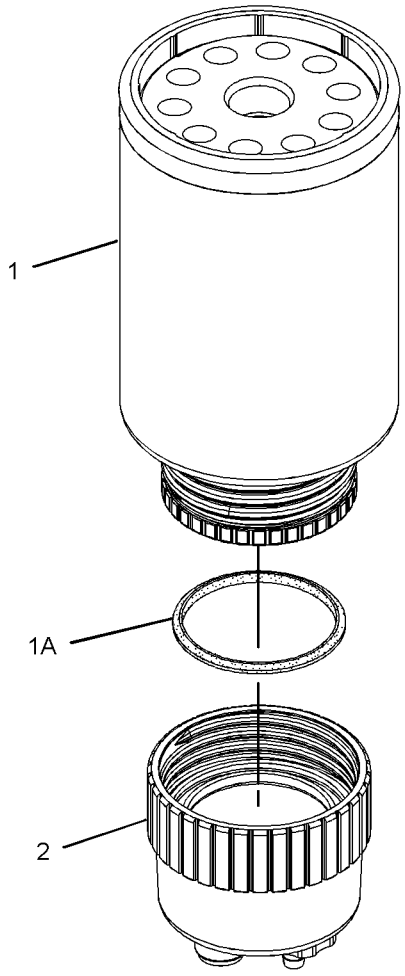

GRAPHIC #1 **<END>** g01179858

FUEL SYSTEM

268-1835 INJECTOR GP-FUEL

S/N: KHX1-3171

PART OF 268-1839 PUMP GP-FUEL INJECTION

SMCS-1251, 1254, 1290, 1713 **i02357729**

NOTE	REF NO	GRAPHIC REF	PART NUMBER	QTY	PART NAME 1 2 3 4 5 6 (PRODUCT LEVEL)	SEE PAGE
	1	1	**149-5240**	1	RING-BACKUP	
	2	1	**169-3104**	1	RING-BACKUP	
	3	1	**169-8598**	1	SEAL-O-RING	
	5	1	**109-3207**	1	SEAL-O-RING	
	6	1	**148-2903**	1	SEAL-O-RING	
	7	1	**169-8586**	1	RING-BACKUP	

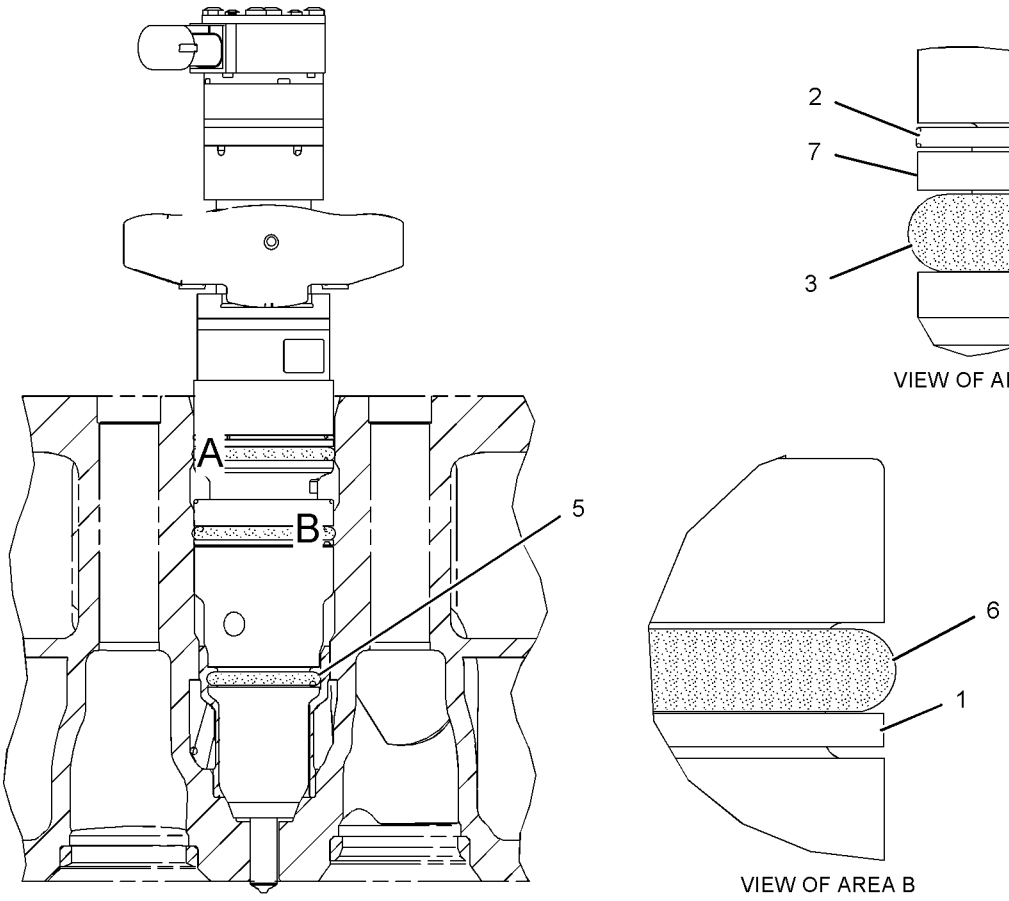

GRAPHIC #1 **<END>** g01032697

295-1411 INJECTOR GP-FUEL

S/N: KHX3172-UP
PART OF 268-1839 PUMP GP-FUEL INJECTION
ALSO AN ATTACHMENT

SMCS-1251, 1254, 1290, 1713 **i02572725**

NOTE	REF NO	GRAPHIC REF	PART NUMBER	QTY	PART NAME 1 2 3 4 5 6 (PRODUCT LEVEL)	SEE PAGE
	1	1	**149-5240**	1	RING-BACKUP	
	2	1	**293-0730**	1	RING-BACKUP	
	3	1	**109-3207**	1	SEAL-O-RING	
	4	1	**148-2903**	2	SEAL-O-RING	

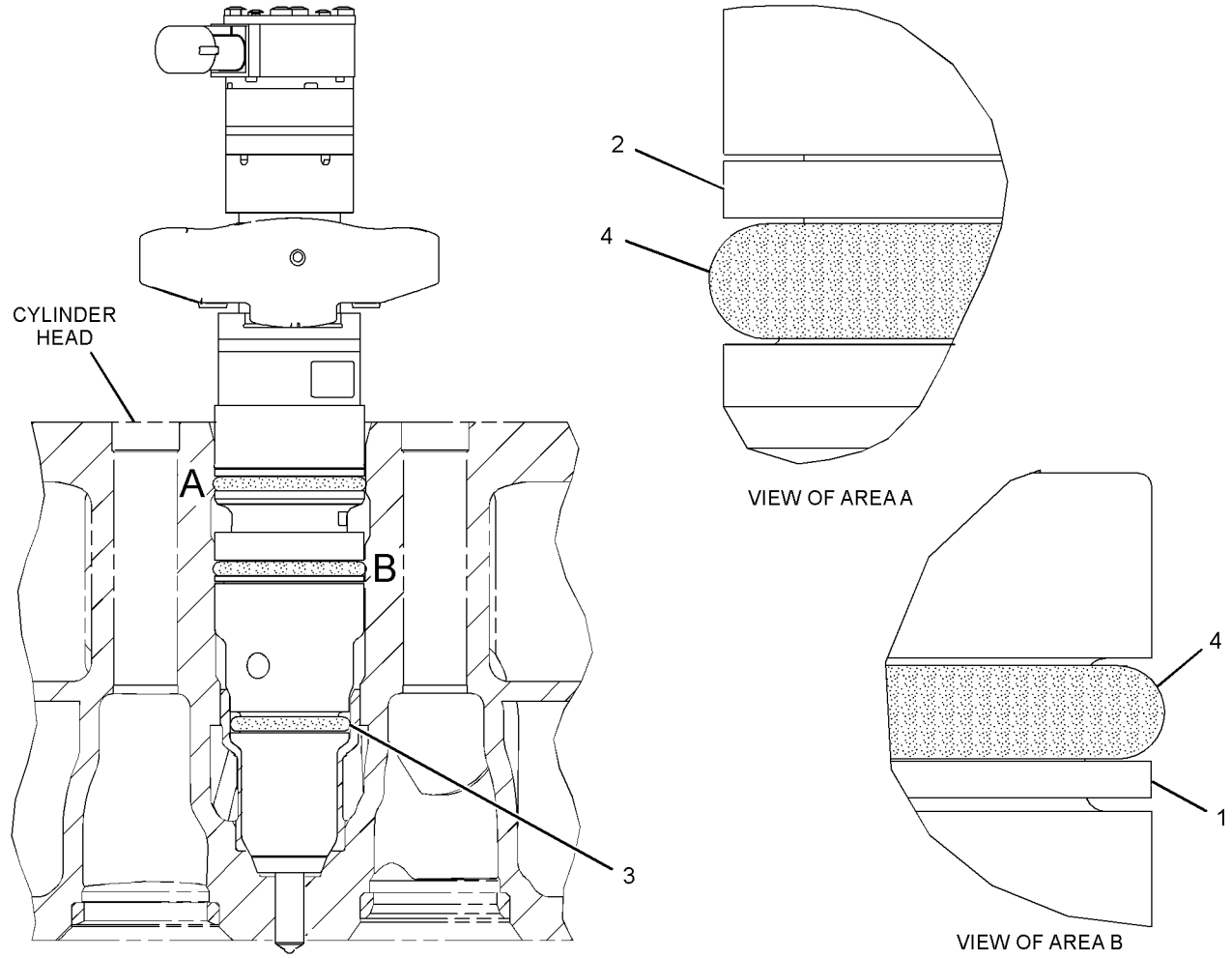

GRAPHIC #1 **<END>** g01290525

FUEL SYSTEM

223-3046 LINES GP-FUEL

S/N: MNB1-UP; WDK1-UP

PART OF 314-3652, 314-3653 CHASSIS AR

SMCS-1274 **i03206253**

NOTE	REF NO	GRAPHIC REF	PART NUMBER	QTY	PART NAME 1 2 3 4 5 6 (PRODUCT LEVEL)	SEE PAGE
	1	2	**4I-0379**	1	VALVE-MANUAL (DRAIN, FUEL TANK)	
C	2	2	**5P-7175**	1	FITTING-STRAIGHT	
	3	2	**9Y-8389**	1	GASKET (FUEL PRIMING PUMP)	
	4	2	**003-7764**	2	END-HOSE	
	5	1,2	**095-1386**	8	CLAMP-HOSE	
	6	2	**134-6852**	1	CONNECTOR	
M	7	1	**135-8575**	4	BOLT AS-LOCKING (M12X1.75X30-MM)	
Y	8	2	**139-6873**	1	VALVE GP-FUEL BYPASS	165
C	9	1	*150-3024*	1	ELBOW AS	
		1	**3J-1907**	1	SEAL-O-RING	
		1	**5P-4924**	1	ELBOW	
Y	10	2	*174-9570*	1	FILTER GP-WATER SEP & FUEL	119
	11	2	**177-9778**	1	BASE AS	
		2	**9S-4167**	1	STUD-HOLLOW (1-14X1.47-IN)	
Y	12	1	*183-2824*	1	PUMP GP-FUEL PRIMING (MANUAL)	146
Y	13	2	*197-8391*	1	SENSOR GP-TEMPERATURE (FUEL)	237
	14	2	**229-0999**	1	HOSE	
	15	2	**237-9312**	1	BASE AS-FUEL FILTER	
		2	**9S-4167**	1	STUD-HOLLOW (1-14X1.47-IN)	
Y	16	2	*239-2396*	1	SENSOR GP-PRESSURE (FUEL)	234
	17	2	**250-6183**	1	ADAPTER	
Y	18	2	**258-0883**	1	SWITCH GP-PRESSURE (FUEL)	254
	19	2	**262-2598**	1	SUPPORT AS	
CY	20	2	**298-3147**	1	VALVE GP-FUEL SHUTOFF	166
	21	2	**307-7975**	1	HOSE AS	
	22	2	**307-7976**	1	HOSE AS	
	23	2	**307-7977**	1	HOSE AS	
	24	2	**307-7978**	1	HOSE AS	
	25	2	**307-7979**	1	HOSE AS	
	26	2	*148-8311*	1	ADAPTER AS	
		2	**3K-0360**	1	SEAL-O-RING	
		2	**8T-1715**	1	ADAPTER	
	27	1	*148-8318*	1	CONNECTOR AS	
		1	**3K-0360**	1	SEAL-O-RING	
		1	**6V-8397**	1	SEAL-O-RING	
		1	**6V-8634**	1	CONNECTOR	
	28	1	*148-8367*	1	ELBOW AS	
		1	**6V-8397**	1	SEAL-O-RING	
		1	**6V-9850**	1	ELBOW	
	29	1	*148-8383*	1	ELBOW AS	
		1	**3K-0360**	1	SEAL-O-RING	
		1	**6V-8397**	1	SEAL-O-RING	
		1	**8T-1683**	1	ELBOW	
	30	2	**1R-0762**	1	FILTER-FUEL (ADVANCED EFFICIENCY)	
	31	2	**2D-1290**	3	GROMMET	
	32	2	**3J-1907**	5	SEAL-O-RING	
	33	1,2	**5K-8451**	13	CLIP	
	34	2	**6K-8178**	5	CLIP	
	35	2	**6V-4589**	1	SEAL-O-RING	
	36	2	**8L-2786**	3	SEAL-O-RING	
	37	1,2	**8T-4121**	28	WASHER-HARD (11X21X2.5-MM THK)	
M	38	2	**8T-4133**	1	NUT (M10X1.5-THD)	
M	39	2	**8T-4136**	4	BOLT (M10X1.5X25-MM)	
M	40	1,2	**8T-4137**	17	BOLT (M10X1.5X20-MM)	
M	41	2	**8T-4195**	4	BOLT (M10X1.5X30-MM)	
M	42	2	**8T-4196**	2	BOLT (M10X1.5X35-MM)	

223-3046 **LINES GP-FUEL** *(contd.)* **i03206253**

NOTE	REF NO	GRAPHIC REF	PART NUMBER	QTY	PART NAME 1 2 3 4 5 6 (PRODUCT LEVEL)	SEE PAGE
	43	2	**8T-4224**	1	WASHER-HARD (8.8X16X2-MM THK)	
M	44	2	**8T-4971**	1	BOLT (M6X1X30-MM)	
M	45	2	**8T-7547**	1	BOLT (M8X1.25X30-MM)	
	46	2	**9M-8406**	6	CLIP	
	47	2	**9S-8004**	5	PLUG-O-RING	
	48	2	**9S-8005**	2	PLUG-O-RING	
	49	2	**9X-8250**	1	CLIP	
	50	2	**9X-8256**	1	WASHER (6.6X12X2-MM THK)	
CE	51	2	**5P-1442**		HOSE (147.5)	
E	51A	2	**5P-1442**		HOSE (35-CM)	
	52	1,2	**7K-1181**	3	STRAP-CABLE	

C-CHANGE FROM PREVIOUS TYPE
E-ORDER BY THE CENTIMETER
M-METRIC PART
Y-SEPARATE ILLUSTRATION

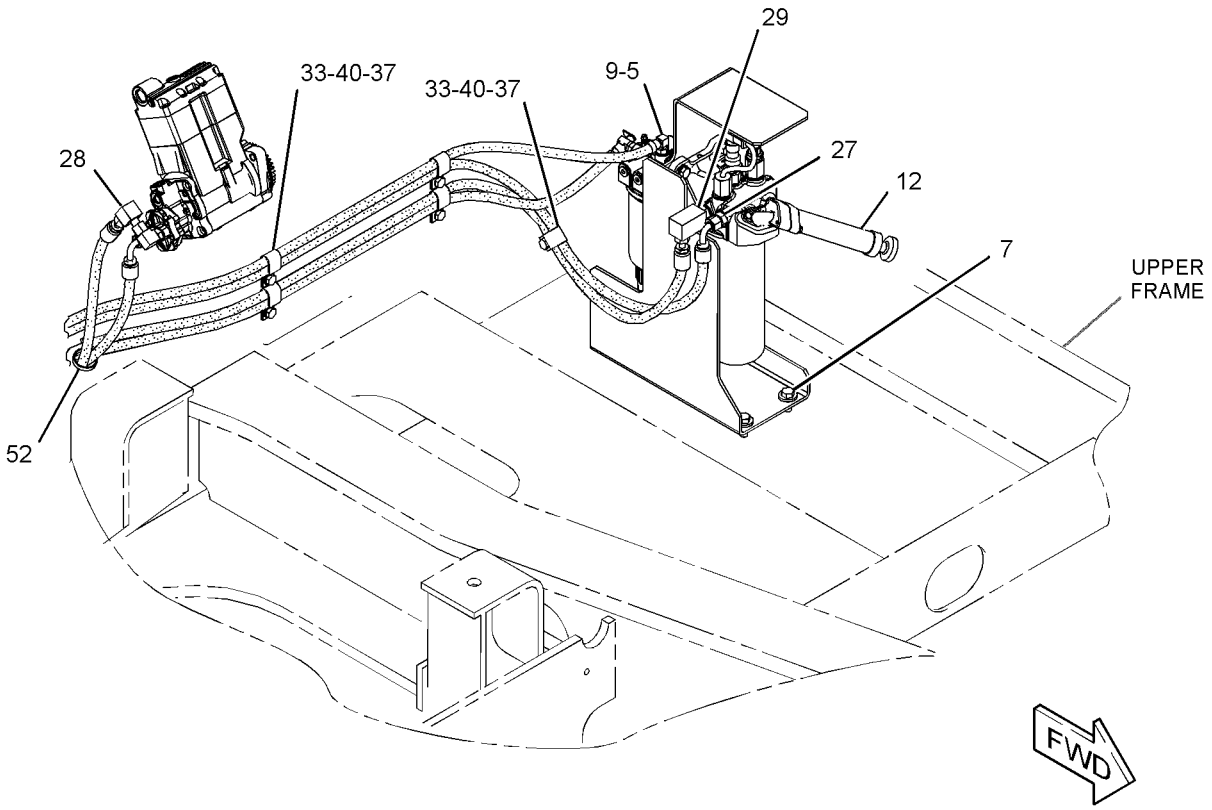

GRAPHIC #1 g01620569

223-3046 **LINES GP-FUEL** *(contd.)* **i03206253**

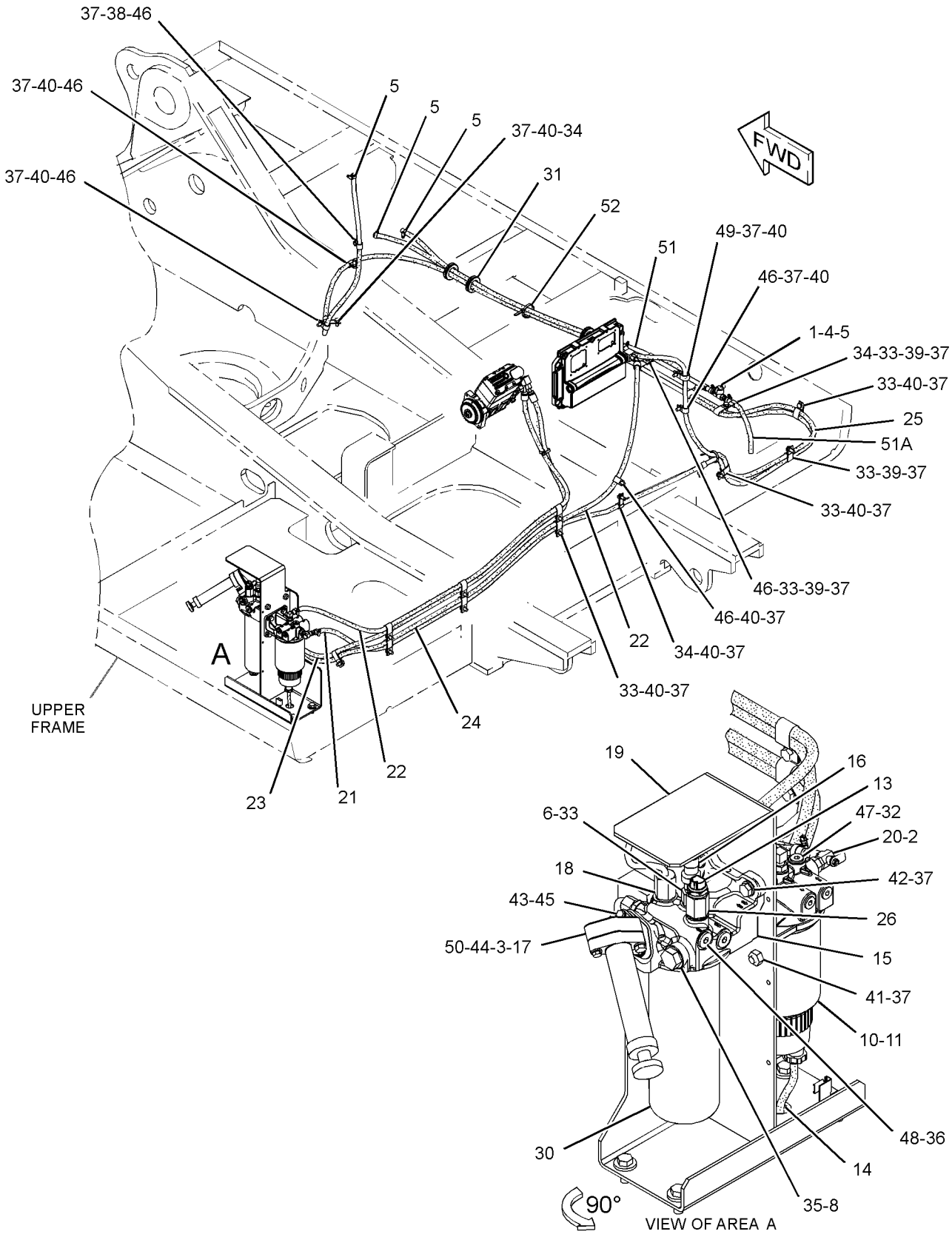

GRAPHIC #2 **<END>** g01620551

FUEL SYSTEM

231-3046 LINES GP-FUEL

S/N: KHX4087-UP

PART OF 224-9842, 290-0754, 290-0755, 290-0756 ENGINE AR-COMPLETE

ALSO AN ATTACHMENT

SMCS-1274 **i02352177**

NOTE	REF NO	GRAPHIC REF	PART NUMBER	QTY	PART NAME 1 2 3 4 5 6 (PRODUCT LEVEL)	SEE PAGE
I	1	1	**193-0158**	1	HOSE AS	
	2	1	**231-3047**	1	TUBE AS	
	3	1	**231-7847**	1	TUBE AS	
Y	4	1	*232-0343*	1	REGULATOR GP-FUEL PRESSURE	158
	5	1	**030-8188**	1	CONNECTOR	
	6	1	*148-8336*	1	CONNECTOR AS	
		1	**3J-1907**	1	SEAL-O-RING	
		1	**6V-8397**	1	SEAL-O-RING	
	7	1	*148-8374*	1	ELBOW AS	
		1	**3K-0360**	1	SEAL-O-RING	
		1	**6V-8397**	1	SEAL-O-RING	
	8	1	*148-8378*	1	ELBOW AS	
		1	**3J-1907**	1	SEAL-O-RING	
		1	**6V-8397**	1	SEAL-O-RING	
	9	1	**6V-3265**	1	CLIP	
	10	1	**2R-6806**	2	CONNECTOR-O-RING	
	11	1	**3J-1907**	3	SEAL-O-RING	
	12	1	**3K-0360**	1	SEAL-O-RING	
M	13	1	**5C-7261**	1	NUT (M8X1.25-THD)	
	14	1	**5P-4116**	2	WASHER-HARD (8.8X20.5X2-MM THK)	
	15	1	**5P-9297**	1	CLIP	
	16	1	**9S-8004**	1	PLUG-O-RING	

I-REFER TO HYDRAULIC INFORMATION SYSTEM
M-METRIC PART
Y-SEPARATE ILLUSTRATION

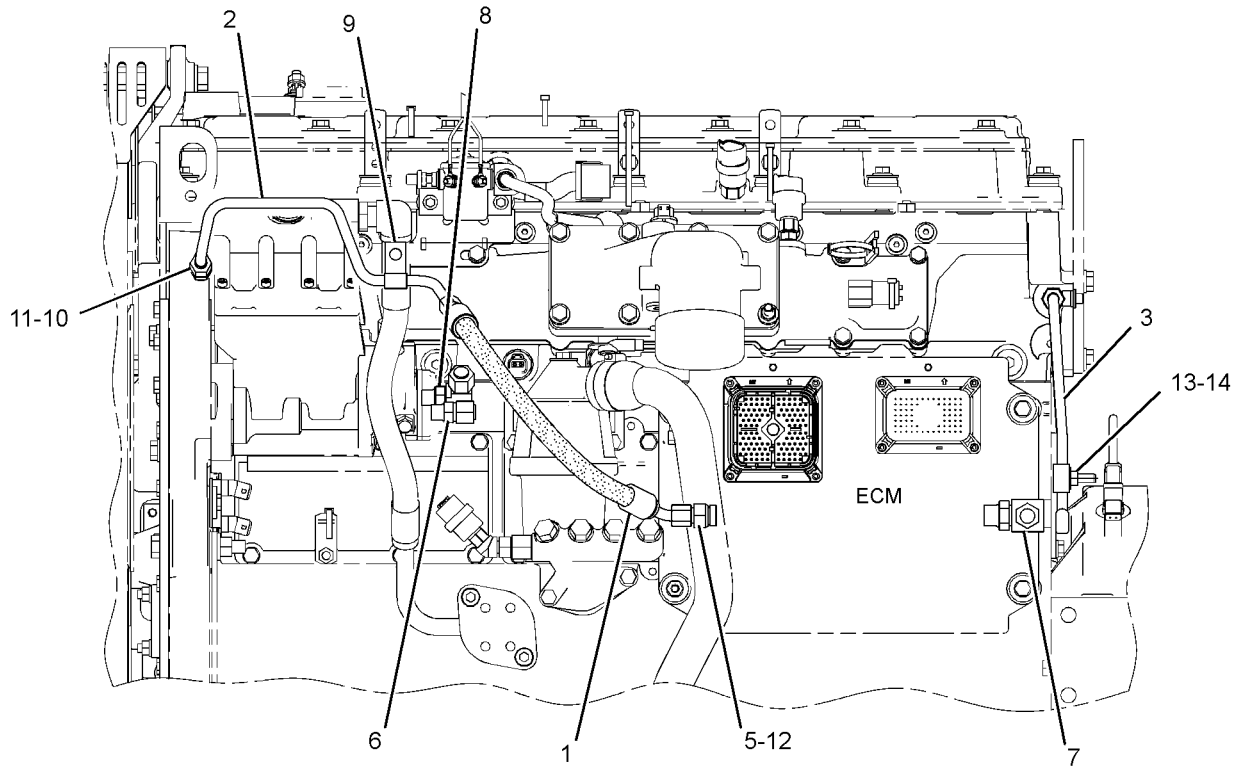

LEFT SIDE VIEW

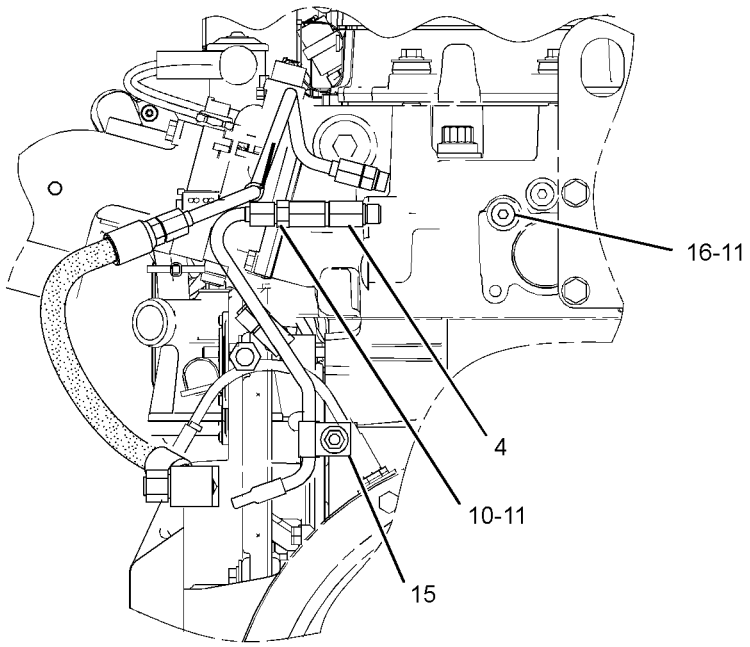

REAR VIEW

GRAPHIC #1

<END>

g01152429

FUEL SYSTEM

259-3885 LINES GP-FUEL

S/N: MNB1-UP; WDK1-UP
PART OF 247-7458 PUMP GP-FUEL PRIMING
AN ATTACHMENT

SMCS-1274 **i03167902**

NOTE	REF NO	GRAPHIC REF	PART NUMBER	QTY	PART NAME 1 2 3 4 5 6 (PRODUCT LEVEL)	SEE PAGE
	1	2	**4I-0379**	1	VALVE-MANUAL (DRAIN, FUEL TANK)	
	2	1	**8T-9655**	6	MOUNT-ISOLATION	
	3	1	**9Y-8389**	1	GASKET (FUEL FILTER)	
	4	2	**003-7764**	2	END-HOSE	
	5	1,2	**095-1386**	7	CLAMP-HOSE	
	6	2	**134-6852**	1	CONNECTOR	
M	7	1	**135-8575**	4	BOLT AS-LOCKING (M12X1.75X30-MM)	
	8	2	*164-5619*	1	PLUG AS	
		2	**2M-9780**	1	SEAL-O-RING	
		2	**9S-8006**	1	PLUG-O-RING (7/8-14-THD)	
Y	9	1	**298-3147**	1	VALVE GP-FUEL SHUTOFF	166
Y	10	1	*188-6121*	1	PUMP GP-FUEL PRM & PRIM FILTER (WITH WATER SEPARATOR)	148
	11	1	**191-1782**	1	SPACER (8.5X12.7X38.2-MM THK)	
	12	1	**191-1783**	2	SPACER (8.5X12.7X87.3-MM THK)	
Y	13	2	*197-8391*	1	SENSOR GP-TEMPERATURE (FUEL)	237
Y	14	2	**258-0883**	1	SWITCH GP-PRESSURE (FUEL)	254
	15	1	**229-0999**	1	HOSE	
	16	1	**237-9312**	1	BASE AS-FUEL FILTER	
		1	**9S-4167**	1	STUD-HOLLOW (1-14X1.47-IN)	
Y	17	2	*239-2396*	1	SENSOR GP-PRESSURE (FUEL)	234
C	18	2	**307-7977**	1	HOSE AS	
C	19	2	**307-7978**	1	HOSE AS	
C	20	2	**307-8013**	1	HOSE AS	
	21	1	**259-3915**	1	COVER	
	22	1	**262-2604**	1	SUPPORT AS	
	23	2	*148-8311*	1	ADAPTER AS	
		2	**3K-0360**	1	SEAL-O-RING	
		2	**8T-1715**	1	ADAPTER	
	24	2	*148-8318*	1	CONNECTOR AS	
		2	**3K-0360**	1	SEAL-O-RING	
		2	**6V-8397**	1	SEAL-O-RING	
		2	**6V-8634**	1	CONNECTOR (SEAL)	
	25	2	*148-8319*	1	CONNECTOR AS	
		2	**2M-9780**	1	SEAL-O-RING	
		2	**6V-8397**	1	SEAL-O-RING	
		2	**6V-8715**	1	CONNECTOR	
	27	1	**148-8367**	1	ELBOW AS (45-DEG)	
		1	**6V-8397**	1	SEAL-O-RING	
		1	**6V-9850**	1	ELBOW (SWIVEL)	
	30	2	*148-8383*	1	ELBOW AS	
		2	**3K-0360**	1	SEAL-O-RING	
		2	**6V-8397**	1	SEAL-O-RING	
		2	**8T-1683**	1	ELBOW (90-DEG)	
	31	1	**1R-0762**	1	FILTER-FUEL (ADVANCED EFFICIENCY) (SECONDARY)	
	32	1,2	**2D-1290**	3	GROMMET	
C	33	1,2	**5K-8451**	13	CLIP	
C	34	1,2	**6K-8178**	5	CLIP	
M	36	1	**6V-7357**	1	BOLT (M6X1X25-MM)	
M	37	1	**7X-2539**	2	BOLT (M8X1.25X110-MM)	
	38	1,2	**8L-2786**	3	SEAL-O-RING	
	39	1,2	**8T-4121**	24	WASHER-HARD (11X21X2.5-MM THK)	
M	40	1	**8T-4133**	1	NUT (M10X1.5-THD)	
M	41	1,2	**8T-4136**	5	BOLT (M10X1.5X25-MM)	
M	42	1,2	**8T-4137**	16	BOLT (M10X1.5X20-MM)	

259-3885 **LINES GP-FUEL** ***(contd.)*** **i03167902**

NOTE	REF NO	GRAPHIC REF	PART NUMBER	QTY	PART NAME 1 2 3 4 5 6 (PRODUCT LEVEL)	SEE PAGE
M	43	1	**8T-4196**	2	BOLT (M10X1.5X35-MM)	
	44	1	**8T-4224**	1	WASHER-HARD (8.8X16X2-MM THK)	
M	45	1	**8T-4908**	1	BOLT (M8X1.25X25-MM)	
M	46	1	**8T-6869**	1	BOLT (M8X1.25X60-MM)	
C	47	1,2	**9M-8406**	7	CLIP (SMALL)	
	48	1	**7X-0579**	3	WASHER-HARD (8.8X25.5X2-MM THK)	
	49	1	**9S-8005**	2	PLUG-O-RING	
	50	1	**9X-8256**	1	WASHER (6.6X12X2-MM THK)	
CE	51	2	**5P-1442**		HOSE (147-CM)	
CE	51A	2	**5P-1442**		HOSE (35-CM)	
	52	1,2	**7K-1181**	3	STRAP-CABLE	
	53	1	**2M-9780**	1	SEAL-O-RING	
	54	1	**5P-7175**	1	FITTING-STRAIGHT	
	55	1	**6V-2606**	1	ADAPTER	
C	56	2	**307-8012**	1	HOSE AS	
C	57	2	**307-7979**	1	HOSE AS	
C	58	2	**9X-8250**	1	CLIP	

C-CHANGE FROM PREVIOUS TYPE
E-ORDER BY THE CENTIMETER
M-METRIC PART
Y-SEPARATE ILLUSTRATION

259-3885 **LINES GP-FUEL** *(contd.)* **i03167902**

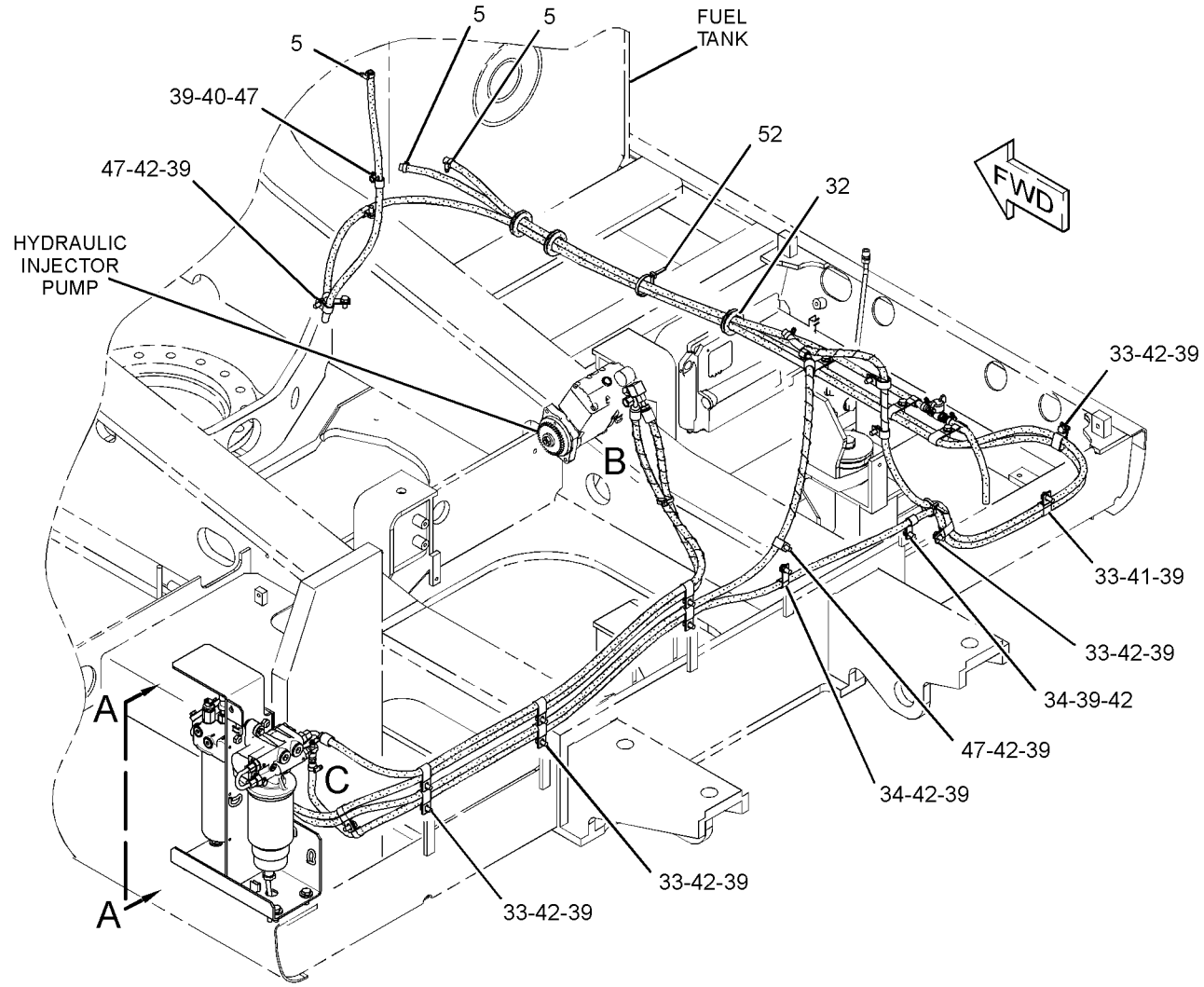

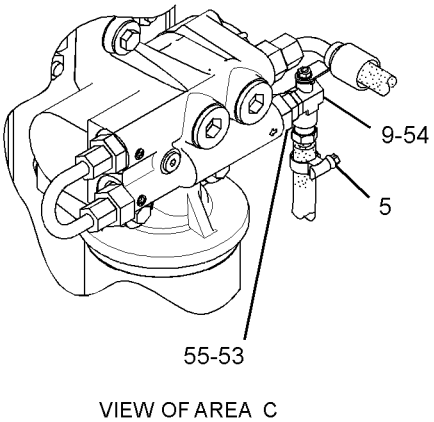

VIEW OF AREA C

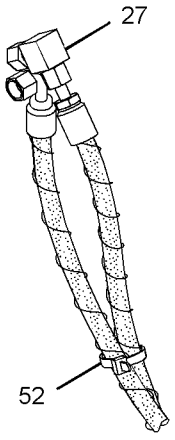

VIEW OF AREA B

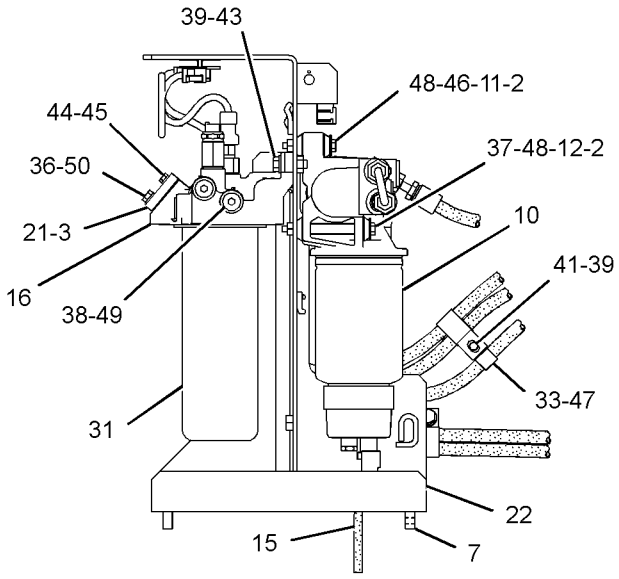

VIEW A-A

GRAPHIC #1 g01466547

259-3885 **LINES GP-FUEL** *(contd.)* **i03167902**

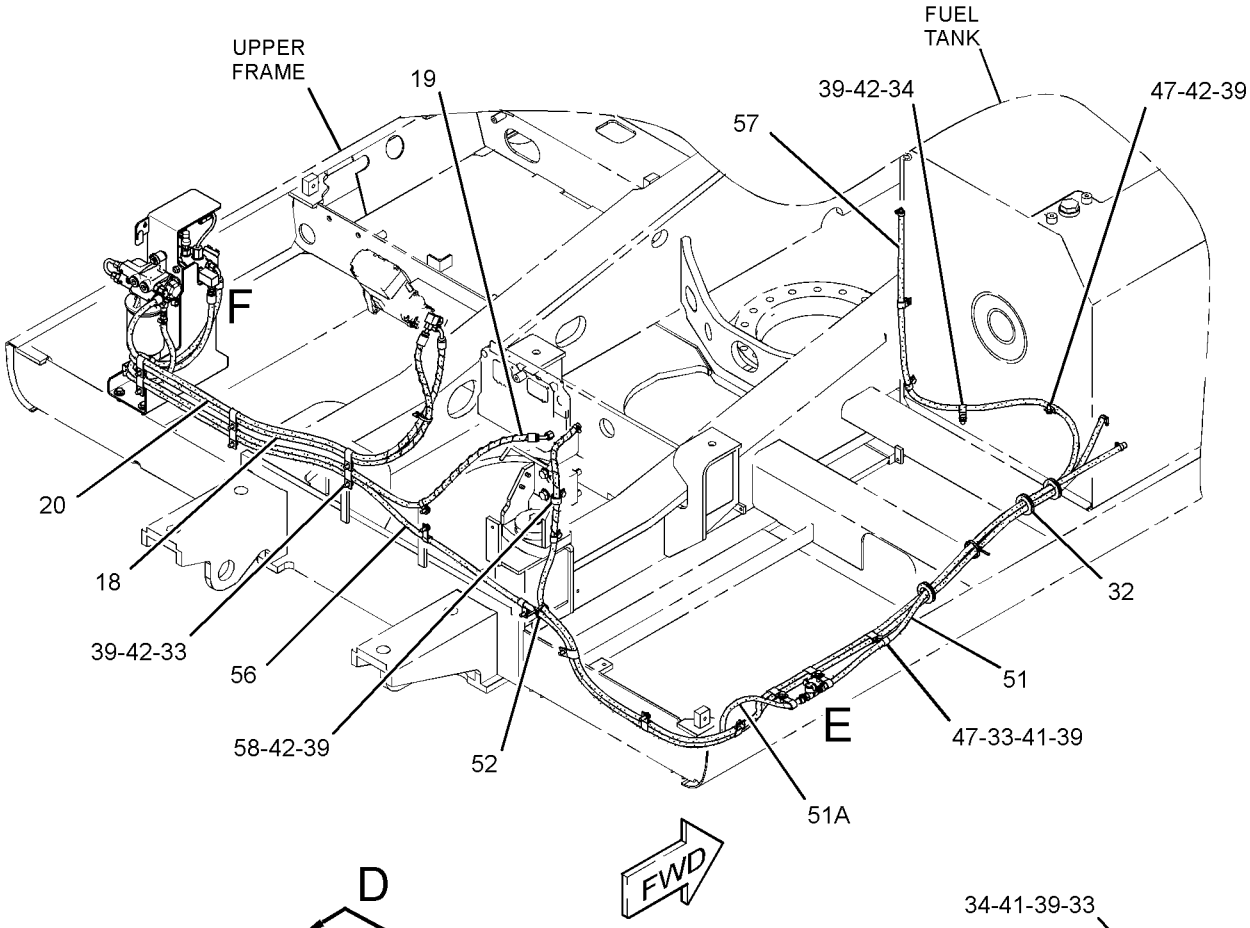

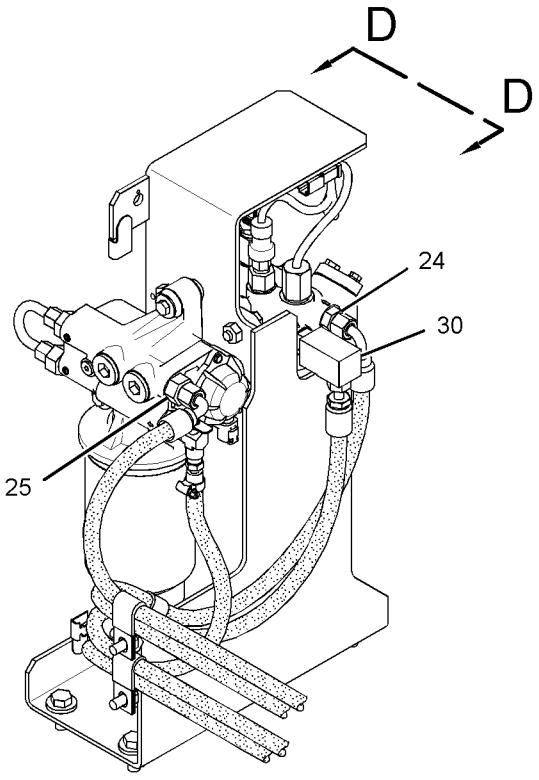

VIEW OF AREA F

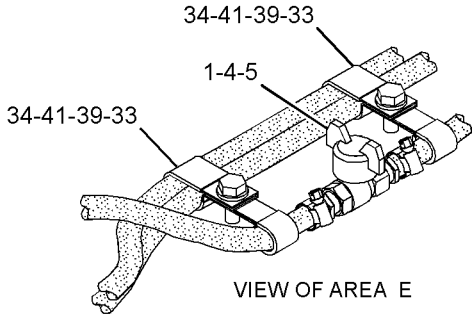

VIEW OF AREA E

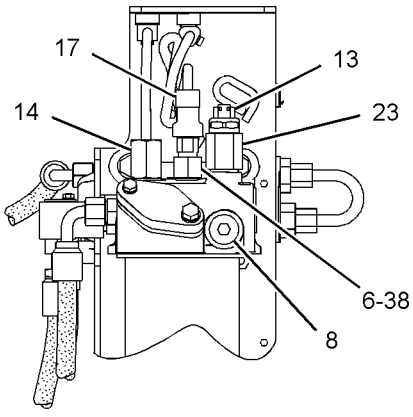

VIEW D-D

GRAPHIC #2 **<END>** g01466548

191-0461 LINES GP-INJECTOR HYD PUMP

S/N: KHX1-UP

PART OF 227-5946, 236-4284, 270-4212, 270-4213 ENGINE AR-CORE

ALSO AN ATTACHMENT

SMCS-1714 **i02354651**

NOTE	REF NO	GRAPHIC REF	PART NUMBER	QTY	PART NAME 1 2 3 4 5 6 (PRODUCT LEVEL)	SEE PAGE
	1	1	**6V-8636**	2	CONNECTOR	
		1	**214-7568**	2	SEAL-O-RING	
		1	**221-3494**	2	SEAL-O-RING	
Y	2	1	*191-0523*	1	ADAPTER GP-OIL LINE	72
	3	1	**205-1280**	1	HOSE AS	
	4	1	**212-3706**	1	TUBE AS	
	5	1	**3V-2431**	2	WASHER (10.2X16X2-MM THK)	
	6	1	**4F-9653**	1	SEAL-O-RING	
M	7	1	**8T-1159**	2	BOLT-SOCKET HEAD (M10X1.5X25-MM)	

M-METRIC PART
Y-SEPARATE ILLUSTRATION

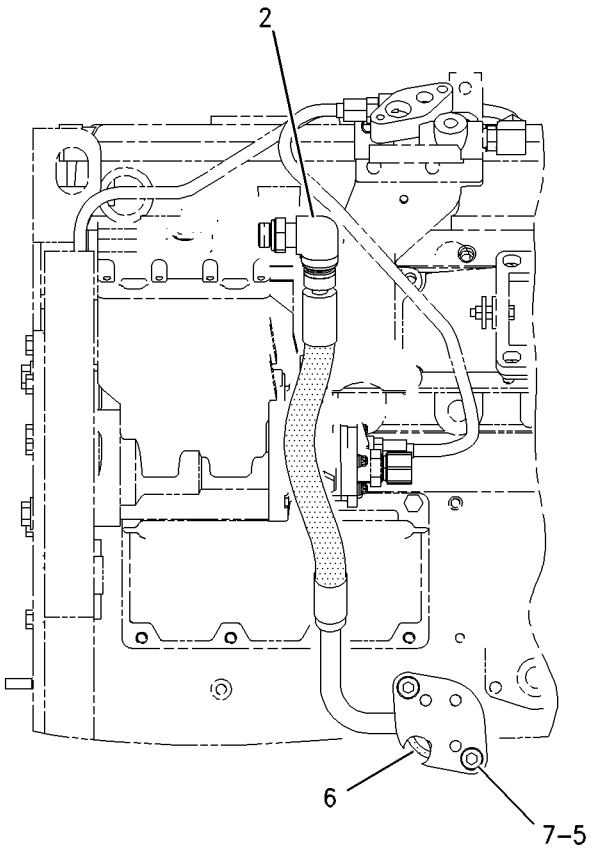

LEFT SIDE VIEW

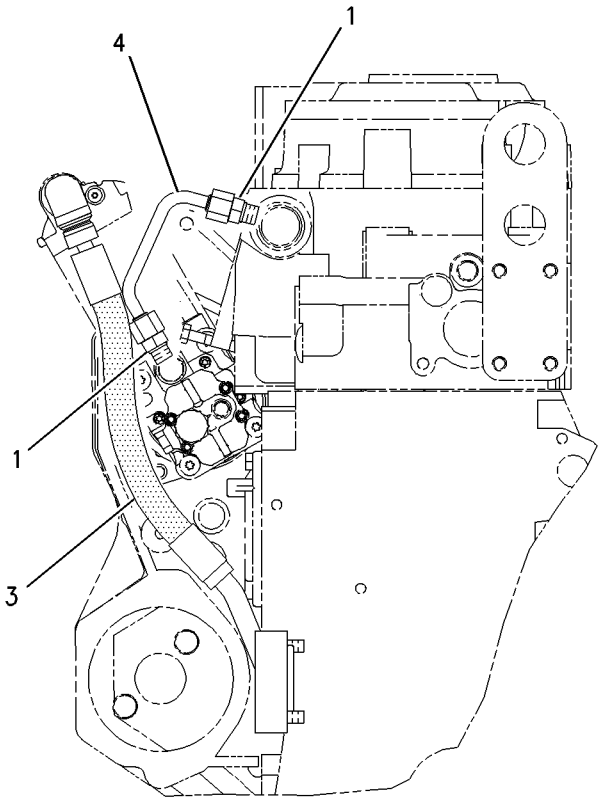

REAR VIEW

GRAPHIC #1 **<END>** g00881566

229-1859 PUMP & MOTOR GP-REFUELING

S/N: MNB1-UP; WDK1-UP
PART OF 229-1785 PUMP GP-REFUELING
AN ATTACHMENT

SMCS-1295 **i02213969**

NOTE	REF NO	GRAPHIC REF	PART NUMBER	QTY	PART NAME 1 2 3 4 5 6 (PRODUCT LEVEL)	SEE PAGE
	1	1	**121-1038**	1	HOUSING-RECEPTACLE	
	2	1	**116-0128**	1	SEAL	
	3	1	**121-1039**	2	TERMINAL (MALE)	

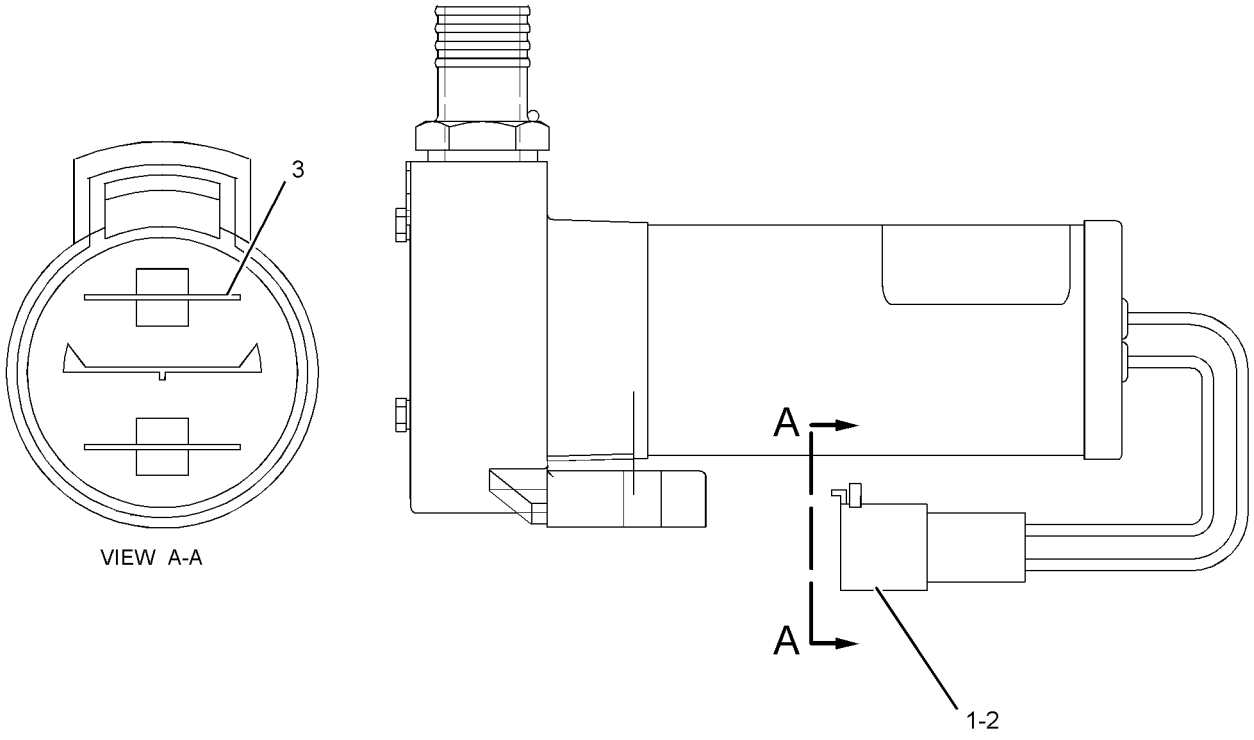

GRAPHIC #1 **<END>** g01104176

222-5900 PUMP & MTG GP-UNIT INJ HYD

S/N: KHX10523-UP
PART OF 236-4284 ENGINE AR-CORE
AN ATTACHMENT

SMCS-1714 **i03028970**

NOTE	REF NO	GRAPHIC REF	PART NUMBER	QTY	PART NAME 1 2 3 4 5 6 (PRODUCT LEVEL)	SEE PAGE
	1	1	**214-7568**	2	SEAL-O-RING	
	2	1	**227-5904**	1	SEAL-O-RING	
CYR	3	1	**319-0677**	1	PUMP GP-UNIT INJECTOR HYD	156
	4	1	**3E-9412**	1	DOWEL	
	5	1	**6V-5839**	2	WASHER (11X21X2.5-MM THK)	
M	6	1	**6V-7981**	2	BOLT (M10X1.5X70-MM)	
	7	1	**9S-8004**	2	PLUG-O-RING	

C-CHANGE FROM PREVIOUS TYPE
M-METRIC PART
R-REMFG PART MAY BE AVAILABLE
Y-SEPARATE ILLUSTRATION

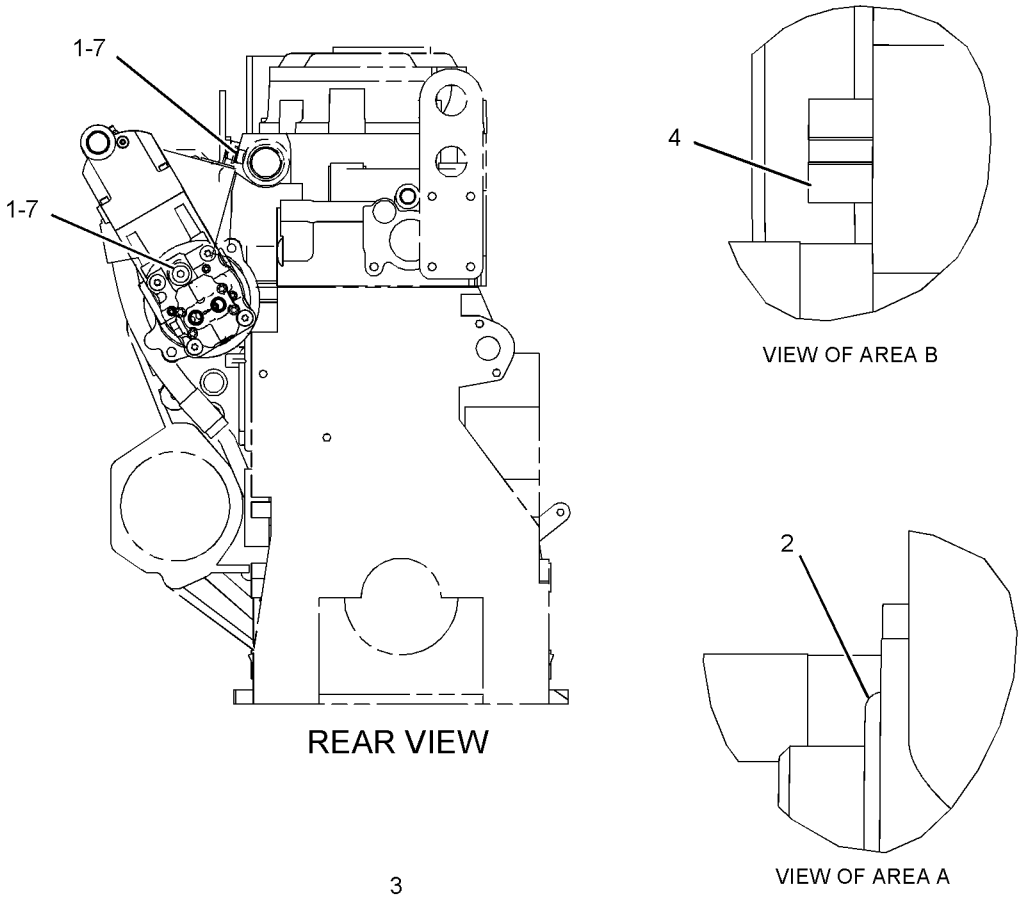

GRAPHIC #1

<END>

g01017748

222-5900 PUMP & MTG GP-UNIT INJ HYD

S/N: KHX1-4813
PART OF 227-5946, 270-4212, 270-4213 ENGINE AR-CORE
ALSO AN ATTACHMENT

SMCS-1714 **i02355616**

NOTE	REF NO	GRAPHIC REF	PART NUMBER	QTY	PART NAME 1 2 3 4 5 6 (PRODUCT LEVEL)	SEE PAGE
	1	1	**214-7568**	2	SEAL-O-RING	
C	2	1	**227-5904**	1	SEAL-O-RING (UNIT INJECTOR HYD PUMP)	
CYR	3	1	**254-4357**	1	PUMP GP-UNIT INJECTOR HYD	152
C	4	1	**3E-9412**	1	DOWEL	
	5	1	**6V-5839**	2	WASHER (11X21X2.5-MM THK)	
M	6	1	**6V-7981**	2	BOLT (M10X1.5X70-MM)	
	7	1	**9S-8004**	2	PLUG-O-RING	

C-CHANGE FROM PREVIOUS TYPE
M-METRIC PART
R-REMFG PART MAY BE AVAILABLE
Y-SEPARATE ILLUSTRATION

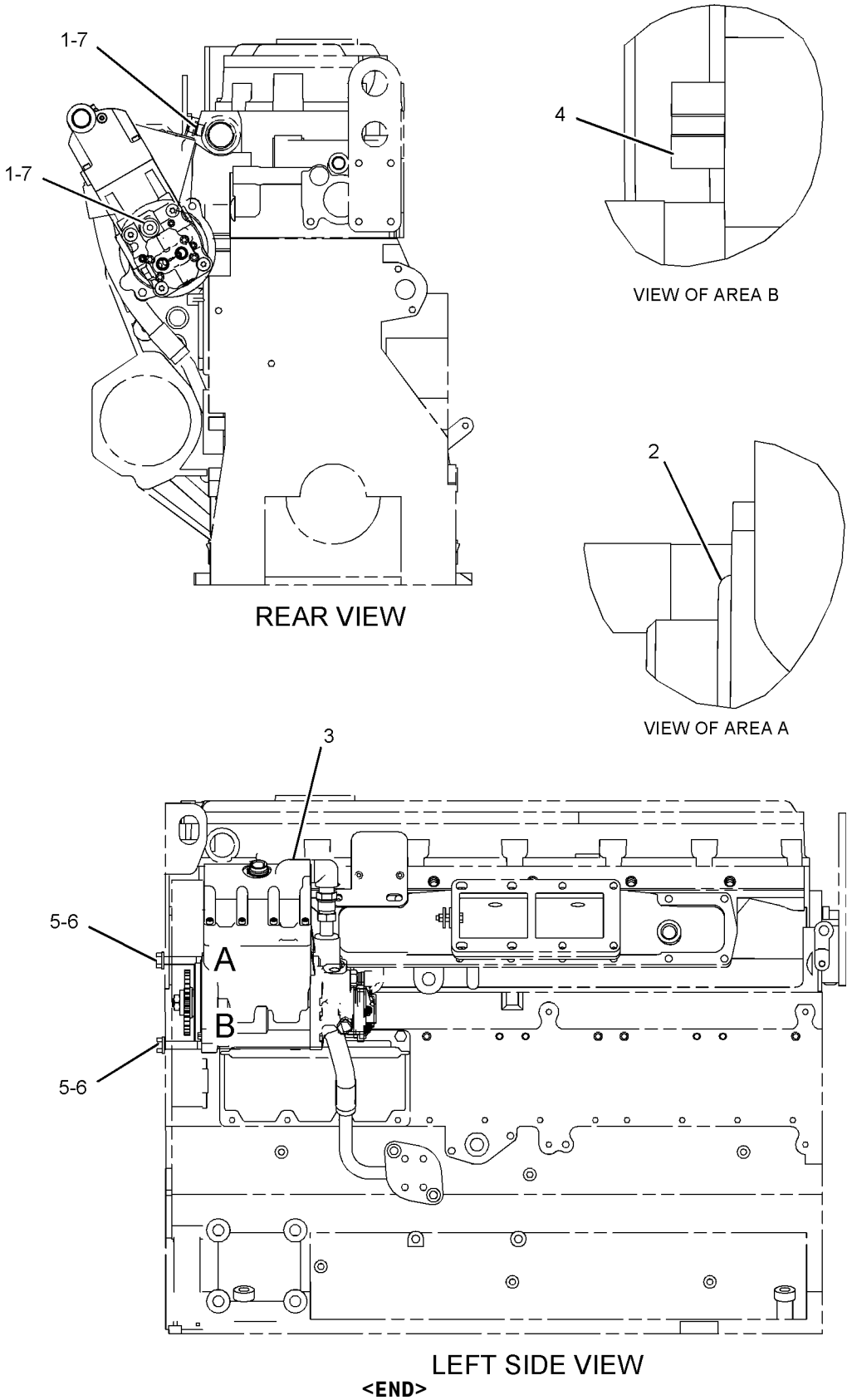

GRAPHIC #1

<END>

g01017748

222-5900 PUMP & MTG GP-UNIT INJ HYD

S/N: KHX4814-6017
PART OF 227-5946, 270-4212, 270-4213 ENGINE AR-CORE
ALSO AN ATTACHMENT

SMCS-1714 **i02684145**

NOTE	REF NO	GRAPHIC REF	PART NUMBER	QTY	PART NAME 1 2 3 4 5 6 (PRODUCT LEVEL)	SEE PAGE
	1	1	**214-7568**	2	SEAL-O-RING	
	2	1	**227-5904**	1	SEAL-O-RING (UNIT INJECTOR HYD PUMP)	
CYR	3	1	**295-4777**	1	PUMP GP-UNIT INJECTOR HYD	153
	4	1	**3E-9412**	1	DOWEL	
	5	1	**6V-5839**	2	WASHER (11X21X2.5-MM THK)	
M	6	1	**6V-7981**	2	BOLT (M10X1.5X70-MM)	
	7	1	**9S-8004**	2	PLUG-O-RING	

C-CHANGE FROM PREVIOUS TYPE
M-METRIC PART
R-REMFG PART MAY BE AVAILABLE
Y-SEPARATE ILLUSTRATION

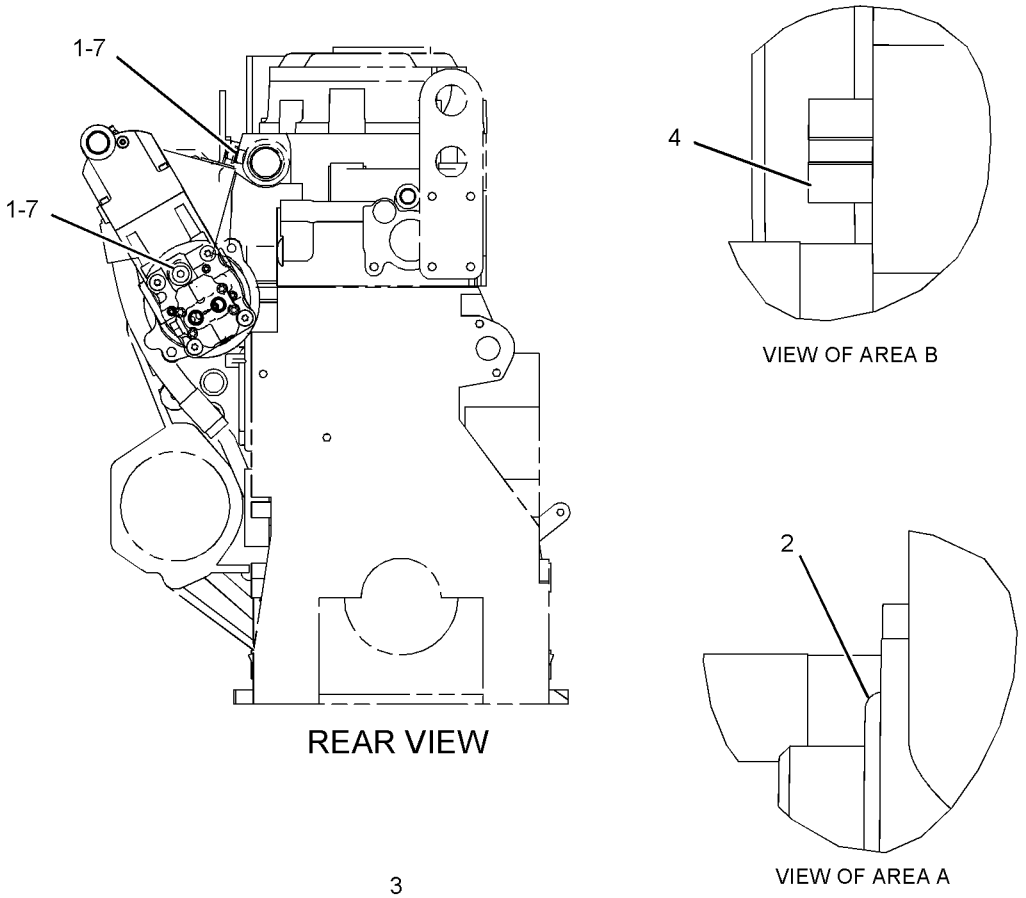

GRAPHIC #1

<END>

g01017748

222-5900 PUMP & MTG GP-UNIT INJ HYD

S/N: KHX6018-UP
PART OF 227-5946, 270-4212, 270-4213 ENGINE AR-CORE
ALSO AN ATTACHMENT

SMCS-1714 **i02755469**

NOTE	REF NO	GRAPHIC REF	PART NUMBER	QTY	PART NAME 1 2 3 4 5 6 (PRODUCT LEVEL)	SEE PAGE
	1	1	**214-7568**	2	SEAL-O-RING	
	2	1	**227-5904**	1	SEAL-O-RING	
CY	3	1	**304-0677**	1	PUMP GP-UNIT INJECTOR HYD	154
	4	1	**3E-9412**	1	DOWEL	
	5	1	**6V-5839**	2	WASHER (11X21X2.5-MM THK)	
M	6	1	**6V-7981**	2	BOLT (M10X1.5X70-MM)	
	7	1	**9S-8004**	2	PLUG-O-RING	

C-CHANGE FROM PREVIOUS TYPE
M-METRIC PART
Y-SEPARATE ILLUSTRATION

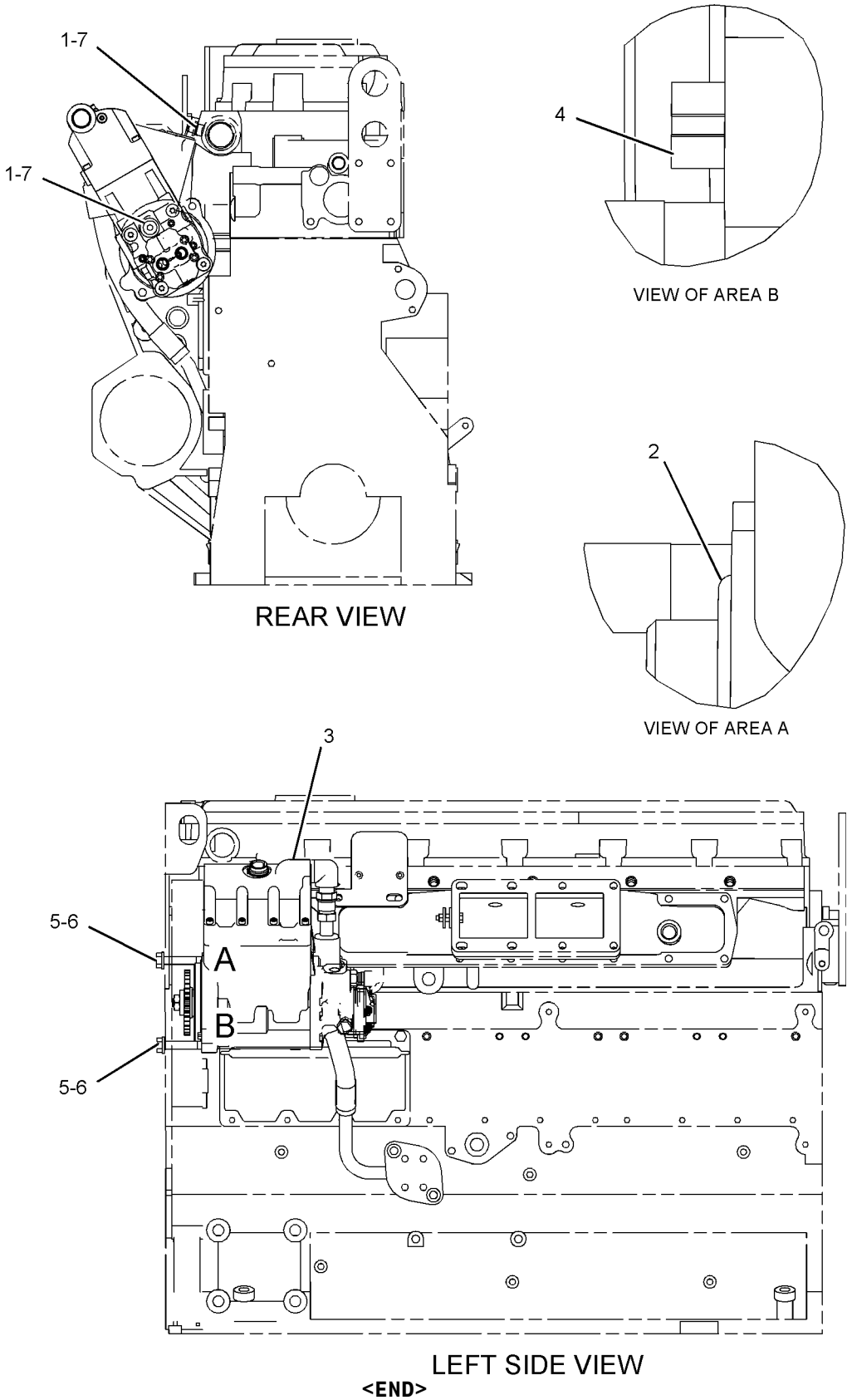

GRAPHIC #1

<END>

g01017748

222-5900 PUMP & MTG GP-UNIT INJ HYD

S/N: KHX6018-9401
PART OF 227-5946, 270-4212, 270-4213 ENGINE AR-CORE
ALSO AN ATTACHMENT

SMCS-1714 **i02808702**

NOTE	REF NO	GRAPHIC REF	PART NUMBER	QTY	PART NAME 1 2 3 4 5 6 (PRODUCT LEVEL)	SEE PAGE
	1	1	**214-7568**	2	SEAL-O-RING	
	2	1	**227-5904**	1	SEAL-O-RING	
CY	3	1	**312-0677**	1	PUMP GP-UNIT INJECTOR HYD	155
	4	1	**3E-9412**	1	DOWEL	
	5	1	**6V-5839**	2	WASHER (11X21X2.5-MM THK)	
M	6	1	**6V-7981**	2	BOLT (M10X1.5X70-MM)	
	7	1	**9S-8004**	2	PLUG-O-RING	

C-CHANGE FROM PREVIOUS TYPE
M-METRIC PART
Y-SEPARATE ILLUSTRATION

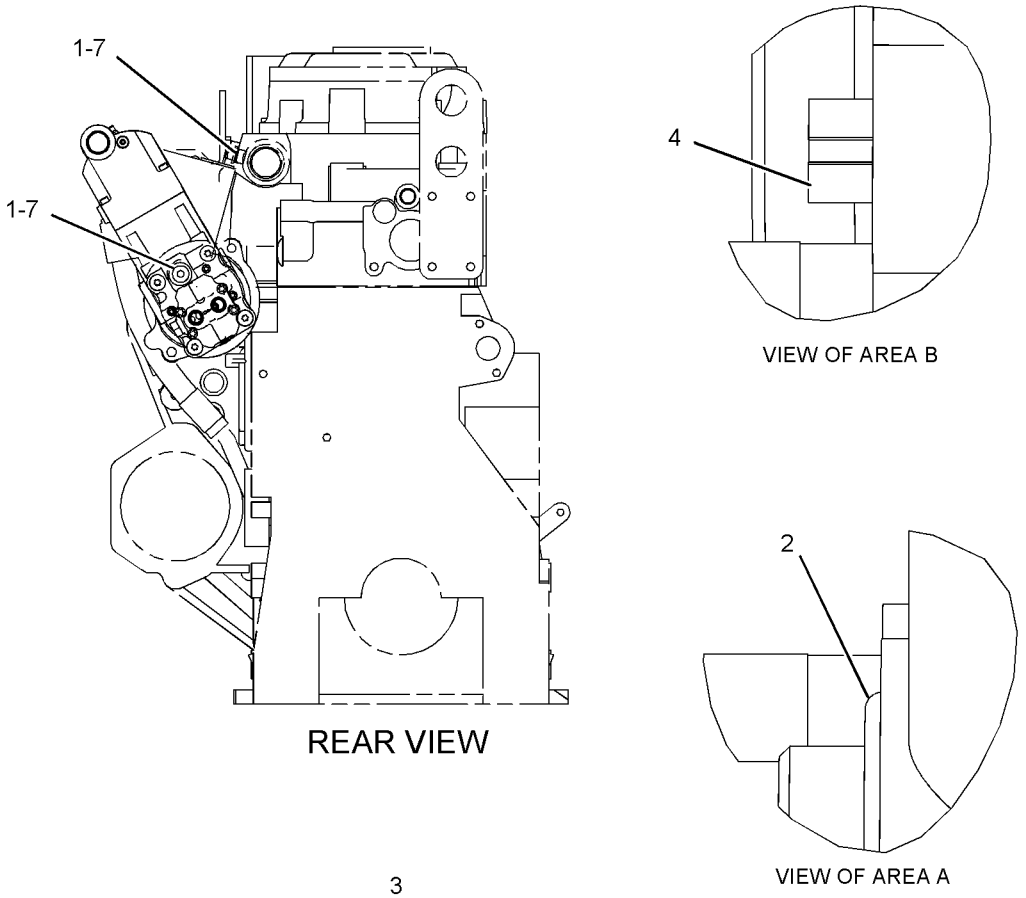

GRAPHIC #1

<END>

g01017748

229-1784 PUMP AR-FUEL TRANSFER

S/N: MNB1-UP; WDK1-UP
AN ATTACHMENT

SMCS-1256 **i03023868**

NOTE	PART NUMBER	QTY	PART NAME 1 2 3 4 5 6 (PRODUCT LEVEL)	SEE PAGE
Y	*298-4258*	1	FILM GP (FUEL TRANSFER PUMP)	1110
Y	*229-1785*	1	PUMP GP-REFUELING	150
Y	*238-1570*	1	WIRING GP-FUEL SYSTEM (REFUELING)	310

Y-SEPARATE ILLUSTRATION

<END>

268-1839 PUMP GP-FUEL INJECTION

S/N: KHX3172-UP

PART OF 227-5946, 236-4284, 270-4212, 270-4213 ENGINE AR-CORE

ALSO AN ATTACHMENT

SMCS-1251, 1290 **i02572543**

NOTE	REF NO	GRAPHIC REF	PART NUMBER	QTY	PART NAME 1 2 3 4 5 6 (PRODUCT LEVEL)	SEE PAGE
	1	1	**235-9651**	2	BOLT-SOCKET HEAD (M8X1.25X65-MM)	
Y	2	1	**295-1411**	1	INJECTOR GP-FUEL	121

Y-SEPARATE ILLUSTRATION

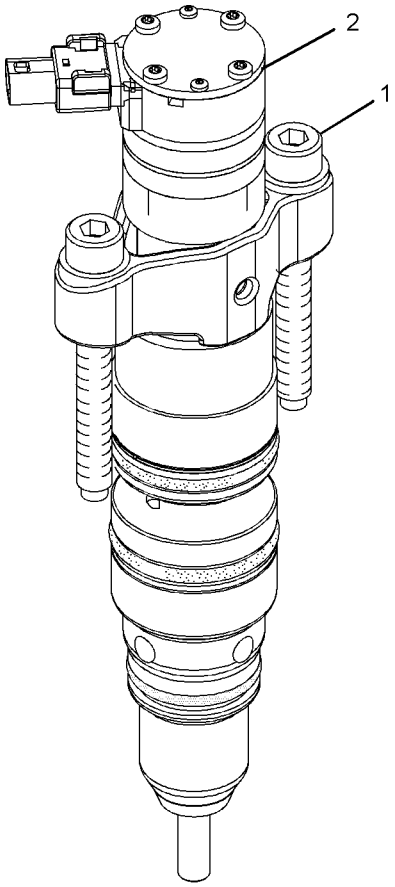

ISOMETRIC VIEW

GRAPHIC #1 **<END>** g01038652

268-1839 PUMP GP-FUEL INJECTION

S/N: KHX1-3171

PART OF 270-4212 ENGINE AR-CORE

SMCS-1251, 1290 **i02355640**

NOTE	REF NO	GRAPHIC REF	PART NUMBER	QTY	PART NAME 1 2 3 4 5 6 (PRODUCT LEVEL)	SEE PAGE
	1	1	**235-9651**	2	BOLT-SOCKET HEAD (M8X1.25X65-MM)	
Y	2	1	**268-1835**	1	INJECTOR GP-FUEL	120

Y-SEPARATE ILLUSTRATION

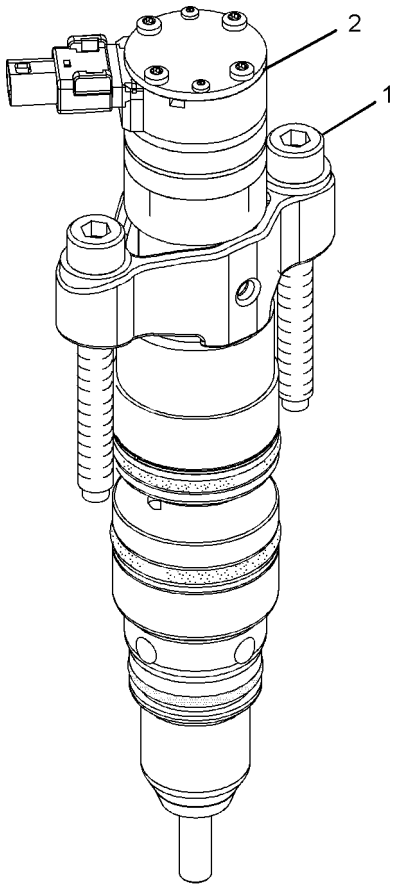

ISOMETRIC VIEW

GRAPHIC #1

<END>

g01038652

183-2824 PUMP GP-FUEL PRIMING

S/N: MNB1-UP; WDK1-UP

PART OF 223-3046 LINES GP-FUEL

SMCS-1258 **i03011849**

NOTE	REF NO	GRAPHIC REF	PART NUMBER	QTY	PART NAME 1 2 3 4 5 6 (PRODUCT LEVEL)	SEE PAGE
	1	1	**9Y-8389**	1	GASKET (FUEL PRIMING PUMP)	
	2	1	**183-2823**	1	PUMP AS-FUEL PRIMING	
		1	**1H-8171**	1	SEAL-O-RING	
		1	**7E-2985**	2	VALVE AS	
	3	1	**5P-0537**	1	WASHER-HARD (7.2X14.5X2-MM THK)	
M	4	1	**6V-2317**	1	BOLT (M8X1.25X30-MM)	
M	5	1	**8T-0640**	1	BOLT (M6X1X30-MM)	
	6	1	**9M-1974**	1	WASHER-HARD (8.8X16X2-MM THK)	

M-METRIC PART

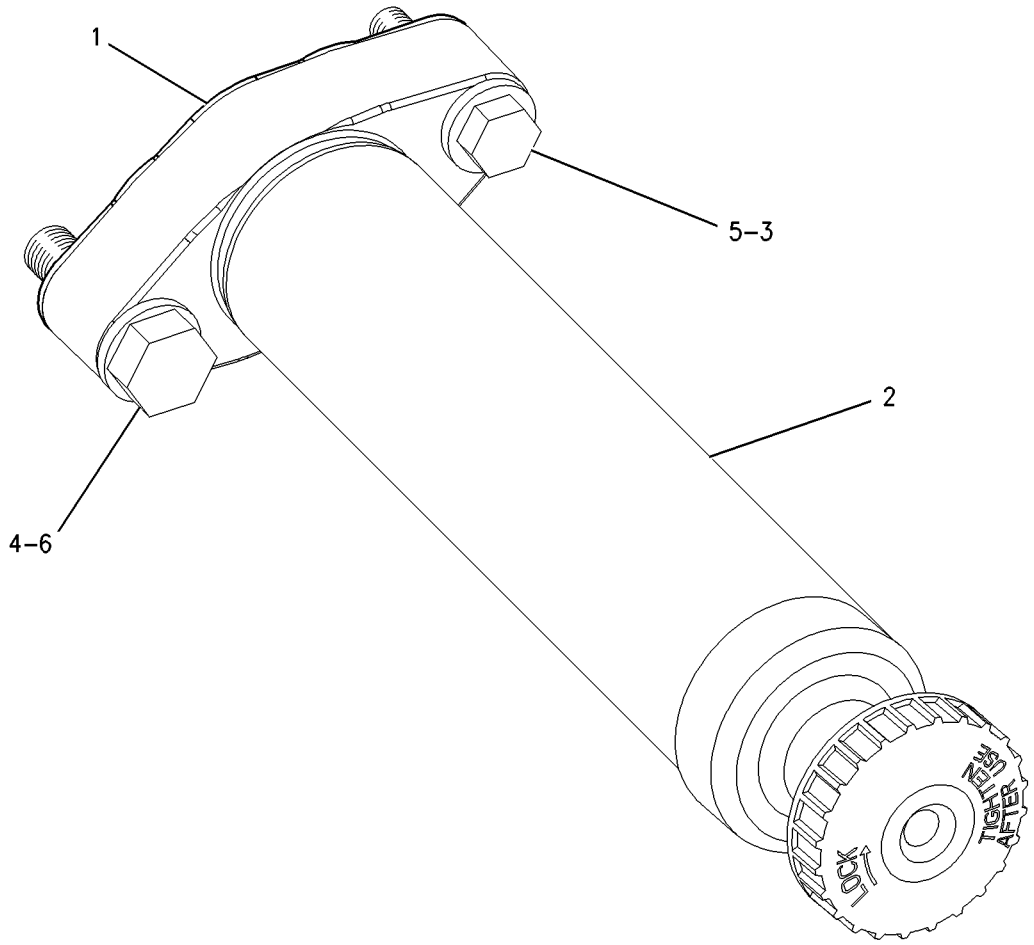

GRAPHIC #1 **<END>** g00671509

FUEL SYSTEM

247-7458 PUMP GP-FUEL PRIMING

S/N: MNB1-UP; WDK1-UP
AN ATTACHMENT

SMCS-1258 **i02407798**

NOTE	PART NUMBER	QTY	PART NAME 1 2 3 4 5 6 (PRODUCT LEVEL)	SEE PAGE
Y	*259-3885*	1	LINES GP-FUEL	127
Y	*259-5118*	1	WIRING GP-CAB (PRIMING PUMP)	280
Y	*259-5053*	1	WIRING GP-FUEL SYSTEM (PRIMING PUMP)	312

Y-SEPARATE ILLUSTRATION

<END>

188-6121 PUMP GP-FUEL PRM & PRIM FILTER–
WITH WATER SEPARATOR
S/N: MNB1-UP; WDK1-UP
PART OF 259-3885 LINES GP-FUEL
AN ATTACHMENT

SMCS-1258 **i02662869**

NOTE	REF NO	GRAPHIC REF	PART NUMBER	QTY	PART NAME 1 2 3 4 5 6 (PRODUCT LEVEL)	SEE PAGE
Y	1	1	**190-8977**	1	PUMP GP-FUEL PRM & WATER SEP	149
	2	1	**209-9234**	1	REGULATOR-PRESSURE (FUEL TRANSFER PUMP)	
	3	1	**211-7730**	1	TUBE AS	
	4	1	**030-8194**	1	CONNECTOR	
	5	1	**136-7227**	2	SEAL-O-RING	

Y-SEPARATE ILLUSTRATION

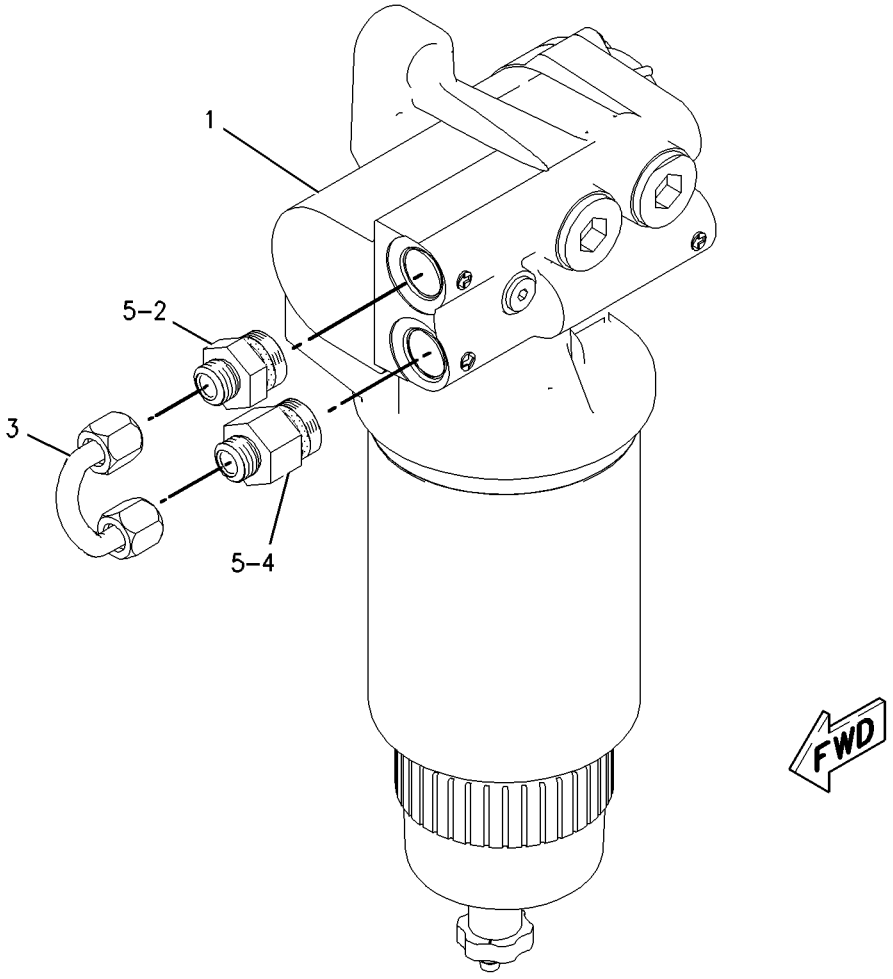

GRAPHIC #1 **<END>** g00850001

190-8977 PUMP GP-FUEL PRM & WATER SEP

S/N: MNB1-UP; WDK1-UP
PART OF 188-6121 PUMP GP-FUEL PRM & PRIM FILTER
AN ATTACHMENT

SMCS-1258, 1261, 1263 **i01934932**

NOTE	REF NO	GRAPHIC REF	PART NUMBER	QTY	PART NAME 1 2 3 4 5 6 (PRODUCT LEVEL)	SEE PAGE
Y	1	1	*174-9570*	1	FILTER GP-WATER SEP & FUEL (PRIMARY)	119
	2	1	**190-8970**	1	BASE AS (FUEL PRIMING PUMP)	

Y-SEPARATE ILLUSTRATION

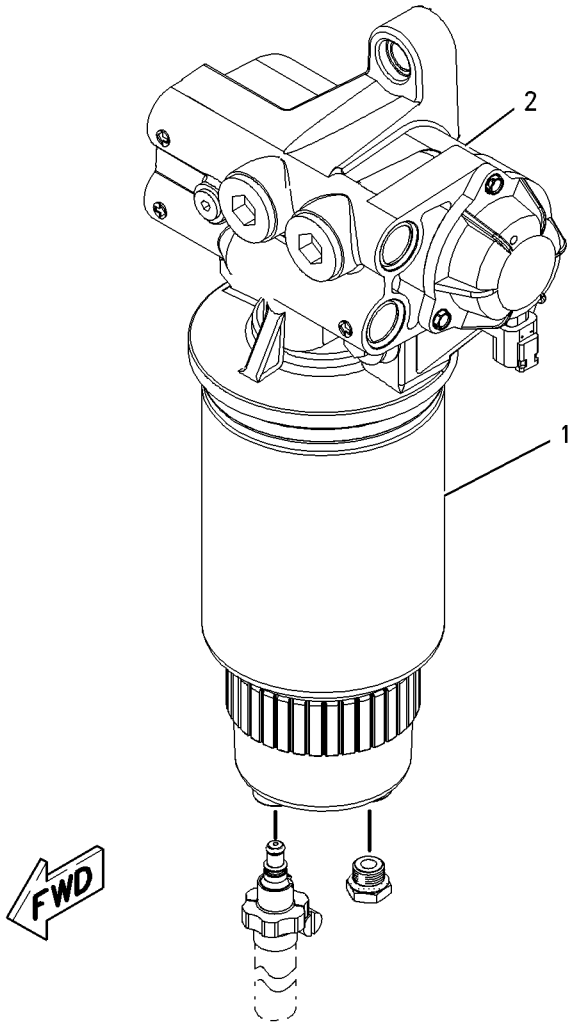

GRAPHIC #1 **<END>** g00904493

FUEL SYSTEM

229-1785 PUMP GP-REFUELING

S/N: MNB1-UP; WDK1-UP
PART OF 229-1784 PUMP AR-FUEL TRANSFER
AN ATTACHMENT

SMCS-1295 **i03089681**

NOTE	REF NO	GRAPHIC REF	PART NUMBER	QTY	PART NAME 1 2 3 4 5 6 (PRODUCT LEVEL)	SEE PAGE
C	1	1	**312-2645**	1	SWITCH AS-LIQUID LEVEL (FUEL TANK SHUTOFF)	
		1	**2S-4078**	1	SEAL-O-RING	
		1	**186-3735**	2	PIN-CONNECTOR (16-GA TO 18-GA)	
		1	**243-4505**	1	RECEPTACLE AS-CONNECTOR (2-PIN)	
	2	1	**7K-1181**	1	STRAP-CABLE	
	3	1	**9M-7958**	4	CLAMP-HOSE	
	4	1	**120-5114**	1	FILM-INSTRUCTION (REFUELING PUMP)	
C	5	1	**324-5761**	1	COVER AS	
M	6	1	**135-8572**	2	BOLT AS (M12X1.75X20-MM)	
M	7	1	**135-8573**	4	BOLT AS (M12X1.75X25-MM)	
Y	8	1	**229-1859**	1	PUMP & MOTOR GP-REFUELING	132
	9	1	**229-1860**	1	STRAINER AS-FUEL	
	10	1	**229-1861**	1	CONNECTOR-HOSE	
	11	1	**240-3920**	1	SUPPORT AS	
M	12	1	**8T-4194**	2	BOLT (M12X1.75X50-MM)	
	13	1	**8T-4223**	4	WASHER-HARD (13.5X25.5X3-MM THK)	
M	14	1	**8T-4244**	2	NUT (M12X1.75-THD)	
E	15	1	**229-1857**		HOSE (430-CM)	
E	15A	1	**229-1857**		HOSE (38-CM)	

C-CHANGE FROM PREVIOUS TYPE
E-ORDER BY THE CENTIMETER
M-METRIC PART
Y-SEPARATE ILLUSTRATION

229-1785 **PUMP GP-REFUELING** *(contd.)* **i03089681**

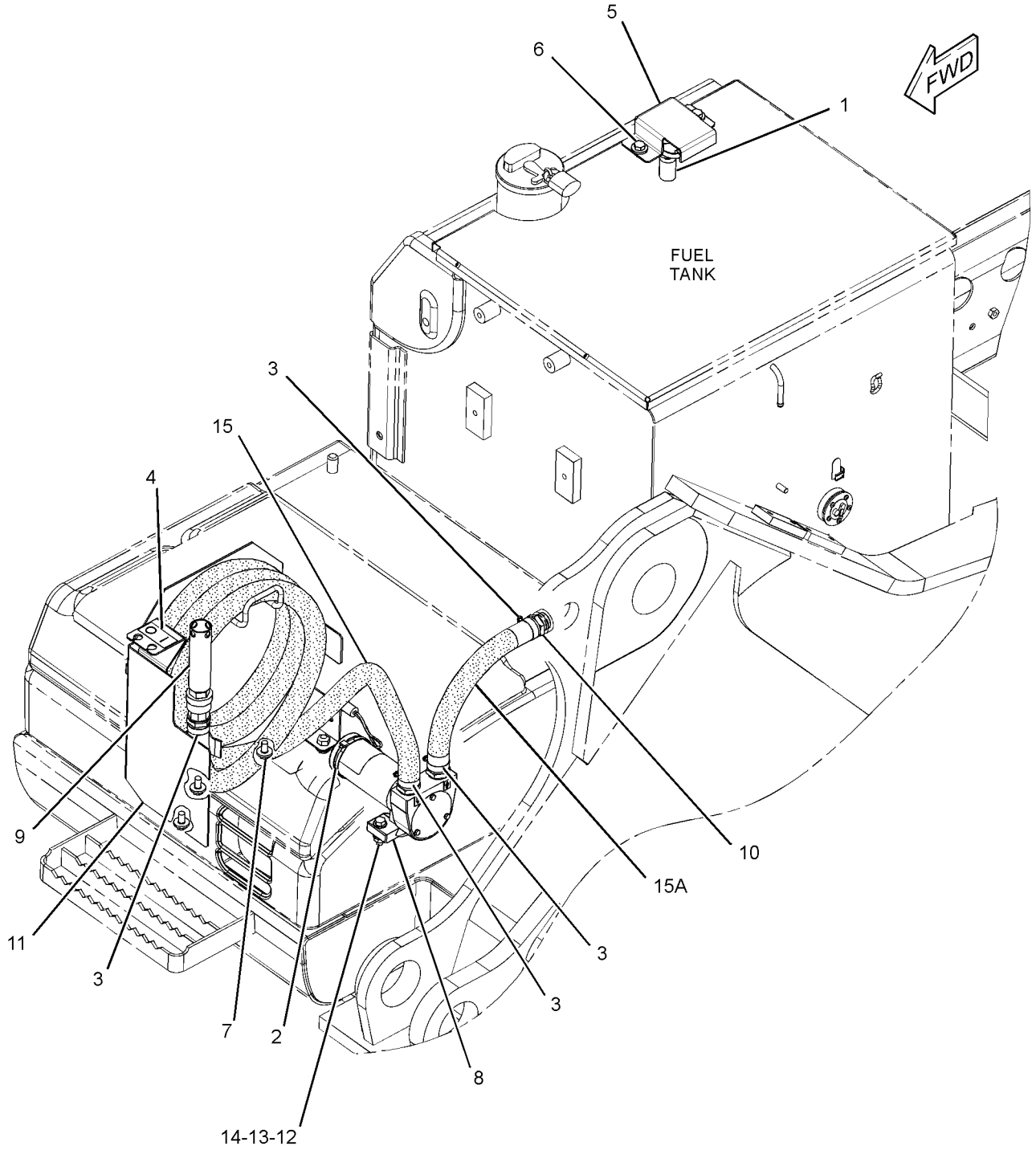

GRAPHIC #1 **<END>** g01582453

254-4357 PUMP GP-UNIT INJECTOR HYD*R

S/N: KHX1-UP

PART OF 222-5900 PUMP & MTG GP-UNIT INJ HYD

ALSO AN ATTACHMENT

SMCS-1714 **i02455472**

NOTE	REF NO	GRAPHIC REF	PART NUMBER	QTY	PART NAME 1 2 3 4 5 6 (PRODUCT LEVEL)	SEE PAGE
	1	1	**178-2357**	1	PUMP GP-FUEL TRANSFER	
	2	1	**179-8128**	1	SEAL-O-RING (FUEL TRANSFER PUMP)	
	3	1	**227-5904**	1	SEAL-O-RING (UNIT INJECTOR HYD PUMP)	

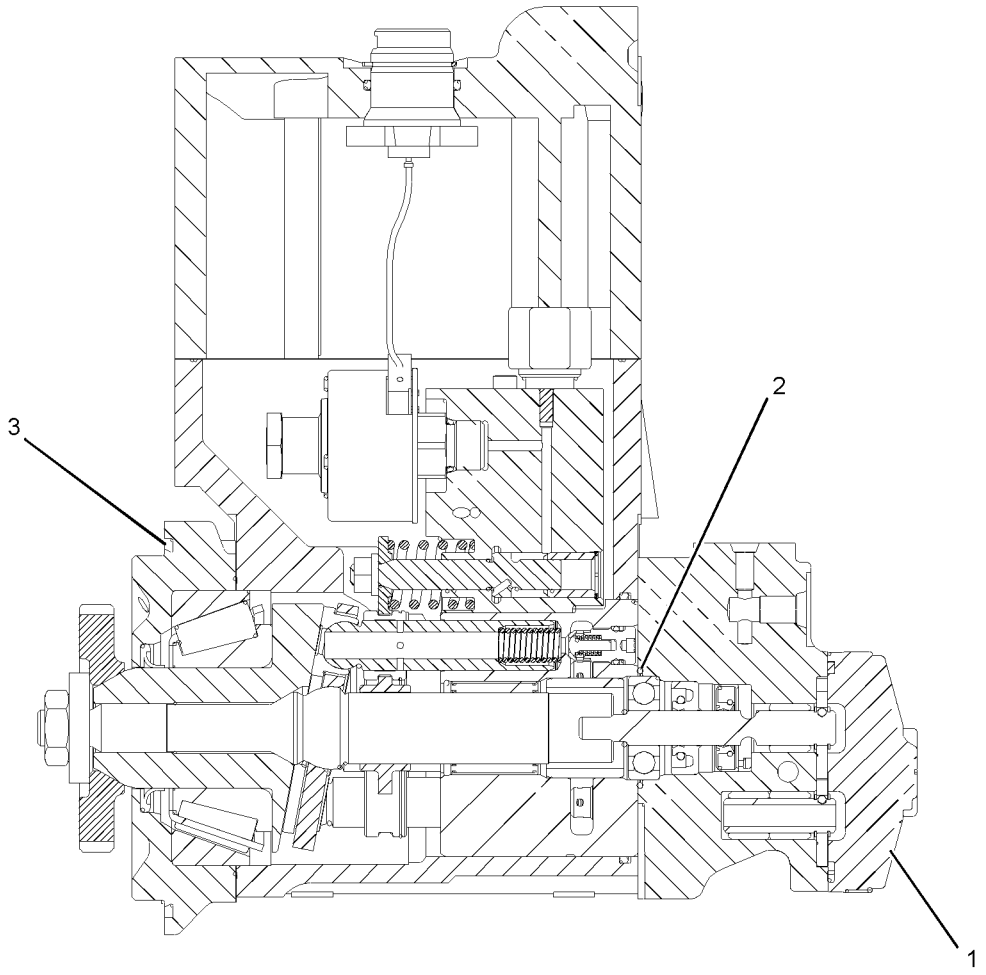

GRAPHIC #1 **<END>** g01225442

295-4777 PUMP GP-UNIT INJECTOR HYD*R

S/N: KHX4814-6017
PART OF 222-5900 PUMP & MTG GP-UNIT INJ HYD
ALSO AN ATTACHMENT

SMCS-1714 **i02684193**

NOTE	REF NO	GRAPHIC REF	PART NUMBER	QTY	PART NAME 1 2 3 4 5 6 (PRODUCT LEVEL)	SEE PAGE
	1	1	**178-2357**	1	PUMP GP-FUEL TRANSFER	
	2	1	**179-8128**	1	SEAL-O-RING (FUEL TRANSFER PUMP)	
	3	1	**227-5904**	1	SEAL-O-RING (UNIT INJECTOR HYD PUMP)	

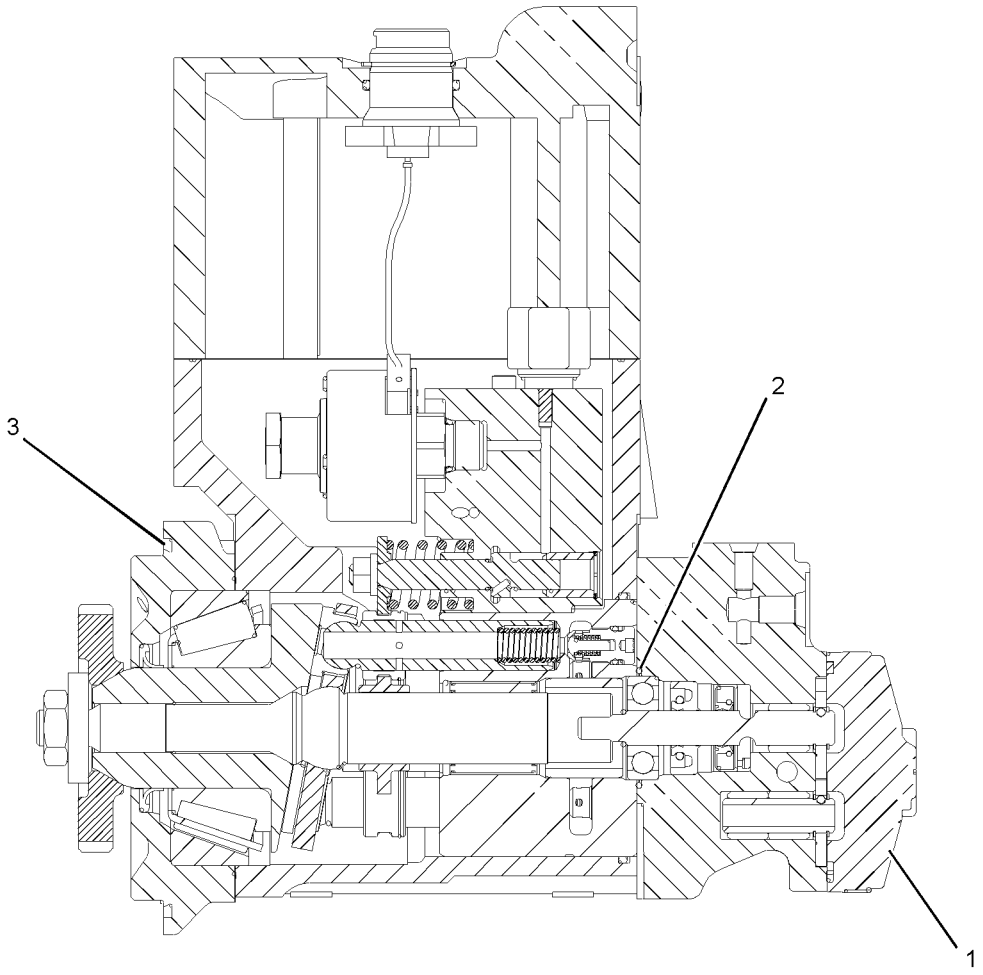

GRAPHIC #1 **<END>** g01225442

304-0677 PUMP GP-UNIT INJECTOR HYD

S/N: KHX6018-UP
PART OF 222-5900 PUMP & MTG GP-UNIT INJ HYD
ALSO AN ATTACHMENT

SMCS-1714 **i02755499**

NOTE	REF NO	GRAPHIC REF	PART NUMBER	QTY	PART NAME 1 2 3 4 5 6 (PRODUCT LEVEL)	SEE PAGE
	1	1	**178-2357**	1	PUMP GP-FUEL TRANSFER	
	2	1	**179-8128**	1	SEAL-O-RING (FUEL TRANSFER PUMP)	
	3	1	**227-5904**	1	SEAL-O-RING (UNIT INJECTOR HYD PUMP)	

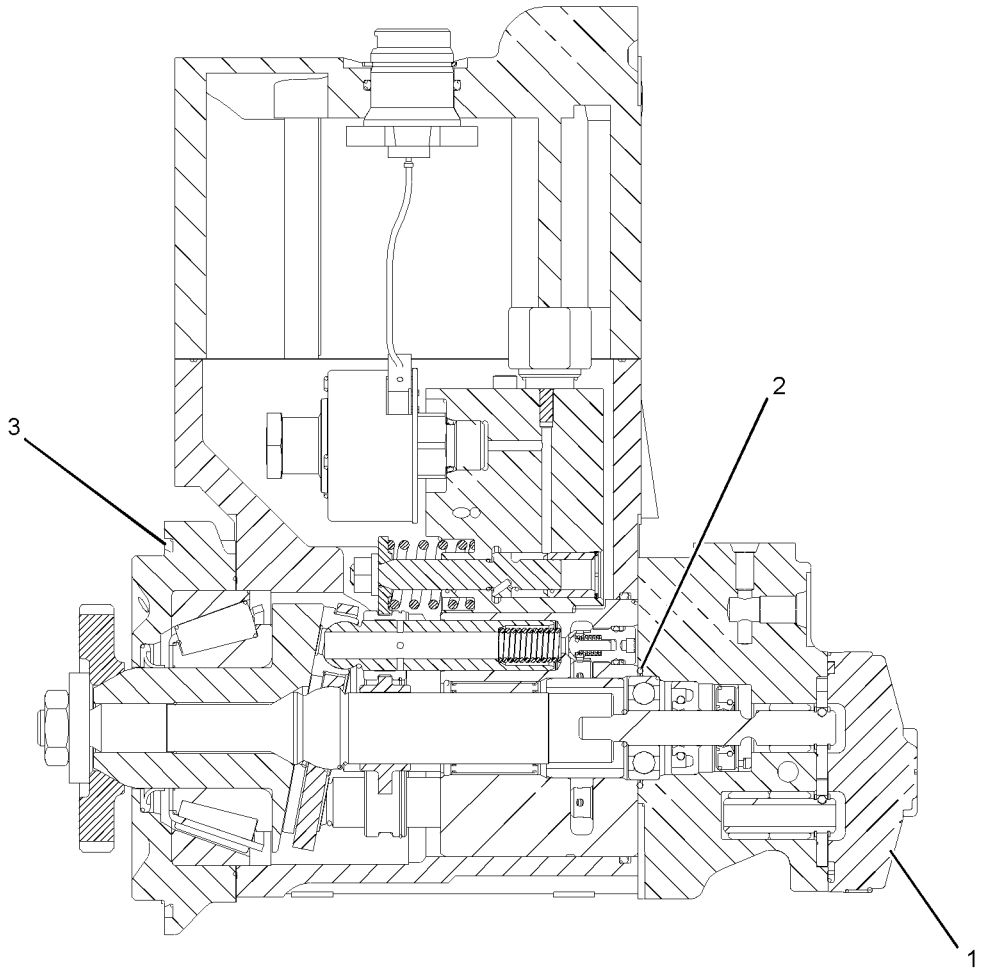

GRAPHIC #1 **<END>** g01225442

312-0677 PUMP GP-UNIT INJECTOR HYD*R

S/N: KHX6018-9401
PART OF 222-5900 PUMP & MTG GP-UNIT INJ HYD
ALSO AN ATTACHMENT

SMCS-1714 **i02813629**

NOTE	REF NO	GRAPHIC REF	PART NUMBER	QTY	PART NAME 1 2 3 4 5 6 (PRODUCT LEVEL)	SEE PAGE
	1	1	**1F-7960**	1	WASHER (13.5X32X6-MM THK)	
M	2	1	**166-8636**	3	BOLT-SOCKET HEAD (M5X0.8X18-MM)	
	3	1	**178-2357**	1	PUMP GP-FUEL TRANSFER	
	4	1	**179-8128**	1	SEAL-O-RING (FUEL TRANSFER PUMP)	
M	5	1	**228-5897**	4	BOLT-TORX (M8X1.25X136.7-MM)	
	6	1	**239-2402**	4	SEAL-O-RING	

M-METRIC PART

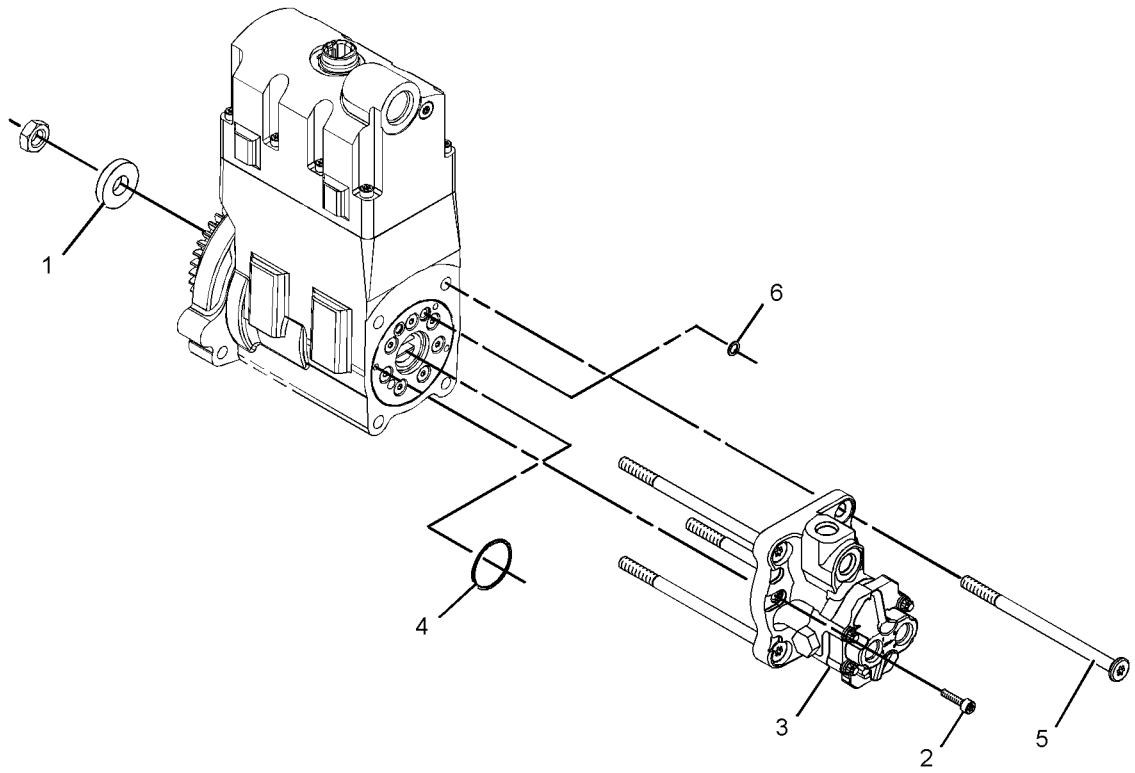

GRAPHIC #1 **<END>** g01401250

319-0677 PUMP GP-UNIT INJECTOR HYD*R

S/N: KHX1-UP

PART OF 222-5900 PUMP & MTG GP-UNIT INJ HYD

AN ATTACHMENT

SMCS-1714 **i03030625**

NOTE	REF NO	GRAPHIC REF	PART NUMBER	QTY	PART NAME 1 2 3 4 5 6 (PRODUCT LEVEL)	SEE PAGE
	1	1	**313-4620**	3	SCREW-PAN HEAD	
	2	1	**318-6357**	1	PUMP GP-FUEL TRANSFER	
	3	1	**179-8128**	1	SEAL-O-RING	
M	4	1	**223-9848**	1	NUT (M12X1.25-THD)	
M	5	1	**228-5897**	4	BOLT-TORX (M8X1.25X136.7-MM)	
	6	1	**239-2402**	3	SEAL-O-RING	
	7	1	**1F-7960**	1	WASHER (13.5X32X6-MM THK)	

M-METRIC PART

319-0677 PUMP GP-UNIT INJECTOR HYD *(contd.)* i03030625

REFER TO ALL ILLUSTRATIONS OF
THIS GROUP FOR AUXILIARY VIEWS

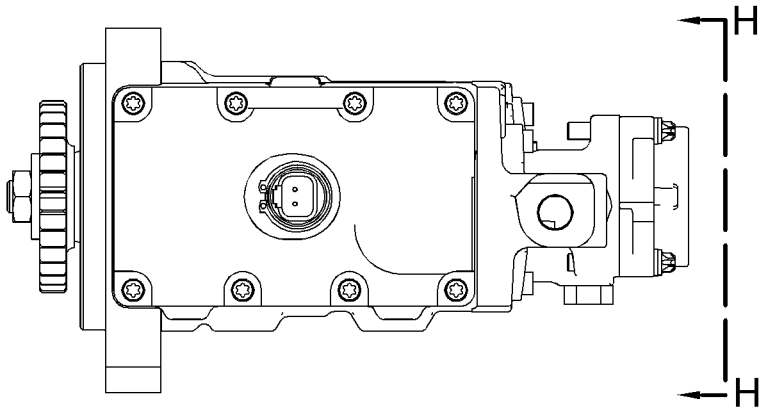

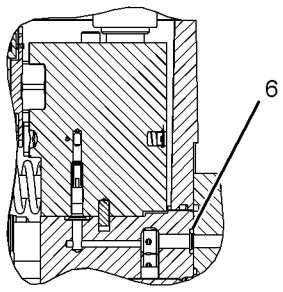

SECTION C-C

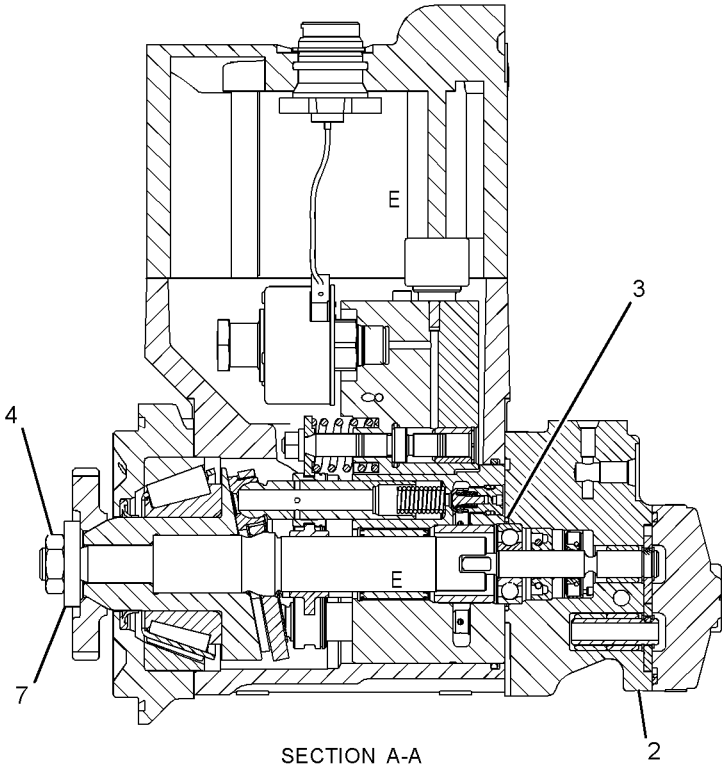

SECTION A-A

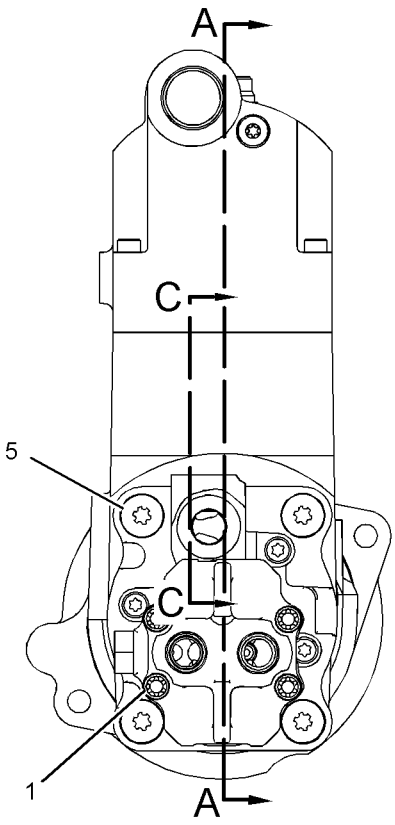

VIEW H-H

GRAPHIC #1 **<END>** g01535476

232-0343 REGULATOR GP-FUEL PRESSURE

S/N: KHX4087-UP
PART OF 231-3046 LINES GP-FUEL
ALSO AN ATTACHMENT

SMCS-1715 **i02676269**

NOTE	REF NO	GRAPHIC REF	PART NUMBER	QTY	PART NAME 1 2 3 4 5 6 (PRODUCT LEVEL)	SEE PAGE
	1	1	**6V-5049**	1	SEAL-O-RING	
	2	1	**294-8620**	1	REGULATOR AS (FUEL PRESSURE)	

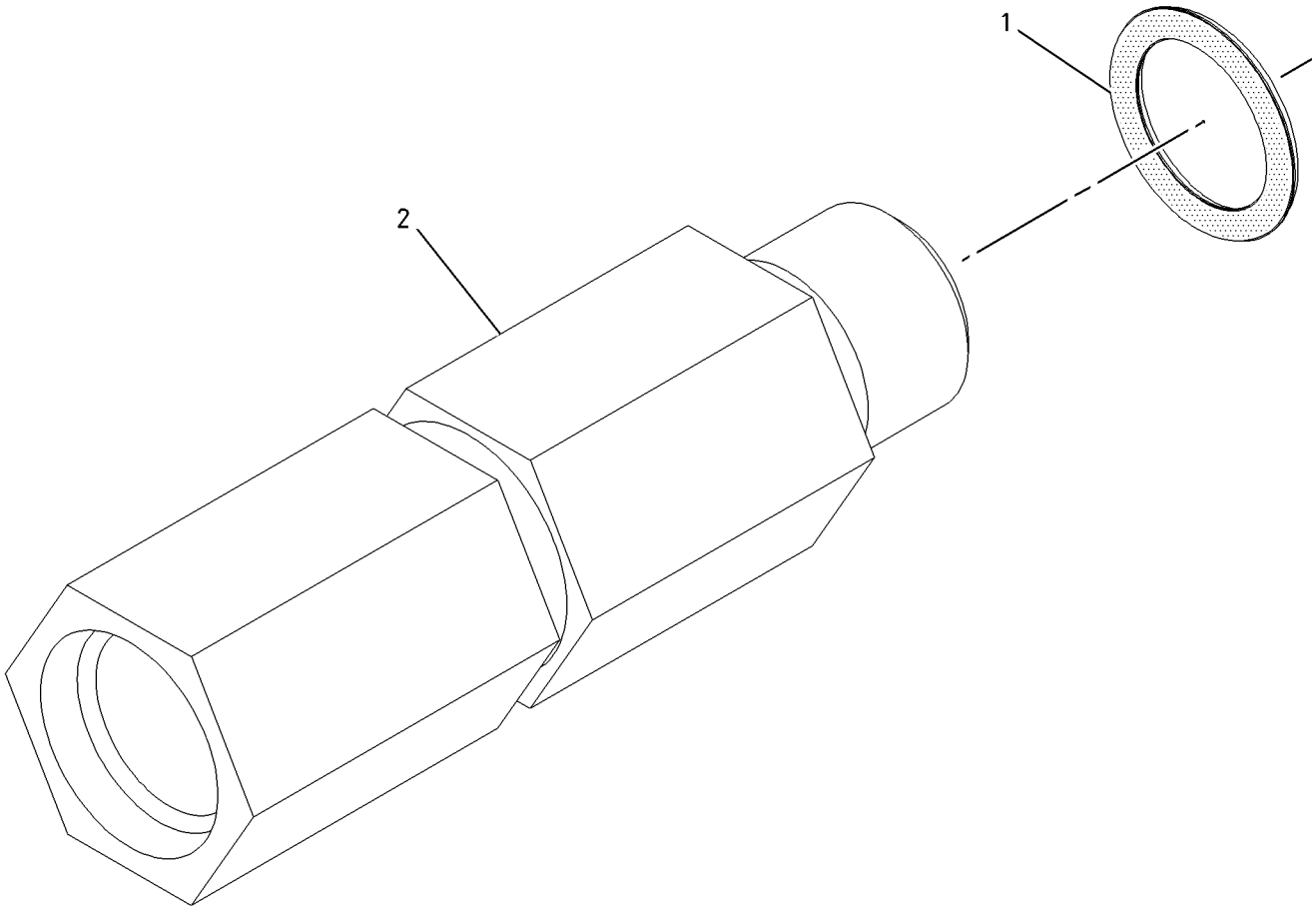

GRAPHIC #1 **<END>** g01004480

223-3037 TANK & MTG GP-FUEL

S/N: MNB1-UP; WDK1-UP

PART OF 314-3652, 314-3653 CHASSIS AR

SMCS-1273 **i03206257**

NOTE	REF NO	GRAPHIC REF	PART NUMBER	QTY	PART NAME 1 2 3 4 5 6 (PRODUCT LEVEL)	SEE PAGE
	1	1	**246-2641**	1	PADLOCK GP	
		1	**5P-8500**	1	KEY (FUEL TANK FILL CAP)	
M	2	1	**135-8572**	2	BOLT AS (M12X1.75X20-MM)	
CY	3	1	*327-3323*	1	TANK GP-FUEL	160
	4	1	**085-9310**	4	SPACER (16.6X32X26-MM THK)	
M	5	1	**8T-4140**	4	BOLT (M16X2X60-MM)	

C-CHANGE FROM PREVIOUS TYPE
M-METRIC PART
Y-SEPARATE ILLUSTRATION

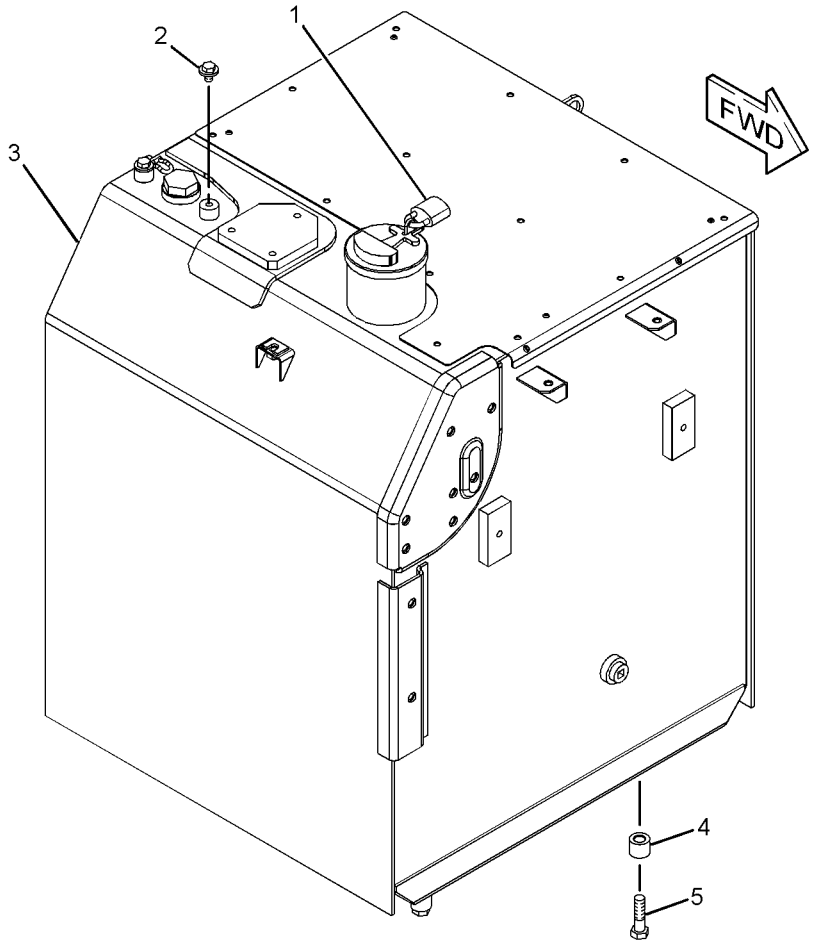

GRAPHIC #1 **<END>** g01607293

FUEL SYSTEM

327-3323 TANK GP-FUEL

S/N: MNB1-UP; WDK1-UP
520-L (137.4-US GAL)
PART OF 223-3037 TANK & MTG GP-FUEL

SMCS-1273 **i03133124**

NOTE	PART NUMBER	QTY	PART NAME 1 2 3 4 5 6 (PRODUCT LEVEL)	SEE PAGE
Y	*327-3324*	1	TANK GP-FUEL	161
			—OR—	
Y	*327-3325*	1	TANK GP-FUEL	163

Y-SEPARATE ILLUSTRATION

<END>

327-3324 TANK GP-FUEL

S/N: MNB1-UP; WDK1-UP
520-L (137.4-US GAL)
PART OF 327-3323 TANK GP-FUEL

SMCS-1273 **i03133125**

NOTE	REF NO	GRAPHIC REF	PART NUMBER	QTY	PART NAME 1 2 3 4 5 6 (PRODUCT LEVEL)	SEE PAGE
	1	1	**4I-0378**	1	GASKET-RUBBER	
	2	1	**5P-4924**	1	ELBOW	
	3	1	**7X-7700**	1	CAP AS-FILLER (FUEL TANK)	
		1	**9X-2205**	1	KIT-CAP FILTER (FUEL TANK)	
					(INCLUDES FILTER AS, SCREWS, GASKETS, & VALVE)	
		1	**9X-8600**	1	SEAL-O-RING	
	4	1	**003-7764**	1	END-HOSE	
	5	1	**128-4411**	1	VALVE AS (FUEL SHUTOFF)	
	6	1	**163-6700**	1	SENSOR GP-FUEL LEVEL	
		1	**186-3735**	1	PIN-CONNECTOR (16-GA TO 18-GA)	
		1	**102-8802**	1	KIT-RECEPTACLE (2-PIN)	
					(INCLUDES RECEPTACLE AS & WEDGE)	
J	7	1	**303-9933**	1	STRAINER AS-FUEL (FLOAT GAUGE)	
	8	1	**9S-6130**	1	PLUG	
M	9	1	**095-0736**	5	SCREW-MACHINE (M5X0.8X10-MM)	
	10	1	**2S-4078**	1	SEAL-O-RING	
	11	1	**3B-0551**	1	PLUG-PIPE	
	12	1	**3J-1907**	1	SEAL-O-RING	
	13	1	**8T-0328**	5	WASHER-HARD (5.5X10X1-MM THK)	
					AVAILABLE REPAIR KIT(S):	
J				1	KIT-GAUGE (FUEL STRAINER)	
					(INCLUDES STOPPER & GAUGE FLOAT)	

J-KIT MARKED J SERVICES PART(S) MARKED J
M-METRIC PART

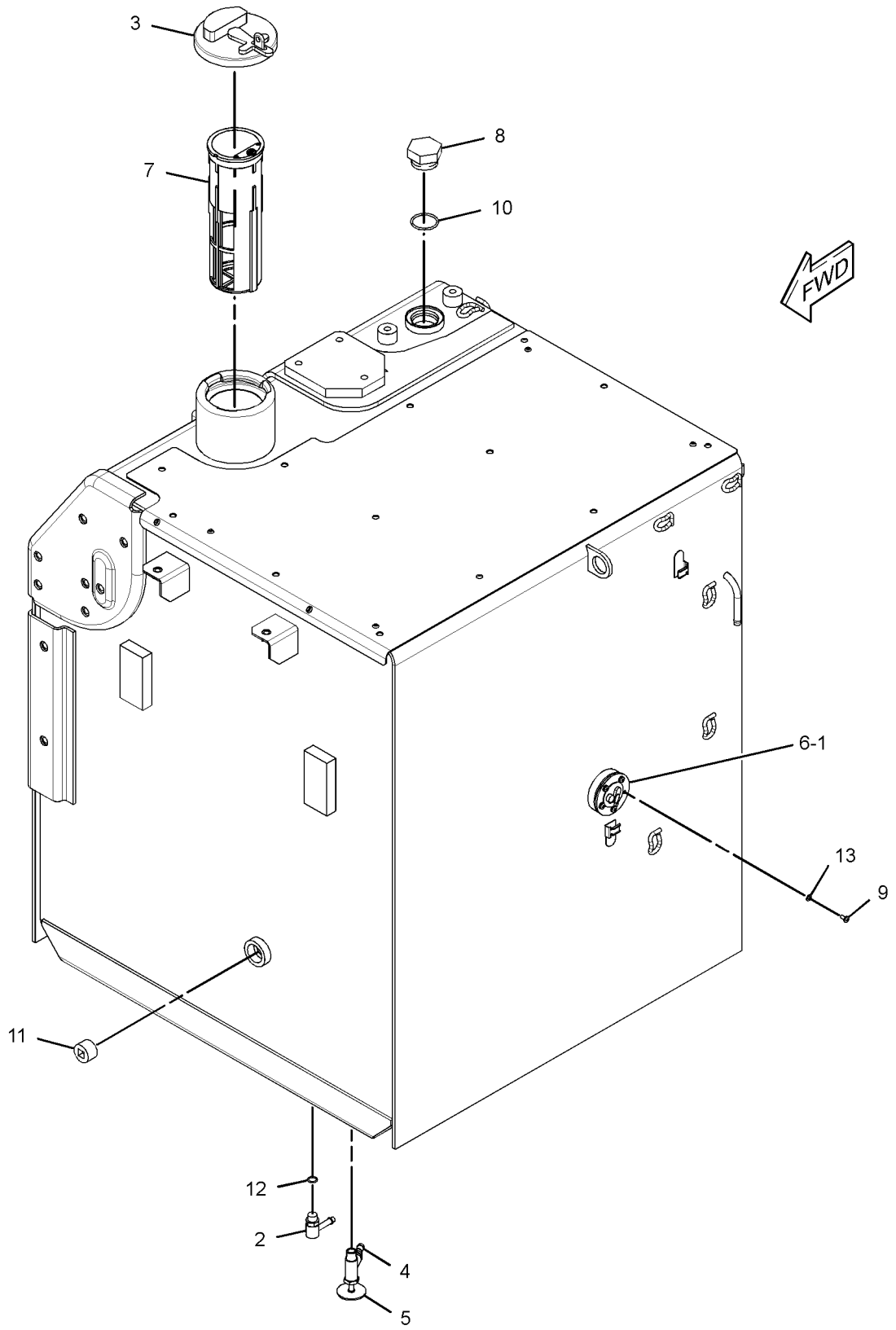

GRAPHIC #1

<END>

g01618879

FUEL SYSTEM

327-3325 TANK GP-FUEL

S/N: MNB1-UP; WDK1-UP
520-L (137.4-US GAL)
PART OF 327-3323 TANK GP-FUEL

SMCS-1273 **i03133128**

NOTE	REF NO	GRAPHIC REF	PART NUMBER	QTY	PART NAME 1 2 3 4 5 6 (PRODUCT LEVEL)	SEE PAGE
	1	1	**4I-0378**	1	GASKET-RUBBER	
	2	1	**5P-4924**	1	ELBOW	
	3	1	**7X-7700**	1	CAP AS-FILLER (FUEL TANK)	
		1	**9X-2205**	1	KIT-CAP FILTER (FUEL TANK)	
					(INCLUDES FILTER AS, SCREWS, GASKETS, & VALVE)	
		1	**9X-8600**	1	SEAL-O-RING	
	4	1	**003-7764**	1	END-HOSE	
	5	1	**128-4411**	1	VALVE AS (FUEL SHUTOFF)	
	6	1	**163-6700**	1	SENSOR GP-FUEL LEVEL	
		1	**186-3735**	2	PIN-CONNECTOR (16-GA TO 18-GA)	
		1	**102-8802**	1	KIT-RECEPTACLE (2-PIN)	
					(INCLUDES RECEPTACLE AS & WEDGE)	
J	7	1	**303-9933**	1	STRAINER AS-FUEL (FLOAT GAUGE)	
	8	1	**9S-6130**	1	PLUG	
M	9	1	**095-0736**	5	SCREW-MACHINE (M5X0.8X10-MM)	
	10	1	**2S-4078**	1	SEAL-O-RING	
	11	1	**3B-0551**	1	PLUG-PIPE	
	12	1	**3J-1907**	1	SEAL-O-RING	
	13	1	**8T-0328**	5	WASHER-HARD (5.5X10X1-MM THK)	
					AVAILABLE REPAIR KIT(S):	
J			**303-9937**	1	KIT-GAUGE (FUEL STRAINER)	
					(INCLUDES STOPPER & GAUGE FLOAT)	

J-KIT MARKED J SERVICES PART(S) MARKED J
M-METRIC PART

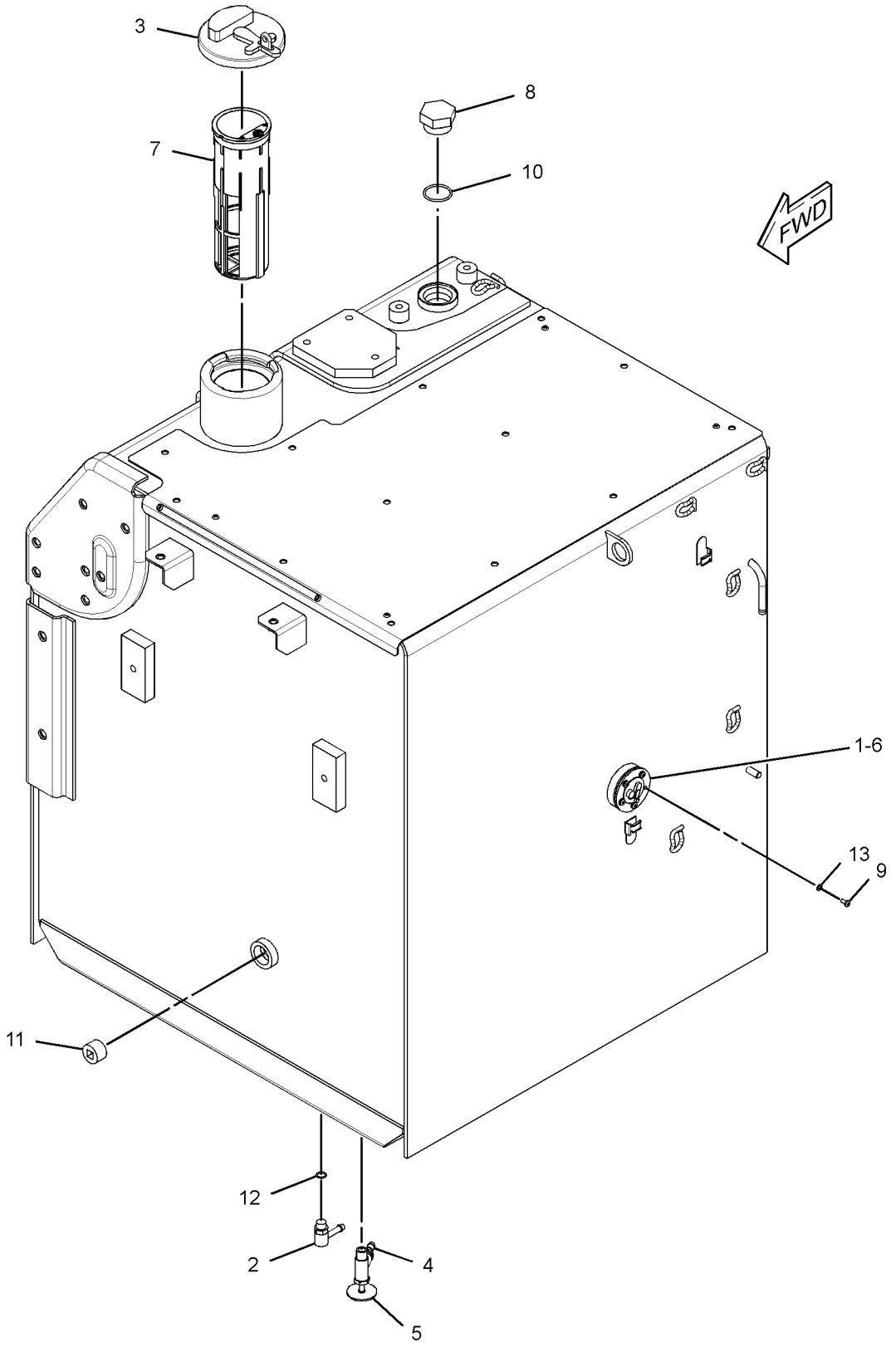

GRAPHIC #1 **<END>** g01618870

139-6873 VALVE GP-FUEL BYPASS

S/N: MNB1-UP; WDK1-UP

PART OF 223-3046 LINES GP-FUEL

SMCS-1250, 1261, 1715 **i02233267**

NOTE	REF NO	GRAPHIC REF	PART NUMBER	QTY	PART NAME 1 2 3 4 5 6 (PRODUCT LEVEL)	SEE PAGE
	1	1	**9X-7737**	1	SEAL-O-RING	

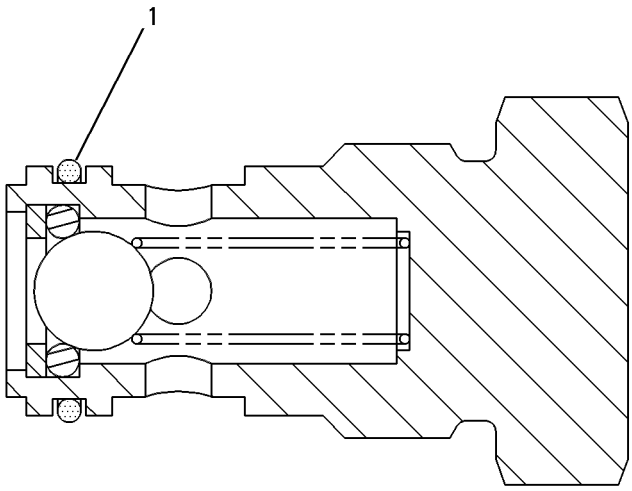

GRAPHIC #1 **<END>** g00266124

298-3147 VALVE GP-FUEL SHUTOFF

S/N: MNB1-UP; WDK1-UP
PART OF 223-3046, 259-3885 LINES GP-FUEL
ALSO AN ATTACHMENT

SMCS-1273 **i02750485**

NOTE	REF NO	GRAPHIC REF	PART NUMBER	QTY	PART NAME 1 2 3 4 5 6 (PRODUCT LEVEL)	SEE PAGE
	1	1	**298-3257**	1	STOP	
	2	1	**298-3258**	1	LEVER	
M	3	1	**260-6692**	1	NUT (M5X0.8-THD)	
	4	1	**3J-1907**	1	SEAL-O-RING	
	5	1	**8T-0328**	1	WASHER-HARD (5.5X10X1-MM THK)	
					PARTS SHOWN IN GRAPHIC(S) WITHOUT A REFERENCE NUMBER ARE NOT SERVICED SEPARATELY	

M-METRIC PART

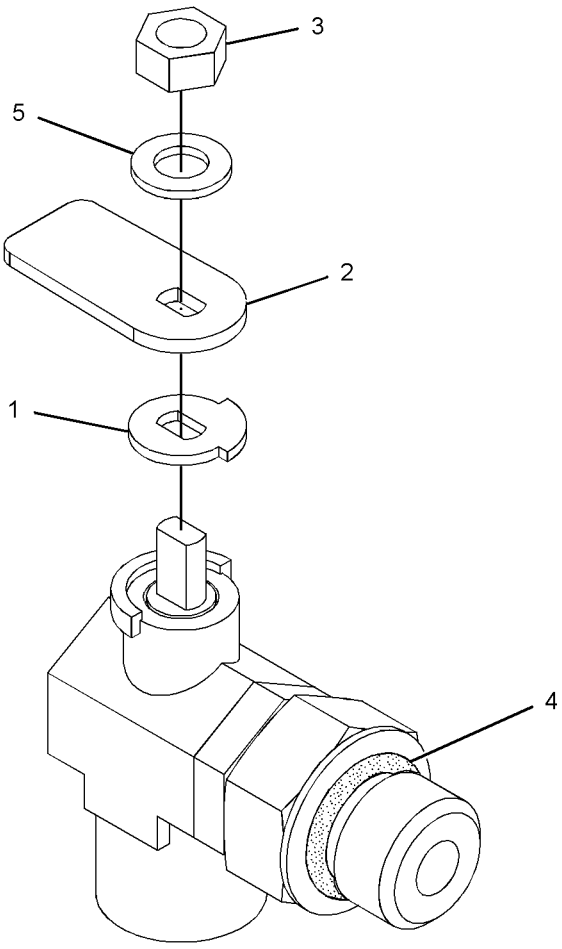

GRAPHIC #1 **<END>** g01377343

132-1829 ALARM GP

S/N: MNB1-UP; WDK1-UP
24-VOLT
PART OF 251-0432 WIRING GP-CAB

SMCS-7400, 7402, 7407 **i03254766**

NOTE	REF NO	GRAPHIC REF	PART NUMBER	QTY	PART NAME 1 2 3 4 5 6 (PRODUCT LEVEL)	SEE PAGE
	1	1	**102-8802**	1	KIT-RECEPTACLE (2-PIN)	
					(INCLUDES RECEPTACLE AS & WEDGE)	
	2	1	**186-3735**	2	PIN-CONNECTOR (16-GA TO 18-GA)	

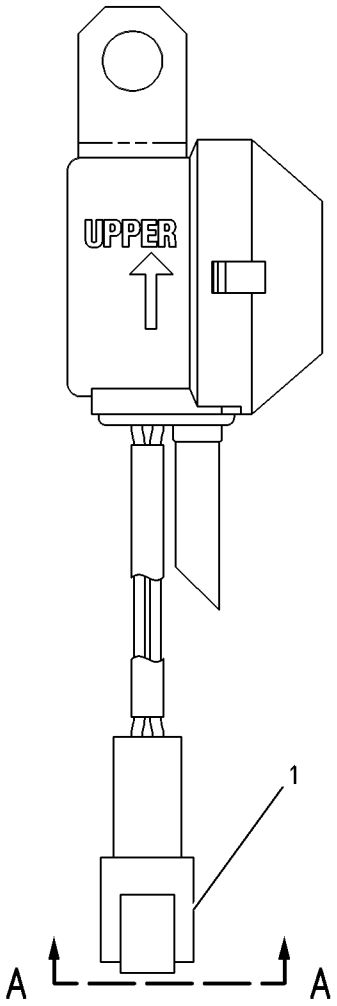

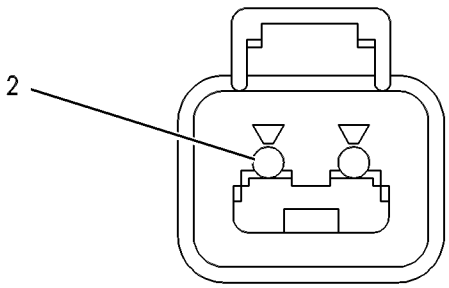

VIEW A-A

GRAPHIC #1 **<END>** g00272185

231-1771 ALARM GP-TRAVEL

S/N: MNB1-UP; WDK1-UP
AN ATTACHMENT

SMCS-7429 **i02693231**

NOTE	REF NO	GRAPHIC REF	PART NUMBER	QTY	PART NAME 1 2 3 4 5 6 (PRODUCT LEVEL)	SEE PAGE
	1	1	**213-9100**	1	ALARM GP	
BD		1	**5P-5623**		WIRE-ELECTRICAL (16-GA, BLACK)	
		1	**102-8802**	1	KIT-RECEPTACLE (2-PIN)	
					(INCLUDES RECEPTACLE AS & WEDGE)	
		1	**186-3735**	2	PIN-CONNECTOR (16-GA TO 18-GA)	
BE		1	**9X-1813**		SLEEVE	
M	2	1	**8T-4189**	2	BOLT (M8X1.25X20-MM)	
	3	1	**5P-4116**	2	WASHER-HARD (8.8X20.5X2-MM THK)	

B-USE AS REQUIRED
D-ORDER BY THE METER
E-ORDER BY THE CENTIMETER
M-METRIC PART

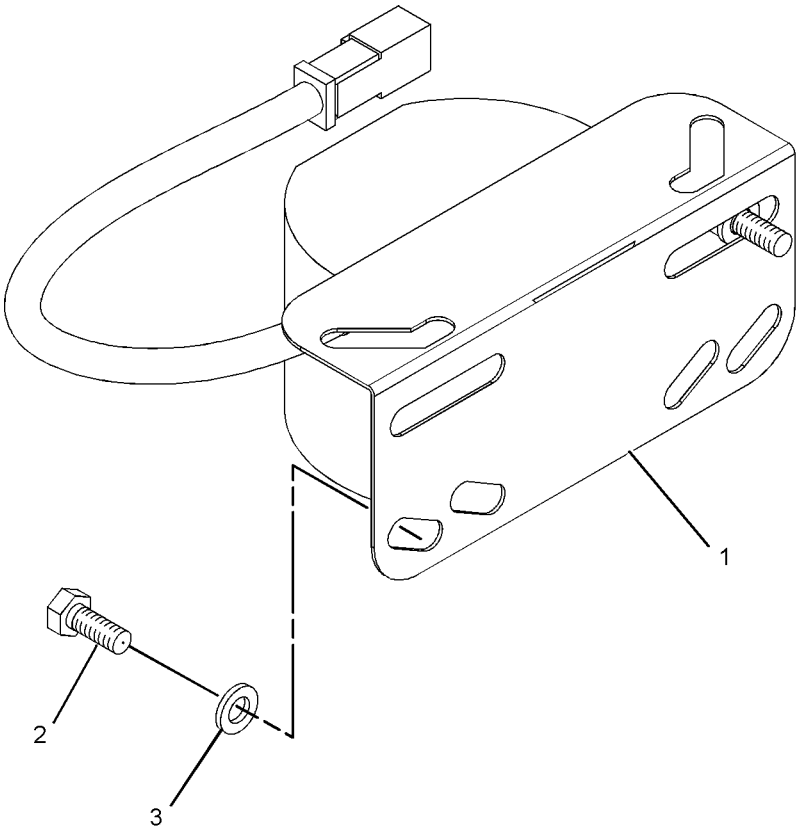

GRAPHIC #1 **<END>** g01071794

177-6972 ALTERNATOR GP-CHARGING

S/N: KHX4087-UP
24-VOLT, 65-AMPERE
PART OF 224-9842, 290-0754, 290-0755, 290-0756 ENGINE AR-COMPLETE
ALSO AN ATTACHMENT

SMCS-1405 **i02246446**

NOTE	REF NO	GRAPHIC REF	PART NUMBER	QTY	PART NAME 1 2 3 4 5 6 (PRODUCT LEVEL)	SEE PAGE
	1	1	**129-5096**	1	PULLEY-ALTERNATOR	
YR	2	1	**185-5294**	1	ALTERNATOR GP-CHARGING (24-VOLT)	170
	3	1	**203-0199**	1	SPACER	
	4	1	**258-7531**	1	GUARD AS	
	5	1	**5P-2424**	1	BOLT (1/2-13X2.25-IN)	
	6	1	**6V-8188**	1	NUT (1/2-13-THD)	
	7	1	**7X-0339**	1	BOLT (1/2-13X6.25-IN)	
	8	1	**8T-4121**	1	WASHER-HARD (11X21X2.5-MM THK)	
M	9	1	**8T-4136**	1	BOLT (M10X1.5X25-MM)	
	10	1	**8T-4223**	3	WASHER-HARD (13.5X25.5X3-MM THK)	

M-METRIC PART
R-REMFG PART MAY BE AVAILABLE
Y-SEPARATE ILLUSTRATION

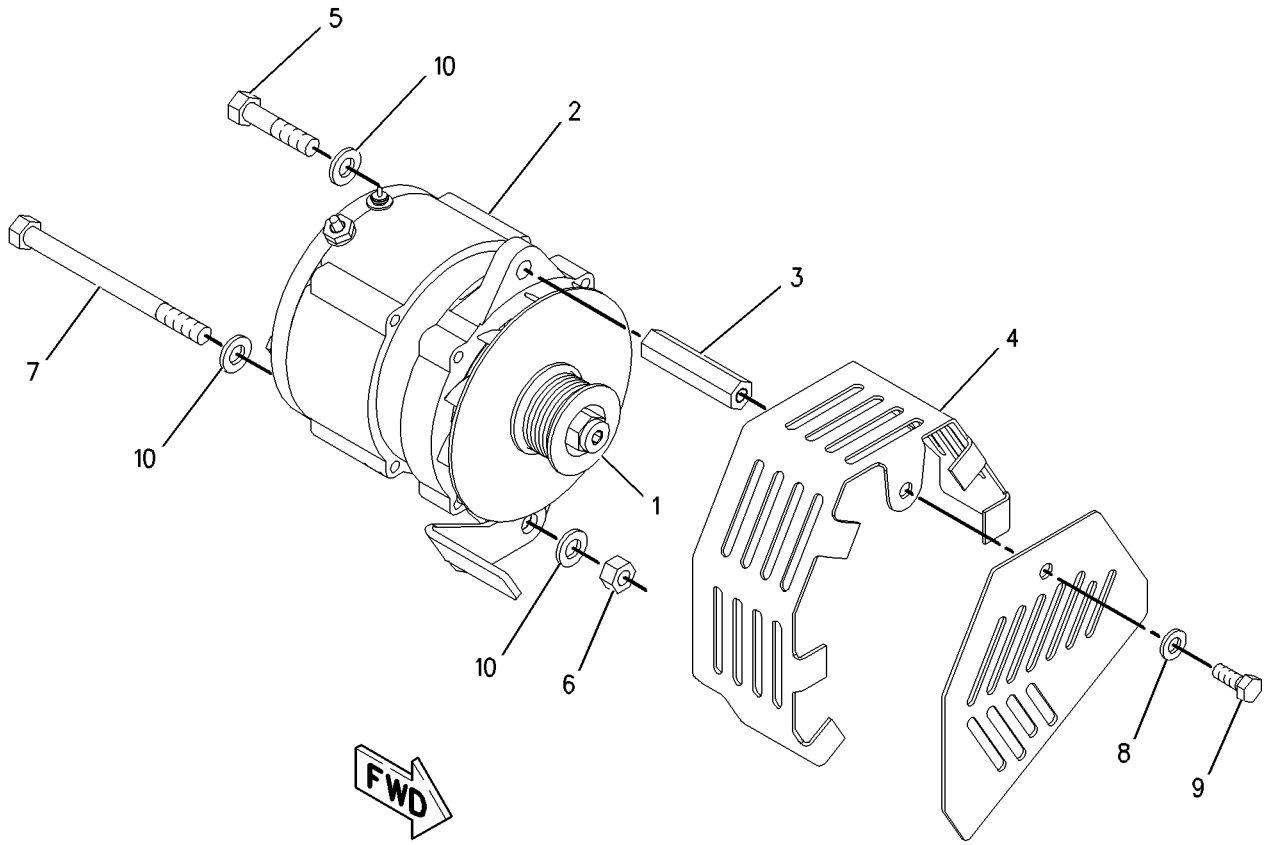

GRAPHIC #1 **<END>** g00775601

185-5294 ALTERNATOR GP-CHARGING*R

S/N: KHX4087-UP
24-VOLT, 65-AMPERE
PART OF 177-6972 ALTERNATOR GP-CHARGING
ALSO AN ATTACHMENT

SMCS-1405 **i02293147**

NOTE	REF NO	GRAPHIC REF	PART NUMBER	QTY	PART NAME 1 2 3 4 5 6 (PRODUCT LEVEL)	SEE PAGE
	1	1	**185-2653**	1	FRAME	
	2	1	**5S-7349**	1	BOLT (1/4-20X0.5-IN)	
	3	1	**185-2639**	1	FAN AS	
	4	1	**1H-3244**	1	LOCKWASHER	
	5	1	**185-2645**	1	FRAME	
	6	1	**2K-4821**	1	LOCKNUT (5/8-18-THD)	
	7	1	**5P-8247**	1	WASHER-HARD (17X32X3.5-MM THK)	
	8	1	**185-2651**	1	COVER	
	9	1	**8T-4205**	1	WASHER-HARD (7.2X14.5X2-MM THK)	
	10	1	**185-2647**	1	GROMMET	
	11	1	**9L-6770**	1	CAP-DUST	
	12	1	**185-2642**	1	STATOR AS	
	13	1	**185-2638**	2	COLLAR	
	14	1	**185-2654**	1	PLATE	
	15	1	**185-2650**	1	ROTOR AS	
	16	1	**185-2644**	1	COIL AS	
	17	1	**185-2648**	1	REGULATOR AS-VOLTAGE (24-VOLT) (ALTERNATOR)	
	18	1	**6V-8189**	1	NUT (5/16-18-THD)	
	19	1	**8T-4224**	1	WASHER-HARD (8.8X16X2-MM THK)	
	20	1	**3F-9556**	1	LOCKWASHER	
					AVAILABLE REPAIR KIT(S):	
			185-2655	1	KIT-BEARING (ALTERNATOR)	
			199-8436	1	KIT-TERMINAL (ALTERNATOR)	
					(INCLUDES HOLDER AS, PLATE INSULATOR, PIN, BOLT KIT, GROMMET, AND NUT)	
			199-7891	1	KIT-TERMINAL (ALTERNATOR)	
					(INCLUDES INSULATORS, WASHERS, AND NUTS)	
			185-2658	1	KIT-HARDWARE (ALTERNATOR)	

185-5294 **ALTERNATOR GP-CHARGING** *(contd.)* **i02293147**

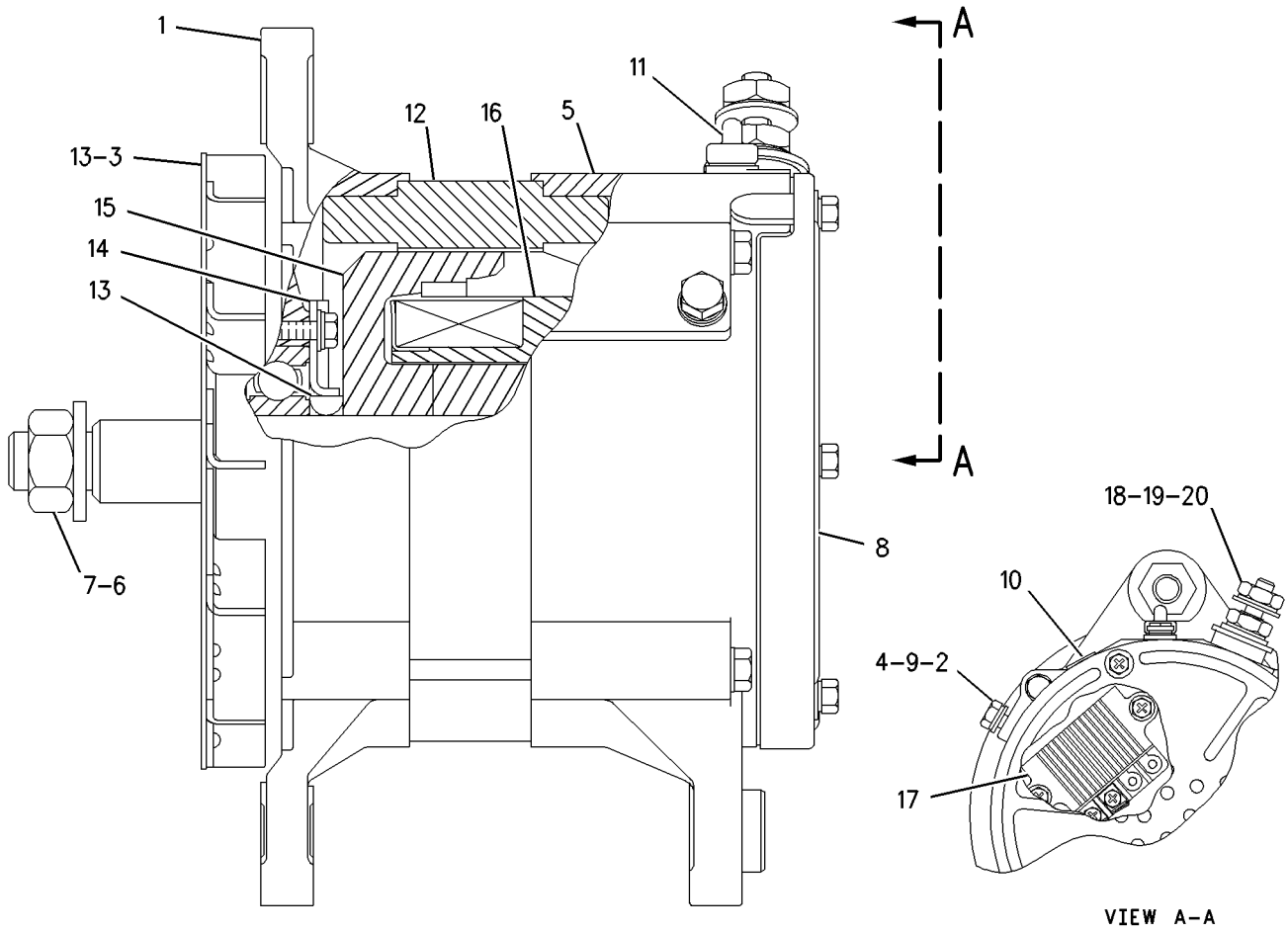

GRAPHIC #1 **<END>** g00789053

ELECTRICAL AND STARTING SYSTEM

251-0429 BATTERY & WIRING GP

S/N: MNB1-UP; WDK1-UP

PART OF 314-3652, 314-3653 CHASSIS AR

SMCS-1401, 1402, 1408 **i02987480**

NOTE	REF NO	GRAPHIC REF	PART NUMBER	QTY	PART NAME 1 2 3 4 5 6 (PRODUCT LEVEL)	SEE PAGE
	1	2,5	**2G-8767**	3	WASHER (10.5X60X3-MM THK)	
	2	1,2,3, 4,5	**3S-2093**	46	STRAP-CABLE	
	3	4	**263-9574**	2	BATTERY (12-VOLT, MAINTENANCE FREE)	
	4	4	**5I-8270**	1	COVER-BATTERY	
	5	4	**6W-6005**	1	HOLD-DOWN-BATTERY	
	6	2,3	**7I-2673**	5	STRAP-CABLE	
C	7	2,4,5	**7K-1181**	14	STRAP-CABLE	
	8	1,4	**7Y-5456**	2	GROMMET	
	9	4	**087-4587**	1	GROMMET	
	10	1,2,3	**111-4836**	10	CLIP	
	11	1,2,4,5	**111-4837**	13	CLIP	
	12	2,4	**111-4838**	9	CLIP	
	13	2,4	**111-4839**	9	STRAP	
	14	1,2,3, 4,5	**116-0118**	12	CLIP	
	15	4	**132-1805**	1	STRAP AS-GROUND	
M	16	2	**135-8572**	2	BOLT AS (M12X1.75X20-MM)	
M	17	4	**135-8573**	2	BOLT AS (M12X1.75X25-MM)	
	18	5	**140-0860**	1	STRAP AS-GROUND	
	19	4	**170-6929**	1	CABLE AS	
E		4	**5P-0761**		CABLE (00-GA, RED) (31-CM)	
		4	**9G-0002**	1	COVER-TERMINAL (RED)	
		4	**9G-0005**	1	COVER-TERMINAL (BLACK)	
					(EACH COVER-TERMINAL INCLUDES)	
		4	**8L-8413**	1	STRAP-CABLE	
		4	**8C-5918**	1	TERMINAL AS (NEGATIVE)	
		4	**8T-9756**	1	TERMINAL AS (POSITIVE)	
					(EACH TERMINAL AS INCLUDES)	
		4	**1M-6119**	1	BOLT (5/16-18X1.375-IN)	
		4	**1M-6120**	1	NUT (5/16-18-THD)	
	20	2	**170-9336**	1	BRACKET AS	
	21	4	**231-1827**	1	CABLE AS	
		4	**1S-7252**	1	TERMINAL-CABLE (00-GA, 3/8-IN BOLT)	
E		4	**5P-0747**		CABLE (00-GA, BLACK) (23-CM)	
		4	**9G-0003**	1	COVER-TERMINAL (BLACK) (BATTERY)	
		4	**8L-8413**	1	STRAP-CABLE	
		4	**9G-8909**	1	COVER-TERMINAL (BLACK) (DISCONNECT SWITCH)	
		4	**8T-9757**	1	TERMINAL AS-BATTERY (NEGATIVE)	
		4	**1M-6119**	1	BOLT (5/16-18X1.375-IN)	
		4	**1M-6120**	1	NUT (5/16-18-THD)	
	22	5	**234-1051**	2	BRACKET	
	23	4	**238-2501**	1	KNOB	
	24	4	**238-2528**	1	ROD	
	25	5	**238-2529**	1	BRACKET AS	
	26	2	**250-5072**	1	SHEET AS	
		2	**250-5073**	1	INSULATION	
	27	2	**250-5075**	1	SHEET AS	
		2	**250-5076**	1	INSULATION	
	28	4	**251-0451**	1	CABLE AS	
		4	**1S-7251**	1	TERMINAL-CABLE (00-GA, 1/2-IN BOLT)	
E		4	**5P-0761**		CABLE (00-GA, RED) (288-CM)	
		4	**8N-0869**	1	COVER-TERMINAL (RED) (STARTING MOTOR)	
		4	**8N-1725**	1	COVER-TERMINAL (RED) (BATTERY)	
		4	**8L-8413**	1	STRAP-CABLE	
		4	**3S-6049**	1	TERMINAL AS-BATTERY (POSITIVE)	

251-0429 **BATTERY & WIRING GP** *(contd.)* **i02987480**

NOTE	REF NO	GRAPHIC REF	PART NUMBER	QTY	PART NAME 1 2 3 4 5 6 (PRODUCT LEVEL)	SEE PAGE
		4	**1M-6119**	1	BOLT (5/16-18X1.375-IN)	
		4	**1M-6120**	1	NUT (5/16-18-THD)	
	29	2	**251-0464**	1	GROMMET	
	30	4	**251-0467**	1	BRACKET AS	
	31	4	**256-1705**	1	SHEET AS	
		4	**256-1707**	1	INSULATION	
C	32	4	**283-2932**	1	HARNESS AS-CHASSIS	
		4	**102-8802**	4	KIT-RECEPTACLE (2-PIN)	
		4	**102-8803**	3	KIT-RECEPTACLE (3-PIN)	
		4	**102-8804**	1	KIT-RECEPTACLE (4-PIN)	
		4	**102-8806**	1	KIT-RECEPTACLE (8-PIN)	
					(EACH RECEPTACLE KIT INCLUDES RECEPTACLE AS & WEDGE)	
		4	**153-2620**	1	PLUG AS-CONNECTOR (54-PIN, BLACK)	
		4	**153-2630**	1	PLUG AS-CONNECTOR (54-PIN, BROWN)	
		4	**155-2260**	3	KIT-CONNECTING PLUG (3-PIN)	
		4	**155-2270**	17	KIT-CONNECTING PLUG (2-PIN)	
		4	**155-2271**	1	KIT-CONNECTING PLUG (4-PIN)	
					(EACH PLUG KIT INCLUDES PLUG AS, WEDGE & INTERFACE SEAL)	
		4	**160-7689**	1	PLUG AS-CONNECTOR (70-PIN)	
		4	**163-6637**	1	RECEPTACLE AS-CONNECTOR (54-PIN, BLACK)	
		4	**174-3016**	2	PLUG AS-CONNECTOR (3-PIN)	
		4	**230-4009**	2	PLUG AS-CONNECTOR (12-PIN)	
		4	**230-4011**	7	PLUG AS-CONNECTOR (2-PIN)	
		4	**230-4013**	2	PLUG AS-CONNECTOR (3-PIN)	
		4	**230-5010**	2	PLUG AS-CONNECTOR (6-PIN)	
		4	**231-2295**	2	PLUG AS-CONNECTOR (8-PIN)	
		4	**243-4505**	6	RECEPTACLE AS-CONNECTOR (2-PIN)	
		4	**243-4506**	2	RECEPTACLE AS-CONNECTOR (3-PIN)	
		4	**243-4508**	2	RECEPTACLE AS-CONNECTOR (6-PIN)	
		4	**243-4509**	2	RECEPTACLE AS-CONNECTOR (8-PIN)	
		4	**3S-2093**	19	STRAP-CABLE	
		4	**8T-8827**	2	BOOT	
E		4	**103-2529**		HOSE (75-CM)	
E		4	**119-3662**		TUBE-HEAT SHRINK (10.85-MM DIA) (33-CM)	
E		4	**125-7874**		TUBE-HEAT SHRINK (5.72-MM DIA) (75-CM)	
E		4	**125-7875**		TUBE-HEAT SHRINK (7.44-MM DIA) (40-CM)	
		4	**243-4510**	2	RECEPTACLE AS-CONNECTOR (12-PIN)	
	33	4	**093-2065**	1	GROMMET	
	34	5	**132-5789**	1	CLIP	
	35	1,4	**4I-7889**	2	SPACER (11X25X45-MM THK)	
	36	4	**4K-8864**	3	CLIP	
	37	2	**4P-7428**	1	CLIP	
	38	5	**4P-7581**	1	CLIP	
M	39	4	**5C-7261**	1	NUT (M8X1.25-THD)	
M	40	4	**5C-7883**	4	BOLT-SOCKET HEAD (M6X1X16-MM)	
	41	5	**5P-4116**	2	WASHER-HARD (8.8X20.5X2-MM THK)	
	42	2,5	**6G-2256**	2	CLAMP	
	43	2,4,5	**6G-2263**	5	SPACER (10.5X19X28.5-MM THK)	
	44	2	**6K-8178**	1	CLIP	
M	45	2,5	**7X-2621**	2	BOLT (M10X1.5X12-MM)	
	46	2,3	**7Y-8165**	2	GROMMET	
	47	4	**8M-2770**	1	CLIP	
	48	1,2,3, 4,5	**8T-4121**	54	WASHER-HARD (11X21X2.5-MM THK)	
M	49	4	**8T-4133**	1	NUT (M10X1.5-THD)	
M	50	2,4	**8T-4136**	5	BOLT (M10X1.5X25-MM)	
M	51	1,2,3, 4,5	**8T-4137**	31	BOLT (M10X1.5X20-MM)	

251-0429 **BATTERY & WIRING GP** *(contd.)* **i02987480**

NOTE	REF NO	GRAPHIC REF	PART NUMBER	QTY	PART NAME 1 2 3 4 5 6 (PRODUCT LEVEL)	SEE PAGE
M	52	4	**8T-4172**	1	BOLT (M10X1.5X80-MM)	
M	53	2,5	**8T-4182**	2	BOLT (M10X1.5X45-MM)	
M	54	4,5	**8T-4185**	2	BOLT (M10X1.5X50-MM)	
M	55	5	**8T-4189**	1	BOLT (M8X1.25X20-MM)	
M	56	2,3,5	**8T-4191**	8	BOLT (M10X1.5X16-MM)	
M	57	3,4	**8T-4195**	2	BOLT (M10X1.5X30-MM)	
	58	4	**8T-4226**	1	WASHER-PLATED (10.5X45X3-MM THK)	
M	59	1	**8T-5005**	1	BOLT (M10X1.5X70-MM)	
M	60	2	**8T-6466**	1	BOLT (M10X1.5X60-MM)	
M	61	5	**8T-6869**	1	BOLT (M8X1.25X60-MM)	
M	62	5	**8T-6912**	1	BOLT (M8X1.25X50-MM)	
	63	4	**9X-8256**	4	WASHER (6.6X12X2-MM THK)	
	64	2	**091-9035**	1	SPACER (11X25X20-MM THK)	

C-CHANGE FROM PREVIOUS TYPE
E-ORDER BY THE CENTIMETER
M-METRIC PART

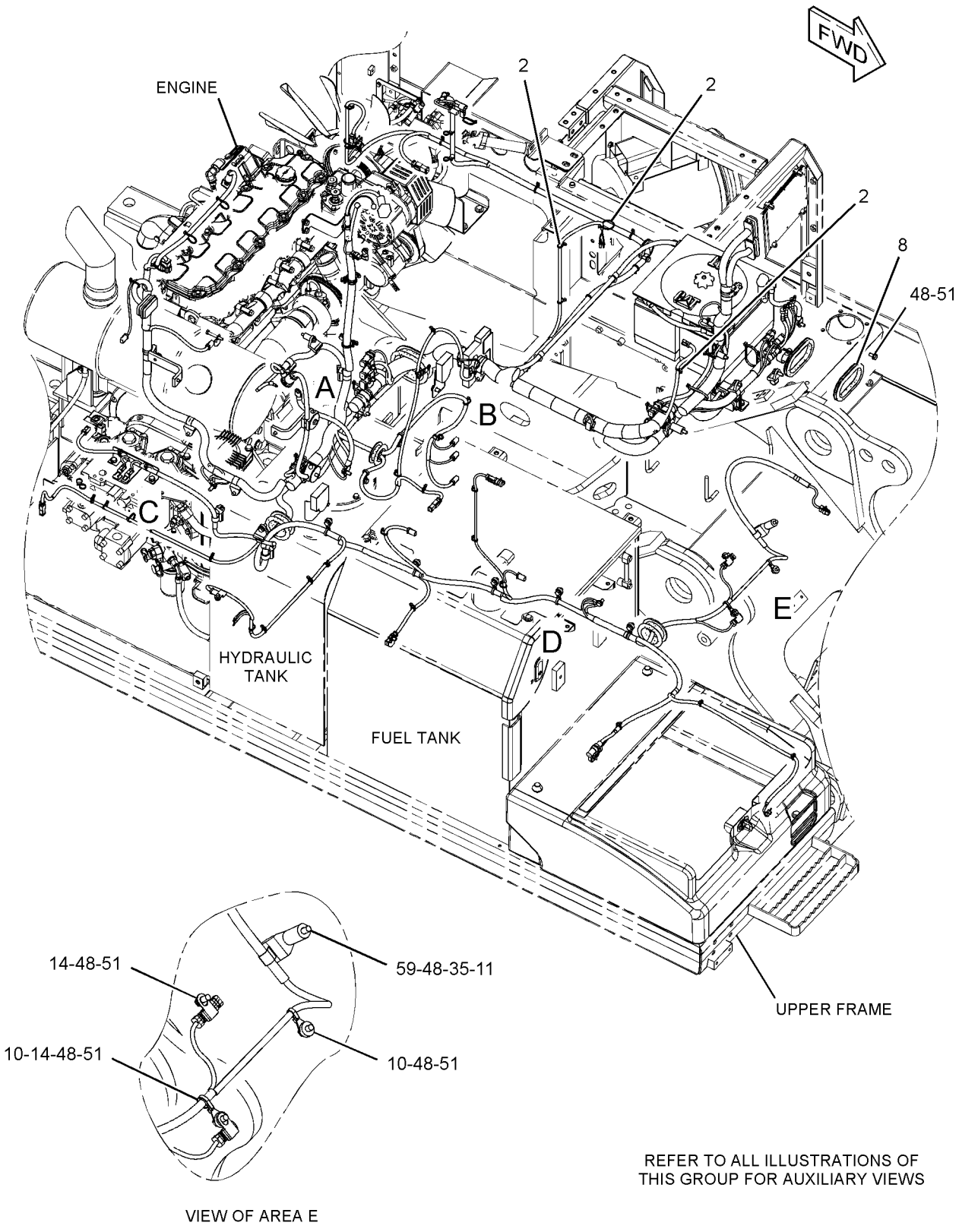

GRAPHIC #1 g01334056

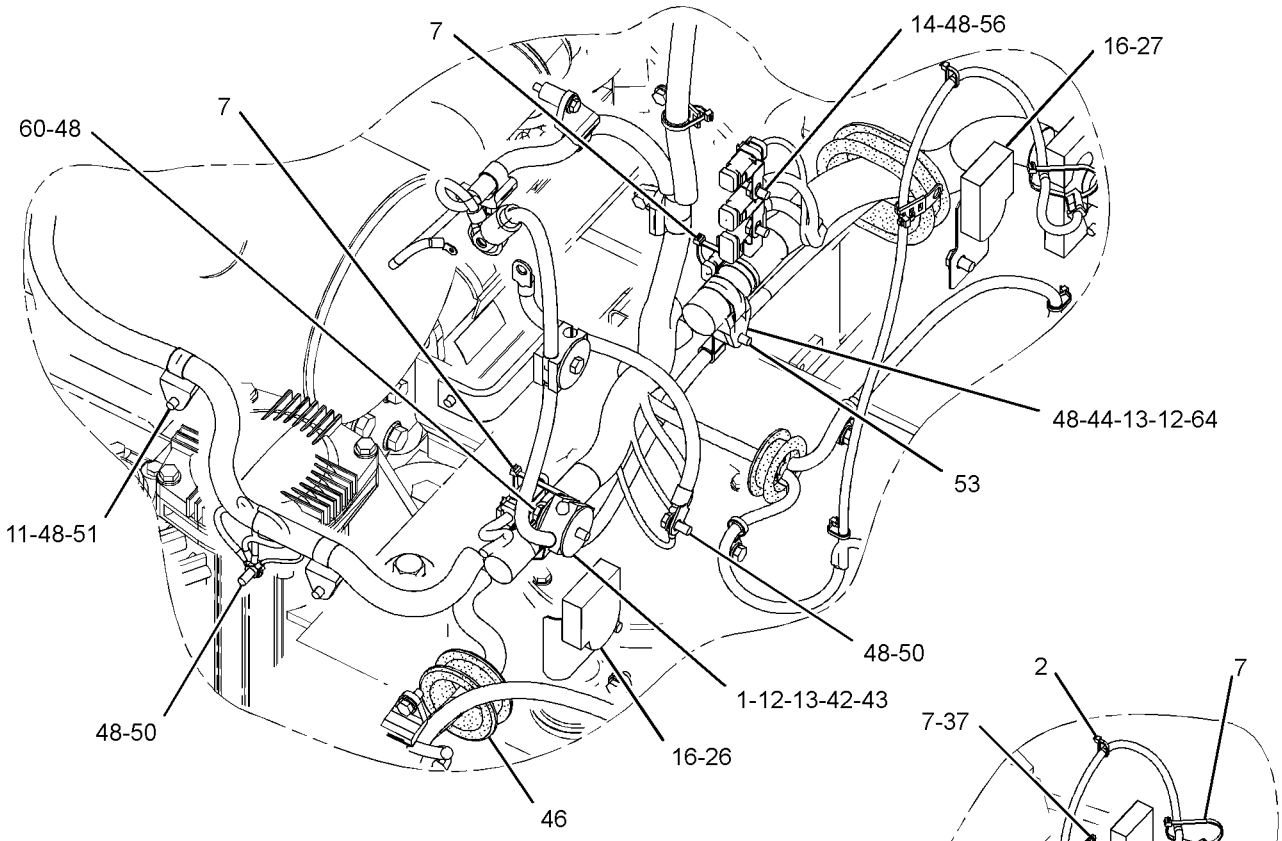

VIEW OF AREA A

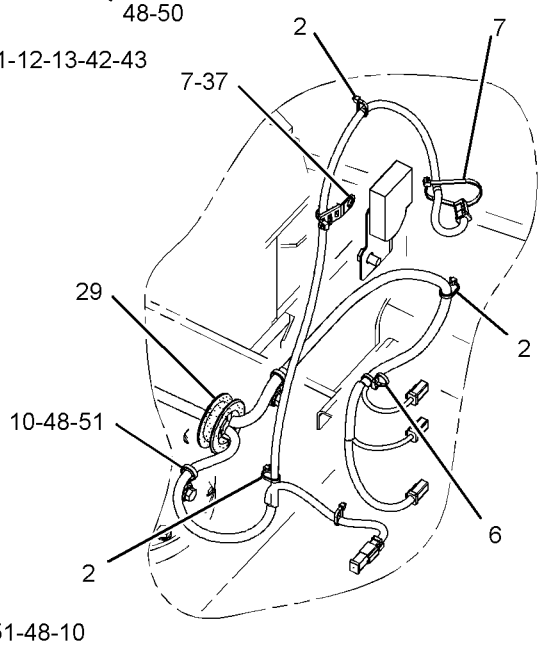

VIEW OF AREA B

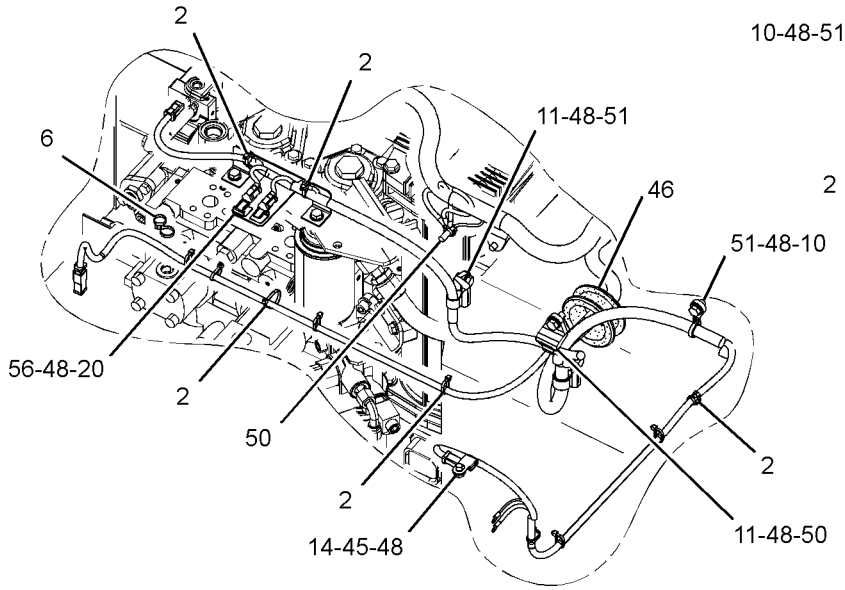

VIEW OF AREA C

GRAPHIC #2

g01334058

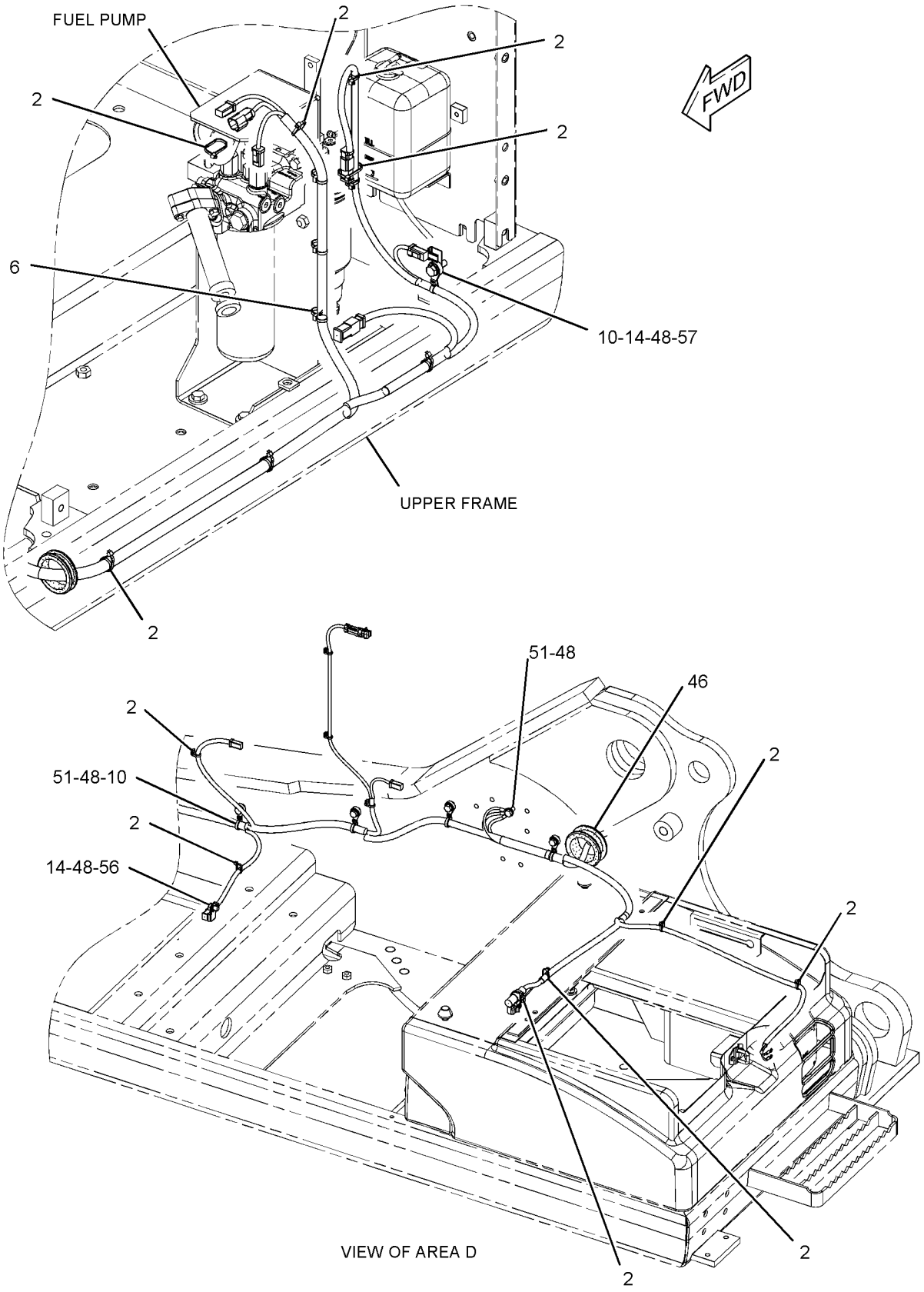

GRAPHIC #3

g01334059

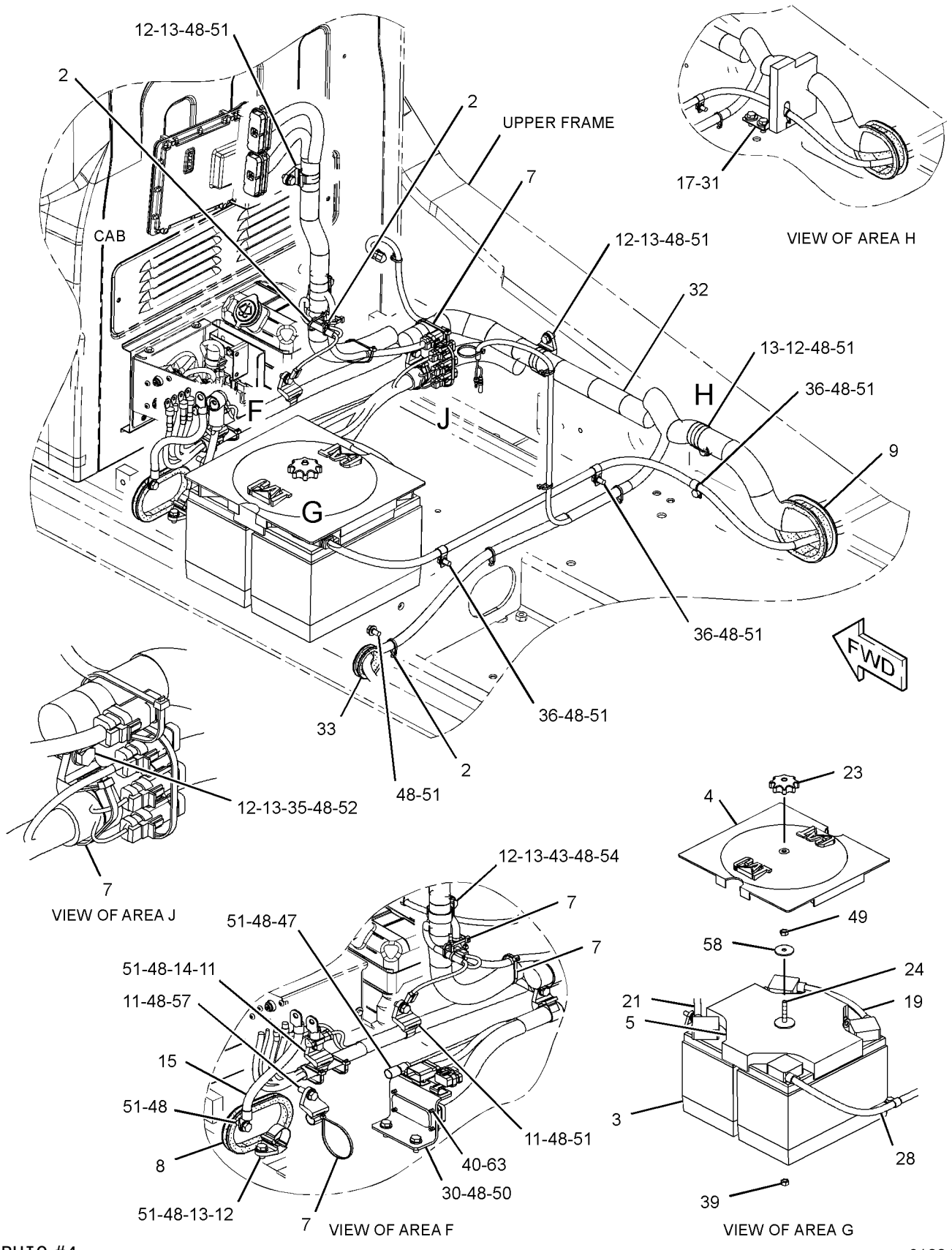

GRAPHIC #4

g01334060

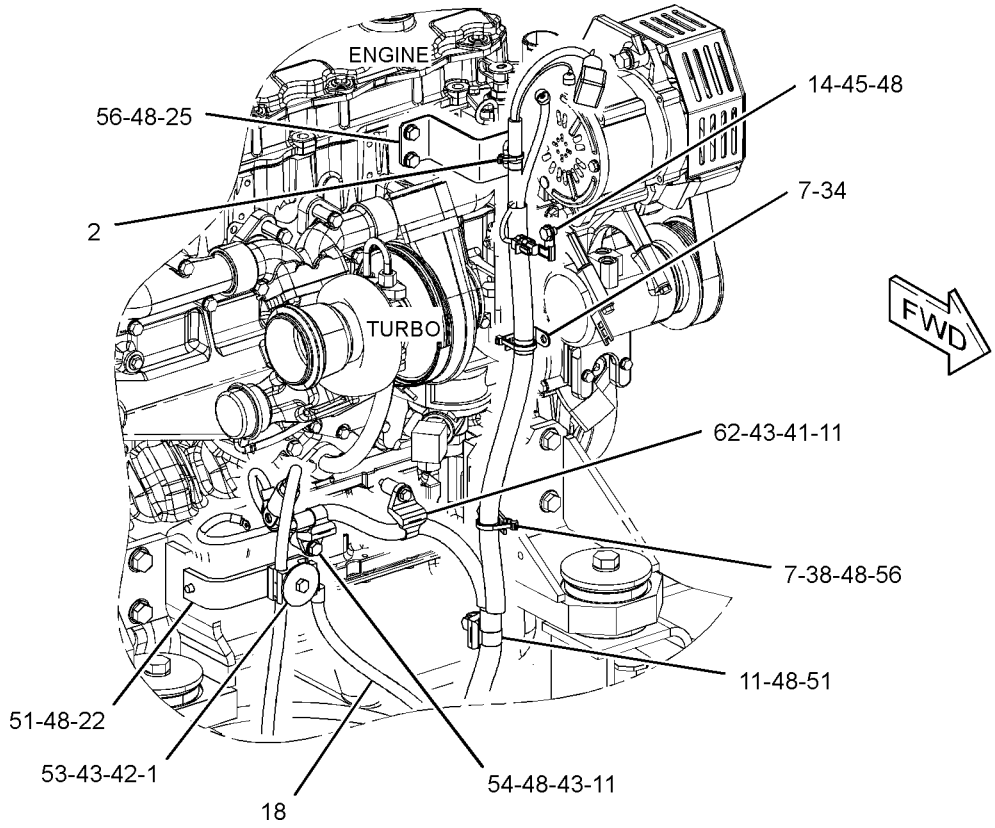

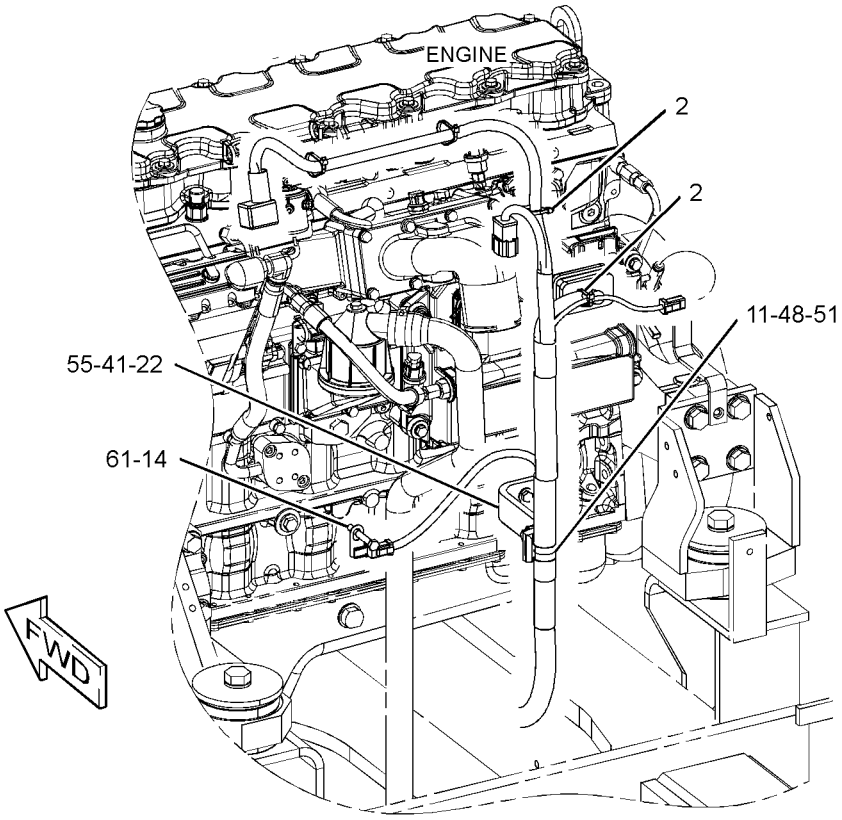

GRAPHIC #5 **<END>** g01334061

ELECTRICAL AND STARTING SYSTEM

251-0440 BATTERY & WIRING GP–COLD WEATHER

S/N: MNB1-UP; WDK1-UP

PART OF 275-3747, 314-3586 STARTING AR-COLD WEATHER

AN ATTACHMENT

SMCS-1401, 1402, 1408 **i03005972**

NOTE	REF NO	GRAPHIC REF	PART NUMBER	QTY	PART NAME 1 2 3 4 5 6 (PRODUCT LEVEL)	SEE PAGE
	1	1	**263-9574**	2	BATTERY (12-VOLT, MAINTENANCE FREE)	
	2	1	**5I-8270**	1	COVER-BATTERY	
	3	1	**6W-6005**	1	HOLD-DOWN-BATTERY	
	4	1	**170-6929**	1	CABLE AS	
E		1	**5P-0761**		CABLE (00-GA, RED) (31-CM)	
		1	**9G-0002**	1	COVER-TERMINAL (RED)	
		1	**8L-8413**	1	STRAP-CABLE	
		1	**9G-0005**	1	COVER-TERMINAL (BLACK)	
		1	**8L-8413**	1	STRAP-CABLE	
		1	**8C-5918**	1	TERMINAL AS (NEGATIVE) (RH)	
		1	**8T-9756**	1	TERMINAL AS (POSITIVE) (LH)	
	5	1	**291-7457**	1	CABLE AS	
		1	**1S-7252**	1	TERMINAL-CABLE (00-GA, 3/8-IN BOLT)	
		1	**7N-5274**	1	COVER-TERMINAL (BLACK)	
		1	**8L-8413**	1	STRAP-CABLE	
E		1	**5P-0747**		CABLE (00-GA, BLACK) (55-CM)	
D		1	**6V-2722**		TUBE-HEAT SHRINK (25.4-MM DIA) (0.1-M)	
		1	**3S-6050**	1	TERMINAL AS-BATTERY (NEGATIVE)	
		1	**1M-6119**	1	BOLT (5/16-18X1.375-IN)	
		1	**1M-6120**	1	NUT (5/16-18-THD)	
	6	1	**238-2501**	1	KNOB	
	7	1	**238-2528**	1	ROD	
	8	1	**251-0454**	1	CABLE AS	
		1	**1S-7251**	1	TERMINAL-CABLE (00-GA, 1/2-IN BOLT)	
E		1	**5P-0761**		CABLE (00-GA, RED) (238-CM)	
		1	**8N-1725**	1	COVER-TERMINAL (RED)	
		1	**8L-8413**	1	STRAP-CABLE	
D		1	**6V-2722**		TUBE-HEAT SHRINK (25.4-MM DIA) (0.1-M)	
		1	**3S-6049**	1	TERMINAL AS-BATTERY (POSITIVE)	
		1	**1M-6119**	1	BOLT (5/16-18X1.375-IN)	
		1	**1M-6120**	1	NUT (5/16-18-THD)	
Y	9	1	**262-2497**	1	SHEET AS-SOUND SUPPRESSION	386
	10	1	**262-2502**	1	SHEET AS	
		1	**262-2503**	1	LINER	
	11	1	**4K-8864**	1	CLIP	
M	12	1	**5C-7261**	1	NUT (M8X1.25-THD)	
	13	1	**6K-8178**	2	CLIP	
M	14	1	**8T-4133**	1	NUT (M10X1.5-THD)	
	15	1	**8T-4226**	1	WASHER-PLATED (10.5X45X3-MM THK)	
	16	1	**204-1673**	1	STRAP-CABLE	

D-ORDER BY THE METER
E-ORDER BY THE CENTIMETER
M-METRIC PART
Y-SEPARATE ILLUSTRATION

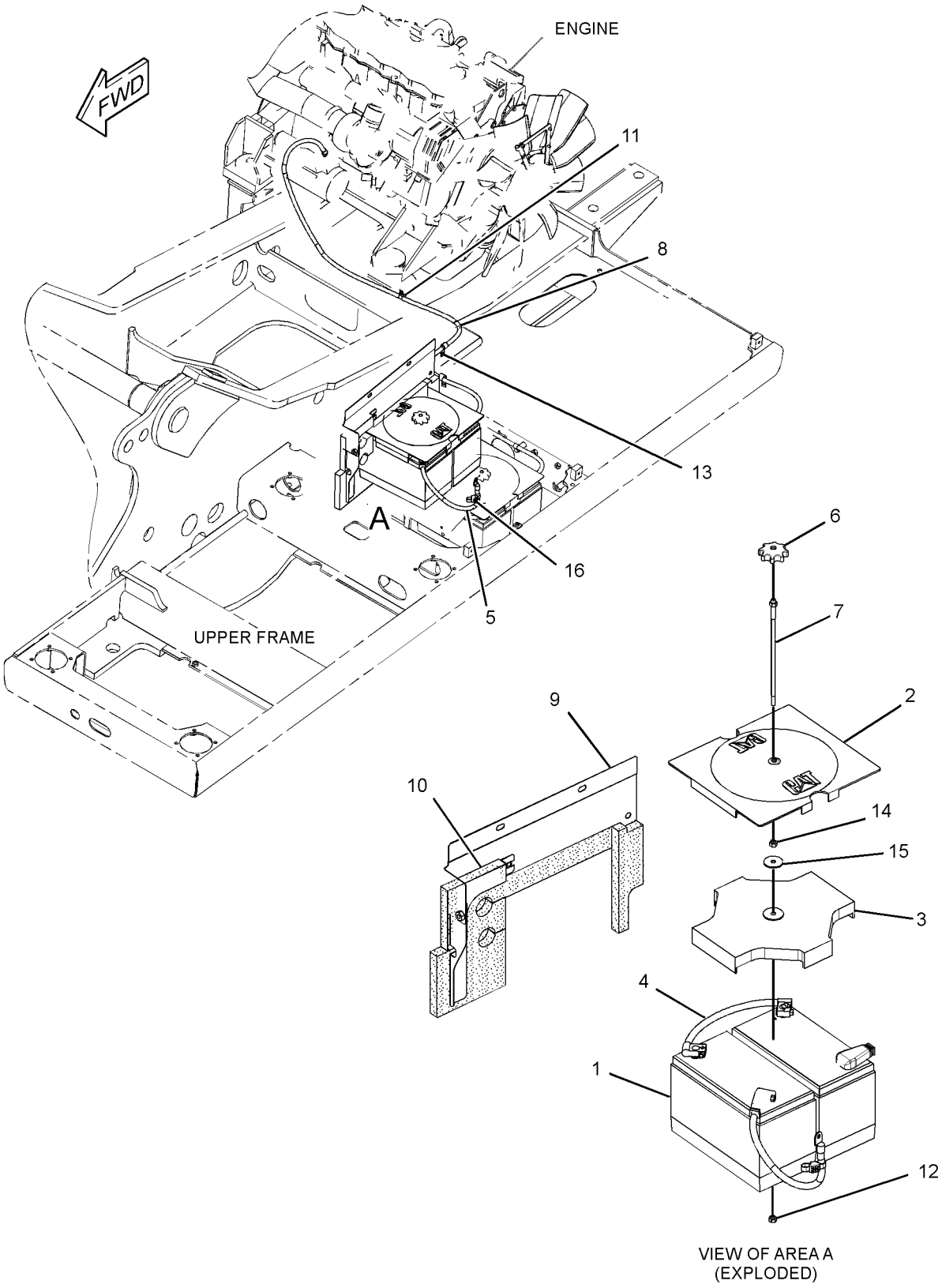

GRAPHIC #1 **<END>** g01395671

9W-0742 BLOCK GP-JUNCTION–BATTERY

S/N: MNB1-UP; WDK1-UP
PART OF 251-0441 WIRING GP-AUX START RECEPTACLE
AN ATTACHMENT

SMCS-7426 **i02236462**

NOTE	REF NO	GRAPHIC REF	PART NUMBER	QTY	PART NAME 1 2 3 4 5 6 (PRODUCT LEVEL)	SEE PAGE
	1	1	**8C-6358**	1	BLOCK GP-JUNCTION (BATTERY)	
	1A	1	**8T-3519**	3	BOLT-BRONZE (1/2-13X2-IN)	
BD	2	1	**6V-2722**		TUBE-HEAT SHRINK (25.4-MM DIA)	
	3	1	**7F-0560**	6	WASHER (0.516X0.938X0.101-IN THK)	
	4	1	**8T-3518**	6	NUT-FULL (1/2-13-THD)	

B-USE AS REQUIRED
D-ORDER BY THE METER

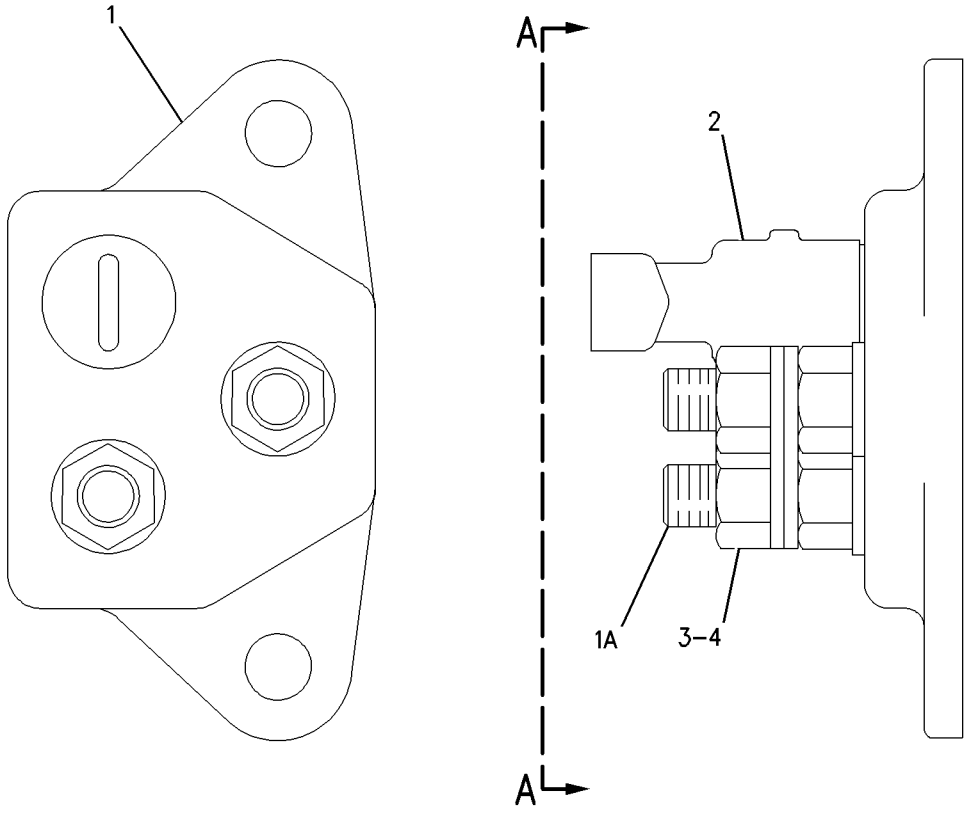

VIEW A-A

GRAPHIC #1 **<END>** g00650721

327-3329 CAMERA & MOUNTING GP

S/N: MNB1-UP; WDK1-UP
PART OF 329-6570 CAMERA & WIRING GP
AN ATTACHMENT

SMCS-7348 **i03114041**

NOTE	REF NO	GRAPHIC REF	PART NUMBER	QTY	PART NAME 1 2 3 4 5 6 (PRODUCT LEVEL)	SEE PAGE
Y	1	1	*313-7833*	1	CAMERA GP (WITH MOUNTING)	186
	2	1	**320-5396**	1	COVER	
	3	1	**8T-4121**	4	WASHER-HARD (11X21X2.5-MM THK)	
M	4	1	**8T-4137**	4	BOLT (M10X1.5X20-MM)	

M-METRIC PART
Y-SEPARATE ILLUSTRATION

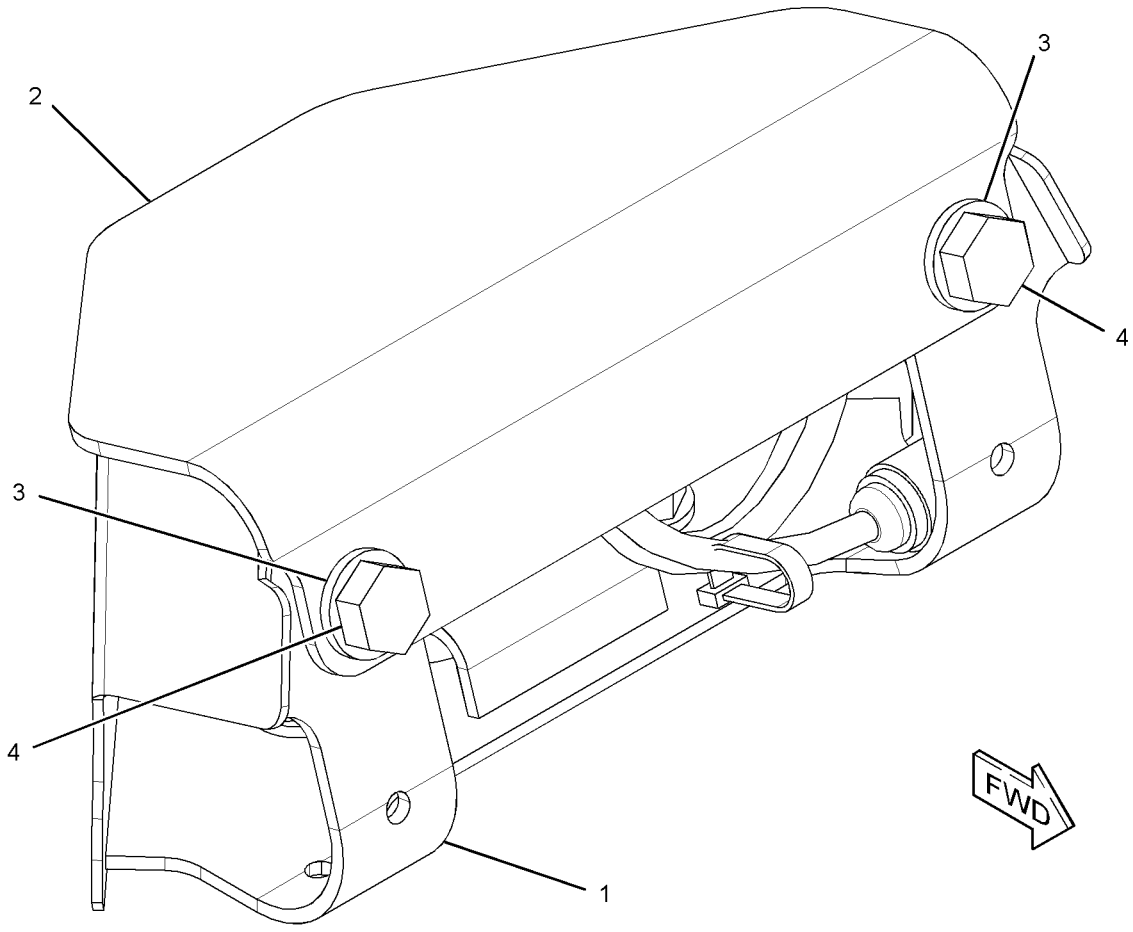

GRAPHIC #1 **<END>** g01609019

329-6570 CAMERA & WIRING GP

S/N: MNB1-UP; WDK1-UP
PART OF 329-6569 CAMERA & MIRROR AR
AN ATTACHMENT

SMCS-7348 **i03167783**

NOTE	PART NUMBER	QTY	PART NAME 1 2 3 4 5 6 (PRODUCT LEVEL)	SEE PAGE
Y	*327-3329*	1	CAMERA & MOUNTING GP	183
Y	*303-2787*	1	FILM GP	1113
Y	*328-0048*	1	WIRING GP-CAB	285
Y	*306-8720*	1	WIRING GP-CAMERA	286

Y-SEPARATE ILLUSTRATION

<END>

286-4271 CAMERA GP

S/N: MNB1-UP; WDK1-UP
PART OF 313-7833 CAMERA GP
AN ATTACHMENT

SMCS-7348 **i02957535**

NOTE	REF NO	GRAPHIC REF	PART NUMBER	QTY	PART NAME 1 2 3 4 5 6 (PRODUCT LEVEL)	SEE PAGE
					AVAILABLE REPAIR KIT(S):	
			251-4162	1	KIT-BRACKET (CAMERA)	
					(KIT INCLUDES BRACKET, BOLTS, LOCKNUTS, SOCKET BOLTS, GASKET, & ALLEN KEY)	

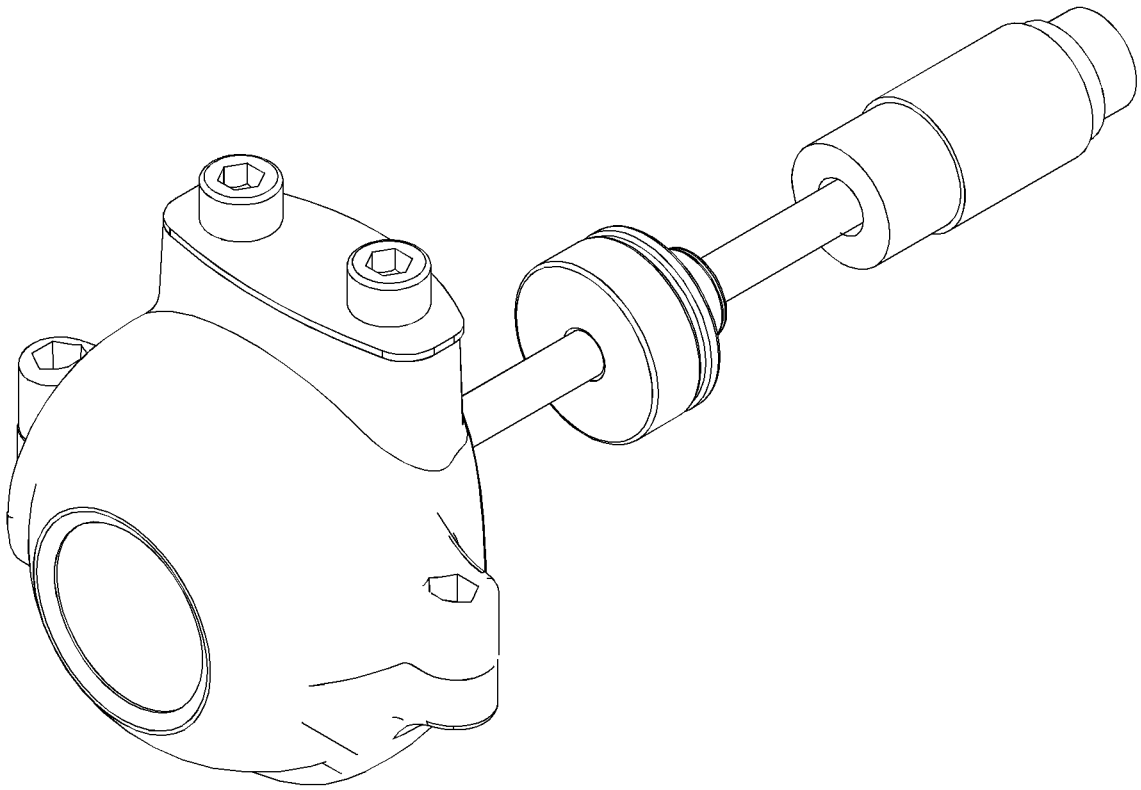

GRAPHIC #1 **<END>** g01356476

313-7833 CAMERA GP

S/N: MNB1-UP; WDK1-UP
PART OF 327-3329 CAMERA & MOUNTING GP
AN ATTACHMENT

SMCS-7348 **i03045209**

NOTE	REF NO	GRAPHIC REF	PART NUMBER	QTY	PART NAME 1 2 3 4 5 6 (PRODUCT LEVEL)	SEE PAGE
	1	1	**096-0061**	1	STRAP-CABLE	
Y	2	1	**286-4271**	1	CAMERA GP	185
	3	1	**320-5392**	1	BRACKET AS	
M	4	1	**8T-4970**	2	BOLT (M6X1X14-MM)	
	5	1	**9X-8256**	2	WASHER (6.6X12X2-MM THK)	

M-METRIC PART
Y-SEPARATE ILLUSTRATION

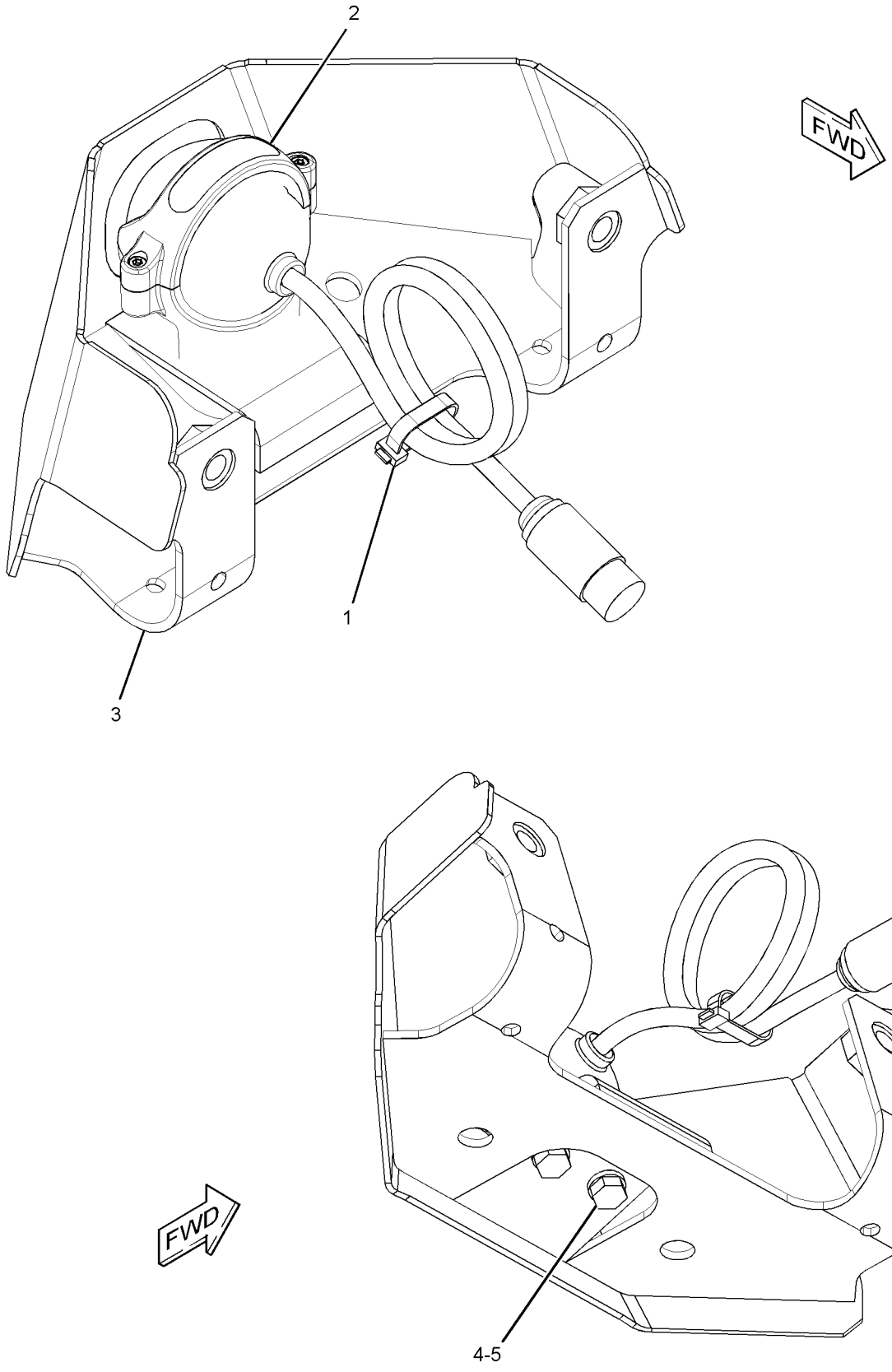

GRAPHIC #1 **<END>** g01515863

309-5842 CONTROL & MTG GP-COMMUNICATION–

PRODUCT LINK 321SR

S/N: MNB1-UP; WDK1-UP

PART OF 314-3529 INSTALLATION AR-COMMUNICATION

AN ATTACHMENT

SMCS-7606 **i02898031**

NOTE	REF NO	GRAPHIC REF	PART NUMBER	QTY	PART NAME 1 2 3 4 5 6 (PRODUCT LEVEL)	SEE PAGE
	1	1	**8C-5608**	4	SPACER (6.5X9.5X25.4-MM THK)	
	2	1	**9X-9896**	8	MOUNT (ISOLATION)	
	3	1	**260-2042**	1	BRACKET AS	
Y	4	1	*262-1421*	1	ELECTRONICS GP-COMMUNICATION (PRODUCT LINK 300)	193
M	5	1	**8C-8451**	4	BOLT (M6X1X40-MM)	
	6	1	**9X-6165**	4	WASHER (6.5X22X2.5-MM THK)	

M-METRIC PART
Y-SEPARATE ILLUSTRATION

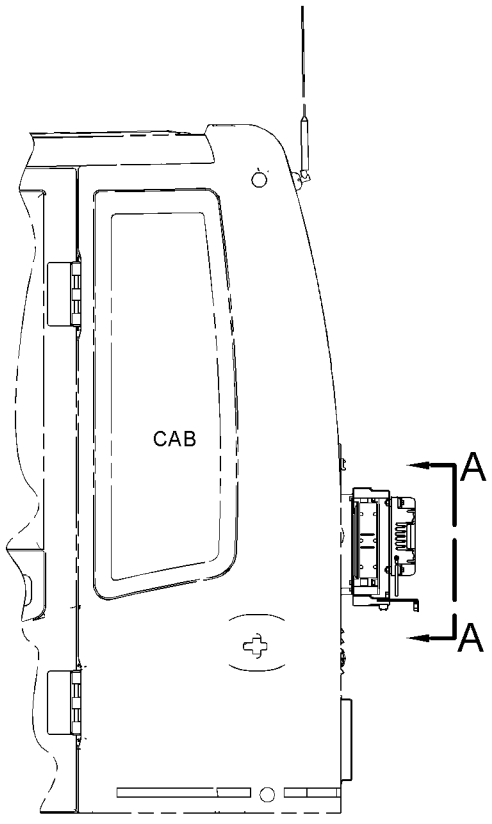

LEFT SIDE VIEW

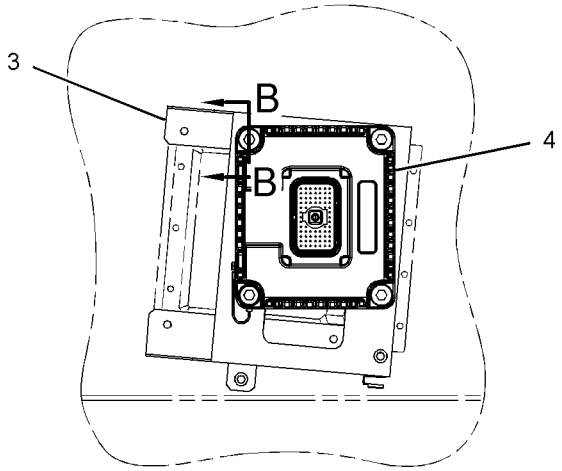

VIEW A-A

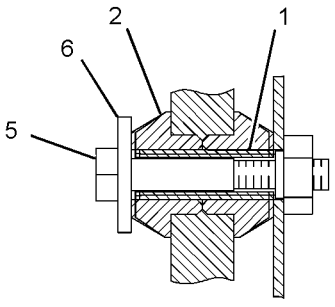

SECTION B-B

GRAPHIC #1 **<END>** g01447041

309-5885 CONTROL & MTG GP-COMMUNICATION–

PRODUCT LINK 121SR

S/N: MNB1-UP; WDK1-UP

PART OF 314-3529, 314-3530 INSTALLATION AR-COMMUNICATION

AN ATTACHMENT

SMCS-7606 **i03077049**

NOTE	REF NO	GRAPHIC REF	PART NUMBER	QTY	PART NAME 1 2 3 4 5 6 (PRODUCT LEVEL)	SEE PAGE
	1	1	**3S-2093**	7	STRAP-CABLE	
	2	1	**7K-1181**	4	STRAP-CABLE	
	3	1	**260-2229**	1	BRACKET AS	
Y	4	1	**263-9088**	1	CONTROL GP-COMMUNICATION (PRODUCT LINK 121SR)	193
	5	1	**111-4836**	1	CLIP	
	6	1	**8T-4121**	1	WASHER-HARD (11X21X2.5-MM THK)	
M	7	1	**8T-4137**	1	BOLT (M10X1.5X20-MM)	
M	8	1	**8T-4138**	4	BOLT (M6X1X20-MM)	
M	9	1	**8T-4183**	2	BOLT (M12X1.75X40-MM)	
	10	1	**8T-4223**	2	WASHER-HARD (13.5X25.5X3-MM THK)	
	11	1	**9X-8256**	4	WASHER (6.6X12X2-MM THK)	
	12	1	**230-1340**	1	FILM-WARNING (PRODUCT LINK RADIO, U.S.)	
					–OR–	
		1	**230-1341**	1	FILM-WARNING (PRODUCT LINK RADIO, INTL)	

M-METRIC PART
Y-SEPARATE ILLUSTRATION

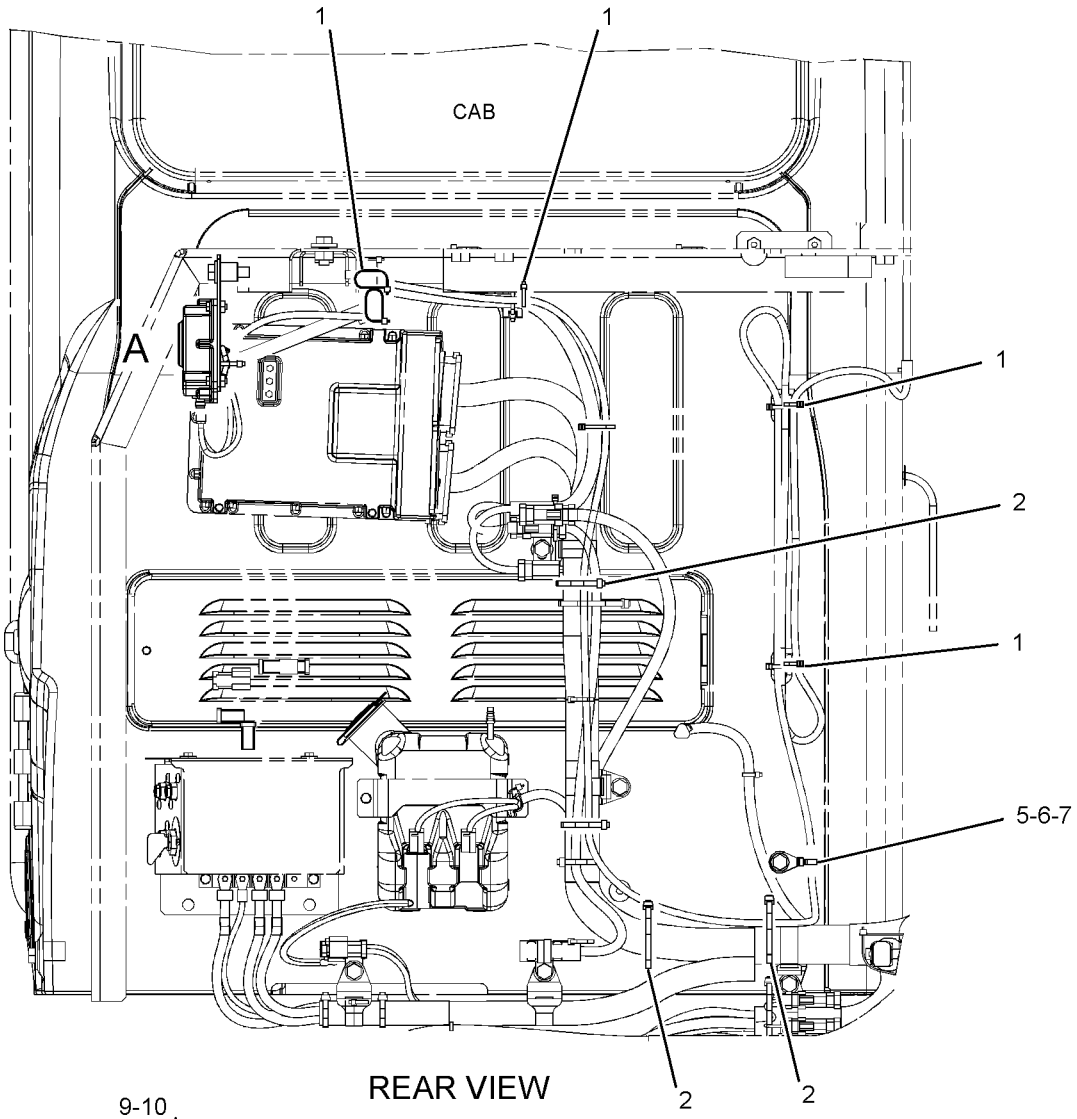

REAR VIEW

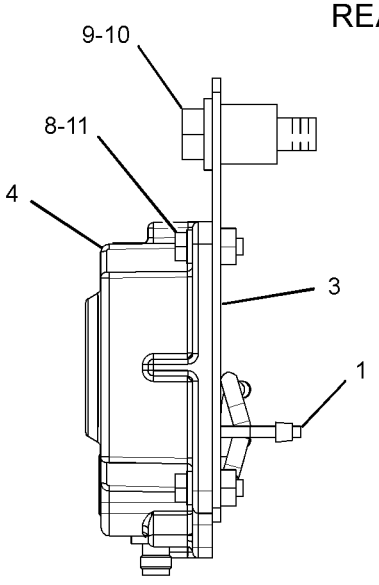

VIEW OF AREA A

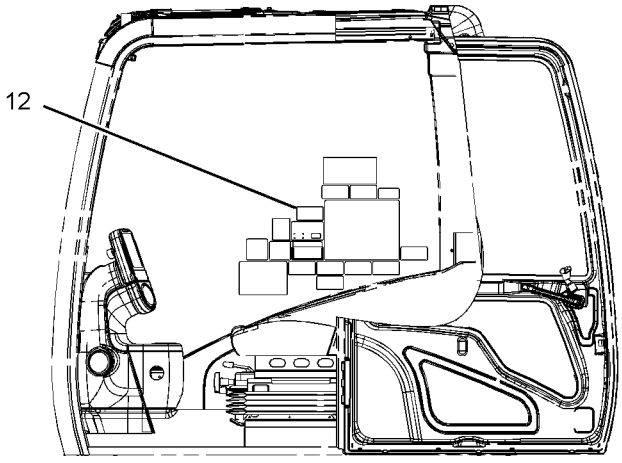

LEFT SIDE VIEW

GRAPHIC #1 **<END>** g01506563

241-7602 CONTROL & MTG GP-ENGINE ELEK

S/N: KHX4087-UP
ADEM IV. FUEL COOLED
PART OF 224-9842, 290-0754, 290-0755, 290-0756 ENGINE AR-COMPLETE
ALSO AN ATTACHMENT

SMCS-1901 **i02616569**

NOTE	REF NO	GRAPHIC REF	PART NUMBER	QTY	PART NAME 1 2 3 4 5 6 (PRODUCT LEVEL)	SEE PAGE
	1	1	**8T-9655**	8	MOUNT-ISOLATION	
	2	1	**101-3128**	4	SPACER-SPECIAL	
	3	1	**130-5300**	1	CLIP	
M	4	1	**143-9392**	4	STUD (M8X1.25-THD)	
	6	1	**244-3168**	1	BRACKET AS	
R	7	1	**262-2879**	1	CONTROL GP-UNPROGRAMMED (ENGINE)	
M	8	1	**5P-7970**	1	NUT (M8X1.25-THD)	
	9	1	**9M-1974**	4	WASHER-HARD (8.8X16X2-MM THK)	
	10	1	**9N-0869**	6	WASHER-HARD (8.8X25.5X2-MM THK)	

M-METRIC PART
R-REMFG PART MAY BE AVAILABLE

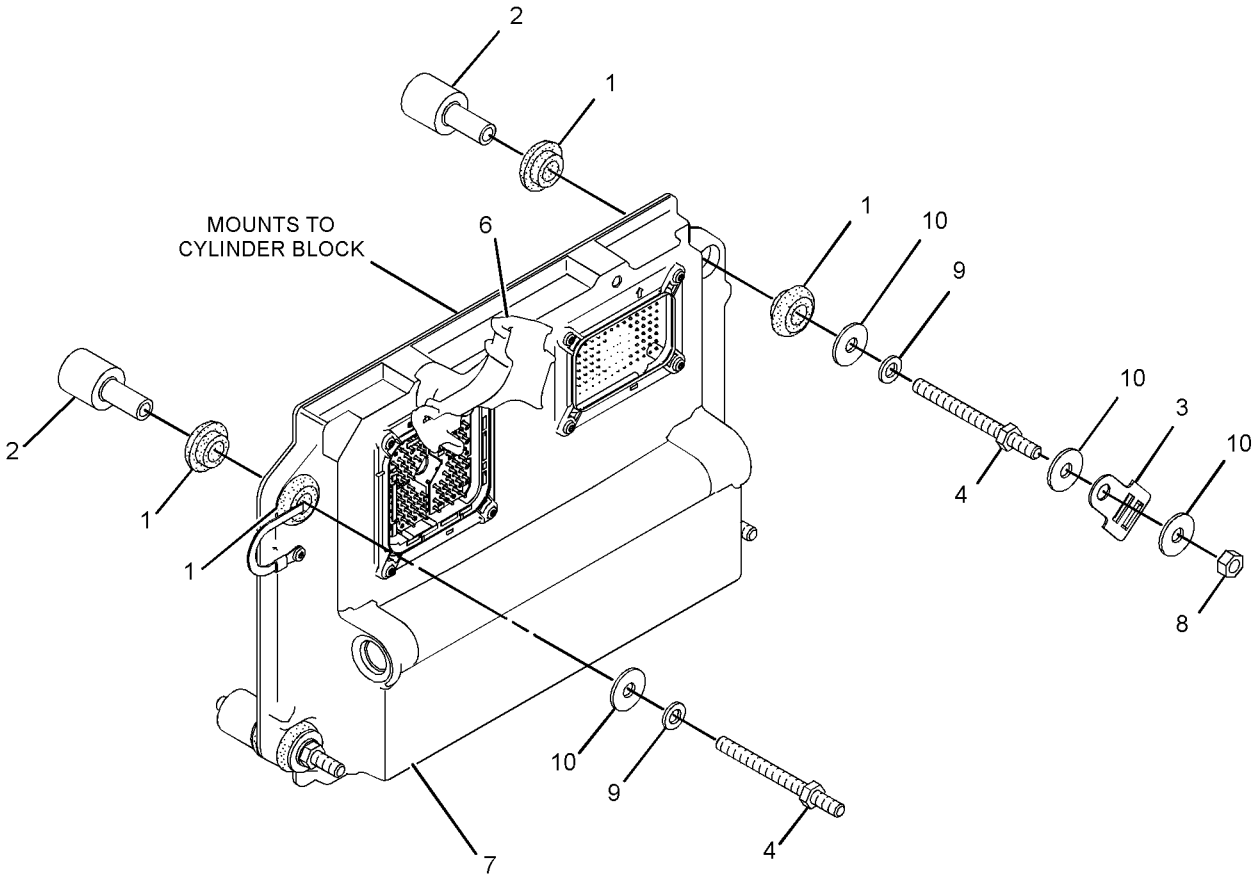

GRAPHIC #1 **<END>** g01311763

ELECTRICAL AND STARTING SYSTEM

221-8872 CONTROL & MTG GP-MACHINE

S/N: MNB1-UP; WDK1-UP

PART OF 229-9072 OPERATOR AR

SMCS-1931, 7600 **i02348301**

NOTE	REF NO	GRAPHIC REF	PART NUMBER	QTY	PART NAME 1 2 3 4 5 6 (PRODUCT LEVEL)	SEE PAGE
	1	1	**221-8874**	1	CONTROL GP-UNPROGRAMMED	
M	2	1	**9X-2480**	4	BOLT (M6X1X45-MM)	
	3	1	**9X-8256**	4	WASHER (6.6X12X2-MM THK)	

M-METRIC PART

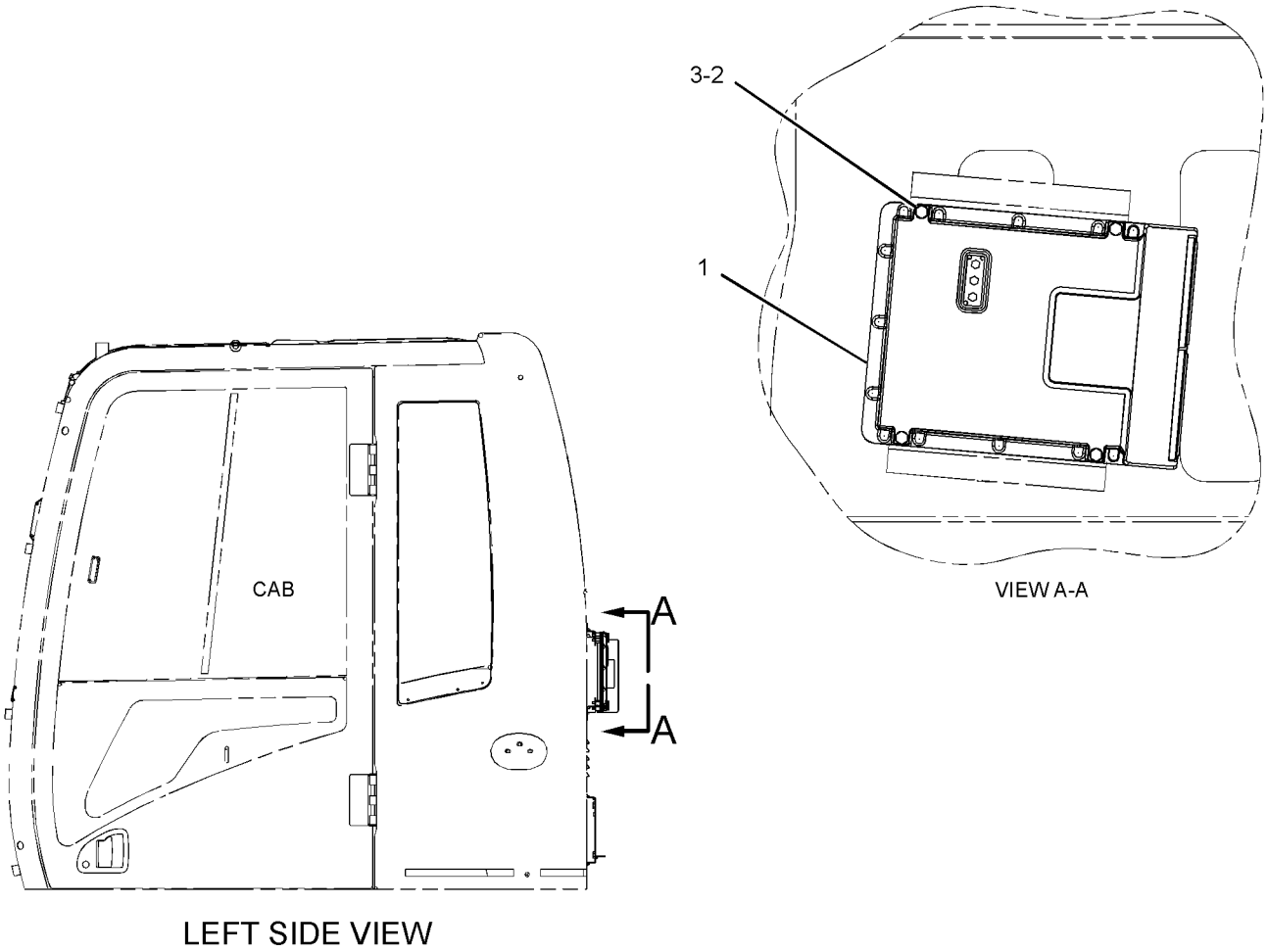

GRAPHIC #1 **<END>** g01150750

263-9088 CONTROL GP-COMMUNICATION–PRODUCT LINK 121SR

S/N: MNB1-UP; WDK1-UP
PART OF 309-5885 CONTROL & MTG GP-COMMUNICATION
AN ATTACHMENT

SMCS-7606, 7610, 7620 **i03135906**

NOTE	PART NUMBER	QTY	PART NAME 1 2 3 4 5 6 (PRODUCT LEVEL)	SEE PAGE
	330-3408	1	SOFTWARE GP-COMMUNICATION (PRODUCT LINK 121SR)	

<END>

262-1421 ELECTRONICS GP-COMMUNICATION–PRODUCT LINK 300

S/N: MNB1-UP; WDK1-UP
PART OF 309-5842 CONTROL & MTG GP-COMMUNICATION
AN ATTACHMENT

SMCS-7606, 7610, 7620 **i03136107**

NOTE	PART NUMBER	QTY	PART NAME 1 2 3 4 5 6 (PRODUCT LEVEL)	SEE PAGE
	330-3409	1	SOFTWARE GP-COMMUNICATION (PRODUCT LINK 300)	
			–OR–	
	330-3410	1	SERVICE GP-COMMUNICATION (PRODUCT LINK 300)	
			(OPTIONAL SERVICE REPLACEMENT)(INCLUDES CONTROL GP & SOFTWARE)	
	7X-6315	1	STRAP AS-GROUND	
	126-7574	1	SCREW-PAN HEAD (8-32X9.52-MM)	
	134-4126	1	WASHER (4.52X8.28X0.76-MM THK)	

<END>

221-8875 ELECTRONICS GP-MACHINE

S/N: MNB1-UP; WDK1-UP
PART OF 314-3641, 314-3642 GENERAL AR

SMCS-7610, 7620 **i03069600**

NOTE	PART NUMBER	QTY	PART NAME 1 2 3 4 5 6 (PRODUCT LEVEL)	SEE PAGE
	319-4358	1	SOFTWARE GP-MACHINE	
			-OR-	
	319-4359	1	SERVICE GP-MACHINE	
			(OPTIONAL SERVICE REPLACEMENT)(INCLUDES CONTROL GP & SOFTWARE)	

<END>

260-2050 ELECTRONICS GP-MACHINE—HIGH POWER

S/N: MNB1-UP; WDK1-UP
PART OF 264-8556 ENGINE AR, 275-3734 ENGINE AR-COMPLETE
AN ATTACHMENT

SMCS-7610, 7620 **i03025062**

NOTE	PART NUMBER	QTY	PART NAME 1 2 3 4 5 6 (PRODUCT LEVEL)	SEE PAGE
	319-4265	1	SOFTWARE GP-MACHINE	
			—OR—	
	319-4266	1	SERVICE GP-MACHINE	
			(OPTIONAL SERVICE REPLACEMENT) (INCLUDES CONTROL GP & SOFTWARE)	

<END>

221-8861 ELECTRONICS GP-MONITOR

S/N: MNB1-UP; WDK1-UP
PART OF 314-3641, 314-3642 GENERAL AR

SMCS-7490, 7601, 7610, 7620 **i03250673**

NOTE	PART NUMBER	QTY	PART NAME 1 2 3 4 5 6 (PRODUCT LEVEL)	SEE PAGE
	327-7486	1	SOFTWARE GP-MONITOR	
			—OR—	
	327-7483	1	MONITOR GP-OPERATOR	
			(OPTIONAL SERVICE REPLACEMENT)(PREPROGRAMMED CONTROL GP)	

<END>

251-0436 FASTENER GP-WIRING HARNESS

S/N: MNB1-UP; WDK1-UP
PART OF 255-5696, 255-5699 CONTROL AR-AUXILIARY
AN ATTACHMENT

SMCS-1408, 7553 **i02536437**

NOTE	REF NO	GRAPHIC REF	PART NUMBER	QTY	PART NAME 1 2 3 4 5 6 (PRODUCT LEVEL)	SEE PAGE
	1	1	**3S-2093**	1	STRAP-CABLE	
	2	1	**116-0118**	1	CLIP	
	3	1	**156-6175**	1	CLIP	
M	4	1	**7X-2621**	1	BOLT (M10X1.5X12-MM)	
	5	1	**8T-4121**	1	WASHER-HARD (11X21X2.5-MM THK)	
M	6	1	**8T-4171**	1	BOLT (M6X1X12-MM)	
	7	1	**9X-8256**	1	WASHER (6.6X12X2-MM THK)	
	8	1	**7K-1181**	1	STRAP-CABLE	

M-METRIC PART

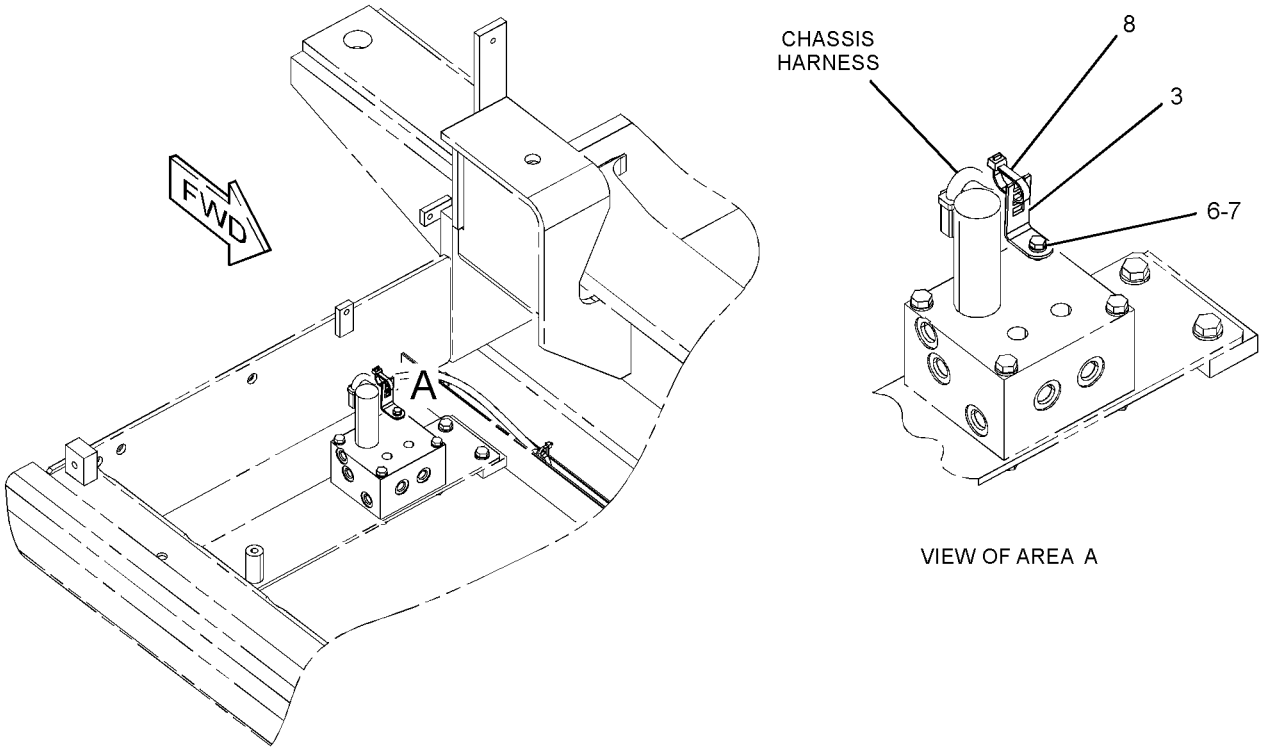

VIEW OF AREA A

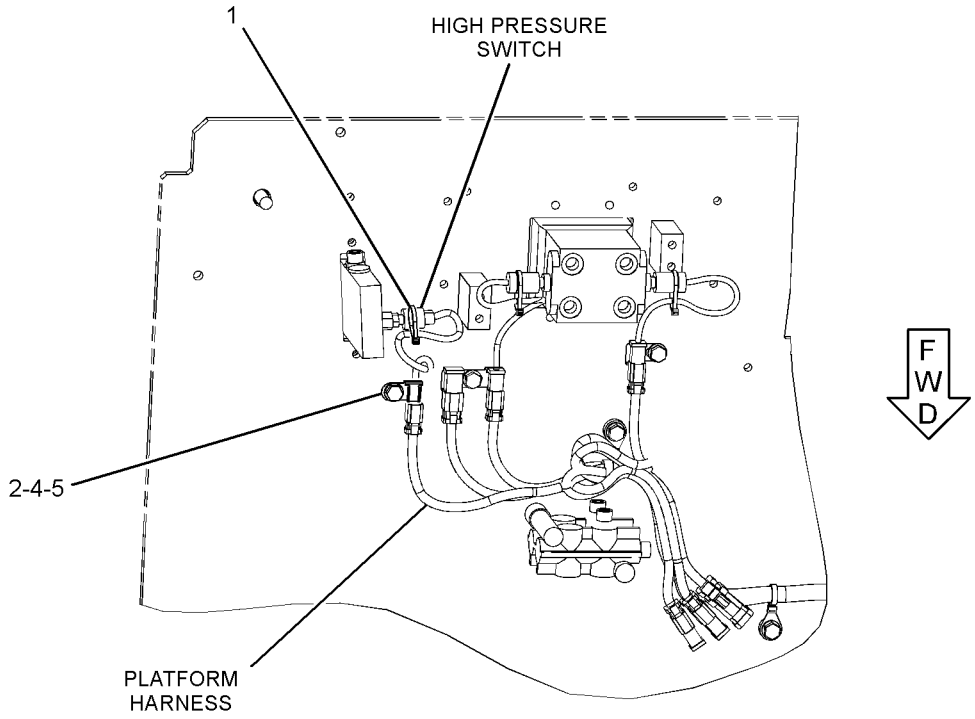

BOTTOM VIEW

GRAPHIC #1 **<END>** g01273033

251-0526 FASTENER GP-WIRING HARNESS–STRAIGHT TRAVEL

S/N: MNB1-UP; WDK1-UP
PART OF 259-7177 PEDAL AR-AUXILIARY
AN ATTACHMENT

SMCS-1408, 7553 **i02344768**

NOTE	REF NO	GRAPHIC REF	PART NUMBER	QTY	PART NAME 1 2 3 4 5 6 (PRODUCT LEVEL)	SEE PAGE
	1	1	**3S-2093**	1	STRAP-CABLE	
	2	1	**116-0118**	1	CLIP	
M	3	1	**7X-2621**	1	BOLT (M10X1.5X12-MM)	
	4	1	**8T-4121**	1	WASHER-HARD (11X21X2.5-MM THK)	

M-METRIC PART

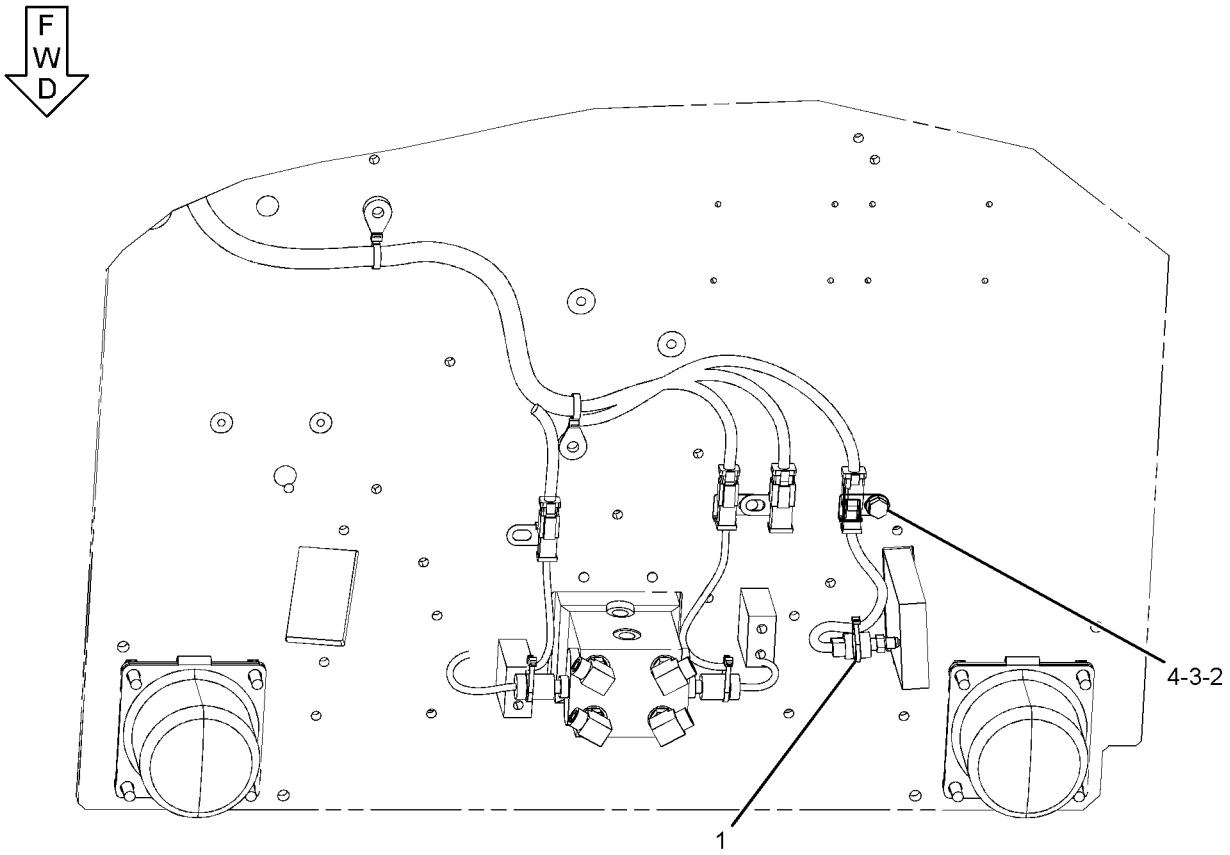

BOTTOM VIEW

GRAPHIC #1 **<END>** g01190326

259-5237 FASTENER GP-WIRING HARNESS–HEAVY LIFT

S/N: MNB1-UP; WDK1-UP
PART OF 247-7392 SPECIAL AR-HEAVY LIFT
AN ATTACHMENT

SMCS-1408, 7553 **i02408058**

NOTE	REF NO	GRAPHIC REF	PART NUMBER	QTY	PART NAME 1 2 3 4 5 6 (PRODUCT LEVEL)	SEE PAGE
	1	1	**7I-2673**	1	STRAP-CABLE	

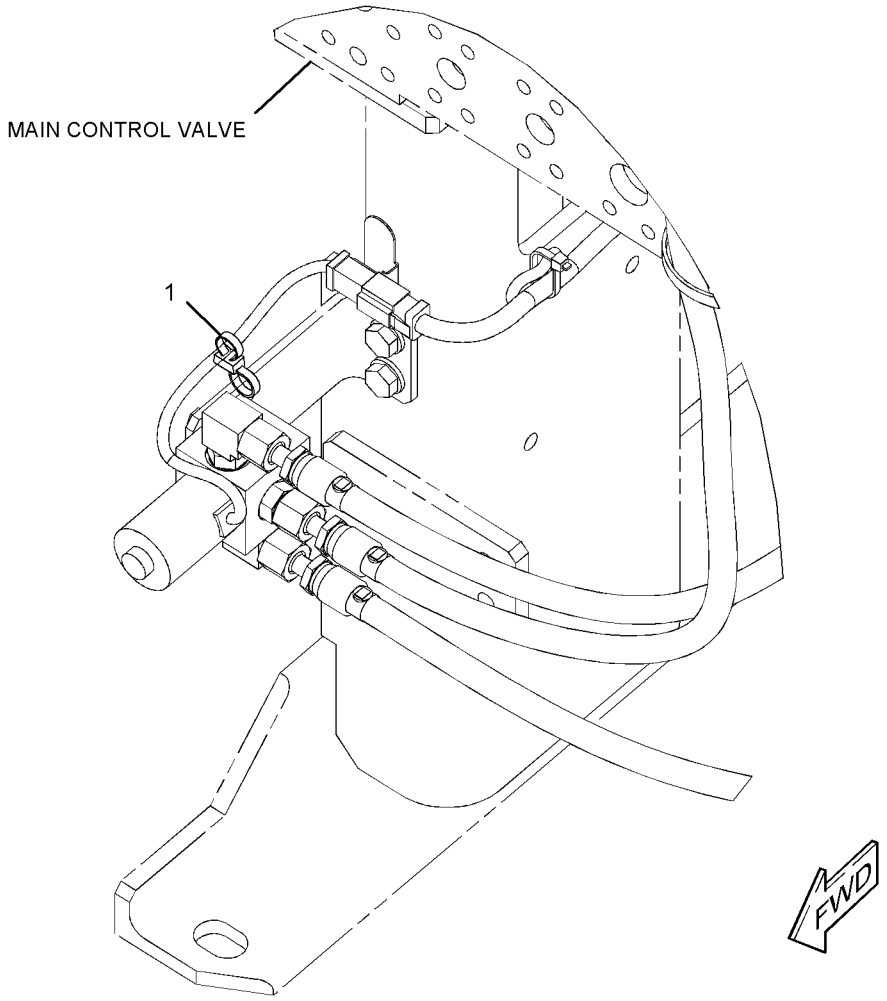

GRAPHIC #1 **<END>** g01200808

259-5294 FASTENER GP-WIRING HARNESS–FOOT SWITCH

S/N: MNB1-UP

PART OF 270-6106 CONTROL AR-AUXILIARY

AN ATTACHMENT

SMCS-1408, 7553 **i02430270**

NOTE	REF NO	GRAPHIC REF	PART NUMBER	QTY	PART NAME 1 2 3 4 5 6 (PRODUCT LEVEL)	SEE PAGE
	1	1	**116-0118**	1	CLIP	
M	2	1	**7X-2621**	1	BOLT (M10X1.5X12-MM)	
	3	1	**8T-4121**	1	WASHER-HARD (11X21X2.5-MM THK)	

M-METRIC PART

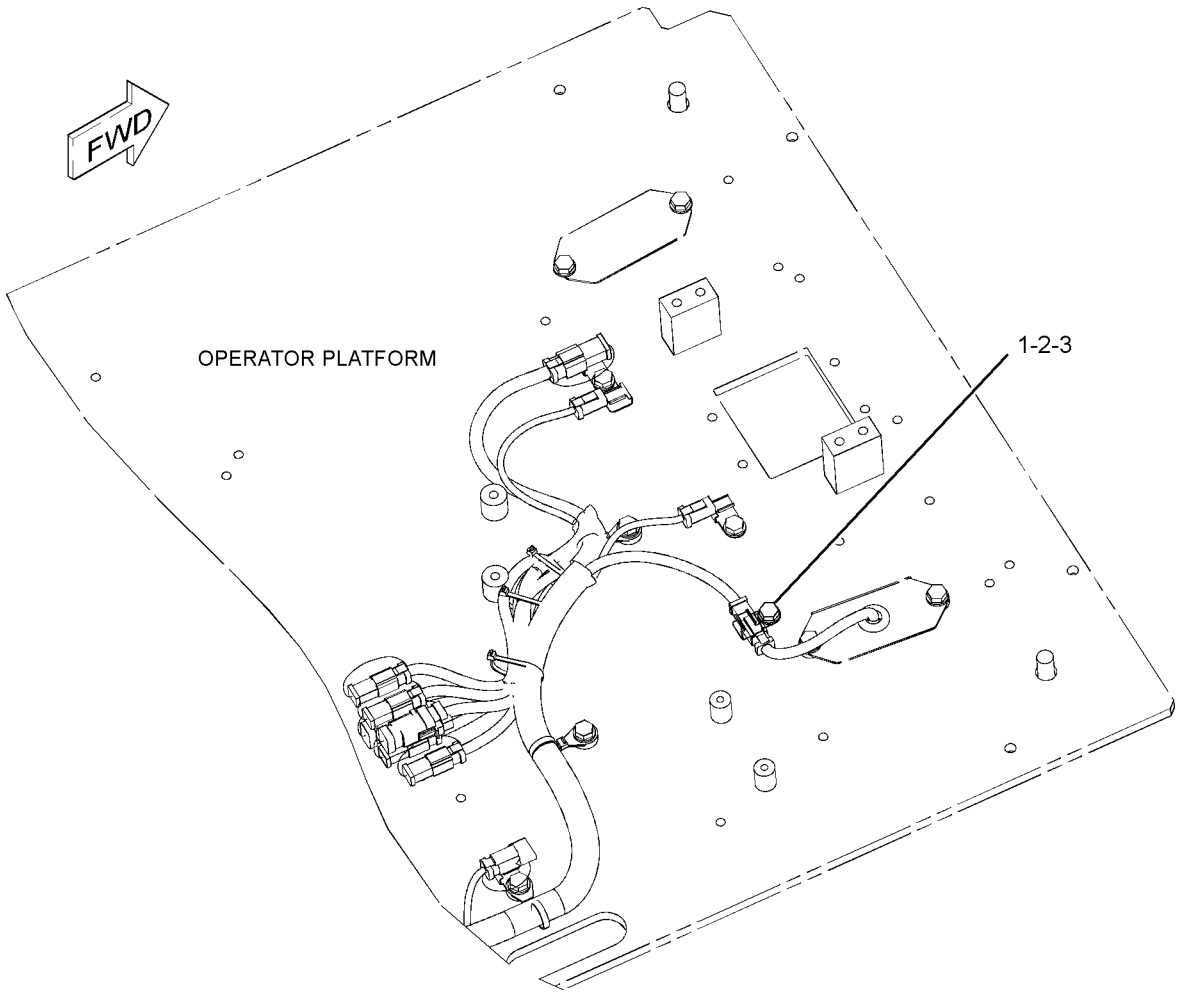

GRAPHIC #1 **<END>** g01156526

292-0276 GRADE CONTROL AR-SATELLITE–ACCUGRADE

S/N: MNB1-UP; WDK1-UP
FIELD INSTALLATION

SMCS-7220 **i03177165**

NOTE	PART NUMBER	QTY	PART NAME 1 2 3 4 5 6 (PRODUCT LEVEL)	SEE PAGE
Y	*286-0134*	1	DISPLAY GP-MONITOR (CD700)	961
Y	*297-5592*	1	MOUNTING GP-GRADE CONTROL	214
Y	*292-0304*	1	MOUNTING GP-MONITOR	1025
Y	*259-4746*	1	MOUNTING GP-RADIO	1028
Y	*292-0291*	1	RECEIVER GP-SATELLITE (DUAL GNSS, MS990)	223
Y	*297-5594*	1	SENSOR AR-GRADE (ANGLE SENSOR)	223
Y	*204-3461*	1	WIRING GP-GRADE CONTROL	314
	293-6883	2	MAST AS	
Y-SEPARATE ILLUSTRATION				

<END>

314-3529 INSTALLATION AR-COMMUNICATION–PRODUCT LINK 321SR

S/N: MNB1-UP; WDK1-UP
AN ATTACHMENT

SMCS-7606 **i03077051**

NOTE	PART NUMBER	QTY	PART NAME 1 2 3 4 5 6 (PRODUCT LEVEL)	SEE PAGE
Y	*309-5789*	1	ANTENNA & MOUNTING GP	904
Y	*309-5842*	1	CONTROL & MTG GP-COMMUNICATION (PRODUCT LINK 321SR)	188
Y	*309-5885*	1	CONTROL & MTG GP-COMMUNICATION (PRODUCT LINK 121SR)	189
Y	*267-7751*	1	WIRING GP-COMMUNICATION (PRODUCT LINK 321SR)	293
Y-SEPARATE ILLUSTRATION				

<END>

314-3530 INSTALLATION AR-COMMUNICATION–PRODUCT LINK 121SR

S/N: MNB1-UP; WDK1-UP
AN ATTACHMENT

SMCS-7606 **i03087020**

NOTE	PART NUMBER	QTY	PART NAME 1 2 3 4 5 6 (PRODUCT LEVEL)	SEE PAGE
Y	*309-5789*	1	ANTENNA & MOUNTING GP	904
Y	*309-5885*	1	CONTROL & MTG GP-COMMUNICATION	189
Y	*267-7752*	1	WIRING GP-COMMUNICATION (PRODUCT LINK 121SR)	295
Y-SEPARATE ILLUSTRATION				

<END>

227-7581 INSTALLATION GP-SECURITY

S/N: MNB1-UP; WDK1-UP
AN ATTACHMENT

SMCS-7631 **i02397785**

NOTE	REF NO	GRAPHIC REF	PART NUMBER	QTY	PART NAME 1 2 3 4 5 6 (PRODUCT LEVEL)	SEE PAGE
	1	1	**8C-5607**	4	MOUNT-ISOLATION	
	2	1	**8C-5608**	2	SPACER (6.5X9.5X25.4-MM THK)	
	3	1	**206-5162**	2	KEY AS-ELECTRONIC (SECURITY)	
	4	1	**218-0404**	1	MODULE GP-INTERFACE (KEY)	
	5	1	**219-6314**	2	KEY RING (IDENTIFICATION)	
Y	6	1	*251-0544*	1	PANEL GP-SWITCH (ENGINE SPEED, START)	220
M	7	1	**7X-2533**	2	BOLT (M6X1X35-MM)	
	8	1	**9X-6165**	2	WASHER (6.5X22X2.5-MM THK)	

M-METRIC PART
Y-SEPARATE ILLUSTRATION

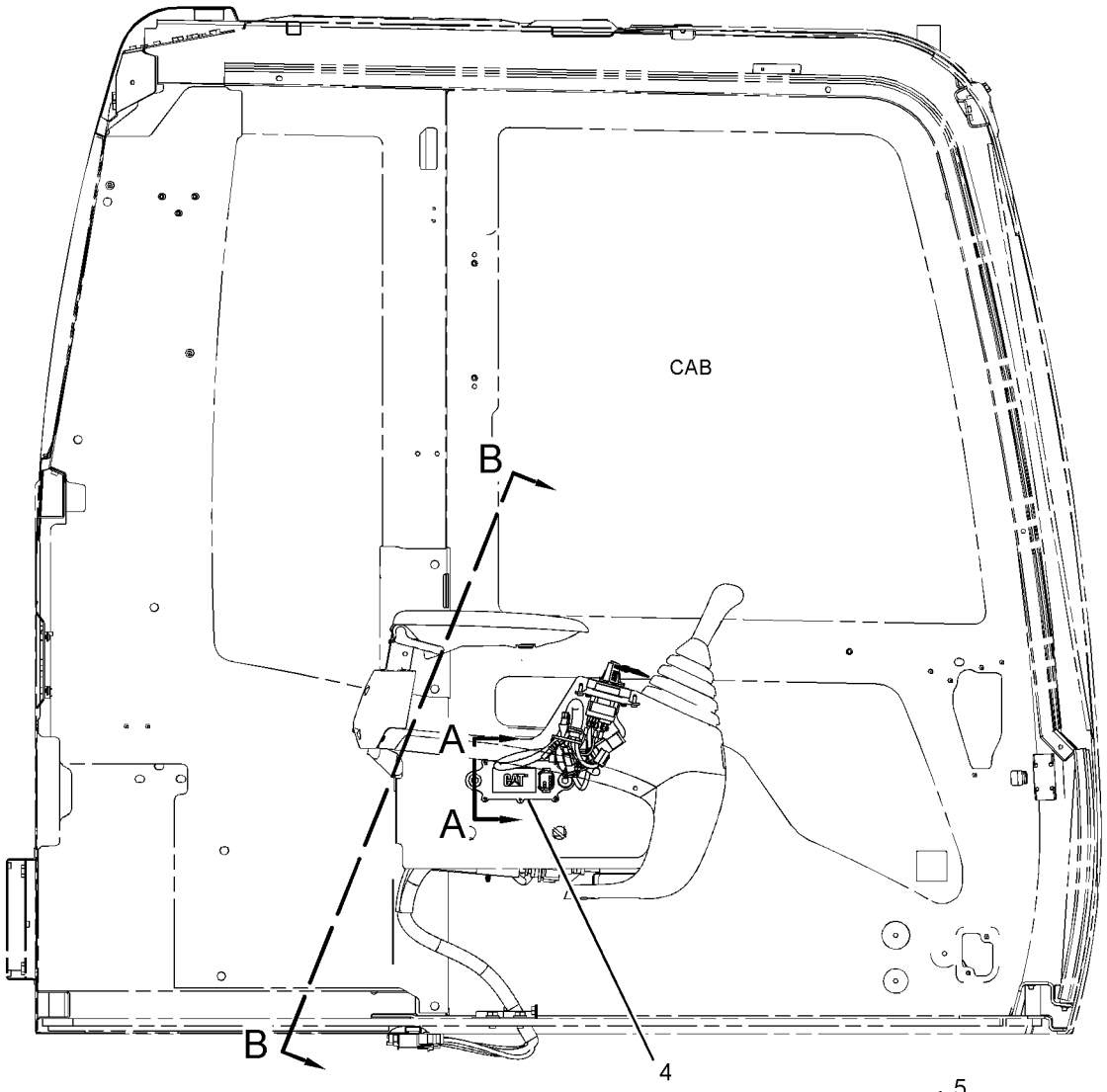

RIGHT SIDE VIEW

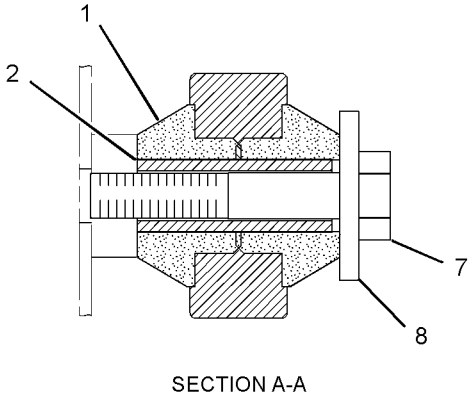

SECTION A-A

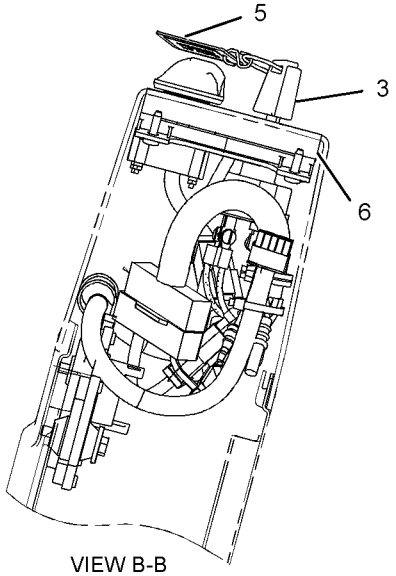

VIEW B-B

GRAPHIC #1 **<END>** g01196691

291-7705 KIT-BRACKET—PRODUCT LINK 321SR

S/N: MNB1-UP; WDK1-UP

FIELD INSTALLATION

SMCS-0635, 7606 **i02894738**

NOTE	PART NUMBER	QTY	PART NAME 1 2 3 4 5 6 (PRODUCT LEVEL)	SEE PAGE
	260-2042	1	BRACKET AS	
	260-2229	1	BRACKET AS	
	270-5455	1	BRACKET AS	
	291-7700	1	HARNESS AS-WIRING	
M	**8T-4171**	1	BOLT (M6X1X12-MM)	
M	**8T-4179**	4	BOLT (M12X1.75X20-MM)	
M	**8T-4183**	2	BOLT (M12X1.75X40-MM)	
M	**8T-4190**	1	BOLT (M16X2X25-MM)	
	270-5433	1	BRACKET	
	096-3872	1	GROMMET	
	9X-8256	1	WASHER (6.6X12X2-MM THK)	
	9X-8257	1	WASHER (17.5X30X3.5-MM THK)	
	8T-4223	4	WASHER-HARD (13.5X25.5X3-MM THK)	

M-METRIC PART

<END>

153-2521 LAMP GP-FLOOD

S/N: MNB1-UP; WDK1-UP
24-VOLT
PART OF 238-2300, 238-2301 LIGHTING GP-FLOOD
AN ATTACHMENT

SMCS-1434 **i02743410**

NOTE	REF NO	GRAPHIC REF	PART NUMBER	QTY	PART NAME 1 2 3 4 5 6 (PRODUCT LEVEL)	SEE PAGE
M	1	1	**6V-5210**	2	SCREW-MACHINE (M4X0.7X10-MM)	
	2	1	**3B-4501**	2	LOCKWASHER	
	3	1	**9X-3463**	1	LAMP-HALOGEN (24-VOLT, 65-WATT)	
	4	1	**8T-4223**	1	WASHER-HARD (13.5X25.5X3-MM THK)	
M	5	1	**8T-4244**	1	NUT (M12X1.75-THD)	
M	6	1	**174-7791**	1	SCREW-TAPPING	
	7	1	**5C-2889**	1	LOCKWASHER	
	8	1	**170-6993**	1	COVER	
M	9	1	**180-3861**	4	SCREW-TAPPING	
	10	1	**170-9417**	1	LENS AS (FLOODLIGHT)	
	11	1	**170-9418**	1	BAND	

M-METRIC PART

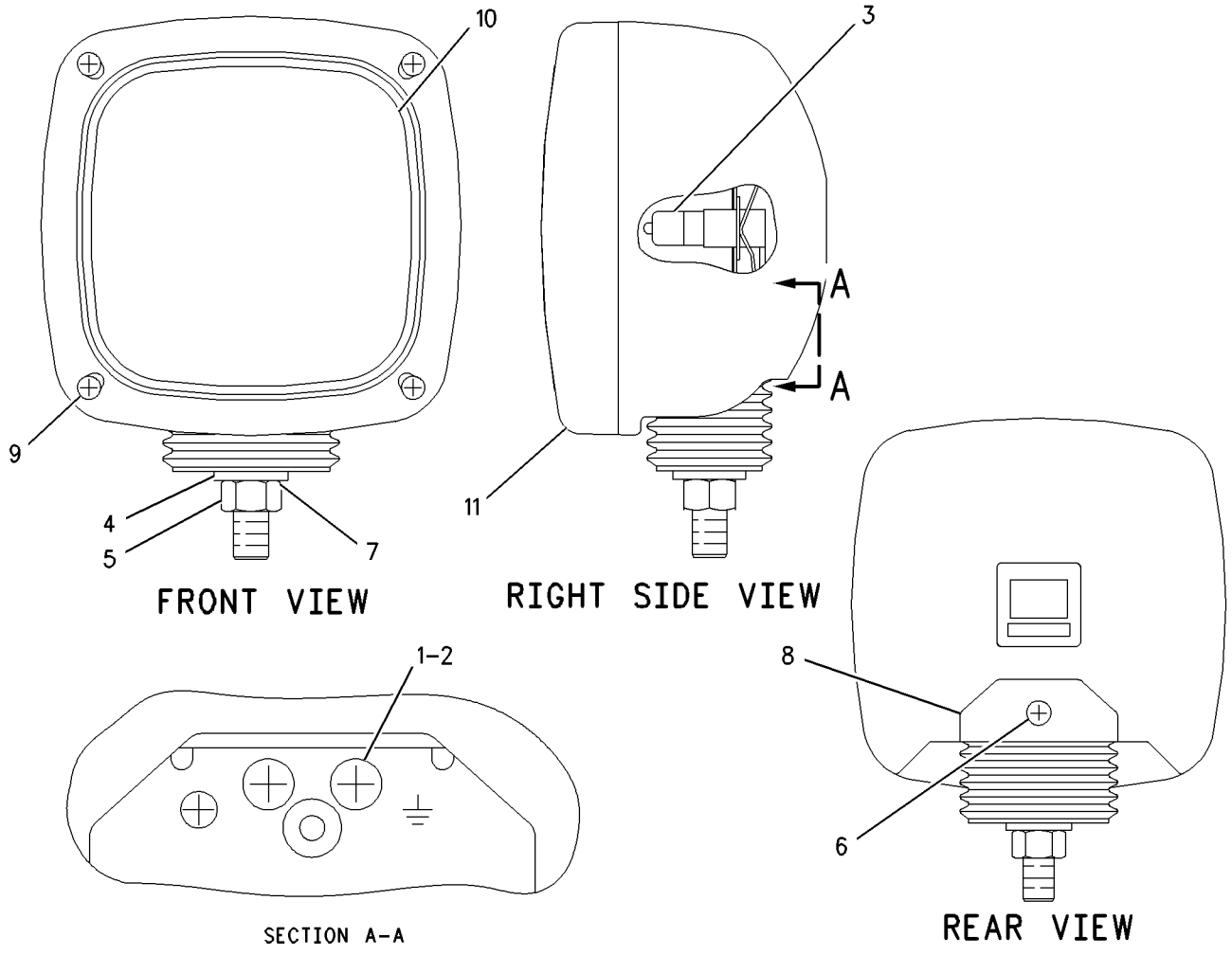

GRAPHIC #1 **<END>** g00645948

153-2523 LAMP GP-FLOOD

S/N: MNB1-UP; WDK1-UP
24-VOLT
PART OF 4I-5409 LIGHTING GP-CHASSIS

SMCS-1434 **i02724687**

NOTE	REF NO	GRAPHIC REF	PART NUMBER	QTY	PART NAME 1 2 3 4 5 6 (PRODUCT LEVEL)	SEE PAGE
M	1	1	**6V-5210**	2	SCREW-MACHINE (M4X0.7X10-MM)	
	2	1	**3B-4501**	2	LOCKWASHER	
	3	1	**9X-3463**	1	LAMP-HALOGEN (24-VOLT, 65-WATT)	
	4	1	**8T-4223**	1	WASHER-HARD (13.5X25.5X3-MM THK)	
M	5	1	**8T-4244**	1	NUT (M12X1.75-THD)	
M	6	1	**174-7791**	1	SCREW-TAPPING	
	7	1	**5C-2889**	1	LOCKWASHER	
	8	1	**170-6993**	1	COVER	
M	9	1	**180-3861**	4	SCREW-TAPPING	
	10	1	**170-9417**	1	LENS AS	
	11	1	**170-9418**	1	BAND	

M-METRIC PART

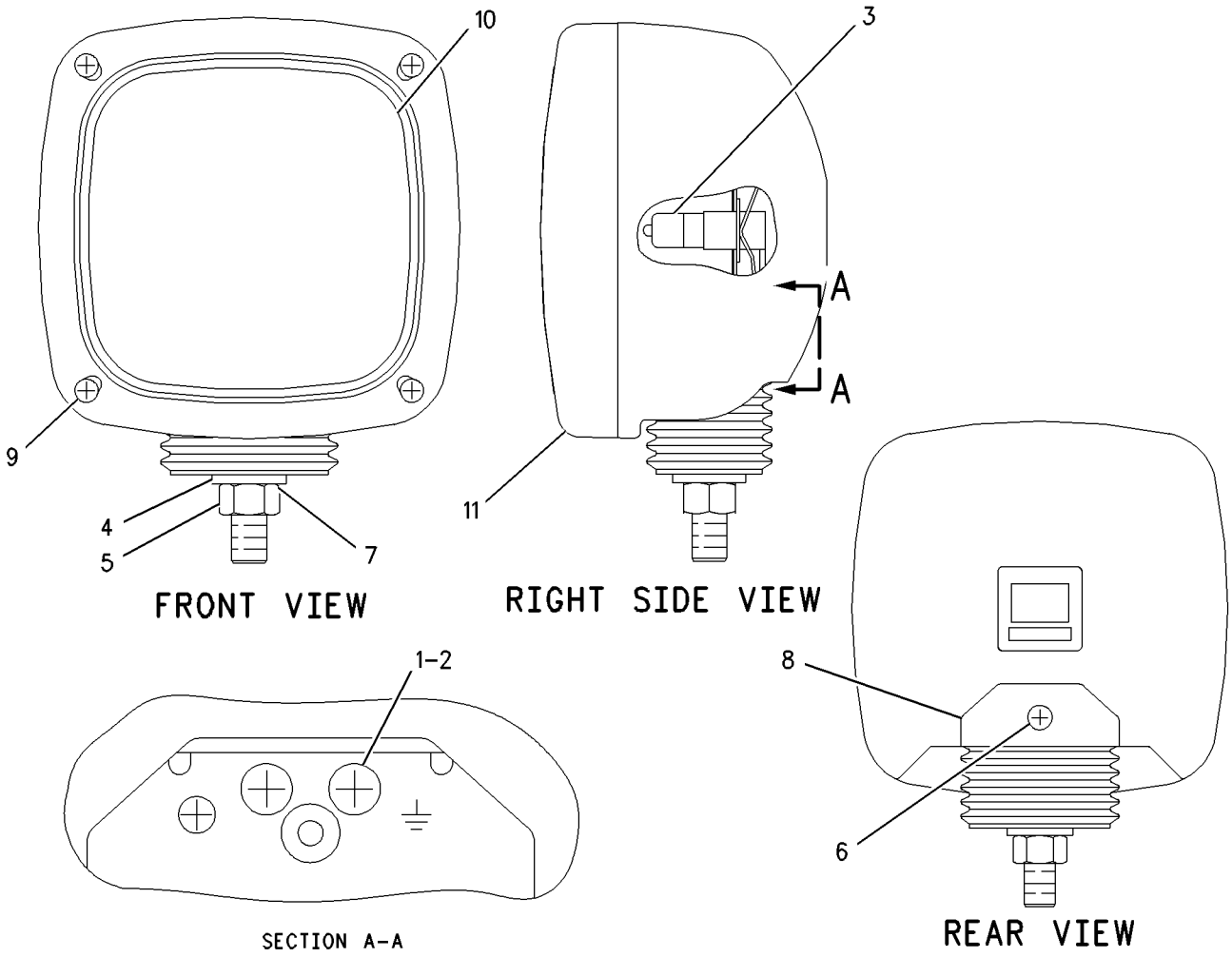

GRAPHIC #1 **<END>** g00645948

167-3441 LAMP GP-FLOOD

S/N: MNB1-UP; WDK1-UP
PART OF 163-6772 LIGHTING GP-FLOOD
AN ATTACHMENT

SMCS-1434 **i01823005**

NOTE	REF NO	GRAPHIC REF	PART NUMBER	QTY	PART NAME 1 2 3 4 5 6 (PRODUCT LEVEL)	SEE PAGE
	1	1	**9X-3463**	1	LAMP-HALOGEN (24-VOLT, 65-WATT)	

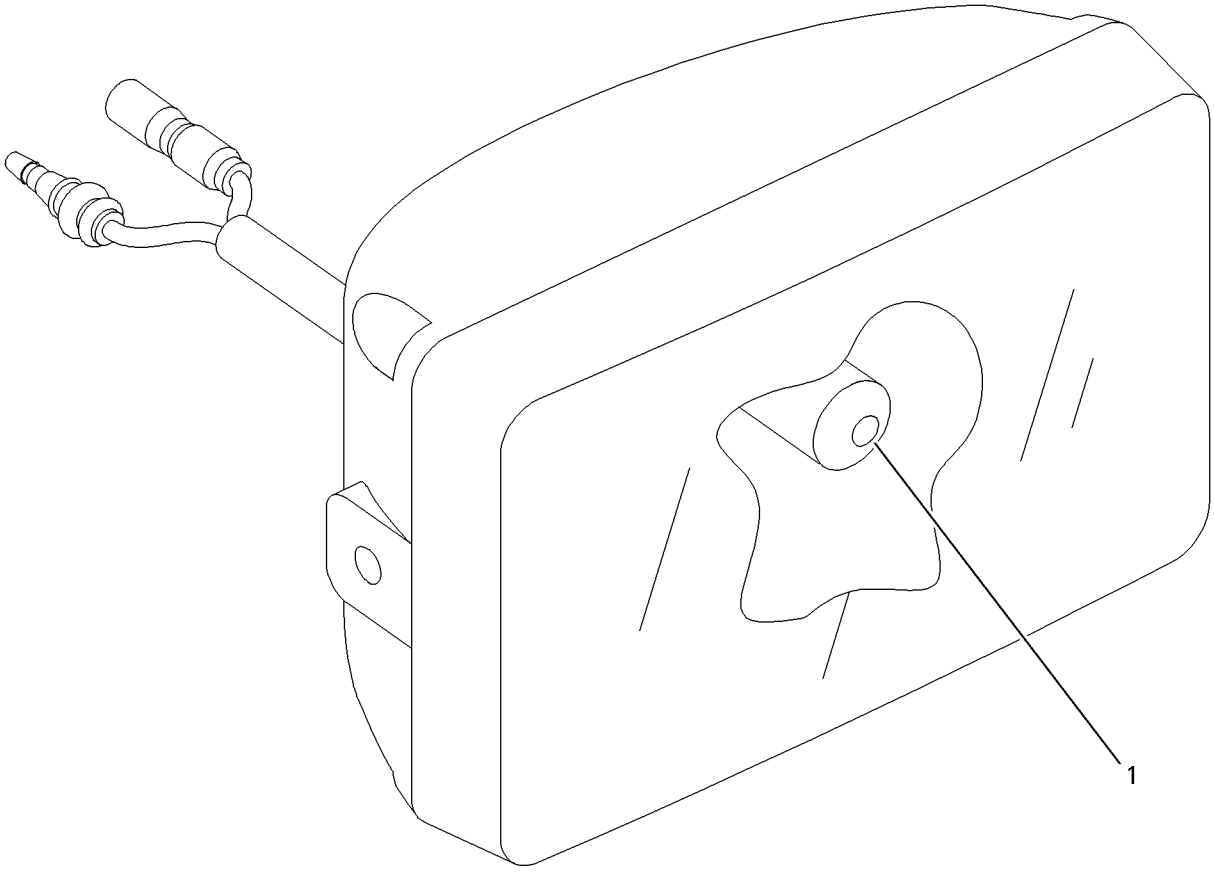

GRAPHIC #1 **<END>** g00692317

4I-5409 LIGHTING GP-CHASSIS–FRONT, RH

S/N: MNB1-UP; WDK1-UP

PART OF 314-3652, 314-3653 CHASSIS AR

SMCS-1429 **i01097714**

NOTE	REF NO	GRAPHIC REF	PART NUMBER	QTY	PART NAME 1 2 3 4 5 6 (PRODUCT LEVEL)	SEE PAGE
Y	1	1	**153-2523**	1	LAMP GP-FLOOD	205

Y-SEPARATE ILLUSTRATION

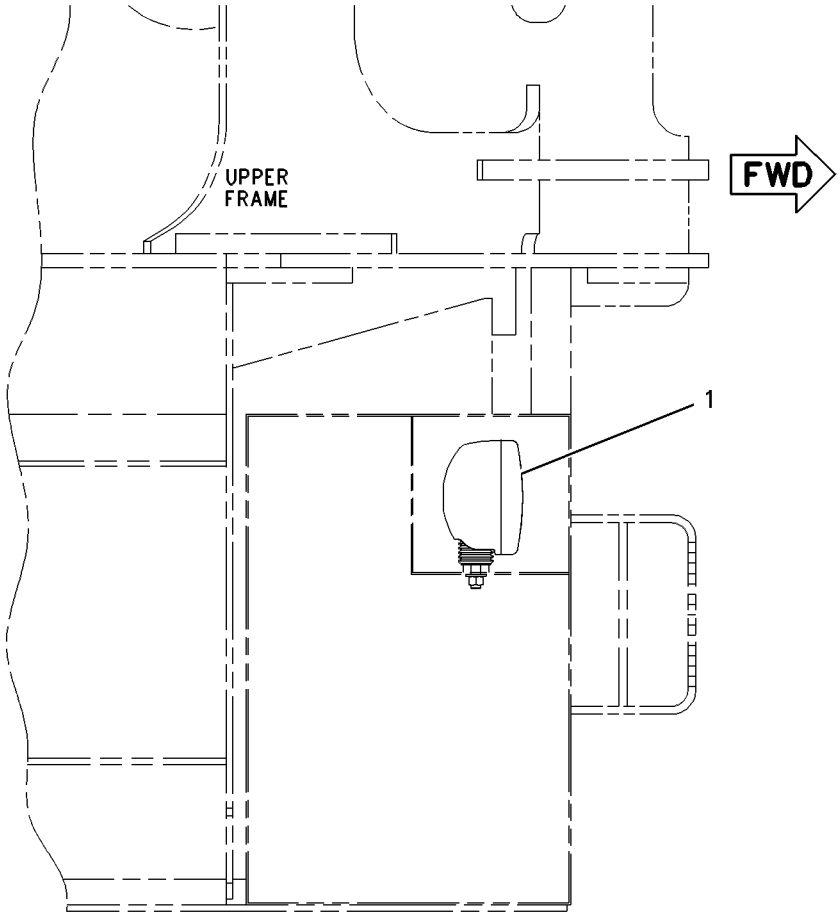

TOP VIEW

GRAPHIC #1 **<END>** g00588573

163-6772 LIGHTING GP-FLOOD—CAB

S/N: MNB1-UP; WDK1-UP
PART OF 259-7174 CAB GP
AN ATTACHMENT

SMCS-1434 **i02075362**

NOTE	REF NO	GRAPHIC REF	PART NUMBER	QTY	PART NAME 1 2 3 4 5 6 (PRODUCT LEVEL)	SEE PAGE
	1	1	**163-6814**	1	COVER (RH)	
	2	1	**163-6813**	1	COVER (LH)	
M	3	1	**8T-4970**	4	BOLT (M6X1X14-MM)	
	4	1	**9X-8256**	12	WASHER (6.6X12X2-MM THK)	
Y	5	1	**167-3441**	2	LAMP GP-FLOOD	206
	6	1	**163-6795**	2	STRAP-CABLE	
B	7	1	**9X-8256**	4	WASHER (6.6X12X2-MM THK)	
	8	1	**167-3437**	1	BRACKET AS (LH)	
M	9	1	**8T-6411**	6	SCREW-MACHINE (M6X1X12-MM)	
M	10	1	**8T-4200**	2	BOLT (M8X1.25X16-MM)	
	11	1	**8T-4224**	2	WASHER-HARD (8.8X16X2-MM THK)	
	12	1	**167-3456**	2	HARNESS AS-LIGHTING (CAB FLOODLIGHT)	
		1	**7Y-3962**	1	TERMINAL (CONNECTOR)	
		1	**7Y-3964**	1	TUBE (CONNECTOR TERMINAL)	
		1	**7Y-3963**	1	TERMINAL (RECEPTACLE)	
		1	**7Y-3965**	1	TUBE (RECEPTACLE TERMINAL)	
	13	1	**167-3438**	1	BRACKET AS (RH)	
M	14	1	**8T-6412**	2	SCREW-MACHINE (M6X1X20-MM)	

B-USE AS REQUIRED
M-METRIC PART
Y-SEPARATE ILLUSTRATION

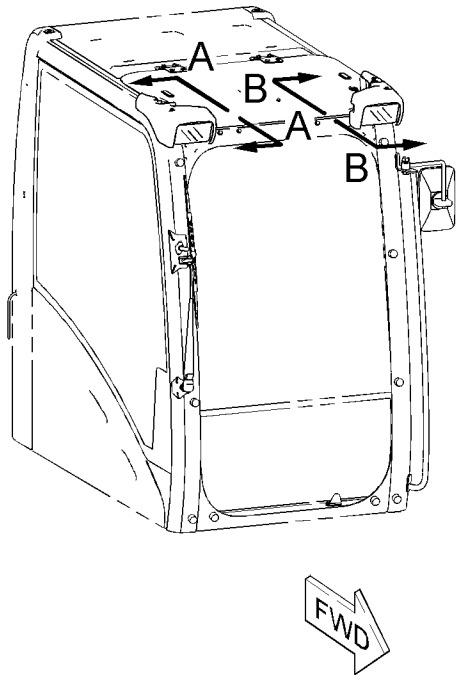

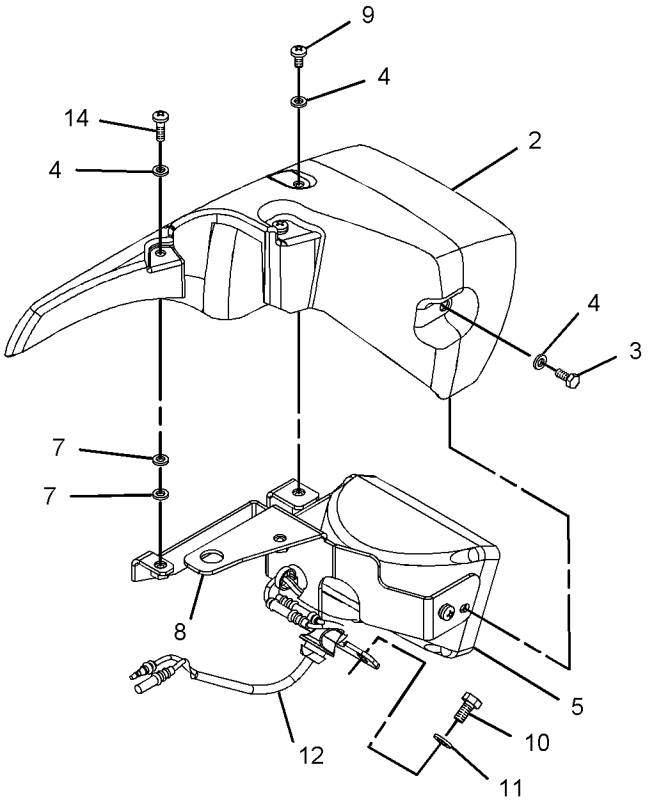

VIEW B-B
(EXPLODED)

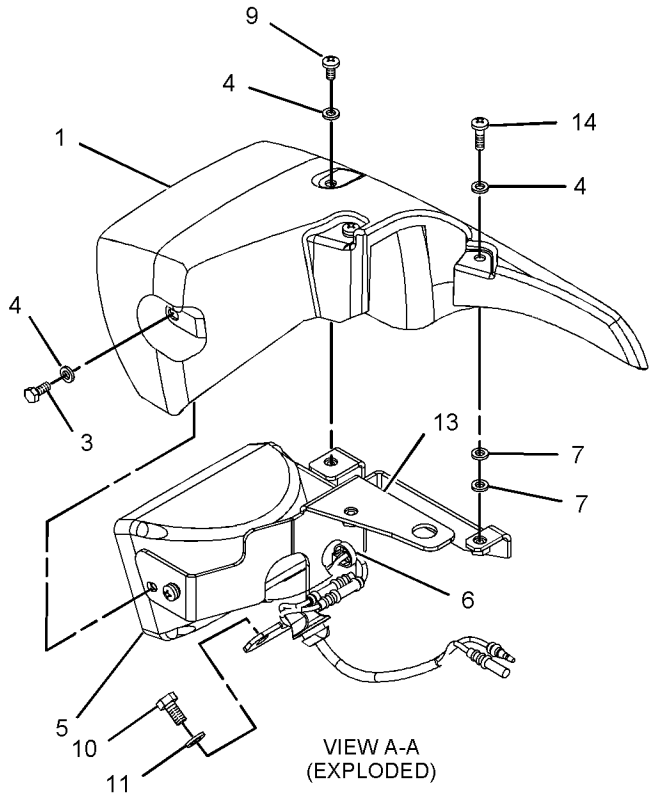

VIEW A-A
(EXPLODED)

GRAPHIC #1 **<END>** g01062205

170-9294 LIGHTING GP-FLOOD–CAB GUARD

S/N: MNB1-UP; WDK1-UP

AN ATTACHMENT

SMCS-1434 **i02259861**

NOTE	REF NO	GRAPHIC REF	PART NUMBER	QTY	PART NAME 1 2 3 4 5 6 (PRODUCT LEVEL)	SEE PAGE
	1	1	**183-1035**	2	LAMP GP-FLOOD	
					(EACH INCLUDES)	
		1	**9X-3463**	1	LAMP-HALOGEN (24-VOLT, 65-WATT)	
	2	1	**163-6795**	2	STRAP-CABLE	
M	3	1	**8T-4133**	2	NUT (M10X1.5-THD)	
	4	1	**8T-4121**	4	WASHER-HARD (11X21X2.5-MM THK)	
M	5	1	**8T-4137**	2	BOLT (M10X1.5X20-MM)	
	6	1	**170-9295**	2	HARNESS AS-LIGHTING (CAB FLOODLIGHTS, FRONT)	
					(EACH INCLUDES)	
		1	**7Y-3962**	2	TERMINAL (CONNECTOR)	
		1	**7Y-3964**	2	TUBE (CONNECTOR TERMINAL)	
		1	**7Y-3963**	2	TERMINAL (RECEPTACLE)	
		1	**7Y-3965**	2	TUBE (RECEPTACLE TERMINAL)	

M-METRIC PART

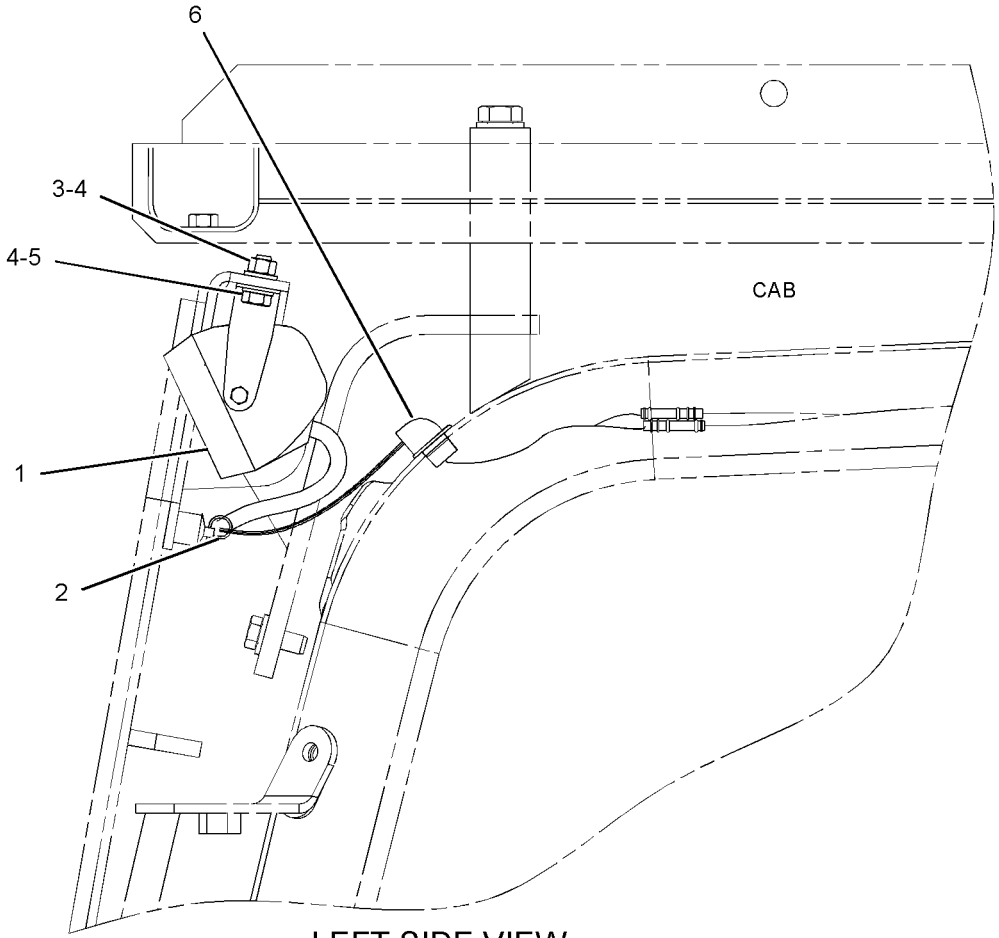

LEFT SIDE VIEW

GRAPHIC #1 **<END>** g01134805

238-2300 LIGHTING GP-FLOOD–BOOM

S/N: MNB1-UP; WDK1-UP
PART OF 229-1754, 229-1758, 229-1760, 275-3699, 275-3839 BOOM AR-1 PIECE LONG,
262-3586 SPECIAL AR-SUPER LONG REACH
AN ATTACHMENT

SMCS-1434 **i02345855**

NOTE	REF NO	GRAPHIC REF	PART NUMBER	QTY	PART NAME 1 2 3 4 5 6 (PRODUCT LEVEL)	SEE PAGE
	1	1	**7I-2673**	2	STRAP-CABLE	
	2	1	**111-4836**	8	CLIP	
	3	1	**116-0118**	1	CLIP	
Y	4	1	**153-2521**	2	LAMP GP-FLOOD (24-VOLT)	204
	5	1	**238-2302**	1	HARNESS AS-LIGHTING	
		1	**243-4505**	1	RECEPTACLE AS-CONNECTOR (2-PIN)	
	6	1	**111-4837**	1	CLIP	
	7	1	**134-3284**	2	BRACKET	
	8	1	**5P-9297**	2	CLIP	
	9	1	**8T-4121**	8	WASHER-HARD (11X21X2.5-MM THK)	
M	10	1	**8T-4133**	7	NUT (M10X1.5-THD)	
M	11	1	**8T-4137**	1	BOLT (M10X1.5X20-MM)	
M	12	1	**8T-4190**	2	BOLT (M16X2X25-MM)	
	13	1	**9X-8257**	2	WASHER (17.5X30X3.5-MM THK)	

M-METRIC PART
Y-SEPARATE ILLUSTRATION

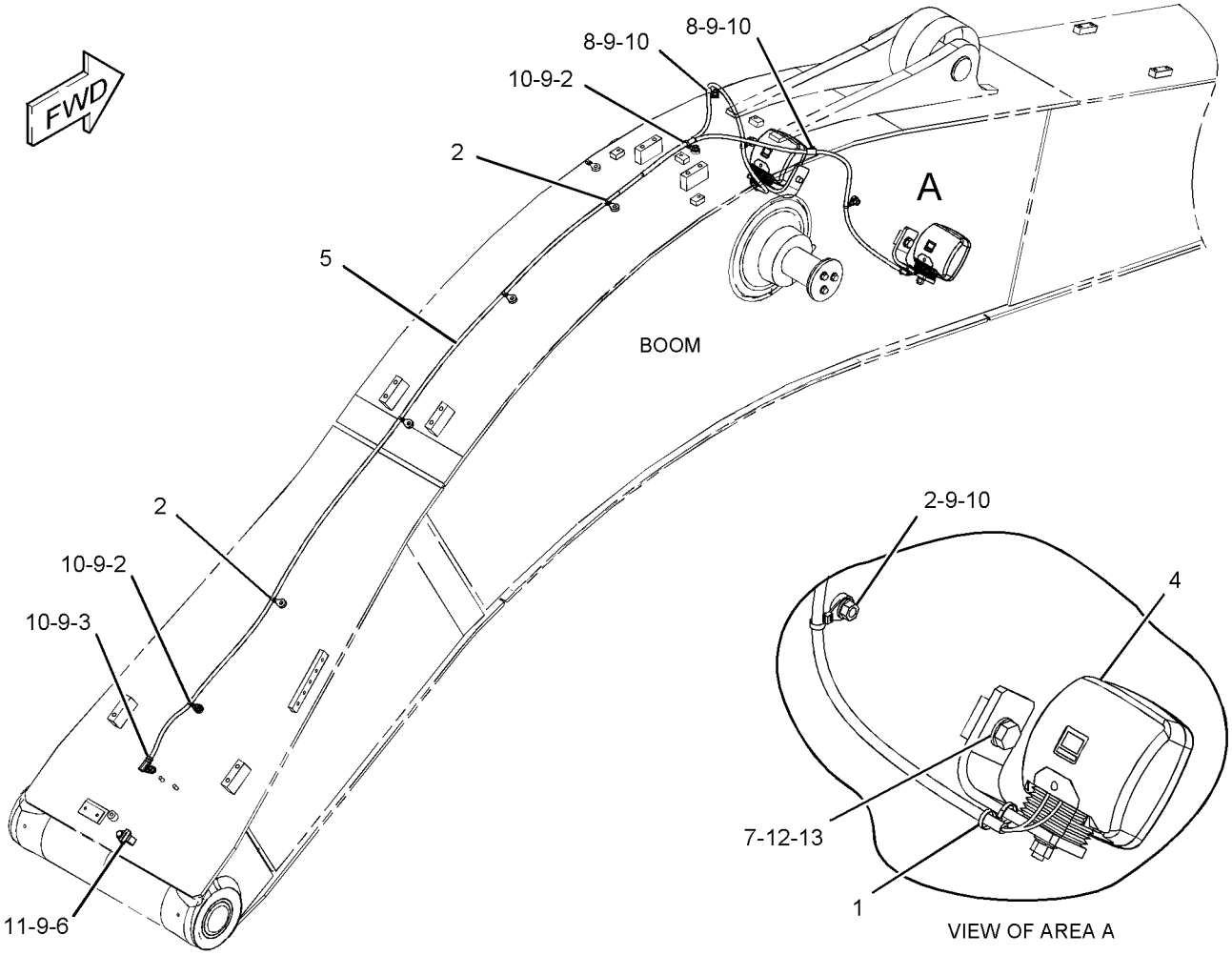

GRAPHIC #1 **<END>** g01186454

238-2301 LIGHTING GP-FLOOD—MASS BOOM

S/N: MNB1-UP; WDK1-UP
PART OF 229-1757, 229-1759 BOOM AR-1 PIECE SHORT
AN ATTACHMENT

SMCS-1434 **i02345896**

NOTE	REF NO	GRAPHIC REF	PART NUMBER	QTY	PART NAME 1 2 3 4 5 6 (PRODUCT LEVEL)	SEE PAGE
	1	1	**7I-2673**	2	STRAP-CABLE	
	2	1	**111-4836**	9	CLIP	
	3	1	**116-0118**	1	CLIP	
Y	4	1	**153-2521**	2	LAMP GP-FLOOD (24-VOLT, VERTICAL MOUNT)	204
	5	1	**238-2303**	1	HARNESS AS-LIGHTING (MASS BOOM)	
		1	**243-4505**	1	RECEPTACLE AS-CONNECTOR (2-PIN)	
	6	1	**111-4837**	1	CLIP	
	7	1	**134-3284**	2	BRACKET	
	8	1	**5P-9297**	2	CLIP	
	9	1	**8T-4121**	11	WASHER-HARD (11X21X2.5-MM THK)	
M	10	1	**8T-4133**	10	NUT (M10X1.5-THD)	
M	11	1	**8T-4137**	1	BOLT (M10X1.5X20-MM)	
M	12	1	**8T-4190**	2	BOLT (M16X2X25-MM)	
	13	1	**9X-8257**	2	WASHER (17.5X30X3.5-MM THK)	

M-METRIC PART
Y-SEPARATE ILLUSTRATION

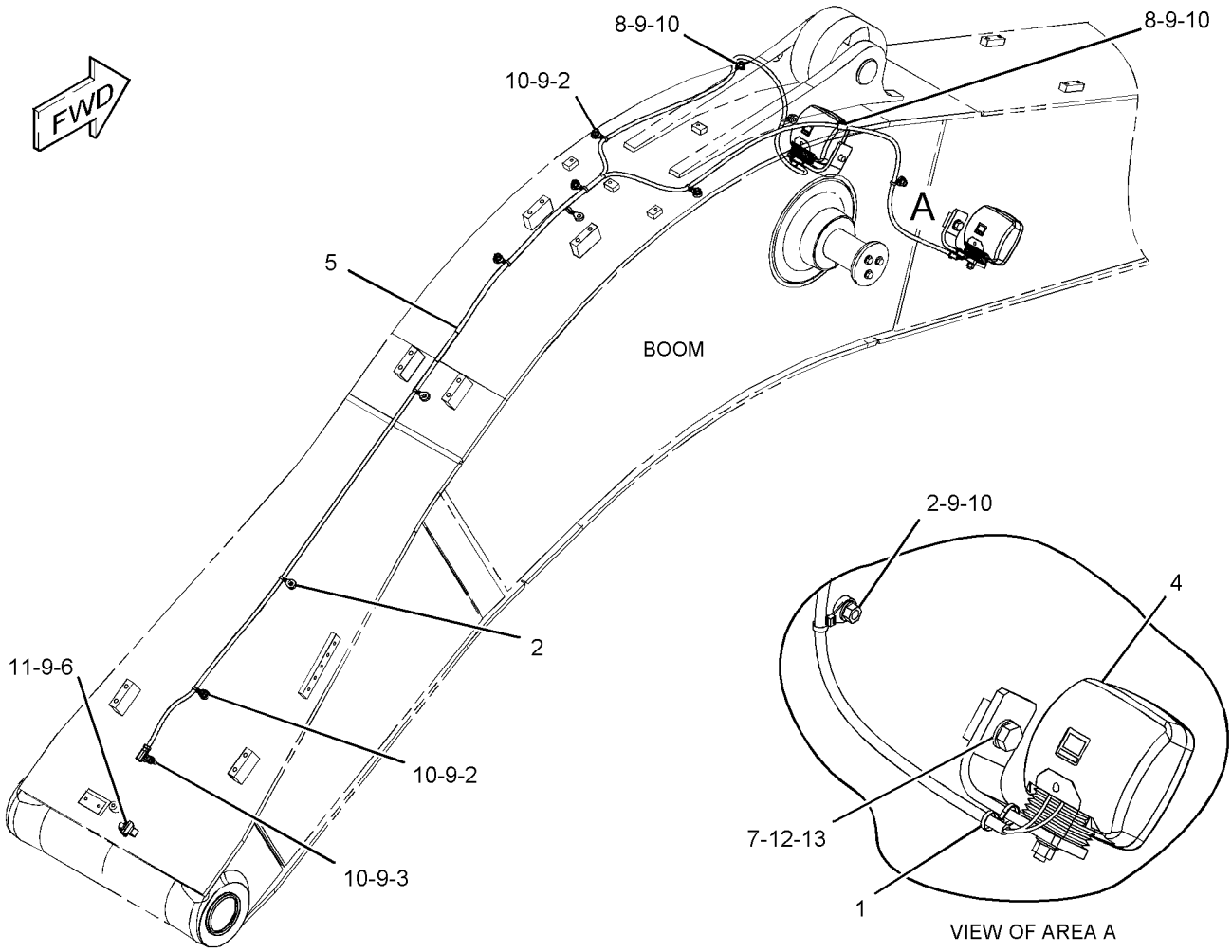

GRAPHIC #1 **<END>** g01187375

297-5592 MOUNTING GP-GRADE CONTROL–ACCUGRADE

S/N: MNB1-UP; WDK1-UP

PART OF 292-0276 GRADE CONTROL AR-SATELLITE

SMCS-7220 **i03177280**

NOTE	PART NUMBER	QTY	PART NAME 1 2 3 4 5 6 (PRODUCT LEVEL)	SEE PAGE
M	**5C-9553**	19	BOLT (M6X1X16-MM)	
M	**6V-8212**	3	BOLT (M10X1.5X16-MM)	
M	**8T-4137**	21	BOLT (M10X1.5X20-MM)	
M	**8T-4140**	8	BOLT (M16X2X60-MM)	
M	**8T-4200**	4	BOLT (M8X1.25X16-MM)	
M	**8T-7852**	3	BOLT (M4X0.7X10-MM)	
	265-8145	4	BRACKET-HOUSING	
	292-0305	2	CABLE AS (MAST)	
			(EACH INCLUDES)	
	8T-8737	5	PLUG-SEAL	
	9X-3402	7	SOCKET-CONNECTOR (16-GA TO 18-GA)	
	230-4009	1	PLUG AS-CONNECTOR (12-PIN)	
	264-7034	1	SEAL-CONNECTOR	
	116-0118	3	CLIP	
	132-5789	5	CLIP	
	8J-1256	3	CLIP	
	265-8146	4	COVER	
	263-6699	2	FLANGE-CONNECTOR	
	7Y-8169	1	GROMMET	
M	**179-4324**	16	LOCKNUT (M5X0.8-THD)	
	3L-8187	8	LOCKWASHER	
M	**3E-8048**	8	SCREW-MACHINE (M3X0.5X6-MM)	
	093-0332	2	SHIM (1-MM THK)	
	093-0334	6	SHIM (0.4-MM THK)	
	085-9310	8	SPACER (16.6X32X26-MM THK)	
	7K-1181	22	STRAP-CABLE	
	3S-2093	10	STRAP-CABLE	
	9X-8256	19	WASHER (6.6X12X2-MM THK)	
	8T-0328	16	WASHER-HARD (5.5X10X1-MM THK)	
	8T-4121	6	WASHER-HARD (11X21X2.5-MM THK)	
	8T-4224	4	WASHER-HARD (8.8X16X2-MM THK)	
	8T-7934	19	WASHER-HARD (11X21X5-MM THK)	
	161-6987	3	WASHER-HARD (5.2X16X1.5-MM THK)	

M-METRIC PART

<END>

238-1432 PANEL & MTG GP-CIRCUIT BREAKER

S/N: MNB1-UP; WDK1-UP
PART OF 229-9072 OPERATOR AR

SMCS-1417, 1420 **i02348252**

NOTE	REF NO	GRAPHIC REF	PART NUMBER	QTY	PART NAME 1 2 3 4 5 6 (PRODUCT LEVEL)	SEE PAGE
Y	1	1	*231-1756*	1	PANEL GP-CIRCUIT BREAKER	216
	2	1	**8T-4121**	4	WASHER-HARD (11X21X2.5-MM THK)	
M	3	1	**8T-4137**	4	BOLT (M10X1.5X20-MM)	

M-METRIC PART
Y-SEPARATE ILLUSTRATION

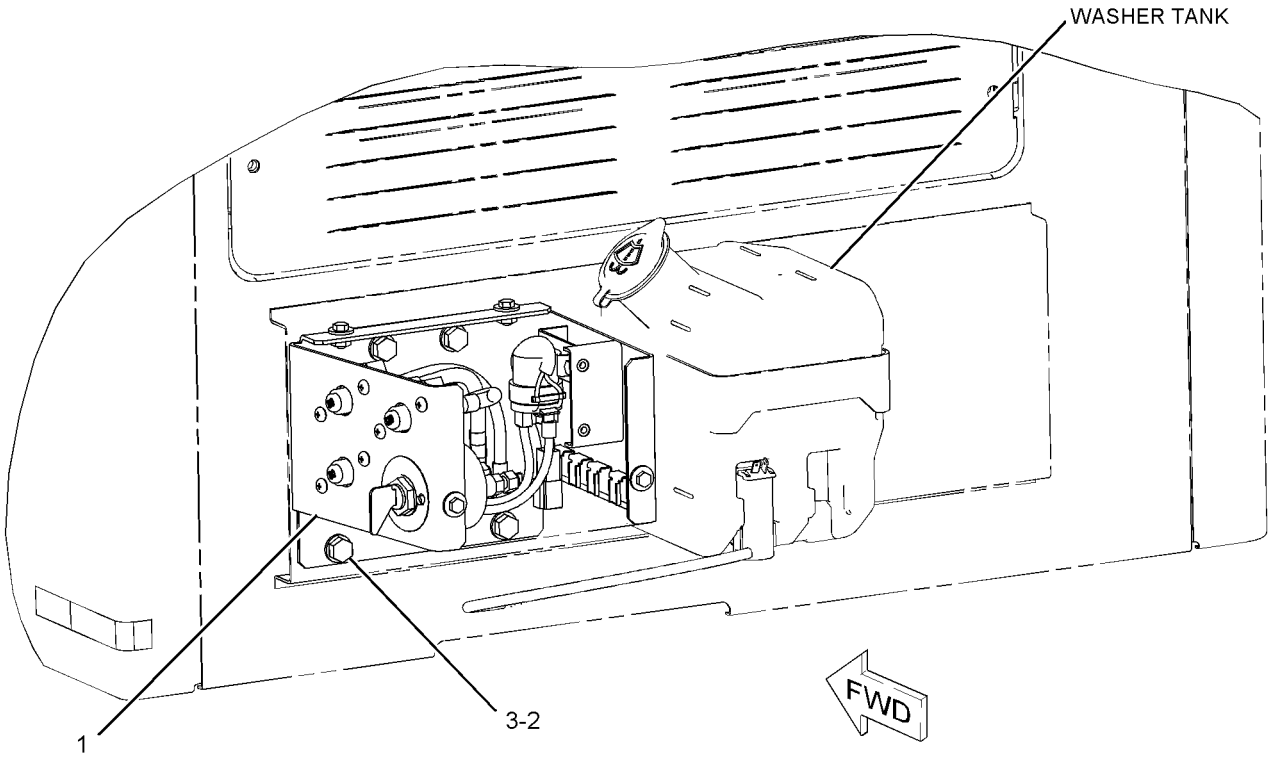

GRAPHIC #1 **<END>** g01150497

ELECTRICAL AND STARTING SYSTEM

231-1756 PANEL GP-CIRCUIT BREAKER

S/N: MNB1-UP; WDK1-UP

PART OF 238-1432 PANEL & MTG GP-CIRCUIT BREAKER

SMCS-1417 **i02612374**

NOTE	REF NO	GRAPHIC REF	PART NUMBER	QTY	PART NAME 1 2 3 4 5 6 (PRODUCT LEVEL)	SEE PAGE
	1	1	**3E-8320**	1	PLATE-INSTRUCTION (BATTERY)	
Y	2	1	**7N-0719**	1	SWITCH GP-DISCONNECT (BATTERY)	250
	3	1	**121-1023**	1	BLOCK-TERMINAL	
Y	4	1	**125-1302**	1	SWITCH GP-MAGNETIC (24-VOLT) (START RELAY)	251
	5	1	**216-4970**	1	CIRCUIT BREAKER AS (120-AMPERE) (HEATER)	
		1	**6V-8187**	2	NUT (1/4-28-THD)	
		1	**8T-4205**	2	WASHER-HARD (7.2X14.5X2-MM THK)	
		1	**253-2111**	2	LOCKWASHER	
	6	1	**291-7547**	1	BRACKET AS	
	7	1	**234-1035**	1	CABLE AS	
	8	1	**234-1037**	1	WIRE AS	
	9	1	**234-1038**	1	WIRE AS	
	10	1	**238-1506**	1	COVER	
	11	1	**238-2279**	1	BAR-BUS	
	12	1	**238-2280**	1	WIRE AS	
	13	1	**251-0303**	1	CABLE AS	
	14	1	**251-0304**	1	CABLE AS	
	15	1	**171-2210**	1	CIRCUIT BREAKER AS (80-AMPERE) (MAIN)	
	15A	1	**171-2210**	1	CIRCUIT BREAKER AS (80-AMPERE) (ALTERNATOR)	
					(EACH CIRCUIT BREAKER AS INCLUDES)	
		1	**6V-8187**	2	NUT (1/4-28-THD)	
		1	**8T-4205**	2	WASHER-HARD (7.2X14.5X2-MM THK)	
		1	**253-2111**	2	LOCKWASHER	
M	16	1	**5C-9553**	5	BOLT (M6X1X16-MM)	
	17	1	**5P-4115**	4	WASHER-HARD (7.2X19X2-MM THK)	
	18	1	**6V-5645**	6	SCREW-MACHINE (10-32X0.87-IN)	
	19	1	**8T-0328**	6	WASHER-HARD (5.5X10X1-MM THK)	
M	20	1	**8T-4171**	4	BOLT (M6X1X12-MM)	
M	21	1	**8T-4970**	4	BOLT (M6X1X14-MM)	
	22	1	**9X-8256**	11	WASHER (6.6X12X2-MM THK)	

M-METRIC PART
Y-SEPARATE ILLUSTRATION

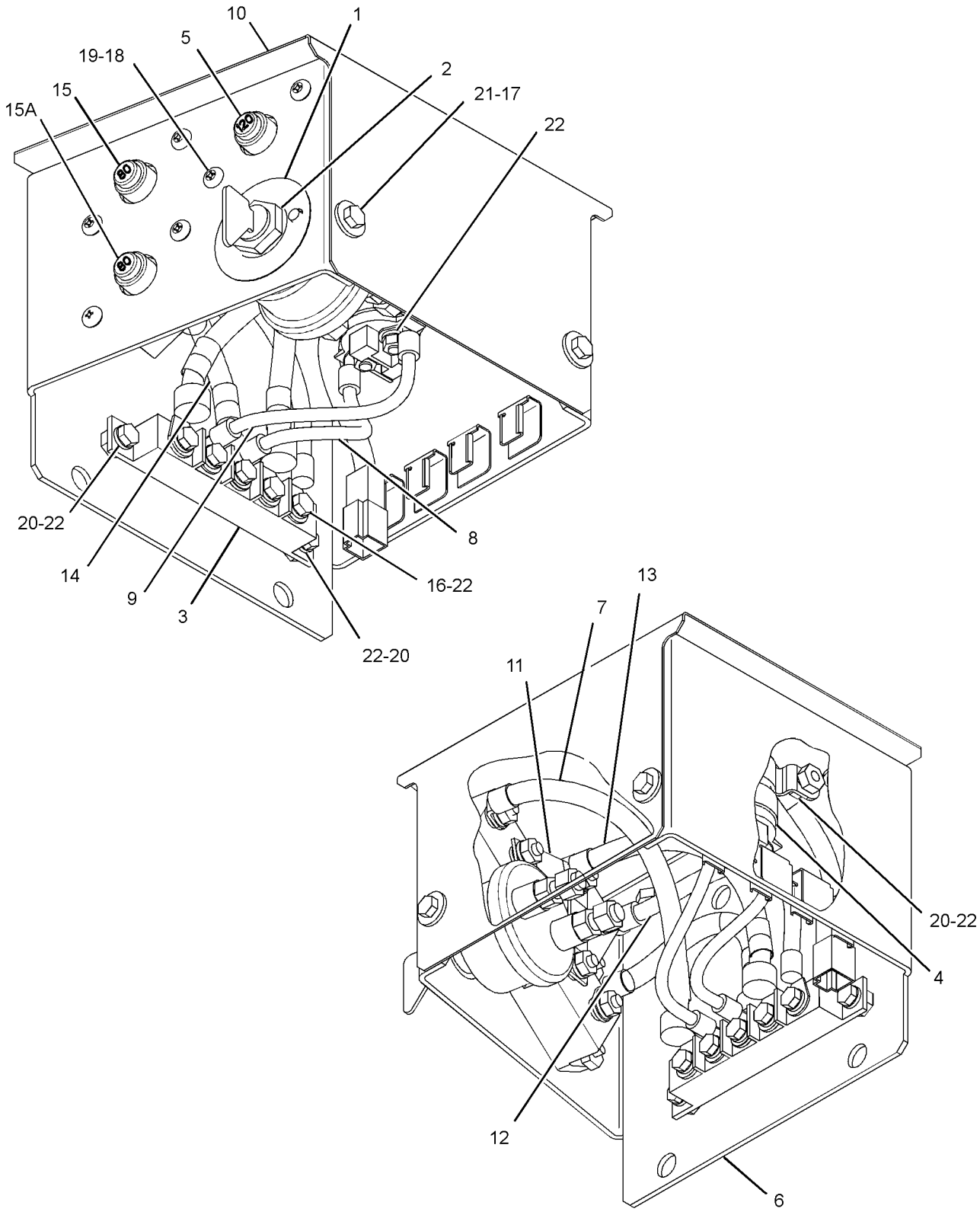

GRAPHIC #1 **<END>** g01326247

251-0542 PANEL GP-SWITCH—ENGINE SPEED, START

S/N: MNB1-UP; WDK1-UP
CONSOLE
CANNOT BE USED WITH 251-0544—PAGE 220
AN ATTACHMENT

SMCS-1408, 1429, 7332, 7451 **i03098161**

NOTE	REF NO	GRAPHIC REF	PART NUMBER	QTY	PART NAME 1 2 3 4 5 6 (PRODUCT LEVEL)	SEE PAGE
	1	1	**3S-2093**	4	STRAP-CABLE	
Y	2	1	**9G-7641**	1	SWITCH GP-START (ENGINE, KEY)	258
CY	3	1	**319-4420**	1	SWITCH GP-ROTARY (THROTTLE POSITION)	257
	4	1	**170-9324**	1	LAMP AS (24-VOLT, 3-WATT)	
	5	1	**185-9208**	1	KNOB AS (THROTTLE POSITION)	
	6	1	**234-1156**	1	COVER	
	7	1	**234-1158**	1	COVER	
	8	1	**267-7976**	1	PANEL	
C	9	1	**328-0021**	1	HARNESS AS-CONSOLE (RH)	
	10	1	**096-6166**	4	WASHER-HARD (4.5X9X1-MM THK)	
	11	1	**119-5026**	4	SCREW-PAN HEAD (10-16X0.63-IN)	
M	12	1	**6V-9491**	4	SCREW-MACHINE (M4X0.7X20-MM)	

C-CHANGE FROM PREVIOUS TYPE
M-METRIC PART
Y-SEPARATE ILLUSTRATION

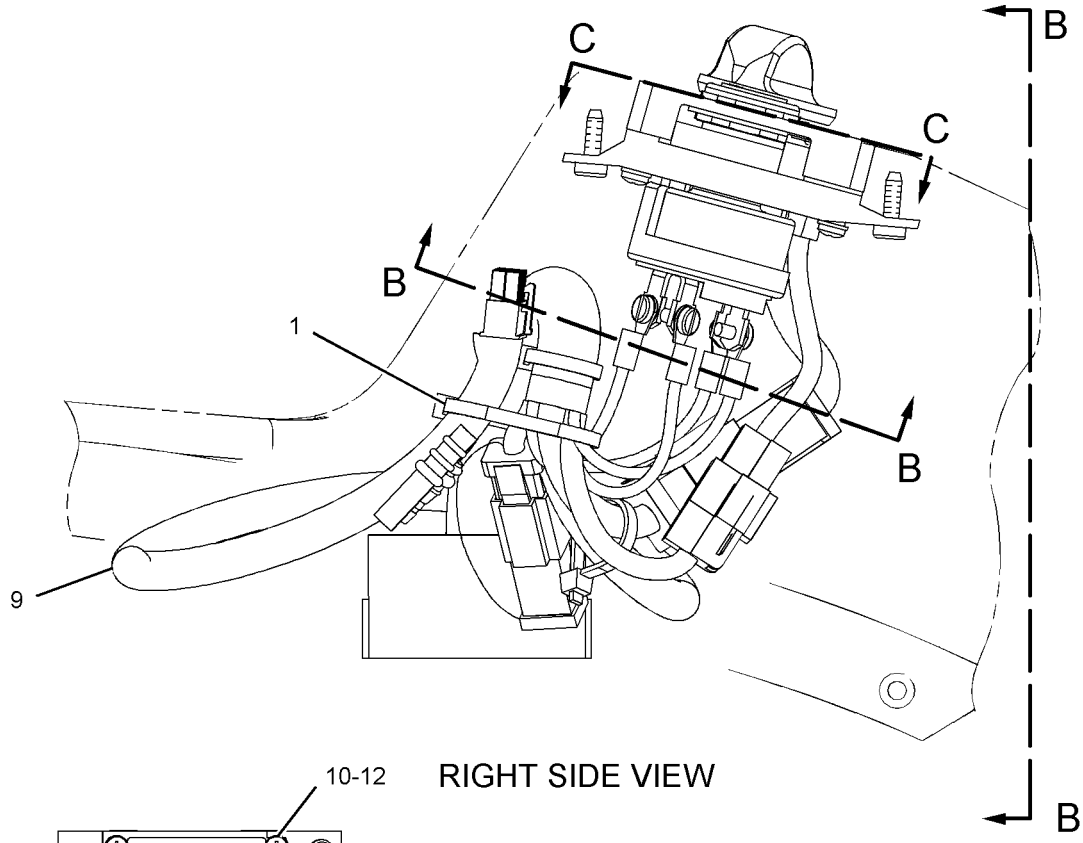

RIGHT SIDE VIEW

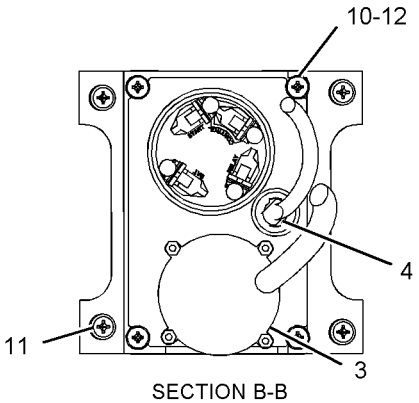

SECTION B-B

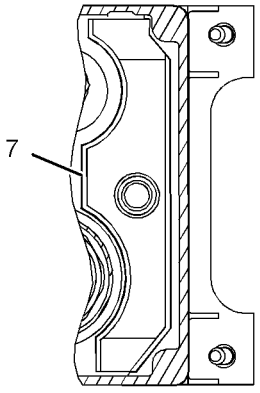

VIEW C-C

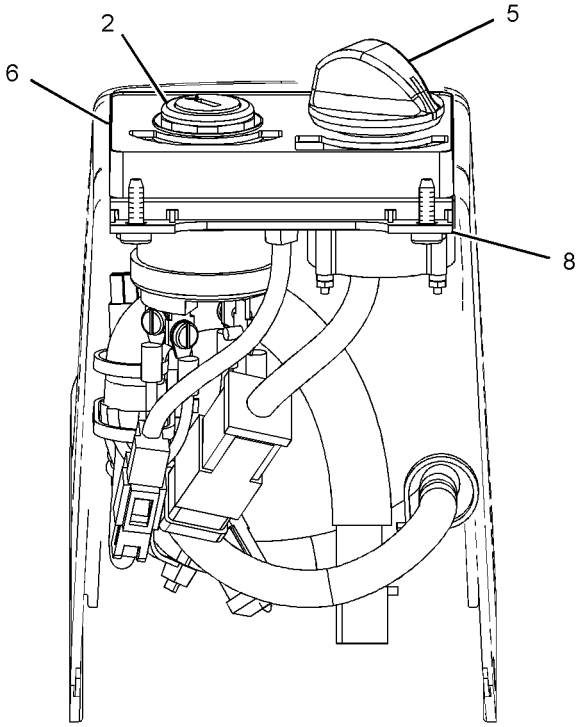

VIEW B-B

GRAPHIC #1 **<END>** g01112022

251-0544 PANEL GP-SWITCH–ENGINE SPEED, START

S/N: MNB1-UP; WDK1-UP

PART OF 227-7581 INSTALLATION GP-SECURITY

AN ATTACHMENT

SMCS-1408, 1429, 7332, 7451 **i03115847**

NOTE	REF NO	GRAPHIC REF	PART NUMBER	QTY	PART NAME 1 2 3 4 5 6 (PRODUCT LEVEL)	SEE PAGE
	1	1	**3S-2093**	5	STRAP-CABLE	
Y	2	1	**9G-7641**	1	SWITCH GP-START (ENGINE, KEY)	258
CY	3	1	**319-4420**	1	SWITCH GP-ROTARY (THROTTLE POSITION)	257
	4	1	**185-9208**	1	KNOB AS	
	5	1	**205-0826**	1	FILM-INSTRUCTION (MACHINE SECURITY, CONSOLE)	
	6	1	**206-5208**	1	COIL AS (EXCITER)	
	7	1	**234-1156**	1	COVER	
	8	1	**267-7977**	1	PANEL	
C	9	1	**328-0021**	1	HARNESS AS-CONSOLE	
	10	1	**096-6166**	4	WASHER-HARD (4.5X9X1-MM THK)	
	11	1	**119-5026**	4	SCREW-PAN HEAD (10-16X0.63-IN)	
M	12	1	**6V-9491**	4	SCREW-MACHINE (M4X0.7X20-MM)	

C-CHANGE FROM PREVIOUS TYPE
M-METRIC PART
Y-SEPARATE ILLUSTRATION

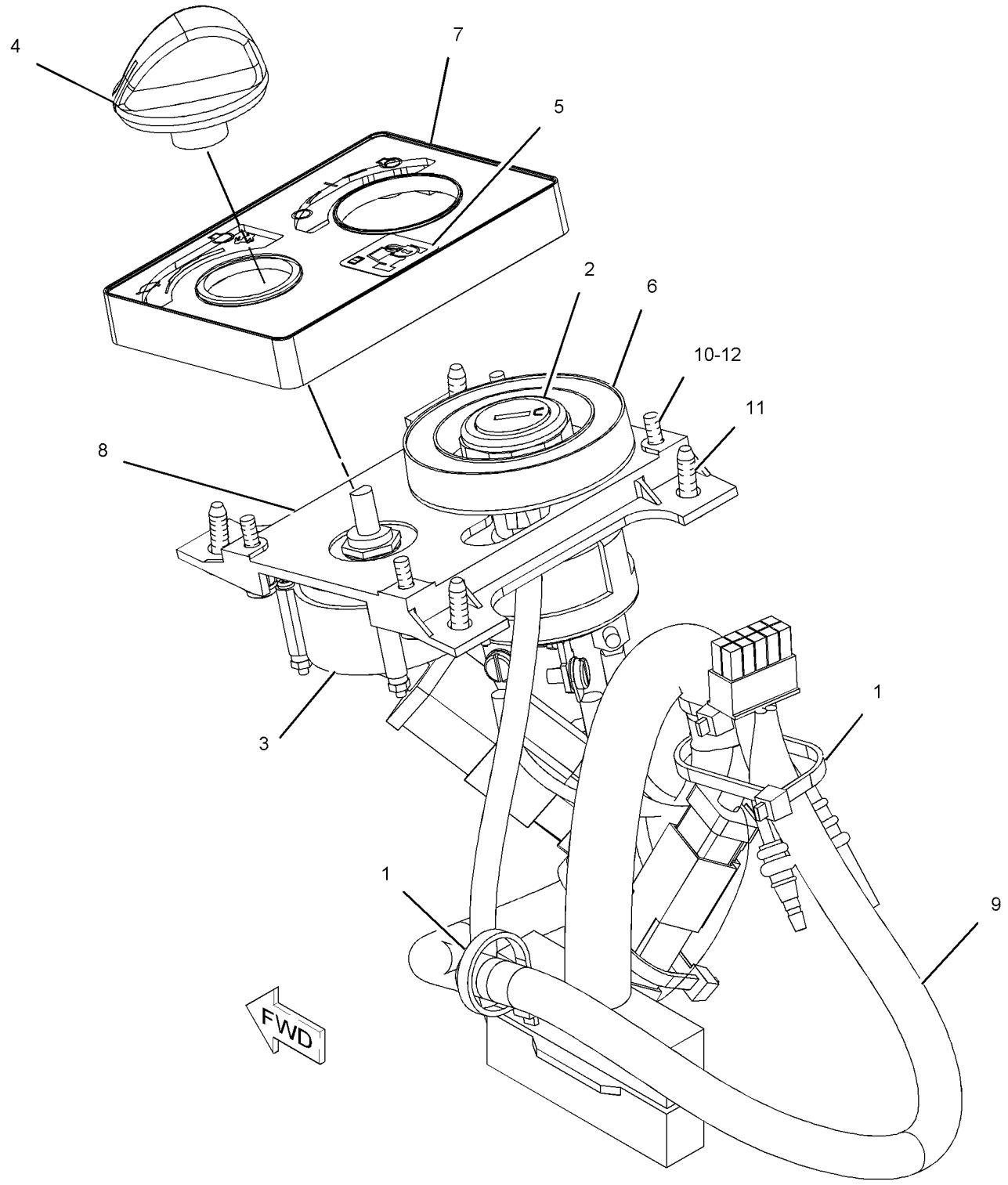

GRAPHIC #1 **<END>** g01123869

235-8200 PLUG GP-CONNECTOR

S/N: KHX4087-UP

PART OF 224-9842, 290-0754, 290-0755, 290-0756 ENGINE AR-COMPLETE

ALSO AN ATTACHMENT

SMCS-1403, 1408 **i02951920**

NOTE	REF NO	GRAPHIC REF	PART NUMBER	QTY	PART NAME 1 2 3 4 5 6 (PRODUCT LEVEL)	SEE PAGE
	1	1	**246-9353**	1	PLUG AS	
		1	**102-8806**	1	KIT-RECEPTACLE (8-PIN)	
					(INCLUDES RECEPTACLE AS & WEDGE)	
	2	1	**3S-2093**	1	STRAP-CABLE (PLASTIC)	

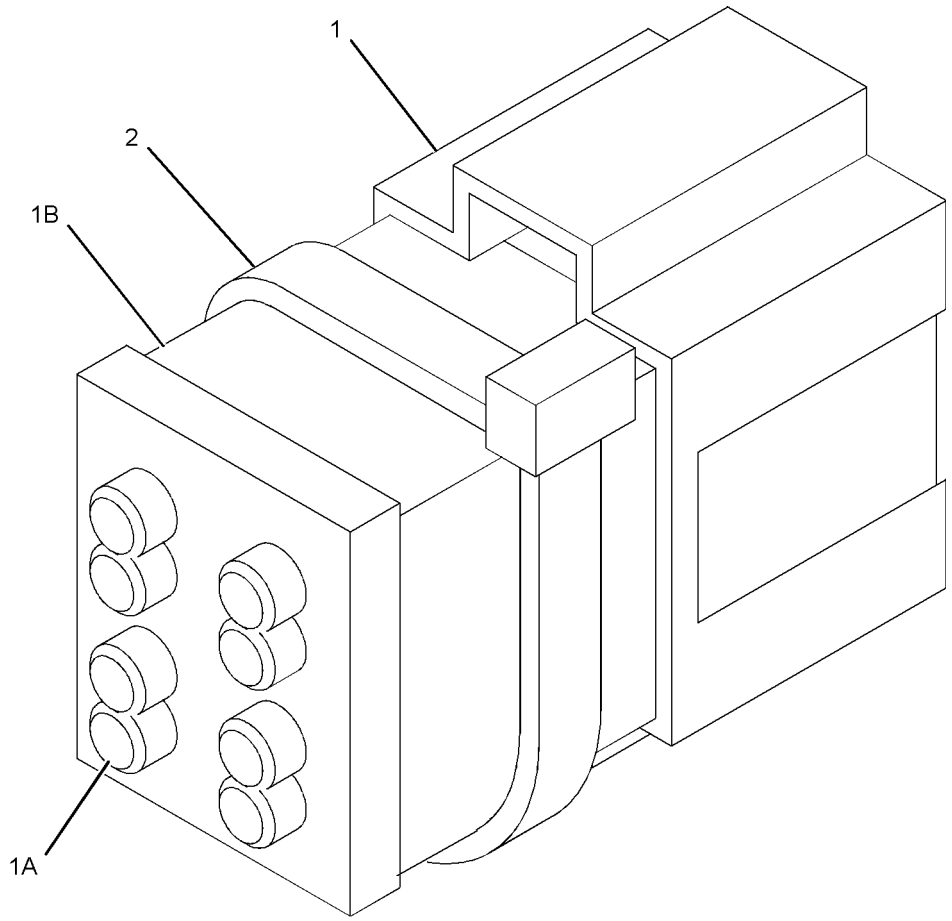

GRAPHIC #1 **<END>** g01105455

292-0291 RECEIVER GP-SATELLITE—DUAL GNSS, MS990

S/N: MNB1-UP; WDK1-UP

PART OF 292-0276 GRADE CONTROL AR-SATELLITE

SMCS-7010 **i03177244**

NOTE	PART NUMBER	QTY	PART NAME 1 2 3 4 5 6 (PRODUCT LEVEL)	SEE PAGE
	252-9628	2	BRACKET AS (RECEIVER)	
			(EACH INCLUDES)	
	8R-1803	5	WASHER (10.5X18X1-MM THK)	
M	**8T-9388**	4	BOLT (M10X1.5X25-MM)	
	113-0693	5	LOCKWASHER	
	289-8449	1	HANDLE AS	
R	**291-1913**	2	RECEIVER AS-SATELLITE (GNSS, MS990)	
	255-0939	1	CASE-PLASTIC (RECEIVER)	
	286-3017	2	HANDLE (RECEIVER)	

M-METRIC PART
R-REMFG PART MAY BE AVAILABLE

<END>

297-5594 SENSOR AR-GRADE—ANGLE SENSOR

S/N: MNB1-UP; WDK1-UP

PART OF 292-0276 GRADE CONTROL AR-SATELLITE

SMCS-5953, 7220 **i03177320**

NOTE	PART NUMBER	QTY	PART NAME 1 2 3 4 5 6 (PRODUCT LEVEL)	SEE PAGE
	265-9492	1	JUNCTION BOX	
	226-9169	1	MODULE AS-POWER SUPPLY	
	244-1720	3	MONITOR AS (LIGHT BAR)	
	265-8047	1	SENSOR AS-POSITION (ANGLE, PITCH)	
	265-8059	3	SENSOR AS-POSITION (ANGLE)	

<END>

257-2186 SENSOR GP-ENGINE

S/N: KHX4087-UP

PART OF 224-9842, 290-0754, 290-0755, 290-0756 ENGINE AR-COMPLETE

ALSO AN ATTACHMENT

SMCS-1000, 1906, 1907, 1924, 7422 **i02421127**

NOTE	REF NO	GRAPHIC REF	PART NUMBER	QTY	PART NAME 1 2 3 4 5 6 (PRODUCT LEVEL)	SEE PAGE
	1	1	**3E-2332**	1	ELBOW	
	2	1	**9X-0262**	1	ADAPTER	
	3	1	*171-6718*	1	TEE AS	
		1	**3K-0360**	1	SEAL-O-RING	
		1	**105-7704**	1	TEE	
CY	4	1	*274-7395*	1	SENSOR GP-TEMPERATURE (AIR INLET MANIFOLD)	238
CY	5	1	*274-7396*	1	SENSOR GP-TEMPERATURE (WATER, COOLANT)	239
Y	6	1	*197-8393*	1	SENSOR GP-PRESSURE (ATMOSPHERIC AIR)	229
Y	7	1	*197-8394*	1	SENSOR GP-PRESSURE (ENGINE OIL)	230
Y	8	1	*210-1747*	1	SENSOR GP-PRESSURE (BOOST)	231
Y	9	1	*236-6220*	1	SENSOR GP-PRESSURE (INJECTION ACTUATION)	233
Y	10	1	*236-6221*	1	SENSOR GP-SPEED (ENGINE TIMING) (ENGINE TIMING)	236
	11	1	*169-5861*	1	PLUG AS	
		1	**3K-8460**	1	PLUG	
		1	**5P-7814**	1	SEAL-O-RING	
	12	1	*183-3406*	2	PLUG AS	
					(EACH INCLUDES)	
		1	**6V-5049**	1	SEAL-O-RING	
		1	**9S-4191**	1	PLUG-O-RING	
	13	1	**3E-4352**	1	WASHER-HARD (8.8X20.5X2.5-MM THK)	
M	14	1	**6V-3940**	1	BOLT (M8X1.25X25-MM)	
	15	1	**6V-5048**	1	SEAL-O-RING	
	16	1	**6V-5049**	1	SEAL-O-RING	

C-CHANGE FROM PREVIOUS TYPE
M-METRIC PART
Y-SEPARATE ILLUSTRATION

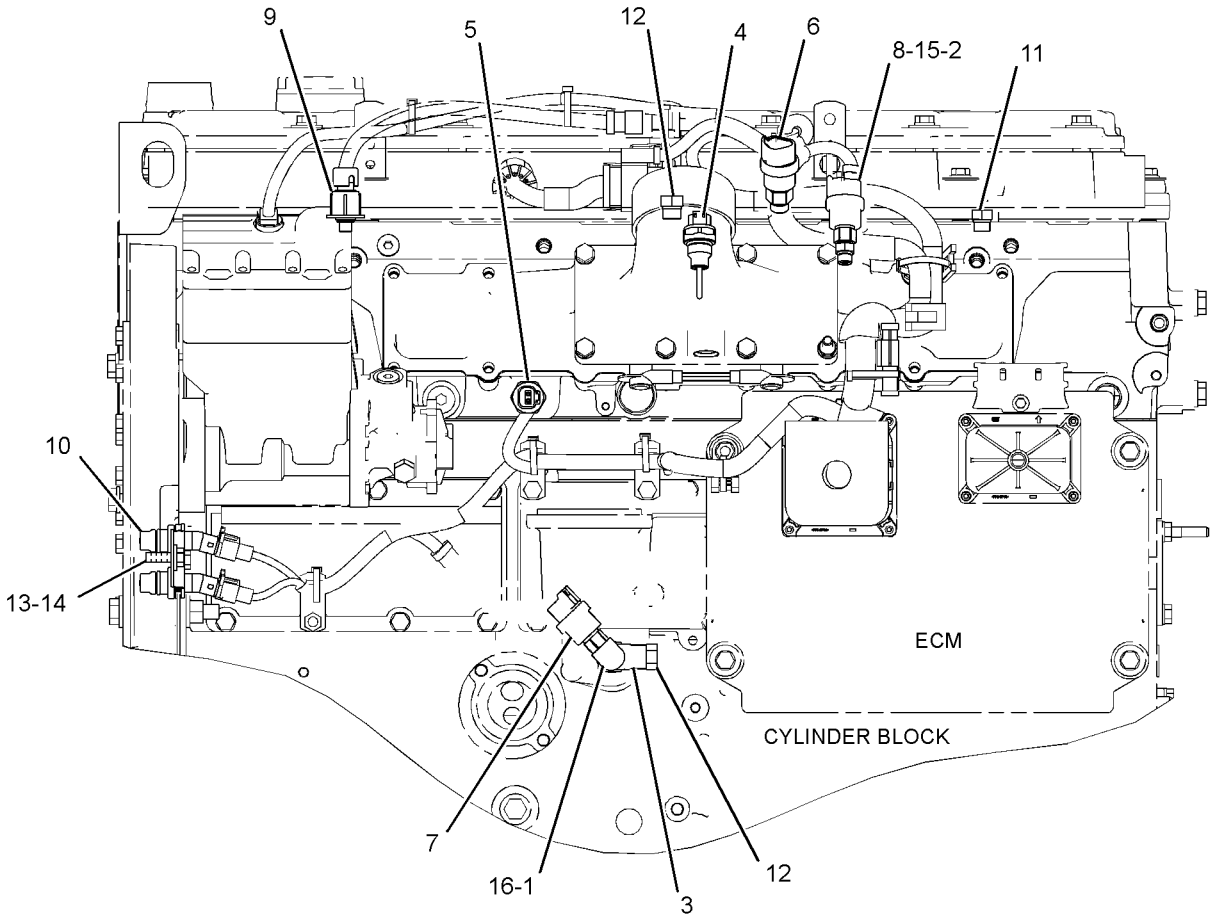

LEFT SIDE VIEW

GRAPHIC #1 **<END>** g01216474

178-2345 SENSOR GP-LIQUID LEVEL

S/N: MNB1-UP; WDK1-UP
PART OF 233-1124 SENSOR GP-LIQUID LEVEL
AN ATTACHMENT

SMCS-7422 **i03195620**

NOTE	REF NO	GRAPHIC REF	PART NUMBER	QTY	PART NAME 1 2 3 4 5 6 (PRODUCT LEVEL)	SEE PAGE
	1	1	**178-2334**	1	PROBE AS-LIQUID LEVEL (WATER SEPARATOR)	
	2	1	**178-2335**	1	SENSOR AS-LIQUID LEVEL (WATER SEPARATOR)	
		1	**102-8804**	1	KIT-RECEPTACLE (4-PIN)	
					(INCLUDES RECEPTACLE AS & WEDGE)	
		1	**155-2270**	1	KIT-CONNECTING PLUG (2-PIN)	
					(INCLUDES PLUG AS,WEDGE & INTERFACE SEAL)	
		1	**186-3735**	4	PIN-CONNECTOR (16-GA TO 18-GA)	
		1	**186-3736**	2	SOCKET-CONNECTOR (16-GA TO 18-GA)	

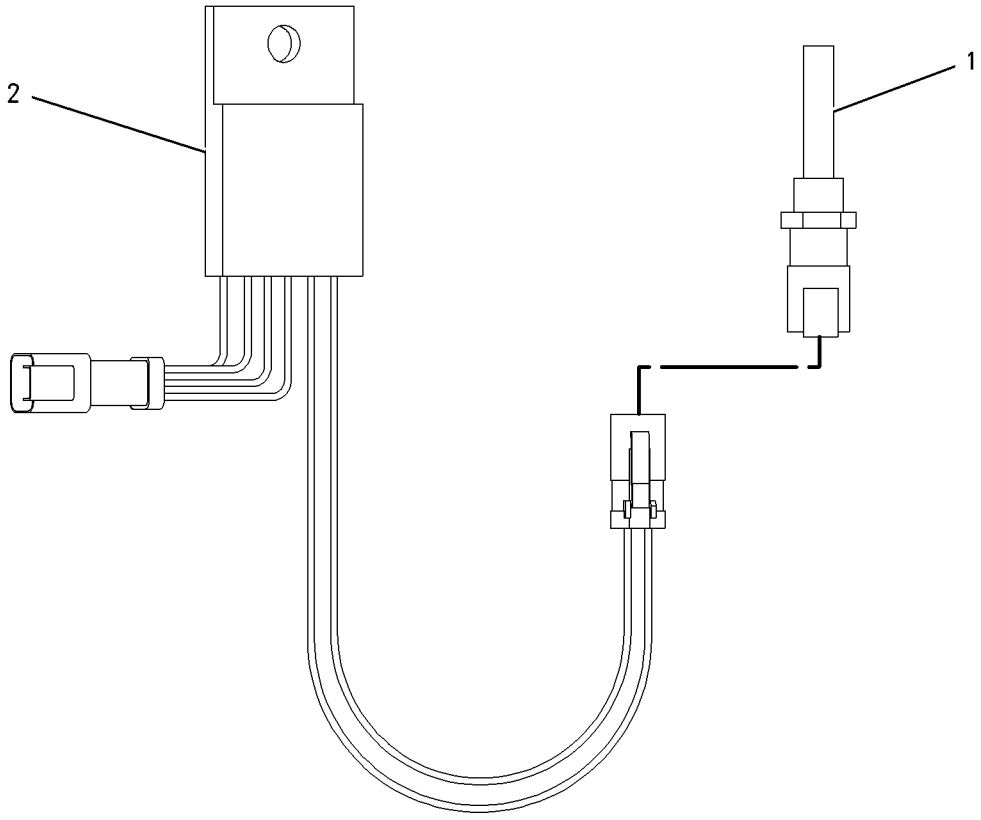

GRAPHIC #1 **<END>** g00816289

233-1124 SENSOR GP-LIQUID LEVEL–WATER IN FUEL

S/N: MNB1-UP; WDK1-UP
AN ATTACHMENT

SMCS-7422 **i02415528**

NOTE	REF NO	GRAPHIC REF	PART NUMBER	QTY	PART NAME 1 2 3 4 5 6 (PRODUCT LEVEL)	SEE PAGE
	1	1	**096-0061**	2	STRAP-CABLE	
Y	2	1	**178-2345**	1	SENSOR GP-LIQUID LEVEL (WATER IN FUEL)	226
	3	1	**6V-5049**	1	SEAL-O-RING	
	4	1	**8T-4121**	1	WASHER-HARD (11X21X2.5-MM THK)	
M	5	1	**8T-4137**	1	BOLT (M10X1.5X20-MM)	

M-METRIC PART
Y-SEPARATE ILLUSTRATION

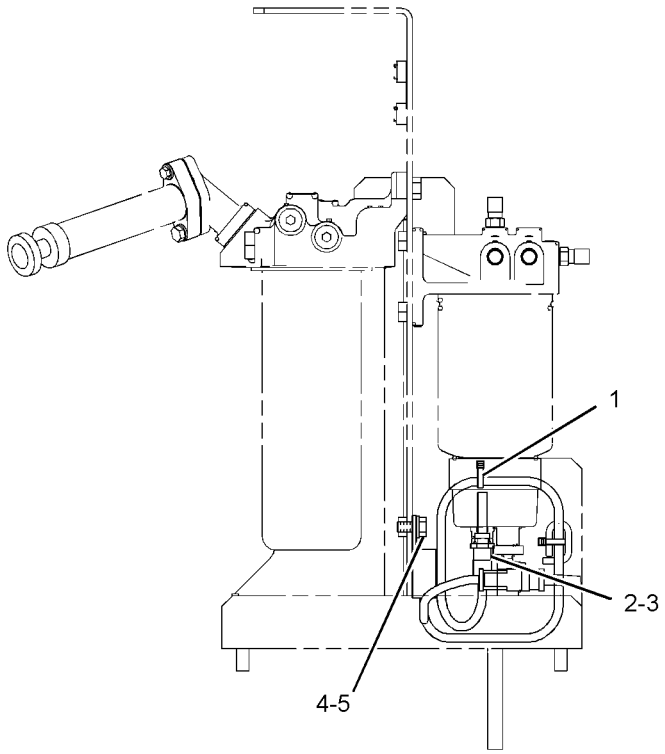

LEFT SIDE VIEW

GRAPHIC #1 **<END>** g01150641

194-6725 SENSOR GP-PRESSURE–FUEL

S/N: MNB1-UP; WDK1-UP
PART OF 239-2396 SENSOR GP-PRESSURE
ALSO AN ATTACHMENT

SMCS-1439, 1916, 1917, 1923, 1924 **i02819906**

NOTE	REF NO	GRAPHIC REF	PART NUMBER	QTY	PART NAME 1 2 3 4 5 6 (PRODUCT LEVEL)	SEE PAGE
E	1	1	**9X-1813**		SLEEVE (34-CM)	
	2	1	**155-2260**	1	KIT-CONNECTING PLUG (3-PIN)	
					(INCLUDES PLUG AS AND WEDGE)	
	3	1	**194-5226**	3	WIRE AS-HARNESS (16-GA TO 18-GA)	
	4	1	**3E-3368**	1	WEDGE-PLUG LOCK (3-PIN)	

E-ORDER BY THE CENTIMETER

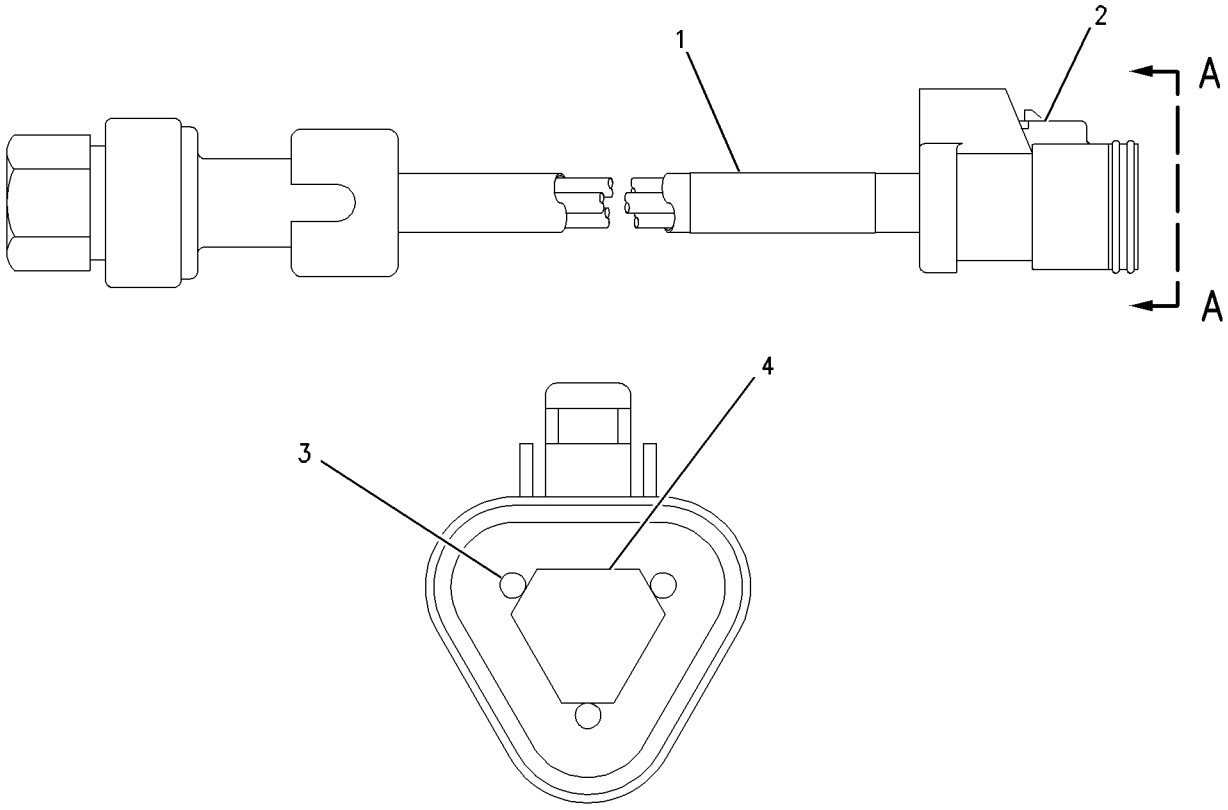

VIEW A-A

GRAPHIC #1 **<END>** g00851220

197-8393 SENSOR GP-PRESSURE

S/N: KHX4087-UP
PART OF 257-2186 SENSOR GP-ENGINE
ALSO AN ATTACHMENT

SMCS-1439, 1916, 1917, 1923, 1924 **i02274095**

NOTE	REF NO	GRAPHIC REF	PART NUMBER	QTY	PART NAME 1 2 3 4 5 6 (PRODUCT LEVEL)	SEE PAGE
	1	1	**161-1703**	1	SENSOR GP-PRESSURE	
	2	1	**6V-5049**	1	SEAL-O-RING	

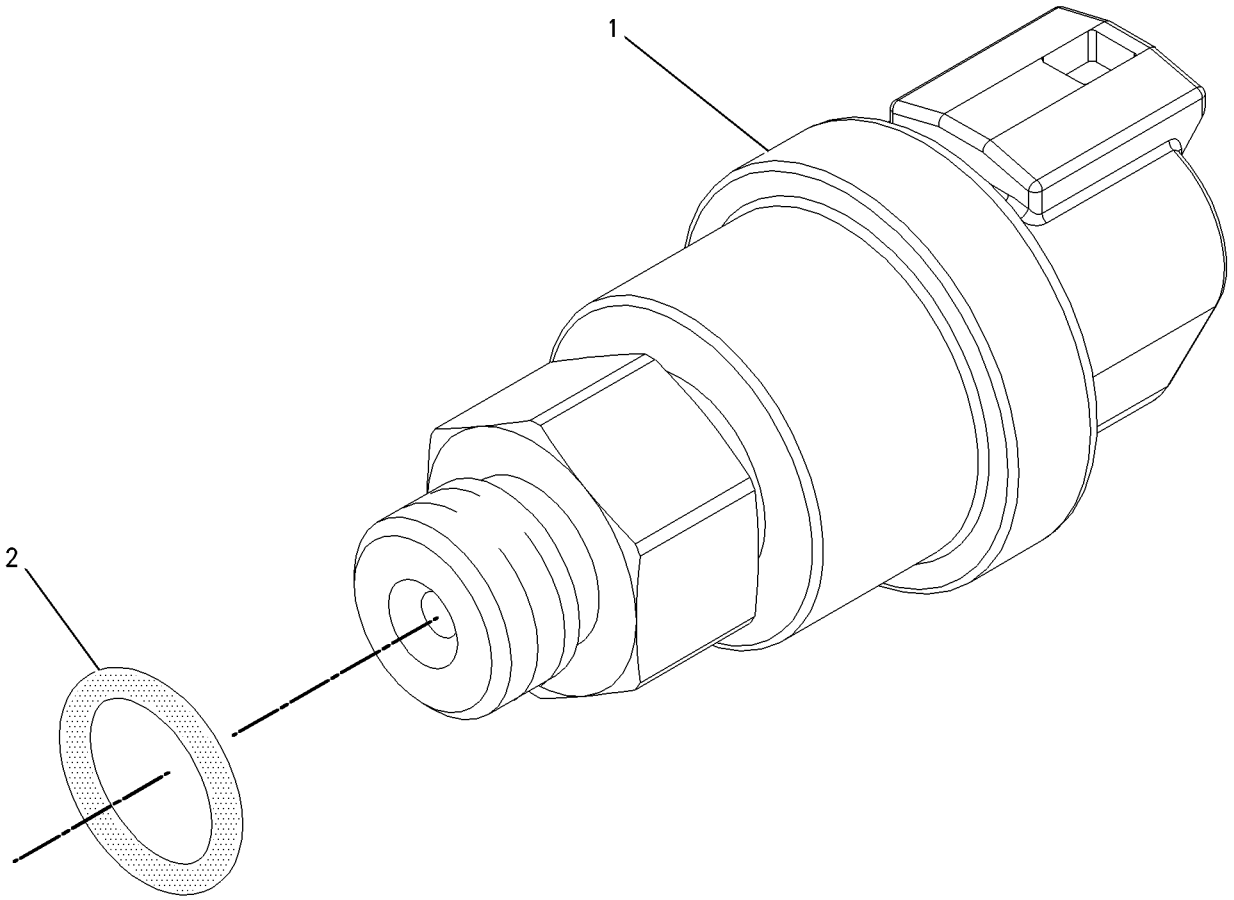

GRAPHIC #1 **<END>** g00855973

197-8394 SENSOR GP-PRESSURE

S/N: KHX4087-UP
PART OF 257-2186 SENSOR GP-ENGINE
ALSO AN ATTACHMENT

SMCS-1439, 1916, 1917, 1923, 1924 **i02274098**

NOTE	REF NO	GRAPHIC REF	PART NUMBER	QTY	PART NAME 1 2 3 4 5 6 (PRODUCT LEVEL)	SEE PAGE
	1	1	**161-1705**	1	SENSOR AS-PRESSURE	
	2	1	**6V-5048**	1	SEAL-O-RING	

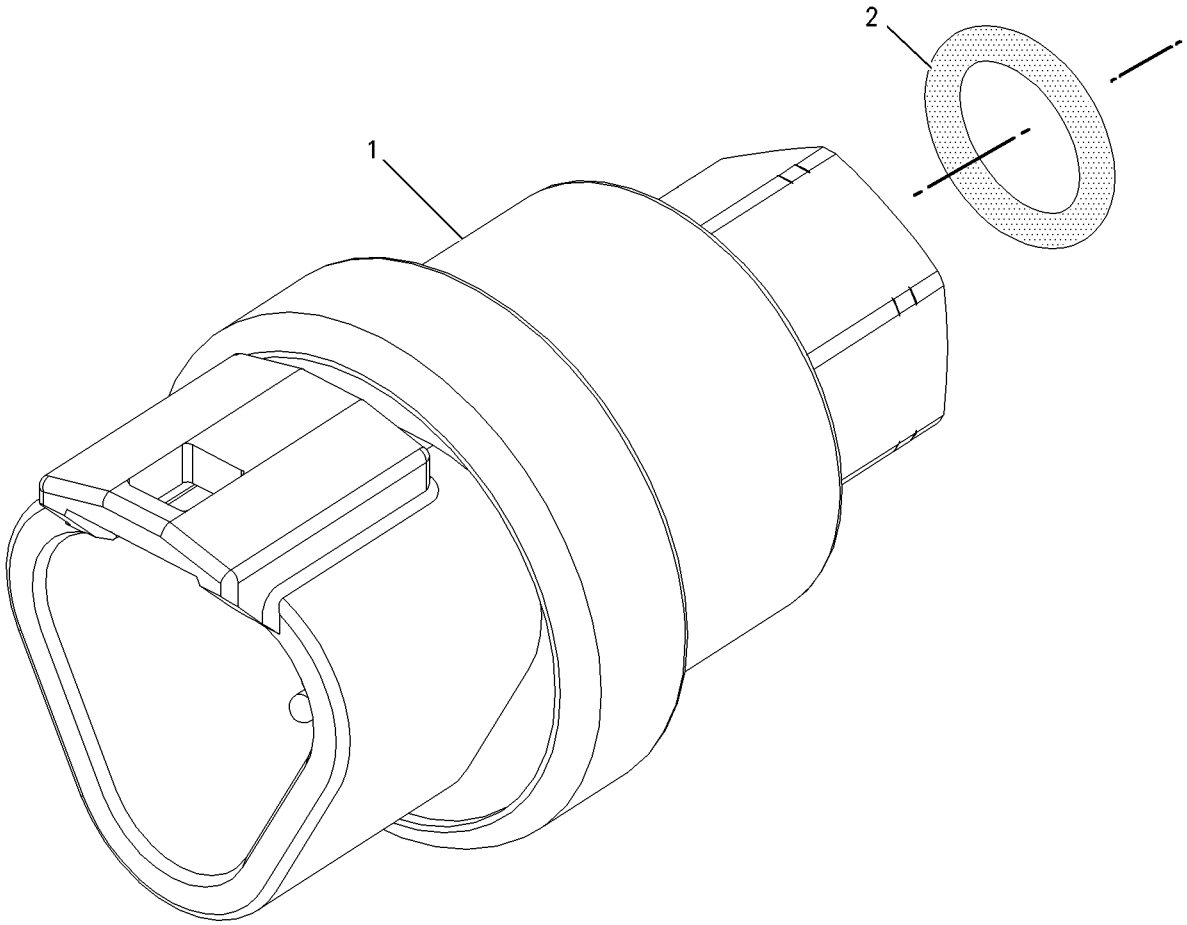

GRAPHIC #1 **<END>** g00856107

210-1747 SENSOR GP-PRESSURE

S/N: KHX4087-UP
PART OF 257-2186 SENSOR GP-ENGINE
ALSO AN ATTACHMENT

SMCS-1439, 1916, 1917, 1923, 1924 **i02274100**

NOTE	REF NO	GRAPHIC REF	PART NUMBER	QTY	PART NAME 1 2 3 4 5 6 (PRODUCT LEVEL)	SEE PAGE
	1	1	**161-1704**	1	SENSOR GP-PRESSURE	
	2	1	**6V-5048**	1	SEAL-O-RING	

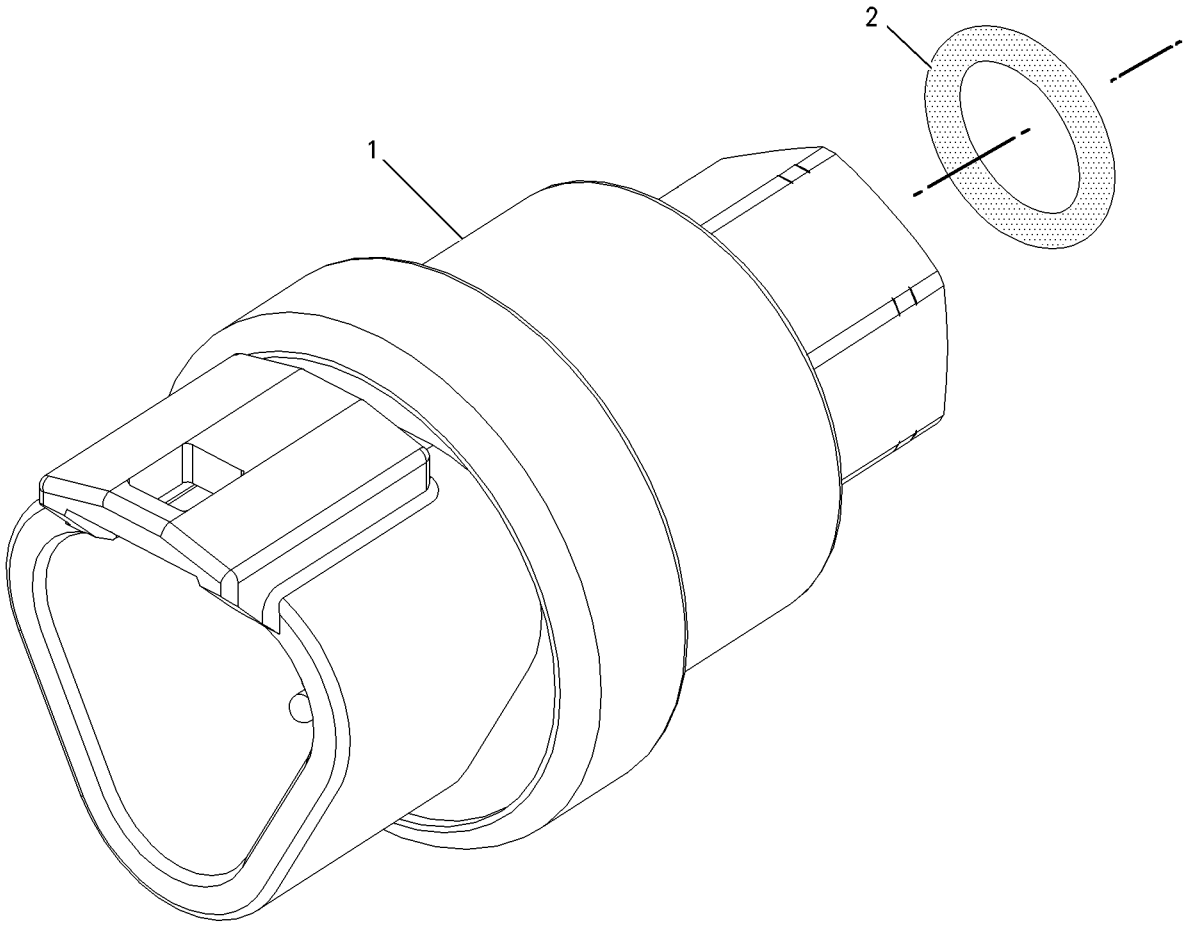

GRAPHIC #1 **<END>** g00856107

224-4536 SENSOR GP-PRESSURE

S/N: KHX4087-UP

PART OF 236-6220 SENSOR GP-PRESSURE

ALSO AN ATTACHMENT

SMCS-1439, 1916, 1917, 1923, 1924 **i02154693**

NOTE	REF NO	GRAPHIC REF	PART NUMBER	QTY	PART NAME 1 2 3 4 5 6 (PRODUCT LEVEL)	SEE PAGE
E	1	1	**9X-1813**		SLEEVE (35-CM)	
	2	1	**155-2260**	1	KIT-CONNECTING PLUG (3-PIN)	
					(INCLUDES PLUG AS AND WEDGE)	
	3	1	**194-5226**	1	WIRE AS-HARNESS (16-GA TO 18-GA) (INJECTION ACTUATION)	
					—OR—	
		1	**194-5227**	1	WIRE AS-HARNESS (14-GA WIRE) (INJECTION ACTUATION)	
	4	1	**155-2276**	1	WEDGE-PLUG LOCK (3-PIN)	

E-ORDER BY THE CENTIMETER

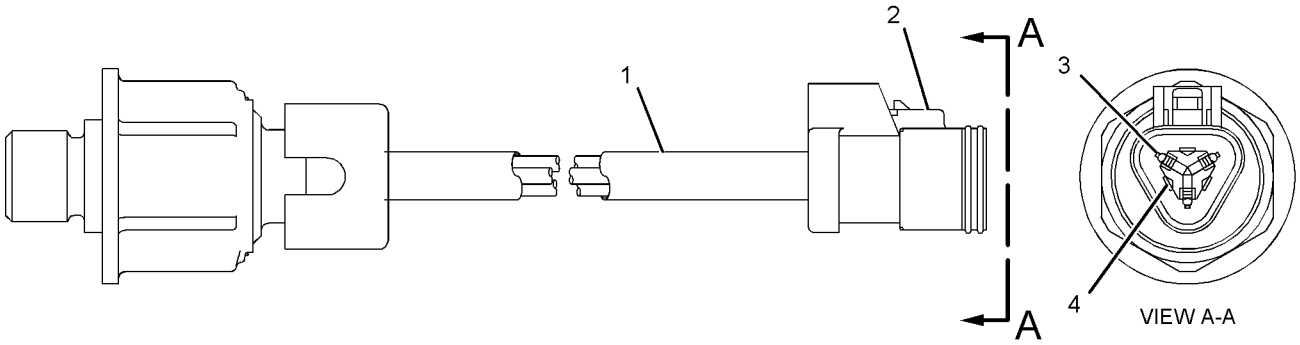

GRAPHIC #1 **<END>** g01040301

236-6220 SENSOR GP-PRESSURE

S/N: KHX4087-UP
PART OF 257-2186 SENSOR GP-ENGINE
ALSO AN ATTACHMENT

SMCS-1439, 1916, 1917, 1923, 1924 **i02096855**

NOTE	REF NO	GRAPHIC REF	PART NUMBER	QTY	PART NAME 1 2 3 4 5 6 (PRODUCT LEVEL)	SEE PAGE
	1	1	**214-7567**	1	SEAL-O-RING	
Y	2	1	**224-4536**	1	SENSOR GP-PRESSURE	232

Y-SEPARATE ILLUSTRATION

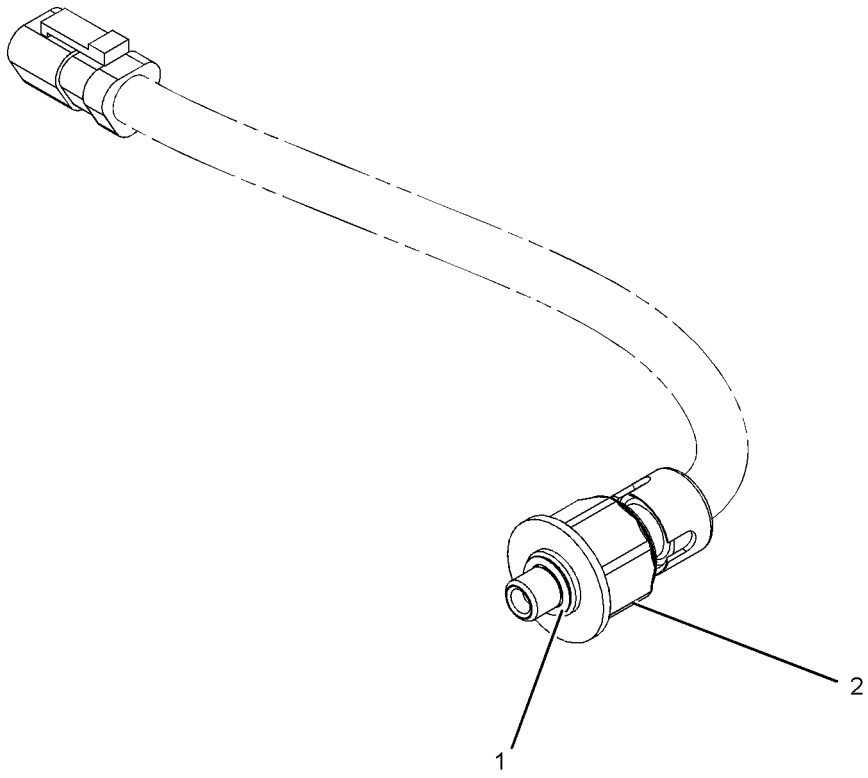

GRAPHIC #1 **<END>** g01054528

239-2396 SENSOR GP-PRESSURE–FUEL

S/N: MNB1-UP; WDK1-UP

PART OF 223-3046, 259-3885 LINES GP-FUEL

ALSO AN ATTACHMENT

SMCS-1439, 1916, 1917, 1923, 1924 **i02973768**

NOTE	REF NO	GRAPHIC REF	PART NUMBER	QTY	PART NAME 1 2 3 4 5 6 (PRODUCT LEVEL)	SEE PAGE
Y	1	1	**194-6725**	1	SENSOR GP-PRESSURE	228
	2	1	**6V-5048**	1	SEAL-O-RING	

Y-SEPARATE ILLUSTRATION

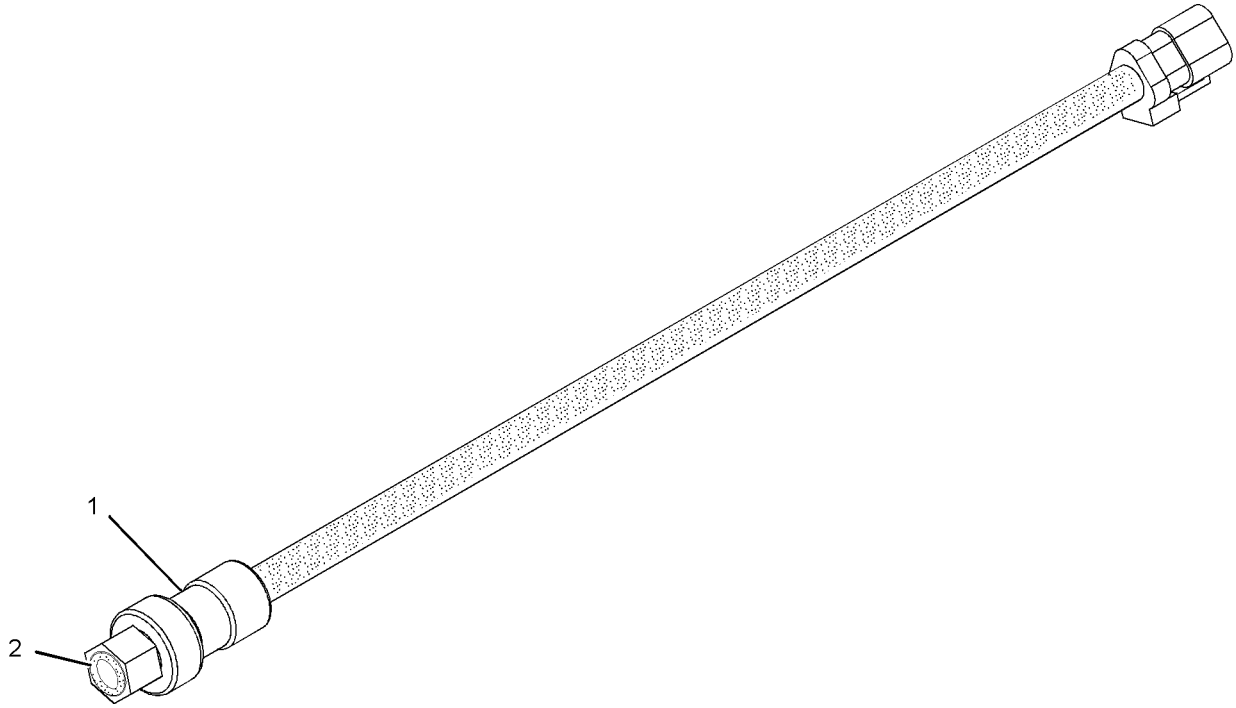

GRAPHIC #1 **<END>** g01019323

190-6186 SENSOR GP-SPEED

S/N: KHX4087-UP

PART OF 224-9842, 290-0754, 290-0755, 290-0756 ENGINE AR-COMPLETE

ALSO AN ATTACHMENT

SMCS-1907, 1912, 4803, 7493 **i01518767**

NOTE	REF NO	GRAPHIC REF	PART NUMBER	QTY	PART NAME 1 2 3 4 5 6 (PRODUCT LEVEL)	SEE PAGE
	1	1	**188-2128**	1	PLUG AS	
		1	**8T-8737**	2	PLUG-SEAL	
		1	**155-2270**	1	KIT-CONNECTING PLUG (2-PIN)	
					(KIT INCLUDES PLUG AS AND WEDGE)	
	2	1	**189-5746**	1	SENSOR GP-SPEED (ENGINE)	
		1	**171-5349**	1	STRAP-MARKER	
		1	**102-8802**	1	KIT-RECEPTACLE (2-PIN)	
					(KIT INCLUDES RECEPTACLE AS AND WEDGE)	
		1	**186-3735**	2	PIN-CONNECTOR (16-GA TO 18-GA)	
E		1	**9X-1386**		SLEEVE	

E-ORDER BY THE CENTIMETER

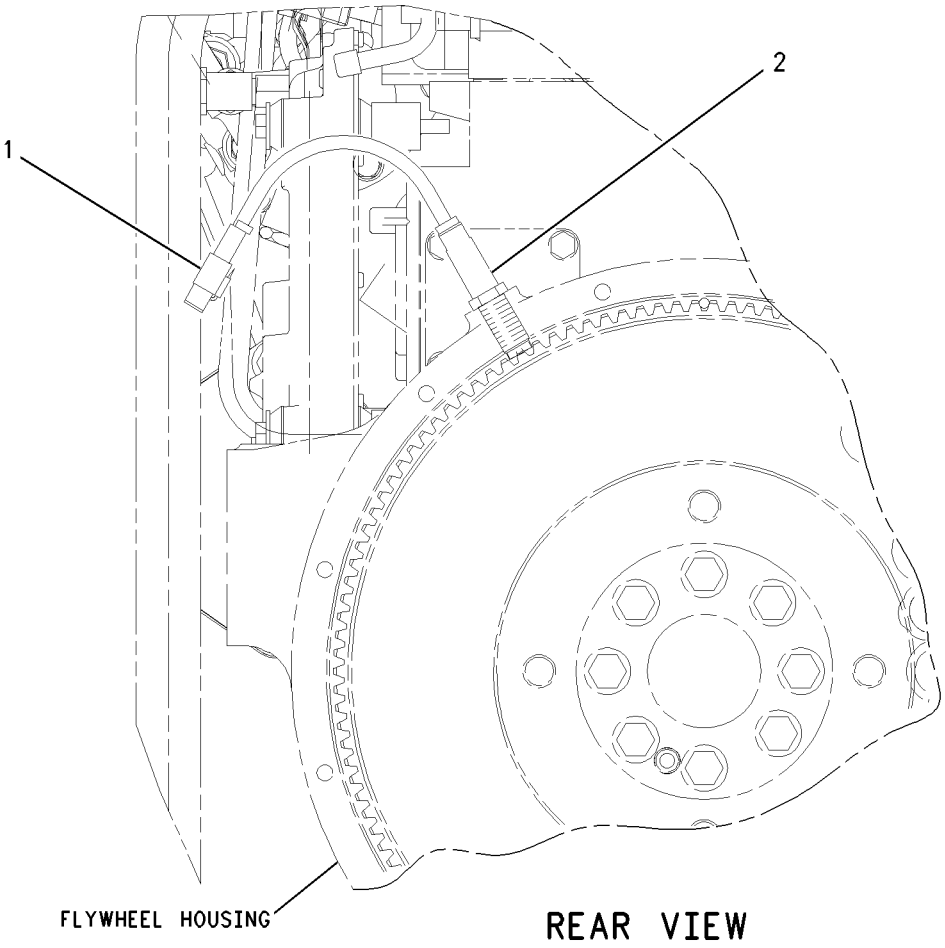

GRAPHIC #1 **<END>** g00777915

236-6221 SENSOR GP-SPEED

S/N: KHX4087-UP
PART OF 257-2186 SENSOR GP-ENGINE
ALSO AN ATTACHMENT

SMCS-1907, 1912, 4803, 7493 **i02096853**

NOTE	REF NO	GRAPHIC REF	PART NUMBER	QTY	PART NAME 1 2 3 4 5 6 (PRODUCT LEVEL)	SEE PAGE
	1	1	**203-3940**	2	SEAL-O-RING	
	2	1	**245-4630**	1	SENSOR GP-SPEED (ENGINE TIMING)	

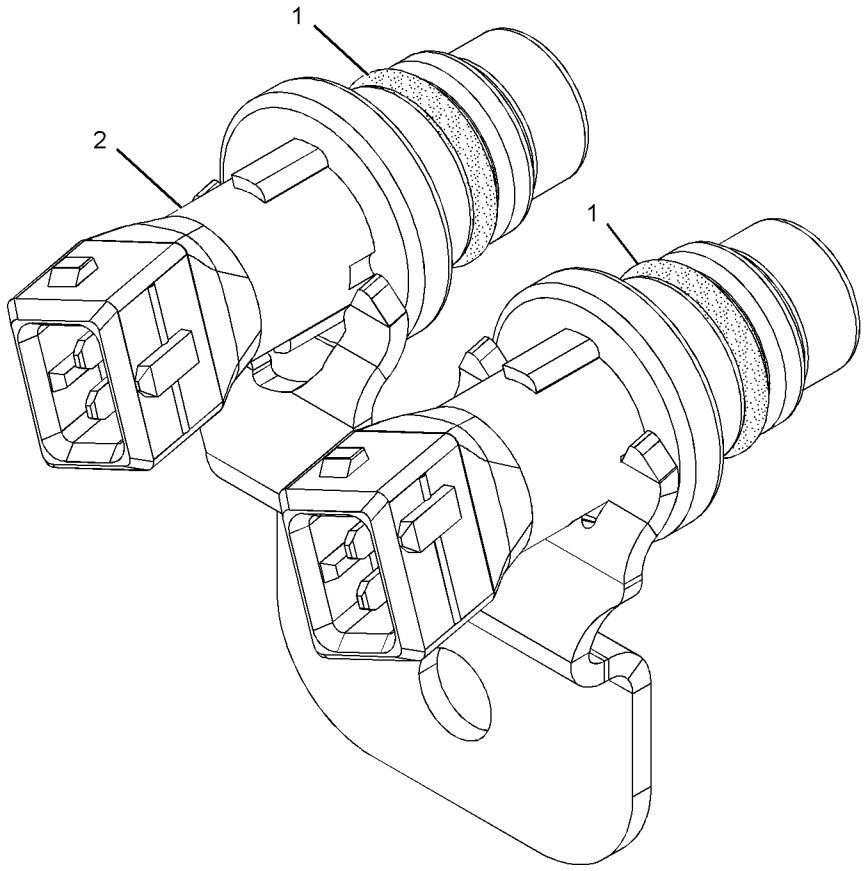

GRAPHIC #1 **<END>** g01013894

197-8391 SENSOR GP-TEMPERATURE–FUEL

S/N: MNB1-UP; WDK1-UP
PART OF 223-3046, 259-3885 LINES GP-FUEL
ALSO AN ATTACHMENT

SMCS-1906, 1921, 1922, 1928, 1929, 3290, 7344 **i02742297**

NOTE	REF NO	GRAPHIC REF	PART NUMBER	QTY	PART NAME 1 2 3 4 5 6 (PRODUCT LEVEL)	SEE PAGE
C	1	1	**264-4297**	1	SENSOR GP-TEMPERATURE (FUEL)	
		1	**137-6645**		PAD	
	2	1	**8L-2786**	1	SEAL-O-RING	

C-CHANGE FROM PREVIOUS TYPE

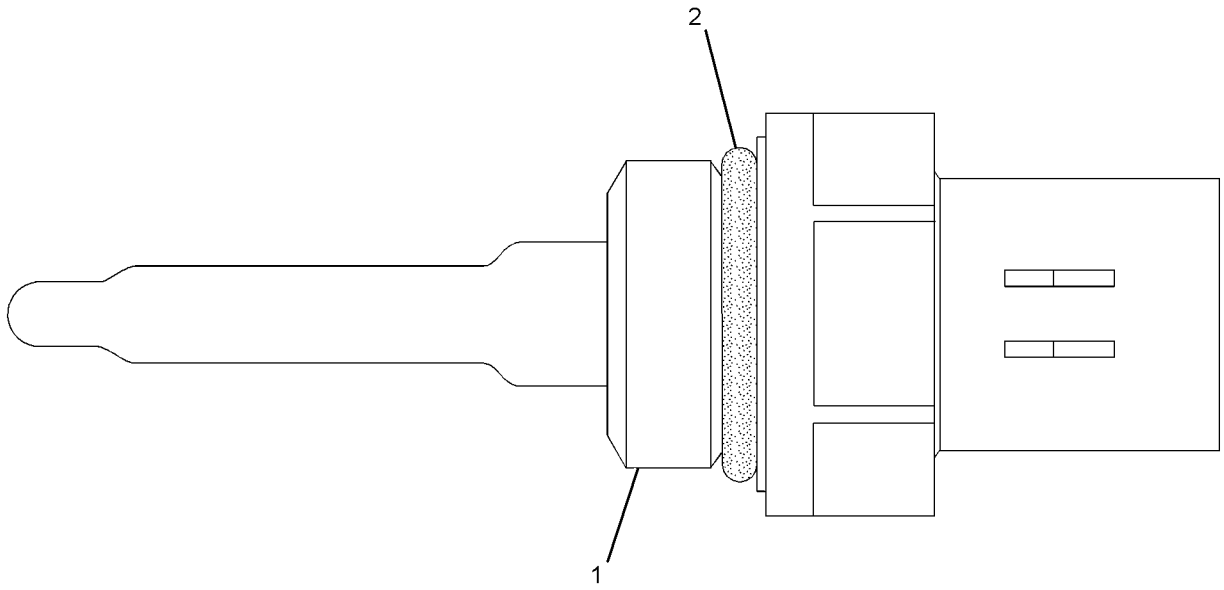

GRAPHIC #1 **<END>** g01164268

274-7395 SENSOR GP-TEMPERATURE

S/N: KHX4087-UP
PART OF 257-2186 SENSOR GP-ENGINE
ALSO AN ATTACHMENT

SMCS-1906, 1921, 1922, 1928, 1929, 3290, 7344 **i02397686**

NOTE	REF NO	GRAPHIC REF	PART NUMBER	QTY	PART NAME 1 2 3 4 5 6 (PRODUCT LEVEL)	SEE PAGE
	1	1	**130-9811**	1	SENSOR GP-TEMPERATURE	
	2	1	**8L-2786**	1	SEAL-O-RING	

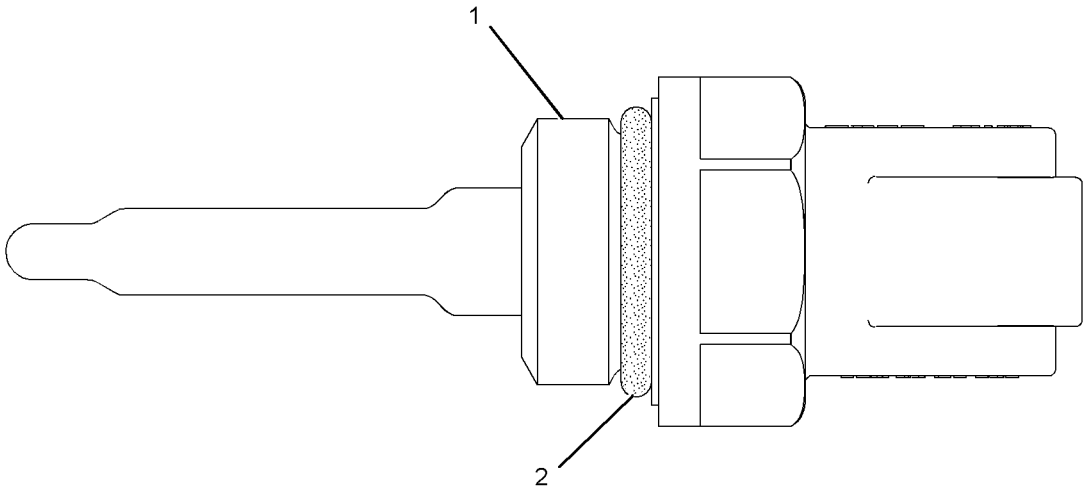

GRAPHIC #1 **<END>** g01199840

274-7396 SENSOR GP-TEMPERATURE

S/N: KHX4087-UP
PART OF 257-2186 SENSOR GP-ENGINE
ALSO AN ATTACHMENT

SMCS-1906, 1921, 1922, 1928, 1929, 3290, 7344 **i02403863**

NOTE	REF NO	GRAPHIC REF	PART NUMBER	QTY	PART NAME 1 2 3 4 5 6 (PRODUCT LEVEL)	SEE PAGE
	1	1	**130-9811**	1	SENSOR GP-TEMPERATURE	
	2	1	**6V-6609**	1	SEAL-O-RING	

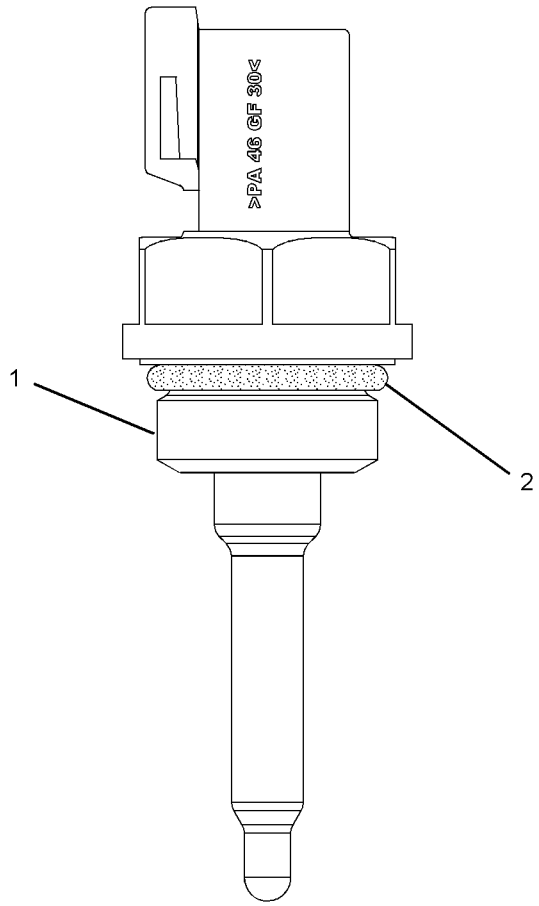

GRAPHIC #1 **<END>** g01193032

249-9223 STARTING AID GP

S/N: KHX4087-UP
24-VOLT FRONT
PART OF 224-9842, 290-0754, 290-0755, 290-0756 ENGINE AR-COMPLETE
ALSO AN ATTACHMENT

SMCS-1090 **i02616595**

NOTE	REF NO	GRAPHIC REF	PART NUMBER	QTY	PART NAME 1 2 3 4 5 6 (PRODUCT LEVEL)	SEE PAGE
Y	1	1	**209-5582**	1	SWITCH GP-MAGNETIC (24-VOLT) (AIR INLET HEATER RELAY)	252
	2	1	**229-8851**	1	CABLE AS	
E		1	**6V-9023**		TUBE-HEAT SHRINK (12.7-MM DIA) (3-CM)	
		1	**030-1712**	1	TERMINAL-RING (2-GA, 6.35-MM)	
		1	**135-2543**	1	BOOT	
	3	1	**283-1224**	1	BRACKET AS	
	4	1	**208-9277**	2	BOLT-FLANGE HEAD (M8X1X25-MM)	
M	5	1	**208-9282**	4	BOLT (M8X1.25X25-MM)	
	6	1	**208-9283**	2	BOLT-FLANGE HEAD (M8X1.25X30-MM)	
M	7	1	**6V-5192**	1	BOLT-SOCKET HEAD (M8X1.25X30-MM)	
	8	1	**9M-1974**	1	WASHER-HARD (8.8X16X2-MM THK)	
	9	1	**3S-2093**	1	STRAP-CABLE	

E-ORDER BY THE CENTIMETER
M-METRIC PART
Y-SEPARATE ILLUSTRATION

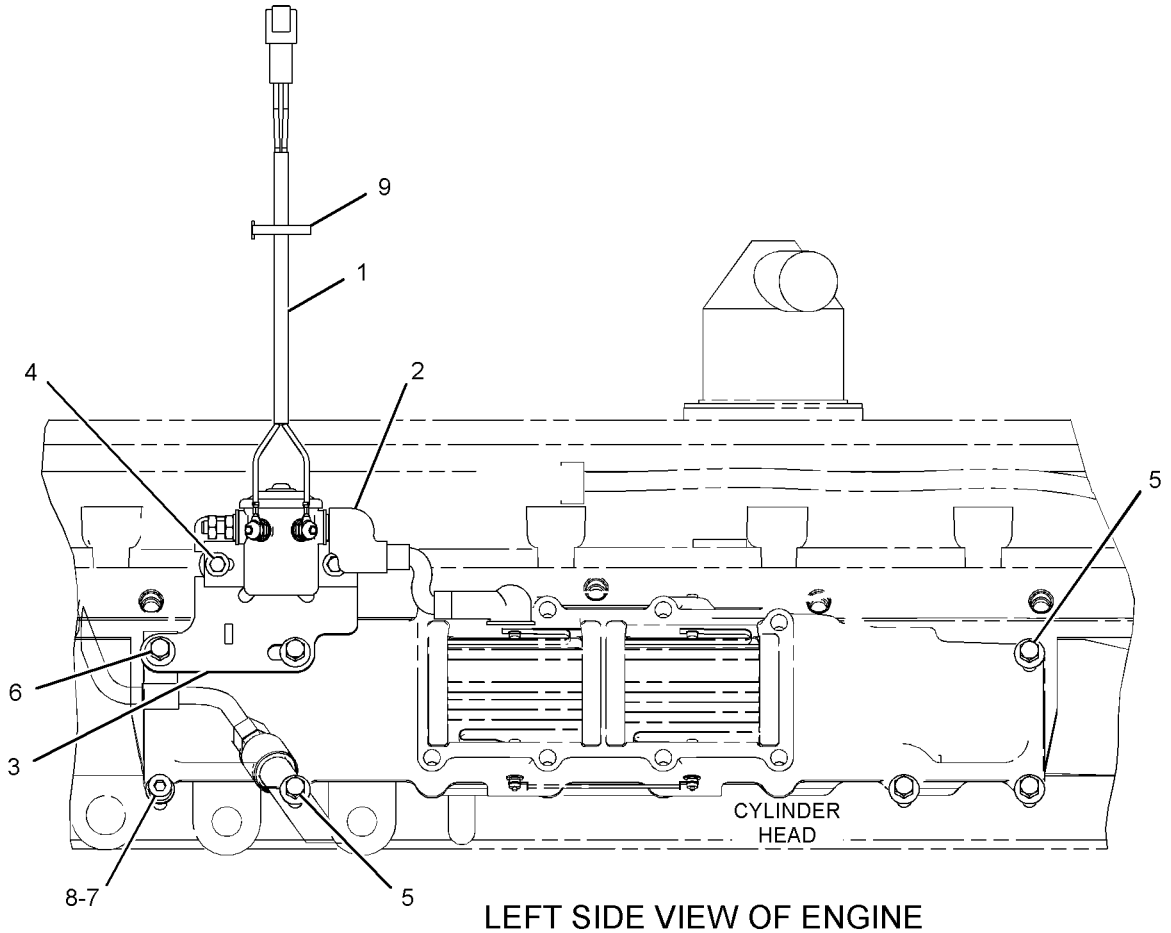

LEFT SIDE VIEW OF ENGINE

GRAPHIC #1 **<END>** g01312265

239-6676 STARTING AID GP-ETHER

S/N: MNB1-UP; WDK1-UP
PART OF 275-3747, 314-3586 STARTING AR-COLD WEATHER
AN ATTACHMENT

SMCS-1456 **i02989450**

NOTE	REF NO	GRAPHIC REF	PART NUMBER	QTY	PART NAME 1 2 3 4 5 6 (PRODUCT LEVEL)	SEE PAGE
	1	1	**5P-6312**	1	UNION	
	2	1	**5P-6313**	3	NUT (5/16-24-THD)	
	3	1	**5P-6314**	3	SLEEVE	
	4	1	**7N-0140**	1	TUBE AS-COIL	
	5	1	**7N-2059**	1	CLAMP AS	
	6	1	**9T-6635**	1	PLUG	
Y	7	1	**239-1134**	1	VALVE GP-ETHER STARTING (24-VOLT)	262
	8	1	**241-4194**	1	FITTING AS (CONTROL)	
		1	**236-4545**	1	NUT-SLEEVE (5/16-24-THD)	
	9	1	**255-2906**	1	TUBE	
	10	1	**255-2909**	1	PLATE AS	
	11	1	**255-2910**	1	PLATE AS	
	12	1	**255-2994**	1	TUBE	
	13	1	**255-2995**	1	TUBE	
	14	1	**297-6828**	1	ATOMIZER GP-ETHER	
		1	**236-4545**	1	NUT-SLEEVE (5/16-24-THD)	
	15	1	**2B-2404**	3	CLIP	
	16	1	**3D-5102**	3	GROMMET	
	17	1	**3K-0360**	1	SEAL-O-RING	
	18	1	**5P-1076**	4	WASHER-HARD (13.5X30X4-MM THK)	
	19	1	**8T-4121**	3	WASHER-HARD (11X21X2.5-MM THK)	
M	20	1	**8T-4136**	2	BOLT (M10X1.5X25-MM)	
M	21	1	**8T-4137**	1	BOLT (M10X1.5X20-MM)	
M	22	1	**8T-4189**	4	BOLT (M8X1.25X20-MM)	
M	23	1	**8T-4192**	4	BOLT (M12X1.75X25-MM)	
	24	1	**8T-4224**	4	WASHER-HARD (8.8X16X2-MM THK)	

M-METRIC PART
Y-SEPARATE ILLUSTRATION

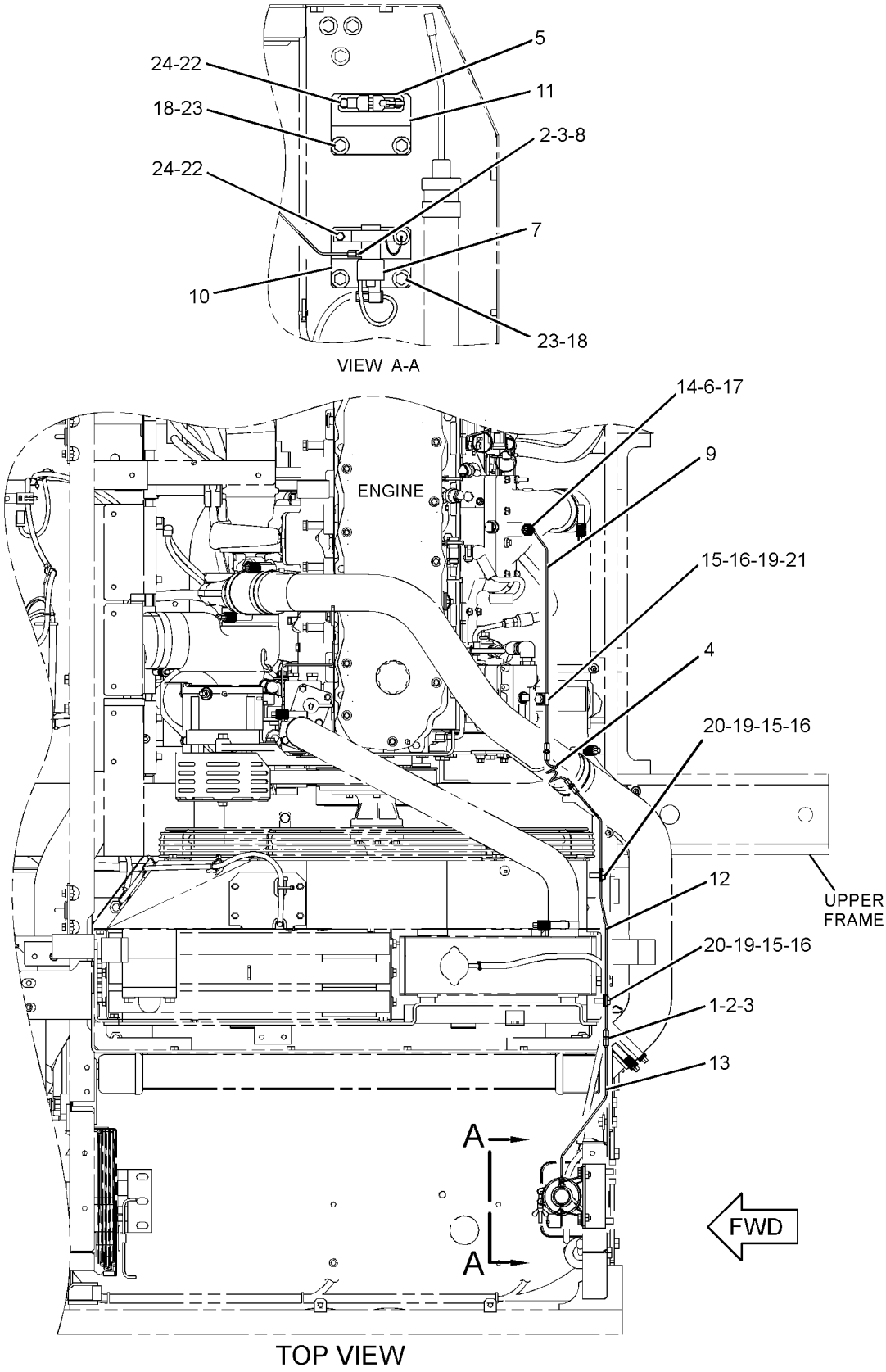

GRAPHIC #1

<END>

g01154195

275-3747 STARTING AR-COLD WEATHER

S/N: MNB1-UP; WDK1-UP
AN ATTACHMENT

SMCS-1450 **i02491435**

NOTE	PART NUMBER	QTY	PART NAME 1 2 3 4 5 6 (PRODUCT LEVEL)	SEE PAGE
Y	*251-0440*	1	BATTERY & WIRING GP (COLD WEATHER)	180
Y	*239-6676*	1	STARTING AID GP-ETHER	241
Y	*128-5626*	1	STARTING MOTOR GP-ELECTRIC (COLD WEATHER)	245

Y-SEPARATE ILLUSTRATION

<END>

314-3586 STARTING AR-COLD WEATHER

S/N: MNB1-UP; WDK1-UP
AN ATTACHMENT

SMCS-1450 **i03033062**

NOTE	PART NUMBER	QTY	PART NAME 1 2 3 4 5 6 (PRODUCT LEVEL)	SEE PAGE
Y	*251-0440*	1	BATTERY & WIRING GP (COLD WEATHER)	180
Y	*239-6676*	1	STARTING AID GP-ETHER	241

Y-SEPARATE ILLUSTRATION

<END>

ELECTRICAL AND STARTING SYSTEM

111-4275 STARTING MOTOR GP-ELECTRIC

S/N: KHX4087-UP

PART OF 224-9842, 290-0754, 290-0756 ENGINE AR-COMPLETE

ALSO AN ATTACHMENT

SMCS-1453 **i02455664**

NOTE	REF NO	GRAPHIC REF	PART NUMBER	QTY	PART NAME 1 2 3 4 5 6 (PRODUCT LEVEL)	SEE PAGE
M	1	1	**118-9573**	3	BOLT-12 POINT HEAD (M10X1.15-THD)	
	2	1	**8Y-9603**	1	CABLE AS-STARTING MOTOR	
		1	**1S-7251**	1	TERMINAL-CABLE (00-GA, 1/2-IN BOLT)	
		1	**1S-7252**	1	TERMINAL-CABLE (00-GA, 3/8-IN BOLT)	
E		1	**5P-0747**		CABLE (00-GA, BLACK) (28-CM)	
	3	1	**3K-3257**	1	GASKET	
M	4	1	**8T-4191**	1	BOLT (M10X1.5X16-MM)	
	5	1	**8T-4121**	4	WASHER-HARD (11X21X2.5-MM THK)	
YR	6	1	**207-1517**	1	STARTING MOTOR GP-ELECTRIC	246

E-ORDER BY THE CENTIMETER
M-METRIC PART
R-REMFG PART MAY BE AVAILABLE
Y-SEPARATE ILLUSTRATION

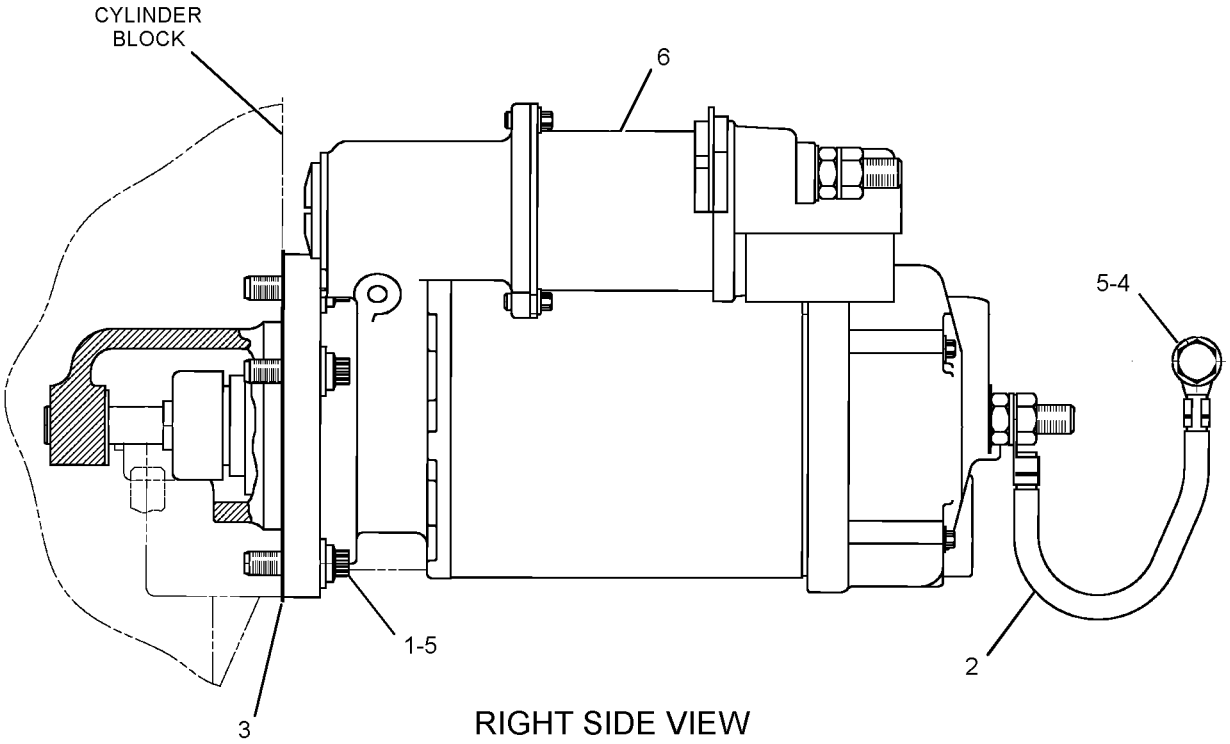

RIGHT SIDE VIEW

GRAPHIC #1 **<END>** g01238323

128-5626 STARTING MOTOR GP-ELECTRIC

S/N: MNB1-UP; WDK1-UP; KHX10523-UP
24 VOLT
PART OF 224-9842, 290-0755 ENGINE AR-COMPLETE, 275-3747 STARTING AR-COLD WEATHER AN ATTACHMENT

SMCS-1453 **i02938526**

NOTE	REF NO	GRAPHIC REF	PART NUMBER	QTY	PART NAME 1 2 3 4 5 6 (PRODUCT LEVEL)	SEE PAGE
	1	1	**3K-3257**	1	GASKET	
	2	1	**8Y-9603**	1	CABLE AS-STARTING MOTOR	
		1	**1S-7251**	1	TERMINAL-CABLE (00-GA, 1/2-IN BOLT)	
		1	**1S-7252**	1	TERMINAL-CABLE (00-GA, 3/8-IN BOLT)	
E		1	**5P-0747**		CABLE (00-GA, BLACK) (28-CM)	
M	3	1	**118-9573**	3	BOLT-12 POINT HEAD (M10X1.15-THD)	
CYR	4	1	**207-1551**	1	STARTING MOTOR GP-ELECTRIC (STARTING)	248
	5	1	**8T-4121**	4	WASHER-HARD (11X21X2.5-MM THK)	
M	6	1	**8T-4191**	1	BOLT (M10X1.5X16-MM)	

C-CHANGE FROM PREVIOUS TYPE
E-ORDER BY THE CENTIMETER
M-METRIC PART
R-REMFG PART MAY BE AVAILABLE
Y-SEPARATE ILLUSTRATION

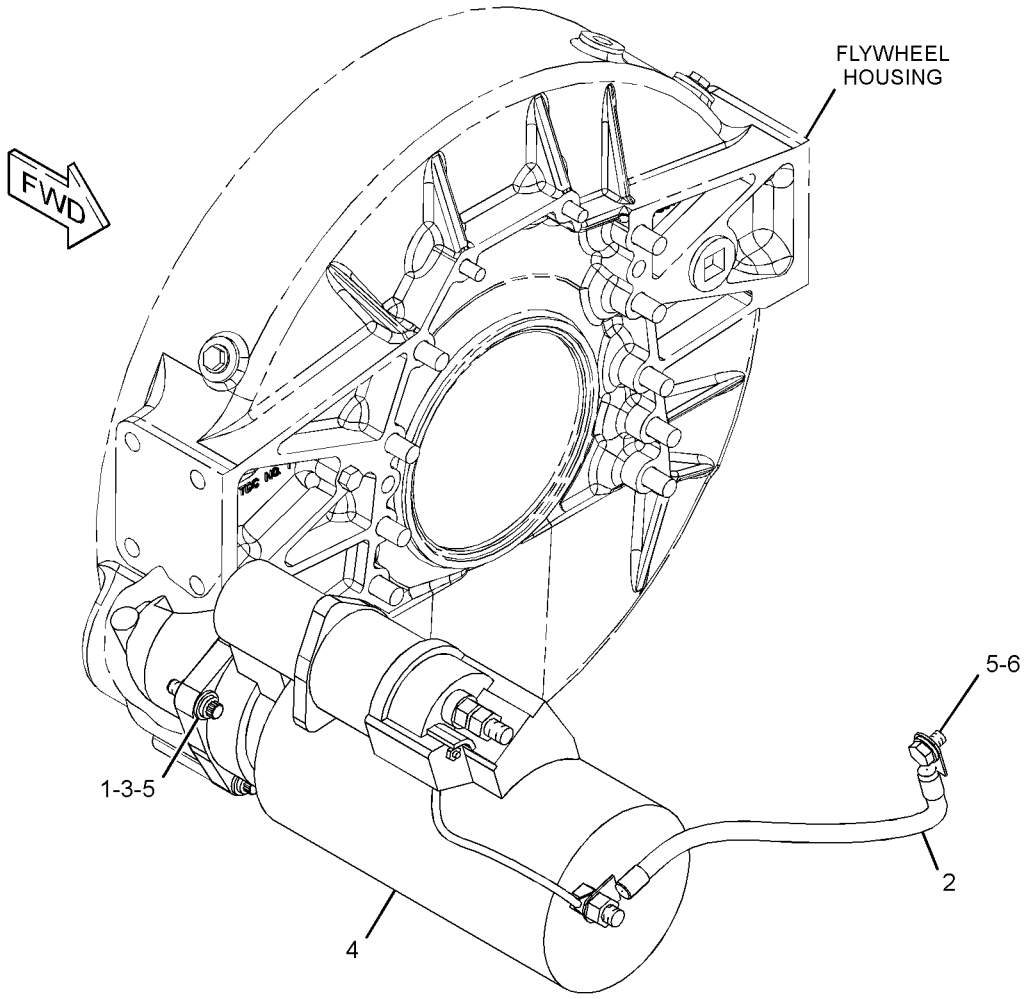

GRAPHIC #1 **<END>** g01392379

207-1517 STARTING MOTOR GP-ELECTRIC*R

S/N: KHX4087-UP
24 VOLT
PART OF 111-4275 STARTING MOTOR GP-ELECTRIC
ALSO AN ATTACHMENT

SMCS-1453 **i02946762**

NOTE	REF NO	GRAPHIC REF	PART NUMBER	QTY	PART NAME 1 2 3 4 5 6 (PRODUCT LEVEL)	SEE PAGE
	1	1	**8T-9884**	1	KIT-INSULATOR (STARTING MOTOR)	
					(INCLUDES INSULATORS & BUSHING)	
	2	1	**106-7149**	1	HOUSING AS	
	3	1	**102-9863**	1	TERMINAL AS	
	4	1	**6V-8188**	4	NUT (1/2-13-THD)	
	5	1	**7X-0562**	4	WASHER-HARD (13.5X19X0.8-MM THK)	
	6	1	**3E-7853**	1	TERMINAL	
	7	1	**9X-4821**	1	PLATE AS	
	8	1	**3E-7852**	1	COIL-STARTING MOTOR	
	9	1	**7T-3454**	1	INSULATOR	
	10	1	**9X-4271**	1	CONNECTOR	
	11	1	**7T-3451**	1	KIT-INSULATOR (TERMINAL)	
	12	1	**8T-8569**	1	INSULATOR-TERMINAL	
	13	1	**5S-7349**	4	BOLT (1/4-20X0.5-IN)	
	14	1	**8T-4205**	4	WASHER-HARD (7.2X14.5X2-MM THK)	
	15	1	**7X-1950**	4	SHOE-POLE	
	16	1	**3E-7861**	1	KIT-LEVER (STARTING MOTOR)	
					(INCLUDES LEVER AS, SHAFT AS, GASKET, O-RINGS, RING & NUT)	
	17	1	**3R-8797**	8	SCREW & WASHER AS (3/8-24X0.72-IN)	
	18	1	**3E-7855**	1	ARMATURE AS-STARTER (24-VOLT)	
	19	1	**7X-1952**	1	HOUSING AS-LEVER	
	20	1	**4M-1831**	1	PLUG-LEVER HOUSING	
	21	1	**7L-2894**	1	GASKET	
	22	1	**036-9823**	5	BOLT (1/4-28X1-IN)	
	23	1	**3E-7857**	1	DRIVE AS-STARTING MOTOR	
	24	1	**3E-7858**	1	HOUSING AS	
	25	1	**7X-3373**	6	BOLT (5/16-18X0.88-IN)	
	26	1	**206-8784**	1	KIT-SOLENOID (STARTING MOTOR)	
					(INCLUDES SOLENOID AS, BOLT, CONNECTORS, NUT & NUT AS)	
	27	1	**6V-8378**	2	NUT (10-32-THD)	
	28	1	**8F-1434**	1	LOCKWASHER	
	29	1	**8T-0328**	2	WASHER-HARD (5.5X10X1-MM THK)	
	30	1	**9X-4824**	1	COVER-STARTING MOTOR	
	31	1	**9X-4825**	1	KIT-BRUSH (STARTING MOTOR)	
					(INCLUDES O-RING, SCREWS, BRUSHES & SPRINGS)	
					AVAILABLE REPAIR KIT(S):	
			3E-7860	1	KIT-BUSHING (STARTING MOTOR)	
					(INCLUDES BUSHINGS, PLUGS, CUPS, SEAL, NUT, O-RINGS, GASKET, SPACER, WASHERS & SCREW ASSEMBLIES)	

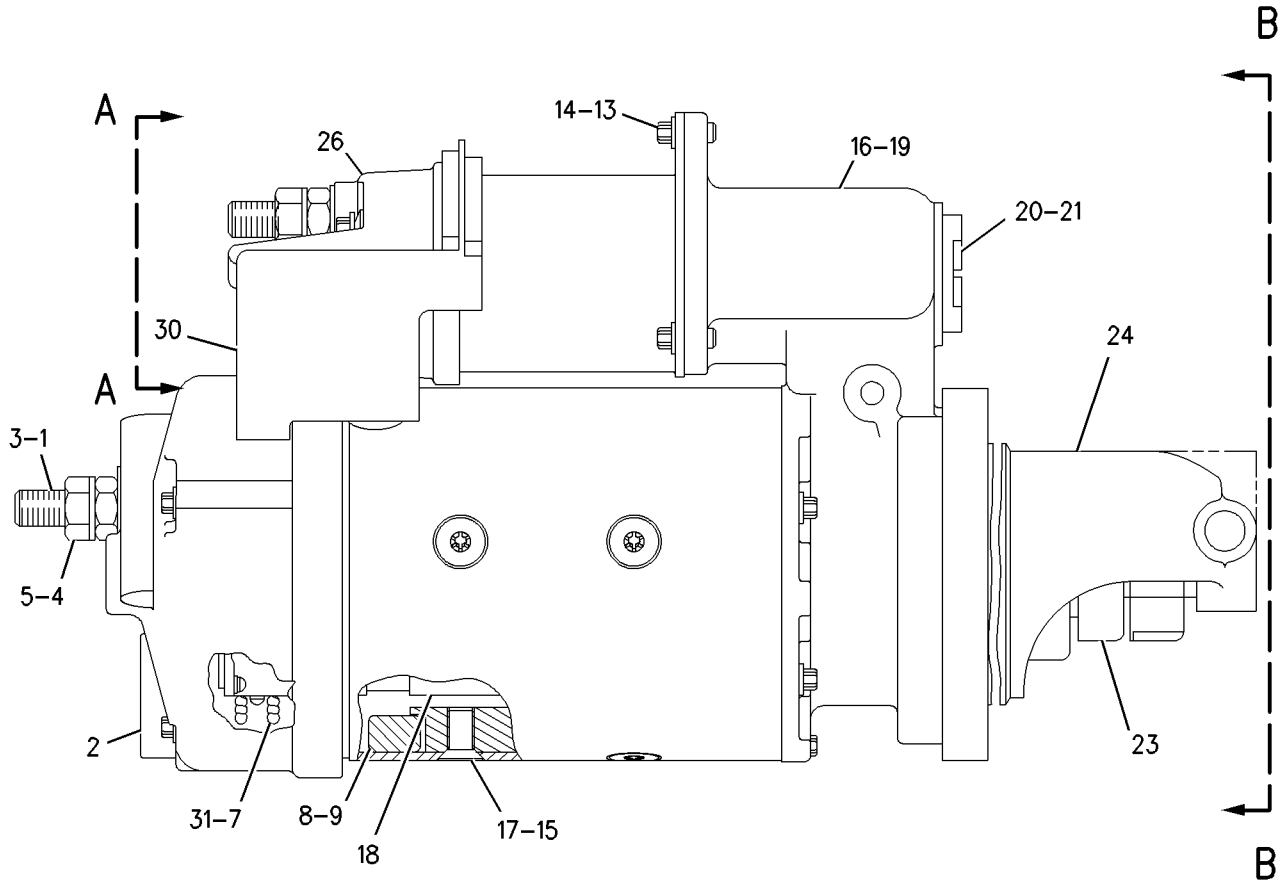

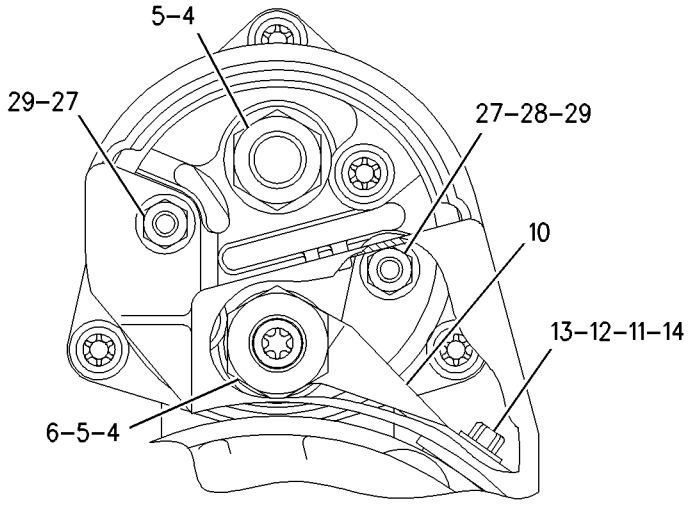

VIEW A–A

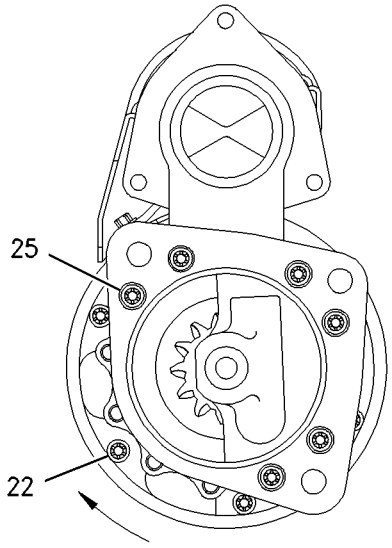

VIEW B–B

GRAPHIC #1 **<END>** g00839695

207-1551 STARTING MOTOR GP-ELECTRIC*R

S/N: MNB1-UP; WDK1-UP; KHX10523-UP
PART OF 128-5626 STARTING MOTOR GP-ELECTRIC
AN ATTACHMENT

SMCS-1453 **i02952082**

NOTE	REF NO	GRAPHIC REF	PART NUMBER	QTY	PART NAME 1 2 3 4 5 6 (PRODUCT LEVEL)	SEE PAGE
	1	1	**9F-2247**	1	PLUG-PIPE	
	2	1	**7T-3279**	1	HOUSING AS	
	3	1	**8T-8566**	1	TERMINAL AS	
	4	1	**6V-8188**	4	NUT (1/2-13-THD)	
	5	1	**7X-0562**	4	WASHER-HARD (13.5X19X0.8-MM THK)	
	6	1	**3T-3422**	1	WIRE AS	
	7	1	**7T-3278**	1	HOLDER AS-BRUSH	
	8	1	**7T-3277**	1	COIL AS-FIELD	
	9	1	**7T-3454**	1	INSULATOR	
	10	1	**7T-3271**	1	CONNECTOR	
	11	1	**7T-3451**	1	KIT-INSULATOR (TERMINAL)	
	12	1	**8T-8569**	1	INSULATOR-TERMINAL	
	13	1	**5S-7349**	4	BOLT (1/4-20X0.5-IN)	
	14	1	**8T-4205**	4	WASHER-HARD (7.2X14.5X2-MM THK)	
	15	1	**8H-1141**	4	SHOE-POLE	
	16	1	**3F-0379**	8	SCREW-POLE SHOE (3/8-24-THD)	
	17	1	**7T-3276**	1	ARMATURE AS (24-VOLT)	
	18	1	**105-9702**	1	HOUSING AS	
	19	1	**4M-1831**	1	PLUG-LEVER HOUSING	
	20	1	**7L-2894**	1	GASKET	
	21	1	**036-9823**	5	BOLT (1/4-28X1-IN)	
	22	1	**6N-3827**	1	DRIVE AS-MOTOR	
	23	1	**9X-9510**	1	HOUSING AS	
	24	1	**7X-3373**	6	BOLT (5/16-18X0.88-IN)	
	25	1	**193-8570**	1	SOLENOID AS-STARTING MOTOR (24-VOLT) (STARTER)	
	26	1	**6V-8378**	3	NUT (10-32-THD)	
	27	1	**8F-1434**	2	LOCKWASHER	
	28	1	**8T-0328**	3	WASHER-HARD (5.5X10X1-MM THK)	
	29	1	**9X-4824**	1	COVER-STARTING MOTOR	
	30	1	**7T-3268**	1	KIT-LEVER (STARTING MOTOR)	
					(INCLUDES LEVER AS, SHAFT AS, GASKETS, SEALS, RINGS, STOP & NUT)	
	31	1	**8C-3655**	1	KIT-BRUSH (STARTING MOTOR)	
					(INCLUDES BRUSHES, SEAL, SCREWS & SPRINGS)	
	32	1	**8T-9884**	1	KIT-INSULATOR (STARTING MOTOR)	
					(INCLUDES INSULATORS & BUSHING)	
	33	1	**9F-2547**	1	WICK	
					AVAILABLE REPAIR KIT(S):	
			7T-3267	1	KIT-BUSHING (STARTING MOTOR)	
					(INCLUDES BUSHINGS, WICKS, CUPS, SEALS, GASKET, WASHERS, SPACER, NUT & SCREW ASSEMBLIES)	

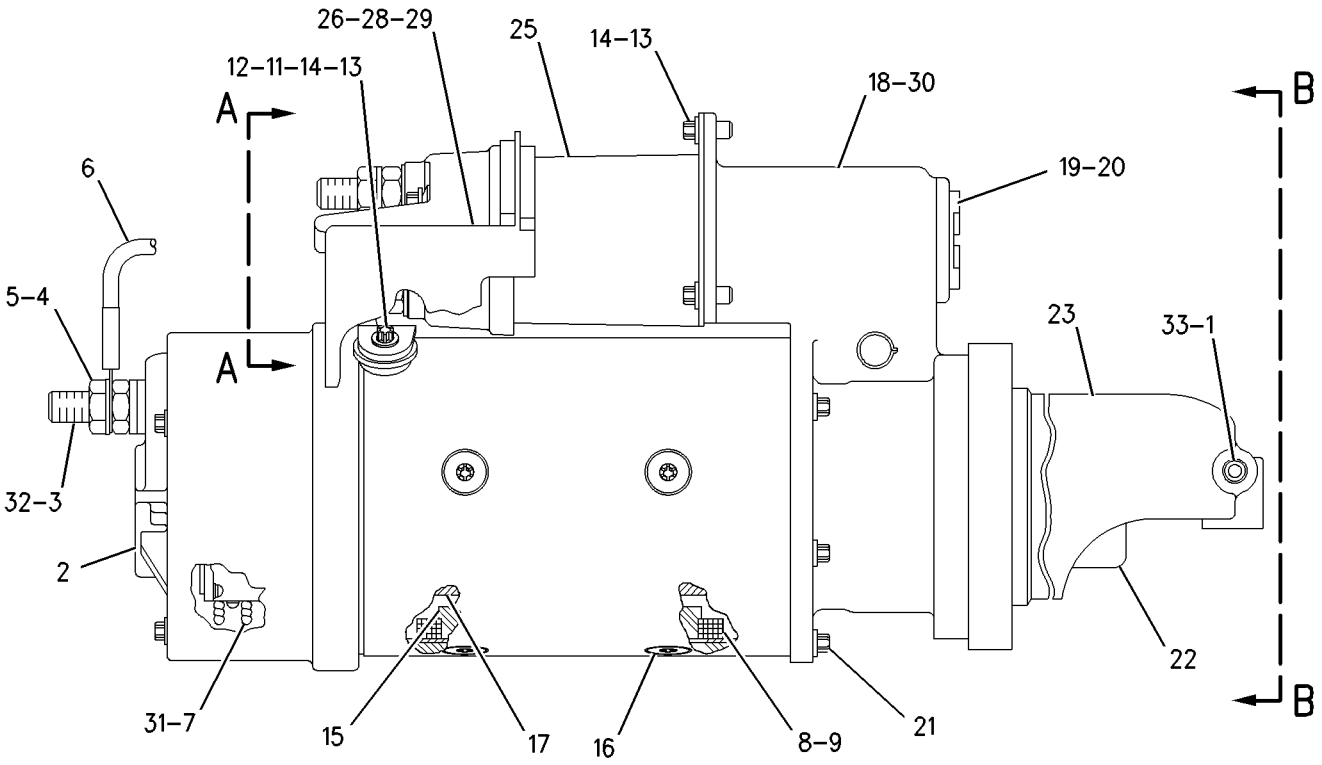

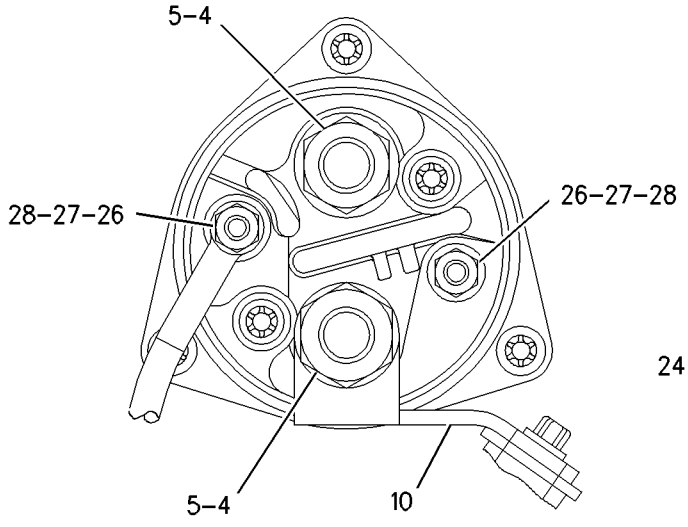

VIEW A-A

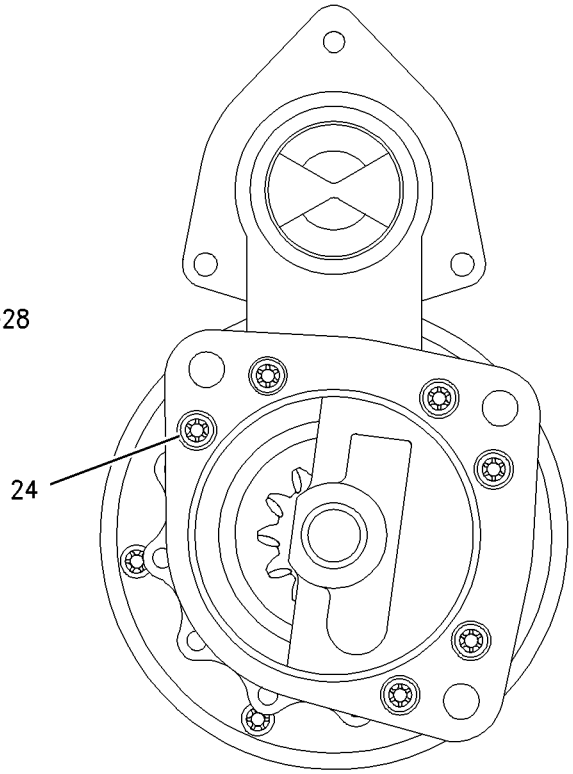

VIEW B-B

GRAPHIC #1 **<END>** g00868789

7N-0719 SWITCH GP-DISCONNECT–BATTERY

S/N: MNB1-UP; WDK1-UP

PART OF 231-1756 PANEL GP-CIRCUIT BREAKER

SMCS-1411 **i01102384**

NOTE	REF NO	GRAPHIC REF	PART NUMBER	QTY	PART NAME 1 2 3 4 5 6 (PRODUCT LEVEL)	SEE PAGE
	1	1	**2H-3922**	1	LOCKWASHER	
	2	1	**8H-5303**	1	NUT (3/4-16-THD)	
	3	1	**9F-5644**	2	LOCKWASHER	
	4	1	**6F-7045**	2	NUT-FULL (3/8-24-THD)	
	5	1	**8H-5306**	1	KEY (BATTERY DISCONNECT)	

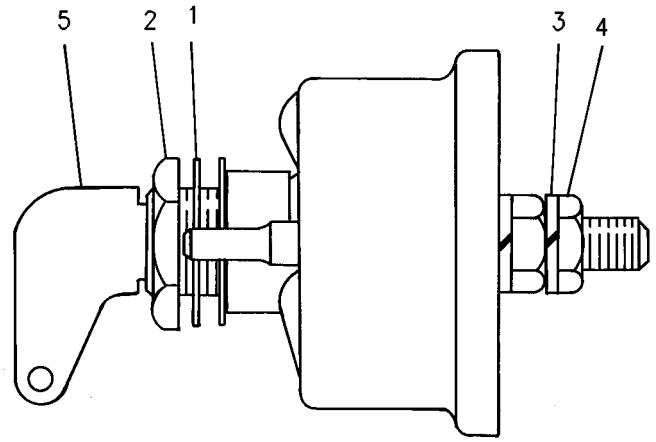

GRAPHIC #1 **<END>** g00580531

125-1302 SWITCH GP-MAGNETIC–START RELAY

S/N: MNB1-UP; WDK1-UP

PART OF 231-1756 PANEL GP-CIRCUIT BREAKER

SMCS-7499 **i01896613**

NOTE	REF NO	GRAPHIC REF	PART NUMBER	QTY	PART NAME 1 2 3 4 5 6 (PRODUCT LEVEL)	SEE PAGE
	1	1	**102-8802**	1	KIT-RECEPTACLE (2-PIN)	
					(INCLUDES RECEPTACLE AS & WEDGE)	
	2	1	**186-3735**	2	PIN-CONNECTOR (16-GA TO 18-GA)	
	3	1	**1H-3338**	2	LOCKWASHER	
	4	1	**012-0380**	2	LOCKWASHER	
M	5	1	**5C-2890**	2	NUT (M6X1-THD)	
E	6	1	**9X-1813**		SLEEVE (16CM)	

E-ORDER BY THE CENTIMETER
M-METRIC PART

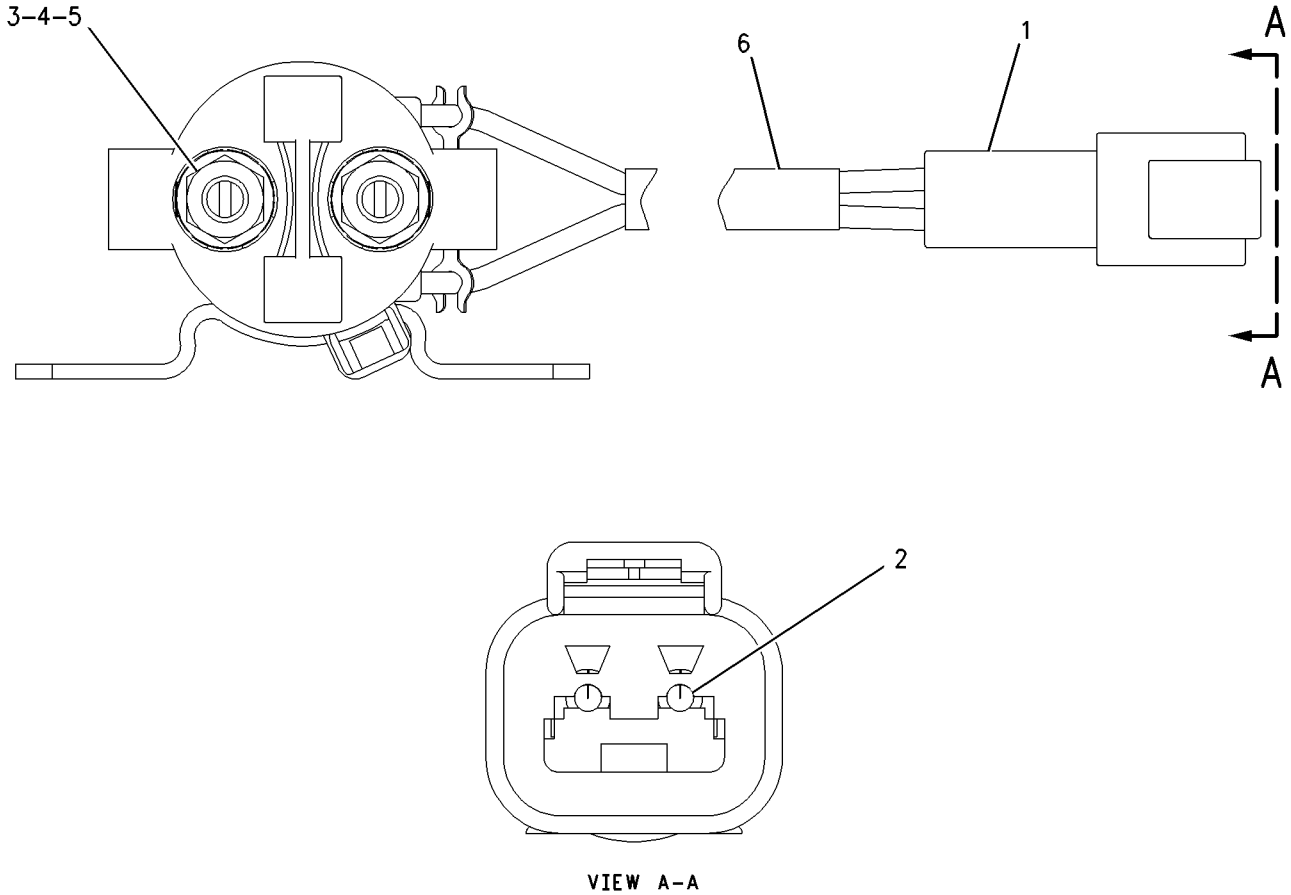

GRAPHIC #1 **<END>** g00988002

209-5582 SWITCH GP-MAGNETIC

S/N: KHX4087-UP
PART OF 249-9223 STARTING AID GP
ALSO AN ATTACHMENT

SMCS-7499 **i02555095**

NOTE	REF NO	GRAPHIC REF	PART NUMBER	QTY	PART NAME 1 2 3 4 5 6 (PRODUCT LEVEL)	SEE PAGE
	1	1	**102-8802**	1	KIT-RECEPTACLE (2-PIN)	
					(INCLUDES RECEPTACLE AS & WEDGE)	
	2	1	**186-3735**	2	PIN-CONNECTOR (16-GA TO 18-GA)	
	3	1	**3F-9556**	2	LOCKWASHER	
	4	1	**6V-8186**	2	NUT-FULL (5/16-24-THD)	
	5	1	**6V-8378**	2	NUT (10-32-THD)	
	6	1	**8F-1434**	2	LOCKWASHER	

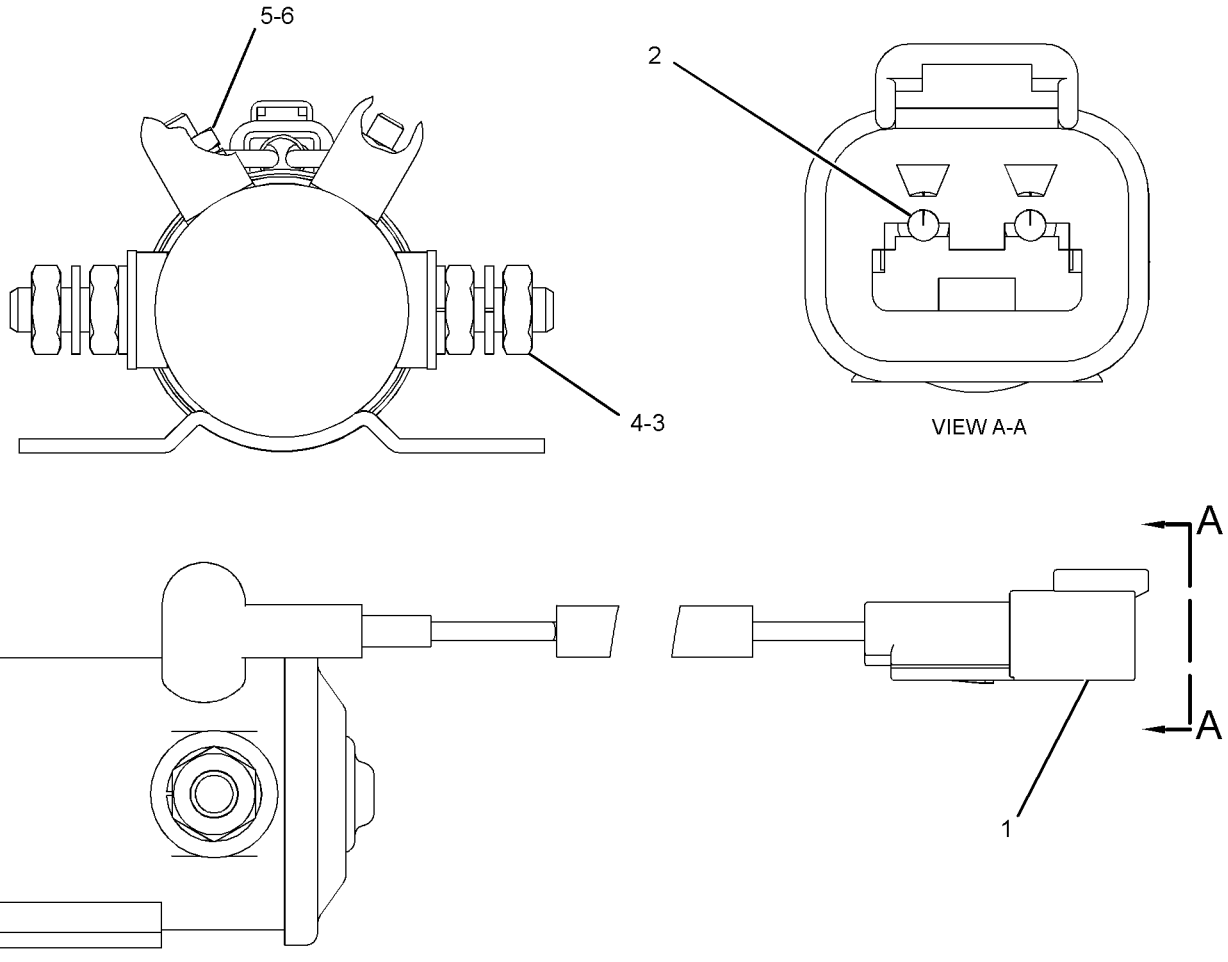

GRAPHIC #1 **<END>** g01279452

234-6613 SWITCH GP-POSITION–HYDRAULIC LOCKOUT

S/N: MNB1-UP; WDK1-UP

PART OF 259-7349 CONSOLE GP-OPERATOR

SMCS-1408, 1435 **i02175053**

NOTE	REF NO	GRAPHIC REF	PART NUMBER	QTY	PART NAME 1 2 3 4 5 6 (PRODUCT LEVEL)	SEE PAGE
	1	1	**3S-2093**	1	STRAP-CABLE	
	2	1	**4I-3038**	2	WASHER (3.3X8X0.5-MM THK)	
	3	1	**111-4799**	1	SWITCH AS-LIMIT (HYDRAULIC LOCKOUT)	
		1	**102-8803**	1	KIT-RECEPTACLE (3-PIN)	
					(INCLUDES RECEPTACLE AS & WEDGE)	
		1	**186-3735**		PIN-CONNECTOR (16-GA TO 18-GA)	
BD		1	**5P-5998**		TUBE	
M	4	1	**185-8286**	2	SCREW-MACHINE (M4X0.7X8-MM)	
	5	1	**234-6615**	1	KNOB	
	6	1	**087-4683**	2	LOCKWASHER	
M	7	1	**120-9027**	2	SCREW-PAN HEAD (M3X0.5X16-MM)	

B-USE AS REQUIRED
D-ORDER BY THE METER
M-METRIC PART

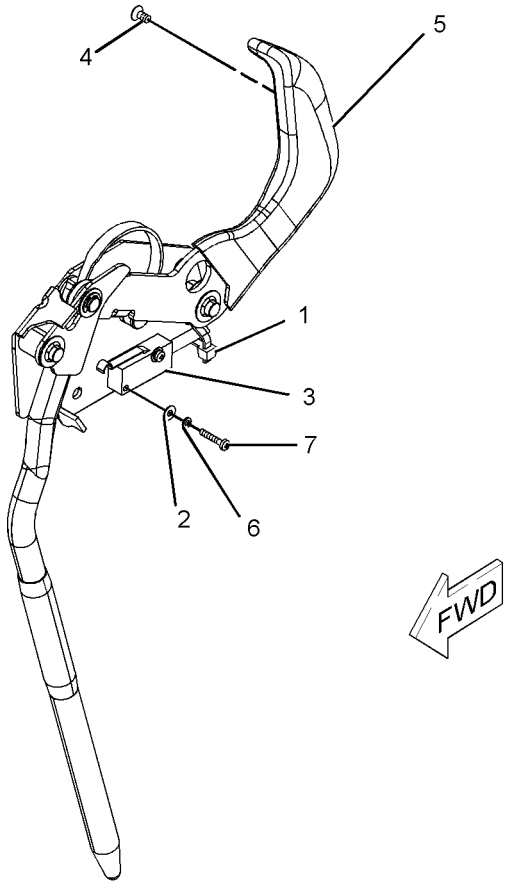

GRAPHIC #1 **<END>** g01096293

258-0883 SWITCH GP-PRESSURE–FUEL

S/N: MNB1-UP; WDK1-UP
PART OF 223-3046, 259-3885 LINES GP-FUEL
ALSO AN ATTACHMENT

SMCS-1435 **i02294948**

NOTE	REF NO	GRAPHIC REF	PART NUMBER	QTY	PART NAME 1 2 3 4 5 6 (PRODUCT LEVEL)	SEE PAGE
	1	1	**102-8802**	1	KIT-RECEPTACLE (2-PIN)	
					(INCLUDES RECEPTACLE AS AND WEDGE)	
	2	1	**3E-3365**	1	WEDGE-RECEPTACLE LOCK (2-PIN)	
	3	1	**186-3735**	2	PIN-CONNECTOR (16-GA TO 18-GA)	
BE	4	1	**9X-1813**		SLEEVE (14-CM)	
	5	1	**6V-4589**	1	SEAL-O-RING	
	6	1	**7L-9061**	1	SEAL-O-RING	

B-USE AS REQUIRED
E-ORDER BY THE CENTIMETER

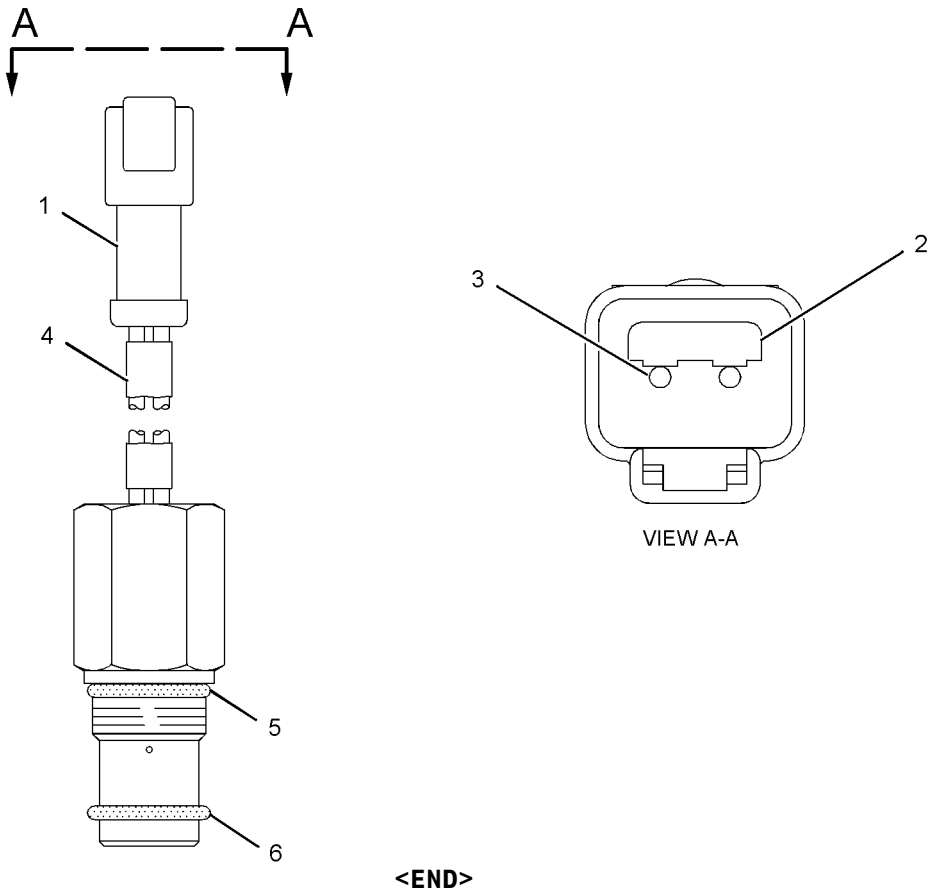

GRAPHIC #1 **<END>** g01072091

238-1594 SWITCH GP-PUSH BUTTON–REFUELING PUMP, START

S/N: MNB1-UP; WDK1-UP
PART OF 238-1570 WIRING GP-FUEL SYSTEM
AN ATTACHMENT

SMCS-1435, 7332 **i03156060**

NOTE	REF NO	GRAPHIC REF	PART NUMBER	QTY	PART NAME 1 2 3 4 5 6 (PRODUCT LEVEL)	SEE PAGE
	1	1	**6T-9442**	1	SWITCH GP-PUSHBUTTON (REFUELING PUMP, START)	
		1	**1S-0812**	2	SCREW-TAPPING	
		1	**3K-0835**	1	NUT (5/8-24-THD)	
		1	**6F-0253**	1	LOCKWASHER	
		1	**8T-8748**	1	ADAPTER-MOUNT	
		1	**9W-0625**	1	SWITCH AS (NORMALLY OPEN)	
	2	1	**238-1595**	1	HARNESS AS-SWITCH	
E	3	1	**125-7875**		TUBE-HEAT SHRINK (7.44-MM DIA) (6-CM)	

E-ORDER BY THE CENTIMETER

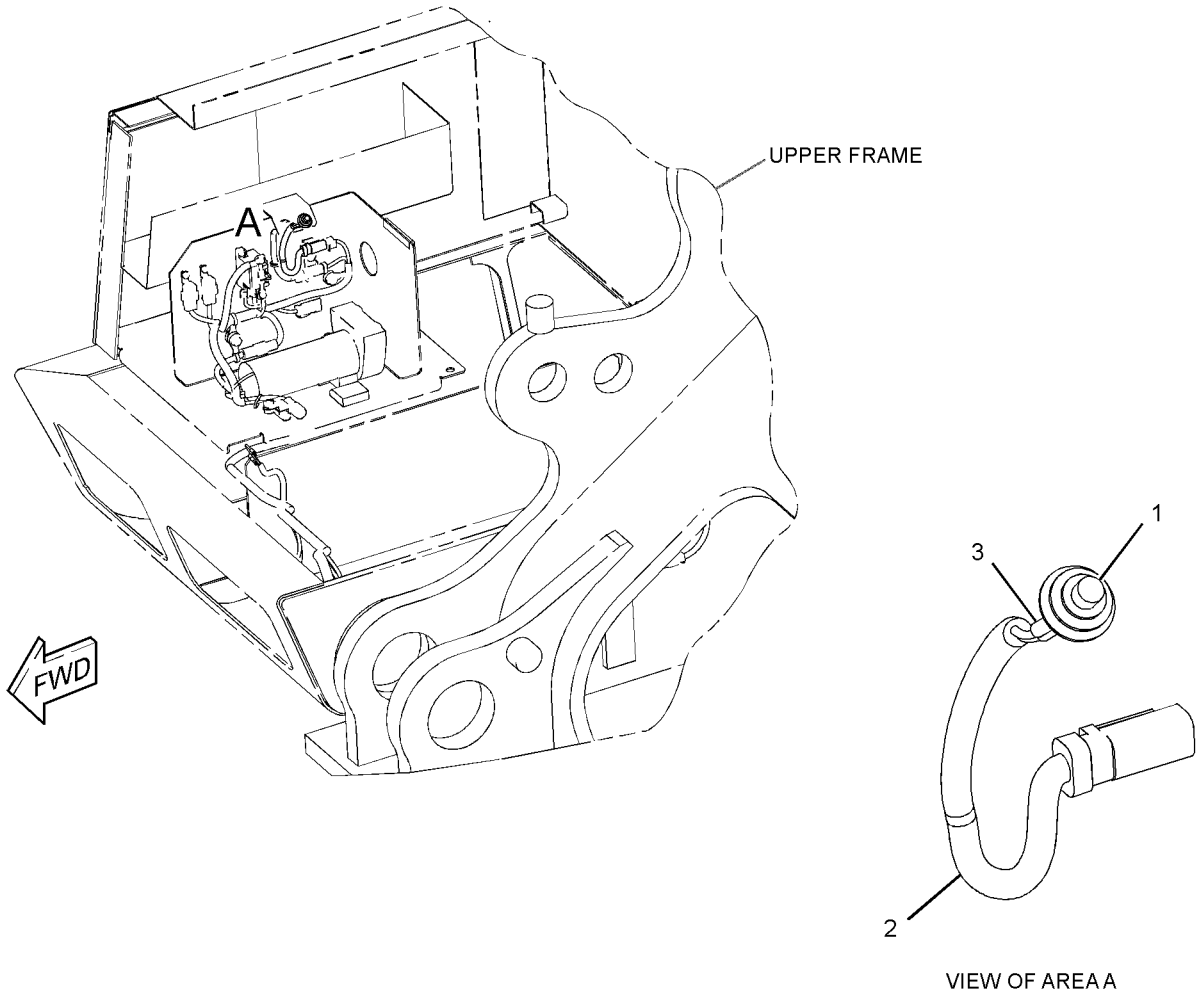

GRAPHIC #1 **<END>** g01560235

238-1596 SWITCH GP-PUSH BUTTON–REFUELING PUMP, STOP

S/N: MNB1-UP; WDK1-UP

PART OF 238-1570 WIRING GP-FUEL SYSTEM

AN ATTACHMENT

SMCS-1435, 7332 **i03156100**

NOTE	REF NO	GRAPHIC REF	PART NUMBER	QTY	PART NAME 1 2 3 4 5 6 (PRODUCT LEVEL)	SEE PAGE
	1	1	*9X-4184*	1	SWITCH AS (REFUELING PUMP, STOP)	
		1	**1S-0812**	2	SCREW-TAPPING	
		1	**3E-7389**	1	SWITCH AS (NORMALLY CLOSED)	
		1	**3K-0835**	1	NUT (5/8-24-THD)	
		1	**6F-0253**	1	LOCKWASHER	
		1	**8T-8748**	1	ADAPTER-MOUNT	
	2	1	**238-1597**	1	HARNESS AS-SWITCH	
E	3	1	**125-7875**		TUBE-HEAT SHRINK (7.44-MM DIA) (6-CM)	

E-ORDER BY THE CENTIMETER

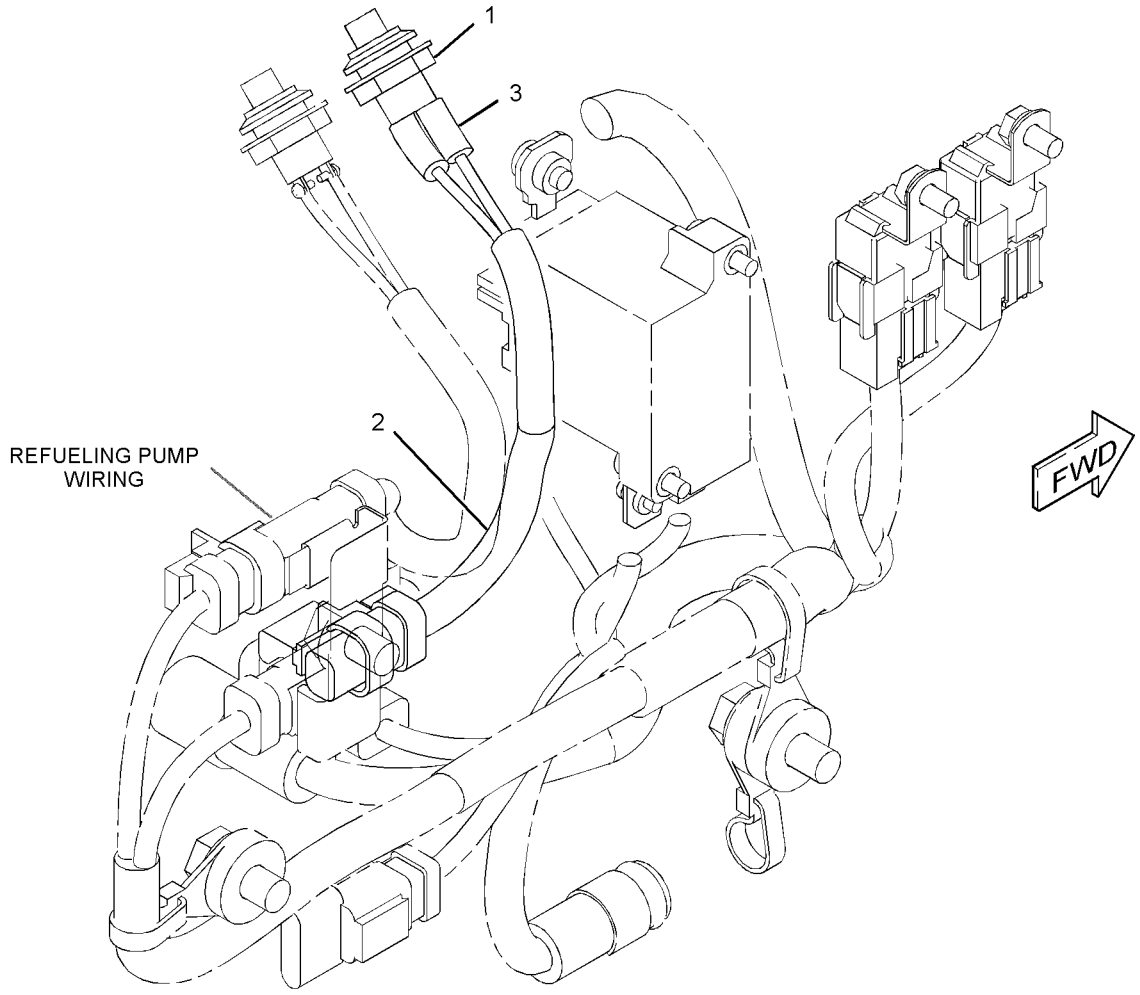

GRAPHIC #1 **<END>** g01560319

319-4420 SWITCH GP-ROTARY–THROTTLE POSITION

S/N: MNB1-UP; WDK1-UP
PART OF 251-0542, 251-0544 PANEL GP-SWITCH
AN ATTACHMENT

SMCS-7332 **i03105700**

NOTE	REF NO	GRAPHIC REF	PART NUMBER	QTY	PART NAME 1 2 3 4 5 6 (PRODUCT LEVEL)	SEE PAGE
	1	1	**243-4508**	1	RECEPTACLE AS-CONNECTOR (6-PIN)	
	2	1	**9X-3401**	5	PIN-CONNECTOR (16-GA TO 18-GA)	
					–OR–	
		1	**126-1767**	5	PIN-CONNECTOR (14-GA)	
	3	1	**8T-8737**	1	PLUG-SEAL	
M	4	1	**7Y-5458**	1	NUT (M12X1-THD)	
	5	1	**7Y-5464**	1	WASHER (M12.2X15.4X0.5-MM THK)	
	6	1	**106-0210**	1	SEAL	

M-METRIC PART

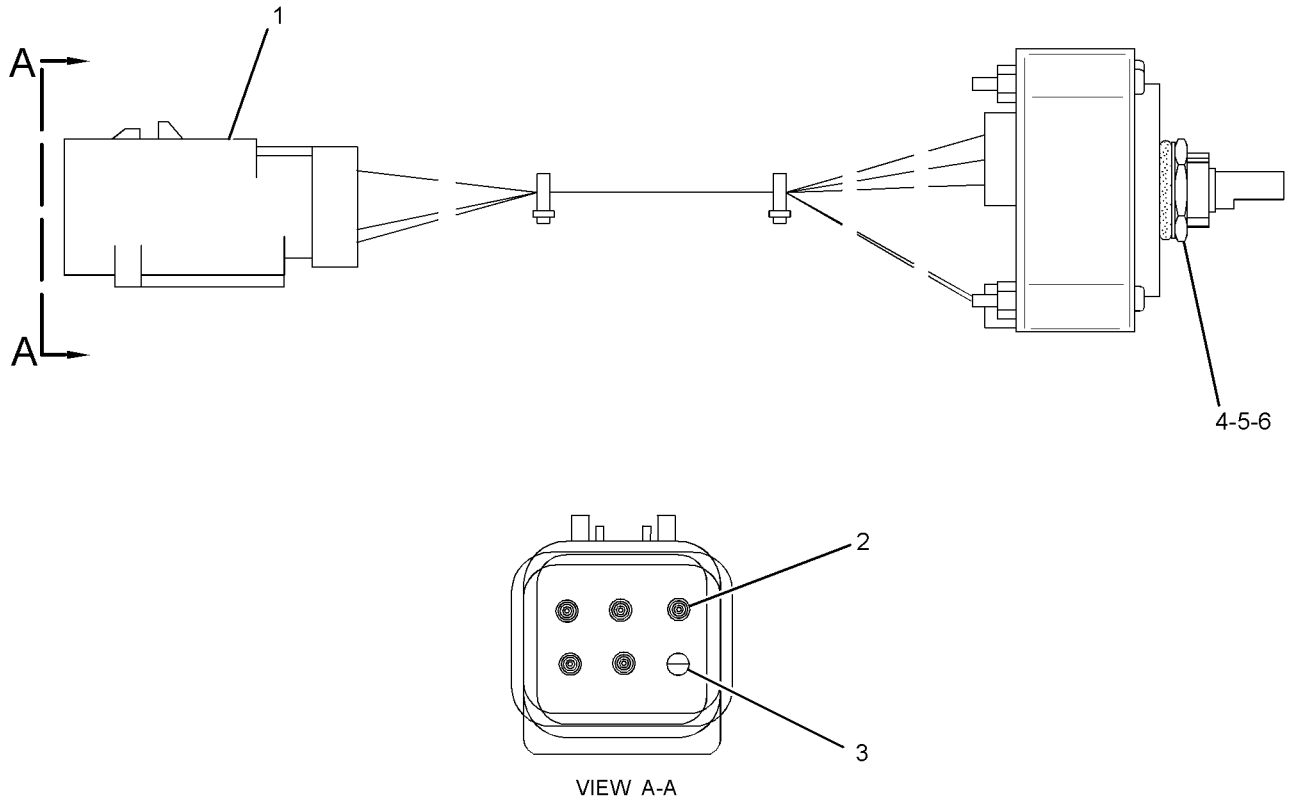

GRAPHIC #1 **<END>** g01588034

9G-7641 SWITCH GP-START–ENGINE, KEY

S/N: MNB1-UP; WDK1-UP
PART OF 251-0542, 251-0544 PANEL GP-SWITCH
AN ATTACHMENT

SMCS-1416 **i01101254**

NOTE	REF NO	GRAPHIC REF	PART NUMBER	QTY	PART NAME 1 2 3 4 5 6 (PRODUCT LEVEL)	SEE PAGE
	1	1	**6V-8362**	4	SCREW-MACHINE (8-32X0.31-IN)	
	2	1	**9B-7233**	4	LOCKWASHER	
	3	1	**7T-6799**	1	NUT-MOUNTING (1-32-THD)	

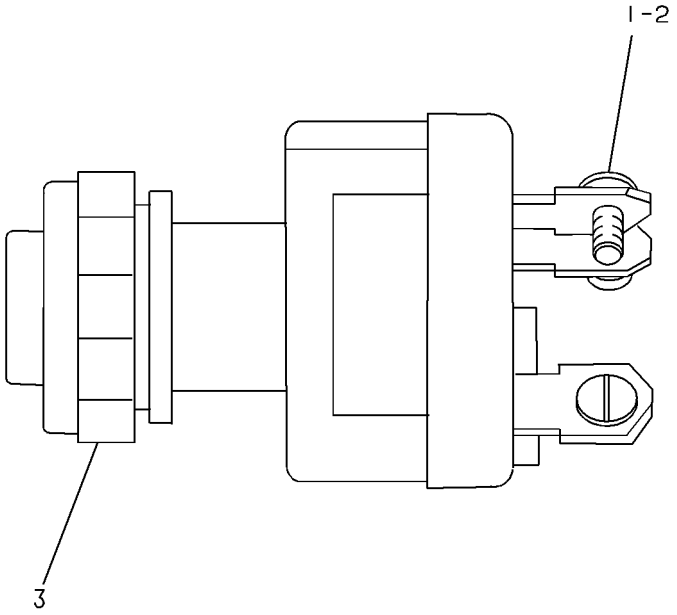

GRAPHIC #1 **<END>** g00081868

165-5970 SWITCH GP-TOGGLE–FUEL PRIMING PUMP

S/N: MNB1-UP; WDK1-UP
PART OF 259-5053 WIRING GP-FUEL SYSTEM
AN ATTACHMENT

SMCS-7332 **i02408655**

NOTE	REF NO	GRAPHIC REF	PART NUMBER	QTY	PART NAME 1 2 3 4 5 6 (PRODUCT LEVEL)	SEE PAGE
	1	1	**6T-3631**	2	NUT-HEX (15/32-32-THD)	
	2	1	**6T-3632**	1	LOCKWASHER	
	3	1	**6T-3633**	1	RING-LOCKING	
	4	1	**102-8803**	1	KIT-RECEPTACLE (3-PIN)	
					(INCLUDES RECEPTACLE AS & WEDGE)	
	5	1	**186-3735**	3	PIN-CONNECTOR (16-GA TO 18-GA)	

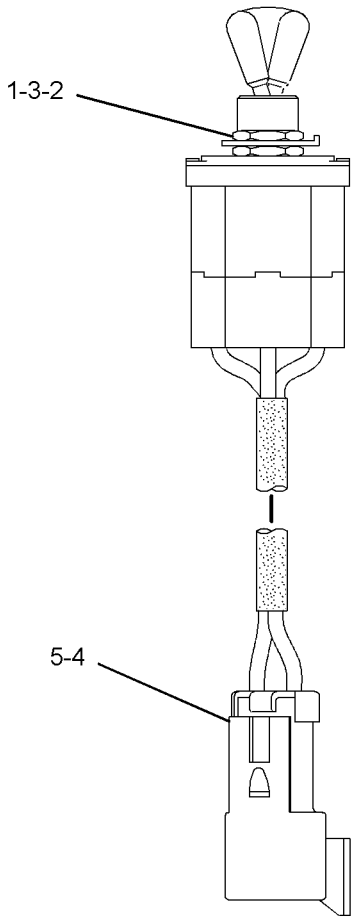

GRAPHIC #1 **<END>** g01203825

238-2478 SWITCH GP-TOGGLE–QUICK COUPLER

S/N: MNB1-UP; WDK1-UP

PART OF 238-2485 WIRING GP-QUICK COUPLER

AN ATTACHMENT

SMCS-7332 **i02518014**

NOTE	REF NO	GRAPHIC REF	PART NUMBER	QTY	PART NAME 1 2 3 4 5 6 (PRODUCT LEVEL)	SEE PAGE
	1	1	**7N-2353**	1	SWITCH AS-TOGGLE (QUICK COUPLER)	
	2	1	**238-2479**	1	HARNESS AS-WIRING (QUICK COUPLER SWITCH)	
		1	**7Y-3950**	2	TERMINAL (MALE)	
		1	**7Y-3953**	1	CONNECTOR-RECEPTACLE	
		1	**3S-2093**	1	STRAP-CABLE	

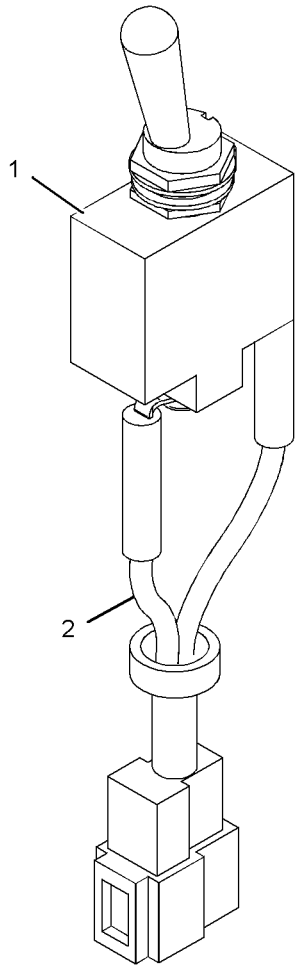

GRAPHIC #1

<END>

g01125914

238-2208 SWITCH GP-WIPER–LOWER

S/N: MNB1-UP; WDK1-UP
PART OF 229-9086 WIPER AR-WINDOW
AN ATTACHMENT

SMCS-7305 **i02971621**

NOTE	REF NO	GRAPHIC REF	PART NUMBER	QTY	PART NAME 1 2 3 4 5 6 (PRODUCT LEVEL)	SEE PAGE
	1	1	**238-2209**	1	SWITCH AS-ROCKER (WIPER, LOWER)	
		1	**167-3542**	1	CONNECTOR-RECEPTACLE	
		1	**167-3543**	5	TERMINAL (MALE)	
	2	1	**238-2210**	1	SWITCH AS-ROCKER (LOWER WASHER)	
		1	**167-3542**	1	CONNECTOR-RECEPTACLE	
		1	**167-3543**	4	TERMINAL (MALE)	

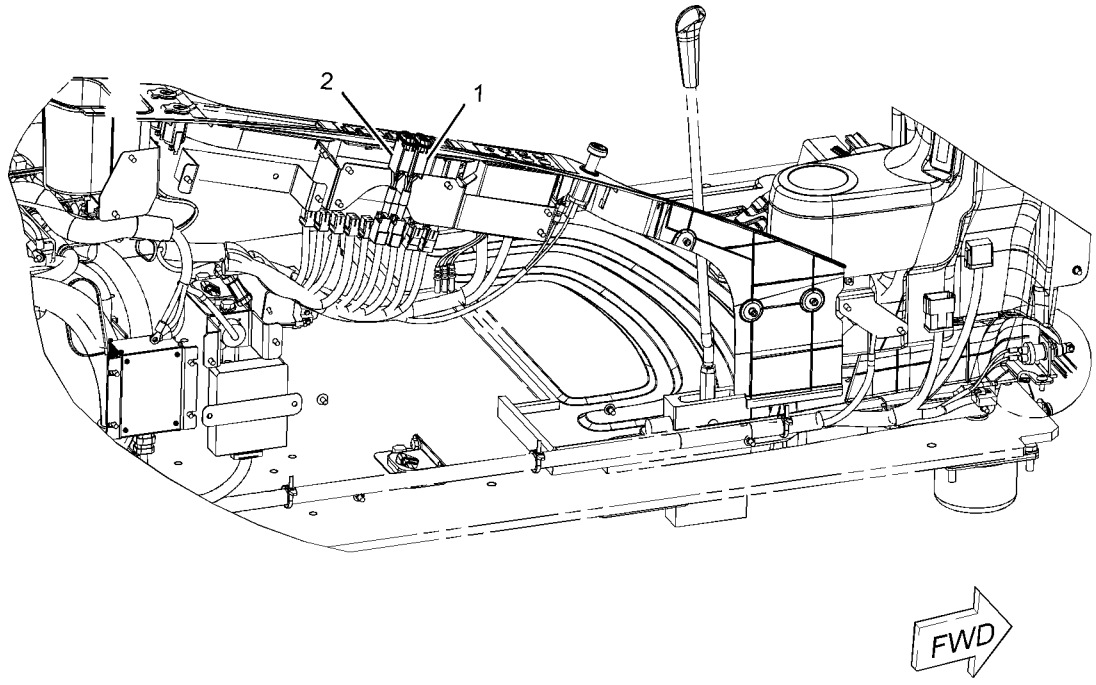

GRAPHIC #1 **<END>** g01098895

239-1134 VALVE GP-ETHER STARTING

S/N: MNB1-UP; WDK1-UP
PART OF 239-6676 STARTING AID GP-ETHER
AN ATTACHMENT

SMCS-1456 **i02748165**

NOTE	REF NO	GRAPHIC REF	PART NUMBER	QTY	PART NAME 1 2 3 4 5 6 (PRODUCT LEVEL)	SEE PAGE
	1	1	**7N-9801**	1	GASKET	
	2	1	**102-8802**	1	KIT-RECEPTACLE (2-PIN)	
					(INCLUDES RECEPTACLE AS & WEDGE)	
	3	1	**186-3735**	2	PIN-CONNECTOR (16-GA TO 18-GA)	

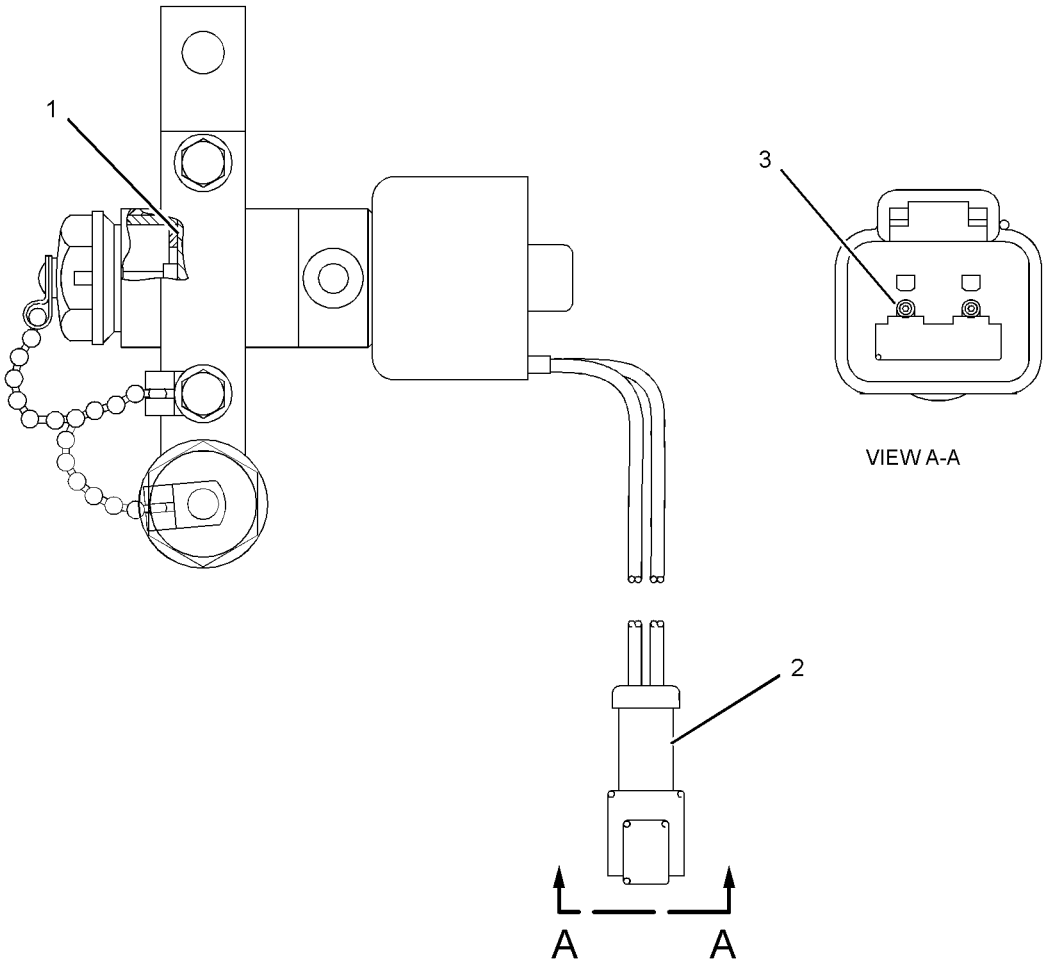

GRAPHIC #1 **<END>** g01375620

251-0441 WIRING GP-AUX START RECEPTACLE–JUMP START

S/N: MNB1-UP; WDK1-UP
AN ATTACHMENT

SMCS-1408, 1463 **i02989497**

NOTE	REF NO	GRAPHIC REF	PART NUMBER	QTY	PART NAME 1 2 3 4 5 6 (PRODUCT LEVEL)	SEE PAGE
	1	1	**2G-1830**	1	RECEPTACLE AS	
		1	**1S-7251**	2	TERMINAL-CABLE (00-GA, 1/2-IN BOLT)	
E		1	**5P-0747**		CABLE (00-GA, BLACK) (49-CM)	
E		1	**5P-0761**		CABLE (00-GA, RED) (56-CM)	
D		1	**6V-2722**		TUBE-HEAT SHRINK (25.4-MM DIA) (0.1-M)	
	2	1	**301-0091**	1	COVER-TERMINAL (RED)	
	3	1	**8S-2634**	1	COVER AS	
	4	1	**251-0452**	1	BRACKET	
	5	1	**251-0455**	1	CABLE AS (POSITIVE)	
		1	**301-0091**	1	COVER-TERMINAL (RED)	
		1	**1S-7251**	2	TERMINAL-CABLE (00-GA, 1/2-IN BOLT)	
E		1	**5P-0761**		CABLE (00-GA, RED) (250-CM)	
		1	**8N-0869**	1	COVER-TERMINAL (RED)	
	6	1	**251-0456**	1	CABLE AS (POSITIVE)	
		1	**3S-6049**	1	TERMINAL AS-BATTERY (POSITIVE)	
		1	**1S-7251**	1	TERMINAL-CABLE (00-GA, 1/2-IN BOLT)	
E		1	**5P-0761**		CABLE (00-GA, RED) (37-CM)	
		1	**301-0091**	1	COVER-TERMINAL (RED)	
		1	**8N-1725**	1	COVER-TERMINAL (RED)	
	7	1	**4I-7889**	1	SPACER (11X25X45-MM THK)	
	8	1	**4K-8864**	2	CLIP	
M	9	1	**5C-9553**	4	BOLT (M6X1X16-MM)	
	10	1	**5P-4115**	4	WASHER-HARD (7.2X19X2-MM THK)	
	11	1	**6G-2263**	1	SPACER (10.5X19X28.5-MM THK)	
	12	1	**8T-4121**	6	WASHER-HARD (11X21X2.5-MM THK)	
M	13	1	**8T-4136**	2	BOLT (M10X1.5X25-MM)	
M	14	1	**8T-4137**	2	BOLT (M10X1.5X20-MM)	
M	15	1	**8T-4182**	1	BOLT (M10X1.5X45-MM)	
M	16	1	**8T-5005**	1	BOLT (M10X1.5X70-MM)	
Y	17	1	**9W-0742**	1	BLOCK GP-JUNCTION (BATTERY)	182

D-ORDER BY THE METER
E-ORDER BY THE CENTIMETER
M-METRIC PART
Y-SEPARATE ILLUSTRATION

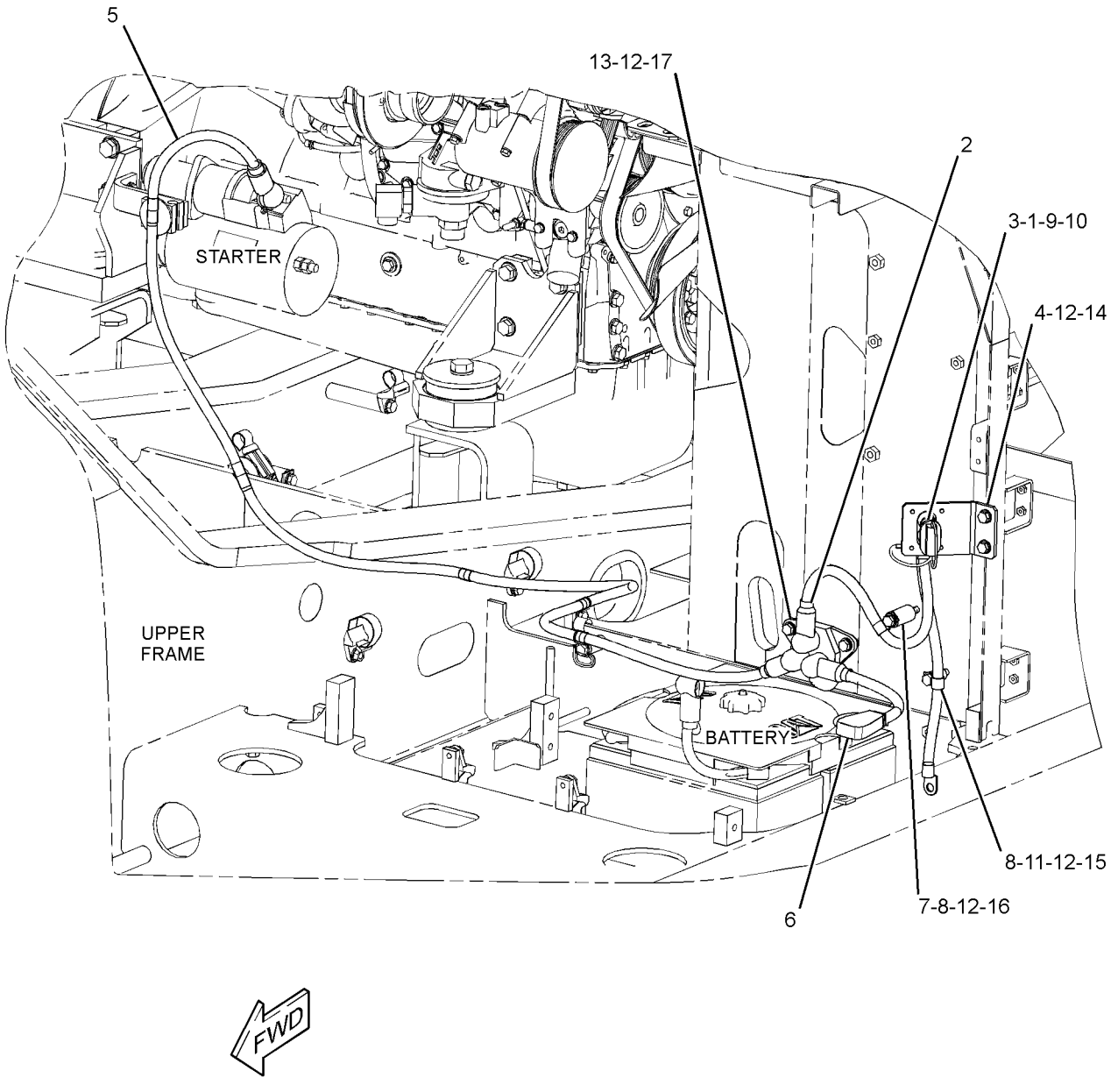

GRAPHIC #1 **<END>** g01401978

251-0437 WIRING GP-AUXILIARY CONTROL–

SYSTEM 17, COMBINED FUNCTION

S/N: MNB1-UP; WDK1-UP

PART OF 255-5703 CONTROL AR-AUXILIARY

AN ATTACHMENT

SMCS-1408 **i02434718**

NOTE	REF NO	GRAPHIC REF	PART NUMBER	QTY	PART NAME 1 2 3 4 5 6 (PRODUCT LEVEL)	SEE PAGE
	1	1,2	**3S-2093**	16	STRAP-CABLE	
	2	1,2	**7K-1181**	9	STRAP-CABLE	
	3	1	**111-4836**	1	CLIP	
	4	1,2	**204-1611**	5	STRAP-CABLE	
	5	1,2	**259-5071**	2	BRACKET AS	
	6	2	**259-5075**	1	BRACKET AS	
	7	1	**267-7867**	1	BRACKET AS	
	8	1	**267-7882**	1	HARNESS AS-AUXILIARY	
		1	**102-8802**	8	KIT-RECEPTACLE (2-PIN)	
		1	**102-8803**	1	KIT-RECEPTACLE (3-PIN)	
					(EACH RECEPTACLE KIT INCLUDES RECEPTALCE AS & WEDGE)	
		1	**3S-2093**	3	STRAP-CABLE	
E		1	**125-7874**		TUBE-HEAT SHRINK (5.72-MM DIA) (10-CM)	
E		1	**125-7875**		TUBE-HEAT SHRINK (7.44-MM DIA) (10-CM)	
		1	**155-2260**	1	KIT-CONNECTING PLUG (3-PIN)	
		1	**155-2270**	9	KIT-CONNECTING PLUG (2-PIN)	
					(EACH PLUG KIT INCLUDES PLUG AS, WEDGE & INTERFACE SEAL)	
		1	**243-4509**	1	RECEPTACLE AS-CONNECTOR (8-PIN)	
		1	**243-4510**		RECEPTACLE AS-CONNECTOR (12-PIN)	
	9	2	**132-5789**	1	CLIP (LADDER)	
	10	1	**156-6175**	1	CLIP (LADDER)	
	11	1,2	**8T-4121**	6	WASHER-HARD (11X21X2.5-MM THK)	
M	12	1	**8T-4137**	1	BOLT (M10X1.5X20-MM)	
M	13	1	**8T-4171**	1	BOLT (M6X1X12-MM)	
M	14	1,2	**8T-4179**	4	BOLT (M12X1.75X20-MM)	
M	15	1,2	**8T-4191**	5	BOLT (M10X1.5X16-MM)	
	16	1,2	**8T-4223**	4	WASHER-HARD (13.5X25.5X3-MM THK)	
	17	1	**9X-8256**	1	WASHER (6.6X12X2-MM THK)	

E-ORDER BY THE CENTIMETER
M-METRIC PART

REFER TO ALL ILLUSTRATIONS OF
THIS GROUP FOR AUXILIARY VIEWS

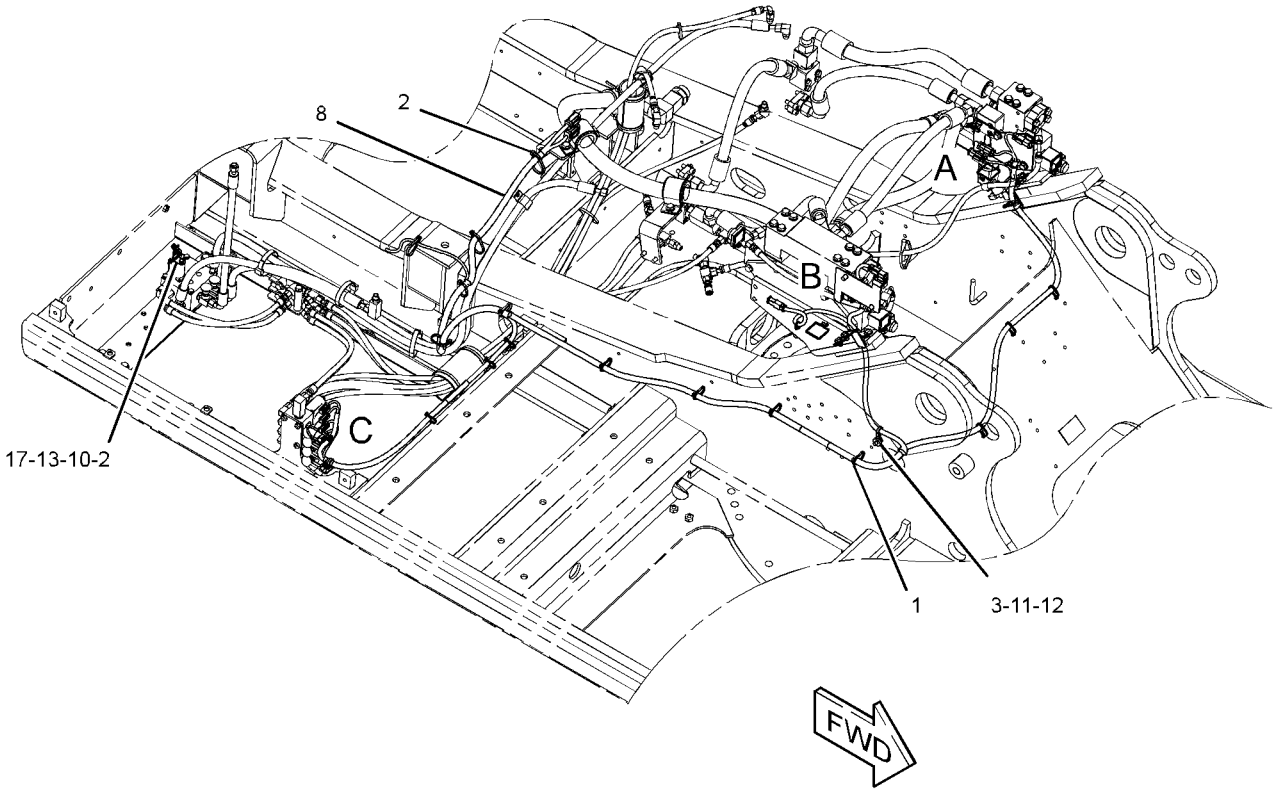

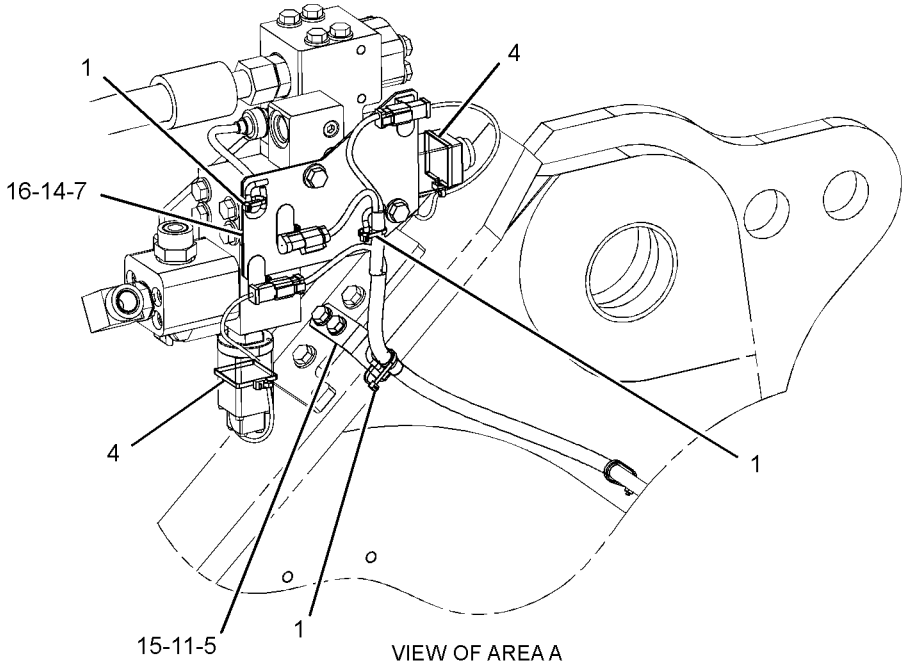

VIEW OF AREA A

GRAPHIC #1

g01246944

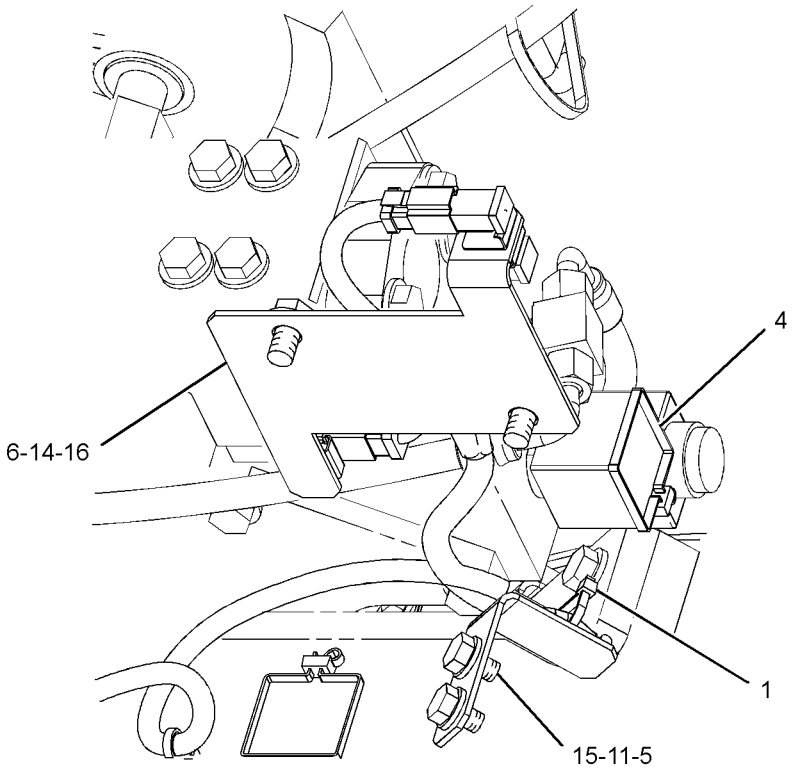

VIEW OF AREA B

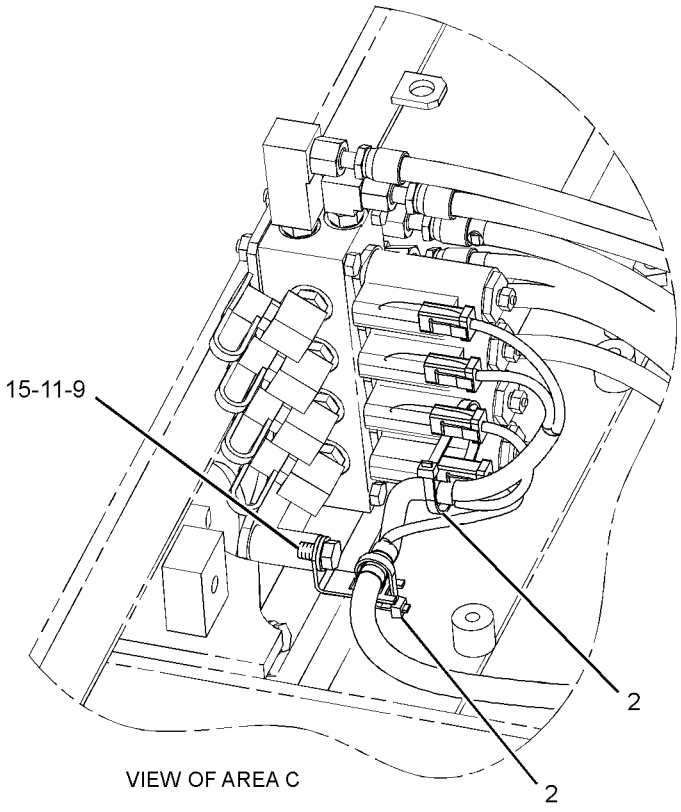

VIEW OF AREA C

GRAPHIC #2 **<END>** g01246945

259-5342 WIRING GP-AUXILIARY CONTROL

S/N: MNB1-UP; WDK1-UP

PART OF 255-5698, 255-5700 CONTROL AR-AUXILIARY

AN ATTACHMENT

SMCS-1408 **i02435535**

NOTE	REF NO	GRAPHIC REF	PART NUMBER	QTY	PART NAME 1 2 3 4 5 6 (PRODUCT LEVEL)	SEE PAGE
	1	1	**3S-2093**	18	STRAP-CABLE	
	2	1	**7K-1181**	7	STRAP-CABLE	
	3	1	**267-7882**	1	HARNESS AS-AUXILIARY	
		1	**102-8802**	8	KIT-RECEPTACLE (2-PIN)	
		1	**102-8803**	1	KIT-RECEPTACLE (3-PIN)	
					EACH RECEPTACLE KIT INCLUDES RECEPTACLE AS & WEDGE)	
		1	**3S-2093**	3	STRAP-CABLE	
E		1	**125-7874**		TUBE-HEAT SHRINK (5.72-MM DIA) (10-CM)	
E		1	**125-7875**		TUBE-HEAT SHRINK (7.44-MM DIA) (10-CM)	
		1	**155-2260**	1	KIT-CONNECTING PLUG (3-PIN)	
		1	**155-2270**	1	KIT-CONNECTING PLUG (2-PIN)	
					(EACH PLUG KIT INCLUDES PLUG AS, WEDGE & INTERFACE SEAL)	
		1	**243-4509**	1	RECEPTACLE AS-CONNECTOR (8-PIN)	
		1	**243-4510**	1	RECEPTACLE AS-CONNECTOR (12-PIN)	
	4	1	**132-5789**	1	CLIP (LADDER)	
	5	1	**8T-4121**	1	WASHER-HARD (11X21X2.5-MM THK)	
JM	6	1	**8T-4191**	1	BOLT (M10X1.5X16-MM)	
J	7	1	**7K-1181**	1	STRAP-CABLE	
J	8	1	**156-6175**	1	CLIP	
JM	9	1	**8T-4171**	1	BOLT (M6X1X12-MM)	
J	10	1	**9X-8256**	1	WASHER (6.6X12X2-MM THK)	

E-ORDER BY THE CENTIMETER
J-(USE ONLY WITH 1 PUMP/1 WAY CONFIGURATION)
M-METRIC PART

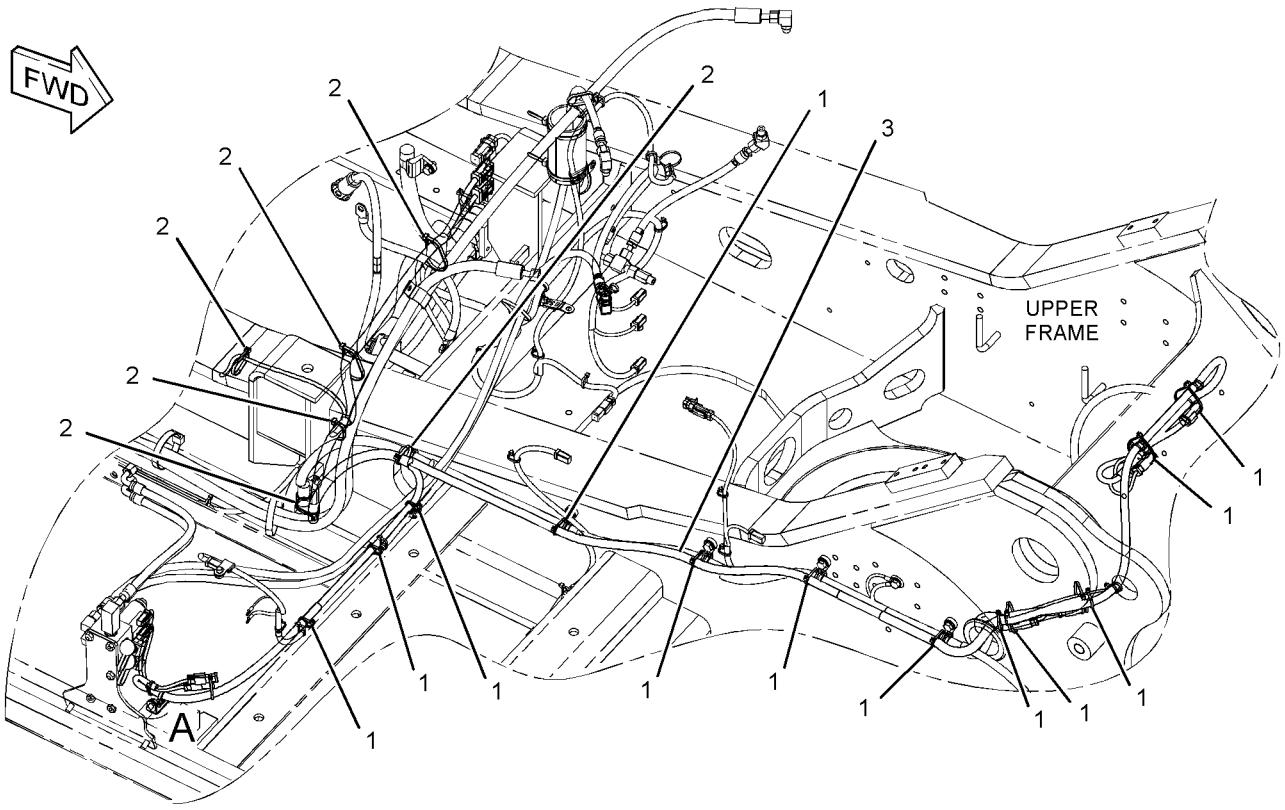

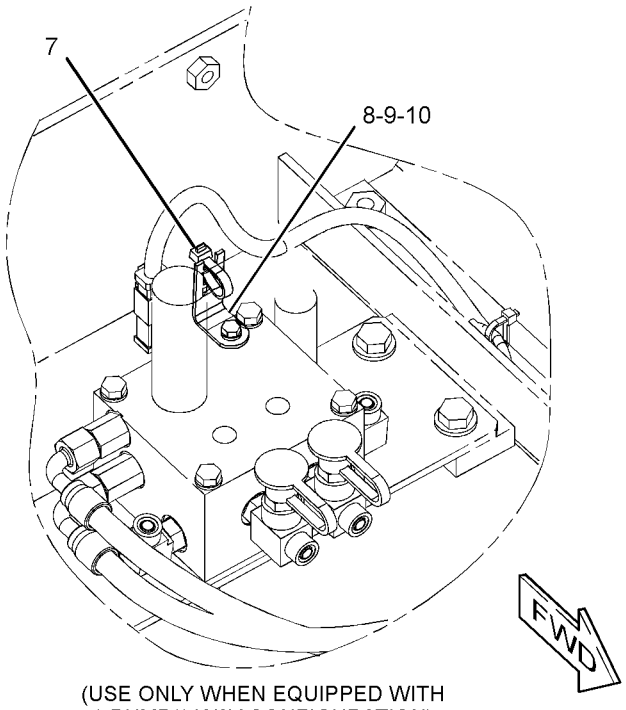

(USE ONLY WHEN EQUIPPED WITH
1 PUMP/1 WAY CONFIGURATION)

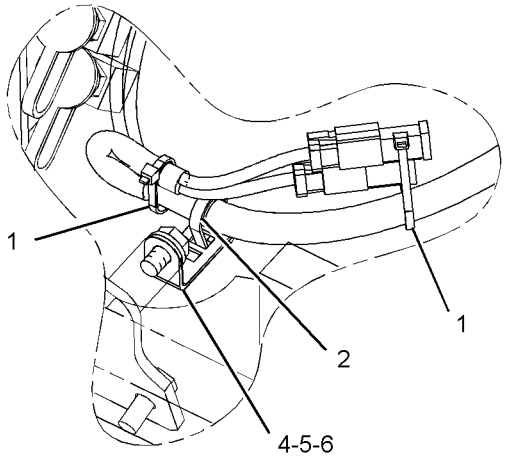

VIEW OF AREA A

GRAPHIC #1 **<END>** g01243588

267-7643 WIRING GP-BOOM FLOAT–COUPLER

S/N: WDK1-UP
PART OF 262-3580 CONTROL AR-COUPLER
AN ATTACHMENT

SMCS-1408 **i02490827**

NOTE	REF NO	GRAPHIC REF	PART NUMBER	QTY	PART NAME 1 2 3 4 5 6 (PRODUCT LEVEL)	SEE PAGE
	1	2	**3S-2093**	14	STRAP-CABLE	
	2	1,2	**7K-1181**	9	STRAP-CABLE	
	3	1	**116-0118**	1	CLIP	
	4	1	**267-7645**	1	HARNESS AS-SOLENOID (QUICK COUPLER)	
		1	**102-8802**	1	KIT-RECEPTACLE (2-PIN)	
					(INCLUDES RECEPTACLE AS & WEDGE)	
		1	**155-2270**	3	KIT-CONNECTING PLUG (2-PIN)	
					(EACH INCLUDES PLUG AS, WEDGE & INTERFACE SEAL)	
E		1	**125-7874**		TUBE-HEAT SHRINK (5.72-MM DIA) (5-CM)	
		1	**243-4507**	1	RECEPTACLE AS-CONNECTOR (4-PIN)	
	5	2	**4P-7581**	1	CLIP	
	6	2	**8T-4121**	1	WASHER-HARD (11X21X2.5-MM THK)	
M	7	2	**8T-4136**	1	BOLT (M10X1.5X25-MM)	

E-ORDER BY THE CENTIMETER
M-METRIC PART

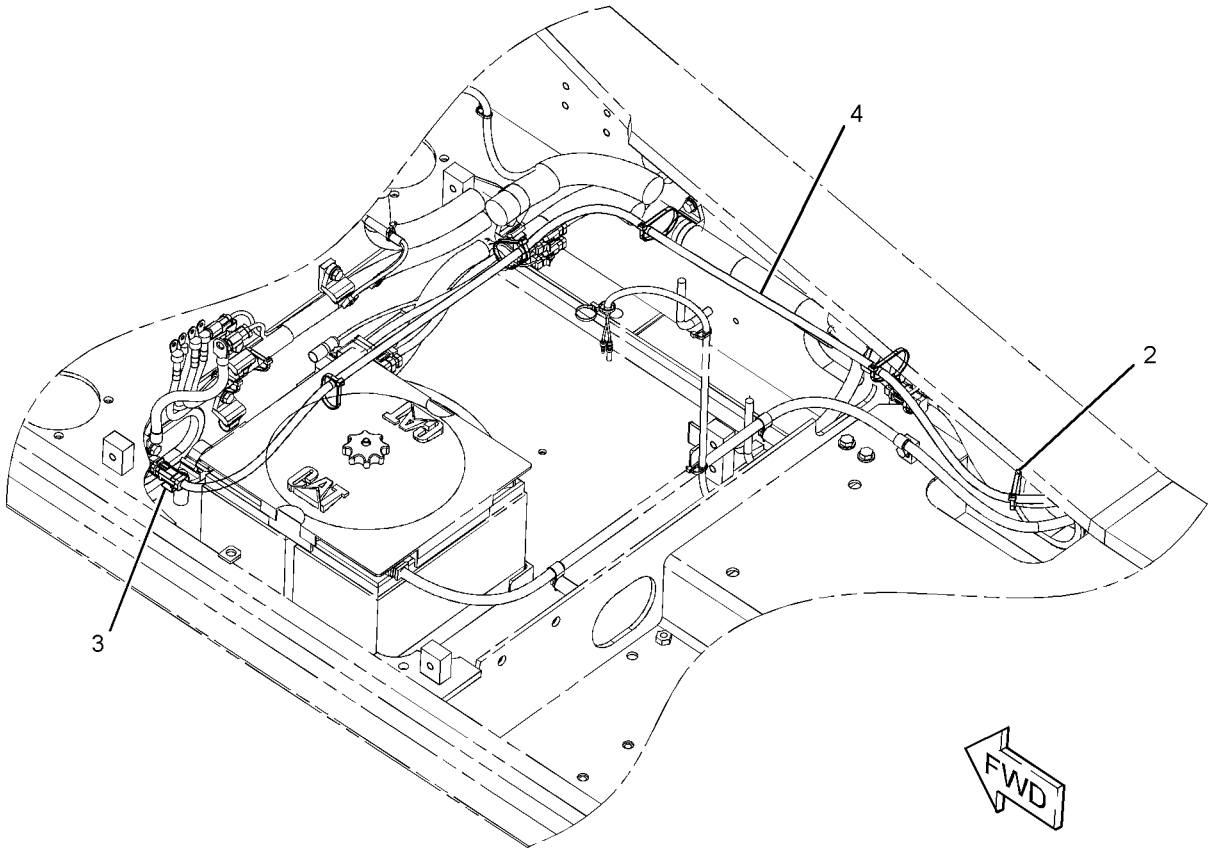

GRAPHIC #1 g01210975

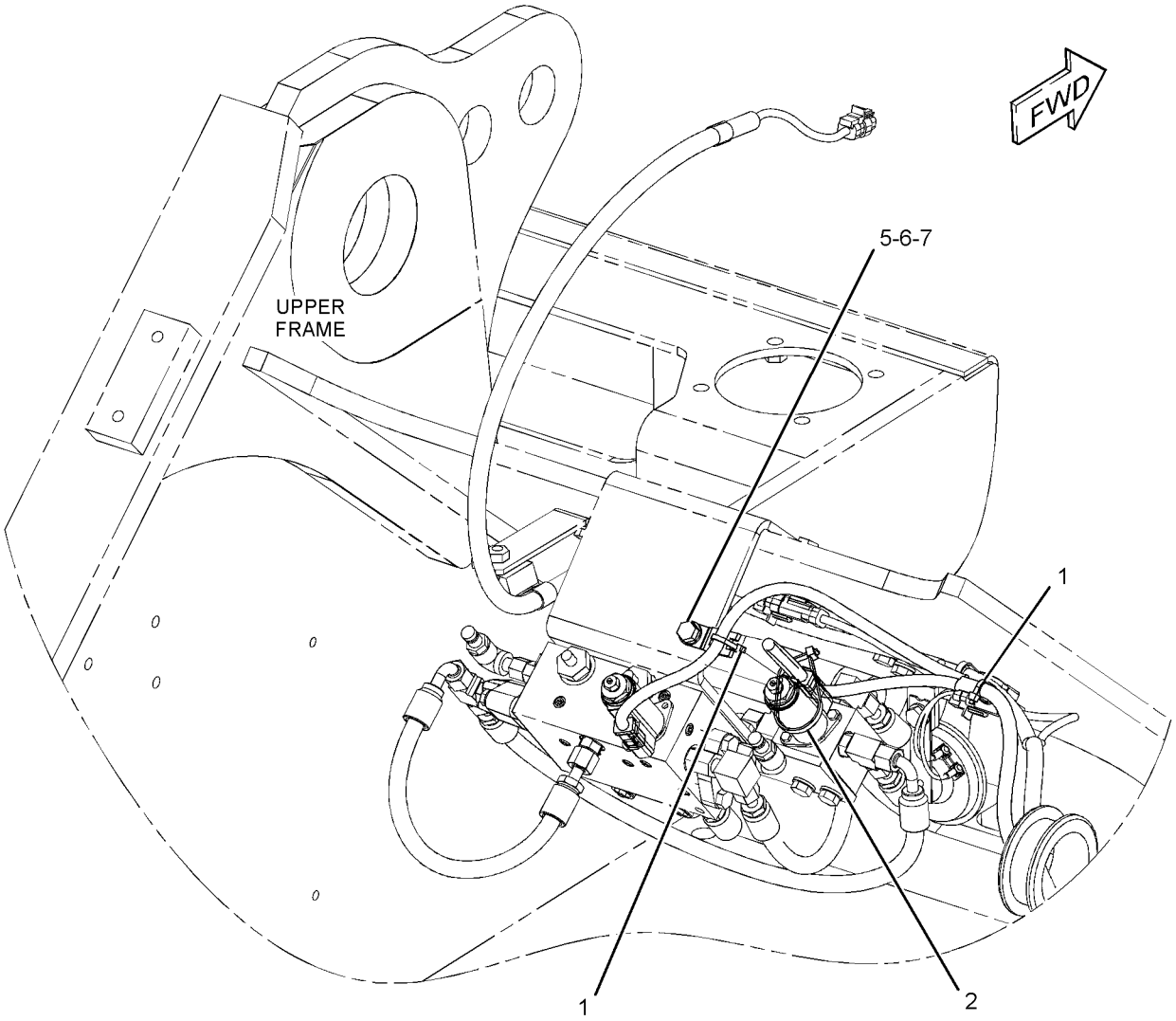

GRAPHIC #2 **<END>** g01210981

ELECTRICAL AND STARTING SYSTEM

251-0432 WIRING GP-CAB

S/N: MNB1-UP; WDK1-UP

PART OF 229-9072 OPERATOR AR

SMCS-1408, 7301 **i02896259**

NOTE	REF NO	GRAPHIC REF	PART NUMBER	QTY	PART NAME 1 2 3 4 5 6 (PRODUCT LEVEL)	SEE PAGE
	1	1,2	**3S-2093**	9	STRAP-CABLE	
	2	1,2	**7Y-5505**	2	SPEAKER AS	
					(EACH INCLUDES)	
		1,2	**7Y-3951**	2	TERMINAL (FEMALE)	
		1,2	**7Y-3954**	1	CONNECTOR-PLUG	
	3	1	**9W-0335**	1	LIGHTER AS-CIGAR (24-VOLT)	
					—OR—	
		1	**238-2318**	1	LIGHTER AS-CIGAR (24-VOLT)	
M	4	1,2	**099-7127**	8	SCREW-MACHINE (M4X0.7X12-MM)	
	5	1	**102-8016**	1	RESISTOR AS	
	6	2	**113-8490**	22	FUSE (10-AMPERE)	
	7	2	**113-8491**	5	FUSE (15-AMPERE)	
	8	2	**113-8493**	3	FUSE (25-AMPERE)	
	9	1,2	**116-0210**	4	BRACKET AS	
	10	2	**124-3548**	2	FUSE (30-AMPERE)	
Y	11	1	**132-1829**	1	ALARM GP (24-VOLT)	167
	12	2	**141-2759**	8	FUSE (5-AMPERE)	
	13	2	**161-3128**	1	RELAY (24-VOLT) (BOOM FLOODLIGHT)	
	13A	2	**161-3128**	1	RELAY (24-VOLT) (CHASSIS LIGHT)	
	13B	2	**161-3128**	1	RELAY (24-VOLT) (CAB FLOODLIGHT)	
	13C	2	**161-3128**	1	RELAY (24-VOLT) (HORN)	
	13D	2	**161-3128**	1	RELAY (24-VOLT) (NEUTRAL START)	
	13E	2	**161-3128**	1	RELAY (24-VOLT) (TRAVEL ALARM)	
	13F	2	**161-3128**	1	RELAY (24-VOLT) (ETHER)	
	14	1	**268-1964**	1	KIT-SERVICE METER	
					(INCLUDES SERVICE METER & FILM)	
	15	2	**163-6758**	1	WIRE AS	
	16	1	**167-3593**	1	STRAP	
	17	2	**170-6888**	1	PULLER-FUSE	
	18	2	**213-0772**	1	SWITCH AS-MAGNETIC (24-VOLT) (MAIN RELAY)	
	19	1	**227-7575**	1	PANEL-CONTROL (SWITCH)	
	20	1	**234-1097**	1	BRACKET	
	21	1	**238-2212**	1	SWITCH AS-ROCKER (FINE SWING)	
		1	**167-3542**	1	CONNECTOR-RECEPTACLE	
		1	**167-3543**	5	TERMINAL (MALE)	
	23	2	**238-2390**	1	CABLE AS	
D		2	**6V-2369**		WIRE (4-GA, BLACK) (0.3-M)	
		2	**9G-4343**	2	TERMINAL (4-GA)	
	24	2	**238-2391**	1	CABLE AS	
D		2	**6V-2369**		WIRE (4-GA, BLACK) (0.3-M)	
		2	**9G-4343**	2	TERMINAL (4-GA)	
	25	1	**245-7760**	8	INSULATION	
	26	1	**251-0637**	1	INSULATION	
	27	1	**259-4883**	1	ANTENNA AS	
	28	1	**267-7591**	1	HARNESS AS-CAB	
M	29	1	**095-0723**	3	SCREW (M3X0.5X10-MM)	
	30	1	**096-5962**	3	WASHER-HARD (3.4X7X0.8-MM THK)	
	31	1	**096-6166**	2	WASHER-HARD (4.5X9X1-MM THK)	
	32	1,2	**132-5789**	7	CLIP	
	33	1	**163-6795**	15	STRAP-CABLE	
	34	2	**4P-7581**	1	CLIP	
M	35	1	**5C-2890**	3	NUT (M6X1-THD)	
M	36	1,2	**6V-5210**	8	SCREW-MACHINE (M4X0.7X10-MM)	
M	37	1	**6V-9672**	2	SCREW-MACHINE (M4X0.7X16-MM)	
	38	2	**8T-0328**	3	WASHER-HARD (5.5X10X1-MM THK)	
M	39	2	**8T-4127**	2	SCREW-MACHINE (M5X0.8X20-MM)	

251-0432 **WIRING GP-CAB** ***(contd.)*** **i02896259**

NOTE	REF NO	GRAPHIC REF	PART NUMBER	QTY	PART NAME 1 2 3 4 5 6 (PRODUCT LEVEL)	SEE PAGE
M	40	2	**8T-6693**	1	SCREW-MACHINE (M5X0.8X16-MM)	
M	41	1,2	**9X-2042**	11	SCREW-TRUSS HEAD (M6X1X12-MM)	
M	42	1,2	**9X-2044**	5	SCREW-TRUSS HEAD (M6X1X16-MM)	
	43	1	**9X-8256**	3	WASHER (6.6X12X2-MM THK)	
E	44	1	**101-2846**		GUARD (9.5-CM)	
E	44A	1	**101-2846**		GUARD (9-CM EACH)	

D-ORDER BY THE METER
E-ORDER BY THE CENTIMETER
M-METRIC PART
Y-SEPARATE ILLUSTRATION

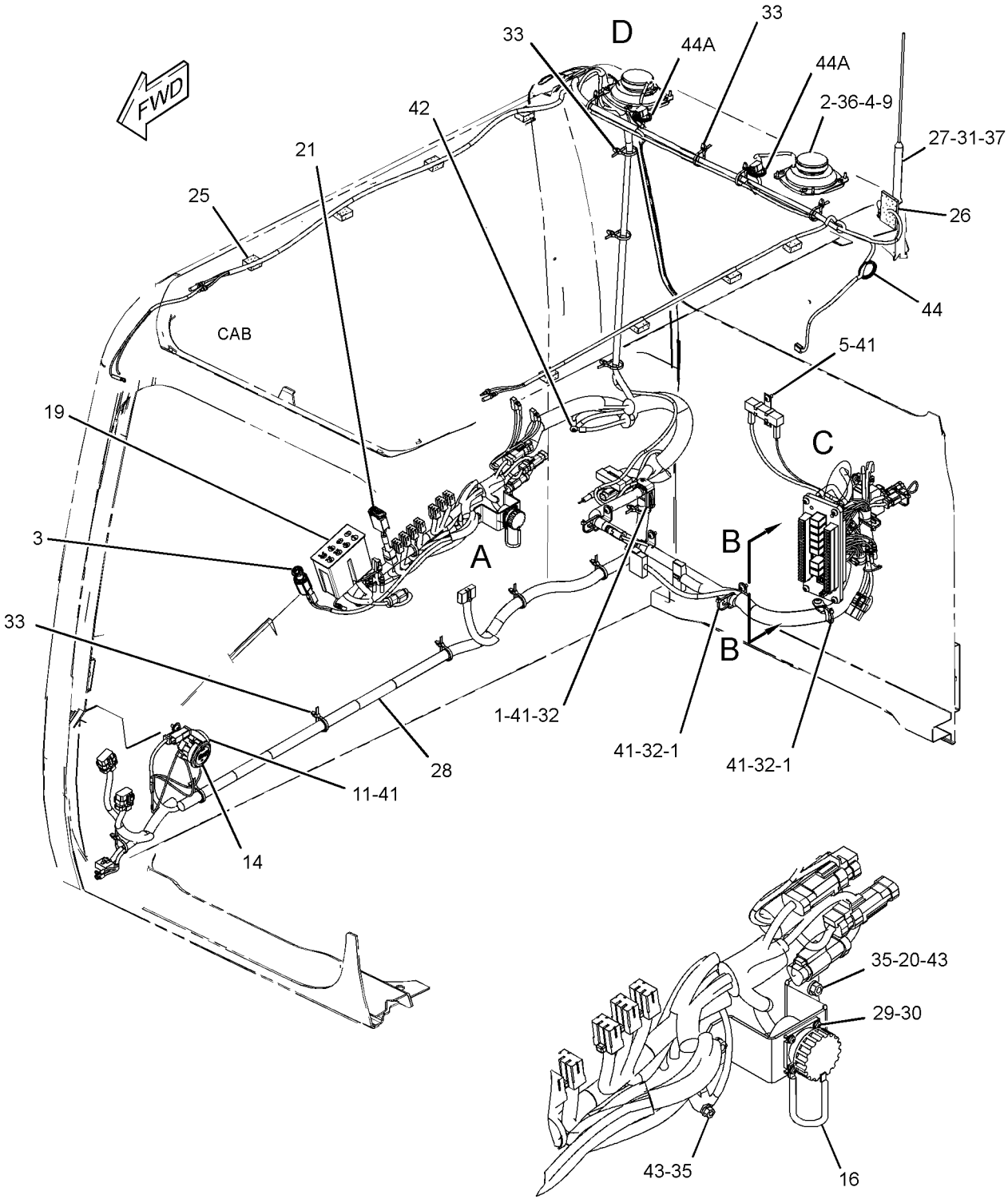

REFER TO ALL ILLUSTRATIONS OF THIS GROUP FOR AUXILIARY VIEWS

VIEW OF AREA A

GRAPHIC #1

g01505996

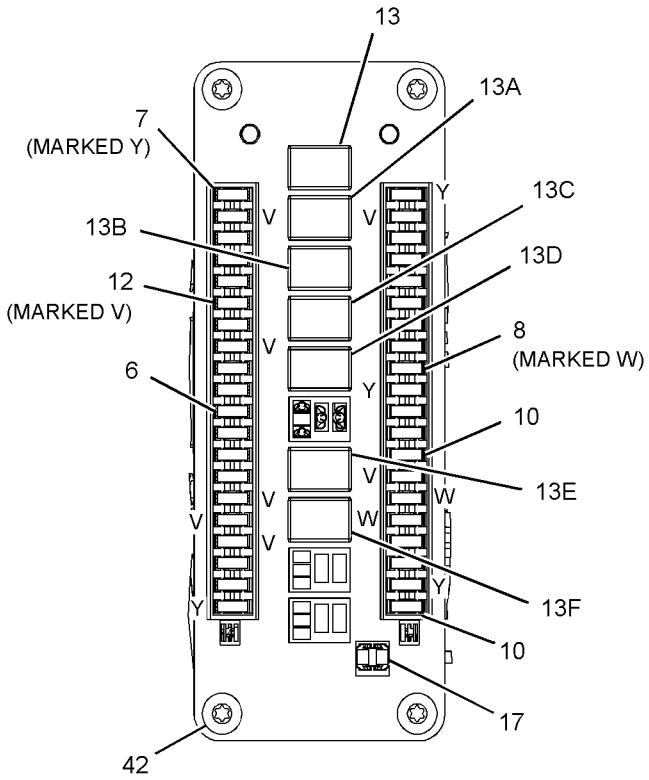

VIEW B-B

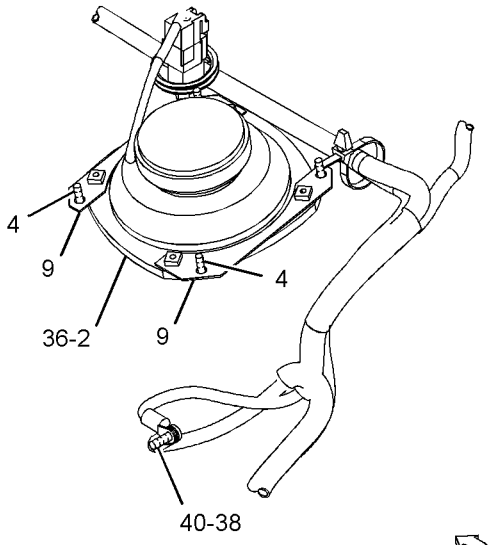

VIEW OF AREA D

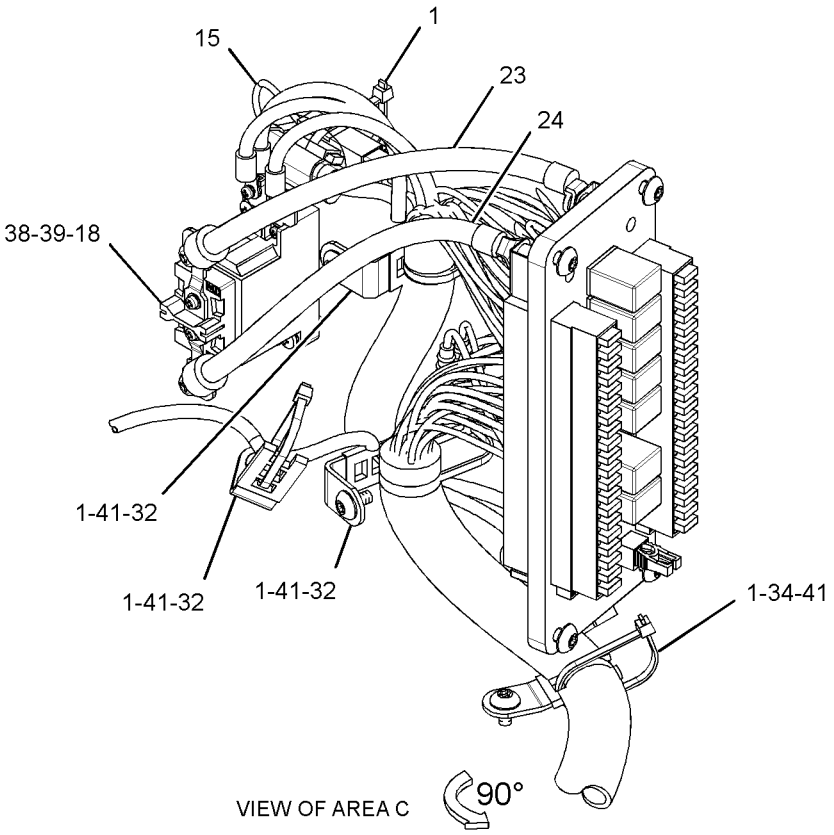

VIEW OF AREA C

GRAPHIC #2 **<END>** g01505997

251-0529 WIRING GP-CAB–1-WAY/2-WAY FLOW

S/N: MNB1-UP; WDK1-UP

PART OF 255-5697, 255-5702 CONTROL AR-AUXILIARY

AN ATTACHMENT

SMCS-1408, 7301 **i02723812**

NOTE	REF NO	GRAPHIC REF	PART NUMBER	QTY	PART NAME 1 2 3 4 5 6 (PRODUCT LEVEL)	SEE PAGE
	1	1,3	**3S-2093**	4	STRAP-CABLE	
	2	1,2	**7K-1181**	8	STRAP-CABLE	
	3	3	**116-0118**	2	CLIP	
	4	1	**149-5050**	1	RELAY (24-VOLT) (1-WAY/2-WAY SOLENOID)	
	5	1	**251-0598**	1	HARNESS AS-SOLENOID (1-WAY/2-WAY FLOW)	
		1	**3S-2093**	6	STRAP-CABLE	
		1	**8T-8737**	1	PLUG-SEAL	
		1	**243-4508**	1	RECEPTACLE AS-CONNECTOR (6-PIN)	
M	6	1	**5C-2890**	1	NUT (M6X1-THD)	
M	7	3	**7X-2621**	2	BOLT (M10X1.5X12-MM)	
	8	3	**8T-4121**	2	WASHER-HARD (11X21X2.5-MM THK)	
	9	1	**9X-8256**	1	WASHER (6.6X12X2-MM THK)	

M-METRIC PART

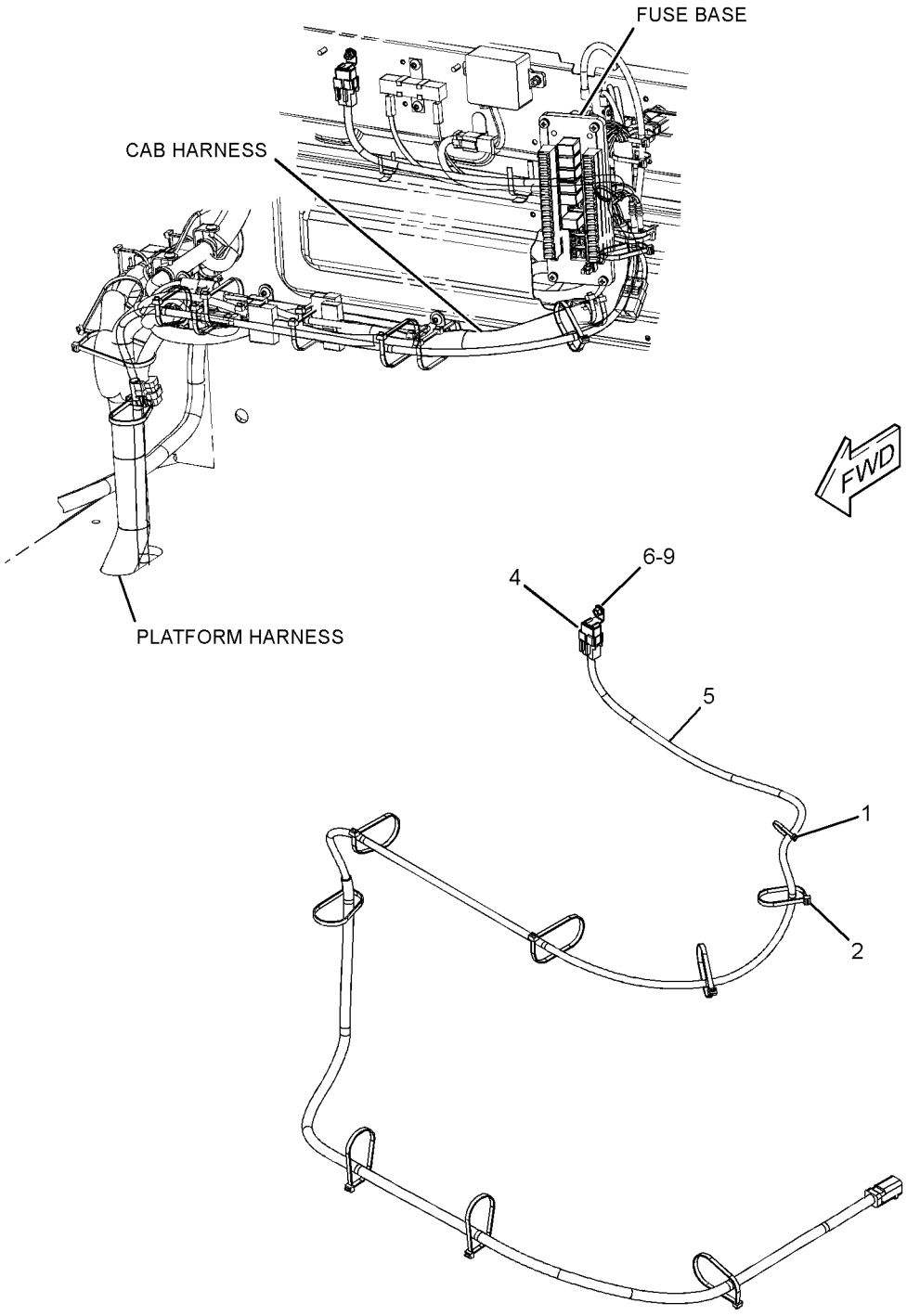

REFER TO ALL ILLUSTRATIONS OF
THIS GROUP FOR AUXILIARY VIEWS

GRAPHIC #1

g01233498

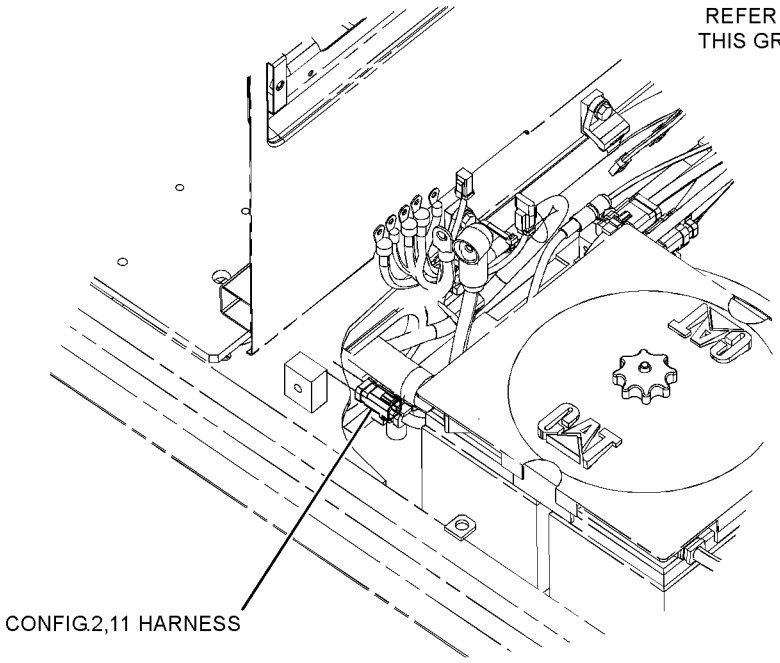

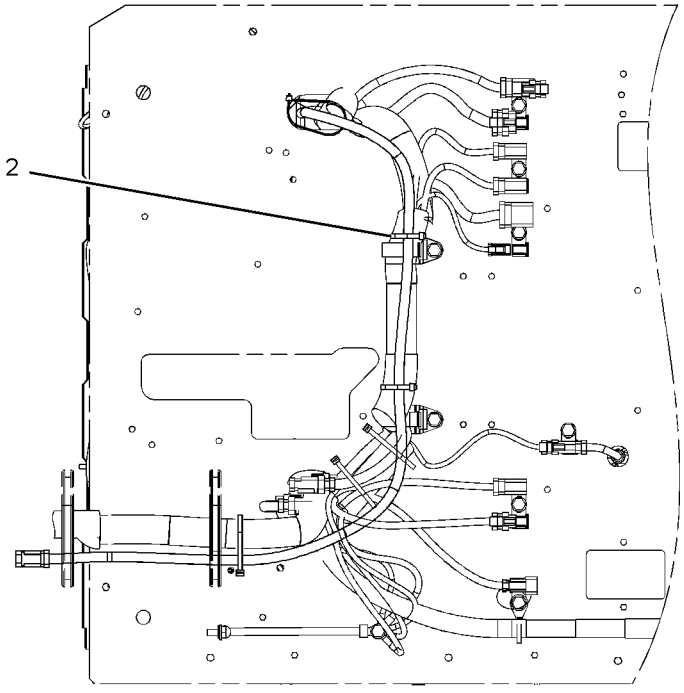

BOTTOM VIEW
(FOR CONFIG. 2,11)

GRAPHIC #2 g01233501

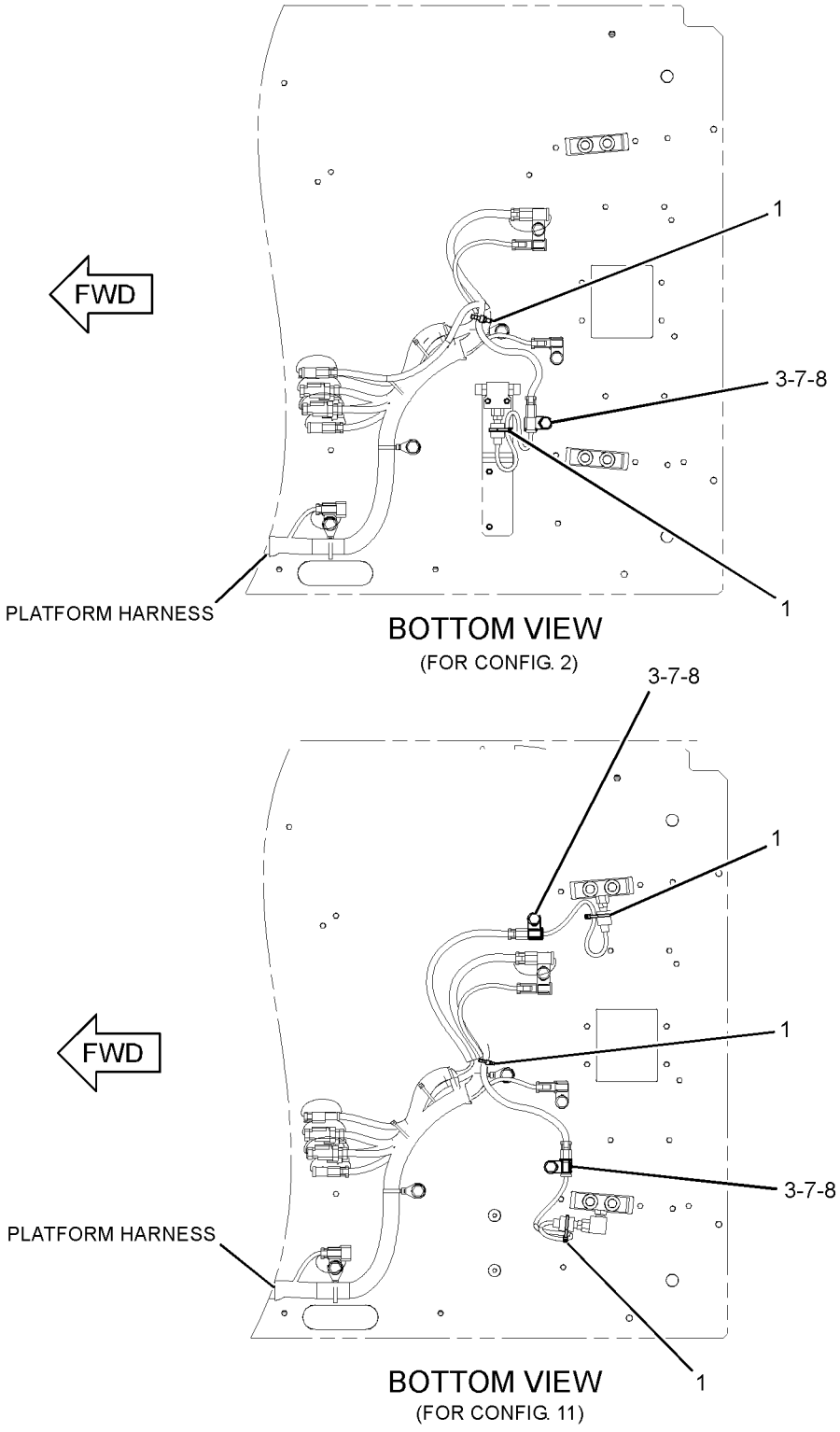

GRAPHIC #3 **<END>** g01233503

259-5118 WIRING GP-CAB–PRIMING PUMP

S/N: MNB1-UP; WDK1-UP
PART OF 247-7458 PUMP GP-FUEL PRIMING
AN ATTACHMENT

SMCS-1408, 7301 **i02407779**

NOTE	REF NO	GRAPHIC REF	PART NUMBER	QTY	PART NAME 1 2 3 4 5 6 (PRODUCT LEVEL)	SEE PAGE
	1	1	**3S-2093**	5	STRAP-CABLE	
	2	1	**7K-1181**	9	STRAP-CABLE	
	3	1	**149-5050**	1	RELAY (24-VOLT) (PRIMING PUMP)	
	4	1	**259-5119**	1	HARNESS AS-CAB	
		1	**3S-2093**	2	STRAP-CABLE	
		1	**230-5008**	1	PLUG AS-CONNECTOR (4-PIN)	
		1	**243-4505**	1	RECEPTACLE AS-CONNECTOR (2-PIN)	
M	5	1	**5C-2890**	1	NUT (M6X1-THD)	
	6	1	**9X-8256**	1	WASHER (6.6X12X2-MM THK)	

M-METRIC PART

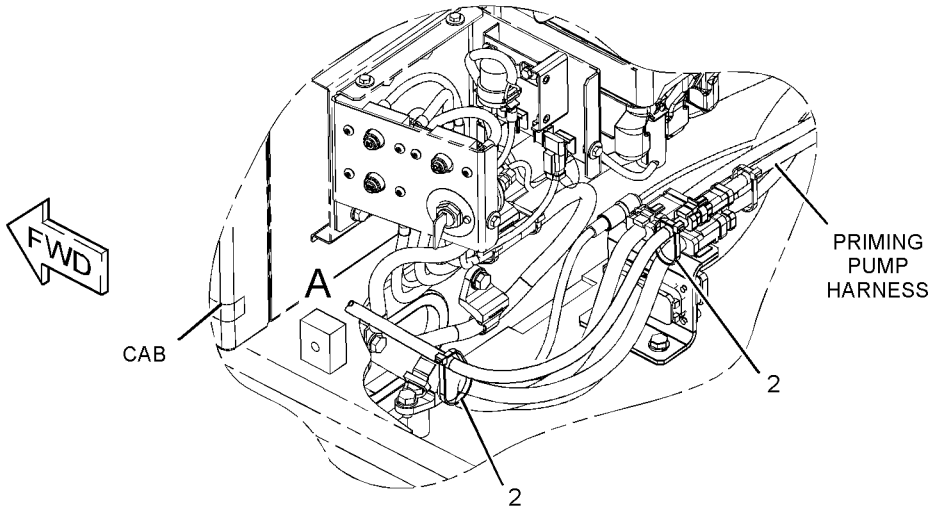

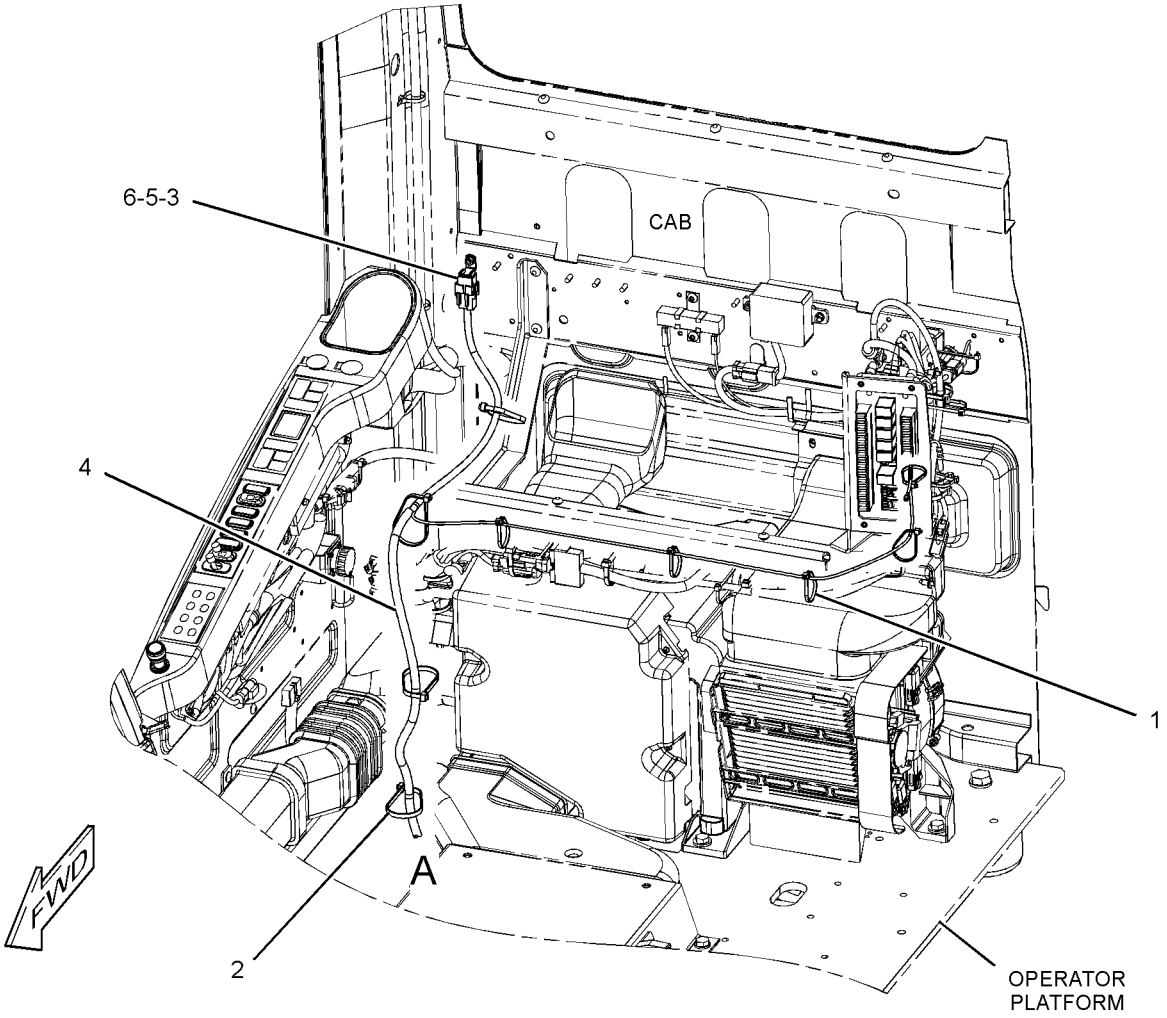

GRAPHIC #1 **<END>** g01155307

267-7642 WIRING GP-CAB–COUPLER

S/N: WDK1-UP
PART OF 262-3580 CONTROL AR-COUPLER
AN ATTACHMENT

SMCS-1408, 7301 **i02706844**

NOTE	REF NO	GRAPHIC REF	PART NUMBER	QTY	PART NAME 1 2 3 4 5 6 (PRODUCT LEVEL)	SEE PAGE
	1	1	**7K-1181**	13	STRAP-CABLE	
	2	1	**149-5050**	1	RELAY (24-VOLT) (QUICK COUPLER LOCK PRIORITY)	
	2A	1	**149-5050**	1	RELAY (24-VOLT) (QUICK COUPLER LOCK ON)	
	2B	1	**149-5050**	1	RELAY (24-VOLT) (QUICK COUPLER LOCK)	
	2C	1	**149-5050**	1	RELAY (24-VOLT) (QUICK COUPLER LOCK)	
	3	1	**259-4884**	1	BRACKET AS	
	4	1	**259-7220**	1	COVER	
	5	1	**267-7644**	1	HARNESS AS-QUICK COUPLER	
		1	**102-7965**	3	TERMINAL (FEMALE)	
E		1	**125-7874**		TUBE-HEAT SHRINK (5.72-MM DIA) (10-CM)	
E		1	**125-7875**		TUBE-HEAT SHRINK (7.44-MM DIA) (15-CM)	
		1	**149-5070**	9	TERMINAL (FEMALE)	
		1	**163-6803**	1	CONNECTOR-PLUG	
		1	**230-5008**	1	PLUG AS-CONNECTOR (4-PIN)	
		1	**7Y-3950**	2	TERMINAL (MALE)	
		1	**7Y-3953**	1	CONNECTOR-RECEPTACLE	
		1	**149-5069**	7	TERMINAL (FEMALE)	
		1	**3S-2093**	15	STRAP-CABLE	
		1	**230-5008**	1	PLUG AS-CONNECTOR (4-PIN)	
	6	1	*267-7671*	1	SWITCH GP-TOGGLE (QUICK COUPLER)	
		1	**105-5175**	1	SWITCH AS-TOGGLE (QUICK COUPLER)	
		1	**3L-8187**	6	LOCKWASHER	
		1	**6T-3631**	2	NUT-HEX (15/32-32-THD)	
		1	**6T-3632**	1	LOCKWASHER	
		1	**6T-3633**	1	RING-LOCKING	
		1	**6V-8374**	6	SCREW-MACHINE (6-32X0.25-IN)	
		1	**267-7672**	1	HARNESS AS-WIRING (CAB)	
		1	**3S-2093**	1	STRAP-CABLE	
		1	**121-1173**	3	TERMINAL	
		1	**167-3542**	1	CONNECTOR-RECEPTACLE	
	7	1	**267-7676**	1	BRACKET AS	
M	8	1	**9X-2042**	7	SCREW-TRUSS HEAD (M6X1X12-MM)	

E-ORDER BY THE CENTIMETER
M-METRIC PART

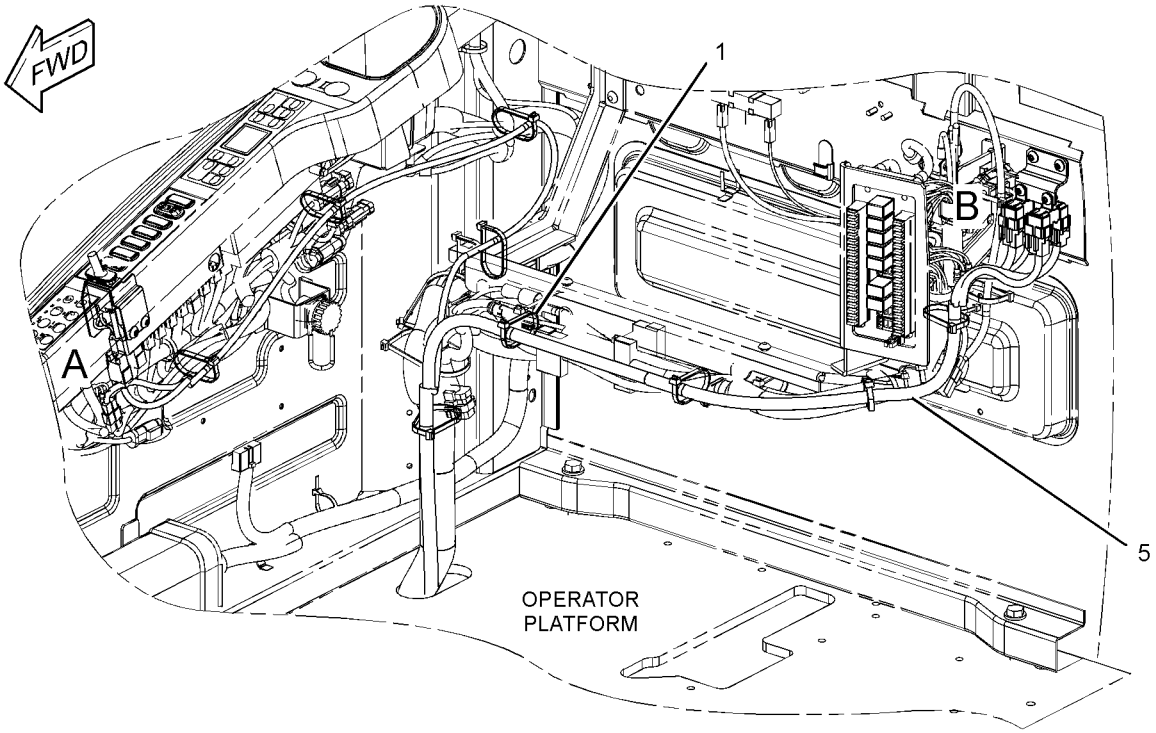

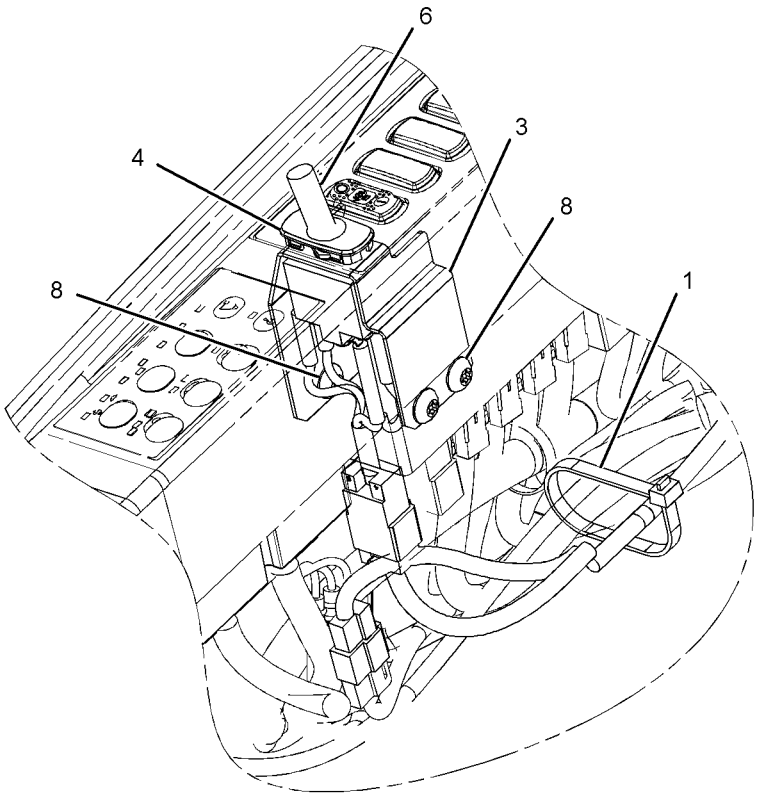

VIEW OF AREA A

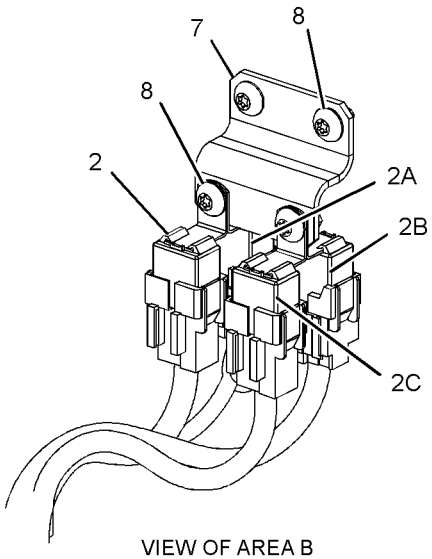

VIEW OF AREA B

GRAPHIC #1 **<END>** g01235651

306-8349 WIRING GP-CAB–ACCUGRADE READY

S/N: MNB1-UP; WDK1-UP
PART OF 290-1778 CONVERSION AR-MACHINE
AN ATTACHMENT

SMCS-1408, 7301 **i02825113**

NOTE	REF NO	GRAPHIC REF	PART NUMBER	QTY	PART NAME 1 2 3 4 5 6 (PRODUCT LEVEL)	SEE PAGE
	1	1	**7K-1181**	7	STRAP-CABLE	
	2	1	**113-8491**	1	FUSE (15-AMPERE)	
	3	1	**306-8350**	1	HARNESS AS-CONTROL	

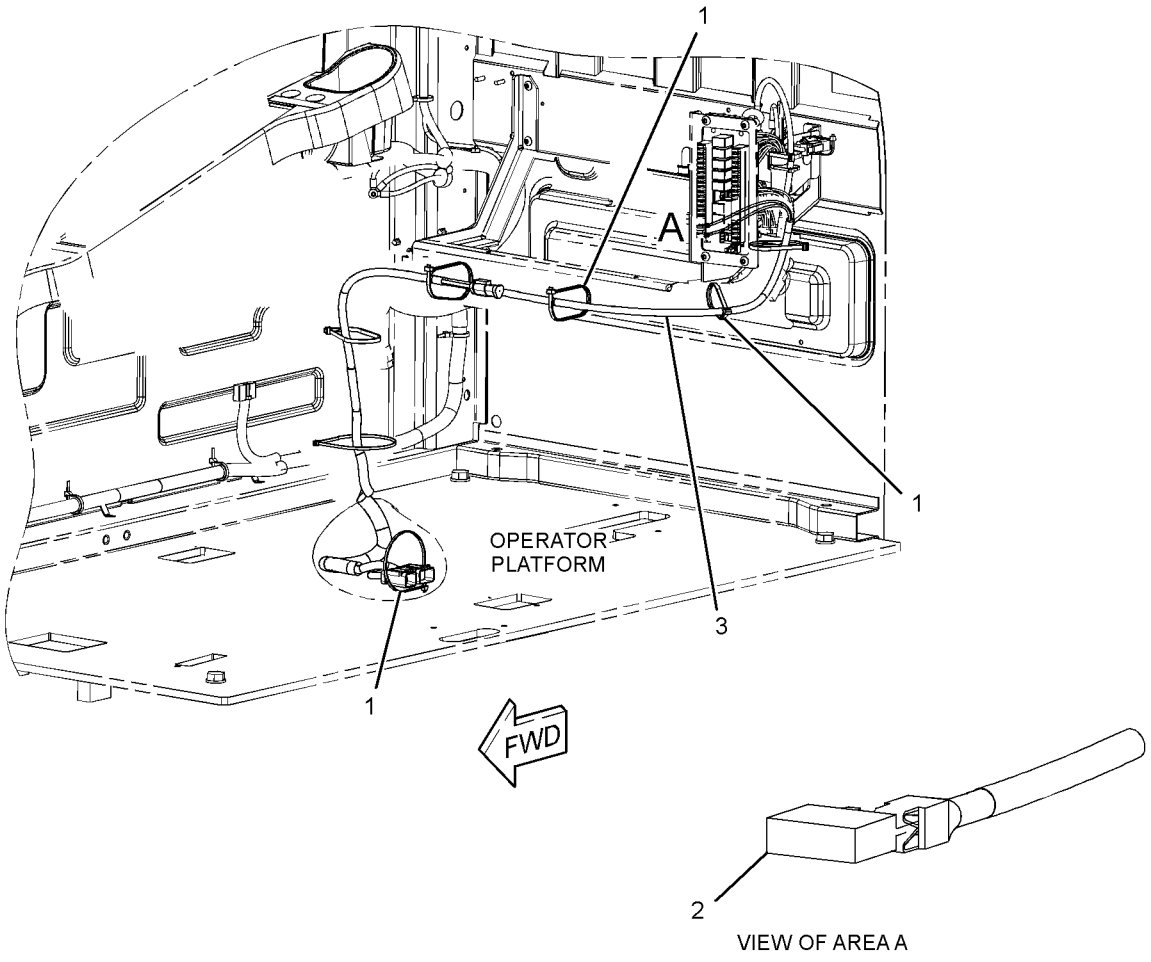

GRAPHIC #1 **<END>** g01398198

328-0048 WIRING GP-CAB–REAR VISION CAMERA

S/N: MNB1-UP; WDK1-UP
PART OF 329-6570 CAMERA & WIRING GP
AN ATTACHMENT

SMCS-1408, 7301 **i03114038**

NOTE	REF NO	GRAPHIC REF	PART NUMBER	QTY	PART NAME 1 2 3 4 5 6 (PRODUCT LEVEL)	SEE PAGE
	1	1	**3S-2093**	13	STRAP-CABLE	
	2	1	**7K-1181**	16	STRAP-CABLE	
	3	1	**306-8590**	1	HARNESS AS-WIRING	
	4	1	**327-9998**	1	HARNESS AS-AUXILIARY	

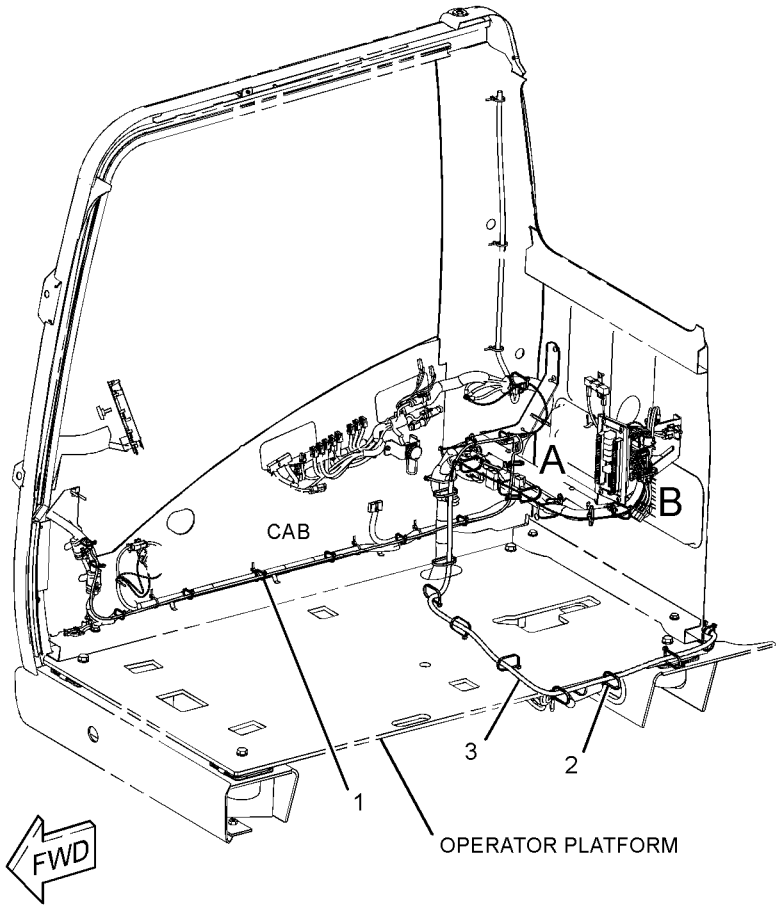

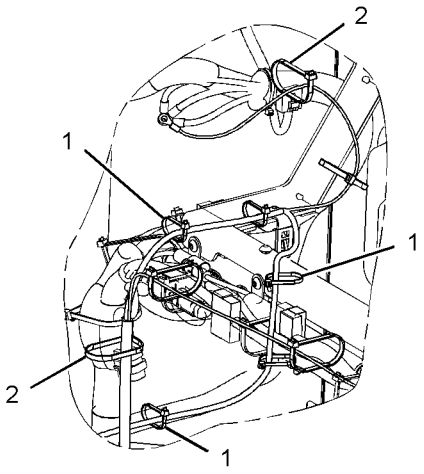

VIEW OF AREA A

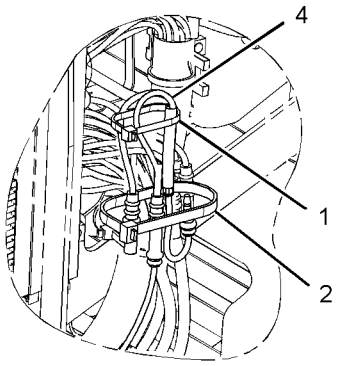

VIEW OF AREA B

GRAPHIC #1 **<END>** g01609106

306-8720 WIRING GP-CAMERA–REAR VISION CAMERA

S/N: MNB1-UP; WDK1-UP

PART OF 329-6570 CAMERA & WIRING GP

AN ATTACHMENT

SMCS-1408, 7348 **i03112885**

NOTE	REF NO	GRAPHIC REF	PART NUMBER	QTY	PART NAME 1 2 3 4 5 6 (PRODUCT LEVEL)	SEE PAGE
	1	1	**3S-2093**	21	STRAP-CABLE	
	2	1	**7K-1181**	6	STRAP-CABLE	
	3	1	**111-4836**	1	CLIP	
	4	1	**268-8643**	1	CABLE AS	
	5	1	**8T-4121**	1	WASHER-HARD (11X21X2.5-MM THK)	
M	6	1	**8T-4191**	1	BOLT (M10X1.5X16-MM)	

M-METRIC PART

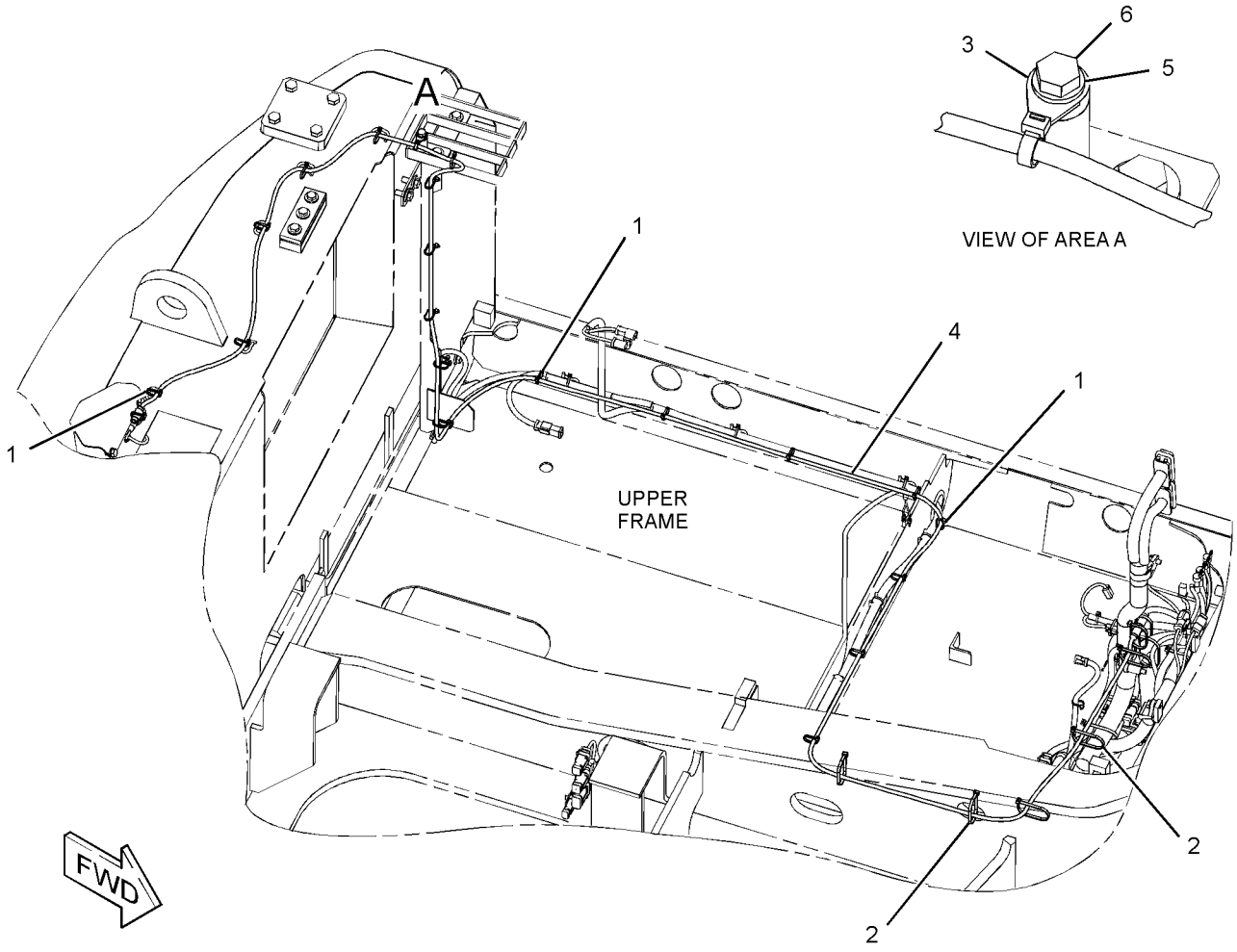

GRAPHIC #1 **<END>** g01609055

275-7192 WIRING GP-CHASSIS

S/N: MNB1-UP; WDK1-UP
PART OF 290-1778 CONVERSION AR-MACHINE
AN ATTACHMENT

SMCS-1408 **i02892253**

NOTE	REF NO	GRAPHIC REF	PART NUMBER	QTY	PART NAME 1 2 3 4 5 6 (PRODUCT LEVEL)	SEE PAGE
C	1	1,2	**7K-1181**	38	STRAP-CABLE	
	3	2	**275-6841**	1	HARNESS AS-CONTROL (BODY TILT SENSOR, GPS RECEIVER)	
		2	**230-4009**	1	PLUG AS-CONNECTOR (12-PIN)	
		2	**239-7356**	1	PLUG AS-CONNECTOR (12-PIN)	
		2	**243-4510**	1	RECEPTACLE AS-CONNECTOR (12-PIN)	
E		2	**125-7874**		TUBE-HEAT SHRINK (5.72-MM DIA) (20-CM)	
	4	2	**275-6842**	1	HARNESS AS-CONTROL (DISPLAY, GPS RADIO)	
		2	**167-8987**	1	PLUG AS-CONNECTOR (8-PIN)	
		2	**243-4510**	1	RECEPTACLE AS-CONNECTOR (12-PIN)	
		2	**263-6699**	1	FLANGE-CONNECTOR	
C	5	1	**306-8367**	1	HARNESS AS-CONTROL	
	6	1	**279-7609**	1	BRACKET AS	
		1	**7T-1099**	1	LINK	
	7	2	**091-9035**	1	SPACER (11X25X20-MM THK)	
	8	2	**132-5789**	1	CLIP	
	9	2	**2S-1647**	1	GROMMET	
	10	1	**4P-7428**	1	CLIP	
	11	2	**4P-7581**	1	CLIP	
M	12	1	**7X-2550**	2	BOLT (M12X1.75X110-MM)	
	13	2	**8T-4121**	2	WASHER-HARD (11X21X2.5-MM THK)	
M	14	2	**8T-4191**	1	BOLT (M10X1.5X16-MM)	
M	15	2	**8T-4196**	1	BOLT (M10X1.5X35-MM)	
	16	1	**8T-4223**	2	WASHER-HARD (13.5X25.5X3-MM THK)	

C-CHANGE FROM PREVIOUS TYPE
E-ORDER BY THE CENTIMETER
M-METRIC PART

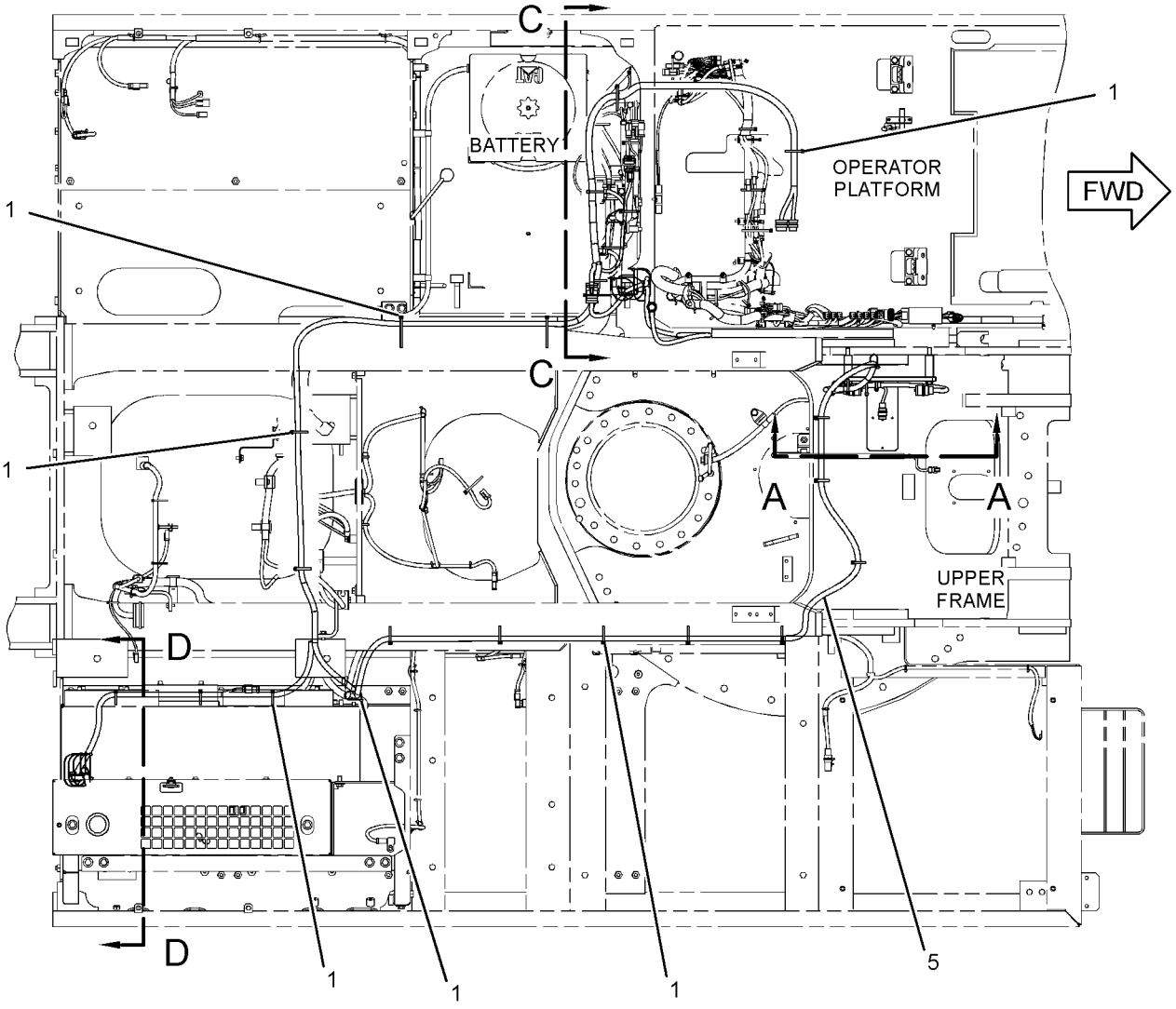

TOP VIEW

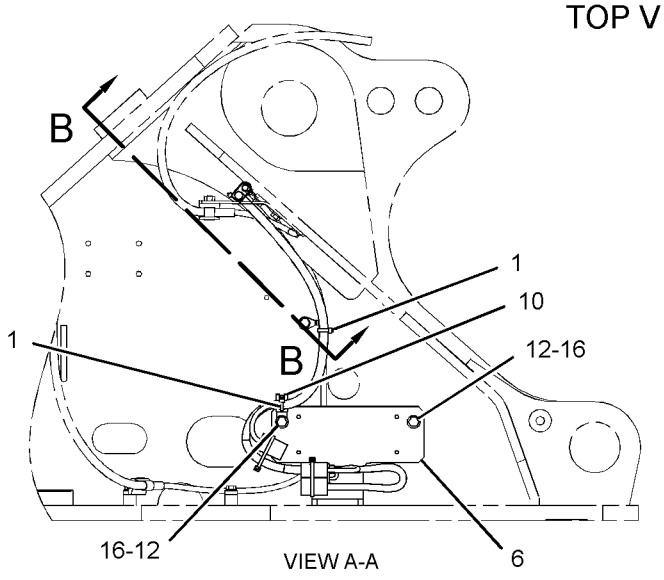

VIEW A-A

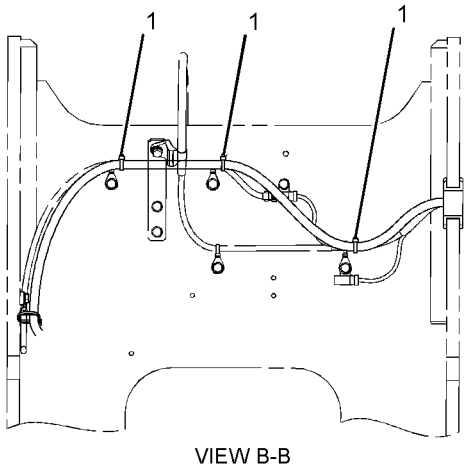

VIEW B-B

REFER TO ALL ILLUSTRATIONS OF
THIS GROUP FOR AUXILIARY VIEWS

GRAPHIC #1

g01409551

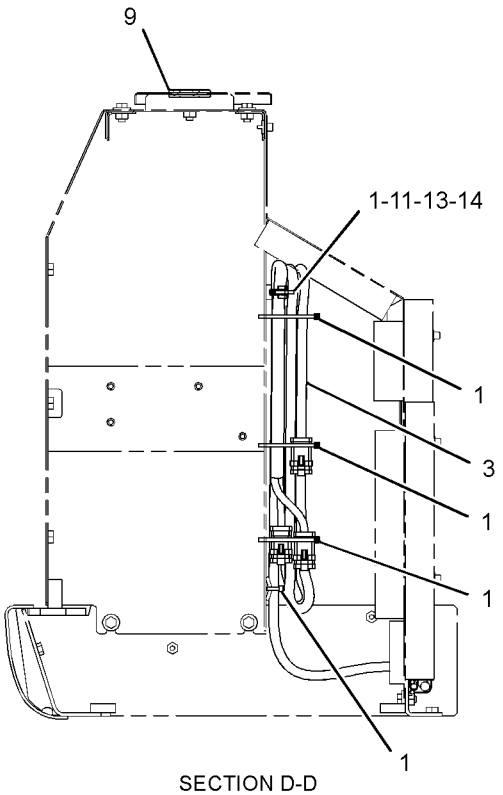

SECTION D-D

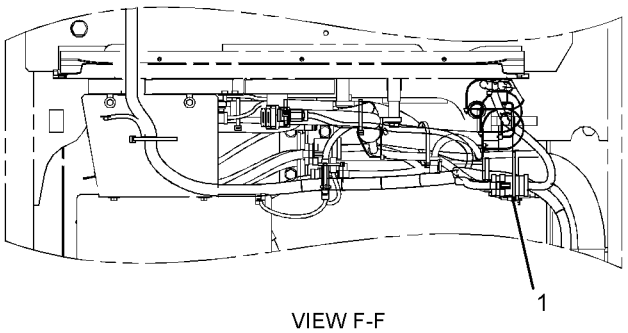

VIEW F-F

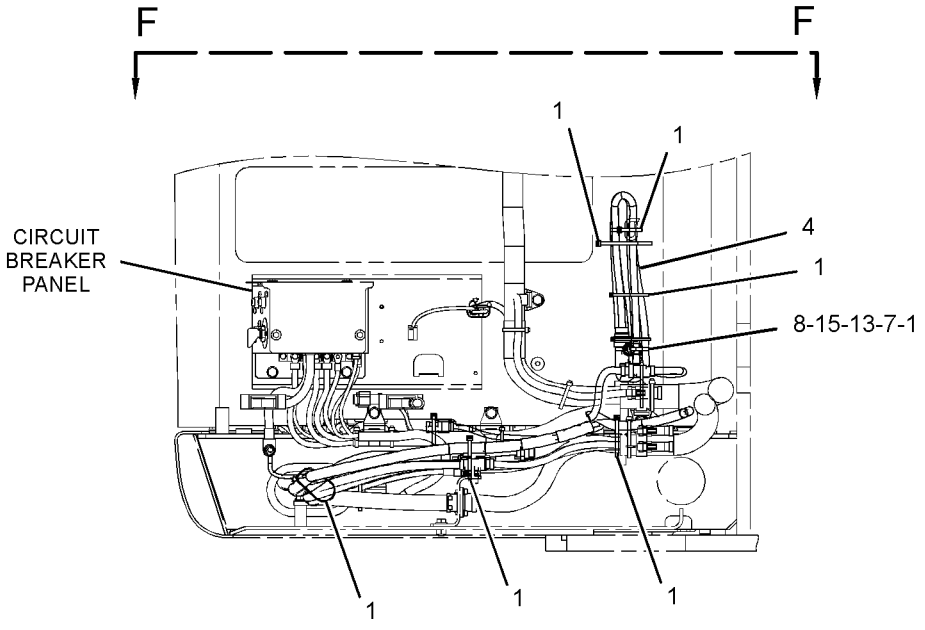

SECTION C-C

GRAPHIC #2 **<END>** g01409552

291-7459 WIRING GP-CHASSIS–FAN CLUTCH

S/N: MNB1-UP; WDK1-UP
PART OF 251-0448 WIRING GP-FAN
AN ATTACHMENT

SMCS-1408 **i02970480**

NOTE	REF NO	GRAPHIC REF	PART NUMBER	QTY	PART NAME 1 2 3 4 5 6 (PRODUCT LEVEL)	SEE PAGE
	1	1	**3S-2093**	7	STRAP-CABLE	
	2	1	**7K-1181**	5	STRAP-CABLE	
	3	1	**107-8618**	1	SENSOR GP-TEMPERATURE (AMBIENT)	
E		1	**112-4550**		SLEEVE (31-CM)	
		1	**186-3735**	3	PIN-CONNECTOR (16-GA TO 18-GA)	
		1	**102-8803**	1	KIT-RECEPTACLE (3-PIN)	
					(INCLUDES RECEPTACLE AS & WEDGE)	
	4	1	**116-0118**	1	CLIP	
	5	1	**267-8020**	1	HARNESS AS-CONTROL (FAN CLUTCH)	
		1	**3S-2093**	1	STRAP-CABLE	
		1	**155-2260**	1	KIT-CONNECTING PLUG (3-PIN)	
					(INCLUDES PLUG AS, WEDGE & INTERFACE SEAL)	
		1	**230-5010**	1	PLUG AS-CONNECTOR (6-PIN)	
		1	**243-4509**	1	RECEPTACLE AS-CONNECTOR (8-PIN)	
	6	1	**8T-4121**	1	WASHER-HARD (11X21X2.5-MM THK)	
M	7	1	**8T-4137**	1	BOLT (M10X1.5X20-MM)	

E-ORDER BY THE CENTIMETER
M-METRIC PART

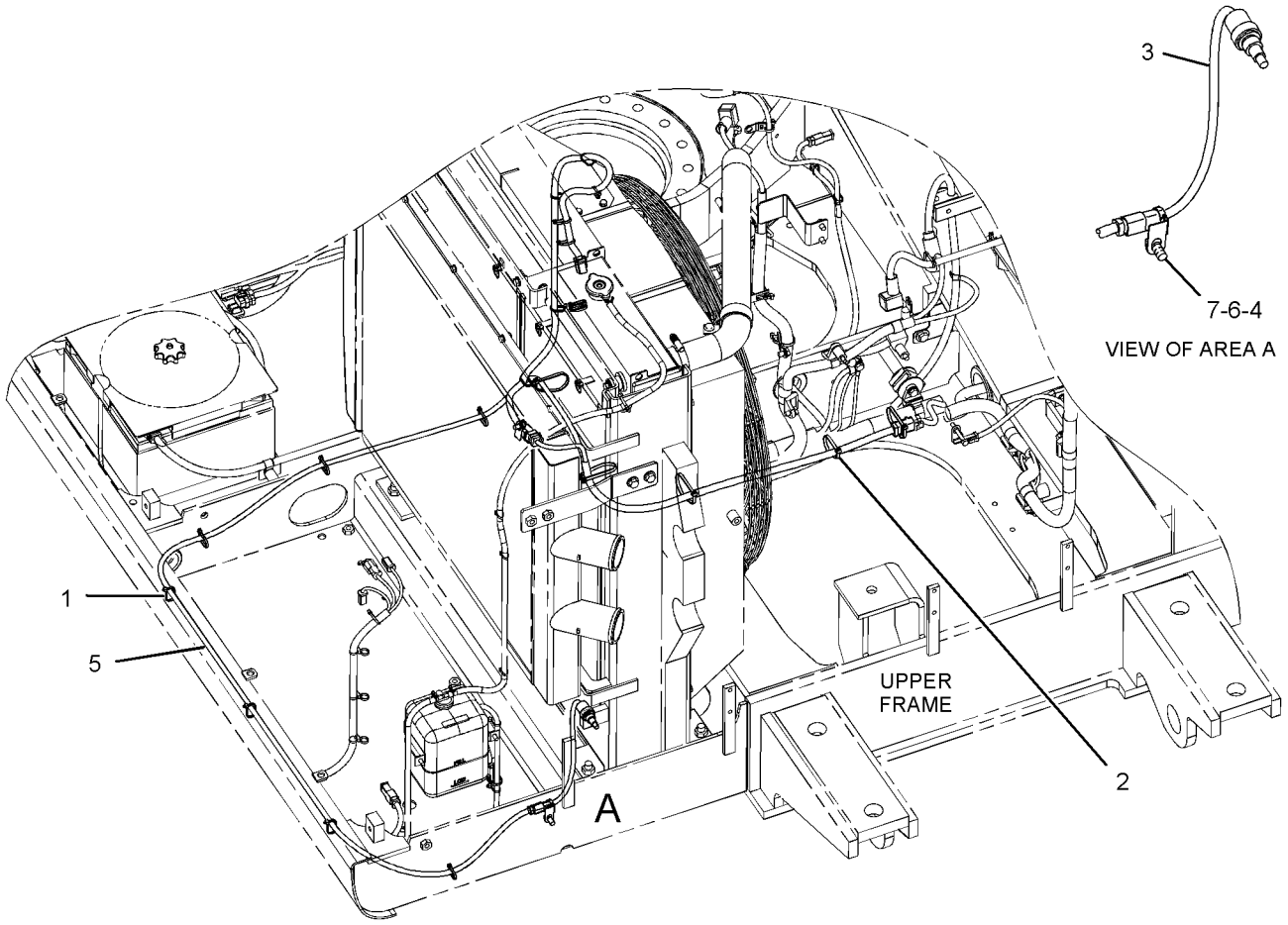

REAR VIEW
(UPPER LEFT)

GRAPHIC #1 **<END>** g01316294

251-0530 WIRING GP-COMBINED FLOW

S/N: MNB1-UP; WDK1-UP
PART OF 255-5697, 255-5702 CONTROL AR-AUXILIARY
AN ATTACHMENT

SMCS-1408 **i02593908**

NOTE	REF NO	GRAPHIC REF	PART NUMBER	QTY	PART NAME 1 2 3 4 5 6 (PRODUCT LEVEL)	SEE PAGE
C	1	1	**3S-2093**	18	STRAP-CABLE	
C	2	1	**7K-1181**	15	STRAP-CABLE	
	3	1	**111-4836**	3	CLIP	
	4	1	**116-0118**	1	CLIP	
C	5	1	**204-1611**	4	STRAP-CABLE	
	6	1	**259-5071**	2	BRACKET AS	
	7	1	**259-5075**	1	BRACKET AS	
C	8	1	**267-7968**	1	HARNESS AS-CONTROL	
		1	**155-2270**	6	KIT-CONNECTING PLUG (2-PIN)	
					(EACH INCLUDES PLUG AS, WEDGE & INTERFACE SEAL)	
		1	**230-5010**	1	PLUG AS-CONNECTOR (6-PIN)	
		1	**243-4510**	1	RECEPTACLE AS-CONNECTOR (12-PIN)	
	9	1	**283-3000**	1	BRACKET AS	
	10	1	**132-5789**	1	CLIP	
C	11	1	**156-6175**	1	CLIP	
C	12	1	**8T-4121**	8	WASHER-HARD (11X21X2.5-MM THK)	
M	13	1	**8T-4137**	3	BOLT (M10X1.5X20-MM)	
CM	14	1	**8T-4171**	1	BOLT (M6X1X12-MM)	
M	15	1	**8T-4179**	4	BOLT (M12X1.75X20-MM)	
CM	16	1	**8T-4191**	5	BOLT (M10X1.5X16-MM)	
	17	1	**8T-4223**	4	WASHER-HARD (13.5X25.5X3-MM THK)	
C	18	1	**9X-8256**	1	WASHER (6.6X12X2-MM THK)	

C-CHANGE FROM PREVIOUS TYPE
M-METRIC PART

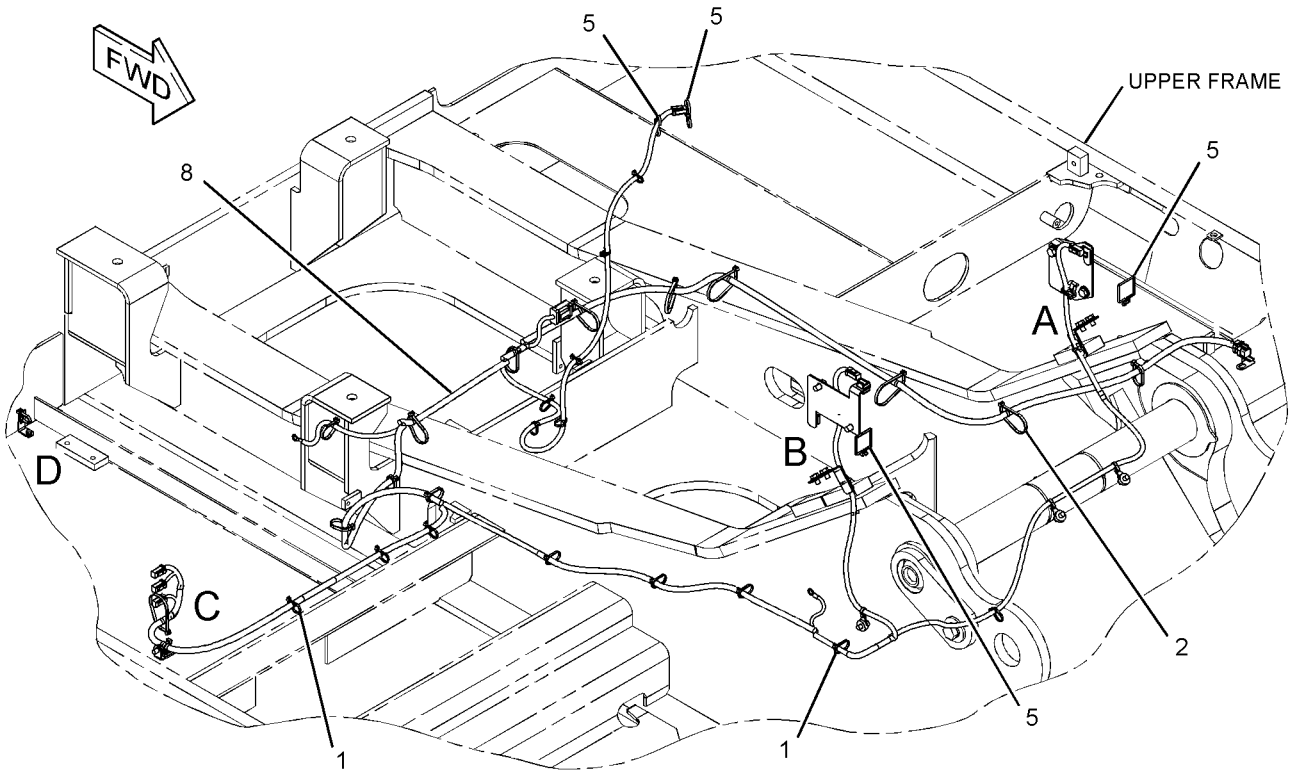

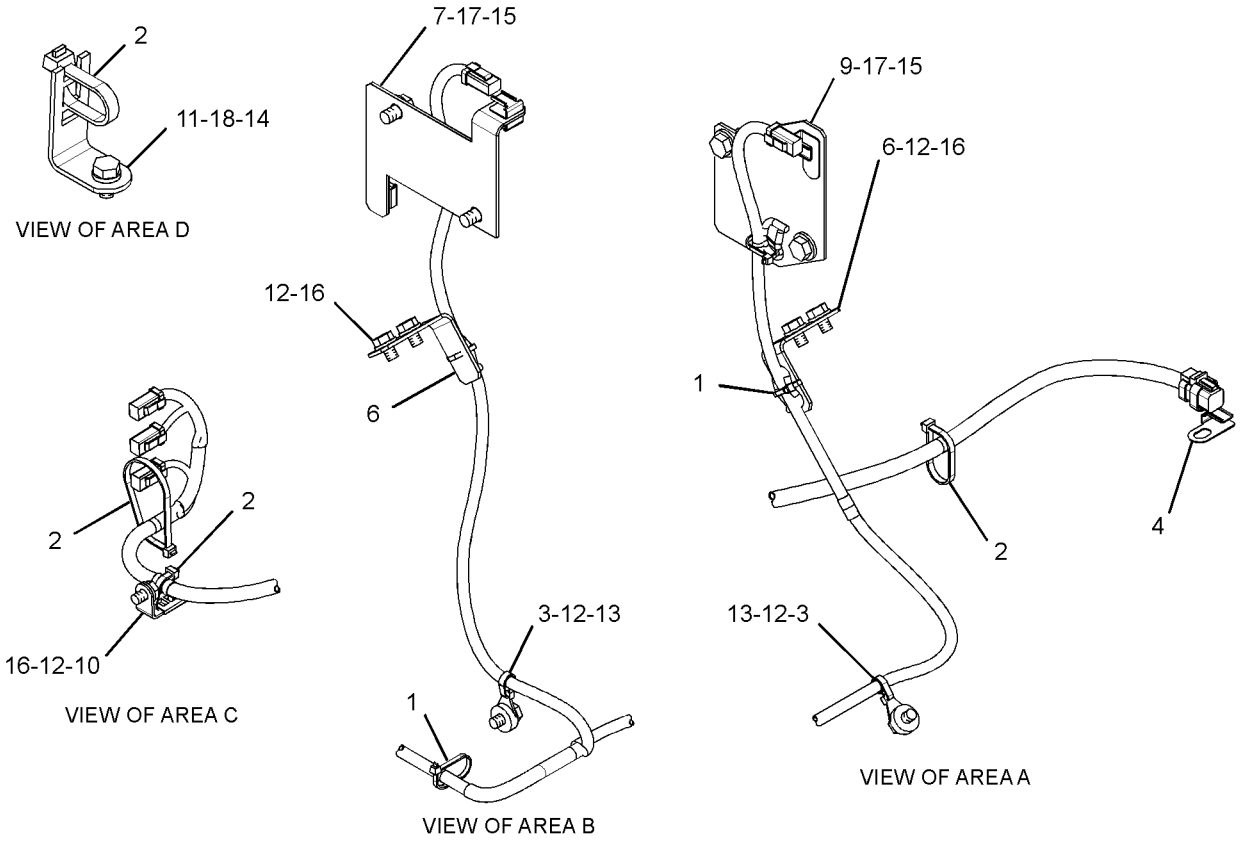

GRAPHIC #1 **<END>** g01327029

267-7751 WIRING GP-COMMUNICATION—PRODUCT LINK 321SR

S/N: MNB1-UP; WDK1-UP
PART OF 314-3529 INSTALLATION AR-COMMUNICATION
AN ATTACHMENT

SMCS-1408 **i03079190**

NOTE	REF NO	GRAPHIC REF	PART NUMBER	QTY	PART NAME 1 2 3 4 5 6 (PRODUCT LEVEL)	SEE PAGE
	1	1	**3S-2093**	5	STRAP-CABLE	
	2	1	**7K-1181**	3	STRAP-CABLE	
	3	1	**9X-3495**	1	CLIP AS	
	4	1	**111-4837**	1	CLIP	
	5	1	**116-0118**	3	CLIP	
	6	1	**259-4887**	1	HARNESS AS-CONTROL (PRODUCT LINK)	
	7	1	**259-4940**	1	HARNESS AS-WIRING (SERVICE CONNECTOR)	
	8	1	**267-7790**	1	HARNESS AS-CONTROL (PRODUCT LINK, ANTENNA)	
	10	1	**132-5789**	1	CLIP	
	11	1	**4I-7889**	1	SPACER (11X25X45-MM THK)	
	12	1	**4P-7581**	2	CLIP	
	13	1	**8T-4121**	4	WASHER-HARD (11X21X2.5-MM THK)	
M	14	1	**8T-4136**	2	BOLT (M10X1.5X25-MM)	
M	15	1	**8T-4137**	2	BOLT (M10X1.5X20-MM)	
M	17	1	**8T-4191**	1	BOLT (M10X1.5X16-MM)	
M	18	1	**8T-5005**	1	BOLT (M10X1.5X70-MM)	

M-METRIC PART

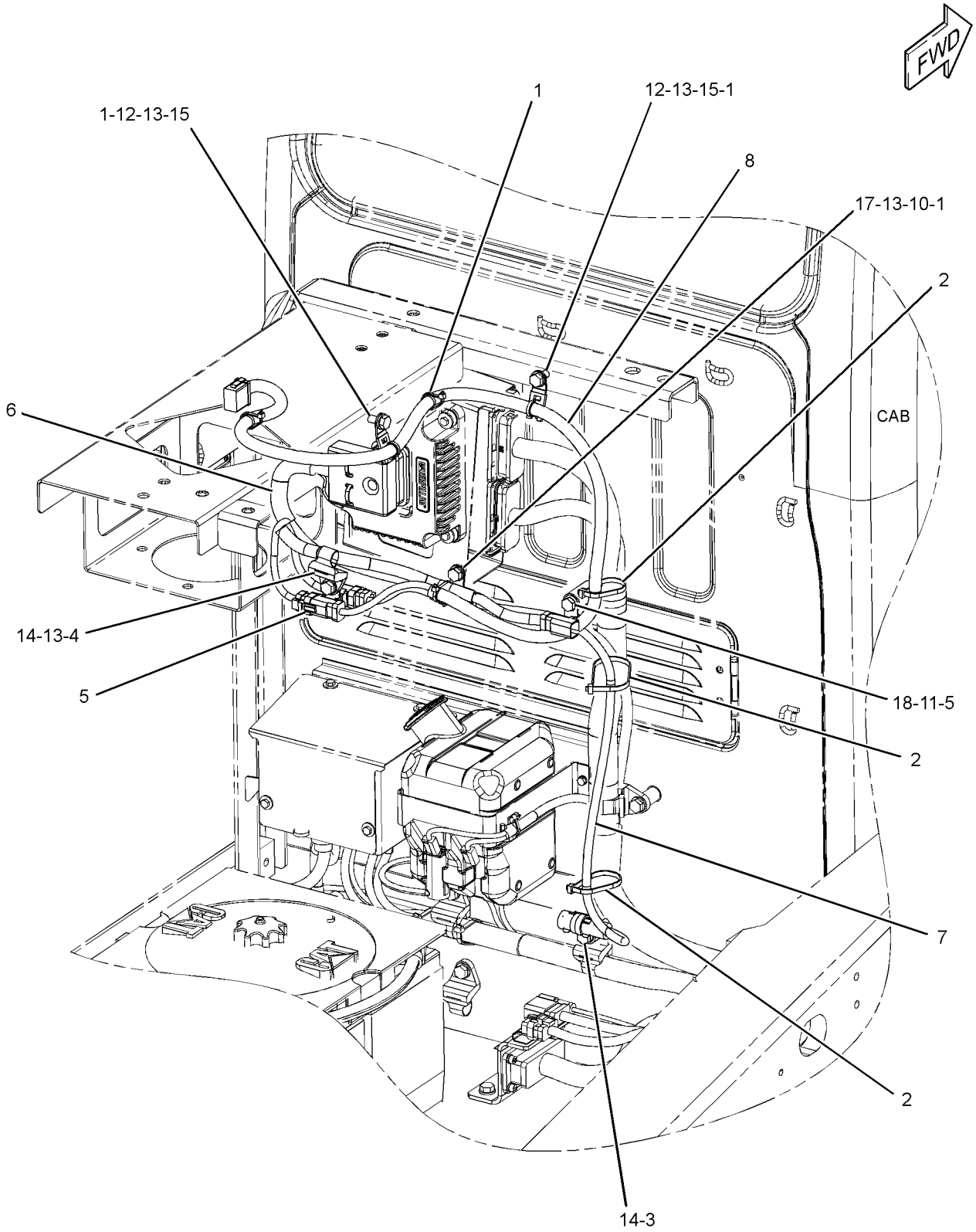

GRAPHIC #1 **<END>** g01505343

267-7752 WIRING GP-COMMUNICATION—PRODUCT LINK 121SR

S/N: MNB1-UP; WDK1-UP
PART OF 314-3530 INSTALLATION AR-COMMUNICATION
AN ATTACHMENT

SMCS-1408 **i02998691**

NOTE	REF NO	GRAPHIC REF	PART NUMBER	QTY	PART NAME 1 2 3 4 5 6 (PRODUCT LEVEL)	SEE PAGE
	1	1	**3S-2093**	5	STRAP-CABLE	
	2	1	**7K-1181**	2	STRAP-CABLE	
	3	1	**9X-3495**	1	CLIP AS	
	4	1	**116-0118**	2	CLIP	
	5	1	**259-4940**	1	HARNESS AS-WIRING (SERVICE CONNECTOR)	
	6	1	**267-7790**	1	HARNESS AS-CONTROL (PRODUCT LINK, ANTENNA)	
M	7	1	**8T-5005**	1	BOLT (M10X1.5X70-MM)	
	8	1	**4I-7889**	1	SPACER (11X25X45-MM THK)	
	9	1	**4P-7581**	2	CLIP	
	10	1	**8T-4121**	2	WASHER-HARD (11X21X2.5-MM THK)	
M	11	1	**8T-4137**	2	BOLT (M10X1.5X20-MM)	
CM	12	1	**8T-4136**	1	BOLT (M10X1.5X25-MM)	

C-CHANGE FROM PREVIOUS TYPE
M-METRIC PART

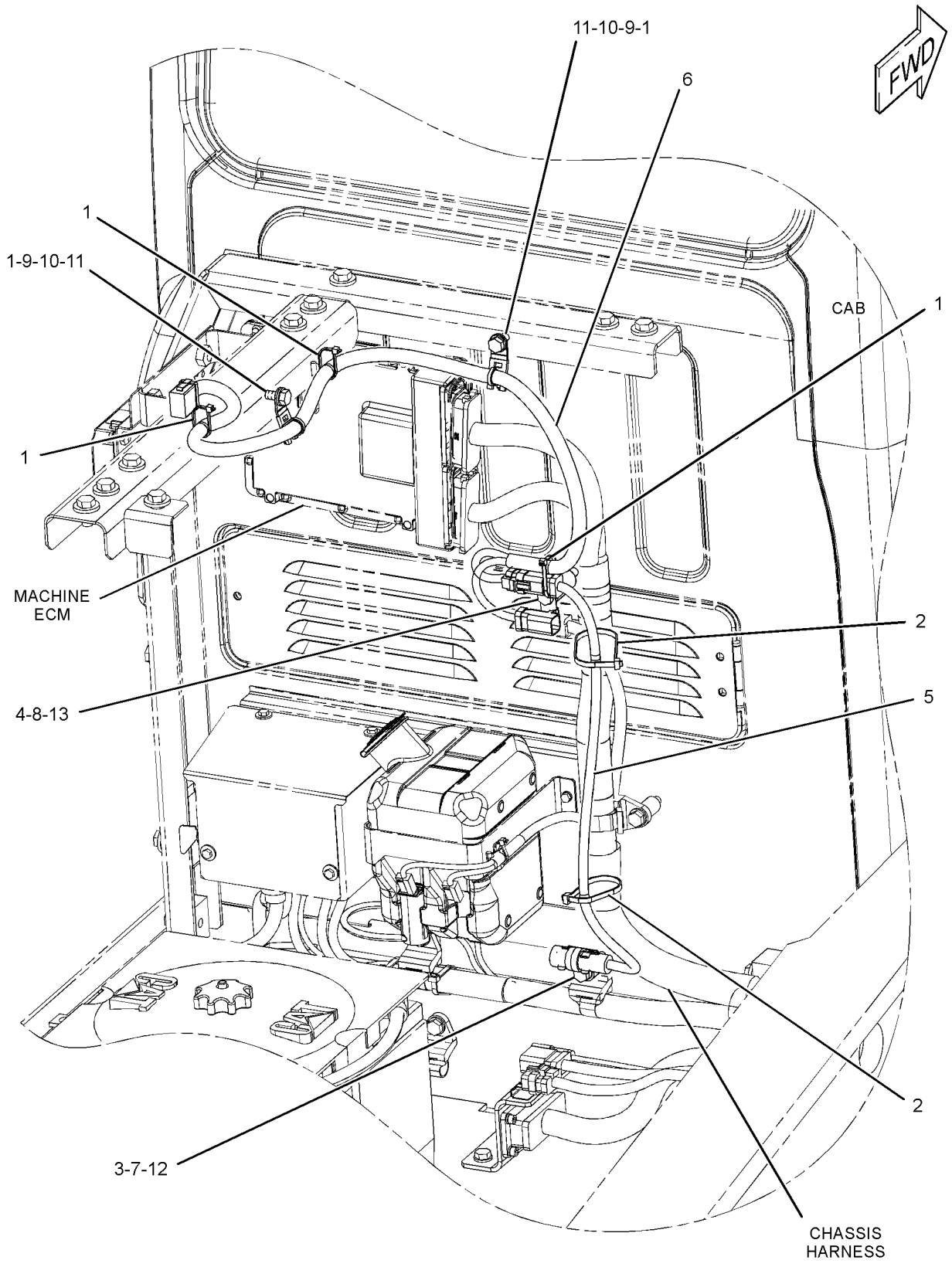

GRAPHIC #1 **<END>** g01220819

283-2761 WIRING GP-COMMUNICATION

S/N: MNB1-UP; WDK1-UP
AN ATTACHMENT

SMCS-1408 **i03084913**

NOTE	REF NO	GRAPHIC REF	PART NUMBER	QTY	PART NAME 1 2 3 4 5 6 (PRODUCT LEVEL)	SEE PAGE
	1	1	**3S-2093**	3	STRAP-CABLE	
	2	1	**4I-7889**	1	SPACER (11X25X45-MM THK)	
	3	1	**7K-1181**	10	STRAP-CABLE	
	4	1	**116-0118**	1	CLIP	
	5	1	**149-5050**	1	RELAY (24-VOLT) (START CONTROL)	
	6	1	**283-2762**	1	HARNESS AS-CONTROL	
M	7	1	**5C-2890**	1	NUT (M6X1-THD)	
M	8	1	**8T-5005**	1	BOLT (M10X1.5X70-MM)	
	9	1	**9X-8256**	1	WASHER (6.6X12X2-MM THK)	

M-METRIC PART

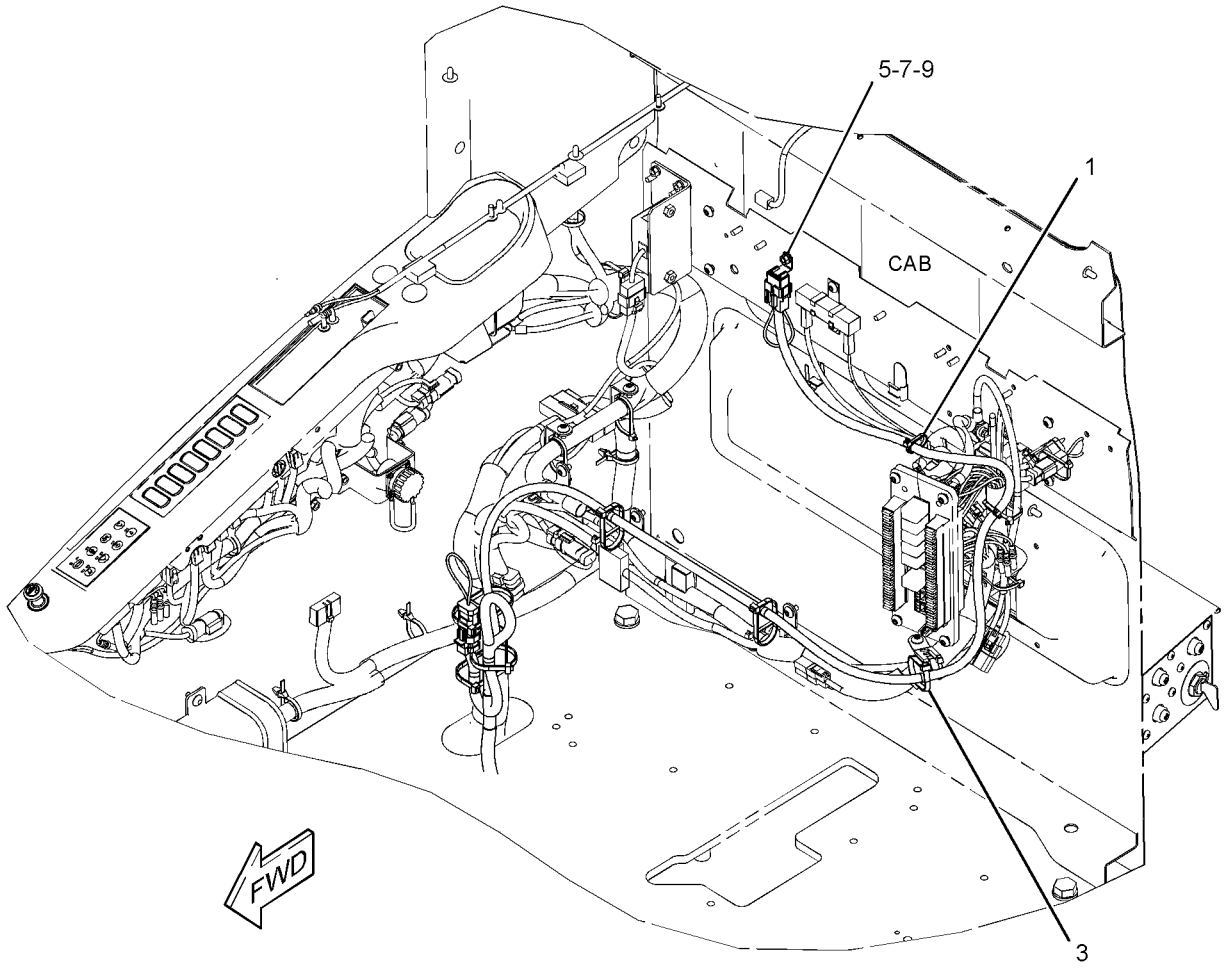

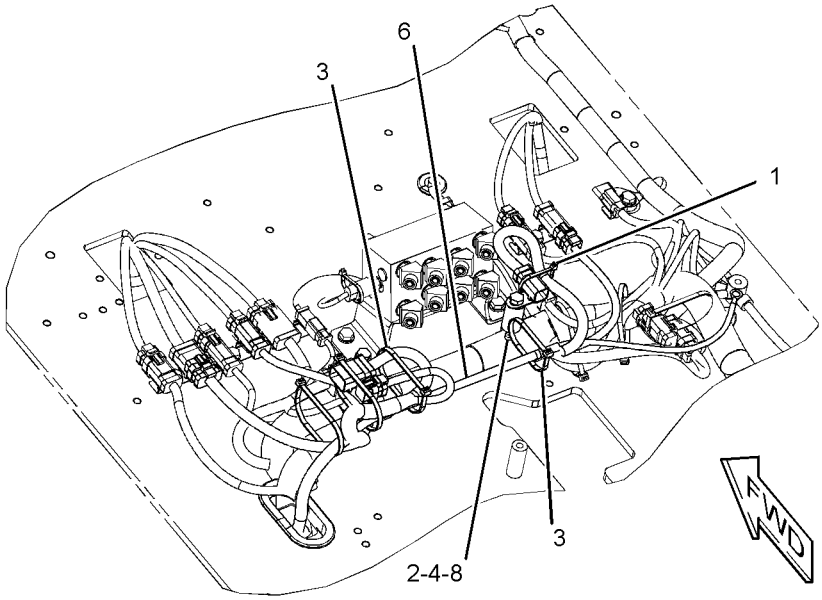

GRAPHIC #1 **<END>** g01571474

231-1836 WIRING GP-CONSOLE–LH

S/N: MNB1-UP; WDK1-UP

PART OF 251-0433 WIRING GP-CONSOLE

SMCS-1408 **i02348297**

NOTE	REF NO	GRAPHIC REF	PART NUMBER	QTY	PART NAME 1 2 3 4 5 6 (PRODUCT LEVEL)	SEE PAGE
	1	1	**3S-2093**	2	STRAP-CABLE	
	2	1	**7K-1181**	1	STRAP-CABLE	
	3	1	**163-6795**	2	STRAP-CABLE	
	4	1	**251-0580**	1	HARNESS AS-CONSOLE (LH)	
		1	**155-2260**	1	KIT-CONNECTING PLUG (3-PIN)	
					(INCLUDES PLUG AS, WEDGE & INTERFACE SEAL)	
		1	**230-4011**	1	PLUG AS-CONNECTOR (2-PIN)	
		1	**230-5010**	1	PLUG AS-CONNECTOR (6-PIN)	
		1	**239-7352**	1	PLUG AS-CONNECTOR (6-PIN)	
		1	**243-4505**	1	RECEPTACLE AS-CONNECTOR (2-PIN)	
		1	**243-4508**	1	RECEPTACLE AS-CONNECTOR (6-PIN)	
		1	**247-2693**	1	RECEPTACLE AS-CONNECTOR (6-PIN)	

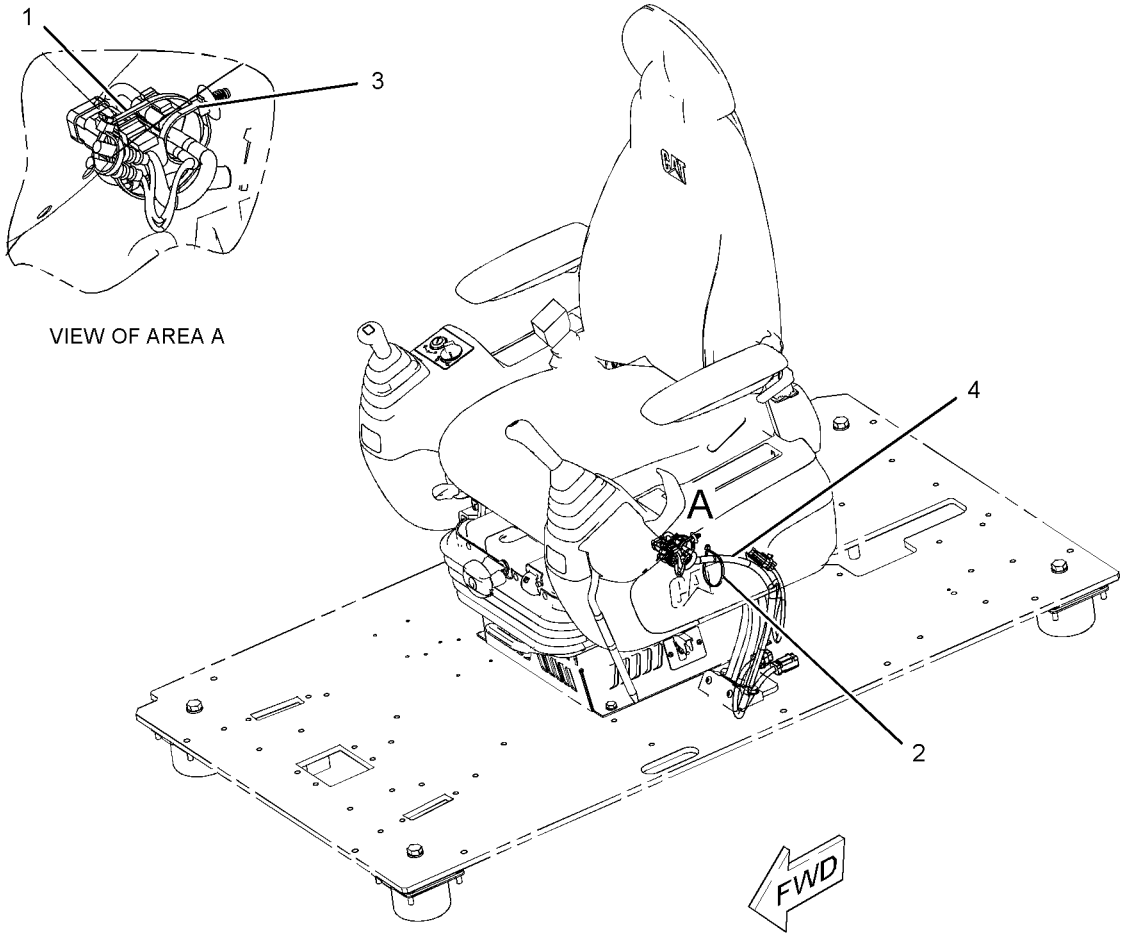

GRAPHIC #1 **<END>** g01150799

ELECTRICAL AND STARTING SYSTEM

251-0433 WIRING GP-CONSOLE

S/N: MNB1-UP; WDK1-UP

PART OF 229-9072 OPERATOR AR

SMCS-1408 **i02706845**

NOTE	PART NUMBER	QTY	PART NAME 1 2 3 4 5 6 (PRODUCT LEVEL)	SEE PAGE
Y	*231-1836*	1	WIRING GP-CONSOLE (LH)	299
Y	*251-0435*	1	WIRING GP-CONSOLE (RH)	301

Y-SEPARATE ILLUSTRATION

<END>

251-0435 WIRING GP-CONSOLE–RH

S/N: MNB1-UP; WDK1-UP

PART OF 251-0433 WIRING GP-CONSOLE

SMCS-1408 **i02553916**

NOTE	REF NO	GRAPHIC REF	PART NUMBER	QTY	PART NAME 1 2 3 4 5 6 (PRODUCT LEVEL)	SEE PAGE
	1	1	**3S-2093**	3	STRAP-CABLE	
	2	1	**7K-1181**	1	STRAP-CABLE	
	3	1	**283-3074**	1	SWITCH AS-TOGGLE (AUTO/MANUAL ENG SPEED CONTROL)	
	4	1	**163-6711**	1	SWITCH AS-TOGGLE (MANUAL ENGINE SPEED CONTROL)	
	5	1	**163-6795**	3	STRAP-CABLE	
	6	1	**251-0602**	1	BRACKET	
	7	1	**259-4877**	1	HARNESS AS-CONSOLE (RH)	
		1	**102-8806**	1	KIT-RECEPTACLE (8-PIN)	
					(INCLUDES RECEPTACLE AS & WEDGE)	
		1	**3S-2093**	10	STRAP-CABLE	
		1	**7Y-3967**	2	TERMINAL AS	
		1	**7Y-3963**	1	TERMINAL (RECEPTACLE)	
		1	**7Y-3965**	1	TUBE (RECEPTACLE TERMINAL)	
		1	**102-7964**	1	CONNECTOR-PLUG	
		1	**102-7965**	14	TERMINAL (FEMALE)	
E		1	**125-7874**		TUBE-HEAT SHRINK (5.72-MM DIA) (10-CM)	
E		1	**125-7875**		TUBE-HEAT SHRINK (7.44-MM DIA) (10-CM)	
		1	**155-2265**	1	KIT-CONNECTING PLUG (8-PIN)	
					(INCLUDES PLUG AS, WEDGE & INTERFACE SEAL)	
		1	**9X-3401**	2	PIN-CONNECTOR (16-GA TO 18-GA)	
					–OR–	
		1	**126-1767**	2	PIN-CONNECTOR (14-GA)	
		1	**230-4009**	1	PLUG AS-CONNECTOR (12-PIN)	
		1	**230-4011**	1	PLUG AS-CONNECTOR (2-PIN)	
		1	**230-5008**	1	PLUG AS-CONNECTOR (4-PIN)	
		1	**230-5010**	1	PLUG AS-CONNECTOR (6-PIN)	
		1	**231-2295**	1	PLUG AS-CONNECTOR (8-PIN)	
		1	**239-7352**	1	PLUG AS-CONNECTOR (6-PIN)	
		1	**243-4505**	1	RECEPTACLE AS-CONNECTOR (2-PIN)	
		1	**243-4510**	1	RECEPTACLE AS-CONNECTOR (12-PIN)	
		1	**247-2693**	1	RECEPTACLE AS-CONNECTOR (6-PIN)	
M	8	1	**9X-2042**	3	SCREW-TRUSS HEAD (M6X1X12-MM)	

E-ORDER BY THE CENTIMETER
M-METRIC PART

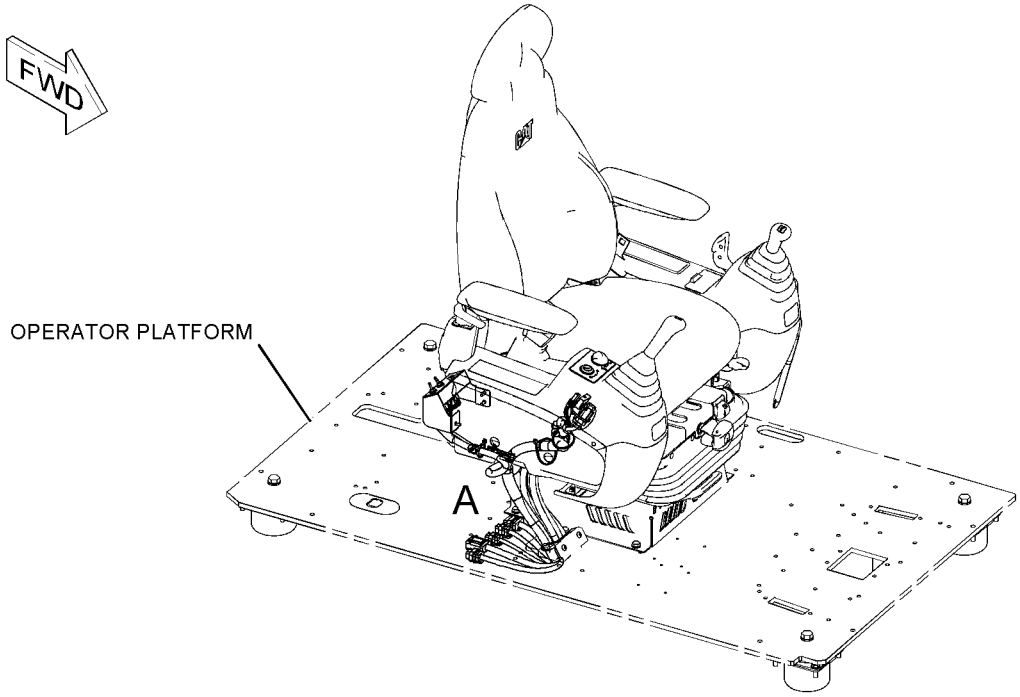

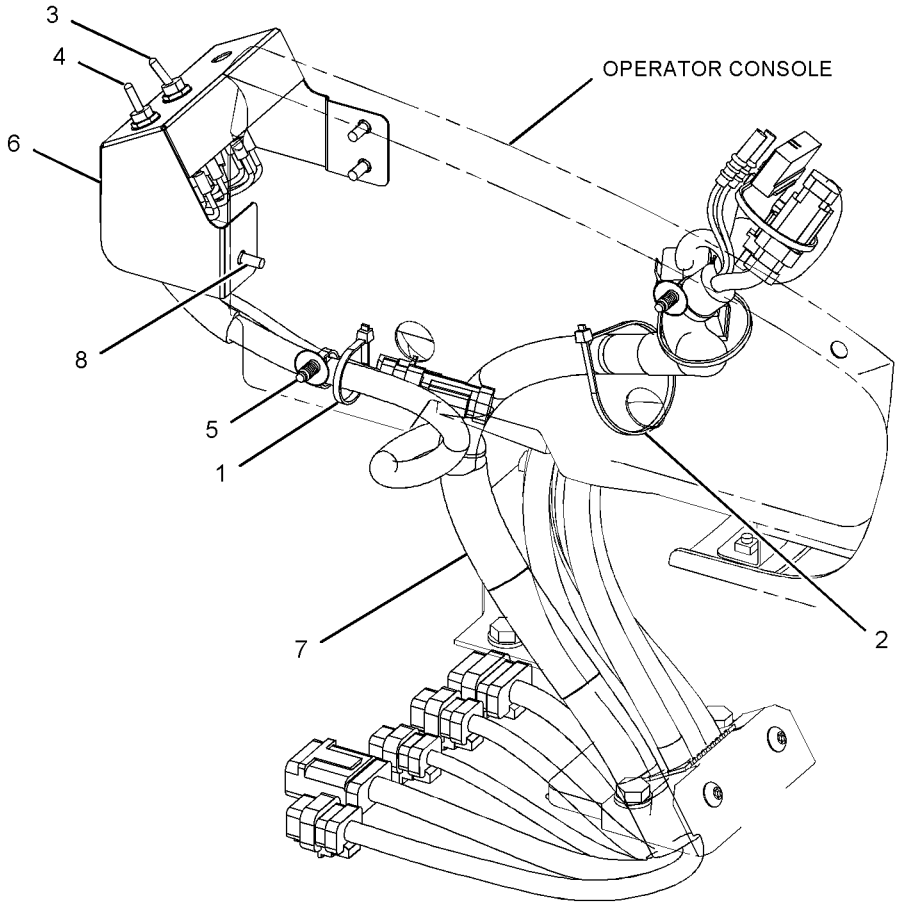

VIEW OF AREA A

GRAPHIC #1 **<END>** g01231684

251-0482 WIRING GP-CONVERTER

S/N: MNB1-UP; WDK1-UP
12-VOLT, 7-AMPERE POWER SUPPLY
CANNOT BE USED WITH 251-0485–PAGE 304
AN ATTACHMENT

SMCS-1421 **i02559417**

NOTE	REF NO	GRAPHIC REF	PART NUMBER	QTY	PART NAME 1 2 3 4 5 6 (PRODUCT LEVEL)	SEE PAGE
	1	1	**7K-1181**	2	STRAP-CABLE	
	2	1	**121-0987**	1	SOCKET (12-VOLT, 7-AMPERE)	
	3	1	**283-2783**	1	CONVERTER-POWER (24-VOLT TO 12-VOLT)	
	4	1	**251-0483**	1	BRACKET	
	5	1	**8T-4121**	2	WASHER-HARD (11X21X2.5-MM THK)	
M	6	1	**8T-4136**	2	BOLT (M10X1.5X25-MM)	
M	7	1	**8T-4171**	4	BOLT (M6X1X12-MM)	
	8	1	**9X-8256**	4	WASHER (6.6X12X2-MM THK)	

M-METRIC PART

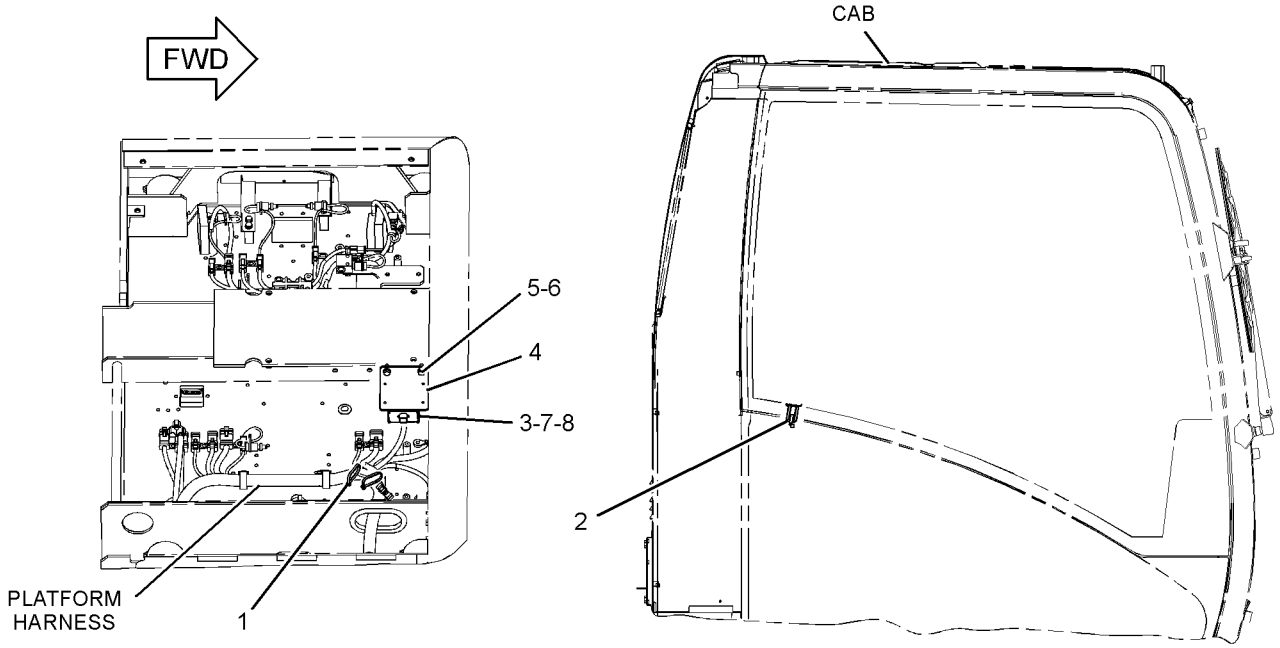

BOTTOM VIEW (PLATFORM)

RIGHT SIDE VIEW

GRAPHIC #1 **<END>** g01155726

251-0485 WIRING GP-CONVERTER

S/N: MNB1-UP; WDK1-UP
12-VOLT, 7-AMPERE X2 POWER SUPPLY
CANNOT BE USED WITH 251-0482—PAGE 303
AN ATTACHMENT

SMCS-1421 **i02559437**

NOTE	REF NO	GRAPHIC REF	PART NUMBER	QTY	PART NAME 1 2 3 4 5 6 (PRODUCT LEVEL)	SEE PAGE
	1	1	**121-0987**	2	SOCKET (12-VOLT, 7-AMPERE)	
	2	1	**283-2783**	2	CONVERTER-POWER (24-VOLT TO 12-VOLT)	
	3	1	**251-0483**	2	BRACKET	
	4	1	**8T-4121**	4	WASHER-HARD (11X21X2.5-MM THK)	
M	5	1	**8T-4136**	4	BOLT (M10X1.5X25-MM)	
M	6	1	**8T-4171**	8	BOLT (M6X1X12-MM)	
	7	1	**9X-8256**	8	WASHER (6.6X12X2-MM THK)	

M-METRIC PART

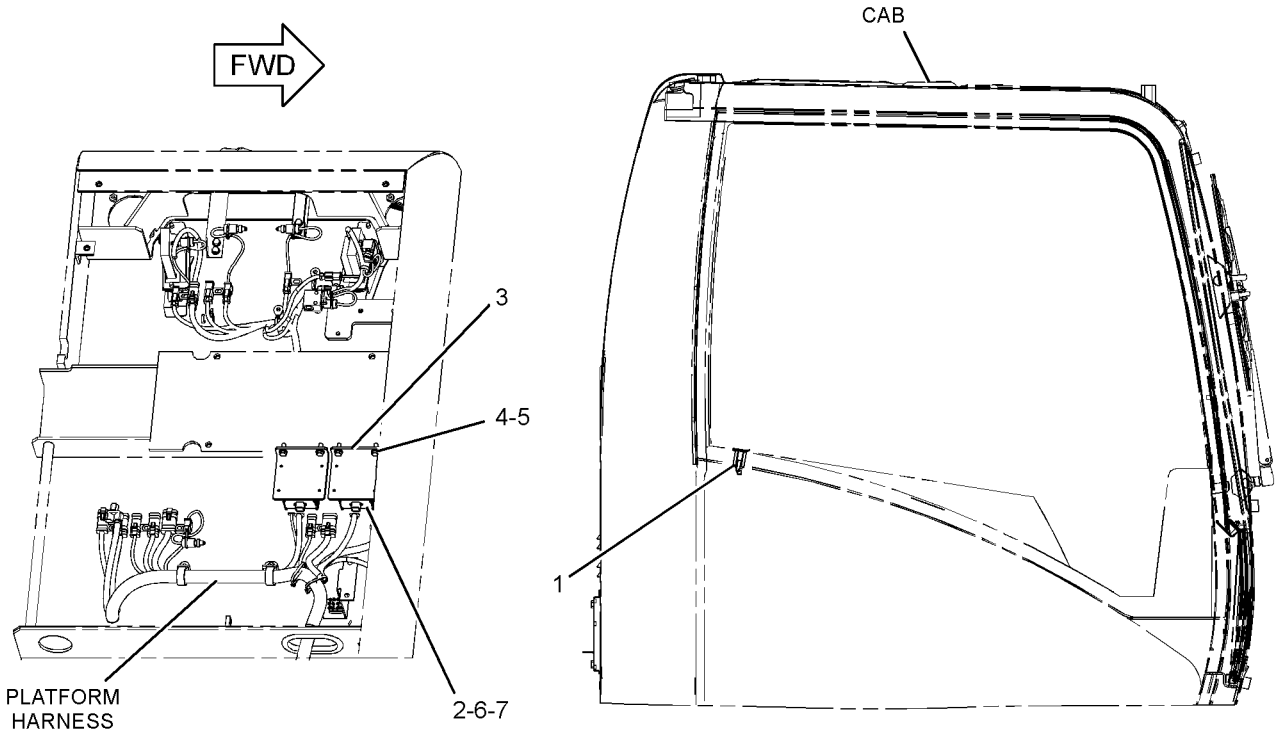

GRAPHIC #1 **<END>** g01155779

198-2714 WIRING GP-ENGINE

S/N: KHX4087-UP

PART OF 224-9842, 290-0754, 290-0755, 290-0756 ENGINE AR-COMPLETE

ALSO AN ATTACHMENT

SMCS-1408 **i02953266**

NOTE	REF NO	GRAPHIC REF	PART NUMBER	QTY	PART NAME 1 2 3 4 5 6 (PRODUCT LEVEL)	SEE PAGE
	1	1	**3S-2093**	18	STRAP-CABLE	
	2	1	**4P-5918**	1	CLIP	
	3	1	**105-1797**	7	MOUNT	
	4	1	**198-2713**	1	HARNESS AS-ENGINE (ELECTRONIC CONTROL MODULE)	
	5	1	**206-1345**	2	STRAP-CABLE	
	6	1	**222-5917**	1	HARNESS AS-ENGINE (FUEL INJECTION)	
	7	1	**4P-8134**	1	CLIP	
M	8	1	**6V-2317**	1	BOLT (M8X1.25X30-MM)	
	9	1	**9M-1974**	1	WASHER-HARD (8.8X16X2-MM THK)	

M-METRIC PART

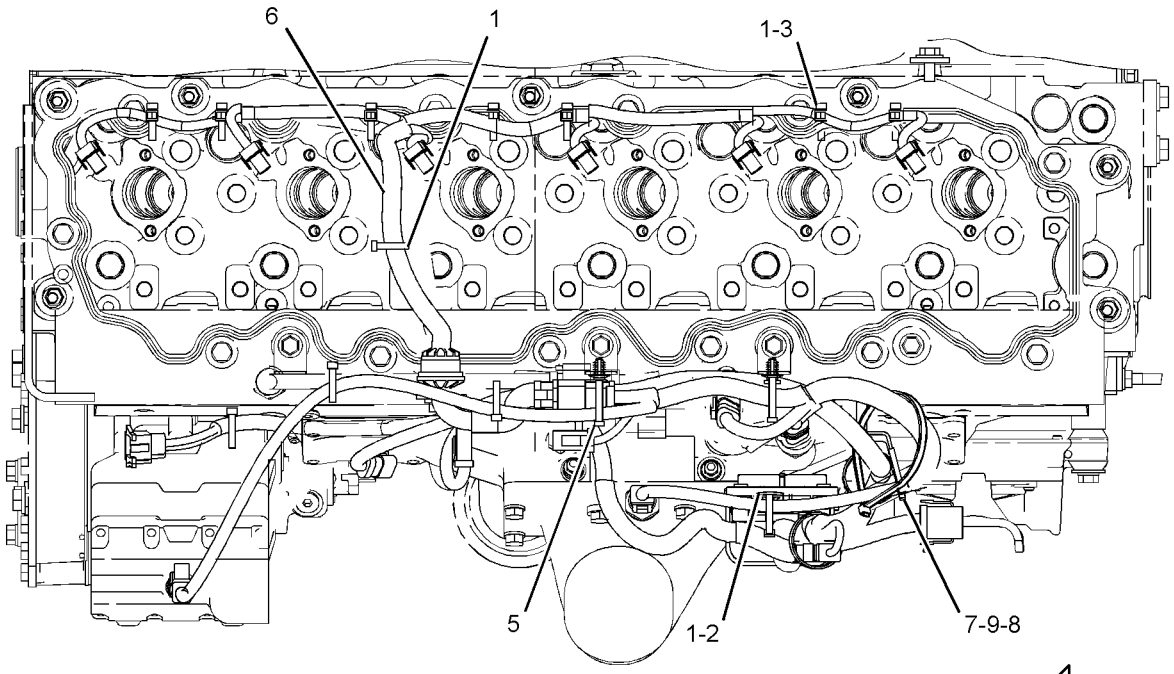

TOP VIEW

FWD

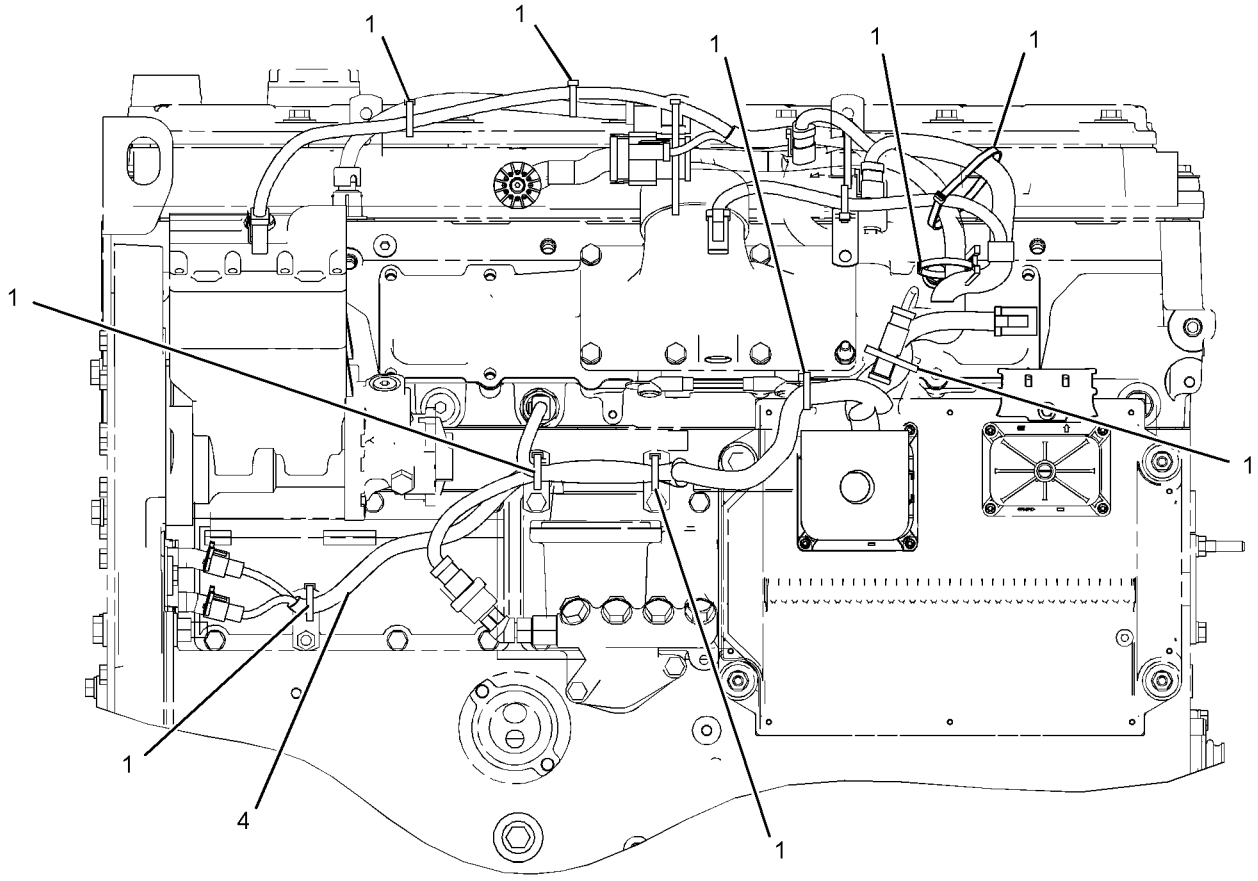

LEFT SIDE VIEW

GRAPHIC #1

<END>

g01175334

251-0448 WIRING GP-FAN–FAN CLUTCH

S/N: MNB1-UP; WDK1-UP
PART OF 229-1787 COOLING AR-HIGH AMBIENT TEMP
AN ATTACHMENT

SMCS-1408 **i02970460**

NOTE	PART NUMBER	QTY	PART NAME 1 2 3 4 5 6 (PRODUCT LEVEL)	SEE PAGE
Y	*291-7459*	1	WIRING GP-CHASSIS	290
Y	*291-7460*	1	WIRING GP-FAN (FAN CLUTCH)	308

Y-SEPARATE ILLUSTRATION

<END>

291-7460 WIRING GP-FAN–FAN CLUTCH

S/N: MNB1-UP; WDK1-UP
PART OF 251-0448 WIRING GP-FAN
AN ATTACHMENT

SMCS-1408 **i02970462**

NOTE	REF NO	GRAPHIC REF	PART NUMBER	QTY	PART NAME 1 2 3 4 5 6 (PRODUCT LEVEL)	SEE PAGE
	1	1	**3S-2093**	9	STRAP-CABLE	
	2	1	**116-0118**	1	CLIP	
	3	1	**275-6911**	1	HARNESS AS-CONTROL	
		1	**155-2274**	1	KIT-CONNECTING PLUG (6-PIN)	
					(INCLUDES PLUS AS, WEDGE & INTERFACE SEAL)	
		1	**243-4508**	1	RECEPTACLE AS-CONNECTOR (6-PIN)	
	4	1	**8T-4121**	1	WASHER-HARD (11X21X2.5-MM THK)	
M	5	1	**8T-4191**	1	BOLT (M10X1.5X16-MM)	

M-METRIC PART

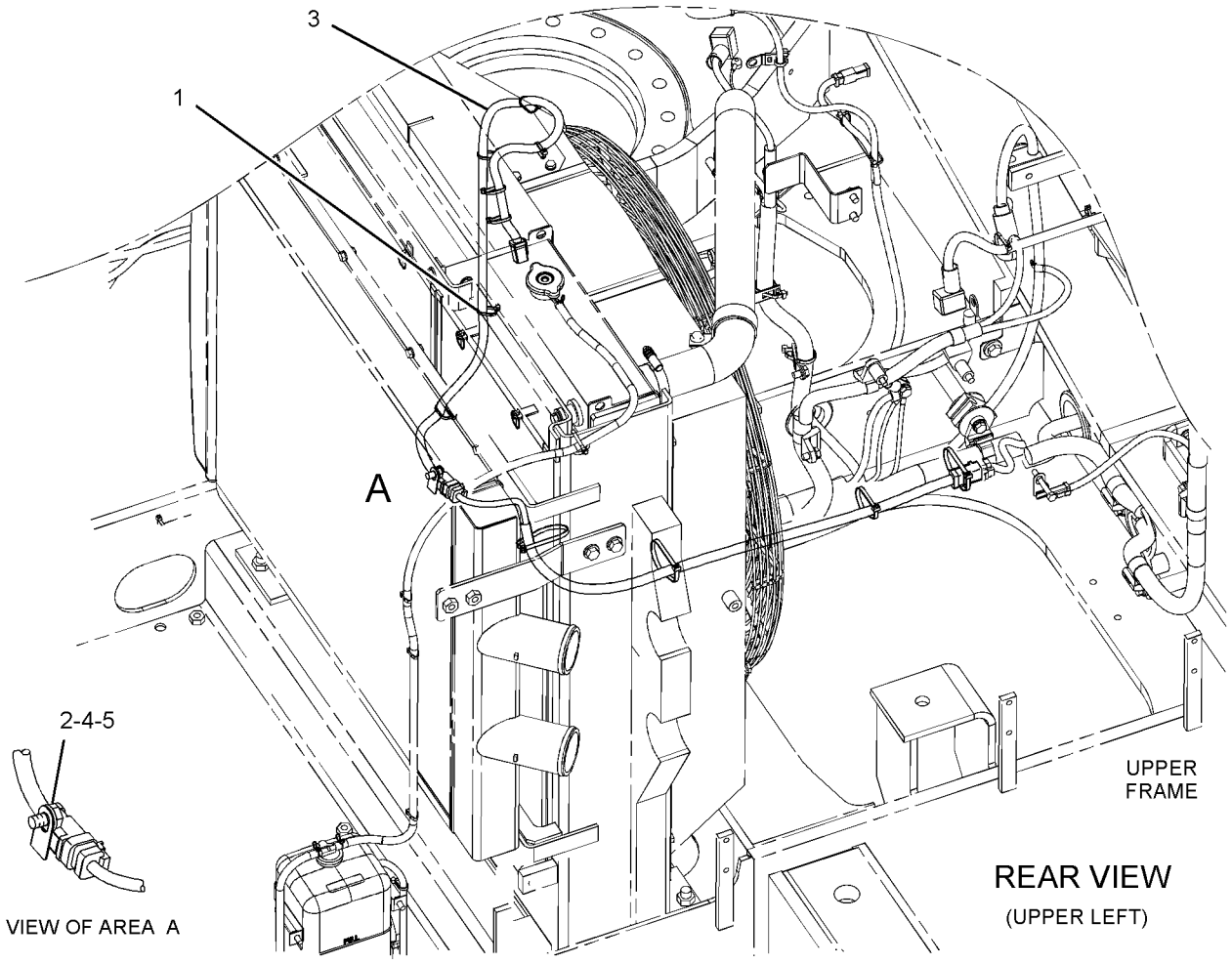

GRAPHIC #1 **<END>** g01316171

259-4965 WIRING GP-FINE SWING

S/N: MNB1-UP; WDK1-UP

PART OF 314-3652, 314-3653 CHASSIS AR

SMCS-1408 **i02926845**

NOTE	REF NO	GRAPHIC REF	PART NUMBER	QTY	PART NAME 1 2 3 4 5 6 (PRODUCT LEVEL)	SEE PAGE
	1	1	**7Y-8109**	1	BRACKET AS	
	2	1	**111-4836**	6	CLIP	
	3	1	**111-4837**	2	CLIP	
	4	1	**291-7551**	1	HARNESS AS-MOTOR (SWING MOTOR CONTROL)	
	5	1	**8T-4121**	7	WASHER-HARD (11X21X2.5-MM THK)	
M	6	1	**8T-4137**	6	BOLT (M10X1.5X20-MM)	
M	7	1	**8T-4195**	1	BOLT (M10X1.5X30-MM)	

M-METRIC PART

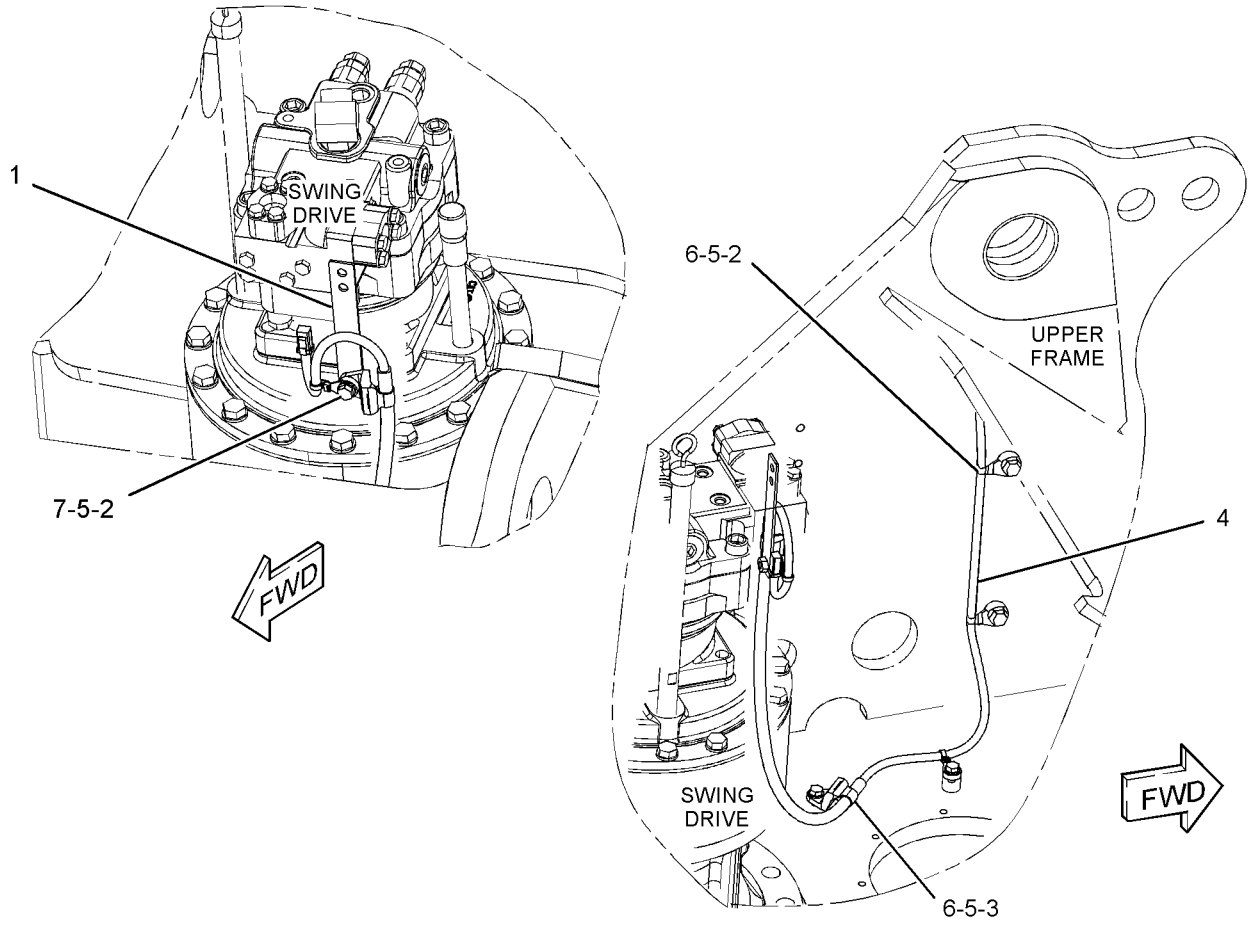

GRAPHIC #1 **<END>** g01309729

238-1570 WIRING GP-FUEL SYSTEM–REFUELING

S/N: MNB1-UP; WDK1-UP
PART OF 229-1784 PUMP AR-FUEL TRANSFER
AN ATTACHMENT

SMCS-1408 **i03087780**

NOTE	REF NO	GRAPHIC REF	PART NUMBER	QTY	PART NAME 1 2 3 4 5 6 (PRODUCT LEVEL)	SEE PAGE
	1	1	**3S-2093**	16	STRAP-CABLE	
	2	1	**9X-3495**	1	CLIP AS	
	3	1	**149-5050**	1	RELAY (24-VOLT) (REFUELING PUMP, STOP)	
	3A	1	**149-5050**	1	RELAY (24-VOLT) (REFUELING PUMP, START)	
	4	1	**213-0772**	1	SWITCH AS-MAGNETIC (24-VOLT) (MAIN RELAY)	
	5	1	**238-1579**	1	HARNESS AS-PUMP (REFUELING)	
C	6	1	**319-1335**	1	HARNESS AS-WIRING	
Y	7	1	**238-1594**	1	SWITCH GP-PUSH BUTTON (REFUELING PUMP, START)	255
Y	8	1	**238-1596**	1	SWITCH GP-PUSH BUTTON (REFUELING PUMP, STOP)	256
M	9	1	**096-2591**	2	SCREW-MACHINE (M5X0.8X35-MM)	
M	10	1	**7X-2619**	2	BOLT (M6X1X10-MM)	
C	11	1	**8T-0328**	2	WASHER-HARD (5.5X10X1-MM THK)	
M	12	1	**8T-4199**	1	BOLT (M8X1.25X12-MM)	
	13	1	**8T-4224**	1	WASHER-HARD (8.8X16X2-MM THK)	
	14	1	**9X-8256**	2	WASHER (6.6X12X2-MM THK)	
	15	1	**275-6993**	1	COVER	
C	16	1	**7K-1181**	11	STRAP-CABLE	

C-CHANGE FROM PREVIOUS TYPE
M-METRIC PART
Y-SEPARATE ILLUSTRATION

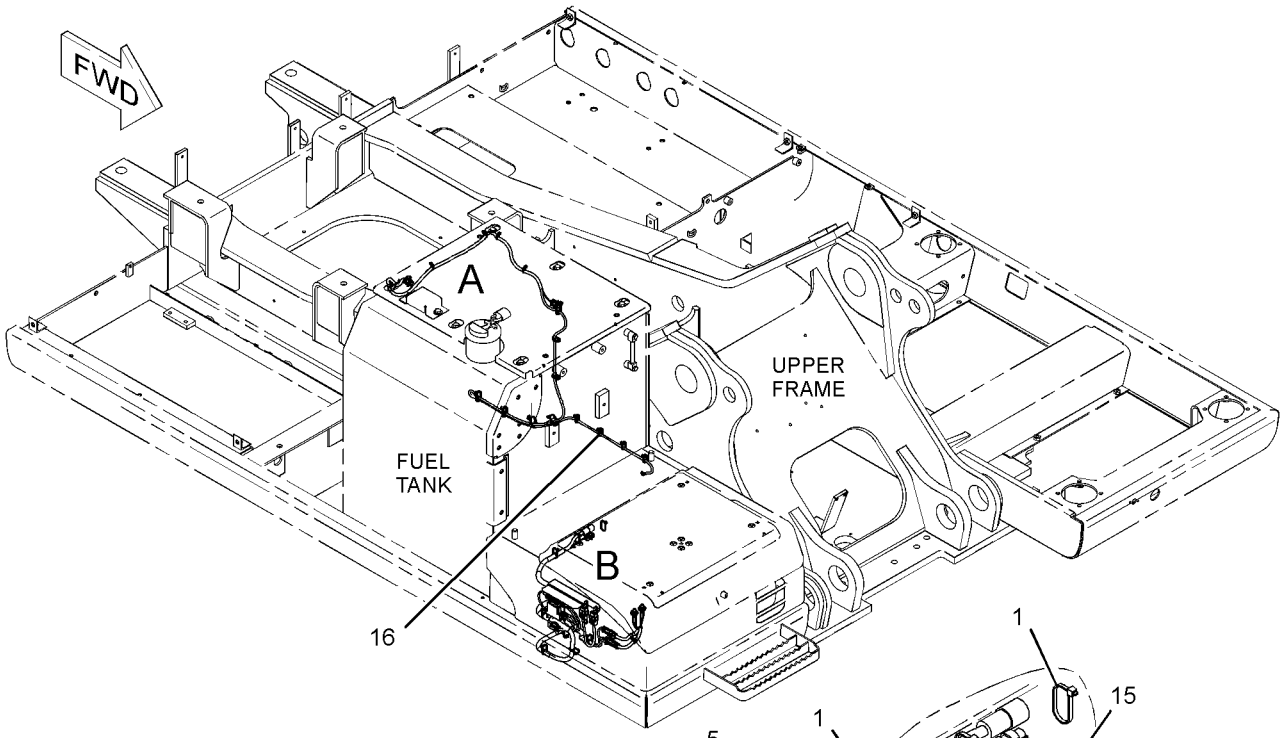

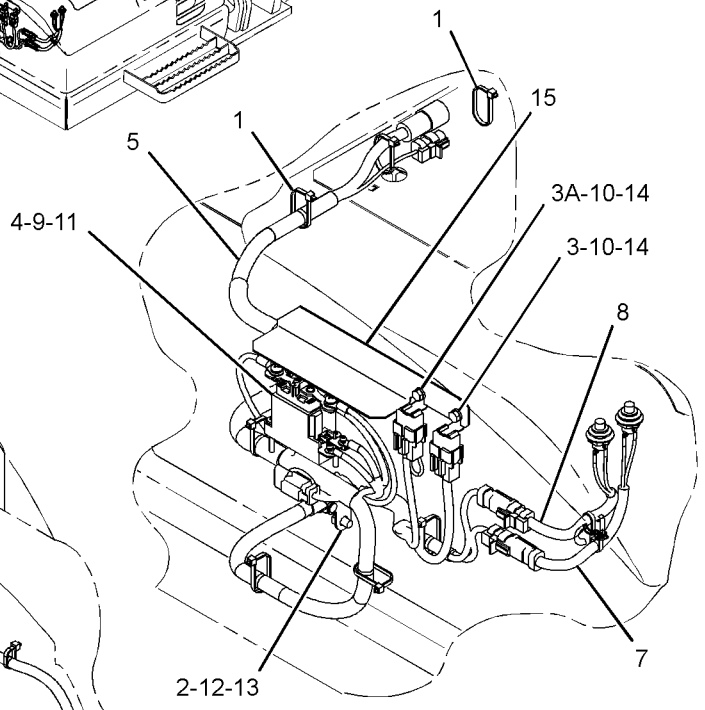

VIEW OF AREA B

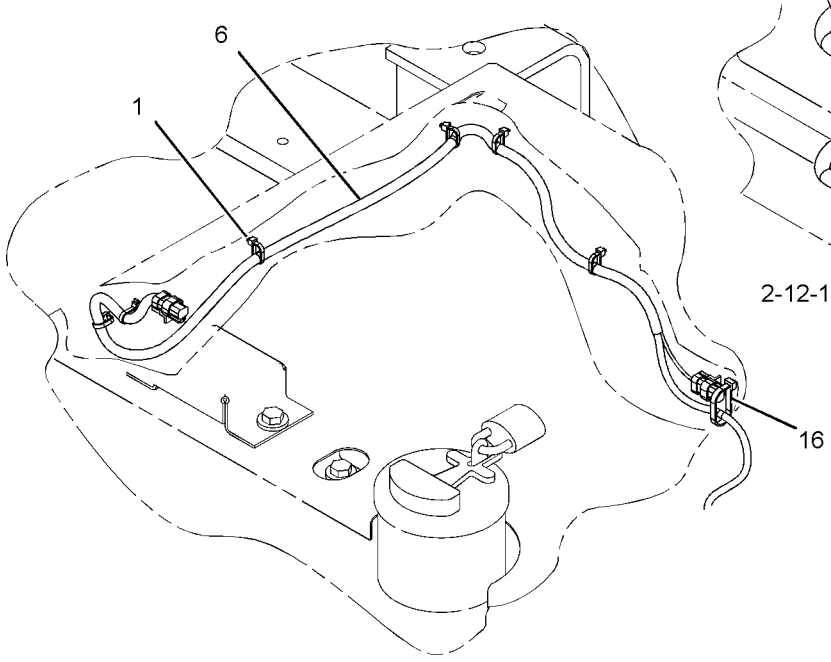

VIEW OF AREA A

GRAPHIC #1 **<END>** g01620056

259-5053 WIRING GP-FUEL SYSTEM–PRIMING PUMP

S/N: MNB1-UP; WDK1-UP

PART OF 247-7458 PUMP GP-FUEL PRIMING

AN ATTACHMENT

SMCS-1408 **i02562362**

NOTE	REF NO	GRAPHIC REF	PART NUMBER	QTY	PART NAME 1 2 3 4 5 6 (PRODUCT LEVEL)	SEE PAGE
	1	1	**3S-2093**	10	STRAP-CABLE	
	2	1	**7K-1181**	7	STRAP-CABLE	
	3	1	**137-6606**	1	FILM-IDENTIFICATION (FUEL)	
Y	4	1	**165-5970**	1	SWITCH GP-TOGGLE (FUEL PRIMING PUMP)	259
C	5	1	**267-7967**	1	HARNESS AS-PUMP (FUEL)	
		1	**155-2260**	1	KIT-CONNECTING PLUG (3-PIN)	
		1	**155-2270**	1	KIT-CONNECTING PLUG (2-PIN)	
					(EACH PLUG KIT INCLUDES PLUG AS, WEDGE & INTERFACE SEAL)	
		1	**243-4507**	1	RECEPTACLE AS-CONNECTOR (4-PIN)	

C-CHANGE FROM PREVIOUS TYPE
Y-SEPARATE ILLUSTRATION

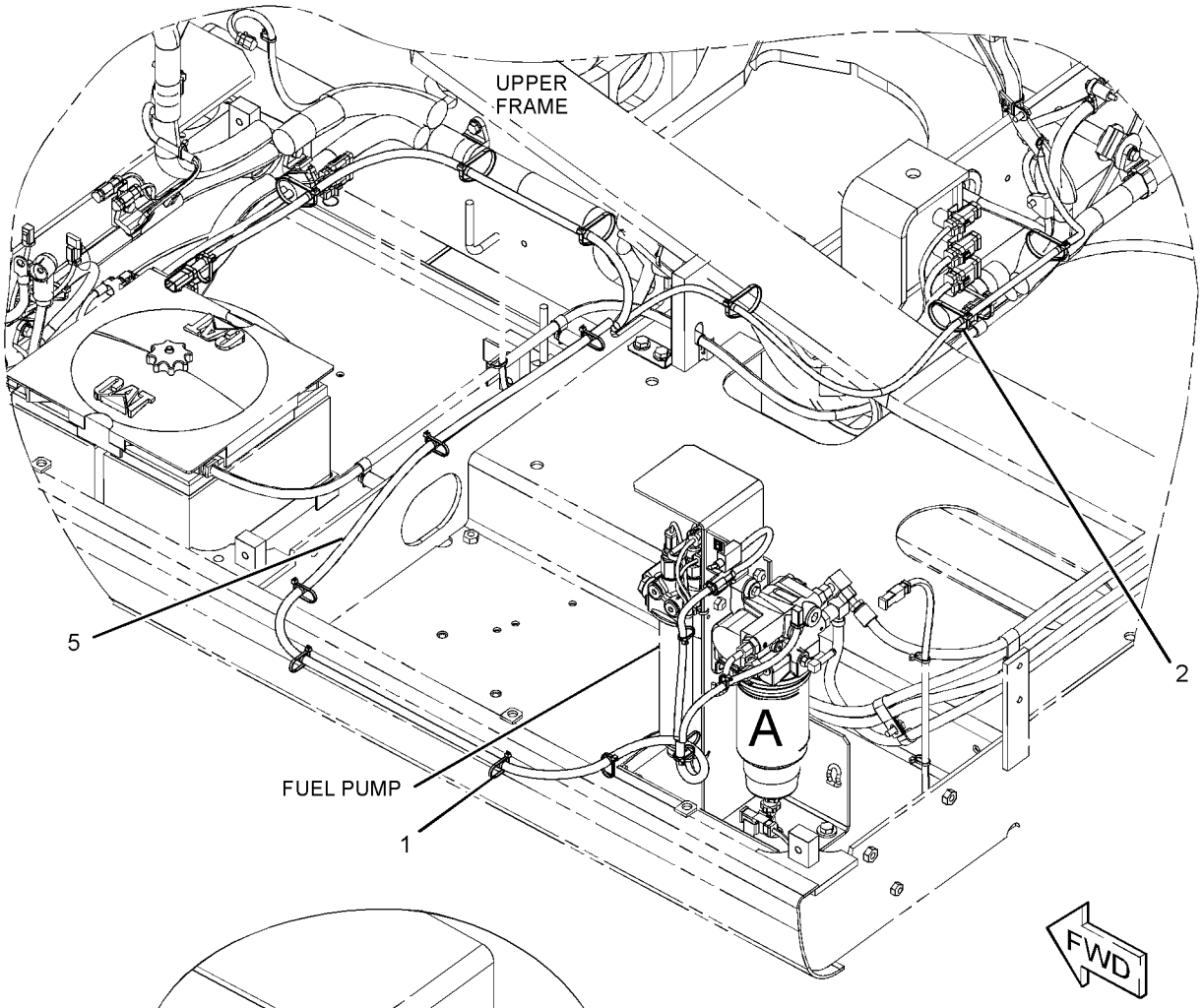

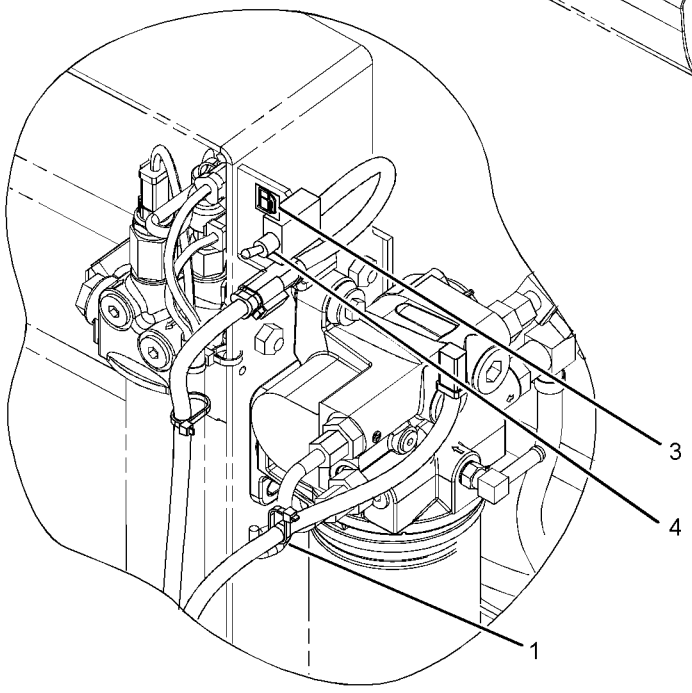

VIEW OF AREA A

GRAPHIC #1 **<END>** g01160769

204-3461 WIRING GP-GRADE CONTROL

S/N: MNB1-UP; WDK1-UP

PART OF 292-0276 GRADE CONTROL AR-SATELLITE

SMCS-1408, 7220 **i03177182**

NOTE	PART NUMBER	QTY	PART NAME 1 2 3 4 5 6 (PRODUCT LEVEL)	SEE PAGE
M	**9X-2480**	4	BOLT (M6X1X45-MM)	
	177-3941	1	CABLE AS (BUCKET)	
	177-3942	1	CABLE AS (STICK)	
	177-3943	1	CABLE AS (BOOM)	
	286-2484	4	CLAMP	
	6D-4244	2	CLIP	
	111-4836	8	CLIP	
	132-5789	1	CLIP (LADDER)	
M	**8T-4133**	10	NUT (M10X1.5-THD)	
	107-4749	2	PLATE	
	3S-2093	6	STRAP-CABLE	
	7K-1181	16	STRAP-CABLE	
	9X-8256	4	WASHER (6.6X12X2-MM THK)	
	8T-4121	10	WASHER-HARD (11X21X2.5-MM THK)	

M-METRIC PART

<END>

251-0442 WIRING GP-HAMMER–RETURN FILTER

S/N: MNB1-UP; WDK1-UP
PART OF 247-7390 FILTER AR-HYDRAULIC
AN ATTACHMENT

SMCS-1408 **i02407144**

NOTE	REF NO	GRAPHIC REF	PART NUMBER	QTY	PART NAME 1 2 3 4 5 6 (PRODUCT LEVEL)	SEE PAGE
	1	1	**3S-2093**	8	STRAP-CABLE	
	2	1	**7K-1181**	7	STRAP-CABLE	
	3	1	**251-0457**	1	HARNESS AS-PUMP	

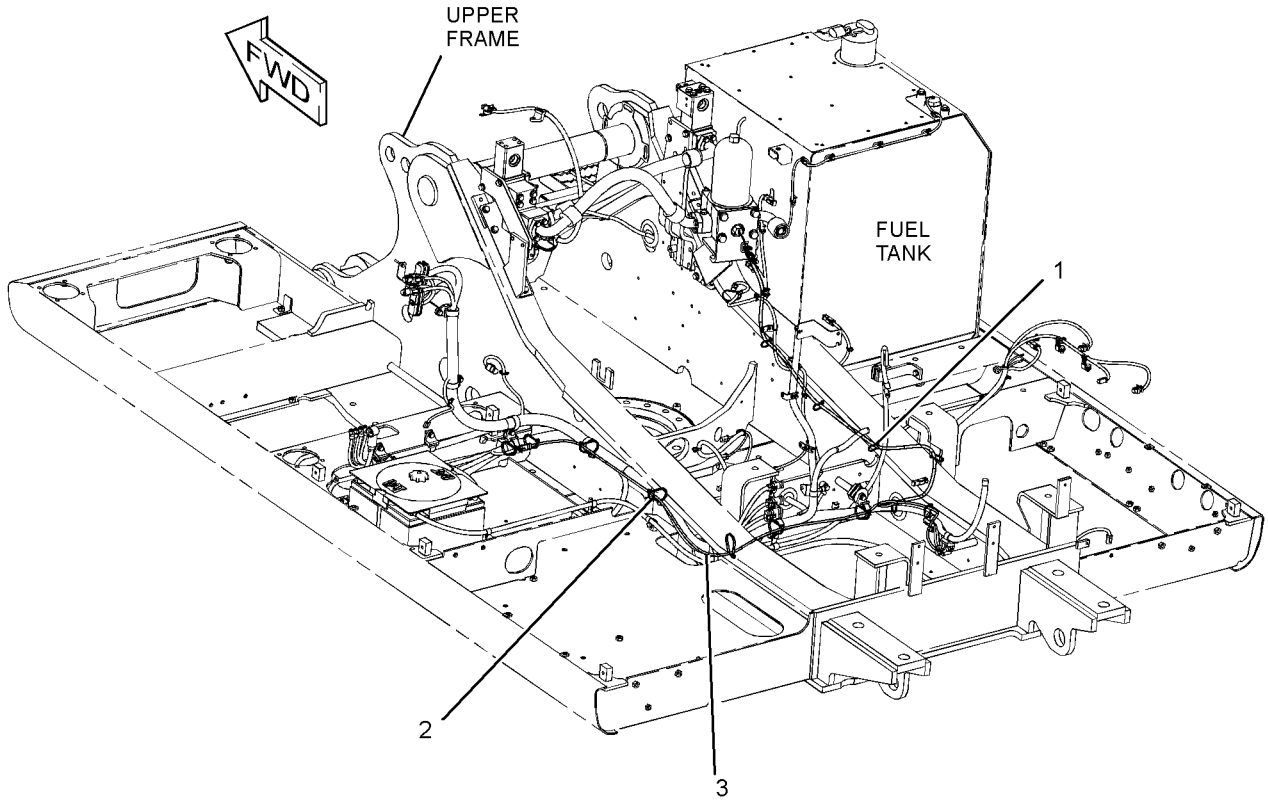

GRAPHIC #1 **<END>** g01247486

259-4949 WIRING GP-MEDIUM PRESSURE

S/N: MNB1-UP; WDK1-UP
PART OF 255-5811 CONTROL AR-AUXILIARY
AN ATTACHMENT

SMCS-1408 **i03206280**

NOTE	REF NO	GRAPHIC REF	PART NUMBER	QTY	PART NAME 1 2 3 4 5 6 (PRODUCT LEVEL)	SEE PAGE
	1	1	**3S-2093**	5	STRAP-CABLE	
	2	1	**7K-1181**	5	STRAP-CABLE	
	3	1	**102-7886**	1	SLEEVE	
	4	1	**267-8019**	1	HARNESS AS-VALVE	
		1	**3S-2093**	1	STRAP-CABLE	
		1	**155-2270**	2	KIT-CONNECTING PLUG (2-PIN)	
					(EACH INCLUDES RECEPTACLE AS & WEDGE)	
		1	**243-4508**	1	RECEPTACLE AS-CONNECTOR (6-PIN)	
	5	1	**132-5789**	1	CLIP	
	6	1	**8T-4121**	1	WASHER-HARD (11X21X2.5-MM THK)	
M	7	1	**8T-4198**	1	BOLT (M10X1.5X100-MM)	

M-METRIC PART

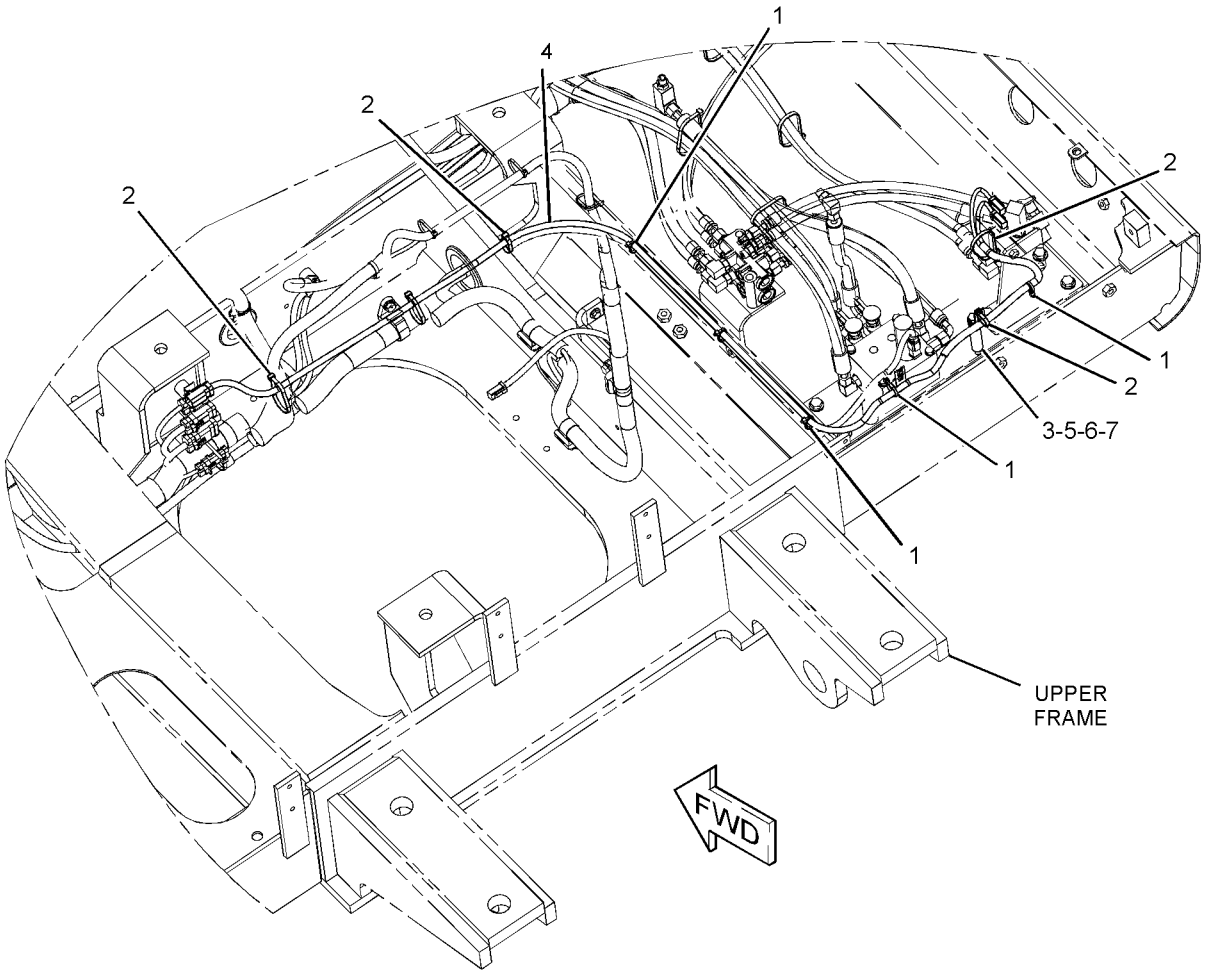

GRAPHIC #1 **<END>** g01243475

251-0430 WIRING GP-PLATFORM

S/N: MNB1-UP; WDK1-UP

PART OF 229-9072 OPERATOR AR

SMCS-1408 **i02528394**

NOTE	REF NO	GRAPHIC REF	PART NUMBER	QTY	PART NAME 1 2 3 4 5 6 (PRODUCT LEVEL)	SEE PAGE
	1	1	**3S-2093**	6	STRAP-CABLE	
	2	1	**7G-1060**	1	STRAP AS-GROUND	
	3	1	**7K-1181**	18	STRAP-CABLE	
	4	1	**111-4836**	4	CLIP	
	5	1	**111-4838**	2	CLIP	
	6	1	**111-4839**	2	STRAP	
	7	1	**116-0118**	14	CLIP	
	8	1	**234-1122**	1	COVER	
	9	1	**251-0299**	1	HARNESS AS-SWITCH (SECONDARY SHUTDOWN)	
		1	**243-4505**	1	RECEPTACLE AS-CONNECTOR (2-PIN)	
	10	1	**267-7592**	1	HARNESS AS-PLATFORM	
		1	**197-4385**	3	DIODE	
		1	**3S-2093**	23	STRAP-CABLE	
		1	**239-7352**	2	PLUG AS-CONNECTOR (6-PIN)	
		1	**243-4505**	2	RECEPTACLE AS-CONNECTOR (2-PIN)	
		1	**243-4507**	1	RECEPTACLE AS-CONNECTOR (4-PIN)	
		1	**243-4508**	4	RECEPTACLE AS-CONNECTOR (6-PIN)	
		1	**243-4509**	1	RECEPTACLE AS-CONNECTOR (8-PIN)	
		1	**243-4510**	2	RECEPTACLE AS-CONNECTOR (12-PIN)	
		1	**247-2693**	1	RECEPTACLE AS-CONNECTOR (6-PIN)	
		1	**102-8802**	5	KIT-RECEPTACLE (2-PIN)	
		1	**102-8804**	1	KIT-RECEPTACLE (4-PIN)	
					(EACH RECEPTACLE KIT INCLUDES RECEPTACLE AS & WEDGE)	
		1	**153-2620**	1	PLUG AS-CONNECTOR (54-PIN, BLACK)	
		1	**155-2272**	1	PLUG AS-CONNECTOR (4-PIN)	
		1	**230-4009**	3	PLUG AS-CONNECTOR (12-PIN)	
		1	**230-4011**	4	PLUG AS-CONNECTOR (2-PIN)	
		1	**230-5010**	3	PLUG AS-CONNECTOR (6-PIN)	
		1	**239-7352**	1	PLUG AS-CONNECTOR (6-PIN)	
		1	**155-2270**	12	KIT-CONNECTING PLUG (2-PIN)	
		1	**155-2271**	1	KIT-CONNECTING PLUG (4-PIN)	
					(EACH PLUG KIT INCLUDES PLUG AS,WEDGE & INTERFACE SEAL)	
M	11	1	**095-0728**	2	SCREW-MACHINE (M4X0.7X12-MM)	
	12	1	**096-6166**	2	WASHER-HARD (4.5X9X1-MM THK)	
	13	1	**3E-5169**	1	GUARD-SWITCH	
	14	1	**4D-1836**	1	SWITCH AS-TOGGLE (SECONDARY SHUTDOWN)	
M	15	1	**7X-2621**	7	BOLT (M10X1.5X12-MM)	
	16	1	**8T-4121**	14	WASHER-HARD (11X21X2.5-MM THK)	
M	17	1	**8T-4137**	7	BOLT (M10X1.5X20-MM)	

M-METRIC PART

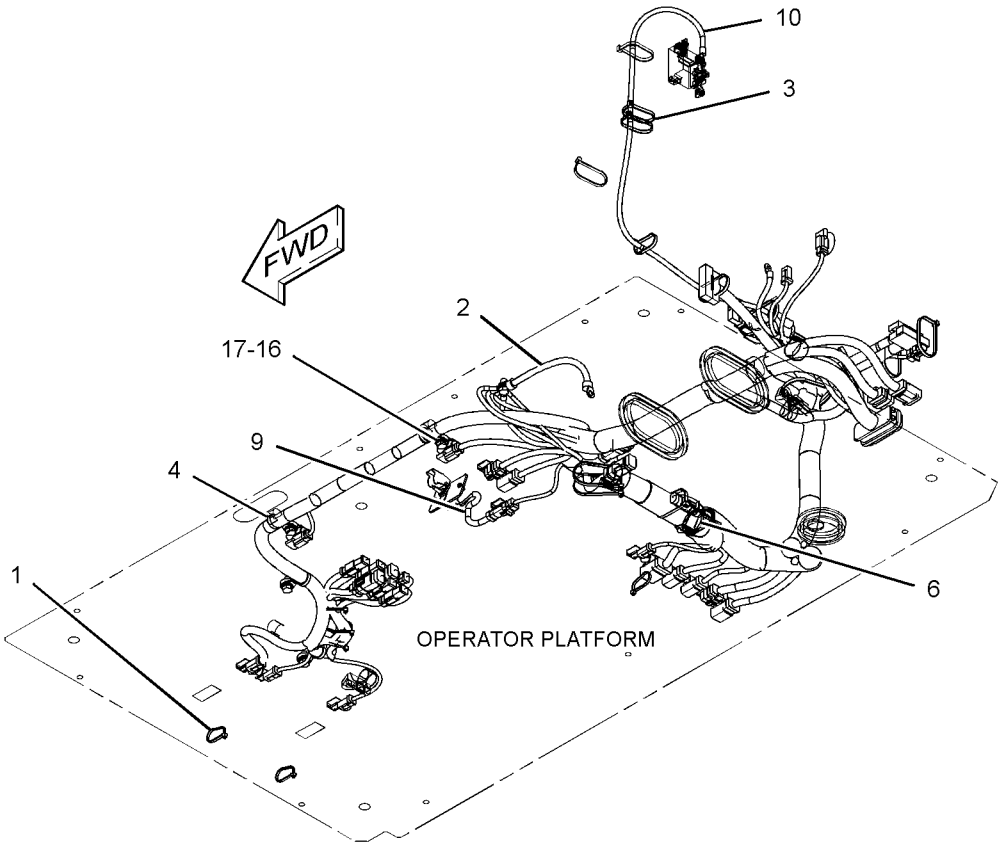

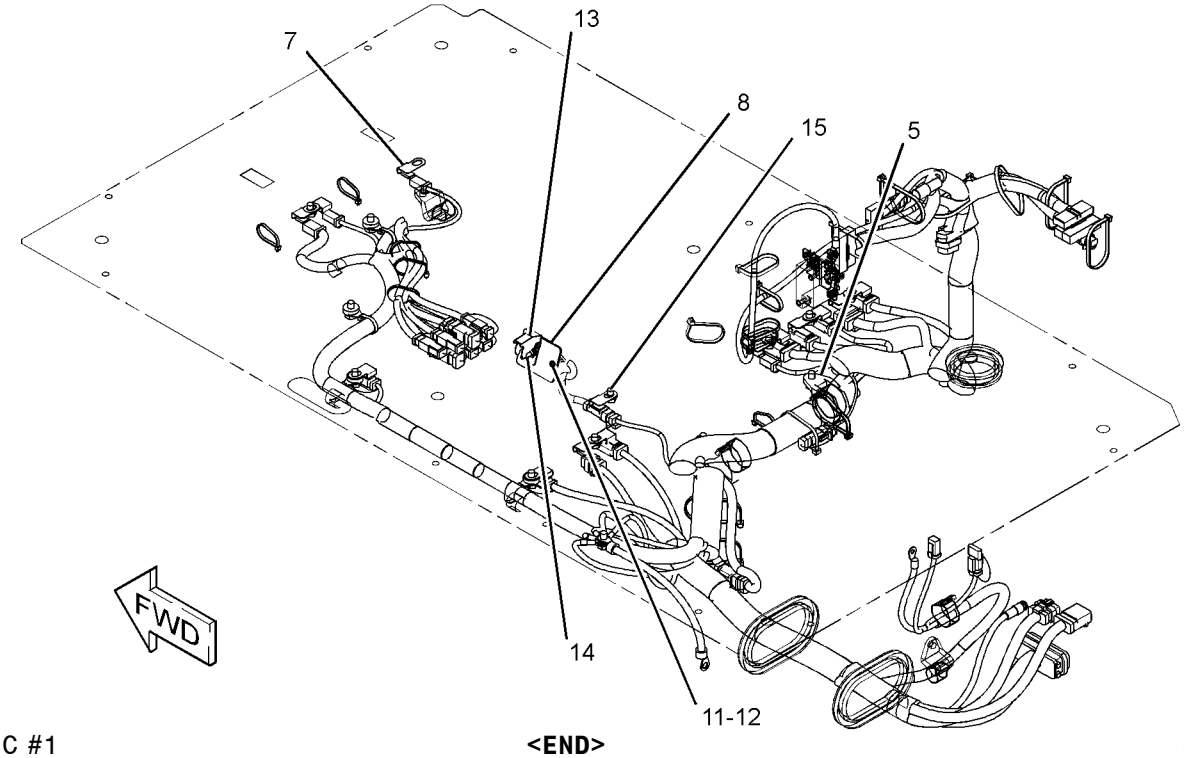

GRAPHIC #1 **<END>** g01152308

231-1764 WIRING GP-QUICK COUPLER

S/N: MNB1-UP; WDK1-UP
PART OF 215-5981 CONTROL AR-COUPLER
AN ATTACHMENT

SMCS-1408, 6129 **i02555460**

NOTE	REF NO	GRAPHIC REF	PART NUMBER	QTY	PART NAME 1 2 3 4 5 6 (PRODUCT LEVEL)	SEE PAGE
	1	1	**3S-2093**	7	STRAP-CABLE	
	2	1	**7K-1181**	6	STRAP-CABLE	
	3	1	**267-7961**	1	HARNESS AS-SOLENOID	
		1	**230-4011**	1	PLUG AS-CONNECTOR (2-PIN)	
		1	**243-4505**	1	RECEPTACLE AS-CONNECTOR (2-PIN)	

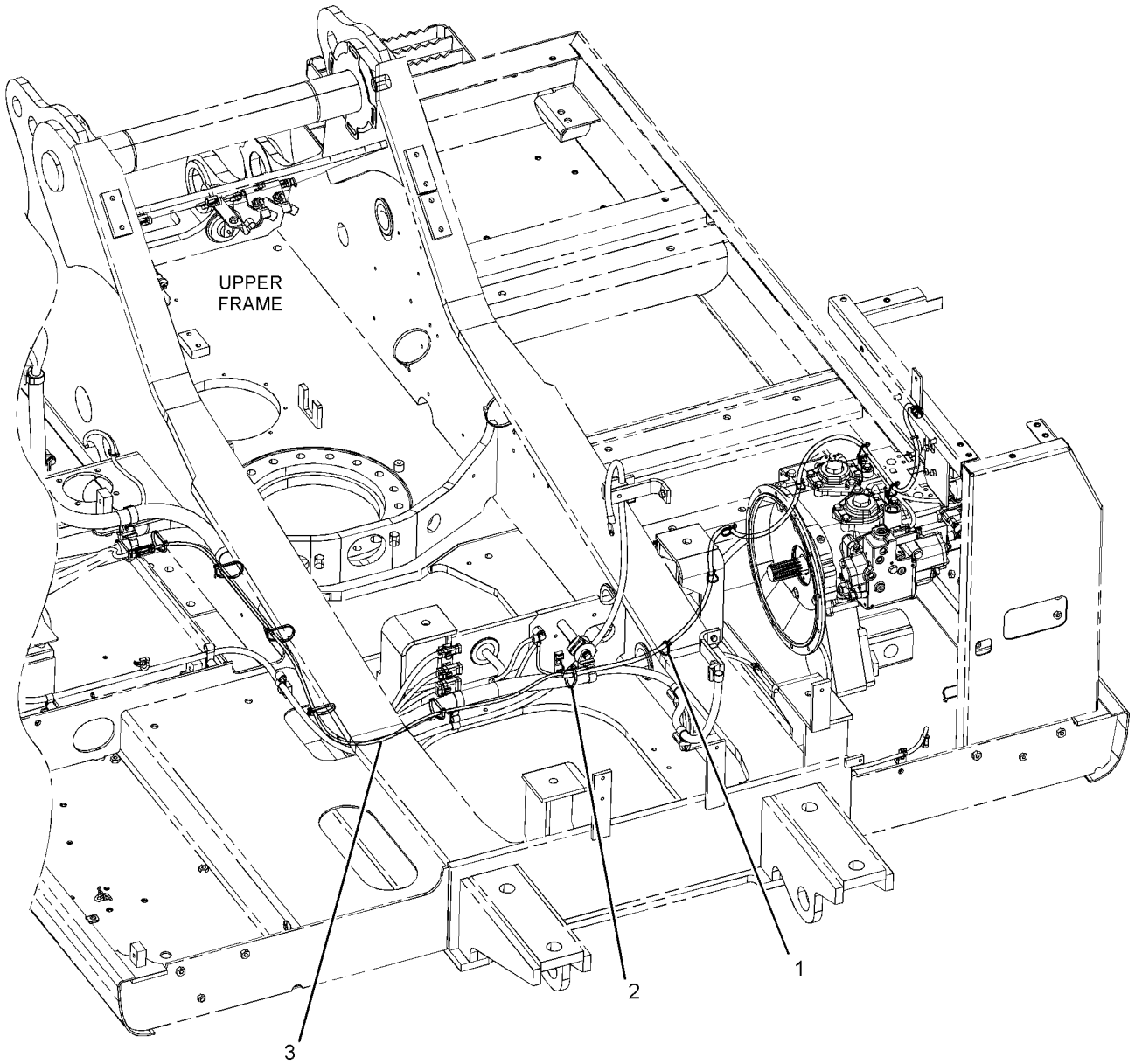

REAR VIEW
(UPPER LEFT)

GRAPHIC #1 **<END>** g01242553

238-2485 WIRING GP-COUPLER

S/N: MNB1-UP; WDK1-UP
PART OF 215-5981 CONTROL AR-COUPLER
AN ATTACHMENT

SMCS-1408, 6129 **i02517794**

NOTE	REF NO	GRAPHIC REF	PART NUMBER	QTY	PART NAME 1 2 3 4 5 6 (PRODUCT LEVEL)	SEE PAGE
Y	1	1	*238-2478*	1	SWITCH GP-TOGGLE (QUICK COUPLER)	260
	2	1	**259-4884**	1	BRACKET AS	
	3	1	**259-7180**	1	COVER	
M	4	1	**9X-2042**	3	SCREW-TRUSS HEAD (M6X1X12-MM)	

M-METRIC PART
Y-SEPARATE ILLUSTRATION

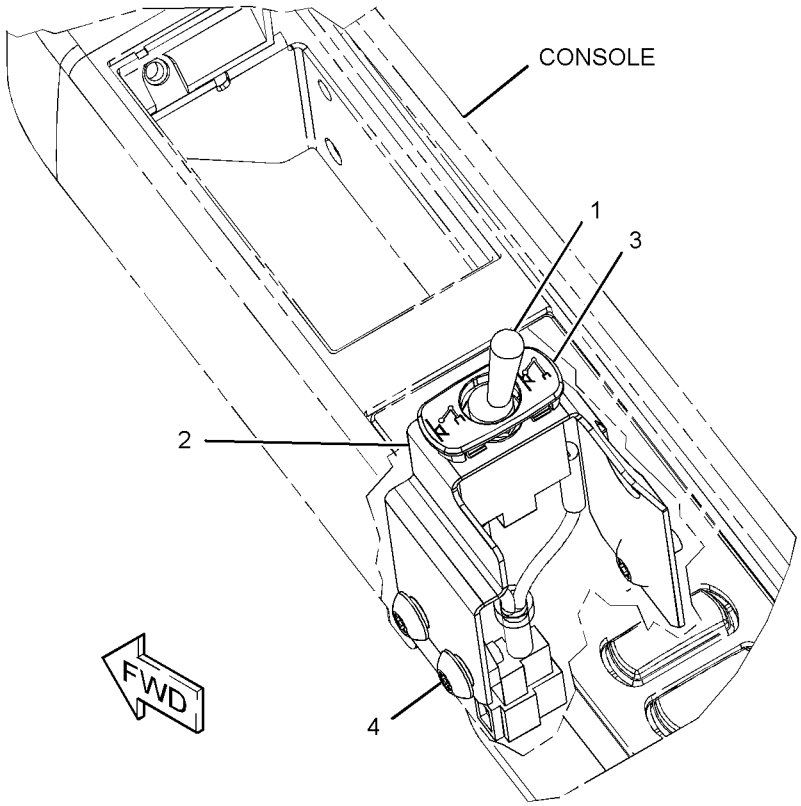

GRAPHIC #1 **<END>** g01259744

ELECTRICAL AND STARTING SYSTEM

283-2913 WIRING GP-RADIO

S/N: WDK1-UP

AN ATTACHMENT

SMCS-1408, 7338 **i02984887**

NOTE	REF NO	GRAPHIC REF	PART NUMBER	QTY	PART NAME 1 2 3 4 5 6 (PRODUCT LEVEL)	SEE PAGE
	1	1	**3S-2093**	11	STRAP-CABLE	
	2	1	**4I-7889**	1	SPACER (11X25X45-MM THK)	
	3	1	**7K-1181**	10	STRAP-CABLE	
	4	1	**116-0118**	1	CLIP	
	5	1	**149-5050**	4	RELAY (24-VOLT) (SPEAKERS)	
	6	1	**170-2512**	1	SWITCH GP-TOGGLE (12-VOLT, 24-VOLT SPEAKER)	
		1	**6T-3631**	2	NUT-HEX (15/32-32-THD)	
		1	**6T-3632**	1	LOCKWASHER	
		1	**6T-3633**	1	RING-LOCKING	
		1	**186-3735**	1	PIN-CONNECTOR (16-GA TO 18-GA)	
		1	**102-8805**	1	KIT-RECEPTACLE (6-PIN)	
					(INCLUDES RECEPTACLE AS & WEDGE)	
	7	1	**267-7676**	1	BRACKET AS	
	8	1	**267-7695**	1	BRACKET AS	
	9	1	**283-2914**	1	HARNESS AS-RADIO	
		1	**3S-2093**	25	STRAP-CABLE	
		1	**149-5051**	4	CONNECTOR	
		1	**155-2274**	1	KIT-CONNECTING PLUG (6-PIN)	
					(KIT INCLUDES PLUG AS, WEDGE, & INTERFACE SEAL	
		1	**230-5010**	1	PLUG AS-CONNECTOR (6-PIN)	
		1	**231-2295**	2	PLUG AS-CONNECTOR (8-PIN)	
		1	**243-4509**	2	RECEPTACLE AS-CONNECTOR (8-PIN)	
	10	1	**283-2984**	1	COVER	
	11	1	**283-2783**	1	CONVERTER-POWER (24-VOLT TO 12-VOLT)	
M	12	1	**8T-4171**	4	BOLT (M6X1X12-MM)	
M	13	1	**8T-5005**	1	BOLT (M10X1.5X70-MM)	
M	14	1	**9X-2042**	7	SCREW-TRUSS HEAD (M6X1X12-MM)	
	15	1	**9X-8256**	4	WASHER (6.6X12X2-MM THK)	

M-METRIC PART

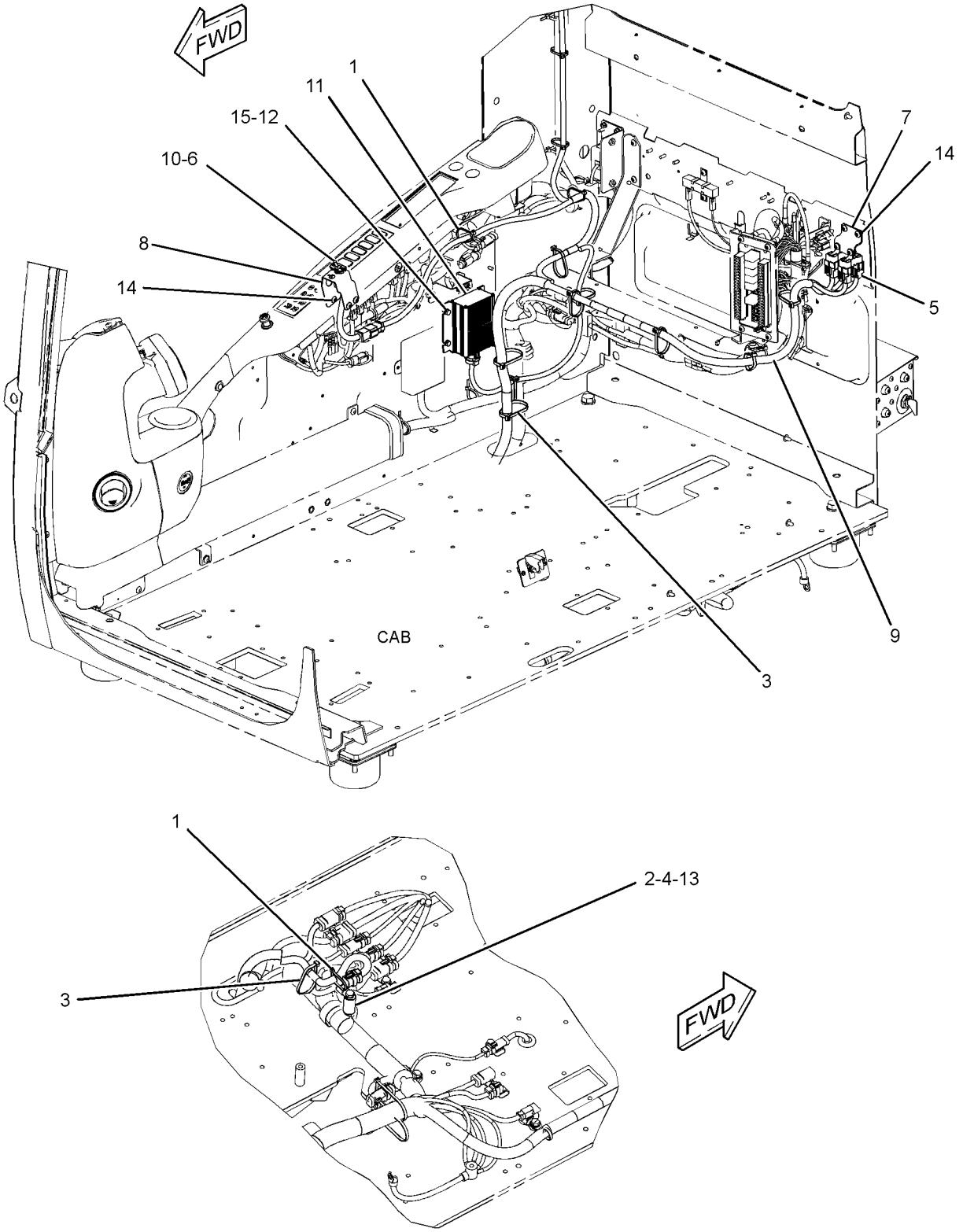

GRAPHIC #1 **<END>** g01290807

POWER TRAIN

267-6796 DRIVE GP-FINAL—WITHOUT MOTOR

S/N: MNB1-UP; WDK1-UP

PART OF 267-6877 DRIVE GP-FINAL

SMCS-4050 **i02895171**

NOTE	REF NO	GRAPHIC REF	PART NUMBER	QTY	PART NAME 1 2 3 4 5 6 (PRODUCT LEVEL)	SEE PAGE
	1	1	**3E-2338**	2	PLUG-PIPE	
BJ	2	1	**7Y-0752**	1	SHIM (0.8-MM THK)	
BJ	3		**7Y-0753**	1	SHIM (1-MM THK)	
BJ	4		**7Y-0754**	1	SHIM (1.6-MM THK)	
B	5	1	**094-0578**	1	PLATE (8-MM THK)	
B	6		**094-0579**	1	PLATE (9-MM THK)	
B	7		**094-0580**	1	PLATE (10-MM THK)	
M	8	1	**094-1528**	12	WASHER (53X84X1-MM THK)	
J	9	1	**114-1540**	4	PIN-DOWEL	
J	10	1	**168-8452**	2	BALL BEARING	
	11	1	**169-5589**	1	GEAR-SUN (24-TEETH)	
	12	1	**169-5590**	1	GEAR-SUN (24-TEETH)	
	13	1	**169-5592**	3	GEAR-PLANETARY (23-TEETH)	
	14	1	**169-5593**	3	GEAR-PLANETARY (23-TEETH)	
	15	1	**169-5601**	3	SHAFT-PLANETARY	
	16	1	**169-5602**	3	SHAFT-PLANETARY	
	17	1	**171-9387**	1	GEAR-RING (64-TEETH)	
	18	1	**191-2569**	3	BEARING AS (CAGED ROLLER)	
	19	1	**191-2570**	6	BEARING AS (CAGED ROLLER)	
	20	1	**191-2571**	1	CARRIER-PLANETARY	
	21	1	**191-2676**	1	GEAR-RING (72-TEETH)	
	22	1	**191-2683**	1	GEAR-SUN (20-TEETH)	
	23	1	**191-2684**	3	GEAR-PLANETARY (21-TEETH)	
	24	1	**191-2685**	3	BEARING AS	
	25	1	**191-2686**	1	CARRIER AS	
		1	**191-2687**	3	RACE-BEARING	
	26	1	**191-2689**	3	WASHER (34X70X1-MM THK)	
	27	1	**191-2690**	3	WASHER (42.3X70X1-MM THK)	
	28	1	**199-4503**	1	COVER	
J	29	1	**207-1571**	1	SEAL GP-DUO-CONE	
		1	**214-3570**	2	RING-TORIC	
J	30	1	**267-6797**	1	HOUSING-MOTOR	
J	31	1	**267-6798**	1	HOUSING	
	32	1	**267-6799**	1	CARRIER-PLANETARY	
J	33	1	**267-6800**	1	GEAR-COUPLING	
BJ	34		**267-6863**	1	SHIM (0.75-MM THK)	
BJ	35		**267-6864**	1	SHIM (0.85-MM THK)	
BJ	36		**267-6865**	1	SHIM (0.9-MM THK)	
BJ	37		**267-6866**	1	SHIM (0.95-MM THK)	
BJ	38		**267-6867**	1	SHIM (1.2-MM THK)	
BJ	39		**267-6868**	1	SHIM (1.4-MM THK)	
BJ	40		**267-6869**	1	SHIM (1.8-MM THK)	
BJ	41		**267-6870**	1	SHIM (2-MM THK)	
BJ	42		**267-6871**	1	SHIM (2.3-MM THK)	
	43	1	**093-1731**	2	RING-RETAINING	
	44	1	**095-0891**	6	PIN-SPRING	
	45	1	**096-0433**	3	RING-RETAINING	
M	46	1	**096-3216**	2	SETSCREW-SOCKET (M12X1.75X12-MM)	
	47	1	**171-9298**	1	SEAL-O-RING	
M	48	1	**179-8733**	16	BOLT (M20X2.5X170-MM)	
	49	1	**7M-8485**	2	SEAL-O-RING	
	50	1	**7Y-0595**	3	SPACER (58X79.6X6-MM THK)	
JM	51	1	**7Y-5217**	16	BOLT-SOCKET HEAD (M20X2.5X70-MM)	
J	52	1	**8T-3282**	16	WASHER-HARD (22X35X3.5-MM THK)	
	53	1	**8T-4123**	16	WASHER (22X35X3.5-MM THK)	
M	54	1	**9X-6032**	12	BOLT-SOCKET HEAD (M10X1.5X30-MM)	

267-6796 **DRIVE GP-FINAL** *(contd.)* **i02895171**

NOTE	REF NO	GRAPHIC REF	PART NUMBER	QTY	PART NAME 1 2 3 4 5 6 (PRODUCT LEVEL)	SEE PAGE
B	55	1	**1U-8846**		SEALANT-GASKET	
					AVAILABLE REPAIR KIT(S):	
J			**267-6818**	1	KIT-FINAL DRIVE BEARING	

B-USE AS REQUIRED
J-KIT MARKED J SERVICES PART(S) MARKED J
M-METRIC PART

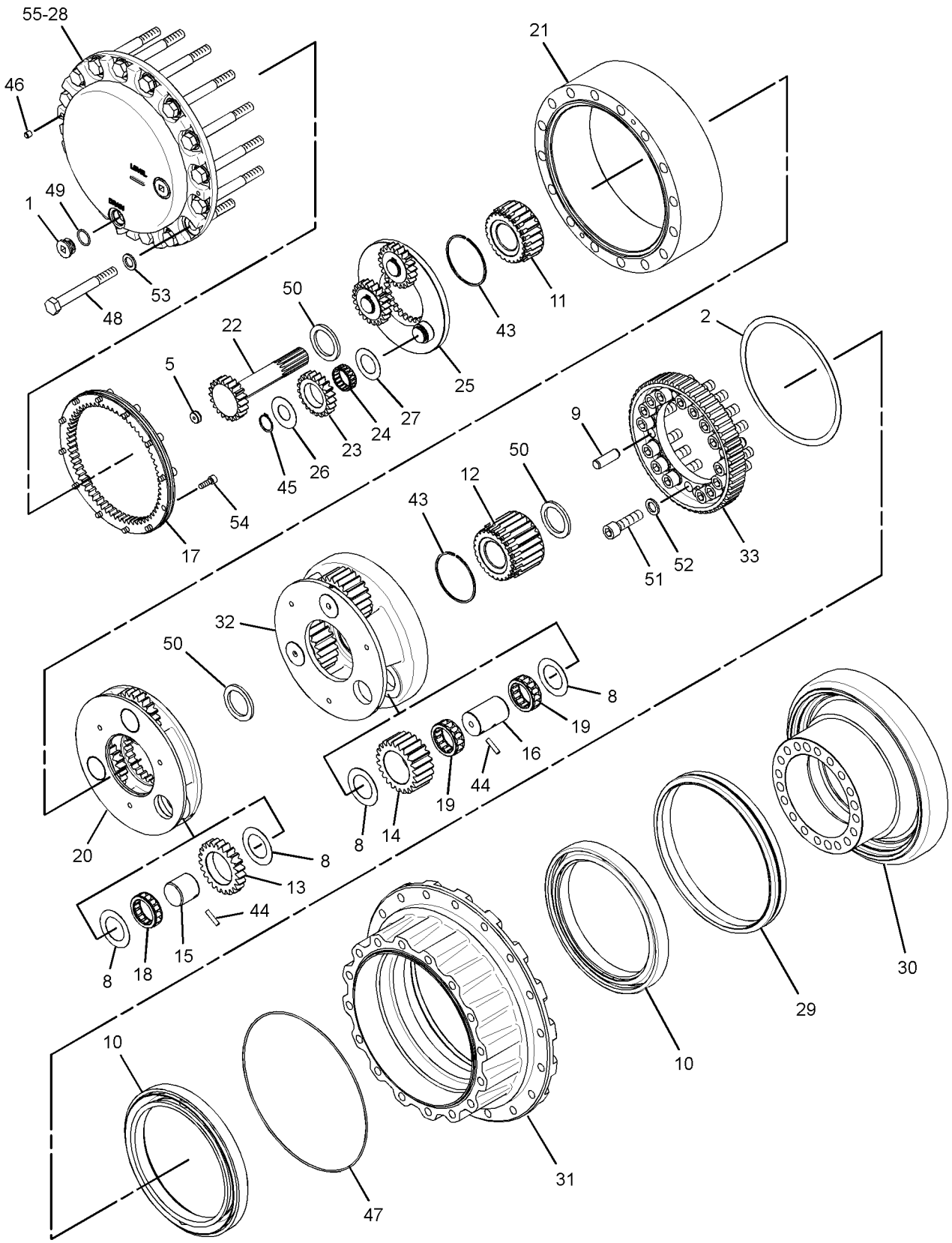

GRAPHIC #1 **<END>** g01442136

267-6877 FINAL DRIVE GP—WITH MOTOR

S/N: MNB1-UP; WDK1-UP
PART OF 171-9410 POWER TRAIN AR
ALSO FIELD INSTALLATION

SMCS-4050 **i02895168**

NOTE	REF NO	GRAPHIC REF	PART NUMBER	QTY	PART NAME 1 2 3 4 5 6 (PRODUCT LEVEL)	SEE PAGE
Y	1	1	*204-2674*	1	MOTOR & MTG GP-TRAVEL	701
Y	2	1	**267-6796**	1	FINAL DRIVE GP	324

Y-SEPARATE ILLUSTRATION

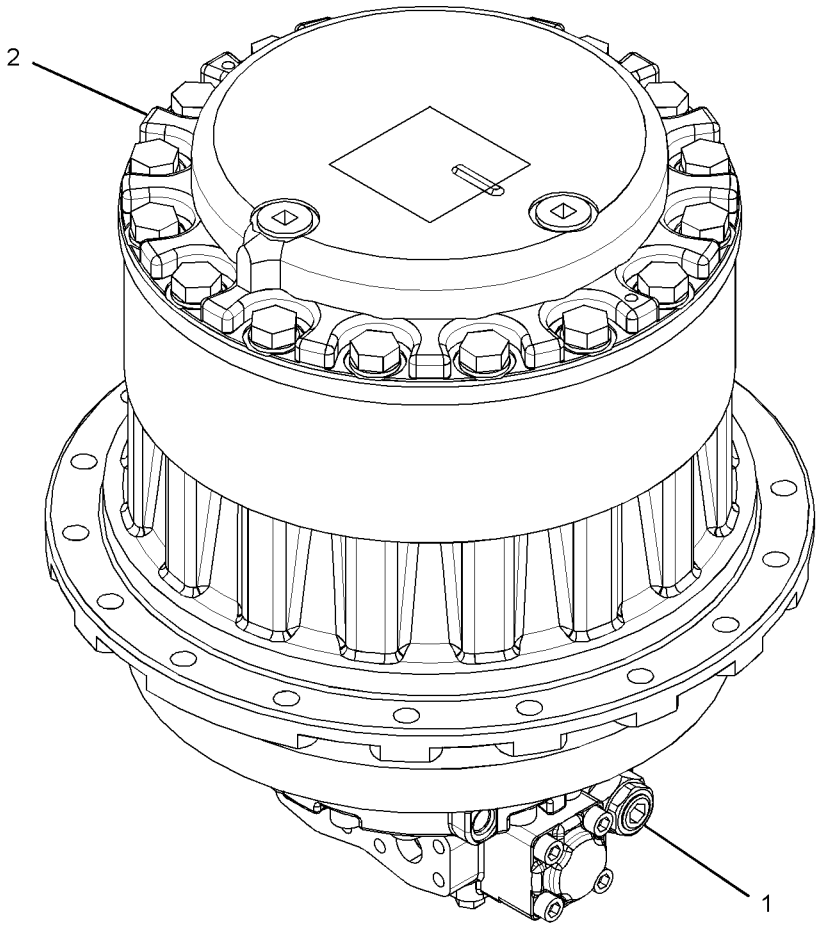

GRAPHIC #1 **<END>** g01442800

POWER TRAIN

171-9410 POWER TRAIN AR

S/N: MNB1-UP; WDK1-UP

PART OF 314-3641, 314-3642 GENERAL AR

SMCS-3000, 4000 **i02986661**

NOTE	PART NUMBER	QTY	PART NAME 1 2 3 4 5 6 (PRODUCT LEVEL)	SEE PAGE
Y	*199-4487*	1	DRIVE GP-SWING	496
Y	*171-9412*	1	FASTENER GP-SWING & FINAL DR	497
Y	*227-6115*	1	FINAL DRIVE GP	
Y	*267-6877*	1	FINAL DRIVE GP	327
Y	*179-2994*	2	SPROCKET GP	329

Y-SEPARATE ILLUSTRATION

<END>

179-2994 SPROCKET GP

S/N: MNB1-UP; WDK1-UP

PART OF 171-9410 POWER TRAIN AR

SMCS-4164 **i02016114**

NOTE	REF NO	GRAPHIC REF	PART NUMBER	QTY	PART NAME 1 2 3 4 5 6 (PRODUCT LEVEL)	SEE PAGE
	1	1	**6Y-4898**	1	SPROCKET-TRACK (21-TEETH)	
M	2	1	**8T-6430**	18	BOLT (M20X2.5X50-MM)	
	3	1	**8T-3282**	18	WASHER-HARD (22X35X3.5-MM THK)	

M-METRIC PART

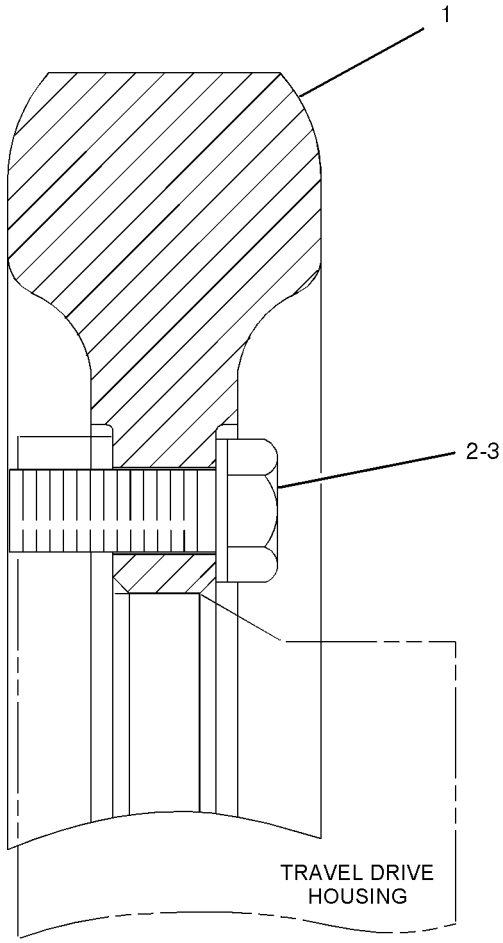

GRAPHIC #1

<END>

g01049811

FRAME AND BODY

223-3040 BOX & MTG GP-STORAGE

S/N: MNB1-UP; WDK1-UP

PART OF 314-3652, 314-3653 CHASSIS AR

SMCS-7268 **i02347066**

NOTE	REF NO	GRAPHIC REF	PART NUMBER	QTY	PART NAME 1 2 3 4 5 6 (PRODUCT LEVEL)	SEE PAGE
Y	1	1	**223-3041**	1	BOX GP-STORAGE	331
M	2	1	**135-8577**	4	BOLT AS (M12X1.75X35-MM)	

M-METRIC PART
Y-SEPARATE ILLUSTRATION

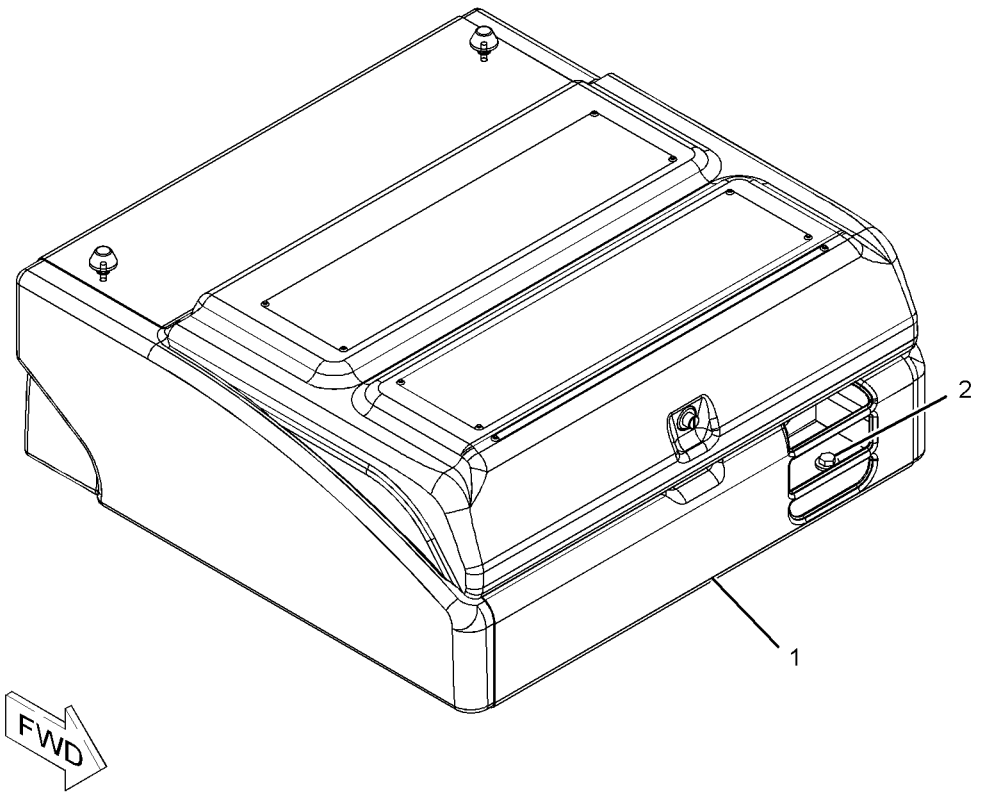

GRAPHIC #1 **<END>** g01150412

223-3041 BOX GP-STORAGE

S/N: MNB1-UP; WDK1-UP

PART OF 223-3040 BOX & MTG GP-STORAGE

SMCS-7268 **i02479480**

NOTE	REF NO	GRAPHIC REF	PART NUMBER	QTY	PART NAME 1 2 3 4 5 6 (PRODUCT LEVEL)	SEE PAGE
	1	1	**4I-2187**	1	SUPPORT AS	
	2	1	**236-3669**	1	LOCK AS	
	3	1	**236-3670**	1	STRIKER AS	
	4	1	**236-3671**	1	SEAL	
	5	1	**236-9435**	1	BOX AS	
	6	1	*236-9437*	1	COVER AS	
	6A	1	**3D-9143**	2	HINGE-BUTT	
	7	1	**236-9438**	1	PLUNGER AS	
	8	1	**236-9440**	1	SHEET	
	9	1	**273-7964**	2	MOUNT	
	10	1	**095-0843**	1	PIN-COTTER	
	11	1	**096-3780**	1	PIN-CLEVIS	
M	12	1	**105-3487**	4	BOLT-SOCKET HEAD (M6X1X20-MM)	
	13	1	**170-9360**	1	GROMMET	
M	15	1	**5C-9553**	3	BOLT (M6X1X16-MM)	
	16	1	**5P-1075**	4	WASHER-HARD (10.2X22.5X3-MM THK)	
	17	1	**5P-4116**	1	WASHER-HARD (8.8X20.5X2-MM THK)	
M	18	1	**8T-4133**	4	NUT (M10X1.5-THD)	
M	19	1	**8T-4200**	2	BOLT (M8X1.25X16-MM)	
	20	1	**8T-4224**	2	WASHER-HARD (8.8X16X2-MM THK)	
	21	1	**9X-8256**	7	WASHER (6.6X12X2-MM THK)	
	22	1	**278-3581**	4	CUSHION	
B	23	1	**8T-4223**	2	WASHER-HARD (13.5X25.5X3-MM THK)	

B-USE AS REQUIRED
M-METRIC PART

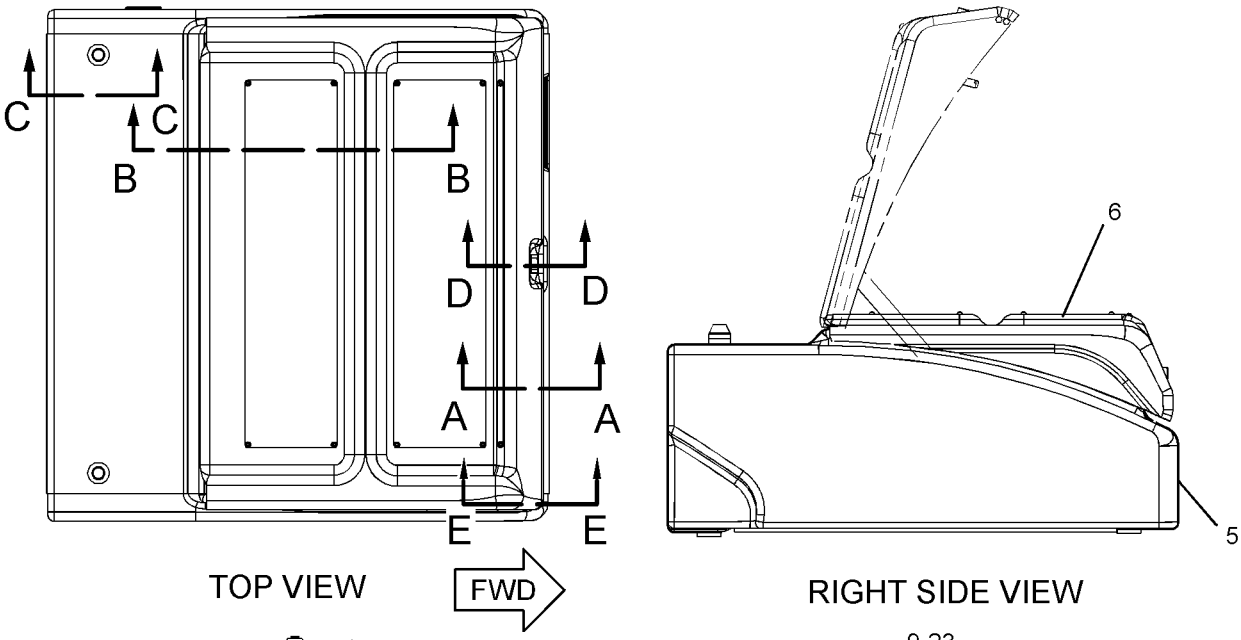

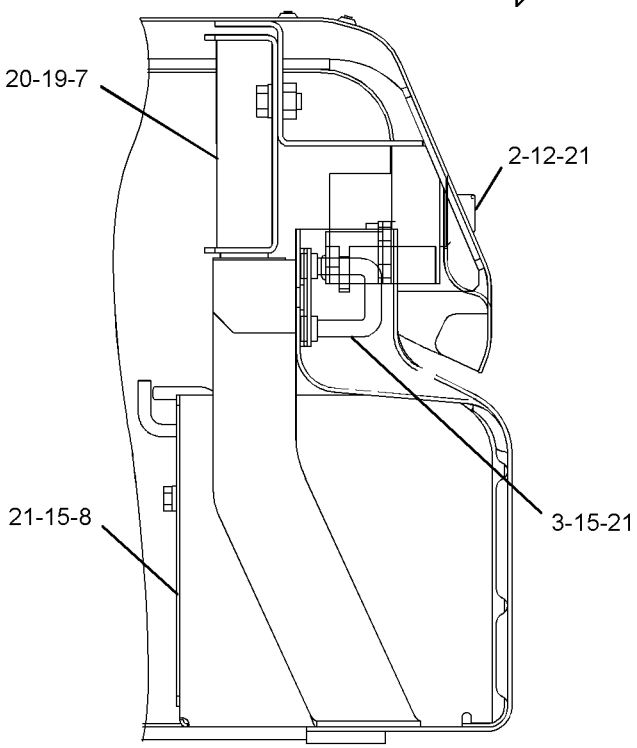

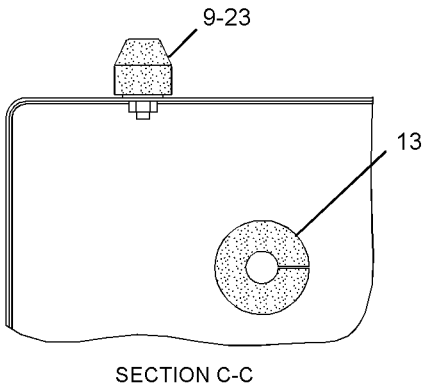

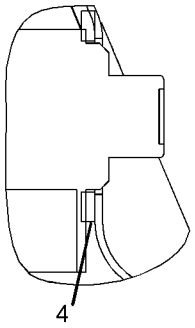

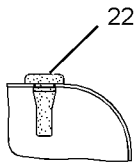

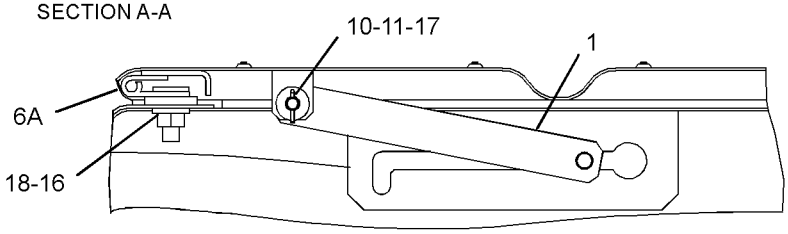

GRAPHIC #1

<END>

g01238343

278-3924 COUNTERWEIGHT & MOUNTING GP

S/N: MNB1-UP; WDK1-UP
AN ATTACHMENT

SMCS-7056 **i03137842**

NOTE	REF NO	GRAPHIC REF	PART NUMBER	QTY	PART NAME 1 2 3 4 5 6 (PRODUCT LEVEL)	SEE PAGE
	1	1	**248-9337**	4	SPACER (39X75X20-MM THK)	
CY	2	1	*330-1258*	1	COUNTERWEIGHT GP	344
M	3	1	**4I-0191**	4	BOLT (M36X4X181-MM)	
M	4	1	**8T-4190**	8	BOLT (M16X2X25-MM)	

C-CHANGE FROM PREVIOUS TYPE
M-METRIC PART
Y-SEPARATE ILLUSTRATION

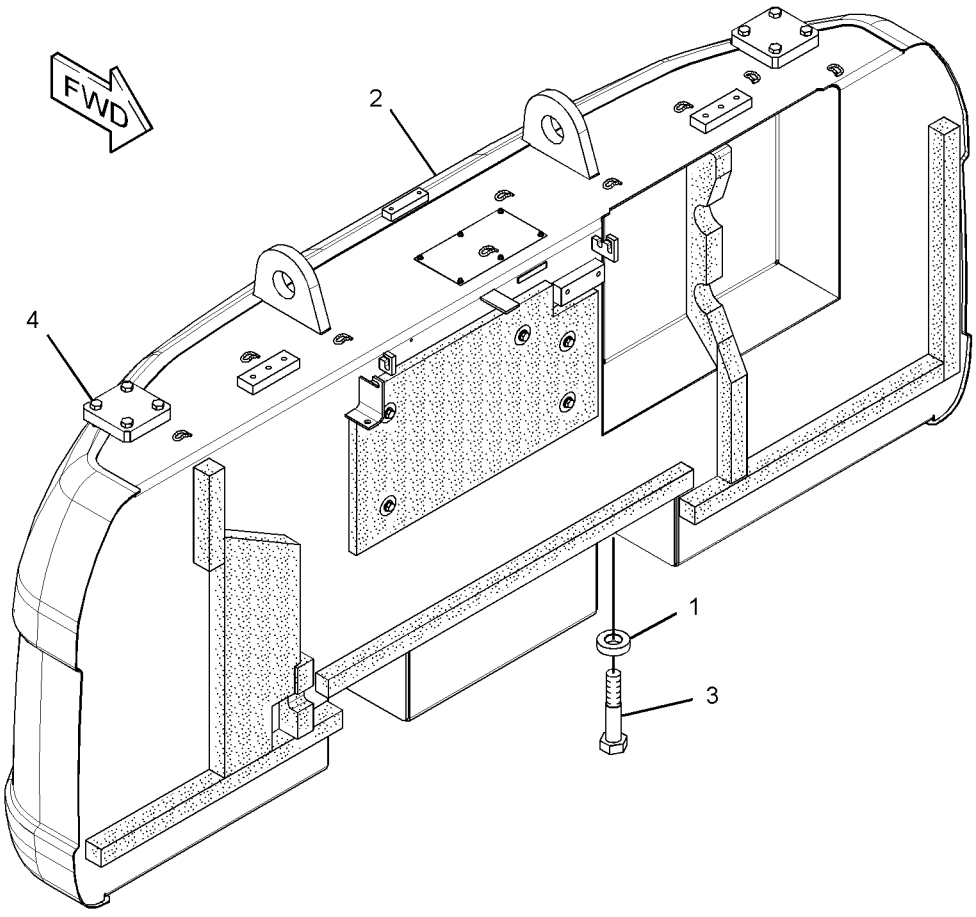

GRAPHIC #1 **<END>** g01618974

FRAME AND BODY

278-3926 COUNTERWEIGHT & MOUNTING GP

S/N: MNB1-UP
AN ATTACHMENT

SMCS-7056 **i03137851**

NOTE	REF NO	GRAPHIC REF	PART NUMBER	QTY	PART NAME 1 2 3 4 5 6 (PRODUCT LEVEL)	SEE PAGE
	1	1	**248-9337**	4	SPACER (39X75X20-MM THK)	
CY	2	1	*330-1261*	1	COUNTERWEIGHT GP (BASIC)	345
M	3	1	**4I-0191**	4	BOLT (M36X4X181-MM)	
M	4	1	**8T-4190**	8	BOLT (M16X2X25-MM)	

C-CHANGE FROM PREVIOUS TYPE
M-METRIC PART
Y-SEPARATE ILLUSTRATION

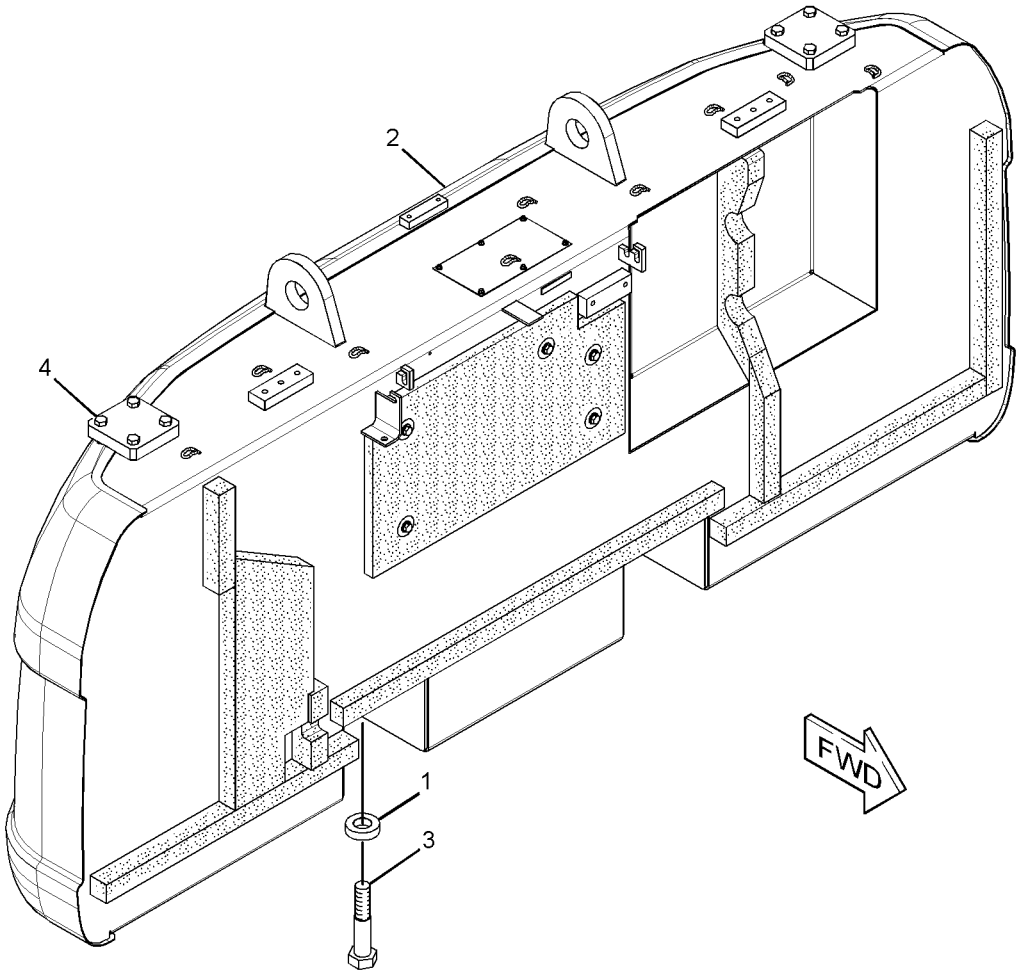

GRAPHIC #1 **<END>** g01619308

FRAME AND BODY

314-3677 COUNTERWEIGHT AR

S/N: MNB1-UP; WDK1-UP
AN ATTACHMENT

SMCS-7056 **i03127805**

NOTE	PART NUMBER	QTY	PART NAME 1 2 3 4 5 6 (PRODUCT LEVEL)	SEE PAGE
Y	*223-3031*	1	COUNTERWEIGHT GP	338
Y	*314-3678*	1	FILM GP	1114

Y-SEPARATE ILLUSTRATION

<END>

223-3022 COUNTERWEIGHT GP

S/N: MNB1-UP; WDK1-UP

PART OF 314-3652, 314-3653 CHASSIS AR

SMCS-7056 **i03127889**

NOTE	REF NO	GRAPHIC REF	PART NUMBER	QTY	PART NAME 1 2 3 4 5 6 (PRODUCT LEVEL)	SEE PAGE
CY	1	1	*330-1247*	1	COUNTERWEIGHT GP	342
	2	1	**248-9337**	4	SPACER (39X75X20-MM THK)	
M	3	1	**4I-0191**	4	BOLT (M36X4X181-MM)	

C-CHANGE FROM PREVIOUS TYPE
M-METRIC PART
Y-SEPARATE ILLUSTRATION

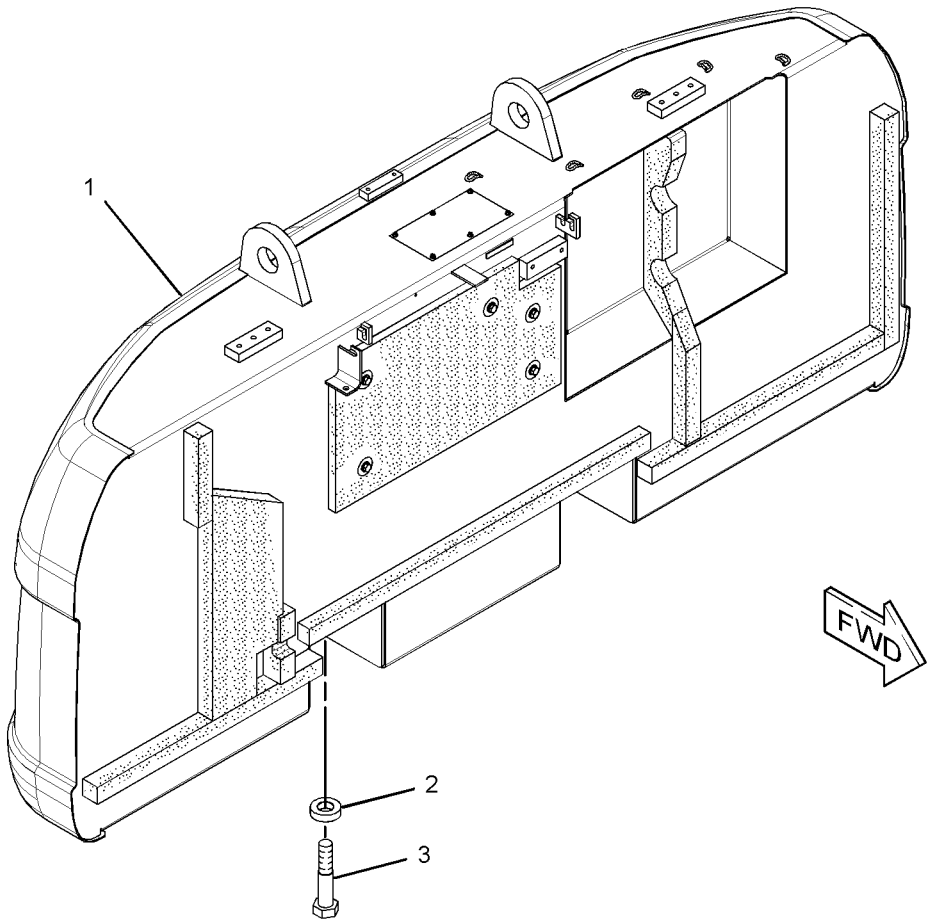

GRAPHIC #1 **<END>** g01618935

FRAME AND BODY

223-3025 COUNTERWEIGHT GP

S/N: MNB1-UP
AN ATTACHMENT

SMCS-7056 **i03133243**

NOTE	REF NO	GRAPHIC REF	PART NUMBER	QTY	PART NAME 1 2 3 4 5 6 (PRODUCT LEVEL)	SEE PAGE
CY	1	1	*330-1250*	1	COUNTERWEIGHT GP	343
	2	1	**248-9337**	4	SPACER (39X75X20-MM THK)	
M	3	1	**4I-0191**	4	BOLT (M36X4X181-MM)	

C-CHANGE FROM PREVIOUS TYPE
M-METRIC PART
Y-SEPARATE ILLUSTRATION

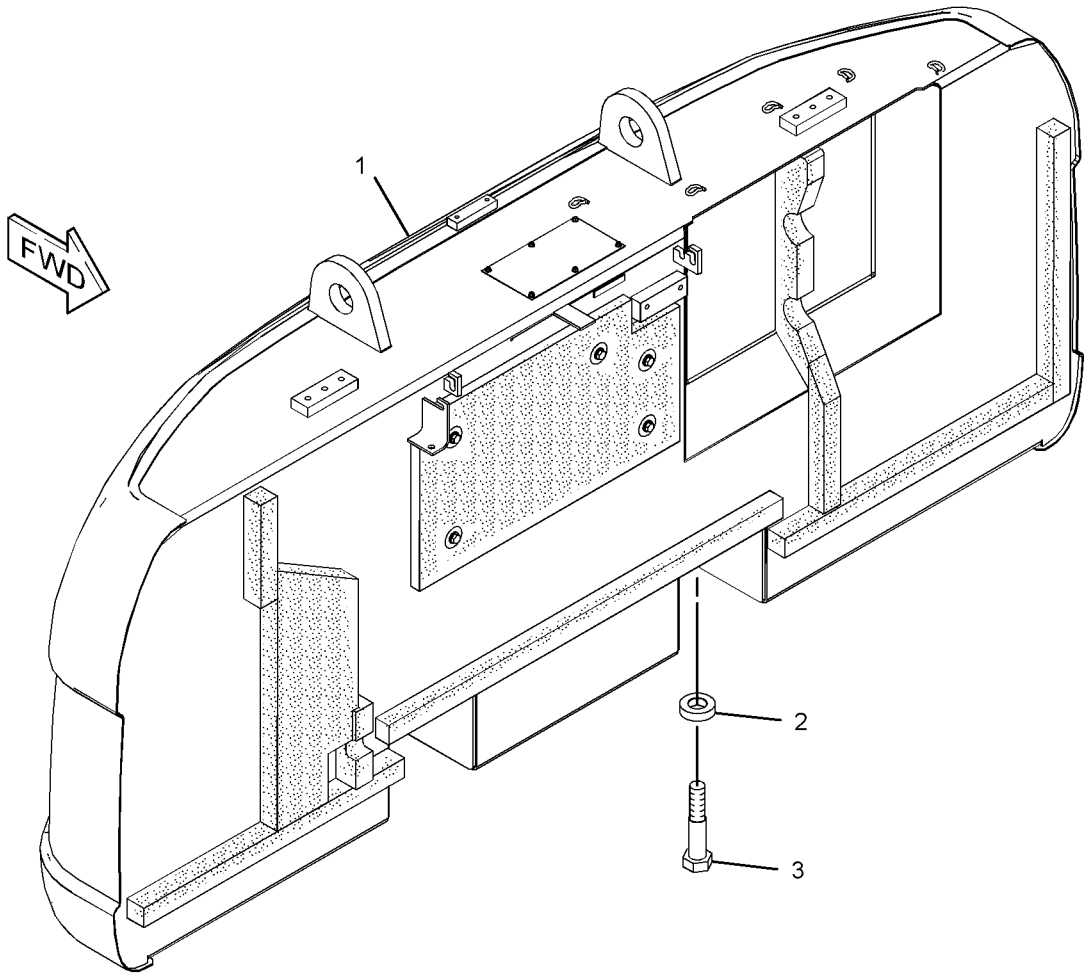

GRAPHIC #1 **<END>** g01620161

223-3031 COUNTERWEIGHT GP

S/N: MNB1-UP; WDK1-UP
PART OF 314-3677 COUNTERWEIGHT AR
AN ATTACHMENT

SMCS-7056 **i03129904**

NOTE	REF NO	GRAPHIC REF	PART NUMBER	QTY	PART NAME 1 2 3 4 5 6 (PRODUCT LEVEL)	SEE PAGE
	1	1	**7Y-0063**	2	FILM-INFORMATION (DO NOT LIFT)	
	2	1	**087-3533**	2	CAP	
CY	3	1	*330-1244*	1	COUNTERWEIGHT GP	341
	4	1	**248-9337**	4	SPACER (39X75X20-MM THK) (39X75X20-MM THK)	
M	5	1	**4I-0191**	4	BOLT (M36X4X181-MM)	

C-CHANGE FROM PREVIOUS TYPE
M-METRIC PART
Y-SEPARATE ILLUSTRATION

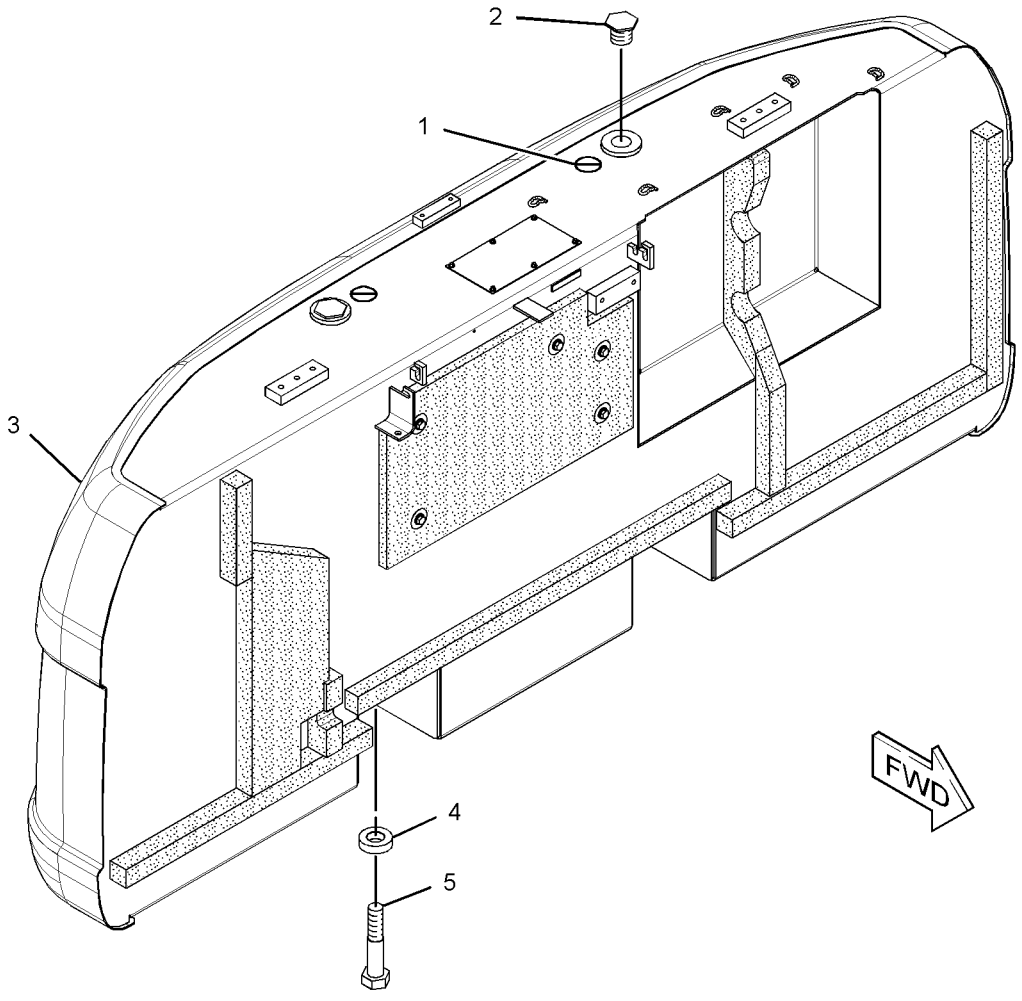

GRAPHIC #1 **<END>** g01618367

268-0462 COUNTERWEIGHT GP

S/N: MNB1-UP
PART OF 262-3586 SPECIAL AR-SUPER LONG REACH
AN ATTACHMENT

SMCS-7056 **i02429558**

NOTE	REF NO	GRAPHIC REF	PART NUMBER	QTY	PART NAME 1 2 3 4 5 6 (PRODUCT LEVEL)	SEE PAGE
	1	1	**248-9337**	4	SPACER (39X75X20-MM THK)	
Y	2	1	*268-0568*	1	COUNTERWEIGHT GP	340
M	3	1	**4I-0191**	4	BOLT (M36X4X181-MM)	

M-METRIC PART
Y-SEPARATE ILLUSTRATION

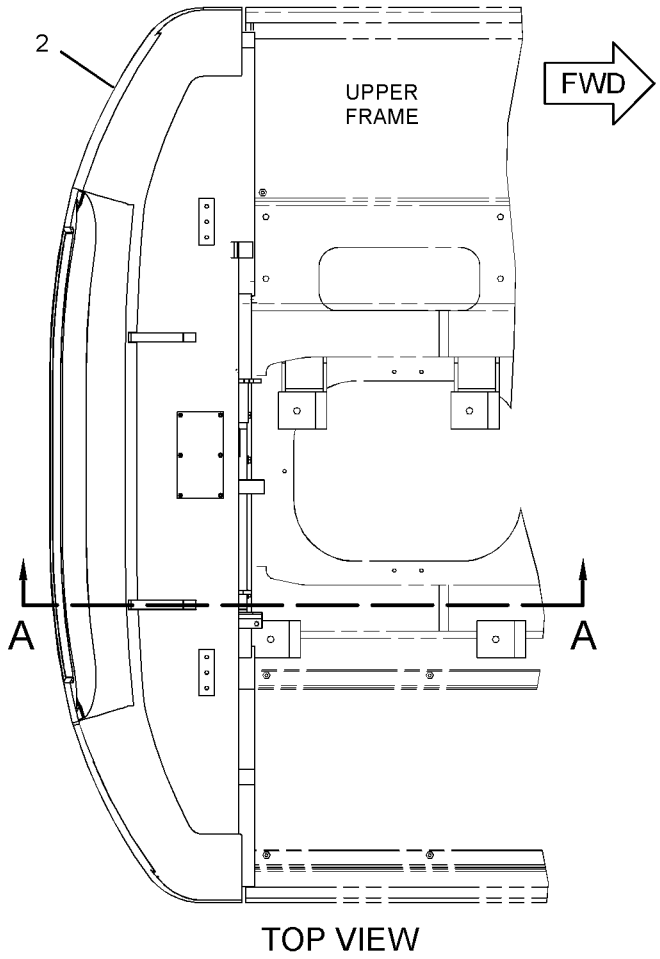

TOP VIEW

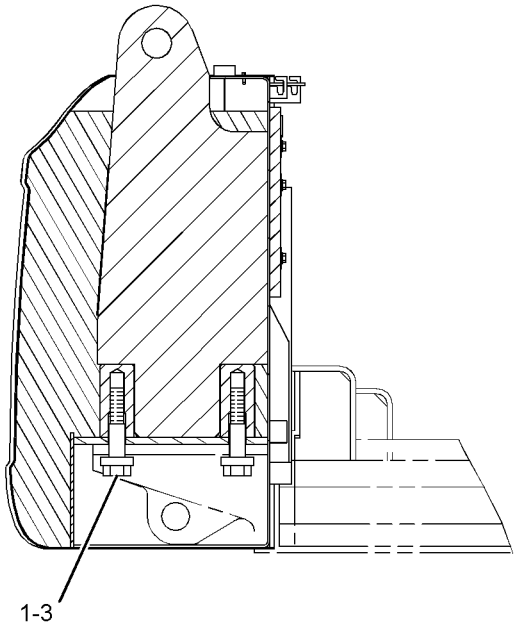

SECTION A-A

GRAPHIC #1 **<END>** g01239786

268-0568 COUNTERWEIGHT GP

S/N: MNB1-UP
6751-KG (14883.4-LB)
PART OF 268-0462 COUNTERWEIGHT GP
AN ATTACHMENT

SMCS-7056 **i02429569**

NOTE	REF NO	GRAPHIC REF	PART NUMBER	QTY	PART NAME 1 2 3 4 5 6 (PRODUCT LEVEL)	SEE PAGE
	1	1	**7I-0717**	1	LINER	
	2	1	**127-7771**	1	LINER	
	3	1	**184-8722**	1	LINER	
	4	1	**236-9527**	1	INSULATION	
	5	1	**236-9528**	1	LINER	
	6	1	**236-9529**	1	LINER	
	7	1	**236-9536**	1	LINER	
	8	1	**236-9539**	1	LINER	
	9	1	**259-3721**	1	LINER	
	10	1	**268-0569**	1	COUNTERWEIGHT AS	
		1	**192-3039**	6	SCREW-HEX FLANGE (6.3X1.8X19-MM)	
	11	1	**273-7799**	1	LINER	
	12	1	**7Y-2292**	5	WASHER (13X50X2-MM THK)	
M	13	1	**8T-4179**	5	BOLT (M12X1.75X20-MM)	
	14	1	**8T-4223**	5	WASHER-HARD (13.5X25.5X3-MM THK)	

M-METRIC PART

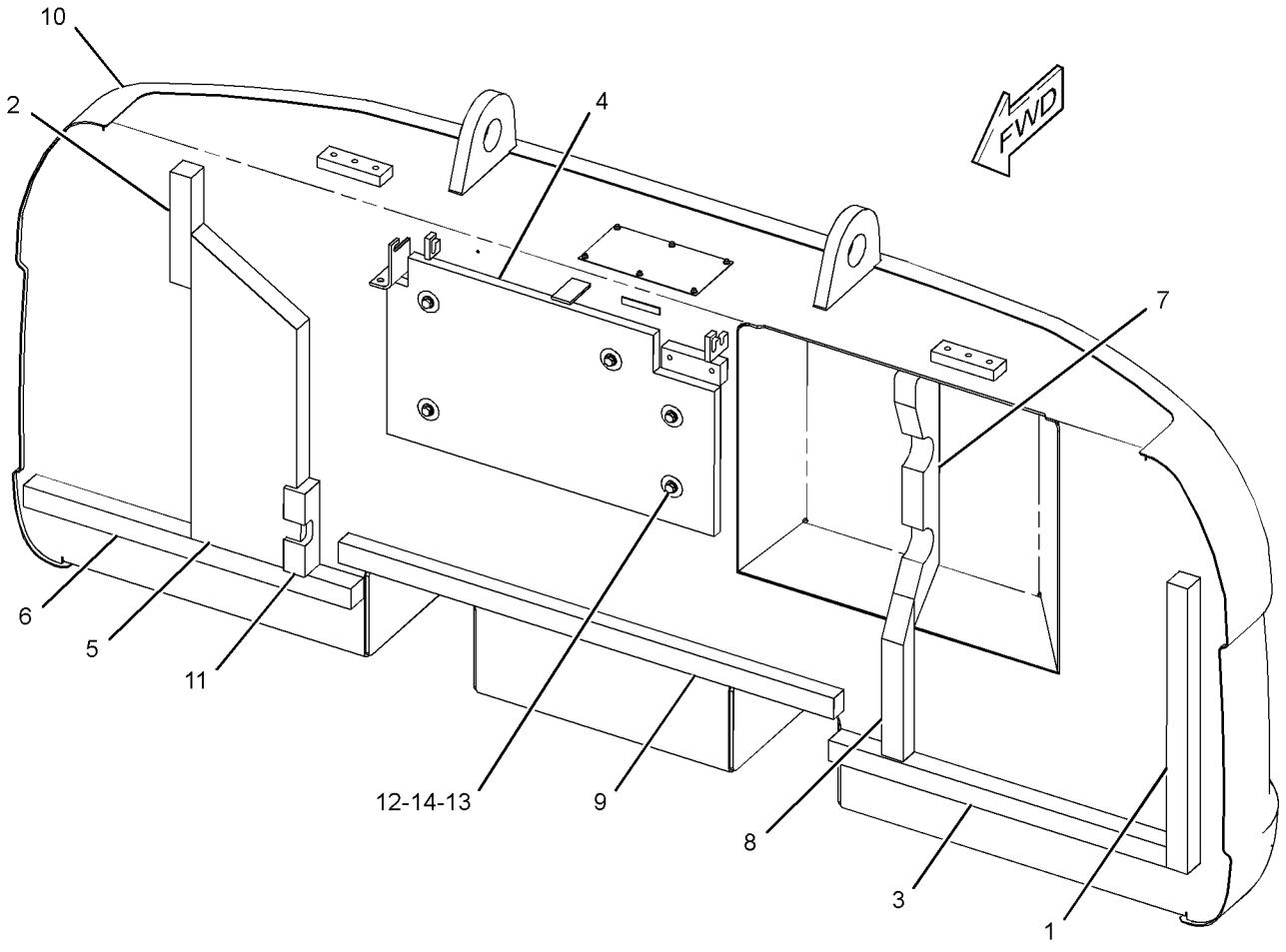

GRAPHIC #1 **<END>** g01239811

FRAME AND BODY

330-1244 COUNTERWEIGHT GP

S/N: MNB1-UP; WDK1-UP
5401-KG (11907.2-LB)
PART OF 223-3031 COUNTERWEIGHT GP
AN ATTACHMENT

SMCS-7056 **i03129905**

NOTE	REF NO	GRAPHIC REF	PART NUMBER	QTY	PART NAME 1 2 3 4 5 6 (PRODUCT LEVEL)	SEE PAGE
	1	1	**7I-0717**	1	LINER	
	2	1	**127-7771**	1	LINER	
	3	1	**184-8722**	1	LINER	
	4	1	**236-9527**	1	INSULATION	
	5	1	**236-9528**	1	LINER	
	6	1	**236-9529**	1	LINER	
	7	1	**236-9536**	1	LINER	
	8	1	**236-9539**	1	LINER	
	9	1	**259-3721**	1	LINER	
	10	1	**273-7799**	1	LINER	
	11	1	**330-1245**	1	COUNTERWEIGHT AS	
	12	1	**7Y-2292**	5	WASHER (13X50X2-MM THK)	
M	13	1	**8T-4179**	5	BOLT (M12X1.75X20-MM)	
	14	1	**8T-4223**	5	WASHER-HARD (13.5X25.5X3-MM THK)	

M-METRIC PART

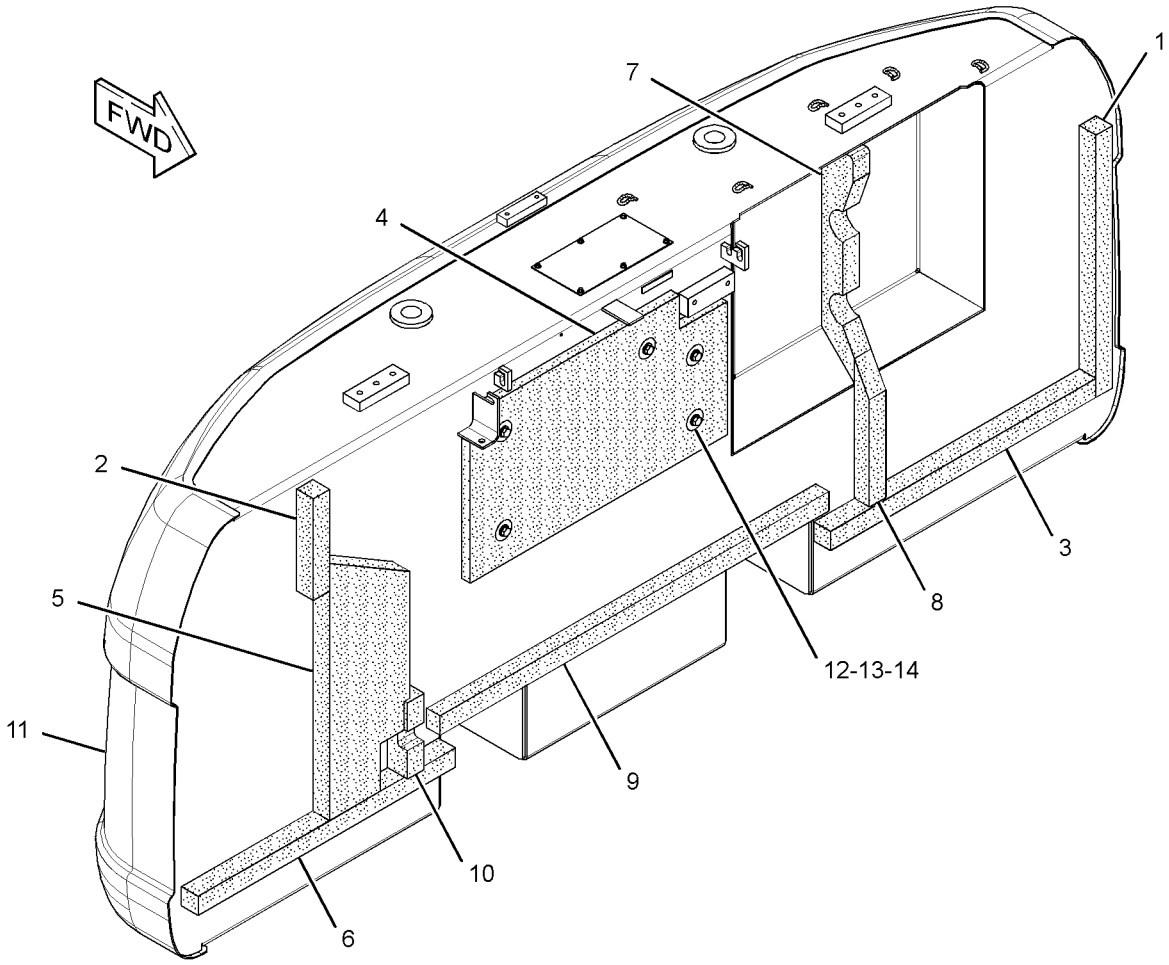

GRAPHIC #1 **<END>** g01615519

FRAME AND BODY

330-1247 COUNTERWEIGHT GP

S/N: MNB1-UP; WDK1-UP
5401-KG (11907.2-LB)
PART OF 223-3022 COUNTERWEIGHT GP

SMCS-7056 **i03127884**

NOTE	REF NO	GRAPHIC REF	PART NUMBER	QTY	PART NAME 1 2 3 4 5 6 (PRODUCT LEVEL)	SEE PAGE
	1	1	**7I-0717**	1	LINER	
	2	1	**127-7771**	1	LINER	
	3	1	**184-8722**	1	LINER	
	4	1	**236-9527**	1	INSULATION	
	5	1	**236-9528**	1	LINER	
	6	1	**236-9529**	1	LINER	
	7	1	**236-9536**	1	LINER	
	8	1	**236-9539**	1	LINER	
	9	1	**259-3721**	1	LINER	
	10	1	**273-7799**	1	LINER	
	11	1	**330-1248**	1	COUNTERWEIGHT AS	
	12	1	**7Y-2292**	5	WASHER (13X50X2-MM THK)	
M	13	1	**8T-4179**	5	BOLT (M12X1.75X20-MM)	
	14	1	**8T-4223**	5	WASHER-HARD (13.5X25.5X3-MM THK)	

M-METRIC PART

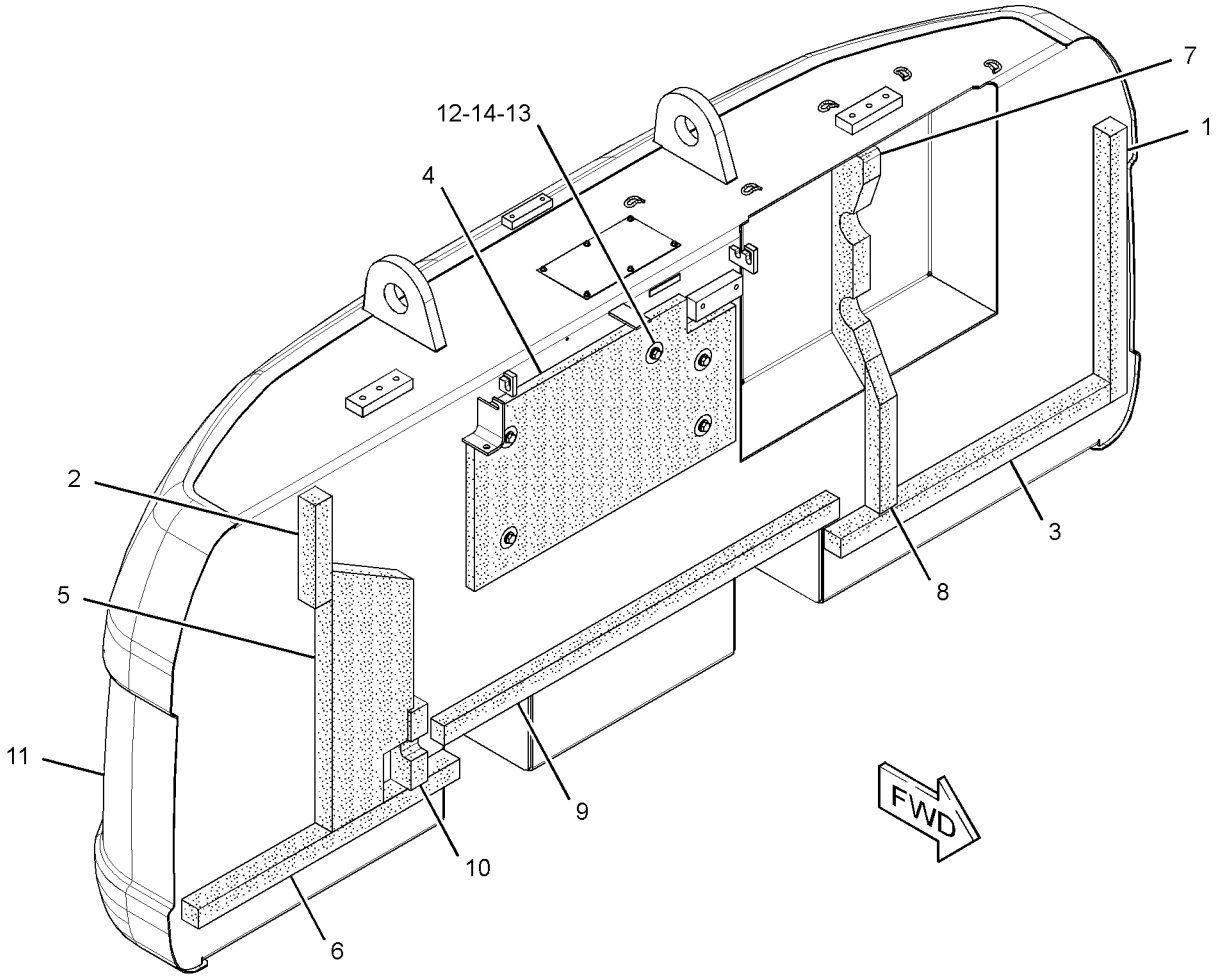

GRAPHIC #1 **<END>** g01618946

330-1250 COUNTERWEIGHT GP

S/N: MNB1-UP
5801-KG (12789-LB)
PART OF 223-3025 COUNTERWEIGHT GP
AN ATTACHMENT

SMCS-7056 **i03133242**

NOTE	REF NO	GRAPHIC REF	PART NUMBER	QTY	PART NAME 1 2 3 4 5 6 (PRODUCT LEVEL)	SEE PAGE
	1	1	**7I-0717**	1	LINER	
	2	1	**127-7771**	1	LINER	
	3	1	**184-8722**	1	LINER	
	4	1	**236-9527**	1	INSULATION	
	5	1	**236-9528**	1	LINER	
	6	1	**236-9529**	1	LINER	
	7	1	**236-9536**	1	LINER	
	8	1	**236-9539**	1	LINER	
	9	1	**259-3721**	1	LINER	
	10	1	**273-7799**	1	LINER	
	11	1	**330-1251**	1	COUNTERWEIGHT AS	
	12	1	**7Y-2292**	5	WASHER (13X50X2-MM THK)	
M	13	1	**8T-4179**	5	BOLT (M12X1.75X20-MM)	
	14	1	**8T-4223**	5	WASHER-HARD (13.5X25.5X3-MM THK)	

M-METRIC PART

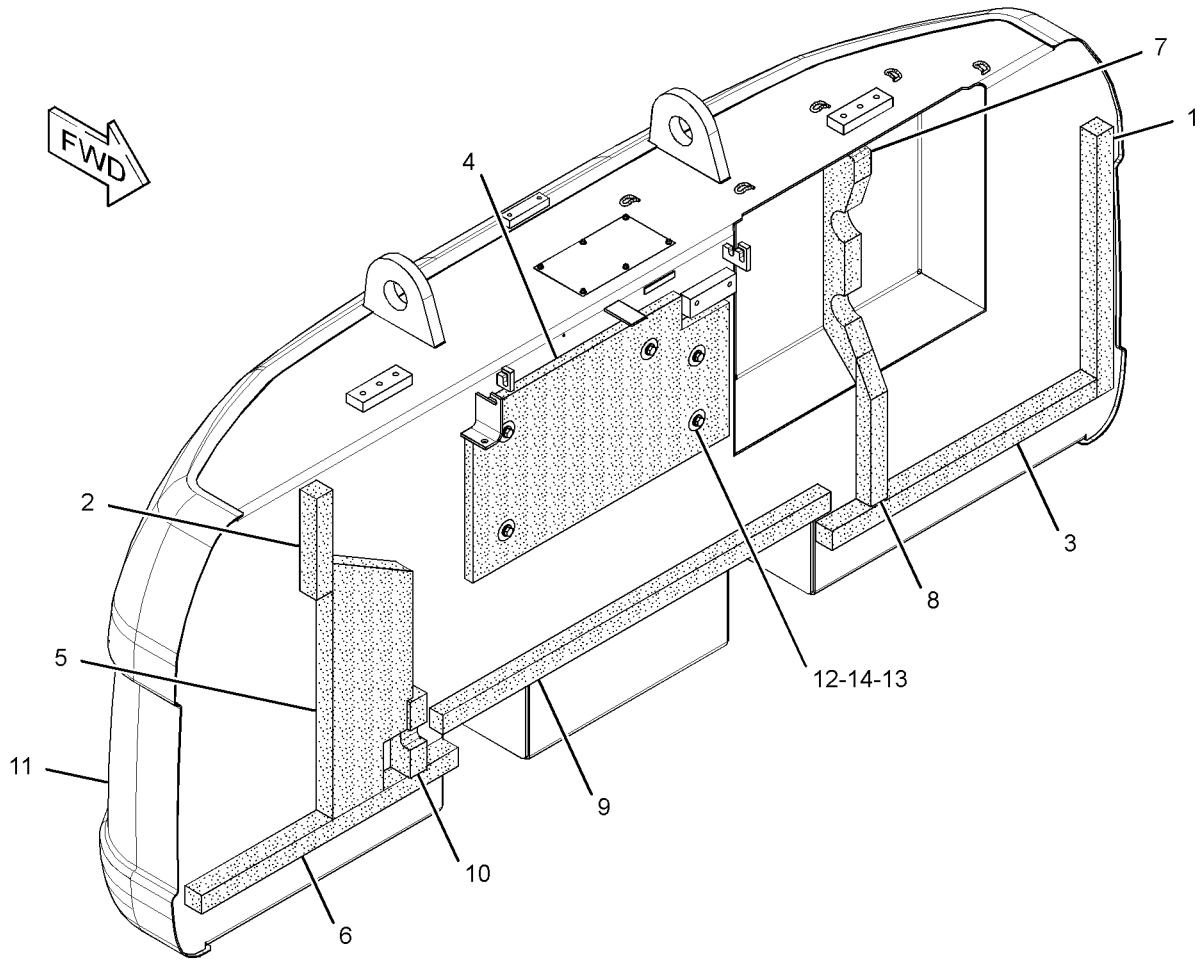

GRAPHIC #1 **<END>** g01615662

330-1258 COUNTERWEIGHT GP

S/N: MNB1-UP; WDK1-UP
5401-KG (11907.2-LB)
PART OF 278-3924 COUNTERWEIGHT & MOUNTING GP
AN ATTACHMENT

SMCS-7056 **i03137841**

NOTE	REF NO	GRAPHIC REF	PART NUMBER	QTY	PART NAME 1 2 3 4 5 6 (PRODUCT LEVEL)	SEE PAGE
	1	1	**7I-0717**	1	LINER	
	2	1	**127-7771**	1	LINER	
	3	1	**184-8722**	1	LINER	
	4	1	**236-9527**	1	INSULATION	
	5	1	**236-9528**	1	LINER	
	6	1	**236-9529**	1	LINER	
	7	1	**236-9536**	1	LINER	
	8	1	**236-9539**	1	LINER	
	9	1	**259-3721**	1	LINER	
	10	1	**273-7799**	1	LINER	
	11	1	**330-1259**	1	COUNTERWEIGHT AS	
	12	1	**7Y-2292**	5	WASHER (13X50X2-MM THK)	
M	13	1	**8T-4179**	5	BOLT (M12X1.75X20-MM)	
	14	1	**8T-4223**	5	WASHER-HARD (13.5X25.5X3-MM THK)	

M-METRIC PART

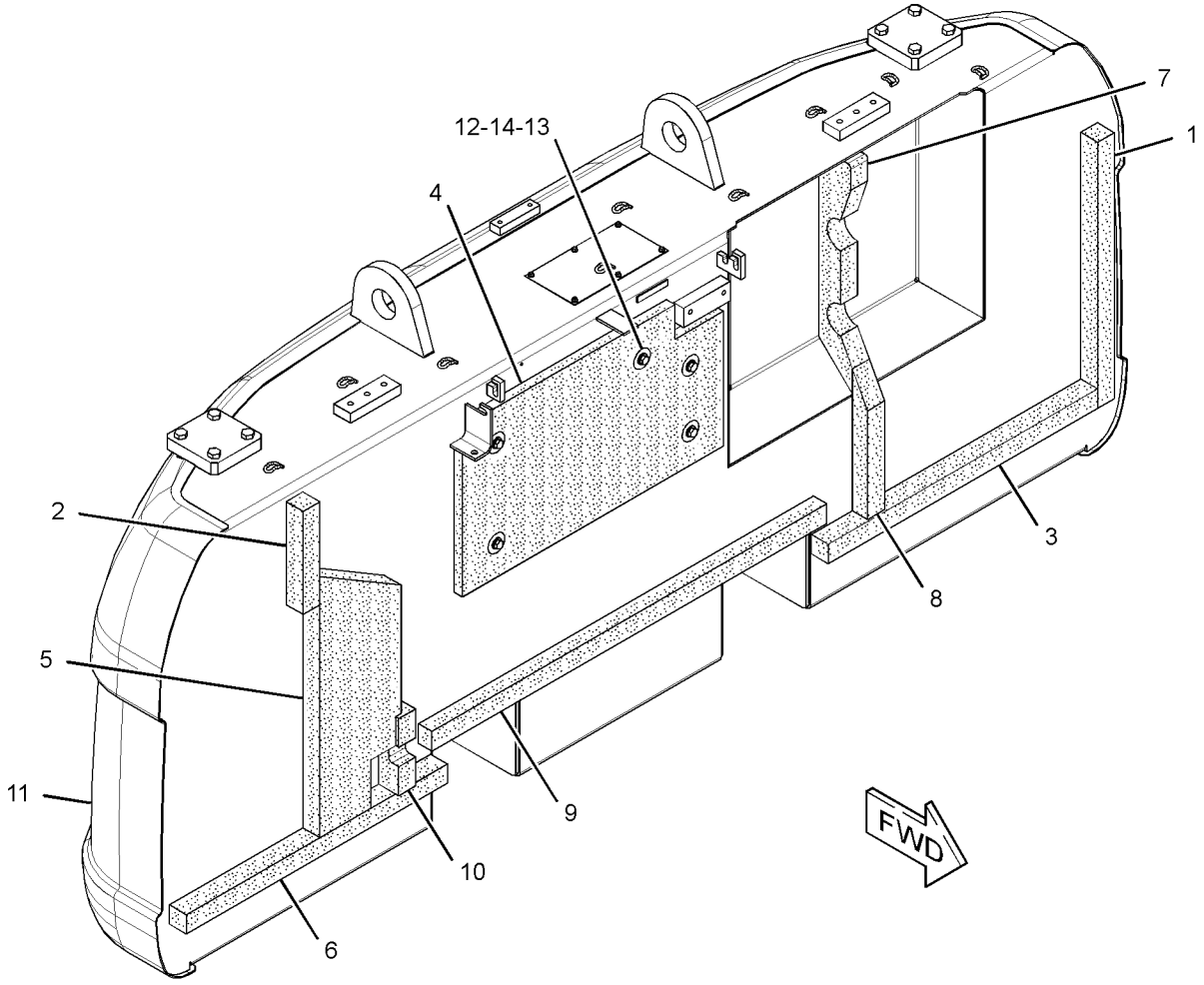

GRAPHIC #1 **<END>** g01618986

330-1261 COUNTERWEIGHT GP

S/N: MNB1-UP
5801-KG (12789-LB)
PART OF 278-3926 COUNTERWEIGHT & MOUNTING GP
AN ATTACHMENT

SMCS-7056 **i03137858**

NOTE	REF NO	GRAPHIC REF	PART NUMBER	QTY	PART NAME 1 2 3 4 5 6 (PRODUCT LEVEL)	SEE PAGE
	1	1	**7I-0717**	1	LINER	
	2	1	**127-7771**	1	LINER	
	3	1	**184-8722**	1	LINER	
	4	1	**236-9527**	1	INSULATION	
	5	1	**236-9528**	1	LINER	
	6	1	**236-9529**	1	LINER	
	7	1	**236-9536**	1	LINER	
	8	1	**236-9539**	1	LINER	
	9	1	**259-3721**	1	LINER	
	10	1	**273-7799**	1	LINER	
	11	1	**330-1262**	1	COUNTERWEIGHT AS	
	12	1	**7Y-2292**	5	WASHER (13X50X2-MM THK)	
M	13	1	**8T-4179**	5	BOLT (M12X1.75X20-MM)	
	14	1	**8T-4223**	5	WASHER-HARD (13.5X25.5X3-MM THK)	

M-METRIC PART

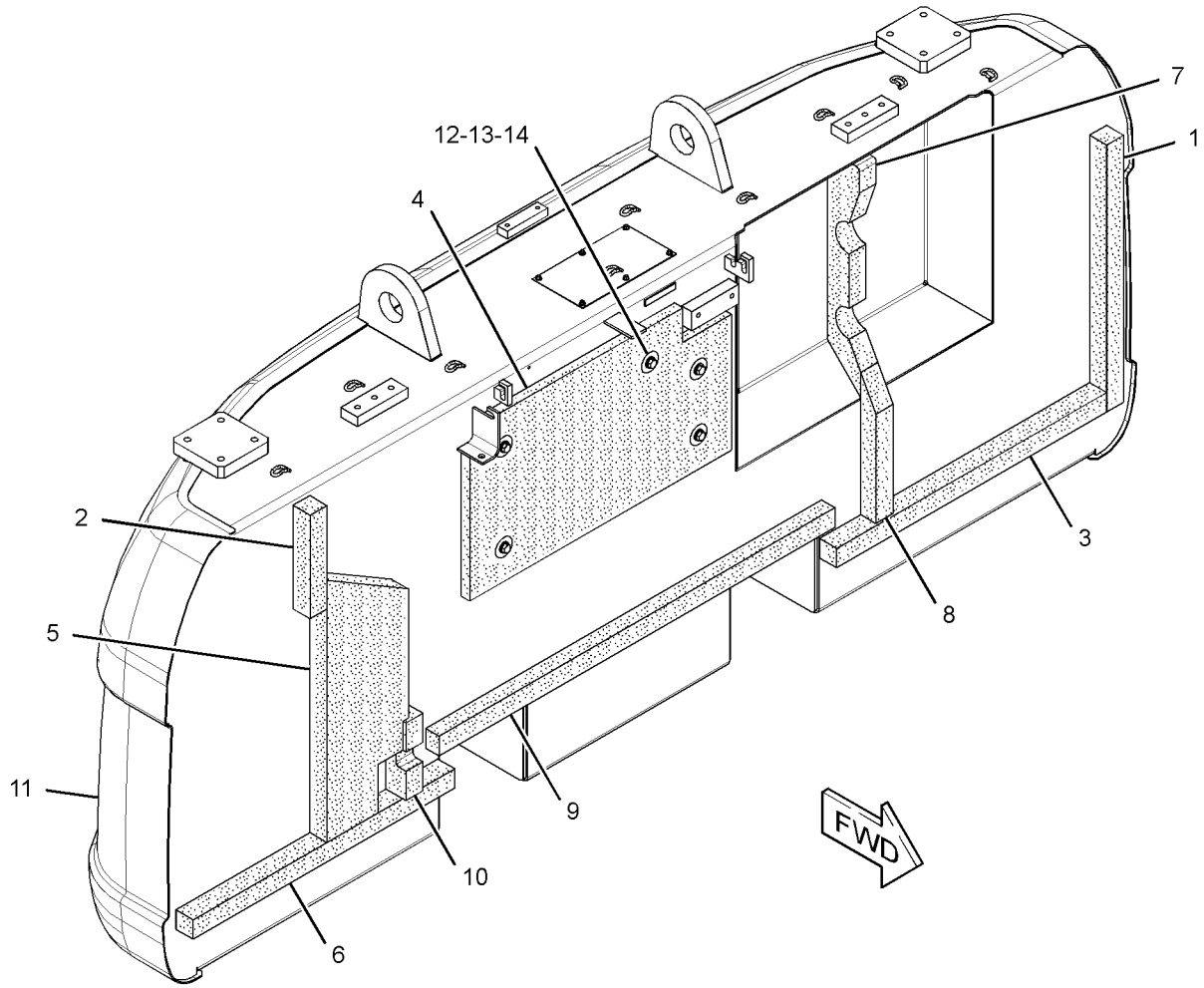

GRAPHIC #1 **<END>** g01618983

256-1677 COVER AS-SOUND SUPPRESSION

S/N: MNB1-UP; WDK1-UP

PART OF 223-3043 HOOD & GUARD GP

SMCS-7253, 7263, 7276, 795C **i02430266**

NOTE	REF NO	GRAPHIC REF	PART NUMBER	QTY	PART NAME 1 2 3 4 5 6 (PRODUCT LEVEL)	SEE PAGE
Z	1	1		1	COVER AS	
	2	1	**256-1678**	1	INSULATION	
	3	1	**256-1679**	2	INSULATION	

Z-NOT SERVICED SEPARATELY

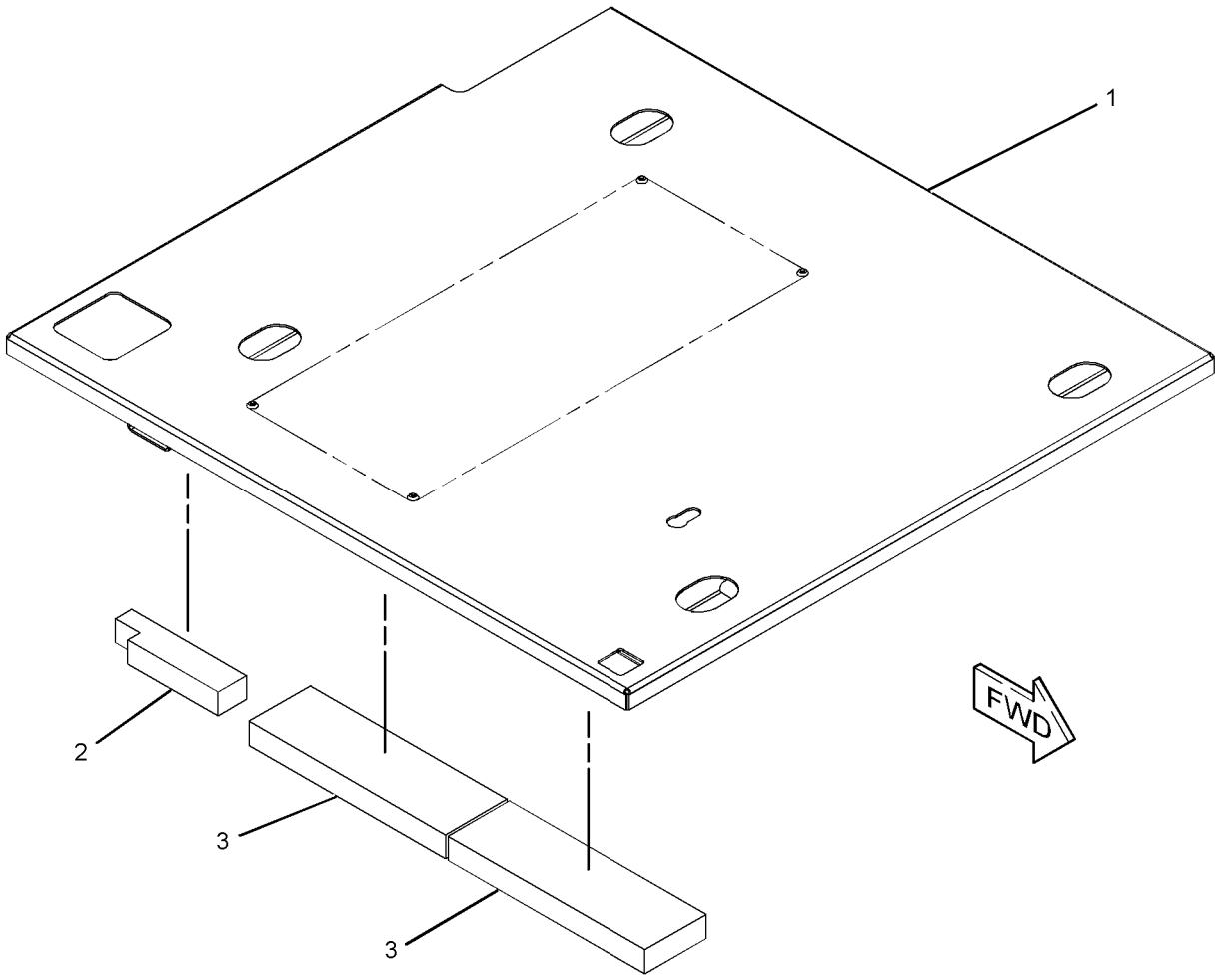

GRAPHIC #1 **<END>** g01214260

330-1430 COVER AS-SOUND SUPPRESSION

S/N: MNB1-UP; WDK1-UP

PART OF 223-3043 HOOD & GUARD GP

SMCS-7253, 7263, 7276, 795C **i03142162**

NOTE	REF NO	GRAPHIC REF	PART NUMBER	QTY	PART NAME 1 2 3 4 5 6 (PRODUCT LEVEL)	SEE PAGE
	1	1	**170-3015**	1	BUMPER	
	2	1	**177-5739**	1	LINER	
	3	1	**203-4927**	1	LINER	
	4	1	**236-9567**	2	SHEET-RUBBER	
	5	1	**236-9568**	1	LINER	

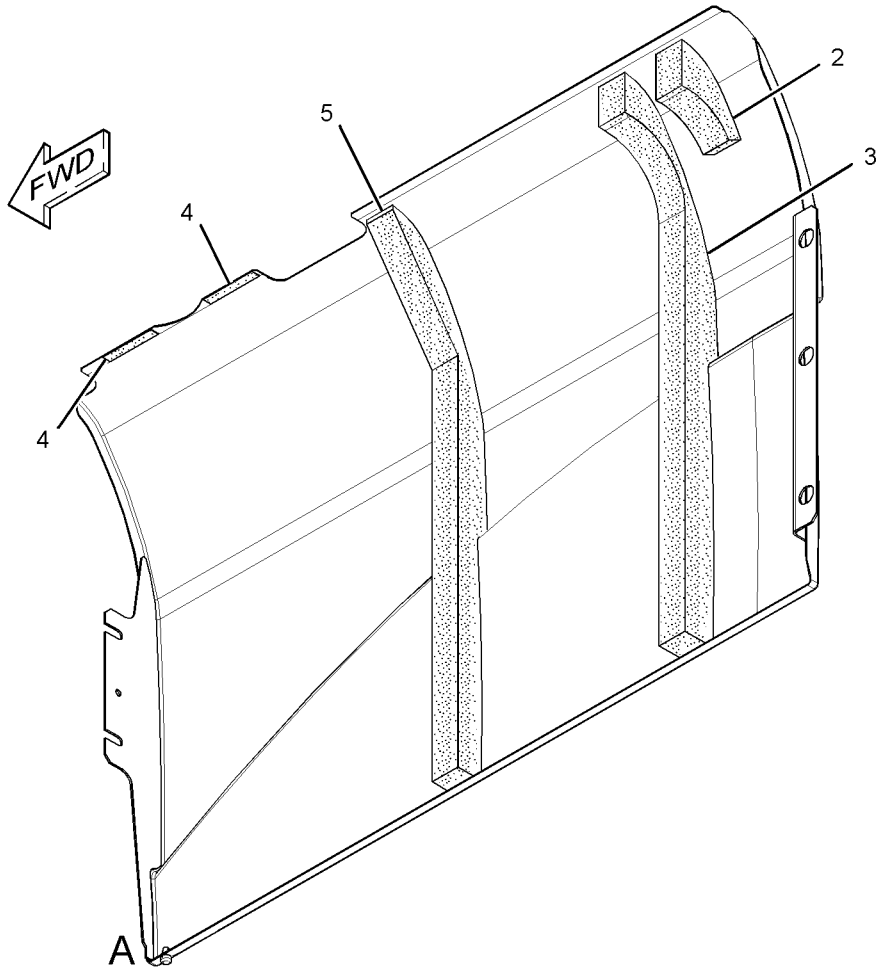

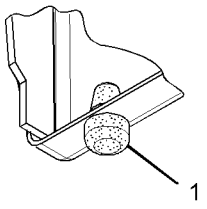

VIEW OF AREA A

GRAPHIC #1 **<END>** g01618993

289-6898 DOOR GP-ACCESS—RADIATOR, LH

S/N: MNB1-UP; WDK1-UP

PART OF 223-3043 HOOD & GUARD GP

SMCS-7273 **i02794912**

NOTE	REF NO	GRAPHIC REF	PART NUMBER	QTY	PART NAME 1 2 3 4 5 6 (PRODUCT LEVEL)	SEE PAGE
M	1	1	**099-6418**	4	NUT (M6X1-THD)	
	2	1	**122-4101**	1	RUBBER	
	3	1	**177-6395**	1	LINER	
	4	1	**208-4289**	1	CUSHION	
	5	1	**262-2468**	1	INSULATION	
	6	1	*289-6899*	1	DOOR AS-SIDE	
		1	**165-2976**	2	HINGE	
J	7	1	**298-2942**	1	LOCK AS	

J-REQUIRES CORPORATE KEY
M-METRIC PART

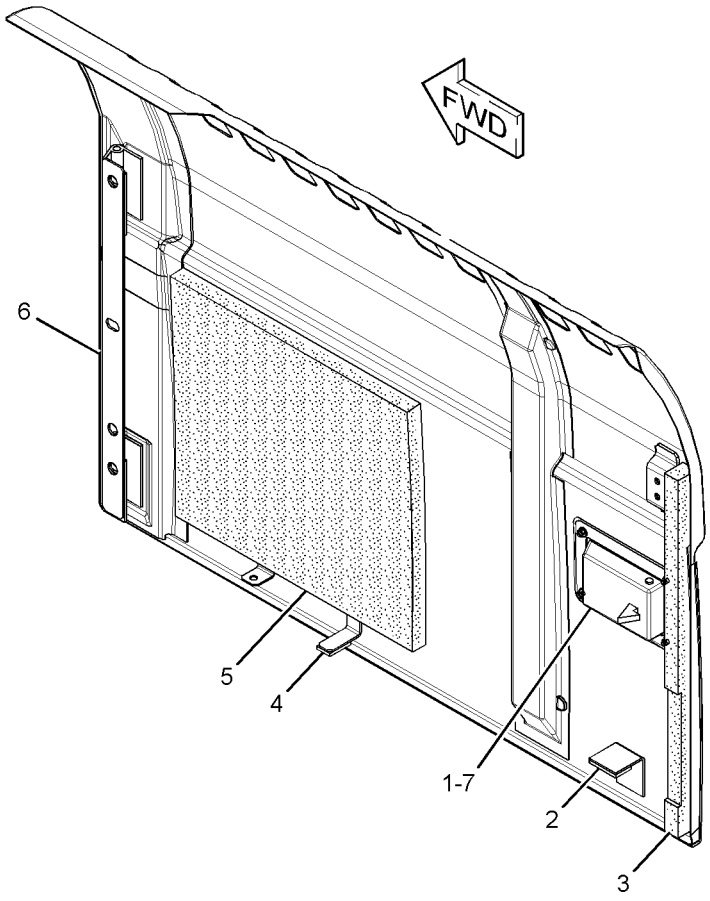

GRAPHIC #1 **<END>** g01398253

289-6902 DOOR GP-ACCESS–RADIATOR

S/N: MNB1-UP; WDK1-UP
PART OF 236-3395 HOOD AR
AN ATTACHMENT

SMCS-7273 **i02780613**

NOTE	REF NO	GRAPHIC REF	PART NUMBER	QTY	PART NAME 1 2 3 4 5 6 (PRODUCT LEVEL)	SEE PAGE
M	1	1	**099-6418**	4	NUT (M6X1-THD)	
	2	1	**122-4101**	1	RUBBER	
	3	1	**177-6395**	1	LINER	
	4	1	**208-4289**	1	CUSHION	
	5	1	*289-6901*	1	DOOR AS-ACCESS	
		1	**165-2976**	2	HINGE	
J	6	1	**298-2942**	1	LOCK AS	

J-REQUIRES CORPORATE KEY
M-METRIC PART

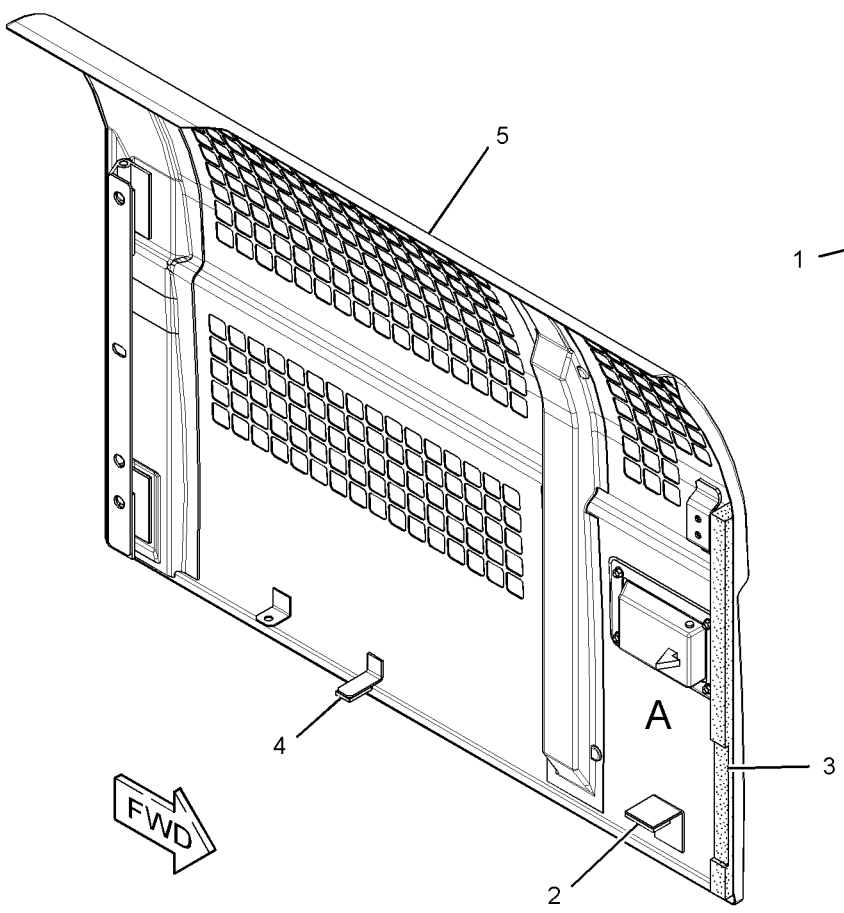

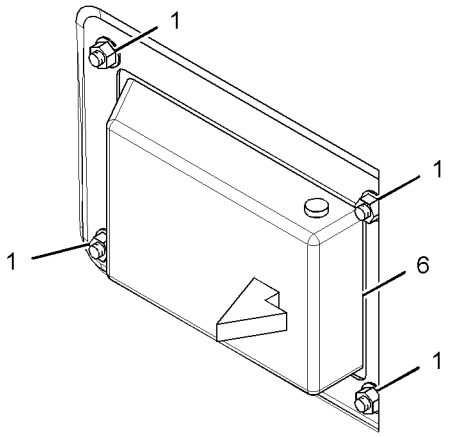

VIEW OF AREA A

GRAPHIC #1 **<END>** g01408848

289-6903 DOOR GP-ACCESS–PUMP COMPARTMENT

S/N: MNB1-UP; WDK1-UP

PART OF 223-3043 HOOD & GUARD GP

SMCS-7273 **i02794913**

NOTE	REF NO	GRAPHIC REF	PART NUMBER	QTY	PART NAME 1 2 3 4 5 6 (PRODUCT LEVEL)	SEE PAGE
M	1	1	**099-6418**	4	NUT (M6X1-THD)	
	2	1	**203-5282**	1	INSULATION	
	3	1	**203-5283**	1	INSULATION	
	4	1	**244-7895**	1	LINER	
J	5	1	**298-2942**	1	LOCK AS	
	6	1	*289-6904*	1	DOOR AS-SIDE	
	6A	1	**165-2976**	2	HINGE	
	7	1	**184-8862**	1	COVER	

J-REQUIRES CORPORATE KEY
M-METRIC PART

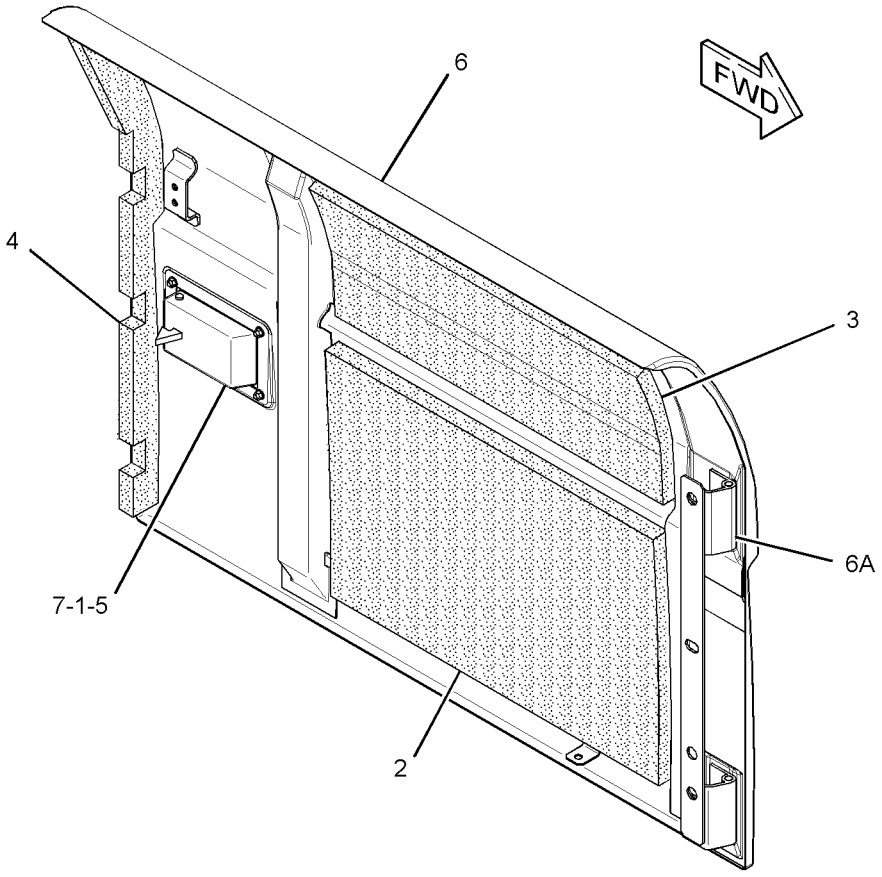

GRAPHIC #1 **<END>** g01385918

298-2968 DOOR GP-ACCESS–AIR CLEANER

S/N: MNB1-UP; WDK1-UP

PART OF 223-3043 HOOD & GUARD GP

SMCS-7273 **i02794914**

NOTE	REF NO	GRAPHIC REF	PART NUMBER	QTY	PART NAME 1 2 3 4 5 6 (PRODUCT LEVEL)	SEE PAGE
	1	1	**208-4289**	1	CUSHION	
	2	1	**236-3747**	1	INSULATION	
	3	1	**250-5054**	1	LINER	
	4	1	**262-2401**	1	INSULATION	
	5	1	*298-2969*	1	DOOR AS-SIDE	
	5A	1	**165-2976**	2	HINGE	

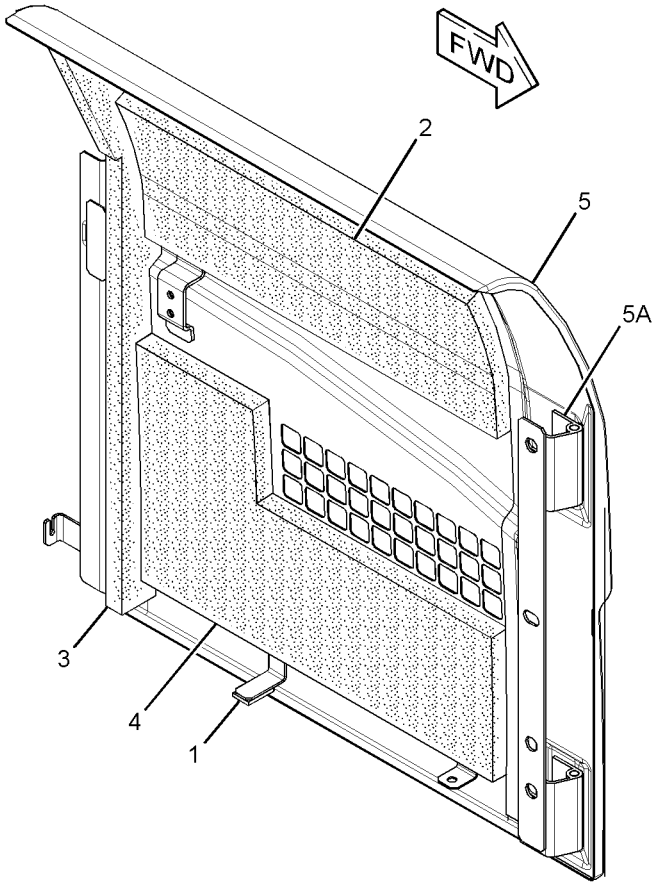

GRAPHIC #1 **<END>** g01398272

FRAME AND BODY

223-3042 FENDER & COVER GP

S/N: MNB1-UP; WDK1-UP

PART OF 314-3652, 314-3653 CHASSIS AR

SMCS-7252 **i02347079**

NOTE	REF NO	GRAPHIC REF	PART NUMBER	QTY	PART NAME 1 2 3 4 5 6 (PRODUCT LEVEL)	SEE PAGE
M	1	1	**135-8573**	2	BOLT AS	
	2	1	**236-3702**	2	SPACER (15X35X11-MM THK)	
	3	1	**236-3703**	2	WASHER (25X35X4-MM THK)	
	4	1	**236-9570**	1	COVER AS	
	5	1	**259-3543**	1	STEP AS	
	6	1	**5P-1075**	2	WASHER-HARD (10.2X22.5X3-MM THK)	
M	7	1	**8T-4195**	2	BOLT (M10X1.5X30-MM)	

M-METRIC PART

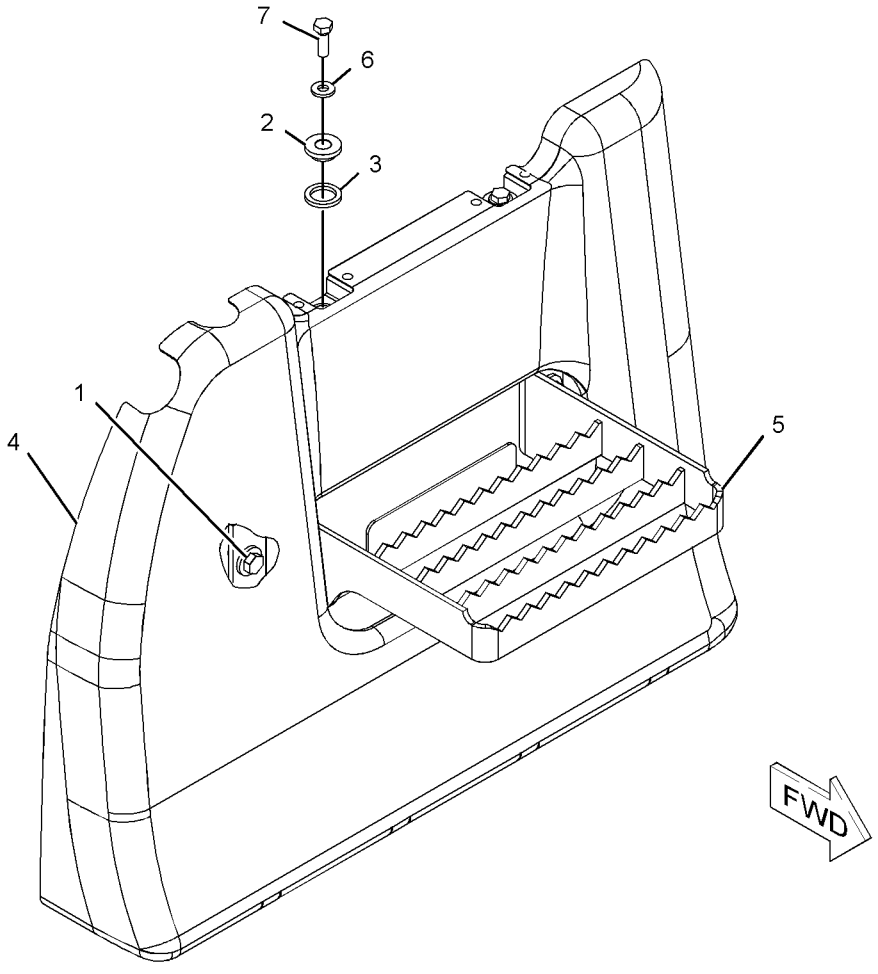

GRAPHIC #1 **<END>** g01150323

FRAME AND BODY

330-1166 FENDER & COVER GP

S/N: MNB1-UP; WDK1-UP
PART OF 330-1353 MIRROR AR-REAR VIEW
AN ATTACHMENT

SMCS-7252 **i03127885**

NOTE	REF NO	GRAPHIC REF	PART NUMBER	QTY	PART NAME 1 2 3 4 5 6 (PRODUCT LEVEL)	SEE PAGE
	1	1	**330-1167**	1	COVER AS	
		1	**278-3818**	1	LINER	

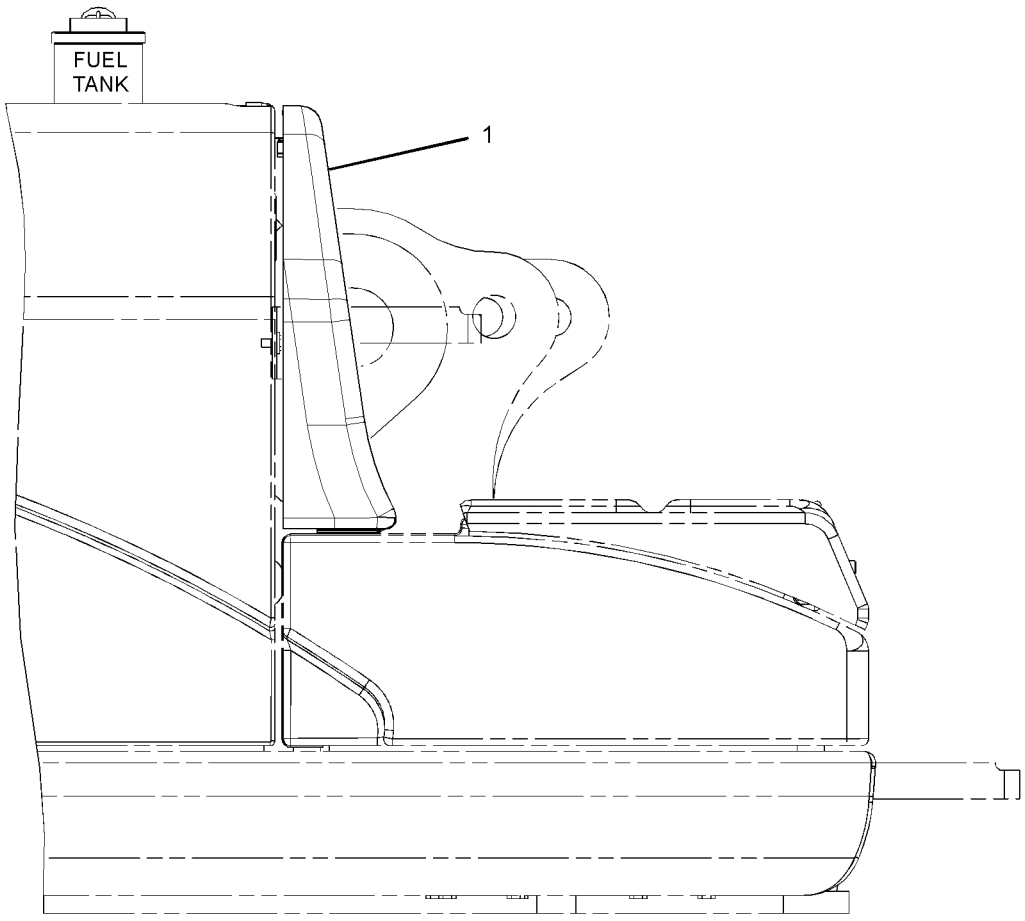

RIGHT SIDE VIEW

GRAPHIC #1

<END>

g01619313

FRAME AND BODY

228-5504 FRAME GP-UPPER

S/N: MNB1-UP; WDK1-UP

PART OF 314-3652, 314-3653 CHASSIS AR

SMCS-7051 **i02973918**

NOTE	REF NO	GRAPHIC REF	PART NUMBER	QTY	PART NAME 1 2 3 4 5 6 (PRODUCT LEVEL)	SEE PAGE
B	1	1	**093-0090**	4	SHIM (1-MM THK)	
	2	1	**093-0364**	2	SPACER (103X140X12-MM THK)	
B	3	1	**133-2427**	2	SHIM (0.5-MM THK)	
	4	1	**186-5663**	2	PIN AS	
	5	1	**201-2771**	1	WASHER (26X90X8-MM THK)	
B	6	1	**212-2840**	2	SHIM (2-MM THK)	
J	7	1	**245-7900**	1	CAP	
J	8	1	**245-7901**	1	CAP	
	9	1	**251-2772**	1	FRAME AS-UPPER	
	10	1	**260-2385**	1	PIN AS	
B	11	1	**308-8781**	1	SHIM (0.5-MM THK)	
B	12	1	**308-8782**	2	SHIM (1-MM THK)	
B	13	1	**308-8783**	1	SHIM (2-MM THK)	
	14	1	**096-6467**	2	WASHER (22X60X8-MM THK)	
B	15	1	**166-1488**	4	SHIM (2-MM THK)	
M	16	1	**7X-2572**	1	BOLT (M24X3X35-MM)	
	17	1	**8T-4123**	2	WASHER (22X35X3.5-MM THK)	
	18	1	**8T-4167**	1	WASHER-HARD (26X44X4-MM THK)	
M	19	1	**8T-4780**	2	BOLT (M20X2.5X30-MM)	

B-USE AS REQUIRED
J-USE ON MACHINE WITHOUT LOWER WIPER
M-METRIC PART

228-5504 **FRAME GP-UPPER** *(contd.)* **i02973918**

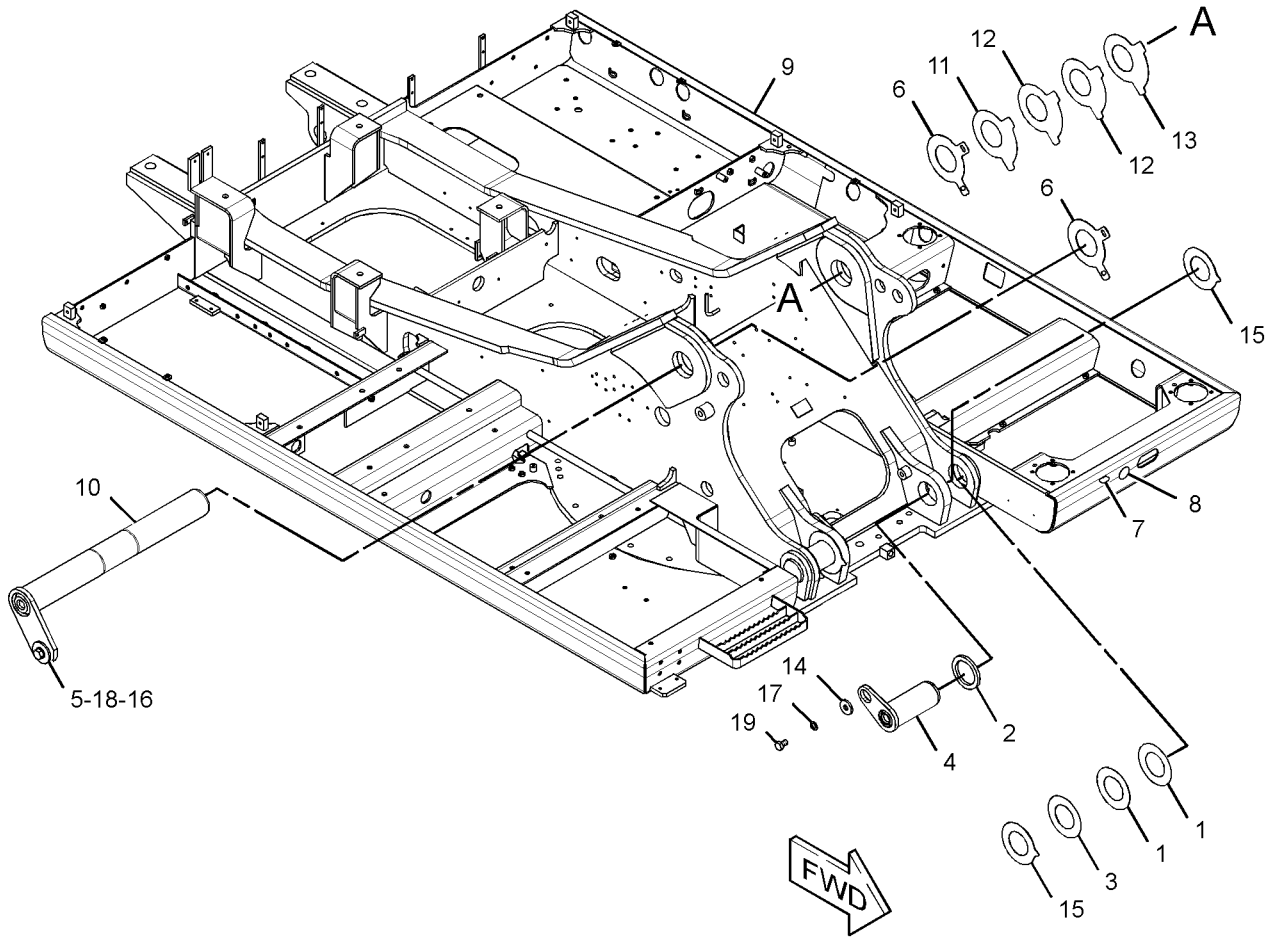

GRAPHIC #1 **<END>** g01479532

FRAME AND BODY

235-7613 FRAME GP-UPPER

S/N: MNB1-UP; WDK1-UP
AN ATTACHMENT

SMCS-7051 **i02350153**

NOTE	REF NO	GRAPHIC REF	PART NUMBER	QTY	PART NAME 1 2 3 4 5 6 (PRODUCT LEVEL)	SEE PAGE
	1	1	**180-7521**	1	BUMPER AS	
	2	1	**180-7525**	2	BUMPER AS	
	3	1	**180-7529**	1	BUMPER AS	
	4	1	**180-7537**	1	BUMPER AS	
	5	1	**186-5611**	1	BUMPER AS	
	6	1	**186-5614**	1	BUMPER AS	
	7	1	**254-2905**	1	FRAME AS-UPPER	
		1	**163-3729**	1	STEP AS	
	8	1	**8T-4223**	16	WASHER-HARD (13.5X25.5X3-MM THK)	
M	9	1	**8T-4244**	16	NUT (M12X1.75-THD)	

M-METRIC PART

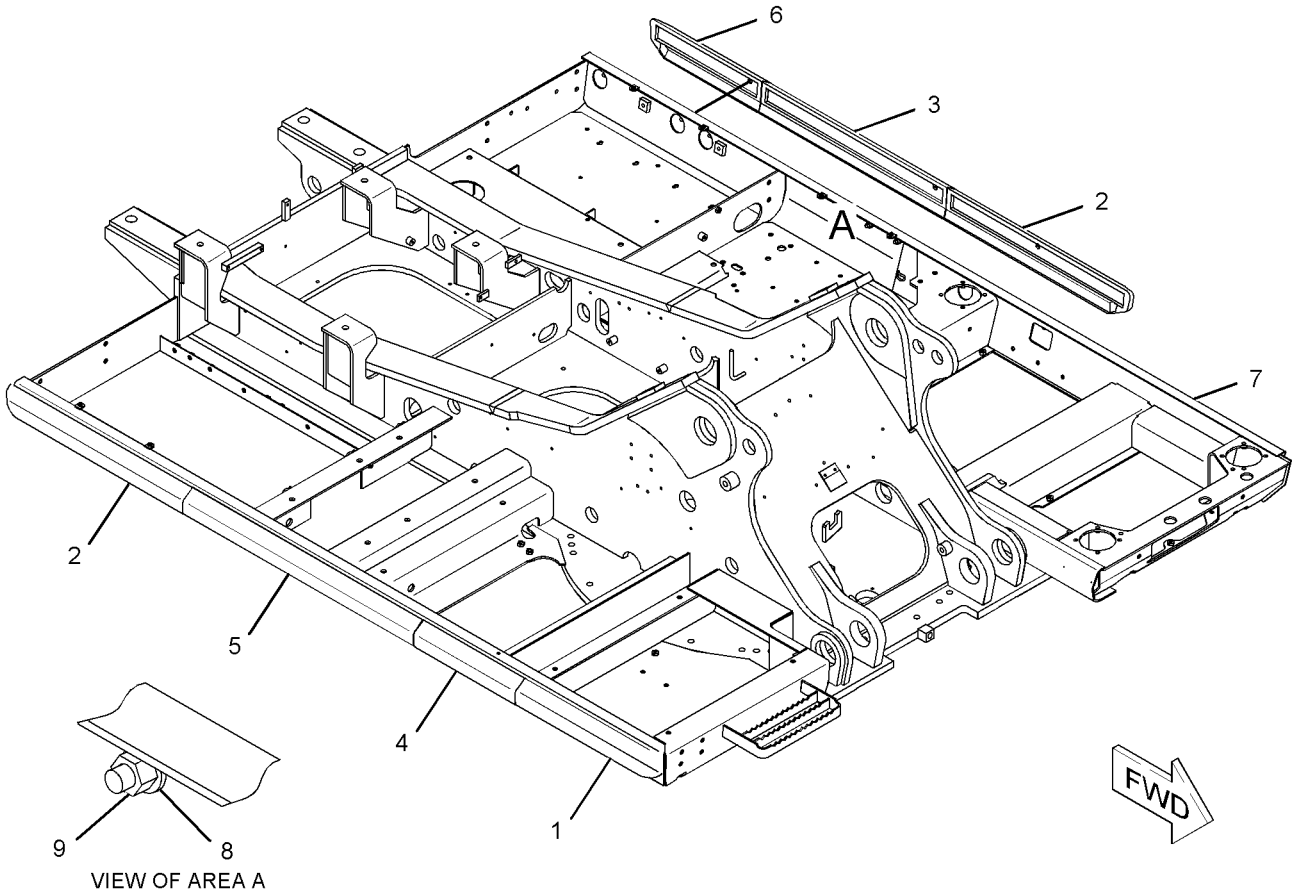

GRAPHIC #1 **<END>** g01141953

199-4478 GEAR & BEARING GP-SWING

S/N: MNB1-UP; WDK1-UP

PART OF 227-6087 GEAR & BEARING GP-SWING

SMCS-7063 **i02487233**

NOTE	REF NO	GRAPHIC REF	PART NUMBER	QTY	PART NAME 1 2 3 4 5 6 (PRODUCT LEVEL)	SEE PAGE
	1	1	**3B-8489**	1	FITTING-GREASE	
BE	2	1	**110-7183**		SEAL	

B-USE AS REQUIRED
E-ORDER BY THE CENTIMETER

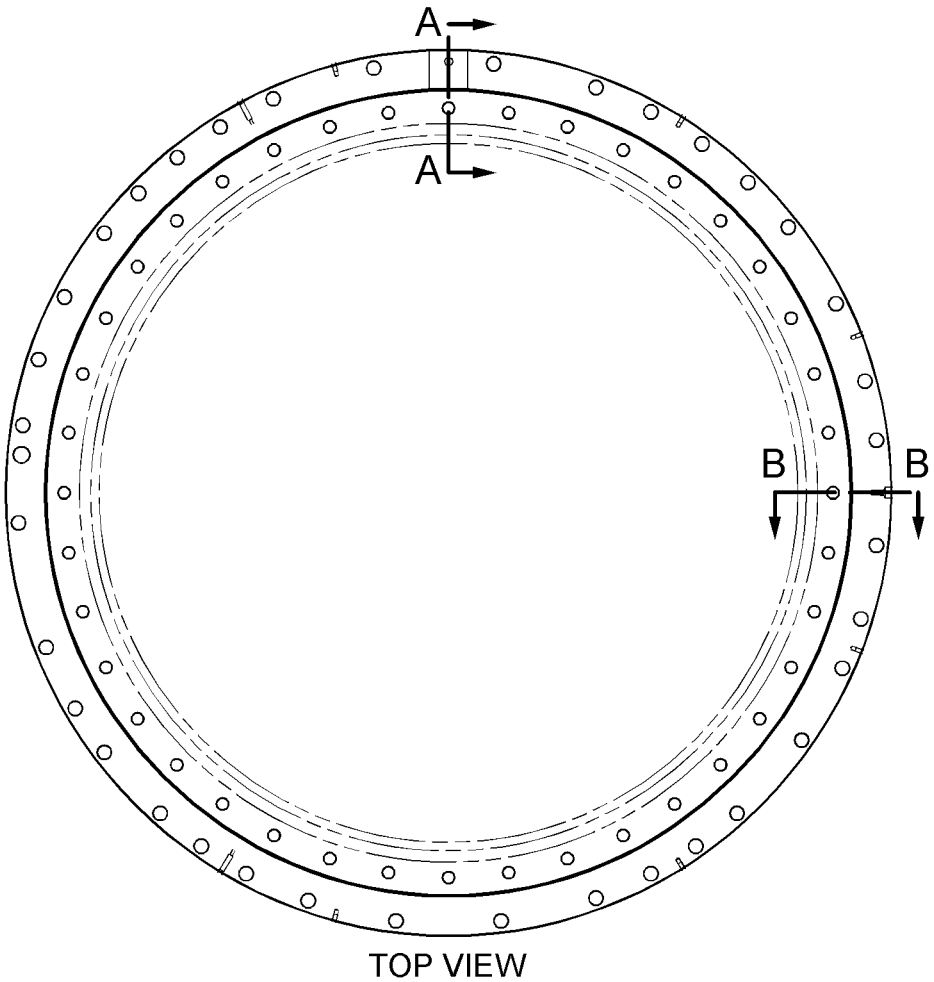

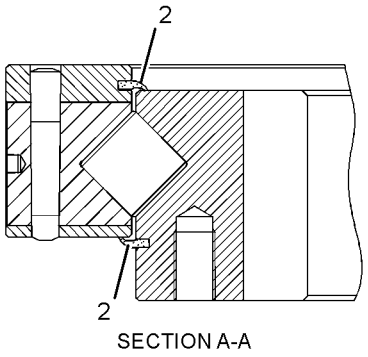

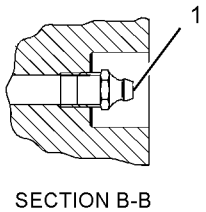

GRAPHIC #1 **<END>** g01151946

227-6087 GEAR & BEARING GP-SWING

S/N: MNB1-UP; WDK1-UP

PART OF 227-6107 GEAR & BEARING GP-SWING

SMCS-7063 **i02348049**

NOTE	PART NUMBER	QTY	PART NAME 1 2 3 4 5 6 (PRODUCT LEVEL)	SEE PAGE
Y	*199-4478*	1	GEAR & BEARING GP-SWING	357
			—OR—	
Y	*227-6088*	1	GEAR & BEARING GP-SWING	359

Y-SEPARATE ILLUSTRATION

<END>

227-6088 GEAR & BEARING GP-SWING

S/N: MNB1-UP; WDK1-UP

PART OF 227-6087 GEAR & BEARING GP-SWING

SMCS-7063 **i02348540**

NOTE	REF NO	GRAPHIC REF	PART NUMBER	QTY	PART NAME 1 2 3 4 5 6 (PRODUCT LEVEL)	SEE PAGE
Z	1	1		75	SEPARATOR-BEARING	
Z	2	1		47	SEPARATOR-BEARING	
Z	3	1		1	RACE-BEARING	
	4	1	**227-6073**	2	SEAL-DUST	
Z	5	1		122	ROLLER	
Z	6	1		1	RACE AS-OUTER	
	7	1	**3B-8489**	1	FITTING-GREASE	

Z-NOT SERVICED SEPARATELY

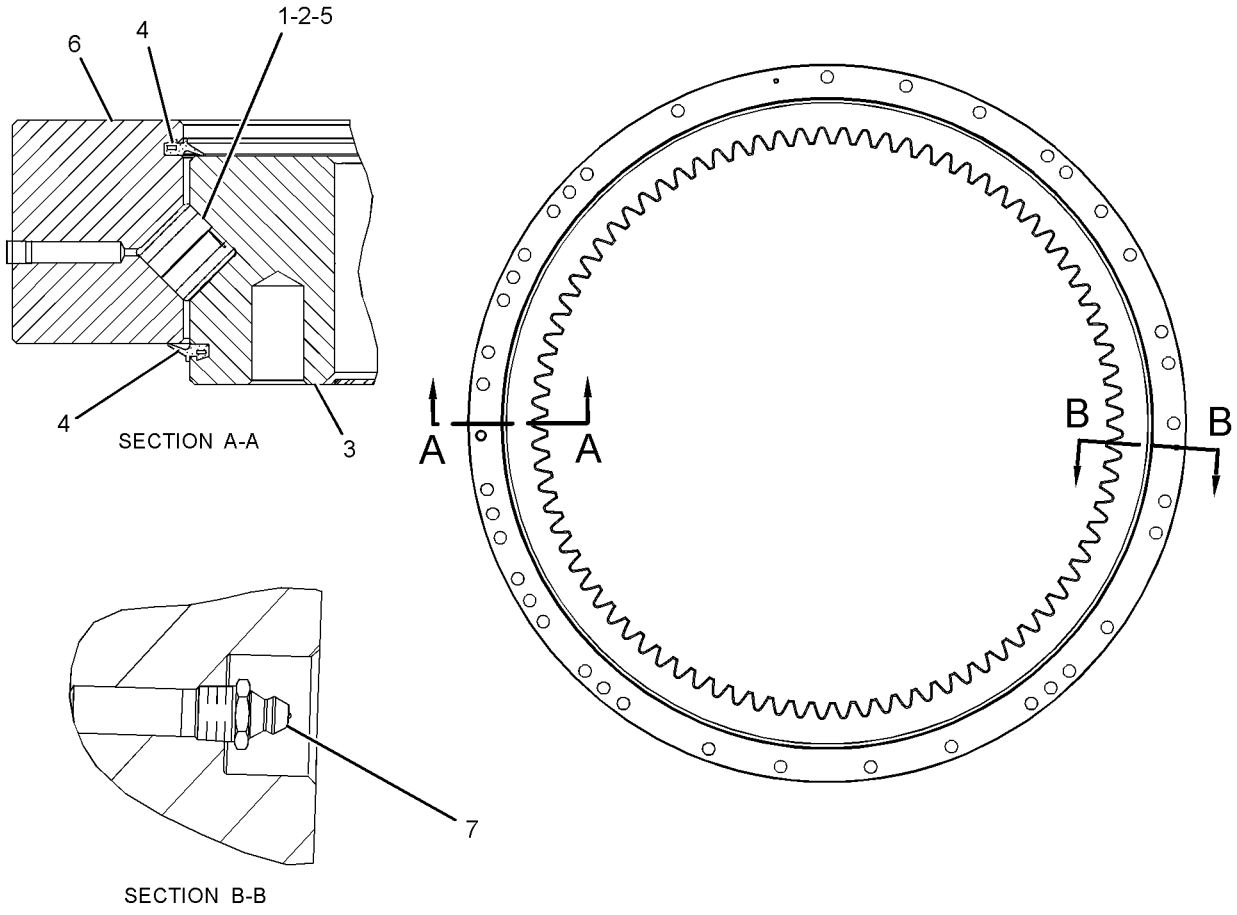

GRAPHIC #1 **<END>** g01151313

FRAME AND BODY

227-6107 GEAR & BEARING GP-SWING

S/N: MNB1-UP; WDK1-UP

PART OF 229-1746, 229-1747 FRAME AR-UNDERCARRIAGE

SMCS-7063 **i03025116**

NOTE	REF NO	GRAPHIC REF	PART NUMBER	QTY	PART NAME 1 2 3 4 5 6 (PRODUCT LEVEL)	SEE PAGE
B	1	1	**1U-8846**		SEALANT-GASKET	
	2	1	**3B-8489**	1	FITTING-GREASE	
	3	1	**5K-9243**	2	ELBOW-FLARED	
	4	1	**6I-6441**	2	CORK	
					(USED ONLY IN LOCATIONS MARKED Y)	
	5	1	**7Y-1647**	1	GASKET	
	6	1	**7Y-1650**	1	CLAMP-HOSE	
	7	1	**199-4522**	1	TUBE AS	
Y	8	1	**227-6087**	1	GEAR & BEARING GP-SWING	358
	9	1	**227-6105**	1	BOOT	
	10	1	**227-6106**	1	RETAINER	
	11	1	**093-0020**	35	SPACER (25X44X6-MM THK)	
					(NOT USED IN LOCATIONS MARKED X)	
	12	1	**096-4902**	1	DOWEL	
	13	1	**148-4703**	1	COVER	
	14	1	**148-4704**	1	GASKET	
	15	1	**4N-9170**	2	CLIP	
	16	1	**7Y-1507**	42	SPACER (24.5X44X43-MM THK)	
	17	1	**7Y-1648**	1	STRIP	
M	18	1	**8T-0667**	42	BOLT (M24X3X100-MM)	
M	19	1	**8T-0669**	35	BOLT (M24X3X130-MM)	
	20	1	**8T-4121**	14	WASHER-HARD (11X21X2.5-MM THK)	
M	21	1	**8T-4136**	12	BOLT (M10X1.5X25-MM)	
M	22	1	**8T-4137**	2	BOLT (M10X1.5X20-MM)	
M	23	1	**8T-4199**	2	BOLT (M8X1.25X12-MM)	

B-USE AS REQUIRED
M-METRIC PART
Y-SEPARATE ILLUSTRATION

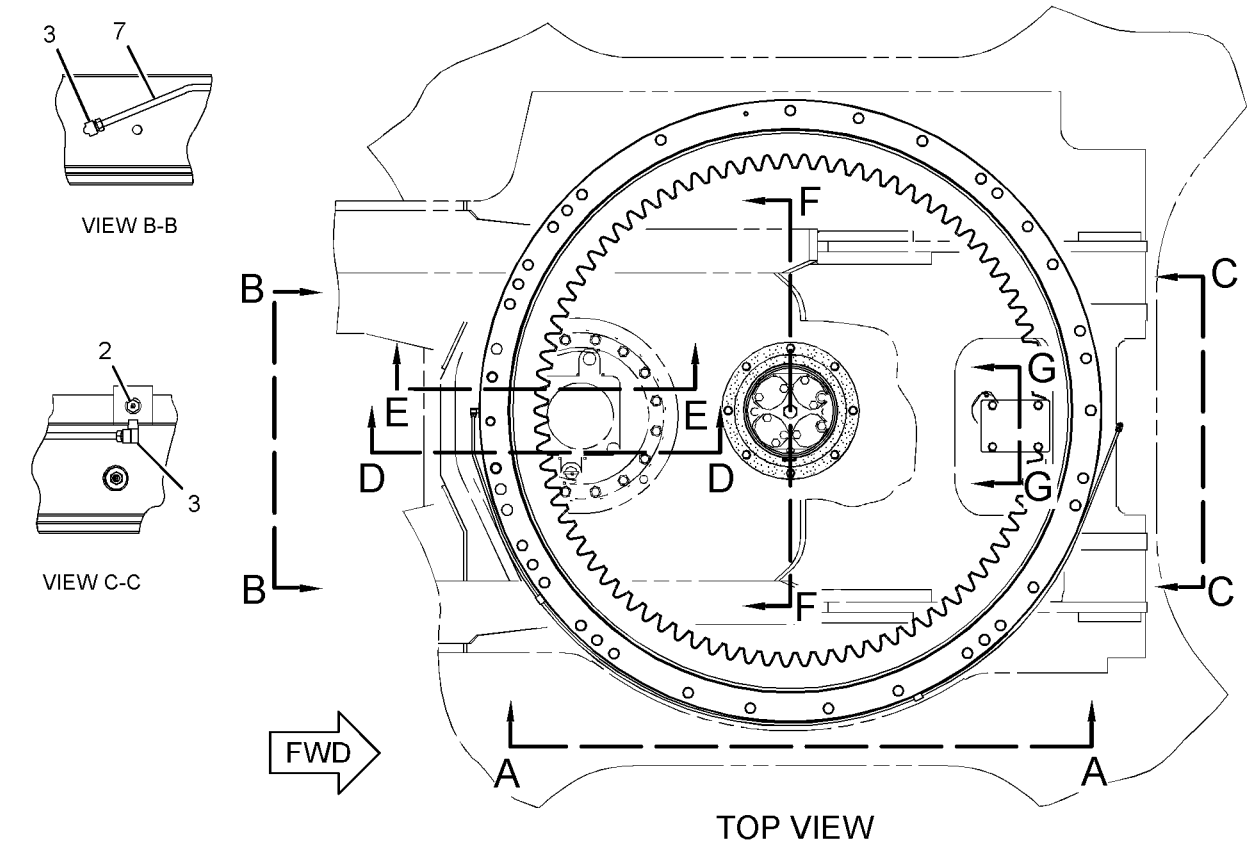

GRAPHIC #1

<END>

g01533260

FRAME AND BODY

223-3047 GUARD GP-BOTTOM

S/N: MNB1-UP; WDK1-UP

PART OF 314-3652, 314-3653 CHASSIS AR

SMCS-7153 **i02348133**

NOTE	REF NO	GRAPHIC REF	PART NUMBER	QTY	PART NAME 1 2 3 4 5 6 (PRODUCT LEVEL)	SEE PAGE
M	1	1	**135-8576**	38	BOLT AS-LOCKING (M12X1.75X30-MM)	
	2	1	**184-8784**	1	SHEET	
	3	1	**223-3098**	1	SHEET	
	4	1	**223-3099**	1	SHEET	
	5	1	**223-3103**	1	SHEET	
	6	1	**223-3104**	1	SHEET	
	7	1	**236-3637**	2	PLATE AS	
	8	1	**262-2376**	1	SHEET	
	9	1	**262-2377**	1	SHEET AS	

M-METRIC PART

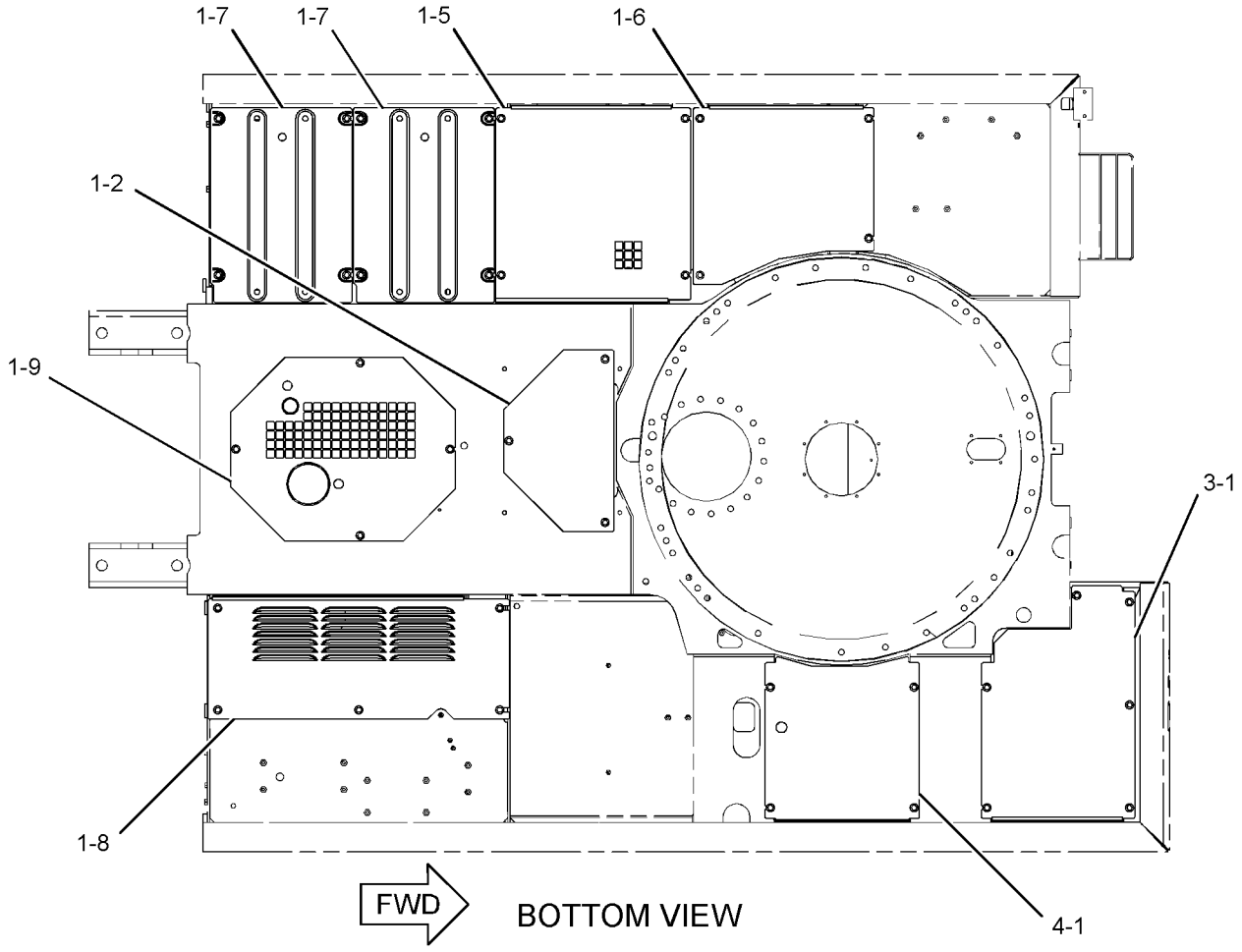

GRAPHIC #1 **<END>** g01184469

223-3049 GUARD GP-BOTTOM

S/N: MNB1-UP; WDK1-UP
AN ATTACHMENT

SMCS-7153 **i02346773**

NOTE	REF NO	GRAPHIC REF	PART NUMBER	QTY	PART NAME 1 2 3 4 5 6 (PRODUCT LEVEL)	SEE PAGE
M	1	1	**135-8576**	4	BOLT AS-LOCKING (M12X1.75X30-MM)	
	2	1	**184-8795**	1	PLATE AS	
	3	1	**236-3629**	1	PLATE AS	
	4	1	**236-3631**	1	PLATE AS	
	5	1	**236-3639**	1	PLATE AS	
	6	1	**236-3641**	1	PLATE AS	
	7	1	**262-2379**	1	PLATE AS	
	8	1	**262-2382**	1	PLATE AS	
	9	1	**262-2384**	1	PLATE AS	

M-METRIC PART

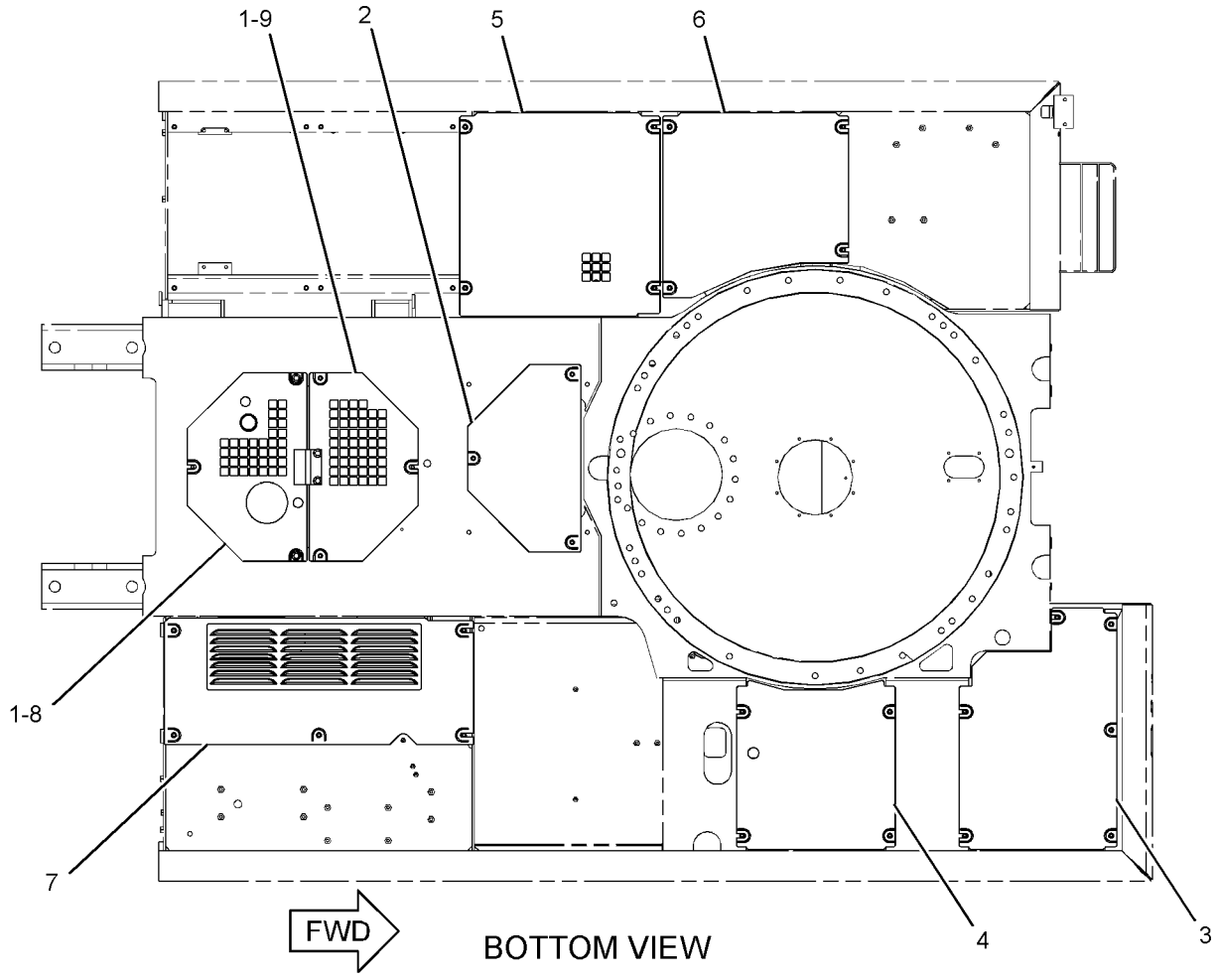

GRAPHIC #1 **<END>** g01184558

262-2486 GUARD GP-BOTTOM

S/N: MNB1-UP; WDK1-UP
PART OF 229-1787 COOLING AR-HIGH AMBIENT TEMP
AN ATTACHMENT

SMCS-7153 **i02399266**

NOTE	REF NO	GRAPHIC REF	PART NUMBER	QTY	PART NAME 1 2 3 4 5 6 (PRODUCT LEVEL)	SEE PAGE
M	1	1	**135-8576**	8	BOLT AS-LOCKING (M12X1.75X30-MM)	
	2	1	**262-2487**	1	PLATE AS	
		1	**099-7857**	1	HINGE	
	3	1	**262-2489**	1	PLATE AS	

M-METRIC PART

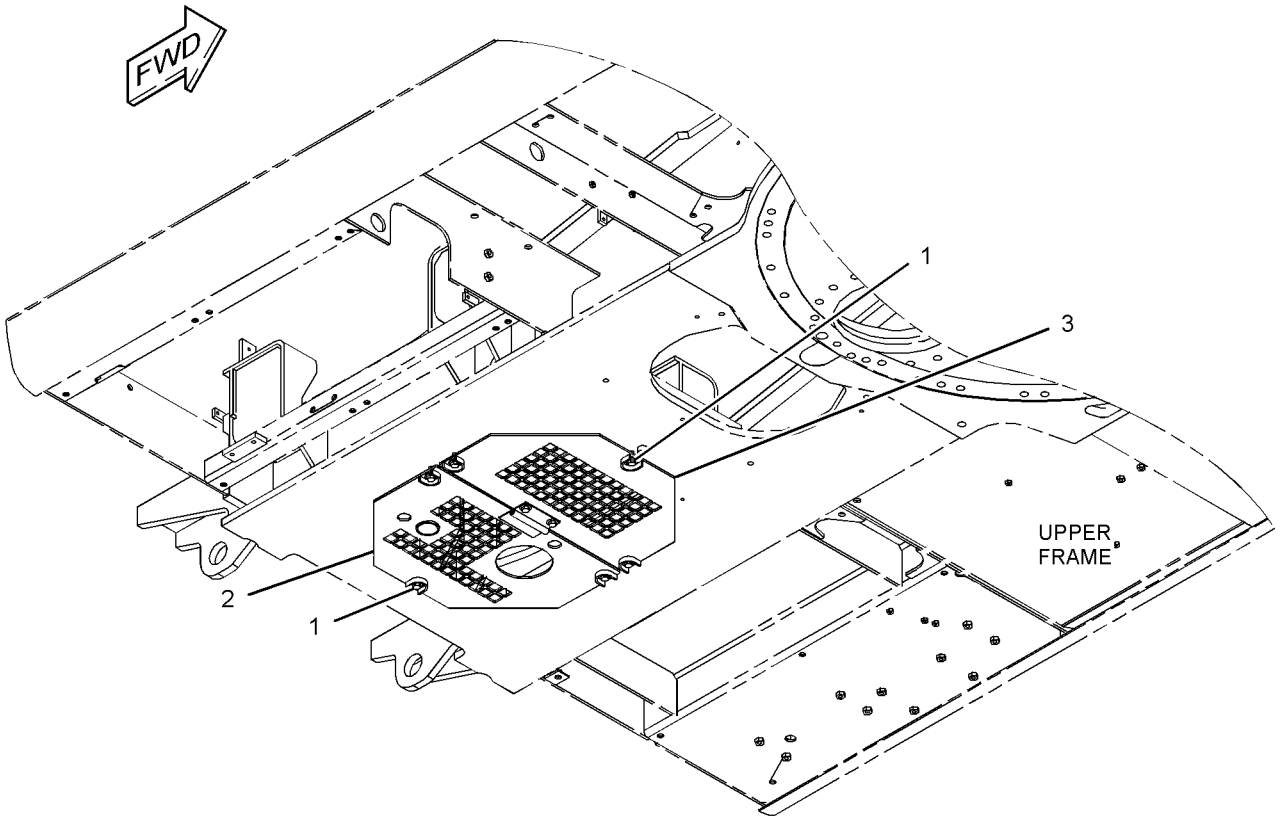

GRAPHIC #1 **<END>** g01245634

130-4272 GUARD GP-SWIVEL

S/N: MNB1-UP; WDK1-UP
AN ATTACHMENT

SMCS-7183 **i01589377**

NOTE	REF NO	GRAPHIC REF	PART NUMBER	QTY	PART NAME 1 2 3 4 5 6 (PRODUCT LEVEL)	SEE PAGE
	1	1	**130-4273**	1	PLATE AS	
	2	1	**130-4276**	4	PLATE	
M	3	1	**8T-4140**	8	BOLT (M16X2X60MM)	
	4	1	**3E-9411**	8	WASHER-HARD (6MM THK)	

M-METRIC PART

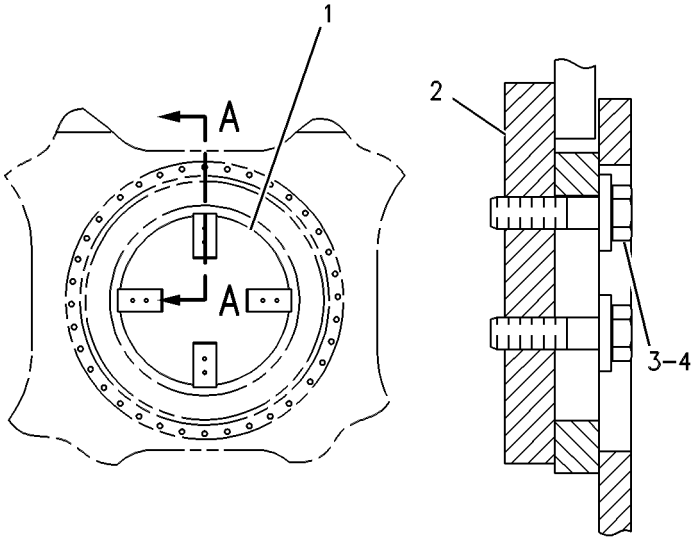

SECTION A-A

GRAPHIC #1 **<END>** g00262509

134-8883 GUARD GP-SWIVEL

S/N: MNB1-UP; WDK1-UP
AN ATTACHMENT

SMCS-7183 **i02909113**

NOTE	REF NO	GRAPHIC REF	PART NUMBER	QTY	PART NAME 1 2 3 4 5 6 (PRODUCT LEVEL)	SEE PAGE
	1	1	**134-8884**	1	PLATE AS	
	2	1	**134-8886**	1	PLATE AS	
M	3	1	**8C-8992**	5	BOLT-LOCKING (M12X1.75X30-MM)	
	4	1	**5P-1076**	5	WASHER-HARD (13.5X30X4-MM THK)	

M-METRIC PART

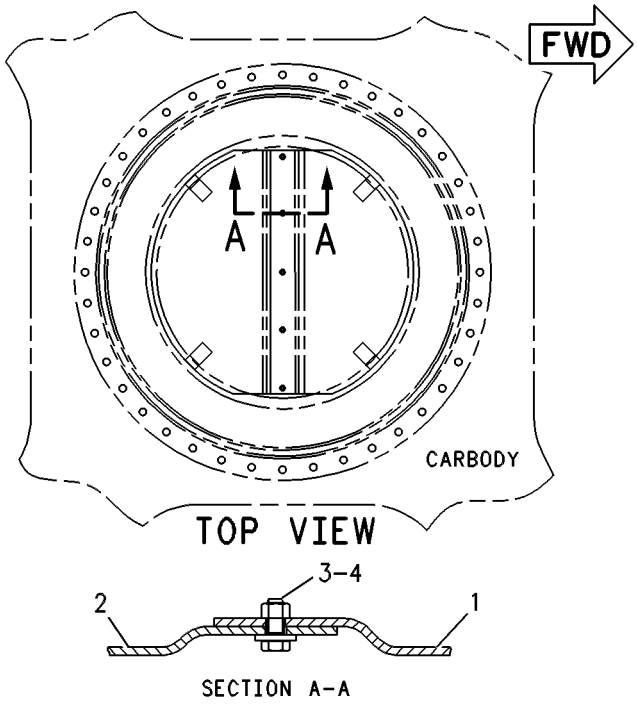

GRAPHIC #1 **<END>** g00263110

256-1644 HANDRAIL GP

S/N: MNB1-UP; WDK1-UP

PART OF 314-3652, 314-3653 CHASSIS AR

SMCS-7256 **i02346775**

NOTE	REF NO	GRAPHIC REF	PART NUMBER	QTY	PART NAME 1 2 3 4 5 6 (PRODUCT LEVEL)	SEE PAGE
M	1	1	**135-8573**	2	BOLT AS (M12X1.75X25-MM)	
M	2	1	**135-8578**	3	BOLT AS (M12X1.75X40-MM)	
	3	1	**177-5879**	2	CLAMP	
	4	1	**177-5880**	4	SLEEVE	
	5	1	**262-2209**	1	HANDRAIL AS	
M	6	1	**8T-4192**	2	BOLT (M12X1.75X25-MM)	
	7	1	**8T-4223**	2	WASHER-HARD (13.5X25.5X3-MM THK)	

M-METRIC PART

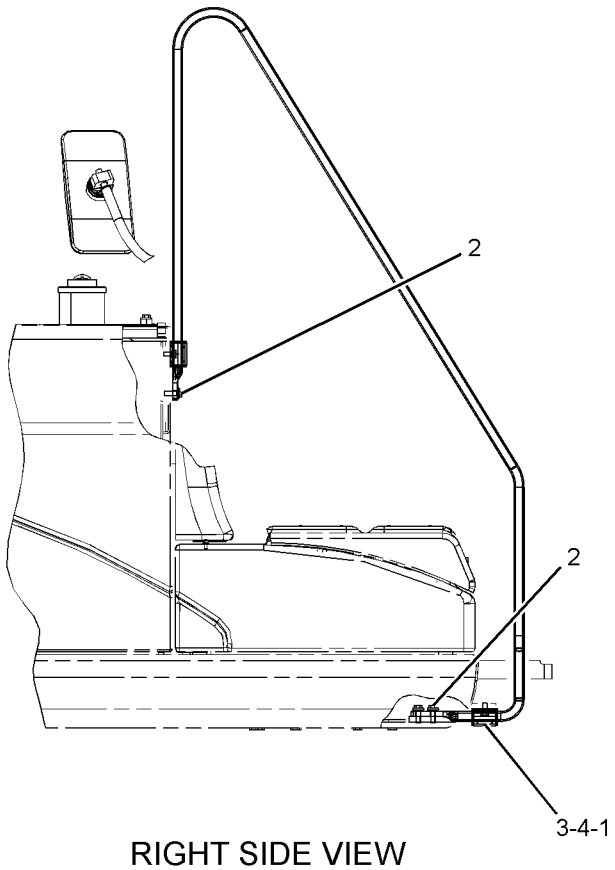

RIGHT SIDE VIEW

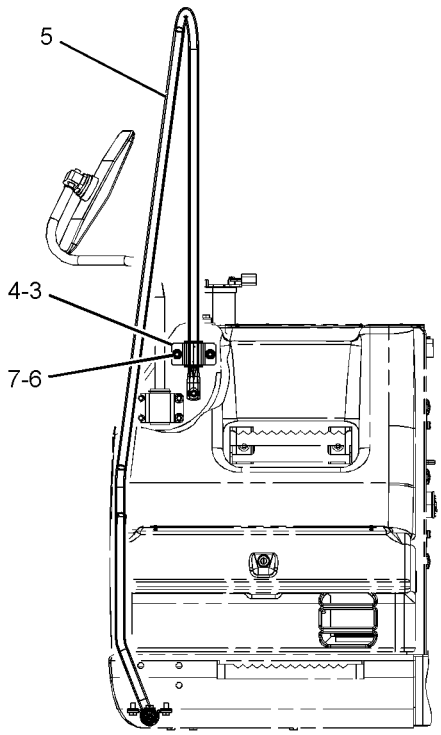

FRONT VIEW

GRAPHIC #1 **<END>** g01226096

FRAME AND BODY

223-3043 HOOD & GUARD GP

S/N: MNB1-UP; WDK1-UP

PART OF 314-3652, 314-3653 CHASSIS AR

SMCS-7251, 7276 **i03142163**

NOTE	REF NO	GRAPHIC REF	PART NUMBER	QTY	PART NAME 1 2 3 4 5 6 (PRODUCT LEVEL)	SEE PAGE
	1	3	**1R-9958**	1	FASTENER	
	2	3	**4I-0117**	1	FASTENER	
	3	3	**4I-0118**	2	HOOK AS	
	4	2	**4I-0232**	2	STRIKER	
	5	2	**4I-8019**	3	SUPPORT	
	6	2	**6I-6033**	3	STOP	
	7	2	**7I-1418**	3	SUPPORT AS	
	8	3	**7Y-2853**	3	SPACER (13X38X5-MM THK)	
	9	2	**087-3908**	2	SHIM (1-MM THK)	
	10	2	**087-3909**	2	SHIM (2-MM THK)	
	11	2	**122-3979**	1	BAND	
	12	2	**122-3980**	1	ROD	
	13	2	**122-4120**	3	ROD	
M	14	1,2,3	**135-8573**	77	BOLT AS (M12X1.75X25-MM)	
M	15	1,2,3	**135-8575**	36	BOLT AS-LOCKING (M12X1.75X30-MM)	
M	16	2	**135-8578**	8	BOLT AS (M12X1.75X40-MM)	
Y	17	2	**273-7802**	1	SHEET AS-SOUND SUPPRESSION	387
	18	3	**170-3016**	6	SPACER (19X32X2-MM THK)	
	19	3	**203-4889**	1	SPRING	
	20	3	**203-4890**	1	SPRING	
	21	3	**212-5185**	1	SUPPORT AS	
	22	3	**236-3304**	1	SUPPORT AS	
	23	3	**236-3313**	1	SUPPORT AS	
	24	3	**236-3328**	1	SUPPORT	
Y	25	2	**236-3329**	1	SUPPORT AS-ENCLOSURE	392
	26	1,2	**236-3345**	1	SUPPORT AS	
	27	2	**289-6798**	1	SUPPORT AS	
	28	3	**236-3354**	1	SUPPORT AS	
C	29	3	**330-1387**	1	SUPPORT AS	
	30	3	**236-3363**	1	COVER AS	
C	31	3	**330-1450**	1	COVER AS	
	32	1	**236-3367**	1	SHEET AS	
	33	3	**236-3370**	1	SHEET AS	
CY	34	2	**330-1430**	1	COVER AS-SOUND SUPPRESSION	347
Y	35	1	**236-3387**	1	SHEET AS-SOUND SUPPRESSION	380
Y	36	2	**289-6903**	1	DOOR GP-ACCESS (PUMP COMPARTMENT)	350
Y	37	2	**289-6898**	1	DOOR GP-ACCESS	348
Y	38	2	**236-9540**	1	HOOD GP-ENGINE	376
	39	3	**237-8476**	1	SUPPORT AS	
Y	40	1	**244-7912**	1	SHEET AS-SOUND SUPPRESSION	381
Y	41	1	**244-7917**	1	SHEET AS-SOUND SUPPRESSION	382
Y	42	1	**244-7922**	1	SHEET AS-SOUND SUPPRESSION	383
	43	1	**248-9312**	1	SHEET AS	
	44	3	**250-5022**	1	SUPPORT AS	
	45	1	**250-5024**	1	SUPPORT AS	
C	46	2	**330-1388**	1	SUPPORT AS	
Y	47	1	**256-1670**	1	SUPPORT AS-ENCLOSURE	393
Y	48	3	**256-1677**	1	COVER AS-SOUND SUPPRESSION	346
	49	3	**256-1696**	1	SUPPORT	
Y	50	1	**256-1698**	1	SHEET AS-SOUND SUPPRESSION	385
Y	51	2	**298-2968**	1	DOOR GP-ACCESS (AIR CLEANER)	351
	52	1	**262-2472**	1	SHEET AS	
		1	**262-2481**	1	LINER	
	53	3	**262-2491**	1	SHEET AS-SOUND SUPPRESSION	
		3	**236-3396**	1	INSULATION	
	54	3	**262-2494**	1	SHEET AS	

223-3043 **HOOD & GUARD GP** *(contd.)* **i03142163**

NOTE	REF NO	GRAPHIC REF	PART NUMBER	QTY	PART NAME 1 2 3 4 5 6 (PRODUCT LEVEL)	SEE PAGE
		3	**262-2495**	1	INSULATION	
	55	2	**3B-4618**	3	PIN-COTTER	
M	56	2	**105-3487**	6	BOLT-SOCKET HEAD (M6X1X20-MM)	
	57	2	**114-6285**	2	BAR	
M	58	2	**5C-9553**	8	BOLT (M6X1X16-MM)	
	59	3	**5P-1076**	1	WASHER-HARD (13.5X30X4-MM THK)	
	60	2	**5P-4115**	16	WASHER-HARD (7.2X19X2-MM THK)	
	61	3	**7J-5925**	1	PIN-COTTER	
	62	3	**7Y-2854**	3	SPACER (24X38X3-MM THK)	
	63	3	**7Y-2916**	1	PIN-CLEVIS	
	64	2	**8T-4121**	3	WASHER-HARD (11X21X2.5-MM THK)	
M	65	2	**8T-4138**	10	BOLT (M6X1X20-MM)	
M	66	3	**8T-4189**	8	BOLT (M8X1.25X20-MM)	
	67	3	**8T-4223**	2	WASHER-HARD (13.5X25.5X3-MM THK)	
	68	3	**8T-4224**	8	WASHER-HARD (8.8X16X2-MM THK)	
	69	2	**9X-8256**	8	WASHER (6.6X12X2-MM THK)	
	70	1	**273-7678**	1	SHEET AS	
		1	**273-7681**	1	INSULATION	

C-CHANGE FROM PREVIOUS TYPE
M-METRIC PART
Y-SEPARATE ILLUSTRATION

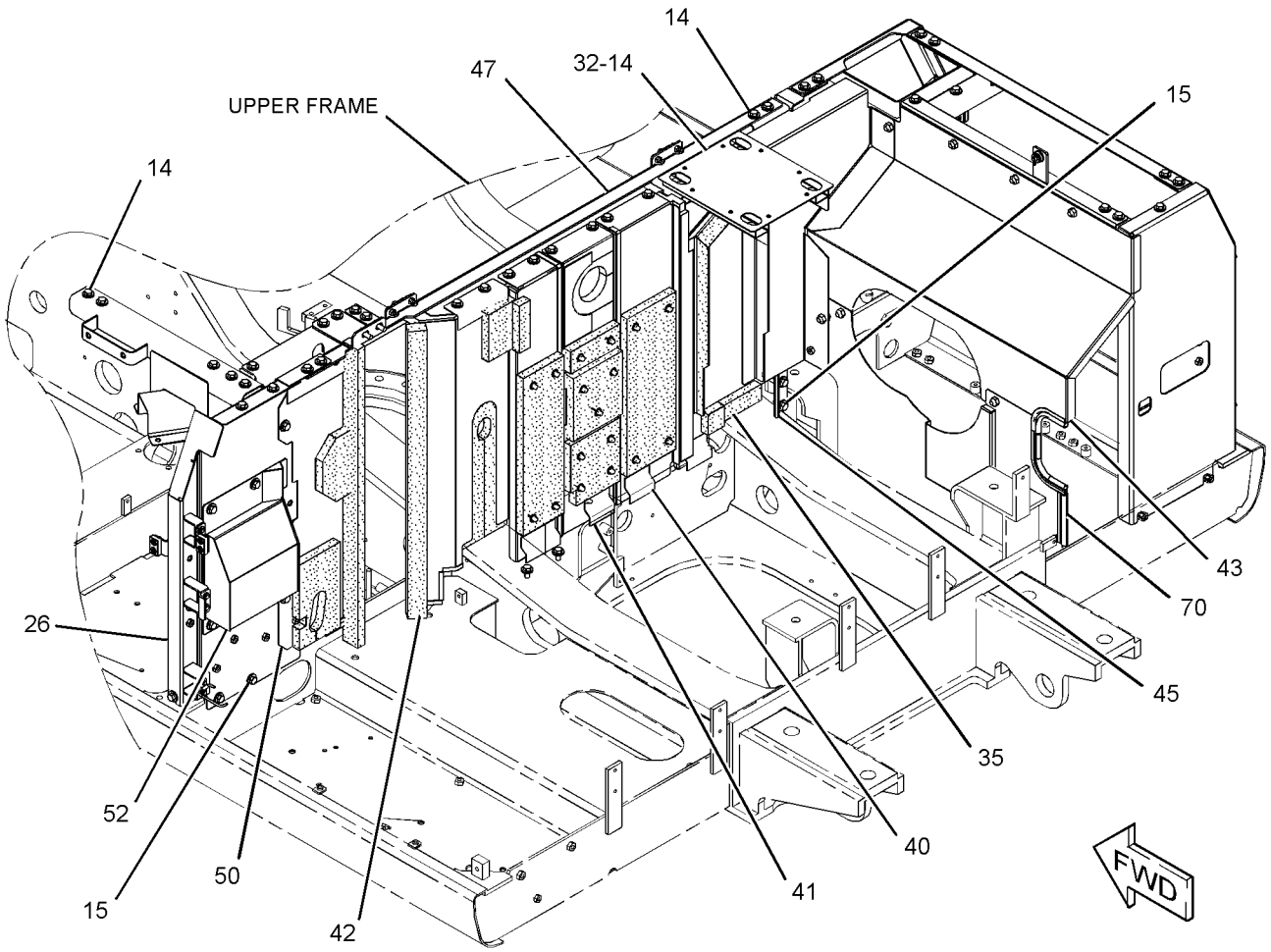

GRAPHIC #1 g01620032

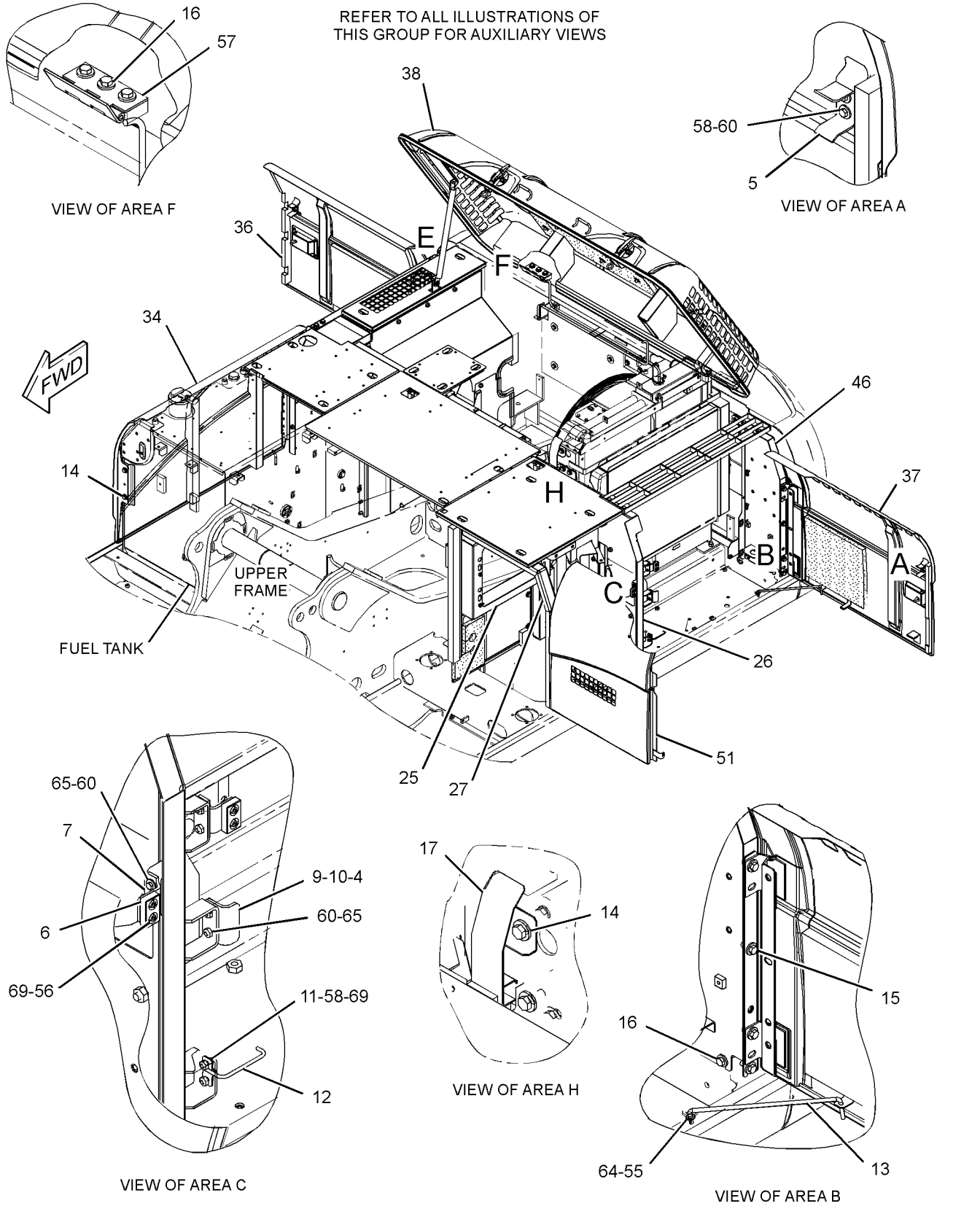

GRAPHIC #2

g01619753

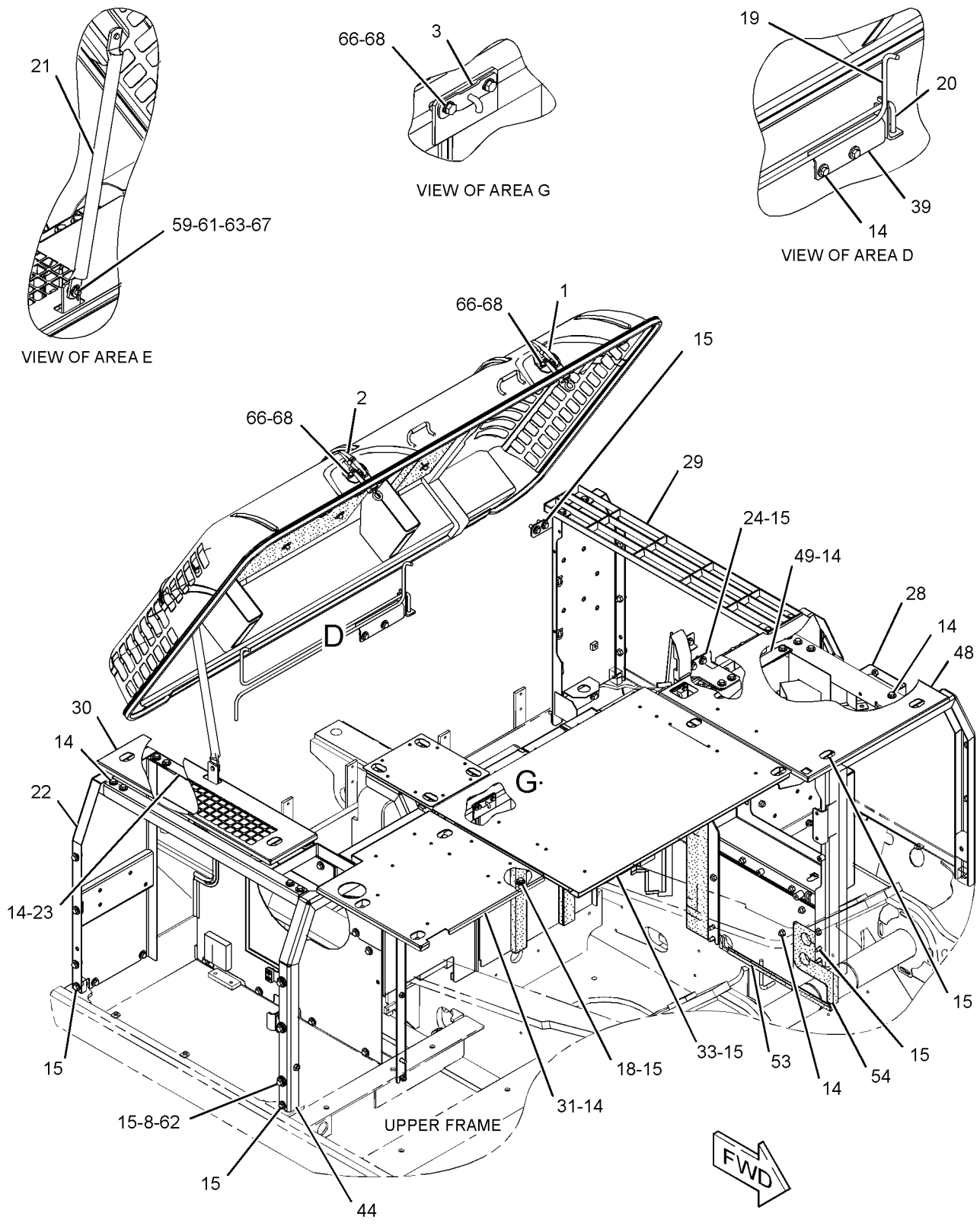

GRAPHIC #3 **<END>** g01619752

FRAME AND BODY

236-3395 HOOD AR–PERFORATED

S/N: MNB1-UP; WDK1-UP

PART OF 229-1787 COOLING AR-HIGH AMBIENT TEMP

AN ATTACHMENT

SMCS-7251 **i02780612**

NOTE	REF NO	GRAPHIC REF	PART NUMBER	QTY	PART NAME 1 2 3 4 5 6 (PRODUCT LEVEL)	SEE PAGE
CY	1	1	**289-6902**	1	DOOR GP-ACCESS (RADIATOR)	349
Y	2	1	**262-2464**	1	HOOD GP-ENGINE	377

C-CHANGE FROM PREVIOUS TYPE
Y-SEPARATE ILLUSTRATION

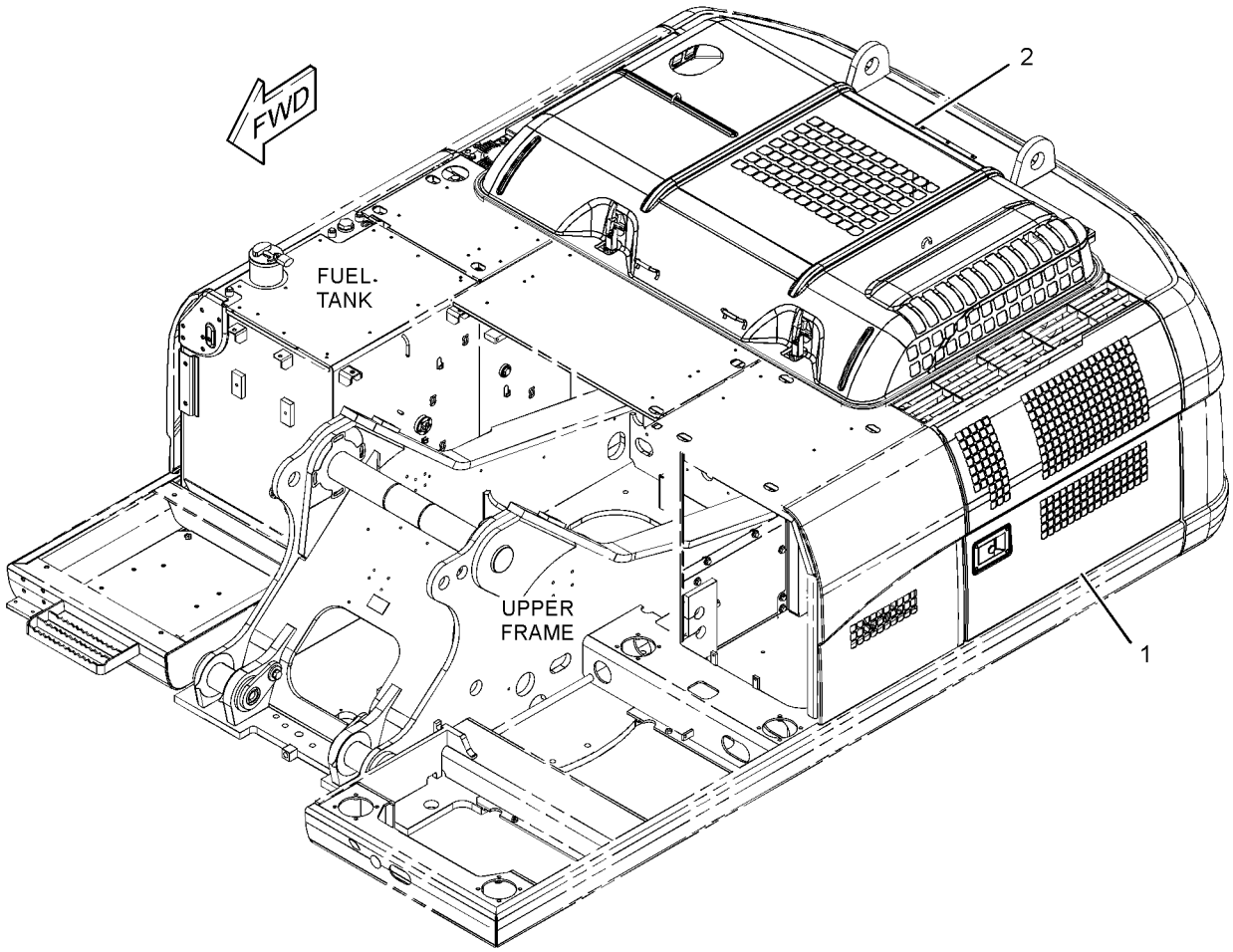

GRAPHIC #1 **<END>** g01246965

223-3045 HOOD GP–PRECLEANER

S/N: MNB1-UP; WDK1-UP
PART OF 229-1794 AIR CLEANER AR
AN ATTACHMENT

SMCS-7251 **i02400212**

NOTE	REF NO	GRAPHIC REF	PART NUMBER	QTY	PART NAME 1 2 3 4 5 6 (PRODUCT LEVEL)	SEE PAGE
	1	1	**237-8480**	1	SUPPORT AS	
	2	1	**256-1725**	1	SUPPORT	
	3	1	**256-1774**	1	COVER AS	
		1	**256-1678**	1	INSULATION	
		1	**256-1679**	2	INSULATION	
	4	1	**262-2509**	1	SHEET AS	

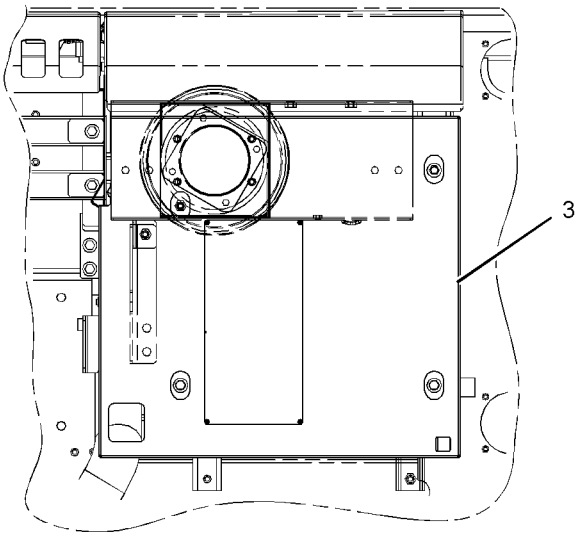

TOP VIEW

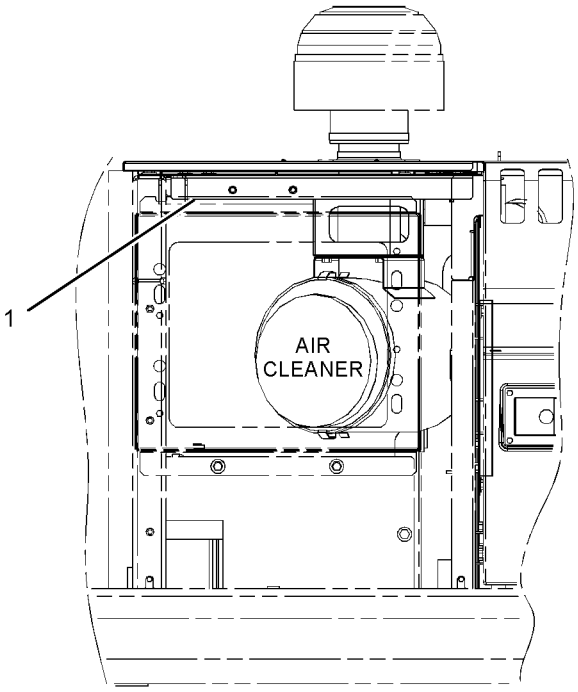

LEFT SIDE VIEW

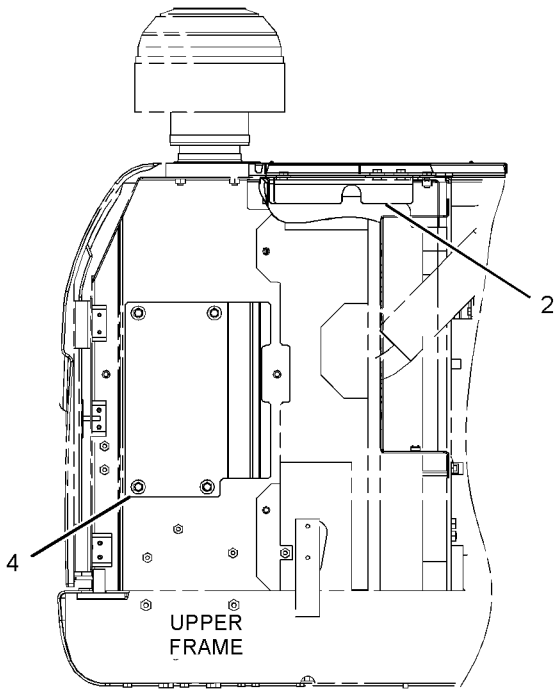

REAR VIEW

GRAPHIC #1 **<END>** g01201755

FRAME AND BODY

298-2885 HOOD GP–ACCUGRADE READY

S/N: MNB1-UP; WDK1-UP
PART OF 290-1778 CONVERSION AR-MACHINE
AN ATTACHMENT

SMCS-7251 **i03162241**

NOTE	REF NO	GRAPHIC REF	PART NUMBER	QTY	PART NAME 1 2 3 4 5 6 (PRODUCT LEVEL)	SEE PAGE
	1	1	**298-2884**	1	SUPPORT AS	
CY	2	1	**333-5017**	1	HOOD GP-ENGINE	378
	3	1	**298-2889**	1	COVER AS	

C-CHANGE FROM PREVIOUS TYPE
Y-SEPARATE ILLUSTRATION

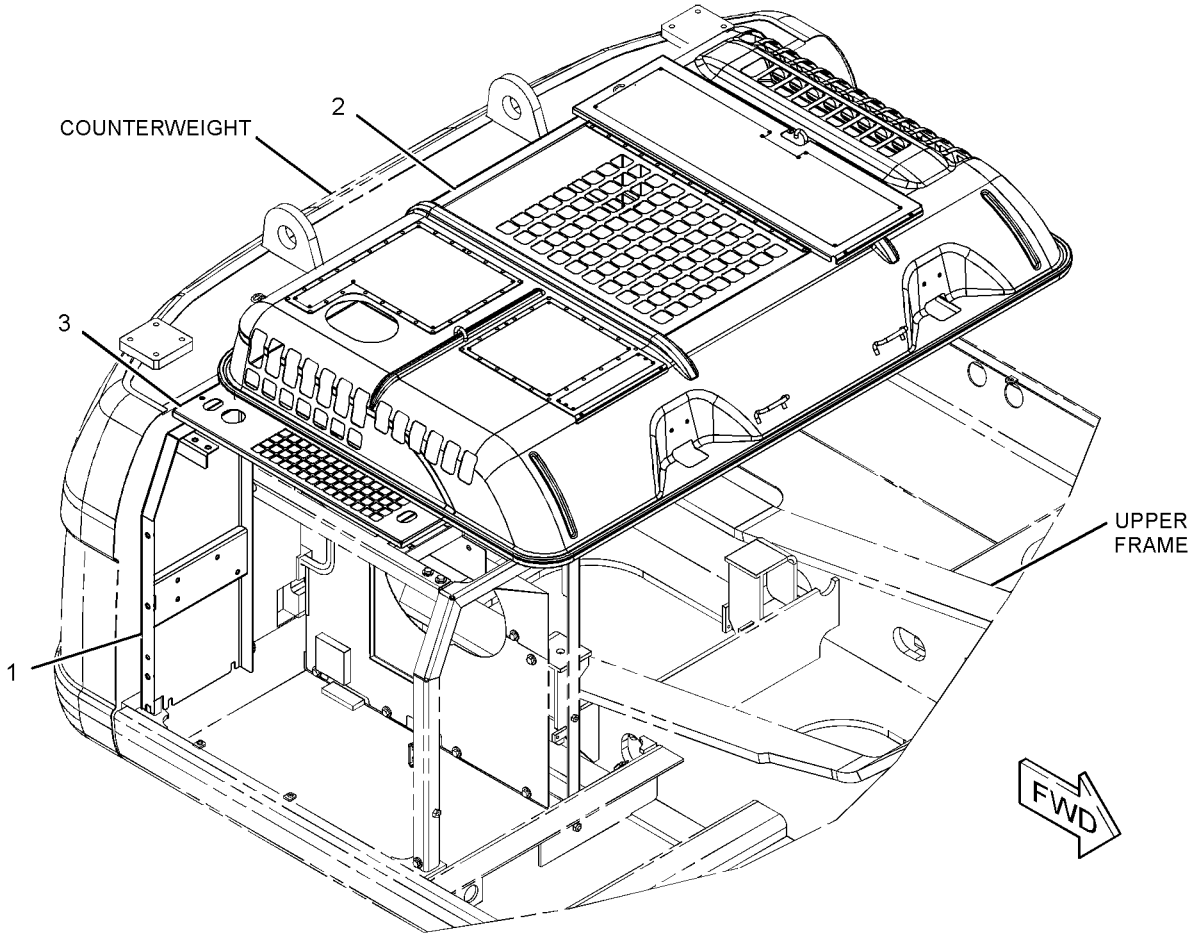

GRAPHIC #1 **<END>** g01622915

FRAME AND BODY

236-9540 HOOD GP-ENGINE

S/N: MNB1-UP; WDK1-UP

PART OF 223-3043 HOOD & GUARD GP

SMCS-7251 **i02528629**

NOTE	REF NO	GRAPHIC REF	PART NUMBER	QTY	PART NAME 1 2 3 4 5 6 (PRODUCT LEVEL)	SEE PAGE
	1	1	**4I-7924**	16	WASHER (4.5X40X1.2-MM THK)	
	2	1	**6P-2216**	16	CAP	
	3	1	**096-4129**	2	CUSHION	
	4	1	*236-9541*	1	HOOD AS-ENGINE	
		1	**114-6289**	2	HINGE	
	5	1	**236-9543**	1	LINER	
	6	1	**236-9544**	1	LINER	
	7	1	**236-9545**	1	LINER	
	8	1	**236-9546**	1	LINER	
	9	1	**262-2178**	1	LINER	
	10	1	**262-2442**	1	INSULATION	
	11	1	**262-2443**	1	INSULATION	
	12	1	**8T-0328**	4	WASHER-HARD (5.5X10X1-MM THK)	
M	13	1	**8T-6693**	4	SCREW-MACHINE (M5X0.8X16-MM)	
D	14	1	**101-9848**		SEAL (6.7-M)	

D-ORDER BY THE METER
M-METRIC PART

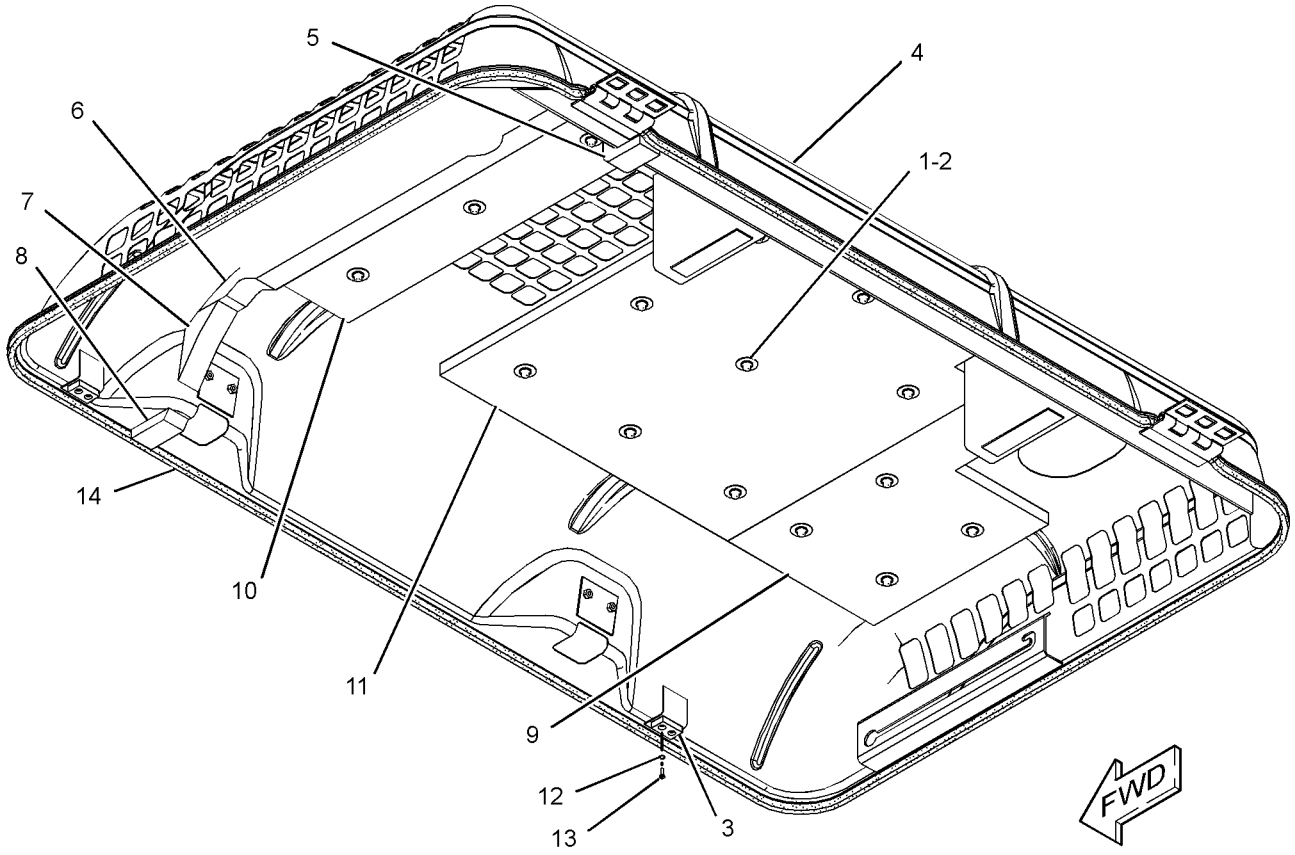

GRAPHIC #1 **<END>** g01189740

FRAME AND BODY

262-2464 HOOD GP-ENGINE

S/N: MNB1-UP; WDK1-UP
PART OF 236-3395 HOOD AR
AN ATTACHMENT

SMCS-7251 **i02397768**

NOTE	REF NO	GRAPHIC REF	PART NUMBER	QTY	PART NAME 1 2 3 4 5 6 (PRODUCT LEVEL)	SEE PAGE
	1	1	**4I-7924**	8	WASHER (4.5X40X1.2-MM THK)	
	2	1	**6P-2216**	8	CAP	
	3	1	**096-4129**	2	CUSHION	
	4	1	**236-9543**	1	LINER	
	5	1	**236-9544**	1	LINER	
	6	1	**236-9545**	1	LINER	
	7	1	**236-9546**	1	LINER	
	8	1	**262-2178**	1	LINER	
	9	1	**262-2442**	1	INSULATION	
	10	1	*262-2465*	1	HOOD AS-ENGINE	
		1	**114-6289**	2	HINGE	
	11	1	**8T-0328**	4	WASHER-HARD (5.5X10X1-MM THK)	
M	12	1	**8T-6693**	4	SCREW-MACHINE (M5X0.8X16-MM)	
D	13	1	**101-9848**		SEAL (1-M)	

D-ORDER BY THE METER
M-METRIC PART

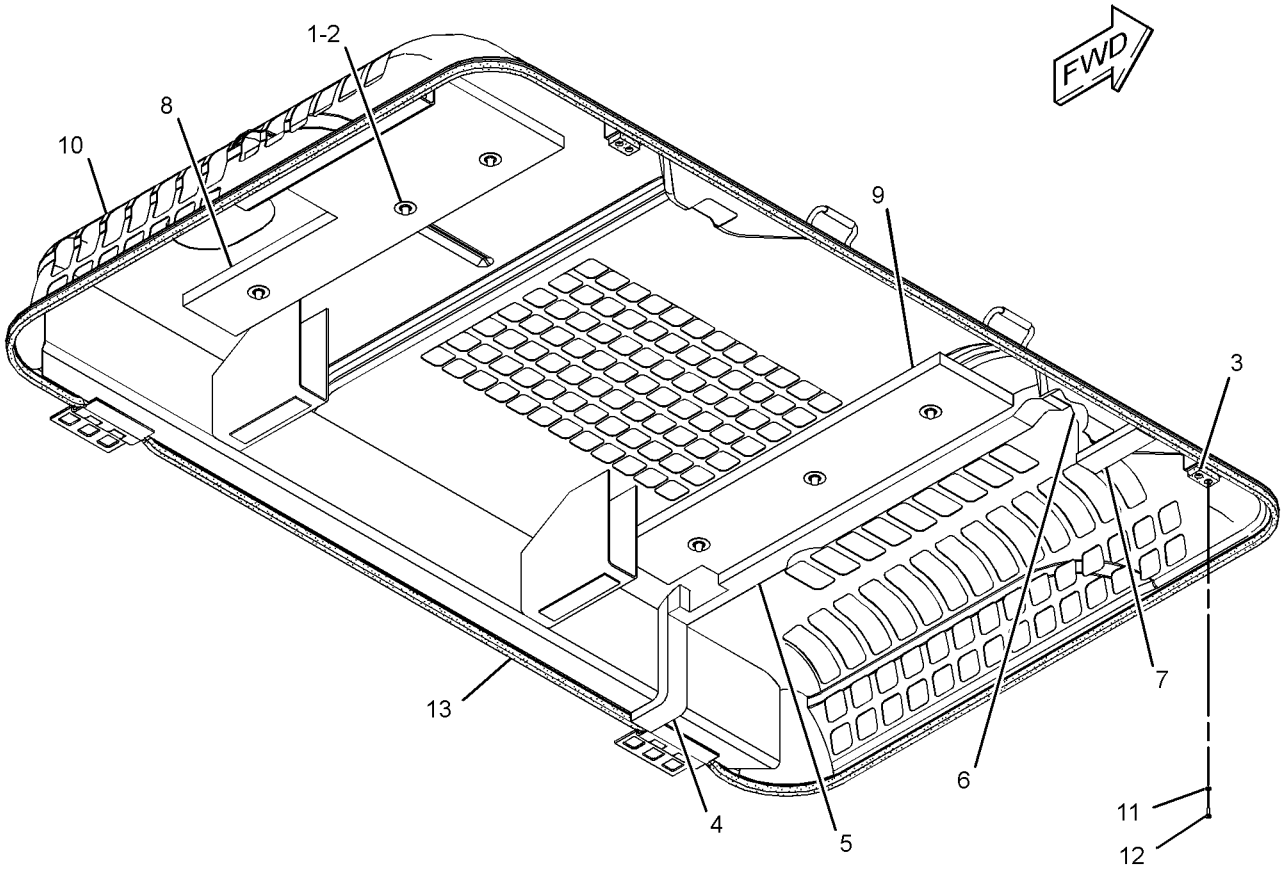

GRAPHIC #1 **<END>** g01245716

333-5017 HOOD GP-ENGINE

S/N: MNB1-UP; WDK1-UP
PART OF 298-2885 HOOD GP
AN ATTACHMENT

SMCS-7251 **i03162244**

NOTE	REF NO	GRAPHIC REF	PART NUMBER	QTY	PART NAME 1 2 3 4 5 6 (PRODUCT LEVEL)	SEE PAGE
	1	1	**4I-7924**	8	WASHER (4.5X40X1.2-MM THK)	
	2	1	**6P-2216**	8	CAP	
	3	1	**096-4129**	2	CUSHION	
	4	1	**236-9543**	1	LINER	
	5	1	**236-9544**	1	LINER	
	6	1	**236-9545**	1	LINER	
	7	1	**236-9546**	1	LINER	
	8	1	**262-2178**	1	LINER	
	9	1	**262-2442**	1	INSULATION	
	10	1	*333-5018*	1	HOOD AS-ENGINE	
	10A	1	**114-6289**	2	HINGE	
	10B	1	**146-4936**	2	HANDLE AS	
	11	1	**8T-0328**	4	WASHER-HARD (5.5X10X1-MM THK)	
M	12	1	**8T-6693**	4	SCREW-MACHINE (M5X0.8X16-MM)	
D	13	1	**101-9848**		SEAL (6.7-M)	
E	14	1	**184-8580**		SEAL (70-CM)	

D-ORDER BY THE METER
E-ORDER BY THE CENTIMETER
M-METRIC PART

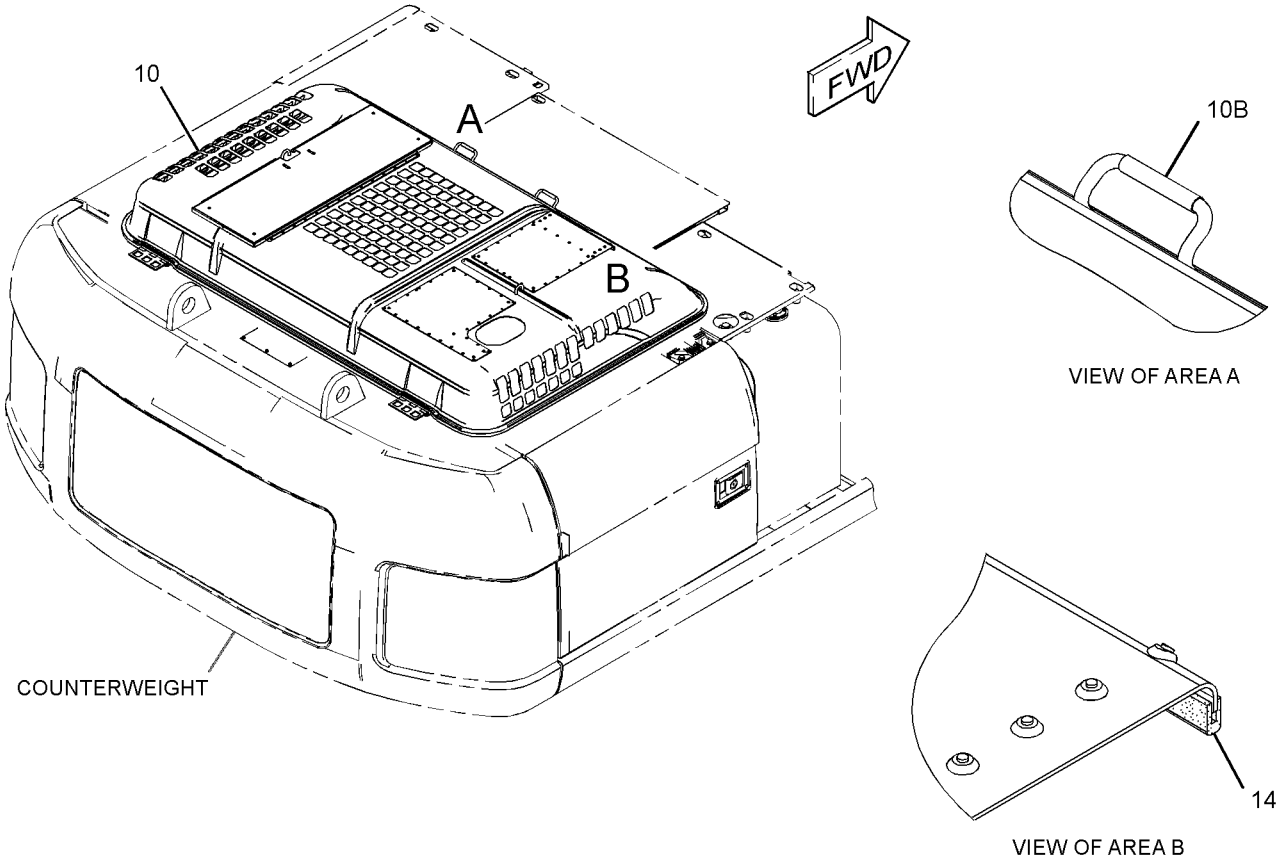

GRAPHIC #1 **<END>** g01623276

236-3387 SHEET AS-SOUND SUPPRESSION

S/N: MNB1-UP; WDK1-UP

PART OF 223-3043 HOOD & GUARD GP

SMCS-1801, 7076, 7251, 7267 **i02349112**

NOTE	REF NO	GRAPHIC REF	PART NUMBER	QTY	PART NAME 1 2 3 4 5 6 (PRODUCT LEVEL)	SEE PAGE
	1	1	**236-3388**	1	INSULATION	
	2	1	*236-3389*	1	SHEET AS	
	3	1	**250-5108**	1	INSULATION	
	4	1	**250-5109**	1	INSULATION	
	5	1	**256-1681**	1	INSULATION	

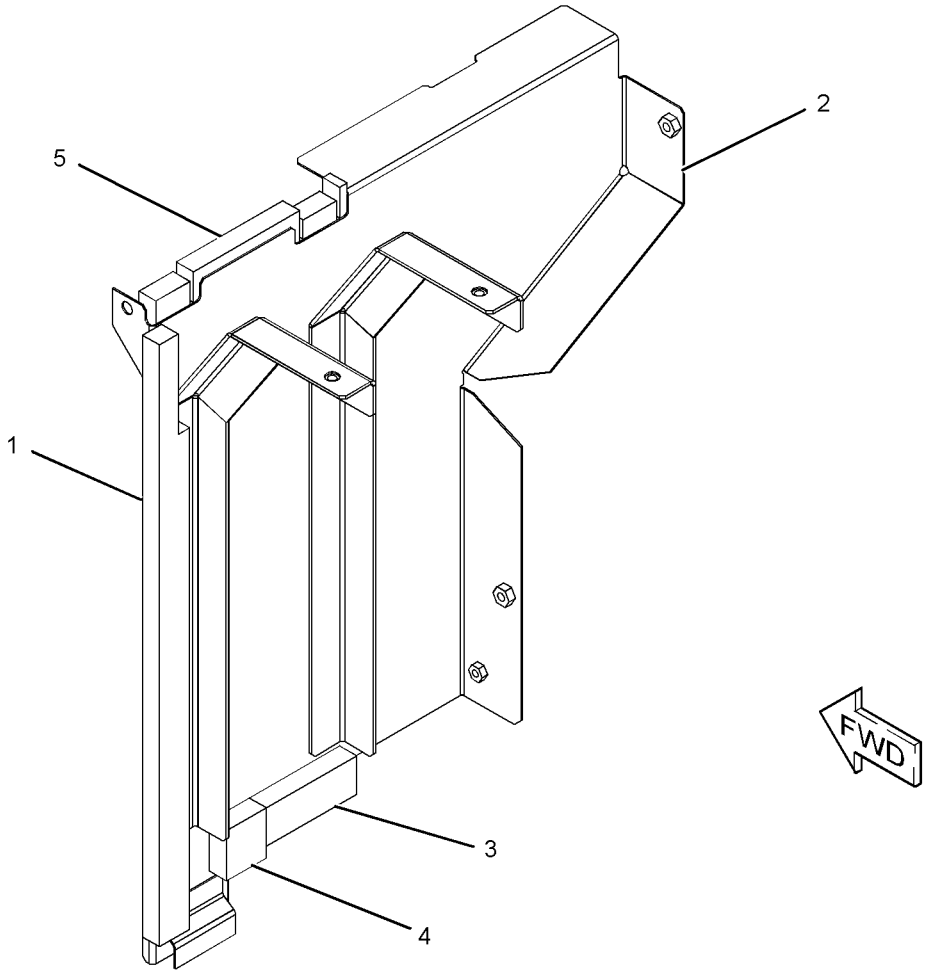

GRAPHIC #1

<END>

g01182481

FRAME AND BODY

244-7912 SHEET AS-SOUND SUPPRESSION

S/N: MNB1-UP; WDK1-UP

PART OF 223-3043 HOOD & GUARD GP

SMCS-1801, 7076, 7251, 7267 **i02349129**

NOTE	REF NO	GRAPHIC REF	PART NUMBER	QTY	PART NAME 1 2 3 4 5 6 (PRODUCT LEVEL)	SEE PAGE
	1	1	**6P-2216**	4	CAP	
	2	1	*244-7913*	1	SHEET AS	
	3	1	**244-7915**	1	INSULATION	
	4	1	**244-7916**	1	INSULATION	
	5	1	**256-1682**	1	INSULATION	

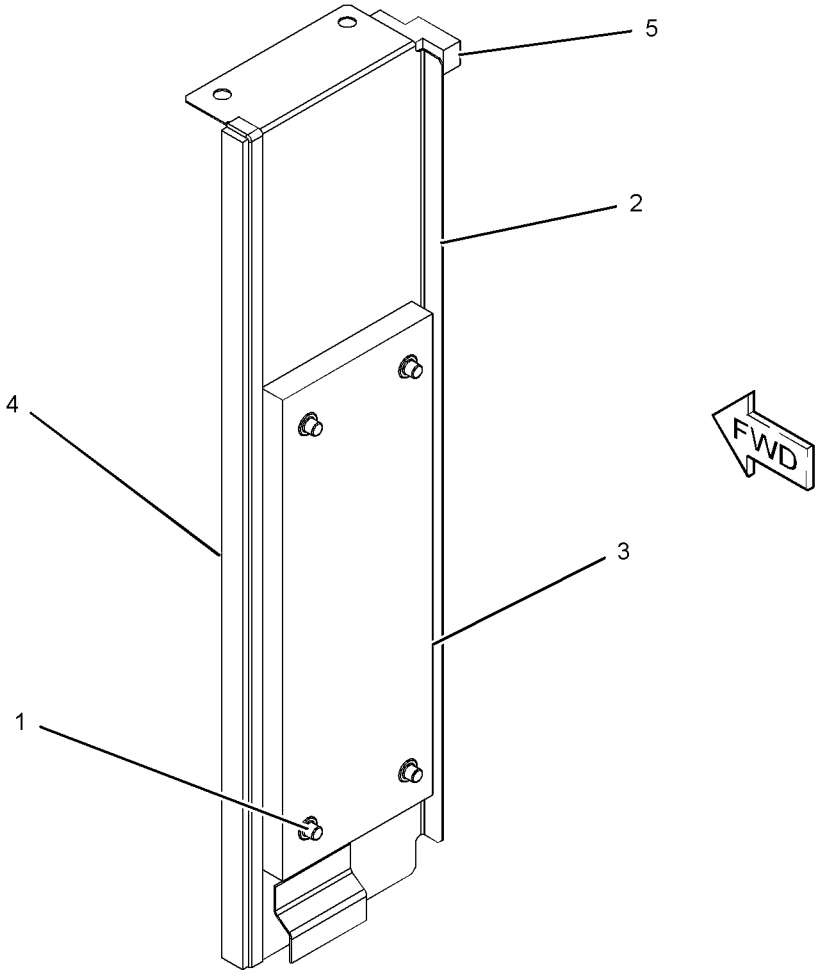

GRAPHIC #1

<END>

g01182580

244-7917 SHEET AS-SOUND SUPPRESSION

S/N: MNB1-UP; WDK1-UP

PART OF 223-3043 HOOD & GUARD GP

SMCS-1801, 7076, 7251, 7267 **i02457495**

NOTE	REF NO	GRAPHIC REF	PART NUMBER	QTY	PART NAME 1 2 3 4 5 6 (PRODUCT LEVEL)	SEE PAGE
	1	1	**6P-2216**	9	CAP	
	2	1	**236-3399**	1	INSULATION	
Z	3	1		1	SHEET AS	
	4	1	**244-7921**	1	LINER	
	5	1	**256-1686**	1	INSULATION	
	6	1	**256-1687**	1	INSULATION	

Z-NOT SERVICED SEPARATELY

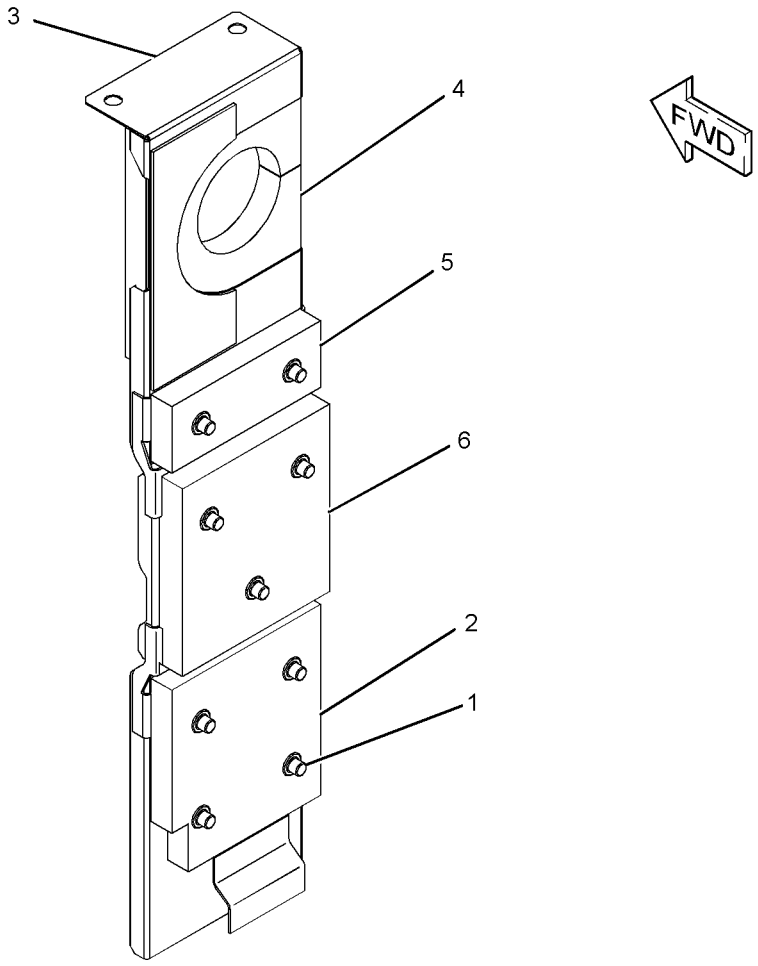

GRAPHIC #1

<END>

g01214265

244-7922 SHEET AS-SOUND SUPPRESSION

S/N: MNB1-UP; WDK1-UP

PART OF 223-3043 HOOD & GUARD GP

SMCS-1801, 7076, 7251, 7267 **i02350008**

NOTE	REF NO	GRAPHIC REF	PART NUMBER	QTY	PART NAME 1 2 3 4 5 6 (PRODUCT LEVEL)	SEE PAGE
	1	1	**6P-2216**	4	CAP	
	2	1	**236-9575**	1	INSULATION	
	3	1	**244-7916**	1	INSULATION	
	4	1	**256-1710**	1	INSULATION	
	5	1	**256-1689**	1	INSULATION	
	6	1	**256-1691**	1	INSULATION	
	7	1	**256-1692**	1	INSULATION	
	8	1	**256-1693**	1	INSULATION	
	9	1	**256-1708**	1	INSULATION	
E	10	1	**184-8580**		SEAL (4.5-CM)	
E	10A	1	**184-8580**		SEAL (8.8-CM)	
E	10B	1	**184-8580**		SEAL (5.7-CM)	

E-ORDER BY THE CENTIMETER

244-7922 SHEET AS-SOUND SUPPRESSION *(contd.)* **i02350008**

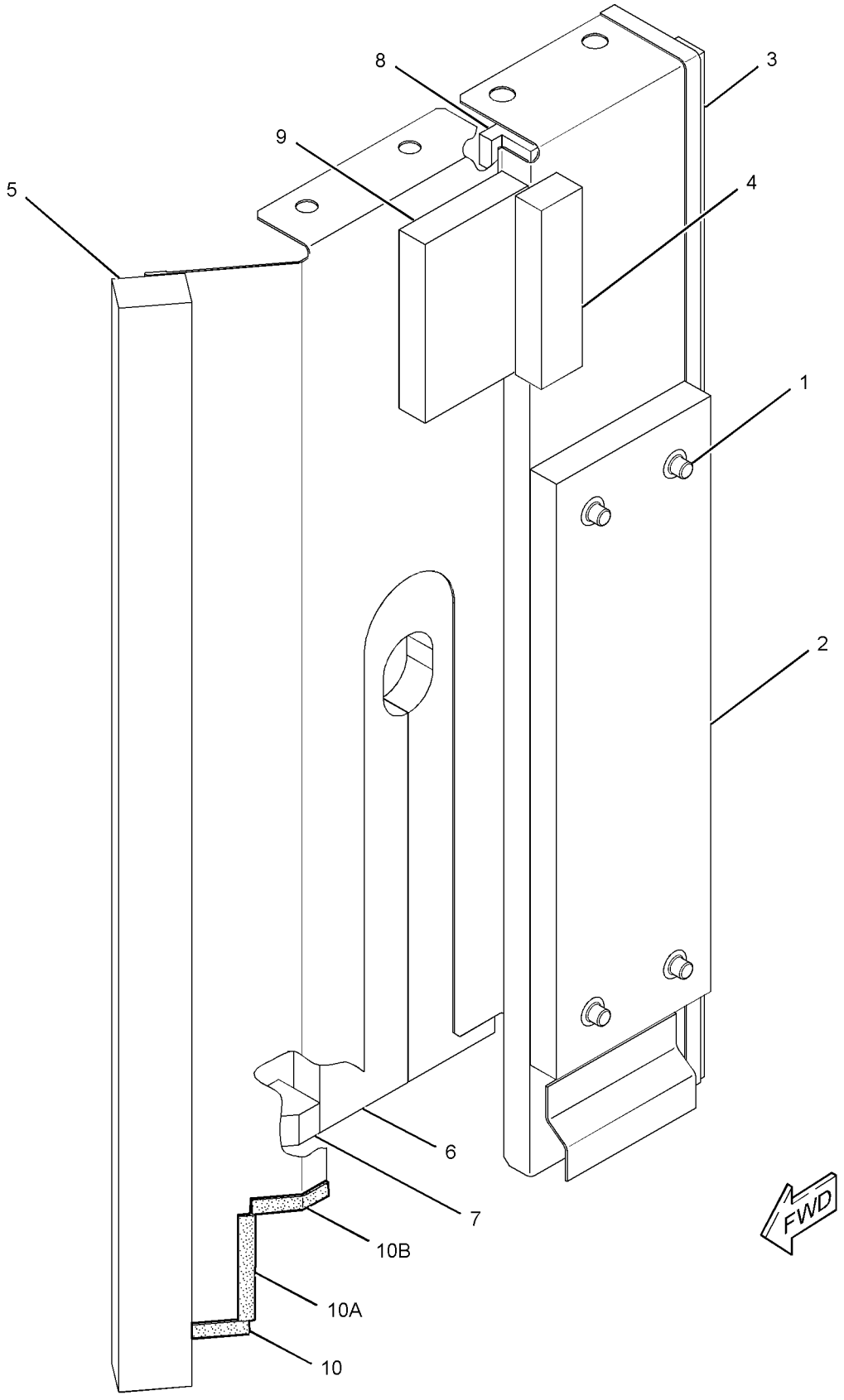

GRAPHIC #1

<END>

g01179776

256-1698 SHEET AS-SOUND SUPPRESSION

S/N: MNB1-UP; WDK1-UP

PART OF 223-3043 HOOD & GUARD GP

SMCS-1801, 7076, 7251, 7267 **i02469425**

NOTE	REF NO	GRAPHIC REF	PART NUMBER	QTY	PART NAME 1 2 3 4 5 6 (PRODUCT LEVEL)	SEE PAGE
Z	1	1		1	SHEET AS	
	2	1	**256-1702**	1	LINER	
	3	1	**256-1703**	1	LINER	
	4	1	**256-1704**	1	LINER	
D	5	1	**5P-8309**		SEAL (0.07-M)	

D-ORDER BY THE METER
Z-NOT SERVICED SEPARATELY

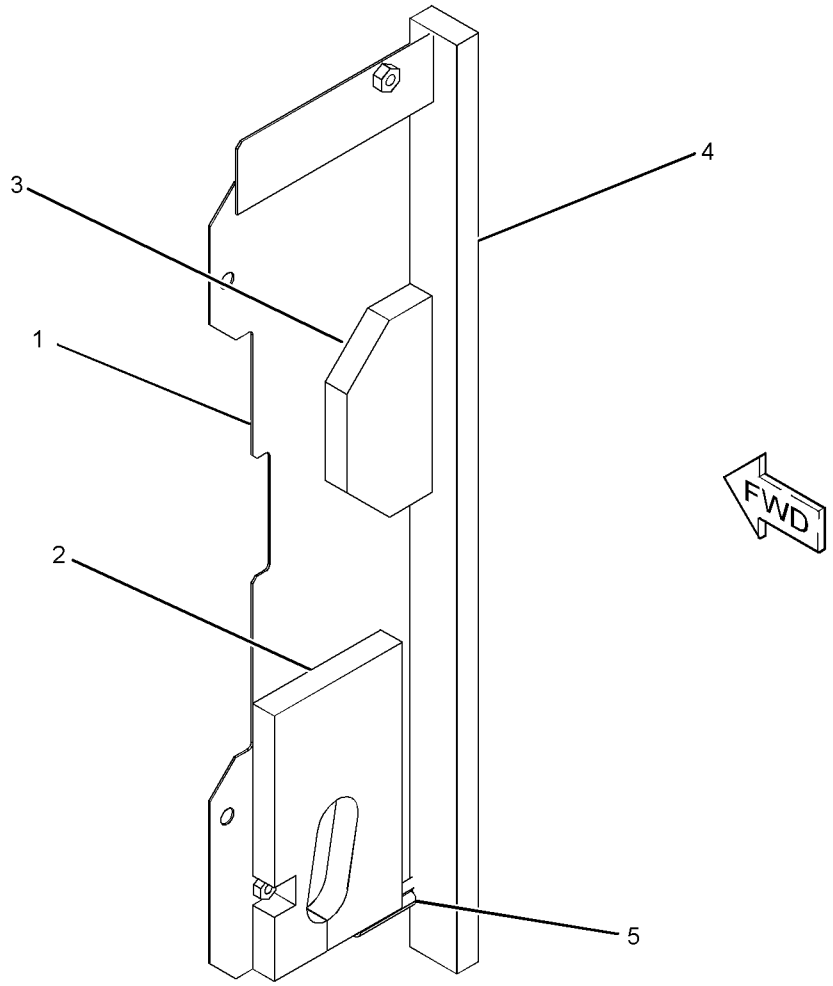

GRAPHIC #1 **<END>** g01231486

262-2497 SHEET AS-SOUND SUPPRESSION

S/N: MNB1-UP; WDK1-UP
PART OF 251-0440 BATTERY & WIRING GP
AN ATTACHMENT

SMCS-1801, 7076, 7251, 7267 **i03087861**

NOTE	REF NO	GRAPHIC REF	PART NUMBER	QTY	PART NAME 1 2 3 4 5 6 (PRODUCT LEVEL)	SEE PAGE
	1	1	**262-2498**	1	LINER	
	2	1	**262-2499**	1	LINER	

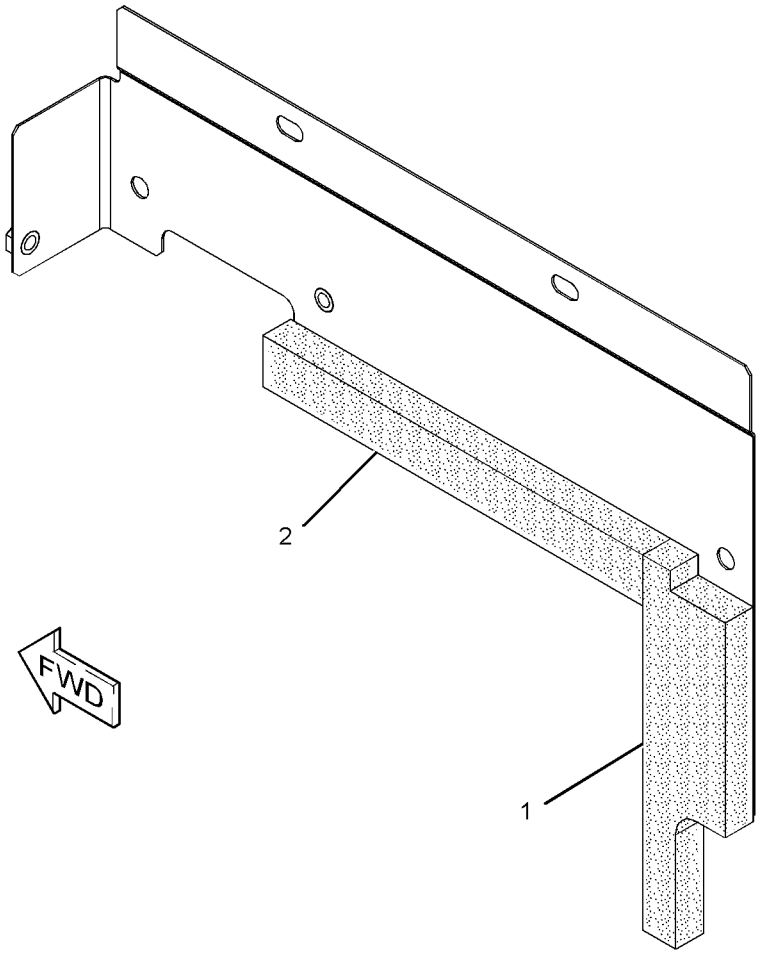

GRAPHIC #1 **<END>** g01523715

273-7802 SHEET AS-SOUND SUPPRESSION

S/N: MNB1-UP; WDK1-UP

PART OF 223-3043 HOOD & GUARD GP

SMCS-1801, 7076, 7251, 7267 **i02424762**

NOTE	REF NO	GRAPHIC REF	PART NUMBER	QTY	PART NAME 1 2 3 4 5 6 (PRODUCT LEVEL)	SEE PAGE
	1	1	**273-7803**	1	LINER	
	2	1	**273-7804**	1	LINER	
Z	3	1		1	SHEET AS	

Z-NOT SERVICED SEPARATELY

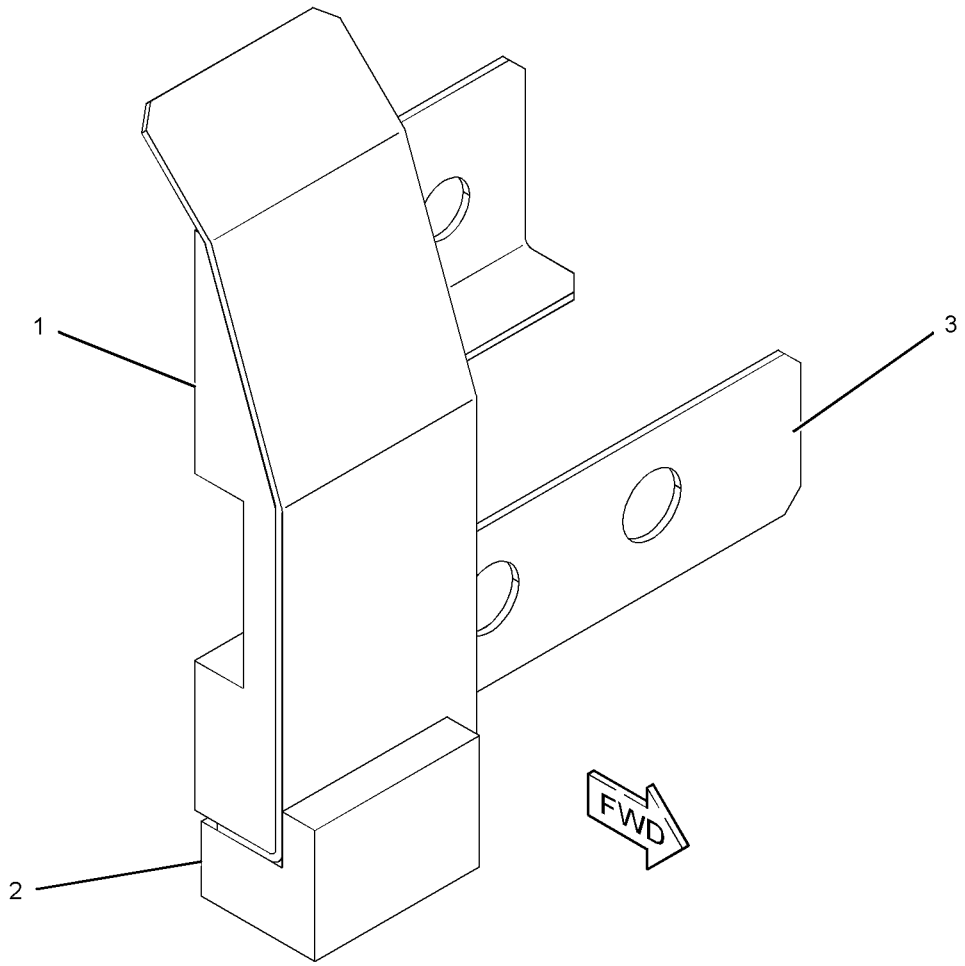

GRAPHIC #1 **<END>** g01217771

235-7764 STEP GP

S/N: MNB1-UP; WDK1-UP
PART OF 298-4287 SPECIAL AR, 229-1864 TRACK AR, 229-1865, 247-7327, 290-1771
TRACK GP
FOR USE WITH TRACK SHOES UPT TO 800-MM (31.5-IN) WIDE
AN ATTACHMENT

SMCS-7254 **i03255291**

NOTE	REF NO	GRAPHIC REF	PART NUMBER	QTY	PART NAME 1 2 3 4 5 6 (PRODUCT LEVEL)	SEE PAGE
	1	1	**235-7765**	2	STEP	
M	2	1	**8T-7338**	4	BOLT (M16X2X45-MM)	
	3	1	**9X-8257**	4	WASHER (17.5X30X3.5-MM THK)	

M-METRIC PART

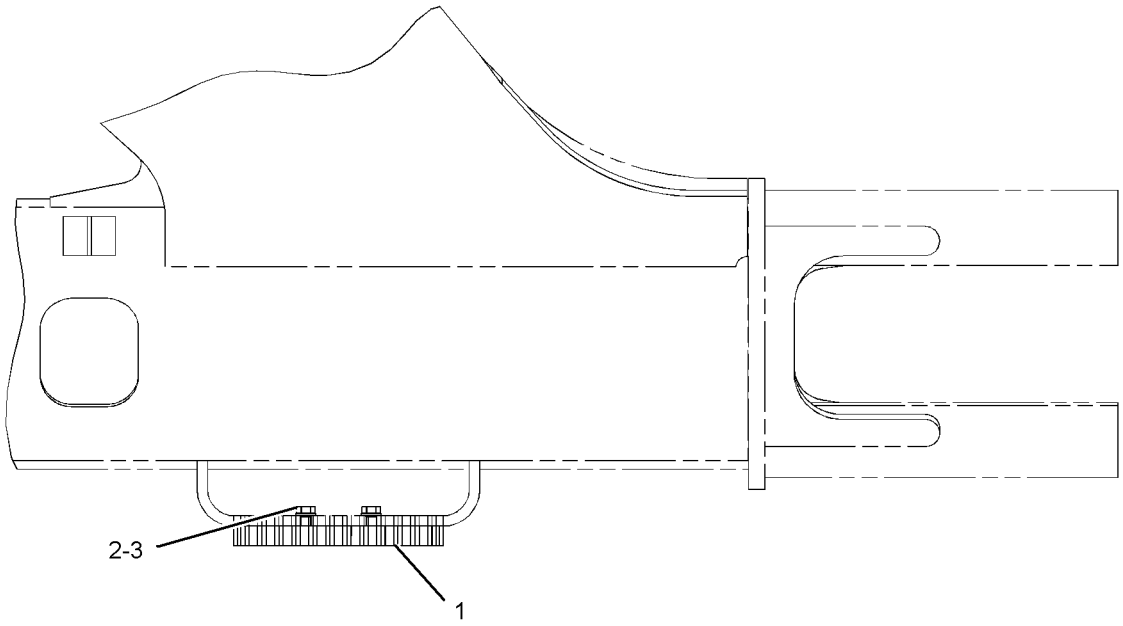

TOP VIEW

GRAPHIC #1 **<END>** g01150668

308-8881 STEP GP

S/N: MNB1-UP; WDK1-UP
PART OF 298-4288 SPECIAL AR
AN ATTACHMENT

SMCS-7254 **i02843488**

NOTE	REF NO	GRAPHIC REF	PART NUMBER	QTY	PART NAME 1 2 3 4 5 6 (PRODUCT LEVEL)	SEE PAGE
	1	1	**308-8882**	2	STEP AS	
M	2	1	**7X-2553**	4	BOLT (M16X2X40-MM)	
	3	1	**9X-8257**	4	WASHER (17.5X30X3.5-MM THK)	

M-METRIC PART

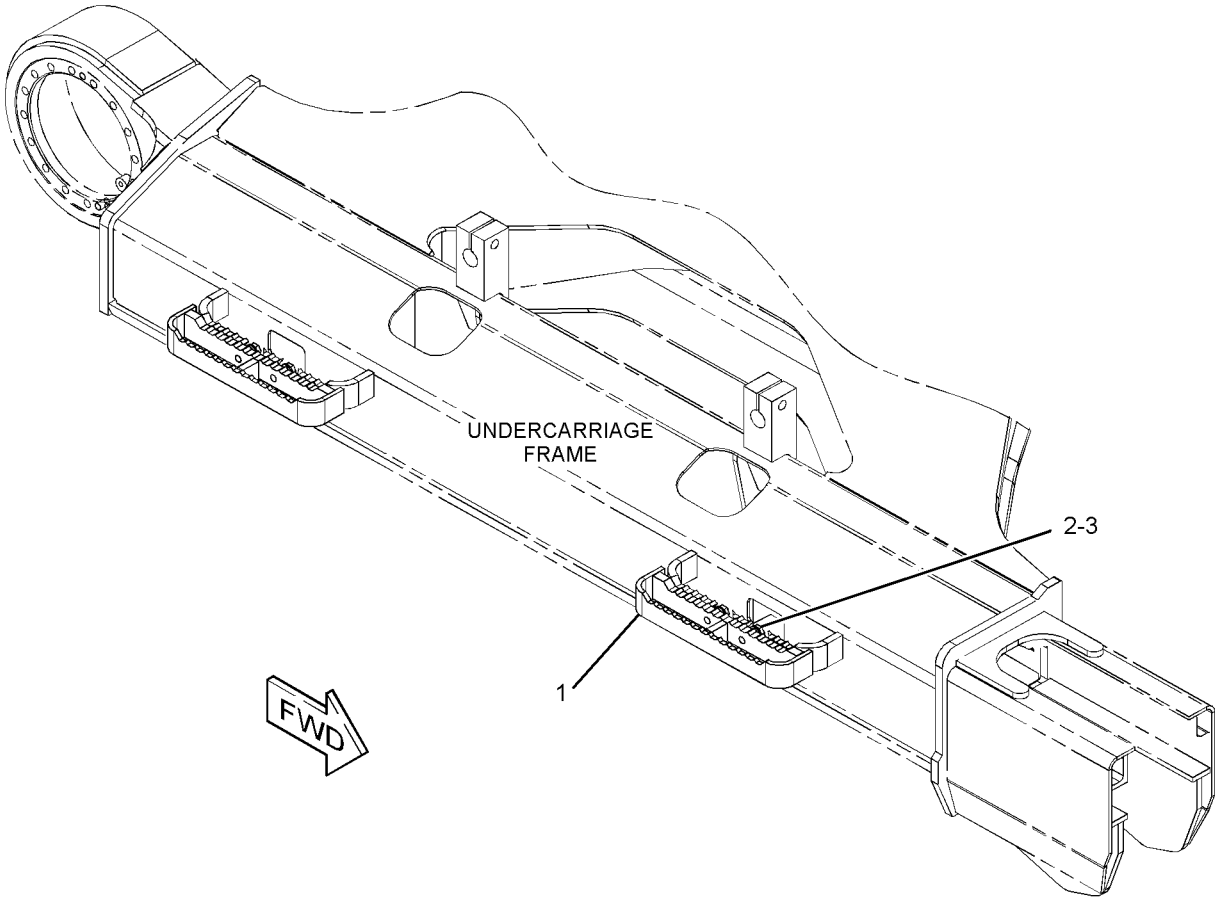

GRAPHIC #1 **<END>** g01421202

223-3055 STORAGE GP-VANDALISM GUARD

S/N: MNB1-UP; WDK1-UP
PART OF 229-1777, 229-1778 GUARD AR-VANDALISM
AN ATTACHMENT

SMCS-7315 **i02397790**

NOTE	REF NO	GRAPHIC REF	PART NUMBER	QTY	PART NAME 1 2 3 4 5 6 (PRODUCT LEVEL)	SEE PAGE
M	1	2	**135-8573**	4	BOLT AS (M12X1.75X25-MM)	
	2	2	**170-3015**	3	BUMPER	
	3	1	**236-9556**	1	SHEET AS	
	3A	2	**7Y-2881**	1	HINGE	
E		1	**237-5586**		SEAL (79-CM)	
	4	2	**241-1933**	1	BOLT AS-SPECIAL	
	5	2	**241-1938**	1	CABLE	
	6	2	**262-2507**	1	SHEET AS	
	7	2	**5P-7958**	2	SLEEVE-CABLE SPLICE	
D	8	1	**5P-8309**		SEAL (0.14-M)	

D-ORDER BY THE METER
E-ORDER BY THE CENTIMETER
M-METRIC PART

REFER TO ALL ILLUSTRATIONS OF THIS GROUP FOR AUXILIARY VIEWS

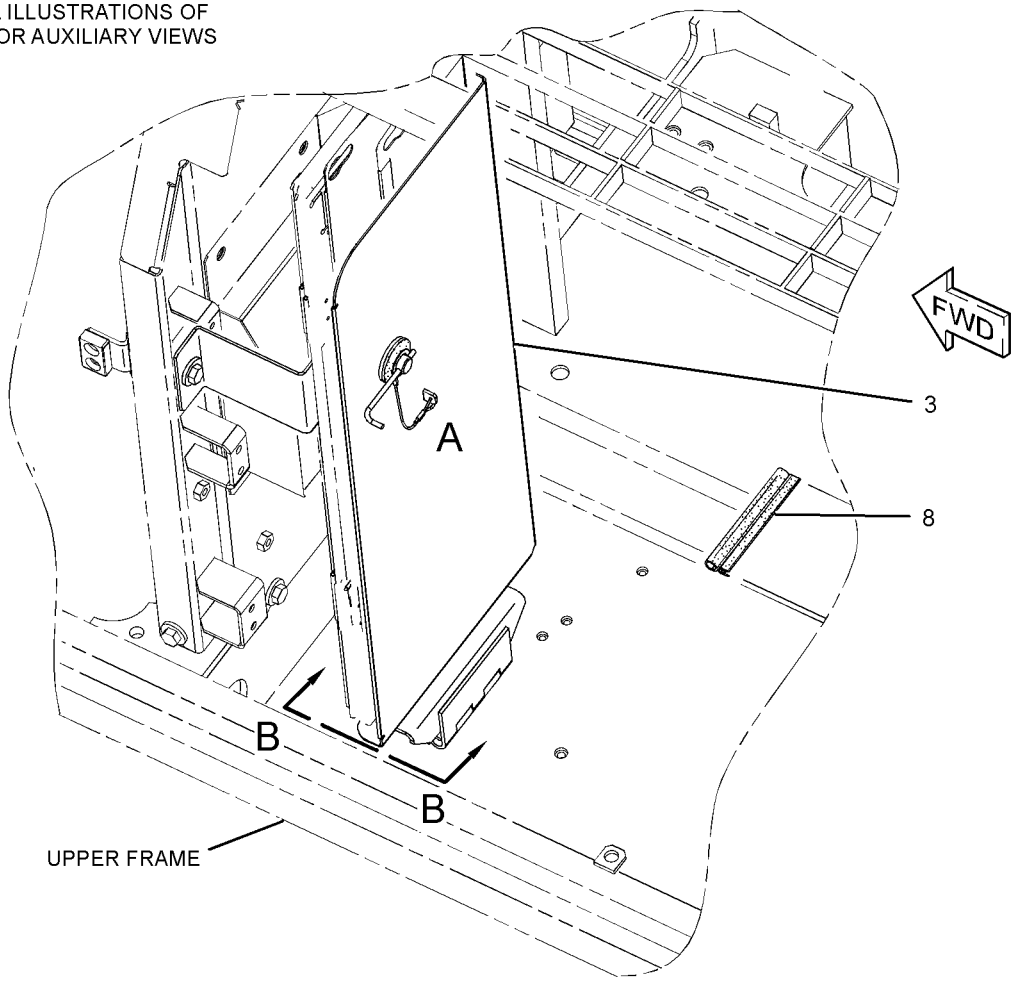

GRAPHIC #1 g01234382

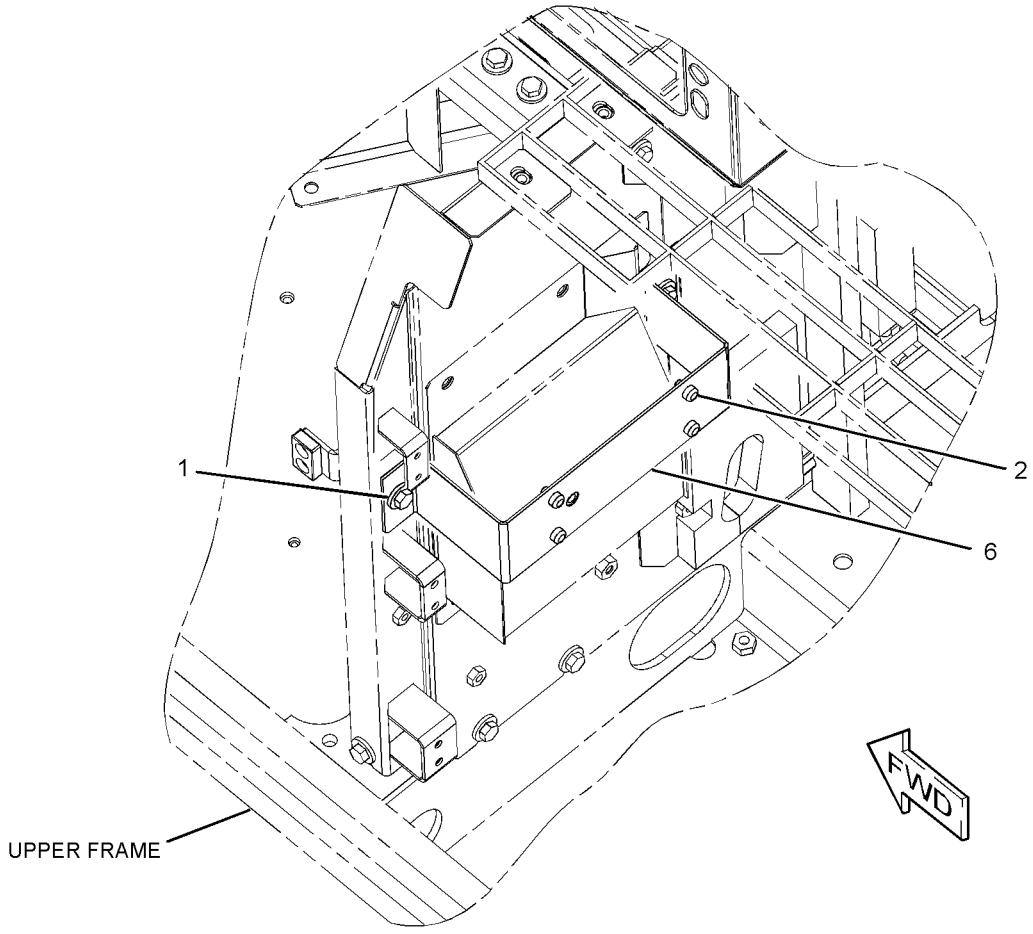

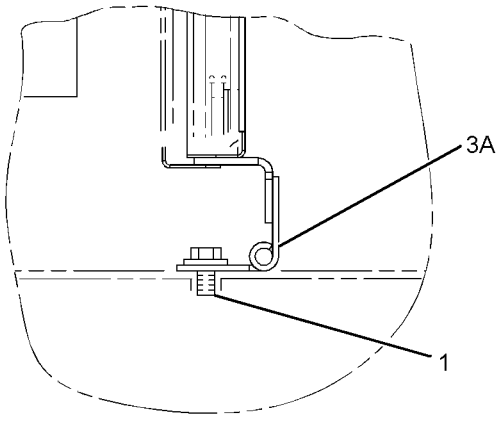

VIEW B-B

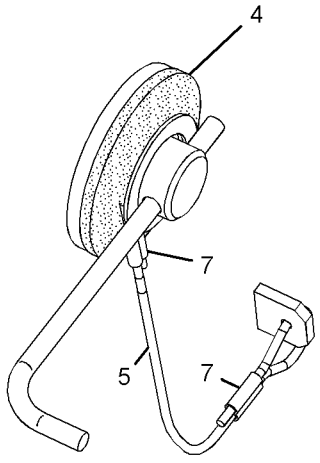

VIEW OF AREA A

GRAPHIC #2 **<END>** g01234500

236-3329 SUPPORT AS-ENCLOSURE

S/N: MNB1-UP; WDK1-UP

PART OF 223-3043 HOOD & GUARD GP

SMCS-0635, 1801, 7076, 7251, 7263, 7267, 7272, 7276 **i02613219**

NOTE	REF NO	GRAPHIC REF	PART NUMBER	QTY	PART NAME 1 2 3 4 5 6 (PRODUCT LEVEL)	SEE PAGE
	1	1	**236-3330**	1	INSULATION	
D	2	1	**101-9848**		SEAL (0.5-M EACH)	
	3	1	**250-5101**	1	INSULATION	

D-ORDER BY THE METER

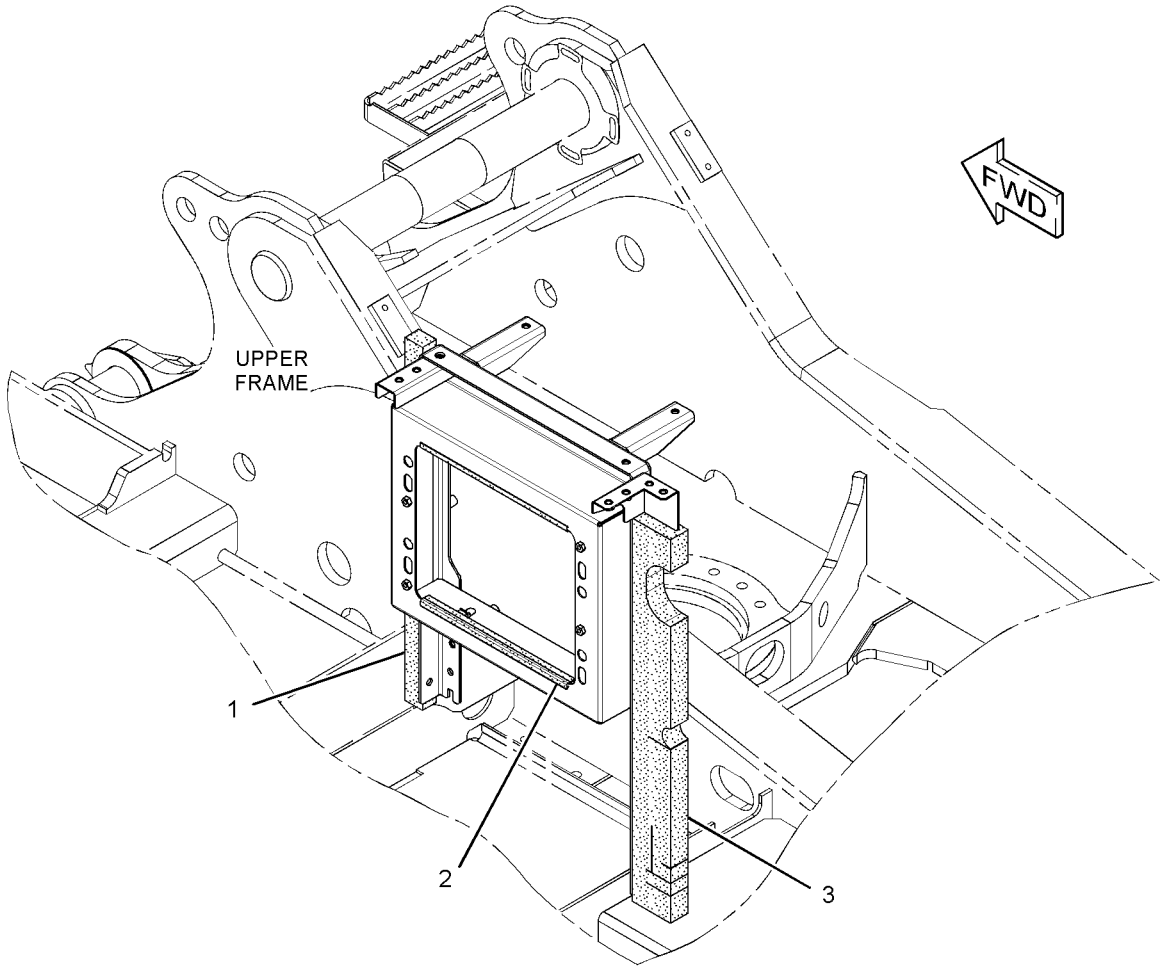

GRAPHIC #1 **<END>** g01357220

256-1670 SUPPORT AS-ENCLOSURE

S/N: MNB1-UP; WDK1-UP

PART OF 223-3043 HOOD & GUARD GP

SMCS-0635, 1801, 7076, 7251, 7263, 7267, 7272, 7276 **i02430968**

NOTE	REF NO	GRAPHIC REF	PART NUMBER	QTY	PART NAME 1 2 3 4 5 6 (PRODUCT LEVEL)	SEE PAGE
Z	1	1		1	SUPPORT AS	
	2	1	**256-1671**	1	INSULATION	
	3	1	**256-1672**	1	INSULATION	

Z-NOT SERVICED SEPARATELY

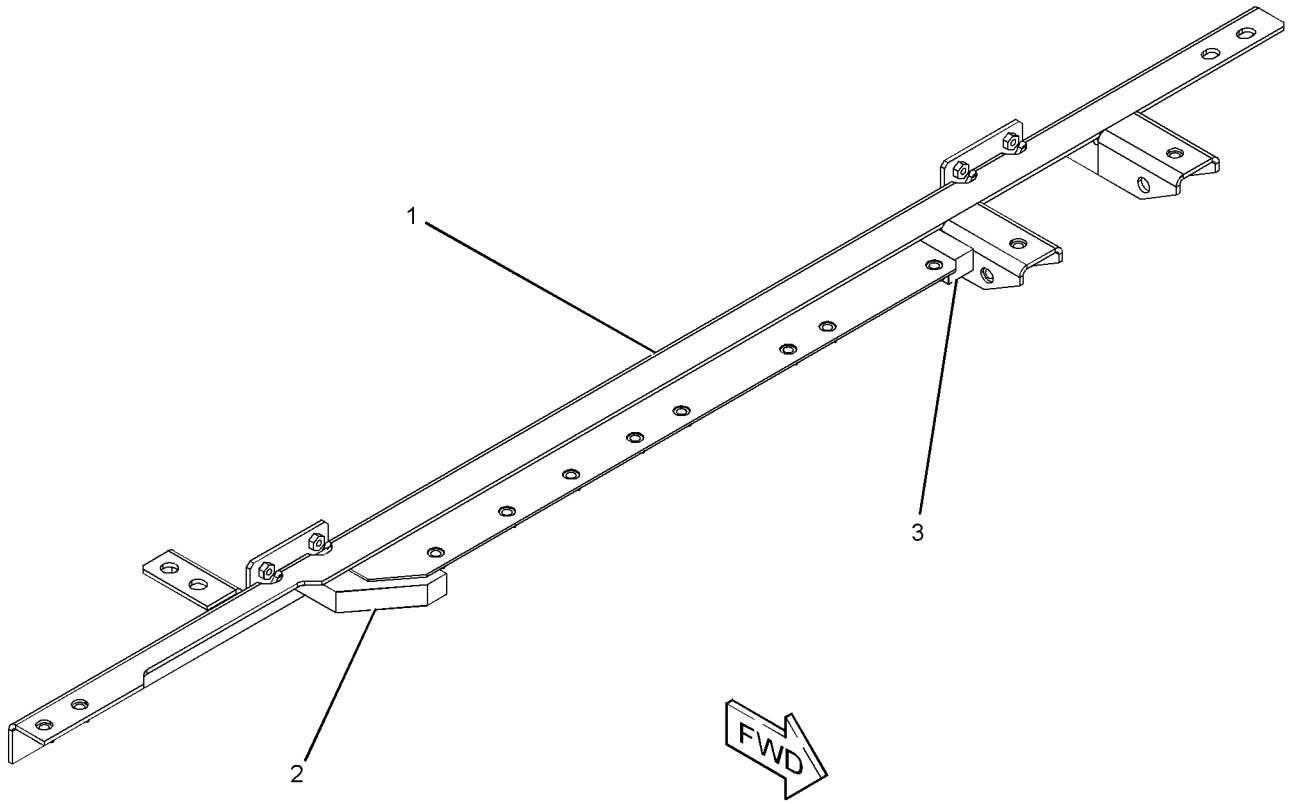

GRAPHIC #1 **<END>** g01182576

179-2998 ADJUSTMENT GP-HYDRAULIC TRACK

S/N: MNB1-UP; WDK1-UP

PART OF 194-1240 IDLER GP-FRONT

SMCS-4157 **i02556205**

NOTE	REF NO	GRAPHIC REF	PART NUMBER	QTY	PART NAME 1 2 3 4 5 6 (PRODUCT LEVEL)	SEE PAGE
	1	1	**2S-5926**	1	VALVE-RELIEF	
	2	1	**7Y-1257**	2	RING-BACKUP	
	3	1	**093-1514**	2	RING-BACKUP	
	4	1	**095-2927**	1	VALVE-FILL	
	5	1	**099-0121**	1	SEAL-LIP TYPE	
	6	1	**113-2824**	1	PLATE AS	
		1	**4B-4158**	4	SCREW-DRIVE (3/16X0.25-IN)	
	7	1	**179-3007**	1	PISTON	
	8	1	**179-3008**	1	CYLINDER	
	9	1	**248-7176**	2	SEAL-O-RING	
M	10	1	**8T-4191**	2	BOLT (M10X1.5X16-MM)	

M-METRIC PART

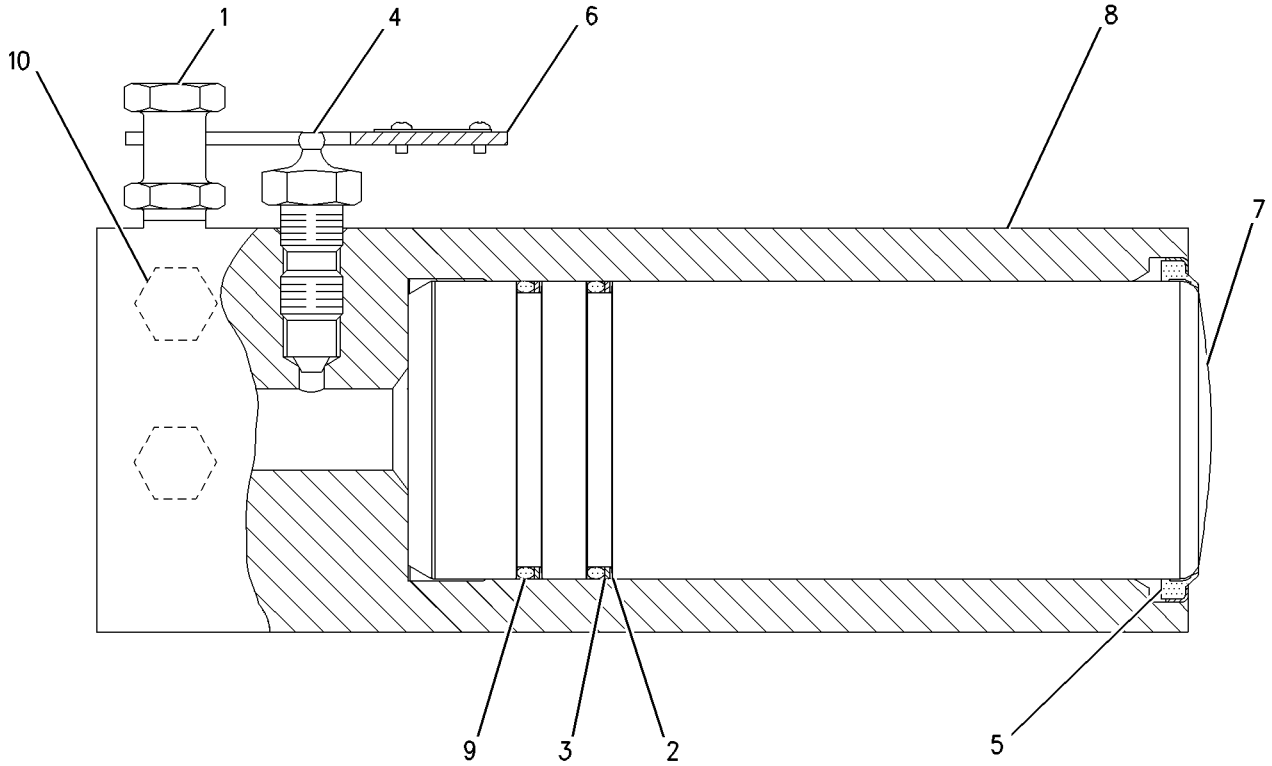

GRAPHIC #1 **<END>** g00730545

UNDERCARRIAGE

229-1746 FRAME AR-UNDERCARRIAGE

S/N: WDK1-UP

PART OF 314-3641 GENERAL AR

SMCS-4151 **i03069720**

NOTE	PART NUMBER	QTY	PART NAME 1 2 3 4 5 6 (PRODUCT LEVEL)	SEE PAGE
Y	**235-7565**	1	FRAME AS-UNDERCARRIAGE	396
Y	*227-6107*	1	GEAR & BEARING GP-SWING	360
Y	*7Y-2202*	2	GUARD GP-TRACK GUIDE	397
Y	*184-5790*	1	GUARD GP-TRAVEL MOTOR	403
Y	*194-1240*	1	IDLER GP-FRONT	405
Y	*7Y-0362*	1	ROLLER AR-TRACK & CARRIER	409
Y-SEPARATE ILLUSTRATION				

<END>

229-1747 FRAME AR-UNDERCARRIAGE

S/N: MNB1-UP

PART OF 314-3642 GENERAL AR

SMCS-4151 **i02614860**

NOTE	PART NUMBER	QTY	PART NAME 1 2 3 4 5 6 (PRODUCT LEVEL)	SEE PAGE
Y	*227-6107*	1	GEAR & BEARING GP-SWING	360
Y	*7Y-2202*	2	GUARD GP-TRACK GUIDE	397
Y	*184-5790*	1	GUARD GP-TRAVEL MOTOR	403
Y	*194-1240*	1	IDLER GP-FRONT	405
Y	*194-1250*	1	ROLLER AR-TRACK & CARRIER	410
	228-5515	1	FRAME AS-UNDERCARRIAGE	
Y-SEPARATE ILLUSTRATION				

<END>

235-7565 FRAME AS-UNDERCARRIAGE

S/N: WDK1-UP

PART OF 229-1746 FRAME AR-UNDERCARRIAGE

SMCS-4150, 7062 **i03069740**

NOTE	REF NO	GRAPHIC REF	PART NUMBER	QTY	PART NAME 1 2 3 4 5 6 (PRODUCT LEVEL)	SEE PAGE
	1	1	*235-7792*	1	FRAME AS-TRACK ROLLER (RH)	
	1A	1	**113-2317**	2	BRACKET	
	1B	1	**235-7520**	2	STEP	
	2	1	*235-7793*	1	FRAME AS-TRACK ROLLER (LH)	
	2A	1	**113-2317**	2	BRACKET	
	2B	1	**235-7520**	2	STEP	

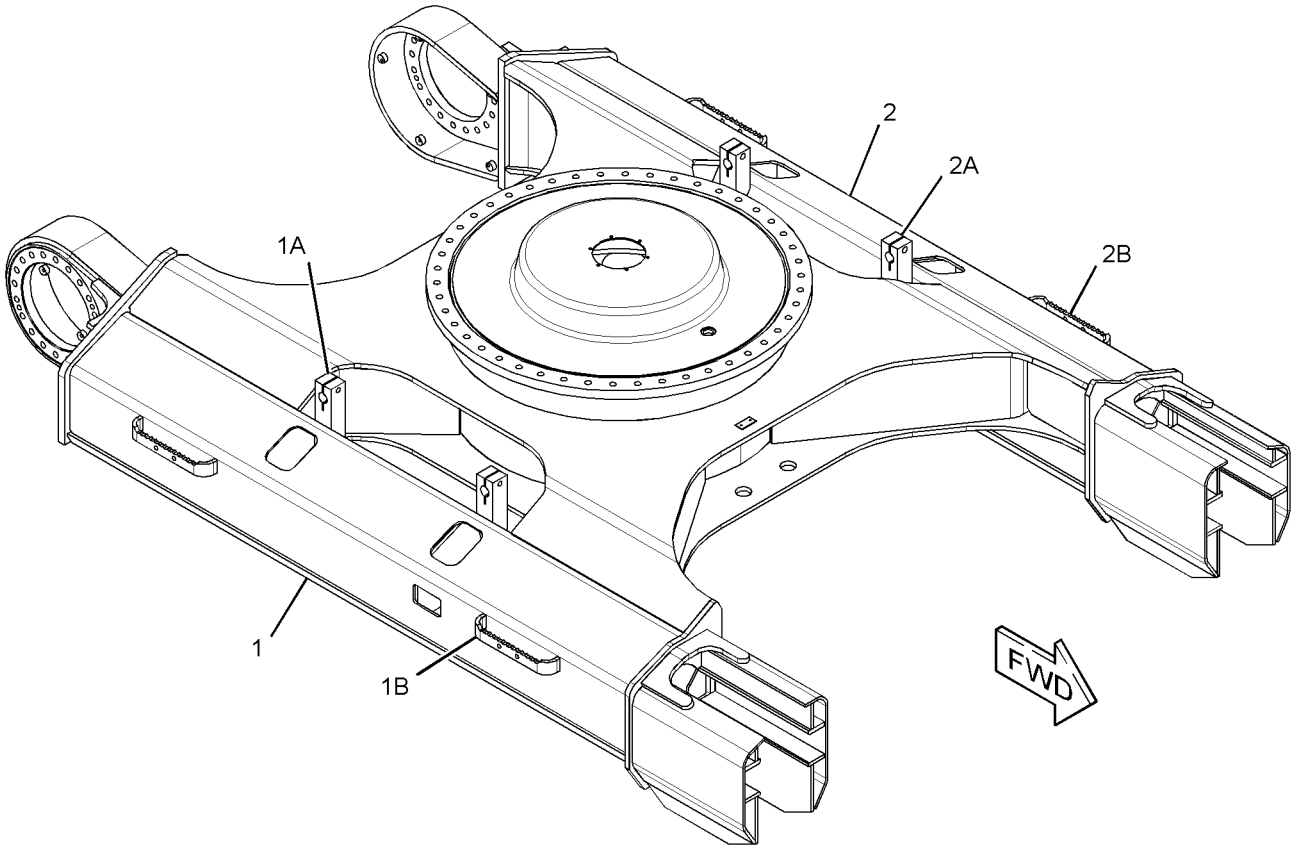

GRAPHIC #1 **<END>** g01522858

7Y-2202 GUARD GP-TRACK GUIDE

S/N: MNB1-UP; WDK1-UP

PART OF 229-1746, 229-1747 FRAME AR-UNDERCARRIAGE

SMCS-4177 **i01595567**

NOTE	REF NO	GRAPHIC REF	PART NUMBER	QTY	PART NAME 1 2 3 4 5 6 (PRODUCT LEVEL)	SEE PAGE
	1	1	**7Y-2581**	1	GUARD AS-TRACK GUIDE	
	2	1	**8T-4123**	4	WASHER (22X35X3.5-MM THK)	
M	3	1	**7X-2563**	4	BOLT (M20X2.5X60-MM)	
	4	1	**8V-1715**	4	SPACER (20.5X35X12-MM THK)	

M-METRIC PART

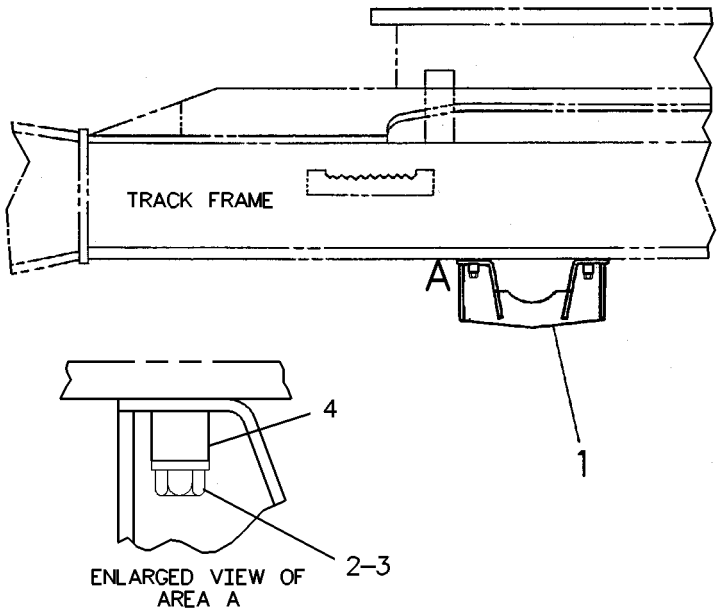

GRAPHIC #1 **<END>** g00826918

195-5374 GUARD GP-TRACK GUIDE

S/N: WDK1-UP
FULL LENGTH
AN ATTACHMENT

SMCS-4177 **i03206333**

NOTE	REF NO	GRAPHIC REF	PART NUMBER	QTY	PART NAME 1 2 3 4 5 6 (PRODUCT LEVEL)	SEE PAGE
	1	1	**119-4554**	4	GUARD AS-TRACK GUIDE	
	2	1	**119-4553**	4	GUARD AS-TRACK GUIDE	
M	3	1	**8T-5460**	24	BOLT (M20X2.5X40-MM)	
	4	1	**8T-5439**	48	WASHER-HARD (21.5X45X6-MM THK)	
M	5	1	**7X-2440**	12	BOLT (M20X2.5X320-MM)	
	6	1	**186-5564**	12	SUPPORT AS	
M		1	**8T-4131**	1	NUT (M20X2.5-THD)	
	7	1	**117-5612**	12	PIPE	

QUANTITIES SHOWN ARE THOSE REQUIRED FOR BOTH LH AND RH SIDES
M-METRIC PART

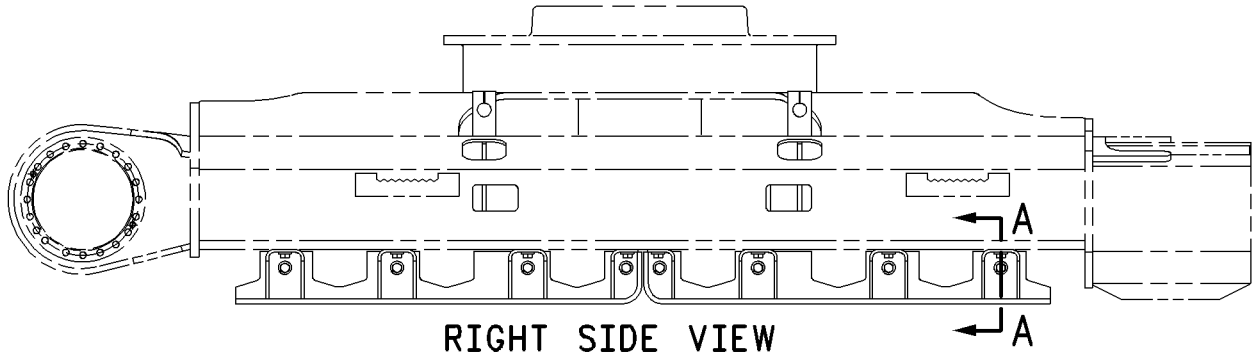

RIGHT SIDE VIEW

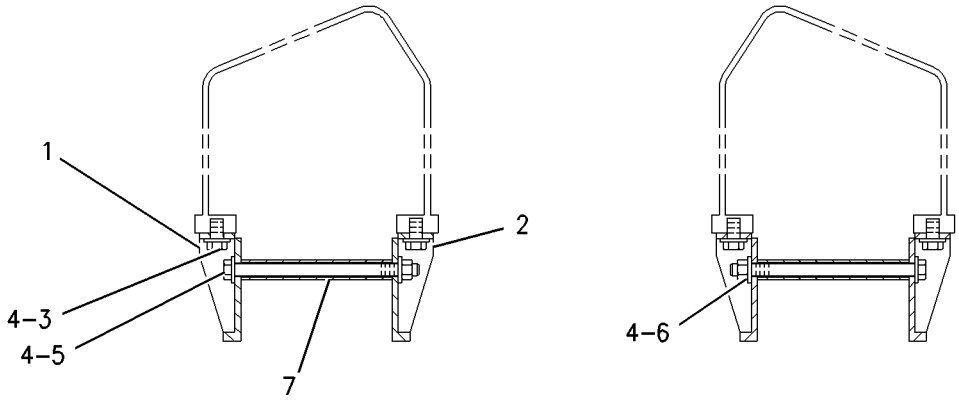

SECTION A-A

GRAPHIC #1 **<END>** g00826330

195-5375 GUARD GP-TRACK GUIDE

S/N: WDK1-UP
SPROKET
AN ATTACHMENT

SMCS-4177 **i03206334**

NOTE	REF NO	GRAPHIC REF	PART NUMBER	QTY	PART NAME 1 2 3 4 5 6 (PRODUCT LEVEL)	SEE PAGE
	1	1	**119-4553**	2	GUARD AS-TRACK GUIDE	
	2	1	**119-4554**	2	GUARD AS-TRACK GUIDE	
M	3	1	**8T-5460**	12	BOLT (M20X2.5X40-MM)	
	4	1	**8T-5439**	24	WASHER-HARD (21.5X45X6-MM THK)	
M	5	1	**7X-2440**	6	BOLT (M20X2.5X320-MM)	
	6	1	**186-5564**	6	SUPPORT AS	
M		1	**8T-4131**	1	NUT (M20X2.5-THD)	
	7	1	**117-5612**	6	PIPE	

QUANTITIES SHOWN ARE THOSE REQUIRED FOR BOTH LH AND RH SIDES
M-METRIC PART

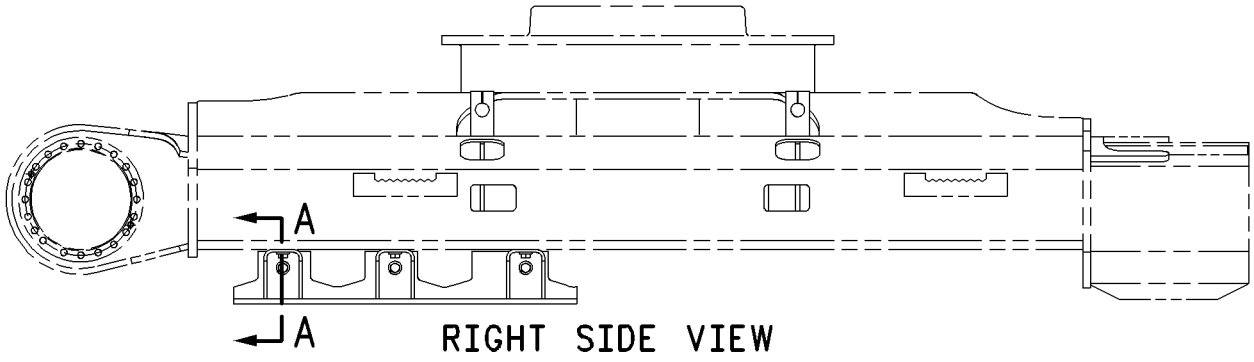

RIGHT SIDE VIEW

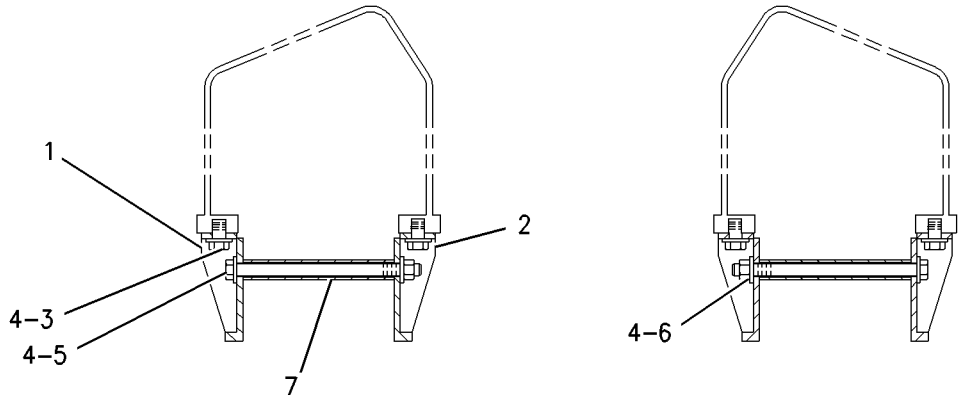

SECTION A-A

GRAPHIC #1 **<END>** g00826336

UNDERCARRIAGE

228-5517 GUARD GP-TRACK GUIDE—FULL LENGTH

S/N: MNB1-UP

AN ATTACHMENT

SMCS-4177 **i03206335**

NOTE	REF NO	GRAPHIC REF	PART NUMBER	QTY	PART NAME 1 2 3 4 5 6 (PRODUCT LEVEL)	SEE PAGE
	1	1	**117-5612**	16	PIPE	
	2	1	**186-5564**	16	SUPPORT AS	
	3	1	**235-7774**	4	GUARD AS-TRACK GUIDE	
	4	1	**235-7775**	4	GUARD AS-TRACK GUIDE	
M	5	1	**7X-2440**	16	BOLT (M20X2.5X320-MM)	
	6	1	**8T-5439**	64	WASHER-HARD (21.5X45X6-MM THK)	
M	7	1	**8T-5460**	32	BOLT (M20X2.5X40-MM)	

QUANTITIES SHOWN ARE THOSE REQUIRED FOR BOTH LH AND RH SIDES
M-METRIC PART

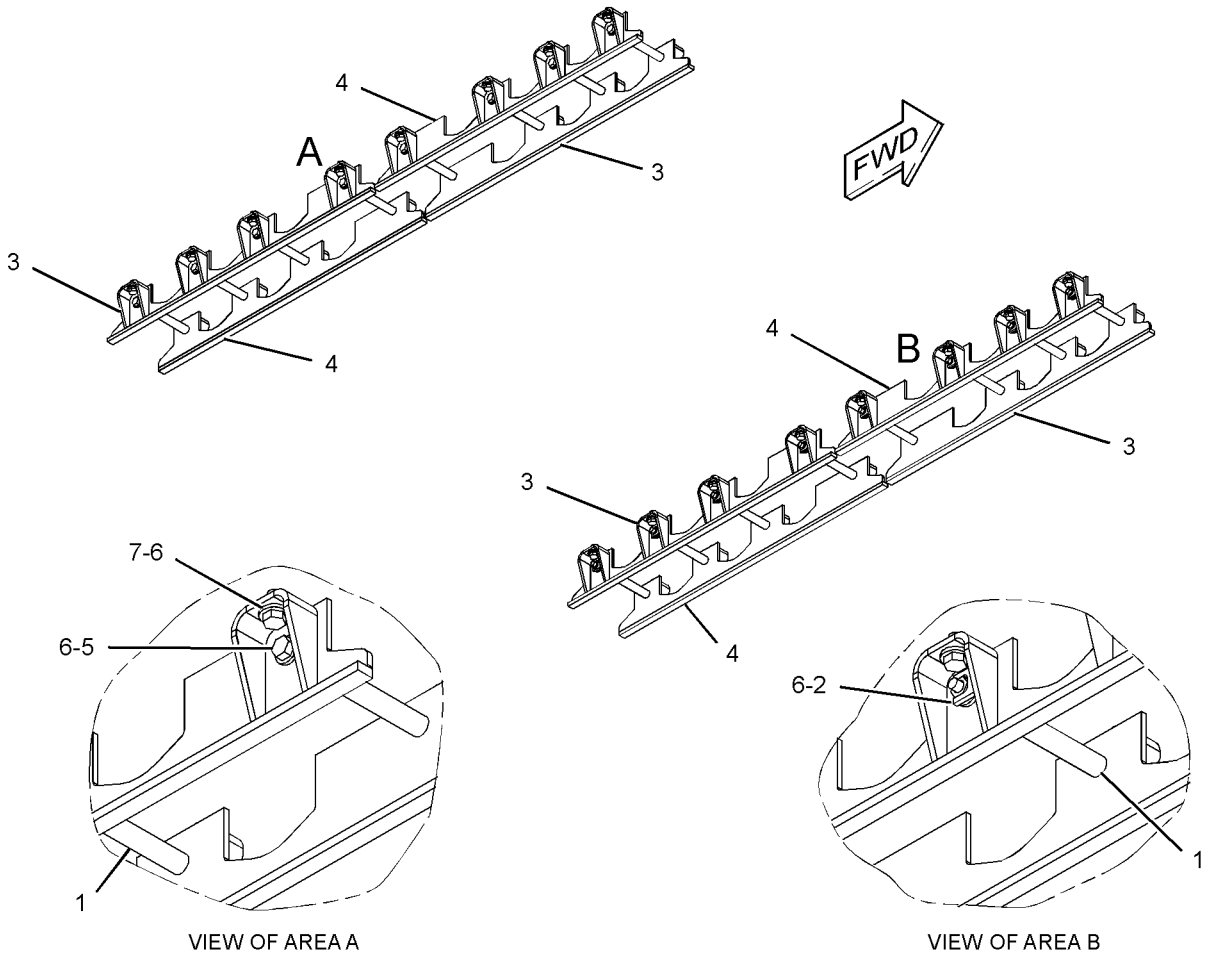

VIEW OF AREA A

VIEW OF AREA B

GRAPHIC #1 **<END>** g01237870

236-8326 GUARD GP-TRACK GUIDE

S/N: MNB1-UP
AN ATTACHMENT

SMCS-4177 **i02454154**

NOTE	REF NO	GRAPHIC REF	PART NUMBER	QTY	PART NAME 1 2 3 4 5 6 (PRODUCT LEVEL)	SEE PAGE
	1	1	**117-5612**	8	PIPE	
	2	1	**186-5564**	8	SUPPORT AS	
	3	1	**235-7774**	2	GUARD AS-TRACK GUIDE	
	4	1	**235-7775**	2	GUARD AS-TRACK GUIDE	
M	5	1	**7X-2440**	8	BOLT (M20X2.5X320-MM)	
	6	1	**8T-5439**	32	WASHER-HARD (21.5X45X6-MM THK)	
M	7	1	**8T-5460**	16	BOLT (M20X2.5X40-MM)	

QUANTITIES SHOWN ARE THOSE REQUIRED FOR BOTH LH AND RH SIDES
M-METRIC PART

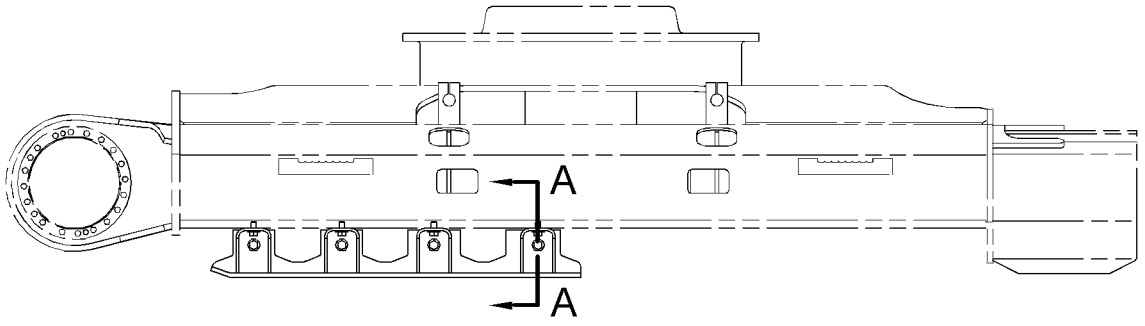

RIGHT SIDE VIEW

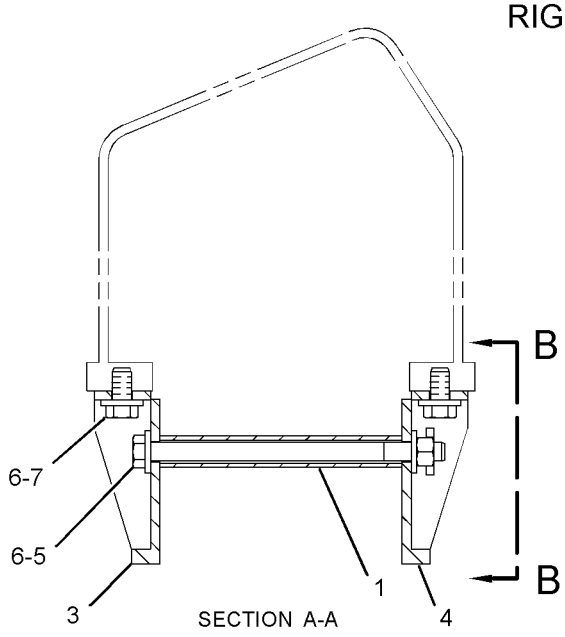

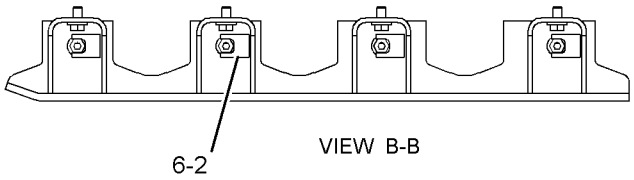

GRAPHIC #1 **<END>** g01154986

184-5713 GUARD GP-TRAVEL MOTOR

S/N: MNB1-UP; WDK1-UP
HEAVY DUTY
AN ATTACHMENT

SMCS-7163 **i01589382**

NOTE	REF NO	GRAPHIC REF	PART NUMBER	QTY	PART NAME 1 2 3 4 5 6 (PRODUCT LEVEL)	SEE PAGE
	1	1	**5P-1076**	1	WASHER-HARD (13.5X30X4MM THK)	
M		1	**8C-8992**	1	BOLT-LOCKING (M12X1.75X30MM)	
	2	1	**186-5474**	1	COVER AS	
	3	1	**186-5475**	1	COVER AS	

M-METRIC PART

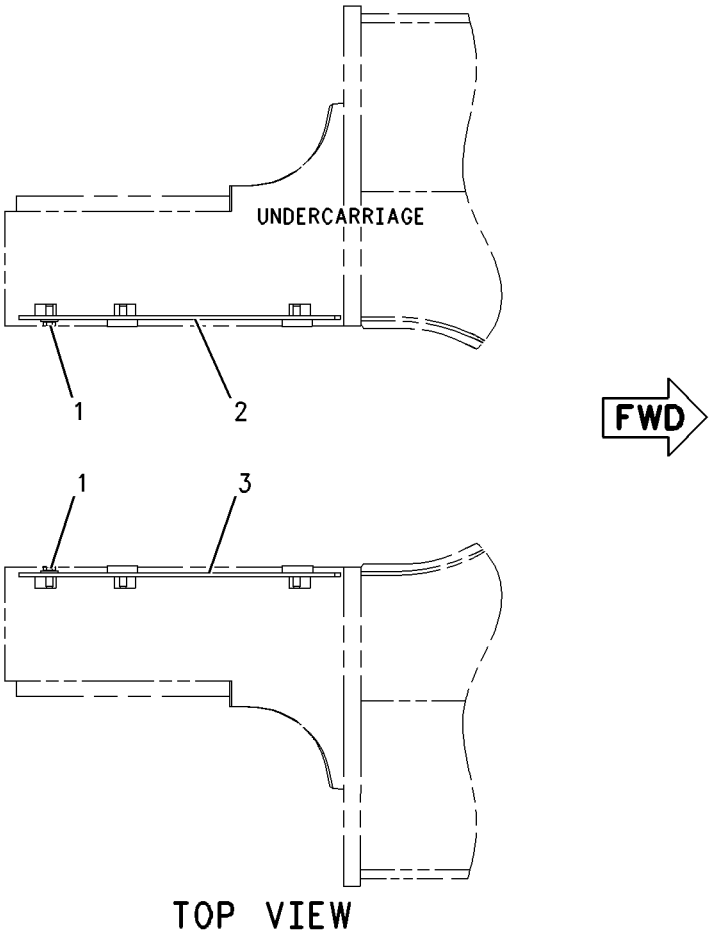

GRAPHIC #1

<END>

g00771447

184-5790 GUARD GP-TRAVEL MOTOR

S/N: MNB1-UP; WDK1-UP

PART OF 229-1746, 229-1747 FRAME AR-UNDERCARRIAGE

SMCS-7163 **i02347176**

NOTE	REF NO	GRAPHIC REF	PART NUMBER	QTY	PART NAME 1 2 3 4 5 6 (PRODUCT LEVEL)	SEE PAGE
M	1	1	**135-8576**	8	BOLT AS-LOCKING (M12X1.75X30-MM)	
	2	1	**186-5473**	2	COVER	

M-METRIC PART

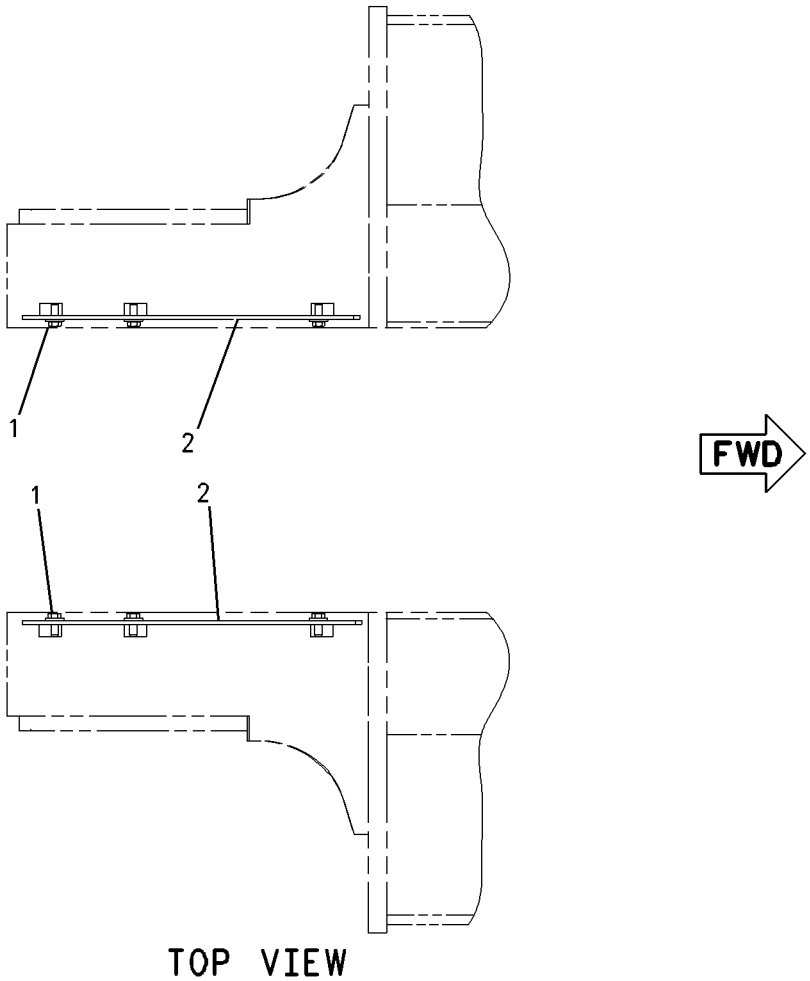

GRAPHIC #1 **<END>** g00808414

115-3696 IDLER GP-FRONT

S/N: MNB1-UP; WDK1-UP

PART OF 194-1241 IDLER GP-FRONT

SMCS-4159 **i02491586**

NOTE	REF NO	GRAPHIC REF	PART NUMBER	QTY	PART NAME 1 2 3 4 5 6 (PRODUCT LEVEL)	SEE PAGE
	1	1	**115-7471**	1	IDLER & BEARING AS	
		1	**6Y-2272**	2	BEARING-IDLER	
	2	1	**7H-3171**	1	PLUG-PIPE	
	3	1	**109-0885**	2	SEAL GP-DUO-CONE	
					(EACH INCLUDES)	
		1	**6Y-2270**	2	RING-SEALING	
	4	1	**8F-8882**	2	SEAL-O-RING	
	5	1	**6Y-2266**	2	PIN	
	6	1	**112-9951**	1	SHAFT-IDLER	
	7	1	**115-3697**	2	BEARING	

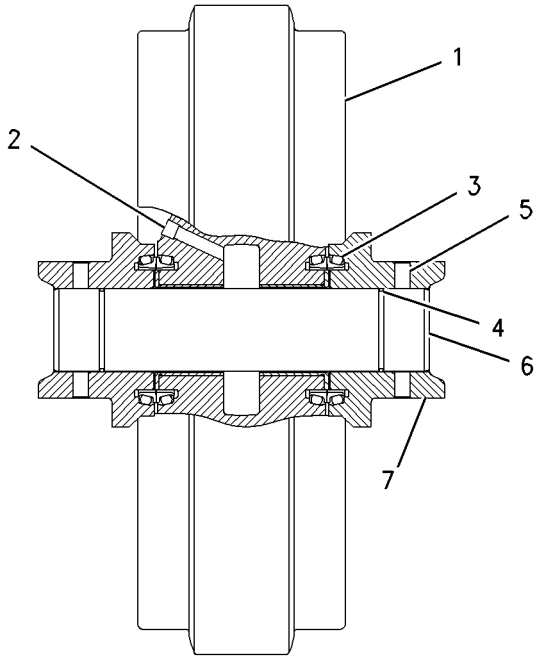

FRONT VIEW

GRAPHIC #1 **<END>** g00826537

UNDERCARRIAGE

194-1240 IDLER GP-FRONT

S/N: MNB1-UP; WDK1-UP

PART OF 229-1746, 229-1747 FRAME AR-UNDERCARRIAGE

SMCS-4159 **i02347186**

NOTE	REF NO	GRAPHIC REF	PART NUMBER	QTY	PART NAME 1 2 3 4 5 6 (PRODUCT LEVEL)	SEE PAGE
Y	1	1	*179-2998*	2	ADJUSTMENT GP-HYDRAULIC TRACK	394
Y	2	1	*194-1241*	2	IDLER GP-FRONT	406
M	3	1	**7X-2563**	4	BOLT (M20X2.5X60-MM)	

M-METRIC PART
Y-SEPARATE ILLUSTRATION

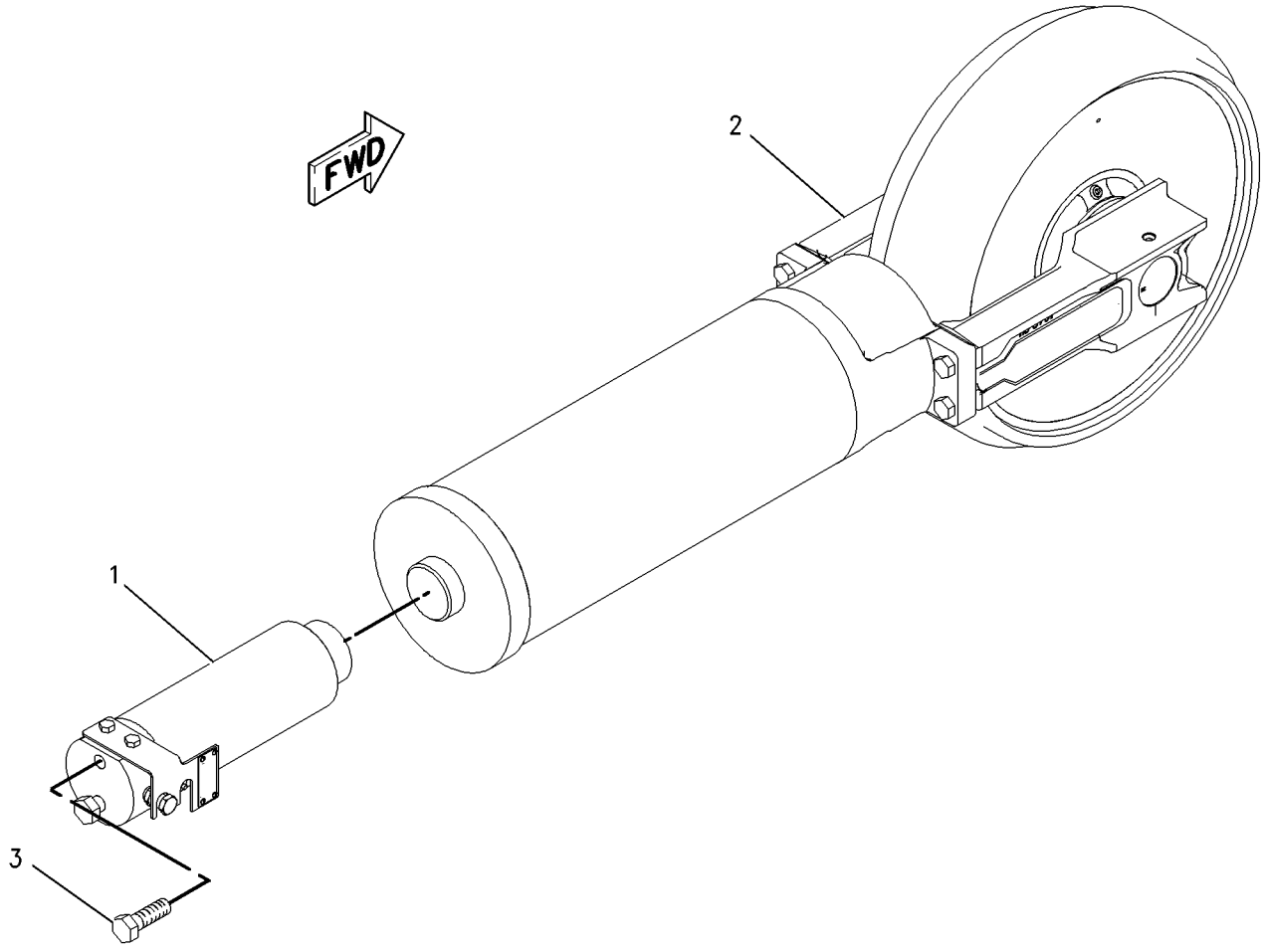

GRAPHIC #1 **<END>** g00733388

UNDERCARRIAGE

194-1241 IDLER GP-FRONT

S/N: MNB1-UP; WDK1-UP

PART OF 194-1240 IDLER GP-FRONT

SMCS-4159 **i02348051**

NOTE	REF NO	GRAPHIC REF	PART NUMBER	QTY	PART NAME 1 2 3 4 5 6 (PRODUCT LEVEL)	SEE PAGE
Y	1	1	**115-3696**	1	IDLER GP-FRONT	404
Y	2	1	*194-1242*	1	SPRING GP-RECOIL	415
M	3	1	**8T-6430**	4	BOLT (M20X2.5X50-MM)	

M-METRIC PART
Y-SEPARATE ILLUSTRATION

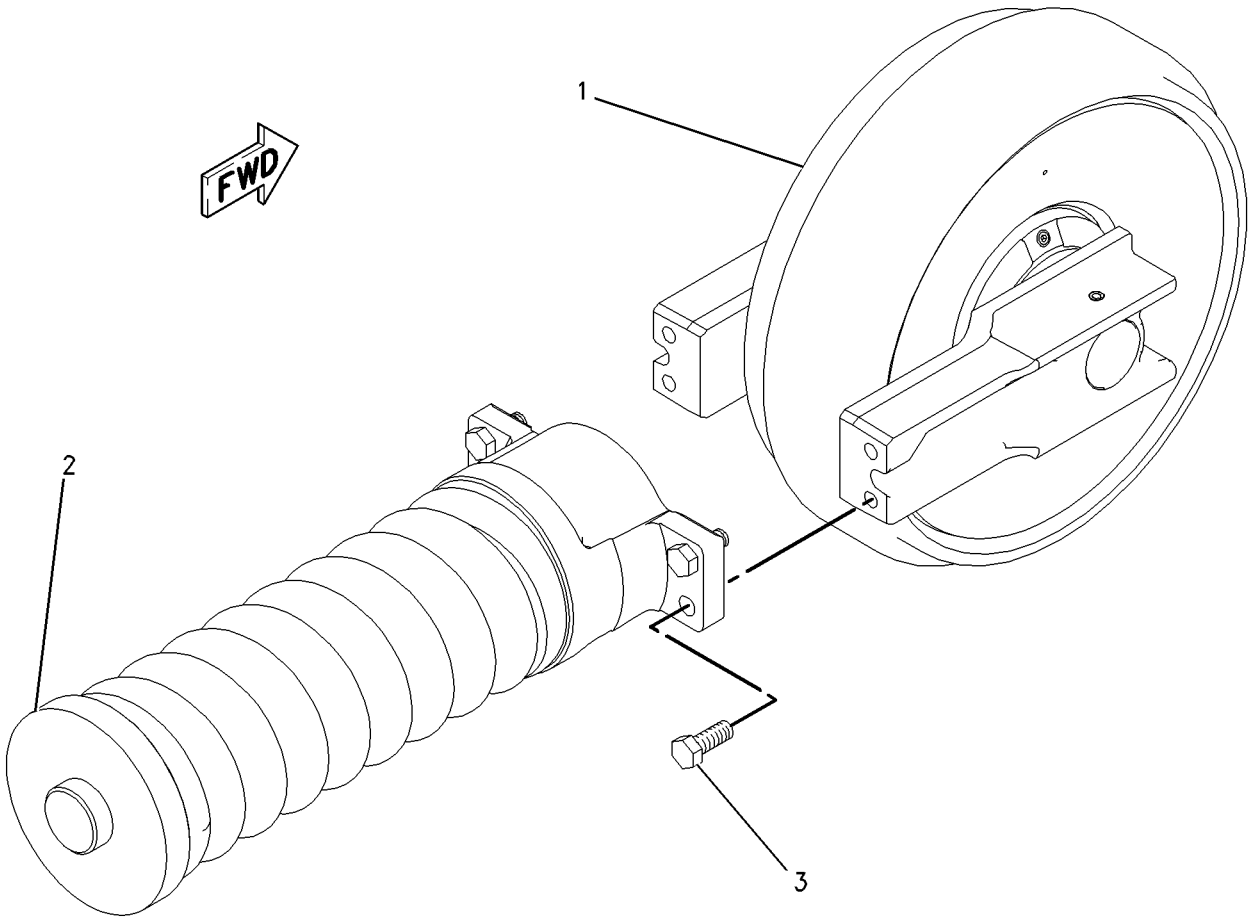

GRAPHIC #1 **<END>** g00773531

201-9116 LINK AS-TRACK

S/N: WDK1-UP
GREASE LUBRICATED TRACK
PART OF 188-3239, 199-2783, 199-3226, 236-8888, 251-1848, 251-1849 TRACK GP
AN ATTACHMENT

SMCS-4169, 4171 **i02887716**

NOTE	REF NO	GRAPHIC REF	PART NUMBER	QTY	PART NAME 1 2 3 4 5 6 (PRODUCT LEVEL)	SEE PAGE
	1	1	**6Y-1608**	44	LINK-TRACK (LH)	
	2	1	**095-7944**	1	PIN-COTTER	
	3	1	**115-1854**	1	LINK-MASTER (LH)	
	4	1	**201-0826**	1	BUSHING-TRACK	
	5	1	**115-1853**	1	LINK-MASTER (RH)	
	6	1	**188-3065**	1	PIN-TRACK MASTER	
	7	1	**179-3427**	2	SEAL-TRACK	
	8	1	**6Y-1607**	44	LINK-TRACK (RH)	
	9	1	**6Y-0851**	44	PIN-TRACK	
	10	1	**179-3425**	88	SEAL-TRACK	
	11	1	**321-1462**	44	BUSHING-TRACK	

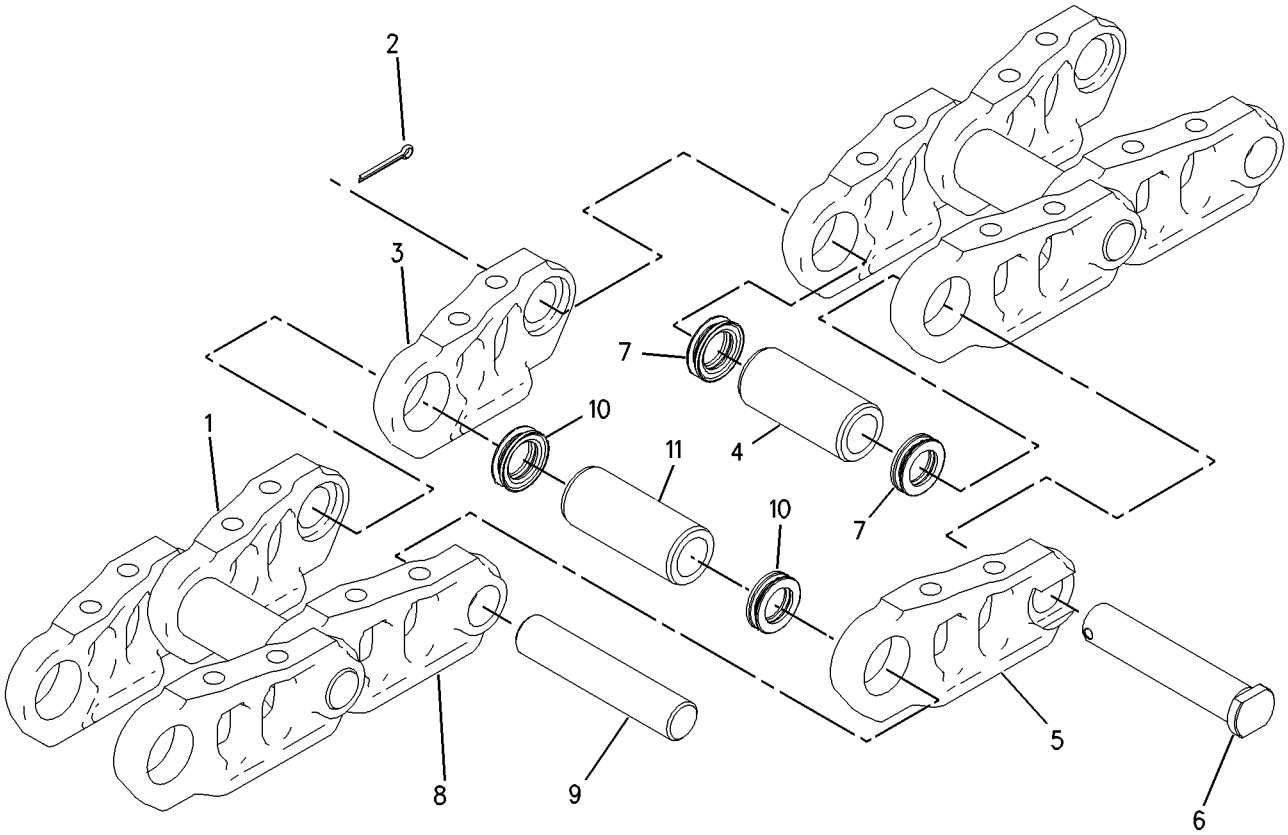

GRAPHIC #1 **<END>** g00793250

236-8893 LINK AS-TRACK

S/N: MNB1-UP
GREASE LUBRICATED TRACK
PART OF 236-8906, 236-8907, 236-8908, 251-1850, 251-1851, 251-1853, 251-1856, 251-1857 TRACK GP
AN ATTACHMENT

SMCS-4169, 4171 **i02887756**

NOTE	REF NO	GRAPHIC REF	PART NUMBER	QTY	PART NAME 1 2 3 4 5 6 (PRODUCT LEVEL)	SEE PAGE
	1	1	**6Y-1608**	49	LINK-TRACK (LH)	
	2	1	**095-7944**	1	PIN-COTTER	
	3	1	**115-1854**	1	LINK-MASTER (LH)	
	4	1	**201-0826**	1	BUSHING-TRACK	
	5	1	**115-1853**	1	LINK-MASTER (RH)	
	6	1	**188-3065**	1	PIN-TRACK MASTER	
	7	1	**179-3427**	2	SEAL-TRACK	
	8	1	**6Y-1607**	49	LINK-TRACK (RH)	
	9	1	**6Y-0851**	49	PIN-TRACK	
	10	1	**179-3425**	98	SEAL-TRACK	
	11	1	**321-1462**	49	BUSHING-TRACK	

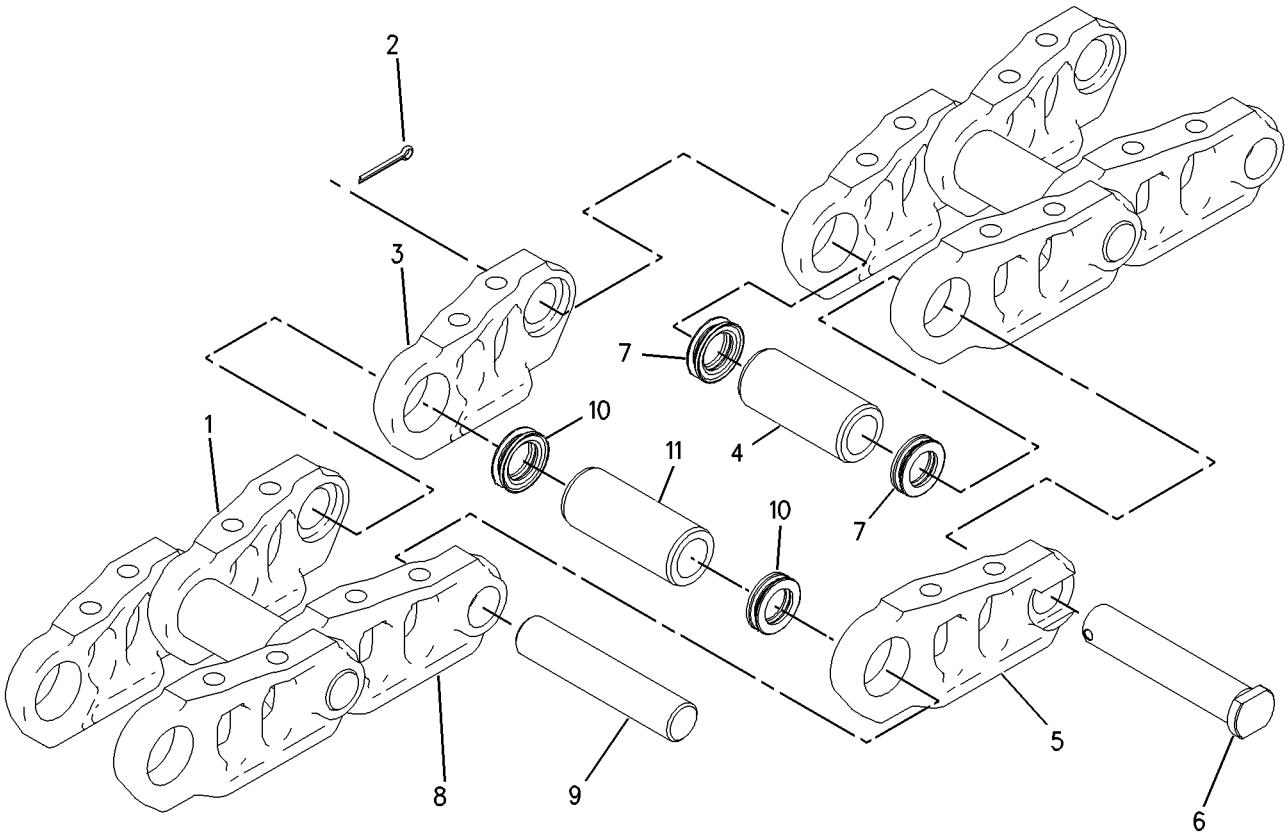

GRAPHIC #1 **<END>** g00793250

7Y-0362 ROLLER AR-TRACK & CARRIER

S/N: WDK1-UP
TRACK AND CARRIER
PART OF 229-1746 FRAME AR-UNDERCARRIAGE

SMCS-4154, 4180 **i03206336**

NOTE	REF NO	GRAPHIC REF	PART NUMBER	QTY	PART NAME 1 2 3 4 5 6 (PRODUCT LEVEL)	SEE PAGE
M	1	1	**8T-5878**	4	BOLT (M24X3X80-MM)	
Y	2	1	**6Y-5323**	4	ROLLER GP-TRACK CARRIER	412
CYR	3	1	**247-0565**	14	ROLLER GP-TRACK-SINGLE FLANGE	414
M	4	1	**7X-2565**	56	BOLT (M20X2.5X100-MM)	
	5	1	**8T-4123**	56	WASHER (22X35X3.5-MM THK)	

QUANTITIES SHOWN ARE THOSE REQUIRED FOR BOTH LH AND RH SIDES
C-CHANGE FROM PREVIOUS TYPE
M-METRIC PART
R-REMFG PART MAY BE AVAILABLE
Y-SEPARATE ILLUSTRATION

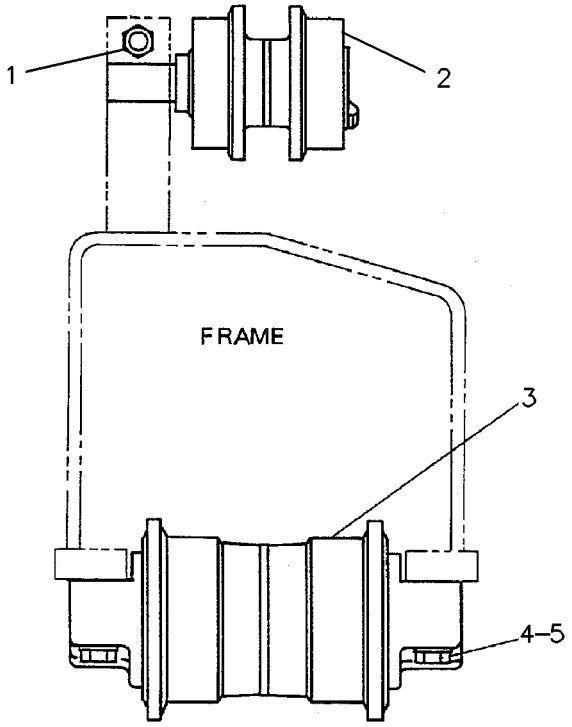

GRAPHIC #1 **<END>** g00827026

UNDERCARRIAGE

194-1250 ROLLER AR-TRACK & CARRIER

S/N: MNB1-UP

PART OF 229-1747 FRAME AR-UNDERCARRIAGE

SMCS-4154, 4180 **i03206337**

NOTE	REF NO	GRAPHIC REF	PART NUMBER	QTY	PART NAME 1 2 3 4 5 6 (PRODUCT LEVEL)	SEE PAGE
Y	1	1	**6Y-5323**	4	ROLLER GP-TRACK CARRIER	412
YR	2	1	**247-0565**	18	ROLLER GP-TRACK-SINGLE FLANGE	414
M	3	1	**7X-2565**	72	BOLT (M20X2.5X100-MM)	
	4	1	**8T-4123**	72	WASHER (22X35X3.5-MM THK)	
M	5	1	**8T-5878**	4	BOLT (M24X3X80-MM)	

QUANTITIES SHOWN ARE THOSE REQUIRED FOR BOTH LH AND RH SIDES
M-METRIC PART
R-REMFG PART MAY BE AVAILABLE
Y-SEPARATE ILLUSTRATION

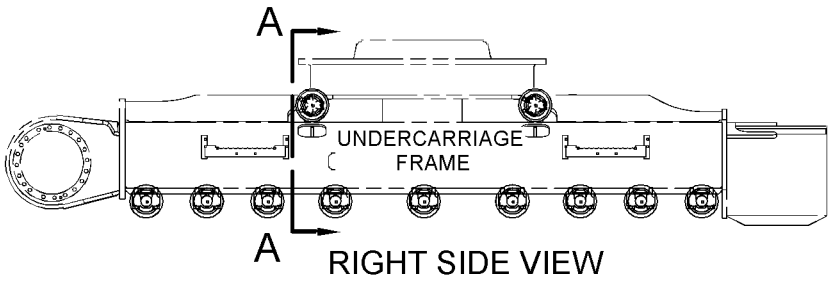

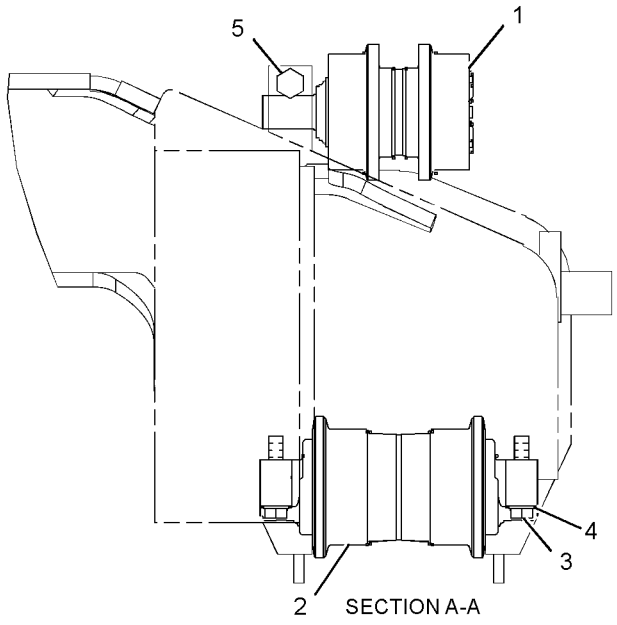

GRAPHIC #1 **<END>** g01151388

UNDERCARRIAGE

194-1256 ROLLER AR-TRACK & CARRIER

S/N: MNB1-UP
AN ATTACHMENT

SMCS-4154, 4180 **i02478029**

NOTE	REF NO	GRAPHIC REF	PART NUMBER	QTY	PART NAME 1 2 3 4 5 6 (PRODUCT LEVEL)	SEE PAGE
M	1	1	**8T-5878**	4	BOLT (M24X3X80-MM)	
Y	2	1	**6Y-5323**	4	ROLLER GP-TRACK CARRIER	412
YR	3	1	**206-1264**	18	ROLLER GP-TRACK-SINGLE FLANGE	413
M	4	1	**7X-2565**	72	BOLT (M20X2.5X100-MM)	
	5	1	**8T-4123**	72	WASHER (22X35X3.5-MM THK)	

QUANTITIES SHOWN ARE THOSE REQUIRED FOR BOTH LH AND RH SIDES
M-METRIC PART
R-REMFG PART MAY BE AVAILABLE
Y-SEPARATE ILLUSTRATION

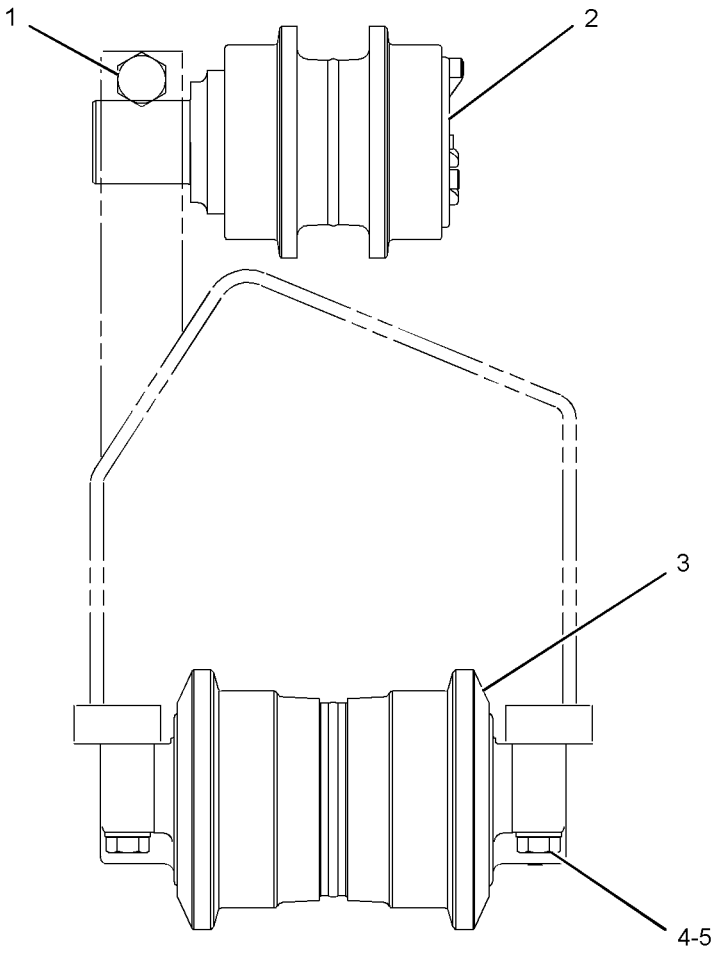

GRAPHIC #1 **<END>** g01215647

6Y-5323 ROLLER GP-TRACK CARRIER

S/N: MNB1-UP; WDK1-UP

PART OF 194-1250, 194-1256, 7Y-0362 ROLLER AR-TRACK & CARRIER

ALSO AN ATTACHMENT

SMCS-4154 **i02434331**

NOTE	REF NO	GRAPHIC REF	PART NUMBER	QTY	PART NAME 1 2 3 4 5 6 (PRODUCT LEVEL)	SEE PAGE
	1	1	**6Y-9858**	1	SHAFT AS-TRACK ROLLER	
	2	1	**179-1292**	1	SEAL GP-DUO-CONE	
	3	1	**6Y-9859**	1	ROLLER & BEARING AS	
	4	1	**6Y-9855**	1	BEARING-CARRIER ROLLER	
	5	1	**6Y-9856**	1	BEARING-CARRIER ROLLER	
	6	1	**5H-8848**	1	SEAL-O-RING	
M	7	1	**8T-1159**	5	BOLT-SOCKET HEAD (M10X1.5X25-MM)	
	8	1	**6Y-8077**	1	COVER-CARRIER ROLLER	
	9	1	**7H-3171**	1	PLUG-PIPE	
	10	1	**6Y-8075**	1	RETAINER	
	11	1	**6Y-8076**	1	WASHER-THRUST	

M-METRIC PART

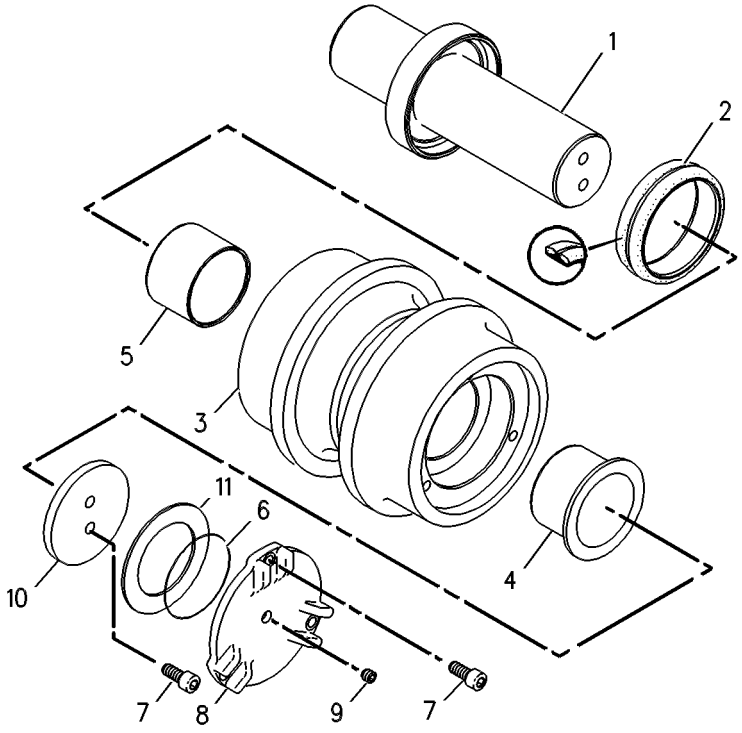

GRAPHIC #1 **<END>** g00266981

206-1264 ROLLER GP-TRACK-SINGLE FLANGE*R

S/N: MNB1-UP

PART OF 194-1256 ROLLER AR-TRACK & CARRIER

AN ATTACHMENT

SMCS-4180 **i02346728**

NOTE	REF NO	GRAPHIC REF	PART NUMBER	QTY	PART NAME 1 2 3 4 5 6 (PRODUCT LEVEL)	SEE PAGE
	1	1	**206-9257**	1	ROLLER & BEARING AS	
	1A	1	**6Y-1782**	2	BEARING-TRACK ROLLER	
	2	1	**8F-6711**	2	SEAL-O-RING	
	3	1	**9W-2146**	1	PLUG	
	4	1	**158-8086**	2	COLLAR-TRACK ROLLER	
	5	1	**159-9526**	2	DOWEL	
	6	1	**206-9212**	2	SEAL GP-DUO-CONE	
					(EACH INCLUDES)	
	6A	1	**171-5713**	2	RING-TORIC	
	7	1	**206-9260**	1	SHAFT-TRACK ROLLER	

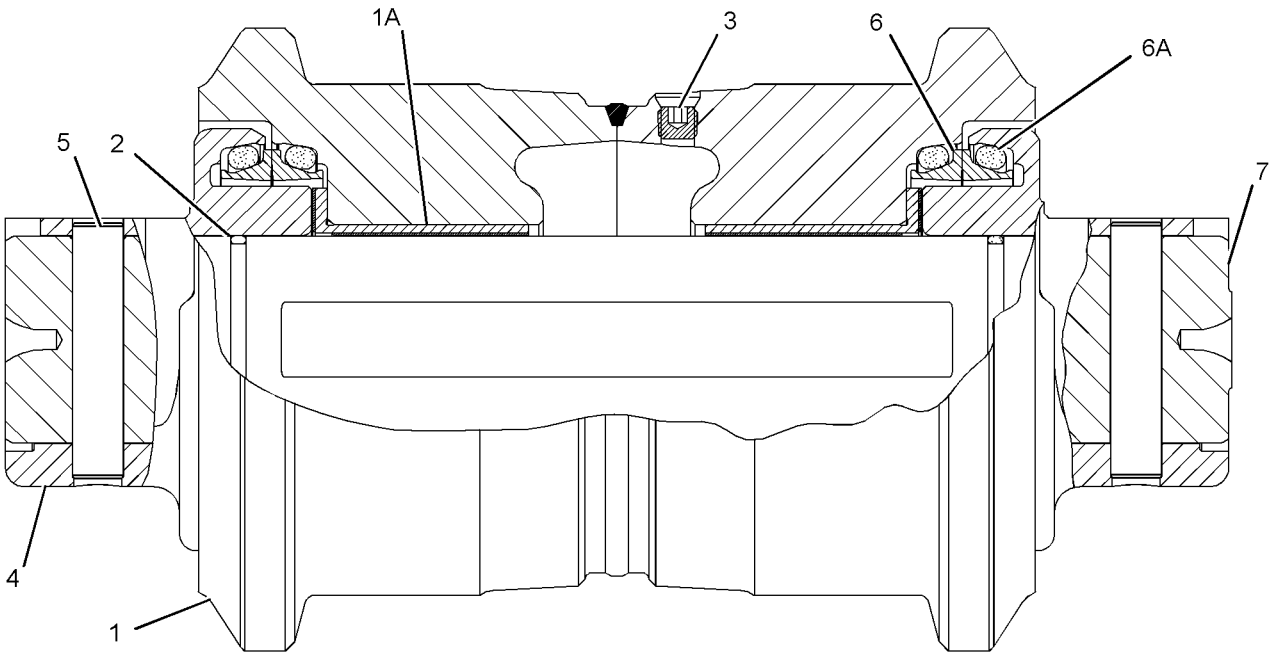

GRAPHIC #1 **<END>** g01187142

247-0565 ROLLER GP-TRACK-SINGLE FLANGE*R

S/N: MNB1-UP; WDK1-UP

PART OF 194-1250, 7Y-0362 ROLLER AR-TRACK & CARRIER

SMCS-4180 **i02424782**

NOTE	REF NO	GRAPHIC REF	PART NUMBER	QTY	PART NAME 1 2 3 4 5 6 (PRODUCT LEVEL)	SEE PAGE
	1	1	**158-8096**	2	RING-RETAINING	
	2	1	**8F-6711**	2	SEAL-O-RING	
	3	1	**5G-2247**	1	STOPPER-RUBBER	
	4	1	**6Y-0473**	1	PLUG-CLEAR	
	5	1	**6Y-1056**	1	ROLLER & BEARING AS	
	5A	1	**6Y-1782**	2	BEARING-TRACK ROLLER	
	6	1	**9W-2201**	2	SEAL GP-DUO-CONE	
					(EACH INCLUDES)	
	6A	1	**6H-1309**	2	RING-SEALING	
	7	1	**158-8086**	2	COLLAR-TRACK ROLLER	
	8	1	**159-9526**	1	DOWEL	
	9	1	**247-0564**	1	SHAFT	

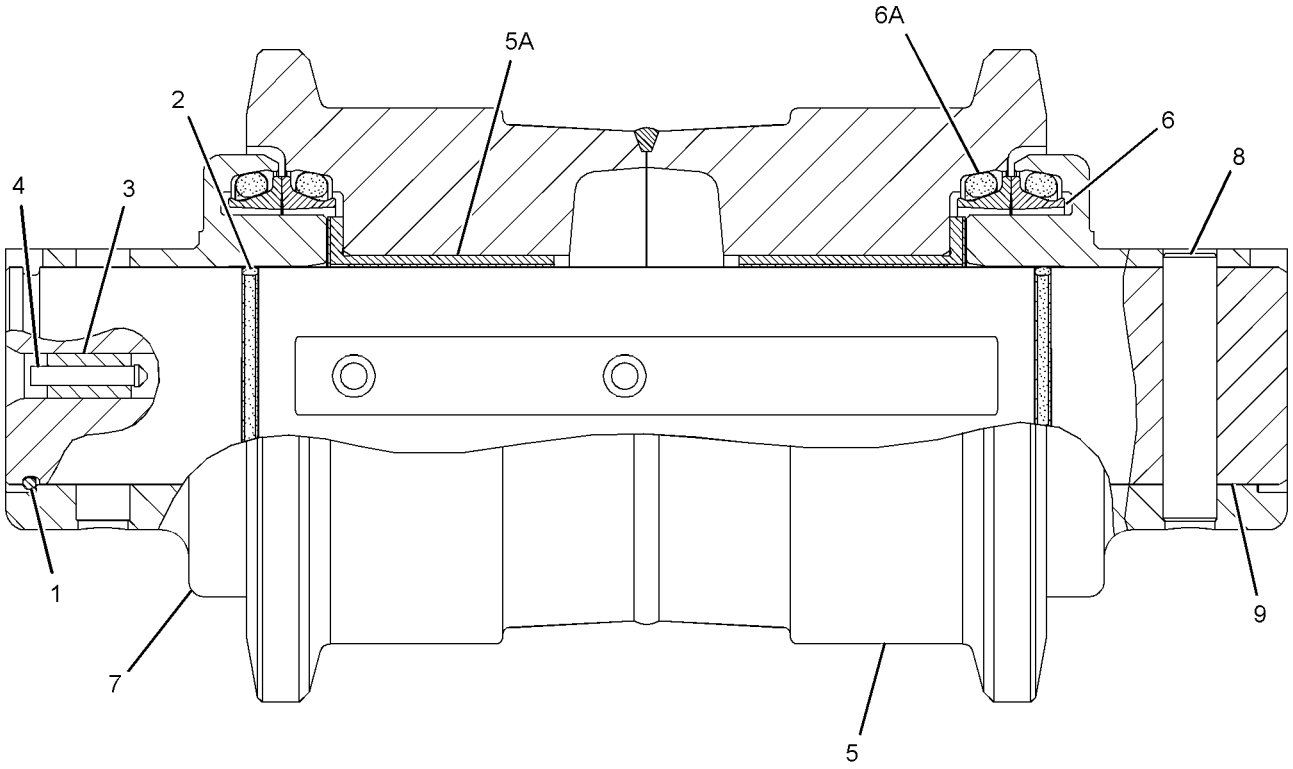

GRAPHIC #1 **<END>** g01211831

194-1242 SPRING GP-RECOIL

S/N: MNB1-UP; WDK1-UP

PART OF 194-1241 IDLER GP-FRONT

SMCS-4158 **i02348052**

NOTE	REF NO	GRAPHIC REF	PART NUMBER	QTY	PART NAME 1 2 3 4 5 6 (PRODUCT LEVEL)	SEE PAGE
	1	1	**7Y-0735**	1	STRIP	
	2	1	**194-1243**	1	SUPPORT AS	
	3	1	**194-1244**	1	SPRING	
	4	1	**194-1245**	1	ROD	
	5	1	**194-1249**	1	SUPPORT	
	6	1	**7Y-0725**	1	WASHER-HARD (52X92X8-MM THK)	
M	7	1	**8C-7328**	1	NUT (M48X5-THD)	
M	8	1	**8T-9080**	2	BOLT-SOCKET HEAD (M12X1.75X20-MM)	

M-METRIC PART

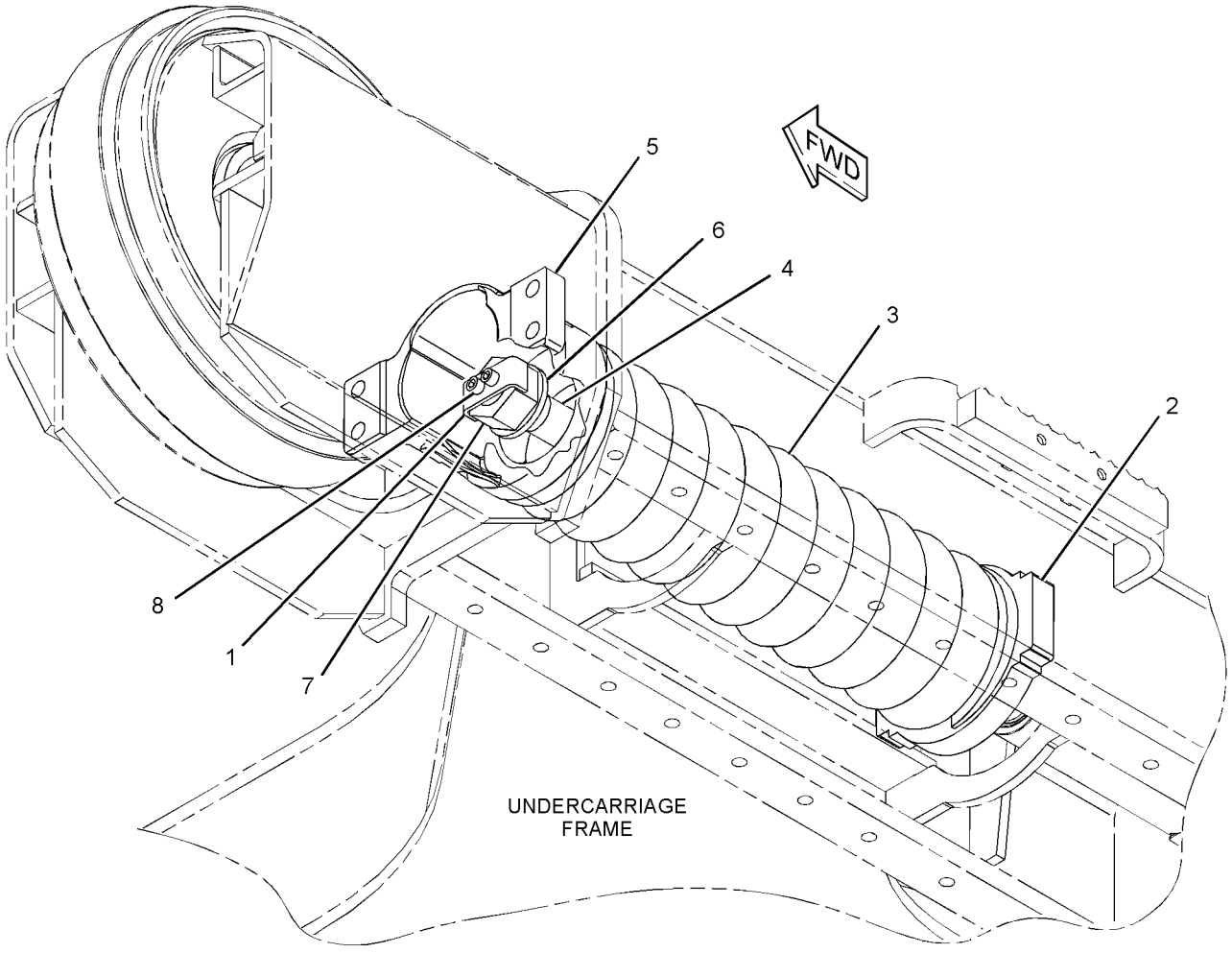

GRAPHIC #1 **<END>** g01189900

UNDERCARRIAGE

229-1864 TRACK AR—2-REQUIRED

S/N: MNB1-UP

800-MM (32-IN) TRIPLE GROUSER SHOE

AN ATTACHMENT

SMCS-4170 **i02347837**

NOTE	PART NUMBER	QTY	PART NAME 1 2 3 4 5 6 (PRODUCT LEVEL)	SEE PAGE
Y	*235-7764*	1	STEP GP	388
Y	*236-8907*	1	TRACK GP	421

Y-SEPARATE ILLUSTRATION

<END>

188-3239 TRACK GP–2-REQUIRED

S/N: WDK1-UP

600-MM (24-IN) TRIPLE GROUSER SHOE. GREASE LUBRICATED TRACK

AN ATTACHMENT

SMCS-4170 **i01721652**

NOTE	REF NO	GRAPHIC REF	PART NUMBER	QTY	PART NAME 1 2 3 4 5 6 (PRODUCT LEVEL)	SEE PAGE
Y	1	1	**201-9116**	1	LINK AS-TRACK	407
	2	1	**126-5064**	45	SHOE-TRACK	
M	3	1	**6Y-0846**	180	BOLT-TRACK (M20X1.5X63-MM)	
M	4	1	**9W-3361**	180	NUT-TRACK (M20X1.5-THD)	

M-METRIC PART
Y-SEPARATE ILLUSTRATION

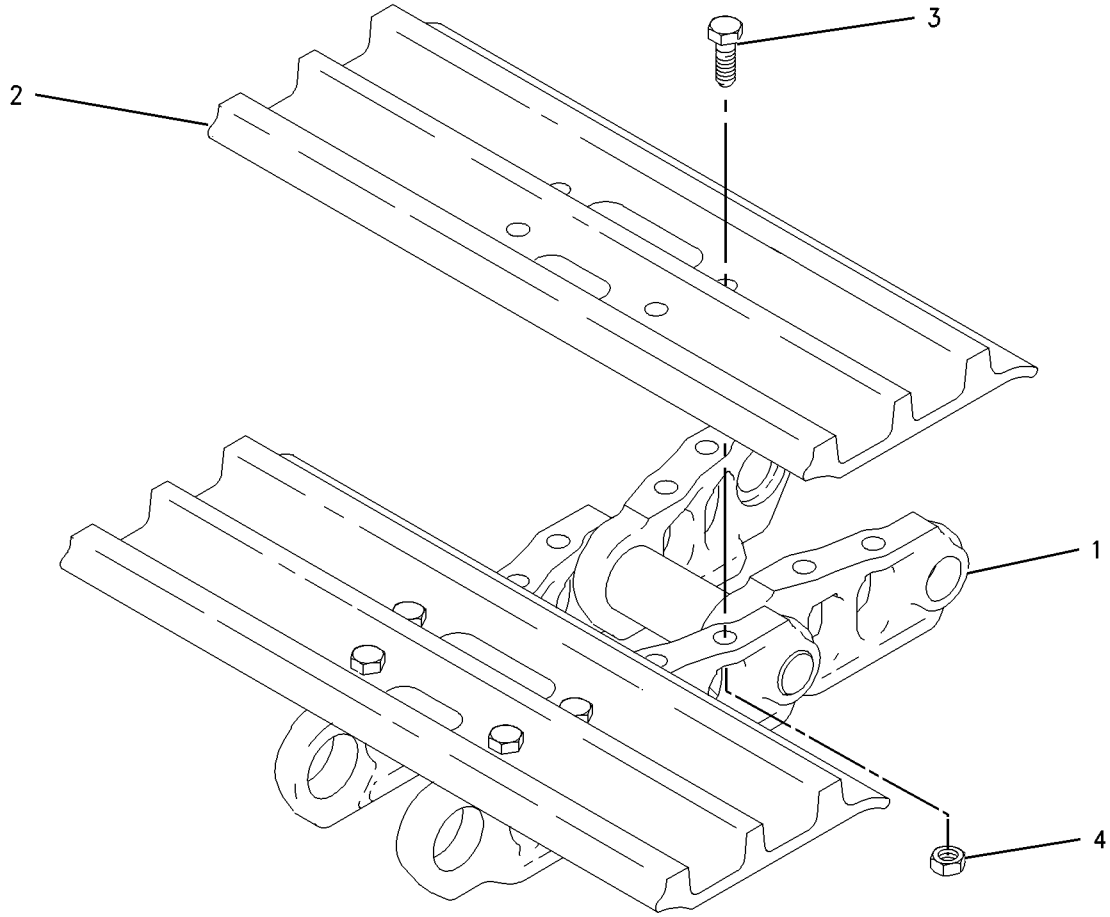

GRAPHIC #1 **<END>** g00731630

UNDERCARRIAGE

199-2783 TRACK GP—2-REQUIRED

S/N: WDK1-UP
800-MM (32-IN) TRIPLE CROUSER SHOE. GREASE LUBRICATED TRACK
PART OF 229-1865 TRACK GP
AN ATTACHMENT

SMCS-4170 **i03210700**

NOTE	PART NUMBER	QTY	PART NAME 1 2 3 4 5 6 (PRODUCT LEVEL)	SEE PAGE
Y	**201-9116**	1	LINK AS-TRACK	407
	306-2148	180	BOLT-TRACK (M20X1.5X68-MM)	
M	**9W-3361**	180	NUT-TRACK (M20X1.5-THD)	
	6Y-2126	45	SHOE-TRACK	

M-METRIC PART
Y-SEPARATE ILLUSTRATION

<END>

199-3226 TRACK GP—2-REQUIRED

S/N: WDK1-UP
700-MM (28-IN) TRIPLE GROUSER SHOE. GREASE LUBRICATED TRACK
AN ATTACHMENT

SMCS-4170 **i01593116**

NOTE	PART NUMBER	QTY	PART NAME 1 2 3 4 5 6 (PRODUCT LEVEL)	SEE PAGE
M	**6Y-0846**	180	BOLT-TRACK (M20X1.5X63-MM)	
Y	**201-9116**	1	LINK AS-TRACK	407
M	**9W-3361**	180	NUT-TRACK (M20X1.5-THD)	
	126-5065	45	SHOE-TRACK	

M-METRIC PART
Y-SEPARATE ILLUSTRATION

<END>

229-1865 TRACK GP—2-REQUIRED

S/N: WDK1-UP
800-MM (32-IN) TRIPLE GROUSER SHOE
AN ATTACHMENT

SMCS-4170 **i02485065**

NOTE	PART NUMBER	QTY	PART NAME 1 2 3 4 5 6 (PRODUCT LEVEL)	SEE PAGE
Y	*235-7764*	1	STEP GP	388
Y	*199-2783*	1	TRACK GP	418

Y-SEPARATE ILLUSTRATION

<END>

236-8888 TRACK GP–2-REQUIRED

S/N: WDK1-UP
800-MM (32-IN) TRIPLE GROUSER SHOE. GREASE LUBRICATED TRACK
PART OF 247-7327 TRACK GP
AN ATTACHMENT

SMCS-4170 **i03013748**

NOTE	REF NO	GRAPHIC REF	PART NUMBER	QTY	PART NAME 1 2 3 4 5 6 (PRODUCT LEVEL)	SEE PAGE
Y	1	1	**201-9116**	1	LINK AS-TRACK	407
	2	1	**6Y-2126**	45	SHOE-TRACK	
	3	1	**306-2148**	180	BOLT-TRACK (M20X1.5X68-MM)	
M	4	1	**9W-3361**	180	NUT-TRACK (M20X1.5-THD)	

M-METRIC PART
Y-SEPARATE ILLUSTRATION

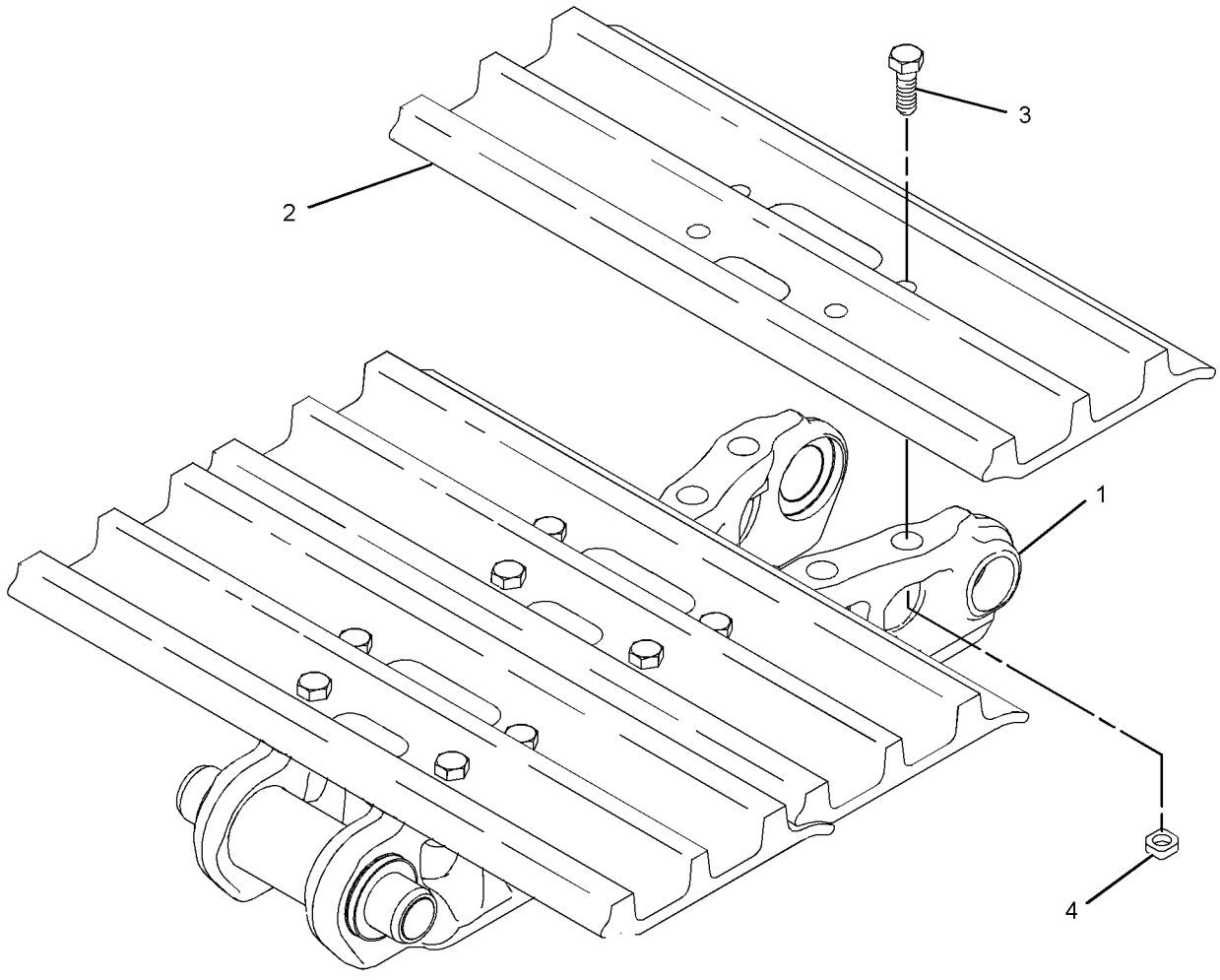

GRAPHIC #1 **<END>** g01129253

236-8906 TRACK GP–2-REQUIRED

S/N: MNB1-UP
800-MM (32-IN) TRIPLE GROUSER SHOE. GREASE LUBRICATED TRACK
PART OF 290-1771 TRACK GP
AN ATTACHMENT

SMCS-4170 **i03013750**

NOTE	REF NO	GRAPHIC REF	PART NUMBER	QTY	PART NAME 1 2 3 4 5 6 (PRODUCT LEVEL)	SEE PAGE
Y	1	1	**236-8893**	1	LINK AS-TRACK	408
	2	1	**6Y-2126**	50	SHOE-TRACK	
	3	1	**306-2148**	200	BOLT-TRACK (M20X1.5X68-MM)	
M	4	1	**9W-3361**	200	NUT-TRACK (M20X1.5-THD)	

M-METRIC PART
Y-SEPARATE ILLUSTRATION

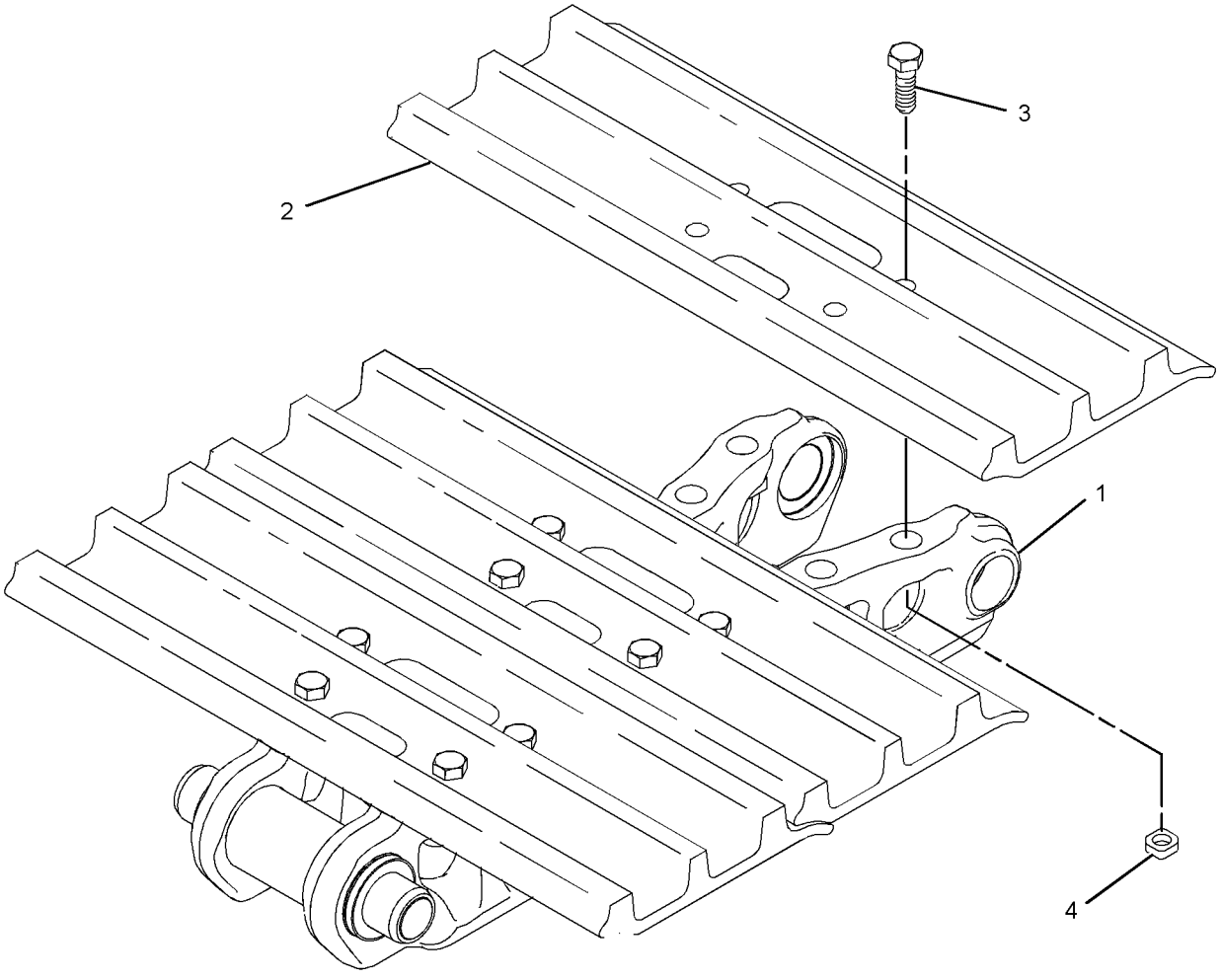

GRAPHIC #1 **<END>** g01129253

236-8907 TRACK GP–2-REQUIRED

S/N: MNB1-UP
800-MM (32-IN) TRIPLE GROUSER SHOE. GREASE LUBRICATED TRACK
PART OF 229-1864 TRACK AR
AN ATTACHMENT

SMCS-4170 **i03194516**

NOTE	REF NO	GRAPHIC REF	PART NUMBER	QTY	PART NAME 1 2 3 4 5 6 (PRODUCT LEVEL)	SEE PAGE
Y	1	1	**236-8893**	1	LINK AS-TRACK	408
	2	1	**306-2148**	200	BOLT-TRACK (M20X1.5X68-MM)	
M	3	1	**9W-3361**	200	NUT-TRACK (M20X1.5-THD)	
	4	1	**6Y-2126**	50	SHOE-TRACK	

M-METRIC PART
Y-SEPARATE ILLUSTRATION

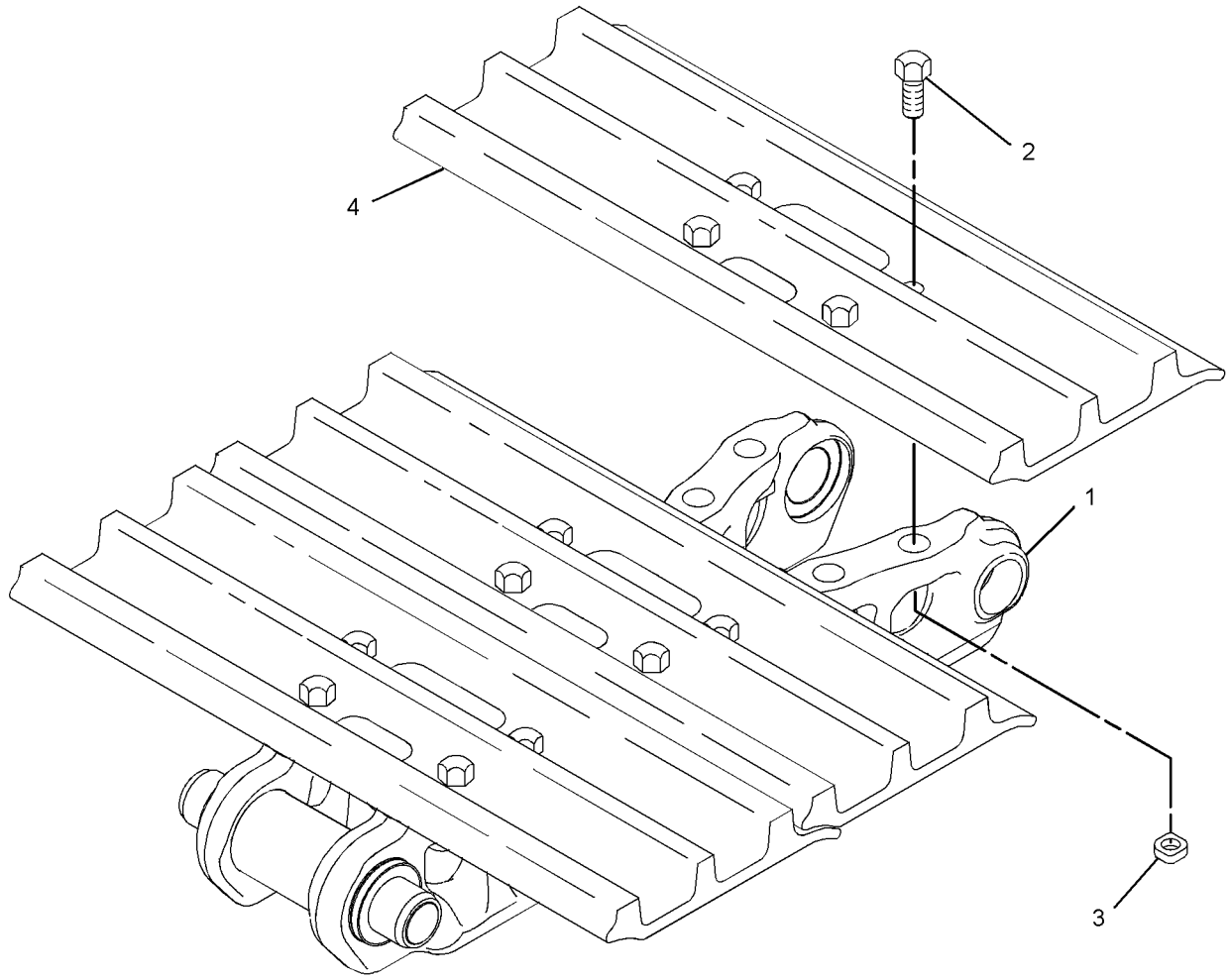

GRAPHIC #1 **<END>** g01237320

UNDERCARRIAGE

236-8908 TRACK GP–2-REQUIRED

S/N: MNB1-UP

600-MM (24-IN) TRIPLE GROUSER SHOE. GREASE LUBRICATED TRACK

AN ATTACHMENT

SMCS-4170 **i02454100**

NOTE	REF NO	GRAPHIC REF	PART NUMBER	QTY	PART NAME 1 2 3 4 5 6 (PRODUCT LEVEL)	SEE PAGE
	1	1	**126-5064**	50	SHOE-TRACK	
M	2	1	**9W-3361**	200	NUT-TRACK (M20X1.5-THD)	
M	3	1	**6Y-0846**	200	BOLT-TRACK (M20X1.5X63-MM)	
Y	4	1	**236-8893**	1	LINK AS-TRACK	408

M-METRIC PART
Y-SEPARATE ILLUSTRATION

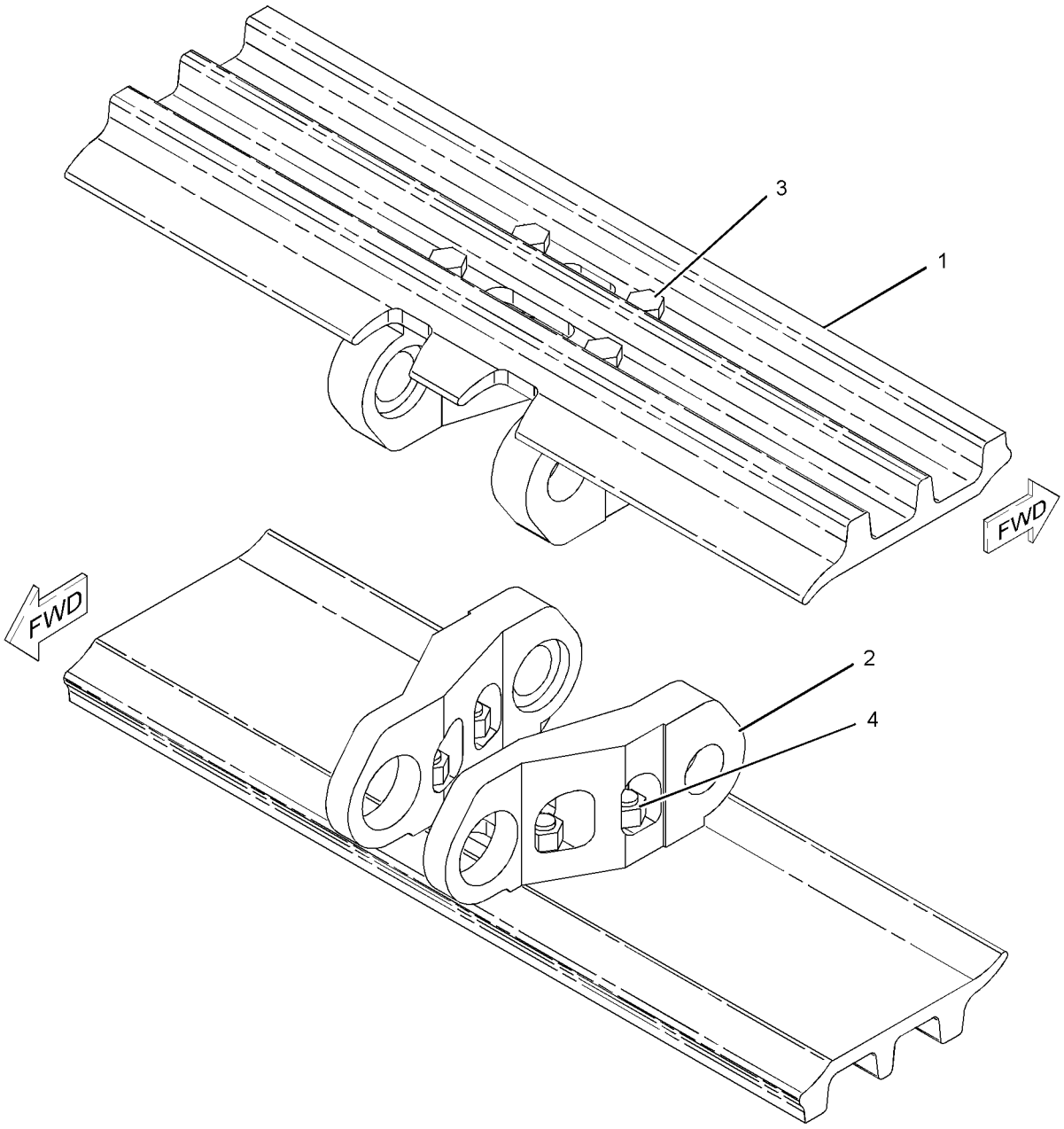

GRAPHIC #1 **<END>** g01226566

247-7327 TRACK GP—2-REQUIRED

S/N: WDK1-UP

800-MM (32-IN) TRIPLE GROUSER SHOE

AN ATTACHMENT

SMCS-4170 **i02489091**

NOTE	PART NUMBER	QTY	PART NAME 1 2 3 4 5 6 (PRODUCT LEVEL)	SEE PAGE
Y	*235-7764*	1	STEP GP	388
Y	*236-8888*	1	TRACK GP	419

Y-SEPARATE ILLUSTRATION

<END>

251-1848 TRACK GP–2-REQUIRED

S/N: WDK1-UP

600-MM (24-IN) DOUBLE GROUSER SHOE. GREASE LUBRICATED TRACK

AN ATTACHMENT

SMCS-4170 **i03087482**

NOTE	REF NO	GRAPHIC REF	PART NUMBER	QTY	PART NAME 1 2 3 4 5 6 (PRODUCT LEVEL)	SEE PAGE
Y	1	1	**201-9116**	1	LINK AS-TRACK	407
	2	1	**306-2148**	180	BOLT-TRACK (M20X1.5X68-MM)	
M	3	1	**9W-3361**	180	NUT-TRACK (M20X1.5-THD)	
	4	1	**8E-8812**	45	SHOE-TRACK	

M-METRIC PART
Y-SEPARATE ILLUSTRATION

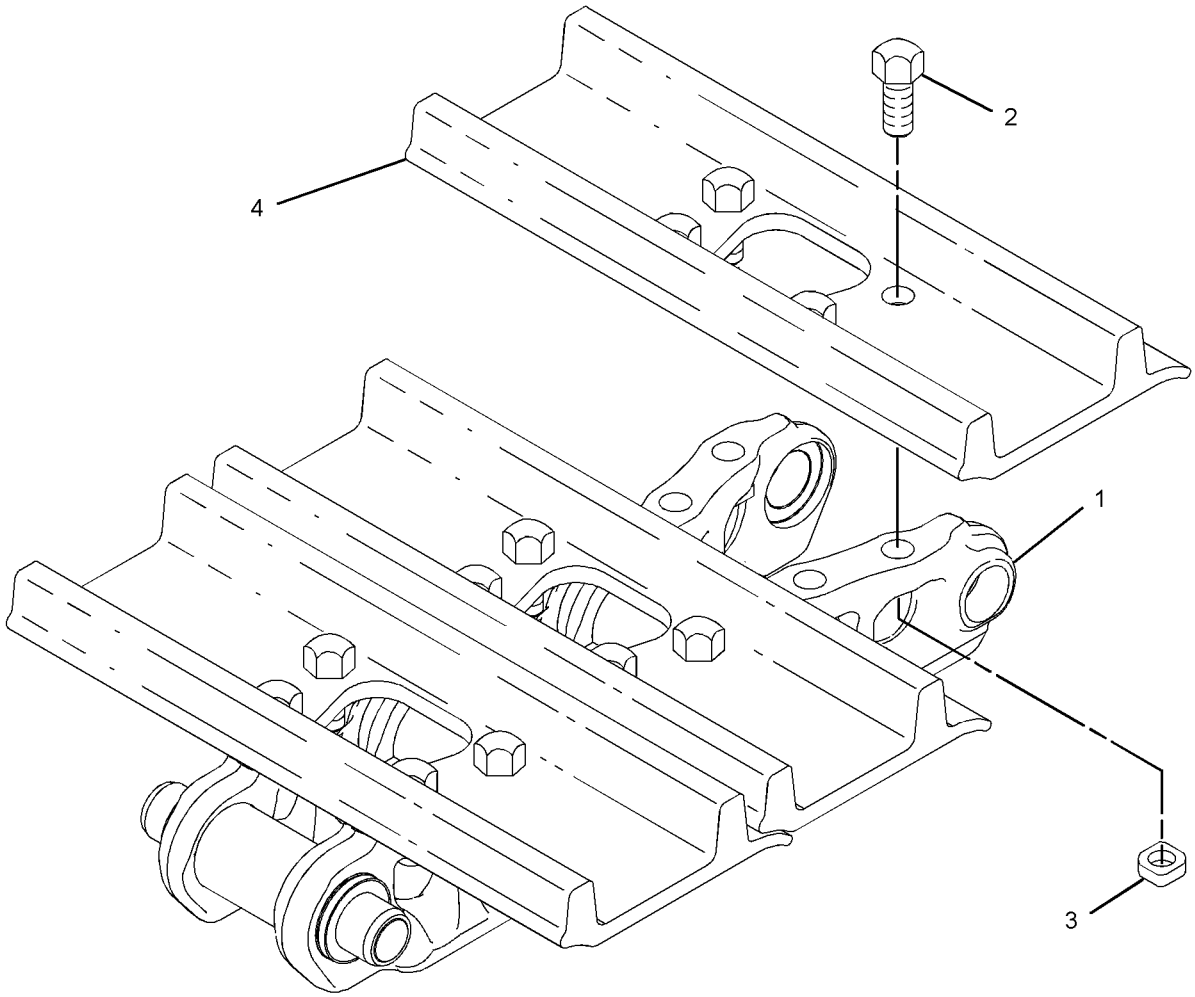

GRAPHIC #1 **<END>** g01250402

251-1849 TRACK GP–2-REQUIRED

S/N: WDK1-UP

700-MM (28-IN) DOUBLE GROUSER SHOE. GREASE LUBRICATED TRACK

AN ATTACHMENT

SMCS-4170 **i03087480**

NOTE	REF NO	GRAPHIC REF	PART NUMBER	QTY	PART NAME 1 2 3 4 5 6 (PRODUCT LEVEL)	SEE PAGE
Y	1	1	**201-9116**	1	LINK AS-TRACK	407
	2	1	**306-2148**	180	BOLT-TRACK (M20X1.5X68-MM)	
M	3	1	**9W-3361**	180	NUT-TRACK (M20X1.5-THD)	
	4	1	**8E-8814**	45	SHOE-TRACK	

M-METRIC PART
Y-SEPARATE ILLUSTRATION

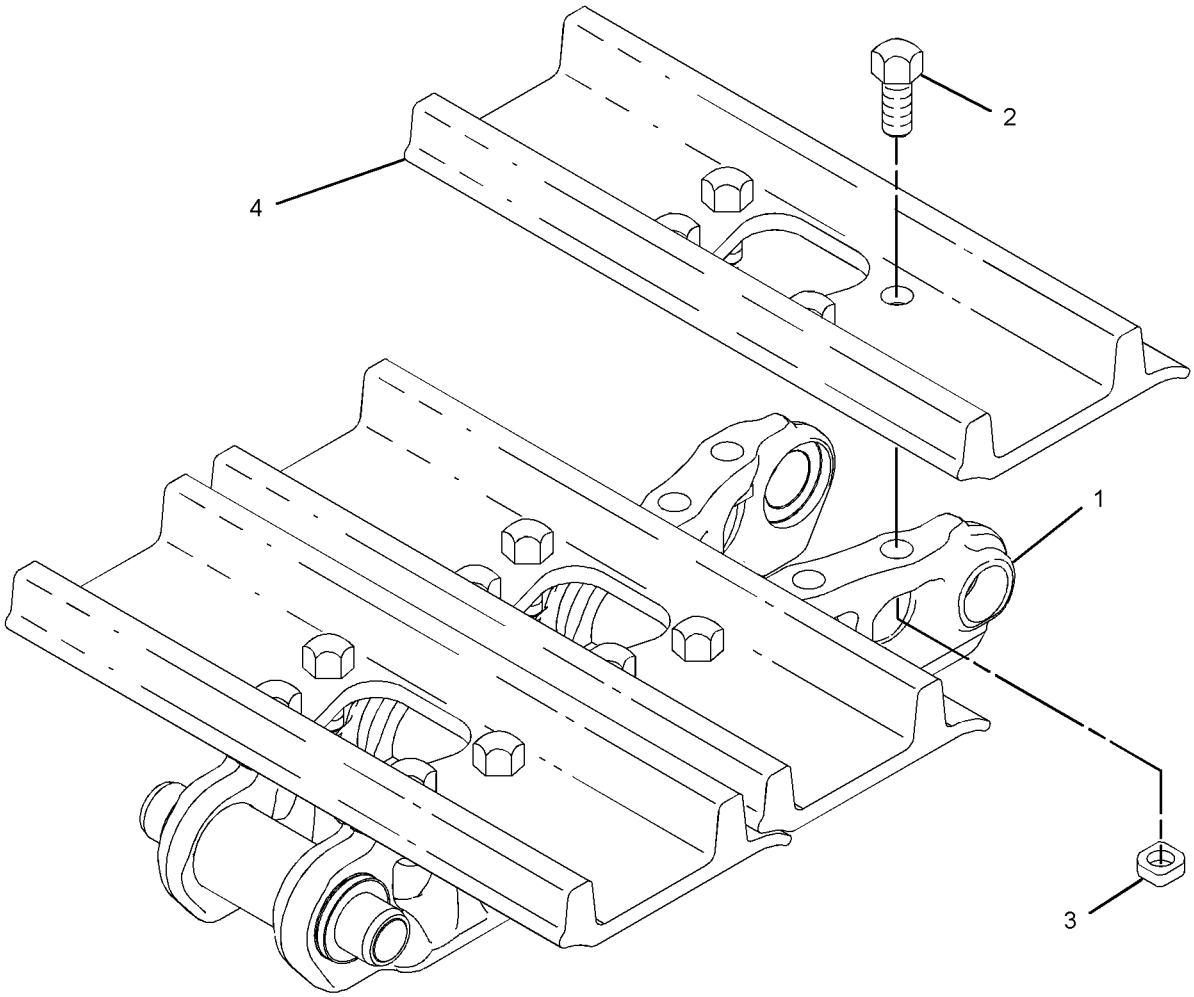

GRAPHIC #1 **<END>** g01250402

251-1850 TRACK GP–2-REQUIRED

S/N: MNB1-UP

600-MM(24-IN)DOUBLE GROUSER SHOE. GREASED LUBRICATED TRACK

AN ATTACHMENT

SMCS-4170 **i03088648**

NOTE	REF NO	GRAPHIC REF	PART NUMBER	QTY	PART NAME 1 2 3 4 5 6 (PRODUCT LEVEL)	SEE PAGE
Y	1	1	**236-8893**	1	LINK AS-TRACK	408
	2	1	**306-2148**	200	BOLT-TRACK (M20X1.5X68-MM)	
M	3	1	**9W-3361**	200	NUT-TRACK (M20X1.5-THD)	
	4	1	**8E-8812**	50	SHOE-TRACK	

M-METRIC PART
Y-SEPARATE ILLUSTRATION

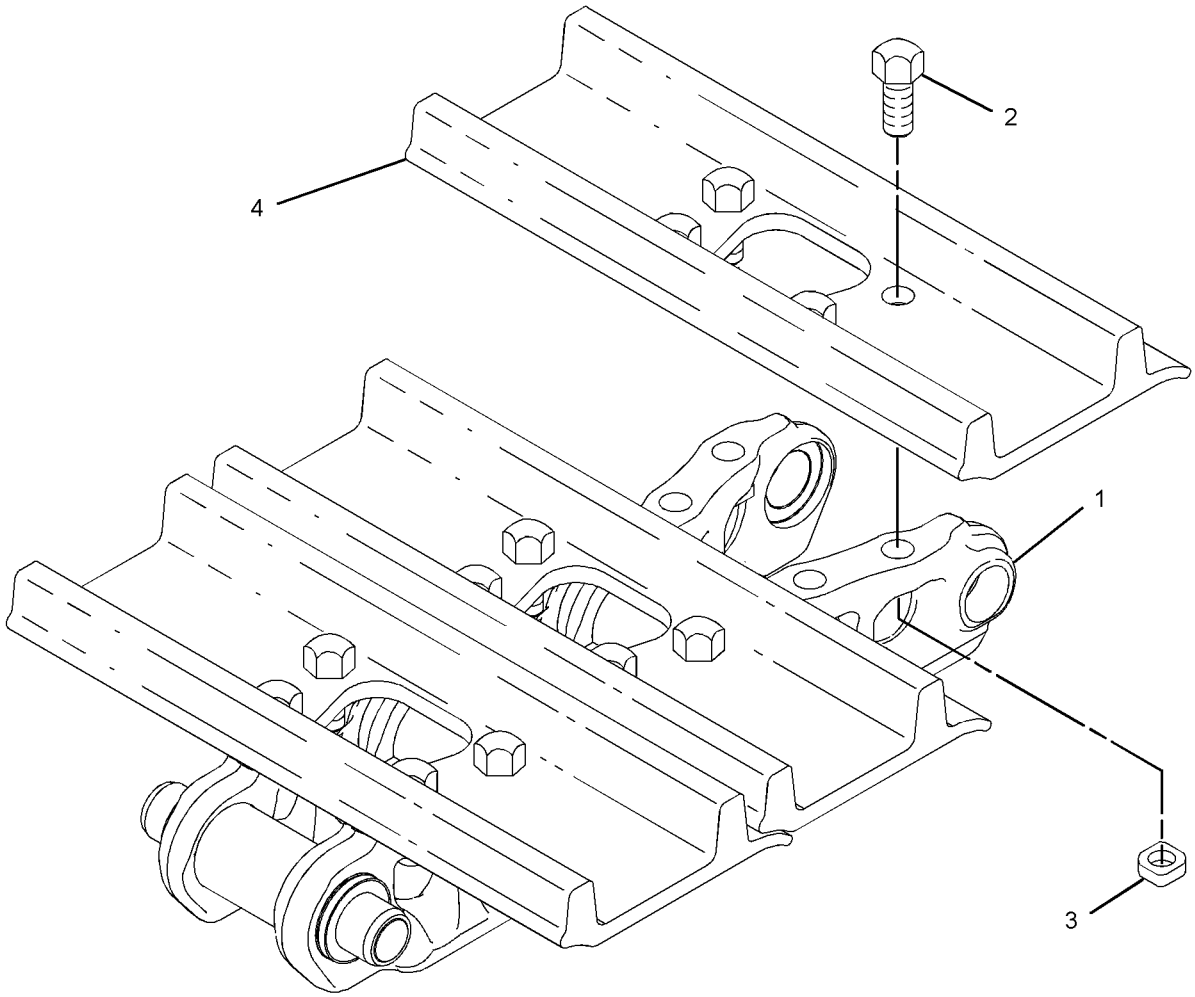

GRAPHIC #1 **<END>** g01250402

251-1851 TRACK GP–2-REQUIRED

S/N: MNB1-UP

700-MM (28-IN) DOUBLE GROUSER SHOE. GREASED LUBRICATED TRACK

AN ATTACHMENT

SMCS-4170 **i03088645**

NOTE	REF NO	GRAPHIC REF	PART NUMBER	QTY	PART NAME 1 2 3 4 5 6 (PRODUCT LEVEL)	SEE PAGE
Y	1	1	**236-8893**	1	LINK AS-TRACK	408
	2	1	**306-2148**	200	BOLT-TRACK (M20X1.5X68-MM)	
M	3	1	**9W-3361**	200	NUT-TRACK (M20X1.5-THD)	
	4	1	**8E-8814**	50	SHOE-TRACK	

M-METRIC PART
Y-SEPARATE ILLUSTRATION

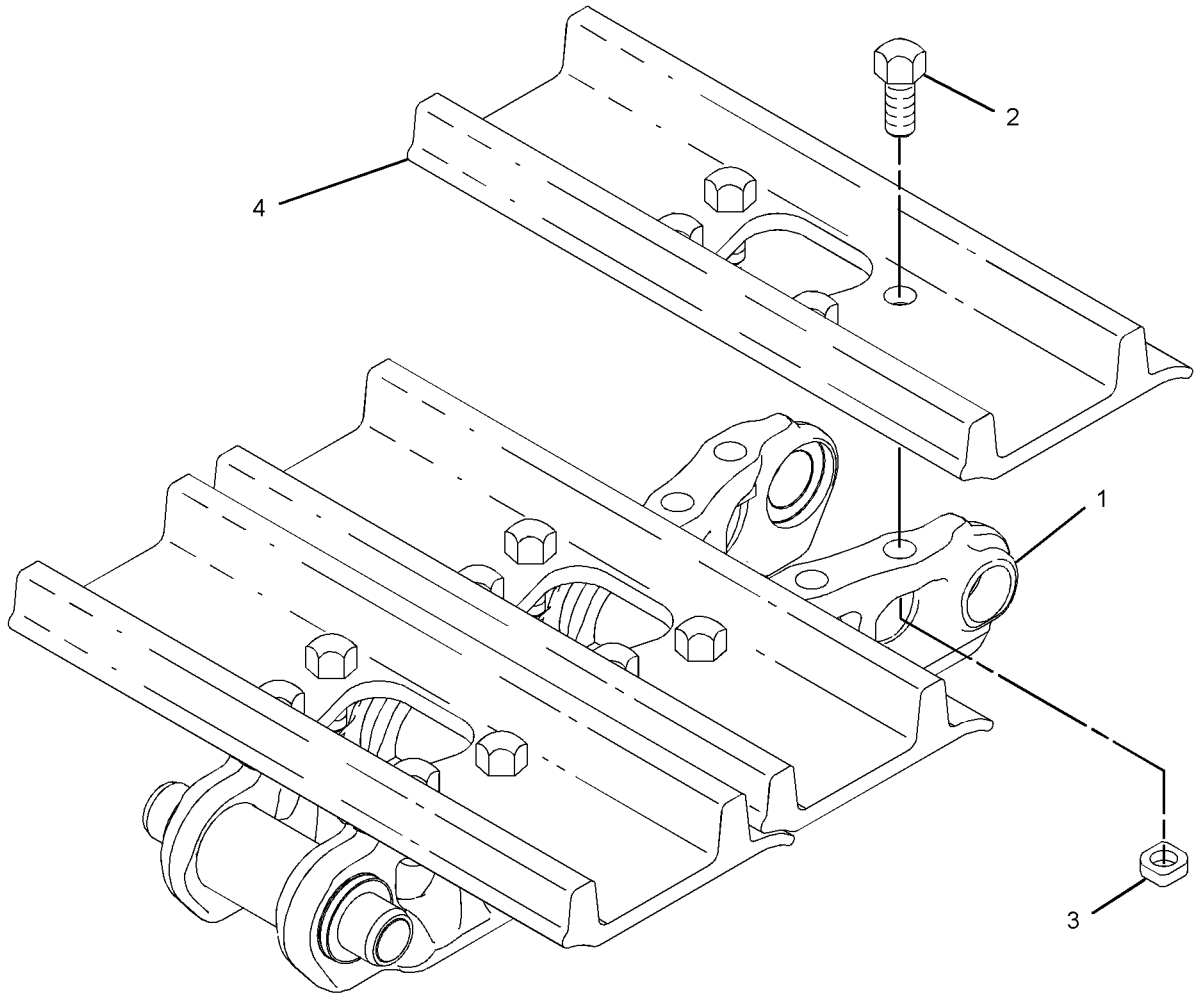

GRAPHIC #1 **<END>** g01250402

UNDERCARRIAGE

251-1853 TRACK GP–2-REQUIRED

S/N: MNB1-UP

700-MM (28-IN) TRIPLE GROUSER SHOE. GREASED LUBRICATED TRACK

AN ATTACHMENT

SMCS-4170 **i02458860**

NOTE	REF NO	GRAPHIC REF	PART NUMBER	QTY	PART NAME 1 2 3 4 5 6 (PRODUCT LEVEL)	SEE PAGE
Y	1	1	**236-8893**	1	LINK AS-TRACK	408
	2	1	**126-5065**	50	SHOE-TRACK	
M	3	1	**6Y-0846**	200	BOLT-TRACK (M20X1.5X63-MM)	
M	4	1	**9W-3361**	200	NUT-TRACK (M20X1.5-THD)	

M-METRIC PART
Y-SEPARATE ILLUSTRATION

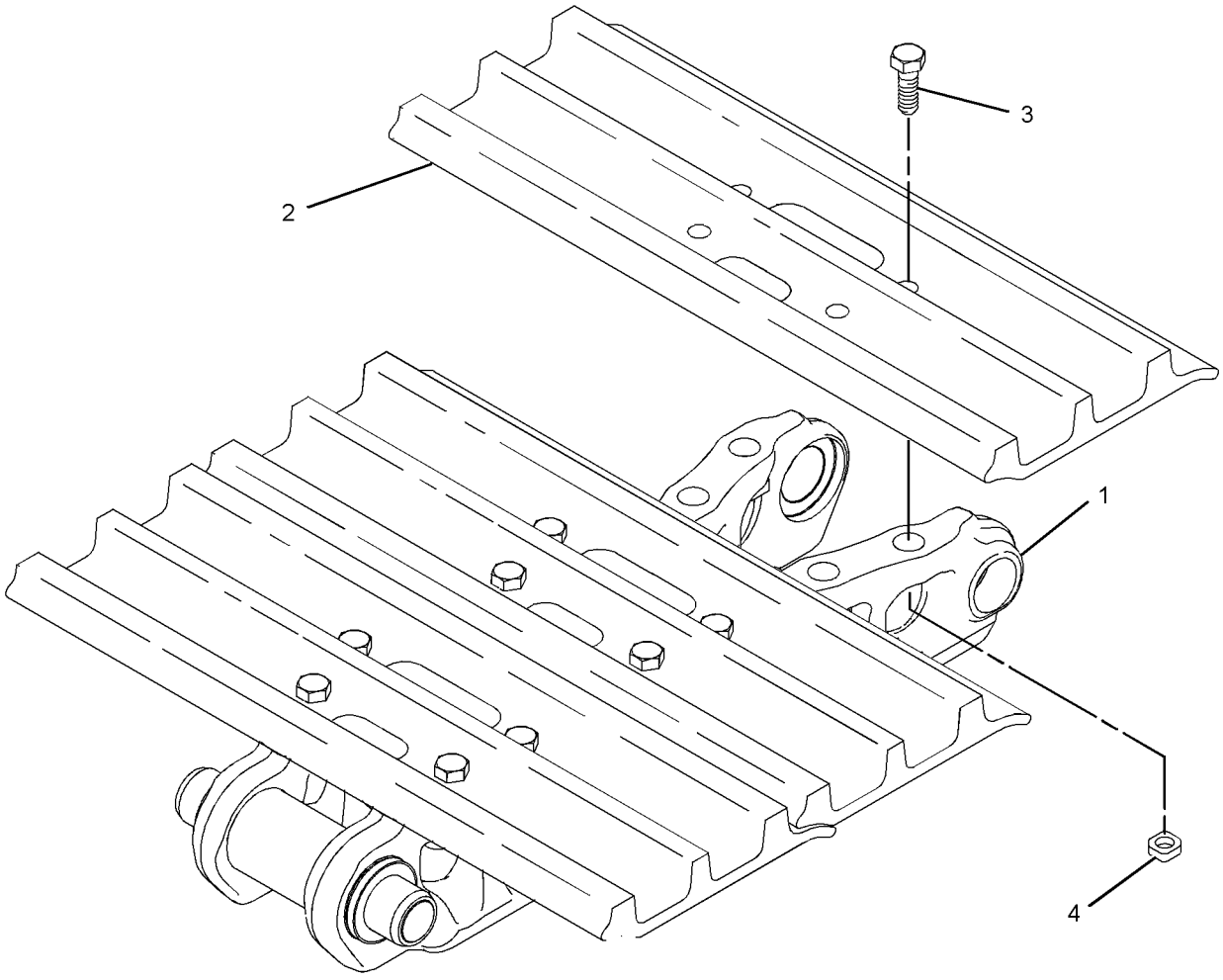

GRAPHIC #1 **<END>** g01129253

251-1856 TRACK GP–2-REQUIRED

S/N: MNB1-UP

600-MM(24-IN)TRIPLE GROUSER SHOE. GREASED LUBRICATED TRACK, HEAVY-DUTY AN ATTACHMENT

SMCS-4170 **i03088644**

NOTE	REF NO	GRAPHIC REF	PART NUMBER	QTY	PART NAME 1 2 3 4 5 6 (PRODUCT LEVEL)	SEE PAGE
Y	1	1	**236-8893**	1	LINK AS-TRACK	408
	2	1	**121-0137**	50	SHOE-TRACK	
	3	1	**306-2148**	200	BOLT-TRACK (M20X1.5X68-MM)	
M	4	1	**9W-3361**	200	NUT-TRACK (M20X1.5-THD)	

M-METRIC PART
Y-SEPARATE ILLUSTRATION

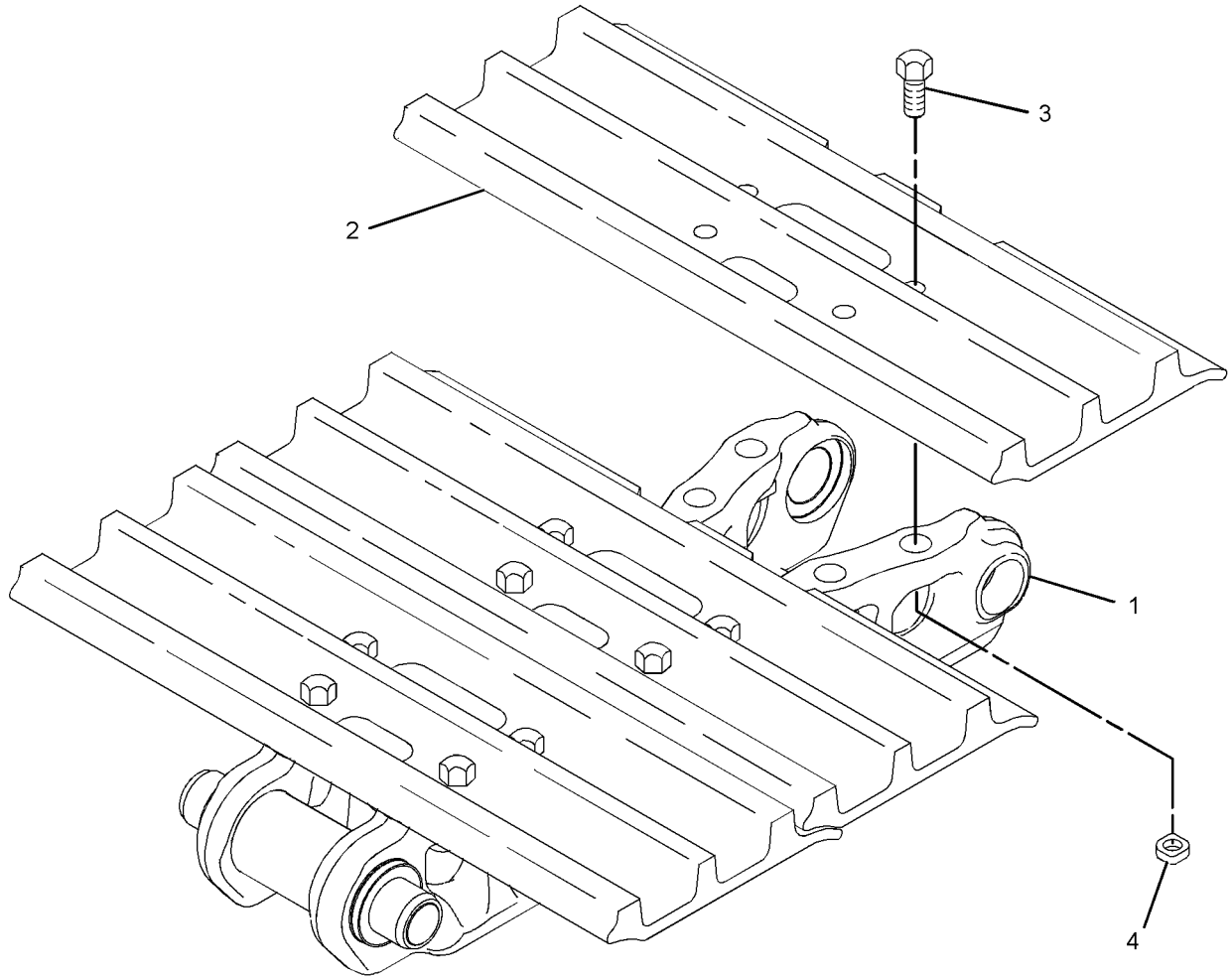

GRAPHIC #1 **<END>** g01201614

251-1857 TRACK GP–2-REQUIRED

S/N: MNB1-UP

700-MM(28-IN)TRIPLE GROUSER SHOE. GREASED LUBRICATED TRACK, HEAVY-DUTY

AN ATTACHMENT

SMCS-4170 **i03088641**

NOTE	REF NO	GRAPHIC REF	PART NUMBER	QTY	PART NAME 1 2 3 4 5 6 (PRODUCT LEVEL)	SEE PAGE
Y	1	1	**236-8893**	1	LINK AS-TRACK	408
	2	1	**121-0138**	50	SHOE-TRACK	
	3	1	**306-2148**	200	BOLT-TRACK (M20X1.5X68-MM)	
M	4	1	**9W-3361**	200	NUT-TRACK (M20X1.5-THD)	

M-METRIC PART
Y-SEPARATE ILLUSTRATION

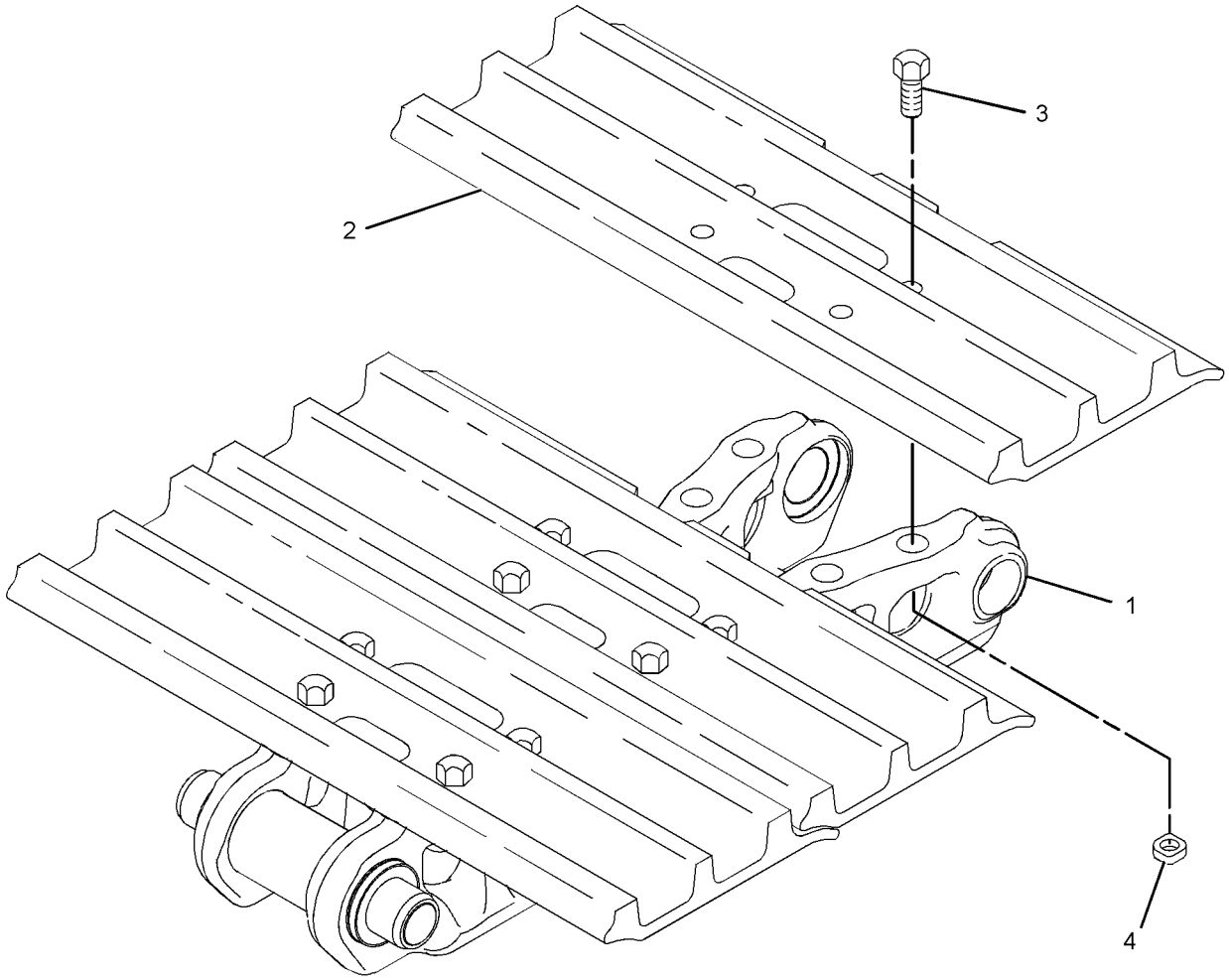

GRAPHIC #1 **<END>** g01201614

290-1771 TRACK GP—2-REQUIRED

S/N: MNB1-UP
800-MM (32-IN) TRIPLE GROUSER SHOE
AN ATTACHMENT

SMCS-4170 **i02726039**

NOTE	PART NUMBER	QTY	PART NAME 1 2 3 4 5 6 (PRODUCT LEVEL)	SEE PAGE
Y	*235-7764*	1	STEP GP	388
Y	*236-8906*	1	TRACK GP	420

Y-SEPARATE ILLUSTRATION

<END>

HYDRAULIC SYSTEM

4I-1536 ACCUMULATOR GP-HYDRAULIC—CHARGED

S/N: MNB1-UP; WDK1-UP

PART OF 087-4456 ACCUMULATOR GP-HYDRAULIC

SMCS-5077 **i01107876**

NOTE	REF NO	GRAPHIC REF	PART NUMBER	QTY	PART NAME 1 2 3 4 5 6 (PRODUCT LEVEL)	SEE PAGE
	1	1	**4I-5862**	1	CAP	
	2	1	**4I-1539**	1	CORE	
	3	1	**5P-3779**	1	TAG-NOTICE (SHIPPING INSTRUCTIONS)	

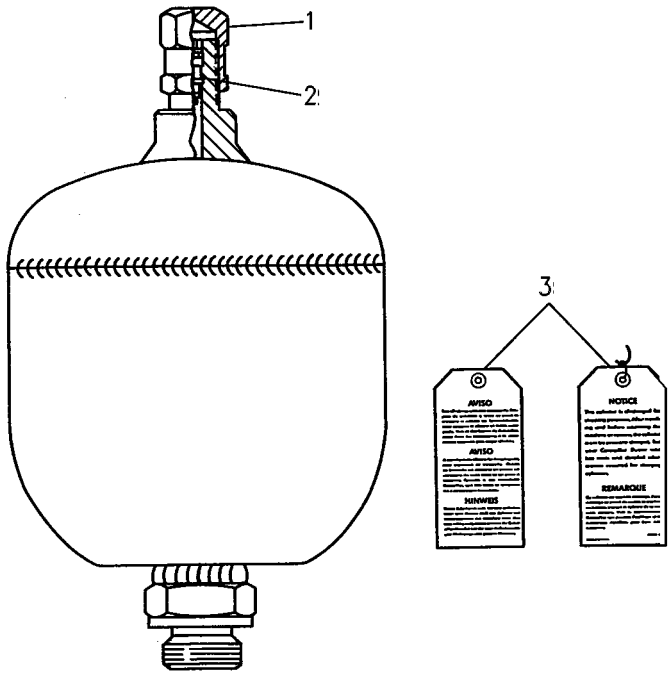

GRAPHIC #1 **<END>** g00237221

5I-8416 ACCUMULATOR GP-HYDRAULIC—CHARGED

S/N: MNB1-UP; WDK1-UP

PART OF 087-4456 ACCUMULATOR GP-HYDRAULIC

SMCS-5077 **i01548084**

NOTE	REF NO	GRAPHIC REF	PART NUMBER	QTY	PART NAME 1 2 3 4 5 6 (PRODUCT LEVEL)	SEE PAGE
	1	1	**4I-8267**	1	CAP-ACCUMULATOR	
Y	2	1	*087-4454*	1	ACCUMULATOR GP-HYDRAULIC (CHARGED)	434

Y-SEPARATE ILLUSTRATION

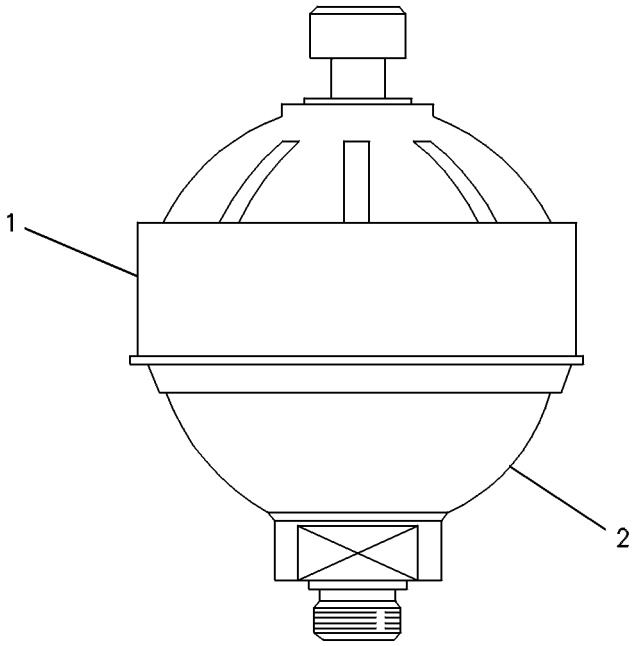

GRAPHIC #1 **<END>** g00237219

087-4454 ACCUMULATOR GP-HYDRAULIC—CHARGED

S/N: MNB1-UP; WDK1-UP

PART OF 5I-8416 ACCUMULATOR GP-HYDRAULIC

SMCS-5077 **i01611978**

NOTE	REF NO	GRAPHIC REF	PART NUMBER	QTY	PART NAME 1 2 3 4 5 6 (PRODUCT LEVEL)	SEE PAGE
	1	1	**087-4577**	1	SEAL	
	2	1	**087-4576**	1	CAP	
	3	1	**087-4575**	1	CORE	
	4	1	**5P-3779**	1	TAG-NOTICE (SHIPPING INSTRUCTIONS)	

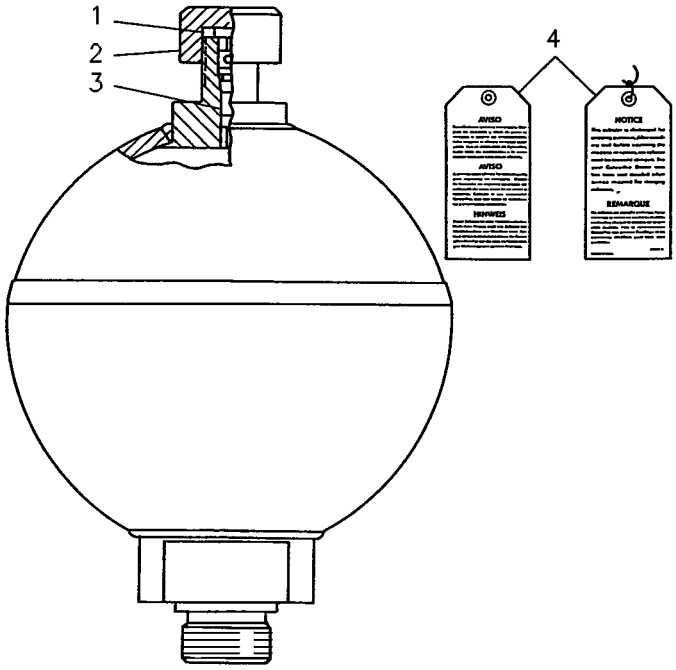

GRAPHIC #1 **<END>** g00237220

087-4456 ACCUMULATOR GP-HYDRAULIC—CHARGED

S/N: MNB1-UP; WDK1-UP

PART OF 164-6981 ACCUMULATOR GP-HYDRAULIC

SMCS-5077 **i02290967**

NOTE	PART NUMBER	QTY	PART NAME 1 2 3 4 5 6 (PRODUCT LEVEL)	SEE PAGE
Y	*4I-1536*	1	ACCUMULATOR GP-HYDRAULIC (CHARGED)	432
			-OR-	
Y	*5I-8416*	1	ACCUMULATOR GP-HYDRAULIC (CHARGED)	433
			-OR-	
Y	*145-5106*	1	ACCUMULATOR GP-HYDRAULIC (CHARGED)	436

Y-SEPARATE ILLUSTRATION

<END>

HYDRAULIC SYSTEM

145-5106 ACCUMULATOR GP-HYDRAULIC—CHARGED

S/N: MNB1-UP; WDK1-UP

PART OF 087-4456 ACCUMULATOR GP-HYDRAULIC

SMCS-5077 **i02464714**

NOTE	REF NO	GRAPHIC REF	PART NUMBER	QTY	PART NAME 1 2 3 4 5 6 (PRODUCT LEVEL)	SEE PAGE
	1	1	**159-4700**	1	FILM-WARNING (HIGH PRESSURE CYLINDER)	

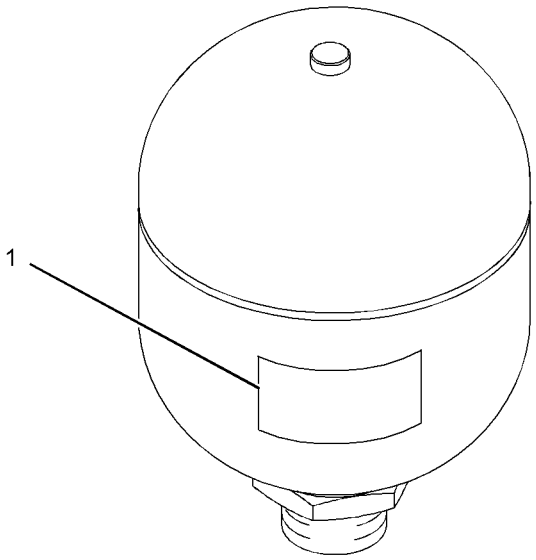

GRAPHIC #1 **<END>** g01229518

164-6981 ACCUMULATOR GP-HYDRAULIC—CHARGED

S/N: MNB1-UP; WDK1-UP

PART OF 248-9827 LINES GP-PILOT

SMCS-5077 **i01284579**

NOTE	PART NUMBER	QTY	PART NAME 1 2 3 4 5 6 (PRODUCT LEVEL)	SEE PAGE
Y	**087-4456**	1	ACCUMULATOR GP-HYDRAULIC (CHARGED)	435
	3K-0360	1	SEAL-O-RING	

Y-SEPARATE ILLUSTRATION

<END>

HYDRAULIC SYSTEM

256-0074 ACTUATOR GP-PUMP–DRIVE

S/N: MNB1-UP; WDK1-UP

PART OF 272-6959 PUMP GP-MAIN HYDRAULIC

SMCS-5078 **i02898485**

NOTE	REF NO	GRAPHIC REF	PART NUMBER	QTY	PART NAME 1 2 3 4 5 6 (PRODUCT LEVEL)	SEE PAGE
B	1	2	**099-3669**	2	SHIM (1-MM THK)	
B		2	**099-3670**	2	SHIM (1.95-MM THK)	
B		2	**099-6117**	2	SHIM (1.35-MM THK)	
B		2	**099-6118**	2	SHIM (1.4-MM THK)	
B		2	**099-6119**	2	SHIM (1.45-MM THK)	
B		2	**099-6120**	2	SHIM (1.5-MM THK)	
B		2	**099-6121**	2	SHIM (1.55-MM THK)	
B		2	**099-6122**	2	SHIM (1.6-MM THK)	
B		2	**099-6123**	2	SHIM (1.65-MM THK)	
B		2	**099-6124**	2	SHIM (1.7-MM THK)	
B		2	**099-6125**	2	SHIM (1.75-MM THK)	
B		2	**099-6126**	2	SHIM (1.8-MM THK)	
B		2	**099-6127**	2	SHIM (1.85-MM THK)	
B		2	**099-6128**	2	SHIM (1.9-MM THK)	
B		2	**099-6109**	2	SHIM (1.05-MM THK)	
B		2	**099-6110**	2	SHIM (1.1-MM THK)	
B		2	**099-6111**	2	SHIM (1.15-MM THK)	
B		2	**099-6112**	2	SHIM (1.2-MM THK)	
B		2	**099-6113**	2	SHIM (1.25-MM THK)	
B		2	**099-6115**	2	SHIM (1.3-MM THK)	
Y	2	2	**111-9916**	1	VALVE GP-SOLENOID (PUMP CONTROL)	808
	3	1	**153-8623**	1	RING-BACKUP	
C	4	2	**301-8294**	1	ADJUSTER	
C	5	2	**301-6874**	1	RETAINER	
	6	2	**189-9763**	3	SEAL-O-RING	
	7	1	**215-9961**	1	STOPPER	
	8	1	**215-9962**	1	STOPPER	
M	10	1	**225-4607**	2	SETSCREW (M20X2.5X45-MM)	
	11	2	**234-4452**	1	COVER	
	12	1	**234-4453**	1	COVER	
C	13	1	**300-9715**	1	BODY AS (DRIVE)	
	14	2	**094-1875**	1	DOWEL	
	15	2	**094-1881**	1	PLATE-SLIDE	
C	16	1	**094-1882**	13	PLUG	
	17	2	**273-8316**	1	SEAL-O-RING	
	18	2	**273-8317**	1	SEAL-O-RING	
	19	2	**273-8319**	1	SEAL-O-RING	
	20	2	**273-8318**	1	SEAL-O-RING	
	21	1	**095-1788**	1	RING-BACKUP	
M	22	1	**8T-4131**	2	NUT (M20X2.5-THD)	
	23	2	**099-3671**	1	SPRING	
	24	2	**150-5797**	1	PIN	
	25	1	**173-3384**	1	PISTON	
	26	2	**173-3397**	1	LEVER	
	27	2	**173-3398**	1	COVER	
	28	1	**173-3413**	1	COVER	
	29	2	**185-0169**	1	GUIDE	
	30	2	**185-0201**	1	PIN AS	
		2	**129-7978**	1	DOWEL	
C	31	1	**9S-4191**	1	PLUG-O-RING	
	32	1	**190-7673**	1	SEAL-O-RING	
	33	1	**190-7674**	1	SEAL-O-RING	
	34	2	**191-5707**	1	SPOOL AS	
CM	35	2	**8T-4133**	1	NUT (M10X1.5-THD)	
M	36	2	**200-3255**	1	NUT (M20X1.5-THD)	
	37	2	**209-5891**	1	SPRING	

256-0074 ACTUATOR GP-PUMP *(contd.)* i02898485

NOTE	REF NO	GRAPHIC REF	PART NUMBER	QTY	PART NAME 1 2 3 4 5 6 (PRODUCT LEVEL)	SEE PAGE
	38	2	**209-5892**	1	SPRING	
	39	2	**209-5893**	1	SPRING	
	40	2	**3D-2891**	1	BALL	
C	41	1,2	**3J-1907**	2	SEAL-O-RING	
M	42	2	**6V-8200**	6	BOLT-SOCKET HEAD (M12X1.75X35-MM)	
M	43	2	**7I-2272**	2	BOLT (M5X0.8X12-MM)	
	44	2	**285-4470**	1	SEAL-O-RING	
M	45	2	**8T-4136**	2	BOLT (M10X1.5X25-MM)	
M	46	1	**8T-4196**	2	BOLT (M10X1.5X35-MM)	
	47	1,2	**8T-4223**	6	WASHER-HARD (13.5X25.5X3-MM THK)	

B-USE AS REQUIRED
C-CHANGE FROM PREVIOUS TYPE
M-METRIC PART
Y-SEPARATE ILLUSTRATION

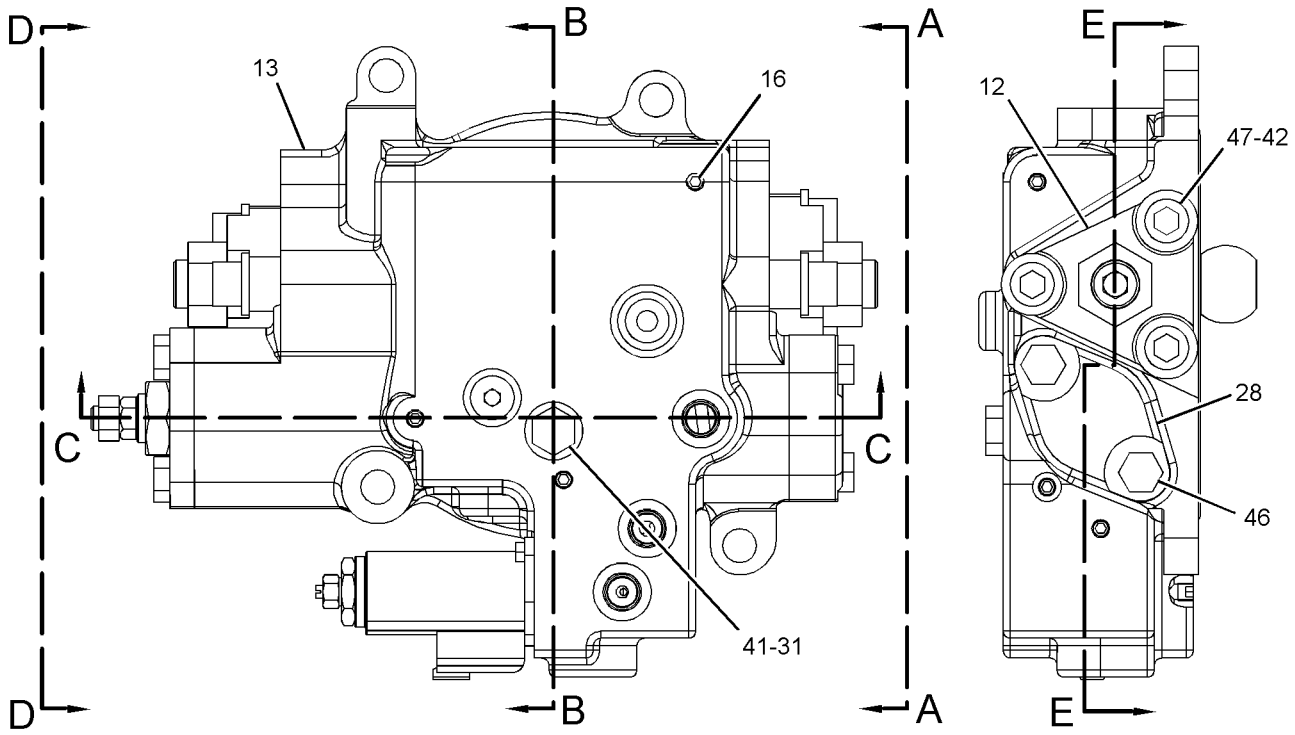

REFER TO ALL ILLUSTRATIONS OF THIS GROUP FOR AUXILIARY VIEWS

VIEW A-A

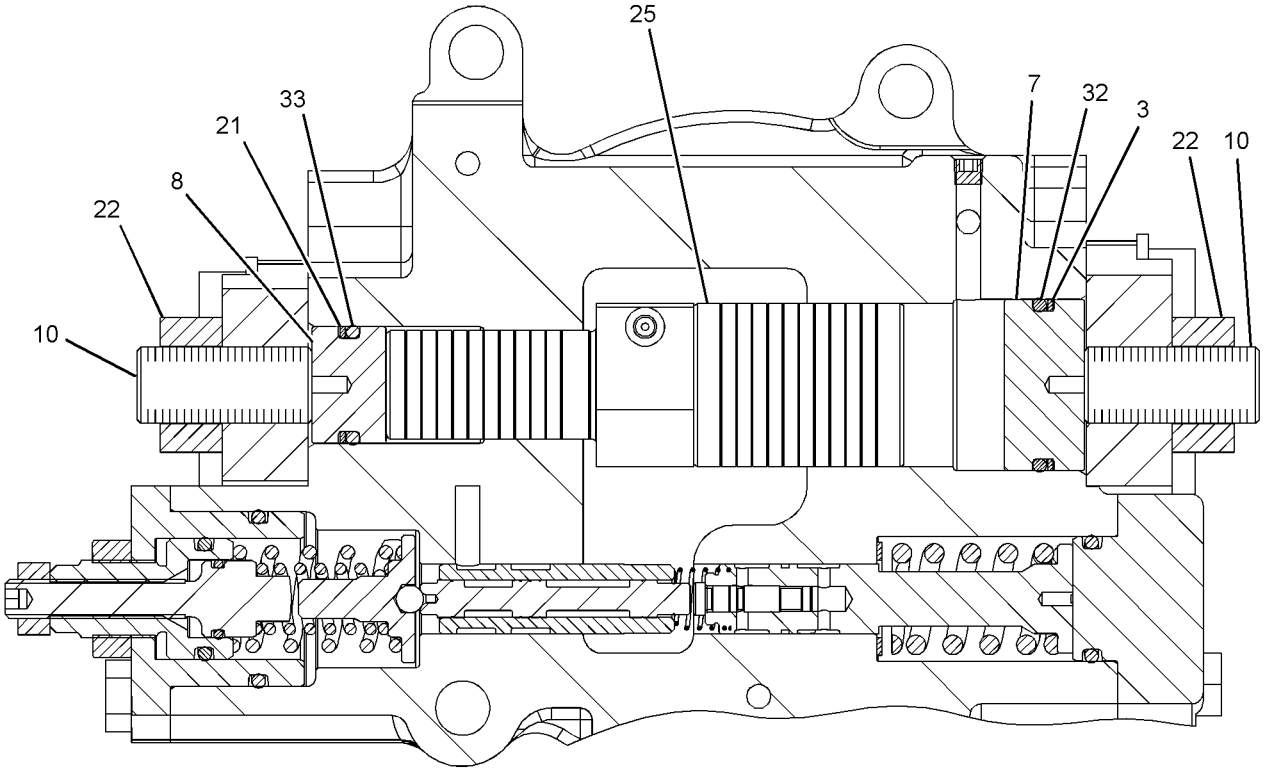

SECTION E-E

GRAPHIC #1

g01410068

256-0074 ACTUATOR GP-PUMP *(contd.)* **i02898485**

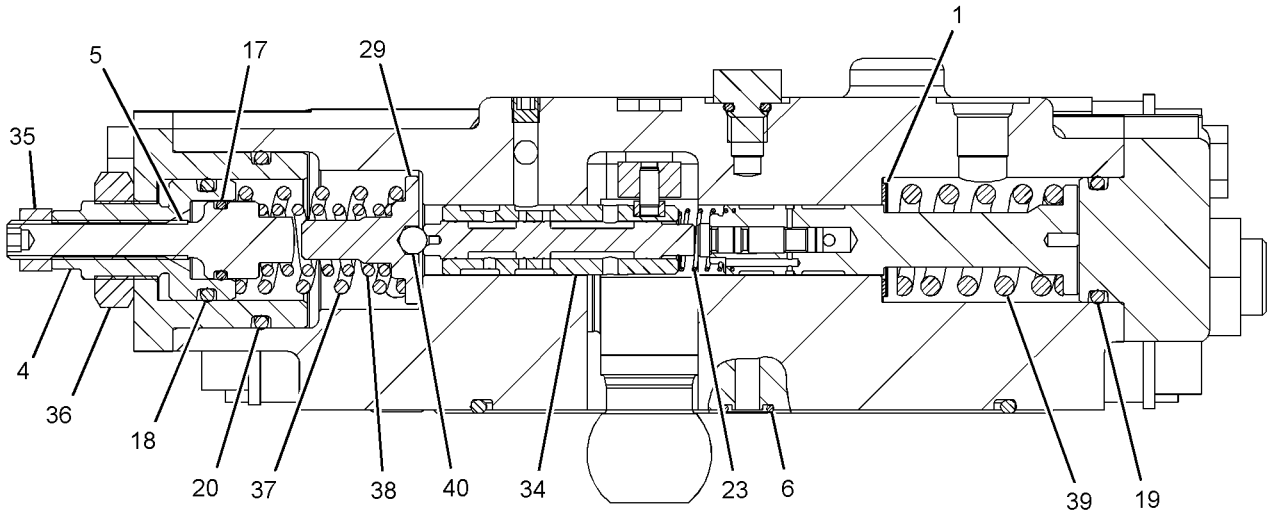

SECTION C-C

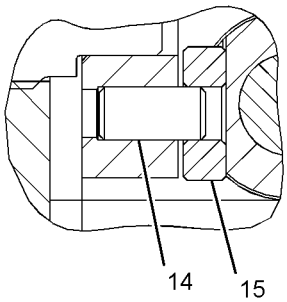

VIEW OF AREA F

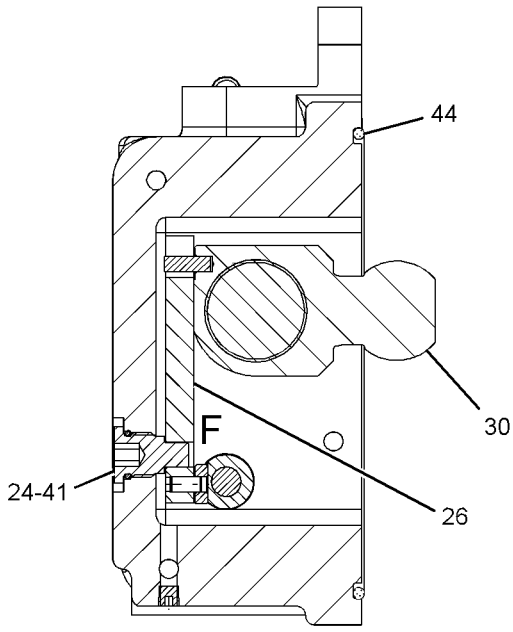

SECTION B-B

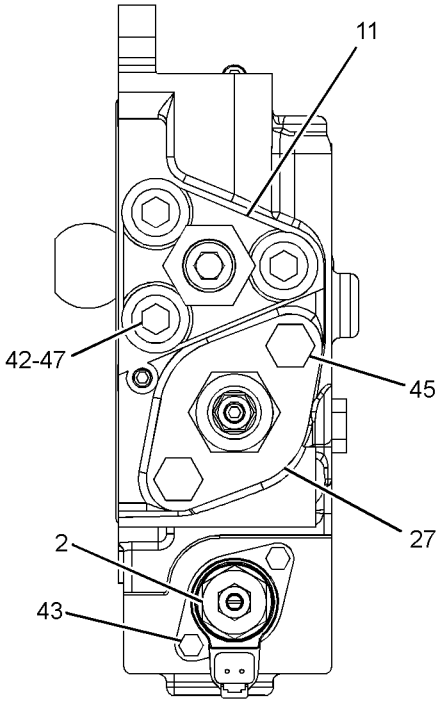

VIEW D-D

GRAPHIC #2 **<END>** g01410069

HYDRAULIC SYSTEM

256-0077 ACTUATOR GP-PUMP–DRIVEN

S/N: MNB1-UP; WDK1-UP

PART OF 272-6959 PUMP GP-MAIN HYDRAULIC

SMCS-5078 **i02998676**

NOTE	REF NO	GRAPHIC REF	PART NUMBER	QTY	PART NAME 1 2 3 4 5 6 (PRODUCT LEVEL)	SEE PAGE
B	1	2	**099-3669**	2	SHIM (1-MM THK)	
B			**099-3670**	2	SHIM (1.95-MM THK)	
B			**099-6117**	2	SHIM (1.35-MM THK)	
B			**099-6118**	2	SHIM (1.4-MM THK)	
B			**099-6119**	2	SHIM (1.45-MM THK)	
B			**099-6120**	2	SHIM (1.5-MM THK)	
B			**099-6121**	2	SHIM (1.55-MM THK)	
B			**099-6122**	2	SHIM (1.6-MM THK)	
B			**099-6123**	2	SHIM (1.65-MM THK)	
B			**099-6124**	2	SHIM (1.7-MM THK)	
B			**099-6125**	2	SHIM (1.75-MM THK)	
B			**099-6126**	2	SHIM (1.8-MM THK)	
B			**099-6127**	2	SHIM (1.85-MM THK)	
B			**099-6128**	2	SHIM (1.9-MM THK)	
B			**099-6109**	2	SHIM (1.05-MM THK)	
B			**099-6110**	2	SHIM (1.1-MM THK)	
B			**099-6111**	2	SHIM (1.15-MM THK)	
B			**099-6112**	2	SHIM (1.2-MM THK)	
B			**099-6113**	2	SHIM (1.25-MM THK)	
B			**099-6115**	2	SHIM (1.3-MM THK)	
	2	1	**153-8623**	1	RING-BACKUP	
C	3	2	**301-8294**	1	ADJUSTER	
C	4	2	**301-6874**	1	RETAINER	
	5	2	**189-9763**	3	SEAL-O-RING	
	6	1	**215-9961**	1	STOPPER	
	7	1	**215-9962**	1	STOPPER	
M	9	1	**225-4607**	2	SETSCREW (M20X2.5X45-MM)	
	10	2	**234-4452**	1	COVER	
	11	1	**234-4453**	1	COVER	
C	12	1	**300-9716**	1	BODY AS (DRIVEN)	
	13	2	**094-1875**	1	DOWEL	
	14	2	**094-1881**	1	PLATE-SLIDE	
C	15	1	**094-1882**	9	PLUG	
	16	2	**273-8316**	1	SEAL-O-RING	
	17	2	**273-8317**	1	SEAL-O-RING	
	18	2	**273-8319**	1	SEAL-O-RING	
	19	2	**273-8318**	1	SEAL-O-RING	
	20	1	**095-1788**	1	RING-BACKUP	
M	21	1	**8T-4131**	2	NUT (M20X2.5-THD)	
	22	2	**099-3671**	1	SPRING	
	23	2	**150-5797**	1	PIN	
	24	1	**173-3384**	1	PISTON	
	25	2	**173-3397**	1	LEVER	
	26	2	**173-3398**	1	COVER	
	27	1	**173-3413**	1	COVER	
	28	2	**185-0169**	1	GUIDE	
	29	2	**185-0201**	1	PIN AS	
		2	**129-7978**	1	DOWEL	
	30	1,2	**8T-4223**	6	WASHER-HARD (13.5X25.5X3-MM THK)	
	31	1	**190-7673**	1	SEAL-O-RING	
	32	1	**190-7674**	1	SEAL-O-RING	
	33	2	**191-5707**	1	SPOOL AS	
CM	34	2	**8T-4133**	1	NUT (M10X1.5-THD)	
M	35	2	**200-3255**	1	NUT (M20X1.5-THD)	
	36	2	**209-5891**	1	SPRING	
	37	2	**209-5892**	1	SPRING	

256-0077 ACTUATOR GP-PUMP *(contd.)* i02998676

NOTE	REF NO	GRAPHIC REF	PART NUMBER	QTY	PART NAME 1 2 3 4 5 6 (PRODUCT LEVEL)	SEE PAGE
	38	2	**209-5893**	1	SPRING	
	39	2	**3D-2891**	1	BALL	
C	40	2	**3J-1907**	1	SEAL-O-RING	
M	41	1,2	**6V-8200**	6	BOLT-SOCKET HEAD (M12X1.75X35-MM)	
	42	2	**285-4470**	1	SEAL-O-RING	
M	43	2	**8T-4136**	2	BOLT (M10X1.5X25-MM)	
M	44	1	**8T-4196**	2	BOLT (M10X1.5X35-MM)	

B-USE AS REQUIRED
C-CHANGE FROM PREVIOUS TYPE
M-METRIC PART

256-0077 ACTUATOR GP-PUMP *(contd.)* **i02998676**

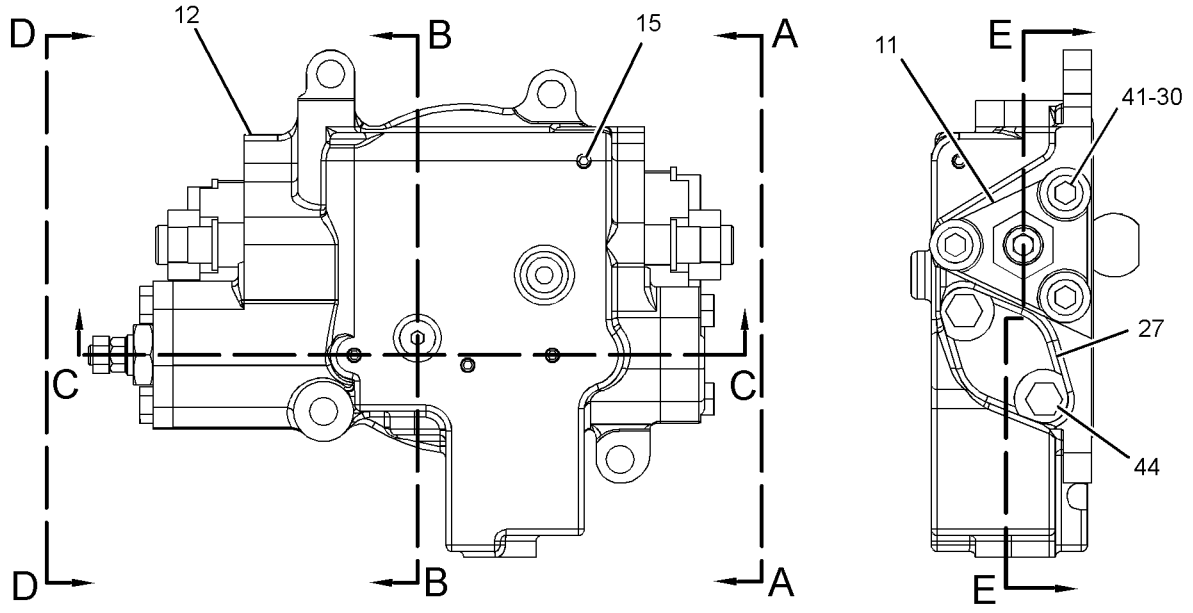

VIEW A-A

REFER TO ALL ILLUSTRATIONS OF
THIS GROUP FOR AUXILIARY VIEWS

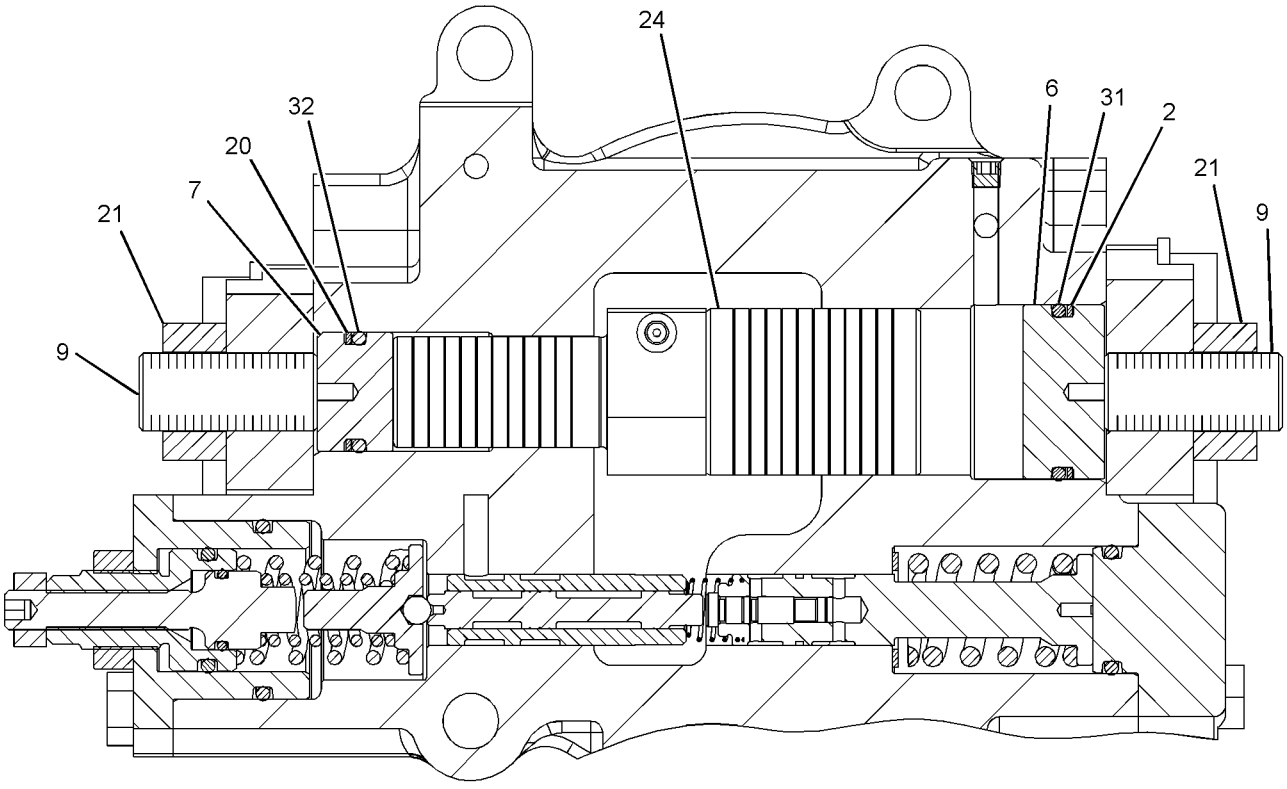

SECTION E-E

GRAPHIC #1

g01624691

256-0077 ACTUATOR GP-PUMP *(contd.)* **i02998676**

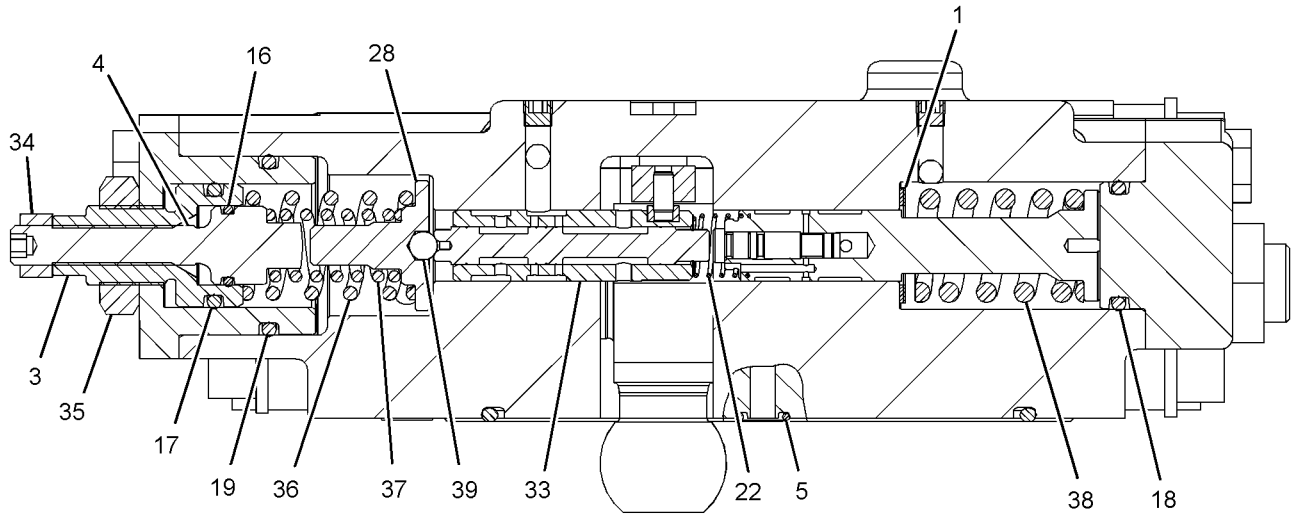

SECTION C-C

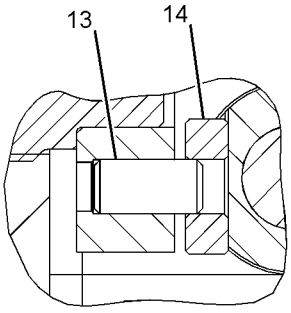

VIEW OF AREA F

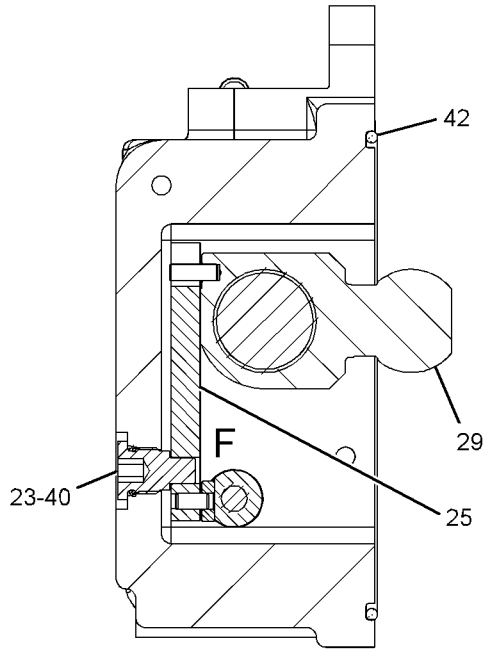

SECTION B-B

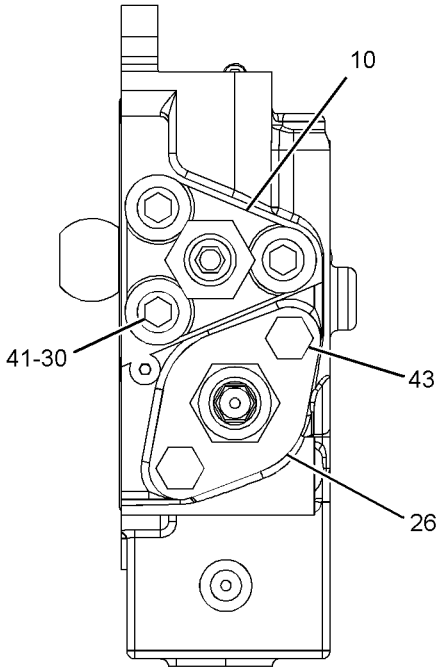

VIEW D-D

GRAPHIC #2 **<END>** g01624690

173-3503 BASE GP-OIL FILTER—HYDRAULIC

S/N: MNB1-UP; WDK1-UP

PART OF 188-4140 FILTER GP-OIL

SMCS-5068 **i01611138**

NOTE	REF NO	GRAPHIC REF	PART NUMBER	QTY	PART NAME 1 2 3 4 5 6 (PRODUCT LEVEL)	SEE PAGE
	1	1	**204-2763**	1	BLOCK	
	2	1	**5L-4758**	1	SEAL-O-RING	
	3	1	**177-2619**	2	PACKING	
	4	1	**173-3505**	1	PLATE-SLIDE	
	5	1	**137-3631**	1	PACKING	
M	6	1	**137-3626**	1	BOLT-SHOULDER (M6X1X28.75-MM)	
	7	1	**173-3506**	1	PLUG AS	
	8	1	**3J-1907**	1	SEAL-O-RING	
	9	1	**7Y-5272**	2	PIN-SPRING	
	10	1	**137-3628**	1	SHIM (0.1-MM THK)	

M-METRIC PART

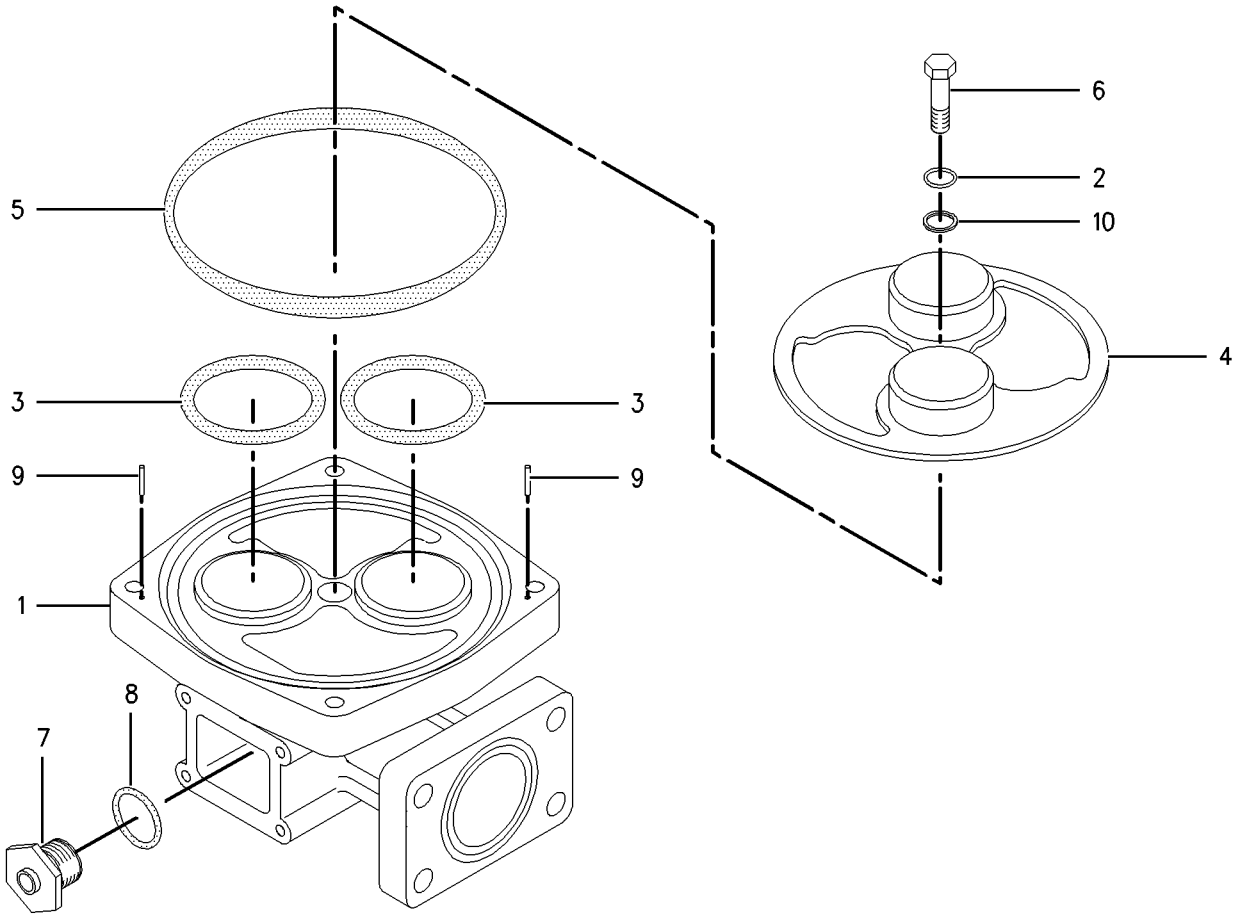

GRAPHIC #1 **<END>** g00671074

255-5696 CONTROL AR-AUXILIARY–SYSTEM 1, 1-WAY, 1-PUMP

S/N: MNB1-UP; WDK1-UP

AN ATTACHMENT

SMCS-5051 **i03104931**

NOTE	PART NUMBER	QTY	PART NAME 1 2 3 4 5 6 (PRODUCT LEVEL)	SEE PAGE
Y	*239-8693*	1	CONTROL GP-HYDRAULIC PEDAL	953
Y	*251-0436*	1	FASTENER GP-WIRING HARNESS	195
Y	*247-7423*	1	FILM GP (OPERATOR CONTROLS, NOTICE)	1102
Y	*255-1758*	1	LINES GP-FRONT	583
Y	*255-1800*	1	LINES GP-PILOT (PEDAL, RH)	650
Y	*255-1801*	1	LINES GP-PILOT (PUMP CONTROL)	652
Y-SEPARATE ILLUSTRATION				

<END>

255-5697 CONTROL AR-AUXILIARY–COMBINED FCTN, 2-HYD PEDALS

S/N: MNB1-UP; WDK1-UP

AN ATTACHMENT

SMCS-5051 **i03105028**

NOTE	PART NUMBER	QTY	PART NAME 1 2 3 4 5 6 (PRODUCT LEVEL)	SEE PAGE
Y	*239-8695*	1	CONTROL GP-HYDRAULIC PEDAL	954
Y	*247-7424*	1	FILM GP (OPERATOR CONTROLS, NOTICE)	1103
Y	*255-1759*	1	LINES GP-FRONT (COMBINED FUNCTION)	587
Y	*255-1802*	1	LINES GP-PILOT (PEDAL CONTROLS)	656
Y	*255-1803*	1	LINES GP-PILOT (COMBINED FCTN, 2-HYD PEDALS)	658
Y	*255-5713*	1	VALVE & MTG GP-CONTROL (AUXILIARY)	728
Y	*251-0529*	1	WIRING GP-CAB (1-WAY/2-WAY FLOW)	276
Y	*251-0530*	1	WIRING GP-COMBINED FLOW	291
Y-SEPARATE ILLUSTRATION				

<END>

255-5698 CONTROL AR-AUXILIARY–2-PUMP, 1-WAY FLOW, FOOT SW

S/N: MNB1-UP; WDK1-UP

FOR USE WITH 270-6106–PAGE 449, 255-2031–PAGE 675, 240-5071–PAGE 971, 240-5073–PAGE 972, 245-7794–PAGE 973, 245-7796–PAGE 974

AN ATTACHMENT

SMCS-5051 **i02435638**

NOTE	PART NUMBER	QTY	PART NAME 1 2 3 4 5 6 (PRODUCT LEVEL)	SEE PAGE
Y	*255-1760*	1	LINES GP-FRONT (AUXILIARY)	591
Y	*255-1967*	1	LINES GP-PILOT (SYSTEM 16, 1-WAY, 2-PUMP)	669
Y	*255-5713*	1	VALVE & MTG GP-CONTROL (AUXILIARY)	728
Y	*259-5342*	1	WIRING GP-AUXILIARY CONTROL	268
Y-SEPARATE ILLUSTRATION				

<END>

255-5699 CONTROL AR-AUXILIARY—2-PUMP, 1-WAY, 1-HYD PEDAL

S/N: MNB1-UP; WDK1-UP

AN ATTACHMENT

SMCS-5051 **i03105043**

NOTE	PART NUMBER	QTY	PART NAME 1 2 3 4 5 6 (PRODUCT LEVEL)	SEE PAGE
Y	*239-8693*	1	CONTROL GP-HYDRAULIC PEDAL	953
Y	*251-0436*	1	FASTENER GP-WIRING HARNESS	195
Y	*247-7423*	1	FILM GP (OPERATOR CONTROLS, NOTICE)	1102
Y	*255-1760*	1	LINES GP-FRONT (AUXILIARY)	591
Y	*255-1661*	1	LINES GP-PILOT (SYSTEM 3 PRIME, 1-WAY, 2-PUMP)	635
Y	*255-1800*	1	LINES GP-PILOT (PEDAL, RH)	650
Y	*255-5713*	1	VALVE & MTG GP-CONTROL (AUXILIARY)	728

Y-SEPARATE ILLUSTRATION

<END>

255-5700 CONTROL AR-AUXILIARY—1-PUMP, 2-WAY, PEDAL

S/N: MNB1-UP; WDK1-UP

FOR USE WITH 255-2031—PAGE 675, 255-2031—PAGE 675, 240-5071—PAGE 971, 240-5073—PAGE 972, 245-7794—PAGE 973, 245-7796—PAGE 974

AN ATTACHMENT

SMCS-5051 **i02434736**

NOTE	PART NUMBER	QTY	PART NAME 1 2 3 4 5 6 (PRODUCT LEVEL)	SEE PAGE
Y	*255-1761*	1	LINES GP-FRONT (AUXILIARY)	594
Y	*255-1807*	1	LINES GP-PILOT (AUXILIARY)	662
Y	*259-5342*	1	WIRING GP-AUXILIARY CONTROL	268

Y-SEPARATE ILLUSTRATION

<END>

255-5702 CONTROL AR-AUXILIARY—SYSTEM 11, COMBINED FN, MEDIUM PRESSURE

S/N: MNB1-UP; WDK1-UP

AN ATTACHMENT

SMCS-5051 **i03105060**

NOTE	PART NUMBER	QTY	PART NAME 1 2 3 4 5 6 (PRODUCT LEVEL)	SEE PAGE
Y	*239-8695*	1	CONTROL GP-HYDRAULIC PEDAL	954
Y	*247-7423*	1	FILM GP (OPERATOR CONTROLS, NOTICE)	1102
Y	*255-1759*	1	LINES GP-FRONT (COMBINED FUNCTION)	587
Y	*255-1765*	1	LINES GP-FRONT (SYSTEM 11, COMBINED FN, MED PR)	600
Y	*255-1663*	1	LINES GP-PILOT (PEDAL CONTROLS)	642
Y	*255-1664*	1	LINES GP-PILOT (COMB FCTN, MED PRESS, 2-PEDALS)	644
Y	*255-5716*	1	VALVE & MTG GP-CONTROL (AUXILIARY)	729
Y	*251-0529*	1	WIRING GP-CAB (1-WAY/2-WAY FLOW)	276
Y	*251-0530*	1	WIRING GP-COMBINED FLOW	291

Y-SEPARATE ILLUSTRATION

<END>

255-5703 CONTROL AR-AUXILIARY–1-PUMP/2-PUMP, 1-WAY/2-WAY FLW

S/N: MNB1-UP; WDK1-UP

FOR USE WITH 270-6106–PAGE 449, 255-2031–PAGE 675, 240-5071–PAGE 971, 240-5073–PAGE 972, 245-7794–PAGE 973, 245-7796–PAGE 974. CANNOT BE USED WITH 247-7390–PAGE 500

AN ATTACHMENT

SMCS-5051 **i02434659**

NOTE	PART NUMBER	QTY	PART NAME 1 2 3 4 5 6 (PRODUCT LEVEL)	SEE PAGE
Y	*255-1762*	1	LINES GP-FRONT (AUXILIARY)	596
Y	*255-1662*	1	LINES GP-PILOT (AUXILIARY)	638
Y	*255-5713*	1	VALVE & MTG GP-CONTROL (AUXILIARY)	728
Y	*251-0437*	1	WIRING GP-AUXILIARY CONTROL (SYSTEM 17, COMBINED FUNCTION)	265

Y-SEPARATE ILLUSTRATION

<END>

255-5811 CONTROL AR-AUXILIARY–MEDIUM PRESSURE

S/N: MNB1-UP; WDK1-UP

FOR USE WITH 240-5071–PAGE 971, 240-5073–PAGE 972, 245-7794–PAGE 973, 245-7796–PAGE 974, 255-1767–PAGE 692, 270-6106–PAGE 449, 255-2031–PAGE 675. CANNOT BE USED WITH 247-7390–PAGE 500

AN ATTACHMENT

SMCS-5051 **i02431441**

NOTE	PART NUMBER	QTY	PART NAME 1 2 3 4 5 6 (PRODUCT LEVEL)	SEE PAGE
Y	*255-1766*	1	LINES GP-FRONT (MEDIUM FLOW)	602
Y	*255-1969*	1	LINES GP-PILOT (MEDIUM PRESSURE)	673
Y	*248-9832*	1	LINES GP-PUMP (MEDIUM FLOW)	679
Y	*200-3365*	1	PUMP & MTG GP-AUXILIARY	711
Y	*259-4949*	1	WIRING GP-MEDIUM PRESSURE	316

Y-SEPARATE ILLUSTRATION

<END>

270-6106 CONTROL AR-AUXILIARY–FOOT SWITCH

S/N: MNB1-UP

AN ATTACHMENT

SMCS-5051 **i03245496**

NOTE	PART NUMBER	QTY	PART NAME 1 2 3 4 5 6 (PRODUCT LEVEL)	SEE PAGE
Y	*270-6107*	1	CONTROL GP-FOOT (LEFT ON/OFF SWITCH)	948
Y	*259-5294*	1	FASTENER GP-WIRING HARNESS (FOOT SWITCH)	199
Y	*247-7465*	1	FILM GP (HAMMER CONTROL, FOOT SWITCH)	1104

Y-SEPARATE ILLUSTRATION

<END>

215-5981 CONTROL AR-COUPLER

S/N: MNB1-UP; WDK1-UP
AN ATTACHMENT

SMCS-6129 **i02492276**

NOTE	PART NUMBER	QTY	PART NAME 1 2 3 4 5 6 (PRODUCT LEVEL)	SEE PAGE
Y	*282-5705*	1	FILM GP (QUICK COUPLER)	1109
Y	*227-0582*	1	LINES GP-FRONT (QUICK COUPLER)	576
Y	*238-2485*	1	WIRING GP-QUICK COUPLER	321
Y	*231-1764*	1	WIRING GP-QUICK COUPLER	319

Y-SEPARATE ILLUSTRATION

<END>

262-3580 CONTROL AR-COUPLER

S/N: WDK1-UP
CANNOT BE USED WITH 215-5981—PAGE 450
AN ATTACHMENT

SMCS-6129 **i02490698**

NOTE	PART NUMBER	QTY	PART NAME 1 2 3 4 5 6 (PRODUCT LEVEL)	SEE PAGE
Y	*268-6816*	1	FILM GP (QUICK COUPLER)	1108
Y	*266-1201*	1	LINES GP-FRONT (QUICK COUPLER) (QUICK COUPLER)	606
Y	*267-7643*	1	WIRING GP-BOOM FLOAT	270
Y	*267-7642*	1	WIRING GP-CAB (COUPLER)	282

Y-SEPARATE ILLUSTRATION

<END>

HYDRAULIC SYSTEM

239-6598 COUPLING GP-PUMP

S/N: MNB1-UP; WDK1-UP

PART OF 233-1115 PUMP & MTG GP-MAIN HYDRAULIC

SMCS-5062 **i02998736**

NOTE	REF NO	GRAPHIC REF	PART NUMBER	QTY	PART NAME 1 2 3 4 5 6 (PRODUCT LEVEL)	SEE PAGE
	1	1	**3E-4895**	1	FLANGE	
	2	1	**239-6599**	1	HUB	
	3	1	**5S-7382**	8	BOLT (3/8-16X1.375-IN)	

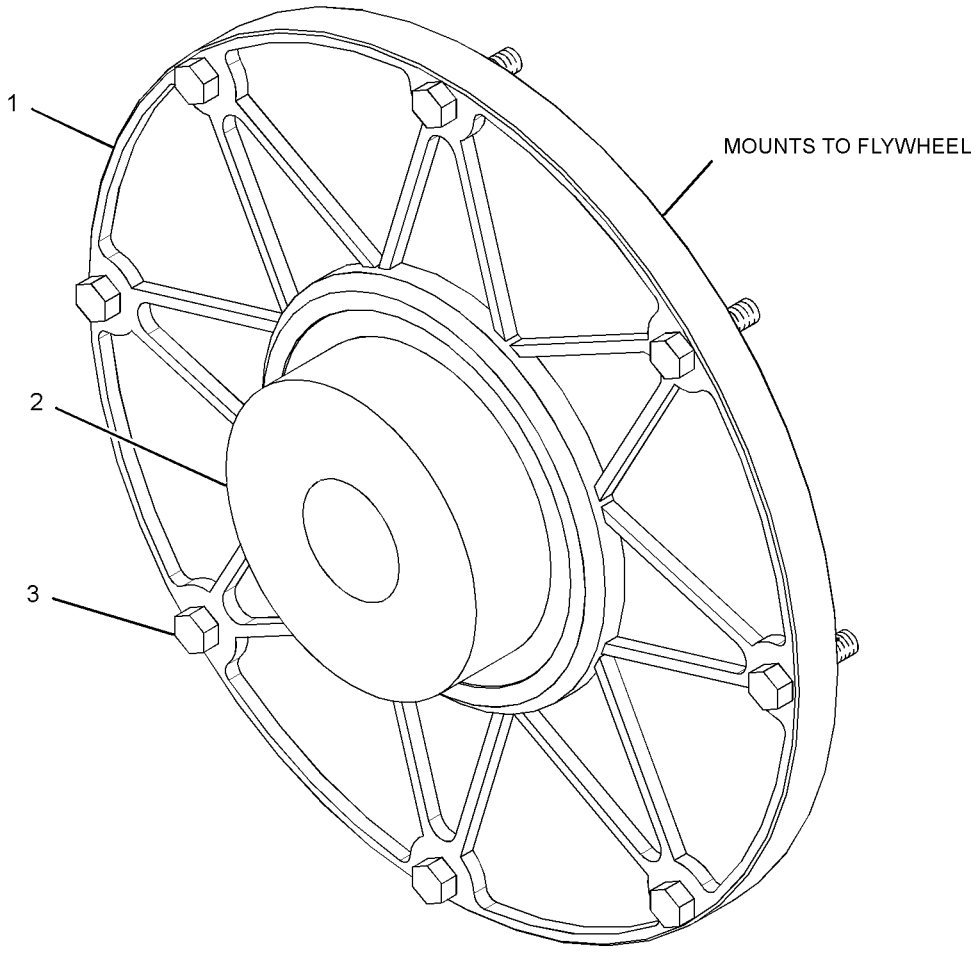

GRAPHIC #1 **<END>** g01522778

225-4582 CYLINDER & LINES GP-BOOM–LH

S/N: MNB1-UP; WDK1-UP
PART OF 229-1754, 229-1760 BOOM AR-1 PIECE LONG, 229-1757 BOOM AR-1 PIECE SHORT, 262-3586 SPECIAL AR-SUPER LONG REACH AN ATTACHMENT

SMCS-5456, 7562 **i02345792**

NOTE	PART NUMBER	QTY	PART NAME 1 2 3 4 5 6 (PRODUCT LEVEL)	SEE PAGE
Y	**225-4584**	1	CYLINDER & SEAL GP-BOOM	457
Y	*225-4585*	1	LINES GP-BOOM CYLINDER	553

Y-SEPARATE ILLUSTRATION

<END>

225-4583 CYLINDER & LINES GP-BOOM–RH

S/N: MNB1-UP; WDK1-UP
PART OF 229-1754, 229-1760 BOOM AR-1 PIECE LONG, 229-1757 BOOM AR-1 PIECE SHORT, 262-3586 SPECIAL AR-SUPER LONG REACH AN ATTACHMENT

SMCS-5456, 7562 **i02439357**

NOTE	PART NUMBER	QTY	PART NAME 1 2 3 4 5 6 (PRODUCT LEVEL)	SEE PAGE
Y	**225-4584**	1	CYLINDER & SEAL GP-BOOM	457
Y	*225-4586*	1	LINES GP-BOOM CYLINDER	554

Y-SEPARATE ILLUSTRATION

<END>

225-4593 CYLINDER & LINES GP-BOOM–LH

S/N: MNB1-UP; WDK1-UP
PART OF 229-1758, 275-3699, 275-3839 BOOM AR-1 PIECE LONG, 229-1759 BOOM AR-1 PIECE SHORT AN ATTACHMENT

SMCS-5456, 7562 **i02346675**

NOTE	PART NUMBER	QTY	PART NAME 1 2 3 4 5 6 (PRODUCT LEVEL)	SEE PAGE
Y	**225-4595**	1	CYLINDER & SEAL GP-BOOM	459
Y	*225-4585*	1	LINES GP-BOOM CYLINDER	553

Y-SEPARATE ILLUSTRATION

<END>

225-4594 CYLINDER & LINES GP-BOOM–RH

S/N: MNB1-UP; WDK1-UP
PART OF 229-1758, 275-3699, 275-3839 BOOM AR-1 PIECE LONG, 229-1759 BOOM AR-1 PIECE SHORT AN ATTACHMENT

SMCS-5456, 7562 **i02439298**

NOTE	PART NUMBER	QTY	PART NAME 1 2 3 4 5 6 (PRODUCT LEVEL)	SEE PAGE
Y	**225-4595**	1	CYLINDER & SEAL GP-BOOM	459
Y	*225-4586*	1	LINES GP-BOOM CYLINDER	554

Y-SEPARATE ILLUSTRATION

<END>

266-7986 CYLINDER & LINES GP-BOOM–LH

S/N: MNB1-UP; WDK1-UP
PART OF 274-2477, 274-2489 CYLINDER AR-HYDRAULIC
AN ATTACHMENT

SMCS-5456, 7562 **i02492471**

NOTE	PART NUMBER	QTY	PART NAME 1 2 3 4 5 6 (PRODUCT LEVEL)	SEE PAGE
Y	*266-7988*	1	CYLINDER & SEAL GP-BOOM	463
Y	*266-8041*	1	LINES GP-BOOM CYLINDER (LH)	558
Y-SEPARATE ILLUSTRATION				

<END>

266-7987 CYLINDER & LINES GP-BOOM–RH

S/N: MNB1-UP; WDK1-UP
PART OF 274-2477, 274-2489 CYLINDER AR-HYDRAULIC
AN ATTACHMENT

SMCS-5456, 7562 **i02492485**

NOTE	PART NUMBER	QTY	PART NAME 1 2 3 4 5 6 (PRODUCT LEVEL)	SEE PAGE
Y	*266-7988*	1	CYLINDER & SEAL GP-BOOM	463
Y	*266-8042*	1	LINES GP-BOOM CYLINDER (RH)	559
Y-SEPARATE ILLUSTRATION				

<END>

225-4579 CYLINDER & LINES GP-BUCKET

S/N: MNB1-UP; WDK1-UP
PART OF 240-3733, 247-7333 LINKAGE AR-BUCKET
AN ATTACHMENT

SMCS-5457 **i02414316**

NOTE	PART NUMBER	QTY	PART NAME 1 2 3 4 5 6 (PRODUCT LEVEL)	SEE PAGE
Y	*225-4580*	1	CYLINDER & SEAL GP-BUCKET	465
Y	*239-1627*	1	LINES GP-BUCKET CYLINDER	565
Y-SEPARATE ILLUSTRATION				

<END>

225-4590 CYLINDER & LINES GP-BUCKET

S/N: MNB1-UP; WDK1-UP
PART OF 229-1772, 247-7331 LINKAGE AR-BUCKET
AN ATTACHMENT

SMCS-5457 **i02348508**

NOTE	PART NUMBER	QTY	PART NAME 1 2 3 4 5 6 (PRODUCT LEVEL)	SEE PAGE
Y	**225-4591**	1	CYLINDER & SEAL GP-BUCKET	466
Y	*225-4592*	1	LINES GP-BUCKET CYLINDER	564
Y-SEPARATE ILLUSTRATION				

<END>

HYDRAULIC SYSTEM

225-4598 CYLINDER & LINES GP-BUCKET

S/N: MNB1-UP; WDK1-UP
PART OF 247-7383, 275-3711 LINKAGE AR-BUCKET
AN ATTACHMENT

SMCS-5457 **i02426063**

NOTE	PART NUMBER	QTY	PART NAME 1 2 3 4 5 6 (PRODUCT LEVEL)	SEE PAGE
Y	**225-4599**	1	CYLINDER & SEAL GP-BUCKET	468
Y	*225-4592*	1	LINES GP-BUCKET CYLINDER	564

Y-SEPARATE ILLUSTRATION

<END>

225-4600 CYLINDER & LINES GP-BUCKET

S/N: MNB1-UP; WDK1-UP
PART OF 247-7384 LINKAGE AR-BUCKET
AN ATTACHMENT

SMCS-5457 **i02416906**

NOTE	PART NUMBER	QTY	PART NAME 1 2 3 4 5 6 (PRODUCT LEVEL)	SEE PAGE
Y	*225-4601*	1	CYLINDER & SEAL GP-BUCKET	470
Y	*239-1627*	1	LINES GP-BUCKET CYLINDER	565

Y-SEPARATE ILLUSTRATION

<END>

253-6664 CYLINDER & LINES GP-BUCKET

S/N: MNB1-UP
PART OF 262-3586 SPECIAL AR-SUPER LONG REACH
AN ATTACHMENT

SMCS-5457 **i02409563**

NOTE	PART NUMBER	QTY	PART NAME 1 2 3 4 5 6 (PRODUCT LEVEL)	SEE PAGE
Y	**248-7854**	1	CYLINDER & SEAL GP-BUCKET	471
Y	*127-6797*	1	LINES GP-BUCKET CYLINDER	560

Y-SEPARATE ILLUSTRATION

<END>

266-7991 CYLINDER & LINES GP-BUCKET

S/N: MNB1-UP; WDK1-UP
PART OF 274-2477 CYLINDER AR-HYDRAULIC
AN ATTACHMENT

SMCS-5457 **i02425034**

NOTE	PART NUMBER	QTY	PART NAME 1 2 3 4 5 6 (PRODUCT LEVEL)	SEE PAGE
Y	**266-7992**	1	CYLINDER & SEAL GP-BUCKET	472
Y	*266-8044*	1	LINES GP-BUCKET CYLINDER	566

Y-SEPARATE ILLUSTRATION

<END>

266-8078 CYLINDER & LINES GP-BUCKET—COLD WEATHER

S/N: MNB1-UP; WDK1-UP
PART OF 274-2489 CYLINDER AR-HYDRAULIC
AN ATTACHMENT

SMCS-5457 **i02492508**

NOTE	PART NUMBER	QTY	PART NAME 1 2 3 4 5 6 (PRODUCT LEVEL)	SEE PAGE
Y	*266-8079*	1	CYLINDER & SEAL GP-BUCKET (COLD WEATHER)	474
Y	*239-1627*	1	LINES GP-BUCKET CYLINDER	565
Y-SEPARATE ILLUSTRATION				

<END>

216-6605 CYLINDER & LINES GP-STICK

S/N: MNB1-UP
LONG REACH
PART OF 262-3586 SPECIAL AR-SUPER LONG REACH
AN ATTACHMENT

SMCS-5458 **i01884428**

NOTE	PART NUMBER	QTY	PART NAME 1 2 3 4 5 6 (PRODUCT LEVEL)	SEE PAGE
Y	*216-6606*	1	CYLINDER & SEAL GP-STICK	475
Y	*216-6617*	1	LINES GP-STICK CYLINDER	687
Y-SEPARATE ILLUSTRATION				

<END>

225-4587 CYLINDER & LINES GP-STICK

S/N: MNB1-UP; WDK1-UP
PART OF 229-1754 BOOM AR-1 PIECE LONG, 229-1757 BOOM AR-1 PIECE SHORT
AN ATTACHMENT

SMCS-5458 **i02345839**

NOTE	PART NUMBER	QTY	PART NAME 1 2 3 4 5 6 (PRODUCT LEVEL)	SEE PAGE
Y	**225-4588**	1	CYLINDER & SEAL GP-STICK	476
Y	*225-4589*	1	LINES GP-STICK CYLINDER	688
Y-SEPARATE ILLUSTRATION				

<END>

225-4596 CYLINDER & LINES GP-STICK

S/N: MNB1-UP; WDK1-UP
PART OF 229-1758, 275-3699, 275-3839 BOOM AR-1 PIECE LONG, 229-1759 BOOM AR-1 PIECE SHORT
AN ATTACHMENT

SMCS-5458 **i02433835**

NOTE	PART NUMBER	QTY	PART NAME 1 2 3 4 5 6 (PRODUCT LEVEL)	SEE PAGE
Y	**225-4597**	1	CYLINDER & SEAL GP-BOOM	461
Y	*225-4589*	1	LINES GP-STICK CYLINDER	688
Y-SEPARATE ILLUSTRATION				

<END>

259-0777 CYLINDER & LINES GP-STICK

S/N: MNB1-UP; WDK1-UP
PART OF 229-1760 BOOM AR-1 PIECE LONG
AN ATTACHMENT

SMCS-5458 **i02349092**

NOTE	PART NUMBER	QTY	PART NAME 1 2 3 4 5 6 (PRODUCT LEVEL)	SEE PAGE
Y	**259-0778**	1	CYLINDER GP-STICK	492
Y	*225-4589*	1	LINES GP-STICK CYLINDER	688

Y-SEPARATE ILLUSTRATION

<END>

266-7989 CYLINDER & LINES GP-STICK

S/N: MNB1-UP; WDK1-UP
PART OF 274-2477, 274-2489 CYLINDER AR-HYDRAULIC
AN ATTACHMENT

SMCS-5458 **i02492493**

NOTE	PART NUMBER	QTY	PART NAME 1 2 3 4 5 6 (PRODUCT LEVEL)	SEE PAGE
Y	*266-7990*	1	CYLINDER & SEAL GP-STICK	479
Y	*266-8043*	1	LINES GP-STICK CYLINDER	691

Y-SEPARATE ILLUSTRATION

<END>

225-4584 CYLINDER & SEAL GP-BOOM

S/N: MNB1-UP; WDK1-UP
140-MM (5.5-IN) BORE X 1407-MM (55.4-IN) STROKE
PART OF 225-4582, 225-4583 CYLINDER & LINES GP-BOOM
AN ATTACHMENT

SMCS-5456 **i02345803**

NOTE	REF NO	GRAPHIC REF	PART NUMBER	QTY	PART NAME 1 2 3 4 5 6 (PRODUCT LEVEL)	SEE PAGE
J	1	1	**133-6904**	1	SEAL-LIP TYPE	
J	2	1	**121-1372**	1	RING-BACKUP	
J	3	1	**121-1371**	1	SEAL-U-CUP	
J	4	1	**204-3623**	1	SEAL-BUFFER	
	5	1	**096-5625**	1	BEARING-SLEEVE	
	6	1	**094-1931**	1	RING-RETAINING	
	7	1	**194-8349**	1	HEAD	
M	8	1	**4I-3628**	12	BOLT-SOCKET HEAD (M18X2.5X80-MM)	
J	9	1	**095-1721**	1	SEAL-O-RING	
J	10	1	**4I-3627**	1	RING-BACKUP	
	11	1	**234-4567**	1	CYLINDER AS	
	11A	1	**228-5654**	1	BEARING-SLEEVE	
	12	1	**234-4568**	1	ROD AS	
	12A	1	**235-7771**	1	BEARING-SLEEVE	
	13	1	**4I-8869**	1	STOP	
J	14	1	**126-1876**	1	RING-SEAL	
J	15	1	**4I-3631**	2	RING-BACKUP	
J	16	1	**096-1570**	1	SEAL AS	
J	17	1	**247-8874**	2	RING	
J	18	1	**096-1571**	2	RING	
	19	1	**247-8873**	1	PISTON	
M	20	1	**096-6210**	1	SETSCREW-SOCKET (M14X2X14-MM)	
	21	1	**4B-9880**	1	BALL	
	22	1	**166-1495**	2	SEAL-LIP TYPE	
	23	1	**9X-4597**	2	SEAL-LIP TYPE	
	24	1	**3B-8489**	1	FITTING-GREASE	
					AVAILABLE REPAIR KIT(S):	
J			**234-4566**	1	KIT-SEAL (BOOM CYLINDER)	

J-KIT MARKED J SERVICES PART(S) MARKED J
M-METRIC PART

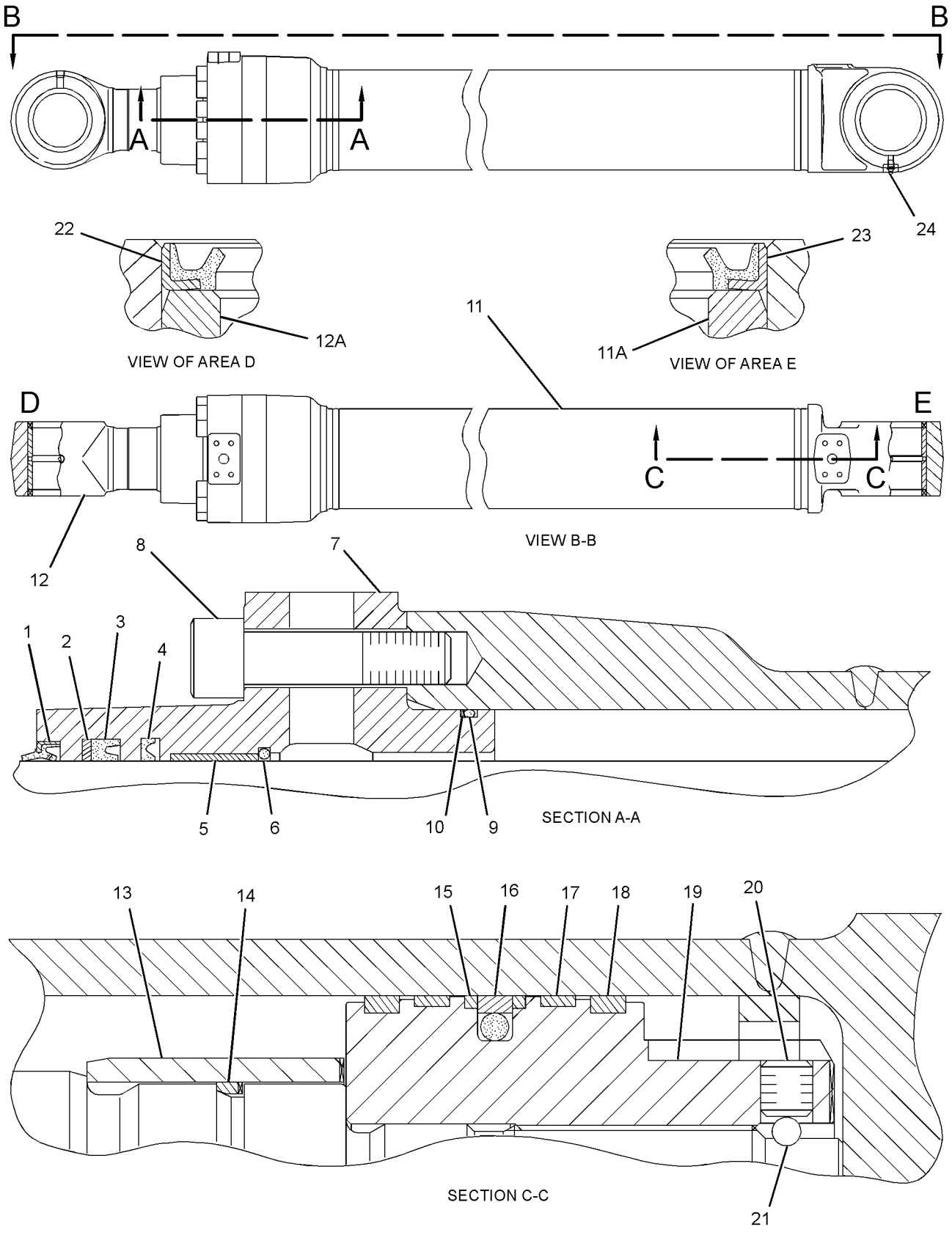

GRAPHIC #1 **<END>** g01188879

225-4595 CYLINDER & SEAL GP-BOOM

S/N: MNB1-UP; WDK1-UP
140-MM (5.5-IN) BORE X 1407-MM (55.4-IN) STROKE
PART OF 225-4593, 225-4594 CYLINDER & LINES GP-BOOM
AN ATTACHMENT

SMCS-5456 **i02346677**

NOTE	REF NO	GRAPHIC REF	PART NUMBER	QTY	PART NAME 1 2 3 4 5 6 (PRODUCT LEVEL)	SEE PAGE
J	1	1	**154-0736**	1	SEAL-LIP TYPE	
J	2	1	**154-0738**	1	RING-BACKUP	
J	3	1	**154-0737**	1	SEAL-U-CUP	
J	4	1	**154-0739**	1	SEAL-BUFFER	
	5	1	**096-5625**	1	BEARING-SLEEVE	
	6	1	**094-1931**	1	RING-RETAINING	
	7	1	**194-8349**	1	HEAD	
M	8	1	**4I-3628**	12	BOLT-SOCKET HEAD (M18X2.5X80-MM)	
J	9	1	**095-1721**	1	SEAL-O-RING	
J	10	1	**4I-3627**	1	RING-BACKUP	
	11	1	**234-4567**	1	CYLINDER AS	
	11A	1	**228-5654**	1	BEARING-SLEEVE	
	12	1	**234-4568**	1	ROD AS	
	12A	1	**235-7771**	1	BEARING-SLEEVE	
	13	1	**4I-8869**	1	STOP	
J	14	1	**126-1876**	1	RING-SEAL	
J	15	1	**4I-3631**	2	RING-BACKUP	
J	16	1	**096-1570**	1	SEAL AS	
J	17	1	**247-8874**	2	RING	
J	18	1	**096-1571**	2	RING	
	19	1	**247-8873**	1	PISTON	
M	20	1	**096-6210**	1	SETSCREW-SOCKET (M14X2X14-MM)	
	21	1	**4B-9880**	1	BALL	
	22	1	**166-1495**	2	SEAL-LIP TYPE	
	23	1	**9X-4597**	2	SEAL-LIP TYPE	
	24	1	**3B-8489**	1	FITTING-GREASE	
					AVAILABLE REPAIR KIT(S):	
J			**259-0648**		KIT-SEAL (BOOM CYLINDER)	

J-KIT MARKED J SERVICES PART(S) MARKED J
M-METRIC PART

225-4595 CYLINDER & SEAL GP-BOOM *(contd.)* i02346677

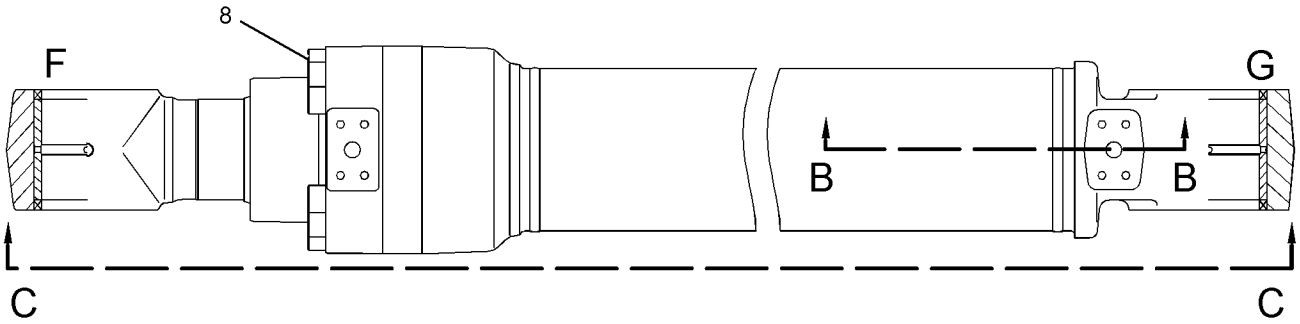

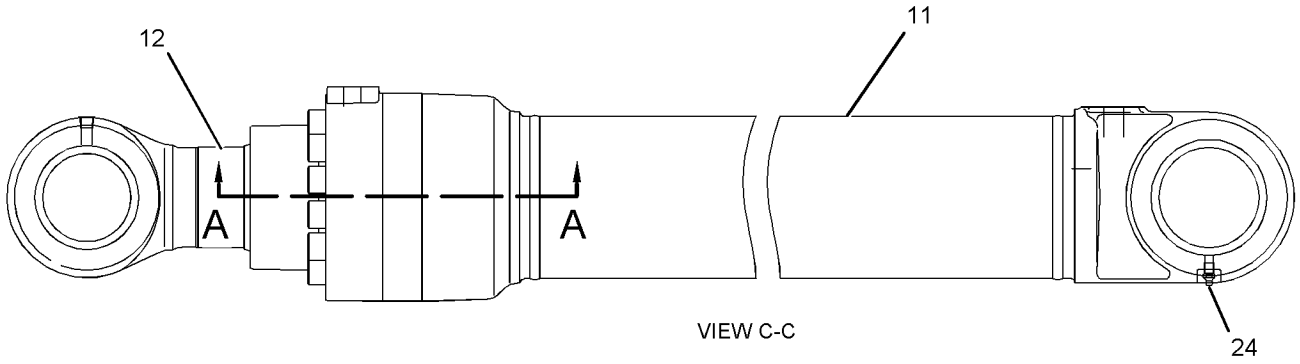

VIEW C-C

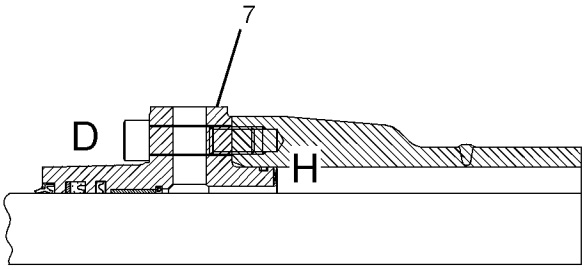

SECTION A-A

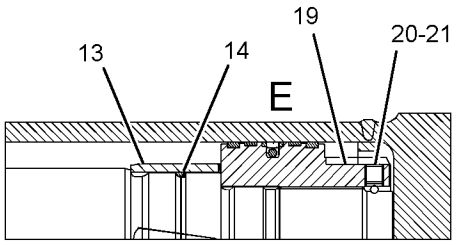

SECTION B-B

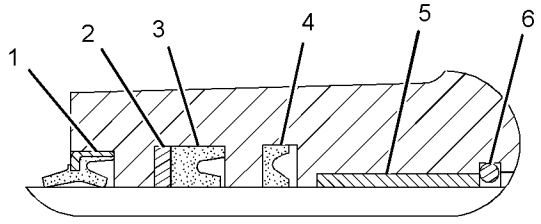

VIEW OF AREA D

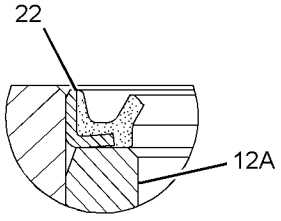

VIEW OF AREA F

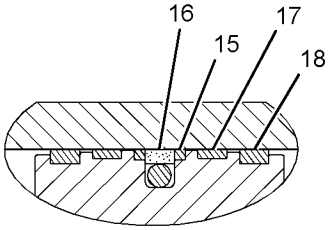

VIEW OF AREA E

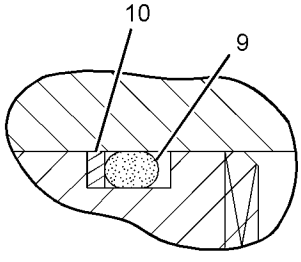

VIEW OF AREA H

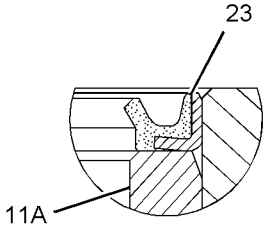

VIEW OF AREA G

GRAPHIC #1

<END>

g01191293

HYDRAULIC SYSTEM

225-4597 CYLINDER & SEAL GP-BOOM

S/N: MNB1-UP; WDK1-UP
150-MM (5.9-IN) BORE X 1646-MM (64.8-IN) STROKE
PART OF 225-4596 CYLINDER & LINES GP-STICK
AN ATTACHMENT

SMCS-5456 **i02346682**

NOTE	REF NO	GRAPHIC REF	PART NUMBER	QTY	PART NAME 1 2 3 4 5 6 (PRODUCT LEVEL)	SEE PAGE
J	1	1	**154-0767**	1	SEAL-LIP TYPE	
J	2	1	**194-8365**	1	RING-BACKUP	
J	3	1	**194-8364**	1	SEAL-U-CUP	
J	4	1	**154-0770**	1	SEAL-BUFFER	
	5	1	**099-5572**	1	BEARING-SLEEVE	
	6	1	**099-5573**	1	RING-RETAINING	
	7	1	**194-8353**	1	HEAD	
M	8	1	**9X-2404**	12	BOLT-SOCKET HEAD (M20X2.5X90-MM)	
J	9	1	**095-1723**	1	SEAL-O-RING	
J	10	1	**114-0706**	1	RING-BACKUP	
	11	1	**234-4578**	1	ROD AS	
	11A	1	**235-7770**	1	BEARING-SLEEVE	
	12	1	**234-4577**	1	CYLINDER AS	
	12A	1	**235-7770**	1	BEARING-SLEEVE	
	13	1	**121-1548**	1	STOP	
J	14	1	**194-8356**	1	RING-SEAL	
J	15	1	**114-0711**	2	RING-BACKUP	
J	16	1	**114-0710**	1	SEAL AS	
J	17	1	**234-4574**	2	RING	
J	18	1	**114-0713**	2	RING	
	19	1	**234-4573**	1	PISTON	
M	20	1	**096-6210**	1	SETSCREW-SOCKET (M14X2X14-MM)	
	21	1	**4B-9880**	1	BALL	
	22	1	**085-8605**	1	RING-RETAINING	
J	23	1	**194-8359**	1	RING-SEAL	
	24	1	**121-1549**	1	STOP	
	25	1	**085-8604**	2	RING-RETAINING	
	26	1	**096-0854**	4	SEAL-LIP TYPE	
	27	1	**3B-8489**	1	FITTING-GREASE	
					AVAILABLE REPAIR KIT(S):	
J			**259-0650**	1	KIT-SEAL (BOOM CYLINDER)	

J-KIT MARKED J SERVICES PART(S) MARKED J
M-METRIC PART

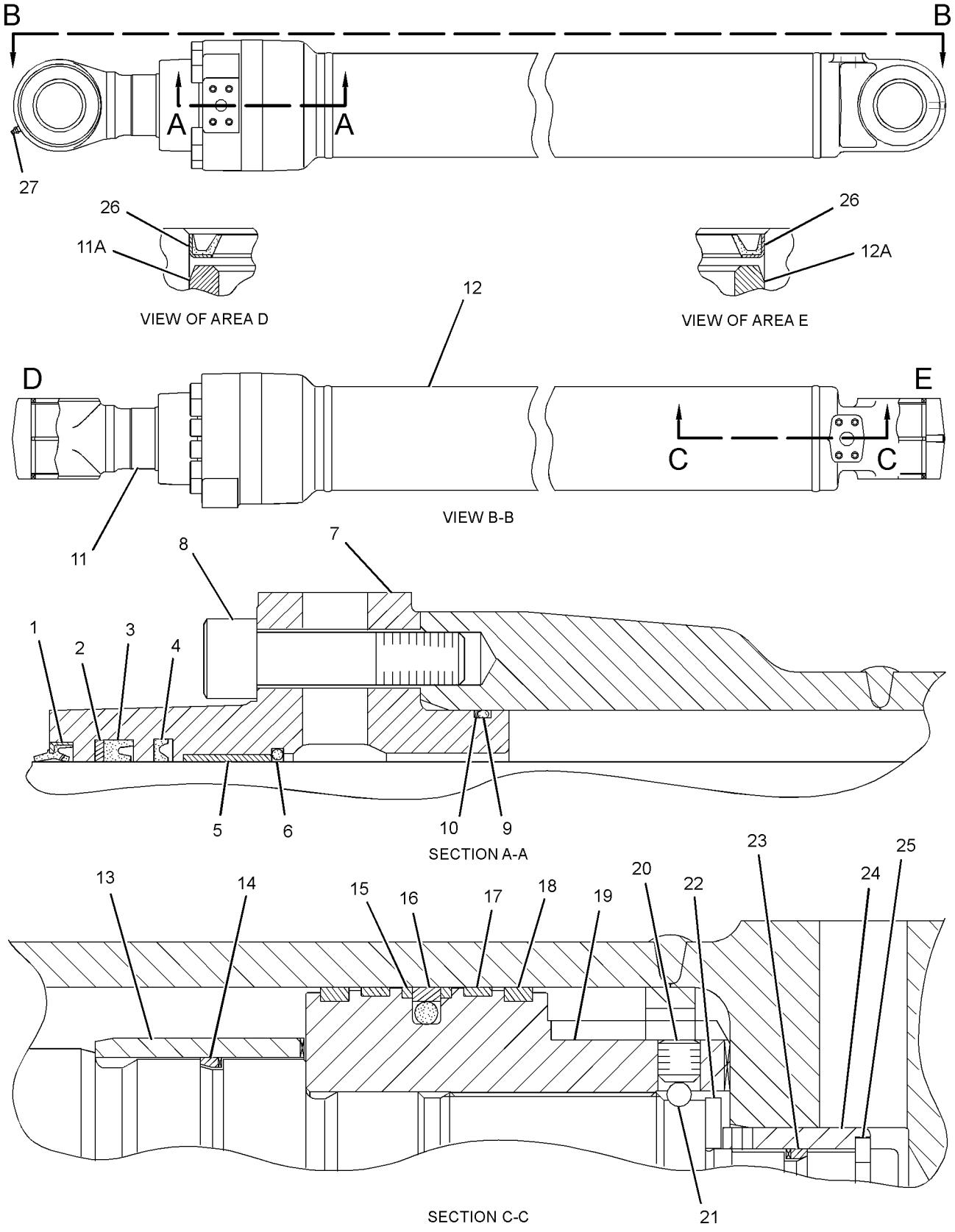

GRAPHIC #1 **<END>** g01191149

HYDRAULIC SYSTEM

266-7988 CYLINDER & SEAL GP-BOOM

S/N: MNB1-UP; WDK1-UP
140-MM (5.5-IN) BORE X 1407-MM (55.4-IN) STROKE
PART OF 266-7986, 266-7987 CYLINDER & LINES GP-BOOM
AN ATTACHMENT

SMCS-5456 **i02492476**

NOTE	REF NO	GRAPHIC REF	PART NUMBER	QTY	PART NAME 1 2 3 4 5 6 (PRODUCT LEVEL)	SEE PAGE
J	1	1	**133-6904**	1	SEAL-LIP TYPE	
J	2	1	**121-1372**	1	RING-BACKUP	
J	3	1	**121-1371**	1	SEAL-U-CUP	
J	4	1	**204-3623**	1	SEAL-BUFFER	
	5	1	**096-5625**	1	BEARING-SLEEVE	
	6	1	**094-1931**	1	RING-RETAINING	
	7	1	**194-8349**	1	HEAD	
M	8	1	**4I-3628**	12	BOLT-SOCKET HEAD (M18X2.5X80-MM)	
J	9	1	**266-7968**	1	SEAL-O-RING	
J	10	1	**4I-3627**	1	RING-BACKUP	
	11	1	**234-4567**	1	CYLINDER AS	
	11A	1	**228-5654**	1	BEARING-SLEEVE	
	12	1	**234-4568**	1	ROD AS	
	12A	1	**235-7771**	1	BEARING-SLEEVE	
	13	1	**4I-8869**	1	STOP	
J	14	1	**126-1876**	1	RING-SEAL	
J	15	1	**4I-3631**	2	RING-BACKUP	
J	16	1	**096-1570**	1	SEAL AS	
J	17	1	**247-8874**	2	RING	
J	18	1	**096-1571**	2	RING	
	19	1	**247-8873**	1	PISTON	
M	20	1	**096-6210**	1	SETSCREW-SOCKET (M14X2X14-MM)	
	21	1	**4B-9880**	1	BALL	
	22	1	**166-1495**	2	SEAL-LIP TYPE	
	23	1	**9X-4597**	2	SEAL-LIP TYPE	
	24	1	**3B-8489**	1	FITTING-GREASE	
					AVAILABLE REPAIR KIT(S):	
J			**266-8015**	1	KIT-SEAL (HYDRAULIC CYLINDER) (BOOM)	

J-KIT MARKED J SERVICES PART(S) MARKED J
M-METRIC PART

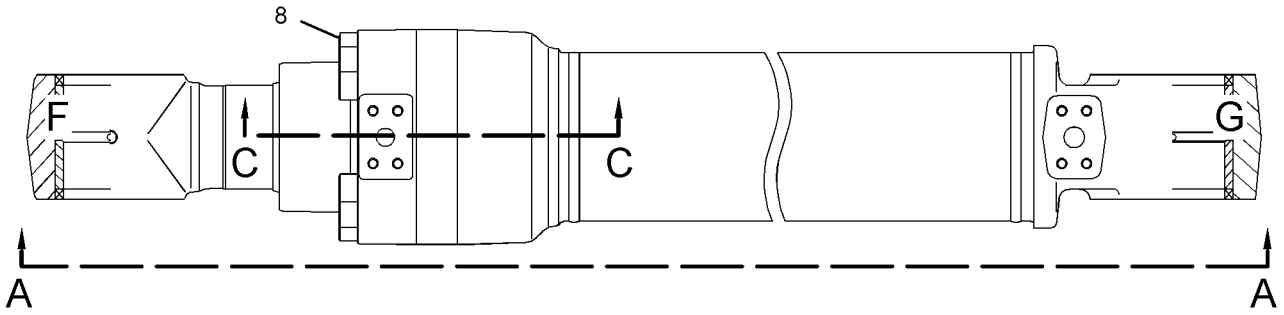

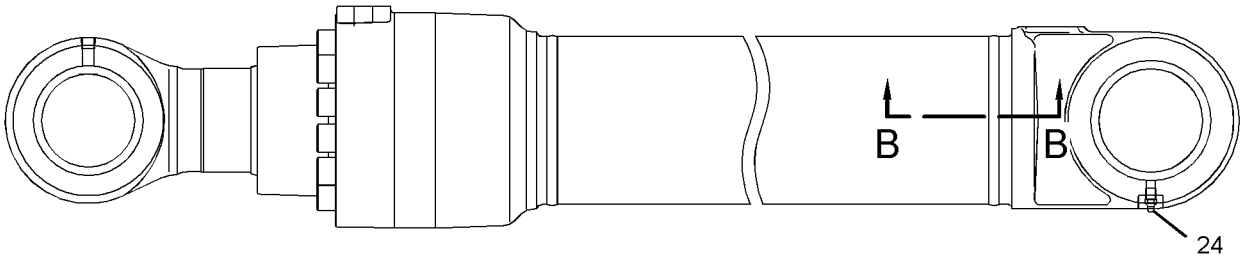

VIEW A-A

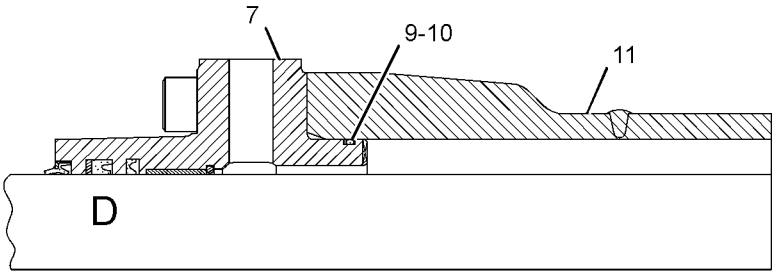

SECTION C-C

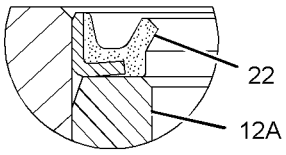

VIEW OF AREA F

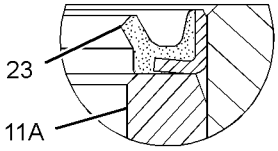

VIEW OF AREA G

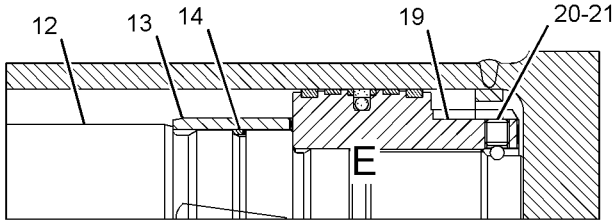

SECTION B-B

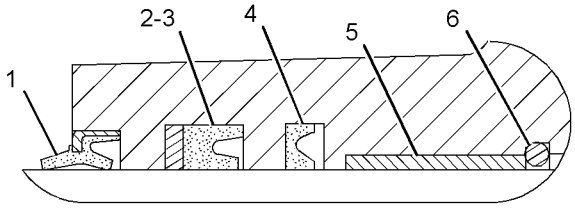

VIEW OF AREA D

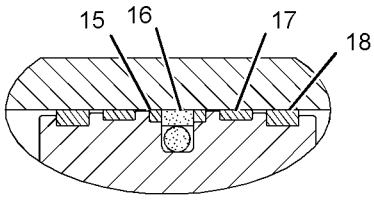

VIEW OF AREA E

GRAPHIC #1 **<END>** g01251480

225-4580 CYLINDER & SEAL GP-BUCKET

S/N: MNB1-UP; WDK1-UP
PART OF 225-4579 CYLINDER & LINES GP-BUCKET
AN ATTACHMENT

SMCS-5457 **i03030203**

NOTE	REF NO	GRAPHIC REF	PART NUMBER	QTY	PART NAME 1 2 3 4 5 6 (PRODUCT LEVEL)	SEE PAGE
	1	1	**3B-8489**	2	FITTING-GREASE	
	2	1	**166-1494**	2	SEAL-LIP TYPE	
	3	1	**166-1496**	2	SEAL-LIP TYPE	
CY	4	1	**315-4442**	1	CYLINDER GP-BUCKET (BUCKET)	484

C-CHANGE FROM PREVIOUS TYPE
Y-SEPARATE ILLUSTRATION

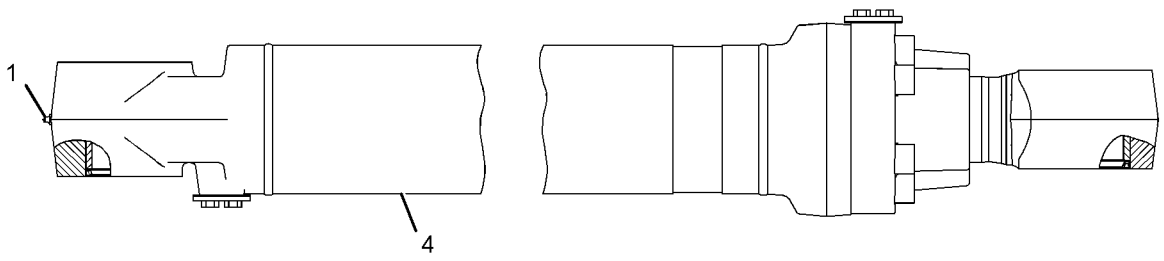

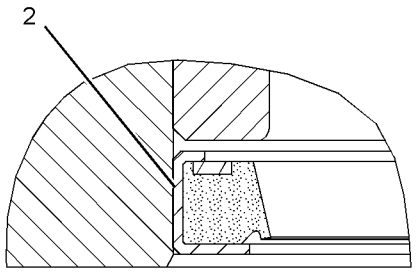

VIEW OF AREA A

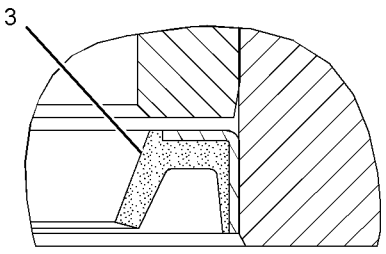

VIEW OF AREA B

GRAPHIC #1 **<END>** g01154899

HYDRAULIC SYSTEM

225-4591 CYLINDER & SEAL GP-BUCKET

S/N: MNB1-UP; WDK1-UP
135-MM (5.3-IN) BORE X 1156-MM (45.5-IN) STROKE
PART OF 225-4590 CYLINDER & LINES GP-BUCKET
AN ATTACHMENT

SMCS-5457 **i02348509**

NOTE	REF NO	GRAPHIC REF	PART NUMBER	QTY	PART NAME 1 2 3 4 5 6 (PRODUCT LEVEL)	SEE PAGE
J	1	1	**150-5828**	1	SEAL-LIP TYPE	
J	2	1	**150-5827**	1	RING-BACKUP	
J	3	1	**150-5826**	1	SEAL-U-CUP	
J	4	1	**209-5957**	1	SEAL-BUFFER	
	5	1	**096-4430**	1	BEARING-SLEEVE	
	6	1	**7Y-4631**	1	RING-RETAINING	
	7	1	**234-4580**	1	HEAD	
M	8	1	**4I-3628**	12	BOLT-SOCKET HEAD (M18X2.5X80-MM)	
J	9	1	**095-1720**	1	SEAL-O-RING	
J	10	1	**234-4581**	1	RING-BACKUP	
	11	1	**234-4589**	1	ROD AS	
	11A	1	**228-5615**	1	BEARING-SLEEVE	
	12	1	**234-4588**	1	CYLINDER AS	
	12A	1	**235-7769**	1	BEARING-SLEEVE	
J	13	1	**234-4583**	1	SEAL AS	
J	14	1	**234-4584**	2	RING-BACKUP	
J	15	1	**234-4585**	2	RING	
J	16	1	**234-4586**	2	RING	
	17	1	**234-4582**	1	PISTON	
M	18	1	**096-6210**	1	SETSCREW-SOCKET (M14X2X14-MM)	
	19	1	**4B-9880**	1	BALL	
	20	1	**166-1495**	2	SEAL-LIP TYPE	
	21	1	**235-7679**	2	SEAL-LIP TYPE	
	22	1	**3B-8489**	2	FITTING-GREASE	
					AVAILABLE REPAIR KIT(S):	
J			**234-4587**	1	KIT-SEAL (BUCKET CYLINDER)	

J-KIT MARKED J SERVICES PART(S) MARKED J
M-METRIC PART

225-4591 **CYLINDER & SEAL GP-BUCKET** ***(contd.)*** **i02348509**

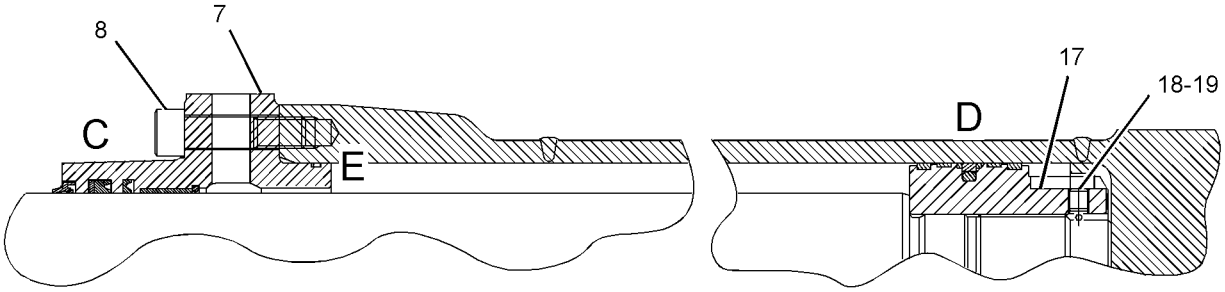

SECTION A-A

SECTION B-B

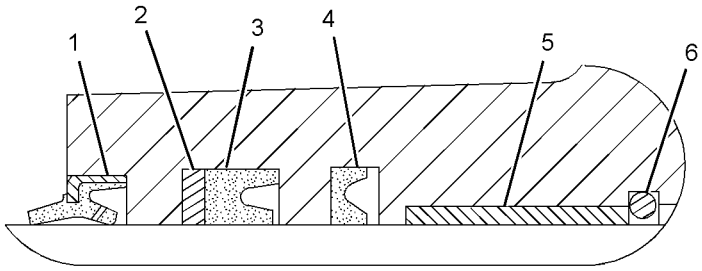

VIEW OF AREA C

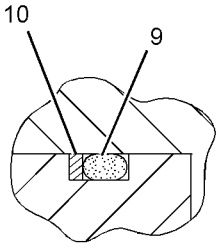

VIEW OF AREA E

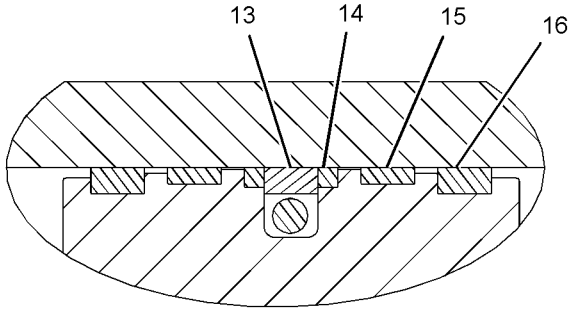

VIEW OF AREA D

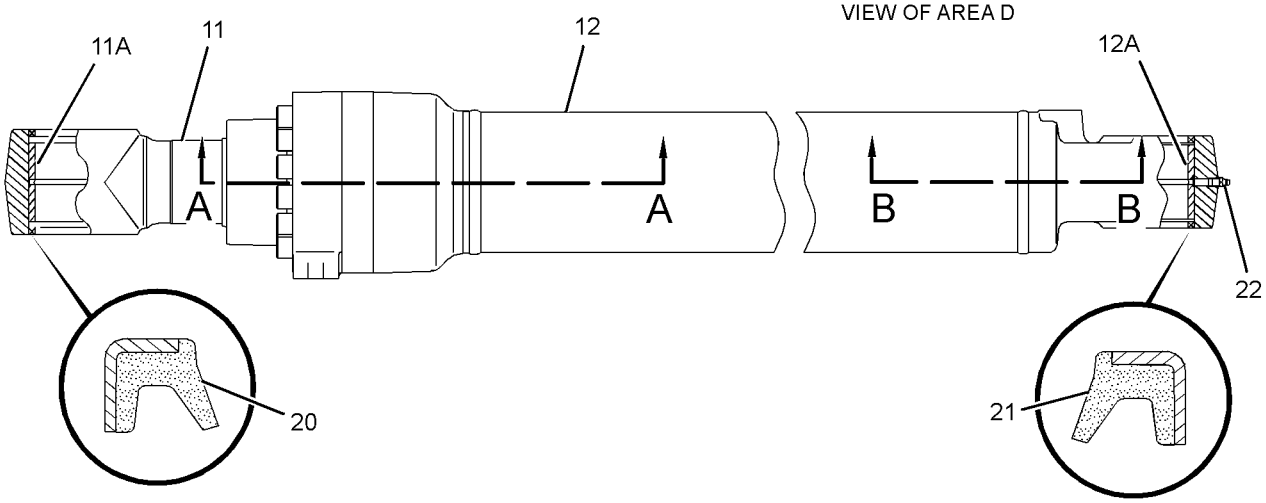

GRAPHIC #1 **<END>** g01191305

225-4599 CYLINDER & SEAL GP-BUCKET

S/N: MNB1-UP; WDK1-UP
135-MM (5.3-IN) BORE X 1156-MM (45.5-IN) STROKE
PART OF 225-4598 CYLINDER & LINES GP-BUCKET
AN ATTACHMENT

SMCS-5457 **i02593770**

NOTE	REF NO	GRAPHIC REF	PART NUMBER	QTY	PART NAME 1 2 3 4 5 6 (PRODUCT LEVEL)	SEE PAGE
J	1	1	**259-0655**	1	SEAL-LIP TYPE	
J	2	1	**259-0654**	1	RING-BACKUP	
J	3	1	**259-0653**	1	SEAL-U-CUP	
J	4	1	**259-0652**	1	SEAL-BUFFER	
	5	1	**096-4430**	1	BEARING-SLEEVE	
	6	1	**7Y-4631**	1	RING-RETAINING	
	7	1	**234-4580**	1	HEAD	
M	8	1	**4I-3628**	12	BOLT-SOCKET HEAD (M18X2.5X80-MM)	
J	9	1	**095-1720**	1	SEAL-O-RING	
J	10	1	**234-4581**	1	RING-BACKUP	
	11	1	**234-4589**	1	ROD AS	
	11A	1	**228-5615**	1	BEARING-SLEEVE	
	12	1	**234-4588**	1	CYLINDER AS	
	12A	1	**235-7769**	1	BEARING-SLEEVE	
J	13	1	**234-4583**	1	SEAL AS	
J	14	1	**234-4584**	2	RING-BACKUP	
J	15	1	**234-4585**	2	RING	
J	16	1	**234-4586**	2	RING	
	17	1	**234-4582**	1	PISTON	
M	18	1	**096-6210**	1	SETSCREW-SOCKET (M14X2X14-MM)	
	19	1	**4B-9880**	1	BALL	
	20	1	**166-1495**	2	SEAL-LIP TYPE	
	21	1	**235-7679**	2	SEAL-LIP TYPE	
	22	1	**3B-8489**	2	FITTING-GREASE	
					AVAILABLE REPAIR KIT(S):	
J			**259-0656**	1	KIT-SEAL (CYLINDER) (BUCKET)	

J-KIT MARKED J SERVICES PARTS MARKED J
M-METRIC PART

225-4599 CYLINDER & SEAL GP-BUCKET *(contd.)* i02593770

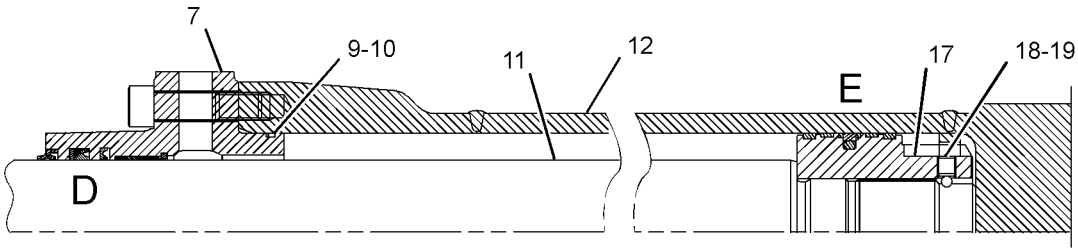

SECTION C-C

SECTION B-B

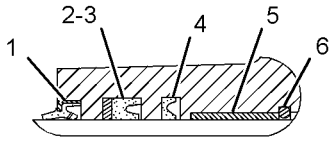

VIEW OF AREA D

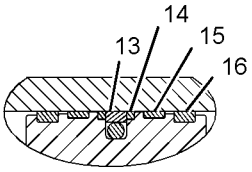

VIEW OF AREA E

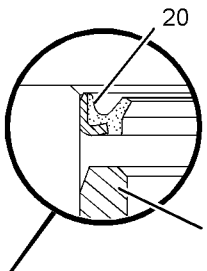

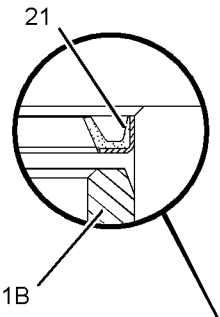

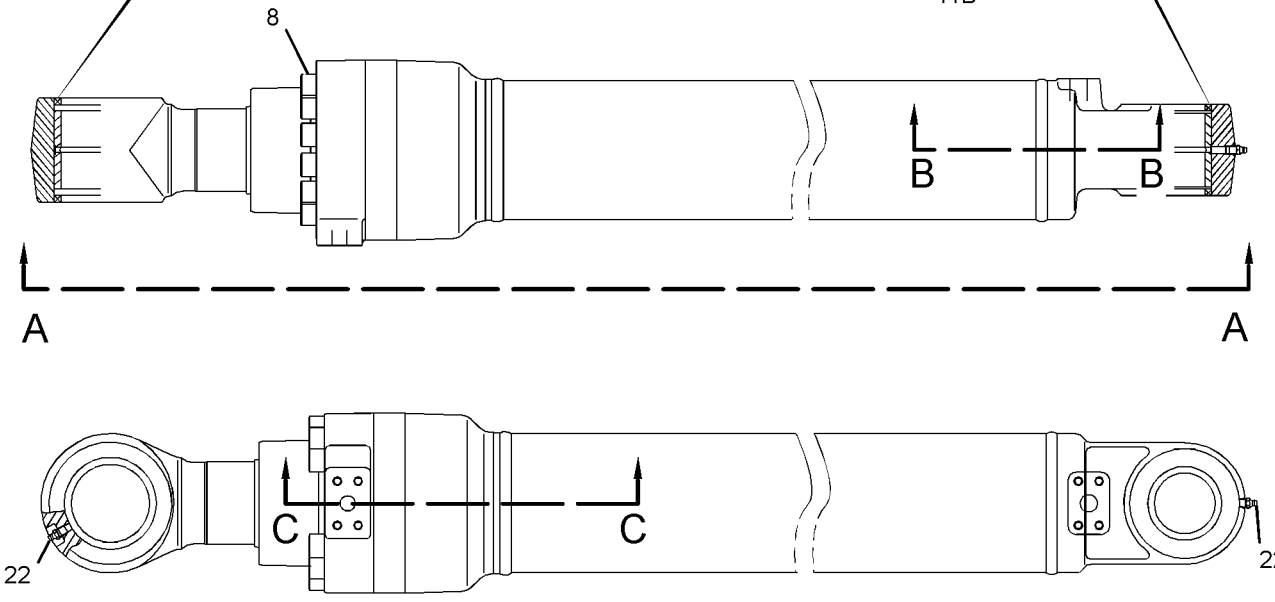

VIEW A-A

GRAPHIC #1 **<END>** g01230434

HYDRAULIC SYSTEM

225-4601 CYLINDER & SEAL GP-BUCKET

S/N: MNB1-UP; WDK1-UP
PART OF 225-4600 CYLINDER & LINES GP-BUCKET
AN ATTACHMENT

SMCS-5457 **i03087661**

NOTE	REF NO	GRAPHIC REF	PART NUMBER	QTY	PART NAME 1 2 3 4 5 6 (PRODUCT LEVEL)	SEE PAGE
	1	1	**3B-8489**	2	FITTING-GREASE	
	2	1	**166-1496**	2	SEAL-LIP TYPE	
	3	1	**166-1494**	2	SEAL-LIP TYPE	
CY	4	1	**315-4449**	1	CYLINDER GP-BUCKET	486

C-CHANGE FROM PREVIOUS TYPE
Y-SEPARATE ILLUSTRATION

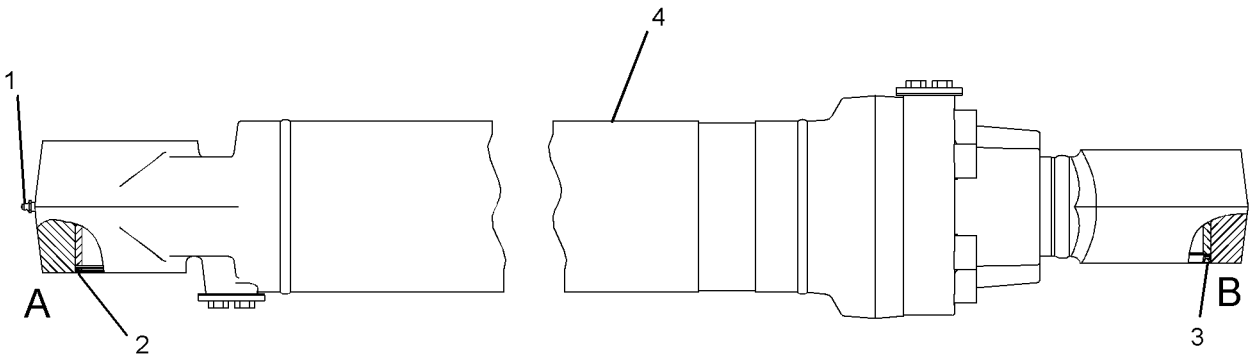

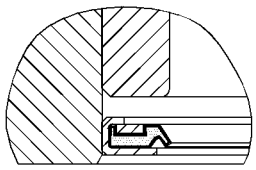

VIEW OF AREA A

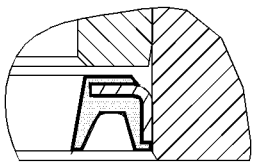

VIEW OF AREA B

GRAPHIC #1 **<END>** g01219397

248-7854 CYLINDER & SEAL GP-BUCKET

S/N: MNB1-UP

PART OF 253-6664 CYLINDER & LINES GP-BUCKET

AN ATTACHMENT

SMCS-5457 **i02555198**

NOTE	REF NO	GRAPHIC REF	PART NUMBER	QTY	PART NAME 1 2 3 4 5 6 (PRODUCT LEVEL)	SEE PAGE
	1	1	**093-1433**	2	SEAL-LIP TYPE	
CY	2	1	**283-6118**	1	CYLINDER GP-BUCKET	482
	3	1	**3B-8489**	2	FITTING-GREASE	
	4	1	**235-7679**	2	SEAL-LIP TYPE	

C-CHANGE FROM PREVIOUS TYPE
Y-SEPARATE ILLUSTRATION

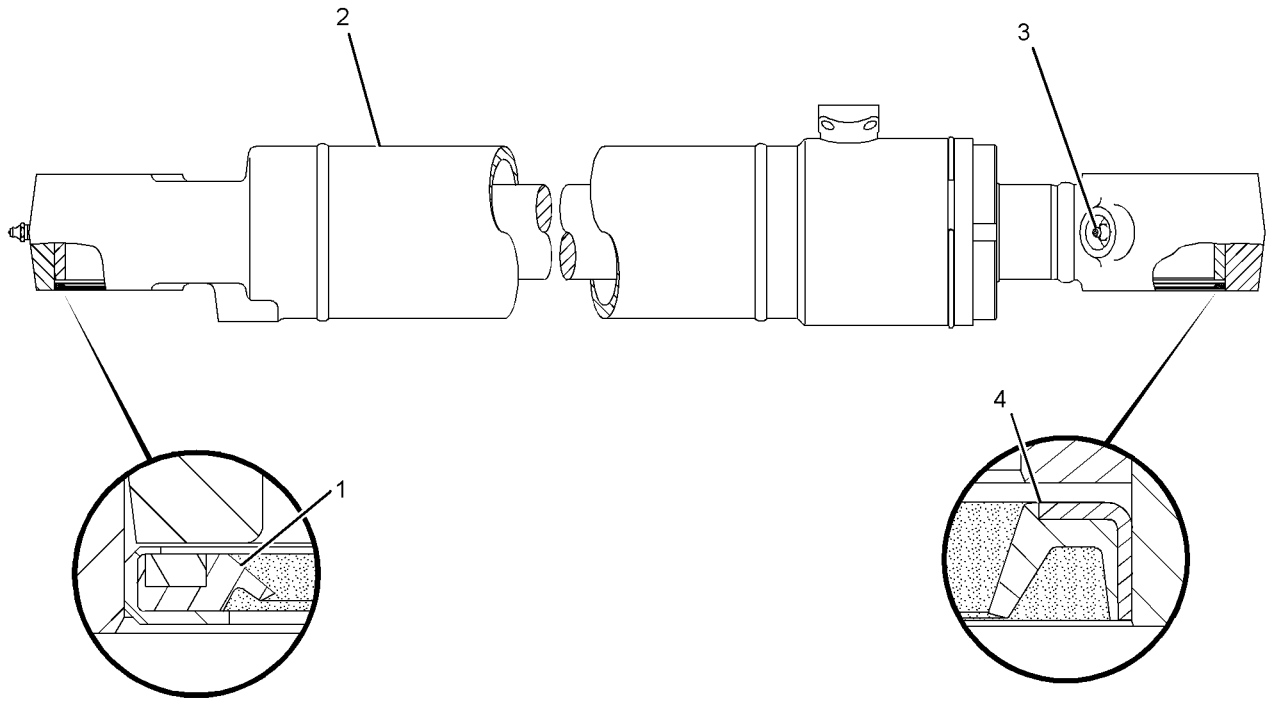

GRAPHIC #1 **<END>** g01280560

266-7992 CYLINDER & SEAL GP-BUCKET

S/N: MNB1-UP; WDK1-UP
160-MM (6.3-IN) BORE X 1156-MM (45.5-IN) STROKE
PART OF 266-7991 CYLINDER & LINES GP-BUCKET
AN ATTACHMENT

SMCS-5457 **i02425163**

NOTE	REF NO	GRAPHIC REF	PART NUMBER	QTY	PART NAME 1 2 3 4 5 6 (PRODUCT LEVEL)	SEE PAGE
J	1	1	**150-5828**	1	SEAL-LIP TYPE	
J	2	1	**150-5827**	1	RING-BACKUP	
J	3	1	**150-5826**	1	SEAL-U-CUP	
J	4	1	**209-5957**	1	SEAL-BUFFER	
	5	1	**096-4430**	1	BEARING-SLEEVE	
	6	1	**7Y-4631**	1	RING-RETAINING	
	7	1	**234-4580**	1	HEAD	
M	8	1	**4I-3628**	12	BOLT-SOCKET HEAD (M18X2.5X80-MM)	
J	9	1	**266-8026**	1	SEAL-O-RING	
J	10	1	**234-4581**	1	RING-BACKUP	
	11	1	**234-4588**	1	CYLINDER AS	
		1	**235-7769**	1	BEARING-SLEEVE	
	12	1	**234-4589**	1	ROD AS	
		1	**228-5615**	1	BEARING-SLEEVE	
J	13	1	**234-4584**	2	RING-BACKUP	
J	14	1	**234-4583**	1	SEAL AS	
	15	1	**234-4585**	2	RING	
J	16	1	**234-4586**	2	RING	
J	17	1	**234-4582**	1	PISTON	
M	18	1	**096-6210**	1	SETSCREW-SOCKET (M14X2X14-MM)	
	19	1	**4B-9880**	1	BALL	
	20	1	**166-1495**	2	SEAL-LIP TYPE	
	21	1	**235-7679**	2	SEAL-LIP TYPE	
	22	1	**3B-8489**	2	FITTING-GREASE	
					AVAILABLE REPAIR KIT(S):	
J			**266-8045**	1	KIT-SEAL (BUCKET CYLINDER)	

J-KIT MARKED J SERVICES PARTS MARKED J
M-METRIC PART

266-7992 CYLINDER & SEAL GP-BUCKET *(contd.)* i02425163

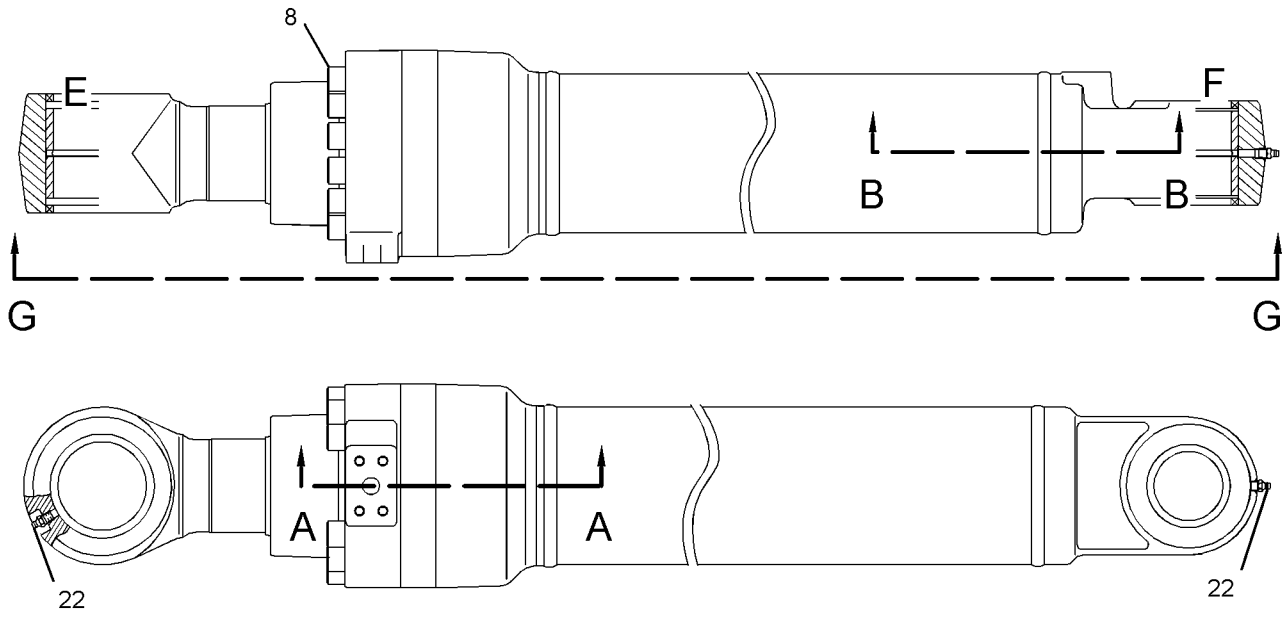

VIEW G-G

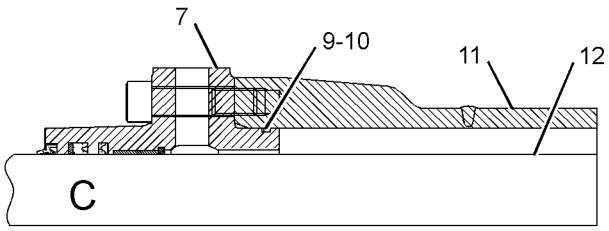

SECTION A-A

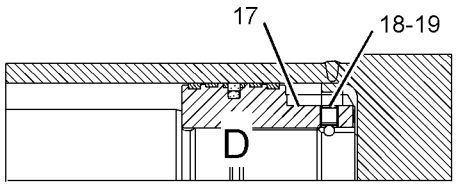

SECTION B-B

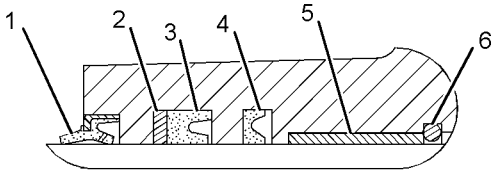

VIEW OF AREA C

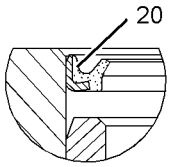

VIEW OF AREA E

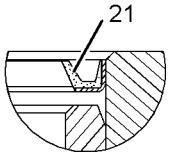

VIEW OF AREA F

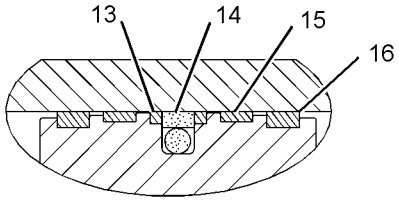

VIEW OF AREA D

GRAPHIC #1 **<END>** g01230047

266-8079 CYLINDER & SEAL GP-BUCKET–COLD WEATHER

S/N: MNB1-UP; WDK1-UP

PART OF 266-8078 CYLINDER & LINES GP-BUCKET

AN ATTACHMENT

SMCS-5457 **i03024506**

NOTE	REF NO	GRAPHIC REF	PART NUMBER	QTY	PART NAME 1 2 3 4 5 6 (PRODUCT LEVEL)	SEE PAGE
	1	1	**3B-8489**	2	FITTING-GREASE	
	2	1	**166-1494**	2	SEAL-LIP TYPE	
	3	1	**166-1496**	2	SEAL-LIP TYPE	
CY	4	1	**315-4450**	1	CYLINDER GP-BUCKET	488

C-CHANGE FROM PREVIOUS TYPE
Y-SEPARATE ILLUSTRATION

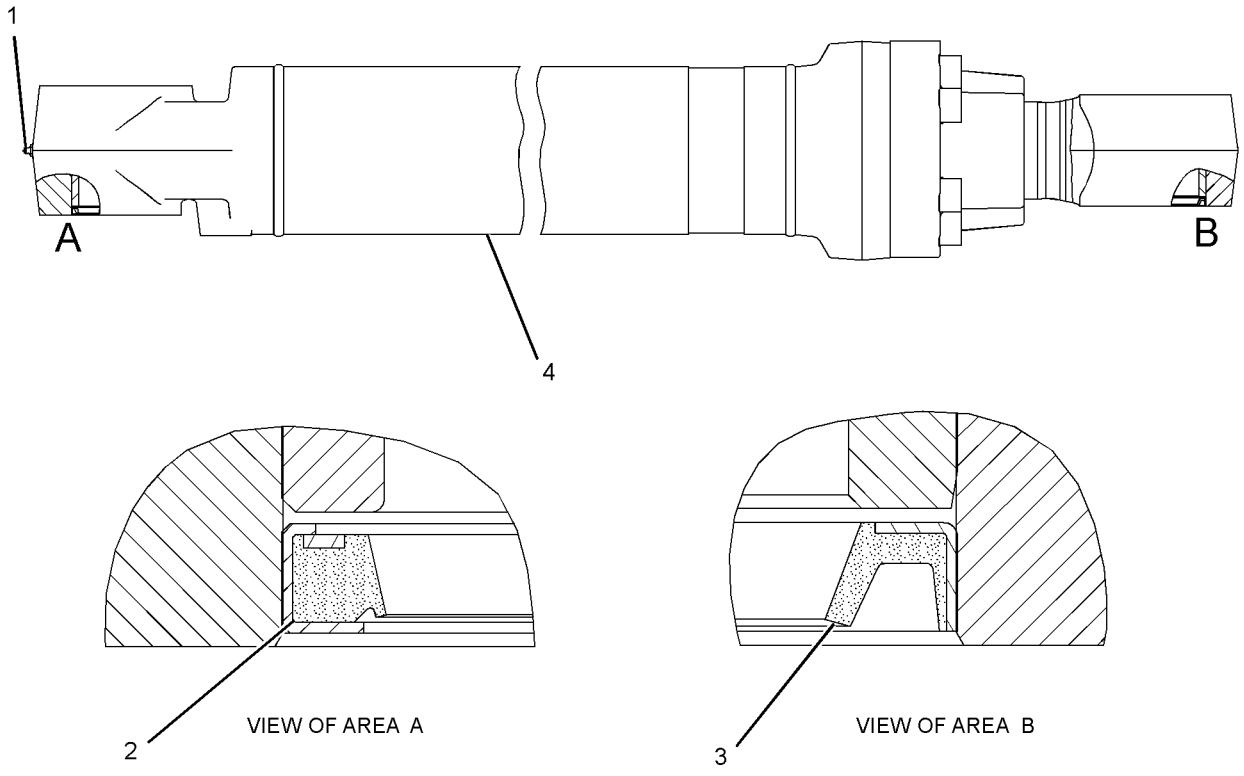

GRAPHIC #1 **<END>** g01251076

216-6606 CYLINDER & SEAL GP-STICK

S/N: MNB1-UP
PART OF 216-6605 CYLINDER & LINES GP-STICK
FOR USE WITH 60 FT LONG REACH MACHINE
AN ATTACHMENT

SMCS-5458 **i01884587**

NOTE	REF NO	GRAPHIC REF	PART NUMBER	QTY	PART NAME 1 2 3 4 5 6 (PRODUCT LEVEL)	SEE PAGE
	1	1	**3B-8489**	1	FITTING-GREASE	
	2	1	**096-0854**	4	SEAL-LIP TYPE	
Y	3	1	**216-6607**	1	CYLINDER GP-STICK	490

Y-SEPARATE ILLUSTRATION

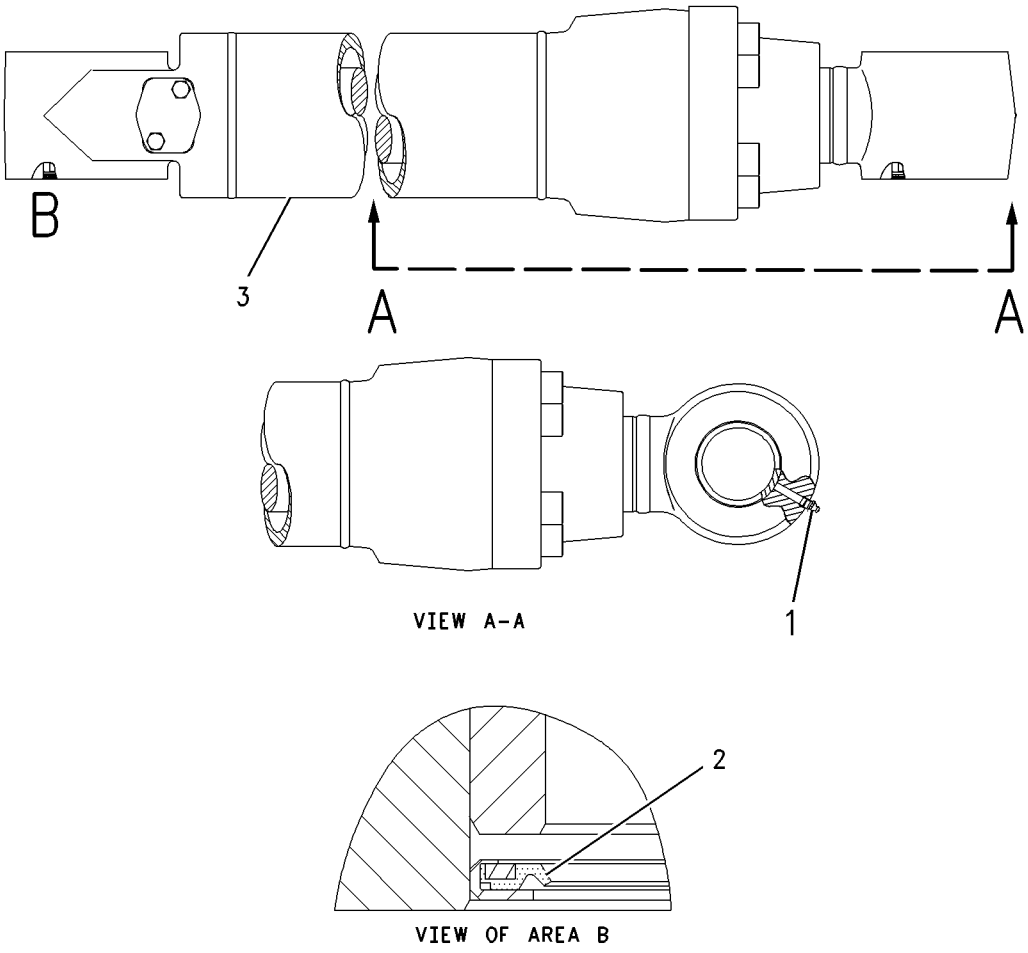

GRAPHIC #1 **<END>** g00947408

225-4588 CYLINDER & SEAL GP-STICK

S/N: MNB1-UP; WDK1-UP
150-MM (5.9-IN) BORE X 1646-MM (64.8-IN) STROKE
PART OF 225-4587 CYLINDER & LINES GP-STICK
AN ATTACHMENT

SMCS-5458 **i02345843**

NOTE	REF NO	GRAPHIC REF	PART NUMBER	QTY	PART NAME 1 2 3 4 5 6 (PRODUCT LEVEL)	SEE PAGE
J	1	2	**133-6909**	1	SEAL-LIP TYPE	
J	2	2	**194-8355**	1	RING-BACKUP	
J	3	2	**194-8354**	1	SEAL-U-CUP	
J	4	2	**209-6009**	1	SEAL	
	5	2	**099-5572**	1	BEARING-SLEEVE	
	6	2	**099-5573**	1	RING-RETAINING	
	7	2	**194-8353**	1	HEAD	
M	8	1	**9X-2404**	12	BOLT-SOCKET HEAD (M20X2.5X90-MM)	
J	9	2	**095-1723**	1	SEAL-O-RING	
J	10	2	**114-0706**	1	RING-BACKUP	
	11	2	**234-4578**	1	ROD AS	
	11A	1	**235-7770**	1	BEARING-SLEEVE	
	12	1	**234-4577**	1	CYLINDER AS	
	12A	1	**235-7770**	1	BEARING-SLEEVE	
	13	2	**121-1548**	1	STOP	
J	14	2	**194-8356**	1	RING-SEAL	
J	15	2	**114-0711**	2	RING-BACKUP	
J	16	2	**114-0710**	1	SEAL AS	
J	17	2	**234-4574**	2	RING	
J	18	2	**114-0713**	2	RING	
	19	2	**234-4573**	1	PISTON	
M	20	2	**096-6210**	1	SETSCREW-SOCKET (M14X2X14-MM)	
	21	2	**4B-9880**	1	BALL	
	22	2	**085-8605**	1	RING-RETAINING	
J	23	2	**194-8359**	1	RING-SEAL	
	24	2	**121-1549**	1	STOP	
	25	2	**085-8604**	2	RING-RETAINING	
	26	1	**166-1494**	4	SEAL-LIP TYPE	
	27	1	**3B-8489**	1	FITTING-GREASE	
					AVAILABLE REPAIR KIT(S):	
J			**234-4576**	1	KIT-SEAL (STICK CYLINDER)	

J-KIT MARKED J SERVICES PART(S) MARKED J
M-METRIC PART

225-4588 CYLINDER & SEAL GP-STICK *(contd.)*

i02345843

REFER TO ALL ILLUSTRATIONS OF
THIS GROUP FOR AUXILIARY VIEWS

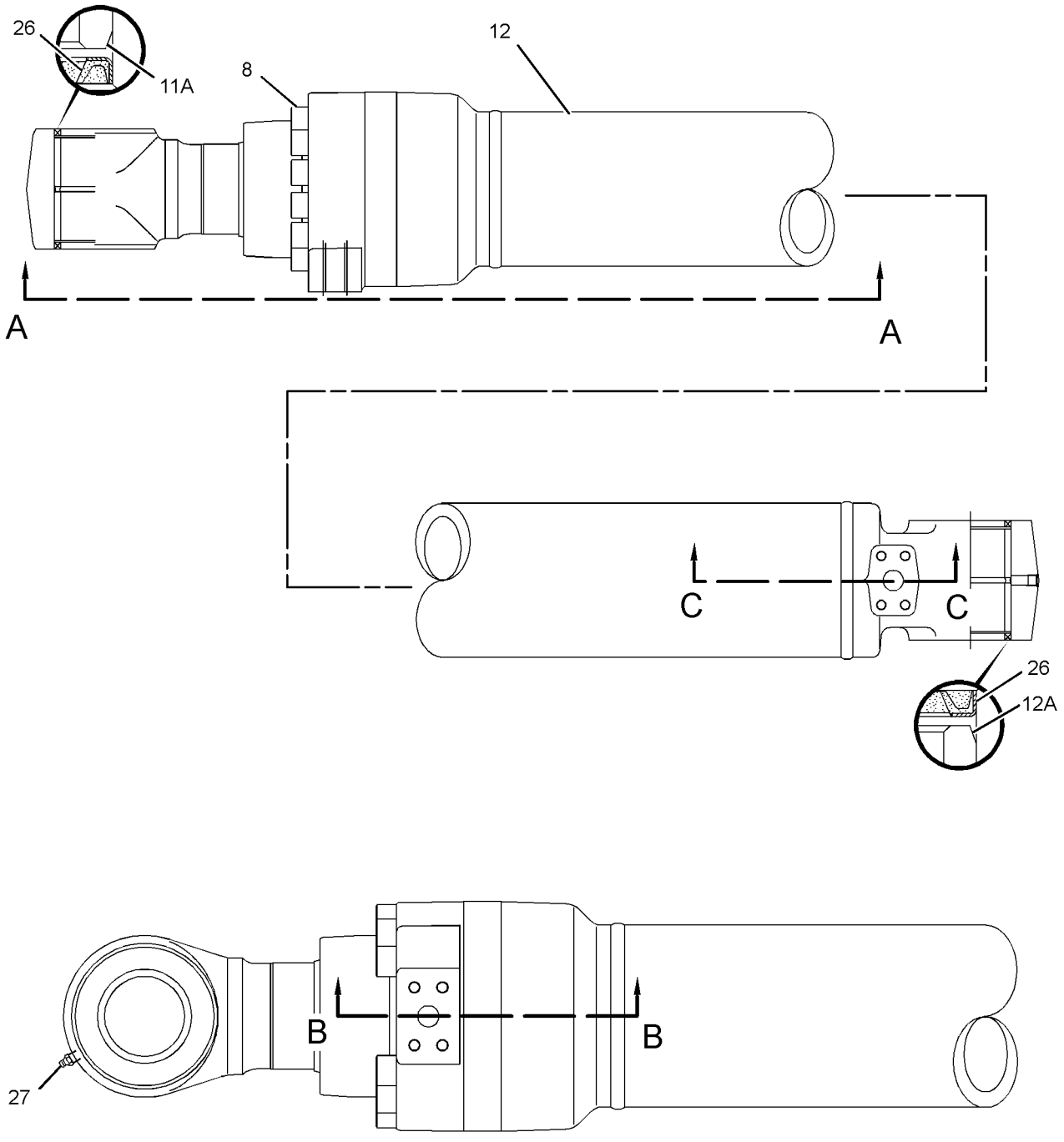

VIEW A-A

GRAPHIC #1

g01178757

225-4588 CYLINDER & SEAL GP-STICK *(contd.)* **i02345843**

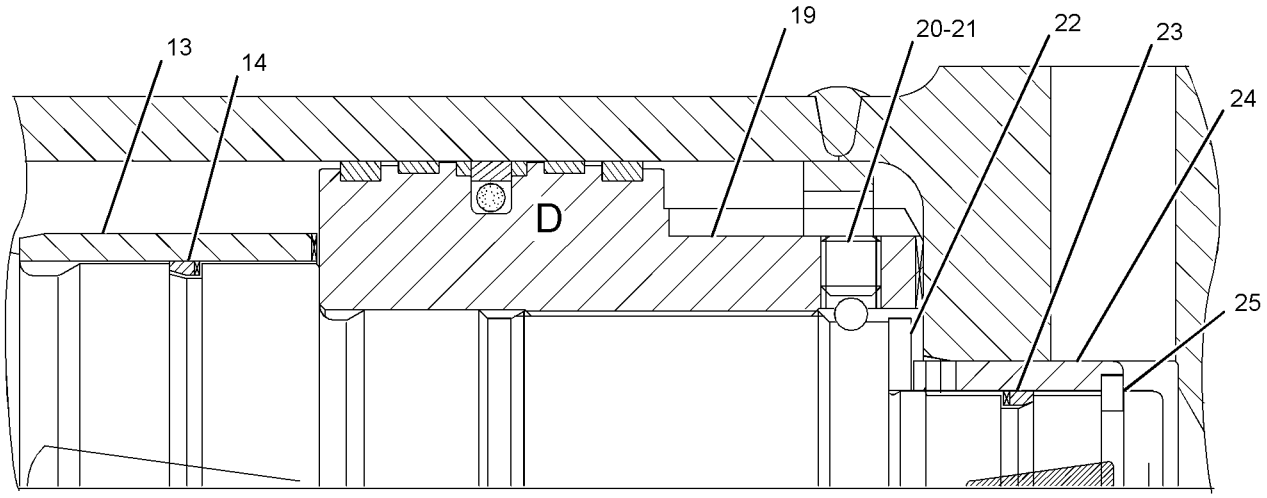

SECTION B-B

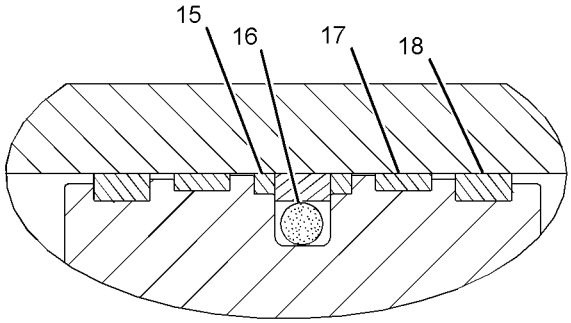

VIEW OF AREA D

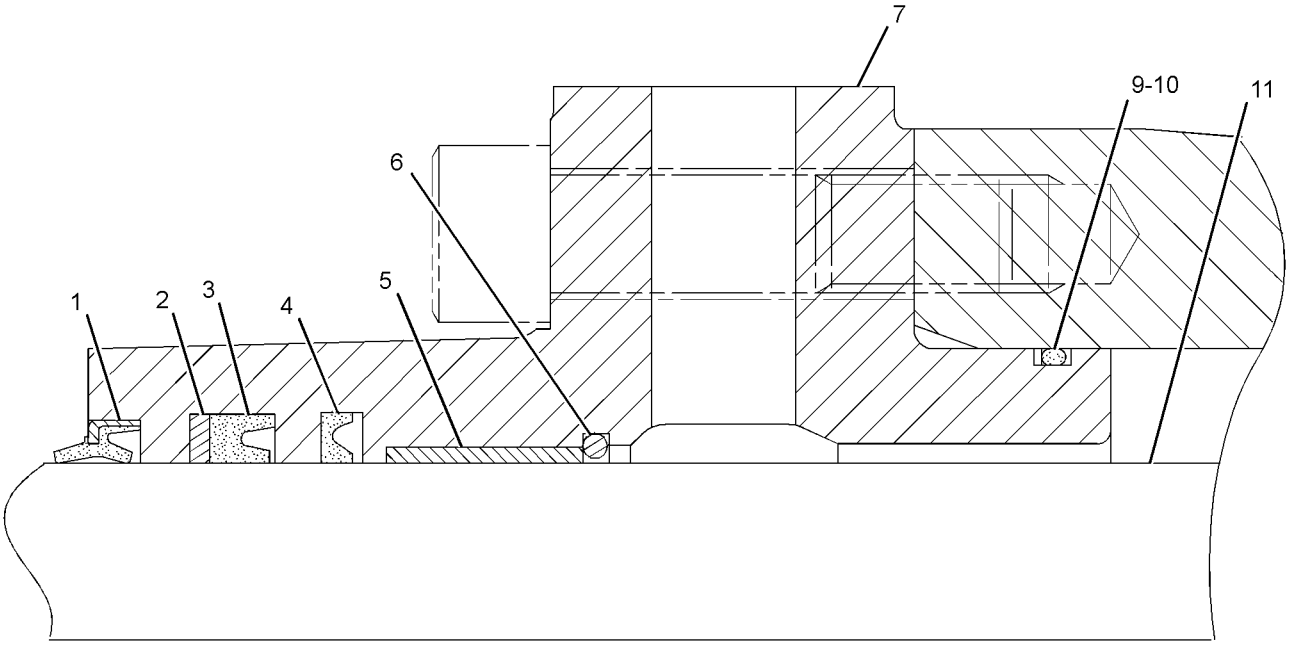

SECTION C-C

GRAPHIC #2 **<END>** g01178758

HYDRAULIC SYSTEM

266-7990 CYLINDER & SEAL GP-STICK

S/N: MNB1-UP; WDK1-UP
150-MM (5.9-IN) BORE X 1646-MM (64.8-IN) STROKE
PART OF 266-7989 CYLINDER & LINES GP-STICK
AN ATTACHMENT

SMCS-5458 **i02492497**

NOTE	REF NO	GRAPHIC REF	PART NUMBER	QTY	PART NAME 1 2 3 4 5 6 (PRODUCT LEVEL)	SEE PAGE
J	1	1	**133-6909**	1	SEAL-LIP TYPE	
J	2	1	**194-8355**	1	RING-BACKUP	
J	3	1	**194-8354**	1	SEAL-U-CUP	
J	4	1	**209-6009**	1	SEAL	
	5	1	**099-5572**	1	BEARING-SLEEVE	
	6	1	**099-5573**	1	RING-RETAINING	
	7	1	**194-8353**	1	HEAD	
M	8	1	**9X-2404**	12	BOLT-SOCKET HEAD (M20X2.5X90-MM)	
J	9	1	**266-7969**	1	SEAL-O-RING	
J	10	1	**114-0706**	1	RING-BACKUP	
	11	1	**234-4577**	1	CYLINDER AS	
	11A	1	**235-7770**	1	BEARING-SLEEVE	
	12	1	**234-4578**	1	ROD AS	
	12A	1	**235-7770**	1	BEARING-SLEEVE	
	13	1	**121-1548**	1	STOP	
J	14	1	**194-8356**	1	RING-SEAL	
J	15	1	**114-0711**	2	RING-BACKUP	
J	16	1	**114-0710**	1	SEAL AS	
J	17	1	**234-4574**	2	RING	
J	18	1	**114-0713**	2	RING	
	19	1	**234-4573**	1	PISTON	
M	20	1	**096-6210**	1	SETSCREW-SOCKET (M14X2X14-MM)	
	21	1	**4B-9880**	1	BALL	
	22	1	**085-8605**	1	RING-RETAINING	
J	23	1	**194-8359**	1	RING-SEAL	
	24	1	**121-1549**	1	STOP	
	25	1	**085-8604**	2	RING-RETAINING	
	26	1	**166-1494**	4	SEAL-LIP TYPE	
	27	1	**3B-8489**	1	FITTING-GREASE	
					AVAILABLE REPAIR KIT(S):	
J			**266-8016**	1	KIT-SEAL (CYLINDER) (STICK)	

J-KIT MARKED J SERVICES PART(S) MARKED J
M-METRIC PART

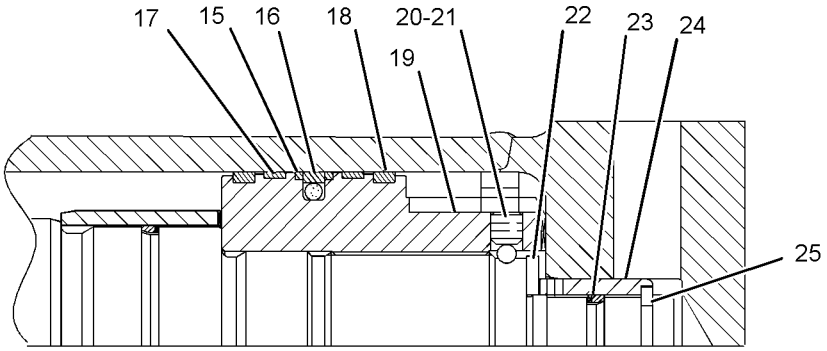

SECTION B-B

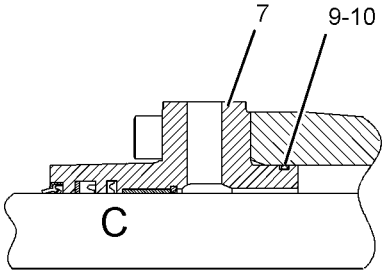

SECTION A-A

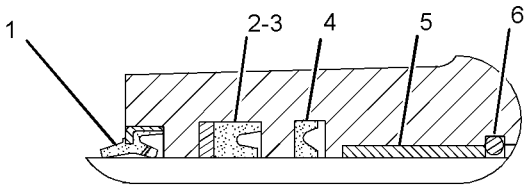

VIEW OF AREA C

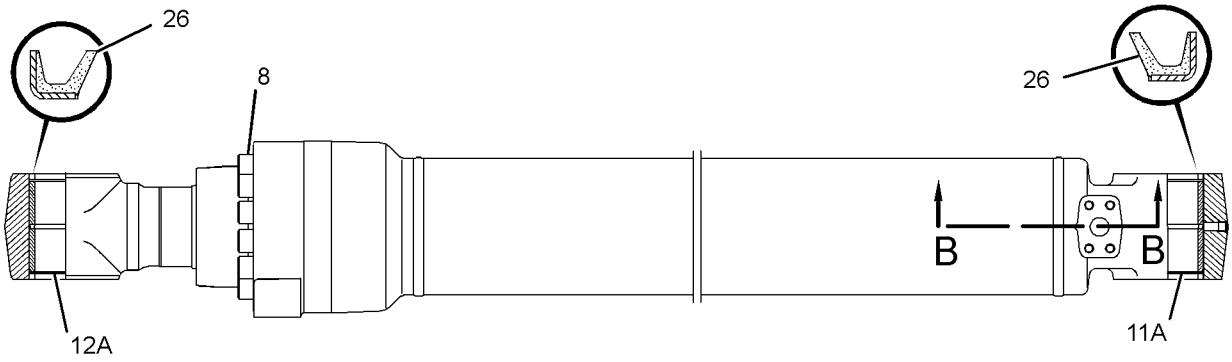

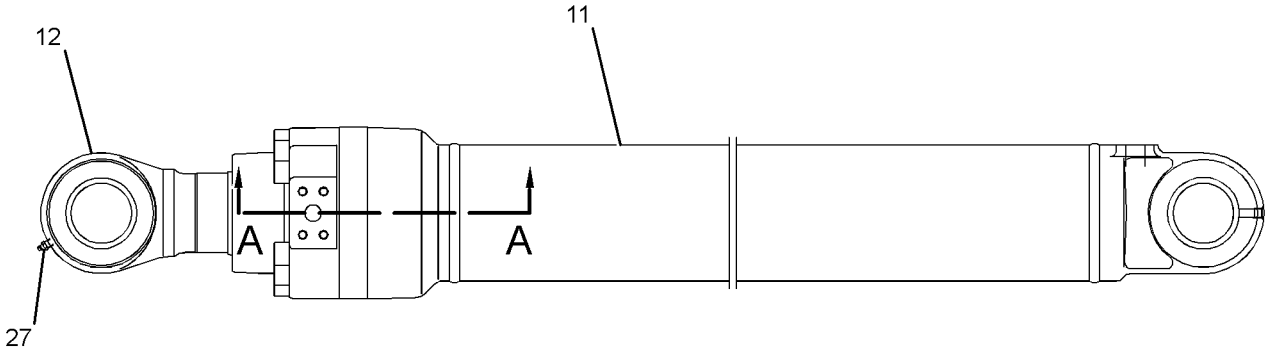

GRAPHIC #1 **<END>** g01252764

274-2477 CYLINDER AR-HYDRAULIC—COLD WEATHER, CB2-FAMILY

S/N: MNB1-UP; WDK1-UP
AN ATTACHMENT

SMCS-5104, 5456, 5458 **i02492561**

NOTE	PART NUMBER	QTY	PART NAME 1 2 3 4 5 6 (PRODUCT LEVEL)	SEE PAGE
Y	*266-7986*	1	CYLINDER & LINES GP-BOOM (LH)	453
Y	*266-7987*	1	CYLINDER & LINES GP-BOOM (RH)	453
Y	*266-7991*	1	CYLINDER & LINES GP-BUCKET	454
Y	*266-7989*	1	CYLINDER & LINES GP-STICK	456
Y-SEPARATE ILLUSTRATION				

<END>

274-2489 CYLINDER AR-HYDRAULIC—COLD WEATHER, DB-FAMILY

S/N: MNB1-UP; WDK1-UP
AN ATTACHMENT

SMCS-5104, 5456, 5458 **i02492465**

NOTE	PART NUMBER	QTY	PART NAME 1 2 3 4 5 6 (PRODUCT LEVEL)	SEE PAGE
Y	*266-7986*	1	CYLINDER & LINES GP-BOOM (LH)	453
Y	*266-7987*	1	CYLINDER & LINES GP-BOOM (RH)	453
Y	*266-8078*	1	CYLINDER & LINES GP-BUCKET (COLD WEATHER)	455
Y	*266-7989*	1	CYLINDER & LINES GP-STICK	456
Y-SEPARATE ILLUSTRATION				

<END>

HYDRAULIC SYSTEM

283-6118 CYLINDER GP-BUCKET

S/N: MNB1-UP
100-MM (3.9-IN) BORE X 939-MM (36.9-IN) STROKE
PART OF 248-7854 CYLINDER & SEAL GP-BUCKET
AN ATTACHMENT

SMCS-5457 **i02908655**

NOTE	REF NO	GRAPHIC REF	PART NUMBER	QTY	PART NAME 1 2 3 4 5 6 (PRODUCT LEVEL)	SEE PAGE
J	1	1	**9X-7298**	1	SEAL AS	
	2	1	**099-0596**	1	HEAD	
	3	1	**099-0600**	1	RING	
	4	1	**099-0700**	1	RING-RETAINING	
	5	1	**143-8023**	1	PISTON	
J	6	1	**143-8024**	1	RING	
J	7	1	**143-8025**	1	RING	
J	8	1	**143-8033**	1	RING	
M	9	1	**143-8149**	1	LOCKNUT-SPECIAL	
J	10	1	**165-9282**	1	SEAL-LIP TYPE	
J	11	1	**170-9840**	1	SEAL-BUFFER	
J	12	1	**170-9856**	1	SEAL-U-CUP	
R	13	1	**170-9938**	1	CYLINDER AS	
	13A	1	**229-1009**	1	BEARING-SLEEVE	
	14	1	**283-6119**	1	ROD AS	
	14A	1	**248-7857**	1	BEARING-SLEEVE	
J	15	1	**095-1625**	1	SEAL-O-RING	
J	16	1	**096-1055**	1	RING	
J	17	1	**099-0699**	1	RING-BACKUP	
	18	1	**114-0754**	1	BEARING-SLEEVE	
J	19	1	**6V-8467**	1	SEAL-O-RING	
					AVAILABLE REPAIR KIT(S):	
J			**170-9941**	1	KIT-SEAL (BUCKET CYLINDER)	

J-KIT MARKED J SERVICES PARTS MARKED J
M-METRIC PART
R-REMFG PART MAY BE AVAILABLE

283-6118 CYLINDER GP-BUCKET *(contd.)* **i02908655**

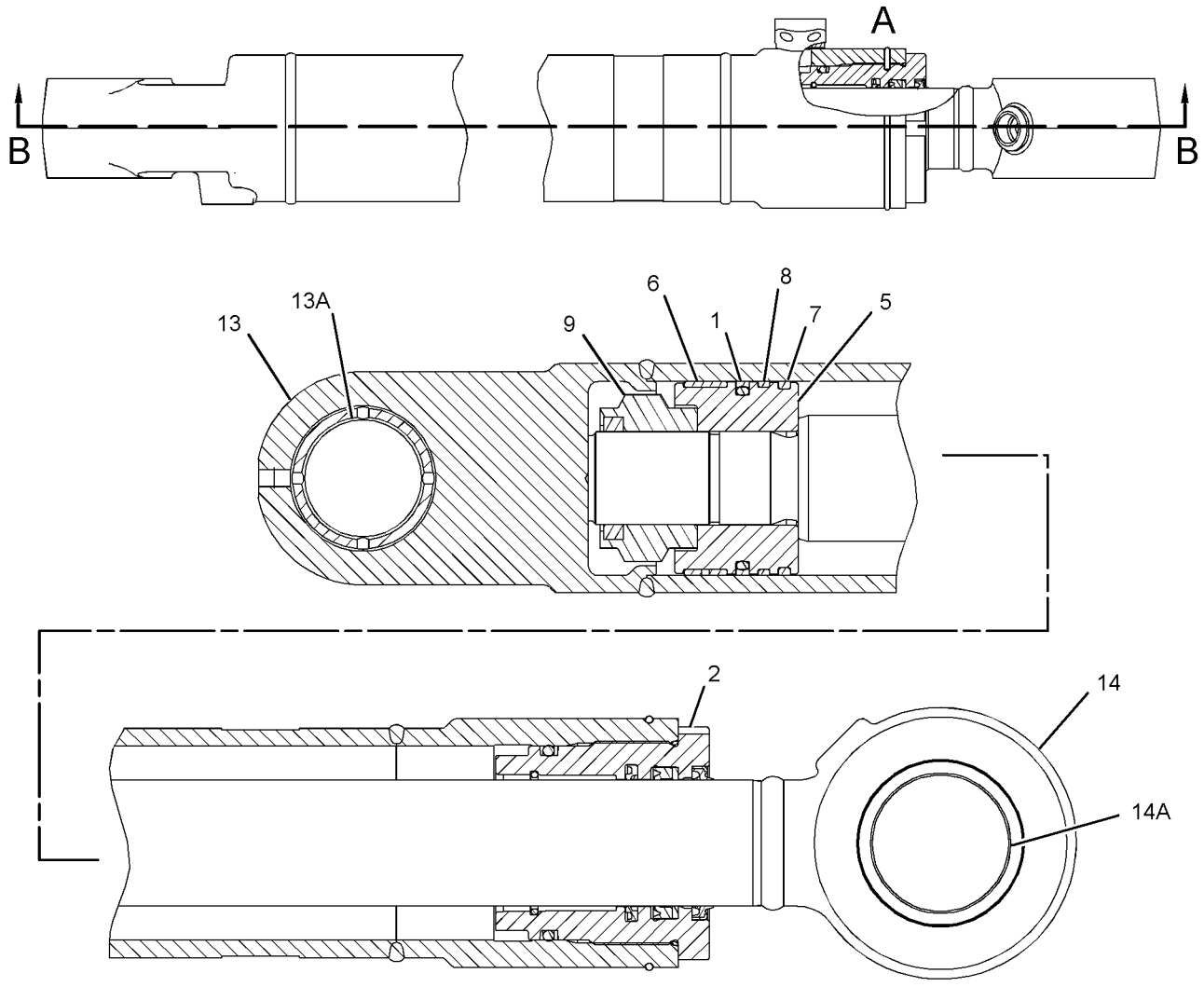

SECTION B-B

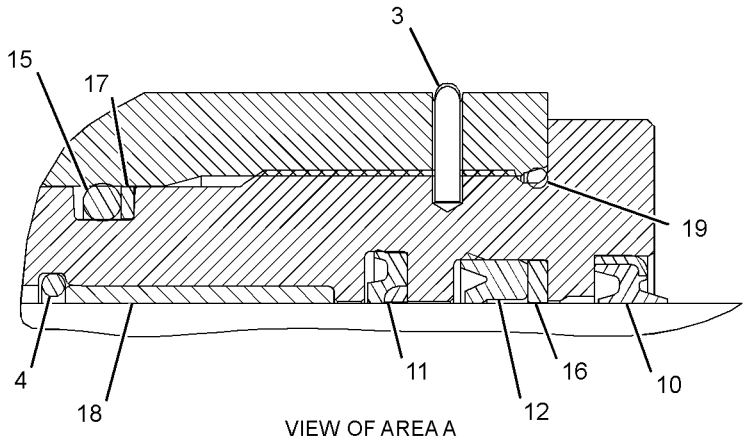

VIEW OF AREA A

GRAPHIC #1 **<END>** g01447773

HYDRAULIC SYSTEM

315-4442 CYLINDER GP-BUCKET

S/N: MNB1-UP; WDK1-UP
150-MM (5.9-IN) BORE X 1151-MM (45.3-IN) STROKE
PART OF 225-4580 CYLINDER & SEAL GP-BUCKET
AN ATTACHMENT

SMCS-5457 **i03030195**

NOTE	REF NO	GRAPHIC REF	PART NUMBER	QTY	PART NAME 1 2 3 4 5 6 (PRODUCT LEVEL)	SEE PAGE
	1	1	**7Y-4660**	1	HEAD	
J	2	1	**7Y-4669**	1	RING-BACKUP	
M	3	1	**7Y-4695**	1	LOCKNUT (M80X2-THD)	
J	4	1	**9X-3601**	1	SEAL AS	
J	5	1	**128-9265**	1	SEAL-BUFFER	
	6	1	**188-4216**	1	PISTON	
J	7	1	**188-4218**	1	RING	
	8	1	**242-6787**	1	ROD AS	
	8A	1	**228-5617**	1	BEARING-SLEEVE	
	9	1	**315-4443**	1	CYLINDER AS-HYDRAULIC	
	9A	1	**235-7770**	1	BEARING-SLEEVE	
	10	1	**7Y-4672**	1	RING-RETAINING	
J	11	1	**165-9290**	1	SEAL-LIP TYPE	
J	12	1	**170-9864**	1	SEAL-U-CUP	
J	13	1	**188-4217**	2	RING	
J	14	1	**095-1633**	1	SEAL-O-RING	
	15	1	**114-0760**	1	BEARING-SLEEVE	
J	16	1	**7Y-4673**	1	RING-BACKUP	
M	17	1	**7Y-5215**	8	BOLT-SOCKET HEAD (M24X3X90-MM)	
					AVAILABLE REPAIR KIT(S):	
J			**191-5619**	1	KIT-SEAL (BUCKET CYLINDER)	
					(ALSO INCLUDES RING SEAL)	

J-KIT MARKED J SERVICES PARTS MARKED J
M-METRIC PART

315-4442 CYLINDER GP-BUCKET *(contd.)* **i03030195**

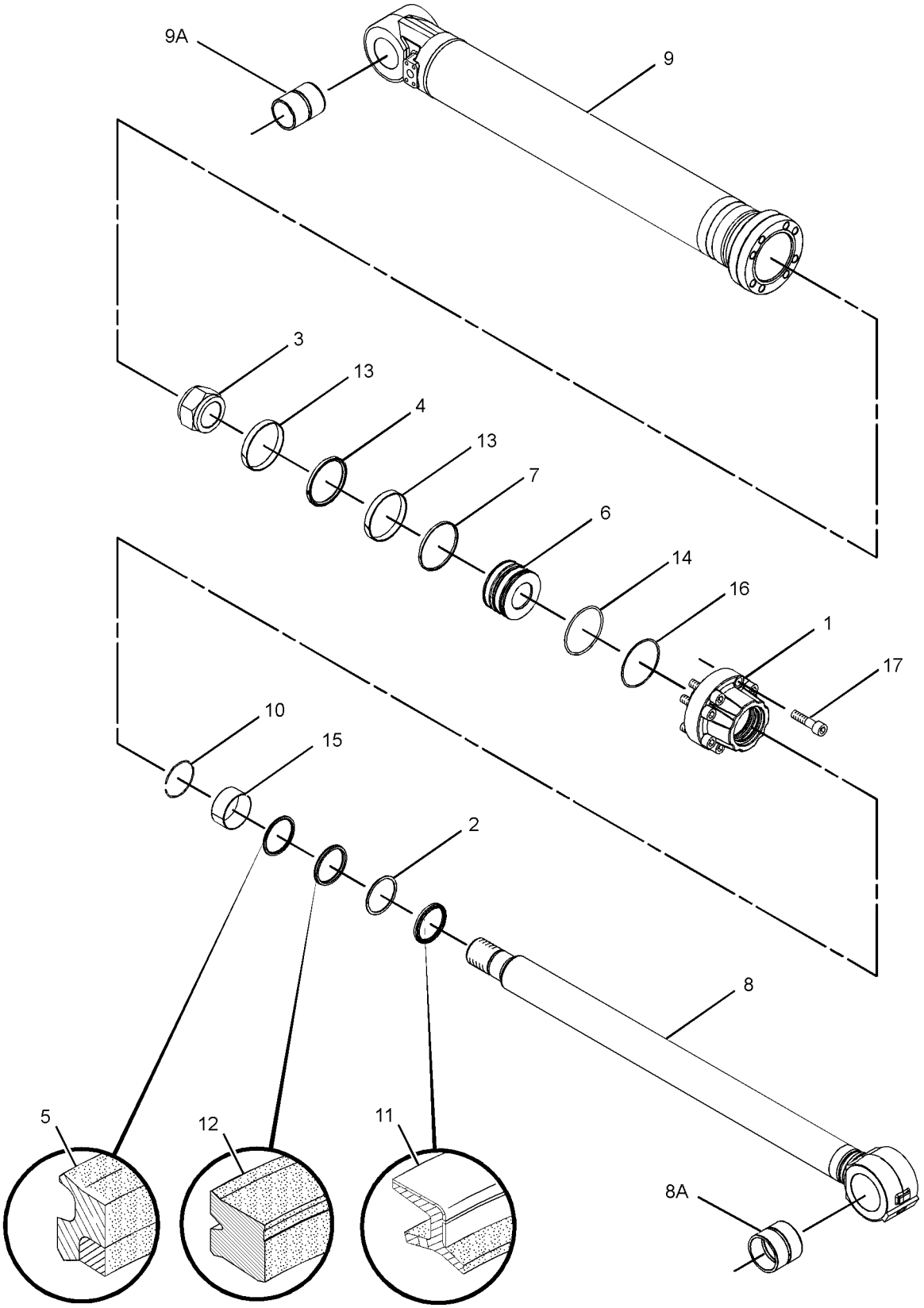

GRAPHIC #1 **<END>** g01611675

HYDRAULIC SYSTEM

315-4449 CYLINDER GP-BUCKET

S/N: MNB1-UP; WDK1-UP
150-MM (5.9-IN) BORE X 1151-MM (45.3-IN) STROKE
PART OF 225-4601 CYLINDER & SEAL GP-BUCKET
AN ATTACHMENT

SMCS-5457 **i03087660**

NOTE	REF NO	GRAPHIC REF	PART NUMBER	QTY	PART NAME 1 2 3 4 5 6 (PRODUCT LEVEL)	SEE PAGE
	1	1	**7Y-4660**	1	HEAD	
J	2	1	**7Y-4669**	1	RING-BACKUP	
M	3	1	**7Y-4695**	1	LOCKNUT (M80X2-THD)	
J	4	1	**9X-3601**	1	SEAL AS	
J	5	1	**128-9265**	1	SEAL-BUFFER	
	6	1	**188-4216**	1	PISTON	
J	7	1	**188-4218**	1	RING	
	8	1	**242-6787**	1	ROD AS	
	8A	1	**228-5617**	1	BEARING-SLEEVE	
	9	1	**315-4443**	1	CYLINDER AS-HYDRAULIC	
	9A	1	**235-7770**	1	BEARING-SLEEVE	
	10	1	**7Y-4672**	1	RING-RETAINING	
J	11	1	**133-6813**	1	SEAL-LIP TYPE	
J	12	1	**188-4217**	2	RING	
J	13	1	**095-1633**	1	SEAL-O-RING	
	14	1	**114-0760**	1	BEARING-SLEEVE	
J	15	1	**167-2332**	1	SEAL-U-CUP	
J	16	1	**7Y-4673**	1	RING-BACKUP	
M	17	1	**7Y-5215**	8	BOLT-SOCKET HEAD (M24X3X90-MM)	
					AVAILABLE REPAIR KIT(S):	
J			**250-2475**	1	KIT-SEAL (BUCKET CYLINDER)	
					(ALSO INCLUDES RING-SEAL)	

J-KIT MARKED J SERVICES PART(S) MARKED J
M-METRIC PART

315-4449 CYLINDER GP-BUCKET *(contd.)* **i03087660**

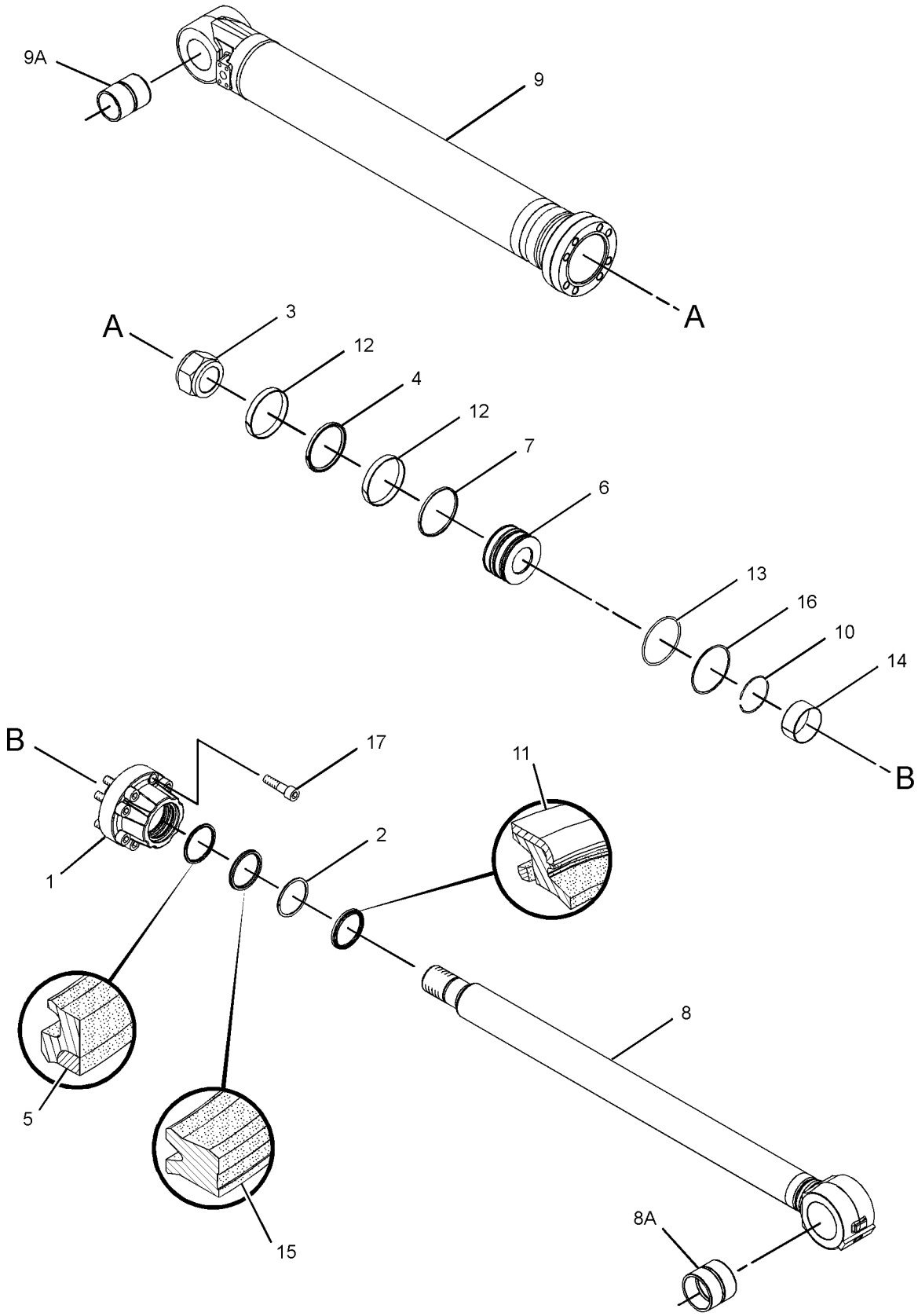

GRAPHIC #1 **<END>** g01580054

HYDRAULIC SYSTEM

315-4450 CYLINDER GP-BUCKET

S/N: MNB1-UP; WDK1-UP
150-MM (5.9-IN) BORE X 1151-MM (88.7-IN) STROKE
PART OF 266-8079 CYLINDER & SEAL GP-BUCKET
AN ATTACHMENT

SMCS-5457 **i03024504**

NOTE	REF NO	GRAPHIC REF	PART NUMBER	QTY	PART NAME 1 2 3 4 5 6 (PRODUCT LEVEL)	SEE PAGE
	1	1	**7Y-4660**	1	HEAD	
J	2	1	**7Y-4669**	1	RING-BACKUP	
M	3	1	**7Y-4695**	1	LOCKNUT (M80X2-THD)	
J	4	1	**9X-3601**	1	SEAL AS	
	5	1	**188-4216**	1	PISTON	
J	6	1	**188-4218**	1	RING	
	7	1	**242-6787**	1	ROD AS	
	7A	1	**228-5617**	1	BEARING-SLEEVE	
J	8	1	**259-0733**	1	SEAL-U-CUP	
J	9	1	**266-7956**	1	SEAL-BUFFER	
J	10	1	**266-7959**	1	SEAL-O-RING	
	11	1	**315-4443**	1	CYLINDER AS-HYDRAULIC	
	11A	1	**235-7770**	1	BEARING-SLEEVE	
	12	1	**7Y-4672**	1	RING-RETAINING	
J	13	1	**165-9290**	1	SEAL-LIP TYPE	
J	14	1	**188-4217**	2	RING	
	15	1	**114-0760**	1	BEARING-SLEEVE	
J	16	1	**7Y-4673**	1	RING-BACKUP	
M	17	1	**7Y-5215**	8	BOLT-SOCKET HEAD (M24X3X90-MM)	
					AVAILABLE REPAIR KIT(S):	
J			**259-0743**	1	KIT-SEAL (BUCKET CYLINDER)	

J-KIT MARKED J SERVICES PARTS MARKED J
M-METRIC PART

315-4450 CYLINDER GP-BUCKET *(contd.)* **i03024504**

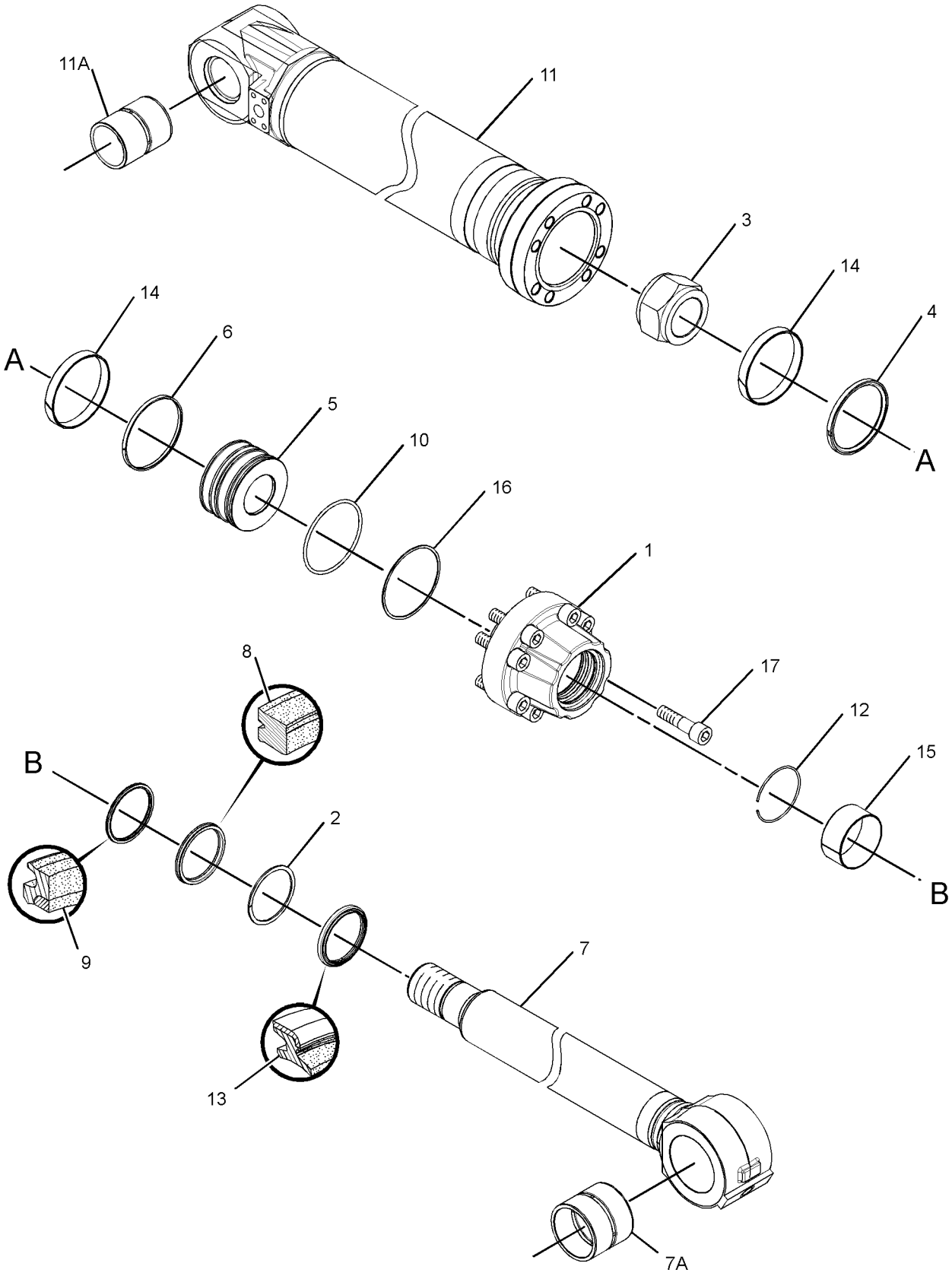

GRAPHIC #1 **<END>** g01619893

HYDRAULIC SYSTEM

216-6607 CYLINDER GP-STICK

S/N: MNB1-UP
150-MM (6-IN) BORE X 1870-MM (74.8-IN) STROKE
PART OF 216-6606 CYLINDER & SEAL GP-STICK
FOR USE WITH 60 FT LONG REACH MACHINE
AN ATTACHMENT

SMCS-5458 **i03206366**

NOTE	REF NO	GRAPHIC REF	PART NUMBER	QTY	PART NAME 1 2 3 4 5 6 (PRODUCT LEVEL)	SEE PAGE
	1	1	**7Y-4660**	1	HEAD	
J	2	1	**7Y-4669**	1	RING-BACKUP	
	3	1	**7Y-4672**	1	RING-RETAINING	
M	4	1	**7Y-4695**	1	LOCKNUT (M80X2-THD)	
J	5	1	**9X-3601**	1	SEAL AS	
J	6	1	**167-2217**	1	SEAL AS-BUFFER	
J	7	1	**188-4217**	2	RING	
J	8	1	**188-4218**	1	RING	
	9	1	**216-6608**	1	CYLINDER GP-STICK	
		1	**186-5477**	1	BEARING-SLEEVE	
J	10	1	**5I-8516**	1	RING-SEAL	
J	11	1	**170-9864**	1	SEAL-U-CUP	
J	12	1	**165-9290**	1	SEAL-LIP TYPE	
	13	1	**188-4216**	1	PISTON	
	14	1	**216-6613**	1	ROD AS	
	14A	1	**186-5477**	1	BEARING-SLEEVE	
	15	1	**095-0929**	2	RING-RETAINING	
J	16	1	**095-1633**	1	SEAL-O-RING	
	17	1	**103-8378**	1	RING-RETAINING	
	18	1	**103-8379**	1	RING	
	19	1	**103-8380**	1	STOP	
	20	1	**114-0760**	1	BEARING-SLEEVE	
J	21	1	**7Y-4673**	1	RING-BACKUP	
	22	1	**7Y-4918**	1	STOP	
M	23	1	**7Y-5215**	8	BOLT-SOCKET HEAD (M24X3X90-MM)	
					AVAILABLE REPAIR KIT(S):	
J			**191-5619**	1	KIT-SEAL	

J-KIT MARKED J SERVICES PART(S) MARKED J
M-METRIC PART

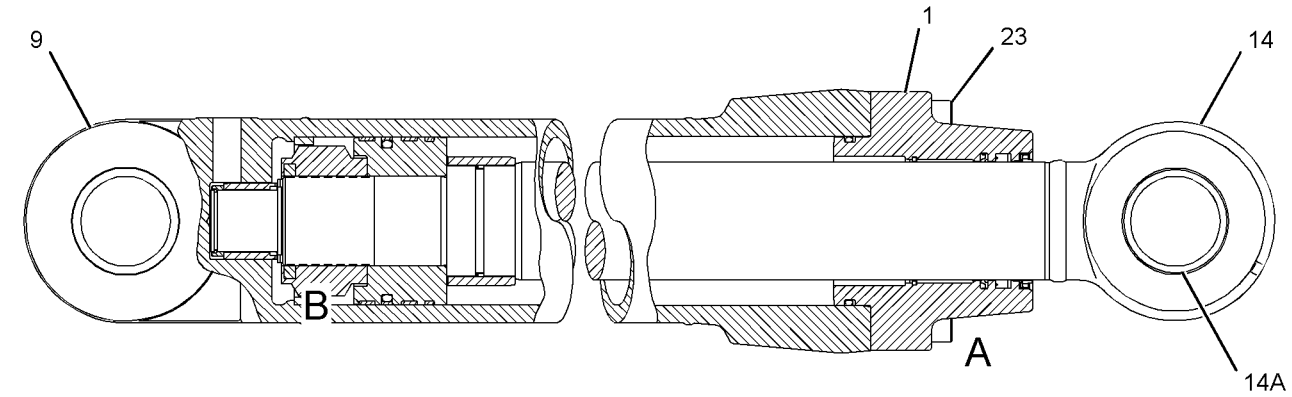

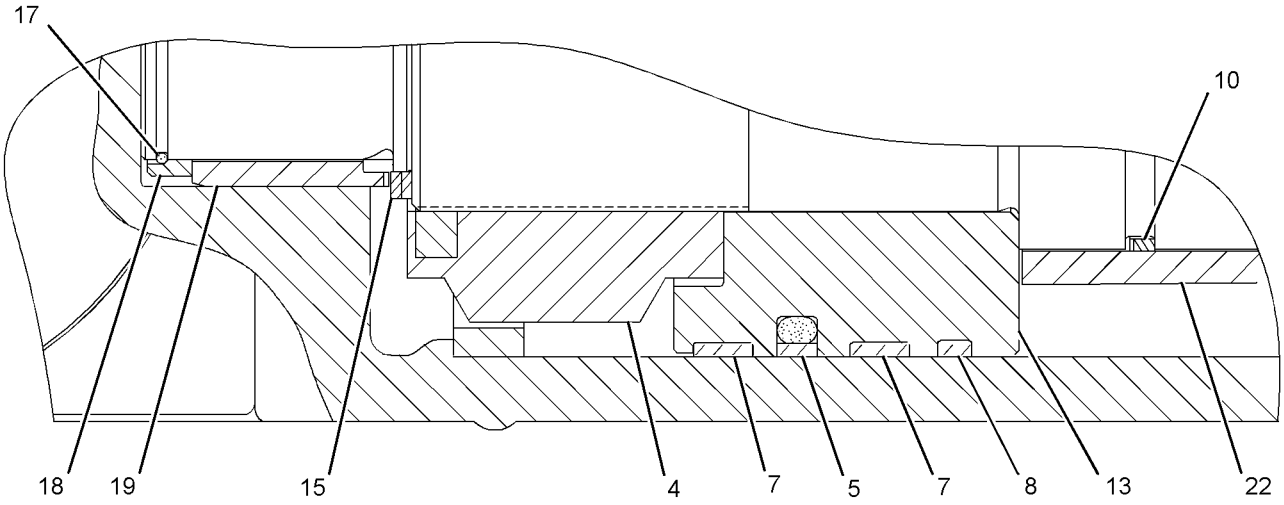

VIEW OF AREA B

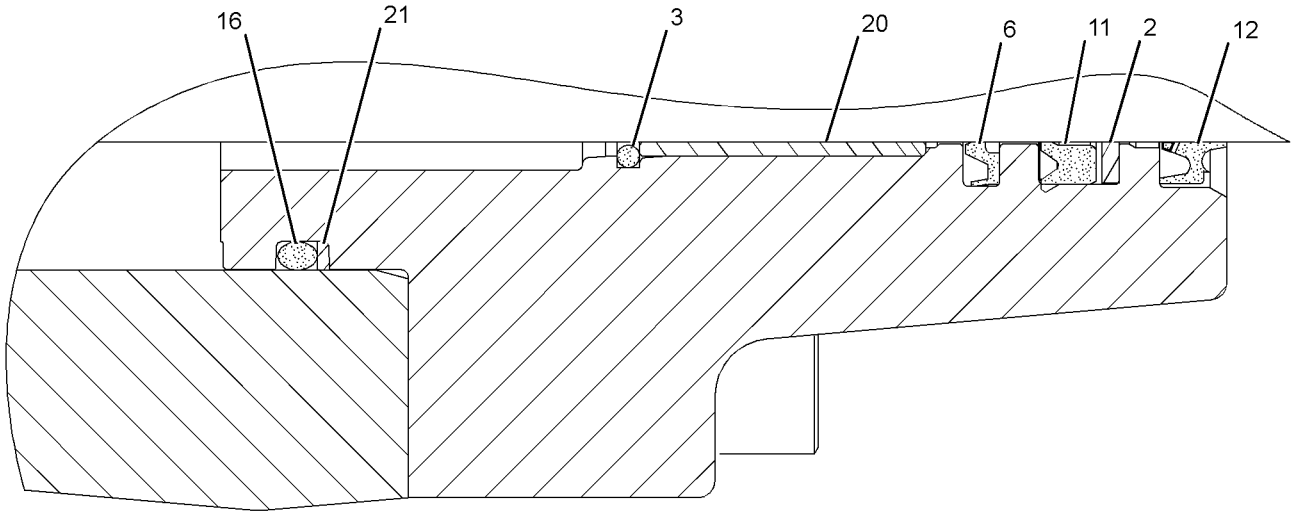

VIEW OF AREA A

GRAPHIC #1 **<END>** g01246956

HYDRAULIC SYSTEM

259-0778 CYLINDER GP-STICK

S/N: MNB1-UP; WDK1-UP
150-MM (5.9-IN) BORE X 1646-MM (64.8-IN) STROKE
PART OF 259-0777 CYLINDER & LINES GP-STICK
AN ATTACHMENT

SMCS-5458 **i02349095**

NOTE	REF NO	GRAPHIC REF	PART NUMBER	QTY	PART NAME 1 2 3 4 5 6 (PRODUCT LEVEL)	SEE PAGE
J	1	1	**133-6909**	1	SEAL-LIP TYPE	
J	2	1	**194-8355**	1	RING-BACKUP	
J	3	1	**194-8354**	1	SEAL-U-CUP	
J	4	1	**209-6009**	1	SEAL	
	5	1	**099-5572**	1	BEARING-SLEEVE	
	6	1	**099-5573**	1	RING-RETAINING	
	7	1	**194-8353**	1	HEAD	
M	8	1	**9X-2404**	12	BOLT-SOCKET HEAD (M20X2.5X90-MM)	
J	9	1	**095-1723**	1	SEAL-O-RING	
J	10	1	**114-0706**	1	RING-BACKUP	
	11	1	**234-4578**	1	ROD AS	
	11A	1	**235-7770**	1	BEARING-SLEEVE	
	12	1	**234-4577**	1	CYLINDER AS	
	12A	1	**235-7770**	1	BEARING-SLEEVE	
	13	1	**121-1548**	1	STOP	
J	14	1	**231-6805**	1	RING-SEAL	
J	15	1	**114-0711**	2	RING-BACKUP	
J	16	1	**114-0710**	1	SEAL AS	
J	17	1	**234-4574**	2	RING	
J	18	1	**114-0713**	2	RING	
	19	1	**234-4573**	1	PISTON	
M	20	1	**096-6210**	1	SETSCREW-SOCKET (M14X2X14-MM)	
	21	1	**4B-9880**	1	BALL	
	22	1	**085-8605**	1	RING-RETAINING	
J	23	1	**194-8359**	1	RING-SEAL	
	24	1	**121-1549**	1	STOP	
	25	1	**085-8604**	2	RING-RETAINING	
	26	1	**166-1494**	4	SEAL-LIP TYPE	
	27	1	**3B-8489**	1	FITTING-GREASE	
					AVAILABLE REPAIR KIT(S):	
J			**259-0779**		KIT-SEAL (BOOM CYLINDER)	

J-KIT MARKED J SERVICES PART(S) MARKED J
M-METRIC PART

259-0778 CYLINDER GP-STICK *(contd.)* **i02349095**

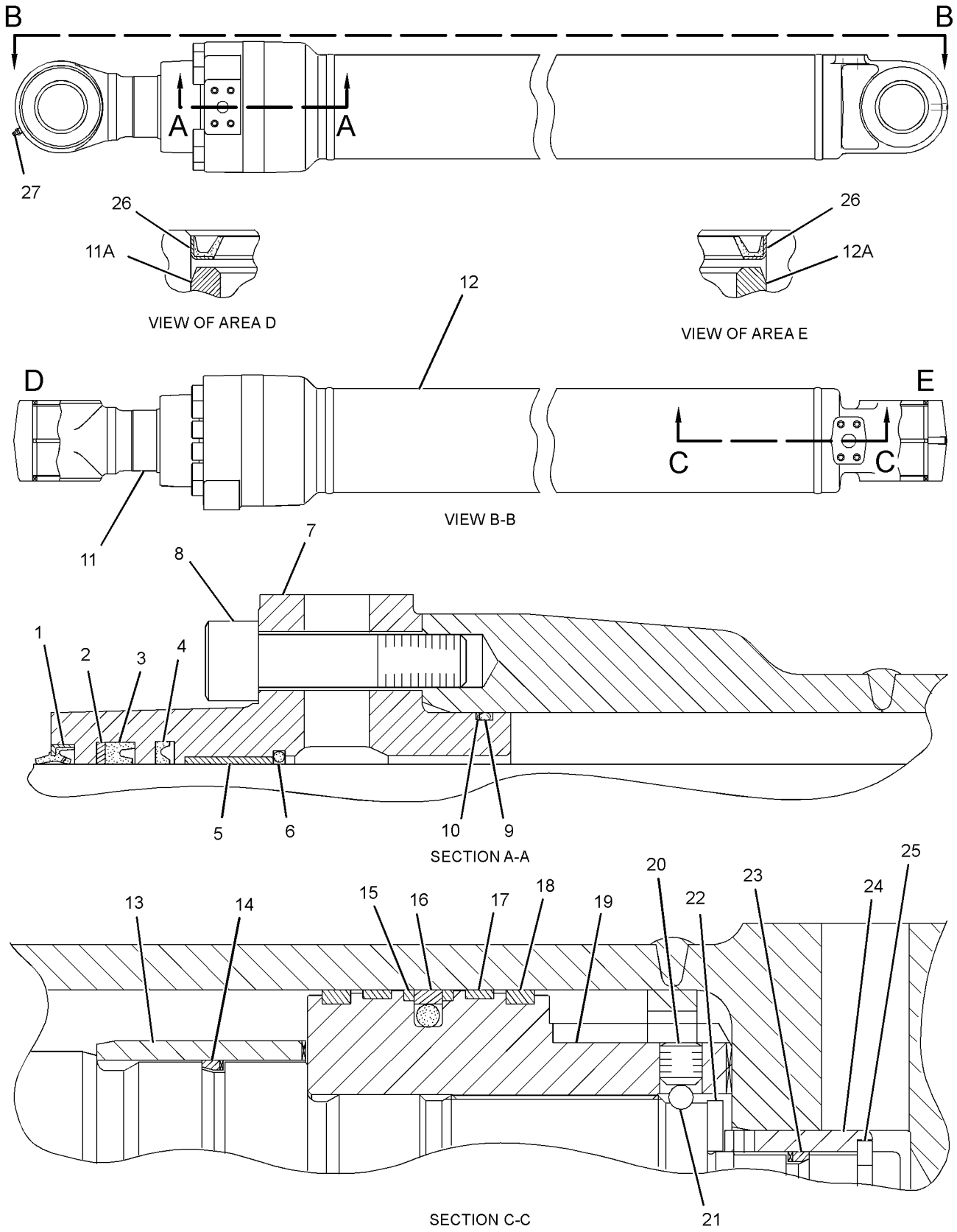

GRAPHIC #1 **<END>** g01191152

HYDRAULIC SYSTEM

191-2693 DRIVE GP-SWING—WITHOUT MOTOR

S/N: MNB1-UP; WDK1-UP

PART OF 199-4487 DRIVE GP-SWING

SMCS-5459 **i03206370**

NOTE	REF NO	GRAPHIC REF	PART NUMBER	QTY	PART NAME 1 2 3 4 5 6 (PRODUCT LEVEL)	SEE PAGE
	1	1	**4I-7466**	4	GEAR-PLANETARY (23-TEETH)	
C	2	1	**227-6221**	1	BREATHER AS (SWING DRIVE)	
	2A	1	**4H-6112**	1	BREATHER (SWING DRIVE)	
	2B	1	**227-6215**	1	BOSS	
	2C	1	**267-6785**	1	PIPE	
	3	1	**6V-7238**	1	VALVE-SHUTOFF (HYDRAULIC OIL)	
	4	1	**7I-7728**	1	CARRIER-PLANETARY	
	5	1	**7Y-0225**	3	SHAFT-PLANETARY	
	6	1	**7Y-1434**	2	SPACER (40X69.5X6-MM THK)	
	7	1	**093-1730**	2	RING-RETAINING	
	8	1	**093-1731**	1	RING-RETAINING	
	9	1	**094-0611**	6	WASHER (47.3X76X1-MM THK)	
M	10	1	**094-1528**	8	WASHER (53X84X1-MM THK)	
	11	1	**136-2940**	1	BEARING	
	12	1	**096-2653**	1	RING-RETAINING	
	13	1	**136-2904**	1	BEARING	
	14	1	**114-1383**	4	SHAFT-PLANETARY	
	15	1	**114-1398**	1	GAUGE-OIL LEVEL (SWING DRIVE)	
	16	1	**114-1399**	1	PIPE-GAUGE	
	17	1	**114-1401**	1	COVER-HOUSING	
	18	1	**191-2696**	1	CAGE	
	19	1	**135-9044**	2	SEAL-LIP TYPE	
	20	1	**169-5617**	1	GEAR-SUN (18-TEETH)	
	21	1	**169-5618**	3	GEAR-PLANETARY (27-TEETH)	
	22	1	**191-2579**	1	CARRIER-PLANETARY	
	23	1	**171-9280**	1	GEAR-RING (72-TEETH)	
	24	1	**191-2694**	1	SHAFT-PINION	
	25	1	**191-2695**	1	HOUSING	
	26	1	**171-9283**	1	GEAR-SUN (24-TEETH)	
	27	1	**171-9375**	1	SEAL-O-RING	
	28	1	**191-2697**	1	SPACER (110X140X90.1-MM THK)	
	29	1	**095-0891**	7	PIN-SPRING	
	30	1	**3K-0360**	1	SEAL-O-RING	
	31	1	**8J-8879**	1	SEAL-O-RING	
	32	1	**7Y-0252**	3	BEARING AS-ROLLER	
	33	1	**191-2513**	8	BEARING AS-ROLLER	
M	34	1	**8T-4183**	8	BOLT (M12X1.75X40-MM)	
	35	1	**8T-4223**	8	WASHER-HARD (13.5X25.5X3-MM THK)	
M	36	1	**8T-6385**	16	BOLT (M16X2X180-MM)	
	37	1	**9X-8257**	16	WASHER (17.5X30X3.5-MM THK)	
B	38	1	**1U-8846**		SEALANT-GASKET	

B-USE AS REQUIRED
C-CHANGE FROM PREVIOUS TYPE
M-METRIC PART

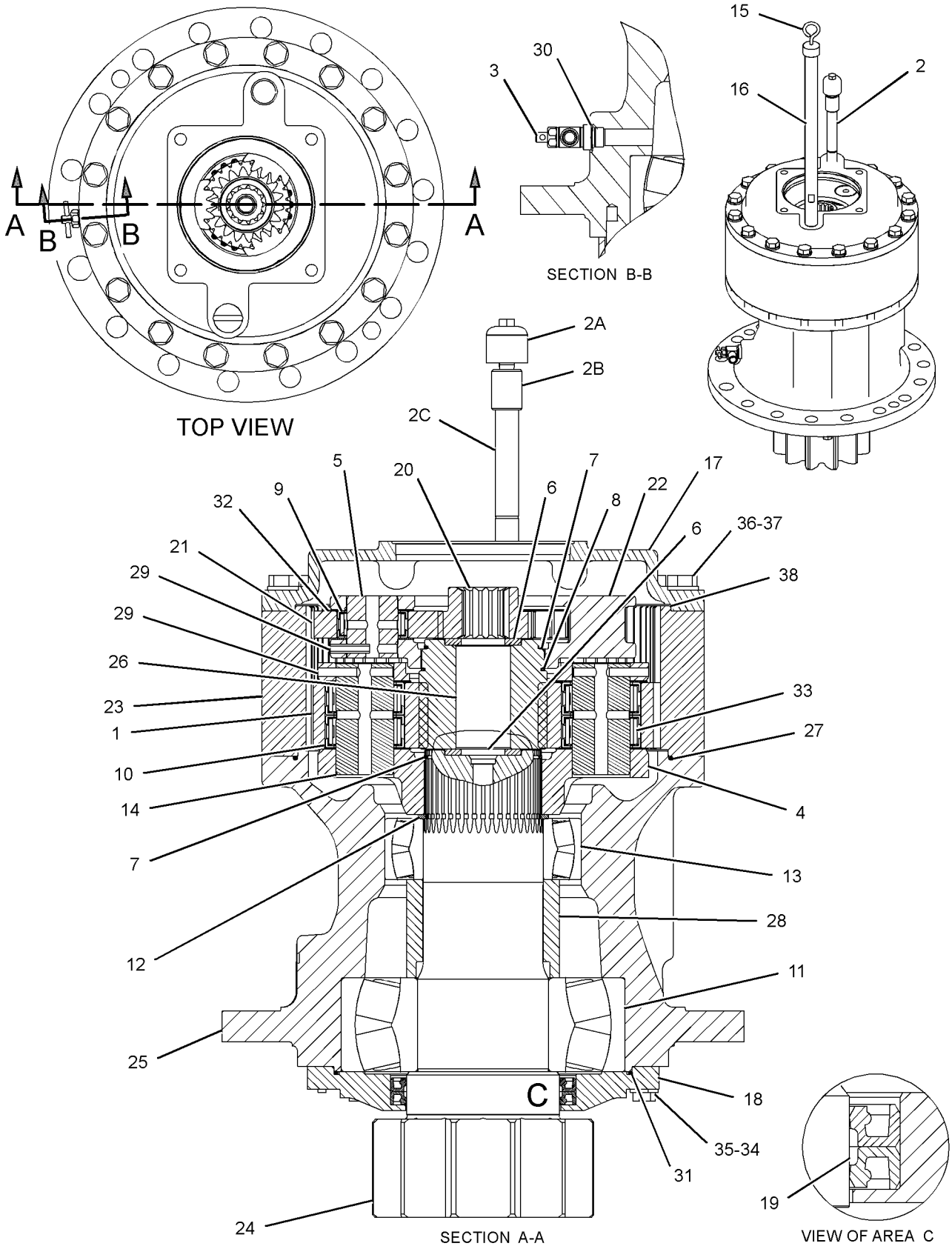

GRAPHIC #1

<END>

g01246939

HYDRAULIC SYSTEM

199-4487 DRIVE GP-SWING

S/N: MNB1-UP; WDK1-UP

PART OF 171-9410 POWER TRAIN AR

SMCS-5459 **i01541252**

NOTE	REF NO	GRAPHIC REF	PART NUMBER	QTY	PART NAME 1 2 3 4 5 6 (PRODUCT LEVEL)	SEE PAGE
Y	1	1	*191-2693*	1	DRIVE GP-SWING (WITHOUT MOTOR)	494
Y	2	1	*179-9774*	1	MOTOR & MTG GP-SWING	700

Y-SEPARATE ILLUSTRATION

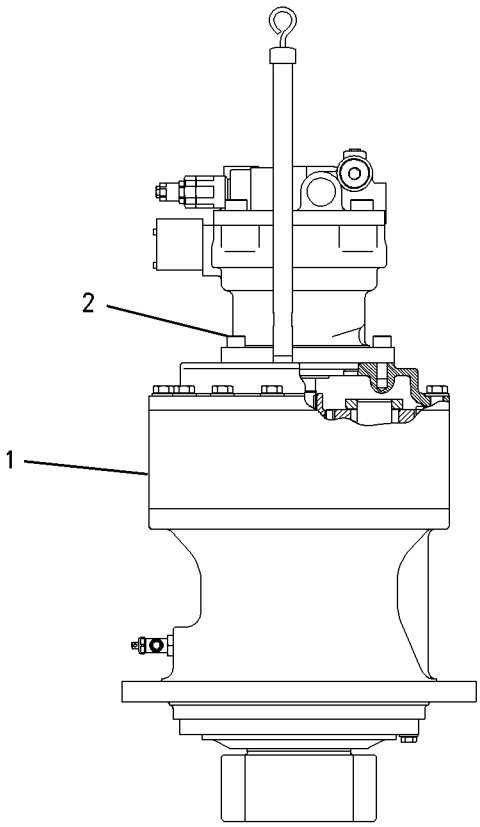

RIGHT SIDE VIEW

GRAPHIC #1 **<END>** g00801439

HYDRAULIC SYSTEM

171-9412 FASTENER GP-SWING & FINAL DR

S/N: MNB1-UP; WDK1-UP

PART OF 171-9410 POWER TRAIN AR

SMCS-4050, 5459 **i02097845**

NOTE	REF NO	GRAPHIC REF	PART NUMBER	QTY	PART NAME 1 2 3 4 5 6 (PRODUCT LEVEL)	SEE PAGE
M	1	2	**8T-4141**	40	BOLT (M20X2.5X70-MM)	
M	2	2	**7X-2576**	16	BOLT (M24X3X70-MM)	
	3	2	**8T-4123**	40	WASHER (22X35X3.5-MM THK)	
	4	2	**8T-4167**	16	WASHER-HARD (26X44X4-MM THK)	
	5	2	**096-4755**	1	PIN	
B	6	2	**1U-8846**		SEALANT-GASKET	
	8	2	**2B-7561**	2	CORK	
E	9	2	**5P-0767**		HOSE (90-CM)	
	10	2	**5D-1026**	1	CLAMP-HOSE	

B-USE AS REQUIRED
E-ORDER BY THE CENTIMETER
M-METRIC PART

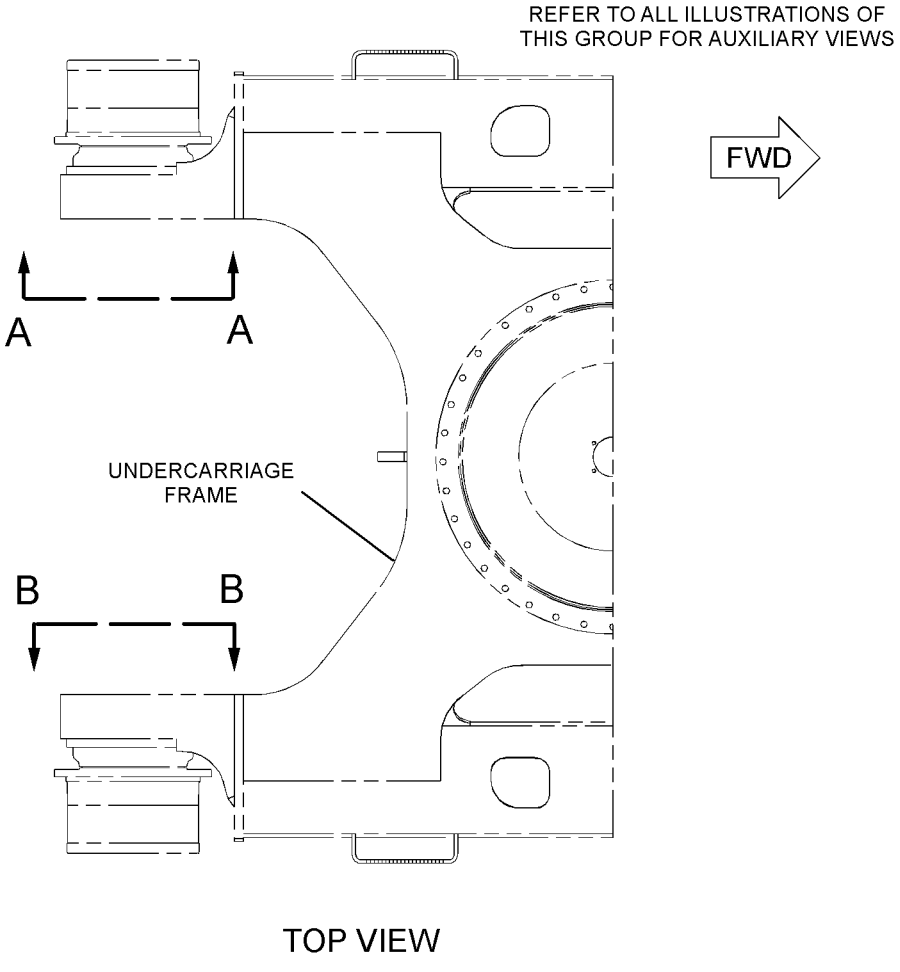

TOP VIEW

GRAPHIC #1 g01078989

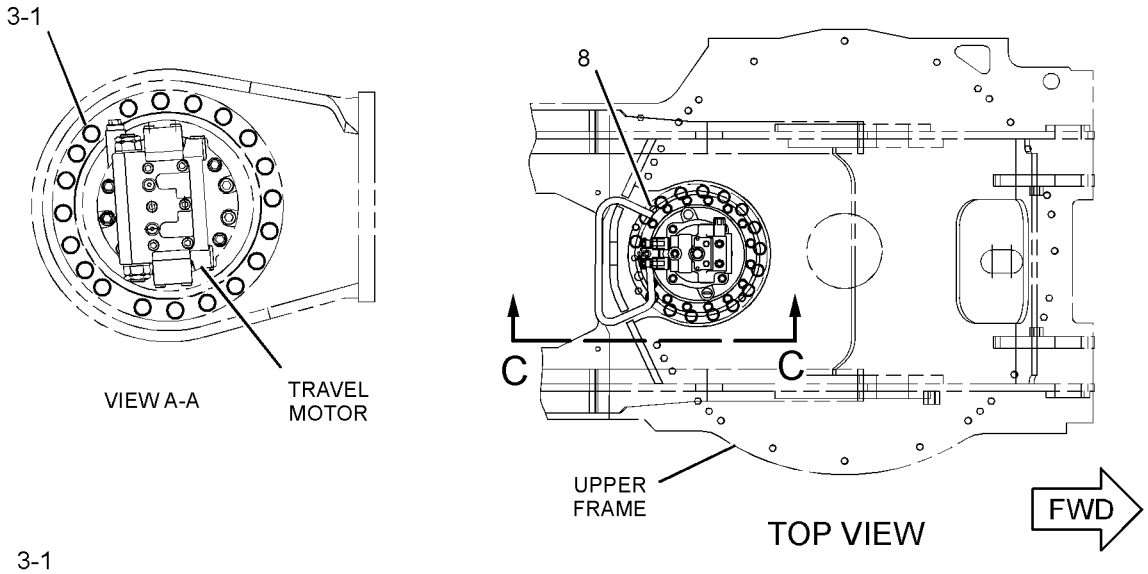

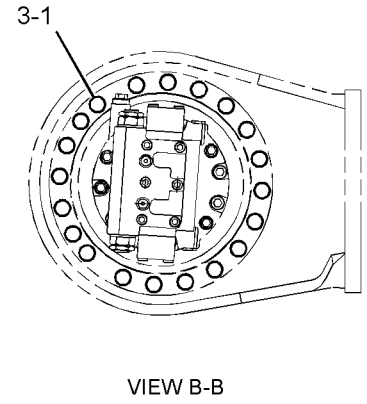

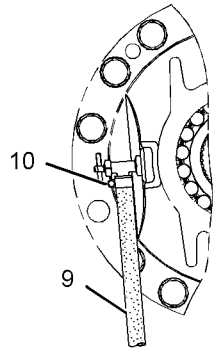

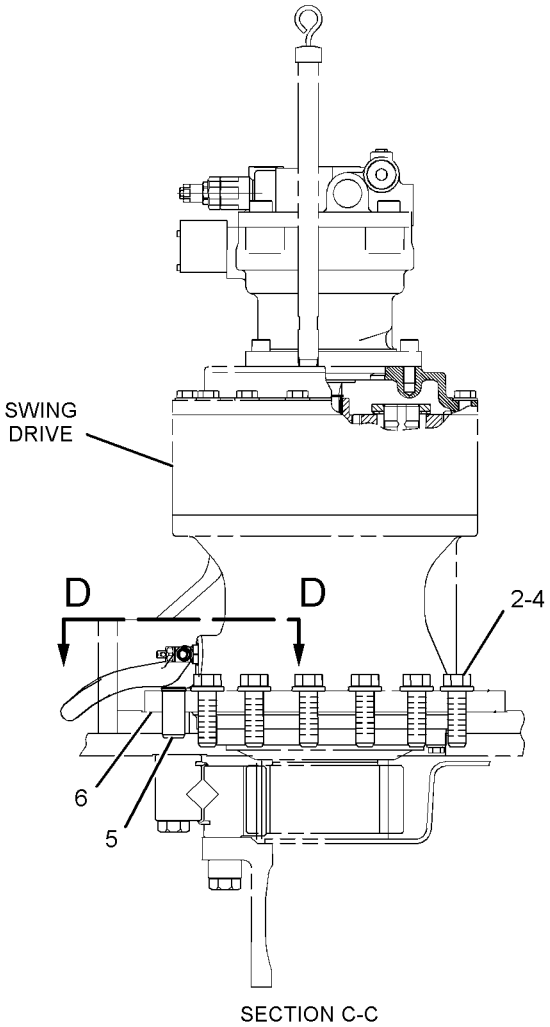

GRAPHIC #2 **<END>** g01078987

158-8987 FILTER & VALVE GP-PILOT–HYDRAULIC OIL

S/N: MNB1-UP; WDK1-UP

PART OF 227-0566 TANK & FILTER GP-HYDRAULIC

SMCS-5072, 5092 **i03215762**

NOTE	REF NO	GRAPHIC REF	PART NUMBER	QTY	PART NAME 1 2 3 4 5 6 (PRODUCT LEVEL)	SEE PAGE
C	1	1	**5I-8670**	1	FILTER-OIL (ADVANCED EFFICIENCY) (HYDRAULIC)	
C	2	1	**215-4909**	1	VALVE GP-PILOT RELIEF (HYDRAULIC FILTER)	
	2A	1	**095-1584**	1	SEAL-O-RING	
	2B	1	**095-1590**	1	SEAL-O-RING	
	2C	1	**095-1596**	1	SEAL-O-RING	

C-CHANGE FROM PREVIOUS TYPE

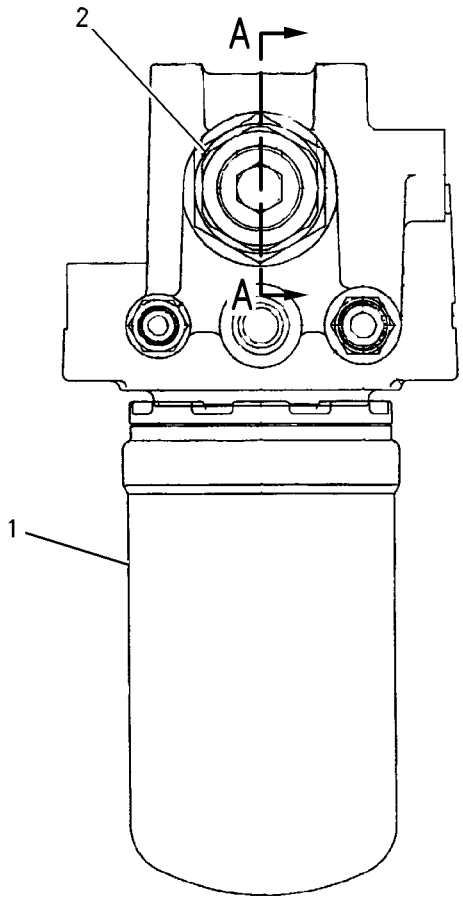

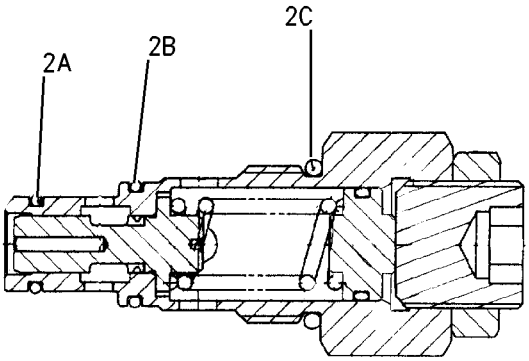

SECTION A–A

GRAPHIC #1 **<END>** g00842119

HYDRAULIC SYSTEM

247-7390 FILTER AR-HYDRAULIC—HAMMER

S/N: MNB1-UP; WDK1-UP

AN ATTACHMENT

SMCS-5068 **i02453505**

NOTE	PART NUMBER	QTY	PART NAME 1 2 3 4 5 6 (PRODUCT LEVEL)	SEE PAGE
Y	*255-1799*	1	LINES GP-FRONT	604
Y	*251-0442*	1	WIRING GP-HAMMER (RETURN FILTER)	315

Y-SEPARATE ILLUSTRATION

<END>

188-4140 FILTER GP-OIL—HYDRAULIC RETURN

S/N: MNB1-UP; WDK1-UP

PART OF 227-0566 TANK & FILTER GP-HYDRAULIC

SMCS-3004, 4295, 431F, 5068, 5091, 5092 **i01518789**

NOTE	REF NO	GRAPHIC REF	PART NUMBER	QTY	PART NAME 1 2 3 4 5 6 (PRODUCT LEVEL)	SEE PAGE
Y	1	1	**173-3503**	1	BASE GP-OIL FILTER (HYDRAULIC)	446
	2	1	**129-8034**	1	VALVE AS-BYPASS	
	3	1	**123-2003**	2	SEAL-O-RING	
	4	1	**173-3507**	1	HOUSING AS	
M	5	1	**8T-4194**	8	BOLT (M12X1.75X50-MM)	
	6	1	**8T-4223**	8	WASHER-HARD (13.5X25.5X3-MM THK)	
Y	7	1	**188-4142**	1	FILTER GP-OIL (HYDRAULIC RETURN)	503
	8	1	**173-3510**	1	COVER	
	9	1	**173-3518**	1	INDICATOR AS (HYDRAULIC RETURN FILTER)	
	10	1	**159-7784**	1	SEAL-O-RING	
M	11	1	**6V-4298**	4	BOLT (M5X0.8X16-MM)	
	12	1	**8T-0328**	4	WASHER-HARD (5.5X10X1-MM THK)	
M	13	1	**8T-6693**	4	SCREW-MACHINE (M5X0.8X16-MM)	

M-METRIC PART
Y-SEPARATE ILLUSTRATION

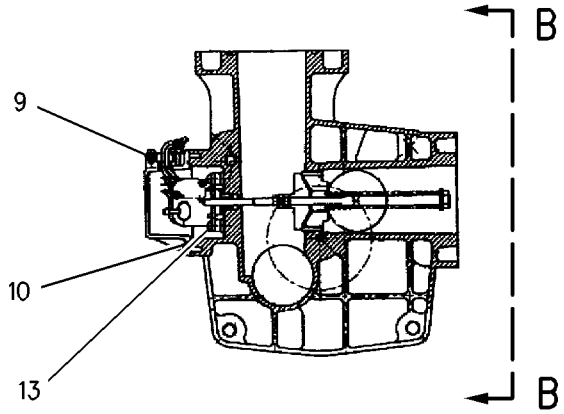

SECTION A-A

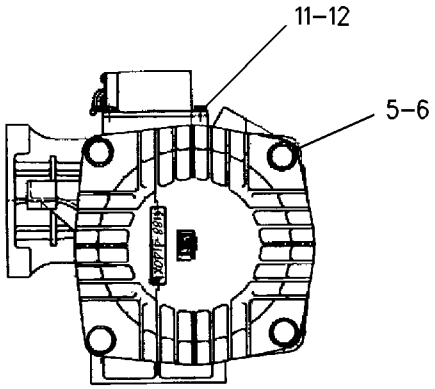

VIEW B-B

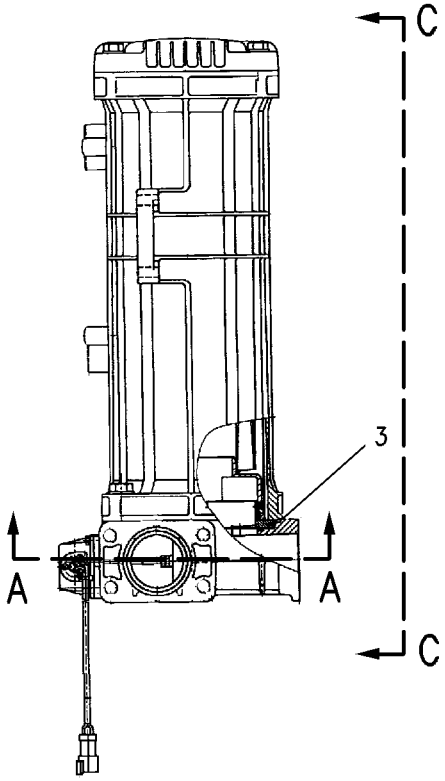

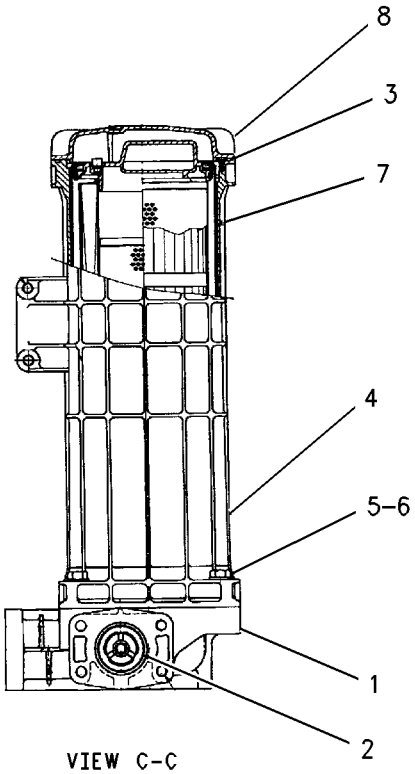

VIEW C-C

GRAPHIC #1 **<END>** g00792787

188-4142 FILTER GP-OIL—HYDRAULIC RETURN

S/N: MNB1-UP; WDK1-UP

PART OF 188-4140 FILTER GP-OIL

SMCS-3004, 4295, 431F, 5068, 5091, 5092 **i03009976**

NOTE	REF NO	GRAPHIC REF	PART NUMBER	QTY	PART NAME 1 2 3 4 5 6 (PRODUCT LEVEL)	SEE PAGE
	1	1	**204-2762**	1	PLATE	
JM	2	1	**173-3529**	6	BOLT (M6X1X15-MM)	
J	3	1	**3T-7528**	6	SEAL-O-RING	
	4	1	**173-3513**	1	BASE	
J	5	1	**3E-4297**	2	SEAL-O-RING	
M	6	1	**137-3626**	1	BOLT-SHOULDER (M6X1X28.75-MM)	
Z	7	1		1	SHELL AS	
	8	1	**179-9806**	1	FILTER ELEMENT AS-OIL (HYDRAULIC RETURN)	
J	9	1	**137-3623**	4	SEAL-O-RING	
J	10	1	**6V-7658**	2	SEAL-O-RING	
J	11	1	**177-2553**	1	SEAL	
J	12	1	**095-1681**	1	SEAL-O-RING	
	13	1	**173-3515**	1	RING-RETAINING	
	14	1	**173-3516**	1	HANDLE	
J	15	1	**4J-7533**	1	SEAL-O-RING	
J	16	1	**9S-4180**	1	PLUG	
JM	17	1	**137-3624**	8	SCREW (M3X0.5X5-MM)	
J	18	1	**137-3625**	2	PAD	
	19	1	**173-3517**	1	PLATE	
J	20	1	**137-3628**	1	SHIM (0.1-MM THK)	
	21	1	**188-4143**	1	FILM-INSTRUCTION (HYDRAULIC OIL RETURN FILTER)	
					AVAILABLE REPAIR KIT(S):	
J			**201-9299**	1	KIT-SERVICE (HYDRAULIC FILTER) (RETURN)	

J-KIT MARKED J SERVICES PARTS MARKED J
M-METRIC PART
Z-NOT SERVICED SEPARATELY

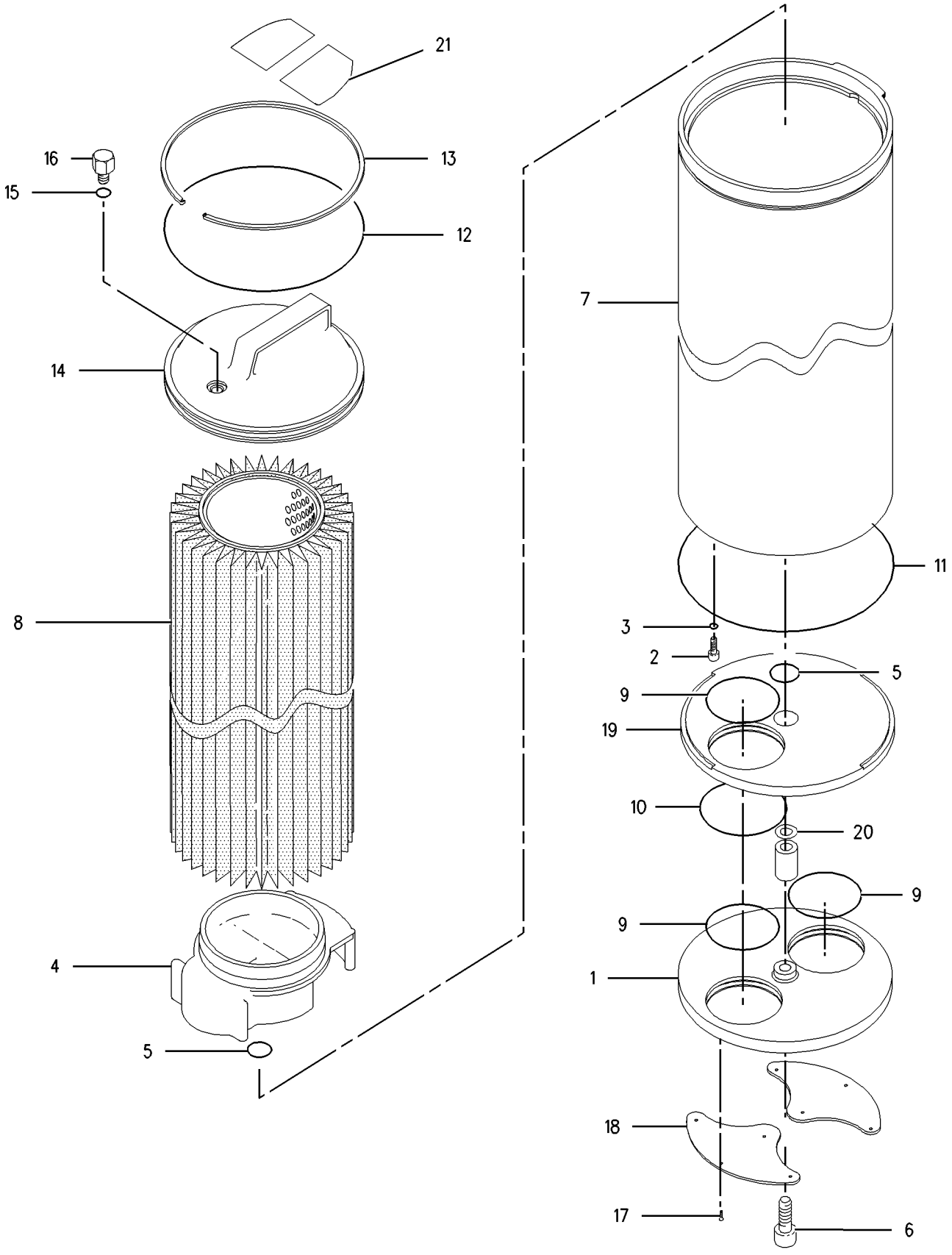

GRAPHIC #1 **<END>** g00923879

234-4515 FILTER GP-OIL–HYDRAULIC

S/N: MNB1-UP; WDK1-UP
PART OF 255-1799 LINES GP-FRONT
AN ATTACHMENT

SMCS-3004, 4295, 431F, 5068, 5091, 5092 **i02407124**

NOTE	REF NO	GRAPHIC REF	PART NUMBER	QTY	PART NAME 1 2 3 4 5 6 (PRODUCT LEVEL)	SEE PAGE
	1	1	**196-6583**	1	PLUG	
	2	1	**095-1579**	1	SEAL-O-RING	
	3	1	**196-6581**	1	FILTER ELEMENT-HYDRAULIC (HYDRAULIC)	
	4	1	**227-6868**	1	CASE	
	5	1	**095-1719**	1	SEAL-O-RING	
	6	1	**196-6582**	1	VALVE-BYPASS	
	7	1	**247-8991**	1	HEAD	
	8	1	**227-6869**	1	PLUG AS	
	9	1	**259-0658**	1	SENDER AS (HYDRAULIC OIL PRESSURE)	
		1	**6V-8398**	1	SEAL-O-RING	
		1	**8T-0211**	1	SEAL-O-RING	

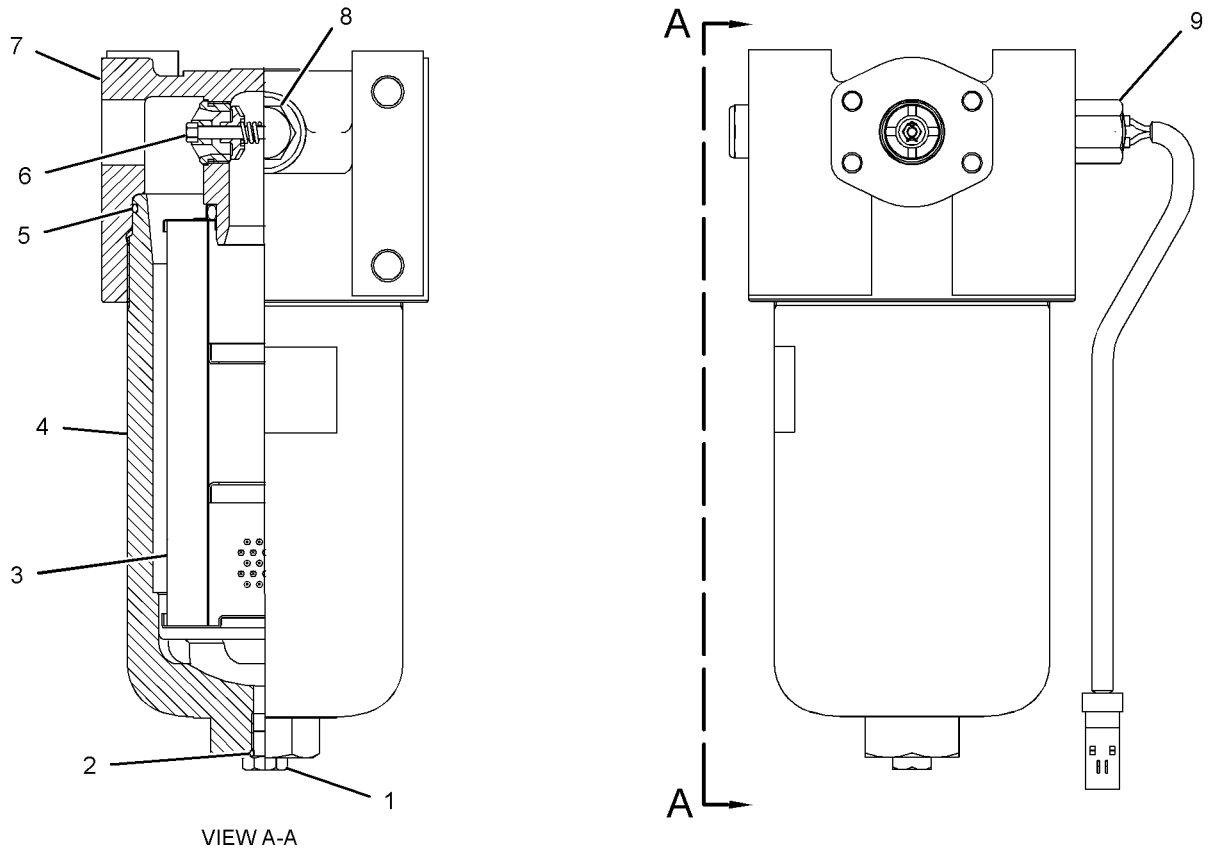

GRAPHIC #1 **<END>** g01241997

289-8194 FILTER GP-OIL–HYDRAULIC, CASE DRAIN

S/N: MNB1-UP; WDK1-UP

PART OF 227-0566 TANK & FILTER GP-HYDRAULIC

SMCS-3004, 4295, 431F, 5068, 5091, 5092 **i02997232**

NOTE	REF NO	GRAPHIC REF	PART NUMBER	QTY	PART NAME 1 2 3 4 5 6 (PRODUCT LEVEL)	SEE PAGE
	1	1	**093-7521**	1	FILTER-OIL (ADVANCED EFFICIENCY) (HYDRAULIC, CASE DRAIN)	
	2	1	**289-8195**	1	HEAD AS-FILTER	

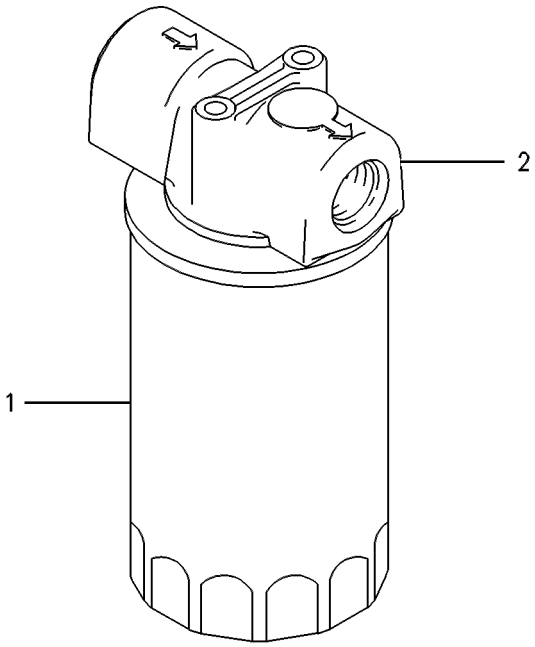

GRAPHIC #1 **<END>** g00258224

227-0620 GAUGE GP-SIGHT—HYDRAULIC OIL LEVEL

S/N: MNB1-UP; WDK1-UP

PART OF 289-5564 TANK GP-HYDRAULIC

SMCS-7479 **i02220641**

NOTE	REF NO	GRAPHIC REF	PART NUMBER	QTY	PART NAME 1 2 3 4 5 6 (PRODUCT LEVEL)	SEE PAGE
	1	1	**236-3258**	2	BLOCK	
M	2	1	**236-3259**	2	BOLT-SPECIAL	
	3	1	**236-3257**	1	PIPE	
	4	1	**095-1519**	4	SEAL-O-RING	
	5	1	**6F-4855**	4	SEAL-O-RING	

M-METRIC PART

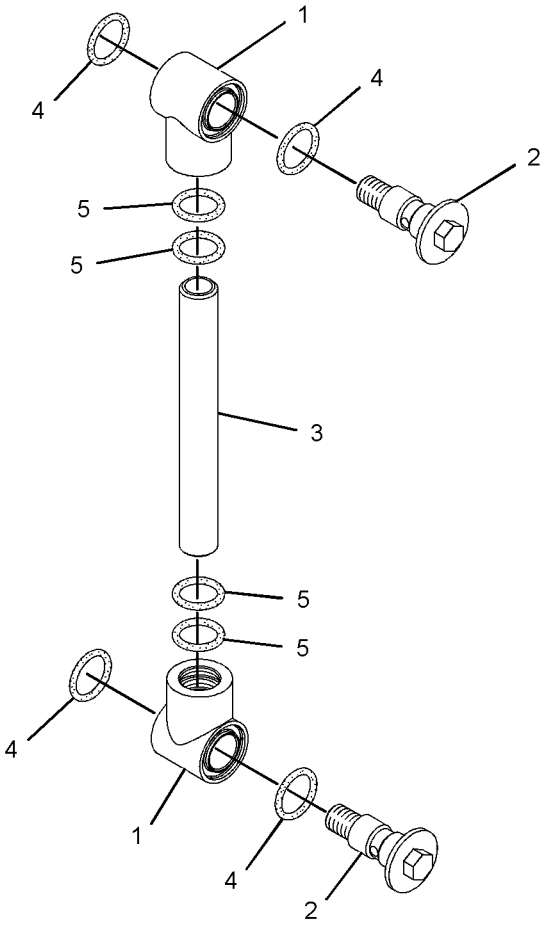

GRAPHIC #1 **<END>** g01091508

194-0174 HOSE GP-HYDRAULIC—CONTROL VALVE, STICK

S/N: MNB1-UP; WDK1-UP

PART OF 245-5179 LINES GP-FRONT

SMCS-5057 **i02014074**

NOTE	PART NUMBER	QTY	PART NAME 1 2 3 4 5 6 (PRODUCT LEVEL)	SEE PAGE
Y	*194-0176*	1	HOSE GP-HYDRAULIC	509
			-OR-	
	168-9760	1	HOSE GP-HYDRAULIC	

Y-SEPARATE ILLUSTRATION

<END>

194-0176 HOSE GP-HYDRAULIC–FRONT

S/N: MNB1-UP; WDK1-UP

PART OF 194-0174 HOSE GP-HYDRAULIC

SMCS-5057 **i02014465**

NOTE	REF NO	GRAPHIC REF	PART NUMBER	QTY	PART NAME 1 2 3 4 5 6 (PRODUCT LEVEL)	SEE PAGE
	1	1	**142-7765**	1	TUBE AS	
	2	1	**5K-9090**	1	SEAL-O-RING	
I	3	1	**165-3165**	1	HOSE AS	

I-REFER TO HYDRAULIC INFORMATION SYSTEM

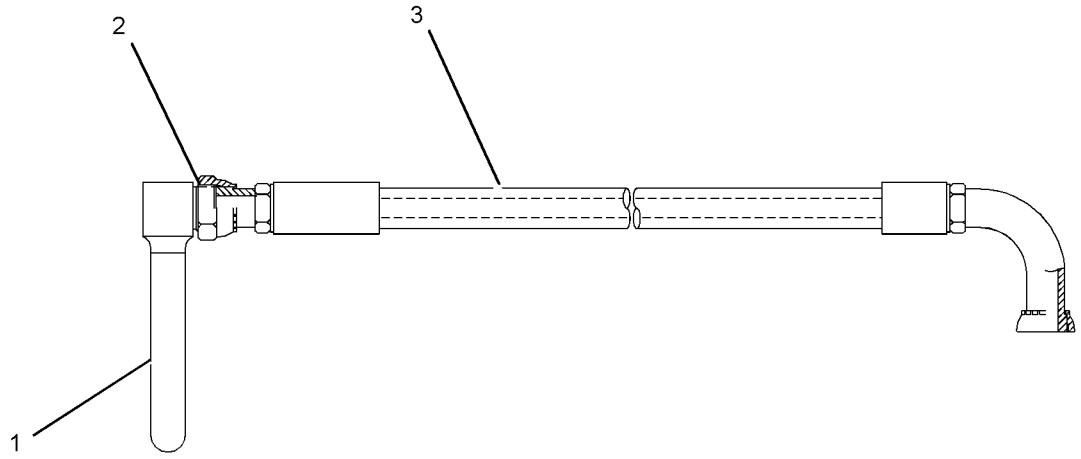

GRAPHIC #1 **<END>** g01041998

194-0177 HOSE GP-HYDRAULIC—CONTROL VALVE, STICK

S/N: MNB1-UP; WDK1-UP

PART OF 245-5179 LINES GP-FRONT

SMCS-5057 **i02253211**

NOTE	PART NUMBER	QTY	PART NAME 1 2 3 4 5 6 (PRODUCT LEVEL)	SEE PAGE
Y	*194-0178*	1	HOSE GP-HYDRAULIC	511
			—OR—	
Y	*194-0179*	1	HOSE GP-HYDRAULIC	512

Y-SEPARATE ILLUSTRATION

<END>

194-0178 HOSE GP-HYDRAULIC–FRONT

S/N: MNB1-UP; WDK1-UP

PART OF 194-0177 HOSE GP-HYDRAULIC

SMCS-5057 **i03169960**

NOTE	REF NO	GRAPHIC REF	PART NUMBER	QTY	PART NAME 1 2 3 4 5 6 (PRODUCT LEVEL)	SEE PAGE
	1	1	**260-7912**	1	HOSE AS	
	2	1	**8C-3206**	2	FLANGE-HALF	
	3	1	**4J-0520**	1	SEAL-O-RING	

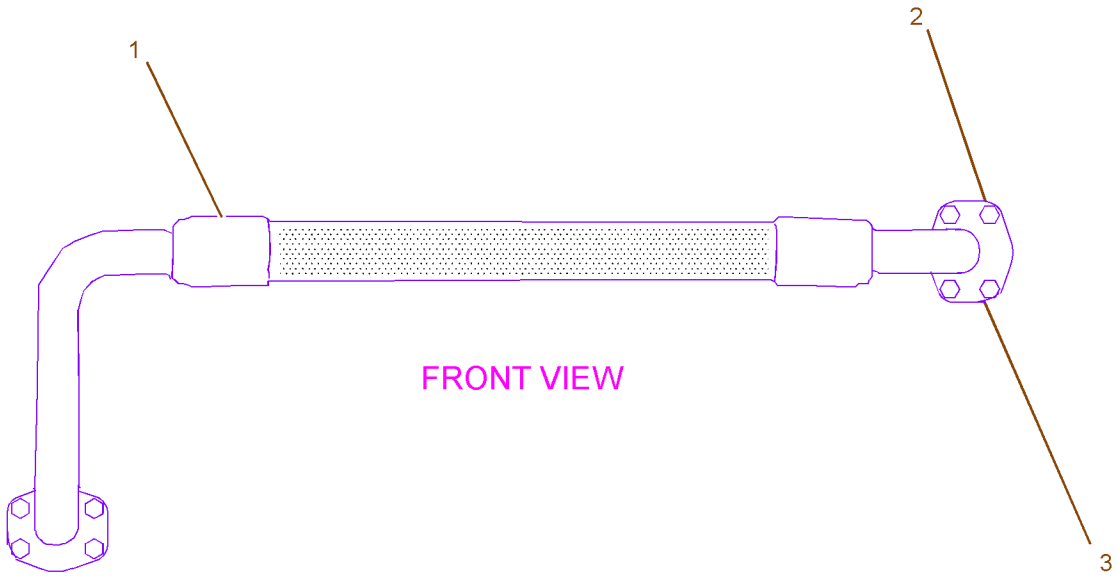

GRAPHIC #1 **<END>** g01042973

194-0179 HOSE GP-HYDRAULIC–FRONT

S/N: MNB1-UP; WDK1-UP

PART OF 194-0177 HOSE GP-HYDRAULIC

SMCS-5057 **i01610604**

NOTE	REF NO	GRAPHIC REF	PART NUMBER	QTY	PART NAME 1 2 3 4 5 6 (PRODUCT LEVEL)	SEE PAGE
I	1	1	**165-3169**	1	HOSE AS	
	2	1	**142-7764**	1	TUBE AS	
	3	1	**7Y-3731**	1	FLANGE	
	4	1	**1P-3703**	1	SEAL-RECTANGULAR	
	5	1	**5K-9090**	2	SEAL-O-RING	

I-REFER TO HYDRAULIC INFORMATION SYSTEM

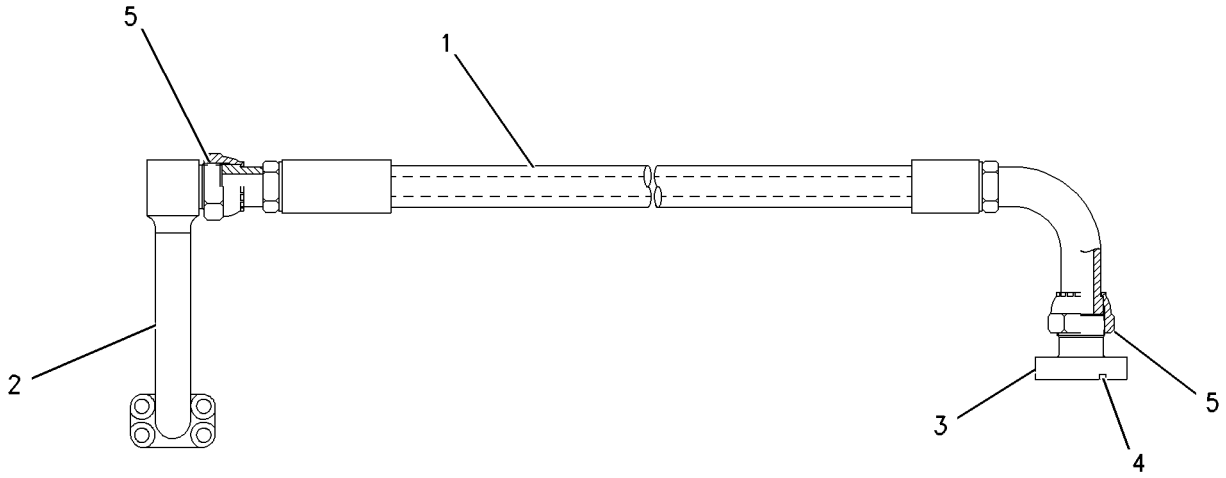

GRAPHIC #1 **<END>** g00834658

194-0180 HOSE GP-HYDRAULIC—CONTROL VALVE, BOOM

S/N: MNB1-UP; WDK1-UP

PART OF 245-5179 LINES GP-FRONT

SMCS-5057 **i02253224**

NOTE	PART NUMBER	QTY	PART NAME 1 2 3 4 5 6 (PRODUCT LEVEL)	SEE PAGE
Y	*194-0181*	1	HOSE GP-HYDRAULIC	514
			—OR—	
Y	*194-0182*	1	HOSE GP-HYDRAULIC	515

Y-SEPARATE ILLUSTRATION

<END>

194-0181 HOSE GP-HYDRAULIC—FRONT

S/N: MNB1-UP; WDK1-UP

PART OF 194-0180 HOSE GP-HYDRAULIC

SMCS-5057 **i02611124**

NOTE	REF NO	GRAPHIC REF	PART NUMBER	QTY	PART NAME 1 2 3 4 5 6 (PRODUCT LEVEL)	SEE PAGE
	1	1	**168-9762**	1	HOSE AS	
	2	1	**8C-3206**	2	FLANGE-HALF	
	3	1	**4J-0520**	1	SEAL-O-RING	



GRAPHIC #1 **<END>** g01049500

194-0182 HOSE GP-HYDRAULIC–FRONT

S/N: MNB1-UP; WDK1-UP

PART OF 194-0180 HOSE GP-HYDRAULIC

SMCS-5057 **i01610617**

NOTE	REF NO	GRAPHIC REF	PART NUMBER	QTY	PART NAME 1 2 3 4 5 6 (PRODUCT LEVEL)	SEE PAGE
I	1	1	**165-3173**	1	HOSE AS	
	2	1	**168-9523**	1	TUBE AS	
	3	1	**113-6479**	1	FLANGE-SPECIAL	
	4	1	**5K-9090**	2	SEAL-O-RING	
	5	1	**1P-3703**	1	SEAL-RECTANGULAR	

I-REFER TO HYDRAULIC INFORMATION SYSTEM

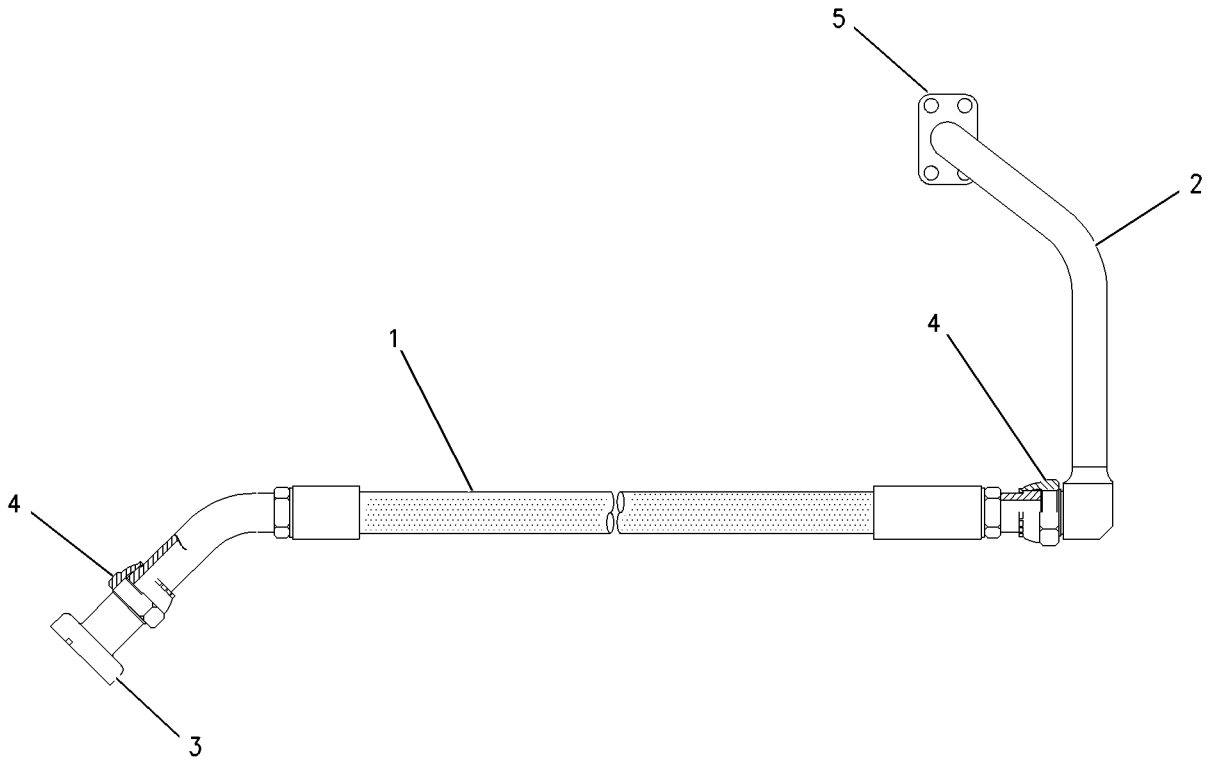

GRAPHIC #1 **<END>** g00834662

HYDRAULIC SYSTEM

255-5707 HYDRAULIC AR

S/N: WDK1-UP

PART OF 314-3641 GENERAL AR

SMCS-5050 **i02348092**

NOTE	PART NUMBER	QTY	PART NAME 1 2 3 4 5 6 (PRODUCT LEVEL)	SEE PAGE
Y	*245-5178*	1	LINES GP-FRONT (BOOM CYLINDER)	578
Y	*245-5179*	1	LINES GP-FRONT (ATTACHMENT)	580
Y	*248-9831*	1	LINES GP-CONTROL (CONTROL VALVE, PUMP)	567
Y	*248-9833*	1	LINES GP-HYDRAULIC OIL COOLER	611
Y	*248-9825*	1	LINES GP-PILOT (JOYSTICK, PEDALS)	613
Y	*248-9826*	1	LINES GP-PILOT (TRAVEL)	617
Y	*248-9827*	1	LINES GP-PILOT (CONTROL VALVE, PUMP)	619
Y	*248-9829*	1	LINES GP-PILOT (PUMP)	626
Y	*227-0548*	1	LINES GP-PUMP (SUPPLY)	678
Y	*227-0542*	1	LINES GP-TRAVEL MOTOR	693
Y	*260-7868*	1	MOUNTING GP-MAIN CONTROL VALVE	708
Y	*233-1115*	1	PUMP & MTG GP-MAIN HYDRAULIC	712
Y	*227-0565*	1	TANK & MTG GP-HYDRAULIC	724
Y	*255-5651*	1	VALVE GP-MAIN CONTROL	770

Y-SEPARATE ILLUSTRATION

<END>

255-5708 HYDRAULIC AR

S/N: MNB1-UP

PART OF 314-3642 GENERAL AR

SMCS-5050 **i02346741**

NOTE	PART NUMBER	QTY	PART NAME 1 2 3 4 5 6 (PRODUCT LEVEL)	SEE PAGE
Y	*245-5178*	1	LINES GP-FRONT (BOOM CYLINDER)	578
Y	*245-5179*	1	LINES GP-FRONT (ATTACHMENT)	580
Y	*248-9831*	1	LINES GP-CONTROL (CONTROL VALVE, PUMP)	567
Y	*248-9833*	1	LINES GP-HYDRAULIC OIL COOLER	611
Y	*248-9825*	1	LINES GP-PILOT (JOYSTICK, PEDALS)	613
Y	*248-9826*	1	LINES GP-PILOT (TRAVEL)	617
Y	*248-9827*	1	LINES GP-PILOT (CONTROL VALVE, PUMP)	619
Y	*248-9829*	1	LINES GP-PILOT (PUMP)	626
Y	*227-0548*	1	LINES GP-PUMP (SUPPLY)	678
Y	*227-0543*	1	LINES GP-TRAVEL MOTOR	695
Y	*260-7868*	1	MOUNTING GP-MAIN CONTROL VALVE	708
Y	*233-1115*	1	PUMP & MTG GP-MAIN HYDRAULIC	712
Y	*227-0565*	1	TANK & MTG GP-HYDRAULIC	724
Y	**255-5651**	1	VALVE GP-MAIN CONTROL	770

Y-SEPARATE ILLUSTRATION

<END>

230-0486 LINES GP-AUXILIARY HYDRAULIC–REACH BOOM

S/N: MNB1-UP; WDK1-UP
HIGH PRESSURE
AN ATTACHMENT

SMCS-5057 **i02778837**

NOTE	REF NO	GRAPHIC REF	PART NUMBER	QTY	PART NAME 1 2 3 4 5 6 (PRODUCT LEVEL)	SEE PAGE
I	1	1	**113-6677**	1	HOSE AS	
	2	1	**151-2494**	4	BAR	
	3	1	**153-8798**	2	PLATE	
	4	1	**173-7916**	8	CLAMP-HALF	
	5	1	**187-9845**	1	TUBE AS	
	6	1	**187-9846**	1	TUBE AS	
	7	1	**230-0494**	2	SUPPORT AS	
	8	1	**237-3116**	1	TUBE AS	
	9	1	**237-3117**	1	TUBE AS	
I	10	1	**282-5760**	1	HOSE AS	
	11	1	**1P-3703**	3	SEAL-RECTANGULAR	
	12	1	**1P-3704**	2	SEAL-RECTANGULAR	
	13	1	**1P-3705**	1	SEAL-RECTANGULAR	
	14	1	**1P-5767**	4	FLANGE-HALF	
	15	1	**6V-0400**	4	FLANGE-HALF	
	16	1	**7Y-4538**	8	CLAMP-HALF	
M	17	1	**8T-4139**	16	BOLT (M12X1.75X30-MM)	
M	18	1	**8T-4183**	4	BOLT (M12X1.75X40-MM)	
M	19	1	**8T-4184**	16	BOLT (M12X1.75X45-MM)	
M	20	1	**8T-4194**	8	BOLT (M12X1.75X50-MM)	
	21	1	**8T-4223**	44	WASHER-HARD (13.5X25.5X3-MM THK)	
M	22	1	**8T-6868**	8	BOLT (M12X1.75X80-MM)	

I-REFER TO HYDRAULIC INFORMATION SYSTEM
M-METRIC PART

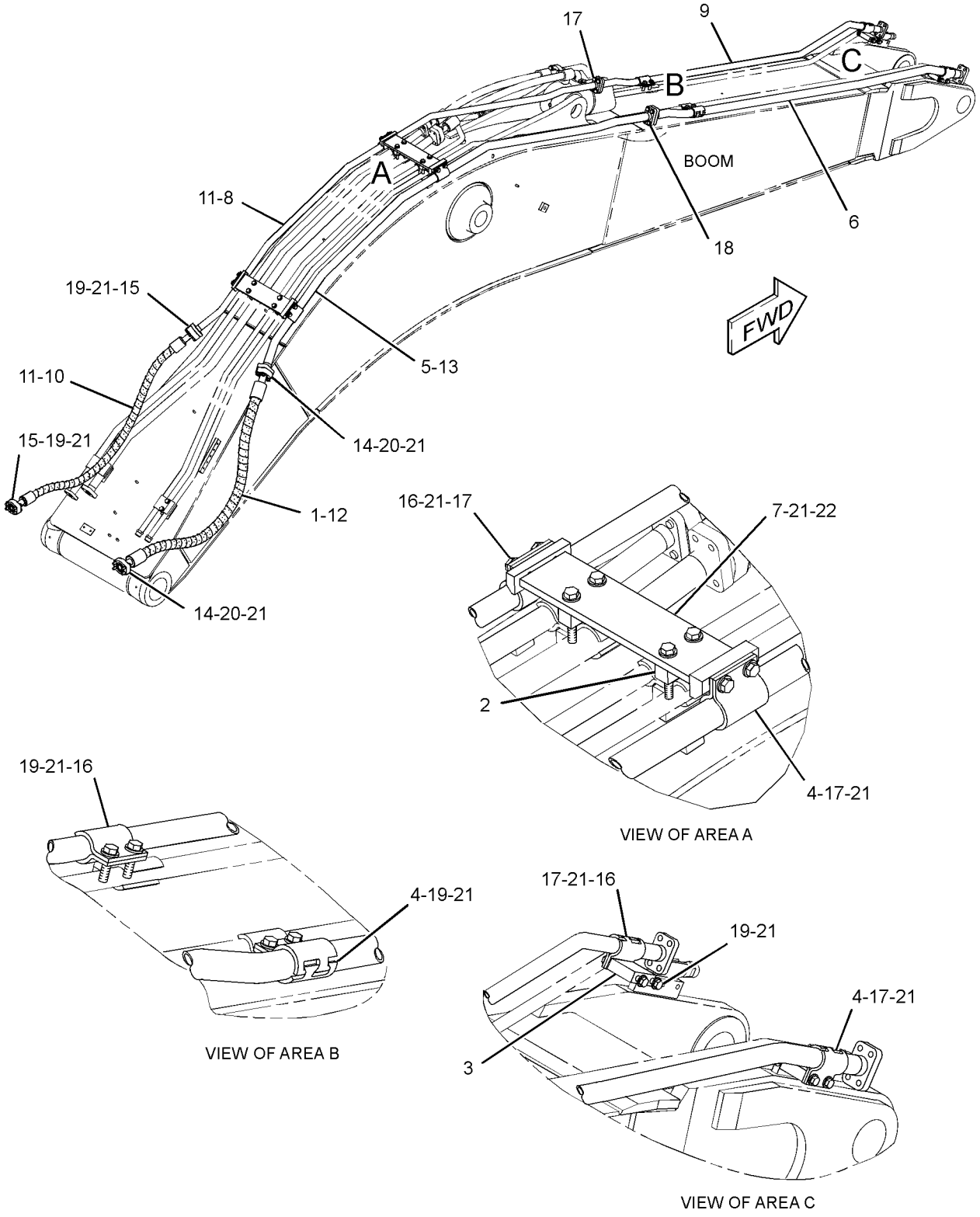

GRAPHIC #1 **<END>** g01400443

230-0487 LINES GP-AUXILIARY HYDRAULIC–REACH BOOM

S/N: MNB1-UP; WDK1-UP
MEDIUM PRESSURE
AN ATTACHMENT

SMCS-5057 **i02959435**

NOTE	REF NO	GRAPHIC REF	PART NUMBER	QTY	PART NAME 1 2 3 4 5 6 (PRODUCT LEVEL)	SEE PAGE
	1	1	**153-8867**	2	CLIP	
C	2	1	**306-1372**	1	PLATE	
	3	1	**173-7895**	4	CLIP	
	4	1	**179-5260**	4	CLIP	
C	5	1	**306-1403**	1	TUBE AS	
C	6	1	**306-1406**	1	TUBE AS	
	7	1	**237-3122**	1	TUBE AS	
	8	1	**247-9298**	2	CLIP AS	
	9	1	**294-3796**	1	PLATE	
	10	1	**294-3797**	1	PLATE	
	11	1	**247-9312**	1	TUBE AS	
	12	1	**093-1291**	2	CLAMP	
	13	1	**6V-8398**	4	SEAL-O-RING	
	14	1	**7J-9108**	2	SEAL-O-RING	
	15	1	**7Y-4868**	3	CLIP	
	16	1	**8T-4121**	2	WASHER-HARD (11X21X2.5-MM THK)	
C	17	1	**8T-7971**	2	WASHER-HARD (13.5X25.5X5-MM THK)	
M	18	1	**8T-4139**	14	BOLT (M12X1.75X30-MM)	
M	19	1	**8T-4184**	4	BOLT (M12X1.75X45-MM)	
M	20	1	**8T-4185**	2	BOLT (M10X1.5X50-MM)	
C	21	1	**8T-4223**	24	WASHER-HARD (13.5X25.5X3-MM THK)	
M	22	1	**8T-4244**	12	NUT (M12X1.75-THD)	
CM	23	1	**8T-7929**	2	BOLT (M12X1.75X180-MM)	
	24	1	**294-3795**	2	CLIP AS	
	25	1	**294-3794**	2	CLIP AS	
M	26	1	**8T-4194**	4	BOLT (M12X1.75X50-MM)	
	27	1	**288-7614**	1	CLIP AS	
	28	1	**149-1738**	2	CLIP	
M	29	1	**8T-6868**	2	BOLT (M12X1.75X80-MM)	

C-CHANGE FROM PREVIOUS TYPE
M-METRIC PART

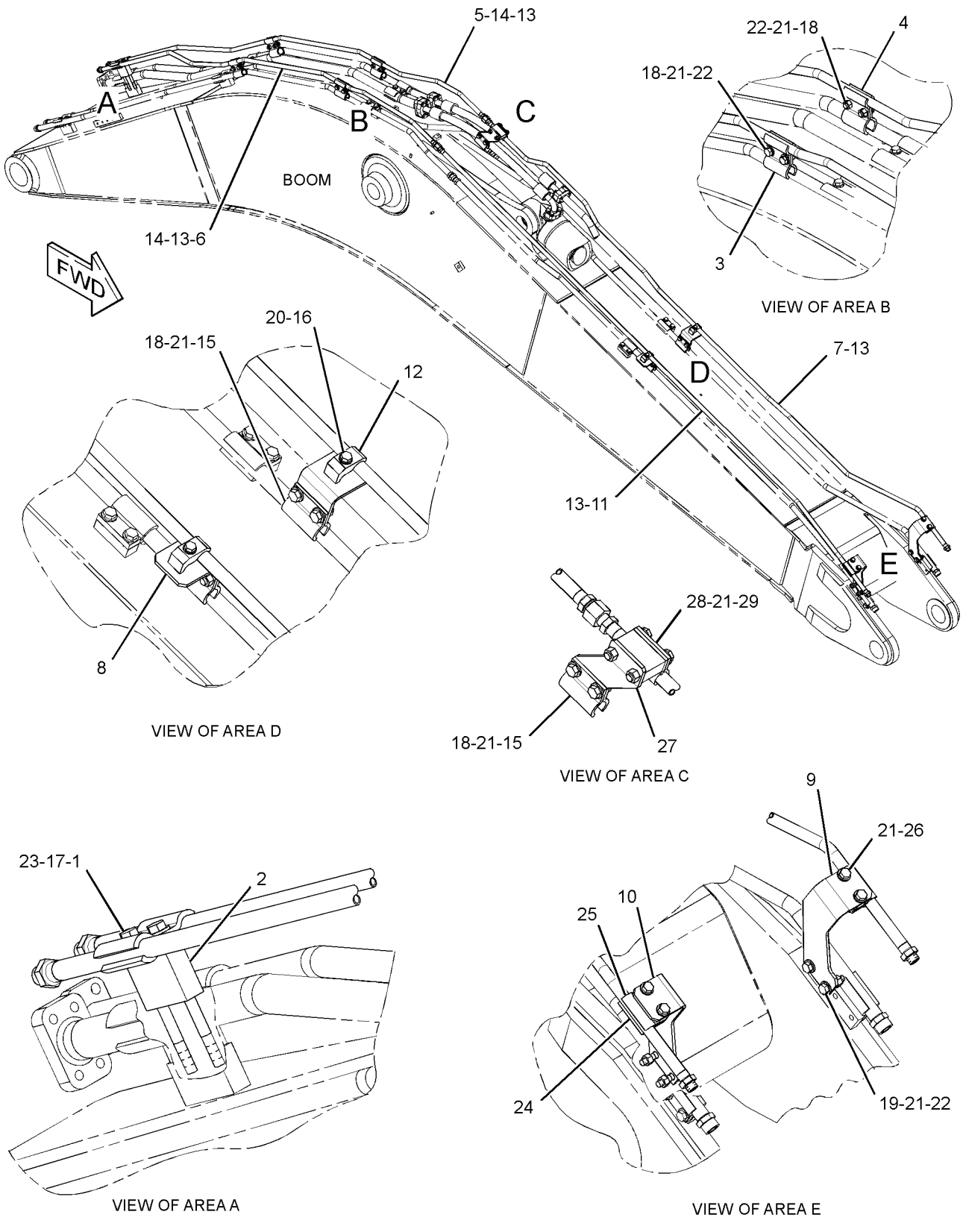

GRAPHIC #1 **<END>** g01460773

230-0490 LINES GP-AUXILIARY HYDRAULIC—MASS BOOM

S/N: MNB1-UP; WDK1-UP
HIGH PRESSURE
AN ATTACHMENT

SMCS-5057 **i02778835**

NOTE	REF NO	GRAPHIC REF	PART NUMBER	QTY	PART NAME 1 2 3 4 5 6 (PRODUCT LEVEL)	SEE PAGE
	1	1	**151-2494**	4	BAR	
M	2	1	**8T-4139**	16	BOLT (M12X1.75X30-MM)	
M	3	1	**8T-4183**	4	BOLT (M12X1.75X40-MM)	
M	4	1	**8T-4184**	16	BOLT (M12X1.75X45-MM)	
M	5	1	**8T-4194**	8	BOLT (M12X1.75X50-MM)	
M	6	1	**8T-6868**	8	BOLT (M12X1.75X80-MM)	
	7	1	**173-7916**	8	CLAMP-HALF	
	8	1	**7Y-4538**	8	CLAMP-HALF	
	9	1	**1P-5767**	4	FLANGE-HALF	
	10	1	**6V-0400**	4	FLANGE-HALF	
I	11	1	**113-6677**	1	HOSE AS	
I	12	1	**282-5760**	1	HOSE AS	
	13	1	**153-8798**	2	PLATE	
	14	1	**1P-3703**	3	SEAL-RECTANGULAR	
	15	1	**1P-3704**	2	SEAL-RECTANGULAR	
	16	1	**1P-3705**	1	SEAL-RECTANGULAR	
	17	1	**230-0494**	2	SUPPORT AS	
	18	1	**197-2348**	1	TUBE AS	
	19	1	**197-2349**	1	TUBE AS	
	20	1	**247-9310**	1	TUBE AS	
	21	1	**247-9311**	1	TUBE AS	
	22	1	**8T-4223**	44	WASHER-HARD (13.5X25.5X3-MM THK)	

I-REFER TO HYDRAULIC INFORMATION SYSTEM
M-METRIC PART

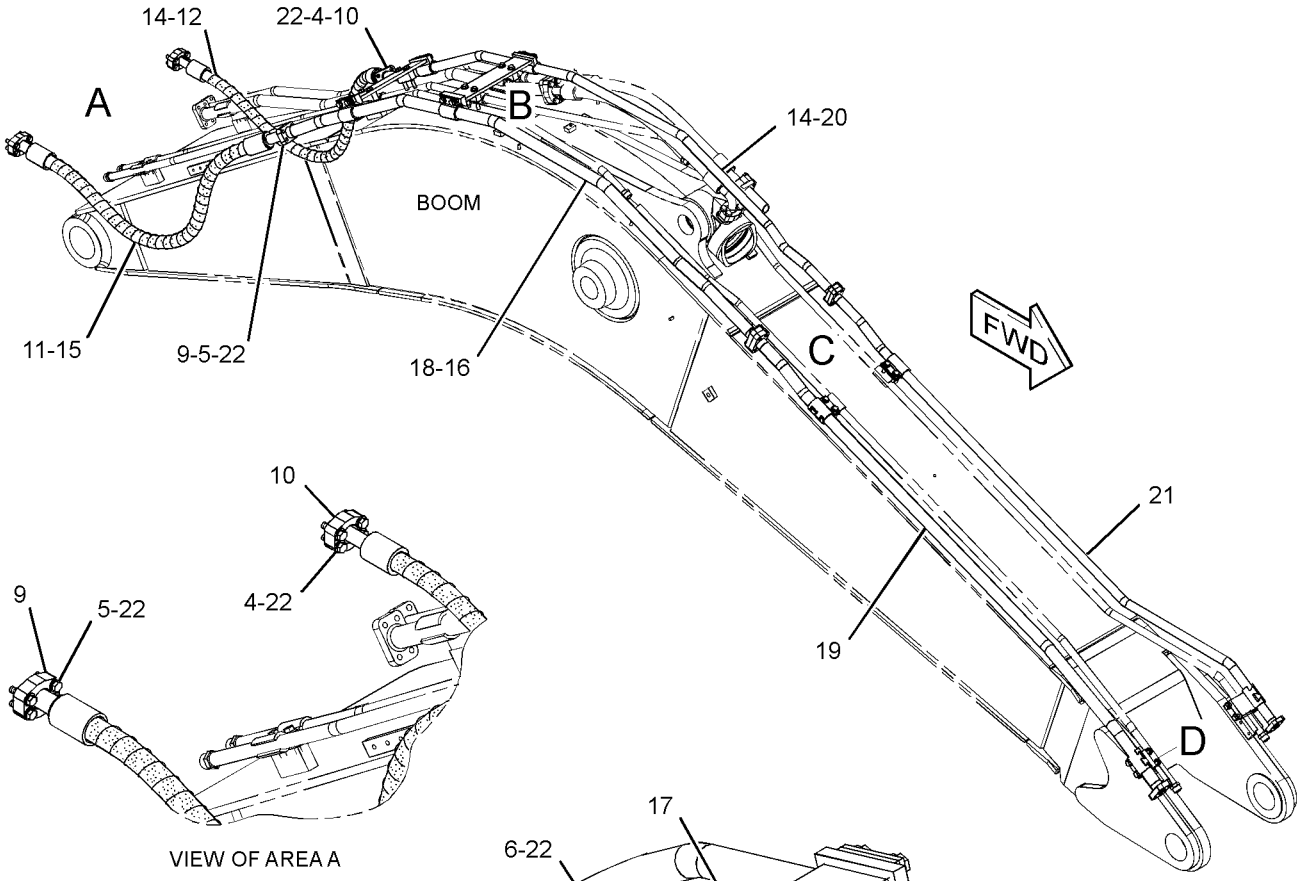

VIEW OF AREA A

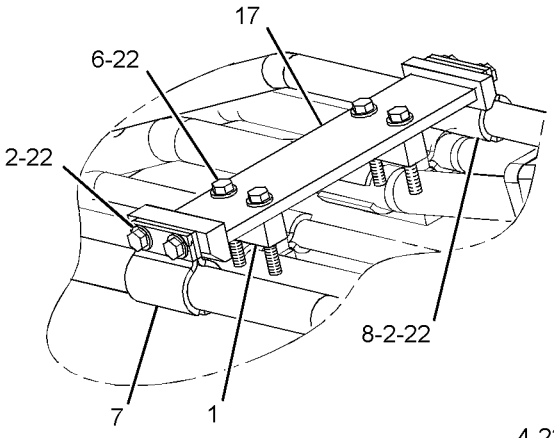

VIEW OF AREA B

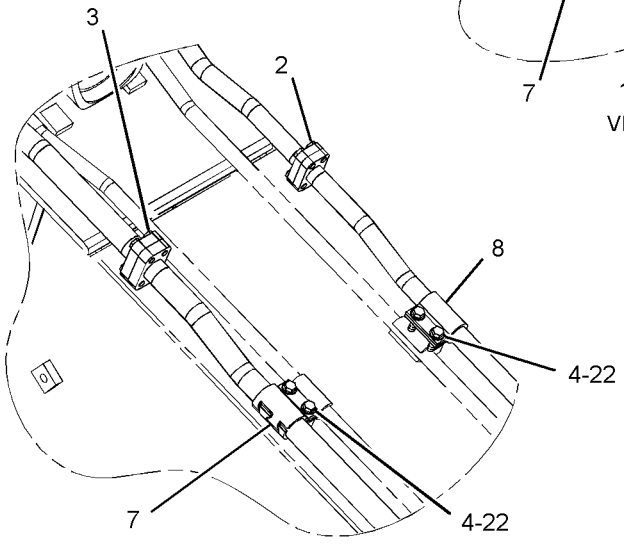

VIEW OF AREA C

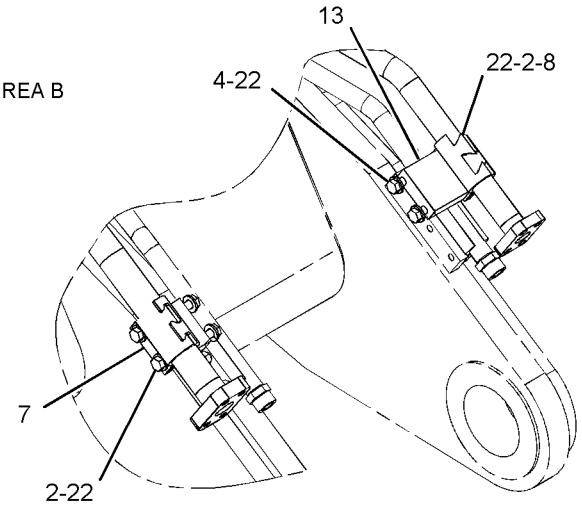

VIEW OF AREA D

GRAPHIC #1

<END>

g01365398

230-0491 LINES GP-AUXILIARY HYDRAULIC–MASS BOOM

S/N: MNB1-UP; WDK1-UP
MEDIUM PRESSURE
AN ATTACHMENT

SMCS-5057 **i02959481**

NOTE	REF NO	GRAPHIC REF	PART NUMBER	QTY	PART NAME 1 2 3 4 5 6 (PRODUCT LEVEL)	SEE PAGE
M	1	1	**8T-4139**	12	BOLT (M12X1.75X30-MM)	
M	2	1	**8T-4184**	4	BOLT (M12X1.75X45-MM)	
M	3	1	**8T-4185**	2	BOLT (M10X1.5X50-MM)	
CM	4	1	**8T-7929**	2	BOLT (M12X1.75X180-MM)	
	5	1	**093-1291**	2	CLAMP	
	6	1	**153-8867**	2	CLIP	
	7	1	**173-7895**	4	CLIP	
	8	1	**179-5260**	4	CLIP	
	9	1	**7Y-4868**	2	CLIP	
	10	1	**247-9298**	2	CLIP AS	
M	11	1	**8T-4194**	4	BOLT (M12X1.75X50-MM)	
M	12	1	**8T-4244**	12	NUT (M12X1.75-THD)	
C	13	1	**306-1372**	1	PLATE	
	14	1	**294-3795**	2	CLIP AS	
	15	1	**294-3794**	2	CLIP AS	
	16	1	**6V-8398**	4	SEAL-O-RING	
	17	1	**7J-9108**	2	SEAL-O-RING	
C	18	1	**306-1409**	1	TUBE AS	
	19	1	**253-6652**	1	TUBE AS	
C	20	1	**306-1412**	1	TUBE AS	
	21	1	**253-6658**	1	TUBE AS	
	22	1	**8T-4121**	2	WASHER-HARD (11X21X2.5-MM THK)	
C	23	1	**8T-4223**	20	WASHER-HARD (13.5X25.5X3-MM THK)	
	24	1	**294-3797**	1	PLATE	
	25	1	**294-3796**	1	PLATE	
C	26	1	**8T-7971**	2	WASHER-HARD (13.5X25.5X5-MM THK)	

C-CHANGE FROM PREVIOUS TYPE
M-METRIC PART

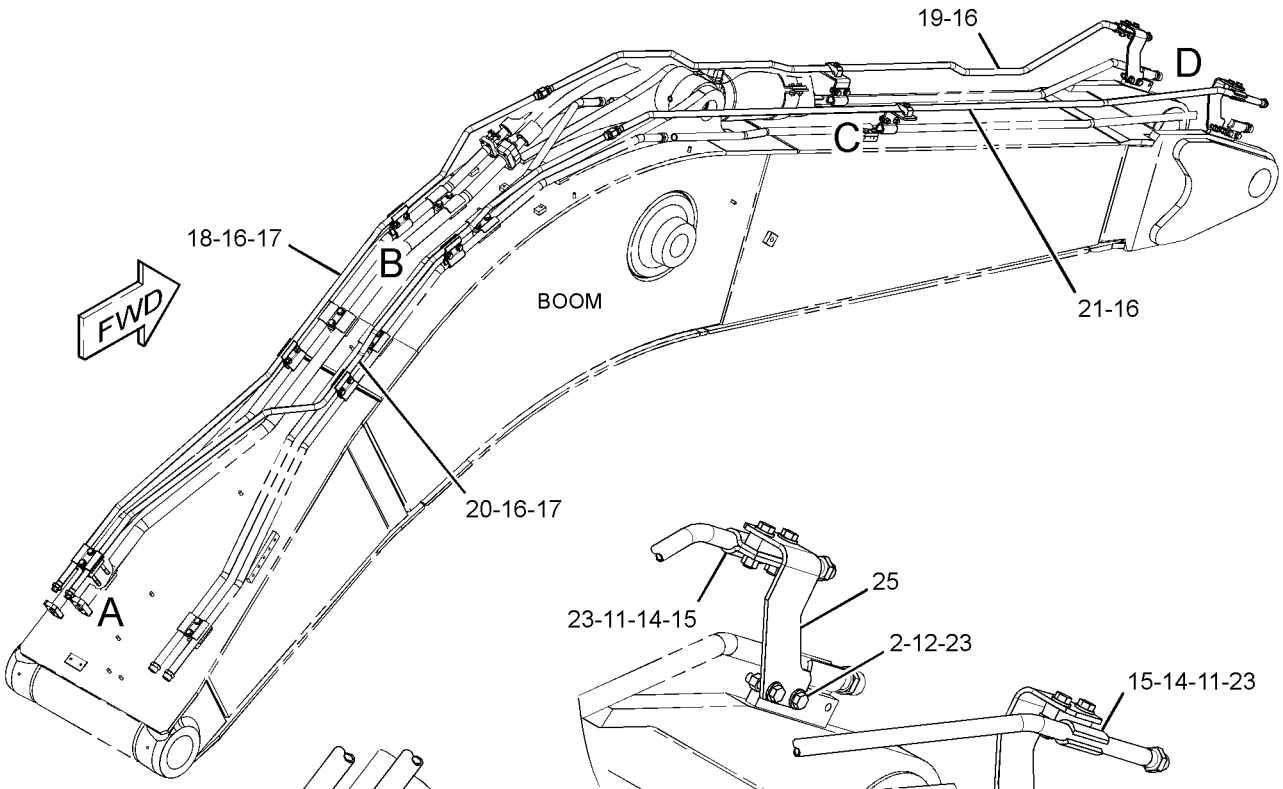

VIEW OF AREA D

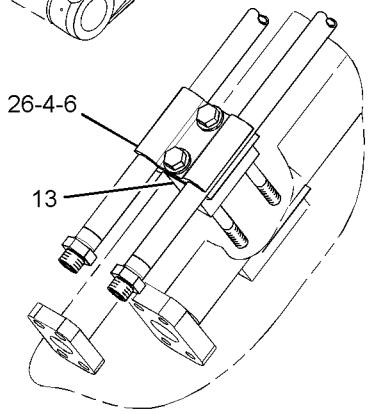

VIEW OF AREA A

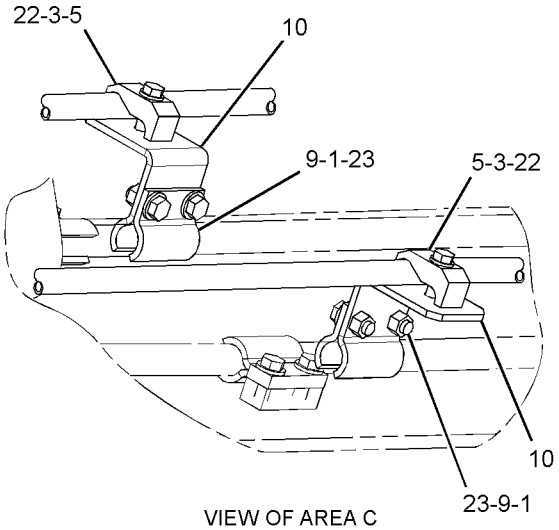

VIEW OF AREA C

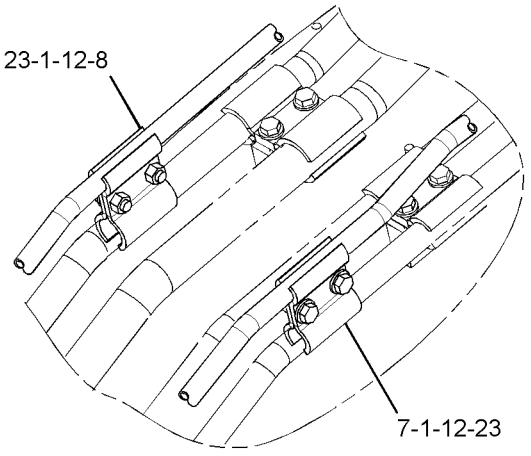

VIEW OF AREA B

GRAPHIC #1 **<END>** g01461328

237-3181 LINES GP-AUXILIARY HYDRAULIC—REACH, MASS

S/N: MNB1-UP; WDK1-UP
3.2-M (10-FT). CB-FAMILY, HIGH PRESSURE
AN ATTACHMENT

SMCS-5057 **i02778834**

NOTE	REF NO	GRAPHIC REF	PART NUMBER	QTY	PART NAME 1 2 3 4 5 6 (PRODUCT LEVEL)	SEE PAGE
	1	1	**173-7916**	4	CLAMP-HALF	
CY	2	1	**277-0954**	2	VALVE GP-MANUAL (AUXILIARY, SHUTOFF)	772
	3	1	**253-6453**	1	TUBE AS	
	4	1	**253-6454**	1	TUBE AS	
I	5	1	**253-6558**	1	HOSE AS	
I	6	1	**253-6562**	1	HOSE AS	
	7	1	**1P-3703**	3	SEAL-RECTANGULAR	
	8	1	**1P-3704**	3	SEAL-RECTANGULAR	
	9	1	**1P-5767**	4	FLANGE-HALF	
	10	1	**6V-0400**	4	FLANGE-HALF	
	11	1	**7Y-4538**	4	CLAMP-HALF	
	12	1	**8T-4121**	4	WASHER-HARD (11X21X2.5-MM THK)	
M	13	1	**8T-4139**	8	BOLT (M12X1.75X30-MM)	
M	14	1	**8T-4183**	4	BOLT (M12X1.75X40-MM)	
M	15	1	**8T-4184**	8	BOLT (M12X1.75X45-MM)	
M	16	1	**8T-4194**	8	BOLT (M12X1.75X50-MM)	
	17	1	**8T-4223**	24	WASHER-HARD (13.5X25.5X3-MM THK)	
M	18	1	**8T-4956**	4	BOLT (M12X1.75X35-MM)	
M	19	1	**8T-6685**	4	BOLT (M10X1.5X110-MM)	

C-CHANGE FROM PREVIOUS TYPE
I-REFER TO HYDRAULIC INFORMATION SYSTEM
M-METRIC PART
Y-SEPARATE ILLUSTRATION

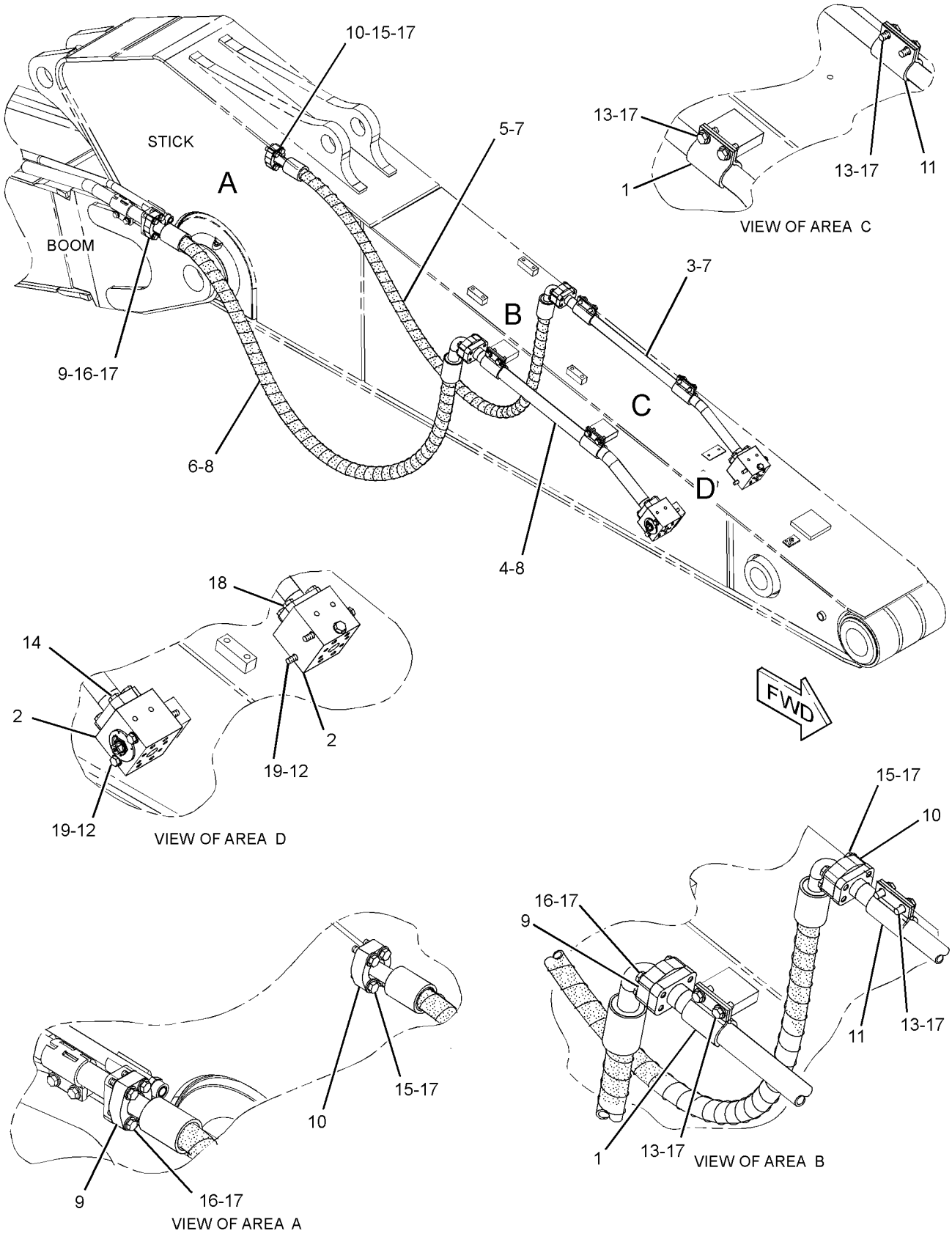

GRAPHIC #1 **<END>** g01365968

HYDRAULIC SYSTEM

237-3182 LINES GP-AUXILIARY HYDRAULIC

S/N: MNB1-UP; WDK1-UP
2.95-M TO 3-M (9.68-FT TO 9.82-FT) STICK. HIGH PRESSURE
AN ATTACHMENT

SMCS-5057 **i02778833**

NOTE	REF NO	GRAPHIC REF	PART NUMBER	QTY	PART NAME 1 2 3 4 5 6 (PRODUCT LEVEL)	SEE PAGE
	1	1	**173-7916**	4	CLAMP-HALF	
CY	2	1	**277-0954**	2	VALVE GP-MANUAL (SHUTOFF)	772
	3	1	**253-6453**	1	TUBE AS	
	4	1	**253-6454**	1	TUBE AS	
I	5	1	**253-6621**	1	HOSE AS	
I	6	1	**253-6625**	1	HOSE AS	
	7	1	**1P-3703**	3	SEAL-RECTANGULAR	
	8	1	**1P-3704**	3	SEAL-RECTANGULAR	
	9	1	**1P-5767**	4	FLANGE-HALF	
	10	1	**6V-0400**	4	FLANGE-HALF	
	11	1	**7Y-4538**	4	CLAMP-HALF	
	12	1	**8T-4121**	4	WASHER-HARD (11X21X2.5-MM THK)	
M	13	1	**8T-4139**	8	BOLT (M12X1.75X30-MM)	
M	14	1	**8T-4183**	4	BOLT (M12X1.75X40-MM)	
M	15	1	**8T-4184**	8	BOLT (M12X1.75X45-MM)	
M	16	1	**8T-4194**	8	BOLT (M12X1.75X50-MM)	
	17	1	**8T-4223**	24	WASHER-HARD (13.5X25.5X3-MM THK)	
M	18	1	**8T-4956**	4	BOLT (M12X1.75X35-MM)	
M	19	1	**8T-6685**	4	BOLT (M10X1.5X110-MM)	

C-CHANGE FROM PREVIOUS TYPE
I-REFER TO HYDRAULIC INFORMATION SYSTEM
M-METRIC PART
Y-SEPARATE ILLUSTRATION

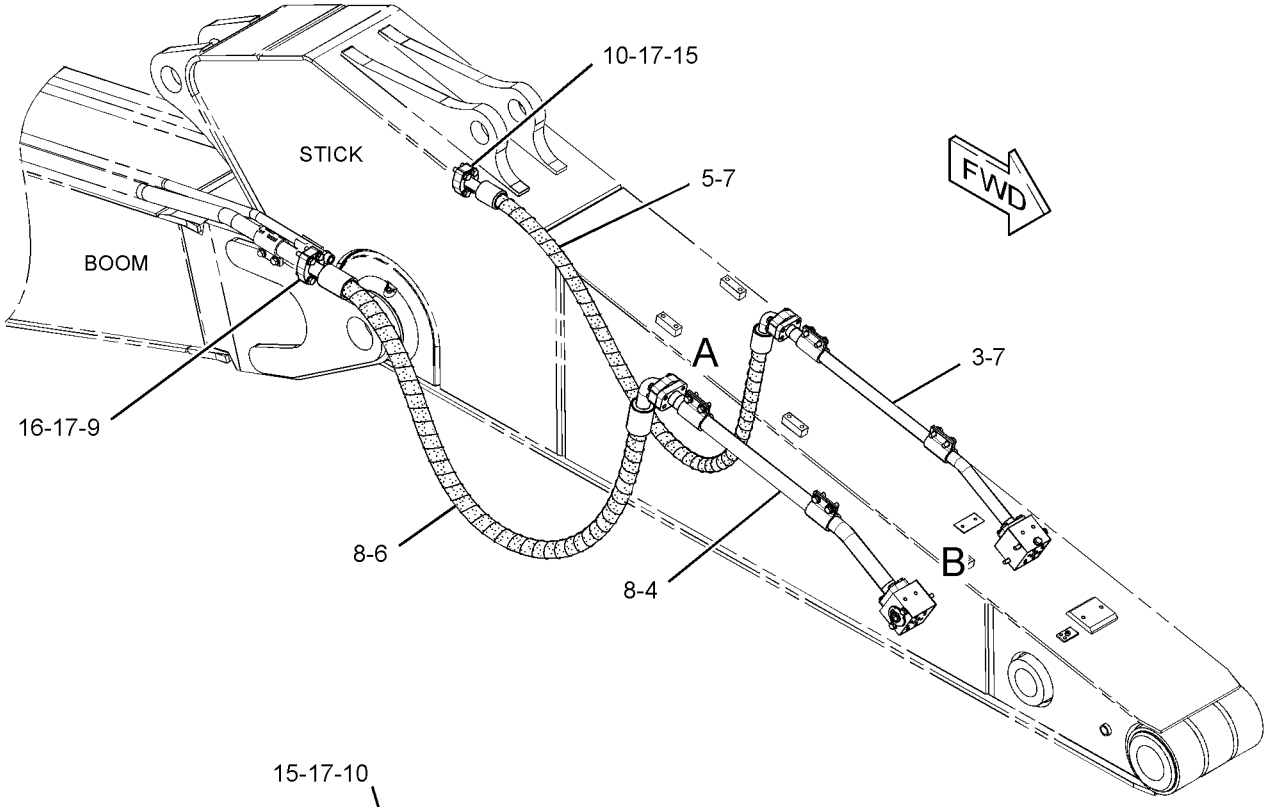

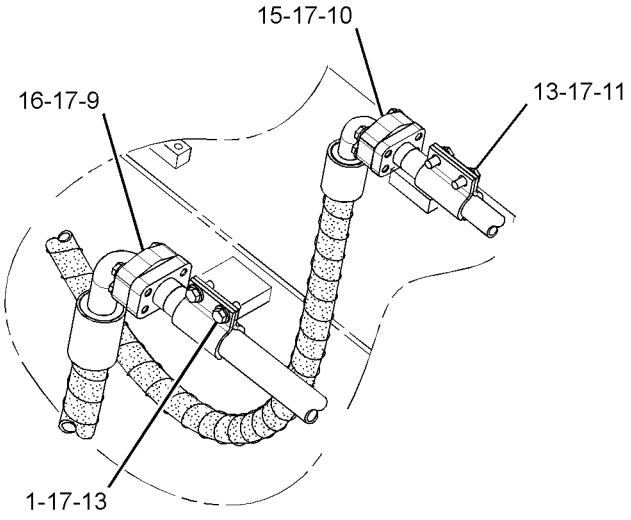

VIEW OF AREA A

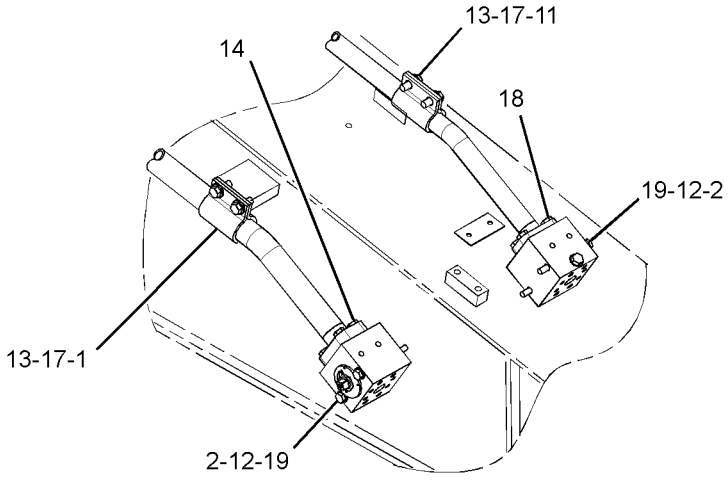

VIEW OF AREA B

GRAPHIC #1 **<END>** g01399854

HYDRAULIC SYSTEM

237-3183 LINES GP-AUXILIARY HYDRAULIC–REACH

S/N: MNB1-UP; WDK1-UP
2.65-M (8.7-FT). CB-FAMILY, HIGH PRESSURE
AN ATTACHMENT

SMCS-5057 **i02778831**

NOTE	REF NO	GRAPHIC REF	PART NUMBER	QTY	PART NAME 1 2 3 4 5 6 (PRODUCT LEVEL)	SEE PAGE
	1	1	**127-6780**	1	TUBE AS	
	2	1	**142-6582**	1	TUBE AS	
	3	1	**173-7916**	4	CLAMP-HALF	
CY	4	1	**277-0954**	2	VALVE GP-MANUAL (AUXILIARY, SHUTOFF)	772
I	5	1	**212-5326**	1	HOSE AS	
I	6	1	**253-6682**	1	HOSE AS	
	7	1	**1P-3703**	3	SEAL-RECTANGULAR	
	8	1	**1P-3704**	3	SEAL-RECTANGULAR	
	9	1	**1P-5767**	4	FLANGE-HALF	
	10	1	**6V-0400**	4	FLANGE-HALF	
	11	1	**7Y-4538**	4	CLAMP-HALF	
	12	1	**8T-4121**	4	WASHER-HARD (11X21X2.5-MM THK)	
M	13	1	**8T-4139**	8	BOLT (M12X1.75X30-MM)	
M	14	1	**8T-4183**	4	BOLT (M12X1.75X40-MM)	
M	15	1	**8T-4184**	8	BOLT (M12X1.75X45-MM)	
M	16	1	**8T-4194**	8	BOLT (M12X1.75X50-MM)	
	17	1	**8T-4223**	24	WASHER-HARD (13.5X25.5X3-MM THK)	
M	18	1	**8T-4956**	4	BOLT (M12X1.75X35-MM)	
M	19	1	**8T-6685**	4	BOLT (M10X1.5X110-MM)	

C-CHANGE FROM PREVIOUS TYPE
I-REFER TO HYDRAULIC INFORMATION SYSTEM
M-METRIC PART
Y-SEPARATE ILLUSTRATION

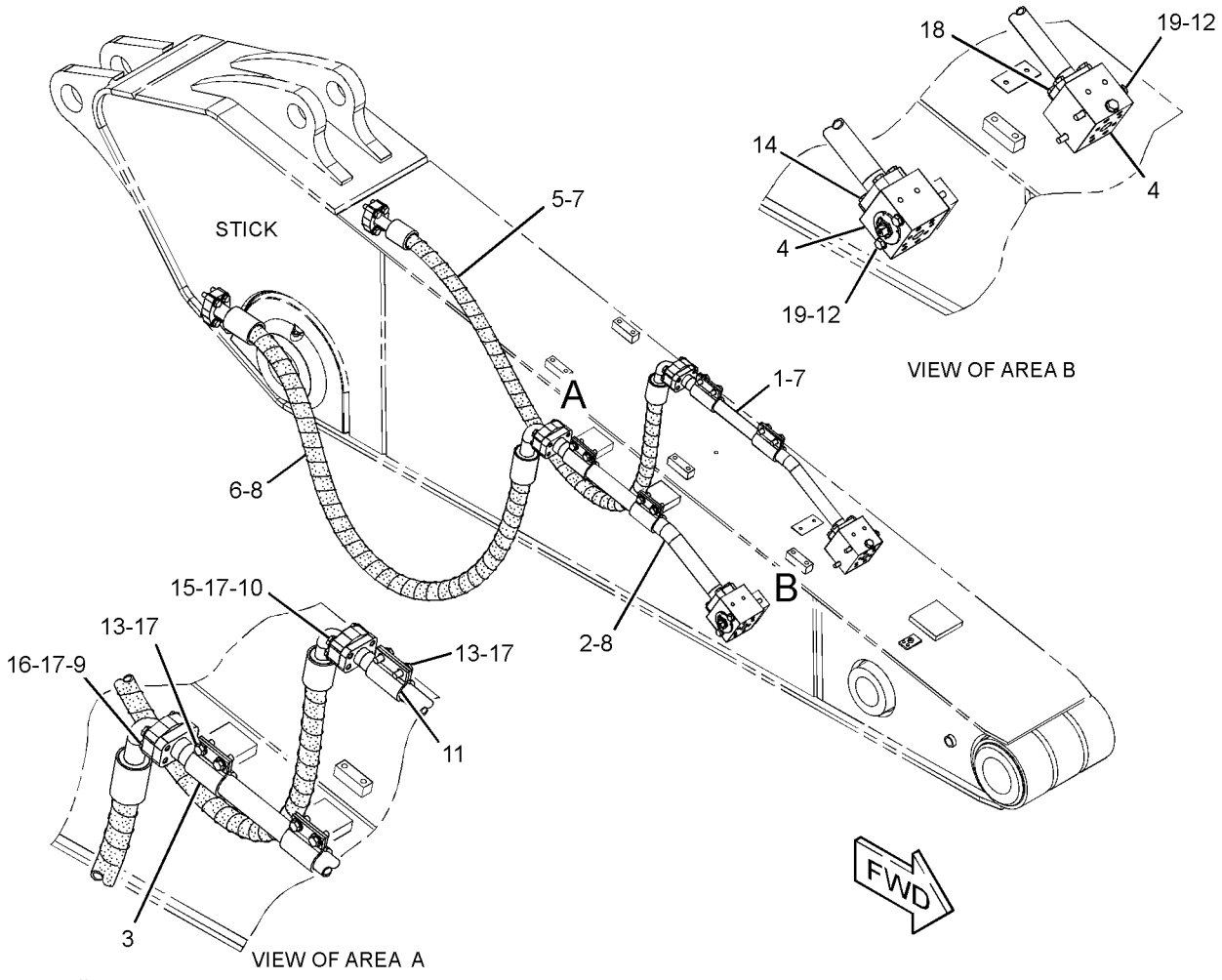

GRAPHIC #1 **<END>** g01365925

HYDRAULIC SYSTEM

237-3184 LINES GP-AUXILIARY HYDRAULIC

S/N: MNB1-UP; WDK1-UP
2.4-M TO 2.5-M (7.87-FT TO 8.2-FT) STICK. HIGH PRESSURE
AN ATTACHMENT

SMCS-5057 **i02954161**

NOTE	REF NO	GRAPHIC REF	PART NUMBER	QTY	PART NAME 1 2 3 4 5 6 (PRODUCT LEVEL)	SEE PAGE
	1	1	**127-6780**	1	TUBE AS	
	2	1	**142-6582**	1	TUBE AS	
	3	1	**173-7916**	4	CLAMP-HALF	
I	4	1	**253-6694**	1	HOSE AS	
I	5	1	**253-6697**	1	HOSE AS	
CY	6	1	**277-0954**	2	VALVE GP-MANUAL (AUXILIARY, SHUTOFF)	772
	7	1	**1P-3703**	3	SEAL-RECTANGULAR	
	8	1	**1P-3704**	3	SEAL-RECTANGULAR	
	9	1	**1P-5767**	4	FLANGE-HALF	
	10	1	**6V-0400**	4	FLANGE-HALF	
	11	1	**7Y-4538**	4	CLAMP-HALF	
	12	1	**8T-4121**	4	WASHER-HARD (11X21X2.5-MM THK)	
M	13	1	**8T-4139**	8	BOLT (M12X1.75X30-MM)	
M	14	1	**8T-4183**	4	BOLT (M12X1.75X40-MM)	
M	15	1	**8T-4184**	8	BOLT (M12X1.75X45-MM)	
M	16	1	**8T-4194**	8	BOLT (M12X1.75X50-MM)	
	17	1	**8T-4223**	24	WASHER-HARD (13.5X25.5X3-MM THK)	
M	18	1	**8T-4956**	4	BOLT (M12X1.75X35-MM)	
M	19	1	**8T-6685**	4	BOLT (M10X1.5X110-MM)	

C-CHANGE FROM PREVIOUS TYPE
I-REFER TO HYDRAULIC INFORMATION SYSTEM
M-METRIC PART
Y-SEPARATE ILLUSTRATION

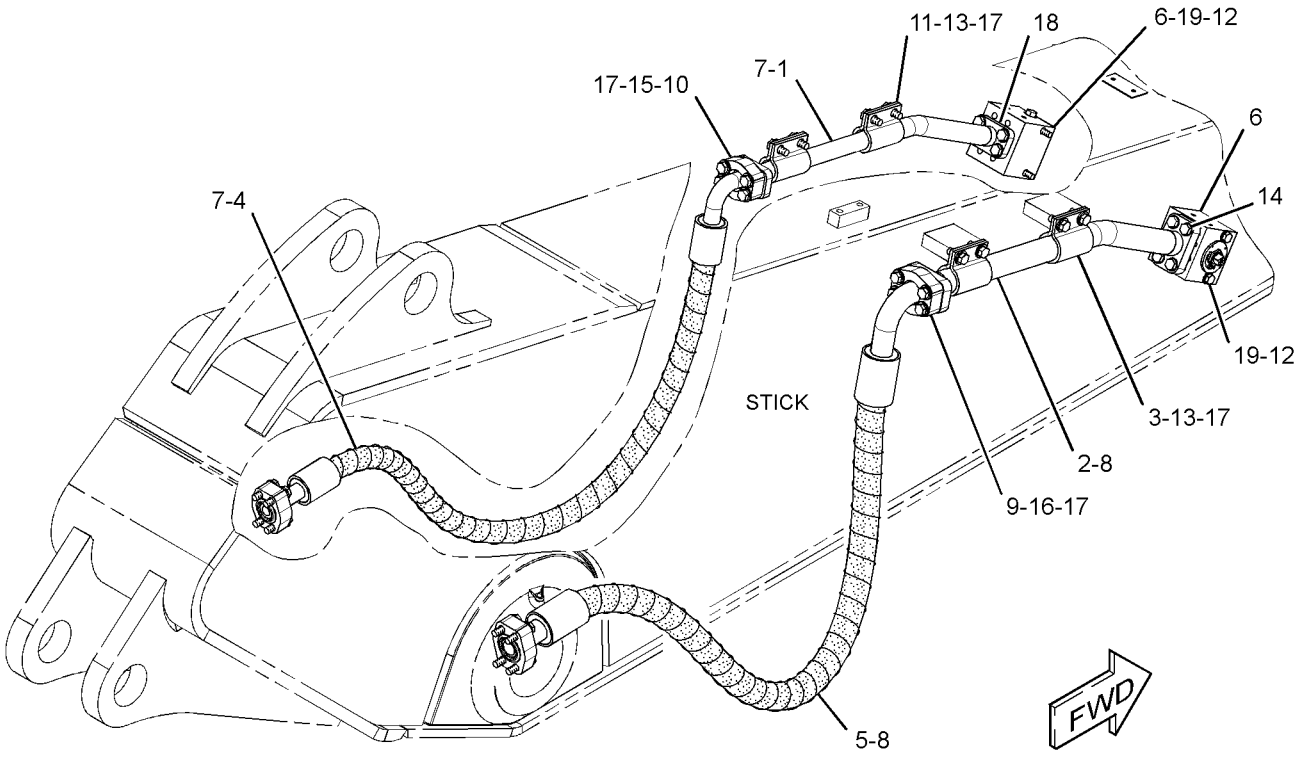

GRAPHIC #1 **<END>** g01475176

HYDRAULIC SYSTEM

242-6492 LINES GP-AUXILIARY HYDRAULIC

S/N: MNB1-UP; WDK1-UP
2.4 TO 2.5-M (7.9 TO 8.2-FT) STICK. MEDIUM PRESSURE
AN ATTACHMENT

SMCS-5057 **i02997271**

NOTE	REF NO	GRAPHIC REF	PART NUMBER	QTY	PART NAME 1 2 3 4 5 6 (PRODUCT LEVEL)	SEE PAGE
	1	1	**6C-6760**	2	MANIFOLD	
	2	1	**149-1738**	4	CLIP	
	3	1	**187-9977**	2	PLATE	
	4	1	**187-9978**	1	SUPPORT AS	
	5	1	**187-9981**	1	SUPPORT AS	
I	6	1	**216-6485**	2	HOSE AS	
	7	1	*250-1440*	2	ADAPTER AS	
					(EACH INCLUDES)	
		1	**3K-0360**	1	SEAL-O-RING	
		1	**7X-3164**	1	ADAPTER-SWIVEL	
	8	1	**253-6685**	2	TUBE AS	
	9	1	**6V-8398**	4	SEAL-O-RING	
	10	1	**8T-4121**	4	WASHER-HARD (11X21X2.5-MM THK)	
M	11	1	**8T-4136**	4	BOLT (M10X1.5X25-MM)	
M	12	1	**8T-4139**	8	BOLT (M12X1.75X30-MM)	
	13	1	**8T-4223**	8	WASHER-HARD (13.5X25.5X3-MM THK)	
M	14	1	**8T-4185**	4	BOLT (M10X1.5X50-MM)	
J	15	1	**197-2362**	2	PLATE	
JM	16	1	**7X-2543**	4	BOLT (M10X1.5X120-MM)	
JM	17	1	**8T-4183**	8	BOLT (M12X1.75X40-MM)	

I-REFER TO HYDRAULIC INFORMATION SYSTEM
J-USED ONLY WITH HIGH PRESSURE AUXILIARY HYDRAULIC LINES
M-METRIC PART

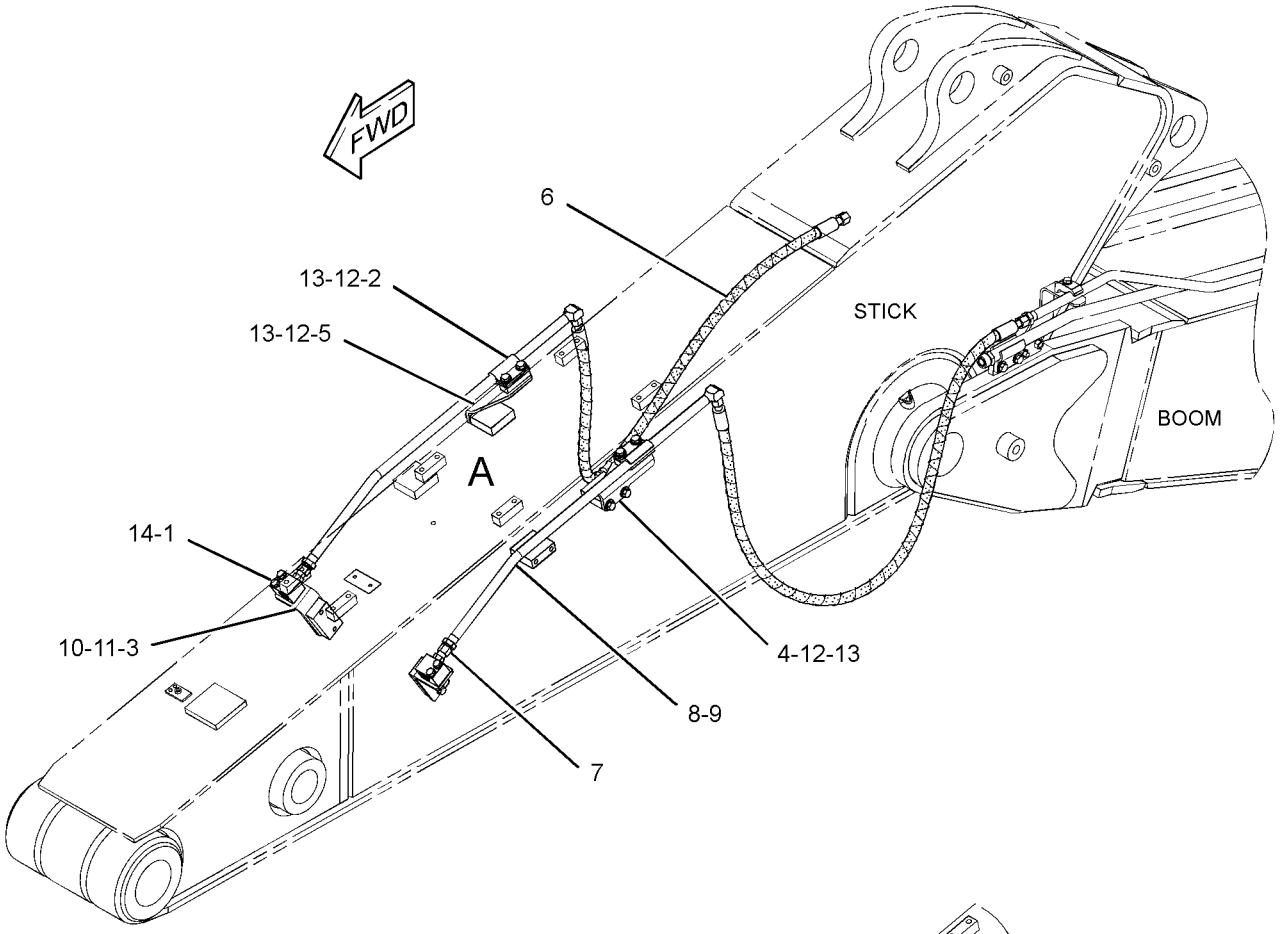

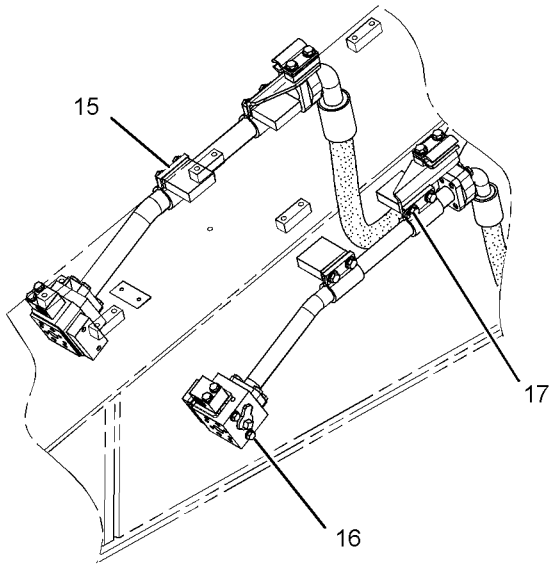

VIEW OF AREA A
(OPTIONAL DESIGN)
(WHEN USED WITH HIGH FLOW LINES)

GRAPHIC #1 **<END>** g01519750

HYDRAULIC SYSTEM

253-6494 LINES GP-AUXILIARY HYDRAULIC

S/N: MNB1-UP; WDK1-UP
3.2-M (10.5-FT). MEDIUM FLOW
AN ATTACHMENT

SMCS-5057 **i02344796**

NOTE	REF NO	GRAPHIC REF	PART NUMBER	QTY	PART NAME 1 2 3 4 5 6 (PRODUCT LEVEL)	SEE PAGE
	1	1	**6C-6760**	2	MANIFOLD	
	2	1	**149-1738**	8	CLIP	
	3	1	**187-9977**	2	PLATE	
	4	1	**187-9978**	2	SUPPORT AS	
	5	1	**187-9981**	2	SUPPORT AS	
	6	1	*250-1440*	2	ADAPTER AS	
					(EACH INCLUDES)	
		1	**3K-0360**	1	SEAL-O-RING	
		1	**7X-3164**	1	ADAPTER-SWIVEL	
	7	1	**253-6455**	2	TUBE AS	
I	8	1	**253-6566**	2	HOSE AS	
	9	1	**6V-8398**	4	SEAL-O-RING	
	10	1	**8T-4121**	4	WASHER-HARD (11X21X2.5-MM THK)	
M	11	1	**8T-4136**	4	BOLT (M10X1.5X25-MM)	
M	12	1	**8T-4139**	16	BOLT (M12X1.75X30-MM)	
M	13	1	**8T-4185**	4	BOLT (M10X1.5X50-MM)	
	14	1	**8T-4223**	16	WASHER-HARD (13.5X25.5X3-MM THK)	
JM	15	1	**7X-2543**	4	BOLT (M10X1.5X120-MM)	
JM	16	1	**8T-4183**	8	BOLT (M12X1.75X40-MM)	

I-REFER TO HYDRAULIC INFORMATION SYSTEM
J-OPTIONAL DESIGN
M-METRIC PART

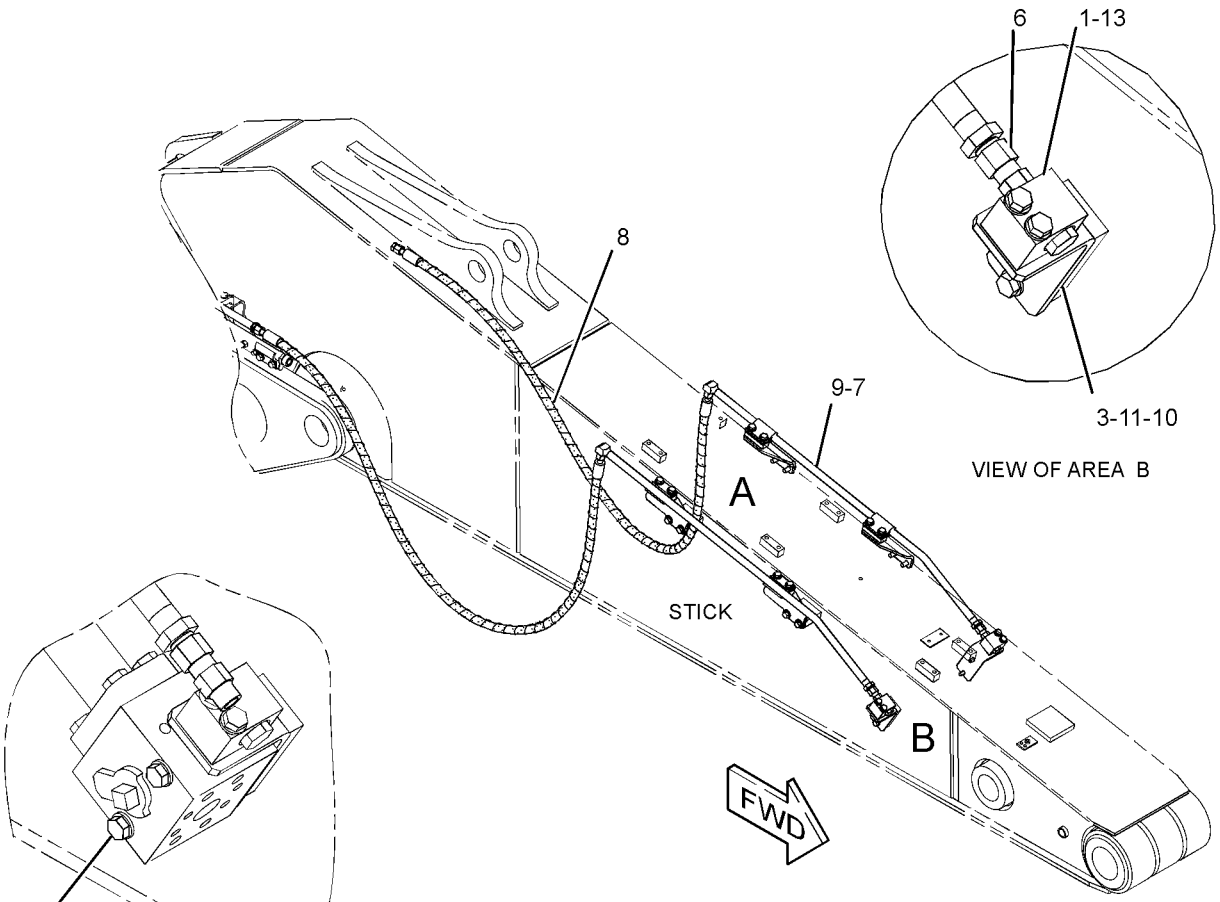

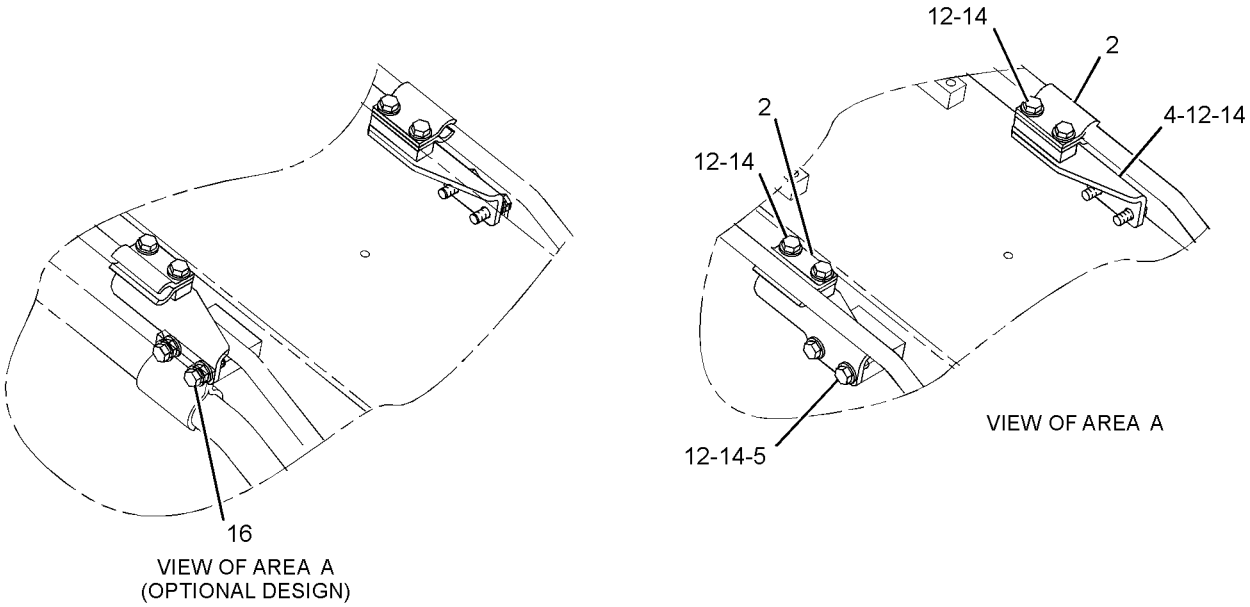

GRAPHIC #1 **<END>** g01215902

HYDRAULIC SYSTEM

253-6497 LINES GP-AUXILIARY HYDRAULIC

S/N: MNB1-UP; WDK1-UP
2.95 TO 3.0-M (9.7 TO 9.8-FT) STICK. MEDIUM FLOW
AN ATTACHMENT

SMCS-5057 **i02484954**

NOTE	REF NO	GRAPHIC REF	PART NUMBER	QTY	PART NAME 1 2 3 4 5 6 (PRODUCT LEVEL)	SEE PAGE
	1	1	**6C-6760**	2	MANIFOLD	
	2	1	**149-1738**	8	CLIP	
	3	1	**187-9977**	2	PLATE	
	4	1	**187-9978**	2	SUPPORT AS	
	5	1	**187-9981**	2	SUPPORT AS	
	6	1	*250-1440*	2	ADAPTER AS	
					(EACH INCLUDES)	
		1	**3K-0360**	1	SEAL-O-RING	
		1	**7X-3164**	1	ADAPTER-SWIVEL	
	7	1	**253-6455**	2	TUBE AS	
I	8	1	**253-6557**	2	HOSE AS	
	9	1	**6V-8398**	4	SEAL-O-RING	
	10	1	**8T-4121**	4	WASHER-HARD (11X21X2.5-MM THK)	
M	11	1	**8T-4136**	4	BOLT (M10X1.5X25-MM)	
M	12	1	**8T-4139**	16	BOLT (M12X1.75X30-MM)	
	13	1	**8T-4223**	16	WASHER-HARD (13.5X25.5X3-MM THK)	
M	14	1	**8T-4185**	4	BOLT (M10X1.5X50-MM)	
JM	15	1	**7X-2543**	4	BOLT (M10X1.5X120-MM)	
JM	16	1	**8T-4183**	8	BOLT (M12X1.75X40-MM)	

I-REFER TO HYDRAULIC INFORMATION SYSTEM
J-USED WITH AUXILIARY HYDRAULIC-HIGH FLOW LINES
M-METRIC PART

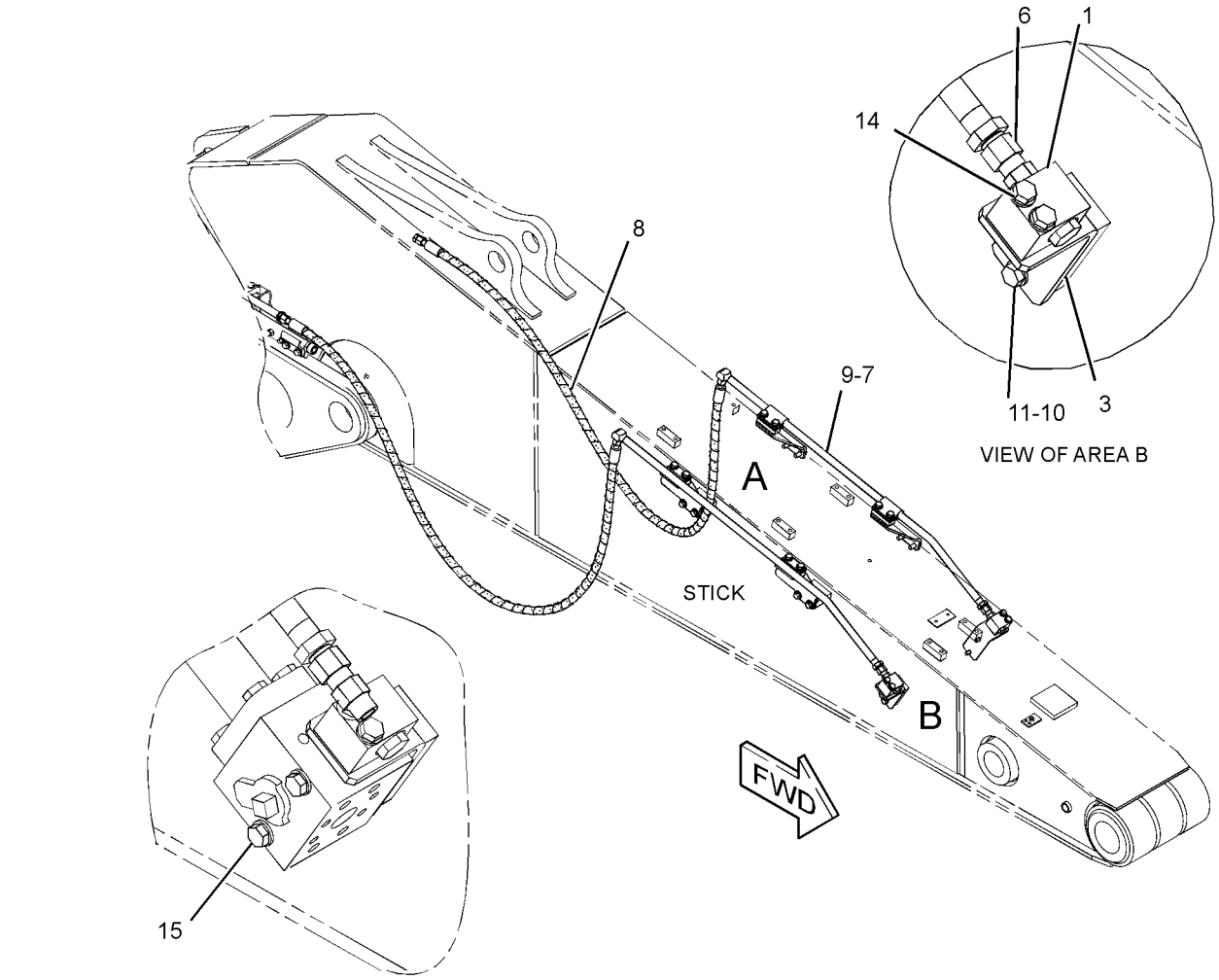

VIEW OF AREA B

VIEW OF AREA B
(OPTIONAL DESIGN WHEN USED WITH HIGH PRESSURE LINES)

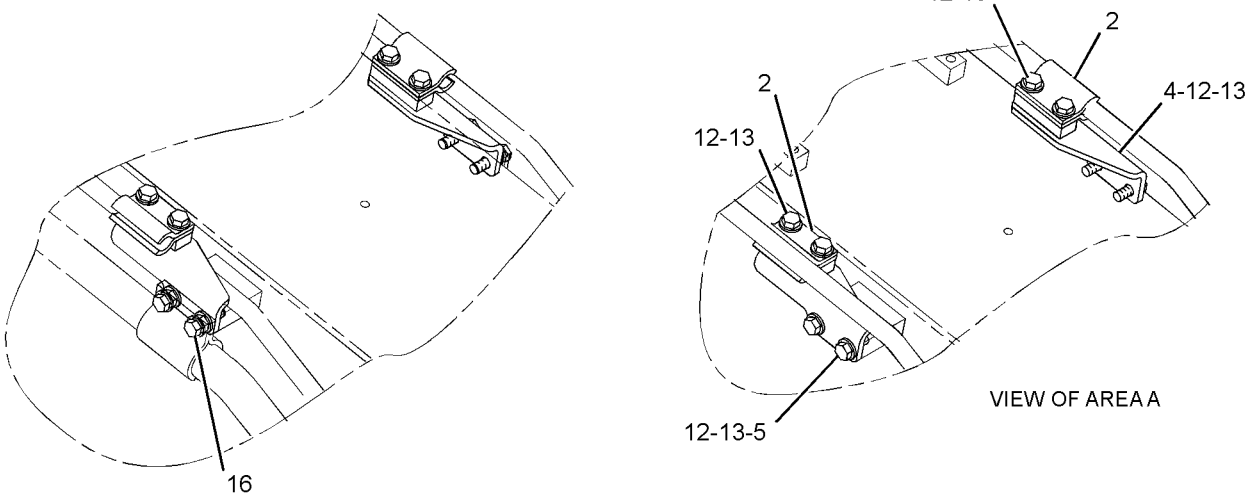

VIEW OF AREA A

VIEW OF AREA A
(OPTIONAL DESIGN WHEN USED
WITH HIGH PRESSURE LINES)

GRAPHIC #1 **<END>** g01202701

HYDRAULIC SYSTEM

253-6500 LINES GP-AUXILIARY HYDRAULIC

S/N: MNB1-UP; WDK1-UP
2.65-M (8.69-FT). MEDIUM FLOW
AN ATTACHMENT

SMCS-5057 **i02489617**

NOTE	REF NO	GRAPHIC REF	PART NUMBER	QTY	PART NAME 1 2 3 4 5 6 (PRODUCT LEVEL)	SEE PAGE
	1	1	**6C-6760**	2	MANIFOLD	
	2	1	**149-1738**	4	CLIP	
I	3	1	**177-8572**	2	HOSE AS	
	4	1	**187-9977**	2	PLATE	
	5	1	**187-9978**	1	SUPPORT AS	
	6	1	**187-9981**	1	SUPPORT AS	
	7	1	*250-1440*	2	ADAPTER AS	
					(EACH INCLUDES)	
		1	**3K-0360**	2	SEAL-O-RING	
		1	**7X-3164**	2	ADAPTER-SWIVEL	
	8	1	**253-6685**	2	TUBE AS	
	9	1	**6V-8398**	4	SEAL-O-RING	
	10	1	**8T-4121**	4	WASHER-HARD (11X21X2.5-MM THK)	
M	11	1	**8T-4136**	4	BOLT (M10X1.5X25-MM)	
M	12	1	**8T-4139**	8	BOLT (M12X1.75X30-MM)	
	13	1	**8T-4223**	8	WASHER-HARD (13.5X25.5X3-MM THK)	
M	14	1	**8T-4185**	4	BOLT (M10X1.5X50-MM)	
J	15	1	**197-2362**	2	PLATE	
JM	16	1	**7X-2543**	4	BOLT (M10X1.5X120-MM)	
JM	17	1	**8T-4183**	8	BOLT (M12X1.75X40-MM)	

I-REFER TO HYDRAULIC INFORMATION SYSTEM
J-OPTIONAL DESIGN
M-METRIC PART

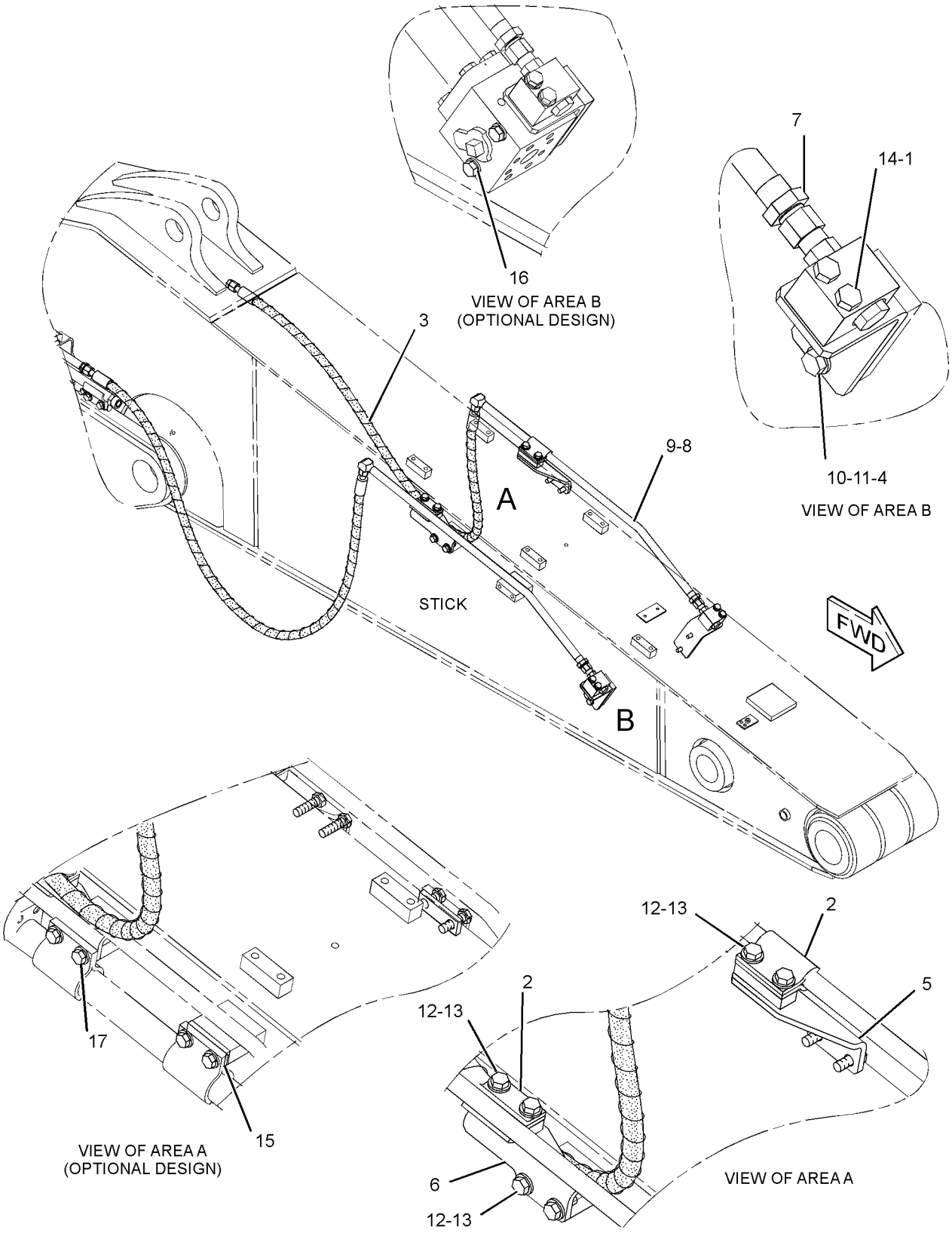

GRAPHIC #1

<END>

g01216095

227-0550 LINES GP-BOOM–1-PIECE LONG BOOM

S/N: MNB1-UP; WDK1-UP

PART OF 229-1754, 229-1758, 229-1760, 275-3699, 275-3839 BOOM AR-1 PIECE LONG AN ATTACHMENT

SMCS-5057 **i03085731**

NOTE	REF NO	GRAPHIC REF	PART NUMBER	QTY	PART NAME 1 2 3 4 5 6 (PRODUCT LEVEL)	SEE PAGE
	1	1	**4I-1674**	5	CLIP	
	2	1	**7Y-4868**	8	CLIP	
	3	1	**187-6817**	1	TUBE AS	
	4	1	**187-6818**	1	TUBE AS	
	5	1	**187-6819**	1	TUBE AS	
	6	1	**187-6820**	1	TUBE AS	
	7	1	**187-6993**	5	CLIP	
	8	1	**202-3763**	1	CLIP AS	
	9	1	**202-3764**	1	CLIP AS	
C	10	1	**296-7417**	1	TUBE AS	
C	11	1	**296-7418**	1	TUBE AS	
I	12	1	**236-3005**	1	HOSE AS	
I	13	1	**236-3009**	1	HOSE AS	
	14	1	**1P-3703**	3	SEAL-RECTANGULAR	
	15	1	**1P-3704**	1	SEAL-RECTANGULAR	
	16	1	**1P-5767**	2	FLANGE-HALF	
	17	1	**6V-0400**	6	FLANGE-HALF	
	18	1	**6V-9746**	6	SEAL-O-RING	
M	19	1	**8T-4139**	16	BOLT (M12X1.75X30-MM)	
M	20	1	**8T-4184**	10	BOLT (M12X1.75X45-MM)	
M	21	1	**8T-4194**	8	BOLT (M12X1.75X50-MM)	
	22	1	**8T-4223**	36	WASHER-HARD (13.5X25.5X3-MM THK)	
M	23	1	**8T-6868**	2	BOLT (M12X1.75X80-MM)	
C	24	1	**9F-2167**	2	SCREW-PURGE (3/8-24X1.164-IN)	

C-CHANGE FROM PREVIOUS TYPE
I-REFER TO HYDRAULIC INFORMATION SYSTEM
M-METRIC PART

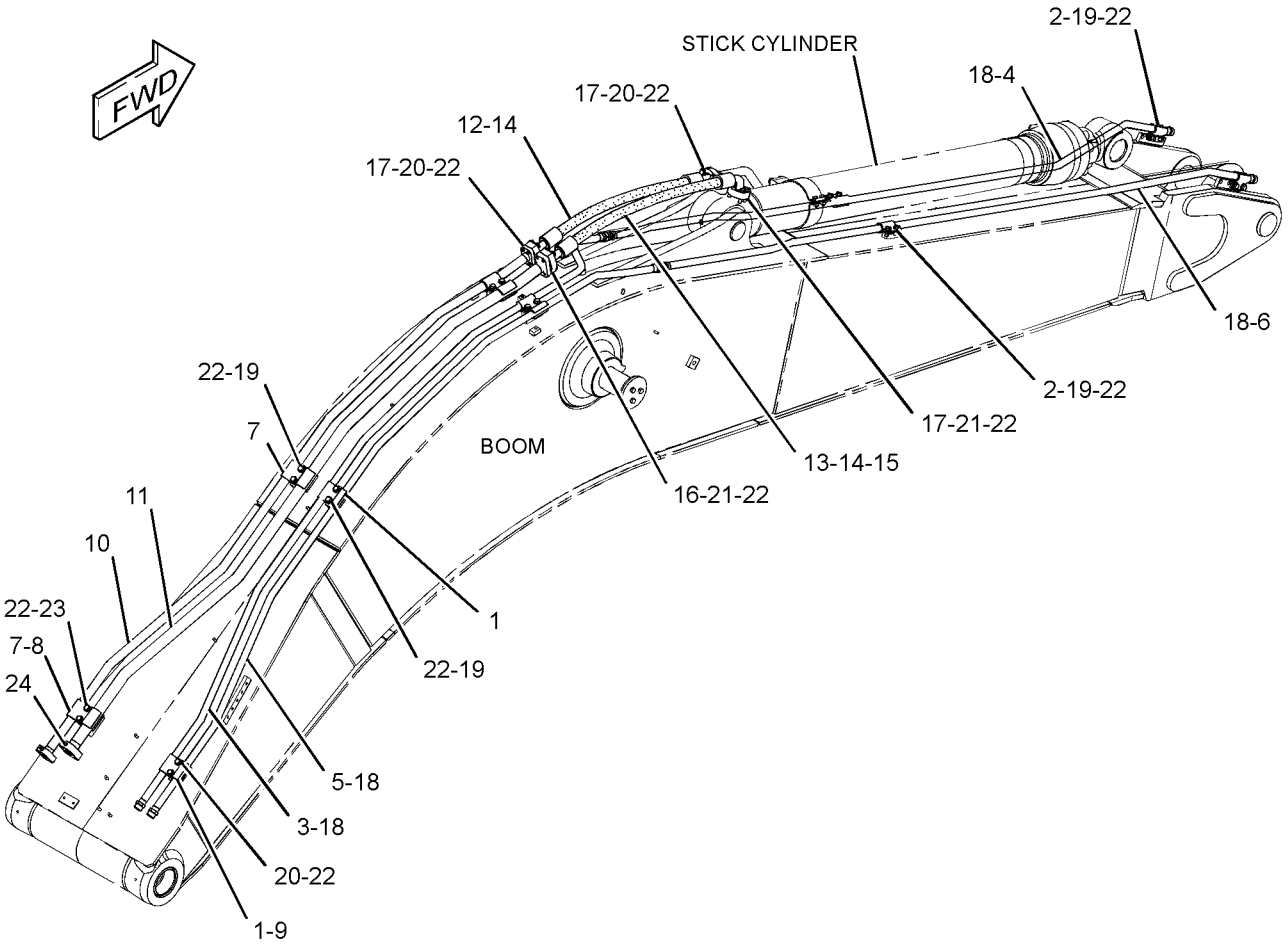

GRAPHIC #1 **<END>** g01366754

227-0551 LINES GP-BOOM–1-PIECE SHORT BOOM

S/N: MNB1-UP; WDK1-UP

PART OF 229-1757, 229-1759 BOOM AR-1 PIECE SHORT

AN ATTACHMENT

SMCS-5057 **i02778838**

NOTE	REF NO	GRAPHIC REF	PART NUMBER	QTY	PART NAME 1 2 3 4 5 6 (PRODUCT LEVEL)	SEE PAGE
	1	1	**4I-1674**	5	CLIP	
	2	1	**7Y-4868**	8	CLIP	
	3	1	**187-6993**	5	CLIP	
	4	1	**202-3763**	1	CLIP AS	
	5	1	**202-3764**	1	CLIP AS	
	6	1	**202-3875**	1	TUBE AS	
	7	1	**202-3876**	1	TUBE AS	
	8	1	**202-3877**	1	TUBE AS	
	9	1	**202-3878**	1	TUBE AS	
I	10	1	**236-3005**	1	HOSE AS	
I	11	1	**236-3009**	1	HOSE AS	
	12	1	**296-7419**	1	TUBE AS	
	13	1	**296-7420**	1	TUBE AS	
	14	1	**1P-3703**	3	SEAL-RECTANGULAR	
	15	1	**1P-3704**	1	SEAL-RECTANGULAR	
	16	1	**1P-5767**	2	FLANGE-HALF	
	17	1	**6V-0400**	6	FLANGE-HALF	
	18	1	**6V-9746**	6	SEAL-O-RING	
M	19	1	**8T-4139**	16	BOLT (M12X1.75X30-MM)	
M	20	1	**8T-4184**	10	BOLT (M12X1.75X45-MM)	
M	21	1	**8T-4194**	8	BOLT (M12X1.75X50-MM)	
	22	1	**8T-4223**	36	WASHER-HARD (13.5X25.5X3-MM THK)	
M	23	1	**8T-6868**	2	BOLT (M12X1.75X80-MM)	
	24	1	**9F-2167**	2	SCREW-PURGE (3/8-24X1.164-IN)	

I-REFER TO HYDRAULIC INFORMATION SYSTEM
M-METRIC PART

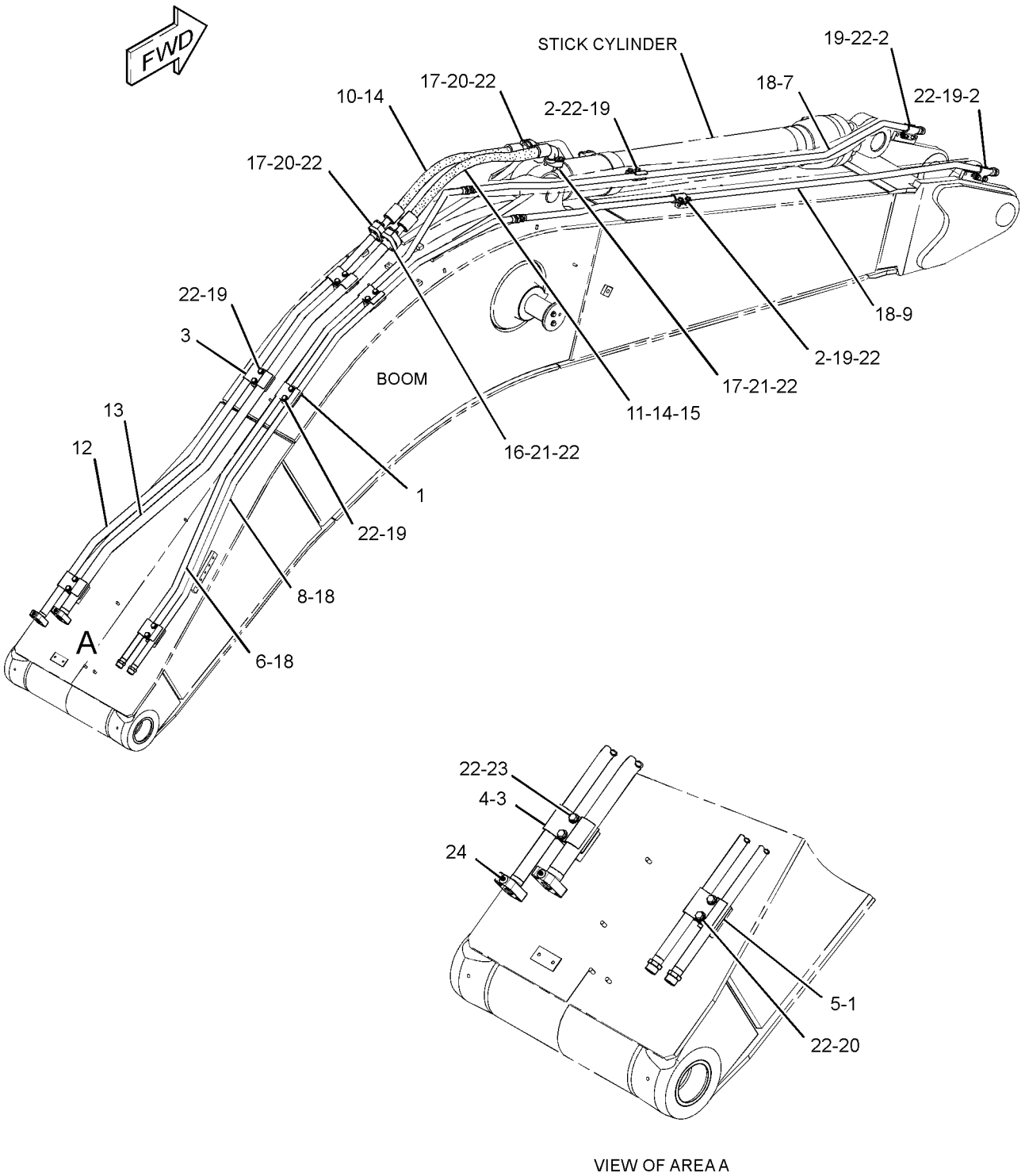

VIEW OF AREA A

GRAPHIC #1 **<END>** g01400421

230-0488 LINES GP-BOOM—DRAIN, REACH BOOM

S/N: MNB1-UP; WDK1-UP
AN ATTACHMENT

SMCS-5057 **i02638117**

NOTE	REF NO	GRAPHIC REF	PART NUMBER	QTY	PART NAME 1 2 3 4 5 6 (PRODUCT LEVEL)	SEE PAGE
	1	1	**7K-1181**	8	STRAP-CABLE	
C	2	1	**153-8798**	1	PLATE	
C	3	1	**253-6417**	2	BRACKET	
I	4	1	**253-6614**	1	HOSE AS	
	5	1	*148-8457*	2	UNION AS	
					(EACH INCLUDES)	
		1	**6V-8398**	2	SEAL-O-RING	
		1	**6V-8995**	1	UNION	
	6	1	**6V-9169**	2	NUT-BULKHEAD (13/16-16-THD)	
CM	7	1	**7X-2550**	2	BOLT (M12X1.75X110-MM)	
CM	8	1	**8T-4184**	2	BOLT (M12X1.75X45-MM)	
M	9	1	**8T-4194**	2	BOLT (M12X1.75X50-MM)	
C	10	1	**8T-4223**	6	WASHER-HARD (13.5X25.5X3-MM THK)	
CM	11	1	**8T-4956**	2	BOLT (M12X1.75X35-MM)	

C-CHANGE FROM PREVIOUS TYPE
I-REFER TO HYDRAULIC INFORMATION SYSTEM
M-METRIC PART

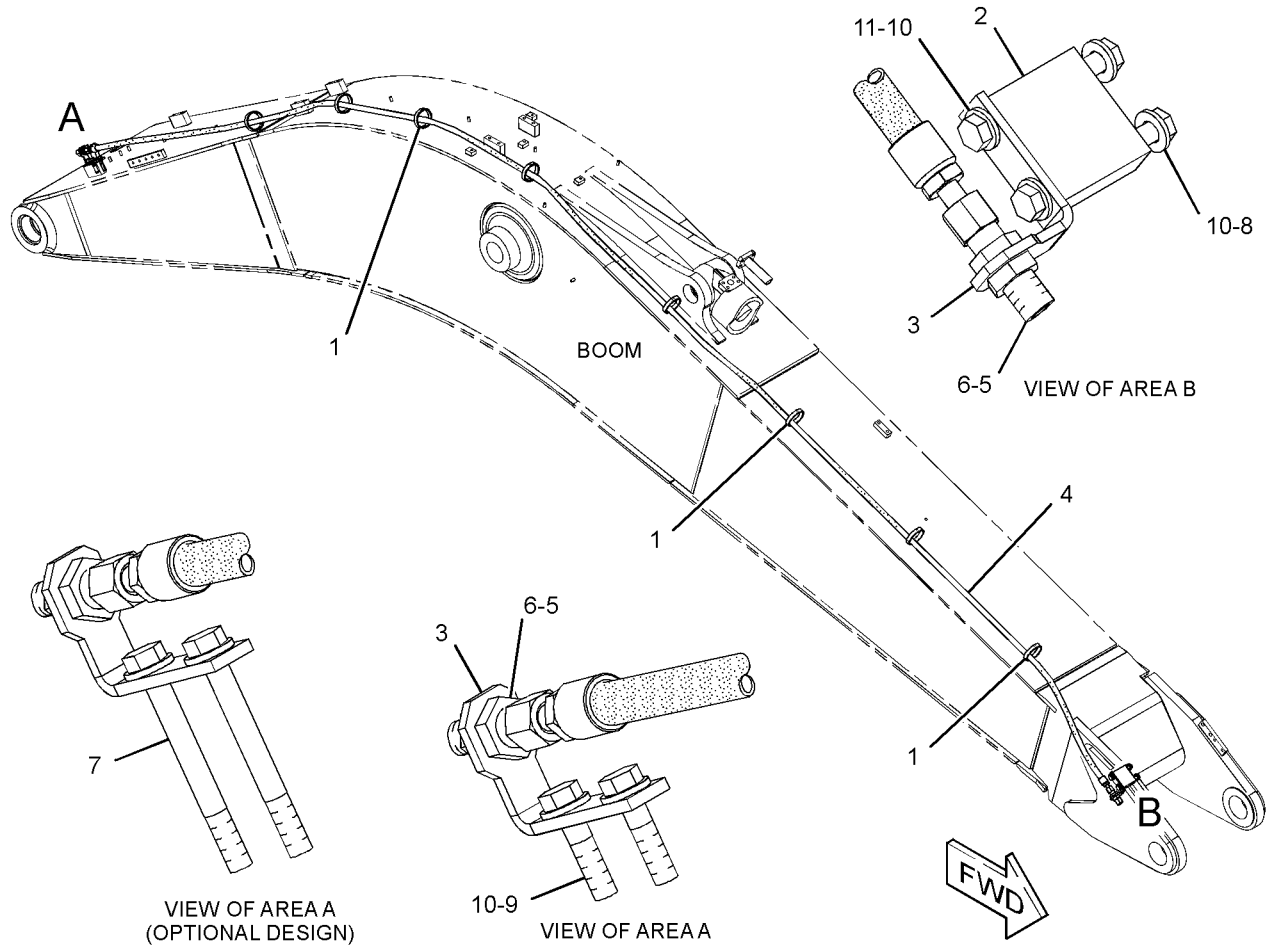

GRAPHIC #1 **<END>** g01336212

230-0492 LINES GP-BOOM—DRAIN, MASS BOOM

S/N: MNB1-UP; WDK1-UP

AN ATTACHMENT

SMCS-5057 **i02780667**

NOTE	REF NO	GRAPHIC REF	PART NUMBER	QTY	PART NAME 1 2 3 4 5 6 (PRODUCT LEVEL)	SEE PAGE
	1	1	**7K-1181**	8	STRAP-CABLE	
C	2	1	**153-8798**	1	PLATE	
C	3	1	**253-6417**	2	BRACKET	
I	4	1	**262-3164**	1	HOSE AS	
	5	1	*148-8457*	2	UNION AS	
					(EACH INCLUDES)	
		1	**6V-8398**	1	SEAL-O-RING	
		1	**6V-8995**	1	UNION	
	6	1	**6V-9169**	2	NUT-BULKHEAD (13/16-16-THD)	
BCM	7	1	**7X-2550**	2	BOLT (M12X1.75X110-MM)	
CM	8	1	**8T-4184**	2	BOLT (M12X1.75X45-MM)	
M	9	1	**8T-4194**	2	BOLT (M12X1.75X50-MM)	
C	10	1	**8T-4223**	6	WASHER-HARD (13.5X25.5X3-MM THK)	
CM	11	1	**8T-4956**	2	BOLT (M12X1.75X35-MM)	

B-USE AS REQUIRED
C-CHANGE FROM PREVIOUS TYPE
I-REFER TO HYDRAULIC INFORMATION SYSTEM
M-METRIC PART

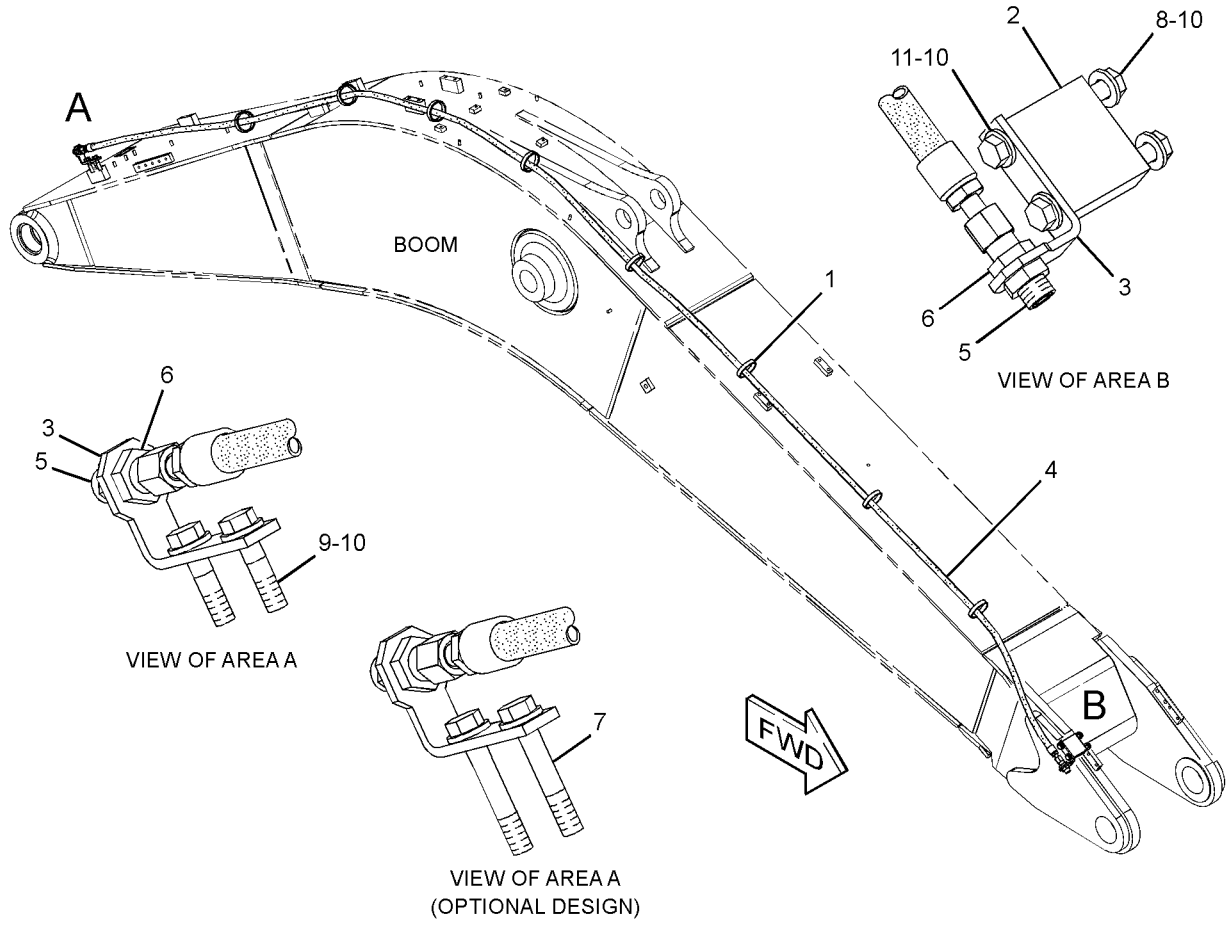

GRAPHIC #1 **<END>** g01403734

HYDRAULIC SYSTEM

268-6783 LINES GP-BOOM

S/N: MNB1-UP

PART OF 262-3586 SPECIAL AR-SUPER LONG REACH AN ATTACHMENT

SMCS-5057 **i02429956**

NOTE	REF NO	GRAPHIC REF	PART NUMBER	QTY	PART NAME 1 2 3 4 5 6 (PRODUCT LEVEL)	SEE PAGE
	1	1	**4I-8789**	1	VALVE GP-CHECK	
I	2	1	**5I-7290**	2	HOSE AS	
	3	1	**7Y-6506**	1	TUBE AS	
	4	1	**7Y-6507**	1	TUBE AS	
	5	1	**116-9118**	1	TUBE AS	
	6	1	**268-6784**	1	TUBE AS	
	7	1	**268-6785**	1	TUBE AS	
	8	1	**268-6786**	1	TUBE AS	
	9	1	**277-0878**	1	TUBE AS	
	10	1	**277-0879**	2	TUBE AS	
	11	1	**277-0880**	2	TUBE AS	
	12	1	**277-0881**	1	TUBE AS	
	13	1	**277-0937**	2	TUBE AS	
	14	1	**108-7550**	4	CLIP	
	15	1	*148-8335*	1	CONNECTOR AS	
		1	**5K-9090**	1	SEAL-O-RING	
		1	**6V-8635**	1	CONNECTOR	
		1	**7M-8485**	1	SEAL-O-RING	
	16	1	**4I-1674**	4	CLIP	
	17	1	**5K-9090**	7	SEAL-O-RING	
	18	1	**6V-9746**	10	SEAL-O-RING	
	19	1	**7M-8485**	1	SEAL-O-RING	
	20	1	**7Y-3732**	16	CLIP	
	21	1	**7Y-4868**	28	CLIP	
M	22	1	**8T-4139**	52	BOLT (M12X1.75X30-MM)	
	23	1	**8T-4223**	52	WASHER-HARD (13.5X25.5X3-MM THK)	

I-REFER TO HYDRAULIC INFORMATION SYSTEM
M-METRIC PART

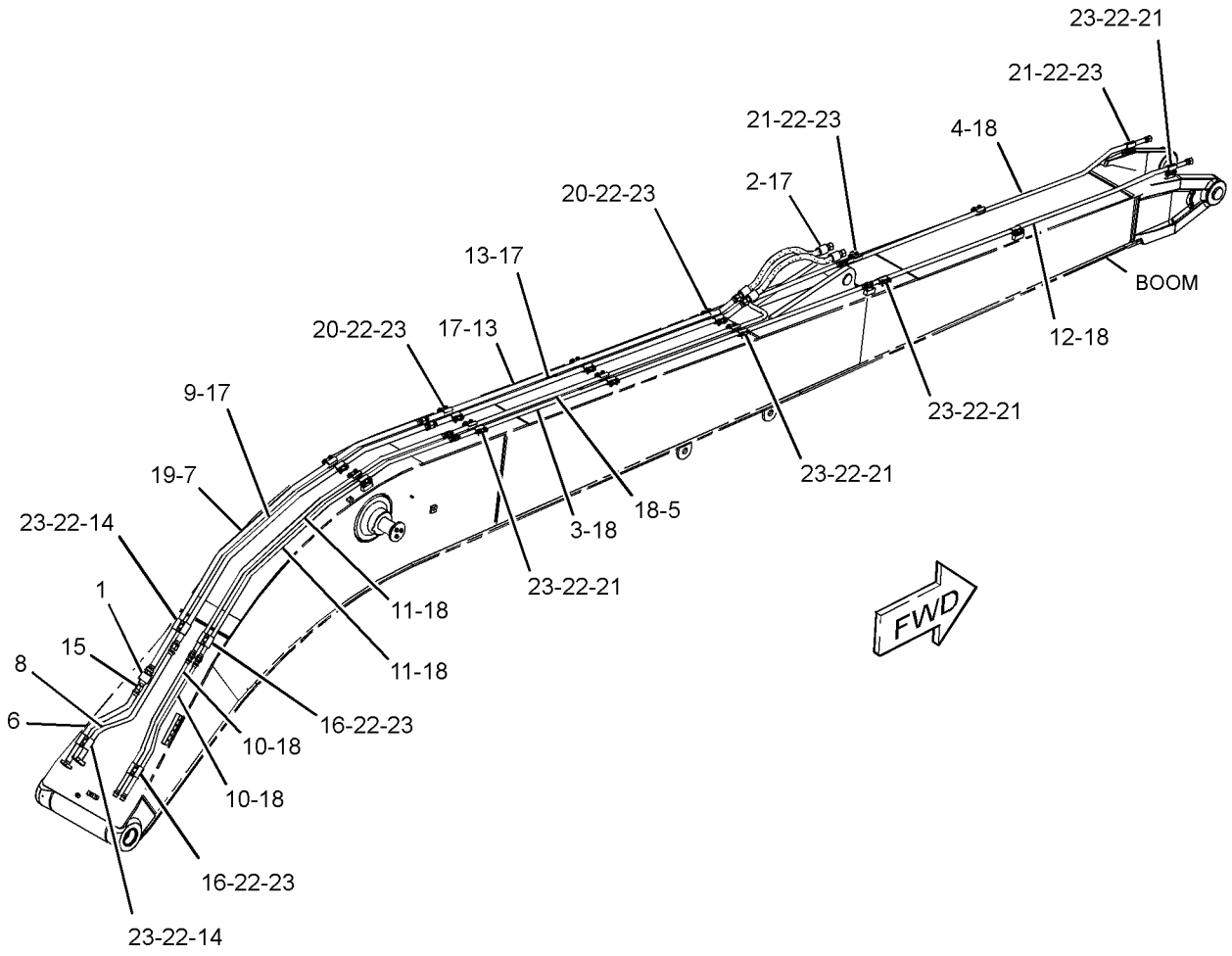

GRAPHIC #1 **<END>** g01238431

282-5579 LINES GP-BOOM–REACH BOOM, STICK LOAD CONTROL

S/N: MNB1-UP; WDK1-UP
PART OF 255-5740 VALVE AR-CHECK & RELIEF
AN ATTACHMENT

SMCS-5057 **i03028711**

NOTE	REF NO	GRAPHIC REF	PART NUMBER	QTY	PART NAME 1 2 3 4 5 6 (PRODUCT LEVEL)	SEE PAGE
	1	1	**7K-1181**	5	STRAP-CABLE	
I	2	1	**7Y-8309**	2	HOSE AS	
I	3	1	**131-9516**	1	HOSE AS	
C	4	1	**157-9338**	1	PLATE	
	5	1	**179-5235**	6	CLIP	
	6	1	**282-5641**	1	PLATE	
C	7	1	**306-1519**	1	TUBE AS	
	8	1	*149-5452*	2	UNION AS	
					(EACH INCLUDES)	
		1	**6V-8397**	2	SEAL-O-RING	
		1	**6V-8994**	1	UNION	
	9	1	**5Q-4212**	2	CLIP	
	10	1	**6V-8398**	2	SEAL-O-RING	
	11	1	**6V-9168**	2	NUT (11/16-16-THD)	
M	12	1	**8T-4139**	6	BOLT (M12X1.75X30-MM)	
	13	1	**8T-4223**	8	WASHER-HARD (13.5X25.5X3-MM THK)	
M	14	1	**8T-4244**	6	NUT (M12X1.75-THD)	
M	15	1	**8T-7930**	2	BOLT (M12X1.75X160-MM)	
J	16	1	**179-5030**	6	CLIP	
J	17	1	**187-9862**	1	PLATE	
CJM	18	1	**7X-3335**	2	BOLT (M12X1.75X240-MM)	

C-CHANGE FROM PREVIOUS TYPE
I-REFER TO HYDRAULIC INFORMATION SYSTEM
J-WHEN USED WITH AUXILIARY HYDRAULIC LINES GP(MEDIUM PRESSURE)
M-METRIC PART

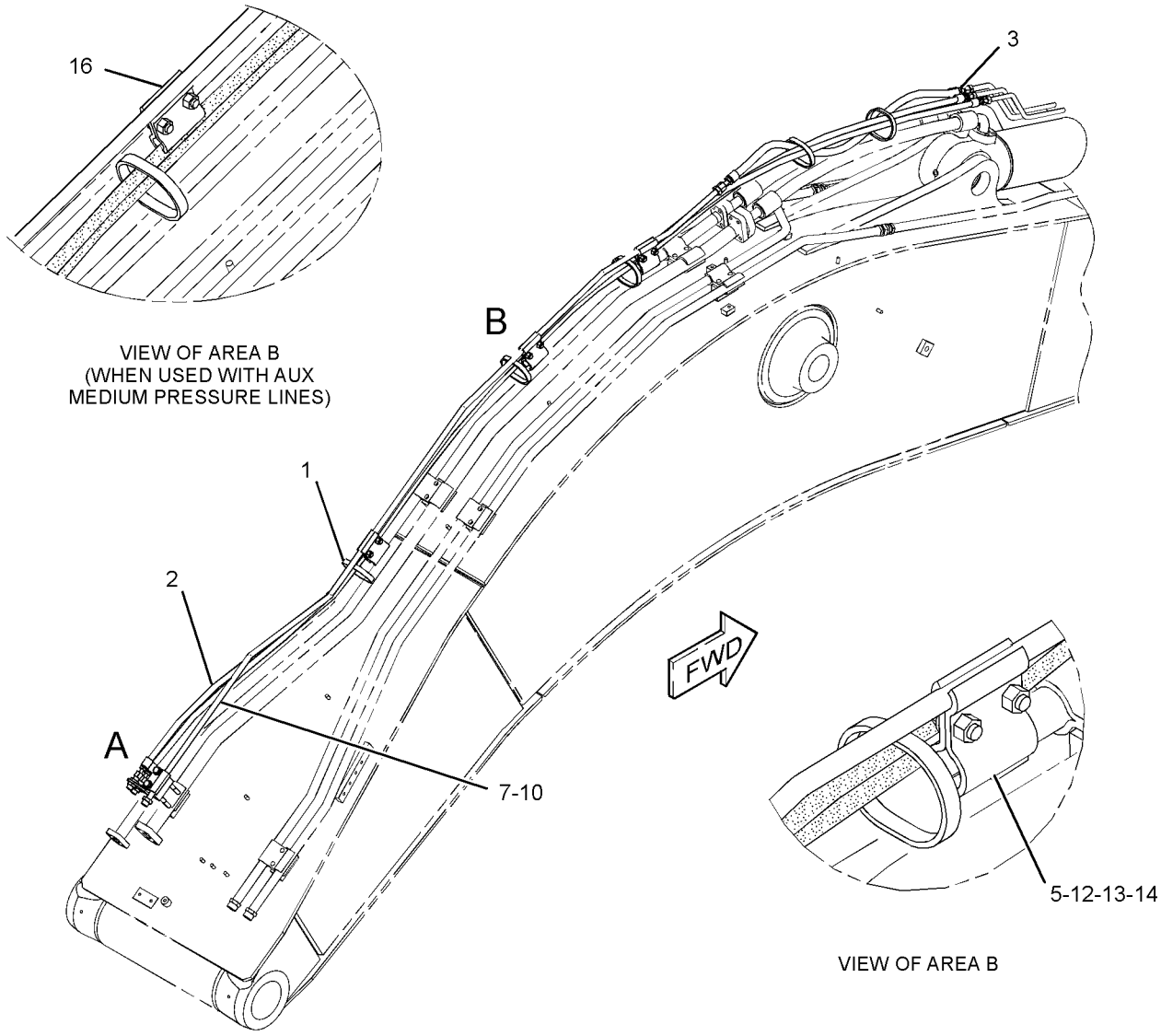

VIEW OF AREA B
(WHEN USED WITH AUX
MEDIUM PRESSURE LINES)

VIEW OF AREA B

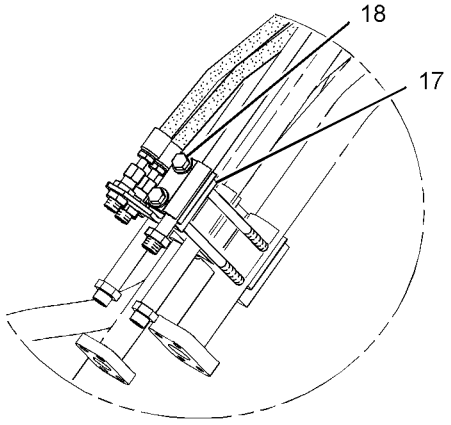

VIEW OF AREA A
(WHEN USED WITH AUX MEDIUM PRESSURE LINES)

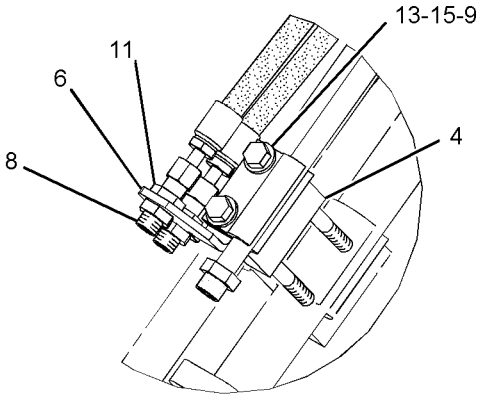

VIEW OF AREA A

GRAPHIC #1 **<END>** g01505400

288-7458 LINES GP-BOOM—STICK LOAD CONTROL VALVE

S/N: MNB1-UP; WDK1-UP
PART OF 310-0060 VALVE AR-LOAD CONTROL
AN ATTACHMENT

SMCS-5057 **i03030038**

NOTE	REF NO	GRAPHIC REF	PART NUMBER	QTY	PART NAME 1 2 3 4 5 6 (PRODUCT LEVEL)	SEE PAGE
	1	1	**7K-1181**	4	STRAP-CABLE	
I	2	1	**131-9516**	1	HOSE AS	
	3	1	**179-5235**	4	CLIP	
C	4	1	**157-9338**	1	PLATE	
I	5	1	**266-1302**	2	HOSE AS	
	6	1	**282-5641**	1	PLATE	
C	7	1	**306-1521**	1	TUBE AS	
	8	1	*149-5452*	2	UNION AS	
					(EACH INCLUDES)	
		1	**6V-8397**	2	SEAL-O-RING	
		1	**6V-8994**	1	UNION	
	9	1	**5Q-4212**	2	CLIP	
	10	1	**6V-8398**	2	SEAL-O-RING	
	11	1	**6V-9168**	2	NUT (11/16-16-THD)	
M	12	1	**8T-4139**	4	BOLT (M12X1.75X30-MM)	
	13	1	**8T-4223**	6	WASHER-HARD (13.5X25.5X3-MM THK)	
M	14	1	**8T-4244**	4	NUT (M12X1.75-THD)	
M	15	1	**8T-7930**	2	BOLT (M12X1.75X160-MM)	
J	16	1	**179-5030**	4	CLIP	
J	17	1	**187-9862**	1	PLATE	
CJM	18	1	**7X-3335**	2	BOLT (M12X1.75X240-MM)	

C-CHANGE FROM PREVIOUS TYPE
I-REFER TO HYDRAULIC INFORMATION SYSTEM
J-WHEN USED WITH LINES GP-AUX HYD (MED PRESS)
M-METRIC PART

288 - 7458 **LINES GP-BOOM** *(contd.)* **i03030038**

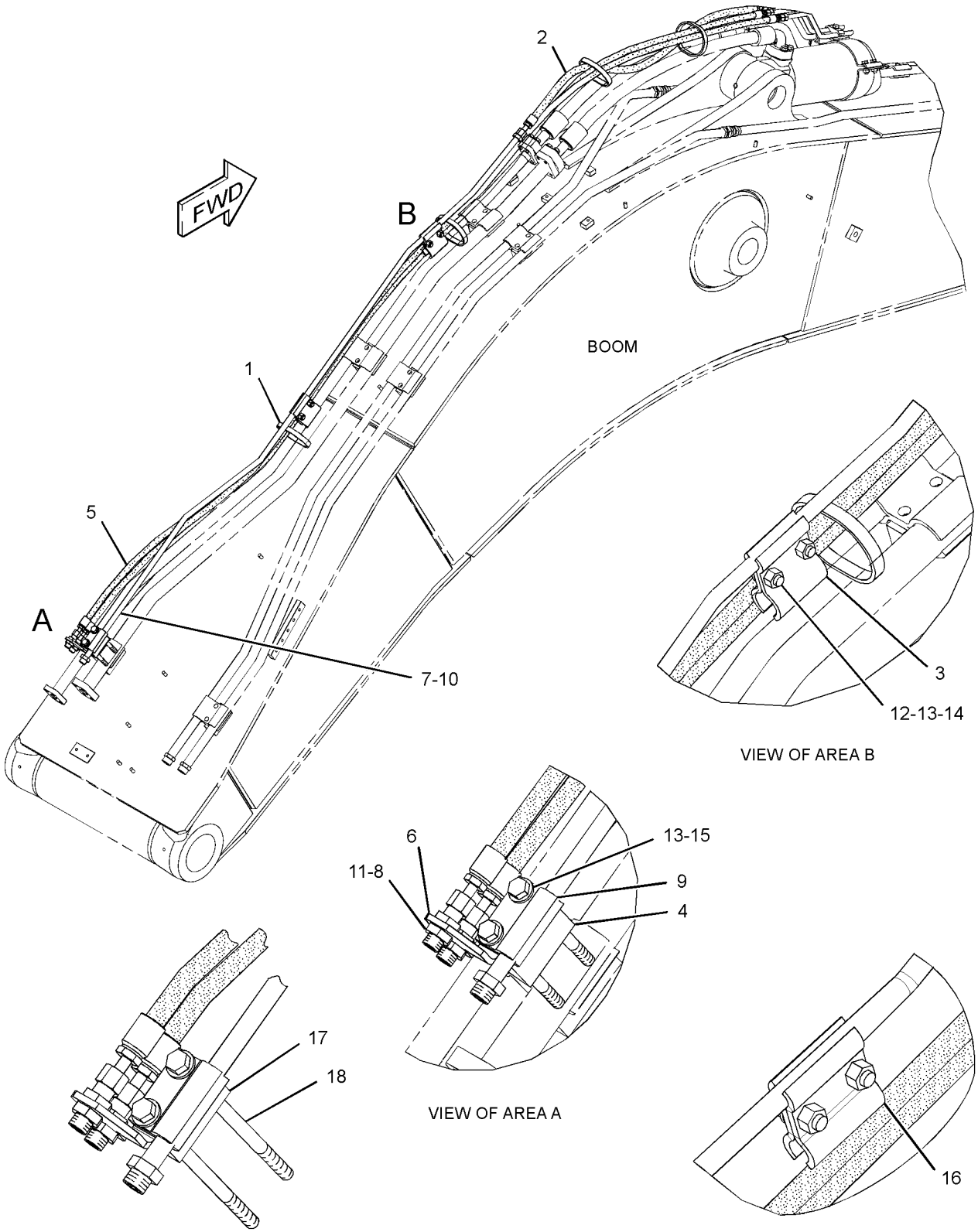

GRAPHIC #1 **<END>** g01619509

225-4585 LINES GP-BOOM CYLINDER

S/N: MNB1-UP; WDK1-UP

PART OF 225-4582, 225-4593 CYLINDER & LINES GP-BOOM

AN ATTACHMENT

SMCS-5057, 5456 **i02345824**

NOTE	REF NO	GRAPHIC REF	PART NUMBER	QTY	PART NAME 1 2 3 4 5 6 (PRODUCT LEVEL)	SEE PAGE
	1	1	**095-1597**	2	SEAL-O-RING	
M	2	1	**9X-6032**	8	BOLT-SOCKET HEAD (M10X1.5X30-MM)	
	3	1	**227-6882**	1	TUBE AS	
	4	1	**234-4570**	1	TUBE AS	
	5	1	**114-0700**	1	SUPPORT AS	
M	6	1	**8T-4196**	2	BOLT (M10X1.5X35-MM)	
	7	1	**8T-4896**	2	WASHER-HARD (10.2X18.5X2.5-MM THK)	
	8	1	**099-8292**	1	SUPPORT	
M	9	1	**8T-3653**	1	BOLT (M14X2X80-MM)	
	10	1	**3B-4509**	1	LOCKWASHER	
	11	1	**094-1920**	2	CLAMP	

M-METRIC PART

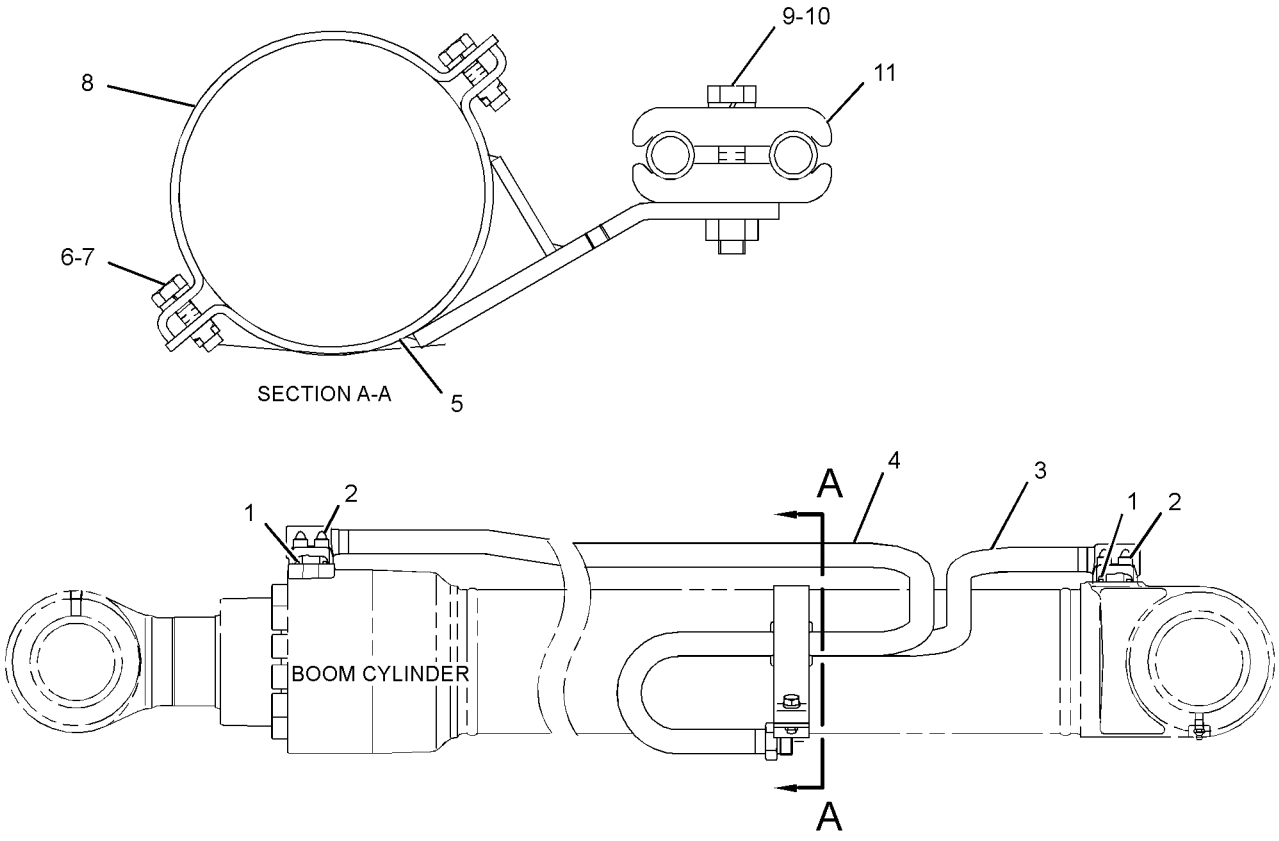

GRAPHIC #1 **<END>** g01178640

HYDRAULIC SYSTEM

225-4586 LINES GP-BOOM CYLINDER–RH

S/N: MNB1-UP; WDK1-UP

PART OF 225-4583, 225-4594 CYLINDER & LINES GP-BOOM

AN ATTACHMENT

SMCS-5057, 5456 **i02345832**

NOTE	REF NO	GRAPHIC REF	PART NUMBER	QTY	PART NAME 1 2 3 4 5 6 (PRODUCT LEVEL)	SEE PAGE
M	1	1	**9X-6032**	8	BOLT-SOCKET HEAD (M10X1.5X30-MM)	
	2	1	**227-6880**	1	TUBE AS	
	3	1	**234-4569**	1	TUBE AS	
	4	1	**095-1597**	2	SEAL-O-RING	
	5	1	**099-8292**	1	SUPPORT	
M	6	1	**8T-4196**	2	BOLT (M10X1.5X35-MM)	
	7	1	**8T-4896**	2	WASHER-HARD (10.2X18.5X2.5-MM THK)	
	8	1	**114-0700**	1	SUPPORT AS	
M	9	1	**8T-3653**	1	BOLT (M14X2X80-MM)	
	10	1	**3B-4509**	1	LOCKWASHER	
	11	1	**094-1920**	2	CLAMP	

M-METRIC PART

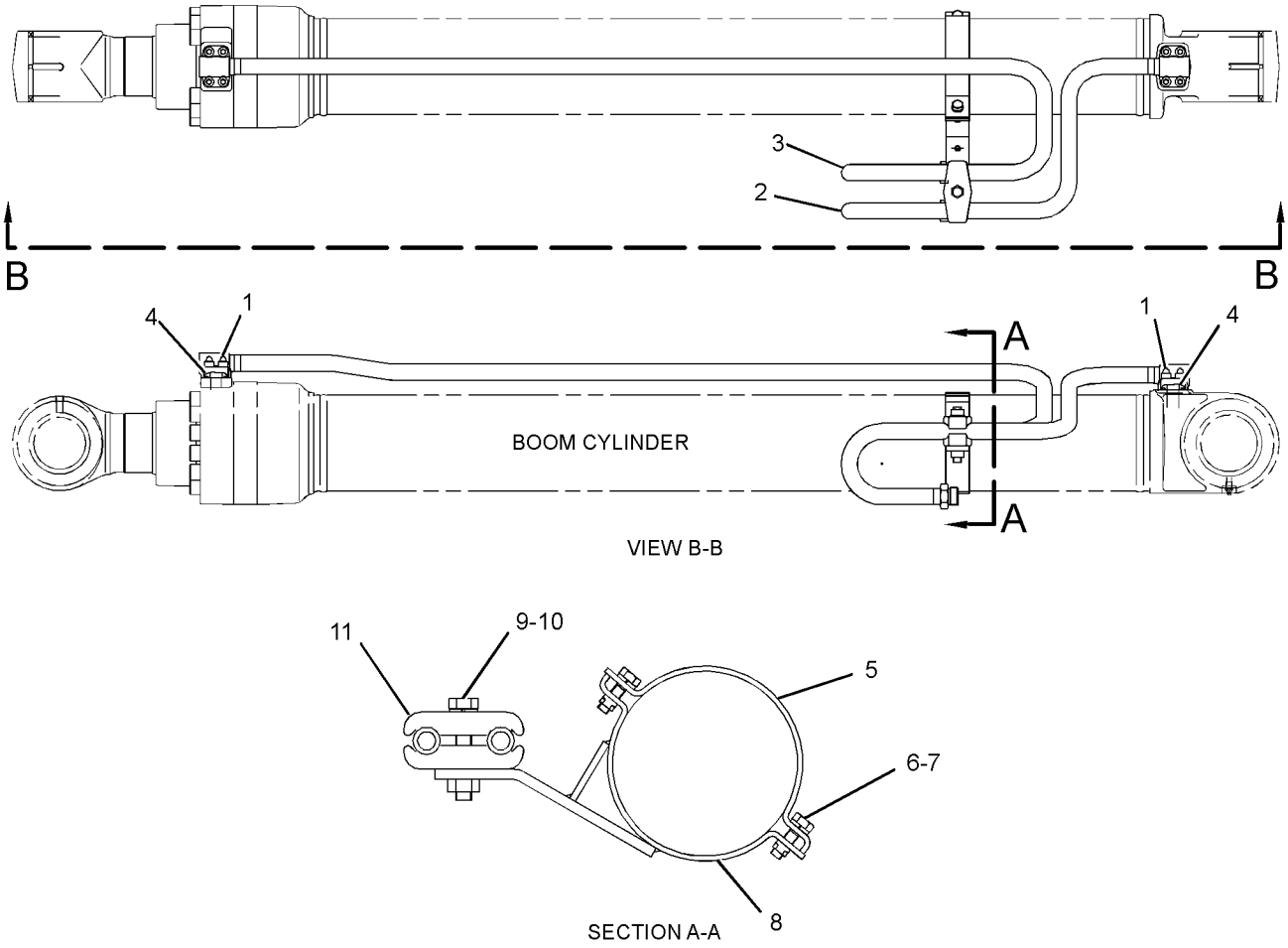

GRAPHIC #1 **<END>** g01188875

HYDRAULIC SYSTEM

255-1794 LINES GP-BOOM CYLINDER—LOAD CONTROL

S/N: MNB1-UP; WDK1-UP
PART OF 255-5738 VALVE AR-LOAD CONTROL
AN ATTACHMENT

SMCS-5057, 5456 **i03018454**

NOTE	REF NO	GRAPHIC REF	PART NUMBER	QTY	PART NAME 1 2 3 4 5 6 (PRODUCT LEVEL)	SEE PAGE
	1	2	**4I-1674**	4	CLIP	
I	2	2	**7I-0948**	1	HOSE AS	
C	3	1	**7K-1181**	8	STRAP-CABLE	
	4	2	**149-1738**	4	CLIP	
	5	2	**192-6832**	2	SUPPORT AS	
Y	6	1	**225-4785**	1	VALVE GP-LOAD CONTROL (BOOM CYLINDER) (LH)	761
Y	6A	1	**225-4785**	1	VALVE GP-LOAD CONTROL (BOOM CYLINDER) (RH)	761
	7	1	**227-0271**	1	TUBE AS	
	8	1	**227-0273**	1	TUBE AS	
	9	1	**227-0275**	1	TUBE AS	
	10	1	**227-0277**	1	TUBE AS	
	11	1	**239-1549**	1	TUBE AS	
	12	1	**239-1550**	1	TUBE AS	
	13	2	**255-1618**	2	SUPPORT AS	
C	14	2	**278-6587**	1	BLOCK	
C	15	2	**278-6588**	1	SUPPORT AS	
C	16	2	**278-6590**	1	SUPPORT AS	
CI	17	1	**278-6593**	2	HOSE AS	
C	18	1	**292-7581**	2	HOSE AS	
C	19	1	**292-7584**	2	HOSE AS	
	20	2	*148-8326*	2	CONNECTOR AS	
					(EACH INCLUDES)	
		2	**3J-7354**	1	SEAL-O-RING	
		2	**6V-8397**	1	SEAL-O-RING	
		2	**6V-9872**	1	CONNECTOR	
C	21	2	*148-8336*	4	CONNECTOR AS	
					(EACH INCLUDES)	
		2	**3J-1907**	1	SEAL-O-RING	
		2	**6V-8397**	1	SEAL-O-RING	
		2	**6V-8636**	1	CONNECTOR	
	22	2	*148-8341*	2	CONNECTOR AS	
					(EACH INCLUDES)	
		2	**3D-2824**	1	SEAL-O-RING	
		2	**6V-8713**	1	CONNECTOR	
		2	**7J-9108**	1	SEAL-O-RING	
	23	2	*148-8378*	2	ELBOW AS	
					(EACH INCLUDES)	
		2	**3J-1907**	1	SEAL-O-RING	
		2	**6V-8397**	1	SEAL-O-RING	
		2	**6V-8724**	1	ELBOW	
C	24	2	*148-8390*	1	ELBOW AS	
		2	**2M-9780**	1	SEAL-O-RING	
		2	**6V-8626**	1	ELBOW	
		2	**7J-9108**	1	SEAL-O-RING	
C	25	2	*148-8407*	2	PLUG AS	
					(EACH INCLUDES)	
		2	**3J-1907**	1	SEAL-O-RING	
		2	**9S-4191**	1	PLUG-O-RING	
C	26	2	*148-8411*	1	PLUG AS	
		2	**3K-0360**	1	SEAL-O-RING	
		2	**9S-4185**	1	PLUG-O-RING	
C	27	2	*148-8435*	2	TEE AS	
					(EACH INCLUDES)	
		2	**3J-1907**	1	SEAL-O-RING	
		2	**6V-8397**	2	SEAL-O-RING	

255-1794 **LINES GP-BOOM CYLINDER** *(contd.)* **i03018454**

NOTE	REF NO	GRAPHIC REF	PART NUMBER	QTY	PART NAME 1 2 3 4 5 6 (PRODUCT LEVEL)	SEE PAGE
		2	**6V-8781**	1	TEE-FACE SEAL	
C	28	2	*164-5578*	1	TEE AS	
		2	**3D-2824**	1	SEAL-O-RING	
		2	**6V-9175**	1	TEE (FACE SEAL)	
		2	**6V-9746**	1	SEAL-O-RING	
		2	**7J-9108**		SEAL-O-RING	
	29	1	**1P-3703**	6	SEAL-RECTANGULAR	
	30	1	**6V-9746**	4	SEAL-O-RING	
	31	1	**7J-9108**	2	SEAL-O-RING	
M	32	1	**8T-0341**	8	BOLT-SOCKET HEAD (M10X1.5X60-MM)	
	33	2	**8T-4121**	18	WASHER-HARD (11X21X2.5-MM THK)	
CM	34	2	**8T-4136**	2	BOLT (M10X1.5X25-MM)	
CM	35	2	**8T-4139**	2	BOLT (M12X1.75X30-MM)	
M	36	1	**8T-4185**	8	BOLT (M10X1.5X50-MM)	
M	37	2	**8T-4196**	8	BOLT (M10X1.5X35-MM)	
	38	2	**8T-4223**	12	WASHER-HARD (13.5X25.5X3-MM THK)	
CM	39	2	**8T-4956**	10	BOLT (M12X1.75X35-MM)	
M	40	2	**8T-6466**	8	BOLT (M10X1.5X60-MM)	

C-CHANGE FROM PREVIOUS TYPE
I-REFER TO HYDRAULIC INFORMATION SYSTEM
M-METRIC PART
Y-SEPARATE ILLUSTRATION

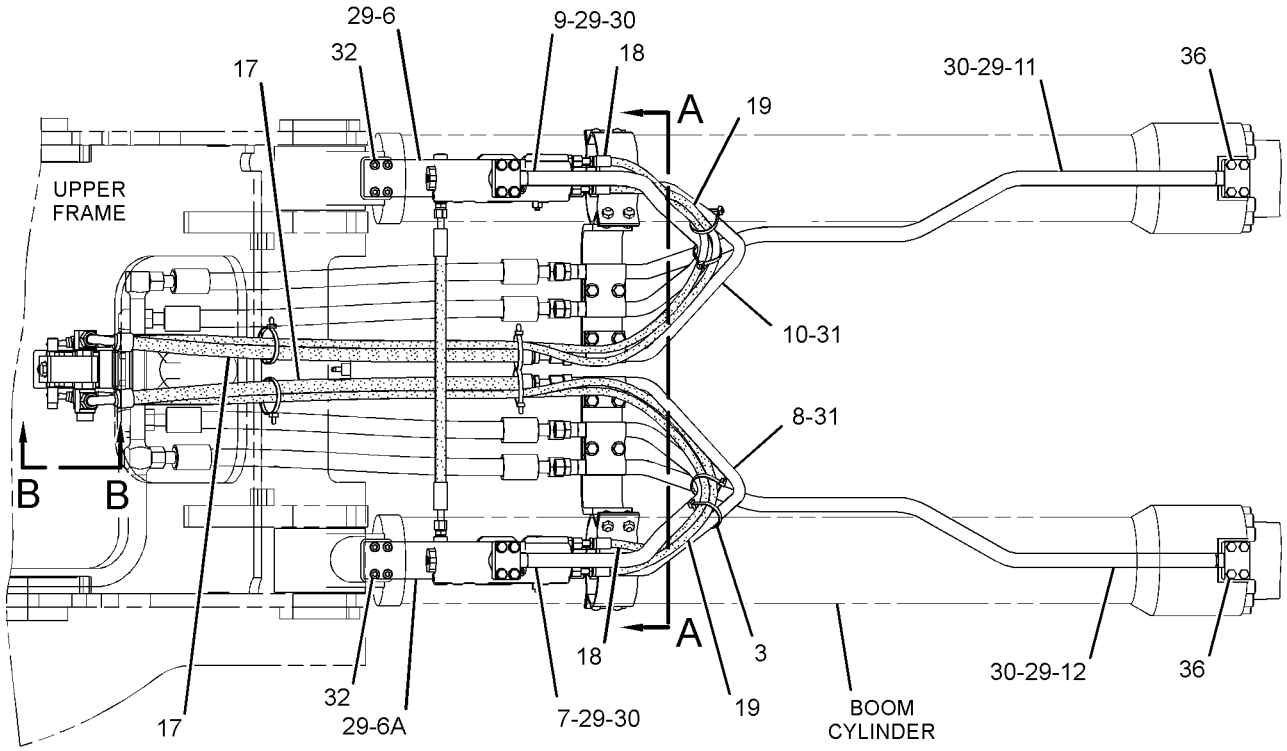

TOP VIEW

FWD

REFER TO ALL ILLUSTRATIONS OF THIS GROUP FOR AUXILIARY VIEWS

GRAPHIC #1

g01624653

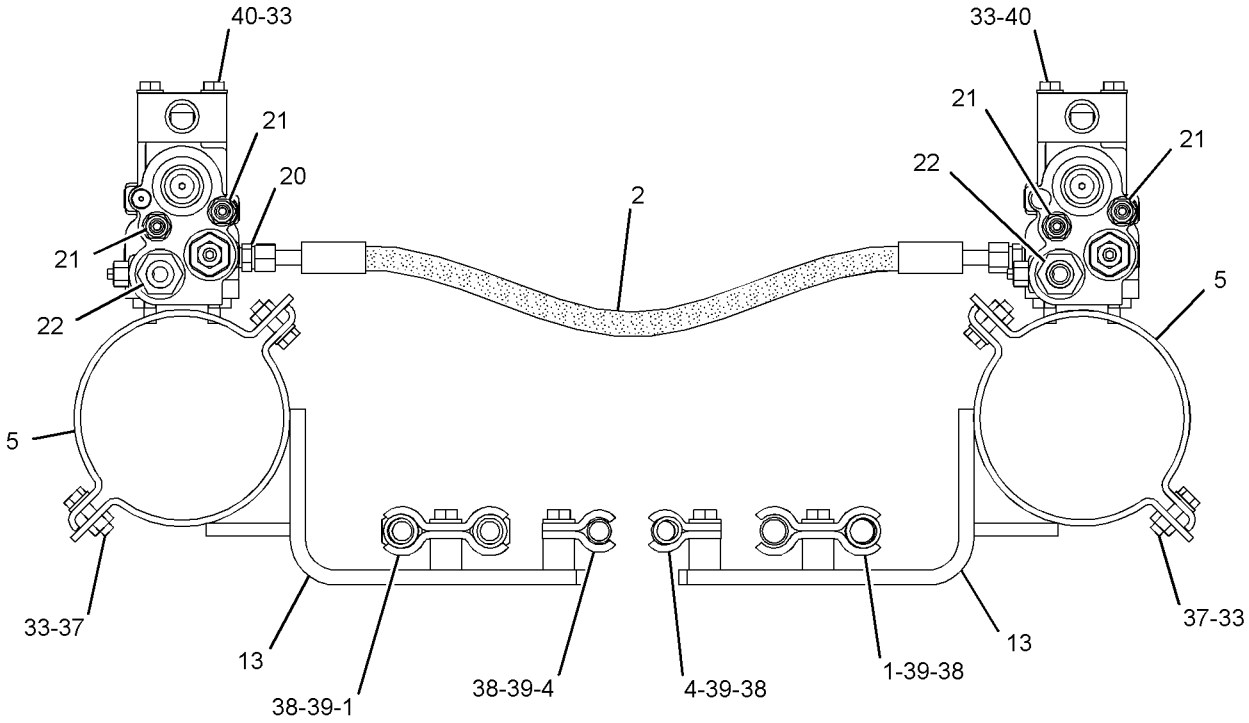

SECTION A-A

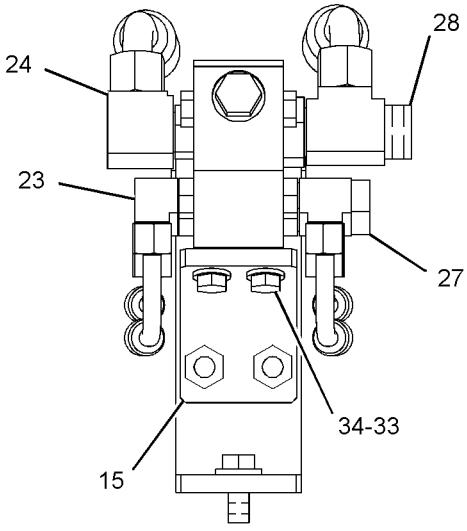

VIEW C-C

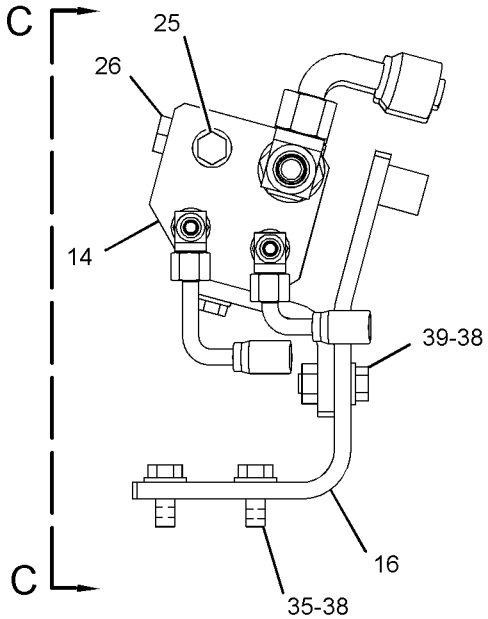

VIEW B-B

GRAPHIC #2 **<END>** g01624654

266-8041 LINES GP-BOOM CYLINDER–LH

S/N: MNB1-UP; WDK1-UP
PART OF 266-7986 CYLINDER & LINES GP-BOOM
AN ATTACHMENT

SMCS-5057, 5456 **i02989530**

NOTE	REF NO	GRAPHIC REF	PART NUMBER	QTY	PART NAME 1 2 3 4 5 6 (PRODUCT LEVEL)	SEE PAGE
	1	1	**266-7964**	2	SEAL-O-RING	
M	2	1	**9X-6032**	8	BOLT-SOCKET HEAD (M10X1.5X30-MM)	
	3	1	**227-6882**	1	TUBE AS	
	4	1	**234-4570**	1	TUBE AS	
	5	1	**137-3711**	1	SUPPORT AS	
M	6	1	**8T-4196**	2	BOLT (M10X1.5X35-MM)	
	7	1	**8T-4896**	2	WASHER-HARD (10.2X18.5X2.5-MM THK)	
	8	1	**099-8292**	1	SUPPORT	
M	9	1	**8T-3653**	1	BOLT (M14X2X80-MM)	
	10	1	**3B-4509**	1	LOCKWASHER	
	11	1	**094-1920**	2	CLAMP	

M-METRIC PART

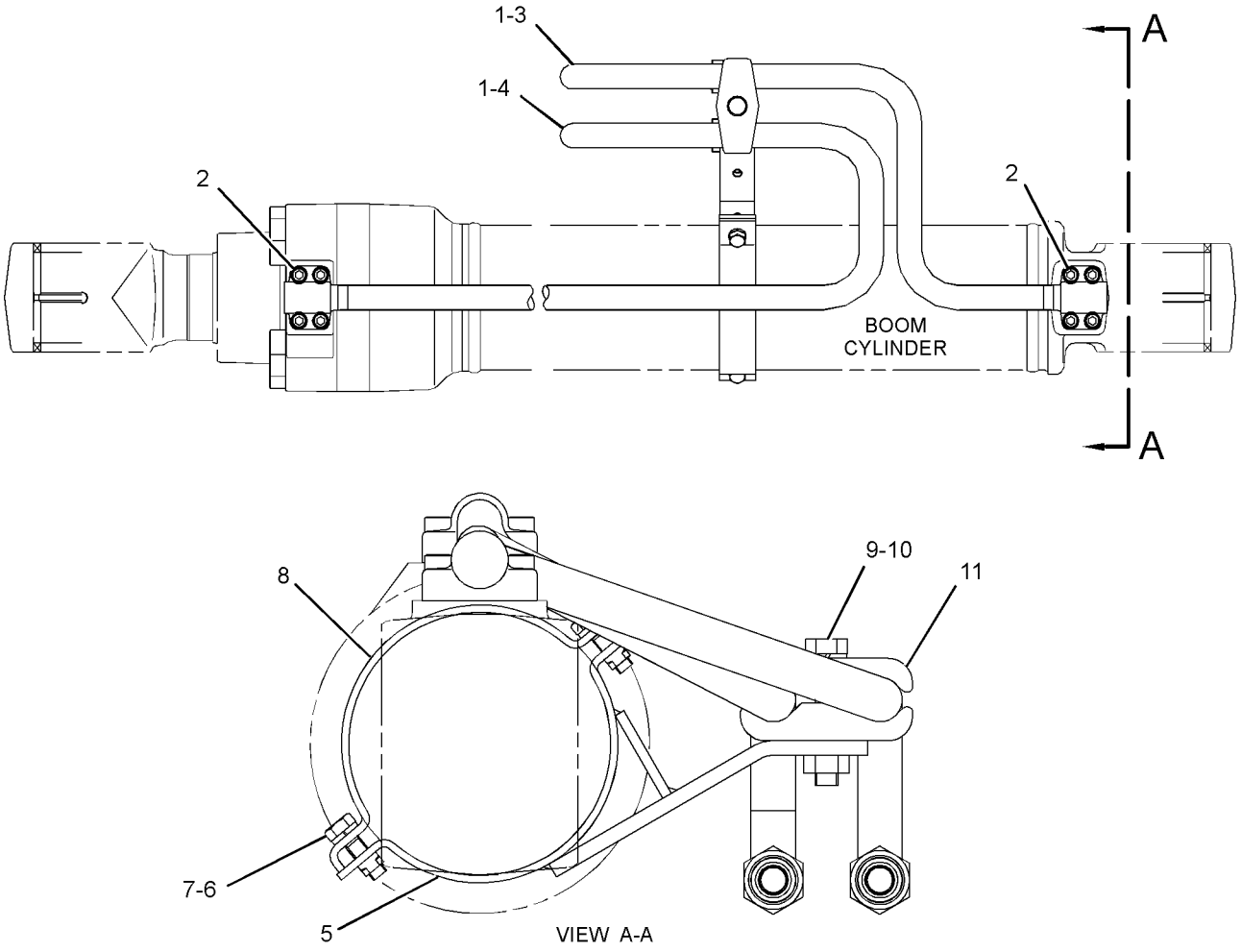

GRAPHIC #1

<END>

g01251039

266-8042 LINES GP-BOOM CYLINDER–RH

S/N: MNB1-UP; WDK1-UP
PART OF 266-7987 CYLINDER & LINES GP-BOOM
AN ATTACHMENT

SMCS-5057, 5456 **i02989529**

NOTE	REF NO	GRAPHIC REF	PART NUMBER	QTY	PART NAME 1 2 3 4 5 6 (PRODUCT LEVEL)	SEE PAGE
	1	1	**266-7964**	2	SEAL-O-RING	
M	2	1	**9X-6032**	8	BOLT-SOCKET HEAD (M10X1.5X30-MM)	
	3	1	**227-6880**	1	TUBE AS	
	4	1	**234-4569**	1	TUBE AS	
	5	1	**094-1920**	2	CLAMP	
M	6	1	**8T-3653**	1	BOLT (M14X2X80-MM)	
	7	1	**3B-4509**	1	LOCKWASHER	
	8	1	**099-8292**	1	SUPPORT	
M	9	1	**8T-4196**	2	BOLT (M10X1.5X35-MM)	
	10	1	**8T-4896**	2	WASHER-HARD (10.2X18.5X2.5-MM THK)	
	11	1	**137-3711**	1	SUPPORT AS	

M-METRIC PART

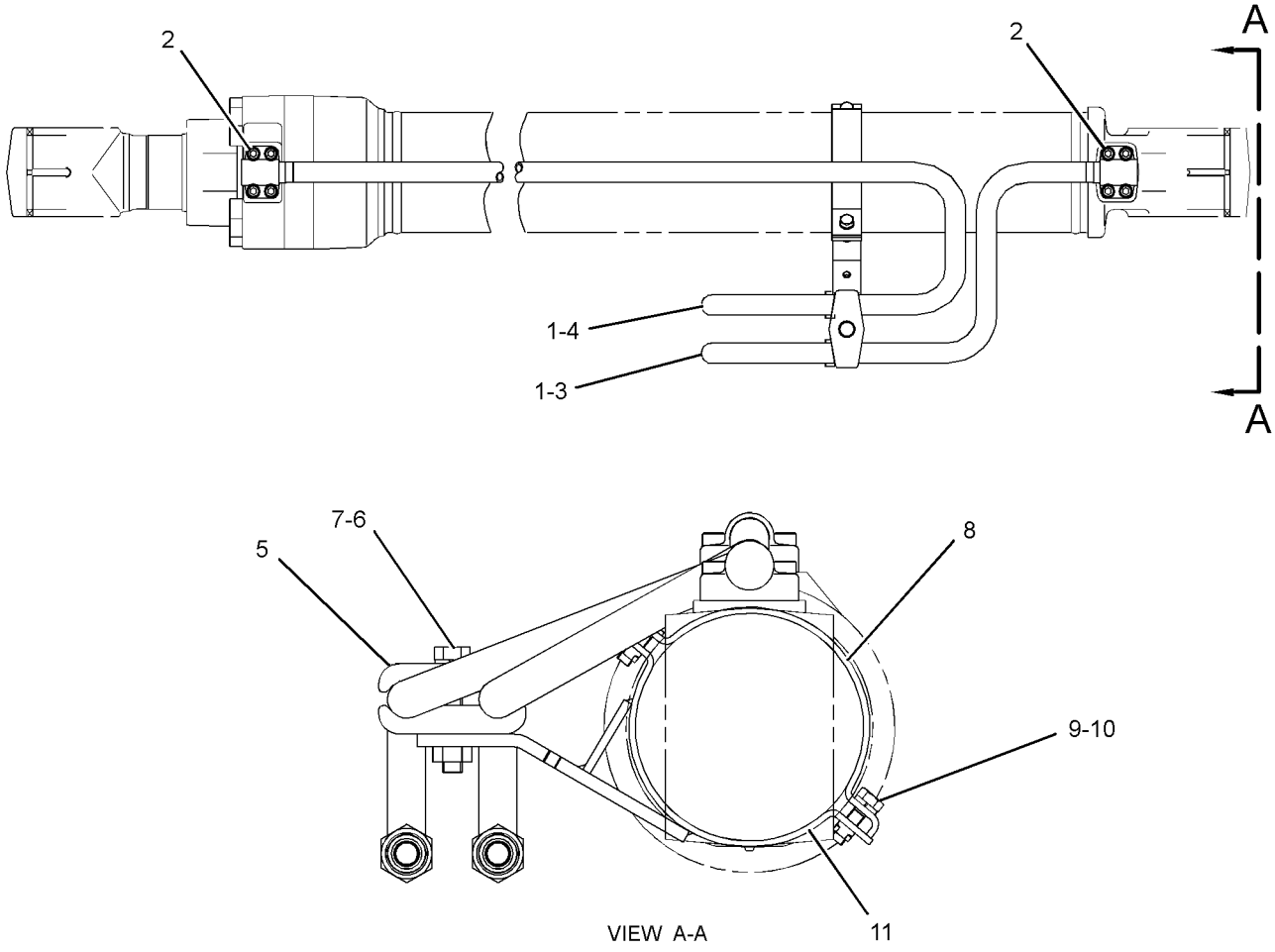

GRAPHIC #1 **<END>** g01251780

HYDRAULIC SYSTEM

127-6797 LINES GP-BUCKET CYLINDER

S/N: MNB1-UP
LONG REACH
PART OF 253-6664 CYLINDER & LINES GP-BUCKET
AN ATTACHMENT

SMCS-5457 **i01341980**

NOTE	REF NO	GRAPHIC REF	PART NUMBER	QTY	PART NAME 1 2 3 4 5 6 (PRODUCT LEVEL)	SEE PAGE
	1	1	**116-9129**	1	TUBE AS	
	2	1	**4J-5267**	2	SEAL-O-RING	
M	3	1	**8T-4185**	4	BOLT (M10X1.5X50-MM)	
	4	1	**8T-4121**	12	WASHER-HARD (11X21X2.5-MM THK)	
M	5	1	**8T-4195**	8	BOLT (M10X1.5X30-MM)	
	6	1	**7Y-6442**	1	TUBE AS	
	7	1	**7Y-6510**	1	SUPPORT AS	
M		1	**8T-4133**	2	NUT (M10X1.5-THD)	
	8	1	**7Y-4868**	2	CLIP	
M	9	1	**8T-4139**	2	BOLT (M12X1.75X30-MM)	
	10	1	**8T-4223**	2	WASHER-HARD (13.5X25.5X3-MM THK)	
	11	1	**7Y-6511**	1	SUPPORT AS	
M		1	**8T-4133**	2	NUT (M10X1.5-THD)	

M-METRIC PART

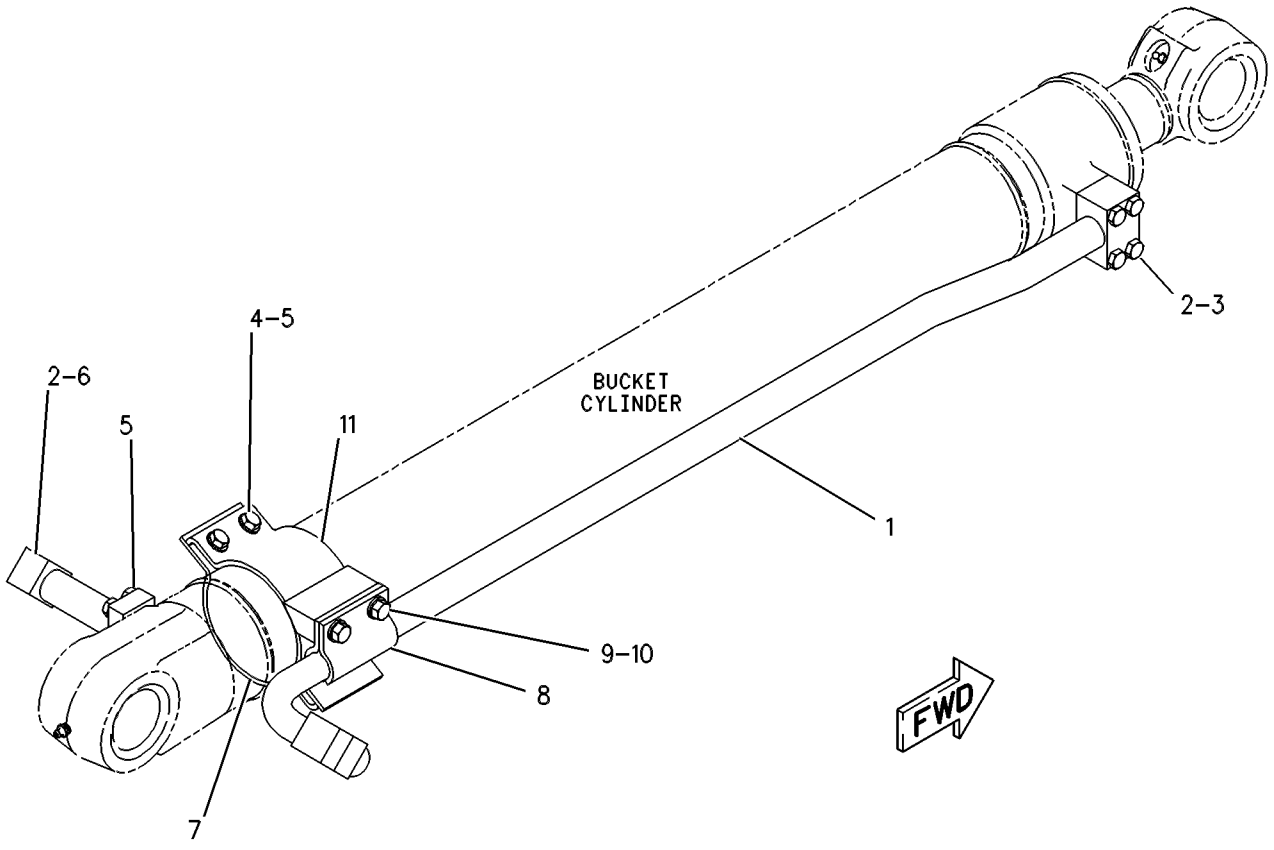

GRAPHIC #1 **<END>** g00263634

HYDRAULIC SYSTEM

196-0536 LINES GP-BUCKET CYLINDER

S/N: MNB1-UP; WDK1-UP

PART OF 229-1762, 229-1855, 240-4029, 275-3704 STICK AR-HOE AN ATTACHMENT

SMCS-5457 **i01575012**

NOTE	REF NO	GRAPHIC REF	PART NUMBER	QTY	PART NAME 1 2 3 4 5 6 (PRODUCT LEVEL)	SEE PAGE
I	1	1	**5I-4359**	2	HOSE AS	
	2	1	**8T-9403**	4	FLANGE-HALF	
	3	1	**1P-3702**	2	SEAL-RECTANGULAR	
	4	1	**5I-4188**	1	BLOCK	
	5	1	**1P-3703**	1	SEAL-RECTANGULAR	
M	6	1	**8T-5436**	4	BOLT (M10X1.5X130-MM)	
	7	1	**8T-4121**	8	WASHER-HARD (11X21X2.5-MM THK)	
M	8	1	**8T-4182**	4	BOLT (M10X1.5X45-MM)	

I-REFER TO HYDRAULIC INFORMATION SYSTEM
M-METRIC PART

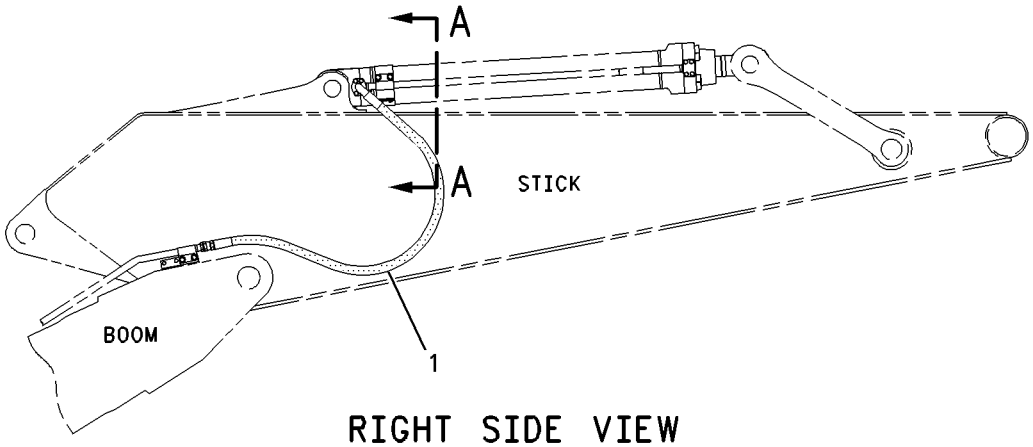

RIGHT SIDE VIEW

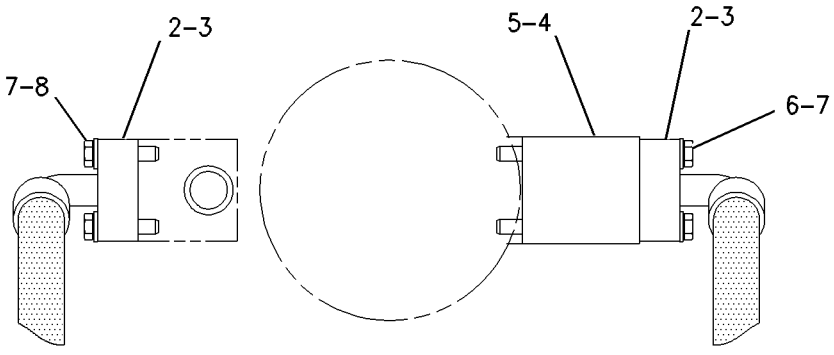

SECTION A-A

GRAPHIC #1 **<END>** g00813774

196-0537 LINES GP-BUCKET CYLINDER

S/N: MNB1-UP; WDK1-UP
PART OF 229-1765, 229-1770 STICK AR-HOE
AN ATTACHMENT

SMCS-5457 **i02347144**

NOTE	REF NO	GRAPHIC REF	PART NUMBER	QTY	PART NAME 1 2 3 4 5 6 (PRODUCT LEVEL)	SEE PAGE
I	1	1	**4I-8785**	2	HOSE AS	
	2	1	**8T-9403**	4	FLANGE-HALF	
	3	1	**1P-3702**	2	SEAL-RECTANGULAR	
	4	1	**5I-4188**	1	BLOCK	
	5	1	**1P-3703**	1	SEAL-RECTANGULAR	
M	6	1	**8T-5436**	4	BOLT (M10X1.5X130-MM)	
	7	1	**8T-4121**	8	WASHER-HARD (11X21X2.5-MM THK)	
M	8	1	**8T-4182**	4	BOLT (M10X1.5X45-MM)	

I-REFER TO HYDRAULIC INFORMATION SYSTEM
M-METRIC PART

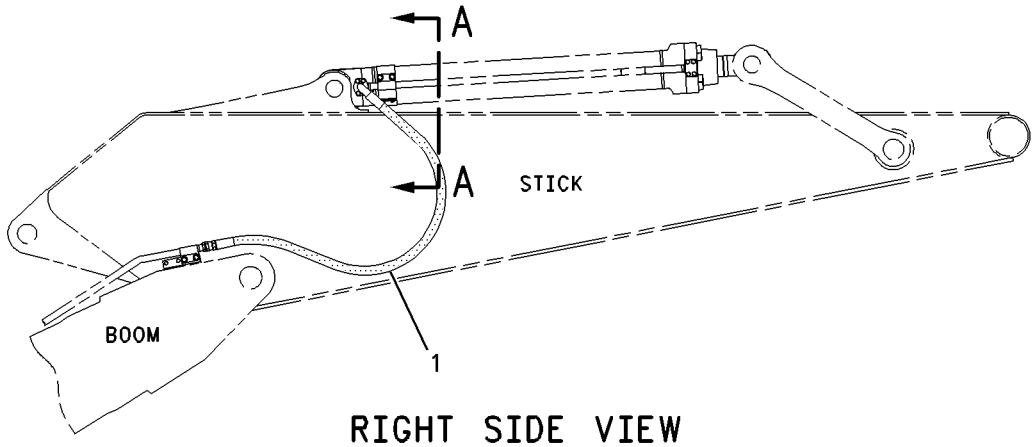

RIGHT SIDE VIEW

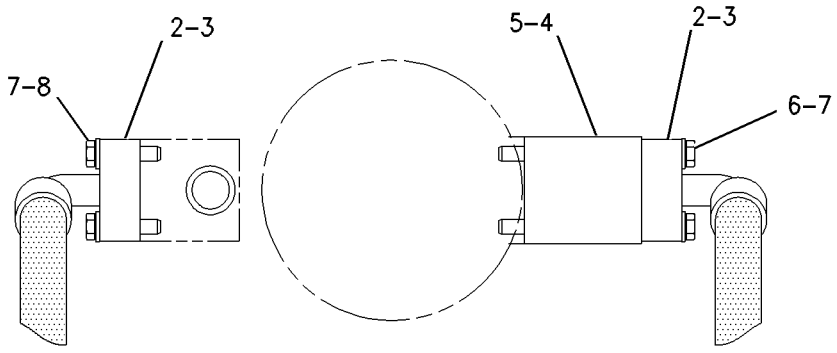

SECTION A-A

GRAPHIC #1 **<END>** g00813786

HYDRAULIC SYSTEM

196-0541 LINES GP-BUCKET CYLINDER

S/N: MNB1-UP; WDK1-UP
PART OF 229-1769 STICK AR-HOE
AN ATTACHMENT

SMCS-5457 **i01575020**

NOTE	REF NO	GRAPHIC REF	PART NUMBER	QTY	PART NAME 1 2 3 4 5 6 (PRODUCT LEVEL)	SEE PAGE
I	1	1	**5I-4216**	2	HOSE AS	
	2	1	**5I-4189**	1	BLOCK	
	3	1	**1P-3703**	3	SEAL-RECTANGULAR	
	4	1	**6V-0400**	4	FLANGE-HALF	
	5	1	**8T-4223**	8	WASHER-HARD (13.5X25.5X3-MM THK)	
M	6	1	**8T-5041**	4	BOLT (M12X1.75X120-MM)	
M	7	1	**8T-4184**	4	BOLT (M12X1.75X45-MM)	

I-REFER TO HYDRAULIC INFORMATION SYSTEM
M-METRIC PART

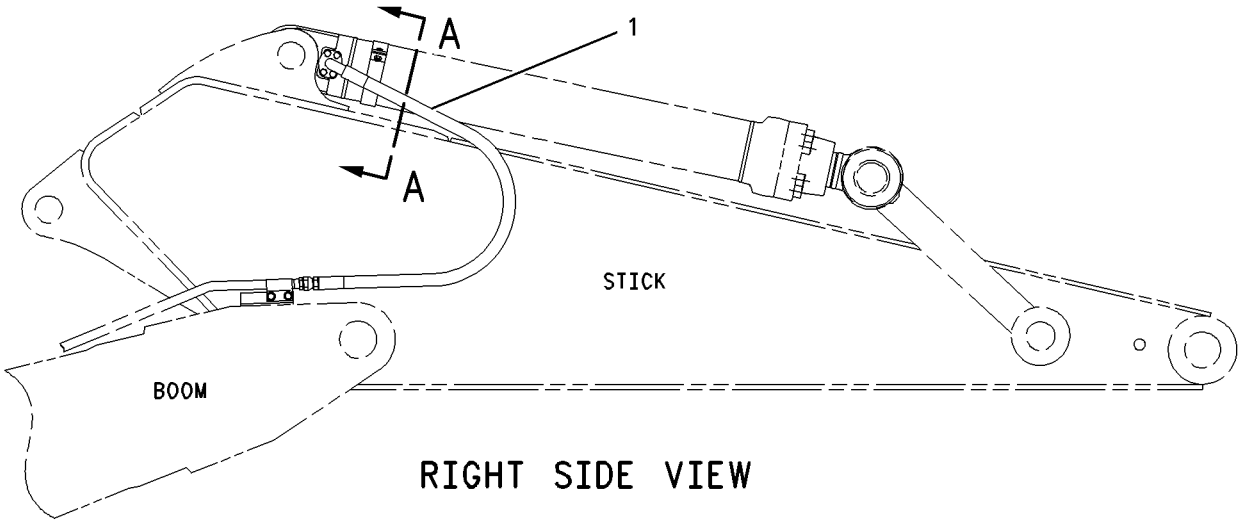

RIGHT SIDE VIEW

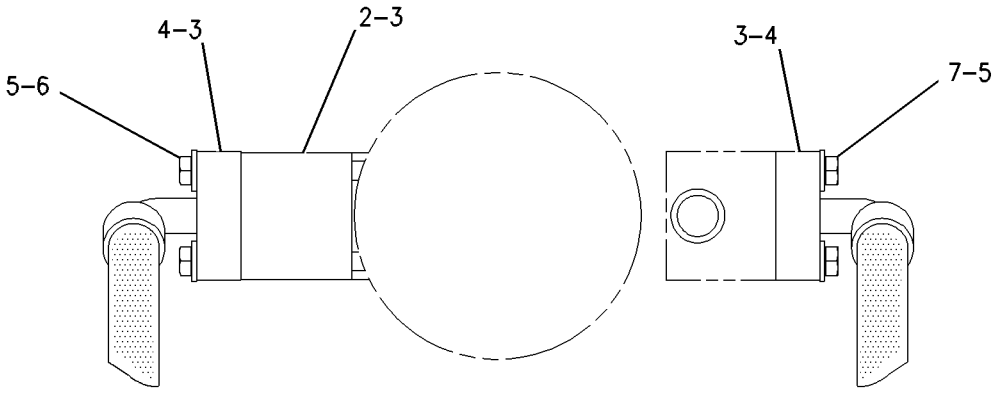

SECTION A–A

GRAPHIC #1 **<END>** g00813160

225-4592 LINES GP-BUCKET CYLINDER

S/N: MNB1-UP; WDK1-UP

PART OF 225-4590, 225-4598 CYLINDER & LINES GP-BUCKET

AN ATTACHMENT

SMCS-5457 **i02348511**

NOTE	REF NO	GRAPHIC REF	PART NUMBER	QTY	PART NAME 1 2 3 4 5 6 (PRODUCT LEVEL)	SEE PAGE
	1	1	**8T-4223**	1	WASHER-HARD (13.5X25.5X3-MM THK)	
M	2	1	**8T-4910**	1	BOLT (M12X1.75X60-MM)	
	3	1	**096-4480**	1	CLAMP	
	4	1	**8T-4896**	2	WASHER-HARD (10.2X18.5X2.5-MM THK)	
M	5	1	**8T-4196**	2	BOLT (M10X1.5X35-MM)	
	6	1	**234-4592**	1	SUPPORT	
	7	1	**234-4591**	1	SUPPORT AS	
	8	1	**095-1597**	1	SEAL-O-RING	
M	9	1	**9X-6032**	4	BOLT-SOCKET HEAD (M10X1.5X30-MM)	
	10	1	**259-0647**	1	TUBE AS	

M-METRIC PART

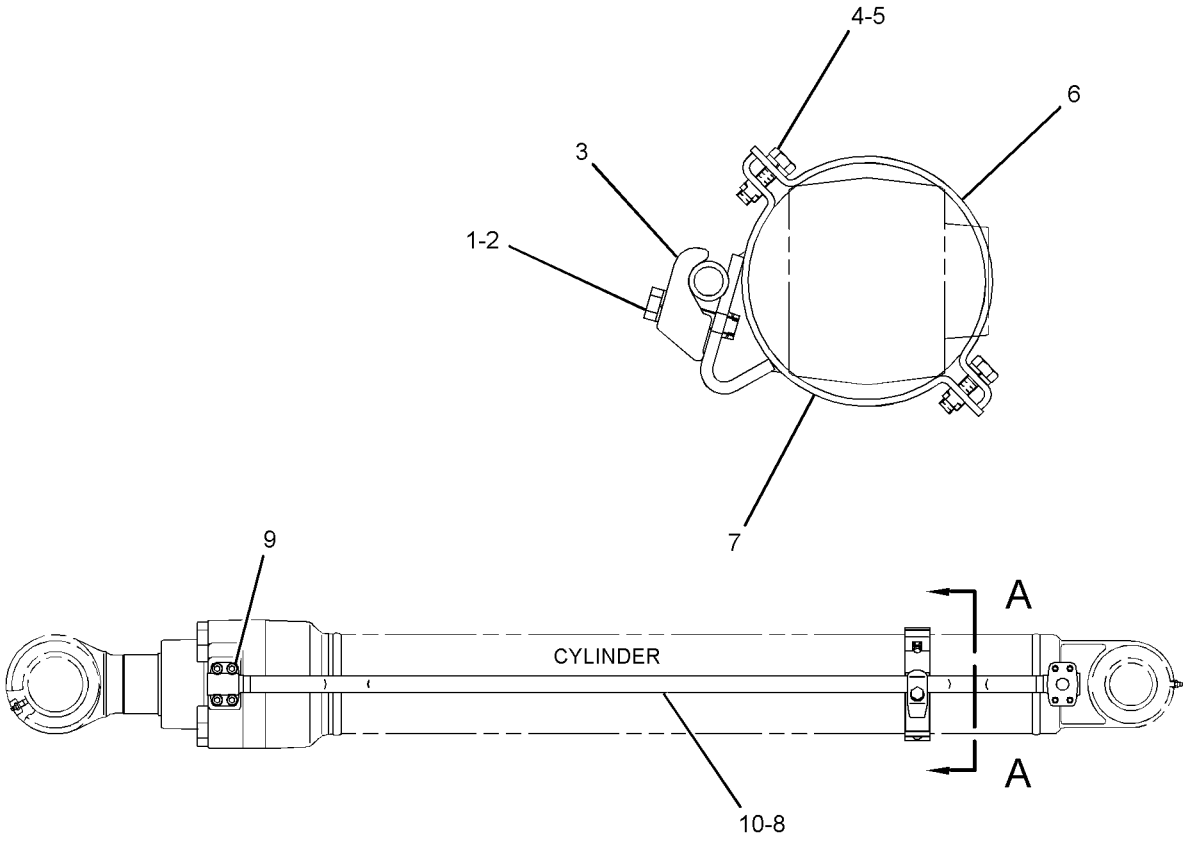

GRAPHIC #1 **<END>** g01188200

239-1627 LINES GP-BUCKET CYLINDER

S/N: MNB1-UP; WDK1-UP

PART OF 225-4579, 225-4600, 266-8078 CYLINDER & LINES GP-BUCKET AN ATTACHMENT

SMCS-5457 **i02414341**

NOTE	REF NO	GRAPHIC REF	PART NUMBER	QTY	PART NAME 1 2 3 4 5 6 (PRODUCT LEVEL)	SEE PAGE
	1	1	**7Y-3732**	2	CLIP	
	2	1	**119-2378**	1	SUPPORT AS	
	3	1	**119-2379**	1	SUPPORT AS	
	4	1	**239-1986**	1	TUBE AS	
	5	1	**1P-3703**	1	SEAL-RECTANGULAR	
	6	1	**8T-4121**	4	WASHER-HARD (11X21X2.5-MM THK)	
M	7	1	**8T-4139**	2	BOLT (M12X1.75X30-MM)	
M	8	1	**8T-4196**	4	BOLT (M10X1.5X35-MM)	
	9	1	**8T-4223**	2	WASHER-HARD (13.5X25.5X3-MM THK)	
M	10	1	**8T-4910**	4	BOLT (M12X1.75X60-MM)	

M-METRIC PART

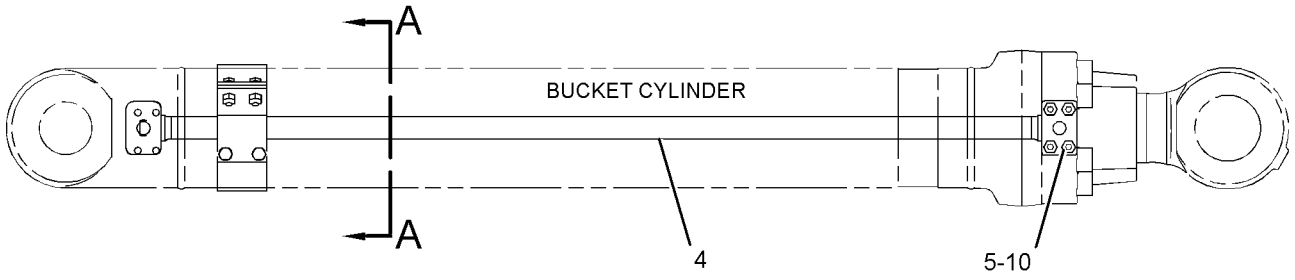

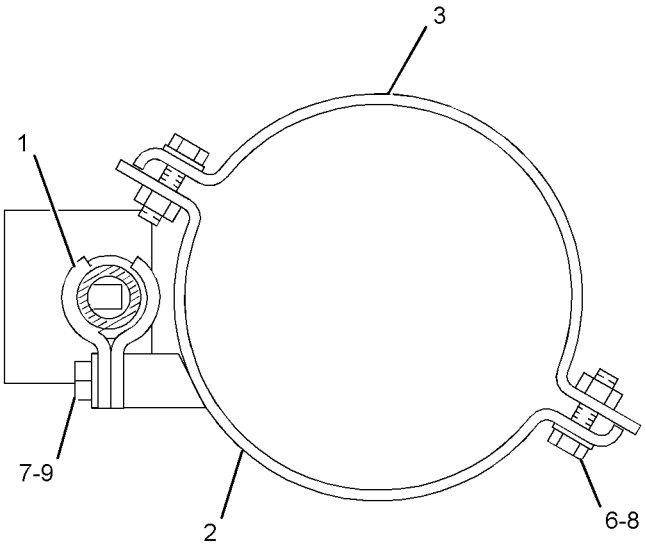

GRAPHIC #1 **<END>** g01154022

266-8044 LINES GP-BUCKET CYLINDER

S/N: MNB1-UP; WDK1-UP
PART OF 266-7991 CYLINDER & LINES GP-BUCKET
AN ATTACHMENT

SMCS-5457 **i02425161**

NOTE	REF NO	GRAPHIC REF	PART NUMBER	QTY	PART NAME 1 2 3 4 5 6 (PRODUCT LEVEL)	SEE PAGE
	1	1	**8T-4223**	1	WASHER-HARD (13.5X25.5X3-MM THK)	
M	2	1	**8T-4910**	1	BOLT (M12X1.75X60-MM)	
	3	1	**096-4480**	1	CLAMP	
	4	1	**8T-4896**	2	WASHER-HARD (10.2X18.5X2.5-MM THK)	
M	5	1	**8T-4196**	2	BOLT (M10X1.5X35-MM)	
	6	1	**234-4592**	1	SUPPORT	
	7	1	**234-4591**	1	SUPPORT AS	
	8	1	**259-0647**	1	TUBE AS	
M	9	1	**9X-6032**	4	BOLT-SOCKET HEAD (M10X1.5X30-MM)	
	10	1	**266-7964**	1	SEAL-O-RING	

M-METRIC PART

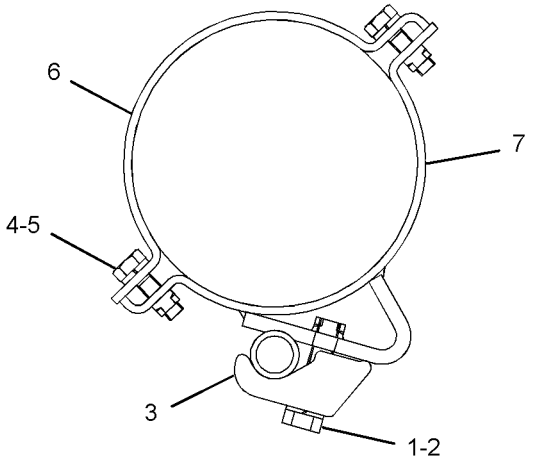

SECTION A-A

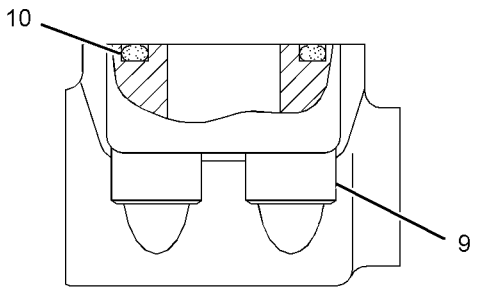

VIEW OF AREA B

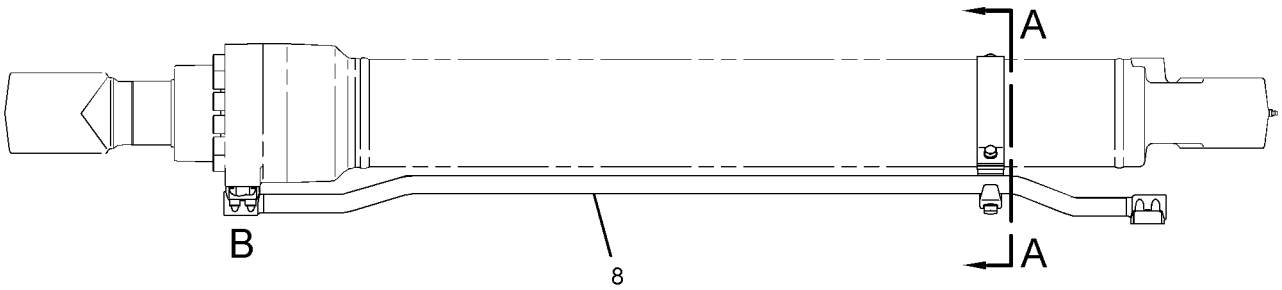

GRAPHIC #1 **<END>** g01230773

248-9831 LINES GP-CONTROL—CONTROL VALVE, REAR

S/N: MNB1-UP; WDK1-UP

PART OF 255-5707, 255-5708 HYDRAULIC AR

SMCS-5057 **i02535526**

NOTE	REF NO	GRAPHIC REF	PART NUMBER	QTY	PART NAME 1 2 3 4 5 6 (PRODUCT LEVEL)	SEE PAGE
M	1	2	**8T-4194**	8	BOLT (M12X1.75X50-MM)	
Y	2	1	**173-4672**	1	VALVE GP-CHECK (OIL COOLER BYPASS) (RETURN LINES)	732
	3	2	**173-4816**	1	SUPPORT AS	
	4	2	**289-5362**	1	TUBE AS	
I	5	2	**179-7500**	1	HOSE AS	
	6	2	**187-5661**	1	PIPE AS	
	7	2	**196-0807**	1	PLATE	
	8	1	**204-8496**	1	PLATE	
	9	2	**144-0367**	2	CLAMP-HOSE	
	10	1	**275-1473**	1	SUPPORT AS	
	11	2	**221-4872**	1	HOSE	
I	12	2	**248-9896**	1	HOSE AS	
	13	2	**282-7330**	1	TUBE AS	
I	14	2	**260-7940**	1	HOSE AS	
M	15	2	**096-4883**	2	LOCKNUT (M10X1.15-THD)	
M	16	2	**101-7402**	8	BOLT-SOCKET HEAD (M12X1.75X30-MM)	
	17	2	*148-8357*	1	ELBOW AS	
		2	**5K-9090**	1	SEAL-O-RING	
		2	**6V-9008**	1	ELBOW	
		2	**7M-8485**	1	SEAL-O-RING	
	18	1	*148-8364*	1	ELBOW AS	
		1	**3K-0360**	1	SEAL-O-RING	
		1	**6V-8398**	1	SEAL-O-RING	
		1	**6V-8625**	1	ELBOW	
	19	2	*148-8408*	1	PLUG AS	
		2	**3D-2824**	1	SEAL-O-RING	
		2	**9S-4183**	1	PLUG-O-RING	
	20	1	*148-8411*	1	PLUG AS	
		1	**3K-0360**	1	SEAL-O-RING	
		1	**9S-4185**	1	PLUG-O-RING	
	21	2	**1P-3703**	4	SEAL-RECTANGULAR	
	22	1,2	**4J-0524**	2	SEAL-O-RING	
	23	2	**4J-0527**	2	SEAL-O-RING	
	24	1	**5P-7468**	3	CLIP (SLOT)	
	25	1	**5P-7469**	3	CLIP (TAB)	
	26	1	**5P-8444**	1	GROMMET	
	27	2	**6V-0400**	4	FLANGE-HALF	
M	28	2	**7X-2544**	4	BOLT (M10X1.5X104-MM)	
M	29	2	**7Y-5247**	1	U-BOLT	
	30	1	**8T-2525**	2	GROMMET	
	31	2	**8T-4121**	8	WASHER-HARD (11X21X2.5-MM THK)	
M	32	2	**8T-4136**	2	BOLT (M10X1.5X25-MM)	
M	33	1,2	**8T-4139**	4	BOLT (M12X1.75X30-MM)	
M	34	2	**8T-4176**	4	BOLT (M12X1.75X90-MM)	
	36	1,2	**8T-4223**	17	WASHER-HARD (13.5X25.5X3-MM THK)	
M	37	1	**8T-4910**	2	BOLT (M12X1.75X60-MM)	
M	38	1	**8T-4956**	3	BOLT (M12X1.75X35-MM)	

I-REFER TO HYDRAULIC INFORMATION SYSTEM
M-METRIC PART
Y-SEPARATE ILLUSTRATION

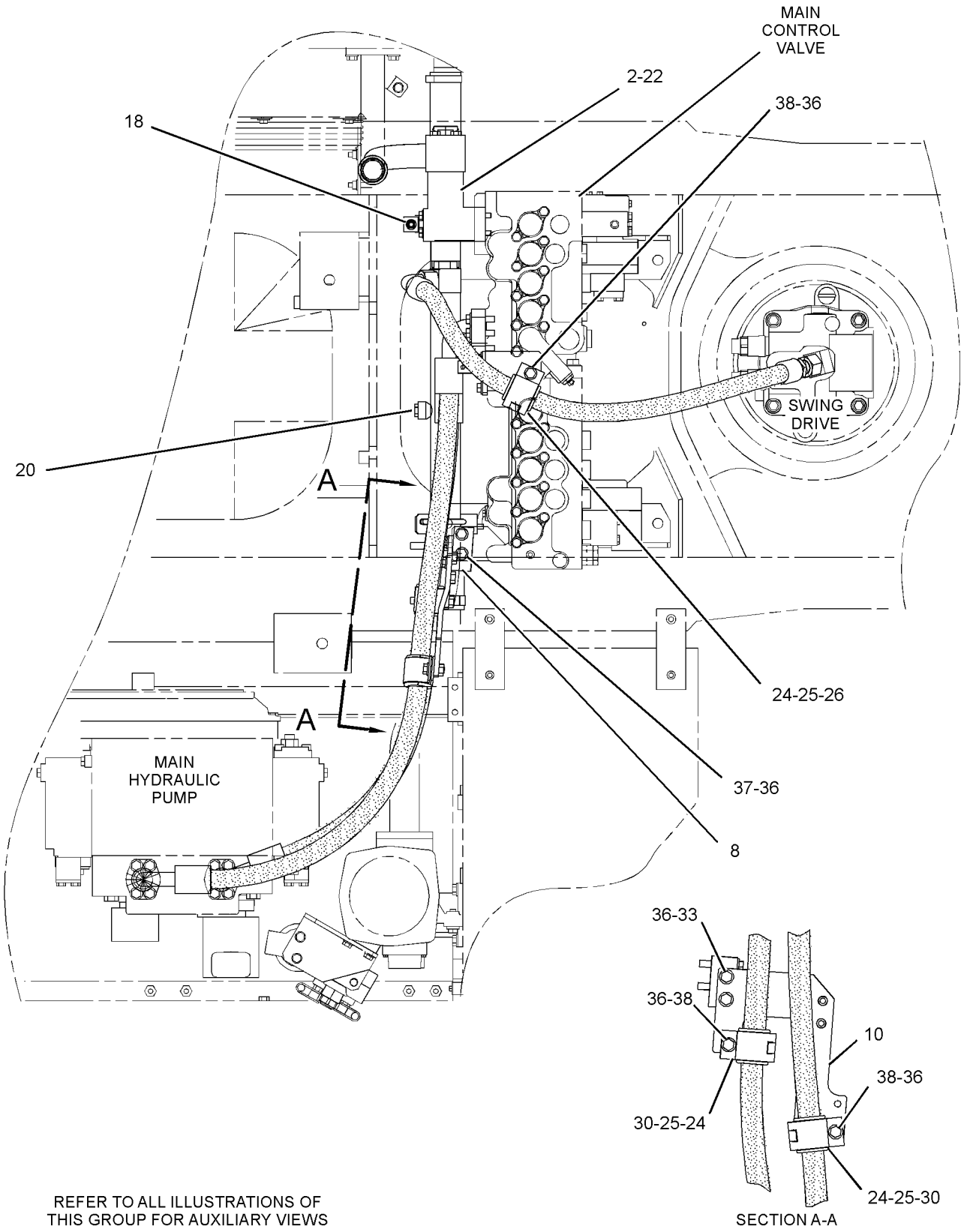

REFER TO ALL ILLUSTRATIONS OF
THIS GROUP FOR AUXILIARY VIEWS

GRAPHIC #1

g01152916

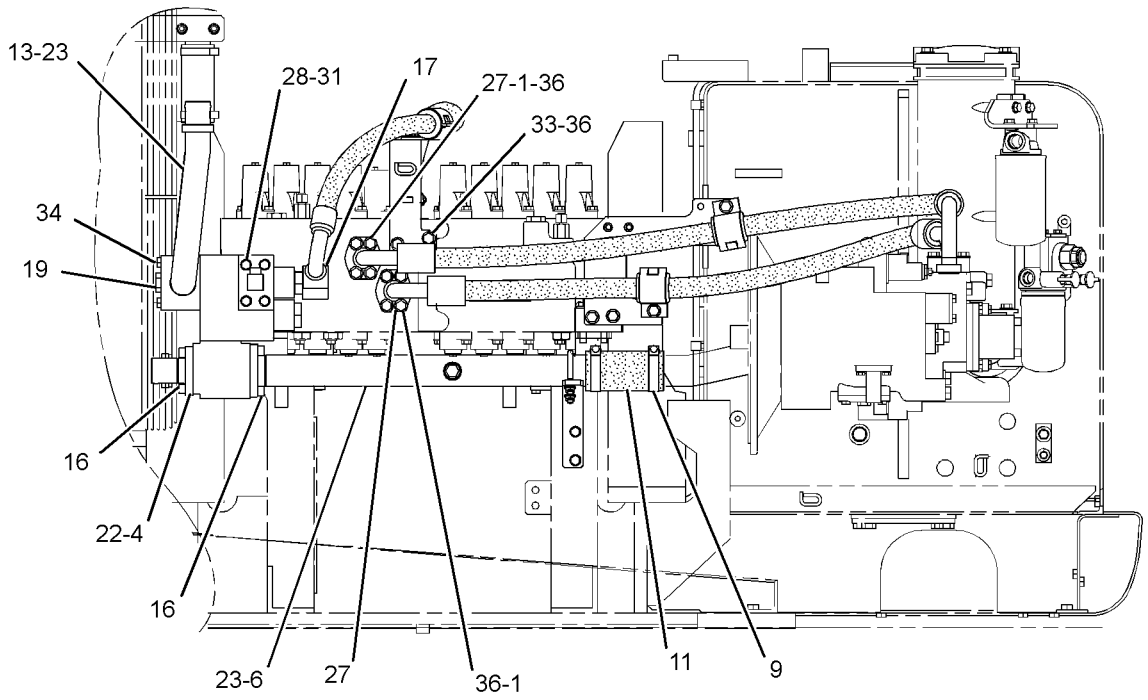

REAR VIEW

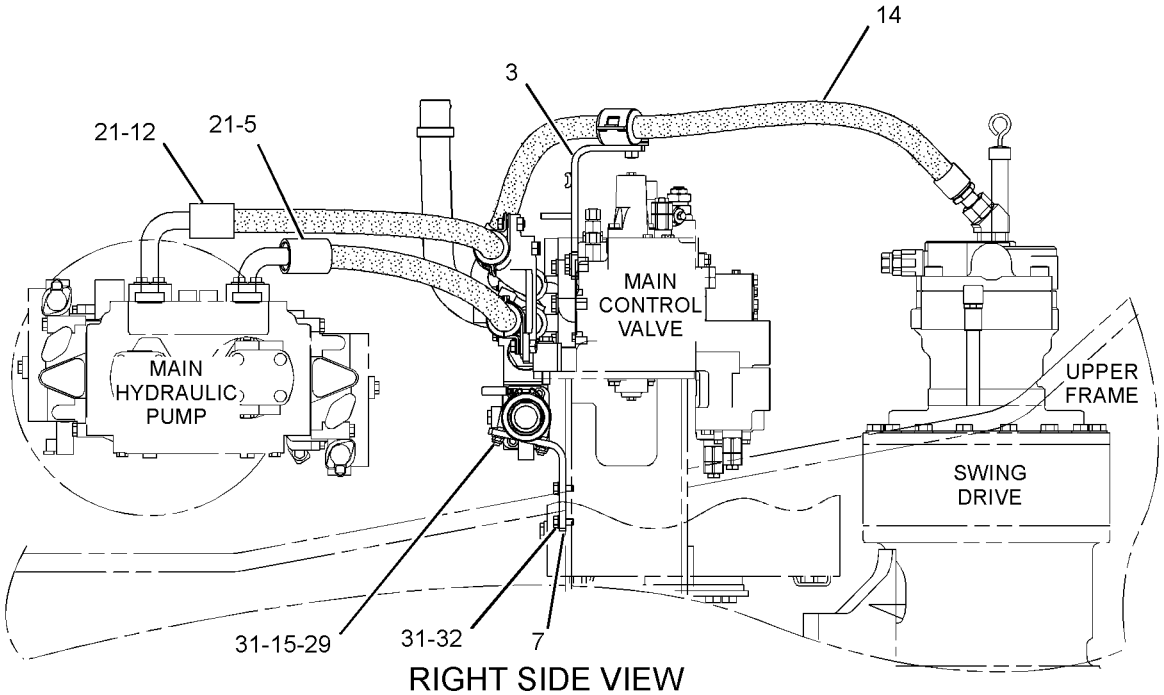

RIGHT SIDE VIEW

GRAPHIC #2 **<END>** g01261065

HYDRAULIC SYSTEM

230-0489 LINES GP-COUPLER–REACH BOOM

S/N: MNB1-UP; WDK1-UP

AN ATTACHMENT

SMCS-5057, 5133 **i02958663**

NOTE	REF NO	GRAPHIC REF	PART NUMBER	QTY	PART NAME 1 2 3 4 5 6 (PRODUCT LEVEL)	SEE PAGE
	1	1	**5Q-4213**	8	CLIP	
	2	1	**187-9862**	1	PLATE	
	3	1	**230-0506**	1	TUBE AS	
	4	1	**230-0510**	1	TUBE AS	
	5	1	**247-9294**	2	SUPPORT AS	
	6	1	**247-9309**	4	CLIP	
	7	1	**247-9315**	1	TUBE AS	
	8	1	**247-9318**	1	TUBE AS	
	9	1	**135-3980**	2	CLIP	
	10	1	**5Q-4212**	4	CLIP	
	11	1	**6V-8398**	6	SEAL-O-RING	
M	12	1	**7X-2550**	2	BOLT (M12X1.75X110-MM)	
M	13	1	**8T-4139**	16	BOLT (M12X1.75X30-MM)	
M	14	1	**8T-4184**	4	BOLT (M12X1.75X45-MM)	
	15	1	**8T-4223**	22	WASHER-HARD (13.5X25.5X3-MM THK)	
M	16	1	**8T-4244**	16	NUT (M12X1.75-THD)	
	17	1	**8T-4121**	2	WASHER-HARD (11X21X2.5-MM THK)	
M	18	1	**8T-4191**	2	BOLT (M10X1.5X16-MM)	
	19	1	**288-7616**	1	CLIP	
	20	1	**288-7617**	1	CLIP	

M-METRIC PART

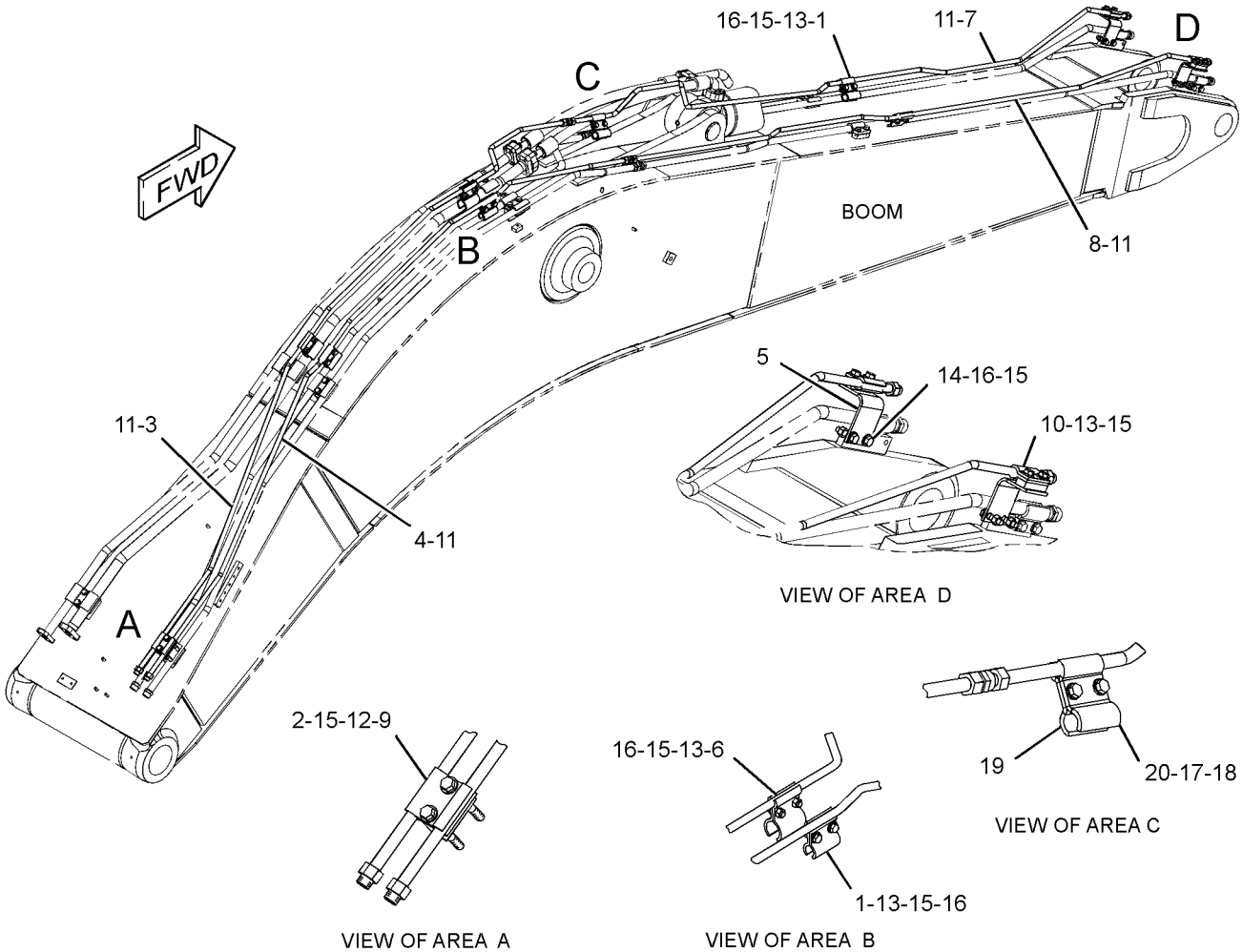

GRAPHIC #1 **<END>** g01365333

230-0493 LINES GP-COUPLER–MASS BOOM

S/N: MNB1-UP; WDK1-UP

AN ATTACHMENT

SMCS-5057, 5133 **i02349931**

NOTE	REF NO	GRAPHIC REF	PART NUMBER	QTY	PART NAME 1 2 3 4 5 6 (PRODUCT LEVEL)	SEE PAGE
	1	1	**5Q-4213**	8	CLIP	
	2	1	**187-9862**	1	PLATE	
	3	1	**253-6637**	1	TUBE AS	
	4	1	**253-6643**	1	TUBE AS	
	5	1	**247-9294**	2	SUPPORT AS	
	6	1	**247-9309**	4	CLIP	
	7	1	**253-6640**	1	TUBE AS	
	8	1	**253-6646**	1	TUBE AS	
	9	1	**135-3980**	2	CLIP	
	10	1	**5Q-4212**	4	CLIP	
	11	1	**6V-8398**	6	SEAL-O-RING	
M	12	1	**7X-2550**	2	BOLT (M12X1.75X110-MM)	
M	13	1	**8T-4139**	16	BOLT (M12X1.75X30-MM)	
M	14	1	**8T-4184**	4	BOLT (M12X1.75X45-MM)	
	15	1	**8T-4223**	22	WASHER-HARD (13.5X25.5X3-MM THK)	
M	16	1	**8T-4244**	16	NUT (M12X1.75-THD)	

M-METRIC PART

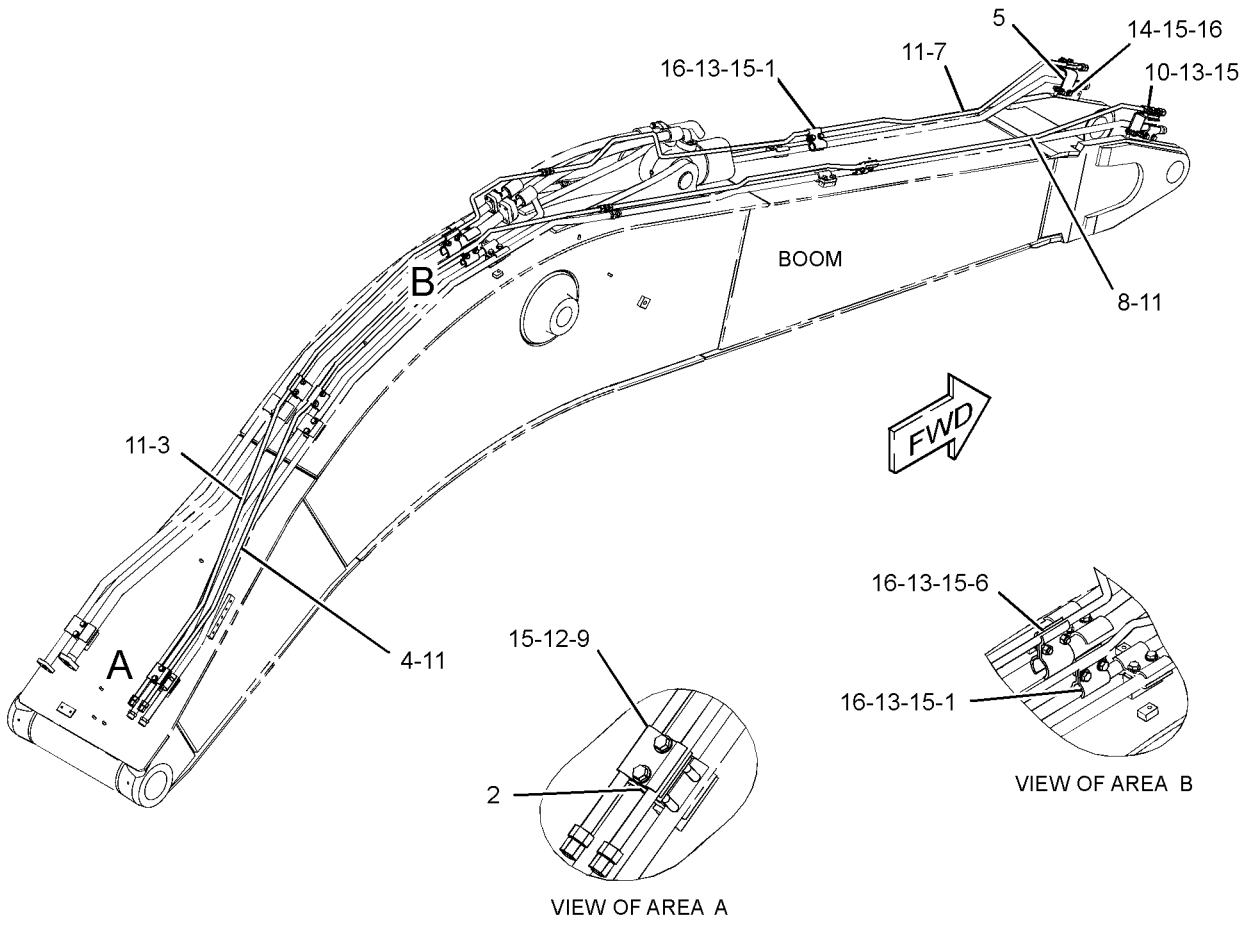

GRAPHIC #1 **<END>** g01154872

HYDRAULIC SYSTEM

242-6494 LINES GP-COUPLER

S/N: MNB1-UP; WDK1-UP
2.4 TO 2.5-M (7.9 TO 8.2-FT) STICK
AN ATTACHMENT

SMCS-5057, 5133 **i02406059**

NOTE	REF NO	GRAPHIC REF	PART NUMBER	QTY	PART NAME 1 2 3 4 5 6 (PRODUCT LEVEL)	SEE PAGE
	1	1	**9X-6582**	1	NUT (13/16-16-THD)	
I	2	1	**210-9966**	2	HOSE AS	
	3	1	**253-6688**	1	TUBE AS	
	4	1	**253-6691**	1	TUBE AS	
	5	1	*148-8415*	1	REDUCER AS	
		1	**6V-8397**	1	SEAL-O-RING	
		1	**6V-8936**	1	REDUCER	
	6	1	*148-8419*	1	REDUCER AS	
		1	**4J-5477**	1	SEAL-O-RING	
		1	**6V-8935**	1	REDUCER-O-RING	
	7	1	**5Q-4212**	12	CLIP	
	8	1	**6V-8398**	4	SEAL-O-RING	
	9	1	**8T-4223**	12	WASHER-HARD (13.5X25.5X3-MM THK)	
M	10	1	**8T-4956**	12	BOLT (M12X1.75X35-MM)	

I-REFER TO HYDRAULIC INFORMATION SYSTEM
M-METRIC PART

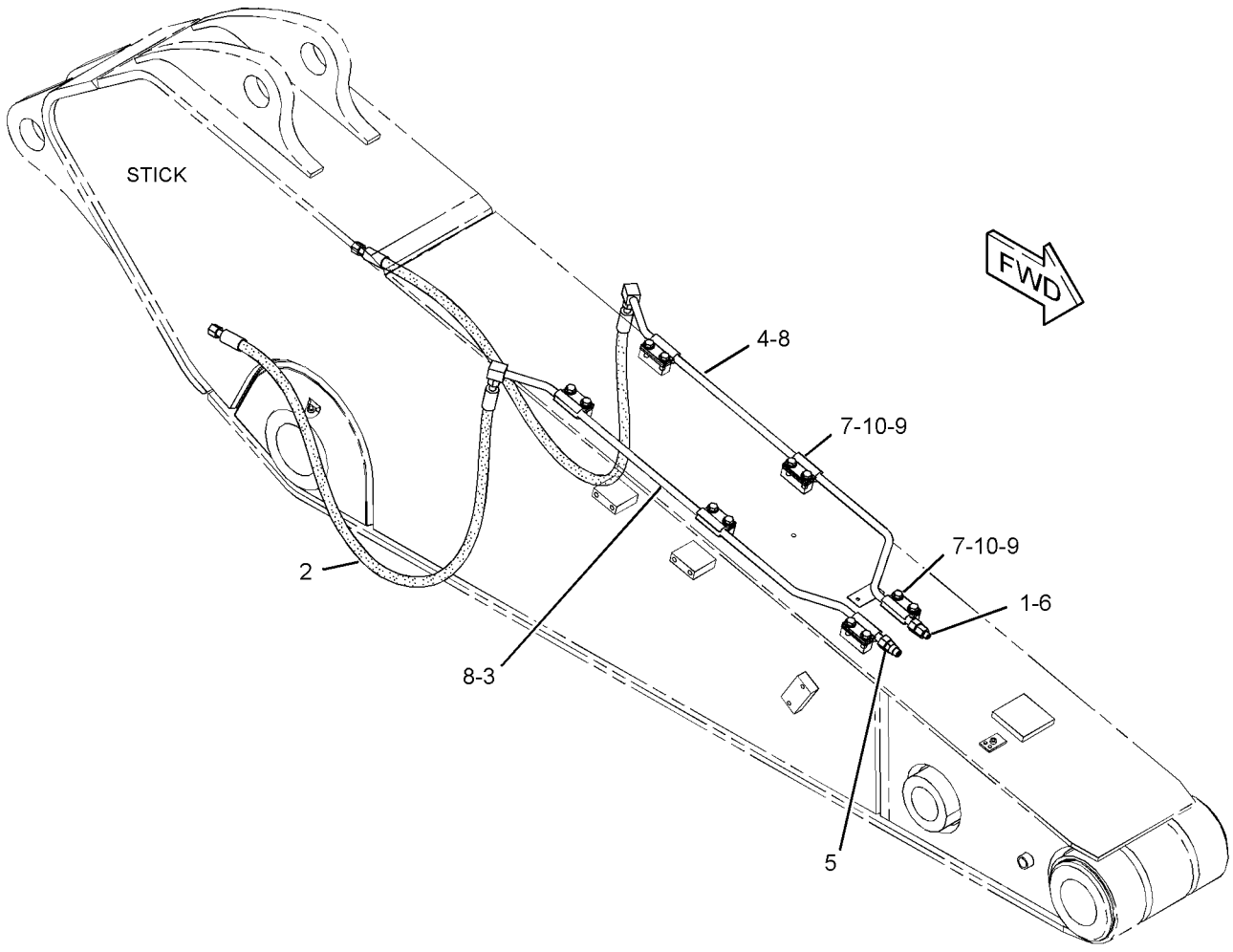

GRAPHIC #1 **<END>** g01236506

HYDRAULIC SYSTEM

253-6495 LINES GP-COUPLER

S/N: MNB1-UP; WDK1-UP
3.2-M (10.5-FT) STICK
AN ATTACHMENT

SMCS-5057, 5133 **i02344895**

NOTE	REF NO	GRAPHIC REF	PART NUMBER	QTY	PART NAME 1 2 3 4 5 6 (PRODUCT LEVEL)	SEE PAGE
	1	1	**9X-6582**	1	NUT (13/16-16-THD)	
	2	1	**253-6548**	1	TUBE AS	
	3	1	**253-6551**	1	TUBE AS	
I	4	1	**253-6554**	2	HOSE AS	
	5	1	*148-8415*	1	REDUCER AS	
		1	**6V-8397**	1	SEAL-O-RING	
		1	**6V-8936**	1	REDUCER	
	6	1	*148-8419*	1	REDUCER AS	
		1	**4J-5477**	1	SEAL-O-RING	
		1	**6V-8935**	1	REDUCER-O-RING	
	7	1	**5Q-4212**	12	CLIP	
	8	1	**6V-8398**	4	SEAL-O-RING	
	9	1	**8T-4223**	12	WASHER-HARD (13.5X25.5X3-MM THK)	
M	10	1	**8T-4956**	12	BOLT (M12X1.75X35-MM)	

I-REFER TO HYDRAULIC INFORMATION SYSTEM
M-METRIC PART

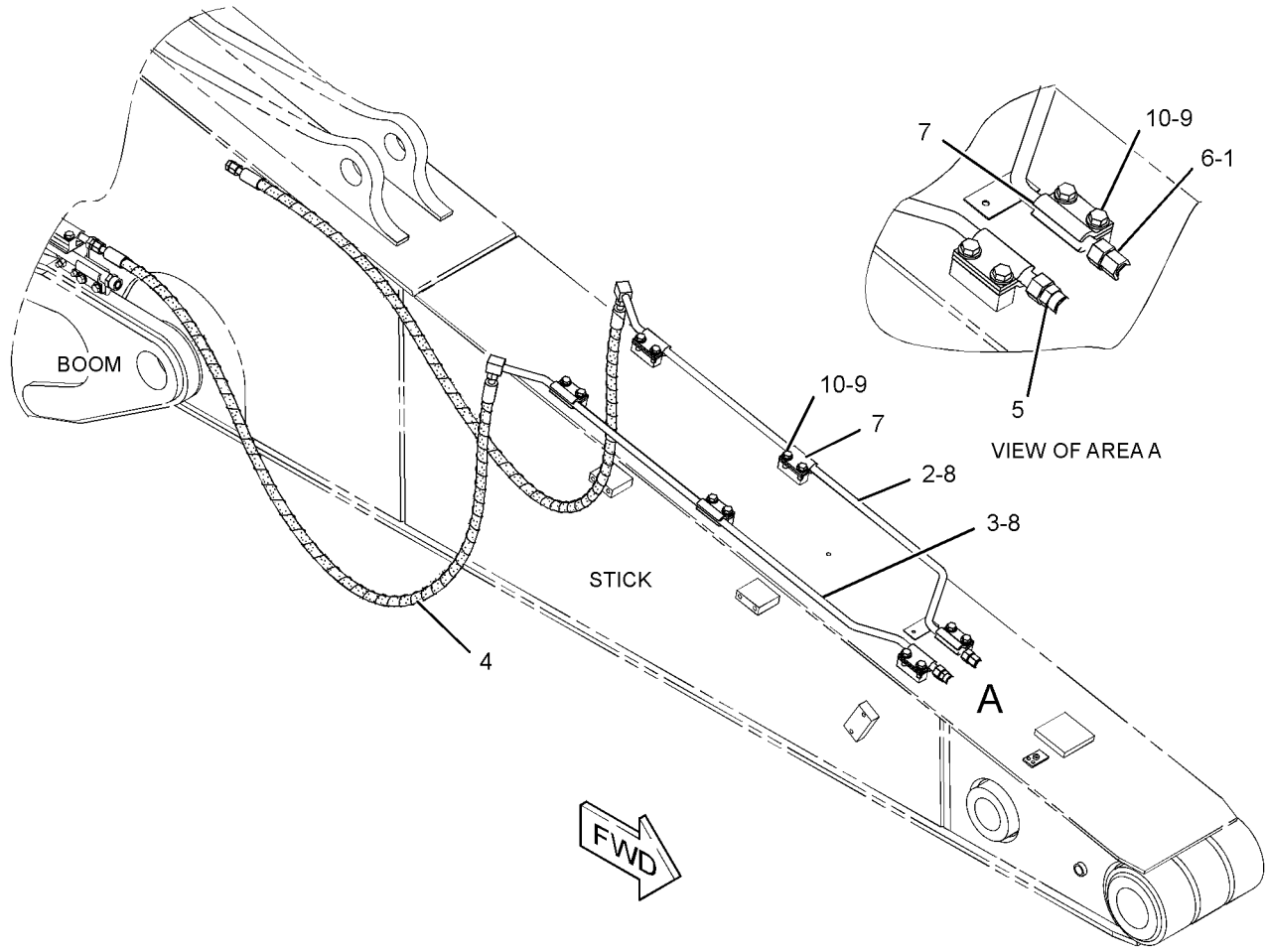

GRAPHIC #1 **<END>** g01156036

HYDRAULIC SYSTEM

253-6498 LINES GP-COUPLER

S/N: MNB1-UP; WDK1-UP
3.0-M (9.8-FT) STICK
AN ATTACHMENT

SMCS-5057, 5133 **i02345009**

NOTE	REF NO	GRAPHIC REF	PART NUMBER	QTY	PART NAME 1 2 3 4 5 6 (PRODUCT LEVEL)	SEE PAGE
	1	1	**9X-6582**	1	NUT (13/16-16-THD)	
I	2	1	**177-8506**	2	HOSE AS	
	3	1	**253-6548**	1	TUBE AS	
	4	1	**253-6551**	1	TUBE AS	
	5	1	*148-8415*	1	REDUCER AS	
		1	**6V-8397**	1	SEAL-O-RING	
		1	**6V-8936**	1	REDUCER	
	6	1	*148-8419*	1	REDUCER AS	
		1	**4J-5477**	1	SEAL-O-RING	
		1	**6V-8935**	1	REDUCER-O-RING	
	7	1	**5Q-4212**	12	CLIP	
	8	1	**6V-8398**	4	SEAL-O-RING	
	9	1	**8T-4223**	12	WASHER-HARD (13.5X25.5X3-MM THK)	
M	10	1	**8T-4956**	12	BOLT (M12X1.75X35-MM)	

I-REFER TO HYDRAULIC INFORMATION SYSTEM
M-METRIC PART

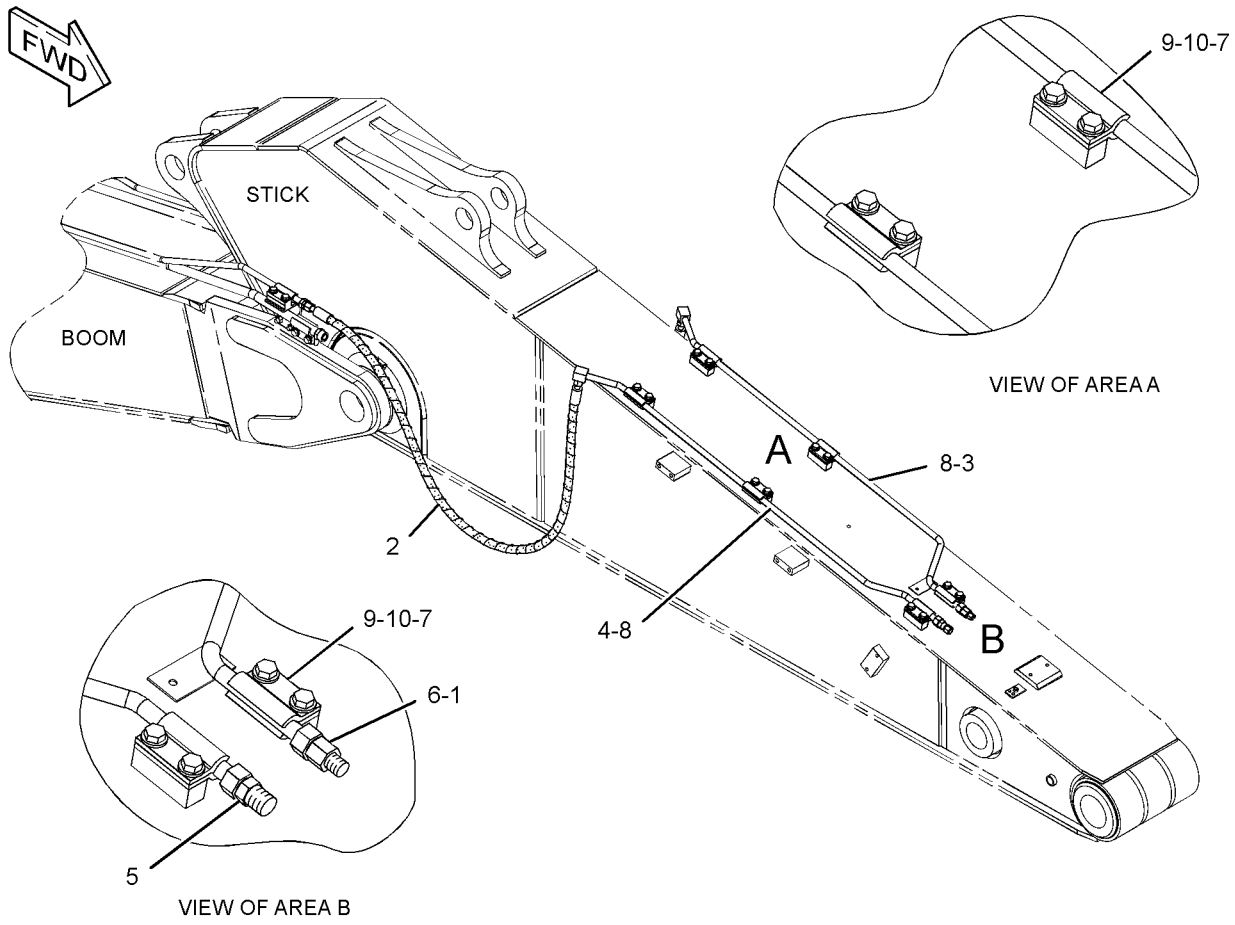

GRAPHIC #1 **<END>** g01190111

HYDRAULIC SYSTEM

253-6501 LINES GP-COUPLER

S/N: MNB1-UP; WDK1-UP
2.65-M (8.69-FT) STICK
AN ATTACHMENT

SMCS-5057, 5133 **i02345026**

NOTE	REF NO	GRAPHIC REF	PART NUMBER	QTY	PART NAME 1 2 3 4 5 6 (PRODUCT LEVEL)	SEE PAGE
	1	1	**9X-6582**	1	NUT (13/16-16-THD)	
I	2	1	**216-6485**	2	HOSE AS	
	3	1	**253-6688**	1	TUBE AS	
	4	1	**253-6691**	1	TUBE AS	
	5	1	*148-8415*	1	REDUCER AS	
		1	**6V-8397**	1	SEAL-O-RING	
		1	**6V-8936**	1	REDUCER	
	6	1	*148-8419*	1	REDUCER AS	
		1	**4J-5477**	1	SEAL-O-RING	
		1	**6V-8935**	1	REDUCER-O-RING	
	7	1	**5Q-4212**	12	CLIP	
	8	1	**6V-8398**	4	SEAL-O-RING	
	9	1	**8T-4223**	12	WASHER-HARD (13.5X25.5X3-MM THK)	
M	10	1	**8T-4956**	12	BOLT (M12X1.75X35-MM)	

I-REFER TO HYDRAULIC INFORMATION SYSTEM
M-METRIC PART

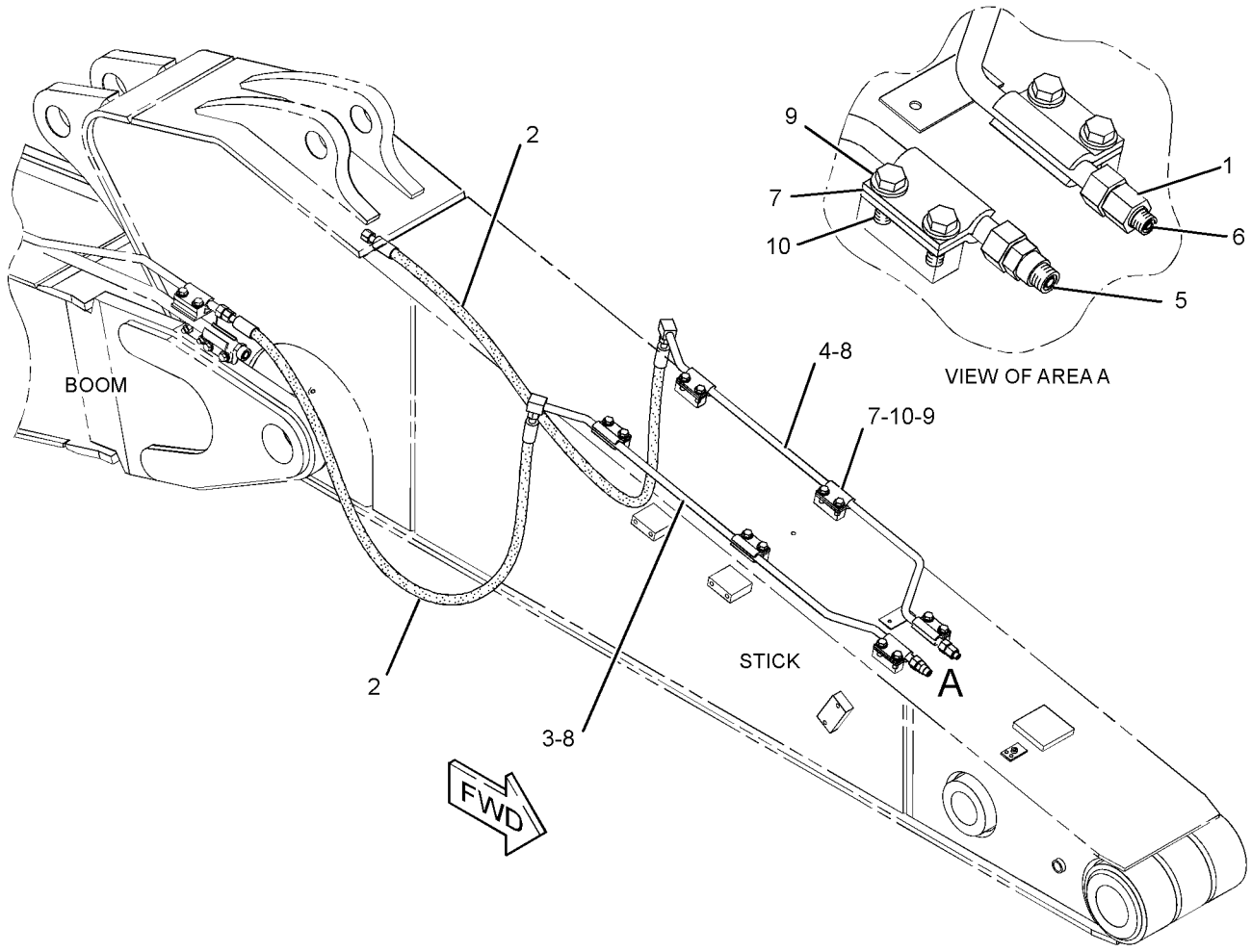

GRAPHIC #1 **<END>** g01191358

HYDRAULIC SYSTEM

227-0582 LINES GP-FRONT—QUICK COUPLER

S/N: MNB1-UP; WDK1-UP
PART OF 215-5981 CONTROL AR-COUPLER
AN ATTACHMENT

SMCS-5057 **i03026049**

NOTE	REF NO	GRAPHIC REF	PART NUMBER	QTY	PART NAME 1 2 3 4 5 6 (PRODUCT LEVEL)	SEE PAGE
	1	1	**3S-2093**	1	STRAP-CABLE	
	2	1	**4I-9521**	4	BAND-MARKER (RED, L1)	
	3	1	**4I-9522**	4	BAND-MARKER (YELLOW, L2)	
	4	1	**5I-4376**	1	FITTING	
	5	1	**7K-1181**	7	STRAP-CABLE	
I	6	1	**087-5762**	1	HOSE AS	
	7	1	**236-3200**	1	SUPPORT AS	
C	8	1	**328-2035**	1	VALVE GP-SOLENOID & MANIFOLD (QUICK COUPLER)	
		1	**260-3883**	1	COIL AS-SOLENOID	
		1	**1S-9593**	2	STRAP-CABLE	
		1	**186-3735**	2	PIN-CONNECTOR (16-GA TO 18-GA)	
		1	**230-4012**	1	RECEPTACLE AS-CONNECTOR (2-PIN)	
I	9	1	**260-7900**	1	HOSE AS	
I	10	1	**325-8862**	2	HOSE AS	
	11	1	**100-4336**	1	CLIP	
	12	1	*148-8336*	4	CONNECTOR AS	
					(EACH INCLUDES)	
		1	**3J-1907**	1	SEAL-O-RING	
		1	**6V-8397**	1	SEAL-O-RING	
		1	**6V-8636**	1	CONNECTOR	
	13	1	*148-8374*	1	ELBOW AS	
		1	**3K-0360**	1	SEAL-O-RING	
		1	**6V-8397**	1	SEAL-O-RING	
		1	**6V-8723**	1	ELBOW	
	14	1	*148-8378*	1	ELBOW AS	
		1	**3J-1907**	1	SEAL-O-RING	
		1	**6V-8397**	1	SEAL-O-RING	
		1	**6V-8724**	1	ELBOW	
	15	1	*148-8415*	2	REDUCER AS	
					(EACH INCLUDES)	
		1	**6V-8397**	1	SEAL-O-RING	
		1	**6V-8936**	1	REDUCER	
	16	1	*148-8353*	1	ELBOW AS	
		1	**3J-1907**	1	SEAL-O-RING	
		1	**6V-8397**	1	SEAL-O-RING	
		1	**6V-9001**	1	ELBOW	
	17	1	*164-5567*	1	COUPLER AS-QUICK DISCONNECT	
		1	**3J-1907**	1	SEAL-O-RING	
		1	**6V-3965**	1	FITTING (QUICK DISCONNECT)	
	18	1	**6V-0852**	1	CAP-DUST	
	19	1	**8T-4121**	3	WASHER-HARD (11X21X2.5-MM THK)	
M	20	1	**8T-4137**	1	BOLT (M10X1.5X20-MM)	
M	21	1	**8T-4185**	2	BOLT (M10X1.5X50-MM)	
M	22	1	**8T-4194**	2	BOLT (M12X1.75X50-MM)	
	23	1	**8T-4223**	2	WASHER-HARD (13.5X25.5X3-MM THK)	
	24	1	*148-8371*	1	ELBOW AS	
		1	**6V-8397**	1	SEAL-O-RING	
		1	**8C-8988**	1	ELBOW	

C-CHANGE FROM PREVIOUS TYPE
I-REFER TO HYDRAULIC INFORMATION SYSTEM
M-METRIC PART

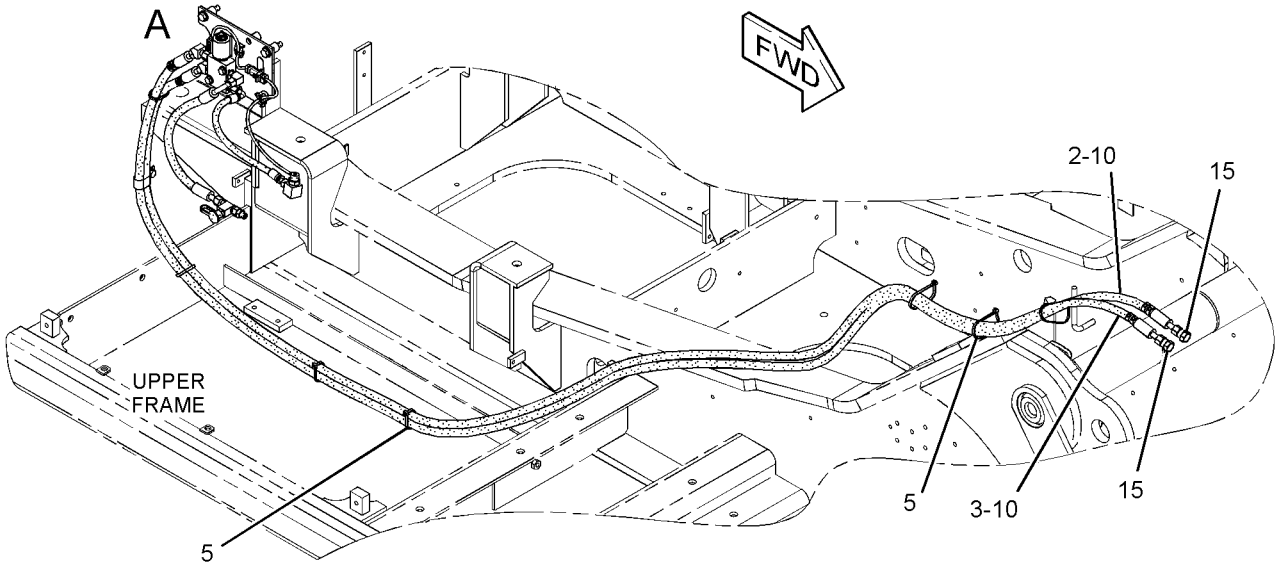

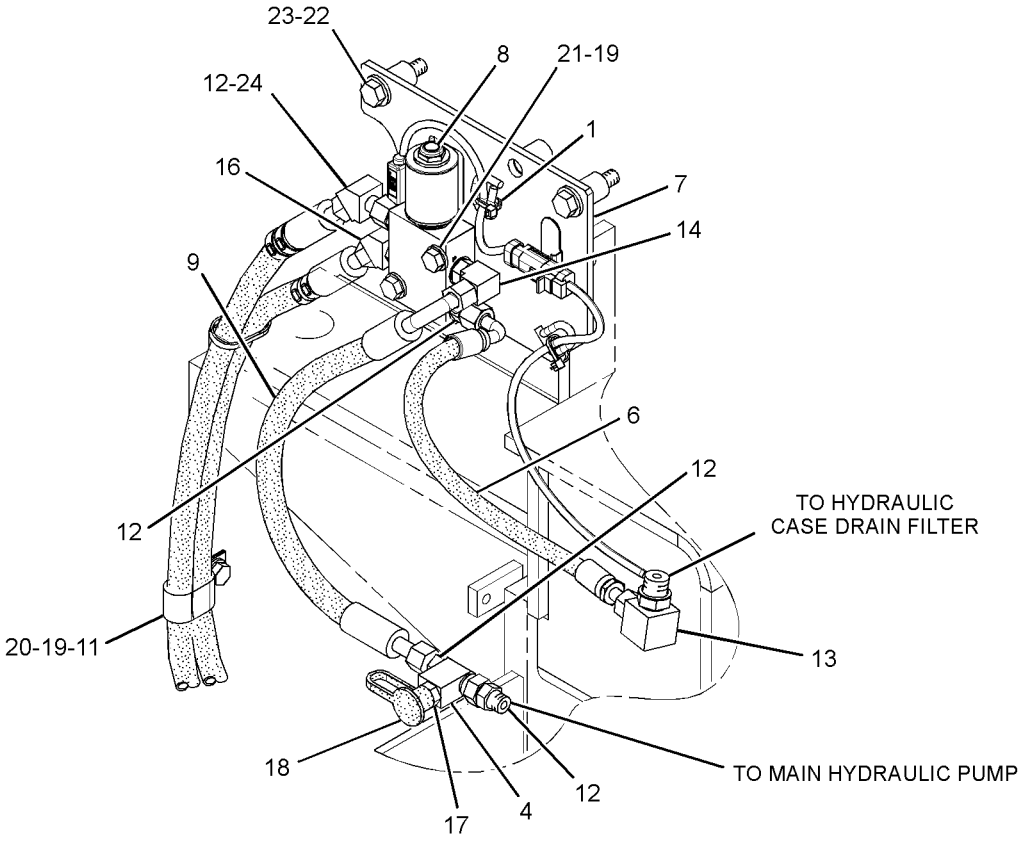

VIEW OF AREA A

GRAPHIC #1 **<END>** g01550114

HYDRAULIC SYSTEM

245-5178 LINES GP-FRONT—BOOM CYLINDER

S/N: MNB1-UP; WDK1-UP

PART OF 255-5707, 255-5708 HYDRAULIC AR

SMCS-5057 **i03113023**

NOTE	REF NO	GRAPHIC REF	PART NUMBER	QTY	PART NAME 1 2 3 4 5 6 (PRODUCT LEVEL)	SEE PAGE
	1	1	**4I-1674**	2	CLIP	
I	2	1	**7Y-7904**	4	HOSE AS	
	3	1	**9F-2167**	1	SCREW-PURGE (3/8-24X1.164-IN)	
M	4	1	**101-7398**	4	BOLT-SOCKET HEAD (M10X1.5X40-MM)	
	5	1	**108-7550**	1	CLIP	
CY	6	1	**322-8716**	1	VALVE GP-SWING CUSHION (FINE SWING)	822
	7	1	*164-5552*	1	CONNECTOR AS	
		1	**3D-2824**	1	SEAL-O-RING	
		1	**4I-7745**	1	CONNECTOR	
		1	**6V-8398**	1	SEAL-O-RING	
I	8	1	**204-8260**	1	HOSE AS	
	9	1	**234-4492**	1	SUPPORT	
	10	1	**255-1785**	1	TUBE AS	
	11	1	**255-1786**	1	TUBE AS	
	12	1	**255-1787**	1	SUPPORT AS	
M	13	1	**101-7404**	4	BOLT-SOCKET HEAD (M10X1.5X30-MM)	
	14	1	**133-5828**	1	SUPPORT AS	
	15	1	*148-8353*	1	ELBOW AS	
		1	**3J-1907**	1	SEAL-O-RING	
		1	**6V-8397**	1	SEAL-O-RING	
		1	**6V-9001**	1	ELBOW	
	16	1	*148-8355*	1	ELBOW AS	
		1	**5K-9090**	1	SEAL-O-RING	
		1	**6V-9005**	1	ELBOW	
		1	**7M-8485**	1	SEAL-O-RING	
	17	1	*148-8364*	1	ELBOW AS	
		1	**3K-0360**	1	SEAL-O-RING	
		1	**6V-8398**	1	SEAL-O-RING	
		1	**6V-8625**	1	ELBOW	
	18	1	*148-8444*	1	TEE AS-SWIVEL	
		1	**6V-8398**	2	SEAL-O-RING	
		1	**6V-9837**	1	TEE-SWIVEL	
	19	1	*148-8367*	1	ELBOW AS	
		1	**6V-8397**	1	SEAL-O-RING	
		1	**6V-9850**	1	ELBOW	
	20	1	**1P-3703**	2	SEAL-RECTANGULAR	
	21	1	**5P-1076**	2	WASHER-HARD (13.5X30X4-MM THK)	
	22	1	**6V-9746**	4	SEAL-O-RING	
	23	1	**8T-4121**	8	WASHER-HARD (11X21X2.5-MM THK)	
M	24	1	**8T-4139**	4	BOLT (M12X1.75X30-MM)	
M	25	1	**8T-4178**	6	BOLT (M10X1.5X90-MM)	
M	26	1	**8T-4182**	8	BOLT (M10X1.5X45-MM)	
	27	1	**8T-4223**	6	WASHER-HARD (13.5X25.5X3-MM THK)	
M	28	1	**8T-4648**	2	BOLT (M12X1.75X70-MM)	
M	29	1	**8T-4910**	2	BOLT (M12X1.75X60-MM)	
	30	1	**8T-9403**	4	FLANGE-HALF	
	31	1	*148-8336*	1	CONNECTOR AS	
		1	**3J-1907**	1	SEAL-O-RING	
		1	**6V-8397**	1	SEAL-O-RING	
		1	**6V-8636**	1	CONNECTOR	

C-CHANGE FROM PREVIOUS TYPE
I-REFER TO HYDRAULIC INFORMATION SYSTEM
M-METRIC PART
Y-SEPARATE ILLUSTRATION

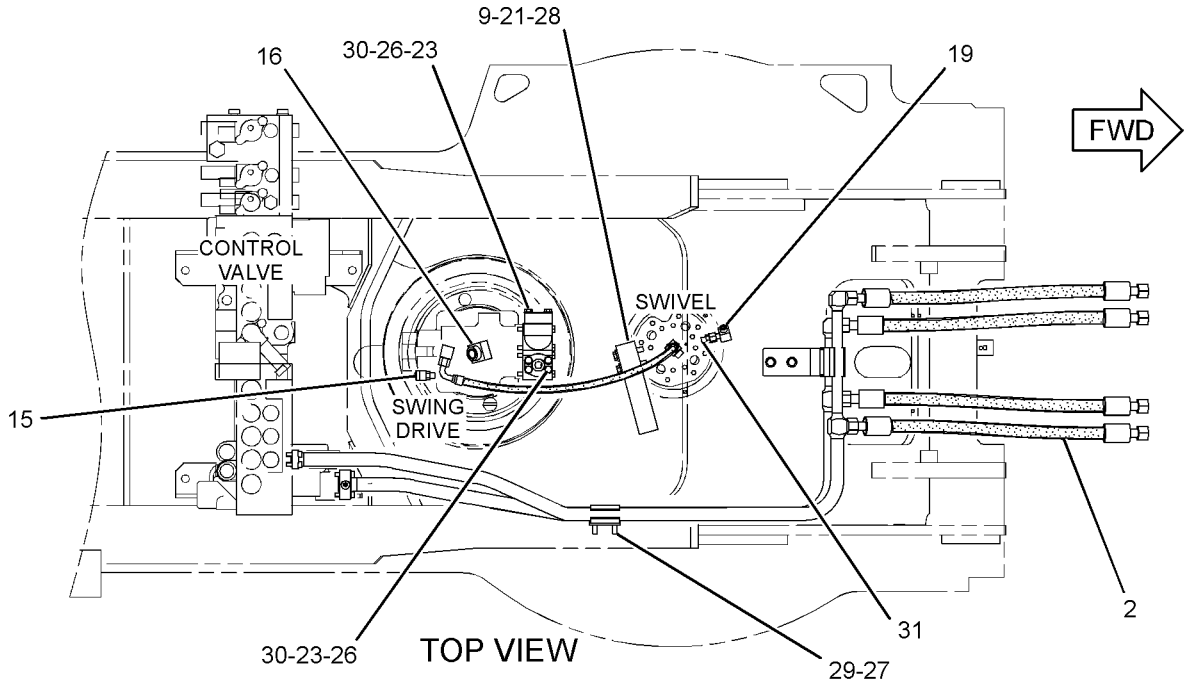

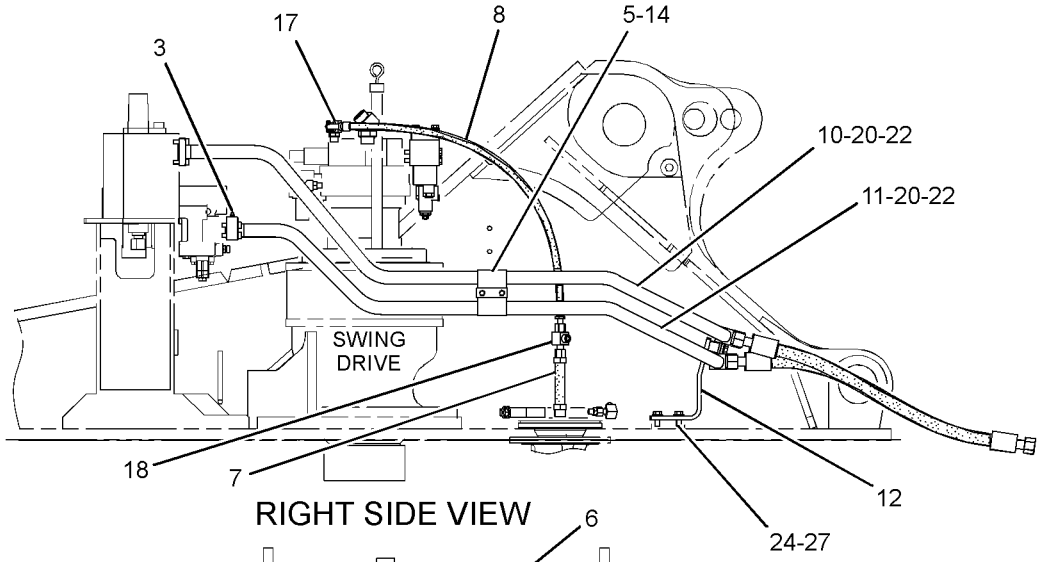

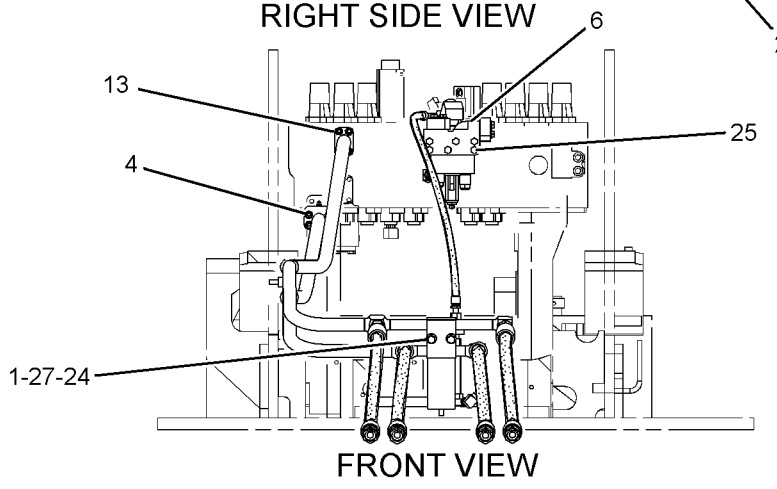

GRAPHIC #1 **<END>** g01270253

HYDRAULIC SYSTEM

245-5179 LINES GP-FRONT—CONTROL VALVE, FRONT

S/N: MNB1-UP; WDK1-UP

PART OF 255-5707, 255-5708 HYDRAULIC AR

SMCS-5057 **i03194607**

NOTE	REF NO	GRAPHIC REF	PART NUMBER	QTY	PART NAME 1 2 3 4 5 6 (PRODUCT LEVEL)	SEE PAGE
	1	2	**7Y-3721**	1	TUBE AS	
	2	2	**7Y-3730**	2	FLANGE-SPECIAL	
M	3	2	**101-7403**	2	BOLT-SOCKET HEAD (M10X1.5X80-MM)	
M	4	2	**105-3477**	8	BOLT-SOCKET HEAD (M10X1.5X45-MM)	
M	5	2	**105-3483**	2	BOLT-SOCKET HEAD (M10X1.5X70-MM)	
M	6	2	**113-2004**	4	BOLT-SOCKET HEAD (M12X1.75X45-MM)	
	7	2	**113-6479**	2	FLANGE-SPECIAL	
	8	2	**137-0856**	1	TUBE AS	
	9	2	**187-5935**	1	BLOCK	
I	10	2	**187-5994**	1	HOSE AS	
Y	11	1	**194-0174**	1	HOSE GP-HYDRAULIC (CONTROL VALVE, STICK)	508
Y	12	1	**194-0177**	1	HOSE GP-HYDRAULIC (CONTROL VALVE, STICK)	510
Y	13	1	**194-0180**	1	HOSE GP-HYDRAULIC (CONTROL VALVE, BOOM)	513
I	14	2	**199-1620**	2	HOSE AS	
I	15	2	**202-3994**	1	HOSE AS	
I	16	2	**202-4038**	1	HOSE AS	
	17	2	**218-1127**	1	TUBE AS	
I	18	1	**248-9866**	1	HOSE AS	
I	19	1	**248-9870**	1	HOSE AS	
I	20	1	**248-9874**	1	HOSE AS	
I	21	1	**248-9878**	1	HOSE AS	
I	22	2	**248-9882**	1	HOSE AS	
Y	23	2	**255-5680**	1	VALVE GP-LOAD CONTROL (STICK DRIFT RED, LINE RELIEF)	766
Y	24	2	**255-5683**	1	VALVE GP-LOAD CONTROL (BOOM DRIFT RED, LINE RELIEF)	768
M	25	2	**101-7397**	4	BOLT-SOCKET HEAD (M12X1.75X50-MM)	
M	26	2	**101-7404**	42	BOLT-SOCKET HEAD (M10X1.5X30-MM)	
M	27	2	**105-3485**	4	BOLT-SOCKET HEAD (M12X1.75X60-MM)	
	28	1	*148-8335*	1	CONNECTOR AS	
		1	**5K-9090**	1	SEAL-O-RING	
		1	**6V-8635**	1	CONNECTOR	
		1	**7M-8485**	1	SEAL-O-RING	
	29	2	*164-4180*	1	PLUG AS	
		2	**7M-8485**	1	SEAL-O-RING	
		2	**9S-4181**	1	PLUG-O-RING	
M	30	2	**199-1286**	6	BOLT-SOCKET HEAD (M10X1.5X150-MM)	
	31	2	**1P-3702**	4	SEAL-RECTANGULAR	
	32	1,2	**1P-3703**	9	SEAL-RECTANGULAR	
	33	2	**1P-3704**	3	SEAL-RECTANGULAR	
	34	2	**1P-5767**	4	FLANGE-HALF	
	35	1,2	**4J-5267**	10	SEAL-O-RING	
	36	2	**4J-5268**	1	SEAL-O-RING	
	37	2	**5K-9090**	4	SEAL-O-RING	
	38	2	**6V-0400**	4	FLANGE-HALF	
	39	2	**6V-9746**	2	SEAL-O-RING	
	40	2	**8T-4121**	8	WASHER-HARD (11X21X2.5-MM THK)	
M	41	2	**8T-4194**	8	BOLT (M12X1.75X50-MM)	
	42	2	**8T-4223**	16	WASHER-HARD (13.5X25.5X3-MM THK)	
	43	2	**8T-9403**	4	FLANGE-HALF	

I-REFER TO HYDRAULIC INFORMATION SYSTEM
M-METRIC PART
Y-SEPARATE ILLUSTRATION

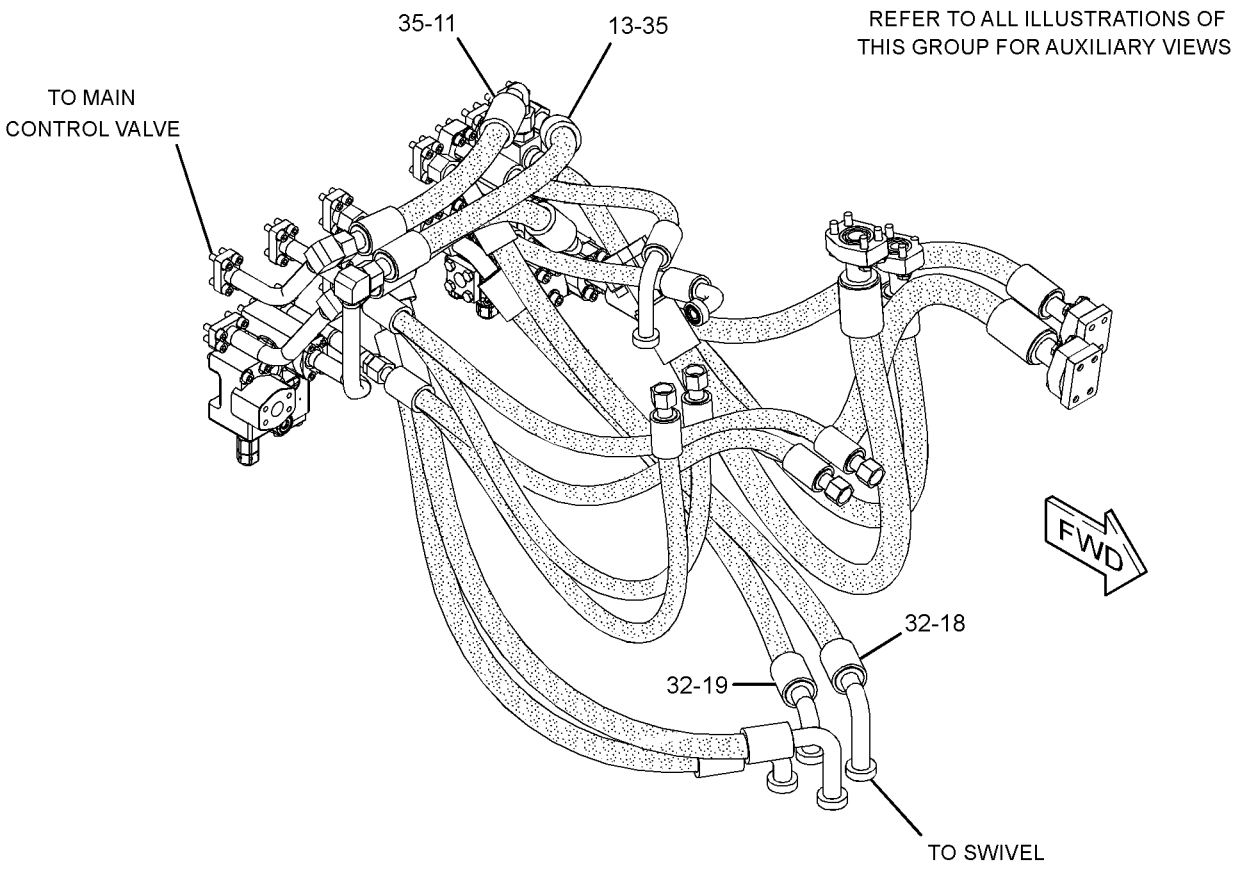

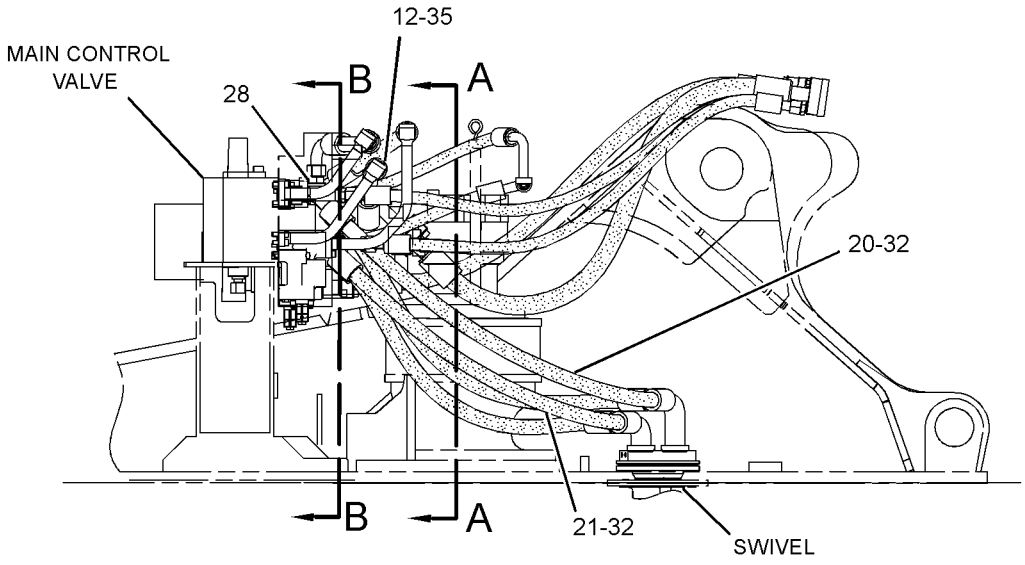

RIGHT SIDE VIEW

GRAPHIC #1 g01629336

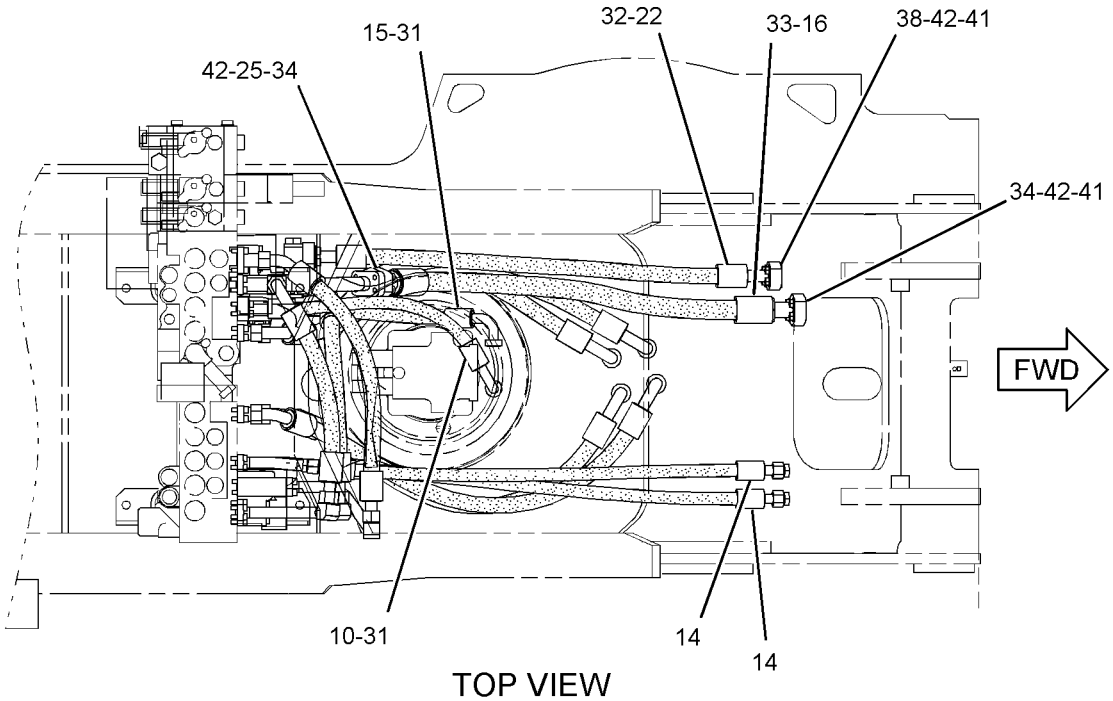

TOP VIEW

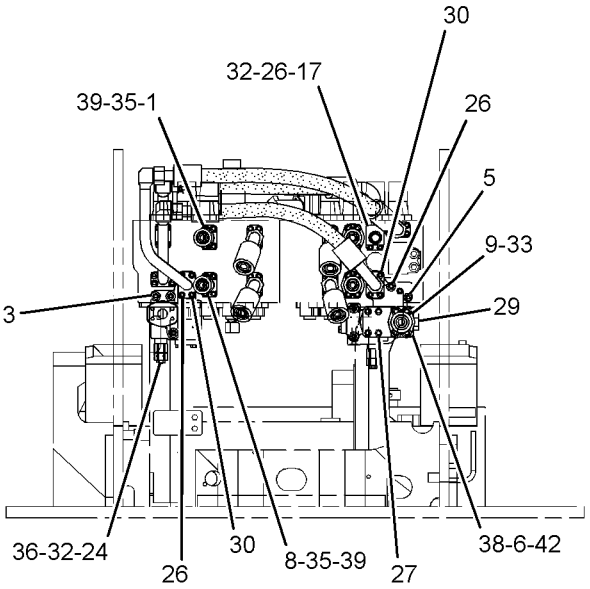

SECTION B-B

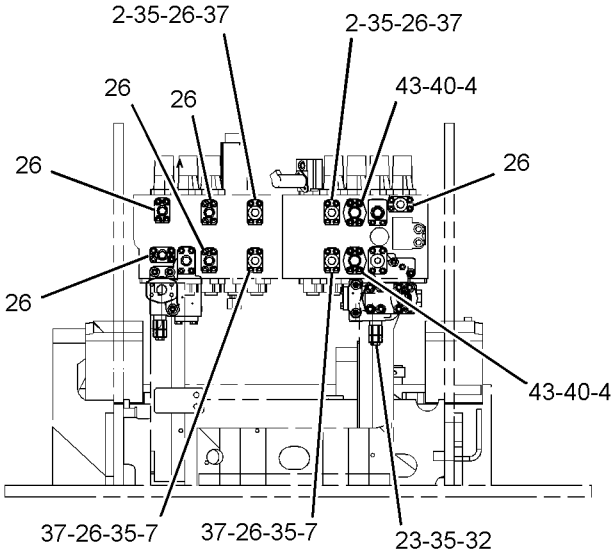

SECTION A-A

GRAPHIC #2 **<END>** g01629334

HYDRAULIC SYSTEM

255-1758 LINES GP-FRONT—SYSTEM 1, 1-WAY, 1-PUMP

S/N: MNB1-UP; WDK1-UP
PART OF 255-5696 CONTROL AR-AUXILIARY
AN ATTACHMENT

SMCS-5057 **i03105026**

NOTE	REF NO	GRAPHIC REF	PART NUMBER	QTY	PART NAME 1 2 3 4 5 6 (PRODUCT LEVEL)	SEE PAGE
	1	2	**7Y-3731**	1	FLANGE	
Y	2	2	**177-2653**	1	VALVE GP-RELIEF (WITH BLOCK)	788
I	3	1	**193-9994**	1	HOSE AS	
	4	2	**199-1773**	1	ELBOW	
	5	1	**204-3737**	1	FLANGE-SPECIAL	
	6	2	**212-5148**	1	BLOCK	
I	7	2	**212-5495**	1	HOSE AS	
	8	2	**218-1139**	1	BLOCK	
I	9	1	**230-0185**	1	HOSE AS	
	10	2	**255-1936**	1	BLOCK	
	11	1	**260-7872**	1	SUPPORT AS	
	12	2	**260-7959**	2	BRACKET	
	13	2	**260-7960**	1	SUPPORT	
	14	2	**260-8034**	1	SUPPORT	
	15	2	**260-8043**	1	BLOCK	
	16	2	**099-8232**	1	SEAL-O-RING	
M	17	1,2	**101-7404**	8	BOLT-SOCKET HEAD (M10X1.5X30-MM)	
	18	2	*148-8335*	1	CONNECTOR AS	
		2	**5K-9090**	1	SEAL-O-RING	
		2	**6V-8635**	1	CONNECTOR	
		2	**7M-8485**	1	SEAL-O-RING	
	19	2	*148-8355*	1	ELBOW AS	
		2	**5K-9090**	1	SEAL-O-RING	
		2	**6V-9005**	1	ELBOW	
		2	**7M-8485**	1	SEAL-O-RING	
	20	2	*148-8387*	1	ELBOW AS	
		2	**6V-8400**	1	SEAL-O-RING	
		2	**6V-9855**	1	ELBOW	
	21	1	*148-8411*	1	PLUG AS	
		1	**3K-0360**	1	SEAL-O-RING	
		1	**9S-4185**	1	PLUG-O-RING	
	22	2	*164-4180*	1	PLUG AS	
		2	**7M-8485**	1	SEAL-O-RING	
		2	**9S-4181**	1	PLUG-O-RING	
	23	1,2	**1P-3703**	4	SEAL-RECTANGULAR	
	24	2	**1P-4578**	2	FLANGE-HALF	
	25	1	**212-5491**	1	SUPPORT AS	
	26	2	**2S-4078**	1	SEAL-O-RING	
	27	2	**4J-0522**	1	SEAL-O-RING	
	28	1,2	**5K-9090**	2	SEAL-O-RING	
	29	1	**5P-7468**	2	CLIP (SLOT)	
	30	1	**5P-7469**	2	CLIP (TAB)	
	31	1	**6V-0545**	2	GROMMET	
	32	2	**6V-8400**	1	SEAL-O-RING	
	33	1,2	**8T-4121**	6	WASHER-HARD (11X21X2.5-MM THK)	
M	34	1	**8T-4136**	2	BOLT (M10X1.5X25-MM)	
M	35	2	**8T-4139**	10	BOLT (M12X1.75X30-MM)	
M	36	2	**8T-4176**	4	BOLT (M12X1.75X90-MM)	
M	37	1	**8T-4183**	2	BOLT (M12X1.75X40-MM)	
M	38	2	**8T-4196**	4	BOLT (M10X1.5X35-MM)	
	39	1,2	**8T-4223**	30	WASHER-HARD (13.5X25.5X3-MM THK)	
M	40	1,2	**8T-4956**	6	BOLT (M12X1.75X35-MM)	
M	41	2	**8T-5092**	8	BOLT (M12X1.75X150-MM)	

I-REFER TO HYDRAULIC INFORMATION SYSTEM
M-METRIC PART
Y-SEPARATE ILLUSTRATION

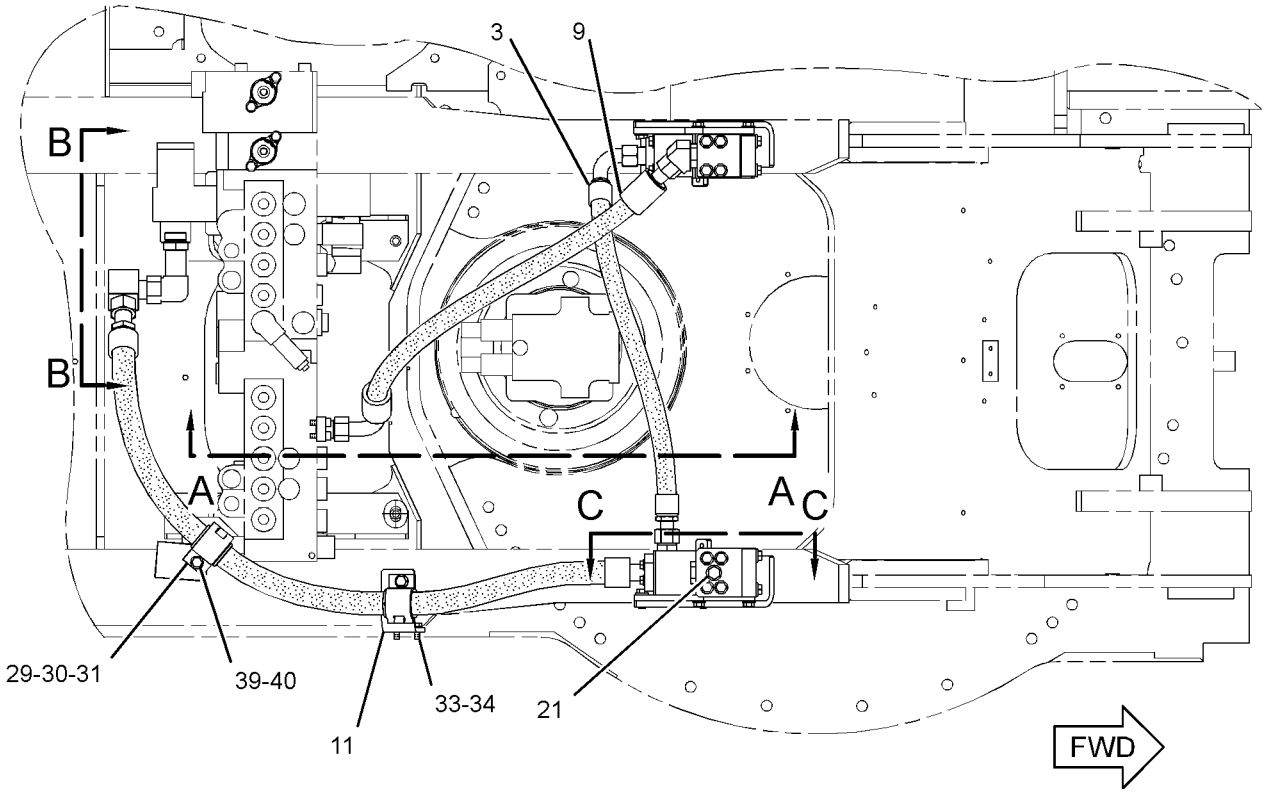

TOP VIEW

REFER TO ALL ILLUSTRATIONS OF
THIS GROUP FOR AUXILIARY VIEWS

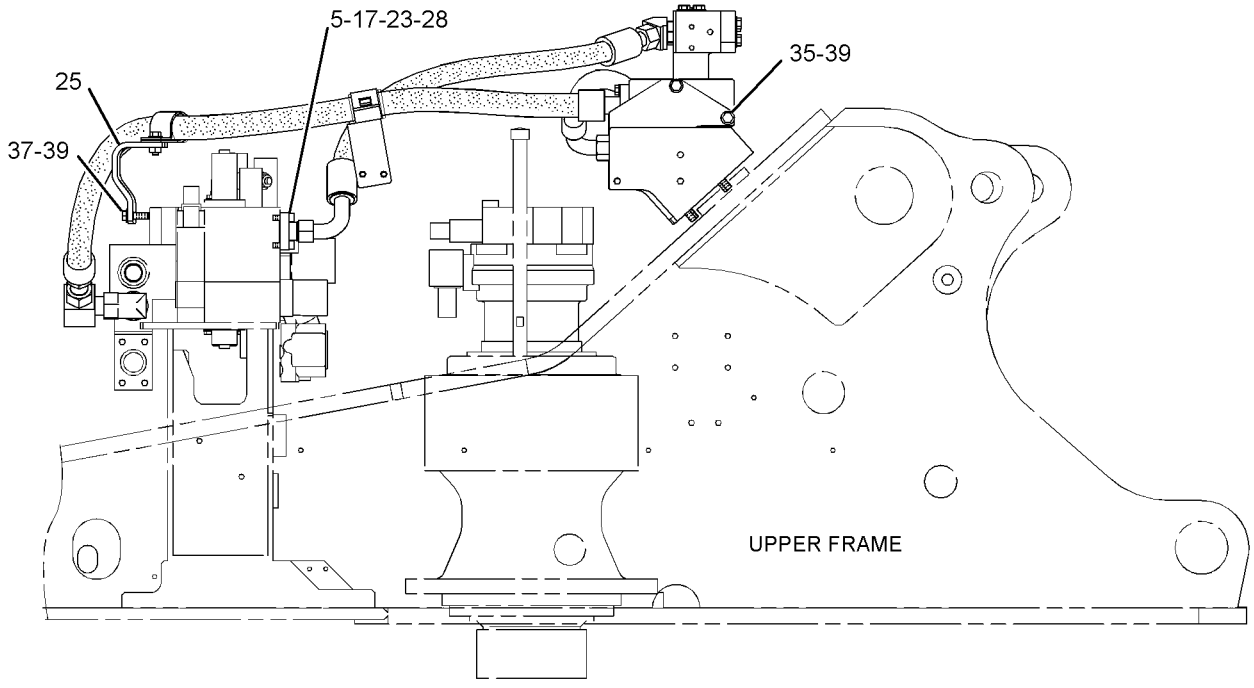

RIGHT SIDE VIEW

GRAPHIC #1

g01620156

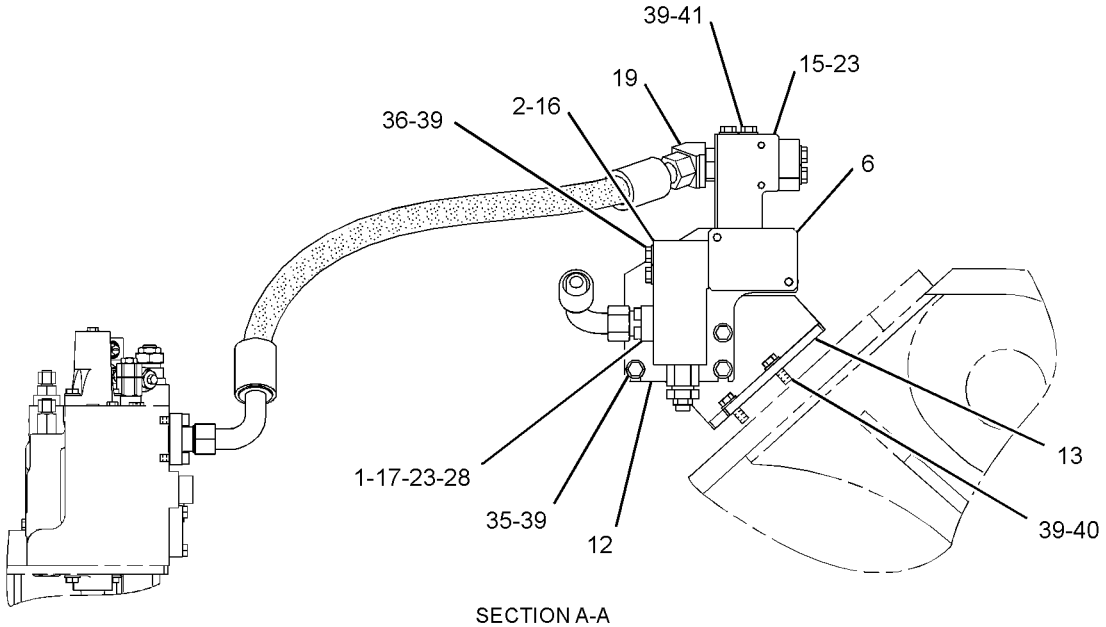

SECTION A-A

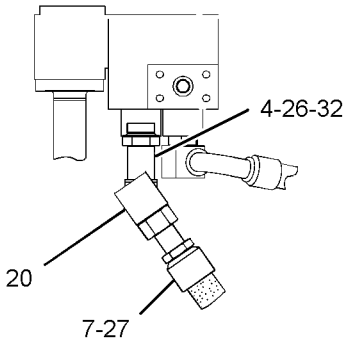

VIEW B-B

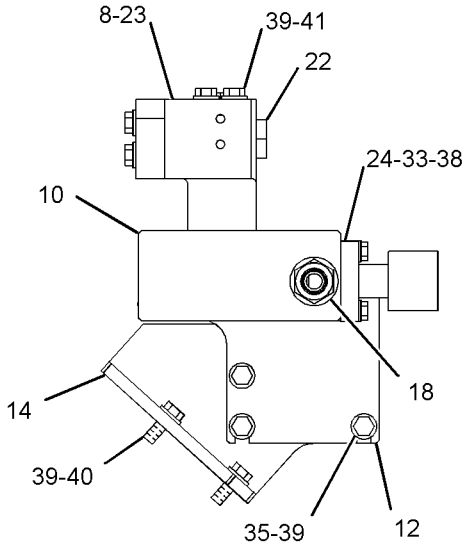

SECTION C-C

GRAPHIC #2 **<END>** g01620196

HYDRAULIC SYSTEM

255-1759 LINES GP-FRONT—COMBINED FUNCTION

S/N: MNB1-UP; WDK1-UP
PART OF 255-5697, 255-5702 CONTROL AR-AUXILIARY
AN ATTACHMENT

SMCS-5057 **i03105040**

NOTE	REF NO	GRAPHIC REF	PART NUMBER	QTY	PART NAME 1 2 3 4 5 6 (PRODUCT LEVEL)	SEE PAGE
	1	2	**7Y-3729**	1	FLANGE	
	2	2	**7Y-3731**	1	FLANGE	
M	3	2	**105-3477**	6	BOLT-SOCKET HEAD (M10X1.5X45-MM)	
Y	4	2	**177-2653**	1	VALVE GP-RELIEF (WITH BLOCK)	788
	5	2	**187-5854**	1	BLOCK	
	6	2	**187-5855**	1	FLANGE	
I	7	1	**193-9994**	1	HOSE AS	
	8	1	**199-1773**	1	ELBOW	
	9	1	**212-5491**	1	SUPPORT AS	
I	10	1	**212-5495**	1	HOSE AS	
Y	11	2	**297-0370**	1	VALVE GP-CHECK (SOLENOID CONTROLLED) (1-WAY/2-WAY, CHECK)	734
Y	11A	1	**297-0370**	1	VALVE GP-CHECK (SOLENOID CONTROLLED) (1-WAY FLOW)	734
	12	1	**218-1139**	1	BLOCK	
	13	1	**260-7872**	1	SUPPORT AS	
	14	2	**260-7959**	2	BRACKET	
	15	2	**260-7960**	1	SUPPORT	
	16	2	**260-8034**	1	SUPPORT	
I	17	1	**266-0943**	1	HOSE AS	
	18	2	**266-0953**	1	BLOCK	
I	19	1	**266-0997**	1	HOSE AS	
	20	2	**266-1278**	1	BLOCK	
	21	2	**266-1279**	2	FLANGE	
I	22	1	**266-1303**	1	HOSE AS	
	23	2	**275-1439**	1	BLOCK	
	24	2	**275-1440**	1	BLOCK	
	25	2	**275-1446**	1	BLOCK	
I	26	1	**275-1448**	1	HOSE AS	
I	27	1	**275-1452**	1	HOSE AS	
	28	2	**099-8232**	1	SEAL-O-RING	
M	29	2	**101-7401**	8	BOLT-SOCKET HEAD (M10X1.5X20-MM)	
M	30	2	**101-7404**	8	BOLT-SOCKET HEAD (M10X1.5X30-MM)	
M	31	2	**108-4282**	4	BOLT-SOCKET HEAD (M10X1.5X100-MM)	
	32	2	*148-8335*	3	CONNECTOR AS	
					(EACH INCLUDES)	
		2	**5K-9090**	1	SEAL-O-RING	
		2	**6V-8635**	1	CONNECTOR	
		2	**7M-8485**	1	SEAL-O-RING	
	33	2	*148-8347*	1	ELBOW AS	
		2	**3D-2824**	1	SEAL-O-RING	
		2	**6V-9007**	1	ELBOW	
		2	**6V-9746**	1	SEAL-O-RING	
	34	1	*148-8387*	1	ELBOW AS	
		1	**6V-8400**	1	SEAL-O-RING	
		1	**6V-9855**	1	ELBOW	
	35	2	*148-8392*	1	ELBOW AS	
		2	**6V-9746**	1	SEAL-O-RING	
		2	**6V-9853**	1	ELBOW	
	36	1	*148-8411*	1	PLUG AS	
		1	**3K-0360**	1	SEAL-O-RING	
		1	**9S-4185**	1	PLUG-O-RING	
	37	2	*148-8442*	1	TEE AS	
		2	**6V-9746**	2	SEAL-O-RING	
		2	**7M-8485**	1	SEAL-O-RING	

255-1759 **LINES GP-FRONT** ***(contd.)*** **i03105040**

NOTE	REF NO	GRAPHIC REF	PART NUMBER	QTY	PART NAME 1 2 3 4 5 6 (PRODUCT LEVEL)	SEE PAGE
		2	**8T-1685**	1	TEE	
	38	1	*153-6237*	1	ELBOW AS	
		1	**3D-2824**	1	SEAL-O-RING	
		1	**6V-9004**	1	ELBOW	
		1	**6V-9746**	1	SEAL-O-RING	
	39	1	*164-5574*	1	TEE AS	
		1	**3D-2824**	1	SEAL-O-RING	
		1	**6V-8784**	1	TEE-FACE SEAL	
		1	**6V-9746**	2	SEAL-O-RING	
	40	2	*164-5606*	1	CONNECTOR AS	
		2	**3D-2824**	1	SEAL-O-RING	
		2	**6V-9746**	1	SEAL-O-RING	
		2	**8T-0078**	1	CONNECTOR	
	41	2	**1P-3702**	6	SEAL-RECTANGULAR	
	42	1,2	**1P-3703**	5	SEAL-RECTANGULAR	
	43	2	**1P-4578**	2	FLANGE-HALF	
M	44	2	**280-2747**	4	BOLT-SOCKET HEAD (M10X1.5X60-MM)	
	45	1	**2S-4078**	1	SEAL-O-RING	
	46	1	**4J-0522**	1	SEAL-O-RING	
	47	2	**5K-9090**	1	SEAL-O-RING	
	48	1	**5P-7468**	2	CLIP (SLOT)	
	49	1	**5P-7469**	2	CLIP (TAB)	
	50	1	**6V-0545**	2	GROMMET	
	51	1	**6V-8400**	1	SEAL-O-RING	
	52	2	**6V-9746**	1	SEAL-O-RING	
M	53	2	**8T-3957**	4	BOLT-SOCKET HEAD (M12X1.75X30-MM)	
	54	1,2	**8T-4121**	6	WASHER-HARD (11X21X2.5-MM THK)	
M	55	1	**8T-4136**	2	BOLT (M10X1.5X25-MM)	
M	56	2	**8T-4139**	10	BOLT (M12X1.75X30-MM)	
M	57	2	**8T-4176**	4	BOLT (M12X1.75X90-MM)	
M	58	2	**8T-4178**	4	BOLT (M10X1.5X90-MM)	
M	59	1	**8T-4183**	2	BOLT (M12X1.75X40-MM)	
	60	1,2	**8T-4223**	30	WASHER-HARD (13.5X25.5X3-MM THK)	
M	61	1,2	**8T-4956**	6	BOLT (M12X1.75X35-MM)	
M	62	2	**8T-5092**	8	BOLT (M12X1.75X150-MM)	

I-REFER TO HYDRAULIC INFORMATION SYSTEM
M-METRIC PART
Y-SEPARATE ILLUSTRATION

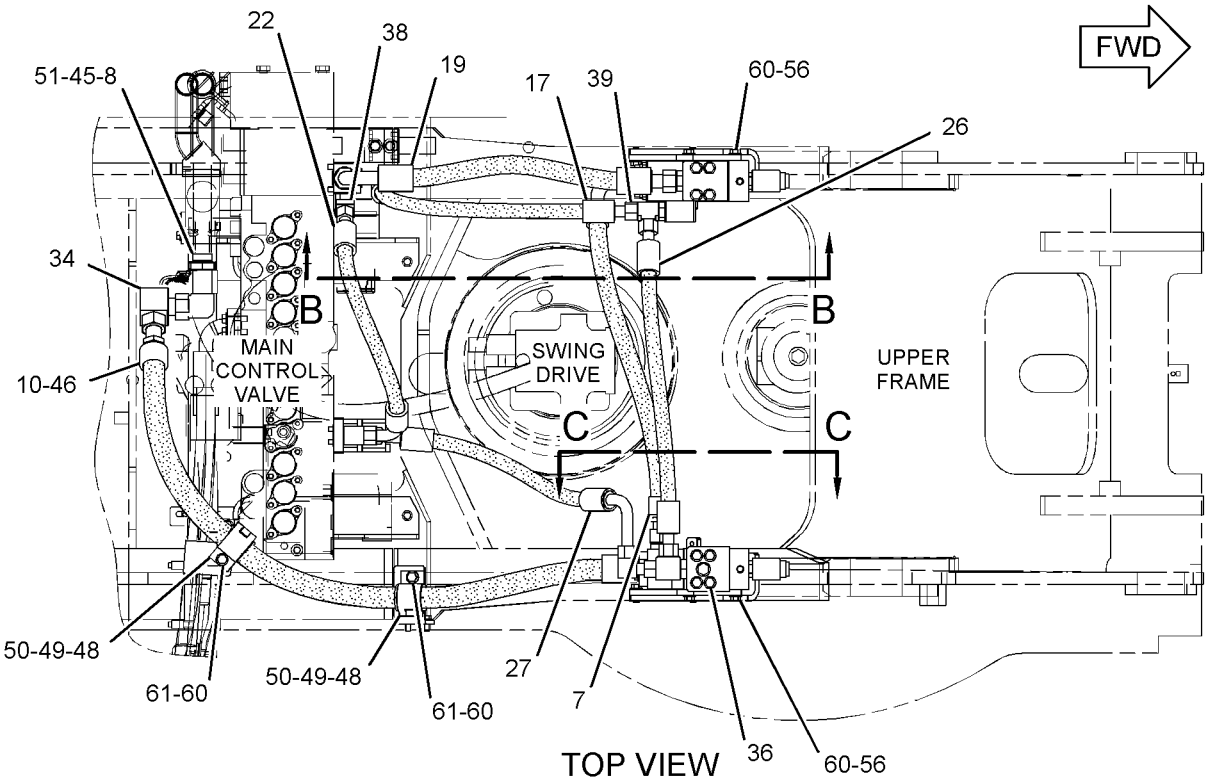

REFER TO ALL ILLUSTRATIONS OF THIS GROUP FOR AUXILIARY VIEWS

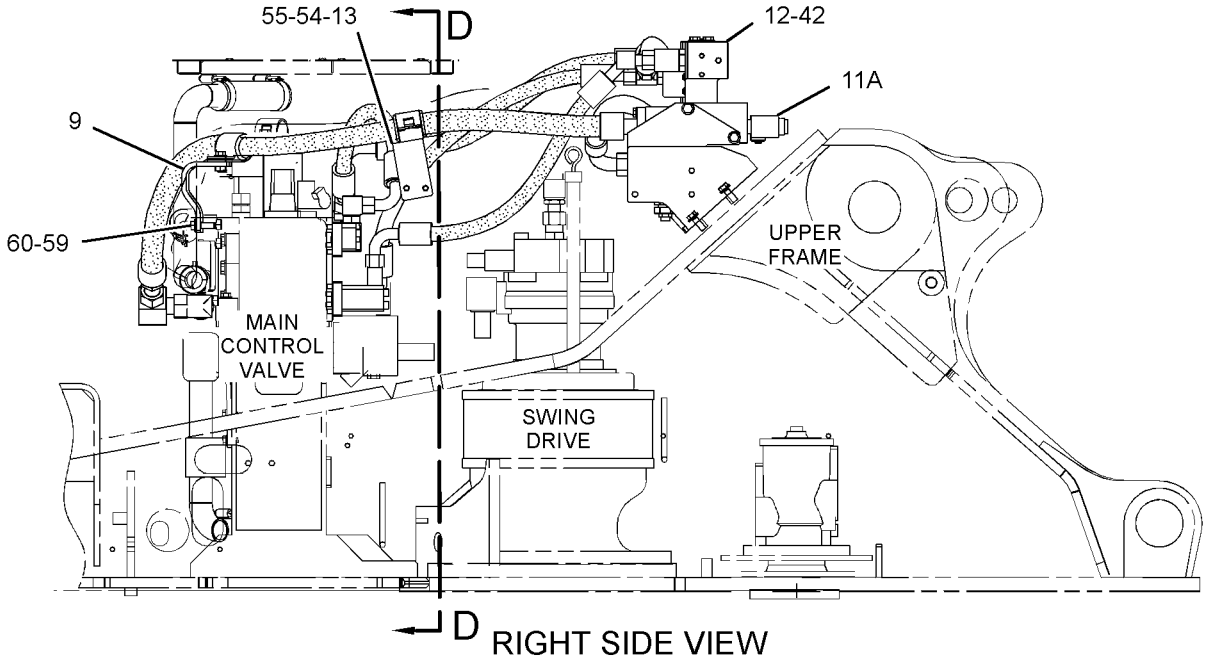

GRAPHIC #1

g01272426

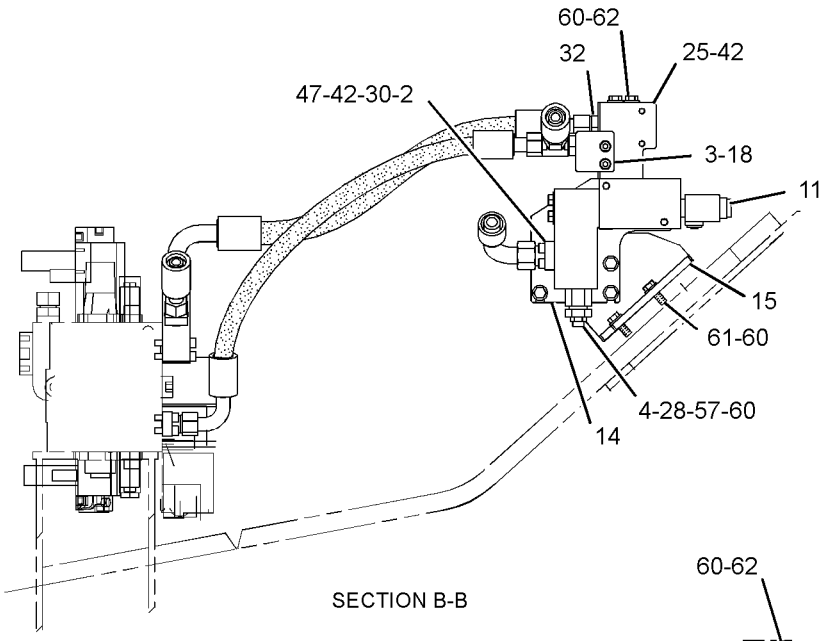

SECTION B-B

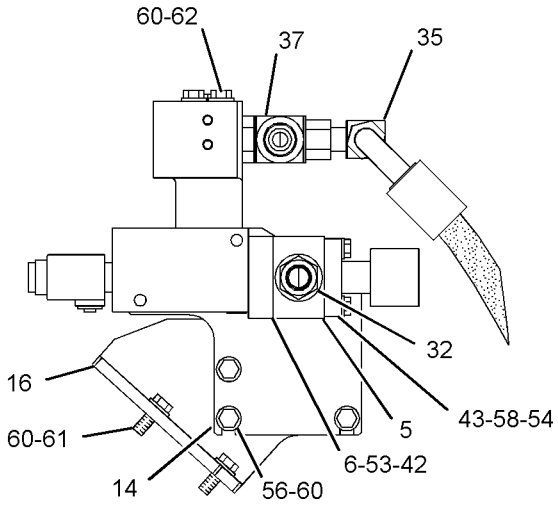

SECTION C-C

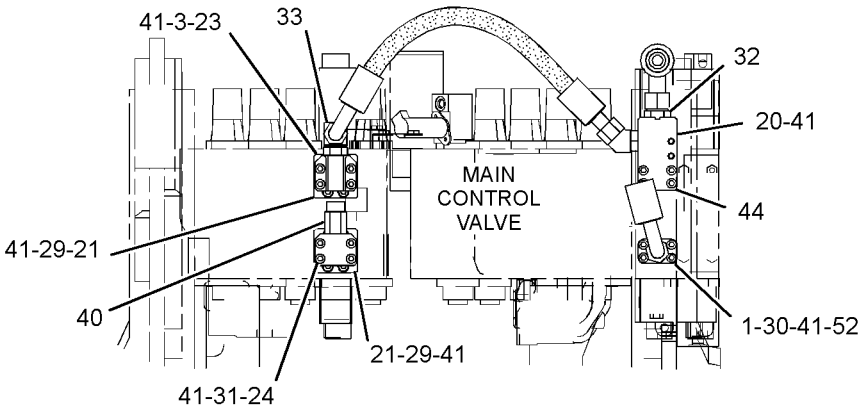

SECTION D-D

GRAPHIC #2 **<END>** g01272427

HYDRAULIC SYSTEM

255-1760 LINES GP-FRONT—AUXILIARY

S/N: MNB1-UP; WDK1-UP
PART OF 255-5698, 255-5699 CONTROL AR-AUXILIARY
AN ATTACHMENT

SMCS-5057 **i02435738**

NOTE	REF NO	GRAPHIC REF	PART NUMBER	QTY	PART NAME 1 2 3 4 5 6 (PRODUCT LEVEL)	SEE PAGE
	1	2	**7Y-3731**	1	FLANGE	
M	2	2	**105-3477**	4	BOLT-SOCKET HEAD (M10X1.5X45-MM)	
Y	3	2	**177-2653**	1	VALVE GP-RELIEF (WITH BLOCK)	788
I	4	1	**193-9994**	1	HOSE AS	
	5	1	**199-1773**	1	ELBOW	
	6	2	**212-5148**	1	BLOCK	
	7	2	**212-5491**	1	SUPPORT AS	
I	8	1	**212-5495**	1	HOSE AS	
	9	2	**218-1139**	1	BLOCK	
	10	2	**255-1936**	1	BLOCK	
	11	1	**260-7872**	1	SUPPORT AS	
	12	2	**260-7959**	2	BRACKET	
	13	2	**260-7960**	1	SUPPORT	
	14	2	**260-8034**	1	SUPPORT	
	15	2	**260-8043**	1	BLOCK	
I	16	1	**266-0997**	1	HOSE AS	
	17	2	**266-1278**	1	BLOCK	
	18	2	**266-1279**	1	FLANGE	
I	19	1	**266-1303**	1	HOSE AS	
	20	2	**275-1439**	1	BLOCK	
	21	2	**099-8232**	1	SEAL-O-RING	
M	22	2	**101-7401**	4	BOLT-SOCKET HEAD (M10X1.5X20-MM)	
M	23	2	**101-7404**	4	BOLT-SOCKET HEAD (M10X1.5X30-MM)	
	24	2	*148-8335*	3	CONNECTOR AS	
					(EACH INCLUDES)	
		2	**5K-9090**	1	SEAL-O-RING	
		2	**6V-8635**	1	CONNECTOR	
		2	**7M-8485**	1	SEAL-O-RING	
	25	2	*148-8347*	1	ELBOW AS	
		2	**3D-2824**	1	SEAL-O-RING	
		2	**6V-9007**	1	ELBOW	
		2	**6V-9746**		SEAL-O-RING	
	26	1	*148-8387*	1	ELBOW AS	
		1	**6V-8400**	1	SEAL-O-RING	
		1	**6V-9855**	1	ELBOW	
	27	1	*148-8411*	1	PLUG AS	
		1	**3K-0360**	1	SEAL-O-RING	
		1	**9S-4185**	1	PLUG-O-RING	
	28	1	*153-6237*	1	ELBOW AS	
		1	**3D-2824**	1	SEAL-O-RING	
		1	**6V-9004**	1	ELBOW	
	29	2	*164-4180*	1	PLUG AS	
		2	**7M-8485**	1	SEAL-O-RING	
		2	**9S-4181**	1	PLUG-O-RING	
	30	2	**1P-3702**	3	SEAL-RECTANGULAR	
	31	2	**1P-3703**	3	SEAL-RECTANGULAR	
	32	2	**1P-4578**	2	FLANGE-HALF	
M	33	2	**280-2747**	4	BOLT-SOCKET HEAD (M10X1.5X60-MM)	
	34	1	**2S-4078**	1	SEAL-O-RING	
	35	1	**4J-0522**	1	SEAL-O-RING	
	36	2	**5K-9090**	1	SEAL-O-RING	
	37	1,2	**5P-7468**	2	CLIP (SLOT) (USE WITH 52-MM OD GROMMET)	
			5P-7469	2	CLIP (TAB) (USE WITH 52-MM OD GROMMET)	
			6V-0545	2	GROMMET (52-MM OD)	
					—OR—	

255-1760 **LINES GP-FRONT** *(contd.)* **i02435738**

NOTE	REF NO	GRAPHIC REF	PART NUMBER	QTY	PART NAME 1 2 3 4 5 6 (PRODUCT LEVEL)	SEE PAGE
			5P-7470	2	CLIP (SLOT) (USE WITH 65-MM OD GROMMET)	
			5P-7471	2	CLIP (TAB) (USE WITH 65-MM OD GROMMET)	
			5P-8182	2	GROMMET (65-MM OD)	
	38	1	**6V-8400**	1	SEAL-O-RING	
	39	1,2	**8T-4121**	6	WASHER-HARD (11X21X2.5-MM THK)	
M	40	1	**8T-4136**	2	BOLT (M10X1.5X25-MM)	
M	41	2	**8T-4139**	10	BOLT (M12X1.75X30-MM)	
M	42	2	**8T-4176**	4	BOLT (M12X1.75X90-MM)	
M	43	2	**8T-4183**	2	BOLT (M12X1.75X40-MM)	
M	44	2	**8T-4196**	4	BOLT (M10X1.5X35-MM)	
	45	1,2	**8T-4223**	8	WASHER-HARD (13.5X25.5X3-MM THK)	
M	46	1,2	**8T-4956**	6	BOLT (M12X1.75X35-MM)	
M	47	2	**8T-5092**	8	BOLT (M12X1.75X150-MM)	

I-REFER TO HYDRAULIC INFORMATION SYSTEM
M-METRIC PART
Y-SEPARATE ILLUSTRATION

REFER TO ALL ILLUSTRATIONS OF THIS GROUP FOR AUXIALARY VIEWS

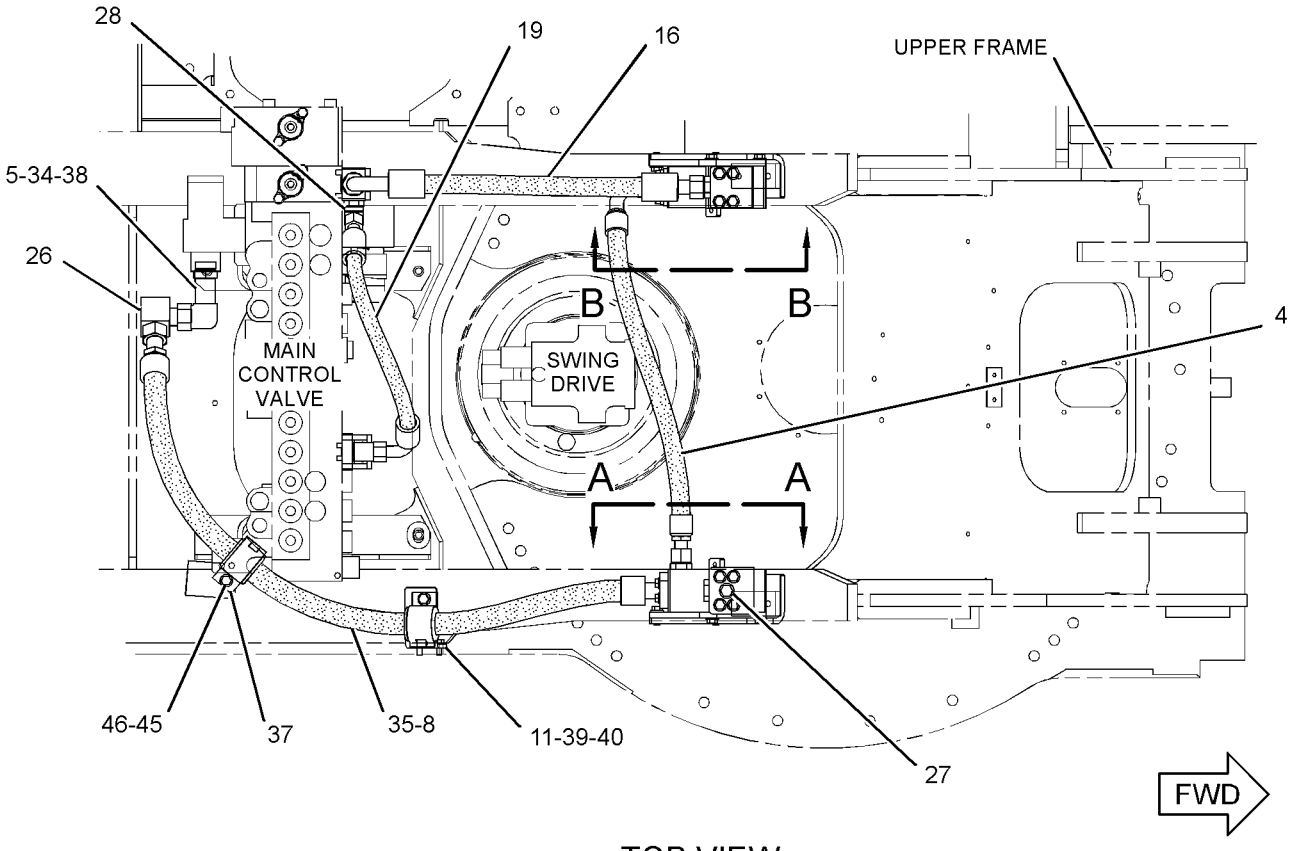

TOP VIEW

GRAPHIC #1

g01243699

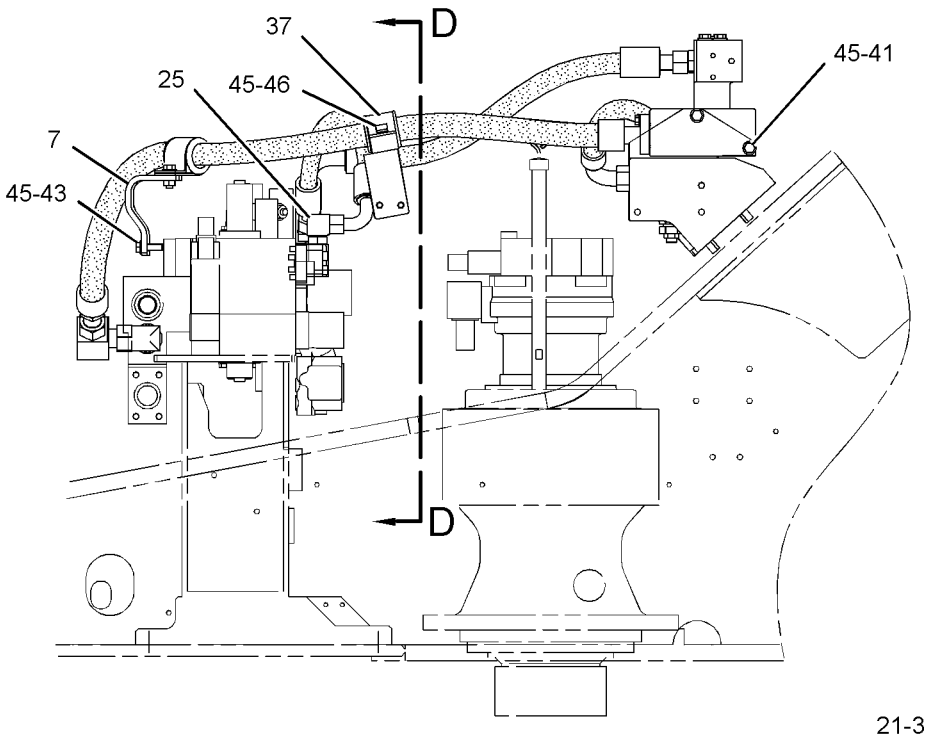

RIGHT SIDE VIEW

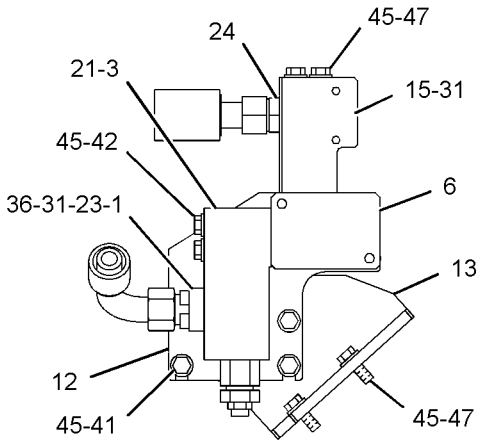

SECTION B-B

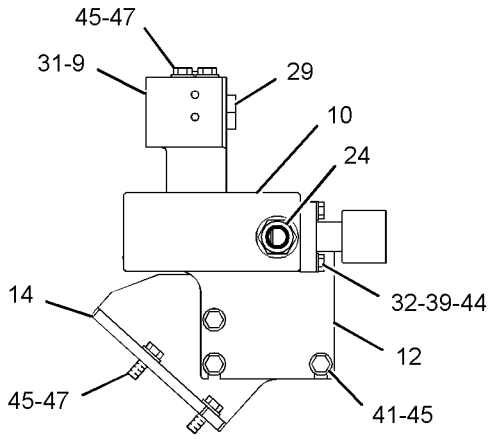

SECTION A-A

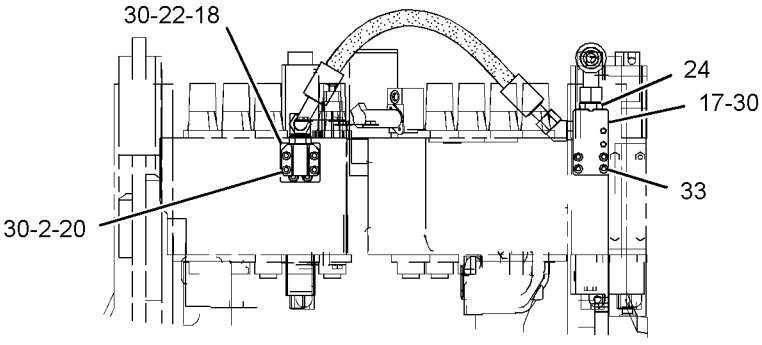

SECTION D-D

GRAPHIC #2 **<END>** g01243700

HYDRAULIC SYSTEM

255-1761 LINES GP-FRONT—AUXILIARY

S/N: MNB1-UP; WDK1-UP
PART OF 255-5700 CONTROL AR-AUXILIARY
AN ATTACHMENT

SMCS-5057 **i02434748**

NOTE	REF NO	GRAPHIC REF	PART NUMBER	QTY	PART NAME 1 2 3 4 5 6 (PRODUCT LEVEL)	SEE PAGE
M	1	1	**105-3477**	4	BOLT-SOCKET HEAD (M10X1.5X45-MM)	
I	2	1	**138-5111**	1	HOSE AS	
	3	1	**179-7662**	2	COVER	
	4	1	**187-5853**	1	BLOCK	
	5	1	**212-5148**	2	BLOCK	
Y	6	1	**250-2508**	2	VALVE GP-RELIEF (LINE)	792
	7	1	**260-7959**	2	BRACKET	
	8	1	**260-7960**	1	SUPPORT	
	9	1	**260-8034**	1	SUPPORT	
	10	1	**260-8043**	1	BLOCK	
	11	1	**266-1279**	2	FLANGE	
	12	1	**275-1439**	1	BLOCK	
	13	1	**275-1440**	1	BLOCK	
I	14	1	**275-1460**	1	HOSE AS	
M	15	1	**101-7401**	8	BOLT-SOCKET HEAD (M10X1.5X20-MM)	
M	16	1	**108-4282**	4	BOLT-SOCKET HEAD (M10X1.5X100-MM)	
	17	1	*148-8317*	1	CONNECTOR AS	
		1	**3D-2824**	1	SEAL-O-RING	
		1	**5K-9090**	1	SEAL-O-RING	
		1	**6V-8714**	1	CONNECTOR	
	18	1	*148-8355*	2	ELBOW AS	
					(EACH INCLUDES)	
		1	**5K-9090**	1	SEAL-O-RING	
		1	**6V-9005**	1	ELBOW	
		1	**7M-8485**	1	SEAL-O-RING	
	19	1	*148-8362*	1	ELBOW AS	
					(EACH INCLUDES)	
		1	**5K-9090**	1	SEAL-O-RING	
		1	**6V-9005**	1	ELBOW	
		1	**7M-8485**	1	SEAL-O-RING	
	20	1	**1P-3702**	4	SEAL-RECTANGULAR	
	21	1	**1P-3703**	4	SEAL-RECTANGULAR	
M	22	1	**8T-4139**	18	BOLT (M12X1.75X30-MM)	
	23	1	**8T-4223**	30	WASHER-HARD (13.5X25.5X3-MM THK)	
M	24	1	**8T-4956**	4	BOLT (M12X1.75X35-MM)	
M	25	1	**8T-5092**	8	BOLT (M12X1.75X150-MM)	

I-REFER TO HYDRAULIC INFORMATION SYSTEM
M-METRIC PART
Y-SEPARATE ILLUSTRATION

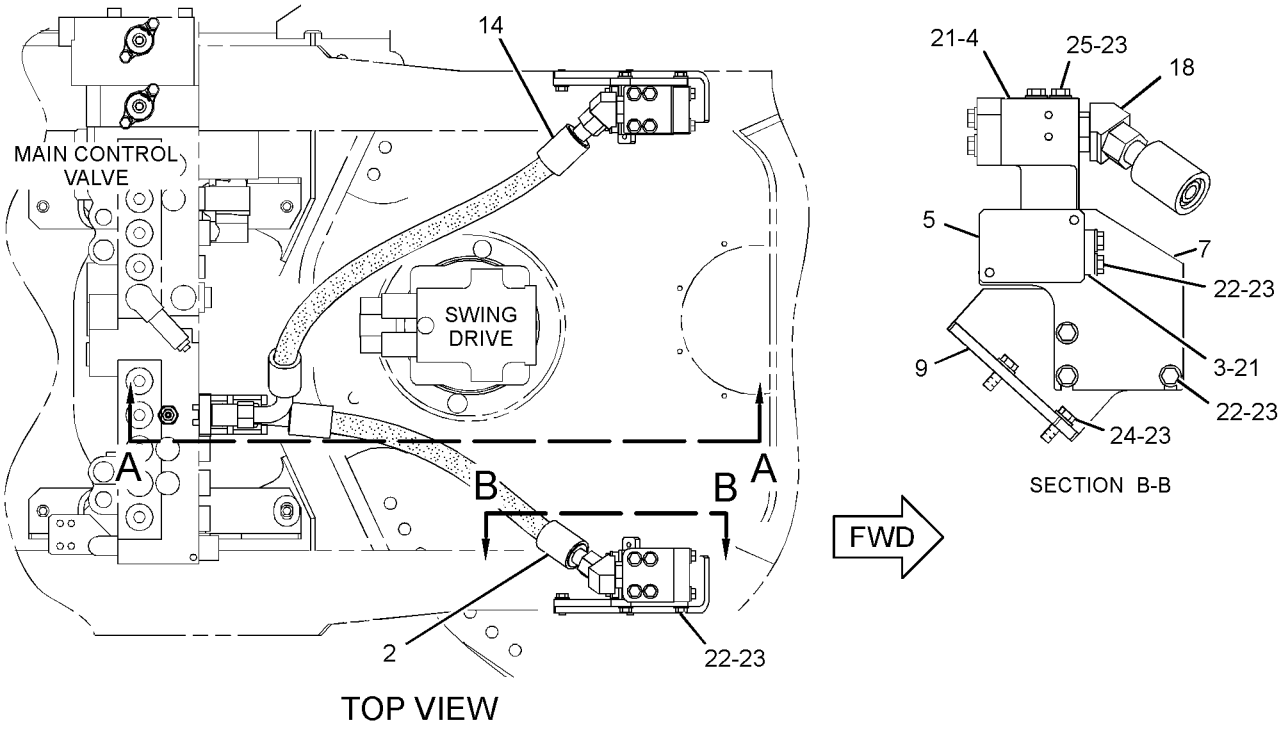

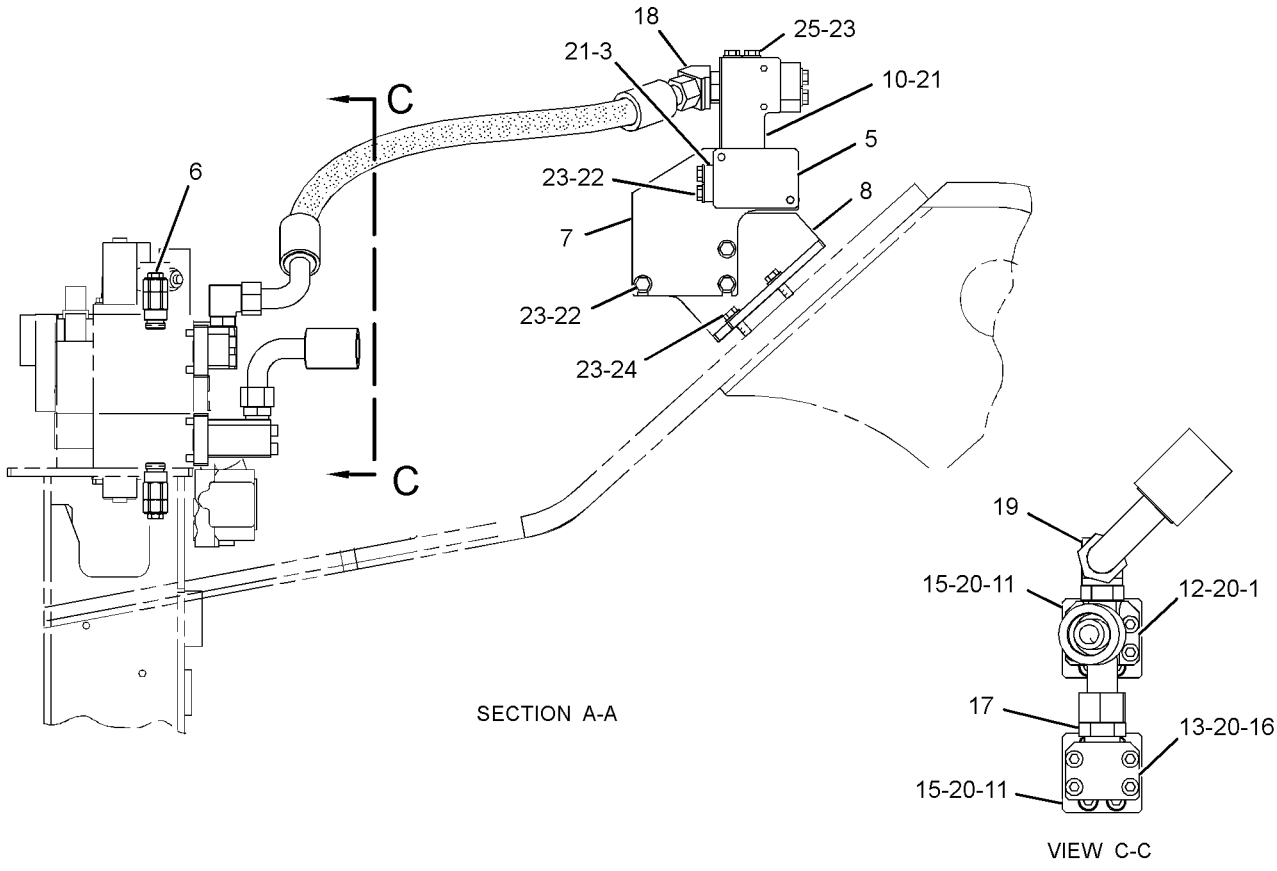

GRAPHIC #1 **<END>** g01243471

HYDRAULIC SYSTEM

255-1762 LINES GP-FRONT—AUXILIARY

S/N: MNB1-UP; WDK1-UP
PART OF 255-5703 CONTROL AR-AUXILIARY
AN ATTACHMENT

SMCS-5057 **i02434734**

NOTE	REF NO	GRAPHIC REF	PART NUMBER	QTY	PART NAME 1 2 3 4 5 6 (PRODUCT LEVEL)	SEE PAGE
	1	1	**4I-6464**	1	HOSE AS	
	2	2	**7Y-3729**	1	FLANGE	
	3	2	**7Y-3731**	1	FLANGE	
M	4	1,2	**105-3477**	6	BOLT-SOCKET HEAD (M10X1.5X45-MM)	
M	5	2	**105-3479**	4	BOLT-SOCKET HEAD (M10X1.5X90-MM)	
	6	2	**187-6720**	1	BLOCK	
	7	1	**199-1773**	1	ELBOW	
	8	1	**212-5491**	1	SUPPORT AS	
Y	9	2	**215-4890**	3	VALVE GP-CHECK (1-WAY/2-WAY, CHECK)	733
	10	1	**218-1007**	1	HOSE AS	
	11	1	**221-8859**	1	SENSOR AS-PRESSURE (CLENCH)	
		1	**3E-3371**	1	WEDGE-RECEPTACLE LOCK (3-PIN)	
		1	**9X-3401**	3	PIN-CONNECTOR (16-GA TO 18-GA)	
		1	**171-0596**	1	RECEPTACLE AS	
Y	12	2	**244-8506**	2	VALVE GP-SOLENOID & RELIEF (1-WAY/2-WAY FLOW)	817
	13	2	**255-1953**	1	SUPPORT AS	
	14	1	**260-7872**	1	SUPPORT AS	
	15	2	**260-7959**	1	BRACKET	
	16	2	**260-7960**	1	SUPPORT	
	17	2	**260-8045**	1	BRACKET AS	
I	18	1	**266-0939**	1	HOSE AS	
I	19	2	**266-0943**	1	HOSE AS	
I	20	1	**266-0947**	1	HOSE AS	
	21	2	**266-0953**	1	BLOCK	
	22	2	**266-0954**	1	BLOCK	
I	23	1	**266-0997**	1	HOSE AS	
	24	2	**266-1278**	1	BLOCK	
	25	1	**266-1279**	2	FLANGE	
I	26	1	**266-1303**	1	HOSE AS	
	27	2	**272-4131**	1	BLOCK	
	28	1	**275-1439**	1	BLOCK	
	29	1	**275-1440**	1	BLOCK	
I	30	1	**275-1582**	1	HOSE AS	
	31	2	**099-8232**	2	SEAL-O-RING	
M	32	1	**101-7401**	8	BOLT-SOCKET HEAD (M10X1.5X20-MM)	
M	33	2	**101-7404**	8	BOLT-SOCKET HEAD (M10X1.5X30-MM)	
M	34	2	**105-3485**	4	BOLT-SOCKET HEAD (M12X1.75X60-MM)	
M	35	1	**108-4282**	4	BOLT-SOCKET HEAD (M10X1.5X100-MM)	
	36	2	*148-8317*	1	CONNECTOR AS	
		2	**3D-2824**	1	SEAL-O-RING	
		2	**5K-9090**	1	SEAL-O-RING	
		2	**6V-8714**	1	CONNECTOR	
	37	2	*148-8335*	2	CONNECTOR AS	
					(EACH INCLUDES)	
		2	**5K-9090**	1	SEAL-O-RING	
		2	**6V-8635**	1	CONNECTOR	
		2	**7M-8485**	1	SEAL-O-RING	
	38	2	*148-8339*	1	CONNECTOR AS	
		2	**6V-8716**	1	CONNECTOR	
		2	**6V-9746**	1	SEAL-O-RING	
		2	**7M-8485**	1	SEAL-O-RING	
	39	1	*148-8347*	1	ELBOW AS	
		1	**3D-2824**	1	SEAL-O-RING	
		1	**6V-9007**	1	ELBOW	
		1	**6V-9746**	1	SEAL-O-RING	

255-1762 **LINES GP-FRONT** *(contd.)* **i02434734**

NOTE	REF NO	GRAPHIC REF	PART NUMBER	QTY	PART NAME 1 2 3 4 5 6 (PRODUCT LEVEL)	SEE PAGE
	40	2	*148-8362*	1	ELBOW AS	
		2	**3D-2824**	1	SEAL-O-RING	
		2	**5K-9090**	1	SEAL-O-RING	
		2	**8T-6684**	1	ELBOW	
	41	1	*148-8387*	1	ELBOW AS	
		1	**6V-8400**	1	SEAL-O-RING	
		1	**6V-9855**	1	ELBOW	
	42	2	*153-6237*	2	ELBOW AS	
					(EACH INCLUDES)	
		2	**3D-2824**	1	SEAL-O-RING	
		2	**6V-9004**	1	ELBOW	
		2	**6V-9746**	1	SEAL-O-RING	
	43	2	*164-4180*	1	PLUG AS	
		2	**7M-8485**	1	SEAL-O-RING	
		2	**9S-4181**	1	PLUG-O-RING	
	44	2	*164-5574*	1	TEE AS	
		2	**3D-2824**	1	SEAL-O-RING	
		2	**6V-8784**	1	TEE-FACE SEAL	
		2	**6V-9746**	2	SEAL-O-RING	
	45	1	*164-5606*	1	CONNECTOR AS	
		1	**3D-2824**	1	SEAL-O-RING	
		1	**6V-9746**	1	SEAL-O-RING	
		1	**8T-0078**	1	CONNECTOR	
	46	2	**199-1918**	1	FLANGE	
	47	1,2	**1P-3702**	6	SEAL-RECTANGULAR	
	48	2	**1P-3703**	3	SEAL-RECTANGULAR	
	49	2	**1P-3704**	3	SEAL-RECTANGULAR	
	50	2	**1P-4578**	2	FLANGE-HALF	
M	51	2	**280-2747**	4	BOLT-SOCKET HEAD (M10X1.5X60-MM)	
	52	1	**2S-4078**	1	SEAL-O-RING	
	53	1	**4J-0522**	1	SEAL-O-RING	
	54	2	**5K-9090**	1	SEAL-O-RING	
	55	1	**5P-7468**	2	CLIP (SLOT) (USE WITH 52-MM OD GROMMET)	
		1	**5P-7469**	2	CLIP (TAB) (USE WITH 52-MM OD GROMMET)	
		1	**6V-0545**	2	GROMMET (52-MM OD)	
					—OR—	
		1	**5P-7470**	2	CLIP (SLOT) (USE WITH 65-MM OD GROMMET)	
		1	**5P-7471**	2	CLIP (TAB) (USE WITH 65-MM OD GROMMET)	
		1	**5P-8182**	2	GROMMET (65-MM OD)	
	56	1	**6V-8400**	1	SEAL-O-RING	
	57	2	**6V-9746**	3	SEAL-O-RING	
	58	1,2	**8T-4121**	6	WASHER-HARD (11X21X2.5-MM THK)	
M	59	1	**8T-4136**	2	BOLT (M10X1.5X25-MM)	
M	60	2	**8T-4139**	9	BOLT (M12X1.75X30-MM)	
M	61	2	**8T-4176**	8	BOLT (M12X1.75X90-MM)	
M	62	1	**8T-4183**	2	BOLT (M12X1.75X40-MM)	
M	63	2	**8T-4186**	4	BOLT (M10X1.5X40-MM)	
	64	1,2	**8T-4223**	43	WASHER-HARD (13.5X25.5X3-MM THK)	
M	65	1,2	**8T-4956**	12	BOLT (M12X1.75X35-MM)	
M	66	2	**8T-5092**	8	BOLT (M12X1.75X150-MM)	
M	67	2	**8T-5412**	4	BOLT (M12X1.75X140-MM)	

I-REFER TO HYDRAULIC INFORMATION SYSTEM
M-METRIC PART
Y-SEPARATE ILLUSTRATION

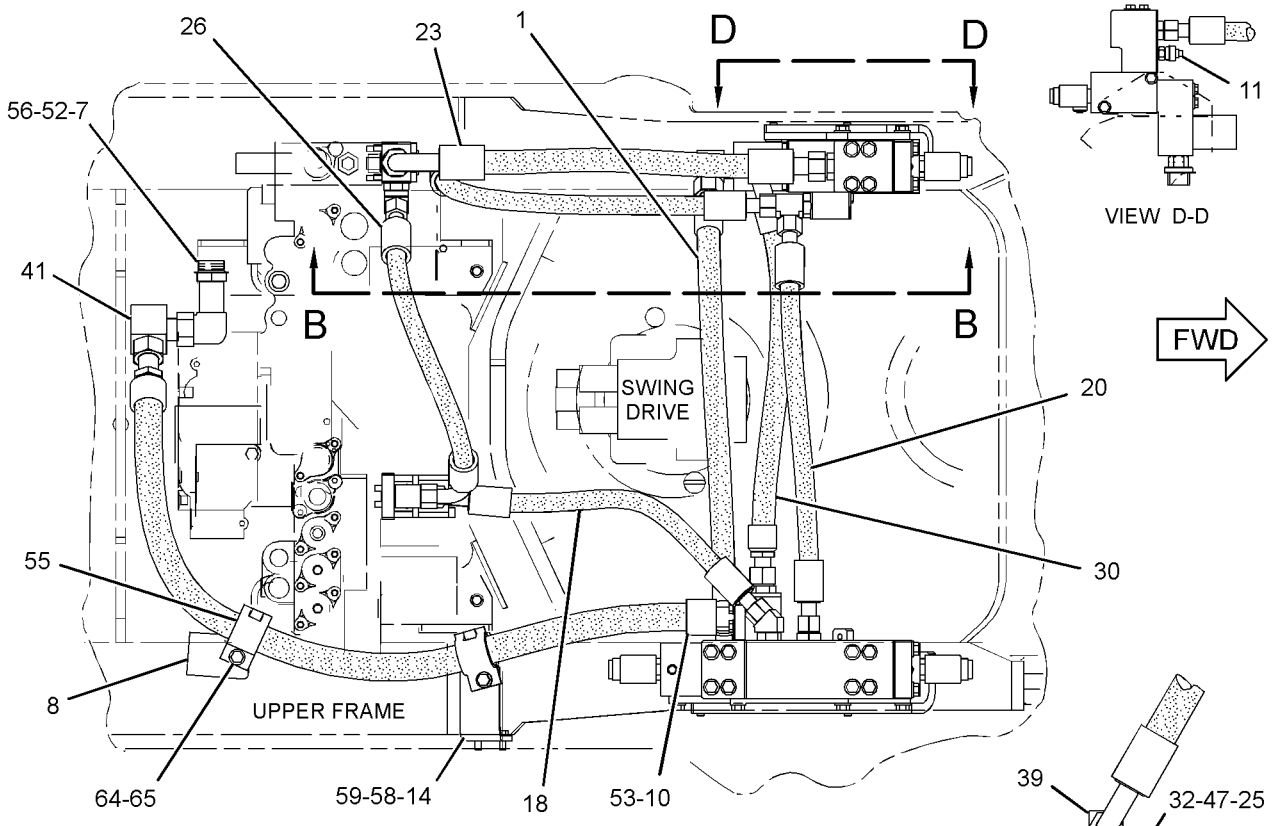

TOP VIEW

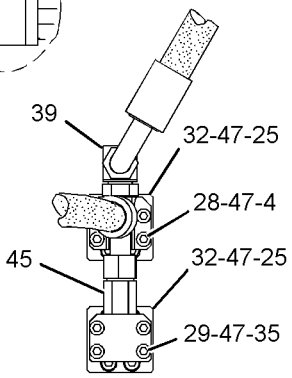

SECTION E-E

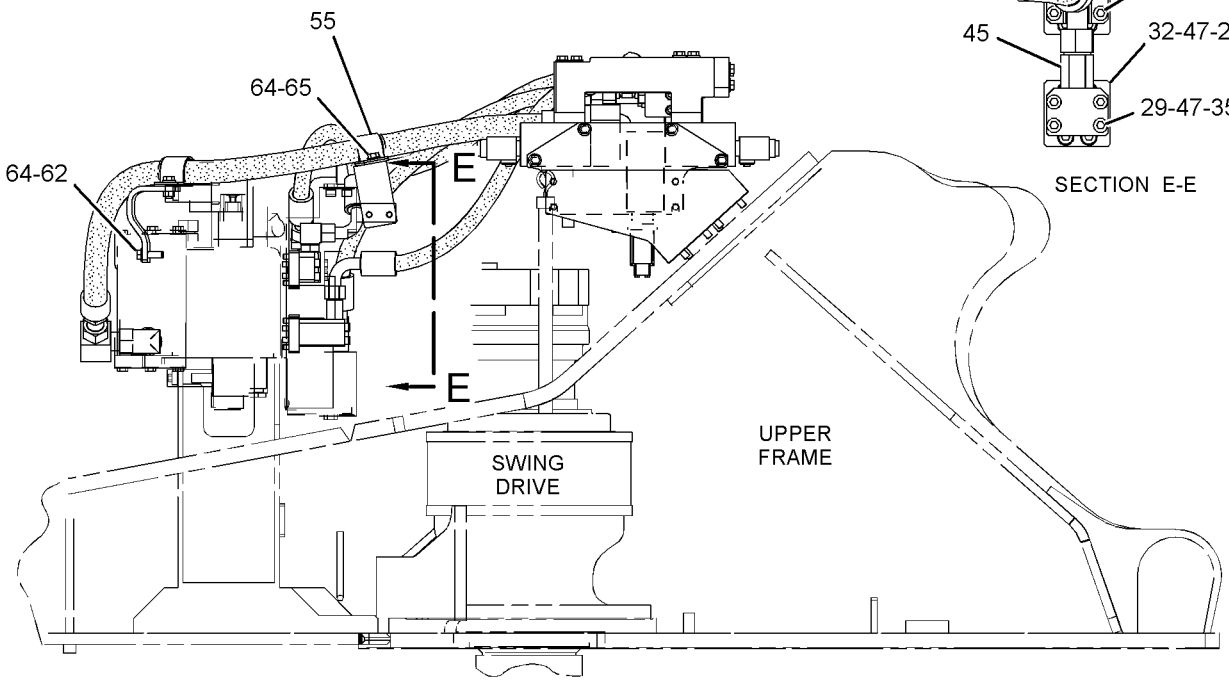

RIGHT SIDE VIEW

REFER TO ALL ILLUSTRATIONS OF THIS GROUP FOR AUXILIARY VIEWS

GRAPHIC #1

g01246303

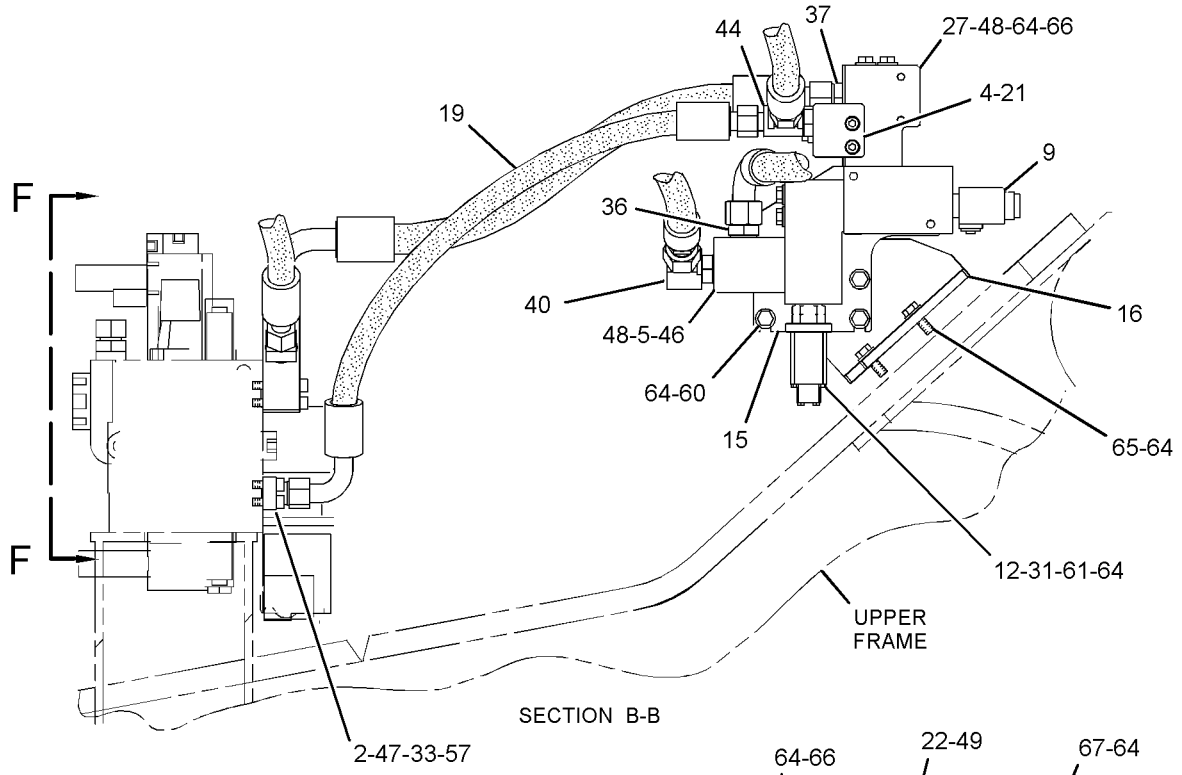

SECTION B-B

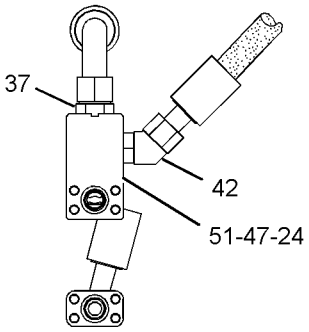

VIEW F-F

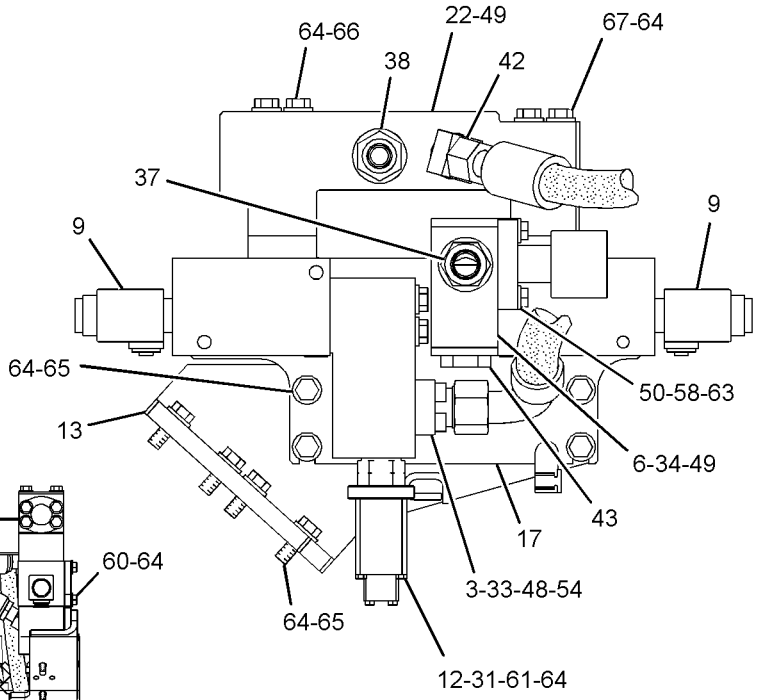

SECTION C-C

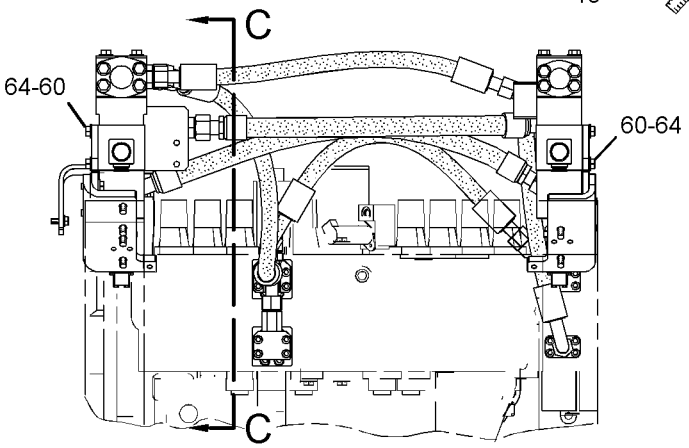

FRONT VIEW

GRAPHIC #2 **<END>** g01246304

HYDRAULIC SYSTEM

255-1765 LINES GP-FRONT–

SYSTEM 11, COMBINED FN, MEDIUM PRESSURE

S/N: MNB1-UP; WDK1-UP

PART OF 255-5702 CONTROL AR-AUXILIARY

AN ATTACHMENT

SMCS-5057 **i03105080**

NOTE	REF NO	GRAPHIC REF	PART NUMBER	QTY	PART NAME 1 2 3 4 5 6 (PRODUCT LEVEL)	SEE PAGE
	1	1	**187-7109**	1	TUBE AS	
I	2	1	**202-4025**	2	HOSE AS	
	3	1	**270-0020**	1	SUPPORT AS	
	4	1	**153-8867**	2	CLIP	
	5	1	**187-7108**	1	TUBE AS	
	6	1	**6V-8398**	2	SEAL-O-RING	
	7	1	**6V-9746**	2	SEAL-O-RING	
	8	1	**8T-4121**	2	WASHER-HARD (11X21X2.5-MM THK)	
M	9	1	**8T-4137**	2	BOLT (M10X1.5X20-MM)	
	10	1	**8T-4223**	2	WASHER-HARD (13.5X25.5X3-MM THK)	
M	11	1	**8T-4956**	2	BOLT (M12X1.75X35-MM)	

I-REFER TO HYDRAULIC INFORMATION SYSTEM
M-METRIC PART

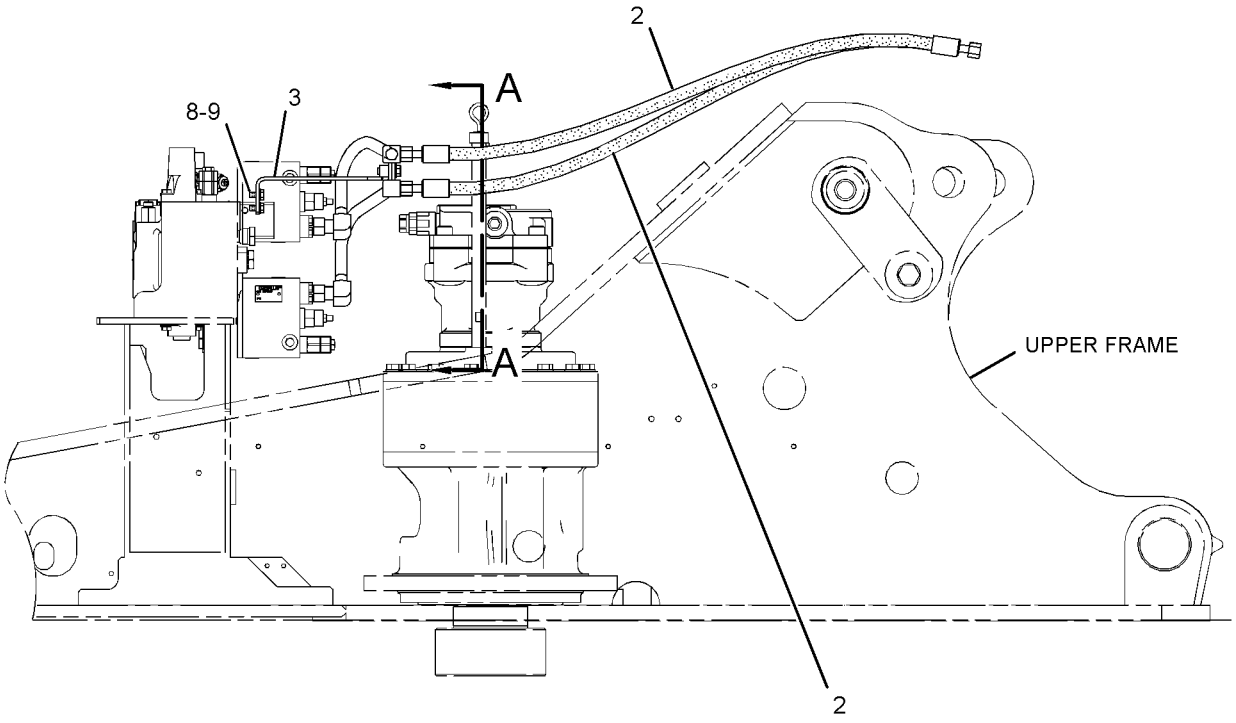

RIGHT SIDE VIEW

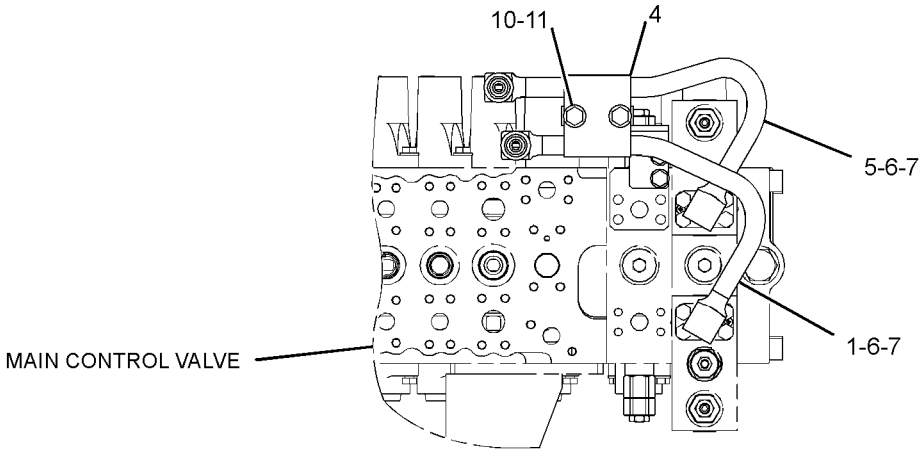

SECTION A-A

GRAPHIC #1 **<END>** g01620117

HYDRAULIC SYSTEM

255-1766 LINES GP-FRONT—MEDIUM FLOW

S/N: MNB1-UP; WDK1-UP
PART OF 255-5811 CONTROL AR-AUXILIARY
AN ATTACHMENT

SMCS-5057 **i02433587**

NOTE	REF NO	GRAPHIC REF	PART NUMBER	QTY	PART NAME 1 2 3 4 5 6 (PRODUCT LEVEL)	SEE PAGE
Y	1	1	**232-4103**	1	VALVE GP-CONTROL (MEDIUM PRESSURE)	736
	2	1	*270-0012*	1	ELBOW AS	
		1	**2M-9780**	1	SEAL-O-RING	
		1	**6V-8398**	1	SEAL-O-RING	
		1	**270-0013**	1	ELBOW	
	3	1	**260-8020**	1	SUPPORT	
I	4	1	**260-8074**	2	HOSE AS	
	5	1	*270-0014*	1	ELBOW AS	
		1	**2M-9780**	1	SEAL-O-RING	
		1	**6V-8398**	1	SEAL-O-RING	
		1	**270-0015**	1	ELBOW	
	6	1	**6V-5782**	4	BOLT (5/16-18X1.125-IN)	
	7	1	**8T-4223**	4	WASHER-HARD (13.5X25.5X3-MM THK)	
	8	1	**8T-4224**	4	WASHER-HARD (8.8X16X2-MM THK)	
M	9	1	**8T-4956**	4	BOLT (M12X1.75X35-MM)	
	10	1	*168-1969*	1	ADAPTER AS	
		1	**1J-9671**	1	SEAL-O-RING	
		1	**5P-1318**	1	ADAPTER	
	11	1	*164-5567*	1	COUPLER AS-QUICK DISCONNECT	
		1	**3J-1907**	1	SEAL-O-RING	
		1	**6V-3965**	1	FITTING (QUICK DISCONNECT)	
	12	1	**6V-0852**	1	CAP-DUST	

I-REFER TO HYDRAULIC INFORMATION SYSTEM
M-METRIC PART
Y-SEPARATE ILLUSTRATION

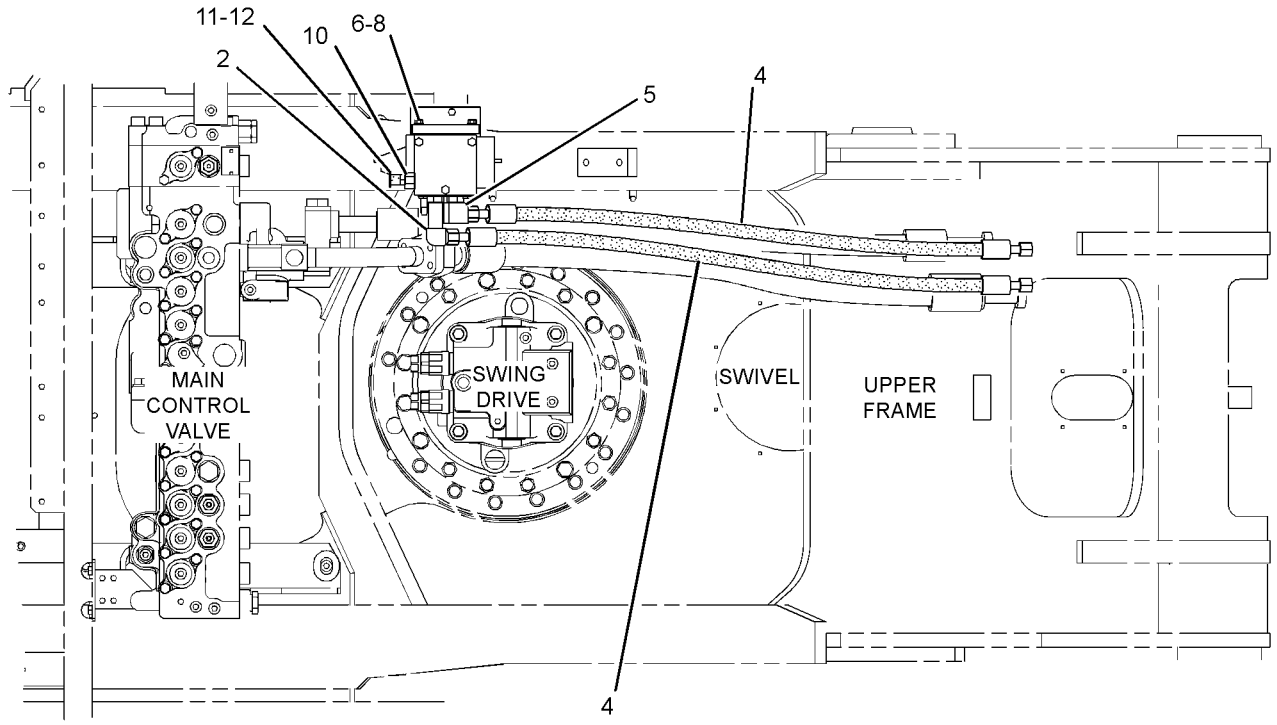

TOP VIEW

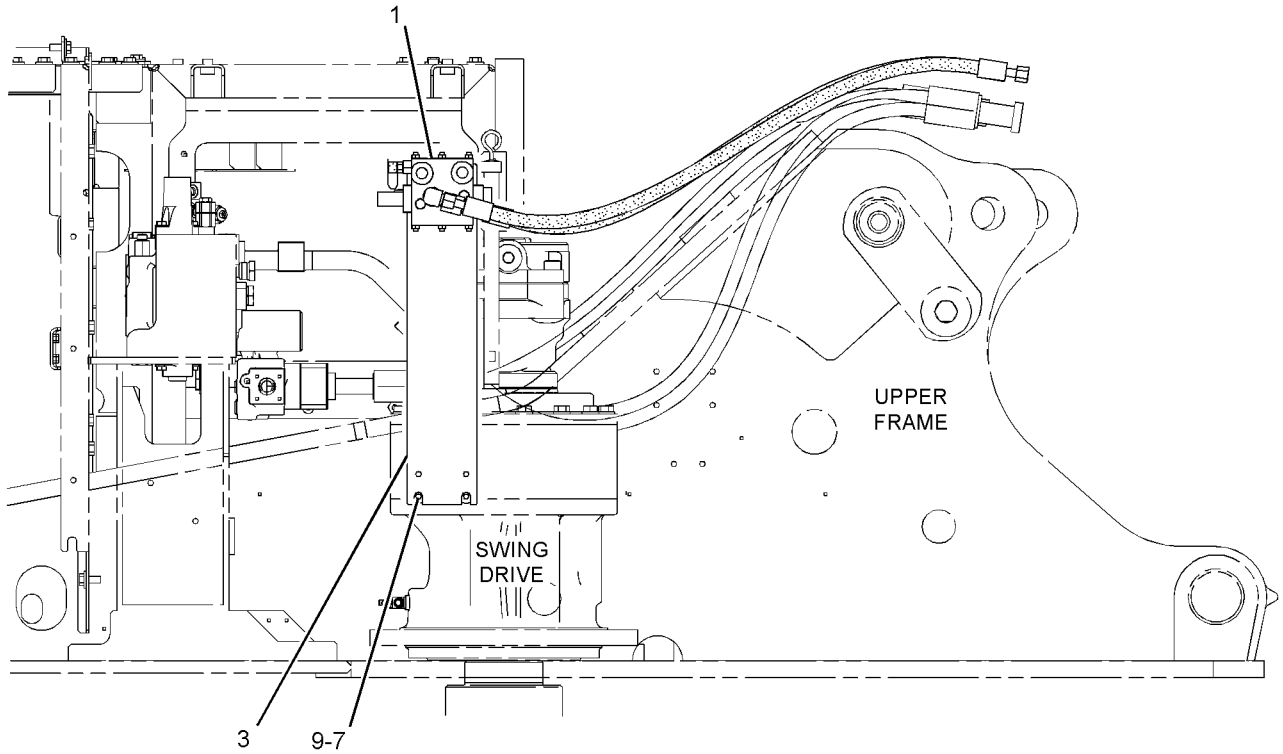

RIGHT SIDE VIEW

GRAPHIC #1 **<END>** g01238065

HYDRAULIC SYSTEM

255-1799 LINES GP-FRONT–HAMMER

S/N: MNB1-UP; WDK1-UP
PART OF 247-7390 FILTER AR-HYDRAULIC
AN ATTACHMENT

SMCS-5057 **i03010453**

NOTE	REF NO	GRAPHIC REF	PART NUMBER	QTY	PART NAME 1 2 3 4 5 6 (PRODUCT LEVEL)	SEE PAGE
I	1	1	**4I-5639**	1	HOSE AS	
M	2	1	**105-3483**	8	BOLT-SOCKET HEAD (M10X1.5X70-MM)	
	3	1	**227-0722**	1	BLOCK	
Y	4	1	*234-4515*	1	FILTER GP-OIL (HYDRAULIC)	505
	5	1	**255-1693**	1	BLOCK	
C	6	1	**307-5173**	1	SUPPORT AS	
I	7	1	**255-1699**	1	HOSE AS	
I	8	1	**255-1702**	1	HOSE AS	
	9	1	**255-1705**	1	BLOCK	
	10	1	**255-1824**	1	BLOCK	
	11	1	**260-7964**	1	SPACER	
	12	1	**275-1464**	1	BLOCK	
M	13	1	**105-3484**	4	BOLT-SOCKET HEAD (M10X1.5X25-MM)	
M	14	1	**107-2723**	4	BOLT-SOCKET HEAD (M12X1.75X20-MM)	
	15	1	*148-8334*	1	CONNECTOR AS	
		1	**2S-4078**	1	SEAL-O-RING	
		1	**6V-8400**	1	SEAL-O-RING	
		1	**8T-3611**	1	CONNECTOR	
	16	1	*148-8407*	1	PLUG AS	
		1	**3J-1907**	1	SEAL-O-RING	
		1	**9S-4191**	1	PLUG-O-RING	
	17	1	*148-8411*	1	PLUG AS	
		1	**3K-0360**	1	SEAL-O-RING	
		1	**9S-4185**	1	PLUG-O-RING	
	18	1	*164-4180*	1	PLUG AS	
		1	**7M-8485**	1	SEAL-O-RING	
		1	**9S-4181**	1	PLUG-O-RING	
	19	1	**1P-3703**	4	SEAL-RECTANGULAR	
	20	1	**1P-4578**	8	FLANGE-HALF	
	21	1	**2S-4078**	1	SEAL-O-RING	
	22	1	**4J-0522**	6	SEAL-O-RING	
CM	23	1	**8T-4779**	4	BOLT (M16X2X35-MM)	
	24	1	**8T-4121**	16	WASHER-HARD (11X21X2.5-MM THK)	
M	25	1	**8T-4178**	4	BOLT (M10X1.5X90-MM)	
M	26	1	**8T-4182**	4	BOLT (M10X1.5X45-MM)	
M	27	1	**8T-4196**	4	BOLT (M10X1.5X35-MM)	
	28	1	**8T-4223**	4	WASHER-HARD (13.5X25.5X3-MM THK)	
CM	29	1	**7X-2549**	4	BOLT (M12X1.75X100-MM)	
	30	1	**9S-6130**	1	PLUG	
	31	1	**9X-8257**	4	WASHER (17.5X30X3.5-MM THK)	
C	32	1	**307-5172**	2	SPACER (13.5X25X60-MM THK)	

C-CHANGE FROM PREVIOUS TYPE
I-REFER TO HYDRAULIC INFORMATION SYSTEM
M-METRIC PART
Y-SEPARATE ILLUSTRATION

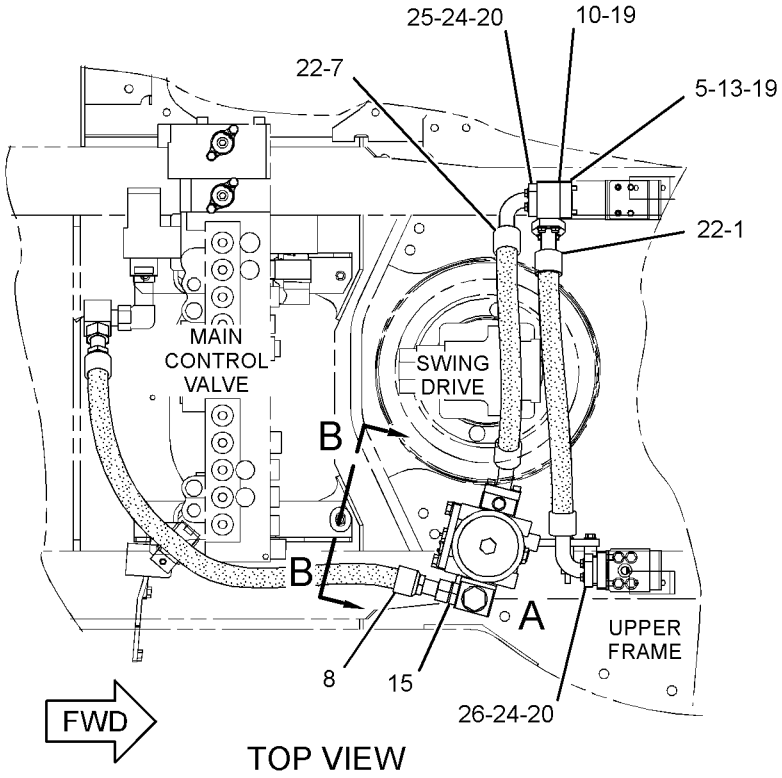

TOP VIEW

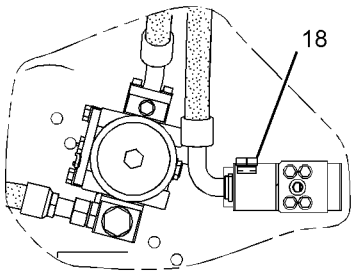

VIEW OF AREA A
(OPTIONAL DESIGN)

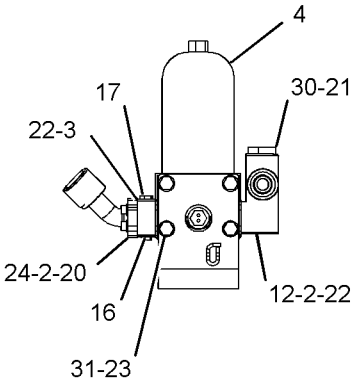

SECTION B-B

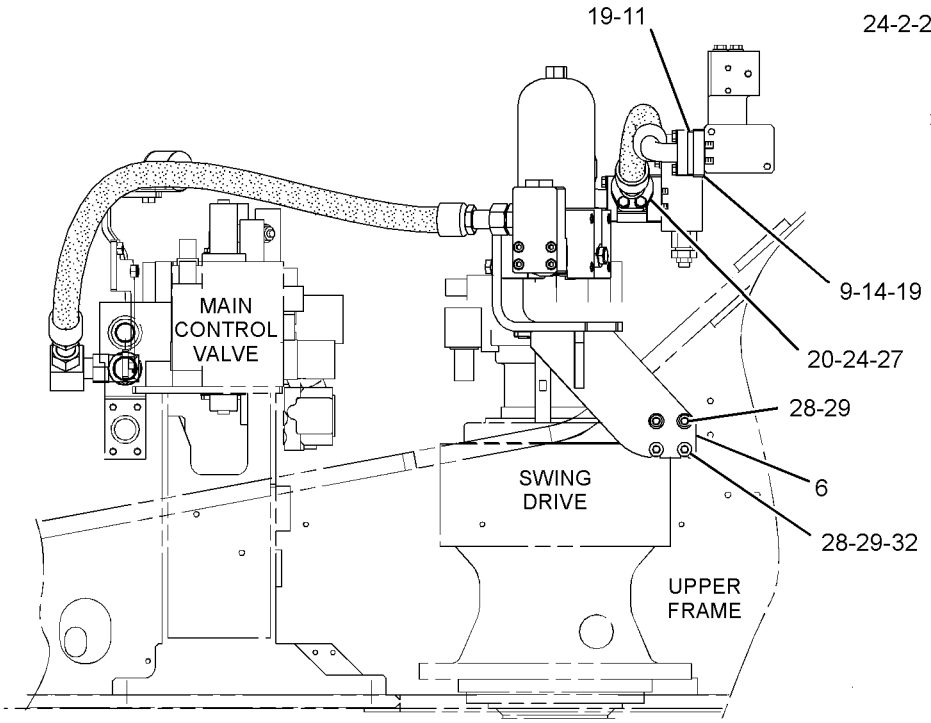

RIGHT SIDE VIEW

GRAPHIC #1 **<END>** g01624950

HYDRAULIC SYSTEM

266-1201 LINES GP-FRONT—QUICK COUPLER

S/N: WDK1-UP

PART OF 262-3580 CONTROL AR-COUPLER

AN ATTACHMENT

SMCS-5057 **i03008777**

NOTE	REF NO	GRAPHIC REF	PART NUMBER	QTY	PART NAME 1 2 3 4 5 6 (PRODUCT LEVEL)	SEE PAGE
I	1	2	**4I-1025**	1	HOSE AS	
I	2	2	**4I-1704**	1	HOSE AS	
	3	1	**4I-9521**	2	BAND-MARKER (RED, L1)	
	4	2	**4I-9522**	2	BAND-MARKER (YELLOW, L2)	
	5	1	**4I-9523**	2	BAND-MARKER (BLUE, L3)	
	6	1	**4I-9525**	2	BAND-MARKER (ORANGE, R1)	
	7	1	**4I-9527**	2	BAND-MARKER (GREEN, R3)	
	8	1	**5I-4376**	1	FITTING	
I	9	2	**5I-4387**	1	HOSE AS	
	10	1	**7K-1181**	10	STRAP-CABLE	
	11	1	**9X-6582**	2	NUT (13/16-16-THD)	
Y	12	1	**123-2549**	1	VALVE GP-SHUTTLE	805
	13	1	**124-1035**	1	FITTING-ORFS	
	14	2	**213-3745**	2	ELBOW	
	15	1	**223-8708**	1	HOSE AS	
Y	16	2	**254-3080**	1	VALVE GP-COUPLER (QUICK COUPLER)	757
Y	17	2	**258-6749**	1	VALVE GP-SOLENOID (QUICK COUPLER)	813
I	18	1	**269-9786**	2	HOSE AS	
	19	2	**269-9864**	1	BRACKET AS	
M		2	**8T-3490**	1	NUT-WELD (M10X1.5-THD)	
	20	1	**272-4606**	1	HOSE AS	
	21	1	**275-1467**	1	HOSE AS	
	22	2	**275-1468**	1	HOSE AS	
	23	1	**275-1469**	1	HOSE AS	
I	24	1	**275-1565**	1	HOSE AS	
	25	1	**103-1384**	1	GUARD	
	26	1	**123-4750**	1	VALVE-CHECK	
	27	2	*148-8325*	1	CONNECTOR AS	
		2	**3J-1907**	2	SEAL-O-RING	
		2	**4J-5477**	2	SEAL-O-RING	
		2	**6V-8641**	1	CONNECTOR	
	28	1	*148-8336*	4	CONNECTOR AS	
					(EACH INCLUDES)	
		1	**3J-1907**	1	SEAL-O-RING	
		1	**6V-8397**	1	SEAL-O-RING	
		1	**6V-8636**	1	CONNECTOR	
	29	1,2	*148-8338*	2	CONNECTOR AS	
					(EACH INCLUDES)	
		1,2	**3J-1907**	1	SEAL-O-RING	
		1,2	**6V-8397**	1	SEAL-O-RING	
		1,2	**8T-0075**	1	CONNECTOR	
	30	1	*148-8353*	1	ELBOW AS	
		1	**3J-1907**	1	SEAL-O-RING	
		1	**6V-8397**	1	SEAL-O-RING	
		1	**6V-9001**	1	ELBOW	
	31	1	*148-8367*	1	ELBOW AS	
		1	**6V-8397**	1	SEAL-O-RING	
		1	**6V-9850**	1	ELBOW	
	32	2	*148-8368*	2	ELBOW AS	
					(EACH INCLUDES)	
		2	**3J-1907**	1	SEAL-O-RING	
		2	**4J-5477**	1	SEAL-O-RING	
		2	**6V-8627**	1	ELBOW	
	33	1	*148-8374*	1	ELBOW AS	
		1	**3K-0360**	1	SEAL-O-RING	

266-1201 **LINES GP-FRONT** *(contd.)* **i03008777**

NOTE	REF NO	GRAPHIC REF	PART NUMBER	QTY	PART NAME 1 2 3 4 5 6 (PRODUCT LEVEL)	SEE PAGE
		1	**6V-8397**	1	SEAL-O-RING	
		1	**6V-8723**	1	ELBOW	
	34	1,2	*148-8378*	4	ELBOW AS	
					(EACH INCLUDES)	
		1,2	**3J-1907**	1	SEAL-O-RING	
		1,2	**6V-8397**	1	SEAL-O-RING	
		1,2	**6V-8724**	1	ELBOW	
	35	1	*148-8415*	1	REDUCER AS	
		1	**6V-8397**	1	SEAL-O-RING	
		1	**6V-8936**	1	REDUCER	
	36	1	*148-8419*	2	REDUCER AS	
					(EACH INCLUDES)	
		1	**4J-5477**	1	SEAL-O-RING	
		1	**6V-8935**	1	REDUCER-O-RING	
	37	2	*148-8434*	1	TEE AS	
		2	**6V-8397**	2	SEAL-O-RING	
		2	**6V-9843**	1	TEE-SWIVEL	
	38	2	*148-8435*	2	TEE AS	
					(EACH INCLUDES)	
		2	**3J-1907**	1	SEAL-O-RING	
		2	**6V-8397**	2	SEAL-O-RING	
		2	**6V-8781**	1	TEE-FACE SEAL	
	39	1	*148-8444*	1	TEE AS-SWIVEL	
		1	**6V-8398**	2	SEAL-O-RING	
		1	**6V-9837**	1	TEE-SWIVEL	
	40	2	*150-3036*	1	ELBOW AS	
		2	**3J-1907**	1	SEAL-O-RING	
		2	**6V-8397**	1	SEAL-O-RING	
		2	**8T-1905**	1	ELBOW	
	41	1	*153-6241*	1	ELBOW AS	
		1	**6V-8398**	1	SEAL-O-RING	
		1	**8C-8989**	1	ELBOW	
	42	2	*164-9640*	1	CONNECTOR AS	
		2	**3J-1907**	1	SEAL-O-RING	
		2	**4J-5477**	1	SEAL-O-RING	
		2	**145-2237**	1	CONNECTOR	
	43	1	*162-0177*	1	PLUG AS	
		1	**3J-1907**	1	SEAL-O-RING	
		1	**9S-8004**	1	PLUG-O-RING	
	44	1,2	*164-5567*	3	COUPLER AS-QUICK DISCONNECT	
					(EACH INCLUDES)	
		1,2	**3J-1907**	1	SEAL-O-RING	
		1,2	**6V-3965**	1	FITTING (QUICK DISCONNECT)	
	45	1	**3J-1907**	1	SEAL-O-RING	
	47	2	**6D-4246**	1	CLIP	
	48	1,2	**6V-0852**	3	CAP-DUST	
	49	1	**6V-8397**	3	SEAL-O-RING	
	50	2	**8T-4121**	5	WASHER-HARD (11X21X2.5-MM THK)	
M	51	2	**8T-4136**	4	BOLT (M10X1.5X25-MM)	
M	52	2	**8T-4137**	1	BOLT (M10X1.5X20-MM)	
M	53	2	**8T-4139**	2	BOLT (M12X1.75X30-MM)	
	54	2	**8T-4223**	2	WASHER-HARD (13.5X25.5X3-MM THK)	
	55	2	*148-8321*	1	CONNECTOR AS	
		2	**3J-1907**	1	SEAL-O-RING	
		2	**6V-8397**	1	SEAL-O-RING	
		2	**8C-0564**	1	CONNECTOR	

I-REFER TO HYDRAULIC INFORMATION SYSTEM
M-METRIC PART
Y-SEPARATE ILLUSTRATION

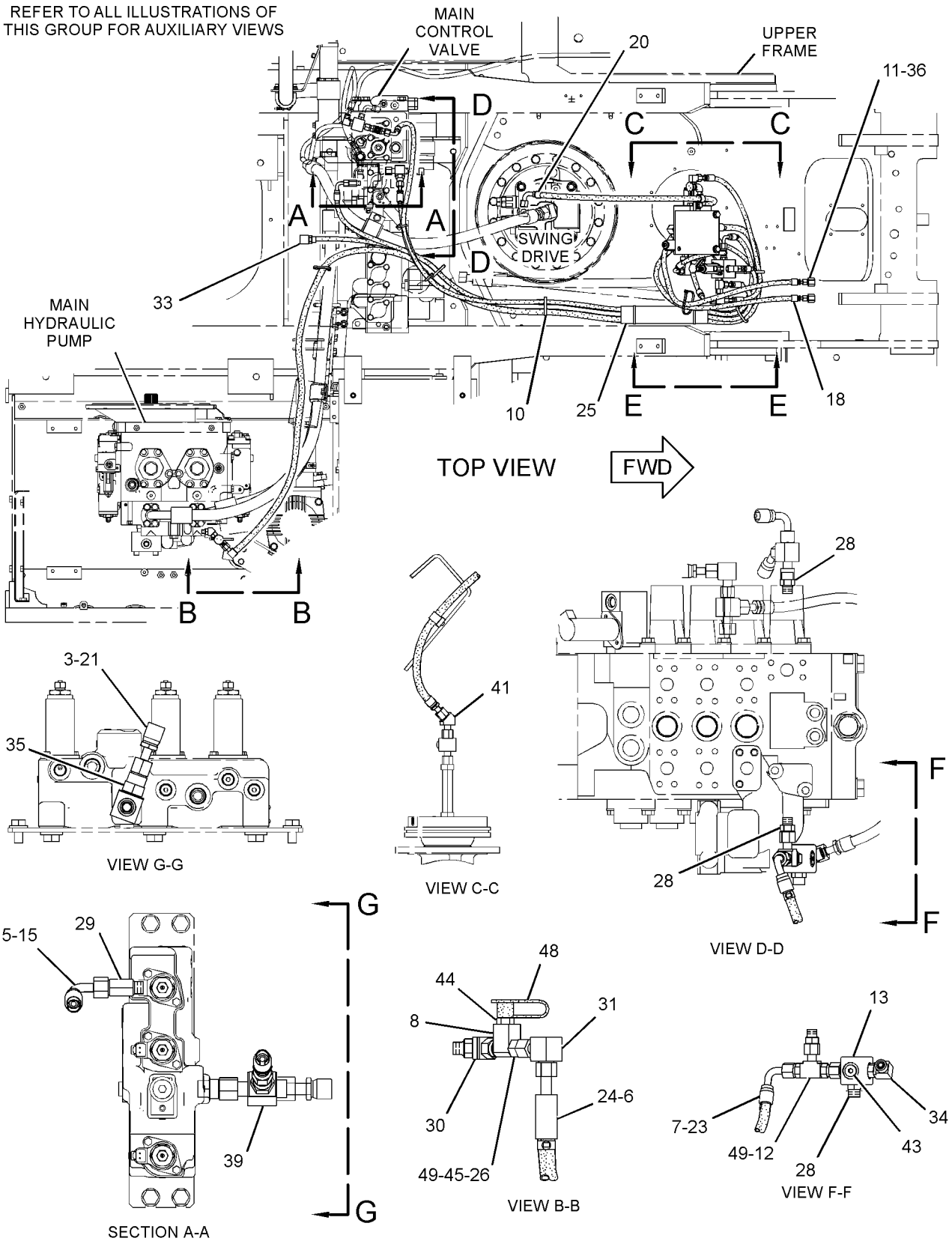

GRAPHIC #1 g01621177

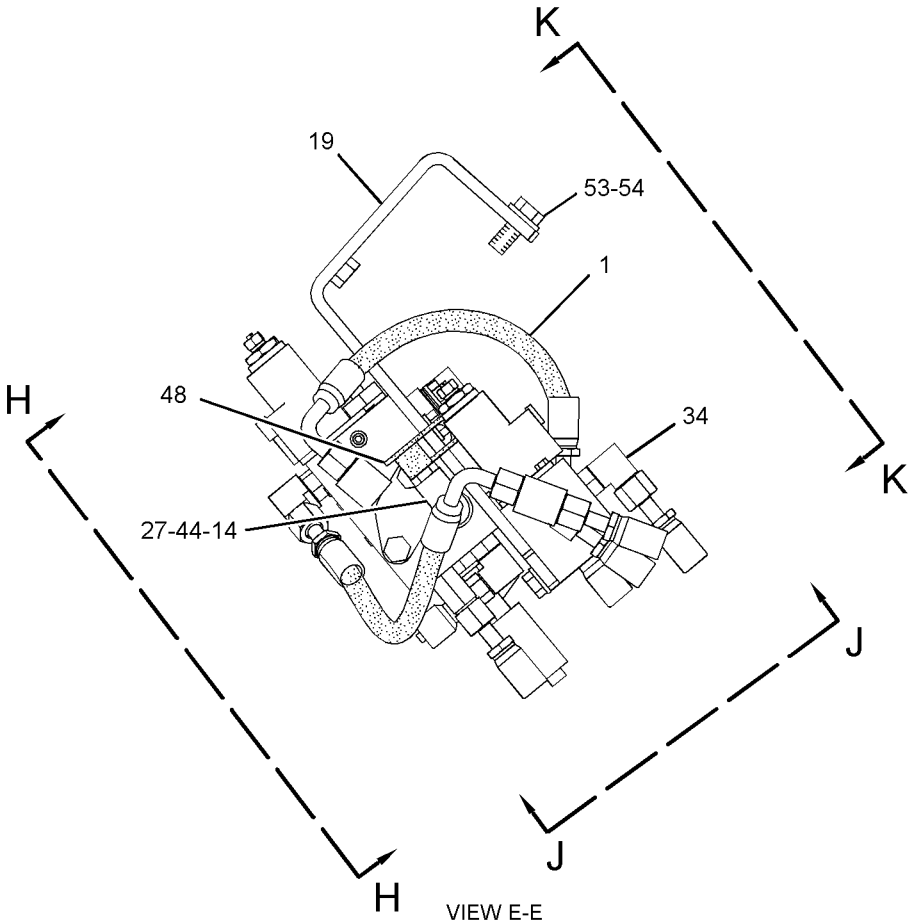

VIEW E-E

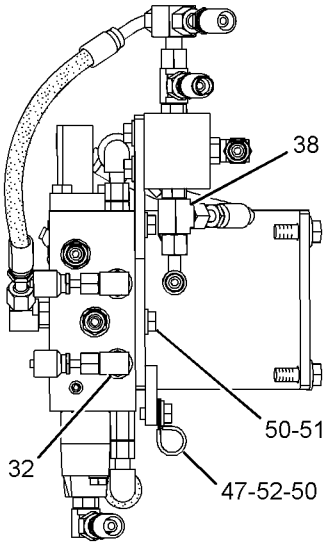

VIEW J-J

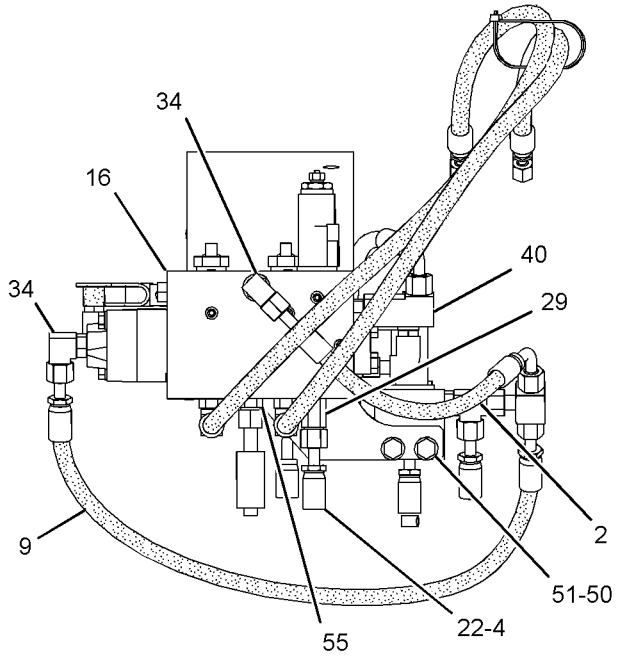

VIEW H-H

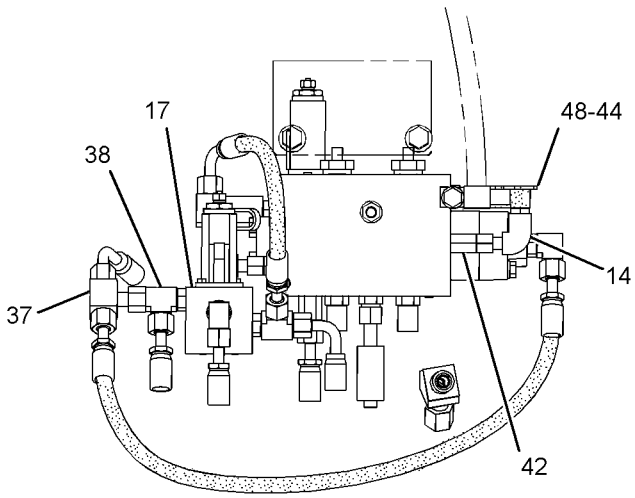

VIEW K-K

GRAPHIC #2 **<END>** g01621178

HYDRAULIC SYSTEM

268-6868 LINES GP-FRONT—BOOM CYLINDER

S/N: MNB1-UP

PART OF 262-3586 SPECIAL AR-SUPER LONG REACH AN ATTACHMENT

SMCS-5057 **i02430018**

NOTE	REF NO	GRAPHIC REF	PART NUMBER	QTY	PART NAME 1 2 3 4 5 6 (PRODUCT LEVEL)	SEE PAGE
	1	1	**4I-8789**	1	VALVE GP-CHECK	
	2	1	**9F-2167**	1	SCREW-PURGE (3/8-24X1.164-IN)	
M	3	1	**101-7398**	4	BOLT-SOCKET HEAD (M10X1.5X40-MM)	
	4	1	**268-7183**	1	PLATE AS	
	5	1	**277-0781**	1	TUBE AS	
	6	1	**277-0782**	1	TUBE AS	
	7	1	*148-8335*	1	CONNECTOR AS	
		1	**5K-9090**	1	SEAL-O-RING	
		1	**6V-8635**	1	CONNECTOR	
		1	**7M-8485**	1	SEAL-O-RING	
	8	1	**1P-3703**	1	SEAL-RECTANGULAR	
	9	1	**6V-9746**	2	SEAL-O-RING	
	10	1	**7M-8485**	1	SEAL-O-RING	
	11	1	**7Y-3732**	4	CLIP	
	12	1	**8T-4223**	4	WASHER-HARD (13.5X25.5X3-MM THK)	
M	13	1	**8T-4910**	2	BOLT (M12X1.75X60-MM)	
M	14	1	**8T-4956**	2	BOLT (M12X1.75X35-MM)	

M-METRIC PART

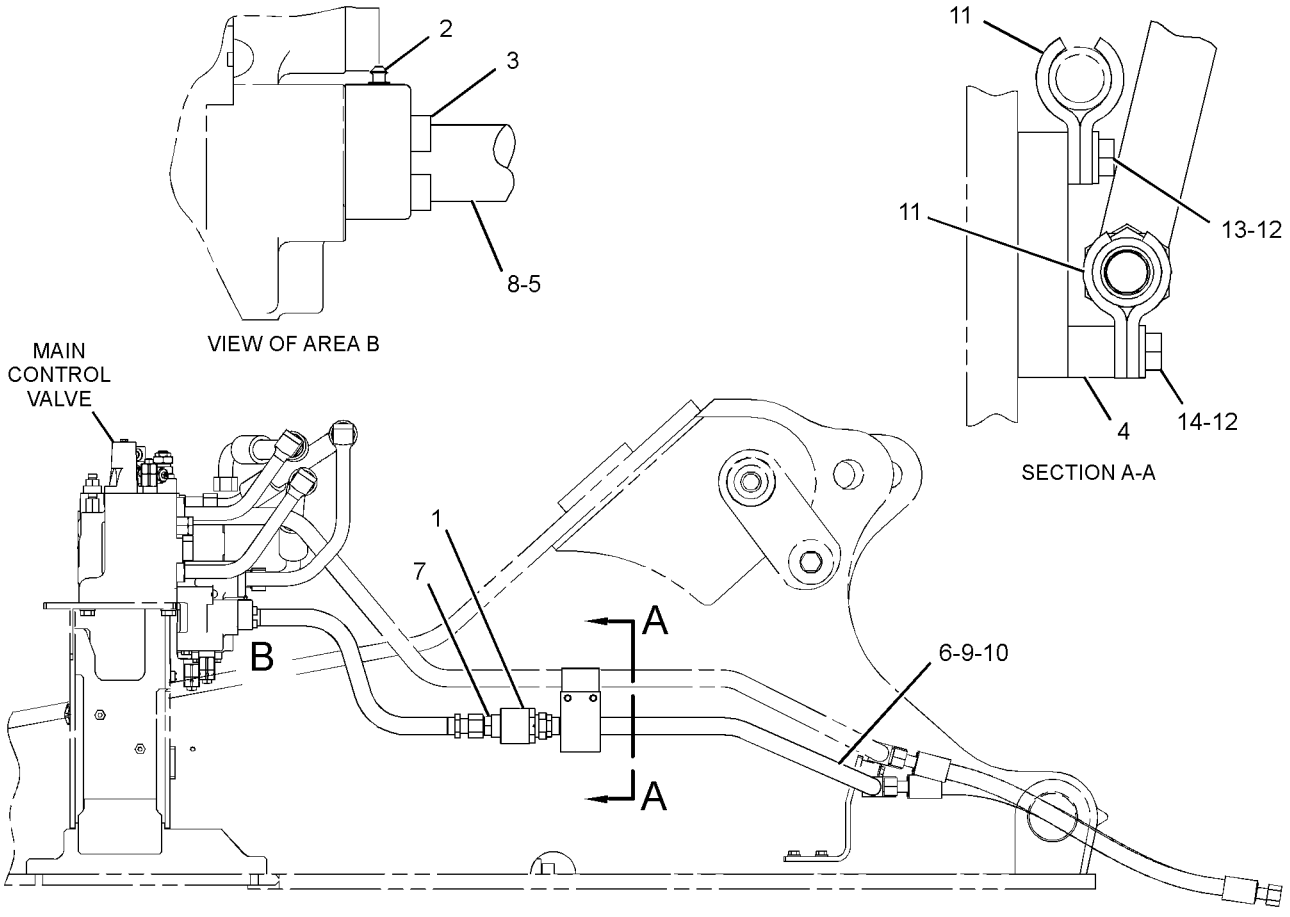

RIGHT SIDE VIEW

GRAPHIC #1 **<END>** g01239605

HYDRAULIC SYSTEM

248-9833 LINES GP-HYDRAULIC OIL COOLER

S/N: MNB1-UP; WDK1-UP

PART OF 255-5707, 255-5708 HYDRAULIC AR

SMCS-1374 **i02768534**

NOTE	REF NO	GRAPHIC REF	PART NUMBER	QTY	PART NAME 1 2 3 4 5 6 (PRODUCT LEVEL)	SEE PAGE
	1	1	**8T-4984**	8	CLAMP-HOSE	
	3	1	**236-3223**	1	SUPPORT	
	4	1	**258-0312**	2	HOSE	
	5	1	**275-1561**	1	TUBE AS	
	6	1	**255-1632**	1	TUBE AS	
	7	1	**289-5367**	1	TUBE AS	
	8	1	**282-7195**	1	SUPPORT	
	9	1	**282-7047**	1	SUPPORT	
M	10	1	**096-4883**	6	LOCKNUT (M10X1.15-THD)	
	11	1	**8T-4223**	10	WASHER-HARD (13.5X25.5X3-MM THK)	
	12	1	**4J-0523**	3	SEAL-O-RING	
M	13	1	**8T-4956**	6	BOLT (M12X1.75X35-MM)	
M	14	1	**7Y-5238**	3	U-BOLT (M10X1.5-THD)	
	15	1	**8T-4121**	8	WASHER-HARD (11X21X2.5-MM THK)	
M	16	1	**8T-4136**	2	BOLT (M10X1.5X25-MM)	
M	17	1	**8T-4139**	4	BOLT (M12X1.75X30-MM)	

M-METRIC PART

248-9833 LINES GP-HYDRAULIC OIL COOLER *(contd.)* i02768534

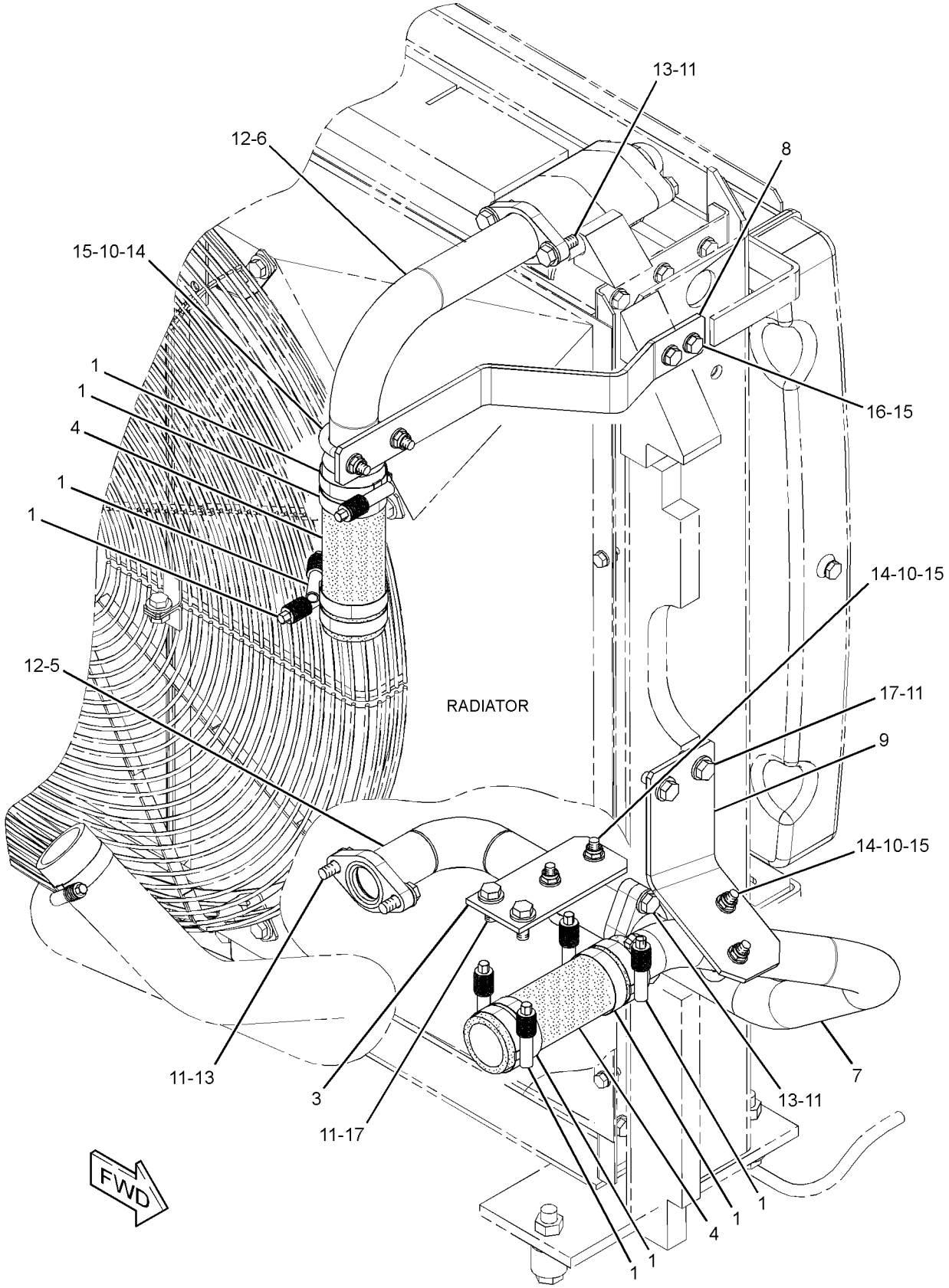

GRAPHIC #1

<END>

g01404915

HYDRAULIC SYSTEM

248-9825 LINES GP-PILOT—JOYSTICK, PEDALS

S/N: MNB1-UP; WDK1-UP

PART OF 255-5707, 255-5708 HYDRAULIC AR

SMCS-5057, 5059 **i03162408**

NOTE	REF NO	GRAPHIC REF	PART NUMBER	QTY	PART NAME 1 2 3 4 5 6 (PRODUCT LEVEL)	SEE PAGE
	1	2	**4I-9521**	2	BAND-MARKER (RED, L1)	
	2	2	**4I-9522**	2	BAND-MARKER (YELLOW, L2)	
	3	2	**4I-9523**	2	BAND-MARKER (BLUE, L3)	
	4	2	**4I-9524**	2	BAND-MARKER (BROWN, L4)	
	5	2	**4I-9525**	2	BAND-MARKER (ORANGE, R1)	
	6	2	**4I-9526**	2	BAND-MARKER (WHITE, R2)	
	7	2	**4I-9527**	2	BAND-MARKER (GREEN, R3)	
	8	2	**4I-9528**	2	BAND-MARKER (PURPLE, R4)	
	9	1	**7K-1181**	3	STRAP-CABLE	
I	10	1	**087-4402**	2	HOSE AS	
	11	2	**133-5813**	4	BAND-MARKER (GRAY, P)	
	12	1	**309-5769**	1	SWITCH AS-PRESSURE (IMPLEMENT, SWING)	
	12A	1	**309-5769**	1	SWITCH AS-PRESSURE (TRAVEL, LH)	
	12B	2	**309-5769**	1	SWITCH AS-PRESSURE (TRAVEL, RH)	
					(EACH SWITCH AS INCLUDES)	
		1,2	**102-8802**	1	KIT-RECEPTACLE (2-PIN)	
					(INCLUDES RECEPTACLE AS & WEDGE)	
		1,2	**9X-3401**	2	PIN-CONNECTOR (16-GA TO 18-GA)	
					—OR—	
		1,2	**126-1767**	2	PIN-CONNECTOR (14-GA)	
	13	2	**168-9759**	1	BLOCK	
	14	1,2	**184-9336**	4	SUPPORT	
	15	2	**185-0383**	1	BRACKET	
Y	16	2	**185-0462**	1	VALVE GP-SHUTTLE	807
	17	2	**236-2843**	4	HOSE AS	
	18	2	**236-2844**	3	HOSE AS	
	19	2	**236-2848**	1	HOSE AS	
	20	2	**245-5079**	1	HOSE AS	
	21	2	**255-1665**	1	HOSE AS	
	22	2	**255-1666**	1	HOSE AS	
CY	23	1	**310-0414**	1	VALVE GP-PILOT	777
	24	1,2	*148-8336*	23	CONNECTOR AS	
					(EACH INCLUDES)	
		1,2	**3J-1907**	1	SEAL-O-RING	
		1,2	**6V-8397**	1	SEAL-O-RING	
		1,2	**6V-8636**	1	CONNECTOR	
	25	2	*148-8353*	8	ELBOW AS	
					(EACH INCLUDES)	
		2	**3J-1907**	1	SEAL-O-RING	
		2	**6V-8397**	1	SEAL-O-RING	
		2	**6V-9001**	1	ELBOW	
	26	2	*148-8354*	2	ELBOW AS	
					(EACH INCLUDES)	
		2	**3K-0360**	1	SEAL-O-RING	
		2	**6V-8398**	1	SEAL-O-RING	
		2	**6V-9002**	1	ELBOW	
	27	1,2	*148-8378*	6	ELBOW AS	
					(EACH INCLUDES)	
		1,2	**3J-1907**	1	SEAL-O-RING	
		1,2	**6V-8397**	1	SEAL-O-RING	
		1,2	**6V-8724**	1	ELBOW	
	28	2	*148-8407*	4	PLUG AS	
					(EACH INCLUDES)	
		2	**3J-1907**	1	SEAL-O-RING	
		2	**9S-4191**	1	PLUG-O-RING	

248-9825 **LINES GP-PILOT** ***(contd.)*** **i03162408**

NOTE	REF NO	GRAPHIC REF	PART NUMBER	QTY	PART NAME 1 2 3 4 5 6 (PRODUCT LEVEL)	SEE PAGE
	29	1,2	*164-5628*	3	CONNECTOR AS	
					(EACH INCLUDES)	
		1,2	**3J-1907**	1	SEAL-O-RING	
		1,2	**6V-8397**	1	SEAL-O-RING	
		1,2	**107-6631**	1	CONNECTOR-FILTER	
	30	1,2	**8T-4121**	20	WASHER-HARD (11X21X2.5-MM THK)	
M	31	1	**8T-4136**	4	BOLT (M10X1.5X25-MM)	
M	32	1,2	**8T-4137**	15	BOLT (M10X1.5X20-MM)	
M	33	2	**8T-4198**	2	BOLT (M10X1.5X100-MM)	
	34	2	**289-5657**	1	HOSE AS	
	35	2	**4P-7581**	1	CLIP	

C-CHANGE FROM PREVIOUS TYPE
I-REFER TO HYDRAULIC INFORMATION SYSTEM
M-METRIC PART
Y-SEPARATE ILLUSTRATION

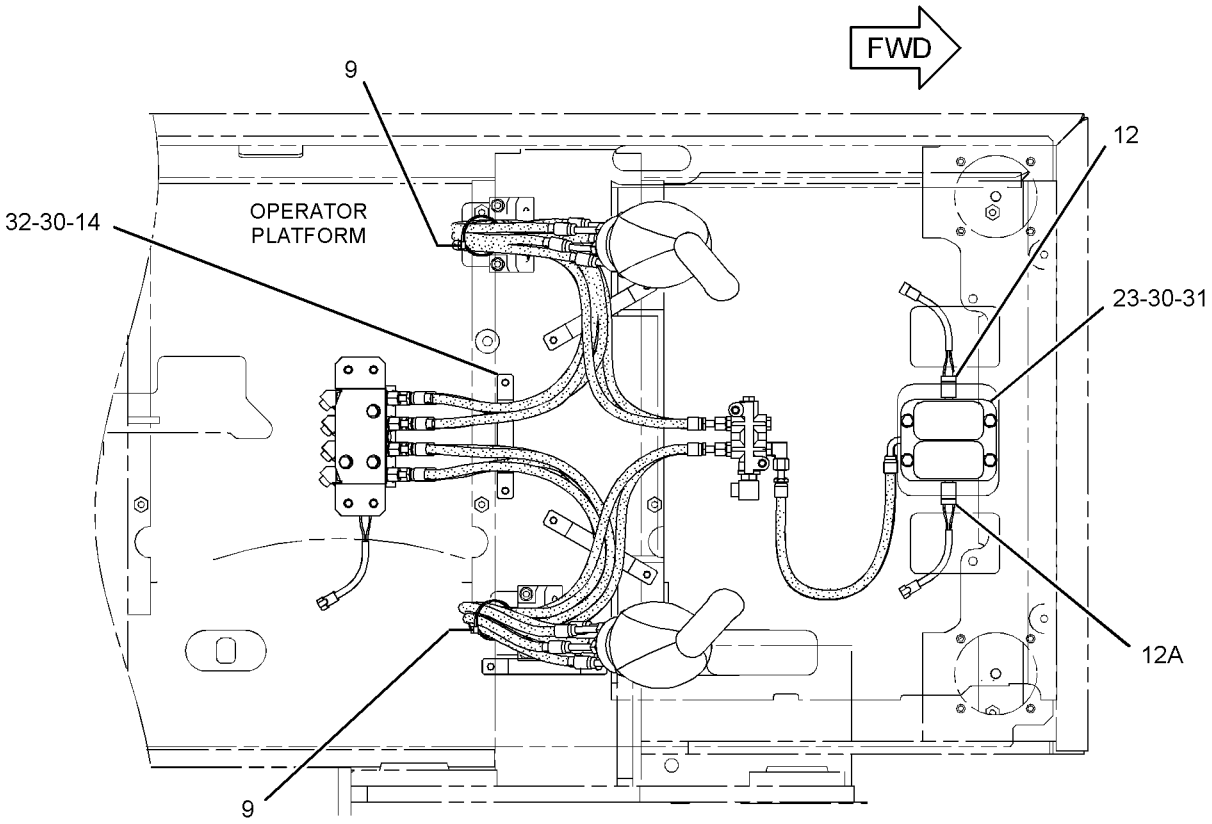

TOP VIEW

REFER TO ALL ILLUSTRATIONS OF
THIS GROUP FOR AUXILIARY VIEWS

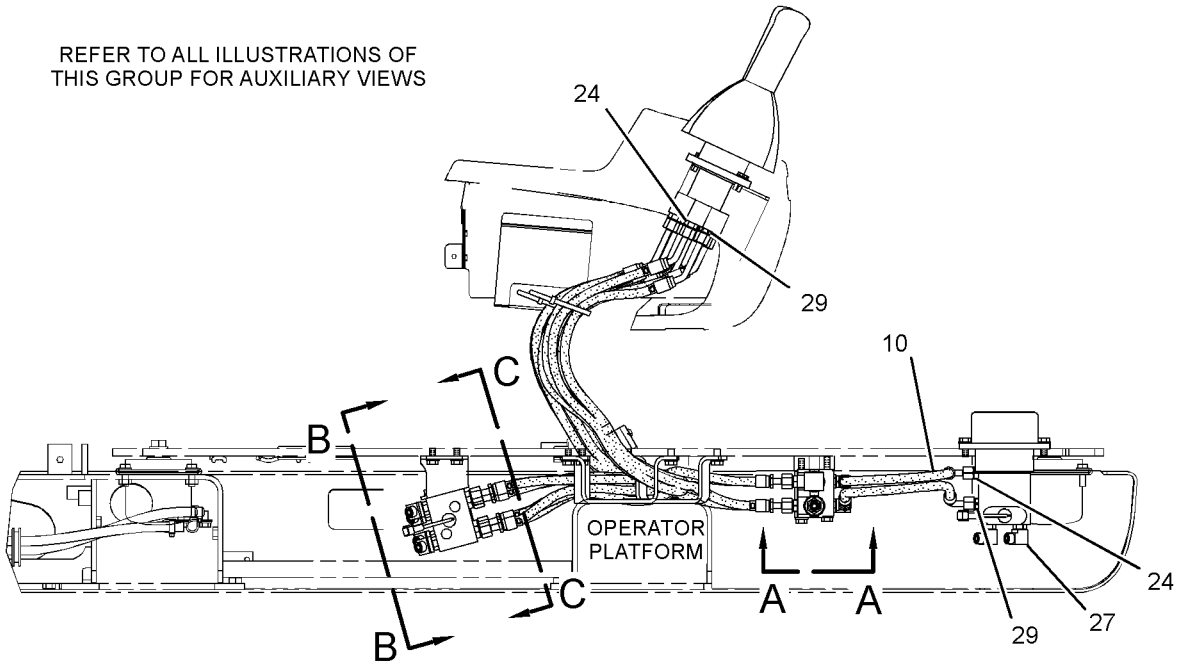

RIGHT SIDE VIEW

GRAPHIC #1

g01269086

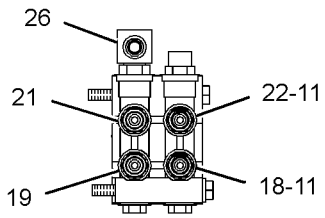

VIEW D-D

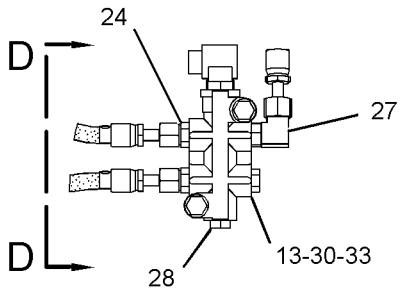

VIEW A-A

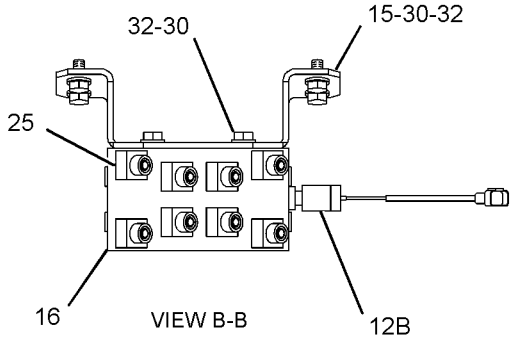

VIEW B-B

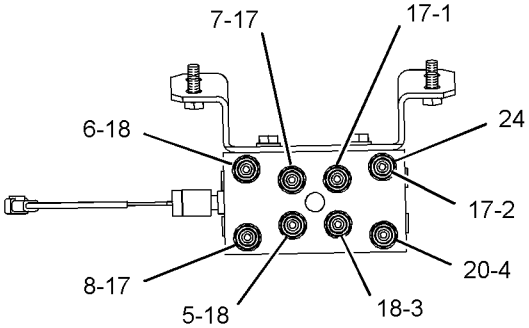

SECTION C-C

GRAPHIC #2 **<END>** g01269087

248-9826 LINES GP-PILOT—CONTROL VALVE

S/N: MNB1-UP; WDK1-UP

PART OF 255-5707, 255-5708 HYDRAULIC AR

SMCS-5057, 5059 **i02346949**

NOTE	REF NO	GRAPHIC REF	PART NUMBER	QTY	PART NAME 1 2 3 4 5 6 (PRODUCT LEVEL)	SEE PAGE
I	1	1	**4I-1631**	1	HOSE AS	
	2	1	**7K-1181**	14	STRAP-CABLE	
I	3	1	**7Y-4193**	1	HOSE AS	
I	4	1	**7Y-4390**	3	HOSE AS	
I	5	1	**087-5780**	1	HOSE AS	
I	6	1	**104-8771**	1	HOSE AS	
I	7	1	**108-7203**	1	HOSE AS	
I	8	1	**108-7372**	1	HOSE AS	
	9	1	**202-4004**	1	GROMMET	
I	10	1	**218-1059**	3	HOSE AS	
	11	1	**115-8645**	3	GUARD	
	12	1	*148-8378*	6	ELBOW AS	
					(EACH INCLUDES)	
		1	**3J-1907**	1	SEAL-O-RING	
		1	**6V-8397**	1	SEAL-O-RING	
		1	**6V-8724**	1	ELBOW	
	13	1	*148-8435*	6	TEE AS	
					(EACH INCLUDES)	
		1	**3J-1907**	1	SEAL-O-RING	
		1	**6V-8397**	2	SEAL-O-RING	
		1	**6V-8781**	1	TEE-FACE SEAL	
	14	1	**176-4746**	1	GROMMET	
	15	1	**4I-3953**	2	GROMMET	
	16	1	**4I-9521**	6	BAND-MARKER (RED, L1)	
	17	1	**4I-9522**	6	BAND-MARKER (YELLOW, L2)	
	18	1	**4I-9523**	2	BAND-MARKER (BLUE, L3)	
	19	1	**4I-9524**	2	BAND-MARKER (BROWN, L4)	
	20	1	**4I-9525**	6	BAND-MARKER (ORANGE, R1)	
	21	1	**4I-9526**	6	BAND-MARKER (WHITE, R2)	
	22	1	**4I-9527**	2	BAND-MARKER (GREEN, R3)	
	23	1	**4I-9528**	2	BAND-MARKER (PURPLE, R4)	

I-REFER TO HYDRAULIC INFORMATION SYSTEM

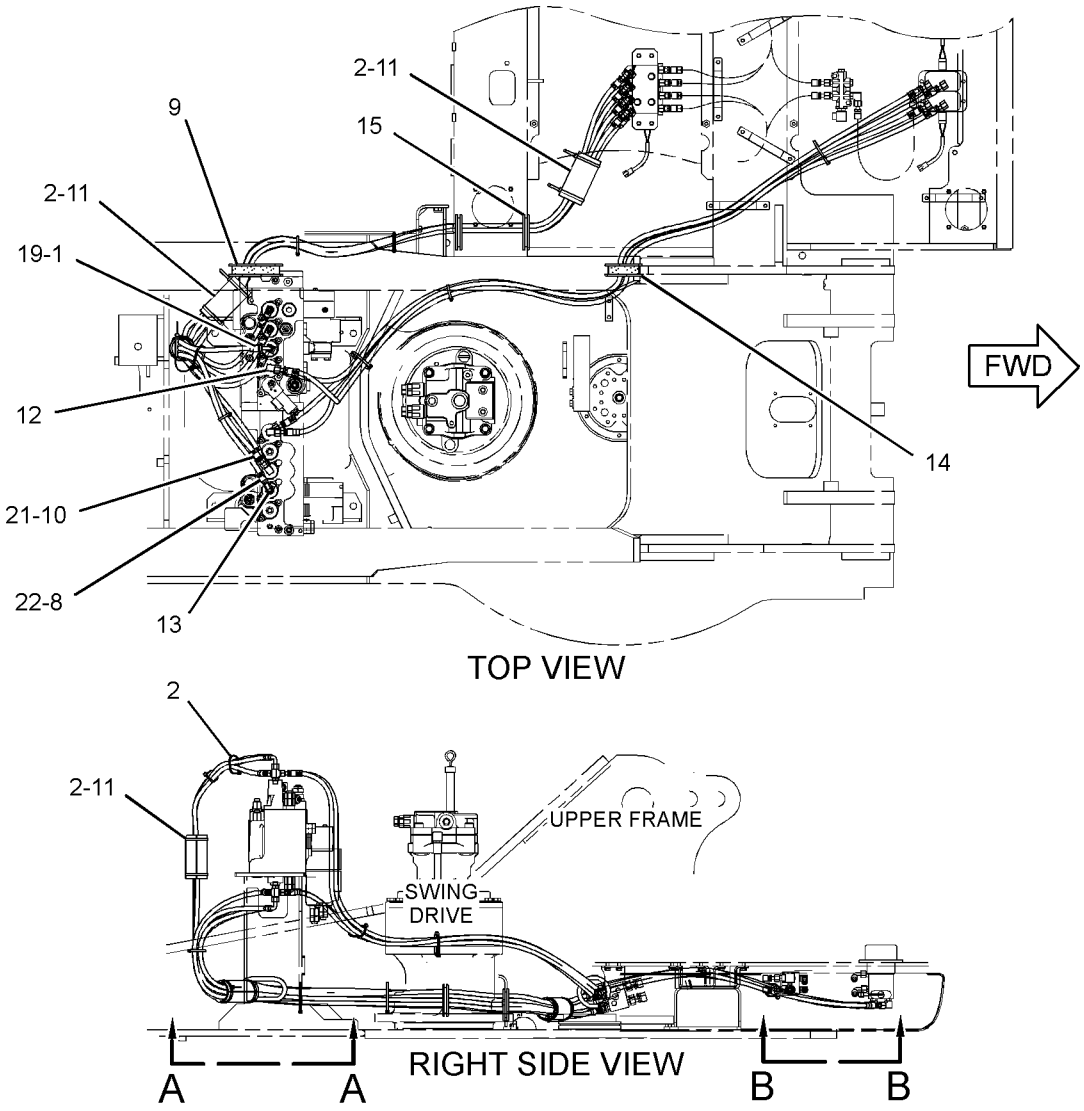

GRAPHIC #1 **<END>** g01152978

HYDRAULIC SYSTEM

248-9827 LINES GP-PILOT—CONTROL VALVE, PUMP

S/N: MNB1-UP; WDK1-UP

PART OF 255-5707, 255-5708 HYDRAULIC AR

SMCS-5057, 5059 **i03172960**

NOTE	REF NO	GRAPHIC REF	PART NUMBER	QTY	PART NAME 1 2 3 4 5 6 (PRODUCT LEVEL)	SEE PAGE
I	1	2	**4I-0836**	1	HOSE AS	
I	2	2	**4I-1739**	1	HOSE AS	
I	3	2	**4I-5900**	1	HOSE AS	
I	4	2	**4I-5906**	1	HOSE AS	
I	5	2	**4I-6121**	1	HOSE AS	
I	6	1	**4I-6136**	1	HOSE AS	
	7	2	**4I-9521**	2	BAND-MARKER (RED, L1)	
	8	1,2	**4I-9522**	6	BAND-MARKER (YELLOW, L2)	
	9	1,2	**4I-9523**	4	BAND-MARKER (BLUE, L3)	
	10	1,2	**4I-9524**	6	BAND-MARKER (BROWN, L4)	
	11	2	**4I-9525**	2	BAND-MARKER (ORANGE, R1)	
	12	2	**4I-9527**	4	BAND-MARKER (GREEN, R3)	
	13	2	**4I-9528**	4	BAND-MARKER (PURPLE, R4)	
I	14	2	**5I-4396**	1	HOSE AS	
I	15	2	**5I-8708**	1	HOSE AS	
	16	1,2	**7K-1181**	18	STRAP-CABLE	
I	17	2	**7Y-4199**	1	HOSE AS	
I	18	2	**087-4411**	1	HOSE AS	
I	19	2	**087-4531**	2	HOSE AS	
I	20	2	**087-4534**	1	HOSE AS	
I	21	2	**087-5760**	1	HOSE AS	
I	22	2	**087-5762**	1	HOSE AS	
I	23	2	**087-5772**	1	HOSE AS	
I	24	2	**087-5774**	1	HOSE AS	
	25	2,3	**8T-4223**	5	WASHER-HARD (13.5X25.5X3-MM THK)	
I	26	2	**102-1157**	1	HOSE AS	
I	27	1	**104-8821**	1	HOSE AS	
I	28	2	**104-8838**	1	HOSE AS	
I	29	2	**104-8950**	1	HOSE AS	
I	30	2	**110-5496**	1	HOSE AS	
I	31	2	**143-4254**	1	HOSE AS	
	32	4	*285-1399*	1	CONNECTOR AS	
		4	**3J-1907**	1	SEAL-O-RING	
		4	**6V-8397**	1	SEAL-O-RING	
		4	**285-1465**	1	CONNECTOR	
Y	33	3	*164-6981*	1	ACCUMULATOR GP-HYDRAULIC (CHARGED)	437
I	34	2	**164-8977**	1	HOSE AS	
I	35	2	**164-8983**	1	HOSE AS	
	36	2	**171-2637**	2	BOSS	
I	37	1	**266-1146**	2	HOSE AS	
	38	3	**176-4463**	1	PLATE	
	39	3	**176-4469**	1	BLOCK	
	40	2	**176-4708**	1	GROMMET	
I	41	2	**176-4768**	1	HOSE AS	
I	42	2	**184-9593**	1	HOSE AS	
I	43	2	**184-9595**	1	HOSE AS	
I	44	1	**307-5096**	1	HOSE AS	
Y	45	3	**215-5037**	1	MANIFOLD GP-CONTROL (PILOT OIL SUPPLY)	697
Y	46	3	**310-0210**	1	VALVE GP-PRESSURE REDUCING (BOOM, SWING PRIORITY)	781
	47	4	*239-9097*	1	PLUG AS	
		4	**3J-1907**	1	SEAL-O-RING	
		4	**239-9117**	1	PLUG	
	48	4	*239-9098*	1	PLUG AS	
		4	**3J-1907**	1	SEAL-O-RING	
		4	**239-9118**	1	PLUG	

248-9827 **LINES GP-PILOT** ***(contd.)*** **i03172960**

NOTE	REF NO	GRAPHIC REF	PART NUMBER	QTY	PART NAME 1 2 3 4 5 6 (PRODUCT LEVEL)	SEE PAGE
	49	2	**266-0982**	3	GUARD	
	50	1,2	**275-1442**	2	CLIP (TAB)	
	51	1,2	**275-1443**	2	CLIP (SLOT)	
	52	1,2	**275-1444**	2	GROMMET	
	53	2	**275-1471**	1	SUPPORT AS	
I	54	2	**275-1484**	1	HOSE AS	
I	55	2	**266-1102**	1	HOSE AS	
M	56	3	**099-3649**	2	BOLT (M8X1.25X40-MM)	
	57	2	**103-1384**	1	GUARD	
M	58	3	**105-3484**	2	BOLT-SOCKET HEAD (M10X1.5X25-MM)	
Y	59	3	**123-2430**	1	VALVE GP-SHUTTLE	804
	60	3,4	*148-8336*	8	CONNECTOR AS	
					(EACH INCLUDES)	
		3,4	**3J-1907**	1	SEAL-O-RING	
		3,4	**6V-8397**	1	SEAL-O-RING	
		3,4	**6V-8636**	1	CONNECTOR	
	61	3	*148-8340*	3	CONNECTOR AS	
					(EACH INCLUDES)	
		3	**3K-0360**	1	SEAL-O-RING	
		3	**6V-8398**	1	SEAL-O-RING	
		3	**6V-8639**	1	CONNECTOR	
	62	3,4	*148-8353*	5	ELBOW AS	
					(EACH INCLUDES)	
		3,4	**3J-1907**	1	SEAL-O-RING	
		3,4	**6V-8397**	1	SEAL-O-RING	
		3,4	**6V-9001**	1	ELBOW	
	63	3	*148-8354*	1	ELBOW AS	
		3	**3K-0360**	1	SEAL-O-RING	
		3	**6V-8398**	1	SEAL-O-RING	
		3	**6V-9002**	1	ELBOW	
	64	3	*148-8364*	2	ELBOW AS	
					(EACH INCLUDES)	
		3	**3K-0360**	1	SEAL-O-RING	
		3	**6V-8398**	1	SEAL-O-RING	
		3	**6V-8625**	1	ELBOW	
	65	3,4	*148-8367*	2	ELBOW AS	
					(EACH INCLUDES)	
		3,4	**6V-8397**	1	SEAL-O-RING	
		3,4	**6V-9850**	1	ELBOW	
	66	3,4	*148-8378*	8	ELBOW AS	
					(EACH INCLUDES)	
		3,4	**3J-1907**	1	SEAL-O-RING	
		3,4	**6V-8397**	1	SEAL-O-RING	
		3,4	**6V-8724**	1	ELBOW	
	67	3	*148-8407*	4	PLUG AS	
					(EACH INCLUDES)	
		3	**3J-1907**	1	SEAL-O-RING	
		3	**9S-4191**	1	PLUG-O-RING	
	68	4	*148-8433*	3	TEE AS	
					(EACH INCLUDES)	
		4	**6V-8397**	2	SEAL-O-RING	
		4	**6V-9836**	1	TEE-SWIVEL	
	69	3,4	*148-8435*	4	TEE AS	
					(EACH INCLUDES)	
		3,4	**3J-1907**	1	SEAL-O-RING	
		3,4	**6V-8397**	1	SEAL-O-RING	
		3,4	**6V-8781**	1	TEE-FACE SEAL	
	70	4	*148-8439*	2	TEE AS	
					(EACH INCLUDES)	

248-9827 **LINES GP-PILOT** *(contd.)* **i03172960**

NOTE	REF NO	GRAPHIC REF	PART NUMBER	QTY	PART NAME 1 2 3 4 5 6 (PRODUCT LEVEL)	SEE PAGE
		4	**3J-1907**	1	SEAL-O-RING	
		4	**6V-8397**	2	SEAL-O-RING	
		4	**6V-8774**	1	TEE	
	71	3,4	*150-4044*	3	CONNECTOR AS	
					(EACH INCLUDES)	
		3,4	**3J-1907**	1	SEAL-O-RING	
		3,4	**6V-8397**	1	SEAL-O-RING	
		3,4	**8T-1779**	1	CONNECTOR	
	72	4	*164-5608*	1	CONNECTOR AS	
		4	**3K-0360**	1	SEAL-O-RING	
		4	**6V-8398**	1	SEAL-O-RING	
		4	**8T-1687**	1	CONNECTOR	
	73	1,2	**5P-7462**	2	CLIP (SLOT)	
	74	1,2	**5P-7463**	2	CLIP (TAB)	
	75	1,2	**6V-0683**	2	GROMMET	
	76	3,4	**6V-8397**	4	SEAL-O-RING	
	77	1,2,3	**8T-4121**	10	WASHER-HARD (11X21X2.5-MM THK)	
M	78	1	**8T-4136**	2	BOLT (M10X1.5X25-MM)	
M	79	2,3	**8T-4137**	5	BOLT (M10X1.5X20-MM)	
M	80	3	**8T-4172**	2	BOLT (M10X1.5X80-MM)	
M	81	3	**8T-4192**	3	BOLT (M12X1.75X25-MM)	
M	82	2	**8T-4194**	2	BOLT (M12X1.75X50-MM)	
M	83	2	**8T-4195**	1	BOLT (M10X1.5X30-MM)	
CI	84	2	**330-2568**	1	HOSE AS	

C-CHANGE FROM PREVIOUS TYPE
I-REFER TO HYDRAULIC INFORMATION SYSTEM
M-METRIC PART
Y-SEPARATE ILLUSTRATION

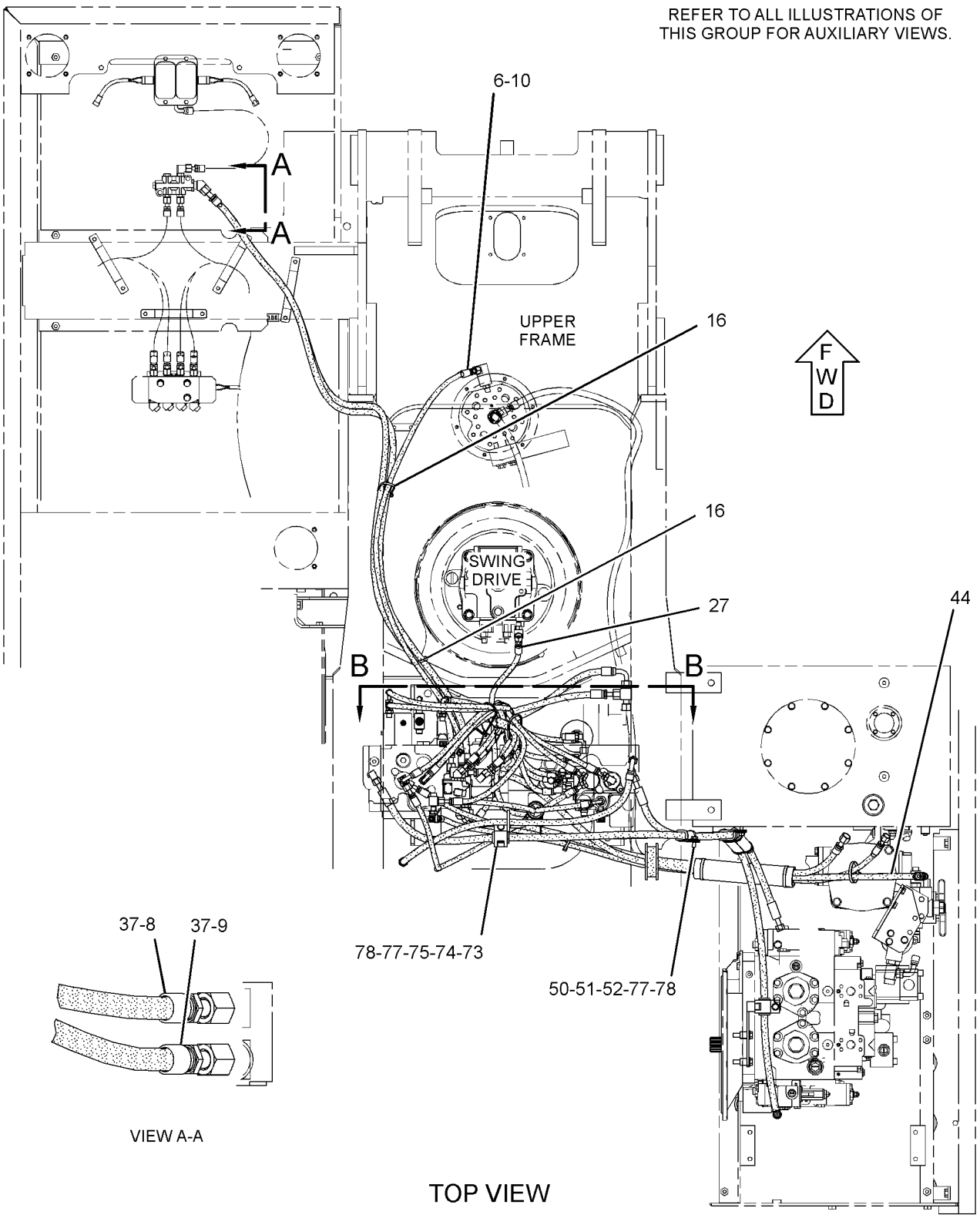

GRAPHIC #1

g01619802

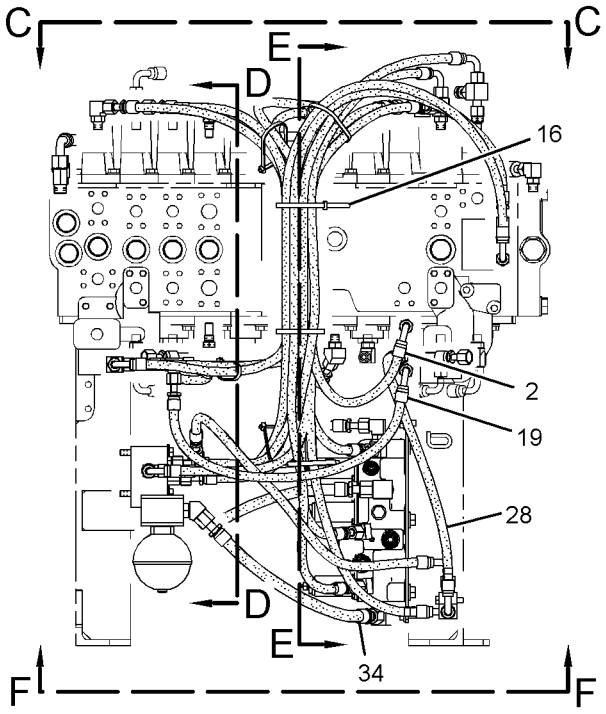

SECTION B-B

REFER TO ALL ILLUSTRATIONS OF THIS GROUP FOR AUXILIARY VIEWS.

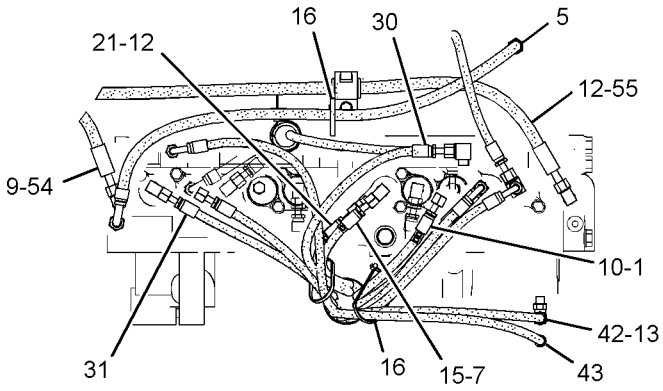

VIEW C-C

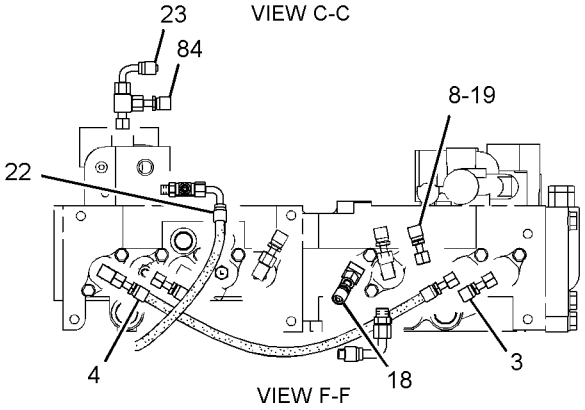

VIEW F-F

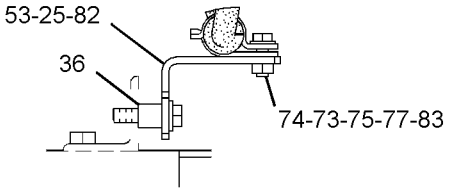

VIEW OF AREA H

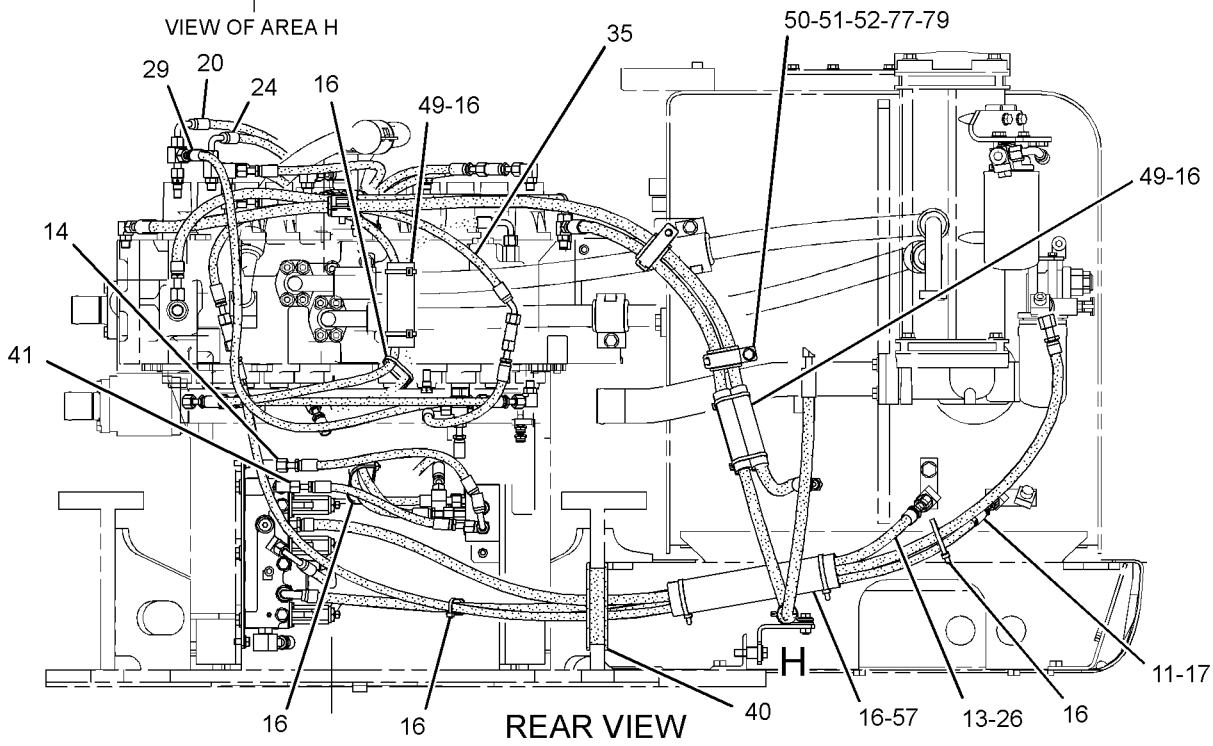

GRAPHIC #2

g01619803

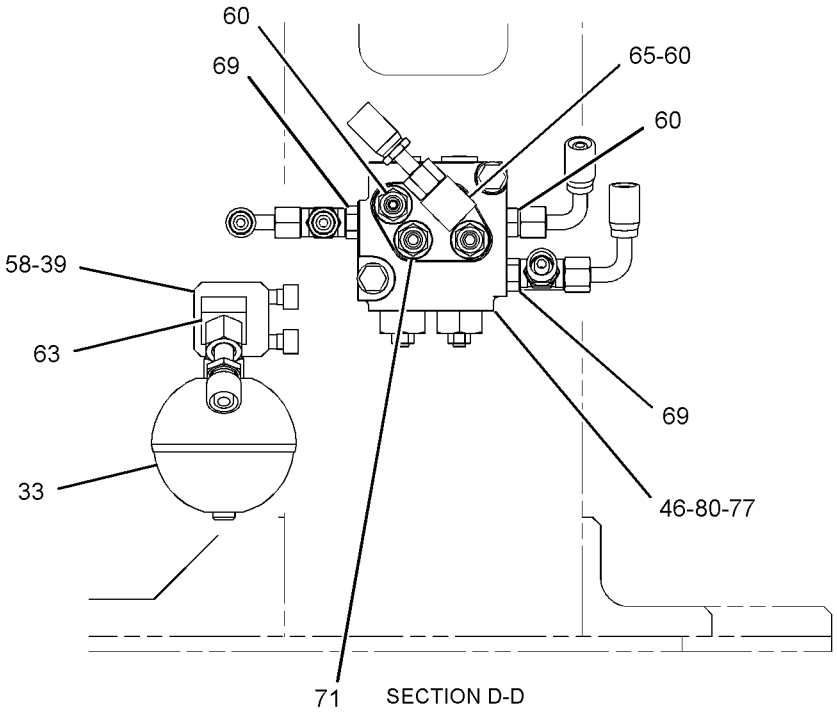

SECTION D-D

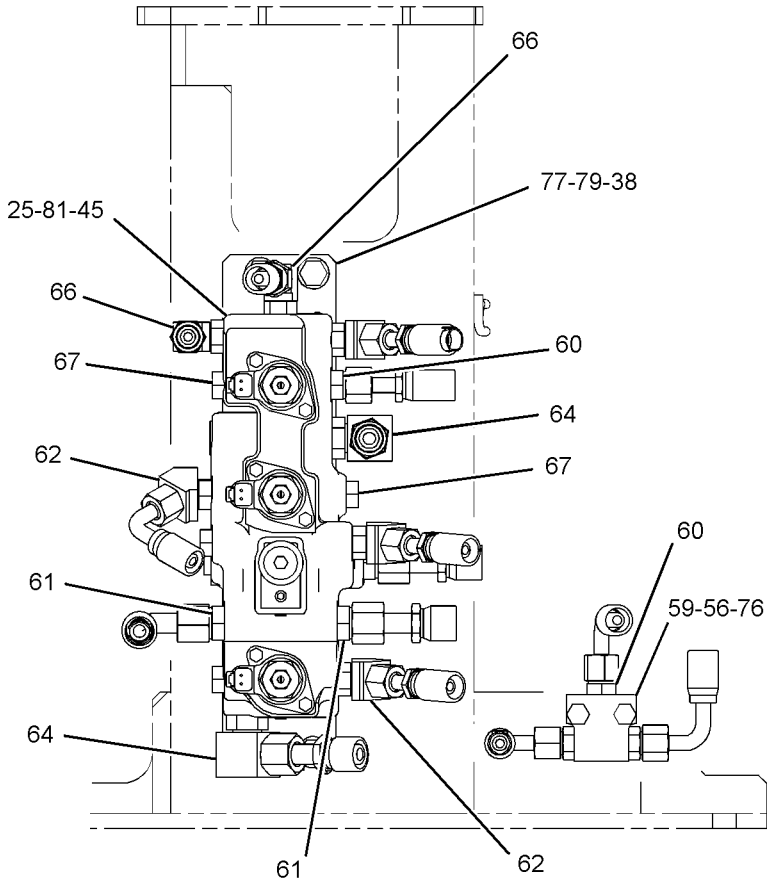

SECTION E-E

GRAPHIC #3

g01520419

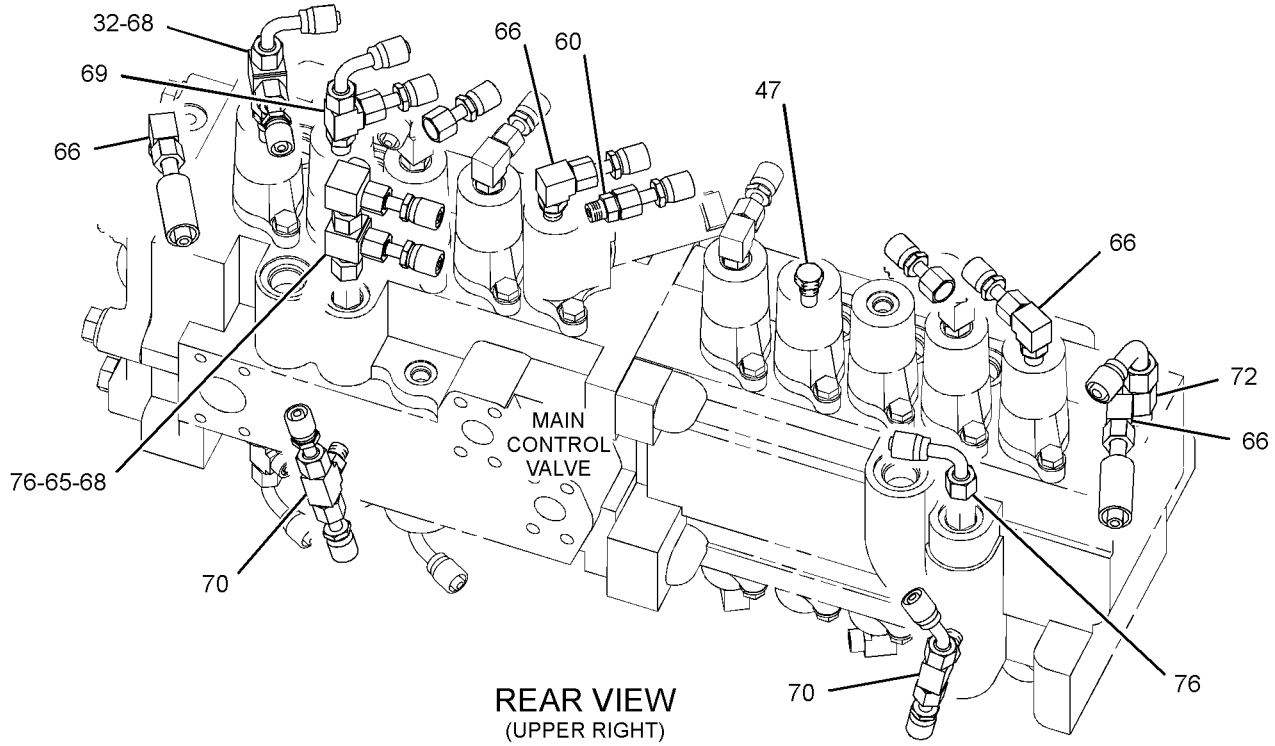

REAR VIEW
(UPPER RIGHT)

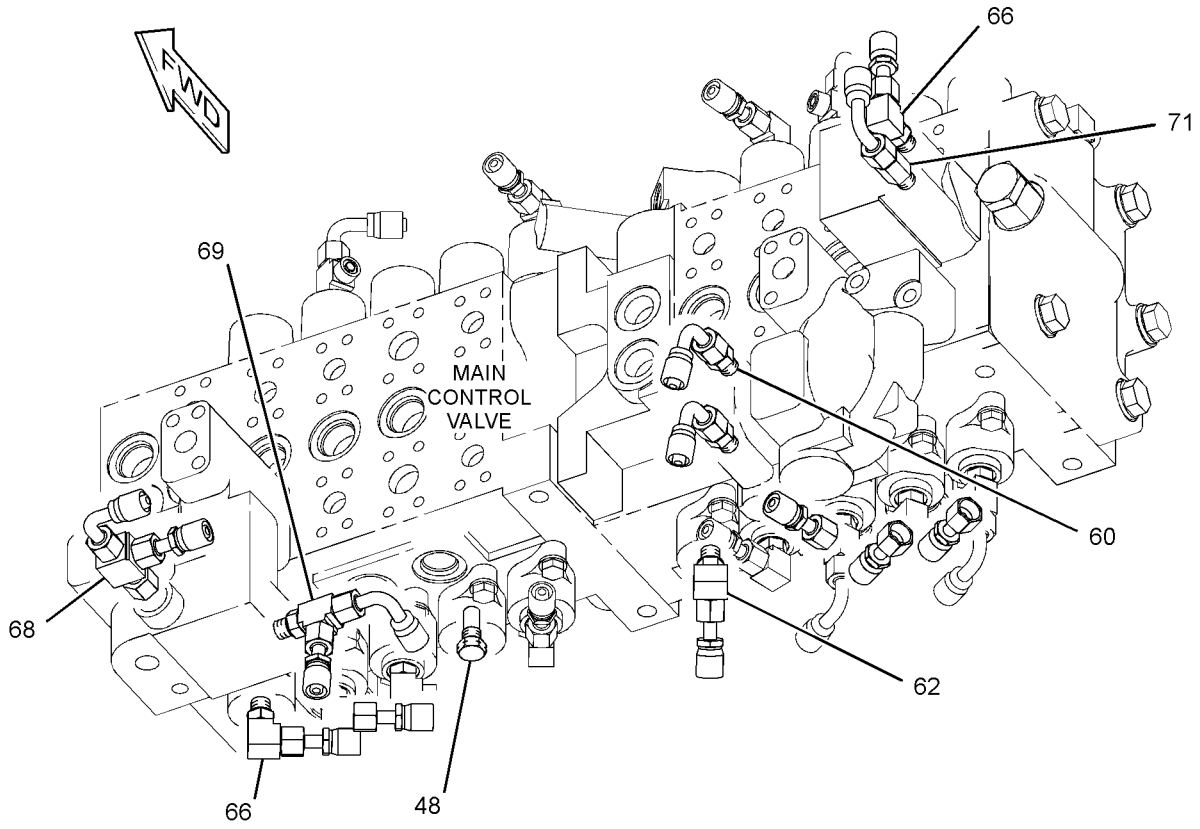

GRAPHIC #4 **<END>** g01520421

HYDRAULIC SYSTEM

248-9829 LINES GP-PILOT–PUMP

S/N: MNB1-UP; WDK1-UP

PART OF 255-5707, 255-5708 HYDRAULIC AR

SMCS-5057, 5059 **i02845421**

NOTE	REF NO	GRAPHIC REF	PART NUMBER	QTY	PART NAME 1 2 3 4 5 6 (PRODUCT LEVEL)	SEE PAGE
CI	1	1	**7I-7515**	1	HOSE AS	
	2	1	**7K-1181**	3	STRAP-CABLE	
I	3	1	**7Y-8379**	1	HOSE AS	
I	4	1	**087-4423**	1	HOSE AS	
	5	1	*164-6874*	2	FITTING AS-ELBOW	
					(EACH INCLUDES)	
		1	**085-7356**	1	FITTING	
		1	**3J-1907**	1	SEAL-O-RING	
	6	1	**221-8859**	2	SENSOR AS-PRESSURE (MAIN HYDRAULIC PUMP)	
					(EACH INCLUDES)	
		1	**3E-3371**	1	WEDGE-RECEPTACLE LOCK (3-PIN)	
		1	**171-0596**	1	RECEPTACLE AS	
		1	**9X-3401**	3	PIN-CONNECTOR (16-GA TO 18-GA)	
					–OR–	
		1	**126-1767**	3	PIN-CONNECTOR (14-GA)	
		1	**3K-0360**	1	SEAL-O-RING	
I	7	1	**236-3261**	1	HOSE AS	
	8	1	**255-1858**	1	HOSE AS	
	9	1	*148-8327*	1	CONNECTOR AS	
		1	**3D-2824**	1	SEAL-O-RING	
		1	**6V-8637**	1	CONNECTOR	
		1	**6V-9746**	1	SEAL-O-RING	
	10	1	*148-8336*	2	CONNECTOR AS	
					(EACH INCLUDES)	
		1	**3J-1907**	1	SEAL-O-RING	
		1	**6V-8397**	1	SEAL-O-RING	
		1	**6V-8636**	1	CONNECTOR	
	11	1	*148-8340*	1	CONNECTOR AS	
		1	**3K-0360**	1	SEAL-O-RING	
		1	**6V-8398**	1	SEAL-O-RING	
		1	**6V-8639**	1	CONNECTOR	
	12	1	*148-8347*	1	ELBOW AS	
		1	**3D-2824**	1	SEAL-O-RING	
		1	**6V-9007**	1	ELBOW	
		1	**6V-9746**	1	SEAL-O-RING	
	13	1	*148-8378*	2	ELBOW AS	
					(EACH INCLUDES)	
		1	**3J-1907**	1	SEAL-O-RING	
		1	**6V-8397**	1	SEAL-O-RING	
		1	**6V-8724**	1	ELBOW	
	14	1	*153-6237*	1	ELBOW AS	
		1	**3D-2824**	1	SEAL-O-RING	
		1	**6V-9004**	1	ELBOW	
		1	**6V-9746**	1	SEAL-O-RING	
	15	1	*164-5567*	5	COUPLER AS-QUICK DISCONNECT	
					(EACH INCLUDES)	
		1	**3J-1907**	1	SEAL-O-RING	
		1	**6V-3965**	1	FITTING (QUICK DISCONNECT)	
	16	1	*150-3036*	1	ELBOW AS	
		1	**3J-1907**	1	SEAL-O-RING	
		1	**6V-8397**	1	SEAL-O-RING	
		1	**8T-1905**	1	ELBOW	
	17	1	**6V-0852**	5	CAP-DUST	

C-CHANGE FROM PREVIOUS TYPE
I-REFER TO HYDRAULIC INFORMATION SYSTEM

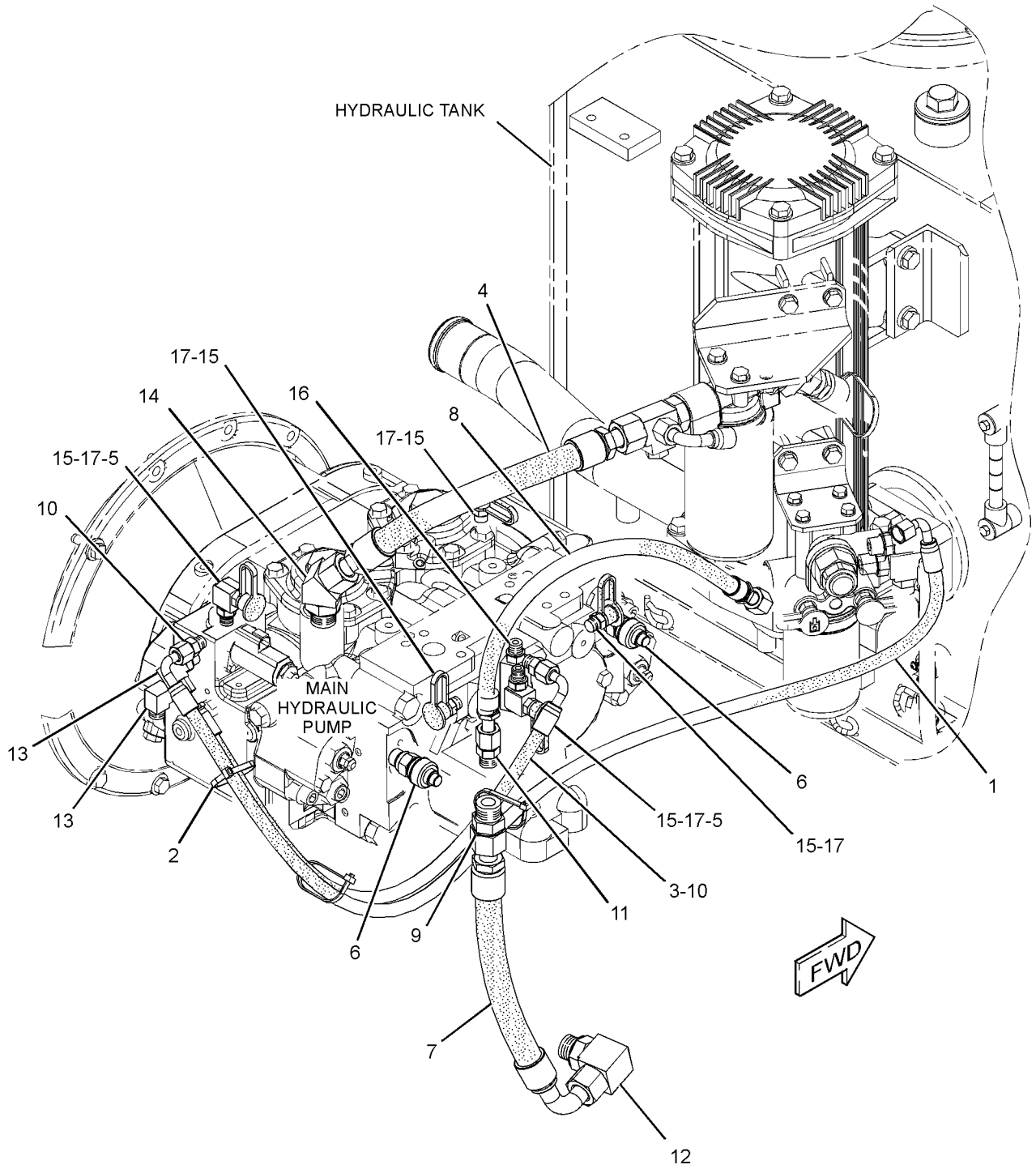

GRAPHIC #1 **<END>** g01409215

HYDRAULIC SYSTEM

255-1656 LINES GP-PILOT–4-WAY PATTERN

S/N: MNB1-UP; WDK1-UP
PART OF 255-5725 VALVE AR-ALT PATTERN CONTROL
AN ATTACHMENT

SMCS-5057, 5059 **i02345715**

NOTE	REF NO	GRAPHIC REF	PART NUMBER	QTY	PART NAME 1 2 3 4 5 6 (PRODUCT LEVEL)	SEE PAGE
I	1	1	**4I-0995**	1	HOSE AS	
I	2	1	**4I-3981**	1	HOSE AS	
I	3	1	**4I-6003**	1	HOSE AS	
I	4	1	**4I-8799**	1	HOSE AS	
	5	1	**4I-9521**	4	BAND-MARKER (RED, L1)	
	6	1	**4I-9522**	4	BAND-MARKER (YELLOW, L2)	
	7	1	**4I-9523**	4	BAND-MARKER (BLUE, L3)	
	8	1	**4I-9524**	4	BAND-MARKER (BROWN, L4)	
	9	1	**4I-9525**	4	BAND-MARKER (ORANGE, R1)	
	10	1	**4I-9526**	4	BAND-MARKER (WHITE, R2)	
	11	1	**4I-9527**	4	BAND-MARKER (GREEN, R3)	
	12	1	**4I-9528**	4	BAND-MARKER (PURPLE, R4)	
	13	1	**7K-1181**	11	STRAP-CABLE	
I	14	1	**7Y-4173**	1	HOSE AS	
I	15	1	**087-5303**	1	HOSE AS	
I	16	1	**104-8768**	1	HOSE AS	
I	17	1	**104-8783**	1	HOSE AS	
I	18	1	**108-7203**	5	HOSE AS	
	19	1	**124-1008**	1	GUARD	
	20	1	**134-6918**	1	HOSE AS	
Y	21	1	**165-9470**	1	VALVE GP-SELECTOR (ALT PATTERN CONTROL, 4-WAY)	801
	22	1	**176-4366**	1	SUPPORT	
I	23	1	**179-7616**	1	HOSE AS	
	24	1	**218-1336**	1	HOSE AS	
	25	1	**255-1671**	1	GROMMET	
	26	1	**115-8645**	2	GUARD	
	27	1	*148-8353*	6	ELBOW AS	
					(EACH INCLUDES)	
		1	**3J-1907**	1	SEAL-O-RING	
		1	**6V-8397**	1	SEAL-O-RING	
		1	**6V-9001**	1	ELBOW	
	28	1	*148-8378*	8	ELBOW AS	
					(EACH INCLUDES)	
		1	**3J-1907**	1	SEAL-O-RING	
		1	**6V-8397**	1	SEAL-O-RING	
		1	**6V-8724**	1	ELBOW	
	29	1	*150-3036*	2	ELBOW AS	
					(EACH INCLUDES)	
		1	**3J-1907**	1	SEAL-O-RING	
		1	**6V-8397**	1	SEAL-O-RING	
		1	**8T-1905**	1	ELBOW	
	30	1	**176-4684**	1	SUPPORT	
	31	1	**8T-4121**	4	WASHER-HARD (11X21X2.5-MM THK)	
M	32	1	**8T-4191**	4	BOLT (M10X1.5X16-MM)	
M	33	1	**8T-4192**	4	BOLT (M12X1.75X25-MM)	
	34	1	**8T-4223**	4	WASHER-HARD (13.5X25.5X3-MM THK)	
	35	1	**8T-4224**	2	WASHER-HARD (8.8X16X2-MM THK)	
M	36	1	**8T-4908**	2	BOLT (M8X1.25X25-MM)	

I-REFER TO HYDRAULIC INFORMATION SYSTEM
M-METRIC PART
Y-SEPARATE ILLUSTRATION

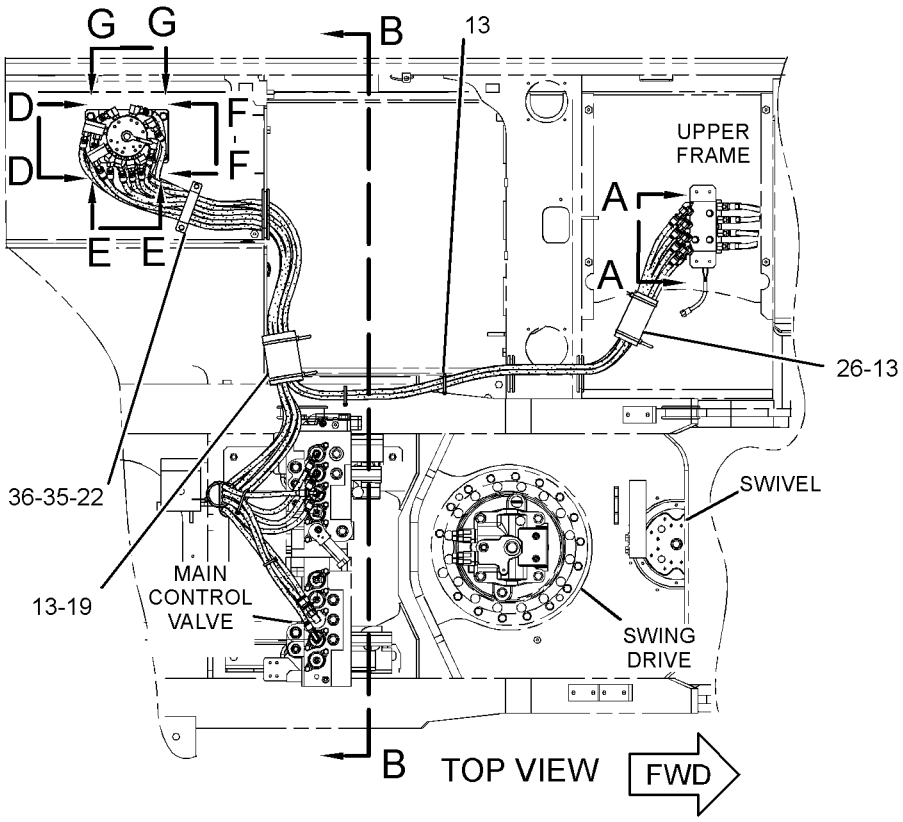

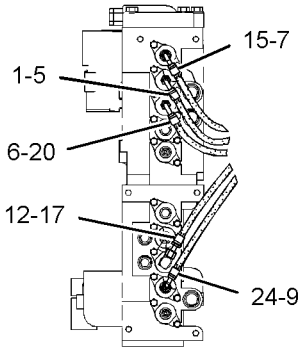

SECTION C-C

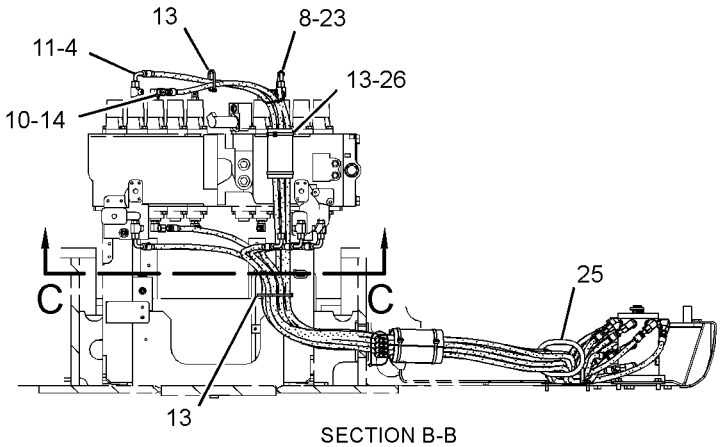

SECTION B-B

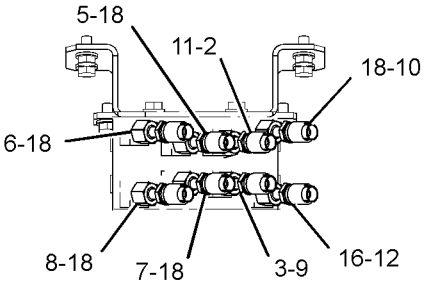

SECTION A-A

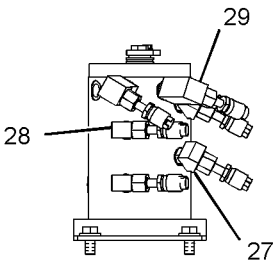

SECTION D-D

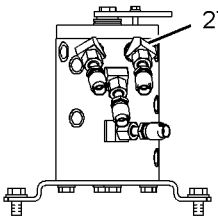

SECTION E-E

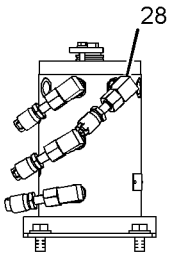

SECTION F-F

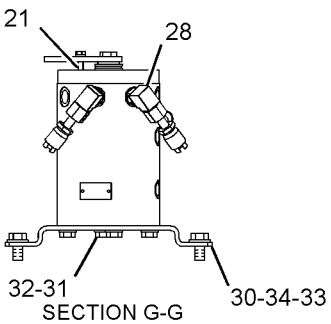

SECTION G-G

GRAPHIC #1 **<END>** g01190795

HYDRAULIC SYSTEM

255-1657 LINES GP-PILOT—ALT PATTERN CONTROL, 2-WAY

S/N: MNB1-UP; WDK1-UP

PART OF 255-5726 VALVE AR-ALT PATTERN CONTROL

AN ATTACHMENT

SMCS-5057, 5059 **i02841501**

NOTE	REF NO	GRAPHIC REF	PART NUMBER	QTY	PART NAME 1 2 3 4 5 6 (PRODUCT LEVEL)	SEE PAGE
	1	2	**4I-9521**	4	BAND-MARKER (RED, L1)	
	2	2	**4I-9523**	4	BAND-MARKER (BLUE, L3)	
	3	2	**4I-9525**	4	BAND-MARKER (ORANGE, R1)	
	4	2	**4I-9527**	4	BAND-MARKER (GREEN, R3)	
I	5	2	**5I-8853**	1	HOSE AS	
	6	1,2	**7K-1181**	7	STRAP-CABLE	
I	7	2	**087-4405**	1	HOSE AS	
I	8	2	**087-6583**	2	HOSE AS	
I	9	2	**108-7203**	2	HOSE AS	
I	10	2	**108-7387**	2	HOSE AS	
CY	11	1	**285-1765**	1	VALVE GP-PILOT (ALT PATTERN CONTROL, 2-WAY)	773
	12	1	**124-1008**	1	GUARD	
	13	1	**179-7433**	1	SUPPORT	
	14	1	**255-1671**	1	GROMMET	
	15	1	**255-1781**	1	SUPPORT	
	17	1,2	*148-8378*	4	ELBOW AS	
					(EACH INCLUDES)	
		1,2	**3J-1907**	1	SEAL-O-RING	
		1,2	**6V-8397**	1	SEAL-O-RING	
		1,2	**6V-8724**	1	ELBOW	
	18	1,2	*150-3036*	4	ELBOW AS	
					(EACH INCLUDES)	
		1,2	**3J-1907**	1	SEAL-O-RING	
		1,2	**6V-8397**	1	SEAL-O-RING	
		1,2	**8T-1905**	1	ELBOW	
M	19	1	**8T-4189**	2	BOLT (M8X1.25X20-MM)	
M	20	1	**8T-4192**	8	BOLT (M12X1.75X25-MM)	
	21	1	**8T-4223**	8	WASHER-HARD (13.5X25.5X3-MM THK)	
	22	1	**8T-4224**	2	WASHER-HARD (8.8X16X2-MM THK)	

C-CHANGE FROM PREVIOUS TYPE
I-REFER TO HYDRAULIC INFORMATION SYSTEM
M-METRIC PART
Y-SEPARATE ILLUSTRATION

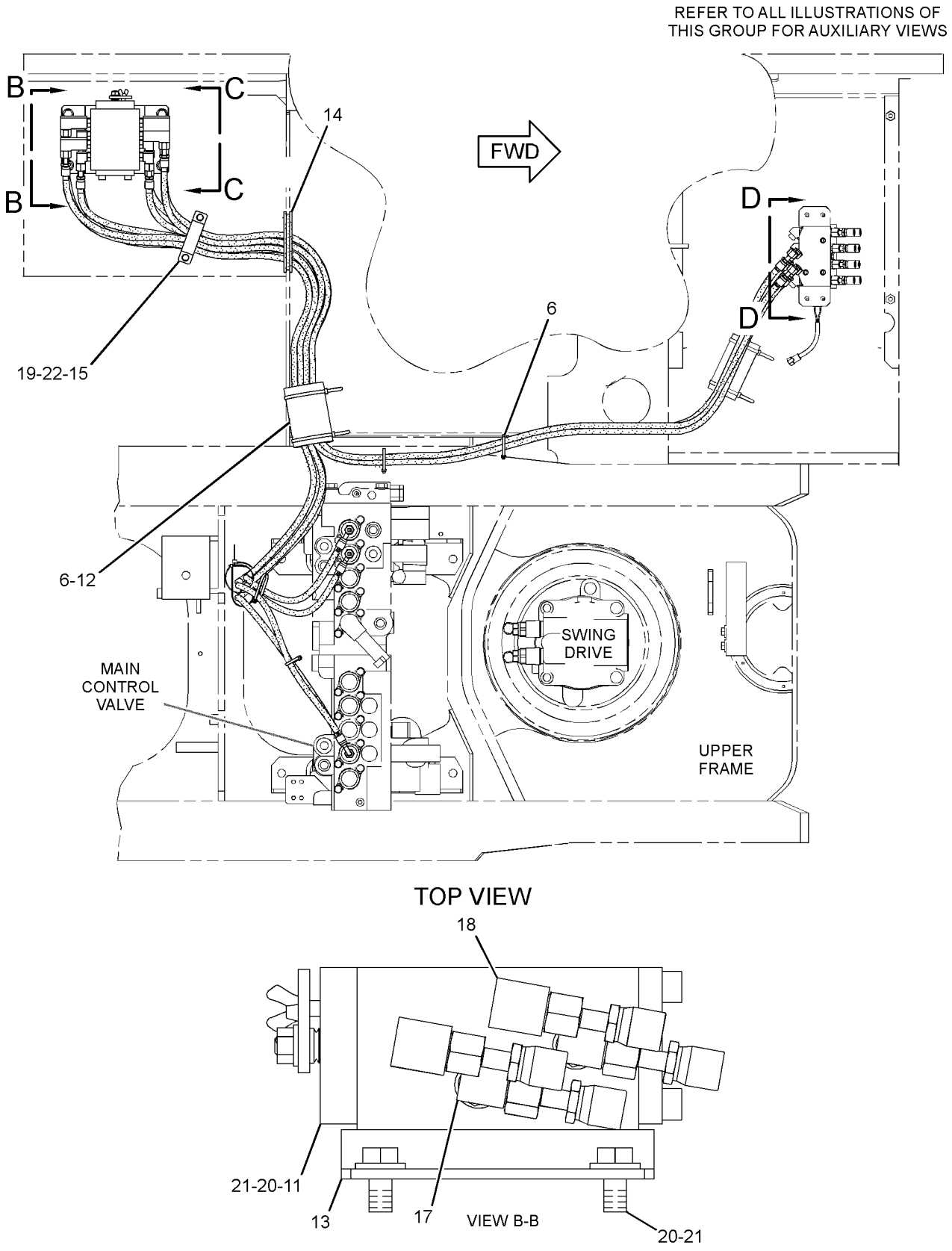

GRAPHIC #1

g01369521

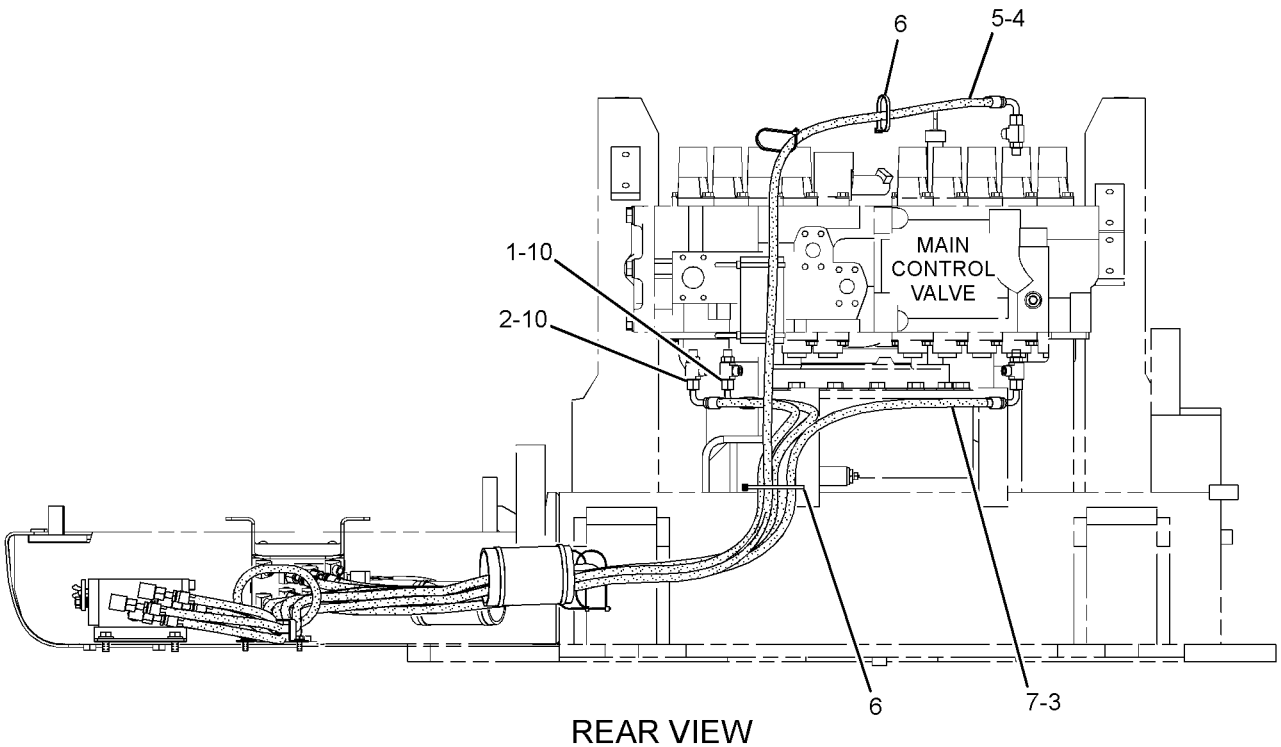

REAR VIEW

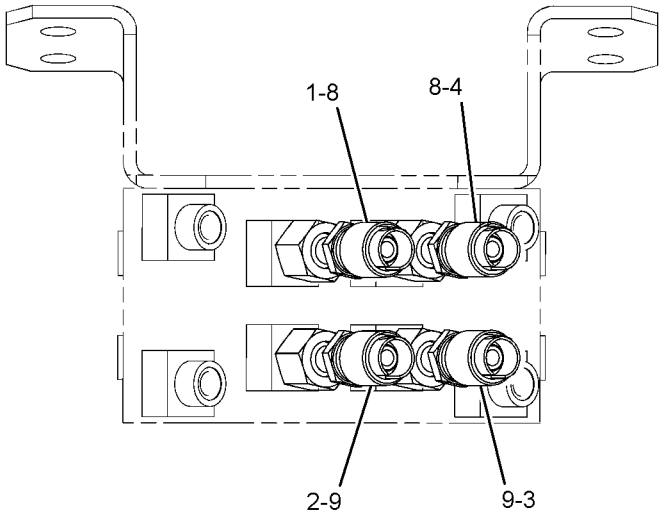

SECTION D-D

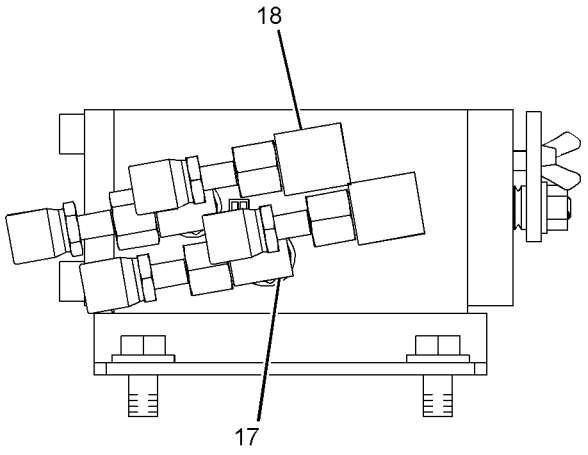

VIEW C-C

GRAPHIC #2 **<END>** g01369522

HYDRAULIC SYSTEM

255-1659 LINES GP-PILOT—HEAVY LIFT

S/N: MNB1-UP; WDK1-UP
PART OF 247-7392 SPECIAL AR-HEAVY LIFT
AN ATTACHMENT

SMCS-5057, 5059 **i03089762**

NOTE	REF NO	GRAPHIC REF	PART NUMBER	QTY	PART NAME 1 2 3 4 5 6 (PRODUCT LEVEL)	SEE PAGE
I	1	1	**087-4402**	1	HOSE AS	
CI	2	1	**087-5772**	1	HOSE AS	
	3	1	**4I-9522**	2	BAND-MARKER (YELLOW, L2)	
	4	1	**4I-9523**	2	BAND-MARKER (BLUE, L3)	
	5	1	**4I-9524**	2	BAND-MARKER (BROWN, L4)	
	6	1	**7K-1181**	2	STRAP-CABLE	
I	7	1	**087-5766**	1	HOSE AS	
Y	8	1	**121-6303**	1	VALVE GP-SOLENOID (HEAVY LIFT)	810
	9	1	**269-9919**	1	PLATE	
	10	1	*148-8336*	2	CONNECTOR AS	
					(EACH INCLUDES)	
		1	**3J-1907**	1	SEAL-O-RING	
		1	**6V-8397**	1	SEAL-O-RING	
		1	**6V-8636**	1	CONNECTOR	
	11	1	*148-8338*	1	CONNECTOR AS	
		1	**3J-1907**	1	SEAL-O-RING	
		1	**6V-8397**	1	SEAL-O-RING	
		1	**8T-0075**	1	CONNECTOR	
	13	1	*148-8378*	2	ELBOW AS	
					(EACH INCLUDES)	
		1	**3J-1907**	1	SEAL-O-RING	
		1	**6V-8397**	1	SEAL-O-RING	
		1	**6V-8724**	1	ELBOW	
	14	1	*148-8435*	1	TEE AS	
		1	**3J-1907**	1	SEAL-O-RING	
		1	**6V-8397**	2	SEAL-O-RING	
		1	**6V-8781**	1	TEE-FACE SEAL	
	15	1	**8T-4121**	2	WASHER-HARD (11X21X2.5-MM THK)	
M	16	1	**8T-4137**	2	BOLT (M10X1.5X20-MM)	
M	17	1	**8T-4970**	2	BOLT (M6X1X14-MM)	
	18	1	**9X-8256**	2	WASHER (6.6X12X2-MM THK)	

C-CHANGE FROM PREVIOUS TYPE
I-REFER TO HYDRAULIC INFORMATION SYSTEM
M-METRIC PART
Y-SEPARATE ILLUSTRATION

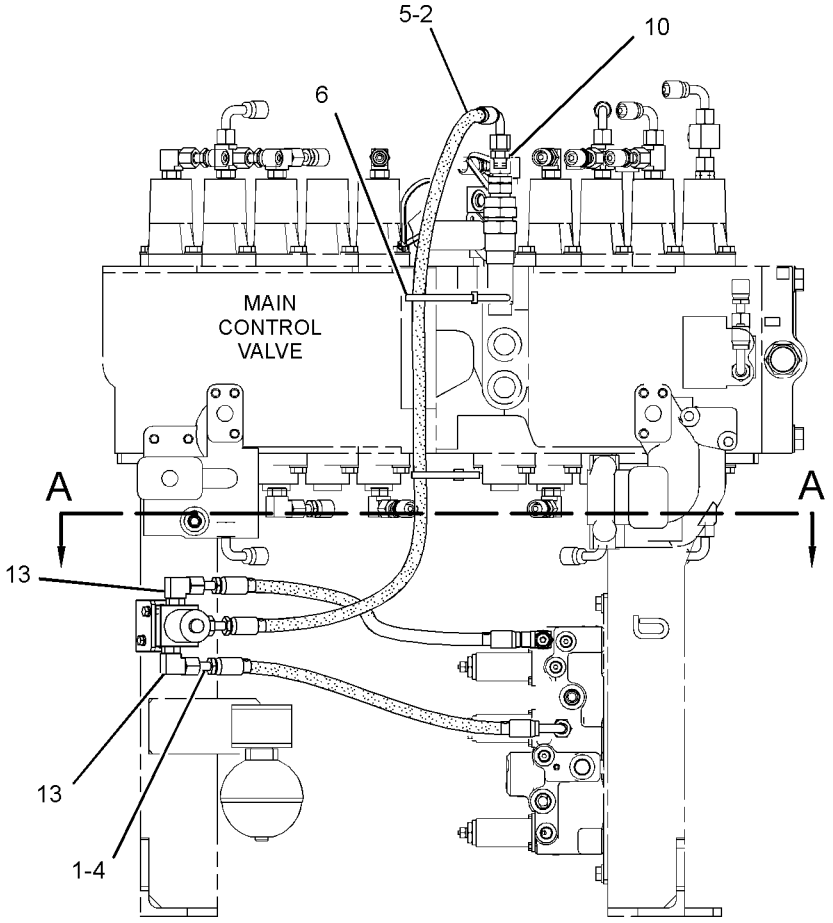

FRONT VIEW

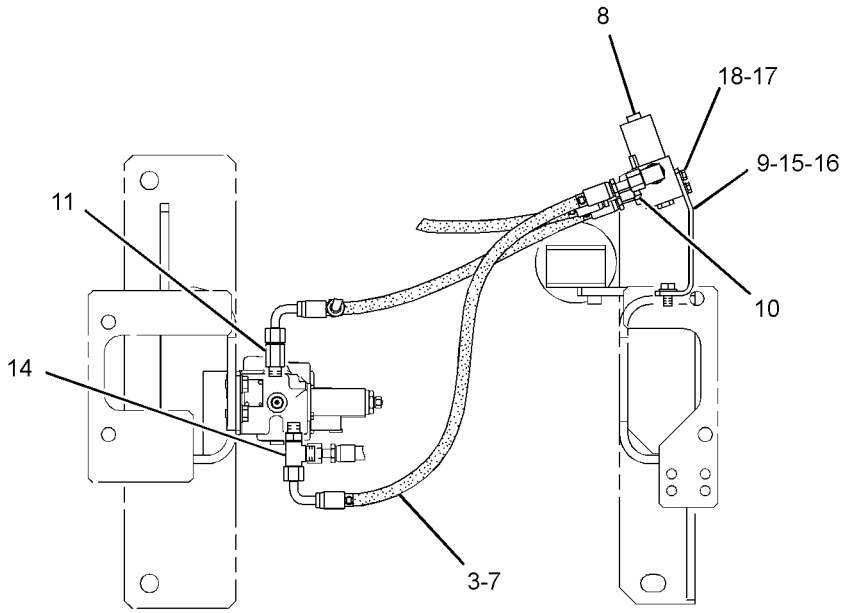

SECTION A-A

GRAPHIC #1 **<END>** g01511702

HYDRAULIC SYSTEM

255-1661 LINES GP-PILOT—AUXILIARY SYSTEM

S/N: MNB1-UP; WDK1-UP
PART OF 255-5699 CONTROL AR-AUXILIARY
AN ATTACHMENT

SMCS-5057, 5059 **i03063321**

NOTE	REF NO	GRAPHIC REF	PART NUMBER	QTY	PART NAME 1 2 3 4 5 6 (PRODUCT LEVEL)	SEE PAGE
I	1	1	**4I-0833**	1	HOSE AS	
I	2	1	**4I-0995**	1	HOSE AS	
	3	1	**4I-9523**	4	BAND-MARKER (BLUE, L3)	
	4	1	**4I-9524**	2	BAND-MARKER (BROWN, L4)	
	5	1	**4I-9525**	2	BAND-MARKER (ORANGE, R1)	
	6	1	**4I-9527**	8	BAND-MARKER (GREEN, R3)	
I	7	1	**5I-4396**	1	HOSE AS	
	8	1	**7K-1181**	15	STRAP-CABLE	
I	9	1	**087-5766**	1	HOSE AS	
I	10	1	**184-9210**	1	HOSE AS	
I	11	1	**4I-1671**	1	HOSE AS	
	12	1	**255-1669**	1	SUPPORT AS	
	13	1	**275-1442**	1	CLIP (TAB)	
	14	1	**275-1443**	1	CLIP (SLOT)	
	15	1	**275-1444**	1	GROMMET	
I	16	1	**269-9700**	1	HOSE AS	
CI	17	1	**302-2857**	1	HOSE AS	
I	18	1	**275-1503**	1	HOSE AS	
I	19	1	**275-1506**	1	HOSE AS	
	20	1	**124-1008**	1	GUARD	
	21	1	*148-8338*	4	CONNECTOR AS	
					(EACH INCLUDES)	
		1	**3J-1907**	1	SEAL-O-RING	
		1	**6V-8397**	1	SEAL-O-RING	
		1	**8T-0075**	1	CONNECTOR	
	22	1	*150-3036*	1	ELBOW AS	
		1	**3J-1907**	1	SEAL-O-RING	
		1	**6V-8397**	1	SEAL-O-RING	
		1	**8T-1905**	1	ELBOW	
	23	1	*148-8378*	6	ELBOW AS	
					(EACH INCLUDES)	
		1	**3J-1907**	1	SEAL-O-RING	
		1	**6V-8397**	1	SEAL-O-RING	
		1	**6V-8724**	1	ELBOW	
	24	1	*148-8433*	2	TEE AS	
					(EACH INCLUDES)	
		1	**6V-8397**	2	SEAL-O-RING	
		1	**6V-9836**	1	TEE-SWIVEL	
	25	1	*148-8435*	1	TEE AS	
		1	**3J-1907**	1	SEAL-O-RING	
		1	**6V-8397**	2	SEAL-O-RING	
		1	**6V-8781**	1	TEE-FACE SEAL	
	26	1	*150-4027*	2	TEE AS	
					(EACH INCLUDES)	
		1	**3E-2310**	1	TEE	
		1	**3J-1907**	1	SEAL-O-RING	
		1	**6V-8397**	1	SEAL-O-RING	
	27	1	*164-5567*	2	COUPLER AS-QUICK DISCONNECT	
					(EACH INCLUDES)	
		1	**3J-1907**	1	SEAL-O-RING	
		1	**6V-3965**	1	FITTING (QUICK DISCONNECT)	
Y	28	1	**171-0188**	1	VALVE GP-SOLENOID (NEG FLOW CONT, PROPN RED VALVE)	812
	29	1	**6V-0852**	2	CAP-DUST	
	30	1	**6V-9829**	1	CAP AS	

255-1661 **LINES GP-PILOT** *(contd.)* **i03063321**

NOTE	REF NO	GRAPHIC REF	PART NUMBER	QTY	PART NAME 1 2 3 4 5 6 (PRODUCT LEVEL)	SEE PAGE
M	31	1	**8T-4177**	4	BOLT (M8X1.25X90-MM)	
M	32	1	**8T-4192**	4	BOLT (M12X1.75X25-MM)	
	33	1	**8T-4223**	4	WASHER-HARD (13.5X25.5X3-MM THK)	
	34	1	**8T-4224**	4	WASHER-HARD (8.8X16X2-MM THK)	

C-CHANGE FROM PREVIOUS TYPE
I-REFER TO HYDRAULIC INFORMATION SYSTEM
M-METRIC PART
Y-SEPARATE ILLUSTRATION

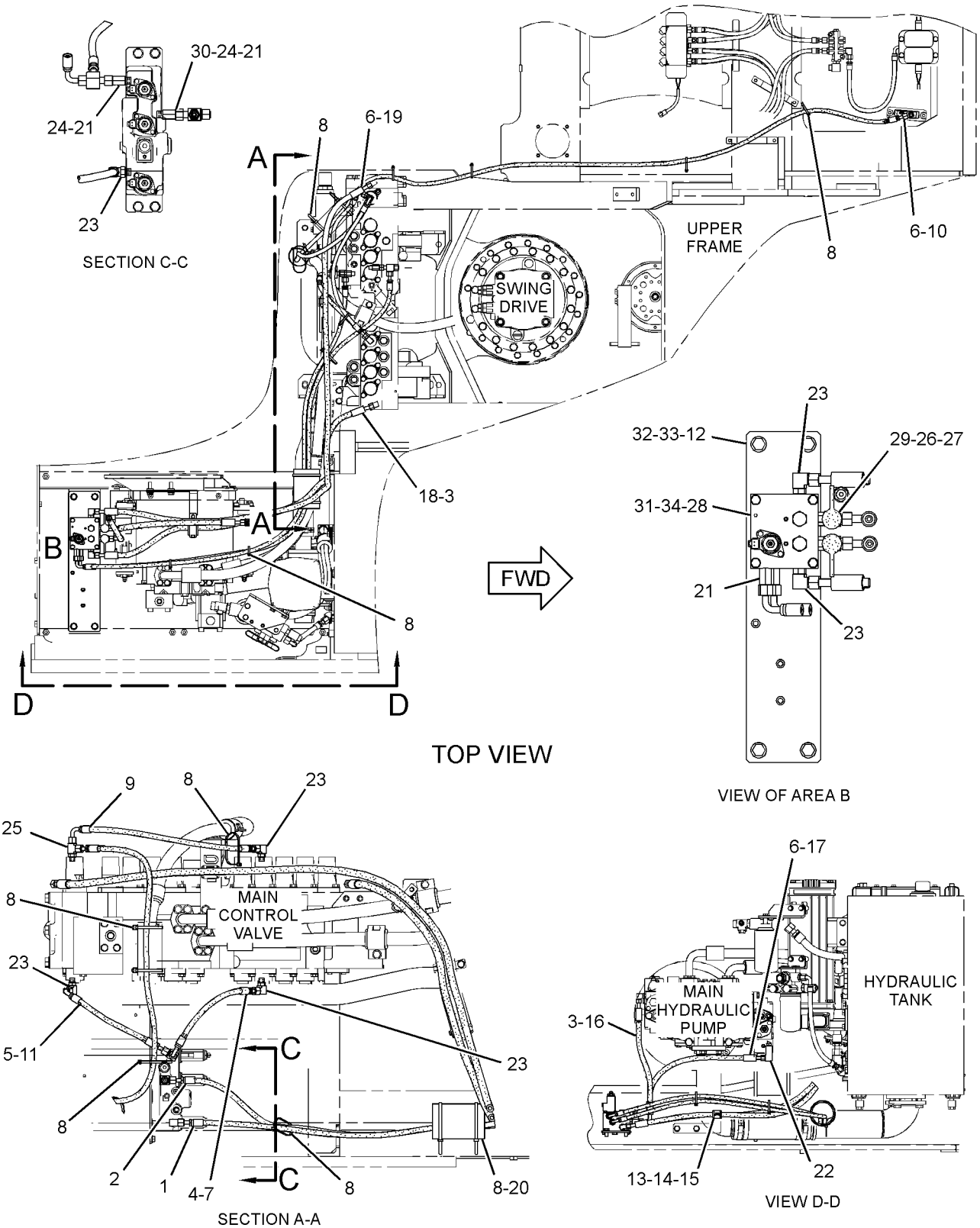

GRAPHIC #1 **<END>** g01596220

HYDRAULIC SYSTEM

255-1662 LINES GP-PILOT–AUXILIARY

S/N: MNB1-UP; WDK1-UP
PART OF 255-5703 CONTROL AR-AUXILIARY
AN ATTACHMENT

SMCS-5057, 5059 **i02434727**

NOTE	REF NO	GRAPHIC REF	PART NUMBER	QTY	PART NAME 1 2 3 4 5 6 (PRODUCT LEVEL)	SEE PAGE
I	1	1	**4I-1688**	2	HOSE AS	
I	2	1	**4I-1783**	1	HOSE AS	
	3	2	**4I-9521**	2	BAND-MARKER (RED, L1)	
	4	2	**4I-9522**	2	BAND-MARKER (YELLOW, L2)	
	5	1	**4I-9523**	4	BAND-MARKER (BLUE, L3)	
	6	2	**4I-9524**	2	BAND-MARKER (BROWN, L4)	
	7	2	**4I-9525**	2	BAND-MARKER (ORANGE, R1)	
	8	1	**4I-9526**	6	BAND-MARKER (WHITE, R2)	
	9	1	**4I-9527**	10	BAND-MARKER (GREEN, R3)	
	10	1,2	**7K-1181**	9	STRAP-CABLE	
I	11	1	**087-5767**	2	HOSE AS	
I	12	2	**104-8774**	1	HOSE AS	
I	13	2	**108-7357**	1	HOSE AS	
I	14	2	**108-7387**	1	HOSE AS	
I	15	1	**108-7393**	1	HOSE AS	
I	16	1	**111-0988**	1	HOSE AS	
	17	1	**164-6874**	4	FITTING AS-ELBOW	
					(EACH INCLUDES)	
		1	**3J-1907**	1	SEAL-O-RING	
		1	**085-7356**	1	FITTING	
	18	2	**221-4807**	1	HOSE AS	
Y	19	2	**259-7429**	1	VALVE GP-SOLENOID (WORK TOOL, 4-FUNCTION) (1-PUMP/2-PUMP, 1-WAY/2-WAY FLW)	814
	20	2	**266-1271**	1	SUPPORT AS	
	21	2	**275-1442**	1	CLIP (TAB)	
	22	2	**275-1443**	1	CLIP (SLOT)	
	23	2	**275-1444**	1	GROMMET	
I	24	1	**275-1497**	1	HOSE AS	
I	25	1	**275-1503**	1	HOSE AS	
I	26	1	**275-1506**	1	HOSE AS	
I	27	1	**278-6785**	1	HOSE AS	
	28	2	**115-8645**	1	GUARD	
	29	2	*148-8336*	3	CONNECTOR AS	
					(EACH INCLUDES)	
		2	**3J-1907**	1	SEAL-O-RING	
		2	**6V-8397**	1	SEAL-O-RING	
		2	**6V-8636**	1	CONNECTOR	
	30	2	*148-8338*	1	CONNECTOR AS	
		2	**3J-1907**	1	SEAL-O-RING	
		2	**6V-8397**	1	SEAL-O-RING	
		2	**8T-0075**	1	CONNECTOR	
	31	2	*148-8353*	1	ELBOW AS	
		2	**3J-1907**	1	SEAL-O-RING	
		2	**6V-8397**	1	SEAL-O-RING	
		2	**6V-9001**	1	ELBOW	
	32	1	*148-8367*	1	ELBOW AS	
		1	**6V-8397**	1	SEAL-O-RING	
		1	**6V-9850**	1	ELBOW	
	33	1,2	*148-8378*	14	ELBOW AS	
					(EACH INCLUDES)	
		1,2	**3J-1907**	1	SEAL-O-RING	
		1,2	**6V-8397**	1	SEAL-O-RING	
		1,2	**6V-8724**	1	ELBOW	
	34	2	*148-8433*	1	TEE AS	
		2	**6V-8397**	2	SEAL-O-RING	

255-1662 **LINES GP-PILOT** *(contd.)* **i02434727**

NOTE	REF NO	GRAPHIC REF	PART NUMBER	QTY	PART NAME 1 2 3 4 5 6 (PRODUCT LEVEL)	SEE PAGE
		2	**6V-9836**	1	TEE-SWIVEL	
	35	1	*148-8434*	1	TEE AS	
		1	**6V-8397**	2	SEAL-O-RING	
		1	**6V-9843**	1	TEE-SWIVEL	
	36	2	*150-3036*	1	ELBOW AS	
		2	**3J-1907**	1	SEAL-O-RING	
		2	**6V-8397**	1	SEAL-O-RING	
		2	**8T-1905**	1	ELBOW	
	37	2	*150-4027*	2	TEE AS	
					(EACH INCLUDES)	
		2	**3E-2310**	1	TEE	
		2	**3J-1907**	1	SEAL-O-RING	
		2	**6V-8397**	1	SEAL-O-RING	
	38	2	*150-4044*	1	CONNECTOR AS	
		2	**3J-1907**	1	SEAL-O-RING	
		2	**6V-8397**	1	SEAL-O-RING	
		2	**8T-1779**	1	CONNECTOR	
	39	1,2	*164-5567*	6	COUPLER AS-QUICK DISCONNECT	
					(EACH INCLUDES)	
		1,2	**3J-1907**	1	SEAL-O-RING	
		1,2	**6V-3965**	1	FITTING (QUICK DISCONNECT)	
Y	40	2	**171-0188**	1	VALVE GP-SOLENOID (NEG FLOW CONT, PROPN RED VALVE)	812
	41	1	**6D-3479**	2	CLIP	
	42	1	**6E-1435**	2	SPACER (11X30X29-MM THK)	
	43	1,2	**6V-0852**	6	CAP-DUST	
	44	1,2	**8T-4121**	4	WASHER-HARD (11X21X2.5-MM THK)	
M	45	2	**8T-4136**	2	BOLT (M10X1.5X25-MM)	
M	46	2	**8T-4177**	4	BOLT (M8X1.25X90-MM)	
M	47	1	**8T-4185**	2	BOLT (M10X1.5X50-MM)	
	48	2	**8T-4224**	4	WASHER-HARD (8.8X16X2-MM THK)	
M	49	2	**8T-6870**	4	BOLT (M8X1.25X70-MM)	

I-REFER TO HYDRAULIC INFORMATION SYSTEM
M-METRIC PART
Y-SEPARATE ILLUSTRATION

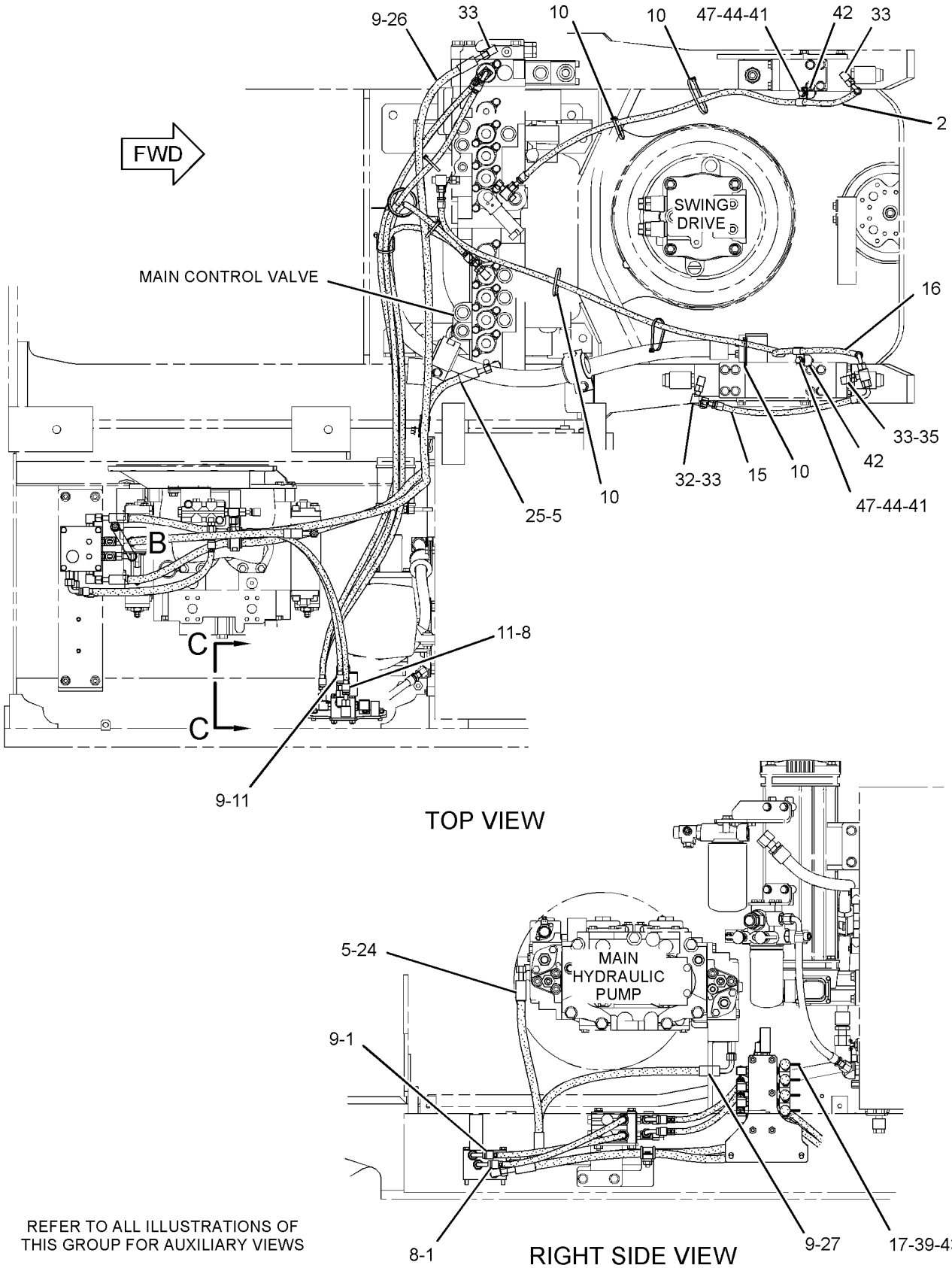

REFER TO ALL ILLUSTRATIONS OF THIS GROUP FOR AUXILIARY VIEWS

GRAPHIC #1

g01243525

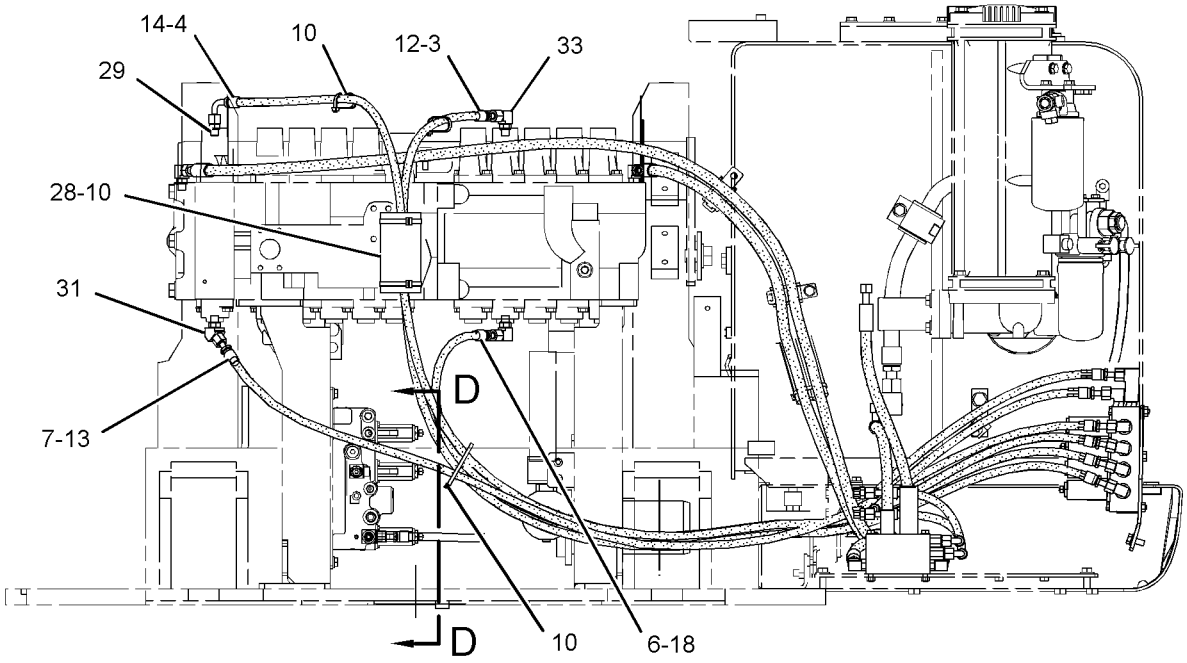

REAR VIEW

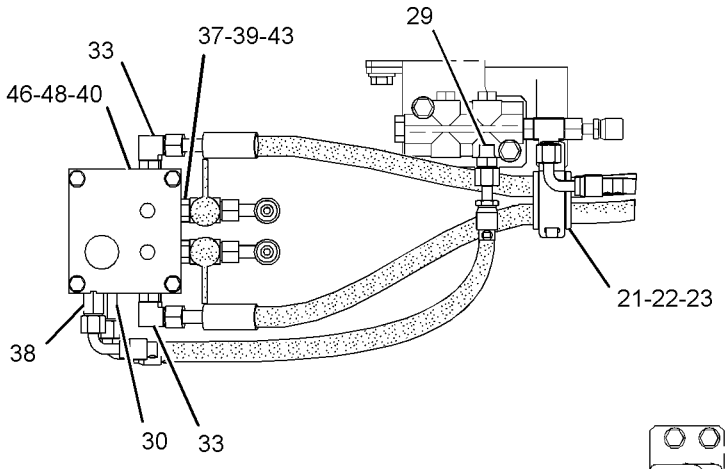

VIEW OF AREA B

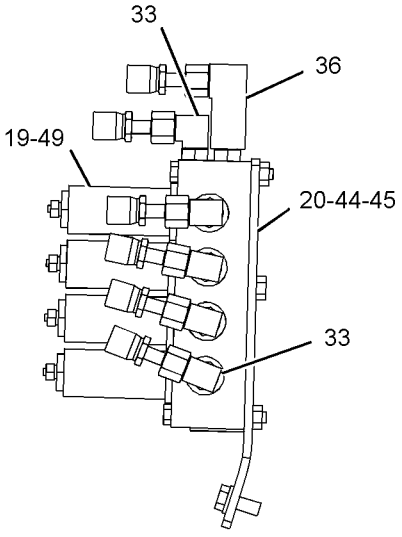

VIEW C-C

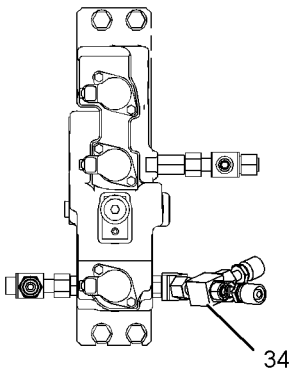

SECTION D-D

GRAPHIC #2 **<END>** g01243526

HYDRAULIC SYSTEM

255-1663 LINES GP-PILOT—PEDAL CONTROLS

S/N: MNB1-UP; WDK1-UP
PART OF 255-5702 CONTROL AR-AUXILIARY
AN ATTACHMENT

SMCS-5057, 5059 **i02882032**

NOTE	REF NO	GRAPHIC REF	PART NUMBER	QTY	PART NAME 1 2 3 4 5 6 (PRODUCT LEVEL)	SEE PAGE
I	1	1	**4I-1025**	1	HOSE AS	
I	2	1	**4I-1704**	1	HOSE AS	
I	3	1	**087-4402**	2	HOSE AS	
	4	1	*164-5629*	2	FITTING AS	
					(EACH INCLUDES)	
		1	**3J-1907**	1	SEAL-O-RING	
		1	**108-7516**	1	FITTING	
	5	1	*164-6874*	1	FITTING AS-ELBOW	
		1	**3J-1907**	1	SEAL-O-RING	
		1	**085-7356**	1	FITTING	
C	6	1	**309-5769**	1	SWITCH AS-PRESSURE (ACTION INPUT, MEDIUM PRESSURE)	
C	6A	1	**309-5769**	1	SWITCH AS-PRESSURE (AUXILIARY, COMBINED FUNCTION)	
					(EACH INCLUDES)	
		1	**102-8802**	1	KIT-RECEPTACLE (2-PIN)	
					(INCLUDES RECEPTACLE AS & WEDGE)	
		1	**9X-3401**	2	PIN-CONNECTOR (16-GA TO 18-GA)	
					—OR—	
		1	**126-1767**	2	PIN-CONNECTOR (14-GA)	
	7	1	*148-8336*	2	CONNECTOR AS	
					(EACH INCLUDES)	
		1	**3J-1907**	1	SEAL-O-RING	
		1	**6V-8397**	1	SEAL-O-RING	
		1	**6V-8636**	1	CONNECTOR	
	8	1	*148-8353*	2	ELBOW AS	
					(EACH INCLUDES)	
		1	**3J-1907**	1	SEAL-O-RING	
		1	**6V-8397**	1	SEAL-O-RING	
		1	**6V-9001**	1	ELBOW	
	9	1	*148-8378*	5	ELBOW AS	
					(EACH INCLUDES)	
		1	**3J-1907**	1	SEAL-O-RING	
		1	**6V-8397**	1	SEAL-O-RING	
		1	**6V-8724**	1	ELBOW	
	10	1	*150-3036*	1	ELBOW AS	
		1	**3J-1907**	1	SEAL-O-RING	
		1	**6V-8397**	1	SEAL-O-RING	
		1	**8T-1905**	1	ELBOW	
	11	1	*164-5628*	2	CONNECTOR AS	
					(EACH INCLUDES)	
		1	**3J-1907**	1	SEAL-O-RING	
		1	**6V-8397**	1	SEAL-O-RING	
		1	**107-6631**	1	CONNECTOR-FILTER	

C-CHANGE FROM PREVIOUS TYPE
I-REFER TO HYDRAULIC INFORMATION SYSTEM

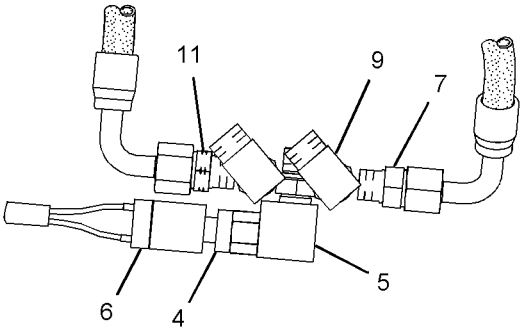

VIEW OF AREA C

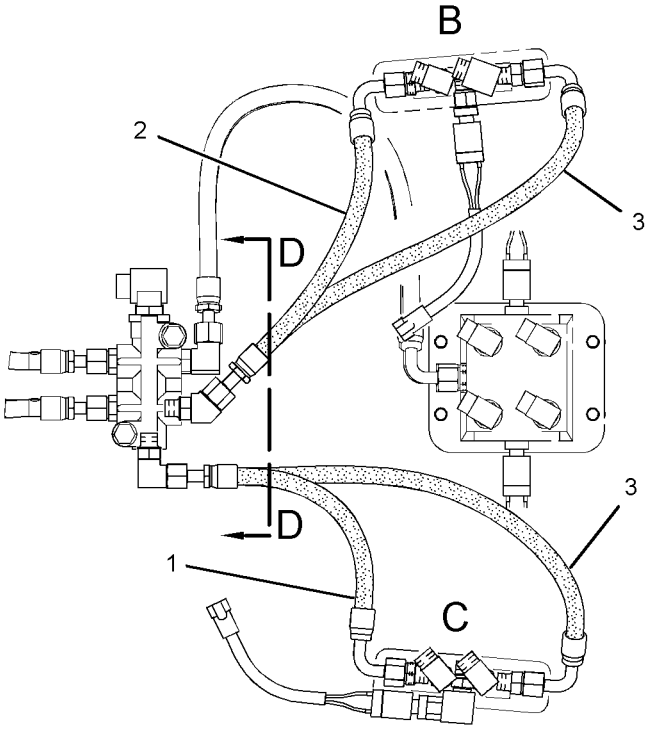

VIEW A-A

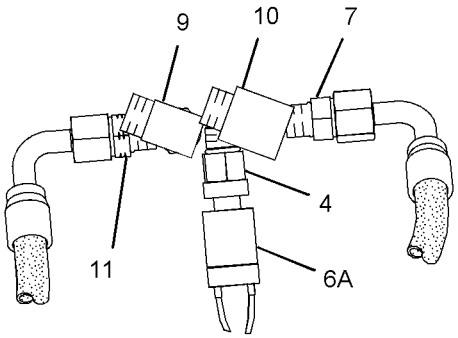

VIEW OF AREA B

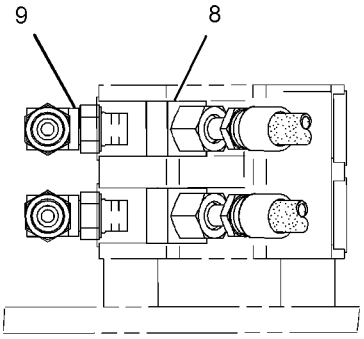

SECTION D-D

RIGHT SIDE VIEW

GRAPHIC #1

<END>

g01439344

HYDRAULIC SYSTEM

255-1664 LINES GP-PILOT—COMB FCTN, MED PRESS, 2-PEDALS

S/N: MNB1-UP; WDK1-UP
PART OF 255-5702 CONTROL AR-AUXILIARY
AN ATTACHMENT

SMCS-5057, 5059 **i03063454**

NOTE	REF NO	GRAPHIC REF	PART NUMBER	QTY	PART NAME 1 2 3 4 5 6 (PRODUCT LEVEL)	SEE PAGE
I	1	1	**4I-0833**	1	HOSE AS	
I	2	2	**4I-0995**	1	HOSE AS	
I	3	1	**4I-1739**	1	HOSE AS	
I	4	1	**4I-1783**	1	HOSE AS	
	5	1	**4I-3941**	1	FITTING AS	
	6	2	**4I-9521**	4	BAND-MARKER (RED, L1)	
	7	2	**4I-9522**	4	BAND-MARKER (YELLOW, L2)	
	8	1,2	**4I-9523**	8	BAND-MARKER (BLUE, L3)	
	9	1,2	**4I-9524**	8	BAND-MARKER (BROWN, L4)	
	10	2	**4I-9525**	4	BAND-MARKER (ORANGE, R1)	
	11	1,2	**4I-9527**	8	BAND-MARKER (GREEN, R3)	
	12	1	**4I-9528**	4	BAND-MARKER (PURPLE, R4)	
	13	1,2	**7K-1181**	19	STRAP-CABLE	
I	14	2	**104-8774**	1	HOSE AS	
I	16	2	**108-7387**	1	HOSE AS	
CI	17	1,2	**111-0988**	2	HOSE AS	
I	18	1	**134-6921**	2	HOSE AS	
I	19	1	**184-9210**	1	HOSE AS	
I	20	1	**199-1609**	2	HOSE AS	
	21	2	**221-4807**	1	HOSE AS	
CI	22	1	**7I-1105**	1	HOSE AS	
	23	1	**255-1669**	1	SUPPORT AS	
	24	2	**266-1158**	1	SUPPORT AS	
	25	2	**275-1442**	1	CLIP (TAB)	
	26	2	**275-1443**	1	CLIP (SLOT)	
	27	2	**275-1444**	1	GROMMET	
I	28	2	**269-9700**	1	HOSE AS	
CI	29	2	**302-2857**	1	HOSE AS	
I	30	1	**275-1503**	1	HOSE AS	
I	31	1	**275-1506**	1	HOSE AS	
	32	1	**103-1384**	1	GUARD	
	33	1	**124-1008**	1	GUARD	
	34	1,2	*148-8336*	2	CONNECTOR AS	
					(EACH INCLUDES)	
		1,2	**3J-1907**	1	SEAL-O-RING	
		1,2	**6V-8397**	1	SEAL-O-RING	
		1,2	**6V-8636**	1	CONNECTOR	
	35	1,2	*148-8338*	3	CONNECTOR AS	
					(EACH INCLUDES)	
		1,2	**3J-1907**	1	SEAL-O-RING	
		1,2	**6V-8397**	1	SEAL-O-RING	
		1,2	**8T-0075**	1	CONNECTOR	
	36	1	*148-8342*	1	CONNECTOR AS	
		1	**3K-0360**	1	SEAL-O-RING	
		1	**6V-8632**	1	CONNECTOR	
		1	**7J-9108**	1	SEAL-O-RING	
	37	2	*150-3036*	1	ELBOW AS	
		2	**3J-1907**	1	SEAL-O-RING	
		2	**6V-8397**	1	SEAL-O-RING	
		2	**8T-1905**	1	ELBOW	
C	38	1,2	*148-8378*	16	ELBOW AS	
					(EACH INCLUDES)	
		1,2	**3J-1907**	1	SEAL-O-RING	
		1,2	**6V-8397**	1	SEAL-O-RING	
		1,2	**6V-8724**	1	ELBOW	

255-1664 **LINES GP-PILOT** *(contd.)* **i03063454**

NOTE	REF NO	GRAPHIC REF	PART NUMBER	QTY	PART NAME 1 2 3 4 5 6 (PRODUCT LEVEL)	SEE PAGE
	39	1	*148-8393*	3	ELBOW AS	
					(EACH INCLUDES)	
		1	**6V-9852**	1	ELBOW	
		1	**7J-9108**	1	SEAL-O-RING	
	40	2	*148-8407*	1	PLUG AS	
		2	**3J-1907**	1	SEAL-O-RING	
		2	**9S-4191**	1	PLUG-O-RING	
	41	1	*148-8411*	2	PLUG AS	
					(EACH INCLUDES)	
		1	**3K-0360**	1	SEAL-O-RING	
		1	**9S-4185**	1	PLUG-O-RING	
	42	1,2	*148-8433*	4	TEE AS	
					(EACH INCLUDES)	
		1,2	**6V-8397**	2	SEAL-O-RING	
		1,2	**6V-9836**	1	TEE-SWIVEL	
	43	2	*148-8435*	1	TEE AS	
		2	**3J-1907**	1	SEAL-O-RING	
		2	**6V-8397**	2	SEAL-O-RING	
		2	**6V-8781**	1	TEE-FACE SEAL	
M	44	2	**8T-6870**	4	BOLT (M8X1.25X70-MM)	
	45	1	*150-4027*	2	TEE AS	
					(EACH INCLUDES)	
		1	**3E-2310**	1	TEE	
		1	**3J-1907**	1	SEAL-O-RING	
		1	**6V-8397**	1	SEAL-O-RING	
	46	1	*150-4048*	1	ELBOW AS	
		1	**3K-0360**	1	SEAL-O-RING	
		1	**6V-8722**	1	ELBOW	
		1	**7J-9108**	1	SEAL-O-RING	
	47	1	*164-5567*	2	COUPLER AS-QUICK DISCONNECT	
					(EACH INCLUDES)	
		1	**3J-1907**	1	SEAL-O-RING	
		1	**6V-3965**	1	FITTING (QUICK DISCONNECT)	
Y	48	2	**165-9549**	1	VALVE GP-SOLENOID (AUXILIARY, COMBINED FUNCTION) (1-PUMP/2-PUMP, 1-WAY/2-WAY FLW)	811
	49	1	**309-5769**	1	SWITCH AS-PRESSURE (PILOT, BOOM UP)	
		1	**102-8802**	1	KIT-RECEPTACLE (2-PIN)	
					(INCLUDES RECEPTACLE AS & WEDGE)	
		1	**126-1767**	1	PIN-CONNECTOR (14-GA)	
					—OR—	
		1	**9X-3401**	1	PIN-CONNECTOR (16-GA TO 18-GA)	
Y	50	1	**171-0188**	1	VALVE GP-SOLENOID (NEG FLOW CONT, PROPN RED VALVE)	812
	51	1,2	**6E-1435**	2	SPACER (11X30X29-MM THK)	
	52	1,2	**9M-8406**	2	CLIP	
	53	1	**6V-0852**	2	CAP-DUST	
B	54	2	**6V-9829**	1	CAP AS	
	55	1,2	**8T-4121**	4	WASHER-HARD (11X21X2.5-MM THK)	
M	56	2	**8T-4136**	2	BOLT (M10X1.5X25-MM)	
M	57	1	**8T-4177**	4	BOLT (M8X1.25X90-MM)	
M	58	1,2	**8T-4185**	2	BOLT (M10X1.5X50-MM)	
M	59	1	**8T-4192**	4	BOLT (M12X1.75X25-MM)	
	60	1	**8T-4223**	4	WASHER-HARD (13.5X25.5X3-MM THK)	
	61	1	**8T-4224**	4	WASHER-HARD (8.8X16X2-MM THK)	

B-USE AS REQUIRED
C-CHANGE FROM PREVIOUS TYPE
I-REFER TO HYDRAULIC INFORMATION SYSTEM
M-METRIC PART
Y-SEPARATE ILLUSTRATION

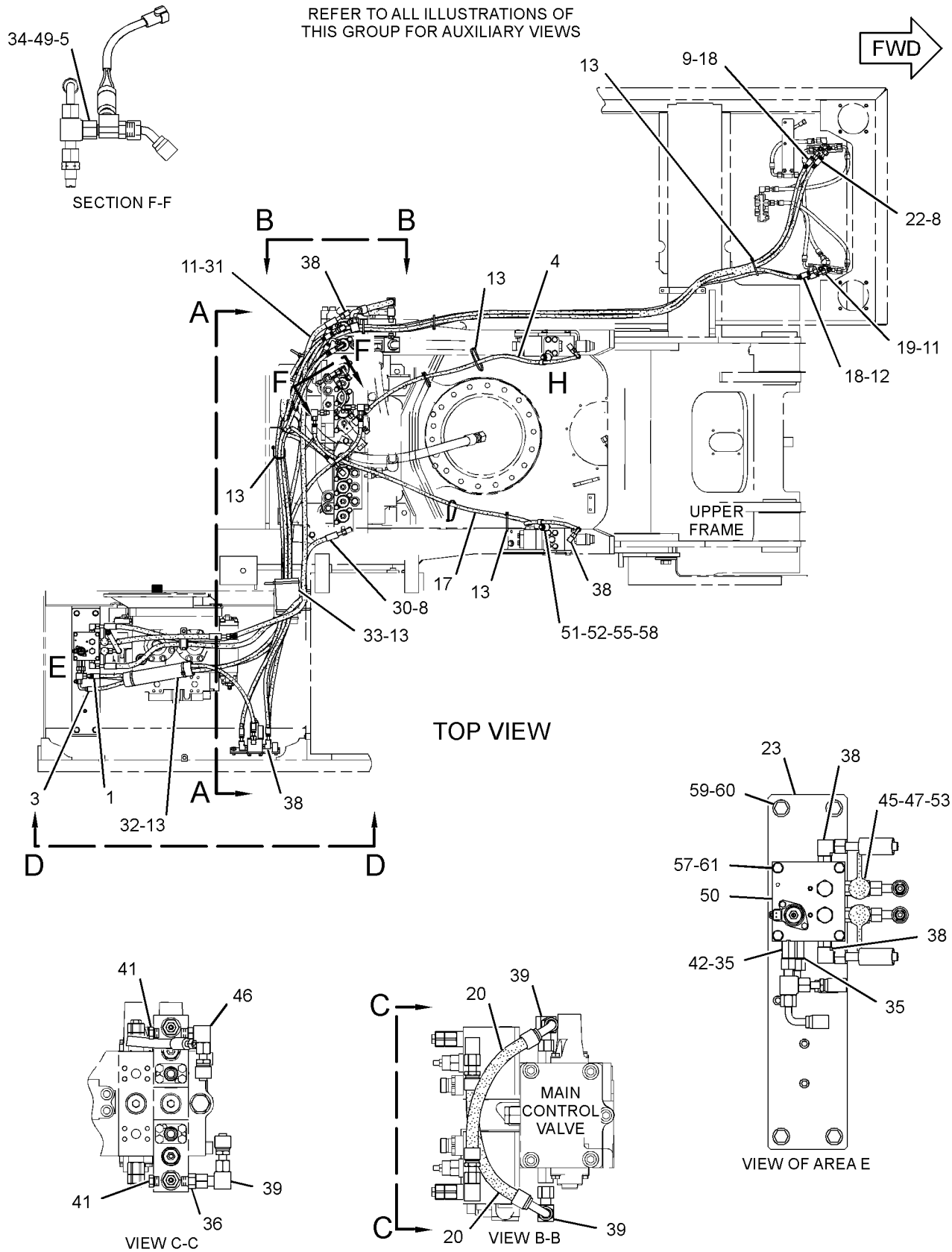

GRAPHIC #1

g01527987

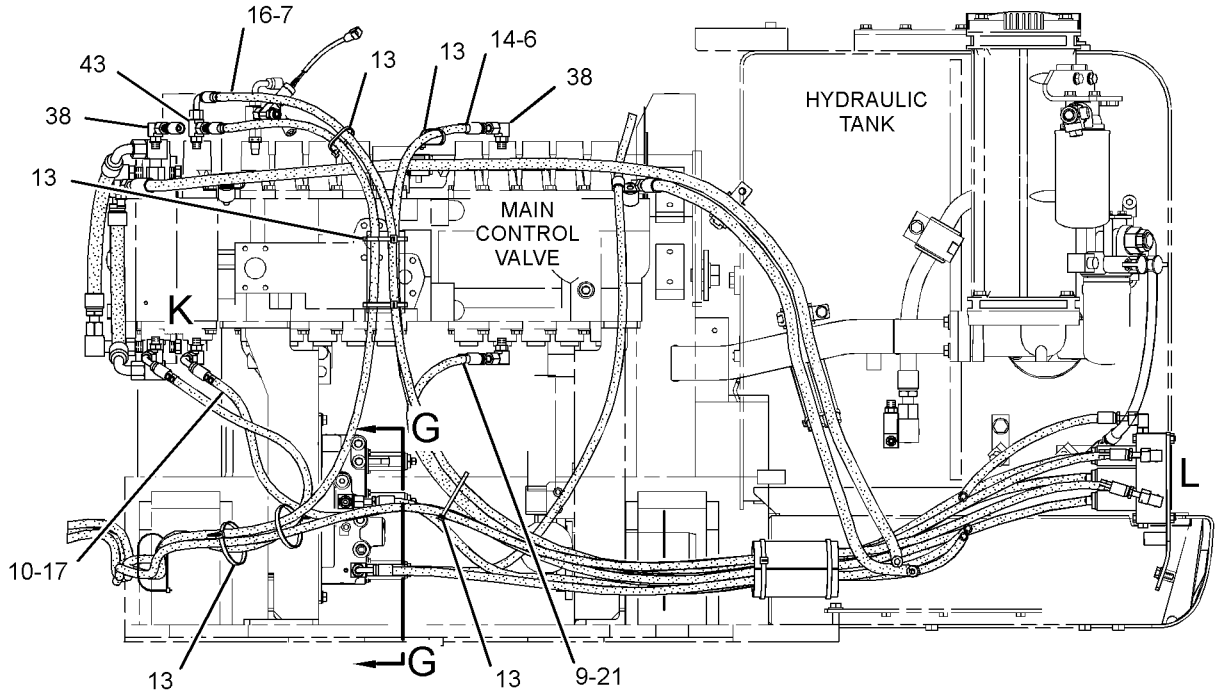

SECTION A-A

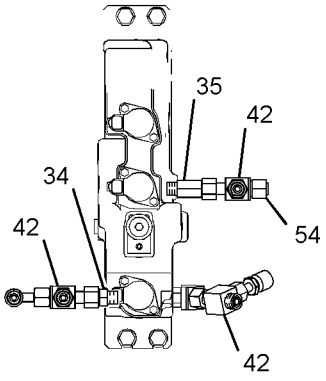

SECTION G-G

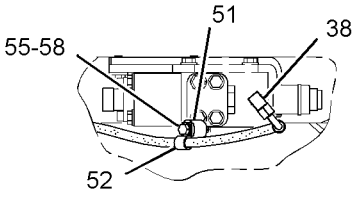

VIEW OF AREA H

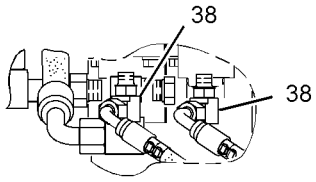

VIEW OF AREA K

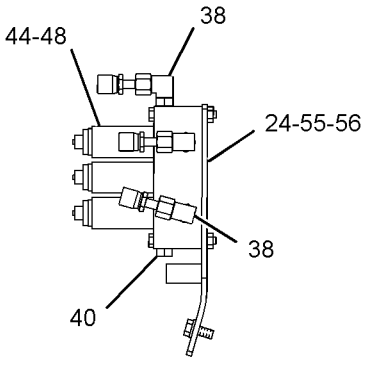

VIEW OF AREA L

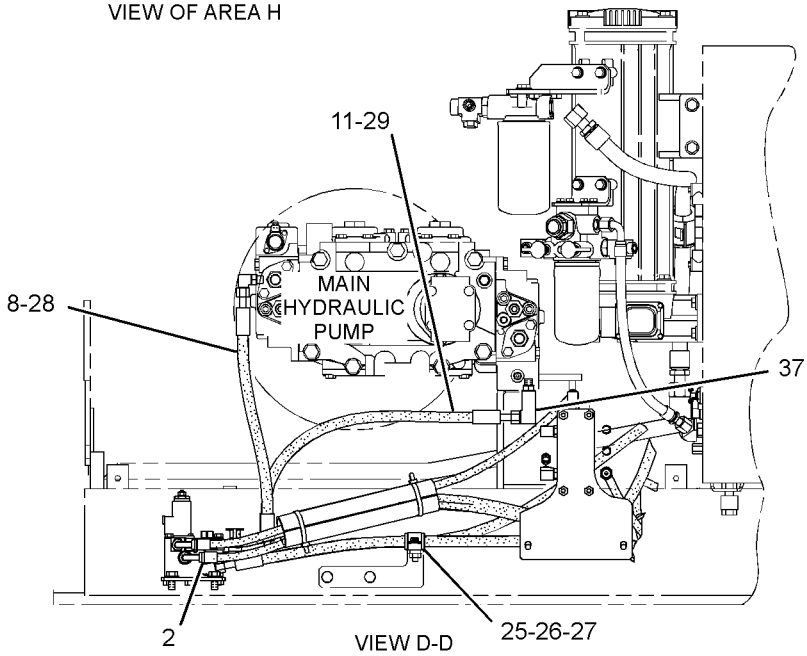

VIEW D-D

GRAPHIC #2 **<END>** g01528019

HYDRAULIC SYSTEM

255-1724 LINES GP-PILOT—LOAD CONTROL, STICK

S/N: MNB1-UP; WDK1-UP

PART OF 255-5740 VALVE AR-CHECK & RELIEF, 310-0060 VALVE AR-LOAD CONTROL AN ATTACHMENT

SMCS-5057, 5059 **i03162444**

NOTE	REF NO	GRAPHIC REF	PART NUMBER	QTY	PART NAME 1 2 3 4 5 6 (PRODUCT LEVEL)	SEE PAGE
	1	1	**7K-1181**	8	STRAP-CABLE	
I	2	1	**187-5642**	1	HOSE AS	
	3	1	**272-4250**	1	HOSE AS	
I	4	1	**275-1493**	1	HOSE AS	
	5	1	**201-9379**	1	BLOCK	
C	6	1	*148-8336*	1	CONNECTOR AS	
		1	**3J-1907**	1	SEAL-O-RING	
		1	**6V-8397**	1	SEAL-O-RING	
		1	**6V-8636**	1	CONNECTOR	
	7	1	*148-8364*	1	ELBOW AS	
		1	**3K-0360**	1	SEAL-O-RING	
		1	**6V-8398**	1	SEAL-O-RING	
		1	**6V-8625**	1	ELBOW	
	8	1	*148-8433*	2	TEE AS	
					(EACH INCLUDES)	
		1	**6V-8397**	2	SEAL-O-RING	
		1	**6V-9836**	1	TEE-SWIVEL	
	9	1	**4I-9523**	4	BAND-MARKER (BLUE, L3)	
	10	1	**133-5813**	2	BAND-MARKER (GRAY, P)	
C	11	1	*148-8378*	1	ELBOW AS	
		1	**3J-1907**	1	SEAL-O-RING	
		1	**6V-8397**	1	SEAL-O-RING	
		1	**6V-8724**	1	ELBOW	

C-CHANGE FROM PREVIOUS TYPE
I-REFER TO HYDRAULIC INFORMATION SYSTEM

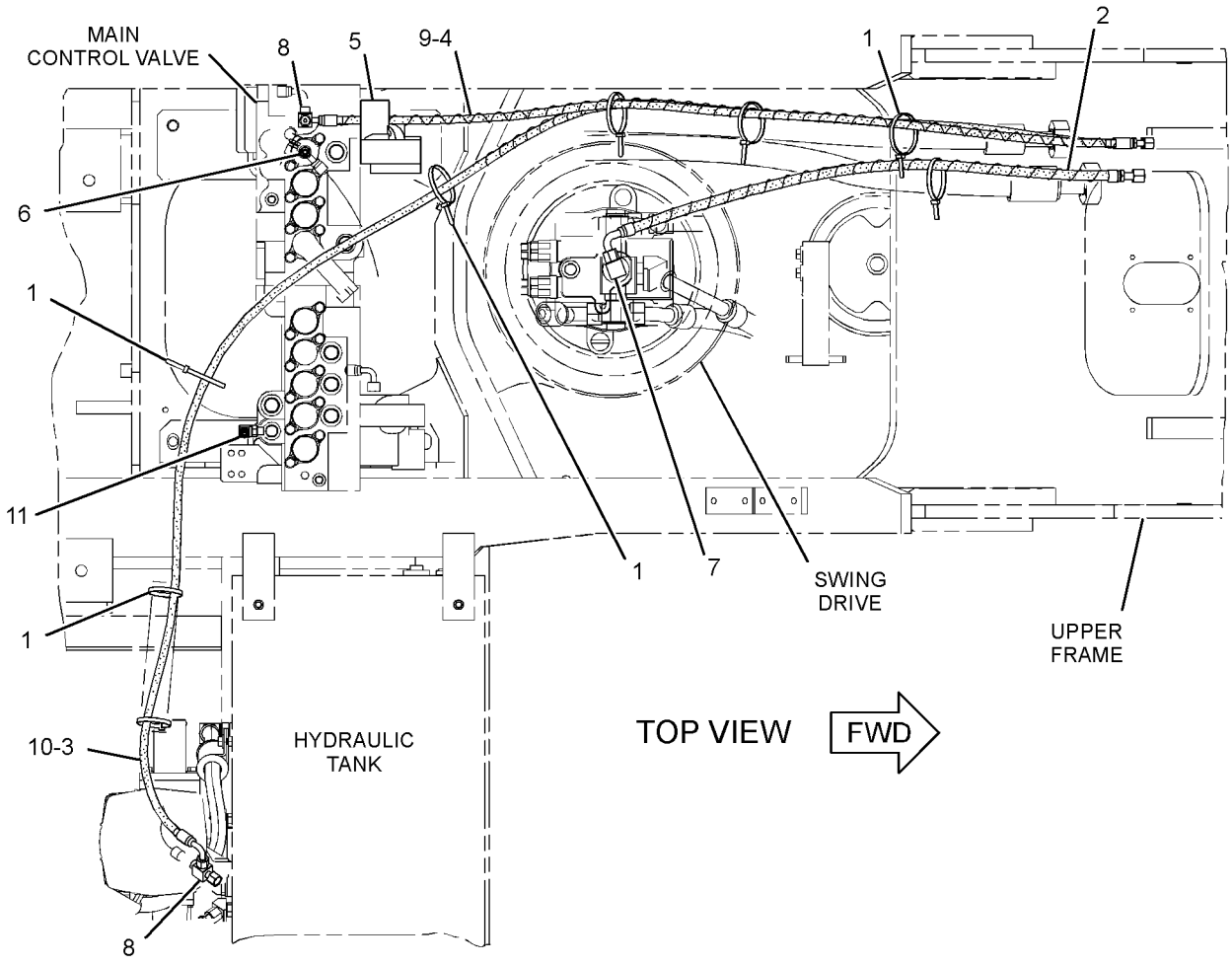

GRAPHIC #1 **<END>** g01623377

HYDRAULIC SYSTEM

255-1800 LINES GP-PILOT—PEDAL, RH

S/N: MNB1-UP; WDK1-UP

PART OF 255-5696, 255-5699 CONTROL AR-AUXILIARY

AN ATTACHMENT

SMCS-5057, 5059 **i02959005**

NOTE	REF NO	GRAPHIC REF	PART NUMBER	QTY	PART NAME 1 2 3 4 5 6 (PRODUCT LEVEL)	SEE PAGE
I	1	1	**4I-1704**	1	HOSE AS	
I	2	1	**087-4402**	1	HOSE AS	
	3	1	*164-5629*	1	FITTING AS	
		1	**3J-1907**	1	SEAL-O-RING	
		1	**108-7516**	1	FITTING	
	4	1	**309-5769**	1	SWITCH AS-PRESSURE (ACTION INPUT, WORK TOOL)	
		1	**102-8802**	1	KIT-RECEPTACLE (2-PIN)	
					(INCLUDES RECEPTACLE AS & WEDGE)	
		1	**9X-3401**	2	PIN-CONNECTOR (16-GA TO 18-GA)	
					—OR—	
		1	**126-1767**	2	PIN-CONNECTOR (14-GA)	
	5	1	*148-8336*	1	CONNECTOR AS	
		1	**3J-1907**	1	SEAL-O-RING	
		1	**6V-8397**	1	SEAL-O-RING	
		1	**6V-8636**	1	CONNECTOR	
	6	1	*148-8353*	2	ELBOW AS	
					(EACH INCLUDES)	
		1	**3J-1907**	1	SEAL-O-RING	
		1	**6V-8397**	1	SEAL-O-RING	
		1	**6V-9001**	1	ELBOW	
	7	1	*148-8378*	1	ELBOW AS	
		1	**3J-1907**	1	SEAL-O-RING	
		1	**6V-8397**	1	SEAL-O-RING	
		1	**6V-8724**	1	ELBOW	
	8	1	*148-8407*	1	PLUG AS	
		1	**3J-1907**	1	SEAL-O-RING	
		1	**9S-4191**	1	PLUG-O-RING	
	9	1	*164-5628*	1	CONNECTOR AS	
		1	**3J-1907**	1	SEAL-O-RING	
		1	**6V-8397**	1	SEAL-O-RING	
		1	**107-6631**	1	CONNECTOR-FILTER	

I-REFER TO HYDRAULIC INFORMATION SYSTEM

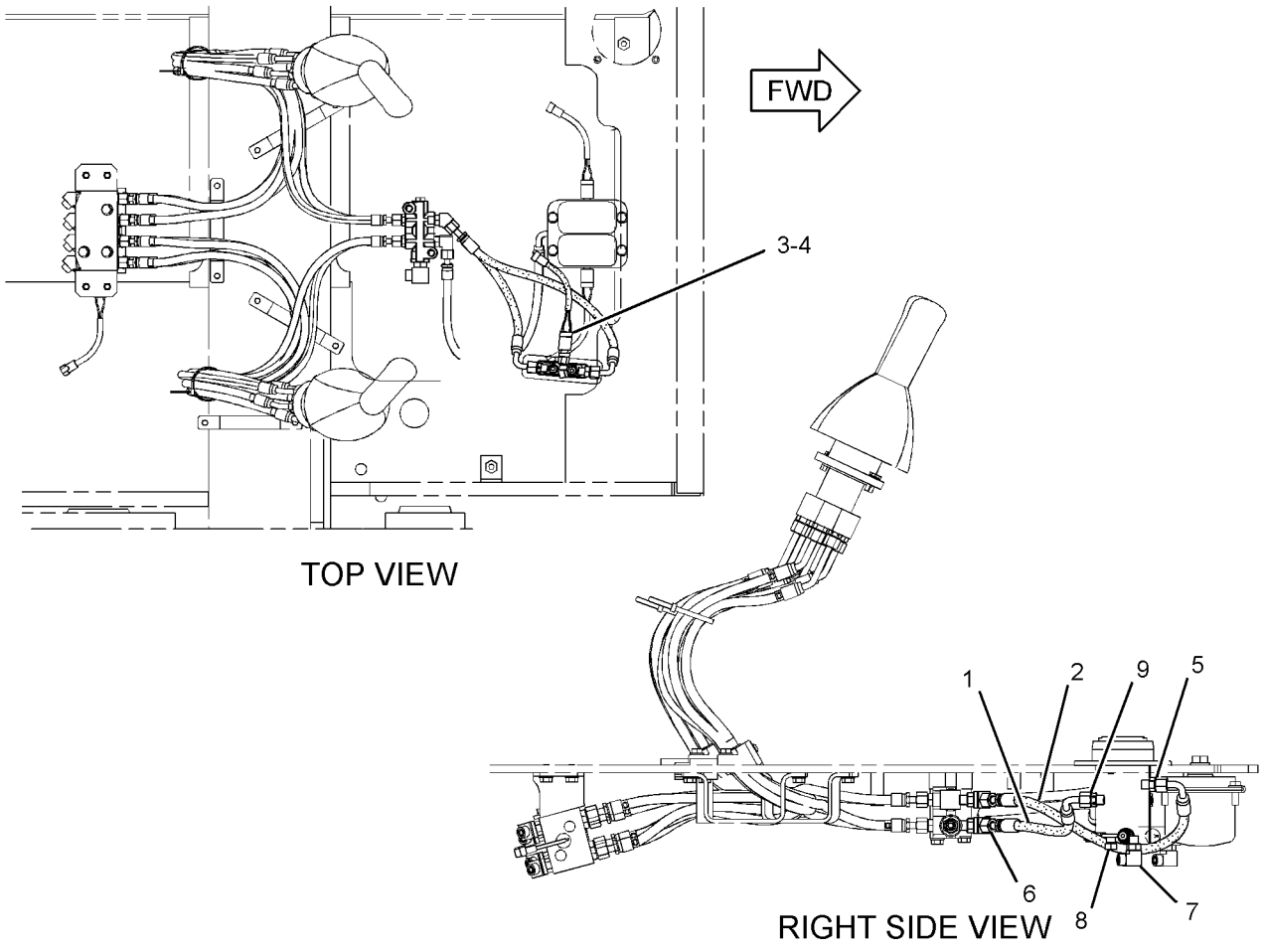

GRAPHIC #1 **<END>** g01389248

HYDRAULIC SYSTEM

255-1801 LINES GP-PILOT—PUMP CONTROL

S/N: MNB1-UP; WDK1-UP
PART OF 255-5696 CONTROL AR-AUXILIARY
AN ATTACHMENT

SMCS-5057, 5059 **i03063481**

NOTE	REF NO	GRAPHIC REF	PART NUMBER	QTY	PART NAME 1 2 3 4 5 6 (PRODUCT LEVEL)	SEE PAGE
	1	1,2	**7K-1181**	15	STRAP-CABLE	
I	2	2	**4I-0833**	1	HOSE AS	
I	3	2	**4I-0995**	1	HOSE AS	
	4	1,2	**4I-9523**	4	BAND-MARKER (BLUE, L3)	
	5	2	**4I-9524**	2	BAND-MARKER (BROWN, L4)	
	6	1,2	**4I-9527**	4	BAND-MARKER (GREEN, R3)	
I	7	2	**5I-4396**	1	HOSE AS	
I	8	1	**184-9210**	1	HOSE AS	
	9	1	**255-1669**	1	SUPPORT AS	
	10	2	**275-1442**	1	CLIP (TAB)	
	11	2	**275-1443**	1	CLIP (SLOT)	
	12	2	**275-1444**	1	GROMMET	
I	13	2	**269-9700**	1	HOSE AS	
CI	14	2	**302-2857**	1	HOSE AS	
I	15	1	**275-1503**	1	HOSE AS	
I	16	1	**275-1506**	1	HOSE AS	
	17	2	**124-1008**	1	GUARD	
	18	2	*148-8336*	1	CONNECTOR AS	
		2	**3J-1907**	1	SEAL-O-RING	
		2	**6V-8397**	1	SEAL-O-RING	
		2	**6V-8636**	1	CONNECTOR	
	19	2	*148-8338*	3	CONNECTOR AS	
					(EACH INCLUDES)	
		2	**3J-1907**	1	SEAL-O-RING	
		2	**6V-8397**	1	SEAL-O-RING	
		2	**8T-0075**	1	CONNECTOR	
	20	1,2	*148-8378*	4	ELBOW AS	
					(EACH INCLUDES)	
		1,2	**3J-1907**	1	SEAL-O-RING	
		1,2	**6V-8397**	1	SEAL-O-RING	
		1,2	**6V-8724**	1	ELBOW	
	21	2	*148-8433*	1	TEE AS	
		2	**6V-8397**	2	SEAL-O-RING	
		2	**6V-9836**	1	TEE-SWIVEL	
	22	1,2	*150-3036*	2	ELBOW AS	
					(EACH INCLUDES)	
		1,2	**3J-1907**	1	SEAL-O-RING	
		1,2	**6V-8397**	1	SEAL-O-RING	
		1,2	**8T-1905**	1	ELBOW	
	23	1	*150-4027*	2	TEE AS	
					(EACH INCLUDES)	
		1	**3E-2310**	1	TEE	
		1	**3J-1907**	1	SEAL-O-RING	
		1	**6V-8397**	1	SEAL-O-RING	
	24	1	*164-5567*	2	COUPLER AS-QUICK DISCONNECT	
					(EACH INCLUDES)	
		1	**3J-1907**	1	SEAL-O-RING	
		1	**6V-3965**	1	FITTING (QUICK DISCONNECT)	
Y	25	1	**171-0188**	1	VALVE GP-SOLENOID (NEG FLOW CONT, PROPN RED VALVE)	812
	26	1	**6V-0852**	2	CAP-DUST	
	27	2	**6V-9829**	1	CAP AS	
M	28	1	**8T-4177**	4	BOLT (M8X1.25X90-MM)	
M	29	1	**8T-4192**	4	BOLT (M12X1.75X25-MM)	
	30	1	**8T-4223**	4	WASHER-HARD (13.5X25.5X3-MM THK)	

255-1801 **LINES GP-PILOT** ***(contd.)*** **i03063481**

NOTE	REF NO	GRAPHIC REF	PART NUMBER	QTY	PART NAME 1 2 3 4 5 6 (PRODUCT LEVEL)	SEE PAGE
	31	1	**8T-4224**	4	WASHER-HARD (8.8X16X2-MM THK)	

C-CHANGE FROM PREVIOUS TYPE
I-REFER TO HYDRAULIC INFORMATION SYSTEM
M-METRIC PART
Y-SEPARATE ILLUSTRATION

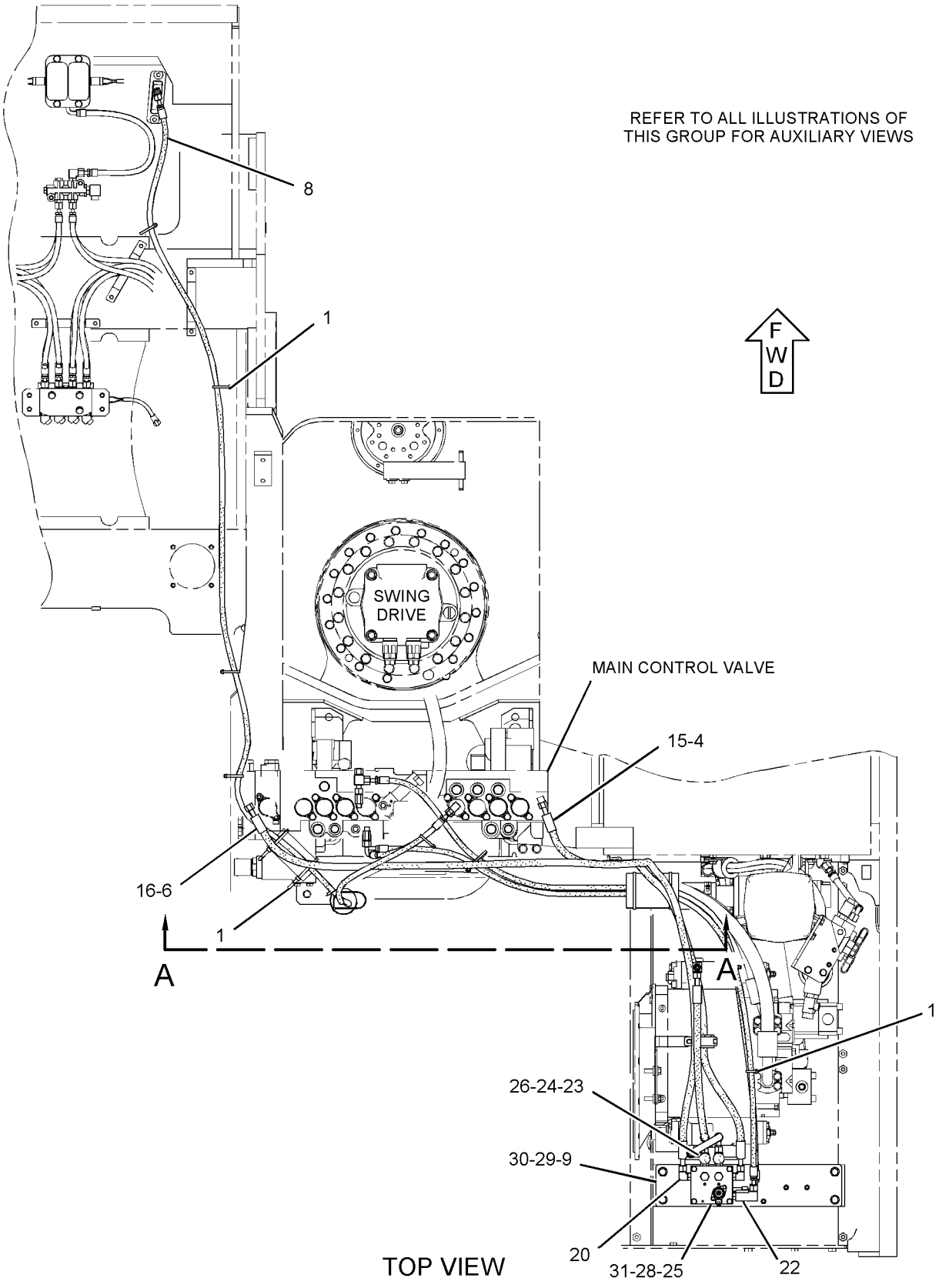

GRAPHIC #1

g01624823

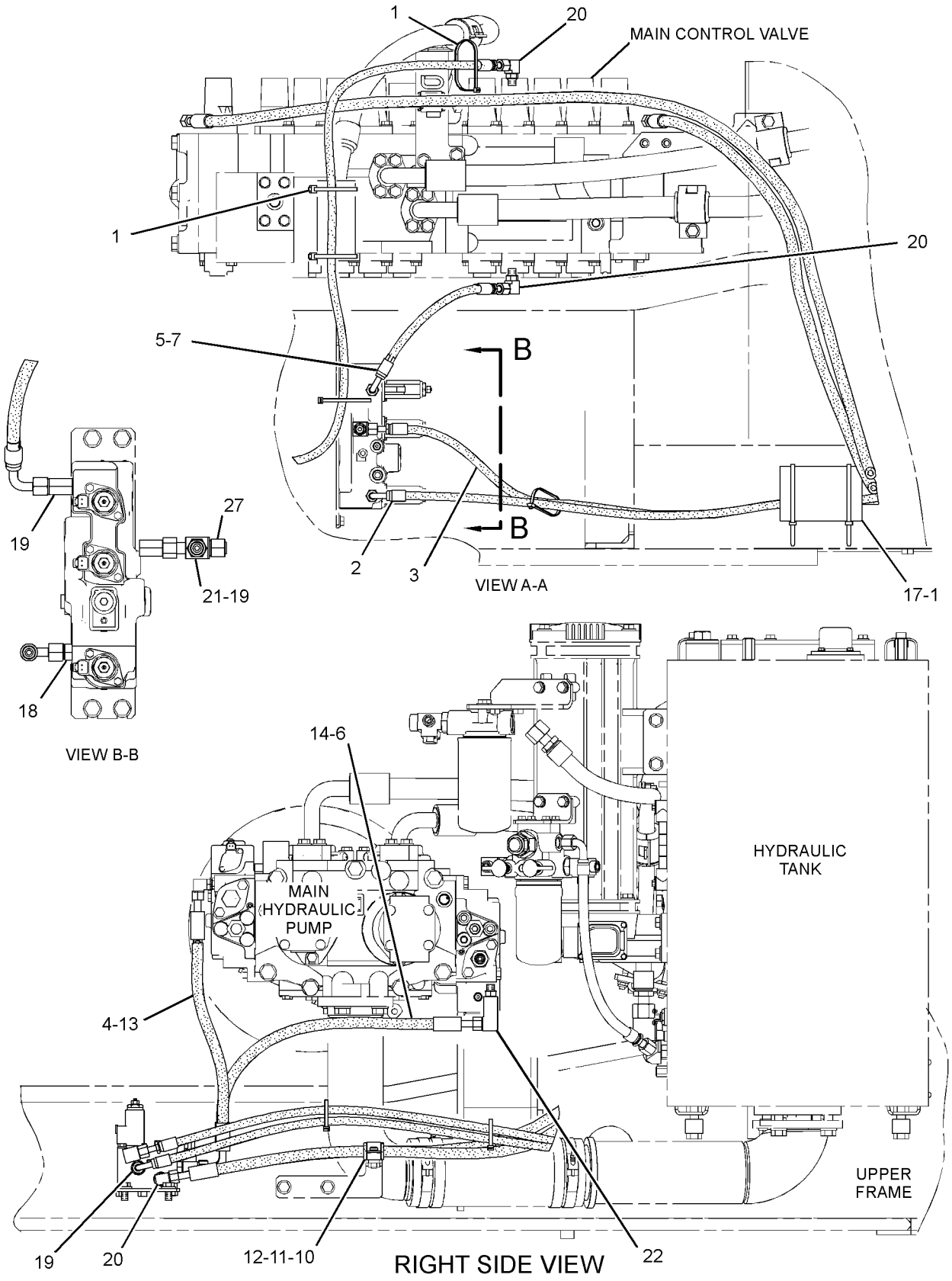

GRAPHIC #2

<END>

g01624825

HYDRAULIC SYSTEM

255-1802 LINES GP-PILOT—PEDAL CONTROLS

S/N: MNB1-UP; WDK1-UP
PART OF 255-5697 CONTROL AR-AUXILIARY
AN ATTACHMENT

SMCS-5057, 5059 **i02959004**

NOTE	REF NO	GRAPHIC REF	PART NUMBER	QTY	PART NAME 1 2 3 4 5 6 (PRODUCT LEVEL)	SEE PAGE
I	1	1	**4I-1025**	1	HOSE AS	
I	2	1	**4I-1704**	1	HOSE AS	
I	3	1	**5I-4396**	1	HOSE AS	
I	4	1	**087-4402**	2	HOSE AS	
I	5	1	**087-6585**	1	HOSE AS	
Y	6	1	**123-2430**	1	VALVE GP-SHUTTLE	804
	7	1	*164-5629*	1	FITTING AS	
		1	**3J-1907**	1	SEAL-O-RING	
		1	**108-7516**	1	FITTING	
	8	1	**309-5769**	1	SWITCH AS-PRESSURE (PILOT, BOOM UP)	
		1	**102-8802**	1	KIT-RECEPTACLE (2-PIN)	
					(INCLUDES RECEPTACLE AS & WEDGE)	
		1	**9X-3401**	2	PIN-CONNECTOR (16-GA TO 18-GA)	
					—OR—	
		1	**126-1767**	2	PIN-CONNECTOR (14-GA)	
	9	1	*148-8336*	2	CONNECTOR AS	
					(EACH INCLUDES)	
		1	**3J-1907**	1	SEAL-O-RING	
		1	**6V-8397**	1	SEAL-O-RING	
		1	**6V-8636**	1	CONNECTOR	
	10	1	*148-8353*	3	ELBOW AS	
					(EACH INCLUDES)	
		1	**3J-1907**	1	SEAL-O-RING	
		1	**6V-8397**	1	SEAL-O-RING	
		1	**6V-9001**	1	ELBOW	
	11	1	*148-8378*	5	ELBOW AS	
					(EACH INCLUDES)	
		1	**3J-1907**	1	SEAL-O-RING	
		1	**6V-8397**	1	SEAL-O-RING	
		1	**6V-8724**	1	ELBOW	
	12	1	*148-8407*	2	PLUG AS	
					(EACH INCLUDES)	
		1	**3J-1907**	1	SEAL-O-RING	
		1	**9S-4191**	1	PLUG-O-RING	
	13	1	*164-5628*	2	CONNECTOR AS	
					(EACH INCLUDES)	
		1	**3J-1907**	1	SEAL-O-RING	
		1	**6V-8397**	1	SEAL-O-RING	
		1	**107-6631**	1	CONNECTOR-FILTER	
	14	1	**179-7578**	1	SUPPORT AS	
	15	1	**6V-8397**	2	SEAL-O-RING	
M	16	1	**7X-0818**	2	BOLT (M8X1.25X45-MM)	
M	17	1	**8T-4189**	2	BOLT (M8X1.25X20-MM)	
	18	1	**8T-4224**	4	WASHER-HARD (8.8X16X2-MM THK)	

I-REFER TO HYDRAULIC INFORMATION SYSTEM
M-METRIC PART
Y-SEPARATE ILLUSTRATION

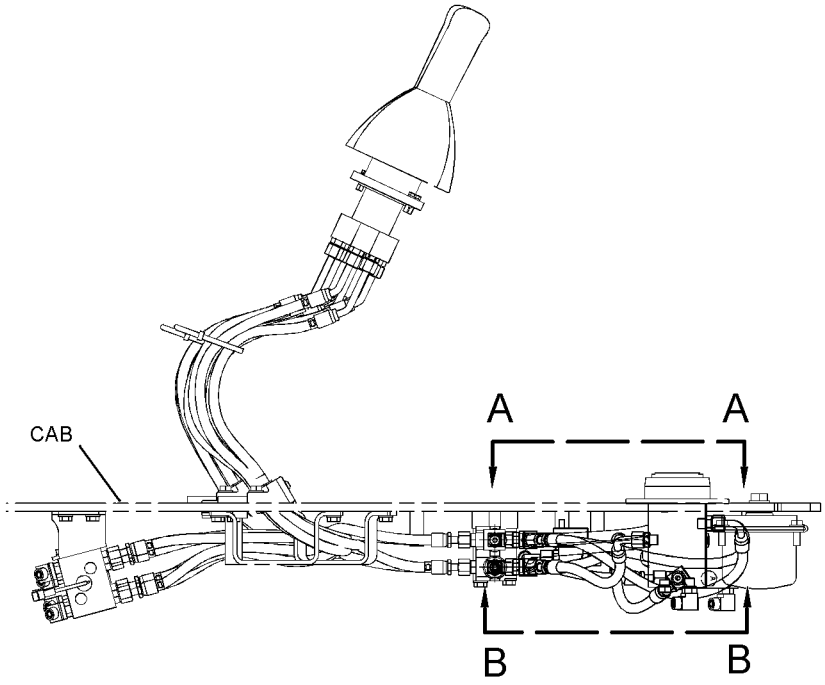

RIGHT SIDE VIEW

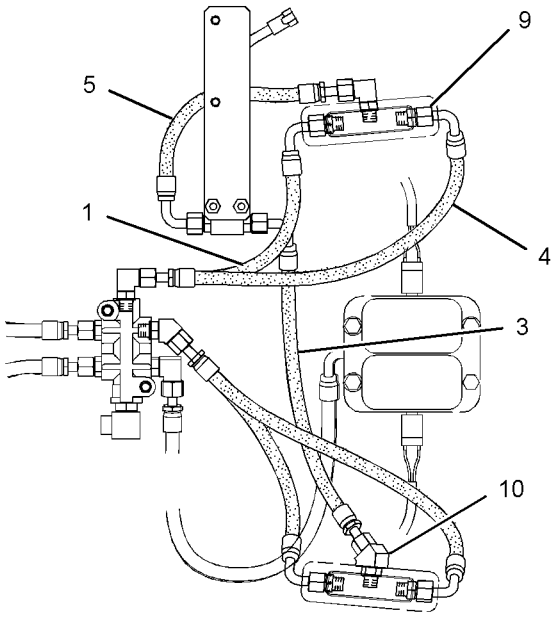

VIEW A-A

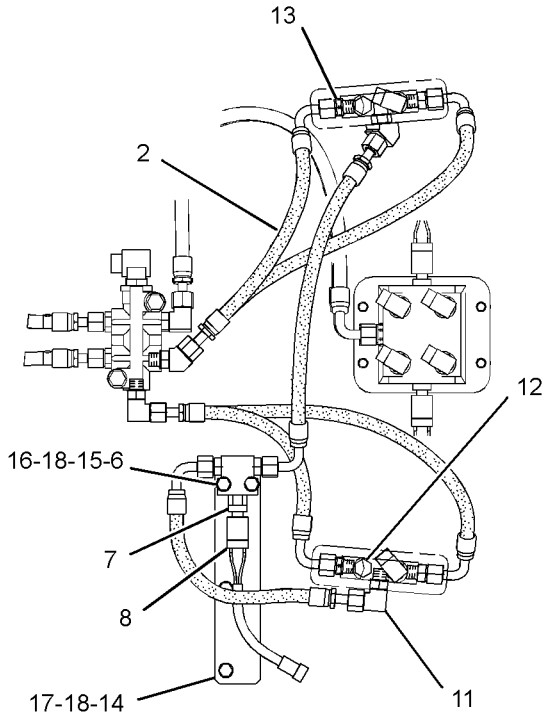

VIEW B-B

GRAPHIC #1 **<END>** g01233445

HYDRAULIC SYSTEM

255-1803 LINES GP-PILOT—COMBINED FCTN, 2-HYD PEDALS

S/N: MNB1-UP; WDK1-UP
PART OF 255-5697 CONTROL AR-AUXILIARY
AN ATTACHMENT

SMCS-5057, 5059 **i03063480**

NOTE	REF NO	GRAPHIC REF	PART NUMBER	QTY	PART NAME 1 2 3 4 5 6 (PRODUCT LEVEL)	SEE PAGE
I	1	1	**4I-0833**	1	HOSE AS	
I	2	2	**4I-0995**	1	HOSE AS	
I	3	1	**4I-1739**	1	HOSE AS	
I	4	1	**4I-1783**	1	HOSE AS	
	5	1	**4I-3941**	1	FITTING AS	
	6	2	**4I-9521**	4	BAND-MARKER (RED, L1)	
	7	2	**4I-9522**	4	BAND-MARKER (YELLOW, L2)	
	8	1,2	**4I-9523**	8	BAND-MARKER (BLUE, L3)	
	9	2	**4I-9524**	4	BAND-MARKER (BROWN, L4)	
	10	2	**4I-9525**	4	BAND-MARKER (ORANGE, R1)	
	11	1,2	**4I-9527**	8	BAND-MARKER (GREEN, R3)	
	12	1,2	**7K-1181**	18	STRAP-CABLE	
	13	1	**103-1384**	1	GUARD	
I	14	2	**104-8774**	1	HOSE AS	
I	16	2	**108-7387**	1	HOSE AS	
I	17	1,2	**111-0988**	2	HOSE AS	
I	18	1	**184-9210**	1	HOSE AS	
I	19	1	**212-5419**	1	HOSE AS	
	20	2	**221-4807**	1	HOSE AS	
	21	1	**255-1669**	1	SUPPORT AS	
	22	1	**266-1158**	1	SUPPORT AS	
	23	2	**275-1442**	1	CLIP (TAB)	
	24	2	**275-1443**	1	CLIP (SLOT)	
	25	2	**275-1444**	1	GROMMET	
I	26	2	**269-9700**	1	HOSE AS	
CI	27	2	**302-2857**	1	HOSE AS	
I	28	1	**275-1503**	1	HOSE AS	
I	29	1	**275-1506**	1	HOSE AS	
	30	1	**124-1008**	1	GUARD	
	31	1,2	*148-8336*	2	CONNECTOR AS	
					(EACH INCLUDES)	
		1,2	**3J-1907**	1	SEAL-O-RING	
		1,2	**6V-8397**	1	SEAL-O-RING	
		1,2	**6V-8636**	1	CONNECTOR	
	32	1,2	*148-8338*	3	CONNECTOR AS	
					(EACH INCLUDES)	
		1,2	**3J-1907**	1	SEAL-O-RING	
		1,2	**6V-8397**	1	SEAL-O-RING	
		1,2	**8T-0075**	1	CONNECTOR	
	33	2	*150-3036*	1	ELBOW AS	
		2	**3J-1907**	1	SEAL-O-RING	
		2	**6V-8397**	1	SEAL-O-RING	
		2	**8T-1905**	1	ELBOW	
	34	1,2	*148-8378*	14	ELBOW AS	
					(EACH INCLUDES)	
		1,2	**3J-1907**	1	SEAL-O-RING	
		1,2	**6V-8397**	1	SEAL-O-RING	
		1,2	**6V-8724**	1	ELBOW	
	35	1	*148-8407*	1	PLUG AS	
		1	**3J-1907**	1	SEAL-O-RING	
		1	**9S-4191**	1	PLUG-O-RING	
	36	1,2	*148-8433*	4	TEE AS	
					(EACH INCLUDES)	
		1,2	**6V-8397**	2	SEAL-O-RING	
		1,2	**6V-9836**	1	TEE-SWIVEL	

255-1803 **LINES GP-PILOT** *(contd.)* **i03063480**

NOTE	REF NO	GRAPHIC REF	PART NUMBER	QTY	PART NAME 1 2 3 4 5 6 (PRODUCT LEVEL)	SEE PAGE
	37	2	*148-8435*	1	TEE AS	
		2	**3J-1907**	1	SEAL-O-RING	
		2	**6V-8397**	2	SEAL-O-RING	
		2	**6V-8781**	1	TEE-FACE SEAL	
M	38	1	**8T-6870**	4	BOLT (M8X1.25X70-MM)	
	39	1	*150-4027*	2	TEE AS	
					(EACH INCLUDES)	
		1	**3E-2310**	1	TEE	
		1	**3J-1907**	1	SEAL-O-RING	
		1	**6V-8397**	1	SEAL-O-RING	
	40	1	*164-5567*	2	COUPLER AS-QUICK DISCONNECT	
					(EACH INCLUDES)	
		1	**3J-1907**	1	SEAL-O-RING	
		1	**6V-3965**	1	FITTING (QUICK DISCONNECT)	
Y	41	1	**165-9549**	1	VALVE GP-SOLENOID (AUXILIARY, COMBINED FUNCTION) (1-PUMP/2-PUMP, 1-WAY/2-WAY FLW)	811
	42	1	**309-5769**	1	SWITCH AS-PRESSURE (PILOT, BOOM UP)	
		1	**102-8802**	1	KIT-RECEPTACLE (2-PIN)	
					(INCLUDES RECEPTACLE AS & WEDGE)	
		1	**9X-3401**	2	PIN-CONNECTOR (16-GA TO 18-GA)	
					—OR—	
		1	**126-1767**	2	PIN-CONNECTOR (14-GA)	
Y	43	1	**171-0188**	1	VALVE GP-SOLENOID (NEG FLOW CONT, PROPN RED VALVE)	812
	44	1	**6E-1435**	2	SPACER (11X30X29-MM THK)	
	45	1	**9M-8406**	2	CLIP	
	46	1	**6V-0852**	2	CAP-DUST (SOLENOID VALVE)	
	47	2	**6V-9829**	1	CAP AS	
	48	1	**8T-4121**	4	WASHER-HARD (11X21X2.5-MM THK)	
M	49	1	**8T-4137**	2	BOLT (M10X1.5X20-MM)	
M	50	1	**8T-4177**	4	BOLT (M8X1.25X90-MM)	
M	51	1	**8T-4185**	2	BOLT (M10X1.5X50-MM)	
M	52	1	**8T-4192**	4	BOLT (M12X1.75X25-MM)	
	53	1	**8T-4223**	4	WASHER-HARD (13.5X25.5X3-MM THK)	
	54	1	**8T-4224**	4	WASHER-HARD (8.8X16X2-MM THK)	

C-CHANGE FROM PREVIOUS TYPE
I-REFER TO HYDRAULIC INFORMATION SYSTEM
M-METRIC PART
Y-SEPARATE ILLUSTRATION

255 - 1803 **LINES GP-PILOT** *(contd.)* **i03063480**

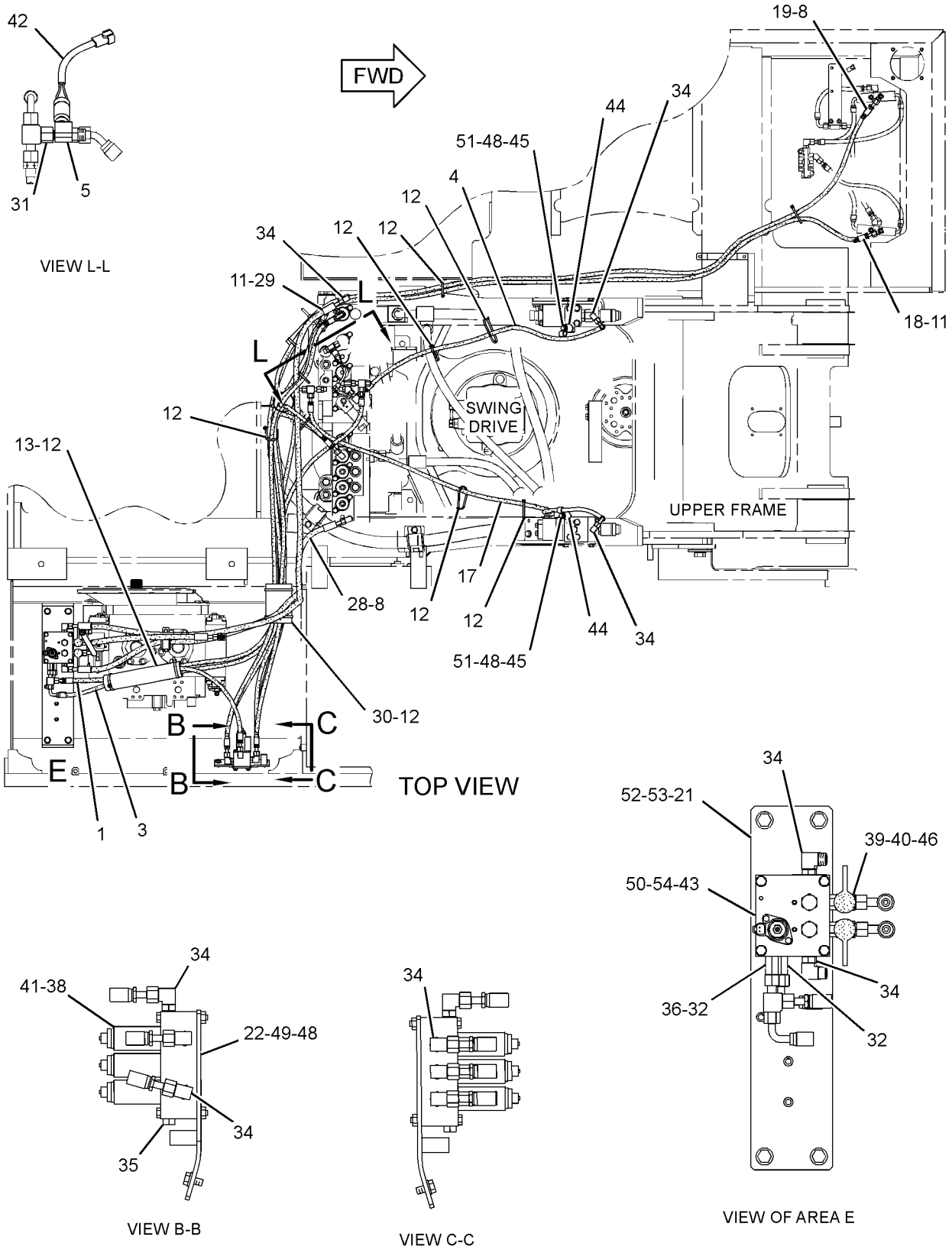

GRAPHIC #1 g01607593

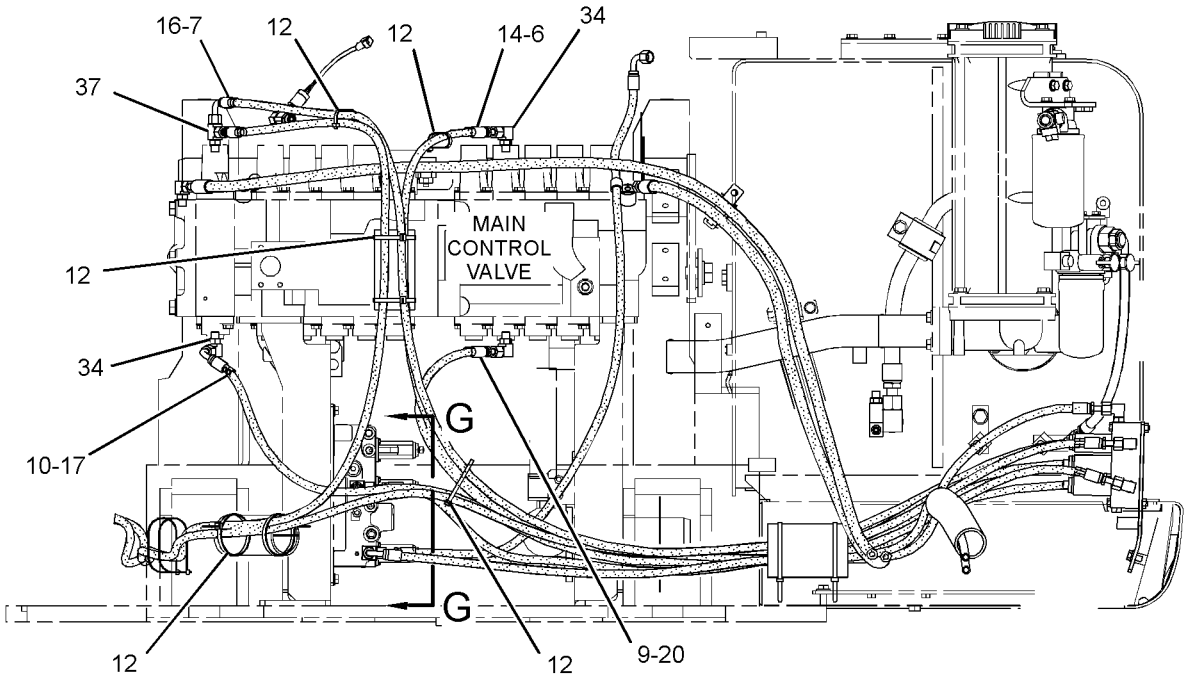

REAR VIEW

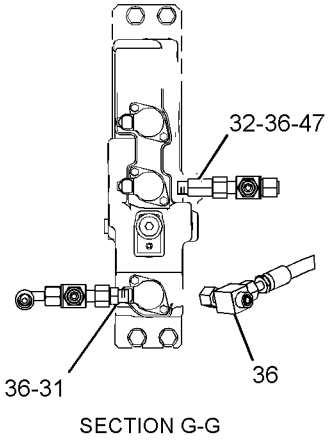

SECTION G-G

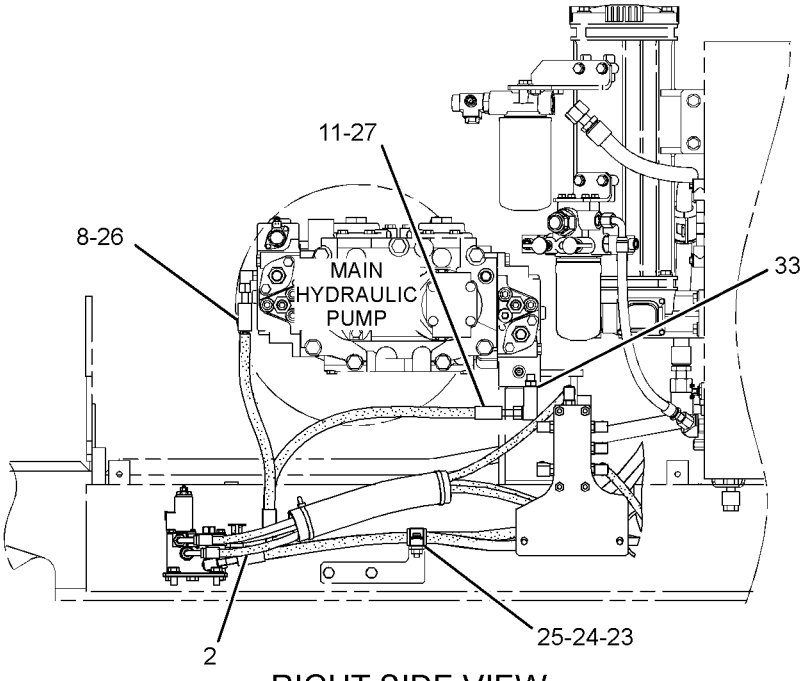

RIGHT SIDE VIEW

GRAPHIC #2 **<END>** g01607594

HYDRAULIC SYSTEM

255-1807 LINES GP-PILOT—AUXILIARY

S/N: MNB1-UP; WDK1-UP
PART OF 255-5700 CONTROL AR-AUXILIARY
AN ATTACHMENT

SMCS-5057, 5059 **i02435058**

NOTE	REF NO	GRAPHIC REF	PART NUMBER	QTY	PART NAME 1 2 3 4 5 6 (PRODUCT LEVEL)	SEE PAGE
	1	1	**4I-9521**	2	BAND-MARKER (RED, L1)	
	2	1	**4I-9524**	2	BAND-MARKER (BROWN, L4)	
	3	1	**4I-9526**	4	BAND-MARKER (WHITE, R2)	
	4	1	**4I-9527**	4	BAND-MARKER (GREEN, R3)	
	5	1	**7K-1181**	5	STRAP-CABLE	
I	6	1	**087-5767**	2	HOSE AS	
I	7	1	**104-8774**	1	HOSE AS	
	8	1	**164-6874**	2	FITTING AS-ELBOW	
					(EACH INCLUDES)	
		1	**3J-1907**	1	SEAL-O-RING	
		1	**085-7356**	1	FITTING	
Y	9	1	**259-7430**	1	VALVE GP-SOLENOID (PRESSURE REDUCING) (2-PUMP, 1-WAY FLOW)	815
	10	1	**266-1271**	1	SUPPORT AS	
	11	1	**115-8645**	1	GUARD	
	12	1	*148-8378*	5	ELBOW AS	
					(EACH INCLUDES)	
		1	**3J-1907**	1	SEAL-O-RING	
		1	**6V-8397**	1	SEAL-O-RING	
		1	**6V-8724**	1	ELBOW	
	13	1	*150-3036*	1	ELBOW AS	
		1	**3J-1907**	1	SEAL-O-RING	
		1	**6V-8397**	1	SEAL-O-RING	
		1	**8T-1905**	1	ELBOW	
	14	1	*164-5567*	2	COUPLER AS-QUICK DISCONNECT	
					(EACH INCLUDES)	
		1	**3J-1907**	1	SEAL-O-RING	
		1	**6V-3965**	1	FITTING (QUICK DISCONNECT)	
	15	1	**221-4807**	1	HOSE AS	
	16	1	**6V-0852**	2	CAP-DUST	
	17	1	**8T-4121**	2	WASHER-HARD (11X21X2.5-MM THK)	
M	18	1	**8T-4136**	2	BOLT (M10X1.5X25-MM)	
M	19	1	**8T-6870**	2	BOLT (M8X1.25X70-MM)	

I-REFER TO HYDRAULIC INFORMATION SYSTEM
M-METRIC PART
Y-SEPARATE ILLUSTRATION

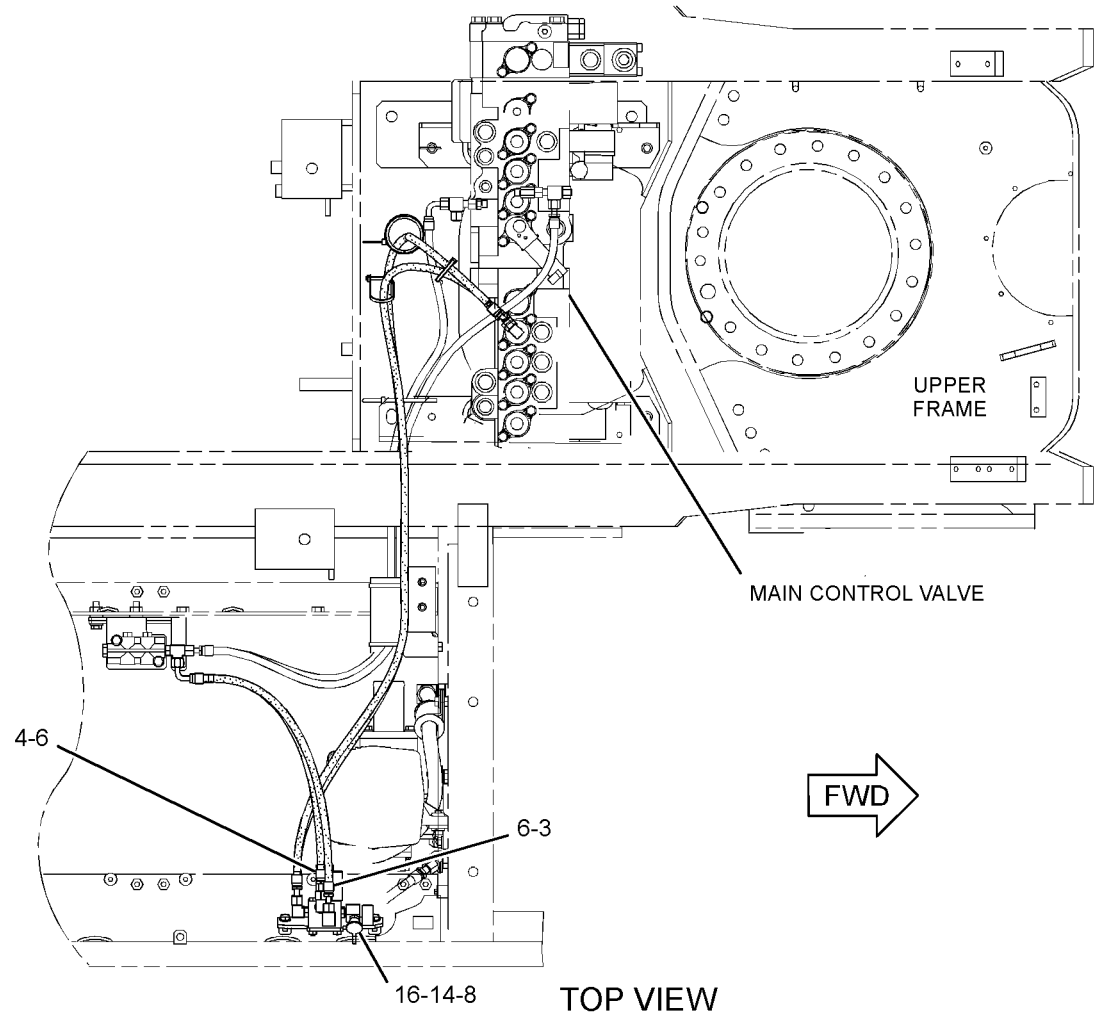

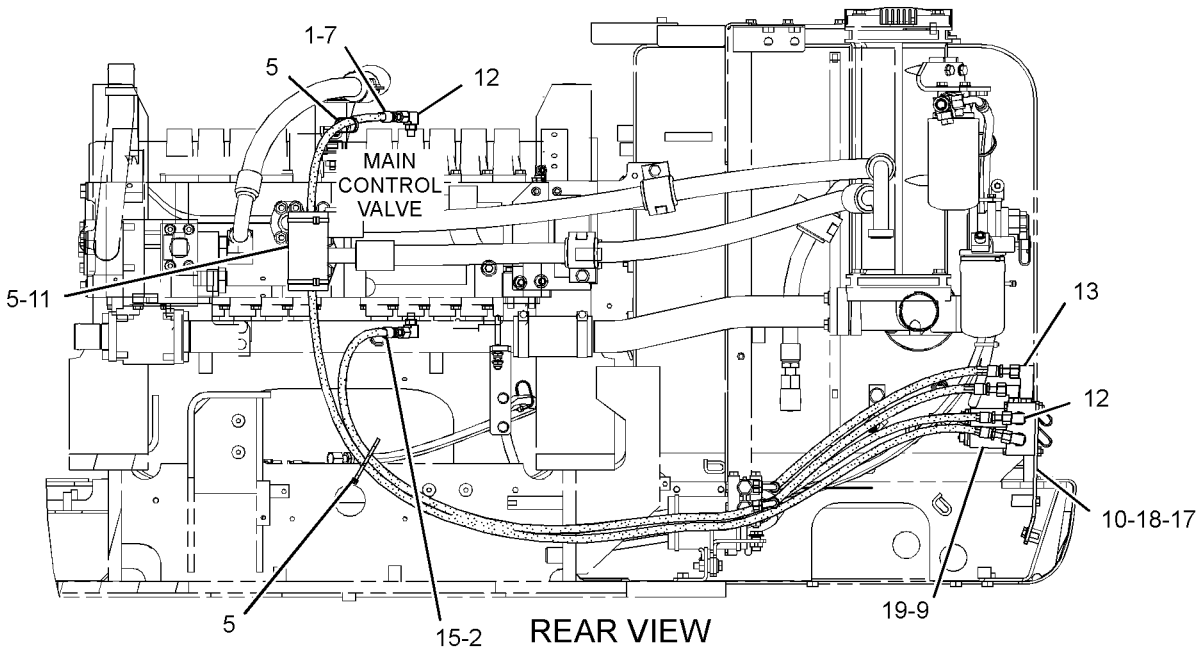

GRAPHIC #1

<END>

g01239029

HYDRAULIC SYSTEM

255-1809 LINES GP-PILOT–BOOM LOWERING CONTROL

S/N: MNB1-UP; WDK1-UP
PART OF 255-5738 VALVE AR-LOAD CONTROL
AN ATTACHMENT

SMCS-5057, 5059 **i03194729**

NOTE	REF NO	GRAPHIC REF	PART NUMBER	QTY	PART NAME 1 2 3 4 5 6 (PRODUCT LEVEL)	SEE PAGE
I	1	1	**4I-0800**	1	HOSE AS	
I	2	1	**4I-0818**	1	HOSE AS	
	3	1	**7K-1181**	9	STRAP-CABLE	
I	4	1	**104-8774**	1	HOSE AS	
I	5	1	**4I-6003**	1	HOSE AS	
	6	1	**133-5813**	2	BAND-MARKER (GRAY, P)	
	7	1	*148-8363*	1	ELBOW AS	
		1	**3K-0360**	1	SEAL-O-RING	
		1	**6V-8397**	1	SEAL-O-RING	
		1	**6V-9876**	1	ELBOW	
	8	1	*148-8433*	1	TEE AS	
		1	**6V-8397**	2	SEAL-O-RING	
		1	**6V-9836**	1	TEE-SWIVEL	

I-REFER TO HYDRAULIC INFORMATION SYSTEM

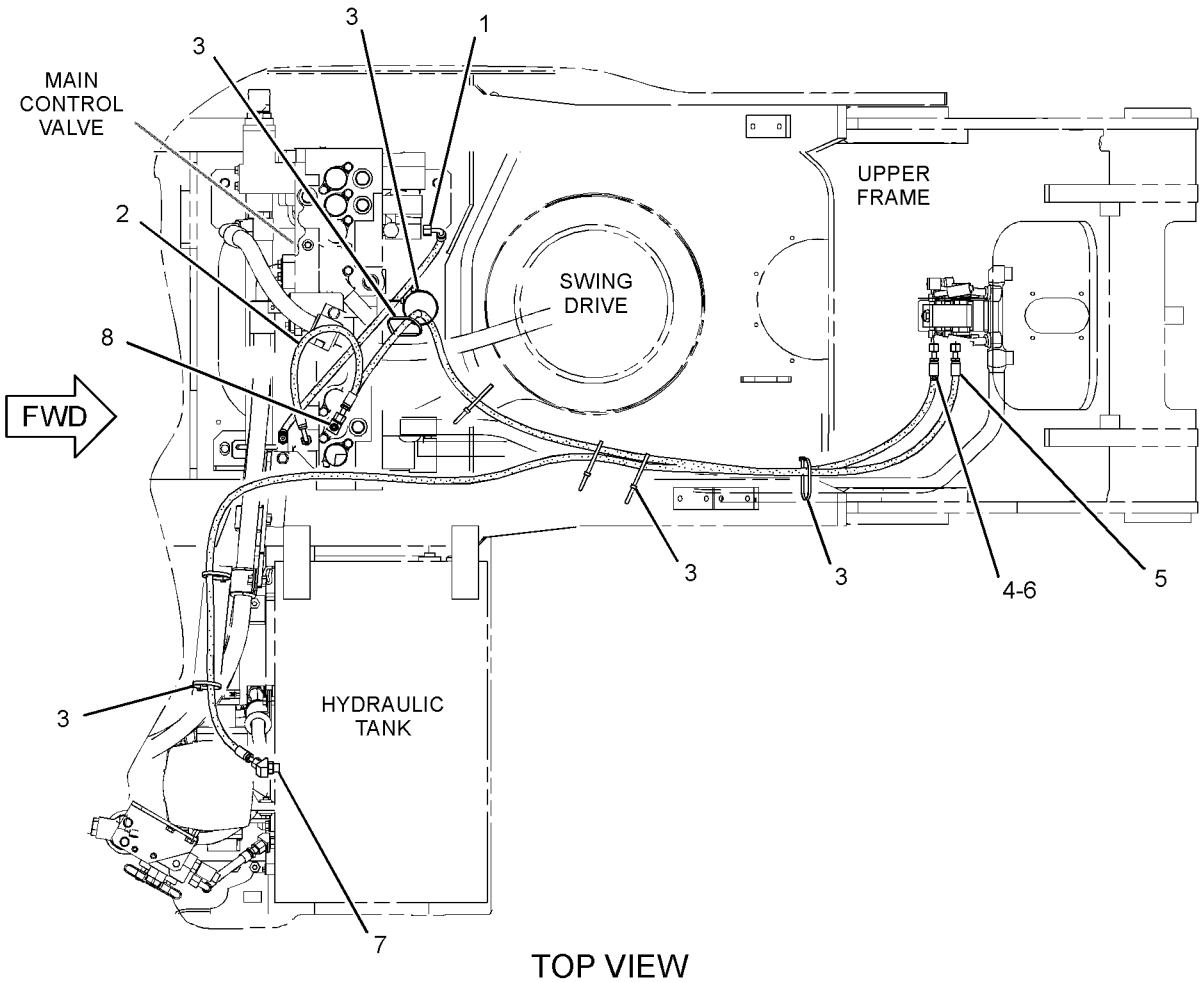

TOP VIEW

GRAPHIC #1 **<END>** g01627359

HYDRAULIC SYSTEM

255-1843 LINES GP-PILOT—THIRD PEDAL, PILOT VALVE

S/N: MNB1-UP; WDK1-UP
PART OF 259-7177 PEDAL AR-AUXILIARY
AN ATTACHMENT

SMCS-5057, 5059 **i02981562**

NOTE	REF NO	GRAPHIC REF	PART NUMBER	QTY	PART NAME 1 2 3 4 5 6 (PRODUCT LEVEL)	SEE PAGE
I	1	1	**4I-1704**	1	HOSE AS	
I	2	1	**087-4402**	1	HOSE AS	
I	3	1	**087-5762**	1	HOSE AS	
I	4	1	**087-5765**	2	HOSE AS	
I	5	1	**087-5766**	1	HOSE AS	
	6	1	*164-5629*	1	FITTING AS	
		1	**3J-1907**	1	SEAL-O-RING	
		1	**108-7516**	1	FITTING	
I	7	1	**179-7456**	2	HOSE AS	
Y	8	1	**112-0083**	1	VALVE GP-SHUTTLE	803
	9	1	*148-8336*	3	CONNECTOR AS	
					(EACH INCLUDES)	
		1	**3J-1907**	1	SEAL-O-RING	
		1	**6V-8397**	1	SEAL-O-RING	
		1	**6V-8636**	1	CONNECTOR	
	10	1	*148-8353*	6	ELBOW AS	
					(EACH INCLUDES)	
		1	**3J-1907**	1	SEAL-O-RING	
		1	**6V-8397**	1	SEAL-O-RING	
		1	**6V-9001**	1	ELBOW	
	11	1	*148-8378*	4	ELBOW AS	
					(EACH INCLUDES)	
		1	**3J-1907**	1	SEAL-O-RING	
		1	**6V-8397**	1	SEAL-O-RING	
		1	**6V-8724**	1	ELBOW	
	12	1	*150-3036*	1	ELBOW AS	
		1	**3J-1907**	1	SEAL-O-RING	
		1	**6V-8397**	1	SEAL-O-RING	
		1	**8T-1905**	1	ELBOW	
	13	1	*150-4044*	1	CONNECTOR AS	
		1	**3J-1907**	1	SEAL-O-RING	
		1	**6V-8397**	1	SEAL-O-RING	
		1	**8T-1779**	1	CONNECTOR	
	14	1	*164-5628*	1	CONNECTOR AS	
		1	**3J-1907**	1	SEAL-O-RING	
		1	**6V-8397**	1	SEAL-O-RING	
		1	**107-6631**	1	CONNECTOR-FILTER	
	15	1	**309-5769**	1	SWITCH AS-PRESSURE (THIRD PEDAL, STRAIGHT TRAVEL)	
		1	**9X-3401**	2	PIN-CONNECTOR (16-GA TO 18-GA)	
					—OR—	
		1	**126-1767**	2	PIN-CONNECTOR (14-GA)	
		1	**102-8802**	1	KIT-RECEPTACLE (2-PIN)	
					(INCLUDES RECEPTACLE AS & WEDGE)	
C	16	1	**4I-7889**	2	SPACER (11X25X45-MM THK)	
CM	17	1	**8T-4178**	2	BOLT (M10X1.5X90-MM)	

C-CHANGE FROM PREVIOUS TYPE
I-REFER TO HYDRAULIC INFORMATION SYSTEM
M-METRIC PART
Y-SEPARATE ILLUSTRATION

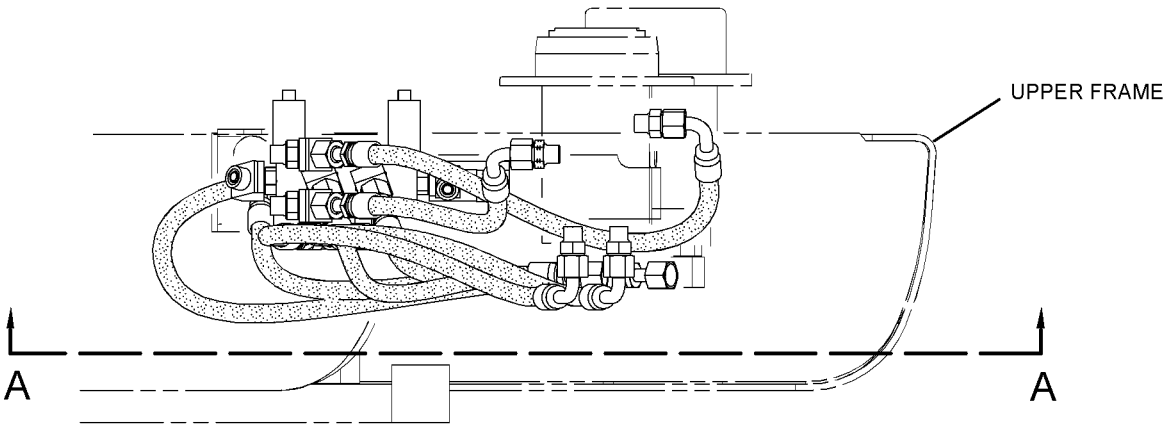

RIGHT SIDE VIEW

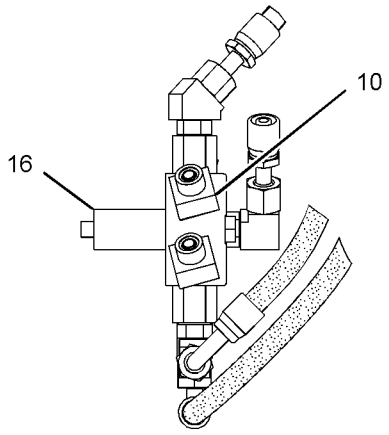

VIEW B-B

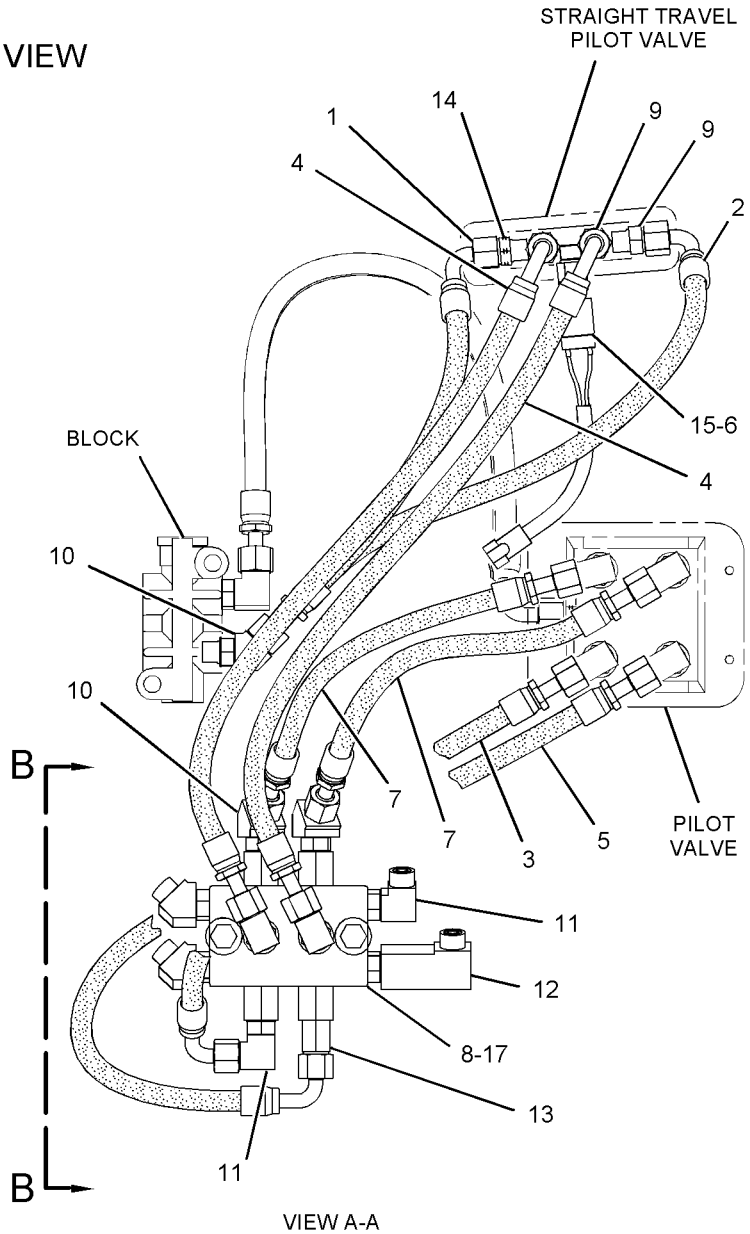

VIEW A-A

GRAPHIC #1

<END>

g01338160

255-1877 LINES GP-PILOT—CONTROL VALVE, TRAVEL VALVE

S/N: MNB1-UP; WDK1-UP
PART OF 259-7177 PEDAL AR-AUXILIARY
AN ATTACHMENT

SMCS-5057, 5059 **i02344776**

NOTE	REF NO	GRAPHIC REF	PART NUMBER	QTY	PART NAME 1 2 3 4 5 6 (PRODUCT LEVEL)	SEE PAGE
I	1	1	**4I-6003**	2	HOSE AS	
	2	1	**4I-9521**	4	BAND-MARKER (RED, L1)	
	3	1	**4I-9522**	4	BAND-MARKER (YELLOW, L2)	
	4	1	**4I-9525**	4	BAND-MARKER (ORANGE, R1)	
	5	1	**4I-9526**	4	BAND-MARKER (WHITE, R2)	
	6	1	**7K-1181**	7	STRAP-CABLE	
I	7	1	**172-0907**	2	HOSE AS	

I-REFER TO HYDRAULIC INFORMATION SYSTEM

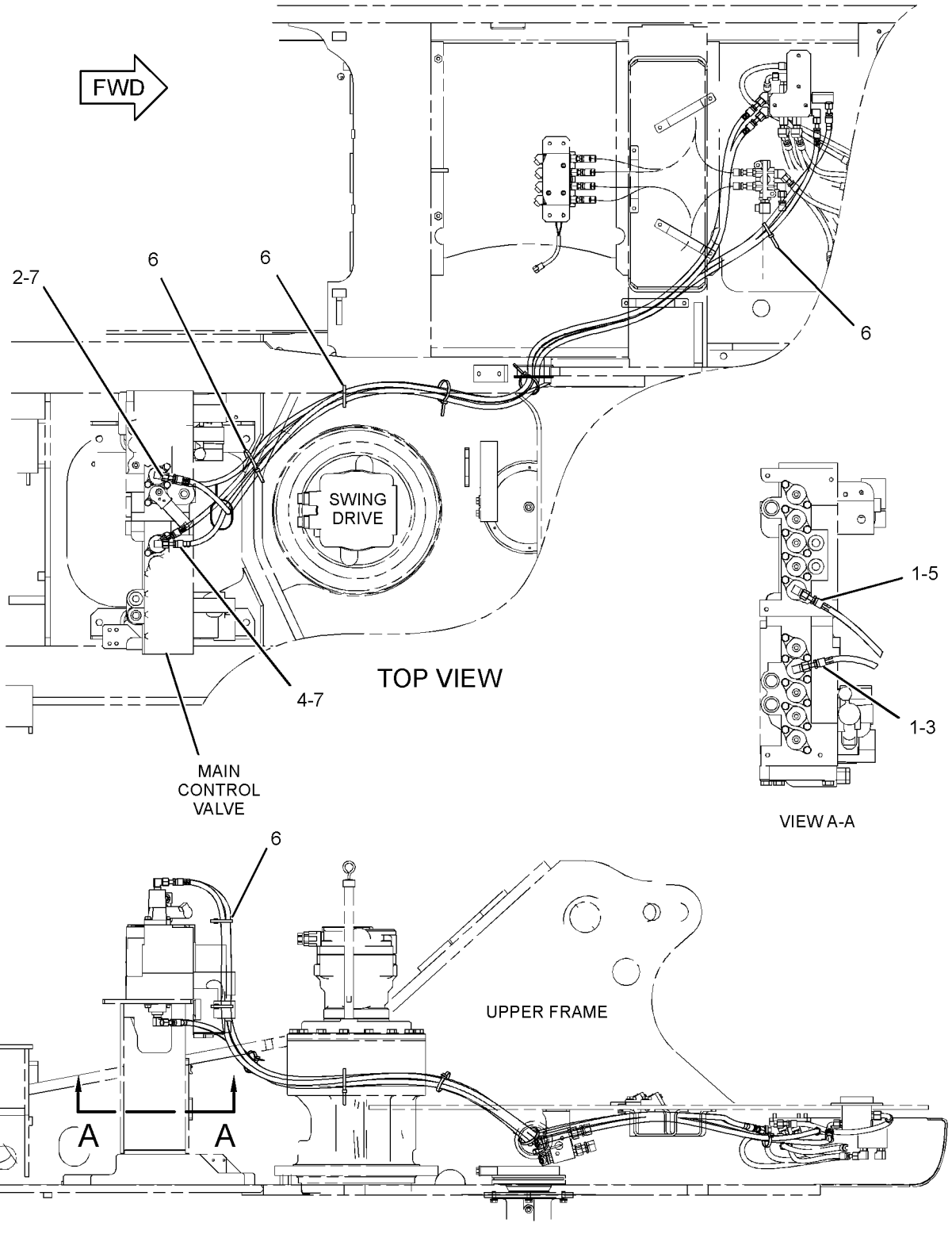

GRAPHIC #1

<END>

g01188876

HYDRAULIC SYSTEM

255-1967 LINES GP-PILOT—SYSTEM 16, 1-WAY, 2-PUMP

S/N: MNB1-UP; WDK1-UP
PART OF 255-5698 CONTROL AR-AUXILIARY
AN ATTACHMENT

SMCS-5057, 5059 **i03180330**

NOTE	REF NO	GRAPHIC REF	PART NUMBER	QTY	PART NAME 1 2 3 4 5 6 (PRODUCT LEVEL)	SEE PAGE
I	1	2	**4I-1688**	2	HOSE AS	
	2	1	**4I-9521**	2	BAND-MARKER (RED, L1)	
	3	1	**4I-9522**	2	BAND-MARKER (YELLOW, L2)	
	4	1,2	**4I-9523**	4	BAND-MARKER (BLUE, L3)	
	5	1	**4I-9524**	2	BAND-MARKER (BROWN, L4)	
	6	1	**4I-9525**	2	BAND-MARKER (ORANGE, R1)	
	7	1,2	**4I-9527**	10	BAND-MARKER (GREEN, R3)	
I	8	1	**5I-4396**	1	HOSE AS	
	9	1	**7K-1181**	5	STRAP-CABLE	
I	10	1	**087-5767**	2	HOSE AS	
I	11	1	**104-8774**	1	HOSE AS	
I	12	1	**108-7387**	1	HOSE AS	
	13	2	*164-6874*	2	FITTING AS-ELBOW	
					(EACH INCLUDES)	
		2	**3J-1907**	1	SEAL-O-RING	
		2	**085-7356**	1	FITTING	
CI	14	1	**4I-1671**	1	HOSE AS	
Y	15	2	**259-7430**	1	VALVE GP-SOLENOID (PRESSURE REDUCING) (2-PUMP, 1-WAY FLOW)	815
	16	2	**266-1271**	1	SUPPORT AS	
	17	2	**275-1442**	1	CLIP (TAB)	
	18	2	**275-1443**	1	CLIP (SLOT)	
	19	2	**275-1444**	1	GROMMET	
I	20	2	**269-9700**	1	HOSE AS	
I	21	2	**302-2857**	1	HOSE AS	
I	22	1	**275-1503**	1	HOSE AS	
I	23	1	**275-1506**	1	HOSE AS	
	24	1,2	*148-8336*	3	CONNECTOR AS	
					(EACH INCLUDES)	
		1,2	**3J-1907**	1	SEAL-O-RING	
		1,2	**6V-8397**	1	SEAL-O-RING	
		1,2	**6V-8636**	1	CONNECTOR	
	25	2	*148-8338*	2	CONNECTOR AS	
					(EACH INCLUDES)	
		2	**3J-1907**	1	SEAL-O-RING	
		2	**6V-8397**	1	SEAL-O-RING	
		2	**8T-0075**	1	CONNECTOR	
C	27	1,2	*148-8378*	9	ELBOW AS	
					(EACH INCLUDES)	
		1,2	**3J-1907**	1	SEAL-O-RING	
		1,2	**6V-8397**	1	SEAL-O-RING	
		1,2	**6V-8724**	1	ELBOW	
	28	2	*148-8433*	1	TEE AS	
		2	**6V-8397**	2	SEAL-O-RING	
		2	**6V-9836**	1	TEE-SWIVEL	
	29	2	*150-3036*	2	ELBOW AS	
					(EACH INCLUDES)	
		2	**3J-1907**	1	SEAL-O-RING	
		2	**6V-8397**	1	SEAL-O-RING	
		2	**8T-1905**	1	ELBOW	
	30	2	*150-4027*	2	TEE AS	
					(EACH INCLUDES)	
		2	**3E-2310**	1	TEE	
		2	**3J-1907**	1	SEAL-O-RING	
		2	**6V-8397**	1	SEAL-O-RING	

255-1967 **LINES GP-PILOT** *(contd.)* **i03180330**

NOTE	REF NO	GRAPHIC REF	PART NUMBER	QTY	PART NAME 1 2 3 4 5 6 (PRODUCT LEVEL)	SEE PAGE
	31	2	*150-4044*	1	CONNECTOR AS	
		2	**3J-1907**	1	SEAL-O-RING	
		2	**6V-8397**	1	SEAL-O-RING	
		2	**8T-1779**	1	CONNECTOR	
	32	2	*164-5567*	4	COUPLER AS-QUICK DISCONNECT	
					(EACH INCLUDES)	
		2	**3J-1907**	1	SEAL-O-RING	
		2	**6V-3965**	1	FITTING (QUICK DISCONNECT)	
Y	33	2	**171-0188**	1	VALVE GP-SOLENOID (NEG FLOW CONT, PROPN RED VALVE)	812
	34	2	**6V-0852**	4	CAP-DUST	
	35	2	**8T-4121**	2	WASHER-HARD (11X21X2.5-MM THK)	
M	36	2	**8T-4136**	2	BOLT (M10X1.5X25-MM)	
M	37	2	**8T-4177**	4	BOLT (M8X1.25X90-MM)	
	38	2	**8T-4224**	4	WASHER-HARD (8.8X16X2-MM THK)	
M	39	2	**8T-6870**	2	BOLT (M8X1.25X70-MM)	
	40	1,2	**4I-9526**	6	BAND-MARKER (WHITE, R2)	

C-CHANGE FROM PREVIOUS TYPE
I-REFER TO HYDRAULIC INFORMATION SYSTEM
M-METRIC PART
Y-SEPARATE ILLUSTRATION

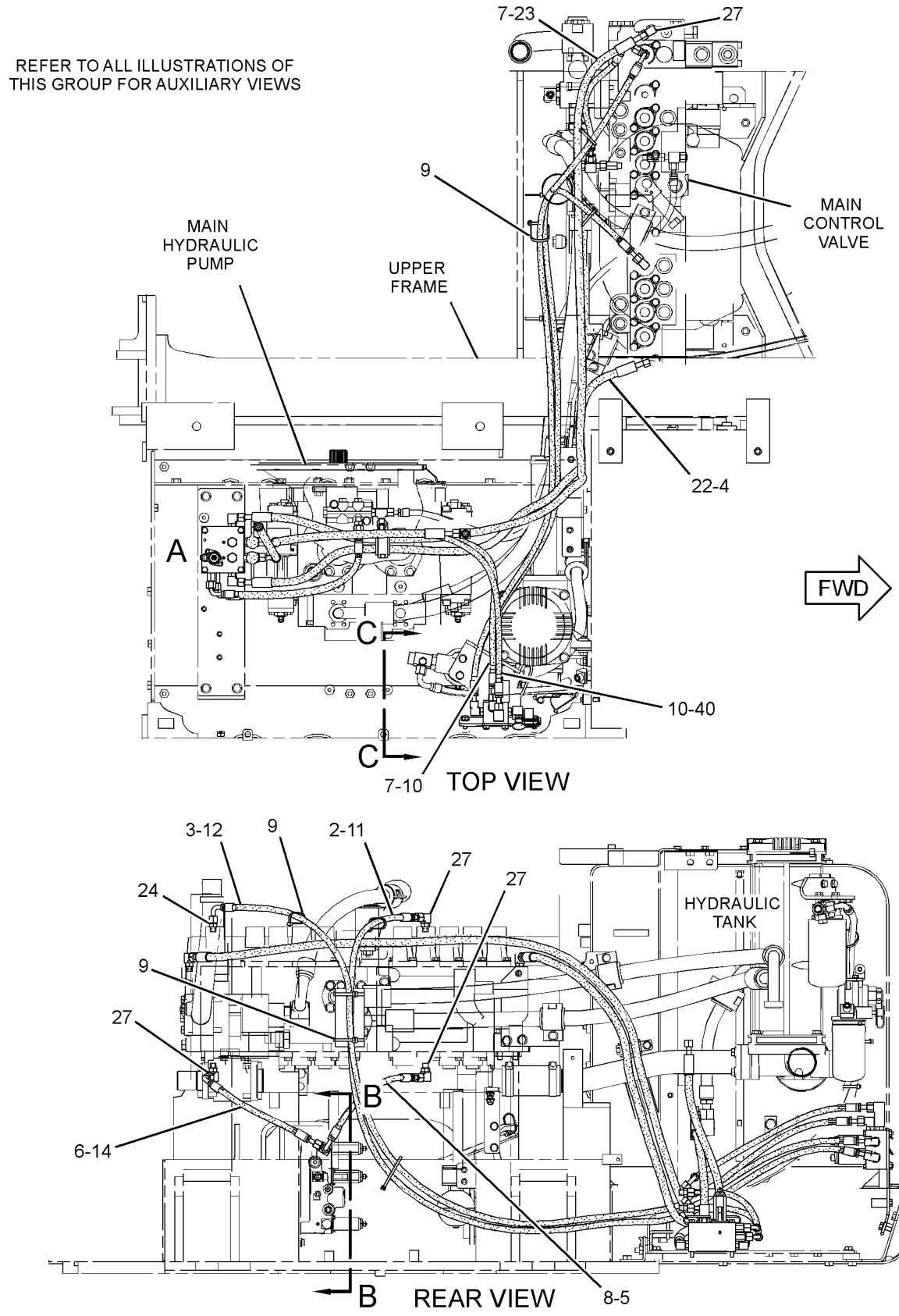

GRAPHIC #1

g01616136

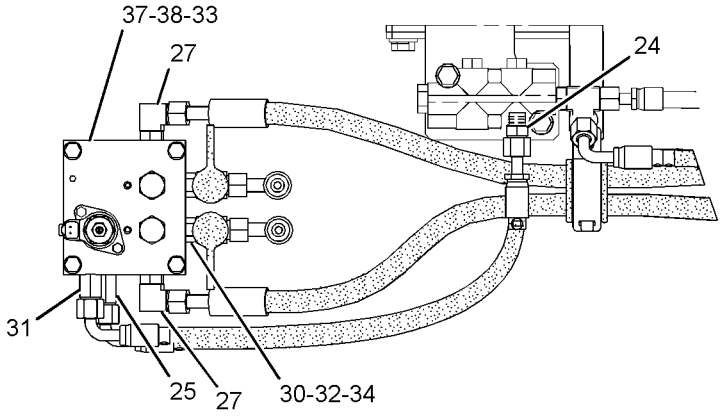

VIEW OF AREA A

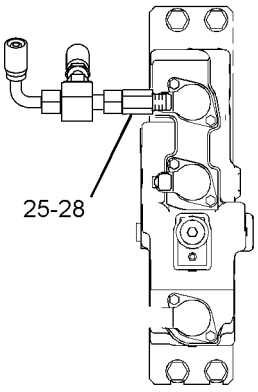

VIEW B-B

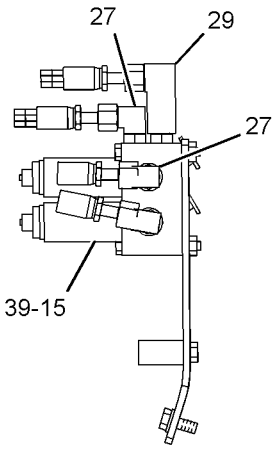

VIEW C-C

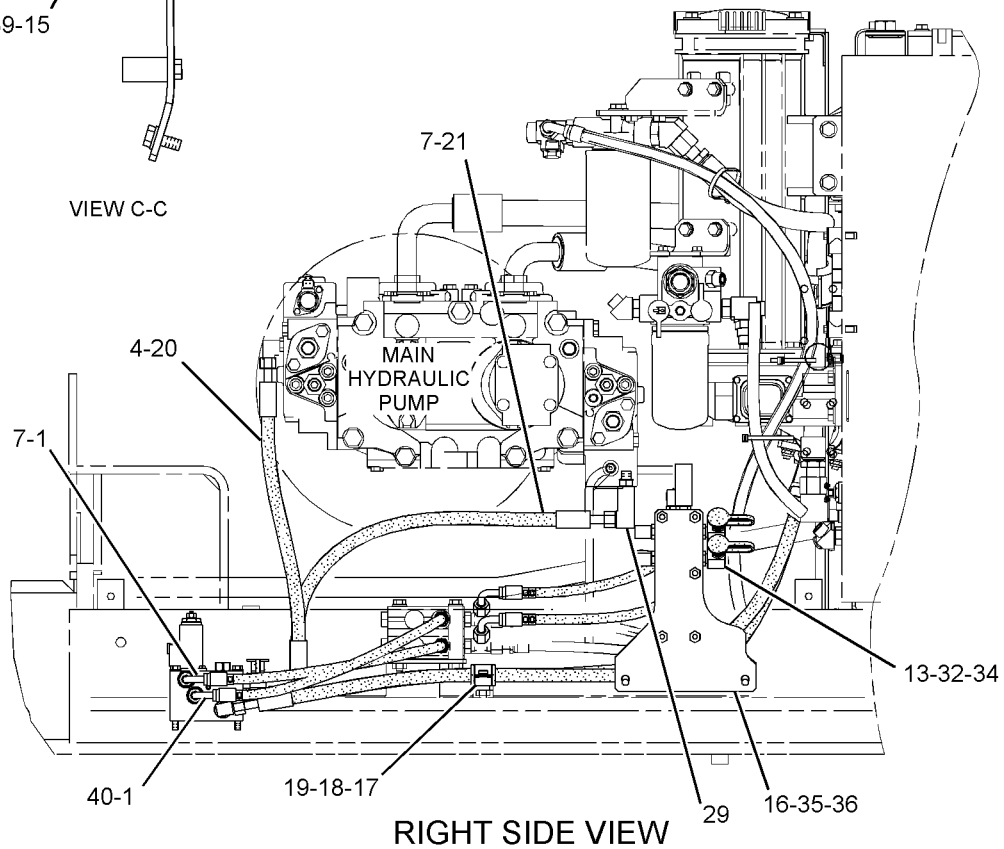

RIGHT SIDE VIEW

GRAPHIC #2 **<END>** g01616138

HYDRAULIC SYSTEM

255-1969 LINES GP-PILOT—MEDIUM PRESSURE

S/N: MNB1-UP; WDK1-UP
PART OF 255-5811 CONTROL AR-AUXILIARY
AN ATTACHMENT

SMCS-5057, 5059 **i02433618**

NOTE	REF NO	GRAPHIC REF	PART NUMBER	QTY	PART NAME 1 2 3 4 5 6 (PRODUCT LEVEL)	SEE PAGE
I	1	1	**4I-1754**	1	HOSE AS	
	2	1	**4I-9523**	2	BAND-MARKER (BLUE, L3)	
	3	1	**4I-9526**	2	BAND-MARKER (WHITE, R2)	
	4	1	**7K-1181**	5	STRAP-CABLE	
I	5	1	**7Y-4384**	2	HOSE AS	
	6	1	*164-6874*	2	FITTING AS-ELBOW	
					(EACH INCLUDES)	
		1	**3J-1907**	1	SEAL-O-RING	
		1	**085-7356**	1	FITTING	
	7	1	**282-7081**	1	SUPPORT AS	
Y	8	1	**259-7430**	1	VALVE GP-SOLENOID (PRESSURE REDUCING) (ROTATOR MOTOR)	815
	9	1	**282-7093**	1	HOSE AS	
	10	1	*148-8336*	2	CONNECTOR AS	
					(EACH INCLUDES)	
		1	**3J-1907**	1	SEAL-O-RING	
		1	**6V-8397**	1	SEAL-O-RING	
		1	**6V-8636**	1	CONNECTOR	
	11	1	*148-8353*	2	ELBOW AS	
					(EACH INCLUDES)	
		1	**3J-1907**	1	SEAL-O-RING	
		1	**6V-8397**	1	SEAL-O-RING	
		1	**6V-9001**	1	ELBOW	
	12	1	*148-8378*	3	ELBOW AS	
					(EACH INCLUDES)	
		1	**3J-1907**	1	SEAL-O-RING	
		1	**6V-8397**	1	SEAL-O-RING	
		1	**6V-8724**	1	ELBOW	
	13	1	*150-3036*	1	ELBOW AS	
		1	**3J-1907**	1	SEAL-O-RING	
		1	**6V-8397**	1	SEAL-O-RING	
		1	**8T-1905**	1	ELBOW	
	14	1	*164-5567*	2	COUPLER AS-QUICK DISCONNECT	
					(EACH INCLUDES)	
		1	**3J-1907**	1	SEAL-O-RING	
		1	**6V-3965**	1	FITTING (QUICK DISCONNECT)	
	15	1	**6V-0852**	2	CAP-DUST	
	16	1	**8T-4121**	2	WASHER-HARD (11X21X2.5-MM THK)	
M	17	1	**8T-4136**	2	BOLT (M10X1.5X25-MM)	
M	18	1	**8T-6870**	2	BOLT (M8X1.25X70-MM)	

I-REFER TO HYDRAULIC INFORMATION SYSTEM
M-METRIC PART
Y-SEPARATE ILLUSTRATION

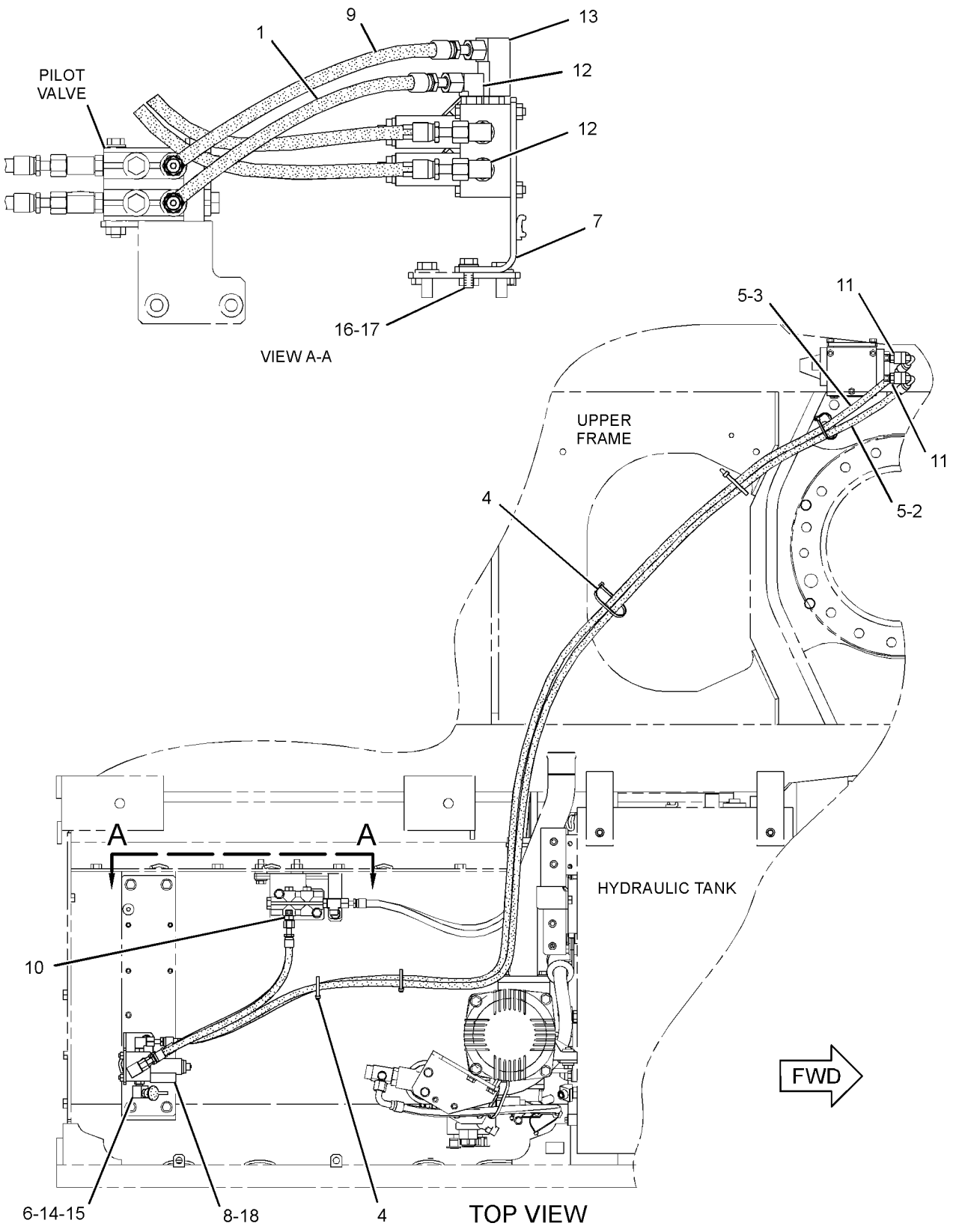

GRAPHIC #1 **<END>** g01235697

HYDRAULIC SYSTEM

255-2031 LINES GP-PILOT—CONTROL VALVE

S/N: MNB1-UP
AN ATTACHMENT

SMCS-5057, 5059 **i02552466**

NOTE	REF NO	GRAPHIC REF	PART NUMBER	QTY	PART NAME 1 2 3 4 5 6 (PRODUCT LEVEL)	SEE PAGE
I	1	1	**4I-1783**	1	HOSE AS	
	2	1	**4I-9526**	2	BAND-MARKER (WHITE, R2)	
	3	1	**4I-9527**	2	BAND-MARKER (GREEN, R3)	
	4	1	**7K-1181**	3	STRAP-CABLE	
I	5	1	**103-1399**	1	HOSE AS	
	6	1	**168-9759**	1	BLOCK	
	7	1	**171-2637**	2	BOSS	
	8	1	**255-1669**	1	SUPPORT AS	
	9	1	**255-2074**	1	SUPPORT AS	
	10	1	*148-8336*	1	CONNECTOR AS	
		1	**3J-1907**	1	SEAL-O-RING	
		1	**6V-8397**	1	SEAL-O-RING	
		1	**6V-8636**	1	CONNECTOR	
	11	1	*148-8338*	1	CONNECTOR AS	
		1	**3J-1907**	1	SEAL-O-RING	
		1	**6V-8397**	1	SEAL-O-RING	
		1	**8T-0075**	1	CONNECTOR	
B	12	1	*148-8407*	8	PLUG AS	
					(EACH INCLUDES)	
		1	**3J-1907**	1	SEAL-O-RING	
		1	**9S-4191**	1	PLUG-O-RING	
	13	1	*148-8411*	2	PLUG AS	
					(EACH INCLUDES)	
		1	**3K-0360**	1	SEAL-O-RING	
		1	**9S-4185**	1	PLUG-O-RING	
	14	1	*148-8433*	2	TEE AS	
					(EACH INCLUDES)	
		1	**6V-8397**	2	SEAL-O-RING	
		1	**6V-9836**	1	TEE-SWIVEL	
	15	1	*148-8435*	2	TEE AS	
					(EACH INCLUDES)	
		1	**3J-1907**	1	SEAL-O-RING	
		1	**6V-8397**	2	SEAL-O-RING	
		1	**6V-8781**	1	TEE-FACE SEAL	
B	16	1	**6V-9829**	4	CAP AS	
	17	1	**8T-4121**	2	WASHER-HARD (11X21X2.5-MM THK)	
M	18	1	**8T-4139**	4	BOLT (M12X1.75X30-MM)	
M	19	1	**8T-4198**	2	BOLT (M10X1.5X100-MM)	
	20	1	**8T-4223**	6	WASHER-HARD (13.5X25.5X3-MM THK)	
M	21	1	**8T-4910**	2	BOLT (M12X1.75X60-MM)	
	22	1	**124-1008**	1	GUARD	

B-USE AS REQUIRED
I-REFER TO HYDRAULIC INFORMATION SYSTEM
M-METRIC PART

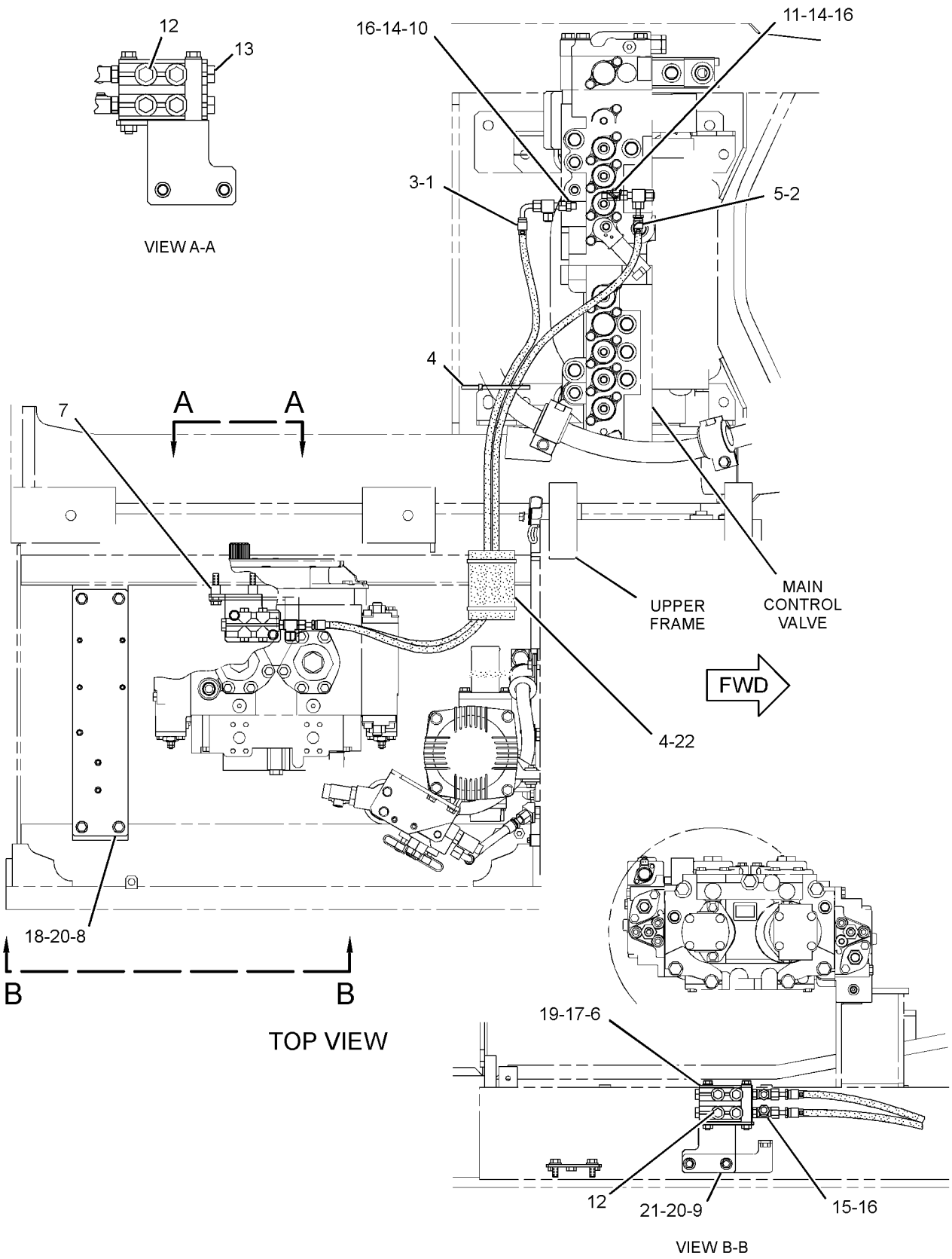

GRAPHIC #1

<END>

g01243672

306-1503 LINES GP-PILOT–DRAIN, HEAVY LIFT

S/N: MNB1-UP

PART OF 262-3586 SPECIAL AR-SUPER LONG REACH AN ATTACHMENT

SMCS-5057, 5059 **i02962825**

NOTE	REF NO	GRAPHIC REF	PART NUMBER	QTY	PART NAME 1 2 3 4 5 6 (PRODUCT LEVEL)	SEE PAGE
	1	1	**4I-9524**	2	BAND-MARKER (BROWN, L4)	
	2	1	**7K-1181**	3	STRAP-CABLE	
I	3	1	**7Y-5088**	1	HOSE AS	
	4	1	*148-8336*	1	CONNECTOR AS	
		1	**3J-1907**	1	SEAL-O-RING	
		1	**6V-8397**	1	SEAL-O-RING	
		1	**6V-8636**	1	CONNECTOR	
	5	1	*148-8367*	1	ELBOW AS	
		1	**6V-8397**	1	SEAL-O-RING	
		1	**6V-9850**	1	ELBOW	
	6	1	*148-8435*	1	TEE AS	
		1	**3J-1907**	1	SEAL-O-RING	
		1	**6V-8397**	2	SEAL-O-RING	
		1	**6V-8781**	1	TEE-FACE SEAL	

I-REFER TO HYDRAULIC INFORMATION SYSTEM

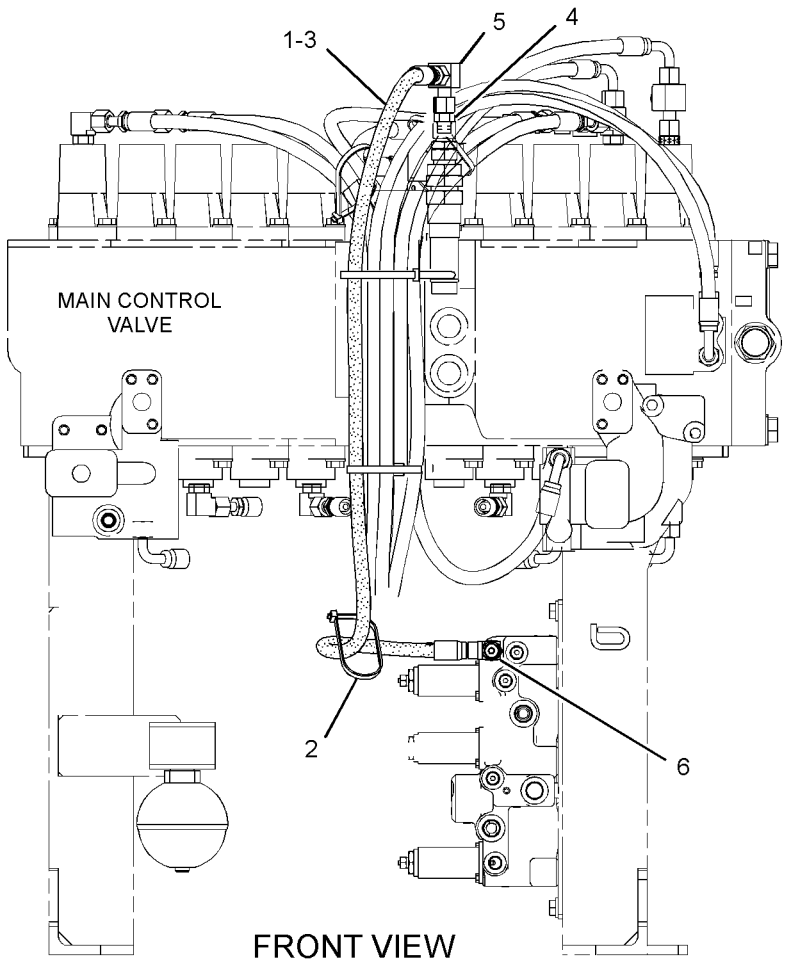

GRAPHIC #1 **<END>** g01506437

HYDRAULIC SYSTEM

227-0548 LINES GP-PUMP–SUPPLY

S/N: MNB1-UP; WDK1-UP

PART OF 255-5707, 255-5708 HYDRAULIC AR

SMCS-5057 **i02586498**

NOTE	REF NO	GRAPHIC REF	PART NUMBER	QTY	PART NAME 1 2 3 4 5 6 (PRODUCT LEVEL)	SEE PAGE
M	1	1	**113-2003**	4	BOLT-SOCKET HEAD (M16X2X40-MM)	
	2	1	**8T-4986**	4	CLAMP-HOSE	
	3	1	**236-2946**	1	TUBE AS	
	4	1	**278-6794**	1	TUBE AS	
	5	1	*148-8407*	1	PLUG AS	
		1	**3J-1907**	1	SEAL-O-RING	
		1	**9S-4191**	1	PLUG-O-RING	
	6	1	**1P-4578**	2	FLANGE-HALF	
	7	1	**202-3900**	1	HOSE	
	8	1	**4J-0522**	1	SEAL-O-RING	
	9	1	**5H-4020**	1	COVER	
	10	1	**5H-8624**	1	SEAL-O-RING	
	11	1	**6V-0400**	4	FLANGE-HALF	
	12	1	**8T-4121**	4	WASHER-HARD (11X21X2.5-MM THK)	
M	13	1	**8T-4194**	8	BOLT (M12X1.75X50-MM)	
M	14	1	**8T-4196**	4	BOLT (M10X1.5X35-MM)	
	15	1	**8T-4223**	8	WASHER-HARD (13.5X25.5X3-MM THK)	
M	16	1	**8T-7338**	4	BOLT (M16X2X45-MM)	
	17	1	**9M-3786**	1	SEAL-O-RING	
	18	1	**9X-8257**	4	WASHER (17.5X30X3.5-MM THK)	

M-METRIC PART

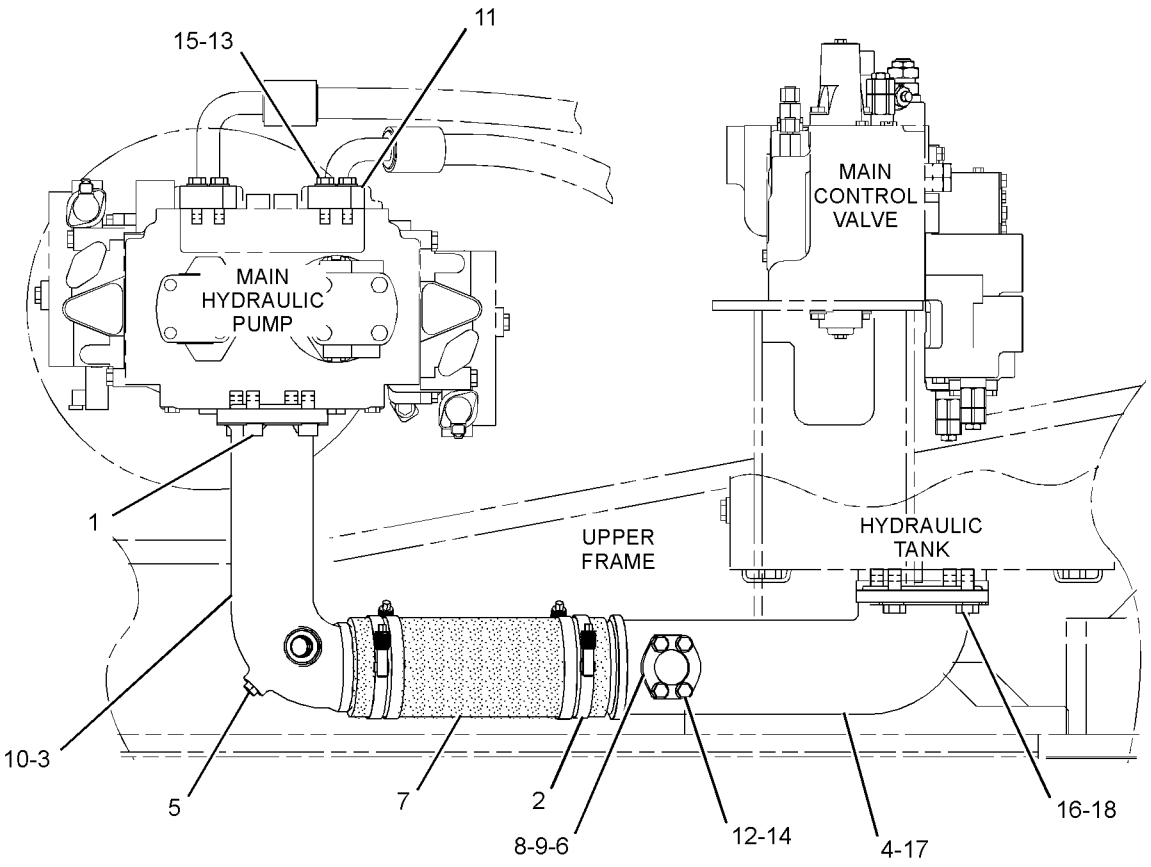

RIGHT SIDE VIEW

GRAPHIC #1 **<END>** g01290091

HYDRAULIC SYSTEM

248-9832 LINES GP-PUMP—MEDIUM FLOW

S/N: MNB1-UP; WDK1-UP
PART OF 255-5811 CONTROL AR-AUXILIARY
AN ATTACHMENT

SMCS-5057 **i02431543**

NOTE	REF NO	GRAPHIC REF	PART NUMBER	QTY	PART NAME 1 2 3 4 5 6 (PRODUCT LEVEL)	SEE PAGE
	1	1	**4I-7889**	1	SPACER (11X25X45-MM THK)	
	2	1	*106-8715*	2	ELBOW AS	
					(EACH INCLUDES)	
		1	**3D-2824**	1	SEAL-O-RING	
		1	**6V-9746**	1	SEAL-O-RING	
		1	**8C-8400**	1	ELBOW	
I	3	1	**260-7953**	1	HOSE AS	
I	4	1	**260-7956**	1	HOSE AS	
I	5	1	**275-1490**	1	HOSE AS	
	6	1	*148-8347*	1	ELBOW AS	
		1	**3D-2824**	1	SEAL-O-RING	
		1	**6V-9007**	1	ELBOW	
		1	**6V-9746**	1	SEAL-O-RING	
	7	1	*153-6237*	1	ELBOW AS	
		1	**3D-2824**	1	SEAL-O-RING	
		1	**6V-9004**	1	ELBOW	
		1	**6V-9746**	1	SEAL-O-RING	
	8	1	**1P-4578**	4	FLANGE-HALF	
	9	1	**4J-0522**	2	SEAL-O-RING	
	10	1	**5P-7468**	2	CLIP (SLOT)	
	11	1	**5P-7469**	2	CLIP (TAB)	
	12	1	**6V-1874**	2	GROMMET	
	13	1	**8T-4121**	9	WASHER-HARD (11X21X2.5-MM THK)	
M	14	1	**8T-4139**	1	BOLT (M12X1.75X30-MM)	
M	15	1	**8T-4196**	8	BOLT (M10X1.5X35-MM)	
	16	1	**8T-4223**	1	WASHER-HARD (13.5X25.5X3-MM THK)	
M	17	1	**8T-5005**	1	BOLT (M10X1.5X70-MM)	

I-REFER TO HYDRAULIC INFORMATION SYSTEM
M-METRIC PART

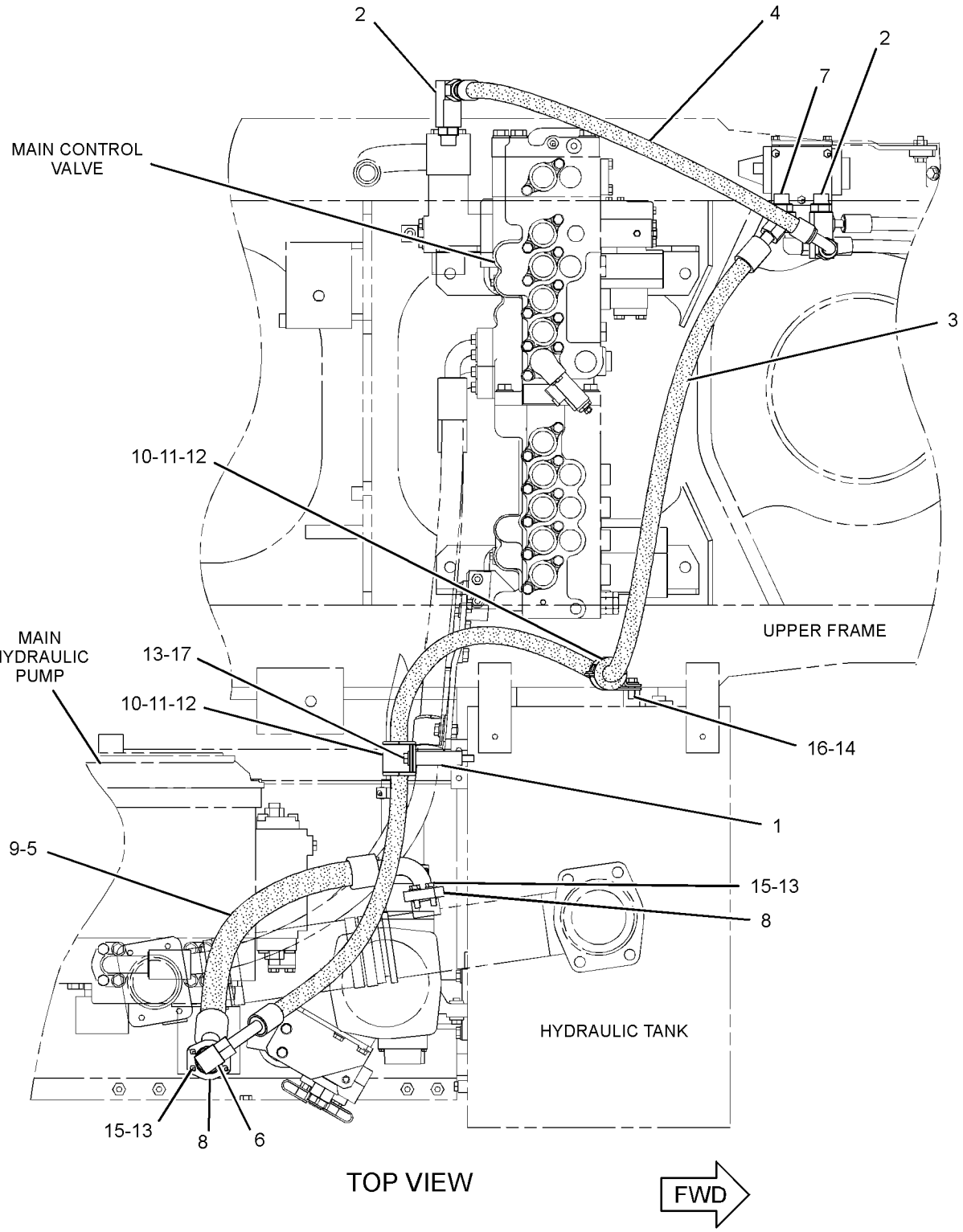

GRAPHIC #1 **<END>** g01216368

HYDRAULIC SYSTEM

248-9830 LINES GP-RETURN

S/N: MNB1-UP; WDK1-UP

PART OF 227-0565 TANK & MTG GP-HYDRAULIC

SMCS-5057 **i03110625**

NOTE	REF NO	GRAPHIC REF	PART NUMBER	QTY	PART NAME 1 2 3 4 5 6 (PRODUCT LEVEL)	SEE PAGE
I	1	1	**4I-7816**	1	HOSE AS	
	2	1	**4I-9527**	2	BAND-MARKER (GREEN, R3)	
	3	1	**7K-1181**	7	STRAP-CABLE	
I	4	1	**176-4770**	1	HOSE AS	
	5	1	**194-0079**	1	FITTING	
C	6	1	*307-5097*	1	TEE AS	
		1	**2M-9780**	1	SEAL-O-RING	
		1	**6V-8397**	1	SEAL-O-RING	
		1	**6V-8398**	1	SEAL-O-RING	
		1	**307-5098**	1	TEE-ORP TO ORFS	
	7	1	**266-0982**	1	GUARD	
C	8	1	*164-5608*	1	CONNECTOR AS	
		1	**3K-0360**	1	SEAL-O-RING	
		1	**6V-8398**	1	SEAL-O-RING	
		1	**8T-1687**	1	CONNECTOR	
	9	1	*148-8347*	1	ELBOW AS	
		1	**3D-2824**	1	SEAL-O-RING	
		1	**6V-9007**	1	ELBOW	
		1	**6V-9746**	1	SEAL-O-RING	
	10	1	*148-8354*	2	ELBOW AS	
					(EACH INCLUDES)	
		1	**3K-0360**	1	SEAL-O-RING	
		1	**6V-8398**	1	SEAL-O-RING	
		1	**6V-9002**	1	ELBOW	
	11	1	*148-8358*	1	ELBOW AS	
		1	**2M-9780**	1	SEAL-O-RING	
		1	**6V-8398**	1	SEAL-O-RING	
		1	**6V-8624**	1	ELBOW	
	12	1	*148-8363*	1	ELBOW AS	
		1	**3K-0360**	1	SEAL-O-RING	
		1	**6V-8397**	1	SEAL-O-RING	
		1	**6V-9876**	1	ELBOW	
	13	1	*148-8411*	2	PLUG AS	
					(EACH INCLUDES)	
		1	**3K-0360**	1	SEAL-O-RING	
		1	**9S-4185**	1	PLUG-O-RING	
	14	1	*153-6237*	1	ELBOW AS	
		1	**3D-2824**	1	SEAL-O-RING	
		1	**6V-9004**	1	ELBOW	
		1	**6V-9746**	1	SEAL-O-RING	
	15	1	**187-5659**	1	PIPE AS	
I	16	1	**275-1361**	1	HOSE AS	
	17	1	**3D-2824**	1	SEAL-O-RING	
	18	1	**5P-7464**	1	CLIP (SLOT)	
	19	1	**5P-7465**	1	CLIP (TAB)	
	20	1	**6J-2680**	1	SEAL-O-RING	
	21	1	**6V-8398**	1	SEAL-O-RING	
	22	1	**6V-9746**	1	SEAL-O-RING	
	23	1	**8T-2920**	1	GROMMET	
M	24	1	**8T-4139**	1	BOLT (M12X1.75X30-MM)	
	25	1	**8T-4223**	5	WASHER-HARD (13.5X25.5X3-MM THK)	
M	26	1	**8T-4956**	4	BOLT (M12X1.75X35-MM)	

C-CHANGE FROM PREVIOUS TYPE
I-REFER TO HYDRAULIC INFORMATION SYSTEM
M-METRIC PART

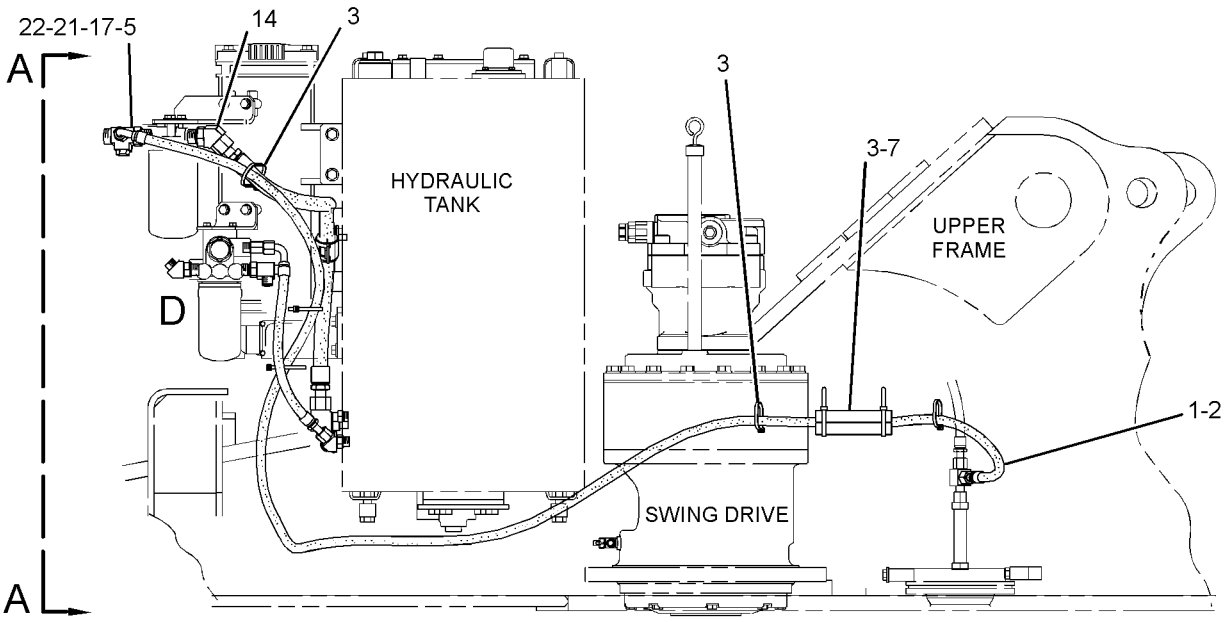

RIGHT SIDE VIEW

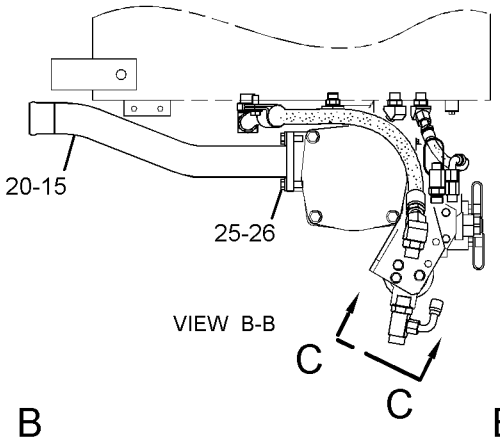

VIEW B-B

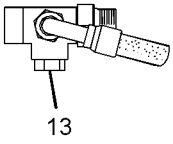

VIEW C-C

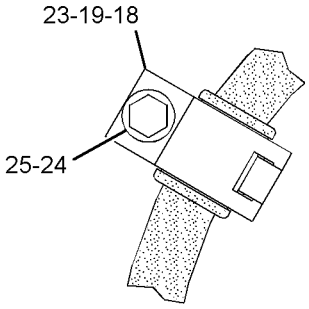

VIEW OF AREA E

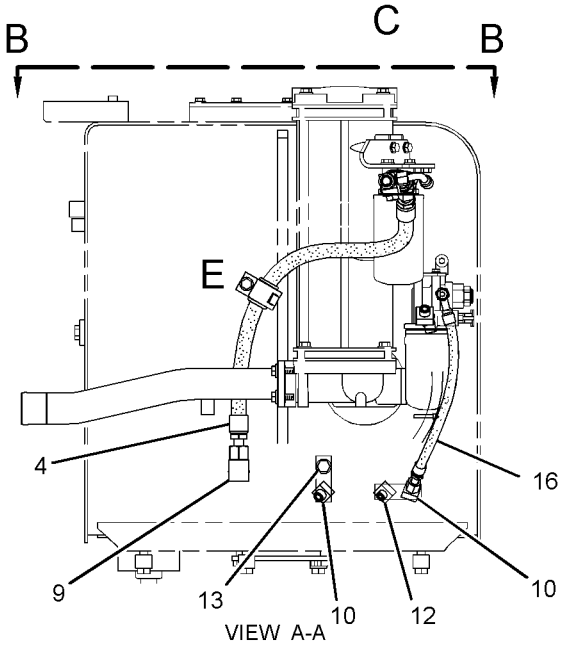

VIEW A-A

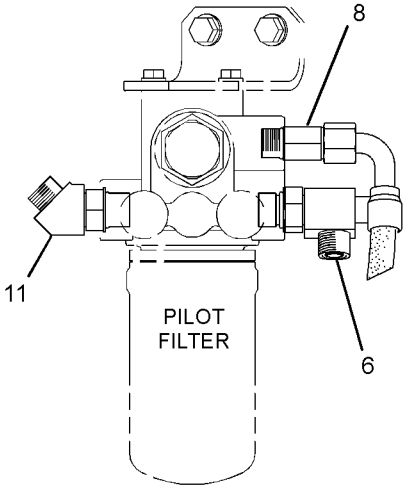

VIEW OF AREA D

GRAPHIC #1 **<END>** g01409398

255-1795 LINES GP-RETURN—LOAD CONTROL, BOOM CYLINDER

S/N: MNB1-UP; WDK1-UP
PART OF 255-5738 VALVE AR-LOAD CONTROL
AN ATTACHMENT

SMCS-5057 **i02650046**

NOTE	REF NO	GRAPHIC REF	PART NUMBER	QTY	PART NAME 1 2 3 4 5 6 (PRODUCT LEVEL)	SEE PAGE
I	1	1	**4I-8826**	1	HOSE AS	
	2	1	**201-9378**	1	BLOCK	
CI	3	1	**113-6612**	1	HOSE AS	
	4	1	*148-8355*	1	ELBOW AS	
		1	**5K-9090**	1	SEAL-O-RING	
		1	**6V-9005**	1	ELBOW	
		1	**7M-8485**	1	SEAL-O-RING	
	5	1	*148-8357*	1	ELBOW AS	
		1	**5K-9090**	1	SEAL-O-RING	
		1	**6V-9008**	1	ELBOW	
		1	**7M-8485**	1	SEAL-O-RING	
	6	1	*148-8411*	1	PLUG AS	
		1	**3K-0360**	1	SEAL-O-RING	
		1	**9S-4185**	1	PLUG-O-RING	
	7	1	**1P-3703**	1	SEAL-RECTANGULAR	
	8	1	**207-6449**	1	BLOCK	
	9	1	**4J-5268**	1	SEAL-O-RING	
	10	1	**6V-9746**	1	SEAL-O-RING	
	11	1	**7M-8485**	1	SEAL-O-RING	

C-CHANGE FROM PREVIOUS TYPE
I-REFER TO HYDRAULIC INFORMATION SYSTEM

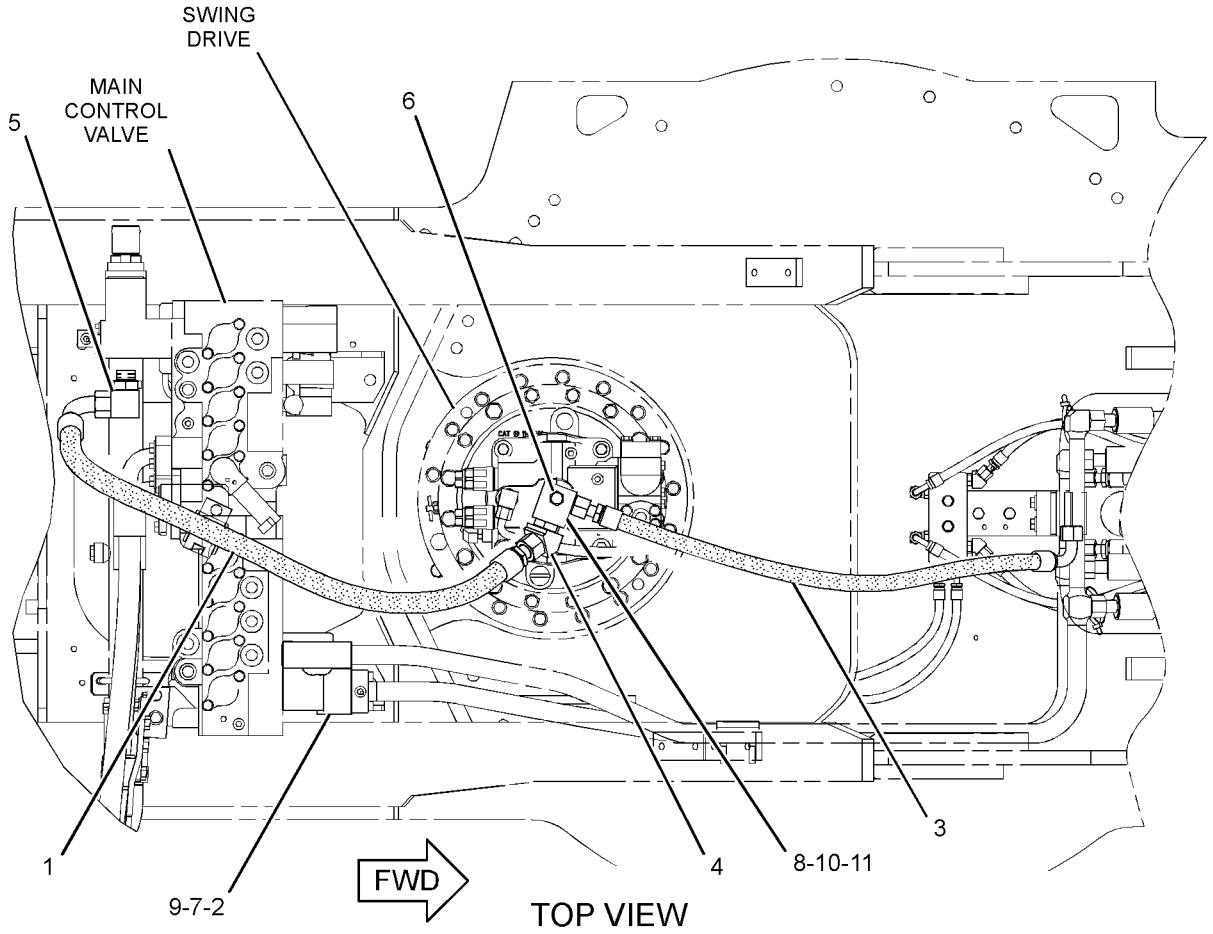

GRAPHIC #1 **<END>** g01184502

127-6634 LINES GP-STICK–LONG REACH

S/N: MNB1-UP
PART OF 262-3586 SPECIAL AR-SUPER LONG REACH
FOR USE WITH 7.85M (25.75 FT) STICK
AN ATTACHMENT

SMCS-5057, 5458 **i01884210**

NOTE	REF NO	GRAPHIC REF	PART NUMBER	QTY	PART NAME 1 2 3 4 5 6 (PRODUCT LEVEL)	SEE PAGE
I	1	1	**5I-4447**	2	HOSE AS	
	2	1	**6V-9746**	10	SEAL-O-RING	
	3	1	**7Y-6448**	1	TUBE AS	
	4	1	**7Y-6447**	1	TUBE AS	
	5	1	**7Y-6449**	2	TUBE AS	
I	6	1	**7Y-7904**	2	HOSE AS	
	7	1	**7Y-4868**	20	CLIP	
M	8	1	**8T-4139**	20	BOLT (M12X1.75X30-MM)	
	9	1	**8T-4223**	20	WASHER-HARD (13.5X25.5X3-MM THK)	

I-REFER TO HYDRAULIC INFORMATION SYSTEM
M-METRIC PART

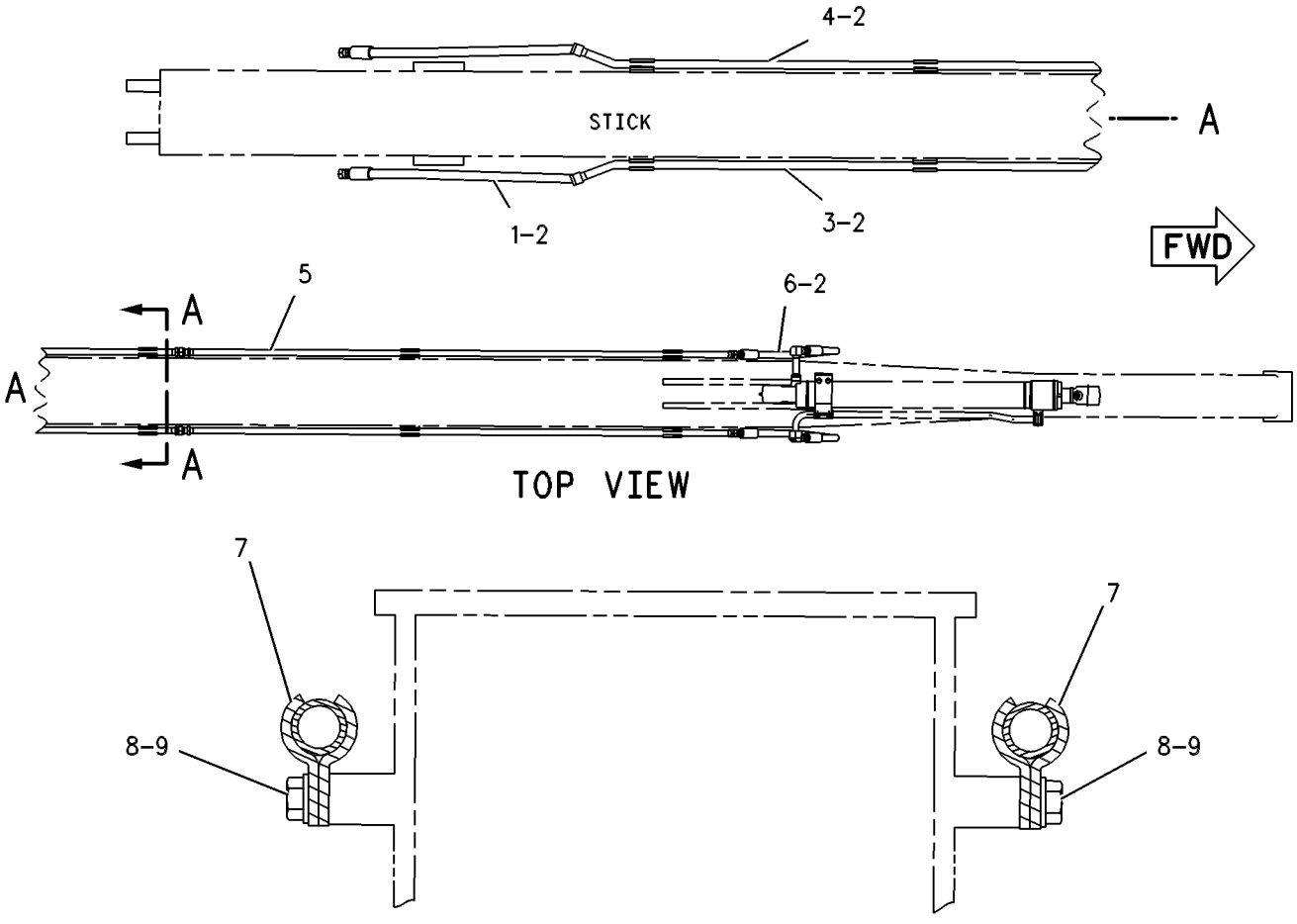

GRAPHIC #1 **<END>** g00263669

HYDRAULIC SYSTEM

236-2968 LINES GP-STICK

S/N: MNB1-UP; WDK1-UP
PART OF 229-1764, 240-4030 STICK AR-HOE
AN ATTACHMENT

SMCS-5057, 5458 **i02347126**

NOTE	REF NO	GRAPHIC REF	PART NUMBER	QTY	PART NAME 1 2 3 4 5 6 (PRODUCT LEVEL)	SEE PAGE
	1	1	**5I-4188**	1	BLOCK	
I	2	1	**5I-4494**	2	HOSE AS	
	3	1	**1P-3702**	2	SEAL-RECTANGULAR	
	4	1	**1P-3703**	1	SEAL-RECTANGULAR	
	5	1	**8T-4121**	8	WASHER-HARD (11X21X2.5-MM THK)	
M	6	1	**8T-4182**	4	BOLT (M10X1.5X45-MM)	
M	7	1	**8T-5436**	4	BOLT (M10X1.5X130-MM)	
	8	1	**8T-9403**	4	FLANGE-HALF	

I-REFER TO HYDRAULIC INFORMATION SYSTEM
M-METRIC PART

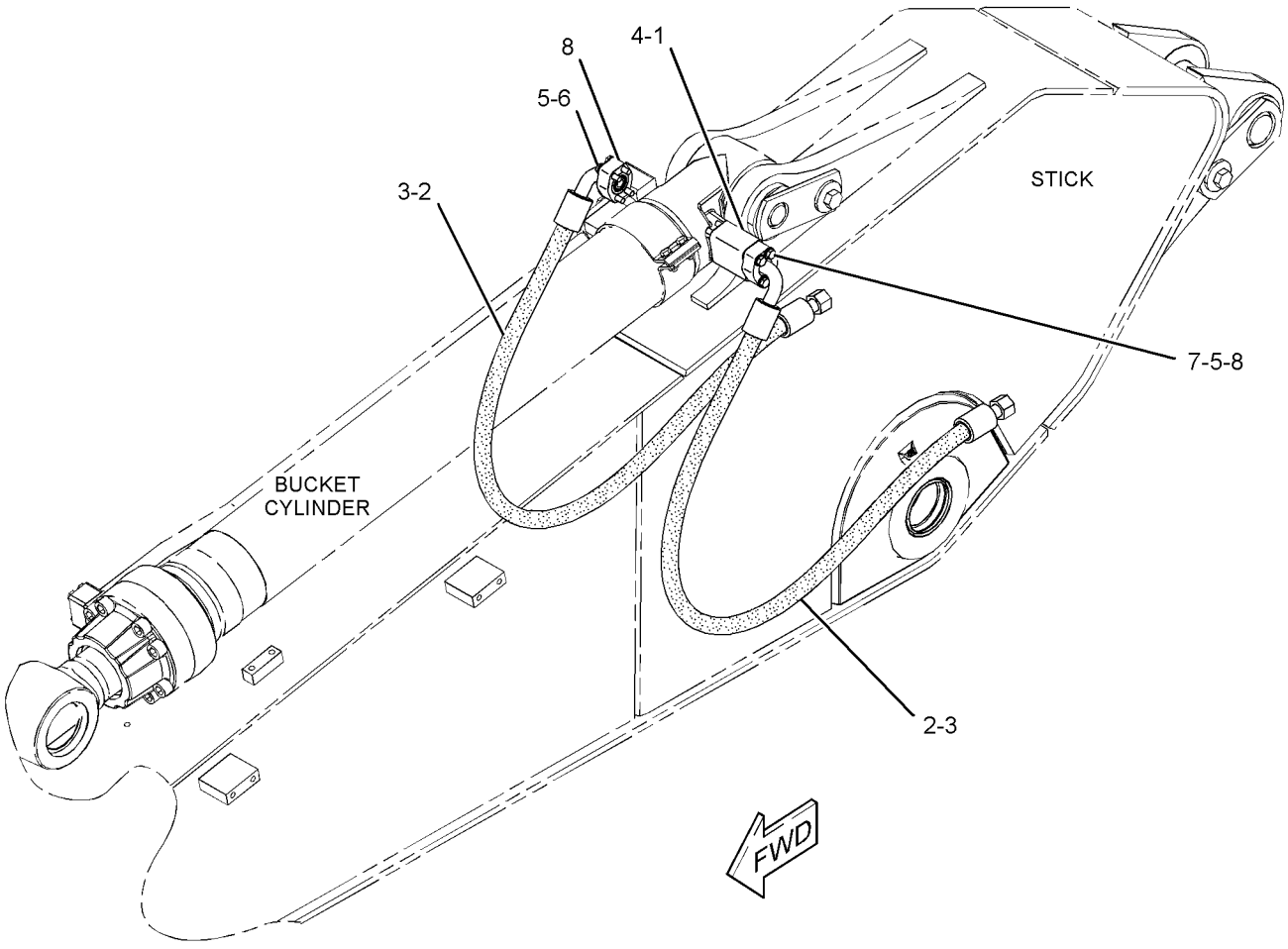

GRAPHIC #1 **<END>** g01179143

216-6617 LINES GP-STICK CYLINDER—LONG REACH

S/N: MNB1-UP

PART OF 216-6605 CYLINDER & LINES GP-STICK

AN ATTACHMENT

SMCS-5458 **i01885132**

NOTE	REF NO	GRAPHIC REF	PART NUMBER	QTY	PART NAME 1 2 3 4 5 6 (PRODUCT LEVEL)	SEE PAGE
	1	1	**216-6645**	1	TUBE AS	
	2	1	**1P-3704**	2	SEAL-RECTANGULAR	
M	3	1	**8T-4648**	8	BOLT (M12X1.75X70-MM)	
M	4	1	**8T-4196**	4	BOLT (M10X1.5X35-MM)	
	5	1	**8T-4121**	4	WASHER-HARD (11X21X2.5-MM THK)	
	6	1	**119-2378**	1	SUPPORT AS	
M		1	**8T-3490**	2	NUT-WELD (M10X1.5-THD)	
	7	1	**8T-4223**	2	WASHER-HARD (13.5X25.5X3-MM THK)	
M	8	1	**8T-4139**	2	BOLT (M12X1.75X30-MM)	
	9	1	**7Y-3732**	2	CLIP	
	10	1	**119-2379**	1	SUPPORT AS	
M		1	**8T-3490**	2	NUT-WELD (M10X1.5-THD)	
	11	1	**6I-6721**	1	ELBOW	

M-METRIC PART

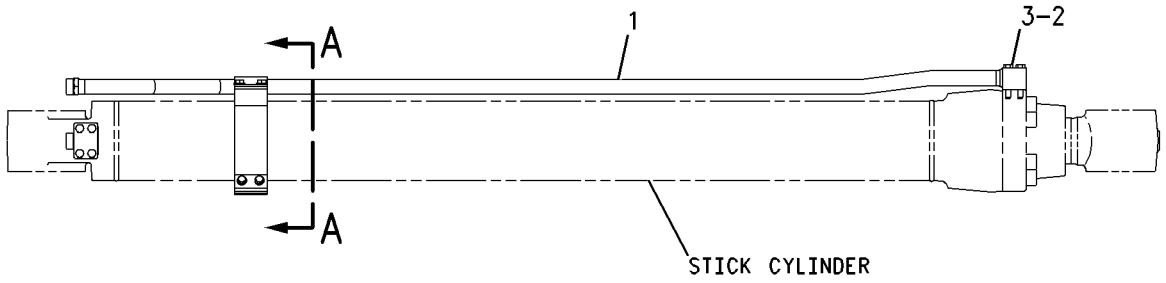

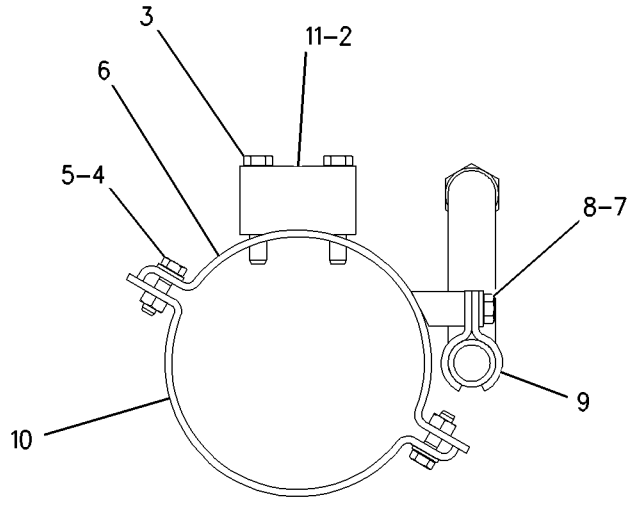

VIEW A-A

GRAPHIC #1 **<END>** g00946817

HYDRAULIC SYSTEM

225-4589 LINES GP-STICK CYLINDER

S/N: MNB1-UP; WDK1-UP

PART OF 225-4587, 225-4596, 259-0777 CYLINDER & LINES GP-STICK

AN ATTACHMENT

SMCS-5458 **i02345846**

NOTE	REF NO	GRAPHIC REF	PART NUMBER	QTY	PART NAME 1 2 3 4 5 6 (PRODUCT LEVEL)	SEE PAGE
	1	1	**234-4579**	1	TUBE AS	
	2	1	**095-1600**	1	SEAL-O-RING	
M	3	1	**6V-8200**	4	BOLT-SOCKET HEAD (M12X1.75X35-MM)	
M	4	1	**8T-4196**	2	BOLT (M10X1.5X35-MM)	
	5	1	**8T-4896**	2	WASHER-HARD (10.2X18.5X2.5-MM THK)	
	6	1	**124-0914**	1	SUPPORT	
	7	1	**194-8380**	1	SUPPORT AS	
	8	1	**096-4447**	1	CLAMP	
M	9	1	**8T-4910**	1	BOLT (M12X1.75X60-MM)	
	10	1	**8T-4223**	1	WASHER-HARD (13.5X25.5X3-MM THK)	

M-METRIC PART

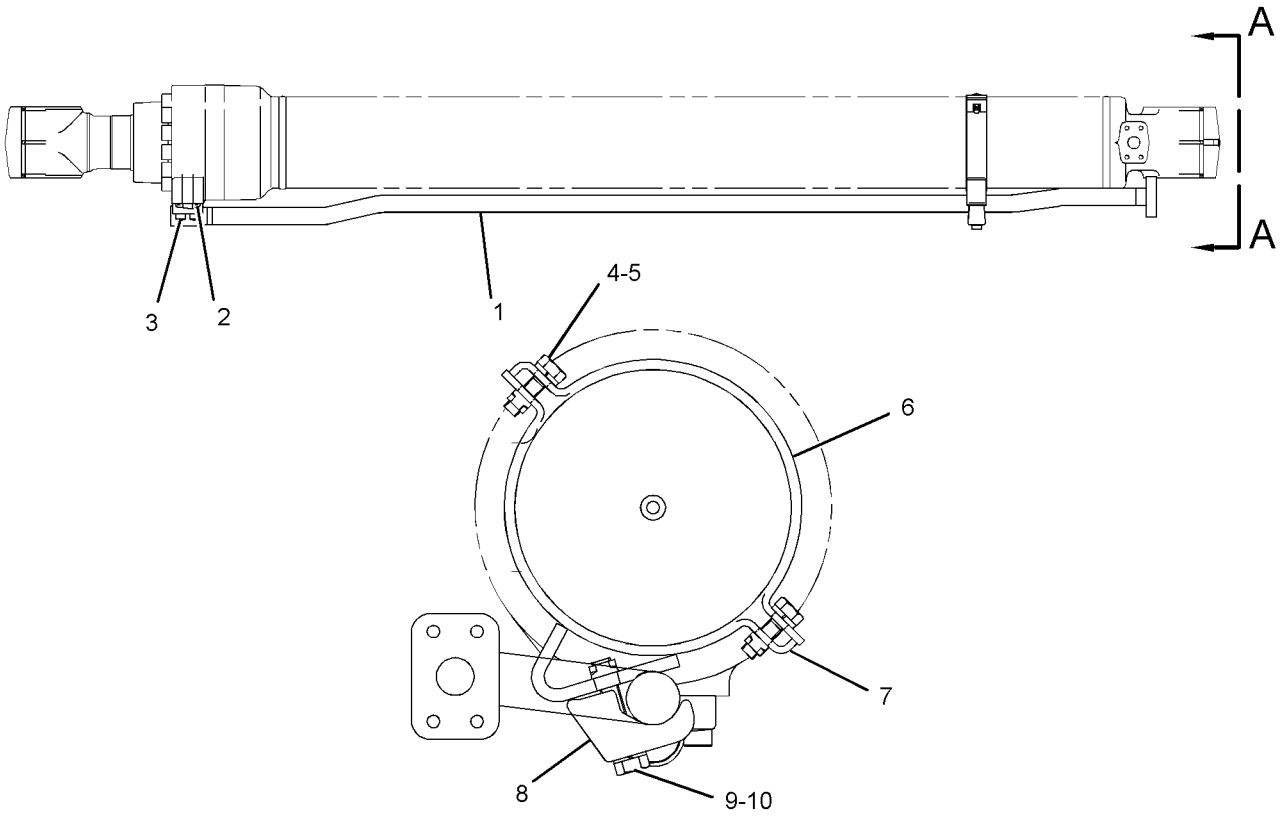

VIEW A-A

GRAPHIC #1 **<END>** g01189986

HYDRAULIC SYSTEM

237-3012 LINES GP-STICK CYLINDER—LOWERING CONTROL

S/N: MNB1-UP; WDK1-UP

PART OF 255-5740 VALVE AR-CHECK & RELIEF, 310-0060 VALVE AR-LOAD CONTROL AN ATTACHMENT

SMCS-5458 **i02485234**

NOTE	REF NO	GRAPHIC REF	PART NUMBER	QTY	PART NAME 1 2 3 4 5 6 (PRODUCT LEVEL)	SEE PAGE
	1	1	**093-1294**	2	CLAMP	
	2	1	**119-2379**	2	SUPPORT AS	
	3	1	**179-5235**	4	CLIP	
	4	1	**188-0072**	2	SUPPORT AS	
Y	5	1	**225-4843**	1	VALVE GP-LOAD CONTROL (STICK CYLINDER)	764
	6	1	**237-3090**	1	TUBE AS	
	7	1	**237-3092**	1	TUBE AS	
	8	1	**237-3094**	1	TUBE AS	
	9	1	**268-7065**	1	TUBE AS	
M	10	1	**107-2724**	4	BOLT-SOCKET HEAD (M12X1.75X100-MM)	
	11	1	*148-8328*	1	CONNECTOR AS	
		1	**3D-2824**	1	SEAL-O-RING	
		1	**6V-8398**	1	SEAL-O-RING	
		1	**6V-8633**	1	CONNECTOR	
	12	1	*148-8368*	2	ELBOW AS	
					(EACH INCLUDES)	
		1	**3J-1907**	1	SEAL-O-RING	
		1	**4J-5477**	1	SEAL-O-RING	
		1	**6V-8627**	1	ELBOW	
	13	1	**1P-3703**	1	SEAL-RECTANGULAR	
	14	1	**1P-3704**	1	SEAL-RECTANGULAR	
	15	1	**6V-8397**	2	SEAL-O-RING	
	16	1	**6V-8398**	1	SEAL-O-RING	
	17	1	**8T-4121**	10	WASHER-HARD (11X21X2.5-MM THK)	
M	18	1	**8T-4139**	4	BOLT (M12X1.75X30-MM)	
M	19	1	**8T-4186**	2	BOLT (M10X1.5X40-MM)	
M	20	1	**8T-4196**	8	BOLT (M10X1.5X35-MM)	
	21	1	**8T-4223**	8	WASHER-HARD (13.5X25.5X3-MM THK)	
M	22	1	**8T-4648**	4	BOLT (M12X1.75X70-MM)	

M-METRIC PART
Y-SEPARATE ILLUSTRATION

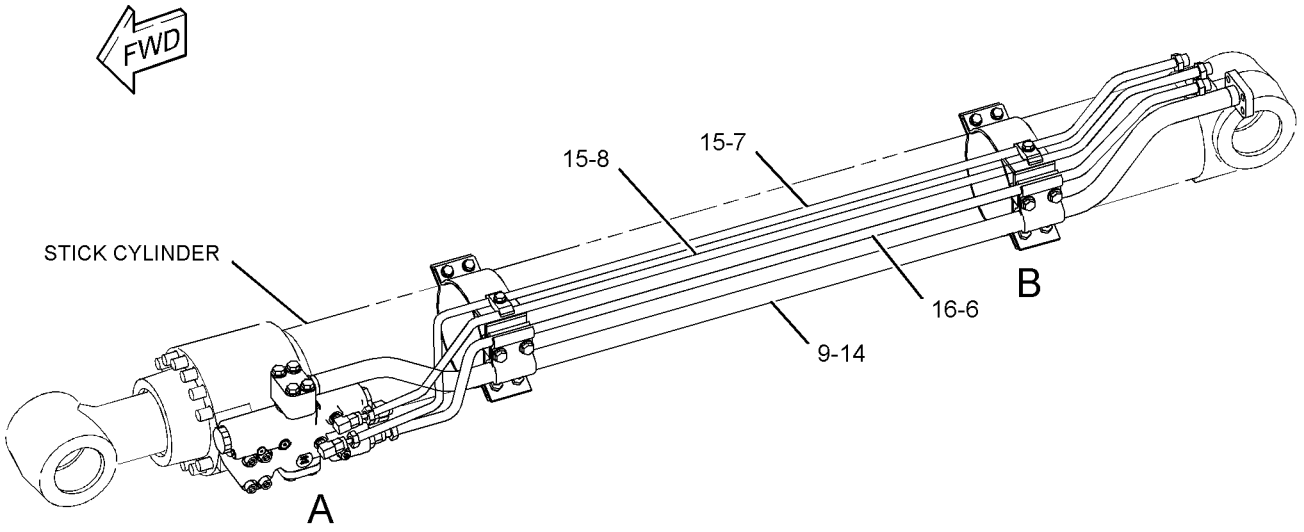

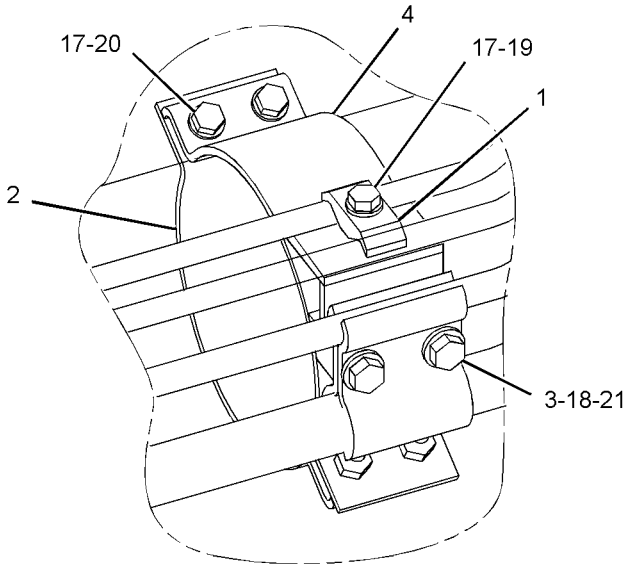

VIEW OF AREA B

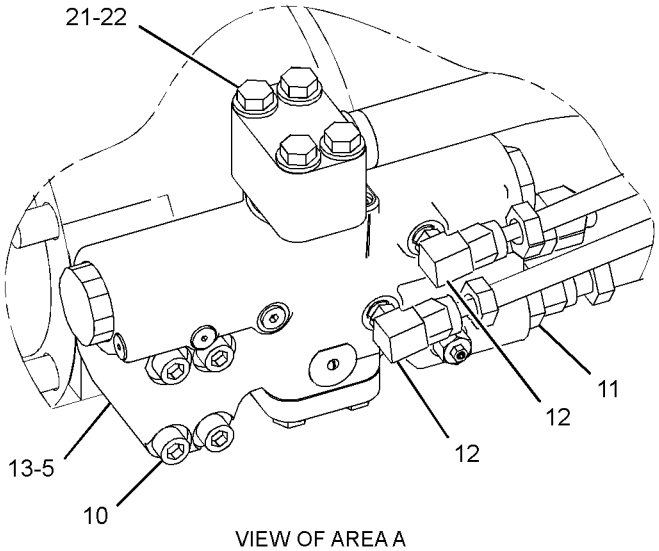

VIEW OF AREA A

GRAPHIC #1 **<END>** g01250435

266-8043 LINES GP-STICK CYLINDER

S/N: MNB1-UP; WDK1-UP
PART OF 266-7989 CYLINDER & LINES GP-STICK
AN ATTACHMENT

SMCS-5458 **i02989528**

NOTE	REF NO	GRAPHIC REF	PART NUMBER	QTY	PART NAME 1 2 3 4 5 6 (PRODUCT LEVEL)	SEE PAGE
M	1	1	**6V-8200**	4	BOLT-SOCKET HEAD (M12X1.75X35-MM)	
	2	1	**266-7965**	1	SEAL-O-RING	
	3	1	**234-4579**	1	TUBE AS	
M	4	1	**8T-4196**	2	BOLT (M10X1.5X35-MM)	
	5	1	**8T-4896**	2	WASHER-HARD (10.2X18.5X2.5-MM THK)	
	6	1	**124-0914**	1	SUPPORT	
	7	1	**194-8380**	1	SUPPORT AS	
	8	1	**096-4447**	1	CLAMP	
M	9	1	**8T-4648**	1	BOLT (M12X1.75X70-MM)	
	10	1	**8T-4223**	1	WASHER-HARD (13.5X25.5X3-MM THK)	

M-METRIC PART

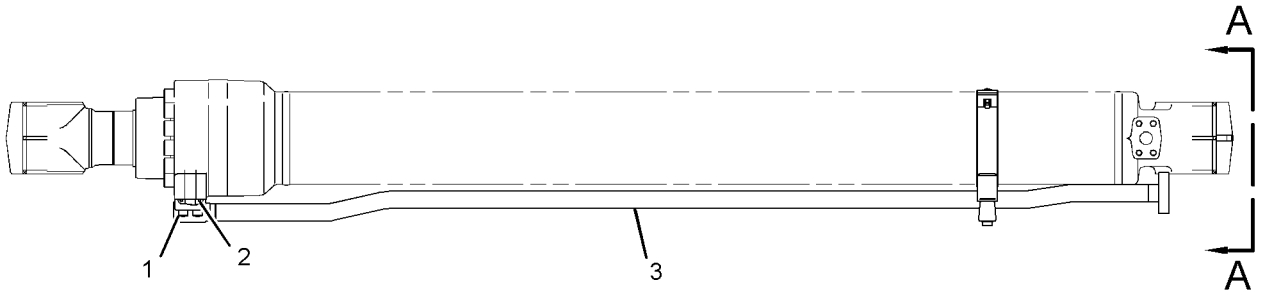

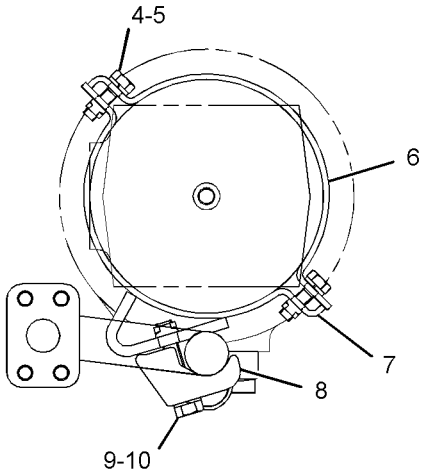

VIEW A-A

GRAPHIC #1 **<END>** g01246909

HYDRAULIC SYSTEM

255-1767 LINES GP-SWING DRIVE DRAIN

S/N: MNB1-UP; WDK1-UP
AN ATTACHMENT

SMCS-5057, 5459 **i02345034**

NOTE	REF NO	GRAPHIC REF	PART NUMBER	QTY	PART NAME 1 2 3 4 5 6 (PRODUCT LEVEL)	SEE PAGE
I	1	1	**187-6967**	1	HOSE AS	
	2	1	*148-8370*	1	ELBOW AS	
		1	**6V-8398**	1	SEAL-O-RING	
		1	**6V-9851**	1	ELBOW	
	3	1	*148-8428*	1	TEE AS	
		1	**3K-0360**	1	SEAL-O-RING	
		1	**6V-8398**	2	SEAL-O-RING	
		1	**6V-8782**	1	TEE	
	4	1	**7K-1181**	1	STRAP-CABLE	

I-REFER TO HYDRAULIC INFORMATION SYSTEM

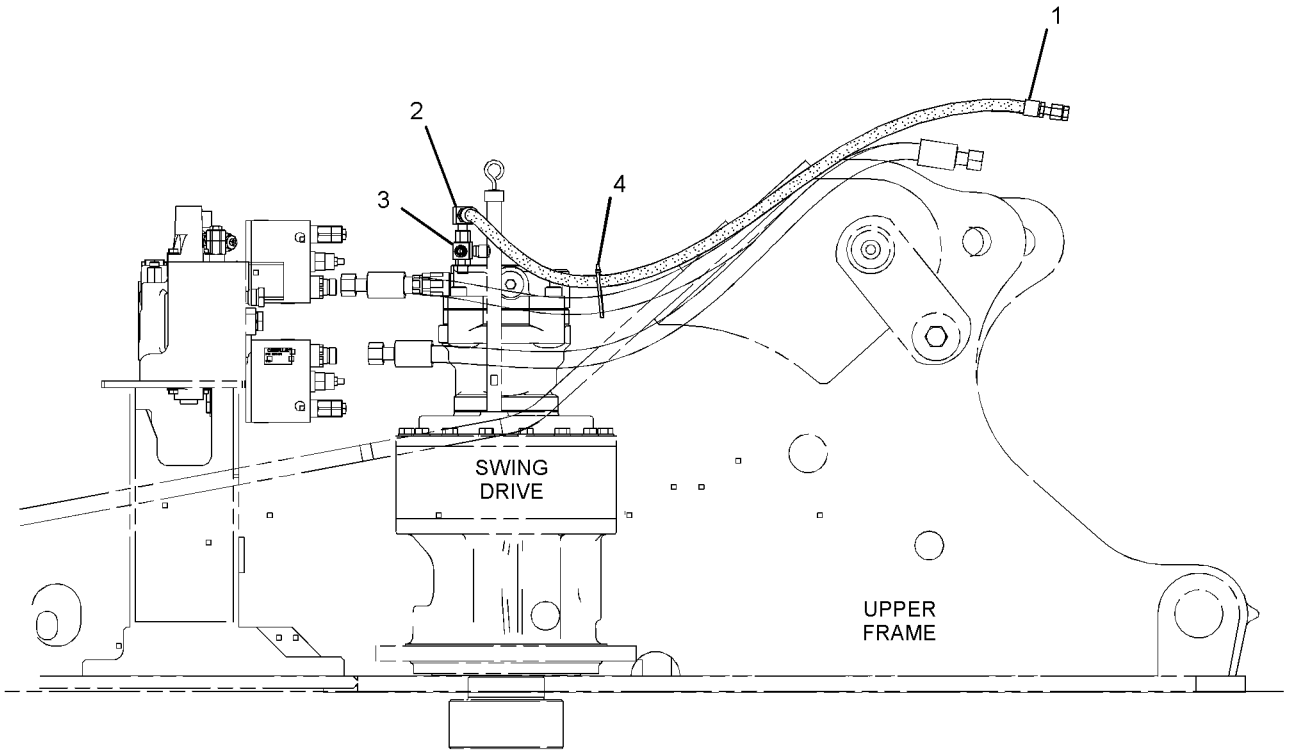

RIGHT SIDE VIEW

GRAPHIC #1 **<END>** g01189815

HYDRAULIC SYSTEM

227-0542 LINES GP-TRAVEL MOTOR

S/N: WDK1-UP

PART OF 255-5707 HYDRAULIC AR

SMCS-5057, 5058 **i03084914**

NOTE	REF NO	GRAPHIC REF	PART NUMBER	QTY	PART NAME 1 2 3 4 5 6 (PRODUCT LEVEL)	SEE PAGE
	1	1	**7K-1181**	4	STRAP-CABLE	
	2	1	**108-7118**	4	GROMMET	
I	3	1	**108-7433**	2	HOSE AS	
I	4	1	**179-7616**	2	HOSE AS	
I	5	1	**227-0621**	4	HOSE AS	
Y	6	1	**234-4440**	1	SWIVEL GP	720
	7	1	*148-8336*	2	CONNECTOR AS	
					(EACH INCLUDES)	
		1	**3J-1907**	1	SEAL-O-RING	
		1	**6V-8397**	1	SEAL-O-RING	
		1	**6V-8636**	1	CONNECTOR	
	8	1	*148-8340*	2	CONNECTOR AS	
					(EACH INCLUDES)	
		1	**3K-0360**	1	SEAL-O-RING	
		1	**6V-8398**	1	SEAL-O-RING	
		1	**6V-8639**	1	CONNECTOR	
	10	1	*148-8372*	1	ELBOW AS	
		1	**2M-9780**	1	SEAL-O-RING	
		1	**6V-8398**	1	SEAL-O-RING	
		1	**6V-8721**	1	ELBOW	
	11	1	*150-4037*	1	TEE AS	
		1	**6V-8398**	2	SEAL-O-RING	
		1	**6V-9844**	1	TEE-SWIVEL	
	12	1	*150-4044*	2	CONNECTOR AS	
					(EACH INCLUDES)	
		1	**3J-1907**	1	SEAL-O-RING	
		1	**6V-8397**	1	SEAL-O-RING	
		1	**8T-1779**	1	CONNECTOR	
	13	1	**1P-3703**	8	SEAL-RECTANGULAR	
	14	1	**6V-0400**	24	FLANGE-HALF	
	15	1	**8T-4121**	6	WASHER-HARD (11X21X2.5-MM THK)	
M	16	1	**8T-4136**	6	BOLT (M10X1.5X25-MM)	
M	17	1	**8T-4184**	48	BOLT (M12X1.75X45-MM)	
	18	1	**8T-4223**	48	WASHER-HARD (13.5X25.5X3-MM THK)	
B	19	1	**1U-8846**		SEALANT-GASKET	

B-USE AS REQUIRED
I-REFER TO HYDRAULIC INFORMATION SYSTEM
M-METRIC PART
Y-SEPARATE ILLUSTRATION

227-0542 **LINES GP-TRAVEL MOTOR** *(contd.)* **i03084914**

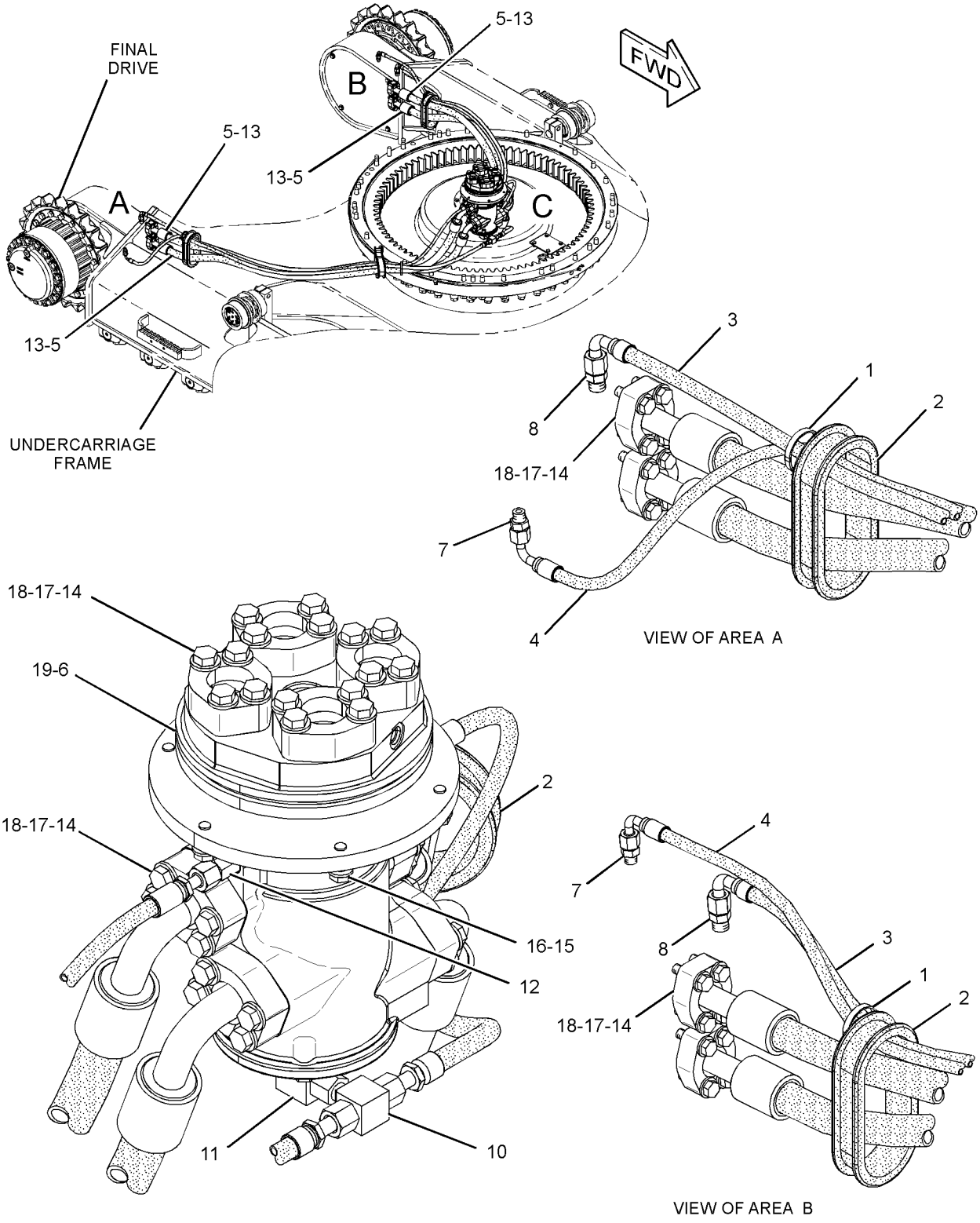

GRAPHIC #1 **<END>** g01596253

227-0543 LINES GP-TRAVEL MOTOR—LONG UNDERCARRIAGE

S/N: MNB1-UP

PART OF 255-5708 HYDRAULIC AR

SMCS-5057, 5058 **i03140182**

NOTE	REF NO	GRAPHIC REF	PART NUMBER	QTY	PART NAME 1 2 3 4 5 6 (PRODUCT LEVEL)	SEE PAGE
I	1	1	**5I-8853**	2	HOSE AS	
	2	1	**7K-1181**	4	STRAP-CABLE	
	3	1	**108-7118**	4	GROMMET	
I	4	1	**227-0674**	4	HOSE AS	
Y	5	1	**234-4440**	1	SWIVEL GP	720
	6	1	**236-3134**	2	HOSE AS	
	7	1	*148-8336*	2	CONNECTOR AS	
					(EACH INCLUDES)	
		1	**3J-1907**	1	SEAL-O-RING	
		1	**6V-8397**	1	SEAL-O-RING	
		1	**6V-8636**	1	CONNECTOR	
	8	1	*148-8340*	2	CONNECTOR AS	
					(EACH INCLUDES)	
		1	**3K-0360**	1	SEAL-O-RING	
		1	**6V-8398**	1	SEAL-O-RING	
		1	**6V-8639**	1	CONNECTOR	
	10	1	*148-8372*	1	ELBOW AS	
		1	**2M-9780**	1	SEAL-O-RING	
		1	**6V-8398**	1	SEAL-O-RING	
		1	**6V-8721**	1	ELBOW	
	11	1	*150-4037*	1	TEE AS	
		1	**6V-8398**	2	SEAL-O-RING	
		1	**6V-9844**	1	TEE-SWIVEL	
	12	1	*150-4044*	2	CONNECTOR AS	
					(EACH INCLUDES)	
		1	**3J-1907**	1	SEAL-O-RING	
		1	**6V-8397**	1	SEAL-O-RING	
	13	1	**1P-3703**	8	SEAL-RECTANGULAR	
	14	1	**6V-0400**	24	FLANGE-HALF	
	15	1	**8T-4121**	6	WASHER-HARD (11X21X2.5-MM THK)	
M	16	1	**8T-4136**	6	BOLT (M10X1.5X25-MM)	
M	17	1	**8T-4184**	48	BOLT (M12X1.75X45-MM)	
	18	1	**8T-4223**	48	WASHER-HARD (13.5X25.5X3-MM THK)	
B	19	1	**1U-8846**		SEALANT-GASKET	

B-USE AS REQUIRED
I-REFER TO HYDRAULIC INFORMATION SYSTEM
M-METRIC PART
Y-SEPARATE ILLUSTRATION

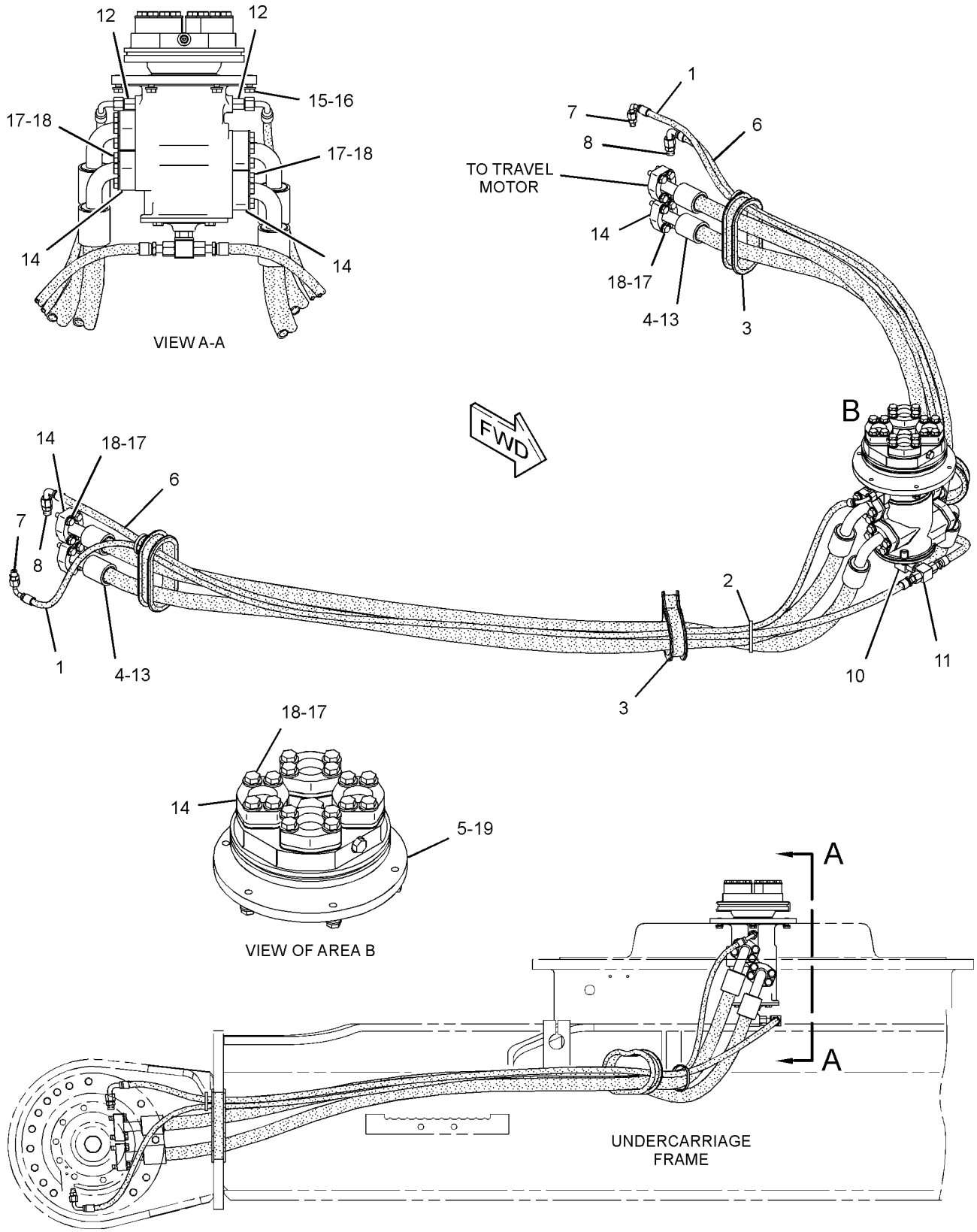

RIGHT SIDE VIEW

GRAPHIC #1

<END>

g01397105

215-5037 MANIFOLD GP-CONTROL—PILOT OIL SUPPLY

S/N: MNB1-UP; WDK1-UP

PART OF 248-9827 LINES GP-PILOT

SMCS-5264 **i02092079**

NOTE	PART NUMBER	QTY	PART NAME 1 2 3 4 5 6 (PRODUCT LEVEL)	SEE PAGE
Y	*239-8998*	1	MANIFOLD GP-CONTROL (PILOT OIL SUPPLY) (STEEL BODY)	699
			-OR-	
Y	*239-8697*	1	MANIFOLD GP-CONTROL (PILOT OIL SUPPLY) (ALUMINUM BODY)	698

Y-SEPARATE ILLUSTRATION

<END>

HYDRAULIC SYSTEM

239-8697 MANIFOLD GP-CONTROL—PILOT OIL SUPPLY

S/N: MNB1-UP; WDK1-UP
ALUMINUM BODY
PART OF 215-5037 MANIFOLD GP-CONTROL

SMCS-5264 **i02092727**

NOTE	REF NO	GRAPHIC REF	PART NUMBER	QTY	PART NAME 1 2 3 4 5 6 (PRODUCT LEVEL)	SEE PAGE
Y	1	1	**121-1491**	1	VALVE GP-SOLENOID (SWING BRAKE RELEASE)	809
Y	2	1	**121-1491**	1	VALVE GP-SOLENOID (HYDRAULIC LOCKOUT)	809
Y	3	1	**121-1491**	1	VALVE GP-SOLENOID (TRAVEL SPEED)	809
	4	1	**197-0196**	1	VALVE-CHECK	
	5	1	**197-0199**	1	SPRING	
	6	1	**197-0273**	1	SPRING	
Z	7	1		1	MANIFOLD GP-CONTROL	
	8	1	**3J-1907**	1	SEAL-O-RING	
	9	1	**3K-0360**	4	SEAL-O-RING	
	10	1	**4J-7533**	6	SEAL-O-RING	
M	11	1	**7I-2272**	6	BOLT (M5X0.8X12-MM)	
	12	1	**9S-8001**	6	PLUG-O-RING	
	13	1	**9S-8004**	1	PLUG-O-RING	
	14	1	**9S-8005**	4	PLUG-O-RING	

M-METRIC PART
Y-SEPARATE ILLUSTRATION
Z-NOT SERVICED SEPARATELY

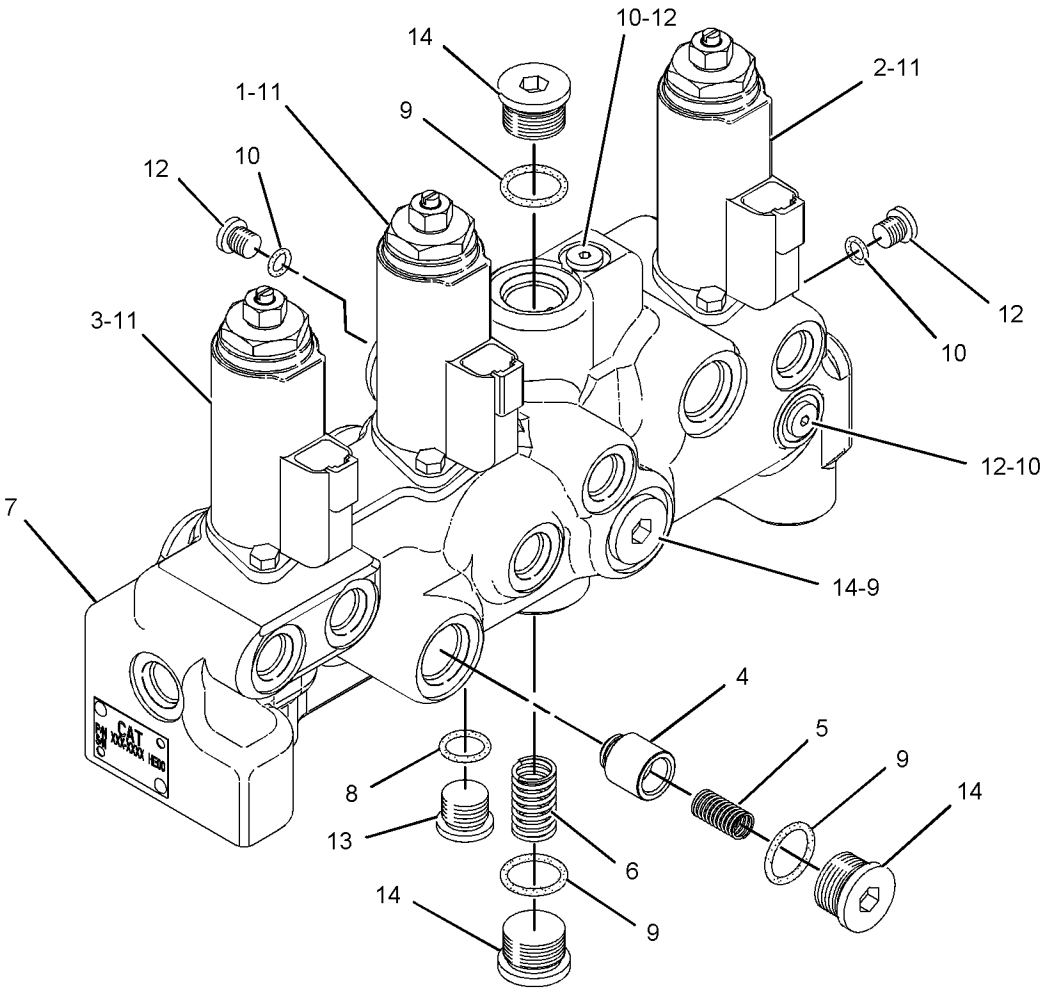

GRAPHIC #1 **<END>** g01084474

239-8998 MANIFOLD GP-CONTROL—PILOT OIL SUPPLY

S/N: MNB1-UP; WDK1-UP
STEEL BODY
PART OF 215-5037 MANIFOLD GP-CONTROL

SMCS-5264 **i02092174**

NOTE	REF NO	GRAPHIC REF	PART NUMBER	QTY	PART NAME 1 2 3 4 5 6 (PRODUCT LEVEL)	SEE PAGE
Y	1	1	**121-1491**	1	VALVE GP-SOLENOID (SWING BRAKE RELEASE)	809
Y	2	1	**121-1491**	1	VALVE GP-SOLENOID (HYDRAULIC LOCKOUT)	809
Y	3	1	**121-1491**	1	VALVE GP-SOLENOID (TRAVEL SPEED)	809
	4	1	**197-0196**	1	VALVE-CHECK	
Z	5	1		1	MANIFOLD GP-CONTROL	
	6	1	**197-0199**	1	SPRING	
	7	1	**197-0273**	1	SPRING	
	8	1	**3K-0360**	3	SEAL-O-RING	
M	9	1	**7I-2272**	6	BOLT (M5X0.8X12-MM)	
	10	1	**7M-7410**	2	PLUG-PIPE	
	11	1	**8T-6759**	6	PLUG-PIPE	
	12	1	**9S-8005**	3	PLUG-O-RING	

M-METRIC PART
Y-SEPARATE ILLUSTRATION
Z-NOT SERVICED SEPARATELY

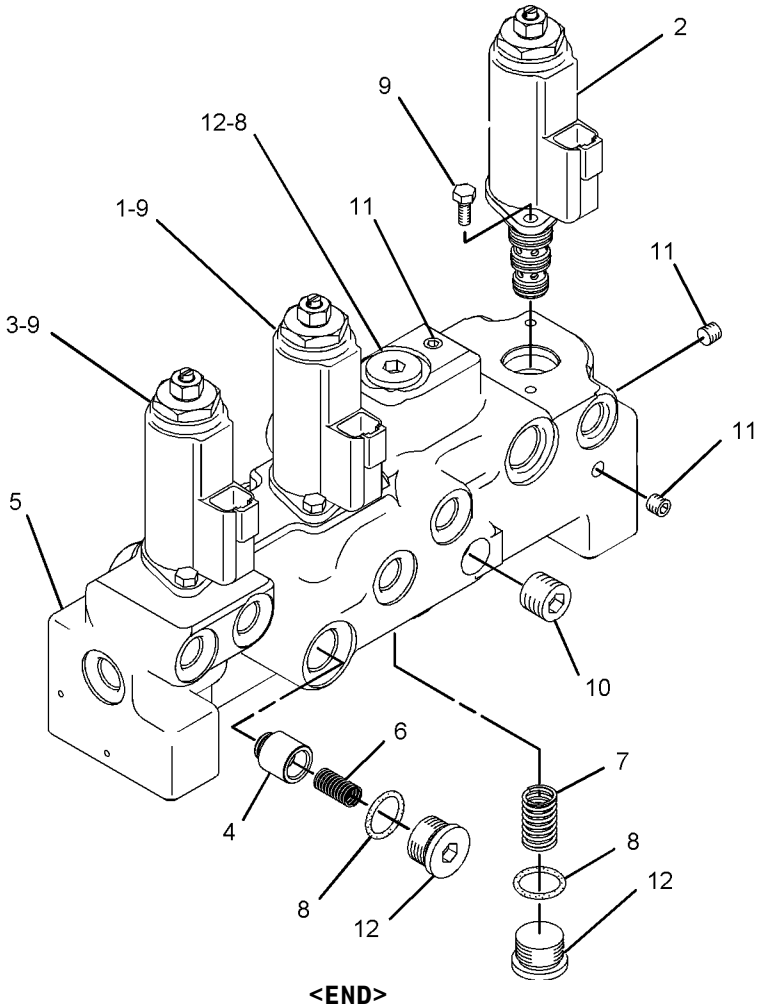

GRAPHIC #1 **<END>** g01083316

HYDRAULIC SYSTEM

179-9774 MOTOR & MTG GP-SWING

S/N: MNB1-UP; WDK1-UP
PISTON-SLIPPER-BASIC
PART OF 199-4487 DRIVE GP-SWING

SMCS-5058 **i01569982**

NOTE	REF NO	GRAPHIC REF	PART NUMBER	QTY	PART NAME 1 2 3 4 5 6 (PRODUCT LEVEL)	SEE PAGE
YR	1	1	*179-9775*	1	MOTOR GP-SWING	702
	2	1	**6V-5204**	1	RING-RETAINING	
	3	1	**9X-8257**	4	WASHER (17.5X30X3.5-MM THK)	
M	4	1	**8T-4944**	4	BOLT-SOCKET HEAD (M16X2X40-MM)	
	5	1	**8T-6404**	1	SEAL-O-RING	

M-METRIC PART
R-REMFG PART MAY BE AVAILABLE
Y-SEPARATE ILLUSTRATION

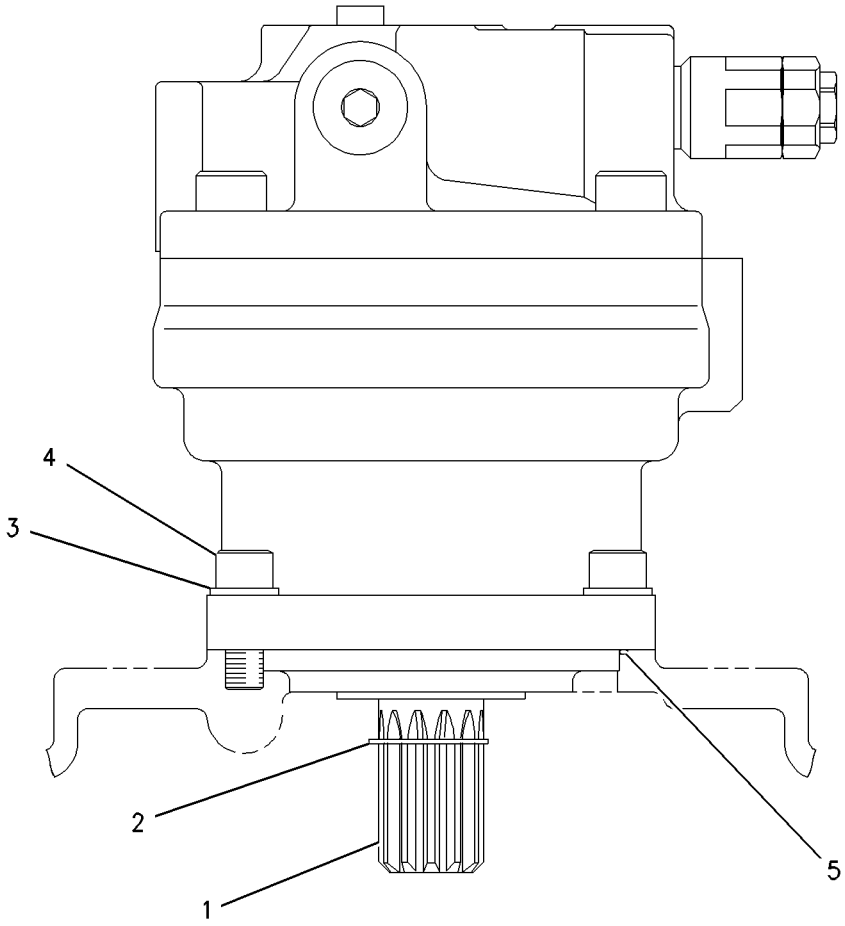

GRAPHIC #1 **<END>** g00773473

HYDRAULIC SYSTEM

204-2674 MOTOR & MTG GP-TRAVEL

S/N: MNB1-UP; WDK1-UP

PART OF 267-6877 DRIVE GP-FINAL

SMCS-4351 **i02117372**

NOTE	REF NO	GRAPHIC REF	PART NUMBER	QTY	PART NAME 1 2 3 4 5 6 (PRODUCT LEVEL)	SEE PAGE
YR	1	1	**215-9952**	1	MOTOR GP-TRAVEL	705
CY	2	1	**204-2819**	1	VALVE GP-TRAVEL COUNTERBALANCE	824
M	3	1	**095-0707**	3	BOLT (M16X2X120-MM)	
M	4	1	**3E-6910**	6	BOLT-SOCKET HEAD (M12X1.75X70-MM)	

C-CHANGE FROM PREVIOUS TYPE
M-METRIC PART
R-REMFG PART MAY BE AVAILABLE
Y-SEPARATE ILLUSTRATION

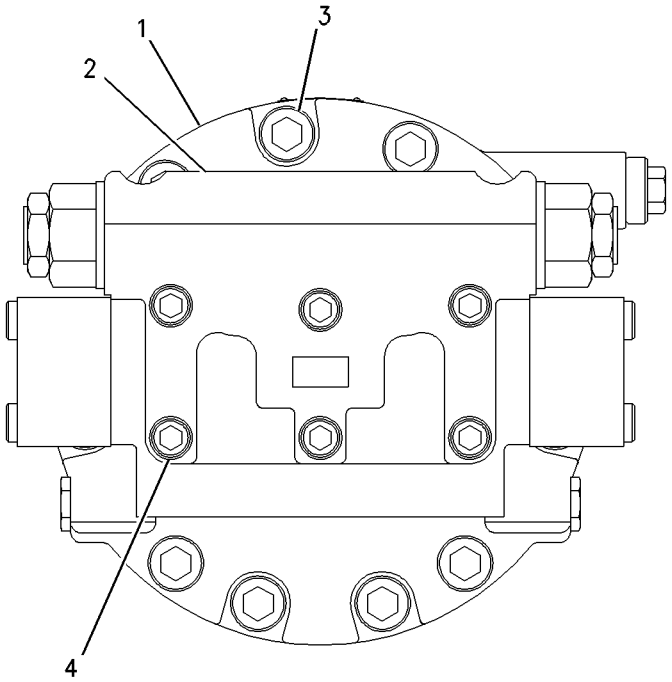

GRAPHIC #1 **<END>** g00803403

HYDRAULIC SYSTEM

179-9775 MOTOR GP-SWING*R

S/N: MNB1-UP; WDK1-UP

PART OF 179-9774 MOTOR & MTG GP-SWING

SMCS-5058 **i01593361**

NOTE	REF NO	GRAPHIC REF	PART NUMBER	QTY	PART NAME 1 2 3 4 5 6 (PRODUCT LEVEL)	SEE PAGE
Y	3	1	**184-3830**	2	VALVE GP-RELIEF (SWING MOTOR)	789
Y	4	1	**188-4175**	1	MOTOR GP-SWING	703

Y-SEPARATE ILLUSTRATION

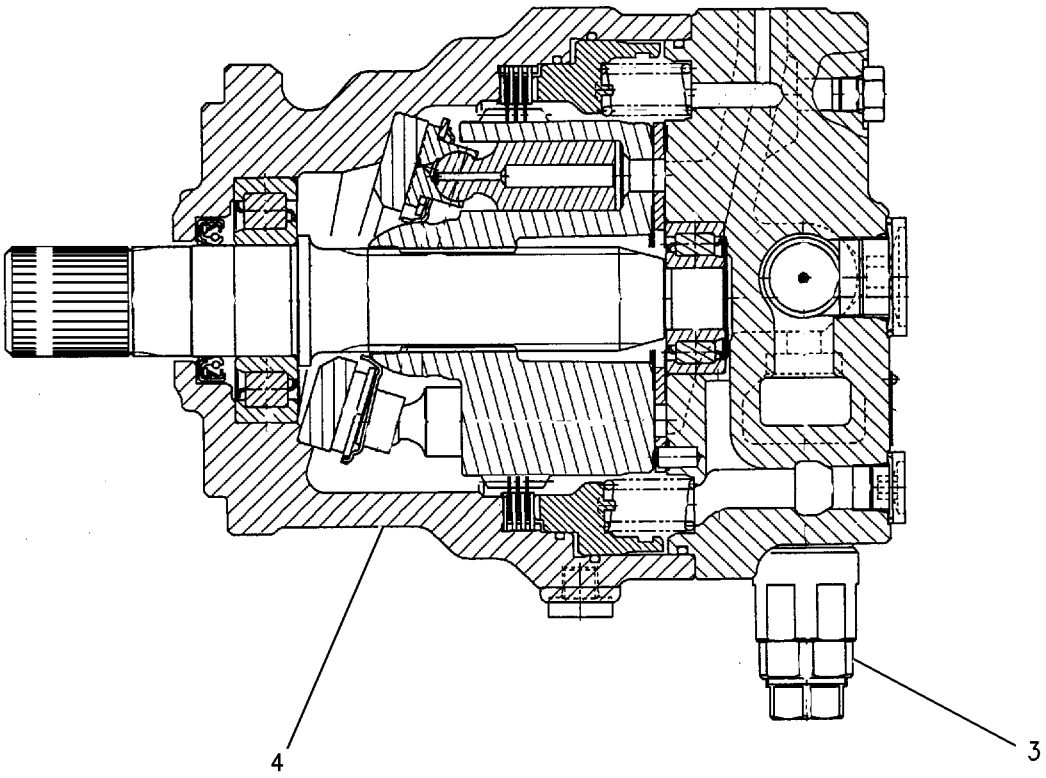

GRAPHIC #1 **<END>** g00826525

HYDRAULIC SYSTEM

188-4175 MOTOR GP-SWING

S/N: MNB1-UP; WDK1-UP

PART OF 179-9775 MOTOR GP-SWING

SMCS-5058 **i02953938**

NOTE	REF NO	GRAPHIC REF	PART NUMBER	QTY	PART NAME 1 2 3 4 5 6 (PRODUCT LEVEL)	SEE PAGE
	1	1	**188-4163**	1	SHAFT	
J	2	1	**096-1533**	1	SEAL-LIP TYPE	
	3	1	**188-4170**	1	BEARING	
	4	1	**188-4169**	1	BODY	
	5	1	**188-4165**	1	PLATE	
	6	1	**188-4167**	1	PLATE	
	7	1	**295-9686**	1	PISTON AS	
	8	1	**188-4166**	1	PLATE	
	9	1	**188-4164**	1	BARREL	
	10	1	**188-4172**	3	PLATE-FRICTION	
	11	1	**188-4173**	4	PLATE-SEPARATOR	
	12	1	**7Y-4290**	1	PISTON-BRAKE	
J	13	1	**5J-2383**	1	SEAL-O-RING	
J	14	1	**7Y-4294**	1	SEAL-O-RING	
J	15	1	**4I-5849**	1	SEAL-O-RING	
	16	1	**123-2139**	20	SPRING	
	17	1	**188-4162**	1	HEAD GP-MOTOR	
		1	**099-8111**	2	PIN-SPRING	
J	18	1	**3J-1907**	2	SEAL-O-RING	
	19	1	**110-5525**	2	PLUG	
	20	1	**204-2677**	1	PLATE-VALVE	
	21	1	**188-4171**	1	BEARING	
	22	1	**170-9996**	2	PLUG	
	23	1	**170-9985**	2	VALVE	
M	24	1	**7Y-5221**	4	BOLT-SOCKET HEAD (M20X2.5X45-MM)	
	25	1	**170-9986**	2	SPRING	
J	26	1	**095-1600**	2	SEAL-O-RING	
					AVAILABLE REPAIR KIT(S):	
J			**188-4176**		KIT-SEAL (SWING MOTOR)	

J-KIT MARKED J SERVICES PART(S) MARKED J
M-METRIC PART

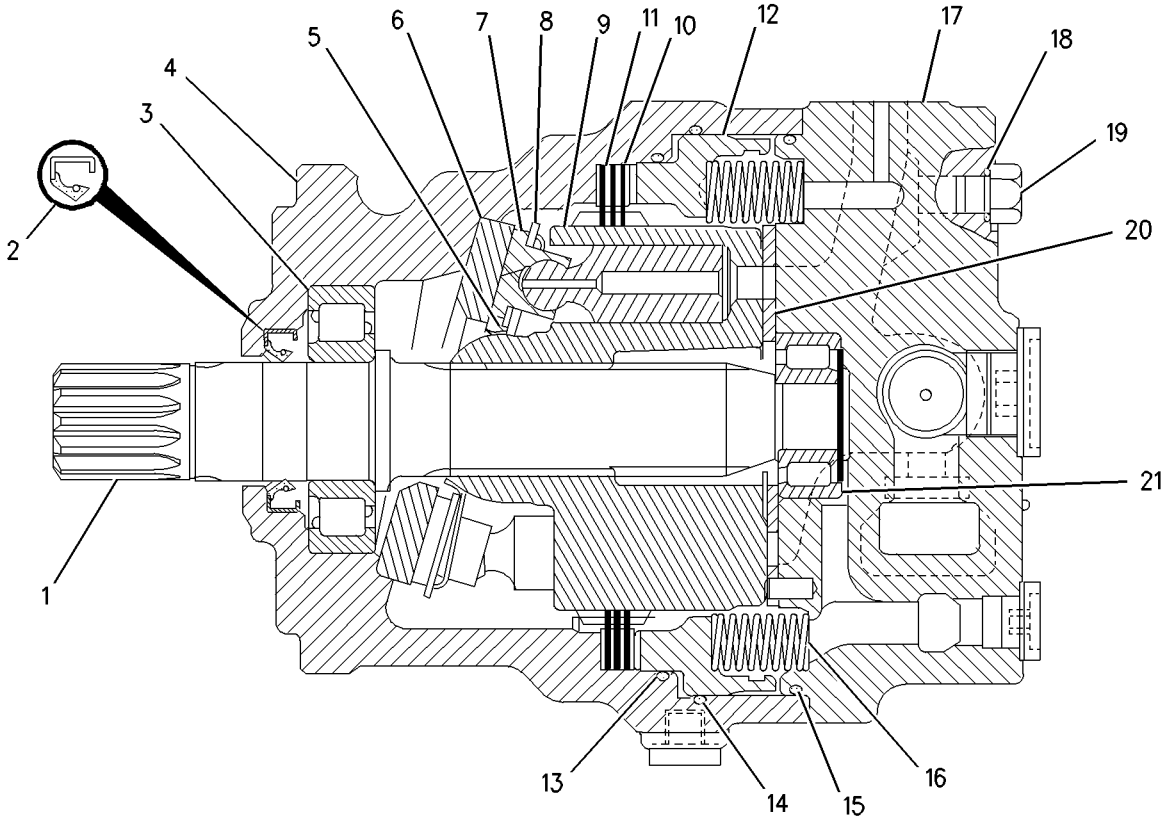

SECTION A-A

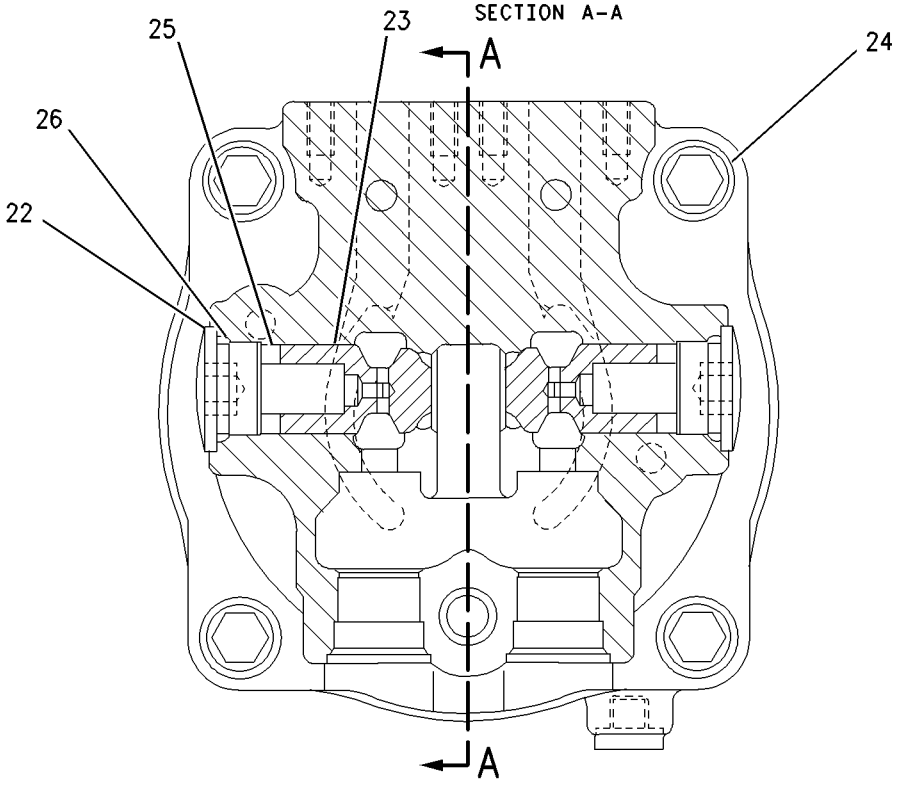

GRAPHIC #1 **<END>** g00746929

HYDRAULIC SYSTEM

215-9952 MOTOR GP-TRAVEL*R

S/N: MNB1-UP; WDK1-UP

PART OF 204-2674 MOTOR & MTG GP-TRAVEL

SMCS-4351, 5058 **i02137453**

NOTE	REF NO	GRAPHIC REF	PART NUMBER	QTY	PART NAME 1 2 3 4 5 6 (PRODUCT LEVEL)	SEE PAGE
	1	1	**209-5894**	1	SHAFT	
	2	1	**087-4743**	2	STOP	
	3	1	**094-1399**	1	RING-RETAINING	
	4	1	**7Y-4212**	1	BEARING	
	5	1	**087-4757**	2	PISTON	
	5A	1	**142-5515**	2	RING-BACKUP	
	6	1	**107-6969**	1	BODY	
	7	1	**122-5114**	1	GUIDE-BALL	
	8	1	**209-5909**	1	PLATE-CAM	
	9	1	**147-5860**	1	PISTON AS	
	10	1	**234-4629**	1	BARREL AS	
	11	1	**107-6954**	4	PLATE-FRICTION	
	12	1	**107-6955**	5	PLATE-SEPARATOR	
	13	1	**096-1523**	1	GUIDE-PISTON	
	14	1	**7Y-4213**	1	PISTON-BRAKE	
	15	1	**7Y-4202**	1	HEAD	
M	16	1	**8T-4944**	10	BOLT-SOCKET HEAD (M16X2X40-MM)	
B	17	1	**096-1521**	1	SHIM (1-MM THK)	
B	18	1	**096-3785**	1	SHIM (1.2-MM THK)	
B	19	1	**096-3786**	1	SHIM (1.4-MM THK)	
B	20	1	**096-3787**	1	SHIM (1.6-MM THK)	
B	21	1	**096-1522**	1	SHIM (2-MM THK)	
B	22	1	**096-3788**	1	SHIM (1.8-MM THK)	
	23	1	**096-5916**	2	SEAT	
	24	1	**2D-6642**	2	BALL	
J	25	1	**095-1572**	2	SEAL-O-RING	
J	26	1	**096-5919**	2	RING-BACKUP	
	27	1	**096-5915**	2	RETAINER	
	28	1	**096-4003**	1	SET-BEARING	
		1	**7Y-4234**	1	RACE-NEEDLE ROLLER	
J	29	1	**095-1585**	1	SEAL-O-RING	
	30	1	**087-4742**	1	VALVE	
	31	1	**096-1519**	1	SEAT	
	32	1	**095-7380**	1	SPRING	
	33	1	**095-7382**	1	RETAINER	
	34	1	**094-1875**	1	DOWEL	
	35	1	**095-7378**	1	WASHER SET	
	36	1	**094-1882**	10	PLUG	
J	37	1	**095-1575**	3	SEAL-O-RING	
J	38	1	**096-4378**	1	RING-BACKUP	
J	39	1	**096-4377**	2	SEAL-O-RING	
H	40	1	**094-1882**	1	PLUG	
J	41	1	**095-7384**	1	SEAL-O-RING	
J	42	1	**095-7383**	1	SEAL-O-RING	
J	43	1	**095-7386**	1	RING-BACKUP	
J	44	1	**095-7387**	1	RING	
J	45	1	**095-1685**	1	SEAL-O-RING	
	46	1	**096-4389**	9	SPRING	
	47	1	**7Y-4215**	1	SPACER	
J	48	1	**095-1586**	2	SEAL-O-RING	
J	49	1	**7Y-4217**	2	RING-BACKUP	
J	50	1	**096-4376**	1	SEAL-LIP TYPE	
	51	1	**123-2008**	2	KEY	
	52	1	**121-1558**	2	PIN	
	53	1	**087-4786**	1	ADAPTER	
J	54	1	**3K-0360**	1	SEAL-O-RING	

215-9952 **MOTOR GP-TRAVEL** ***(contd.)*** **i02137453**

NOTE	REF NO	GRAPHIC REF	PART NUMBER	QTY	PART NAME 1 2 3 4 5 6 (PRODUCT LEVEL)	SEE PAGE
	55	1	**9S-4185**	1	PLUG-O-RING	
J	56	1	**095-1700**	2	SEAL-O-RING	
	57	1	**7Y-4224**	2	ORIFICE	
	58	1	**096-3978**	1	SPRING	
	59	1	**7Y-4216**	1	SPOOL	
J	60	1	**2M-9780**	1	SEAL-O-RING	
					AVAILABLE REPAIR KIT(S):	
J			**7Y-4222**	1	KIT-SEAL (TRAVEL MOTOR)	

B-USE AS REQUIRED
H-NOT REQUIRED FOR OPTIONAL BODY DESIGN
J-KIT MARKED J SERVICES PART(S) MARKED J
M-METRIC PART

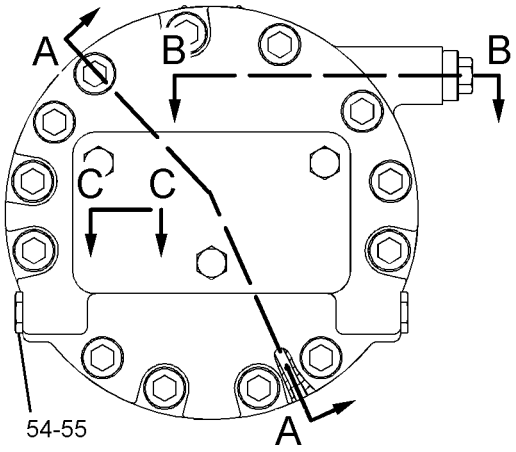

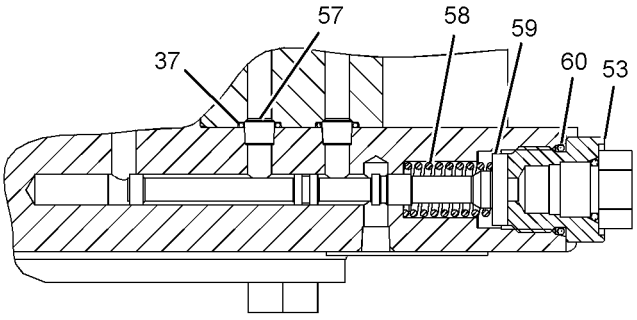

SECTION B-B

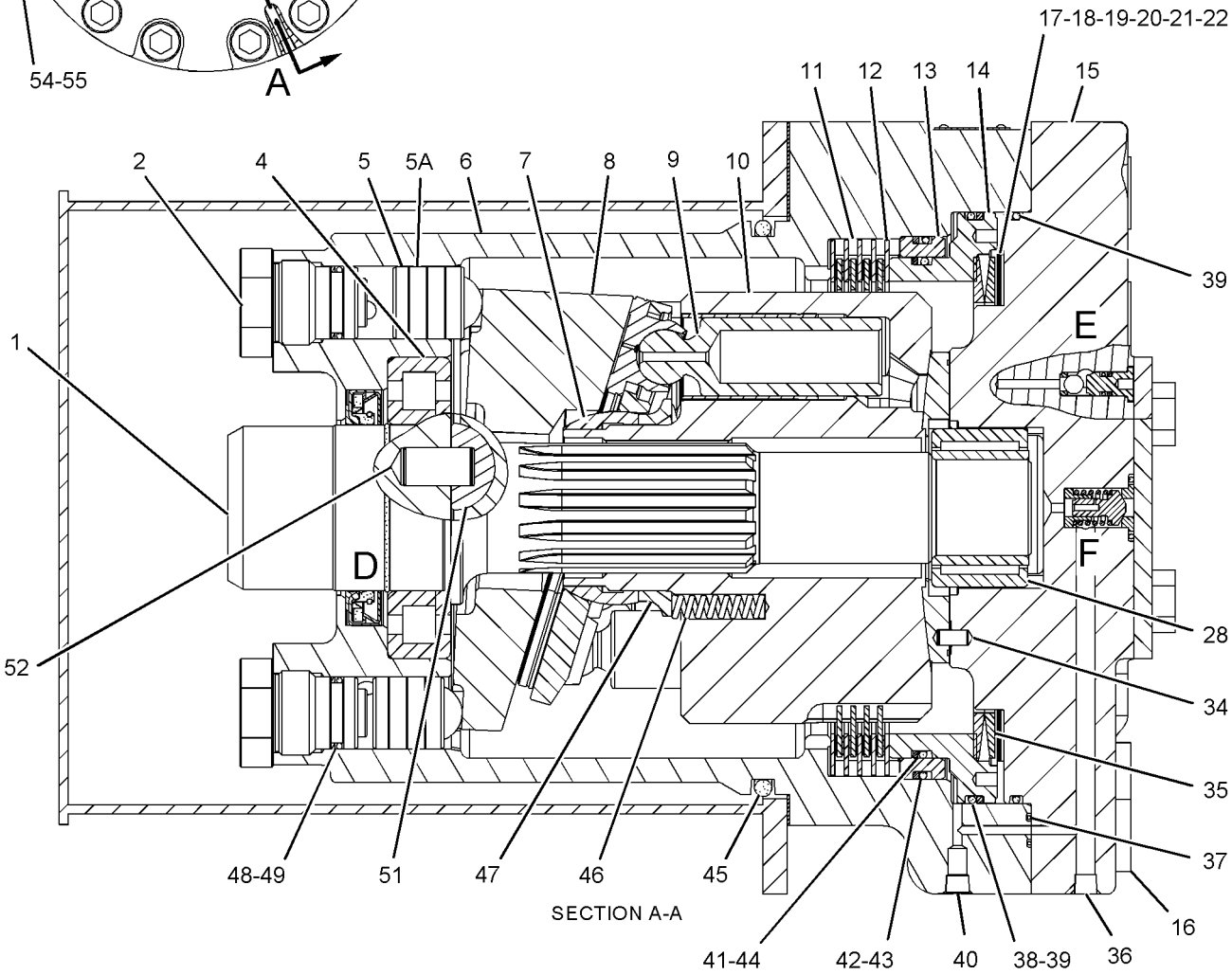

SECTION A-A

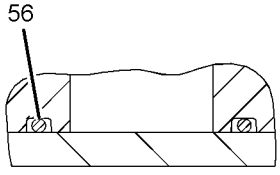

SECTION C-C

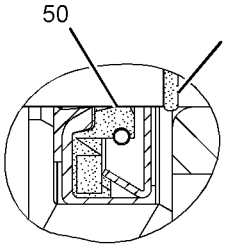

VIEW OF AREA D

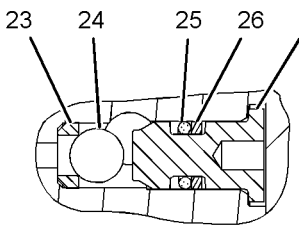

VIEW OF AREA E

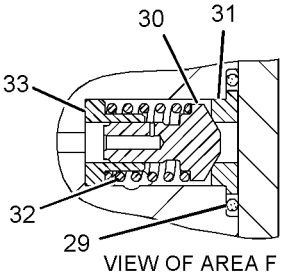

VIEW OF AREA F

GRAPHIC #1 **<END>** g01091297

260-7868 MOUNTING GP-MAIN CONTROL VALVE

S/N: MNB1-UP; WDK1-UP

PART OF 255-5707, 255-5708 HYDRAULIC AR

SMCS-5051 **i02346962**

NOTE	REF NO	GRAPHIC REF	PART NUMBER	QTY	PART NAME 1 2 3 4 5 6 (PRODUCT LEVEL)	SEE PAGE
	1	1	**260-7904**	1	SUPPORT AS	
	2	1	**260-7906**	1	SUPPORT AS	
M	3	1	**100-3866**	8	BOLT-SELF-LOCKING (M16X2X40-MM)	
	4	1	**9X-8257**	4	WASHER (17.5X30X3.5-MM THK)	
	5	1	**196-0711**	4	WASHER (17X40X8-MM THK)	

M-METRIC PART

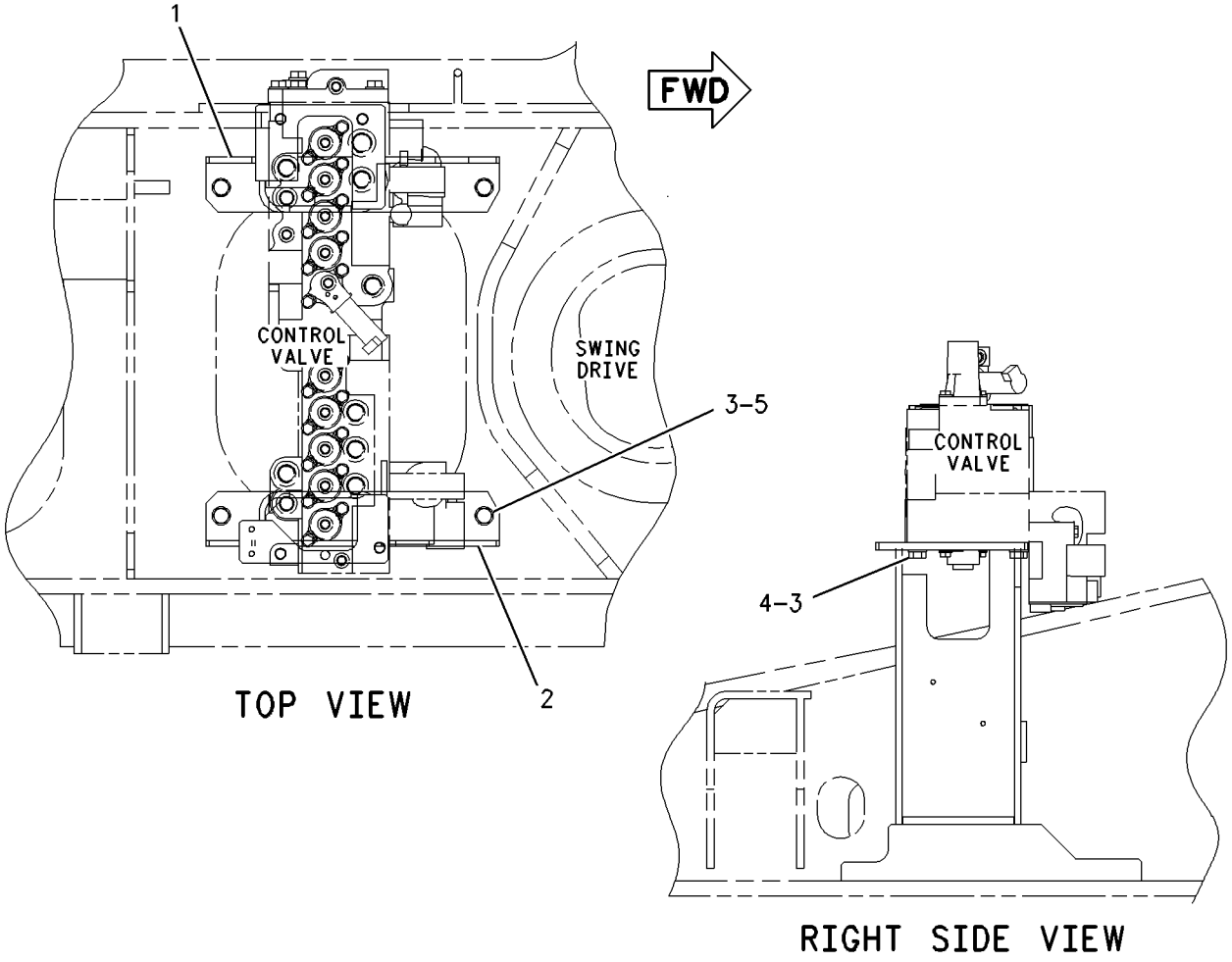

GRAPHIC #1 **<END>** g00676425

6E-4816 PLUG GP-CONTROL VALVE

S/N: MNB1-UP; WDK1-UP
PART OF 310-0085 VALVE GP-CONTROL
ALSO AN ATTACHMENT

SMCS-5051 **i02867891**

NOTE	PART NUMBER	QTY	PART NAME 1 2 3 4 5 6 (PRODUCT LEVEL)	SEE PAGE
	6E-4793	1	PLUG GP-CONTROL VALVE	
	9J-0705	1	RING-BACKUP	
	033-5879	1	SEAL-O-RING	
	033-6036	1	SEAL-O-RING	
			-OR-	
	6E-2746	1	PLUG GP-CONTROL VALVE	
	6E-2745	1	SEAL-O-RING	
	9T-4506	1	PLUG	
			-OR-	
	106-6248	1	PLUG GP-CONTROL VALVE	
	9T-4506	1	PLUG	
	6E-2745	1	SEAL-O-RING	

<END>

HYDRAULIC SYSTEM

165-9473 PLUG GP-CONTROL VALVE

S/N: MNB1-UP; WDK1-UP
PART OF 244-8419 VALVE GP-CONTROL
AN ATTACHMENT

SMCS-5051 **i01449105**

NOTE	REF NO	GRAPHIC REF	PART NUMBER	QTY	PART NAME 1 2 3 4 5 6 (PRODUCT LEVEL)	SEE PAGE
	1	1	**6M-5062**	1	SEAL-O-RING	
	2	1	**9J-0705**	1	RING-BACKUP	
	3	1	**3D-2824**	1	SEAL-O-RING	
	4	1	**165-9474**	1	PLUG	
	5	1	**7J-9108**	1	SEAL-O-RING	

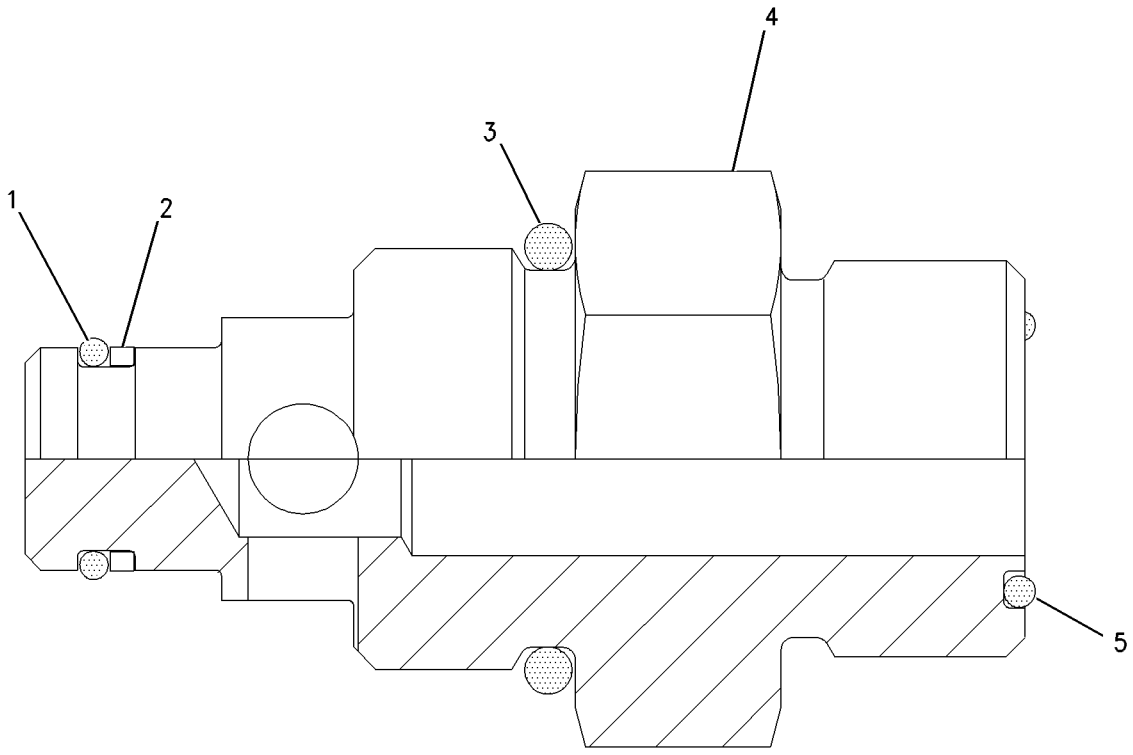

GRAPHIC #1 **<END>** g00693084

HYDRAULIC SYSTEM

200-3365 PUMP & MTG GP-AUXILIARY

S/N: MNB1-UP; WDK1-UP
30-CC
PART OF 255-5811 CONTROL AR-AUXILIARY
AN ATTACHMENT

SMCS-5070, 5073 **i02680127**

NOTE	REF NO	GRAPHIC REF	PART NUMBER	QTY	PART NAME 1 2 3 4 5 6 (PRODUCT LEVEL)	SEE PAGE
	1	1	**200-3326**	1	SPACER	
	2	1	**200-3327**	1	COUPLING	
Y	3	1	**240-2998**	1	PUMP GP-GEAR (AUXILIARY HYDRAULIC)	713
M	4	1	**105-3478**	2	BOLT-SOCKET HEAD (M10X1.5X35-MM)	
	5	1	**273-8315**	2	SEAL-O-RING	
M	6	1	**8T-4136**	2	BOLT (M10X1.5X25-MM)	

M-METRIC PART
Y-SEPARATE ILLUSTRATION

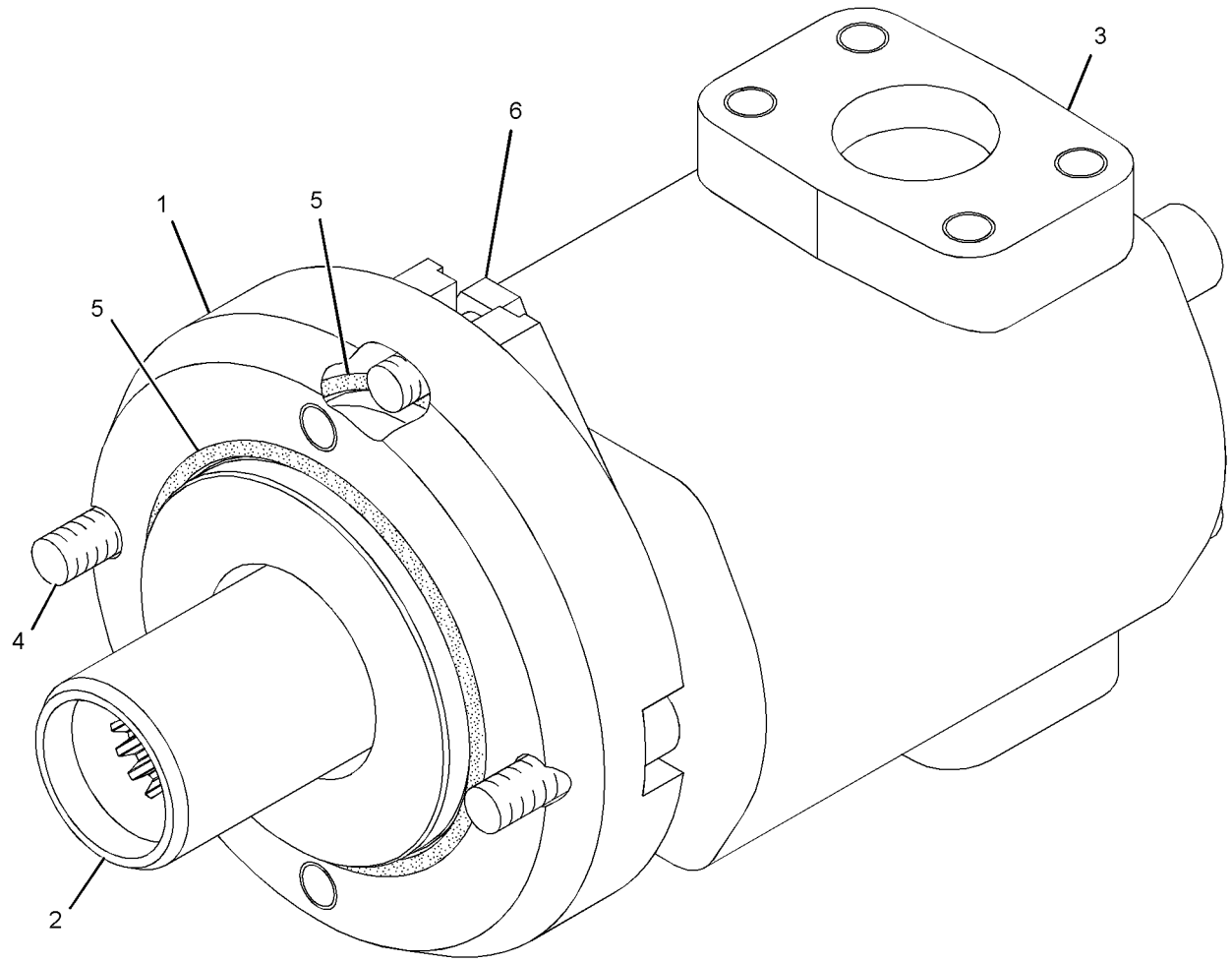

GRAPHIC #1 **<END>** g01219159

HYDRAULIC SYSTEM

233-1115 PUMP & MTG GP-MAIN HYDRAULIC

S/N: MNB1-UP; WDK1-UP

PART OF 255-5707, 255-5708 HYDRAULIC AR

SMCS-5070 **i02346837**

NOTE	REF NO	GRAPHIC REF	PART NUMBER	QTY	PART NAME 1 2 3 4 5 6 (PRODUCT LEVEL)	SEE PAGE
Y	1	1	*239-6598*	1	COUPLING GP-PUMP	451
Y	2	1	**272-6959**	1	PUMP GP-MAIN HYDRAULIC	714
	3	1	**7X-7729**	9	WASHER (11X25X3-MM THK)	
M	4	1	**8T-4195**	9	BOLT (M10X1.5X30-MM)	

M-METRIC PART
Y-SEPARATE ILLUSTRATION

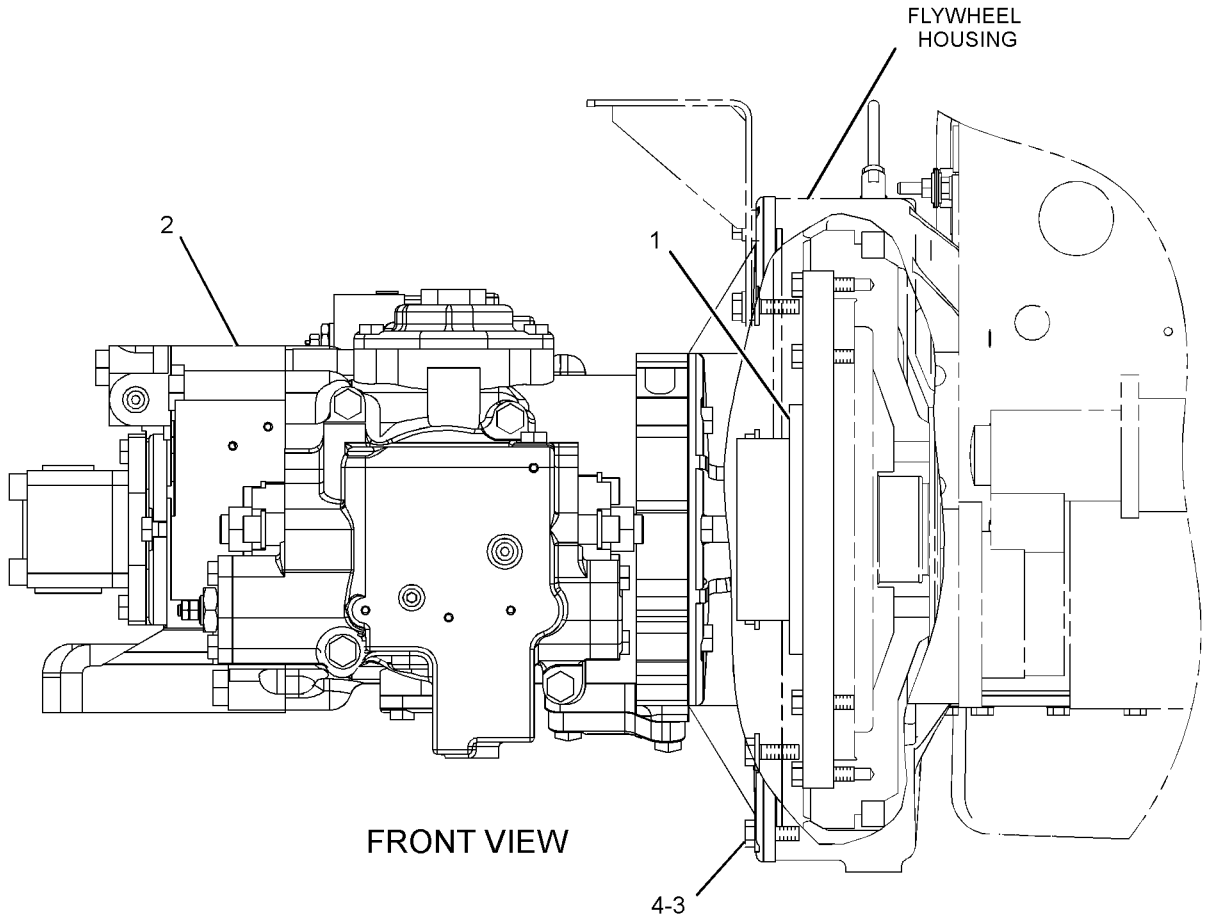

GRAPHIC #1 **<END>** g01152794

240-2998 PUMP GP-GEAR–AUXILIARY

S/N: MNB1-UP; WDK1-UP
PART OF 200-3365 PUMP & MTG GP-AUXILIARY
AN ATTACHMENT

SMCS-5073 **i02998678**

NOTE	REF NO	GRAPHIC REF	PART NUMBER	QTY	PART NAME 1 2 3 4 5 6 (PRODUCT LEVEL)	SEE PAGE
J	1	1	**9T-0836**	1	RING-RETAINING	
J	2	1	**3G-5083**	1	SEAL-LIP TYPE	
					AVAILABLE REPAIR KIT(S):	
			204-2800	1	KIT-SEAL (GEAR PUMP)	
					(INCLUDES GASKETS, STRIPS & PARTS MARKED J)	
J-KIT MARKED J SERVICES PART(S) MARKED J						

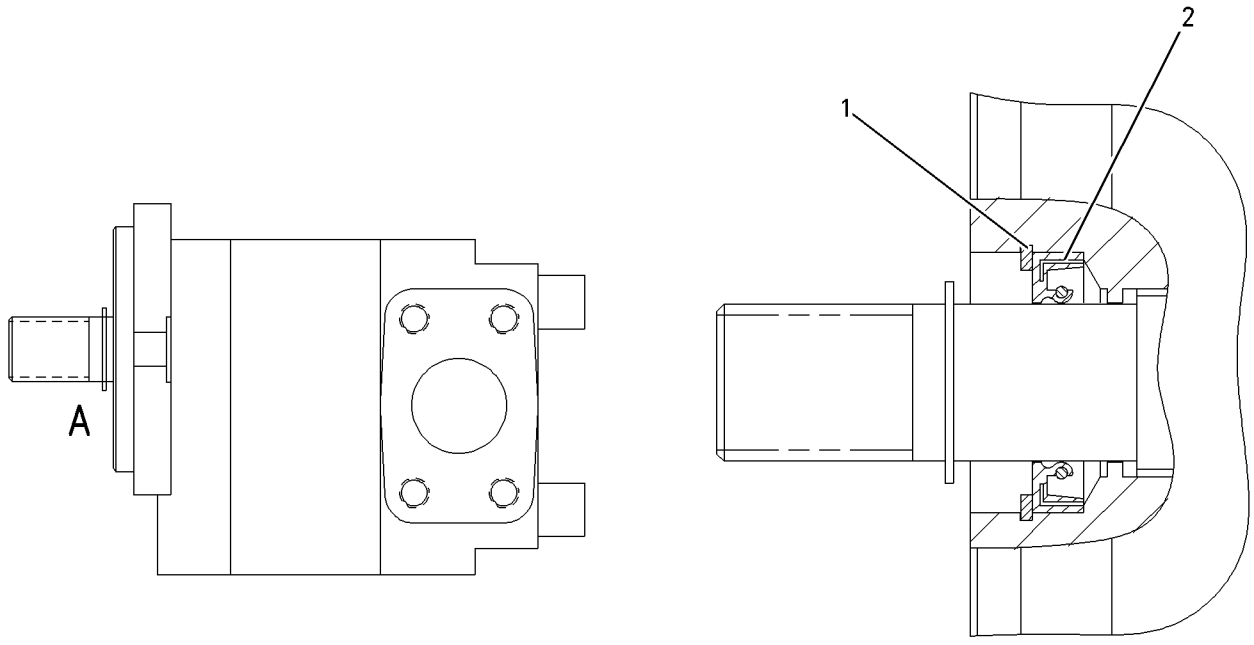

VIEW OF AREA A

GRAPHIC #1 **<END>** g00880819

HYDRAULIC SYSTEM

272-6959 PUMP GP-MAIN HYDRAULIC

S/N: MNB1-UP; WDK1-UP

PART OF 233-1115 PUMP & MTG GP-MAIN HYDRAULIC

SMCS-5070 **i02535260**

NOTE	REF NO	GRAPHIC REF	PART NUMBER	QTY	PART NAME 1 2 3 4 5 6 (PRODUCT LEVEL)	SEE PAGE
	1	3	**4I-1022**	2	ORIFICE	
	2	2	**7Y-4215**	2	SPACER	
	3	3	**096-3983**	1	RING-RETAINING	
	4	2	**096-4389**	18	SPRING	
J	5	3	**126-2016**	1	PUMP GP-GEAR (PILOT)	
	5A	3	**9T-0835**	1	RING-RETAINING	
	6	3	**129-7854**	1	CASE	
	7	2	**129-7855**	1	GASKET	
	8	1	**129-7857**	1	GASKET	
	9	2	**194-8325**	2	SET-BEARING	
	10	1	**129-7863**	1	COVER	
	11	2	**129-7921**	2	RING-RETAINING	
	12	3	**129-7925**	1	SEAL-LIP TYPE	
	13	2	**129-7927**	2	BEARING	
	14	1	**129-7979**	4	DOWEL	
	15	1	**150-5782**	2	COVER	
	16	3	**225-4541**	1	SHAFT-DRIVE	
	17	2	**173-3427**	2	GUIDE-BALL	
	18	2	**129-7853**	2	PLATE-CREEP	
	19	3	**256-0081**	1	BARREL AS-DRIVE	
	20	2	**256-0083**	1	BARREL AS-PUMP	
	21	1	**177-2470**	1	COVER	
	22	1	**177-2471**	1	COVER	
	23	2	**273-8314**	1	SEAL-O-RING	
	24	1	**179-9763**	1	FLANGE	
	25	2	**188-4210**	2	PISTON AS	
	26	2	**192-0573**	4	PIN-DOWEL	
	27	1	**200-3333**	1	HEAD-PUMP	
	28	2	**200-3334**	1	COVER	
	29	2	**225-4542**	1	SHAFT-DRIVEN	
Y	30	1	**256-0074**	1	ACTUATOR GP-PUMP (DRIVE)	438
Y	31	1	**256-0077**	1	ACTUATOR GP-PUMP (DRIVEN)	442
	32	2	**242-6801**	2	SWASHPLATE AS	
					(EACH INCLUDES)	
	32A	3	**094-1875**	1	DOWEL	
	32B	3	**173-3428**	1	BEARING-SLEEVE	
	32C	2	**242-6803**	2	PIN-DOWEL	
	33	2	**242-6804**	4	BEARING	
	34	1	**9S-4185**	2	PLUG-O-RING	
	35	1	**247-8782**	1	BODY	
	36	2	**247-8920**	2	ORIFICE	
	37	3	**094-1875**	6	DOWEL	
	38	1,3	**094-1882**	16	PLUG	
	39	2	**095-0946**	2	RING-RETAINING	
M	40	3	**8T-4196**	2	BOLT (M10X1.5X35-MM)	
	41	3	**096-3944**	1	SEAL-O-RING	
	42	2,3	**189-9763**	8	SEAL-O-RING	
	43	2	**190-4896**	2	PLUG	
	44	2	**193-1736**	4	SEAL-O-RING	
	45	1	**3K-0360**	2	SEAL-O-RING	
	46	3	**7M-8485**	2	SEAL-O-RING	
M	47	1	**7X-2557**	1	BOLT (M16X2X140-MM)	
	48	3	**8J-4645**	2	PLUG (STRAIGHT THREAD O-RING)	
	49	2,3	**273-8315**	2	SEAL-O-RING	
M	50	1,2,3	**8T-4136**	18	BOLT (M10X1.5X25-MM)	
M	51	3	**8T-4137**	2	BOLT (M10X1.5X20-MM)	

272-6959 PUMP GP-MAIN HYDRAULIC *(contd.)* i02535260

NOTE	REF NO	GRAPHIC REF	PART NUMBER	QTY	PART NAME 1 2 3 4 5 6 (PRODUCT LEVEL)	SEE PAGE
M	52	1,2	**8T-4139**	10	BOLT (M12X1.75X30-MM)	
M	53	1	**8T-4140**	4	BOLT (M16X2X60-MM)	
M	54	1	**8T-4175**	2	BOLT (M16X2X90-MM)	
M	55	1,2	**8T-4176**	2	BOLT (M12X1.75X90-MM)	
M	56	3	**8T-4192**	10	BOLT (M12X1.75X25-MM)	
					AVAILABLE REPAIR KIT(S):	
J			**250-2503**	1	KIT-SEAL (PILOT GEAR PUMP)	
					(INCLUDES 2 GASKETS, LIP SEAL, SEAL & RETAINING RING)	

J-KIT MARKED J SERVICES PART(S) MARKED J
M-METRIC PART
Y-SEPARATE ILLUSTRATION

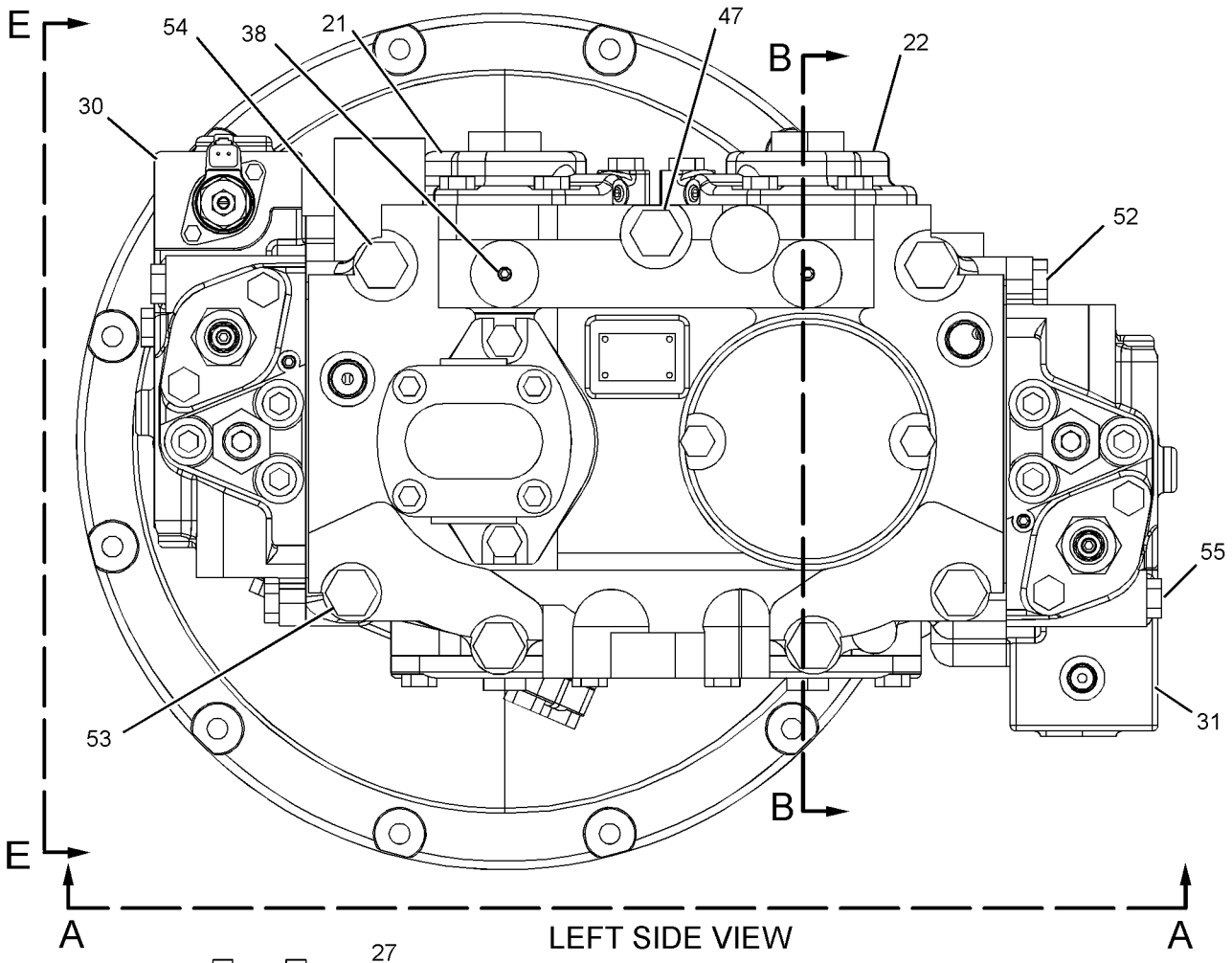

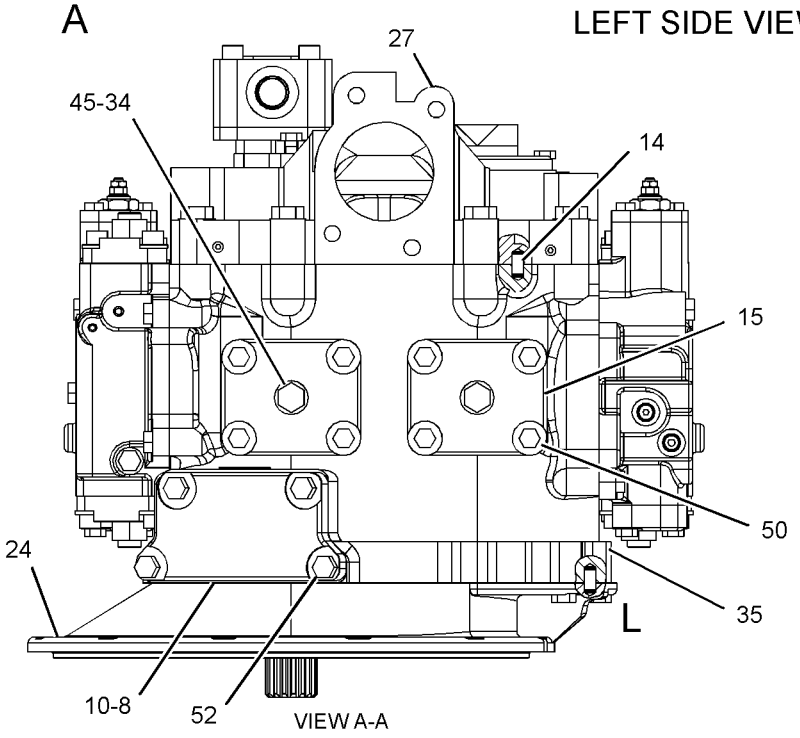

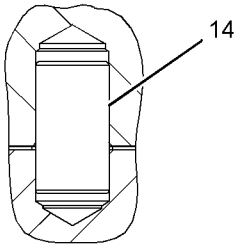

REFER TO ALL ILLUSTRATIONS OF THIS GROUP FOR AUXILIARY VIEWS

GRAPHIC #1

g01245429

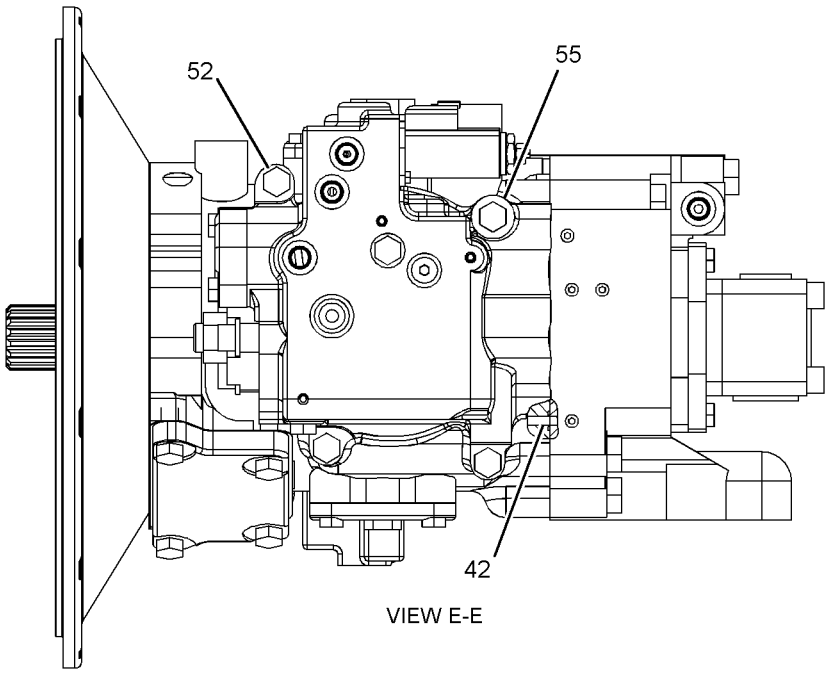

VIEW E-E

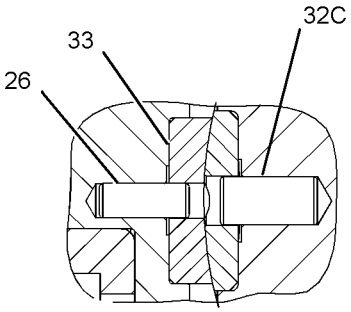

VIEW OF AREA M

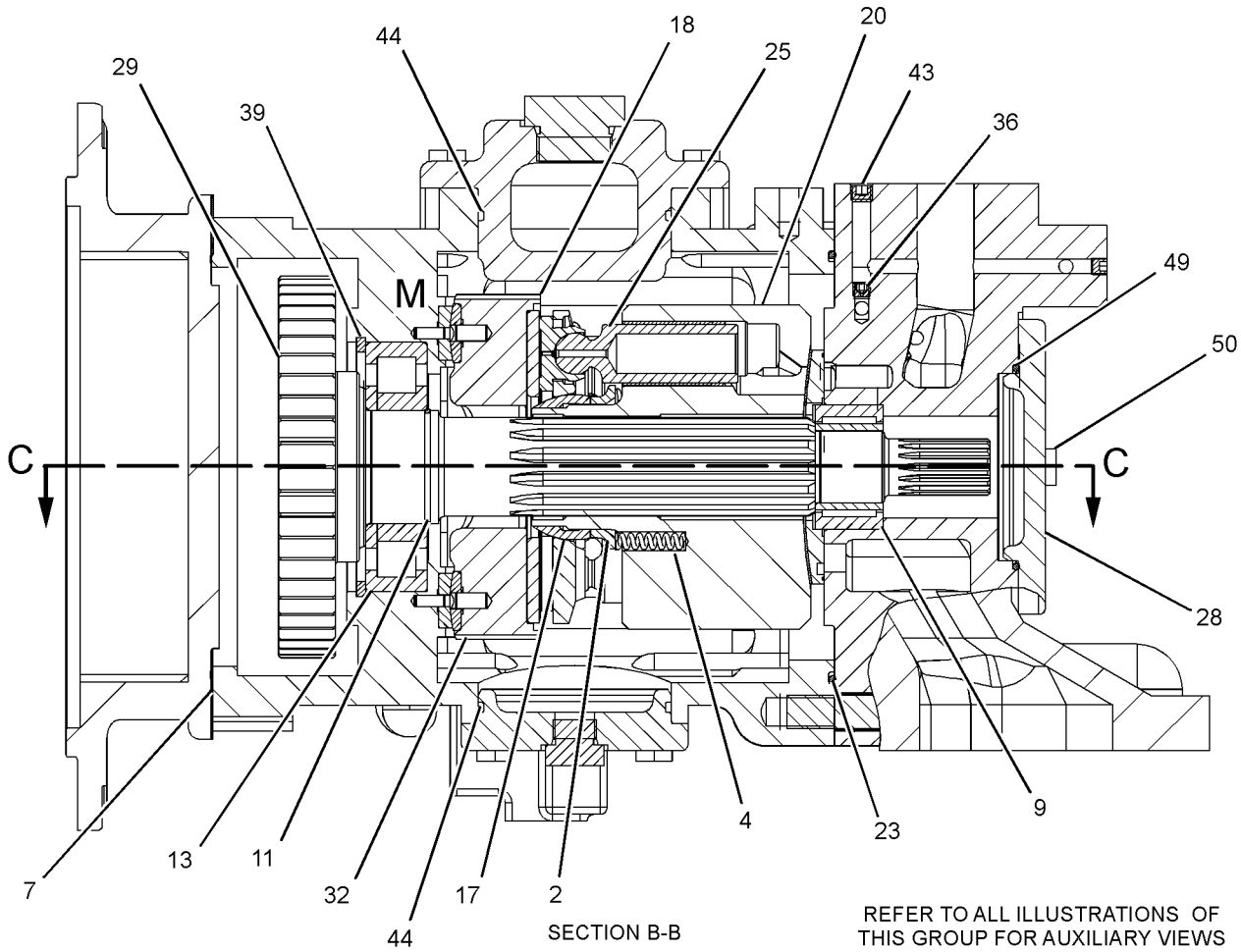

SECTION B-B

REFER TO ALL ILLUSTRATIONS OF THIS GROUP FOR AUXILIARY VIEWS

GRAPHIC #2

g01245433

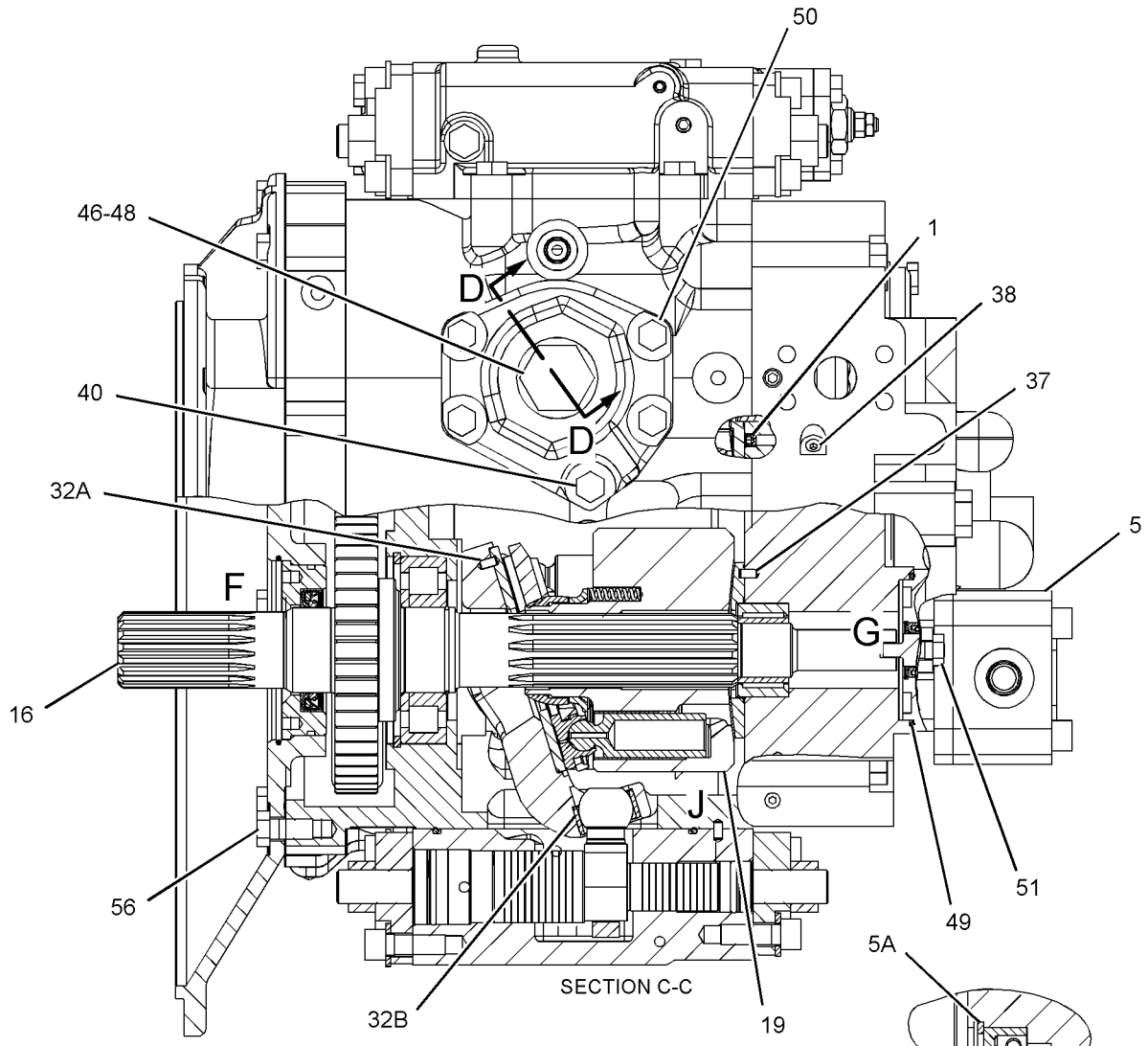

GRAPHIC #3 **<END>** g01245435

259-0922 SCREEN GP-HYDRAULIC–TANK

S/N: MNB1-UP; WDK1-UP

PART OF 289-5564 TANK GP-HYDRAULIC

SMCS-5068 **i02292934**

NOTE	REF NO	GRAPHIC REF	PART NUMBER	QTY	PART NAME 1 2 3 4 5 6 (PRODUCT LEVEL)	SEE PAGE
	1	1	**259-0918**	1	GUIDE	
	2	1	**095-6639**	1	SPRING	
M	3	1	**8T-4133**	2	NUT (M10X1.5-THD)	
	4	1	**129-7784**	1	ROD	
	5	1	**209-6000**	1	SCREEN AS (HYDRAULIC TANK)	
	6	1	**5H-5672**	1	SEAL-O-RING	

M-METRIC PART

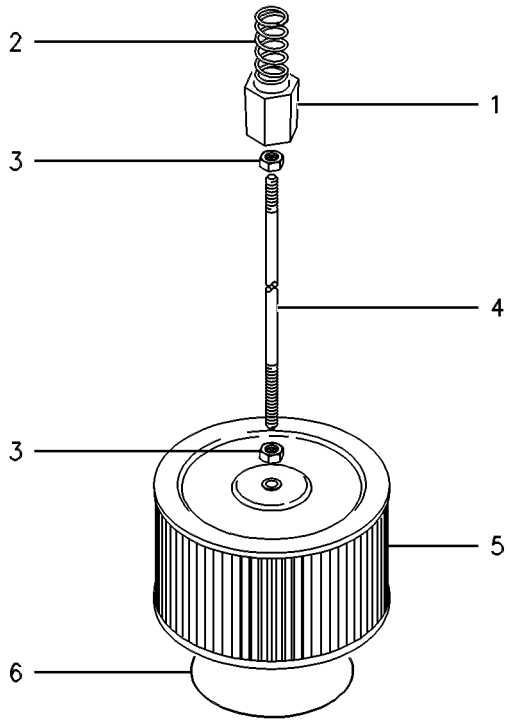

GRAPHIC #1 **<END>** g00267878

HYDRAULIC SYSTEM

234-4440 SWIVEL GP

S/N: MNB1-UP; WDK1-UP

PART OF 227-0542, 227-0543 LINES GP-TRAVEL MOTOR

SMCS-5060 **i02738907**

NOTE	REF NO	GRAPHIC REF	PART NUMBER	QTY	PART NAME 1 2 3 4 5 6 (PRODUCT LEVEL)	SEE PAGE
	1	1	**7I-7131**	1	RETAINER	
	2	1	**7Y-4817**	1	COVER	
	3	1	**159-7782**	5	SEAL	
	4	1	**225-4548**	1	HOUSING	
	5	1	**225-4549**	1	ROTOR	
	6	1	**095-1625**	3	SEAL-O-RING	
	7	1	**095-1716**	1	SEAL-O-RING	
	8	1	**8T-4121**	2	WASHER-HARD (11X21X2.5-MM THK)	
M	9	1	**8T-4136**	6	BOLT (M10X1.5X25-MM)	
	10	1	**8T-6759**	1	PLUG-PIPE	

M-METRIC PART

234-4440 SWIVEL GP *(contd.)* **i02738907**

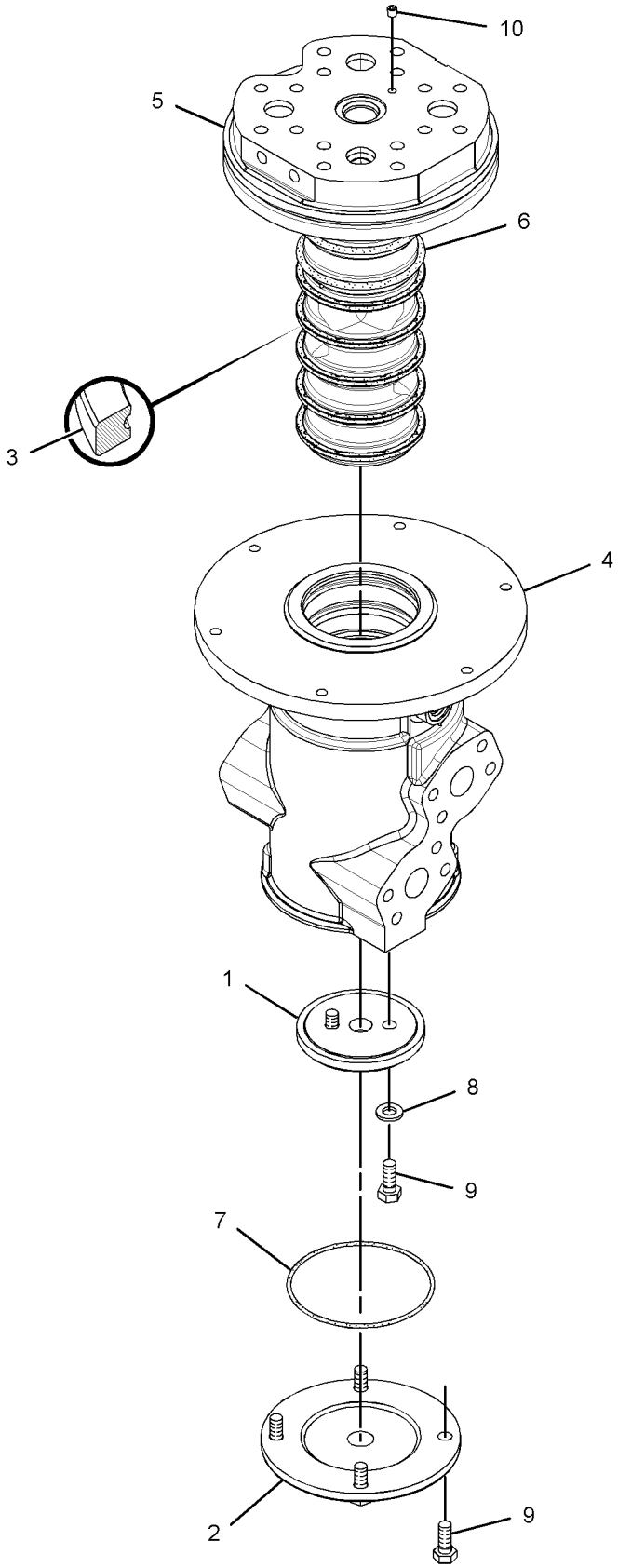

GRAPHIC #1 **<END>** g01373464

HYDRAULIC SYSTEM

227-0566 TANK & FILTER GP-HYDRAULIC

S/N: MNB1-UP; WDK1-UP
260-L (69-US GAL)
PART OF 227-0565 TANK & MTG GP-HYDRAULIC

SMCS-5056, 5068 **i02940341**

NOTE	REF NO	GRAPHIC REF	PART NUMBER	QTY	PART NAME 1 2 3 4 5 6 (PRODUCT LEVEL)	SEE PAGE
M	1	1	**8T-4956**	4	BOLT (M12X1.75X35-MM)	
M	2	1	**8T-4908**	4	BOLT (M8X1.25X25-MM)	
C	3	1	**292-7299**	1	SUPPORT AS	
	4	1	**8T-4224**	4	WASHER-HARD (8.8X16X2-MM THK)	
	5	1	**8T-4223**	4	WASHER-HARD (13.5X25.5X3-MM THK)	
M	6	1	**8T-4195**	4	BOLT (M10X1.5X30-MM)	
M	7	1	**8T-4183**	2	BOLT (M12X1.75X40-MM)	
CM	8	1	**8T-4136**	3	BOLT (M10X1.5X25-MM)	
C	9	1	**8T-4121**	7	WASHER-HARD (11X21X2.5-MM THK)	
	10	1	**8C-3451**	1	CAP-DUST	
	11	1	**6V-0852**	1	CAP-DUST	
	12	1	**275-1362**	1	BRACKET	
CY	13	1	**289-8194**	1	FILTER GP-OIL (HYDRAULIC, CASE DRAIN)	506
Y	14	1	**158-8987**	1	FILTER & VALVE GP-PILOT (HYDRAULIC OIL)	499
	15	1	**6J-2680**	1	SEAL-O-RING	
	16	1	*164-5567*	1	COUPLER AS-QUICK DISCONNECT	
		1	**3J-1907**	1	SEAL-O-RING	
		1	**6V-3965**	1	FITTING (QUICK DISCONNECT)	
	17	1	*164-5590*	1	VALVE AS-FLUID SAMPLING	
		1	**3J-7354**	1	SEAL-O-RING	
		1	**8C-3446**	1	VALVE-FLUID SAMPLING	
C	18	1	**8T-7971**	2	WASHER-HARD (13.5X25.5X5-MM THK)	
Y	19	1	*188-4140*	1	FILTER GP-OIL (HYDRAULIC RETURN)	501
Y	20	1	**289-5564**	1	TANK GP-HYDRAULIC	725

C-CHANGE FROM PREVIOUS TYPE
M-METRIC PART
Y-SEPARATE ILLUSTRATION

227-0566 TANK & FILTER GP-HYDRAULIC *(contd.)* **i02940341**

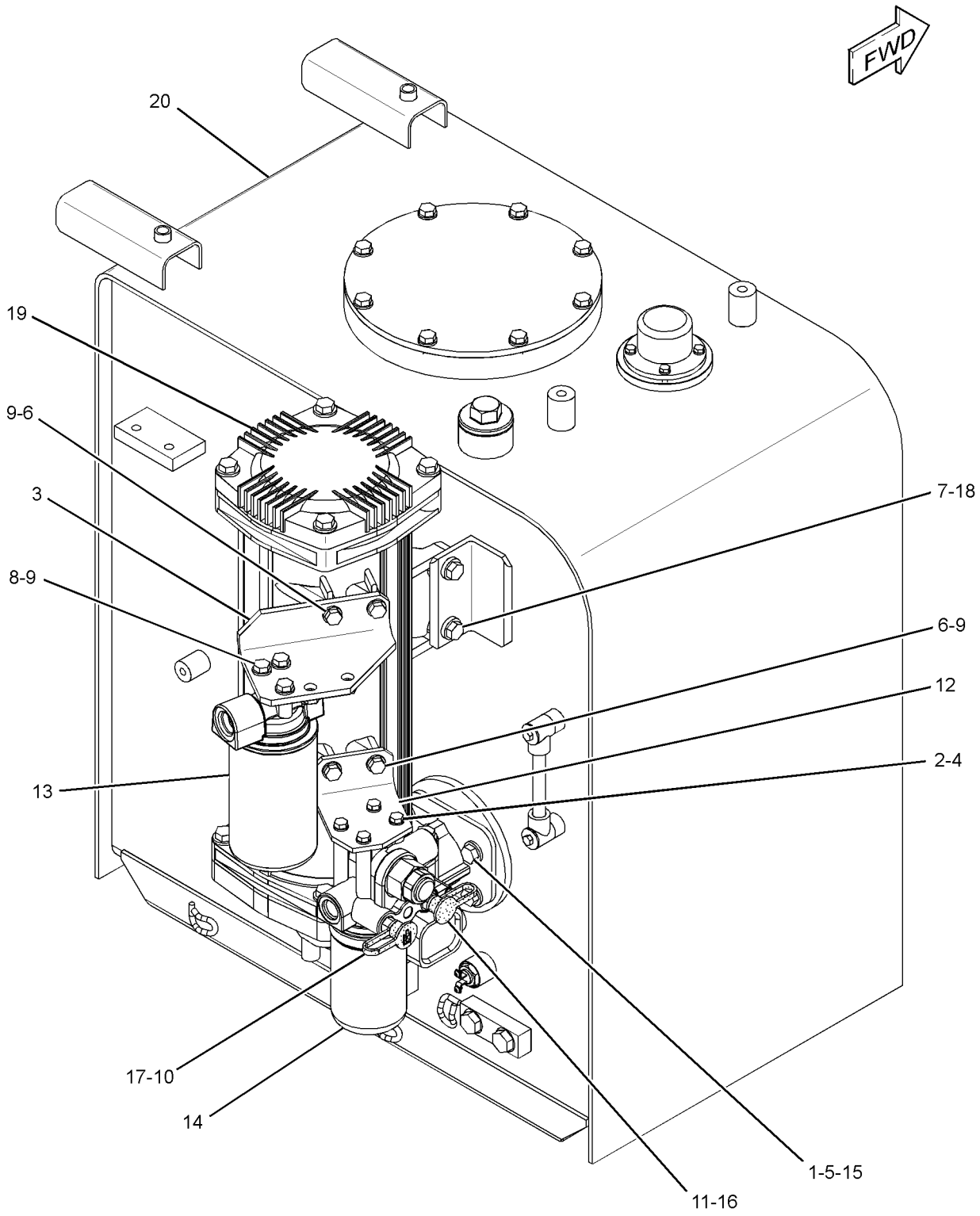

GRAPHIC #1 **<END>** g01347687

227-0565 TANK & MTG GP-HYDRAULIC

S/N: MNB1-UP; WDK1-UP

PART OF 255-5707, 255-5708 HYDRAULIC AR

SMCS-5056 **i02346812**

NOTE	REF NO	GRAPHIC REF	PART NUMBER	QTY	PART NAME 1 2 3 4 5 6 (PRODUCT LEVEL)	SEE PAGE
Y	1	1	**227-0566**	1	TANK & FILTER GP-HYDRAULIC	722
Y	2	1	*248-9830*	1	LINES GP-RETURN (FILTERS)	681
	3	1	**085-9310**	6	SPACER (16.6X32X26-MM THK)	
M	4	1	**8T-4140**	6	BOLT (M16X2X60-MM)	

M-METRIC PART
Y-SEPARATE ILLUSTRATION

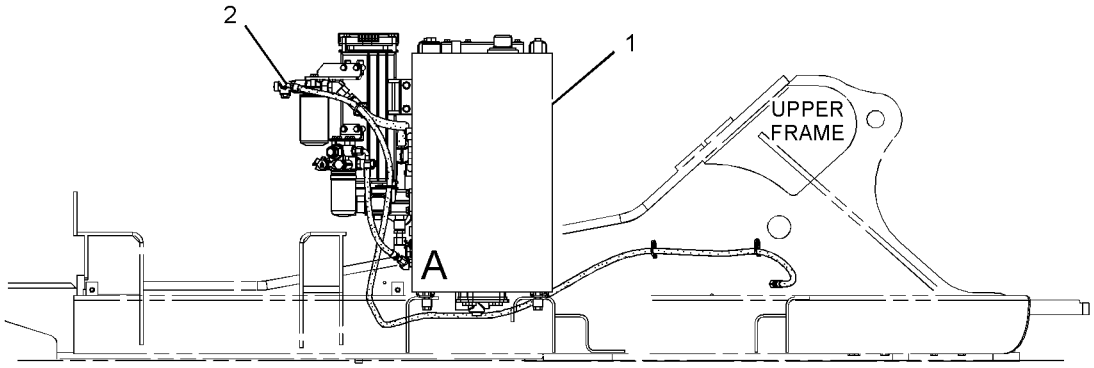

RIGHT SIDE VIEW

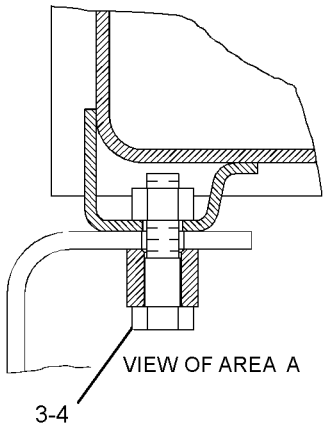

GRAPHIC #1 **<END>** g01153074

HYDRAULIC SYSTEM

289-5564 TANK GP-HYDRAULIC

S/N: MNB1-UP; WDK1-UP

PART OF 227-0566 TANK & FILTER GP-HYDRAULIC

SMCS-5056, 5068, 7479 **i03206480**

NOTE	REF NO	GRAPHIC REF	PART NUMBER	QTY	PART NAME 1 2 3 4 5 6 (PRODUCT LEVEL)	SEE PAGE
	1	1	**4I-5394**	1	SENDER AS-TEMPERATURE (HYDRAULIC OIL)	
M		1	**4I-5490**	2	SCREW-MACHINE (M4X0.7X6-MM)	
		1	**095-0826**	2	LOCKWASHER	
	2	2	**6I-0723**	1	PLUG-OIL DRAIN	
	3	2	**6I-0724**	1	ADAPTER-PLUG	
	4	2	**213-0677**	1	SWITCH AS-LIQUID LEVEL (HYDRAULIC OIL)	
		2	**102-8802**	1	KIT-RECEPTACLE (2-PIN)	
					(INCLUDES RECEPTACLE AS & WEDGE)	
		2	**9X-3401**	2	PIN-CONNECTOR (16-GA TO 18-GA)	
	5	1	**227-0590**	1	BREATHER GP (HYDRAULIC TANK)	
Y	6	1	**227-0620**	1	GAUGE GP-SIGHT (HYDRAULIC OIL LEVEL)	507
Z	7	1		1	TANK AS-HYDRAULIC	
	8	1	**236-3170**	1	COVER AS	
Y	9	2	**259-0922**	1	SCREEN GP-HYDRAULIC (TANK)	719
	10	1	**207-6403**	1	PLUG	
	11	1	**207-6404**	1	WASHER (49.5X60.5X1.5-MM THK)	
	12	1	**095-1608**	1	SEAL-O-RING	
	13	1	**095-1735**	1	SEAL-O-RING	
	14	2	**165-3256**	1	PIPE AS	
	15	2	**3D-2824**	1	SEAL-O-RING	
	16	1	**3K-0360**	1	SEAL-O-RING	
	17	1	**4J-0527**	1	SEAL-O-RING	
M	18	1	**5C-9553**	4	BOLT (M6X1X16-MM)	
	19	2	**5P-8068**	1	SEAL-O-RING	
	20	2	**6D-9157**	1	SEAL-O-RING	
M	21	2	**8T-0267**	2	BOLT-SOCKET HEAD (M6X1X12-MM)	
	22	1	**8T-4121**	8	WASHER-HARD (11X21X2.5-MM THK)	
M	23	1	**8T-4137**	8	BOLT (M10X1.5X20-MM)	
	24	2	**8T-4223**	2	WASHER-HARD (13.5X25.5X3-MM THK)	
M	25	2	**8T-4956**	2	BOLT (M12X1.75X35-MM)	
	26	2	**8T-6761**	1	PLUG-PIPE	
	27	1	**9X-8256**	4	WASHER (6.6X12X2-MM THK)	

M-METRIC PART
Y-SEPARATE ILLUSTRATION
Z-NOT SERVICED SEPARATELY

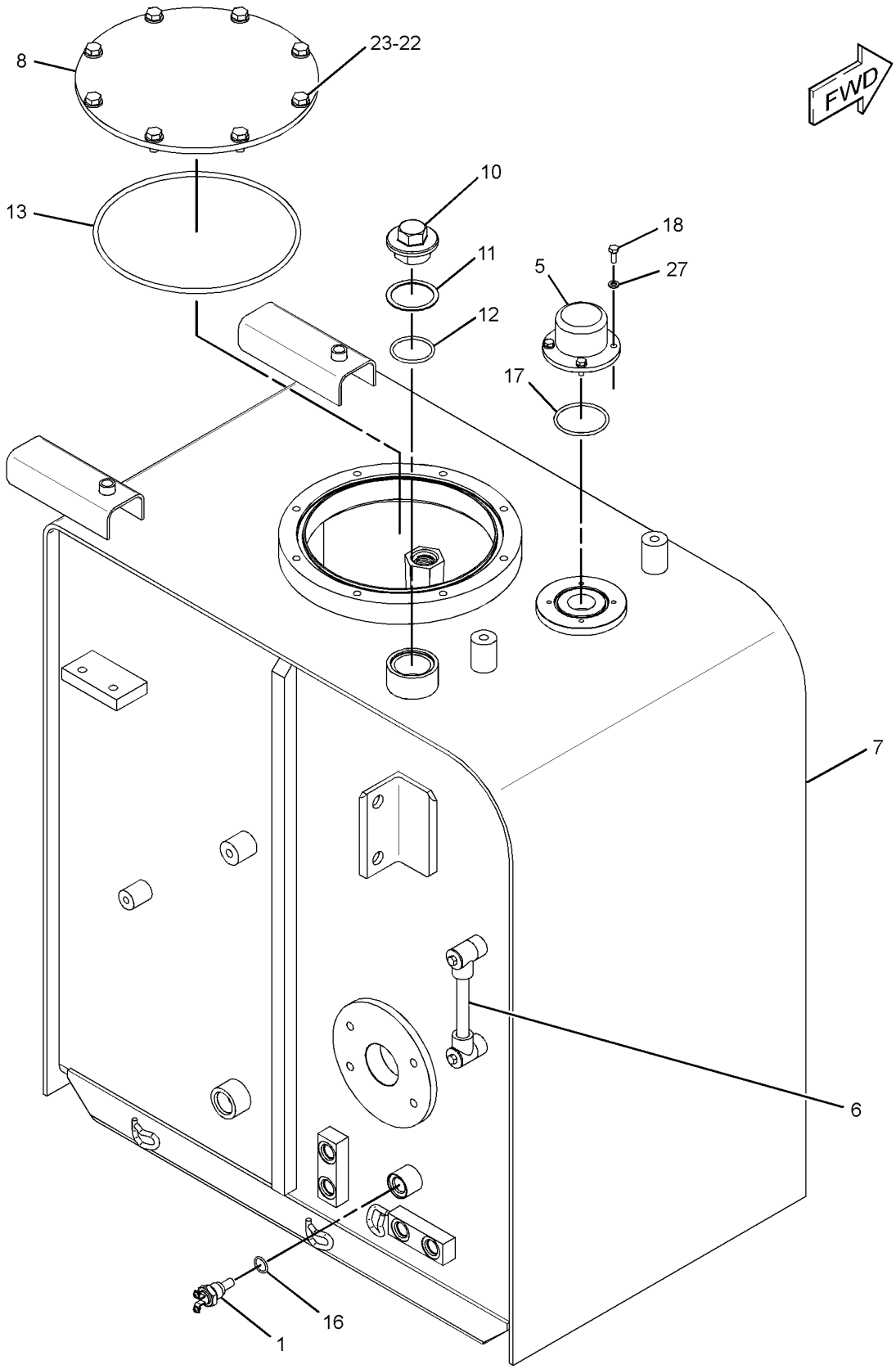

GRAPHIC #1 g01324932

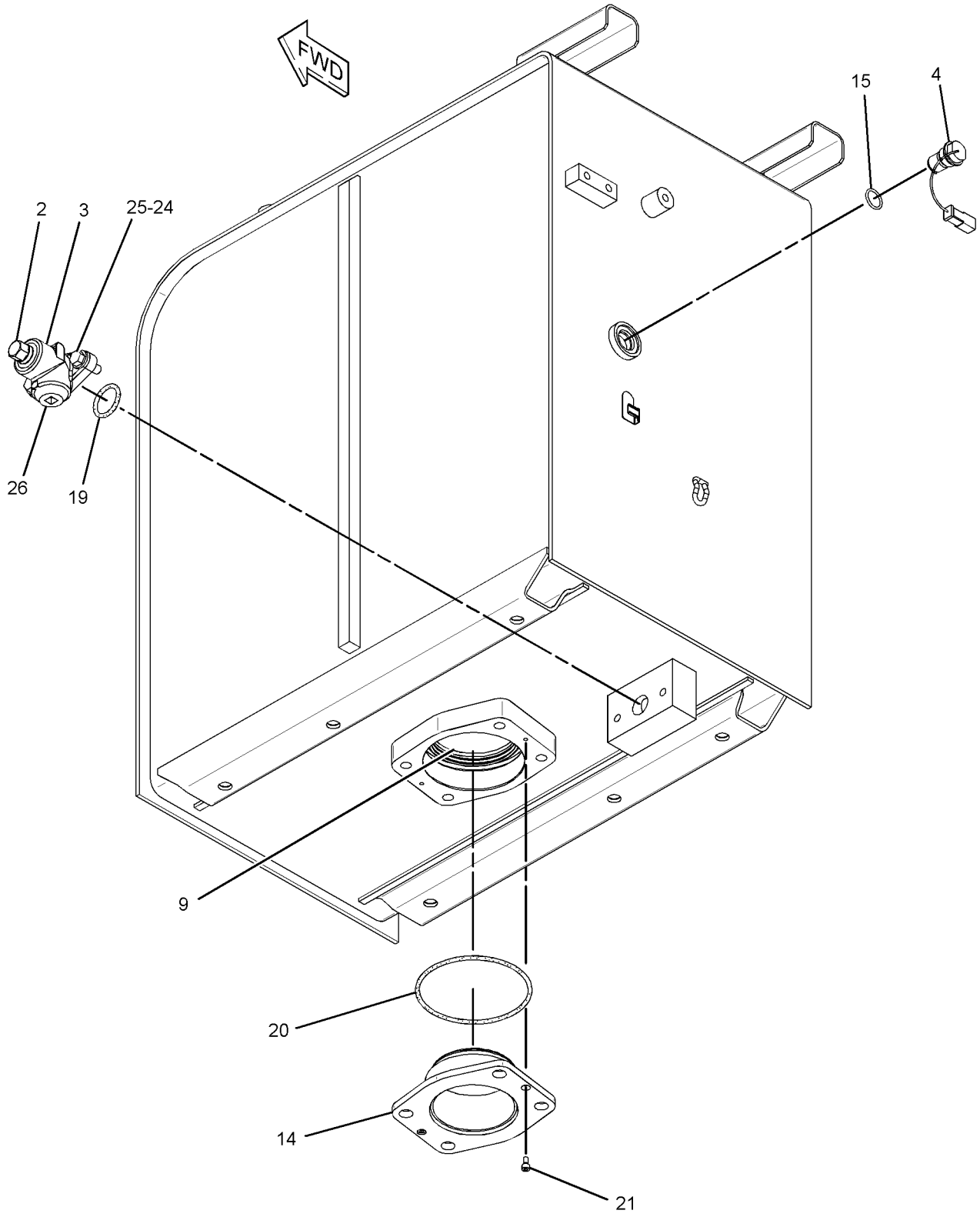

GRAPHIC #2 **<END>** g01324934

255-5713 VALVE & MTG GP-CONTROL–AUXILIARY

S/N: MNB1-UP; WDK1-UP

PART OF 255-5697, 255-5698, 255-5699, 255-5703 CONTROL AR-AUXILIARY

AN ATTACHMENT

SMCS-5051 **i02412829**

NOTE	REF NO	GRAPHIC REF	PART NUMBER	QTY	PART NAME 1 2 3 4 5 6 (PRODUCT LEVEL)	SEE PAGE
Y	1	1	**259-7378**	1	VALVE GP-CONTROL (AUXILIARY)	746
M	2	1	**7I-1026**	5	BOLT-SOCKET HEAD (M16X2X130-MM)	
	3	1	**4J-8998**	2	SEAL-O-RING	
	4	1	**1P-3702**	2	SEAL-RECTANGULAR	

M-METRIC PART
Y-SEPARATE ILLUSTRATION

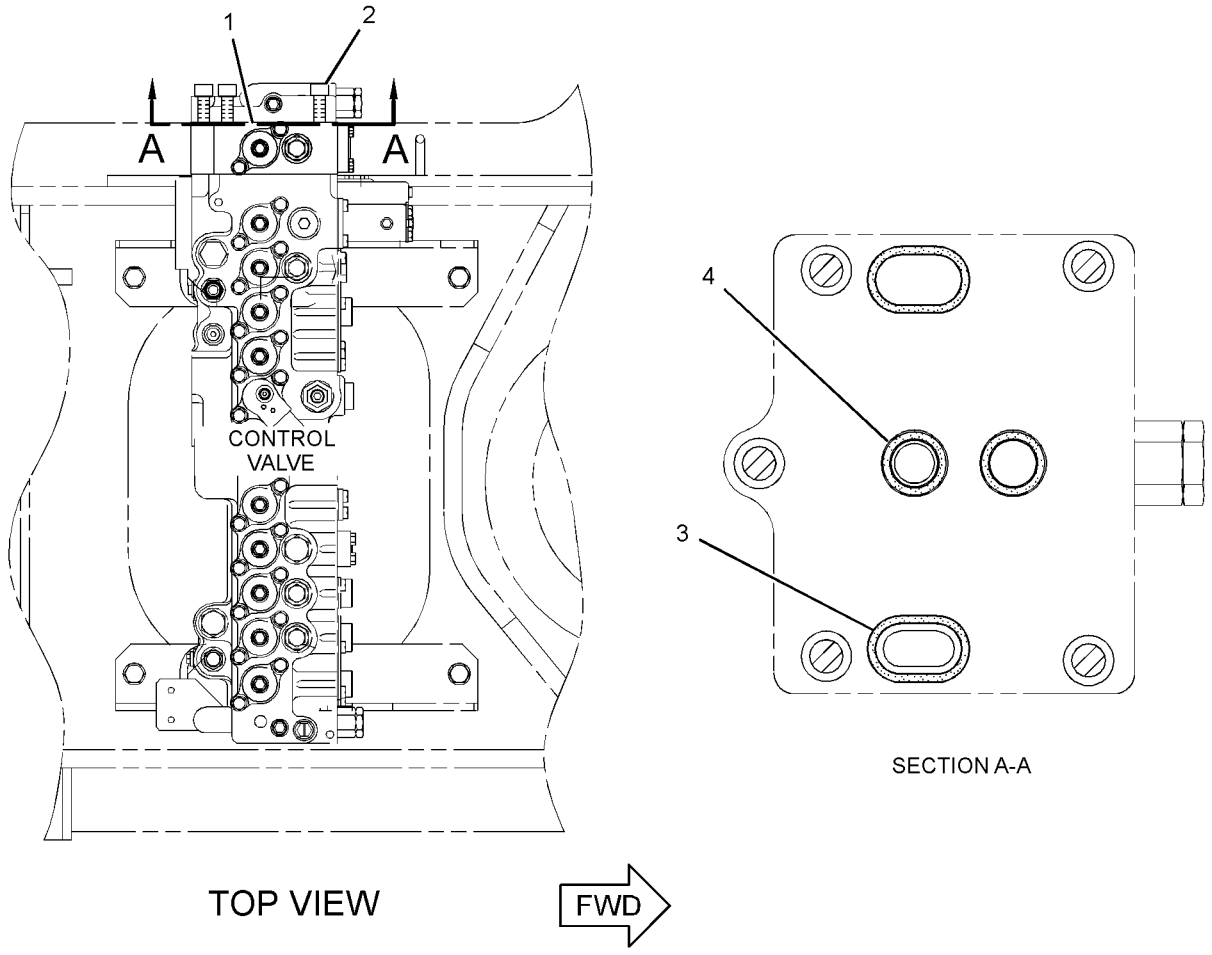

GRAPHIC #1

<END>

g01214142

255-5716 VALVE & MTG GP-CONTROL–AUXILIARY

S/N: MNB1-UP; WDK1-UP
PART OF 255-5702 CONTROL AR-AUXILIARY
AN ATTACHMENT

SMCS-5051 **i02411538**

NOTE	REF NO	GRAPHIC REF	PART NUMBER	QTY	PART NAME 1 2 3 4 5 6 (PRODUCT LEVEL)	SEE PAGE
Y	1	1	**244-8419**	1	VALVE GP-CONTROL (MEDIUM FLOW)	739
Y	2	1	**259-7378**	1	VALVE GP-CONTROL (AUXILIARY)	746
M	3	1	**7Y-5243**	5	BOLT-SOCKET HEAD (M16X2X200-MM)	
	4	1	**1P-3702**	2	SEAL-RECTANGULAR	
	5	1	**4J-8998**	2	SEAL-O-RING	

M-METRIC PART
Y-SEPARATE ILLUSTRATION

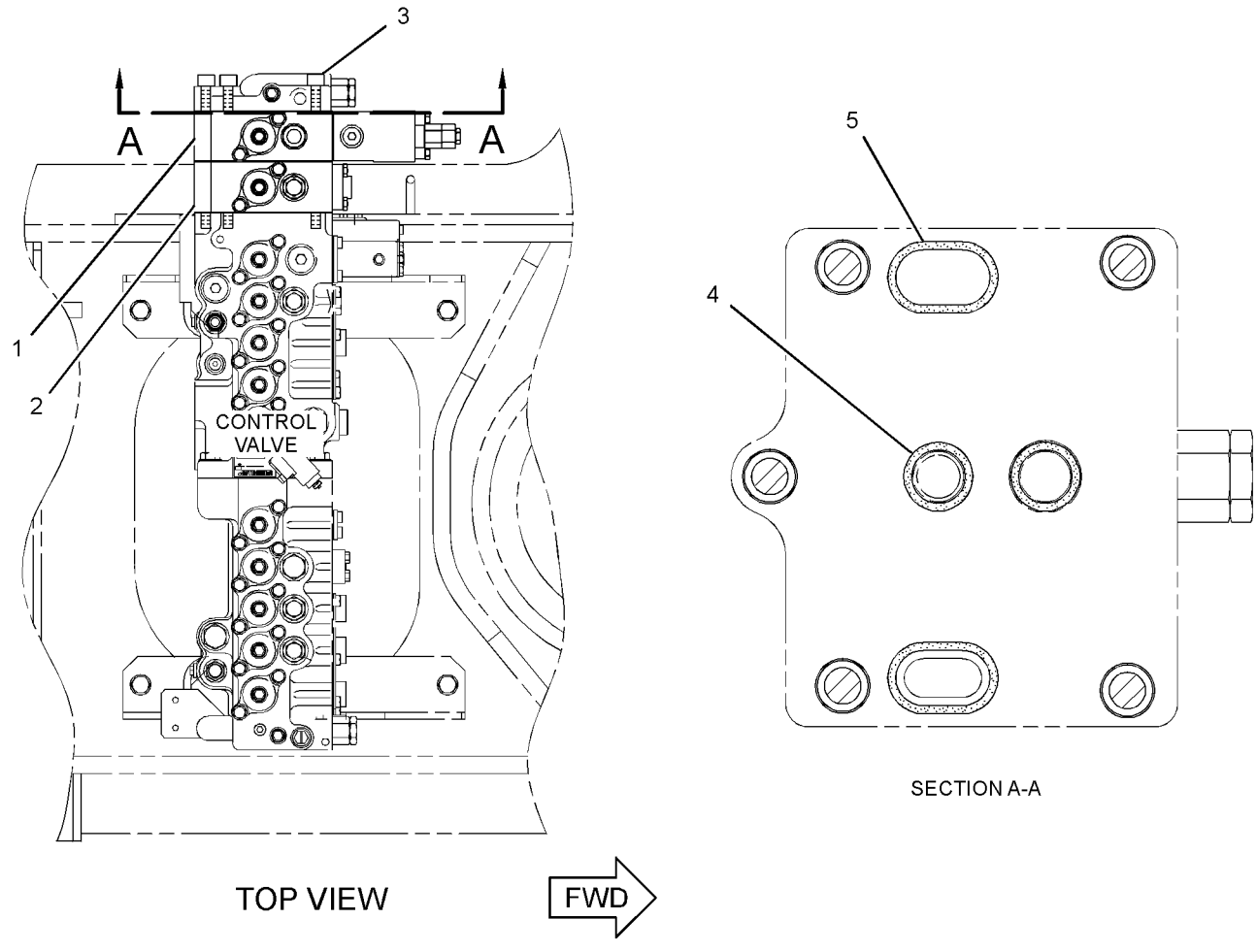

GRAPHIC #1 **<END>** g01232197

255-5725 VALVE AR-ALT PATTERN CONTROL–4-WAY

S/N: MNB1-UP; WDK1-UP
AN ATTACHMENT

SMCS-5065 **i02345714**

NOTE	PART NUMBER	QTY	PART NAME 1 2 3 4 5 6 (PRODUCT LEVEL)	SEE PAGE
Y	*247-7492*	1	FILM GP (ALT PATTERN CONTROL, WARNING)	1106
Y	*255-1656*	1	LINES GP-PILOT (ALT PATTERN CONTROL, 4-WAY)	628
Y-SEPARATE ILLUSTRATION				

<END>

255-5726 VALVE AR-ALT PATTERN CONTROL–2-WAY

S/N: MNB1-UP; WDK1-UP
AN ATTACHMENT

SMCS-5065 **i02345719**

NOTE	PART NUMBER	QTY	PART NAME 1 2 3 4 5 6 (PRODUCT LEVEL)	SEE PAGE
Y	*247-7490*	1	FILM GP (ALT PATTERN CONTROL, WARNING)	1105
Y	*255-1657*	1	LINES GP-PILOT (ALT PATTERN CONTROL, 2-WAY)	630
Y-SEPARATE ILLUSTRATION				

<END>

255-5740 VALVE AR-CHECK & RELIEF

S/N: MNB1-UP; WDK1-UP
STICK LOWERING CONTROL
FOR USE WITH 255-5738–PAGE 730. CANNOT BE USED WITH 229-1757–PAGE 826, 229-1759–PAGE 827
AN ATTACHMENT

SMCS-5117, 5453 **i02650222**

NOTE	PART NUMBER	QTY	PART NAME 1 2 3 4 5 6 (PRODUCT LEVEL)	SEE PAGE
Y	*282-5579*	1	LINES GP-BOOM (REACH BOOM, STICK LOAD CONTROL)	549
Y	*255-1724*	1	LINES GP-PILOT (LOAD CONTROL, STICK)	648
Y	*237-3012*	1	LINES GP-STICK CYLINDER	689
Y-SEPARATE ILLUSTRATION				

<END>

255-5738 VALVE AR-LOAD CONTROL

S/N: MNB1-UP; WDK1-UP
FOR USE WITH 229-1754–PAGE 825, 229-1757–PAGE 826, 229-1758–PAGE 825, 229-1759–PAGE 827, 229-1760–PAGE 825
AN ATTACHMENT

SMCS-5067, 5117, 5147, 5811 **i02345746**

NOTE	PART NUMBER	QTY	PART NAME 1 2 3 4 5 6 (PRODUCT LEVEL)	SEE PAGE
Y	*255-1794*	1	LINES GP-BOOM CYLINDER (LOAD CONTROL)	555
Y	*255-1809*	1	LINES GP-PILOT (BOOM LOWERING CONTROL)	664
Y	*255-1795*	1	LINES GP-RETURN (LOAD CONTROL, BOOM CYLINDER)	683
Y-SEPARATE ILLUSTRATION				

<END>

310-0060 VALVE AR-CHECK & RELIEF—STICK LOWERING CONTROL

S/N: MNB1-UP; WDK1-UP

FOR USE WITH 255-5738—PAGE 730. CANNOT BE USED WITH 229-1754—PAGE 825, 229-1760—PAGE 825, 275-3839—PAGE 826, 275-3699—PAGE 826

AN ATTACHMENT

SMCS-5067, 5117, 5147, 5811 **i03030027**

NOTE	PART NUMBER	QTY	PART NAME 1 2 3 4 5 6 (PRODUCT LEVEL)	SEE PAGE
Y	*288-7458*	1	LINES GP-BOOM	551
Y	*255-1724*	1	LINES GP-PILOT (LOAD CONTROL, STICK)	648
Y	*237-3012*	1	LINES GP-STICK CYLINDER	689
Y-SEPARATE ILLUSTRATION				

<END>

247-7451 VALVE AR-SWING

S/N: MNB1-UP; WDK1-UP

AN ATTACHMENT

SMCS-5480 **i02407560**

NOTE	PART NUMBER	QTY	PART NAME 1 2 3 4 5 6 (PRODUCT LEVEL)	SEE PAGE
Y	*259-0680*	1	VALVE GP-SWING CUSHION	821
Y-SEPARATE ILLUSTRATION				

<END>

173-4672 VALVE GP-CHECK–OIL COOLER BYPASS

S/N: MNB1-UP; WDK1-UP

PART OF 248-9831 LINES GP-CONTROL

SMCS-5067 **i01721698**

NOTE	REF NO	GRAPHIC REF	PART NUMBER	QTY	PART NAME 1 2 3 4 5 6 (PRODUCT LEVEL)	SEE PAGE
	1	1	**190-7826**	1	PLUG	
	2	1	**095-1547**	1	SEAL-O-RING	
	3	1	**177-2713**	1	VALVE AS	
	4	1	**184-3841**	1	RING	
	5	1	**184-3833**	1	VALVE AS	
	6	1	**177-2709**	1	BODY	
	7	1	**9S-6130**	1	PLUG	
	8	1	**2S-4078**	1	SEAL-O-RING	

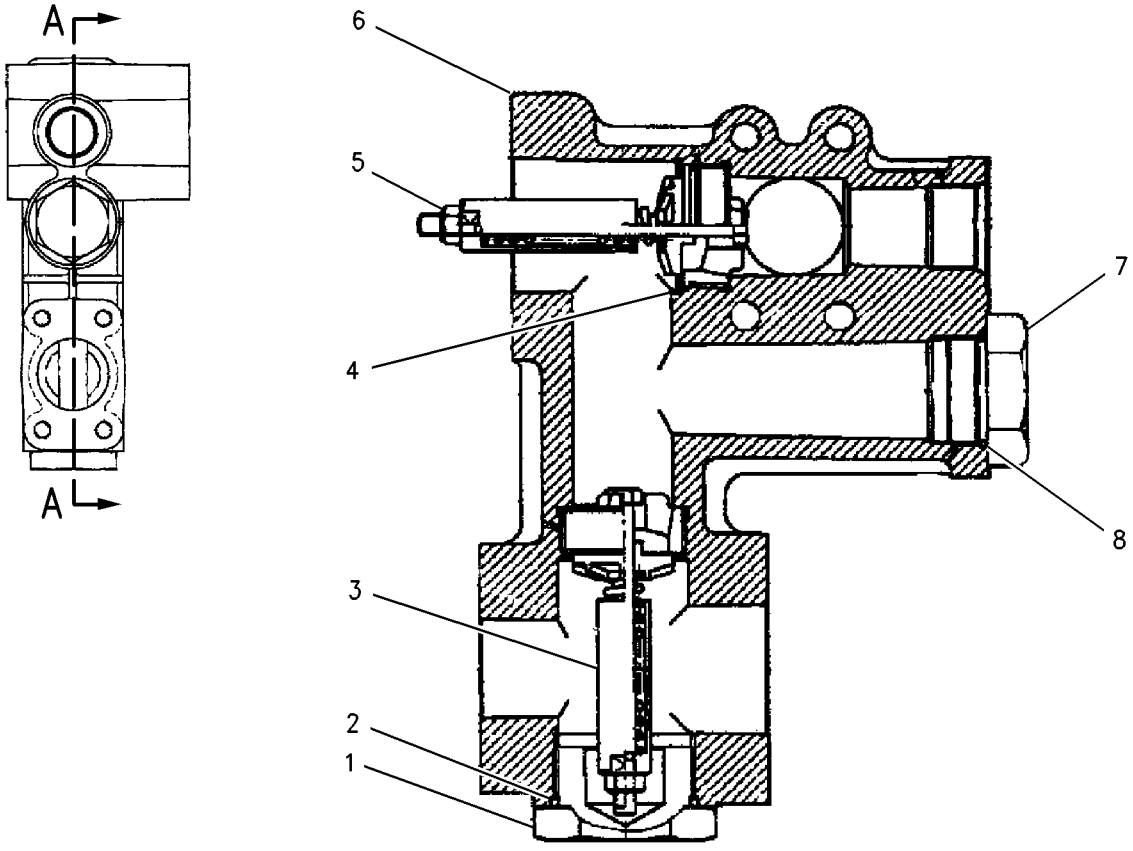

SECTION A-A

GRAPHIC #1 **<END>** g00885076

215-4890 VALVE GP-CHECK–1-WAY/2-WAY, CHECK

S/N: MNB1-UP; WDK1-UP
PART OF 255-1762 LINES GP-FRONT
FIELD REPLACEMENT ORDER 297-0370–PAGE 734
AN ATTACHMENT

SMCS-5067 **i02333086**

NOTE	REF NO	GRAPHIC REF	PART NUMBER	QTY	PART NAME 1 2 3 4 5 6 (PRODUCT LEVEL)	SEE PAGE
	1	1	**095-1602**	1	SEAL-O-RING	
	2	1	**095-1601**	1	SEAL-O-RING	
	3	1	**095-1700**	1	SEAL-O-RING	
	4	1	**232-4113**	1	RING	
	5	1	**8T-3008**	1	RING-BACKUP	

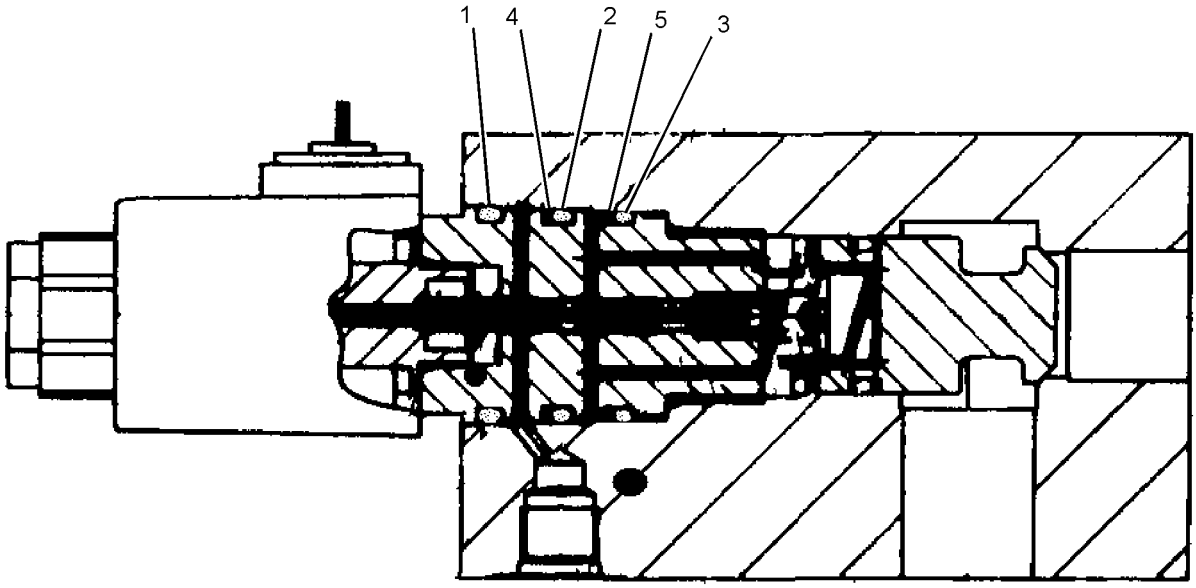

GRAPHIC #1 **<END>** g01146910

HYDRAULIC SYSTEM

297-0370 VALVE GP-CHECK

S/N: MNB1-UP; WDK1-UP
PART OF 255-1759 LINES GP-FRONT
FIELD REPLACEMENT FOR 215-4890—PAGE 733
AN ATTACHMENT

SMCS-5067 **i02757868**

NOTE	REF NO	GRAPHIC REF	PART NUMBER	QTY	PART NAME 1 2 3 4 5 6 (PRODUCT LEVEL)	SEE PAGE
	1	1	**095-1585**	1	SEAL-O-RING	
	2	1	**225-4804**	3	PLUG	
	3	1	**4J-7533**	3	SEAL-O-RING	
	4	1	**095-1602**	1	SEAL-O-RING	
	5	1	**232-4113**	1	RING	
	6	1	**095-1601**	1	SEAL-O-RING	
	7	1	**8T-3008**	1	RING-BACKUP	
	8	1	**095-1700**	1	SEAL-O-RING	
	9	1	**7M-8485**	1	SEAL-O-RING	
	10	1	**095-1657**	1	SEAL-O-RING	
	11	1	**232-4114**	2	RING	

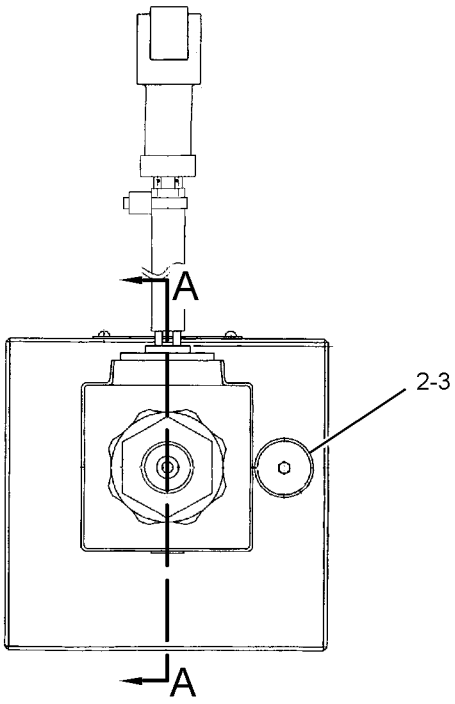

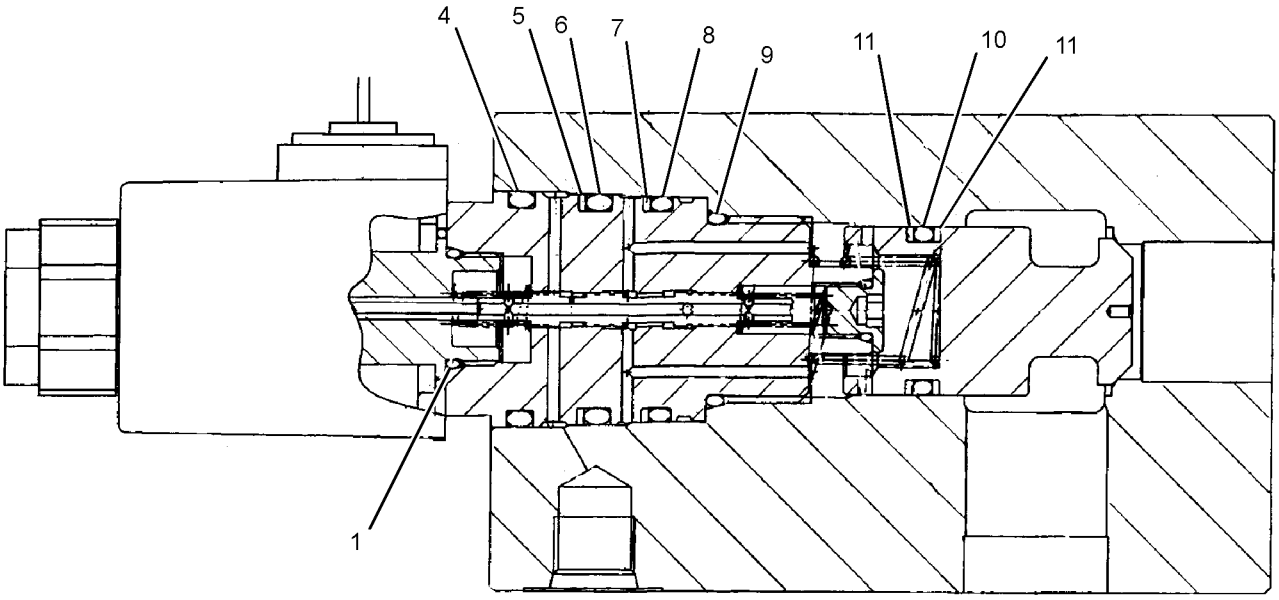

SECTION A-A

GRAPHIC #1 **<END>** g01382946

232-4103 VALVE GP-CONTROL—MEDIUM PRESSURE

S/N: MNB1-UP; WDK1-UP
PART OF 255-1766 LINES GP-FRONT
AN ATTACHMENT

SMCS-5051 **i02762668**

NOTE	REF NO	GRAPHIC REF	PART NUMBER	QTY	PART NAME 1 2 3 4 5 6 (PRODUCT LEVEL)	SEE PAGE
C	1	1	**260-3003**	2	VALVE GP-RELIEF (160-BAR (2321-PSI)) (MEDIUM PRESSURE)	
					—OR—	
C		1	**309-9941**	2	VALVE GP-RELIEF (80-BAR (1161-PSI)) (MEDIUM PRESSURE)	
					(USE FOR LOW PRESSURE APPLICATIONS ONLY)	

C-CHANGE FROM PREVIOUS TYPE

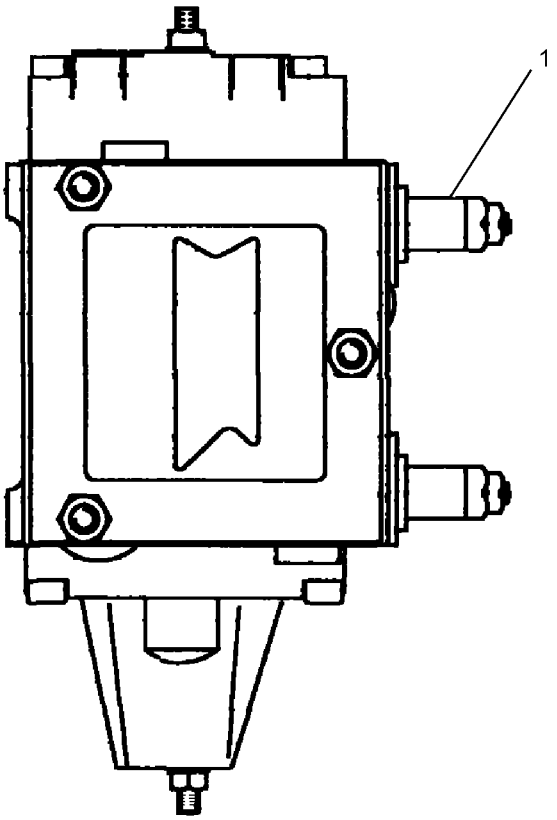

GRAPHIC #1 **<END>** g01384591

HYDRAULIC SYSTEM

239-8825 VALVE GP-CONTROL—REAR, WITHOUT HOUSINGS

S/N: MNB1-UP; WDK1-UP

PART OF 255-5653, 259-7432 VALVE GP-CONTROL

ALSO AN ATTACHMENT

SMCS-5051 **i02878429**

NOTE	REF NO	GRAPHIC REF	PART NUMBER	QTY	PART NAME 1 2 3 4 5 6 (PRODUCT LEVEL)	SEE PAGE
	1	1	**2S-2596**	1	SPRING	
	2	1	**6E-2163**	1	VALVE-CHECK	
	3	1	**6E-2271**	8	RETAINER	
	4	1	**104-7293**	2	SPRING	
	5	1	**104-7294**	1	SPRING	
	6	1	**104-7296**	1	SPRING	
M	7	1	**153-5276**	4	BOLT-SPECIAL	
	8	1	**3K-0360**	1	SEAL-O-RING	

M-METRIC PART

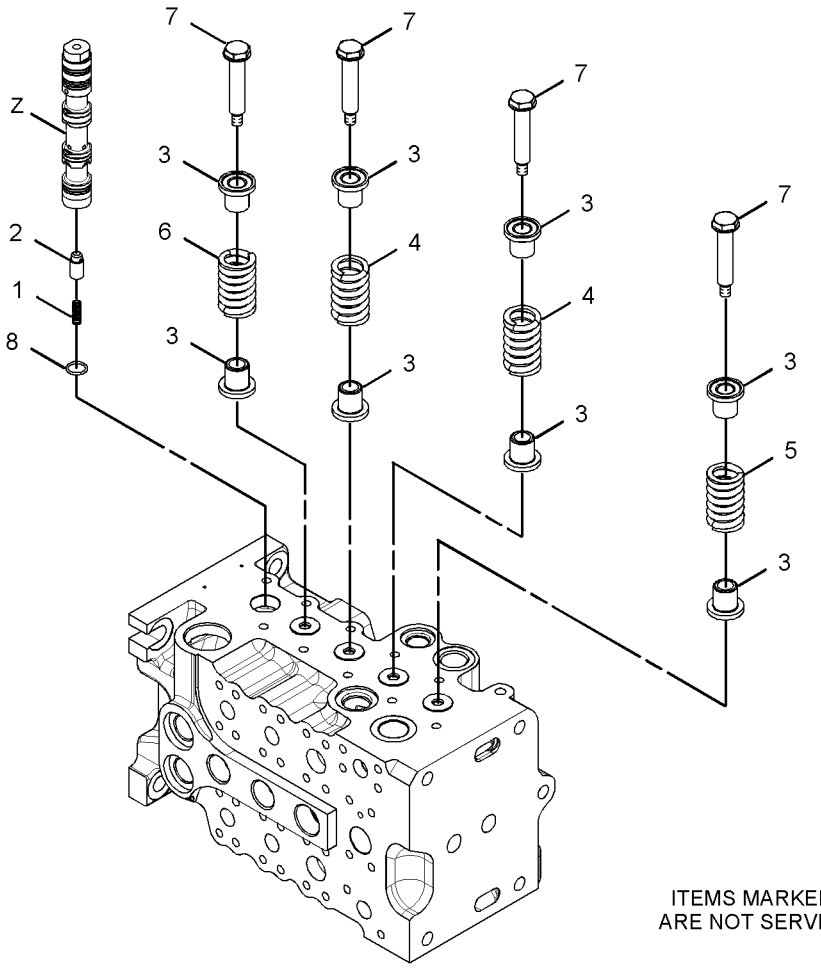

ITEMS MARKED "Z" IN GRAPHIC
ARE NOT SERVICED SEPARATELY

GRAPHIC #1 **<END>** g01522579

244-8400 VALVE GP-CONTROL—WITHOUT COVERS, HOUSINGS

S/N: MNB1-UP; WDK1-UP

PART OF 244-8419, 259-7378 VALVE GP-CONTROL

AN ATTACHMENT

SMCS-5051 **i02344306**

NOTE	REF NO	GRAPHIC REF	PART NUMBER	QTY	PART NAME 1 2 3 4 5 6 (PRODUCT LEVEL)	SEE PAGE
	1	1	**104-7293**	1	SPRING	
Z	2	1		1	STEM-AUXILIARY	
Z	3	1		1	BLOCK	
	4	1	**153-5276**	1	BOLT-SPECIAL	
	5	1	**6E-2271**	2	RETAINER	

Z-NOT SERVICED SEPARATELY

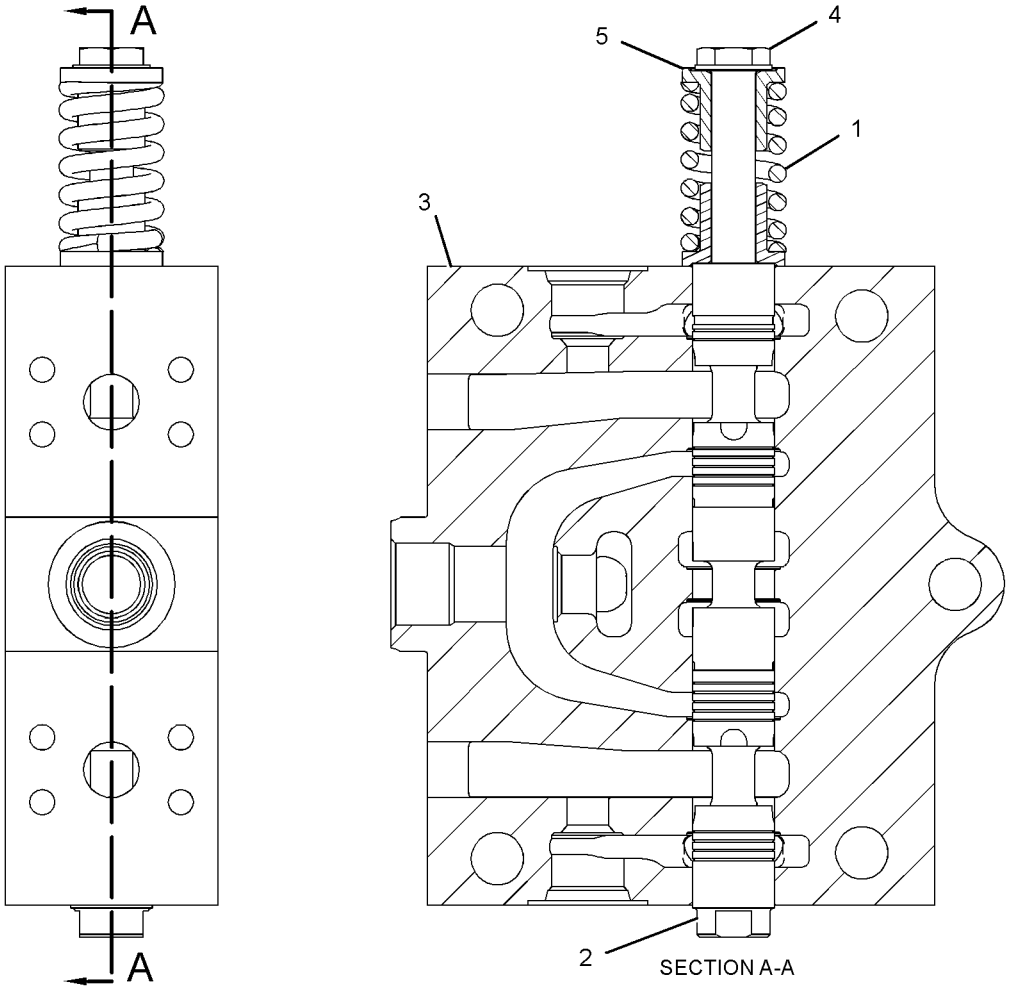

GRAPHIC #1 **<END>** g01218449

244-8419 VALVE GP-CONTROL–MEDIUM FLOW

S/N: MNB1-UP; WDK1-UP
PART OF 255-5716 VALVE & MTG GP-CONTROL
AN ATTACHMENT

SMCS-5051 **i02412644**

NOTE	REF NO	GRAPHIC REF	PART NUMBER	QTY	PART NAME 1 2 3 4 5 6 (PRODUCT LEVEL)	SEE PAGE
M	1	1	**8T-4195**	4	BOLT (M10X1.5X30-MM)	
	2	1	**4J-8998**	2	SEAL-O-RING	
	3	1	**6E-5731**	1	VALVE (LOAD CHECK)	
	4	1	**7I-1248**	1	SPRING	
	5	1	**158-8159**	1	HOUSING	
Y	6	1	**165-9473**	2	PLUG GP-CONTROL VALVE (AUXILIARY)	710
Y	7	1	**185-0490**	2	VALVE GP-FLOW CONTROL & RELIEF (MEDIUM FLOW, ROTATOR MOTOR)	759
	8	1	**236-6419**	1	PLUG	
Y	9	1	*244-8400*	1	VALVE GP-CONTROL (WITHOUT COVERS, HOUSINGS)	738
	10	1	**8T-4121**	4	WASHER-HARD (11X21X2.5-MM THK)	
	11	1	**095-1590**	1	SEAL-O-RING	
	12	1	**095-1787**	1	RING-BACKUP	
	13	1	**1P-3702**	2	SEAL-RECTANGULAR	
	14	1	**4J-5267**	2	SEAL-O-RING	
	15	1	**6E-2274**	1	COVER	
	16	1	**6V-5597**	2	SEAL-O-RING	
M	17	1	**7X-2545**	8	BOLT (M10X1.5X150-MM)	

M-METRIC PART
Y-SEPARATE ILLUSTRATION

244-8419 VALVE GP-CONTROL *(contd.)* i02412644

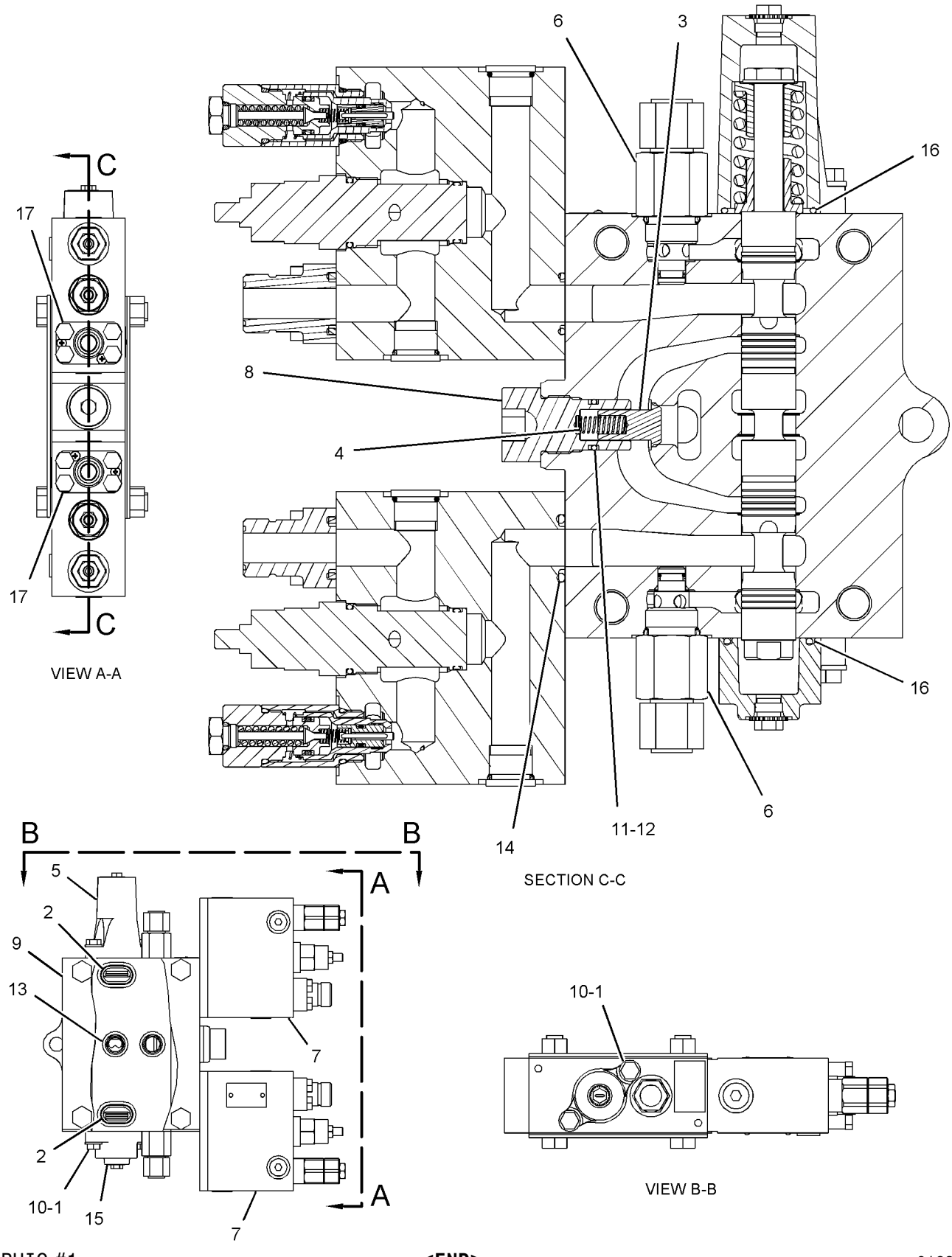

GRAPHIC #1 **<END>** g01232090

HYDRAULIC SYSTEM

255-5653 VALVE GP-CONTROL—REAR

S/N: MNB1-UP; WDK1-UP

PART OF 255-5651 VALVE GP-MAIN CONTROL

SMCS-5051 **i03081200**

NOTE	REF NO	GRAPHIC REF	PART NUMBER	QTY	PART NAME 1 2 3 4 5 6 (PRODUCT LEVEL)	SEE PAGE
	1	2,3	**4T-3148**	3	SPRING	
	2	3	**6E-5169**	1	SPRING	
	3	2	**7I-1248**	1	SPRING	
Y	4	1	**121-1491**	1	VALVE GP-SOLENOID (STRAIGHT TRAVEL)	809
	5	3	**153-5288**	1	SPRING	
	6	3	**153-5289**	1	GUIDE	
	7	3	**153-5290**	2	PLUG	
	8	3	**153-5291**	1	CONNECTOR	
	9	3	**153-5292**	1	VALVE-CHECK	
	10	3	**153-5293**	1	SPRING	
Y	11	2	**153-5295**	1	VALVE GP-PRIORITY (SWING)	783
	12	2	**153-5298**	1	SLEEVE	
	13	2	**153-5299**	1	VALVE	
	14	2	**153-5306**	1	SPRING	
	15	3	**153-5309**	1	SLEEVE	
	16	3	**153-5311**	1	SPRING	
	17	3	**158-8150**	1	VALVE GP-UNLOADING (STICK)	
	18	1	**158-8159**	4	HOUSING	
	19	1	**158-8206**	1	HOUSING	
	20	3	**158-8207**	1	STOPPER	
	21	2	**165-9595**	1	COVER	
CY	22	3	**310-0390**	1	VALVE GP-RELIEF (MAIN)	797
	23	3	**201-9263**	2	PLUG	
	24	2	**236-6419**	1	PLUG	
	25	3	**236-6421**	1	PLUG	
Y	26	1	*239-8825*	1	VALVE GP-CONTROL (WITHOUT COVERS, HOUSINGS)	737
	27	2	**250-2446**	1	PLUG	
	28	3	**250-2447**	1	PLUG	
Y	29	2	**255-5661**	1	VALVE GP-RELIEF (LINE)	793
	30	2	**264-9961**	1	PLUG	
	31	3	**095-1575**	1	SEAL-O-RING	
	32	2,3	**095-1590**	3	SEAL-O-RING	
	33	3	**095-1603**	1	SEAL-O-RING	
	34	3	**095-1778**	1	RING-BACKUP	
	35	2,3	**095-1787**	3	RING-BACKUP	
	36	2	**103-8173**	1	SEAL-O-RING	
	37	3	**103-8177**	1	ADAPTER	
	38	3	**123-2485**	1	PLUG	
	39	3	**2M-9780**	1	SEAL-O-RING	
	40	3	**3J-1907**	1	SEAL-O-RING	
	41	1	**4I-3569**	1	RING-BACKUP	
	42	3	**4I-6397**	3	RING-BACKUP	
	43	2	**4J-5309**	1	SEAL-O-RING	
	45	2	**4T-5074**	1	RING-BACKUP	
	46	1	**6E-2274**	5	COVER	
	47	1	**6E-3653**	1	PLUG	
	48	2,3	**6E-5643**	3	VALVE (LOAD CHECK)	
	49	2	**6E-5731**	1	VALVE (LOAD CHECK)	
	50	3	**6V-3922**	3	SEAL-O-RING	
	51	3	**6V-5393**	1	SEAL-O-RING	
	52	2	**6V-5556**	1	SEAL-O-RING	
	53	2,3	**6V-5597**	9	SEAL-O-RING	
M	54	1	**7I-2272**	2	BOLT (M5X0.8X12-MM)	
	55	3	**7M-8485**	2	SEAL-O-RING	
M	56	2	**7X-2621**	1	BOLT (M10X1.5X12-MM)	
	57	1	**7Y-5219**	1	SEAL-O-RING	

255-5653 VALVE GP-CONTROL *(contd.)* i03081200

NOTE	REF NO	GRAPHIC REF	PART NUMBER	QTY	PART NAME 1 2 3 4 5 6 (PRODUCT LEVEL)	SEE PAGE
	58	1,2	**8T-4121**	24	WASHER-HARD (11X21X2.5-MM THK)	
M	59	1	**8T-4195**	20	BOLT (M10X1.5X30-MM)	
M	60	2	**8T-6685**	4	BOLT (M10X1.5X110-MM)	
	61	1	**8T-6759**	2	PLUG-PIPE	
	62	2	*222-4737*	3	PLUG AS	
					(EACH INCLUDES)	
		2	**9S-4180**	1	PLUG	
		2	**4J-7533**	1	SEAL-O-RING	

C-CHANGE FROM PREVIOUS TYPE
M-METRIC PART
Y-SEPARATE ILLUSTRATION

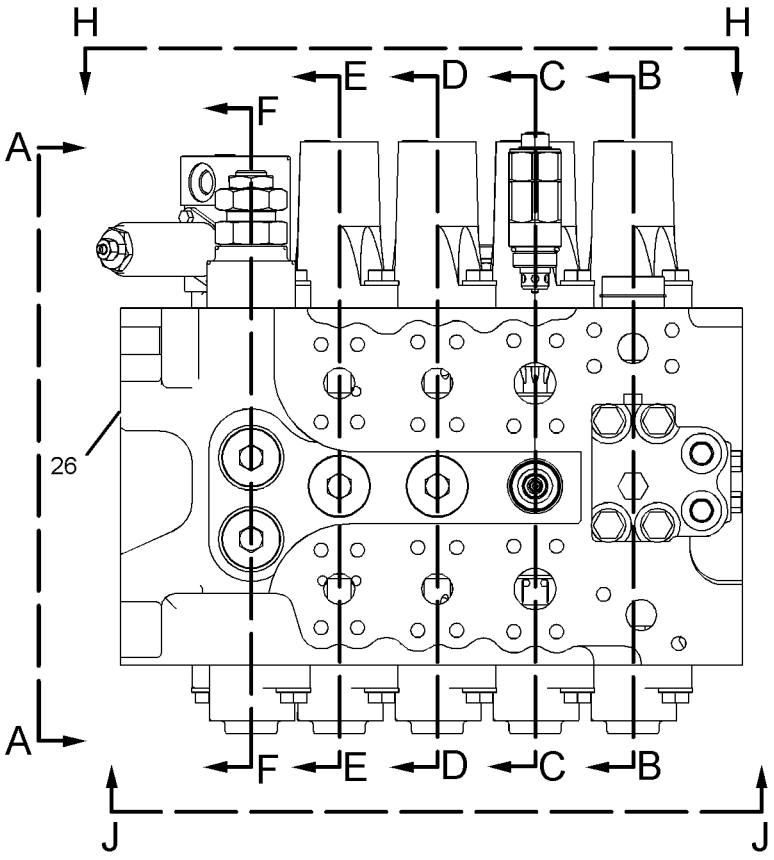

REFER TO ALL ILLUSTRATIONS OF THIS GROUP FOR AUXILIARY VIEWS

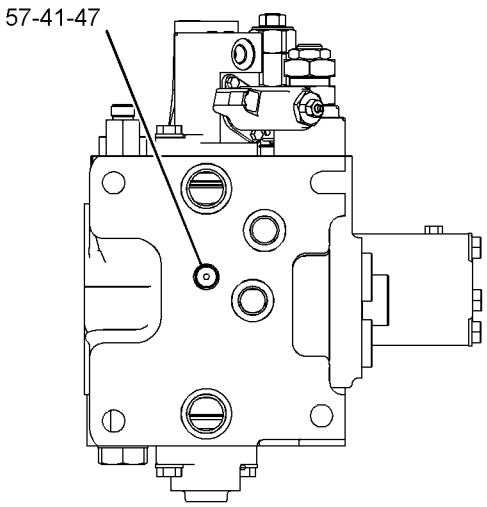

VIEW A-A

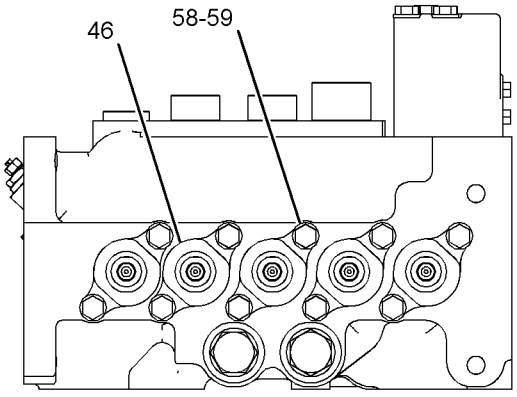

VIEW J-J

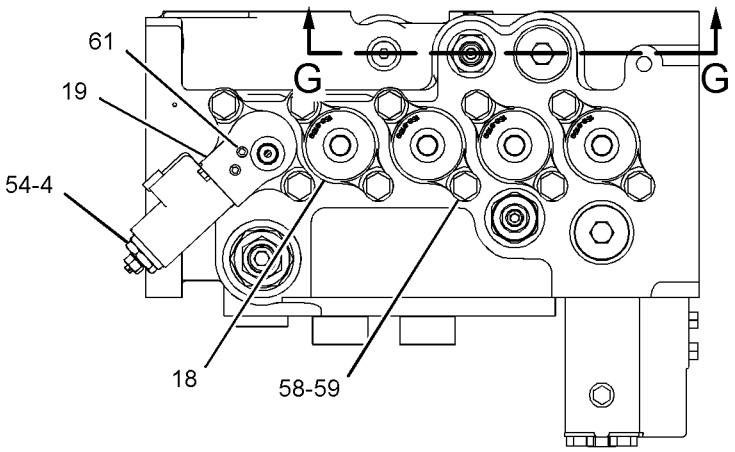

VIEW H-H

GRAPHIC #1

g01174982

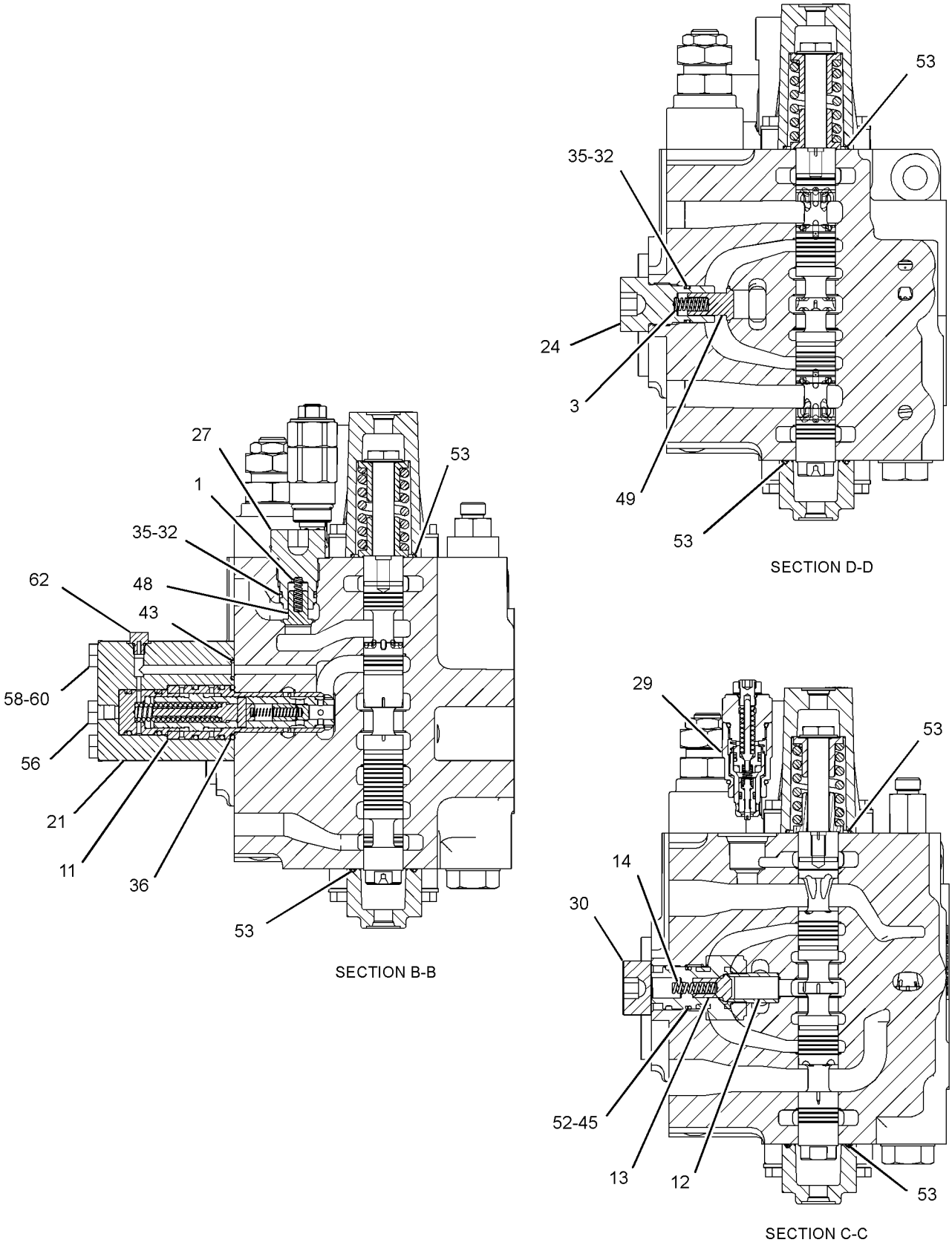

GRAPHIC #2

g01174984

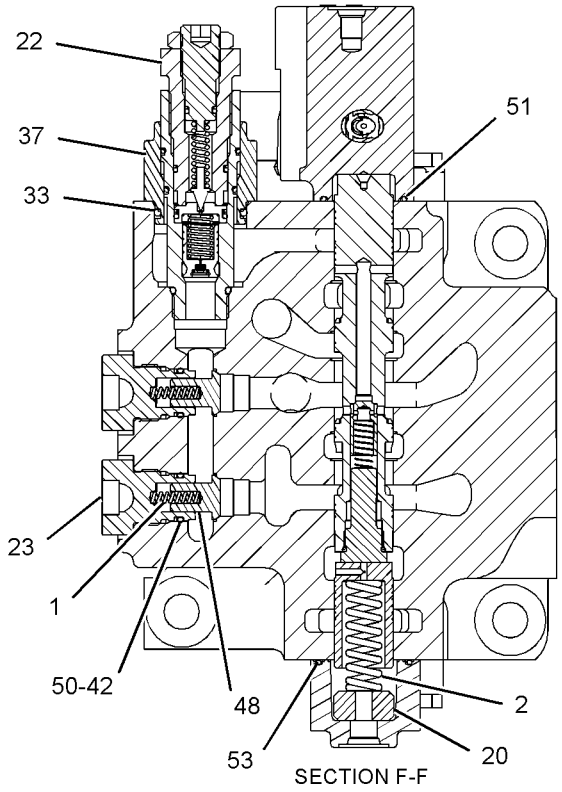

SECTION F-F

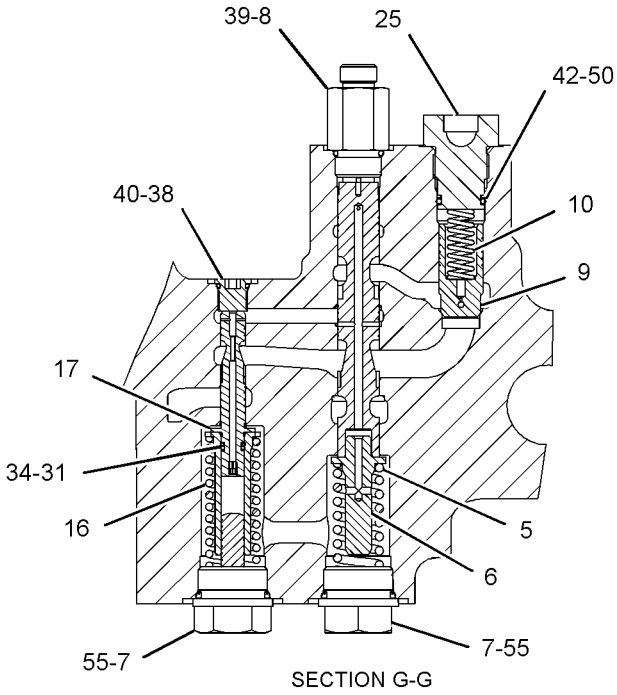

SECTION G-G

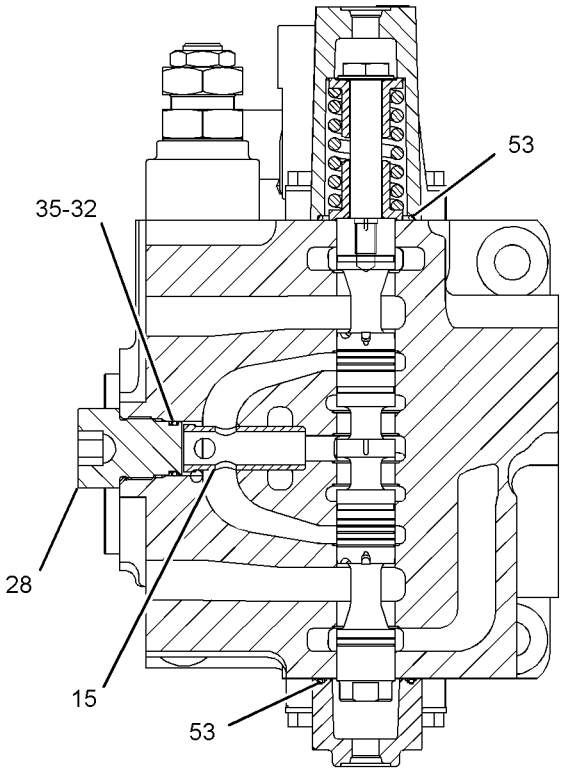

SECTION E-E

GRAPHIC #3 **<END>** g01174985

HYDRAULIC SYSTEM

259-7378 VALVE GP-CONTROL—AUXILIARY

S/N: MNB1-UP; WDK1-UP
1-PUMP/2-PUMP, 1-WAY FLOW
PART OF 255-5713, 255-5716 VALVE & MTG GP-CONTROL
AN ATTACHMENT

SMCS-5051 **i02412589**

NOTE	REF NO	GRAPHIC REF	PART NUMBER	QTY	PART NAME 1 2 3 4 5 6 (PRODUCT LEVEL)	SEE PAGE
M	1	1	**8T-4195**	12	BOLT (M10X1.5X30-MM)	
	2	1	**4J-8998**	2	SEAL-O-RING	
	3	1	**6E-5731**	1	VALVE (LOAD CHECK)	
	4	1	**7I-1248**	1	SPRING	
	5	1	**171-0150**	2	COVER	
	6	1	**236-6419**	1	PLUG	
Y	7	1	*244-8400*	1	VALVE GP-CONTROL (WITHOUT COVERS, HOUSINGS)	738
Y	8	1	**255-5661**	2	VALVE GP-RELIEF (LINE)	793
	9	1	**8T-4121**	4	WASHER-HARD (11X21X2.5-MM THK)	
	10	1	**095-1590**	1	SEAL-O-RING	
	11	1	**095-1787**	1	RING-BACKUP	
	12	1	**158-8159**	1	HOUSING	
	13	1	**1P-3702**	4	SEAL-RECTANGULAR	
	14	1	**6E-2274**	1	COVER	
	15	1	**6V-5597**	2	SEAL-O-RING	

M-METRIC PART
Y-SEPARATE ILLUSTRATION

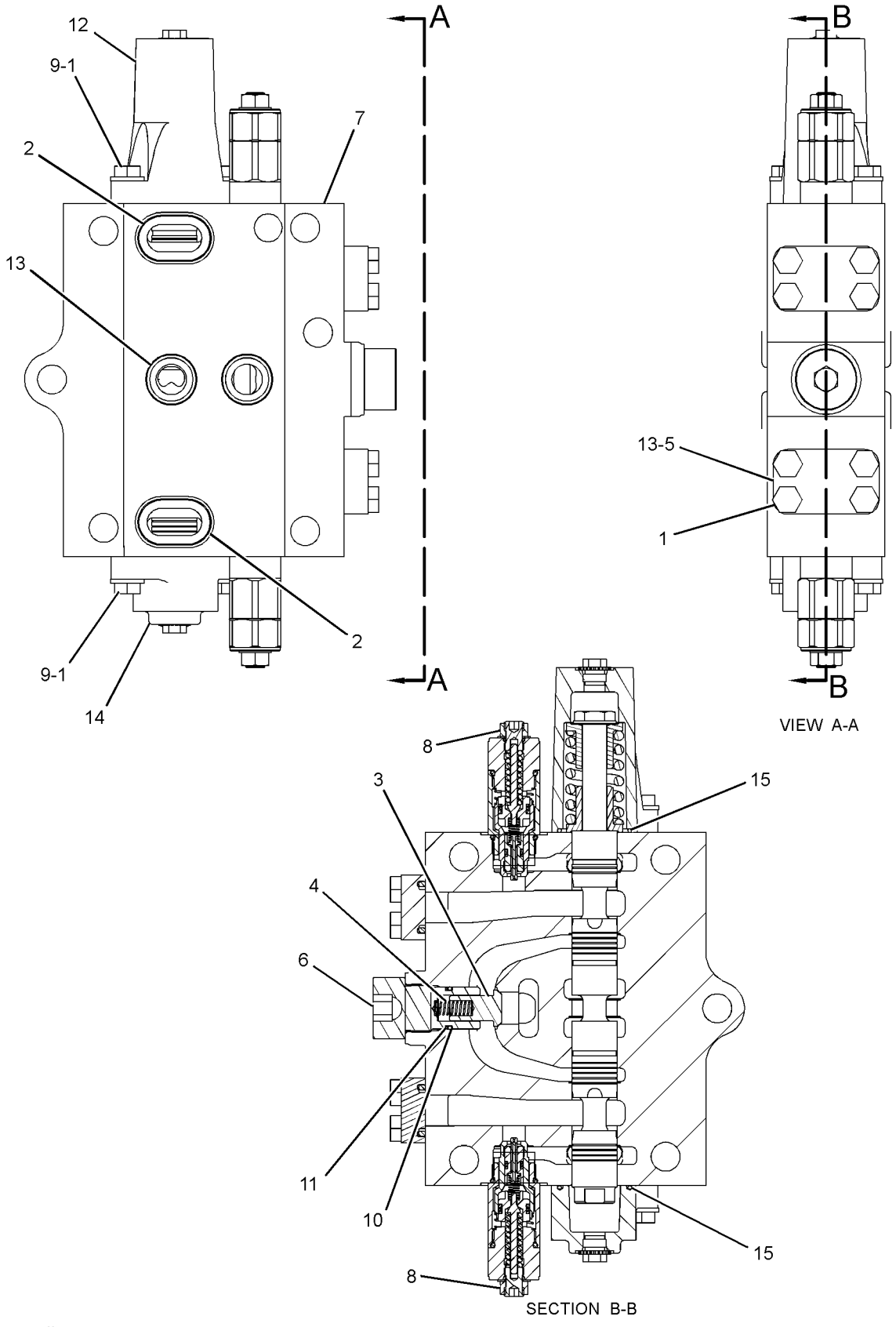

GRAPHIC #1 **<END>** g01219416

HYDRAULIC SYSTEM

259-7432 VALVE GP-CONTROL—HEAVY LIFT

S/N: MNB1-UP; WDK1-UP

PART OF 259-7424 VALVE GP-MAIN CONTROL

AN ATTACHMENT

SMCS-5051 **i03134922**

NOTE	REF NO	GRAPHIC REF	PART NUMBER	QTY	PART NAME 1 2 3 4 5 6 (PRODUCT LEVEL)	SEE PAGE
	1	2,3	**4T-3148**	3	SPRING	
	2	1	**6E-2274**	5	COVER	
	3	3	**6E-5169**	1	SPRING	
	4	2	**7I-1248**	1	SPRING	
Y	5	1	**121-1491**	1	VALVE GP-SOLENOID (STRAIGHT TRAVEL)	809
	6	3	**153-5288**	1	SPRING	
	7	3	**153-5289**	1	GUIDE	
	8	3	**153-5290**	2	PLUG	
	9	3	**153-5291**	1	CONNECTOR	
	10	3	**153-5292**	1	VALVE-CHECK	
	11	3	**153-5293**	1	SPRING	
Y	12	2	**153-5295**	1	VALVE GP-PRIORITY (SWING)	783
	13	2	**153-5298**	1	SLEEVE	
	14	2	**153-5299**	1	VALVE	
	15	2	**153-5306**	1	SPRING	
	16	3	**153-5309**	1	SLEEVE	
	17	3	**153-5311**	1	SPRING	
	18	3	**158-8150**	1	VALVE GP-UNLOADING (STICK)	
	19	1	**158-8159**	4	HOUSING	
	20	1	**158-8206**	1	HOUSING	
	21	3	**158-8207**	1	STOPPER	
	22	2	**165-9595**	1	COVER	
	23	3	**201-9263**	2	PLUG	
	24	2	*222-4737*	3	PLUG AS	
					(EACH INCLUDES)	
		2	**4J-7533**	1	SEAL-O-RING	
		2	**9S-4180**	1	PLUG	
	25	2	**236-6419**	1	PLUG	
	26	3	**236-6421**	1	PLUG	
	27	2	**264-9961**	1	PLUG	
CY	28	3	**310-0393**	1	VALVE GP-RELIEF (MAIN, HEAVY LIFT) (PILOT OPERATED)	798
Y	29	1	*239-8825*	1	VALVE GP-CONTROL (WITHOUT COVERS, HOUSINGS)	737
	30	2	**250-2446**	1	PLUG	
	31	3	**250-2447**	1	PLUG	
Y	32	2	**255-5661**	1	VALVE GP-RELIEF (LINE) (STICK)	793
	33	3	**095-1575**	1	SEAL-O-RING	
	34	2,3	**095-1590**	3	SEAL-O-RING	
	35	3	**095-1603**	1	SEAL-O-RING	
	36	3	**095-1778**	1	RING-BACKUP	
	37	2,3	**095-1787**	3	RING-BACKUP	
	38	2	**103-8173**	1	SEAL-O-RING	
	39	3	**103-8177**	1	ADAPTER	
	40	3	**123-2485**	1	PLUG	
	41	3	**2M-9780**	1	SEAL-O-RING	
	42	3	**3J-1907**	1	SEAL-O-RING	
	43	1	**4I-3569**	1	RING-BACKUP	
	44	3	**4I-6397**	3	RING-BACKUP	
	45	2	**4J-5309**	1	SEAL-O-RING	
	46	2	**4T-5074**	1	RING-BACKUP	
	47	1	**6E-3653**	1	PLUG	
	48	2,3	**6E-5643**	3	VALVE (LOAD CHECK)	
	49	2	**6E-5731**	1	VALVE (LOAD CHECK)	
	50	3	**6V-3922**	3	SEAL-O-RING	
	51	3	**6V-5393**	1	SEAL-O-RING	

259-7432 VALVE GP-CONTROL *(contd.)* i03134922

NOTE	REF NO	GRAPHIC REF	PART NUMBER	QTY	PART NAME 1 2 3 4 5 6 (PRODUCT LEVEL)	SEE PAGE
	52	2	**6V-5556**	1	SEAL-O-RING	
	53	2,3	**6V-5597**	9	SEAL-O-RING	
M	54	1	**7I-2272**	2	BOLT (M5X0.8X12-MM)	
	55	3	**7M-8485**	2	SEAL-O-RING	
M	56	2	**7X-2621**	1	BOLT (M10X1.5X12-MM)	
	57	1	**7Y-5219**	1	SEAL-O-RING	
	58	1,2	**8T-4121**	24	WASHER-HARD (11X21X2.5-MM THK)	
M	59	1	**8T-4195**	20	BOLT (M10X1.5X30-MM)	
M	60	2	**8T-6685**	4	BOLT (M10X1.5X110-MM)	
	61	1	**8T-6759**	2	PLUG-PIPE	

C-CHANGE FROM PREVIOUS TYPE
M-METRIC PART
Y-SEPARATE ILLUSTRATION

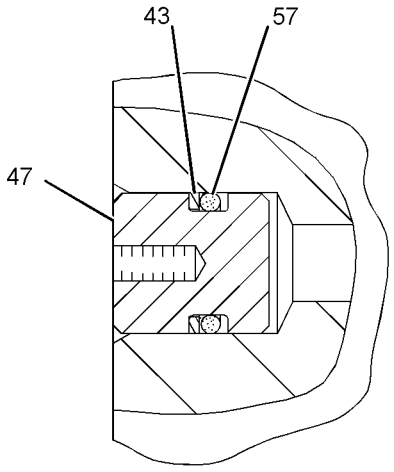

VIEW OF AREA J

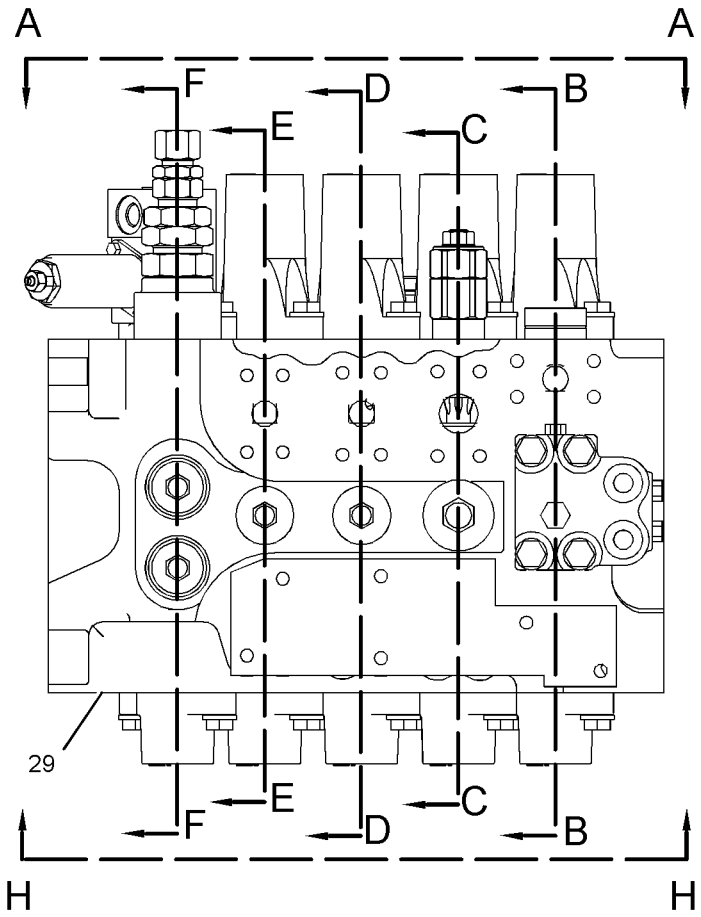

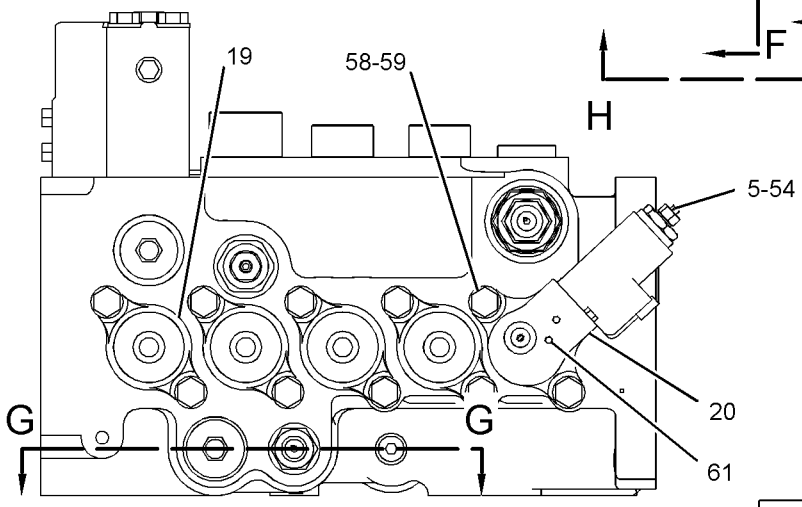

VIEW A-A

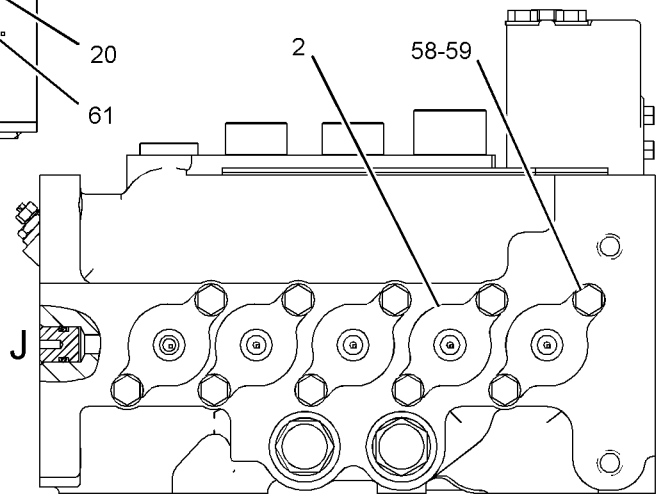

VIEW H-H

REFER TO ALL ILLUSTRATIONS OF
THIS GROUP FOR AUXILIARY VIEWS

GRAPHIC #1

g01160710

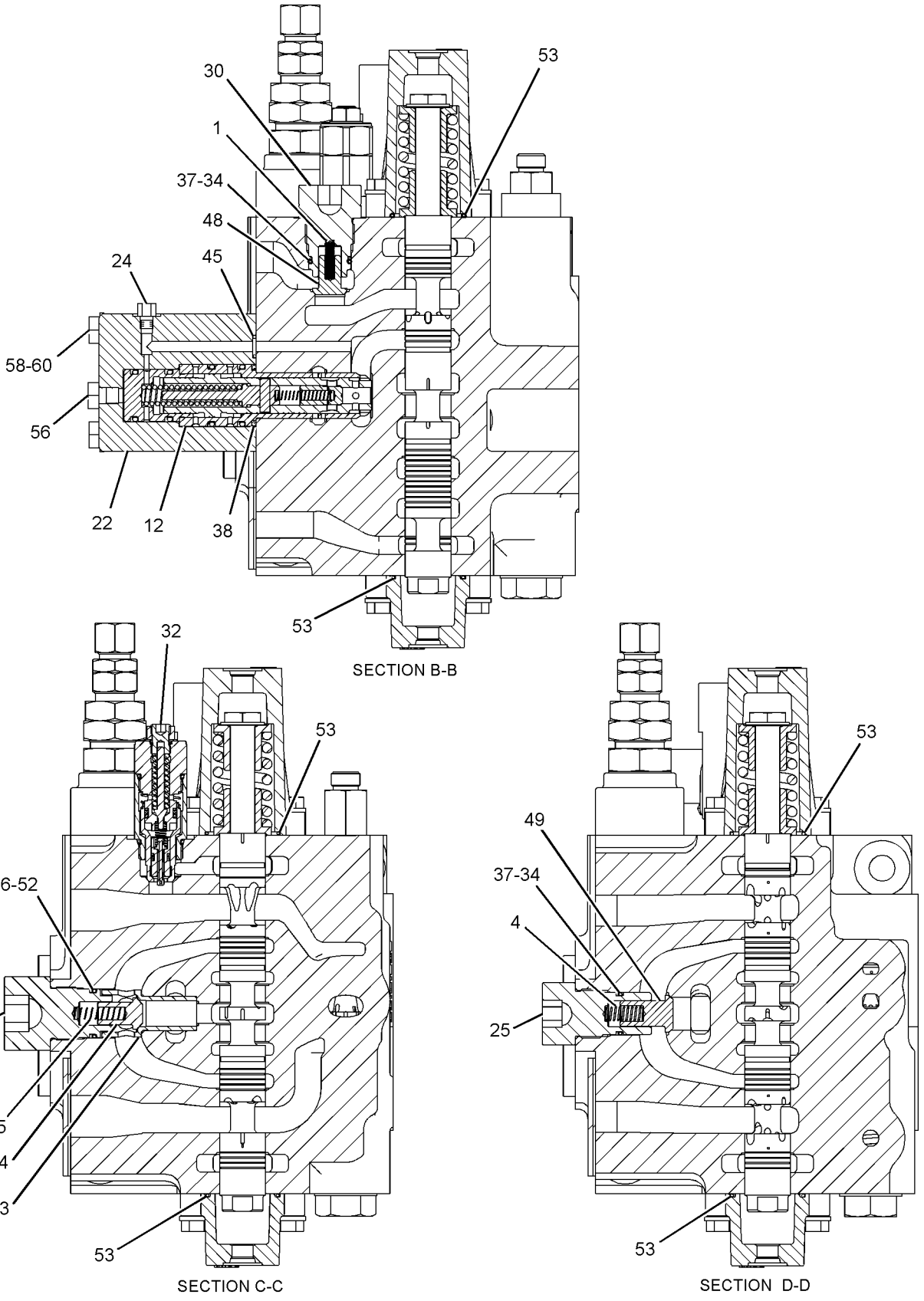

GRAPHIC #2

g01160711

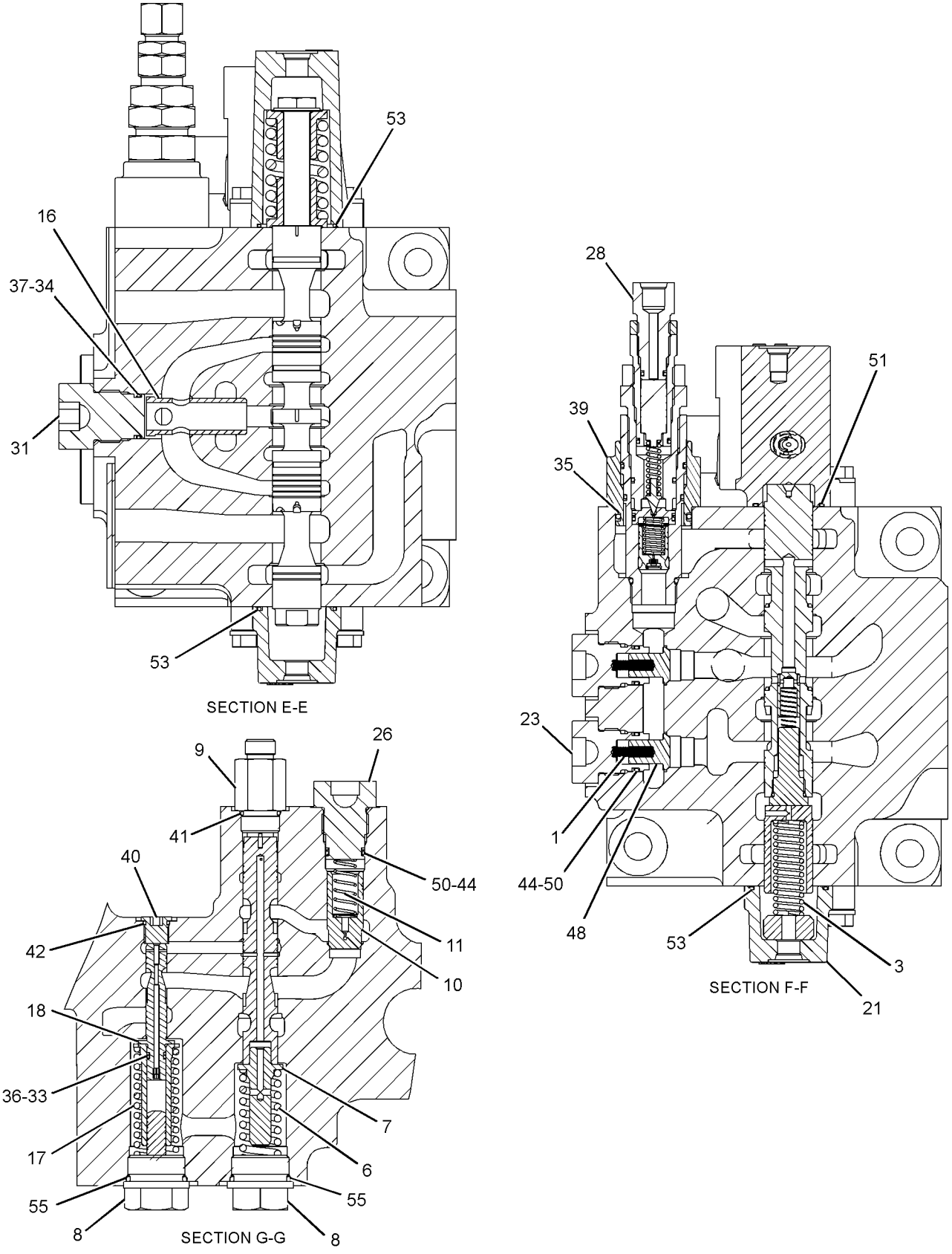

GRAPHIC #3 **<END>** g01160712

HYDRAULIC SYSTEM

310-0085 VALVE GP-CONTROL

S/N: MNB1-UP; WDK1-UP
PART OF 255-5651, 259-7424 VALVE GP-MAIN CONTROL
ALSO AN ATTACHMENT

SMCS-5051 **i03114960**

NOTE	REF NO	GRAPHIC REF	PART NUMBER	QTY	PART NAME 1 2 3 4 5 6 (PRODUCT LEVEL)	SEE PAGE
	1	2	**6E-2274**	5	COVER	
Y	2	1	**6E-4816**	2	PLUG GP-CONTROL VALVE	709
	3	1	**6E-5731**	4	VALVE (LOAD CHECK)	
	4	1	**7I-1248**	5	SPRING	
	5	1	**7Y-8099**	2	COVER	
	6	1	**153-5286**	1	VALVE (LOAD CHECK)	
	7	2	**153-5288**	1	SPRING	
	8	2	**153-5289**	1	GUIDE	
	9	2	**153-5290**	1	PLUG	
	10	2	**153-5291**	1	CONNECTOR	
	11	2	**153-5292**	1	VALVE-CHECK	
	12	2	**153-5293**	1	SPRING	
	13	1	**158-8159**	5	HOUSING	
	14	1	**236-6419**	5	PLUG	
	15	2	**236-6421**	1	PLUG	
Y	16	1	**255-5661**	3	VALVE GP-RELIEF (LINE)	793
Y	17	1	*310-0086*	1	VALVE GP-CONTROL	756
	18	1	**095-1590**	5	SEAL-O-RING	
	19	1	**095-1787**	5	RING-BACKUP	
Y	20	1	**109-5152**	1	VALVE GP-RELIEF (NEGATIVE FLOW CONTROL)	785
	21	1	**111-9959**	1	PLUG-PIPE	
	22	2	**2M-9780**	1	SEAL-O-RING	
	23	2	**4I-6397**	1	RING-BACKUP	
	24	1	**4J-0520**	2	SEAL-O-RING	
	25	2	**6V-3922**	1	SEAL-O-RING	
	26	1,2	**6V-5597**	10	SEAL-O-RING	
	27	2	**7M-8485**	1	SEAL-O-RING	
	28	1,2	**8T-4121**	20	WASHER-HARD (11X21X2.5-MM THK)	
M	29	1,2	**8T-4195**	28	BOLT (M10X1.5X30-MM)	

M-METRIC PART
Y-SEPARATE ILLUSTRATION

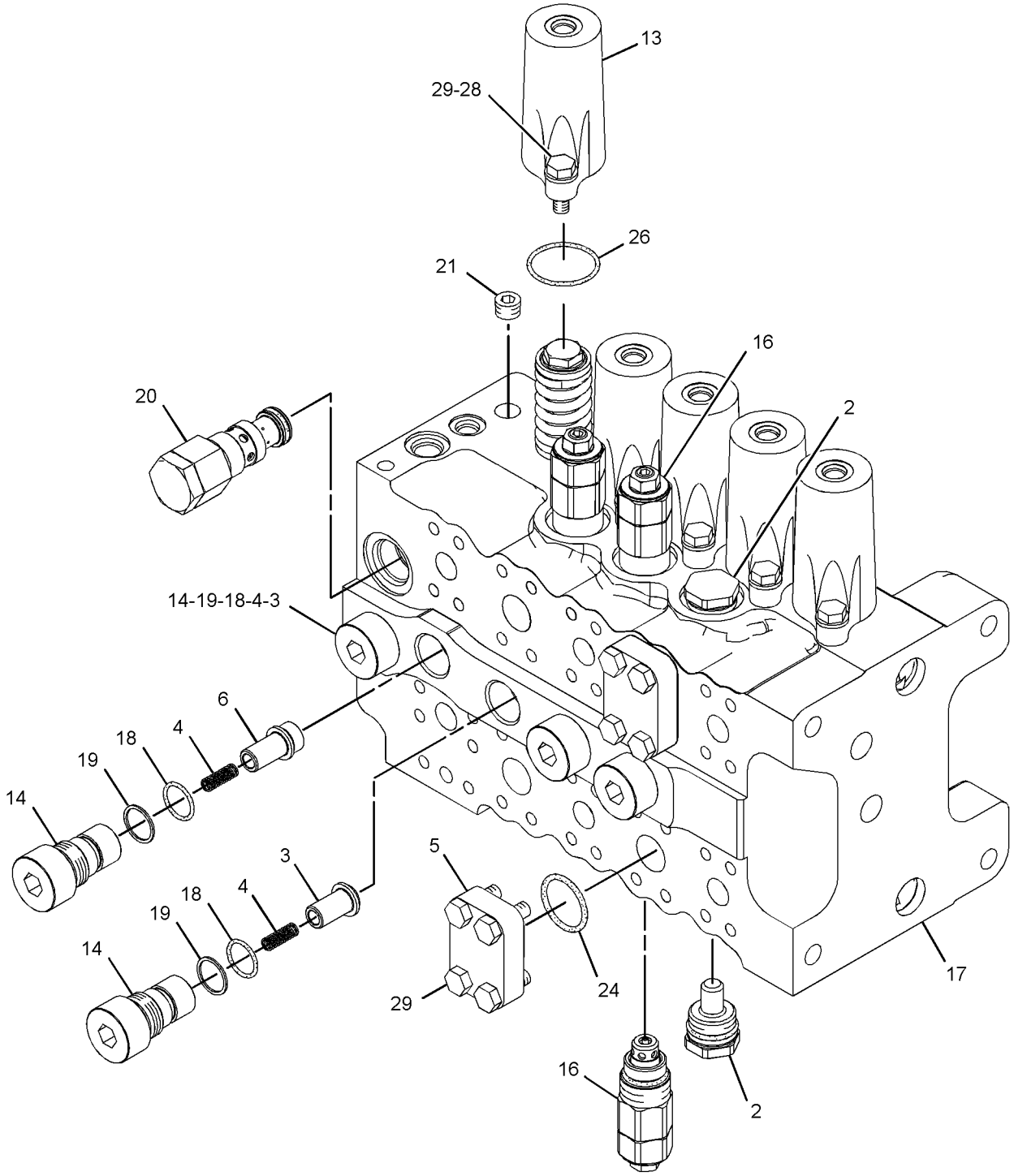

GRAPHIC #1 g01601533

310-0085 VALVE GP-CONTROL *(contd.)* **i03114960**

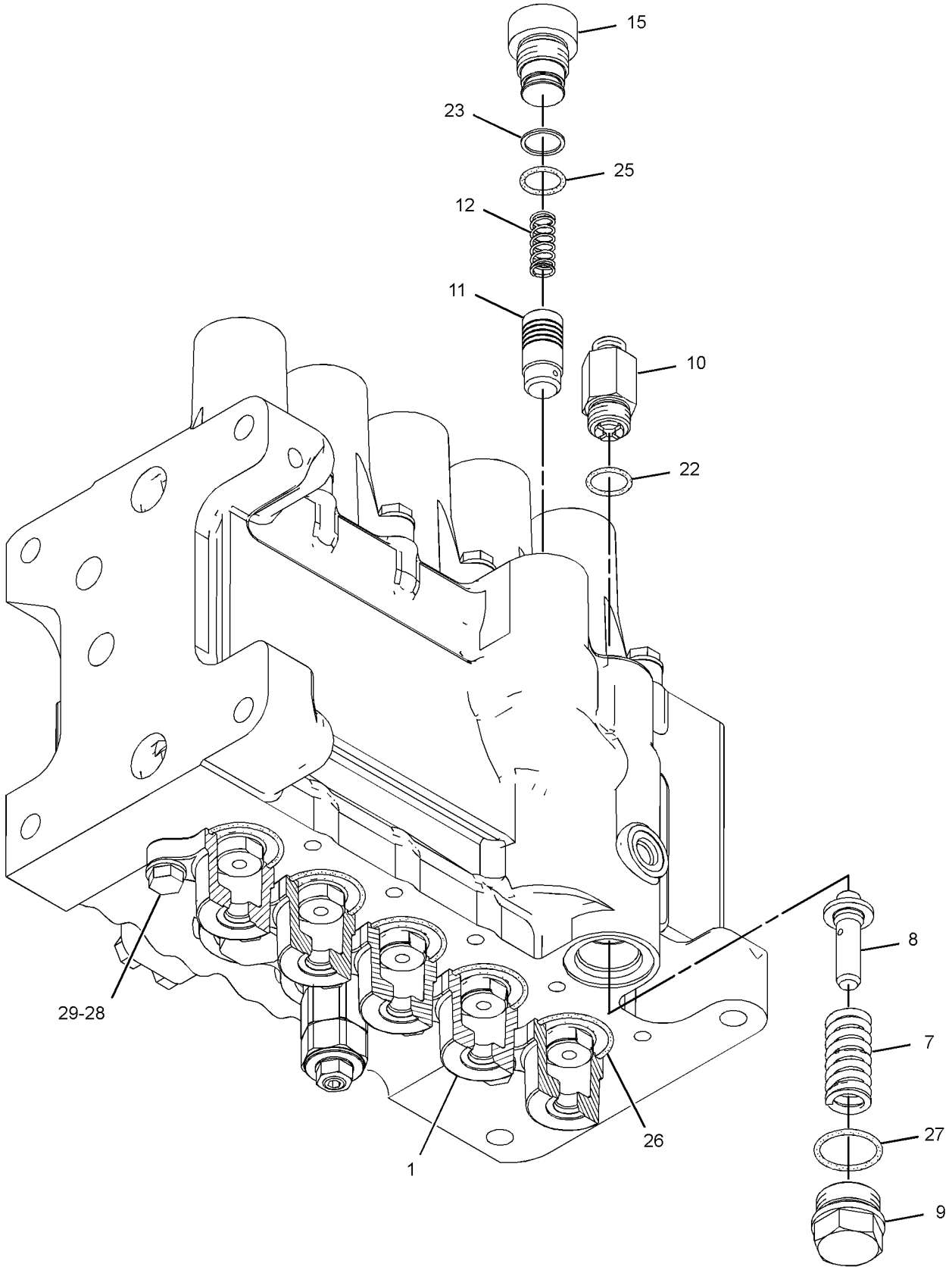

GRAPHIC #2 **<END>** g01598233

HYDRAULIC SYSTEM

310-0086 VALVE GP-CONTROL

S/N: MNB1-UP; WDK1-UP
PART OF 310-0085 VALVE GP-CONTROL
ALSO AN ATTACHMENT

SMCS-5051 **i03114982**

NOTE	REF NO	GRAPHIC REF	PART NUMBER	QTY	PART NAME 1 2 3 4 5 6 (PRODUCT LEVEL)	SEE PAGE
	1	1	**6E-2271**	10	RETAINER	
	2	1	**104-7293**	3	SPRING	
	3	1	**104-7294**	1	SPRING	
	4	1	**104-7296**	1	SPRING	
M	5	1	**153-5276**	5	BOLT-SPECIAL	

M-METRIC PART

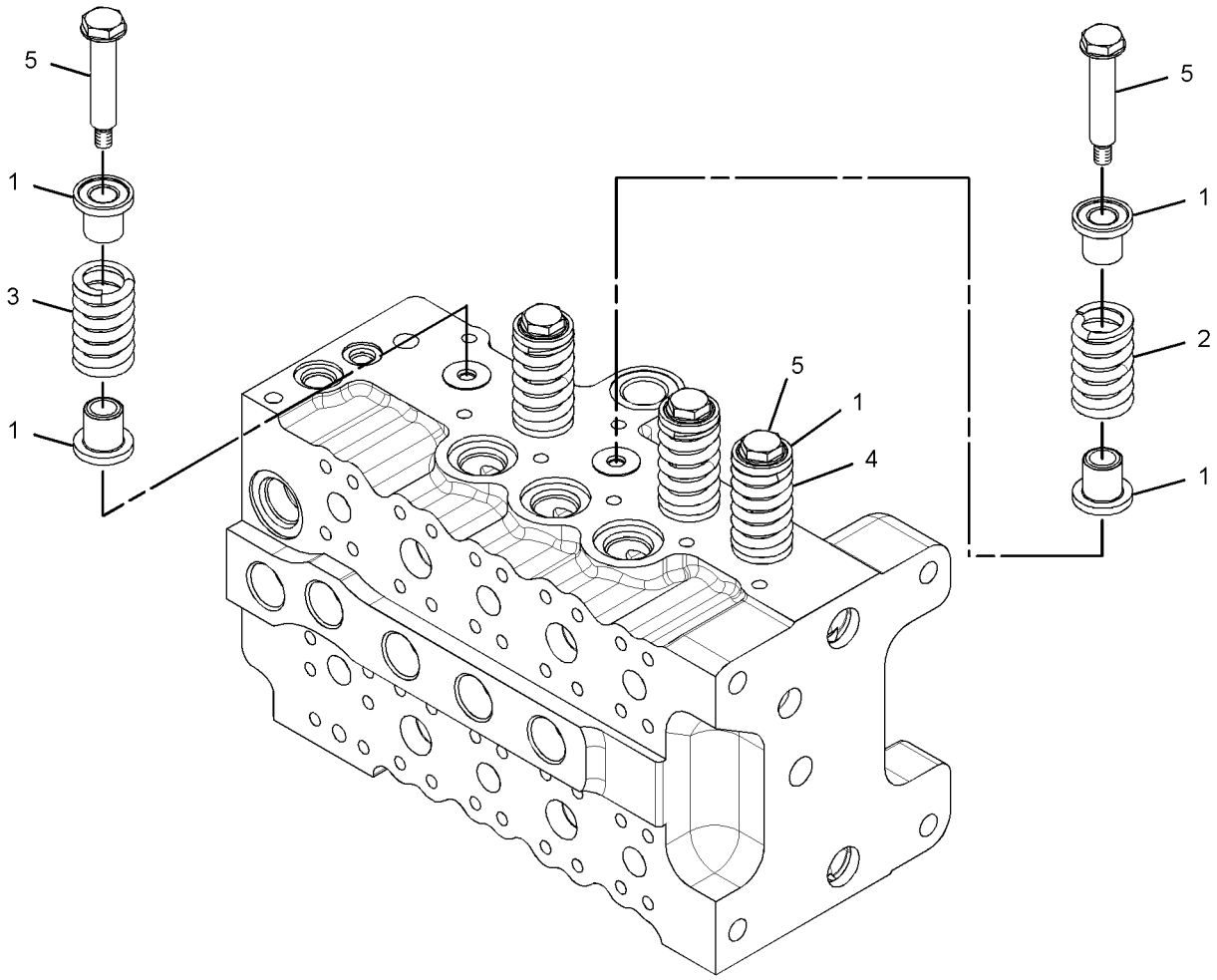

GRAPHIC #1 **<END>** g01594694

HYDRAULIC SYSTEM

254-3080 VALVE GP-COUPLER—QUICK COUPLER

S/N: WDK1-UP
PART OF 266-1201 LINES GP-FRONT
AN ATTACHMENT

SMCS-5491 **i02997486**

NOTE	REF NO	GRAPHIC REF	PART NUMBER	QTY	PART NAME 1 2 3 4 5 6 (PRODUCT LEVEL)	SEE PAGE
	1	1	**287-2352**	1	RETAINER-SPRING	
	2	1	**6E-5438**	1	SPRING	
	3	1	**6E-5439**	1	SPRING	
Y	4	1	**121-1491**	1	VALVE GP-SOLENOID (QUICK COUPLER)	809
J	5	1	**247-7587**	2	VALVE GP-PRESSURE REDUCING (QUICK COUPLER)	
Z	6	1		1	BODY-VALVE	
Z	7	1		1	STEM	
	8	1	*148-8407*	2	PLUG AS	
					(EACH INCLUDES)	
		1	**3J-1907**	1	SEAL-O-RING	
		1	**9S-4191**	1	PLUG-O-RING	
	9	1	**4J-5267**	1	SEAL-O-RING	
	10	1	**6E-2313**	1	COVER	
	11	1	**6E-5431**	5	SHIM (0.5-MM THK)	
	12	1	**6E-5434**	1	HOUSING-PILOT	
M	13	1	**7I-2272**	2	BOLT (M5X0.8X12-MM)	
	14	1	**8F-0212**	1	SEAL-O-RING	
M	15	1	**8T-4195**	2	BOLT (M10X1.5X30-MM)	
	16	1	**8T-4224**	2	WASHER-HARD (8.8X16X2-MM THK)	
	17	1	**8T-6759**	12	PLUG-PIPE	
M	18	1	**8T-6870**	2	BOLT (M8X1.25X70-MM)	
					AVAILABLE REPAIR KIT(S):	
J			**172-4432**	1	KIT-SEAL (QUICK COUPLER VALVE)	

J-KIT MARKED J AVAILABLE FOR PART MARKED J
M-METRIC PART
Y-SEPARATE ILLUSTRATION
Z-NOT SERVICED SEPARATELY

254-3080 VALVE GP-COUPLER *(contd.)* **i02997486**

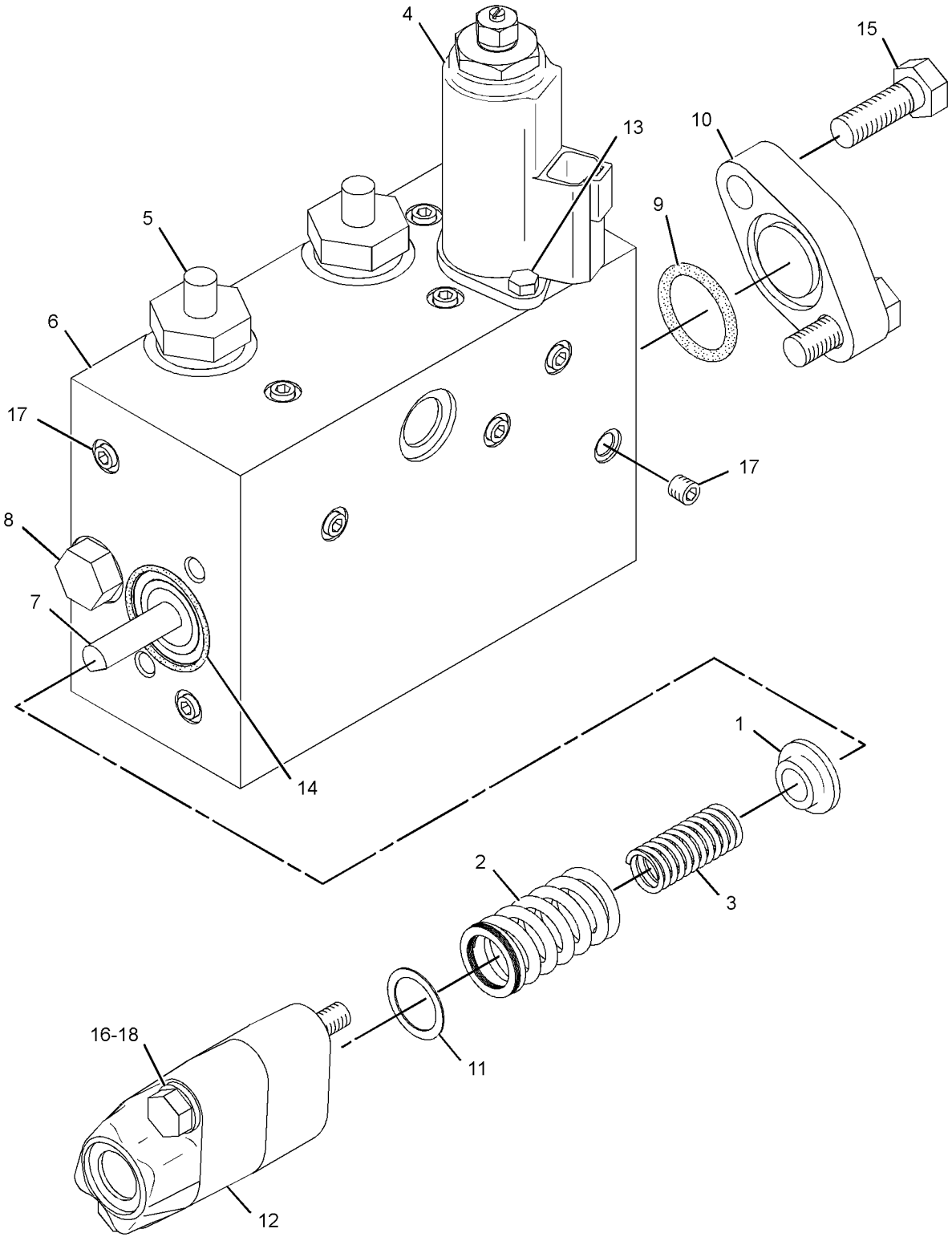

GRAPHIC #1 **<END>** g01245214

HYDRAULIC SYSTEM

185-0490 VALVE GP-FLOW CONTROL & RELIEF

S/N: MNB1-UP; WDK1-UP
PART OF 244-8419 VALVE GP-CONTROL
AN ATTACHMENT

SMCS-5117, 5137 **i01906005**

NOTE	REF NO	GRAPHIC REF	PART NUMBER	QTY	PART NAME 1 2 3 4 5 6 (PRODUCT LEVEL)	SEE PAGE
M	1	1	**096-3773**	2	SCREW-MACHINE (M4X0.7X25-MM)	
Y	2	1	**201-9352**	1	VALVE GP-RELIEF (LINE)	790
	3	1	**165-9497**	1	VALVE GP-FLOW CONTROL (MEDIUM PRESSURE)	
		1	**185-0400**	1	KIT-SEAL	
	4	1	**9S-8006**	2	PLUG-O-RING	
	5	1	**2M-9780**	2	SEAL-O-RING	
	6	1	**123-2423**	1	FLANGE-TUBE	
	7	1	**1P-3702**	1	SEAL-RECTANGULAR	

M-METRIC PART
Y-SEPARATE ILLUSTRATION

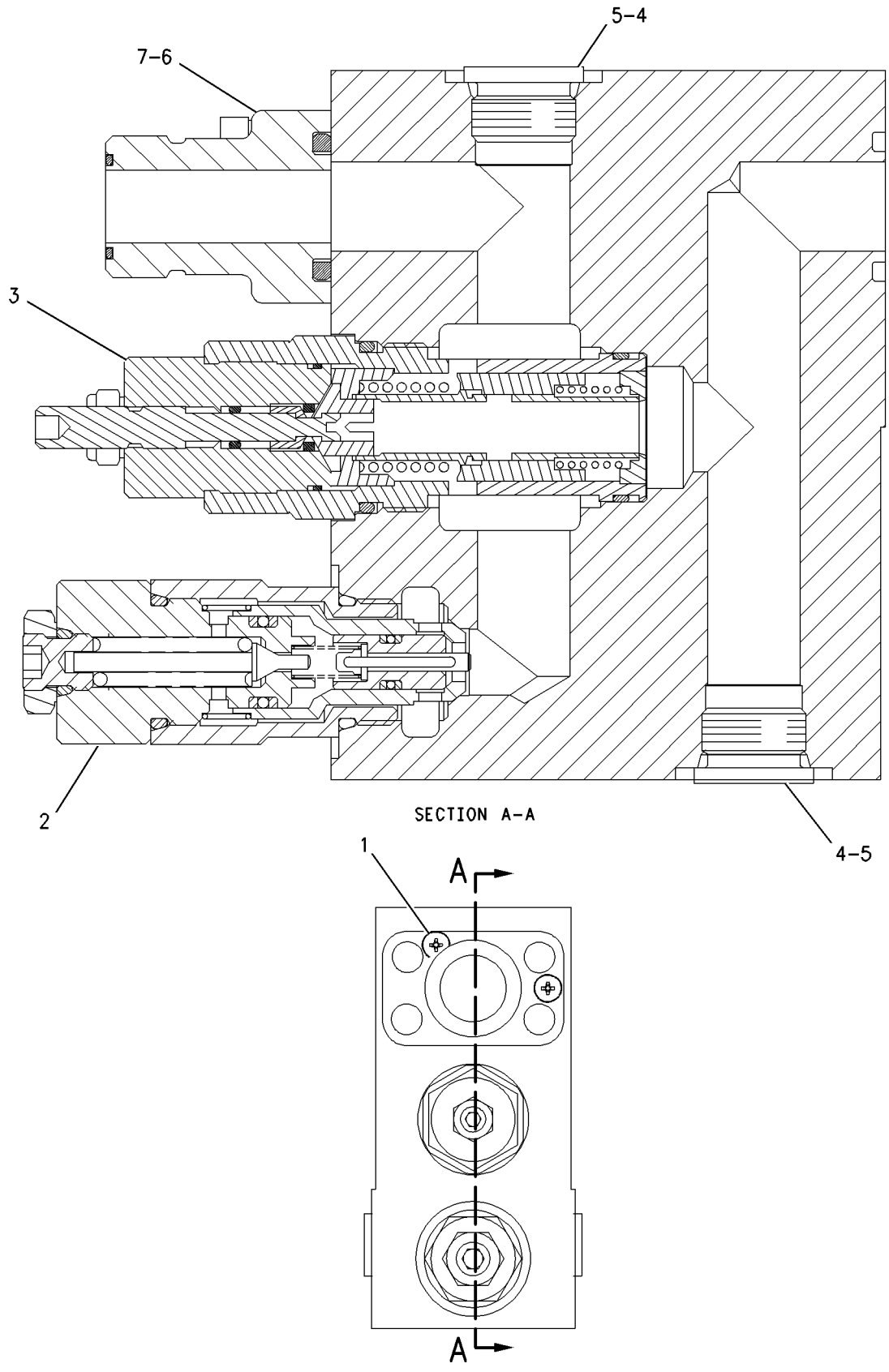

GRAPHIC #1 **<END>** g00885072

HYDRAULIC SYSTEM

225-4785 VALVE GP-LOAD CONTROL—BOOM CYLINDER

S/N: MNB1-UP; WDK1-UP
PART OF 255-1794 LINES GP-BOOM CYLINDER
AN ATTACHMENT

SMCS-5067, 5117, 5147, 5811 **i02959301**

NOTE	REF NO	GRAPHIC REF	PART NUMBER	QTY	PART NAME 1 2 3 4 5 6 (PRODUCT LEVEL)	SEE PAGE
	1	2	**2S-2596**	1	SPRING	
	3	1,2	**114-8229**	3	ORIFICE	
	4	2	**9T-1614**	1	VALVE	
	5	2	**165-9513**	1	SEAT	
	6	2	**165-9514**	1	PLUG	
Z	7	1		1	BODY-VALVE	
	8	2	**225-4787**	1	VALVE	
	9	2	**225-4789**	1	VALVE	
	10	2	**225-4790**	1	SPRING	
	11	2	**225-4791**	1	GUIDE	
	12	2	**225-4792**	1	PLUG	
	13	2	**225-4793**	1	VALVE AS	
	14	2	**225-4796**	1	PISTON	
	15	2	**225-4797**	1	VALVE AS	
	16	2	**259-7788**	1	GUIDE AS	
		2	**4T-0987**	1	BEARING-SLEEVE	
	17	1	**225-4803**	1	COVER	
	18	1	**8T-6759**	1	PLUG-PIPE	
	19	1,2	*225-4818*	7	PLUG AS	
					(EACH INCLUDES)	
		1,2	**4J-7533**	1	SEAL-O-RING	
		1,2	**225-4804**	1	PLUG	
	20	1,2	*225-4820*	4	PLUG AS	
					(EACH INCLUDES)	
		1,2	**3J-7354**	1	SEAL-O-RING	
		1,2	**225-4821**	1	PLUG	
B	21	2	**225-4830**	1	SHIM (1.0-MM THK)	
B	22	2	**225-4831**	2	SHIM (0.5-MM THK)	
B	23	2	**225-4832**	2	SHIM (0.2-MM THK)	
B	24	2	**225-4833**	1	SHIM (0.1-MM THK)	
Y	25	1	**255-5662**	1	VALVE GP-RELIEF (LINE)	794
	26	2	**095-1594**	2	SEAL-O-RING	
	27	2	**095-1789**	2	RING	
	28	2	**122-7797**	2	RING	
	29	2	**2D-6642**	1	BALL	
	30	2	**3H-0442**	1	SEAL-O-RING	
	31	2	**3J-1907**	2	SEAL-O-RING	
	32	2	**6V-5326**	2	SEAL-O-RING	
M	33	2	**7Y-5226**	1	NUT (M5X0.8-THD)	
M	34	1	**8T-4139**	4	BOLT (M12X1.75X30-MM)	

B-USE AS REQUIRED
M-METRIC PART
Y-SEPARATE ILLUSTRATION
Z-NOT SERVICED SEPARATELY

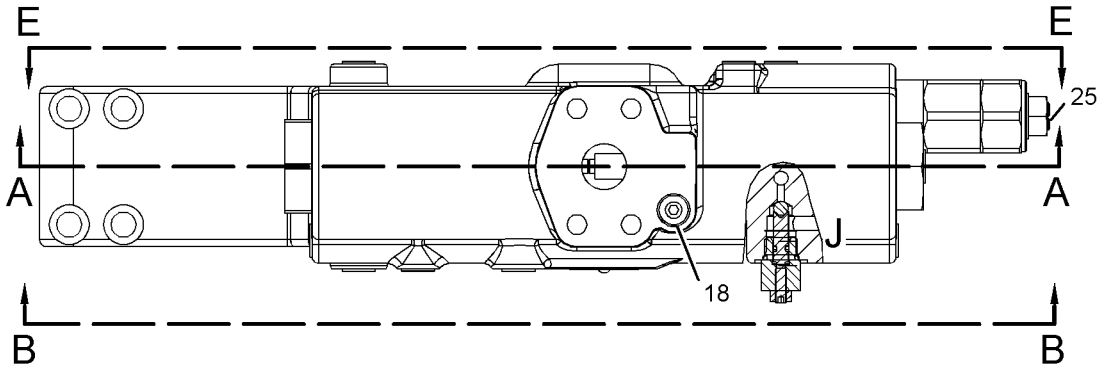

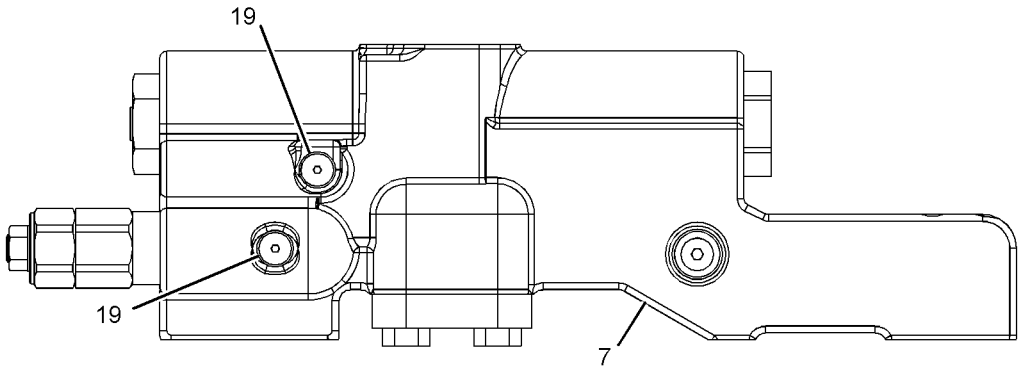

VIEW E-E

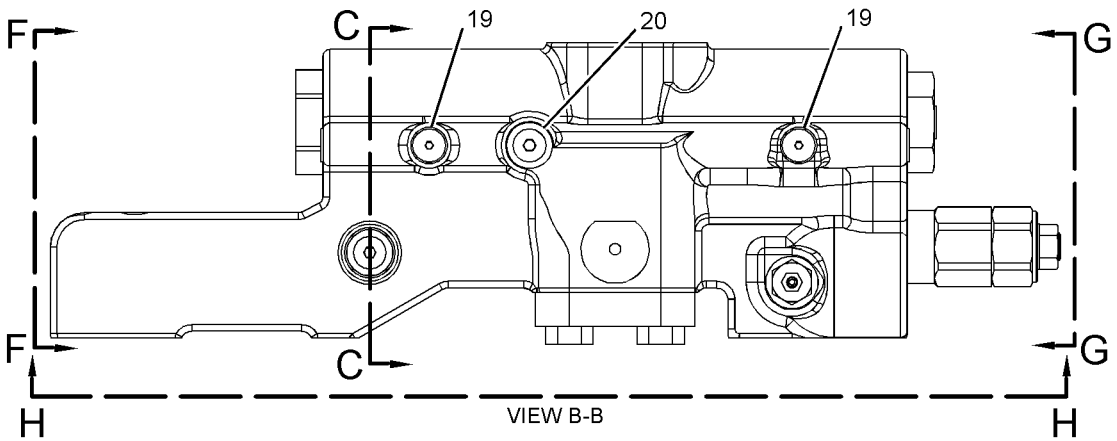

VIEW B-B

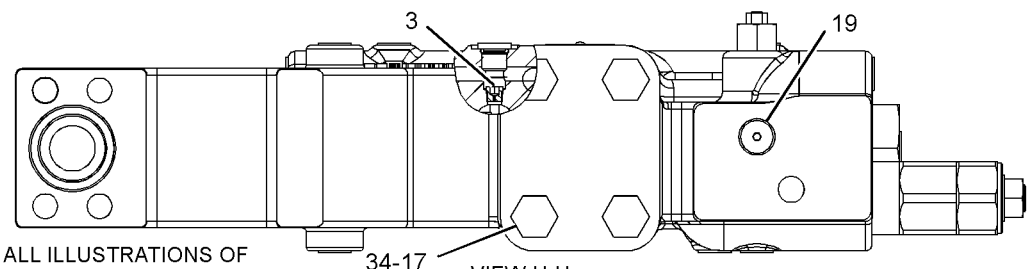

VIEW H-H

REFER TO ALL ILLUSTRATIONS OF THIS GROUP FOR AUXILIARY VIEWS

GRAPHIC #1

g01213798

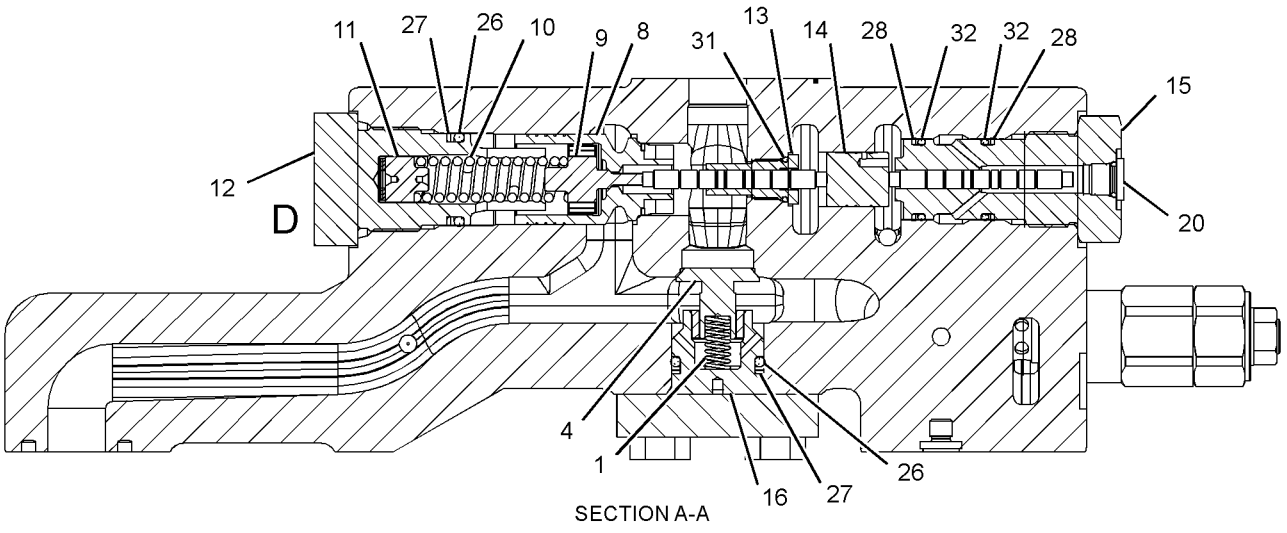

SECTION A-A

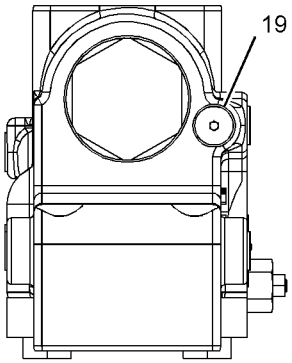

VIEW F-F

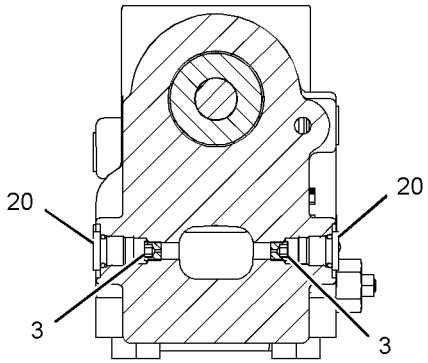

SECTION C-C

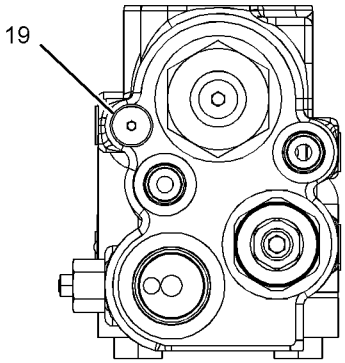

VIEW G-G

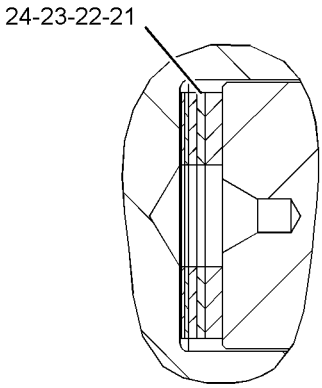

VIEW OF AREA D

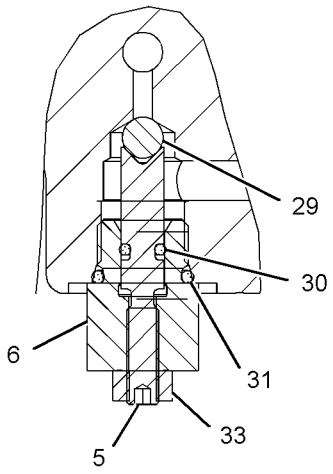

VIEW OF AREA J

GRAPHIC #2 **<END>** g01243563

HYDRAULIC SYSTEM

225-4843 VALVE GP-LOAD CONTROL—STICK CYLINDER

S/N: MNB1-UP; WDK1-UP

PART OF 237-3012 LINES GP-STICK CYLINDER

AN ATTACHMENT

SMCS-5067, 5117, 5147, 5811 **i02963003**

NOTE	REF NO	GRAPHIC REF	PART NUMBER	QTY	PART NAME 1 2 3 4 5 6 (PRODUCT LEVEL)	SEE PAGE
	1	1	**2S-2596**	1	SPRING	
	3	1	**114-8229**	1	ORIFICE	
	4	1	**9T-1614**	1	VALVE	
	5	1	**165-9513**	1	SEAT	
	6	1	**165-9514**	1	PLUG	
	7	1	**225-4787**	1	VALVE	
	8	1	**225-4789**	1	VALVE	
	9	1	**225-4790**	1	SPRING	
	10	1	**225-4791**	1	GUIDE	
	11	1	**225-4792**	1	PLUG	
	12	1	**225-4793**	1	VALVE AS	
	13	1	**225-4796**	1	PISTON	
	14	1	**225-4797**	1	VALVE AS	
	15	1	**259-7788**	1	GUIDE AS	
		1	**4T-0987**	1	BEARING-SLEEVE	
	16	1	**225-4803**	1	COVER	
	17	1	*225-4818*	6	PLUG AS	
					(EACH INCLUDES)	
		1	**4J-7533**	1	SEAL-O-RING	
		1	**225-4804**	1	PLUG	
	18	1	*225-4820*	2	PLUG AS	
					(EACH INCLUDES)	
		1	**3J-7354**	1	SEAL-O-RING	
		1	**225-4821**	1	PLUG	
B	19	1	**225-4830**	1	SHIM (1.0-MM THK)	
B	20	1	**225-4831**	2	SHIM (0.5-MM THK)	
B	21	1	**225-4832**	2	SHIM (0.2-MM THK)	
B	22	1	**225-4833**	1	SHIM (0.1-MM THK)	
	23	1	**225-4844**	1	BODY-VALVE	
Y	25	1	**255-5662**	1	VALVE GP-RELIEF (LINE) (STICK CYLINDER)	794
	26	1	**095-1594**	2	SEAL-O-RING	
	27	1	**095-1789**	2	RING	
	28	1	**122-7797**	2	RING	
	29	1	**2D-6642**	1	BALL	
	30	1	**3H-0442**	1	SEAL-O-RING	
	31	1	**3J-1907**	2	SEAL-O-RING	
	32	1	**6V-5326**	2	SEAL-O-RING	
M	33	1	**7Y-5226**	1	NUT (M5X0.8-THD)	
M	34	1	**8T-4139**	4	BOLT (M12X1.75X30-MM)	
	35	1	**8T-6759**	1	PLUG-PIPE	

B-USE AS REQUIRED
M-METRIC PART
Y-SEPARATE ILLUSTRATION

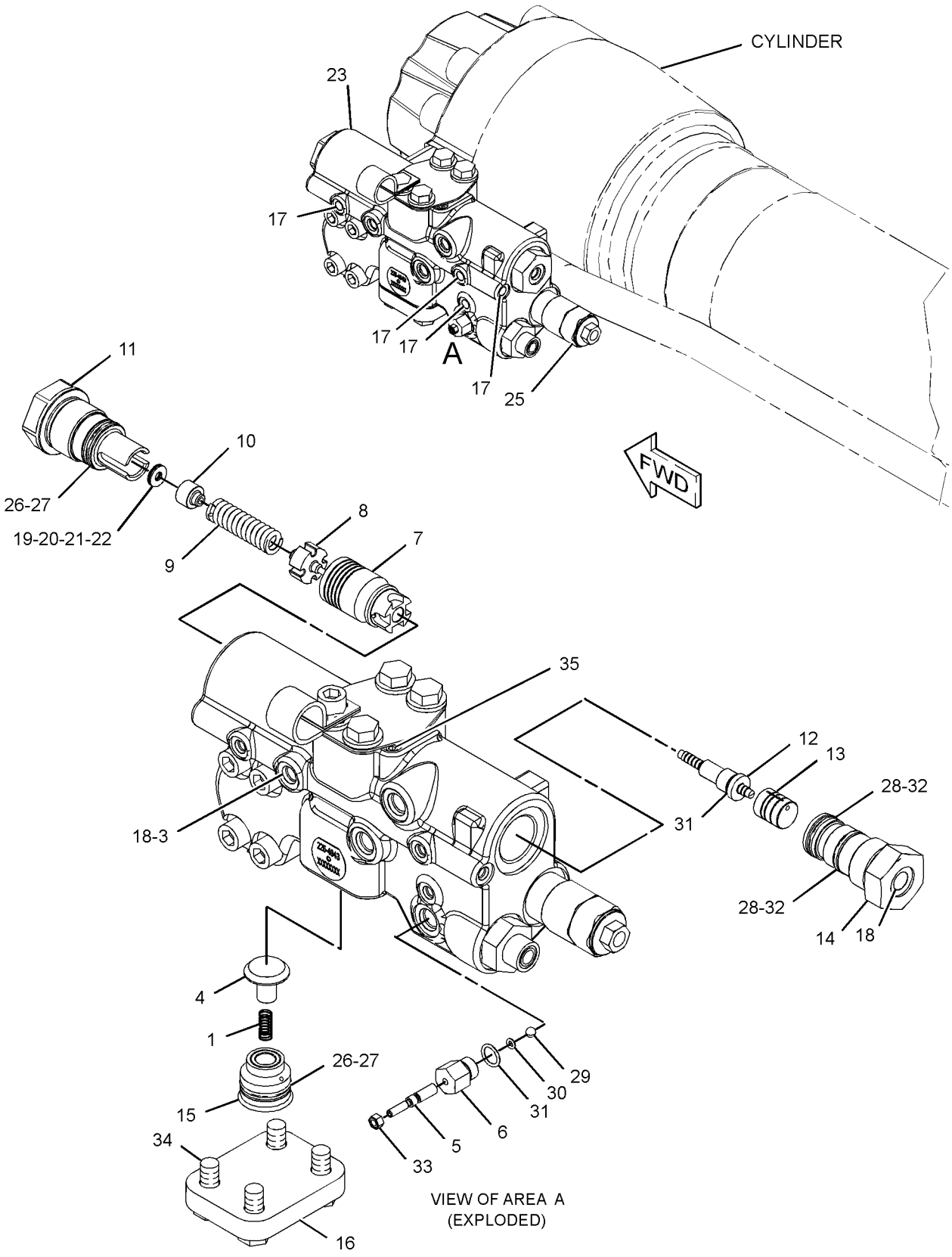

GRAPHIC #1 **<END>** g01296864

255-5680 VALVE GP-LOAD CONTROL–
STICK DRIFT RED, LINE RELIEF
S/N: MNB1-UP; WDK1-UP
PART OF 245-5179 LINES GP-FRONT

SMCS-5067, 5117, 5147, 5811 **i02346907**

NOTE	REF NO	GRAPHIC REF	PART NUMBER	QTY	PART NAME 1 2 3 4 5 6 (PRODUCT LEVEL)	SEE PAGE
	2	1	**4I-8965**	1	GUIDE	
	3	1	**5I-8511**	1	SPRING	
	4	1	**087-5166**	1	SPRING	
	5	1	**118-4044**	1	COVER	
	7	1	**147-4184**	1	PLUG	
	8	1	*225-4818*	2	PLUG AS	
					(EACH INCLUDES)	
		1	**4J-7533**	1	SEAL-O-RING	
		1	**225-4804**	1	PLUG	
Y	9	1	**255-5662**	1	VALVE GP-RELIEF (LINE)	794
Z	10	1		1	VALVE GP-CONTROL (DRIFT CONTROL)	
	11	1	**095-1594**	1	SEAL-O-RING	
	12	1	**095-1789**	1	RING	
	13	1	*148-8395*	1	PLUG AS	
		1	**3K-0360**	1	SEAL-O-RING	
		1	**9S-8005**	1	PLUG-O-RING	
	14	1	*162-0177*	1	PLUG AS	
		1	**3J-1907**	1	SEAL-O-RING	
		1	**9S-8004**	1	PLUG-O-RING	
M	15	1	**8T-4136**	4	BOLT (M10X1.5X25-MM)	

M-METRIC PART
Y-SEPARATE ILLUSTRATION
Z-NOT SERVICED SEPARATELY

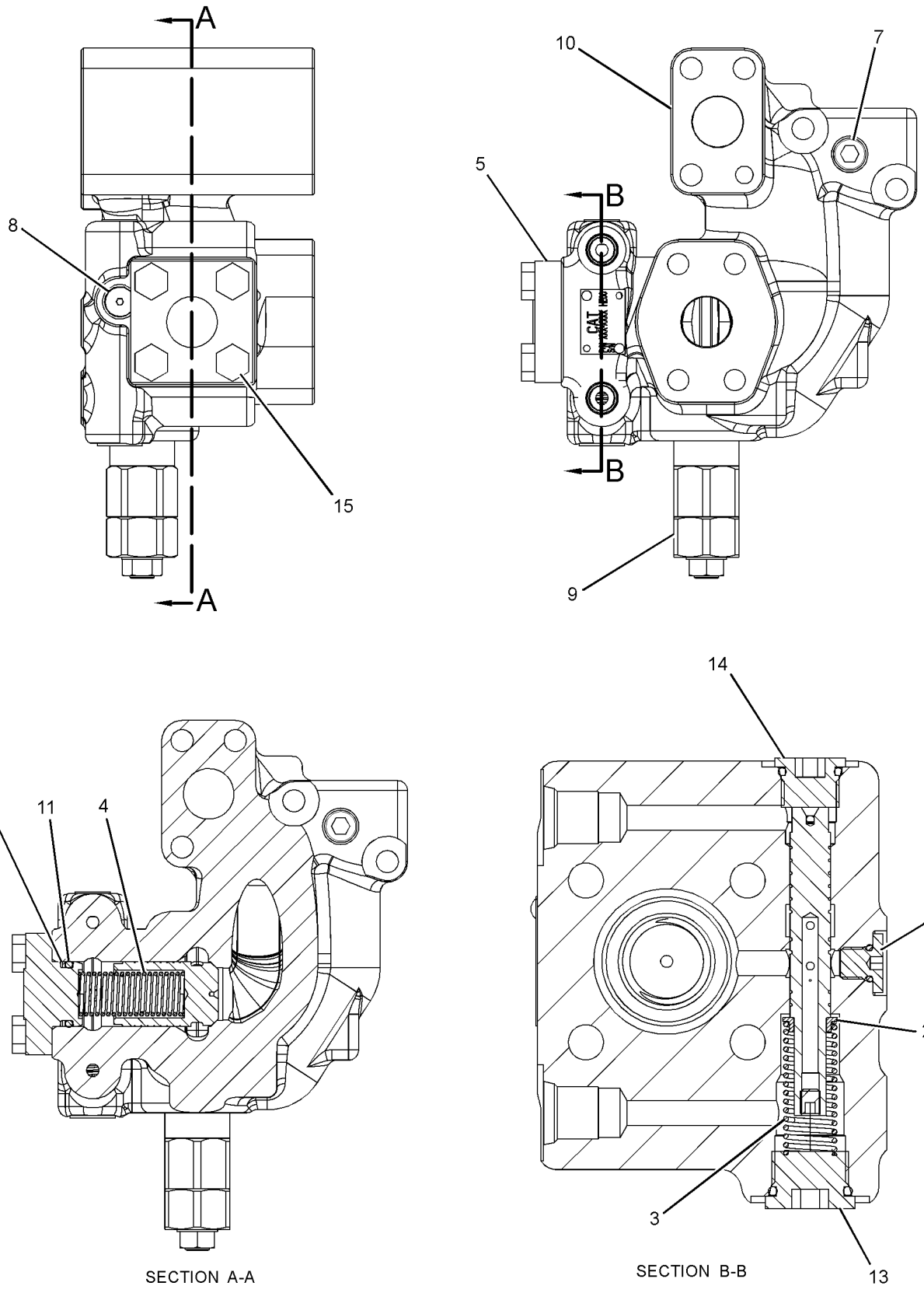

GRAPHIC #1 **<END>** g01174591

HYDRAULIC SYSTEM

255-5683 VALVE GP-LOAD CONTROL–

BOOM DRIFT RED, LINE RELIEF

S/N: MNB1-UP; WDK1-UP

PART OF 245-5179 LINES GP-FRONT

SMCS-5067, 5117, 5147, 5811 **i02346909**

NOTE	REF NO	GRAPHIC REF	PART NUMBER	QTY	PART NAME 1 2 3 4 5 6 (PRODUCT LEVEL)	SEE PAGE
	2	1	**4I-8965**	1	GUIDE	
	3	1	**5I-8511**	1	SPRING	
	4	1	**087-5166**	1	SPRING	
	5	1	**118-4044**	1	COVER	
	7	1	*225-4818*	2	PLUG AS	
					(EACH INCLUDES)	
		1	**225-4804**	1	PLUG	
	7A	1	**4J-7533**	1	SEAL-O-RING	
Y	8	1	**255-5662**	1	VALVE GP-RELIEF (LINE)	794
Z	9	1		1	VALVE GP-CONTROL (DRIFT REDUCTION)	
	10	1	**095-1594**	1	SEAL-O-RING	
	11	1	**095-1789**	1	RING	
	12	1	*148-8395*	1	PLUG AS	
		1	**9S-8005**	1	PLUG-O-RING	
	12A	1	**3K-0360**	1	SEAL-O-RING	
	13	1	*148-8407*	1	PLUG AS	
		1	**9S-4191**	1	PLUG-O-RING	
	13A	1	**3J-1907**	1	SEAL-O-RING	
	14	1	**190-7865**	1	CONNECTOR	
	15	1	**3J-1907**	1	SEAL-O-RING	
	16	1	**6V-8397**	1	SEAL-O-RING	
M	17	1	**8T-4136**	4	BOLT (M10X1.5X25-MM)	

M-METRIC PART
Y-SEPARATE ILLUSTRATION
Z-NOT SERVICED SEPARATELY

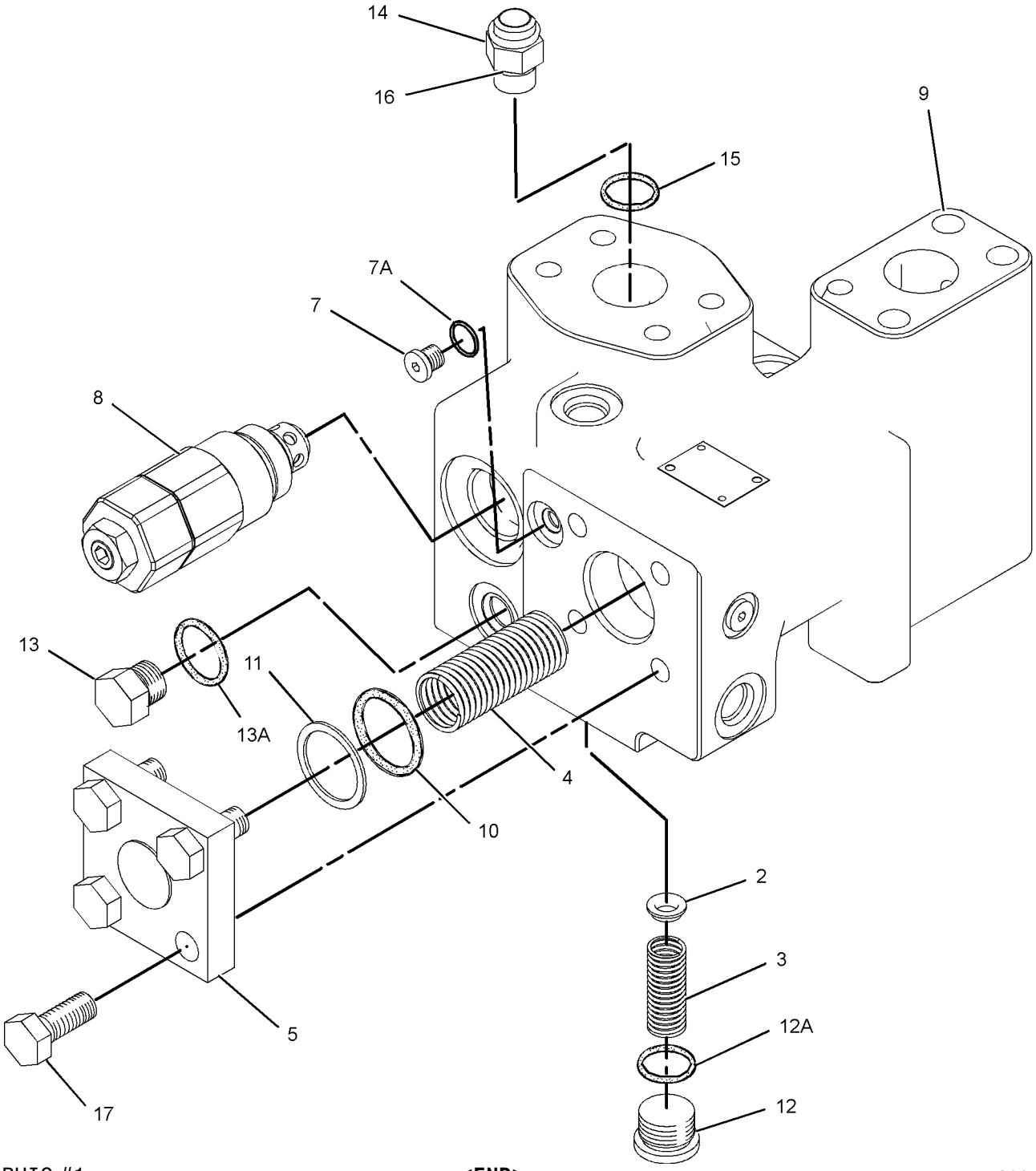

GRAPHIC #1 **<END>** g01152135

HYDRAULIC SYSTEM

255-5651 VALVE GP-MAIN CONTROL

S/N: MNB1-UP; WDK1-UP

PART OF 255-5707, 255-5708 HYDRAULIC AR

SMCS-5051 **i03212027**

NOTE	REF NO	GRAPHIC REF	PART NUMBER	QTY	PART NAME 1 2 3 4 5 6 (PRODUCT LEVEL)	SEE PAGE
Y	1	1	**153-5313**	1	VALVE GP-RELIEF (NEGATIVE FLOW CONTROL)	786
CY	2	1	**310-0085**	1	VALVE GP-CONTROL (FRONT)	753
Y	3	1	**255-5653**	1	VALVE GP-CONTROL (REAR)	741
	4	1	**1P-3702**	2	SEAL-RECTANGULAR	
	5	1	**4J-0519**	2	SEAL-O-RING	
M	6	1	**8T-4140**	5	BOLT (M16X2X60-MM)	
M	7	1	**8T-4193**	4	BOLT (M16X2X50-MM)	
	8	1	**9X-8257**	9	WASHER (17.5X30X3.5-MM THK)	

C-CHANGE FROM PREVIOUS TYPE
M-METRIC PART
Y-SEPARATE ILLUSTRATION

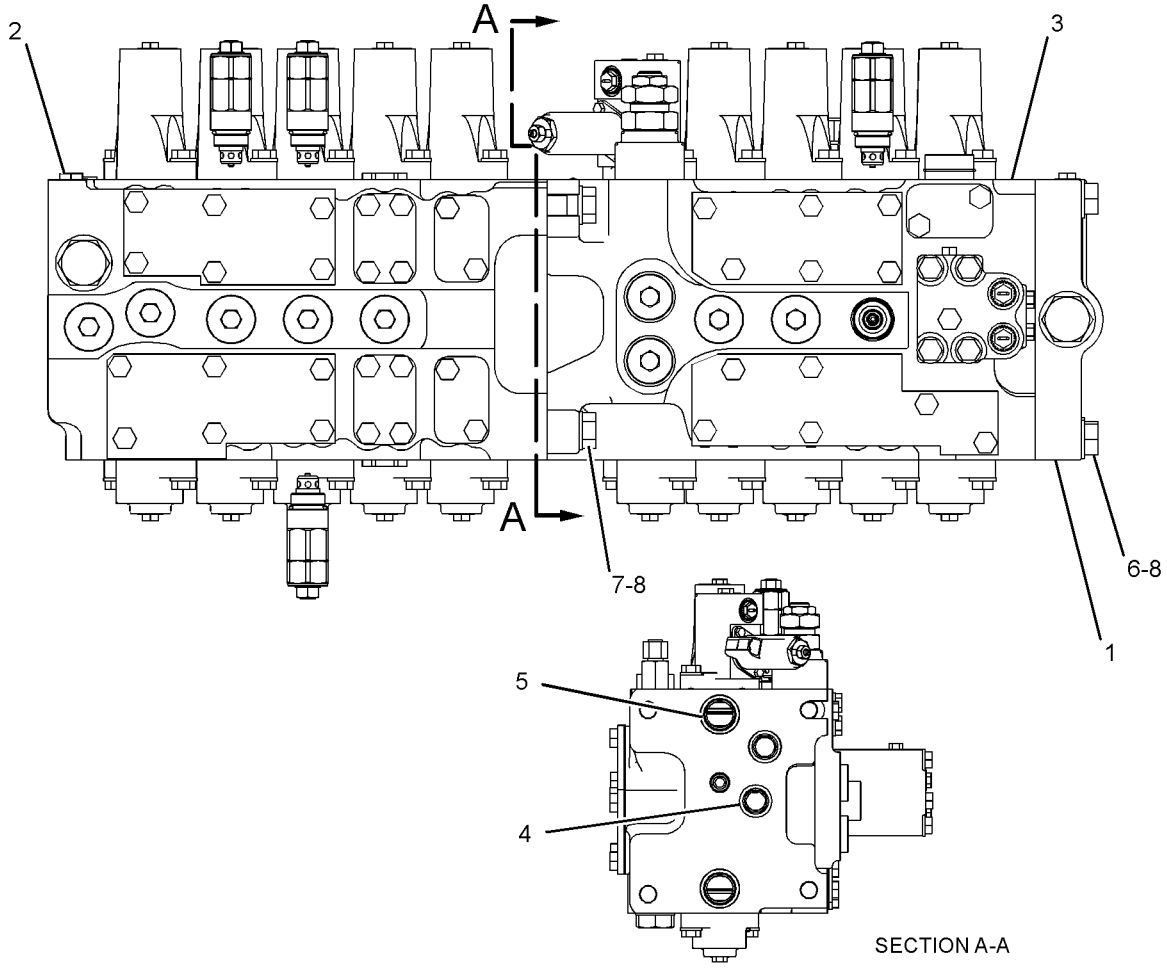

GRAPHIC #1 **<END>** g01174946

259-7424 VALVE GP-MAIN CONTROL–INCREASED LIFT

S/N: MNB1-UP; WDK1-UP
PART OF 247-7392 SPECIAL AR-HEAVY LIFT
AN ATTACHMENT

SMCS-5051 **i03114940**

NOTE	REF NO	GRAPHIC REF	PART NUMBER	QTY	PART NAME 1 2 3 4 5 6 (PRODUCT LEVEL)	SEE PAGE
CY	1	1	**310-0085**	1	VALVE GP-CONTROL	753
Y	2	1	**259-7432**	1	VALVE GP-CONTROL	748
M	3	1	**8T-4193**	4	BOLT (M16X2X50-MM)	
	4	1	**9X-8257**	9	WASHER (17.5X30X3.5-MM THK)	
	5	1	**4J-0519**	2	SEAL-O-RING	
	6	1	**1P-3702**	2	SEAL-RECTANGULAR	
Y	9	1	**153-5313**	1	VALVE GP-RELIEF (NEGATIVE FLOW CONTROL)	786
M	10	1	**8T-4140**	5	BOLT (M16X2X60-MM)	

C-CHANGE FROM PREVIOUS TYPE
M-METRIC PART
Y-SEPARATE ILLUSTRATION

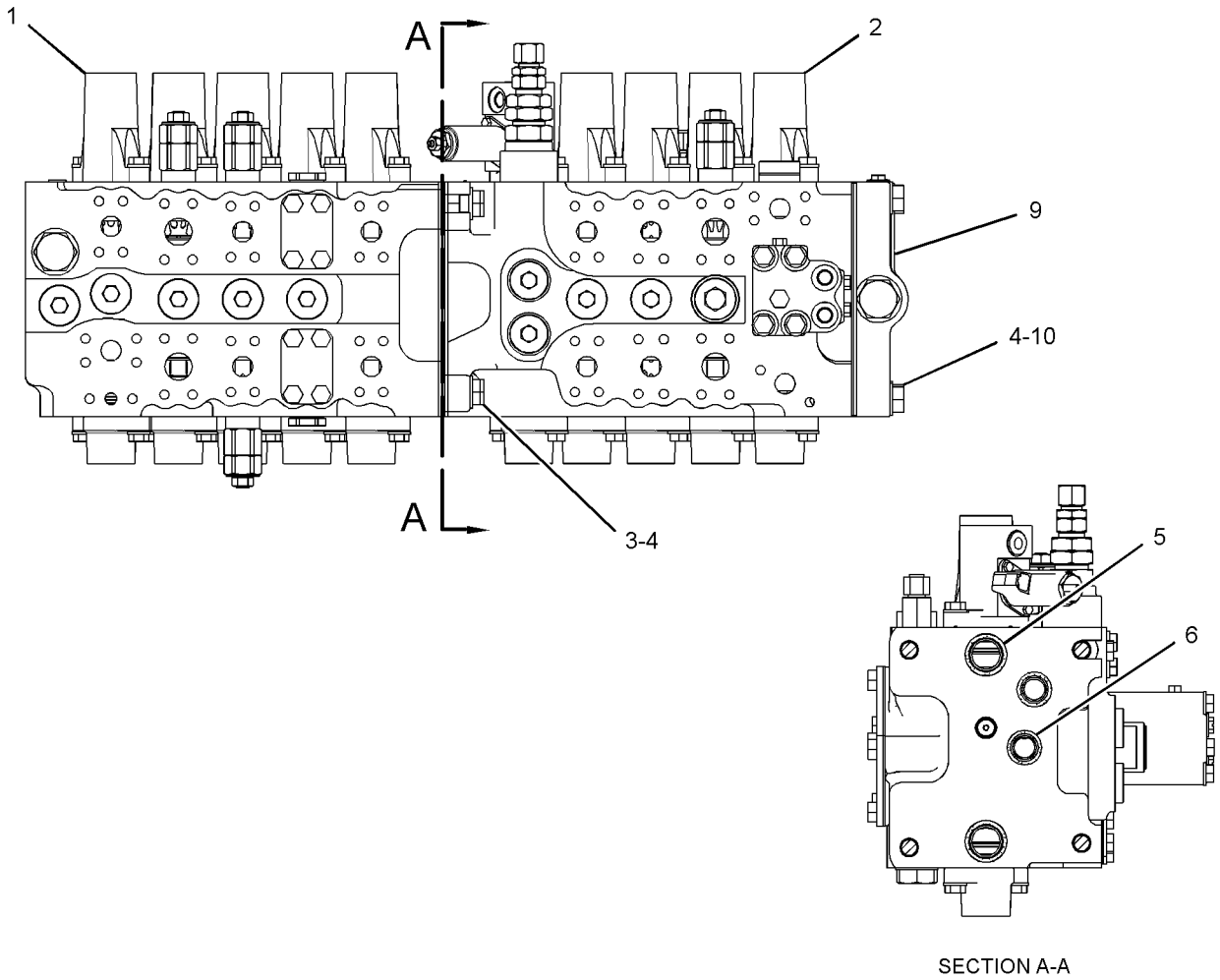

SECTION A-A

GRAPHIC #1 **<END>** g01598055

HYDRAULIC SYSTEM

277-0954 VALVE GP-MANUAL

S/N: MNB1-UP; WDK1-UP

PART OF 237-3181, 237-3182, 237-3183, 237-3184 LINES GP-AUXILIARY HYDRAULIC AN ATTACHMENT

SMCS-1329, 5001, 5130 **i02871149**

NOTE	REF NO	GRAPHIC REF	PART NUMBER	QTY	PART NAME 1 2 3 4 5 6 (PRODUCT LEVEL)	SEE PAGE
	1	1	**302-9466**	1	HANDLE	
	2	1	**3J-1907**	1	SEAL-O-RING	
	3	1	**9S-4191**	1	PLUG-O-RING	

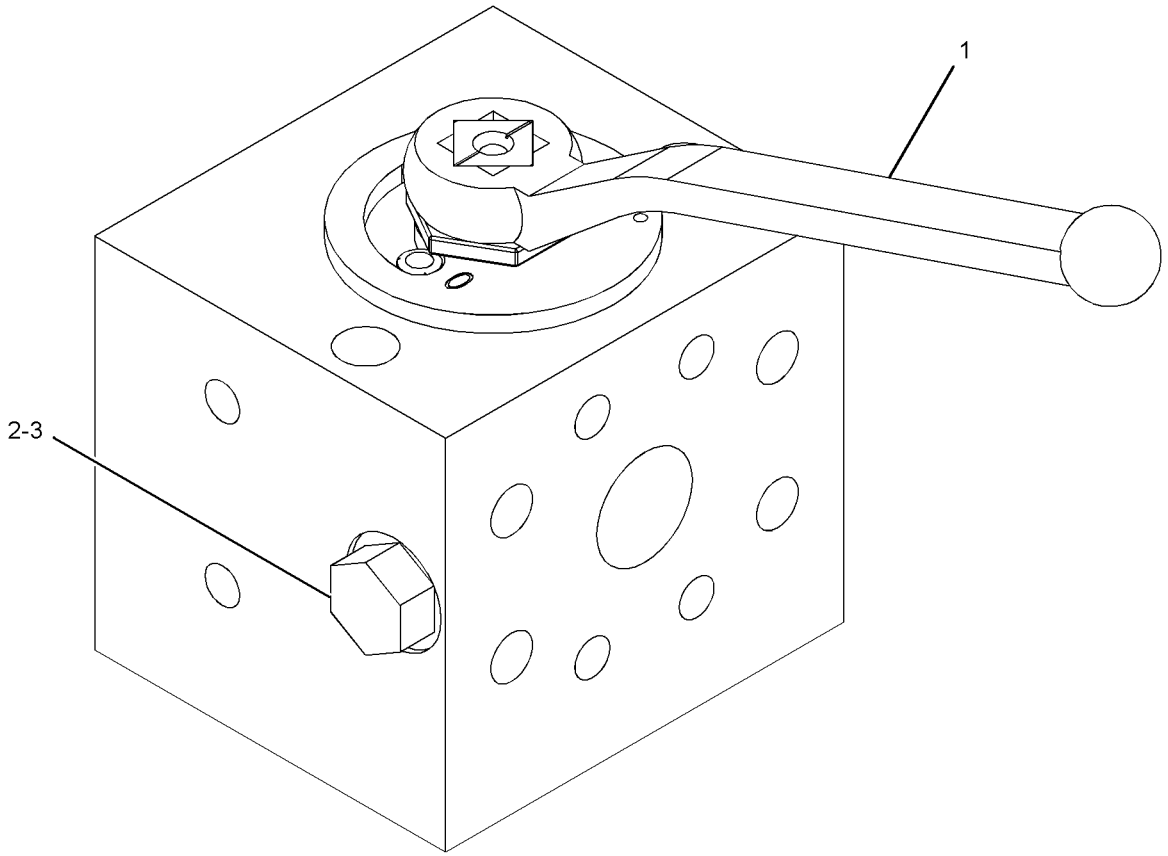

GRAPHIC #1 **<END>** g01236800

285-1765 VALVE GP-PILOT–ALT PATTERN CONTROL, 2-WAY

S/N: MNB1-UP; WDK1-UP
PART OF 255-1657 LINES GP-PILOT
AN ATTACHMENT

SMCS-5059 **i02649524**

NOTE	REF NO	GRAPHIC REF	PART NUMBER	QTY	PART NAME 1 2 3 4 5 6 (PRODUCT LEVEL)	SEE PAGE
	1	1	**118-5983**	1	SEAL-RUBBER	
	2	1	**285-1764**	1	BOLT-WING	
	3	1	**285-1766**	1	LEVER	
	4	1	**285-1767**	1	COVER	
	5	1	**1J-9671**	4	SEAL-O-RING	
	6	1	**4J-0528**	2	SEAL-O-RING	
	7	1	**5I-4000**	1	HOUSING	
	8	1	**5I-4002**	1	COVER	
	9	1	**6I-6758**	1	SPOOL AS	
	9A	1	**7Y-5272**	1	PIN-SPRING	
M	10	1	**6V-3938**	4	BOLT (M10X1.5X20-MM)	
	11	1	**7Y-5219**	1	SEAL-O-RING	
M	12	1	**8T-1159**	4	BOLT-SOCKET HEAD (M10X1.5X25-MM)	
	13	1	**8T-4121**	1	WASHER-HARD (11X21X2.5-MM THK)	
M	14	1	**8T-4133**	1	NUT (M10X1.5-THD)	
	15	1	**9S-8003**	4	PLUG	

M-METRIC PART

285-1765 VALVE GP-PILOT *(contd.)* **i02649524**

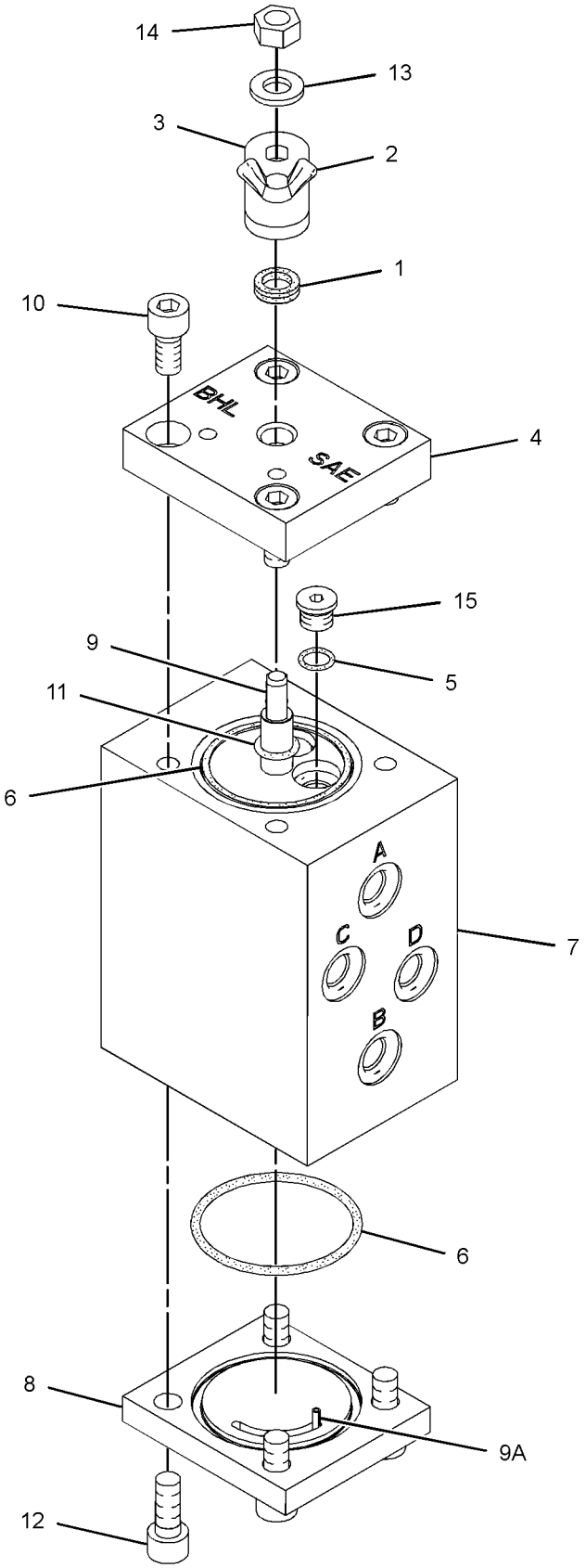

GRAPHIC #1

<END>

g01335005

HYDRAULIC SYSTEM

297-0529 VALVE GP-PILOT—JOYSTICK

S/N: MNB1-UP; WDK1-UP
PART OF 297-0532, 297-0533 CONTROL GP-JOYSTICK
AN ATTACHMENT

SMCS-5059 **i03017531**

NOTE	REF NO	GRAPHIC REF	PART NUMBER	QTY	PART NAME 1 2 3 4 5 6 (PRODUCT LEVEL)	SEE PAGE
	1	1	**270-5953**	4	SPRING	
	2	1	**095-1586**	4	SEAL-O-RING	
	3	1	**4I-6365**	1	JOINT	
	4	1	**094-0876**	4	SEAL	
	5	1	**096-1628**	4	PLUG	
B	6	1	**099-6137**	4	WASHER (6.1X9X0.2-MM THK)	
	7	1	**118-4086**	4	ROD	
	8	1	**118-4087**	4	SPRING	
M	9	1	**131-5915**	1	NUT-SPECIAL	
	10	1	**165-9431**	1	PLATE	
	11	1	**165-9435**	2	SEAT	
	12	1	**165-9436**	2	SEAT	
	13	1	**165-9438**	1	PLATE	
	14	1	**165-9442**	2	SPRING	
	15	1	**165-9443**	2	SEAT-SPRING	
	16	1	**165-9444**	2	SEAT-SPRING	
	17	1	**165-9460**	2	SPRING	
	18	1	**171-0087**	1	BELLOWS	

PARTS SHOWN IN GRAPHIC(S) WITHOUT A REFERENCE NUMBER ARE NOT SERVICED SEPARATELY

B-USE AS REQUIRED
M-METRIC PART

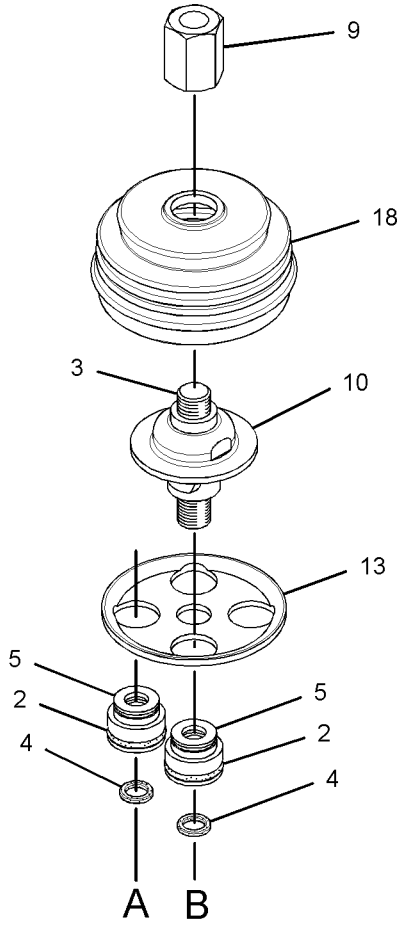

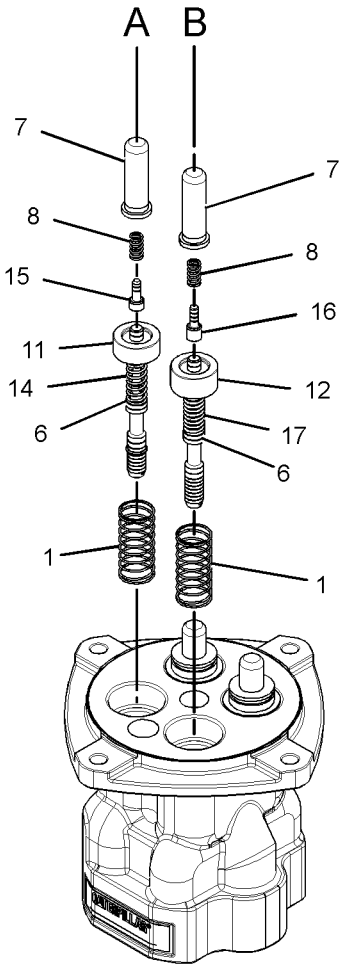

GRAPHIC #1 **<END>** g01528724

HYDRAULIC SYSTEM

310-0414 VALVE GP-PILOT–TRAVEL

S/N: MNB1-UP; WDK1-UP

PART OF 248-9825 LINES GP-PILOT

SMCS-5059 **i03162420**

NOTE	REF NO	GRAPHIC REF	PART NUMBER	QTY	PART NAME 1 2 3 4 5 6 (PRODUCT LEVEL)	SEE PAGE
	1	1	**087-5708**	2	PEDAL	
M	2	1	**095-0673**	2	BOLT-SOCKET HEAD (M12X1.75X60-MM)	
	3	1	**099-6137**	4	WASHER (6.1X9X0.2-MM THK)	
	4	1	**099-6141**	4	WASHER (6.1X11X1.5-MM THK)	
	5	1	**099-6144**	4	BUSHING-TERMINAL	
	6	1	**099-6145**	2	CAMSHAFT	
	7	1	**119-5388**	4	CAP	
	8	1	**119-5389**	4	PACKING	
	9	1	**119-5391**	4	SEAT	
	10	1	**126-1865**	4	SPRING	
	11	1	**126-1866**	4	SPRING	
	12	1	**131-5818**	4	SPRING	
	13	1	**147-4131**	2	BOOT-PROTECTION	
	14	1	**153-5223**	12	BALL	
	15	1	**165-9463**	2	COVER	
	16	1	**165-9552**	4	PUSHROD	
	17	1	**165-9553**	1	COVER	
	18	1	**165-9554**	4	PLUG	
	19	1	**196-3784**	2	PLUG	
	20	1	**270-5949**	4	PISTON	
	21	1	**270-5950**	4	SPRING	
	22	1	**310-0419**	4	SEAT	
	23	1	**310-0420**	4	SEAL-O-RING	
	24	1	**310-0421**	2	BUSHING	
	25	1	**310-0422**	2	SEAT	
	26	1	**323-7770**	2	ADAPTER	
M	27	1	**087-4710**	4	SETSCREW	
M	28	1	**095-1260**	2	SETSCREW-SOCKET (M6X1X6-MM)	
	29	1	**095-1575**	4	SEAL-O-RING	
	30	1	**3J-7354**	2	SEAL-O-RING	
	31	1	**3Y-9267**	2	BALL	
	32	1	**6V-8400**	4	SEAL-O-RING	
M	33	1	**8C-6965**	2	BOLT-SOCKET HEAD (M6X1X45-MM)	
M	34	1	**8T-1158**	2	BOLT-SOCKET HEAD (M8X1.25X20-MM)	
M	35	1	**8T-4133**	4	NUT (M10X1.5-THD)	
	36	1	**8T-6759**	4	PLUG-PIPE	

M-METRIC PART

310-0414 VALVE GP-PILOT *(contd.)* i03162420

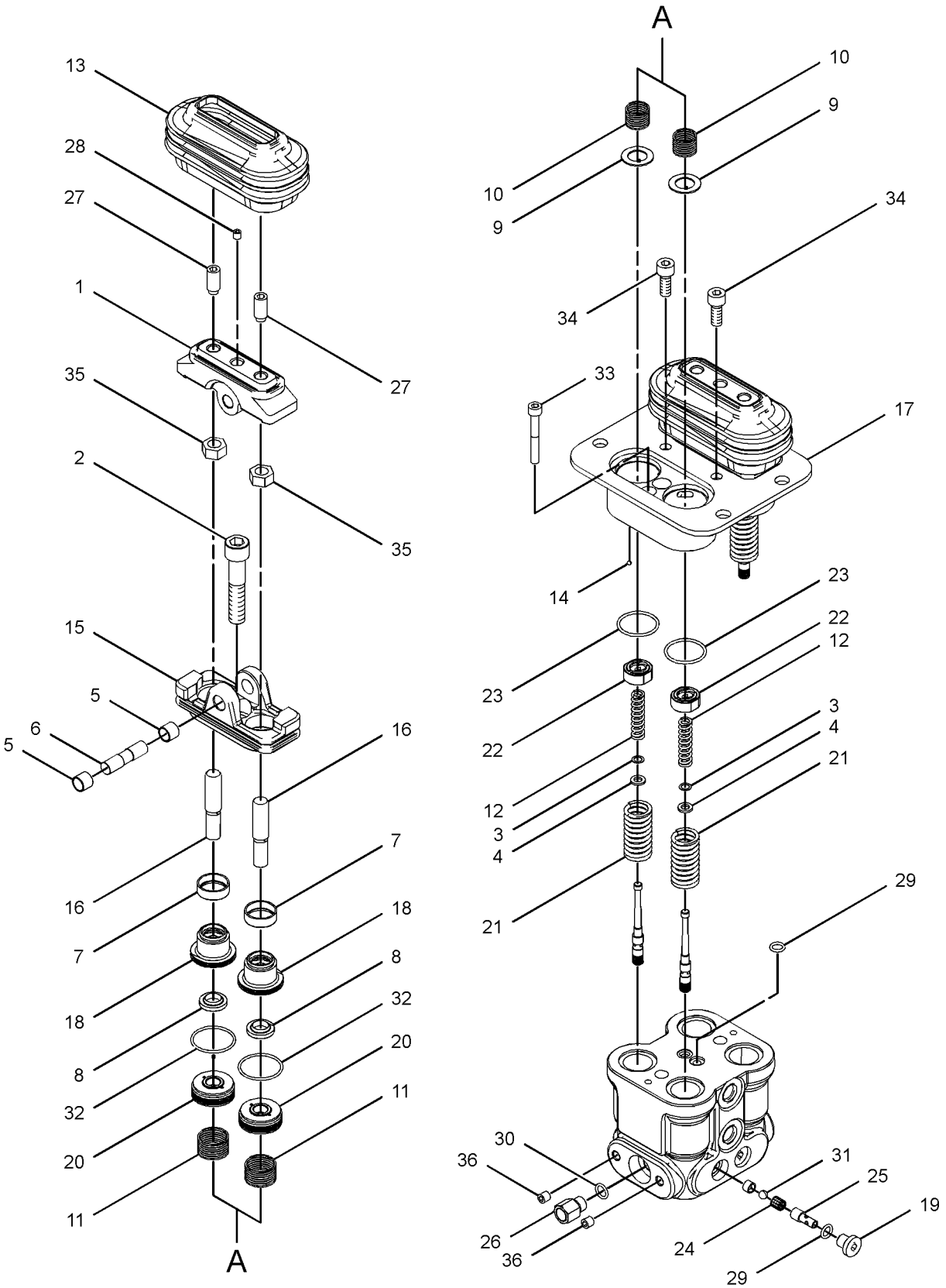

GRAPHIC #1 **<END>** g01622941

HYDRAULIC SYSTEM

105-1321 VALVE GP-PILOT RELIEF

S/N: MNB1-UP; WDK1-UP
PART OF 201-9352 VALVE GP-RELIEF
AN ATTACHMENT

SMCS-5072 **i01583813**

NOTE	REF NO	GRAPHIC REF	PART NUMBER	QTY	PART NAME 1 2 3 4 5 6 (PRODUCT LEVEL)	SEE PAGE
	1	1	**030-0167**	1	RING-BACKUP	
	2	1	**8L-2779**	1	SEAL-O-RING	
	3	1	**033-6036**	2	SEAL-O-RING	
	4	1	**3P-0647**	1	SEAL-O-RING	
	5	1	**9J-0707**	1	RING-BACKUP	
	6	1	**8T-7877**	1	SEAL-O-RING	

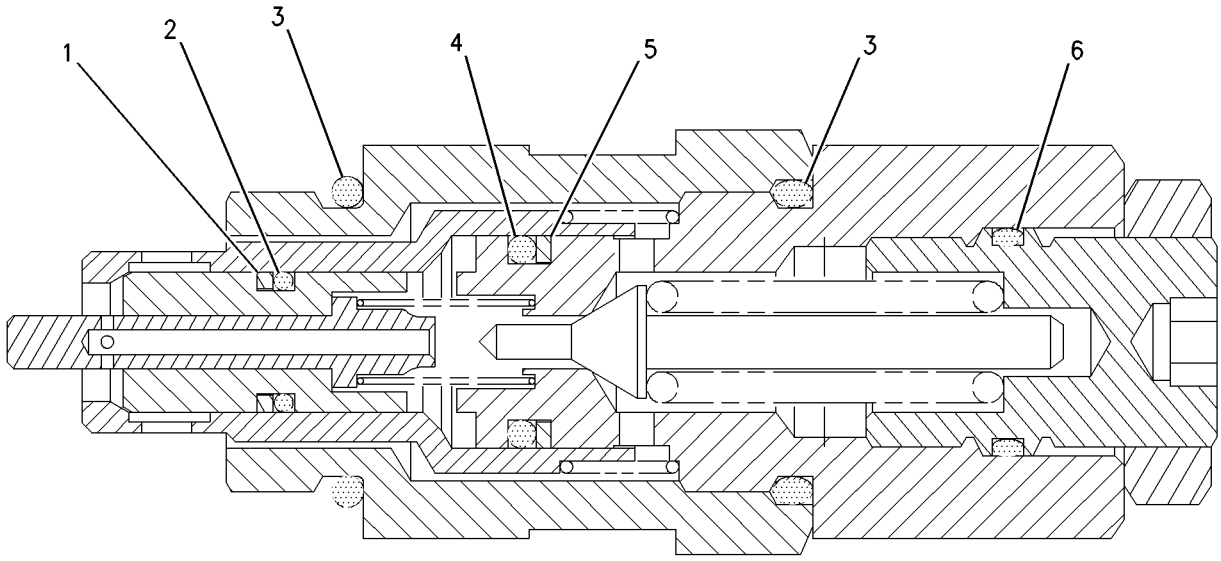

GRAPHIC #1 **<END>** g00826154

HYDRAULIC SYSTEM

201-9353 VALVE GP-PILOT RELIEF

S/N: MNB1-UP; WDK1-UP
PART OF 201-9352 VALVE GP-RELIEF
AN ATTACHMENT

SMCS-5072 **i01591938**

NOTE	REF NO	GRAPHIC REF	PART NUMBER	QTY	PART NAME 1 2 3 4 5 6 (PRODUCT LEVEL)	SEE PAGE
	1	1	**095-1578**	1	SEAL-O-RING	
	2	1	**3D-2824**	2	SEAL-O-RING	
	3	1	**103-8255**	1	SEAL-O-RING	
	4	1	**103-8252**	2	RING	
	5	1	**103-8254**	1	SEAL-O-RING	
	6	1	**103-8253**	2	RING	

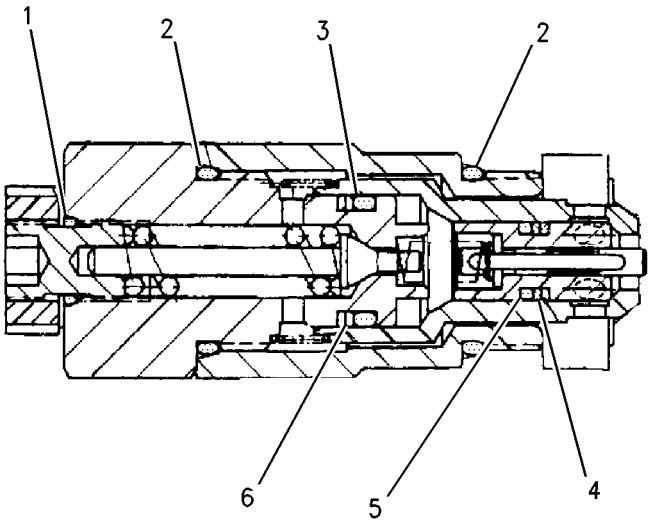

GRAPHIC #1 **<END>** g00831254

310-0210 VALVE GP-PRESSURE REDUCING–

BOOM, SWING PRIORITY

S/N: MNB1-UP; WDK1-UP

PART OF 248-9827 LINES GP-PILOT

SMCS-5117 **i03018448**

NOTE	REF NO	GRAPHIC REF	PART NUMBER	QTY	PART NAME 1 2 3 4 5 6 (PRODUCT LEVEL)	SEE PAGE
	1	1	**111-9998**	2	PLUG	
	2	1	**171-0123**	2	PLUG	
M	3	1	**171-0124**	2	SETSCREW (M8X1.25X18-MM)	
	4	1	**171-0126**	2	SEAT-SPRING	
	5	1	**171-0127**	2	SEAT-SPRING	
	6	1	**171-0128**	2	SPRING	
	7	1	**185-0423**	2	STOP	
	8	1	**095-1580**	2	SEAL-O-RING	
	9	1	**095-1582**	2	SEAL-O-RING	
	10	1	**095-1590**	2	SEAL-O-RING	
M	11	1	**5C-7261**	2	NUT (M8X1.25-THD)	

M-METRIC PART

310-0210 VALVE GP-PRESSURE REDUCING *(contd.)* i03018448

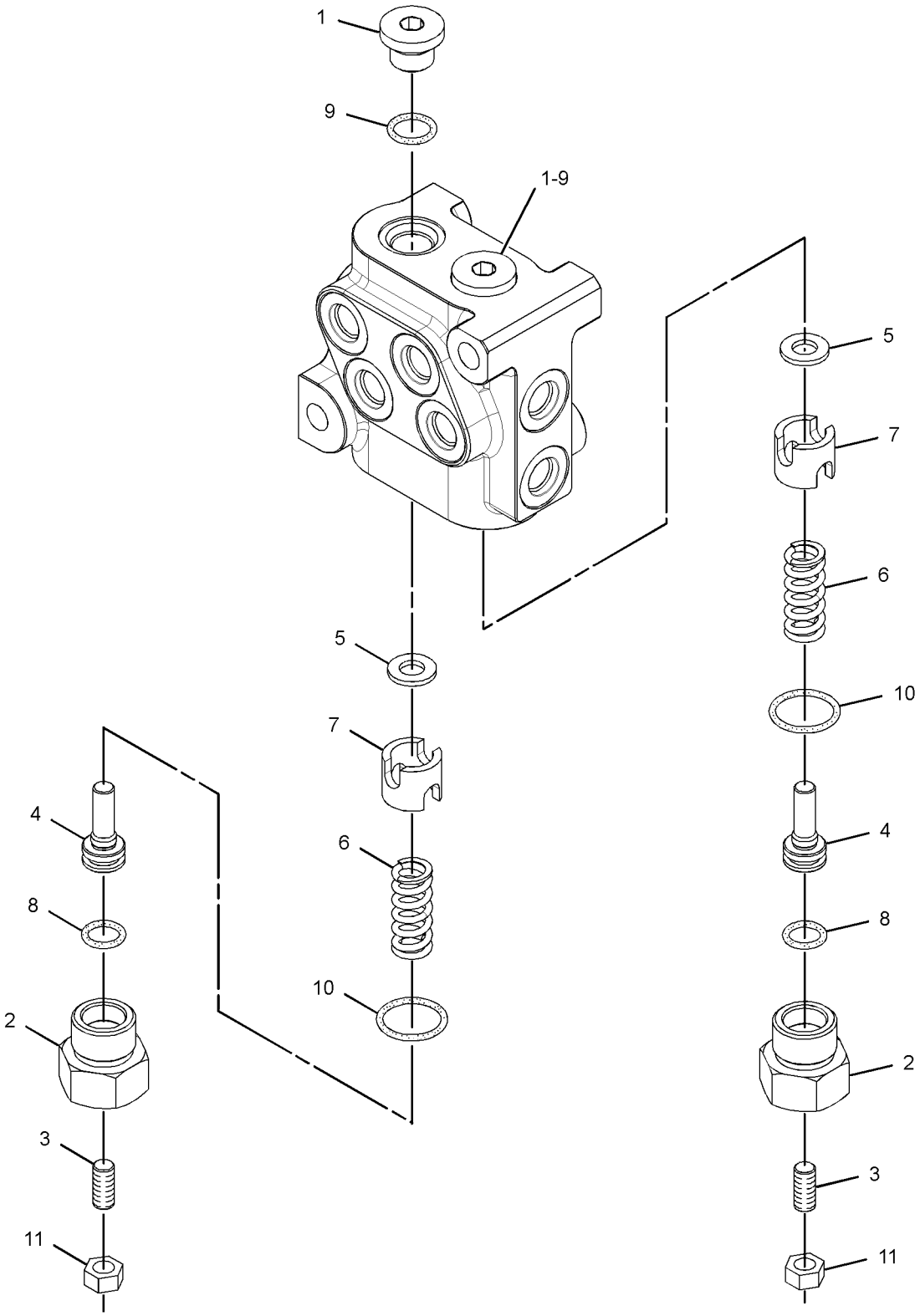

GRAPHIC #1 **<END>** g01506435

153-5295 VALVE GP-PRIORITY–SWING

S/N: MNB1-UP; WDK1-UP
PART OF 255-5653, 259-7432 VALVE GP-CONTROL
ALSO AN ATTACHMENT

SMCS-506P **i02697141**

NOTE	REF NO	GRAPHIC REF	PART NUMBER	QTY	PART NAME 1 2 3 4 5 6 (PRODUCT LEVEL)	SEE PAGE
Z	1	1		1	SLEEVE	
Z	2	1		1	STEM	
Z	3	1		1	SPRING	
	4	1	**158-8186**	1	SPRING	
	5	1	**102-0889**	2	SEAL-O-RING	
	6	1	**103-8173**	2	SEAL-O-RING	
	7	1	**140-0674**	1	VALVE	
	8	1	**140-0677**	1	PIN	
Z	9	1		1	ROD	
Z	10	1		1	SLEEVE	

Z-NOT SERVICED SEPARATELY

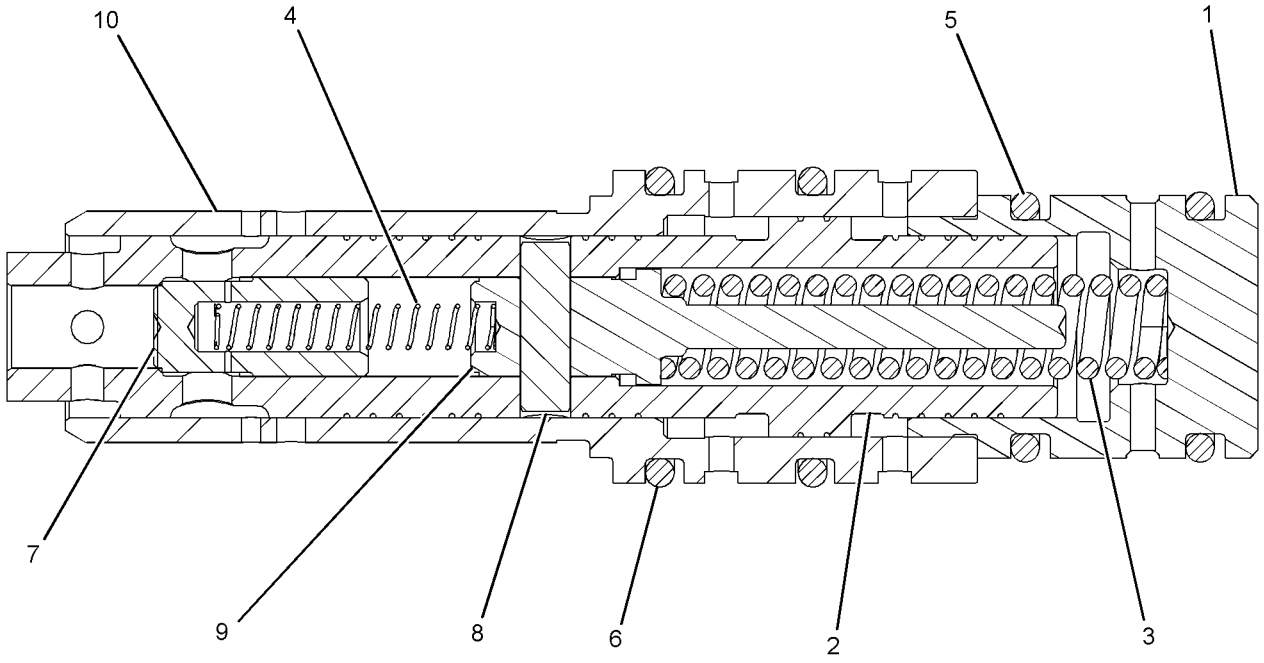

GRAPHIC #1 **<END>** g01266687

HYDRAULIC SYSTEM

109-2667 VALVE GP-RELIEF

S/N: MNB1-UP; WDK1-UP
PART OF 153-5313 VALVE GP-RELIEF
ALSO AN ATTACHMENT

SMCS-5069, 5117 **i01259345**

NOTE	REF NO	GRAPHIC REF	PART NUMBER	QTY	PART NAME 1 2 3 4 5 6 (PRODUCT LEVEL)	SEE PAGE
	1	1	**5I-4111**	1	PLUG	
	2	1	**109-2665**	1	BODY-VALVE	
	3	1	**107-6370**	1	SPRING	
	4	1	**107-6371**	1	VALVE	
	5	1	**4K-1388**	2	SEAL-O-RING	
B	6	1	**4J-7385**	1	SHIM (0.048-IN THK)	
B	7	1	**4J-7386**	5	SHIM (0.01-IN THK)	
	8	1	**5P-3108**	1	SEAL-O-RING	

B-USE AS REQUIRED

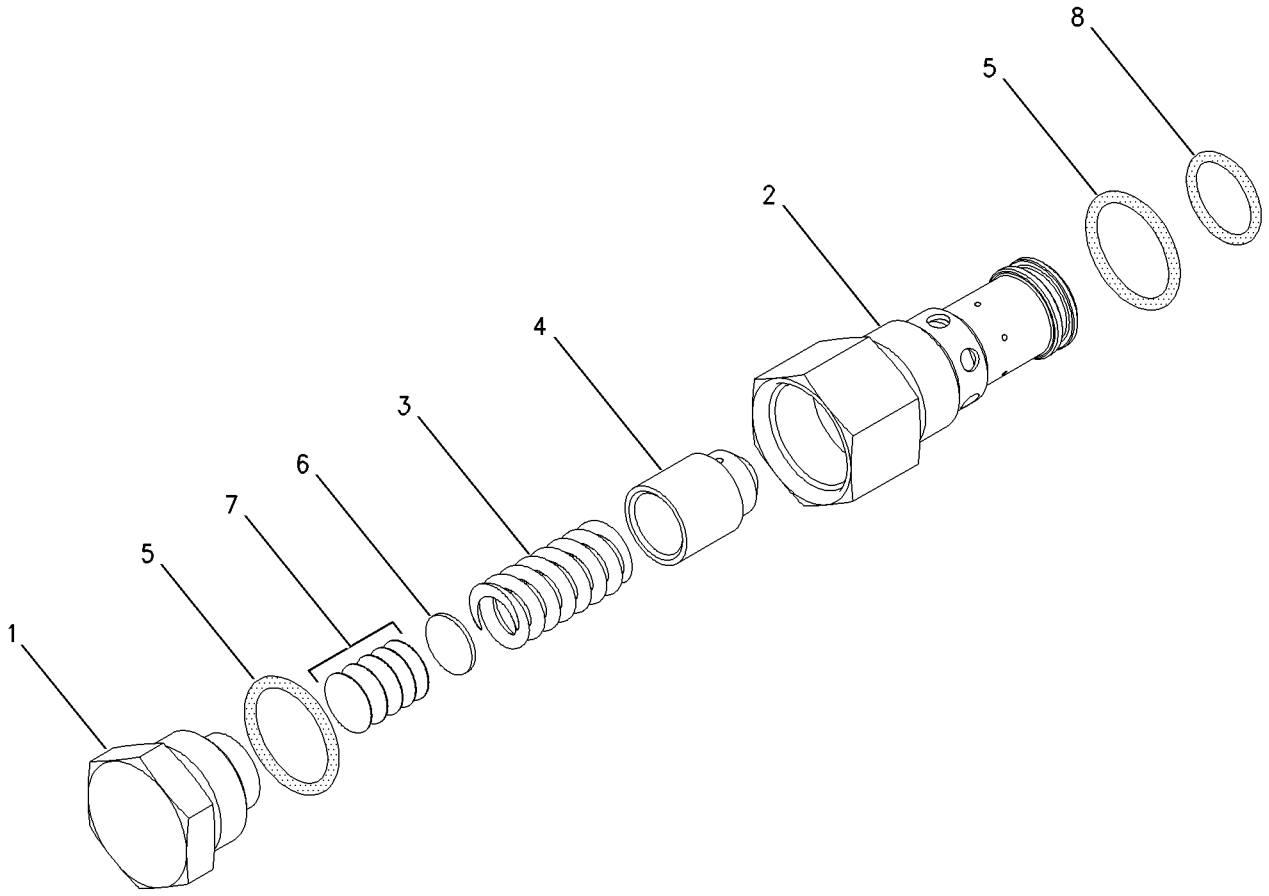

GRAPHIC #1 **<END>** g00672680

109-5152 VALVE GP-RELIEF—NEGATIVE FLOW CONTROL

S/N: MNB1-UP; WDK1-UP
PART OF 310-0085 VALVE GP-CONTROL
ALSO AN ATTACHMENT

SMCS-5069, 5117 **i01271453**

NOTE	REF NO	GRAPHIC REF	PART NUMBER	QTY	PART NAME 1 2 3 4 5 6 (PRODUCT LEVEL)	SEE PAGE
	1	1	**5I-4111**	1	PLUG	
	2	1	*109-5153*	1	BODY-VALVE	
	3	1	**107-6370**	1	SPRING	
	4	1	**107-6371**	1	VALVE	
	5	1	**4K-1388**	2	SEAL-O-RING	
B	6	1	**4J-7385**	1	SHIM (0.048-IN THK)	
B	7	1	**4J-7386**	1	SHIM (0.01-IN THK)	
	8	1	**5P-3108**	1	SEAL-O-RING	

B-USE AS REQUIRED

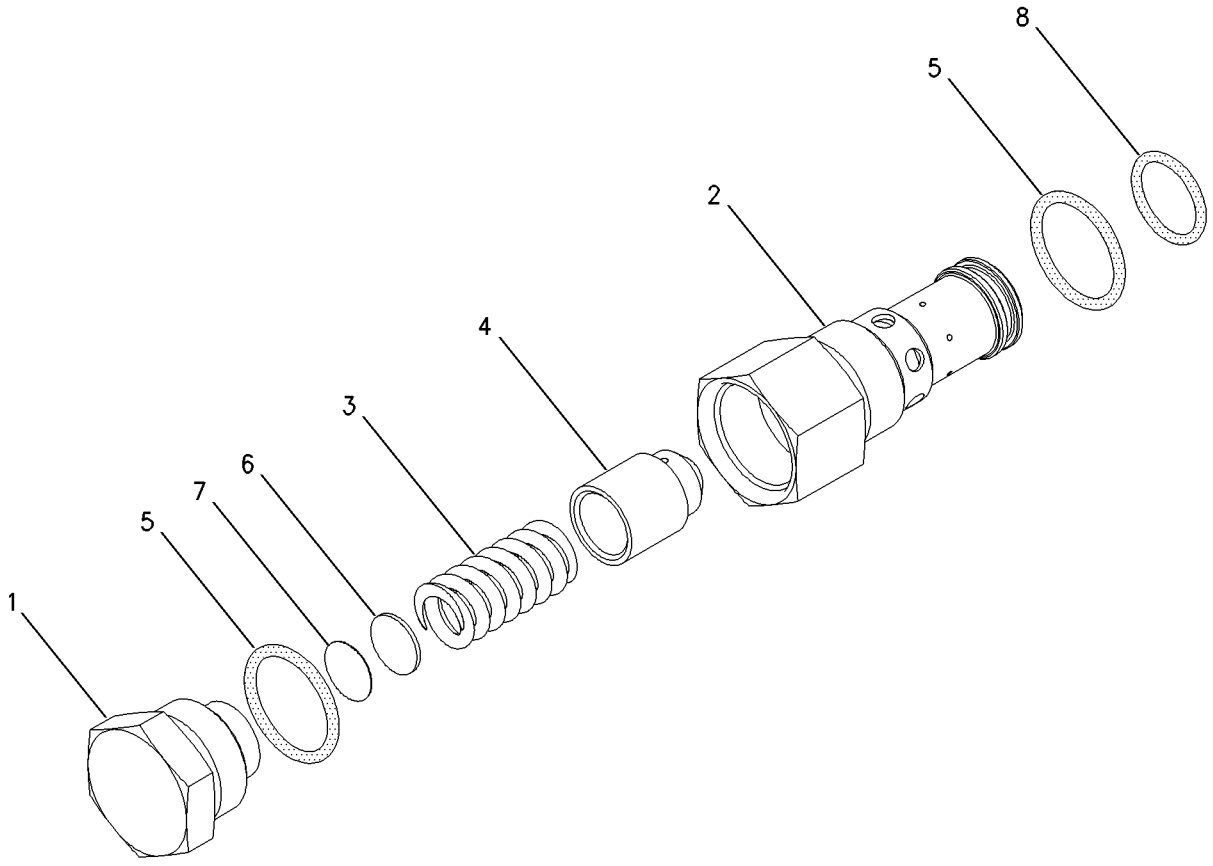

GRAPHIC #1 **<END>** g00680634

153-5313 VALVE GP-RELIEF–NEGATIVE FLOW CONTROL

S/N: MNB1-UP; WDK1-UP

PART OF 255-5651, 259-7424 VALVE GP-MAIN CONTROL

ALSO AN ATTACHMENT

SMCS-5069, 5117 **i01548212**

NOTE	REF NO	GRAPHIC REF	PART NUMBER	QTY	PART NAME 1 2 3 4 5 6 (PRODUCT LEVEL)	SEE PAGE
	1	1	*153-5239*	1	COVER	
Y	2	1	**109-2667**	1	VALVE GP-RELIEF	784
	3	1	**1P-3702**	2	SEAL-RECTANGULAR	
	4	1	**4J-8998**	2	SEAL-O-RING	

Y-SEPARATE ILLUSTRATION

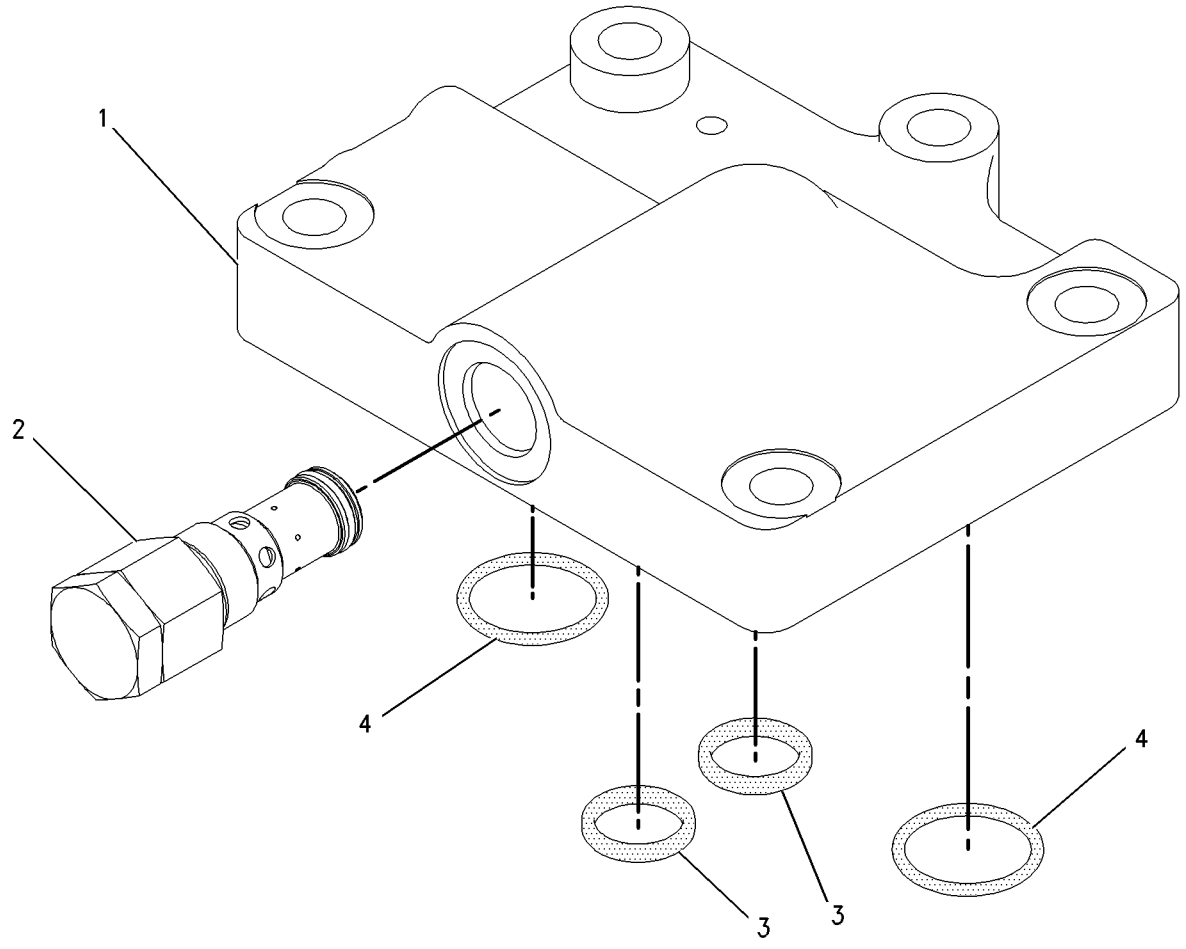

GRAPHIC #1 **<END>** g00743238

HYDRAULIC SYSTEM

173-3536 VALVE GP-RELIEF

S/N: MNB1-UP; WDK1-UP
PART OF 158-9085, 322-8716 VALVE GP-SWING CUSHION
ALSO AN ATTACHMENT

SMCS-5069, 5117 **i01251972**

NOTE	REF NO	GRAPHIC REF	PART NUMBER	QTY	PART NAME 1 2 3 4 5 6 (PRODUCT LEVEL)	SEE PAGE
	1	1	**095-1785**	1	RING-BACKUP	
	2	1	**095-1586**	1	SEAL-O-RING	

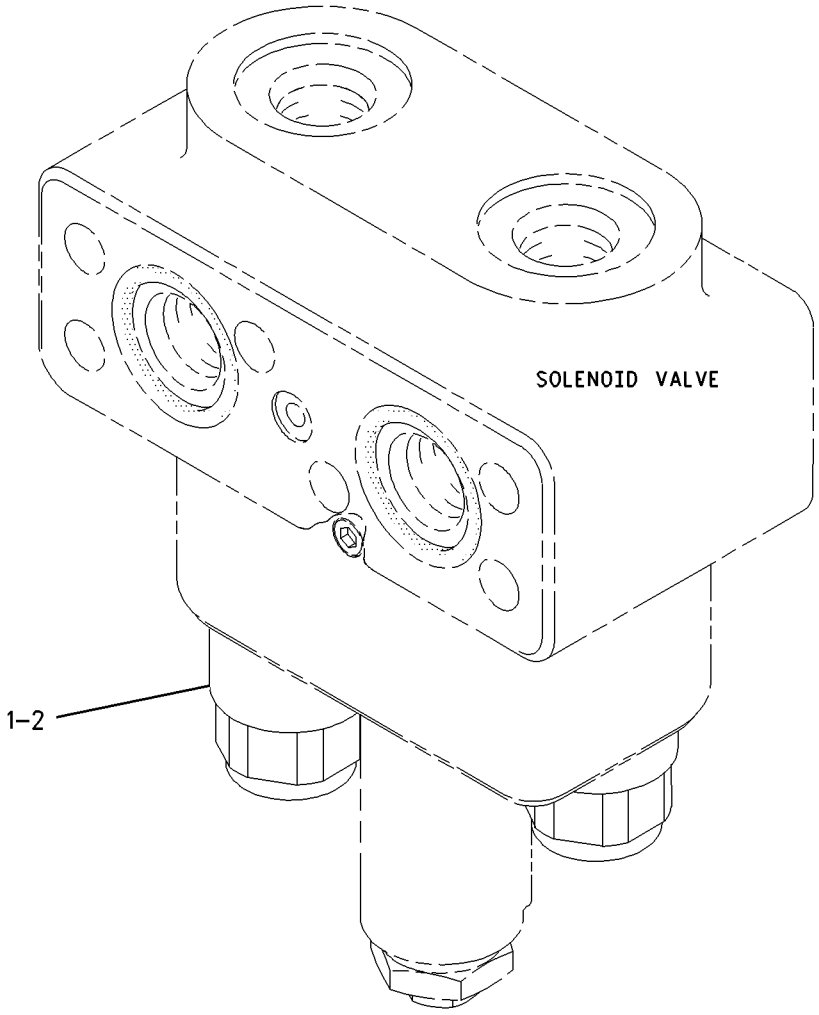

GRAPHIC #1 **<END>** g00672771

HYDRAULIC SYSTEM

177-2653 VALVE GP-RELIEF—WITH BLOCK

S/N: MNB1-UP; WDK1-UP

PART OF 255-1758, 255-1759, 255-1760 LINES GP-FRONT

AN ATTACHMENT

SMCS-5069, 5117 **i03254261**

NOTE	REF NO	GRAPHIC REF	PART NUMBER	QTY	PART NAME 1 2 3 4 5 6 (PRODUCT LEVEL)	SEE PAGE
CY	1	1	**310-0394**	1	VALVE GP-RELIEF (PILOT OPERATED)	800
Z	2	1		1	BLOCK	

C-CHANGE FROM PREVIOUS TYPE
Y-SEPARATE ILLUSTRATION
Z-NOT SERVICED SEPARATELY

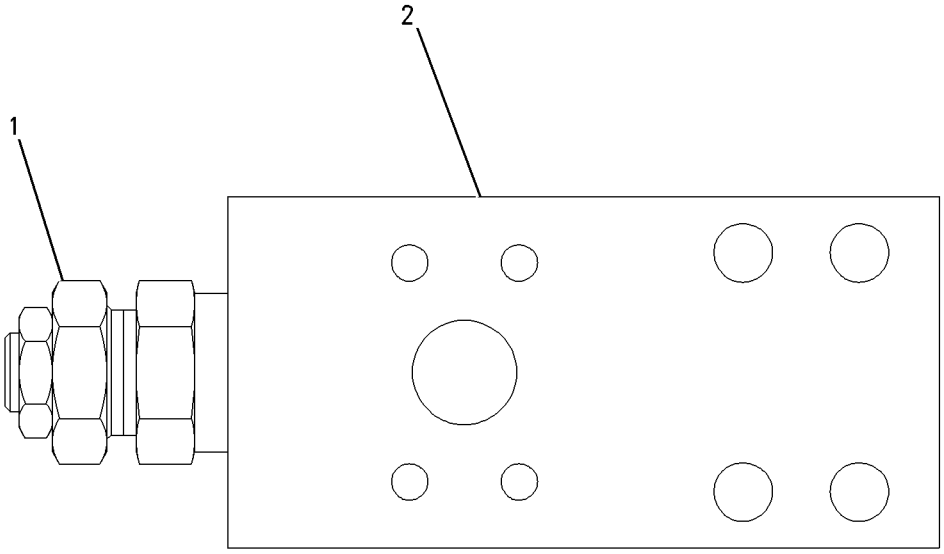

GRAPHIC #1 **<END>** g00684155

184-3830 VALVE GP-RELIEF–SWING MOTOR

S/N: MNB1-UP; WDK1-UP

PART OF 179-9775 MOTOR GP-SWING

SMCS-5069, 5117 **i01597645**

NOTE	REF NO	GRAPHIC REF	PART NUMBER	QTY	PART NAME 1 2 3 4 5 6 (PRODUCT LEVEL)	SEE PAGE
	1	1	**168-0766**	1	PLUG	
	2	1	**168-0765**	1	RING-BACKUP	
	3	1	**7J-9933**	1	SEAL-O-RING	
M	4	1	**168-0764**	1	LOCKNUT (M33X1.5-THD)	
	5	1	**7I-0966**	1	RING-BACKUP	
	6	1	**6V-5556**	1	SEAL-O-RING	
	7	1	**168-0763**	1	RETAINER	
	8	1	**095-1698**	1	SEAL-O-RING	
	9	1	**168-0713**	1	BODY AS	
	10	1	**191-3201**	1	SPRING	

M-METRIC PART

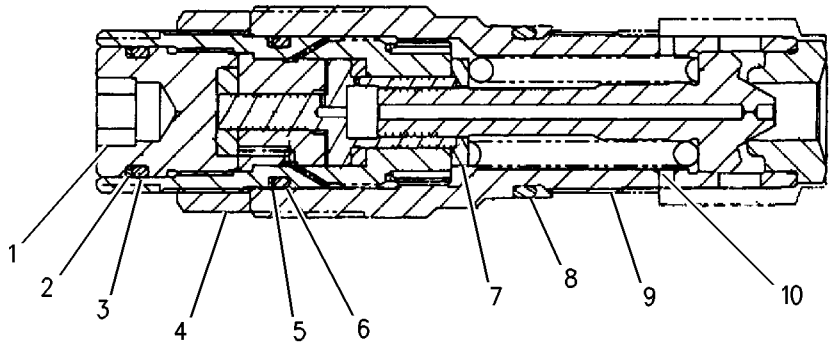

GRAPHIC #1 **<END>** g00813817

HYDRAULIC SYSTEM

201-9352 VALVE GP-RELIEF—LINE

S/N: MNB1-UP; WDK1-UP

PART OF 185-0490 VALVE GP-FLOW CONTROL & RELIEF

AN ATTACHMENT

SMCS-5069, 5117 **i01862988**

NOTE	PART NUMBER	QTY	PART NAME 1 2 3 4 5 6 (PRODUCT LEVEL)	SEE PAGE
Y	**201-9353**	1	VALVE GP-PILOT RELIEF	780
			-OR-	
Y	**105-1321**	1	VALVE GP-PILOT RELIEF	779

Y-SEPARATE ILLUSTRATION

<END>

204-2755 VALVE GP-RELIEF

S/N: MNB1-UP; WDK1-UP

PART OF 204-2819 VALVE GP-TRAVEL COUNTERBALANCE

SMCS-5069, 5117 **i01593344**

NOTE	REF NO	GRAPHIC REF	PART NUMBER	QTY	PART NAME 1 2 3 4 5 6 (PRODUCT LEVEL)	SEE PAGE
M	1	1	**7Y-8436**	1	SETSCREW (M27X2X27-MM)	
M	2	1	**7Y-8437**	1	NUT (M27X2-THD)	
	3	1	**095-1601**	1	SEAL-O-RING	
	4	1	**095-1787**	2	RING-BACKUP	
	5	1	**095-1590**	1	SEAL-O-RING	
	6	1	**121-1459**	2	RING-BACKUP	
	7	1	**095-1586**	2	SEAL-O-RING	
	8	1	**095-1785**	1	RING-BACKUP	

M-METRIC PART

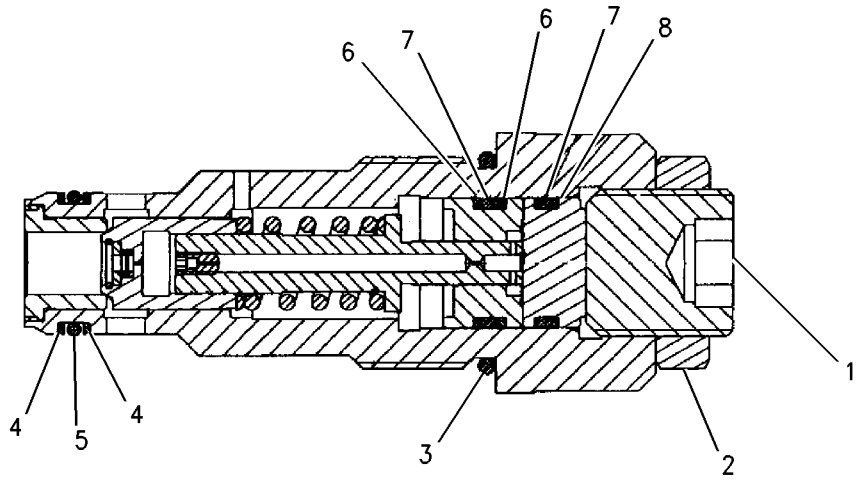

GRAPHIC #1 **<END>** g00826520

HYDRAULIC SYSTEM

250-2508 VALVE GP-RELIEF–LINE

S/N: MNB1-UP; WDK1-UP
PART OF 255-1761 LINES GP-FRONT
AN ATTACHMENT

SMCS-5069, 5117 **i03020820**

NOTE	PART NUMBER	QTY	PART NAME 1 2 3 4 5 6 (PRODUCT LEVEL)	SEE PAGE
Y	*259-7646*	1	VALVE GP-RELIEF (LINE)	795
			-OR-	
Y	*267-3727*	1	VALVE GP-RELIEF (LINE)	796

Y-SEPARATE ILLUSTRATION

<END>

255-5661 VALVE GP-RELIEF–LINE

S/N: MNB1-UP; WDK1-UP

PART OF 255-5653, 259-7378, 259-7432, 310-0085 VALVE GP-CONTROL

ALSO AN ATTACHMENT

SMCS-5069, 5117 **i02346991**

NOTE	REF NO	GRAPHIC REF	PART NUMBER	QTY	PART NAME 1 2 3 4 5 6 (PRODUCT LEVEL)	SEE PAGE
	1	1	**095-1578**	1	SEAL-O-RING	
	2	1	**103-8252**	2	RING	
	3	1	**103-8253**	2	RING	
	4	1	**103-8254**	1	SEAL-O-RING	
	5	1	**103-8255**	1	SEAL-O-RING	
	6	1	**3D-2824**	2	SEAL-O-RING	

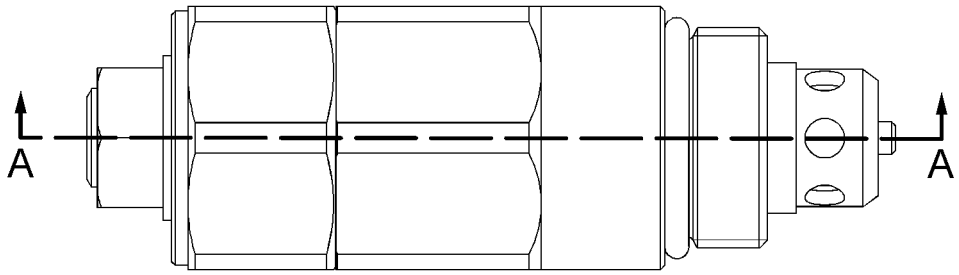

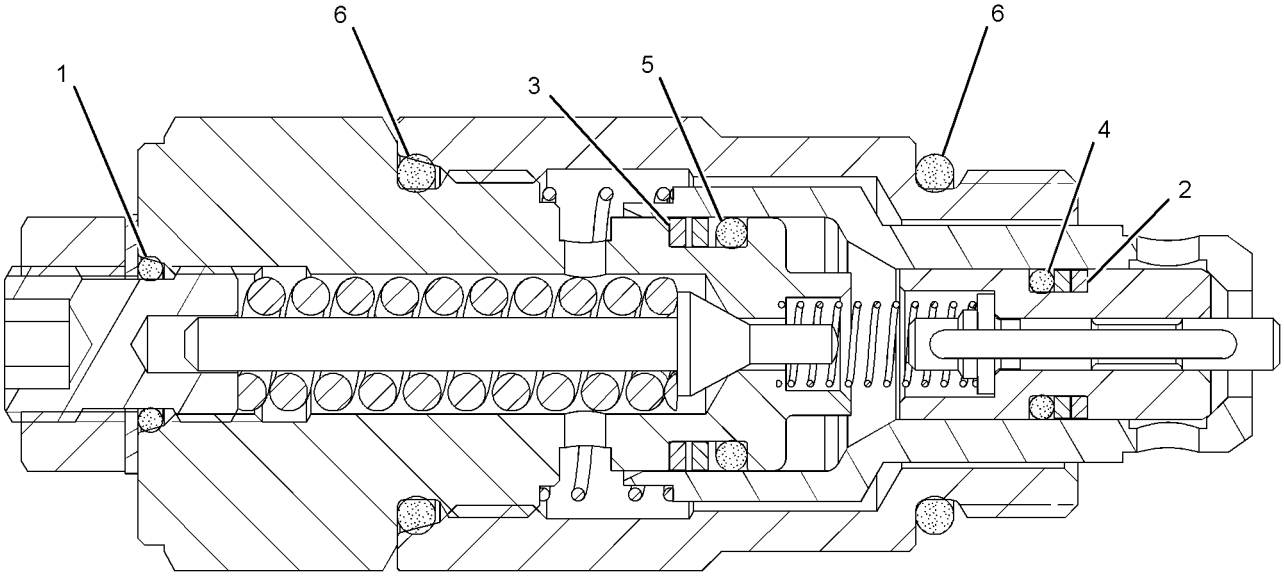

SECTION A-A

GRAPHIC #1 **<END>** g01149370

HYDRAULIC SYSTEM

255-5662 VALVE GP-RELIEF–LINE

S/N: MNB1-UP; WDK1-UP

PART OF 225-4785, 225-4843, 255-5680, 255-5683 VALVE GP-LOAD CONTROL

ALSO AN ATTACHMENT

SMCS-5069, 5117 **i02345741**

NOTE	REF NO	GRAPHIC REF	PART NUMBER	QTY	PART NAME 1 2 3 4 5 6 (PRODUCT LEVEL)	SEE PAGE
	1	1	**095-1578**	1	SEAL-O-RING	
	2	1	**103-8252**	2	RING	
	3	1	**103-8253**	2	RING	
	4	1	**103-8254**	1	SEAL-O-RING	
	5	1	**103-8255**	1	SEAL-O-RING	
	6	1	**3D-2824**	2	SEAL-O-RING	

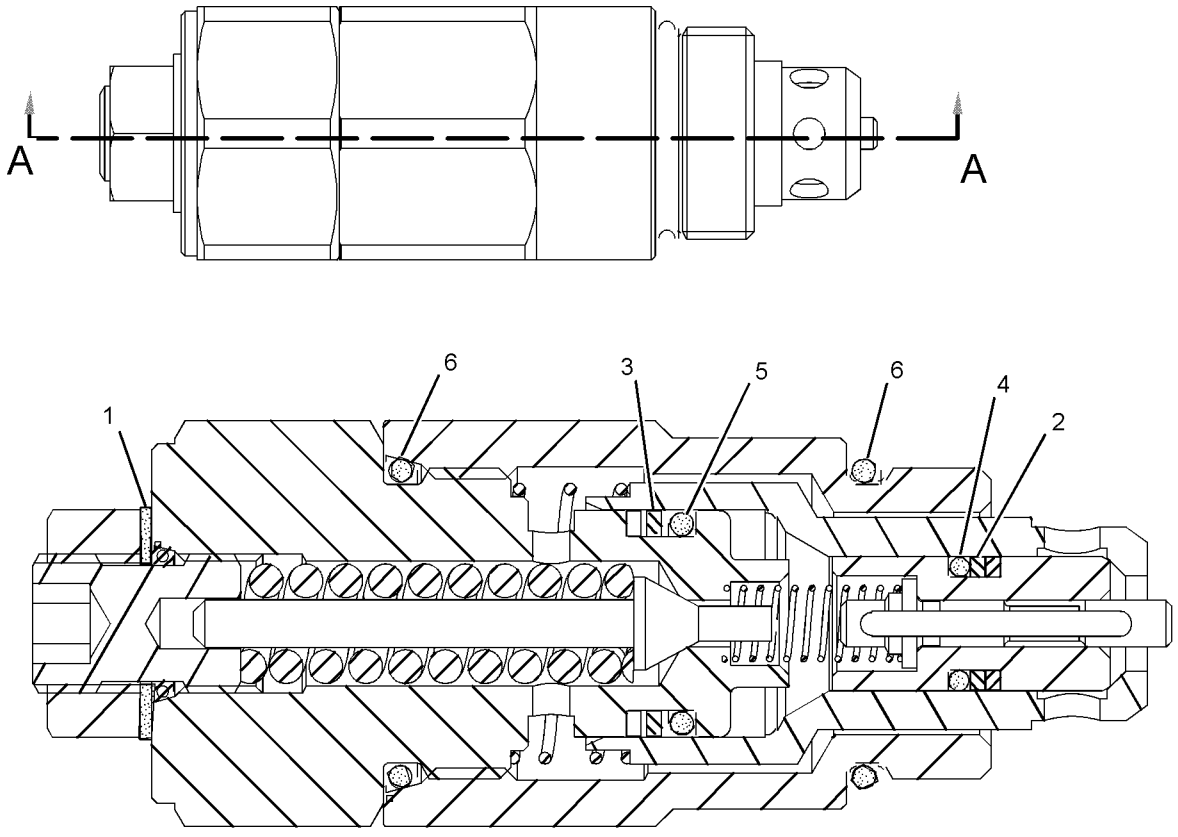

SECTION A-A

GRAPHIC #1 **<END>** g01152131

HYDRAULIC SYSTEM

259-7646 VALVE GP-RELIEF

S/N: MNB1-UP; WDK1-UP
PART OF 250-2508 VALVE GP-RELIEF
AN ATTACHMENT

SMCS-5069, 5117 **i02292195**

NOTE	REF NO	GRAPHIC REF	PART NUMBER	QTY	PART NAME 1 2 3 4 5 6 (PRODUCT LEVEL)	SEE PAGE
	1	1	**095-1578**	1	SEAL-O-RING	
	2	1	**103-8252**	2	RING	
	3	1	**103-8253**	2	RING	
	4	1	**103-8254**	1	SEAL-O-RING	
	5	1	**103-8255**	1	SEAL-O-RING	
	6	1	**3D-2824**	2	SEAL-O-RING	

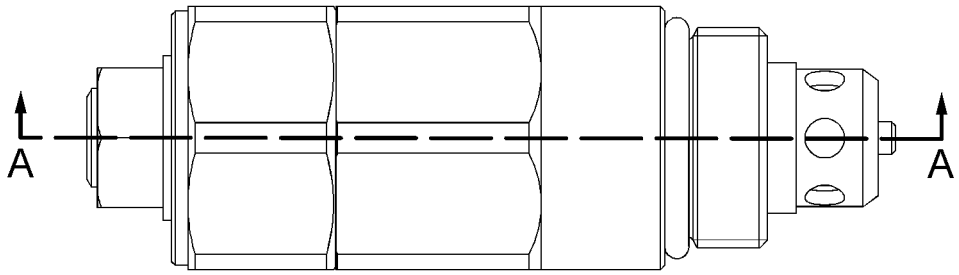

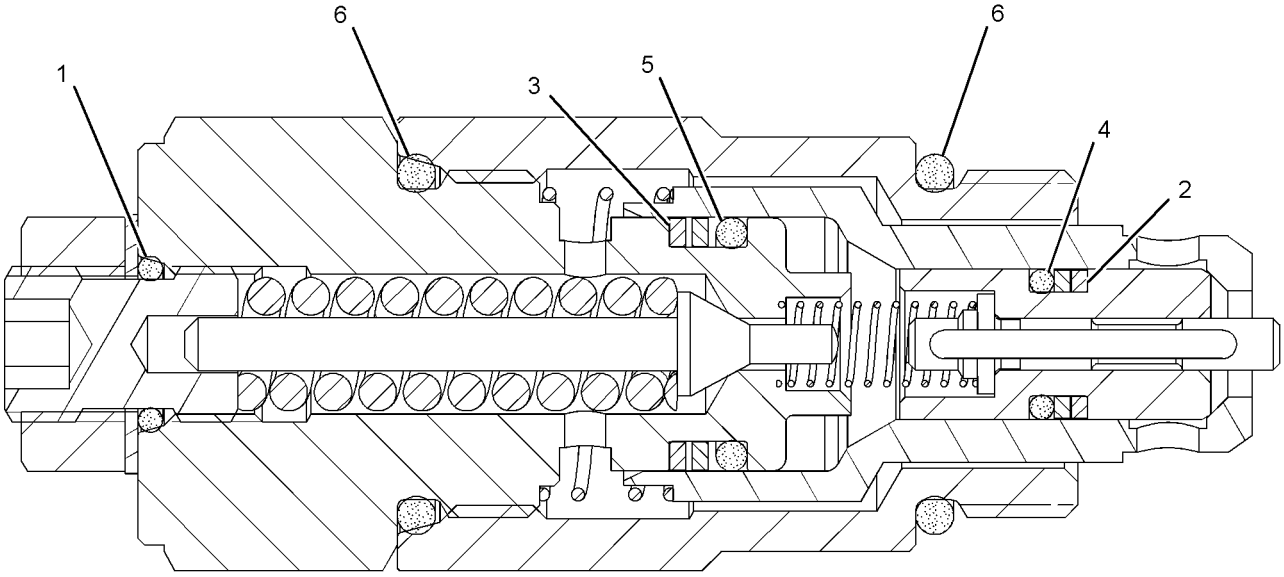

SECTION A-A

GRAPHIC #1 **<END>** g01149370

HYDRAULIC SYSTEM

267-3727 VALVE GP-RELIEF

S/N: MNB1-UP; WDK1-UP
PART OF 250-2508 VALVE GP-RELIEF
AN ATTACHMENT

SMCS-5069, 5117 **i02503004**

NOTE	REF NO	GRAPHIC REF	PART NUMBER	QTY	PART NAME 1 2 3 4 5 6 (PRODUCT LEVEL)	SEE PAGE
	1	1	**030-0167**	1	RING-BACKUP	
	2	1	**8L-2779**	1	SEAL-O-RING	
	3	1	**033-6036**	2	SEAL-O-RING	
	4	1	**3P-0647**	1	SEAL-O-RING	
	5	1	**9J-0707**	2	RING-BACKUP	
	6	1	**2P-2975**	1	SEAL-O-RING	

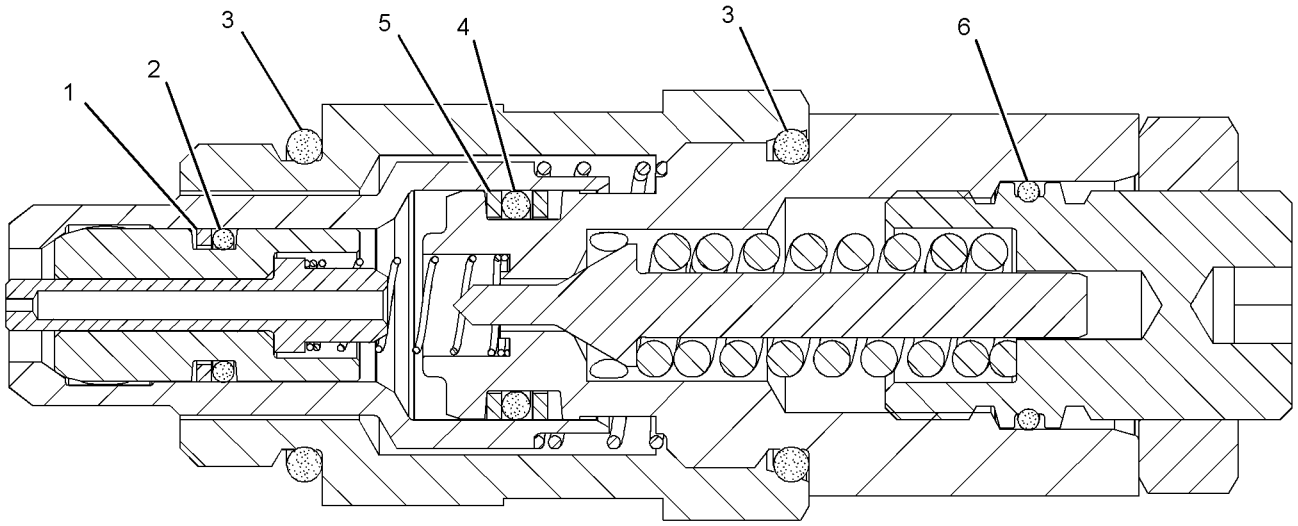

GRAPHIC #1 **<END>** g01254929

310-0390 VALVE GP-RELIEF

S/N: MNB1-UP; WDK1-UP

PART OF 255-5653 VALVE GP-CONTROL

SMCS-5069, 5117 **i02998140**

NOTE	REF NO	GRAPHIC REF	PART NUMBER	QTY	PART NAME 1 2 3 4 5 6 (PRODUCT LEVEL)	SEE PAGE
	1	1	**4I-3510**	1	SPRING	
	2	1	**4I-7714**	1	NUT (3/4-16-THD)	
	3	1	**6I-6795**	1	SPRING	
	4	1	**095-1786**	1	RING-BACKUP	
	5	1	**107-6540**	1	COLLAR	
	6	1	**107-6541**	1	RING-RETAINING	
	7	1	**119-5398**	1	SCREEN	
	8	1	**171-0034**	1	SEAT	
	9	1	**171-0035**	1	HOLDER	
	10	1	**171-0036**	1	ADJUSTER	
	11	1	**171-0037**	1	VALVE	
	13	1	**095-1579**	1	SEAL-O-RING	
	14	1	**095-1587**	1	SEAL-O-RING	
	15	1	**095-1590**	1	SEAL-O-RING	
	16	1	**3D-2824**	1	SEAL-O-RING	
	17	1	**6V-8218**	1	SEAL-O-RING	
	18	1	**6V-8978**	1	SEAL-O-RING	

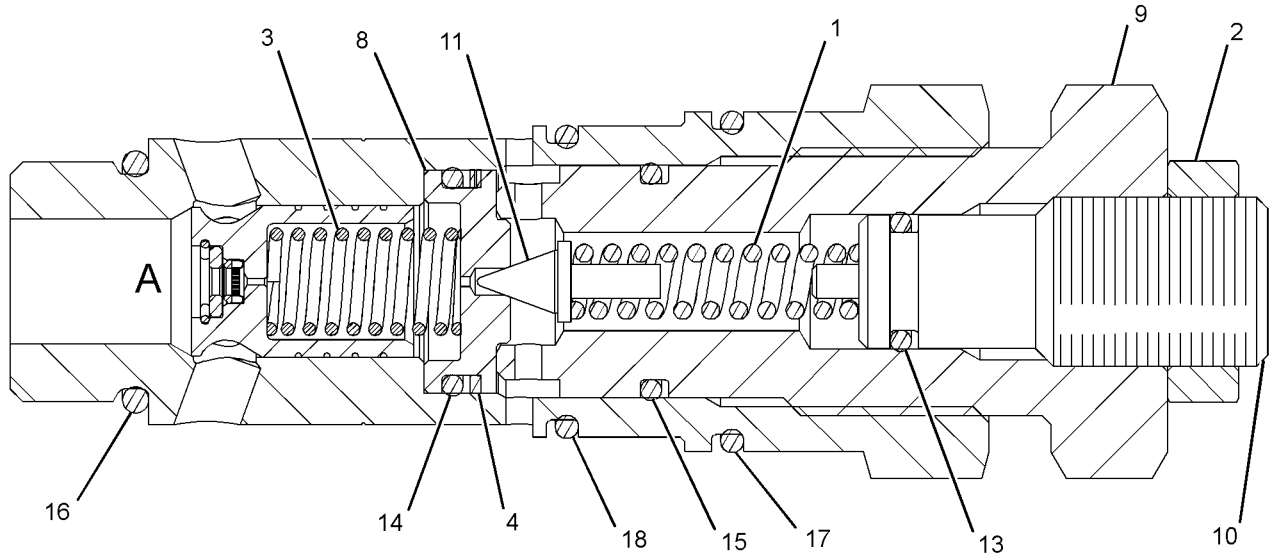

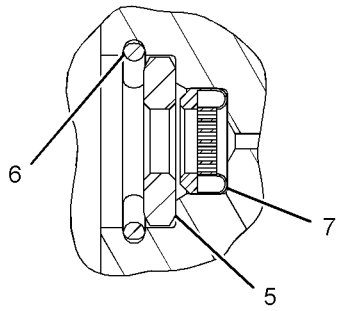

VIEW OF AREA A

GRAPHIC #1 **<END>** g01522182

310-0393 VALVE GP-RELIEF–MAIN, HEAVY LIFT

S/N: MNB1-UP; WDK1-UP
PART OF 259-7432 VALVE GP-CONTROL
AN ATTACHMENT

SMCS-5069, 5117 **i02945241**

NOTE	REF NO	GRAPHIC REF	PART NUMBER	QTY	PART NAME 1 2 3 4 5 6 (PRODUCT LEVEL)	SEE PAGE
	1	1	**4I-3510**	1	SPRING	
	2	1	**4I-7714**	1	NUT (3/4-16-THD)	
	3	1	**6I-6795**	1	SPRING	
	4	1	**095-1786**	1	RING-BACKUP	
	5	1	**107-6540**	1	COLLAR	
	6	1	**107-6541**	1	RING-RETAINING	
	7	1	**119-5398**	1	SCREEN	
	8	1	**171-0034**	1	SEAT	
	9	1	**171-0037**	1	VALVE	
	10	1	**259-7848**	1	SLEEVE	
	11	1	**259-7849**	1	PISTON	
	12	1	**259-7850**	1	SLEEVE	
	13	1	**259-7851**	1	ADJUSTER	
M	14	1	**259-7852**	1	NUT (M24X2-THD)	
	16	1	**095-1579**	1	SEAL-O-RING	
	17	1	**095-1584**	1	SEAL-O-RING	
	18	1	**095-1587**	1	SEAL-O-RING	
	19	1	**095-1590**	1	SEAL-O-RING	
	20	1	**3D-2824**	1	SEAL-O-RING	
	21	1	**6V-8218**	1	SEAL-O-RING	
	22	1	**6V-8978**	1	SEAL-O-RING	

M-METRIC PART

310-0393 VALVE GP-RELIEF *(contd.)* **i02945241**

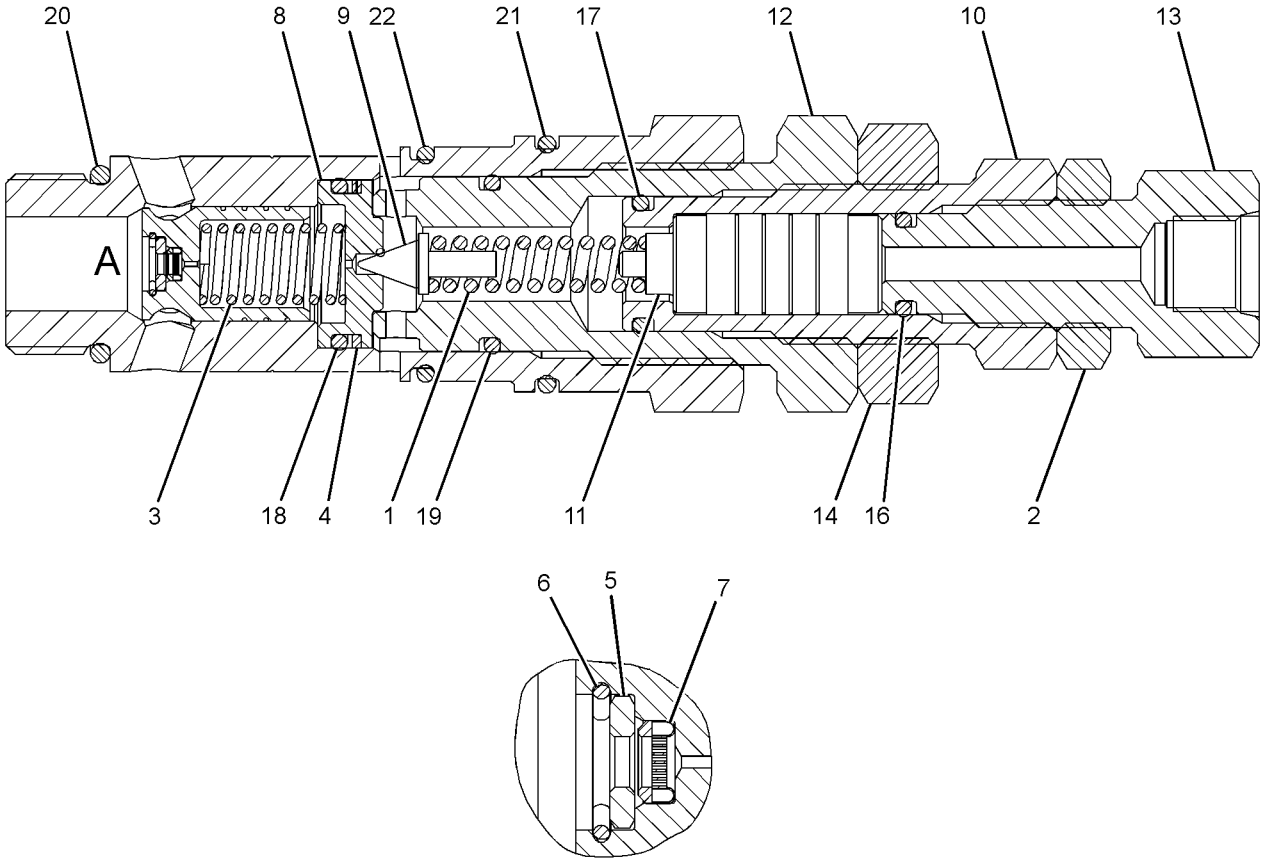

VIEW OF AREA A

GRAPHIC #1 **<END>** g01460589

HYDRAULIC SYSTEM

310-0394 VALVE GP-RELIEF—PILOT OPERATED

S/N: MNB1-UP; WDK1-UP
PART OF 177-2653 VALVE GP-RELIEF
AN ATTACHMENT

SMCS-5069, 5117 **i02990240**

NOTE	REF NO	GRAPHIC REF	PART NUMBER	QTY	PART NAME 1 2 3 4 5 6 (PRODUCT LEVEL)	SEE PAGE
Z	1	1		1	VALVE GP-RELIEF	
	2	1	**6I-6795**	1	SPRING	
	3	1	**171-0034**	1	SEAT	
	4	1	**171-0037**	1	VALVE	
	5	1	**4I-3510**	1	SPRING	
	6	1	**171-0035**	1	HOLDER	
	7	1	**222-0085**	1	NUT (3/4-16-THD)	
	8	1	**171-0036**	1	ADJUSTER	
	9	1	**095-1579**	1	SEAL-O-RING	
	10	1	**6V-8218**	1	SEAL-O-RING	
	11	1	**095-1590**	1	SEAL-O-RING	
	12	1	**6V-8978**	1	SEAL-O-RING	
	13	1	**095-1786**	1	RING-BACKUP	
	14	1	**095-1587**	1	SEAL-O-RING	
	15	1	**3D-2824**	1	SEAL-O-RING	

Z-NOT SERVICED SEPARATELY

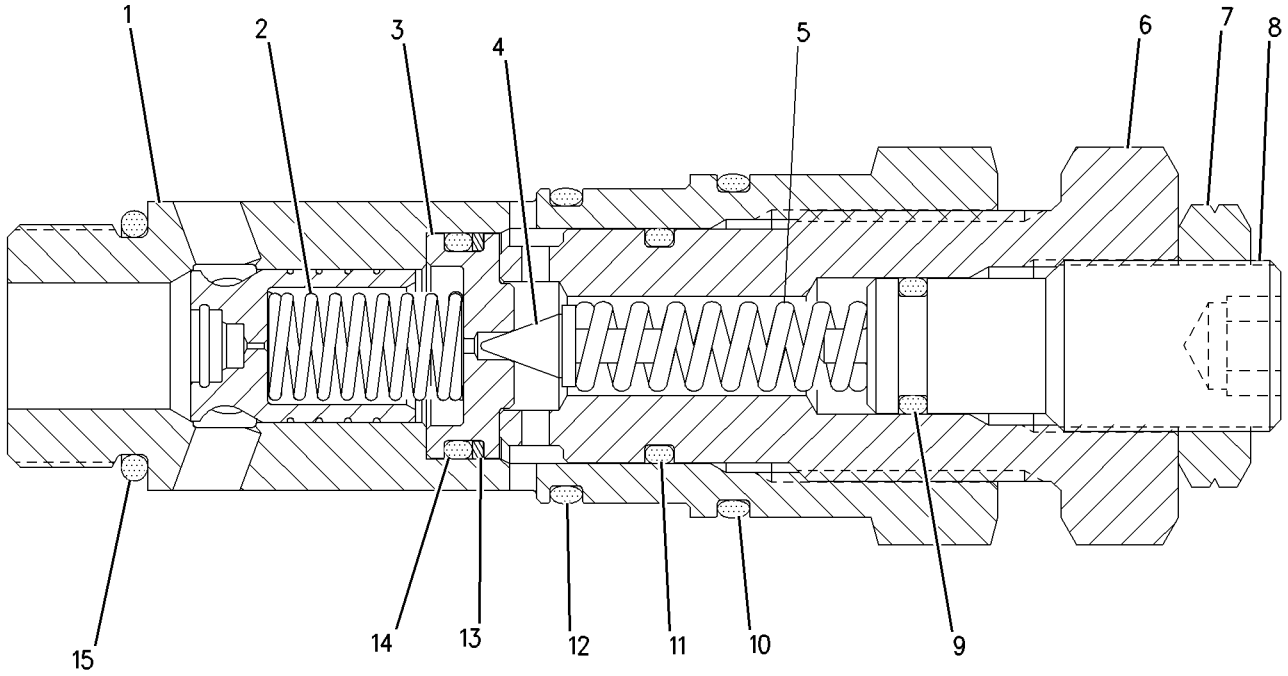

GRAPHIC #1 **<END>** g00927977

HYDRAULIC SYSTEM

165-9470 VALVE GP-SELECTOR–ALT PATTERN CONTROL, 4-WAY

S/N: MNB1-UP; WDK1-UP
PART OF 255-1656 LINES GP-PILOT
AN ATTACHMENT

SMCS-5065 **i01298655**

NOTE	REF NO	GRAPHIC REF	PART NUMBER	QTY	PART NAME 1 2 3 4 5 6 (PRODUCT LEVEL)	SEE PAGE
M	1	1	**6V-8202**	6	BOLT-SOCKET HEAD (M8X1.25X16-MM)	
	2	1	**085-7083**	1	PIN-SPRING	
	3	1	**085-7084**	1	BOLT (M8X1.25X35-MM)	
	4	1	**085-7080**	1	LEVER	
	5	1	**085-7079**	1	GRIP	
M	6	1	**6V-3938**	4	BOLT (M10X1.5X20-MM)	
	7	1	**171-0185**	1	COVER	
	8	1	**085-7081**	4	NEEDLE	
	9	1	**171-0184**	1	SPRING	
M	10	1	**8T-9533**	1	SETSCREW (M12X1.75-THD)	
	11	1	**006-6803**	1	BALL	
	12	1	**171-0183**	1	COVER	
	13	1	**095-1710**	2	SEAL-O-RING	
	14	1	**6I-6923**	1	SEAL	
	15	1	**095-1590**	1	SEAL-O-RING	
	16	1	**095-0965**	7	PLUG	
	17	1	**1F-0425**	1	BALL	
	18	1	**126-9993**	2	SCREW-RIVET	

M-METRIC PART

165-9470 VALVE GP-SELECTOR *(contd.)* i01298655

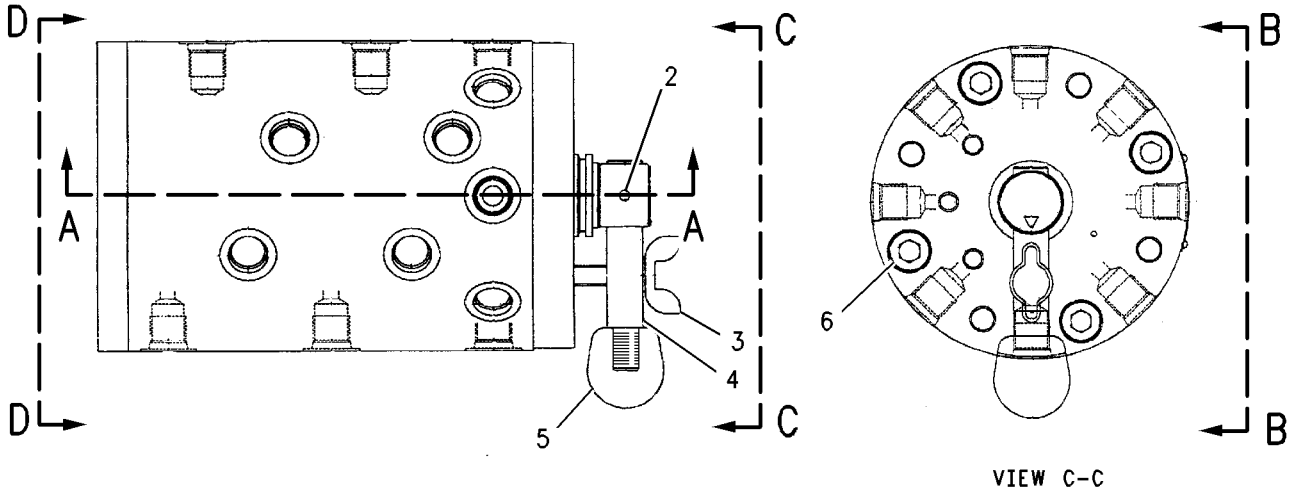

VIEW C-C

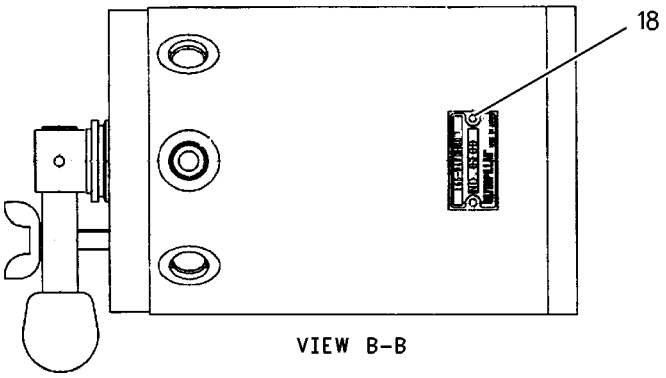

VIEW B-B

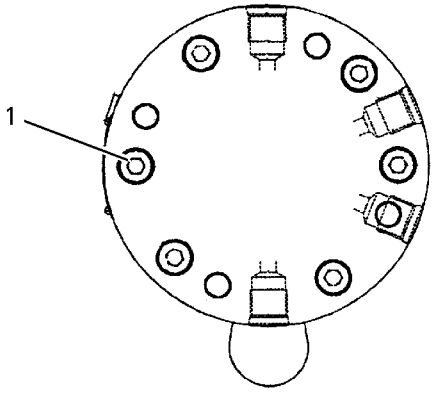

VIEW D-D

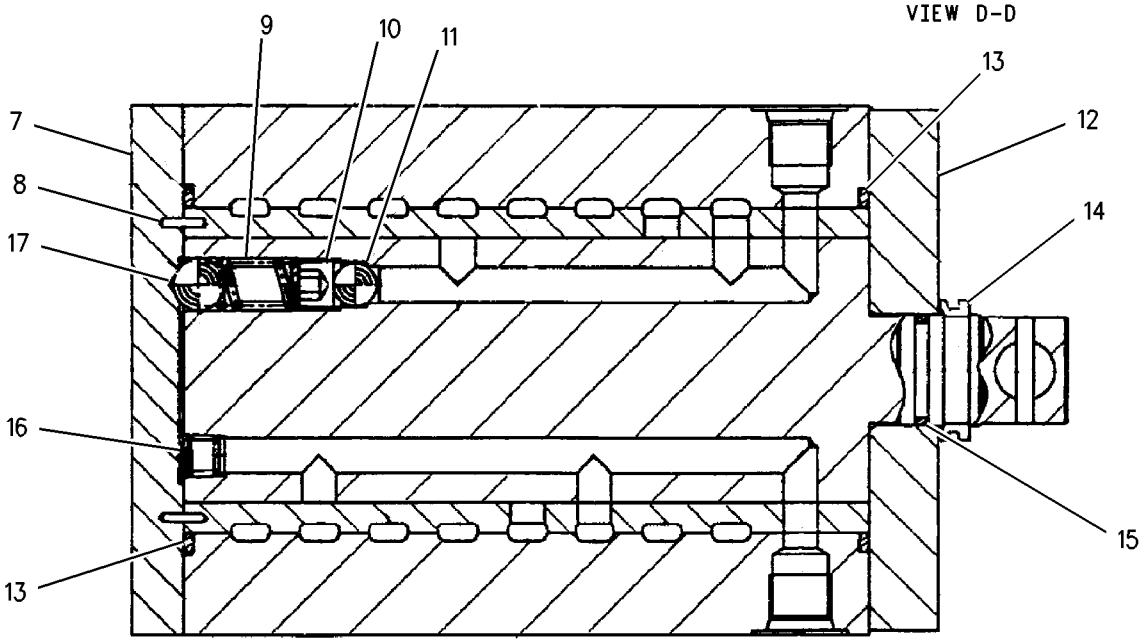

SECTION A-A

GRAPHIC #1 **<END>** g00690417

112-0083 VALVE GP-SHUTTLE

S/N: MNB1-UP; WDK1-UP
PART OF 255-1843 LINES GP-PILOT
AN ATTACHMENT

SMCS-5079 **i03093680**

NOTE	REF NO	GRAPHIC REF	PART NUMBER	QTY	PART NAME 1 2 3 4 5 6 (PRODUCT LEVEL)	SEE PAGE
Z	1	1		1	BODY	
	2	1	**2D-6642**	4	BALL	
	3	1	**112-0085**	4	PLUG	
	4	1	**3J-1907**	4	SEAL-O-RING	

Z-NOT SERVICED SEPARATELY

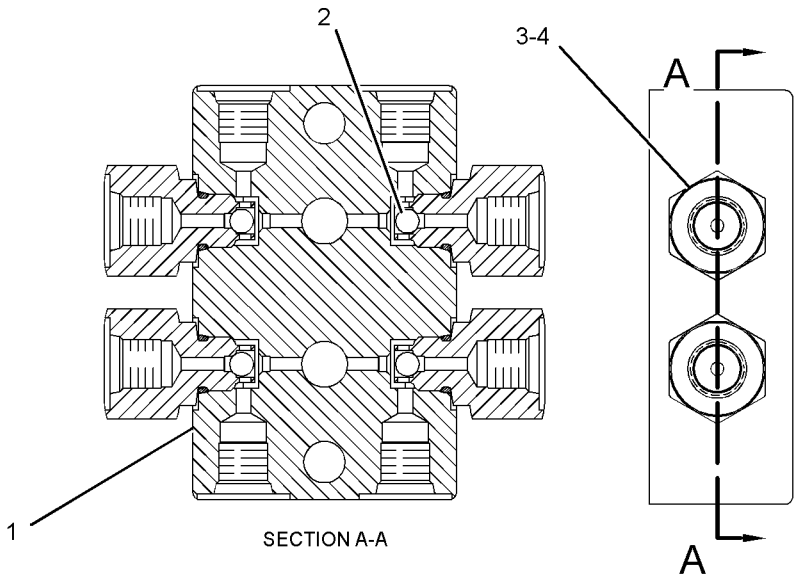

GRAPHIC #1 **<END>** g01206121

HYDRAULIC SYSTEM

123-2430 VALVE GP-SHUTTLE

S/N: MNB1-UP; WDK1-UP
PART OF 248-9827, 255-1802 LINES GP-PILOT
ALSO AN ATTACHMENT

SMCS-5079 **i01884911**

NOTE	REF NO	GRAPHIC REF	PART NUMBER	QTY	PART NAME 1 2 3 4 5 6 (PRODUCT LEVEL)	SEE PAGE
Z	1	1		1	BODY-VALVE	
	2	1	**4B-9783**	1	BALL	
	3	1	**3J-1907**	2	SEAL-O-RING	
	4	1	**123-2552**	2	CONNECTOR	

Z-NOT SERVICED SEPARATELY

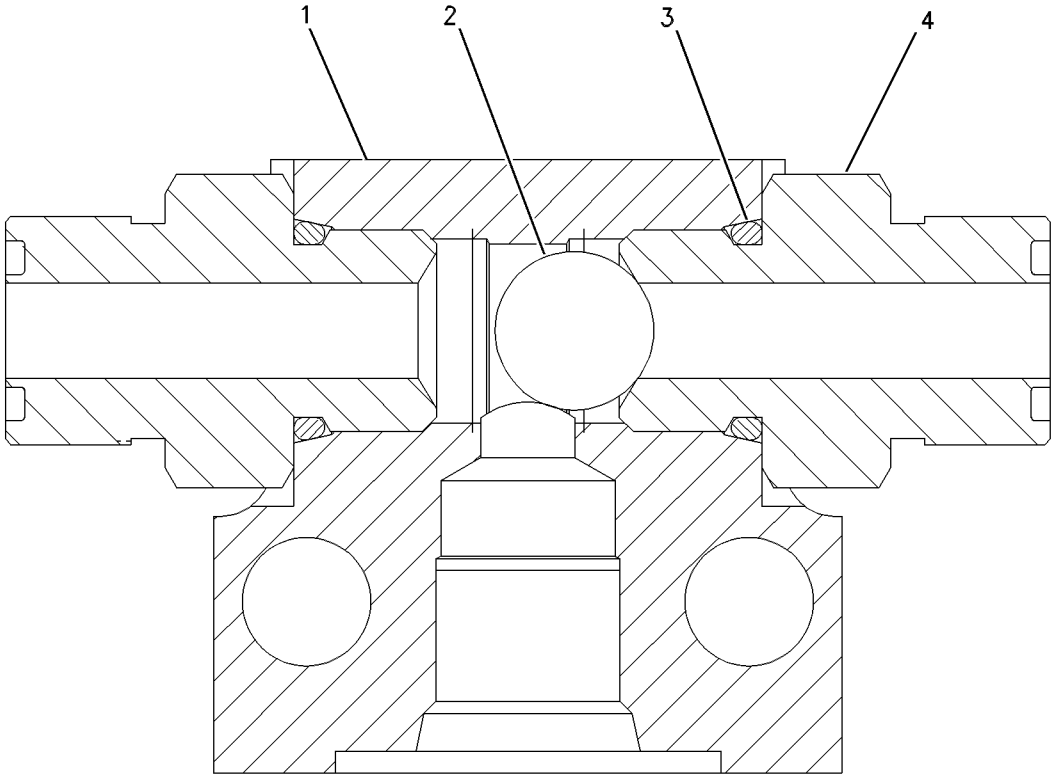

GRAPHIC #1 **<END>** g00652899

123-2549 VALVE GP-SHUTTLE–1-PUMP/2-PUMP

S/N: WDK1-UP

PART OF 266-1201 LINES GP-FRONT

AN ATTACHMENT

SMCS-5079 **i02210148**

NOTE	REF NO	GRAPHIC REF	PART NUMBER	QTY	PART NAME 1 2 3 4 5 6 (PRODUCT LEVEL)	SEE PAGE
	1	1	**123-2511**	1	TEE	
	2	1	**4B-9783**	1	BALL	
	3	1	**123-2552**	2	CONNECTOR	
	4	1	**3J-1907**	2	SEAL-O-RING	

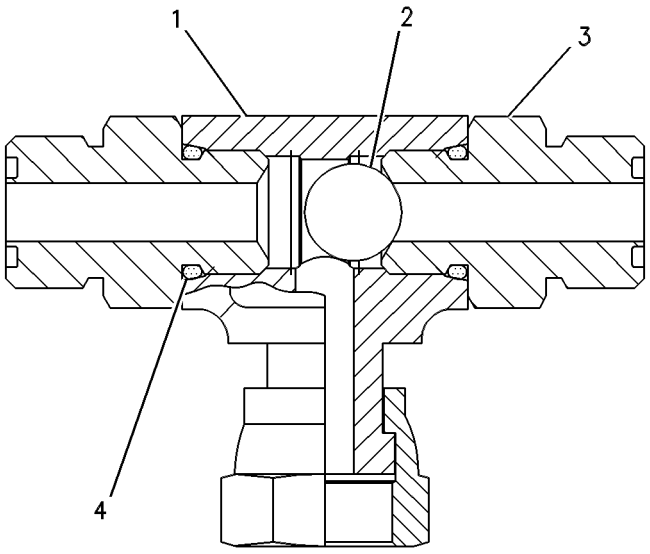

GRAPHIC #1 **<END>** g00274258

HYDRAULIC SYSTEM

171-0198 VALVE GP-SHUTTLE

S/N: MNB1-UP; WDK1-UP
PART OF 171-0188 VALVE GP-SOLENOID
AN ATTACHMENT

SMCS-5079 **i01269960**

NOTE	PART NUMBER	QTY	PART NAME 1 2 3 4 5 6 (PRODUCT LEVEL)	SEE PAGE
	185-0407	1	KIT-SEAL (SHUTTLE VALVE)	

<END>

185-0462 VALVE GP-SHUTTLE

S/N: MNB1-UP; WDK1-UP

PART OF 248-9825 LINES GP-PILOT

SMCS-5079 **i01612080**

NOTE	REF NO	GRAPHIC REF	PART NUMBER	QTY	PART NAME 1 2 3 4 5 6 (PRODUCT LEVEL)	SEE PAGE
	1	1	**7I-8084**	4	PLUG	
	2	1	**185-0463**	1	SEAT	
	3	1	**4B-9880**	7	BALL	
	4	1	**165-9464**	6	SEAT	
	5	1	**095-1578**	7	SEAL-O-RING	
	6	1	**107-6479**	7	PLUG	

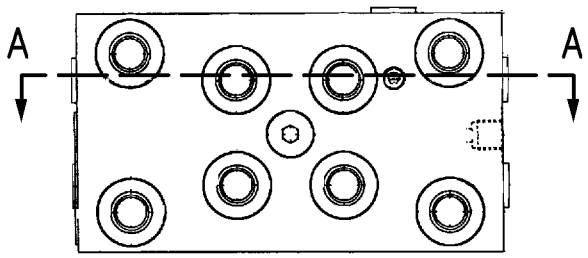

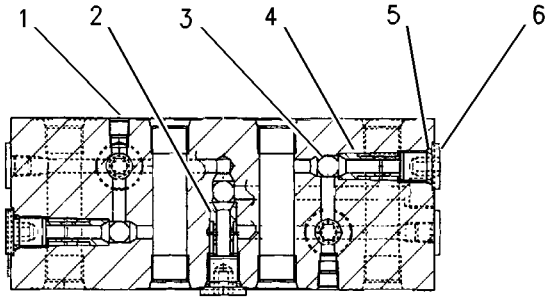

SECTION A-A

GRAPHIC #1 **<END>** g00699270

111-9916 VALVE GP-SOLENOID–PRESSURE REDUCING

S/N: MNB1-UP; WDK1-UP

PART OF 256-0074 ACTUATOR GP-PUMP, 171-0188, 259-7429, 259-7430 VALVE GP-SOLENOID

ALSO AN ATTACHMENT

SMCS-5479 **i02649387**

NOTE	REF NO	GRAPHIC REF	PART NUMBER	QTY	PART NAME 1 2 3 4 5 6 (PRODUCT LEVEL)	SEE PAGE
	1	1	**095-1750**	1	SEAL-O-RING	
	2	1	**6V-8398**	1	SEAL-O-RING	
	3	1	**095-1751**	1	SEAL-O-RING	
	4	1	**095-1586**	1	SEAL-O-RING	
M	5	1	**114-0623**	1	NUT AS (M6X1-THD)	

M-METRIC PART

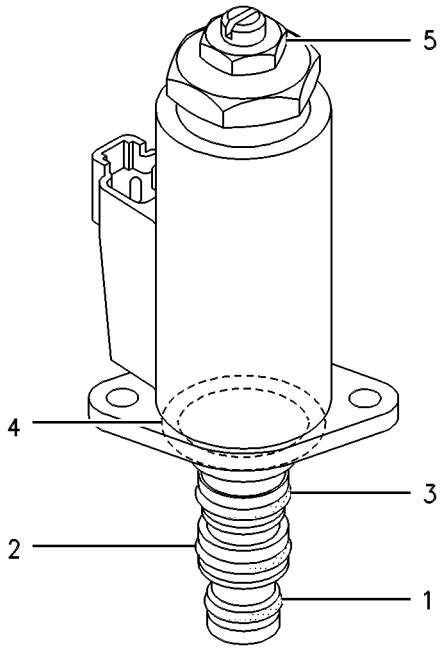

GRAPHIC #1 **<END>** g00258219

121-1491 VALVE GP-SOLENOID

S/N: MNB1-UP; WDK1-UP

PART OF 239-8697, 239-8998 MANIFOLD GP-CONTROL, 255-5653, 259-7432 VALVE GP-CONTROL, 254-3080 VALVE GP-COUPLER, 165-9549, 258-6749 VALVE GP-SOLENOID ALSO AN ATTACHMENT

SMCS-5479 **i02196717**

NOTE	REF NO	GRAPHIC REF	PART NUMBER	QTY	PART NAME 1 2 3 4 5 6 (PRODUCT LEVEL)	SEE PAGE
	1	1	**095-1750**	1	SEAL-O-RING	
	2	1	**6V-8398**	1	SEAL-O-RING	
	3	1	**095-1751**	1	SEAL-O-RING	
	4	1	**095-1586**	1	SEAL-O-RING	
M	5	1	**114-0623**	1	NUT AS (M6X1-THD)	

M-METRIC PART

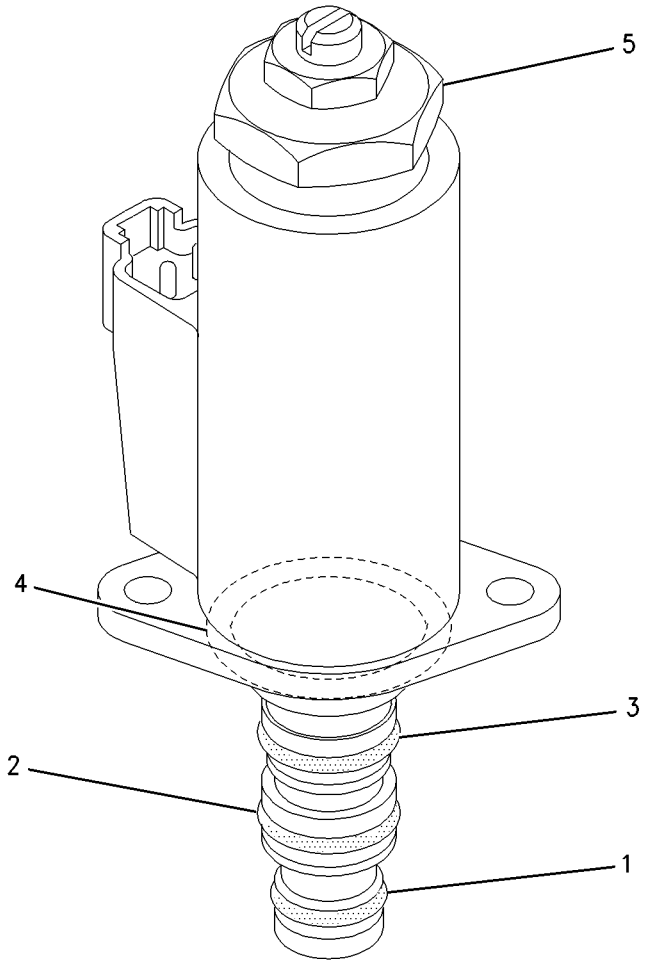

GRAPHIC #1 **<END>** g00928680

HYDRAULIC SYSTEM

121-6303 VALVE GP-SOLENOID–HEAVY LIFT

S/N: MNB1-UP; WDK1-UP
PART OF 255-1659 LINES GP-PILOT
AN ATTACHMENT

SMCS-5479 **i01272110**

NOTE	REF NO	GRAPHIC REF	PART NUMBER	QTY	PART NAME 1 2 3 4 5 6 (PRODUCT LEVEL)	SEE PAGE
	1	1	**7I-8102**	1	VALVE AS	
	2	1	**121-6304**	1	COIL GP	
M	3	1	**099-0822**	2	BOLT-SOCKET HEAD (M5X0.8X10-MM)	
	4	1	**095-1519**	1	SEAL-O-RING	
	5	1	**7I-0986**	1	PLUG	
	6	1	**7I-7403**	1	SPRING	
	7	1	**095-1578**	1	SEAL-O-RING	

M-METRIC PART

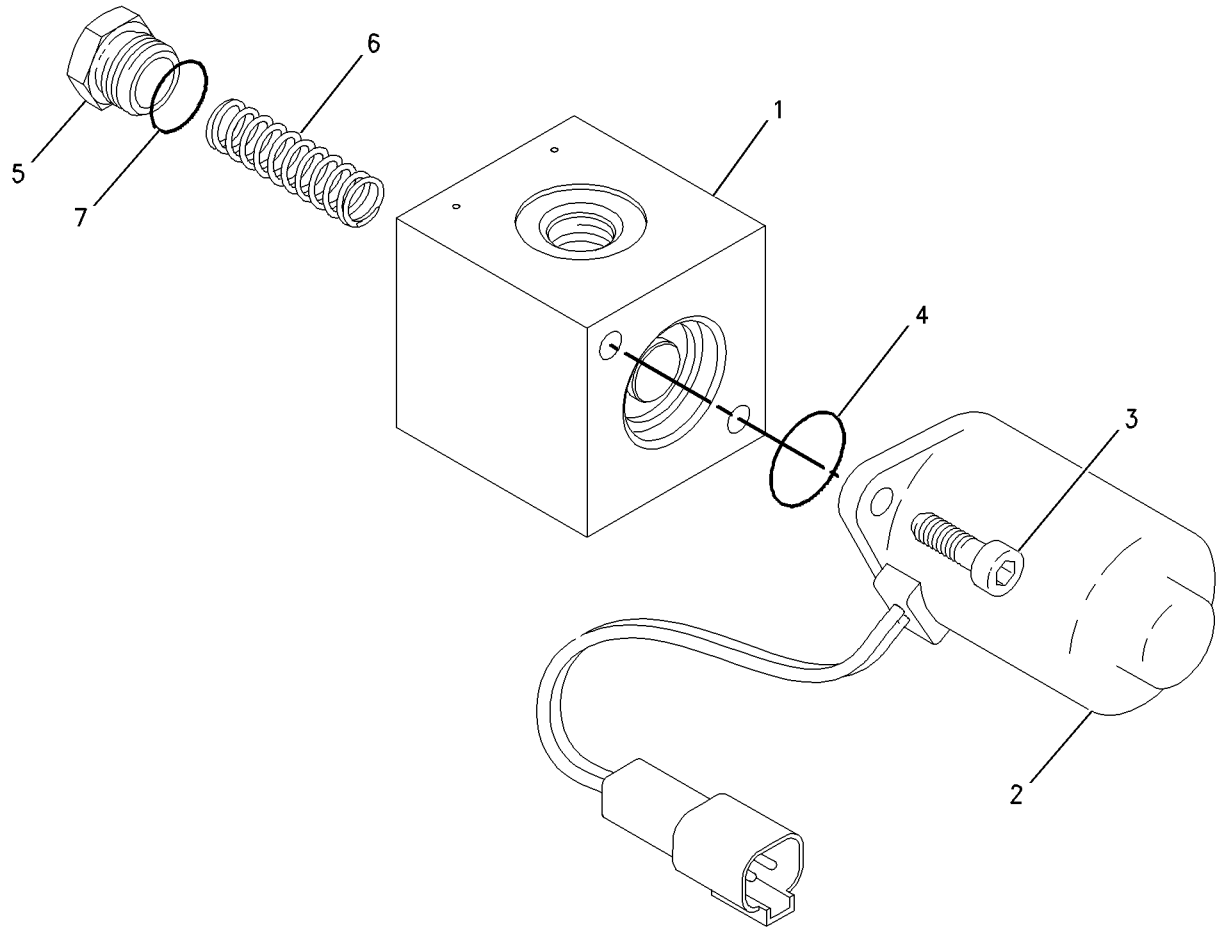

GRAPHIC #1 **<END>** g00685554

165-9549 VALVE GP-SOLENOID–COMBINED FCTN, MEDIUM PRESSURE

S/N: MNB1-UP; WDK1-UP
PART OF 255-1664, 255-1803 LINES GP-PILOT
AN ATTACHMENT

SMCS-5479 **i01440887**

NOTE	REF NO	GRAPHIC REF	PART NUMBER	QTY	PART NAME 1 2 3 4 5 6 (PRODUCT LEVEL)	SEE PAGE
	1	1	**7I-8084**	4	PLUG	
Y	2	1	**121-1491**	3	VALVE GP-SOLENOID	809
M	3	1	**8T-0288**	6	BOLT (M5X0.8X12-MM)	

M-METRIC PART
Y-SEPARATE ILLUSTRATION

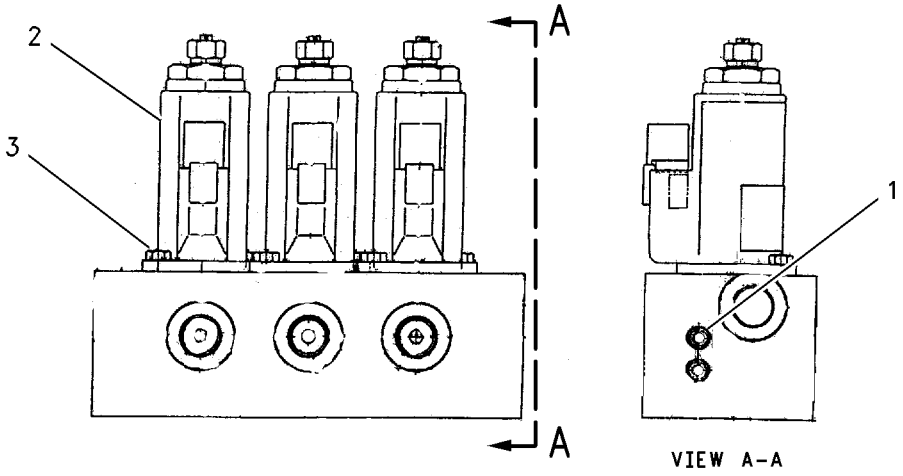

GRAPHIC #1 **<END>** g00754979

171-0188 VALVE GP-SOLENOID

S/N: MNB1-UP; WDK1-UP
PART OF 255-1661, 255-1662, 255-1664, 255-1801, 255-1803, 255-1967 LINES
GP-PILOT
AN ATTACHMENT

SMCS-5479 **i01478221**

NOTE	REF NO	GRAPHIC REF	PART NUMBER	QTY	PART NAME 1 2 3 4 5 6 (PRODUCT LEVEL)	SEE PAGE
Y	1	1	**111-9916**	1	VALVE GP-SOLENOID	808
M	2	1	**8T-0288**	2	BOLT (M5X0.8X12-MM)	
Y	3	1	**171-0198**	2	VALVE GP-SHUTTLE	806
	4	1	**7I-8084**	6	PLUG	

M-METRIC PART
Y-SEPARATE ILLUSTRATION

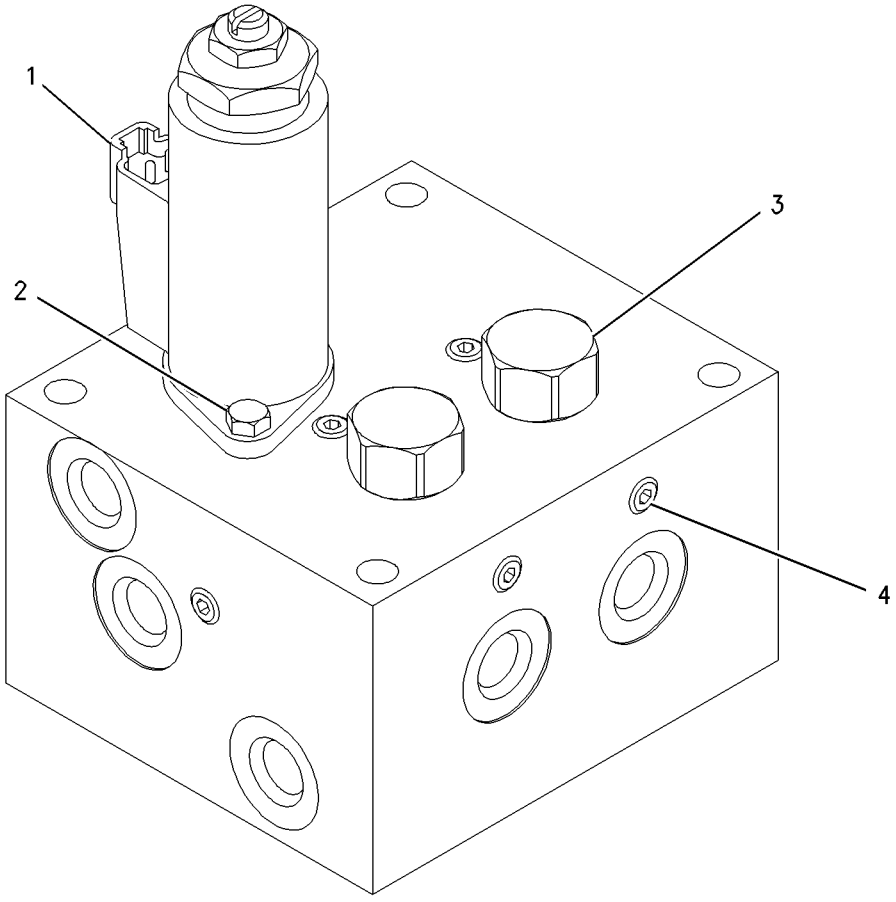

GRAPHIC #1 **<END>** g00681111

258-6749 VALVE GP-SOLENOID—QUICK COUPLER

S/N: WDK1-UP
PART OF 266-1201 LINES GP-FRONT
AN ATTACHMENT

SMCS-5479 **i02490783**

NOTE	REF NO	GRAPHIC REF	PART NUMBER	QTY	PART NAME 1 2 3 4 5 6 (PRODUCT LEVEL)	SEE PAGE
Y	1	1	**121-1491**	1	VALVE GP-SOLENOID (QUICK COUPLER PIN)	809
Z	2	1		1	BODY-VALVE	
M	3	1	**8T-0288**	2	BOLT (M5X0.8X12-MM)	

M-METRIC PART
Y-SEPARATE ILLUSTRATION
Z-NOT SERVICED SEPARATELY

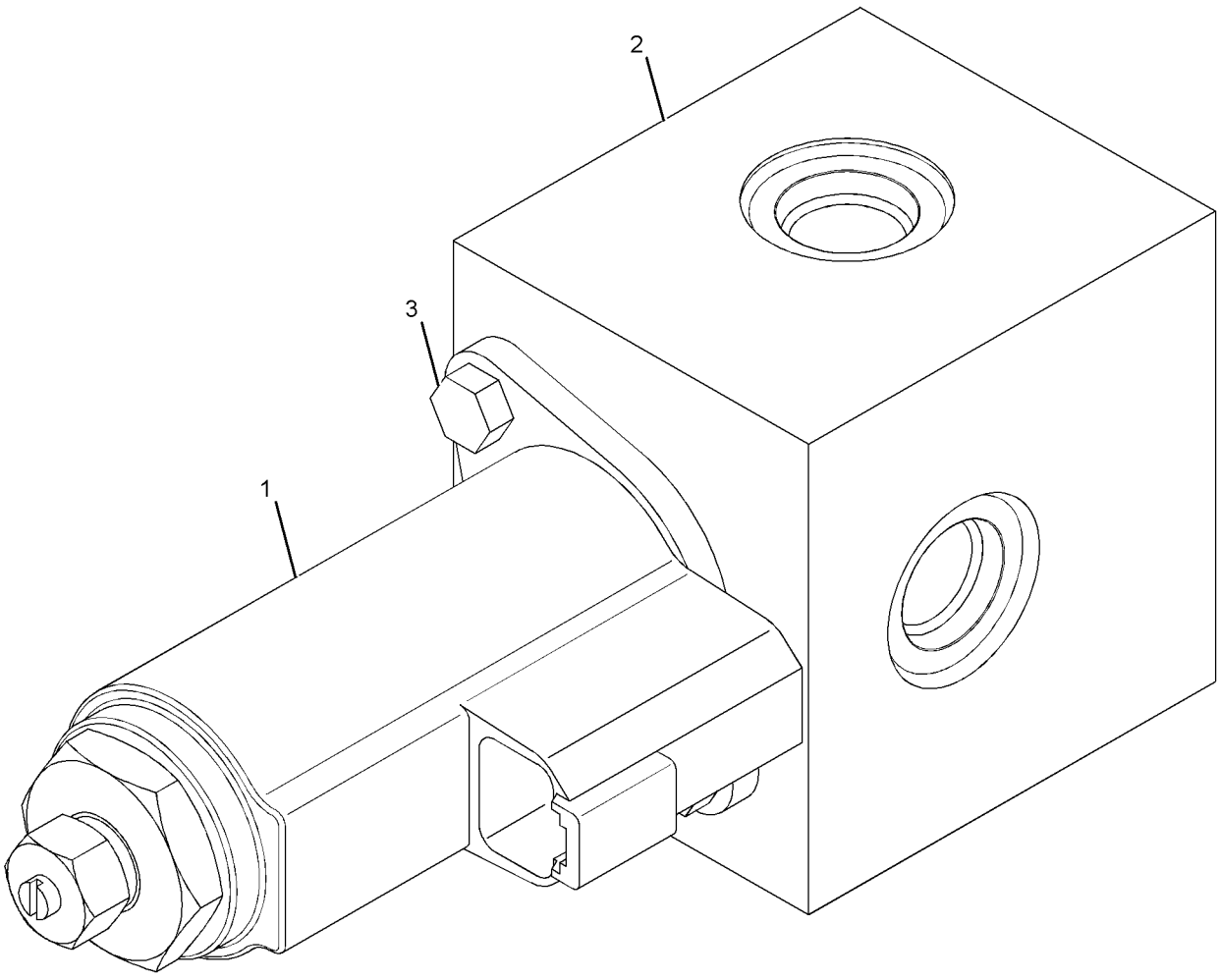

GRAPHIC #1 **<END>** g01137453

259-7429 VALVE GP-SOLENOID—WORK TOOL, 4-FUNCTION

S/N: MNB1-UP; WDK1-UP
PART OF 255-1662 LINES GP-PILOT
AN ATTACHMENT

SMCS-5479 **i02412951**

NOTE	REF NO	GRAPHIC REF	PART NUMBER	QTY	PART NAME 1 2 3 4 5 6 (PRODUCT LEVEL)	SEE PAGE
M	1	1	**8T-0288**	8	BOLT (M5X0.8X12-MM)	
Y	2	1	**111-9916**	4	VALVE GP-SOLENOID (WORK TOOL, 4-FUNCTION)	808

M-METRIC PART
Y-SEPARATE ILLUSTRATION

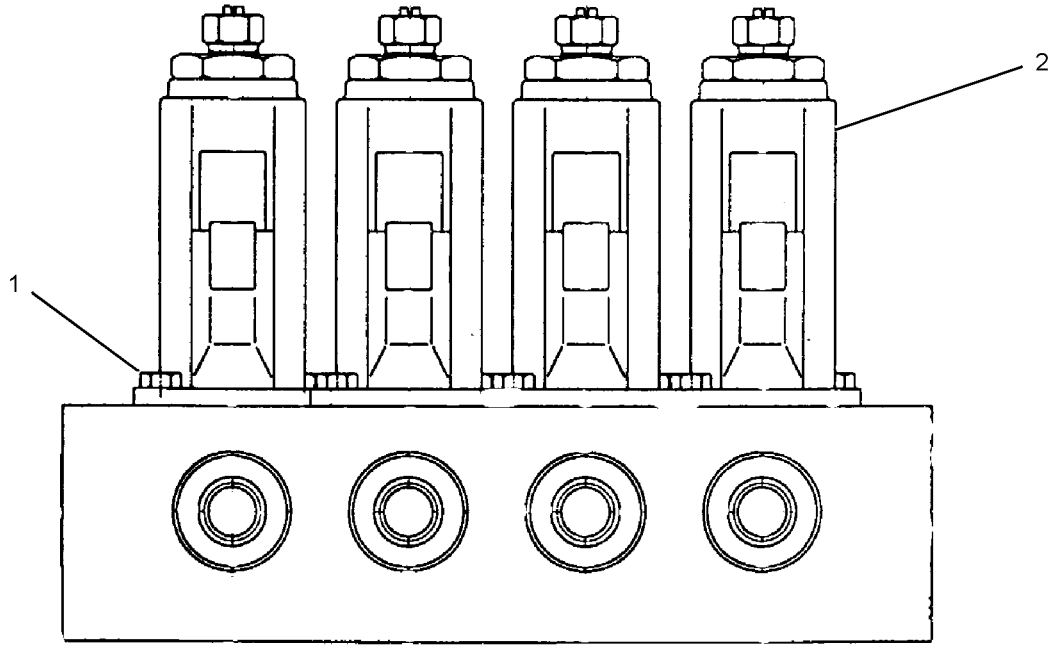

GRAPHIC #1 **<END>** g01014124

259-7430 VALVE GP-SOLENOID—PRESSURE REDUCING

S/N: MNB1-UP; WDK1-UP

PART OF 255-1807, 255-1967, 255-1969 LINES GP-PILOT

AN ATTACHMENT

SMCS-5479 **i03196381**

NOTE	REF NO	GRAPHIC REF	PART NUMBER	QTY	PART NAME 1 2 3 4 5 6 (PRODUCT LEVEL)	SEE PAGE
M	1	1	**8T-0288**	4	BOLT (M5X0.8X12-MM)	
Y	2	1	**111-9916**	2	VALVE GP-SOLENOID (PRESSURE REDUCING)	808

M-METRIC PART
Y-SEPARATE ILLUSTRATION

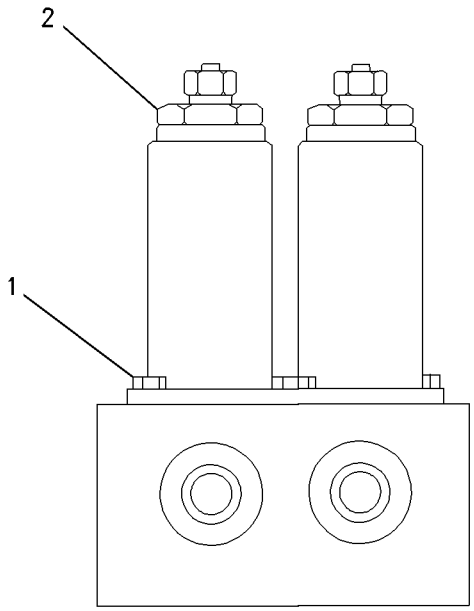

GRAPHIC #1 **<END>** g00785417

315-4412 VALVE GP-SOLENOID—FINE SWING

S/N: MNB1-UP; WDK1-UP
PART OF 322-8716 VALVE GP-SWING CUSHION
ALSO AN ATTACHMENT

SMCS-5479 **i02954227**

NOTE	REF NO	GRAPHIC REF	PART NUMBER	QTY	PART NAME 1 2 3 4 5 6 (PRODUCT LEVEL)	SEE PAGE
	1	1	**126-6514**	1	SEAL-O-RING	
	2	1	**126-6515**	1	SEAL-O-RING	
	3	1	**126-6516**	1	SEAL-O-RING	
	4	1	**095-1586**	1	SEAL-O-RING	

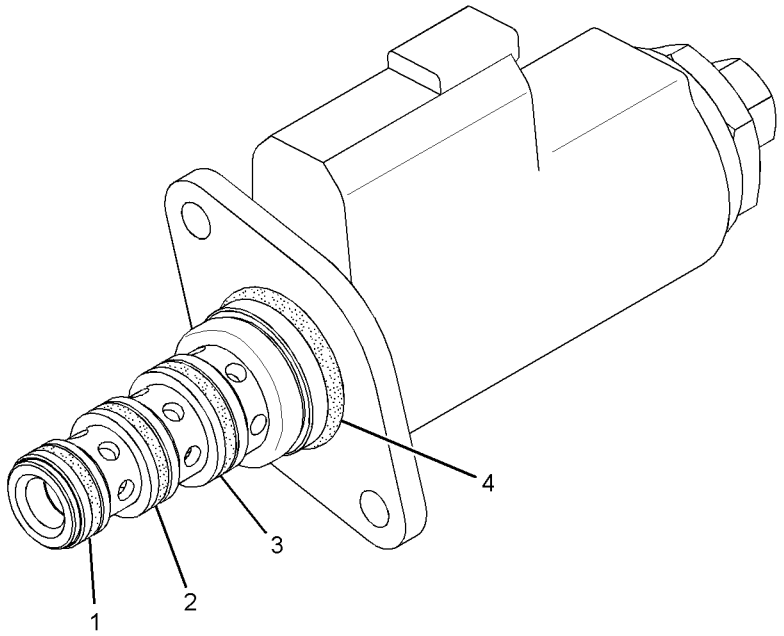

GRAPHIC #1 **<END>** g01456627

244-8506 VALVE GP-SOLENOID & RELIEF–1-WAY/2-WAY FLOW

S/N: MNB1-UP; WDK1-UP
PART OF 255-1762 LINES GP-FRONT
AN ATTACHMENT

SMCS-5571 **i02115753**

NOTE	REF NO	GRAPHIC REF	PART NUMBER	QTY	PART NAME 1 2 3 4 5 6 (PRODUCT LEVEL)	SEE PAGE
Y	1	1	**244-8507**	1	VALVE GP-SOLENOID & RELIEF	818
	2	1	**165-9627**	1	BLOCK	

Y-SEPARATE ILLUSTRATION

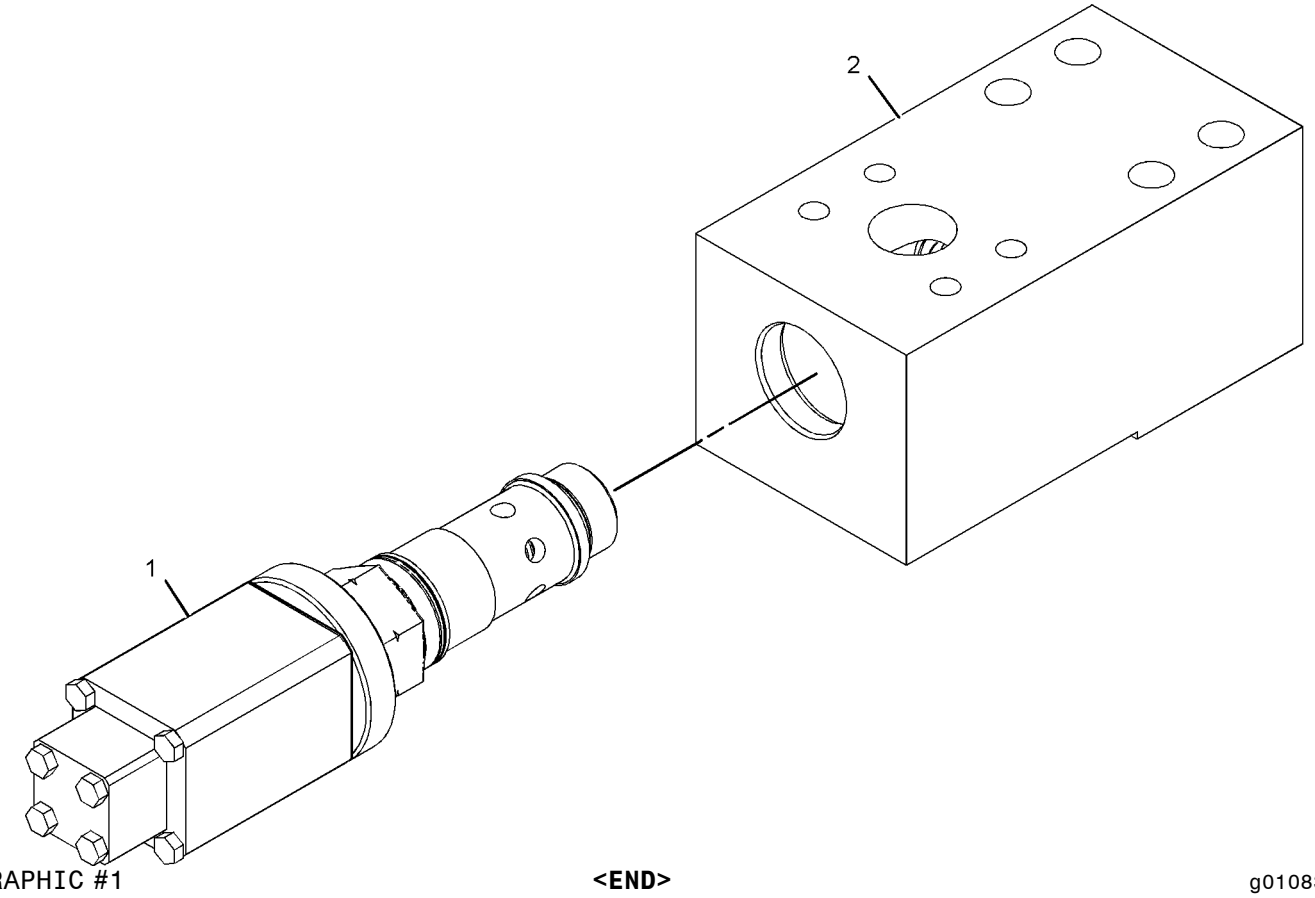

GRAPHIC #1 **<END>** g01083102

244-8507 VALVE GP-SOLENOID & RELIEF

S/N: MNB1-UP; WDK1-UP
PART OF 244-8506 VALVE GP-SOLENOID & RELIEF
AN ATTACHMENT

SMCS-5571 **i02115759**

NOTE	REF NO	GRAPHIC REF	PART NUMBER	QTY	PART NAME 1 2 3 4 5 6 (PRODUCT LEVEL)	SEE PAGE
	1	1	**3D-2824**	1	SEAL-O-RING	
	2	1	**6V-9746**	1	SEAL-O-RING	
	3	1	**085-7538**	1	SEAL-O-RING	
	4	1	**107-7017**	1	SPRING	
	5	1	**107-7018**	1	RING-BACKUP	
B	6	1	**111-9977**	2	SHIM (0.1-MM THK)	
	7	1	**111-9985**	1	RING	
	8	1	**111-9986**	1	SEAL-O-RING	
	9	1	**112-0090**	1	COIL AS (1-WAY/2-WAY FLOW)	
	10	1	**119-5259**	1	VALVE	
	11	1	**119-5260**	1	ADAPTER	
B	12	1	**119-5262**	2	SHIM (0.2-MM THK)	
B	13	1	**123-2516**	2	SHIM (0.15-MM THK)	
	14	1	**171-0023**	1	SEAT	
B	15	1	**197-0252**	2	SHIM (0.5-MM THK)	
Z	16	1		1	VALVE AS	
M	17	1	**114-0489**	4	BOLT (M5X0.8X75-MM)	

B-USE AS REQUIRED
M-METRIC PART
Z-NOT SERVICED SEPARATELY

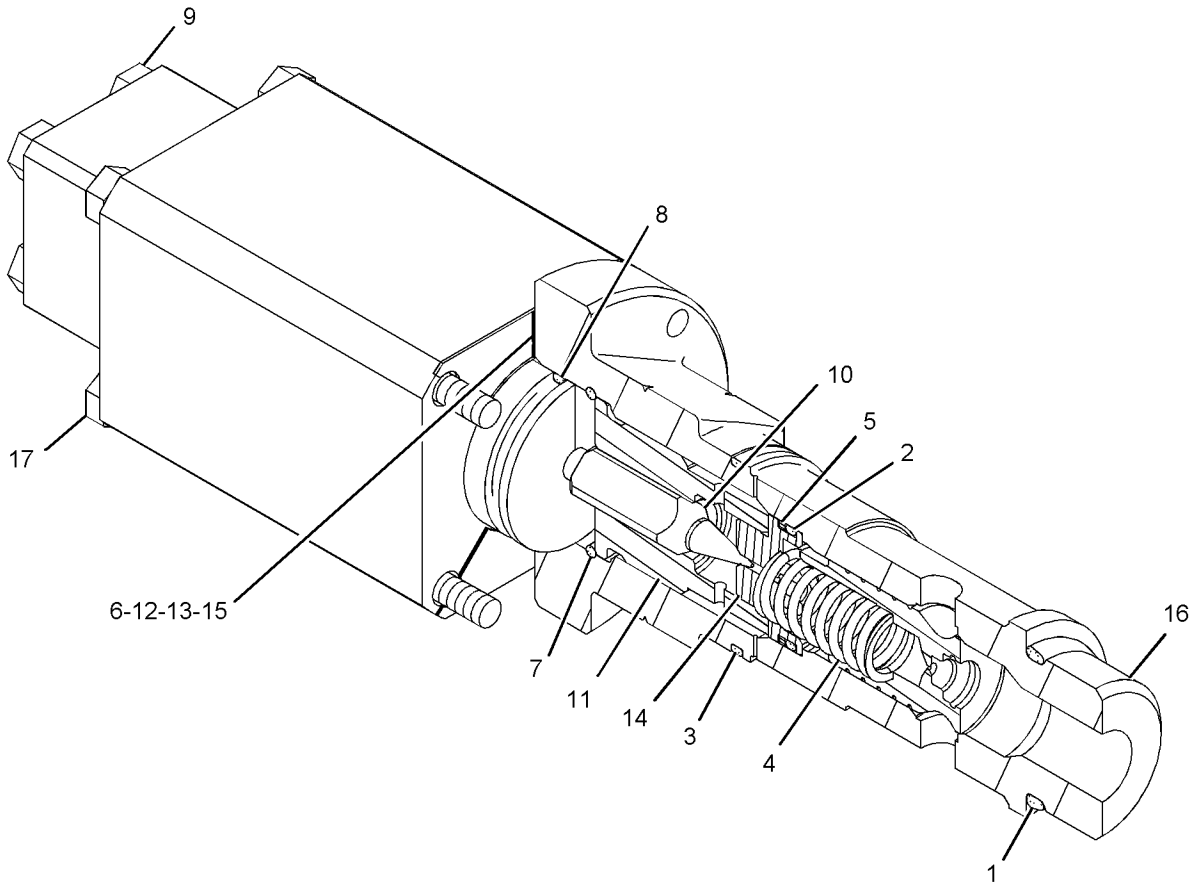

GRAPHIC #1 **<END>** g01082956

158-9085 VALVE GP-SWING CUSHION

S/N: MNB1-UP; WDK1-UP
PART OF 259-0680 VALVE GP-SWING CUSHION
AN ATTACHMENT

SMCS-5480 **i01550090**

NOTE	REF NO	GRAPHIC REF	PART NUMBER	QTY	PART NAME 1 2 3 4 5 6 (PRODUCT LEVEL)	SEE PAGE
	1	1	*173-3535*	1	BODY	
	2	1	**095-1576**	1	SEAL-O-RING	
Y	3	1	**173-3536**	2	VALVE GP-RELIEF	787
	4	1	**095-1698**	2	SEAL-O-RING	
	5	1	**8T-6759**	4	PLUG-PIPE	

Y-SEPARATE ILLUSTRATION

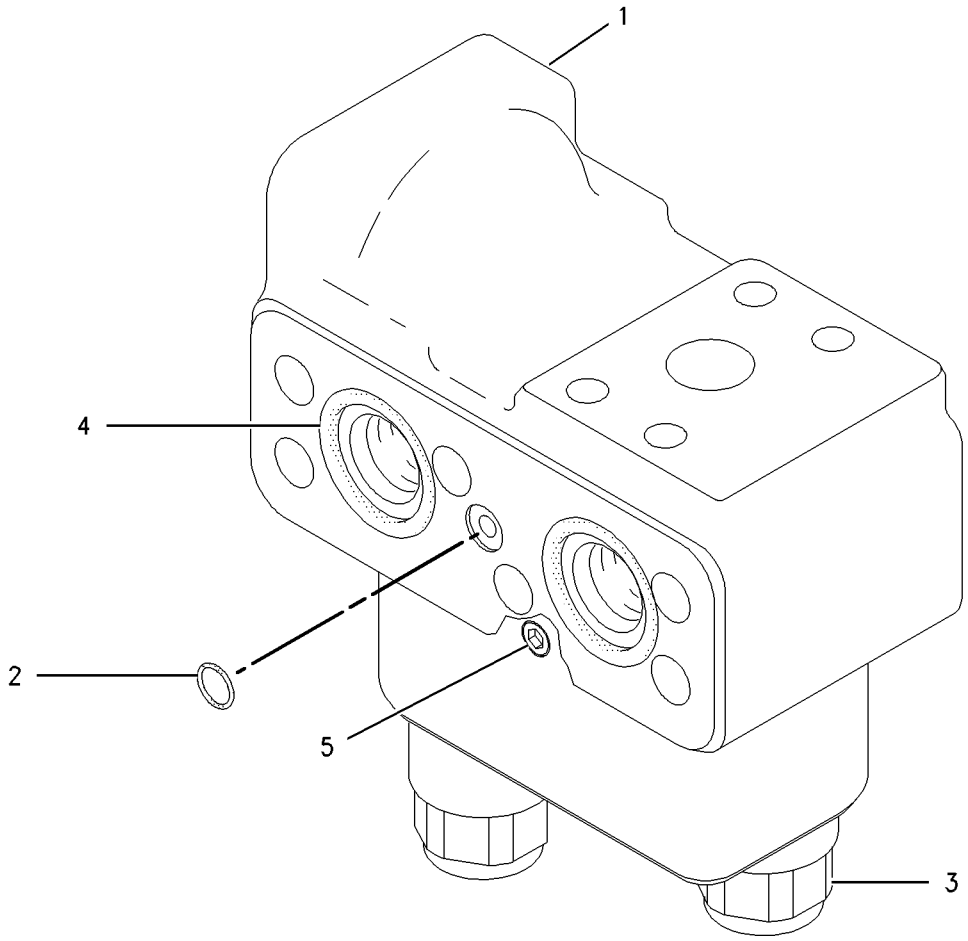

GRAPHIC #1 **<END>** g00673144

HYDRAULIC SYSTEM

158-9091 VALVE GP-SWING CUSHION—FINE SWING

S/N: MNB1-UP; WDK1-UP
AN ATTACHMENT

SMCS-5480 **i03089708**

NOTE	REF NO	GRAPHIC REF	PART NUMBER	QTY	PART NAME 1 2 3 4 5 6 (PRODUCT LEVEL)	SEE PAGE
CY	1	1	**322-8716**	1	VALVE GP-SWING CUSHION (FINE SWING) (FINE SWING)	822

C-CHANGE FROM PREVIOUS TYPE
Y-SEPARATE ILLUSTRATION

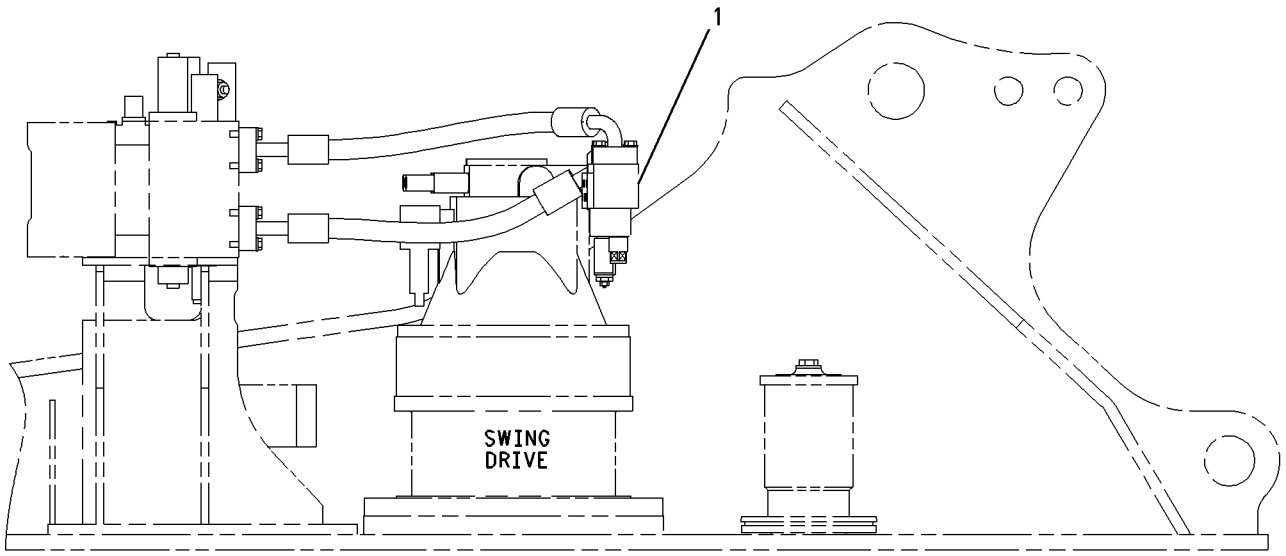

RIGHT SIDE VIEW

GRAPHIC #1 **<END>** g00692557

259-0680 VALVE GP-SWING CUSHION

S/N: MNB1-UP; WDK1-UP
PART OF 247-7451 VALVE AR-SWING
AN ATTACHMENT

SMCS-5480 **i02407559**

NOTE	REF NO	GRAPHIC REF	PART NUMBER	QTY	PART NAME 1 2 3 4 5 6 (PRODUCT LEVEL)	SEE PAGE
Y	1	1	**158-9085**	1	VALVE GP-SWING CUSHION	819

Y-SEPARATE ILLUSTRATION

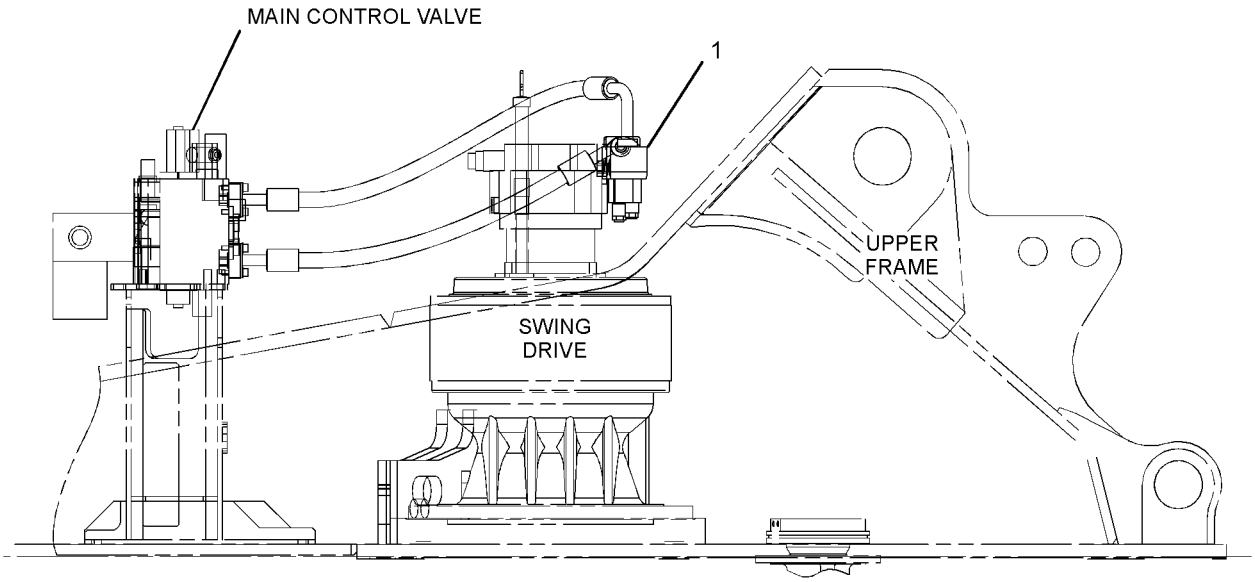

RIGHT SIDE VIEW

GRAPHIC #1 **<END>** g01212011

322-8716 VALVE GP-SWING CUSHION—FINE SWING

S/N: MNB1-UP; WDK1-UP

PART OF 245-5178 LINES GP-FRONT, 158-9091 VALVE GP-SWING CUSHION

ALSO AN ATTACHMENT

SMCS-5480 **i03081126**

NOTE	REF NO	GRAPHIC REF	PART NUMBER	QTY	PART NAME 1 2 3 4 5 6 (PRODUCT LEVEL)	SEE PAGE
Y	1	1	**315-4412**	1	VALVE GP-SOLENOID (24-VOLT) (FINE SWING)	816
Y	2	1	**173-3536**	2	VALVE GP-RELIEF	787
	3	1	**095-1698**	2	SEAL-O-RING	
M	4	1	**8T-0288**	2	BOLT (M5X0.8X12-MM)	
	5	1	**133-6788**	2	ORIFICE	
	6	1	**8T-6759**	6	PLUG-PIPE	
	7	1	**095-1576**	1	SEAL-O-RING	

M-METRIC PART
Y-SEPARATE ILLUSTRATION

322-8716 VALVE GP-SWING CUSHION *(contd.)* **i03081126**

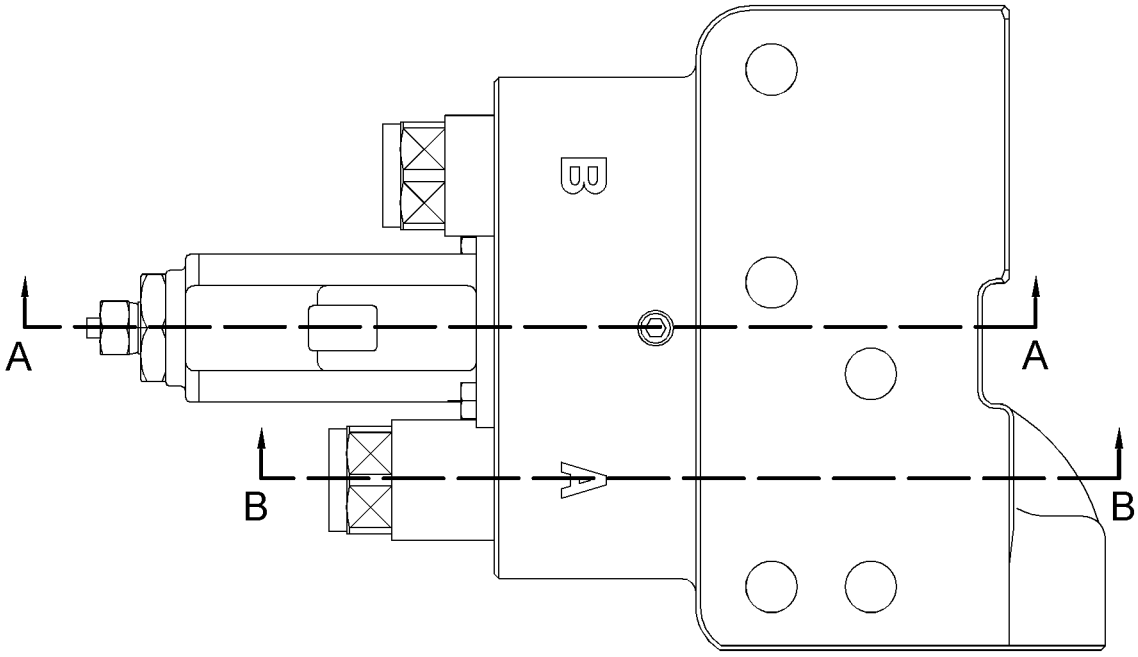

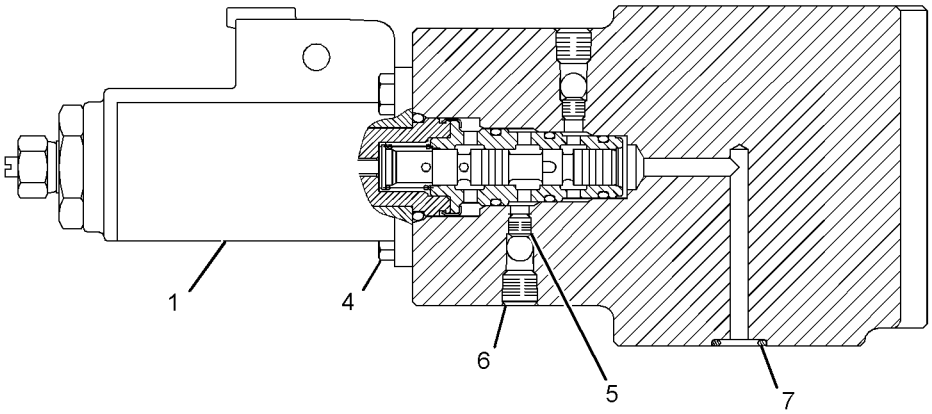

SECTION A-A

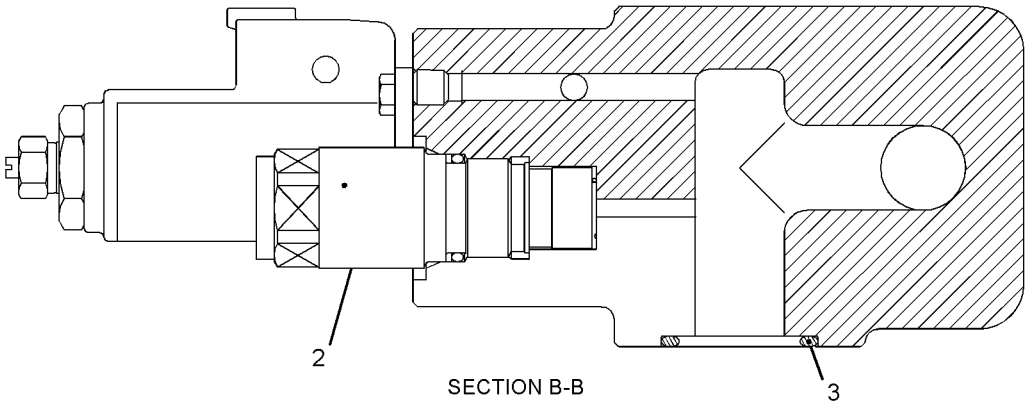

SECTION B-B

GRAPHIC #1 **<END>** g01572033

204-2819 VALVE GP-TRAVEL COUNTERBALANCE

S/N: MNB1-UP; WDK1-UP

PART OF 204-2674 MOTOR & MTG GP-TRAVEL

SMCS-5811 **i01625757**

NOTE	REF NO	GRAPHIC REF	PART NUMBER	QTY	PART NAME 1 2 3 4 5 6 (PRODUCT LEVEL)	SEE PAGE
	1	1	**209-5917**	1	VALVE GP-COUNTERBALANCE	
Y	2	1	**204-2755**	2	VALVE GP-RELIEF	791
	3	1	**9S-8004**	2	PLUG-O-RING	
	4	1	**3J-1907**	2	SEAL-O-RING	
	5	1	**096-1545**	2	WASHER (28.5X37X2-MM THK)	
	6	1	**209-5920**	2	SPRING	
	7	1	**204-2756**	2	COVER	
M	8	1	**8T-7811**	8	BOLT-SOCKET HEAD (M12X1.75X50-MM)	
	9	1	**5P-2568**	2	SEAL-O-RING	

M-METRIC PART
Y-SEPARATE ILLUSTRATION

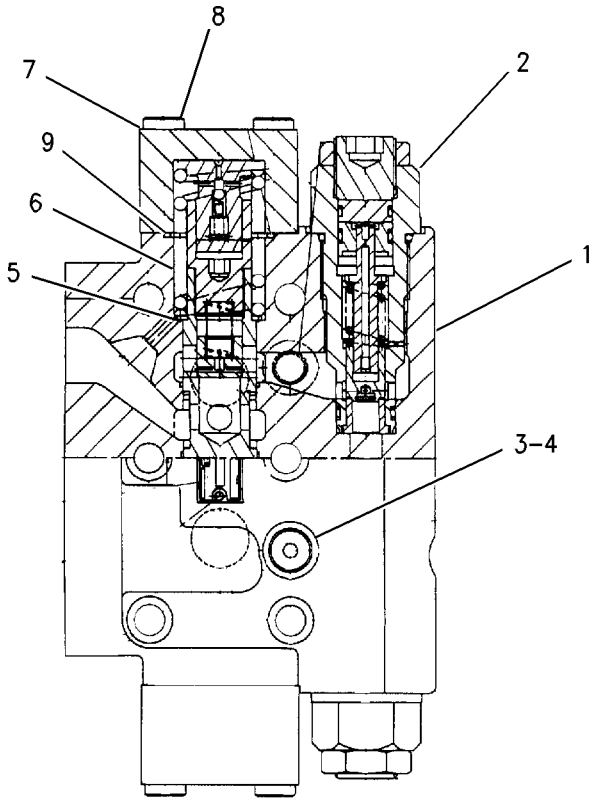

GRAPHIC #1 **<END>** g00835139

IMPLEMENTS

229-1754 BOOM AR-1 PIECE LONG

S/N: MNB1-UP; WDK1-UP

AN ATTACHMENT

SMCS-6501 **i02345857**

NOTE	PART NUMBER	QTY	PART NAME 1 2 3 4 5 6 (PRODUCT LEVEL)	SEE PAGE
Y	*228-5521*	1	BOOM GP-REACH	834
Y	*225-4582*	1	CYLINDER & LINES GP-BOOM (LH)	452
Y	*225-4583*	1	CYLINDER & LINES GP-BOOM (RH)	452
Y	*225-4587*	1	CYLINDER & LINES GP-STICK	455
Y	*238-2300*	1	LIGHTING GP-FLOOD (BOOM)	211
Y	*227-0550*	1	LINES GP-BOOM (1-PIECE LONG BOOM)	541
Y	*180-7816*	1	LINES GP-GREASE (1-PIECE LONG BOOM)	840
Y-SEPARATE ILLUSTRATION				

<END>

229-1758 BOOM AR-1 PIECE LONG—HIGH TEMPERATURE

S/N: MNB1-UP; WDK1-UP

AN ATTACHMENT

SMCS-6501 **i02346683**

NOTE	PART NUMBER	QTY	PART NAME 1 2 3 4 5 6 (PRODUCT LEVEL)	SEE PAGE
Y	*228-5521*	1	BOOM GP-REACH	834
Y	*225-4593*	1	CYLINDER & LINES GP-BOOM (LH)	452
Y	*225-4594*	1	CYLINDER & LINES GP-BOOM (RH)	452
Y	*225-4596*	1	CYLINDER & LINES GP-STICK	455
Y	*238-2300*	1	LIGHTING GP-FLOOD (BOOM)	211
Y	*227-0550*	1	LINES GP-BOOM (1-PIECE LONG BOOM)	541
Y	*180-7816*	1	LINES GP-GREASE (1-PIECE LONG BOOM)	840
Y-SEPARATE ILLUSTRATION				

<END>

229-1760 BOOM AR-1 PIECE LONG

S/N: MNB1-UP; WDK1-UP

AN ATTACHMENT

SMCS-6501 **i02346714**

NOTE	PART NUMBER	QTY	PART NAME 1 2 3 4 5 6 (PRODUCT LEVEL)	SEE PAGE
Y	*228-5522*	1	BOOM GP-REACH (HEAVY-DUTY)	836
Y	*225-4582*	1	CYLINDER & LINES GP-BOOM (LH)	452
Y	*225-4583*	1	CYLINDER & LINES GP-BOOM (RH)	452
Y	*259-0777*	1	CYLINDER & LINES GP-STICK	456
Y	*238-2300*	1	LIGHTING GP-FLOOD (BOOM)	211
Y	*227-0550*	1	LINES GP-BOOM (1-PIECE LONG BOOM)	541
Y	*180-7816*	1	LINES GP-GREASE (1-PIECE LONG BOOM)	840
Y-SEPARATE ILLUSTRATION				

<END>

IMPLEMENTS

275-3699 BOOM AR-1 PIECE LONG–
ACCUGRADE READY, HIGH AMBIENT
S/N: MNB1-UP; WDK1-UP
FOR USE WITH 275-3704–PAGE 862, 275-3711–PAGE 845, 278-3924–PAGE 333
AN ATTACHMENT

SMCS-6501 **i02492101**

NOTE	PART NUMBER	QTY	PART NAME 1 2 3 4 5 6 (PRODUCT LEVEL)	SEE PAGE
Y	*282-4549*	1	BOOM GP-1 PIECE (ACCUGRADE)	832
Y	*225-4593*	1	CYLINDER & LINES GP-BOOM (LH)	452
Y	*225-4594*	1	CYLINDER & LINES GP-BOOM (RH)	452
Y	*225-4596*	1	CYLINDER & LINES GP-STICK	455
Y	*238-2300*	1	LIGHTING GP-FLOOD (BOOM)	211
Y	*227-0550*	1	LINES GP-BOOM (1-PIECE LONG BOOM) (1-PIECE LONG BOOM)	541
Y	*180-7816*	1	LINES GP-GREASE (1-PIECE LONG BOOM)	840

Y-SEPARATE ILLUSTRATION

<END>

275-3839 BOOM AR-1 PIECE LONG–
HEAVY-DUTY, HIGH AMBIENT TEMPERATURE
S/N: MNB1-UP; WDK1-UP
AN ATTACHMENT

SMCS-6501 **i03033001**

NOTE	PART NUMBER	QTY	PART NAME 1 2 3 4 5 6 (PRODUCT LEVEL)	SEE PAGE
Y	*228-5522*	1	BOOM GP-REACH (HEAVY-DUTY)	836
Y	*225-4593*	1	CYLINDER & LINES GP-BOOM (LH)	452
Y	*225-4594*	1	CYLINDER & LINES GP-BOOM (RH)	452
Y	*225-4596*	1	CYLINDER & LINES GP-STICK	455
Y	*238-2300*	1	LIGHTING GP-FLOOD (BOOM)	211
Y	*227-0550*	1	LINES GP-BOOM (1-PIECE LONG BOOM)	541
Y	*180-7816*	1	LINES GP-GREASE (1-PIECE LONG BOOM)	840

Y-SEPARATE ILLUSTRATION

<END>

229-1757 BOOM AR-1 PIECE SHORT
S/N: MNB1-UP; WDK1-UP
AN ATTACHMENT

SMCS-6501 **i02345899**

NOTE	PART NUMBER	QTY	PART NAME 1 2 3 4 5 6 (PRODUCT LEVEL)	SEE PAGE
Y	*235-7614*	1	BOOM GP-1 PIECE	828
Y	*225-4582*	1	CYLINDER & LINES GP-BOOM (LH)	452
Y	*225-4583*	1	CYLINDER & LINES GP-BOOM (RH)	452
Y	*225-4587*	1	CYLINDER & LINES GP-STICK	455
Y	*238-2301*	1	LIGHTING GP-FLOOD (BOOM)	213
Y	*227-0551*	1	LINES GP-BOOM	543
Y	*184-5543*	1	LINES GP-GREASE	842

Y-SEPARATE ILLUSTRATION

<END>

229-1759 BOOM AR-1 PIECE SHORT—HIGH TEMPERATURE

S/N: MNB1-UP; WDK1-UP

AN ATTACHMENT

SMCS-6501 **i02346690**

NOTE	PART NUMBER	QTY	PART NAME 1 2 3 4 5 6 (PRODUCT LEVEL)	SEE PAGE
Y	*235-7614*	1	BOOM GP-1 PIECE	828
Y	*225-4593*	1	CYLINDER & LINES GP-BOOM (LH)	452
Y	*225-4594*	1	CYLINDER & LINES GP-BOOM (RH)	452
Y	*225-4596*	1	CYLINDER & LINES GP-STICK	455
Y	*238-2301*	1	LIGHTING GP-FLOOD (BOOM)	213
Y	*227-0551*	1	LINES GP-BOOM	543
Y	*184-5543*	1	LINES GP-GREASE	842

Y-SEPARATE ILLUSTRATION

<END>

IMPLEMENTS

235-7614 BOOM GP-1 PIECE

S/N: MNB1-UP; WDK1-UP
5.55-M (18.2-FT)
PART OF 229-1757, 229-1759 BOOM AR-1 PIECE SHORT
AN ATTACHMENT

SMCS-6301, 6302, 6460, 6501, 6516, 6521, 6535, 6536 **i02345881**

NOTE	REF NO	GRAPHIC REF	PART NUMBER	QTY	PART NAME 1 2 3 4 5 6 (PRODUCT LEVEL)	SEE PAGE
B	1	1	**4I-0575**	1	SHIM (1-MM THK)	
	2	1	**4I-3183**	1	WASHER (26X70X8-MM THK)	
	3	1	**4I-4618**	1	PIN AS	
	4	1	**7Y-2390**	2	PLATE	
	5	1	**093-0349**	1	WASHER (22X60X6-MM THK)	
	6	1	**093-0363**	1	SPACER (83X120X12-MM THK)	
	7	1	**166-1489**	2	SHIM (2-MM THK)	
	8	1	**166-1497**	2	SEAL-LIP TYPE	
	9	1	**186-5637**	1	PIN	
	10	1	**254-2880**	1	BOOM & BEARING AS	
	10A	1	**234-3811**	2	BEARING-SLEEVE	
	11	1	**254-2885**	1	PIN AS	
	12	1	**087-5955**	2	SPACER (93X130X8-MM THK)	
	13	1	**103-5245**	1	SPACER (113X150X14-MM THK)	
B	14	1	**133-2428**	1	SHIM (0.5-MM THK)	
	15	1	**166-1487**	2	SHIM (2-MM THK)	
M	16	1	**7X-2573**	1	BOLT (M24X3X40-MM)	
	17	1	**8T-4123**	1	WASHER (22X35X3.5-MM THK)	
	18	1	**8T-4167**	1	WASHER-HARD (26X44X4-MM THK)	
	19	1	**8T-4223**	6	WASHER-HARD (13.5X25.5X3-MM THK)	
M	20	1	**8T-4780**	1	BOLT (M20X2.5X30-MM)	
M	21	1	**8T-4956**	6	BOLT (M12X1.75X35-MM)	

B-USE AS REQUIRED
M-METRIC PART

235-7614 **BOOM GP-1 PIECE** *(contd.)* **i02345881**

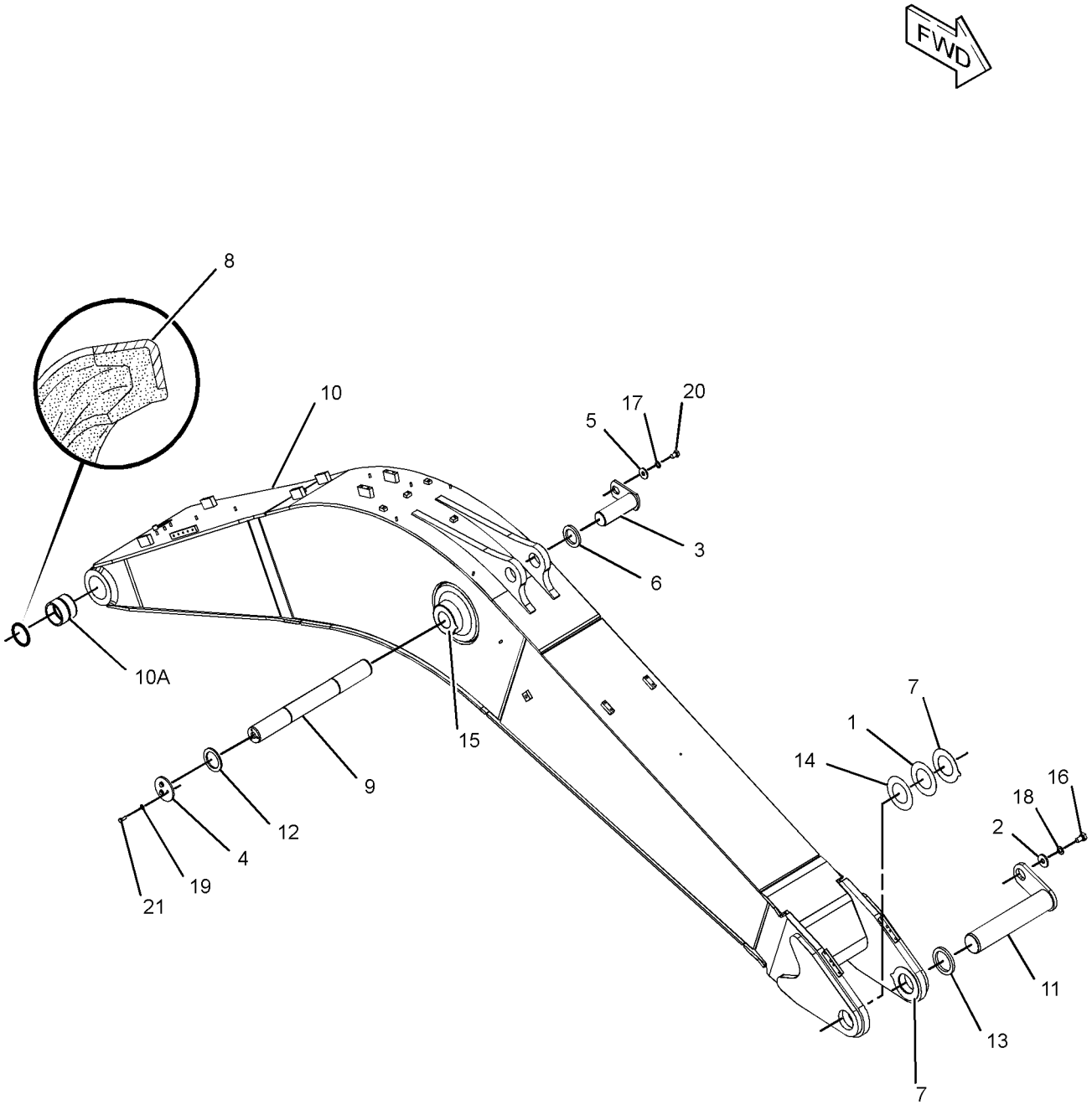

GRAPHIC #1 **<END>** g01189926

IMPLEMENTS

268-6780 BOOM GP

S/N: MNB1-UP

10.2-M (33.5-FT)

PART OF 262-3586 SPECIAL AR-SUPER LONG REACH

AN ATTACHMENT

SMCS-6301, 6302, 6460, 6501, 6516, 6521, 6535, 6536 **i02429807**

NOTE	REF NO	GRAPHIC REF	PART NUMBER	QTY	PART NAME 1 2 3 4 5 6 (PRODUCT LEVEL)	SEE PAGE
	1	1	**4I-4618**	1	PIN AS	
	2	1	**7Y-2390**	2	PLATE	
	3	1	**7Y-6620**	1	PIN AS	
B	4	1	**093-0084**	1	SHIM (1-MM THK)	
	5	1	**093-0116**	2	SHIM (2-MM THK)	
	6	1	**093-0349**	2	WASHER (22X60X6-MM THK)	
	7	1	**093-0363**	1	SPACER (83X120X12-MM THK)	
B	8	1	**113-2127**	1	SHIM (0.5-MM THK)	
	9	1	**166-1497**	2	SEAL-LIP TYPE	
	10	1	**186-5637**	1	PIN	
	11	1	**268-6781**	1	BOOM & BEARING AS	
	11A	1	**234-3811**	2	BEARING-SLEEVE	
	12	1	**087-5955**	2	SPACER (93X130X8-MM THK)	
	13	1	**166-1487**	2	SHIM (2-MM THK)	
	14	1	**8T-4123**	2	WASHER (22X35X3.5-MM THK)	
	15	1	**8T-4223**	6	WASHER-HARD (13.5X25.5X3-MM THK)	
M	16	1	**8T-4780**	2	BOLT (M20X2.5X30-MM)	
M	17	1	**8T-4956**	6	BOLT (M12X1.75X35-MM)	

B-USE AS REQUIRED
M-METRIC PART

268-6780 **BOOM GP** *(contd.)* **i02429807**

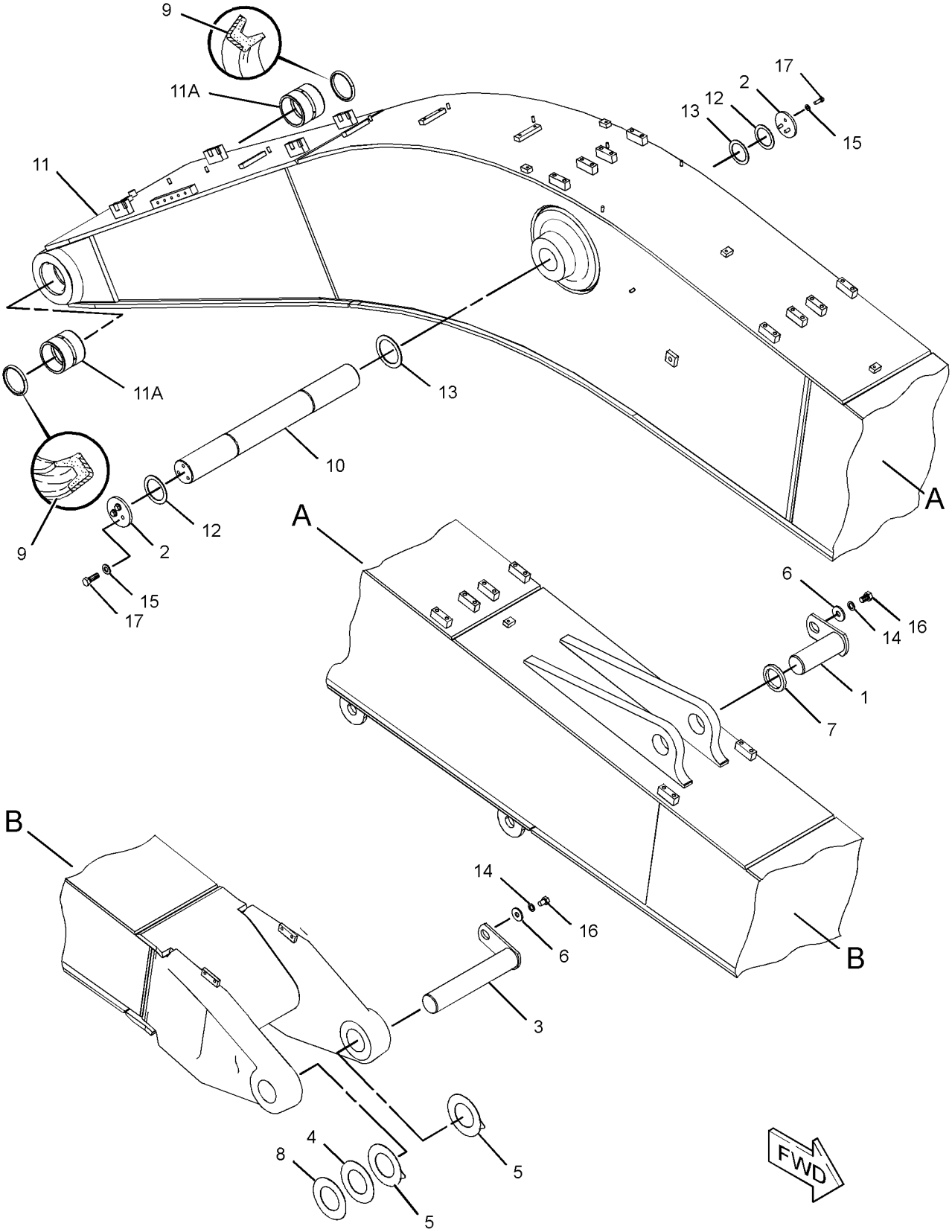

GRAPHIC #1 **<END>** g01239644

282-4549 BOOM GP-1 PIECE–ACCUGRADE

S/N: MNB1-UP; WDK1-UP
6.2-M (20.3-FT)
PART OF 275-3699 BOOM AR-1 PIECE LONG
AN ATTACHMENT

SMCS-6301, 6302, 6460, 6501, 6516, 6521, 6535, 6536 **i02491093**

NOTE	REF NO	GRAPHIC REF	PART NUMBER	QTY	PART NAME 1 2 3 4 5 6 (PRODUCT LEVEL)	SEE PAGE
	1	1	**4I-4618**	1	PIN AS	
	2	1	**7Y-2390**	2	PLATE	
B	3	1	**093-0090**	1	SHIM (1-MM THK)	
	4	1	**093-0349**	2	WASHER (22X60X6-MM THK)	
	5	1	**093-0363**	1	SPACER (83X120X12-MM THK)	
	6	1	**093-0364**	1	SPACER (103X140X12-MM THK)	
B	7	1	**133-2427**	1	SHIM (0.5-MM THK)	
	8	1	**166-1497**	2	SEAL-LIP TYPE	
	9	1	**186-5637**	1	PIN	
	10	1	**282-4550**	1	BOOM & BEARING AS	
	10A	1	**234-3811**	2	BEARING-SLEEVE	
	11	1	**234-3803**	1	PIN AS	
	12	1	**087-5955**	2	SPACER (93X130X8-MM THK)	
	13	1	**166-1487**	2	SHIM (2-MM THK)	
	14	1	**166-1488**	2	SHIM (2-MM THK)	
	15	1	**8T-4123**	2	WASHER (22X35X3.5-MM THK)	
	16	1	**8T-4223**	6	WASHER-HARD (13.5X25.5X3-MM THK)	
M	17	1	**8T-4780**	2	BOLT (M20X2.5X30-MM)	
M	18	1	**8T-4956**	6	BOLT (M12X1.75X35-MM)	

B-USE AS REQUIRED
M-METRIC PART

282-4549 **BOOM GP-1 PIECE** *(contd.)* **i02491093**

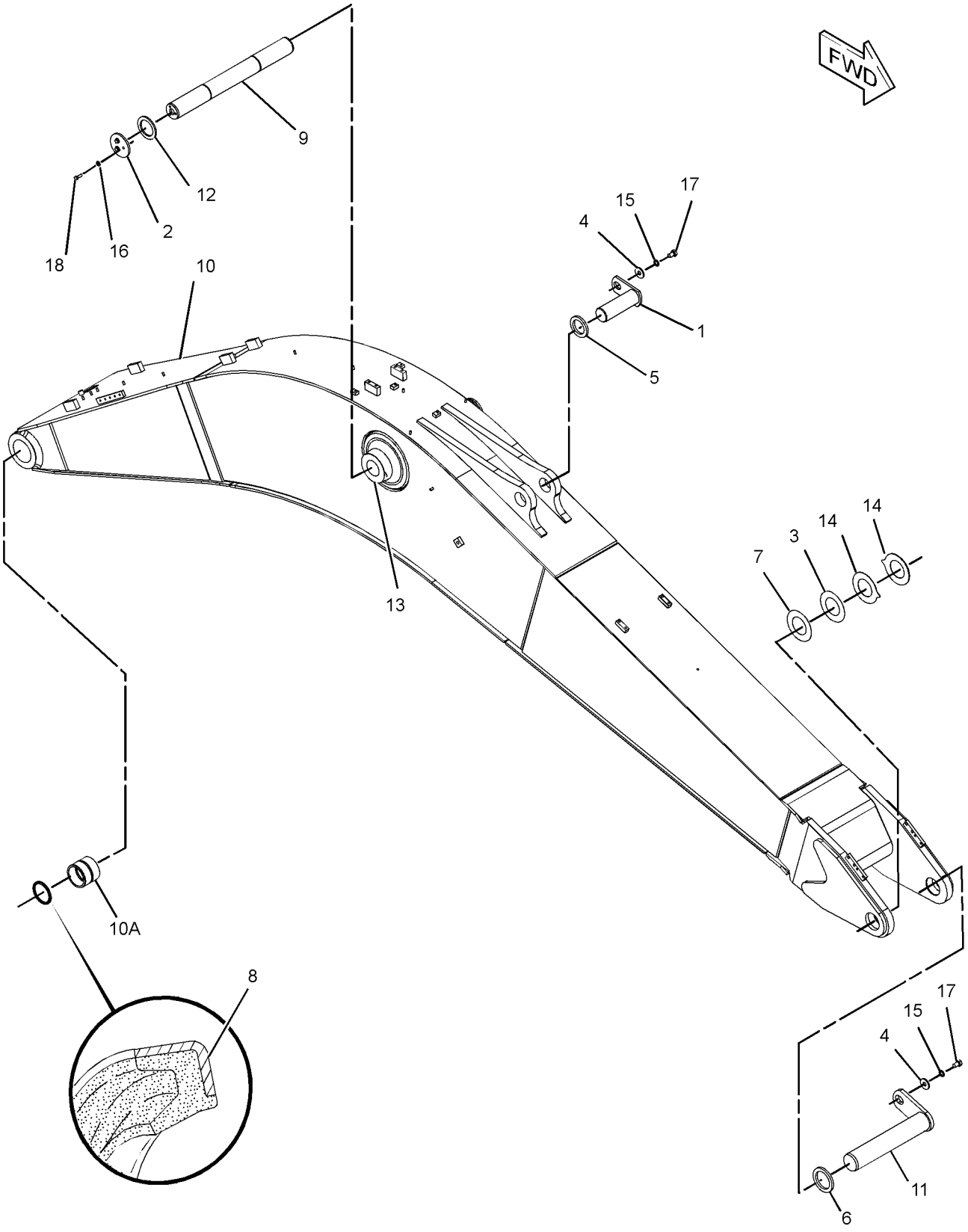

GRAPHIC #1 **<END>** g01186932

IMPLEMENTS

228-5521 BOOM GP-REACH

S/N: MNB1-UP; WDK1-UP
6.15-M (20.18-FT)
PART OF 229-1754, 229-1758 BOOM AR-1 PIECE LONG
AN ATTACHMENT

SMCS-6501 **i02345852**

NOTE	REF NO	GRAPHIC REF	PART NUMBER	QTY	PART NAME 1 2 3 4 5 6 (PRODUCT LEVEL)	SEE PAGE
	1	1	**4I-4618**	1	PIN AS	
	2	1	**7Y-2390**	2	PLATE	
B	3	1	**093-0090**	1	SHIM (1-MM THK)	
	4	1	**093-0349**	2	WASHER (22X60X6-MM THK)	
	5	1	**093-0363**	1	SPACER (83X120X12-MM THK)	
	6	1	**093-0364**	1	SPACER (103X140X12-MM THK)	
B	7	1	**133-2427**	1	SHIM (0.5-MM THK)	
	8	1	**166-1497**	2	SEAL-LIP TYPE	
	9	1	**186-5637**	1	PIN	
	10	1	**234-3799**	1	BOOM & BEARING AS	
	10A	1	**234-3811**	2	BEARING-SLEEVE	
	11	1	**234-3803**	1	PIN AS	
	12	1	**087-5955**	2	SPACER (93X130X8-MM THK)	
	13	1	**166-1487**	2	SHIM (2-MM THK)	
	14	1	**166-1488**	2	SHIM (2-MM THK)	
	15	1	**8T-4123**	2	WASHER (22X35X3.5-MM THK)	
	16	1	**8T-4223**	6	WASHER-HARD (13.5X25.5X3-MM THK)	
M	17	1	**8T-4780**	2	BOLT (M20X2.5X30-MM)	
M	18	1	**8T-4956**	6	BOLT (M12X1.75X35-MM)	

B-USE AS REQUIRED
M-METRIC PART

228-5521 **BOOM GP-REACH** *(contd.)* **i02345852**

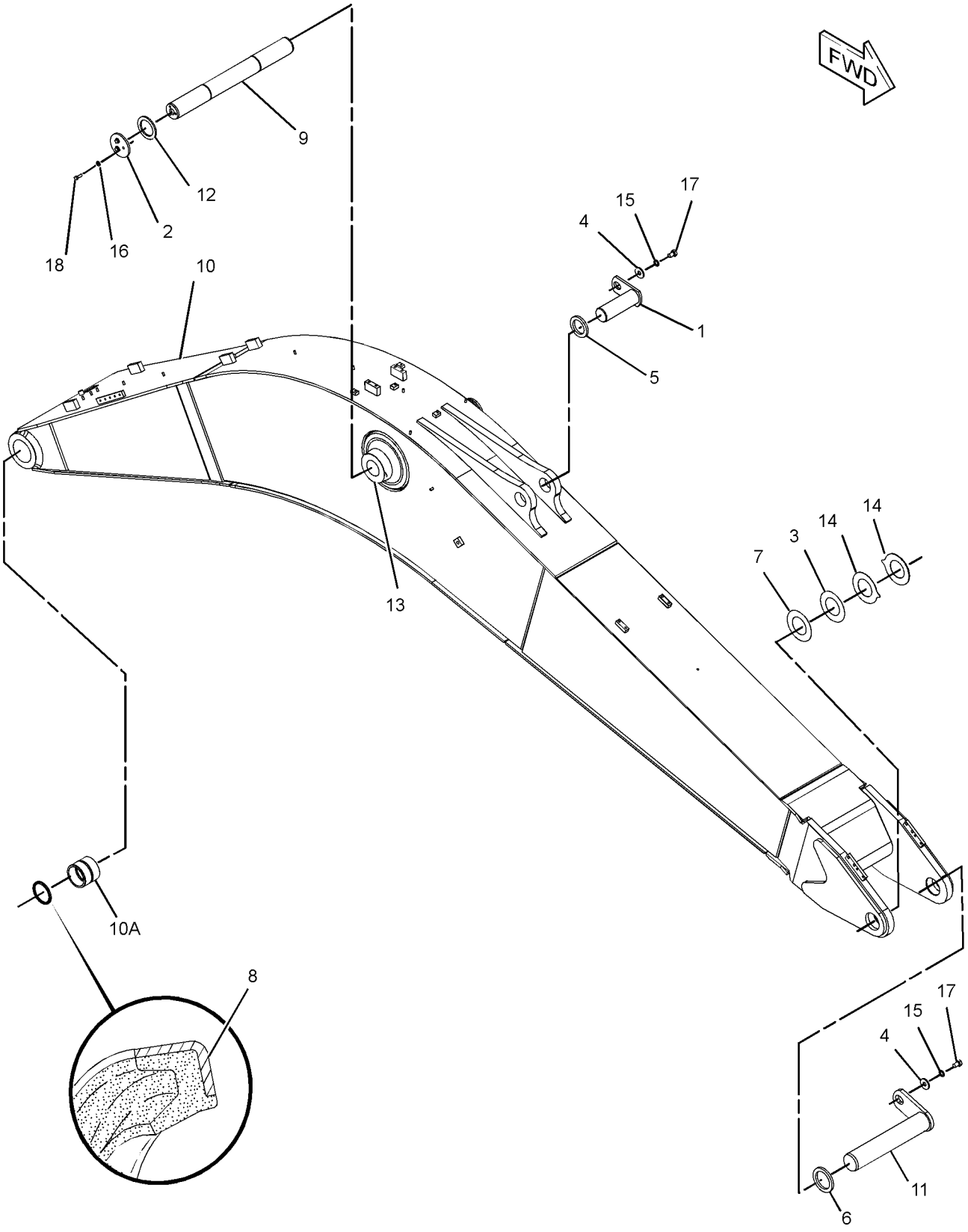

GRAPHIC #1 **<END>** g01186932

228-5522 BOOM GP-REACH–HEAVY DUTY

S/N: MNB1-UP; WDK1-UP
6.15-M (20.18-FT)
PART OF 229-1760, 275-3839 BOOM AR-1 PIECE LONG
AN ATTACHMENT

SMCS-6501 **i02346706**

NOTE	REF NO	GRAPHIC REF	PART NUMBER	QTY	PART NAME 1 2 3 4 5 6 (PRODUCT LEVEL)	SEE PAGE
	1	1	**4I-4618**	1	PIN AS	
	2	1	**7Y-2390**	2	PLATE	
B	3	1	**093-0090**	1	SHIM (1-MM THK)	
	4	1	**093-0349**	2	WASHER (22X60X6-MM THK)	
	5	1	**093-0363**	1	SPACER (83X120X12-MM THK)	
	6	1	**093-0364**	1	SPACER (103X140X12-MM THK)	
B	7	1	**133-2427**	1	SHIM (0.5-MM THK)	
	8	1	**166-1497**	2	SEAL-LIP TYPE	
	9	1	**186-5637**	1	PIN	
	10	1	**234-3803**	1	PIN AS	
	11	1	**235-7766**	1	BOOM & BEARING AS	
	11A	1	**234-3811**	2	BEARING-SLEEVE	
	12	1	**087-5955**	2	SPACER (93X130X8-MM THK)	
	13	1	**166-1487**	2	SHIM (2-MM THK)	
	14	1	**166-1488**	2	SHIM (2-MM THK)	
	15	1	**8T-4123**	2	WASHER (22X35X3.5-MM THK)	
	16	1	**8T-4223**	6	WASHER-HARD (13.5X25.5X3-MM THK)	
M	17	1	**8T-4780**	2	BOLT (M20X2.5X30-MM)	
M	18	1	**8T-4956**	6	BOLT (M12X1.75X35-MM)	

B-USE AS REQUIRED
M-METRIC PART

228-5522 **BOOM GP-REACH** *(contd.)* **i02346706**

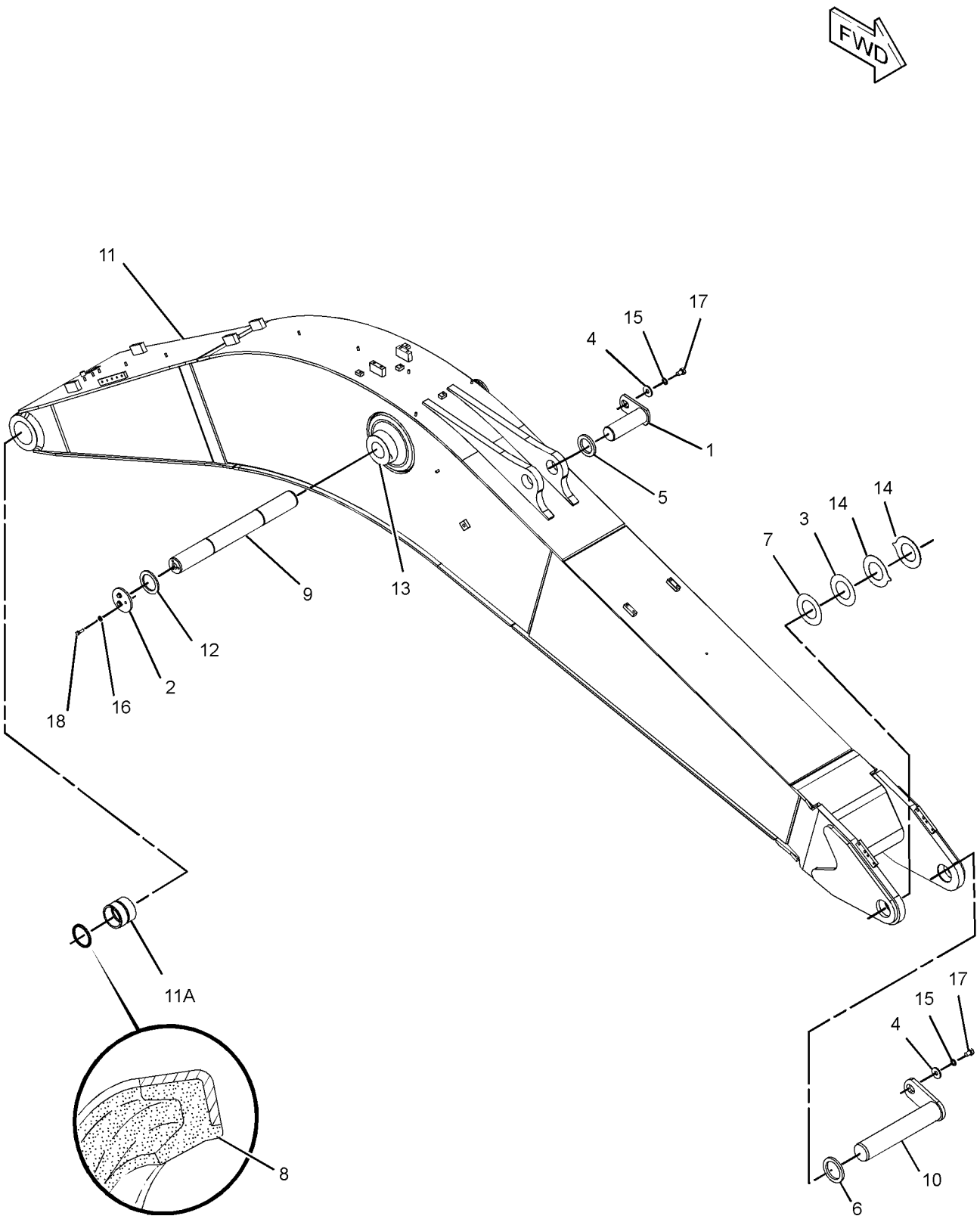

GRAPHIC #1 **<END>** g01187181

IMPLEMENTS

116-9133 LINES GP-GREASE–BOOM

S/N: MNB1-UP
PART OF 262-3586 SPECIAL AR-SUPER LONG REACH
AN ATTACHMENT

SMCS-7510 **i02428281**

NOTE	REF NO	GRAPHIC REF	PART NUMBER	QTY	PART NAME 1 2 3 4 5 6 (PRODUCT LEVEL)	SEE PAGE
	1	1	**7Y-2662**	1	TUBE AS	
	2	1	**7Y-2663**	1	TUBE AS	
I	3	1	**087-5857**	1	HOSE AS	
I	4	1	**7Y-2664**	1	HOSE AS	
I	5	1	**116-9140**	1	HOSE AS	
	6	1	**8M-2772**	2	CLIP	
M	7	1	**8T-4191**	17	BOLT (M10X1.5X16-MM)	
	8	1	**8T-4121**	17	WASHER-HARD (11X21X2.5-MM THK)	
	9	1	**087-5840**	4	PLATE	
	10	1	**033-8248**	7	CLIP	
	11	1	**6L-3616**	2	CONNECTOR	
	12	1	**3B-8489**	5	FITTING-GREASE	
	13	1	**5K-9243**	2	ELBOW-FLARED	

I-REFER TO HYDRAULIC INFORMATION SYSTEM
M-METRIC PART

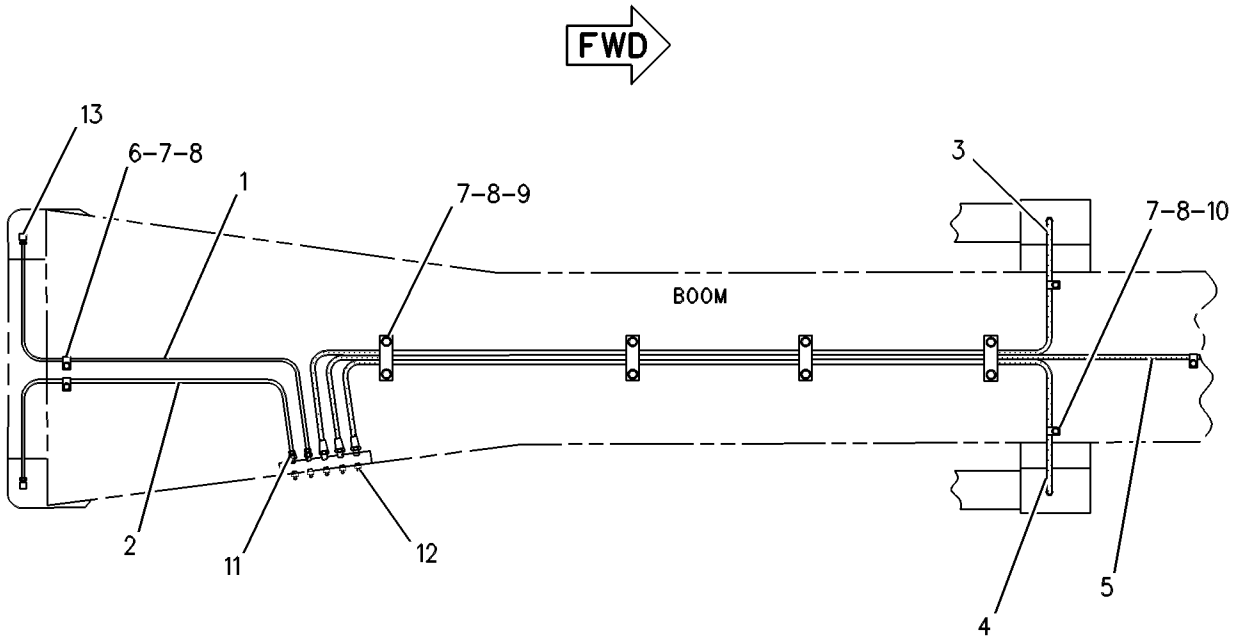

TOP VIEW

GRAPHIC #1 **<END>** g00260228

121-1729 LINES GP-GREASE–STICK

S/N: MNB1-UP
PART OF 262-3586 SPECIAL AR-SUPER LONG REACH
AN ATTACHMENT

SMCS-7510 **i02473545**

NOTE	REF NO	GRAPHIC REF	PART NUMBER	QTY	PART NAME 1 2 3 4 5 6 (PRODUCT LEVEL)	SEE PAGE
	1	1	**7Y-6656**	1	TUBE AS	
	2	1	**7Y-6657**	1	TUBE AS	
	3	1	**7Y-6658**	2	TUBE AS	
I	4	1	**087-5966**	1	HOSE AS	
	5	1	**5K-9243**	1	ELBOW-FLARED	
	6	1	**6L-3616**	3	CONNECTOR	
	7	1	**5H-8936**	1	ADAPTER	
M	8	1	**8T-4191**	11	BOLT (M10X1.5X16-MM)	
	9	1	**8T-4121**	11	WASHER-HARD (11X21X2.5-MM THK)	
	10	1	**8M-2772**	11	CLIP	
	11	1	**3B-8489**	3	FITTING-GREASE (STICK)	
	12	1	**5K-9242**	2	UNION-FLARED	
C	13	1	**260-4057**	1	ELBOW	
I	14	1	**7Y-2920**	1	HOSE AS	

C-CHANGE FROM PREVIOUS TYPE
I-REFER TO HYDRAULIC INFORMATION SYSTEM
M-METRIC PART

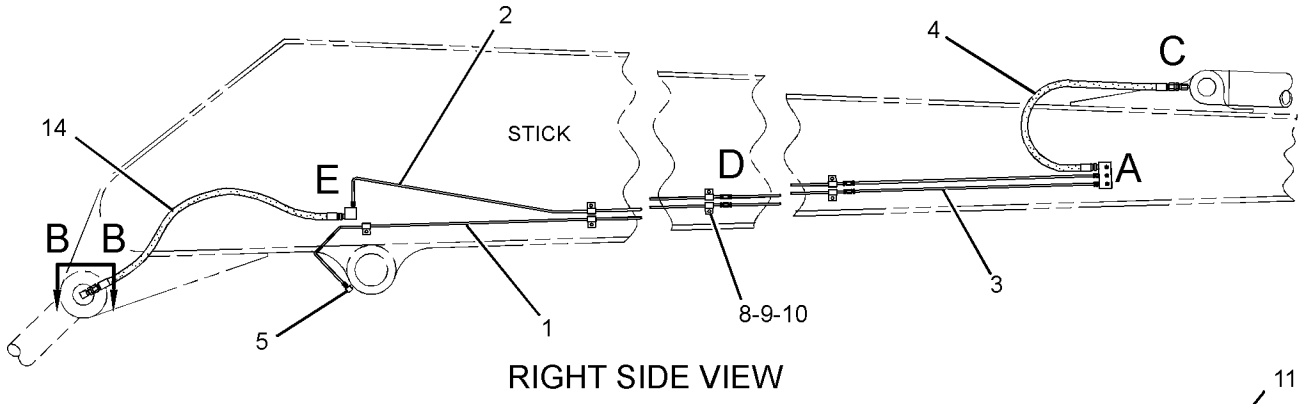

RIGHT SIDE VIEW

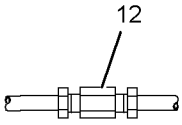

VIEW OF AREA D

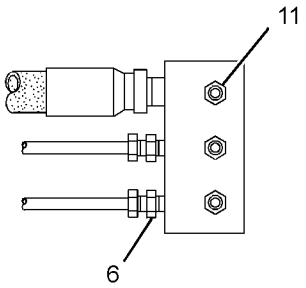

VIEW OF AREA A

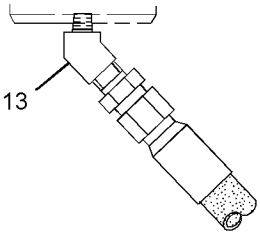

VIEW B-B

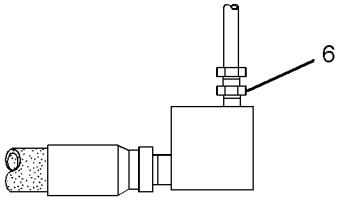

VIEW OF AREA E

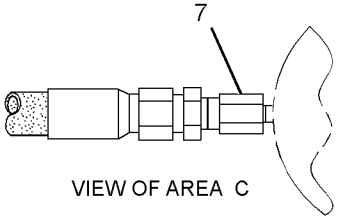

VIEW OF AREA C

GRAPHIC #1 **<END>** g01245468

IMPLEMENTS

180-7816 LINES GP-GREASE

S/N: MNB1-UP; WDK1-UP

PART OF 229-1754, 229-1758, 229-1760, 275-3699, 275-3839 BOOM AR-1 PIECE LONG AN ATTACHMENT

SMCS-7510 **i01590496**

NOTE	REF NO	GRAPHIC REF	PART NUMBER	QTY	PART NAME 1 2 3 4 5 6 (PRODUCT LEVEL)	SEE PAGE
I	1	1	**115-2678**	1	HOSE AS	
I	2	1	**115-2677**	1	HOSE AS	
	3	1	**120-7224**	1	HOSE AS	
	4	1	**186-5560**	1	TUBE AS	
	5	1	**186-5559**	1	TUBE AS	
	6	1	**166-1579**	4	CLIP	
	7	1	**8M-2772**	2	CLIP	
M	8	1	**8T-4133**	6	NUT (M10X1.5-THD)	
	9	1	**8T-4121**	10	WASHER-HARD (11X21X2.5-MM THK)	
	10	1	**3B-8489**	5	FITTING-GREASE	
	11	1	**6L-3616**	2	CONNECTOR	
	12	1	**5K-9243**	2	ELBOW-FLARED	
	13	1	**033-8248**	4	CLIP	
M	14	1	**8T-4191**	4	BOLT (M10X1.5X16-MM)	

I-REFER TO HYDRAULIC INFORMATION SYSTEM
M-METRIC PART

180-7816 **LINES GP-GREASE** *(contd.)* **i01590496**

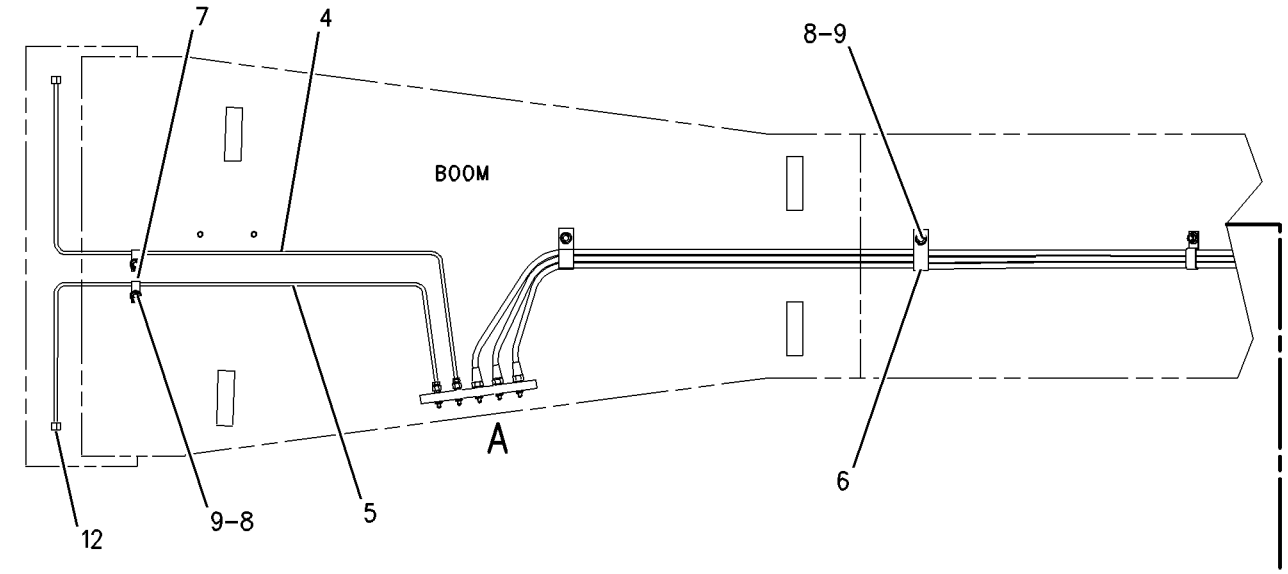

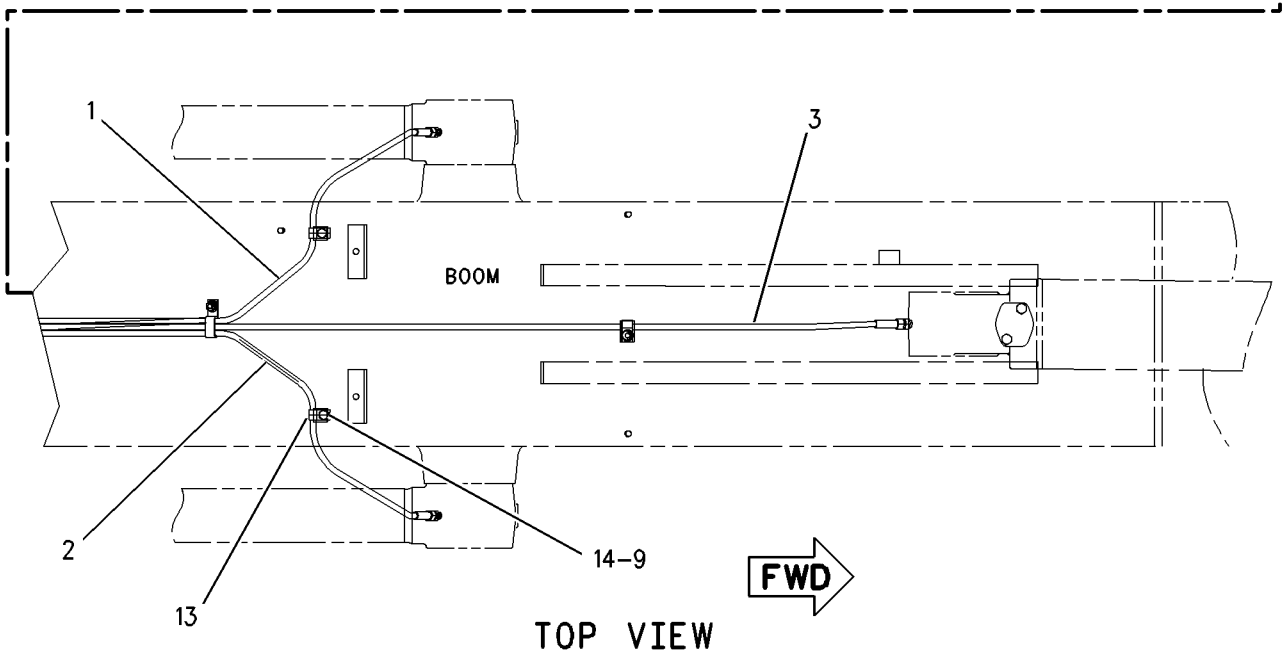

TOP VIEW

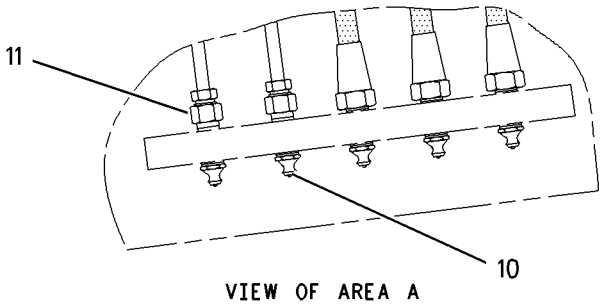

VIEW OF AREA A

GRAPHIC #1 **<END>** g00773349

IMPLEMENTS

184-5543 LINES GP-GREASE

S/N: MNB1-UP; WDK1-UP

PART OF 229-1757, 229-1759 BOOM AR-1 PIECE SHORT

AN ATTACHMENT

SMCS-7510 **i01564871**

NOTE	REF NO	GRAPHIC REF	PART NUMBER	QTY	PART NAME 1 2 3 4 5 6 (PRODUCT LEVEL)	SEE PAGE
I	1	1	**121-8460**	1	HOSE AS	
I	2	1	**201-2868**	1	HOSE AS	
I	3	1	**121-8662**	1	HOSE AS	
	4	1	**186-5560**	1	TUBE AS	
	5	1	**186-5559**	1	TUBE AS	
	6	1	**166-1579**	3	CLIP	
	7	1	**8M-2772**	2	CLIP	
M	8	1	**8T-4133**	5	NUT (M10X1.5-THD)	
	9	1	**8T-4121**	9	WASHER-HARD (11X21X2.5-MM THK)	
	10	1	**3B-8489**	5	FITTING-GREASE	
	11	1	**6L-3616**	2	CONNECTOR	
	12	1	**5K-9243**	2	ELBOW-FLARED	
	13	1	**033-8248**	4	CLIP	
M	14	1	**8T-4191**	4	BOLT (M10X1.5X16-MM)	

I-REFER TO HYDRAULIC INFORMATION SYSTEM
M-METRIC PART

184-5543 **LINES GP-GREASE** *(contd.)* **i01564871**

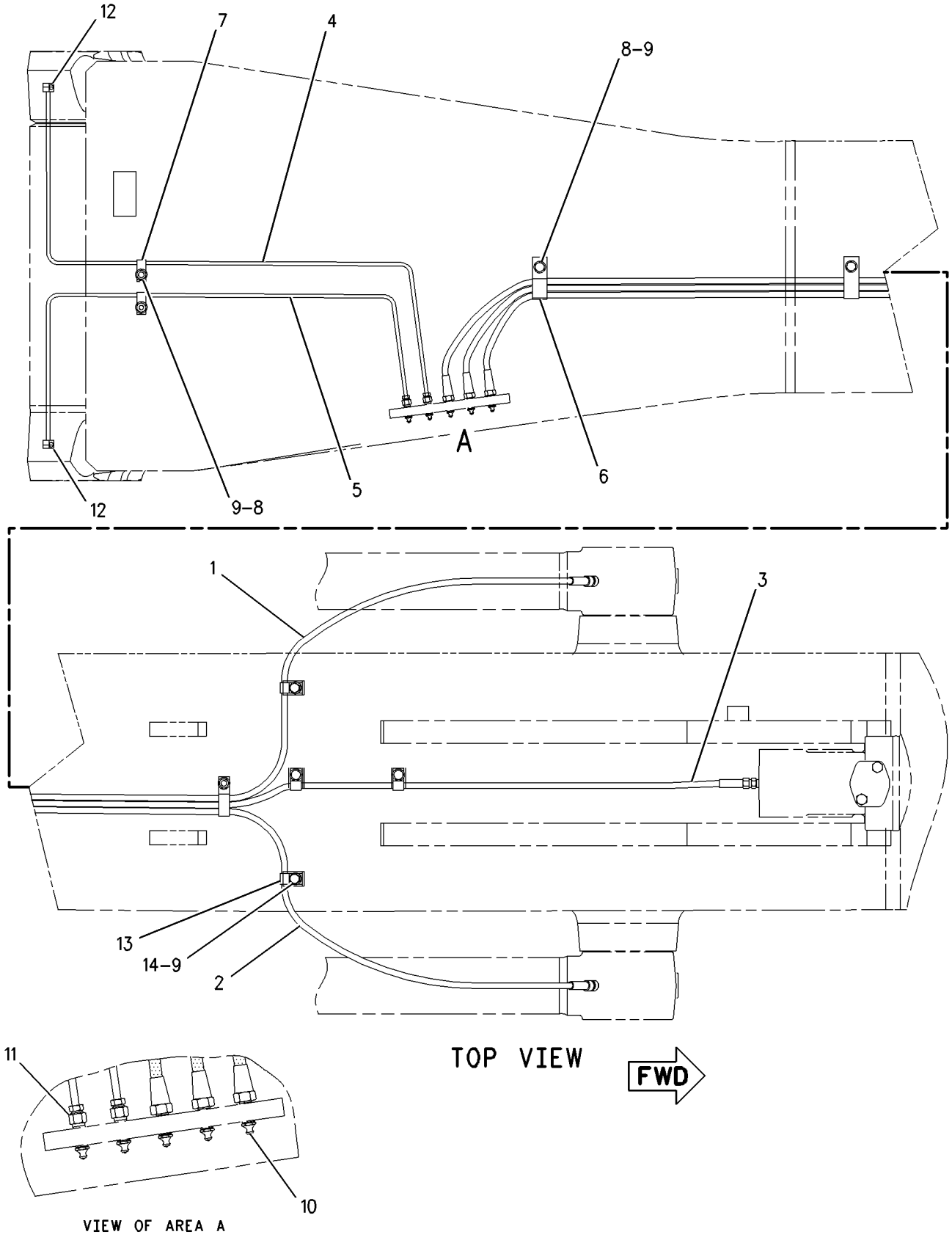

GRAPHIC #1 **<END>** g00813605

229-1772 LINKAGE AR-BUCKET—CB2-FAMILY

S/N: MNB1-UP; WDK1-UP
WITHOUT LIFTING EYE
AN ATTACHMENT

SMCS-6513 **i02348523**

NOTE	PART NUMBER	QTY	PART NAME 1 2 3 4 5 6 (PRODUCT LEVEL)	SEE PAGE
Y	*225-4590*	1	CYLINDER & LINES GP-BUCKET	453
Y	*228-5528*	1	LINKAGE GP-BUCKET (CB2-FAMILY)	846
Y-SEPARATE ILLUSTRATION				

<END>

240-3733 LINKAGE AR-BUCKET—DB-FAMILY

S/N: MNB1-UP; WDK1-UP
WITHOUT LIFTING EYE
AN ATTACHMENT

SMCS-6513 **i02410239**

NOTE	PART NUMBER	QTY	PART NAME 1 2 3 4 5 6 (PRODUCT LEVEL)	SEE PAGE
Y	*225-4579*	1	CYLINDER & LINES GP-BUCKET	453
Y	*236-8416*	1	LINKAGE GP-BUCKET	850
Y-SEPARATE ILLUSTRATION				

<END>

247-7331 LINKAGE AR-BUCKET—CB2-FAMILY

S/N: MNB1-UP; WDK1-UP
AN ATTACHMENT

SMCS-6513 **i02426029**

NOTE	PART NUMBER	QTY	PART NAME 1 2 3 4 5 6 (PRODUCT LEVEL)	SEE PAGE
Y	*225-4590*	1	CYLINDER & LINES GP-BUCKET	453
Y	*251-2597*	1	LINKAGE GP-BUCKET	854
Y-SEPARATE ILLUSTRATION				

<END>

247-7333 LINKAGE AR-BUCKET—DB-FAMILY

S/N: MNB1-UP; WDK1-UP
WITH LIFTING EYE
AN ATTACHMENT

SMCS-6513 **i02410449**

NOTE	PART NUMBER	QTY	PART NAME 1 2 3 4 5 6 (PRODUCT LEVEL)	SEE PAGE
Y	*225-4579*	1	CYLINDER & LINES GP-BUCKET	453
Y	*236-8415*	1	LINKAGE GP-BUCKET	848
Y-SEPARATE ILLUSTRATION				

<END>

247-7383 LINKAGE AR-BUCKET—CB2-FAMILY

S/N: MNB1-UP; WDK1-UP
HIGH TEMPERATURE
AN ATTACHMENT

SMCS-6513 **i02426027**

NOTE	PART NUMBER	QTY	PART NAME 1 2 3 4 5 6 (PRODUCT LEVEL)	SEE PAGE
Y	*225-4598*	1	CYLINDER & LINES GP-BUCKET	454
Y	*251-2597*	1	LINKAGE GP-BUCKET	854
Y-SEPARATE ILLUSTRATION				

<END>

247-7384 LINKAGE AR-BUCKET—DB-FAMILY

S/N: MNB1-UP; WDK1-UP
HIGH TEMPERATURE, WITH LIFTING EYE
AN ATTACHMENT

SMCS-6513 **i02416925**

NOTE	PART NUMBER	QTY	PART NAME 1 2 3 4 5 6 (PRODUCT LEVEL)	SEE PAGE
Y	*225-4600*	1	CYLINDER & LINES GP-BUCKET	454
Y	*236-8415*	1	LINKAGE GP-BUCKET	848
Y-SEPARATE ILLUSTRATION				

<END>

275-3711 LINKAGE AR-BUCKET—CB2-FAMILY, WITH LIFTING EYE

S/N: MNB1-UP; WDK1-UP
ACCUGRADE READY
FOR USE WITH 275-3699—PAGE 826, 275-3704—PAGE 862, 278-3924—PAGE 333
AN ATTACHMENT

SMCS-6513 **i02492141**

NOTE	PART NUMBER	QTY	PART NAME 1 2 3 4 5 6 (PRODUCT LEVEL)	SEE PAGE
Y	*225-4598*	1	CYLINDER & LINES GP-BUCKET	454
Y	*282-4555*	1	LINKAGE GP-BUCKET	856
Y-SEPARATE ILLUSTRATION				

<END>

228-5528 LINKAGE GP-BUCKET—CB2-FAMILY

S/N: MNB1-UP; WDK1-UP
PART OF 229-1772 LINKAGE AR-BUCKET
AN ATTACHMENT

SMCS-6513 **i02348513**

NOTE	REF NO	GRAPHIC REF	PART NUMBER	QTY	PART NAME 1 2 3 4 5 6 (PRODUCT LEVEL)	SEE PAGE
	1	1	**3B-8489**	5	FITTING-GREASE	
M	2	1	**8T-4131**	4	NUT (M20X2.5-THD)	
	3	1	**093-0349**	2	WASHER (22X60X6-MM THK)	
	4	1	**186-5662**	1	PIN	
	5	1	**234-3927**	1	LINK AS	
	6	1	**234-3928**	1	LINK	
	7	1	**234-3930**	1	PIN	
	8	1	**234-3931**	2	PIN AS	
	9	1	**248-1842**	1	LINK & BEARING AS	
		1	**228-5615**	4	BEARING-SLEEVE	
	10	1	**093-1345**	4	SEAL-O-RING	
	11	1	**166-1487**	2	SHIM (2-MM THK)	
	12	1	**166-1495**	6	SEAL-LIP TYPE	
M	13	1	**186-5649**	1	BOLT (M20X2.5X160-MM)	
M	14	1	**189-3925**	1	BOLT (M20X2.5X170-MM)	
	15	1	**8T-4123**	2	WASHER (22X35X3.5-MM THK)	
M	16	1	**8T-5460**	2	BOLT (M20X2.5X40-MM)	

M-METRIC PART

228-5528 **LINKAGE GP-BUCKET** *(contd.)* **i02348513**

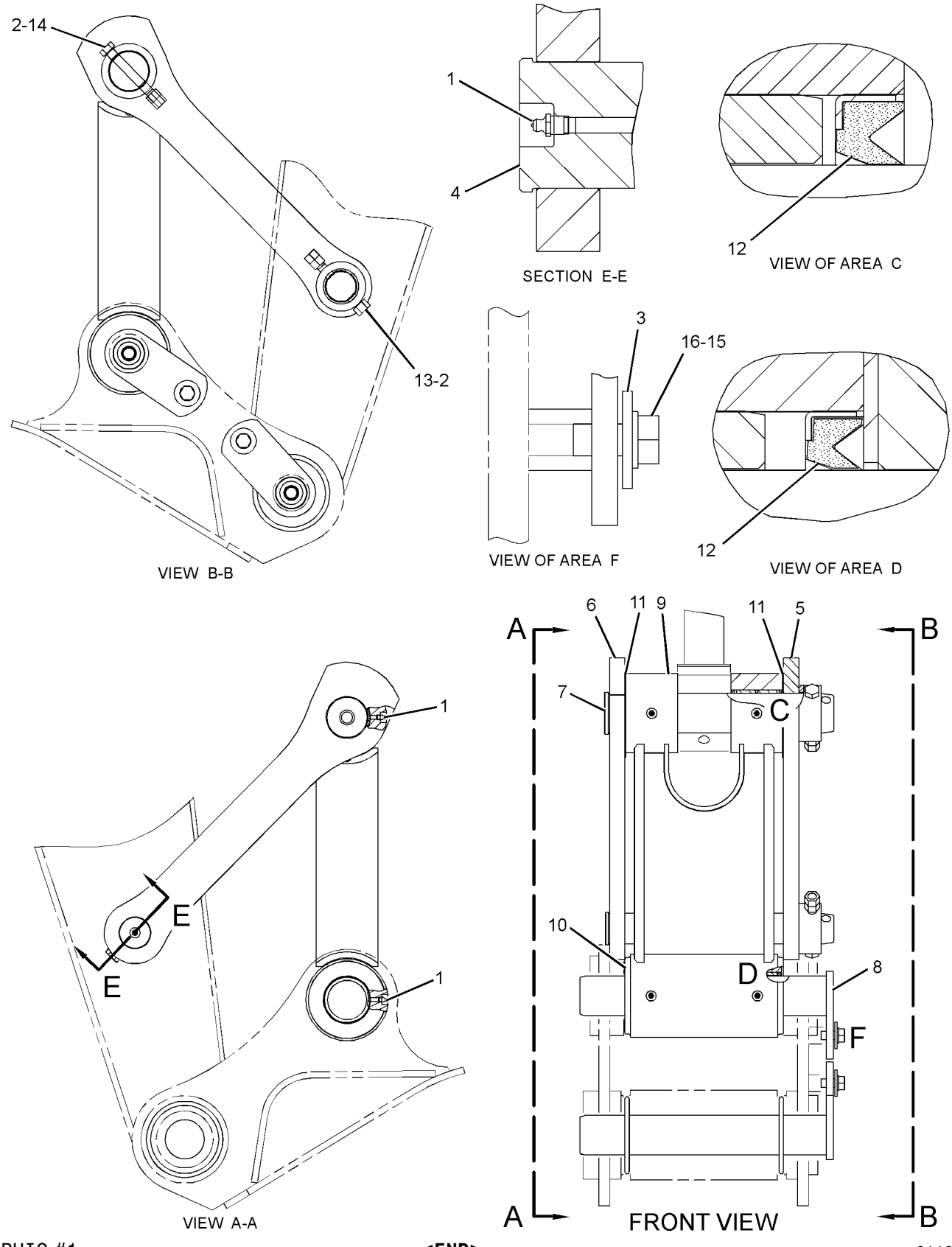

GRAPHIC #1 **<END>** g01182977

236-8415 LINKAGE GP-BUCKET—DB-FAMILY

S/N: MNB1-UP; WDK1-UP
WITH LIFTING EYE
PART OF 247-7333, 247-7384 LINKAGE AR-BUCKET
AN ATTACHMENT

SMCS-6513 **i02414373**

NOTE	REF NO	GRAPHIC REF	PART NUMBER	QTY	PART NAME 1 2 3 4 5 6 (PRODUCT LEVEL)	SEE PAGE
	1	1	**3B-8489**	5	FITTING-GREASE	
	2	1	**093-0349**	1	WASHER (22X60X6-MM THK)	
	3	1	**166-1496**	4	SEAL-LIP TYPE	
	4	1	**189-3922**	1	PIN	
	5	1	**201-2771**	1	WASHER (26X90X8-MM THK)	
M	6	1	**201-2836**	1	BOLT (M24X3X200-MM)	
	7	1	**241-7129**	1	LINK	
	8	1	**241-7150**	1	LINK AS	
	9	1	**251-2552**	1	PIN AS	
	10	1	**251-2557**	1	PIN	
	11	1	**251-2558**	1	PIN AS	
	12	1	**254-3025**	1	LINK & BEARING AS	
	12A	1	**241-7280**	2	BEARING-SLEEVE	
	13	1	**093-1345**	2	SEAL-O-RING	
	14	1	**093-1349**	2	SEAL-O-RING	
	15	1	**166-1488**	2	SHIM (2-MM THK)	
	16	1	**166-1495**	2	SEAL-LIP TYPE	
M	17	1	**186-5649**	1	BOLT (M20X2.5X160-MM)	
M	18	1	**8T-4001**	2	NUT (M24X3-THD)	
	19	1	**8T-4123**	1	WASHER (22X35X3.5-MM THK)	
M	20	1	**8T-4131**	2	NUT (M20X2.5-THD)	
	21	1	**8T-4167**	1	WASHER-HARD (26X44X4-MM THK)	
M	22	1	**8T-5379**	1	BOLT (M24X3X50-MM)	
M	23	1	**8T-5460**	1	BOLT (M20X2.5X40-MM)	

M-METRIC PART

236-8415 **LINKAGE GP-BUCKET** *(contd.)* **i02414373**

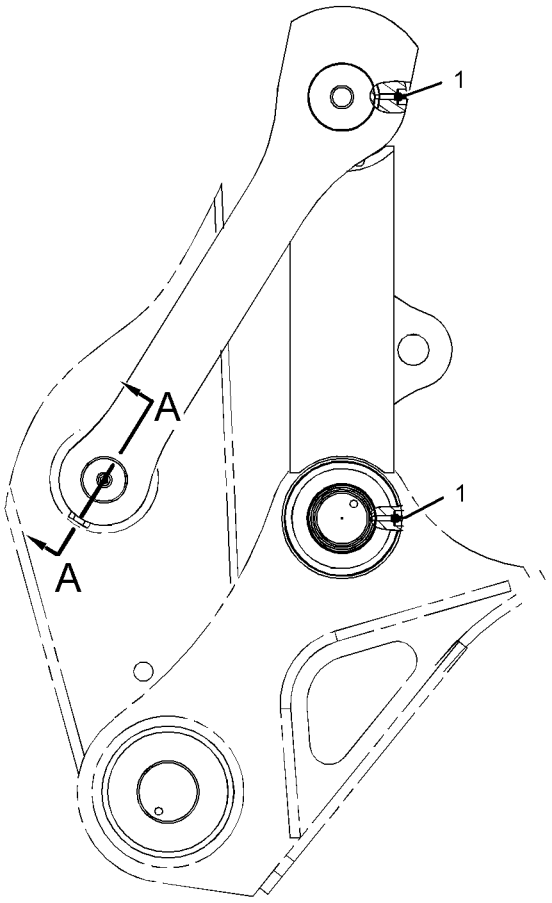

RIGHT SIDE VIEW

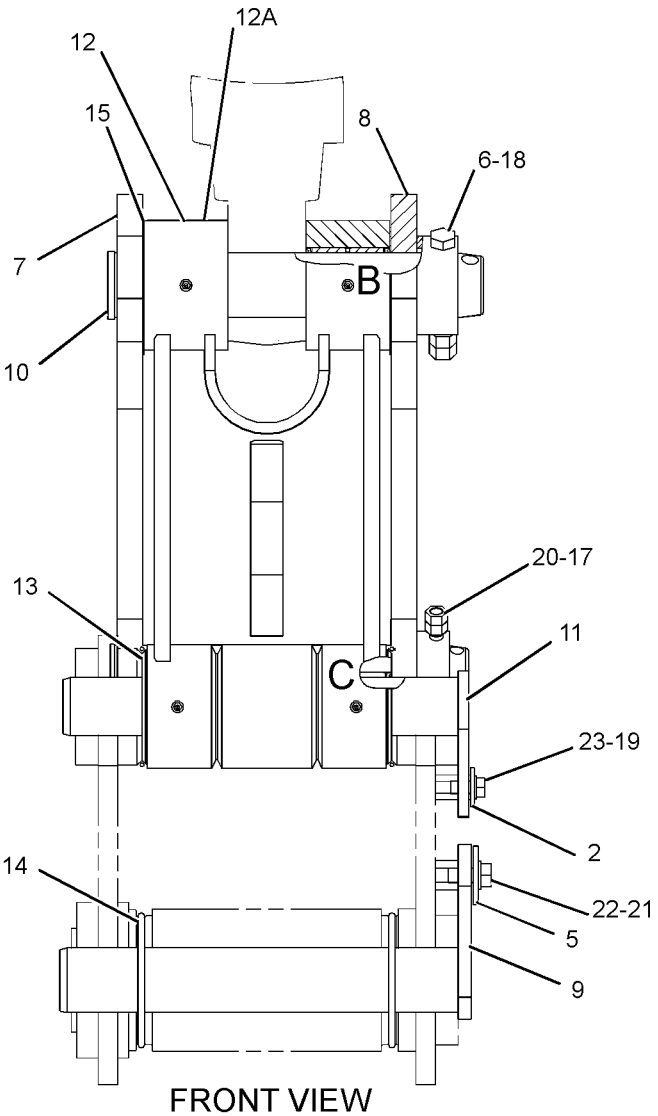

FRONT VIEW

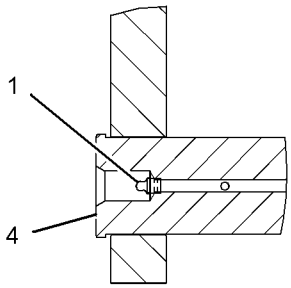

SECTION A-A

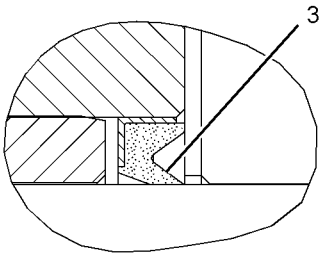

VIEW OF AREA B

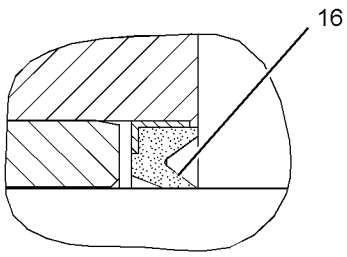

VIEW OF AREA C

GRAPHIC #1 **<END>** g01155860

236-8416 LINKAGE GP-BUCKET—DB-FAMILY

S/N: MNB1-UP; WDK1-UP
WITHOUT LIFTING EYE
PART OF 240-3733 LINKAGE AR-BUCKET
AN ATTACHMENT

SMCS-6513 **i02414346**

NOTE	REF NO	GRAPHIC REF	PART NUMBER	QTY	PART NAME 1 2 3 4 5 6 (PRODUCT LEVEL)	SEE PAGE
	1	1	**3B-8489**	5	FITTING-GREASE	
	2	1	**093-0349**	1	WASHER (22X60X6-MM THK)	
	3	1	**166-1496**	4	SEAL-LIP TYPE	
	4	1	**189-3922**	1	PIN	
	5	1	**201-2771**	1	WASHER (26X90X8-MM THK)	
M	6	1	**201-2836**	1	BOLT (M24X3X200-MM)	
	7	1	**241-7129**	1	LINK	
	8	1	**241-7140**	1	LINK & BEARING AS	
		1	**228-5615**	2	BEARING-SLEEVE	
		1	**241-7280**	2	BEARING-SLEEVE	
	9	1	**241-7150**	1	LINK AS	
	10	1	**251-2552**	1	PIN AS	
	11	1	**251-2557**	1	PIN	
	12	1	**251-2558**	1	PIN AS	
	13	1	**093-1345**	2	SEAL-O-RING	
	14	1	**093-1349**	2	SEAL-O-RING	
	15	1	**166-1488**	2	SHIM (2-MM THK)	
	16	1	**166-1495**	2	SEAL-LIP TYPE	
M	17	1	**186-5649**	1	BOLT (M20X2.5X160-MM)	
M	18	1	**8T-4001**	2	NUT (M24X3-THD)	
	19	1	**8T-4123**	1	WASHER (22X35X3.5-MM THK)	
M	20	1	**8T-4131**	2	NUT (M20X2.5-THD)	
	21	1	**8T-4167**	1	WASHER-HARD (26X44X4-MM THK)	
M	22	1	**8T-5379**	1	BOLT (M24X3X50-MM)	
M	23	1	**8T-5460**	1	BOLT (M20X2.5X40-MM)	

M-METRIC PART

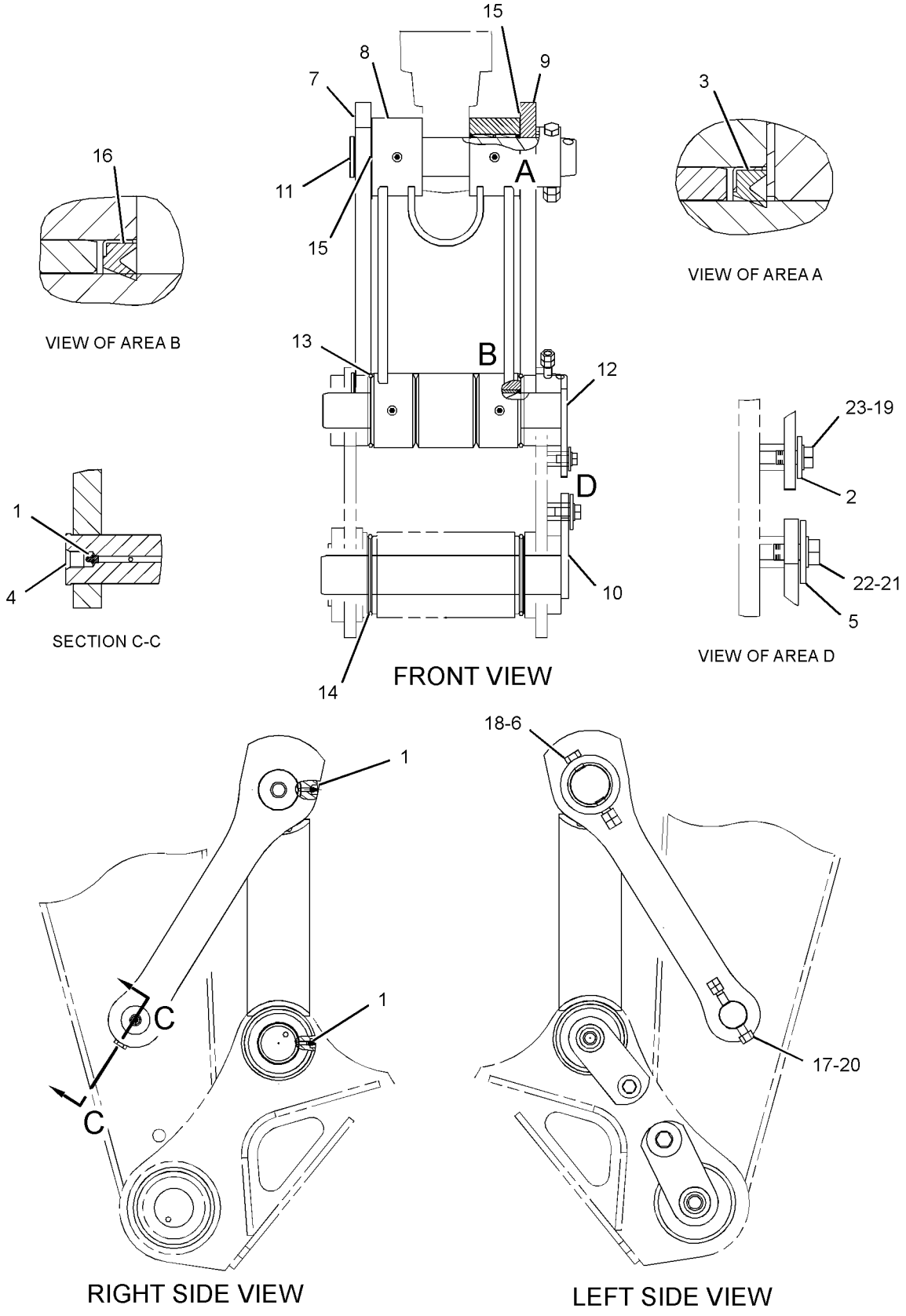

GRAPHIC #1 **<END>** g01236986

248-7831 LINKAGE GP-BUCKET

S/N: MNB1-UP

PART OF 262-3586 SPECIAL AR-SUPER LONG REACH AN ATTACHMENT

SMCS-6513 **i02408178**

NOTE	REF NO	GRAPHIC REF	PART NUMBER	QTY	PART NAME 1 2 3 4 5 6 (PRODUCT LEVEL)	SEE PAGE
	1	1	**248-7822**	1	LINK	
	2	1	**248-7820**	1	PIN	
	3	1	**248-7832**	1	LINK & BEARING AS	
	3A	1	**248-7835**	2	BEARING-SLEEVE	
	3B	1	**229-1092**	2	BEARING-SLEEVE	
	4	1	**3B-8489**	5	FITTING-GREASE	
M	5	1	**096-4876**	6	NUT (M14X2-THD)	
M	6	1	**099-0707**	1	BOLT (M14X2X115-MM)	
	7	1	**248-7823**	1	LINK AS	
M	8	1	**099-0724**	2	BOLT (M14X2X145-MM)	
	9	1	**086-0523**	2	PIN	
	10	1	**093-1342**	4	SEAL-O-RING	
	11	1	**235-7679**	4	SEAL-LIP TYPE	
	12	1	**248-7836**	2	SEAL-LIP TYPE	
	13	1	**166-1482**	2	SHIM (2-MM THK)	
	14	1	**7I-6843**	1	PIN	
M	15	1	**236-6365**	1	BOLT (M16X2X150-MM)	
M	16	1	**8T-4132**	2	NUT (M16X2-THD)	

M-METRIC PART

248-7831 **LINKAGE GP-BUCKET** *(contd.)* **i02408178**

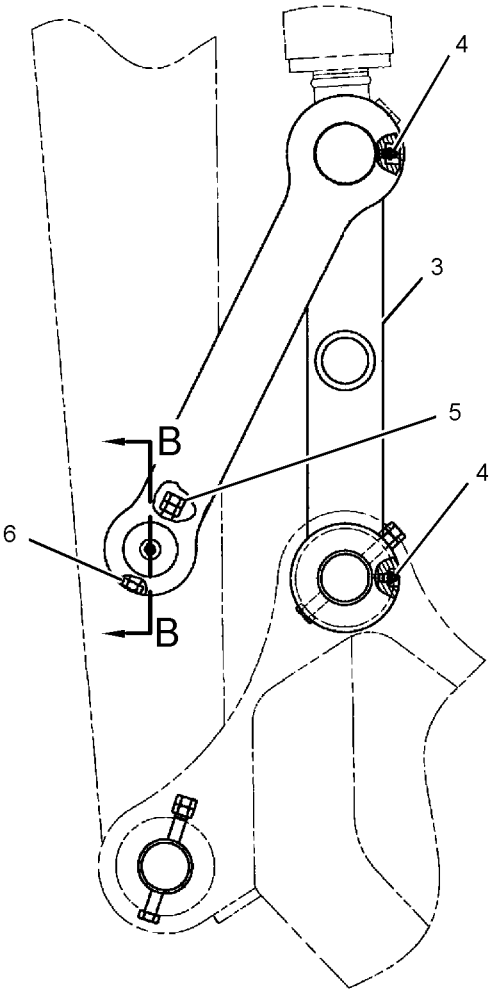

VIEW A-A

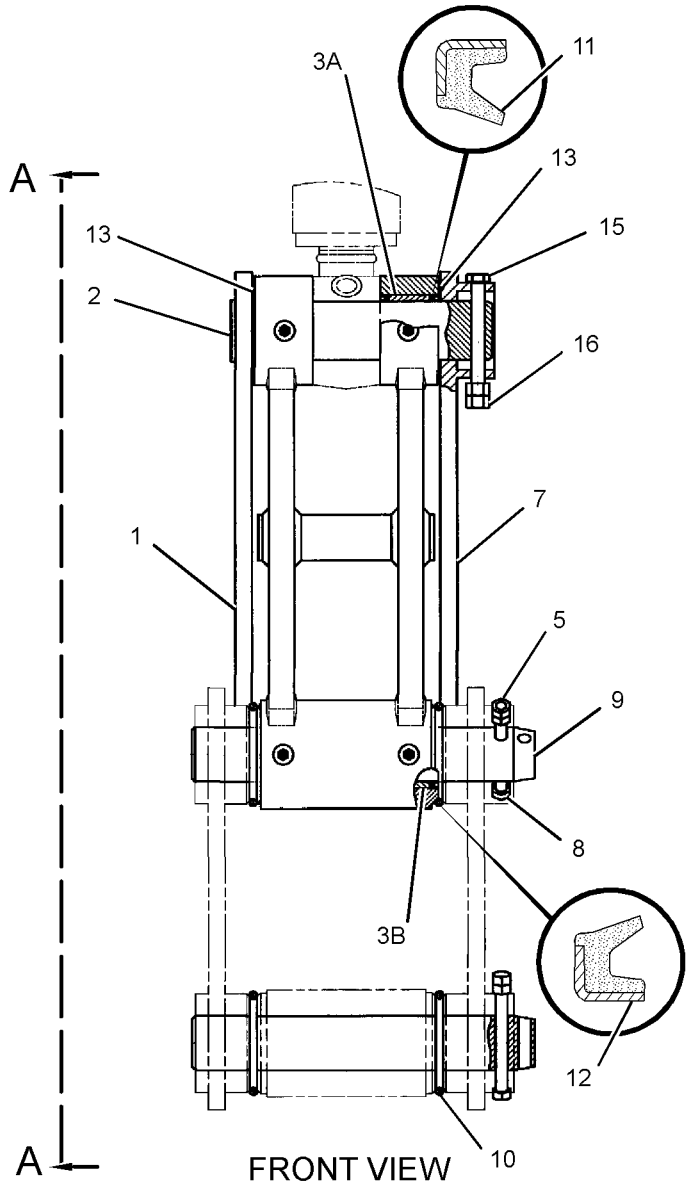

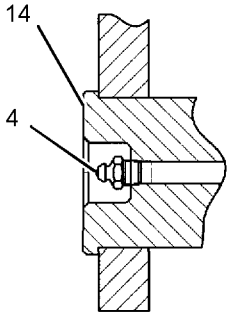

SECTION B-B

GRAPHIC #1 **<END>** g01209947

251-2597 LINKAGE GP-BUCKET—CB2-FAMILY

S/N: MNB1-UP; WDK1-UP

PART OF 247-7331, 247-7383 LINKAGE AR-BUCKET

AN ATTACHMENT

SMCS-6513 **i02426033**

NOTE	REF NO	GRAPHIC REF	PART NUMBER	QTY	PART NAME 1 2 3 4 5 6 (PRODUCT LEVEL)	SEE PAGE
	1	1	**3B-8489**	5	FITTING-GREASE	
M	2	1	**8T-4131**	4	NUT (M20X2.5-THD)	
	3	1	**093-0349**	2	WASHER (22X60X6-MM THK)	
	4	1	**186-5662**	1	PIN	
	5	1	**234-3927**	1	LINK AS	
	6	1	**234-3928**	1	LINK	
	7	1	**234-3930**	1	PIN	
	8	1	**234-3931**	2	PIN AS	
	9	1	**254-2996**	1	LINK & BEARING AS	
	9A	1	**228-5615**	4	BEARING-SLEEVE	
	10	1	**093-1345**	4	SEAL-O-RING	
	11	1	**166-1487**	2	SHIM (2-MM THK)	
	12	1	**166-1495**	6	SEAL-LIP TYPE	
M	13	1	**186-5649**	1	BOLT (M20X2.5X160-MM)	
M	14	1	**189-3925**	1	BOLT (M20X2.5X170-MM)	
	15	1	**8T-4123**	2	WASHER (22X35X3.5-MM THK)	
M	16	1	**8T-5460**	2	BOLT (M20X2.5X40-MM)	

M-METRIC PART

251-2597 **LINKAGE GP-BUCKET** *(contd.)* **i02426033**

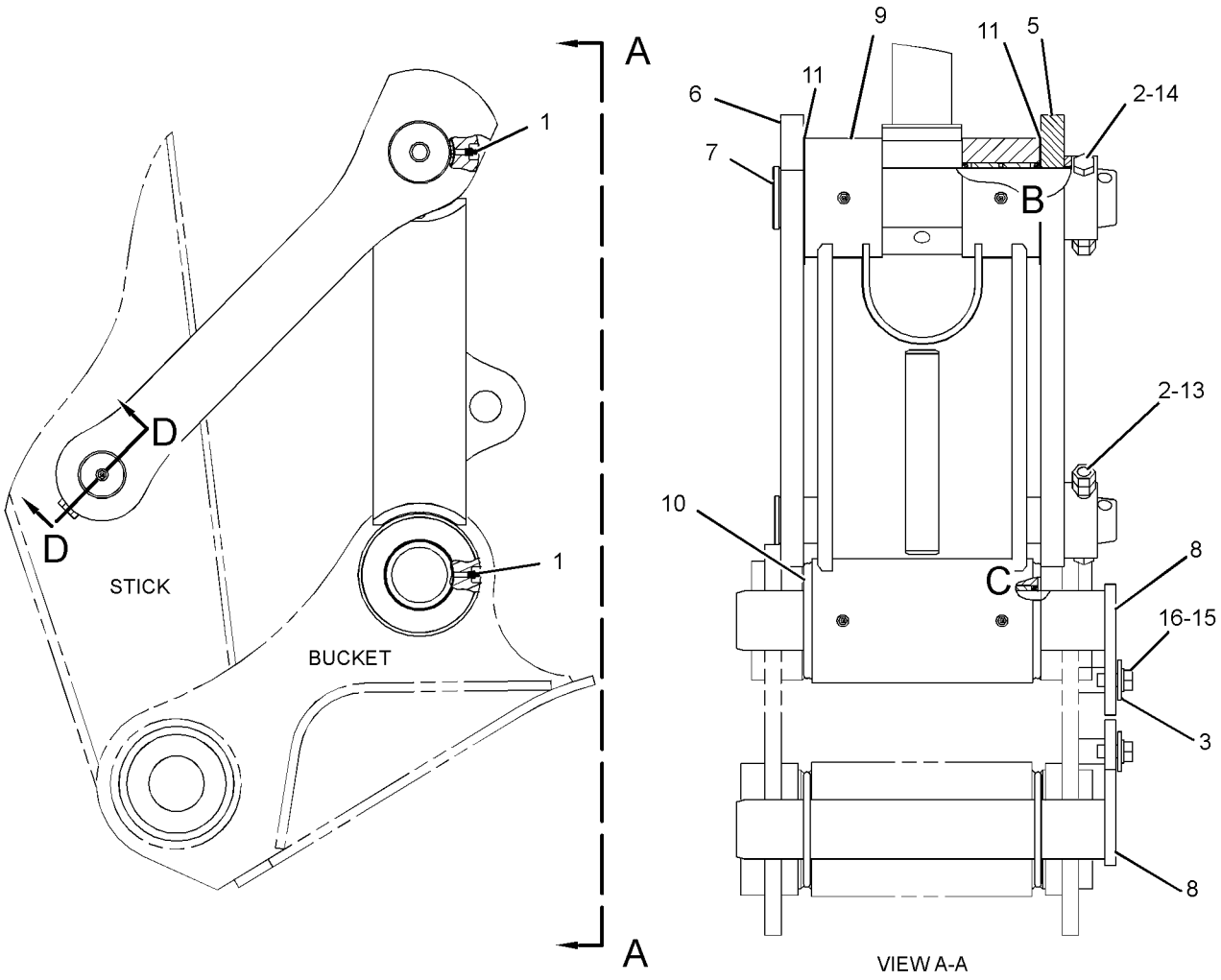

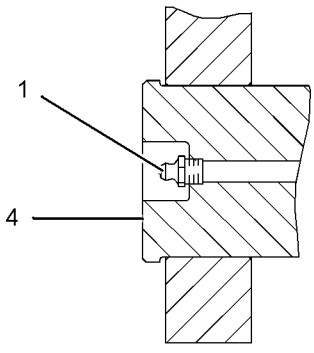

SECTION D-D

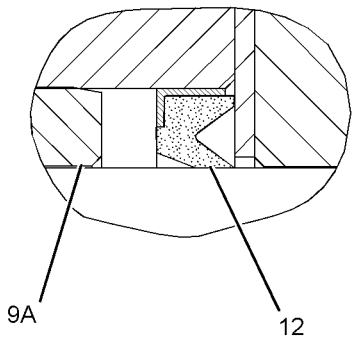

VIEW OF AREA B

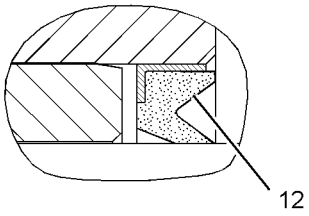

VIEW OF AREA C

GRAPHIC #1 **<END>** g01212616

282-4555 LINKAGE GP-BUCKET—CB2-FAMILY

S/N: MNB1-UP; WDK1-UP
ACCUGRADE
PART OF 275-3711 LINKAGE AR-BUCKET
AN ATTACHMENT

SMCS-6513 **i02491424**

NOTE	REF NO	GRAPHIC REF	PART NUMBER	QTY	PART NAME 1 2 3 4 5 6 (PRODUCT LEVEL)	SEE PAGE
	1	1	**3B-8489**	5	FITTING-GREASE	
M	2	1	**8T-4131**	4	NUT (M20X2.5-THD)	
	3	1	**093-0349**	2	WASHER (22X60X6-MM THK)	
	4	1	**186-5662**	1	PIN	
	5	1	**234-3928**	1	LINK	
	6	1	**234-3930**	1	PIN	
	7	1	**234-3931**	2	PIN AS	
	8	1	**254-2996**	1	LINK & BEARING AS	
		1	**228-5615**	4	BEARING-SLEEVE	
	9	1	**282-4556**	1	LINK AS	
	10	1	**093-1345**	4	SEAL-O-RING	
	11	1	**166-1487**	2	SHIM (2-MM THK)	
	12	1	**166-1495**	6	SEAL-LIP TYPE	
M	13	1	**186-5649**	1	BOLT (M20X2.5X160-MM)	
M	14	1	**189-3925**	1	BOLT (M20X2.5X170-MM)	
	15	1	**8T-4123**	2	WASHER (22X35X3.5-MM THK)	
M	16	1	**8T-5460**	2	BOLT (M20X2.5X40-MM)	

M-METRIC PART

282-4555 **LINKAGE GP-BUCKET** *(contd.)* **i02491424**

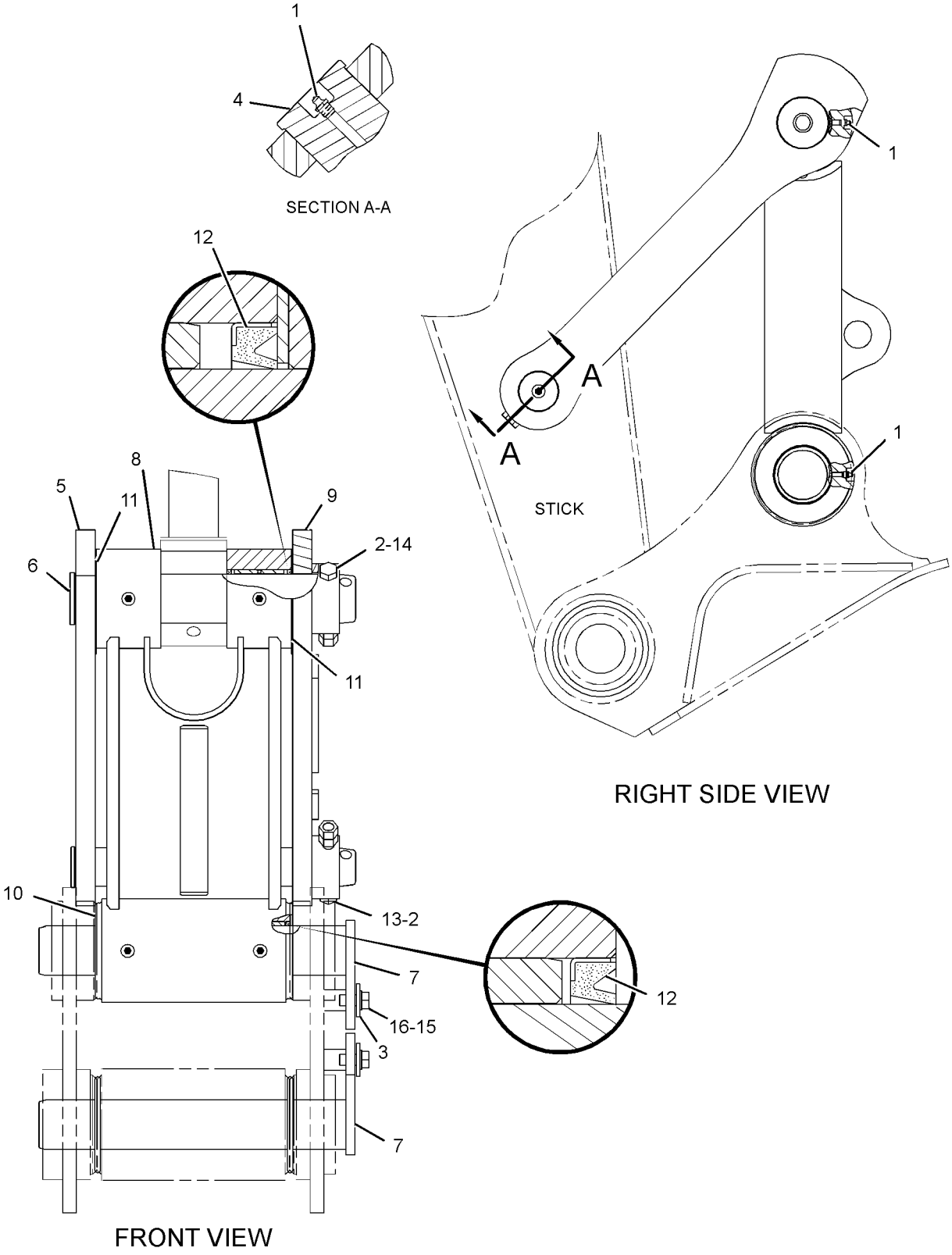

GRAPHIC #1 **<END>** g01243757

IMPLEMENTS

116-9115 LOCK GP-TRANSPORT

S/N: MNB1-UP
PART OF 262-3586 SPECIAL AR-SUPER LONG REACH
AN ATTACHMENT

SMCS-7505 **i01341866**

NOTE	REF NO	GRAPHIC REF	PART NUMBER	QTY	PART NAME 1 2 3 4 5 6 (PRODUCT LEVEL)	SEE PAGE
	1	1	**7Y-6649**	2	PIN	
	2	1	**7Y-6641**	1	ROD AS	
M	3	1	**8T-6466**	2	BOLT (M10X1.5X60-MM)	
M	4	1	**8T-4133**	4	NUT (M10X1.5-THD)	

M-METRIC PART

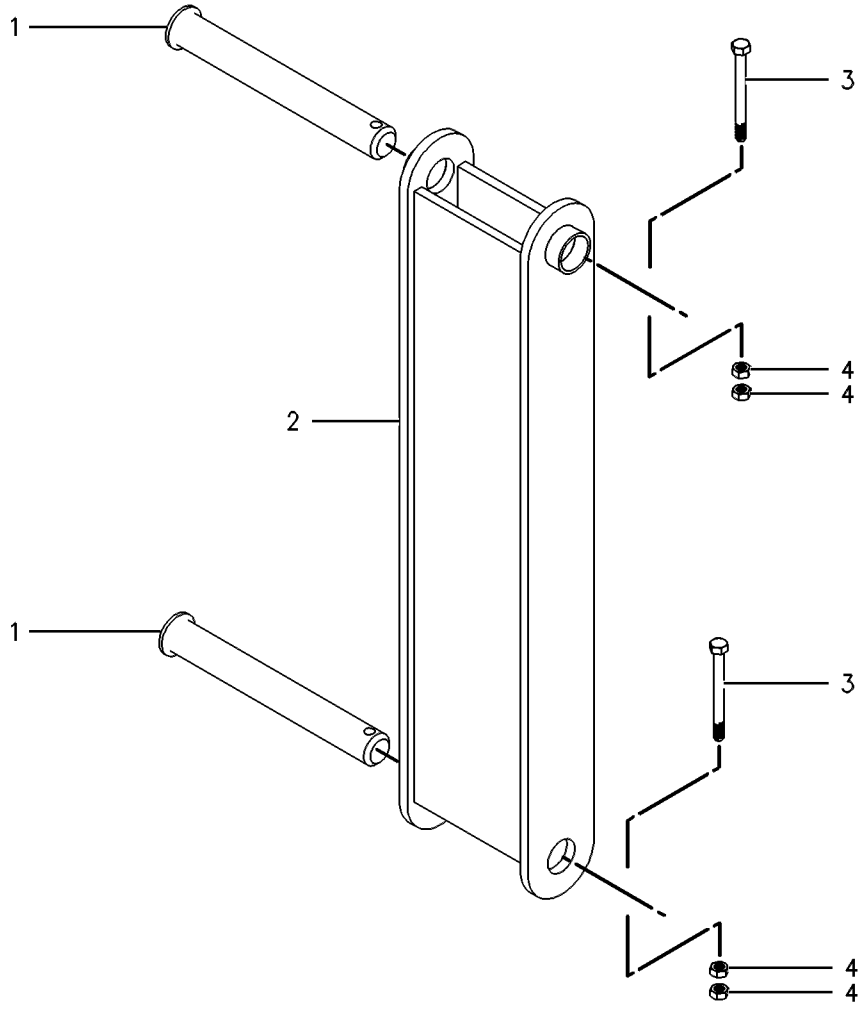

GRAPHIC #1 **<END>** g00287071

233-1123 MOUNTING GP-LINES

S/N: MNB1-UP; WDK1-UP

PART OF 222-8379 INSTALLATION AR-ENGINE

SMCS-5057 **i02782186**

NOTE	REF NO	GRAPHIC REF	PART NUMBER	QTY	PART NAME 1 2 3 4 5 6 (PRODUCT LEVEL)	SEE PAGE
C	1	1	**203-2287**	2	CLIP	
	2	1	**4D-7388**	2	CLIP	
	3	1	**7X-0507**	1	WASHER-HARD (12X22.5X5-MM THK)	
	4	1	**7X-7729**	1	WASHER (11X25X3-MM THK)	
C	5	1	**8T-4121**	3	WASHER-HARD (11X21X2.5-MM THK)	
CM	6	1	**8T-4137**	2	BOLT (M10X1.5X20-MM)	
M	7	1	**8T-4195**	3	BOLT (M10X1.5X30-MM)	
CM	8	1	**8T-4196**	1	BOLT (M10X1.5X35-MM)	

C-CHANGE FROM PREVIOUS TYPE
M-METRIC PART

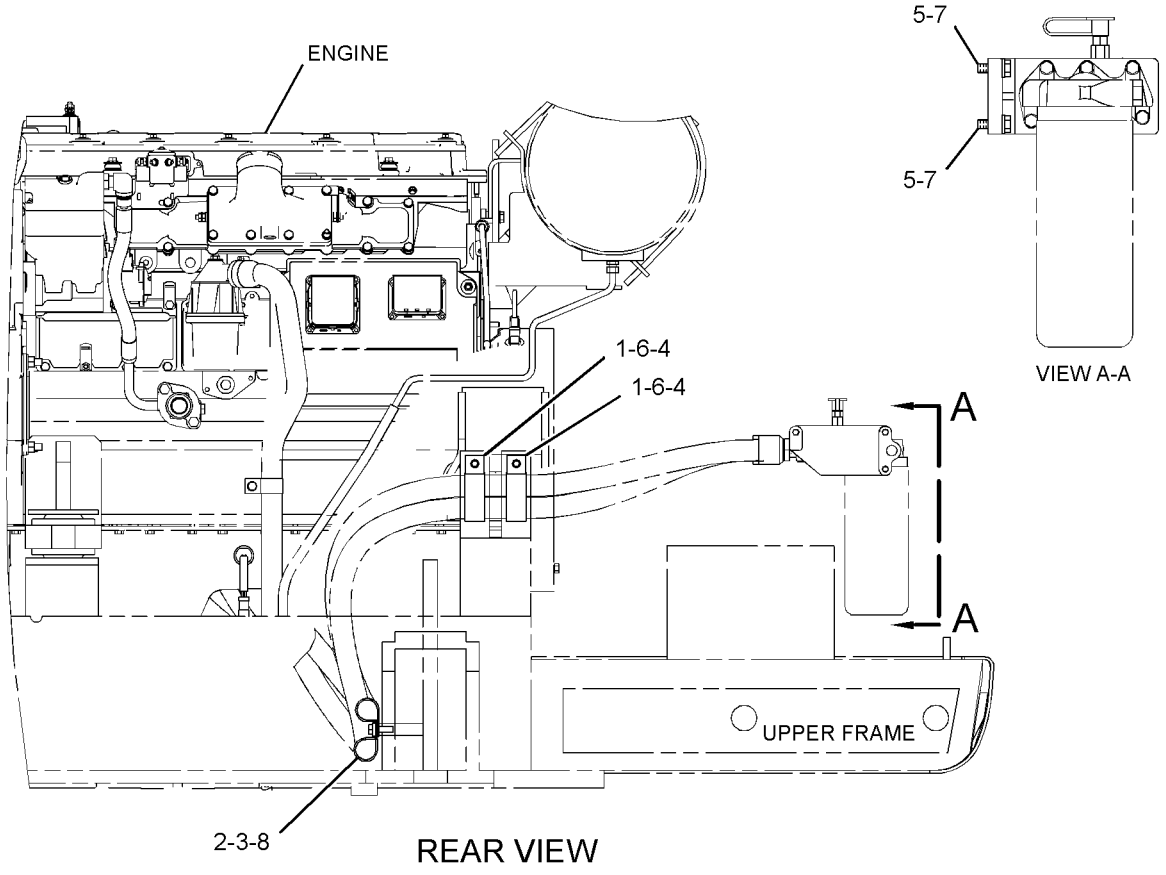

GRAPHIC #1 **<END>** g01396124

IMPLEMENTS

229-1762 STICK AR-HOE

S/N: MNB1-UP; WDK1-UP
3.2-M (10.5-FT) REACH. CB-FAMILY
AN ATTACHMENT

SMCS-6502 **i02347123**

NOTE	PART NUMBER	QTY	PART NAME 1 2 3 4 5 6 (PRODUCT LEVEL)	SEE PAGE
Y	*196-0536*	1	LINES GP-BUCKET CYLINDER	561
Y	*228-5526*	1	STICK GP-HOE	869
Y-SEPARATE ILLUSTRATION				

<END>

229-1764 STICK AR-HOE

S/N: MNB1-UP; WDK1-UP
3-M (9.8-FT) REACH. CB-FAMILY
AN ATTACHMENT

SMCS-6502 **i02347136**

NOTE	PART NUMBER	QTY	PART NAME 1 2 3 4 5 6 (PRODUCT LEVEL)	SEE PAGE
Y	*236-2968*	1	LINES GP-STICK	686
Y	*228-5523*	1	STICK GP-HOE	865
Y-SEPARATE ILLUSTRATION				

<END>

229-1765 STICK AR-HOE

S/N: MNB1-UP; WDK1-UP
2.65-M (8.69-FT) REACH. CB-FAMILY
AN ATTACHMENT

SMCS-6502 **i02347153**

NOTE	PART NUMBER	QTY	PART NAME 1 2 3 4 5 6 (PRODUCT LEVEL)	SEE PAGE
Y	*196-0537*	1	LINES GP-BUCKET CYLINDER	562
Y	*228-5524*	1	STICK GP-HOE (REACH)	867
Y-SEPARATE ILLUSTRATION				

<END>

229-1769 STICK AR-HOE

S/N: MNB1-UP; WDK1-UP
2.5-M (8.2-FT) REACH. DB-FAMILY
AN ATTACHMENT

SMCS-6502 **i02347172**

NOTE	PART NUMBER	QTY	PART NAME 1 2 3 4 5 6 (PRODUCT LEVEL)	SEE PAGE
Y	*196-0541*	1	LINES GP-BUCKET CYLINDER	563
Y	*235-7619*	1	STICK GP-HOE (MASS)	872
Y-SEPARATE ILLUSTRATION				

<END>

IMPLEMENTS

229-1770 STICK AR-HOE

S/N: MNB1-UP; WDK1-UP
2.65-M (8.69-FT) REACH. CB-FAMILY
AN ATTACHMENT

SMCS-6502 **i02348505**

NOTE	PART NUMBER	QTY	PART NAME 1 2 3 4 5 6 (PRODUCT LEVEL)	SEE PAGE
Y	*196-0537*	1	LINES GP-BUCKET CYLINDER	562
Y	*228-5525*	1	STICK GP-HOE	868
Y-SEPARATE ILLUSTRATION				

<END>

229-1855 STICK AR-HOE—MASS

S/N: MNB1-UP; WDK1-UP
3.2-M(10-FT). CB-FAMILY
AN ATTACHMENT

SMCS-6502 **i02454483**

NOTE	PART NUMBER	QTY	PART NAME 1 2 3 4 5 6 (PRODUCT LEVEL)	SEE PAGE
Y	*196-0536*	1	LINES GP-BUCKET CYLINDER	561
Y	*235-7618*	1	STICK GP-HOE	871
Y-SEPARATE ILLUSTRATION				

<END>

240-4029 STICK AR-HOE

S/N: MNB1-UP; WDK1-UP
3.2-M (1.49-FT). CB-FAMILY
AN ATTACHMENT

SMCS-6502 **i02481599**

NOTE	PART NUMBER	QTY	PART NAME 1 2 3 4 5 6 (PRODUCT LEVEL)	SEE PAGE
Y	*196-0536*	1	LINES GP-BUCKET CYLINDER	561
Y	*235-7616*	1	STICK GP-HOE	870
Y-SEPARATE ILLUSTRATION				

<END>

240-4030 STICK AR-HOE

S/N: MNB1-UP; WDK1-UP
3-M (9.8-FT). CB-FAMILY
AN ATTACHMENT

SMCS-6502 **i02481602**

NOTE	PART NUMBER	QTY	PART NAME 1 2 3 4 5 6 (PRODUCT LEVEL)	SEE PAGE
Y	*236-2968*	1	LINES GP-STICK	686
Y	*244-4359*	1	STICK GP-HOE	873
Y-SEPARATE ILLUSTRATION				

<END>

IMPLEMENTS

275-3704 STICK AR-HOE—REACH, ACCUGRADE READY

S/N: MNB1-UP; WDK1-UP

3.2-M (10.5-FT) . CB2-FAMILY

FOR USE WITH 275-3699—PAGE 826, 275-3711—PAGE 845, 278-3924—PAGE 333, 278-3926—PAGE 334

AN ATTACHMENT

SMCS-6502 **i02491230**

NOTE	PART NUMBER	QTY	PART NAME 1 2 3 4 5 6 (PRODUCT LEVEL)	SEE PAGE
Y	*196-0536*	1	LINES GP-BUCKET CYLINDER	561
Y	*282-4552*	1	STICK GP-HOE	874

Y-SEPARATE ILLUSTRATION

<END>

216-6599 STICK GP-HOE

S/N: MNB1-UP
PART OF 262-3586 SPECIAL AR-SUPER LONG REACH
FOR USE WITH 60 FT LONG REACH MACHINE
AN ATTACHMENT

SMCS-6502 **i02096308**

NOTE	REF NO	GRAPHIC REF	PART NUMBER	QTY	PART NAME 1 2 3 4 5 6 (PRODUCT LEVEL)	SEE PAGE
	1	1	**093-0363**	1	SPACER (83X120X12-MM THK)	
	2	1	**7Y-6684**	1	PIN AS	
M	3	1	**8T-4780**	1	BOLT (M20X2.5X30-MM)	
	4	1	**093-0349**	1	WASHER (22X60X6-MM THK)	
	5	1	**8T-4123**	1	WASHER (22X35X3.5-MM THK)	
	6	1	**216-6600**	1	STICK & BEARING AS	
	6A	1	**229-1095**	2	BEARING-SLEEVE	
	6B	1	**227-6789**	2	BEARING-SLEEVE	
	6C	1	**229-1091**	2	BEARING-SLEEVE	
M	7	1	**8T-4179**	1	BOLT (M12X1.75X20-MM)	
	8	1	**127-3913**	1	PIN AS	
	9	1	**093-0357**	1	WASHER (63X100X9-MM THK)	
	10	1	**3B-8489**	1	FITTING-GREASE	
	11	1	**166-1495**	2	SEAL-LIP TYPE	
	12	1	**096-0131**	2	SEAL-LIP TYPE	
	13	1	**093-1433**	2	SEAL-LIP TYPE	
	14	1	**086-0297**	1	WASHER (13X50X6-MM THK)	
	15	1	**166-1486**	2	SHIM (2-MM THK)	

M-METRIC PART

216-6599 **STICK GP-HOE** *(contd.)* **i02096308**

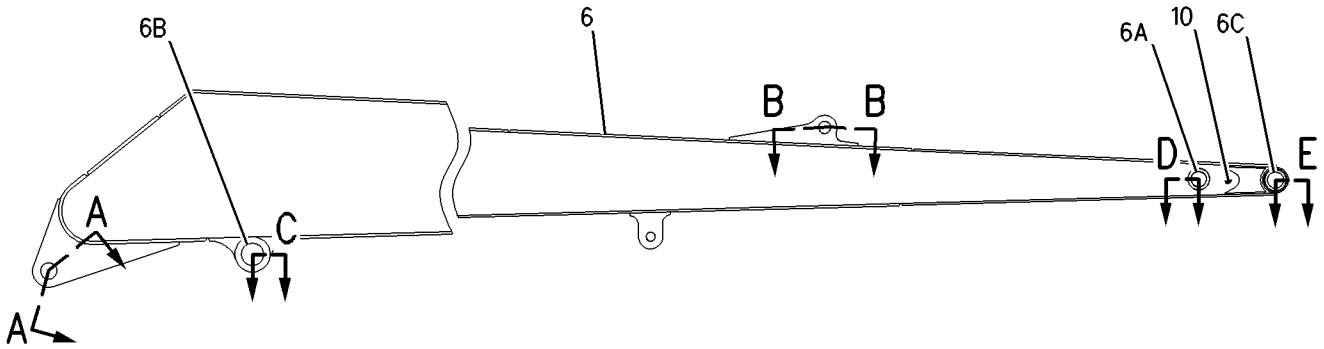

RIGHT SIDE VIEW

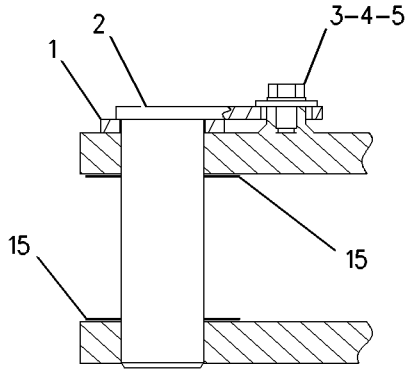

SECTION A-A

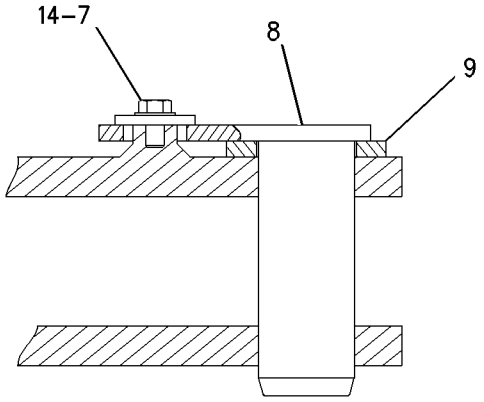

SECTION B-B

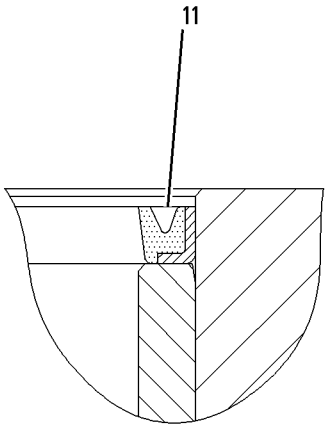

SECTION C

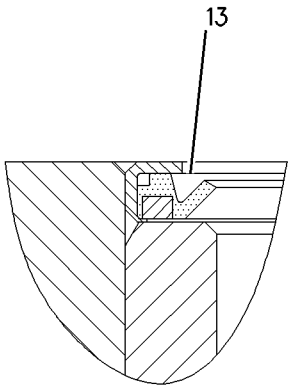

SECTION D

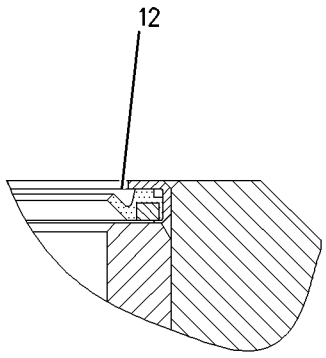

SECTION E

GRAPHIC #1 **<END>** g00946953

228-5523 STICK GP-HOE

S/N: MNB1-UP; WDK1-UP
3-M (9.8-FT)
PART OF 229-1764 STICK AR-HOE
AN ATTACHMENT

SMCS-6502 **i02347129**

NOTE	REF NO	GRAPHIC REF	PART NUMBER	QTY	PART NAME 1 2 3 4 5 6 (PRODUCT LEVEL)	SEE PAGE
	1	1	**3B-8489**	3	FITTING-GREASE	
	2	1	**4I-4618**	1	PIN AS	
	3	1	**4I-4620**	1	PIN AS	
	4	1	**093-0349**	2	WASHER (22X60X6-MM THK)	
	5	1	**093-0363**	1	SPACER (83X120X12-MM THK)	
	6	1	**118-5982**	1	SPACER (73X105X14-MM THK)	
	7	1	**166-1486**	2	SHIM (2-MM THK)	
	8	1	**228-5653**	1	STICK & BEARING AS	
	8A	1	**228-5614**	2	BEARING-SLEEVE	
	8B	1	**228-5615**	2	BEARING-SLEEVE	
	8C	1	**228-5654**	2	BEARING-SLEEVE	
	9	1	**235-7679**	2	SEAL-LIP TYPE	
	10	1	**166-1495**	2	SEAL-LIP TYPE	
	11	1	**166-1496**	2	SEAL-LIP TYPE	
	12	1	**8T-4123**	2	WASHER (22X35X3.5-MM THK)	
M	13	1	**8T-4780**	2	BOLT (M20X2.5X30-MM)	

M-METRIC PART

228-5523 **STICK GP-HOE** *(contd.)* **i02347129**

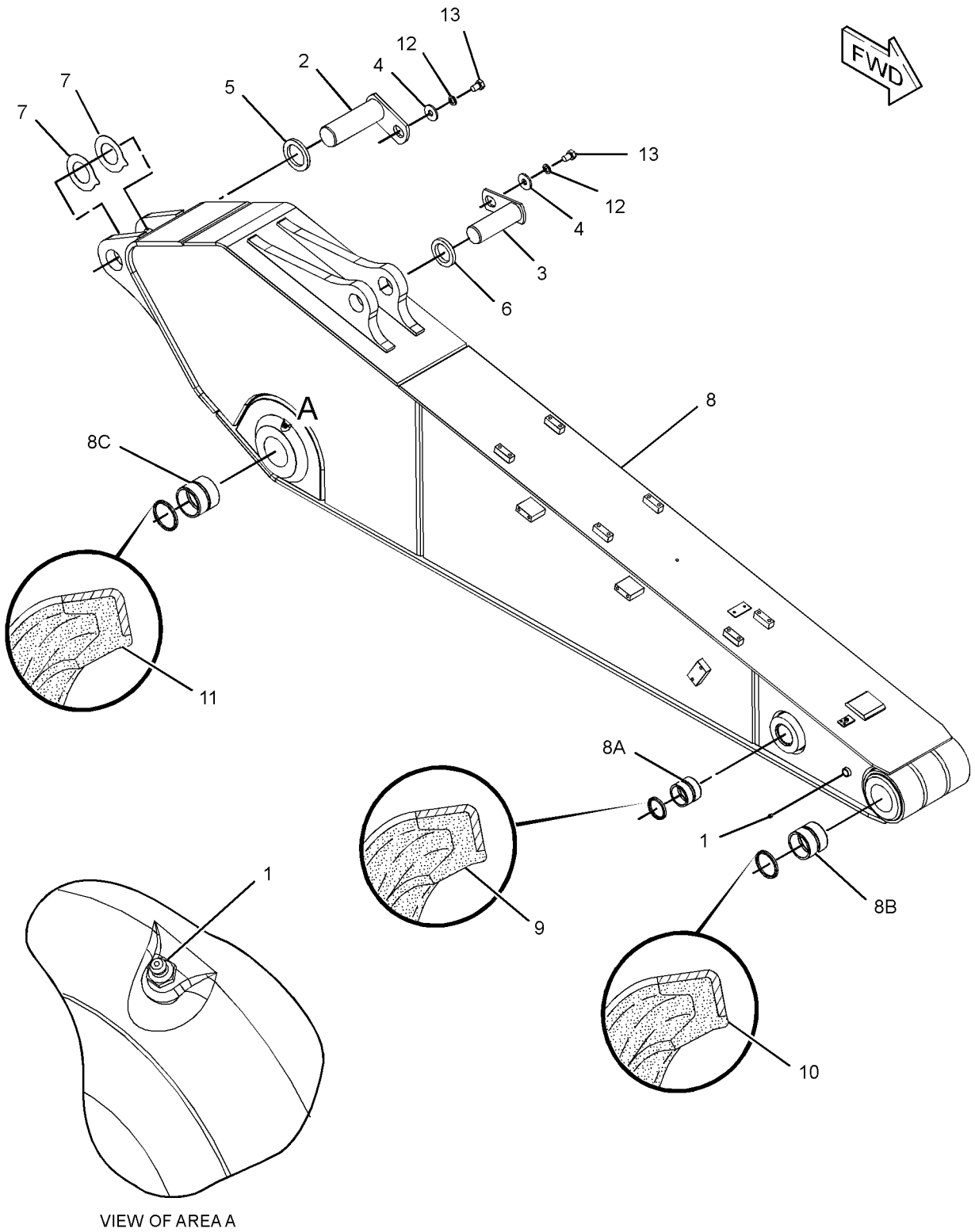

GRAPHIC #1 **<END>** g01182515

228-5524 STICK GP-HOE

S/N: MNB1-UP; WDK1-UP
2.65-M (8.69-FT)
PART OF 229-1765 STICK AR-HOE
AN ATTACHMENT

SMCS-6502 **i02347150**

NOTE	REF NO	GRAPHIC REF	PART NUMBER	QTY	PART NAME 1 2 3 4 5 6 (PRODUCT LEVEL)	SEE PAGE
	1	1	**3B-8489**	3	FITTING-GREASE	
	2	1	**4I-4618**	1	PIN AS	
	3	1	**4I-4620**	1	PIN AS	
	4	1	**093-0349**	2	WASHER (22X60X6-MM THK)	
	5	1	**093-0363**	1	SPACER (83X120X12-MM THK)	
	6	1	**118-5982**	1	SPACER (73X105X14-MM THK)	
	7	1	**166-1486**	2	SHIM (2-MM THK)	
	8	1	**234-3771**	1	STICK & BEARING AS	
	8A	1	**228-5614**	2	BEARING-SLEEVE	
	8B	1	**228-5615**	2	BEARING-SLEEVE	
	8C	1	**228-5654**	2	BEARING-SLEEVE	
	9	1	**235-7679**	2	SEAL-LIP TYPE	
	10	1	**166-1495**	2	SEAL-LIP TYPE	
	11	1	**166-1496**	2	SEAL-LIP TYPE	
	12	1	**8T-4123**	2	WASHER (22X35X3.5-MM THK)	
M	13	1	**8T-4780**	2	BOLT (M20X2.5X30-MM)	

M-METRIC PART

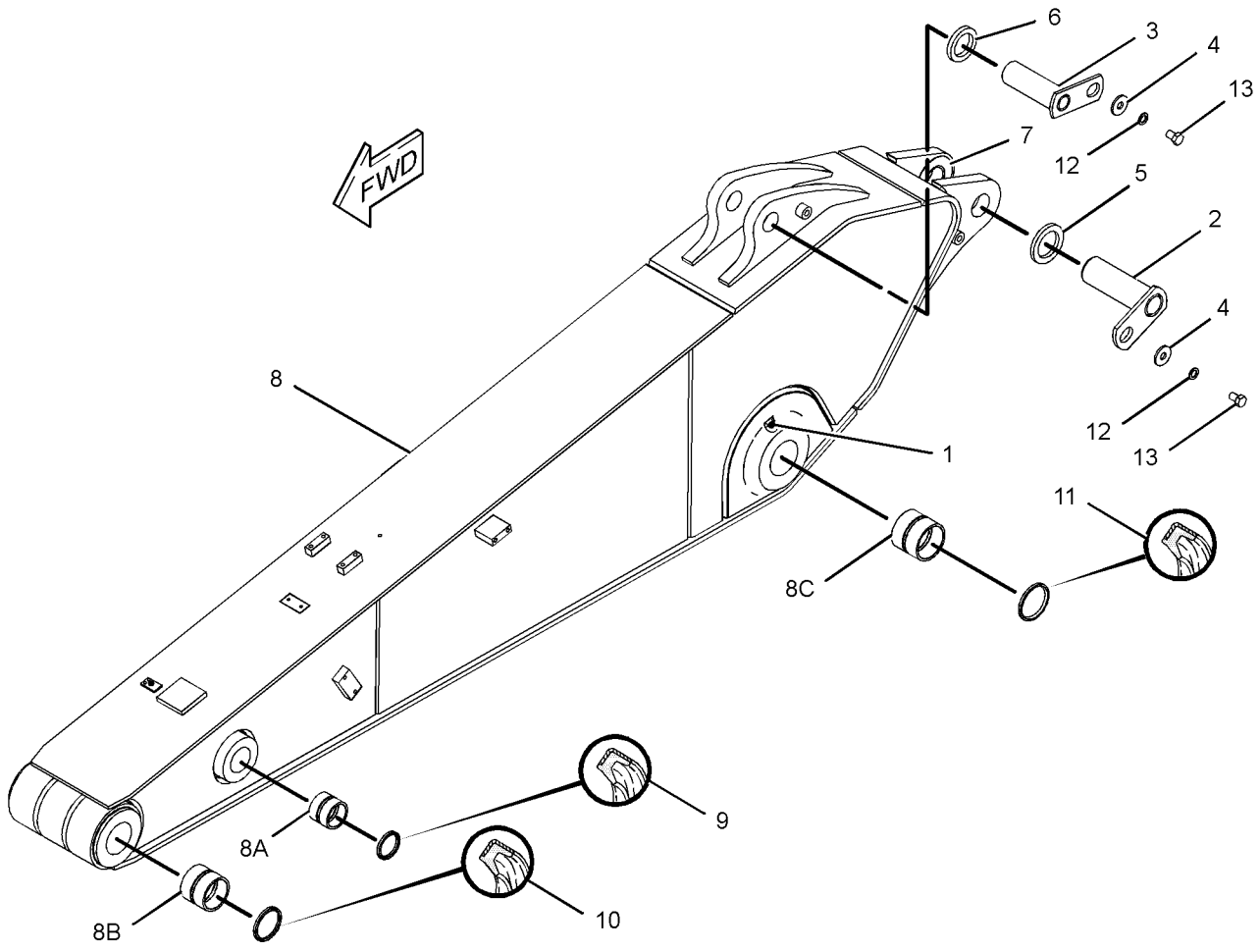

GRAPHIC #1 **<END>** g01179035

IMPLEMENTS

228-5525 STICK GP-HOE

S/N: MNB1-UP; WDK1-UP
2.65-M (8.69-FT)
PART OF 229-1770 STICK AR-HOE
AN ATTACHMENT

SMCS-6502 **i02348503**

NOTE	REF NO	GRAPHIC REF	PART NUMBER	QTY	PART NAME 1 2 3 4 5 6 (PRODUCT LEVEL)	SEE PAGE
	1	1	**3B-8489**	3	FITTING-GREASE	
	2	1	**4I-4618**	1	PIN AS	
	3	1	**4I-4620**	1	PIN AS	
	4	1	**093-0349**	2	WASHER (22X60X6-MM THK)	
	5	1	**093-0363**	1	SPACER (83X120X12-MM THK)	
	6	1	**118-5982**	1	SPACER (73X105X14-MM THK)	
B	7	1	**166-1486**	2	SHIM (2-MM THK)	
	8	1	**235-7679**	2	SEAL-LIP TYPE	
	9	1	**235-7709**	1	STICK & BEARING AS	
	9A	1	**228-5614**	2	BEARING-SLEEVE	
	9B	1	**228-5615**	2	BEARING-SLEEVE	
	9C	1	**228-5654**	2	BEARING-SLEEVE	
	10	1	**166-1495**	2	SEAL-LIP TYPE	
	11	1	**166-1496**	2	SEAL-LIP TYPE	
	12	1	**8T-4123**	2	WASHER (22X35X3.5-MM THK)	
M	13	1	**8T-4780**	2	BOLT (M20X2.5X30-MM)	

B-USE AS REQUIRED
M-METRIC PART

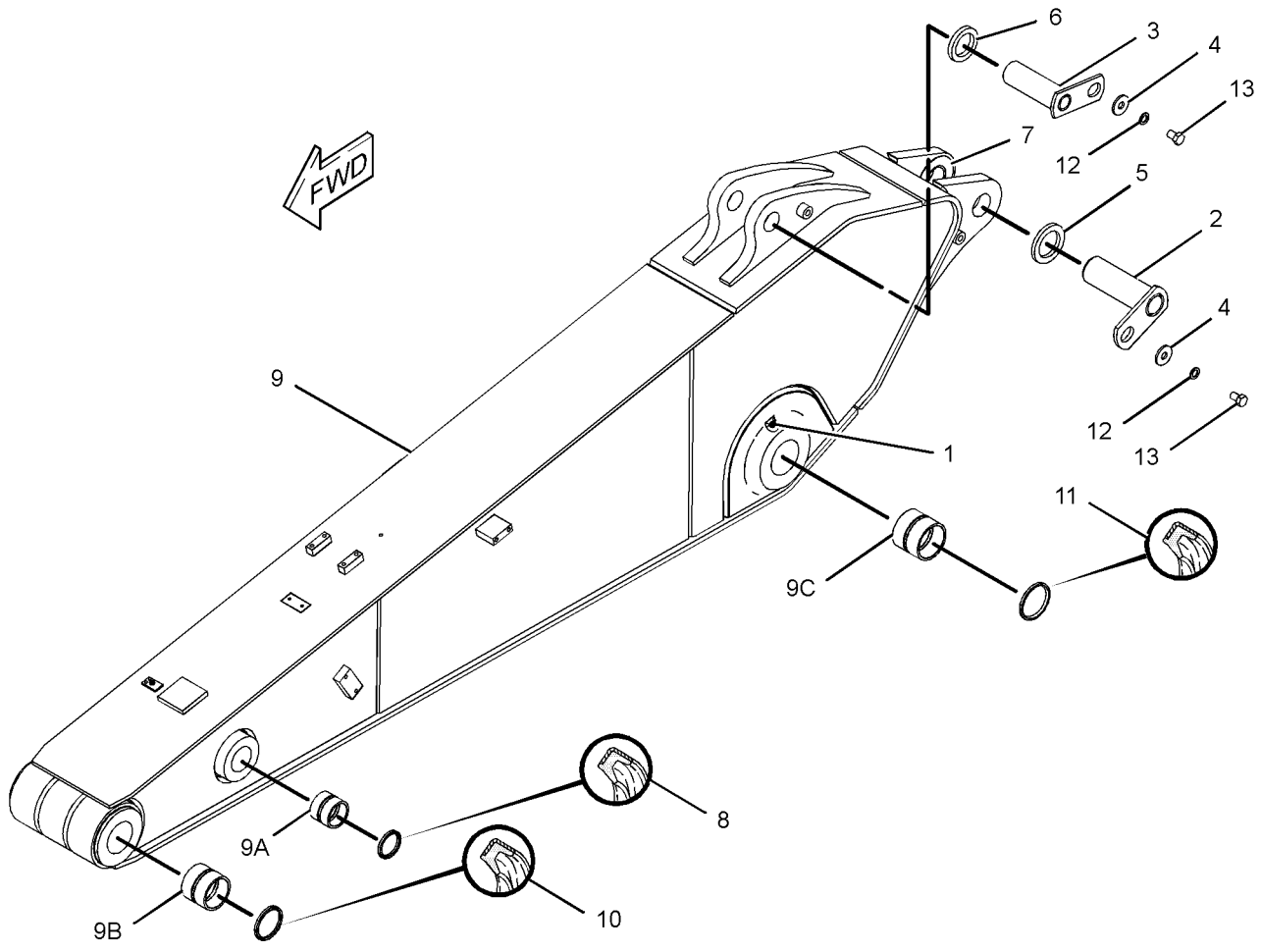

GRAPHIC #1 **<END>** g01179004

228-5526 STICK GP-HOE

S/N: MNB1-UP; WDK1-UP
3.2-M (10.5-FT)
PART OF 229-1762 STICK AR-HOE
AN ATTACHMENT

SMCS-6502 **i02347116**

NOTE	REF NO	GRAPHIC REF	PART NUMBER	QTY	PART NAME 1 2 3 4 5 6 (PRODUCT LEVEL)	SEE PAGE
	1	1	**3B-8489**	3	FITTING-GREASE	
	2	1	**4I-4618**	1	PIN AS	
	3	1	**4I-4620**	1	PIN AS	
	4	1	**093-0349**	2	WASHER (22X60X6-MM THK)	
	5	1	**093-0363**	1	SPACER (83X120X12-MM THK)	
	6	1	**118-5982**	1	SPACER (73X105X14-MM THK)	
	7	1	**166-1486**	2	SHIM (2-MM THK)	
	8	1	**235-7590**	1	STICK & BEARING AS	
	8A	1	**228-5614**	2	BEARING-SLEEVE	
	8B	1	**228-5615**	2	BEARING-SLEEVE	
	8C	1	**228-5654**	2	BEARING-SLEEVE	
	9	1	**235-7679**	2	SEAL-LIP TYPE	
	10	1	**166-1495**	2	SEAL-LIP TYPE	
	11	1	**166-1496**	2	SEAL-LIP TYPE	
	12	1	**8T-4123**	2	WASHER (22X35X3.5-MM THK)	
M	13	1	**8T-4780**	2	BOLT (M20X2.5X30-MM)	

M-METRIC PART

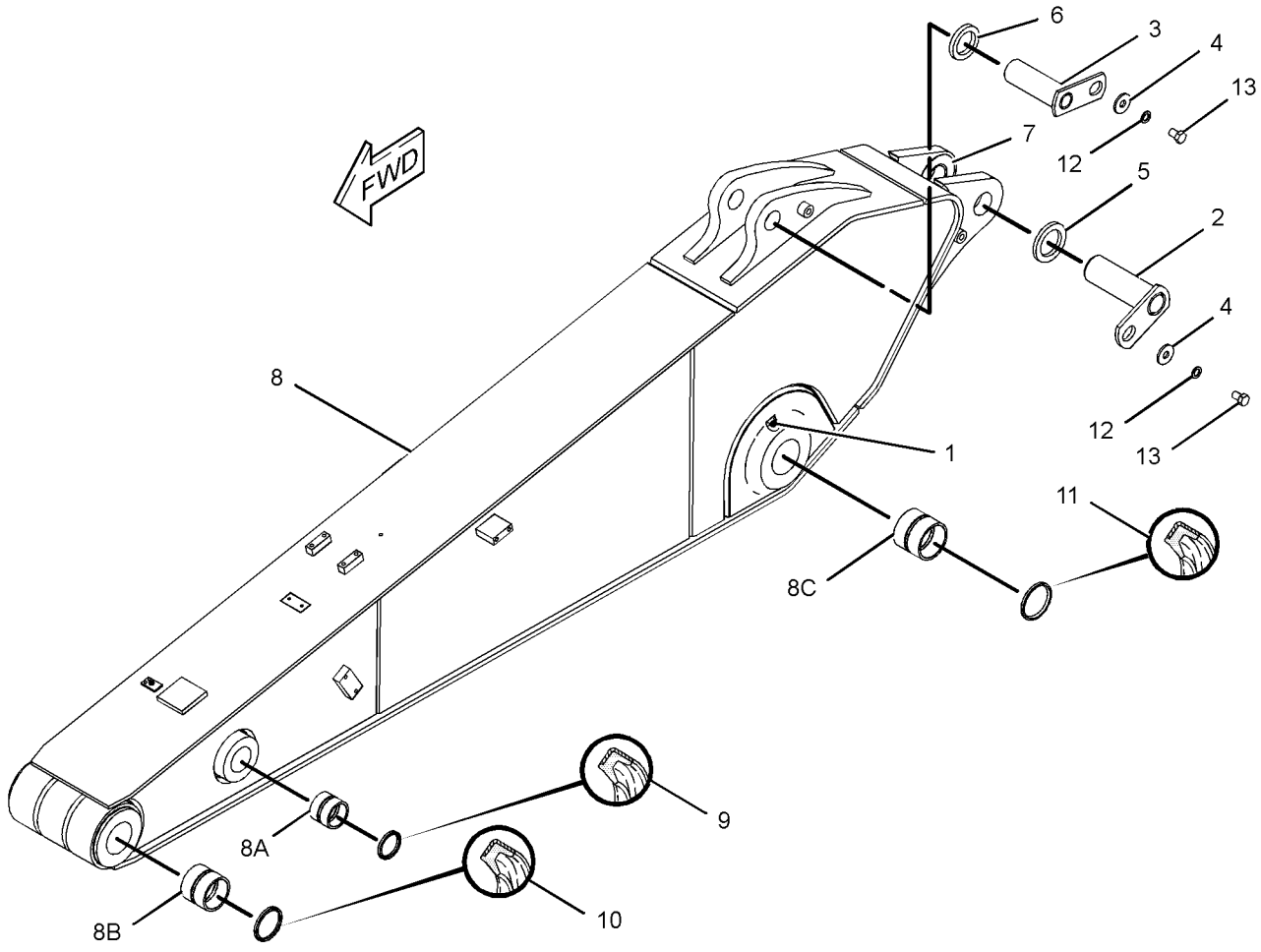

GRAPHIC #1 **<END>** g01179035

235-7616 STICK GP-HOE

S/N: MNB1-UP; WDK1-UP
3.2-M (10.49-FT). CB-FAMILY
PART OF 240-4029 STICK AR-HOE
AN ATTACHMENT

SMCS-6502 **i02481598**

NOTE	REF NO	GRAPHIC REF	PART NUMBER	QTY	PART NAME 1 2 3 4 5 6 (PRODUCT LEVEL)	SEE PAGE
	1	1	**3B-8489**	3	FITTING-GREASE	
	2	1	**4I-4618**	1	PIN AS	
	3	1	**4I-4620**	1	PIN AS	
	4	1	**093-0349**	2	WASHER (22X60X6-MM THK)	
	5	1	**093-0363**	1	SPACER (83X120X12-MM THK)	
	6	1	**118-5982**	1	SPACER (73X105X14-MM THK)	
	7	1	**166-1486**	2	SHIM (2-MM THK)	
	8	1	**235-7679**	2	SEAL-LIP TYPE	
	9	1	**248-1742**	1	STICK & BEARING AS	
	9A	1	**228-5654**	2	BEARING-SLEEVE	
	9B	1	**228-5614**	2	BEARING-SLEEVE	
	9C	1	**228-5615**	2	BEARING-SLEEVE	
	10	1	**166-1495**	2	SEAL-LIP TYPE	
	11	1	**166-1496**	2	SEAL-LIP TYPE	
	12	1	**8T-4123**	2	WASHER (22X35X3.5-MM THK)	
M	13	1	**8T-4780**	2	BOLT (M20X2.5X30-MM)	

M-METRIC PART

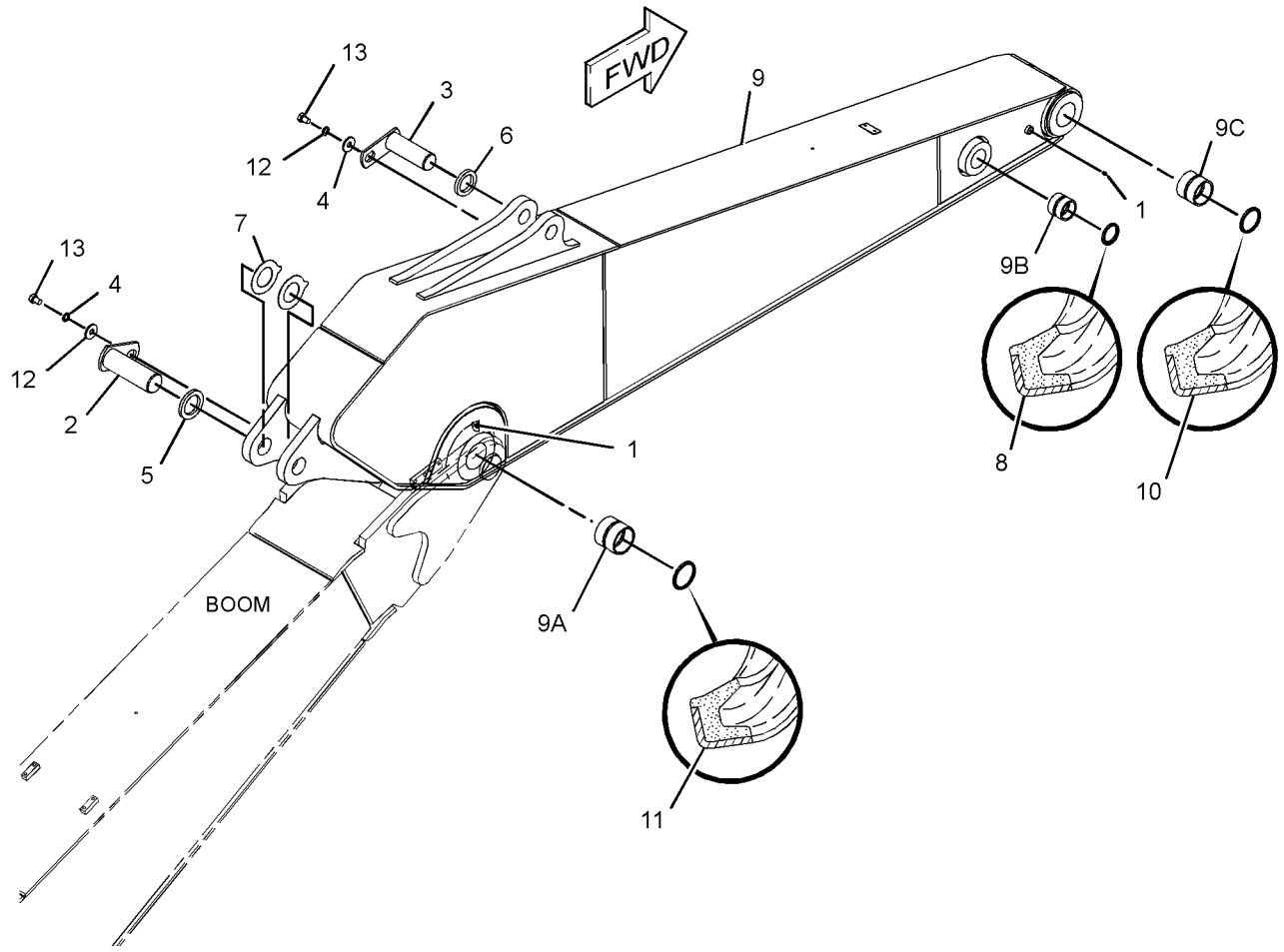

GRAPHIC #1 **<END>** g01249679

235-7618 STICK GP-HOE

S/N: MNB1-UP; WDK1-UP
3.2-M (10.5-FT)
PART OF 229-1855 STICK AR-HOE
AN ATTACHMENT

SMCS-6502 **i02454566**

NOTE	REF NO	GRAPHIC REF	PART NUMBER	QTY	PART NAME 1 2 3 4 5 6 (PRODUCT LEVEL)	SEE PAGE
	1	1	**3B-8489**	3	FITTING-GREASE	
	2	1	**4I-4618**	1	PIN AS	
	3	1	**4I-4620**	1	PIN AS	
	4	1	**093-0349**	2	WASHER (22X60X6-MM THK)	
	5	1	**093-0363**	1	SPACER (83X120X12-MM THK)	
	6	1	**118-5982**	1	SPACER (73X105X14-MM THK)	
	7	1	**166-1486**	2	SHIM (2-MM THK)	
	8	1	**166-1495**	2	SEAL-LIP TYPE	
	9	1	**166-1497**	2	SEAL-LIP TYPE	
	10	1	**235-7679**	2	SEAL-LIP TYPE	
	11	1	**251-2680**	1	STICK & BEARING AS	
	11A	1	**228-5614**	2	BEARING-SLEEVE	
	11B	1	**228-5615**	2	BEARING-SLEEVE	
	11C	1	**278-9256**	2	BEARING-SLEEVE	
	12	1	**8T-4123**	2	WASHER (22X35X3.5-MM THK)	
M	13	1	**8T-4780**	2	BOLT (M20X2.5X30-MM)	

M-METRIC PART

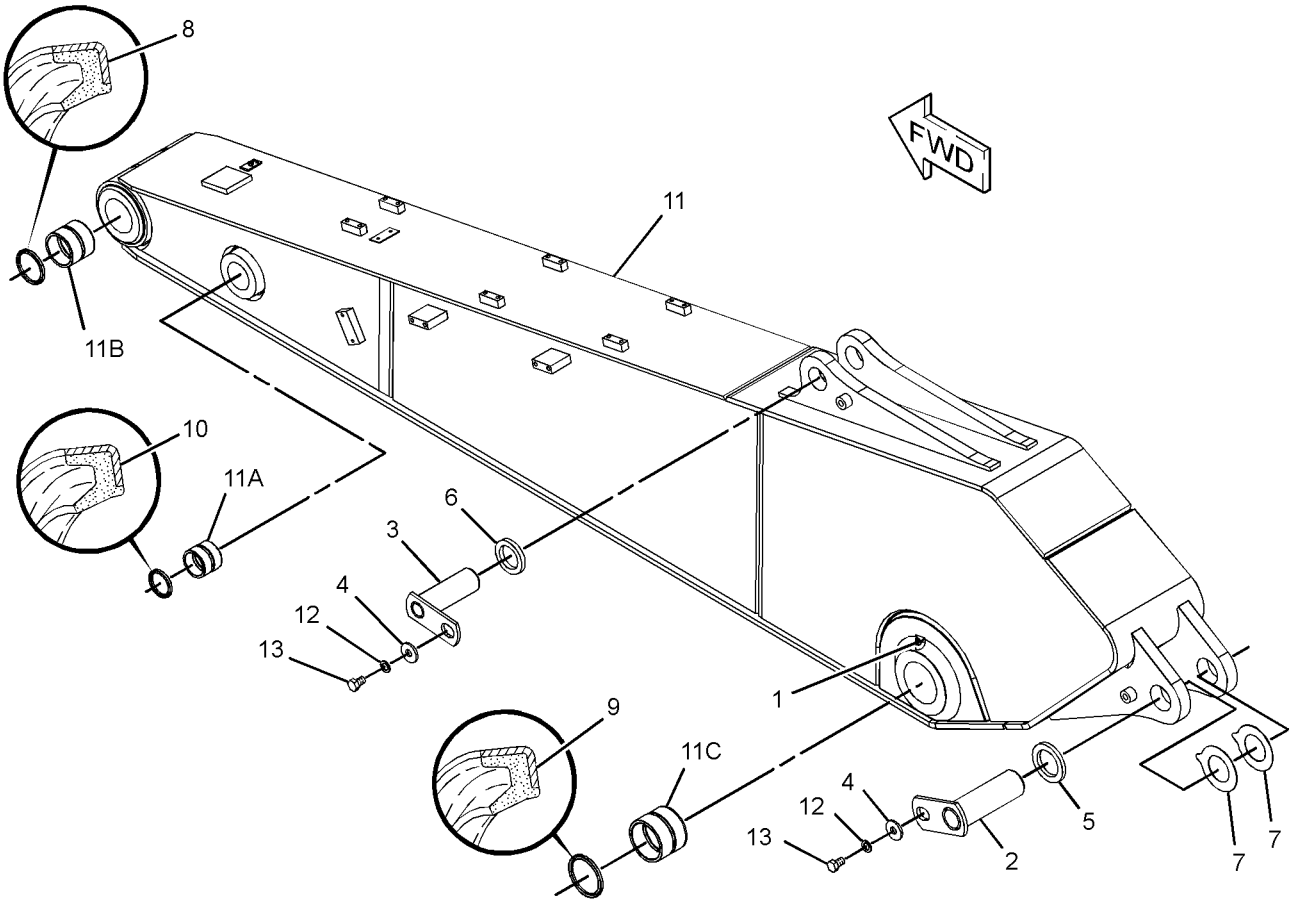

GRAPHIC #1 **<END>** g01243476

IMPLEMENTS

235-7619 STICK GP-HOE

S/N: MNB1-UP; WDK1-UP
2.5-M (8.2-FT)
PART OF 229-1769 STICK AR-HOE
AN ATTACHMENT

SMCS-6502 **i02347161**

NOTE	REF NO	GRAPHIC REF	PART NUMBER	QTY	PART NAME 1 2 3 4 5 6 (PRODUCT LEVEL)	SEE PAGE
	1	1	**3B-8489**	3	FITTING-GREASE	
	2	1	**4I-4618**	2	PIN AS	
	3	1	**093-0349**	2	WASHER (22X60X6-MM THK)	
	4	1	**093-0363**	2	SPACER (83X120X12-MM THK)	
	5	1	**166-1486**	2	SHIM (2-MM THK)	
	6	1	**166-1496**	2	SEAL-LIP TYPE	
	7	1	**166-1497**	2	SEAL-LIP TYPE	
	8	1	**235-7679**	2	SEAL-LIP TYPE	
	9	1	**251-2563**	1	STICK & BEARING AS	
	9A	1	**228-5617**	2	BEARING-SLEEVE	
	9B	1	**241-7231**	2	BEARING-SLEEVE	
	9C	1	**241-7341**	2	BEARING-SLEEVE	
	10	1	**8T-4123**	2	WASHER (22X35X3.5-MM THK)	
M	11	1	**8T-4780**	2	BOLT (M20X2.5X30-MM)	

M-METRIC PART

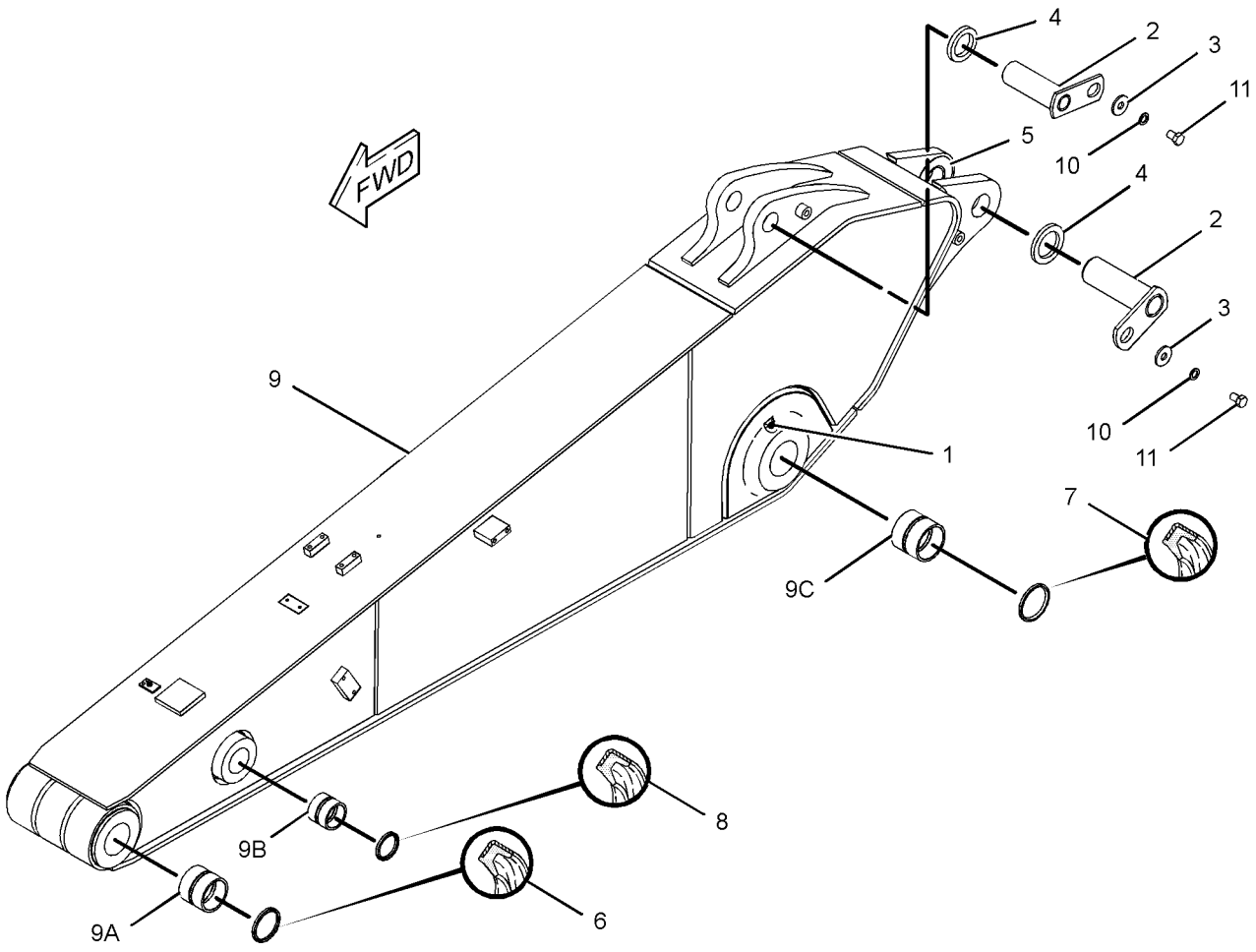

GRAPHIC #1 **<END>** g01179043

244-4359 STICK GP-HOE

S/N: MNB1-UP; WDK1-UP
3-M (9.8-FT)
PART OF 240-4030 STICK AR-HOE
AN ATTACHMENT

SMCS-6502 **i02481600**

NOTE	REF NO	GRAPHIC REF	PART NUMBER	QTY	PART NAME 1 2 3 4 5 6 (PRODUCT LEVEL)	SEE PAGE
	1	1	**3B-8489**	3	FITTING-GREASE	
	2	1	**4I-4618**	1	PIN AS	
	3	1	**4I-4620**	1	PIN AS	
	4	1	**093-0349**	2	WASHER (22X60X6-MM THK)	
	5	1	**093-0363**	1	SPACER (83X120X12-MM THK)	
	6	1	**118-5982**	1	SPACER (73X105X14-MM THK)	
	7	1	**166-1486**	2	SHIM (2-MM THK)	
	8	1	**235-7679**	2	SEAL-LIP TYPE	
	9	1	**248-1743**	1	STICK & BEARING AS	
	9A	1	**228-5654**	2	BEARING-SLEEVE	
	9B	1	**228-5614**	2	BEARING-SLEEVE	
	9C	1	**228-5615**	2	BEARING-SLEEVE	
	10	1	**166-1495**	2	SEAL-LIP TYPE	
	11	1	**166-1496**	2	SEAL-LIP TYPE	
	12	1	**8T-4123**	2	WASHER (22X35X3.5-MM THK)	
M	13	1	**8T-4780**	2	BOLT (M20X2.5X30-MM)	

M-METRIC PART

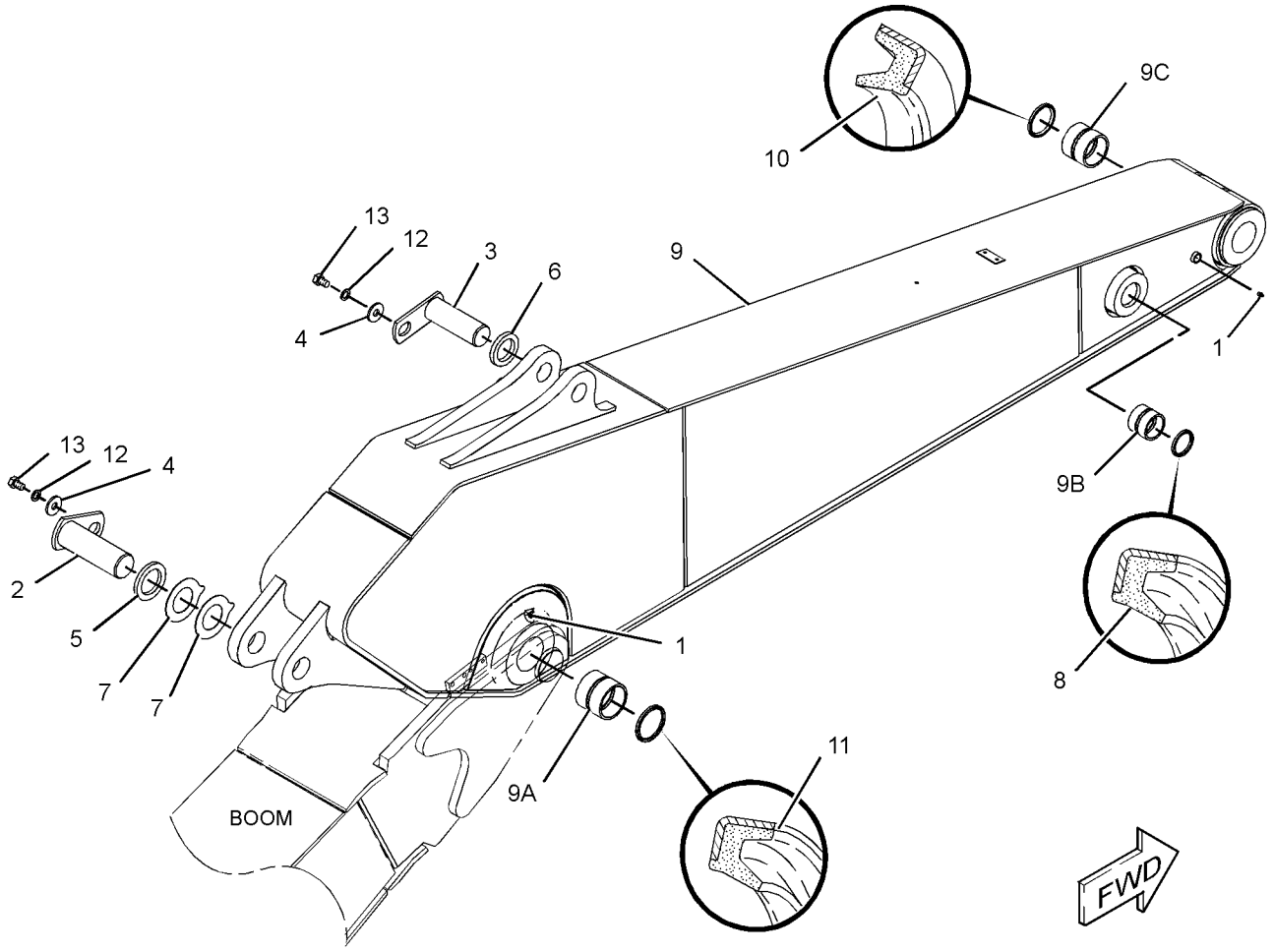

GRAPHIC #1 **<END>** g01249690

282-4552 STICK GP-HOE—ACCUGRADE

S/N: MNB1-UP; WDK1-UP
3.2-M (10.5-FT)
PART OF 275-3704 STICK AR-HOE
AN ATTACHMENT

SMCS-6502 **i02491377**

NOTE	REF NO	GRAPHIC REF	PART NUMBER	QTY	PART NAME 1 2 3 4 5 6 (PRODUCT LEVEL)	SEE PAGE
	1	1	**3B-8489**	3	FITTING-GREASE	
	2	1	**4I-4618**	1	PIN AS	
	3	1	**4I-4620**	1	PIN AS	
	4	1	**093-0349**	2	WASHER (22X60X6-MM THK)	
	5	1	**093-0363**	1	SPACER (83X120X12-MM THK)	
	6	1	**118-5982**	1	SPACER (73X105X14-MM THK)	
	7	1	**166-1486**	2	SHIM (2-MM THK)	
	8	1	**166-1496**	2	SEAL-LIP TYPE	
	9	1	**235-7679**	2	SEAL-LIP TYPE	
	10	1	**282-4553**	1	STICK & BEARING AS	
	10A	1	**228-5614**	2	BEARING-SLEEVE	
	10B	1	**228-5615**	2	BEARING-SLEEVE	
	10C	1	**228-5654**	2	BEARING-SLEEVE	
	11	1	**166-1495**	2	SEAL-LIP TYPE	
	12	1	**8T-4123**	2	WASHER (22X35X3.5-MM THK)	
M	13	1	**8T-4780**	2	BOLT (M20X2.5X30-MM)	

M-METRIC PART

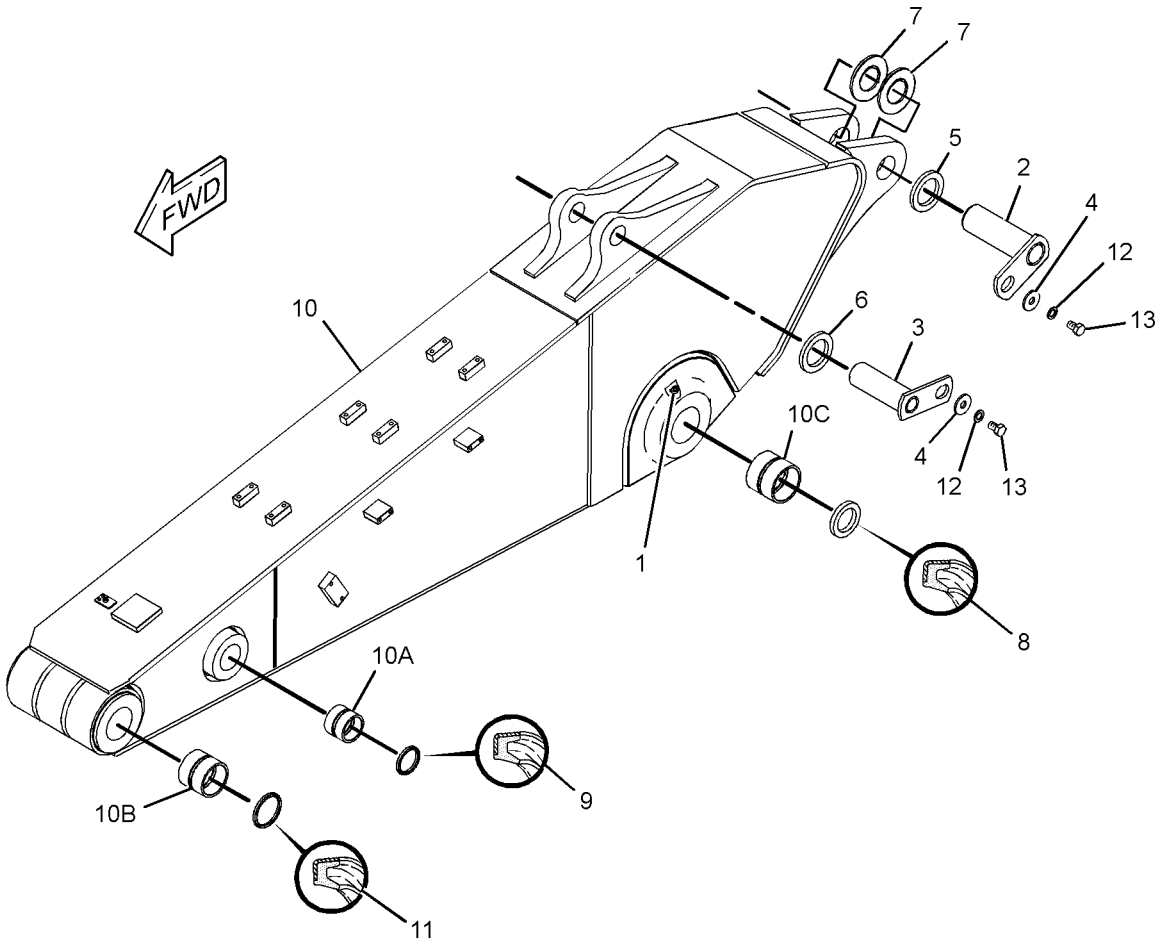

GRAPHIC #1 **<END>** g01238208

WORK TOOLS

250-6418 ADJUSTER GP-BUCKET

S/N: MNB1-UP; WDK1-UP
PART OF 229-7910, 239-2565, 239-2571, 239-2714 BUCKET & ADJUSTER GP
AN ATTACHMENT

SMCS-6513, 6700 **i02555580**

NOTE	REF NO	GRAPHIC REF	PART NUMBER	QTY	PART NAME 1 2 3 4 5 6 (PRODUCT LEVEL)	SEE PAGE
	1	1	**087-5974**	1	PIN	
B	2	1	**087-5975**	4	SHIM (0.5-MM THK)	
B	3	1	**087-5976**	6	SHIM (1-MM THK)	
	4	1	**134-8950**	1	PLATE	
	5	1	**250-6417**	1	FLANGE	
M	6	1	**8T-4193**	6	BOLT (M16X2X50-MM)	
	7	1	**9X-8257**	6	WASHER (17.5X30X3.5-MM THK)	

B-USE AS REQUIRED
M-METRIC PART

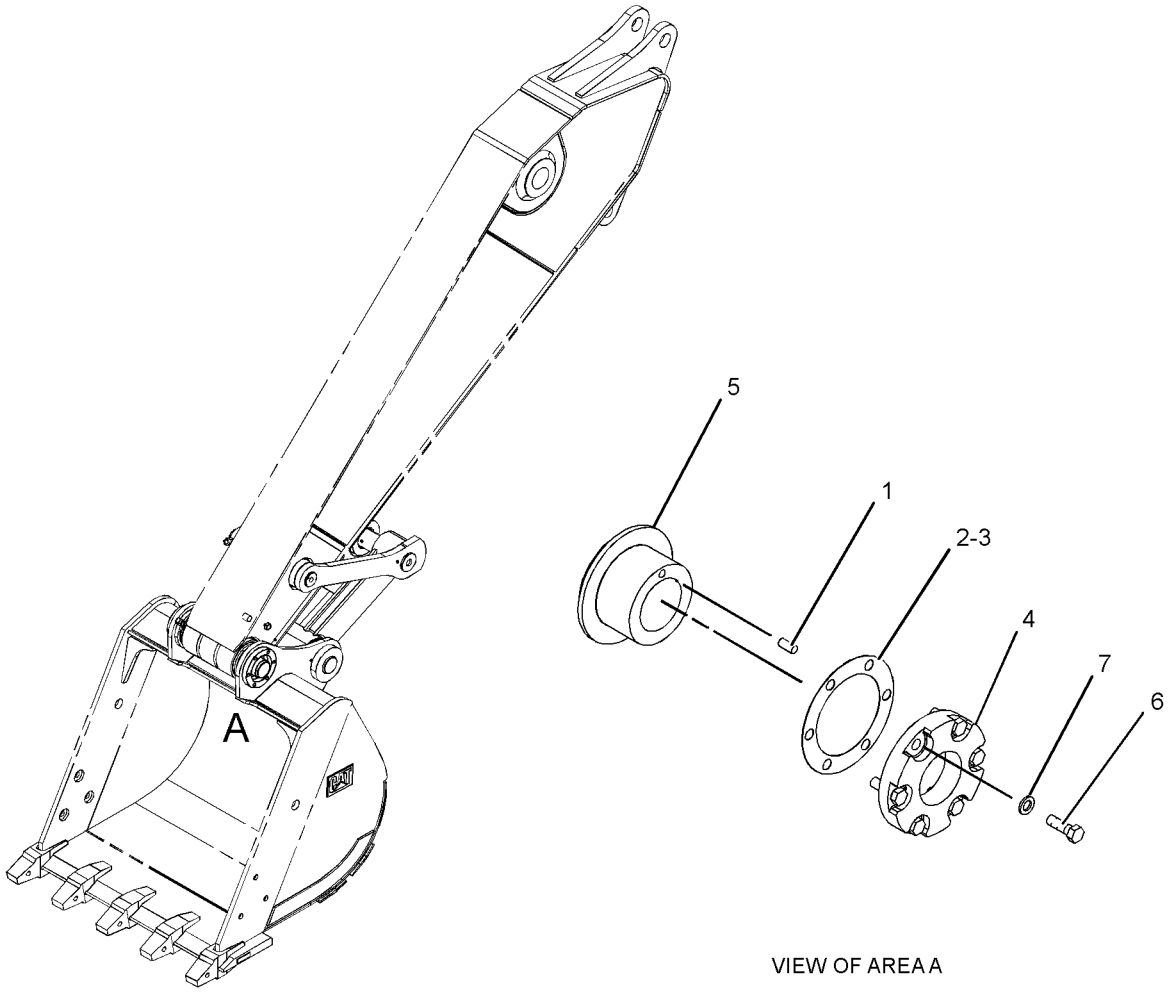

VIEW OF AREA A

GRAPHIC #1 **<END>** g01218311

WORK TOOLS

250-6430 ADJUSTER GP-BUCKET

S/N: MNB1-UP; WDK1-UP

PART OF 239-2699, 239-2702, 239-2705, 289-3488, 289-3490, 295-2010 BUCKET & ADJUSTER GP

AN ATTACHMENT

SMCS-6513, 6700 **i02502437**

NOTE	REF NO	GRAPHIC REF	PART NUMBER	QTY	PART NAME 1 2 3 4 5 6 (PRODUCT LEVEL)	SEE PAGE
	1	1	**4I-6626**	1	PIN	
	2	1	**4I-6604**	4	SHIM (0.5-MM THK)	
	3	1	**4I-6605**	6	SHIM (1-MM THK)	
	4	1	**134-8951**	1	PLATE	
	5	1	**250-6457**	1	FLANGE	
M	6	1	**7X-2563**	5	BOLT (M20X2.5X60-MM)	
	7	1	**8T-4123**	5	WASHER (22X35X3.5-MM THK)	

M-METRIC PART

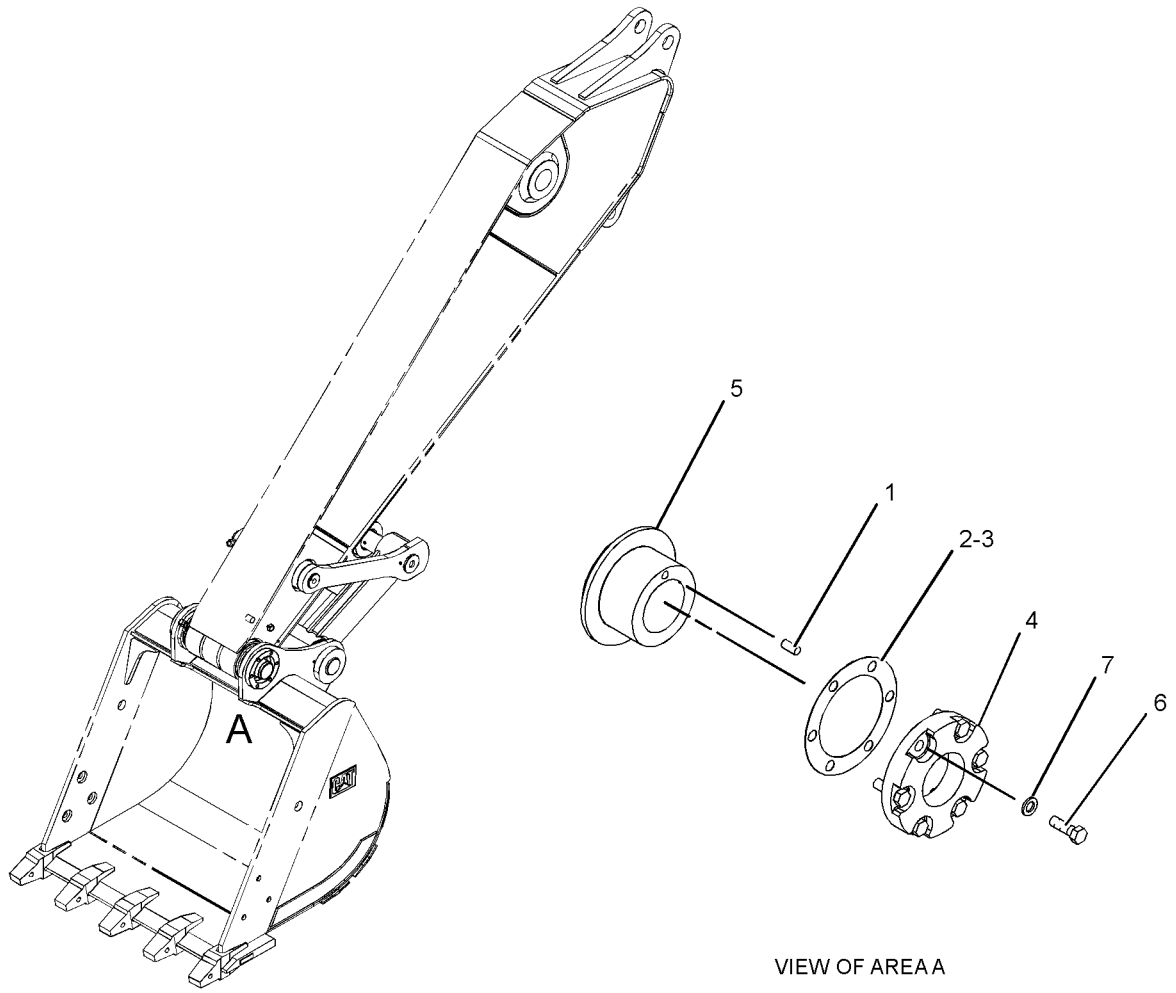

VIEW OF AREA A

GRAPHIC #1 **<END>** g01218311

WORK TOOLS

229-7910 BUCKET & ADJUSTER GP—EXCAVATION, CB-FAMILY

S/N: MNB1-UP; WDK1-UP

1405-MM (55-IN) WIDE X 1.3-CU M (1.7-CU YD) CAPACITY

AN ATTACHMENT

SMCS-6503, 6513 **i02909121**

NOTE	PART NUMBER	QTY	PART NAME 1 2 3 4 5 6 (PRODUCT LEVEL)	SEE PAGE
Y	**250-6418**	1	ADJUSTER GP-BUCKET	875
Y	**229-7911**	1	BUCKET AS-EXCAVATION	886

Y-SEPARATE ILLUSTRATION

<END>

239-2565 BUCKET & ADJUSTER GP—EXCAVATION, CB-FAMILY

S/N: MNB1-UP; WDK1-UP

1320-MM (52-IN) WIDE X 1.1-CU M (1.4-CU YD) CAPACITY. J-400 ADAPTERS, (5X)

AN ATTACHMENT

SMCS-6503, 6513 **i02556110**

NOTE	REF NO	GRAPHIC REF	PART NUMBER	QTY	PART NAME 1 2 3 4 5 6 (PRODUCT LEVEL)	SEE PAGE
	1	1	*250-6415*	1	BUCKET AS-EXCAVATION	
	2	1	**255-0493**	1	EDGE AS	
	2A	1	**6I-6406**	1	ADAPTER-TIP (J-400, 2-STRAP, LH)	
	2B	1	**6I-6404**	3	ADAPTER-TIP (J-400, 2-STRAP, CENTER)	
	2C	1	**6I-6405**	1	ADAPTER-TIP (J-400, 2-STRAP, RH)	
	2D	1	**8P-9770**	1	PLATE	
	3	1	**239-2733**	2	PLATE-WEAR	
	4	1	**255-0496**	2	PLATE-WEAR	
	5	1	**255-0497**	1	PLATE-REINFORCEMENT	
	6	1	**2C-9259**	2	PLATE-IDENTIFICATION (CAT)	
Y	7	1	**250-6418**	1	ADJUSTER GP-BUCKET	875

Y-SEPARATE ILLUSTRATION

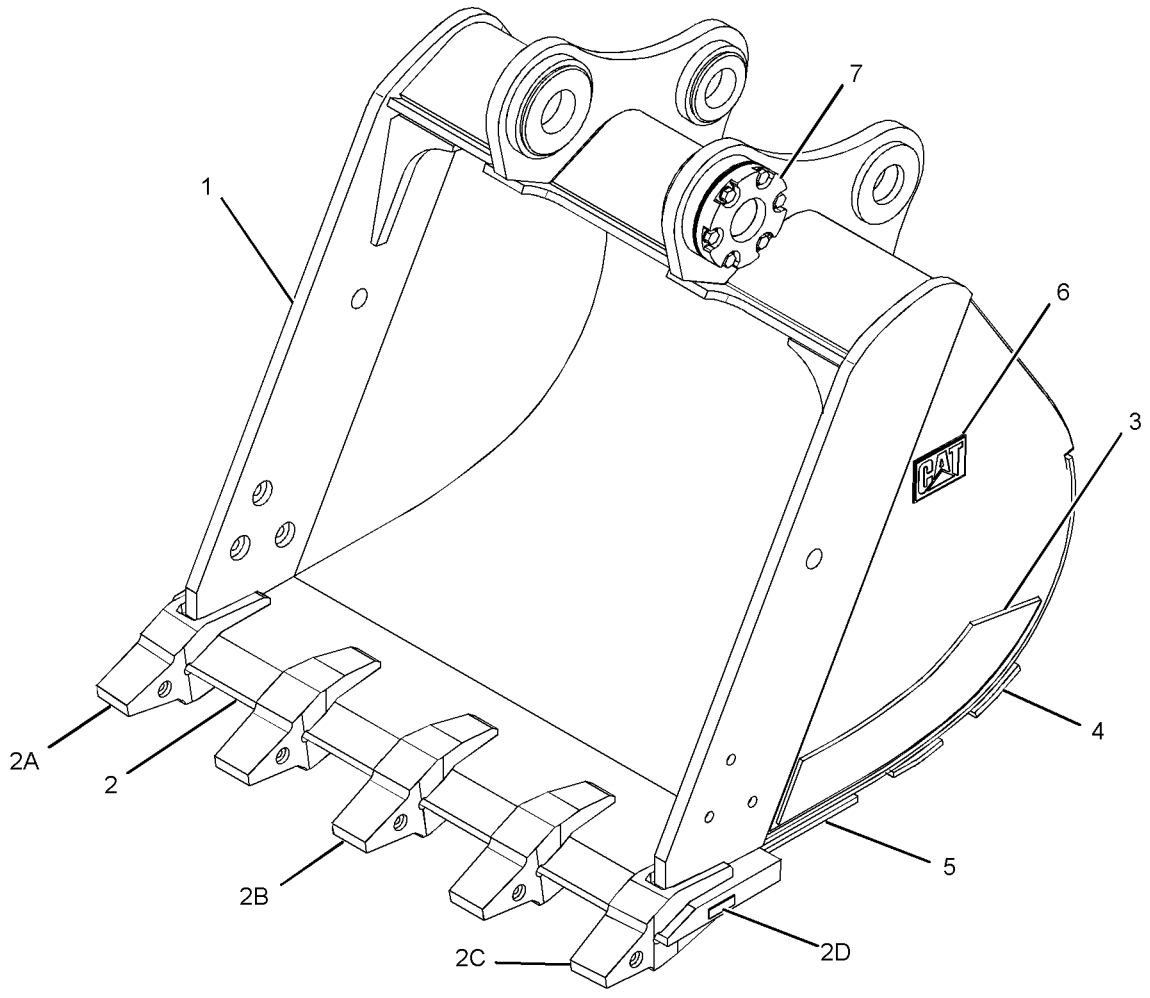

GRAPHIC #1

<END>

g01281528

WORK TOOLS

239-2571 BUCKET & ADJUSTER GP—MASS EXCAVATION, CB-FAMILY

S/N: MNB1-UP; WDK1-UP

1625-MM (64-IN) WIDE X 1.5-CU M (2.0-CU YD) CAPACITY. J-400 ADAPTERS, (6X)

AN ATTACHMENT

SMCS-6503, 6513 **i02602122**

NOTE	REF NO	GRAPHIC REF	PART NUMBER	QTY	PART NAME 1 2 3 4 5 6 (PRODUCT LEVEL)	SEE PAGE
	1	1	*239-2572*	1	BUCKET AS-MASS EXCAVATOR	
	2	1	**255-0510**	1	EDGE AS	
	2A	1	**6I-6406**	1	ADAPTER-TIP (J-400, 2-STRAP, LH)	
	2B	1	**6I-6404**	4	ADAPTER-TIP (J-400, 2-STRAP, CENTER)	
	2C	1	**6I-6405**	1	ADAPTER-TIP (J-400, 2-STRAP, RH)	
	2D	1	**8P-9770**	1	PLATE	
	3	1	**250-6364**	2	PLATE-WEAR	
	4	1	**255-0509**	3	PLATE-WEAR	
	5	1	**255-0508**	1	PLATE-REINFORCEMENT	
	6	1	**2C-9259**	1	PLATE-IDENTIFICATION (CAT)	
Y	7	1	**250-6418**	1	ADJUSTER GP-BUCKET	875

Y-SEPARATE ILLUSTRATION

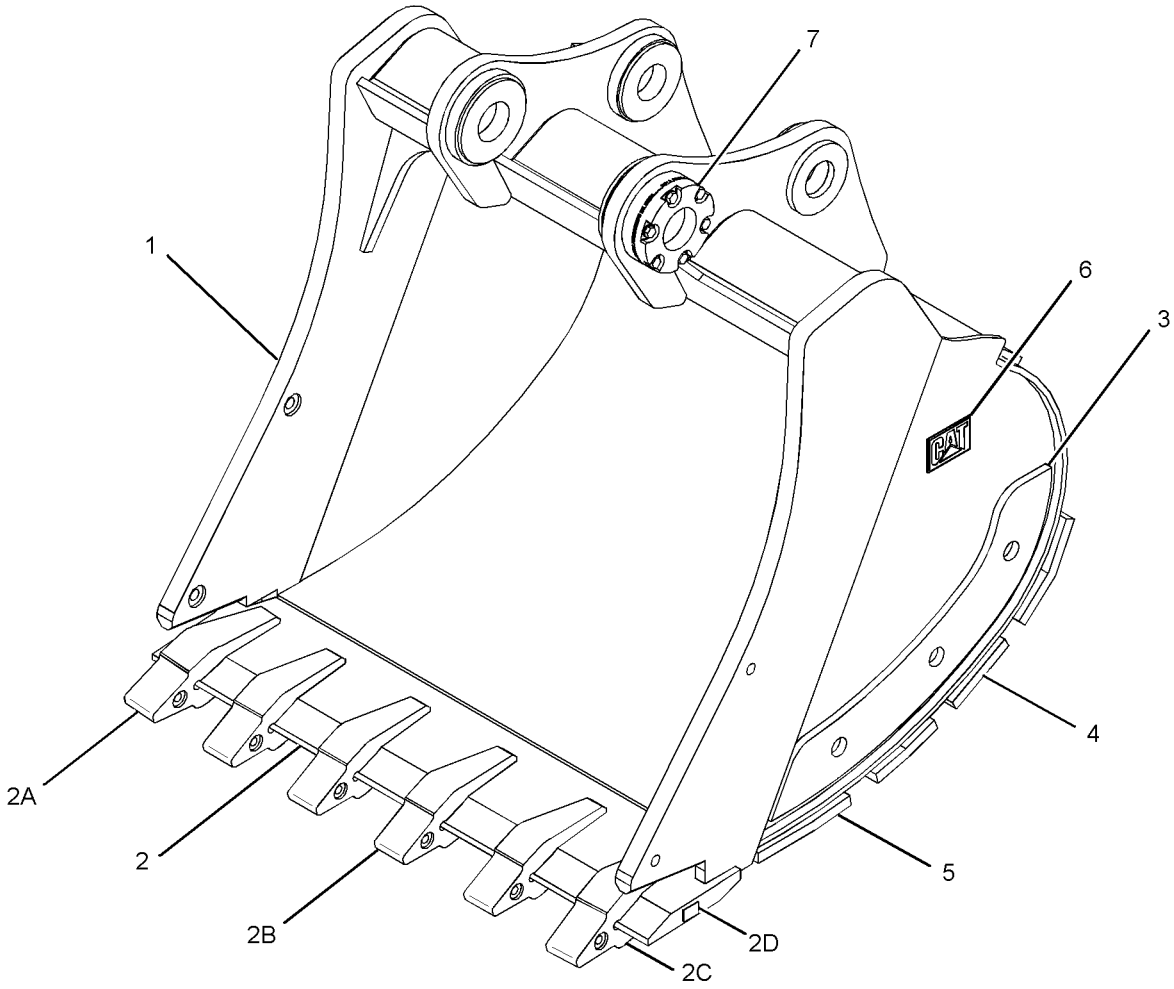

GRAPHIC #1 **<END>** g01361079

WORK TOOLS

239-2699 BUCKET & ADJUSTER GP—EXCAVATION, DB-FAMILY

S/N: MNB1-UP; WDK1-UP

1472-MM (58-IN) WIDE X 1.2-CU M (1.8-CU YD) CAPACITY. J-400 ADAPTERS, (5X)

AN ATTACHMENT

SMCS-6503, 6513 **i02527738**

NOTE	REF NO	GRAPHIC REF	PART NUMBER	QTY	PART NAME 1 2 3 4 5 6 (PRODUCT LEVEL)	SEE PAGE
	1	1	**239-2700**	1	BUCKET AS-EXCAVATION (DB-FAMILY)	
	2	1	**239-2758**	1	EDGE AS	
	2A	1	**6I-6405**	1	ADAPTER-TIP (J-400, 2-STRAP, RH)	
	2B	1	**6I-6404**	3	ADAPTER-TIP (J-400, 2-STRAP, CENTER)	
	2C	1	**6I-6406**	1	ADAPTER-TIP (J-400, 2-STRAP, LH)	
	2D	1	**8P-9770**	1	PLATE	
	3	1	**239-2591**	3	PLATE-WEAR	
	4	1	**239-2590**	1	PLATE-REINFORCEMENT	
	5	1	**239-2445**	2	PLATE-WEAR	
	6	1	**2C-9259**	2	PLATE-IDENTIFICATION (CAT)	
Y	7	1	**250-6430**	1	ADJUSTER GP-BUCKET (DB-FAMILY)	876

Y-SEPARATE ILLUSTRATION

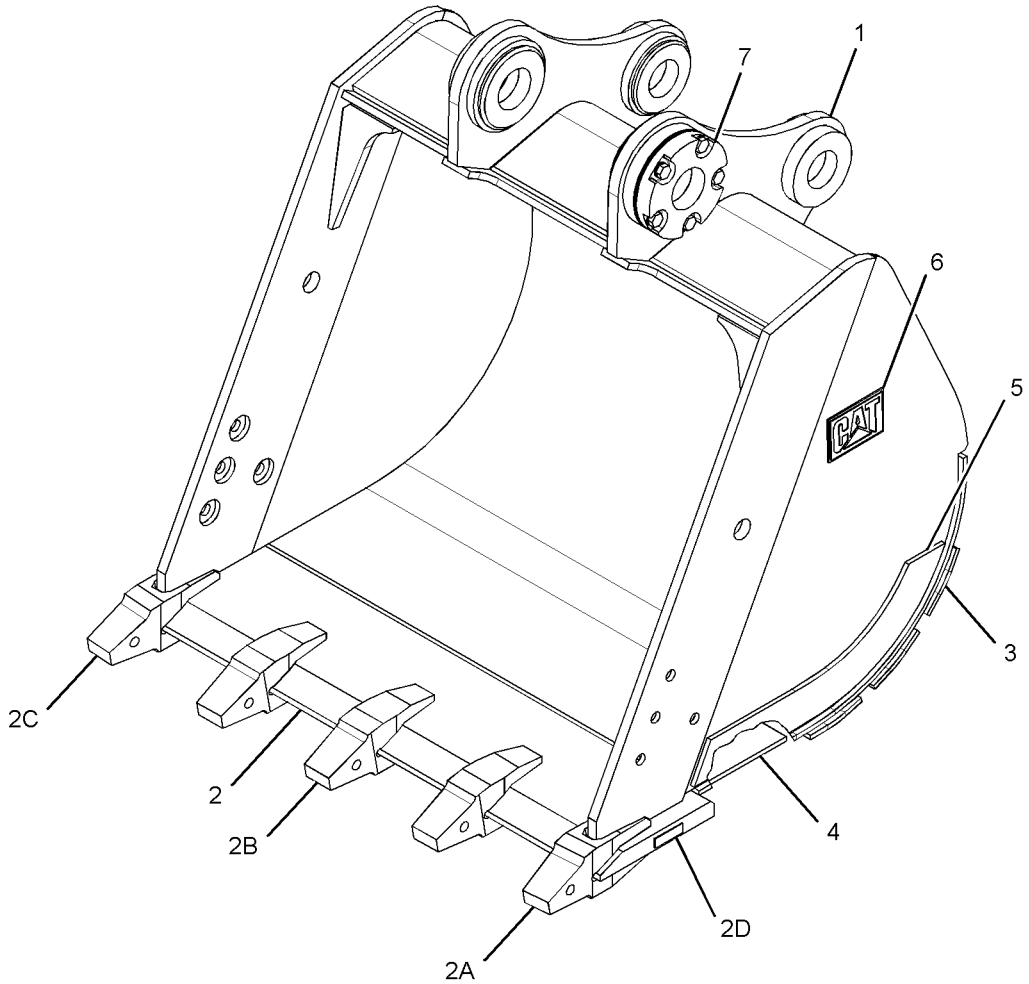

GRAPHIC #1 **<END>** g01343068

239-2702 BUCKET & ADJUSTER GP—EXCAVATION, DB-FAMILY

S/N: MNB1-UP; WDK1-UP
1559-MM (61-IN) WIDE X 1.3-CU M (2.0-CU YD) CAPACITY. J-400 ADAPTERS, (5X)
PART OF 239-2701 BUCKET AR-EXCAVATION
AN ATTACHMENT

SMCS-6503, 6513 **i02527746**

NOTE	REF NO	GRAPHIC REF	PART NUMBER	QTY	PART NAME 1 2 3 4 5 6 (PRODUCT LEVEL)	SEE PAGE
	1	1	**239-2703**	1	BUCKET AS-EXCAVATION (DB-FAMILY)	
	2	1	**239-2738**	1	EDGE AS	
	2A	1	**6I-6406**	1	ADAPTER-TIP (J-400, 2-STRAP, LH)	
	2B	1	**6I-6404**	3	ADAPTER-TIP (J-400, 2-STRAP, CENTER)	
	2C	1	**6I-6405**	1	ADAPTER-TIP (J-400, 2-STRAP, RH)	
	2D	1	**8P-9770**	1	PLATE	
	3	1	**239-2432**	3	PLATE-WEAR	
	4	1	**239-2431**	1	PLATE-REINFORCEMENT	
	5	1	**239-2445**	2	PLATE-WEAR	
	6	1	**2C-9259**	2	PLATE-IDENTIFICATION (CAT)	
Y	7	1	**250-6430**	1	ADJUSTER GP-BUCKET (DB-FAMILY)	876

Y-SEPARATE ILLUSTRATION

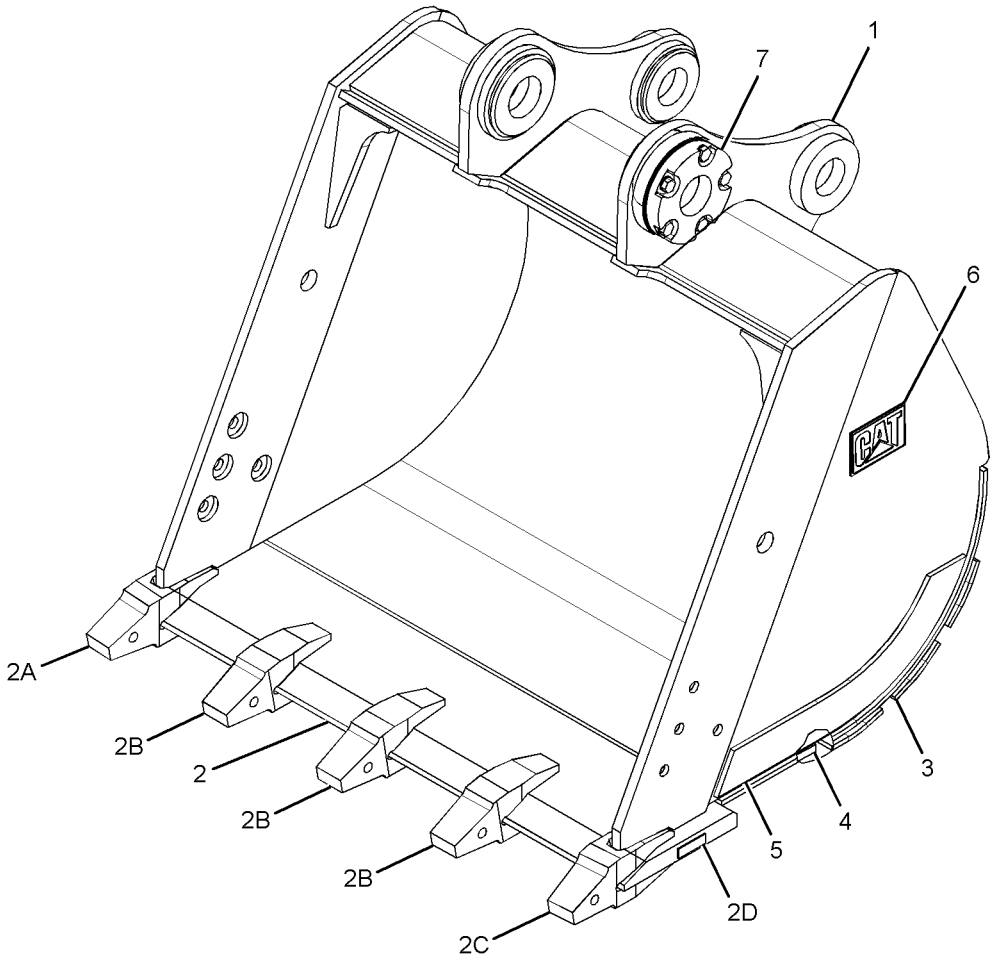

GRAPHIC #1 **<END>** g01332132

239-2705 BUCKET & ADJUSTER GP—MASS EXCAVATION, DB-FAMILY

S/N: MNB1-UP; WDK1-UP

1538-MM (61-IN) WIDE X 1.6-CU M (2.1-CU YD) CAPACITY. J-400 ADAPTERS, (6X)

AN ATTACHMENT

SMCS-6503, 6513 **i02527759**

NOTE	REF NO	GRAPHIC REF	PART NUMBER	QTY	PART NAME 1 2 3 4 5 6 (PRODUCT LEVEL)	SEE PAGE
	1	1	**255-0370**	1	EDGE AS	
	1A	1	**6I-6406**	1	ADAPTER-TIP (J-400, 2-STRAP, LH)	
	1B	1	**6I-6404**	4	ADAPTER-TIP (J-400, 2-STRAP, CENTER)	
	1C	1	**6I-6405**	1	ADAPTER-TIP (J-400, 2-STRAP, RH)	
	1D	1	**8P-9770**	1	PLATE	
	2	1	**255-0369**	2	PLATE-WEAR	
	3	1	**229-7894**	1	PLATE-WEAR	
	4	1	**229-7893**	2	PLATE-WEAR	
	5	1	**239-2479**	1	PLATE-WEAR	
	6	1	**2C-9259**	2	PLATE-IDENTIFICATION (CAT)	
Y	7	1	**250-6430**	1	ADJUSTER GP-BUCKET (DB-FAMILY)	876

Y-SEPARATE ILLUSTRATION

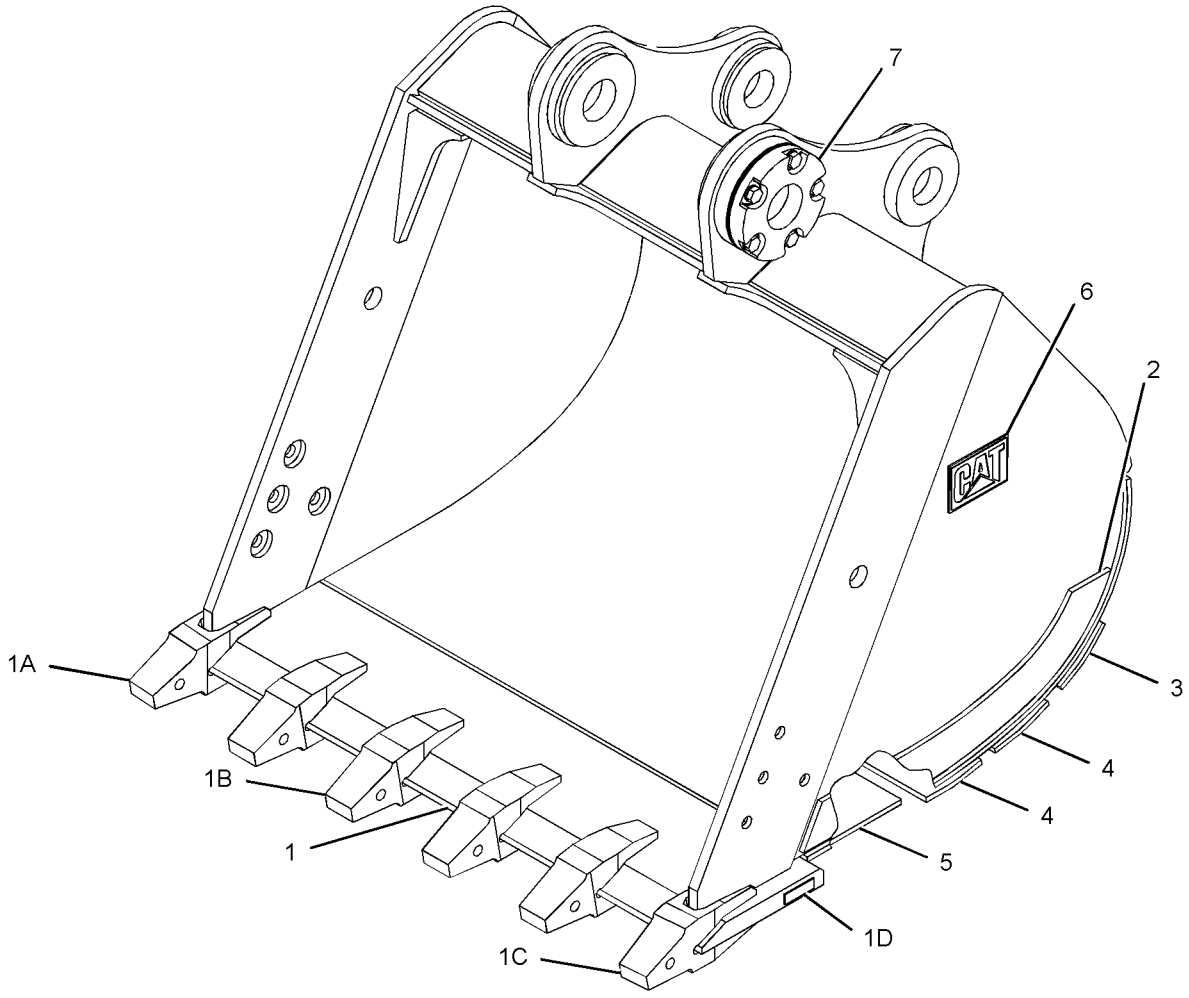

GRAPHIC #1

<END>

g01276539

239-2714 BUCKET & ADJUSTER GP–EXTREME EXCAVATION, CB-FAMILY

S/N: MNB1-UP; WDK1-UP

1450-MM (57-IN) WIDE X 1.3-CU M (1.7-CU YD) CAPACITY. J-400 ADAPTERS, (6X)

AN ATTACHMENT

SMCS-6503, 6513 **i03093501**

NOTE	PART NUMBER	QTY	PART NAME 1 2 3 4 5 6 (PRODUCT LEVEL)	SEE PAGE
Y	**250-6418**	1	ADJUSTER GP-BUCKET	875
Y	**250-6444**	1	BUCKET AS-MASS EXCAVATOR	889

Y-SEPARATE ILLUSTRATION

<END>

289-3488 BUCKET & ADJUSTER GP–HEAVY-DUTY, DB-FAMILY

S/N: MNB1-UP; WDK1-UP

1626-MM (64-IN) WIDE X 2.0-CU M (2.62-CU YD) CAPACITY. K-110 ADAPTERS, (5X)

AN ATTACHMENT

SMCS-6503, 6513 **i02830856**

NOTE	PART NUMBER	QTY	PART NAME 1 2 3 4 5 6 (PRODUCT LEVEL)	SEE PAGE
Y	**250-6430**	1	ADJUSTER GP-BUCKET (DB-FAMILY)	876
Y	*289-3489*	1	BUCKET AS-HEAVY DUTY (DB-FAMILY)	887

Y-SEPARATE ILLUSTRATION

<END>

289-3490 BUCKET & ADJUSTER GP–DB-FAMILY

S/N: MNB1-UP; WDK1-UP

1778-MM (70-IN) WIDE X 2.20-CU M (2.87-CU YD) CAPACITY. K-110 ADAPTERS, (5X)

AN ATTACHMENT

SMCS-6503, 6513 **i03024161**

NOTE	PART NUMBER	QTY	PART NAME 1 2 3 4 5 6 (PRODUCT LEVEL)	SEE PAGE
Y	**250-6430**	1	ADJUSTER GP-BUCKET (DB-FAMILY)	876
Y	*289-3491*	1	BUCKET AS-HEAVY DUTY	888

Y-SEPARATE ILLUSTRATION

<END>

295-2010 BUCKET & ADJUSTER GP—HEAVY-DUTY, DB-FAMILY

S/N: MNB1-UP; WDK1-UP

1490-MM (59-IN) WIDE X 1.8-CU M (2.35-CU YD) CAPACITY. K-110 ADAPTERS, (4X)

AN ATTACHMENT

SMCS-6503, 6513 **i02729008**

NOTE	REF NO	GRAPHIC REF	PART NUMBER	QTY	PART NAME 1 2 3 4 5 6 (PRODUCT LEVEL)	SEE PAGE
	1	1	**295-2014**	1	EDGE AS	
	1A	1	**264-2116**	1	ADAPTER-TIP (K-110, 2-STRAP, LH)	
	1B	1	**232-0114**	2	ADAPTER-TIP (K-110, 2-STRAP, CENTER)	
	1C	1	**264-2115**	1	ADAPTER-TIP (K-110, 2-STRAP, RH)	
	1D	1	**8P-9770**	1	PLATE	
	2	1	**295-2018**	1	PLATE AS-BOX	
	3	1	**290-2832**	2	PLATE-WEAR	
	4	1	**295-2016**	6	PLATE-WEAR	
	5	1	**295-2015**	1	PLATE-REINFORCEMENT	
	6	1	**2C-9259**	2	PLATE-IDENTIFICATION (CAT)	
Y	7	1	**250-6430**	1	ADJUSTER GP-BUCKET (DB-FAMILY)	876

Y-SEPARATE ILLUSTRATION

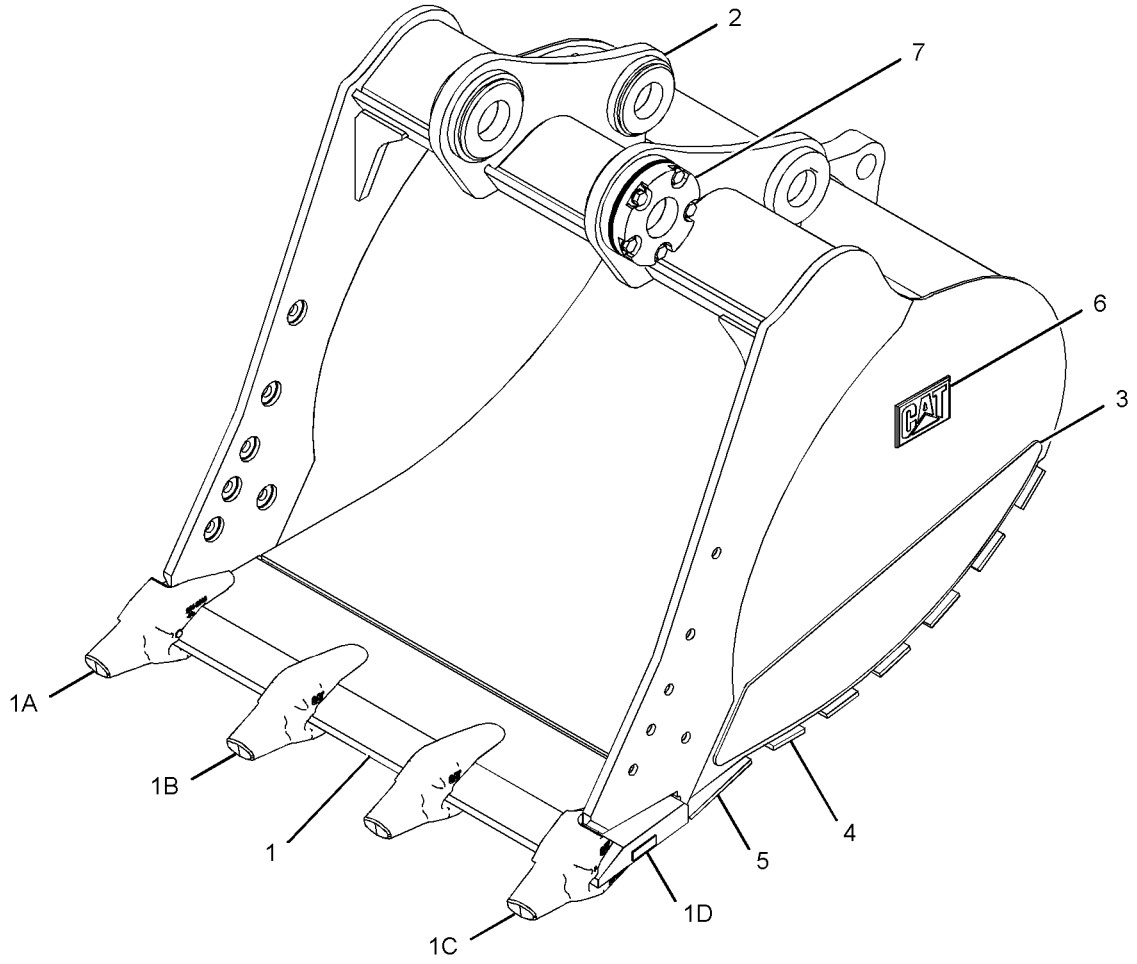

GRAPHIC #1 **<END>** g01341425

WORK TOOLS

239-2701 BUCKET AR-EXCAVATION—DB-FAMILY

S/N: MNB1-UP; WDK1-UP

1559-MM (61-IN) WIDE X 1.5-CU M (2.0-CU YD) CAPACITY. J-400 ADAPTERS, (5X)

AN ATTACHMENT

SMCS-6523 **i03093360**

NOTE	PART NUMBER	QTY	PART NAME 1 2 3 4 5 6 (PRODUCT LEVEL)	SEE PAGE
Y	*239-2702*	1	BUCKET & ADJUSTER GP (EXCAVATION, DB-FAMILY)	881
Y	*112-2481*	1	SIDECUTTER GP	890
Y	*127-0716*	5	TIP GP-LONG	891

Y-SEPARATE ILLUSTRATION

<END>

229-7911 BUCKET AS-EXCAVATION–CB-FAMILY

S/N: MNB1-UP; WDK1-UP

1405-MM (55-IN) WIDE X 1.3-CU M (1.7-CU YD) CAPACITY. K-100 ADAPTERS, (6X)

PART OF 229-7910 BUCKET & ADJUSTER GP

AN ATTACHMENT

SMCS-6523 **i03174721**

NOTE	REF NO	GRAPHIC REF	PART NUMBER	QTY	PART NAME 1 2 3 4 5 6 (PRODUCT LEVEL)	SEE PAGE
	1	1	**275-2715**	1	EDGE AS	
	1A	1	**220-9104**	4	ADAPTER-TIP (K-100, 2-STRAP, CENTER)	
	1B	1	**220-9105**	1	ADAPTER-TIP (K-100, 2-STRAP, RH)	
	1C	1	**220-9106**	1	ADAPTER-TIP (K-100, 2-STRAP, LH)	
	1D	1	**8P-9770**	1	PLATE	
	2	1	**275-2672**	3	PLATE-WEAR	
	3	1	**209-8009**	1	PLATE-WEAR	
	4	1	**2C-9259**	1	PLATE-IDENTIFICATION (CAT)	
	5	1	**229-8017**	2	PLATE-WEAR	

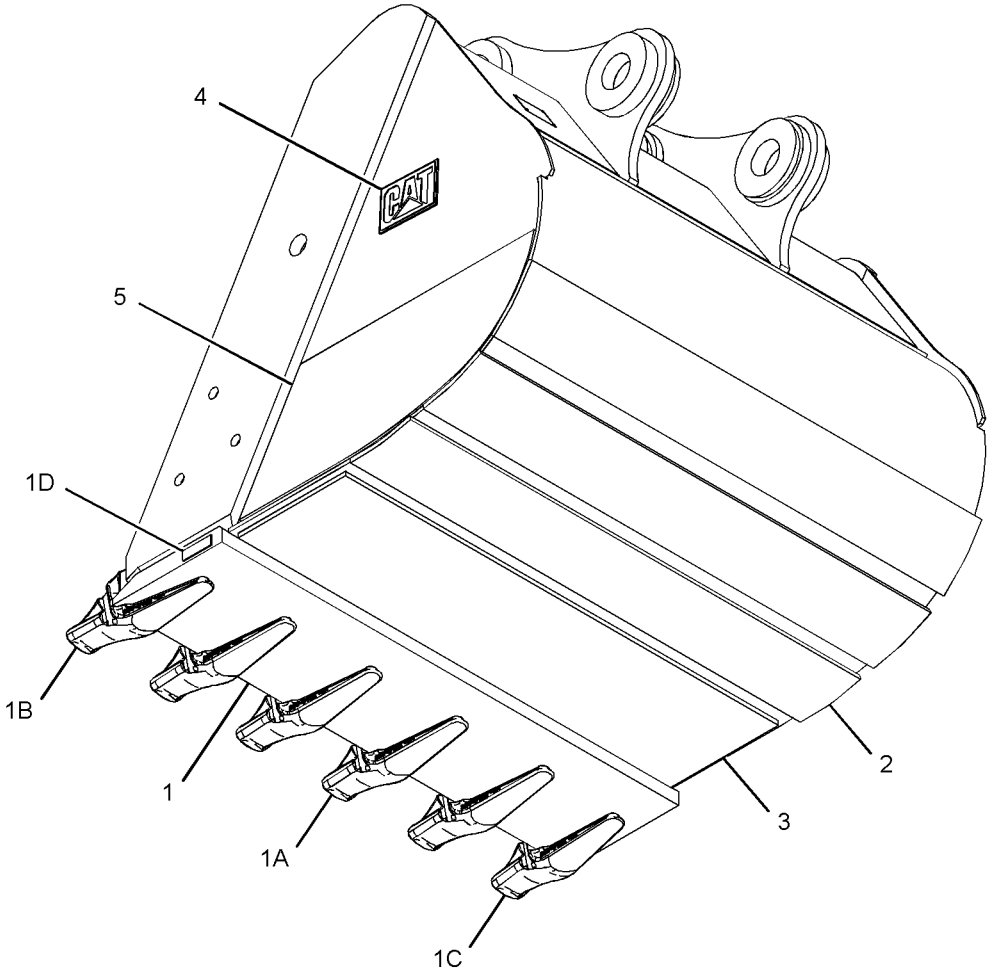

GRAPHIC #1 **<END>** g01626591

WORK TOOLS

289-3489 BUCKET AS-HEAVY DUTY–DB-FAMILY

S/N: MNB1-UP; WDK1-UP
1626-MM (64-IN) WIDE X 2.0PCU M (2.62-CU YD) CAPACITY. K-110 ADAPTERS, (5X)
PART OF 289-3488 BUCKET & ADJUSTER GP
AN ATTACHMENT

SMCS-6531 **i02830863**

NOTE	REF NO	GRAPHIC REF	PART NUMBER	QTY	PART NAME 1 2 3 4 5 6 (PRODUCT LEVEL)	SEE PAGE
	1	1	**290-2826**	1	EDGE AS	
	1A	1	**264-2115**	1	ADAPTER-TIP (K-110, 2-STRAP, RH)	
	1B	1	**232-0114**	3	ADAPTER-TIP (K-110, 2-STRAP, CENTER)	
	1C	1	**264-2116**	1	ADAPTER-TIP (K-110, 2-STRAP, LH)	
	1D	1	**8P-9770**	1	PLATE	
	2	1	**290-2849**	1	PLATE-REINFORCEMENT	
	3	1	**290-2852**	6	PLATE-WEAR	
	4	1	**290-2832**	2	PLATE-WEAR	
	5	1	**2C-9259**	2	PLATE-IDENTIFICATION (CAT)	

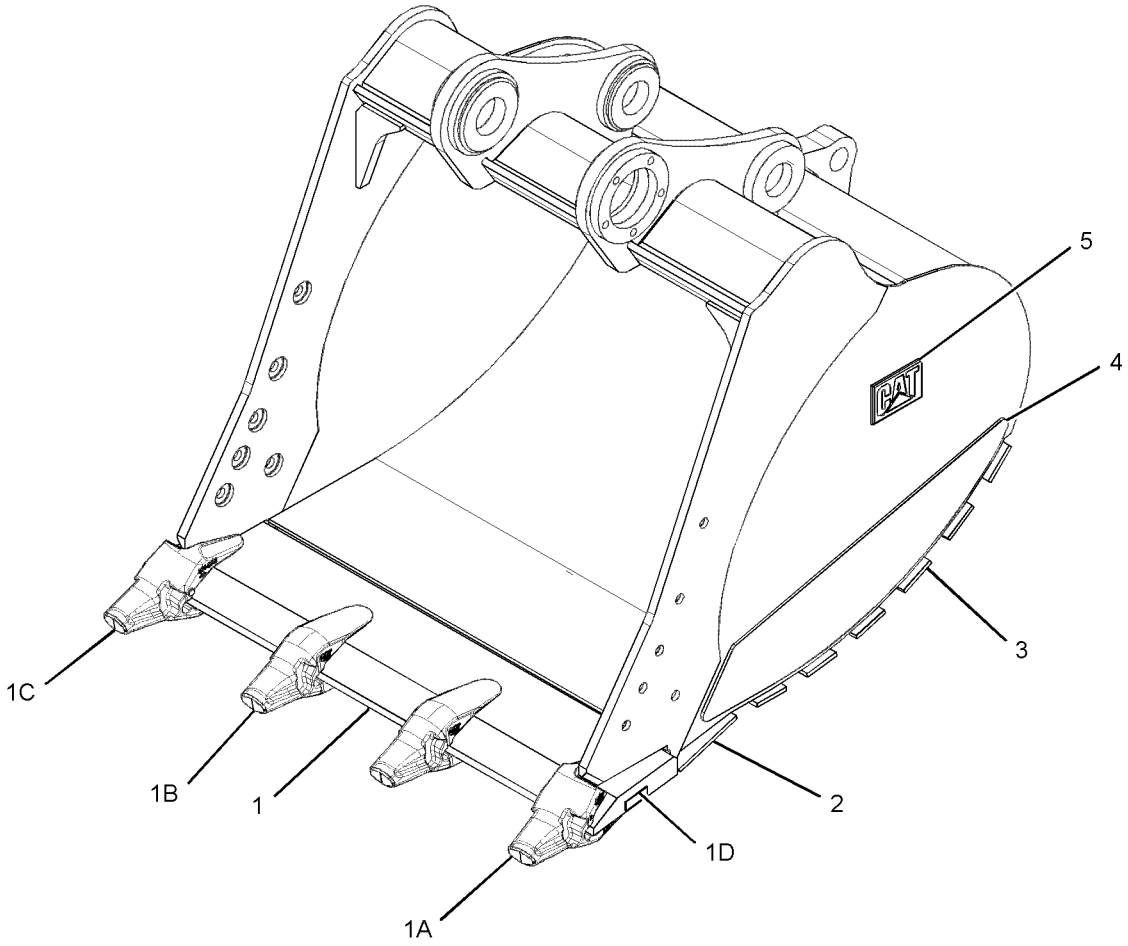

GRAPHIC #1 **<END>** g01407232

WORK TOOLS

289-3491 BUCKET AS-HEAVY DUTY—DB-FAMILY

S/N: MNB1-UP; WDK1-UP

1778-MM (70-IN) WIDE X 2.2-CU M (2.87-CU YD) CAPACITY. K-110 ADAPTERS, (5X)

PART OF 289-3490 BUCKET & ADJUSTER GP

AN ATTACHMENT

SMCS-6531 **i03024202**

NOTE	REF NO	GRAPHIC REF	PART NUMBER	QTY	PART NAME 1 2 3 4 5 6 (PRODUCT LEVEL)	SEE PAGE
	1	1	**290-2838**	1	EDGE AS	
	1A	1	**264-2115**	1	ADAPTER-TIP (K-110, 2-STRAP, RH)	
	1B	1	**232-0114**	3	ADAPTER-TIP (K-110, 2-STRAP, CENTER)	
	1C	1	**264-2116**	1	ADAPTER-TIP (K-110, 2-STRAP, LH)	
	1D	1	**8P-9770**	1	PLATE	
	2	1	**290-2839**	1	PLATE AS-BOX	
	3	1	**290-2850**	1	PLATE-REINFORCEMENT	
	4	1	**290-2853**	6	PLATE-WEAR	
	5	1	**290-2832**	2	PLATE-WEAR	
	6	1	**2C-9259**	2	PLATE-IDENTIFICATION (CAT)	

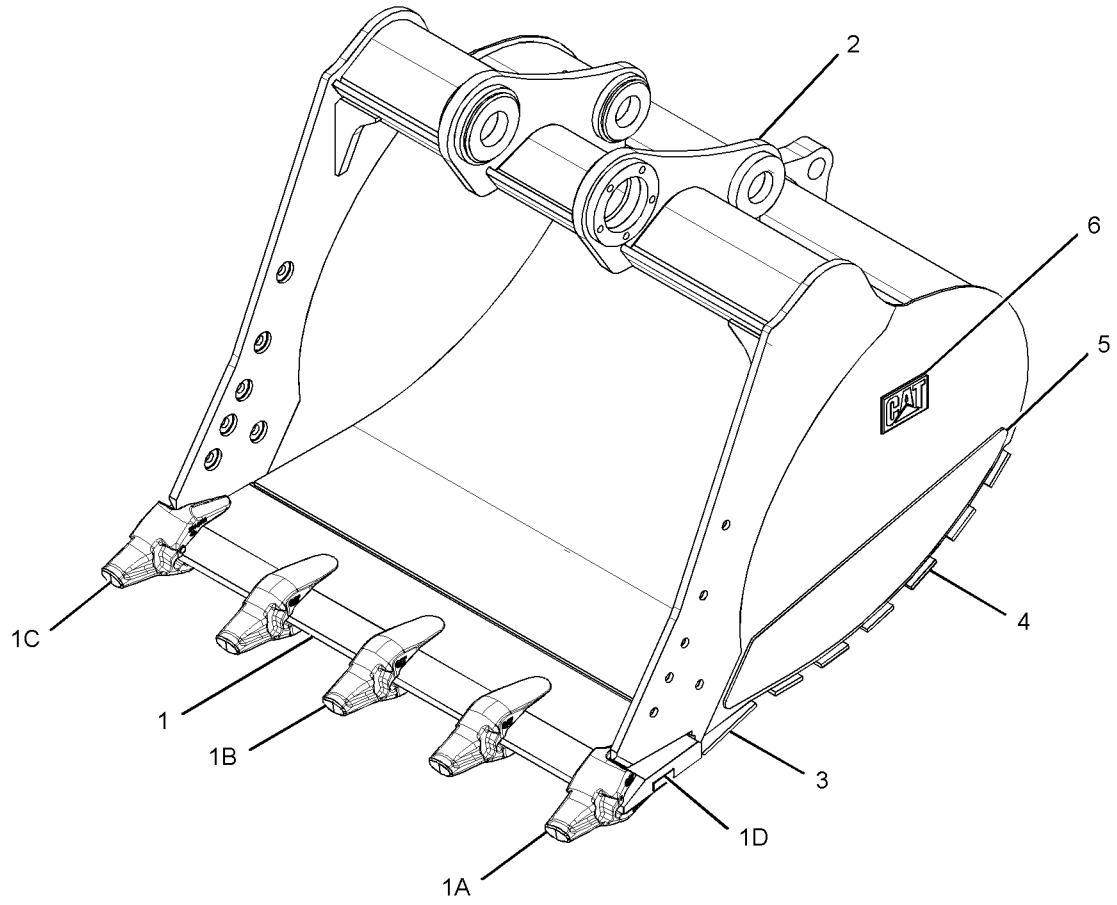

GRAPHIC #1 **<END>** g01407219

WORK TOOLS

250-6444 BUCKET AS-MASS EXCAVATOR–CB-FAMILY

S/N: MNB1-UP; WDK1-UP
1450-MM (57-IN) WIDE X 1.3-CU M (1.7-CU YD) CAPACITY. J-400 ADAPTERS, (6X)
PART OF 239-2714 BUCKET & ADJUSTER GP
AN ATTACHMENT

SMCS-6537 **i03093505**

NOTE	REF NO	GRAPHIC REF	PART NUMBER	QTY	PART NAME 1 2 3 4 5 6 (PRODUCT LEVEL)	SEE PAGE
	1	1	**275-2673**	1	EDGE AS	
	1A	1	**6I-6404**	4	ADAPTER-TIP (J-400, 2-STRAP, CENTER)	
	1B	1	**6I-6405**	1	ADAPTER-TIP (J-400, 2-STRAP, RH)	
	1C	1	**6I-6406**	1	ADAPTER-TIP (J-400, 2-STRAP, LH)	
	1D	1	**8P-9770**	1	PLATE	
	2	1	**209-8009**	1	PLATE-WEAR	
	3	1	**275-2672**	3	PLATE-WEAR	
	4	1	**2C-9259**	2	PLATE-IDENTIFICATION (CAT)	
	5	1	**229-8017**	2	PLATE-WEAR	

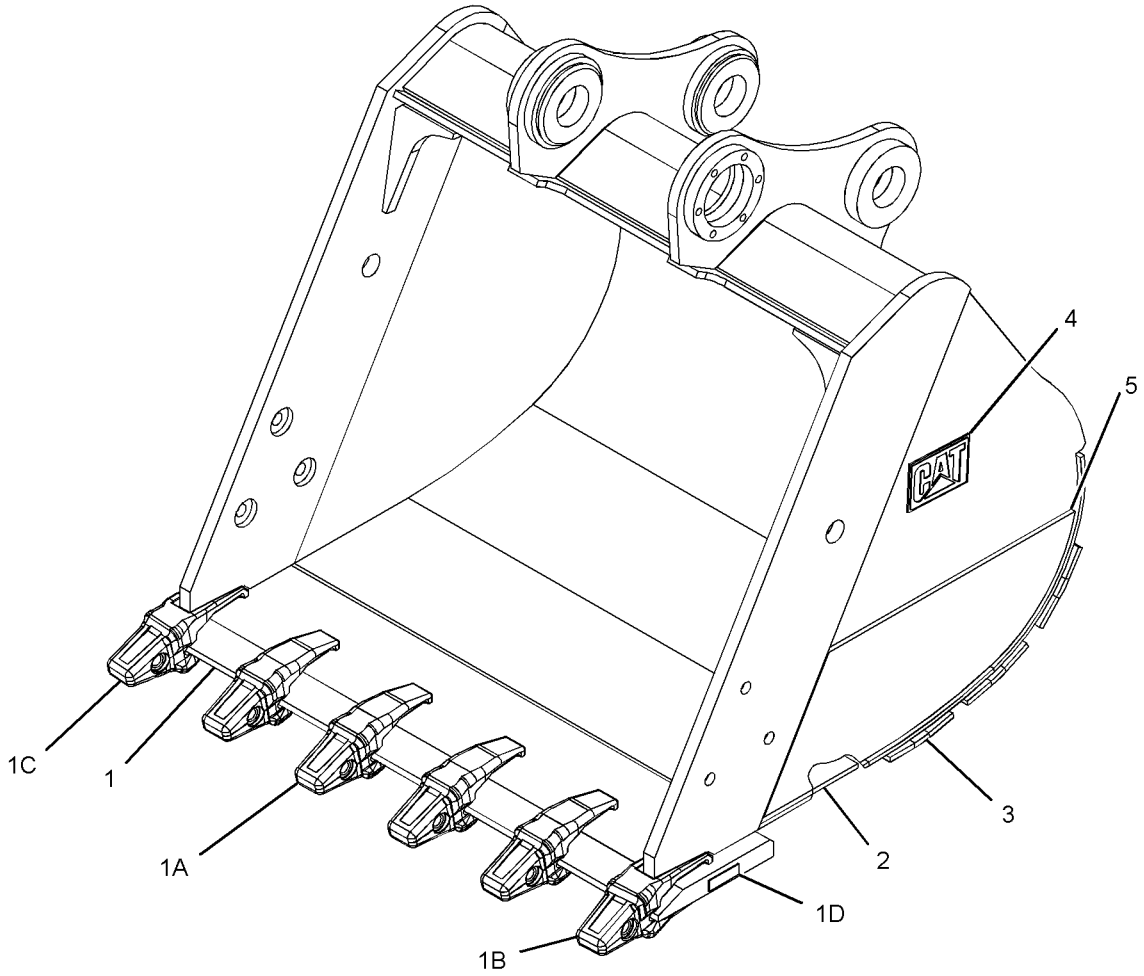

GRAPHIC #1 **<END>** g01620255

WORK TOOLS

112-2481 SIDECUTTER GP

S/N: MNB1-UP; WDK1-UP
PART OF 239-2701 BUCKET AR-EXCAVATION
AN ATTACHMENT

SMCS-6813 **i02457664**

NOTE	REF NO	GRAPHIC REF	PART NUMBER	QTY	PART NAME 1 2 3 4 5 6 (PRODUCT LEVEL)	SEE PAGE
	1	1	**232-2147**	1	SIDECUTTER (RH)	
	2	1	**232-2148**	1	SIDECUTTER (LH)	
	3	1	**1D-4635**	8	BOLT (1-8X2.5-IN)	
	4	1	**2J-3507**	8	NUT-FULL (1-8-THD)	
	5	1	**3K-5234**	8	WASHER-HARD (28X49X6-MM THK)	

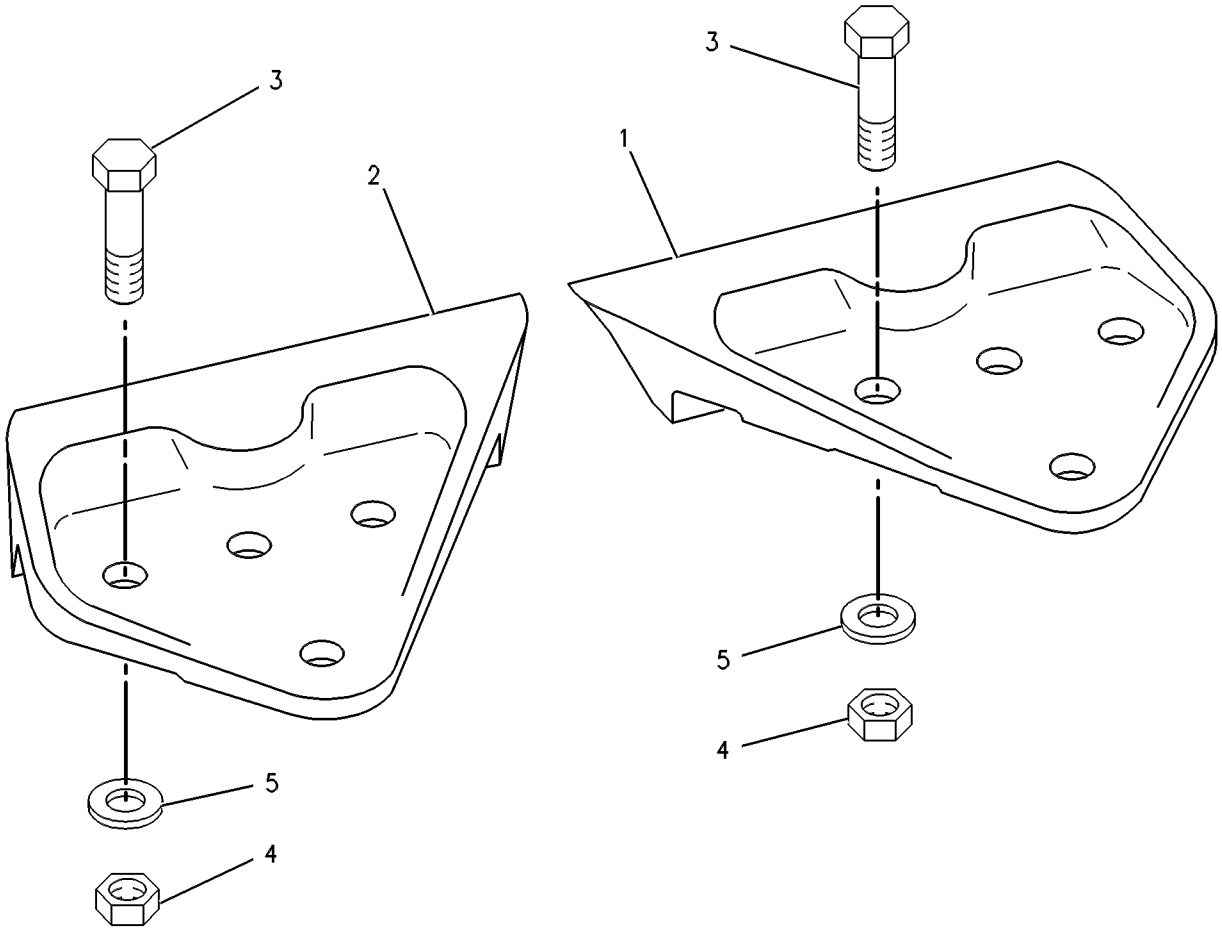

GRAPHIC #1 **<END>** g00276567

WORK TOOLS

127-0716 TIP GP-LONG

S/N: MNB1-UP; WDK1-UP
PART OF 239-2701 BUCKET AR-EXCAVATION
AN ATTACHMENT

SMCS-6805 **i01498865**

NOTE	REF NO	GRAPHIC REF	PART NUMBER	QTY	PART NAME 1 2 3 4 5 6 (PRODUCT LEVEL)	SEE PAGE
	1	1	**7T-3402**	1	TIP-LONG	
	2	1	**116-7408**	1	PIN-G.E.T.	
	3	1	**116-7409**	1	RETAINER AS-G.E.T.	

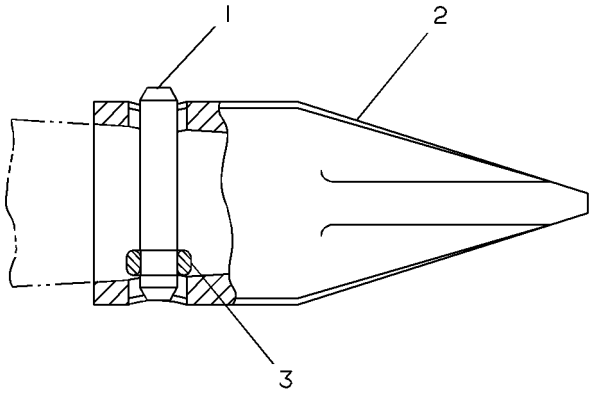

GRAPHIC #1 **<END>** g00187844

WORK TOOLS

232-0102 TIP-LEVELING EDGE–K-100

S/N: MNB1-UP; WDK1-UP
FIELD INSTALLATION

SMCS-6805 **i02501044**

NOTE	REF NO	GRAPHIC REF	PART NUMBER	QTY	PART NAME 1 2 3 4 5 6 (PRODUCT LEVEL)	SEE PAGE
					(NO SERVICED PARTS)	

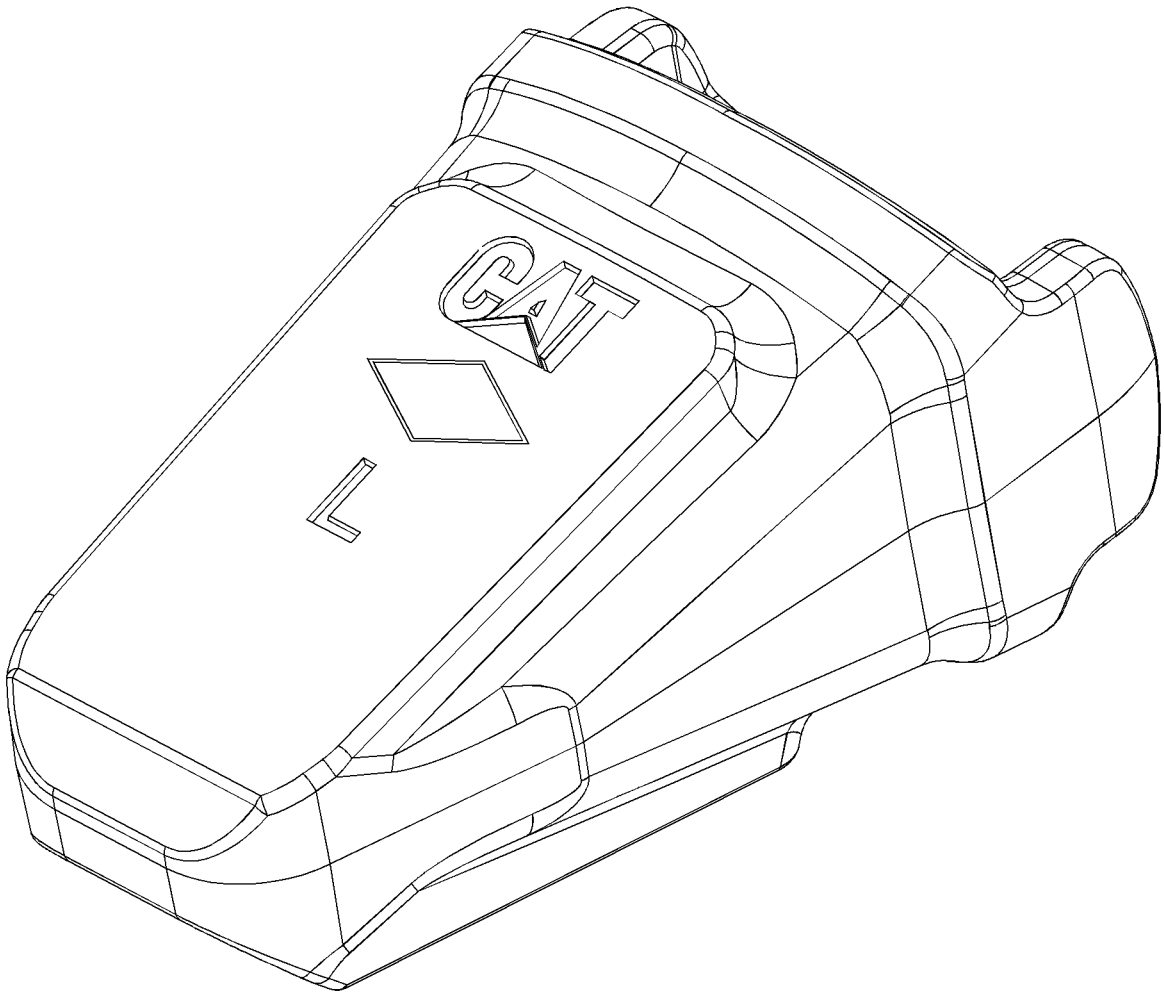

GRAPHIC #1 **<END>** g01294328

OPERATOR STATION

245-7889 ADJUSTER GP-SEAT—UPPER SLIDE

S/N: MNB1-UP; WDK1-UP

PART OF 229-9095, 240-5063 SUSPENSION GP-SEAT

AN ATTACHMENT

SMCS-7321 **i02407038**

NOTE	REF NO	GRAPHIC REF	PART NUMBER	QTY	PART NAME 1 2 3 4 5 6 (PRODUCT LEVEL)	SEE PAGE
	1	1	**245-7897**	4	PLATE	
M	2	1	**245-7899**	4	SCREW-BUTTON HEAD (M8X1.25X30-MM)	
M	3	1	**5C-7261**	8	NUT (M8X1.25-THD)	
	4	1	**8T-4224**	8	WASHER-HARD (8.8X16X2-MM THK)	

M-METRIC PART

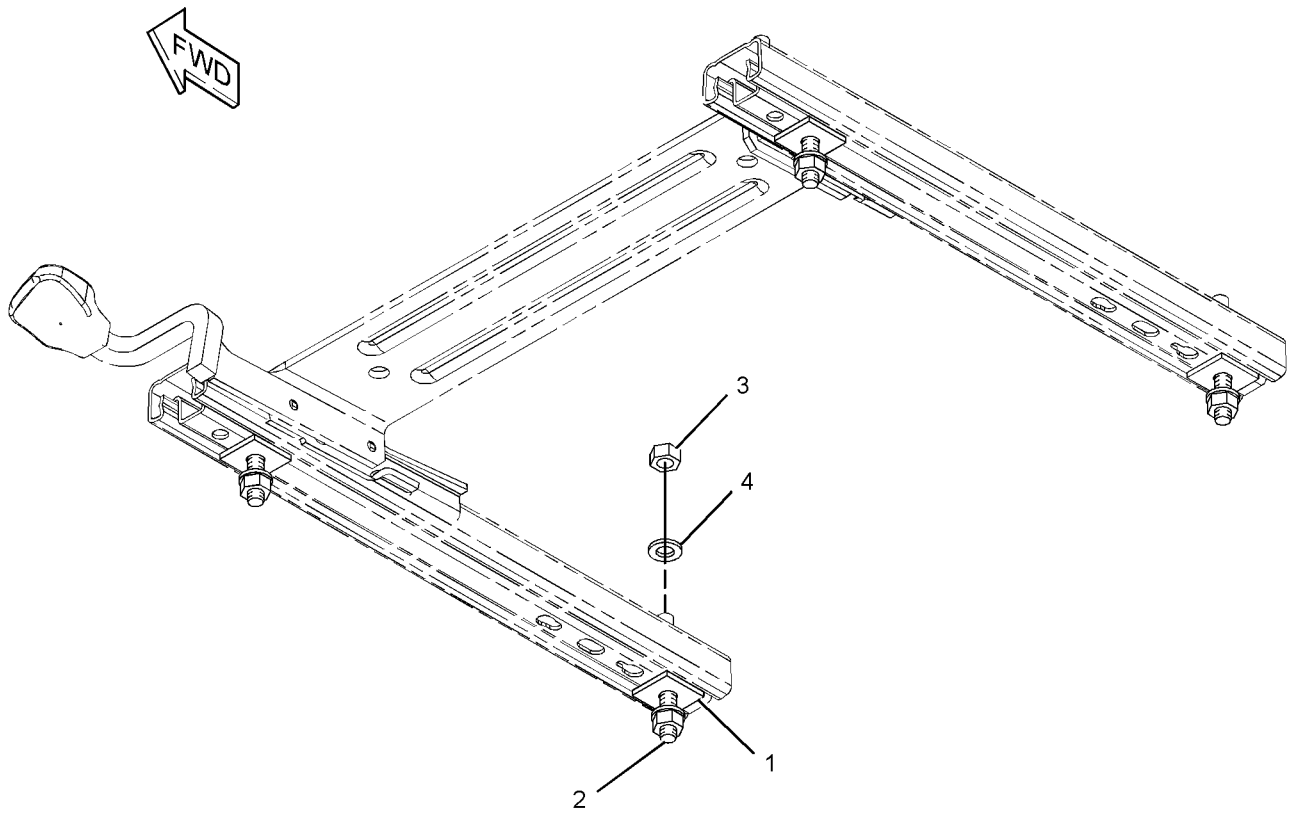

GRAPHIC #1 **<END>** g01203316

OPERATOR STATION

245-7896 ADJUSTER GP-SEAT—LOWER SLIDE

S/N: MNB1-UP; WDK1-UP

PART OF 229-9077, 229-9095, 240-5063 SUSPENSION GP-SEAT

AN ATTACHMENT

SMCS-7321 **i02178063**

NOTE	REF NO	GRAPHIC REF	PART NUMBER	QTY	PART NAME 1 2 3 4 5 6 (PRODUCT LEVEL)	SEE PAGE
M	1	1	**198-3899**	2	SCREW-BUTTON HEAD (M8X1.25X20-MM)	
	2	1	**245-7886**	2	PLATE	
	3	1	**245-7897**	4	PLATE	
M	4	1	**245-7898**	2	SCREW-BUTTON HEAD (M8X1.25X25-MM)	
M	5	1	**5C-7261**	4	NUT (M8X1.25-THD)	
	6	1	**8T-4224**	4	WASHER-HARD (8.8X16X2-MM THK)	

M-METRIC PART

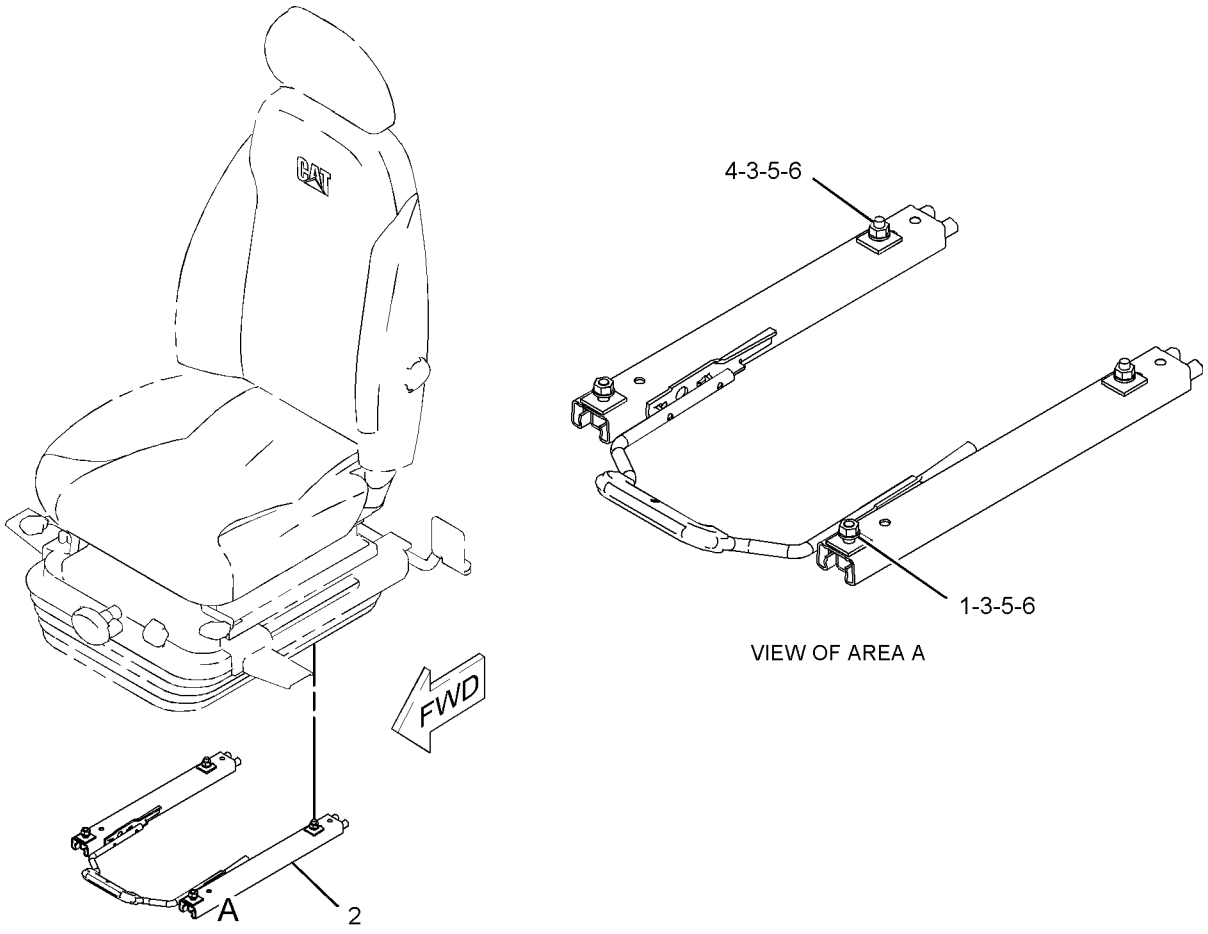

VIEW OF AREA A

GRAPHIC #1 **<END>** g01103189

OPERATOR STATION

229-9080 AIR CONDITIONER & MOUNTING GP

S/N: MNB1-UP; WDK1-UP
PART OF 229-9079 AIR CONDITIONER AR
AN ATTACHMENT

SMCS-7320 **i03086500**

NOTE	REF NO	GRAPHIC REF	PART NUMBER	QTY	PART NAME 1 2 3 4 5 6 (PRODUCT LEVEL)	SEE PAGE
	1	1	**293-1136**	1	PANEL AS-CONTROL	
	2	1	**235-8873**	1	HARNESS AS-HEATER & AIR COND (CONTROL PANEL SWITCHES)	
	3	1	**235-8874**	1	SENSOR-TEMPERATURE (AMBIENT AIR)	
	4	1	**235-8875**	1	BRACKET	
	5	1	**235-9006**	1	HARNESS AS-HEATER & AIR COND	
	6	1	**9X-8256**	1	WASHER (6.6X12X2-MM THK)	
M	7	1	**099-2374**	2	BOLT-SOCKET HEAD (M5X0.8X12-MM)	
	8	1	**111-4836**	3	CLIP	
CY	9	1	**316-8812**	1	AIR CONDITIONER GP	901
	10	1	**3S-2093**	2	STRAP-CABLE	
M	11	1	**5C-9553**	1	BOLT (M6X1X16-MM)	
	12	1	**7X-7729**	7	WASHER (11X25X3-MM THK)	
	13	1	**8T-0328**	2	WASHER-HARD (5.5X10X1-MM THK)	
	14	1	**8T-4121**	3	WASHER-HARD (11X21X2.5-MM THK)	
M	15	1	**8T-4136**	7	BOLT (M10X1.5X25-MM)	
M	16	1	**8T-4137**	3	BOLT (M10X1.5X20-MM)	

C-CHANGE FROM PREVIOUS TYPE
M-METRIC PART
Y-SEPARATE ILLUSTRATION

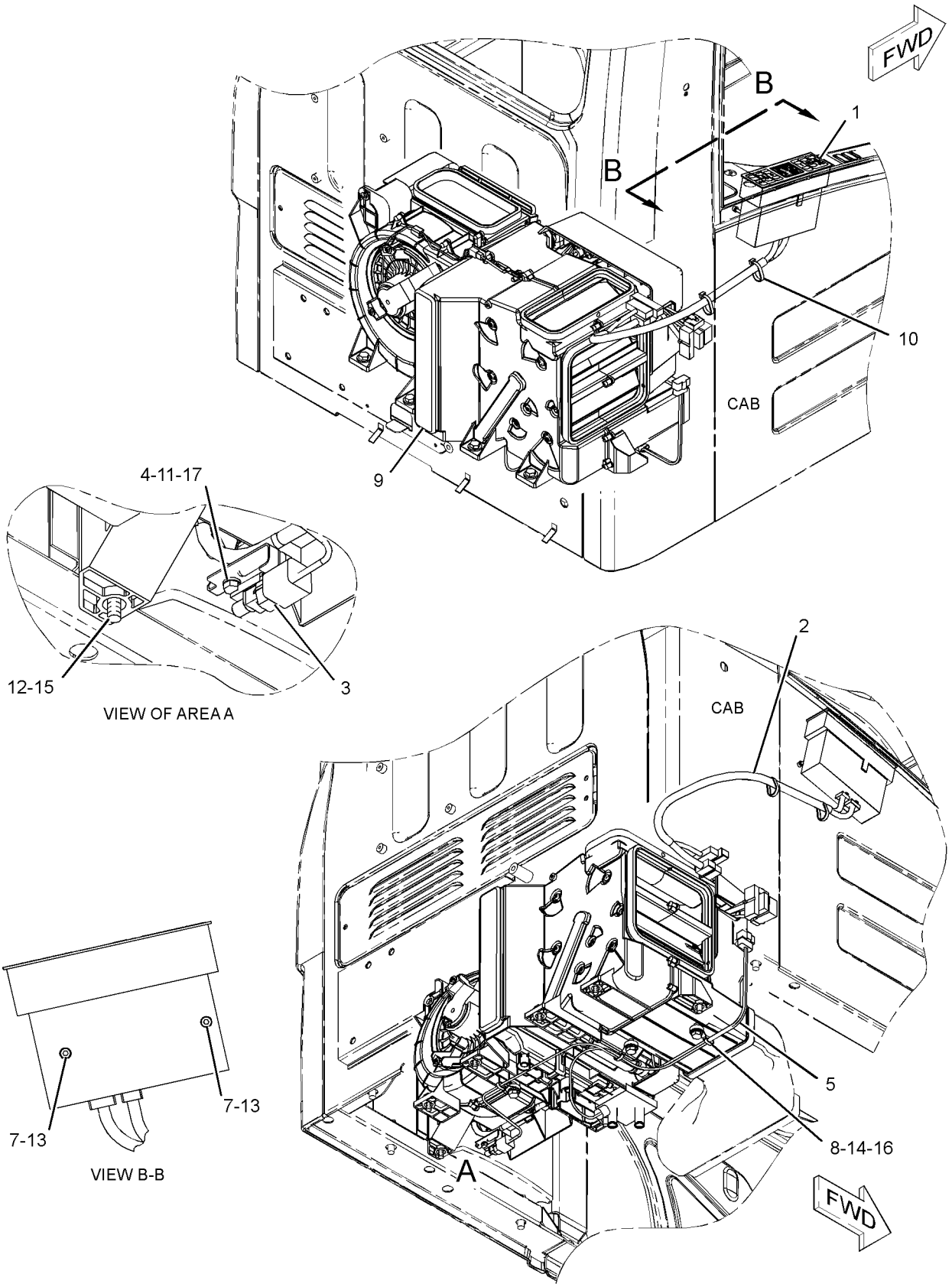

GRAPHIC #1 **<END>** g01435098

OPERATOR STATION

229-9079 AIR CONDITIONER AR

S/N: MNB1-UP; WDK1-UP

AN ATTACHMENT

SMCS-7320 **i02216143**

NOTE	PART NUMBER	QTY	PART NAME 1 2 3 4 5 6 (PRODUCT LEVEL)	SEE PAGE
Y	*229-9080*	1	AIR CONDITIONER & MOUNTING GP	895
Y	*229-9082*	1	DUCT GP-CAB AIR	969

Y-SEPARATE ILLUSTRATION

<END>

OPERATOR STATION

316-8811 AIR CONDITIONER GP

S/N: MNB1-UP; WDK1-UP
PART OF 229-9084 HEATER & MTG GP-CAB
AN ATTACHMENT

SMCS-7320 **i03012140**

NOTE	REF NO	GRAPHIC REF	PART NUMBER	QTY	PART NAME 1 2 3 4 5 6 (PRODUCT LEVEL)	SEE PAGE
	1	1	**185-8300**	35	SCREW-TAPPING	
	2	2	**185-8302**	3	SCREW AS-TAPPING	
	3	1	**245-7817**	2	MOTOR AS	
	4	1	**245-7818**	3	CLIP	
	5	2	**245-7819**	2	CLIP	
	6	1	**245-7820**	1	COVER-FRONT	
	7	1	**245-7825**	1	INSULATOR	
	8	2	**245-7826**	1	INSULATOR	
	9	2	**245-7827**	1	INSULATOR	
	10	2	**245-7828**	1	INSULATOR	
	11	1	**245-7829**	1	PACKING	
	12	1	**245-7830**	1	CLIP	
	13	1	**245-7831**	1	SENSOR AS-TEMPERATURE (COOLANT)	
	14	1	**245-7832**	1	CONTROL AS	
	15	1	**245-7833**	1	CORE AS-HEATER	
	16	1	**245-7834**	1	DAMPER AS	
	17	2	**245-7835**	1	SENSOR AS (AMBIENT AIR TEMP)	
Y	18	2	**245-7836**	1	COIL GP-EVAPORATOR	936
	19	2	**245-7838**	1	PACKING	
	20	2	**245-7839**	1	MOTOR AS (WITH FAN)	
Y	21	1	**245-7846**	1	CONTROL GP-HEAT & AIR COND (AIR INLET)	951
	22	1	**245-7847**	1	HARNESS AS-HEATER & AIR COND	
	23	2	**245-7856**	3	SCREW AS-TAPPING	
	24	1	**293-1137**	1	FILTER GP-AIR (AIR CONDITIONER)	
		1	**245-7823**	1	FILTER ELEMENT-CAB AIR (AIR CONDITIONER)	
		1	**245-7824**	1	PACKING	
	25	2	**316-8845**	1	PLATE	
	26	2	**316-8846**	1	PLATE	
	27	2	**316-8847**	2	ROD	
	28	2	**316-8848**	1	ROD	
	29	1	**316-8849**	1	ROD	
	30	2	**316-8850**	1	ROD	

Y-SEPARATE ILLUSTRATION

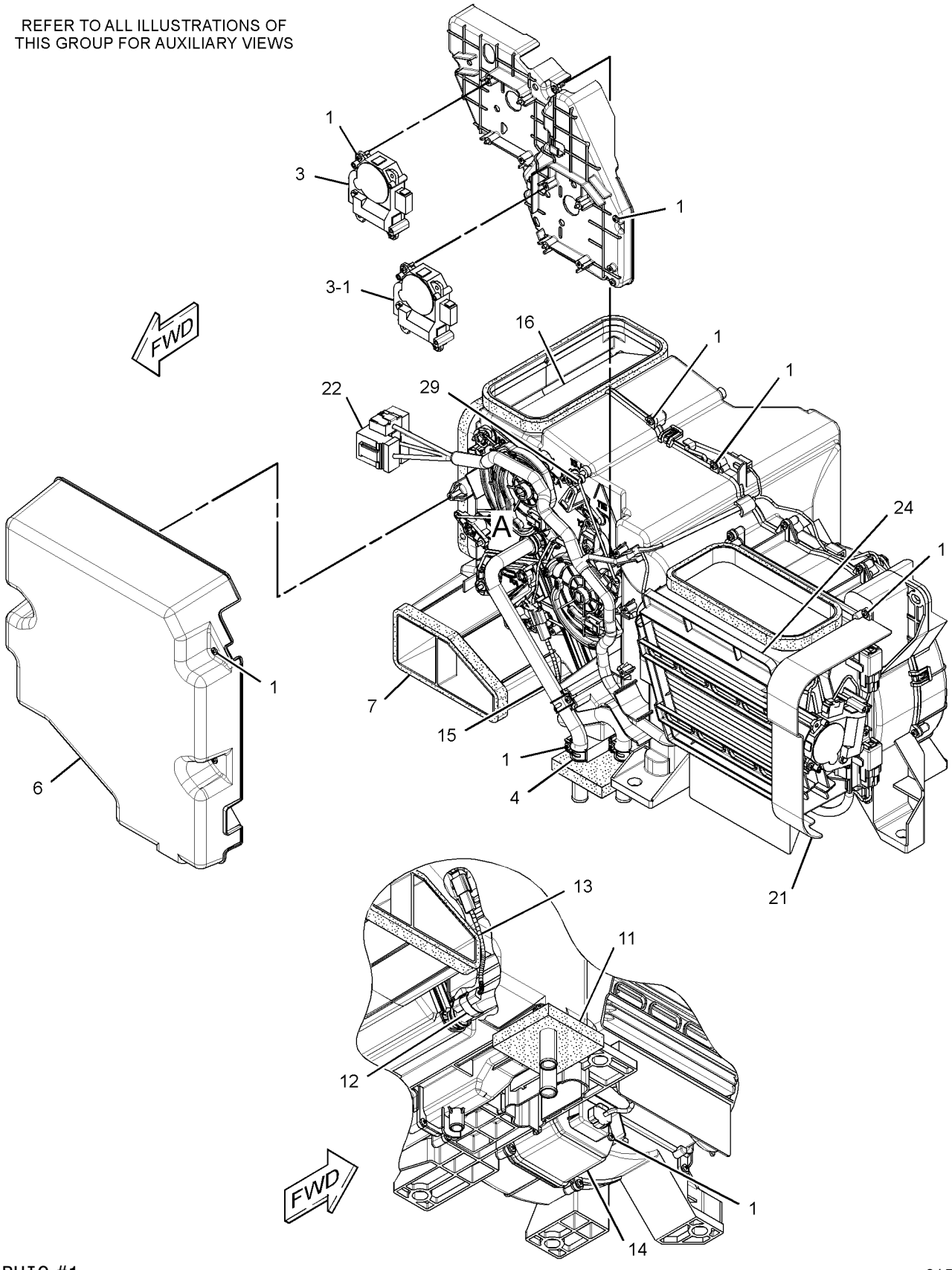

GRAPHIC #1

g01525866

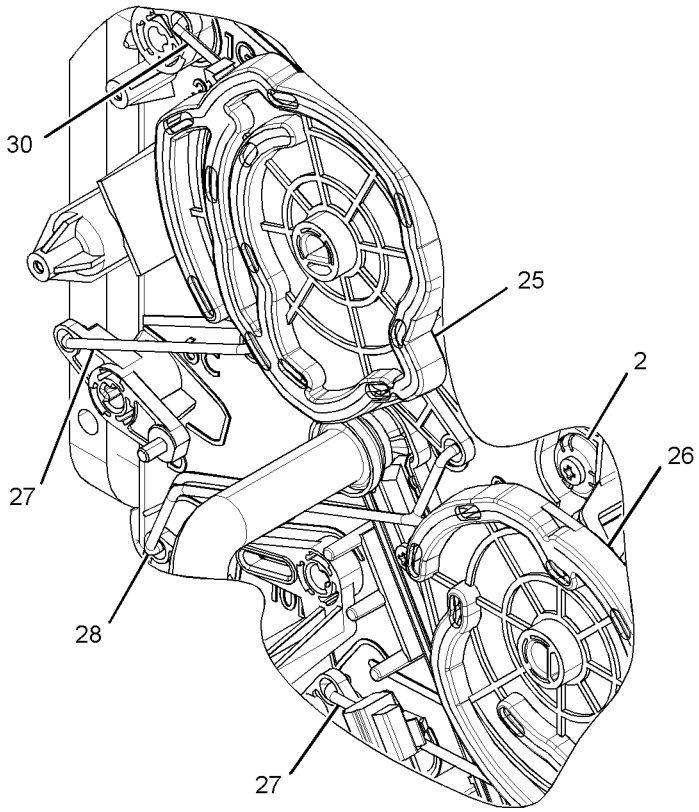

VIEW OF AREA A

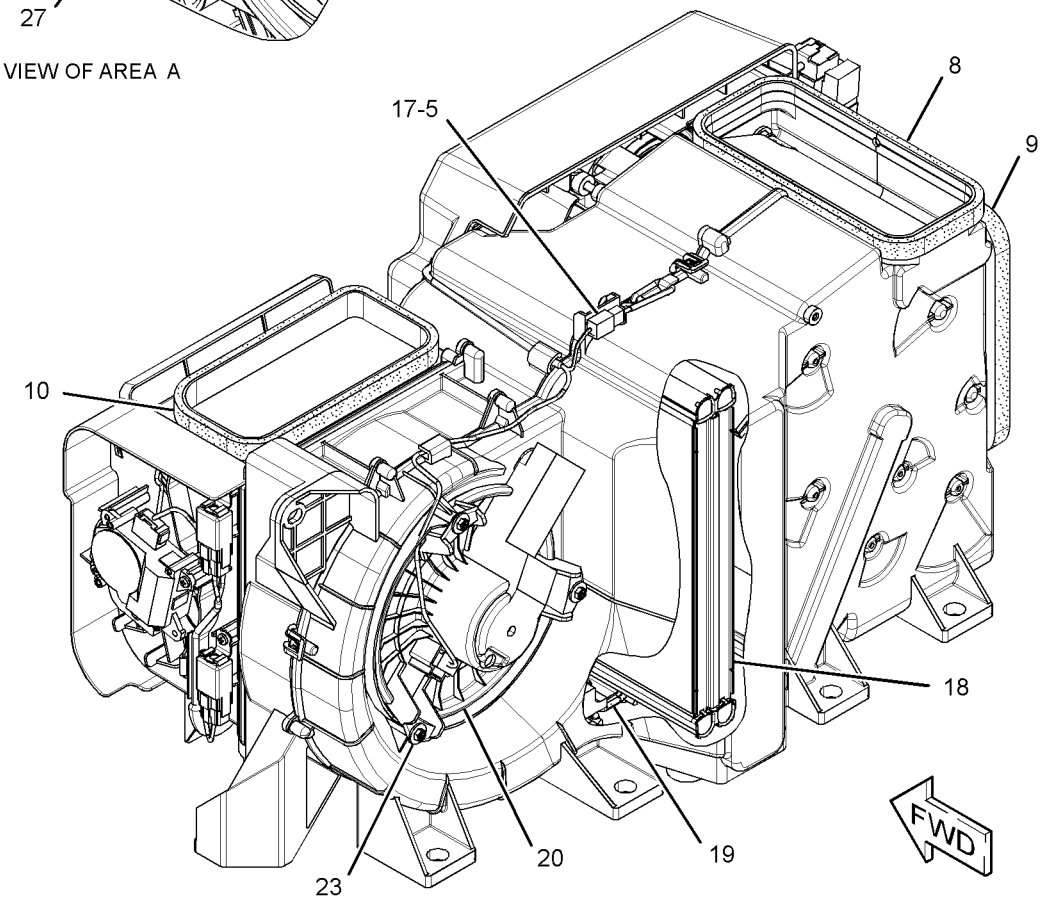

GRAPHIC #2

<END>

g01526086

OPERATOR STATION

316-8812 AIR CONDITIONER GP

S/N: MNB1-UP; WDK1-UP
PART OF 229-9080 AIR CONDITIONER & MOUNTING GP
AN ATTACHMENT

SMCS-7320 **i03085820**

NOTE	REF NO	GRAPHIC REF	PART NUMBER	QTY	PART NAME 1 2 3 4 5 6 (PRODUCT LEVEL)	SEE PAGE
	1	1,2	**185-8300**	35	SCREW-TAPPING	
	2	2	**185-8302**	3	SCREW AS-TAPPING	
Y	3	1	**245-7812**	1	HOUSING GP-AIR CONDITIONER (INLET AIR)	1000
	4	1	**245-7817**	2	MOTOR AS	
	5	1	**245-7818**	3	CLIP	
	6	2	**245-7819**	2	CLIP	
	7	1	**245-7820**	1	COVER-FRONT	
	8	1	**245-7821**	1	HARNESS AS-HEATER & AIR COND	
	9	1	**245-7825**	1	INSULATOR	
	10	1	**245-7826**	1	INSULATOR	
	11	1	**245-7827**	1	INSULATOR	
	12	1	**245-7828**	1	INSULATOR	
	13	2	**245-7829**	1	PACKING	
	14	1	**245-7830**	1	CLIP	
	15	1	**245-7831**	1	SENSOR AS-TEMPERATURE (COOLANT)	
	16	2	**245-7832**	1	CONTROL AS	
	17	1	**245-7833**	1	CORE AS-HEATER	
	18	1	**245-7834**	1	DAMPER AS	
	19	2	**245-7835**	1	SENSOR AS (AMBIENT AIR TEMP)	
Y	20	1	**245-7836**	1	COIL GP-EVAPORATOR	936
	21	1	**245-7838**	1	PACKING	
	22	1	**245-7839**	1	MOTOR AS (WITH FAN)	
	23	1	**245-7856**	3	SCREW AS-TAPPING	
	24	1	**293-1137**	1	FILTER GP-AIR (AIR CONDITIONER)	
		1	**245-7823**	1	FILTER ELEMENT-CAB AIR (AIR CONDITIONER)	
		1	**245-7824**	1	PACKING	
	25	1	**316-8845**	1	PLATE	
	26	1	**316-8846**	1	PLATE	
	27	2	**316-8847**	2	ROD	
	28	2	**316-8848**	1	ROD	
	29	2	**316-8849**	1	ROD	
	30	2	**316-8850**	1	ROD	

Y-SEPARATE ILLUSTRATION

REFER TO ALL ILLUSTRATIONS OF
THIS GROUP FOR AUXILIARY VIEWS.

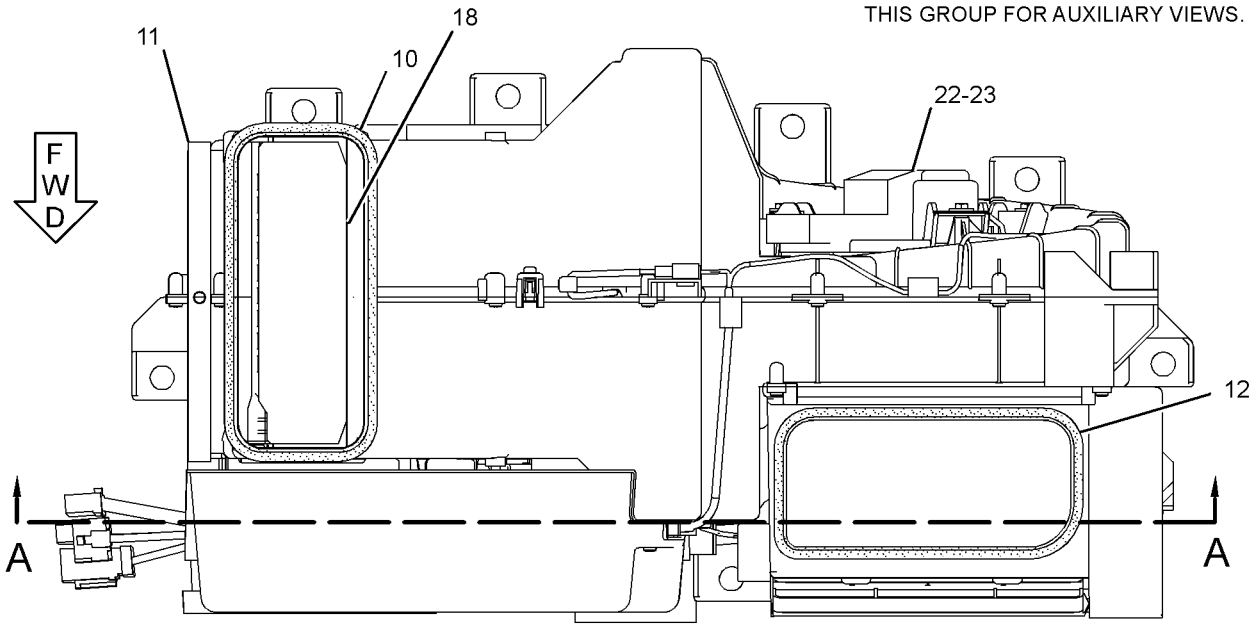

TOP VIEW

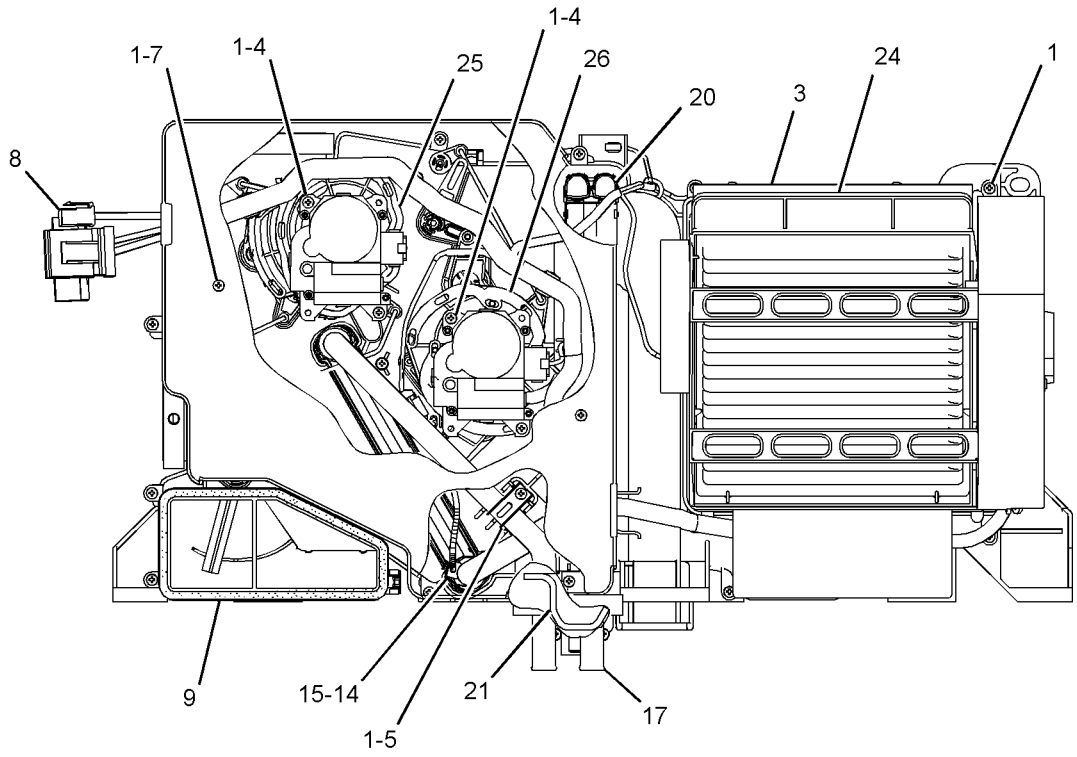

FRONT VIEW

GRAPHIC #1 g01520271

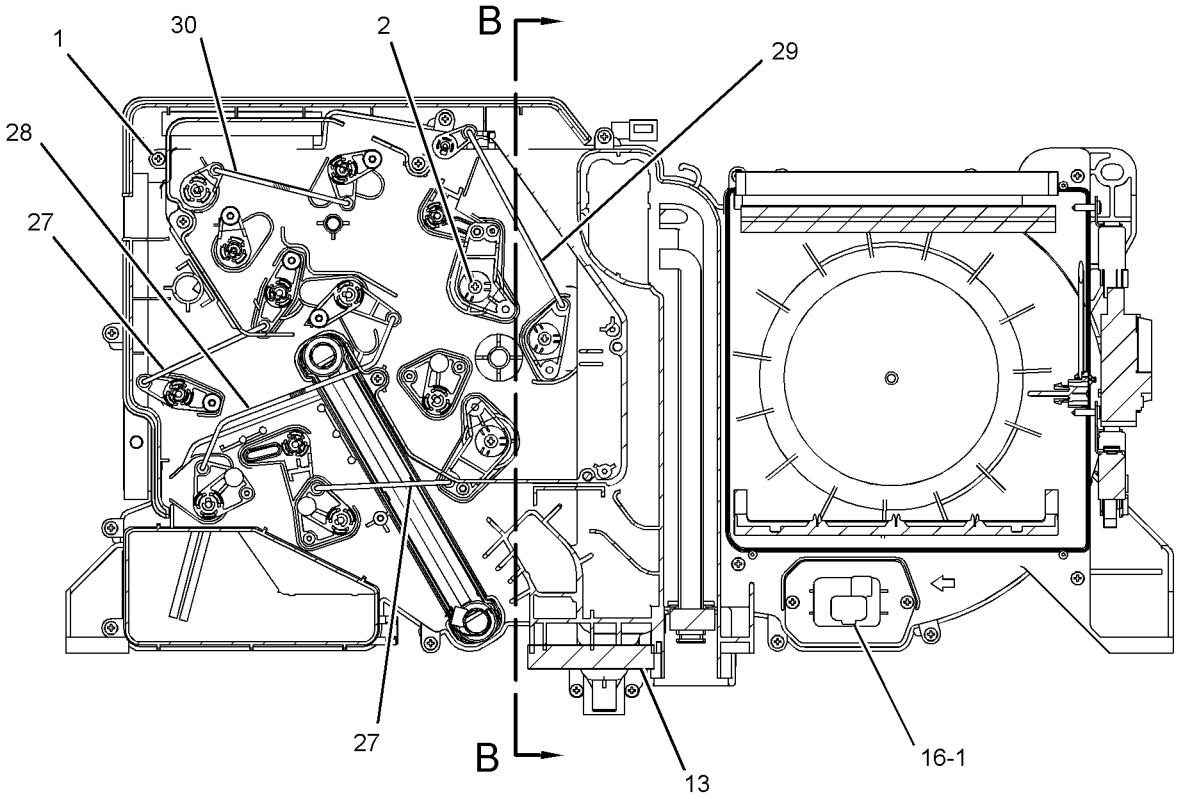

SECTION A-A

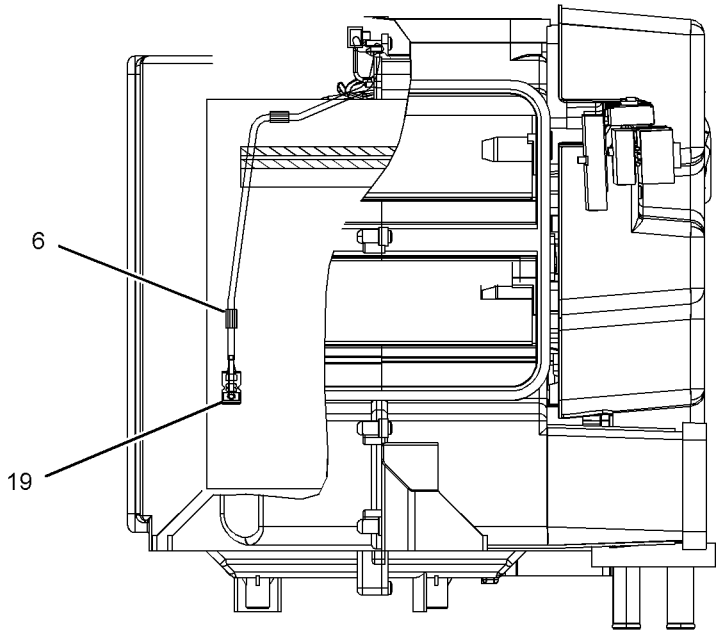

SECTION B-B

GRAPHIC #2 **<END>** g01520275

OPERATOR STATION

309-5789 ANTENNA & MOUNTING GP—PRODUCT LINK

S/N: MNB1-UP; WDK1-UP

PART OF 314-3529, 314-3530 INSTALLATION AR-COMMUNICATION

AN ATTACHMENT

SMCS-7606 **i03027383**

NOTE	REF NO	GRAPHIC REF	PART NUMBER	QTY	PART NAME 1 2 3 4 5 6 (PRODUCT LEVEL)	SEE PAGE
	1	1	**309-5751**	1	BRACKET	
	2	1	**310-2393**	1	ANTENNA AS	
		1	**301-0589**	1	ANTENNA (WHIP)	
	3	1	**095-0910**	4	CLIP	
	4	1	**161-6987**	3	WASHER-HARD (5.2X16X1.5-MM THK)	
M	5	1	**143-9397**	3	SCREW-PAN HEAD (M4X0.7X12-MM)	
M	6	1	**8T-4190**	1	BOLT (M16X2X25-MM)	
M	7	1	**8T-4138**	1	BOLT (M6X1X20-MM)	
	8	1	**9X-2026**	1	WASHER (6.5X17X1-MM THK)	
	9	1	**9X-6165**	1	WASHER (6.5X22X2.5-MM THK)	
	10	1	**9X-8257**	1	WASHER (17.5X30X3.5-MM THK)	

M-METRIC PART

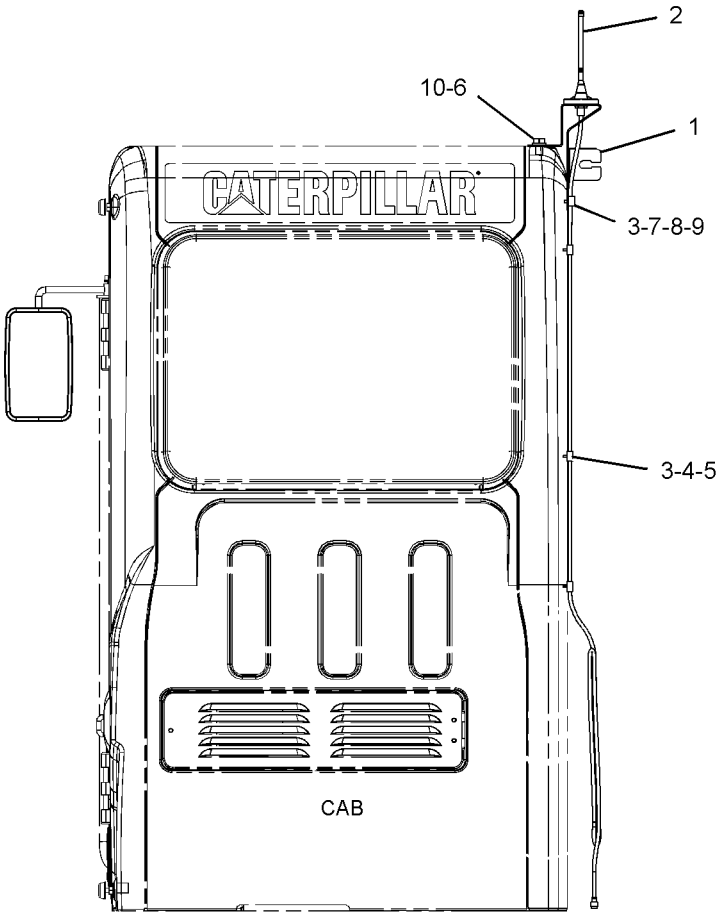

REAR VIEW

GRAPHIC #1

<END>

g01444711

OPERATOR STATION

259-7346 ARMREST GP–RH

S/N: MNB1-UP; WDK1-UP

PART OF 259-7348 CONSOLE GP-OPERATOR

SMCS-7307 **i02488350**

NOTE	REF NO	GRAPHIC REF	PART NUMBER	QTY	PART NAME 1 2 3 4 5 6 (PRODUCT LEVEL)	SEE PAGE
	1	1	**171-7325**	3	SCREW-TAPPING	
M	2	1	**185-8286**	2	SCREW-MACHINE (M4X0.7X8-MM)	
	3	1	**235-8951**	1	SUPPORT AS	
	4	1	**235-8996**	1	COVER	
	5	1	**235-8997**	1	KNOB	
	6	1	**279-3161**	1	CUSHION	

M-METRIC PART

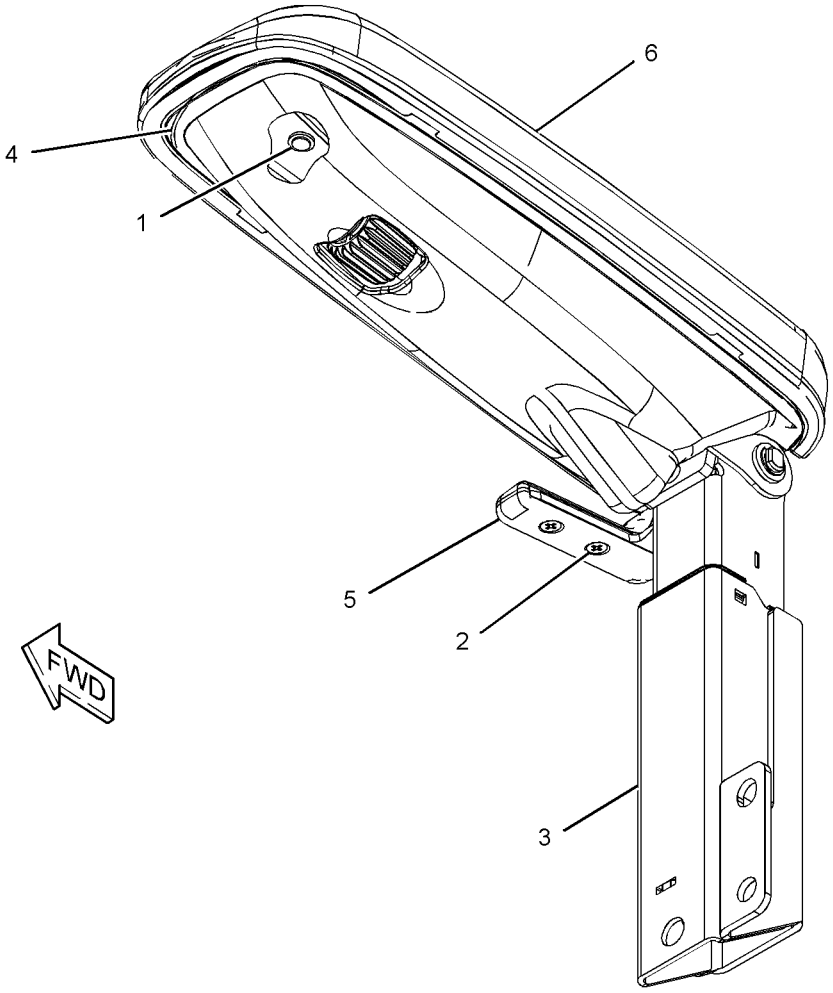

GRAPHIC #1 **<END>** g01217218

OPERATOR STATION

259-7347 ARMREST GP–LH

S/N: MNB1-UP; WDK1-UP

PART OF 259-7349 CONSOLE GP-OPERATOR

SMCS-7307 **i02488397**

NOTE	REF NO	GRAPHIC REF	PART NUMBER	QTY	PART NAME 1 2 3 4 5 6 (PRODUCT LEVEL)	SEE PAGE
	1	1	**171-7325**	3	SCREW-TAPPING	
M	2	1	**185-8286**	2	SCREW-MACHINE (M4X0.7X8-MM)	
	3	1	**235-8952**	1	SUPPORT AS	
	4	1	**235-8996**	1	COVER	
	5	1	**235-8998**	1	KNOB	
	6	1	**259-7345**	1	CUSHION	

M-METRIC PART

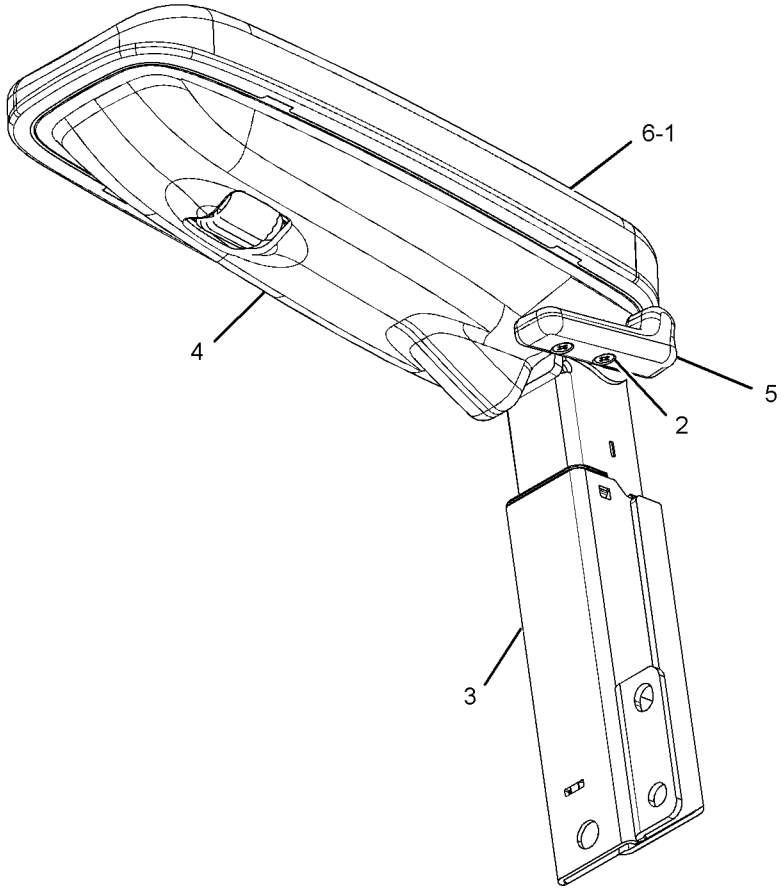

GRAPHIC #1 **<END>** g01210886

OPERATOR STATION

259-7295 BRACKET GP-MIRROR

S/N: MNB1-UP; WDK1-UP
PART OF 235-8910 CAB GP
AN ATTACHMENT

SMCS-7319 **i02612533**

NOTE	REF NO	GRAPHIC REF	PART NUMBER	QTY	PART NAME 1 2 3 4 5 6 (PRODUCT LEVEL)	SEE PAGE
	1	1	**2U-2552**	5	LOCKWASHER	
M	2	1	**6V-5683**	3	BOLT (M6X1X16-MM)	
M	3	1	**9X-6153**	2	BOLT (M6X1X10-MM)	
Z	4	1		1	BRACKET-MIRROR	

M-METRIC PART
Z-NOT SERVICED SEPARATELY

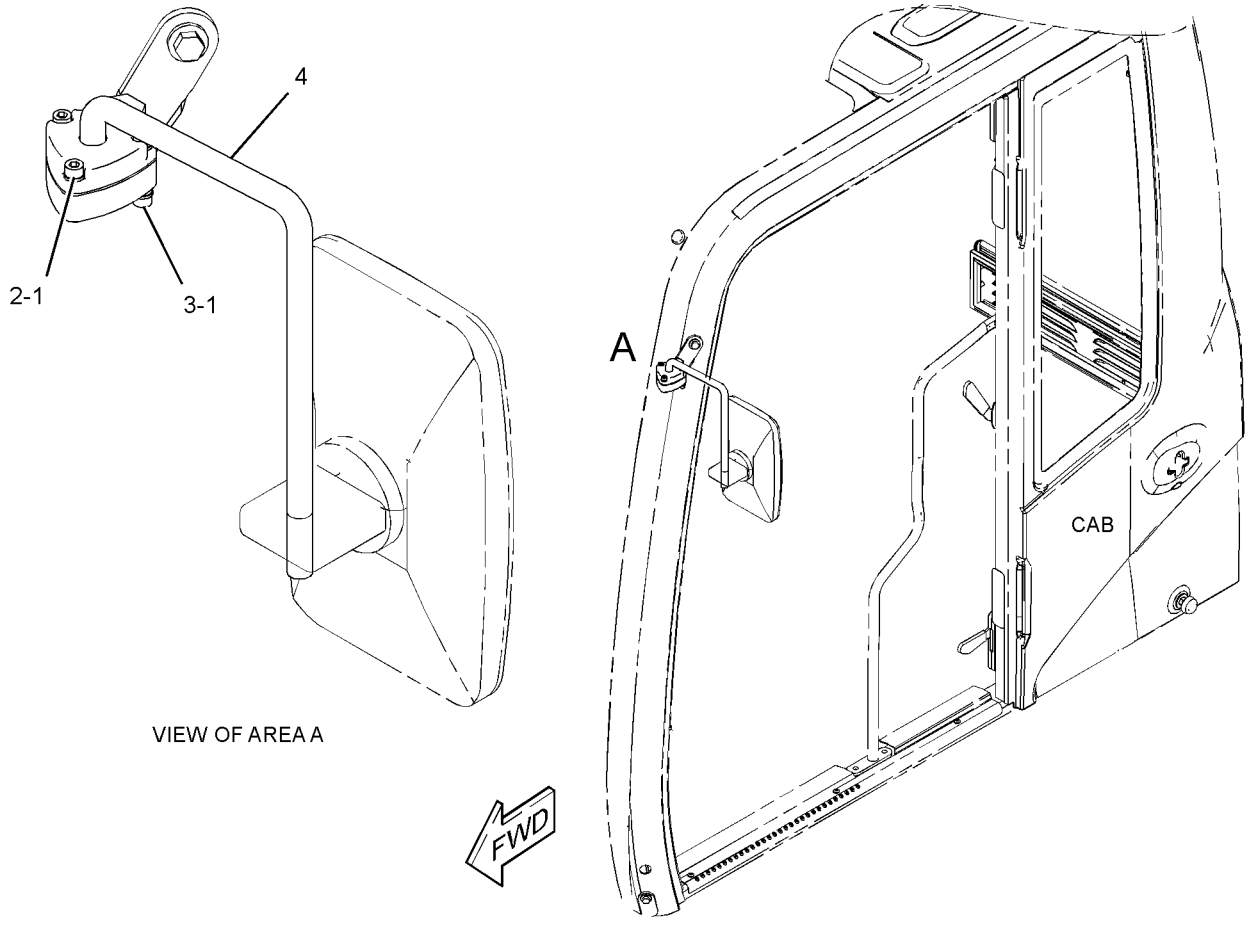

VIEW OF AREA A

GRAPHIC #1 **<END>** g01307553

OPERATOR STATION

245-7890 BRACKET GP-MOUNTING—SUSPENSION SEAT

S/N: MNB1-UP; WDK1-UP

PART OF 229-9095, 240-5063 SUSPENSION GP-SEAT

AN ATTACHMENT

SMCS-0635 **i02407041**

NOTE	REF NO	GRAPHIC REF	PART NUMBER	QTY	PART NAME 1 2 3 4 5 6 (PRODUCT LEVEL)	SEE PAGE
	1	1	**245-7897**	4	PLATE	
M	2	1	**245-7899**	4	SCREW-BUTTON HEAD (M8X1.25X30-MM)	
M	3	1	**5C-7261**	4	NUT (M8X1.25-THD)	
	4	1	**8T-4224**	4	WASHER-HARD (8.8X16X2-MM THK)	

M-METRIC PART

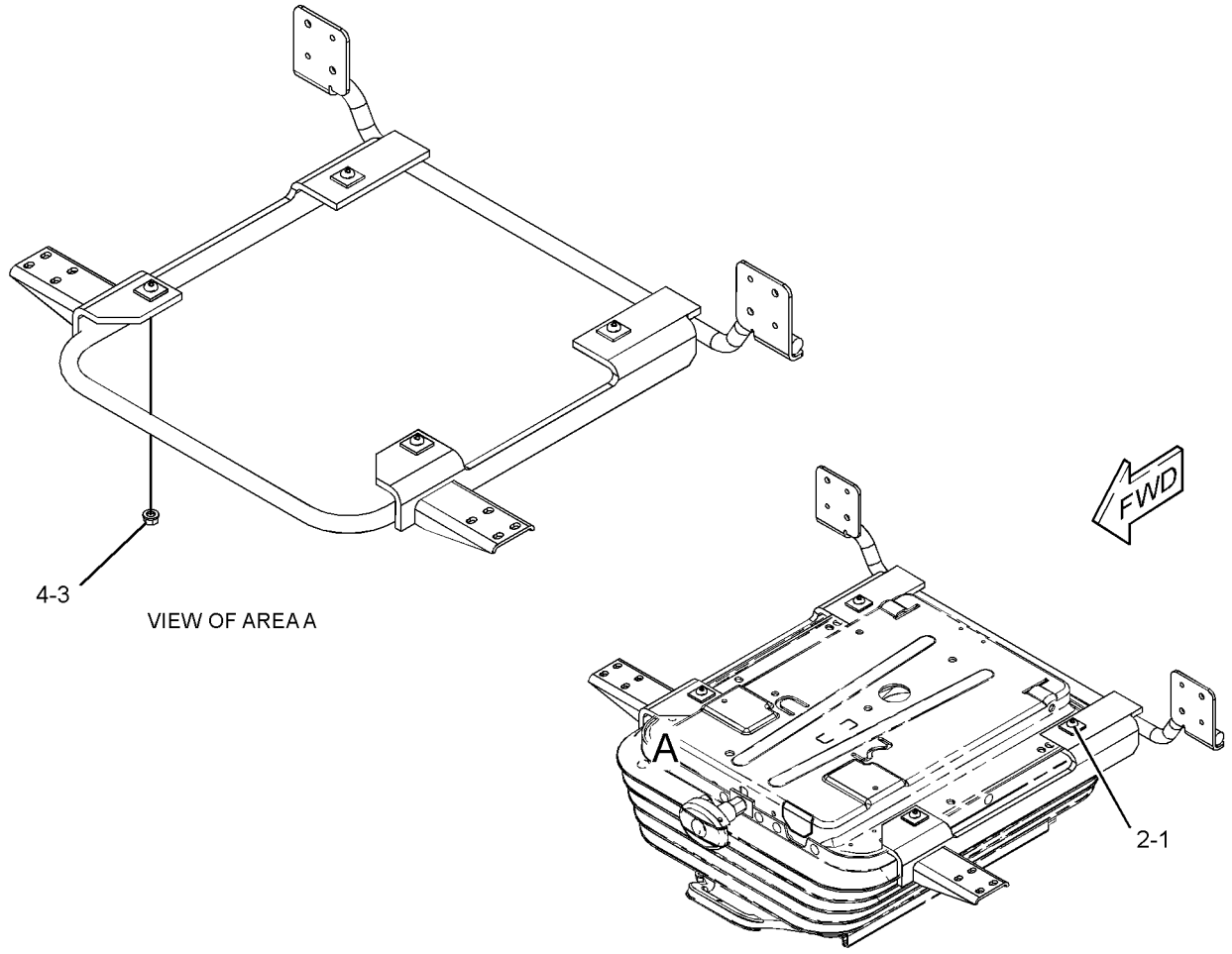

GRAPHIC #1 **<END>** g01231528

OPERATOR STATION

229-9096 CAB GP

S/N: MNB1-UP; WDK1-UP
AN ATTACHMENT

SMCS-7301, 7325 **i02485097**

NOTE	REF NO	GRAPHIC REF	PART NUMBER	QTY	PART NAME 1 2 3 4 5 6 (PRODUCT LEVEL)	SEE PAGE
M	1	1	**128-2135**	5	SCREW-TRUSS HEAD (M6X1X13-MM)	
	2	1	**164-8474**	2	LOUVER AS-VENT	
Y	3	1	**229-9097**	1	CAB GP	911
Y	4	1	*234-6501*	1	COVER GP-CAB (REAR)	959
	5	1	**235-9001**	1	SUPPORT	
M	6	1	**8T-4179**	5	BOLT (M12X1.75X20-MM)	
M	7	1	**8T-4190**	4	BOLT (M16X2X25-MM)	
	8	1	**8T-4223**	13	WASHER-HARD (13.5X25.5X3-MM THK)	
M	9	1	**8T-4910**	6	BOLT (M12X1.75X60-MM)	
M	10	1	**8T-6868**	2	BOLT (M12X1.75X80-MM)	
	11	1	**8Y-6967**	2	LOUVER AS	
	12	1	**9X-8257**	6	WASHER (17.5X30X3.5-MM THK)	

M-METRIC PART
Y-SEPARATE ILLUSTRATION

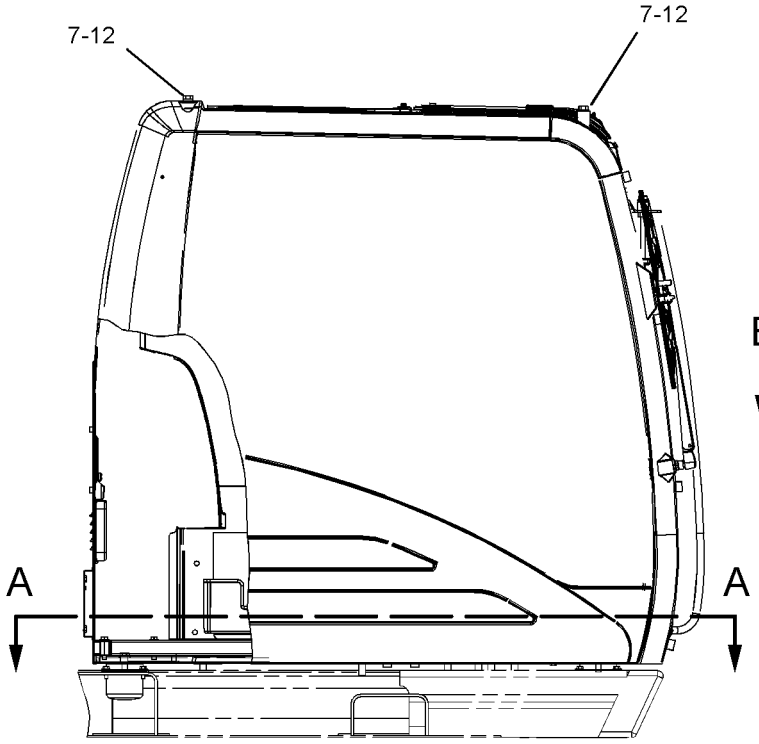

RIGHT SIDE VIEW

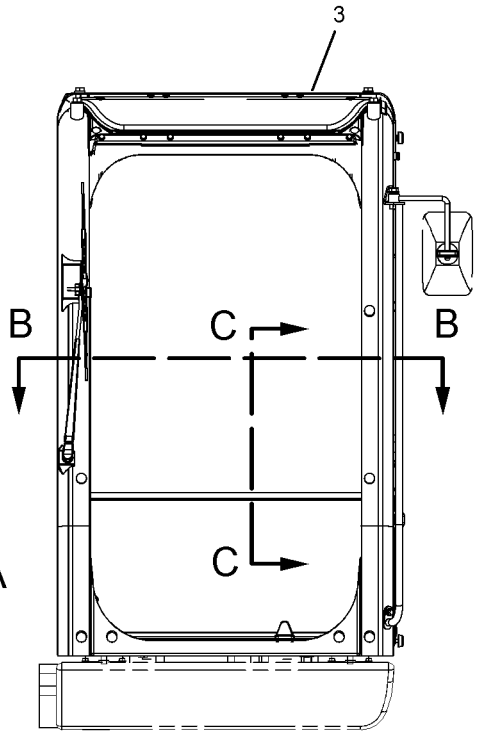

FRONT VIEW

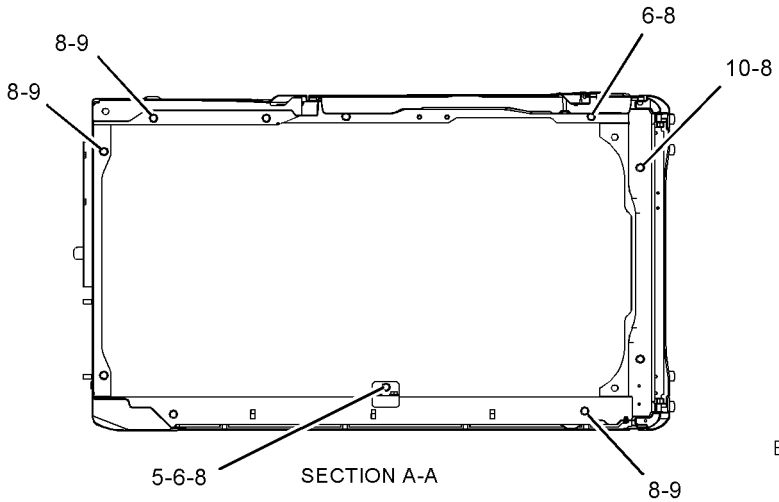

SECTION A-A

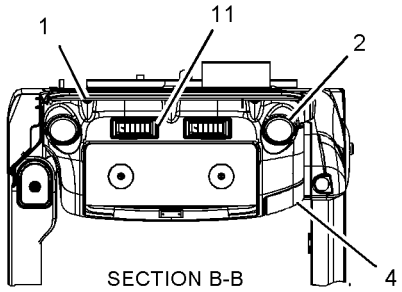

SECTION B-B

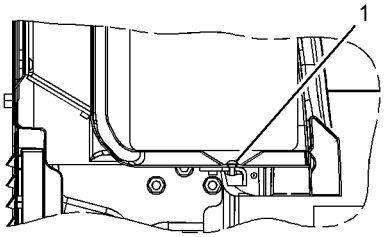

SECTION C-C

GRAPHIC #1 **<END>** g01125071

OPERATOR STATION

229-9097 CAB GP

S/N: MNB1-UP; WDK1-UP
PART OF 229-9096 CAB GP
AN ATTACHMENT

SMCS-7301, 7325 **i02857422**

NOTE	REF NO	GRAPHIC REF	PART NUMBER	QTY	PART NAME 1 2 3 4 5 6 (PRODUCT LEVEL)	SEE PAGE
	1	1	*234-6467*	1	CAB AS	
Y	2	1	*235-8910*	1	CAB GP (EXTERIOR)	927
Y	3	1	*235-8908*	1	CAB GP (INTERIOR)	925
Y	4	1	*235-8909*	1	WINDOW GP-CAB (SIDE, REAR)	1093
Y	5	1	*234-6594*	1	WIPER GP-WINDOW (FRONT, UPPER)	1100
Y	6	1	**189-2768**	1	DOOR & MTG GP-CAB	962
JY	7	1	*139-7101*	1	WINDOW GP-CAB (FRONT, UPPER)	1087
Y	8	1	*176-1958*	1	WINDOW GP-CAB (LOWER)	1091
Y	9	1	*139-7099*	1	HATCH GP-ROOF	988
FJY		1	*171-7503*	1	FRAME GP-UPPER FRONT WINDOW	976
FJY		1	*207-0144*	1	WINDOW AS-FRONT (UPPER)	1086

F-NOT SHOWN
J-ITEMS MARKED J AVAILABLE FOR SERVICE REPAIR OF WINDOW GP MARKED J
Y-SEPARATE ILLUSTRATION

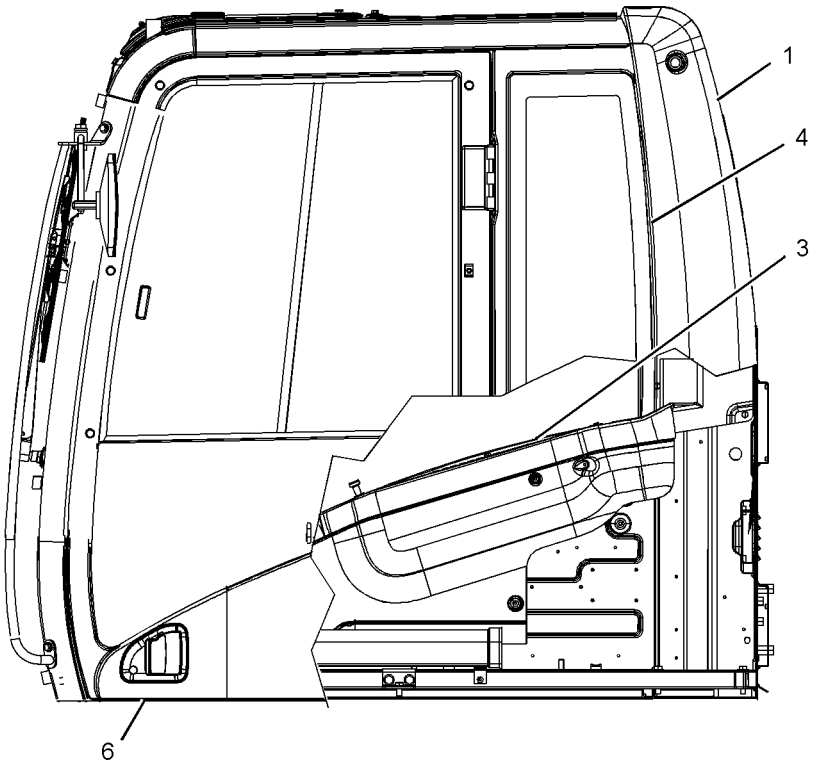

LEFT SIDE VIEW

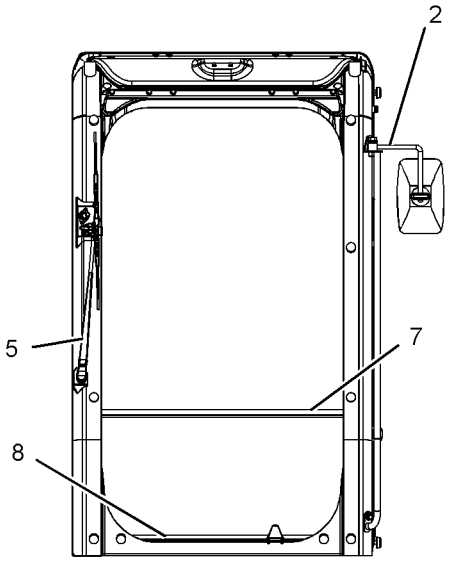

FRONT VIEW

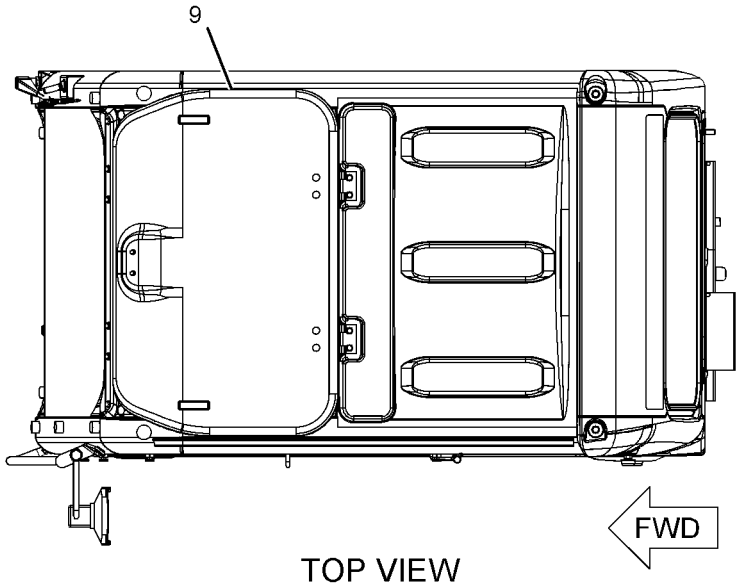

TOP VIEW

GRAPHIC #1 **<END>** g01125083

OPERATOR STATION

229-9098 CAB GP

S/N: MNB1-UP; WDK1-UP
AN ATTACHMENT

SMCS-7301, 7325 **i02401091**

NOTE	REF NO	GRAPHIC REF	PART NUMBER	QTY	PART NAME 1 2 3 4 5 6 (PRODUCT LEVEL)	SEE PAGE
M	1	1	**128-2135**	5	SCREW-TRUSS HEAD (M6X1X13-MM)	
	2	1	**164-8474**	2	LOUVER AS-VENT	
Y	3	1	**229-9099**	1	CAB GP	915
Y	4	1	*234-6501*	1	COVER GP-CAB (REAR)	959
	5	1	**235-9001**	1	SUPPORT	
M	6	1	**8T-4179**	5	BOLT (M12X1.75X20-MM)	
M	7	1	**8T-4190**	4	BOLT (M16X2X25-MM)	
	8	1	**8T-4223**	13	WASHER-HARD (13.5X25.5X3-MM THK)	
M	9	1	**8T-4910**	6	BOLT (M12X1.75X60-MM)	
M	10	1	**8T-6868**	2	BOLT (M12X1.75X80-MM)	
	11	1	**8Y-6967**	2	LOUVER AS	
	12	1	**9X-8257**	6	WASHER (17.5X30X3.5-MM THK)	

M-METRIC PART
Y-SEPARATE ILLUSTRATION

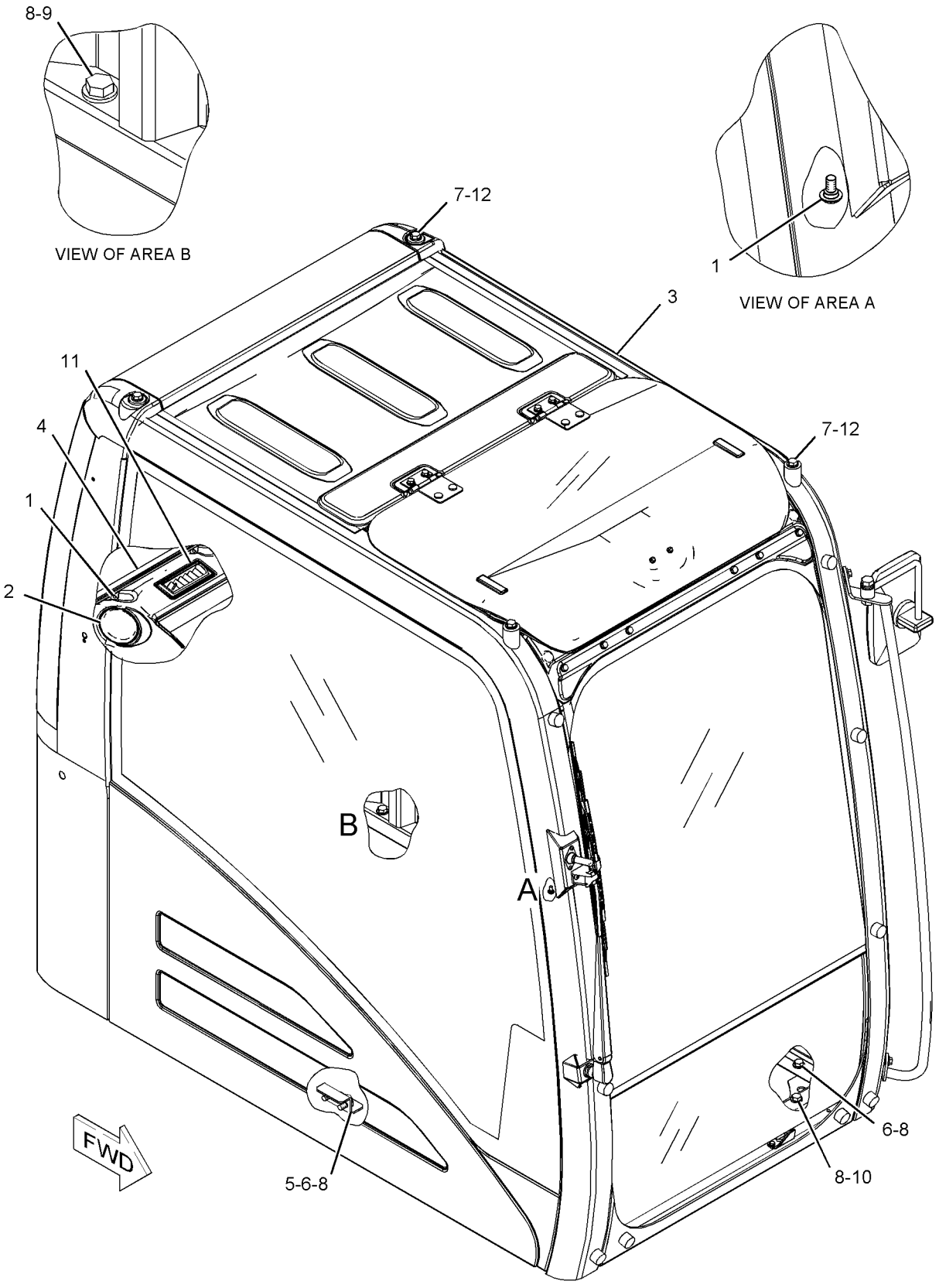

GRAPHIC #1 **<END>** g01119695

OPERATOR STATION

229-9099 CAB GP

S/N: MNB1-UP; WDK1-UP
PART OF 229-9098 CAB GP
AN ATTACHMENT

SMCS-7301, 7325 **i02888830**

NOTE	REF NO	GRAPHIC REF	PART NUMBER	QTY	PART NAME 1 2 3 4 5 6 (PRODUCT LEVEL)	SEE PAGE
	1	1	*235-8916*	1	CAB AS	
Y	2	1	*235-8910*	1	CAB GP (EXTERIOR)	927
Y	3	1	*235-8908*	1	CAB GP (INTERIOR)	925
Y	4	1	*235-8909*	1	WINDOW GP-CAB (SIDE, REAR)	1093
Y	5	1	*234-6594*	1	WIPER GP-WINDOW (FRONT, UPPER)	1100
Y	6	1	**189-2768**	1	DOOR & MTG GP-CAB	962
JY	7	1	*139-7101*	1	WINDOW GP-CAB (FRONT, UPPER)	1087
Y	8	1	*176-1958*	1	WINDOW GP-CAB (LOWER)	1091
Y	9	1	*139-7099*	1	HATCH GP-ROOF	988
FJY		1	*171-7503*	1	FRAME GP-UPPER FRONT WINDOW	976
FJY		1	*207-0144*	1	WINDOW AS-FRONT (UPPER)	1086

F-NOT SHOWN
J-ITEMS MARKED J AVAILABLE FOR SERVICE REPAIR OF WINDOW GP MARKED J
Y-SEPARATE ILLUSTRATION

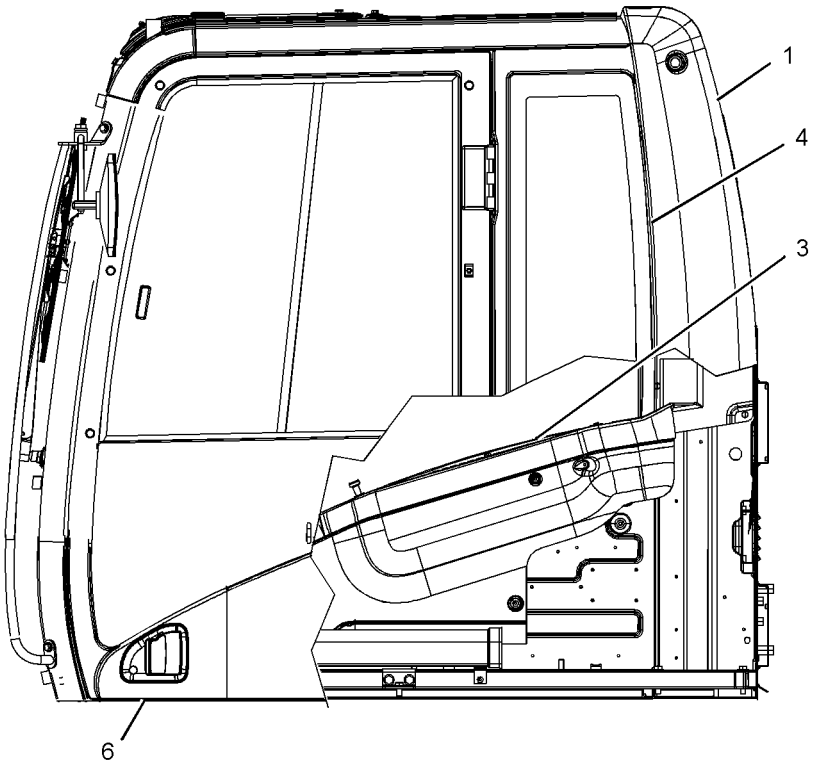

LEFT SIDE VIEW

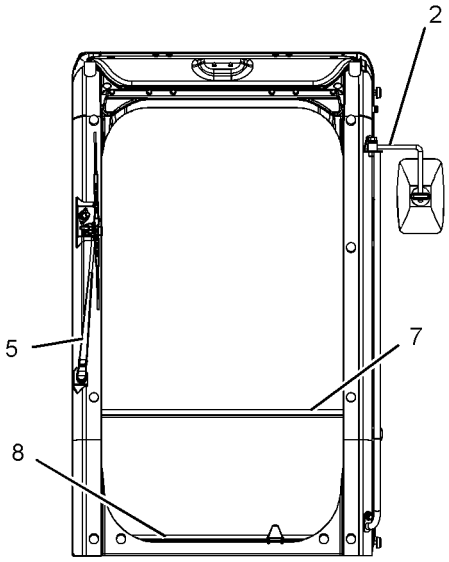

FRONT VIEW

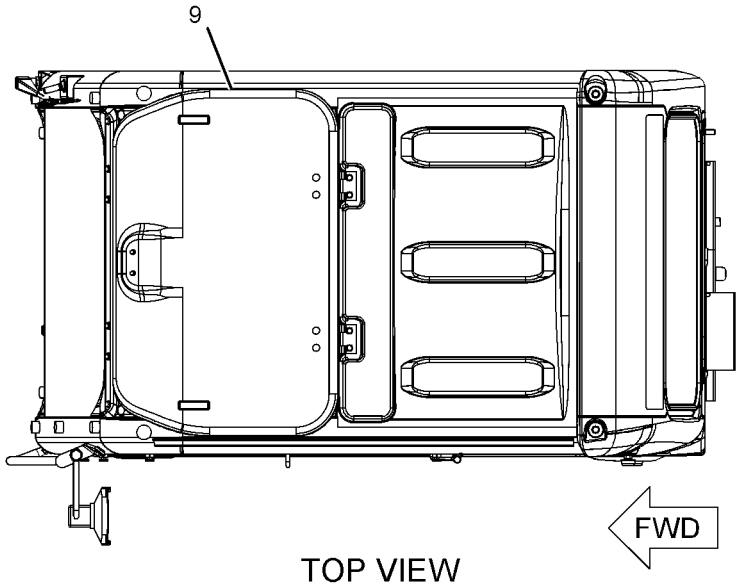

TOP VIEW

GRAPHIC #1 **<END>** g01125083

OPERATOR STATION

229-9100 CAB GP

S/N: MNB1-UP; WDK1-UP
AN ATTACHMENT

SMCS-7301, 7325 **i02401123**

NOTE	REF NO	GRAPHIC REF	PART NUMBER	QTY	PART NAME 1 2 3 4 5 6 (PRODUCT LEVEL)	SEE PAGE
M	1	1	**128-2135**	5	SCREW-TRUSS HEAD (M6X1X13-MM)	
	2	1	**164-8474**	2	LOUVER AS-VENT	
Y	3	1	**229-9101**	1	CAB GP	919
Y	4	1	*234-6501*	1	COVER GP-CAB (REAR)	959
	5	1	**235-9001**	1	SUPPORT	
M	6	1	**8T-4179**	5	BOLT (M12X1.75X20-MM)	
M	7	1	**8T-4190**	4	BOLT (M16X2X25-MM)	
	8	1	**8T-4223**	13	WASHER-HARD (13.5X25.5X3-MM THK)	
M	9	1	**8T-4910**	6	BOLT (M12X1.75X60-MM)	
M	10	1	**8T-6868**	2	BOLT (M12X1.75X80-MM)	
	11	1	**8Y-6967**	2	LOUVER AS	
	12	1	**9X-8257**	6	WASHER (17.5X30X3.5-MM THK)	

M-METRIC PART
Y-SEPARATE ILLUSTRATION

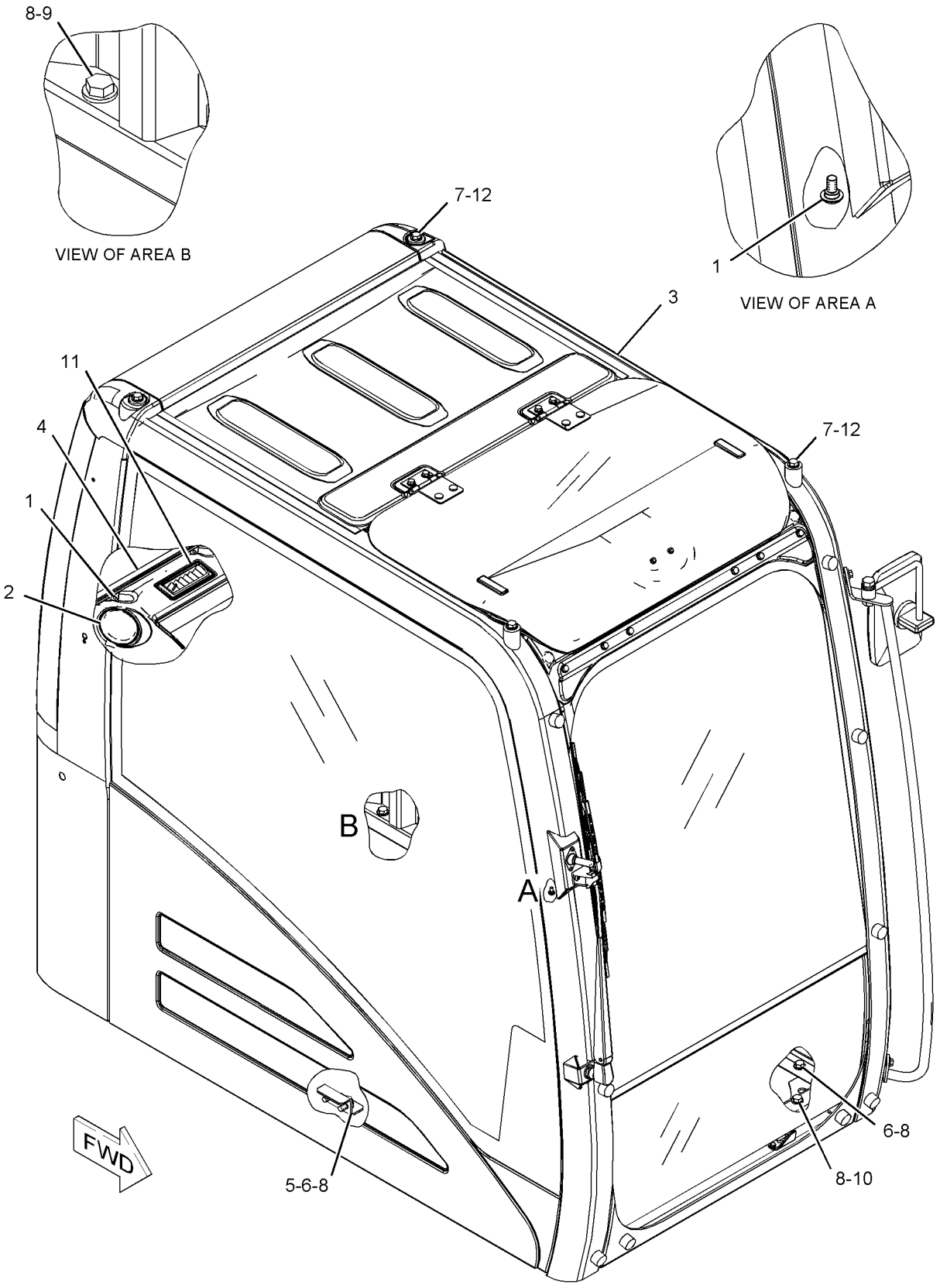

GRAPHIC #1 **<END>** g01119695

OPERATOR STATION

229-9101 CAB GP

S/N: MNB1-UP; WDK1-UP
PART OF 229-9100, 259-7174 CAB GP
AN ATTACHMENT

SMCS-7301, 7325 **i02857421**

NOTE	REF NO	GRAPHIC REF	PART NUMBER	QTY	PART NAME 1 2 3 4 5 6 (PRODUCT LEVEL)	SEE PAGE
	1		**234-6493**	1	CAB AS	
Y	2	1	*235-8910*	1	CAB GP (EXTERIOR)	927
Y	3	1	*235-8908*	1	CAB GP (INTERIOR)	925
Y	4	1	*235-8915*	1	WINDOW GP-CAB (SIDE, REAR)	1094
Y	5	1	*234-6594*	1	WIPER GP-WINDOW (FRONT, UPPER)	1100
Y	6	1	*176-1964*	1	DOOR GP-CAB	965
JY	7	1	*139-7101*	1	WINDOW GP-CAB (FRONT, UPPER)	1087
Y	8	1	*176-1958*	1	WINDOW GP-CAB (LOWER)	1091
Y	9	1	*139-7099*	1	HATCH GP-ROOF	988
FJY		1	*189-2793*	1	DOOR GP-CAB	968
FJY		1	*171-7503*	1	FRAME GP-UPPER FRONT WINDOW	976
FJY		1	*207-0144*	1	WINDOW AS-FRONT (UPPER)	1086

F-NOT SHOWN
J-ITEMS MARKED J AVAILABLE FOR SERVICE REPAIR OF WINDOW GP MARKED J
Y-SEPARATE ILLUSTRATION

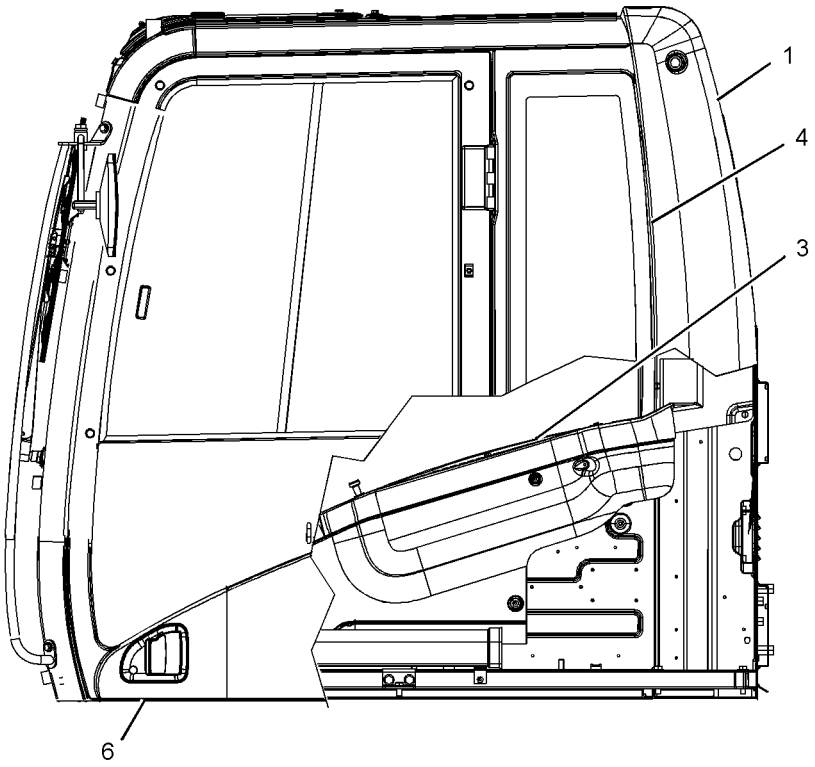

LEFT SIDE VIEW

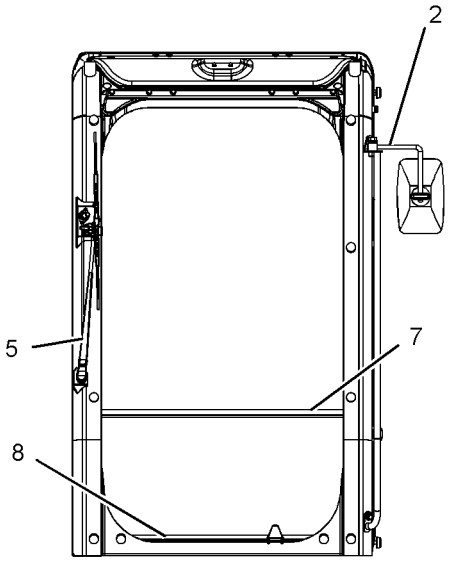

FRONT VIEW

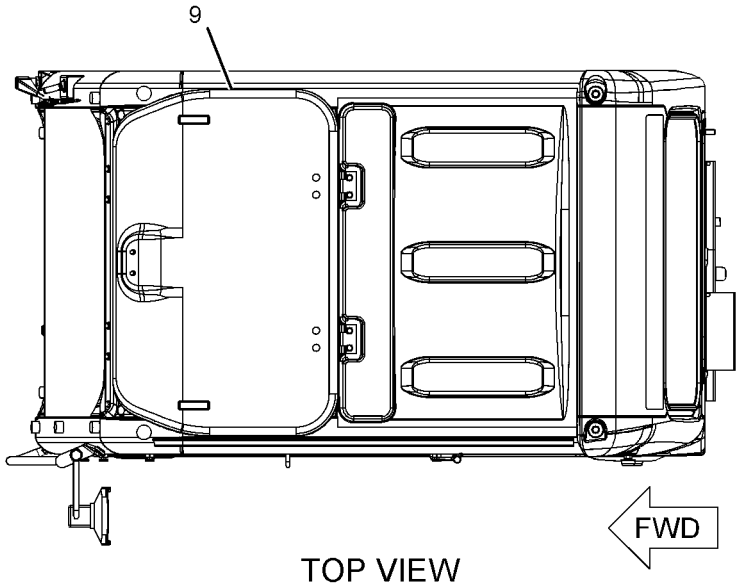

TOP VIEW

GRAPHIC #1 **<END>** g01125083

OPERATOR STATION

229-9108 CAB GP

S/N: MNB1-UP; WDK1-UP
AN ATTACHMENT

SMCS-7301, 7325 **i02485105**

NOTE	REF NO	GRAPHIC REF	PART NUMBER	QTY	PART NAME 1 2 3 4 5 6 (PRODUCT LEVEL)	SEE PAGE
M	1	1	**128-2135**	5	SCREW-TRUSS HEAD (M6X1X13-MM)	
	2	1	**164-8474**	2	LOUVER AS-VENT	
Y	3	1	**229-9109**	1	CAB GP	923
Y	4	1	*234-6501*	1	COVER GP-CAB (REAR)	959
	5	1	**235-9001**	1	SUPPORT	
M	6	1	**8T-4179**	5	BOLT (M12X1.75X20-MM)	
M	7	1	**8T-4190**	4	BOLT (M16X2X25-MM)	
	8	1	**8T-4223**	13	WASHER-HARD (13.5X25.5X3-MM THK)	
M	9	1	**8T-4910**	6	BOLT (M12X1.75X60-MM)	
M	10	1	**8T-6868**	2	BOLT (M12X1.75X80-MM)	
	11	1	**8Y-6967**	2	LOUVER AS	
	12	1	**9X-8257**	6	WASHER (17.5X30X3.5-MM THK)	

M-METRIC PART
Y-SEPARATE ILLUSTRATION

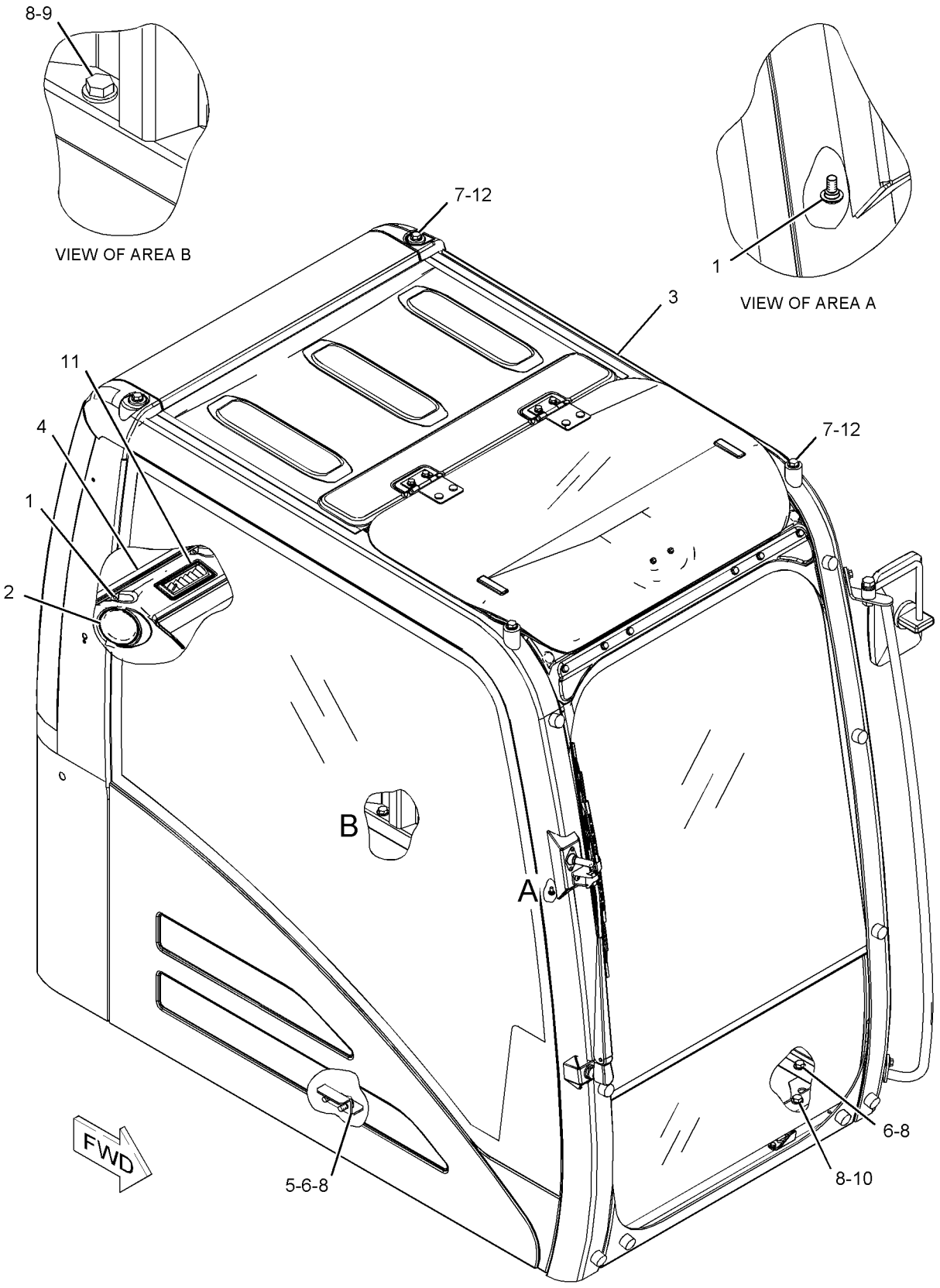

GRAPHIC #1 **<END>** g01119695

OPERATOR STATION

229-9109 CAB GP

S/N: MNB1-UP; WDK1-UP
PART OF 229-9108 CAB GP
AN ATTACHMENT

SMCS-7301, 7325 **i02857455**

NOTE	REF NO	GRAPHIC REF	PART NUMBER	QTY	PART NAME 1 2 3 4 5 6 (PRODUCT LEVEL)	SEE PAGE
	1	1	*234-6467*	1	CAB AS	
Y	2	1	*235-8910*	1	CAB GP (EXTERIOR)	927
Y	3	1	*235-8917*	1	CAB GP (INTERIOR)	931
Y	4	1	*235-8909*	1	WINDOW GP-CAB (SIDE, REAR)	1093
Y	5	1	*234-6594*	1	WIPER GP-WINDOW (FRONT, UPPER)	1100
Y	6	1	*189-2768*	1	DOOR & MTG GP-CAB	962
JY	7	1	*139-7101*	1	WINDOW GP-CAB (FRONT, UPPER)	1087
Y	8	1	*176-1958*	1	WINDOW GP-CAB (LOWER)	1091
Y	9	1	*259-7350*	1	HATCH GP-ROOF	990
FJY		1	*171-7503*	1	FRAME GP-UPPER FRONT WINDOW	976
FJY		1	*207-0144*	1	WINDOW AS-FRONT (UPPER)	1086

F-NOT SHOWN
J-ITEMS MARKED J AVAILABLE FOR SERVICE REPAIR OF WINDOW GP MARKED J
Y-SEPARATE ILLUSTRATION

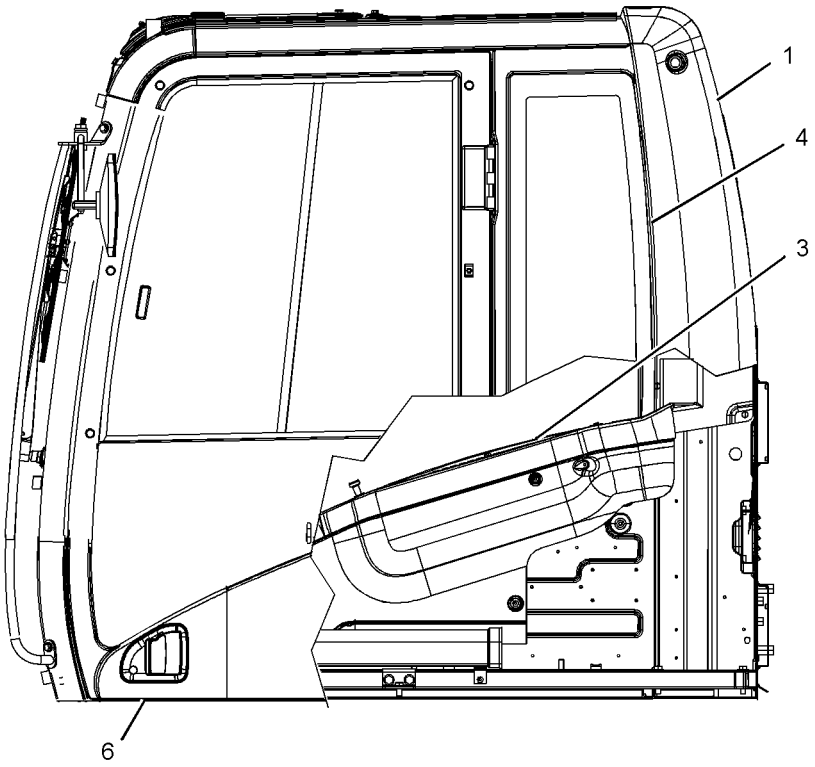

LEFT SIDE VIEW

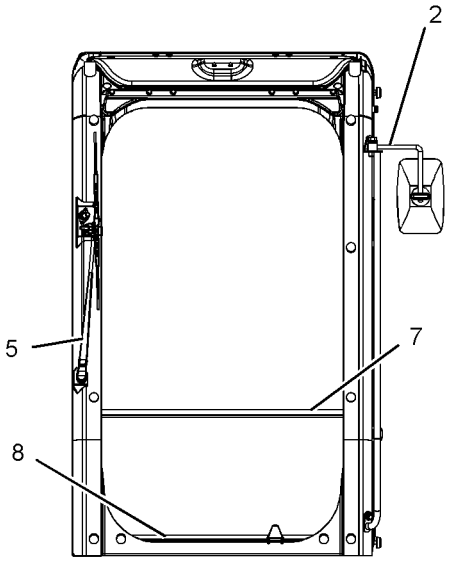

FRONT VIEW

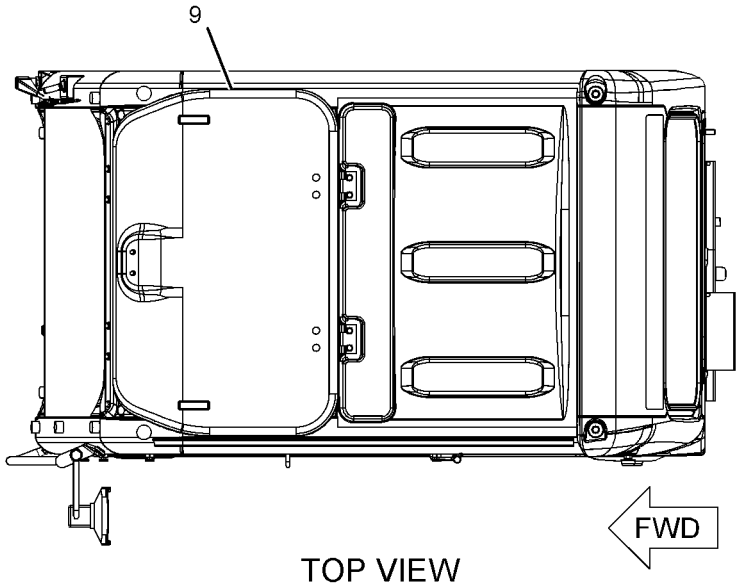

TOP VIEW

GRAPHIC #1 **<END>** g01125083

OPERATOR STATION

235-8908 CAB GP—INTERIOR

S/N: MNB1-UP; WDK1-UP
PART OF 229-9097, 229-9099, 229-9101 CAB GP
AN ATTACHMENT

SMCS-7301, 7325 **i03087701**

NOTE	REF NO	GRAPHIC REF	PART NUMBER	QTY	PART NAME 1 2 3 4 5 6 (PRODUCT LEVEL)	SEE PAGE
	1	1	**8Y-6352**	1	LOUVER AS	
	2	1	**156-6656**	1	RAIL	
	3	1	**156-6657**	1	RAIL	
	4	1	**164-0646**	1	CUP	
	5	1	**164-0655**	1	PANEL-SWITCH (OPERATOR CONSOLE)	
	6	1	**164-8474**	2	LOUVER AS-VENT	
	7	1	**170-9724**	5	CLIP	
	8	1	**171-7420**	6	CLIP	
	9	1	**176-1946**	1	PLATE	
	10	1	**176-1947**	1	PLATE	
	11	1	**176-1972**	1	COVER	
	12	1	**185-8214**	1	BRACKET AS	
	13	1	**189-2678**	3	SPACER	
	14	1	**234-6468**	1	COVER AS	
	15	1	**234-6470**	1	COVER-MONITOR	
	16	1	**234-6471**	1	COVER-DUCT	
	17	1	**234-6472**	1	COVER	
	18	1	**234-6473**	1	COVER-FRONT (UPPER, RH)	
	19	1	**234-6474**	1	COVER (UPPER, RH)	
	20	1	**305-0330**	1	COVER	
	21	1	**234-6476**	1	DUCT	
	22	1	**234-6477**	1	BRACKET AS	
	23	1	**305-0333**	1	BRACKET	
	24	1	**234-6480**	1	BRACKET AS	
	25	1	**234-6483**	1	BRACKET AS	
	26	1	**234-6485**	1	BRACKET AS	
	27	1	**234-6490**	1	CUP	
	28	1	**234-6491**	1	COVER	
	29	1	**234-6497**	1	COVER	
	30	1	**234-6498**	3	RIVET	
	31	1	**234-6521**	1	COVER	
	32	1	**234-6547**	1	COVER	
	33	1	**234-6548**	1	COVER	
	34	1	**234-6549**	1	COVER	
	35	1	**234-6550**	1	COVER	
	36	1	**234-6579**	2	NUT-SPEED	
	37	1	**235-8922**	1	COVER	
	38	1	**235-8923**	2	CAP	
	39	1	**235-8926**	1	VISOR	
	40	1	**235-8928**	1	LINER	
	41	1	**235-8929**	2	HANDLE	
	42	1	**185-8205**	5	CLIP	
	43	1	**235-8950**	10	CLIP	
	44	1	**245-7790**	2	SCREW-TAPPING	
M	45	1	**128-2135**	13	SCREW-TRUSS HEAD (M6X1X13-MM)	
M	46	1	**128-2136**	1	SCREW-TRUSS HEAD (M6X1X16-MM)	
	47	1	**189-2855**	1	COVER	
	48	1	**234-6469**	1	COVER	
M	49	1	**9X-2042**	23	SCREW-TRUSS HEAD (M6X1X12-MM)	
M	50	1	**9X-2044**	6	SCREW-TRUSS HEAD (M6X1X16-MM)	

M-METRIC PART

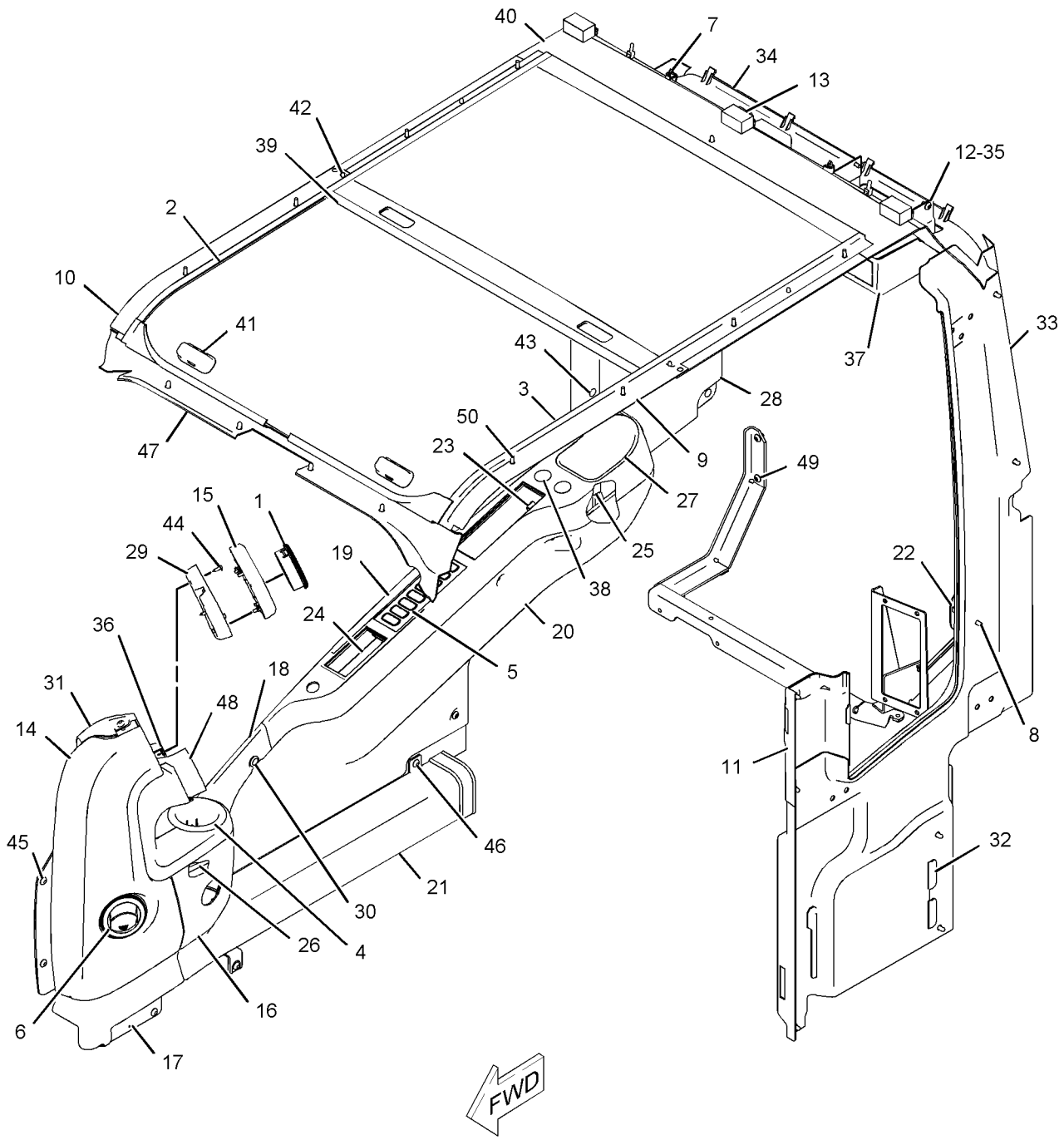

GRAPHIC #1

<END>

g01097914

OPERATOR STATION

235-8910 CAB GP–EXTERIOR

S/N: MNB1-UP; WDK1-UP

PART OF 229-9097, 229-9099, 229-9101, 229-9109 CAB GP

AN ATTACHMENT

SMCS-7301, 7325 **i03087760**

NOTE	REF NO	GRAPHIC REF	PART NUMBER	QTY	PART NAME 1 2 3 4 5 6 (PRODUCT LEVEL)	SEE PAGE
	1	2	**139-7126**	1	HOLDER	
	2	2	**139-7127**	1	HOLDER	
	3	1	**156-6599**	1	STRIKER	
	4	2	**161-3685**	1	ROD	
	5	1	**235-8933**	1	HANDLE AS	
	6	1	**161-3697**	1	GUARD	
	7	2	**164-0523**	1	LEVER AS	
	8	2	**164-0527**	1	ROD	
Y	9	2	*164-0528*	1	LEVER GP-AIR & TEMP CONTROL	1008
	10	1	**167-7018**	1	COVER AS	
	11	2	**167-7042**	2	SEAL	
	12	2	**171-7426**	1	CABLE AS	
	13	2	*176-1939*	1	LEVER AS	
M		2	**9X-2044**	1	SCREW-TRUSS HEAD (M6X1X16-MM)	
		2	**176-1937**	1	BRACKET AS	
		2	**176-1938**	1	LEVER	
	14	2	**176-1942**	1	COVER	
	15	1	**178-5570**	2	GROMMET	
	16	2	**185-8196**	1	GROMMET	
	17	2	**189-2704**	1	SEAL	
M	18	1,2	**189-3396**	5	NUT (M10X1.15-THD)	
	19	2	**189-3409**	3	WASHER	
	20	2	**201-4530**	1	BRACKET AS	
	21	2	**205-6295**	1	LATCH AS	
	22	1	**210-5808**	1	SEAL	
	23	1	**235-8912**	1	HANDLE AS	
M	24	1	**099-0823**	3	SCREW-MACHINE (M6X1X6-MM)	
M	25	1	**127-0580**	2	SCREW-FLAT HEAD (M8X1.25X20-MM)	
	26	2	**133-8016**	1	PACKING	
CY	27	1	**327-6550**	1	MIRROR GP-REAR VIEW	1018
Y	28	1	**259-7295**	1	BRACKET GP-MIRROR	907
	29	2	**176-1986**	1	LAMP AS-DOME	
		2	**201-4417**	1	LAMP (24-VOLT, 10-WATT) (DOME)	
	30	1	**1R-5998**	2	LOCKWASHER	
M	31	1	**284-4426**	1	BOLT-WING (M8X1.25X15-MM)	
M	32	2	**3E-8020**	6	SCREW-TRUSS HEAD (M6X1X25-MM)	
M	33	2	**3E-9874**	2	SCREW-OVAL HEAD	
	34	1	**4I-1205**	2	BUMPER	
	35	2	**4I-1206**	2	GUIDE	
	36	2	**4I-3063**	1	SPRING	
M	37	1	**4I-3123**	2	BOLT (M10X1.5X20-MM)	
	38	1	**4I-3144**	2	WASHER-HARD (10.2X22X3.2-MM THK)	
	39	2	**4I-4270**	1	HOLDER-GLASS	
	40	2	**4I-4392**	3	CLIP	
	41	2	**5C-7793**	1	HOOK-COAT	
	42	2	**6V-7636**	4	PIN AS-SPRING	
	43	1	**7X-0578**	2	WASHER-HARD (10.2X32X2.5-MM THK)	
					–OR–	
		1	**099-3607**	2	WASHER-HARD (10.2X30X3.2-MM THK)	
M	44	1	**8T-4779**	1	BOLT (M16X2X35-MM)	
M	45	2	**9X-2041**	1	SCREW-TRUSS HEAD (M10X1.5X20-MM)	
M	46	2	**9X-2042**	5	SCREW-TRUSS HEAD (M6X1X12-MM)	
M	47	2	**9X-2044**	5	SCREW-TRUSS HEAD (M6X1X16-MM)	
M	48	2	**9X-2045**	2	SCREW-TRUSS HEAD (M6X1X20-MM)	
	49	1	**9X-8257**	1	WASHER (17.5X30X3.5-MM THK)	

OPERATOR STATION

235-8910 **CAB GP** *(contd.)* **i03087760**

NOTE	REF NO	GRAPHIC REF	PART NUMBER	QTY	PART NAME 1 2 3 4 5 6 (PRODUCT LEVEL)	SEE PAGE
E	50	2	**6I-5470**		SEAL (150-CM)	
	51	1	**085-6452**	2	WASHER	
M	52	1	**105-2169**	2	BOLT AS (M8X1.25X16-MM)	
M	53	1	**189-2864**	2	SCREW-FLAT HEAD (M8X1.25X30-MM)	
	54	1	**4I-3090**	4	SEAL	

C-CHANGE FROM PREVIOUS TYPE
E-ORDER BY THE CENTIMETER
M-METRIC PART
Y-SEPARATE ILLUSTRATION

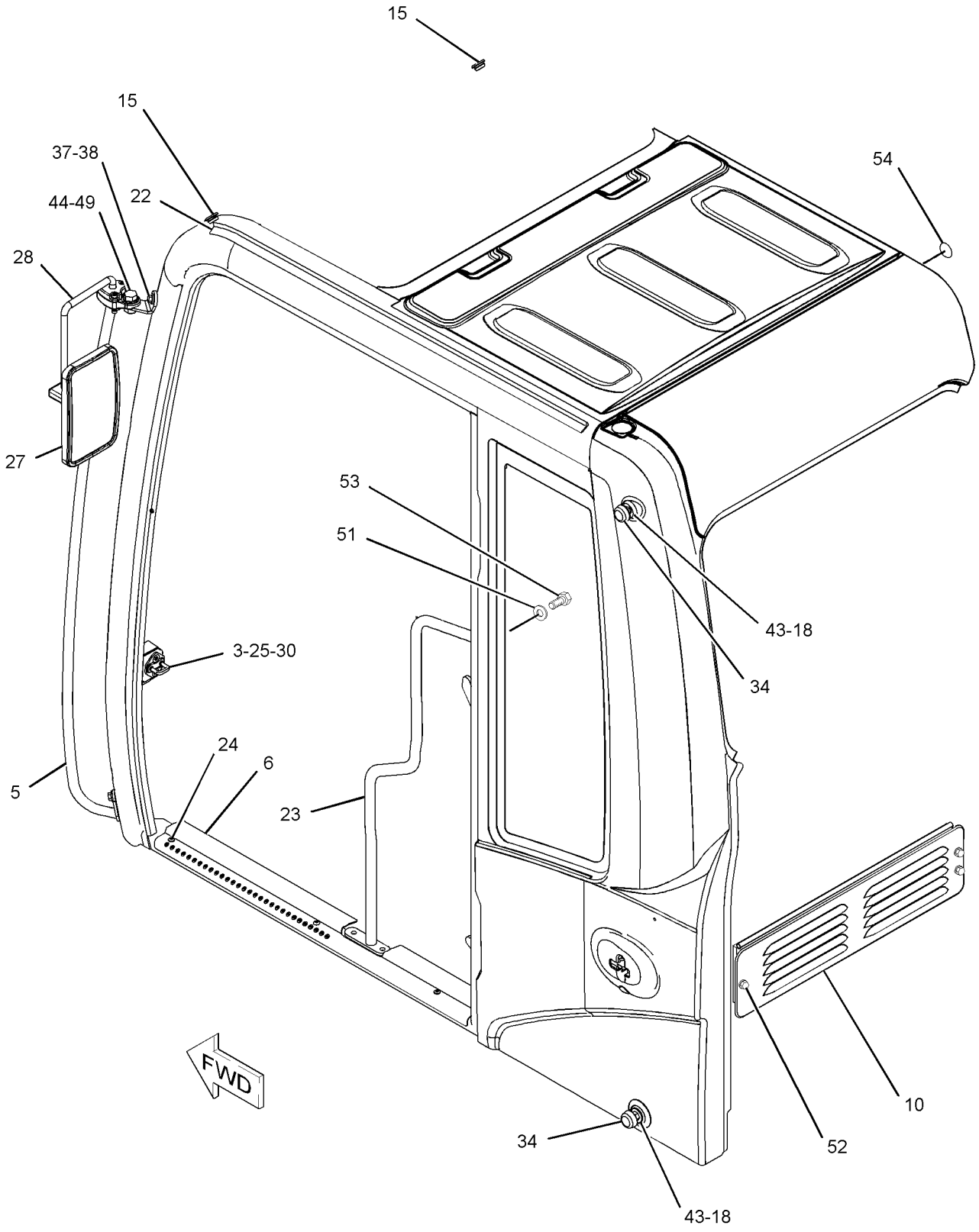

GRAPHIC #1 g01253581

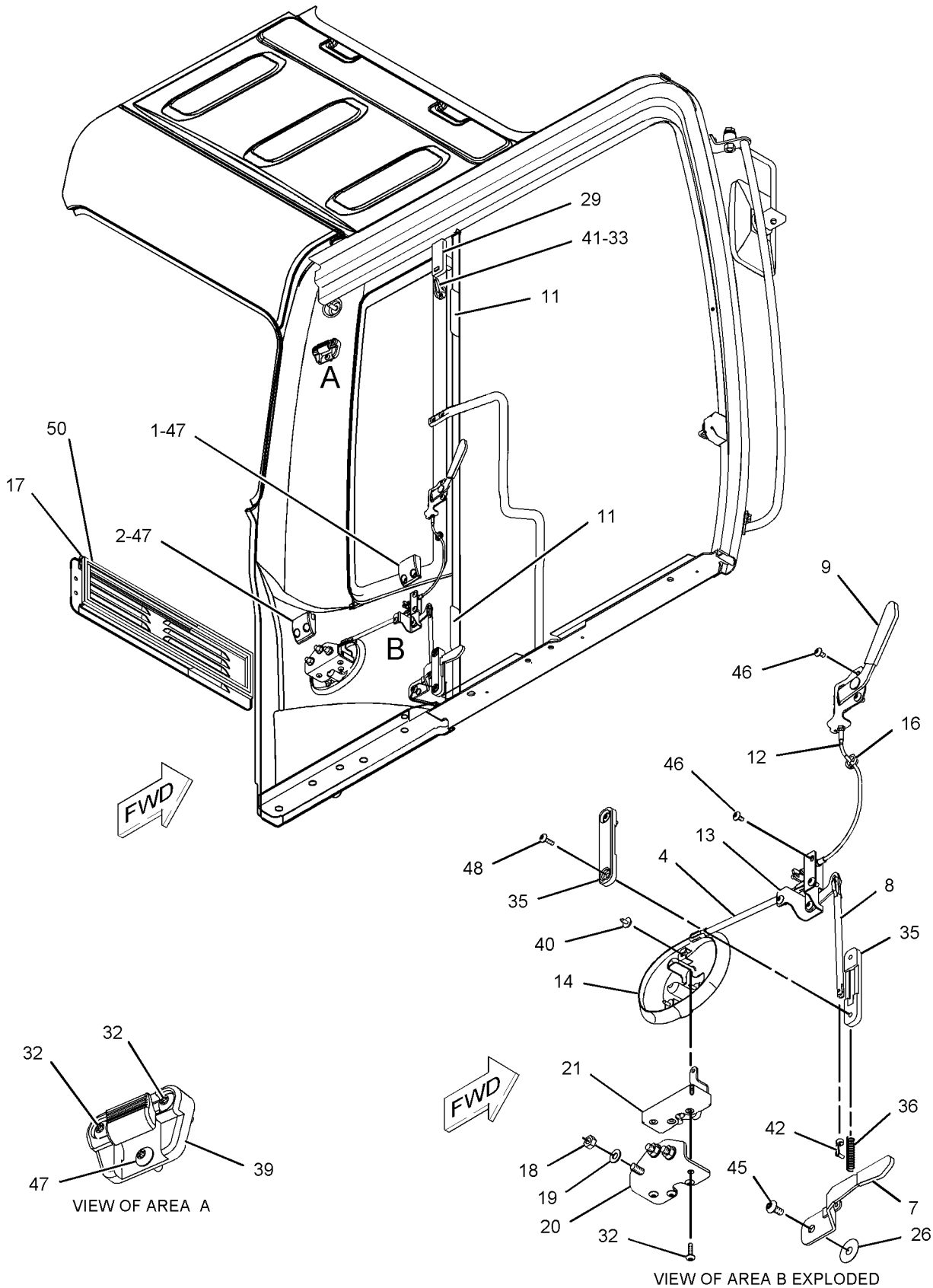

GRAPHIC #2 **<END>** g01098017

OPERATOR STATION

235-8917 CAB GP—INTERIOR

S/N: MNB1-UP; WDK1-UP
PART OF 229-9109 CAB GP
AN ATTACHMENT

SMCS-7301, 7325 **i02783571**

NOTE	REF NO	GRAPHIC REF	PART NUMBER	QTY	PART NAME 1 2 3 4 5 6 (PRODUCT LEVEL)	SEE PAGE
	1	1	**8Y-6352**	1	LOUVER AS	
	2	1	**164-0646**	1	CUP	
	3	1	**164-0655**	1	PANEL-SWITCH (OPERATOR CONSOLE)	
	4	1	**164-8474**	2	LOUVER AS-VENT	
	5	1	**170-9724**	5	CLIP	
	6	1	**171-7420**	10	CLIP	
	7	1	**176-1972**	1	COVER	
	8	1	**185-8205**	7	CLIP	
	9	1	**185-8214**	1	BRACKET AS	
	10	1	**189-2678**	3	SPACER	
	11	1	**189-2853**	1	COVER	
	12	1	**189-2854**	1	COVER	
	13	1	**234-6468**	1	COVER AS	
		1	**259-7353**	4	CLIP	
	14	1	**234-6470**	1	COVER-MONITOR	
	15	1	**234-6471**	1	COVER-DUCT	
	16	1	**234-6472**	1	COVER	
	17	1	**234-6473**	1	COVER-FRONT (UPPER, RH)	
	18	1	**234-6474**	1	COVER (UPPER, RH)	
	20	1	**234-6476**	1	DUCT	
	21	1	**234-6477**	1	BRACKET AS	
	23	1	**234-6480**	1	BRACKET AS	
	24	1	**234-6483**	1	BRACKET AS	
	25	1	**234-6485**	1	BRACKET AS	
	26	1	**234-6490**	1	CUP	
	27	1	**234-6491**	1	COVER	
	28	1	**234-6497**	1	COVER	
	29	1	**234-6498**	3	RIVET	
	30	1	**234-6521**	1	COVER	
	31	1	**234-6547**	1	COVER	
	32	1	**234-6548**	1	COVER	
	33	1	**234-6549**	1	COVER	
	34	1	**234-6550**	1	COVER	
	35	1	**234-6579**	2	NUT-SPEED	
	36	1	**235-8922**	1	COVER	
	37	1	**235-8923**	2	CAP	
	38	1	**235-8930**	1	LINER	
C	39	1	**235-8950**	10	CLIP	
	40	1	**245-7790**	2	SCREW-TAPPING	
M	41	1	**128-2135**	13	SCREW-TRUSS HEAD (M6X1X13-MM)	
M	42	1	**128-2136**	1	SCREW-TRUSS HEAD (M6X1X16-MM)	
	43	1	**189-2855**	1	COVER	
	44	1	**234-6469**	1	COVER	
M	45	1	**9X-2042**	23	SCREW-TRUSS HEAD (M6X1X12-MM)	
C	46	1	**305-0333**	1	BRACKET	
C	47	1	**305-0330**	1	COVER	

C-CHANGE FROM PREVIOUS TYPE
M-METRIC PART

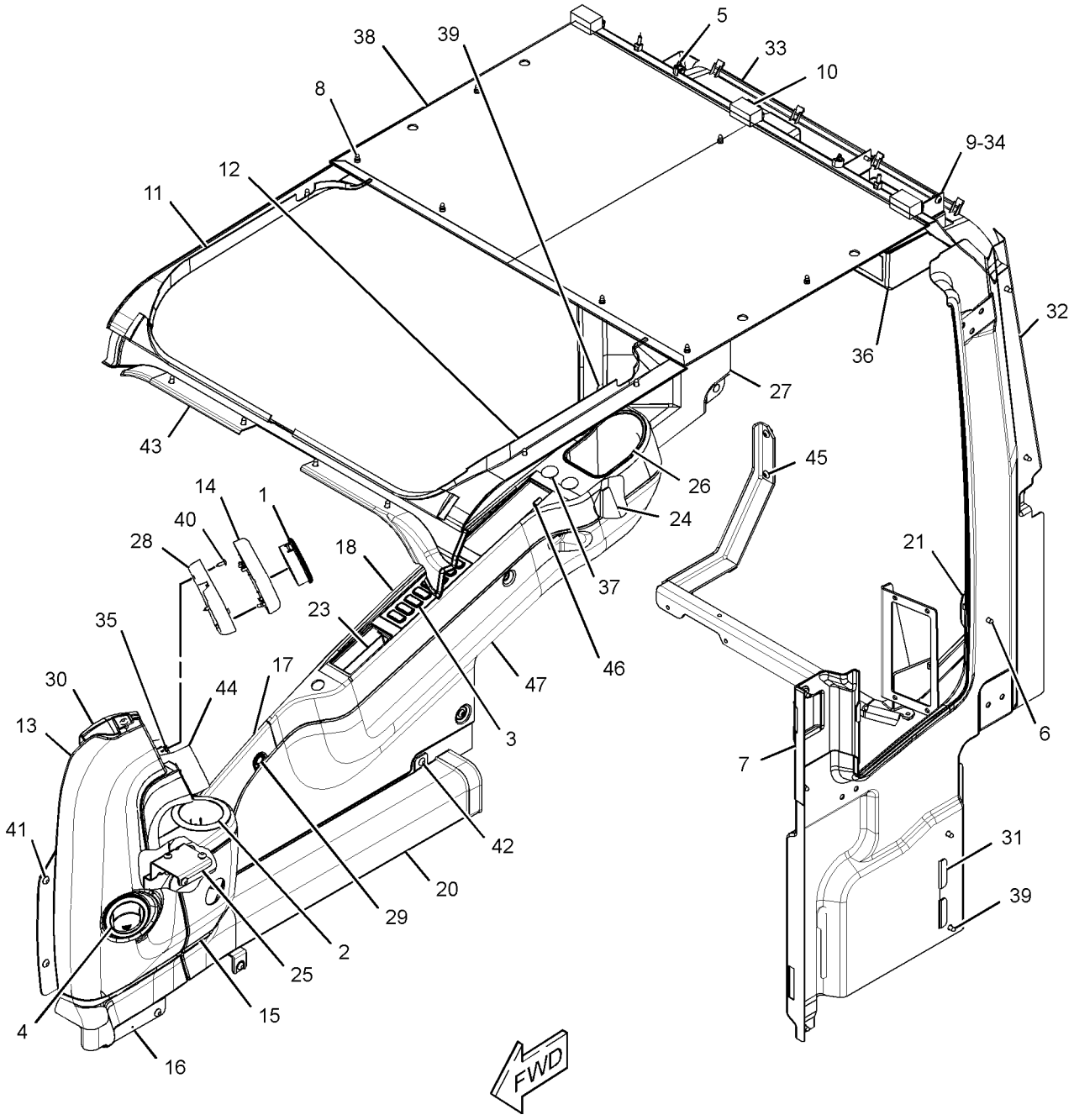

GRAPHIC #1 **<END>** g01421499

OPERATOR STATION

259-7174 CAB GP

S/N: MNB1-UP; WDK1-UP
AN ATTACHMENT

SMCS-7301, 7325 **i02344754**

NOTE	REF NO	GRAPHIC REF	PART NUMBER	QTY	PART NAME 1 2 3 4 5 6 (PRODUCT LEVEL)	SEE PAGE
M	1	1	**128-2135**	5	SCREW-TRUSS HEAD (M6X1X13-MM)	
	2	1	**164-8474**	2	LOUVER AS-VENT	
Y	3	1	**229-9101**	1	CAB GP	919
Y	4	1	*234-6501*	1	COVER GP-CAB (REAR)	959
	5	1	**235-9001**	1	SUPPORT	
M	6	1	**8T-4179**	5	BOLT (M12X1.75X20-MM)	
M	7	1	**8T-4190**	4	BOLT (M16X2X25-MM)	
	8	1	**8T-4223**	13	WASHER-HARD (13.5X25.5X3-MM THK)	
M	9	1	**8T-4910**	6	BOLT (M12X1.75X60-MM)	
M	10	1	**8T-6868**	2	BOLT (M12X1.75X80-MM)	
	11	1	**8Y-6967**	2	LOUVER AS	
	12	1	**9X-8257**	6	WASHER (17.5X30X3.5-MM THK)	
Y	13	1	*163-6772*	1	LIGHTING GP-FLOOD (CAB) (CAB)	208

M-METRIC PART
Y-SEPARATE ILLUSTRATION

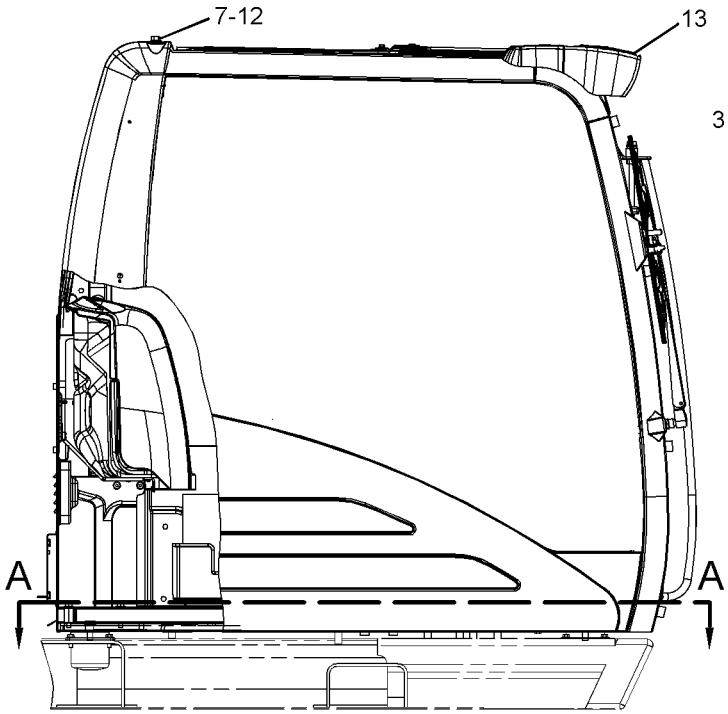

RIGHT SIDE VIEW

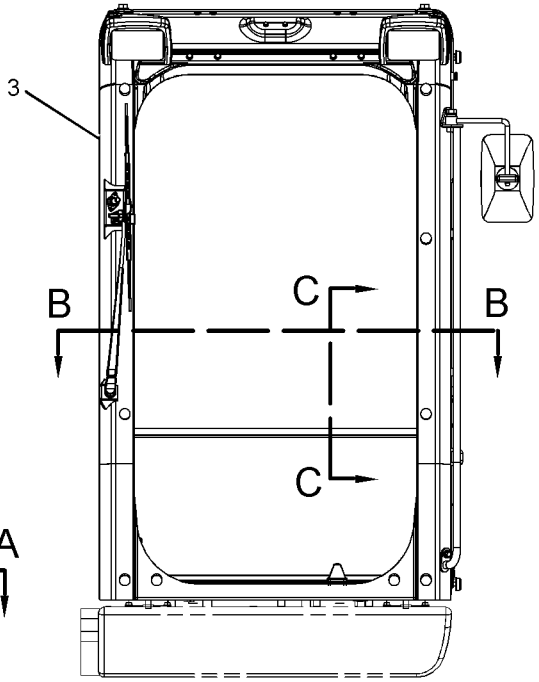

FRONT VIEW

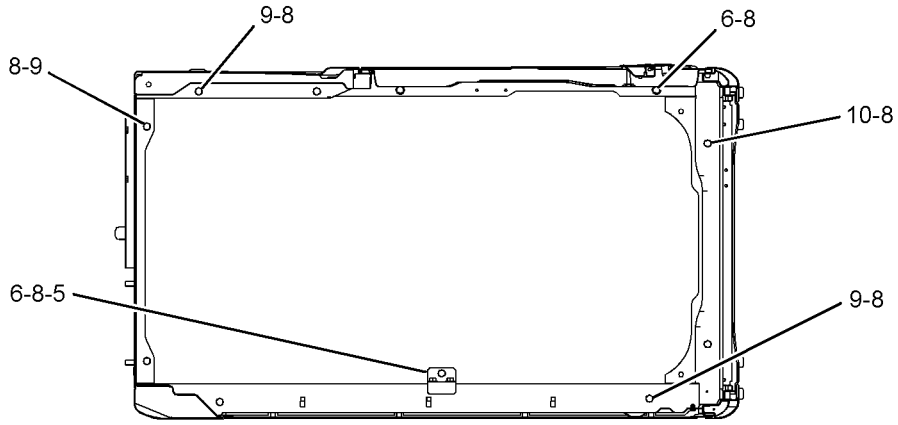

SECTION A-A

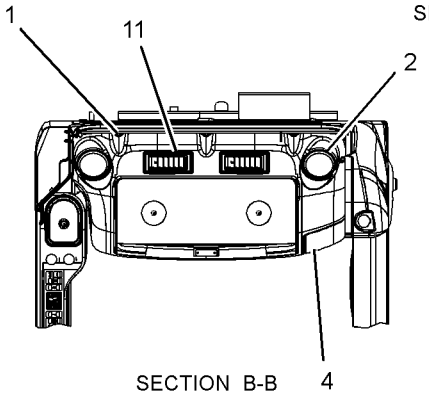

SECTION B-B

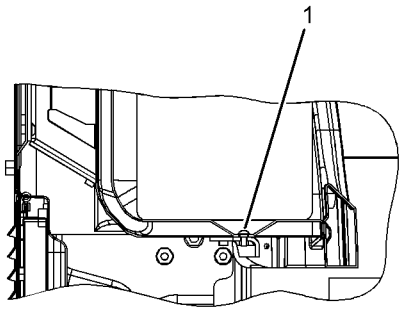

SECTION C-C

GRAPHIC #1 **<END>** g01182738

OPERATOR STATION

329-6569 CAMERA & MIRROR AR

S/N: MNB1-UP; WDK1-UP

FOR USE WITH 327-6552—PAGE 1019, 327-6553—PAGE 1020

AN ATTACHMENT

SMCS-7319, 7348 **i03167801**

NOTE	PART NUMBER	QTY	PART NAME 1 2 3 4 5 6 (PRODUCT LEVEL)	SEE PAGE
Y	*329-6570*	1	CAMERA & WIRING GP	184
Y	*330-1353*	1	MIRROR AR-REAR VIEW	1015

Y-SEPARATE ILLUSTRATION

<END>

OPERATOR STATION

245-7836 COIL GP-EVAPORATOR

S/N: MNB1-UP; WDK1-UP

PART OF 316-8811, 316-8812 AIR CONDITIONER GP

AN ATTACHMENT

SMCS-7343 **i02218138**

NOTE	REF NO	GRAPHIC REF	PART NUMBER	QTY	PART NAME 1 2 3 4 5 6 (PRODUCT LEVEL)	SEE PAGE
	1	1	**245-7837**	1	VALVE AS-EXPANSION	
	2	1	**245-7905**	1	INSULATOR	
M	3	1	**8T-0266**	2	BOLT-SOCKET HEAD (M5X0.8X40-MM)	
	4	1	**121-7136**	1	SEAL-O-RING	
	5	1	**121-7138**	1	SEAL-O-RING	

M-METRIC PART

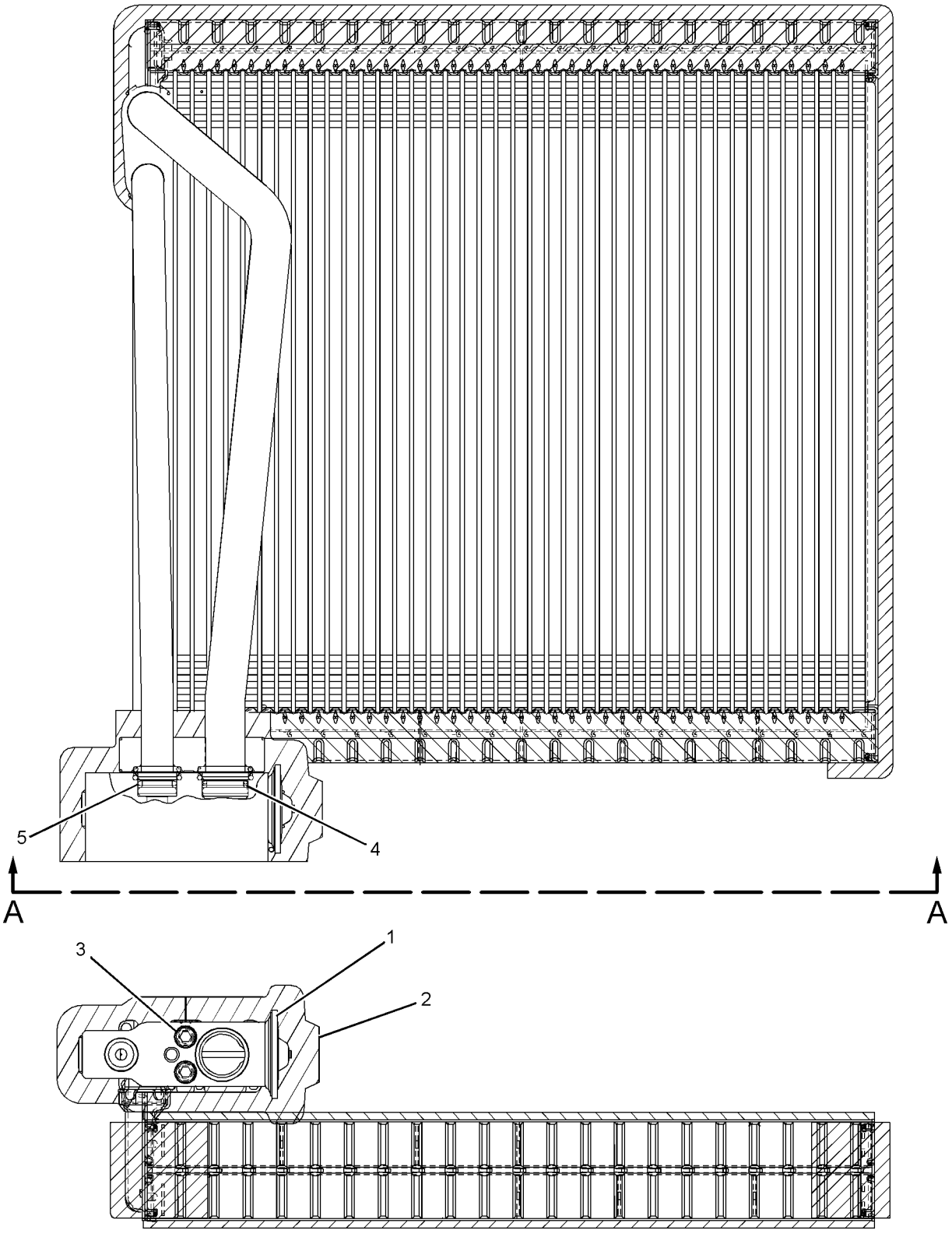

VIEW A-A

GRAPHIC #1 **<END>** g01134658

OPERATOR STATION

276-3815 COMPRESSOR GP-REFRIGERANT

S/N: KHX4087-UP

PART OF 224-9842, 290-0754, 290-0755, 290-0756 ENGINE AR-COMPLETE

ALSO AN ATTACHMENT

SMCS-1802 **i02997463**

NOTE	REF NO	GRAPHIC REF	PART NUMBER	QTY	PART NAME 1 2 3 4 5 6 (PRODUCT LEVEL)	SEE PAGE
M	1	1	**258-9892**	2	BOLT (M8X1.25X80-MM)	
	2	1	**305-0325**	1	COMPRESSOR & MTG GP-REFRIG	
	3	1	**132-5789**	1	CLIP	
M	4	1	**8T-3647**	2	BOLT (M8X1.25X80-MM)	
	5	1	**8T-4224**	4	WASHER-HARD (8.8X16X2-MM THK)	

M-METRIC PART

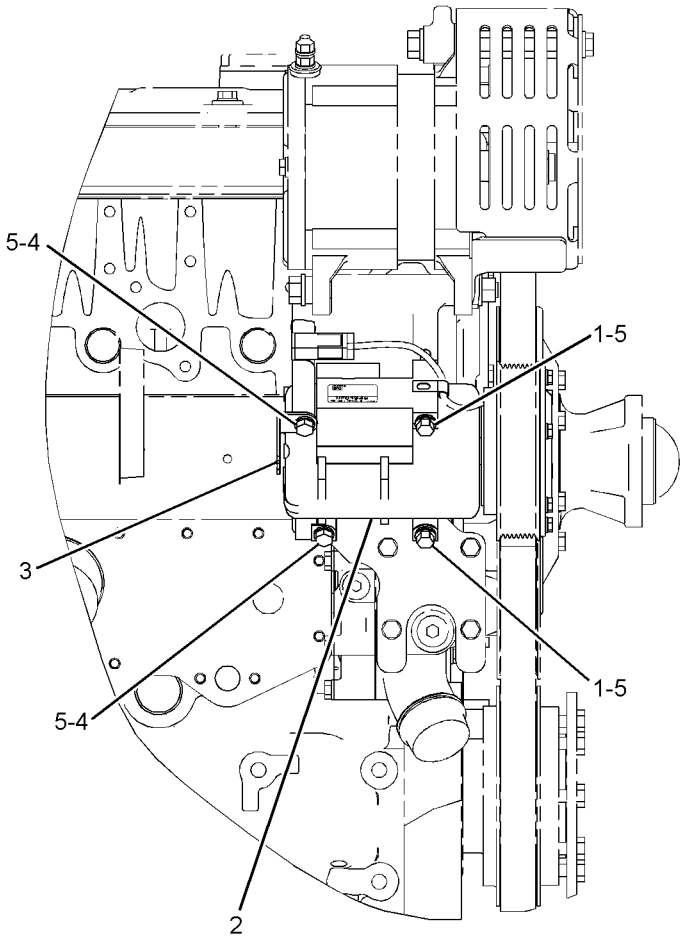

RIGHT SIDE VIEW

GRAPHIC #1 **<END>** g01236709

OPERATOR STATION

245-7909 CONDENSER & MTG GP-REFRIGERANT

S/N: MNB1-UP; WDK1-UP

PART OF 222-8379 INSTALLATION AR-ENGINE

SMCS-1805 **i02602119**

NOTE	REF NO	GRAPHIC REF	PART NUMBER	QTY	PART NAME 1 2 3 4 5 6 (PRODUCT LEVEL)	SEE PAGE
Y	1	1	**273-5315**	1	CONDENSER GP-REFRIGERANT	940
	2	1	**8T-4121**	4	WASHER-HARD (11X21X2.5-MM THK)	
M	3	1	**8T-4137**	4	BOLT (M10X1.5X20-MM)	

M-METRIC PART
Y-SEPARATE ILLUSTRATION

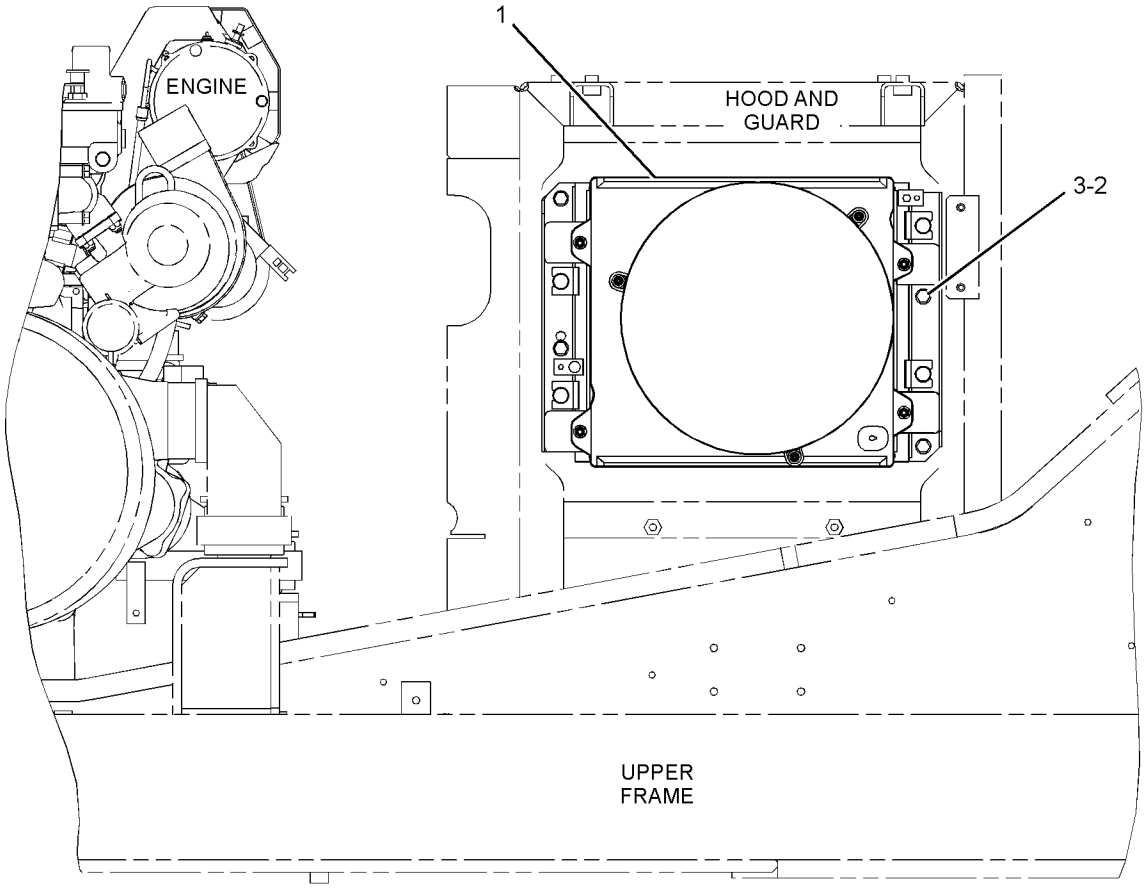

RIGHT SIDE VIEW

GRAPHIC #1 **<END>** g01152846

OPERATOR STATION

273-5315 CONDENSER GP-REFRIGERANT

S/N: MNB1-UP; WDK1-UP

PART OF 245-7909 CONDENSER & MTG GP-REFRIGERANT

SMCS-1805 **i03121867**

NOTE	REF NO	GRAPHIC REF	PART NUMBER	QTY	PART NAME 1 2 3 4 5 6 (PRODUCT LEVEL)	SEE PAGE
	1	1	**161-3732**	1	MOTOR AS	
	2	1	**161-3734**	1	RESISTOR AS	
M	3	1	**164-0499**	1	NUT-FLANGE (M5X0.8-THD)	
M	4	1	**164-0500**	4	NUT-FLANGE (M8X1.25-THD)	
M	5	1	**227-6846**	8	BOLT AS (M8X1.25X30-MM)	
	6	1	**245-7868**	4	BUSHING AS	
	7	1	**245-7870**	1	STRAP-CABLE	
M	8	1	**245-7871**	4	NUT-FLANGE (M6X1-THD)	
M	9	1	**245-7876**	3	BOLT AS (M6X1X16-MM)	
M	10	1	**245-7877**	3	SCREW AS (M4X0.7X11-MM)	
M	11	1	**245-7903**	1	BOLT AS (M6X1X12-MM)	
	12	1	**245-7906**	2	PACKING-RUBBER	
	13	1	**273-5316**	1	HARNESS AS-MOTOR (CONDENSER FAN)	
M	14	1	**273-5337**	1	BOLT AS (M5X0.8X14-MM)	
	15	1	**245-7911**	1	CONDENSER AS	

M-METRIC PART

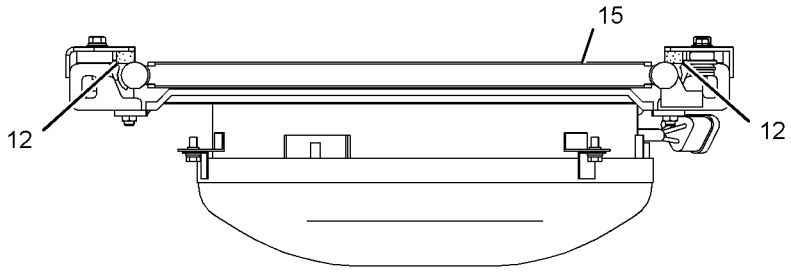

VIEW B-B

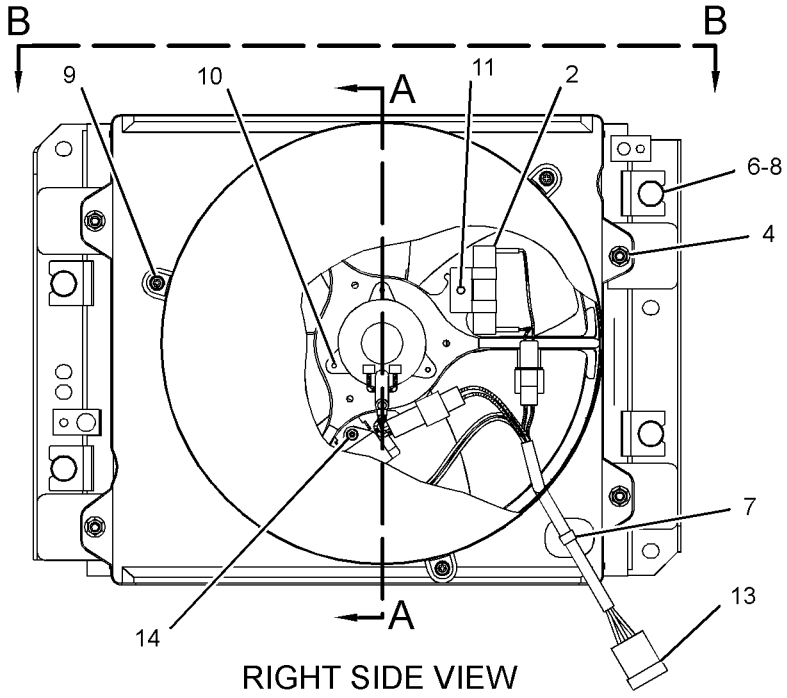

RIGHT SIDE VIEW

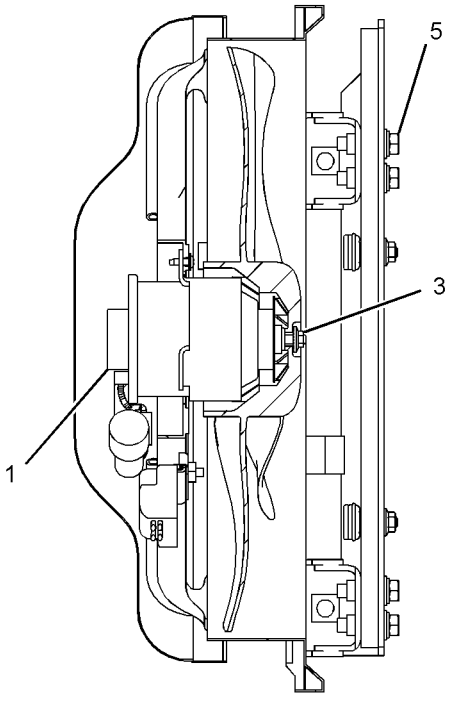

SECTION A-A

GRAPHIC #1 **<END>** g01391593

OPERATOR STATION

245-7922 CONSOLE GP-OPERATOR

S/N: MNB1-UP; WDK1-UP

PART OF 229-9072 OPERATOR AR

SMCS-5258 **i03158925**

NOTE	REF NO	GRAPHIC REF	PART NUMBER	QTY	PART NAME 1 2 3 4 5 6 (PRODUCT LEVEL)	SEE PAGE
	1	1	**176-1916**	2	GROMMET	
	2	1	**178-5422**	2	GROMMET	
	3	1	**178-5423**	2	GROMMET	
	4	1	**185-8161**	2	INSULATOR	
	5	1	**235-8893**	2	SUPPORT	
	6	1	**235-8894**	2	SUPPORT	
Y	7	1	*259-7349*	1	CONSOLE GP-OPERATOR (LH)	945
Y	8	1	*259-7348*	1	CONSOLE GP-OPERATOR (RH)	943
	9	1	**8T-4121**	4	WASHER-HARD (11X21X2.5-MM THK)	
M	10	1	**8T-4195**	4	BOLT (M10X1.5X30-MM)	
CM	11	1	**9X-2046**	8	SCREW-TRUSS HEAD (M6X1X35-MM)	
CM	12	1	**9X-2045**	12	SCREW-TRUSS HEAD (M6X1X20-MM)	
	13	1	**7K-1181**	4	STRAP-CABLE	
	14	1	**122-9617**	2	GUARD	
C	15	1	**105-1766**	8	SPACER (6.6X11X6-MM THK)	

C-CHANGE FROM PREVIOUS TYPE
M-METRIC PART
Y-SEPARATE ILLUSTRATION

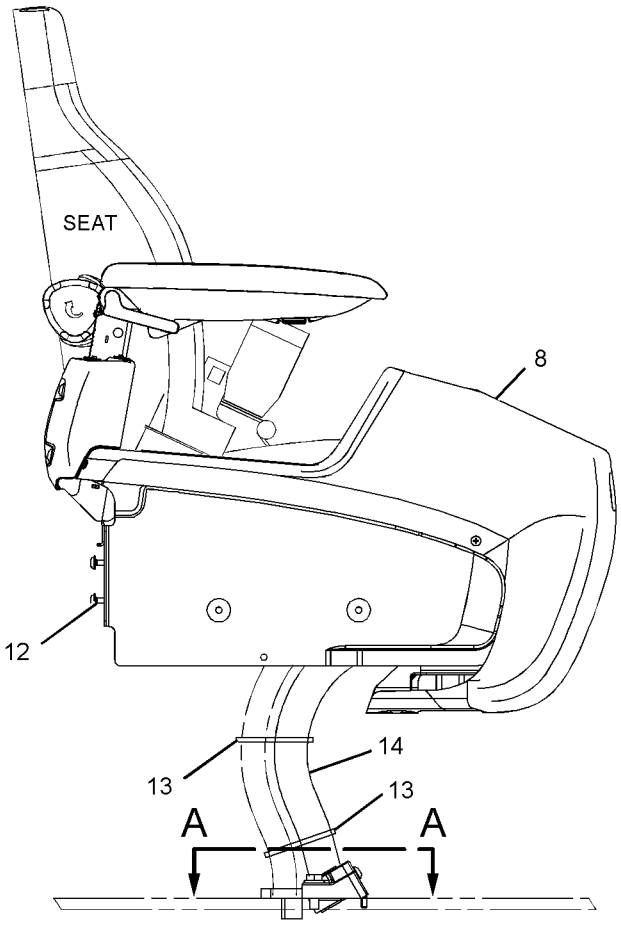

RIGHT SIDE VIEW

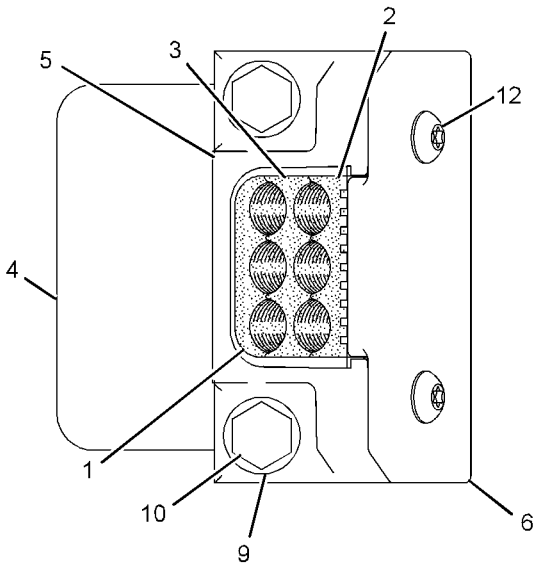

SECTION A-A

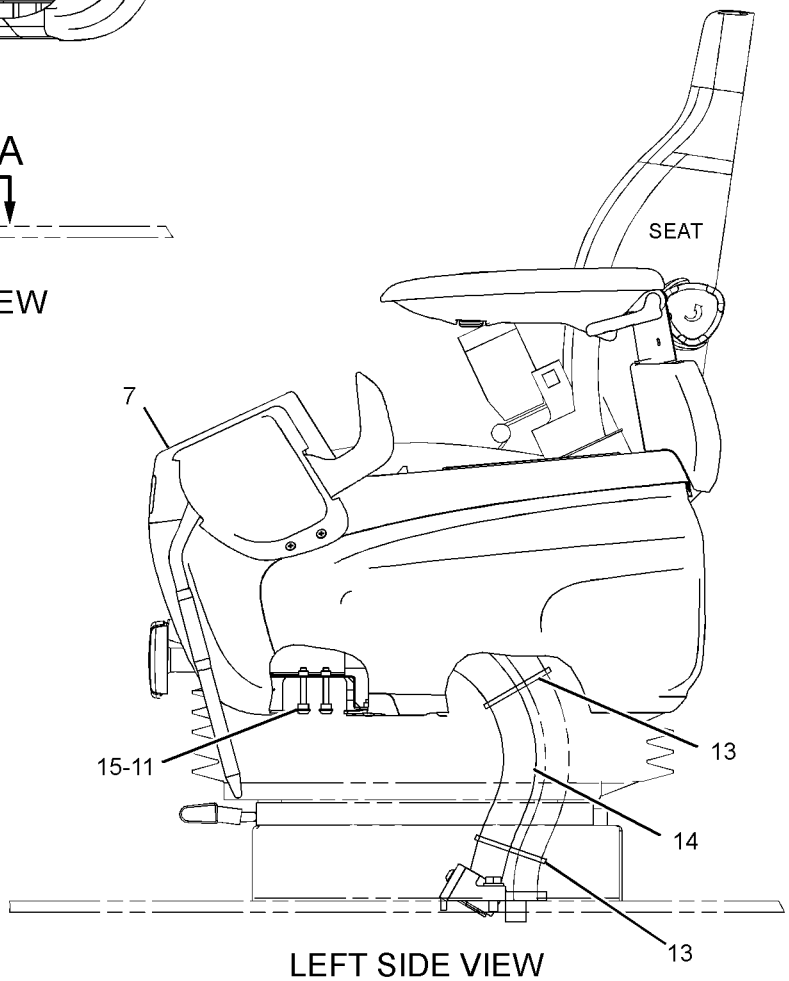

LEFT SIDE VIEW

GRAPHIC #1 **<END>** g01620582

OPERATOR STATION

259-7348 CONSOLE GP-OPERATOR—RH

S/N: MNB1-UP; WDK1-UP

PART OF 245-7922 CONSOLE GP-OPERATOR

SMCS-5258 **i02488237**

NOTE	REF NO	GRAPHIC REF	PART NUMBER	QTY	PART NAME 1 2 3 4 5 6 (PRODUCT LEVEL)	SEE PAGE
M	1	1	**128-2135**	4	SCREW-TRUSS HEAD (M6X1X13-MM)	
	2	1	**185-8284**	1	COVER	
	3	1	**234-6579**	2	NUT-SPEED	
	4	1	**234-6580**	2	CAP	
	5	1	**234-6602**	1	COVER	
	6	1	**234-6604**	1	COVER	
	7	1	**234-6608**	1	COVER	
	8	1	**234-6609**	1	COVER	
	9	1	**234-6610**	1	COVER	
	10	1	**235-8914**	4	NUT-SPEED	
	11	1	**235-8966**	2	BASE-MOUNTING	
	12	1	**245-7790**	2	SCREW-TAPPING	
	13	1	**245-7926**	1	SUPPORT AS	
	14	1	**245-7948**	4	SCREW-TAPPING	
Y	15	1	**259-7346**	1	ARMREST GP (RH)	905
M	16	1	**9X-2041**	3	SCREW-TRUSS HEAD (M10X1.5X20-MM)	

M-METRIC PART
Y-SEPARATE ILLUSTRATION

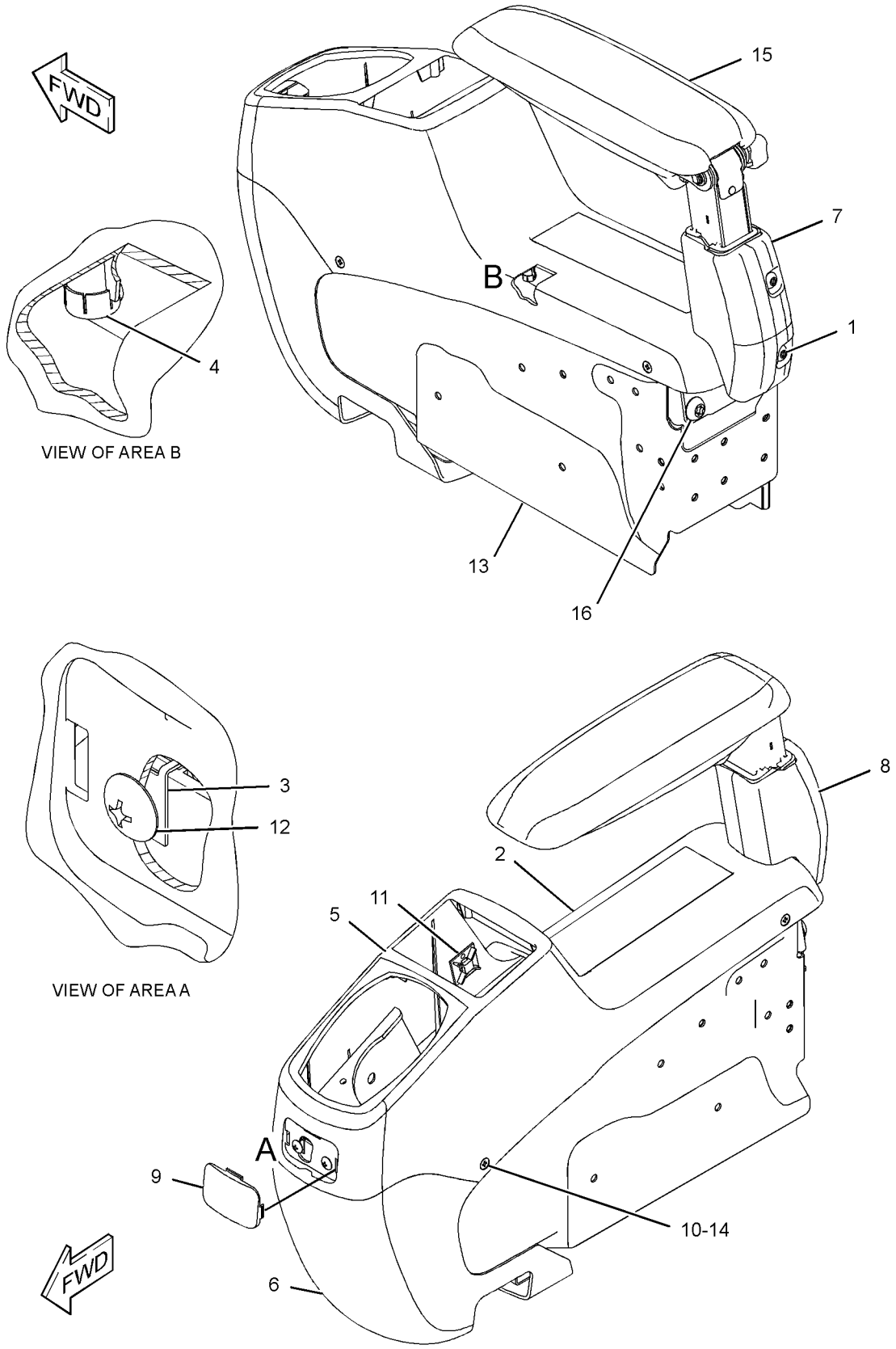

GRAPHIC #1

<END>

g01217107

OPERATOR STATION

259-7349 CONSOLE GP-OPERATOR—LH

S/N: MNB1-UP; WDK1-UP

PART OF 245-7922 CONSOLE GP-OPERATOR

SMCS-5258 **i02488329**

NOTE	REF NO	GRAPHIC REF	PART NUMBER	QTY	PART NAME 1 2 3 4 5 6 (PRODUCT LEVEL)	SEE PAGE
M	1	1	**128-2135**	5	SCREW-TRUSS HEAD (M6X1X13-MM)	
	2	1	**171-7325**	3	SCREW-TAPPING	
	3	1	**234-6579**	6	NUT-SPEED	
	4	1	**234-6580**	4	CAP	
	5	1	**234-6603**	1	COVER	
	6	1	**234-6605**	1	COVER	
	7	1	**234-6608**	1	COVER	
	8	1	**234-6609**	1	COVER	
	9	1	**234-6610**	1	COVER	
	10	1	**234-6611**	1	CASE	
	11	1	**234-6612**	1	COVER	
Y	12	1	**234-6613**	1	SWITCH GP-POSITION (HYDRAULIC LOCKOUT)	253
	13	1	**234-6614**	1	COVER	
	14	1	**235-8914**	4	NUT-SPEED	
	15	1	**235-8965**	1	GUARD	
	16	1	**245-7790**	3	SCREW-TAPPING	
	17	1	**245-7925**	1	SUPPORT AS	
	18	1	**245-7948**	7	SCREW-TAPPING	
	19	1	**259-7202**	1	ASHTRAY	
Y	20	1	**259-7347**	1	ARMREST GP (LH)	906
M	21	1	**9X-2041**	3	SCREW-TRUSS HEAD (M10X1.5X20-MM)	
M	22	1	**9X-2042**	2	SCREW-TRUSS HEAD (M6X1X12-MM)	

M-METRIC PART
Y-SEPARATE ILLUSTRATION

259 - 7349 **CONSOLE GP - OPERATOR** *(contd.)* **i02488329**

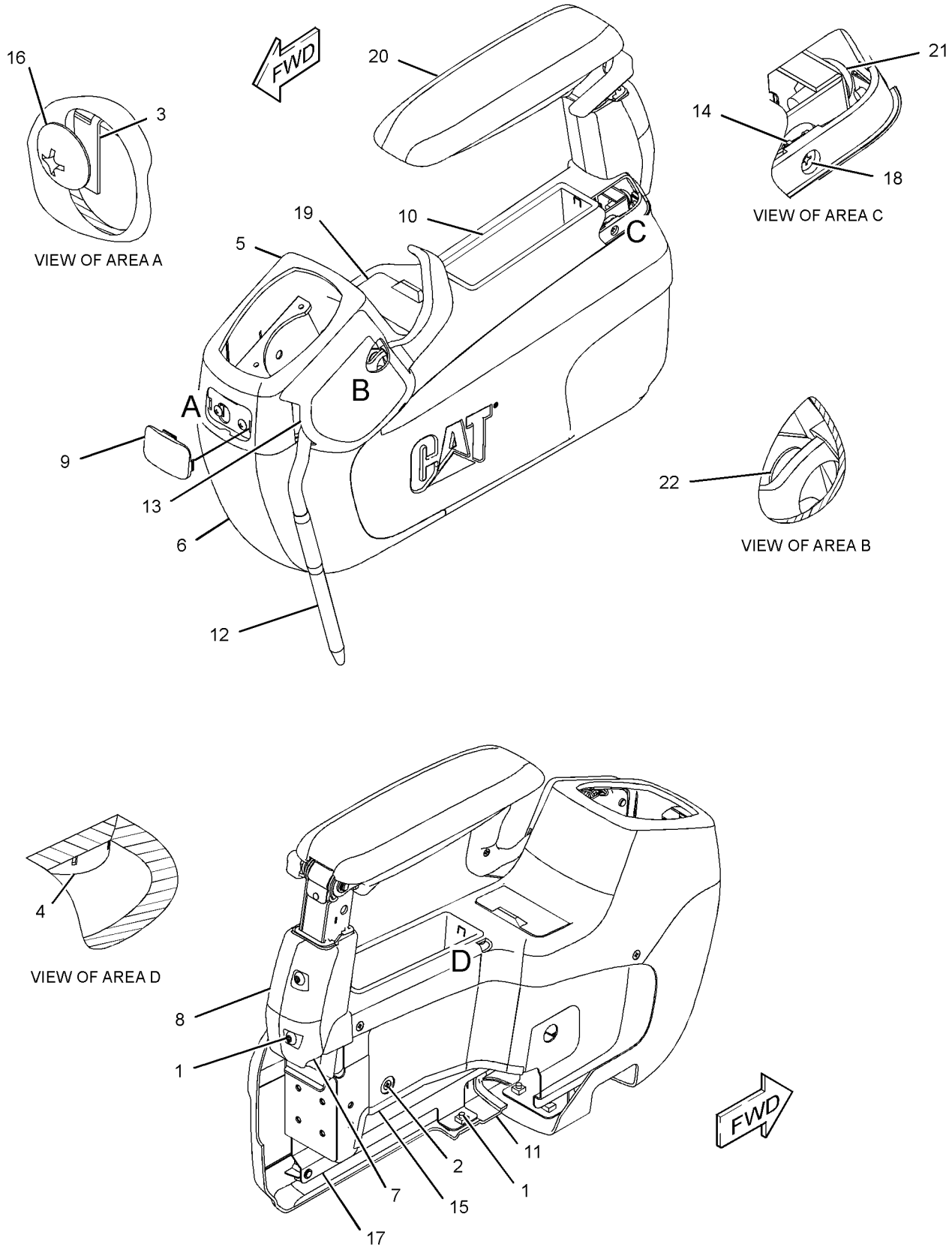

GRAPHIC #1 **<END>** g01217096

OPERATOR STATION

310-0078 CONTROL & MTG GP-JOYSTICK

S/N: MNB1-UP; WDK1-UP
AN ATTACHMENT

SMCS-5063, 5705 **i03031921**

NOTE	REF NO	GRAPHIC REF	PART NUMBER	QTY	PART NAME 1 2 3 4 5 6 (PRODUCT LEVEL)	SEE PAGE
Y	1	1	**297-0532**	1	CONTROL GP-JOYSTICK (RH)	957
Y	2	1	**297-0533**	1	CONTROL GP-JOYSTICK (LH)	958
M	3	1	**6V-7357**	6	BOLT (M6X1X25-MM)	
	4	1	**9X-8256**	6	WASHER (6.6X12X2-MM THK)	

M-METRIC PART
Y-SEPARATE ILLUSTRATION

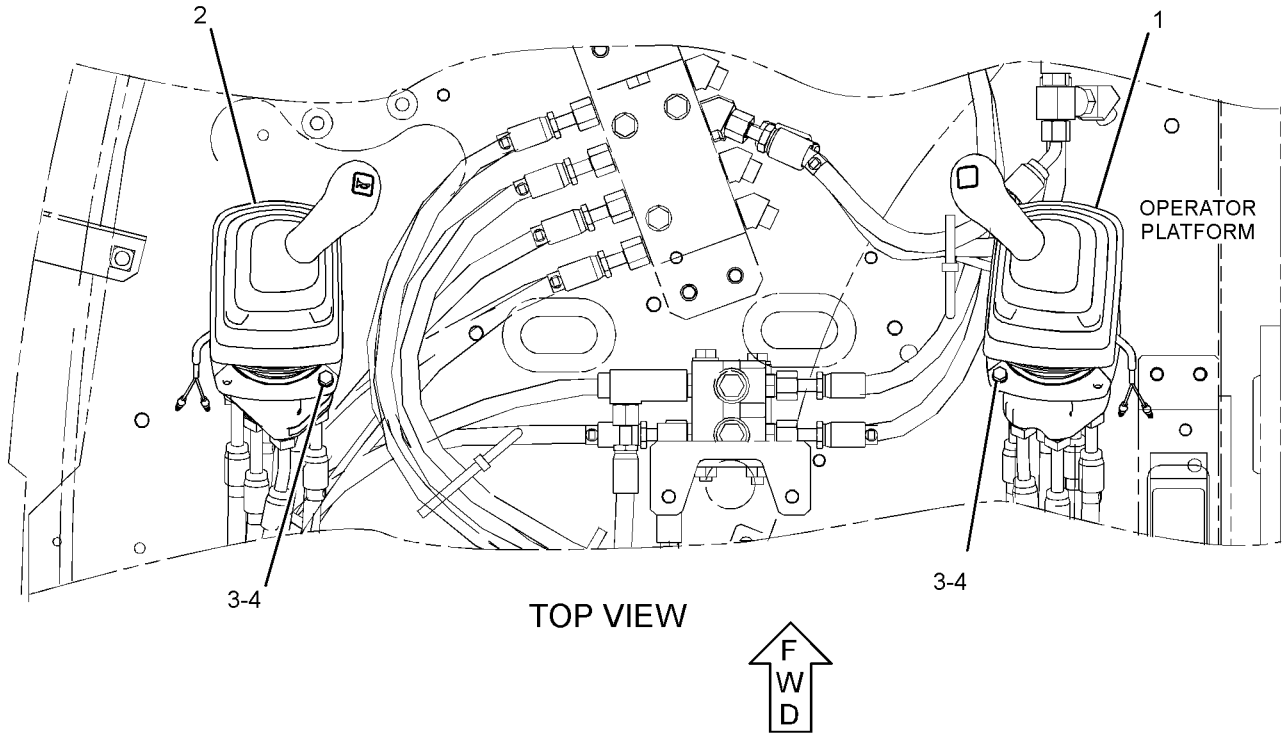

GRAPHIC #1 **<END>** g01442248

OPERATOR STATION

270-6107 CONTROL GP-FOOT–LH

S/N: MNB1-UP
PART OF 270-6106 CONTROL AR-AUXILIARY
AN ATTACHMENT

SMCS-1435 **i02490892**

NOTE	REF NO	GRAPHIC REF	PART NUMBER	QTY	PART NAME 1 2 3 4 5 6 (PRODUCT LEVEL)	SEE PAGE
	1	1	**093-2069**	1	GROMMET	
	2	1	**2Q-4703**	1	SWITCH AS-FOOT (WORK TOOL)	
		1	**205-1340**	1	HARNESS AS-OPERATOR CONTROLS	
		1	**155-2270**	1	KIT-CONNECTING PLUG (2-PIN)	
					(INCLUDES PLUG AS, WEDGE & INTERFACE SEAL)	
	3	1	**285-1332**	1	SUPPORT AS	
	4	1	**285-1333**	1	SUPPORT AS	
	5	1	**285-1337**	1	PLATE-STOP	
	6	1	**6V-7646**	1	WASHER-HARD (7.2X25X2-MM THK)	
M	7	1	**8C-8580**	2	BOLT-SOCKET HEAD (M5X0.8X16-MM)	
M	8	1	**8T-0269**	2	BOLT-SOCKET HEAD (M6X1X20-MM)	
	9	1	**8T-4121**	4	WASHER-HARD (11X21X2.5-MM THK)	
M	10	1	**8T-4137**	4	BOLT (M10X1.5X20-MM)	
	11	1	**9X-8256**	1	WASHER (6.6X12X2-MM THK)	

M-METRIC PART

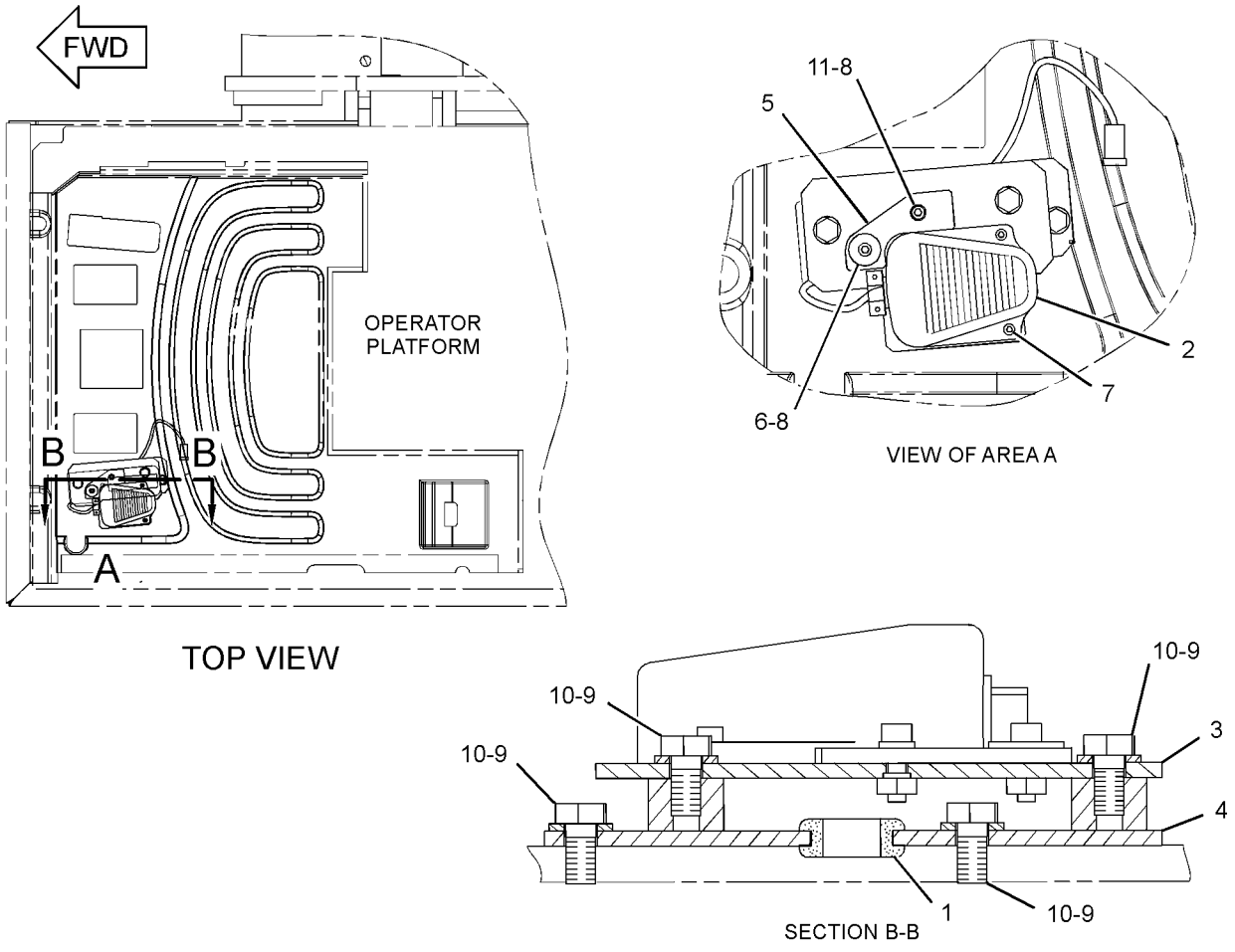

GRAPHIC #1 **<END>** g01252474

235-8969 CONTROL GP-HANDLE–JOYSTICK, LH

S/N: MNB1-UP; WDK1-UP
PART OF 297-0533 CONTROL GP-JOYSTICK
AN ATTACHMENT

SMCS-5705 **i02923993**

NOTE	REF NO	GRAPHIC REF	PART NUMBER	QTY	PART NAME 1 2 3 4 5 6 (PRODUCT LEVEL)	SEE PAGE
	1	1	**124-4010**	1	LEVER	
	2	1	**235-8971**	1	BOOT	
	3	1	**245-7842**	1	KNOB AS	
M		1	**6I-5298**	1	SCREW-TAPPING	
		1	**124-4009**	1	SHAFT	
		1	**222-0225**	1	SWITCH AS-PUSH BUTTON (HORN)	
M	4	1	**096-2617**	2	SCREW-MACHINE (M5X0.8X6-MM)	

M-METRIC PART

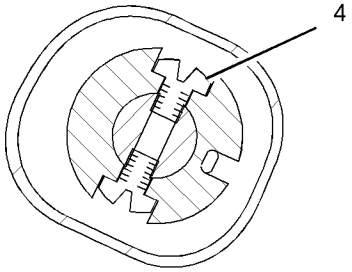

SECTION B-B

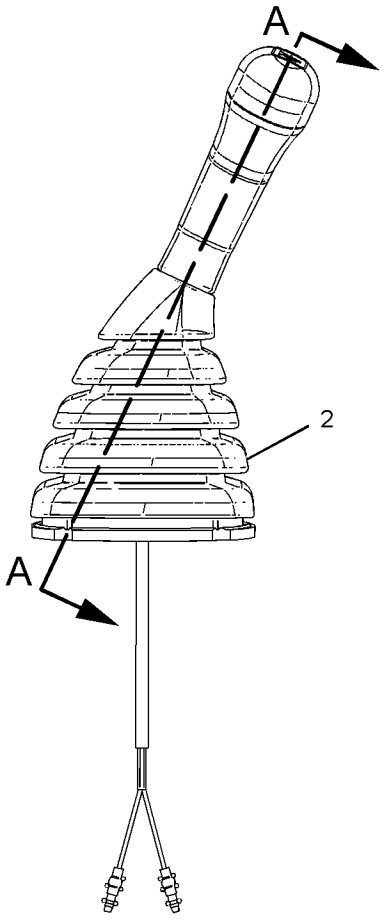

LEFT SIDE VIEW

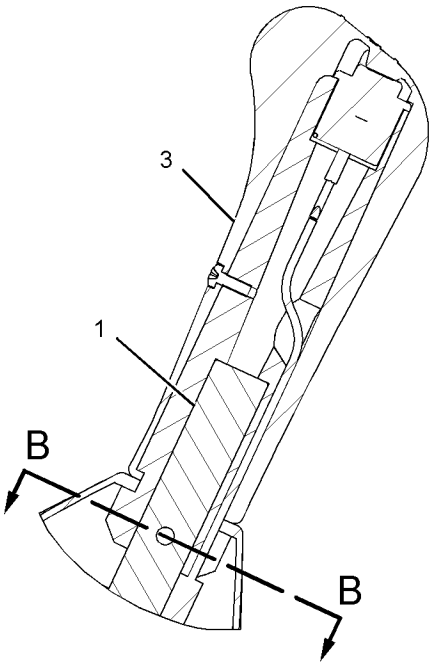

SECTION A-A

GRAPHIC #1 **<END>** g01082395

OPERATOR STATION

235-8970 CONTROL GP-HANDLE–JOYSTICK, RH

S/N: MNB1-UP; WDK1-UP

PART OF 297-0532 CONTROL GP-JOYSTICK

AN ATTACHMENT

SMCS-5705 **i02924011**

NOTE	REF NO	GRAPHIC REF	PART NUMBER	QTY	PART NAME 1 2 3 4 5 6 (PRODUCT LEVEL)	SEE PAGE
	1	1	**124-4010**	1	LEVER	
	2	1	**235-8972**	1	BOOT	
	3	1	**245-7844**	1	KNOB AS	
M		1	**6I-5298**	1	SCREW-TAPPING	
		1	**124-4009**	1	SHAFT	
		1	**222-0225**	1	SWITCH AS-PUSH BUTTON (MANUAL LOW IDLE)	
M	4	1	**096-2617**	2	SCREW-MACHINE (M5X0.8X6-MM)	

M-METRIC PART

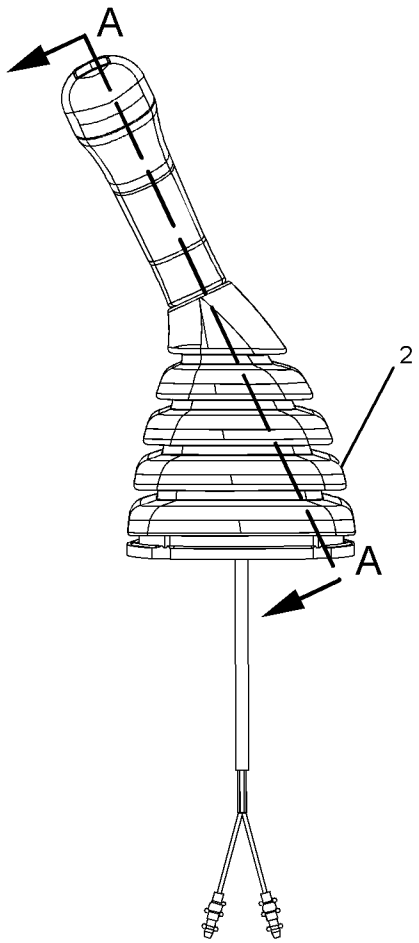

RIGHT SIDE VIEW

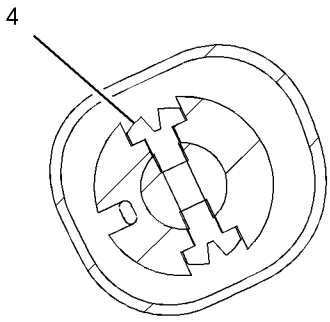

SECTION B-B

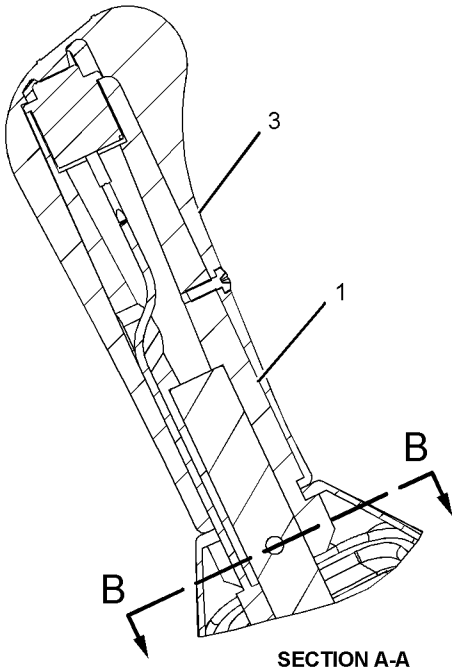

SECTION A-A

GRAPHIC #1 **<END>** g01082427

OPERATOR STATION

245-7846 CONTROL GP-HEAT & AIR COND–AIR INLET

S/N: MNB1-UP; WDK1-UP
PART OF 316-8811 AIR CONDITIONER GP
AN ATTACHMENT

SMCS-7309 **i02547472**

NOTE	REF NO	GRAPHIC REF	PART NUMBER	QTY	PART NAME 1 2 3 4 5 6 (PRODUCT LEVEL)	SEE PAGE
	1	1	**185-8300**	4	SCREW-TAPPING	
	2	1	**196-1666**	1	RELAY (COMPRESSOR CLUTCH)	
	2A	1	**196-1666**	1	RELAY (BLOWER)	
	3	1	**245-7813**	1	MOTOR AS	
	4	1	**245-7814**	1	BRACKET	
	5	1	**245-7815**	1	SENSOR AS-TEMPERATURE (AIR)	
	6	1	**245-7816**	1	DAMPER AS	

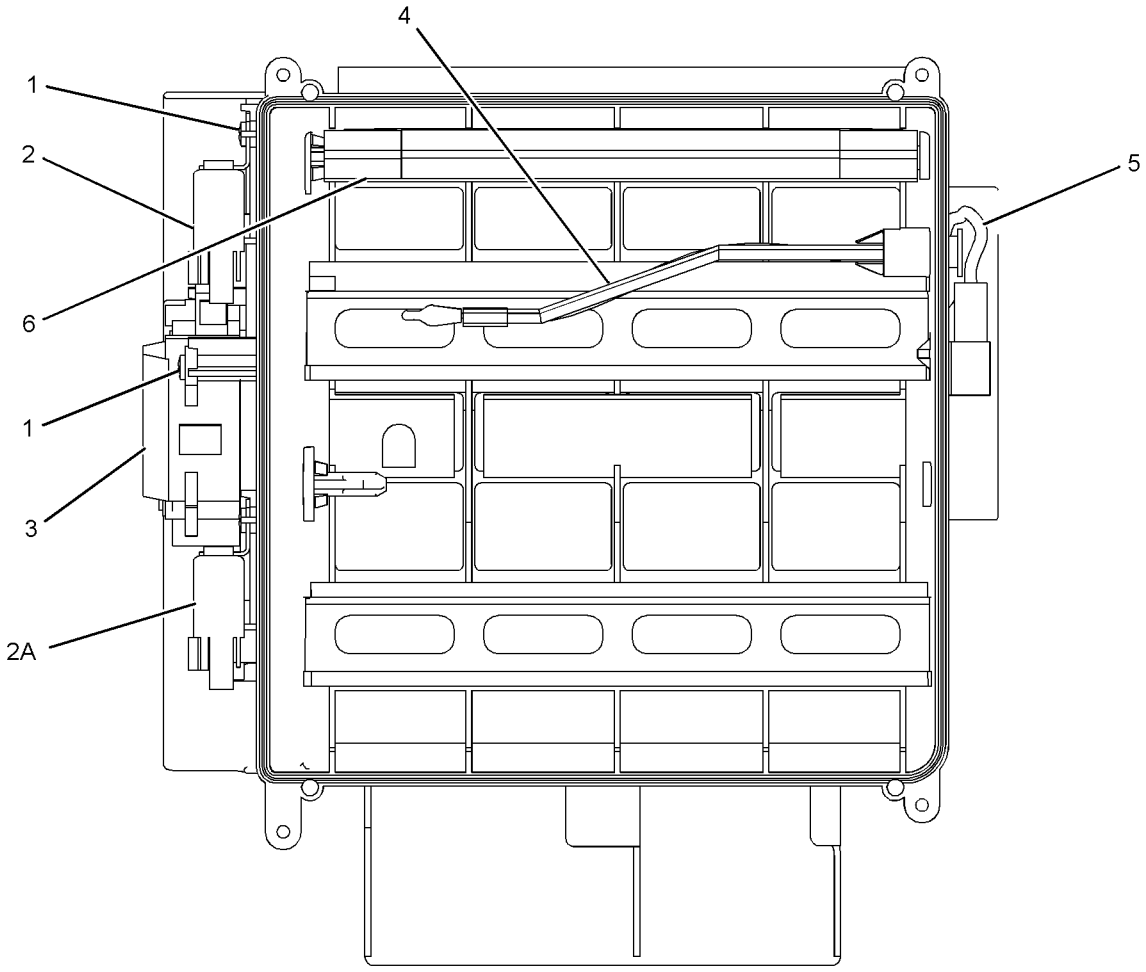

GRAPHIC #1 **<END>** g01245591

OPERATOR STATION

170-9497 CONTROL GP-HYDRAULIC PEDAL–TRAVEL

S/N: MNB1-UP; WDK1-UP

PART OF 229-9072 OPERATOR AR

SMCS-5059, 5063 **i02997569**

NOTE	REF NO	GRAPHIC REF	PART NUMBER	QTY	PART NAME 1 2 3 4 5 6 (PRODUCT LEVEL)	SEE PAGE
	1	1	**096-6166**	2	WASHER-HARD (4.5X9X1-MM THK)	
M	2	1	**095-0728**	2	SCREW-MACHINE (M4X0.7X12-MM)	
	3	1	**8T-4121**	12	WASHER-HARD (11X21X2.5-MM THK)	
M	4	1	**8T-4136**	4	BOLT (M10X1.5X25-MM)	
M	5	1	**8T-4191**	8	BOLT (M10X1.5X16-MM)	
	6	1	**142-5546**	2	KNOB	
	7	1	**117-6356**	2	STEP AS	
	8	1	**122-9610**	2	STEP	
	9	1	**170-9499**	1	LEVER AS (LH)	
	10	1	**170-9498**	1	LEVER AS (RH)	
	11	1	**122-9608**	1	PEDAL-RUBBER (RH)	
	12	1	**117-6350**	1	PEDAL AS (RH)	
	13	1	**122-9609**	1	PEDAL-RUBBER (LH)	
	14	1	**117-6349**	1	PEDAL AS (LH)	

M-METRIC PART

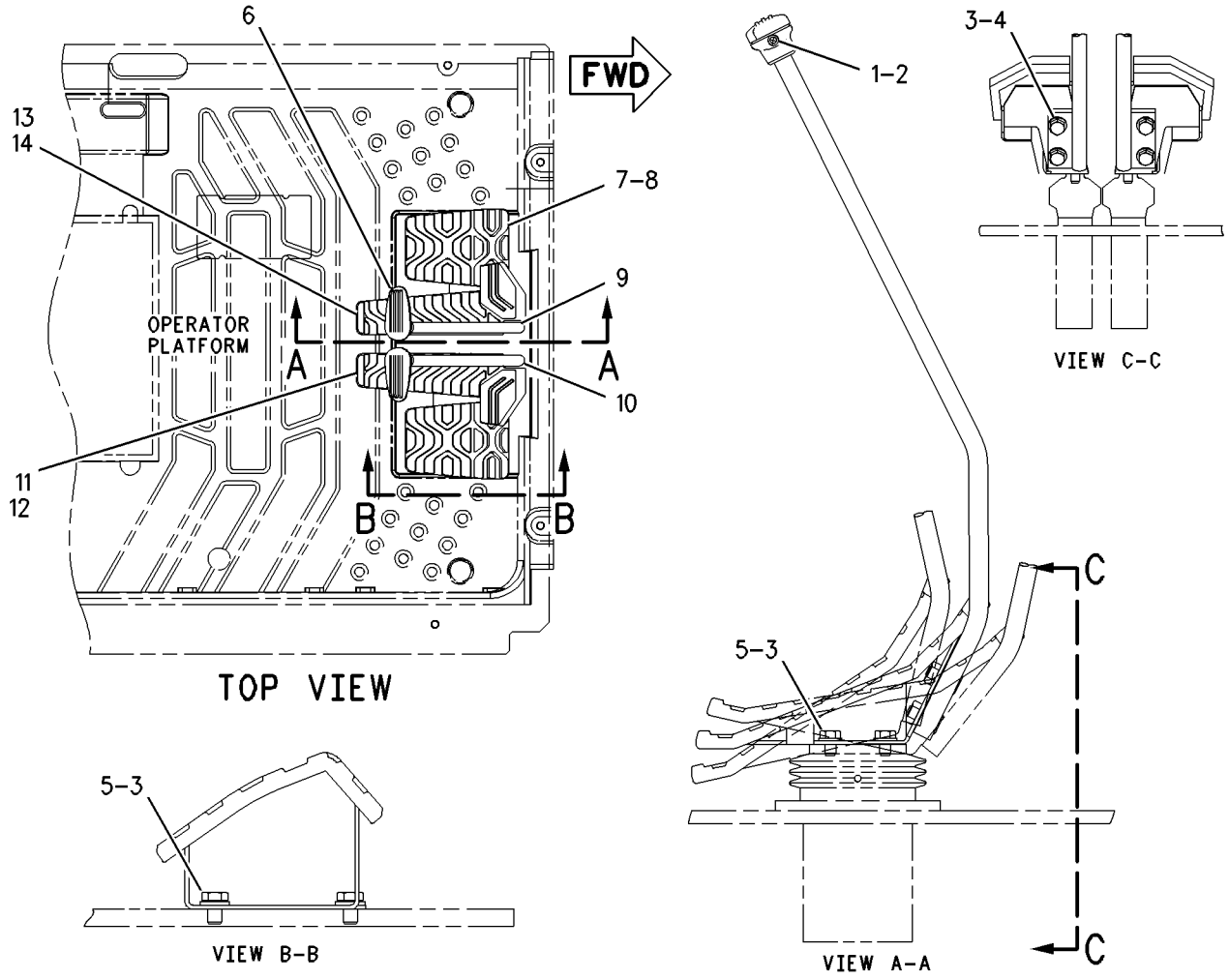

GRAPHIC #1 **<END>** g00672963

OPERATOR STATION

239-8693 CONTROL GP-HYDRAULIC PEDAL

S/N: MNB1-UP; WDK1-UP
PART OF 255-5696, 255-5699 CONTROL AR-AUXILIARY
AN ATTACHMENT

SMCS-5059, 5063 **i02408783**

NOTE	REF NO	GRAPHIC REF	PART NUMBER	QTY	PART NAME 1 2 3 4 5 6 (PRODUCT LEVEL)	SEE PAGE
	1	1	**5I-7090**	1	CHAIN AS	
	2	1	**122-9611**	1	PEDAL-RUBBER (RH)	
	3	1	**128-2173**	1	PIN	
	4	1	**153-8762**	1	PEDAL AS	
	5	1	**153-8763**	1	SUPPORT AS	
	6	1	**206-3336**	1	VALVE GP-PILOT	
M	7	1	**095-0735**	2	SCREW-MACHINE (M5X0.8X8-MM)	
M	8	1	**7X-2536**	2	BOLT (M8X1.25X14-MM)	
	9	1	**8T-0114**	1	PIN-SPRING	
	10	1	**8T-4121**	3	WASHER-HARD (11X21X2.5-MM THK)	
M	11	1	**8T-4136**	2	BOLT (M10X1.5X25-MM)	
M	12	1	**8T-4137**	1	BOLT (M10X1.5X20-MM)	
	13	1	**8T-4224**	2	WASHER-HARD (8.8X16X2-MM THK)	

M-METRIC PART

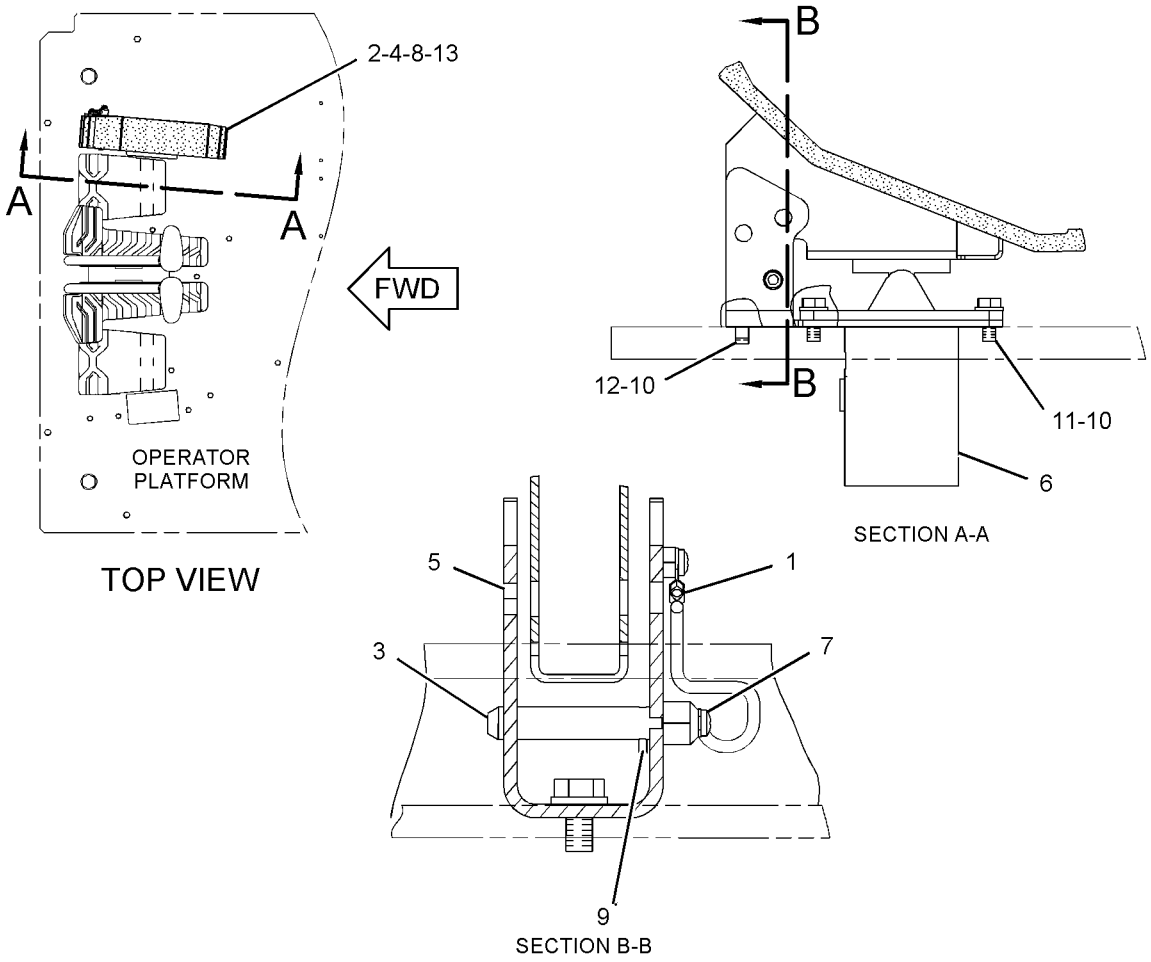

GRAPHIC #1 **<END>** g01239101

OPERATOR STATION

239-8695 CONTROL GP-HYDRAULIC PEDAL

S/N: MNB1-UP; WDK1-UP
PART OF 255-5697, 255-5702 CONTROL AR-AUXILIARY
AN ATTACHMENT

SMCS-5059, 5063 **i02412874**

NOTE	REF NO	GRAPHIC REF	PART NUMBER	QTY	PART NAME 1 2 3 4 5 6 (PRODUCT LEVEL)	SEE PAGE
	1	1	**5I-7090**	2	CHAIN AS	
	2	1	**121-1865**	1	PEDAL-RUBBER (LH)	
	3	1	**122-9611**	1	PEDAL-RUBBER (RH)	
	4	1	**128-2173**	2	PIN	
	5	1	**153-8753**	1	PEDAL AS	
	6	1	**153-8762**	1	PEDAL AS	
	7	1	**153-8763**	1	SUPPORT AS	
	8	1	**206-3336**	2	VALVE GP-PILOT	
	9	1	**259-7877**	1	SUPPORT AS	
M	10	1	**095-0735**	4	SCREW-MACHINE (M5X0.8X8-MM)	
M	11	1	**7X-2536**	4	BOLT (M8X1.25X14-MM)	
	12	1	**8T-0114**	2	PIN-SPRING	
	13	1	**8T-4121**	6	WASHER-HARD (11X21X2.5-MM THK)	
M	14	1	**8T-4136**	4	BOLT (M10X1.5X25-MM)	
M	15	1	**8T-4137**	2	BOLT (M10X1.5X20-MM)	
	16	1	**8T-4224**	4	WASHER-HARD (8.8X16X2-MM THK)	

M-METRIC PART

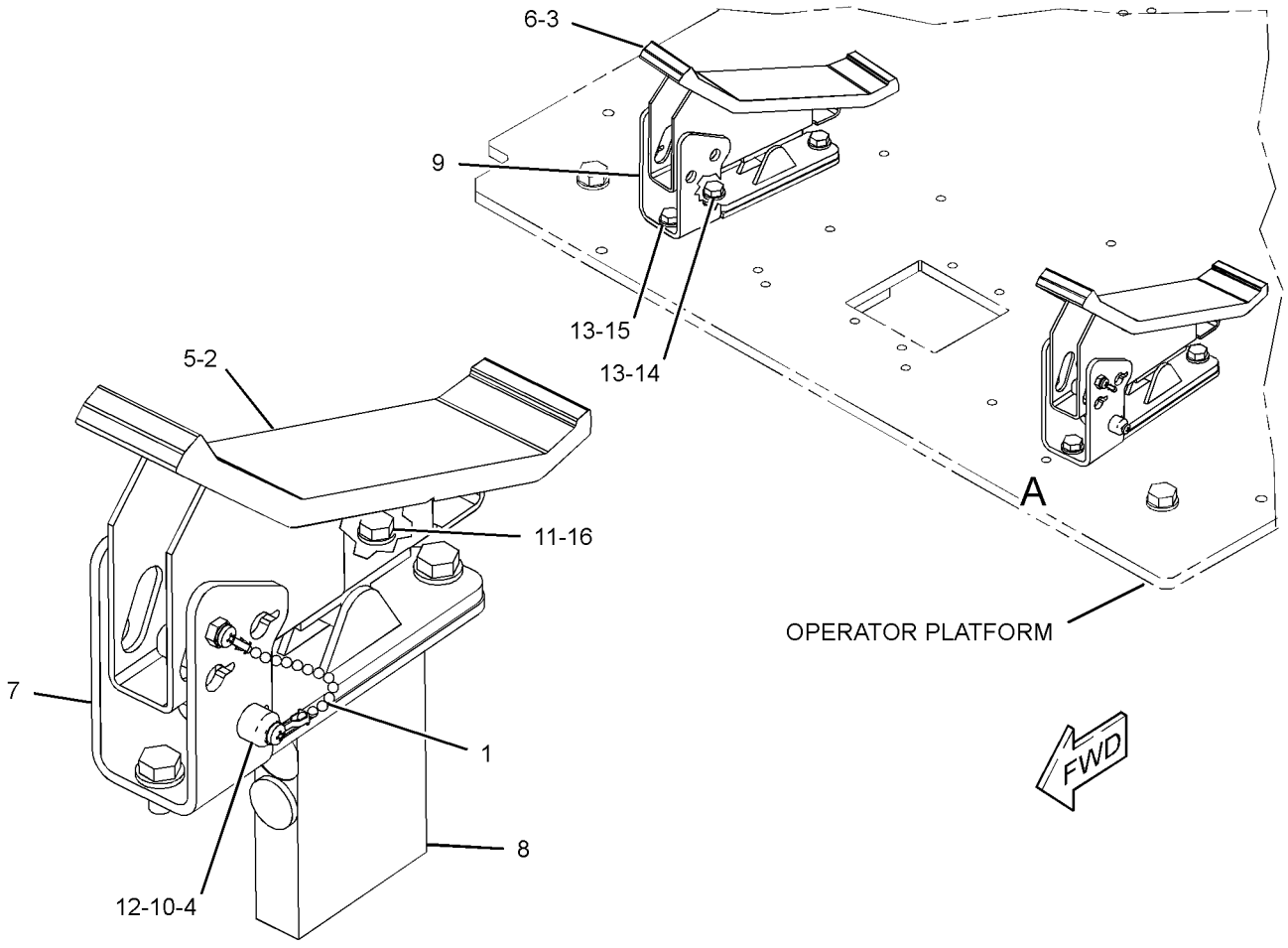

VIEW OF AREA A

GRAPHIC #1 **<END>** g01231524

OPERATOR STATION

259-7179 CONTROL GP-HYDRAULIC PEDAL

S/N: MNB1-UP; WDK1-UP
PART OF 259-7177 PEDAL AR-AUXILIARY
AN ATTACHMENT

SMCS-5059, 5063 **i02479255**

NOTE	REF NO	GRAPHIC REF	PART NUMBER	QTY	PART NAME 1 2 3 4 5 6 (PRODUCT LEVEL)	SEE PAGE
	1	1	**5I-7090**	1	CHAIN AS	
	2	1	**128-2173**	1	PIN	
	3	1	**135-2274**	1	PEDAL-RUBBER	
	4	1	**164-0614**	1	PEDAL AS	
	5	1	**164-0617**	1	SUPPORT AS	
	6	1	**206-3336**	1	VALVE GP-PILOT (THIRD PEDAL, STRAIGHT TRAVEL)	
		1	**190-7819**	2	SPRING	
M	7	1	**095-0735**	2	SCREW-MACHINE (M5X0.8X8-MM)	
M	8	1	**7X-2536**	2	BOLT (M8X1.25X14-MM)	
	9	1	**8T-0114**	1	PIN-SPRING	
	10	1	**8T-4121**	3	WASHER-HARD (11X21X2.5-MM THK)	
M	11	1	**8T-4136**	2	BOLT (M10X1.5X25-MM)	
M	12	1	**8T-4191**	1	BOLT (M10X1.5X16-MM)	
	13	1	**8T-4224**	2	WASHER-HARD (8.8X16X2-MM THK)	

M-METRIC PART

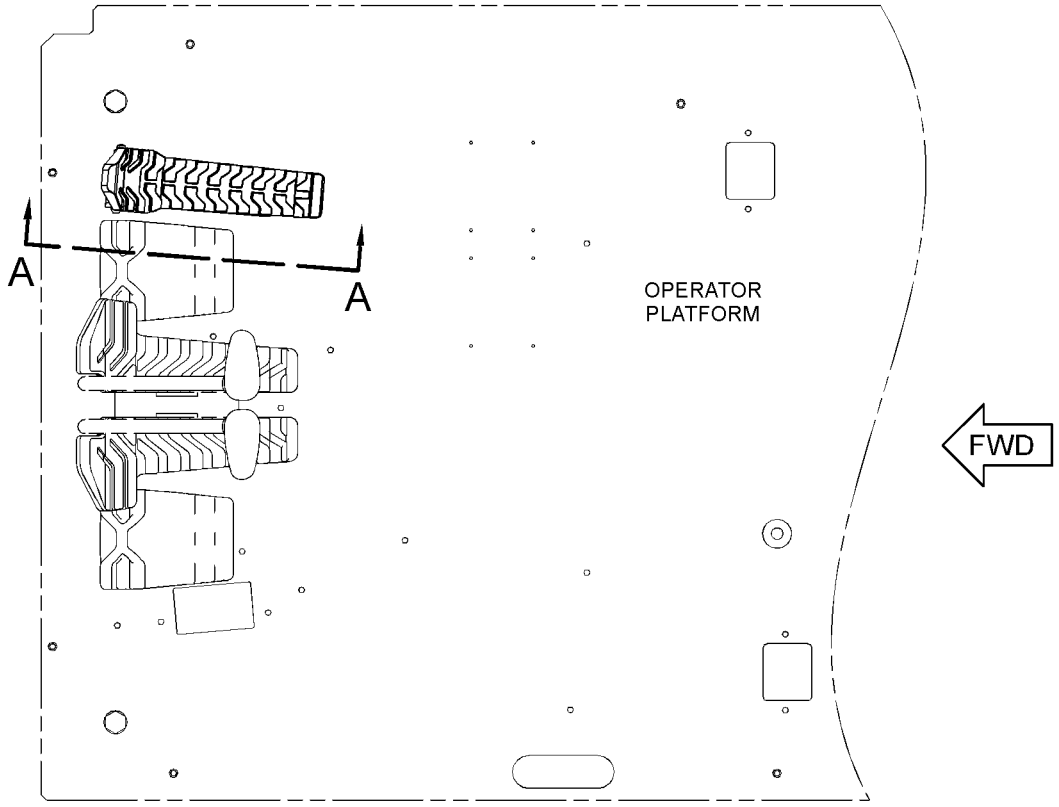

TOP VIEW

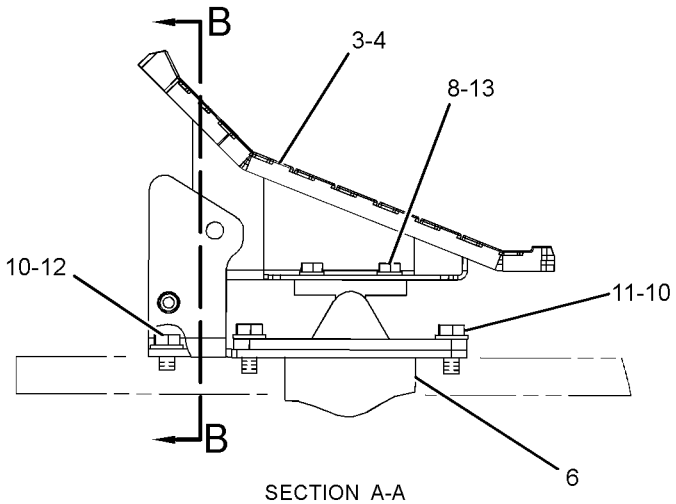

SECTION A-A

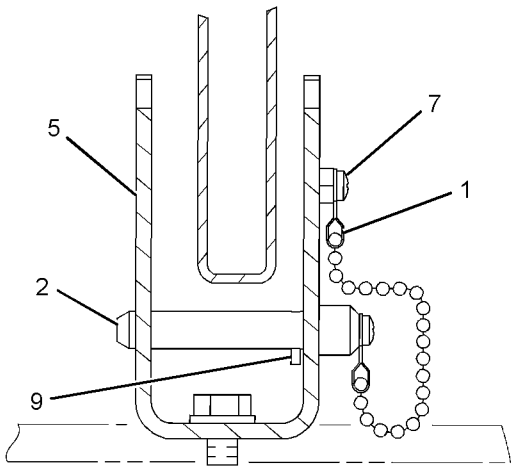

SECTION B-B

GRAPHIC #1 **<END>** g01182505

OPERATOR STATION

297-0532 CONTROL GP-JOYSTICK–RH

S/N: MNB1-UP; WDK1-UP
PART OF 310-0078 CONTROL & MTG GP-JOYSTICK
AN ATTACHMENT

SMCS-5705 **i03010035**

NOTE	REF NO	GRAPHIC REF	PART NUMBER	QTY	PART NAME 1 2 3 4 5 6 (PRODUCT LEVEL)	SEE PAGE
M	1	1	**7Y-8463**	1	NUT (M14X2-THD)	
Y	2	1	**235-8970**	1	CONTROL GP-HANDLE (JOYSTICK, RH)	950
Y	3	1	**297-0529**	1	VALVE GP-PILOT (JOYSTICK)	775
	4	1	**6K-0806**	1	STRAP-CABLE	

M-METRIC PART
Y-SEPARATE ILLUSTRATION

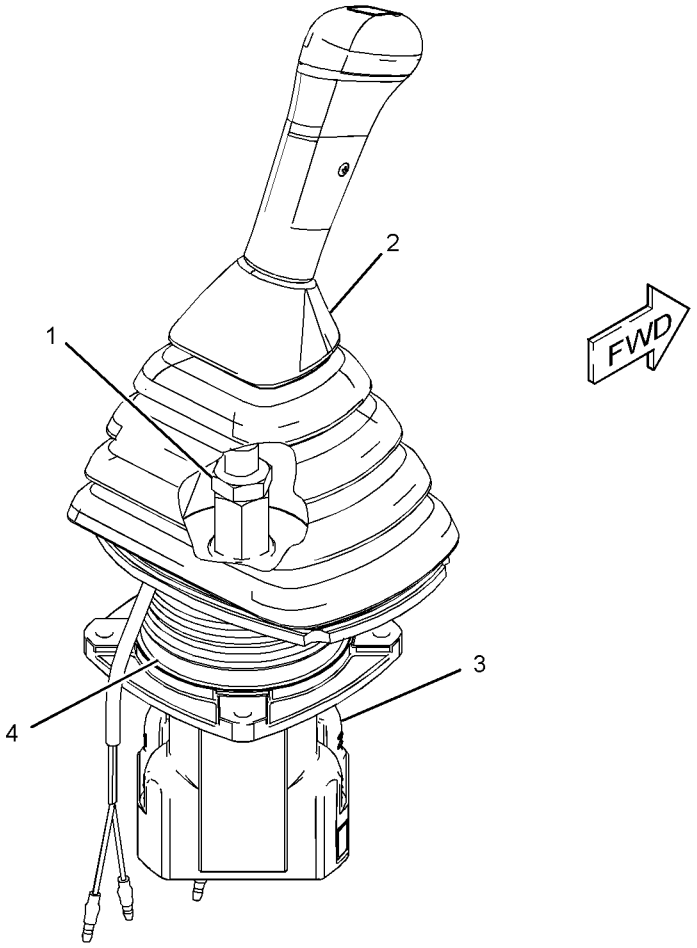

GRAPHIC #1 **<END>** g01452407

OPERATOR STATION

297-0533 CONTROL GP-JOYSTICK–LH

S/N: MNB1-UP; WDK1-UP

PART OF 310-0078 CONTROL & MTG GP-JOYSTICK

AN ATTACHMENT

SMCS-5705 **i03010036**

NOTE	REF NO	GRAPHIC REF	PART NUMBER	QTY	PART NAME 1 2 3 4 5 6 (PRODUCT LEVEL)	SEE PAGE
M	1	1	**7Y-8463**	1	NUT (M14X2-THD)	
Y	2	1	**235-8969**	1	CONTROL GP-HANDLE (JOYSTICK, LH)	949
Y	3	1	**297-0529**	1	VALVE GP-PILOT (JOYSTICK)	775
	4	1	**6K-0806**	1	STRAP-CABLE	

M-METRIC PART
Y-SEPARATE ILLUSTRATION

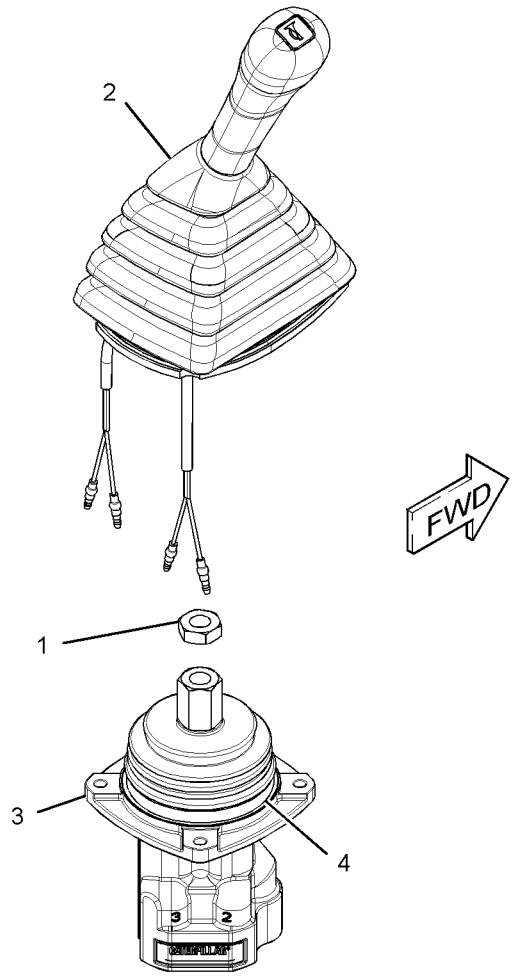

GRAPHIC #1 **<END>** g01452496

OPERATOR STATION

234-6501 COVER GP-CAB–REAR

S/N: MNB1-UP; WDK1-UP

PART OF 229-9096, 229-9098, 229-9100, 229-9108, 259-7174 CAB GP

AN ATTACHMENT

SMCS-7301, 7308 **i03159185**

NOTE	REF NO	GRAPHIC REF	PART NUMBER	QTY	PART NAME 1 2 3 4 5 6 (PRODUCT LEVEL)	SEE PAGE
	1	1	**234-6499**	1	COVER AS	
	2	1	**234-6502**	1	COVER-ACCESS (FUSE-REAR PANEL)	
	3	1	**234-6593**	2	FASTENER	
					USE WITH COVER WITH A 9-MM DIAMETER UPPER MOUNTING HOLE	
					–OR–	
		1	**245-7929**	2	CLIP	
					USE WITH COVER WITH A 7.6-MM DIAMETER UPPER MOUNTING HOLE	

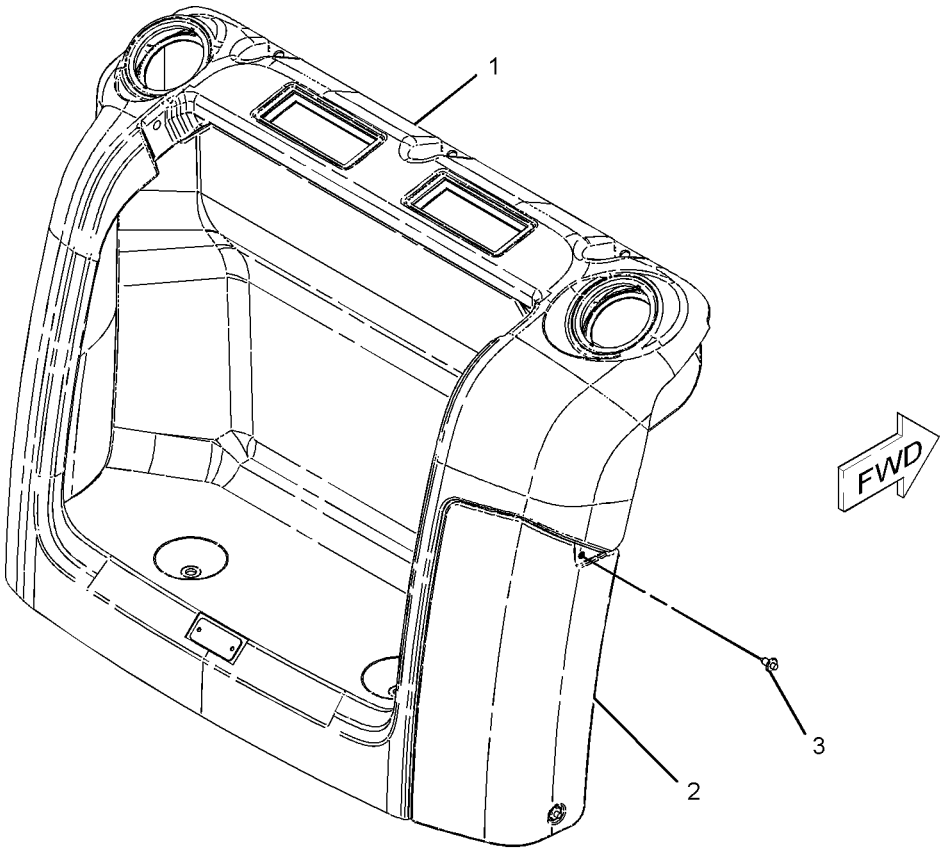

GRAPHIC #1 **<END>** g01101423

OPERATOR STATION

234-6500 COVER GP-STORAGE

S/N: MNB1-UP; WDK1-UP
USED ON STORAGE COMPARTMENT INSIDE CAB
AN ATTACHMENT

SMCS-7268 **i02232841**

NOTE	REF NO	GRAPHIC REF	PART NUMBER	QTY	PART NAME 1 2 3 4 5 6 (PRODUCT LEVEL)	SEE PAGE
					(NO SERVICED PARTS)	

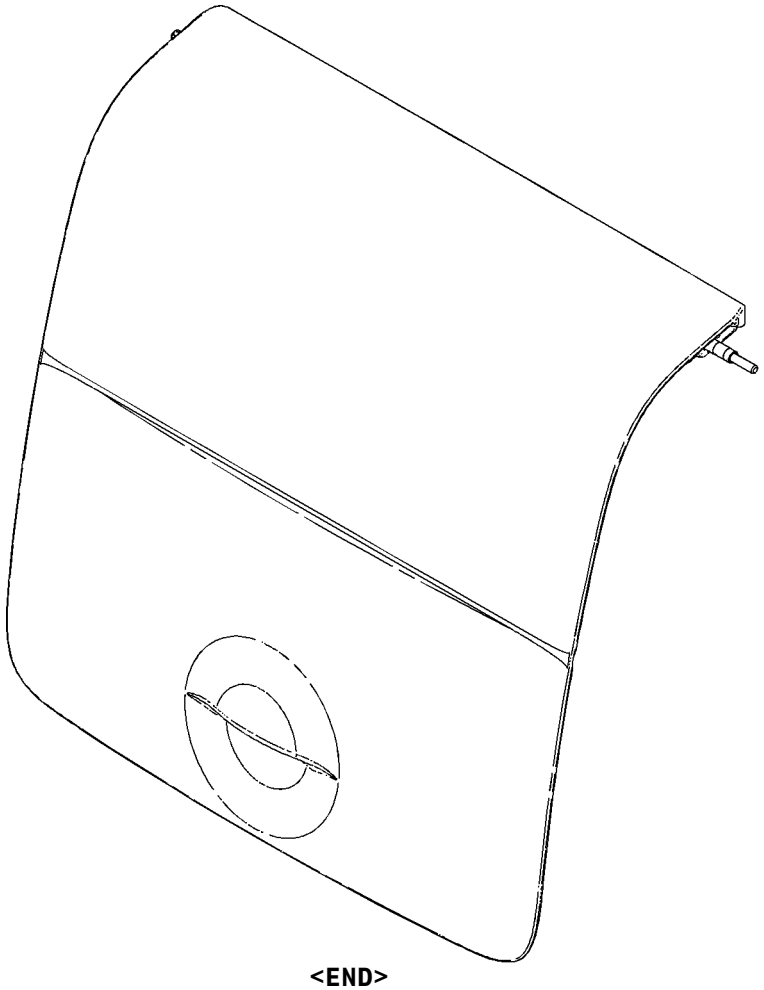

GRAPHIC #1 **<END>** g01092876

OPERATOR STATION

286-0134 DISPLAY GP-MONITOR—CD700

S/N: MNB1-UP; WDK1-UP

PART OF 292-0276 GRADE CONTROL AR-SATELLITE

SMCS-7490 **i03177207**

NOTE	PART NUMBER	QTY	PART NAME 1 2 3 4 5 6 (PRODUCT LEVEL)	SEE PAGE
R	**244-1716**	1	DISPLAY GP-MONITOR (CD700)	
	283-4426	1	CARD AS-MEMORY (FLASH)	
	194-8031	1	ADAPTER (COMPACT)	
M	**8T-4171**	4	BOLT (M6X1X12-MM)	
	292-0311	1	CASE-CARRYING	
	318-5081	1	COMPACT DISC (ACCUGRADE V10.71)	
M	**8T-0285**	6	SCREW-MACHINE (M4X0.7X12-MM)	
	9X-8256	4	WASHER (6.6X12X2-MM THK)	
	096-6166	6	WASHER-HARD (4.5X9X1-MM THK)	

M-METRIC PART
R-REMFG PART MAY BE AVAILABLE

<END>

OPERATOR STATION

189-2768 DOOR & MTG GP-CAB

S/N: MNB1-UP; WDK1-UP
PART OF 229-9097, 229-9099, 229-9109 CAB GP
AN ATTACHMENT

SMCS-7308 **i03013736**

NOTE	REF NO	GRAPHIC REF	PART NUMBER	QTY	PART NAME 1 2 3 4 5 6 (PRODUCT LEVEL)	SEE PAGE
Y	1	1	*139-7100*	1	DOOR GP-CAB	963
	2	1	*151-6767*	1	DOOR AS	
M		1	**9X-2041**	6	SCREW-TRUSS HEAD (M10X1.5X20-MM)	
		1	**151-6777**	2	HINGE	

M-METRIC PART
Y-SEPARATE ILLUSTRATION

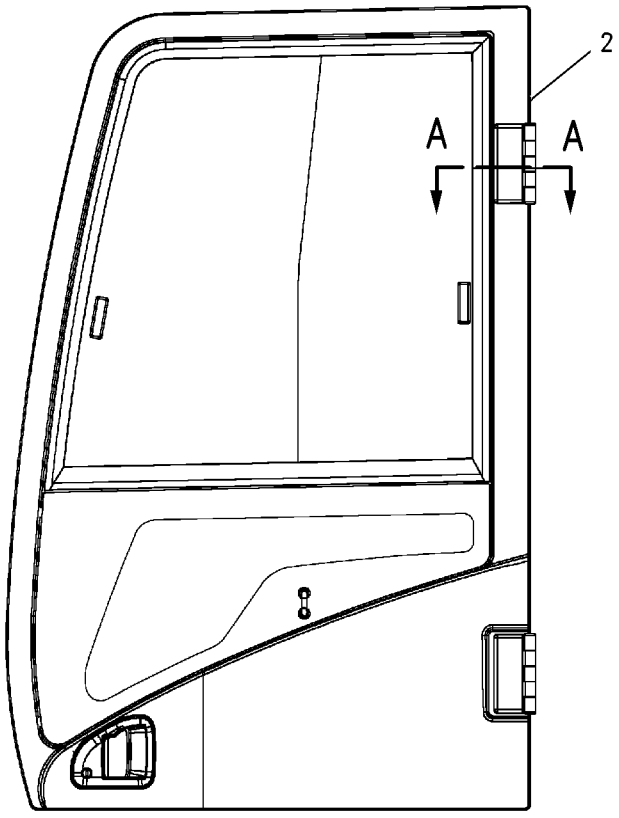

LEFT SIDE VIEW

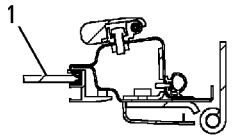

SECTION A-A

GRAPHIC #1 **<END>** g00840880

OPERATOR STATION

139-7100 DOOR GP-CAB

S/N: MNB1-UP; WDK1-UP
PART OF 189-2768 DOOR & MTG GP-CAB
AN ATTACHMENT

SMCS-7308 **i03172907**

NOTE	REF NO	GRAPHIC REF	PART NUMBER	QTY	PART NAME 1 2 3 4 5 6 (PRODUCT LEVEL)	SEE PAGE
C	1	1	**327-6579**	1	HANDLE-PULL	
Y	3	1	**151-6792**	1	WINDOW GP-DOOR	1095
	4	1	**156-6471**	1	GLASS	
	5	1	**156-6598**	1	HOOK	
J	6	1	**156-6600**	1	LOCK AS	
		1	**164-0514**	1	CLIP	
		1	**164-0519**	1	CLIP	
	7	1	**156-6643**	1	COVER	
	8	1	**156-6645**	1	HANDLE AS	
		1	**201-4391**	1	CLIP	
	9	1	**161-3639**	1	HANDLE AS	
	10	1	**161-3650**	1	COVER AS	
	11	1	**161-3663**	1	SEAL AS	
		1	**151-9497**	45	CLIP	
	12	1	**161-3665**	1	SEAL	
	13	1	**259-7354**	1	COVER	
	14	1	**164-0515**	1	JOINT	
	15	1	**167-7039**	1	GROMMET	
M	16	1	**185-8180**	3	SCREW (M6X1X16-MM)	
	17	1	**189-2711**	2	WASHER (8.5X16X2.3-MM THK)	
M	18	1	**096-2622**	2	SCREW-MACHINE (M4X0.7X8-MM)	
M	19	1	**096-3884**	2	NUT-SPRING	
M	20	1	**101-8899**	2	SCREW AS (M6X1X16-MM)	
M	21	1	**101-8900**	2	SCREW AS (M6X1X20-MM)	
	22	1	**151-9461**	4	SPACER	
	23	1	**156-6644**	1	COVER	
	24	1	**178-5573**	4	SPACER	
	25	1	**178-5574**	2	SPACER	
	26	1	**189-2690**	1	HANDLE AS	
	27	1	**4I-4286**	1	KNOB	
M	28	1	**9X-2042**	8	SCREW-TRUSS HEAD (M6X1X12-MM)	

C-CHANGE FROM PREVIOUS TYPE
J-REQUIRES CORPORATE KEY
M-METRIC PART
Y-SEPARATE ILLUSTRATION

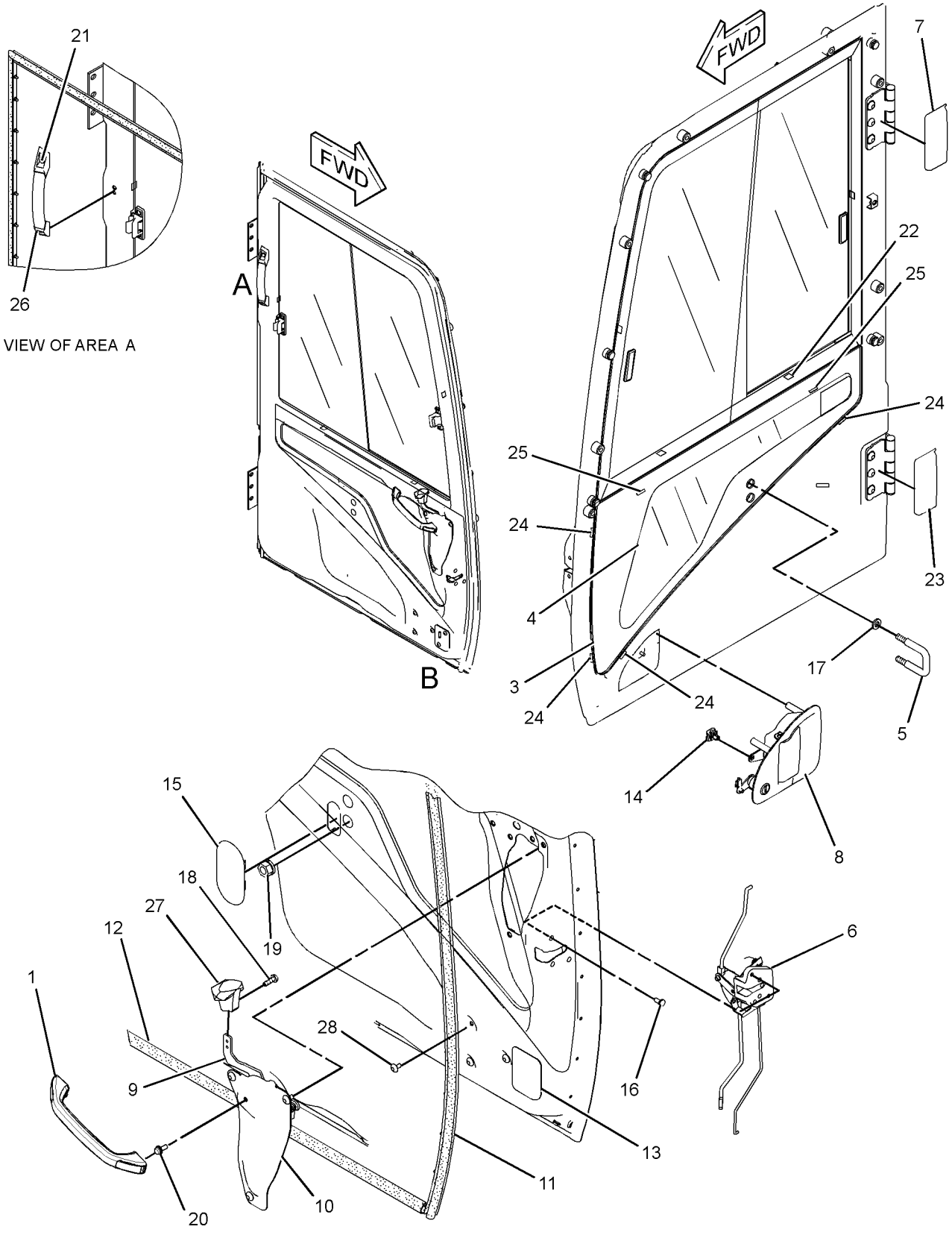

GRAPHIC #1 **<END>** g01625586

OPERATOR STATION

176-1964 DOOR GP-CAB

S/N: MNB1-UP; WDK1-UP
PART OF 229-9101 CAB GP, 189-2793 DOOR GP-CAB
AN ATTACHMENT

SMCS-7308 **i03172900**

NOTE	REF NO	GRAPHIC REF	PART NUMBER	QTY	PART NAME 1 2 3 4 5 6 (PRODUCT LEVEL)	SEE PAGE
C	1	2	**327-6579**	1	HANDLE-PULL	
Y	3	1	**151-6792**	1	WINDOW GP-DOOR	1095
	4	1	**156-6598**	1	HOOK	
J	5	2	**156-6600**	1	LOCK AS	
		2	**164-0514**	1	CLIP	
	5A	2	**164-0519**	1	CLIP	
	6	1	**156-6643**	1	COVER	
	7	1	**156-6645**	1	HANDLE AS	
	7A	1	**201-4391**	1	CLIP	
	8	2	**161-3639**	1	HANDLE AS	
	9	2	**161-3650**	1	COVER AS	
	10	2	**161-3663**	1	SEAL AS	
		2	**151-9497**	45	CLIP	
	11	2	**161-3665**	1	SEAL	
	12	2	**259-7354**	1	COVER	
	13	1	**164-0515**	1	JOINT	
	14	1	**167-7038**	1	GLASS	
	15	2	**167-7039**	1	GROMMET	
M	16	2	**185-8180**	3	SCREW (M6X1X16-MM)	
	17	1	**8T-4224**	2	WASHER-HARD (8.8X16X2-MM THK)	
M	18	2	**096-2622**	2	SCREW-MACHINE (M4X0.7X8-MM)	
M	19	2	**096-3884**	2	NUT-SPRING	
M	20	2	**101-8899**	1	SCREW AS (M6X1X16-MM)	
M	21	2	**101-8900**	2	SCREW AS (M6X1X20-MM)	
	22	1	**151-9461**	4	SPACER	
	23	1	**156-6644**	1	COVER	
	24	1	**178-5573**	4	SPACER	
	25	1	**178-5574**	2	SPACER	
	26	2	**189-2690**	1	HANDLE AS	
	27	2	**4I-4286**	1	KNOB	
M	28	2	**9X-2042**	8	SCREW-TRUSS HEAD (M6X1X12-MM)	

C-CHANGE FROM PREVIOUS TYPE
J-REQUIRES CORPORATE KEY
M-METRIC PART
Y-SEPARATE ILLUSTRATION

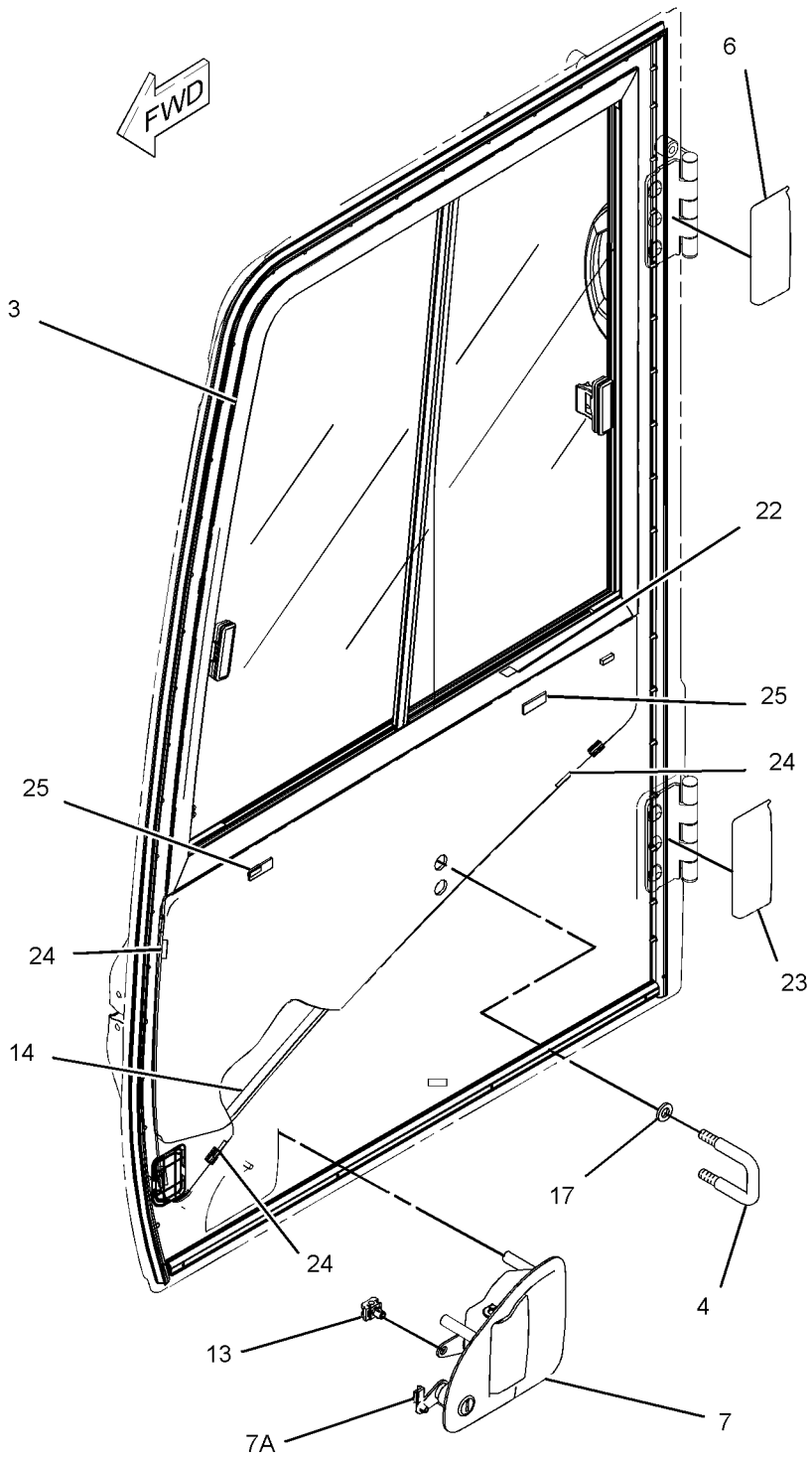

GRAPHIC #1 g01625289

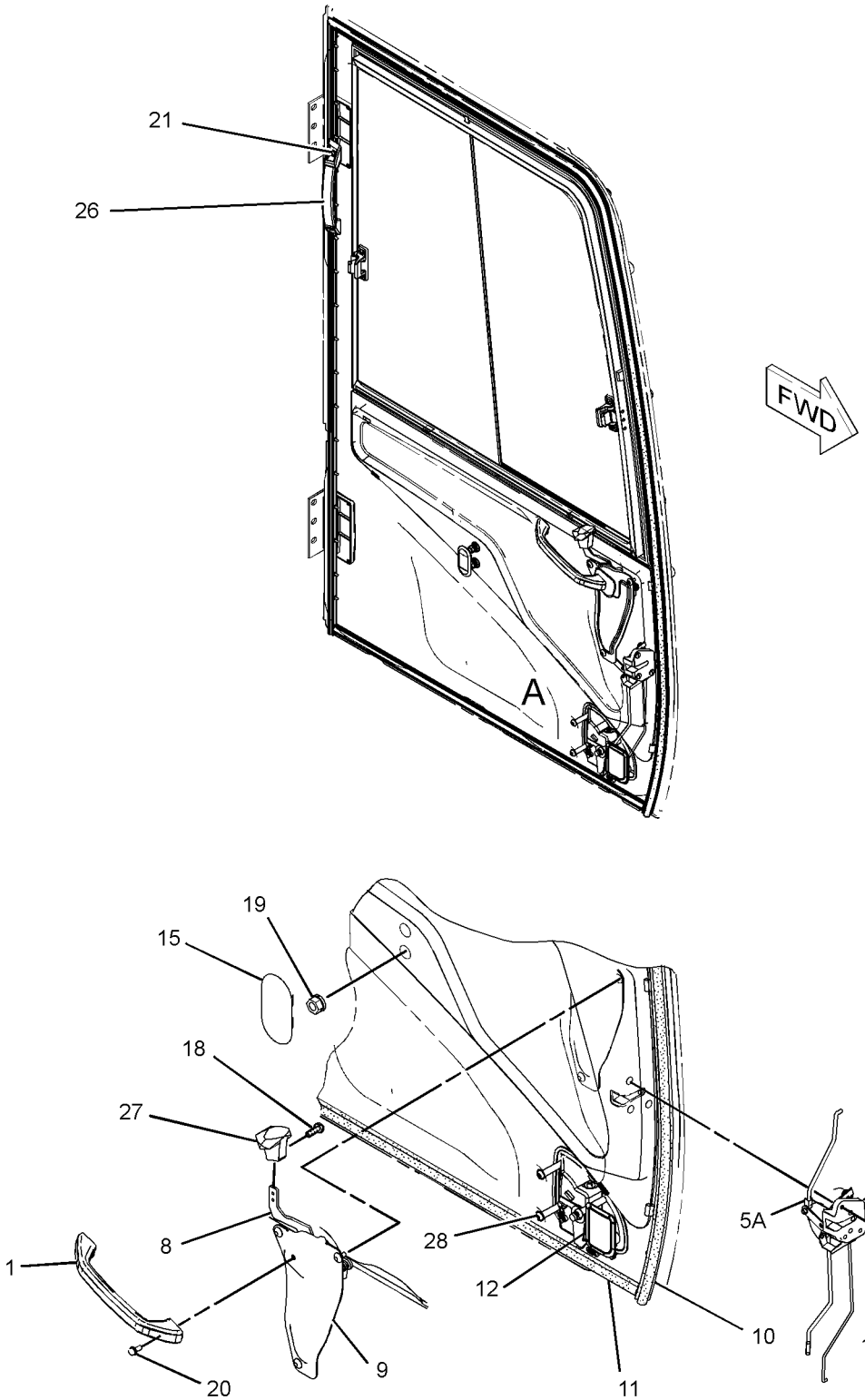

VIEW OF AREA A

GRAPHIC #2 **<END>** g01625166

OPERATOR STATION

189-2793 D00R GP-CAB

S/N: MNB1-UP; WDK1-UP
PART OF 229-9101 CAB GP
AN ATTACHMENT

SMCS-7308 **i02841129**

NOTE	REF NO	GRAPHIC REF	PART NUMBER	QTY	PART NAME 1 2 3 4 5 6 (PRODUCT LEVEL)	SEE PAGE
Y	1	1	**176-1964**	1	DOOR GP-CAB	965
	2	1	**189-2796**	1	DOOR AS	
	2A	1	**151-6777**	2	HINGE	
M	2B	1	**9X-2041**	6	SCREW-TRUSS HEAD (M10X1.5X20-MM)	

M-METRIC PART
Y-SEPARATE ILLUSTRATION

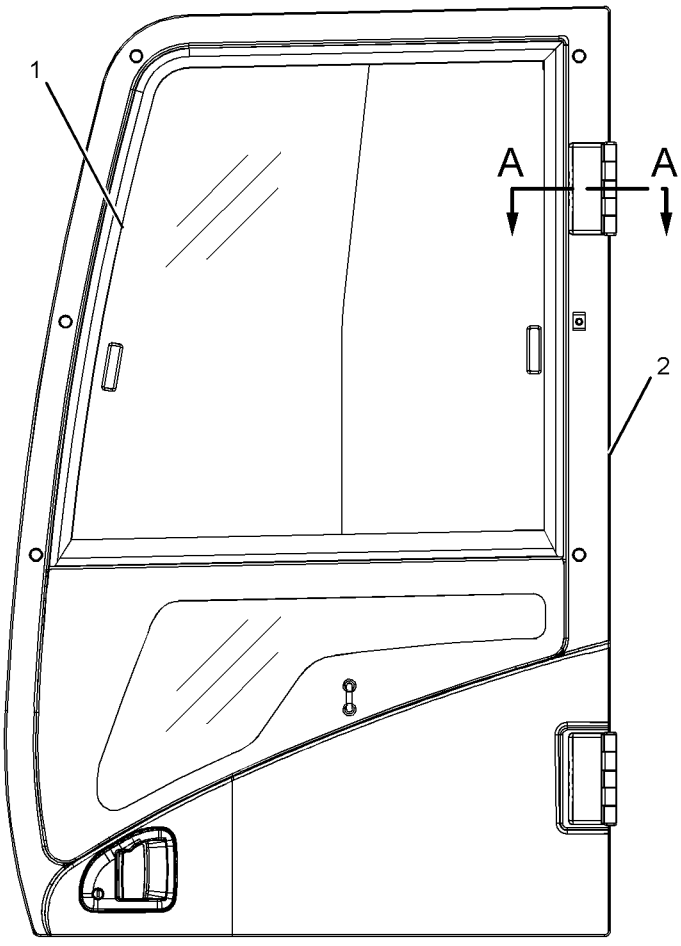

LEFT SIDE VIEW

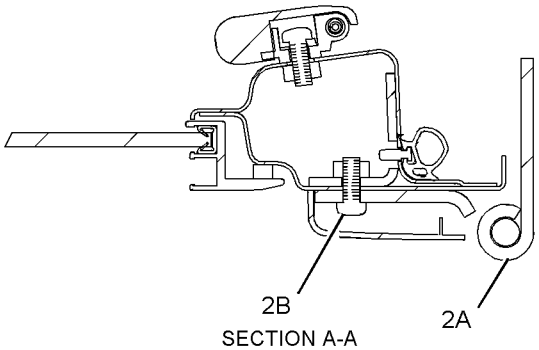

SECTION A-A

GRAPHIC #1 **<END>** g01121662

OPERATOR STATION

229-9082 DUCT GP-CAB AIR

S/N: MNB1-UP; WDK1-UP
PART OF 229-9079 AIR CONDITIONER AR, 229-9083 HEATER AR-CAB
AN ATTACHMENT

SMCS-734D **i03040445**

NOTE	REF NO	GRAPHIC REF	PART NUMBER	QTY	PART NAME 1 2 3 4 5 6 (PRODUCT LEVEL)	SEE PAGE
	1	1	**305-0329**	1	FILTER ELEMENT AS-CAB AIR	
		1	**293-1184**	1	FILTER ELEMENT-CAB AIR	
	2	1	**235-8876**	1	DUCT AS (FRESH AIR, UPPER)	
		1	**245-7872**	1	INSULATOR	
	3	1	**235-8877**	1	DUCT AS (VENT, REAR)	
		1	**245-7792**	1	INSULATOR	
	4	1	**235-8878**	1	DUCT AS (VENT, FRONT)	
		1	**245-7793**	1	INSULATOR	
	5	1	**235-8879**	1	DUCT AS (FLOOR)	
		1	**245-7873**	1	INSULATOR	
	6	1	**240-5074**	1	DUCT AS (FRESH AIR, LOWER)	
		1	**245-7791**	1	INSULATOR	
M	7	1	**101-8899**	2	SCREW AS (M6X1X16-MM)	
	8	1	**176-1996**	5	CLIP	

M-METRIC PART

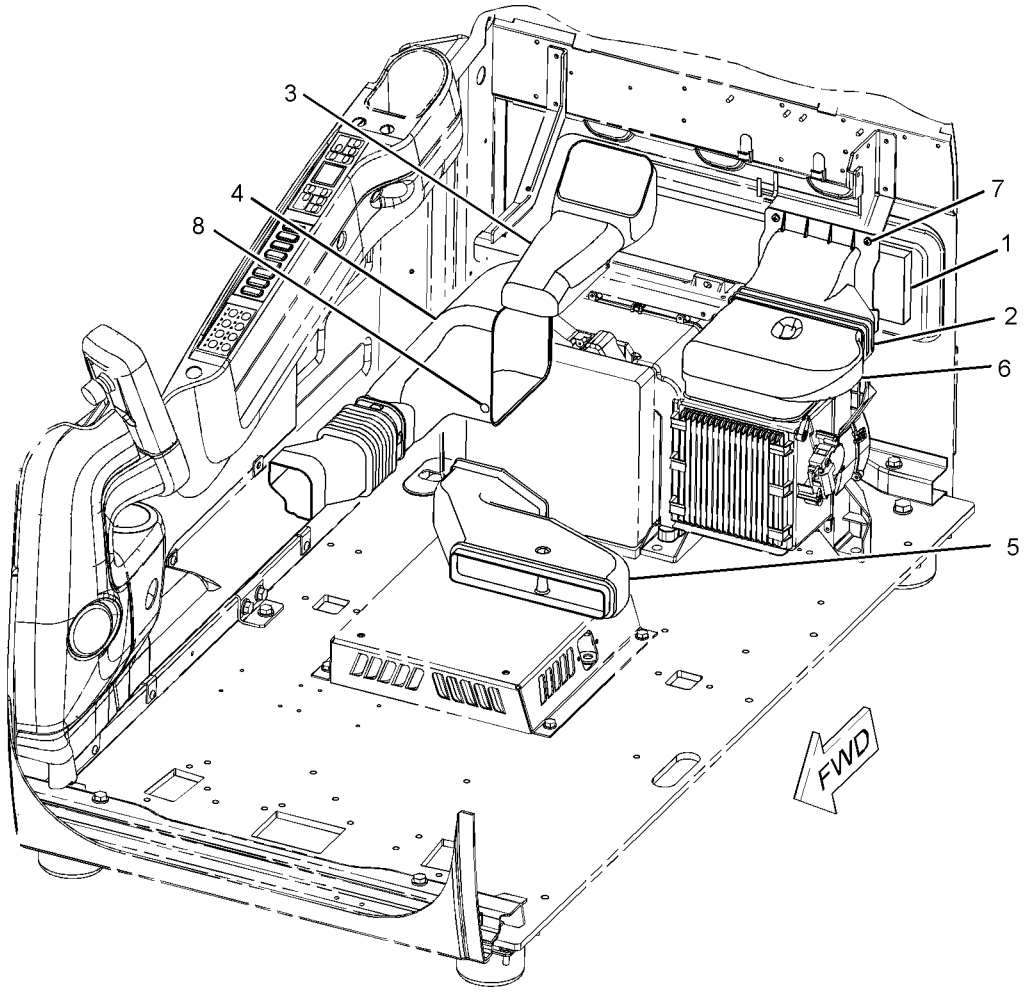

GRAPHIC #1 **<END>** g01126665

OPERATOR STATION

305-0326 FLOOR MAT

S/N: MNB1-UP; WDK1-UP

FIELD REPLACEMENT ORDER 240-5071—PAGE 971

AN ATTACHMENT

SMCS-726M **i02737365**

NOTE	REF NO	GRAPHIC REF	PART NUMBER	QTY	PART NAME 1 2 3 4 5 6 (PRODUCT LEVEL)	SEE PAGE
					(NO SERVICED PARTS)	

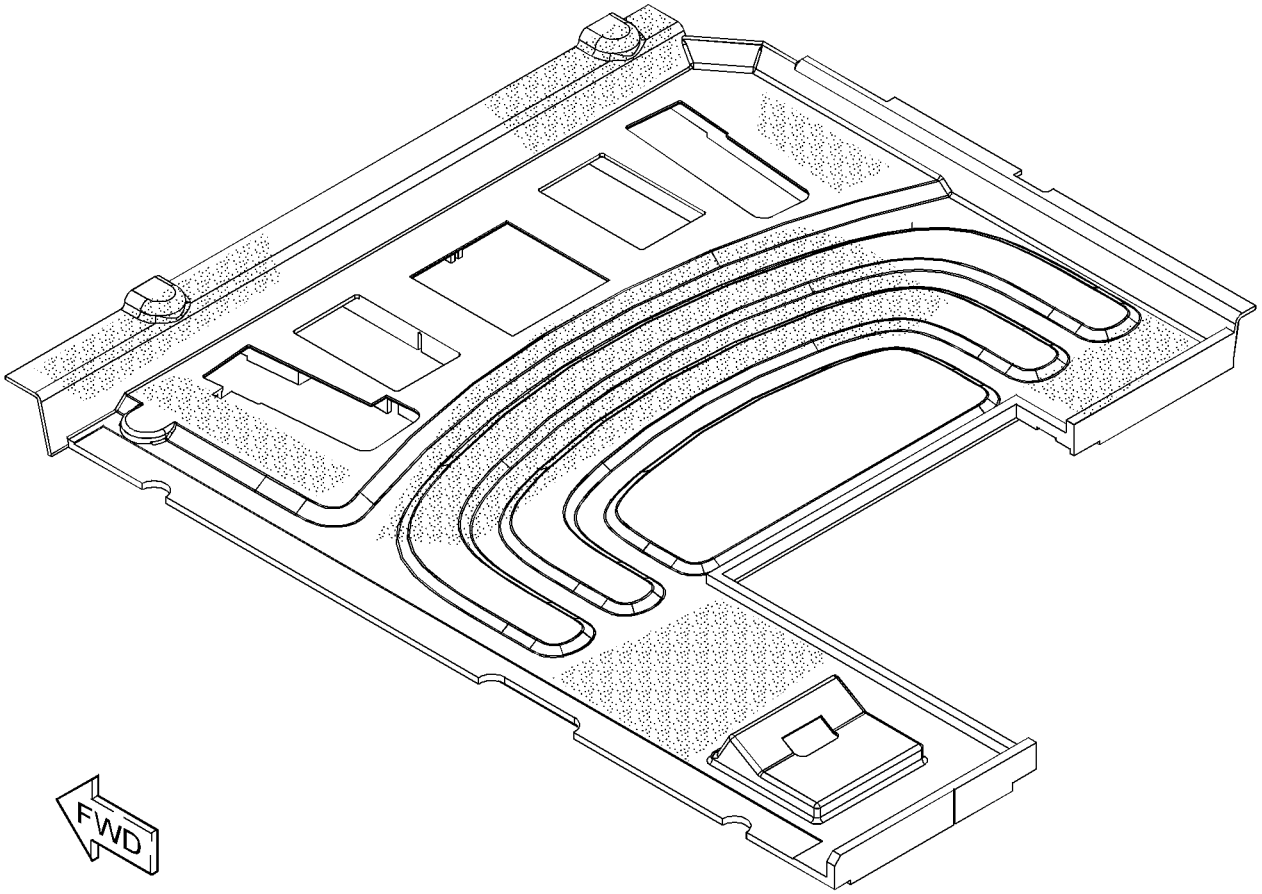

GRAPHIC #1 **<END>** g01374693

OPERATOR STATION

240-5071 FLOOR MAT GP

S/N: MNB1-UP; WDK1-UP

FIELD REPLACEMENT FOR 240-5073—PAGE 972: FOR 245-7796—PAGE 974: FOR 305-0326—PAGE 970: FOR 245-7794—PAGE 973 AN ATTACHMENT

SMCS-7265, 726M **i02605555**

NOTE	REF NO	GRAPHIC REF	PART NUMBER	QTY	PART NAME 1 2 3 4 5 6 (PRODUCT LEVEL)	SEE PAGE
					(NO SERVICED PARTS)	

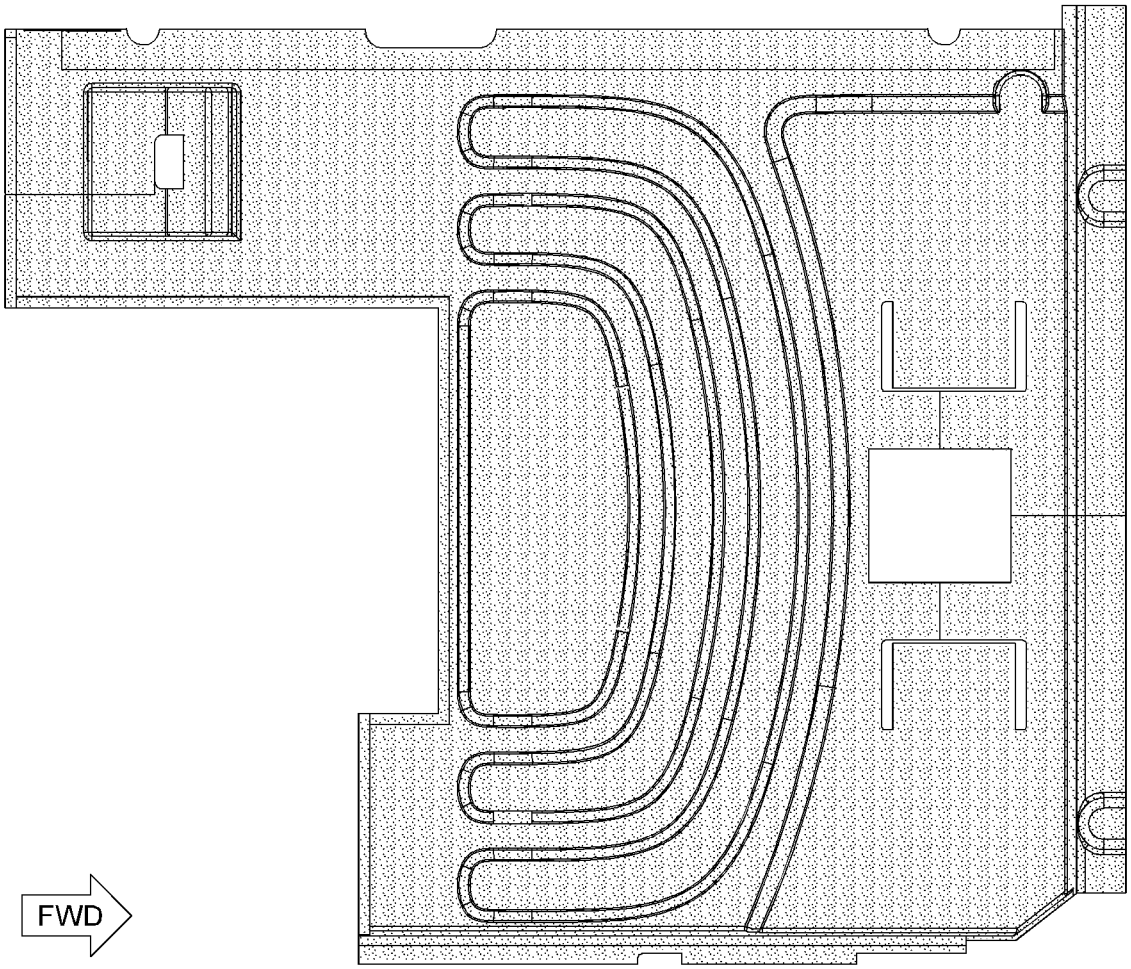

GRAPHIC #1 **<END>** g01305328

OPERATOR STATION

240-5073 FLOOR MAT GP

S/N: MNB1-UP; WDK1-UP
FIELD REPLACEMENT ORDER 240-5071—PAGE 971
AN ATTACHMENT

SMCS-7265, 726M **i02963424**

NOTE	REF NO	GRAPHIC REF	PART NUMBER	QTY	PART NAME 1 2 3 4 5 6 (PRODUCT LEVEL)	SEE PAGE
					(NO SERVICED PARTS)	

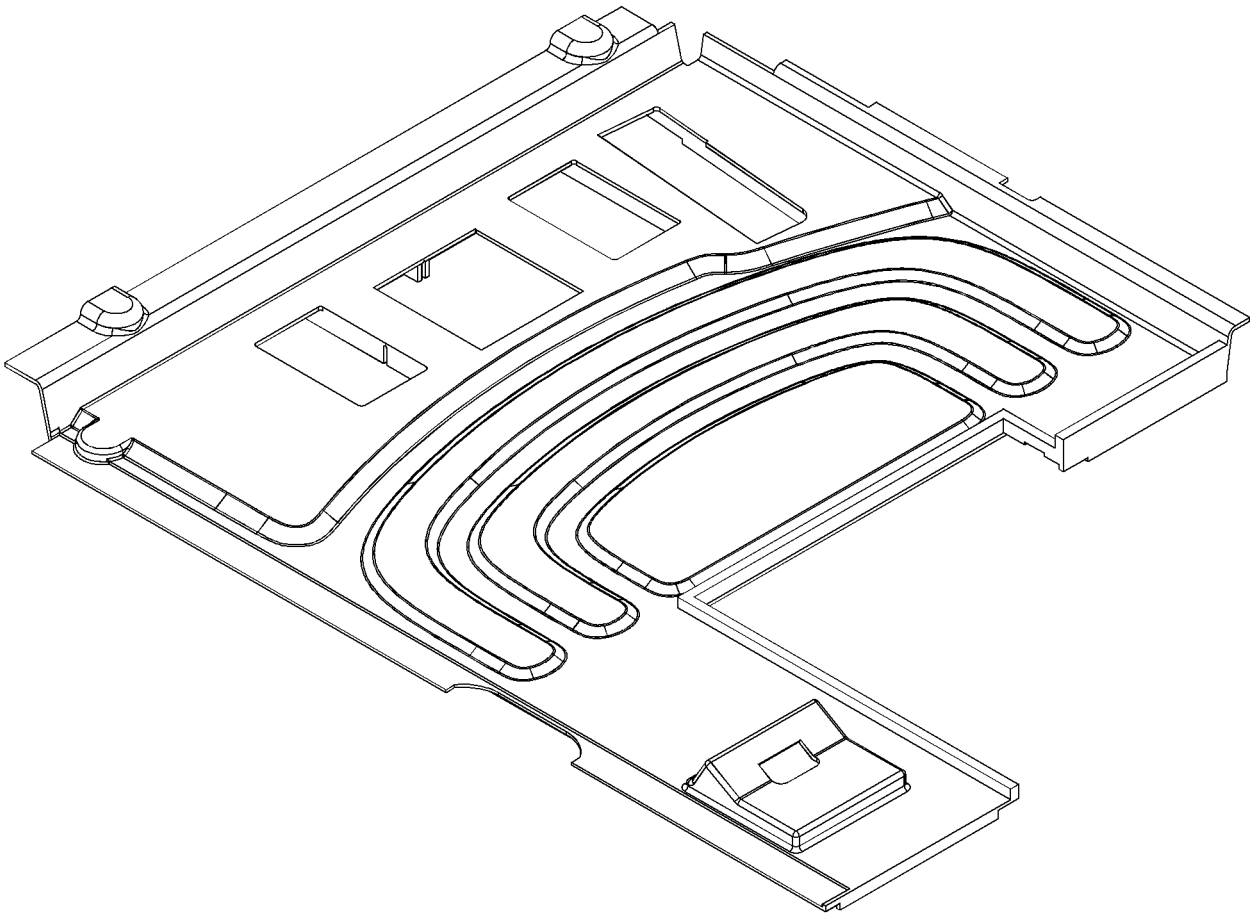

GRAPHIC #1 **<END>** g01124624

OPERATOR STATION

245-7794 FLOOR MAT GP

S/N: MNB1-UP; WDK1-UP
FIELD REPLACEMENT ORDER 240-5071—PAGE 971
AN ATTACHMENT

SMCS-7265, 726M **i02963460**

NOTE	REF NO	GRAPHIC REF	PART NUMBER	QTY	PART NAME 1 2 3 4 5 6 (PRODUCT LEVEL)	SEE PAGE
					(NO SERVICED PARTS)	

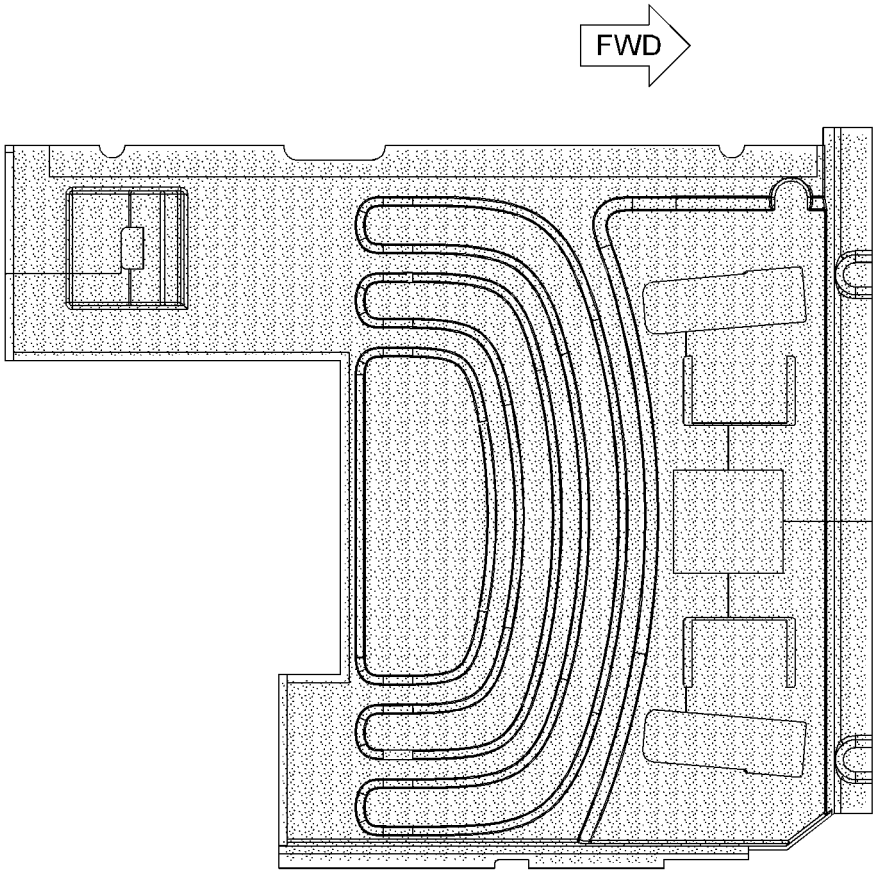

TOP VIEW

GRAPHIC #1 **<END>** g01125036

OPERATOR STATION

245-7796 FLOOR MAT GP

S/N: MNB1-UP; WDK1-UP

FIELD REPLACEMENT ORDER 240-5071—PAGE 971

AN ATTACHMENT

SMCS-7265, 726M **i02963491**

NOTE	REF NO	GRAPHIC REF	PART NUMBER	QTY	PART NAME 1 2 3 4 5 6 (PRODUCT LEVEL)	SEE PAGE
					(NO SERVICED PARTS)	

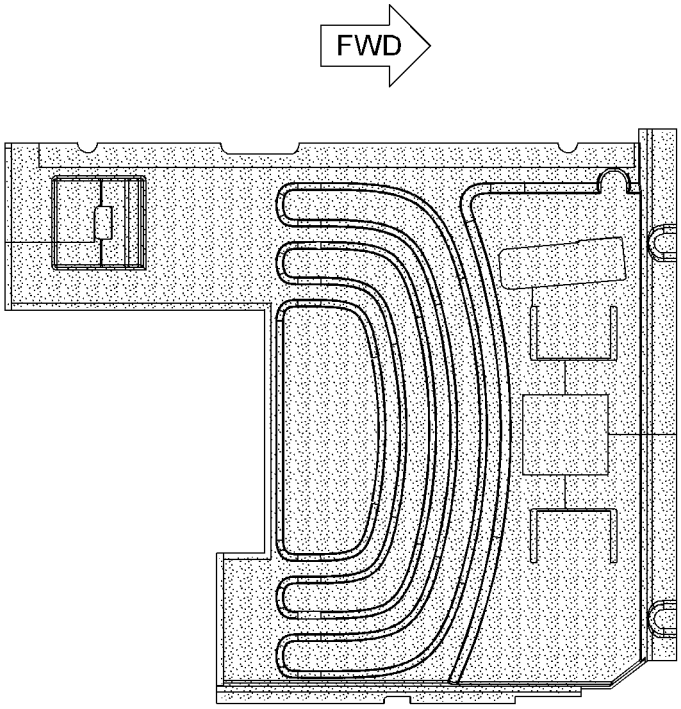

TOP VIEW

GRAPHIC #1 **<END>** g01123305

OPERATOR STATION

273-5358 FLOOR MAT GP

S/N: MNB1-UP; WDK1-UP
PART OF 290-1778 CONVERSION AR-MACHINE
AN ATTACHMENT

SMCS-7265, 726M **i02851816**

NOTE	REF NO	GRAPHIC REF	PART NUMBER	QTY	PART NAME 1 2 3 4 5 6 (PRODUCT LEVEL)	SEE PAGE
	1	1	*273-5333*	1	FLOOR MAT	
	2	1	**273-5359**	1	PLATE-RUBBER	
	3	1	**273-5360**	1	PLATE-RUBBER	

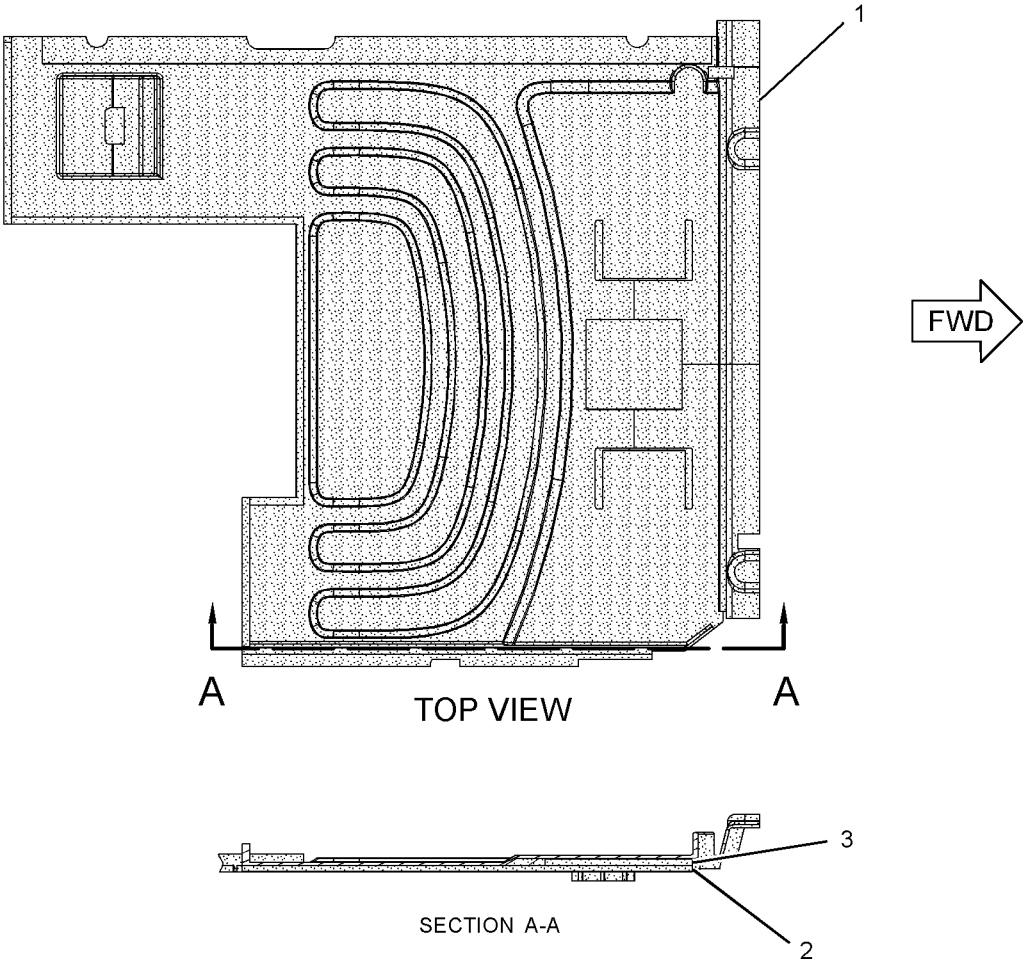

GRAPHIC #1 **<END>** g01235480

OPERATOR STATION

171-7503 FRAME GP-UPPER FRONT WINDOW

S/N: MNB1-UP; WDK1-UP
PART OF 229-9097, 229-9099, 229-9101, 229-9109 CAB GP
FIELD REPLACEMENT FOR 139-7101 WINDOW GP-CAB
AN ATTACHMENT

SMCS-7340 **i03013743**

NOTE	REF NO	GRAPHIC REF	PART NUMBER	QTY	PART NAME 1 2 3 4 5 6 (PRODUCT LEVEL)	SEE PAGE
	1	1	**161-3698**	1	SEAL	
M	2	1	**101-8900**	2	SCREW AS (M6X1X20-MM)	
	3	1	**151-6703**	1	HANDLE-PULL	
	4	1	**151-6704**	2	CAP (HANDLE)	
	5	1	**151-6778**	1	FRAME AS	
	6	1	**151-6813**	1	BRACKET AS	
	7	1	**151-6815**	1	BRACKET AS	
	8	1	**273-5345**	1	LINK AS	
	9	1	**273-5346**	1	LINK AS	
	10	1	**151-6831**	1	LOCK AS	
	11	1	**151-6832**	1	LEVER AS	
	12	1	**156-6472**	1	GLASS	
	13	1	**170-9722**	1	CUSHION	
	14	1	**151-9576**	4	ROLLER	
M	15	1	**9X-2042**	15	SCREW-TRUSS HEAD (M6X1X12-MM)	

M-METRIC PART

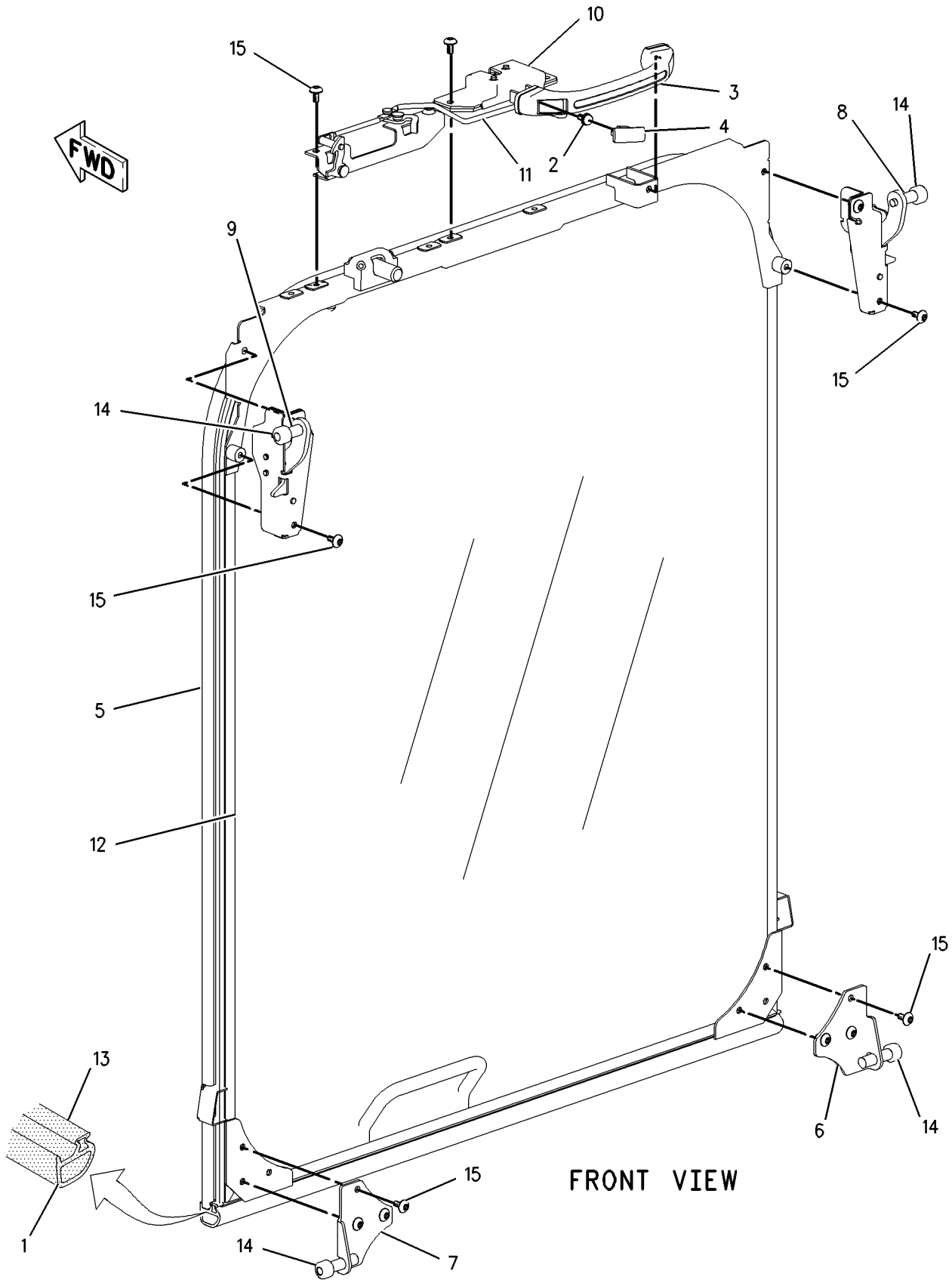

GRAPHIC #1 **<END>** g00852375

OPERATOR STATION

178-5549 GUARD AR-OVERHEAD—FOG

S/N: MNB1-UP; WDK1-UP
CANNOT BE USED WITH VANDALISM GUARD, WINDOW GUARD
AN ATTACHMENT

SMCS-7159 **i01485889**

NOTE	PART NUMBER	QTY	PART NAME 1 2 3 4 5 6 (PRODUCT LEVEL)	SEE PAGE
Y	*171-7485*	1	GUARD GP-FRONT WINDOW	982
Y	*164-0497*	1	GUARD GP-OVERHEAD	984

Y-SEPARATE ILLUSTRATION

<END>

229-1777 GUARD AR-VANDALISM

S/N: MNB1-UP; WDK1-UP
AN ATTACHMENT

SMCS-7315 **i02397792**

NOTE	PART NUMBER	QTY	PART NAME 1 2 3 4 5 6 (PRODUCT LEVEL)	SEE PAGE
Y	*207-0159*	1	GUARD GP-VANDALISM (CAB)	986
Y	*223-3055*	1	STORAGE GP-VANDALISM GUARD	390

Y-SEPARATE ILLUSTRATION

<END>

229-1778 GUARD AR-VANDALISM—WITH SUN VISOR

S/N: MNB1-UP; WDK1-UP
AN ATTACHMENT

SMCS-7315 **i02397794**

NOTE	PART NUMBER	QTY	PART NAME 1 2 3 4 5 6 (PRODUCT LEVEL)	SEE PAGE
Y	*207-0160*	1	GUARD GP-VANDALISM	987
Y	*223-3055*	1	STORAGE GP-VANDALISM GUARD	390

Y-SEPARATE ILLUSTRATION

<END>

OPERATOR STATION

164-0534 GUARD GP-FRONT WINDOW—FULL

S/N: MNB1-UP; WDK1-UP

CANNOT BE USED WITH 164-0535—PAGE 981, 171-7485—PAGE 982

AN ATTACHMENT

SMCS-7182, 7315 **i03142180**

NOTE	REF NO	GRAPHIC REF	PART NUMBER	QTY	PART NAME 1 2 3 4 5 6 (PRODUCT LEVEL)	SEE PAGE
	1	1	**2Y-5685**	4	RING-RETAINING	
	2	1	**6C-8382**	2	SPRING-LATCH	
	3	1	**176-1928**	2	BRACKET AS	
	4	1	**196-1569**	1	SUPPORT AS	
	5	1	**196-1571**	1	SUPPORT AS	
	6	1	**196-1572**	2	LATCH AS	
	7	1	**201-4534**	2	PIN	
	8	1	**201-4535**	2	PIN	
	9	1	**207-0216**	2	SPRING AS-GAS	
	10	1	**258-0330**	2	BRACKET AS	
C	11	1	**327-6601**	1	FRAME AS	
M	12	1	**096-4882**	2	LOCKNUT (M8X1.25-THD)	
	13	1	**4I-6602**	8	BOSS (M12X1.75X20-MM)	
M	14	1	**7X-2553**	2	BOLT (M16X2X40-MM)	
M	15	1	**7Y-0623**	2	LOCKNUT (M16X2-THD)	
M	16	1	**8T-4139**	6	BOLT (M12X1.75X30-MM)	
M	17	1	**8T-4192**	2	BOLT (M12X1.75X25-MM)	
	18	1	**8T-4223**	8	WASHER-HARD (13.5X25.5X3-MM THK)	
	19	1	**8T-4224**	4	WASHER-HARD (8.8X16X2-MM THK)	
	20	1	**9X-8257**	4	WASHER (17.5X30X3.5-MM THK)	

C-CHANGE FROM PREVIOUS TYPE
M-METRIC PART

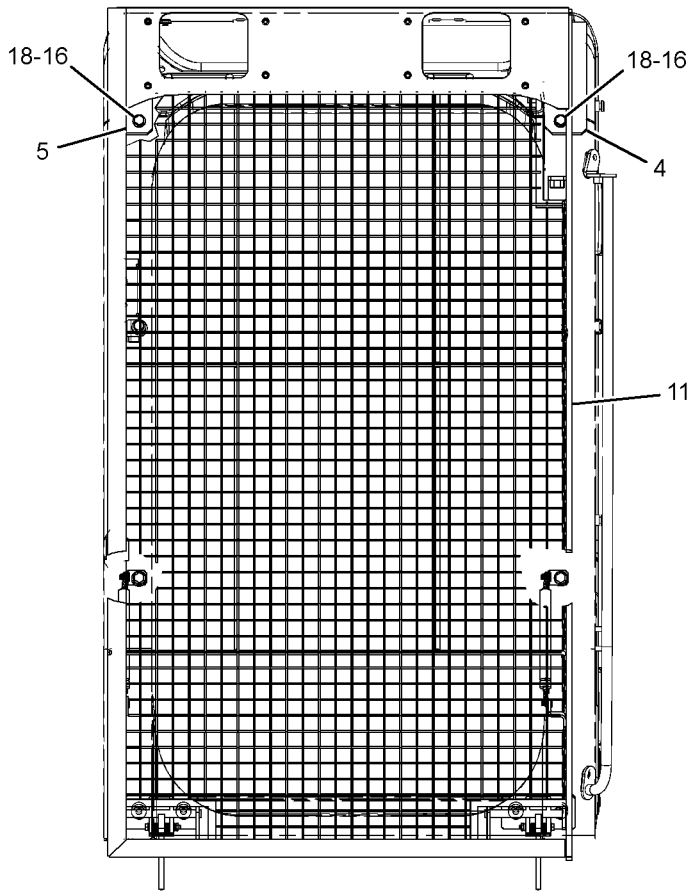

FRONT VIEW

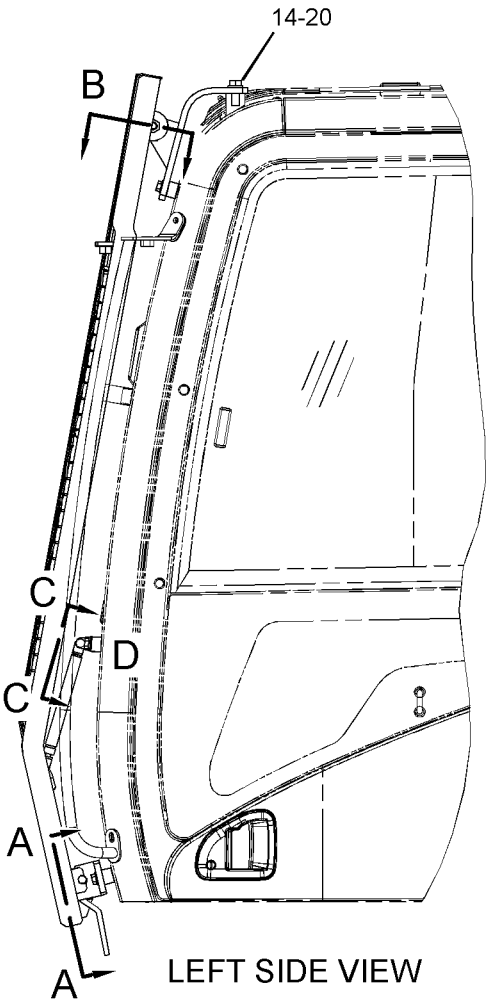

LEFT SIDE VIEW

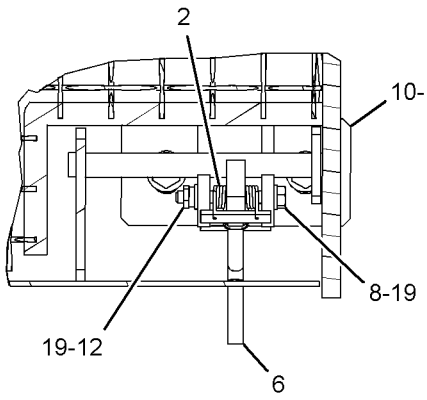

SECTION A-A

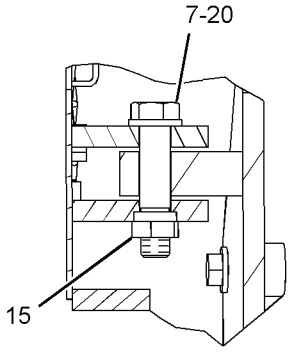

SECTION B

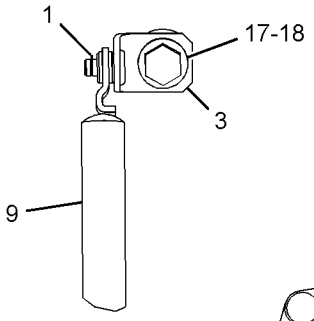

VIEW C-C

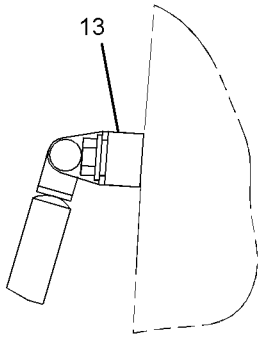

VIEW OF AREA D

GRAPHIC #1 **<END>** g01619617

OPERATOR STATION

164-0535 GUARD GP-FRONT WINDOW–LOWER

S/N: MNB1-UP; WDK1-UP
AN ATTACHMENT

SMCS-7182, 7315 **i02909135**

NOTE	REF NO	GRAPHIC REF	PART NUMBER	QTY	PART NAME 1 2 3 4 5 6 (PRODUCT LEVEL)	SEE PAGE
M	1	1	**8T-4192**	4	BOLT (M12X1.75X25-MM)	
	2	1	**8T-4223**	4	WASHER-HARD (13.5X25.5X3-MM THK)	
	3	1	**167-7055**	1	FRAME AS	
	4	1	**4I-6602**	4	BOSS (M12X1.75X20-MM)	

M-METRIC PART

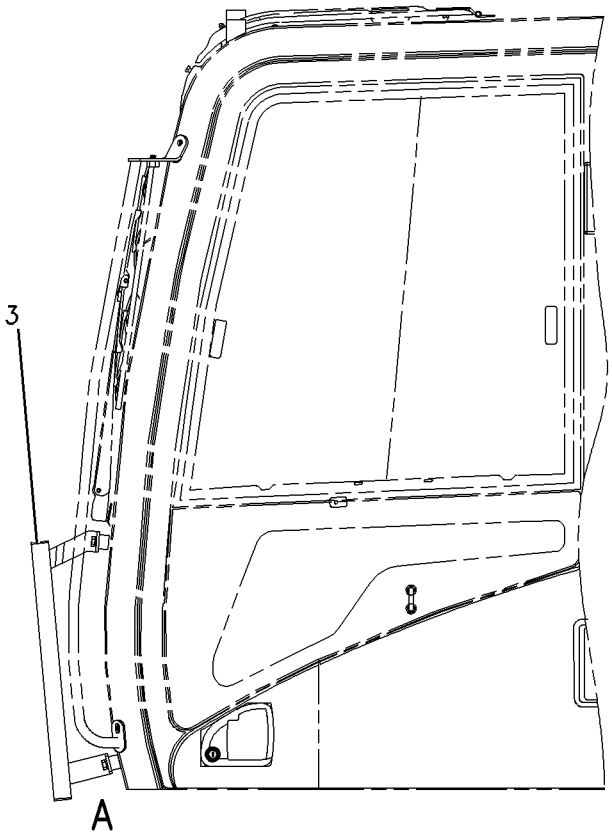

LEFT SIDE VIEW

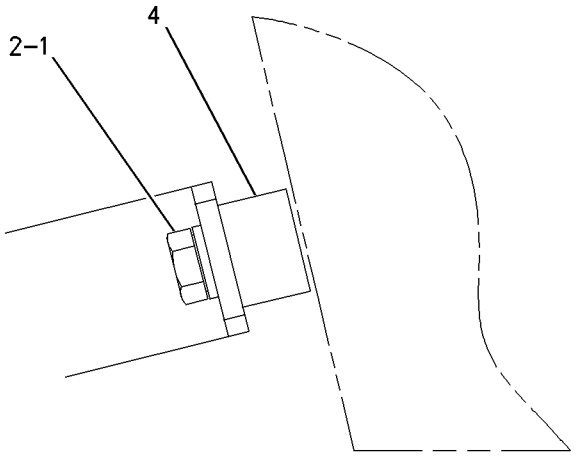

VIEW OF AREA A

GRAPHIC #1 **<END>** g00689592

OPERATOR STATION

171-7485 GUARD GP-FRONT WINDOW

S/N: MNB1-UP; WDK1-UP

PART OF 178-5549 GUARD AR-OVERHEAD

CANNOT BE USED WITH 164-0534—PAGE 979, 164-0535—PAGE 981, 161-3750—PAGE 1082

AN ATTACHMENT

SMCS-7182, 7315 **i03139021**

NOTE	REF NO	GRAPHIC REF	PART NUMBER	QTY	PART NAME 1 2 3 4 5 6 (PRODUCT LEVEL)	SEE PAGE
	1	1	**5D-4822**	4	RING-RETAINING	
	2	1	**6C-8382**	2	SPRING-LATCH	
	4	1	**316-8908**	1	GUARD AS-WINDOW	
	5	1	**176-1925**	2	SPRING AS-GAS	
	6	1	**176-1928**	2	BRACKET AS	
	7	1	**196-1569**	1	SUPPORT AS	
	8	1	**196-1571**	1	SUPPORT AS	
	9	1	**196-1572**	2	LATCH AS	
	10	1	**258-0330**	2	BRACKET AS	
	11	1	**201-4534**	2	PIN	
	12	1	**201-4535**	2	PIN	
M	13	1	**096-4882**	2	LOCKNUT (M8X1.25-THD)	
B	15	1	**4I-6602**	8	BOSS (M12X1.75X20-MM)	
M	16	1	**7X-2553**	2	BOLT (M16X2X40-MM)	
M	17	1	**7Y-0623**	2	LOCKNUT (M16X2-THD)	
M	18	1	**8T-4139**	6	BOLT (M12X1.75X30-MM)	
M	19	1	**8T-4192**	2	BOLT (M12X1.75X25-MM)	
	20	1	**8T-4223**	8	WASHER-HARD (13.5X25.5X3-MM THK)	
	21	1	**8T-4224**	4	WASHER-HARD (8.8X16X2-MM THK)	
	22	1	**9X-8257**	4	WASHER (17.5X30X3.5-MM THK)	
	23	1	**298-4195**	1	FILM-CERTIFICATION (OPS GUARD, READ OMM, ENGLISH)	
	25	1	**219-0305**	1	FILM-WARNING (NO WELD, NO DRILL, READ OMM)	

B-USE AS REQUIRED
M-METRIC PART

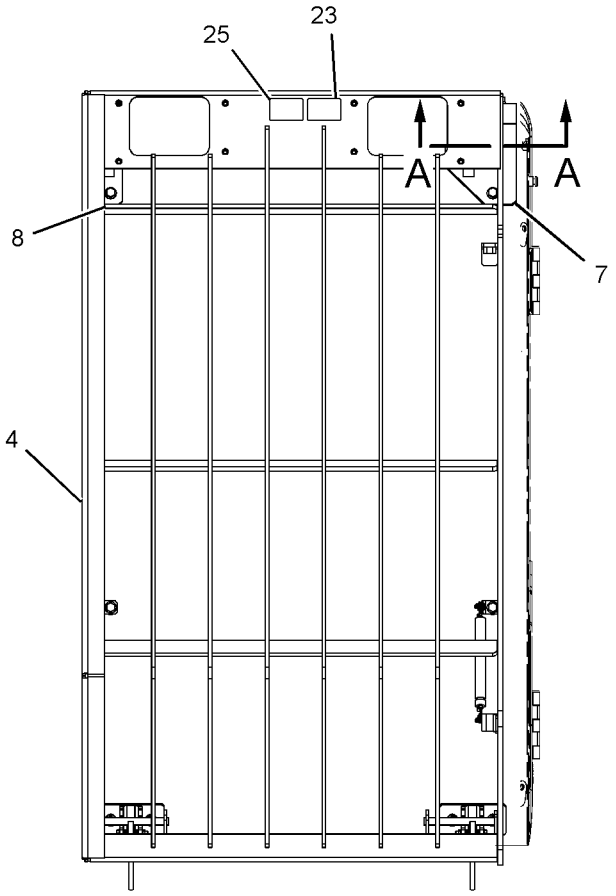

FRONT VIEW

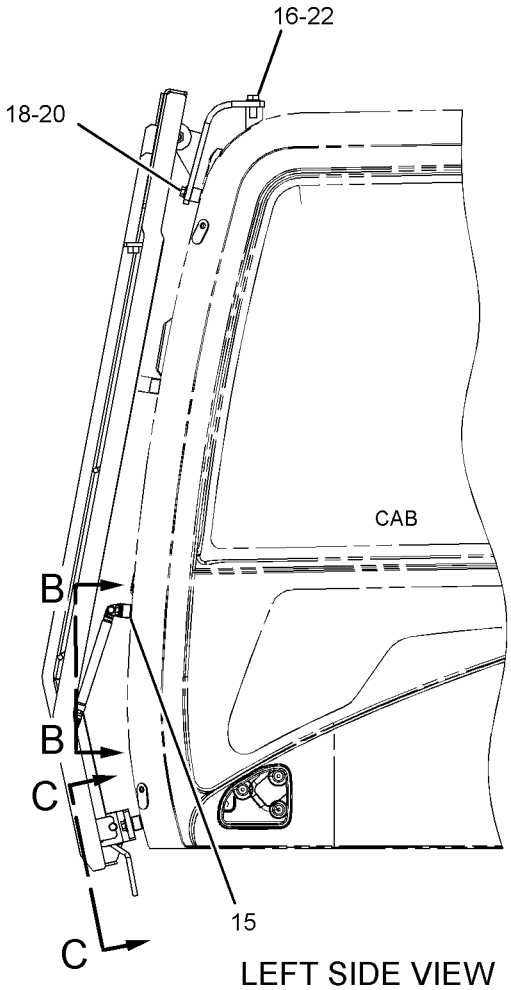

LEFT SIDE VIEW

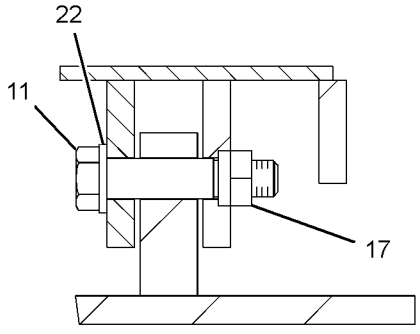

SECTION A-A

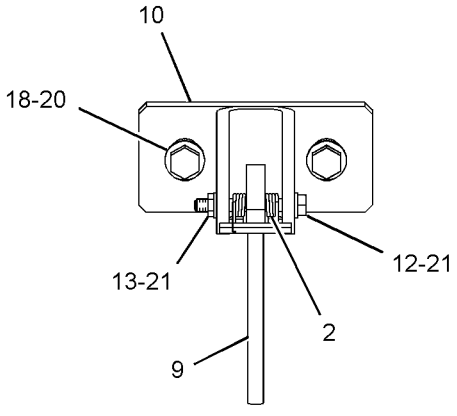

SECTION C-C

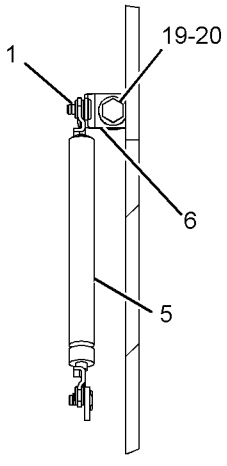

SECTION B-B

GRAPHIC #1 **<END>** g01620958

OPERATOR STATION

164-0497 GUARD GP-OVERHEAD

S/N: MNB1-UP; WDK1-UP
PART OF 178-5549 GUARD AR-OVERHEAD
AN ATTACHMENT

SMCS-7159 **i03253683**

NOTE	REF NO	GRAPHIC REF	PART NUMBER	QTY	PART NAME 1 2 3 4 5 6 (PRODUCT LEVEL)	SEE PAGE
	1	1	**8V-1715**	2	SPACER (20.5X35X12-MM THK)	
	2	1	**167-7141**	1	GUARD AS	
	3	1	**219-0305**	1	FILM-WARNING (NO WELD, NO DRILL, READ OMM)	
	4	1	**298-4196**	1	FILM-CERTIFICATION (OPS GUARD, READ OMM)	
	6	1	**090-8865**	2	SPACER (17X40X3-MM THK)	
					(WHEN EQUIPPED WITH CAB LIGHTS)	
					-OR-	
		1	**090-8865**	3	SPACER (17X40X3-MM THK)	
					(WHEN EQUIPPED WITH PRODUCT LINK)	
					-OR-	
		1	**090-8865**	1	SPACER (17X40X3-MM THK)	
					(WHEN EQUIPPED WITH CAB LIGHTS AND PRODUCT LINK)	
M	7	1	**7X-2559**	2	BOLT (M16X2X160-MM)	
M	8	1	**8T-4174**	2	BOLT (M16X2X120-MM)	
	9	1	**9X-8257**	4	WASHER (17.5X30X3.5-MM THK)	

M-METRIC PART

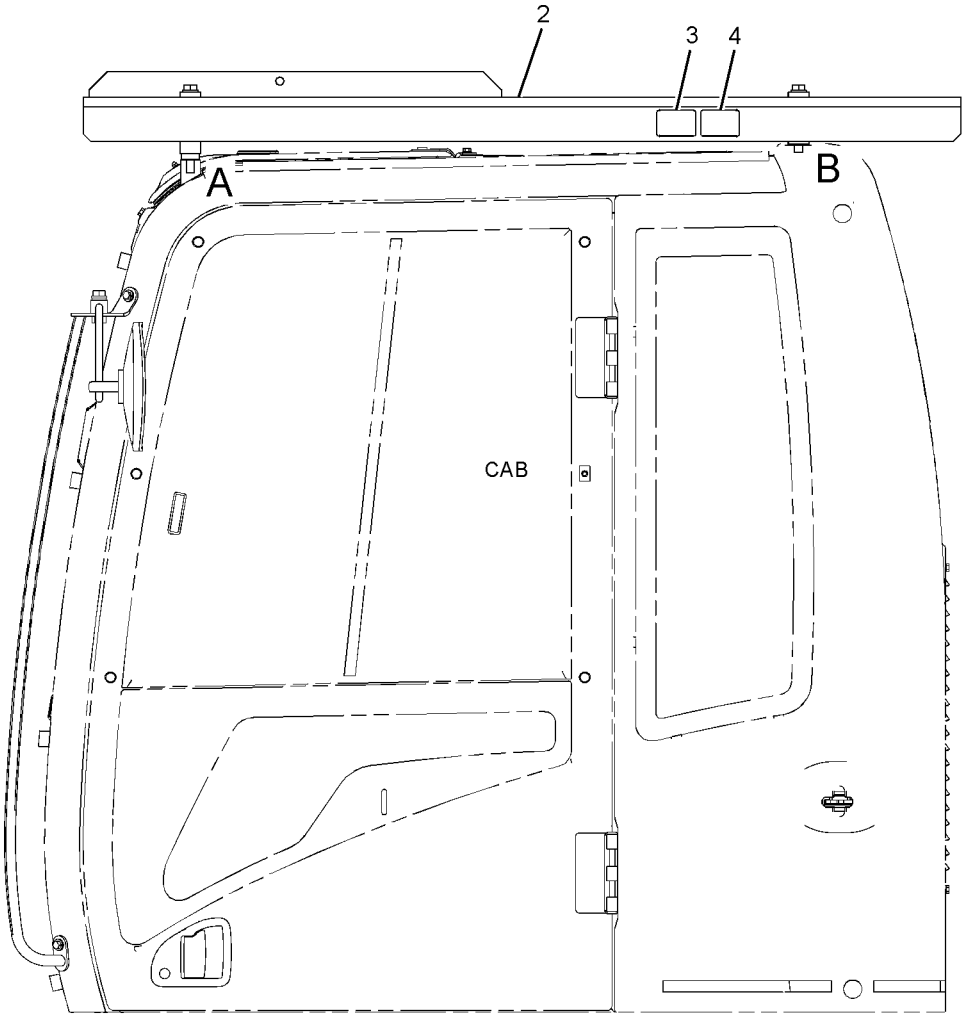

LEFT SIDE VIEW

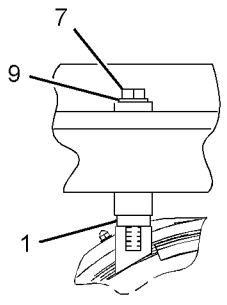

VIEW OF AREA A

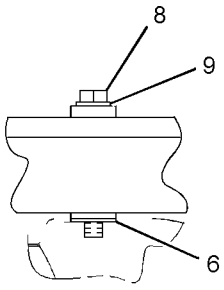

VIEW OF AREA B

GRAPHIC #1 **<END>** g01654213

OPERATOR STATION

207-0159 GUARD GP-VANDALISM—CAB

S/N: MNB1-UP; WDK1-UP
PART OF 229-1777 GUARD AR-VANDALISM
AN ATTACHMENT

SMCS-7315 **i02110739**

NOTE	REF NO	GRAPHIC REF	PART NUMBER	QTY	PART NAME 1 2 3 4 5 6 (PRODUCT LEVEL)	SEE PAGE
	1	1	**7Y-8621**	6	PIN	
	2	1	**7Y-8622**	1	PIN	
	3	1	**207-0161**	1	GUARD AS	
		1	**8H-2282**	2	HINGE	
	4	1	**207-0164**	1	GUARD AS	
		1	**8H-2282**	2	HINGE	
	5	1	**207-0167**	1	GUARD AS	
		1	**8H-2282**	2	HINGE	
	6	1	**207-0170**	1	GUARD AS	
		1	**8H-2282**	2	HINGE	
	7	1	**207-0173**	1	GUARD AS	
		1	**8H-2282**	2	HINGE	
M	8	1	**8T-4200**	2	BOLT (M8X1.25X16-MM)	
	9	1	**8T-4224**	2	WASHER-HARD (8.8X16X2-MM THK)	

M-METRIC PART

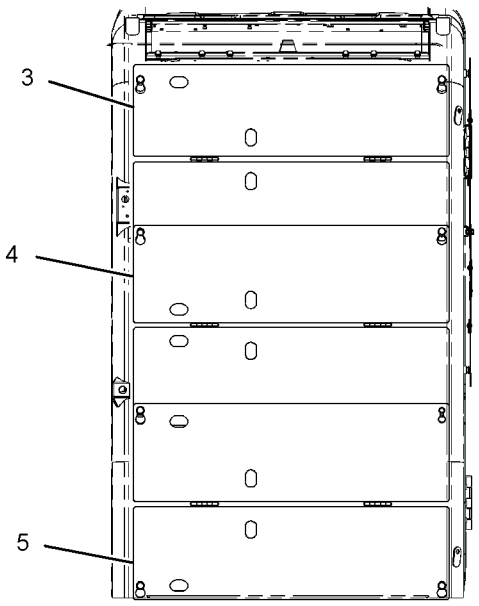

FRONT VIEW

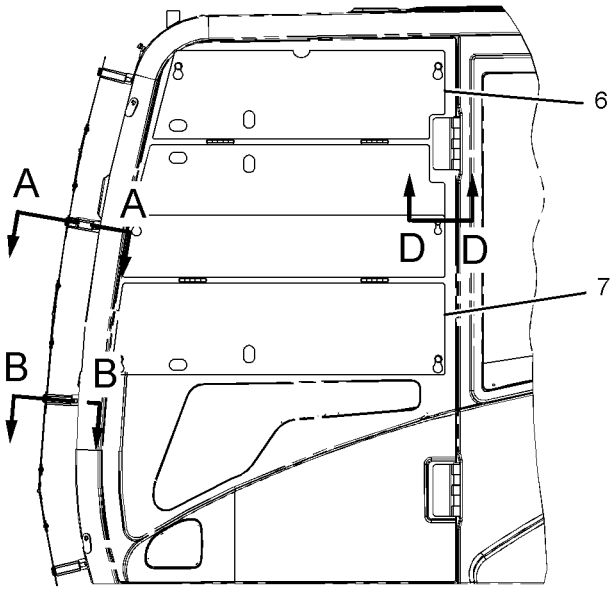

LEFT SIDE VIEW

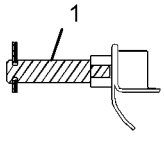

SECTION A-A

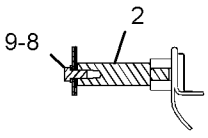

SECTION B-B

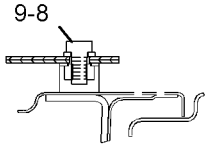

SECTION D-D

GRAPHIC #1

<END>

g01079377

OPERATOR STATION

207-0160 GUARD GP-VANDALISM–CAB

S/N: MNB1-UP; WDK1-UP
PART OF 229-1778 GUARD AR-VANDALISM
AN ATTACHMENT

SMCS-7315 **i01707116**

NOTE	REF NO	GRAPHIC REF	PART NUMBER	QTY	PART NAME 1 2 3 4 5 6 (PRODUCT LEVEL)	SEE PAGE
	1	1	**7Y-8621**	4	PIN	
	2	1	**7Y-8622**	1	PIN	
	3	1	**164-0643**	1	BRACKET AS	
	4	1	**207-0164**	1	GUARD AS	
		1	**8H-2282**	2	HINGE	
	5	1	**207-0167**	1	GUARD AS	
		1	**8H-2282**	2	HINGE	
	6	1	**207-0170**	1	GUARD AS	
		1	**8H-2282**	2	HINGE	
	7	1	**207-0173**	1	GUARD AS	
		1	**8H-2282**	2	HINGE	
	8	1	**207-0176**	1	GUARD AS	
		1	**8H-2282**	2	HINGE	
M	9	1	**8T-4138**	4	BOLT (M6X1X20MM)	
M	10	1	**8T-4200**	2	BOLT (M8X1.25X16MM)	
	11	1	**8T-4224**	2	WASHER-HARD (8.8X16X2MM THK)	

M-METRIC PART

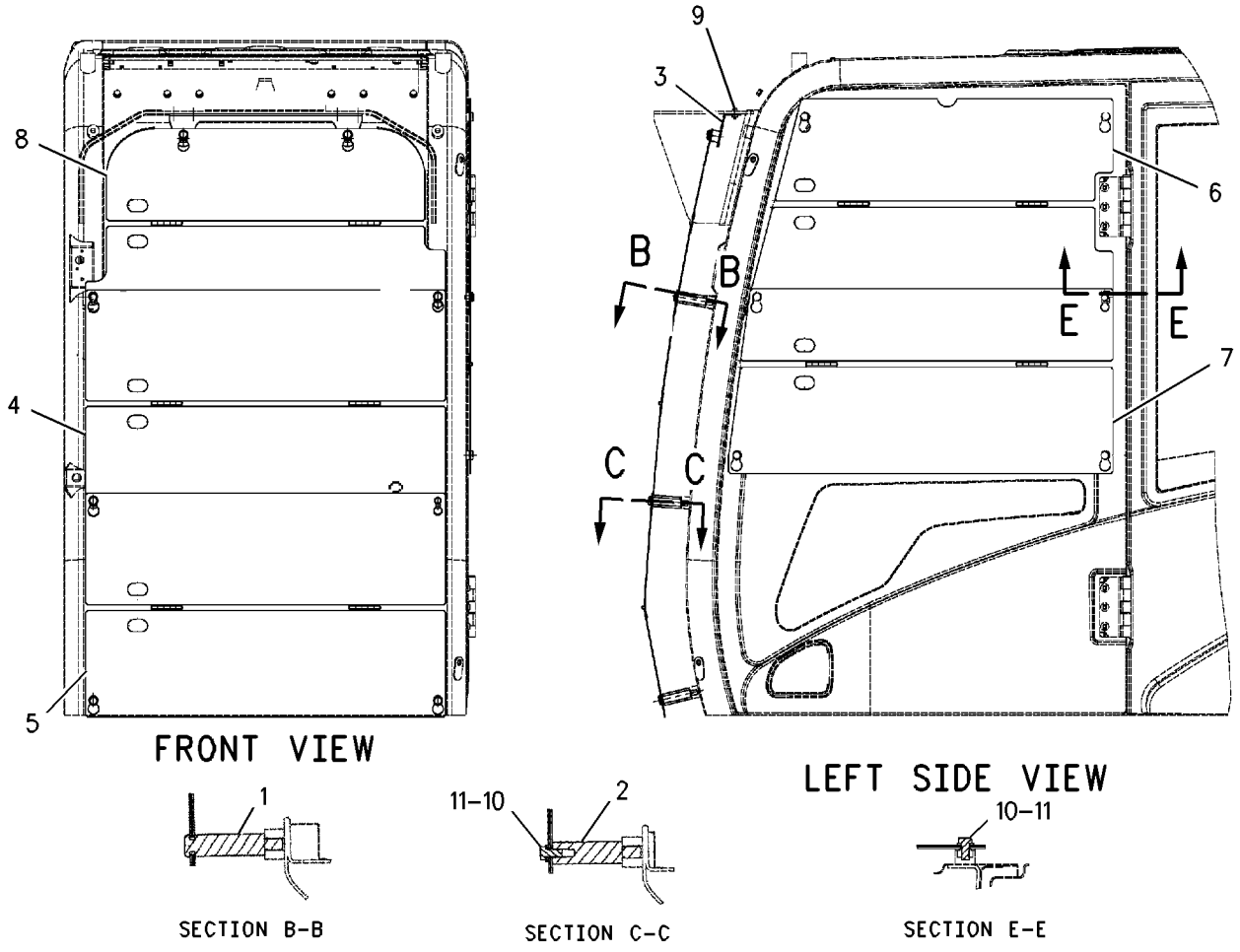

GRAPHIC #1 **<END>** g00880379

OPERATOR STATION

139-7099 HATCH GP-ROOF

S/N: MNB1-UP; WDK1-UP
PART OF 229-9097, 229-9099, 229-9101 CAB GP
AN ATTACHMENT

SMCS-7303 **i02757434**

NOTE	REF NO	GRAPHIC REF	PART NUMBER	QTY	PART NAME 1 2 3 4 5 6 (PRODUCT LEVEL)	SEE PAGE
	1	1	**2Y-5685**	4	RING-RETAINING	
	2	1	**099-3506**	2	SPRING AS-GAS	
M	3	1	**105-2169**	4	BOLT AS (M8X1.25X16-MM)	
Y	4	1	**189-2849**	1	HATCH GP-ROOF	989
	5	1	**189-2847**	1	SEAL	

M-METRIC PART
Y-SEPARATE ILLUSTRATION

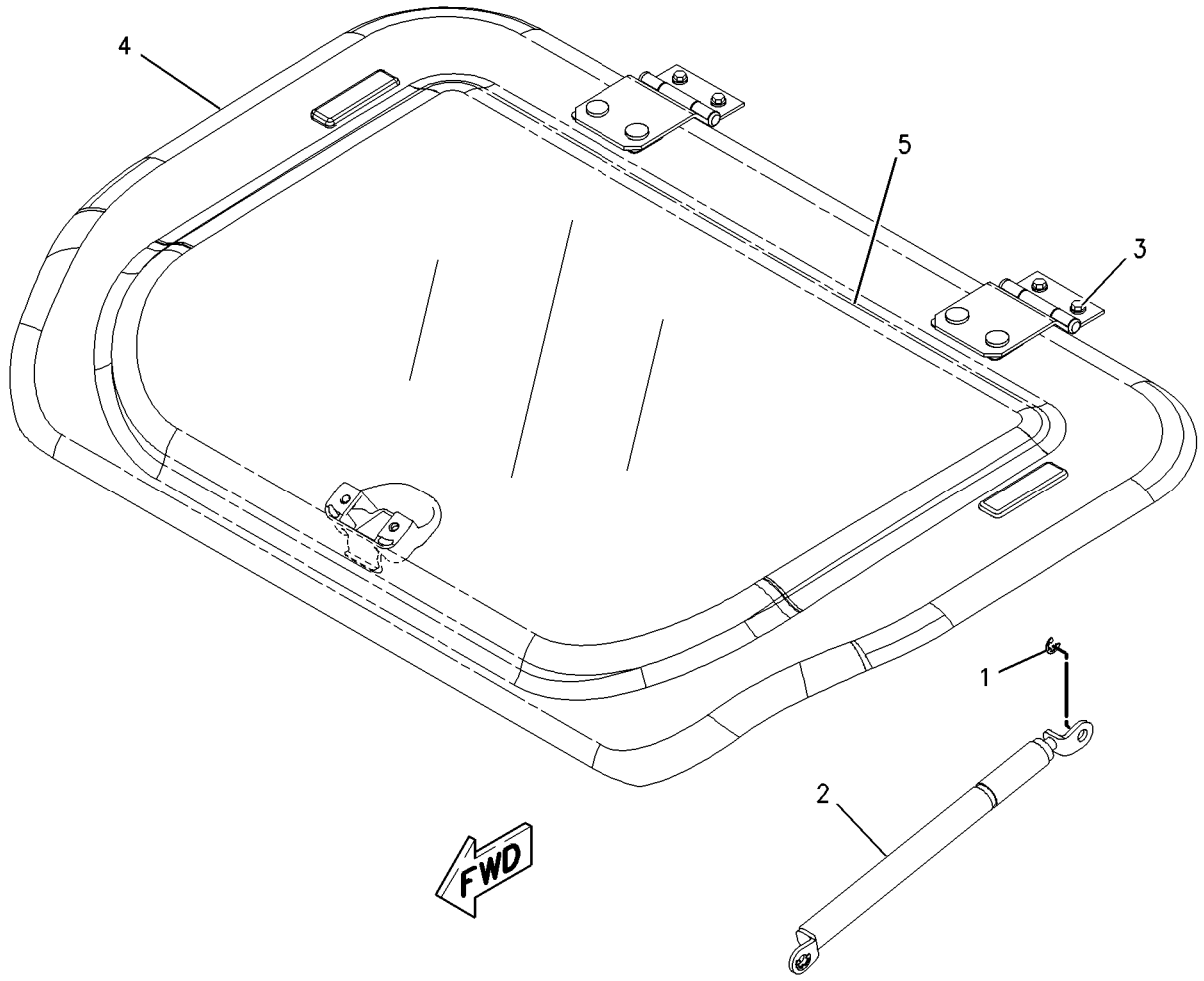

GRAPHIC #1 **<END>** g00737364

OPERATOR STATION

189-2849 HATCH GP-ROOF

S/N: MNB1-UP; WDK1-UP
PART OF 139-7099 HATCH GP-ROOF
AN ATTACHMENT

SMCS-7303 **i01895765**

NOTE	REF NO	GRAPHIC REF	PART NUMBER	QTY	PART NAME 1 2 3 4 5 6 (PRODUCT LEVEL)	SEE PAGE
	1	1	**161-3694**	1	CATCH	
	2	1	**189-2693**	1	BRACKET AS (RH)	
	3	1	**189-2694**	1	BRACKET AS (LH)	
	4	1	**189-2716**	2	HINGE AS	
Z	5	1		1	COVER	
	6	1	**085-6449**	2	PACKING	
M	7	1	**100-2881**	4	SCREW-TRUSS HEAD	
	8	1	**171-7477**	2	NUT	
	9	1	**4I-1260**	2	PACKING	
	10	1	**4I-4361**	2	RETAINER	
M	11	1	**6I-5342**	4	NUT (M8X1.25-THD)	
M	12	1	**9X-2045**	2	SCREW-TRUSS HEAD (M6X1X20-MM)	

M-METRIC PART
Z-NOT SERVICED SEPARATELY

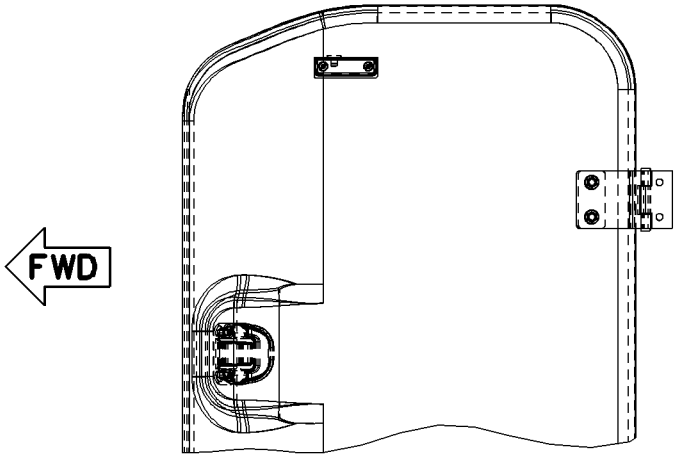

TOP VIEW

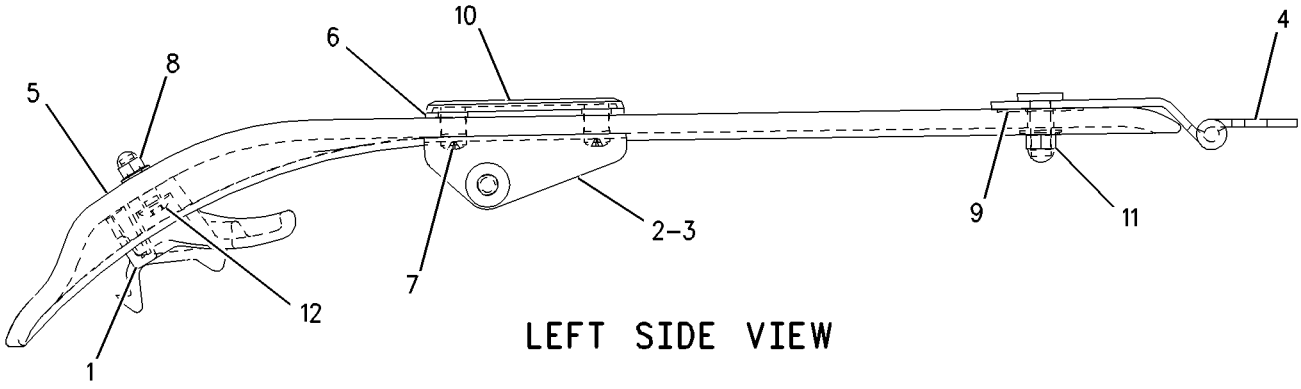

LEFT SIDE VIEW

GRAPHIC #1 **<END>** g00986370

OPERATOR STATION

259-7350 HATCH GP-ROOF

S/N: MNB1-UP; WDK1-UP
PART OF 229-9109 CAB GP
AN ATTACHMENT

SMCS-7303 **i02485110**

NOTE	REF NO	GRAPHIC REF	PART NUMBER	QTY	PART NAME 1 2 3 4 5 6 (PRODUCT LEVEL)	SEE PAGE
	1	1	**259-7352**	1	CATCH	
	2	1	**189-2847**	1	SEAL	
	3	1	**259-7351**	1	HATCH AS	
	3A	1	**176-1949**	2	BRACKET AS	
	3B	1	**189-2717**	2	HINGE AS	
	4	1	**099-3506**	2	SPRING AS-GAS	
M	5	1	**105-2169**	4	BOLT AS (M8X1.25X16-MM)	
	6	1	**5D-4822**	4	RING-RETAINING	
M	7	1	**9X-2042**	2	SCREW-TRUSS HEAD (M6X1X12-MM)	

M-METRIC PART

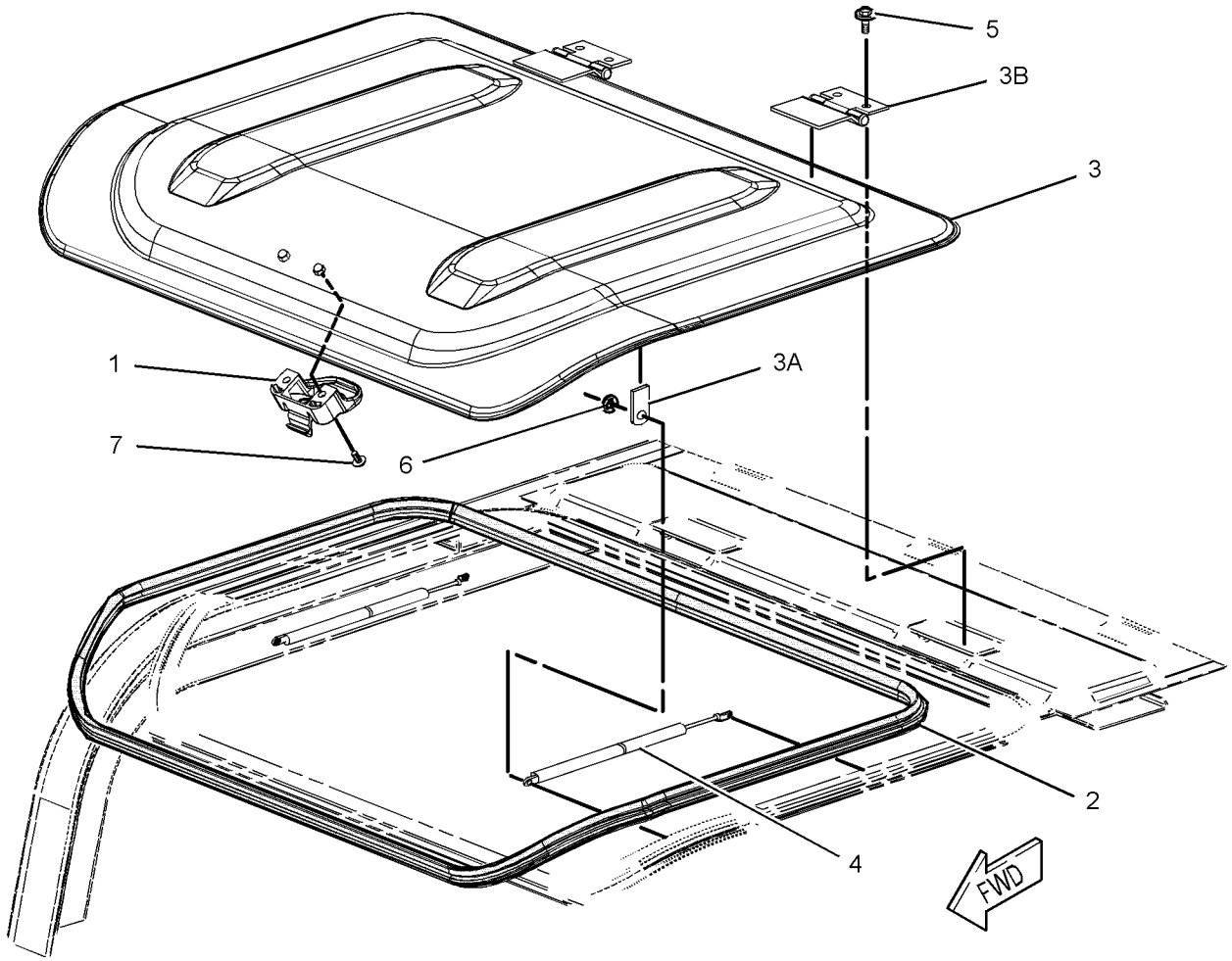

GRAPHIC #1 **<END>** g01242907

OPERATOR STATION

229-9094 HEADREST AS-SEAT–CLOTH

S/N: MNB1-UP; WDK1-UP

AN ATTACHMENT

SMCS-7312 **i02232852**

NOTE	REF NO	GRAPHIC REF	PART NUMBER	QTY	PART NAME 1 2 3 4 5 6 (PRODUCT LEVEL)	SEE PAGE
					(NO SERVICED PARTS)	

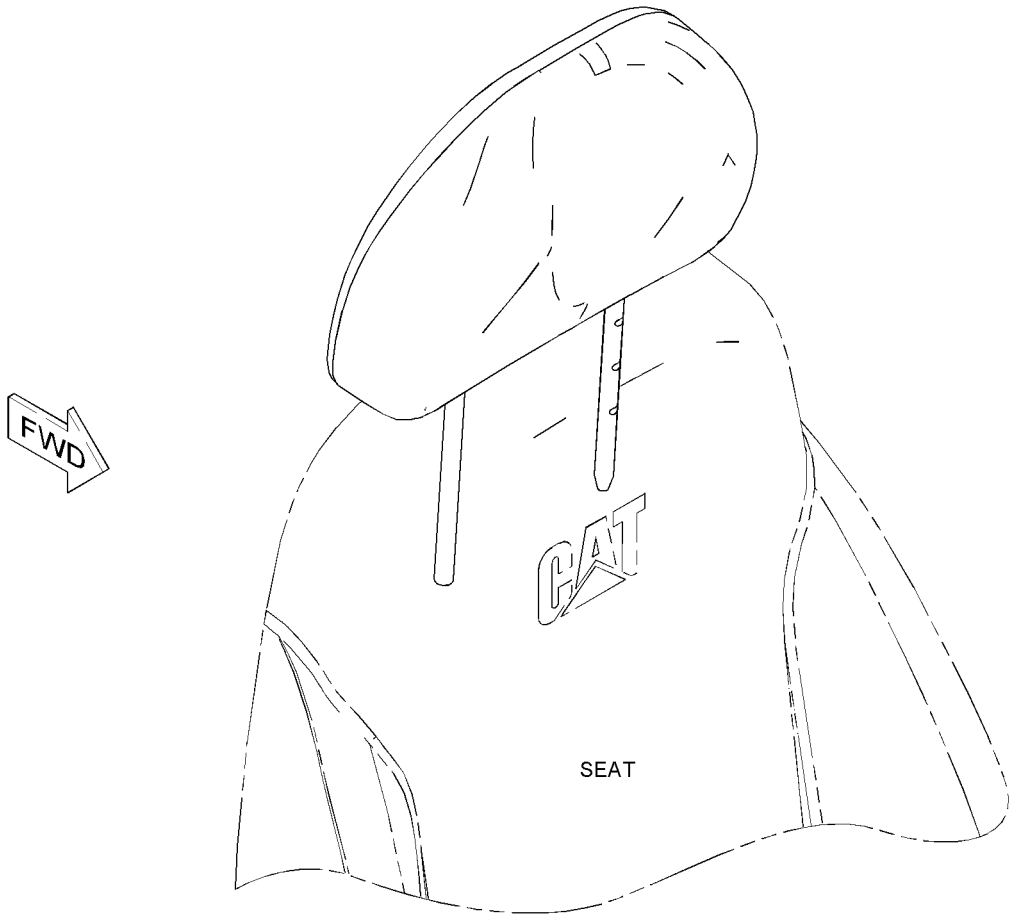

GRAPHIC #1 **<END>** g01126613

OPERATOR STATION

240-5060 HEADREST AS-SEAT

S/N: MNB1-UP; WDK1-UP

AN ATTACHMENT

SMCS-7312 **i02455420**

NOTE	REF NO	GRAPHIC REF	PART NUMBER	QTY	PART NAME 1 2 3 4 5 6 (PRODUCT LEVEL)	SEE PAGE
					(NO SERVICED PARTS)	

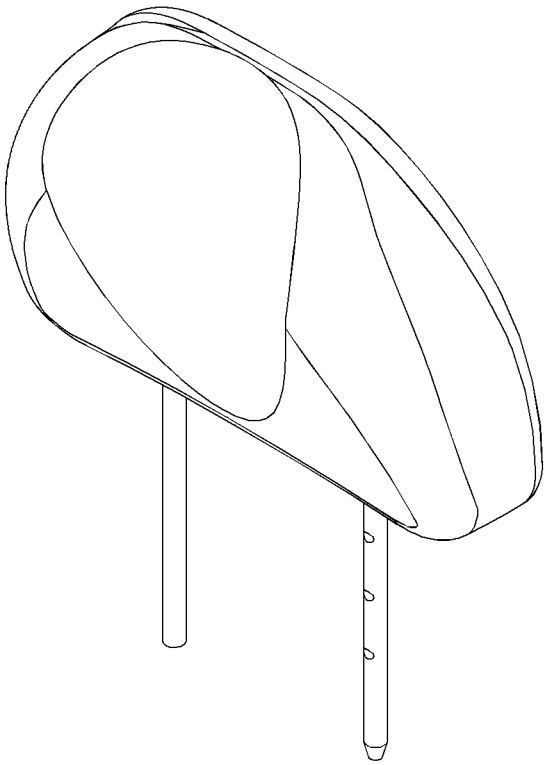

GRAPHIC #1 **<END>** g01202314

OPERATOR STATION

327-6514 HEADREST AS-SEAT

S/N: MNB1-UP; WDK1-UP

AN ATTACHMENT

SMCS-7312 **i03213631**

NOTE	REF NO	GRAPHIC REF	PART NUMBER	QTY	PART NAME 1 2 3 4 5 6 (PRODUCT LEVEL)	SEE PAGE
					(NO SERVICED PARTS)	

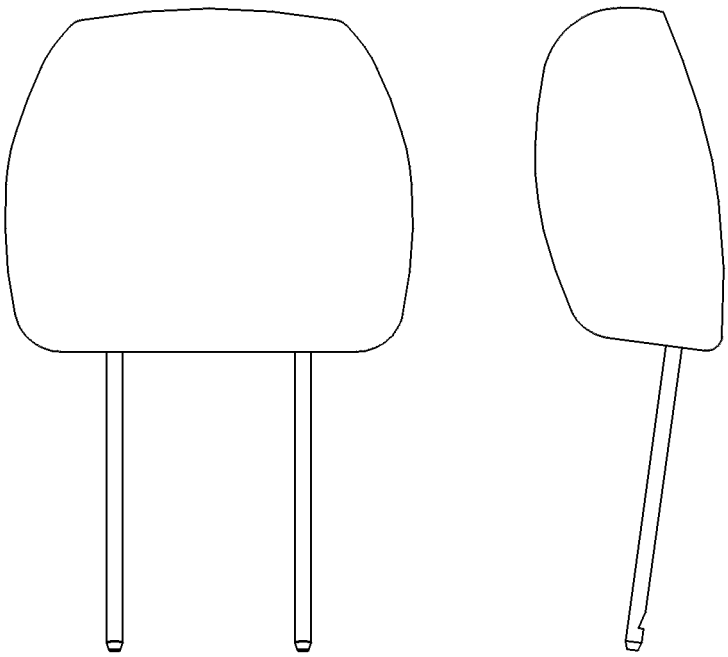

GRAPHIC #1 **<END>** g00242379

OPERATOR STATION

327-6515 HEADREST AS-SEAT

S/N: MNB1-UP; WDK1-UP
PART OF 327-6512, 327-6513 SEAT GP
AN ATTACHMENT

SMCS-7312 **i03090223**

NOTE	REF NO	GRAPHIC REF	PART NUMBER	QTY	PART NAME 1 2 3 4 5 6 (PRODUCT LEVEL)	SEE PAGE
					(NO SERVICED PARTS)	

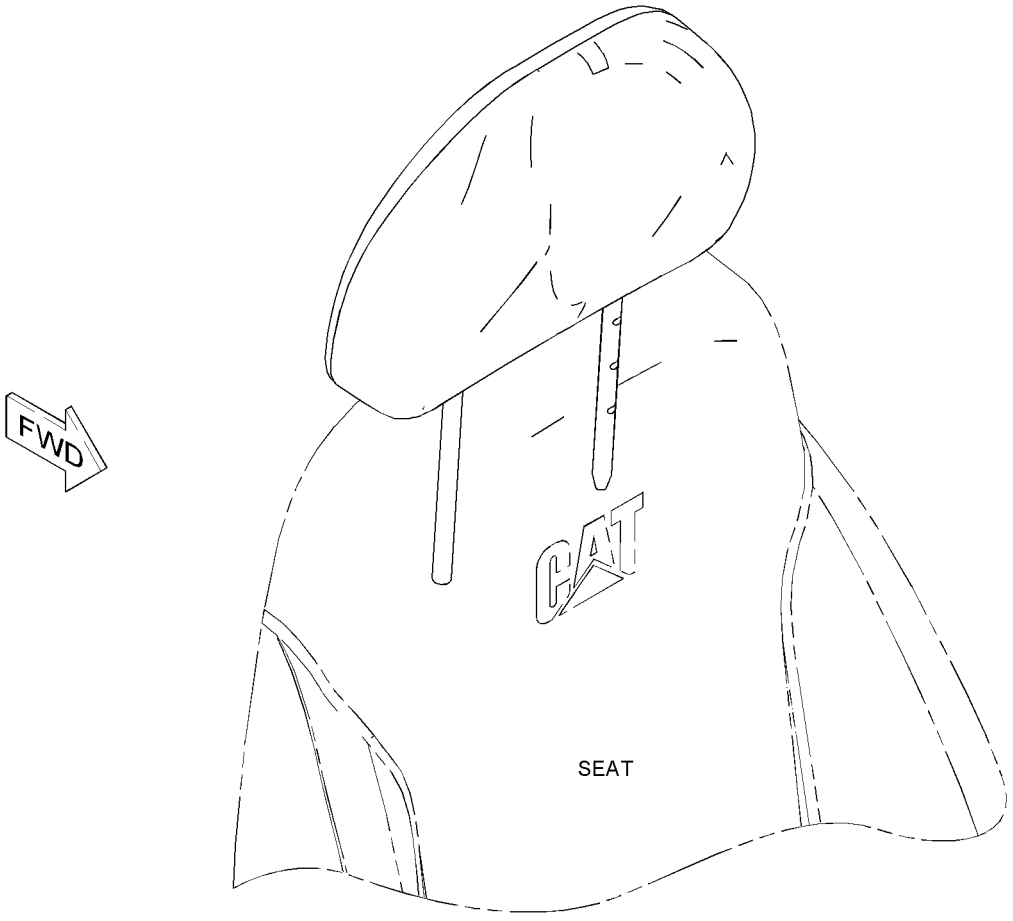

GRAPHIC #1 **<END>** g01126613

OPERATOR STATION

229-9084 HEATER & MTG GP-CAB

S/N: MNB1-UP; WDK1-UP
PART OF 229-9083 HEATER AR-CAB
AN ATTACHMENT

SMCS-7304 **i02911100**

NOTE	REF NO	GRAPHIC REF	PART NUMBER	QTY	PART NAME 1 2 3 4 5 6 (PRODUCT LEVEL)	SEE PAGE
	1	1	**235-8873**	1	HARNESS AS-HEATER & AIR COND (CONTROL PANEL SWITCHES)	
	2	1	**235-8874**	1	SENSOR-TEMPERATURE (AMBIENT AIR)	
	3	1	**235-8875**	1	BRACKET	
CY	4	1	**316-8811**	1	AIR CONDITIONER GP	898
	5	1	**293-1138**	1	PANEL AS-CONTROL	
	6	1	**245-7858**	1	HARNESS AS-HEATER	
M	8	1	**099-2374**	2	BOLT-SOCKET HEAD (M5X0.8X12-MM)	
	9	1	**111-4836**	3	CLIP	
	10	1	**3S-2093**	2	STRAP-CABLE	
M	11	1	**5C-9553**	1	BOLT (M6X1X16-MM)	
	12	1	**7X-7729**	7	WASHER (11X25X3-MM THK)	
	13	1	**8T-0328**	2	WASHER-HARD (5.5X10X1-MM THK)	
	14	1	**8T-4121**	3	WASHER-HARD (11X21X2.5-MM THK)	
M	15	1	**8T-4136**	7	BOLT (M10X1.5X25-MM)	
M	16	1	**8T-4137**	3	BOLT (M10X1.5X20-MM)	
	17	1	**9X-8256**	1	WASHER (6.6X12X2-MM THK)	

C-CHANGE FROM PREVIOUS TYPE
M-METRIC PART
Y-SEPARATE ILLUSTRATION

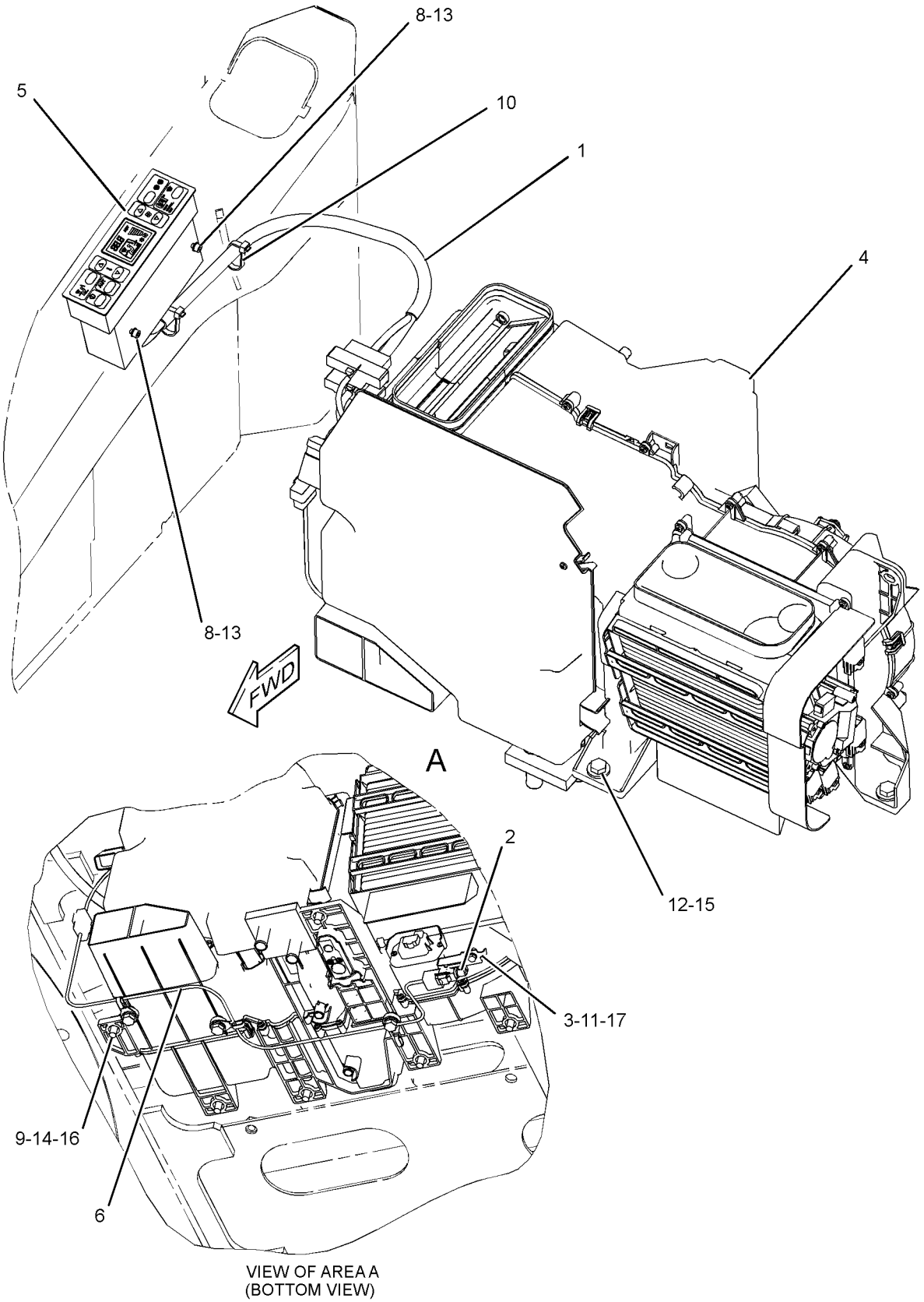

VIEW OF AREA A
(BOTTOM VIEW)

GRAPHIC #1 **<END>** g01405002

OPERATOR STATION

229-9083 HEATER AR-CAB

S/N: MNB1-UP; WDK1-UP
AN ATTACHMENT

SMCS-7304 **i02400911**

NOTE	PART NUMBER	QTY	PART NAME 1 2 3 4 5 6 (PRODUCT LEVEL)	SEE PAGE
Y	*229-9082*	1	DUCT GP-CAB AIR	969
Y	*229-9084*	1	HEATER & MTG GP-CAB	995
Y	*229-9085*	1	LINES GP-HEATER	1013

Y-SEPARATE ILLUSTRATION

<END>

OPERATOR STATION

267-8071 HORN GP-ELECTRIC

S/N: MNB1-UP; WDK1-UP

PART OF 314-3652, 314-3653 CHASSIS AR

SMCS-7402 **i02562505**

NOTE	REF NO	GRAPHIC REF	PART NUMBER	QTY	PART NAME 1 2 3 4 5 6 (PRODUCT LEVEL)	SEE PAGE
CY	1	1	*291-7559*	1	HORN GP-ELECTRIC	999
	2	1	**8T-4121**	2	WASHER-HARD (11X21X2.5-MM THK)	
M	3	1	**8T-4195**	2	BOLT (M10X1.5X30-MM)	

C-CHANGE FROM PREVIOUS TYPE
M-METRIC PART
Y-SEPARATE ILLUSTRATION

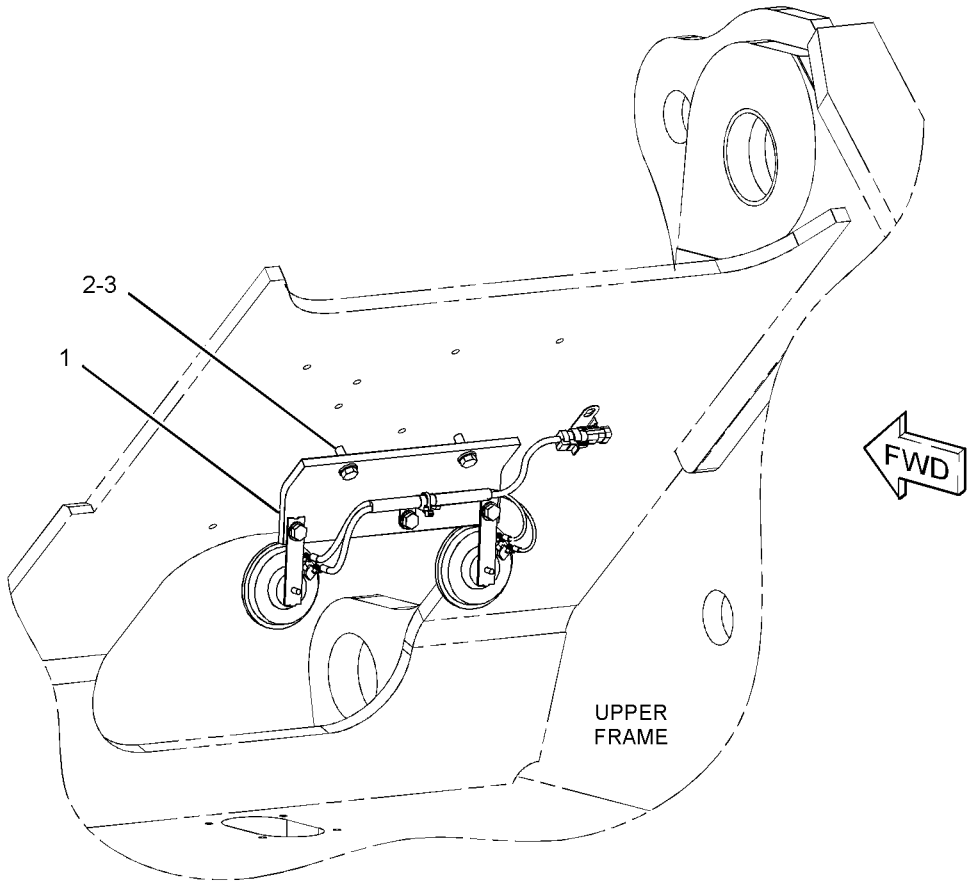

GRAPHIC #1 **<END>** g01289732

OPERATOR STATION

291-7559 HORN GP-ELECTRIC

S/N: MNB1-UP; WDK1-UP

PART OF 267-8071 HORN GP-ELECTRIC

SMCS-7402 **i02725439**

NOTE	REF NO	GRAPHIC REF	PART NUMBER	QTY	PART NAME 1 2 3 4 5 6 (PRODUCT LEVEL)	SEE PAGE
	1	1	**3S-2093**	1	STRAP-CABLE	
	2	1	**7Y-3919**	1	HORN AS (24-VOLT)	
		1	**095-0826**	2	LOCKWASHER	
M		1	**095-7930**	2	SCREW-MACHINE (M4X0.07X6-MM)	
	3	1	**7Y-3920**	1	HORN AS (24-VOLT)	
		1	**095-0826**	2	LOCKWASHER	
M		1	**095-7930**	2	SCREW-MACHINE (M4X0.07X6-MM)	
	4	1	**291-7560**	1	HARNESS AS-CHASSIS (HORN)	
		1	**3S-2093**	1	STRAP-CABLE	
		1	**230-4011**	1	PLUG AS-CONNECTOR (2-PIN)	
	5	1	**291-7561**	1	BRACKET	
	6	1	**132-5789**	1	CLIP	
	7	1	**8T-4121**	3	WASHER-HARD (11X21X2.5-MM THK)	
M	8	1	**8T-4191**	3	BOLT (M10X1.5X16-MM)	

M-METRIC PART

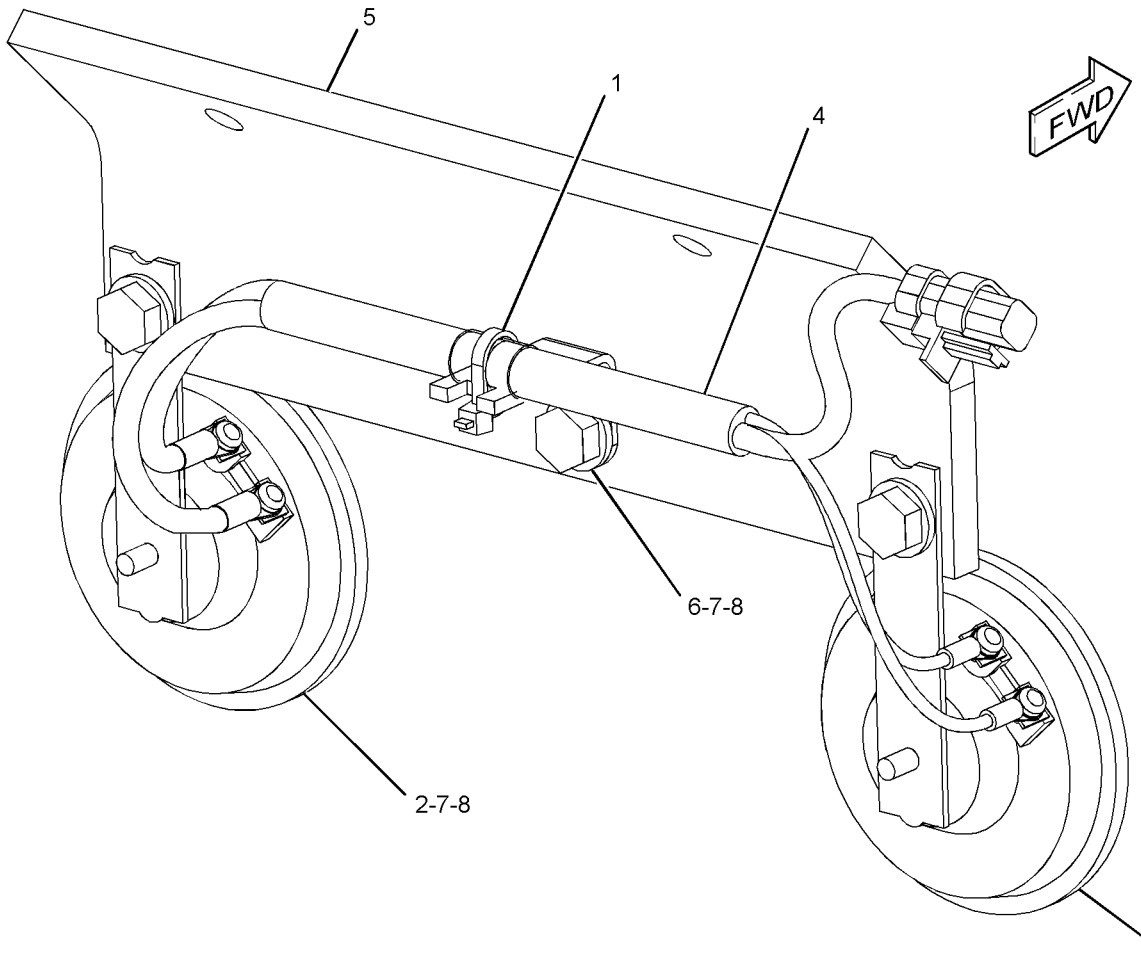

GRAPHIC #1 **<END>** g01302495

OPERATOR STATION

245-7812 HOUSING GP-AIR CONDITIONER–INLET AIR

S/N: MNB1-UP; WDK1-UP
PART OF 316-8812 AIR CONDITIONER GP
AN ATTACHMENT

SMCS-7320 **i02503823**

NOTE	REF NO	GRAPHIC REF	PART NUMBER	QTY	PART NAME 1 2 3 4 5 6 (PRODUCT LEVEL)	SEE PAGE
	1	1	**185-8300**	6	SCREW-TAPPING	
	2	1	**196-1666**	1	RELAY (COMPRESSOR CLUTCH)	
	2A	1	**196-1666**	1	RELAY (BLOWER)	
	2B	1	**196-1666**	1	RELAY (CONDENSER)	
	2C	1	**196-1666**	1	RELAY (CONDENSER, HIGH)	
	3	1	**245-7813**	1	MOTOR AS	
	4	1	**245-7814**	1	BRACKET	
	5	1	**245-7815**	1	SENSOR AS-TEMPERATURE (AIR)	
	6	1	**245-7816**	1	DAMPER AS	

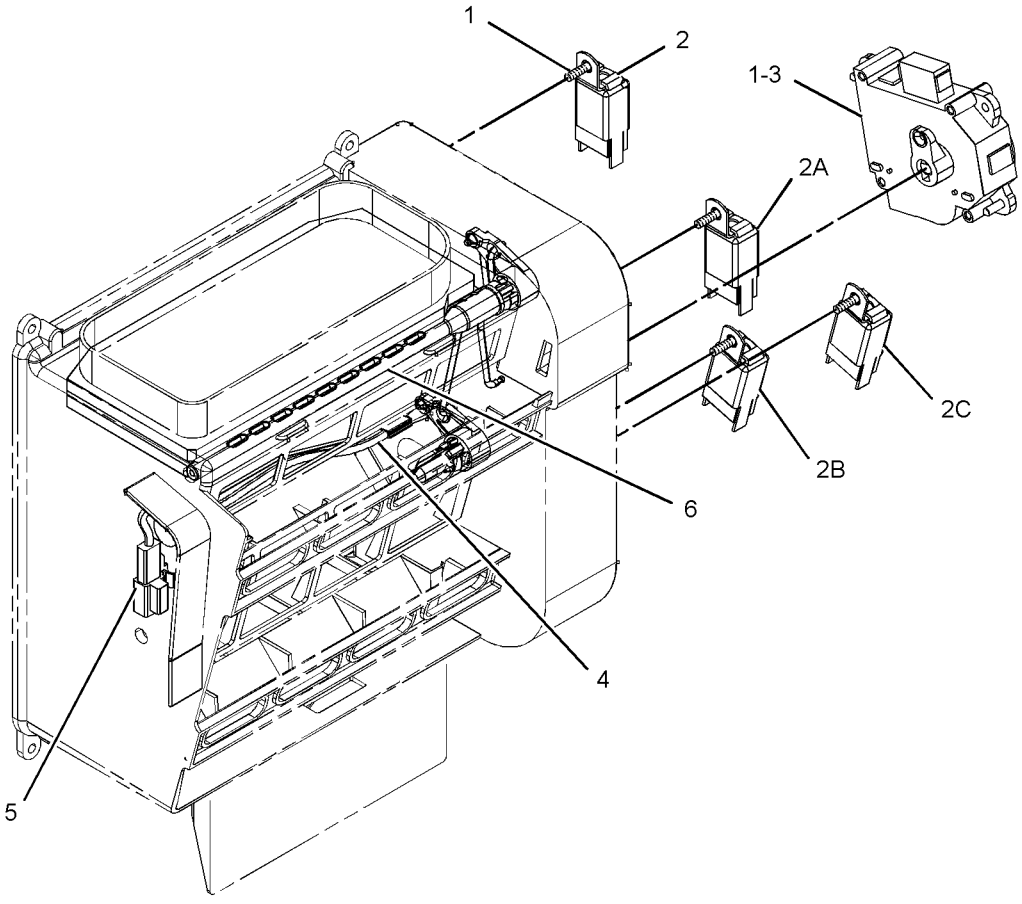

GRAPHIC #1 **<END>** g01253119

OPERATOR STATION

231-1768 INSTALLATION GP-RADIO

S/N: MNB1-UP; WDK1-UP

CAN NOT BE USED WITH 251-0538 AND 238-1631 RADIO GROUPS IN 345C, 385C, AND 365C MODELS

AN ATTACHMENT

SMCS-7338 **i02574068**

NOTE	REF NO	GRAPHIC REF	PART NUMBER	QTY	PART NAME 1 2 3 4 5 6 (PRODUCT LEVEL)	SEE PAGE
	1	1	**3S-2093**	9	STRAP-CABLE	
	2	1	**7K-1181**	8	STRAP-CABLE	
	3	1	**283-2783**	1	CONVERTER-POWER (24-VOLT TO 12-VOLT)	
	4	1	**234-1124**	1	HARNESS AS-RADIO	
		1	**3S-2093**	15	STRAP-CABLE	
		1	**230-5010**	1	PLUG AS-CONNECTOR (6-PIN)	
		1	**231-2295**	2	PLUG AS-CONNECTOR (8-PIN)	
		1	**243-4505**	1	RECEPTACLE AS-CONNECTOR (2-PIN)	
		1	**243-4509**	1	RECEPTACLE AS-CONNECTOR (8-PIN)	
	5	1	**238-1463**	1	RECEPTACLE AS	
	6	1	**238-2216**	1	SWITCH AS-ROCKER (RADIO MUTE)	
		1	**167-3543**	5	TERMINAL (MALE)	
		1	**167-3542**	1	CONNECTOR-RECEPTACLE	
M	7	1	**8T-4171**	4	BOLT (M6X1X12-MM)	
	8	1	**9X-8256**	4	WASHER (6.6X12X2-MM THK)	

M-METRIC PART

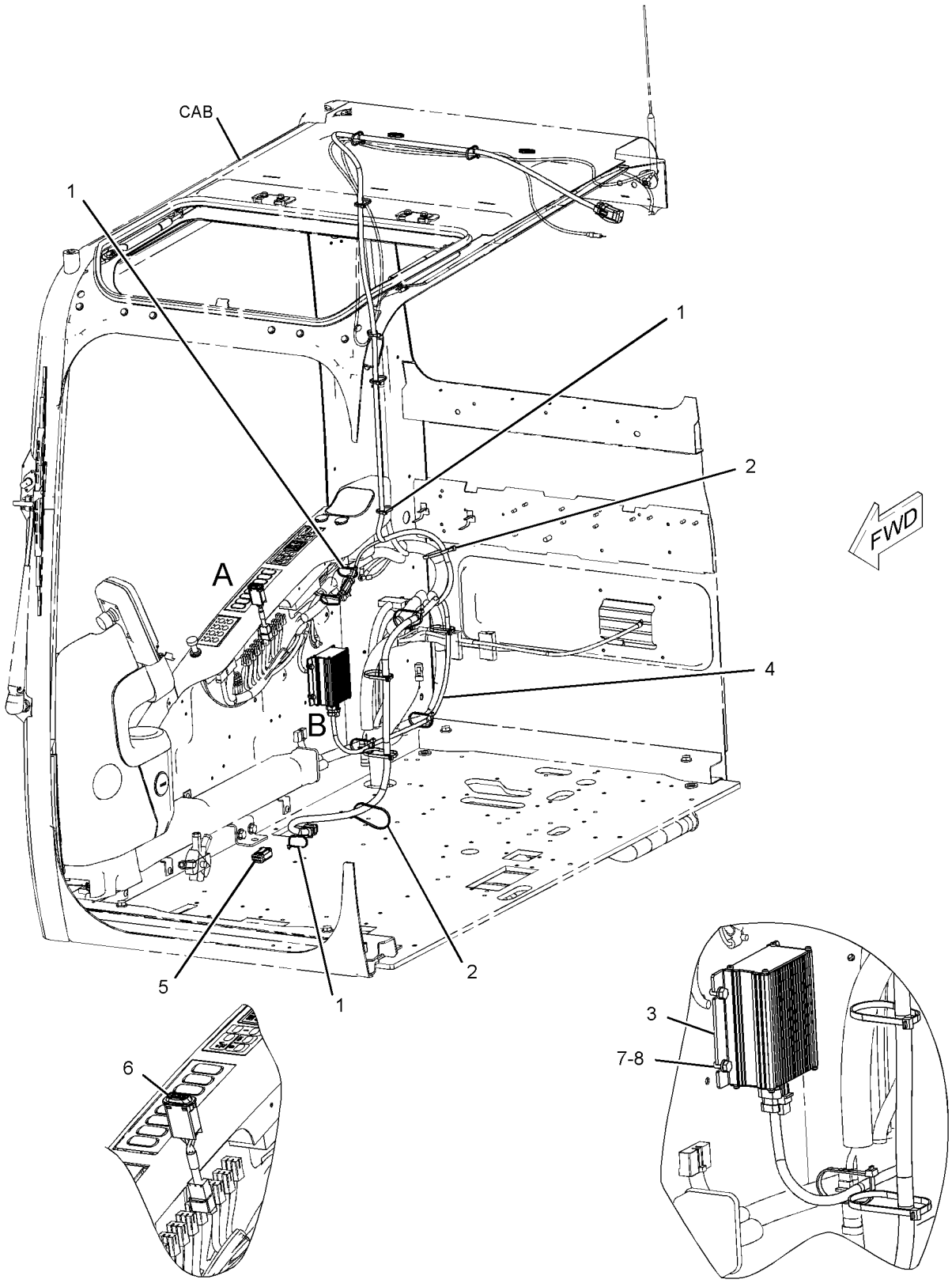

GRAPHIC #1 **<END>** g01199689

OPERATOR STATION

251-0538 INSTALLATION GP-RADIO

S/N: MNB1-UP; WDK1-UP
AN ATTACHMENT

SMCS-7338 **i02996046**

NOTE	REF NO	GRAPHIC REF	PART NUMBER	QTY	PART NAME 1 2 3 4 5 6 (PRODUCT LEVEL)	SEE PAGE
	1	1	**3S-2093**	2	STRAP-CABLE	
	2	1	**7K-1181**	2	STRAP-CABLE	
M	3	1	**095-0736**	2	SCREW-MACHINE (M5X0.8X10-MM)	
	4	1	**238-2260**	1	CABLE	
	5	1	**306-8802**	1	RADIO-AM/FM	
	6	1	**259-4914**	1	BRACKET AS	
	7	1	**119-5026**	2	SCREW-PAN HEAD (10-16X0.63-IN)	

M-METRIC PART

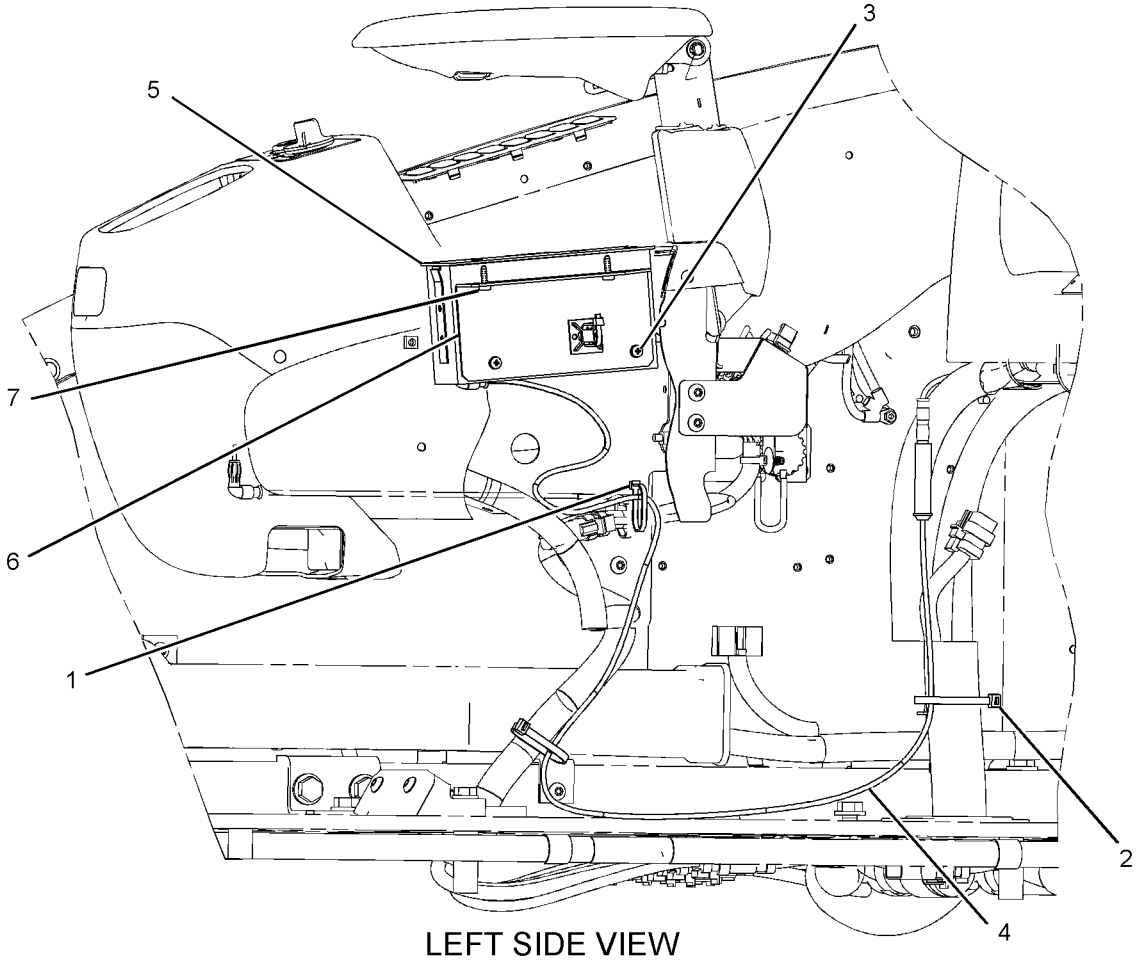

LEFT SIDE VIEW

GRAPHIC #1 **<END>** g01520813

OPERATOR STATION

316-8872 KIT-CONSOLE ADJUSTMENT

S/N: MNB1-UP; WDK1-UP
FIELD INSTALLATION

SMCS-5258 **i02911066**

NOTE	REF NO	GRAPHIC REF	PART NUMBER	QTY	PART NAME 1 2 3 4 5 6 (PRODUCT LEVEL)	SEE PAGE
					INDIVIDUAL PARTS NOT SERVICED SEPARATELY	

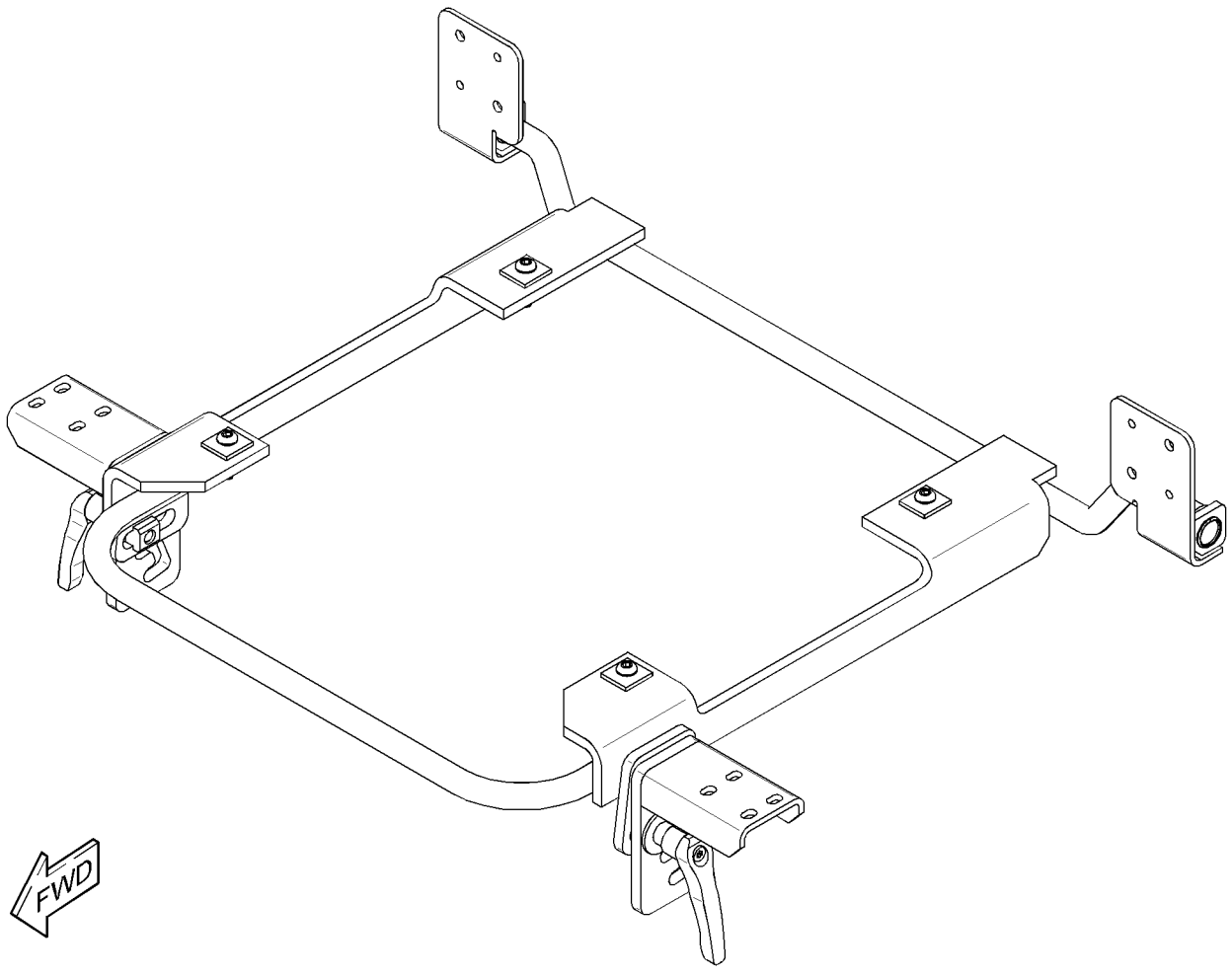

GRAPHIC #1 **<END>** g01451227

OPERATOR STATION

327-6645 KIT-SEAT SUSPENSION—SEAT HEIGHT

S/N: MNB1-UP; WDK1-UP
PART OF 327-6520 SUSPENSION GP-SEAT
AN ATTACHMENT

SMCS-7312 **i03207841**

NOTE	REF NO	GRAPHIC REF	PART NUMBER	QTY	PART NAME 1 2 3 4 5 6 (PRODUCT LEVEL)	SEE PAGE
	1	1	**327-6646**	1	KIT-CYLINDER (DAMPENER)	
J	2	1	**327-6647**	1	KIT-COVER (SUSPENSION SEAT)	
					(INCLUDES COVER & CLIP KIT)	
	3	1	**333-4180**	6	SCREW-BUTTON HEAD	
	4	1	**333-4181**	1	KIT-HANDLE (SEAT HEIGHT)	
M	5	1	**7Y-7394**	4	SCREW-BUTTON HEAD (M8X1.25X25-MM)	
					AVAILABLE REPAIR KIT(S):	
J			**245-7895**	1	KIT-CLIP (SUSPENSION SEAT)	
					(INCLUDES 28 CLIPS)	

J-KIT MARKED J SERVICES PART(S) MARKED J
M-METRIC PART

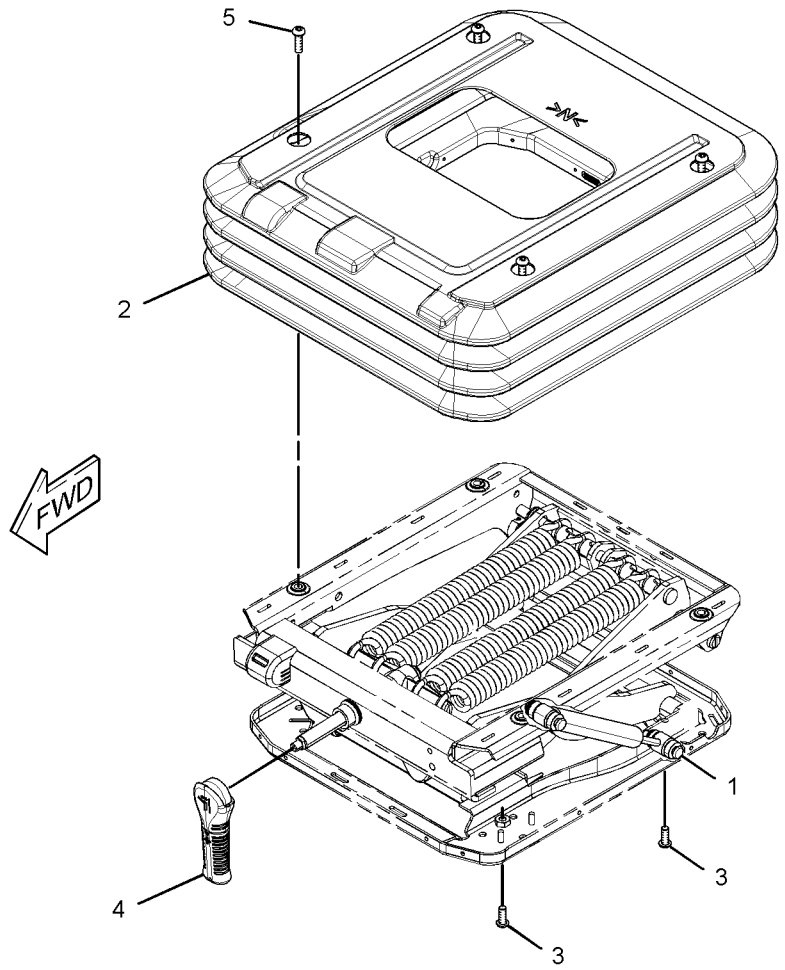

GRAPHIC #1 **<END>** g01637858

OPERATOR STATION

333-4157 KIT-SEAT SUSPENSION

S/N: MNB1-UP; WDK1-UP
PART OF 327-6521 SUSPENSION GP-SEAT
AN ATTACHMENT

SMCS-7312 **i03207839**

NOTE	REF NO	GRAPHIC REF	PART NUMBER	QTY	PART NAME 1 2 3 4 5 6 (PRODUCT LEVEL)	SEE PAGE
	1	1	**327-6646**	1	KIT-CYLINDER (DAMPENER)	
J	2	1	**333-4158**	1	KIT-COVER (AIR SEAT)	
					(INCLUDES COVER & CLIP KIT)	
	3	1	**333-4159**	1	KIT-VALVE (AIR SEAT)	
		1	**333-4178**	1	NUT	
	4	1	**333-4180**	6	SCREW-BUTTON HEAD	
M	5	1	**7Y-7394**	4	SCREW-BUTTON HEAD (M8X1.25X25-MM)	
					AVAILABLE REPAIR KIT(S):	
J			**245-7895**	1	KIT-CLIP (SUSPENSION SEAT)	
					(INCLUDES 28 CLIPS)	

J-KIT MARKED J SERVICES PART(S) MARKED J
M-METRIC PART

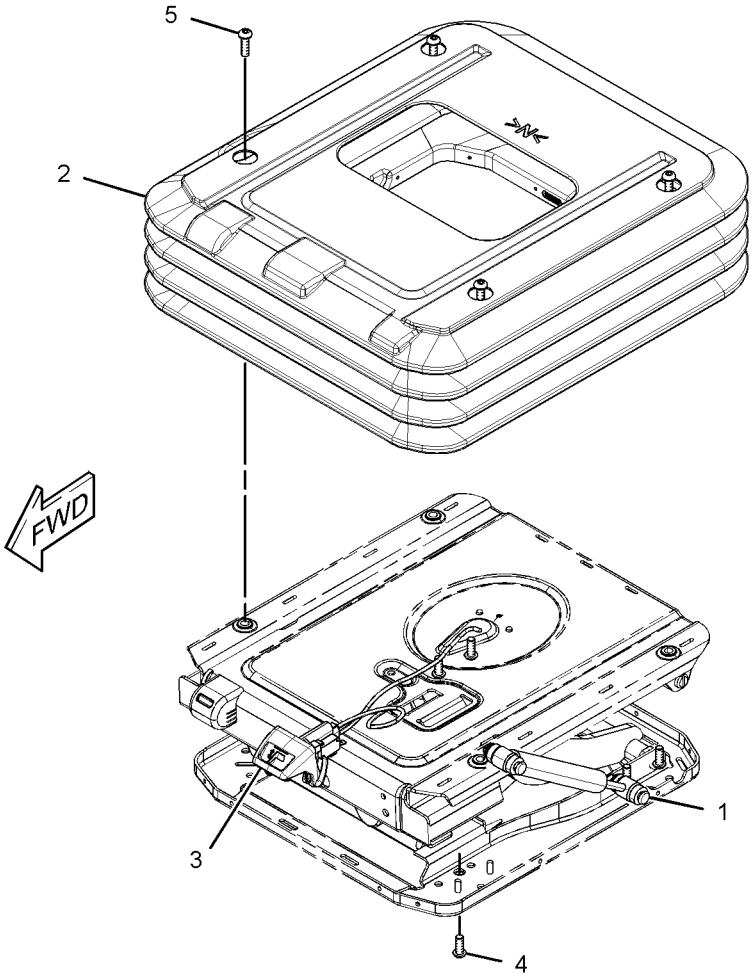

GRAPHIC #1 **<END>** g01637859

OPERATOR STATION

333-4173 KIT-SEAT SUSPENSION

S/N: MNB1-UP; WDK1-UP
PART OF 327-6517 SUSPENSION GP-SEAT
AN ATTACHMENT

SMCS-7312 **i03213417**

NOTE	REF NO	GRAPHIC REF	PART NUMBER	QTY	PART NAME 1 2 3 4 5 6 (PRODUCT LEVEL)	SEE PAGE
J	1	1	**333-4174**	1	KIT-COVER (SUSPENSION SEAT)	
	2	1	**333-4180**	6	SCREW-BUTTON HEAD	
	3	1	**333-4181**	1	KIT-HANDLE (SEAT HEIGHT)	
M	4	1	**7Y-7394**	4	SCREW-BUTTON HEAD (M8X1.25X25-MM)	
					AVAILABLE REPAIR KIT(S):	
J			**245-7895**	1	KIT-CLIP (SUSPENSION SEAT)	
					(KIT INCLUDES 28 CLIPS)	

J-KIT MARKED J SERVICES PART(S) MARKED J
M-METRIC PART

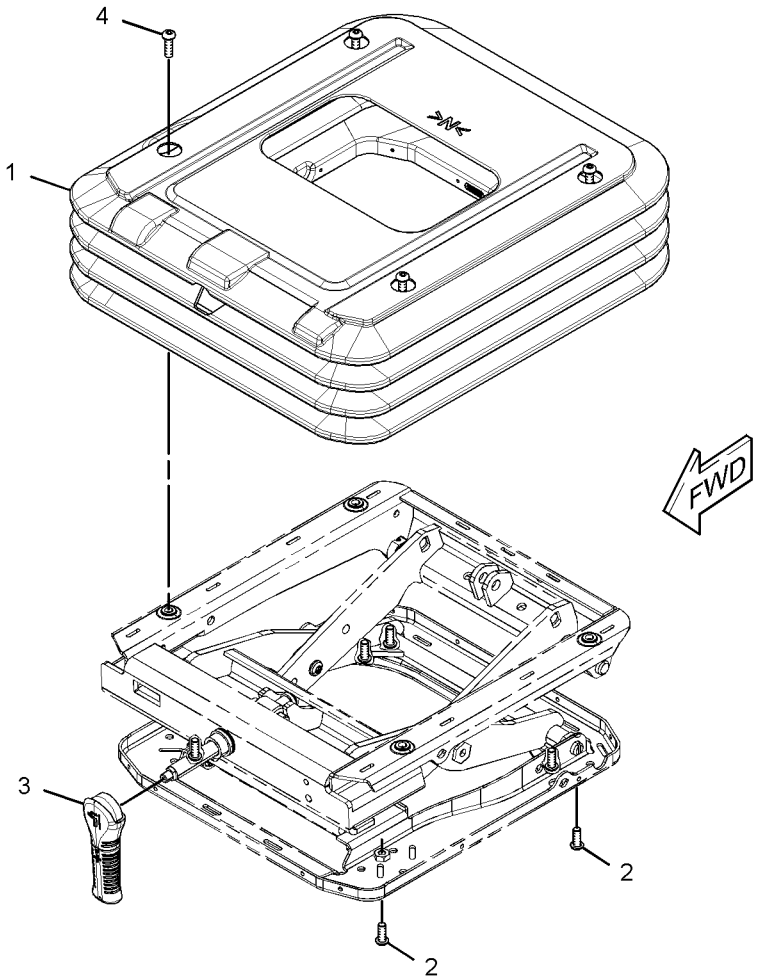

GRAPHIC #1 **<END>** g01641134

OPERATOR STATION

164-0528 LEVER GP-AIR & TEMP CONTROL

S/N: MNB1-UP; WDK1-UP
PART OF 235-8910 CAB GP
AN ATTACHMENT

SMCS-7309, 7337 **i02504626**

NOTE	REF NO	GRAPHIC REF	PART NUMBER	QTY	PART NAME 1 2 3 4 5 6 (PRODUCT LEVEL)	SEE PAGE
	1	1	**156-6642**	1	LEVER AS	
	2	1	**164-0664**	1	BRACKET	
	3	1	**176-1941**	1	PIN	
	4	1	**185-8280**	1	WASHER-WAVE (10.5X15X0.3-MM THK)	
	5	1	**185-8281**	1	SPRING	

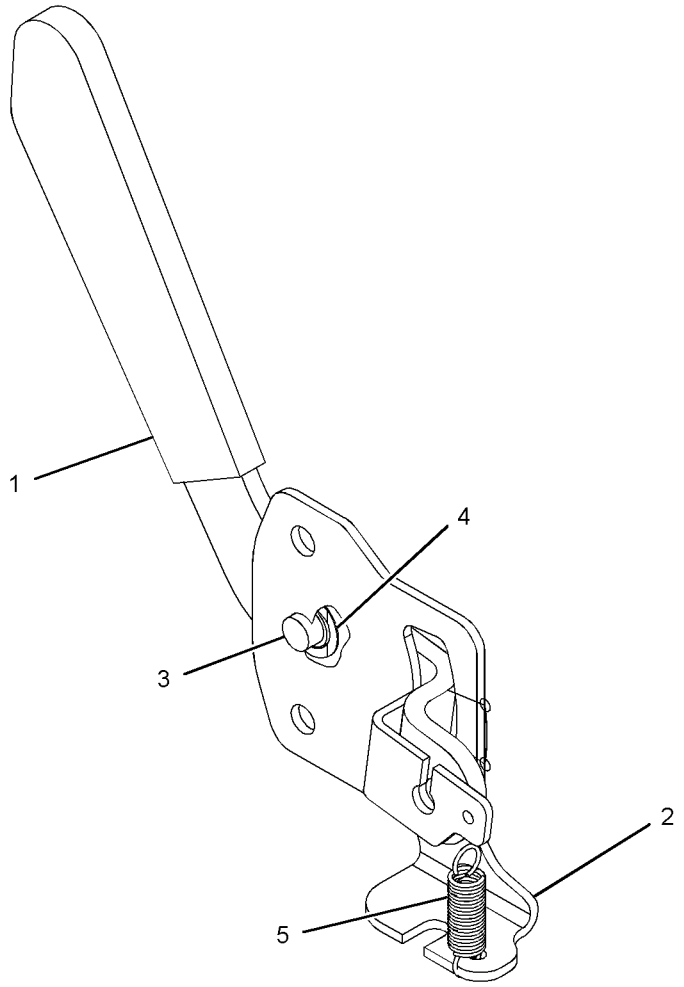

GRAPHIC #1 **<END>** g01217036

OPERATOR STATION

229-9071 LINES GP-AIR CONDITIONER

S/N: MNB1-UP; WDK1-UP

PART OF 314-3652, 314-3653 CHASSIS AR

SMCS-1808 **i03115044**

NOTE	REF NO	GRAPHIC REF	PART NUMBER	QTY	PART NAME 1 2 3 4 5 6 (PRODUCT LEVEL)	SEE PAGE
	1	1,2	**305-0442**	2	BAND-MARKER (HR)	
	2	2	**122-9657**	2	CLAMP	
	3	2	**176-1902**	1	RECEIVER DRYER AS (REFRIGERANT)	
	4	2	**235-8891**	1	PLATE	
C	5	1,2	**235-9014**	4	CLAMP-HOSE	
					—OR—	
C		1,2	**5D-1026**	4	CLAMP-HOSE	
	7	2	**245-7913**	1	TUBE AS	
		2	**121-7138**	2	SEAL-O-RING	
	8	1	**104-3173**	5	CLIP	
	9	2	**121-7098**	1	BRACKET AS	
M		2	**8T-4138**	2	BOLT (M6X1X20-MM)	
		2	**9X-8256**	2	WASHER (6.6X12X2-MM THK)	
	10	2	**130-0252**	2	HOSE-DRAIN	
	11	2	**1S-0994**	1	CLIP	
	12	2	**235-8854**	1	HOSE AS	
		2	**121-7138**	2	SEAL-O-RING	
		2	**196-1665**	1	SWITCH AS-PRESSURE (REFRIGERANT)	
		2	**185-8293**	1	SEAL-O-RING	
	13	1	**245-7800**	1	HOSE AS	
		1	**245-7851**	1	PLUG	
		1	**121-7136**	2	SEAL-O-RING	
	14	2	**305-0358**	1	HOSE AS	
		1	**245-7850**	1	PLUG	
		2	**121-7137**	2	SEAL-O-RING	
	15	1	**2M-9780**	1	SEAL-O-RING	
	16	1	**3K-0360**	3	SEAL-O-RING	
	17	2	**3S-2093**	1	STRAP-CABLE	
	18	2	**4I-3503**	1	GROMMET	
	19	2	**5P-2369**	1	CLIP	
	20	2	**6D-1641**	1	CLIP	
	21	2	**6D-4246**	1	CLIP	
	22	2	**6V-3265**	1	CLIP	
	23	1	**6V-7238**	2	VALVE-SHUTOFF	
M	24	2	**6V-7357**	3	BOLT (M6X1X25-MM)	
	25	1	**273-5156**	1	ADAPTER	
	26	2	**7Y-8165**	1	GROMMET	
	27	2	**7Y-8167**	1	GROMMET	
	28	2	**8M-2773**	2	CLIP	
	29	1	**8T-1715**	1	ADAPTER	
	30	1,2	**8T-4121**	11	WASHER-HARD (11X21X2.5-MM THK)	
M	31	1,2	**8T-4137**	10	BOLT (M10X1.5X20-MM)	
M	32	2	**8T-4191**	1	BOLT (M10X1.5X16-MM)	
M	33	2	**8T-4200**	2	BOLT (M8X1.25X16-MM)	
	34	2	**8T-4224**	2	WASHER-HARD (8.8X16X2-MM THK)	
M	35	1,2	**8T-4971**	3	BOLT (M6X1X30-MM)	
	36	1,2	**9X-8256**	7	WASHER (6.6X12X2-MM THK)	
CE	37	1	**5P-0767**		HOSE (320-CM EACH)	
E	38	1	**107-1678**		GUARD (13-CM)	
	39	1,2	**7K-1181**	2	STRAP-CABLE	
E	40	1	**293-1135**		GUARD (15-CM)	
M	41	2	**8T-4971**	1	BOLT (M6X1X30-MM)	
					—OR—	
M		2	**7X-2533**	1	BOLT (M6X1X35-MM)	
	42	2	**132-5789**	1	CLIP	
	43	2	**305-0357**	1	TUBE AS	

OPERATOR STATION

229-9071 **LINES GP-AIR CONDITIONER** *(contd.)* **i03115044**

NOTE	REF NO	GRAPHIC REF	PART NUMBER	QTY	PART NAME 1 2 3 4 5 6 (PRODUCT LEVEL)	SEE PAGE
		2	**121-7137**	1	SEAL-O-RING	
	44	1,2	**305-0441**	2	BAND-MARKER (HS)	

C-CHANGE FROM PREVIOUS TYPE
E-ORDER BY THE CENTIMETER
M-METRIC PART

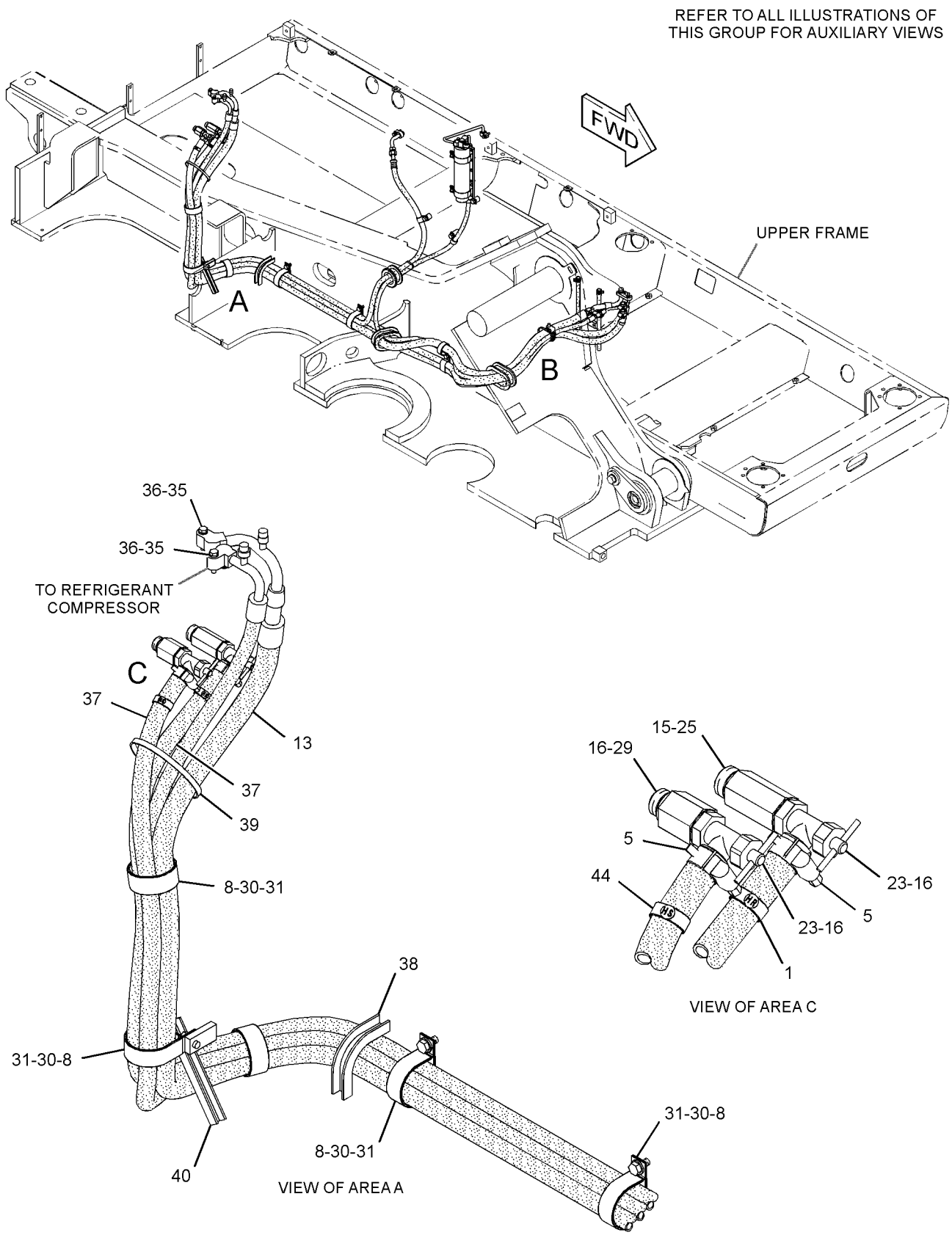

GRAPHIC #1

g01619512

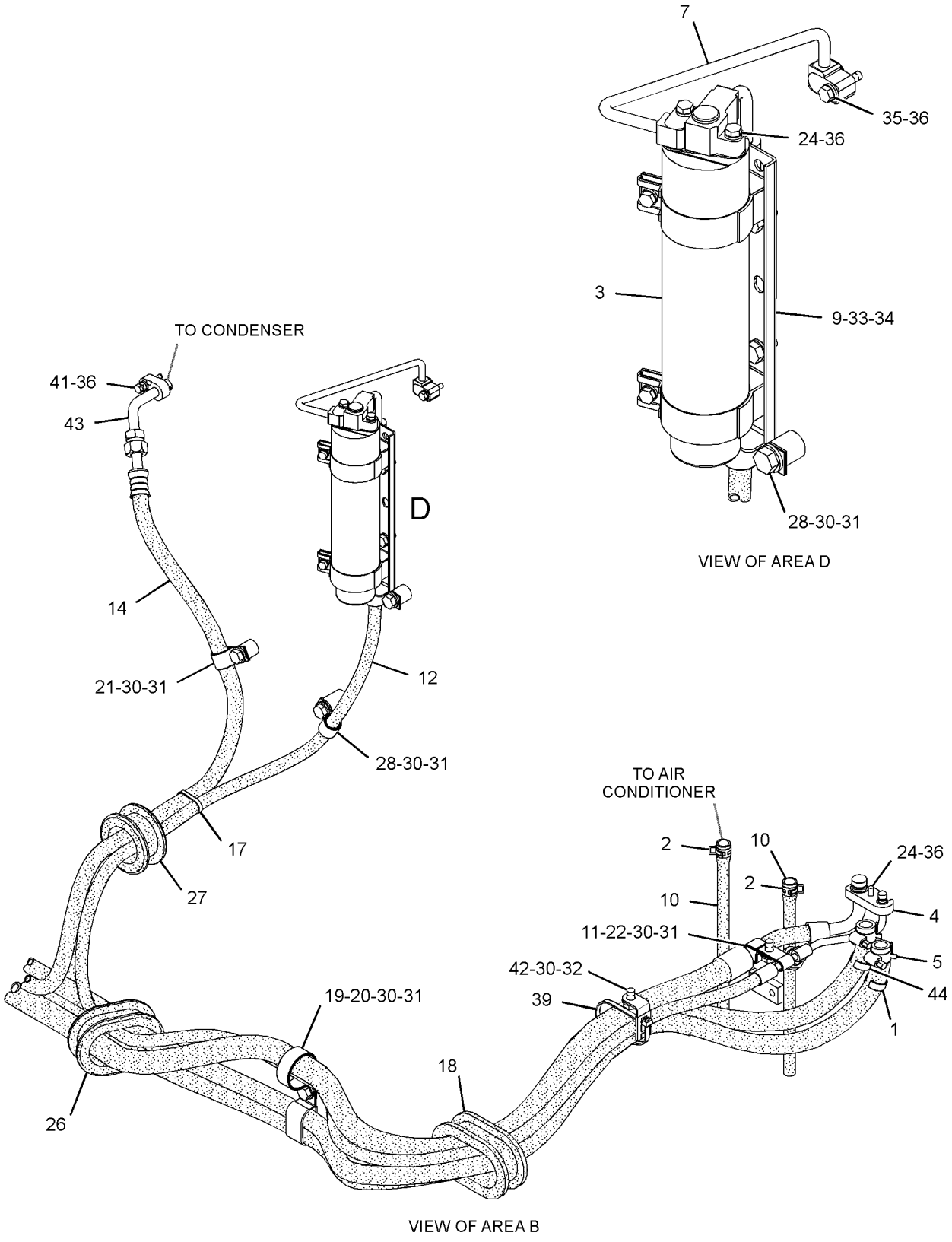

VIEW OF AREA D

VIEW OF AREA B

GRAPHIC #2 **<END>** g01619513

OPERATOR STATION

229-9085 LINES GP-HEATER

S/N: MNB1-UP; WDK1-UP
PART OF 229-9083 HEATER AR-CAB
AN ATTACHMENT

SMCS-1812, 7304 **i03112402**

NOTE	REF NO	GRAPHIC REF	PART NUMBER	QTY	PART NAME 1 2 3 4 5 6 (PRODUCT LEVEL)	SEE PAGE
	1	1	**305-0441**	2	BAND-MARKER (HS)	
	2	1	**102-8803**	1	KIT-RECEPTACLE (3-PIN)	
					(INCLUDES PLUG AS & WEDGE)	
C	3	1	**235-9014**	4	CLAMP-HOSE	
	4	1	**305-0442**	2	BAND-MARKER (HR)	
	5	1	**259-7188**	1	COVER	
	6	1	**210-5821**	1	CAP AS	
	7	1	**210-5822**	1	CAP AS	
	8	1	**2M-9780**	1	SEAL-O-RING	
	9	1	**3K-0360**	3	SEAL-O-RING	
	10	1	**4I-3503**	1	GROMMET	
	11	1	**6D-1641**	6	CLIP	
	12	1	**6V-7238**	2	VALVE-SHUTOFF	
	13	1	**6V-7420**	1	ADAPTER	
	14	1	**7Y-8165**	1	GROMMET	
	15	1	**8T-1715**	1	ADAPTER	
	16	1	**8T-4121**	11	WASHER-HARD (11X21X2.5-MM THK)	
M	17	1	**8T-4137**	9	BOLT (M10X1.5X20-MM)	
M	18	1	**8T-4191**	2	BOLT (M10X1.5X16-MM)	
CE	19	1	**5P-0767**		HOSE (320-CM EACH)	
	20	1	**7K-1181**	1	STRAP-CABLE	
	21	1	**132-5789**	1	CLIP	

C-CHANGE FROM PREVIOUS TYPE
E-ORDER BY THE CENTIMETER
M-METRIC PART

229-9085 **LINES GP-HEATER** *(contd.)* **i03112402**

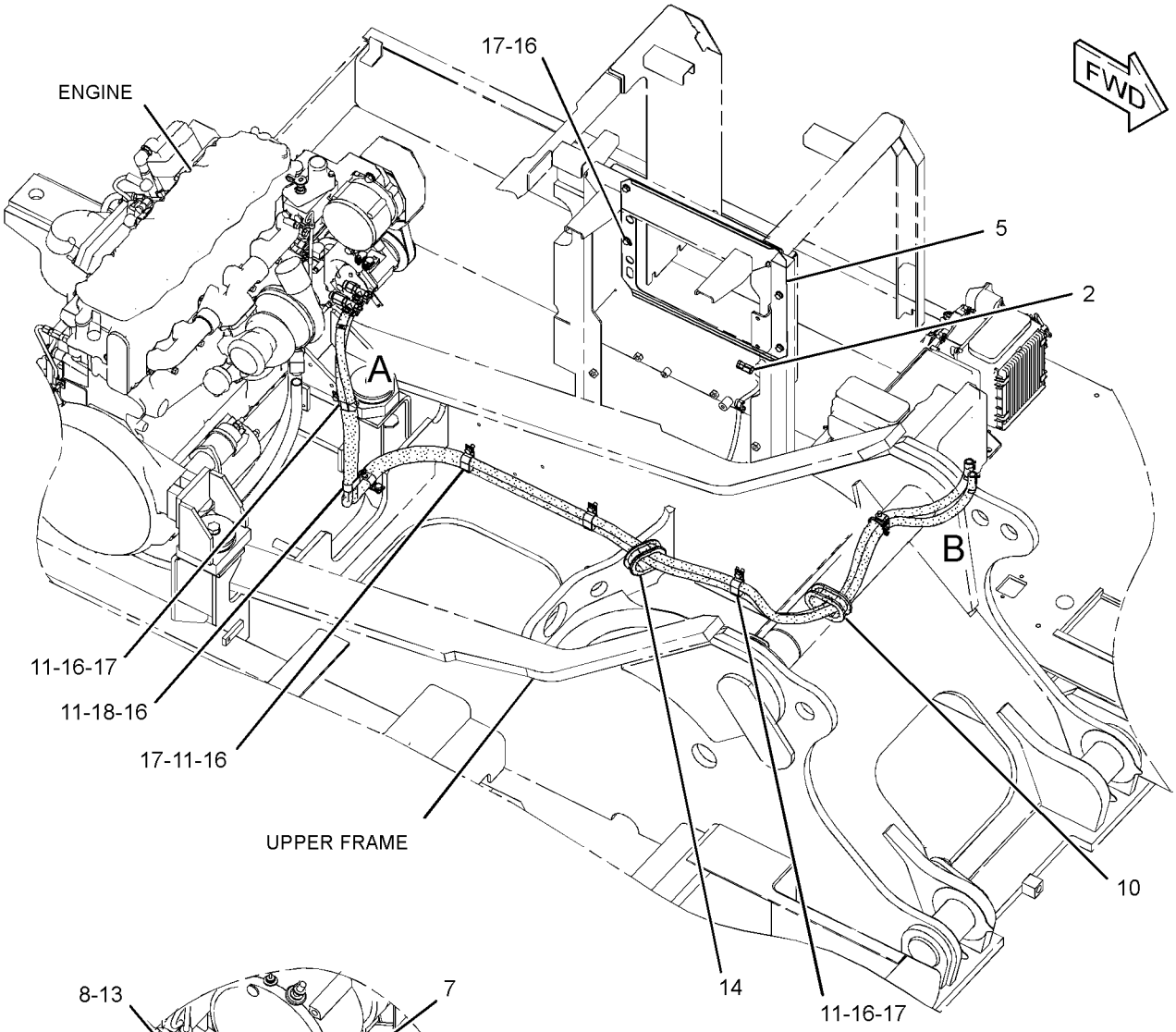

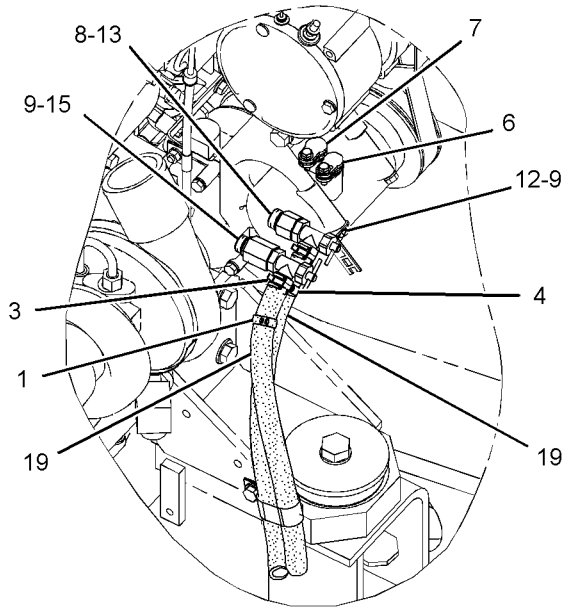

VIEW OF AREA A

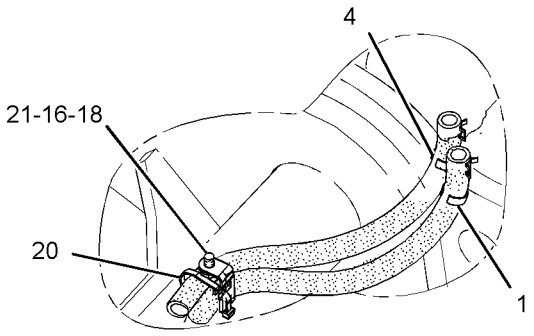

VIEW OF AREA B

GRAPHIC #1 **<END>** g01619500

OPERATOR STATION

7Y-0059 LITERATURE GP

S/N: MNB1-UP; WDK1-UP
PART OF 314-3652, 314-3653 CHASSIS AR

SMCS-7300 **i01809351**

NOTE	PART NUMBER	QTY	PART NAME 1 2 3 4 5 6 (PRODUCT LEVEL)	SEE PAGE
	099-3645	1	CABLE-LANYARD	
	5P-8500	2	KEY	
	5P-7958	2	SLEEVE-CABLE SPLICE	

<END>

330-1353 MIRROR AR-REAR VIEW

S/N: MNB1-UP; WDK1-UP
PART OF 329-6569 CAMERA & MIRROR AR
AN ATTACHMENT

SMCS-7319 **i03127882**

NOTE	PART NUMBER	QTY	PART NAME 1 2 3 4 5 6 (PRODUCT LEVEL)	SEE PAGE
Y	*330-1166*	1	FENDER & COVER GP	353
Y	*330-1162*	1	MIRROR GP	1016

Y-SEPARATE ILLUSTRATION

<END>

OPERATOR STATION

330-1162 MIRROR GP

S/N: MNB1-UP; WDK1-UP
PART OF 330-1353 MIRROR AR-REAR VIEW
AN ATTACHMENT

SMCS-7319 **i03117525**

NOTE	REF NO	GRAPHIC REF	PART NUMBER	QTY	PART NAME 1 2 3 4 5 6 (PRODUCT LEVEL)	SEE PAGE
M	1	1	**135-8575**	3	BOLT AS-LOCKING (M12X1.75X30-MM)	
	2	1	**320-5525**	1	TUBE AS	
	3	1	**327-3062**	1	MIRROR GP-REAR VIEW	
M		1	**8T-0269**	2	BOLT-SOCKET HEAD (M6X1X20-MM)	
		1	**9X-8256**	2	WASHER (6.6X12X2-MM THK)	
	4	1	**327-3063**	1	MIRROR GP-REAR VIEW	
M		1	**8T-0269**	2	BOLT-SOCKET HEAD (M6X1X20-MM)	
		1	**9X-8256**	2	WASHER (6.6X12X2-MM THK)	

M-METRIC PART

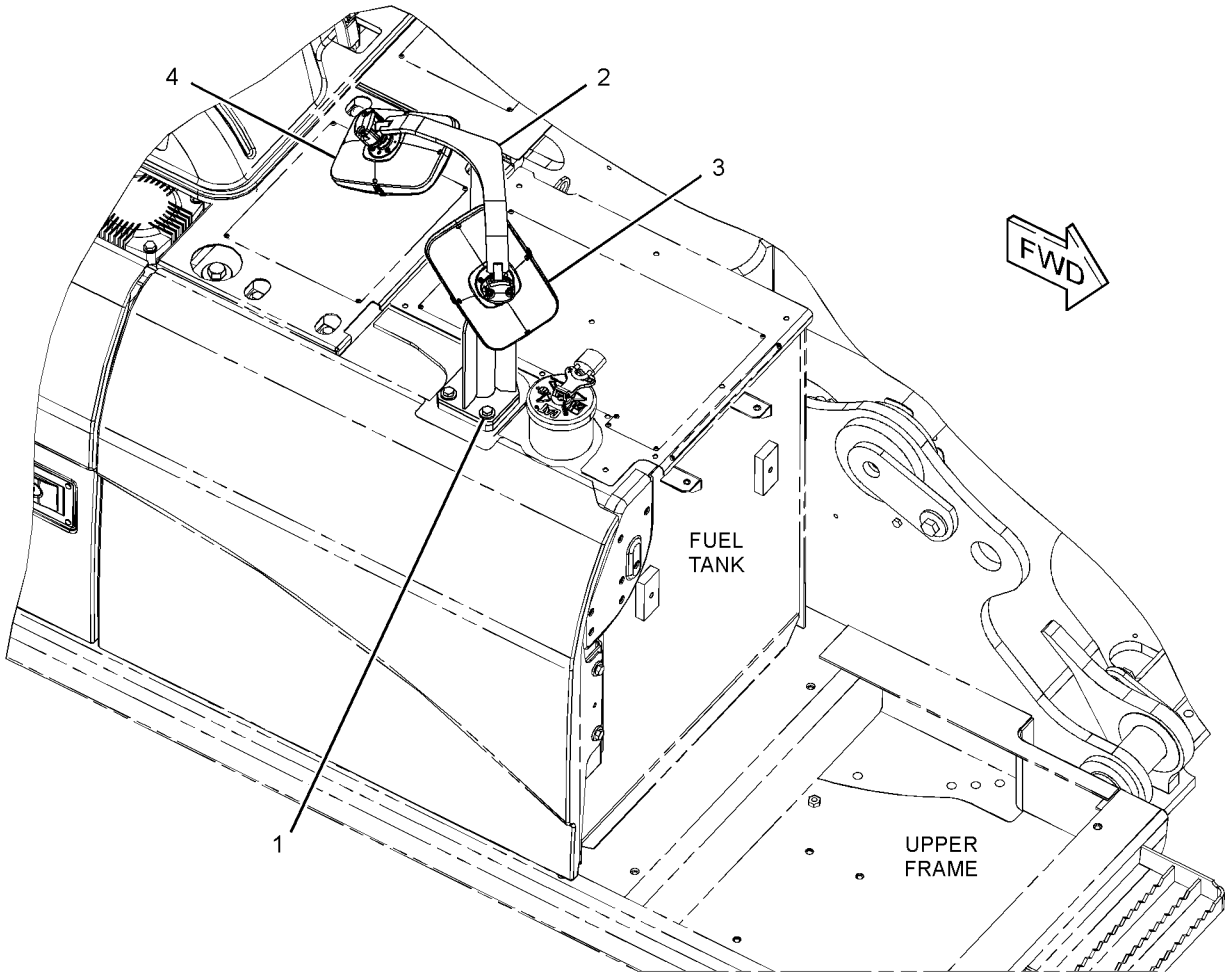

GRAPHIC #1 **<END>** g01619310

OPERATOR STATION

142-3836 MIRROR GP-REAR VIEW—FRONT, RH

S/N: MNB1-UP; WDK1-UP

PART OF 314-3652, 314-3653 CHASSIS AR

SMCS-7319 **i01584884**

NOTE	REF NO	GRAPHIC REF	PART NUMBER	QTY	PART NAME 1 2 3 4 5 6 (PRODUCT LEVEL)	SEE PAGE
	1	1	**2M-0849**	4	WASHER-HARD (13.5X25.5X5-MM THK)	
	2	1	**137-2270**	1	MIRROR	
	3	1	**165-3065**	1	BRACKET-MIRROR	
	4	1	**177-6315**	4	PLUG	
M	5	1	**8T-4192**	4	BOLT (M12X1.75X25-MM)	

M-METRIC PART

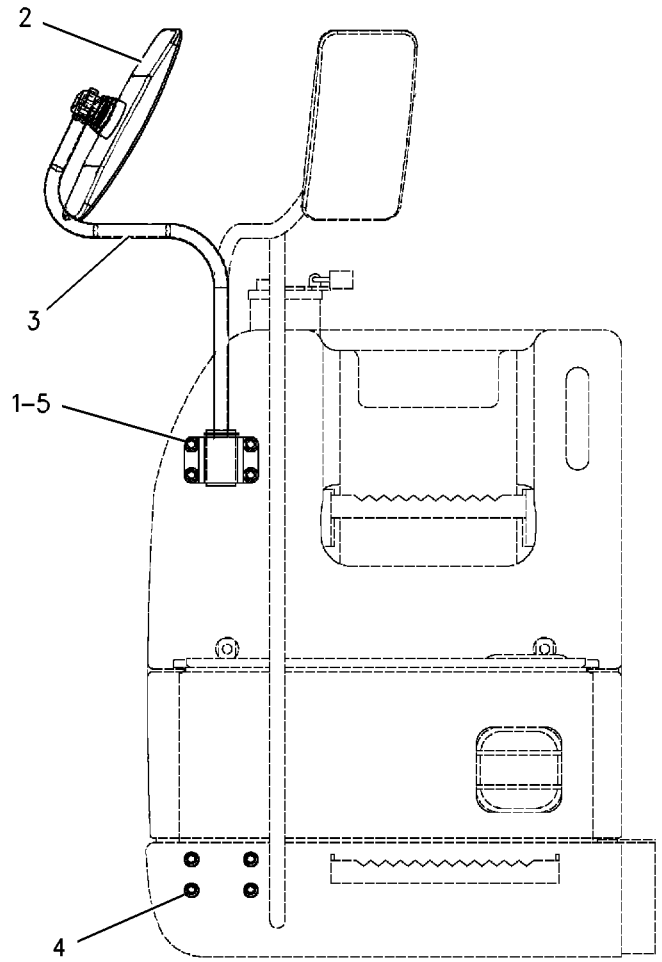

FRONT VIEW

GRAPHIC #1 **<END>** g00682738

OPERATOR STATION

327-6550 MIRROR GP-REAR VIEW

S/N: MNB1-UP; WDK1-UP

PART OF 235-8910 CAB GP, 327-6552, 327-6553 MIRROR GP-REAR VIEW

AN ATTACHMENT

SMCS-7319 **i03185260**

NOTE	REF NO	GRAPHIC REF	PART NUMBER	QTY	PART NAME 1 2 3 4 5 6 (PRODUCT LEVEL)	SEE PAGE
M	1	1	**8T-0269**	2	BOLT-SOCKET HEAD (M6X1X20-MM)	
	2	1	**9X-8256**	2	WASHER (6.6X12X2-MM THK)	

M-METRIC PART

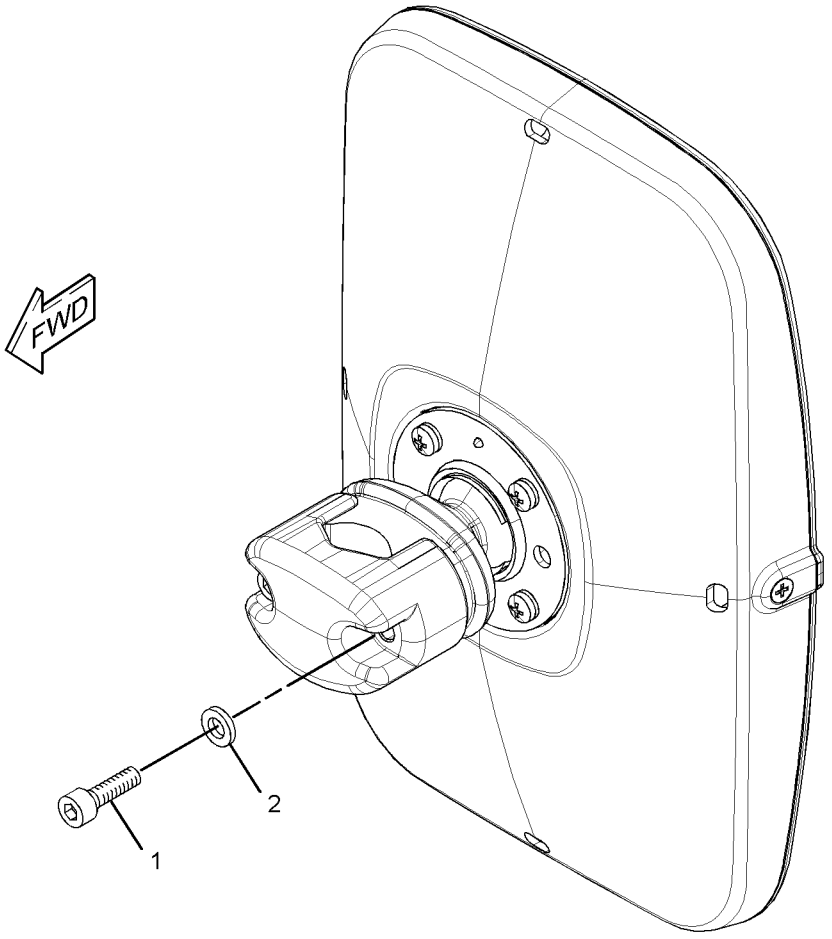

GRAPHIC #1 **<END>** g01615528

327-6552 MIRROR GP-REAR VIEW

S/N: MNB1-UP; WDK1-UP
CANNOT BE USED WITH GAURD
AN ATTACHMENT

SMCS-7319 **i03250686**

NOTE	REF NO	GRAPHIC REF	PART NUMBER	QTY	PART NAME 1 2 3 4 5 6 (PRODUCT LEVEL)	SEE PAGE
Y	1	1	**327-6550**	1	MIRROR GP-REAR VIEW	1018
	2	1	**327-6576**	1	SUPPORT AS	
M	3	1	**8T-4175**	1	BOLT (M16X2X90-MM)	
	4	1	**9X-8257**	1	WASHER (17.5X30X3.5-MM THK)	

M-METRIC PART
Y-SEPARATE ILLUSTRATION

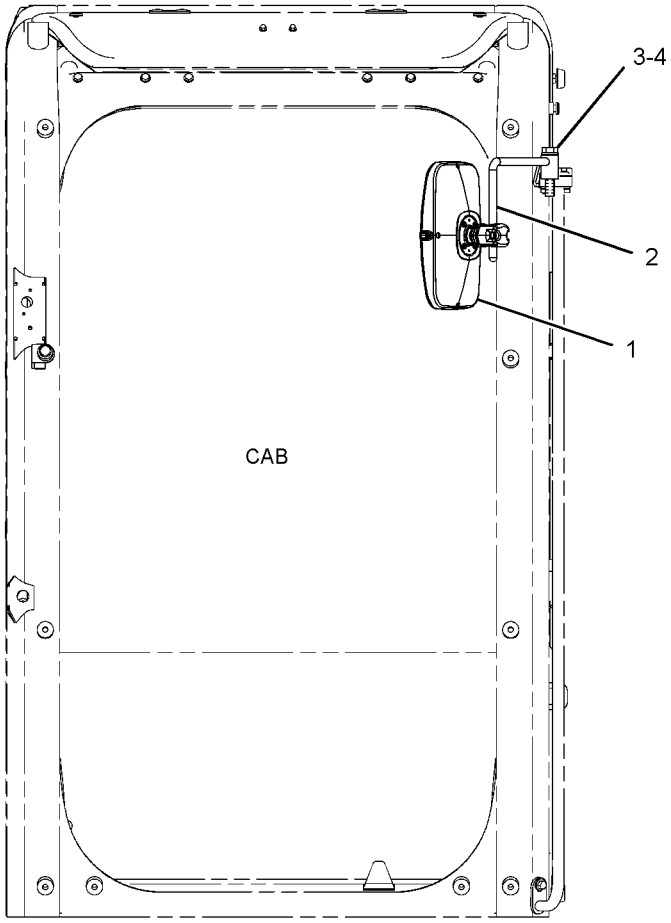

FRONT VIEW

GRAPHIC #1 **<END>** g01615557

OPERATOR STATION

327-6553 MIRROR GP-REAR VIEW

S/N: MNB1-UP; WDK1-UP
FOR USE WITH GUARD
AN ATTACHMENT

SMCS-7319 **i03082146**

NOTE	REF NO	GRAPHIC REF	PART NUMBER	QTY	PART NAME 1 2 3 4 5 6 (PRODUCT LEVEL)	SEE PAGE
	1	1	**316-8989**	1	SUPPORT AS	
Y	2	1	**327-6550**	1	MIRROR GP-REAR VIEW	1018
M	3	1	**8T-4193**	1	BOLT (M16X2X50-MM)	
	4	1	**9X-8257**	1	WASHER (17.5X30X3.5-MM THK)	

M-METRIC PART
Y-SEPARATE ILLUSTRATION

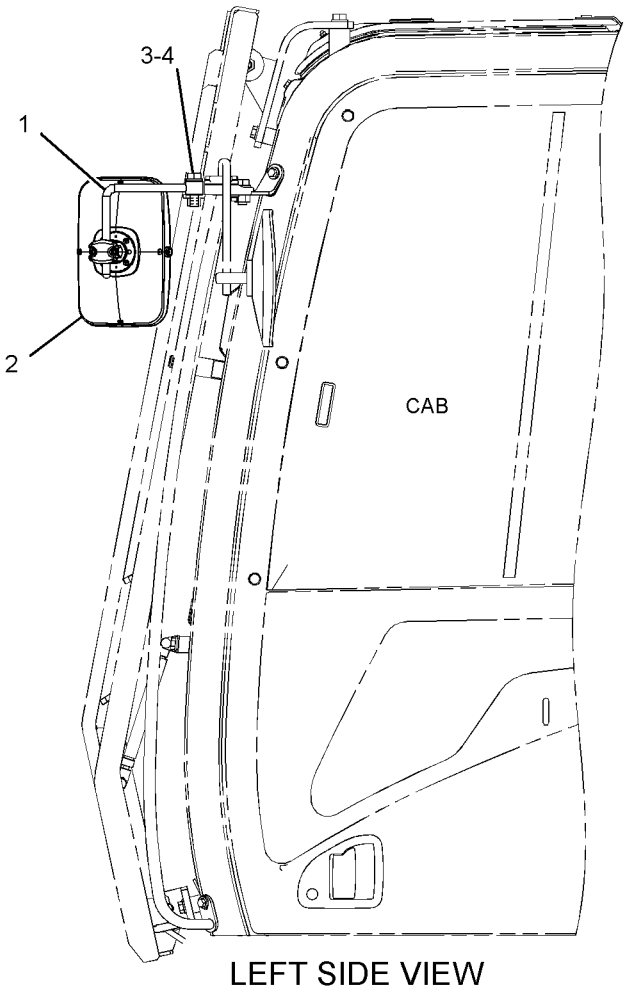

LEFT SIDE VIEW

GRAPHIC #1

<END>

g01615542

OPERATOR STATION

221-8813 MONITOR & MTG GP-OPERATOR

S/N: MNB1-UP; WDK1-UP

PART OF 229-9072 OPERATOR AR

SMCS-7490 **i03017455**

NOTE	REF NO	GRAPHIC REF	PART NUMBER	QTY	PART NAME 1 2 3 4 5 6 (PRODUCT LEVEL)	SEE PAGE
Y	1	1	**319-4353**	1	MONITOR GP-OPERATOR	1022
M	2	1	**9X-2046**	3	SCREW-TRUSS HEAD (M6X1X35-MM)	

M-METRIC PART
Y-SEPARATE ILLUSTRATION

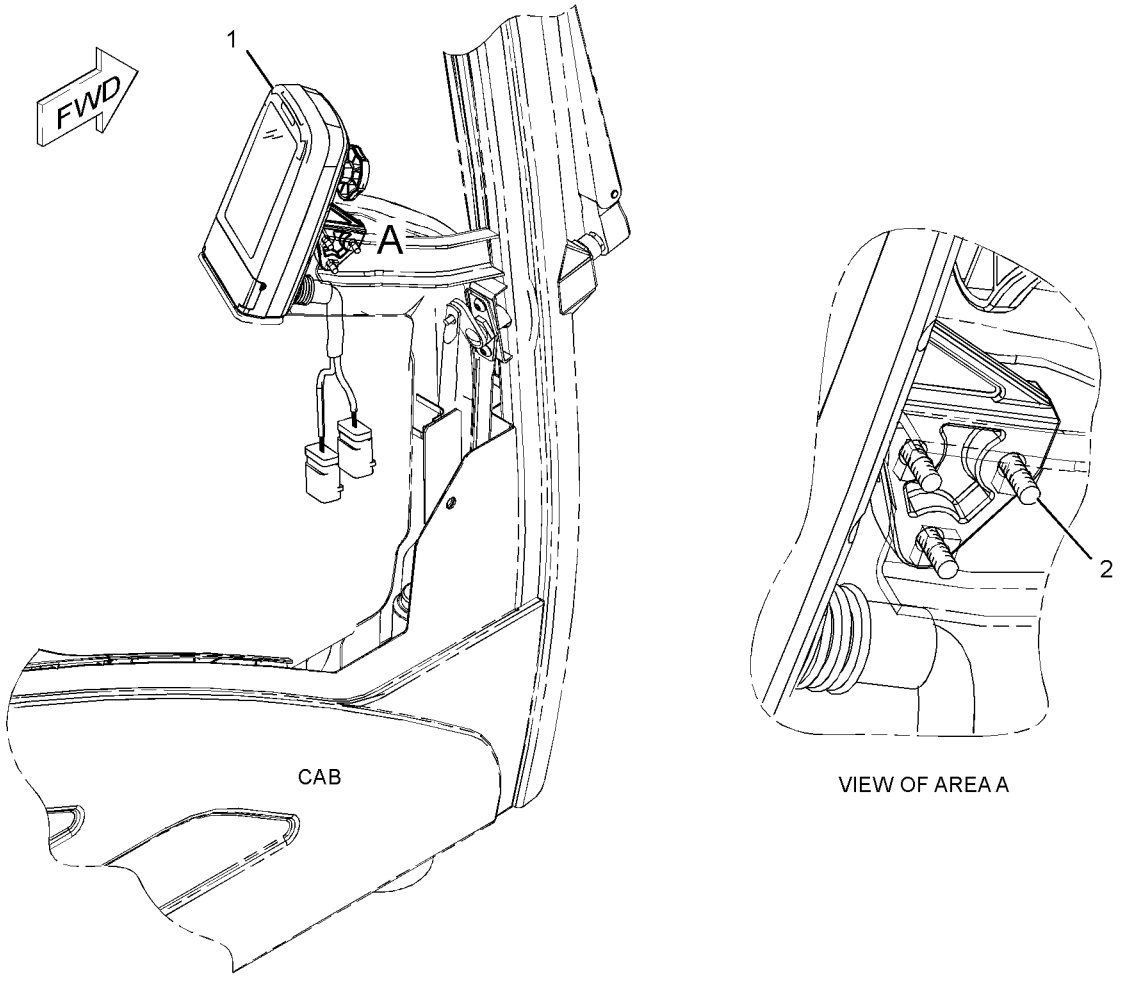

GRAPHIC #1 **<END>** g01231835

OPERATOR STATION

319-4353 MONITOR GP-OPERATOR

S/N: MNB1-UP; WDK1-UP

PART OF 221-8813 MONITOR & MTG GP-OPERATOR

SMCS-7490 **i03022205**

NOTE	REF NO	GRAPHIC REF	PART NUMBER	QTY	PART NAME 1 2 3 4 5 6 (PRODUCT LEVEL)	SEE PAGE
	1	1	**247-2694**	1	RECEPTACLE AS-CONNECTOR (12-PIN)	
	2	1	**247-2695**	1	RECEPTACLE AS-CONNECTOR (12-PIN)	
	3	1	**9X-3401**	17	PIN-CONNECTOR (16-GA TO 18-GA)	
					—OR—	
		1	**126-1767**	17	PIN-CONNECTOR (14-GA)	
	4	1	**8T-8737**	7	PLUG-SEAL	

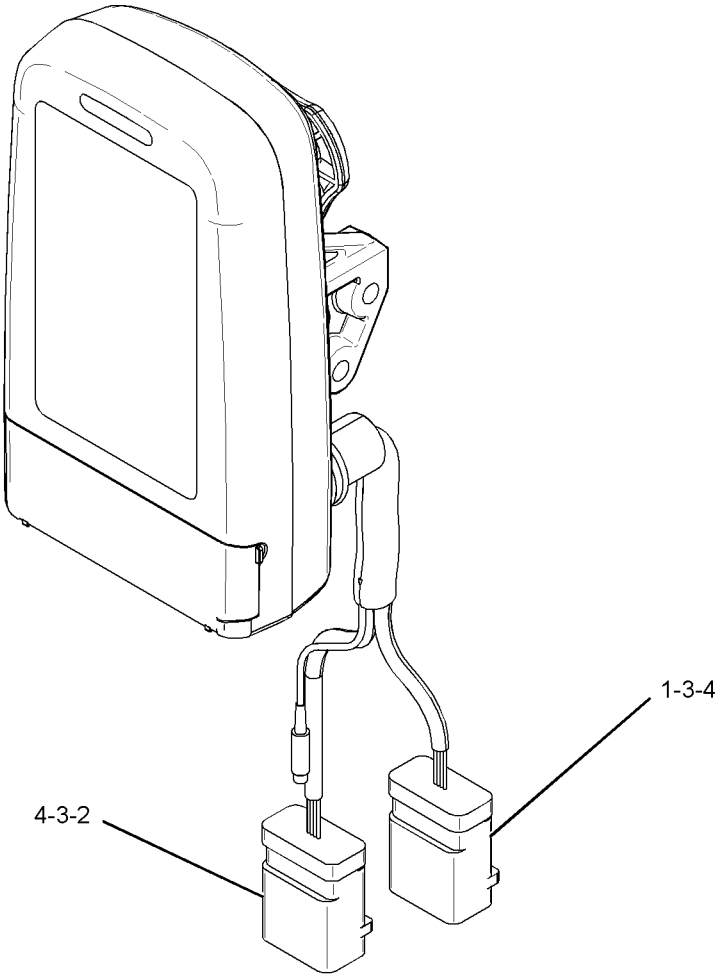

GRAPHIC #1 **<END>** g01528758

OPERATOR STATION

270-5603 MOUNTING GP-ANTENNA

S/N: MNB1-UP; WDK1-UP
PART OF 290-1778 CONVERSION AR-MACHINE
AN ATTACHMENT

SMCS-7338, 7606 **i02862871**

NOTE	REF NO	GRAPHIC REF	PART NUMBER	QTY	PART NAME 1 2 3 4 5 6 (PRODUCT LEVEL)	SEE PAGE
	1	1	**309-5849**	1	BRACKET AS	
M	2	1	**7X-2552**	2	BOLT (M16X2X30-MM)	
	3	1	**9X-8257**	2	WASHER (17.5X30X3.5-MM THK)	

M-METRIC PART

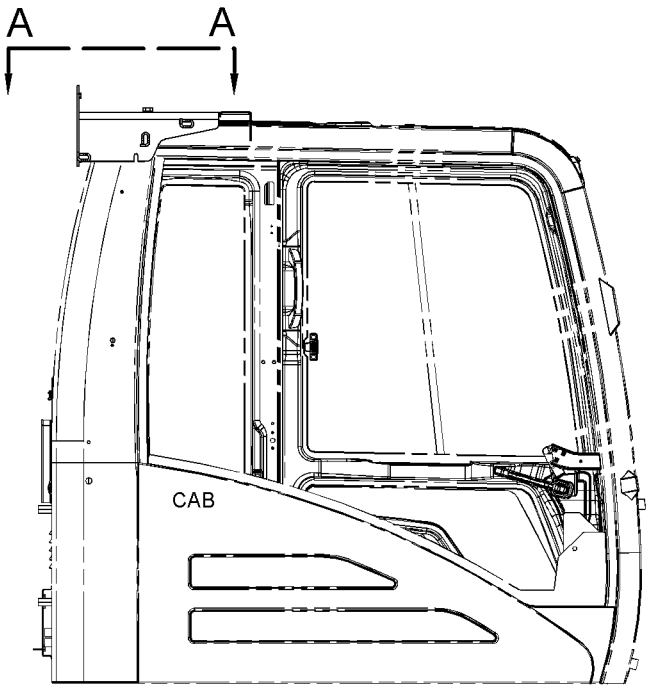

RIGHT SIDE VIEW
(WITHOUT CAB GUARD)

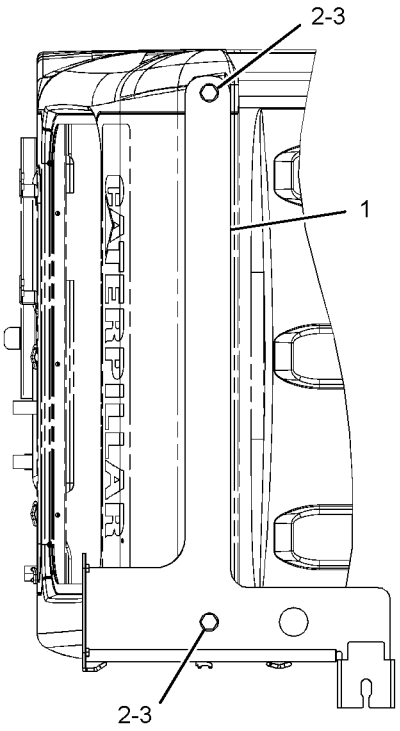

VIEW A-A

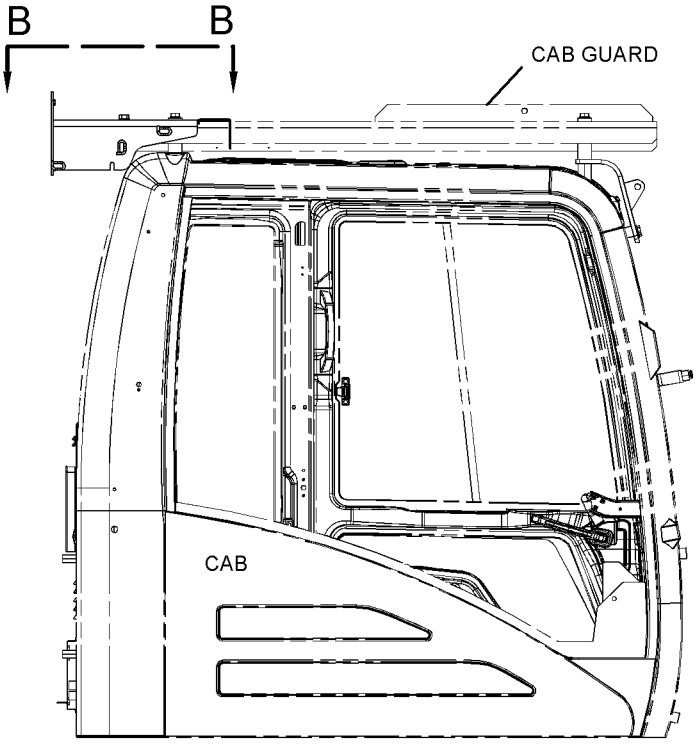

RIGHT SIDE VIEW
(WITH CAB GUARD)

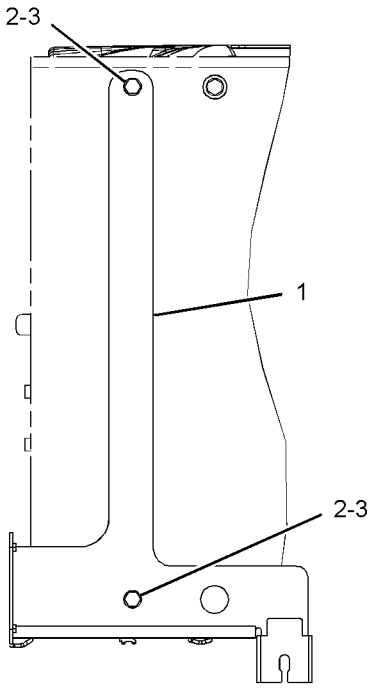

VIEW B-B

GRAPHIC #1 **<END>** g01435822

OPERATOR STATION

292-0304 MOUNTING GP-MONITOR–ACCUGRADE

S/N: MNB1-UP; WDK1-UP

PART OF 292-0276 GRADE CONTROL AR-SATELLITE

SMCS-7220, 7490, 7604 **i03177260**

NOTE	PART NUMBER	QTY	PART NAME 1 2 3 4 5 6 (PRODUCT LEVEL)	SEE PAGE
	295-1921	2	BALL	
M	**5C-9553**	9	BOLT (M6X1X16-MM)	
M	**8T-0325**	4	BOLT (M5X0.8X14-MM)	
M	**8T-4136**	3	BOLT (M10X1.5X25-MM)	
M	**8T-4176**	2	BOLT (M12X1.75X90-MM)	
	270-5582	1	BRACKET AS (MONITOR)	
	270-5589	1	BRACKET AS (LIGHT BAR)	
	202-0943	1	CLAMP-MOUNTING	
	275-6839	1	HARNESS AS-MONITOR (HIGH MOUNT)	
	202-0901	1	HARNESS AS-MONITOR (LOW MOUNT)	
	267-8024	1	HARNESS AS-WIRING (LIGHT BAR)	
	226-9258	1	PLATE	
M	**8T-0337**	6	SCREW-MACHINE (M4X0.7X12-MM)	
	3S-2093	8	STRAP-CABLE	
	7I-2673	1	STRAP-CABLE	
	167-8853	1	SUPPORT AS	
	9X-8256	9	WASHER (6.6X12X2-MM THK)	
	2M-0849	3	WASHER-HARD (13.5X25.5X5-MM THK)	
	8T-0328	4	WASHER-HARD (5.5X10X1-MM THK)	
	096-6166	6	WASHER-HARD (4.5X9X1-MM THK)	

M-METRIC PART

<END>

OPERATOR STATION

245-7811 MOUNTING GP-PLATFORM

S/N: MNB1-UP; WDK1-UP

PART OF 314-3652, 314-3653 CHASSIS AR

SMCS-7253 **i02217210**

NOTE	REF NO	GRAPHIC REF	PART NUMBER	QTY	PART NAME 1 2 3 4 5 6 (PRODUCT LEVEL)	SEE PAGE
	1	1	**235-8862**	4	MOUNT AS	
	2	1	**8T-4121**	16	WASHER-HARD (11X21X2.5-MM THK)	
M	3	1	**8T-4195**	16	BOLT (M10X1.5X30-MM)	

M-METRIC PART

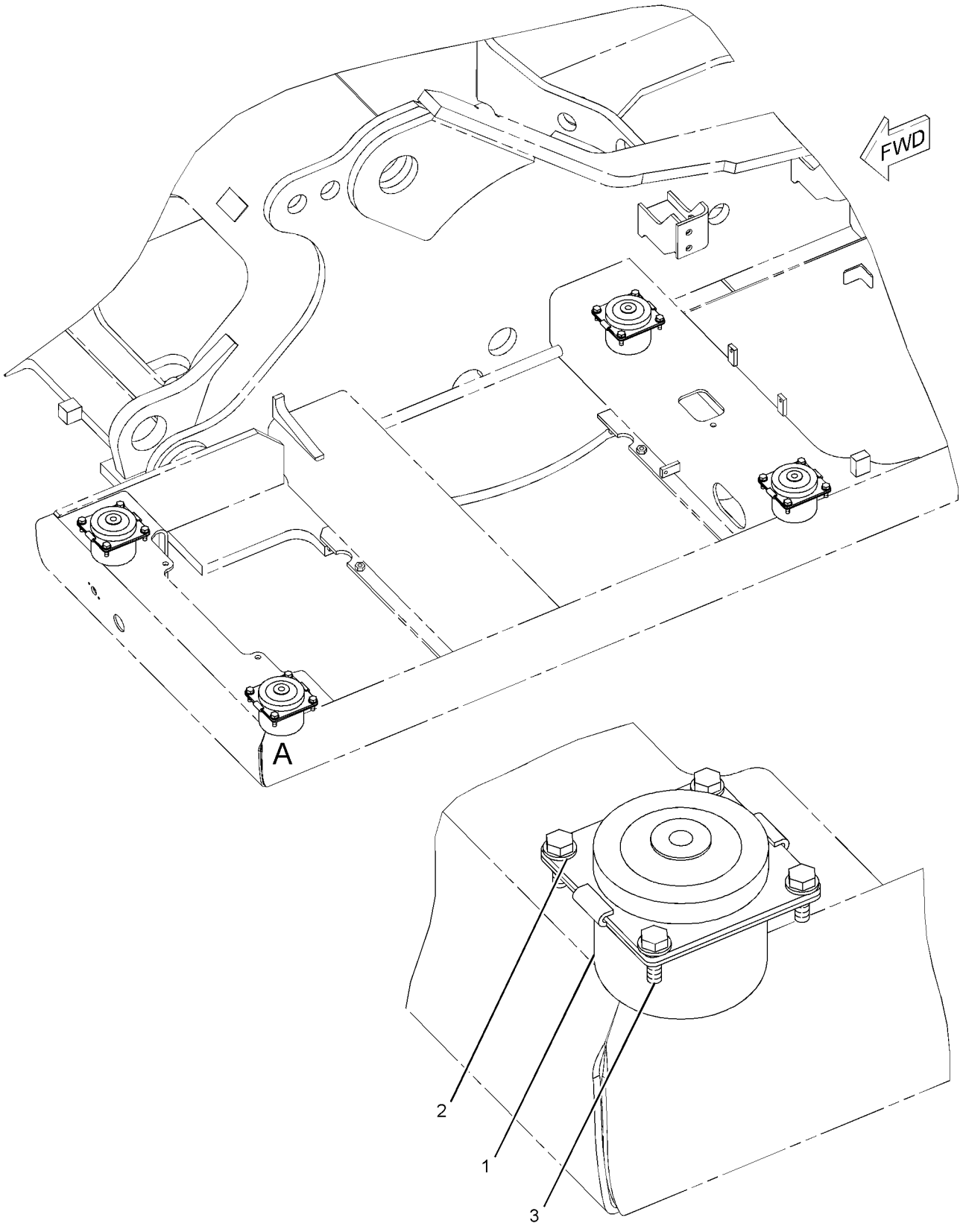

VIEW OF AREA A

GRAPHIC #1 **<END>** g01101486

OPERATOR STATION

259-4746 MOUNTING GP-RADIO–GRADE CONTROL

S/N: MNB1-UP; WDK1-UP

PART OF 292-0276 GRADE CONTROL AR-SATELLITE

SMCS-7338 **i03177200**

NOTE	REF NO	GRAPHIC REF	PART NUMBER	QTY	PART NAME 1 2 3 4 5 6 (PRODUCT LEVEL)	SEE PAGE
	1	1	**8C-5607**	6	MOUNT-ISOLATION	
	2	1	**8C-5608**	3	SPACER (6.5X9.5X25.4-MM THK)	
	3	1	**140-7480**	1	BRACKET-MOUNTING	
	4	1	**167-8610**	1	BRACKET AS	
	5	1	**5S-7349**	2	BOLT (1/4-20X0.5-IN)	
	6	1	**8T-4205**	2	WASHER-HARD (7.2X14.5X2-MM THK)	
M	7	1	**9X-2480**	3	BOLT (M6X1X45-MM)	
	8	1	**9X-6165**	3	WASHER (6.5X22X2.5-MM THK)	
BJM	9	1	**7X-2533**	3	BOLT (M6X1X35-MM)	

B-USE AS REQUIRED
J-TO BE USED ON HYDRAULIC EXCAVATOR
M-METRIC PART

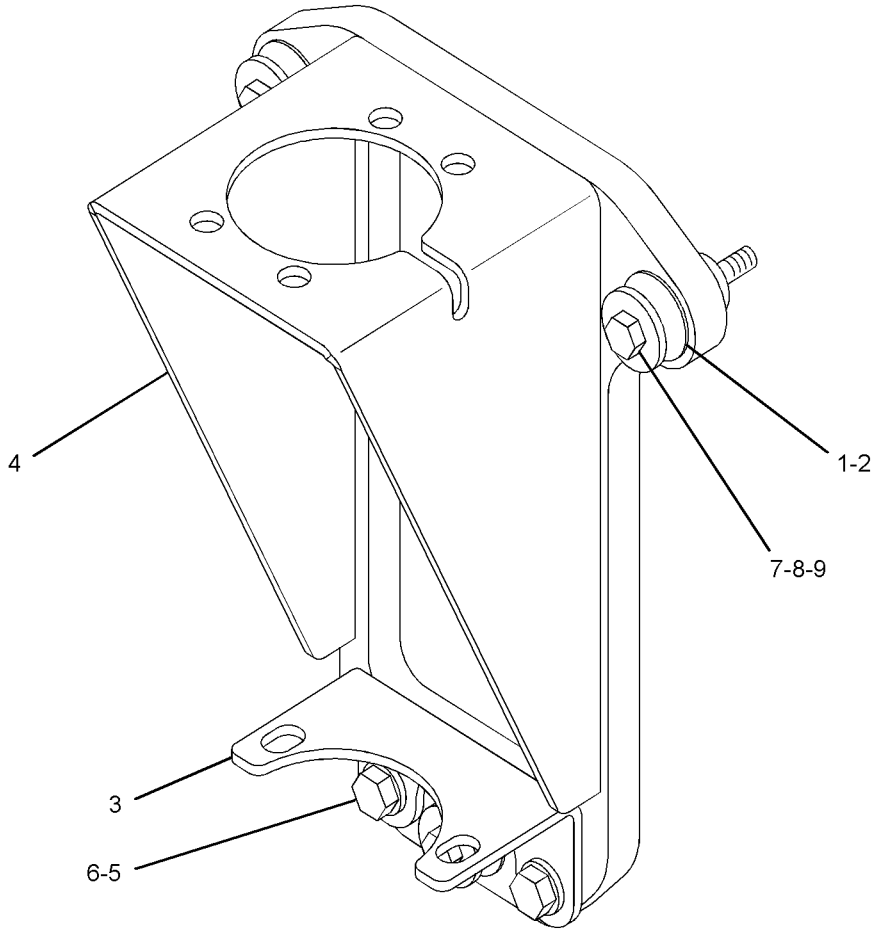

GRAPHIC #1 **<END>** g01259563

OPERATOR STATION

229-9072 OPERATOR AR

S/N: MNB1-UP; WDK1-UP

PART OF 314-3652, 314-3653 CHASSIS AR

SMCS-7301 **i03134945**

NOTE	PART NUMBER	QTY	PART NAME 1 2 3 4 5 6 (PRODUCT LEVEL)	SEE PAGE
Y	*245-7922*	1	CONSOLE GP-OPERATOR	941
Y	*221-8872*	1	CONTROL & MTG GP-MACHINE	192
Y	*170-9497*	1	CONTROL GP-HYDRAULIC PEDAL (TRAVEL)	952
Y	*221-8813*	1	MONITOR & MTG GP-OPERATOR	1021
Y	*229-9078*	1	PLATFORM GP-OPERATOR	1030
Y	*327-6523*	1	SUPPORT GP-SEAT	1072
Y	*251-0432*	1	WIRING GP-CAB	272
Y	*251-0433*	1	WIRING GP-CONSOLE	300
Y	*238-1432*	1	PANEL & MTG GP-CIRCUIT BREAKER	215
Y	*251-0430*	1	WIRING GP-PLATFORM	317

Y-SEPARATE ILLUSTRATION

<END>

259-7177 PEDAL AR-AUXILIARY—THIRD PEDAL, STRAIGHT TRAVEL

S/N: MNB1-UP; WDK1-UP

AN ATTACHMENT

SMCS-5059 **i02344764**

NOTE	PART NUMBER	QTY	PART NAME 1 2 3 4 5 6 (PRODUCT LEVEL)	SEE PAGE
Y	*259-7179*	1	CONTROL GP-HYDRAULIC PEDAL	955
Y	*251-0526*	1	FASTENER GP-WIRING HARNESS (STRAIGHT TRAVEL)	197
Y	*255-1843*	1	LINES GP-PILOT (THIRD PEDAL, PILOT VALVE)	665
Y	*255-1877*	1	LINES GP-PILOT (CONTROL VALVE, TRAVEL VALVE)	667
	260-6948	1	FILM-INSTRUCTION (OPERATOR CONTROLS, READ OMM)	

Y-SEPARATE ILLUSTRATION

<END>

OPERATOR STATION

229-9078 PLATFORM GP-OPERATOR

S/N: MNB1-UP; WDK1-UP

PART OF 229-9072 OPERATOR AR

SMCS-7253 **i02348241**

NOTE	REF NO	GRAPHIC REF	PART NUMBER	QTY	PART NAME 1 2 3 4 5 6 (PRODUCT LEVEL)	SEE PAGE
	1	1	**135-8965**	1	GROMMET	
	2	1	**135-8966**	1	GROMMET	
	3	1	**245-7916**	1	PLATFORM AS	
	4	1	**161-3717**	1	STRIP	
	5	1	**4I-3266**	1	STRIP	
M	6	1	**7X-2553**	4	BOLT (M16X2X40-MM)	
	7	1	**8T-4121**	4	WASHER-HARD (11X21X2.5-MM THK)	
M	8	1	**8T-4191**	4	BOLT (M10X1.5X16-MM)	
	9	1	**9X-8257**	4	WASHER (17.5X30X3.5-MM THK)	

M-METRIC PART

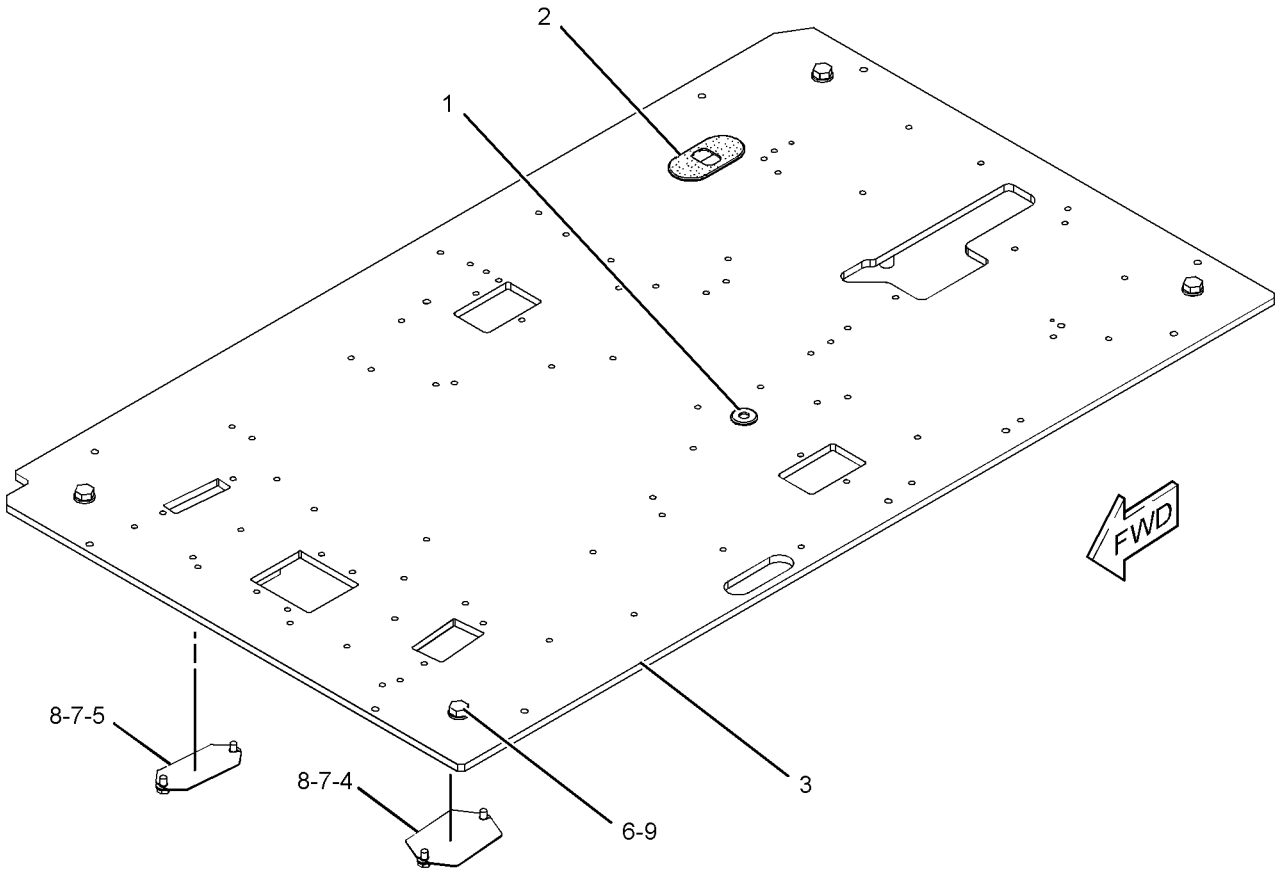

GRAPHIC #1 **<END>** g01188224

OPERATOR STATION

245-7881 SCREEN GP-SUN

S/N: MNB1-UP; WDK1-UP

AN ATTACHMENT

SMCS-7165 **i02440979**

NOTE	REF NO	GRAPHIC REF	PART NUMBER	QTY	PART NAME 1 2 3 4 5 6 (PRODUCT LEVEL)	SEE PAGE
	1	1	**255-4410**	1	SCREEN AS (CAB)	
	2	1	**259-7214**	3	HOOK-RETAINER	
	3	1	**259-7215**	3	HOOK-RETAINER	
M	4	1	**099-0822**	6	BOLT-SOCKET HEAD (M5X0.8X10-MM)	

M-METRIC PART

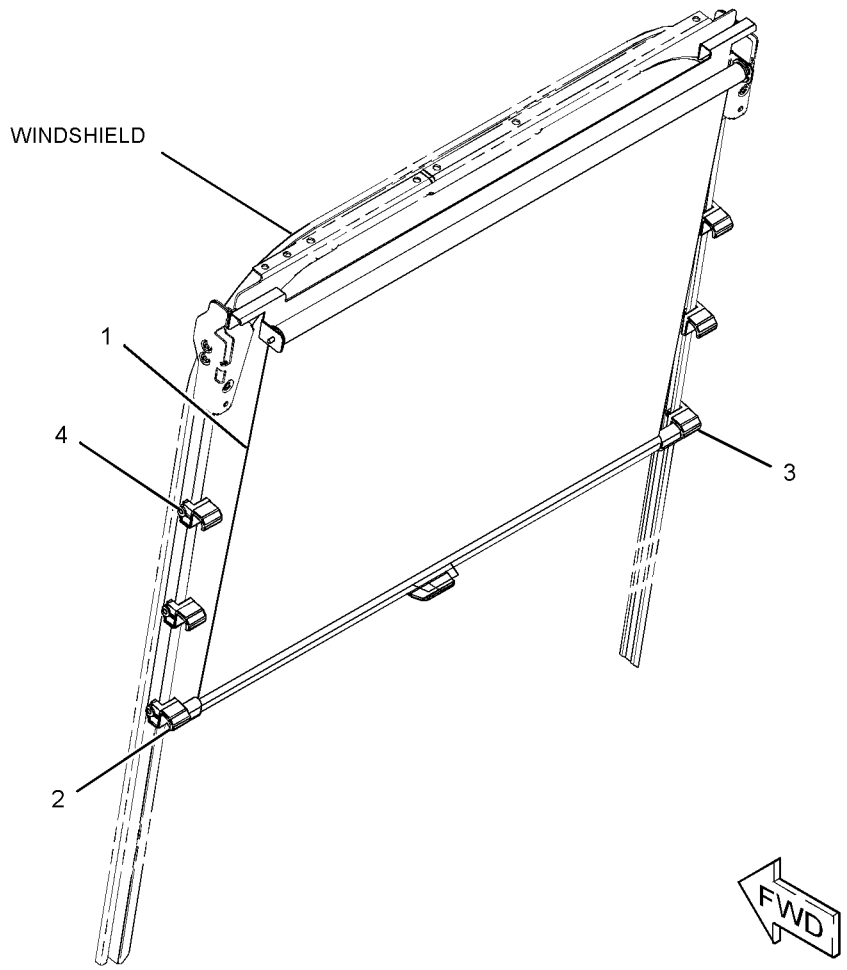

GRAPHIC #1 **<END>** g01177458

OPERATOR STATION

240-4999 SEAT & MOUNTING GP—LOW BACK WITH TILT

S/N: MNB1-UP; WDK1-UP

AN ATTACHMENT

SMCS-7312 **i02212239**

NOTE	REF NO	GRAPHIC REF	PART NUMBER	QTY	PART NAME 1 2 3 4 5 6 (PRODUCT LEVEL)	SEE PAGE
Y	1	1	*229-9075*	1	SEAT GP-SUSPENSION (LOW BACK, TILT)	1059
M	2	1	**6V-8202**	4	BOLT-SOCKET HEAD (M8X1.25X16-MM)	

M-METRIC PART
Y-SEPARATE ILLUSTRATION

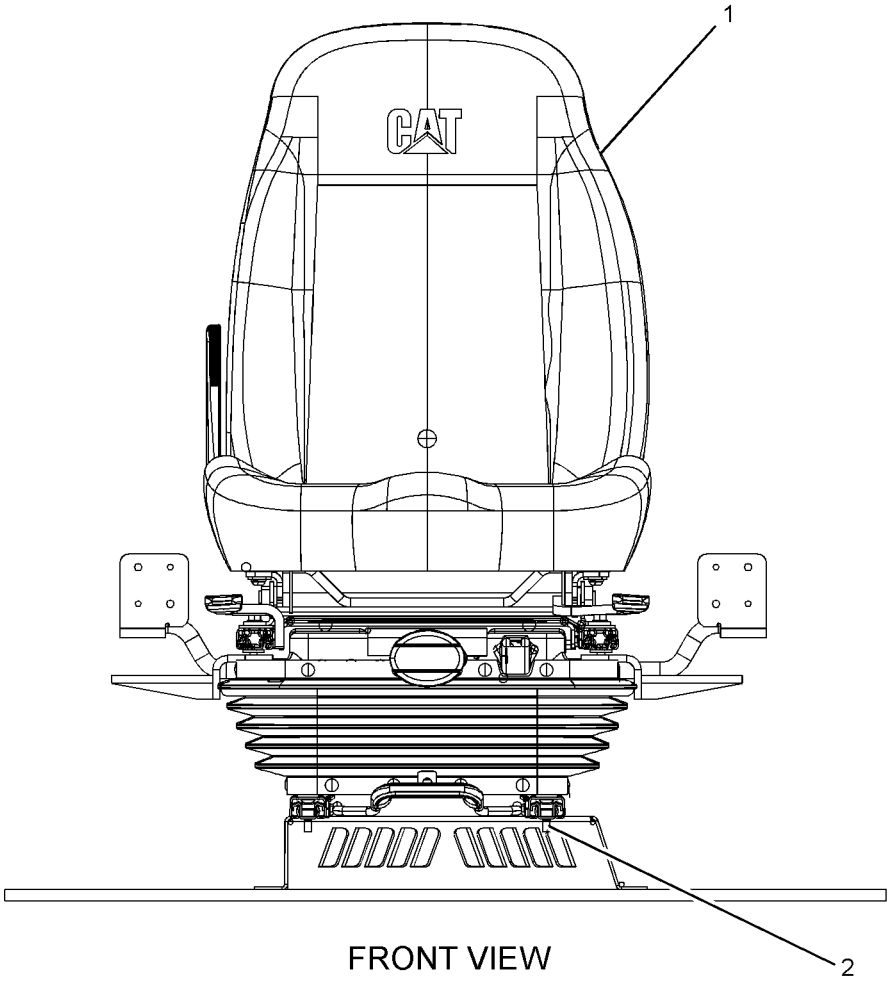

FRONT VIEW

GRAPHIC #1

<END>

g01089524

OPERATOR STATION

240-5003 SEAT & MOUNTING GP—HIGH BACK, TILT

S/N: MNB1-UP; WDK1-UP

AN ATTACHMENT

SMCS-7312 **i02707796**

NOTE	REF NO	GRAPHIC REF	PART NUMBER	QTY	PART NAME 1 2 3 4 5 6 (PRODUCT LEVEL)	SEE PAGE
Y	1	1	*229-9089*	1	SEAT GP-SUSPENSION (HIGH BACK, TILT)	1060
M	2	1	**6V-8202**	4	BOLT-SOCKET HEAD (M8X1.25X16-MM)	

M-METRIC PART
Y-SEPARATE ILLUSTRATION

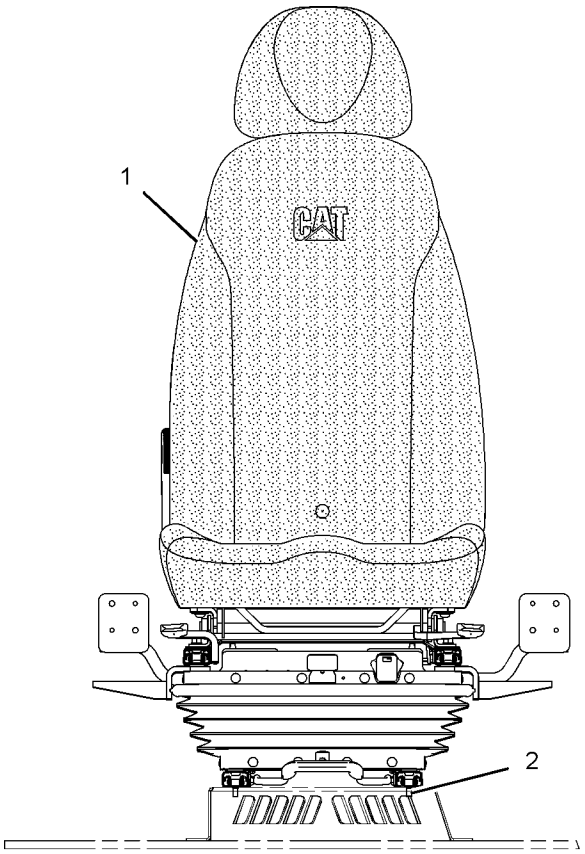

FRONT VIEW

GRAPHIC #1 **<END>** g01103598

OPERATOR STATION

240-5061 SEAT & MOUNTING GP—AIR SUSPENSION

S/N: MNB1-UP; WDK1-UP
AN ATTACHMENT

SMCS-7312 **i02212385**

NOTE	REF NO	GRAPHIC REF	PART NUMBER	QTY	PART NAME 1 2 3 4 5 6 (PRODUCT LEVEL)	SEE PAGE
Y	1	1	*240-5062*	1	SEAT GP-SUSPENSION (AIR SUSPENSION)	1061
M	2	1	**6V-8202**	4	BOLT-SOCKET HEAD (M8X1.25X16-MM)	

M-METRIC PART
Y-SEPARATE ILLUSTRATION

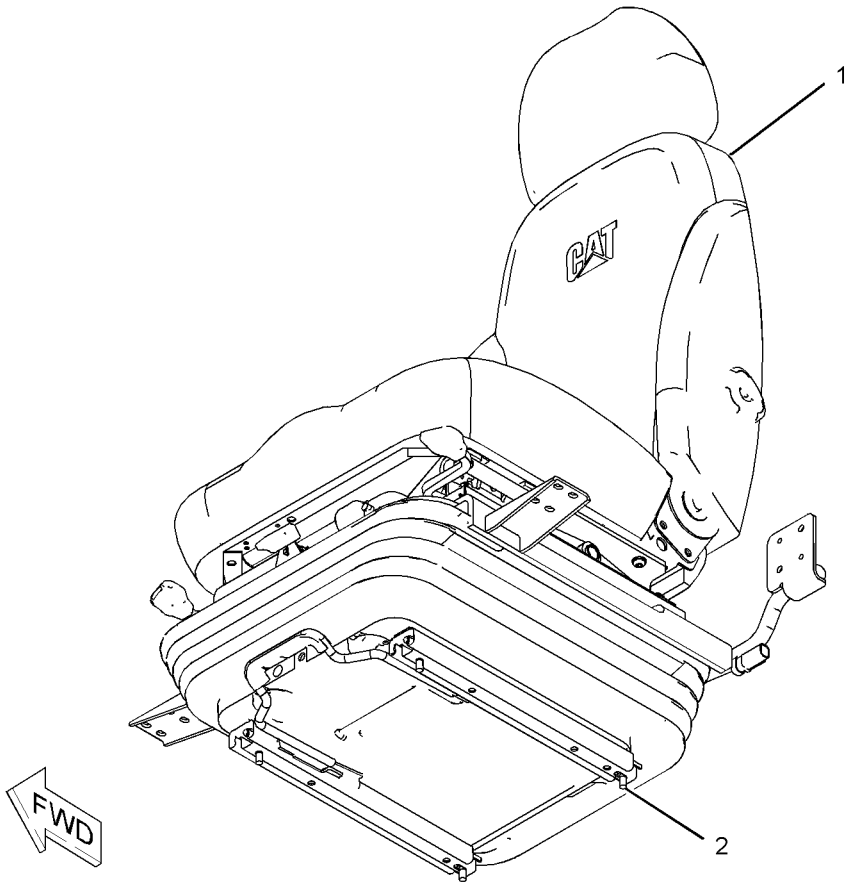

GRAPHIC #1 **<END>** g01118562

OPERATOR STATION

327-6501 SEAT & MOUNTING GP—HIGH BACK, TILT

S/N: MNB1-UP; WDK1-UP

AN ATTACHMENT

SMCS-7312 **i03196559**

NOTE	REF NO	GRAPHIC REF	PART NUMBER	QTY	PART NAME 1 2 3 4 5 6 (PRODUCT LEVEL)	SEE PAGE
	1	1	**316-8987**	2	BRACKET	
Y	2	1	*327-6507*	1	SEAT GP-SUSPENSION (HIGH BACK, TILT)	1068
M	3	1	**5A-3604**	2	BOLT-SOCKET HEAD (M8X1.25X25-MM)	
M	4	1	**6V-8202**	2	BOLT-SOCKET HEAD (M8X1.25X16-MM)	

M-METRIC PART
Y-SEPARATE ILLUSTRATION

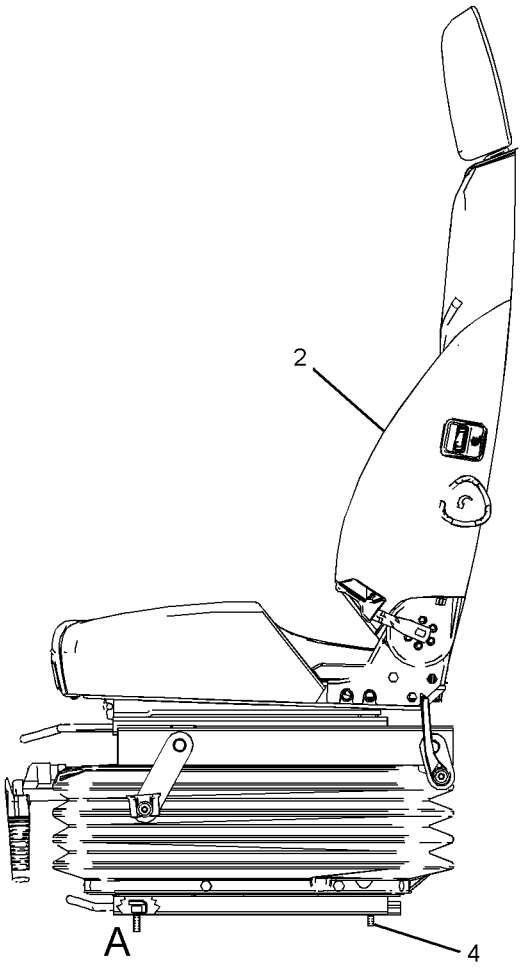

LEFT SIDE VIEW

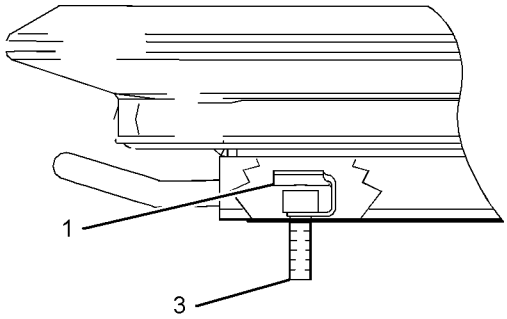

VIEW OF AREA A

GRAPHIC #1 **<END>** g01619849

OPERATOR STATION

327-6502 SEAT & MOUNTING GP—HIGH BACK, TILT

S/N: MNB1-UP; WDK1-UP

AN ATTACHMENT

SMCS-7312 **i03147963**

NOTE	REF NO	GRAPHIC REF	PART NUMBER	QTY	PART NAME 1 2 3 4 5 6 (PRODUCT LEVEL)	SEE PAGE
	1	1	**316-8987**	2	BRACKET	
Y	2	1	*327-6508*	1	SEAT GP-SUSPENSION	1069
M	3	1	**5A-3604**	2	BOLT-SOCKET HEAD (M8X1.25X25-MM)	
M	4	1	**6V-8202**	2	BOLT-SOCKET HEAD (M8X1.25X16-MM)	

M-METRIC PART
Y-SEPARATE ILLUSTRATION

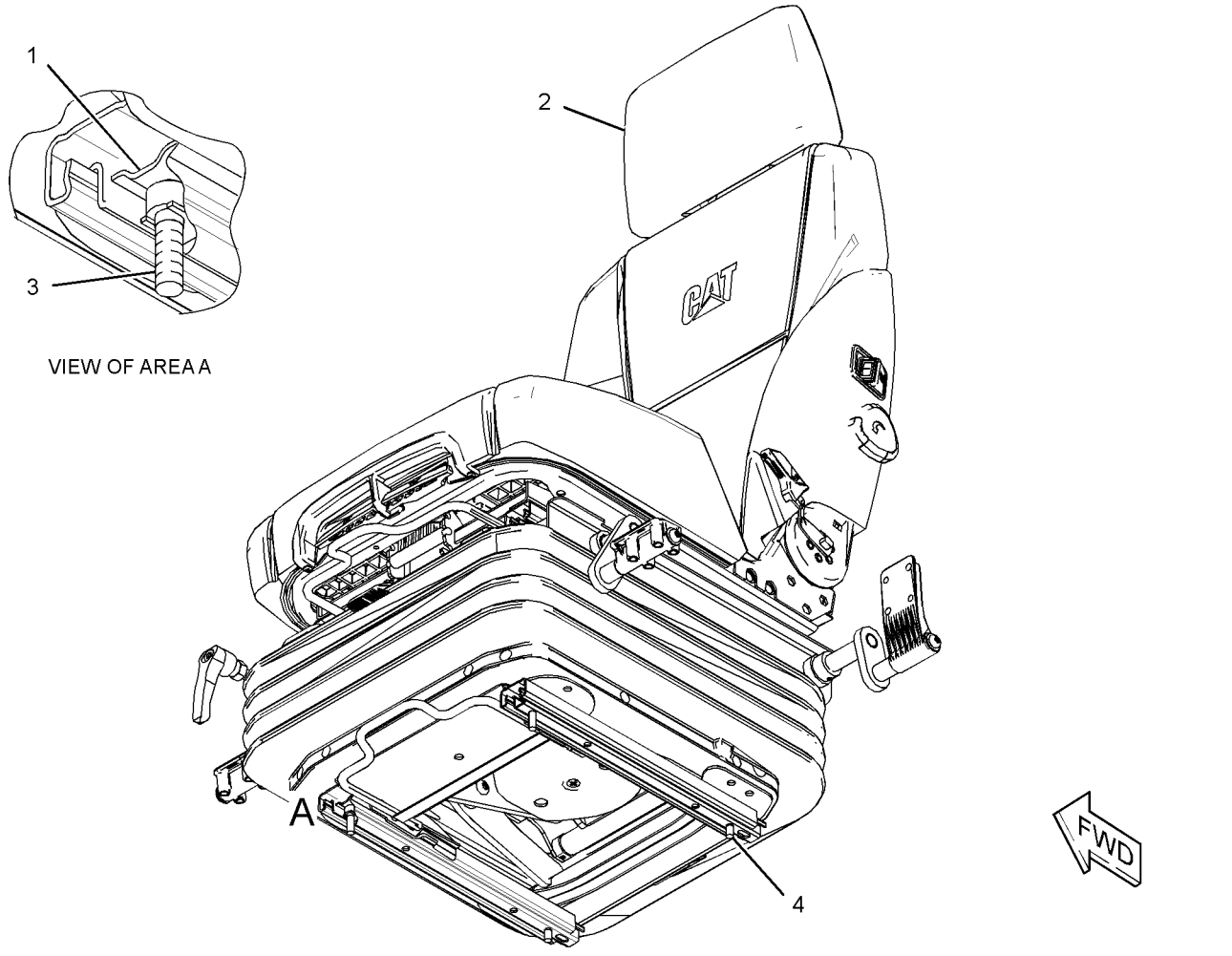

GRAPHIC #1 **<END>** g01624023

OPERATOR STATION

235-9020 SEAT BELT GP–RETRACTABLE

S/N: MNB1-UP; WDK1-UP
PART OF 240-5039 SEAT BELT GP
AN ATTACHMENT

SMCS-7327 **i02212218**

NOTE	REF NO	GRAPHIC REF	PART NUMBER	QTY	PART NAME 1 2 3 4 5 6 (PRODUCT LEVEL)	SEE PAGE
	1	1	**8S-4724**	1	BOLT (7/16-20X2.25-IN)	
	2	1	**8S-4723**	1	BOLT (7/16-20X1.5-IN)	
	3	1	**8S-0934**	1	LOCKNUT-FLANGE (7/16-20-THD)	

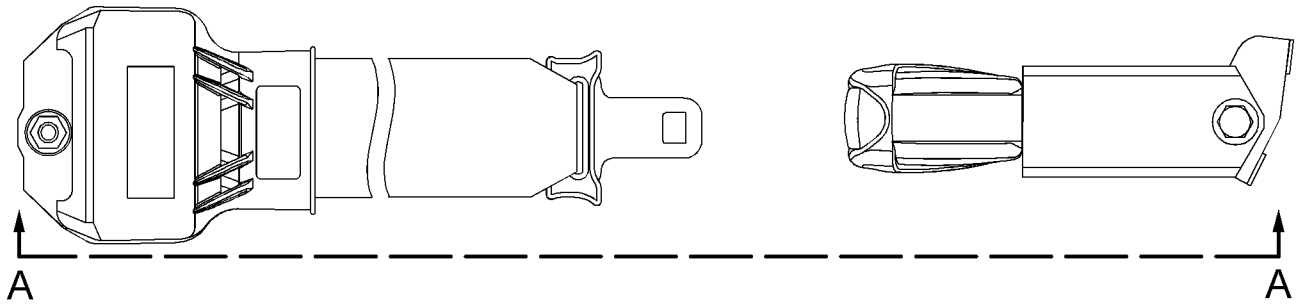

TOP VIEW

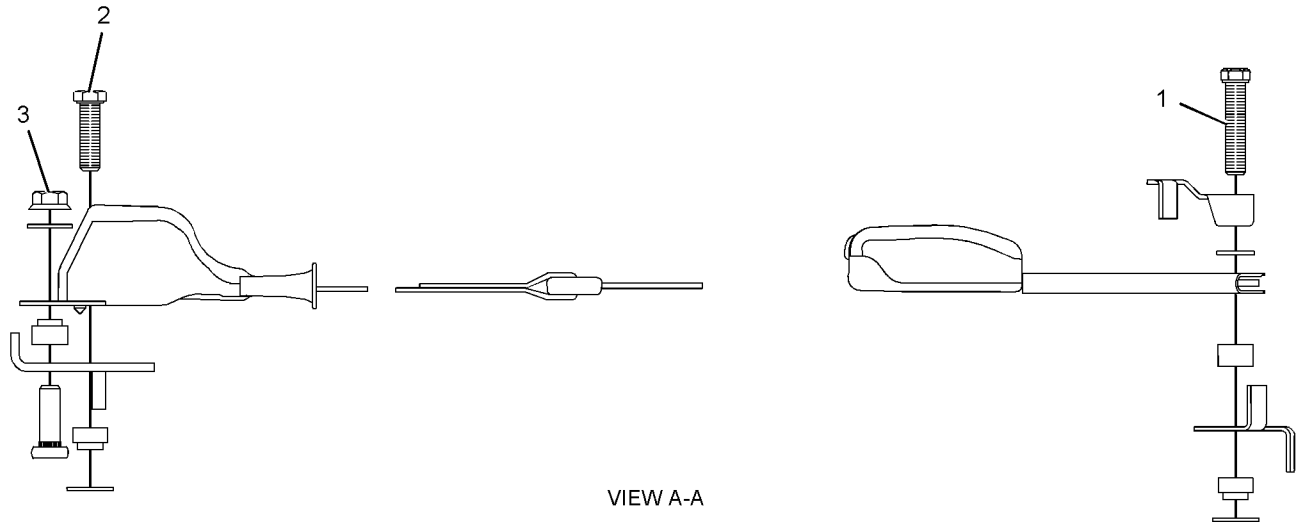

VIEW A-A

GRAPHIC #1 **<END>** g01131817

OPERATOR STATION

240-5037 SEAT BELT GP–RETRACTABLE, 46-MM

S/N: MNB1-UP; WDK1-UP

AN ATTACHMENT

SMCS-7327 **i02578051**

NOTE	REF NO	GRAPHIC REF	PART NUMBER	QTY	PART NAME 1 2 3 4 5 6 (PRODUCT LEVEL)	SEE PAGE
Y	1	1	**273-5446**	1	SEAT BELT GP (RETRACTABLE, 46-MM)	1040

Y-SEPARATE ILLUSTRATION

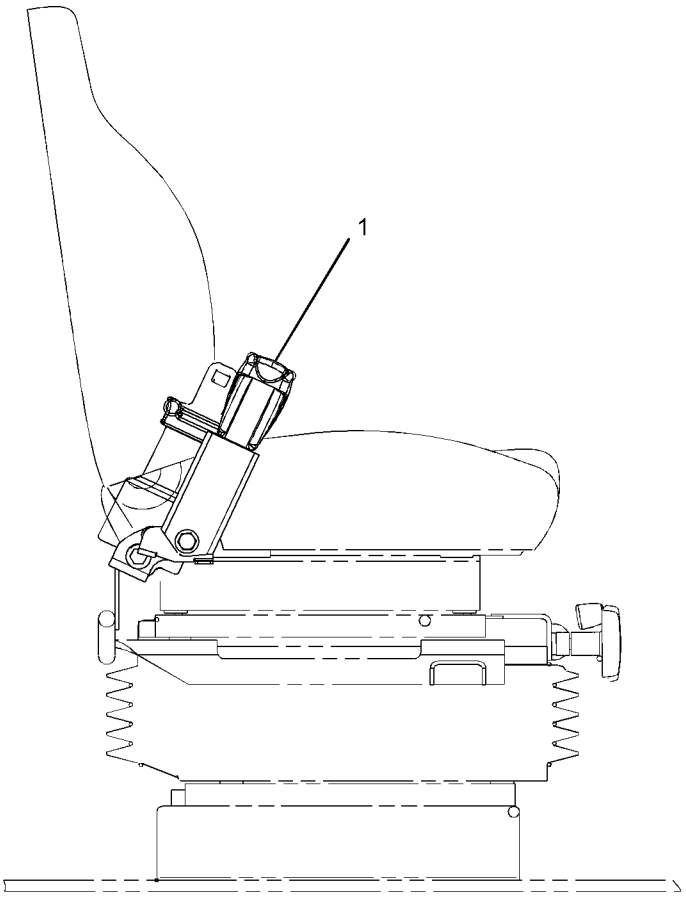

RIGHT SIDE VIEW

GRAPHIC #1 **<END>** g01071615

240-5039 SEAT BELT GP—RETRACTABLE, 3-IN

S/N: MNB1-UP; WDK1-UP

AN ATTACHMENT

SMCS-7327 **i02497564**

NOTE	REF NO	GRAPHIC REF	PART NUMBER	QTY	PART NAME 1 2 3 4 5 6 (PRODUCT LEVEL)	SEE PAGE
Y	1	1	**235-9020**	1	SEAT BELT GP (RETRACTABLE, 3-IN)	1037

Y-SEPARATE ILLUSTRATION

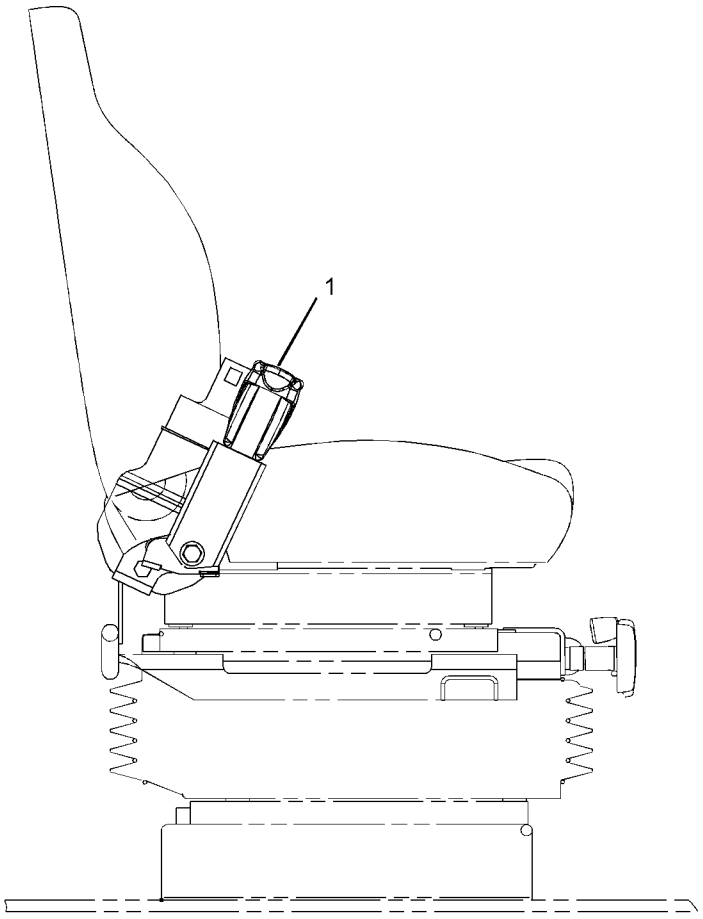

RIGHT SIDE VIEW

GRAPHIC #1

<END>

g01071676

OPERATOR STATION

273-5446 SEAT BELT GP–RETRACTABLE, 46-MM

S/N: MNB1-UP; WDK1-UP
PART OF 240-5037 SEAT BELT GP
AN ATTACHMENT

SMCS-7327 **i02578052**

NOTE	REF NO	GRAPHIC REF	PART NUMBER	QTY	PART NAME 1 2 3 4 5 6 (PRODUCT LEVEL)	SEE PAGE
	1	1	**8S-4724**	1	BOLT (7/16-20X2.25-IN)	
	2	1	**8S-4723**	1	BOLT (7/16-20X1.5-IN)	
	3	1	**8S-0934**	1	LOCKNUT-FLANGE (7/16-20-THD)	

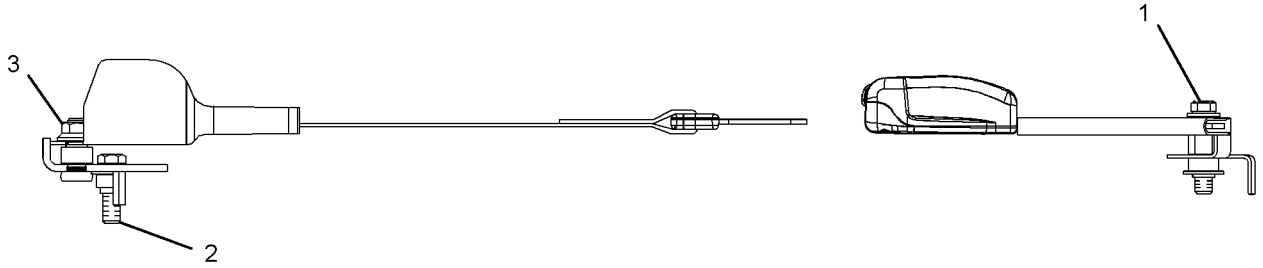

GRAPHIC #1 **<END>** g01253938

OPERATOR STATION

305-0466 SEAT BELT GP–RETRACTABLE

S/N: MNB1-UP; WDK1-UP

AN ATTACHMENT

SMCS-7327 **i03090282**

NOTE	REF NO	GRAPHIC REF	PART NUMBER	QTY	PART NAME 1 2 3 4 5 6 (PRODUCT LEVEL)	SEE PAGE
	1	1	**327-6540**	1	SEAT BELT GP	

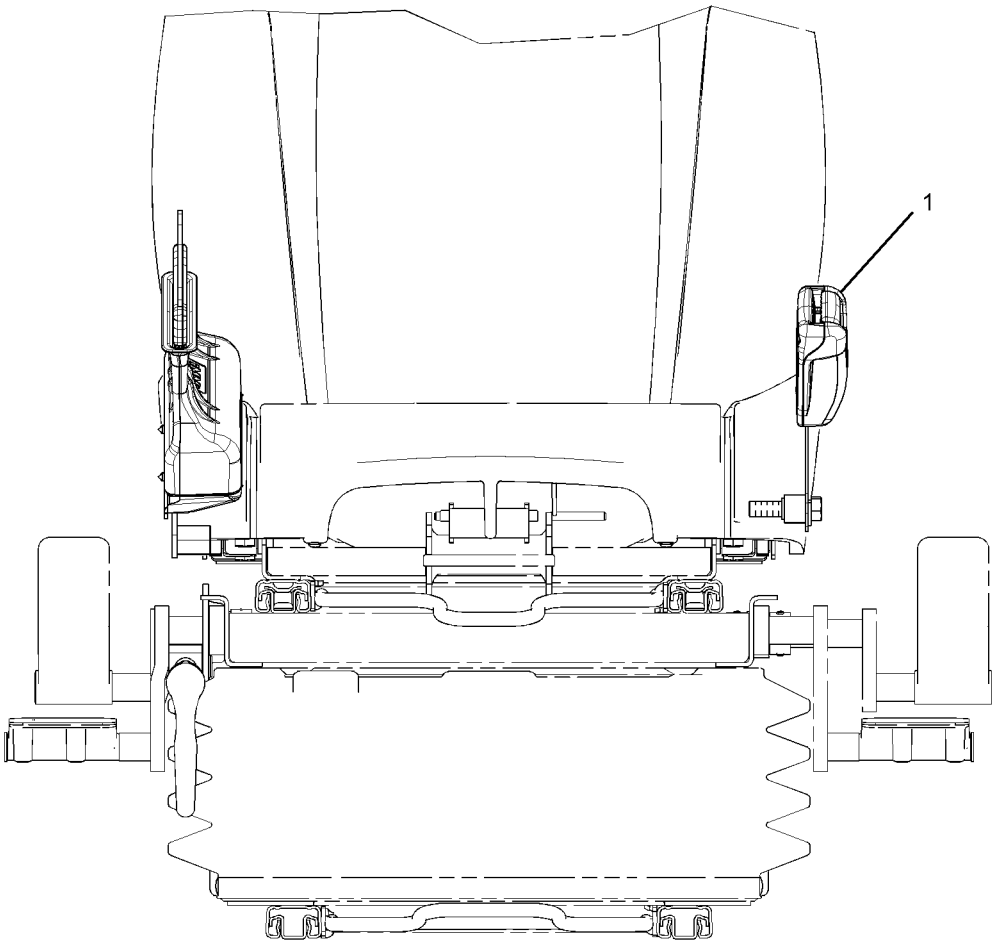

FRONT VIEW

GRAPHIC #1 **<END>** g01576875

OPERATOR STATION

305-0467 SEAT BELT GP–RETRACTABLE

S/N: MNB1-UP; WDK1-UP

AN ATTACHMENT

SMCS-7327 **i03090307**

NOTE	REF NO	GRAPHIC REF	PART NUMBER	QTY	PART NAME 1 2 3 4 5 6 (PRODUCT LEVEL)	SEE PAGE
	1	1	**327-6541**	1	SEAT BELT GP	

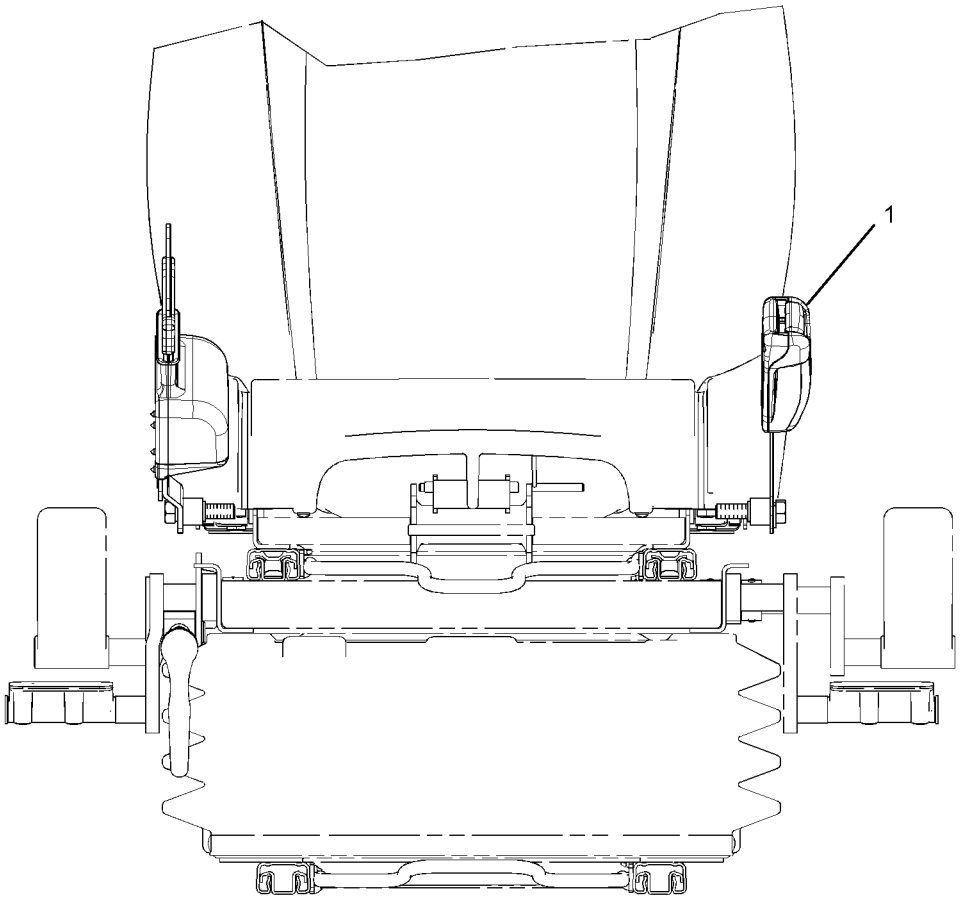

FRONT VIEW

GRAPHIC #1 **<END>** g01576478

OPERATOR STATION

229-9076 SEAT GP—LOW BACK WITH TILT

S/N: MNB1-UP; WDK1-UP

PART OF 235-9028 SEAT GP, 229-9075 SEAT GP-SUSPENSION

AN ATTACHMENT

SMCS-7312 **i02526961**

NOTE	REF NO	GRAPHIC REF	PART NUMBER	QTY	PART NAME 1 2 3 4 5 6 (PRODUCT LEVEL)	SEE PAGE
	1	1	**245-7883**	1	KIT-SEAT (CONTROL HANDLE)	
	1A	1	**8T-4224**	4	WASHER-HARD (8.8X16X2-MM THK)	
	1B	1	**245-7887**	1	LEVER-CONTROL	
M	1C	1	**245-7898**	4	SCREW-BUTTON HEAD (M8X1.25X25-MM)	
	2	1	**245-7888**	1	KIT-SEAT SUPPORT	
M	2A	1	**5C-7261**	4	NUT (M8X1.25-THD)	
	2B	1	**8T-4224**	8	WASHER-HARD (8.8X16X2-MM THK)	
M	2C	1	**245-7898**	4	SCREW-BUTTON HEAD (M8X1.25X25-MM)	
					J-PARTS INCLUDED IN BOTH SEAT KIT AND SEAT SUPPORT KIT	

M-METRIC PART

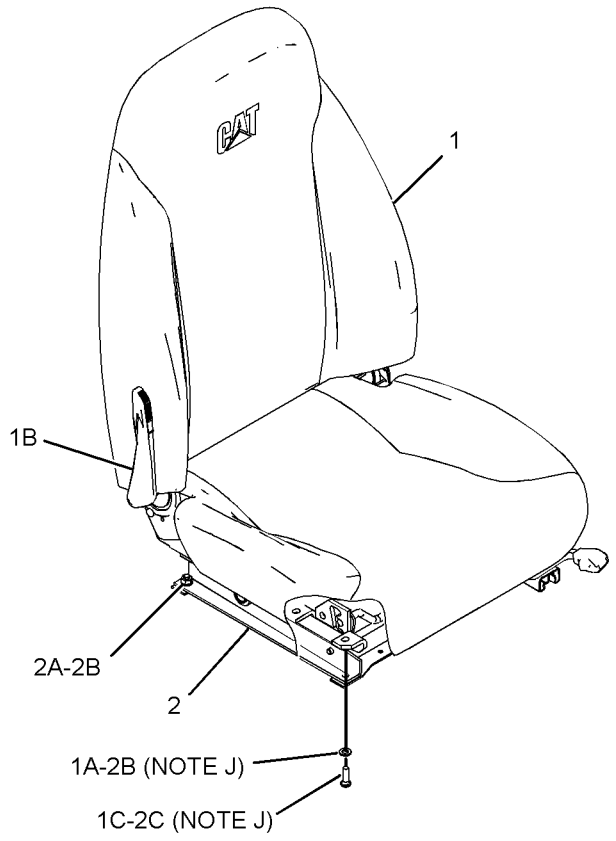

GRAPHIC #1 **<END>** g01263931

OPERATOR STATION

229-9090 SEAT GP–HIGH BACK, TILT

S/N: MNB1-UP; WDK1-UP

PART OF 229-9089, 240-5062 SEAT GP-SUSPENSION

AN ATTACHMENT

SMCS-7312 **i02212463**

NOTE	REF NO	GRAPHIC REF	PART NUMBER	QTY	PART NAME 1 2 3 4 5 6 (PRODUCT LEVEL)	SEE PAGE
	1	1	**245-7884**	1	KIT-SEAT	
M	1A	1	**245-7898**	4	SCREW-BUTTON HEAD (M8X1.25X25-MM)	
	1B	1	**8T-4224**	4	WASHER-HARD (8.8X16X2-MM THK)	
	1C	1	**178-5659**	1	HANDLE (LUMBAR SUPPORT ADJUSTER)	
	1D	1	**229-9094**	1	HEADREST AS-SEAT	
	1E	1	**245-7887**	1	LEVER-CONTROL	
	2	1	**245-7888**	1	KIT-SEAT SUPPORT	
M	2A	1	**245-7898**	4	SCREW-BUTTON HEAD (M8X1.25X25-MM)	
	2B	1	**8T-4224**	8	WASHER-HARD (8.8X16X2-MM THK)	
M	2C	1	**5C-7261**	4	NUT (M8X1.25-THD)	
					J-PARTS INCLUDED IN BOTH SEAT KIT AND SEAT SUPPORT KIT	

M-METRIC PART

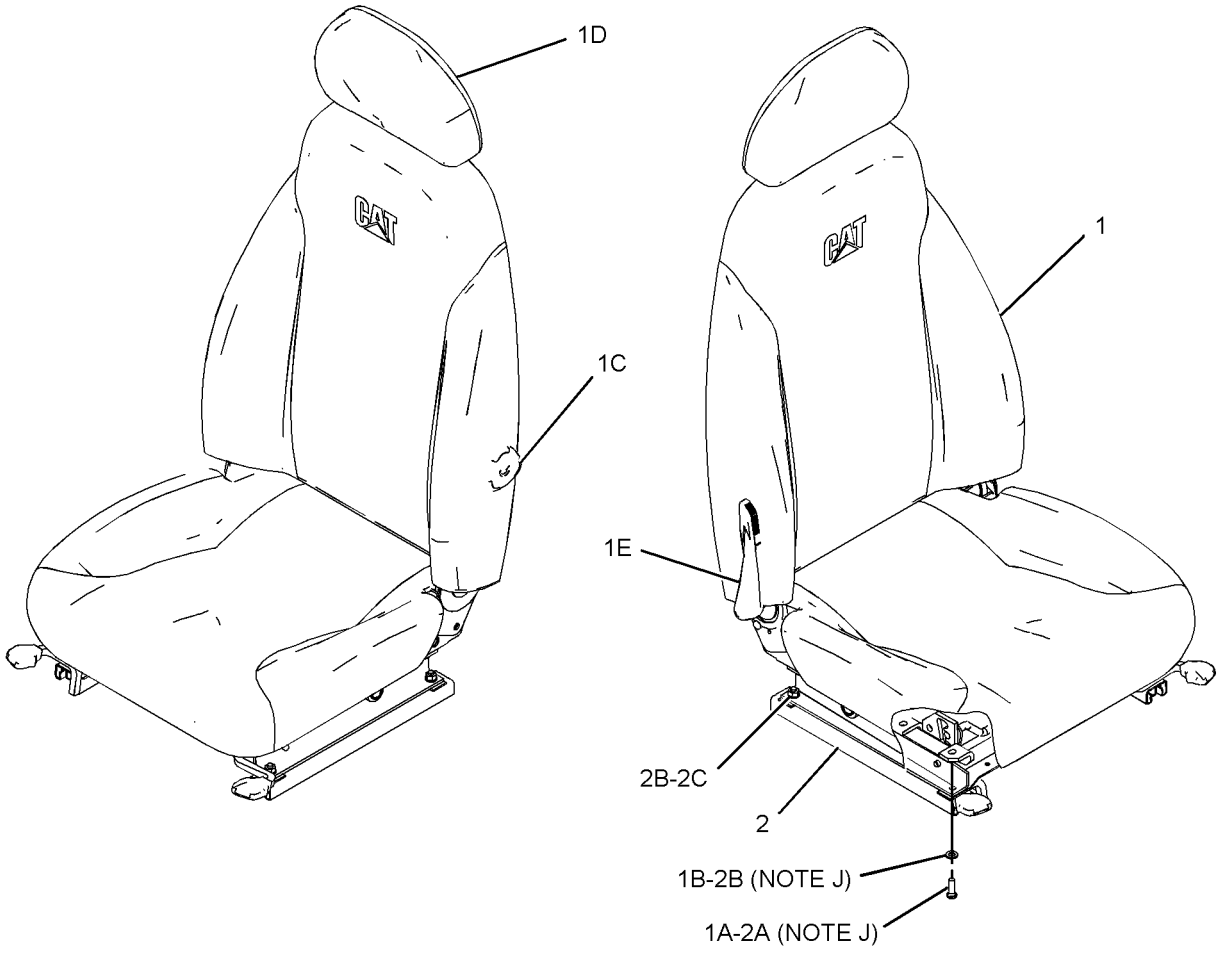

GRAPHIC #1 **<END>** g01118558

OPERATOR STATION

229-9093 SEAT GP—HIGH BACK, WITH HEATER

S/N: MNB1-UP; WDK1-UP
PART OF 240-5065 SEAT GP-SUSPENSION
AN ATTACHMENT

SMCS-7312 **i02212370**

NOTE	REF NO	GRAPHIC REF	PART NUMBER	QTY	PART NAME 1 2 3 4 5 6 (PRODUCT LEVEL)	SEE PAGE
	1	1	**245-7885**	1	SEAT GP	
		1	**8T-4224**	4	WASHER-HARD (8.8X16X2-MM THK)	
		1	**178-5659**	1	HANDLE (LUMBAR SUPPORT ADJUSTER)	
		1	**229-9094**	1	HEADREST AS-SEAT	
		1	**245-7887**	1	LEVER-CONTROL	
M		1	**245-7898**	4	SCREW-BUTTON HEAD (M8X1.25X25-MM)	
	2	1	**245-7888**	1	KIT-SEAT SUPPORT	
M		1	**5C-7261**	4	NUT (M8X1.25-THD)	
		1	**8T-4224**	8	WASHER-HARD (8.8X16X2-MM THK)	
M		1	**245-7898**	4	SCREW-BUTTON HEAD (M8X1.25X25-MM)	

M-METRIC PART

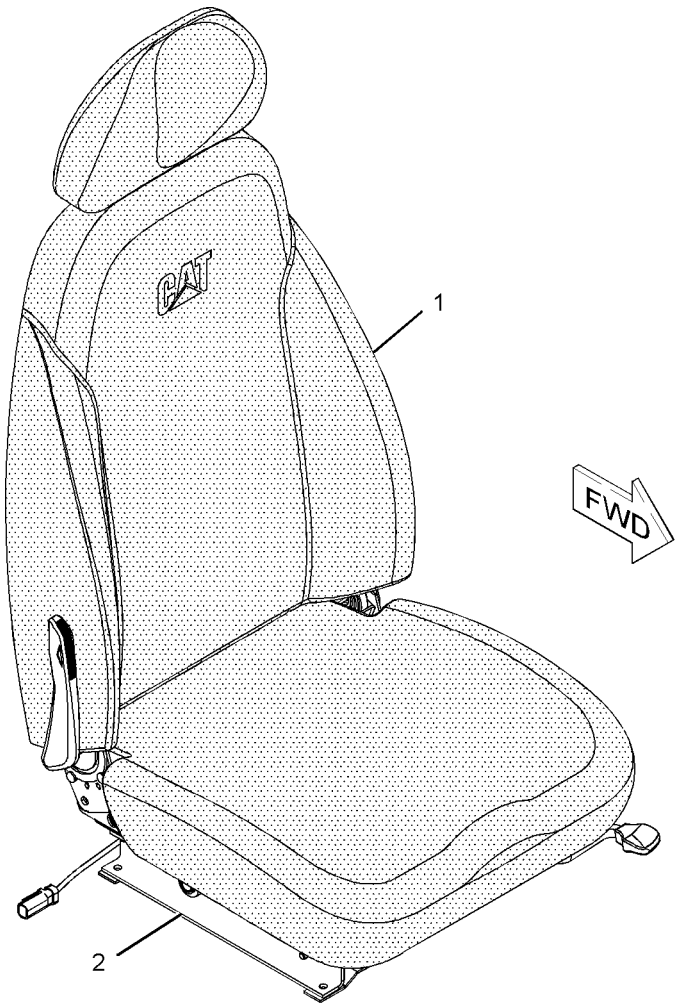

GRAPHIC #1

<END>

g01086049

OPERATOR STATION

235-9028 SEAT GP—LOW BACK, TILT

S/N: MNB1-UP; WDK1-UP
PART OF 240-5001 SEAT GP
AN ATTACHMENT

SMCS-7312 **i02489602**

NOTE	REF NO	GRAPHIC REF	PART NUMBER	QTY	PART NAME 1 2 3 4 5 6 (PRODUCT LEVEL)	SEE PAGE
Y	1	1	**229-9076**	1	SEAT GP (LOW BACK, TILT)	1043
Y	2	1	*229-9095*	1	SUSPENSION GP-SEAT	1074
M	3	1	**5C-7261**	4	NUT (M8X1.25-THD)	
	4	1	**8T-4224**	4	WASHER-HARD (8.8X16X2-MM THK)	

M-METRIC PART
Y-SEPARATE ILLUSTRATION

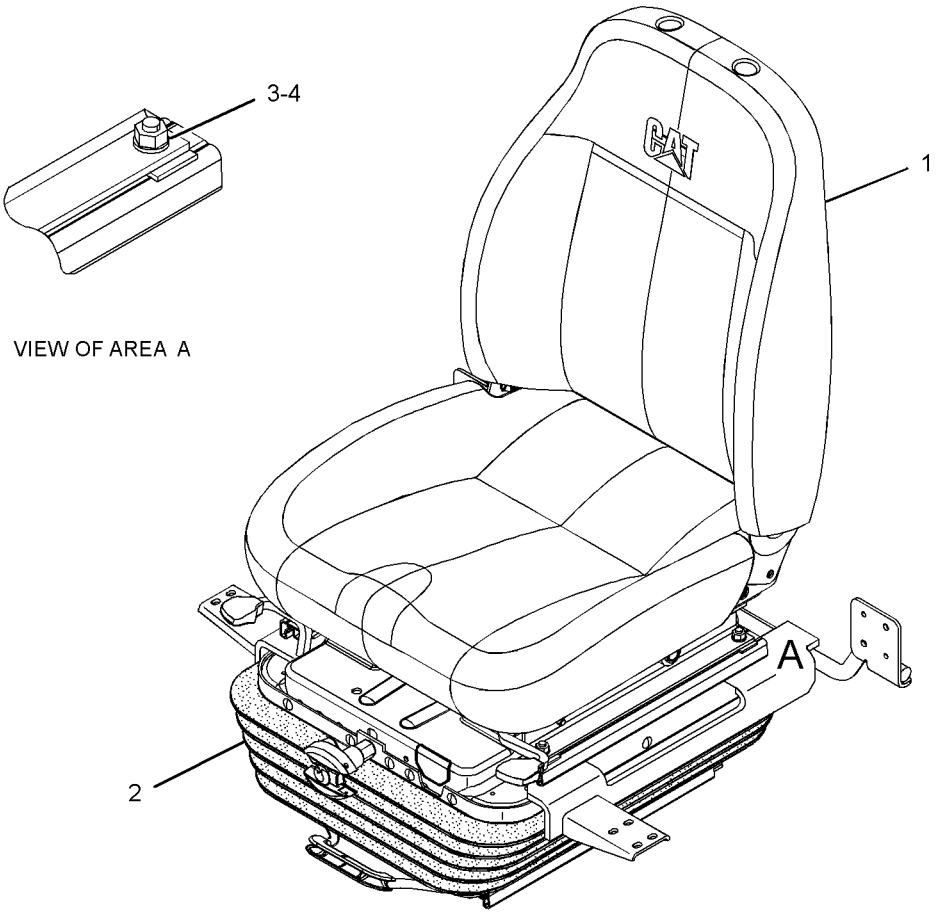

GRAPHIC #1 **<END>** g01251410

240-5001 SEAT GP–LOW BACK, TILT

S/N: MNB1-UP; WDK1-UP
AN ATTACHMENT

SMCS-7312 **i02526931**

NOTE	REF NO	GRAPHIC REF	PART NUMBER	QTY	PART NAME 1 2 3 4 5 6 (PRODUCT LEVEL)	SEE PAGE
Y	1	1	*235-9028*	1	SEAT GP (LOW BACK, TILT)	1046
M	2	1	**6V-8202**	4	BOLT-SOCKET HEAD (M8X1.25X16-MM)	

M-METRIC PART
Y-SEPARATE ILLUSTRATION

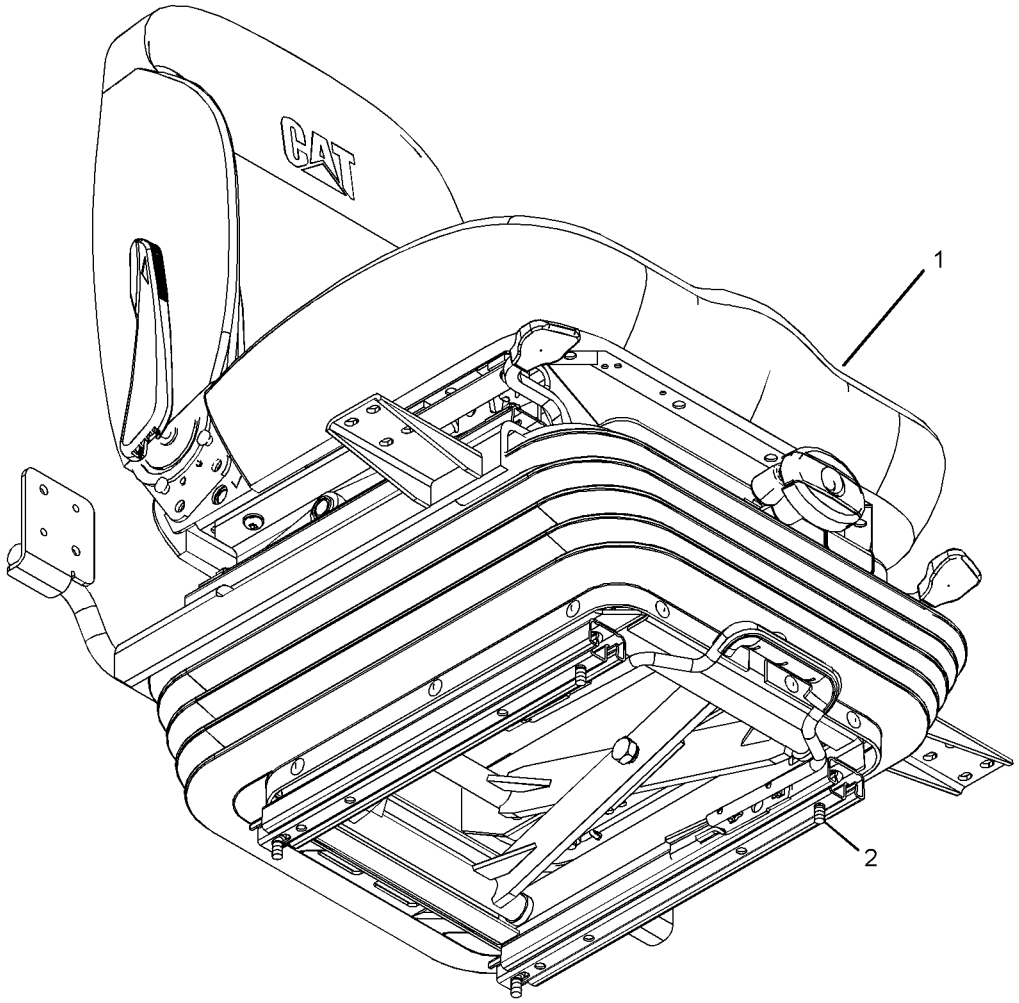

GRAPHIC #1 **<END>** g01236378

OPERATOR STATION

240-5056 SEAT GP

S/N: MNB1-UP; WDK1-UP
AN ATTACHMENT

SMCS-7312 **i02405962**

NOTE	REF NO	GRAPHIC REF	PART NUMBER	QTY	PART NAME 1 2 3 4 5 6 (PRODUCT LEVEL)	SEE PAGE
Y	1	1	*240-5057*	1	SEAT GP	1049
M	2	1	**6V-8202**	4	BOLT-SOCKET HEAD (M8X1.25X16-MM)	

M-METRIC PART
Y-SEPARATE ILLUSTRATION

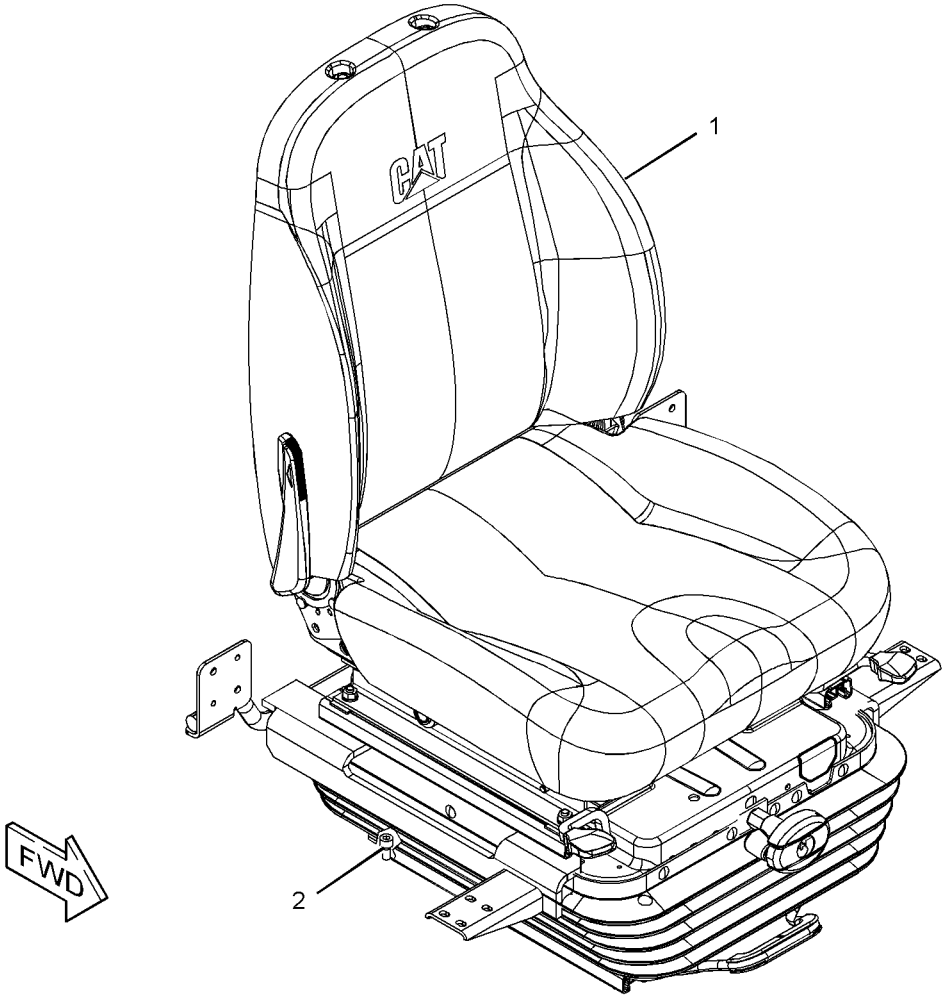

GRAPHIC #1 **<END>** g01232409

OPERATOR STATION

240-5057 SEAT GP

S/N: MNB1-UP; WDK1-UP
PART OF 240-5056 SEAT GP
AN ATTACHMENT

SMCS-7312 **i02489607**

NOTE	REF NO	GRAPHIC REF	PART NUMBER	QTY	PART NAME 1 2 3 4 5 6 (PRODUCT LEVEL)	SEE PAGE
Y	1	1	*229-9095*	1	SUSPENSION GP-SEAT	1074
Y	2	1	**240-5058**	1	SEAT GP (LOW BACK, TILT)	1050
M	3	1	**5C-7261**	4	NUT (M8X1.25-THD)	
	4	1	**8T-4224**	4	WASHER-HARD (8.8X16X2-MM THK)	

M-METRIC PART
Y-SEPARATE ILLUSTRATION

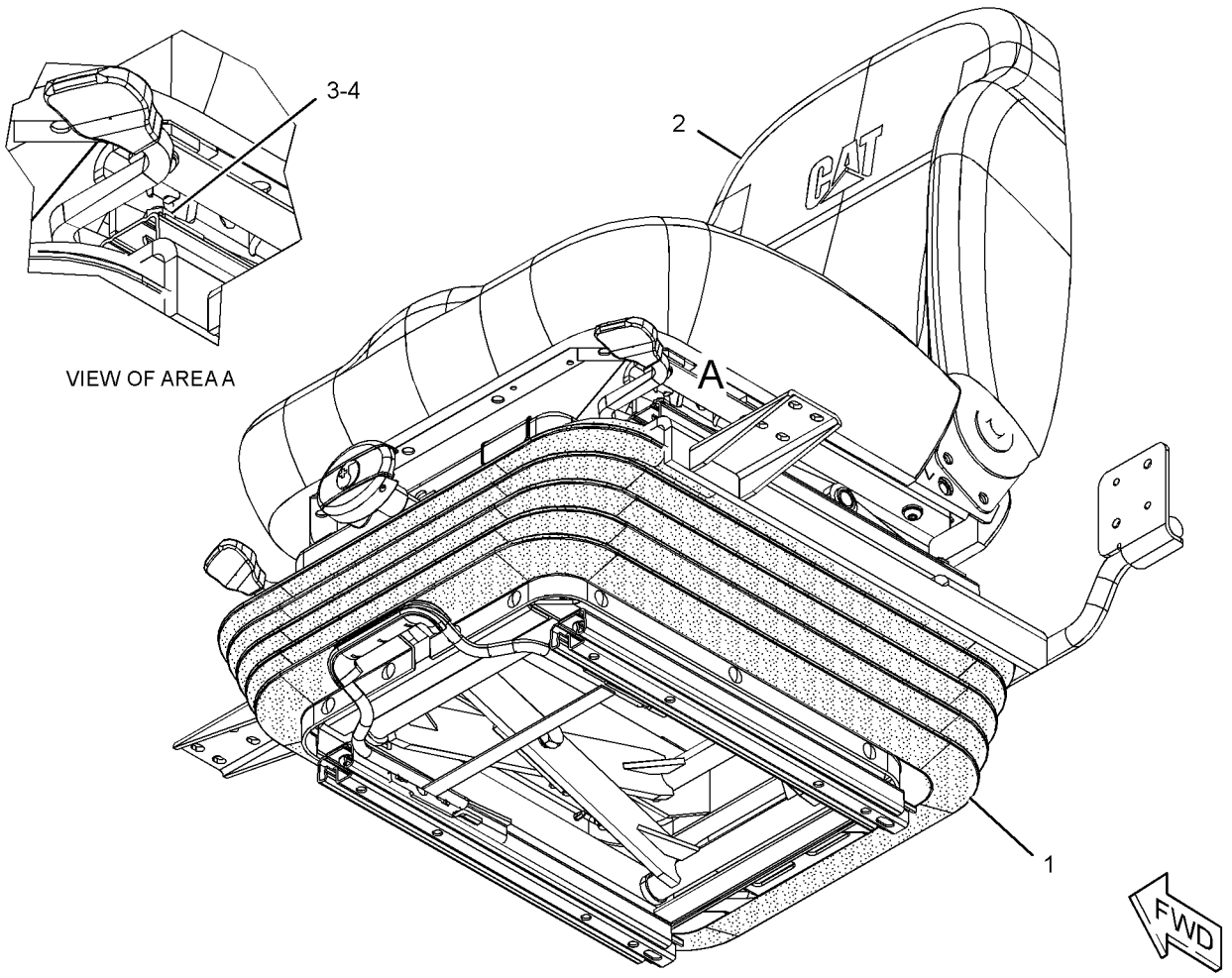

GRAPHIC #1 **<END>** g01251481

OPERATOR STATION

240-5058 SEAT GP—LOW BACK, TILT

S/N: MNB1-UP; WDK1-UP
PART OF 240-5057 SEAT GP
AN ATTACHMENT

SMCS-7312 **i02476490**

NOTE	REF NO	GRAPHIC REF	PART NUMBER	QTY	PART NAME 1 2 3 4 5 6 (PRODUCT LEVEL)	SEE PAGE
	1	1	**245-7882**	1	KIT-SEAT	
M	1A	1	**245-7898**	4	SCREW-BUTTON HEAD (M8X1.25X25-MM)	
	1B	1	**8T-4224**	4	WASHER-HARD (8.8X16X2-MM THK)	
	1C	1	**245-7887**	1	LEVER-CONTROL	
	2	1	**245-7888**	1	KIT-SEAT SUPPORT	
M	2A	1	**245-7898**	4	SCREW-BUTTON HEAD (M8X1.25X25-MM)	
	2B	1	**8T-4224**	8	WASHER-HARD (8.8X16X2-MM THK)	
M	2C	1	**5C-7261**	4	NUT (M8X1.25-THD)	
					J-PARTS INCLUDED IN BOTH SEAT KIT AND SEAT SUPPORT KIT	

M-METRIC PART

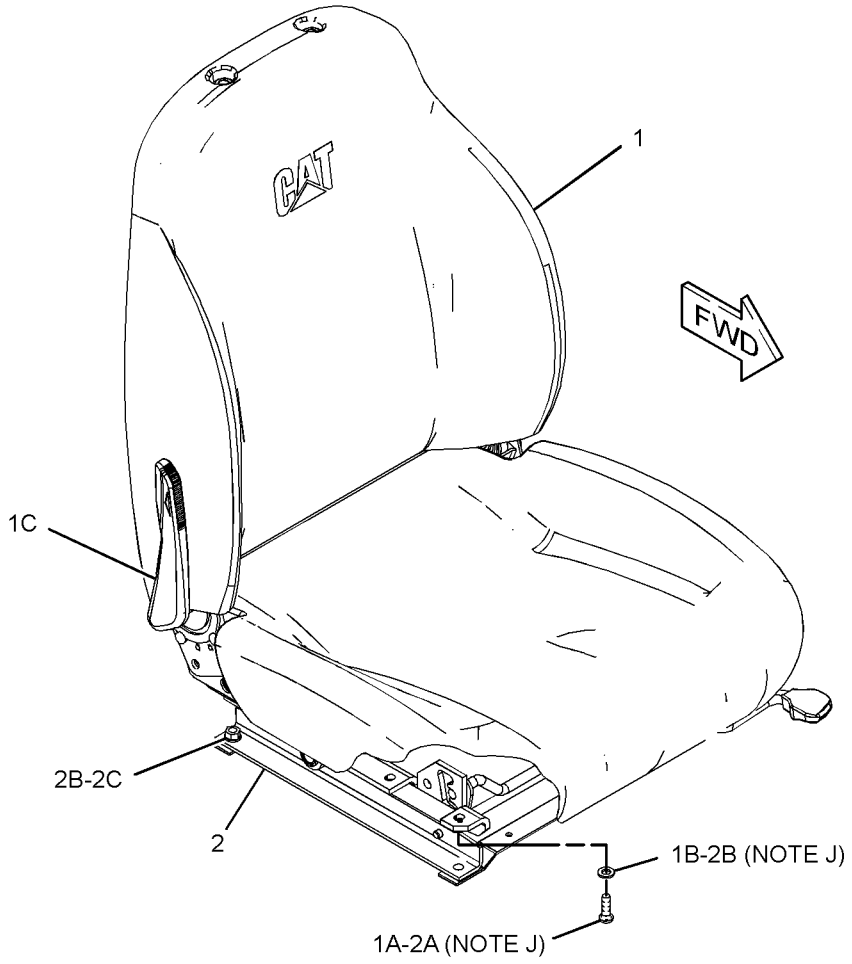

GRAPHIC #1 **<END>** g01242921

OPERATOR STATION

327-6498 SEAT GP—LOW BACK, VINYL

S/N: MNB1-UP; WDK1-UP

AN ATTACHMENT

SMCS-7312 **i03213397**

NOTE	REF NO	GRAPHIC REF	PART NUMBER	QTY	PART NAME 1 2 3 4 5 6 (PRODUCT LEVEL)	SEE PAGE
	1	1	**316-8987**	2	BRACKET	
Y	2	1	*327-6504*	1	SEAT GP	1053
M	3	1	**5A-3604**	2	BOLT-SOCKET HEAD (M8X1.25X25-MM)	
M	4	1	**6V-8202**	2	BOLT-SOCKET HEAD (M8X1.25X16-MM)	

M-METRIC PART
Y-SEPARATE ILLUSTRATION

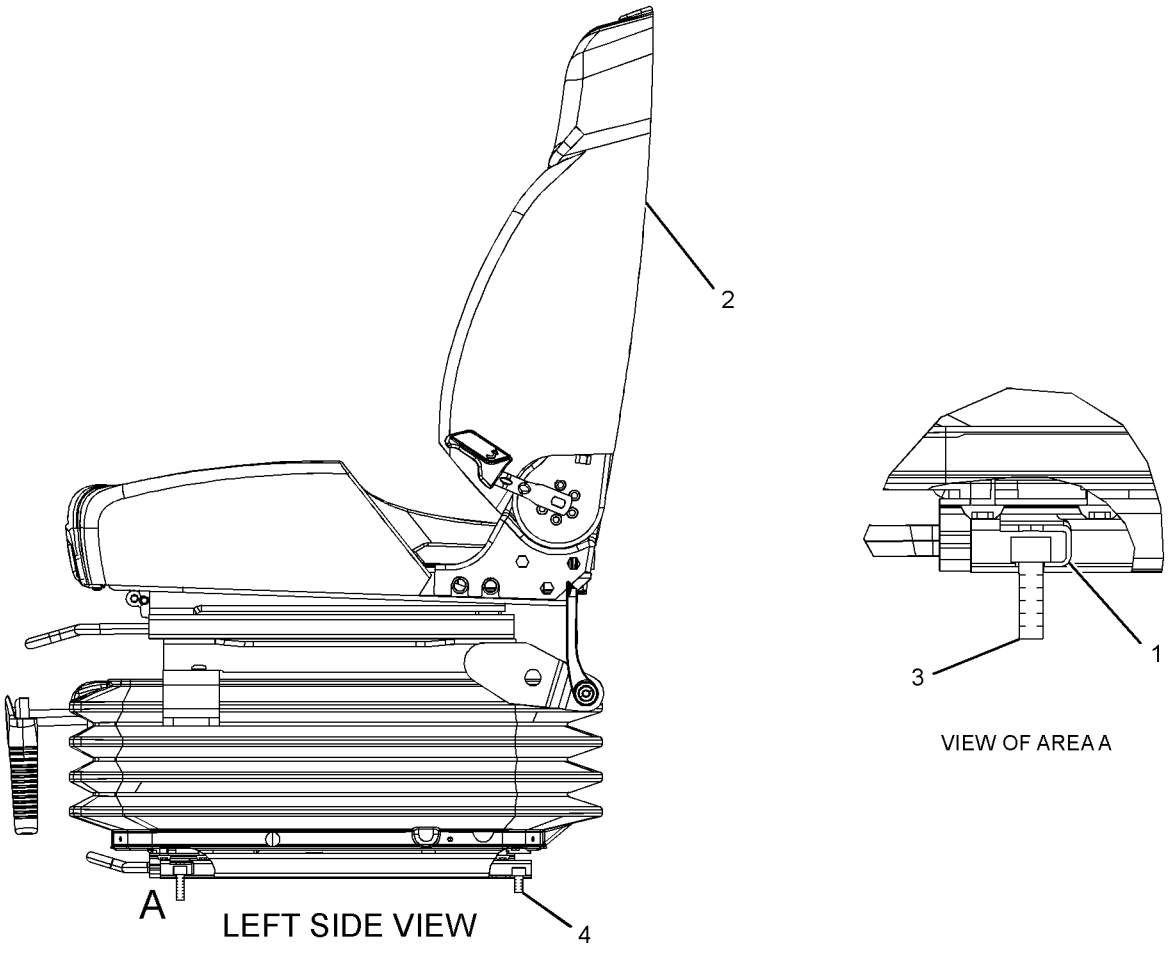

GRAPHIC #1 **<END>** g01642053

OPERATOR STATION

327-6499 SEAT GP—LOW BACK, TILT

S/N: MNB1-UP; WDK1-UP

AN ATTACHMENT

SMCS-7312 **i03213460**

NOTE	REF NO	GRAPHIC REF	PART NUMBER	QTY	PART NAME 1 2 3 4 5 6 (PRODUCT LEVEL)	SEE PAGE
	1	1	**316-8987**	2	BRACKET	
Y	2	1	*327-6505*	1	SEAT GP	1054
M	3	1	**5A-3604**	2	BOLT-SOCKET HEAD (M8X1.25X25-MM)	
M	4	1	**6V-8202**	2	BOLT-SOCKET HEAD (M8X1.25X16-MM)	

M-METRIC PART
Y-SEPARATE ILLUSTRATION

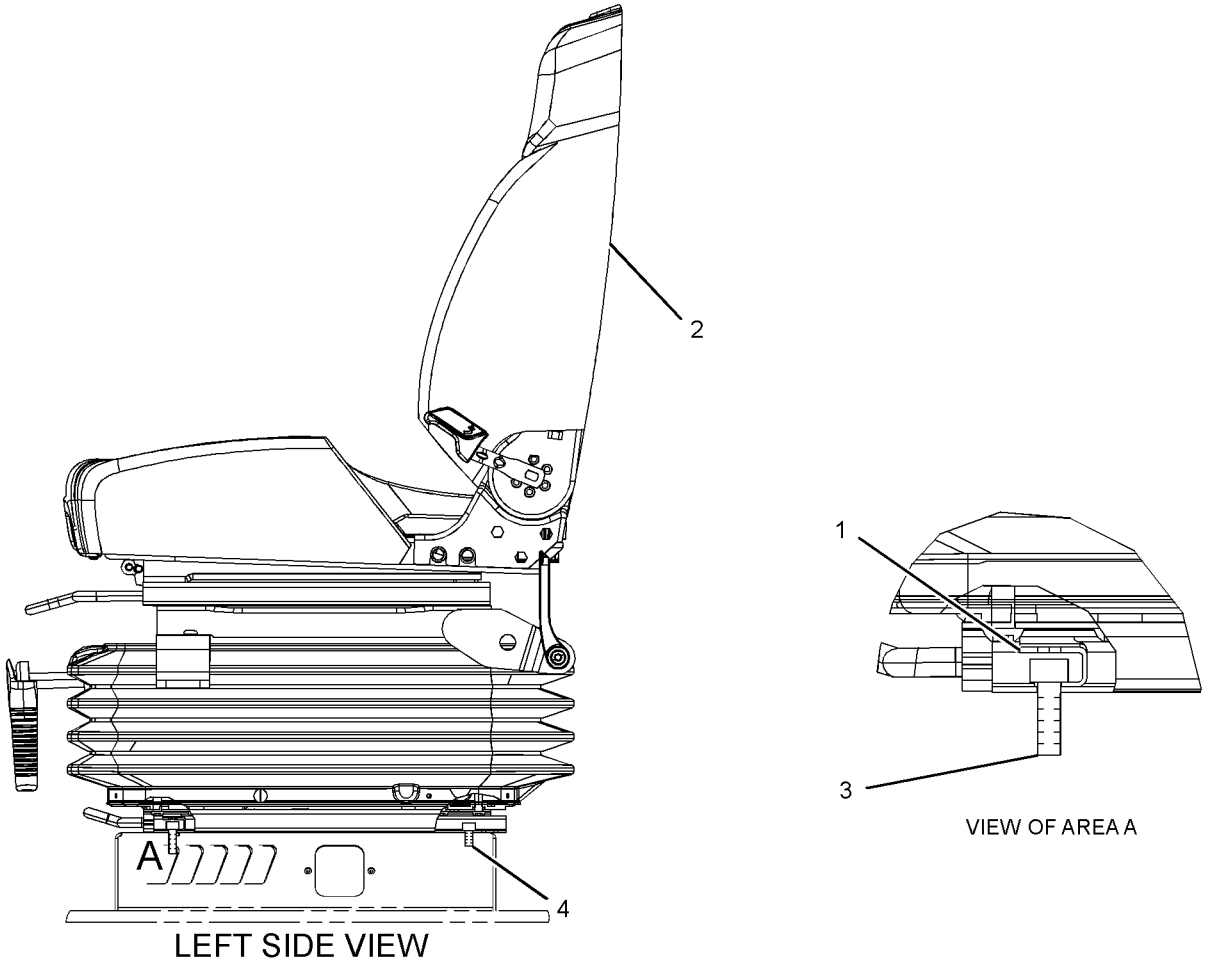

LEFT SIDE VIEW

GRAPHIC #1 **<END>** g01642156

OPERATOR STATION

327-6504 SEAT GP—LOW BACK, VINYL

S/N: MNB1-UP; WDK1-UP
PART OF 327-6498 SEAT GP
AN ATTACHMENT

SMCS-7312 **i03213408**

NOTE	REF NO	GRAPHIC REF	PART NUMBER	QTY	PART NAME 1 2 3 4 5 6 (PRODUCT LEVEL)	SEE PAGE
	1	1	**316-8987**	2	BRACKET	
Y	2	1	**327-6510**	1	SEAT GP	1055
Y	3	1	**327-6517**	1	SUSPENSION GP-SEAT	1078
M	4	1	**5A-3604**	4	BOLT-SOCKET HEAD (M8X1.25X25-MM)	

M-METRIC PART
Y-SEPARATE ILLUSTRATION

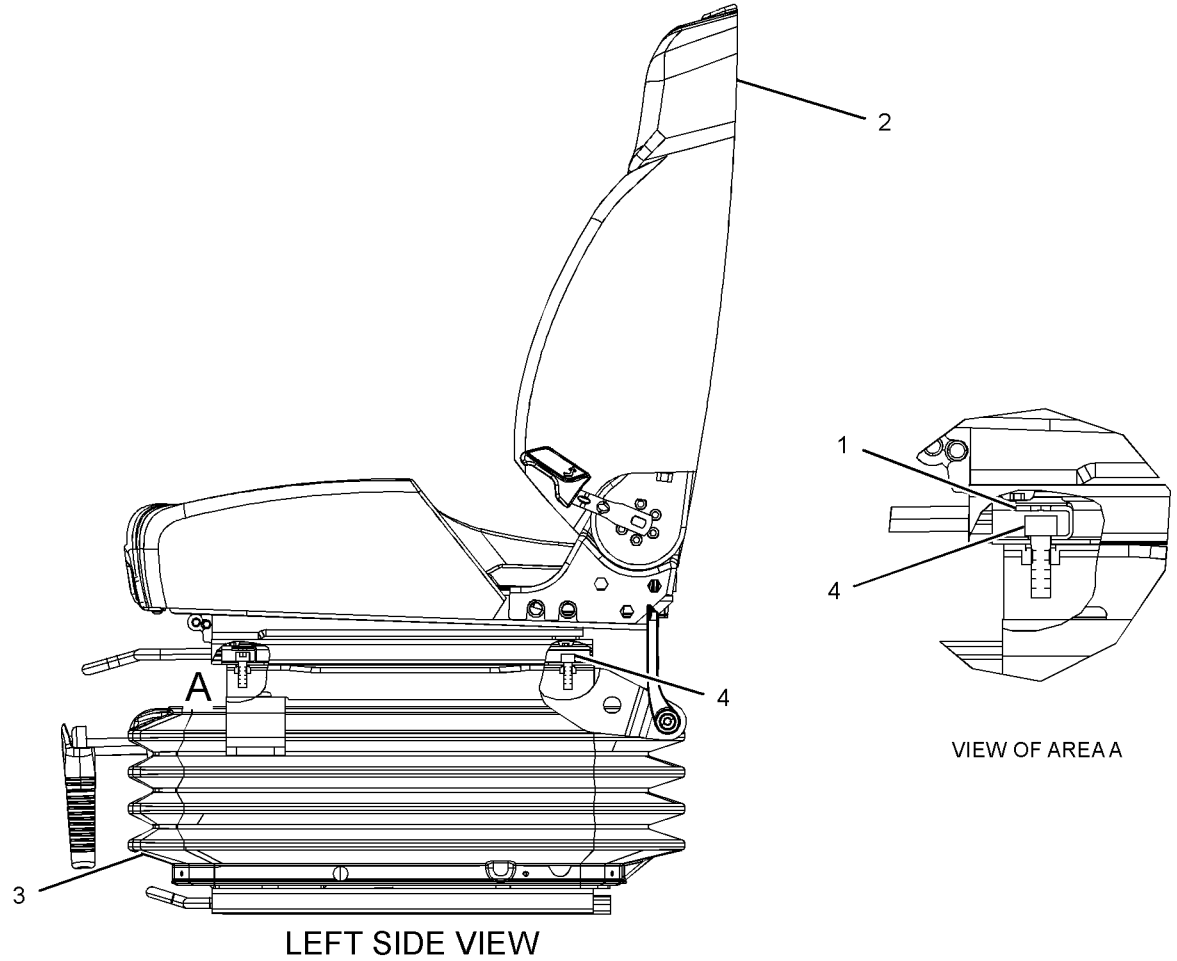

LEFT SIDE VIEW

GRAPHIC #1 **<END>** g01641812

OPERATOR STATION

327-6505 SEAT GP—LOW BACK, TILT

S/N: MNB1-UP; WDK1-UP
PART OF 327-6499 SEAT GP
AN ATTACHMENT

SMCS-7312 **i03213463**

NOTE	REF NO	GRAPHIC REF	PART NUMBER	QTY	PART NAME 1 2 3 4 5 6 (PRODUCT LEVEL)	SEE PAGE
	1	1	**316-8987**	2	BRACKET	
Y	2	1	**327-6511**	1	SEAT GP	1056
Y	3	1	**327-6517**	1	SUSPENSION GP-SEAT	1078
M	4	1	**5A-3604**	4	BOLT-SOCKET HEAD (M8X1.25X25-MM)	

M-METRIC PART
Y-SEPARATE ILLUSTRATION

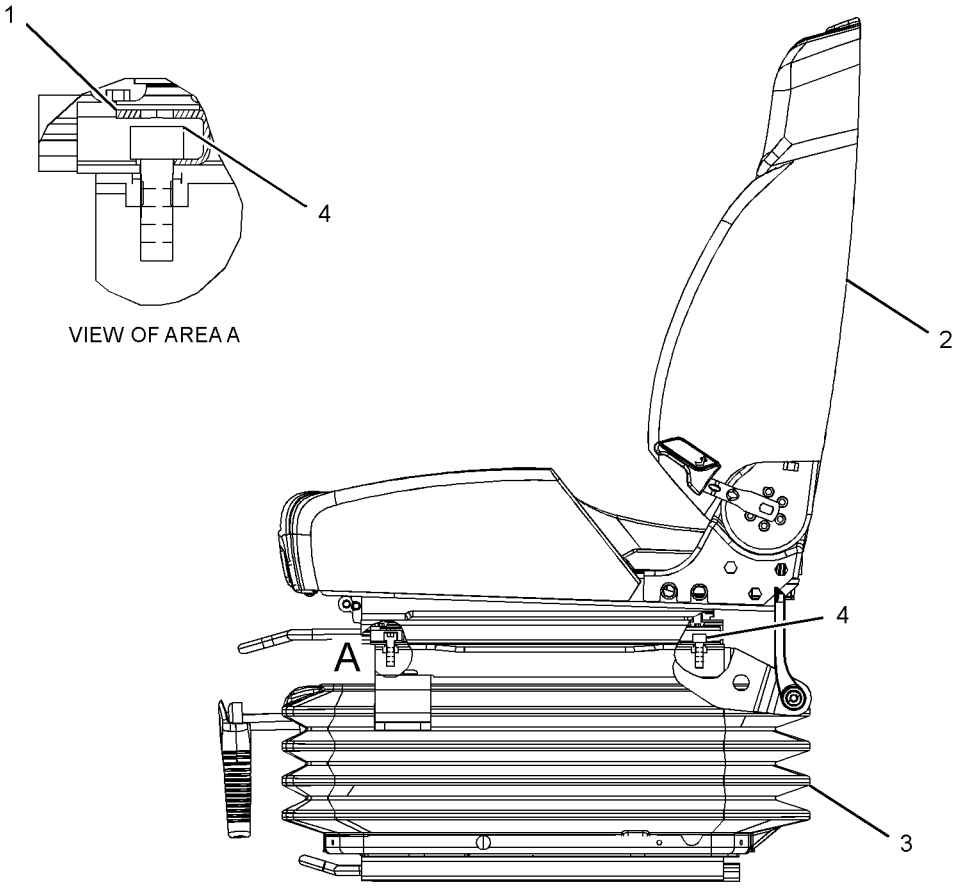

LEFT SIDE VIEW

GRAPHIC #1 **<END>** g01641267

OPERATOR STATION

327-6510 SEAT GP—LOW BACK, VINYL

S/N: MNB1-UP; WDK1-UP
PART OF 327-6504 SEAT GP
AN ATTACHMENT

SMCS-7312 **i03213421**

NOTE	REF NO	GRAPHIC REF	PART NUMBER	QTY	PART NAME 1 2 3 4 5 6 (PRODUCT LEVEL)	SEE PAGE
	1	1	**327-6642**	1	KIT-ADJUSTER (SEAT TILT)	
M		1	**9X-2616**	4	SCREW-SOCKET (M8X1.25X16-MM)	
		1	**333-4179**	2	BOLT	
	2	1	**327-6643**	1	KIT-ADJUSTER (CUSHION POSITIONING)	
M		1	**9X-2616**	4	SCREW-SOCKET (M8X1.25X16-MM)	
		1	**316-8987**	2	BRACKET	
J	3	1	**333-4172**	1	KIT-SEAT (LOW BACK, VINYL)	
		1	**333-4179**	2	BOLT	
					AVAILABLE REPAIR KIT(S):	
J			**327-6640**	1	KIT-HANDLE (RECLINER)	

J-KIT MARKED J SERVICES PART(S) MARKED J
M-METRIC PART

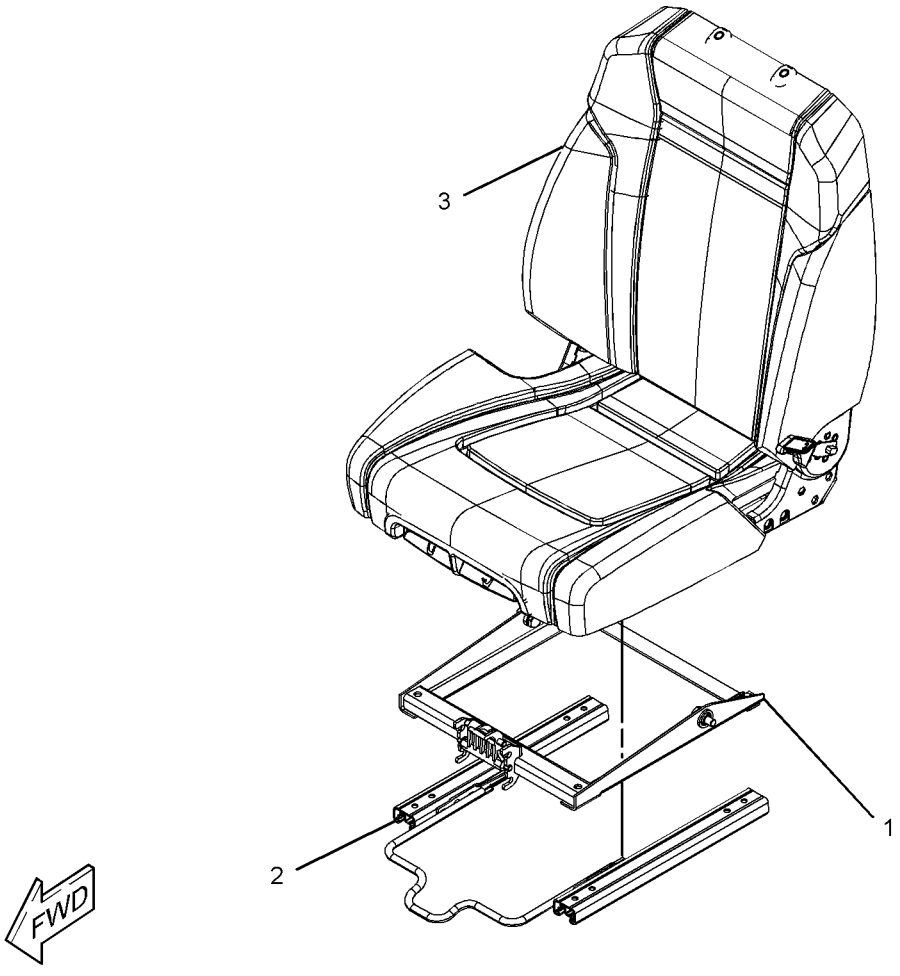

GRAPHIC #1 **<END>** g01641780

OPERATOR STATION

327-6511 SEAT GP

S/N: MNB1-UP; WDK1-UP
PART OF 327-6505 SEAT GP, 327-6506 SEAT GP-SUSPENSION
AN ATTACHMENT

SMCS-7312 **i03207831**

NOTE	REF NO	GRAPHIC REF	PART NUMBER	QTY	PART NAME 1 2 3 4 5 6 (PRODUCT LEVEL)	SEE PAGE
J	1	1	**327-6639**	1	KIT-SEAT (CLOTH, LOW BACK)	
		1	**333-4179**	2	BOLT	
	2	1	**327-6642**	1	KIT-ADJUSTER (SEAT TILT)	
M		1	**9X-2616**	4	SCREW-SOCKET (M8X1.25X16-MM)	
		1	**333-4179**	2	BOLT	
	3	1	**327-6643**	1	KIT-ADJUSTER (CUSHION POSITIONING)	
M		1	**9X-2616**	4	SCREW-SOCKET (M8X1.25X16-MM)	
		1	**316-8987**	2	BRACKET	
					AVAILABLE REPAIR KIT(S):	
J			**327-6640**	1	KIT-HANDLE (RECLINER)	

J-KIT MARKED J SERVICES PART(S) MARKED J
M-METRIC PART

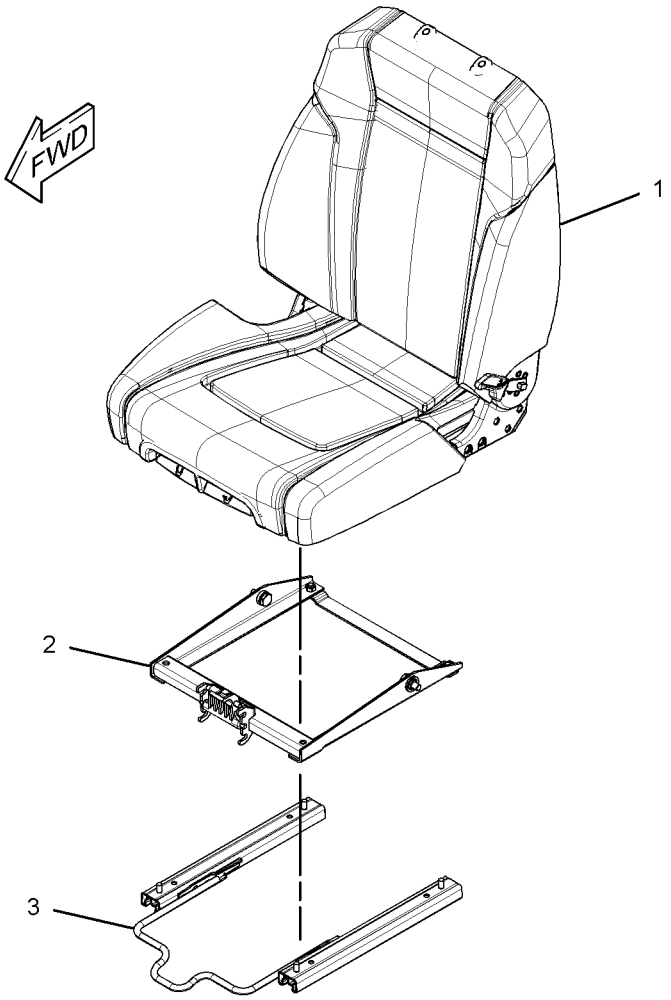

GRAPHIC #1

<END>

g01637855

OPERATOR STATION

327-6512 SEAT GP–HIGH BACK, TILT

S/N: MNB1-UP; WDK1-UP
PART OF 327-6507, 327-6508 SEAT GP-SUSPENSION
AN ATTACHMENT

SMCS-7312 **i03213644**

NOTE	REF NO	GRAPHIC REF	PART NUMBER	QTY	PART NAME 1 2 3 4 5 6 (PRODUCT LEVEL)	SEE PAGE
Y	1	1	**327-6515**	1	HEADREST AS-SEAT	994
	2	1	**327-6642**	1	KIT-ADJUSTER (SEAT TILT)	
M		1	**9X-2616**	4	SCREW-SOCKET (M8X1.25X16-MM)	
		1	**333-4179**	2	BOLT	
	3	1	**327-6643**	1	KIT-ADJUSTER (CUSHION POSITIONING)	
M		1	**9X-2616**	4	SCREW-SOCKET (M8X1.25X16-MM)	
		1	**316-8987**	2	BRACKET	
J	4	1	**333-4160**	1	KIT-SEAT (CLOTH, HIGH BACK)	
		1	**178-5659**	1	HANDLE (LUMBAR SUPPORT ADJUSTER)	
		1	**333-4179**	2	BOLT	
					AVAILABLE REPAIR KIT(S):	
J			**327-6640**	1	KIT-HANDLE (RECLINER)	

J-KIT MARKED J SERVICES PART(S) MARKED J
M-METRIC PART
Y-SEPARATE ILLUSTRATION

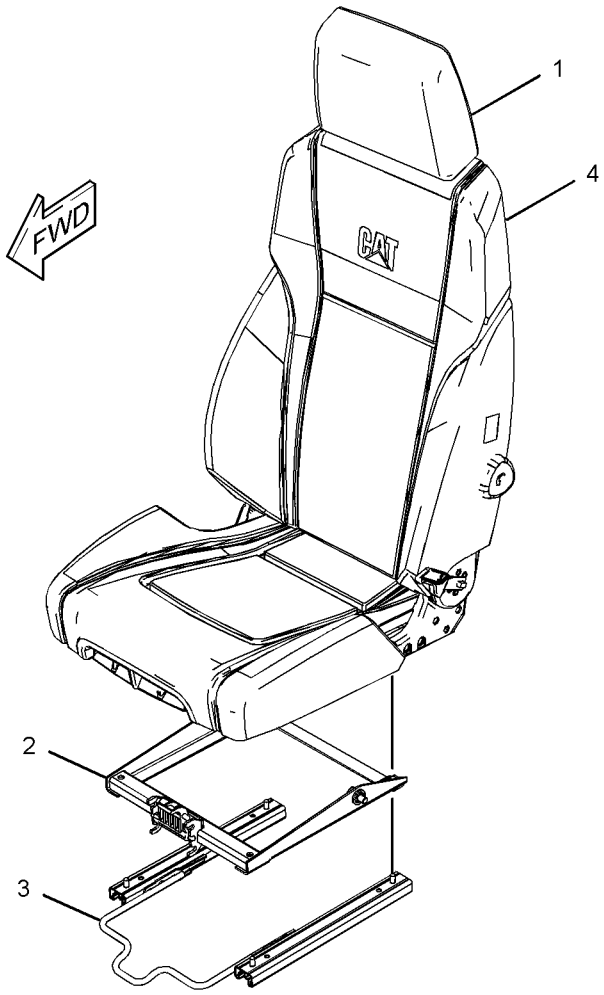

GRAPHIC #1 **<END>** g01641173

OPERATOR STATION

327-6513 SEAT GP—HIGH BACK, WITH HEATER

S/N: MNB1-UP; WDK1-UP

PART OF 327-6509 SEAT GP-SUSPENSION

AN ATTACHMENT

SMCS-7312 **i03213502**

NOTE	REF NO	GRAPHIC REF	PART NUMBER	QTY	PART NAME 1 2 3 4 5 6 (PRODUCT LEVEL)	SEE PAGE
Y	1	1	**327-6515**	1	HEADREST AS-SEAT	994
	2	1	**327-6642**	1	KIT-ADJUSTER (SEAT TILT)	
M		1	**9X-2616**	4	SCREW-SOCKET (M8X1.25X16-MM)	
		1	**333-4179**	2	BOLT	
	3	1	**327-6643**	1	KIT-ADJUSTER (CUSHION POSITIONING)	
M		1	**9X-2616**	4	SCREW-SOCKET (M8X1.25X16-MM)	
		1	**316-8987**	2	BRACKET	
J	4	1	**327-6649**	1	KIT-SEAT (HIGH BACK, WITH HEATER)	
		1	**178-5659**	1	HANDLE (LUMBAR SUPPORT ADJUSTER)	
		1	**333-4179**	2	BOLT	
					AVAILABLE REPAIR KIT(S):	
J			**327-6640**	1	KIT-HANDLE (RECLINER)	

J-KIT MARKED J SERVICES PART(S) MARKED J
M-METRIC PART
Y-SEPARATE ILLUSTRATION

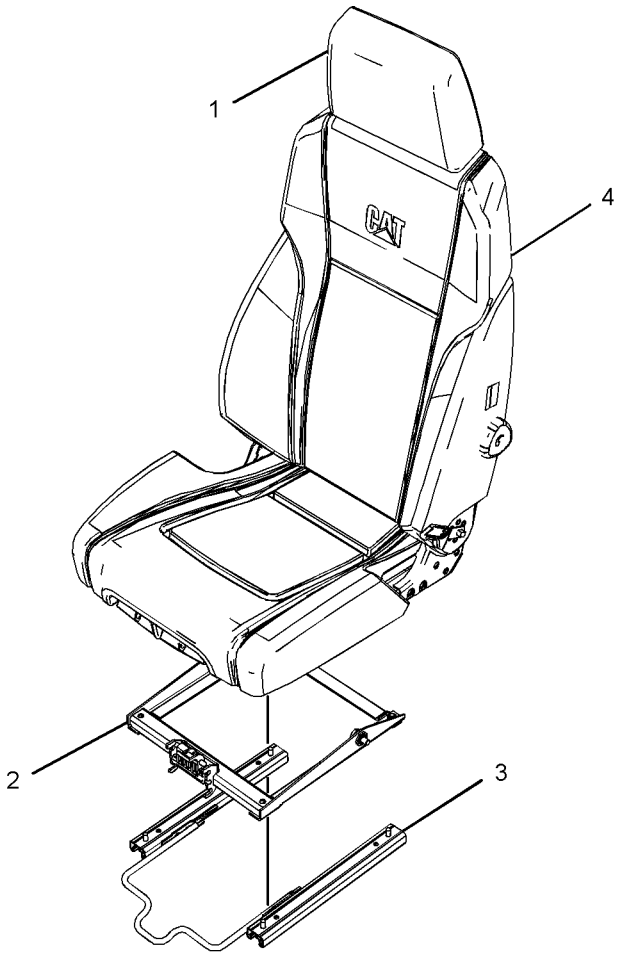

GRAPHIC #1 **<END>** g01641553

229-9075 SEAT GP-SUSPENSION–LOW BACK, TILT

S/N: MNB1-UP; WDK1-UP
PART OF 240-4999 SEAT & MOUNTING GP
AN ATTACHMENT

SMCS-7324, 7336 **i02212271**

NOTE	REF NO	GRAPHIC REF	PART NUMBER	QTY	PART NAME 1 2 3 4 5 6 (PRODUCT LEVEL)	SEE PAGE
Y	1	1	**229-9076**	1	SEAT GP (LOW BACK, TILT)	1043
Y	2	1	**229-9077**	1	SUSPENSION GP-SEAT	1073
M	3	1	**5C-7261**	4	NUT (M8X1.25-THD)	
	4	1	**8T-4224**	4	WASHER-HARD (8.8X16X2-MM THK)	

M-METRIC PART
Y-SEPARATE ILLUSTRATION

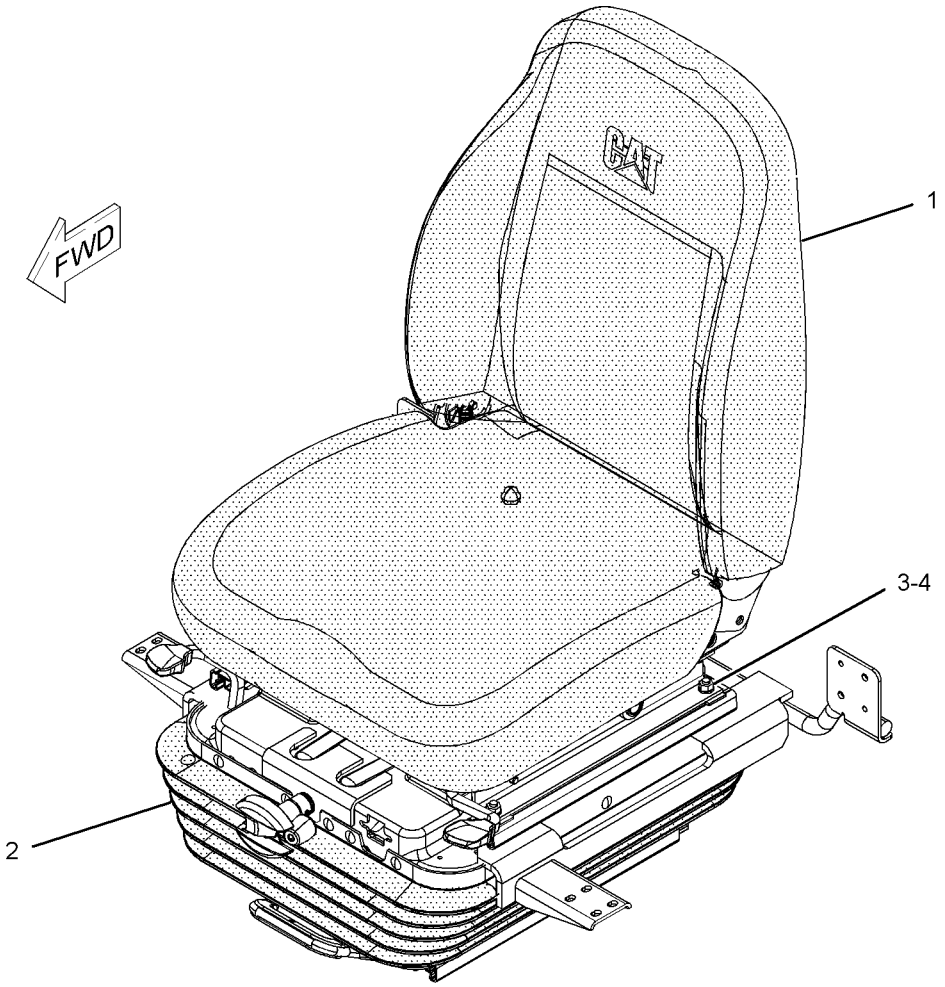

GRAPHIC #1 **<END>** g01092314

OPERATOR STATION

229-9089 SEAT GP-SUSPENSION—HIGH BACK, TILT

S/N: MNB1-UP; WDK1-UP

PART OF 240-5003 SEAT & MOUNTING GP

AN ATTACHMENT

SMCS-7324, 7336 **i03016833**

NOTE	REF NO	GRAPHIC REF	PART NUMBER	QTY	PART NAME 1 2 3 4 5 6 (PRODUCT LEVEL)	SEE PAGE
Y	1	1	**229-9077**	1	SUSPENSION GP-SEAT	1073
Y	2	1	**229-9090**	1	SEAT GP (HIGH BACK, TILT)	1044
M	3	1	**5C-7261**	4	NUT (M8X1.25-THD)	
	4	1	**8T-4224**	4	WASHER-HARD (8.8X16X2-MM THK)	

M-METRIC PART
Y-SEPARATE ILLUSTRATION

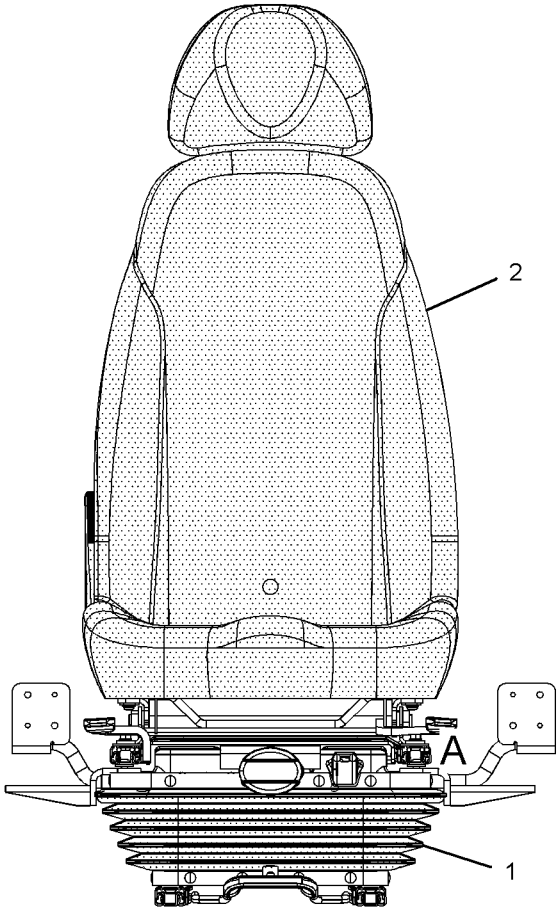

FRONT VIEW

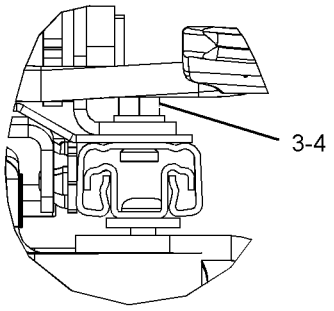

VIEW OF AREA A

GRAPHIC #1 **<END>** g01172597

240-5062 SEAT GP-SUSPENSION—AIR SUSPENSION

S/N: MNB1-UP; WDK1-UP
PART OF 240-5061 SEAT & MOUNTING GP
AN ATTACHMENT

SMCS-7324, 7336 **i02212396**

NOTE	REF NO	GRAPHIC REF	PART NUMBER	QTY	PART NAME 1 2 3 4 5 6 (PRODUCT LEVEL)	SEE PAGE
Y	1	1	**229-9090**	1	SEAT GP (HIGH BACK, TILT)	1044
Y	2	1	**240-5063**	1	SUSPENSION GP-SEAT (AIR)	1075
M	3	1	**5C-7261**	4	NUT (M8X1.25-THD)	
	4	1	**8T-4224**	4	WASHER-HARD (8.8X16X2-MM THK)	

M-METRIC PART
Y-SEPARATE ILLUSTRATION

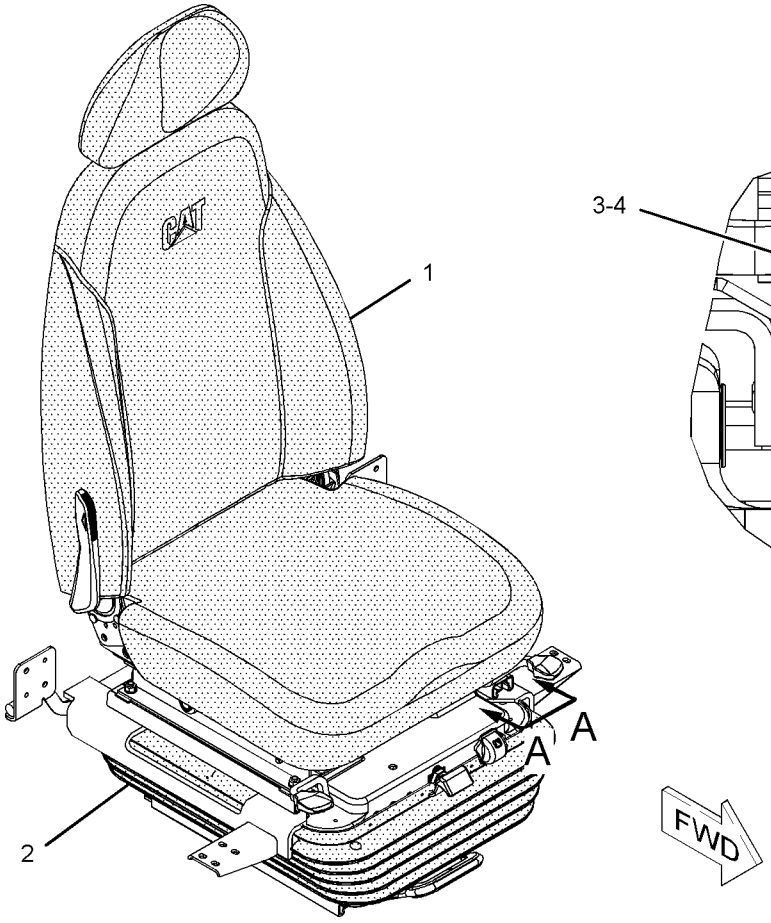

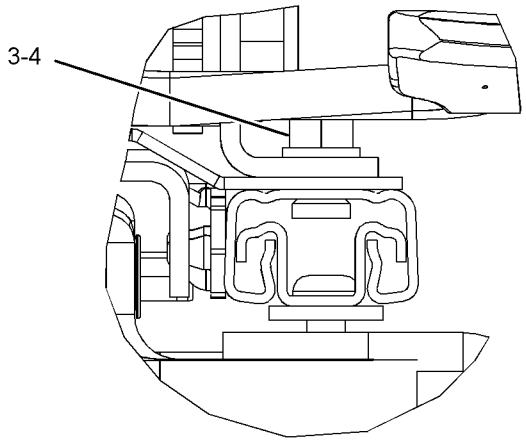

VIEW A-A

GRAPHIC #1 **<END>** g01085982

OPERATOR STATION

240-5064 SEAT GP-SUSPENSION—AIR SUSP, HIGH BACK, WITH HTR

S/N: MNB1-UP; WDK1-UP

AN ATTACHMENT

SMCS-7324, 7336 **i02476000**

NOTE	REF NO	GRAPHIC REF	PART NUMBER	QTY	PART NAME 1 2 3 4 5 6 (PRODUCT LEVEL)	SEE PAGE
	1	1	**3S-2093**	2	STRAP-CABLE	
	2	1	**238-2211**	1	SWITCH AS-ROCKER (HEATED SEAT)	
		1	**167-3542**	1	CONNECTOR-RECEPTACLE	
		1	**167-3543**	4	TERMINAL (MALE)	
Y	3	1	*240-5065*	1	SEAT GP-SUSPENSION (AIR SUSP, HIGH BACK, WITH HTR)	1064
M	4	1	**6V-8202**	4	BOLT-SOCKET HEAD (M8X1.25X16-MM)	
	5	1	**7I-2673**	1	STRAP-CABLE	

M-METRIC PART
Y-SEPARATE ILLUSTRATION

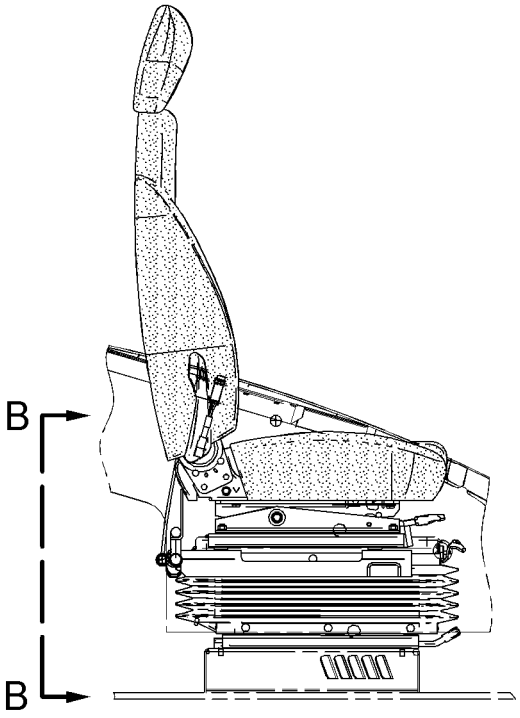

RIGHT SIDE VIEW

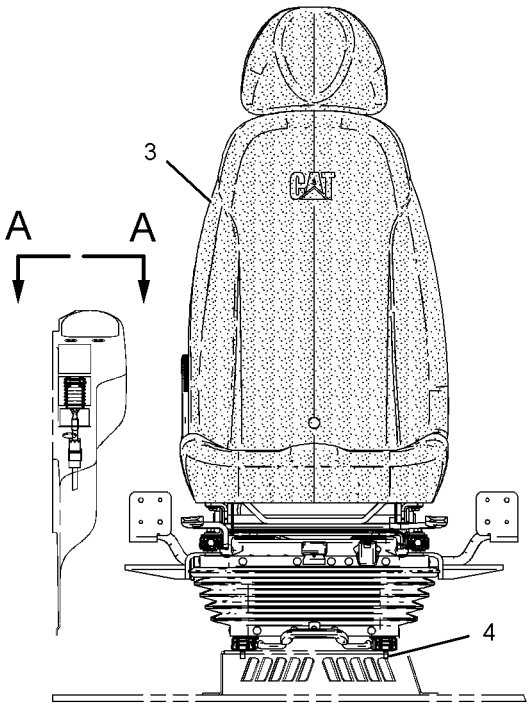

FRONT VIEW

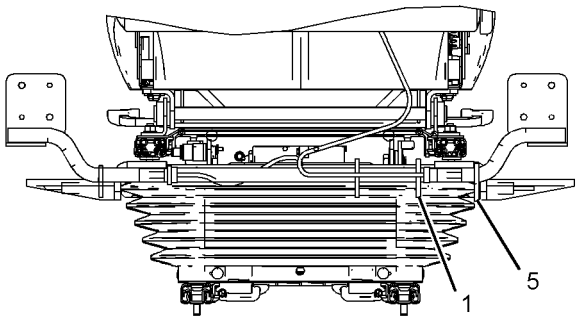

VIEW B-B

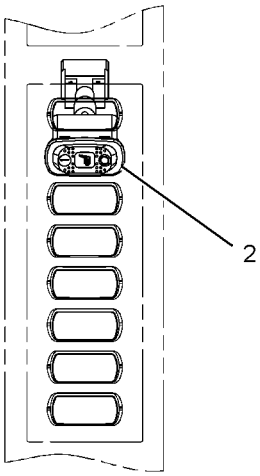

VIEW A-A

GRAPHIC #1 **<END>** g01122377

OPERATOR STATION

240-5065 SEAT GP-SUSPENSION—AIR SUSP, HIGH BACK, WITH HTR

S/N: MNB1-UP; WDK1-UP
PART OF 240-5064 SEAT GP-SUSPENSION
AN ATTACHMENT

SMCS-7324, 7336 **i02510753**

NOTE	REF NO	GRAPHIC REF	PART NUMBER	QTY	PART NAME 1 2 3 4 5 6 (PRODUCT LEVEL)	SEE PAGE
Y	1	1	**229-9093**	1	SEAT GP (HIGH BACK, WITH HEATER)	1045
Y	2	1	**240-5063**	1	SUSPENSION GP-SEAT (AIR)	1075
M	3	1	**5C-7261**	4	NUT (M8X1.25-THD)	
	4	1	**8T-4224**	4	WASHER-HARD (8.8X16X2-MM THK)	

M-METRIC PART
Y-SEPARATE ILLUSTRATION

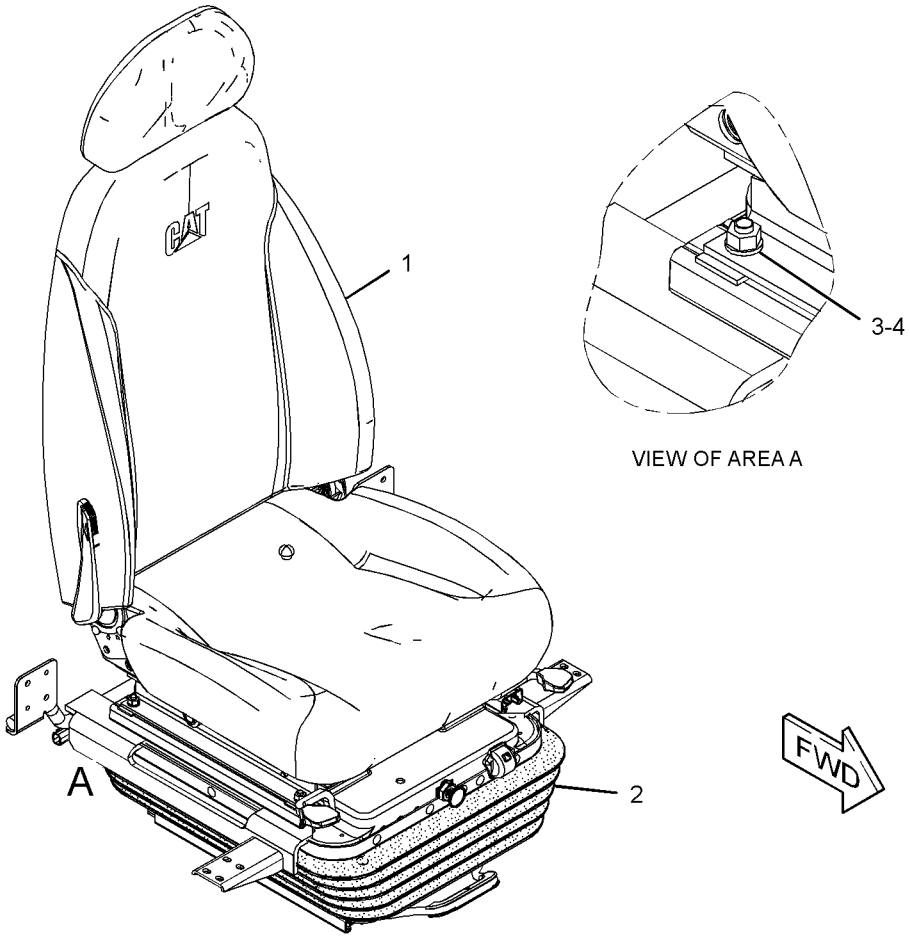

GRAPHIC #1 **<END>** g01235077

OPERATOR STATION

327-6500 SEAT GP-SUSPENSION–LOW BACK, TILT

S/N: MNB1-UP; WDK1-UP
AN ATTACHMENT

SMCS-7324, 7336 **i03196573**

NOTE	REF NO	GRAPHIC REF	PART NUMBER	QTY	PART NAME 1 2 3 4 5 6 (PRODUCT LEVEL)	SEE PAGE
	1	1	**316-8987**	2	BRACKET	
Y	2	1	*327-6506*	1	SEAT GP-SUSPENSION (LOW BACK, TILT)	1067
M	3	1	**5A-3604**	4	BOLT-SOCKET HEAD (M8X1.25X25-MM)	
M	4	1	**6V-8202**	2	BOLT-SOCKET HEAD (M8X1.25X16-MM)	

M-METRIC PART
Y-SEPARATE ILLUSTRATION

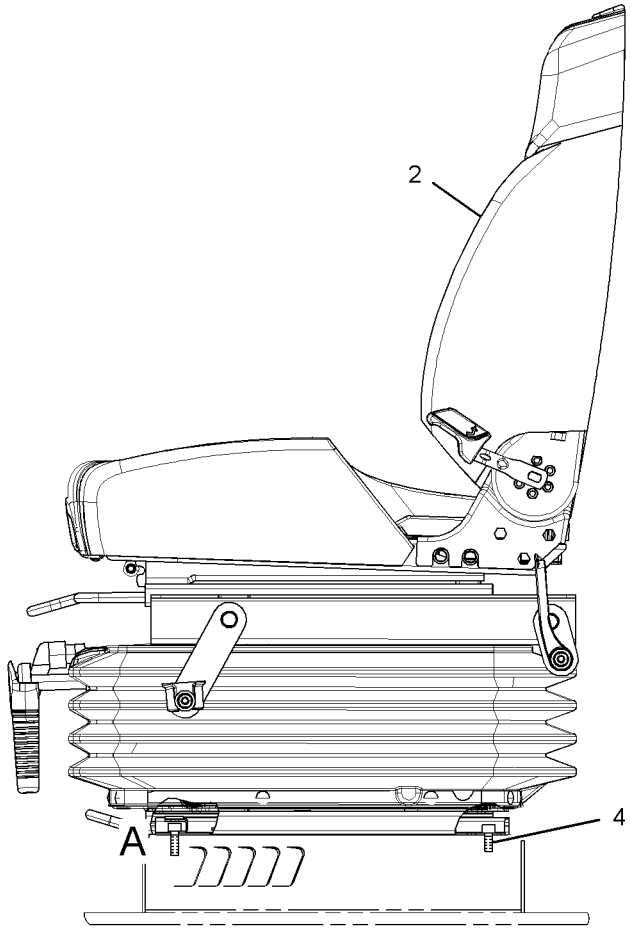

LEFT SIDE VIEW

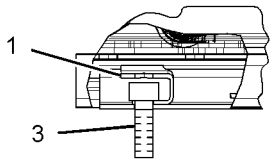

VIEW OF AREA A

GRAPHIC #1 **<END>** g01619401

OPERATOR STATION

327-6503 SEAT GP-SUSPENSION—HIGH BACK, WITH HEATER

S/N: MNB1-UP; WDK1-UP

AN ATTACHMENT

SMCS-7324, 7336 **i03213686**

NOTE	REF NO	GRAPHIC REF	PART NUMBER	QTY	PART NAME 1 2 3 4 5 6 (PRODUCT LEVEL)	SEE PAGE
	1	1	**316-8987**	2	BRACKET	
Y	2	1	*327-6509*	1	SEAT GP-SUSPENSION (HIGH BACK, WITH HEATER)	1070
M	3	1	**5A-3604**	2	BOLT-SOCKET HEAD (M8X1.25X25-MM)	
M	4	1	**6V-8202**	2	BOLT-SOCKET HEAD (M8X1.25X16-MM)	
	5	1	**238-2211**	1	SWITCH AS-ROCKER (HEATED SEAT)	
		1	**167-3542**	1	CONNECTOR-RECEPTACLE	
		1	**167-3543**	4	TERMINAL (MALE)	

M-METRIC PART
Y-SEPARATE ILLUSTRATION

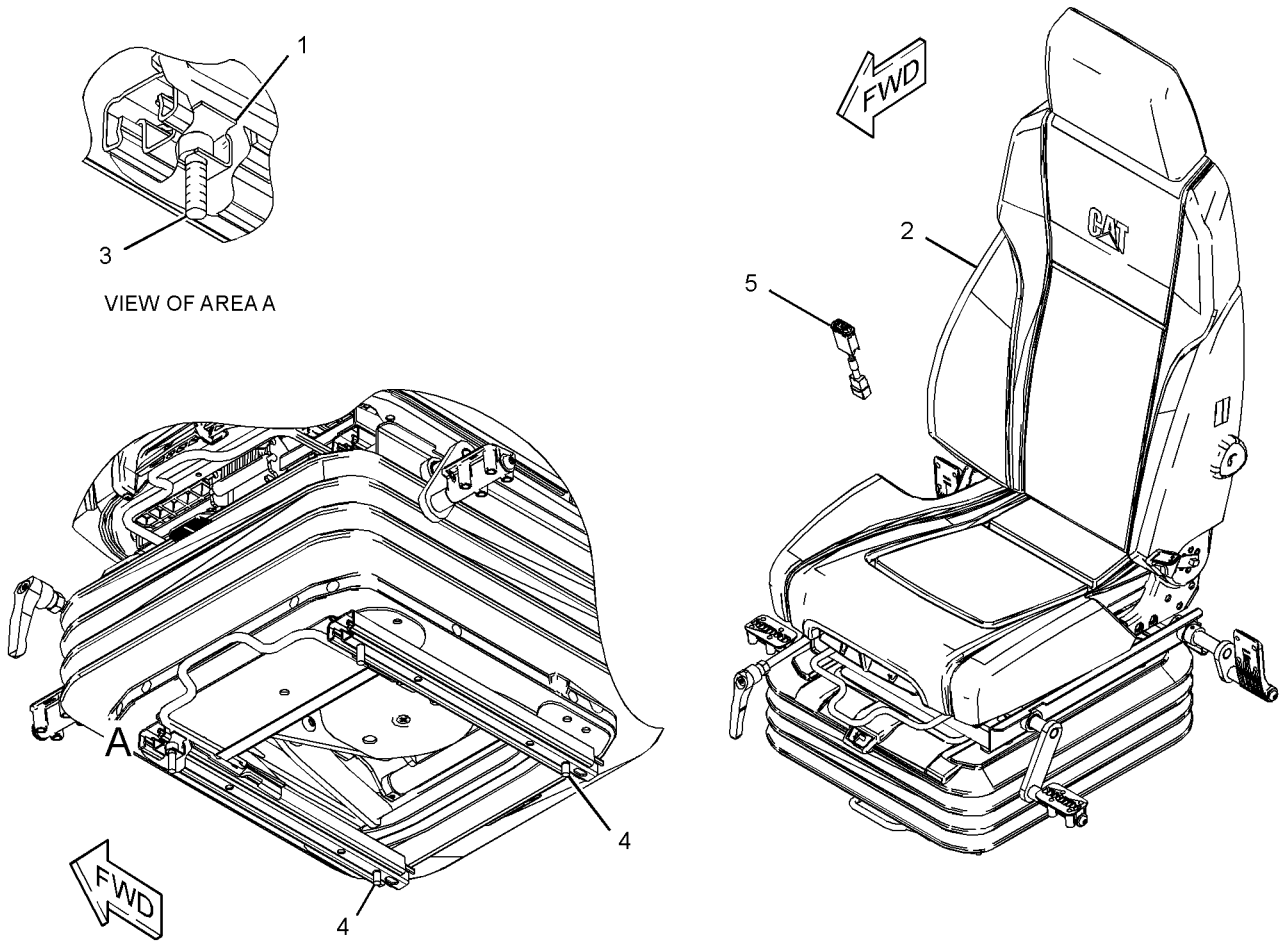

GRAPHIC #1 **<END>** g01641373

OPERATOR STATION

327-6506 SEAT GP-SUSPENSION—LOW BACK, TILT

S/N: MNB1-UP; WDK1-UP
PART OF 327-6500 SEAT GP-SUSPENSION
AN ATTACHMENT

SMCS-7324, 7336 **i03213928**

NOTE	REF NO	GRAPHIC REF	PART NUMBER	QTY	PART NAME 1 2 3 4 5 6 (PRODUCT LEVEL)	SEE PAGE
	1	1	**316-8987**	2	BRACKET	
Y	2	1	**327-6511**	1	SEAT GP	1056
Y	3	1	**327-6520**	1	SUSPENSION GP-SEAT	1079
M	4	1	**5A-3604**	4	BOLT-SOCKET HEAD (M8X1.25X25-MM)	

M-METRIC PART
Y-SEPARATE ILLUSTRATION

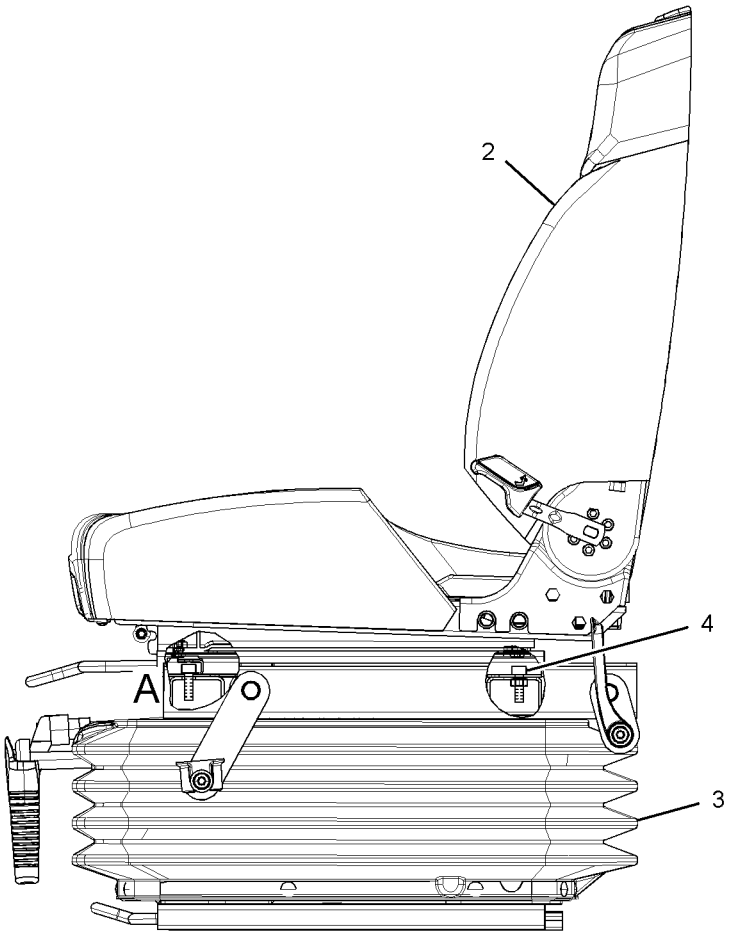

LEFT SIDE VIEW

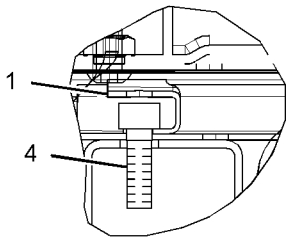

VIEW OF AREA A

GRAPHIC #1 **<END>** g01576297

OPERATOR STATION

327-6507 SEAT GP-SUSPENSION—HIGH BACK, TILT

S/N: MNB1-UP; WDK1-UP

PART OF 327-6501 SEAT & MOUNTING GP

AN ATTACHMENT

SMCS-7324, 7336 **i03213641**

NOTE	REF NO	GRAPHIC REF	PART NUMBER	QTY	PART NAME 1 2 3 4 5 6 (PRODUCT LEVEL)	SEE PAGE
	1	1	**316-8987**	2	BRACKET	
Y	2	1	**327-6512**	1	SEAT GP	1057
Y	3	1	**327-6520**	1	SUSPENSION GP-SEAT	1079
M	4	1	**5A-3604**	4	BOLT-SOCKET HEAD (M8X1.25X25-MM)	

M-METRIC PART
Y-SEPARATE ILLUSTRATION

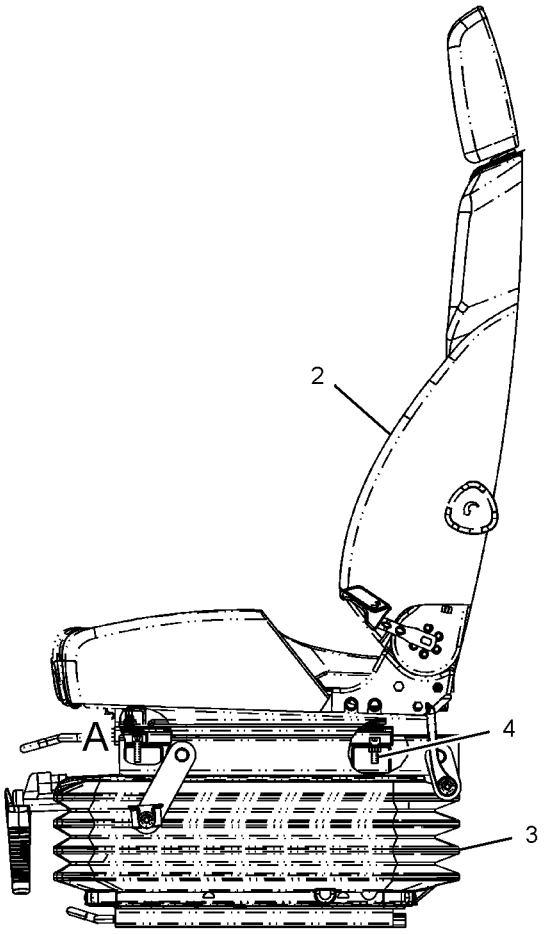

LEFT SIDE VIEW

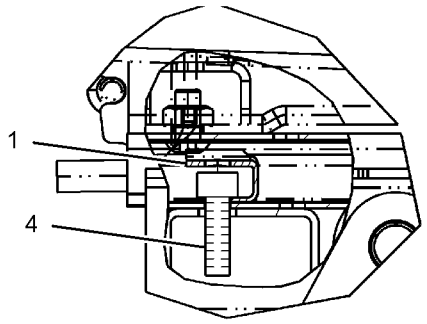

VIEW OF AREA A

GRAPHIC #1 **<END>** g01592076

OPERATOR STATION

327-6508 SEAT GP-SUSPENSION—HIGH BACK, TILT

S/N: MNB1-UP; WDK1-UP
PART OF 327-6502 SEAT & MOUNTING GP
AN ATTACHMENT

SMCS-7324, 7336 **i03213642**

NOTE	REF NO	GRAPHIC REF	PART NUMBER	QTY	PART NAME 1 2 3 4 5 6 (PRODUCT LEVEL)	SEE PAGE
	1	1	**316-8987**	2	BRACKET	
Y	2	1	**327-6512**	1	SEAT GP	1057
Y	3	1	**327-6521**	1	SUSPENSION GP-SEAT	1080
M	4	1	**5A-3604**	4	BOLT-SOCKET HEAD (M8X1.25X25-MM)	

M-METRIC PART
Y-SEPARATE ILLUSTRATION

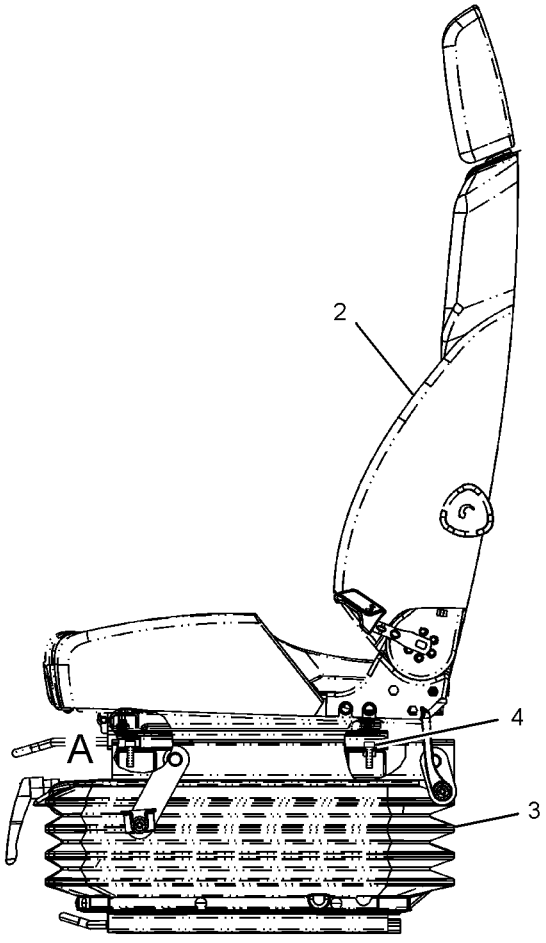

LEFT SIDE VIEW

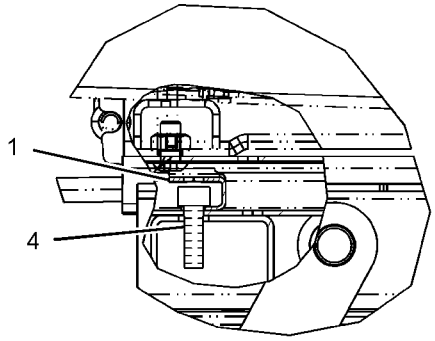

VIEW OF AREA A

GRAPHIC #1 **<END>** g01577953

OPERATOR STATION

327-6509 SEAT GP-SUSPENSION—HIGH BACK, WITH HEATER

S/N: MNB1-UP; WDK1-UP

PART OF 327-6503 SEAT GP-SUSPENSION

AN ATTACHMENT

SMCS-7324, 7336 **i03213688**

NOTE	REF NO	GRAPHIC REF	PART NUMBER	QTY	PART NAME 1 2 3 4 5 6 (PRODUCT LEVEL)	SEE PAGE
	1	1	**316-8987**	2	BRACKET	
Y	2	1	**327-6513**	1	SEAT GP	1058
Y	3	1	**327-6521**	1	SUSPENSION GP-SEAT	1080
M	4	1	**5A-3604**	4	BOLT-SOCKET HEAD (M8X1.25X25-MM)	
	5	1	**7I-2673**	1	STRAP-CABLE	

M-METRIC PART
Y-SEPARATE ILLUSTRATION

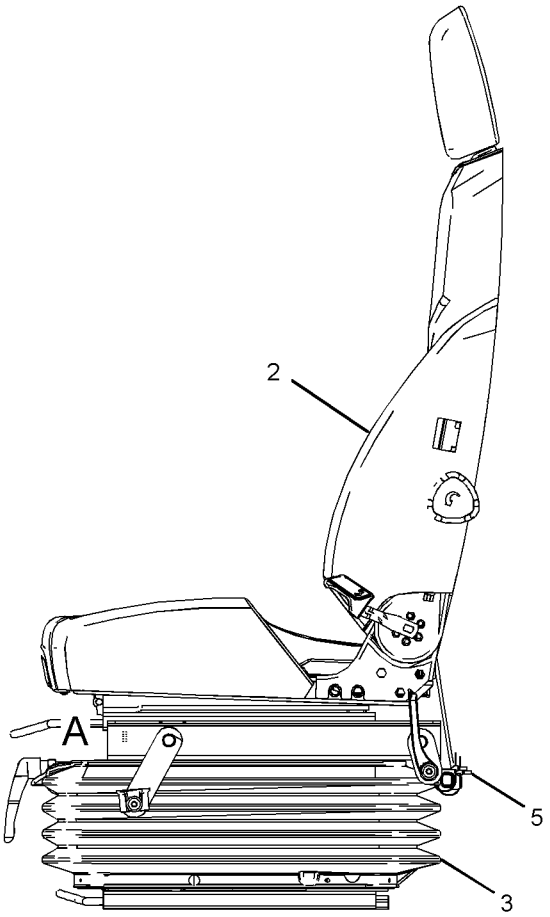

LEFT SIDE VIEW

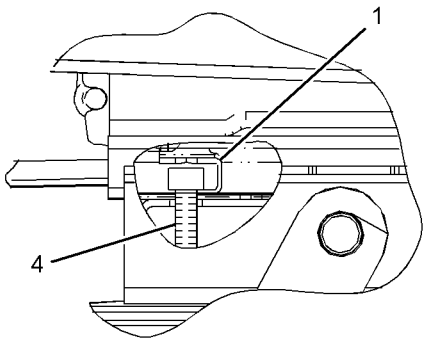

VIEW OF AREA A

GRAPHIC #1 **<END>** g01641377

OPERATOR STATION

245-7891 SUPPORT GP-SEAT

S/N: MNB1-UP; WDK1-UP
PART OF 229-9095 SUSPENSION GP-SEAT
AN ATTACHMENT

SMCS-7321 **i02407043**

NOTE	REF NO	GRAPHIC REF	PART NUMBER	QTY	PART NAME 1 2 3 4 5 6 (PRODUCT LEVEL)	SEE PAGE
M	1	1	**198-3899**	2	SCREW-BUTTON HEAD (M8X1.25X20-MM)	
	2	1	**245-7897**	8	PLATE	
M	3	1	**245-7898**	2	SCREW-BUTTON HEAD (M8X1.25X25-MM)	
M	4	1	**245-7899**	4	SCREW-BUTTON HEAD (M8X1.25X30-MM)	
M	5	1	**5C-7261**	8	NUT (M8X1.25-THD)	
	6	1	**8T-4224**	8	WASHER-HARD (8.8X16X2-MM THK)	

M-METRIC PART

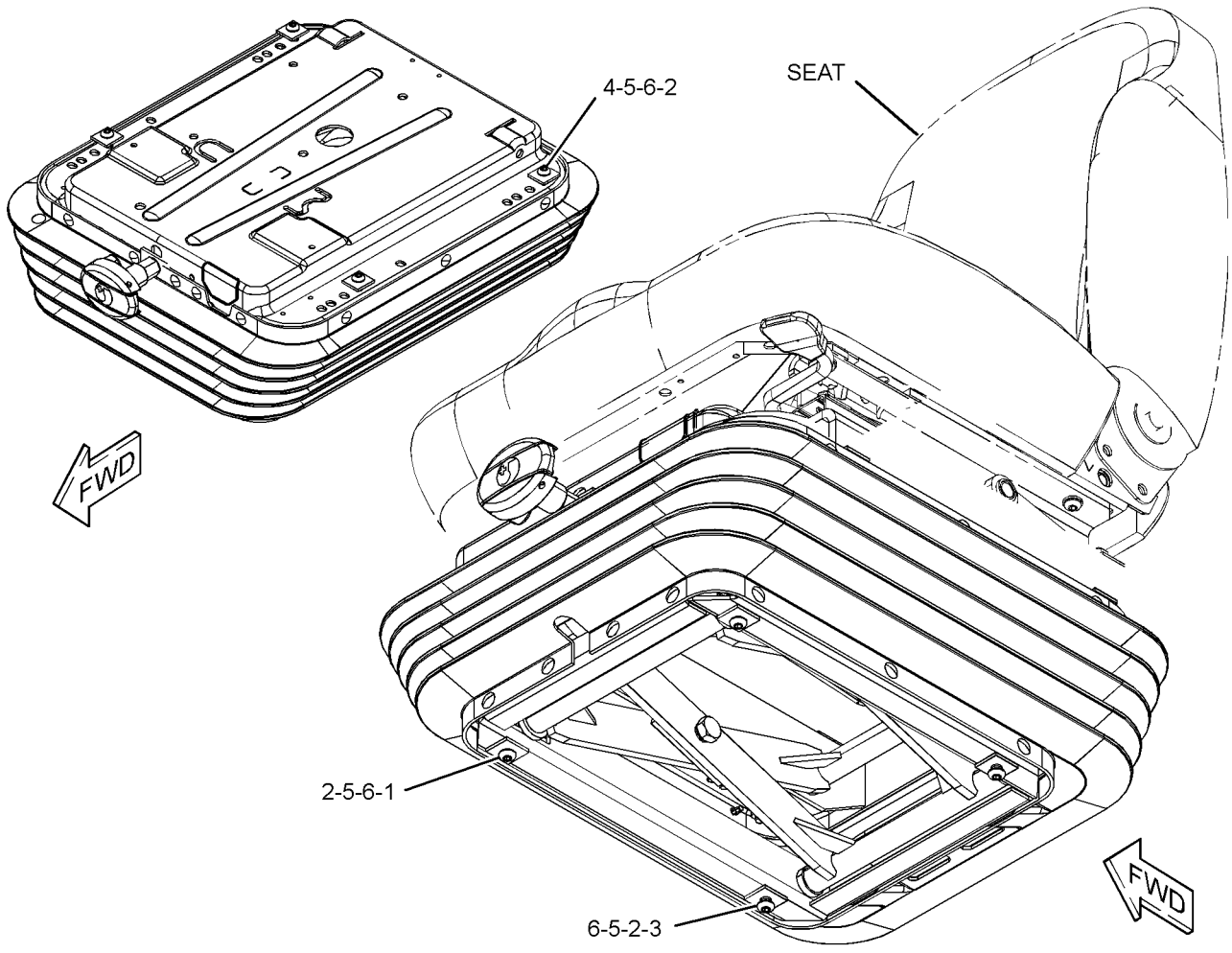

GRAPHIC #1 **<END>** g01231529

OPERATOR STATION

327-6523 SUPPORT GP-SEAT

S/N: MNB1-UP; WDK1-UP

PART OF 229-9072 OPERATOR AR

SMCS-7321 **i03017400**

NOTE	REF NO	GRAPHIC REF	PART NUMBER	QTY	PART NAME 1 2 3 4 5 6 (PRODUCT LEVEL)	SEE PAGE
	1	1	**327-6538**	1	SUPPORT AS-SEAT	
M		1	**5C-7261**	8	NUT (M8X1.25-THD)	
M		1	**9X-2032**	2	NUT-WELD (M4X0.7-THD)	
	2	1	**8T-4121**	4	WASHER-HARD (11X21X2.5-MM THK)	
M	3	1	**8T-4191**	4	BOLT (M10X1.5X16-MM)	

M-METRIC PART

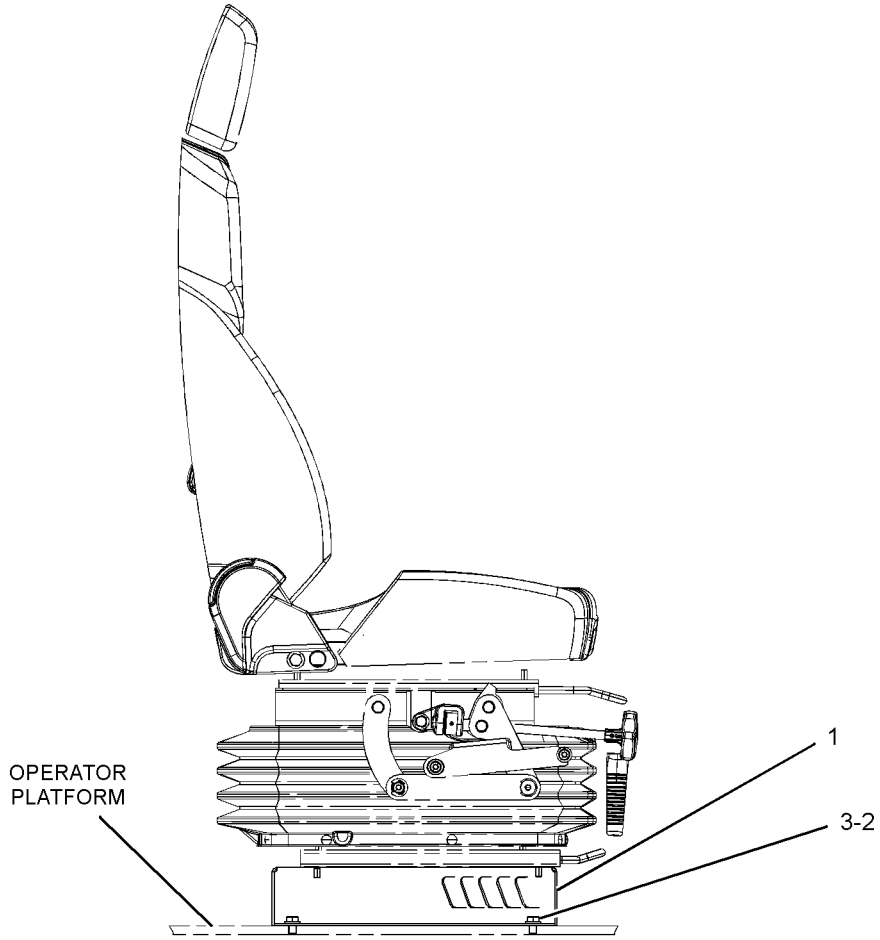

RIGHT SIDE VIEW

GRAPHIC #1 **<END>** g01528767

OPERATOR STATION

229-9077 SUSPENSION GP-SEAT

S/N: MNB1-UP; WDK1-UP
PART OF 229-9075, 229-9089 SEAT GP-SUSPENSION
AN ATTACHMENT

SMCS-7324 **i02177429**

NOTE	REF NO	GRAPHIC REF	PART NUMBER	QTY	PART NAME 1 2 3 4 5 6 (PRODUCT LEVEL)	SEE PAGE
	1	1	**242-8768**	1	COVER AS	
		1	**147-4921**	1	KIT-CLIP (SEAT)	
	2	1	**245-7889**	1	ADJUSTER GP-SEAT (UPPER SLIDE)	
M		1	**5C-7261**	8	NUT (M8X1.25-THD)	
		1	**8T-4224**	8	WASHER-HARD (8.8X16X2-MM THK)	
		1	**245-7897**	4	PLATE	
M		1	**245-7899**	4	SCREW-BUTTON HEAD (M8X1.25X30-MM)	
	3	1	**245-7890**	1	BRACKET GP-MOUNTING	
M		1	**5C-7261**	4	NUT (M8X1.25-THD)	
		1	**8T-4224**	4	WASHER-HARD (8.8X16X2-MM THK)	
		1	**245-7897**	4	PLATE	
M		1	**245-7899**	4	SCREW-BUTTON HEAD (M8X1.25X30-MM)	
Y	4	1	**245-7892**	1	SUSPENSION GP-SEAT	1076
	5	1	**245-7895**	1	KIT-CLIP (SUSPENSION SEAT)	
Y	6	1	**245-7896**	1	ADJUSTER GP-SEAT (LOWER SLIDE)	894

M-METRIC PART
Y-SEPARATE ILLUSTRATION

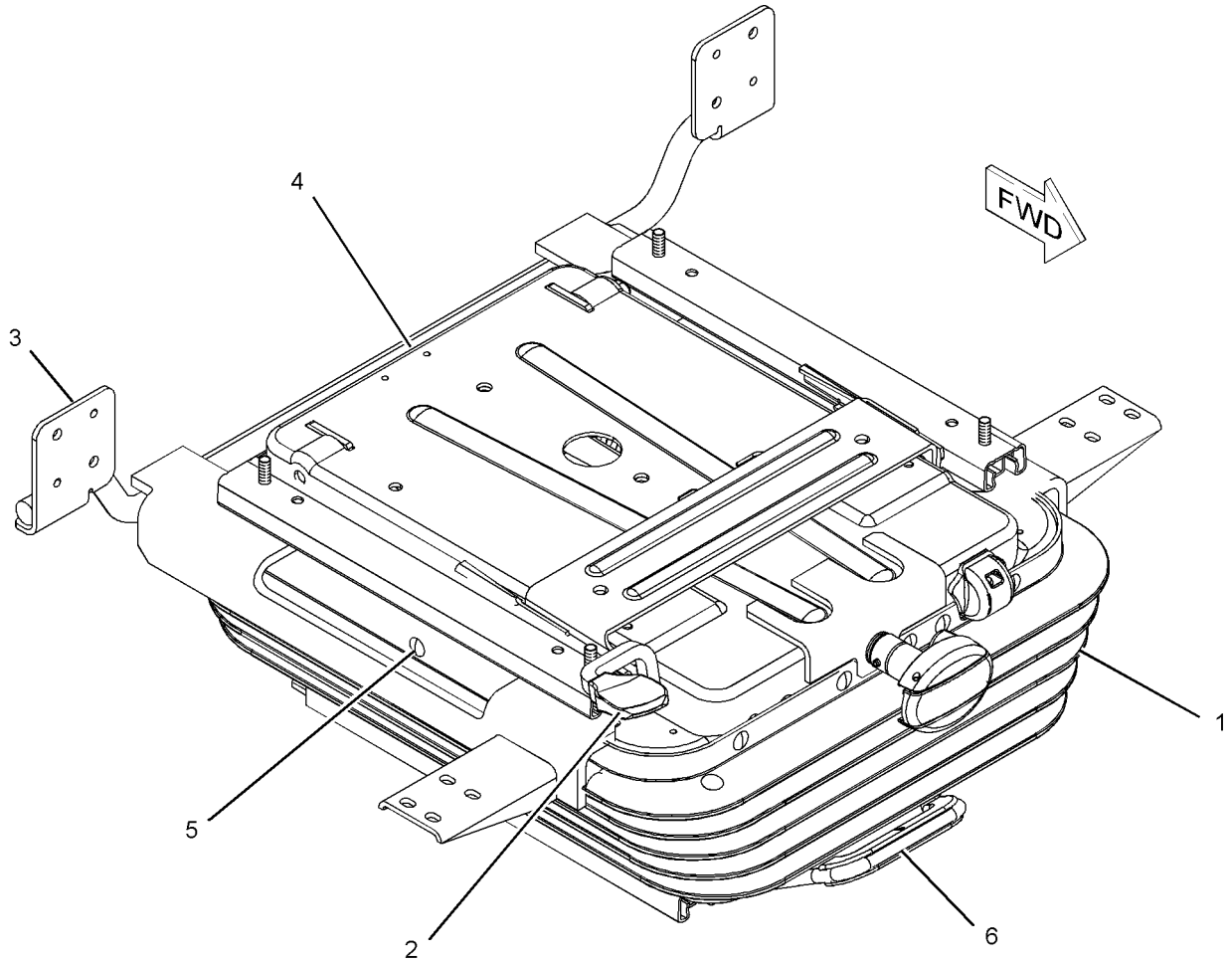

GRAPHIC #1 **<END>** g01087842

OPERATOR STATION

229-9095 SUSPENSION GP-SEAT

S/N: MNB1-UP; WDK1-UP
PART OF 235-9028, 240-5057 SEAT GP
AN ATTACHMENT

SMCS-7324 **i02752800**

NOTE	REF NO	GRAPHIC REF	PART NUMBER	QTY	PART NAME 1 2 3 4 5 6 (PRODUCT LEVEL)	SEE PAGE
J	1	1	**242-8768**	1	COVER AS	
Y	2	1	**245-7889**	1	ADJUSTER GP-SEAT (UPPER SLIDE)	893
Y	3	1	**245-7890**	1	BRACKET GP-MOUNTING	908
Y	4	1	**245-7891**	1	SUPPORT GP-SEAT	1071
Y	5	1	**245-7896**	1	ADJUSTER GP-SEAT (LOWER SLIDE)	894
					AVAILABLE REPAIR KIT(S):	
			245-7895	1	KIT-CLIP (SUSPENSION SEAT)	
					(INCLUDES 28 CLIPS)	

J-KIT MARKED J AVAILABLE FOR PART MARKED J
Y-SEPARATE ILLUSTRATION

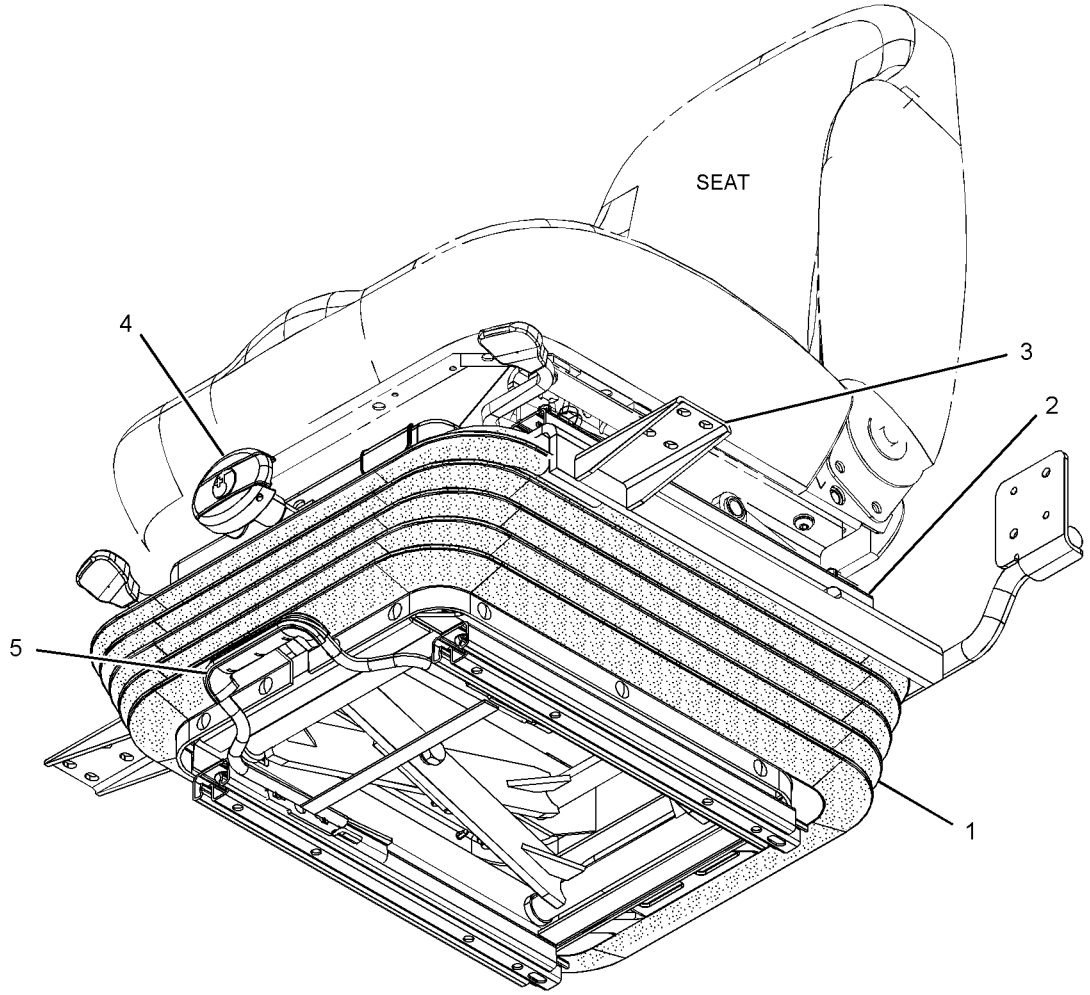

GRAPHIC #1 **<END>** g01253953

240-5063 SUSPENSION GP-SEAT–AIR

S/N: MNB1-UP; WDK1-UP
PART OF 240-5062, 240-5065 SEAT GP-SUSPENSION
AN ATTACHMENT

SMCS-7324 **i03130945**

NOTE	REF NO	GRAPHIC REF	PART NUMBER	QTY	PART NAME 1 2 3 4 5 6 (PRODUCT LEVEL)	SEE PAGE
	1	1	**7I-2673**	1	STRAP-CABLE	
	2	1	**242-8768**	1	COVER AS	
		1	**147-4921**	1	KIT-CLIP (SEAT)	
Y	3	1	**245-7889**	1	ADJUSTER GP-SEAT (UPPER SLIDE)	893
Y	4	1	**245-7890**	1	BRACKET GP-MOUNTING (SUSPENSION SEAT)	908
Y	5	1	**273-5384**	1	SUSPENSION GP-SEAT	1077
	6	1	**245-7895**	1	KIT-CLIP (SUSPENSION SEAT)	
Y	7	1	**245-7896**	1	ADJUSTER GP-SEAT (LOWER SLIDE)	894

Y-SEPARATE ILLUSTRATION

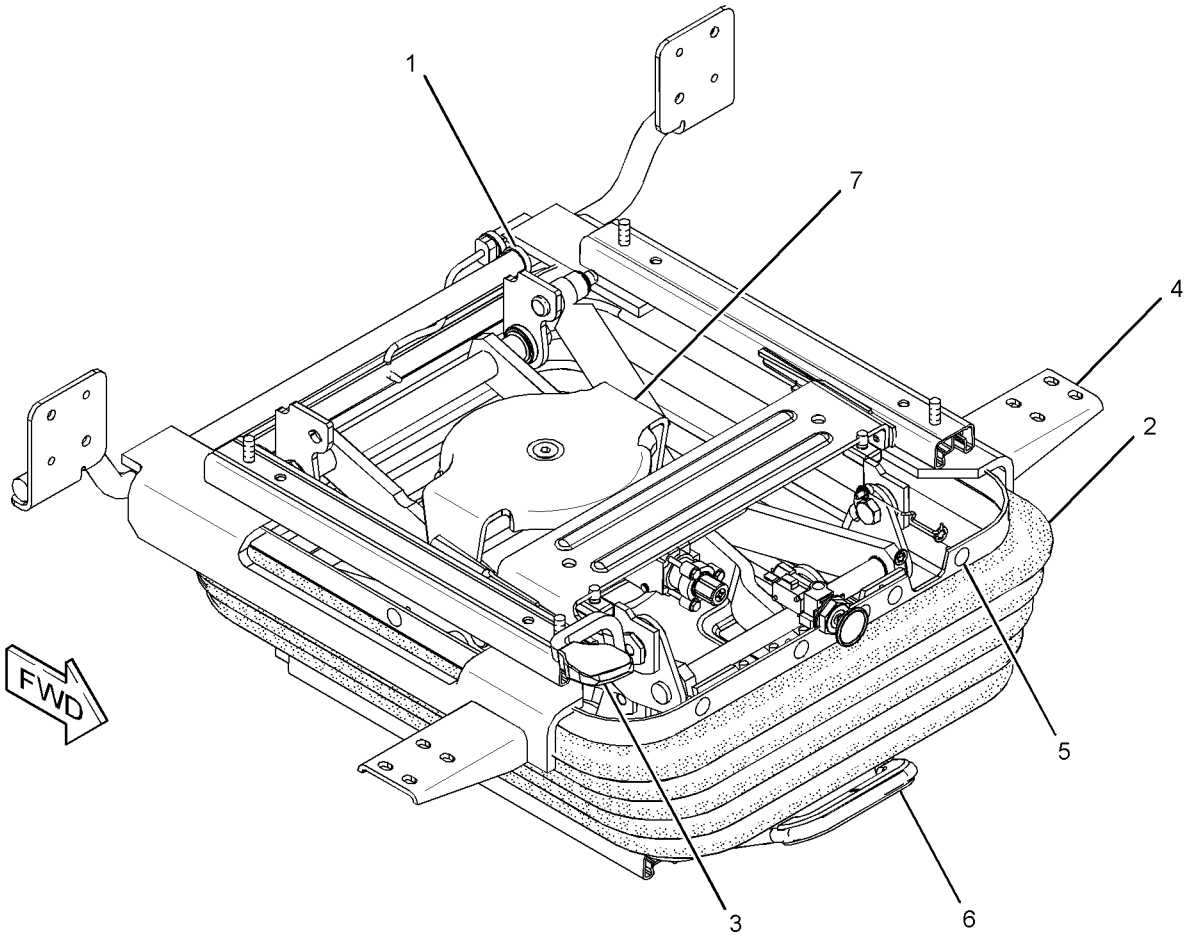

GRAPHIC #1 **<END>** g01307533

OPERATOR STATION

245-7892 SUSPENSION GP-SEAT

S/N: MNB1-UP; WDK1-UP
PART OF 229-9077 SUSPENSION GP-SEAT
AN ATTACHMENT

SMCS-7324 **i02178065**

NOTE	REF NO	GRAPHIC REF	PART NUMBER	QTY	PART NAME 1 2 3 4 5 6 (PRODUCT LEVEL)	SEE PAGE
M	1	1	**198-3899**	2	SCREW-BUTTON HEAD (M8X1.25X20-MM)	
	2	1	**209-4280**	1	CYLINDER-DAMPER	
	3	1	**245-7897**	8	PLATE	
M	4	1	**245-7898**	2	SCREW-BUTTON HEAD (M8X1.25X25-MM)	
M	5	1	**245-7899**	4	SCREW-BUTTON HEAD (M8X1.25X30-MM)	
M	6	1	**5C-7261**	8	NUT (M8X1.25-THD)	
	7	1	**8T-4224**	8	WASHER-HARD (8.8X16X2-MM THK)	

M-METRIC PART

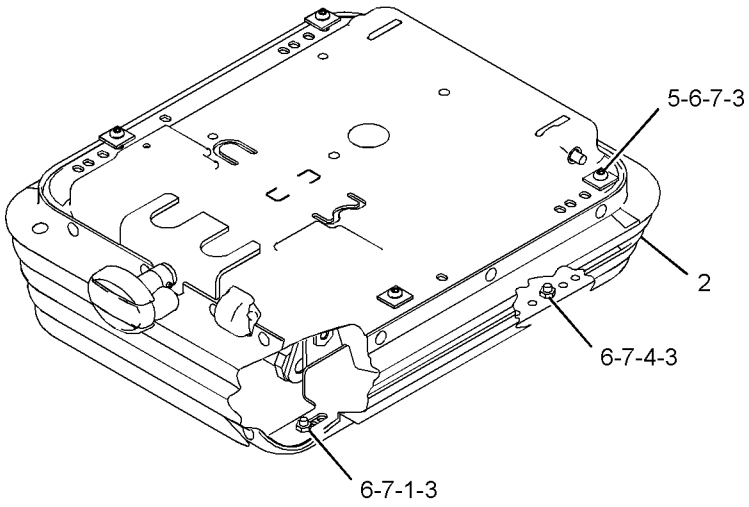

VIEW OF AREA A

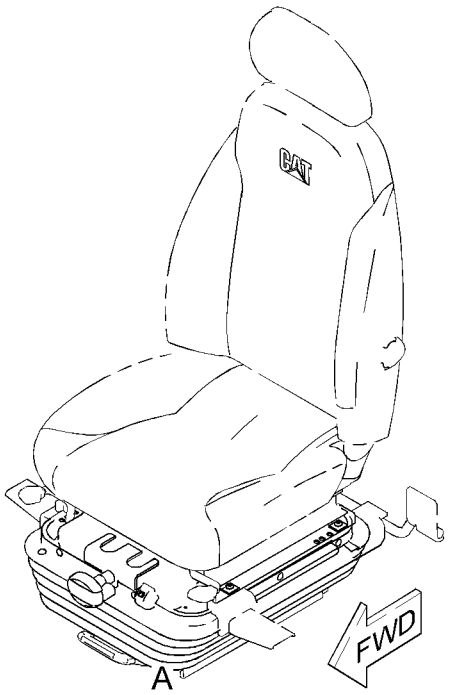

GRAPHIC #1 **<END>** g01103188

OPERATOR STATION

273-5384 SUSPENSION GP-SEAT

S/N: MNB1-UP; WDK1-UP
PART OF 240-5063 SUSPENSION GP-SEAT
AN ATTACHMENT

SMCS-7324 **i02795410**

NOTE	REF NO	GRAPHIC REF	PART NUMBER	QTY	PART NAME 1 2 3 4 5 6 (PRODUCT LEVEL)	SEE PAGE
M	1	1	**198-3899**	2	SCREW-BUTTON HEAD (M8X1.25X20-MM)	
	2	1	**209-0348**	1	DAMPER (SUSPENSION)	
	3	1	**245-7897**	8	PLATE	
M	4	1	**245-7898**	2	SCREW-BUTTON HEAD (M8X1.25X25-MM)	
M	5	1	**245-7899**	4	SCREW-BUTTON HEAD (M8X1.25X30-MM)	
M	6	1	**5C-7261**	8	NUT (M8X1.25-THD)	
	7	1	**8T-4224**	8	WASHER-HARD (8.8X16X2-MM THK)	
	8	1	**273-5386**	1	VALVE AS-AIR (SEAT)	

M-METRIC PART

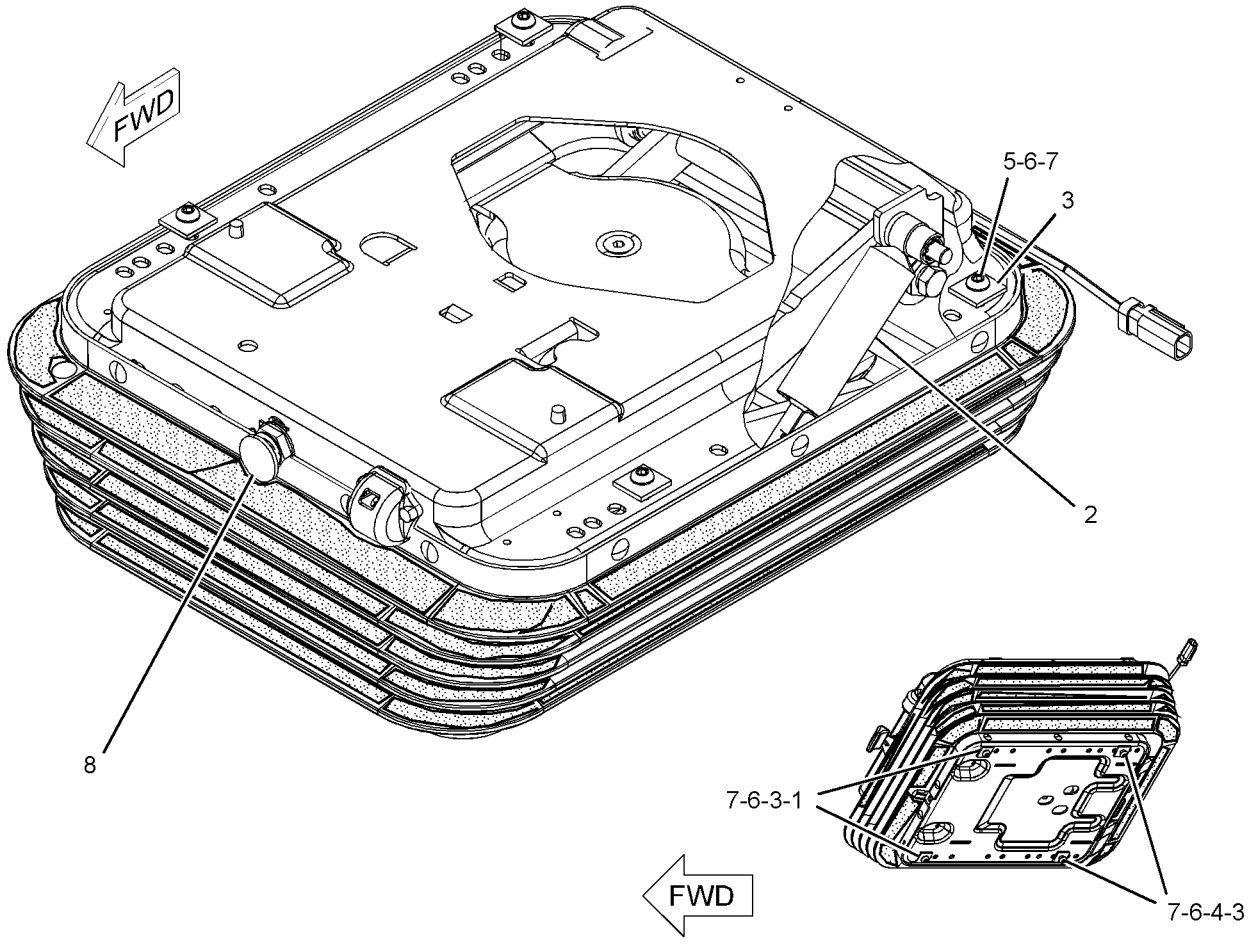

GRAPHIC #1 **<END>** g01254074

OPERATOR STATION

327-6517 SUSPENSION GP-SEAT

S/N: MNB1-UP; WDK1-UP
PART OF 327-6504, 327-6505 SEAT GP
AN ATTACHMENT

SMCS-7324 **i03213412**

NOTE	REF NO	GRAPHIC REF	PART NUMBER	QTY	PART NAME 1 2 3 4 5 6 (PRODUCT LEVEL)	SEE PAGE
	1	1	**327-6648**	1	KIT-ADJUSTER (SEAT POSITION)	
		1	**316-8987**	2	BRACKET	
		1	**333-4180**	6	SCREW-BUTTON HEAD	
Y	2	1	**333-4173**	1	KIT-SEAT SUSPENSION (MECHANICAL)	1007
	3	1	**333-4175**	1	KIT-BRACKET (CONSOLE)	
M		1	**7Y-7394**	4	SCREW-BUTTON HEAD (M8X1.25X25-MM)	

M-METRIC PART
Y-SEPARATE ILLUSTRATION

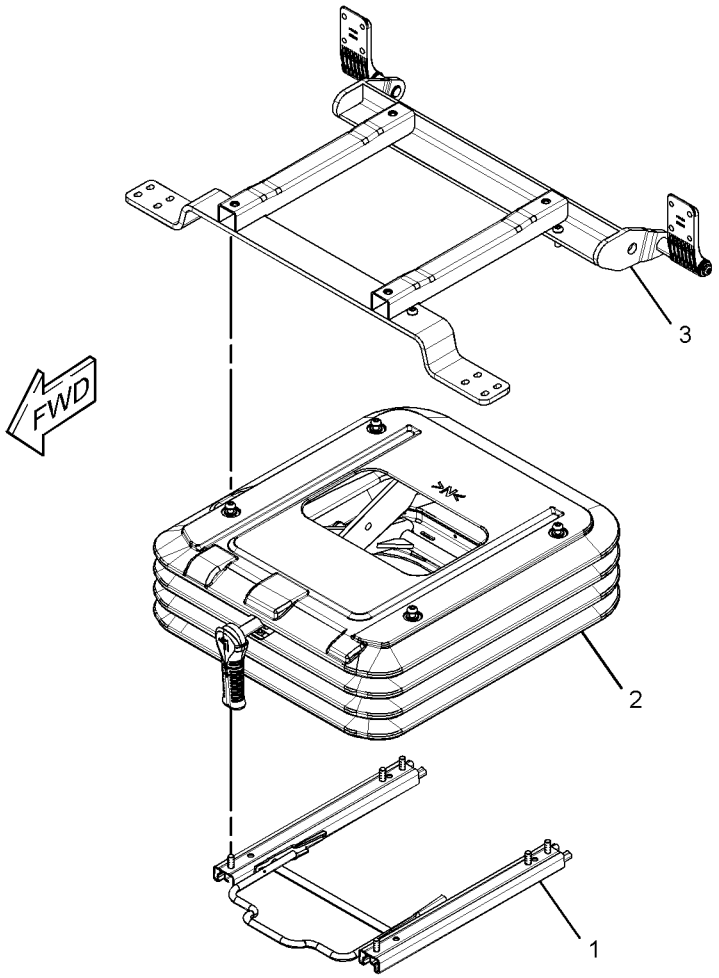

GRAPHIC #1 **<END>** g01644135

OPERATOR STATION

327-6520 SUSPENSION GP-SEAT

S/N: MNB1-UP; WDK1-UP
PART OF 327-6506, 327-6507 SEAT GP-SUSPENSION
AN ATTACHMENT

SMCS-7324 **i03207836**

NOTE	REF NO	GRAPHIC REF	PART NUMBER	QTY	PART NAME 1 2 3 4 5 6 (PRODUCT LEVEL)	SEE PAGE
	1	1	**327-6644**	1	KIT-BRACKET (CONSOLE RAISE, LOWER)	
		1	**327-6648**	4	KIT-ADJUSTER	
Y	2	1	**327-6645**	1	KIT-SEAT SUSPENSION (MECHANICAL) (SEAT HEIGHT)	1005
	3	1	**327-6648**	1	KIT-ADJUSTER (SEAT POSITION)	
		1	**316-8987**	2	BRACKET	
		1	**333-4180**	6	SCREW-BUTTON HEAD	

Y-SEPARATE ILLUSTRATION

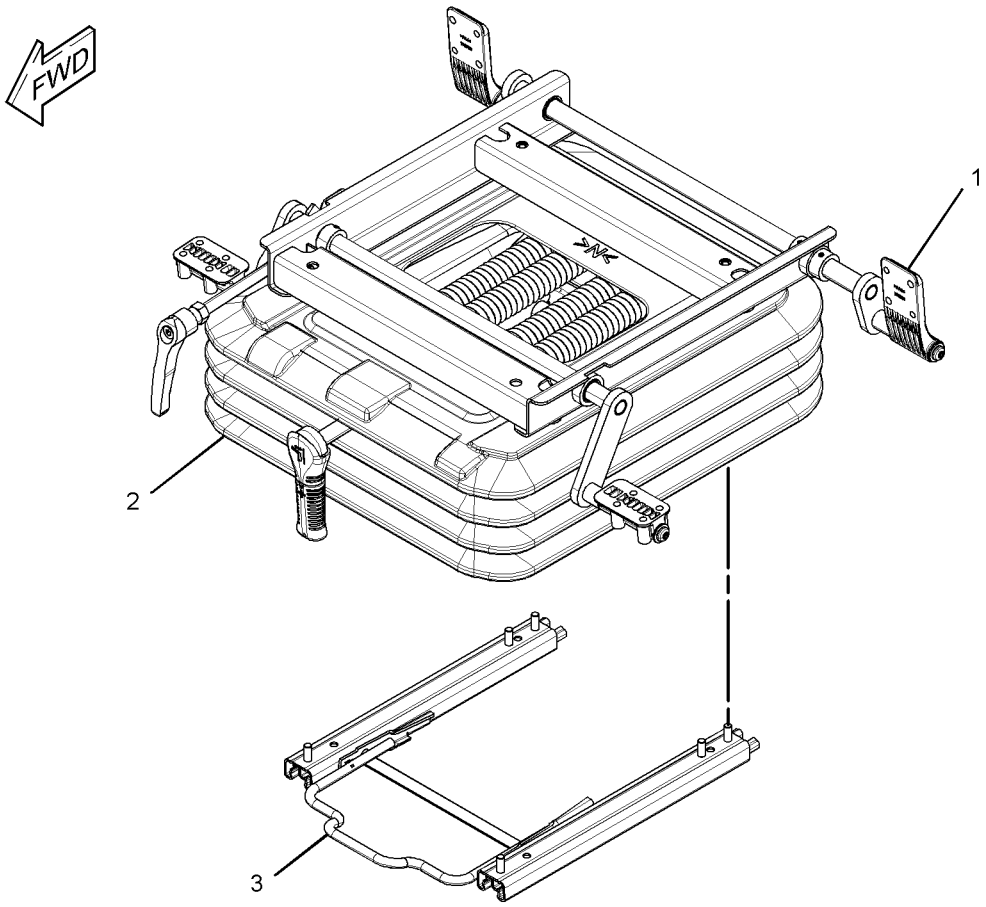

GRAPHIC #1 **<END>** g01637856

OPERATOR STATION

327-6521 SUSPENSION GP-SEAT

S/N: MNB1-UP; WDK1-UP
PART OF 327-6508, 327-6509 SEAT GP-SUSPENSION
AN ATTACHMENT

SMCS-7324 **i03207834**

NOTE	REF NO	GRAPHIC REF	PART NUMBER	QTY	PART NAME 1 2 3 4 5 6 (PRODUCT LEVEL)	SEE PAGE
	1	1	**7I-2673**	1	STRAP-CABLE	
	2	1	**327-6644**	1	KIT-BRACKET (CONSOLE RAISE, LOWER)	
M		1	**7Y-7394**	4	SCREW-BUTTON HEAD (M8X1.25X25-MM)	
	3	1	**327-6648**	1	KIT-ADJUSTER (SEAT POSITION)	
		1	**316-8987**	2	BRACKET	
		1	**333-4180**	6	SCREW-BUTTON HEAD	
Y	4	1	**333-4157**	1	KIT-SEAT SUSPENSION (AIR) (SEAT HEIGHT)	1006

M-METRIC PART
Y-SEPARATE ILLUSTRATION

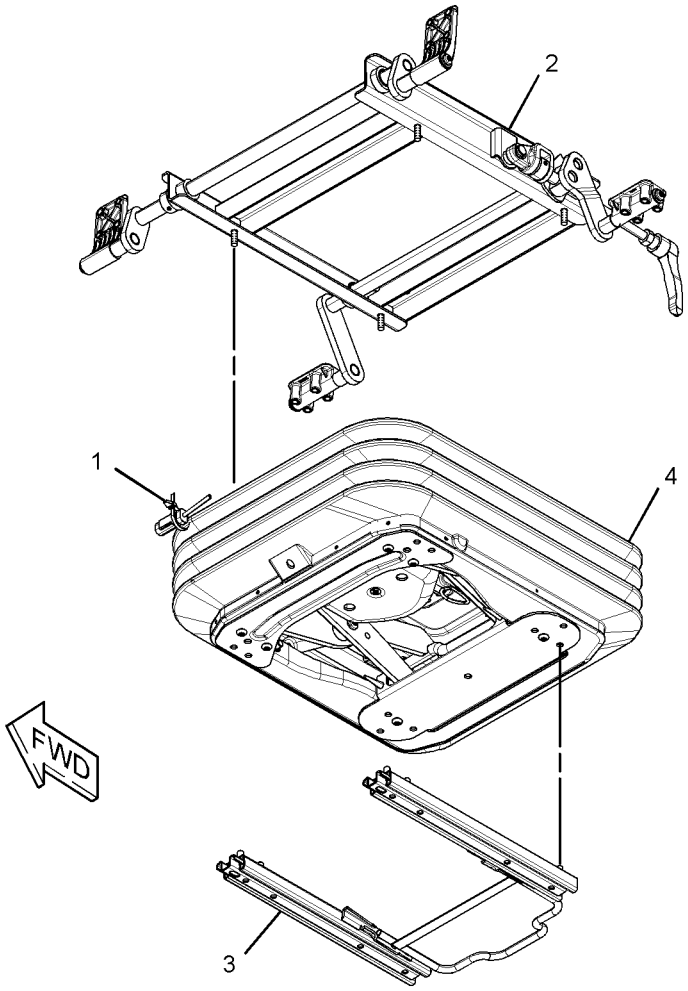

GRAPHIC #1 **<END>** g01637857

OPERATOR STATION

161-3751 VISOR GP-CAB

S/N: MNB1-UP; WDK1-UP
AN ATTACHMENT

SMCS-7301 **i02906060**

NOTE	REF NO	GRAPHIC REF	PART NUMBER	QTY	PART NAME 1 2 3 4 5 6 (PRODUCT LEVEL)	SEE PAGE
	1	1	**164-0639**	1	BRACKET AS	
	2	1	**210-5827**	1	PLATE	
	3	1	**210-5828**	1	PLATE	
	4	1	**210-5829**	2	BOLT	
	5	1	**210-5834**	1	BRACKET AS	
	6	1	**210-5836**	1	VISOR	
	7	1	**210-5837**	2	STRIP	
	8	1	**210-5838**	4	PACKING	
	9	1	**8H-3481**	2	LOCKWASHER	
M	10	1	**9X-2044**	8	SCREW-TRUSS HEAD (M6X1X16-MM)	
M	11	1	**9X-2046**	2	SCREW-TRUSS HEAD (M6X1X35-MM)	
	12	1	**9X-8256**	2	WASHER (6.6X12X2-MM THK)	

M-METRIC PART

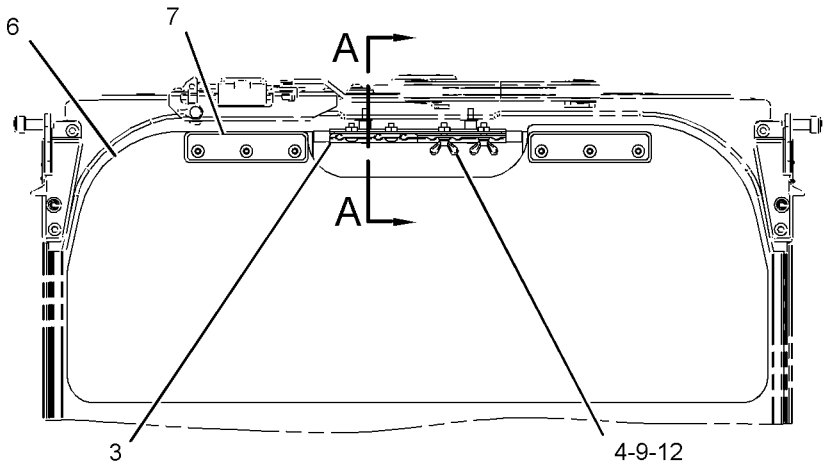

FRONT VIEW

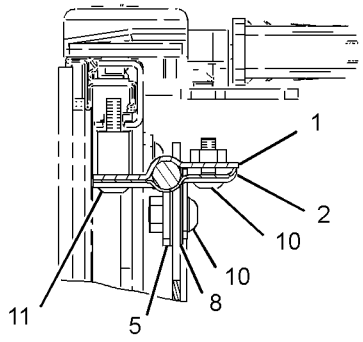

SECTION A-A

GRAPHIC #1 **<END>** g01447299

OPERATOR STATION

161-3750 VISOR GP-PROTECTION—RAIN

S/N: MNB1-UP; WDK1-UP
AN ATTACHMENT

SMCS-7340 **i03087900**

NOTE	REF NO	GRAPHIC REF	PART NUMBER	QTY	PART NAME 1 2 3 4 5 6 (PRODUCT LEVEL)	SEE PAGE
M	1	1	**4I-5049**	8	NUT-SPACER (M6X1-THD)	
	2	1	**164-0618**	2	BRACKET	
	3	1	**164-0619**	1	BRACKET	
	4	1	**164-0620**	1	BRACKET	
	5	1	**327-6581**	1	VISOR	
M	6	1	**6V-7357**	8	BOLT (M6X1X25-MM)	
M	7	1	**8T-4189**	4	BOLT (M8X1.25X20-MM)	
	8	1	**8T-4224**	4	WASHER-HARD (8.8X16X2-MM THK)	
	9	1	**9X-8256**	8	WASHER (6.6X12X2-MM THK)	
D	10	1	**5P-8292**		SEAL (1.4-M)	

D-ORDER BY THE METER
M-METRIC PART

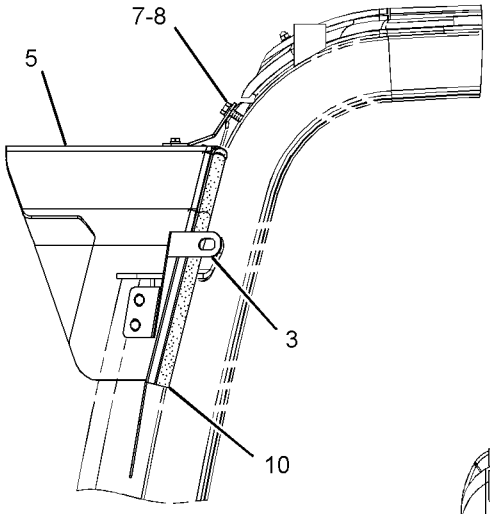

LEFT SIDE VIEW

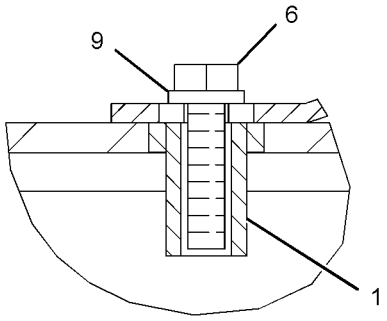

SECTION A-A

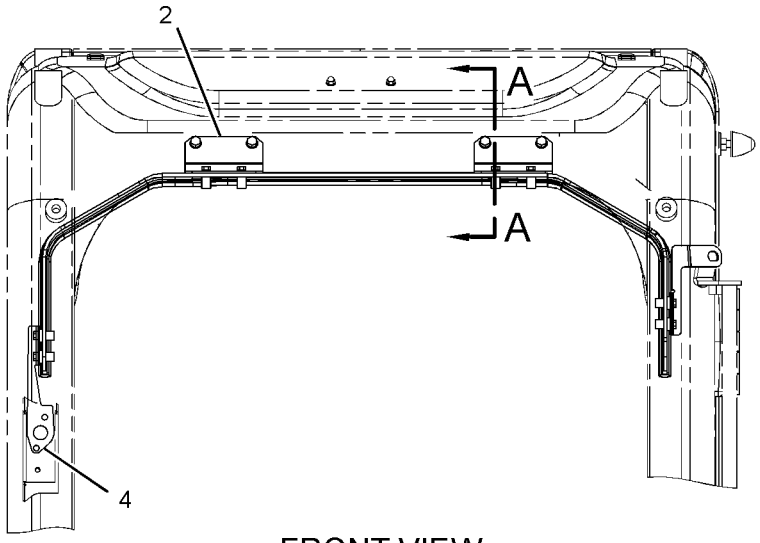

FRONT VIEW

GRAPHIC #1 **<END>** g01592616

OPERATOR STATION

229-9070 WASHER GP-WINDOW

S/N: MNB1-UP; WDK1-UP
CANNOT BE USED WITH 229-9086—PAGE 1099
AN ATTACHMENT

SMCS-7306 **i02593848**

NOTE	REF NO	GRAPHIC REF	PART NUMBER	QTY	PART NAME 1 2 3 4 5 6 (PRODUCT LEVEL)	SEE PAGE
	1	1	**7Y-3474**	1	VALVE AS-CHECK (WINDOW WASHER)	
	2	1	**163-6795**	2	STRAP-CABLE	
	3	1	**176-1931**	1	TANK AS-WINDOW WASHER	
		1	**5C-8138**	1	GROMMET	
		1	**7T-8890**	1	PUMP AS-WASHER	
		1	**178-5431**	1	CAP AS (WINDOW WASHER)	
		1	**3W-6399**		PACKING	
	4	1	**235-9012**	1	SUPPORT AS	
M	5	1	**8T-4970**	2	BOLT (M6X1X14-MM)	
	6	1	**9X-8256**	2	WASHER (6.6X12X2-MM THK)	
CE	7	1	**144-0195**		HOSE (13-CM)	
	8	1	**3S-2093**	1	STRAP-CABLE	

C-CHANGE FROM PREVIOUS TYPE
E-ORDER BY THE CENTIMETER
M-METRIC PART

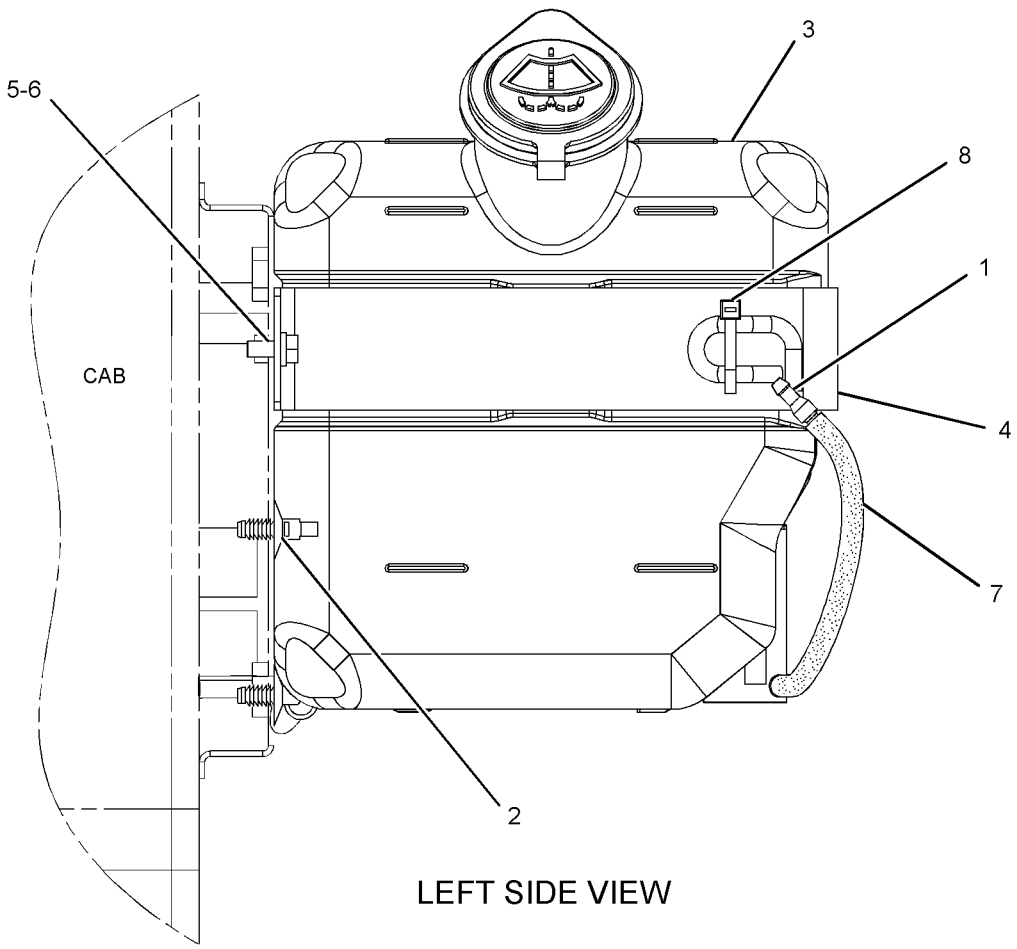

LEFT SIDE VIEW

GRAPHIC #1 **<END>** g01307642

OPERATOR STATION

229-9088 WASHER GP-WINDOW—LOWER

S/N: MNB1-UP; WDK1-UP
PART OF 229-9086 WIPER AR-WINDOW
AN ATTACHMENT

SMCS-7306 **i02703029**

NOTE	REF NO	GRAPHIC REF	PART NUMBER	QTY	PART NAME 1 2 3 4 5 6 (PRODUCT LEVEL)	SEE PAGE
	1	1	**3S-2093**	2	STRAP-CABLE	
	2	1	**293-1256**	2	VALVE AS-CHECK	
	3	1	**163-6795**	2	STRAP-CABLE	
	4	1	**170-9492**	1	PLATE	
E	5	1	**144-0195**		HOSE (290-CM)	
E	5A	1	**144-0195**		HOSE (30-CM)	
E	5B	1	**144-0195**		HOSE (13-CM)	
	6	1	**235-9012**	1	SUPPORT AS	
	7	1	**176-1932**	1	TANK AS-WINDOW WASHER	
	8	1	**178-5500**	1	NOZZLE AS	
		1	**085-8037**	1	NOZZLE	
		1	**105-9526**	1	ADAPTER	
		1	**105-9527**	1	GASKET	
M	9	1	**3E-9872**	2	SCREW AS (M4X0.7X12-MM)	
	10	1	**6V-3265**	10	CLIP	
	11	1	**8T-4121**	10	WASHER-HARD (11X21X2.5-MM THK)	
M	12	1	**8T-4191**	10	BOLT (M10X1.5X16-MM)	
M	13	1	**8T-4970**	2	BOLT (M6X1X14-MM)	
	14	1	**9X-8256**	2	WASHER (6.6X12X2-MM THK)	

E-ORDER BY THE CENTIMETER
M-METRIC PART

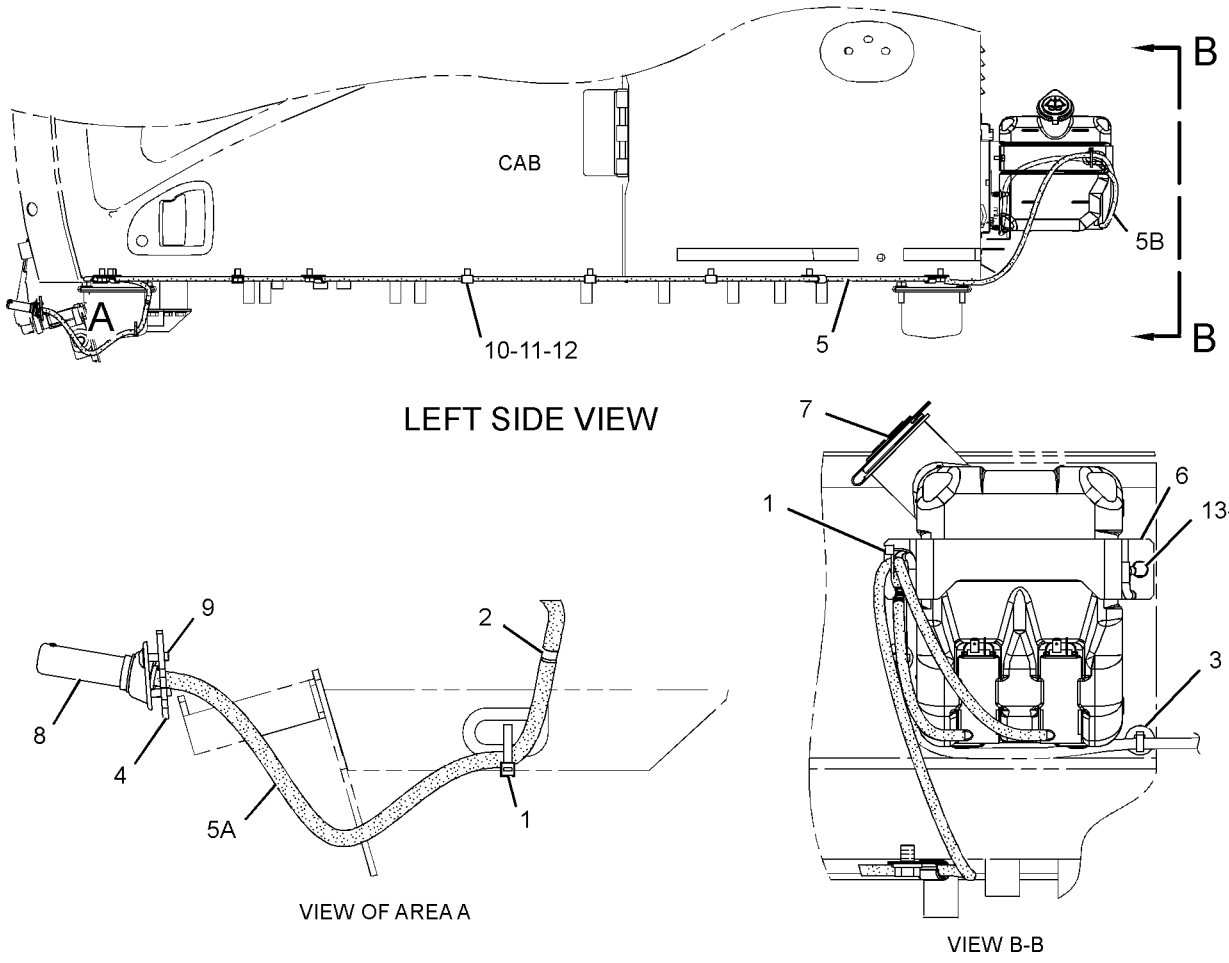

GRAPHIC #1 **<END>** g01292034

OPERATOR STATION

207-0144 WINDOW AS-FRONT–UPPER

S/N: MNB1-UP; WDK1-UP
PART OF 229-9097, 229-9099, 229-9101, 229-9109 CAB GP
AN ATTACHMENT

SMCS-7340 **i02857428**

NOTE	REF NO	GRAPHIC REF	PART NUMBER	QTY	PART NAME 1 2 3 4 5 6 (PRODUCT LEVEL)	SEE PAGE
	1	1	**170-9722**	1	CUSHION	
	2	1	**156-6472**	1	GLASS	
	3	1	**161-3698**	1	SEAL	
	4	1	**4I-0420**	1	STRIP	

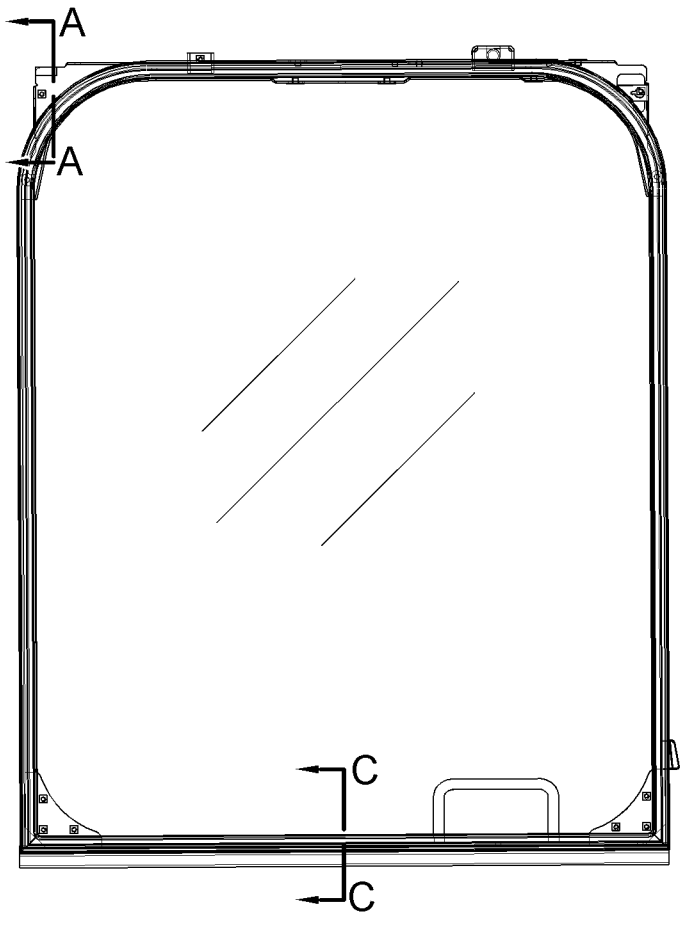

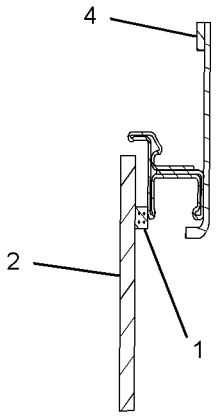

SECTION A-A

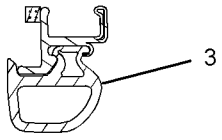

SECTION C-C

GRAPHIC #1 **<END>** g01439108

OPERATOR STATION

139-7101 WINDOW GP-CAB—FRONT, UPPER

S/N: MNB1-UP; WDK1-UP

PART OF 229-9097, 229-9099, 229-9101, 229-9109 CAB GP

AN ATTACHMENT

SMCS-7310 **i02836457**

NOTE	REF NO	GRAPHIC REF	PART NUMBER	QTY	PART NAME 1 2 3 4 5 6 (PRODUCT LEVEL)	SEE PAGE
	1	2	**170-9722**	1	CUSHION	
	2	1	**151-6703**	1	HANDLE-PULL	
	3	1	**151-6704**	2	CAP (HANDLE)	
	4	2	**151-6778**	1	FRAME AS	
	5	1	**151-6785**	1	BRACKET AS	
	6	1	**151-6813**	1	BRACKET AS	
	7	1	**151-6815**	1	BRACKET AS	
	8	1	**273-5345**	1	LINK AS	
	9	1	**273-5346**	1	LINK AS	
	10	1	**151-6831**	1	LOCK AS	
	11	1	**151-6832**	1	LEVER AS	
	12	2	**151-6844**	1	COVER	
	13	1	**151-9557**	2	STOP-RUBBER	
	14	2	**156-6472**	1	GLASS	
	15	2	**156-6554**	1	CABLE AS	
	16	1	**156-6555**	1	STRIKER AS	
	17	2	**156-6562**	1	BRACKET	
	18	2	**273-5274**	1	CATCH AS	
	19	2	**156-6579**	1	STOP	
	20	2	**156-6601**	1	SEAL AS	
	21	2	**156-6627**	1	STOP AS	
	22	1	**161-3684**	2	STOP	
	23	1	**161-3698**	1	SEAL	
	24	2	**164-0648**	1	BRACKET AS	
	25	1	**178-5576**	1	STOP	
M	26	2	**185-8181**	2	SCREW (M4X0.7X10-MM)	
M	27	2	**185-8182**	4	BOLT (M10X1.5X20-MM)	
M	28	2	**5C-8312**	1	NUT (M4X0.7-THD)	
	29	2	**185-8187**	4	WASHER (10.2X22X3.2-MM THK)	
M	30	1	**185-8197**	1	NUT (M10X1.15-THD)	
	31	1	**185-8221**	1	STOP	
M	32	1	**099-0823**	2	SCREW-MACHINE (M6X1X6-MM)	
M	33	1	**101-8900**	2	SCREW AS (M6X1X20-MM)	
	34	1	**117-6306**	1	SWITCH (WINDOW LOWER LIMIT)	
	35	1	**151-9576**	4	ROLLER	
	36	1	**4I-0420**	1	STRIP	
	37	1	**7X-0578**	1	WASHER-HARD (10.2X32X2.5-MM THK)	
M	38	2	**9X-2042**	20	SCREW-TRUSS HEAD (M6X1X12-MM)	
M	39	1,2	**9X-2044**	5	SCREW-TRUSS HEAD (M6X1X16-MM)	
M	40	2	**9X-2045**	3	SCREW-TRUSS HEAD (M6X1X20-MM)	
	41	2	**9X-8256**	2	WASHER (6.6X12X2-MM THK)	

M-METRIC PART

REFER TO ALL ILLUSTRATIONS OF
THIS GROUP FOR AUXILIARY VIEWS

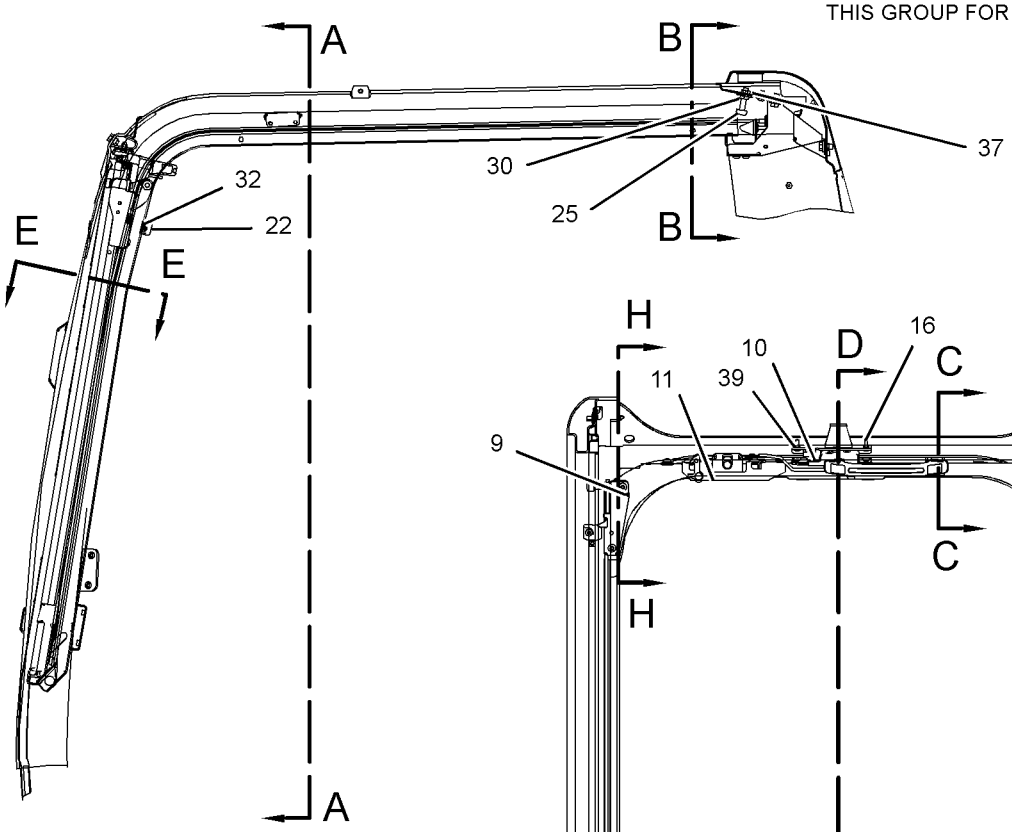

LEFT SIDE VIEW

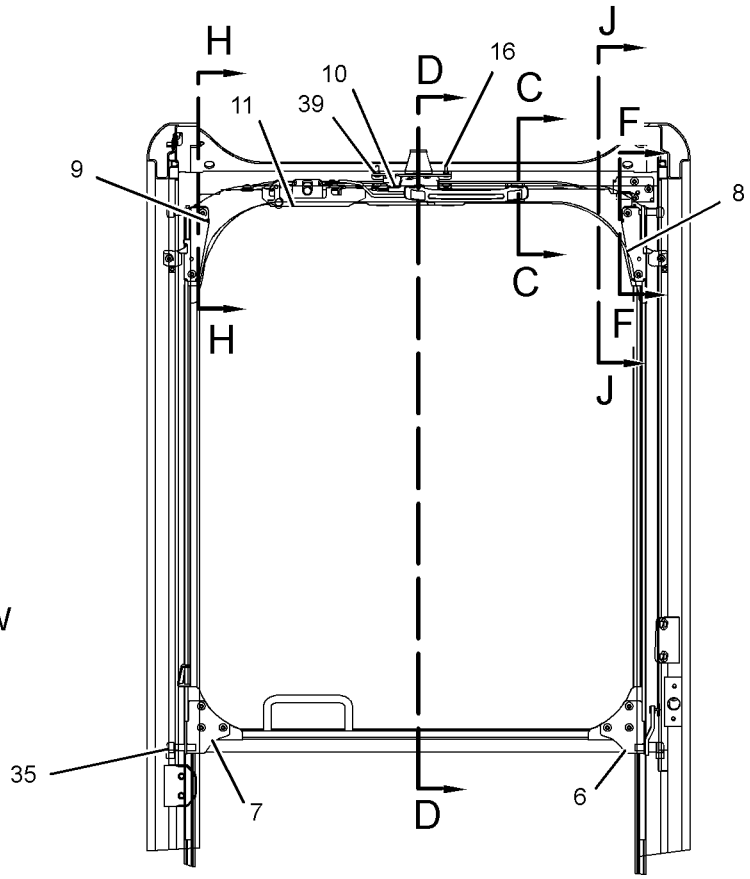

SECTION A-A

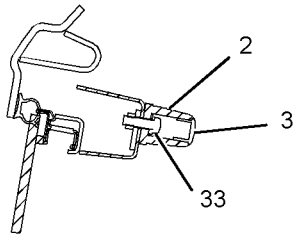

SECTION C-C

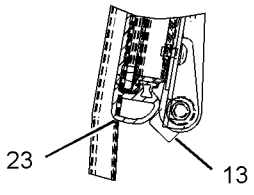

SECTION D-D

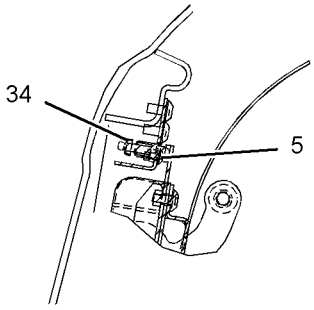

SECTION F-F

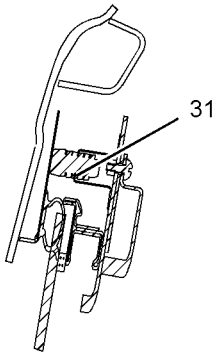

SECTION H-H

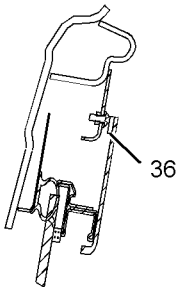

SECTION J-J

GRAPHIC #1 g01231378

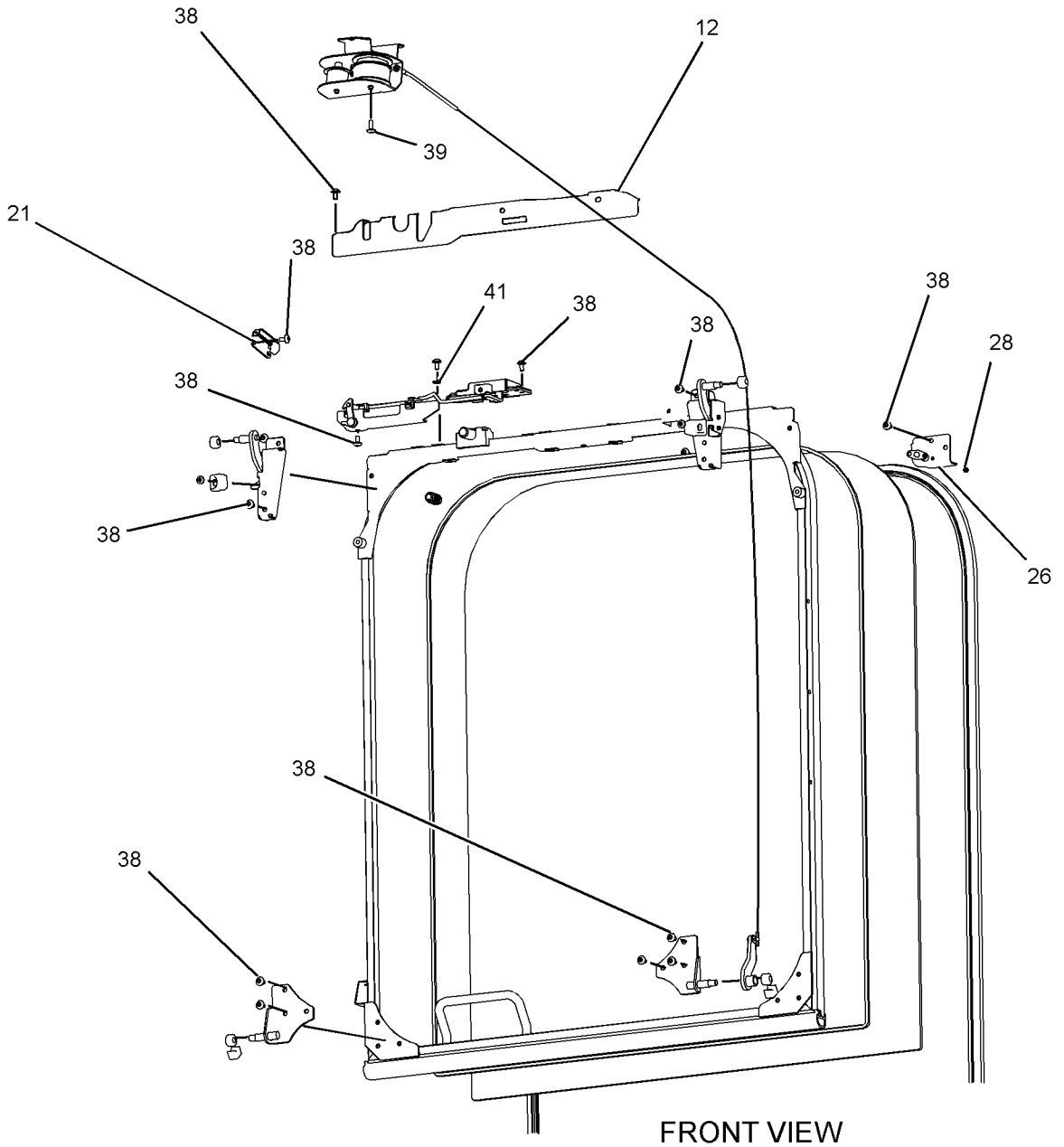

FRONT VIEW

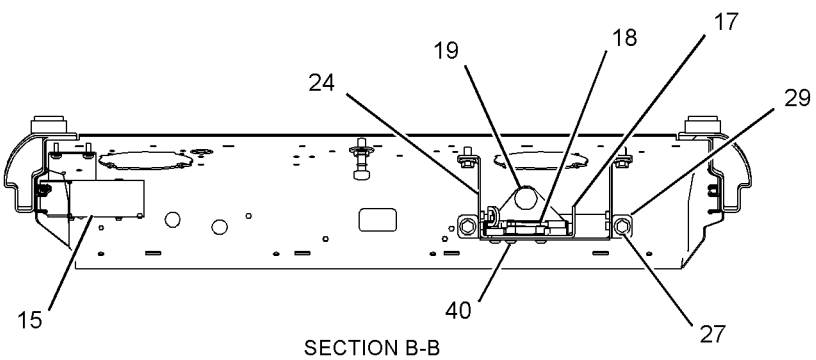

SECTION B-B

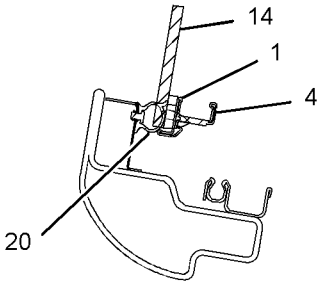

SECTION E-E

GRAPHIC #2 **<END>** g01231379

OPERATOR STATION

156-6647 WINDOW GP-CAB–FRONT, LOWER

S/N: MNB1-UP; WDK1-UP

PART OF 229-9087 WIPER & WASHER GP-WINDOW

AN ATTACHMENT

SMCS-7310 **i02243909**

NOTE	REF NO	GRAPHIC REF	PART NUMBER	QTY	PART NAME 1 2 3 4 5 6 (PRODUCT LEVEL)	SEE PAGE
	1	1	*156-6648*	1	GLASS	
M	2	1	**9X-2042**	2	SCREW-TRUSS HEAD (M6X1X12-MM)	
	3	1	**151-6705**	1	PACKING	
	4	1	**124-3966**	1	STOP	
	5	1	**144-9692**	2	RETAINER	
	6	1	**144-9691**	2	PACKING	

M-METRIC PART

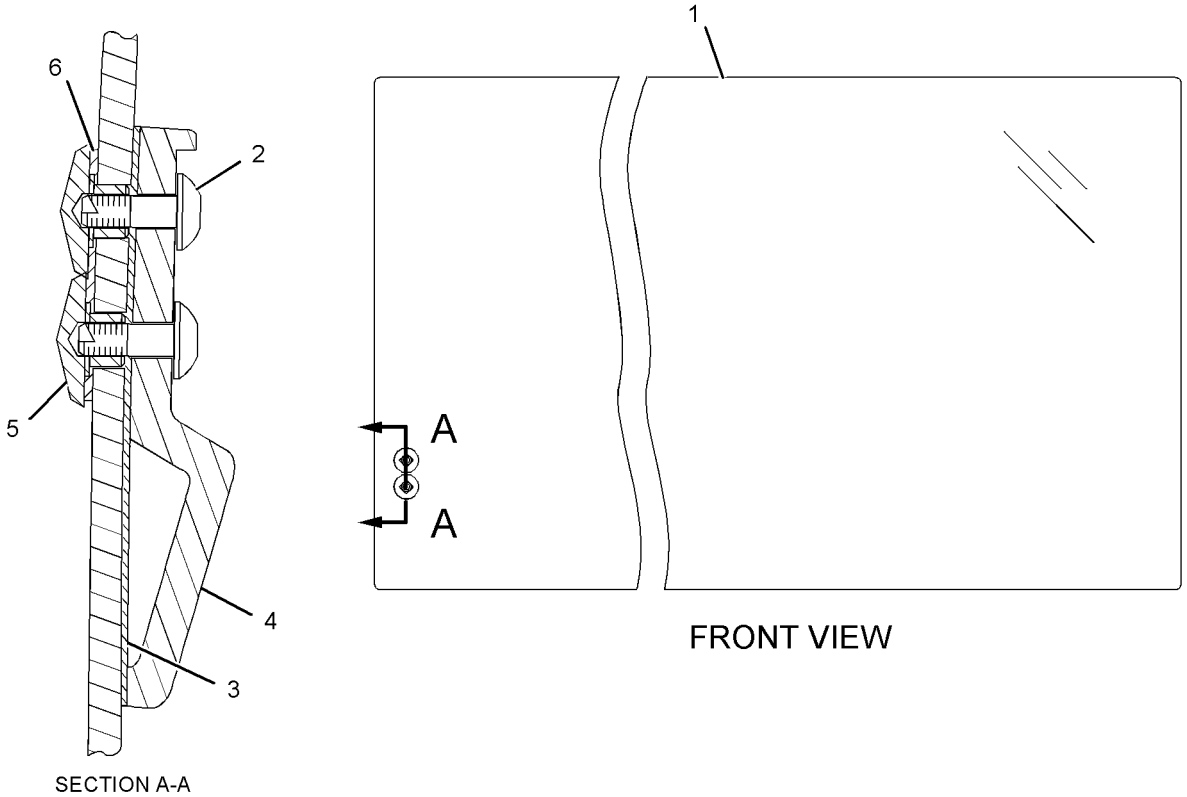

SECTION A-A

FRONT VIEW

GRAPHIC #1 **<END>** g01131367

OPERATOR STATION

176-1958 WINDOW GP-CAB—LOWER

S/N: MNB1-UP; WDK1-UP

PART OF 229-9097, 229-9099, 229-9101, 229-9109 CAB GP

AN ATTACHMENT

SMCS-7310 **i02793691**

NOTE	REF NO	GRAPHIC REF	PART NUMBER	QTY	PART NAME 1 2 3 4 5 6 (PRODUCT LEVEL)	SEE PAGE
	1	1	**156-6473**	1	GLASS (LOWER FRONT)	
	2	1	**156-6631**	2	STOP	
	3	1	**305-0361**	1	SEAL	
	4	1	**178-5569**	2	SEAL	
	5	1	**189-2702**	2	SEAL	
	6	1	**139-7119**	2	PLUG	

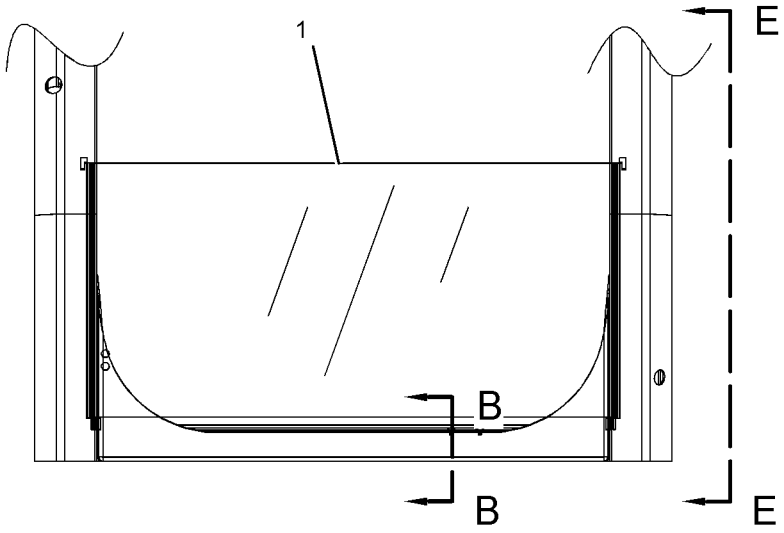

FRONT VIEW

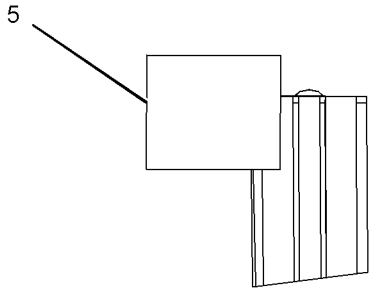

VIEW OF AREA D

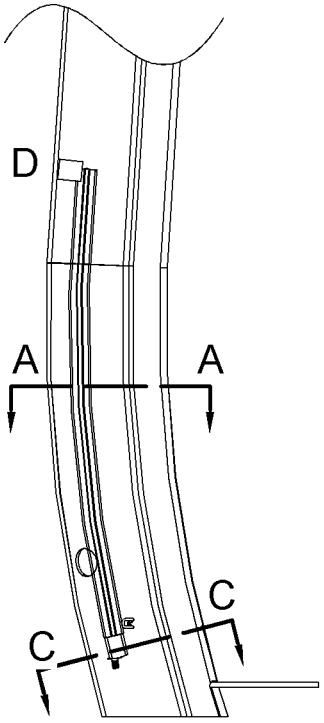

VIEW E-E

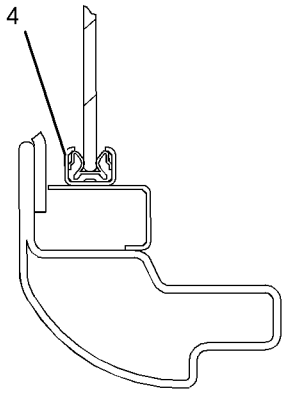

SECTION A-A

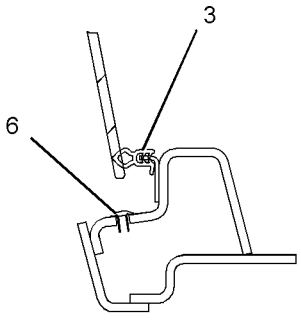

SECTION B-B

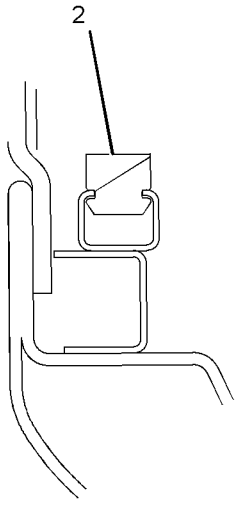

SECTION C-C

GRAPHIC #1 **<END>** g01398601

OPERATOR STATION

235-8909 WINDOW GP-CAB—SIDE, REAR

S/N: MNB1-UP; WDK1-UP
PART OF 229-9097, 229-9099, 229-9109 CAB GP
AN ATTACHMENT

SMCS-7310 **i02877557**

NOTE	REF NO	GRAPHIC REF	PART NUMBER	QTY	PART NAME 1 2 3 4 5 6 (PRODUCT LEVEL)	SEE PAGE
	1	1	**151-6790**	1	GLASS	
	2	1	**156-6469**	1	GLASS	
	3	1	**164-0666**	1	SEAL	
	4	1	**178-5572**	4	SPACER	
	5	1	**234-6489**	1	GLASS	
	6	1	**099-3629**	1	RING-KEY	
	7	1	**178-5573**	4	SPACER	
	8	1	**178-5574**	9	SPACER	

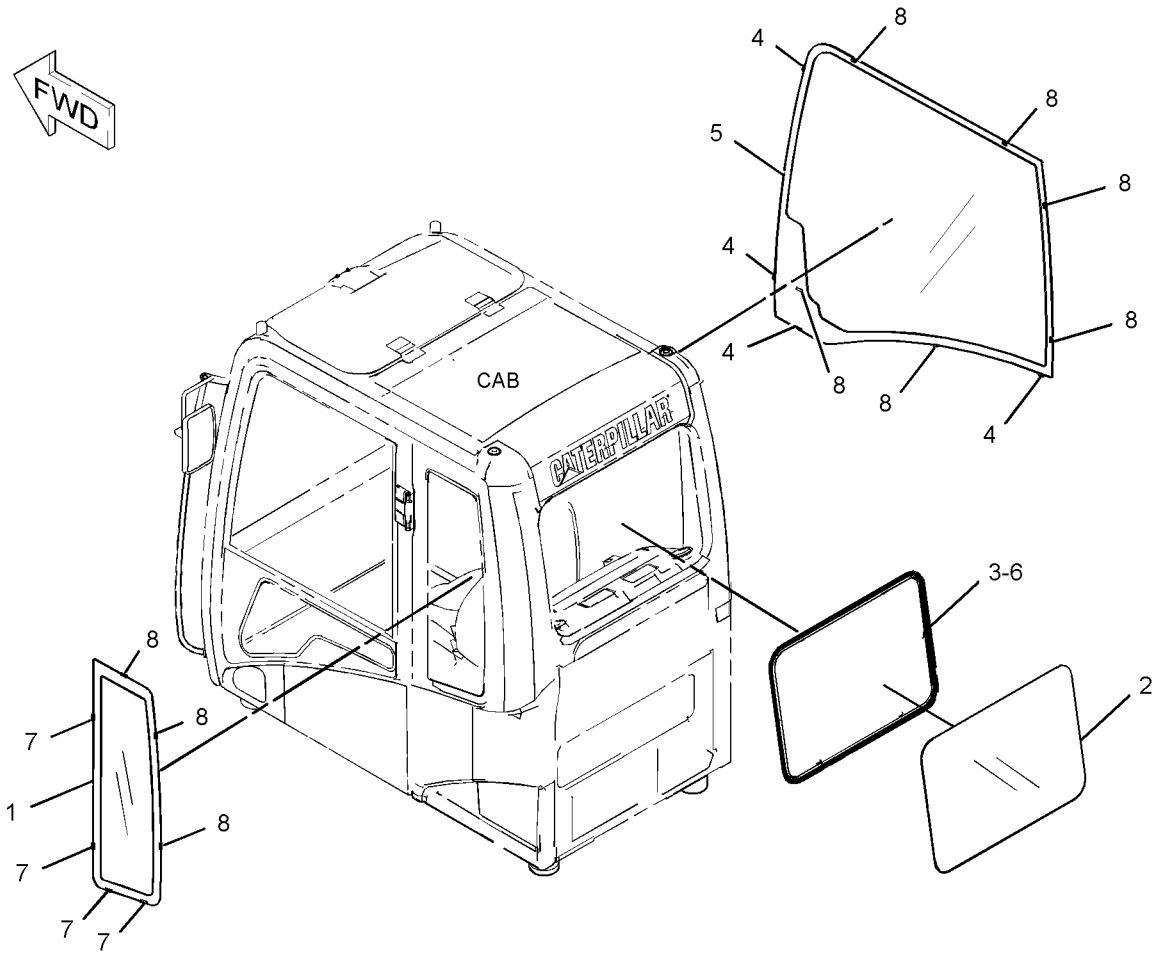

GRAPHIC #1 **<END>** g01432743

OPERATOR STATION

235-8915 WINDOW GP-CAB

S/N: MNB1-UP; WDK1-UP
PART OF 229-9101 CAB GP
AN ATTACHMENT

SMCS-7310 **i02862883**

NOTE	REF NO	GRAPHIC REF	PART NUMBER	QTY	PART NAME 1 2 3 4 5 6 (PRODUCT LEVEL)	SEE PAGE
	1	1	**164-0666**	1	SEAL	
	2	1	**167-7037**	1	GLASS (REAR)	
	3	1	**178-5572**	4	SPACER	
	4	1	**235-8911**	1	GLASS (RH)	
	5	1	**099-3629**	1	RING-KEY	
	6	1	**167-7036**	1	GLASS (LH)	
	7	1	**178-5573**	4	SPACER	
	8	1	**178-5574**	9	SPACER	

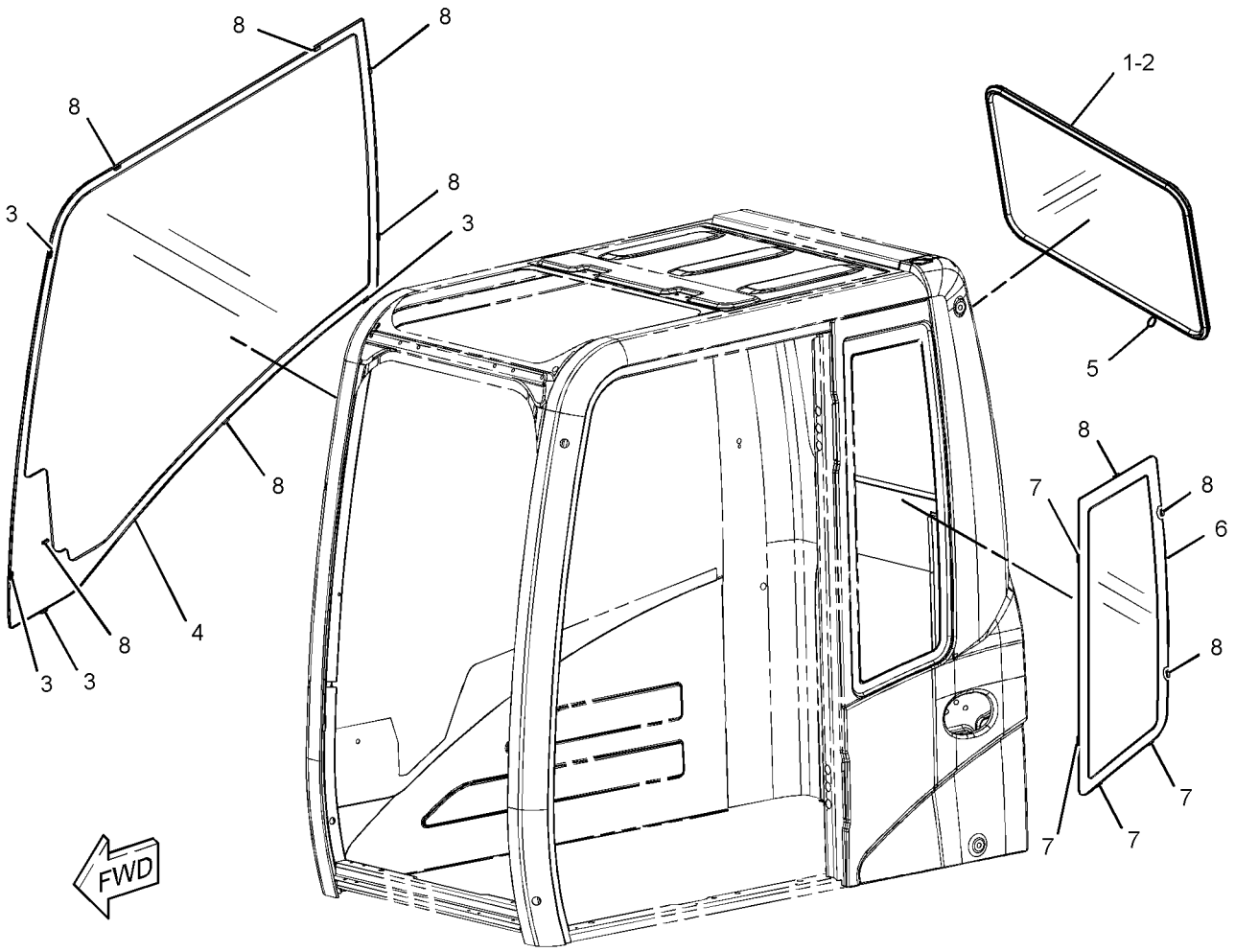

GRAPHIC #1 **<END>** g01427383

OPERATOR STATION

151-6792 WINDOW GP-DOOR

S/N: MNB1-UP; WDK1-UP
PART OF 139-7100, 176-1964 DOOR GP-CAB
AN ATTACHMENT

SMCS-7308, 7310 **i03214888**

NOTE	REF NO	GRAPHIC REF	PART NUMBER	QTY	PART NAME 1 2 3 4 5 6 (PRODUCT LEVEL)	SEE PAGE
	1	1	**085-6444**	2	LATCH GP-FRONT WINDOW	
					(EACH INCLUDES)	
		1	**085-6447**	1	RETAINER	
M		1	**085-6448**	2	SCREW-TAPPING	
		1	**085-6449**	1	PACKING	
	2	1	**151-6793**	1	FRAME AS	
		1	**4I-4298**	1	STOPPER	
		1	**4I-4300**	1	CATCH	
		1	**099-0139**	3	RIVET	
	3	1	**151-6841**	1	SEAL	
	4	1	**156-6474**	1	GLASS	
	5	1	**156-6475**	1	GLASS	
	6	1	**161-3695**	1	SEAL	
	7	1	**161-3705**	1	SEAL	
	8	1	**164-0516**	1	RUBBER	
	9	1	**164-0517**	1	RUBBER	
	10	1	**164-0518**	1	RUBBER	
	11	1	**171-7413**	1	SPACER	
	12	1	**171-7414**	1	SPACER	
	13	1	**176-1951**	1	SPACER	
	14	1	**176-1952**	1	SPACER	
	15	1	**176-1953**	1	STOP	
	16	1	**176-1954**	1	SEAL	
	17	1	**176-1955**	1	SEAL	
	18	1	**176-1956**	1	SEAL	
	19	1	**176-1957**	1	SEAL	

M-METRIC PART

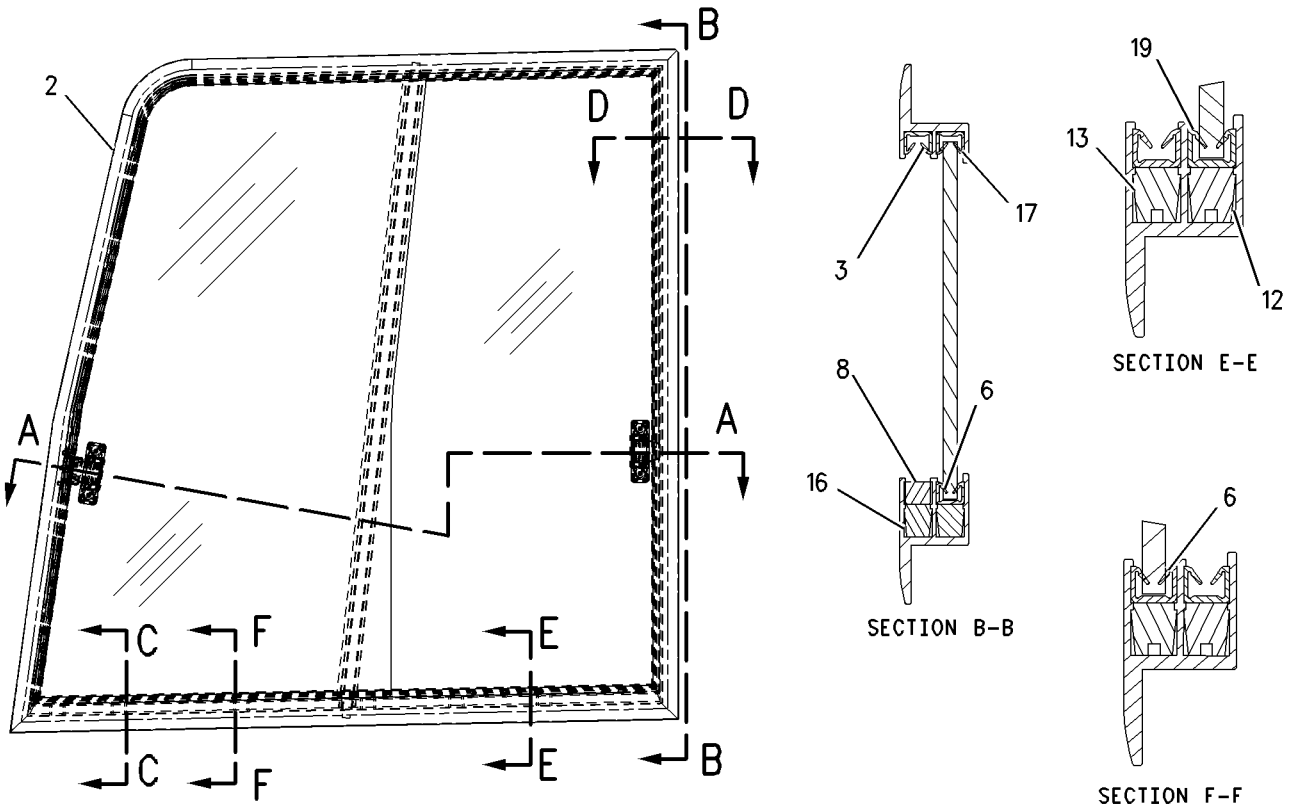

GRAPHIC #1

<END>

g00722948

OPERATOR STATION

229-9087 WIPER & WASHER GP-WINDOW—LOWER

S/N: MNB1-UP; WDK1-UP
PART OF 229-9086 WIPER AR-WINDOW
AN ATTACHMENT

SMCS-7305, 7306 **i03079185**

NOTE	REF NO	GRAPHIC REF	PART NUMBER	QTY	PART NAME 1 2 3 4 5 6 (PRODUCT LEVEL)	SEE PAGE
	1	1	**4I-5021**	1	BLADE AS-WIPER (275-MM) (LOWER)	
	2	1	**235-8974**	1	BRACKET AS	
C	3	1	**293-1140**	1	MOTOR AS-WINDOW WIPER (LOWER)	
	4	1	**3S-2093**	1	STRAP-CABLE	
	5	1	**9X-8256**	5	WASHER (6.6X12X2-MM THK)	
M	6	1	**5C-2890**	3	NUT (M6X1-THD)	
M	7	1	**9X-2044**	2	SCREW-TRUSS HEAD (M6X1X16-MM)	
	8	1	**156-6646**	1	BRACKET	
	9	1	**8T-4121**	4	WASHER-HARD (11X21X2.5-MM THK)	
	10	1	**4I-5020**	1	ARM AS-WIPER	
M	11	1	**8T-4191**	4	BOLT (M10X1.5X16-MM)	
	12	1	**4I-1163**	1	BRACKET	
M	13	1	**5C-9553**	2	BOLT (M6X1X16-MM)	
Y	14	1	**156-6647**	1	WINDOW GP-CAB (FRONT, LOWER)	1090
	15	1	**129-6466**	1	SWITCH AS-ROLLER (WIPER, LOWER)	
	15A	1	**9X-0199**	1	BOOT-SWITCH	
	15B	1	**6V-8370**	1	NUT-HEX (3/4-32-THD)	
		1	**2H-3922**	1	LOCKWASHER	
	15C	1	**6V-8363**	2	SCREW (10-32X0.312-IN)	
		1	**8F-1434**	2	LOCKWASHER	

C-CHANGE FROM PREVIOUS TYPE
M-METRIC PART
Y-SEPARATE ILLUSTRATION

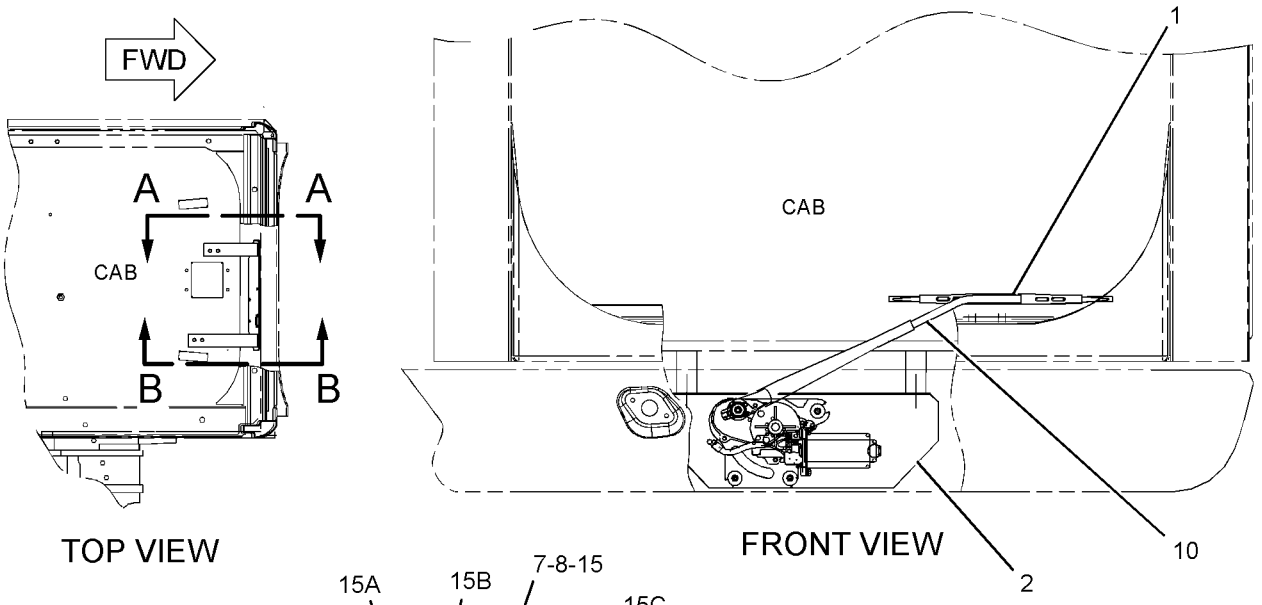

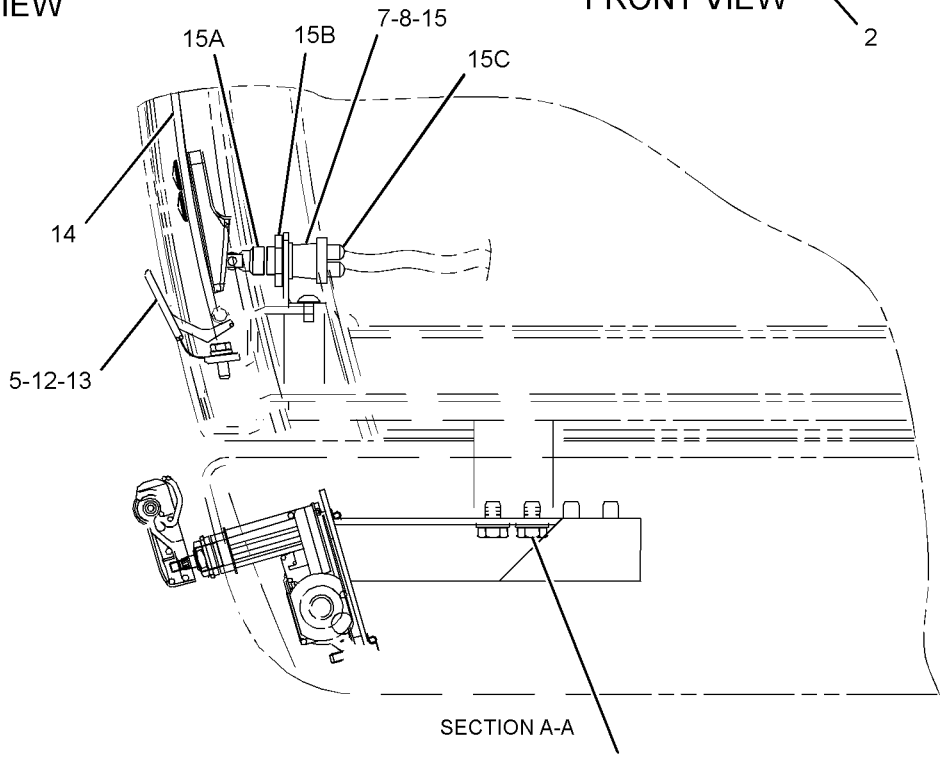

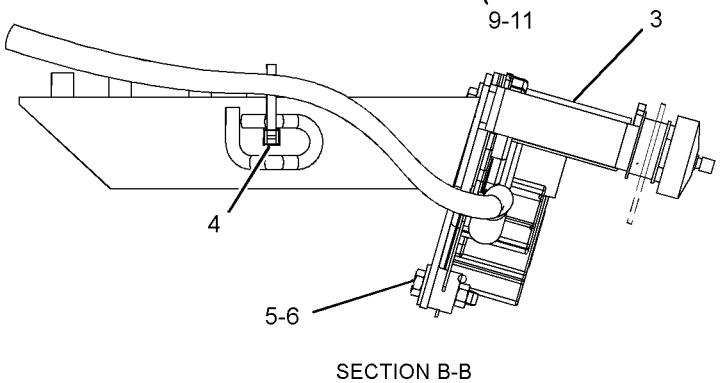

GRAPHIC #1 **<END>** g01527310

OPERATOR STATION

229-9086 WIPER AR-WINDOW

S/N: MNB1-UP; WDK1-UP
CANNOT BE USED WITH 229-9070—PAGE 1083
AN ATTACHMENT

SMCS-7305 **i02210004**

NOTE	PART NUMBER	QTY	PART NAME 1 2 3 4 5 6 (PRODUCT LEVEL)	SEE PAGE
Y	*229-9088*	1	WASHER GP-WINDOW (LOWER)	1084
Y	*229-9087*	1	WIPER & WASHER GP-WINDOW (LOWER)	1097
Y	*238-2208*	1	SWITCH GP-WIPER (LOWER)	261

Y-SEPARATE ILLUSTRATION

<END>

OPERATOR STATION

234-6594 WIPER GP-WINDOW—FRONT, UPPER

S/N: MNB1-UP; WDK1-UP

PART OF 229-9097, 229-9099, 229-9101, 229-9109 CAB GP

AN ATTACHMENT

SMCS-7305 **i02725441**

NOTE	REF NO	GRAPHIC REF	PART NUMBER	QTY	PART NAME 1 2 3 4 5 6 (PRODUCT LEVEL)	SEE PAGE
	1	1	**161-3677**	1	HOLDER	
	2	1	**245-7931**	1	MOTOR AS (WIPER)	
M		1	**6V-8231**	1	NUT (M10X1.25-THD)	
M		1	**7Y-3470**	1	NUT (M20X1-THD)	
		1	**7Y-3472**	1	CAP	
		1	**124-3953**	1	WASHER (20.5X30X2-MM THK)	
	3	1	**235-8932**	1	NOZZLE AS	
	4	1	**155-7042**	1	RELAY AS (WIPER)	
	5	1	**161-3668**	1	ARM AS	
		1	**161-3669**	1	GUIDE	
		1	**161-3670**	1	BLADE AS-WIPER (600-MM) (UPPER)	
		1	**185-8290**	1	SCREW AS (M35X0.06X9-MM)	
	6	1	**163-6795**	1	STRAP-CABLE	
M	7	1	**3E-9872**	2	SCREW AS (M4X0.7X12-MM)	
	8	1	**4I-3090**	1	SEAL	
	9	1	**7Y-7364**	1	GROMMET	
M	10	1	**8T-4134**	4	NUT (M6X1-THD)	
M	11	1	**9X-2042**	2	SCREW-TRUSS HEAD (M6X1X12-MM)	
M	12	1	**9X-2044**	3	SCREW-TRUSS HEAD (M6X1X16-MM)	

M-METRIC PART

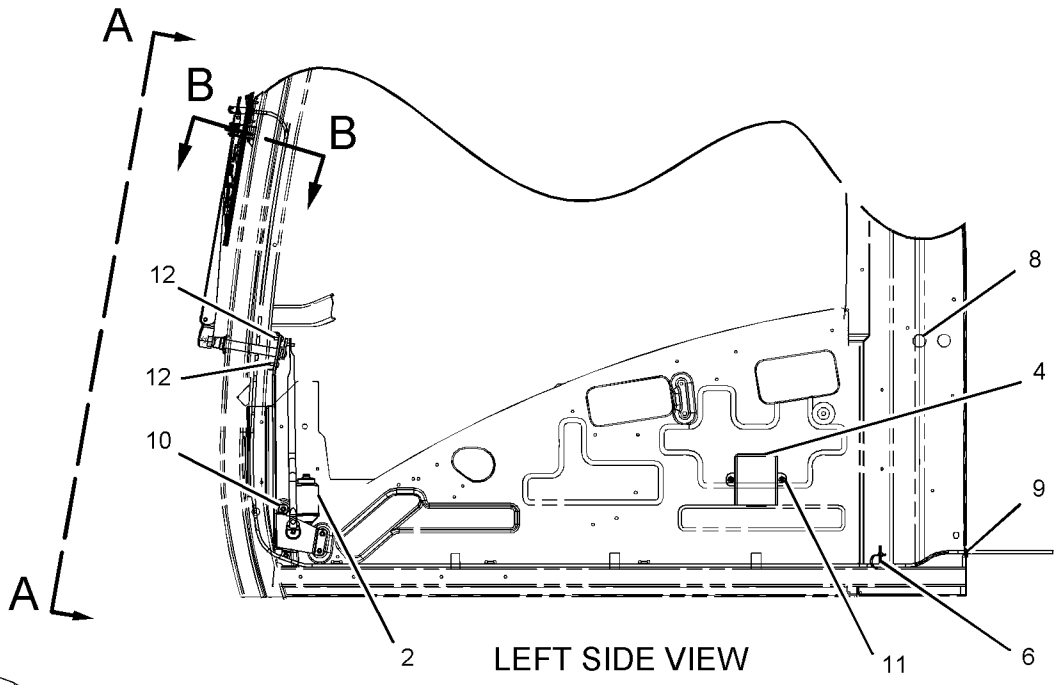

LEFT SIDE VIEW

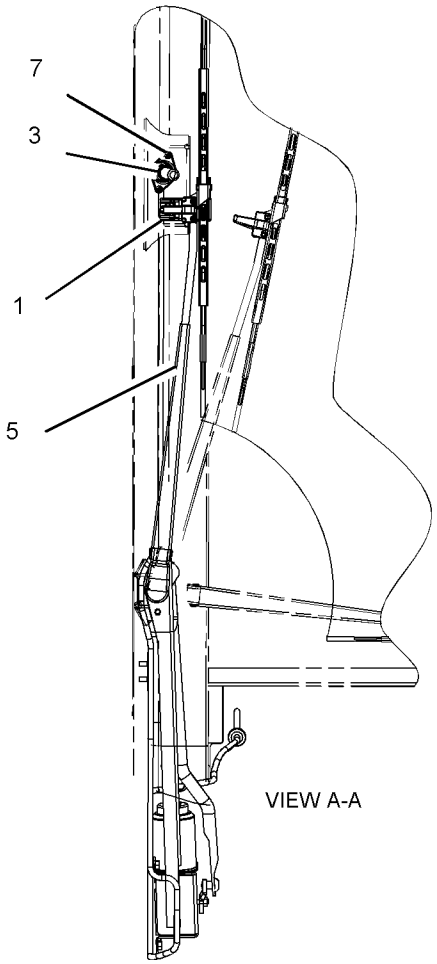

VIEW A-A

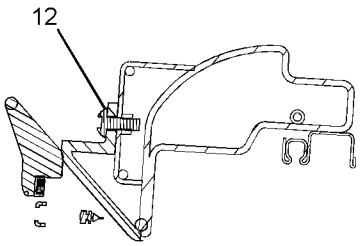

SECTION B-B

GRAPHIC #1 **<END>** g01098021

SERVICE EQUIPMENT AND SUPPLIES

247-7423 FILM GP–OPERATOR CONTROLS

S/N: MNB1-UP; WDK1-UP

PART OF 255-5696, 255-5699, 255-5702 CONTROL AR-AUXILIARY

AN ATTACHMENT

SMCS-7405, 7557 **i02905367**

NOTE	REF NO	GRAPHIC REF	PART NUMBER	QTY	PART NAME 1 2 3 4 5 6 (PRODUCT LEVEL)	SEE PAGE
	1	1	**260-6945**	1	FILM-INSTRUCTION (OPERATOR CONTROL PEDALS)	
	2	1	**250-8054**	1	FILM-NOTICE (HAMMER, READ OMM)	

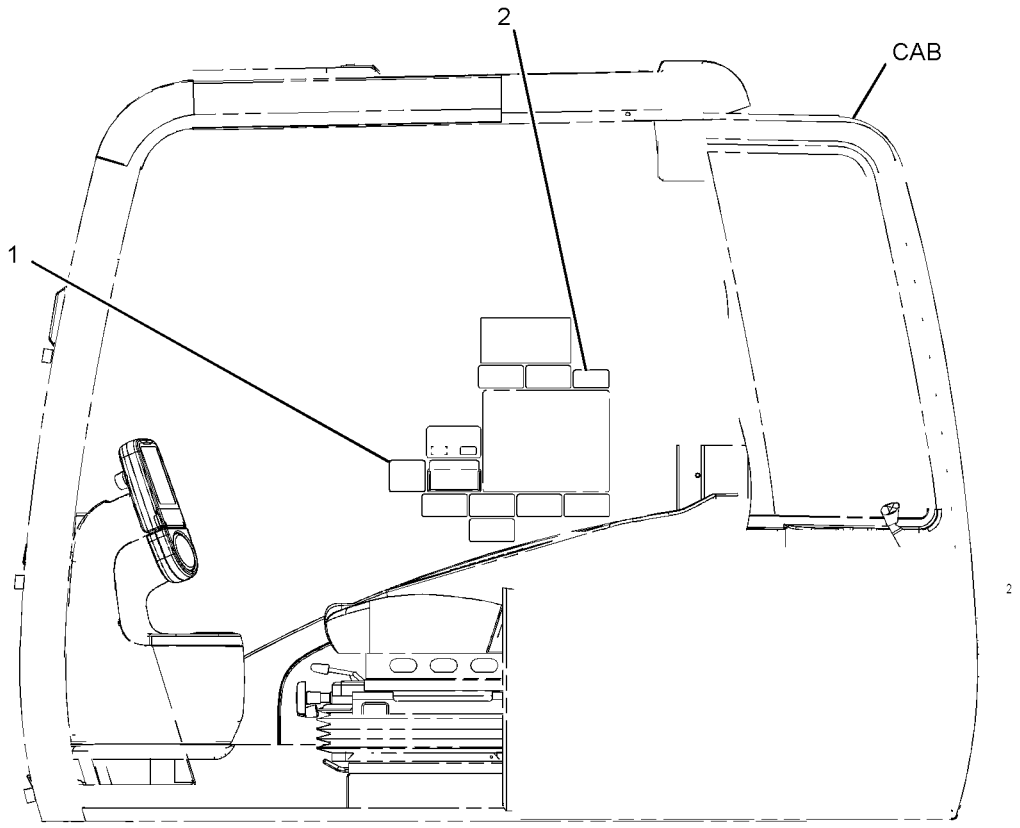

LEFT SIDE VIEW

GRAPHIC #1 **<END>** g01231531

SERVICE EQUIPMENT AND SUPPLIES

247-7424 FILM GP–OPERATOR CONTROLS, NOTICE

S/N: MNB1-UP; WDK1-UP
PART OF 255-5697 CONTROL AR-AUXILIARY
AN ATTACHMENT

SMCS-7405, 7557 **i02412793**

NOTE	REF NO	GRAPHIC REF	PART NUMBER	QTY	PART NAME 1 2 3 4 5 6 (PRODUCT LEVEL)	SEE PAGE
	1	1	**260-6946**	1	FILM-INSTRUCTION (OPERATOR CONTROL PEDALS)	
	2	1	**250-8054**	1	FILM-NOTICE (HAMMER, READ OMM)	

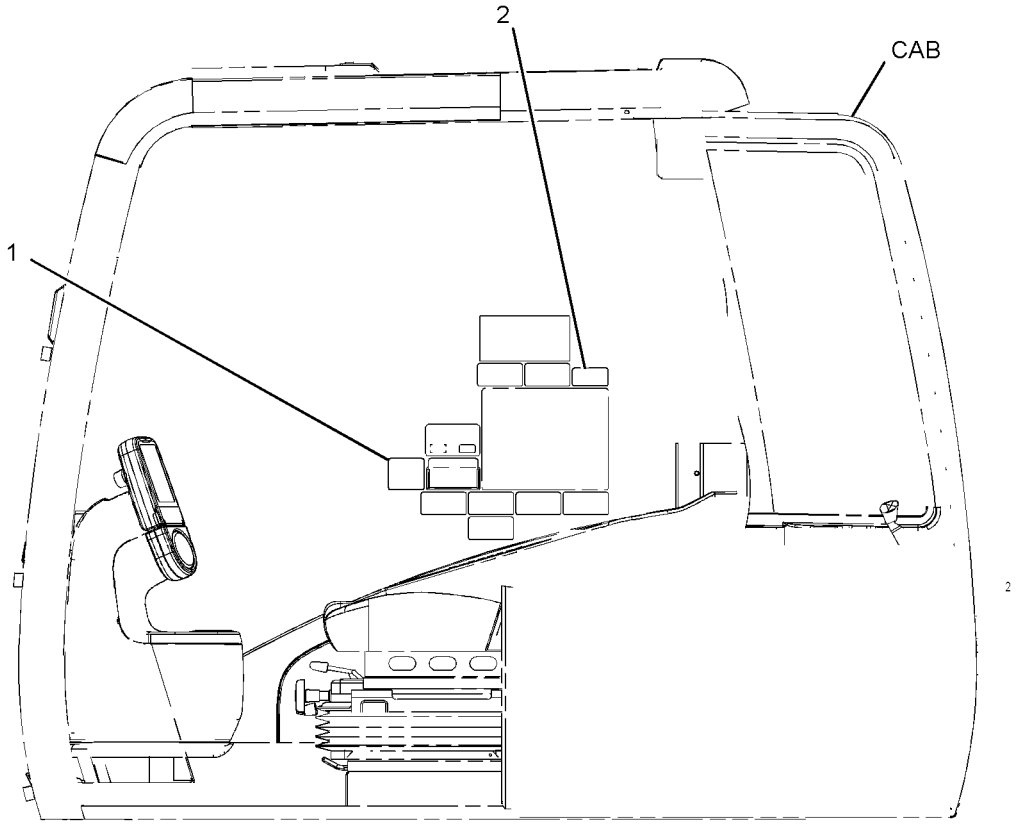

LEFT SIDE VIEW

GRAPHIC #1 **<END>** g01231531

SERVICE EQUIPMENT AND SUPPLIES

247-7465 FILM GP–HAMMER CONTROL, FOOT SWITCH

S/N: MNB1-UP

PART OF 270-6106 CONTROL AR-AUXILIARY

AN ATTACHMENT

SMCS-7405, 7557 **i02424961**

NOTE	REF NO	GRAPHIC REF	PART NUMBER	QTY	PART NAME 1 2 3 4 5 6 (PRODUCT LEVEL)	SEE PAGE
	1	1	**176-2815**	1	FILM-INSTRUCTION (HAMMER CONTROL)	
	2	1	**250-8054**	1	FILM-NOTICE (HAMMER, READ OMM)	

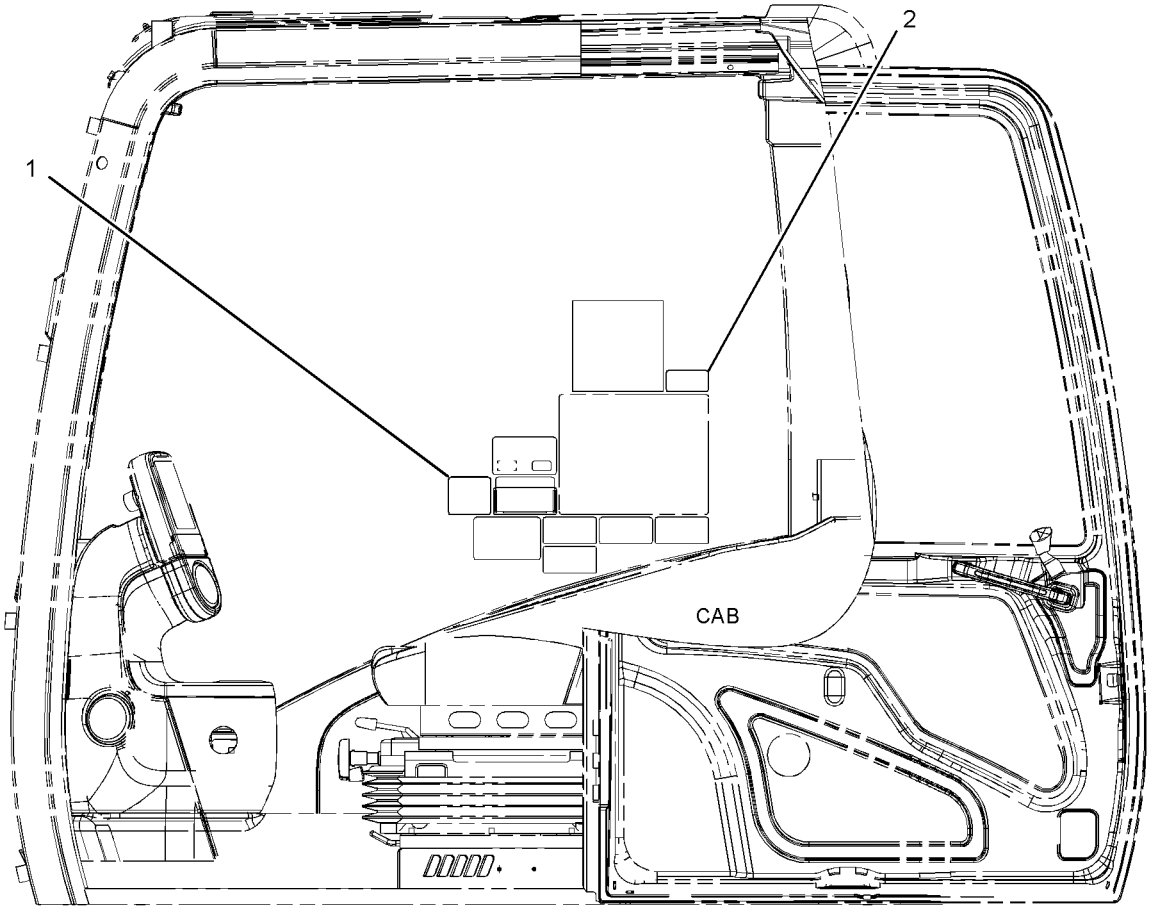

LEFT SIDE VIEW

GRAPHIC #1 **<END>** g01157047

SERVICE EQUIPMENT AND SUPPLIES

247-7490 FILM GP–ALT PATTERN CONTROL, WARNING

S/N: MNB1-UP; WDK1-UP
PART OF 255-5726 VALVE AR-ALT PATTERN CONTROL
AN ATTACHMENT

SMCS-7405, 7557 **i02345726**

NOTE	REF NO	GRAPHIC REF	PART NUMBER	QTY	PART NAME 1 2 3 4 5 6 (PRODUCT LEVEL)	SEE PAGE
	1	1	**4I-2885**	1	CASE	
	2	1	**255-3170**	1	FILM-INSTRUCTION (ALT PATTERN CONTROL, READ OMM)	
	3	1	**255-3171**	1	PLATE-INSTRUCTION (CONTROL PATTERN CHANGE)	
	4	1	**255-3173**	1	FILM-WARNING (CRUSH HAZARD, READ OMM, INTL)	
	5	1	**257-5015**	1	FILM-WARNING (CRUSH HAZARD, READ OMM, U.S.)	

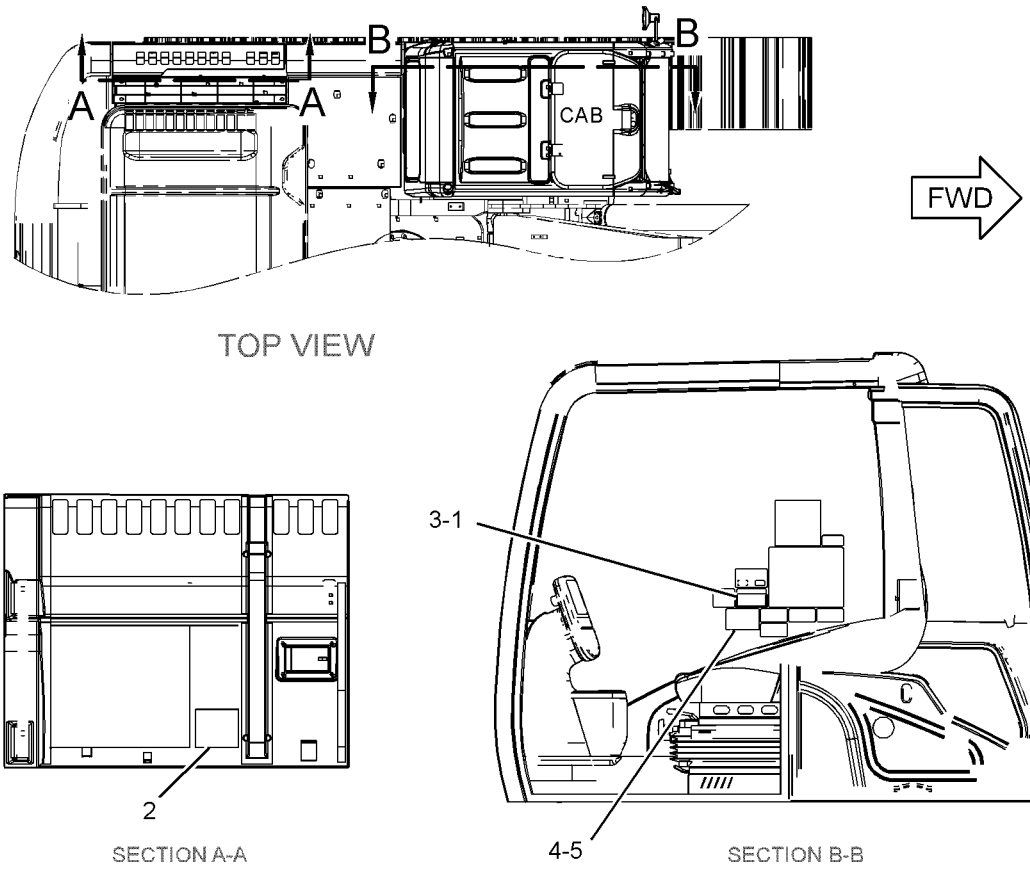

GRAPHIC #1 **<END>** g01187810

SERVICE EQUIPMENT AND SUPPLIES

247-7492 FILM GP—CONTROL PATTERN CHANGE, 4-WAY

S/N: MNB1-UP; WDK1-UP

PART OF 255-5725 VALVE AR-ALT PATTERN CONTROL

AN ATTACHMENT

SMCS-7405, 7557 **i02436751**

NOTE	REF NO	GRAPHIC REF	PART NUMBER	QTY	PART NAME 1 2 3 4 5 6 (PRODUCT LEVEL)	SEE PAGE
	1	1	**4I-2885**	1	CASE	
	2	1	**176-2688**	1	FILM (QUICK CHANGES)	
	3	1	**214-4531**	1	PLATE-INSTRUCTION (OPERATOR CONTROLS, READ OMM)	
	4	1	**214-4532**	1	PLATE-INSTRUCTION (OPERATOR CONTROLS, READ OMM)	
	5	1	**257-4547**	1	FILM-WARNING (CRUSH HAZARD, READ OMM, INTL)	

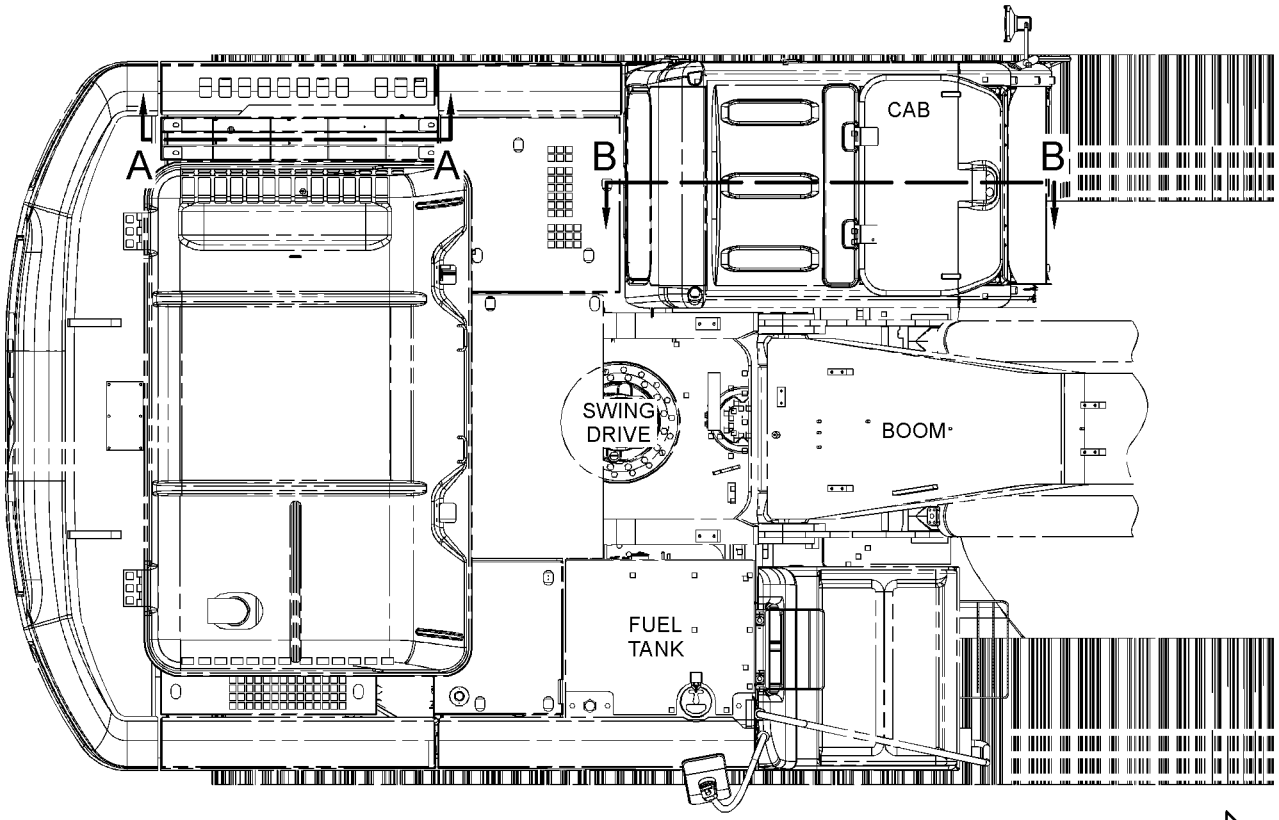

TOP VIEW

FWD

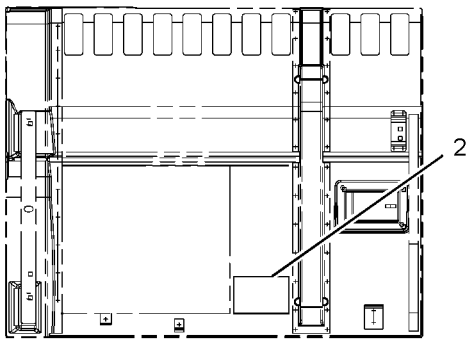

SECTION A-A

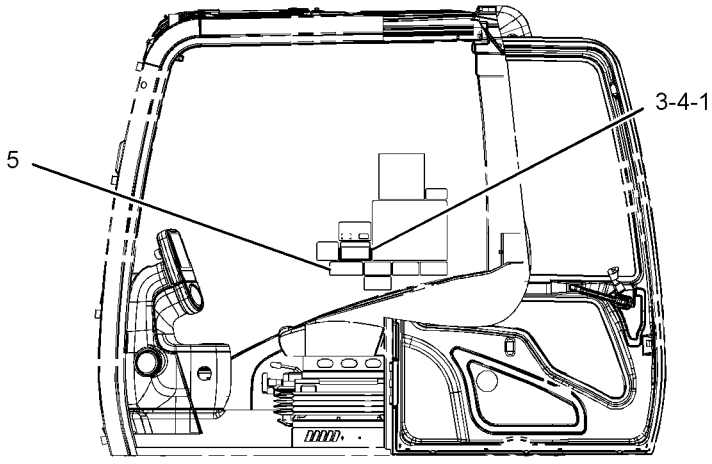

SECTION B-B

GRAPHIC #1 **<END>** g01217306

SERVICE EQUIPMENT AND SUPPLIES

268-6816 FILM GP—QUICK COUPLER

S/N: WDK1-UP
PART OF 262-3580 CONTROL AR-COUPLER
AN ATTACHMENT

SMCS-7405, 7557 **i02490845**

NOTE	REF NO	GRAPHIC REF	PART NUMBER	QTY	PART NAME 1 2 3 4 5 6 (PRODUCT LEVEL)	SEE PAGE
	1	1	**268-6817**	1	FILM-IDENTIFICATION (QUICK COUPLER)	

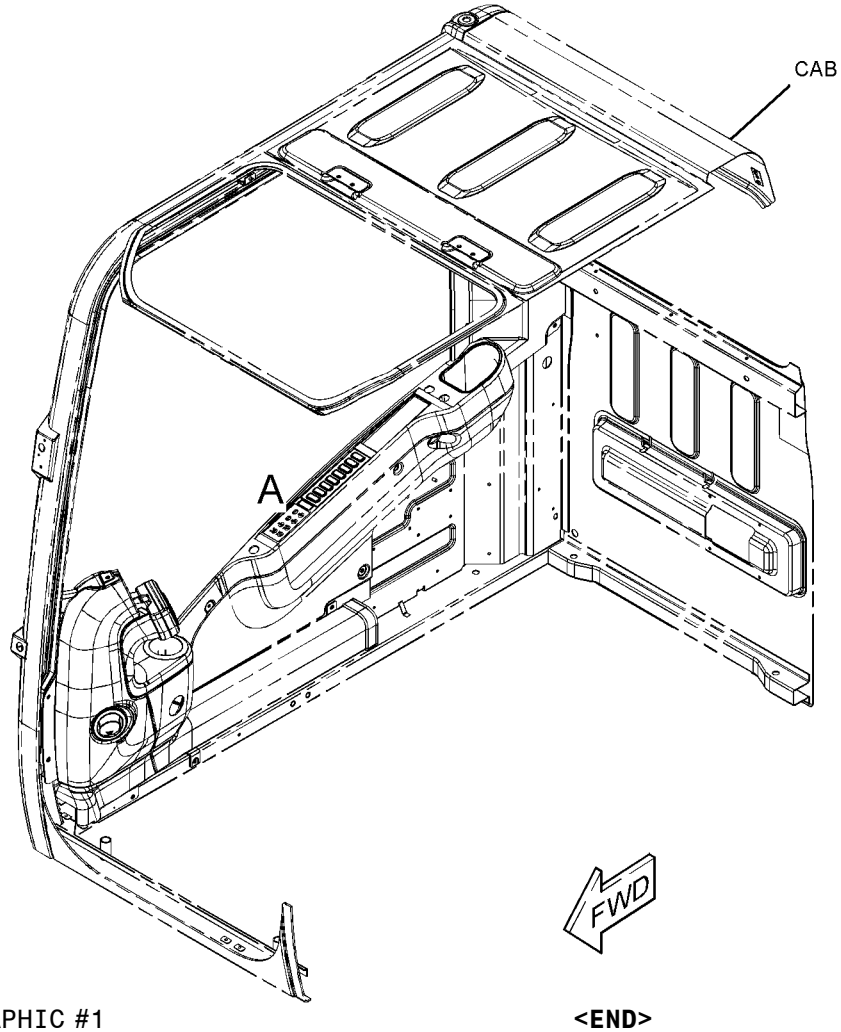

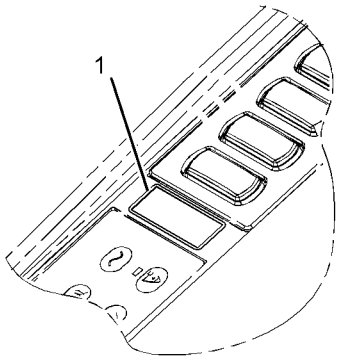

VIEW OF AREA A

GRAPHIC #1 **<END>** g01199575

SERVICE EQUIPMENT AND SUPPLIES

282-5705 FILM GP—QUICK COUPLER

S/N: MNB1-UP; WDK1-UP
PART OF 215-5981 CONTROL AR-COUPLER
AN ATTACHMENT

SMCS-7405, 7557 **i02817497**

NOTE	REF NO	GRAPHIC REF	PART NUMBER	QTY	PART NAME 1 2 3 4 5 6 (PRODUCT LEVEL)	SEE PAGE
	1	1	**268-4530**	1	FILM-WARNING (CRUSH HAZARD, READ OMM, U.S.)	
					—OR—	
		1	**269-0120**	1	FILM-WARNING (CRUSH HAZARD, READ OMM, INTL)	
	2	1	**268-4531**	1	FILM-INSTRUCTION (COUPLER OPERATION)	
	3	1	**268-8872**	1	FILM-WARNING (CRUSH HAZARD, READ OMM, U.S.)	
					—OR—	
		1	**269-0121**	1	FILM-WARNING (CRUSH HAZARD, READ OMM, INTL)	

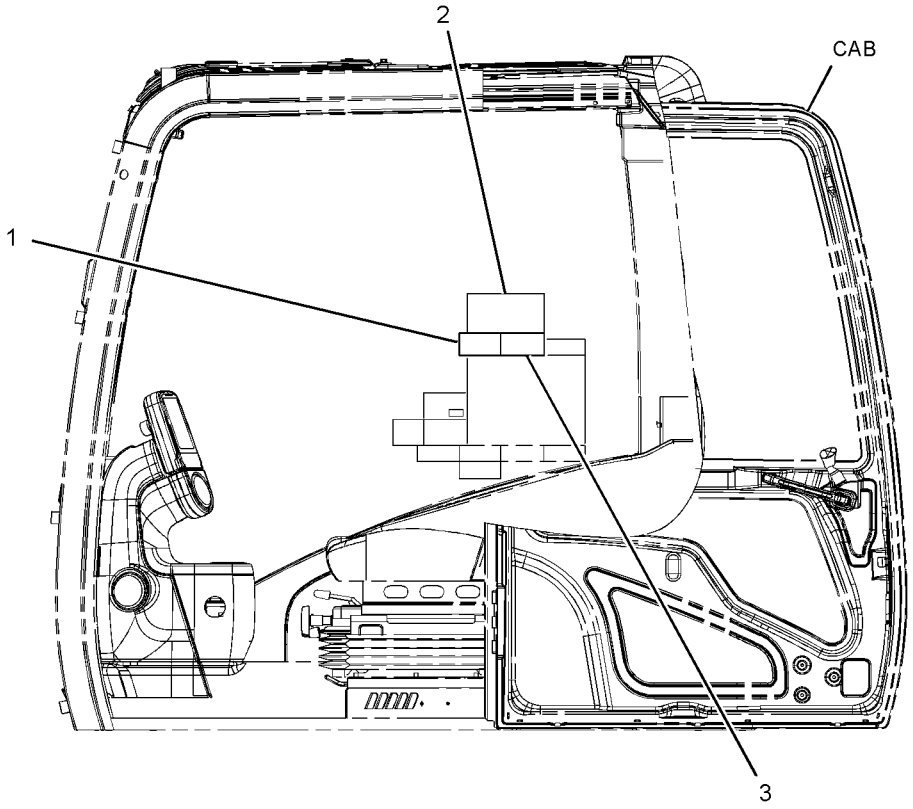

LEFT SIDE VIEW

GRAPHIC #1 **<END>** g01238116

SERVICE EQUIPMENT AND SUPPLIES

298-4258 FILM GP–FUEL TRANSFER PUMP

S/N: MNB1-UP; WDK1-UP

PART OF 229-1784 PUMP AR-FUEL TRANSFER

AN ATTACHMENT

SMCS-7405, 7557 **i03023882**

NOTE	REF NO	GRAPHIC REF	PART NUMBER	QTY	PART NAME 1 2 3 4 5 6 (PRODUCT LEVEL)	SEE PAGE
	1	1	**309-3872**	1	FILM-WARNING (EXPLOSION HAZARD, READ OMM)	

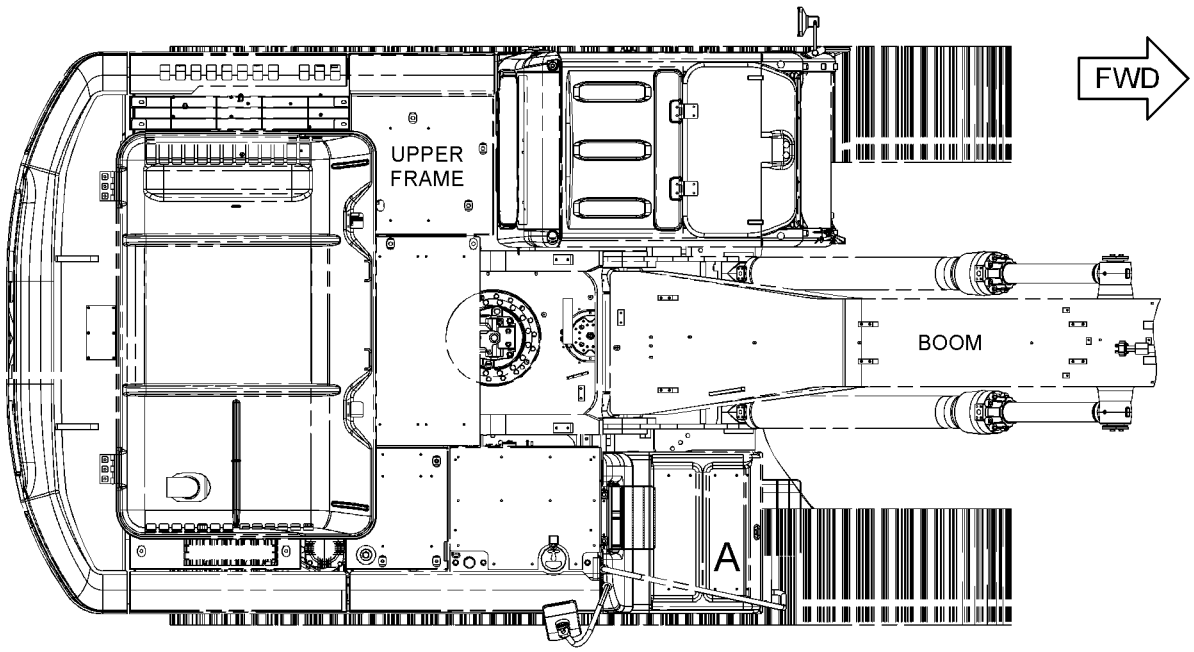

TOP VIEW

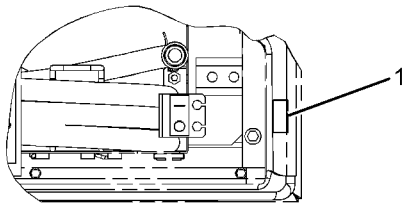

VIEW OF AREA A

GRAPHIC #1 **<END>** g01428719

SERVICE EQUIPMENT AND SUPPLIES

298-4281 FILM GP

S/N: MNB1-UP; WDK1-UP
CHINA
PART OF 298-4286, 298-4287, 298-4288 SPECIAL AR
AN ATTACHMENT

SMCS-7405, 7557 **i02842428**

NOTE	REF NO	GRAPHIC REF	PART NUMBER	QTY	PART NAME 1 2 3 4 5 6 (PRODUCT LEVEL)	SEE PAGE
	1	1	**158-7864**	1	FILM-IDENTIFICATION (HYDRAULIC OIL)	
	2	1	**298-4282**	2	FILM-WARNING (CRUSH HAZARD)	
	3	1	**312-5525**	1	FILM-WARNING (CUTTING HAZARD HAND, STAY BACK)	

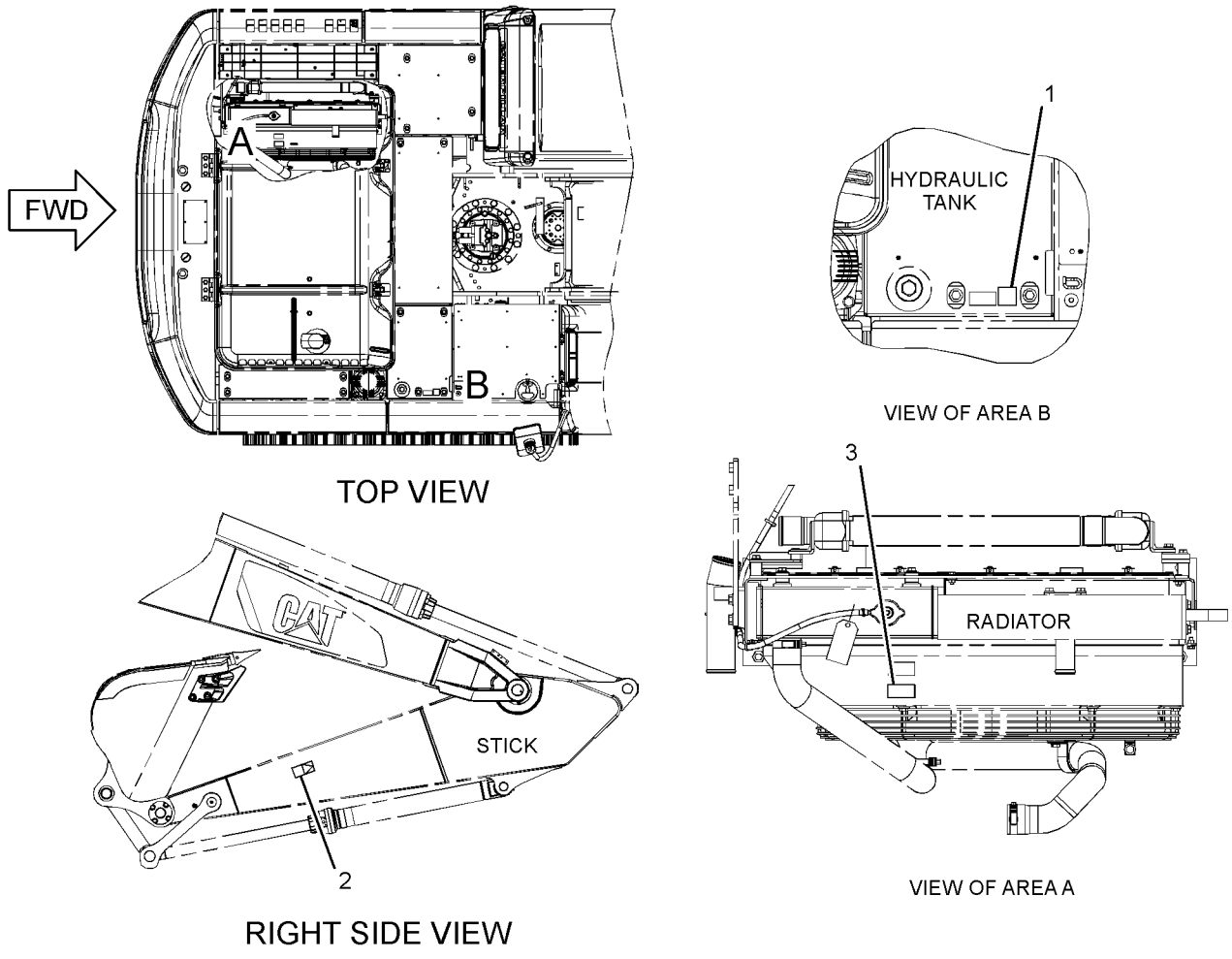

GRAPHIC #1 **<END>** g01441235

SERVICE EQUIPMENT AND SUPPLIES

302-9279 FILM GP

S/N: MNB1-UP
PART OF 262-3586 SPECIAL AR-SUPER LONG REACH
FOR USE WITH 60-FT (18.29-M) BOOM
AN ATTACHMENT

SMCS-7405, 7557 **i03021457**

NOTE	REF NO	GRAPHIC REF	PART NUMBER	QTY	PART NAME 1 2 3 4 5 6 (PRODUCT LEVEL)	SEE PAGE
	1	1	**116-9135**	1	FILM-INFORMATION (READ OMM)	
	2	1	**283-8982**	1	FILM-IDENTIFICATION (CAT RH)	
	3	1	**283-8983**	1	FILM-IDENTIFICATION (CAT LH)	
F			**268-7200**	1	FILM-INFORMATION (LIFTING CAPACITY)	

F-NOT SHOWN

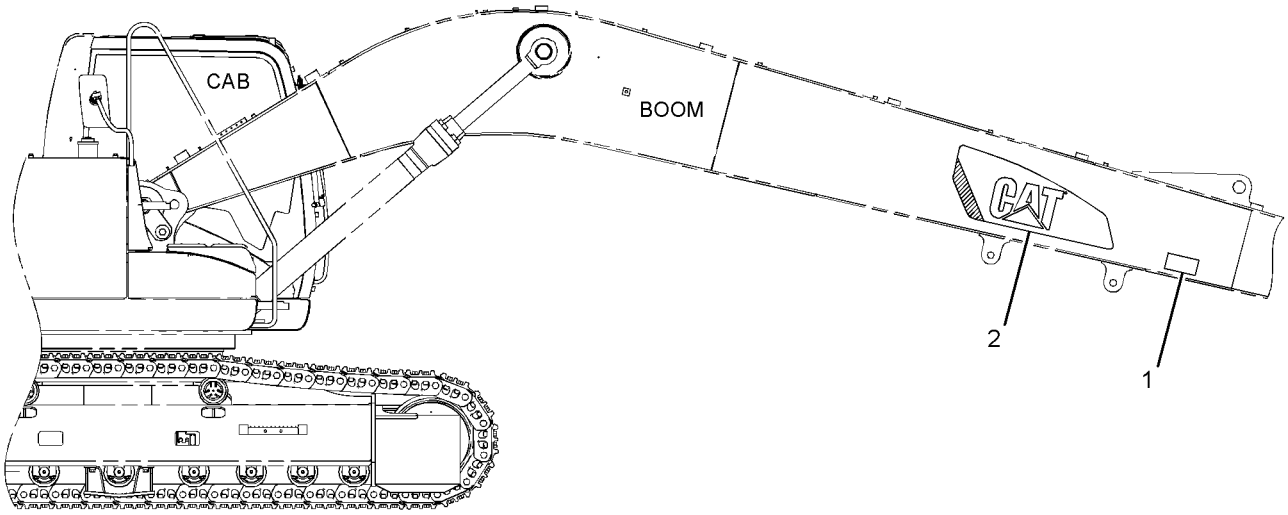

RIGHT SIDE VIEW

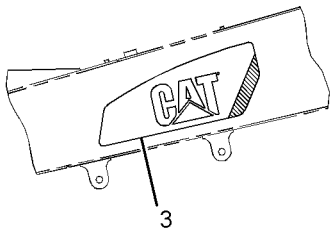

LEFT SIDE VIEW
(BOOM)

GRAPHIC #1 **<END>** g01524763

SERVICE EQUIPMENT AND SUPPLIES

303-2787 FILM GP—WORK AREA VISUAL SYSTEM, REAR

S/N: MNB1-UP; WDK1-UP
PART OF 329-6570 CAMERA & WIRING GP
AN ATTACHMENT

SMCS-7405, 7557 **i03128324**

NOTE	REF NO	GRAPHIC REF	PART NUMBER	QTY	PART NAME 1 2 3 4 5 6 (PRODUCT LEVEL)	SEE PAGE
	1	1	**319-9152**	1	FILM-INSTRUCTION (BATTERY LIFE, CAMERA)	

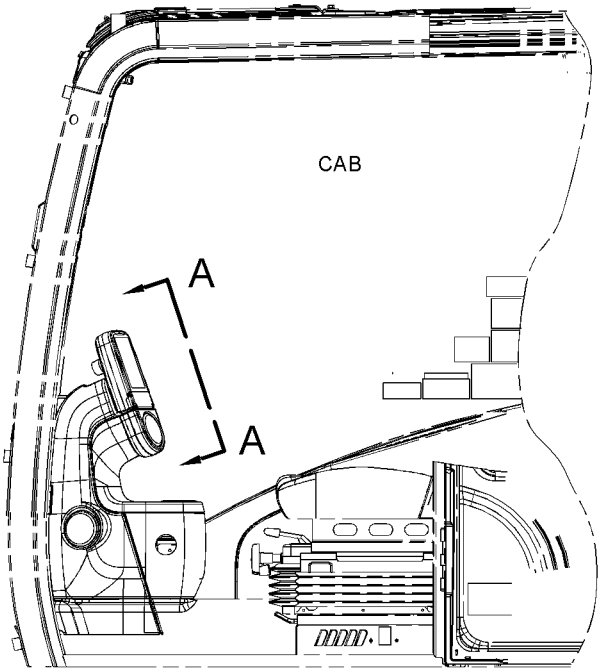

LEFT SIDE VIEW

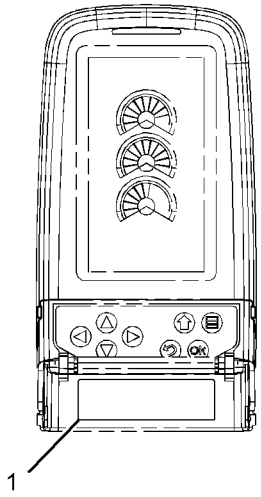

VIEW A-A

GRAPHIC #1 **<END>** g01620358

SERVICE EQUIPMENT AND SUPPLIES

314-3678 FILM GP

S/N: MNB1-UP; WDK1-UP
PART OF 314-3677 COUNTERWEIGHT AR
AN ATTACHMENT

SMCS-7405, 7557 **i03117290**

NOTE	REF NO	GRAPHIC REF	PART NUMBER	QTY	PART NAME 1 2 3 4 5 6 (PRODUCT LEVEL)	SEE PAGE
	1	1	**314-3679**	1	FILM	

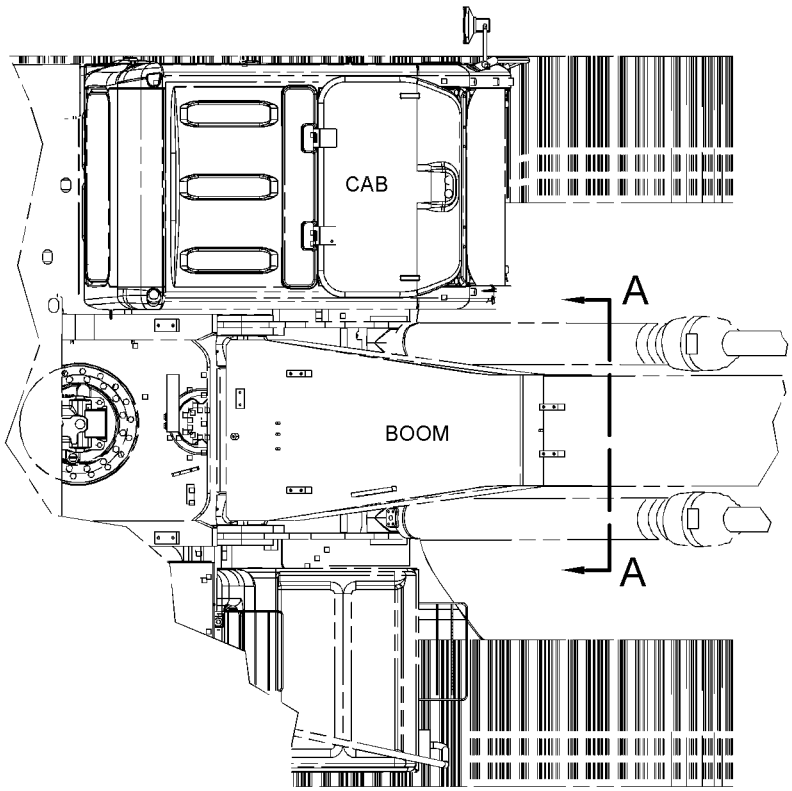

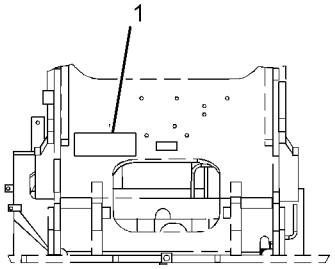

VIEW A-A

TOP VIEW FWD

GRAPHIC #1 **<END>** g01619819

SERVICE EQUIPMENT AND SUPPLIES

314-3660 PLATE & FILM GP

S/N: WDK1-UP

PART OF 314-3652 CHASSIS AR

SMCS-7405, 7557 **i03112765**

NOTE	REF NO	GRAPHIC REF	PART NUMBER	QTY	PART NAME 1 2 3 4 5 6 (PRODUCT LEVEL)	SEE PAGE
	1	1	**1P-2807**	4	FILM-INFORMATION (LIFT EYE LOCATION)	
	2	2,3	**7X-7644**	4	FILM-INFORMATION (TIE-DOWN)	
	3	1,2	**290-1729**	2	FILM-IDENTIFICATION (CAT UPPER STRUCTURE)	
	4	1	**228-7316**	3	FILM-WARNING (HOT SURFACE, HANDS CLEAR)	
	6	3	**134-7258**	1	FILM-INFORMATION (EXTENDED LIFE COOLANT,READ OMM)	
	7	3	**146-6747**	1	FILM-INFORMATION (24-VOLT)	
	8	1	**167-7270**	1	FILM-INSTRUCTION (NO STEP)	
	9	2	**190-5386**	2	FILM-STRIPE (ROUND RED REFLECTIVE)	
	10	3	**224-8946**	1	FILM-WARNING (NO ETHER SPRAY/AIR INTK, INTL)	
	11	3	**225-0312**	1	FILM-WARNING (JUMP START, READ OMM)	
	12	1	**225-4257**	2	FILM-WARNING (HOT FLUID UNDER PRESS, INTL)	
	13	2	**228-2781**	2	FILM-WARNING (MACHINE SWING, CRUSHING, INTL)	
	14	3	**229-0887**	1	FILM-INFORMATION (AIR CLEANER)	
	15	1	**239-6986**	1	PLATE-IDENTIFICATION (MACHINE)	
	16	3	**242-1510**	1	FILM-INSTRUCTION (HYDRAULIC OIL CHECK)	
	17	3	**242-6092**	1	FILM-WARNING (ACCUMULATOR PRESSURE)	
	18	1,2	**314-3673**	2	FILM-IDENTIFICATION (329D)	
					—OR—	
A		1,2	**314-3688**	2	FILM-IDENTIFICATION (329D ME)	
	19	2	**247-7436**	1	FILM-IDENTIFICATION (CAT)	
	20	3	**247-7437**	1	FILM-IDENTIFICATION (BATTERY CIRCUIT BREAKER)	
	21	3	**247-7438**	2	FILM-IDENTIFICATION (ELECTRICAL CIRCUIT BREAKER)	
	23	1	**290-1727**	1	FILM-IDENTIFICATION (CAT BOOM, RH)	
	24	2	**290-1728**	1	FILM-IDENTIFICATION (CAT BOOM, LH)	
	25	1,2	**253-0861**	2	FILM-INFORMATION (CAT POWER, ACERT TECHNOLOGY)	
	26	2	**257-4502**	1	FILM-IDENTIFICATION (CATERPILLAR)	
	27	4	**8T-6842**	1	FILM-INSTRUCTION (PULL RING, ALTERNATE EXIT)	
	28	4	**214-7915**	1	FILM-INSTRUCTION (ENGINE SHUTOFF)	
	29	4	**221-8045**	1	FILM-WARNING (SEAT BELT, INTERNATIONAL)	
	30	1	**223-9818**	1	FILM-INSTRUCTION (WINDOW CLEANING, READ OMM)	
	31	4	**224-0554**	1	FILM-WARNING (UNIVERSAL, READ OMM, INTL)	
	32	4	**228-9254**	1	FILM-WARNING (ELEC HAZARD, READ OMM, INTL)	
	33	4	**242-1588**	1	FILM-WARNING (FRONT WINDOW, READ OMM, INTL)	
	34	4	**245-5457**	1	FILM-INSTRUCTION (BACKUP CONTROL)	
	35	4	**266-5431**	1	FILM-WARNING (CRUSH HAZARD, READ OMM, INTL)	
	36	4	**187-0661**	1	FILM-INSTRUCTION (ALTERNATE EXIT)	
E	37	1,2	**290-1906**		FILM-STRIPE (RED) (45-CM EACH)	
	39	4	**4I-8472**	1	FILM-INSTRUCTION (OPERATOR CONTROLS, READ OMM)	
	40	4	**247-7441**	1	FILM-IDENTIFICATION (FUSE PANEL)	
	42	4	**310-6252**	1	FILM-INSTRUCTION (BACKUP CONTROL, READ OMM)	
AF			**4W-1413**	1	PLATE-SERIAL NUMBER (ENGINE)	
					(ON LOWER RH SIDE OF CYLINDER BLOCK)	

A-NOT PART OF THIS GROUP
E-ORDER BY THE CENTIMETER
F-NOT SHOWN

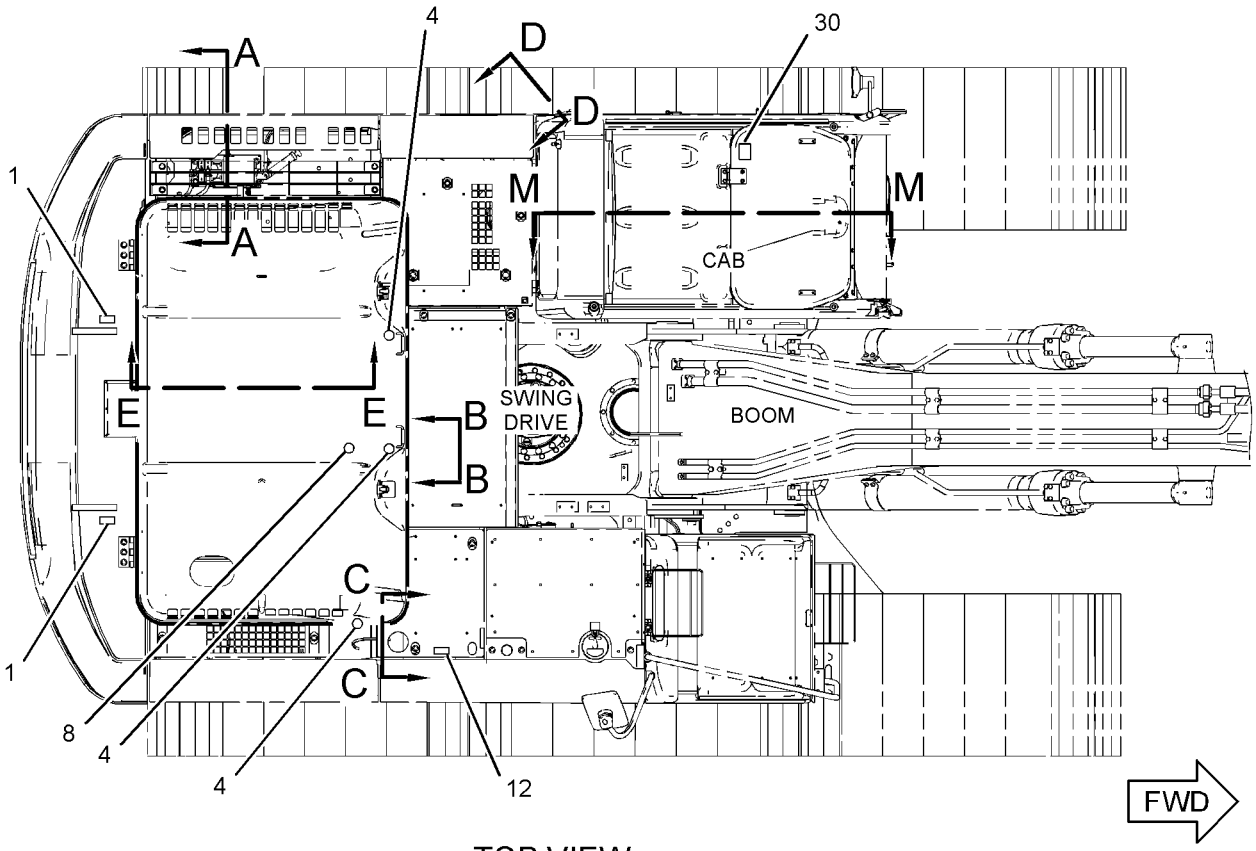

TOP VIEW

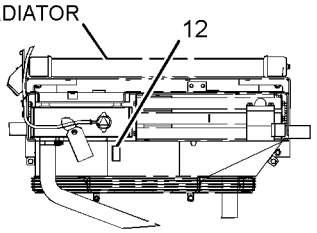

VIEW G-G

REFER TO ALL ILLUSTRATIONS OF
THIS GROUP FOR AUXILIARY VIEWS

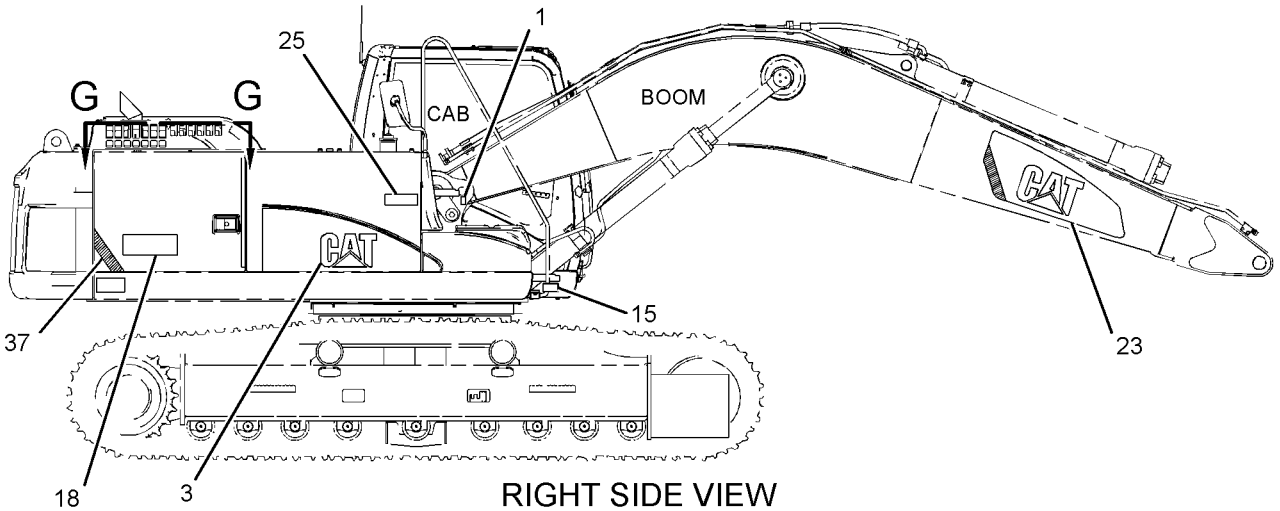

RIGHT SIDE VIEW

GRAPHIC #1

g01604093

REFER TO ALL ILLUSTRATIONS OF
THIS GROUP FOR AUXILIARY VIEWS

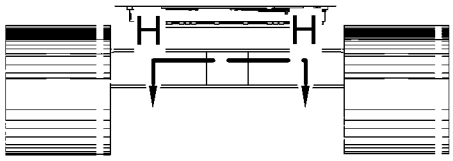

VIEW P-P

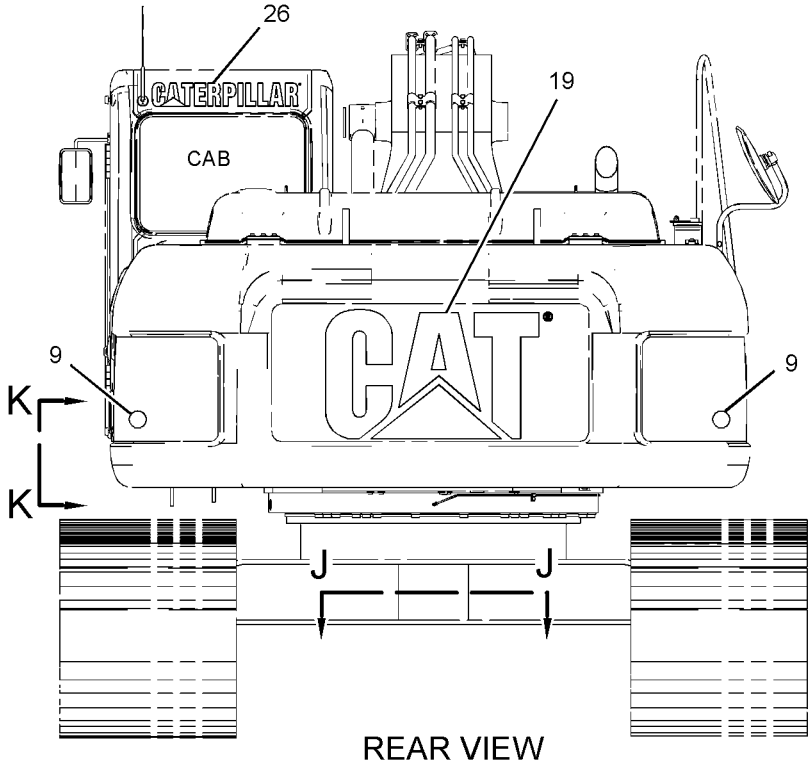

REAR VIEW

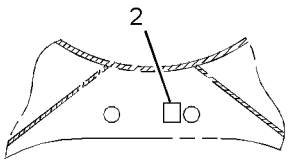

VIEW J-J

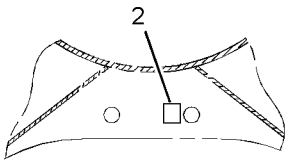

VIEW H-H

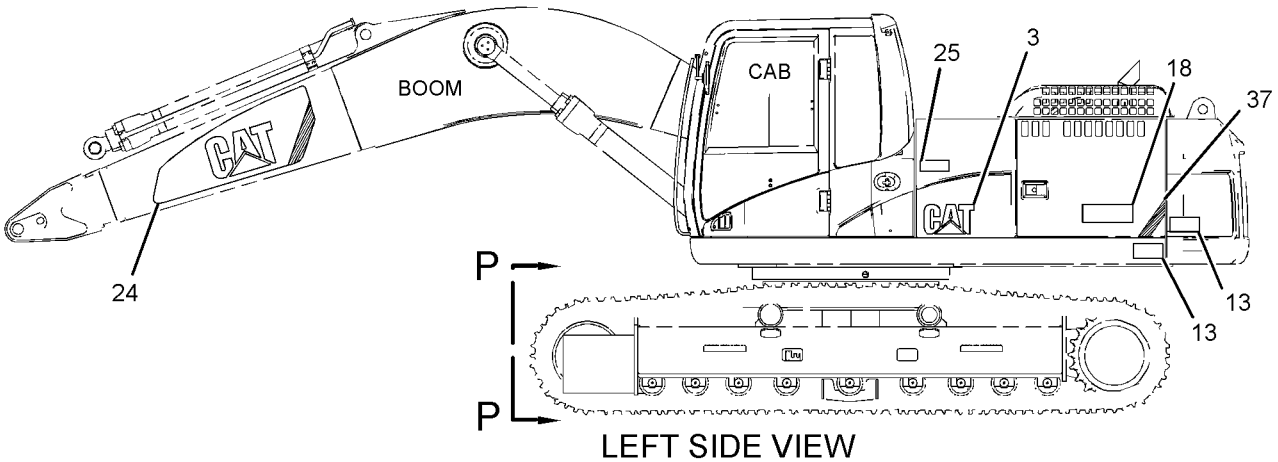

LEFT SIDE VIEW

GRAPHIC #2 g01604094

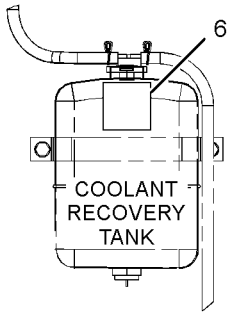

SECTION A-A

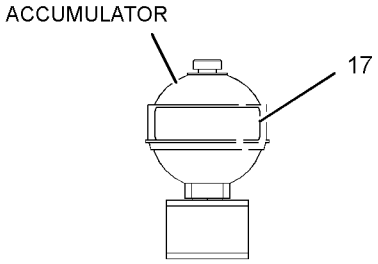

VIEW B-B

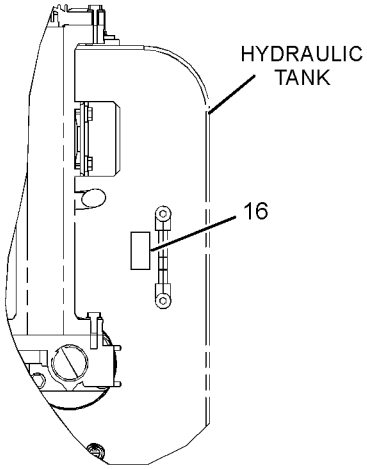

VIEW C-C

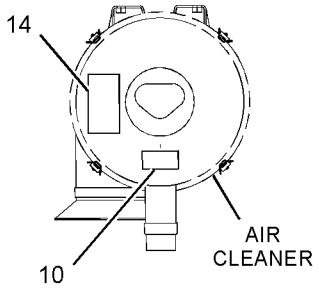

SECTION D-D

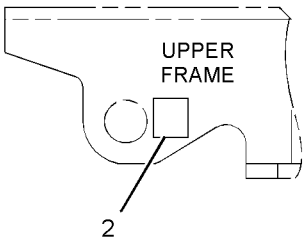

SECTION E-E

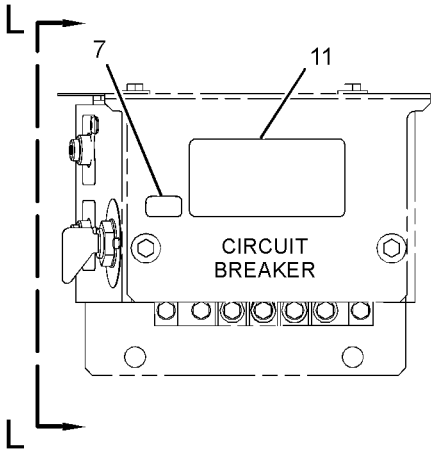

VIEW K-K

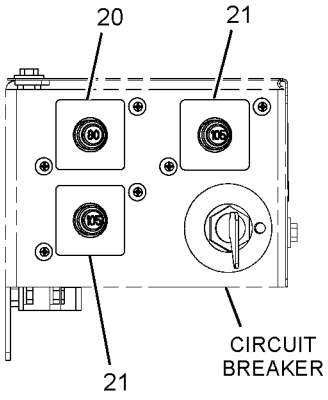

VIEW L-L

GRAPHIC #3

g01604095

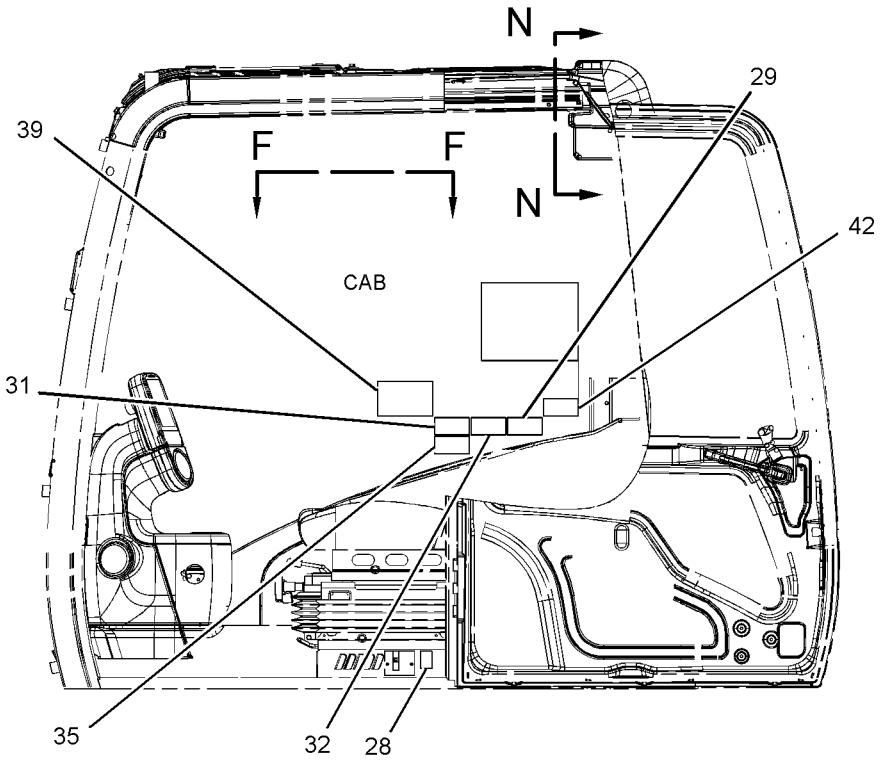

SECTION M-M

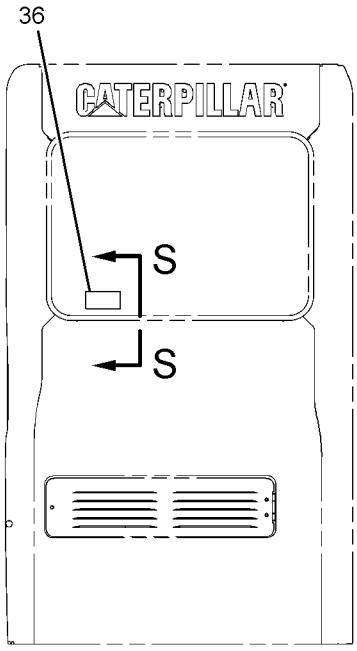

REAR VIEW

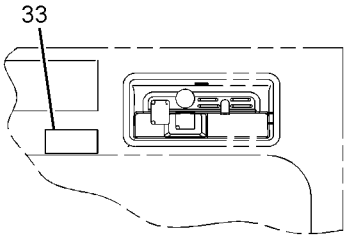

SECTION N-N

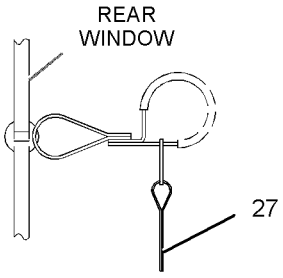

SECTION S-S

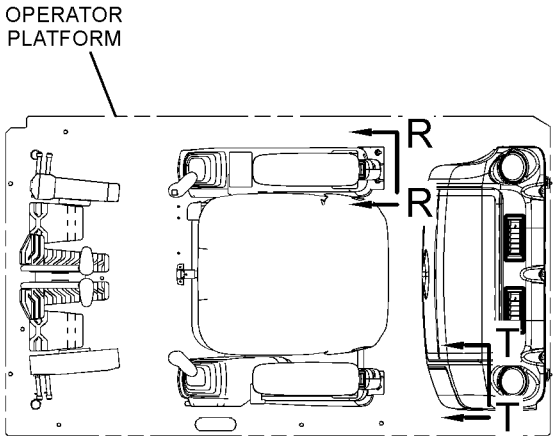

SECTION F-F

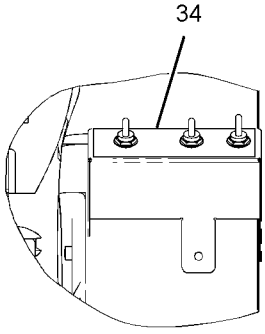

VIEW R-R

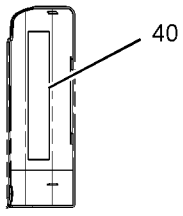

SECTION T-T

GRAPHIC #4 **<END>** g01604413

SERVICE EQUIPMENT AND SUPPLIES

314-3661 PLATE & FILM GP

S/N: MNB1-UP

PART OF 314-3653 CHASSIS AR

SMCS-7405, 7557 **i03140153**

NOTE	REF NO	GRAPHIC REF	PART NUMBER	QTY	PART NAME 1 2 3 4 5 6 (PRODUCT LEVEL)	SEE PAGE
	1	1	**1P-2807**	4	FILM-INFORMATION (LIFT EYE LOCATION)	
	2	2,3	**7X-7644**	4	FILM-INFORMATION (TIE-DOWN)	
	3	1,2	**290-1729**	2	FILM-IDENTIFICATION (CAT UPPER STRUCTURE)	
	4	1	**228-7316**	3	FILM-WARNING (HOT SURFACE, HANDS CLEAR)	
	6	3	**134-7258**	1	FILM-INFORMATION (EXTENDED LIFE COOLANT,READ OMM)	
	7	3	**146-6747**	1	FILM-INFORMATION (24-VOLT)	
	8	1	**167-7270**	1	FILM-INSTRUCTION (NO STEP)	
	9	2	**190-5386**	2	FILM-STRIPE (ROUND RED REFLECTIVE)	
	10	3	**224-8946**	1	FILM-WARNING (NO ETHER SPRAY/AIR INTK, INTL)	
	11	3	**225-0312**	1	FILM-WARNING (JUMP START, READ OMM)	
	12	1	**225-4257**	2	FILM-WARNING (HOT FLUID UNDER PRESS, INTL)	
	13	2	**228-2781**	2	FILM-WARNING (MACHINE SWING, CRUSHING, INTL)	
	14	3	**229-0887**	1	FILM-INFORMATION (AIR CLEANER)	
	15	1	**239-6986**	1	PLATE-IDENTIFICATION (MACHINE)	
	16	3	**242-1510**	1	FILM-INSTRUCTION (HYDRAULIC OIL CHECK)	
	17	3	**242-6092**	1	FILM-WARNING (ACCUMULATOR PRESSURE)	
	18	1,2	**314-3674**	2	FILM-IDENTIFICATION (329D L)	
					—OR—	
A		1,2	**314-3690**	2	FILM-IDENTIFICATION (329D LME)	
	19	2	**247-7436**	1	FILM-IDENTIFICATION (CAT)	
	20	3	**247-7437**	1	FILM-IDENTIFICATION (BATTERY CIRCUIT BREAKER)	
	21	3	**247-7438**	2	FILM-IDENTIFICATION (ELECTRICAL CIRCUIT BREAKER)	
	23	1	**290-1727**	1	FILM-IDENTIFICATION (CAT BOOM, RH)	
	24	2	**290-1728**	1	FILM-IDENTIFICATION (CAT BOOM, LH)	
	25	1,2	**253-0861**	2	FILM-INFORMATION (CAT POWER, ACERT TECHNOLOGY)	
	26	2	**257-4502**	1	FILM-IDENTIFICATION (CATERPILLAR)	
	27	4	**8T-6842**	1	FILM-INSTRUCTION (PULL RING, ALTERNATE EXIT)	
	28	4	**214-7915**	1	FILM-INSTRUCTION (ENGINE SHUTOFF)	
	29	4	**221-8045**	1	FILM-WARNING (SEAT BELT, INTERNATIONAL)	
	30	1	**223-9818**	1	FILM-INSTRUCTION (WINDOW CLEANING, READ OMM)	
	31	4	**224-0554**	1	FILM-WARNING (UNIVERSAL, READ OMM, INTL)	
	32	4	**228-9254**	1	FILM-WARNING (ELEC HAZARD, READ OMM, INTL)	
	33	4	**242-1588**	1	FILM-WARNING (FRONT WINDOW, READ OMM, INTL)	
	34	4	**245-5457**	1	FILM-INSTRUCTION (BACKUP CONTROL)	
	35	4	**266-5431**	1	FILM-WARNING (CRUSH HAZARD, READ OMM, INTL)	
	36	4	**187-0661**	1	FILM-INSTRUCTION (ALTERNATE EXIT)	
E	37	1,2	**290-1906**		FILM-STRIPE (RED) (45-CM EACH)	
	39	4	**4I-8472**	1	FILM-INSTRUCTION (OPERATOR CONTROLS, READ OMM)	
	40	4	**247-7441**	1	FILM-IDENTIFICATION (FUSE PANEL)	
	42	4	**310-6252**	1	FILM-INSTRUCTION (BACKUP CONTROL, READ OMM)	
AF			**4W-1413**	1	PLATE-SERIAL NUMBER (ENGINE)	
					(ON LOWER RH SIDE OF CYLINDER BLOCK)	

A-NOT PART OF THIS GROUP
E-ORDER BY THE CENTIMETER
F-NOT SHOWN

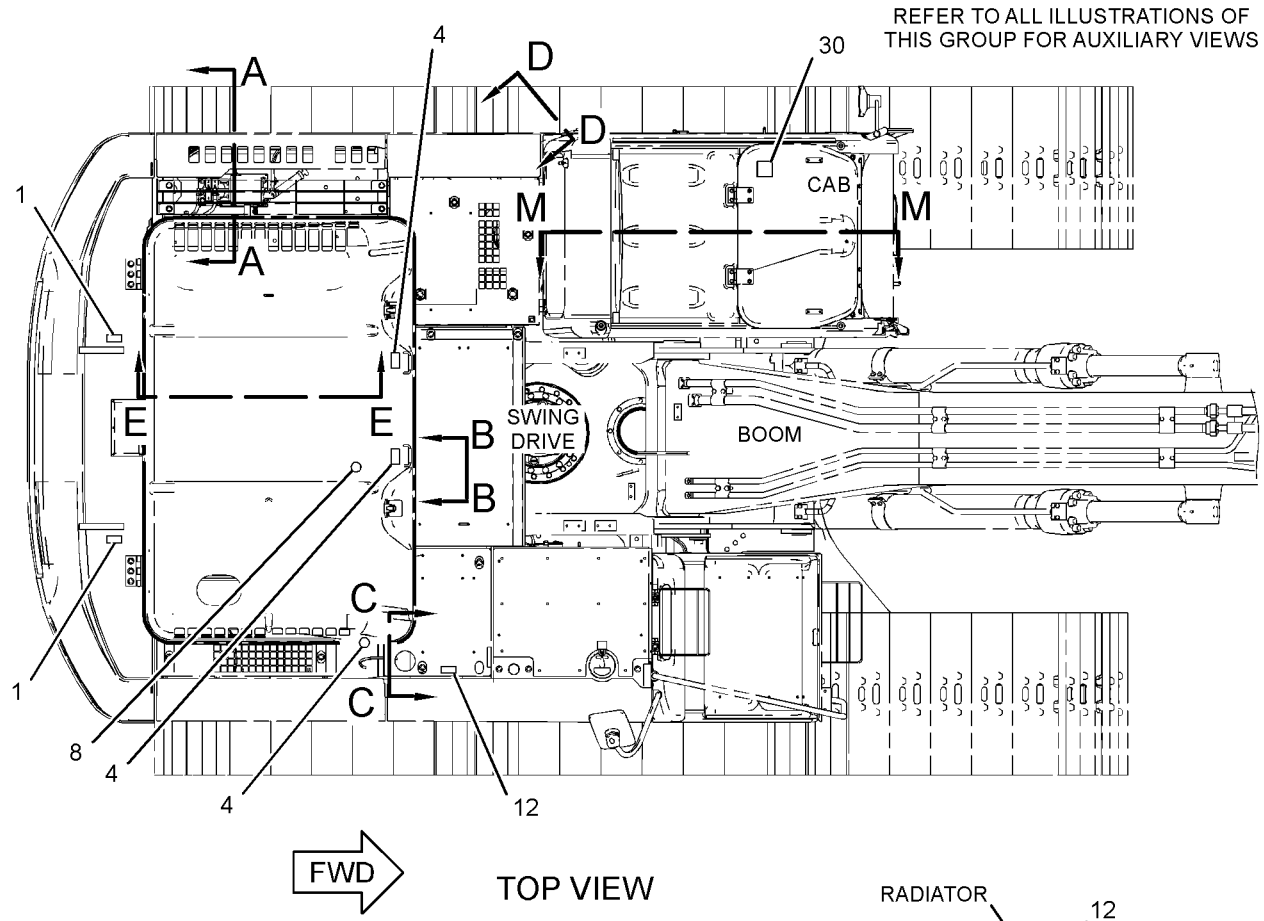

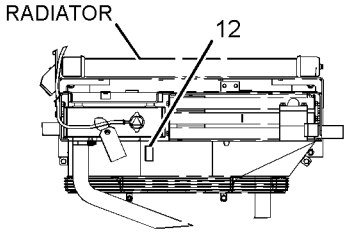

SECTION G-G

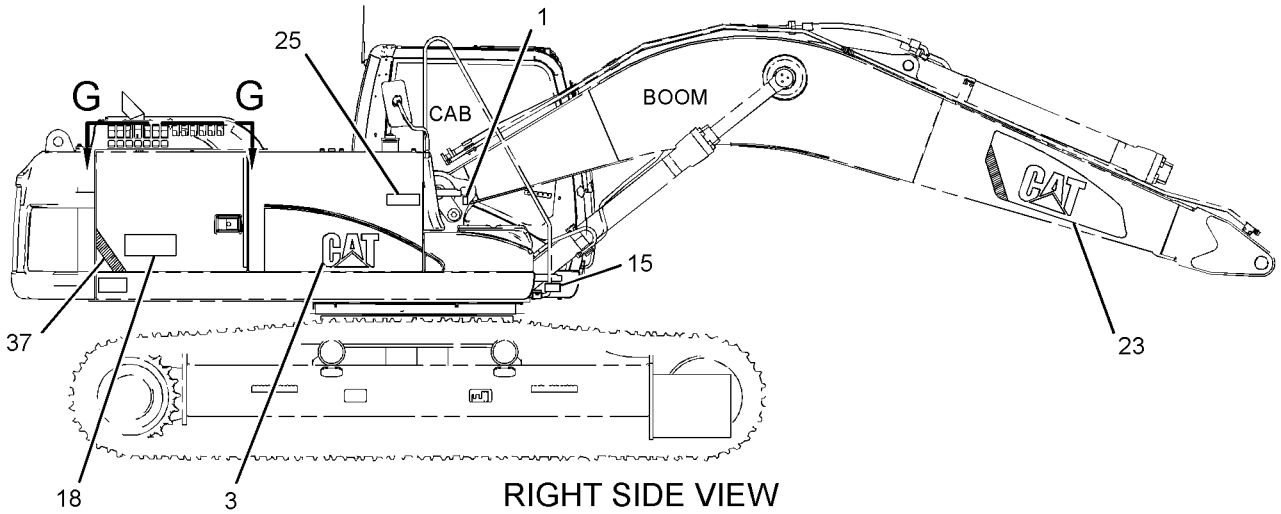

GRAPHIC #1

g01615793

REFER TO ALL ILLUSTRATIONS OF
THIS GROUP FOR AUXILIARY VIEWS

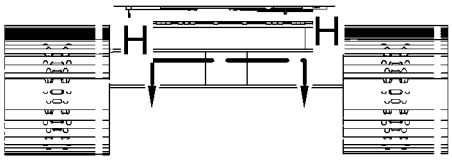

VIEW P-P

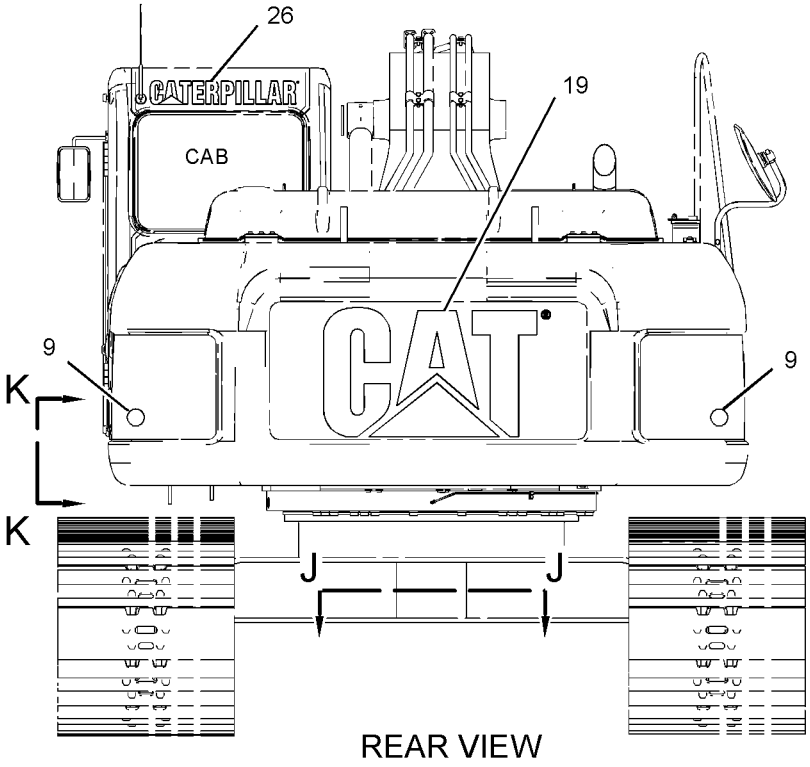

REAR VIEW

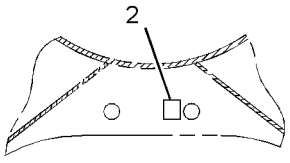

SECTION J-J

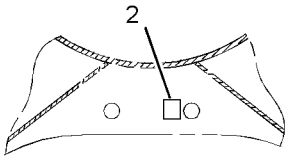

SECTION H-H

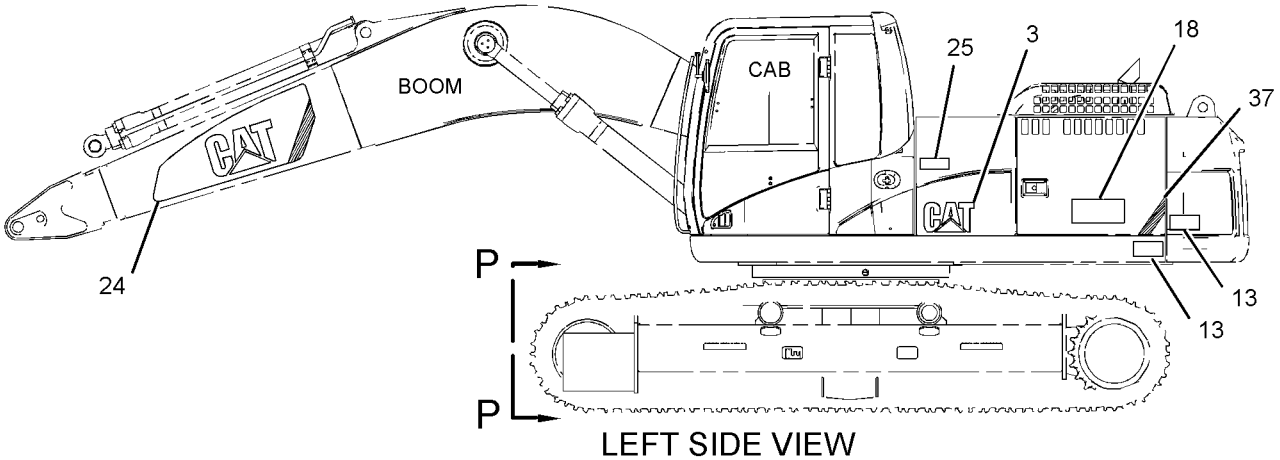

LEFT SIDE VIEW

GRAPHIC #2 g01615795

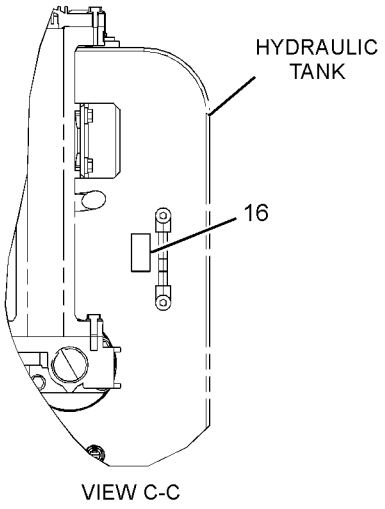

VIEW C-C

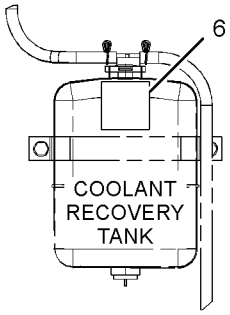

SECTION A-A

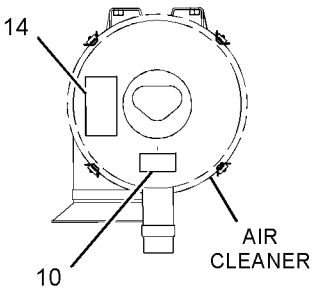

SECTION D-D

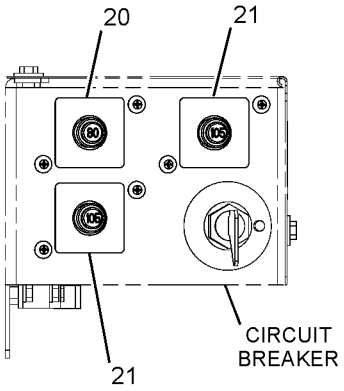

VIEW L-L

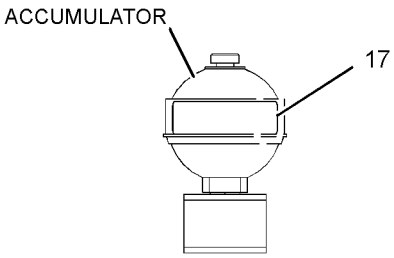

VIEW B-B

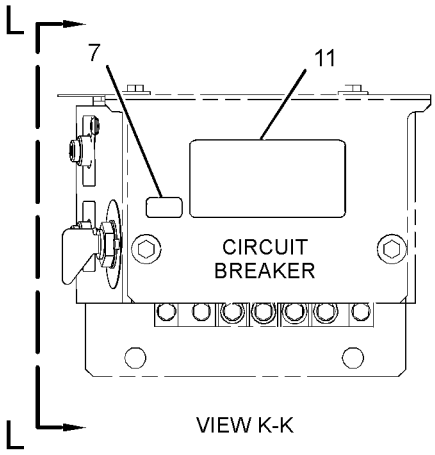

VIEW K-K

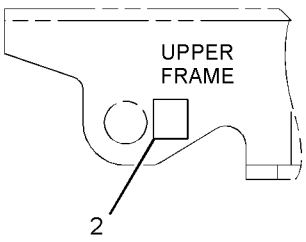

SECTION E-E

GRAPHIC #3

g01596435

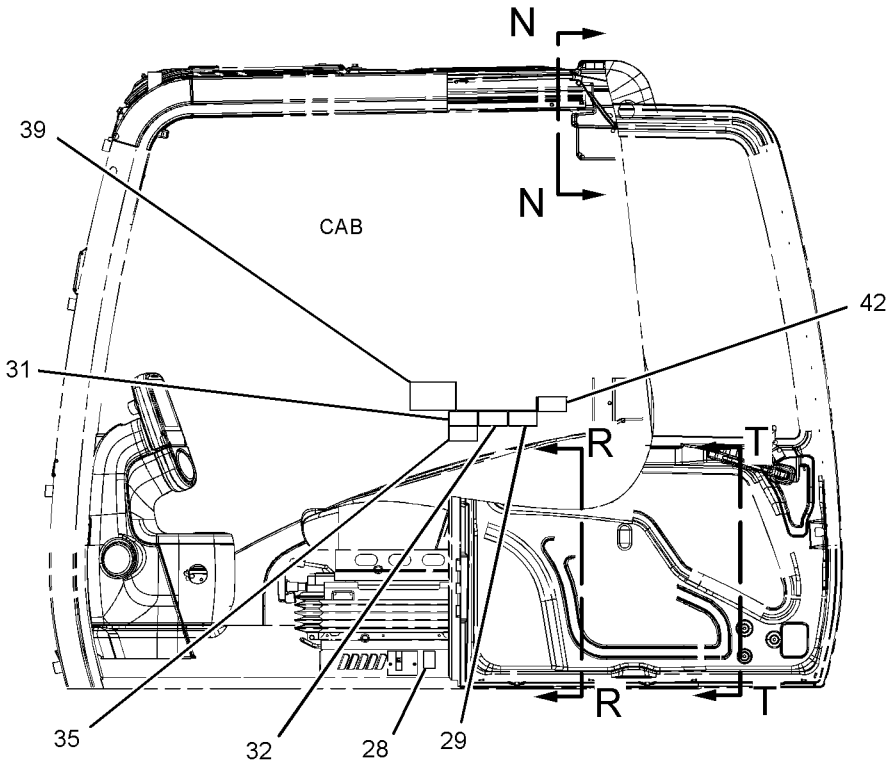

SECTION M-M

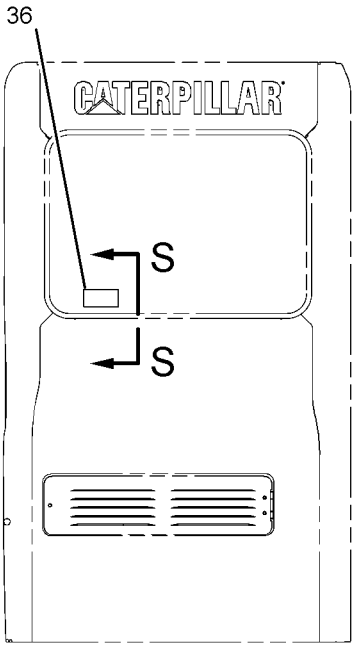

REAR VIEW
(CAB)

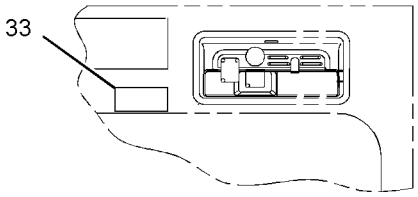

SECTION N-N

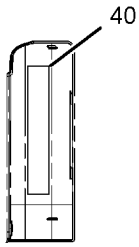

VIEW T-T

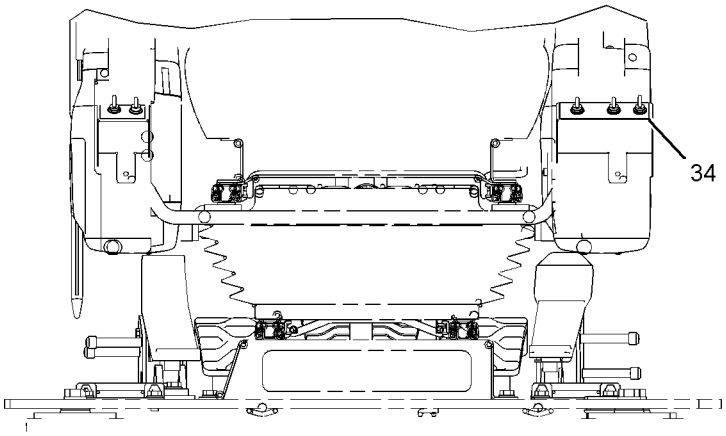

VIEW R-R

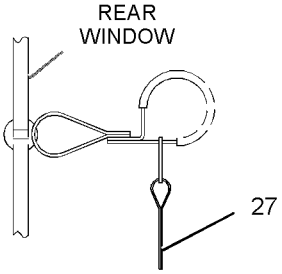

SECTION S-S

GRAPHIC #4 **<END>** g01596553

PART NUMBER INDEX

Part	Page
1	
1B-8705	20
	28
1D-4635	890
1F-0425	801
1F-7960	155
	156
1H-3244	170
1H-3338	251
1H-8171	146
1J-9671	91
	602
	773
1M-6119	172
	173
	180
1M-6120	172
	173
	180
1N-5999	36
1P-2807	1115
	1120
1P-3702	561
	562
	580
	588
	591
	594
	597
	686
	728
	729
	739
	746
	759
	770
	771
	786
1P-3703	512
	515
	517
	521
	525
	527
	529
	531
	541
	543
	556
	561
	562
	563
	565
	567
	578
	580
	583
	588
	591
	594
	597
	604
	610
	683
	686
	689
	693
	695
1P-3704	517
	521
	525
	527
	529
	531
	541
	543
	580
	597
	687
	689
1P-3705	517
	521
1P-4578	583
	588
	591
	597
	604
	678
	679
1P-5767	517
	521
	525
	527
	529
	531
	541
	543
	580
1R-0762	122
	127
1R-1807	74
1R-5998	927
1R-9958	368
1S-0812	255
	256
1S-0994	1009
1S-2563	79
1S-7251	172
	180
	244
	245
	263
1S-7252	172
	180
	244
	245
1S-9593	576
1U-8846	22
	52
	106
	108
	325
	360
	494
	497
	693
	695
1W-1064	48
1W-2431	114
1W-2715	38
1W-8407	30
2	
2A-4429	38
2B-2404	241
2B-7561	497
2C-9259	878
	879
	880
	881
	882
	884
	886
	887
	888
	889
2D-1290	122
	127
2D-6642	53
	705
	761
	764
	803
2G-1830	263
2G-8767	172
2H-3922	250
	1097
2J-3507	890
2K-4821	170
2K-8199	57
	81
2M-0849	1017
	1025
2M-4453	91
2M-6471	32
2M-9780	32
	36
	74
	77
	91
	127
	128
	555
	602
	681
	693
	695
	706
	741
	748
	753
	759
	1009
	1013
2P-1294	51
2P-2537	74
2P-2975	796
2Q-4703	948
2R-6806	125
2S-1647	287
2S-2053	77
2S-2596	737
2S-4078	150
	161
	163
	583
	588
	591
	597
	604
	732
2S-5926	394
2U-2552	907
2W-0027	58
	59
2W-6544	22
2W-6546	21
2W-7213	32
2W-7381	40
2W-8147	28
2Y-5685	979
	988
2Y-5829	64
	65
	69
3	
3B-0551	161
	163
3B-4501	204
	205
3B-4509	553
	554
	558
	559
3B-4618	369
3B-8489	357
	359
	360
	457
	459
	461
	463
	465
	466
	468
	470
	471
	472
	474
	475
	476
	479
	492
	838
	839
	840
	842
	846
	848
	850
	852
	854

► **PRIMARY REFERENCE**

PART NUMBER INDEX

Part	Page	Part	Page	Part	Page	Part	Page
	856	3E-7855	246		644		604
	863	3E-7857	246		645		606
	865	3E-7858	246		648		613
	867	3E-7860	246		650		620
	868	3E-7861	246		652		621
	869	3E-8017	113		656		626
	870		115		658		644
	871		118		659		645
	872	3E-8020	927		662		648
	873	3E-8048	214		665		664
	874	3E-8320	216		669		675
3D-2824	60	3E-9411	365		670		681
	74	3E-9412	67		673		683
	91		68		675		692
	555		133		677		693
	556		135		678		695
	567		137		689		698
	578		139		693		699
	587		141		695		705
	588	3E-9872	1084		698		714
	591		1100		703		725
	594	3E-9874	927		722		737
	596	3F-0379	248		741		766
	597	3F-9556	170		748		768
	626		252		757		1009
	679	3G-5083	713		761		1013
	681	3H-0442	761		764	3K-0835	255
	689		764		766		256
	710	3H-5552	32		768	3K-3257	244
	725	3H-7654	67		772		245
	780		68		803	3K-5234	890
	793	3J-1907	36		804	3K-8460	224
	794		74		805	3L-8187	214
	795		82		824		282
	797		89	3J-3679	91	3P-0647	779
	798		107	3J-7354	74		796
	800		122		77	3P-1156	80
	818		125		89		86
3D-2891	439		161		555	3P-1932	89
	443		163		722	3P-9847	93
3D-5102	241		166		761		95
3D-9143	331		439		764	3R-6790	74
3E-2310	635		443		777	3R-8797	246
	639		446	3K-0360	61	3S-2093	93
	645		555		89		95
	652		576		91		112
	659		578		108		172
	669		602		122		173
3E-2332	224		604		125		189
3E-2338	324		606		127		195
3E-3213	48		607		224		197
3E-3362	57		613		241		214
3E-3365	57		614		437		218
	254		617		494		220
3E-3368	228		619		533		222
3E-3371	596		620		535		240
	626		621		537		253
3E-4297	503		626		539		260
3E-4352	224		628		555		265
3E-4895	451		630		567		268
3E-5169	317		633		576		270
3E-6910	701		635		578		272
3E-7389	256		638		583		276
3E-7852	246		639		587		280
3E-7853	246		642		591		282

► **PRIMARY REFERENCE**

PART NUMBER INDEX

Part	Page	Part	Page	Part	Page	Part	Page
	285	4I-0118	368	4I-3063	927	4I-5490	725
	286	4I-0191	333	4I-3090	928	4I-5639	604
	290		334		1100	4I-5849	703
	291		336	4I-3123	927	4I-5862	432
	293		337	4I-3144	927	4I-5900	619
	295		338	4I-3183	828	4I-5906	619
	297		339	4I-3266	1030	4I-6003	628
	299	4I-0232	368	4I-3503	1009		664
	301	4I-0378	161		1013		667
	305		163	4I-3510	797	4I-6121	619
	308	4I-0379	122		798	4I-6136	619
	310		127		800	4I-6365	775
	312	4I-0420	1086	4I-3569	741	4I-6397	741
	314		1087		748		748
	315	4I-0575	828	4I-3627	457		753
	316	4I-0800	664		459	4I-6464	596
	317	4I-0818	664		463	4I-6602	979
	319	4I-0833	635	4I-3628	457		981
	322		644		459		982
	576		652		463	4I-6604	876
	895		658		466	4I-6605	876
	995	4I-0836	619		468	4I-6626	876
	999	4I-0995	628		472	4I-7466	494
	1001		635	4I-3631	457	4I-7714	797
	1003		644		459		798
	1009		652		463	4I-7745	578
	1025		658	4I-3941	644	4I-7816	681
	1062	4I-1022	714		658	4I-7889	173
	1083	4I-1025	606	4I-3953	617		263
	1084		642	4I-3981	628		293
	1097		656	4I-4270	927		295
3S-6049	172	4I-1163	1097	4I-4286	963		297
	180	4I-1205	927		965		322
	263	4I-1206	927	4I-4298	1095		665
3S-6050	180	4I-1260	989	4I-4300	1095		679
3T-3422	248	4I-1536	▶432	4I-4361	989	4I-7924	376
3T-7528	503		435	4I-4392	927		377
3V-2431	131	4I-1539	432	4I-4618	828		378
3W-6399	1083	4I-1631	617		830	4I-8019	368
3Y-9267	777	4I-1671	635		832	4I-8267	433
			669		834	4I-8472	1115
		4I-1674	541		836		1120
4			543		865	4I-8785	562
			547		867	4I-8789	547
4B-4158	394		555		868		610
4B-9783	804		578		869	4I-8799	628
	805	4I-1688	638		870	4I-8826	683
4B-9880	457		669		871	4I-8869	457
	459	4I-1704	606		872		459
	461		642		873		463
	463		650		874	4I-8965	766
	466		656	4I-4620	865		768
	468		665		867	4I-9521	576
	472	4I-1739	619		868		606
	476		644		869		613
	479		658		870		617
	492	4I-1754	673		871		619
	807	4I-1783	638		873		628
4C-9612	21		644		874		630
4D-1836	317		658	4I-5020	1097		638
4D-7388	859		675	4I-5021	1097		644
4F-5695	34	4I-2187	331	4I-5049	1082		658
4F-9653	131	4I-2885	1105	4I-5394	725		662
4H-6112	494		1106	4I-5409	1		667
4I-0117	368	4I-3038	253		▶207		669

▶ **PRIMARY REFERENCE**

PART NUMBER INDEX

Part	Page
4I-9522	576
	606
	613
	617
	619
	628
	633
	638
	644
	658
	667
	669
4I-9523	606
	613
	617
	619
	628
	630
	633
	635
	638
	644
	648
	652
	658
	669
	673
4I-9524	613
	617
	619
	628
	633
	635
	638
	644
	652
	658
	662
	669
	677
4I-9525	606
	613
	617
	619
	628
	630
	635
	638
	644
	658
	667
	669
4I-9526	613
	617
	628
	638
	662
	667
	670
	673
	675
4I-9527	606
	613
	617
	619
	628
	644
4I-9528	613
	617
	619
	628
	644
4J-0519	770
	771
4J-0520	511
	514
	753
4J-0522	583
	588
	591
	597
	604
	678
	679
4J-0523	611
4J-0524	91
	567
4J-0527	567
	725
4J-0528	773
4J-5267	560
	580
	739
	757
4J-5268	580
	683
4J-5309	741
	748
4J-5477	572
	573
	574
	575
	606
	607
	689
4J-7385	784
	785
4J-7386	784
	785
4J-7533	503
	698
	734
	742
	748
	761
	764
	766
	768
4J-8998	728
	729
	739
	746
	786
4K-1388	74
	784
	785
4K-8864	173
	180
	263
4M-1831	246
	248
4N-9170	360
4P-5524	105
4P-5918	22
	305
4P-7428	173
	287
4P-7581	173
	270
	272
	287
	293
	295
	614
4P-8134	305
4P-9103	74
4P-9107	74
4R-9999	66
4T-0987	761
	764
4T-3148	741
	748
4T-5074	741
	748
4W-0253	92
4W-1203	41
4W-1204	41
4W-1413	1115
	1120
4W-2026	24
4W-2042	41
4W-2232	80
4W-3462	7
	10
	11
	12
	▶21
4W-7592	92
4Y-9652	22
	5
5A-3604	1035
	1036
	1051
	1052
	1053
	1054
	1065
	1066
	1067
	1068
	1069
	1070
5B-1866	69
	71
5C-2889	204
	205
5C-2890	251
	272
	276
	280
	297
	1097
5C-7261	22
	25
	42
	125
	173
	180
	781
	893
	894
	908
	1043
	1044
	1045
	1046
	1049
	1050
	1059
	1060
	1061
	1064
	1071
	1072
	1073
	1076
	1077
5C-7793	927
5C-7883	173
5C-8138	1083
5C-8312	1087
5C-9553	214
	216
	263
	331
	369
	725
	895
	995
	1025
	1097
5D-1026	497
	1009
5D-4822	982
	990
5D-8159	97
	99
5F-9657	74
5G-2247	414
5H-4020	678
5H-5672	719
5H-8624	678
5H-8848	412
5H-8936	839
5I-4000	773
5I-4002	773
5I-4111	784
	785

▶ PRIMARY REFERENCE

PART NUMBER INDEX

Part	Page
5I-4188	561
	562
	686
5I-4189	563
5I-4216	563
5I-4359	561
5I-4376	576
	606
5I-4387	606
5I-4396	619
	635
	652
	656
	669
5I-4447	685
5I-4494	686
5I-7090	953
	954
	955
5I-7290	547
5I-8270	172
	180
5I-8416	▶433
	435
5I-8511	766
	768
5I-8516	490
5I-8670	499
5I-8708	619
5I-8853	630
	695
5J-2383	703
5K-8451	122
	127
5K-9090	74
	509
	512
	515
	547
	567
	578
	580
	583
	587
	588
	591
	594
	596
	597
	610
	683
5K-9242	839
5K-9243	360
	838
	839
	840
	842
5L-3233	104
5L-4758	446
5N-4185	73
5P-0537	146
5P-0743	81
5P-0747	172
	180
	244
	245
	263
5P-0761	172
	180
	263
5P-0767	497
	1009
	1013
5P-1075	331
	352
5P-1076	102
	241
	366
	369
	402
	578
5P-1318	602
5P-1425	77
5P-1442	112
	123
	128
5P-2369	1009
5P-2424	169
5P-2568	824
5P-3108	784
	785
5P-3779	432
	434
5P-4115	216
	263
	369
5P-4116	125
	168
	173
	331
5P-4536	116
	117
5P-4924	122
	161
	163
5P-4961	77
	112
5P-5623	168
5P-5998	253
5P-6312	241
5P-6313	241
5P-6314	241
5P-7175	122
	128
5P-7462	621
5P-7463	621
5P-7464	681
5P-7465	681
5P-7468	567
	583
	588
	591
	597
	679
5P-7469	567
	583
	588
	591
	597
	679
5P-7470	592
	597
5P-7471	592
	597
5P-7814	224
5P-7958	390
	1015
5P-7970	77
	79
	191
5P-8066	74
	82
5P-8068	725
5P-8182	592
	597
5P-8196	74
5P-8245	24
	46
	48
5P-8247	31
	170
5P-8292	1082
5P-8309	385
	390
5P-8347	89
5P-8444	567
5P-8500	159
	1015
5P-9297	125
	211
	213
5P-9617	74
5P-9890	82
5P-9909	93
	95
5Q-4212	549
	551
	570
	571
	572
	573
	574
	575
5Q-4213	570
	571
5S-7349	170
	246
	248
	1028
5S-7382	451
5S-9062	41
	6
6C-6760	533
	535
	537
	539
6C-8382	979
	982
6D-1641	1009
	1013
6D-3479	639
6D-4244	314
6D-4246	607
	1009
6D-9157	725
6E-1435	639
	645
	659
6E-2163	737
6E-2271	737
	738
	756
6E-2274	739
	741
	746
	748
	753
6E-2313	757
6E-2745	709
6E-2746	709
6E-3653	741
	748
6E-4793	709
6E-4816	▶709
	753
6E-5169	741
	748
6E-5431	757
6E-5434	757
6E-5438	757
6E-5439	757
6E-5643	741
	748
6E-5731	739
	741
	746
	748
	753
6F-0253	255
	256
6F-4855	507
6F-7045	250
6F-7062	60
6G-2256	173
6G-2263	173
	263
6H-1309	414
6I-0723	725
6I-0724	725
6I-2503	104
	105
6I-2504	104
	105
6I-4464	105
6I-5298	949
	950
6I-5342	989
6I-5470	928
6I-6033	368
6I-6404	878
	879
	880
	881
	882
	889
6I-6405	878
	879

▶ **PRIMARY REFERENCE**

PART NUMBER INDEX

Part	Page	Part	Page	Part	Page	Part	Page
	880		597		224	6V-7646	948
	881	6V-0683	621		230	6V-7658	503
	882	6V-0852	576		231	6V-7981	133
	889		602		234		135
6I-6406	878		607	6V-5049	82		137
	879		626		158		139
	880		635		224		141
	881		639		227	6V-8004	41
	882		645		229	6V-8149	24
	889		652	6V-5192	240	6V-8186	252
6I-6441	360		659	6V-5204	700	6V-8187	216
6I-6721	687		662	6V-5210	204	6V-8188	169
6I-6758	773		670		205		246
6I-6795	797		673		272		248
	798		722	6V-5215	62	6V-8189	170
	800	6V-1874	679	6V-5217	52	6V-8197	48
6I-6923	801	6V-2317	19		63	6V-8200	439
6J-2680	681		22		79		443
	722		45	6V-5218	82		688
6K-0806	74		74	6V-5219	74		691
	957		146	6V-5223	89	6V-8202	801
	958		305	6V-5326	761		1032
6K-8178	122	6V-2369	272		764		1033
	127	6V-2606	128	6V-5393	741		1034
	173	6V-2722	180		748		1035
	180		182	6V-5556	741		1036
6L-3616	838		263		749		1047
	839	6V-3265	125		789		1048
	840		1009	6V-5597	739		1051
	842		1084		741		1052
6M-5062	710	6V-3538	21		746		1062
6N-3827	248		30		749		1065
6P-2216	376	6V-3821	108		753		1066
	377	6V-3918	52	6V-5645	216	6V-8212	214
	378		77	6V-5683	907	6V-8218	797
	381		92	6V-5696	24		798
	382	6V-3922	741		67		800
	383		748		68	6V-8231	1100
6T-3631	259		753	6V-5782	602	6V-8336	46
	282	6V-3938	773	6V-5815	84	6V-8362	258
	322		801	6V-5839	18	6V-8363	1097
6T-3632	259	6V-3940	20		19	6V-8370	1097
	282		21		37	6V-8374	282
	322		58		79	6V-8378	246
6T-3633	259		59		84		248
	282		80		113		252
	322		89		133	6V-8397	82
6T-9442	255		224		135		122
6V-0400	517	6V-3965	576		137		125
	521		602		139		127
	525		607		141		549
	527		626	6V-5842	19		551
	529		635		51		555
	531		639	6V-5843	49		572
	541		645	6V-6317	79		573
	543		652	6V-6609	239		574
	563		659	6V-7238	494		575
	567		662		1009		576
	580		670		1013		578
	678		673	6V-7357	127		606
	693		722		947		607
	695	6V-4298	501		1009		613
6V-0545	583	6V-4589	122		1082		614
	588		254	6V-7420	1013		617
	591	6V-5048	36	6V-7636	927		619

PART NUMBER INDEX

Part	Page	Part	Page	Part	Page	Part	Page
	620	6V-8400	583		695		628
	621		587	6V-8722	645		638
	626		588	6V-8723	576		642
	628		591		607		650
	630		592	6V-8724	82		656
	633		597		555		665
	635		604		576		673
	638		777		607	6V-9002	613
	639	6V-8467	482		613		620
	642	6V-8624	681		617		681
	644	6V-8625	567		620	6V-9004	588
	645		578		626		591
	648		620		628		597
	650		648		630		626
	652	6V-8626	555		633		679
	656	6V-8627	606		635		681
	658		689		638	6V-9005	578
	659	6V-8632	644		642		583
	662	6V-8633	689		644		594
	664	6V-8634	122		648		683
	665		127		650	6V-9007	587
	669	6V-8635	547		652		591
	670		580		656		596
	673		583		658		626
	675		587		662		679
	677		591		665		681
	681		596		669	6V-9008	74
	689		610		673		567
	693	6V-8636	82	6V-8774	621		683
	695		131	6V-8781	556	6V-9023	240
	768		555		607	6V-9168	549
6V-8398	505		576		617		551
	519		578		620	6V-9169	545
	523		606		633		546
	533		613		635	6V-9175	556
	535		620		645	6V-9491	218
	537		626		659		220
	539		633		675	6V-9672	272
	545		638		677	6V-9746	541
	546		642	6V-8782	692		543
	549		644	6V-8784	588		547
	551		648		597		556
	567		650	6V-8935	572		578
	570		652		573		580
	571		656		574		587
	572		658		575		588
	573		665		607		591
	574		669	6V-8936	572		596
	575		673		573		597
	578		675		574		600
	600		677		575		610
	602		693		576		626
	607		695		607		679
	613	6V-8637	626	6V-8978	797		681
	620	6V-8639	620		798		683
	621		626		800		685
	626		693	6V-8994	549		818
	648		695		551	6V-9748	41
	681	6V-8641	606	6V-8995	545	6V-9829	635
	689	6V-8713	555		546		645
	692	6V-8714	594	6V-9001	576		652
	693		596		578		659
	695	6V-8715	127		606		675
	808	6V-8716	596		613	6V-9836	620
	809	6V-8721	693		620		635

► **PRIMARY REFERENCE**

PART NUMBER INDEX

Part	Page
	639
	645
	648
	652
	658
	664
	669
	675
6V-9837	578
	607
6V-9843	607
	639
6V-9844	693
	695
6V-9850	122
	127
	578
	606
	620
	638
	677
6V-9851	692
6V-9852	645
6V-9853	587
6V-9855	583
	587
	591
	597
6V-9872	555
6V-9876	664
	681
6W-6005	172
	180
6Y-0473	414
6Y-0846	417
	418
	422
	428
6Y-0851	407
	408
6Y-1056	414
6Y-1607	407
	408
6Y-1608	407
	408
6Y-1782	413
	414
6Y-2126	418
	419
	420
	421
6Y-2266	404
6Y-2270	404
6Y-2272	404
6Y-4898	329
6Y-5323	409
	410
	411
	▶412
6Y-8075	412
6Y-8076	412
6Y-8077	412
6Y-9855	412
6Y-9856	412
6Y-9858	412
6Y-9859	412

7

Part	Page
7C-0111	58
7C-1445	25
7C-1493	74
7C-2475	7
	10
	11
	12
	▶80
7C-3571	66
7C-5233	51
7C-5403	80
7C-6670	116
7C-6672	116
7C-6976	59
7C-6977	59
7C-7431	115
	118
7C-7980	28
7C-8369	41
7C-8370	41
7C-8634	41
7E-0759	89
7E-2968	31
7E-2985	146
7E-6794	53
7E-7779	38
7F-0216	74
7F-0560	182
7F-8268	27
7G-1060	317
7H-3171	404
	412
7I-0717	340
	341
	342
	343
	344
	345
7I-0948	555
7I-0966	789
7I-0986	810
7I-1026	728
7I-1105	644
7I-1248	739
	741
	746
	748
	753
7I-1418	368
7I-2272	439
	698
	699
	741
	749
	757
7I-2673	104
	105
	172
	198
	211
	213
	1025
	1062
	1070
	1075
	1080
7I-6843	852
7I-7131	720
7I-7403	810
7I-7515	626
7I-7728	494
7I-8084	807
	811
	812
7I-8102	810
7J-0204	36
7J-5925	369
7J-9108	519
	523
	555
	556
	644
	645
	710
7J-9933	789
7K-1181	123
	128
	150
	172
	189
	195
	214
	265
	268
	270
	276
	280
	282
	284
	285
	286
	287
	290
	291
	293
	295
	297
	299
	301
	303
	310
	312
	314
	315
	316
	317
	319
	322
	545
	546
	549
	551
	555
	576
	606
	613
	617
	619
	626
	628
	630
	633
	635
	638
	644
	648
	652
	658
	662
	664
	667
	669
	673
	675
	677
	681
	692
	693
	695
	941
	1001
	1003
	1009
	1013
7L-2894	246
	248
7L-9061	254
7M-0242	55
7M-7410	699
7M-8485	74
	324
	547
	567
	578
	580
	583
	587
	591
	594
	596
	597
	604
	610
	683
	714
	734
	741
	749
	753
7M-9918	116
7N-0140	241
7N-0719	216
	▶250
7N-2059	241
7N-2353	260
7N-5274	180
7N-5683	30
7N-9801	262
7S-6369	77
	108

▶ PRIMARY REFERENCE

PART NUMBER INDEX

Part	Page
7S-8735	114
7T-1099	287
7T-3267	248
7T-3268	248
7T-3271	248
7T-3276	248
7T-3277	248
7T-3278	248
7T-3279	248
7T-3402	891
7T-3451	246
	248
7T-3454	246
	248
7T-6799	258
7T-8890	1083
7W-3871	22
7W-3872	22
7W-5340	80
7W-8813	7
	10
	11
	12
	▶51
7W-9028	74
7W-9737	85
7W-9738	85
7W-9740	85
7W-9930	85
7X-0339	169
7X-0507	859
7X-0510	55
7X-0562	246
	248
7X-0578	927
	1087
7X-0579	128
7X-0818	42
	656
7X-1950	246
7X-1952	246
7X-2440	398
	399
	400
	401
7X-2532	55
7X-2533	201
	1009
	1028
7X-2536	953
	954
	955
7X-2539	88
	127
7X-2543	533
	535
	537
	539
7X-2544	567
7X-2545	739
7X-2549	604
7X-2550	287
	545
	546
	570
	571
7X-2552	1023
7X-2553	389
	979
	982
	1030
7X-2554	93
	95
7X-2555	55
7X-2557	714
7X-2559	984
7X-2563	397
	405
	876
7X-2565	409
	410
	411
7X-2572	354
7X-2573	828
7X-2576	497
7X-2619	310
7X-2621	173
	195
	197
	199
	276
	317
	741
	749
7X-3164	533
	535
	537
	539
7X-3335	549
	551
7X-3373	246
	248
7X-6315	193
7X-7644	1115
	1120
7X-7700	161
	163
7X-7729	93
	95
	109
	712
	859
	895
	995
7Y-0059	1
	▶1015
7Y-0063	338
7Y-0225	494
7Y-0252	494
7Y-0362	395
	▶409
7Y-0595	324
7Y-0623	979
	982
7Y-0725	415
7Y-0735	415
7Y-0752	324
7Y-0753	324
7Y-0754	324
7Y-1257	394
7Y-1319	114
7Y-1434	494
7Y-1507	360
7Y-1647	360
7Y-1648	360
7Y-1650	360
7Y-1976	93
	95
	97
	99
7Y-2202	395
	▶397
7Y-2292	340
	341
	342
	343
	344
	345
7Y-2390	828
	830
	832
	834
	836
7Y-2581	397
7Y-2662	838
7Y-2663	838
7Y-2664	838
7Y-2853	368
7Y-2854	369
7Y-2881	390
7Y-2916	369
7Y-2920	839
7Y-3470	1100
7Y-3472	1100
7Y-3474	1083
7Y-3721	580
7Y-3729	587
	596
7Y-3730	580
7Y-3731	512
	583
	587
	591
	596
7Y-3732	547
	565
	610
	687
7Y-3919	999
7Y-3920	999
7Y-3950	260
	282
7Y-3951	272
7Y-3953	260
	282
7Y-3954	272
7Y-3962	208
	210
7Y-3963	208
	210
7Y-3964	208
	210
7Y-3965	208
	210
	301
7Y-3967	301
7Y-4173	628
7Y-4193	617
7Y-4199	619
7Y-4202	705
7Y-4212	705
7Y-4213	705
7Y-4215	705
	714
7Y-4216	706
7Y-4217	705
7Y-4222	706
7Y-4224	706
7Y-4234	705
7Y-4290	703
7Y-4294	703
7Y-4384	673
7Y-4390	617
7Y-4538	517
	521
	525
	527
	529
	531
7Y-4631	466
	468
	472
7Y-4660	484
	486
	488
	490
7Y-4669	484
	486
	488
	490
7Y-4672	484
	486
	488
	490
7Y-4673	484
	486
	488
	490
7Y-4695	484
	486
	488
	490
7Y-4817	720
7Y-4868	519
	523
	541
	543
	547
	560
	685
7Y-4918	490
7Y-5088	677
7Y-5215	484
	486
	488
	490
7Y-5217	324
7Y-5219	741
	749

▶ **PRIMARY REFERENCE**

PART NUMBER INDEX

Part	Page
	773
7Y-5221	703
7Y-5226	761
	764
7Y-5238	611
7Y-5243	729
7Y-5247	567
7Y-5272	446
	773
7Y-5456	172
7Y-5458	257
7Y-5464	257
7Y-5505	272
7Y-6442	560
7Y-6447	685
7Y-6448	685
7Y-6449	685
7Y-6506	547
7Y-6507	547
7Y-6510	560
7Y-6511	560
7Y-6620	830
7Y-6641	858
7Y-6649	858
7Y-6656	839
7Y-6657	839
7Y-6658	839
7Y-6684	863
7Y-7364	1100
7Y-7394	1005
	1006
	1007
	1078
	1080
7Y-7904	578
	685
7Y-8099	753
7Y-8109	309
7Y-8165	173
	1009
	1013
7Y-8167	1009
7Y-8169	214
7Y-8309	549
7Y-8379	626
7Y-8436	791
7Y-8437	791
7Y-8463	957
	958
7Y-8621	986
	987
7Y-8622	986
	987

8

Part	Page
8C-0564	607
8C-3206	511
	514
8C-3445	74
8C-3446	74
	722
8C-3451	722
8C-3655	248
8C-5607	201
	1028
8C-5608	188
	201
	1028
8C-5918	172
	180
8C-6358	182
8C-6965	777
8C-7328	415
8C-8400	679
8C-8451	188
8C-8580	948
8C-8988	576
8C-8989	607
8C-8992	366
	402
8E-8812	424
	426
8E-8814	425
	427
8F-0212	757
8F-1434	246
	248
	252
	1097
8F-6711	413
	414
8F-8882	404
8H-1141	248
8H-2046	73
8H-2282	986
	987
8H-3481	1081
8H-5244	69
	71
8H-5303	250
8H-5306	250
8H-7521	74
8J-1256	214
8J-4645	714
8J-8879	494
8L-2779	82
	779
	796
8L-2786	108
	122
	127
	237
	238
8L-8413	172
	180
8M-2770	173
8M-2772	838
	839
	840
	842
8M-2773	1009
8M-5860	34
8N-0869	172
	263
8N-1725	172
	180
	263
8P-9770	878
	879
	880
	881
	882
	884
	886
	887
	888
	889
8R-1803	223
8S-0934	1037
	1040
8S-2634	263
8S-4723	1037
	1040
8S-4724	1037
	1040
8T-0075	606
	633
	635
	638
	644
	652
	658
	669
	675
8T-0078	588
	597
8T-0100	44
	45
	67
	68
	89
8T-0114	953
	954
	955
8T-0211	505
8T-0226	51
8T-0266	936
8T-0267	725
8T-0269	948
	1016
	1018
8T-0276	74
8T-0285	961
8T-0288	811
	812
	813
	814
	815
	822
8T-0293	60
8T-0325	1025
8T-0328	161
	163
	166
	214
	216
	246
	248
	272
	310
	376
	377
	378
8T-0337	1025
8T-0341	556
8T-0640	146
8T-0643	18
8T-0644	91
8T-0667	360
8T-0669	360
8T-1158	777
8T-1159	131
	412
	773
8T-1683	122
	127
8T-1685	588
8T-1687	621
	681
8T-1715	122
	127
	1009
	1013
8T-1779	621
	639
	665
	670
	693
8T-1905	607
	626
	628
	630
	635
	639
	642
	644
	652
	658
	662
	665
	669
	673
8T-2525	567
8T-2920	681
8T-3008	733
	734
8T-3282	37
	324
	329
8T-3490	93
	606
	687
8T-3518	182
8T-3519	182
8T-3597	93
8T-3611	604
8T-3647	938
8T-3653	553
	554
	558
	559
8T-3666	40
8T-3957	588
8T-4001	848

► **PRIMARY REFERENCE**

PART NUMBER INDEX

Part	Page	Part	Page	Part	Page	Part	Page
	850		570		397		127
8T-4121	47		576		409		169
	54		578		410		173
	93		580		411		241
	95		583		497		263
	97		588		828		270
	99		592		830		293
	103		597		832		295
	109		600		834		303
	112		604		836		304
	114		607		846		360
	122		611		848		439
	127		614		850		443
	169		621		854		533
	173		628		856		535
	183		633		863		537
	189		639		865		539
	195		645		867		556
	197		659		868		567
	199		662		869		583
	210		670		870		588
	211		673		871		592
	213		675		872		597
	214		678		873		607
	215		679		874		611
	227		686		876		614
	241		687	8T-4127	272		621
	244		689	8T-4131	398		639
	245		693		399		645
	263		695		438		662
	265		720		442		670
	268		722		846		673
	270		725		848		693
	276		739		850		695
	286		742		854		711
	287		746		856		714
	290		749	8T-4132	852		720
	291		753	8T-4133	114		722
	293		773		122		766
	295		838		127		768
	303		839		173		895
	304		840		180		952
	308		842		210		953
	309		859		211		954
	314		895		213		955
	316		939		314		995
	317		941		331		1025
	360		948		438	8T-4137	93
	369		952		442		95
	519		953		560		103
	523		954		719		122
	525		955		773		127
	527		995		777		173
	529		998		840		183
	531		999		842		189
	533		1009		858		210
	535		1013	8T-4134	1100		211
	537		1026	8T-4136	47		213
	539		1030		54		214
	556		1072		97		215
	560		1084		99		227
	561		1097		109		241
	562	8T-4123	55		112		263
	565		324		114		265
	567		354		122		290

► **PRIMARY REFERENCE**

PART NUMBER INDEX

Part	Page	Part	Page	Part	Page	Part	Page
	291		681		909		99
	293		685		913		168
	295		687		917		174
	309		689		921		241
	317		715		933		369
	360		761	8T-4182	174		630
	576		764		263		656
	600		979		561		1082
	607		982		562	8T-4190	203
	614	8T-4140	159		578		211
	621		214		604		213
	633		365		686		333
	659		715	8T-4183	189		334
	714		724		203		904
	725		770		494		909
	859		771		517		913
	895	8T-4141	497		521		917
	939	8T-4167	354		525		921
	948		497		527		933
	953		828		529	8T-4191	174
	954		848		531		244
	995		850		533		245
	1009	8T-4171	195		535		265
	1013		203		537		268
8T-4138	189		216		539		286
	369		265		583		287
	904		268		588		291
	987		291		592		293
	1009		303		597		308
8T-4139	93		304		722		394
	95		322	8T-4184	517		570
	102		961		519		628
	517		1001		521		838
	519	8T-4172	174		523		839
	521		621		525		840
	523	8T-4174	984		527		842
	525	8T-4175	715		529		952
	527		1019		531		955
	529	8T-4176	567		541		999
	531		583		543		1009
	533		588		545		1013
	535		592		546		1030
	537		597		563		1072
	539		715		570		1084
	541		1025		571		1097
	543	8T-4177	636		693	8T-4192	111
	547		639		695		241
	549		645	8T-4185	114		367
	551		652		174		621
	556		659		519		628
	560		670		523		630
	565	8T-4178	578		533		636
	567		588		535		645
	570		604		537		652
	571		665		539		659
	578	8T-4179	203		556		715
	583		265		560		979
	588		291		576		981
	592		340		639		982
	594		341		645		1017
	597		342		659	8T-4193	770
	607		343	8T-4186	597		771
	611		344		689		875
	675		345	8T-4189	88		1020
	679		863		97	8T-4194	150

► PRIMARY REFERENCE

PART NUMBER INDEX

Part	Page
	501
	517
	519
	521
	523
	525
	527
	529
	531
	541
	543
	545
	546
	567
	576
	580
	621
	678
8T-4195	97
	99
	122
	174
	309
	352
	560
	621
	712
	722
	739
	742
	746
	749
	753
	757
	859
	941
	998
	1026
8T-4196	114
	122
	128
	287
	439
	443
	553
	554
	556
	558
	559
	564
	565
	566
	583
	592
	604
	678
	679
	687
	688
	689
	691
	714
	859
8T-4198	316
	614
	675
8T-4199	310
	360
8T-4200	42
	93
	95
	208
	214
	331
	986
	987
	1009
8T-4205	170
	216
	246
	248
	1028
8T-4223	93
	95
	111
	150
	169
	189
	203
	204
	205
	265
	287
	291
	331
	340
	341
	342
	343
	344
	345
	356
	367
	369
	439
	442
	494
	501
	517
	519
	521
	523
	525
	527
	529
	531
	533
	535
	537
	539
	541
	543
	545
	546
	547
	549
	551
	556
	560
	563
	564
	565
	566
	567
	570
	571
	572
	573
	574
	575
	576
	578
	580
	583
	588
	592
	594
	597
	600
	602
	604
	607
	610
	611
	619
	628
	630
	636
	645
	652
	659
	675
	678
	679
	681
	685
	687
	688
	689
	691
	693
	695
	722
	725
	828
	830
	832
	834
	836
	909
	913
	917
	921
	933
	979
	981
	982
8T-4224	22
	25
	27
	42
	45
	88
	93
	95
	97
	99
	123
	128
	170
	208
	214
	241
	310
	331
	369
	602
	628
	630
	636
	639
	645
	653
	656
	659
	670
	722
	757
	893
	894
	908
	938
	953
	954
	955
	965
	979
	982
	986
	987
	1009
	1043
	1044
	1045
	1046
	1049
	1050
	1059
	1060
	1061
	1064
	1071
	1073
	1076
	1077
	1082
8T-4226	174
	180
8T-4244	150
	204
	205
	356
	519
	523
	549
	551
	570
	571
8T-4648	578
	687

► **PRIMARY REFERENCE**

PART NUMBER INDEX

Part	Page
	689
	691
8T-4779	604
	927
8T-4780	354
	828
	830
	832
	834
	836
	863
	865
	867
	868
	869
	870
	871
	872
	873
	874
8T-4896	553
	554
	558
	559
	564
	566
	688
	691
8T-4908	128
	628
	722
8T-4910	564
	565
	566
	567
	578
	610
	675
	688
	909
	913
	917
	921
	933
8T-4944	700
	705
8T-4956	525
	527
	529
	531
	545
	546
	556
	567
	572
	573
	574
	575
	583
	588
	592
	594
	597
	600
	602
	610
	611
	681
	722
	725
	828
	830
	832
	834
	836
8T-4970	186
	208
	216
	633
	1083
	1084
8T-4971	123
	1009
8T-4984	611
8T-4986	111
	678
8T-4987	111
8T-5005	174
	263
	293
	295
	297
	322
	679
8T-5035	40
8T-5041	563
8T-5092	583
	588
	592
	594
	597
8T-5379	848
	850
8T-5412	597
8T-5436	561
	562
	686
8T-5439	398
	399
	400
	401
8T-5460	398
	399
	400
	401
	846
	848
	850
	854
	856
8T-5878	409
	410
	411
8T-6385	494
8T-6404	700
8T-6411	208
8T-6412	208
8T-6430	329
	406
8T-6453	74
8T-6466	174
	556
	858
8T-6684	597
8T-6685	525
	527
	529
	531
	742
	749
8T-6693	273
	376
	377
	378
	501
8T-6703	93
	95
8T-6759	699
	720
	742
	749
	757
	761
	764
	777
	819
	822
8T-6761	725
8T-6842	1115
	1120
8T-6868	517
	519
	521
	541
	543
	909
	913
	917
	921
	933
8T-6869	128
	174
8T-6870	639
	645
	659
	662
	670
	673
	757
8T-6912	174
8T-7044	113
8T-7338	388
	678
8T-7547	123
8T-7811	824
8T-7852	214
8T-7877	779
8T-7929	519
	523
8T-7930	549
	551
8T-7934	114
	214
8T-7950	37
8T-7971	519
	523
	722
8T-8442	67
	68
8T-8566	248
8T-8569	246
	248
8T-8737	57
	214
	235
	257
	276
	1022
8T-8748	255
	256
8T-8827	173
8T-9080	415
8T-9388	223
8T-9403	561
	562
	578
	580
	686
8T-9533	801
8T-9655	127
	191
8T-9756	172
	180
8T-9757	172
8T-9884	246
	248
8V-1715	397
	984
8Y-6352	925
	931
8Y-6967	909
	913
	917
	921
	933
8Y-9603	244
	245
9B-7233	258
9F-2167	541
	543
	578
	610
9F-2247	248
9F-2547	248
9F-5644	250
9G-0002	172
	180
9G-0003	172
9G-0005	172
	180
9G-4343	272
9G-7641	218
	220
	▶258
9G-8909	172
9J-0705	709

9

▶ PRIMARY REFERENCE

PART NUMBER INDEX

Part	Page	Part	Page	Part	Page	Part	Page
	710		620		420	9X-2480	192
9J-0707	779		645		421		314
	796		650		422		1028
9L-6770	170		656		424	9X-2616	1055
9M-1974	19		658		425		1056
	21		675		426		1057
	22		678		427		1058
	52		757		428	9X-3401	257
	67		768		429		301
	68		772		430		596
	74	9S-6130	161	9X-0199	1097		613
	77		163	9X-0262	224		626
	79		604	9X-1386	235		642
	80		732	9X-1813	168		645
	82	9S-8001	698		228		650
	89	9S-8002	36		232		656
	92	9S-8003	91		251		659
	146		773		254		665
	191	9S-8004	36	9X-2026	904		725
	240		89	9X-2032	1072		1022
	305		123	9X-2041	927	9X-3402	214
9M-2904	77		125		943	9X-3463	204
9M-3786	678		133		945		205
9M-7958	150		135		962		206
9M-8406	123		137		968		210
	128		139	9X-2042	273	9X-3495	293
	645		141		282		295
	659		607		301		310
9N-0869	44		698		321	9X-3601	484
	191		766		322		486
9S-1350	79		824		925		488
9S-4167	122	9S-8005	61		927		490
	127		89		931	9X-4184	256
9S-4180	503		91		945	9X-4271	246
	742		108		963	9X-4597	457
	748		123		965		459
9S-4181	580		128		976		463
	583		698		990	9X-4821	246
	591		699		1087	9X-4824	246
	597		766		1090		248
	604		768		1100	9X-4825	246
9S-4182	51	9S-8006	32	9X-2044	273	9X-6032	324
	89		36		925		553
9S-4183	51		91		927		554
	567		127		1081		558
9S-4185	89		759		1087		559
	555	9S-8008	60		1097		564
	567		91		1100		566
	583	9S-9334	34	9X-2045	927	9X-6153	907
	587		36		941	9X-6165	188
	591	9T-0835	714		989		201
	604	9T-0836	713		1087		904
	645	9T-1614	761	9X-2046	941		1028
	675		764		1021	9X-6582	572
	681	9T-4506	709		1081		573
	683	9T-6635	241	9X-2098	45		574
	706	9W-0335	272	9X-2099	22		575
	714	9W-0625	255	9X-2201	102		606
9S-4188	74	9W-0742	▶182	9X-2205	161	9X-7298	482
9S-4191	107		263		163	9X-7712	34
	224	9W-2146	413	9X-2305	85		36
	438	9W-2201	414	9X-2404	461	9X-7737	165
	555	9W-3361	417		476	9X-8250	123
	604		418		479		128
	613		419		492	9X-8256	123

▶ **PRIMARY REFERENCE**

PART NUMBER INDEX

Part	Page	Part	Page	Part	Page	Part	Page
	128		984		479	087-6583	630
	174		1019		492	087-6585	656
	186		1020	085-9310	159	090-8865	984
	189		1023		214	091-9035	174
	192		1030		724		287
	195	9X-8600	161	086-0297	863	092-6629	77
	203		163	086-0523	852	093-0020	360
	208	9X-8916	31	087-3533	338	093-0084	830
	214	9X-9510	248	087-3908	368	093-0090	354
	216	9X-9896	188	087-3909	368		832
	265	9Y-8389	122	087-4402	613		834
	268		127		633		836
	273		146		642	093-0116	830
	276				650	093-0332	214
	280				656	093-0334	214
	291	**0**			665	093-0349	828
	297			087-4405	630		830
	303	003-7764	122	087-4411	619		832
	304		127	087-4423	626		834
	310		161	087-4454	433		836
	314		163		▶434		846
	322	006-6803	801	087-4456	▶435		848
	331	012-0380	251		437		850
	369	030-0167	779	087-4531	619		854
	633		796	087-4534	619		856
	725	030-1712	240	087-4575	434		863
	895	030-8188	125	087-4576	434		865
	947	030-8194	148	087-4577	434		867
	948	033-5879	709	087-4587	172		868
	961	033-6027	72	087-4683	253		869
	995	033-6036	709	087-4710	777		870
	1001		779	087-4742	705		871
	1009		796	087-4743	705		872
	1016	033-8248	838	087-4757	705		873
	1018		840	087-4786	705		874
	1025		842	087-5166	766	093-0357	863
	1081	036-9823	246		768	093-0363	828
	1082		248	087-5303	628		830
	1083	039-2280	77	087-5708	777		832
	1084	061-9455	25	087-5760	619		834
	1087	085-6444	1095	087-5762	576		836
	1097	085-6447	1095		619		863
9X-8257	55	085-6448	1095		665		865
	203	085-6449	989	087-5765	665		867
	211		1095	087-5766	633		868
	213	085-6452	928		635		869
	388	085-7079	801		665		870
	389	085-7080	801	087-5767	638		871
	494	085-7081	801		662		872
	604	085-7083	801		669		873
	678	085-7084	801	087-5772	619		874
	700	085-7356	626		633	093-0364	354
	708		638	087-5774	619		832
	770		642	087-5780	617		834
	771		662	087-5840	838		836
	875		669	087-5857	838	093-1291	519
	904		673	087-5955	828		523
	909	085-7538	818		830	093-1294	689
	913	085-8037	1084		832	093-1342	852
	917	085-8604	461		834	093-1345	846
	921		476		836		848
	927		479	087-5966	839		850
	933		492	087-5974	875		854
	979	085-8605	461	087-5975	875		856
	982		476	087-5976	875	093-1349	848

▶ PRIMARY REFERENCE

PART NUMBER INDEX

Part	Page	Part	Page	Part	Page	Part	Page
	850	095-1547	732		720	096-1055	482
093-1433	471	095-1572	705	095-1633	484	096-1519	705
	863	095-1575	705		486	096-1521	705
093-1514	394		741		490	096-1522	705
093-1730	494		748	095-1657	734	096-1523	705
093-1731	324		777	095-1681	503	096-1533	703
	494	095-1576	819	095-1685	705	096-1545	824
093-2065	173		822	095-1698	789	096-1570	457
093-2069	948	095-1578	780		819		459
093-5432	97		793		822		463
	99		794	095-1700	706	096-1571	457
093-7521	506		795		733		459
094-0578	324		807		734		463
094-0579	324		810	095-1710	801	096-1628	775
094-0580	324	095-1579	505	095-1716	720	096-2591	310
094-0611	494		797	095-1719	505	096-2617	949
094-0876	775		798	095-1720	466		950
094-1399	705		800		468	096-2622	963
094-1528	324	095-1580	781	095-1721	457		965
	494	095-1582	781		459	096-2653	494
094-1875	438	095-1584	499	095-1723	461	096-3216	324
	442		798		476	096-3773	759
	705	095-1585	705		492	096-3780	331
	714		734	095-1735	725	096-3785	705
094-1881	438	095-1586	705	095-1750	808	096-3786	705
	442		775		809	096-3787	705
094-1882	438		787	095-1751	808	096-3788	705
	442		791		809	096-3872	203
	705		808	095-1778	741	096-3884	963
	714		809		748		965
094-1920	553		816	095-1785	787	096-3944	714
	554	095-1587	797		791	096-3978	706
	558		798	095-1786	797	096-3983	714
	559		800		798	096-4003	705
094-1931	457	095-1590	499		800	096-4035	93
	459		739	095-1787	739		95
	463		741		741		97
095-0673	777		746		746		99
095-0707	701		748		748	096-4129	376
095-0723	272		753		753		377
095-0728	317		781		791		378
	952		791	095-1788	438	096-4376	705
095-0735	953		797		442	096-4377	705
	954		798	095-1789	761	096-4378	705
	955		800		764	096-4389	705
095-0736	161		801		766		714
	163	095-1594	761		768	096-4430	466
	1003		764	095-2927	394		468
095-0826	725		766	095-6639	719		472
	999		768	095-7378	705	096-4447	688
095-0843	331	095-1596	499	095-7380	705		691
095-0891	324	095-1597	553	095-7382	705	096-4480	564
	494		554	095-7383	705		566
095-0910	904		564	095-7384	705	096-4755	497
095-0929	490	095-1600	688	095-7386	705	096-4876	852
095-0946	714		703	095-7387	705	096-4882	979
095-0965	801	095-1601	733	095-7930	999		982
095-1260	777		734	095-7944	407	096-4883	567
095-1386	122		791		408		611
	127	095-1602	733	096-0061	186	096-4902	360
095-1388	81		734		227	096-5625	457
095-1519	507	095-1603	741	096-0131	863		459
	810		748	096-0433	324		463
095-1543	97	095-1608	725	096-0854	461	096-5915	705
	99	095-1625	482		475	096-5916	705

► **PRIMARY REFERENCE**

PART NUMBER INDEX

Part	Page
096-5919	705
096-5962	272
096-6166	218
	220
	272
	317
	952
	961
	1025
096-6210	457
	459
	461
	463
	466
	468
	472
	476
	479
	492
096-6467	354
096-9259	55
096-9988	55
099-0121	394
099-0139	1095
099-0596	482
099-0600	482
099-0699	482
099-0700	482
099-0707	852
099-0724	852
099-0822	810
	1031
099-0823	927
	1087
099-2374	895
	995
099-3506	988
	990
099-3607	927
099-3629	1093
	1094
099-3645	1015
099-3649	27
	620
099-3669	438
	442
099-3670	438
	442
099-3671	438
	442
099-5572	461
	476
	479
	492
099-5573	461
	476
	479
	492
099-6109	438
	442
099-6110	438
	442
099-6111	438
	442
099-6112	438
	442
099-6113	438
	442
099-6115	438
	442
099-6117	438
	442
099-6118	438
	442
099-6119	438
	442
099-6120	438
	442
099-6121	438
	442
099-6122	438
	442
099-6123	438
	442
099-6124	438
	442
099-6125	438
	442
099-6126	438
	442
099-6127	438
	442
099-6128	438
	442
099-6137	775
	777
099-6141	777
099-6144	777
099-6145	777
099-6418	348
	349
	350
099-6607	93
	95
099-7127	272
099-7857	364
099-8111	703
099-8232	583
	587
	591
	596
099-8292	553
	554
	558
	559
100-2881	989
100-3866	708
100-4336	576
101-2846	273
101-3128	191
101-7397	580
101-7398	578
	610
101-7401	587
	591
	594
	596
101-7402	567
101-7403	580
101-7404	578
	580
	583
	587
	591
	596
101-8899	963
	965
	969
101-8900	963
	965
	976
	1087
101-9848	376
	377
	378
	392
102-0889	783
102-1157	619
102-6671	108
102-7886	316
102-7964	301
102-7965	282
	301
102-8016	272
102-8802	57
	161
	163
	167
	168
	173
	235
	251
	252
	254
	262
	265
	268
	270
	317
	613
	642
	645
	650
	656
	659
	665
	725
102-8803	173
	253
	259
	265
	268
	290
	1013
102-8804	173
	226
	317
102-8805	42
	322
102-8806	173
	222
102-9863	246
103-1384	606
	620
	644
	658
103-1399	675
103-2529	173
103-5245	828
103-8173	741
	748
	783
103-8177	741
	748
103-8252	780
	793
	794
	795
103-8253	780
	793
	794
	795
103-8254	780
	793
	794
	795
103-8255	780
	793
	794
	795
103-8378	490
103-8379	490
103-8380	490
104-3173	1009
104-7293	737
	738
	756
104-7294	737
	756
104-7296	737
	756
104-8768	628
104-8771	617
104-8774	638
	644
	658
	662
	664
	669
104-8783	628
104-8821	619
104-8838	619
104-8950	619
105-1321	▶779
	790
105-1766	941
105-1797	305
105-2169	928
	988
	990
105-3477	580
	587
	591
	594
	596

1

▶ PRIMARY REFERENCE

PART NUMBER INDEX

Part	Page	Part	Page	Part	Page	Part	Page
105-3478	711		665	112-9951	404	115-3696	▶404
105-3479	596	108-7550	547	113-0693	223		406
105-3483	580		578	113-2003	678	115-3697	404
	604	109-0885	404	113-2004	580	115-4072	49
105-3484	604	109-2665	784	113-2127	830	115-4203	7
	620	109-2667	▶784	113-2317	396		10
105-3485	580		786	113-2824	394		11
	596	109-3207	120	113-6069	49		12
105-3487	331		121	113-6170	7		▶66
	369	109-5152	753		10	115-4219	49
105-5175	282		▶785		11	115-7471	404
105-7704	224	109-5153	785		12	115-8645	617
105-9526	1084	109-9329	55		▶47		628
105-9527	1084	109-9350	55	113-6479	515		638
105-9702	248	109-9369	55		580		662
106-0210	257	110-5496	619	113-6612	683	116-0118	172
106-6248	709	110-5525	703	113-6677	517		195
106-7149	246	110-7183	357		521		197
106-8715	679	110-7618	22	113-8490	272		199
107-1678	1009	111-0988	638	113-8491	272		211
107-2723	604		644		284		213
107-2724	689		658	113-8493	272		214
107-4749	314	111-4275	7	114-0489	818		270
107-6370	784		10	114-0623	808		276
	785		12		809		290
107-6371	784		▶244	114-0700	553		291
	785	111-4799	253		554		293
107-6479	807	111-4836	172	114-0706	461		295
107-6540	797		189		476		297
	798		211		479		308
107-6541	797		213		492		317
	798		265	114-0710	461		322
107-6631	614		286		476	116-0128	132
	642		291		479	116-0210	272
	650		309		492	116-2659	102
	656		314	114-0711	461	116-4556	7
	665		317		476		10
107-6954	705		895		479		11
107-6955	705		995		492		12
107-6969	705	111-4837	172	114-0713	461		▶46
107-7017	818		211		476	116-4663	108
107-7018	818		213		479	116-6332	40
107-7694	20		293		492	116-7408	891
107-7708	28		309	114-0754	482	116-7409	891
107-8618	290	111-4838	172	114-0760	484	116-9115	4
108-4282	587		317		486		▶858
	594	111-4839	172		488	116-9118	547
	596		317		490	116-9129	560
108-7118	693	111-9916	438	114-1383	494	116-9133	4
	695		▶808	114-1398	494		▶838
108-7203	617		812	114-1399	494	116-9135	1112
	628		814	114-1401	494	116-9140	838
	630		815	114-1540	324	117-3437	92
108-7357	638	111-9959	753	114-6285	369	117-3643	13
108-7372	617	111-9977	818	114-6289	376		14
108-7387	630	111-9985	818		377		15
	638	111-9986	818		378		16
	644	111-9998	781	114-8229	761		▶86
	658	112-0083	665		764	117-5612	398
	669		▶803	115-1853	407		399
108-7393	638	112-0085	803		408		400
108-7433	693	112-0090	818	115-1854	407		401
108-7516	642	112-2481	885		408	117-6306	1087
	650		▶890	115-2677	840	117-6349	952
	656	112-4550	290	115-2678	840	117-6350	952

▶ **PRIMARY REFERENCE**

PART NUMBER INDEX

Part	Page
117-6356	952
118-1727	7
	10
	11
	12
	▶24
118-4044	766
	768
118-4086	775
118-4087	775
118-5982	865
	867
	868
	869
	870
	871
	873
	874
118-5983	773
118-9573	244
	245
118-9930	55
119-2378	565
	687
119-2379	565
	687
	689
119-2921	66
119-2942	82
119-3025	92
119-3662	173
119-4553	398
	399
119-4554	398
	399
119-5026	218
	220
	1003
119-5259	818
119-5260	818
119-5262	818
119-5388	777
119-5389	777
119-5391	777
119-5398	797
	798
120-5114	150
120-7224	840
120-9027	253
121-0137	429
121-0138	430
121-0307	74
121-0987	303
	304
121-1023	216
121-1038	132
121-1039	132
121-1173	282
121-1371	457
	463
121-1372	457
	463
121-1459	791
121-1491	698
	699
	741
	748
	757
	▶809
	811
	813
121-1548	461
	476
	479
	492
121-1549	461
	476
	479
	492
121-1558	705
121-1729	4
	▶839
121-1865	954
121-6303	633
	▶810
121-6304	810
121-7098	1009
121-7136	936
	1009
121-7137	1009
	1010
121-7138	936
	1009
121-8460	842
121-8662	842
122-3979	368
122-3980	368
122-4101	348
	349
122-4120	368
122-5114	705
122-7797	761
	764
122-9608	952
122-9609	952
122-9610	952
122-9611	953
	954
122-9617	941
122-9657	1009
123-2003	501
123-2008	705
123-2139	703
123-2423	759
123-2430	620
	656
	▶804
123-2485	741
	748
123-2511	805
123-2516	818
123-2549	606
	▶805
123-2552	804
	805
123-4750	606
124-0506	27
124-0914	688
	691
124-1008	628
	630
	635
	644
	652
	658
	675
124-1035	606
124-3548	272
124-3953	1100
124-3966	1090
124-4009	949
	950
124-4010	949
	950
125-1302	216
	▶251
125-7874	173
	265
	268
	270
	282
	287
	301
125-7875	173
	255
	256
	265
	268
	282
	301
126-1757	26
126-1767	257
	301
	613
	626
	642
	645
	650
	656
	659
	665
	1022
126-1865	777
126-1866	777
126-1876	457
	459
	463
126-2016	714
126-5064	417
	422
126-5065	418
	428
126-5466	89
126-5869	89
126-6514	816
126-6515	816
126-6516	816
126-7574	193
126-9993	801
127-0580	927
127-0716	885
	▶891
127-3913	863
127-6634	4
	▶685
127-6780	529
	531
127-6797	454
	▶560
127-7771	340
	341
	342
	343
	344
	345
128-2135	909
	913
	917
	921
	925
	931
	933
	943
	945
128-2136	925
	931
128-2173	953
	954
	955
128-4411	161
	163
128-5626	7
	11
	243
	▶245
128-9265	484
	486
129-1170	92
129-5096	169
129-6466	1097
129-7784	719
129-7853	714
129-7854	714
129-7855	714
129-7857	714
129-7863	714
129-7921	714
129-7925	714
129-7927	714
129-7978	438
	442
129-7979	714
129-8034	501
130-0252	1009
130-3280	102
130-4272	▶365
130-4273	365
130-4276	365
130-5300	191
130-9811	238
	239
131-5818	777
131-5915	775
131-8826	104
131-8828	104
131-8829	104
131-9516	549
	551
132-1805	172
132-1829	▶167

▶ PRIMARY REFERENCE

PART NUMBER INDEX

Part	Page	Part	Page	Part	Page	Part	Page
	272		368		▶963	147-8211	38
132-5789	173		390	139-7101	911	147-8214	38
	214	135-8575	122		915	147-8220	38
	265		127		919	148-2903	120
	268		368		923		121
	272		1016		▶1087	148-4703	360
	287	135-8576	362	139-7119	1091	148-4704	360
	291		363	139-7126	927	148-8311	122
	293		364	139-7127	927		127
	314		403	139-8794	104	148-8317	594
	316	135-8577	330	139-9476	53		596
	938	135-8578	367	140-0674	783	148-8318	122
	999		368	140-0677	783		127
	1009	135-8965	1030	140-0860	172	148-8319	127
	1013	135-8966	1030	140-6188	38	148-8321	607
132-7165	104	135-9044	494	140-7480	1028	148-8325	606
	105	135-9819	24	140-9670	38	148-8326	555
133-2427	354	136-0812	89	141-2759	272	148-8327	626
	832	136-0822	26	142-3836	1	148-8328	689
	834	136-2904	494		▶1017	148-8329	74
	836	136-2940	494	142-5515	705	148-8334	604
133-2428	828	136-4183	49	142-5546	952	148-8335	547
133-4995	37	136-4303	57	142-6582	529		580
133-5813	613	136-7227	148		531		583
	648	137-0856	580	142-7764	512		587
	664	137-1602	117	142-7765	509		591
133-5828	578	137-2270	1017	142-8100	7		596
133-6379	67	137-3623	503		10		610
	68	137-3624	503		11	148-8336	125
133-6788	822	137-3625	503		12		555
133-6813	486	137-3626	446		▶54		576
133-6904	457		503	143-4254	619		578
	463	137-3628	446	143-4654	73		606
133-6909	476		503	143-8023	482		613
	479	137-3631	446	143-8024	482		620
	492	137-3711	558	143-8025	482		626
133-8016	927		559	143-8033	482		633
134-3284	211	137-6606	312	143-8149	482		638
	213	137-6645	237	143-9392	191		642
134-4126	193	137-6715	38	143-9397	904		644
134-4483	38	137-6717	69	144-0195	1083		648
134-6852	122		71		1084		650
	127	137-6718	38	144-0367	109		652
134-6918	628	137-6726	108		567		656
134-6921	644	138-3252	37	144-1636	57		658
134-7089	102	138-5111	594	144-9691	1090		665
134-7258	1115	138-7198	69	144-9692	1090		669
	1120		71	145-0162	28		673
134-8226	79	138-8402	69	145-0164	28		675
134-8883	▶366		71	145-0168	28		677
134-8884	366	138-8403	69	145-0170	28		693
134-8886	366		71	145-2237	607		695
134-8950	875	138-9868	69	145-5106	435	148-8338	606
134-8951	876		71		▶436		633
135-2274	955	139-4081	▶53	145-7376	69		635
135-2543	240		67	145-7385	69		638
135-3980	570		68	146-4936	378		644
	571	139-4084	53	146-6747	1115		652
135-8572	150	139-6873	122		1120		658
	159		▶165	147-4131	777		669
	172	139-7099	911	147-4184	766		675
135-8573	150		915	147-4921	1073	148-8339	596
	172		919		1075	148-8340	620
	352		▶988	147-5088	92		626
	367	139-7100	962	147-5860	705		693

▶ **PRIMARY REFERENCE**

PART NUMBER INDEX

Part	Page
	695
148-8341	555
148-8342	644
148-8347	587
	591
	596
	626
	679
	681
148-8353	576
	578
	606
	613
	620
	628
	638
	642
	650
	656
	665
	673
148-8354	613
	620
	681
148-8355	578
	583
	594
	683
148-8357	567
	683
148-8358	681
148-8362	594
	597
148-8363	664
	681
148-8364	567
	578
	620
	648
148-8367	122
	127
	578
	606
	620
	638
	677
148-8368	606
	689
148-8370	692
148-8371	576
148-8372	693
	695
148-8374	125
	576
	606
148-8378	82
	125
	555
	576
	607
	613
	617
	620
	626
	628
	630
	633
	635
	638
	642
	644
	648
	650
	652
	656
	658
	662
	665
	669
	673
148-8383	122
	127
148-8387	583
	587
	591
	597
148-8390	555
148-8392	587
148-8393	645
148-8395	61
	89
	91
	766
	768
148-8407	555
	604
	613
	620
	645
	650
	656
	658
	675
	678
	757
	768
148-8408	567
148-8409	91
148-8411	89
	555
	567
	583
	587
	591
	604
	645
	675
	681
	683
148-8415	572
	573
	574
	575
	576
	607
148-8419	572
	573
	574
	575
	607
148-8428	692
148-8433	620
	635
	638
	645
	648
	652
	658
	664
	669
	675
148-8434	607
	639
148-8435	555
	607
	617
	620
	633
	635
	645
	659
	675
	677
148-8439	620
148-8442	587
148-8444	578
	607
148-8457	545
	546
149-1738	519
	533
	535
	537
	539
	555
149-5050	276
	280
	282
	297
	310
	322
149-5051	322
149-5069	282
149-5070	282
149-5240	120
	121
149-5452	549
	551
150-3024	122
150-3036	607
	626
	628
	630
	635
	639
	642
	644
	652
	658
	662
	665
	669
	673
150-4027	635
	639
	645
	652
150-4037	693
	695
150-4044	621
	639
	665
	670
	693
	695
150-4048	645
150-5782	714
150-5797	438
	442
150-5826	466
	472
150-5827	466
	472
150-5828	466
	472
151-2494	517
	521
151-6703	976
	1087
151-6704	976
	1087
151-6705	1090
151-6767	962
151-6777	962
	968
151-6778	976
	1087
151-6785	1087
151-6790	1093
151-6792	963
	965
	▶1095
151-6793	1095
151-6813	976
	1087
151-6815	976
	1087
151-6831	976
	1087
151-6832	976
	1087
151-6841	1095
151-6844	1087
151-9461	963
	965
151-9497	963
	965
151-9557	1087
151-9576	976
	1087
152-3952	92
153-1036	40
153-2521	▶204
	211
	213
153-2523	▶205
	207
153-2620	173

▶ PRIMARY REFERENCE

PART NUMBER INDEX

Part	Page	Part	Page	Part	Page	Part	Page
	317	154-0736	459		965	161-3684	1087
153-2630	173	154-0737	459	156-6645	963	161-3685	927
153-5223	777	154-0738	459		965	161-3694	989
153-5239	786	154-0739	459	156-6646	1097	161-3695	1095
153-5276	737	154-0767	461	156-6647	▶1090	161-3697	927
	738	154-0770	461		1097	161-3698	976
	756	154-0896	54	156-6648	1090		1086
153-5286	753	154-9023	89	156-6656	925		1087
153-5288	741	155-2260	173	156-6657	925	161-3705	1095
	748		228	157-0670	89	161-3717	1030
	753		232	157-9338	549	161-3732	940
153-5289	741		265		551	161-3734	940
	748		268	158-6072	116	161-3750	▶1082
	753		290		117	161-3751	▶1081
153-5290	741		299	158-7864	1111	161-6963	116
	748		312	158-8086	413		117
	753	155-2265	301		414	161-6987	214
153-5291	741	155-2270	57	158-8096	414		904
	748		173	158-8150	741	162-0177	89
	753		226		748		607
153-5292	741		235	158-8159	739		766
	748		265		741	162-8068	7
	753		268		746		10
153-5293	741		270		748		11
	748		291		753		12
	753		312	158-8186	783		▶61
153-5295	741		316	158-8206	741	163-2478	38
	748		317		748	163-3729	356
	▶783		948	158-8207	741	163-6637	173
153-5298	741	155-2271	173		748	163-6700	161
	748		317	158-8987	▶499		163
153-5299	741	155-2272	317		722	163-6711	301
	748	155-2274	308	158-9085	▶819	163-6758	272
153-5306	741		322		821	163-6772	▶208
	748	155-2276	232	158-9091	▶820		933
153-5309	741	155-3624	89	159-0303	7	163-6795	208
	748	155-7042	1100		10		210
153-5311	741	156-6175	195		11		272
	748		265		12		299
153-5313	770		268		▶60		301
	771		291	159-4700	436		1083
	▶786	156-6469	1093	159-7667	104		1084
153-6237	588	156-6471	963	159-7782	720		1100
	591	156-6472	976	159-7784	501	163-6803	282
	597		1086	159-9526	413	163-6813	208
	626		1087		414	163-6814	208
	679	156-6473	1091	160-0526	27	164-0210	73
	681	156-6474	1095	160-5140	74	164-0497	978
153-6241	607	156-6475	1095	160-7689	173		▶984
153-8467	69	156-6554	1087	161-1703	229	164-0499	940
153-8470	69	156-6555	1087	161-1704	231	164-0500	940
153-8623	438	156-6562	1087	161-1705	230	164-0514	963
	442	156-6579	1087	161-3128	272		965
153-8753	954	156-6598	963	161-3639	963	164-0515	963
153-8762	953		965		965		965
	954	156-6599	927	161-3650	963	164-0516	1095
153-8763	953	156-6600	963		965	164-0517	1095
	954		965	161-3663	963	164-0518	1095
153-8798	517	156-6601	1087		965	164-0519	963
	521	156-6627	1087	161-3665	963		965
	545	156-6631	1091		965	164-0523	927
	546	156-6642	1008	161-3668	1100	164-0527	927
153-8867	519	156-6643	963	161-3669	1100	164-0528	927
	523		965	161-3670	1100		▶1008
	600	156-6644	963	161-3677	1100	164-0534	▶979

PART NUMBER INDEX

Part	Page
164-0535	▶981
164-0614	955
164-0617	955
164-0618	1082
164-0619	1082
164-0620	1082
164-0639	1081
164-0643	987
164-0646	925
	931
164-0648	1087
164-0655	925
	931
164-0664	1008
164-0666	1093
	1094
164-4180	580
	583
	591
	597
	604
164-5552	578
164-5567	576
	602
	607
	626
	635
	639
	645
	652
	659
	662
	670
	673
	722
164-5574	588
	597
164-5578	556
164-5590	722
164-5606	588
	597
164-5608	621
	681
164-5619	91
	127
164-5628	614
	642
	650
	656
	665
164-5629	642
	650
	656
	665
164-6874	626
	638
	642
	662
	669
	673
164-6981	▶437
	619
164-8474	909
	913
	917
	921
	925
	931
	933
164-8977	619
164-8983	619
164-9640	607
165-2976	348
	349
	350
	351
165-3065	1017
165-3165	509
165-3169	512
165-3173	515
165-3256	725
165-5970	▶259
	312
165-9282	482
165-9290	484
	488
	490
165-9431	775
165-9435	775
165-9436	775
165-9438	775
165-9442	775
165-9443	775
165-9444	775
165-9460	775
165-9463	777
165-9464	807
165-9470	628
	▶801
165-9473	▶710
	739
165-9474	710
165-9497	759
165-9513	761
	764
165-9514	761
	764
165-9549	645
	659
	▶811
165-9552	777
165-9553	777
165-9554	777
165-9595	741
	748
165-9627	817
166-1482	852
166-1486	863
	865
	867
	868
	869
	870
	871
	872
	873
	874
166-1487	828
	830
	832
	834
	836
	846
	854
	856
166-1488	354
	832
	834
	836
	848
	850
166-1489	828
166-1494	465
	470
	474
	476
	479
	492
166-1495	457
	459
	463
	466
	468
	472
	846
	848
	850
	854
	856
	863
	865
	867
	868
	869
	870
	871
	873
	874
166-1496	465
	470
	474
	848
	850
	865
	867
	868
	869
	870
	872
	873
	874
166-1497	828
	830
	832
	834
	836
	871
	872
166-1579	840
	842
166-1776	26
166-1781	26
166-2905	57
166-8636	155
167-2217	490
167-2332	486
167-3437	208
167-3438	208
167-3441	▶206
	208
167-3456	208
167-3542	261
	272
	282
	1001
	1062
	1066
167-3543	261
	272
	1001
	1062
	1066
167-3593	272
167-7018	927
167-7036	1094
167-7037	1094
167-7038	965
167-7039	963
	965
167-7042	927
167-7055	981
167-7141	984
167-7270	1115
	1120
167-8121	40
167-8610	1028
167-8853	1025
167-8987	287
168-0713	789
168-0763	789
168-0764	789
168-0765	789
168-0766	789
168-1969	602
168-7224	58
168-8452	324
168-9523	515
168-9759	613
	675
168-9760	508
168-9762	514
169-3104	120
169-5589	324
169-5590	324
169-5592	324
169-5593	324
169-5601	324
169-5602	324
169-5617	494
169-5618	494
169-5861	224
169-8586	120
169-8598	120
170-2512	322
170-3015	347
	390
170-3016	368
170-6888	272
170-6929	172
	180

▶ PRIMARY REFERENCE

PART NUMBER INDEX

Part	Page
170-6993	204
	205
170-9294	▶210
170-9295	210
170-9324	218
170-9336	172
170-9360	331
170-9417	204
	205
170-9418	204
	205
170-9492	1084
170-9497	▶952
	1029
170-9498	952
170-9499	952
170-9722	976
	1086
	1087
170-9724	925
	931
170-9840	482
170-9856	482
170-9864	484
	490
170-9938	482
170-9941	482
170-9985	703
170-9986	703
170-9996	703
171-0023	818
171-0034	797
	798
	800
171-0035	797
	800
171-0036	797
	800
171-0037	797
	798
	800
171-0087	775
171-0123	781
171-0124	781
171-0126	781
171-0127	781
171-0128	781
171-0150	746
171-0183	801
171-0184	801
171-0185	801
171-0188	635
	639
	645
	652
	659
	670
	▶812
171-0198	▶806
	812
171-0596	596
	626
171-2210	216
171-2637	619
	675
171-3369	93
	95
171-5349	235
171-5713	413
171-6718	224
171-7325	905
	906
	945
171-7413	1095
171-7414	1095
171-7420	925
	931
171-7426	927
171-7477	989
171-7485	978
	▶982
171-7503	911
	915
	919
	923
	▶976
171-9073	112
171-9114	17
	▶81
171-9280	494
171-9283	494
171-9298	324
171-9375	494
171-9387	324
171-9410	2
	▶328
171-9412	328
	▶497
172-0907	667
172-4432	757
172-8732	7
	10
	11
	12
	▶25
173-0143	58
173-3384	438
	442
173-3397	438
	442
173-3398	438
	442
173-3413	438
	442
173-3427	714
173-3428	714
173-3503	▶446
	501
173-3505	446
173-3506	446
173-3507	501
173-3510	501
173-3513	503
173-3515	503
173-3516	503
173-3517	503
173-3518	501
173-3529	503
173-3535	819
173-3536	▶787
	819
	822
173-4672	567
	▶732
173-4816	567
173-5549	69
173-7895	519
	523
173-7916	517
	521
	525
	527
	529
	531
174-3016	173
174-5415	102
174-7791	204
	205
174-9570	▶119
	122
	149
175-1367	22
175-3676	57
176-1902	1009
176-1916	941
176-1925	982
176-1928	979
	982
176-1931	1083
176-1932	1084
176-1937	927
176-1938	927
176-1939	927
176-1941	1008
176-1942	927
176-1946	925
176-1947	925
176-1949	990
176-1951	1095
176-1952	1095
176-1953	1095
176-1954	1095
176-1955	1095
176-1956	1095
176-1957	1095
176-1958	911
	915
	919
	923
	▶1091
176-1964	919
	▶965
	968
176-1972	925
	931
176-1986	927
176-1996	969
176-2688	1106
176-2815	1104
176-4179	79
176-4366	628
176-4463	619
176-4469	619
176-4684	628
176-4708	619
176-4746	617
176-4768	619
176-4770	681
176-9429	7
	10
	11
	12
	▶57
176-9430	57
177-0438	13
	16
	▶115
177-0440	115
	▶116
177-2470	714
177-2471	714
177-2553	503
177-2619	446
177-2653	583
	587
	591
	▶788
177-2709	732
177-2713	732
177-3941	314
177-3942	314
177-3943	314
177-4814	7
	10
	11
	12
	▶79
177-5739	347
177-5879	367
177-5880	367
177-6315	1017
177-6395	348
	349
177-6920	116
177-6972	7
	10
	11
	12
	▶169
177-6973	19
	▶41
177-8506	574
177-8572	539
177-9778	122
177-9823	7
	10
	11
	12
	▶91
178-2334	226
178-2335	226
178-2345	▶226
	227
178-2357	152
	153
	154
	155
178-5422	941
178-5423	941
178-5431	1083

▶ **PRIMARY REFERENCE**

PART NUMBER INDEX

Part	Page
178-5500	1084
178-5549	▶978
178-5569	1091
178-5570	927
178-5572	1093
	1094
178-5573	963
	965
	1093
	1094
178-5574	963
	965
	1093
	1094
178-5576	1087
178-5659	1044
	1045
	1057
	1058
178-6450	93
	95
179-1292	412
179-2994	328
	▶329
179-2998	▶394
	405
179-3007	394
179-3008	394
179-3425	407
	408
179-3427	407
	408
179-4324	214
179-5030	549
	551
179-5235	549
	551
	689
179-5260	519
	523
179-7433	630
179-7456	665
179-7500	567
179-7578	656
179-7616	628
	693
179-7662	594
179-8128	152
	153
	154
	155
	156
179-8733	324
179-9763	714
179-9774	496
	▶700
179-9775	700
	▶702
179-9806	503
180-3861	204
	205
180-7521	356
180-7525	356
180-7529	356
180-7537	356
180-7816	825
	826
	▶840
183-1035	210
183-2823	146
183-2824	122
	▶146
183-2851	79
183-2854	41
183-3351	19
183-3406	224
183-4365	64
	69
183-8192	114
184-3830	702
	▶789
184-3833	732
184-3841	732
184-5543	826
	827
	▶842
184-5713	▶402
184-5790	395
	▶403
184-8580	378
	383
184-8722	340
	341
	342
	343
	344
	345
184-8784	362
184-8795	363
184-8862	350
184-9210	635
	644
	652
	658
184-9336	613
184-9593	619
184-9595	619
185-0169	438
	442
185-0201	438
	442
185-0383	613
185-0400	759
185-0407	806
185-0423	781
185-0462	613
	▶807
185-0463	807
185-0490	739
	▶759
185-2638	170
185-2639	170
185-2642	170
185-2644	170
185-2645	170
185-2647	170
185-2648	170
185-2650	170
185-2651	170
185-2653	170
185-2654	170
185-2655	170
185-2658	170
185-3159	27
185-5294	169
	▶170
185-8161	941
185-8180	963
	965
185-8181	1087
185-8182	1087
185-8187	1087
185-8196	927
185-8197	1087
185-8205	925
	931
185-8214	925
	931
185-8221	1087
185-8280	1008
185-8281	1008
185-8284	943
185-8286	253
	905
	906
185-8290	1100
185-8293	1009
185-8300	898
	901
	951
	1000
185-8302	898
	901
185-9208	218
	220
186-3735	42
	150
	161
	163
	167
	168
	226
	235
	251
	252
	253
	254
	259
	262
	290
	322
	576
186-3736	226
186-5473	403
186-5474	402
186-5475	402
186-5477	490
186-5559	840
	842
186-5560	840
	842
186-5564	398
	399
	400
	401
186-5611	356
186-5614	356
186-5637	828
	830
	832
	834
	836
186-5649	846
	848
	850
	854
	856
186-5662	846
	854
	856
186-5663	354
186-5892	7
	10
	11
	12
	▶48
187-0661	1115
	1120
187-5642	648
187-5659	681
187-5661	567
187-5853	594
187-5854	587
187-5855	587
187-5935	580
187-5994	580
187-6720	596
187-6817	541
187-6818	541
187-6819	541
187-6820	541
187-6967	692
187-6993	541
	543
187-7108	600
187-7109	600
187-8278	38
187-8279	38
187-8280	38
187-8281	38
187-9845	517
187-9846	517
187-9862	549
	551
	570
	571
187-9977	533
	535
	537
	539
187-9978	533
	535
	537
	539
187-9981	533
	535
	537
	539
188-0072	689
188-2128	235

▶ PRIMARY REFERENCE

PART NUMBER INDEX

Part	Page	Part	Page	Part	Page	Part	Page
188-3065	407	189-3409	927	191-2697	494		459
	408	189-3922	848	191-3201	789		463
188-3239	▶417		850	191-5619	484	194-8353	461
188-4140	▶501	189-3925	846		490		476
	722		854	191-5707	438		479
188-4142	501		856		442		492
	▶503	189-5746	235	192-0573	714	194-8354	476
188-4143	503	189-8777	85	192-2981	13		479
188-4162	703	189-8780	7		14		492
188-4163	703		10		15	194-8355	476
188-4164	703		11		16		479
188-4165	703		12		▶84		492
188-4166	703		▶106	192-3039	340	194-8356	461
188-4167	703	189-9377	57	192-6832	555		476
188-4169	703	189-9763	438	192-9971	89		479
188-4170	703		442	192-9972	7	194-8359	461
188-4171	703		714		10		476
188-4172	703	190-0643	18		11		479
188-4173	703	190-4896	714		12		492
188-4175	702	190-5386	1115		▶89	194-8364	461
	▶703		1120	193-0158	125	194-8365	461
188-4176	703	190-5791	111	193-1736	714	194-8380	688
188-4210	714	190-6186	7	193-2882	102		691
188-4216	484		10	193-8570	248	195-0321	58
	486		11	193-9994	583		59
	488		12		587	195-5374	▶398
	490		▶235		591	195-5375	▶399
188-4217	484	190-7673	438	194-0079	681	195-6025	116
	486		442	194-0174	▶508	196-0267	116
	488	190-7674	438		580	196-0354	116
	490		442	194-0176	508	196-0536	▶561
188-4218	484	190-7819	955		▶509		860
	486	190-7826	732	194-0177	▶510		861
	488	190-7865	768		580		862
	490	190-8970	149	194-0178	510	196-0537	▶562
188-6121	127	190-8977	148		▶511		860
	▶148		▶149	194-0179	510		861
189-2678	925	191-0461	13		▶512	196-0541	▶563
	931		14	194-0180	▶513		860
189-2690	963		15		580	196-0711	708
	965		16	194-0181	513	196-0807	567
189-2693	989		▶131		▶514	196-1569	979
189-2694	989	191-0522	72	194-0182	513		982
189-2702	1091	191-0523	▶72		▶515	196-1571	979
189-2704	927		131	194-1240	395		982
189-2711	963	191-1782	127		▶405	196-1572	979
189-2716	989	191-1783	127	194-1241	405		982
189-2717	990	191-2513	494		▶406	196-1665	1009
189-2768	911	191-2569	324	194-1242	406	196-1666	951
	915	191-2570	324		▶415		1000
	923	191-2571	324	194-1243	415	196-3784	777
	▶962	191-2579	494	194-1244	415	196-6581	505
189-2793	919	191-2676	324	194-1245	415	196-6582	505
	▶968	191-2683	324	194-1249	415	196-6583	505
189-2796	968	191-2684	324	194-1250	395	196-9519	28
189-2847	988	191-2685	324		▶410	197-0196	698
	990	191-2686	324	194-1256	▶411		699
189-2849	988	191-2687	324	194-5226	228	197-0199	698
	▶989	191-2689	324		232		699
189-2853	931	191-2690	324	194-5227	232	197-0252	818
189-2854	931	191-2693	▶494	194-6725	▶228	197-0273	698
189-2855	925		496		234		699
	931	191-2694	494	194-8031	961	197-2348	521
189-2864	928	191-2695	494	194-8325	714	197-2349	521
189-3396	927	191-2696	494	194-8349	457	197-2362	533

▶ **PRIMARY REFERENCE**

PART NUMBER INDEX

Part	Page
	539
197-4385	317
197-8391	122
	127
	▶237
197-8393	224
	▶229
197-8394	224
	▶230
197-8419	82
197-9353	58
	59
197-9354	58
197-9371	59
197-9372	59
197-9386	58
	59
198-2713	305
198-2714	7
	10
	11
	12
	▶305
198-3899	894
	1071
	1076
	1077
199-1286	580
199-1609	644
199-1620	580
199-1773	583
	587
	591
	596
199-1918	597
199-2783	418
199-3226	▶418
199-4478	▶357
	358
199-4487	328
	▶496
199-4503	324
199-4522	360
199-7891	170
199-8436	170

2

Part	Page
200-3255	438
	442
200-3326	711
200-3327	711
200-3333	714
200-3334	714
200-3365	449
	▶711
200-4495	49
200-4497	84
	▶85
201-0826	407
	408
201-2771	354
	848
	850
201-2836	848
	850
201-2868	842
201-4391	963
	965
201-4417	927
201-4530	927
201-4534	979
	982
201-4535	979
	982
201-9116	▶407
	417
	418
	419
	424
	425
201-9263	741
	748
201-9299	503
201-9352	759
	▶790
201-9353	▶780
	790
201-9378	683
201-9379	648
202-0901	1025
202-0943	1025
202-2382	48
202-3763	541
	543
202-3764	541
	543
202-3875	543
202-3876	543
202-3877	543
202-3878	543
202-3900	678
202-3994	580
202-4004	617
202-4025	600
202-4038	580
203-0199	169
203-2287	859
203-3940	236
203-4183	57
	81
203-4889	368
203-4890	368
203-4927	347
203-5282	350
203-5283	350
204-1611	265
	291
204-1673	180
204-2674	327
	▶701
204-2677	703
204-2755	▶791
	824
204-2756	824
204-2762	503
204-2763	446
204-2800	713
204-2819	701
	▶824
204-3461	200
	▶314
204-3623	457
	463
204-3737	583
204-4444	27
204-8260	578
204-8496	567
205-0826	220
205-1280	131
205-1320	49
205-1321	13
	14
	15
	16
	▶49
205-1332	82
205-1340	948
205-6295	927
206-1264	411
	▶413
206-1345	305
206-3336	953
	954
	955
206-5162	201
206-5208	220
206-8784	246
206-9212	413
206-9257	413
206-9260	413
207-0144	911
	915
	919
	923
	▶1086
207-0159	978
	▶986
207-0160	978
	▶987
207-0161	986
207-0164	986
	987
207-0167	986
	987
207-0170	986
	987
207-0173	986
	987
207-0176	987
207-0216	979
207-1517	244
	▶246
207-1551	245
	▶248
207-1571	324
207-6403	725
207-6404	725
207-6449	683
208-4289	348
	349
	351
208-9277	240
208-9282	240
208-9283	240
209-0348	1077
209-4280	1076
209-5582	240
	▶252
209-5891	438
	442
209-5892	439
	442
209-5893	439
	443
209-5894	705
209-5909	705
209-5917	824
209-5920	824
209-5957	466
	472
209-6000	719
209-6009	476
	479
	492
209-8009	886
	889
209-9234	148
210-1747	224
	▶231
210-3321	22
210-5590	13
	14
	15
	16
	▶28
210-5592	14
	15
	▶58
210-5808	927
210-5821	1013
210-5822	1013
210-5827	1081
210-5828	1081
210-5829	1081
210-5834	1081
210-5836	1081
210-5837	1081
210-5838	1081
210-8175	17
	▶109
210-8176	▶42
	87
210-9966	572
211-7730	148
211-9120	13
	14
	15
	16
	▶26
212-2840	354
212-3652	13
	16
	▶59
212-3664	113
212-3706	131
212-4288	20
212-4289	13
	14

▶ PRIMARY REFERENCE

PART NUMBER INDEX

Part	Page
	15
	16
	▶20
212-4893	28
212-5148	583
	591
	594
212-5185	368
212-5326	529
212-5419	658
212-5491	583
	587
	591
	596
212-5495	583
	587
	591
213-0677	57
	725
213-0772	272
	310
213-3193	58
	59
213-3745	606
213-9100	168
214-3570	324
214-4531	1106
214-4532	1106
214-7567	233
214-7568	131
	133
	135
	137
	139
	141
214-7915	1115
	1120
215-4890	596
	▶733
215-4909	499
215-5037	619
	▶697
215-5981	▶450
215-9952	701
	▶705
215-9961	438
	442
215-9962	438
	442
216-4970	216
216-5586	32
216-6485	533
	575
216-6599	4
	▶863
216-6600	863
216-6605	4
	▶455
216-6606	455
	▶475
216-6607	475
	▶490
216-6608	490
216-6613	490
216-6617	455
	▶687
216-6645	687
218-0404	201
218-1007	596
218-1059	617
218-1127	580
218-1139	583
	587
	591
218-1336	628
219-0305	982
	984
219-3309	67
	68
219-5840	7
	10
	11
	12
	▶113
219-5847	▶36
	37
219-5849	13
	14
	15
	16
	▶37
219-5855	113
219-6314	201
220-8678	119
220-9104	886
220-9105	886
220-9106	886
221-3494	131
221-4482	13
	14
	15
	16
	▶30
221-4807	638
	644
	658
	662
221-4872	567
221-8045	1115
	1120
221-8813	▶1021
	1029
221-8859	596
	626
221-8861	2
	▶194
221-8872	▶192
	1029
221-8874	192
221-8875	2
	▶193
222-0085	800
222-0225	949
	950
222-1185	69
222-1186	69
222-4737	742
	748
222-5900	13
	14
	15
	16
	▶133
	▶135
	▶137
	▶139
	▶141
222-5917	305
222-5946	7
	10
	11
	12
	▶73
222-5958	13
222-8299	6
	▶114
222-8379	2
	▶17
223-3022	1
	▶336
223-3025	▶337
223-3031	335
	▶338
223-3037	1
	▶159
223-3040	1
	▶330
223-3041	330
	▶331
223-3042	1
	▶352
223-3043	1
	▶368
223-3045	101
	▶373
223-3046	1
	▶122
223-3047	1
	▶362
223-3049	▶363
223-3055	▶390
	978
223-3098	362
223-3099	362
223-3103	362
223-3104	362
223-8708	606
223-9818	1115
	1120
223-9848	156
224-0554	1115
	1120
224-3247	20
224-4536	▶232
	233
224-6638	58
	59
224-8946	1115
	1120
224-9842	▶7
	9
225-0312	1115
	1120
225-4257	1115
	1120
225-4541	714
225-4542	714
225-4548	720
225-4549	720
225-4579	▶453
	844
225-4580	453
	▶465
225-4582	4
	▶452
	825
	826
225-4583	4
	▶452
	825
	826
225-4584	452
	▶457
225-4585	452
	▶553
225-4586	452
	▶554
225-4587	▶455
	825
	826
225-4588	455
	▶476
225-4589	455
	456
	▶688
225-4590	▶453
	844
225-4591	453
	▶466
225-4592	453
	454
	▶564
225-4593	▶452
	825
	826
	827
225-4594	▶452
	825
	826
	827
225-4595	452
	▶459
225-4596	▶455
	825
	826
	827
225-4597	455
	▶461
225-4598	▶454
	845
225-4599	454
	▶468
225-4600	▶454
	845
225-4601	454
	▶470
225-4607	438
	442
225-4785	555
	▶761

▶ **PRIMARY REFERENCE**

PART NUMBER INDEX

Part	Page	Part	Page	Part	Page	Part	Page
225-4787	761		▶576		▶846	229-1765	▶860
	764	227-0590	725	228-5614	865	229-1769	▶860
225-4789	761	227-0620	▶507		867	229-1770	▶861
	764		725		868	229-1772	▶844
225-4790	761	227-0621	693		869	229-1777	▶978
	764	227-0674	695		870	229-1778	▶978
225-4791	761	227-0722	604		871	229-1784	▶143
	764	227-1200	34		873	229-1785	143
225-4792	761	227-4531	27		874		▶150
	764	227-5480	28	228-5615	466	229-1787	▶87
225-4793	761	227-5904	133		468	229-1794	▶101
	764		135		472	229-1855	▶861
225-4796	761		137		846	229-1857	150
	764		139		850	229-1859	▶132
225-4797	761		141		854		150
	764		152		856	229-1860	150
225-4803	761		153		865	229-1861	150
	764		154		867	229-1864	▶416
225-4804	734	227-5942	89		868	229-1865	▶418
	761	227-5946	7		869	229-2543	77
	764		▶13		870	229-5153	28
	766	227-6073	359		871	229-5154	28
	768	227-6087	▶358		873	229-5155	28
225-4818	761		360		874	229-5156	28
	764	227-6088	358	228-5617	484	229-7893	882
	766		▶359		486	229-7894	882
	768	227-6105	360		488	229-7910	▶877
225-4820	761	227-6106	360		872	229-7911	877
	764	227-6107	▶360	228-5653	865		▶886
225-4821	761		395	228-5654	457	229-8017	886
	764	227-6115	328		459		889
225-4830	761	227-6215	494		463	229-8844	44
	764	227-6221	494		865	229-8851	240
225-4831	761	227-6789	863		867	229-9070	▶1083
	764	227-6846	940		868	229-9071	1
225-4832	761	227-6868	505		869		▶1009
	764	227-6869	505		870	229-9072	1
225-4833	761	227-6880	554		873		▶1029
	764		559		874	229-9075	1032
225-4843	689	227-6882	553	228-5897	155		▶1059
	▶764		558		156	229-9076	▶1043
225-4844	764	227-7575	272	228-7316	1115		1046
226-9169	223	227-7581	▶201		1120		1059
226-9258	1025	228-2781	1115	228-9254	1115	229-9077	1059
227-0271	555		1120		1120		1060
227-0273	555	228-3621	40	228-9392	13		▶1073
227-0275	555	228-4766	54	229-0887	1115	229-9078	1029
227-0277	555	228-5504	1		1120		▶1030
227-0542	516		▶354	229-0999	122	229-9079	▶897
	▶693	228-5515	395		127	229-9080	▶895
227-0543	516	228-5517	▶400	229-1009	482		897
	▶695	228-5521	825	229-1091	863	229-9082	897
227-0548	516		▶834	229-1092	852		▶969
	▶678	228-5522	825	229-1095	863		997
227-0550	▶541		826	229-1746	2	229-9083	▶997
	825		▶836		▶395	229-9084	▶995
	826	228-5523	860	229-1747	2		997
227-0551	▶543		▶865		▶395	229-9085	997
	826	228-5524	860	229-1754	▶825		▶1013
	827		▶867	229-1757	▶826	229-9086	▶1099
227-0565	516	228-5525	861	229-1758	▶825	229-9087	▶1097
	▶724		▶868	229-1759	▶827		1099
227-0566	▶722	228-5526	860	229-1760	▶825	229-9088	▶1084
	724		▶869	229-1762	▶860		1099
227-0582	450	228-5528	844	229-1764	▶860	229-9089	1033

▶ PRIMARY REFERENCE

PART NUMBER INDEX

Part	Page
	▶1060
229-9090	▶1044
	1060
	1061
229-9093	▶1045
	1064
229-9094	▶991
	1044
	1045
229-9095	1046
	1049
	▶1074
229-9096	▶909
229-9097	909
	▶911
229-9098	▶913
229-9099	913
	▶915
229-9100	▶917
229-9101	917
	▶919
	933
229-9108	▶921
229-9109	921
	▶923
230-0185	583
230-0486	▶517
230-0487	▶519
230-0488	▶545
230-0489	▶570
230-0490	▶521
230-0491	▶523
230-0492	▶546
230-0493	▶571
230-0494	517
	521
230-0506	570
230-0510	570
230-1340	189
230-1341	189
230-2190	62
230-2865	109
230-2866	109
230-2867	109
230-2868	109
230-2870	93
	95
230-2871	109
230-2876	109
230-2881	93
	95
230-2882	93
	95
230-2887	87
	▶93
230-2888	93
	95
230-2890	93
	95
230-2892	42
	88
230-2893	6
	▶88
230-2901	88
230-4009	173
	214
	287
	301
	317
230-4011	173
	299
	301
	317
	319
	999
230-4012	576
230-4013	173
230-5008	280
	282
	301
230-5010	173
	290
	291
	299
	301
	317
	322
	1001
231-1756	215
	▶216
231-1764	▶319
	450
231-1768	▶1001
231-1771	▶168
231-1827	172
231-1836	▶299
	300
231-2295	173
	301
	322
	1001
231-3046	7
	10
	11
	12
	▶125
231-3047	125
231-3950	7
	10
	11
	12
	▶108
231-6805	492
231-7266	7
	10
	11
	12
	▶74
231-7847	125
232-0102	▶892
232-0114	884
	887
	888
232-0343	125
	▶158
232-1285	34
232-1754	67
	68
232-2147	890
232-2148	890
232-3717	13
	14
	15
	16
	▶67
	▶68
232-4103	602
	▶736
232-4113	733
	734
232-4114	734
233-1115	516
	▶712
233-1119	17
	▶111
233-1120	17
	▶55
233-1123	17
	▶859
233-1124	▶227
233-1125	▶62
	87
233-1127	101
	▶102
233-1254	114
233-1293	55
233-1296	55
233-1299	55
233-7655	86
234-1035	216
234-1037	216
234-1038	216
234-1051	172
234-1097	272
234-1122	317
234-1124	1001
234-1156	218
	220
234-1158	218
234-3771	867
234-3799	834
234-3803	832
	834
	836
234-3811	828
	830
	832
	834
	836
234-3927	846
	854
234-3928	846
	854
	856
234-3930	846
	854
	856
234-3931	846
	854
	856
234-4440	693
	695
	▶720
234-4452	438
	442
234-4453	438
	442
234-4492	578
234-4515	▶505
	604
234-4566	457
234-4567	457
	459
	463
234-4568	457
	459
	463
234-4569	554
	559
234-4570	553
	558
234-4573	461
	476
	479
	492
234-4574	461
	476
	479
	492
234-4576	476
234-4577	461
	476
	479
	492
234-4578	461
	476
	479
	492
234-4579	688
	691
234-4580	466
	468
	472
234-4581	466
	468
	472
234-4582	466
	468
	472
234-4583	466
	468
	472
234-4584	466
	468
	472
234-4585	466
	468
	472
234-4586	466
	468
	472
234-4587	466
234-4588	466
	468
	472
234-4589	466
	468
	472
234-4591	564
	566

▶ **PRIMARY REFERENCE**

PART NUMBER INDEX

Part	Page
234-4592	564
	566
234-4629	705
234-6467	911
	923
234-6468	925
	931
234-6469	925
	931
234-6470	925
	931
234-6471	925
	931
234-6472	925
	931
234-6473	925
	931
234-6474	925
	931
234-6476	925
	931
234-6477	925
	931
234-6480	925
	931
234-6483	925
	931
234-6485	925
	931
234-6489	1093
234-6490	925
	931
234-6491	925
	931
234-6493	919
234-6497	925
	931
234-6498	925
	931
234-6499	959
234-6500	▶960
234-6501	909
	913
	917
	921
	933
	▶959
234-6502	959
234-6521	925
	931
234-6547	925
	931
234-6548	925
	931
234-6549	925
	931
234-6550	925
	931
234-6579	925
	931
	943
	945
234-6580	943
	945
234-6593	959
234-6594	911
	915
	919
	923
	▶1100
234-6602	943
234-6603	945
234-6604	943
234-6605	945
234-6608	943
	945
234-6609	943
	945
234-6610	943
	945
234-6611	945
234-6612	945
234-6613	▶253
	945
234-6614	945
234-6615	253
235-5527	69
	71
235-5528	68
	▶69
235-7520	396
235-7565	395
	▶396
235-7590	869
235-7613	▶356
235-7614	826
	827
	▶828
235-7616	861
	▶870
235-7618	861
	▶871
235-7619	860
	▶872
235-7679	466
	468
	471
	472
	852
	865
	867
	868
	869
	870
	871
235-7709	872
	873
	874
235-7764	868
	3
	▶388
	416
	418
	423
	431
235-7765	388
235-7766	836
235-7769	466
	468
	472
235-7770	461
	476
	479
	484
	486
	488
	492
235-7771	457
	459
	463
235-7774	400
	401
235-7775	400
	401
235-7792	396
235-7793	396
235-8200	7
	10
	11
	12
	▶222
235-8226	14
235-8854	1009
235-8862	1026
235-8873	895
	995
235-8874	895
	995
235-8875	895
	995
235-8876	969
235-8877	969
235-8878	969
235-8879	969
235-8891	1009
235-8893	941
235-8894	941
235-8908	911
	915
	919
	▶925
235-8909	911
	915
	923
	▶1093
235-8910	911
	915
	919
	923
	▶927
235-8911	1094
235-8912	927
235-8914	943
	945
235-8915	919
	▶1094
235-8916	915
235-8917	923
	▶931
235-8922	925
	931
235-8923	925
	931
235-8926	925
235-8928	925
235-8929	925
235-8930	931
235-8932	1100
235-8933	927
235-8950	925
	931
235-8951	905
235-8952	906
235-8965	945
235-8966	943
235-8969	▶949
	958
235-8970	▶950
	957
235-8971	949
235-8972	950
235-8974	1097
235-8996	905
	906
235-8997	905
235-8998	906
235-9001	909
	913
	917
	921
	933
235-9006	895
235-9012	1083
	1084
235-9014	1009
	1013
235-9020	▶1037
	1039
235-9028	▶1046
	1047
235-9651	144
	145
236-2843	613
236-2844	613
236-2848	613
236-2946	678
236-2968	▶686
	860
	861
236-3005	541
	543
236-3009	541
	543
236-3134	695
236-3170	725
236-3200	576
236-3223	611
236-3257	507
236-3258	507
236-3259	507
236-3261	626
236-3304	368
236-3313	368
236-3328	368
236-3329	368
	▶392
236-3330	392
236-3345	368
236-3354	368
236-3363	368

▶ PRIMARY REFERENCE

PART NUMBER INDEX

Part	Page	Part	Page	Part	Page	Part	Page
236-3367	368	236-9438	331	237-5176	89	239-2396	122
236-3370	368	236-9440	331	237-5586	390		127
236-3387	368	236-9527	340	237-8476	368		▶234
	▶380		341	237-8480	373	239-2402	155
236-3388	380		342	237-9312	122		156
236-3389	380		343		127	239-2431	881
236-3395	87		344	238-1432	▶215	239-2432	881
	▶372		345		1029	239-2445	880
236-3396	368	236-9528	340	238-1463	1001		881
236-3399	382		341	238-1506	216	239-2479	882
236-3629	363		342	238-1570	143	239-2565	▶878
236-3631	363		343		▶310	239-2571	▶879
236-3637	362		344	238-1579	310	239-2572	879
236-3639	363		345	238-1594	▶255	239-2590	880
236-3641	363	236-9529	340		310	239-2591	880
236-3669	331		341	238-1595	255	239-2699	▶880
236-3670	331		342	238-1596	▶256	239-2700	880
236-3671	331		343		310	239-2701	▶885
236-3702	352		344	238-1597	256	239-2702	▶881
236-3703	352		345	238-2208	▶261		885
236-3747	351	236-9536	340		1099	239-2703	881
236-4284	11		341	238-2209	261	239-2705	▶882
	▶14		342	238-2210	261	239-2714	▶883
236-4413	91		343	238-2211	1062	239-2733	878
	▶92		344		1066	239-2738	881
236-4420	92		345	238-2212	272	239-2758	880
236-4421	92	236-9539	340	238-2216	1001	239-6598	▶451
236-4545	241		341	238-2260	1003		712
236-6220	224		342	238-2279	216	239-6599	451
	▶233		343	238-2280	216	239-6676	▶241
236-6221	224		344	238-2300	4		243
	▶236		345		▶211	239-6686	111
236-6365	852	236-9540	368		825	239-6687	111
236-6419	739		▶376		826	239-6986	1115
	741	236-9541	376	238-2301	▶213		1120
	746	236-9543	376		826	239-7352	299
	748		377		827		301
	753		378	238-2302	211		317
236-6421	741	236-9544	376	238-2303	213	239-7356	287
	748		377	238-2318	272	239-8693	447
	753		378	238-2390	272		448
236-8326	▶401	236-9545	376	238-2391	272		▶953
236-8415	844		377	238-2478	▶260	239-8695	447
	845		378		321		448
	▶848	236-9546	376	238-2479	260		▶954
236-8416	844		377	238-2485	▶321	239-8697	697
	▶850		378		450		▶698
236-8888	▶419	236-9556	390	238-2501	172	239-8825	▶737
	423	236-9567	347		180		741
236-8893	▶408	236-9568	347	238-2528	172		748
	420	236-9570	352		180	239-8998	697
	421	236-9575	383	238-2529	172		▶699
	422	237-3012	▶689	238-2698	58	239-9097	619
	426		730	238-2706	59	239-9098	619
	427		731	238-2720	59	239-9117	619
	428	237-3090	689	239-0583	21	239-9118	619
	429	237-3092	689	239-1134	241	240-2998	711
	430	237-3094	689		▶262		▶713
236-8906	▶420	237-3116	517	239-1549	555	240-3733	▶844
	431	237-3117	517	239-1550	555	240-3920	150
236-8907	416	237-3122	519	239-1627	453	240-4029	▶861
	▶421	237-3181	▶525		454	240-4030	▶861
236-8908	▶422	237-3182	▶527		455	240-4999	▶1032
236-9435	331	237-3183	▶529		▶565	240-5001	▶1047
236-9437	331	237-3184	▶531	239-1986	565	240-5003	▶1033

▶ **PRIMARY REFERENCE**

PART NUMBER INDEX

Part	Page
240-5037	▶1038
240-5039	▶1039
240-5056	▶1048
240-5057	1048
	▶1049
240-5058	1049
	▶1050
240-5060	▶992
240-5061	▶1034
240-5062	1034
	▶1061
240-5063	1061
	1064
	▶1075
240-5064	▶1062
240-5065	1062
	▶1064
240-5071	▶971
240-5073	▶972
240-5074	969
241-1933	390
241-1938	390
241-2896	63
241-4194	241
241-7129	848
	850
241-7140	850
241-7150	848
	850
241-7231	872
241-7280	848
	850
241-7341	872
241-7602	7
	10
	11
	12
	▶191
241-9264	114
242-1510	1115
	1120
242-1588	1115
	1120
242-3360	117
242-3864	74
242-6092	1115
	1120
242-6492	▶533
242-6494	▶572
242-6787	484
	486
	488
242-6801	714
242-6803	714
242-6804	714
242-8768	1073
	1074
	1075
243-4505	150
	173
	211
	213
	280
	299
	301
	317
	319
	1001
243-4506	173
243-4507	270
	312
	317
243-4508	173
	257
	276
	299
	308
	316
	317
243-4509	173
	265
	268
	290
	317
	322
	1001
243-4510	173
	265
	268
	287
	291
	301
	317
244-1716	961
244-1720	223
244-3168	191
244-4359	861
	▶873
244-4486	27
244-4500	44
244-7895	350
244-7912	368
	▶381
244-7913	381
244-7915	381
244-7916	381
	383
244-7917	368
	▶382
244-7921	382
244-7922	368
	▶383
244-8400	▶738
	739
	746
244-8419	729
	▶739
244-8506	596
	▶817
244-8507	817
	▶818
245-3259	52
245-3260	13
	14
	15
	16
	▶52
245-4630	236
245-5079	613
245-5178	516
	▶578
245-5179	516
	▶580
245-5457	1115
	1120
245-6795	107
245-6796	27
245-7760	272
245-7790	925
	931
	943
	945
245-7791	969
245-7792	969
245-7793	969
245-7794	▶973
245-7796	▶974
245-7800	1009
245-7811	1
	▶1026
245-7812	901
	▶1000
245-7813	951
	1000
245-7814	951
	1000
245-7815	951
	1000
245-7816	951
	1000
245-7817	898
	901
245-7818	898
	901
245-7819	898
	901
245-7820	898
	901
245-7821	901
245-7823	898
	901
245-7824	898
	901
245-7825	898
	901
245-7826	898
	901
245-7827	898
	901
245-7828	898
	901
245-7829	898
	901
245-7830	898
	901
245-7831	898
	901
245-7832	898
	901
245-7833	898
	901
245-7834	898
	901
245-7835	898
	901
245-7836	898
	901
	▶936
245-7837	936
245-7838	898
	901
245-7839	898
	901
245-7842	949
245-7844	950
245-7846	898
	▶951
245-7847	898
245-7850	1009
245-7851	1009
245-7856	898
	901
245-7858	995
245-7868	940
245-7870	940
245-7871	940
245-7872	969
245-7873	969
245-7876	940
245-7877	940
245-7881	▶1031
245-7882	1050
245-7883	1043
245-7884	1044
245-7885	1045
245-7886	894
245-7887	1043
	1044
	1045
	1050
245-7888	1043
	1044
	1045
	1050
245-7889	▶893
	1073
	1074
	1075
245-7890	▶908
	1073
	1074
	1075
245-7891	▶1071
	1074
245-7892	1073
	▶1076
245-7895	1005
	1006
	1007
	1073
	1074
	1075
245-7896	▶894
	1073
	1074
	1075
245-7897	893
	894
	908
	1071

▶ PRIMARY REFERENCE

PART NUMBER INDEX

Part	Page
	1073
	1076
	1077
245-7898	894
	1043
	1044
	1045
	1050
	1071
	1076
	1077
245-7899	893
	908
	1071
	1073
	1076
	1077
245-7900	354
245-7901	354
245-7903	940
245-7905	936
245-7906	940
245-7909	17
	▶939
245-7911	940
245-7913	1009
245-7916	1030
245-7922	▶941
	1029
245-7925	945
245-7926	943
245-7929	959
245-7931	1100
245-7948	943
	945
245-9181	93
	95
245-9205	93
	95
245-9207	97
	99
245-9208	97
	99
245-9209	97
	99
245-9212	97
	99
245-9213	97
	99
245-9214	97
	99
245-9215	97
	99
245-9216	97
	99
245-9217	97
	99
245-9218	97
	99
245-9219	97
	99
245-9220	97
	99
245-9221	97
	99
245-9222	97
	99
245-9276	97
245-9295	17
	▶95
246-2641	159
246-9353	222
247-0564	414
247-0565	409
	410
	▶414
247-1876	21
247-2693	299
	301
	317
247-2694	1022
247-2695	1022
247-7327	▶423
247-7331	▶844
247-7333	▶844
247-7383	▶845
247-7384	▶845
247-7390	▶500
247-7392	▶4
247-7423	447
	448
	▶1102
247-7424	447
	▶1103
247-7436	1115
	1120
247-7437	1115
	1120
247-7438	1115
	1120
247-7441	1115
	1120
247-7451	▶731
247-7458	▶147
247-7465	449
	▶1104
247-7490	730
	▶1105
247-7492	730
	▶1106
247-7587	757
247-8782	714
247-8873	457
	459
	463
247-8874	457
	459
	463
247-8920	714
247-8991	505
247-9294	570
	571
247-9298	519
	523
247-9309	570
	571
247-9310	521
247-9311	521
247-9312	519
247-9315	570
247-9318	570
248-1742	870
248-1743	873
248-1842	846
248-7176	394
248-7820	852
248-7822	852
248-7823	852
248-7831	4
	▶852
248-7832	852
248-7835	852
248-7836	852
248-7854	454
	▶471
248-7857	482
248-9312	368
248-9337	333
	334
	336
	337
	338
	339
248-9825	516
	▶613
248-9826	516
	▶617
248-9827	516
	▶619
248-9829	516
	▶626
248-9830	▶681
	724
248-9831	516
	▶567
248-9832	449
	▶679
248-9833	516
	▶611
248-9866	580
248-9870	580
248-9874	580
248-9878	580
248-9882	580
248-9896	567
249-5523	22
249-6673	77
249-9223	7
	10
	11
	12
	▶240
250-1440	533
	535
	537
	539
250-2446	741
	748
250-2447	741
	748
250-2475	486
250-2503	715
250-2508	594
	▶792
250-5022	368
250-5024	368
250-5054	351
250-5072	172
250-5073	172
250-5075	172
250-5076	172
250-5101	392
250-5108	380
250-5109	380
250-5785	22
250-6183	122
250-6364	879
250-6415	878
250-6417	875
250-6418	▶875
	877
	878
	879
	883
250-6430	▶876
	880
	881
	882
	883
	884
250-6444	883
	▶889
250-6457	876
250-7696	▶117
	118
250-8054	1102
	1103
	1104
251-0299	317
251-0303	216
251-0304	216
251-0429	1
	▶172
251-0430	▶317
	1029
251-0432	▶272
	1029
251-0433	▶300
	1029
251-0435	300
	▶301
251-0436	▶195
	447
	448
251-0437	▶265
	449
251-0440	▶180
	243
251-0441	▶263
251-0442	▶315
	500
251-0448	87
	▶307
251-0451	172
251-0452	263
251-0454	180
251-0455	263
251-0456	263
251-0457	315
251-0464	173

▶ **PRIMARY REFERENCE**

PART NUMBER INDEX

Part	Page
251-0467	173
251-0482	▶303
251-0483	303
	304
251-0485	▶304
251-0526	▶197
	1029
251-0529	▶276
	447
	448
251-0530	▶291
	447
	448
251-0538	▶1003
251-0542	▶218
251-0544	201
	▶220
251-0580	299
251-0598	276
251-0602	301
251-0637	272
251-1848	▶424
251-1849	▶425
251-1850	▶426
251-1851	▶427
251-1853	▶428
251-1856	▶429
251-1857	▶430
251-2552	848
	850
251-2557	848
	850
251-2558	848
	850
251-2563	872
251-2597	844
	845
	▶854
251-2680	871
251-2772	354
251-4162	185
252-2328	7
	10
	11
	12
	▶27
252-7801	38
252-9551	7
	10
	11
	12
	▶45
252-9620	82
252-9628	223
253-0433	7
	10
	11
	12
	▶18
253-0437	7
	10
	11
	12
	▶19
253-0861	1115
	1120
253-2111	216
253-6417	545
	546
253-6453	525
	527
253-6454	525
	527
253-6455	535
	537
253-6494	▶535
253-6495	▶573
253-6497	▶537
253-6498	▶574
253-6500	▶539
253-6501	▶575
253-6548	573
	574
253-6551	573
	574
253-6554	573
253-6557	537
253-6558	525
253-6562	525
253-6566	535
253-6614	545
253-6621	527
253-6625	527
253-6637	571
253-6640	571
253-6643	571
253-6646	571
253-6652	523
253-6658	523
253-6664	4
	▶454
253-6682	529
253-6685	533
	539
253-6688	572
	575
253-6691	572
	575
253-6694	531
253-6697	531
254-2880	828
254-2885	828
254-2905	356
254-2996	854
	856
254-3025	848
254-3080	606
	▶757
254-3808	13
	14
	15
	16
	▶118
254-4357	135
	▶152
254-7342	7
	10
	11
	12
	▶77
255-0369	882
255-0370	882
255-0493	878
255-0496	878
255-0497	878
255-0508	879
255-0509	879
255-0510	879
255-0939	223
255-1618	555
255-1632	611
255-1656	▶628
	730
255-1657	▶630
	730
255-1659	4
	▶633
255-1661	448
	▶635
255-1662	449
	▶638
255-1663	448
	▶642
255-1664	448
	▶644
255-1665	613
255-1666	613
255-1669	635
	644
	652
	658
	675
255-1671	628
	630
255-1693	604
255-1699	604
255-1702	604
255-1705	604
255-1724	▶648
	730
	731
255-1758	447
	▶583
255-1759	447
	448
	▶587
255-1760	447
	448
	▶591
255-1761	448
	▶594
255-1762	449
	▶596
255-1765	448
	▶600
255-1766	449
	▶602
255-1767	▶692
255-1781	630
255-1785	578
255-1786	578
255-1787	578
255-1794	▶555
	730
255-1795	▶683
	730
255-1799	500
	▶604
255-1800	447
	448
	▶650
255-1801	447
	▶652
255-1802	447
	▶656
255-1803	447
	▶658
255-1807	448
	▶662
255-1809	▶664
	730
255-1824	604
255-1843	▶665
	1029
255-1858	626
255-1877	▶667
	1029
255-1936	583
	591
255-1953	596
255-1967	447
	▶669
255-1969	449
	▶673
255-2031	▶675
255-2074	675
255-2866	102
255-2899	114
255-2906	241
255-2909	241
255-2910	241
255-2966	104
	105
255-2994	241
255-2995	241
255-3053	17
	▶103
255-3170	1105
255-3171	1105
255-3173	1105
255-4410	1031
255-5651	516
	▶770
255-5653	▶741
	770
255-5661	741
	746
	748
	753
	▶793
255-5662	761
	764
	766
	768
	▶794
255-5680	580
	▶766
255-5683	580
	▶768
255-5696	▶447

▶ PRIMARY REFERENCE

PART NUMBER INDEX

Part	Page
255-5697	▶447
	448
	449
	▶728
255-5716	448
	▶729
255-5725	▶730
255-5726	▶730
255-5738	▶730
255-5740	▶730
255-5811	▶449
256-0074	▶438
	714
256-0077	▶442
	714
256-0081	714
256-0083	714
256-1644	1
	▶367
256-1670	368
	▶393
256-1671	393
256-1672	393
256-1677	▶346
	368
256-1678	346
	373
256-1679	346
	373
256-1681	380
256-1682	381
256-1686	382
256-1687	382
256-1689	383
256-1691	383
256-1692	383
256-1693	383
256-1696	368
256-1698	368
	▶385
256-1702	385
256-1703	385
256-1704	385
256-1705	173
256-1707	173
256-1708	383
256-1710	383
256-1725	373
256-1774	373
256-3830	67
	▶71
256-3831	▶64
	71
256-3832	64
256-3834	▶65
	71
256-3835	65
257-2186	7
	10
	11
	12
	▶224
257-4502	1115
	1120
257-4547	1106
257-5015	1105
257-9145	7
	10
	11
	12
	▶22
258-0312	611
258-0330	979
	982
258-0883	122
	127
	▶254
258-6749	606
	▶813
258-7531	169
258-8723	7
	10
	11
	12
	▶44
258-9892	938
259-0647	564
	566
259-0648	459
259-0650	461
259-0652	468
259-0653	468
259-0654	468
259-0655	468
259-0656	468
259-0658	505
259-0680	731
	▶821
259-0733	488
259-0743	488
259-0777	▶456
	825
259-0778	456
	▶492
259-0779	492
259-0918	719
259-0922	▶719
	725
259-3543	352
259-3721	340
	341
	342
	343
	344
	345
259-3885	▶127
	147
259-3915	127
259-4746	200
	▶1028
259-4877	301
259-4883	272
259-4884	282
	321
259-4887	293
259-4914	1003
259-4940	293
	295
259-4949	▶316
	449
259-4965	1
	▶309
259-5053	147
	▶312
259-5071	265
	291
259-5075	265
	291
259-5118	147
	▶280
259-5119	280
259-5237	4
	▶198
259-5294	▶199
	449
259-5342	▶268
	447
	448
259-7174	▶933
259-7177	▶1029
259-7179	▶955
	1029
259-7180	321
259-7188	1013
259-7202	945
259-7214	1031
259-7215	1031
259-7220	282
259-7295	▶907
	927
259-7345	906
259-7346	▶905
	943
259-7347	▶906
	945
259-7348	941
	▶943
259-7349	941
	▶945
259-7350	923
	▶990
259-7351	990
259-7352	990
259-7353	931
259-7354	963
	965
259-7378	728
	729
	▶746
259-7424	4
	▶771
259-7429	638
	▶814
259-7430	662
	669
	673
	▶815
259-7432	▶748
	771
259-7646	792
	▶795
259-7788	761
	764
259-7848	798
259-7849	798
259-7850	798
259-7851	798
259-7852	798
259-7877	954
260-2042	188
	203
260-2050	5
	9
	▶194
260-2229	189
	203
260-2385	354
260-3003	736
260-3883	576
260-4057	839
260-6692	166
260-6945	1102
260-6946	1103
260-6948	1029
260-7524	65
260-7868	516
	▶708
260-7872	583
	587
	591
	596
260-7900	576
260-7904	708
260-7906	708
260-7912	511
260-7940	567
260-7953	679
260-7956	679
260-7959	583
	587
	591
	594
	596
260-7960	583
	587
	591
	594
	596
260-7964	604
260-8020	602
260-8034	583
	587
	591
	594
260-8043	583
	591
	594
260-8045	596
260-8074	602
261-9367	117

▶ **PRIMARY REFERENCE**

PART NUMBER INDEX

Part	Page
262-1421	188
	▶193
262-2178	376
	377
	378
262-2209	367
262-2376	362
262-2377	362
262-2379	363
262-2382	363
262-2384	363
262-2401	351
262-2442	376
	377
	378
262-2443	376
262-2464	372
	▶377
262-2465	377
262-2468	348
262-2472	368
262-2481	368
262-2486	87
	▶364
262-2487	364
262-2489	364
262-2491	368
262-2494	368
262-2495	369
262-2497	180
	▶386
262-2498	386
262-2499	386
262-2502	180
262-2503	180
262-2507	390
262-2509	373
262-2598	122
262-2604	127
262-2879	191
262-3164	546
262-3580	▶450
262-3586	▶4
263-1848	7
	10
	11
	12
	▶63
263-1850	7
	10
	11
	12
	▶40
263-3774	▶31
	32
263-6699	214
	287
263-9088	189
	▶193
263-9574	172
	180
264-2115	884
	887
	888
264-2116	884
264-4297	237
264-6157	34
264-7034	214
264-8556	▶5
264-8597	▶8
264-9961	741
	748
265-3515	97
	99
265-3560	93
	95
265-3580	97
	99
265-3593	42
265-3686	93
	▶97
265-3687	97
265-3688	95
	▶99
265-8047	223
265-8059	223
265-8145	214
265-8146	214
265-9492	223
266-0939	596
266-0943	587
	596
266-0947	596
266-0953	587
	596
266-0954	596
266-0982	620
	681
266-0997	587
	591
	596
266-1102	620
266-1146	619
266-1158	644
	658
266-1201	450
	▶606
266-1271	638
	662
	669
266-1278	587
	591
	596
266-1279	587
	591
	594
	596
266-1302	551
266-1303	587
	591
	596
266-5431	1115
	1120
266-6261	2
	▶6
266-6329	114
266-6348	114
266-7956	488
266-7959	488
266-7964	558
	559
	566
266-7965	691
266-7968	463
266-7969	479
266-7986	▶453
	481
266-7987	▶453
	481
266-7988	453
	▶463
266-7989	▶456
	481
266-7990	456
	▶479
266-7991	▶454
	481
266-7992	454
	▶472
266-8015	463
266-8016	479
266-8026	472
266-8041	453
	▶558
266-8042	453
	▶559
266-8043	456
	▶691
266-8044	454
	▶566
266-8045	472
266-8078	▶455
	481
266-8079	455
	▶474
267-3727	792
	▶796
267-4743	86
267-6785	494
267-6796	▶324
	327
267-6797	324
267-6798	324
267-6799	324
267-6800	324
267-6818	325
267-6863	324
267-6864	324
267-6865	324
267-6866	324
267-6867	324
267-6868	324
267-6869	324
267-6870	324
267-6871	324
267-6877	▶327
	328
267-7591	272
267-7592	317
267-7642	▶282
	450
267-7643	▶270
	450
267-7644	282
267-7645	270
267-7671	282
267-7672	282
267-7676	282
	322
267-7695	322
267-7751	200
	▶293
267-7752	200
	▶295
267-7790	293
	295
267-7867	265
267-7882	265
	268
267-7961	319
267-7967	312
267-7968	291
267-7976	218
267-7977	220
267-8019	316
267-8020	290
267-8024	1025
267-8071	1
	▶998
268-0462	4
	▶339
268-0568	339
	▶340
268-0569	340
268-1835	▶120
	145
268-1839	13
	14
	15
	16
	▶144
	▶145
268-1964	272
268-4530	1109
268-4531	1109
268-6780	4
	▶830
268-6781	830
268-6783	4
	▶547
268-6784	547
268-6785	547
268-6786	547
268-6816	450
	▶1108
268-6817	1108
268-6868	4
	▶610
268-7065	689
268-7183	610
268-7200	1112
268-8643	286
268-8872	1109
269-0120	1109
269-0121	1109
269-9700	635
	644
	652

▶ PRIMARY REFERENCE

PART NUMBER INDEX

Part	Page	Part	Page	Part	Page	Part	Page
	658		341	275-1471	620	278-8316	113
	669		342	275-1473	567	278-9256	871
269-9786	606		343	275-1484	620	279-3161	905
269-9864	606		344	275-1490	679	279-7609	287
269-9919	633		345	275-1493	648	280-1548	74
270-0012	602	273-7802	368	275-1497	638	280-1549	74
270-0013	602		▶387	275-1503	635	280-2072	113
270-0014	602	273-7803	387		638	280-2747	588
270-0015	602	273-7804	387		644		591
270-0020	600	273-7964	331		652		597
270-4212	12	273-8314	714		658	280-2748	59
	▶15	273-8315	711		669	280-4371	7
270-4213	10		714	275-1506	635		10
	▶16	273-8316	438		638		11
270-5320	119		442		644		12
270-5433	203	273-8317	438		652		▶82
270-5455	203		442		658	281-3448	99
270-5582	1025	273-8318	438		669	281-3486	97
270-5589	1025		442	275-1561	611	281-3487	93
270-5603	2	273-8319	438	275-1565	606		95
	▶1023		442	275-1582	596	281-3589	42
270-5949	777	274-2477	▶481	275-2672	886	282-4549	826
270-5950	777	274-2489	▶481		889		▶832
270-5953	775	274-7395	224	275-2673	889	282-4550	832
270-6106	▶449		▶238	275-2715	886	282-4552	862
270-6107	449	274-7396	224	275-3699	▶826		▶874
	▶948		▶239	275-3704	▶862	282-4553	874
270-7512	15	275-1361	681	275-3711	▶845	282-4555	845
270-7514	16	275-1362	722	275-3734	▶9		▶856
271-2417	27	275-1439	587	275-3747	▶243	282-4556	856
272-0388	27		591	275-3839	▶826	282-5579	▶549
272-1956	113		594	275-6839	1025		730
272-4131	596		596	275-6841	287	282-5641	549
272-4250	648	275-1440	587	275-6842	287		551
272-4606	606		594	275-6911	308	282-5705	450
272-4624	17		596	275-6993	310		▶1109
	▶112	275-1442	620	275-7192	2	282-5760	517
272-4625	112		635		▶287		521
272-4800	55		638	276-3815	7	282-7047	611
272-6959	712		644		10	282-7081	673
	▶714		652		11	282-7093	673
273-2838	27		658		12	282-7195	611
273-5156	1009		669		▶938	282-7330	567
273-5274	1087	275-1443	620	277-0781	610	283-1224	240
273-5315	939		635	277-0782	610	283-2761	▶297
	▶940		638	277-0878	547	283-2762	297
273-5316	940		644	277-0879	547	283-2783	303
273-5333	975		652	277-0880	547		304
273-5337	940		658	277-0881	547		322
273-5345	976		669	277-0937	547		1001
	1087	275-1444	620	277-0954	525	283-2913	▶322
273-5346	976		635		527	283-2914	322
	1087		638		529	283-2932	173
273-5358	2		644		531	283-2984	322
	▶975		652		▶772	283-3000	291
273-5359	975		658	278-3581	331	283-3074	301
273-5360	975		669	278-3818	353	283-4426	961
273-5384	1075	275-1446	587	278-3924	▶333	283-6118	471
	▶1077	275-1448	587	278-3926	▶334		▶482
273-5386	1077	275-1452	587	278-6587	555	283-6119	482
273-5446	1038	275-1460	594	278-6588	555	283-8982	1112
	▶1040	275-1464	604	278-6590	555	283-8983	1112
273-7678	369	275-1467	606	278-6593	555	284-3502	77
273-7681	369	275-1468	606	278-6785	638	284-4426	927
273-7799	340	275-1469	606	278-6794	678	285-1332	948

▶ **PRIMARY REFERENCE**

PART NUMBER INDEX

Part	Page
285-1333	948
285-1337	948
285-1399	619
285-1465	619
285-1764	773
285-1765	630
	▶773
285-1766	773
285-1767	773
285-4470	439
	443
286-0134	200
	▶961
286-2484	314
286-3017	223
286-4271	▶185
	186
287-2352	757
288-7458	▶551
	731
288-7614	519
288-7616	570
288-7617	570
288-9179	27
289-3488	▶883
289-3489	883
	▶887
289-3490	▶883
289-3491	883
	▶888
289-5362	567
289-5367	611
289-5564	722
	▶725
289-5657	614
289-6798	368
289-6898	▶348
	368
289-6899	348
289-6901	349
289-6902	▶349
	372
289-6903	▶350
	368
289-6904	350
289-8194	▶506
	722
289-8195	506
289-8449	223
290-0754	5
	▶10
290-0755	8
	▶11
290-0756	6
	▶12
290-1727	1115
	1120
290-1728	1115
	1120
290-1729	1115
	1120
290-1771	▶431
290-1778	▶2
290-1906	1115
	1120
290-2778	62
290-2826	887
290-2832	884
	887
	888
290-2838	888
290-2839	888
290-2849	887
290-2850	888
290-2852	887
290-2853	888
291-0515	63
291-1913	223
291-7457	180
291-7459	▶290
	307
291-7460	307
	▶308
291-7547	216
291-7551	309
291-7559	998
	▶999
291-7560	999
291-7561	999
291-7700	203
291-7705	▶203
292-0276	▶200
292-0291	200
	▶223
292-0304	200
	▶1025
292-0305	214
292-0311	961
292-7299	722
292-7581	555
292-7584	555
293-0730	121
293-1135	1009
293-1136	895
293-1137	898
	901
293-1138	995
293-1140	1097
293-1184	969
293-1256	1084
293-6883	200
293-8781	77
294-3794	519
	523
294-3795	519
	523
294-3796	519
	523
294-3797	519
	523
294-7675	106
	▶107
294-8620	158
295-1411	▶121
	144
295-1921	1025
295-2010	▶884
295-2014	884
295-2015	884
295-2016	884
295-2018	884
295-4777	137
	▶153
295-9686	703
296-7417	541
296-7418	541
296-7419	543
296-7420	543
297-0370	587
	▶734
297-0529	▶775
	957
	958
297-0532	947
	▶957
297-0533	947
	▶958
297-5592	200
	▶214
297-5594	200
	▶223
297-6828	241
298-2884	375
298-2885	2
	▶375
298-2889	375
298-2942	348
	349
	350
298-2968	▶351
	368
298-2969	351
298-3147	122
	127
	▶166
298-3257	166
298-3258	166
298-4195	982
298-4196	984
298-4258	143
	▶1110
298-4281	3
	▶1111
298-4282	1111
298-4286	▶3
298-4287	▶3
298-4288	▶3
300-7933	74
300-9550	36
	▶38
300-9715	438
300-9716	442
301-0091	263
301-0589	904
301-6874	438
	442
301-8294	438
	442
302-2857	635
	644
	652
302-9279	4
	▶1112
302-9466	772
303-2787	184
	▶1113
303-9933	161
	163
303-9937	163
304-0677	139
	▶154
305-0325	938
305-0326	▶970
305-0329	969
305-0330	925
	931
305-0333	925
	931
305-0357	1009
305-0358	1009
305-0361	1091
305-0395	3
305-0441	1010
	1013
305-0442	1009
	1013
305-0466	▶1041
305-0467	▶1042
305-8141	30
	▶32
306-1372	519
	523
306-1403	519
306-1406	519
306-1409	523
306-1412	523
306-1503	4
	▶677
306-1519	549
306-1521	551
306-2148	418
	419
	420
	421
	424
	425
	426
	427
	429
	430
306-8349	2
	▶284
306-8350	284
306-8367	287
306-8590	285
306-8720	184
	▶286
306-8802	1003
307-5096	619
307-5097	681
307-5098	681
307-5172	604
307-5173	604
307-7975	122

3

▶ PRIMARY REFERENCE

PART NUMBER INDEX

Part	Page
307-7976	122
307-7977	122
	127
307-7978	122
	127
307-7979	122
	128
307-8012	128
307-8013	127
308-8781	354
308-8782	354
308-8783	354
308-8881	3
	▶389
308-8882	389
309-3872	1110
309-5751	904
309-5769	613
	642
	645
	650
	656
	659
	665
309-5789	200
	▶904
309-5842	▶188
	200
309-5849	1023
309-5885	▶189
	200
309-9941	736
310-0060	▶731
310-0078	▶947
310-0085	▶753
	770
	771
310-0086	753
	▶756
310-0210	619
	▶781
310-0390	741
	▶797
310-0393	748
	▶798
310-0394	788
	▶800
310-0414	613
	▶777
310-0419	777
310-0420	777
310-0421	777
310-0422	777
310-2393	904
310-6252	1115
	1120
310-7255	34
310-7257	34
310-9668	103
	▶104
310-9677	102
	▶105
312-0677	141
	▶155
312-2645	150
312-5525	1111
313-4620	156
313-7833	183
	▶186
314-3529	▶200
314-3530	▶200
314-3586	▶243
314-3641	▶2
314-3642	▶2
314-3652	▶1
	2
314-3653	▶1
	2
314-3660	1
	▶1115
314-3661	1
	▶1120
314-3673	1115
314-3674	1120
314-3677	▶335
314-3678	335
	▶1114
314-3679	1114
314-3688	1115
314-3690	1120
314-4184	▶34
	38
315-4412	▶816
	822
315-4442	465
	▶484
315-4443	484
	486
	488
315-4449	470
	▶486
315-4450	474
	▶488
316-8811	▶898
	995
316-8812	895
	▶901
316-8845	898
	901
316-8846	898
	901
316-8847	898
	901
316-8848	898
	901
316-8849	898
	901
316-8850	898
	901
316-8872	▶1004
316-8908	982
316-8987	1035
	1036
	1051
	1052
	1053
	1054
	1055
	1056
	1057
	1058
	1065
	1066
	1067
	1068
	1069
	1070
	1078
	1079
	1080
316-8989	1020
318-5081	961
318-6357	156
319-0677	133
	▶156
319-1335	310
319-3819	34
319-3820	34
319-3821	34
319-3822	34
319-3823	34
319-3824	34
319-4265	194
319-4266	194
319-4353	1021
	▶1022
319-4358	193
319-4359	193
319-4420	218
	220
	▶257
319-9152	1113
320-5392	186
320-5396	183
320-5525	1016
321-1462	407
	408
322-8716	578
	820
	▶822
323-7770	777
324-5761	150
325-8862	576
326-1644	119
327-3062	1016
327-3063	1016
327-3323	159
	▶160
327-3324	160
	▶161
327-3325	160
	▶163
327-3329	▶183
	184
327-6498	▶1051
327-6499	▶1052
327-6500	▶1065
327-6501	▶1035
327-6502	▶1036
327-6503	▶1066
327-6504	1051
	▶1053
327-6505	1052
	▶1054
327-6506	1065
	▶1067
327-6507	1035
	▶1068
327-6508	1036
	▶1069
327-6509	1066
	▶1070
327-6510	1053
	▶1055
327-6511	1054
	▶1056
	1067
327-6512	▶1057
	1068
	1069
327-6513	▶1058
	1070
327-6514	▶993
327-6515	▶994
	1057
	1058
327-6517	1053
	1054
	▶1078
327-6520	1067
	1068
	▶1079
327-6521	1069
	1070
	▶1080
327-6523	1029
	▶1072
327-6538	1072
327-6540	1041
327-6541	1042
327-6550	927
	▶1018
	1019
	1020
327-6552	▶1019
327-6553	▶1020
327-6576	1019
327-6579	963
	965
327-6581	1082
327-6601	979
327-6639	1056
327-6640	1055
	1056
	1057
	1058
327-6642	1055
	1056
	1057
	1058
327-6643	1055
	1056
	1057
	1058
327-6644	1079
	1080
327-6645	▶1005
	1079
327-6646	1005
	1006

▶ **PRIMARY REFERENCE**

PART NUMBER INDEX

Part	Page
327-6647	1005
327-6648	1078
	1079
	1080
327-6649	1058
327-7483	194
327-7486	194
327-9998	285
328-0021	218
	220
328-0048	184
	▶285
328-2035	576
329-6569	▶935
329-6570	▶184
	935
330-1162	1015
	▶1016
330-1166	▶353
	1015
330-1167	353
330-1244	338
	▶341
330-1245	341
330-1247	336
	▶342
330-1248	342
330-1250	337
	▶343
330-1251	343
330-1258	333
	▶344
330-1259	344
330-1261	334
	▶345
330-1262	345
330-1353	935
	▶1015
330-1387	368
330-1388	368
330-1430	▶347
	368
330-1450	368
330-2568	621
330-3408	193
330-3409	193
330-3410	193
333-4157	▶1006
	1080
333-4158	1006
333-4159	1006
333-4160	1057
333-4172	1055
333-4173	▶1007
	1078
333-4174	1007
333-4175	1078
333-4178	1006
333-4179	1055
	1056
	1057
	1058
333-4180	1005
	1006
	1007
	1078
	1079
	1080
333-4181	1005
	1007
333-5017	375
	▶378
333-5018	378

▶ PRIMARY REFERENCE



© 2008 CATERPILLAR
ALL RIGHTS RESERVED

CAT, CATERPILLAR, THEIR RESPECTIVE LOGOS, “CATERPILLAR YELLOW” AND THE POWER EDGE TRADE DRESS, AS WELL AS CORPORATE AND PRODUCT IDENTITY USED HEREIN, ARE TRADEMARKS OF CATERPILLAR AND MAY NOT BE USED WITHOUT PERMISSION.

PRINTED IN U.S.A.