CATERPILLAR®

SEBR0539-00



SETEMBRO 1992

Service Manual

3304 and 3406 Industrial & Marine Engines

S/N 66D12370-26831
S/N 67D01370-02421
S/N 23C (arr. N3417)

Use the bookmarks for navigation inside of the manual

https://barringtondieselclub.co.za/

CATERPILLAR®

SEBR0539-00



Engine Specification

3304 & 3306 INDUSTRIAL & MARINE ENGINE

http://engine.od.ua

Introduction

SMCS - 1405-016

The specifications given in this book are on the basis of information available at the time the book was written. These specifications give the torques, operating pressure, measurements of new parts, adjustments and other items that will affect the service of the product.

When the words "use again" are in the description, the specification given can be used to determine if a part can be used again. If the part is equal to or within the specification given, use the part again.

When the word "permissible" is in the description, the specification given is the "maximum or minimum" tolerance permitted before adjustment, repair and/or new parts are needed.

A comparison can be made between the measurements of a worn part, and the specifications of a new part to find the amount of wear. A part that is worn can be safe to use if an estimate of the remainder of its service life is good. If a short service life is expected, replace the part.

NOTE: The specifications given for "use again" and "permissible" are intended for guidance only and Caterpillar Tractor Co. hereby expressly denies and excludes any representation, warranty or implied warranty of the reuse of any component.

Engine Design

SMCS - 1405-016

ENGINE DESIGN

	3304	3306
Bore	4.75 in. (120.7 mm)	4.75 in. (120.7 mm)
Stroke	6.0 in. (152.4 mm)	6.0 in. (152.4 mm)
Number of Cylinders	4	6
Cylinder Arrangement	*in-line	*in-line
Firing Order (Injection Sequence)	1, 3, 4, 2	1, 5, 3, 6, 2, 4
Direction of Rotation (when seen from flywheel end)	Counterclockwise	Counterclockwise

*No. 1 Cylinder Is Opposite Flywheel End.

Fuel Injection Equipment

SMCS - 1405-016

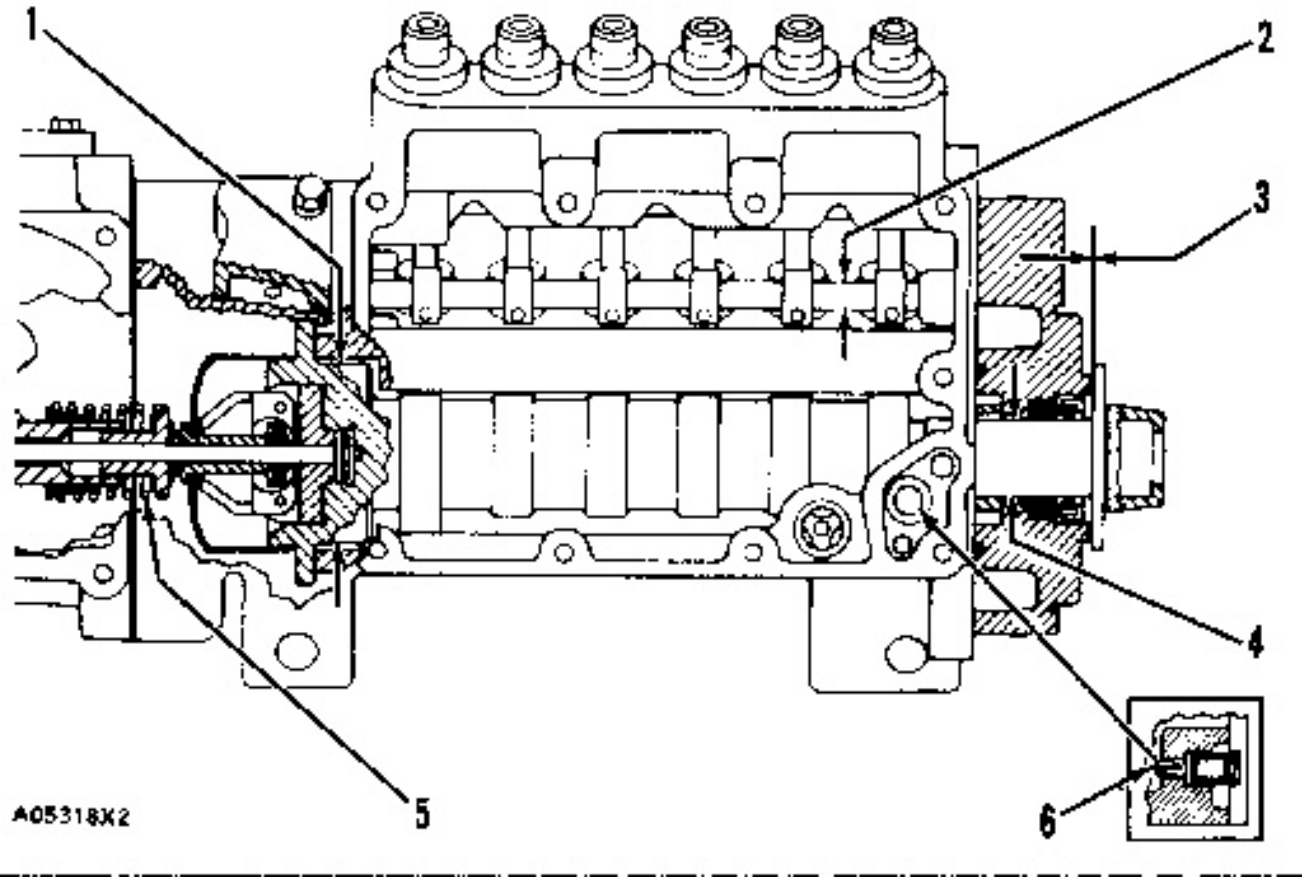

Firing order (injection sequence), 3306 Engine ... 1, 5, 3, 6, 2, 4

Firing order (injection sequence), 3304 Engine ... 1, 3, 4, 2

TIMING CHART FOR 3306 ENGINES		
(A) PART NUMBER OF FUEL INJECTION PUMP AND GOVERNOR GROUP	PART NUMBER OF CAMSHAFT IN THE FUEL INJECTION PUMP AND GOVERNOR GROUP	TIMING DEGREE BEFORE TC (top center)
6N3688 6N6100 6N6265 7N5304 9N1292	6N5322	8.5 ± 1°
6N172 6N313 6N314 6N2828 6N2829 6N6213 6N6214 6N6265 6N7606 6N7607 7N22 7N578 7N1870 7N5303 7N5947 7N6439	4N4313	13.5 ± 1°

https://barringtondieselclub.co.za/

TIMING CHART FOR 3304 ENGINES		
(B) IDENTIFICATION NUMBER ON HOUSING	PART NUMBER OF CAMSHAFT IN THE FUEL INJECTION PUMP AND GOVERNOR GROUP	TIMING DEGREE BEFORE TC (top center)
1 to 44899	4N4312 (original camshaft) 6N6567 (replacement for 4N4312 camshaft)	12.5 ± 1° 13.5 ± 1°
44900–Up	6N6567	13.5 ± 1°

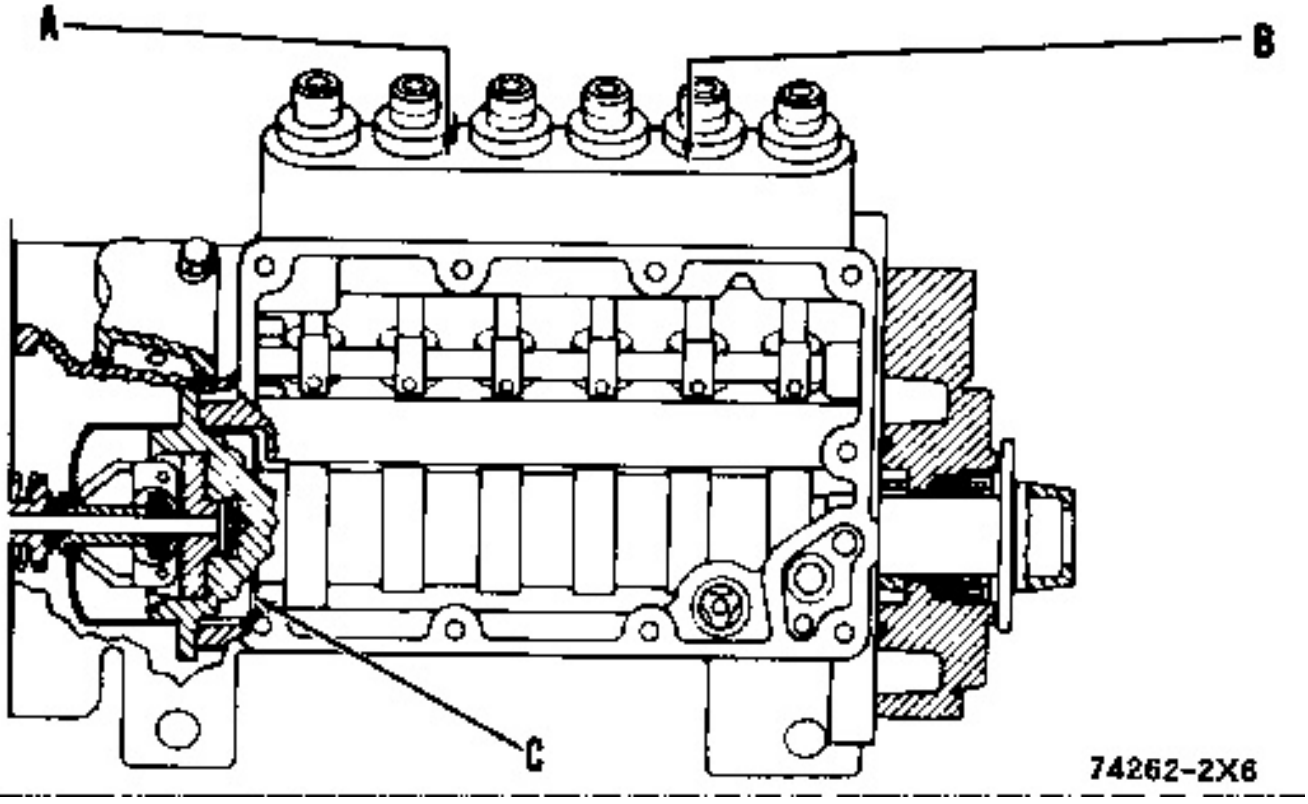

A. Part number of fuel injection pump and governor group. B. Identification number on housing. C. Location of part number marks on camshaft.

NOTE: Early camshafts had no part number marks on the camshafts. All 4 cylinder camshafts without part number marks at location (C) are 4N4312.

NOTE: If the part number of the fuel injection pump and governor group is not in the chart or if it has a

different camshaft, make reference to the parts book, or to TECHNICAL PARTSGRAM; COMMON USAGE IN SLEEVE METERING FUEL SYSTEMS, 4 and 6 PUMP GROUPS, Form No. FEG00707.

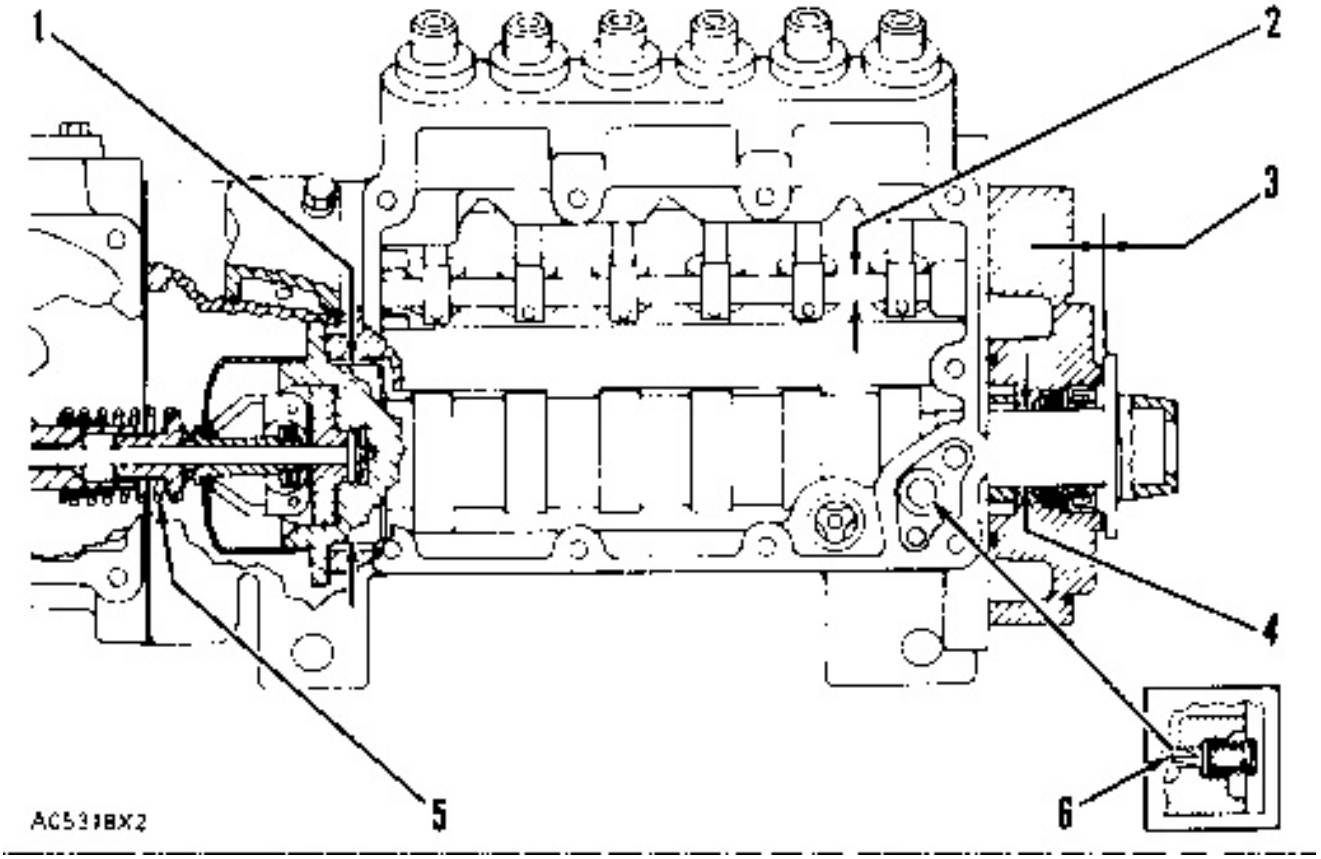

Torque for bolt in hole for timing pin ... 108 ± 36 lb. in.(12.2 ± 4.1 N·m)

Torque for bolts that hold governor weight carrier to camshaft ... 90 ± 10 lb. in.(10.2 ± 1.1 N·m)

(1) Diameter of rear bearing surface (journal) of the camshaft (new) ... 2.3720 ± .0005 in.(60.249 ± 0.013 mm)

Bore in the rear bearing for the camshaft (new) ... 2.3750 ± .0005 in.(60.325 ± 0.013 mm)

Maximum permissible clearance between the bore in the housing and the sleeve control shaft (worn) ... .003 in.(0.08 mm)

(2) Diameter of sleeve control shaft (new) ... .3530 ± .0003 in.(8.966 ± 0.008 mm)

Bore in the housing for the fuel control shaft (new) ... .3543 ± .0005 in.(8.999 ± 0.013 mm)

Maximum permissible clearance between the bore in the housing and the sleeve control shaft (worn) ... .003 in.(0.07 mm)

(3) End play for camshaft with sleeve installed (new) ... .023 ± .018 in.(0.58 ± 0.46 mm)

NOTE: When installing sleeve on end of camshaft, support the camshaft to prevent damage to parts inside

of injection pump and governor housing.

(4) Diameter of front bearing surface (journal) of the camshaft (new) ... .9990 ± .0005 in.(25.375 ± 0.013 mm)

Bore in the front bearing for the camshaft (new) ... 1.0005 ± .0005 in.(25.413 ± 0.013 mm)

Maximum permissible clearance between the bearing and the camshaft bearing surface (journal) (worn) ... .003 in.(0.08 mm)

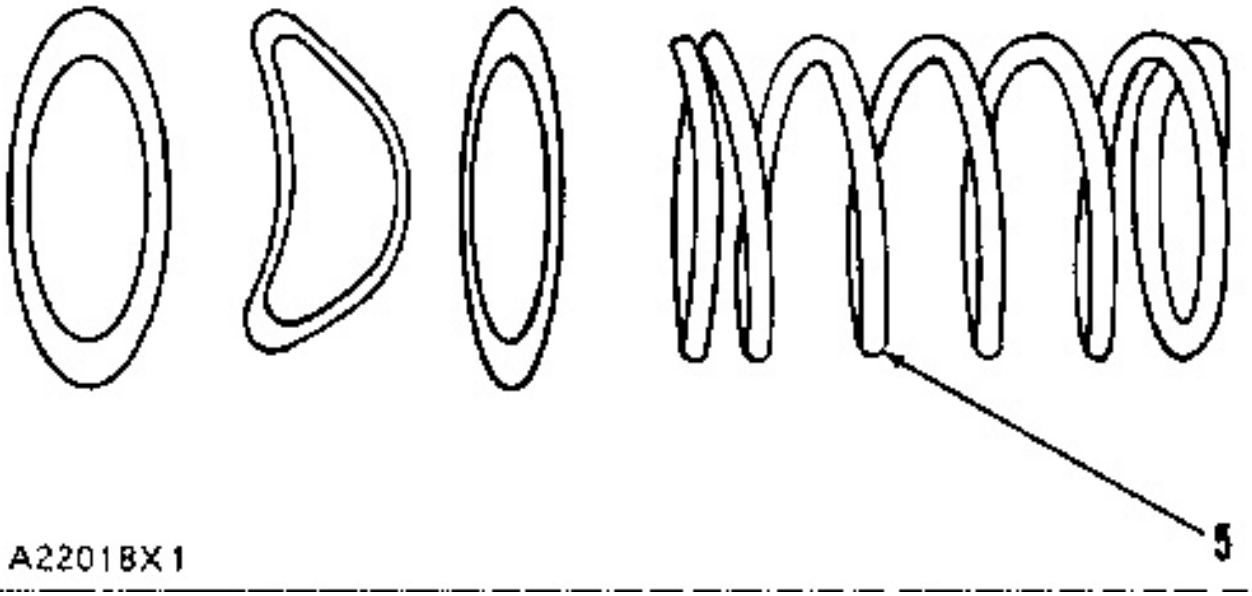

Install spring washer with bent side towards the governor spring (5) as shown.

(5) Governor spring:

Make reference to the chart "GOVERNOR SPRINGS."

For the correct part number for the governor spring for the fuel injection pump and governor group, make reference to the following:

Parts book, RACK SETTING INFORMATION, TECHNICAL PARTSGRAM; COMMON USAGE IN SLEEVE METERING FUEL SYSTEMS, 4 and 6 PUMP GROUPS, Form No. FEG00707.

NOTE: If the engine has "surging", install the 6N6901 Governor Conversion Group For Close Regulation ("Dashpot" Governor). Special Instruction, Form No. SMHS6762 has instructions for the installation procedures.

GOVERNOR SPRINGS

Part No.	Color Code (stripes)	Spring rate	Put a load on spring of	Then make spring shorter by	Total test force	Free length after test	Outside diameter
		lb./in. (N/mm)	lb. (N)	in. (mm)	lb. (N)	in. (mm)	in. (mm)
4N9191	2 white, 1 pink	6.0 (1.05)	2.0 (8.9)	.70 (17.8)	6.2 ± 0.1 (27.6 ± 0.5)	2.35 ± .03 (59.6 ± 0.7)	1.184 (30.07)
6N7815	1 green 3 yellow	6.0 (1.05)	2.0 (8.9)	.70 (17.8)	6.2 ± 0.1 (27.6 ± 0.5)	2.02 ± .03 (51.4 ± 0.7)	1.184 (30.07)
6N8158	3 green, 1 yellow	7.00 (1.23)	3.0 (13.3)	.50 (12.7)	6.5 ± 0.1 (28.9 ± 0.5)	2.29 ± .03 (58.3 ± 0.7)	1.184 (30.07)
4N4221	2 pink	8.0 (1.40)	3.0 (13.3)	.90 (22.9)	10.2 ± 0.3 (45.3 ± 1.1)	2.15 ± .03 (54.6 ± 0.7)	1.184 (30.07)
6N7814	2 green 2 yellow	8.0 (1.40)	3.0 (13.3)	.80 (20.3)	9.4 ± 0.2 (41.8 ± 0.9)	2.00 ± .03 (50.9 ± 0.7)	1.184 (30.07)
4N9192	2 pink, 1 white	8.6 (1.51)	3.0 (13.3)	.90 (22.9)	10.7 ± 0.3 (47.7 ± 1.1)	2.35 ± .03 (59.6 ± 0.7)	1.184 (30.07)
4N4222	2 pink 1 yellow	10.0 (1.75)	2.9 (13.0)	.90 (22.8)	11.9 ± 0.5 (52.9 ± 2.0)	1.99 ± .03 (50.5 ± 0.7)	1.184 (30.07)
6N8157	3 pink, 1 white	10.00 (1.75)	5.0 (22.2)	.50 (12.7)	10.0 ± 0.2 (44.5 ± 0.7)	2.19 ± .03 (55.8 ± 0.7)	1.184 (30.07)
4N4223	2 yellow	11.0 (1.93)	3.0 (13.3)	.80 (20.3)	11.8 ± 0.4 (52.5 ± 1.8)	1.97 ± .03 (50.0 ± 0.7)	1.196 (30.37)
4N4224	2 yellow 1 white	12.0 (2.10)	4.0 (17.8)	.80 (20.3)	13.6 ± 0.4 (60.5 ± 1.8)	1.96 ± .03 (49.7 ± 0.7)	1.196 (30.37)
4N4225	2 yellow 1 pink	13.0 (2.28)	4.0 (17.8)	.80 (20.3)	14.4 ± 0.4 (64.1 ± 1.8)	1.95 ± .03 (49.4 ± 0.7)	1.200 (30.49)
4N4227	2 yellow 1 green	14.0 (2.45)	4.0 (17.8)	.80 (20.3)	15.2 ± 0.4 (67.6 ± 1.8)	1.94 ± .03 (49.2 ± 0.7)	1.200 (30.49)
4N4226	2 yellow 1 purple	15.0 (2.63)	4.0 (17.8)	.80 (20.3)	16.0 ± 0.4 (71.2 ± 1.8)	1.93 ± .03 (49.0 ± 0.7)	1.208 (30.69)
6N5170	1 yellow 1 pink	16.0 (2.80)	4.0 (17.8)	.80 (20.3)	16.8 ± 0.4 (74.7 ± 1.8)	1.92 ± .03 (48.8 ± 0.7)	1.210 (30.73)
6N5169	1 pink 1 green	17.0 (2.98)	5.0 (22.2)	.80 (20.3)	18.6 ± 0.5 (82.7 ± 2.0)	1.92 ± .03 (48.8 ± 0.7)	1.214 (30.83)
4N4229	1 pink 2 green	18.0 (3.15)	5.0 (22.2)	.70 (17.8)	17.6 ± 0.4 (78.3 ± 1.6)	1.91 ± .03 (48.5 ± 0.7)	1.214 (30.83)
6N230	1 yellow 2 green	20.0 (3.50)	4.0 (17.8)	.70 (17.8)	18.0 ± 0.5 (80.1 ± 2.2)	1.89 ± .03 (48.0 ± 0.7)	1.234 (31.35)

https://barringtondieselclub.co.za/

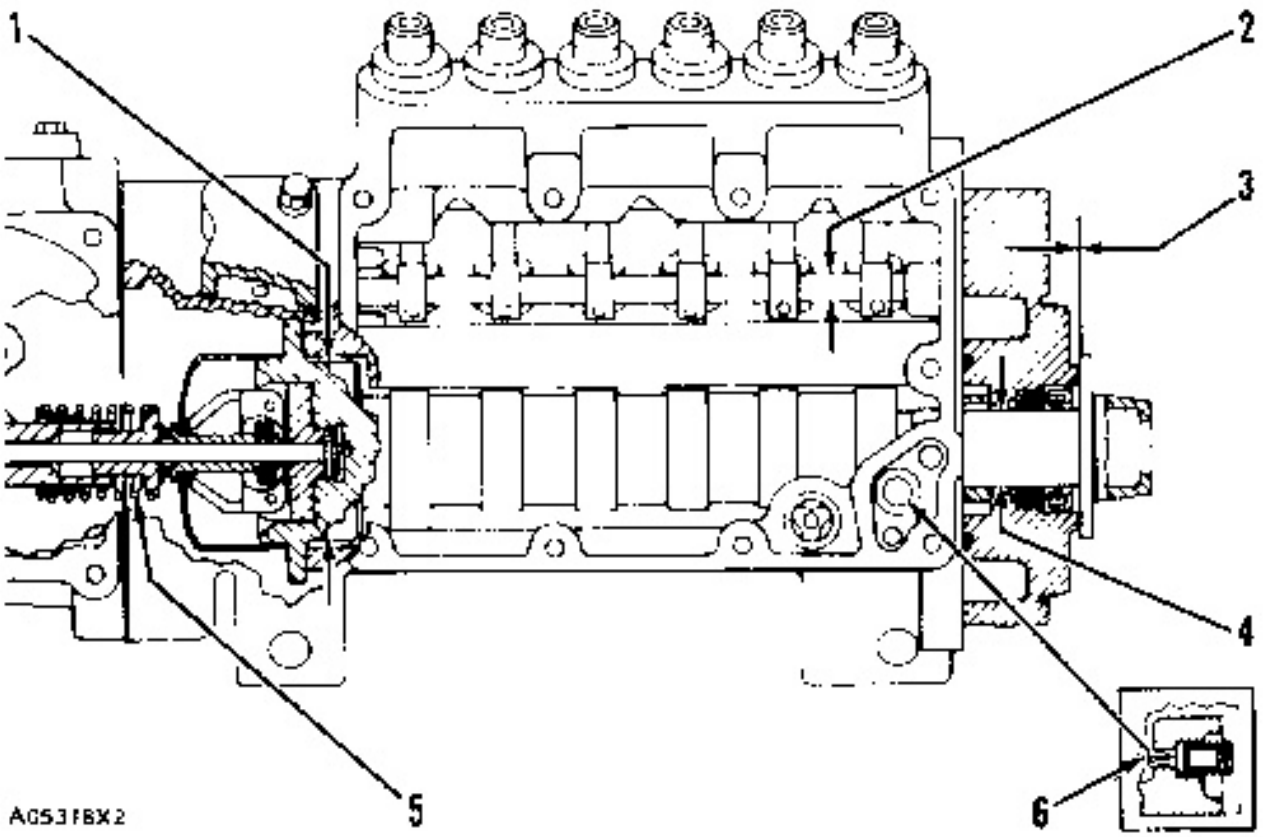

(6) Bypass valve:

BYPASS VALVE SPRINGS		
Part No.	**4N605**	
	Later	**Earlier**
Direction of coil	either	right hand
Number of coils	13	12½
Length under test force	.882 in. (22.40 mm)	1.23 in. (31.2 mm)
Test force	3.5 ± 0.2 lb. (16 ± 1 N)	1.4 ± 0.1 lb. (6 ± 1 N)
Free length after test	1.73 in. (43.9 mm)	1.50 in. (38.1 mm)
Outside diameter	.527 in. (13.39 mm)	.531 in. (13.50 mm)
Diameter of wire	.045 in. (1.14 mm)	.047 in. (1.19 mm)

NOTE: If the spring keeps the pressure in the fuel injection pump housing above 25 psi (170 kPa) with the engine operating under full load, the spring is good.

Pressure of fuel in housing for fuel injection pumps, (Full Load) ... 30 ± 5 psi(205 ± 35 kPa)

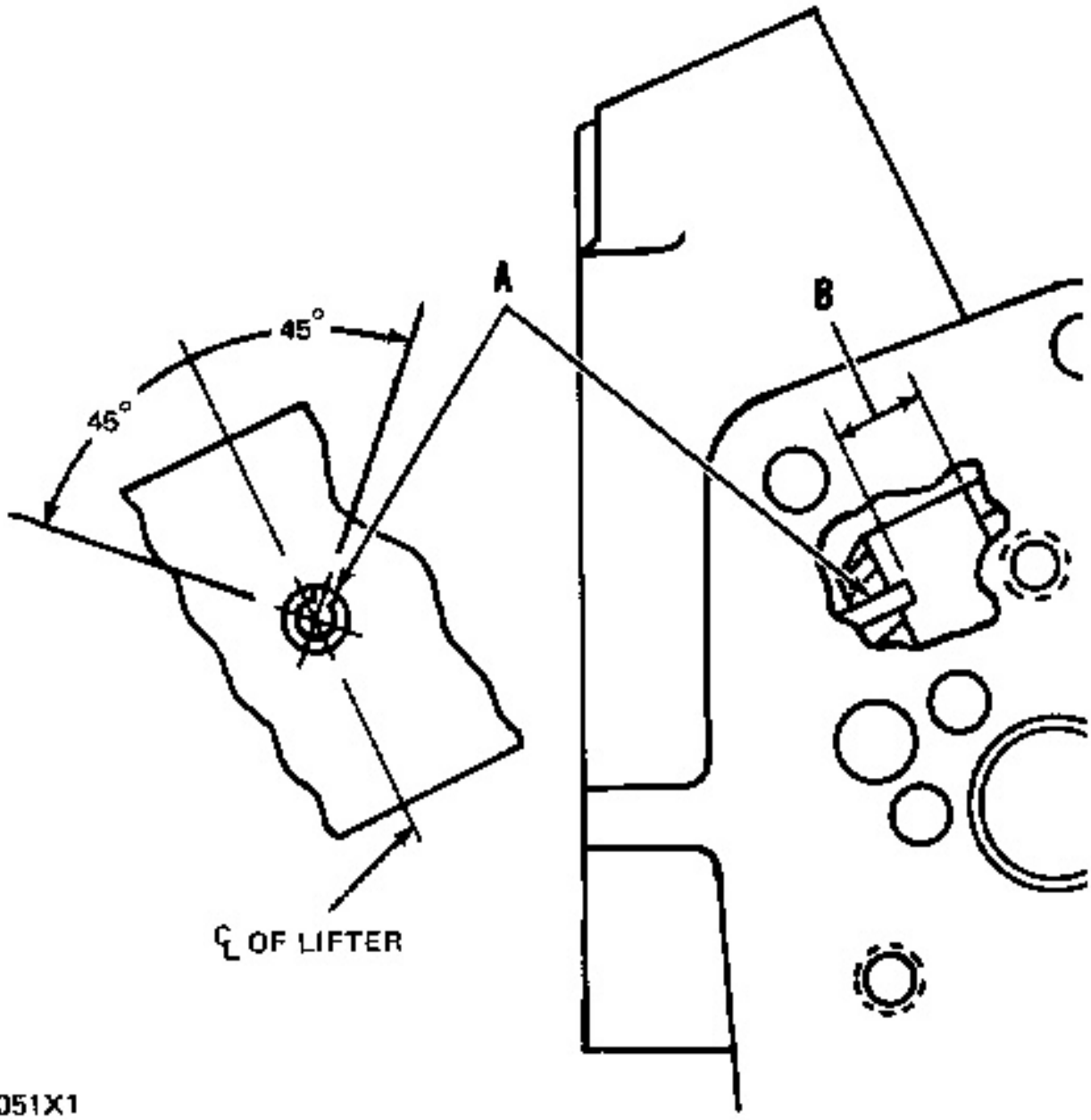

Install guide pin (A) to depth (B) [.642 ± .003 in. (16.31 ± 0.08 mm)]. Slot in guide pin (A) must be in area shown from center of lifter.

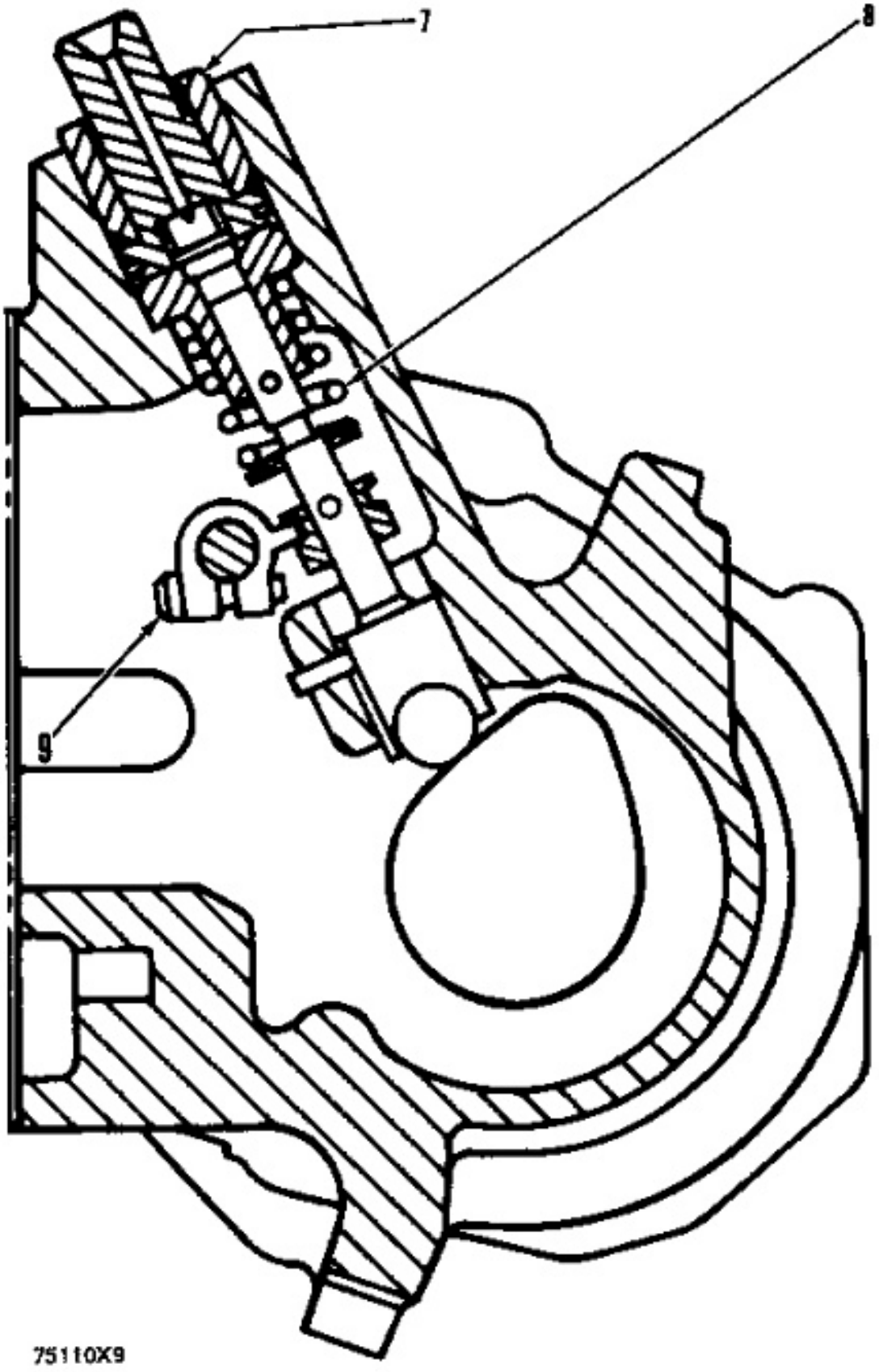

(7) Torque for bushing ... 70 ± 5 lb. ft.(95 ± 7 N·m)

(8) 4N4318 Spring for injection pump:

Length under test force ... 1.35 in.(34.3 mm)

Test force ... 12.5 ± 1.3 lb.(56 ± 6 N)

Free length after test ... 1.566 in.(39.78 mm)

Outside diameter ... .728 in.(18.49 mm)

(9) Torque for bolt holding sleeve on control shaft ... 24 ± 2 lb. in.(2.8 ± 0.2 N·m)

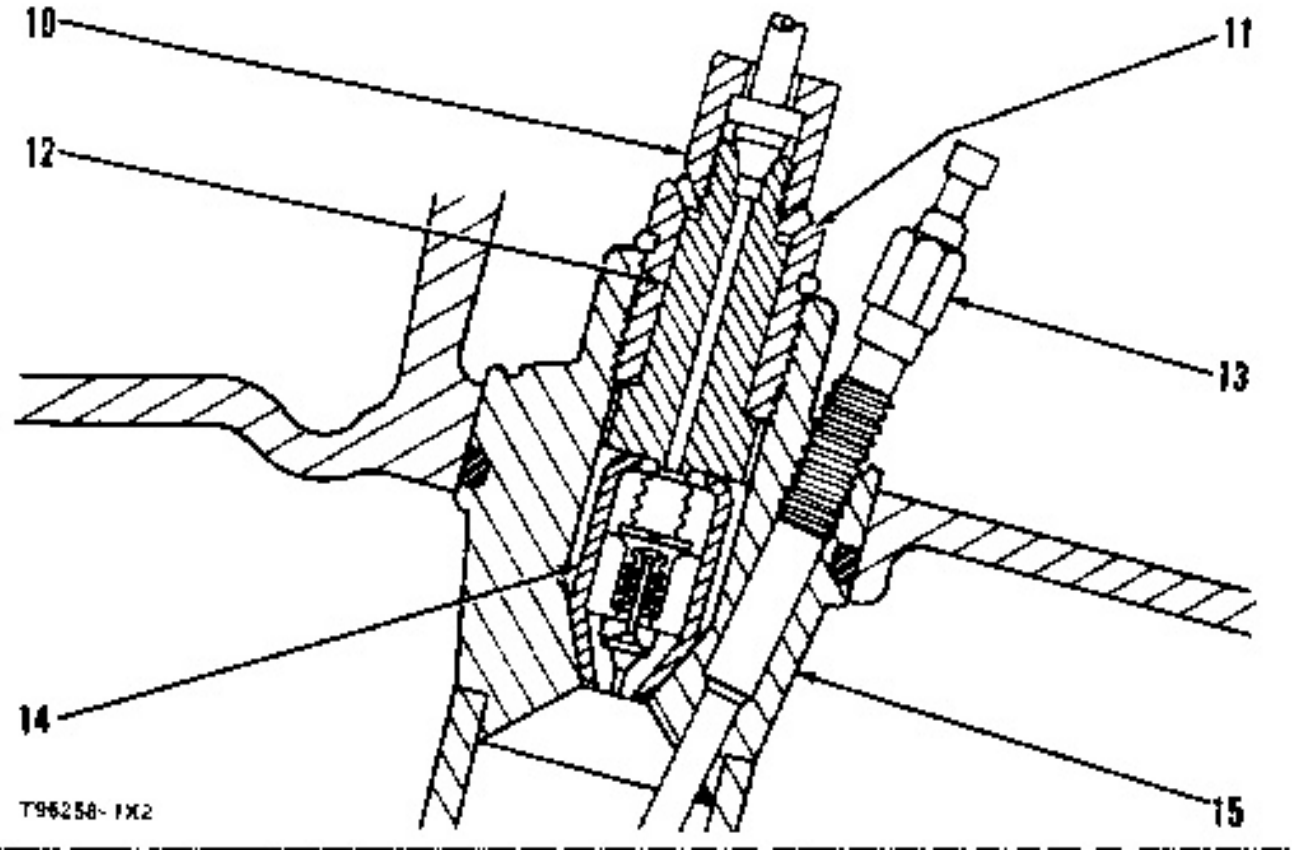

(10) Torque for the nuts that hold the fuel lines (Use 5P144 Fuel line Socket) ... 30 ± 5 lb. ft.(40 ± 7 N·m)

(11) Torque for the nuts that hold the nozzles ... 105 ± 5 lb. ft.(142 ± 7 N·m)

(12) Body.

(13) Put 5P3931 Anti-Seize Compound on threads of glow plug and tighten to ... 120 ± 24 lb. in.(13.6 ± 2.8 N·m)

(14) Tighten nozzle finger tight on body.

(15) Torque for precombustion chamber (put 5P3931 Anti-Seize Compound on threads) ... 150 ± 10 lb. ft. (205 ± 14 N·m)

NOTE: See Glow Plug Positioning.

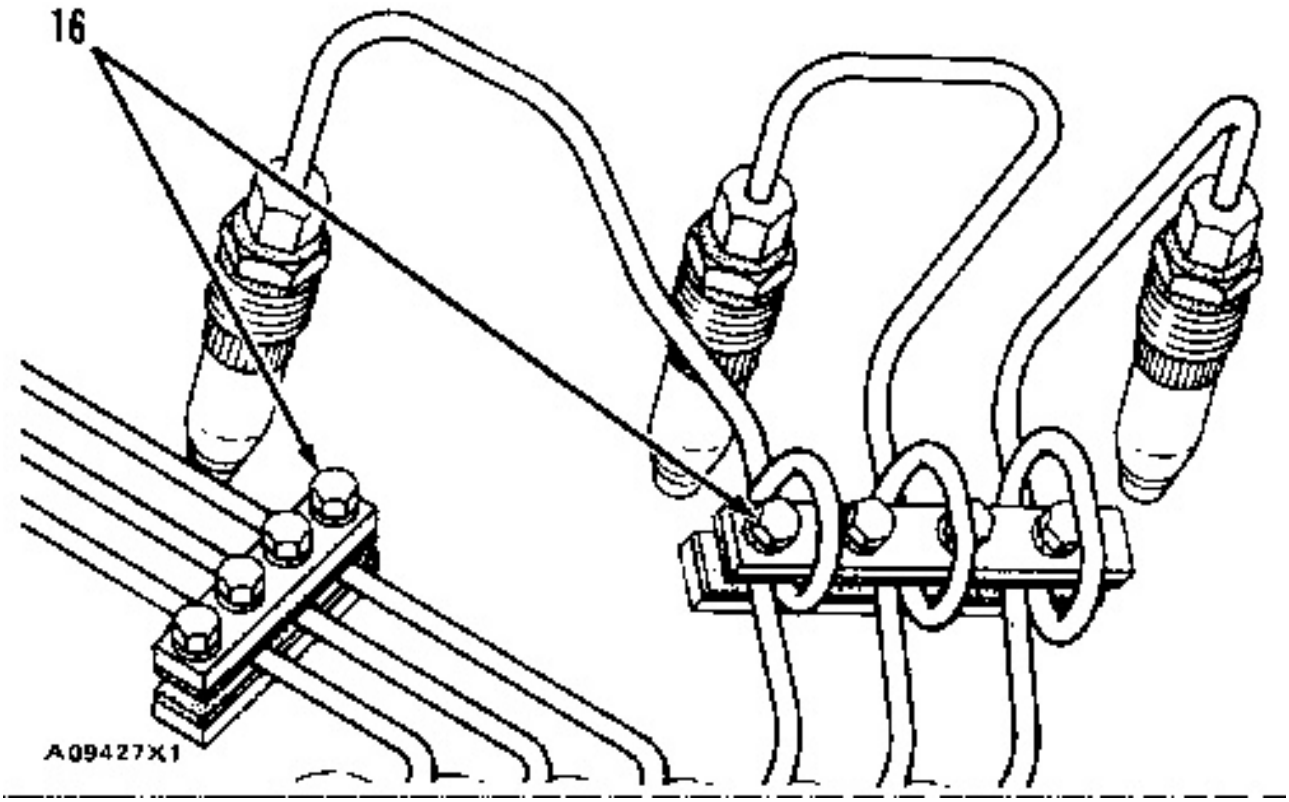

TYPICAL ILLUSTRATION

(16) Torque for bolts holding clamps on fuel injection lines:

With rubber damper ... 84 ± 24 lb. in.(9.6 ± 2.8 N·m)

Without damper ... 108 ± 36 lb. in.(12.2 ± 4.1 N·m)

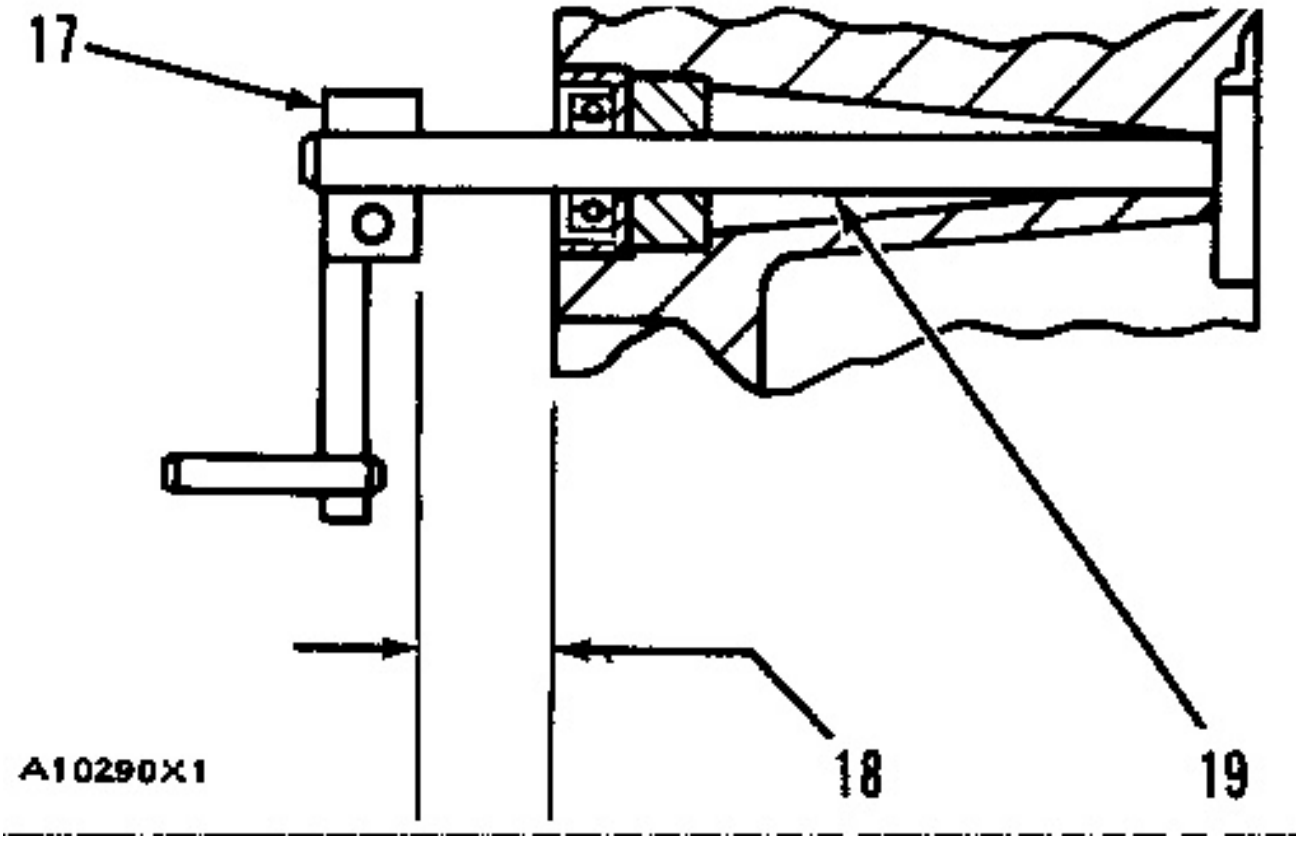

(17) Lever assembly.

(18) Clearance between lever assembly (17) and governor housing when shaft assembly (19) is pulled against the governor housing ... .437 in.(11.10 mm)

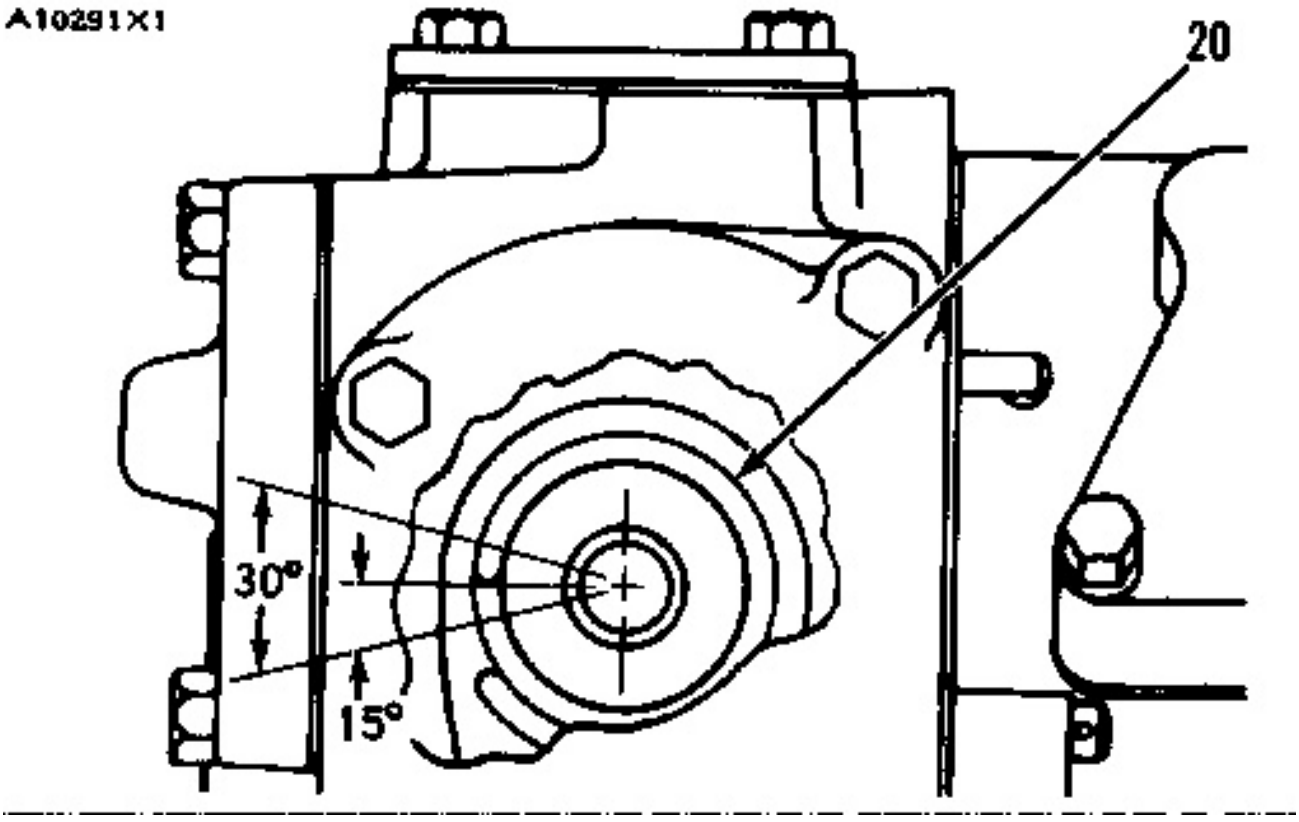

(20) Spring for the terminal shaft. Install the spring (20) for the terminal shaft so that the end of the spring

is in the 30° range as shown.

SPRINGS FOR TERMINAL SHAFT			
Part No.	**4N4366**	**2P726**	**9S8597**
Color code (stripes)	—	one red	one white
Length under test force	.58 in. (14.8 mm)	.58 in. (14.8 mm)	.58 in. (14.8 mm)
Test force	156 lb. (695 N)	109 lb. (485 N)	56 lb. (249 N)
Free length after test	1.01 in. (25.7 mm)	1.04 in. (26.4 mm)	1.21 in. (30.7 mm)
Outside diameter	1.638 in. (41.61 mm)	1.635 in. (41.53 mm)	1.635 in. (41.53 mm)
Diameter of wire	.168 in. (4.27 mm)	.156 in. (3.96 mm)	.135 in. (3.43 mm)

https://barringtondieselclub.co.za/

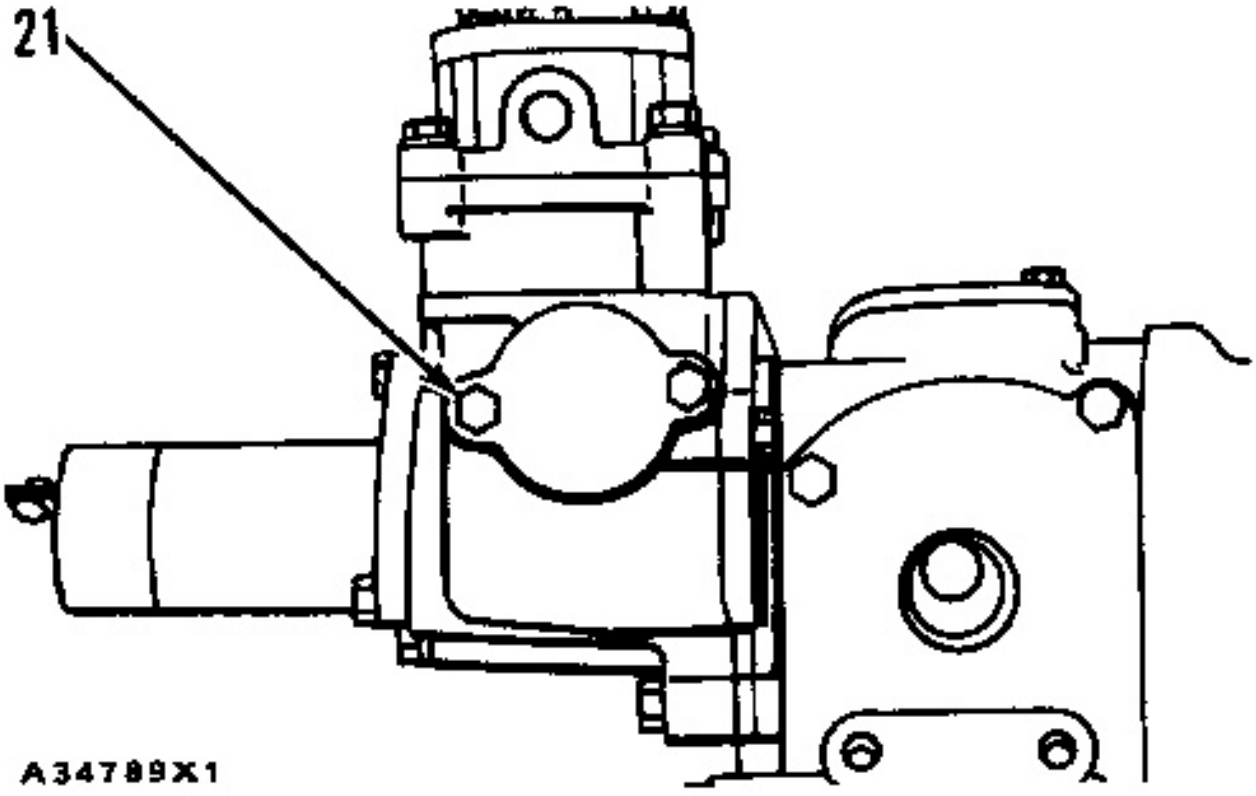

PLASTIC COVER ILLUSTRATED

(21) Torque for bolts holding plastic cover (without tapped hole) ... 72 ± 9 lb. in.(8.2 ± 1.0 N·m)

NOTE: Use standard torque for bolts holding steel cover (with tapped hole).

Adjustable "Dashpot" (Close Regulation Type Governor)

SMCS - 1405-016

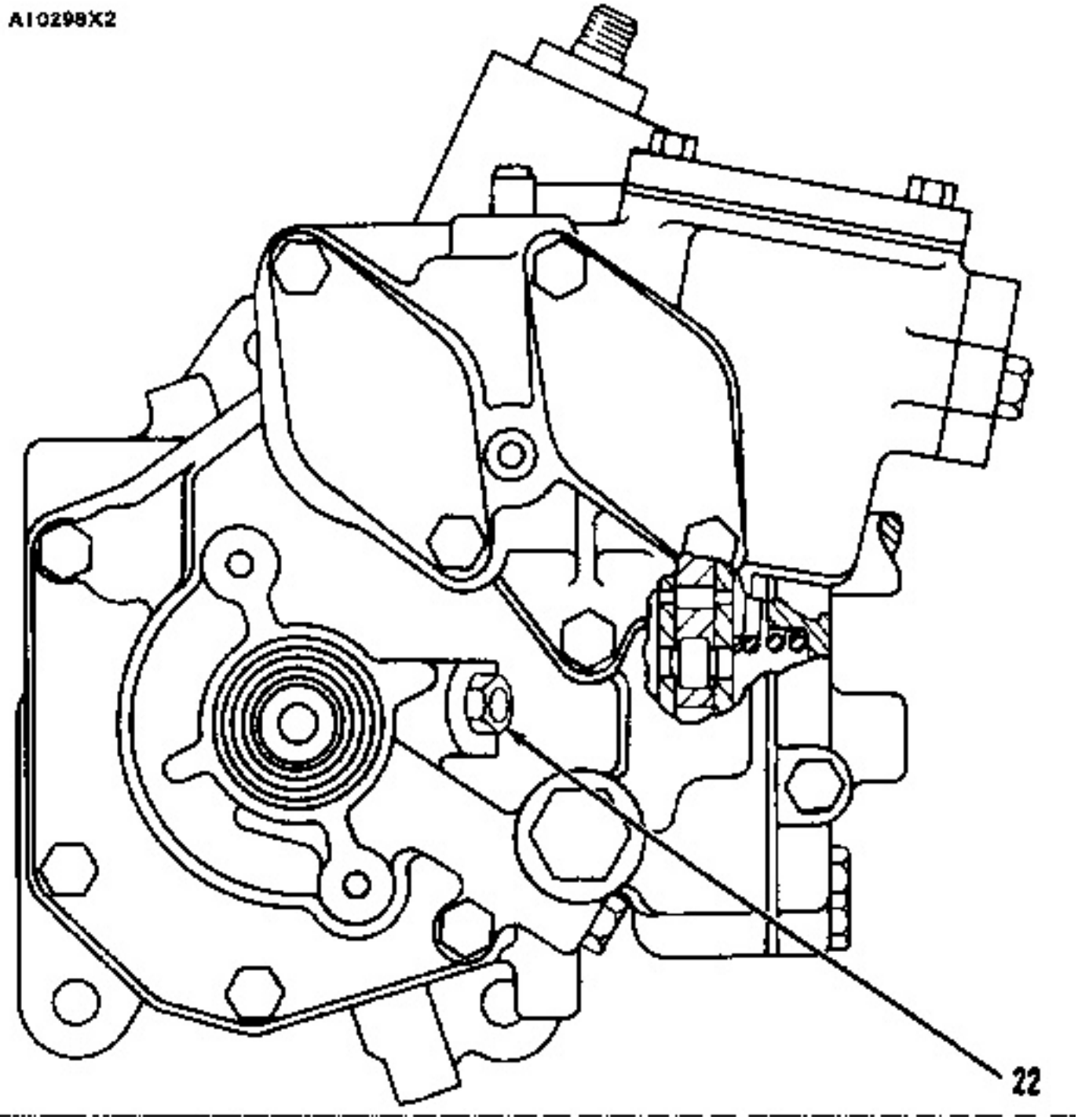

(22) Torque for body of needle valve ... 108 ± 36 lb. in.(12.2 ± 4.1 N·m)

Adjustment for needle valve:

1. Turn the needle valve fully clockwise.

2. Then turn the needle valve approximately 1/4 to 1/2 turn counterclockwise.

NOTE: If starting the engine for the first time after the fuel injection pump housing was empty of fuel, first turn the needle valve counterclockwise 2 or 3 turns. Run the engine for a few minutes at the rated speed. Then do steps 1 and 2.

Fuel Transfer Pump

SMCS - 1405-016

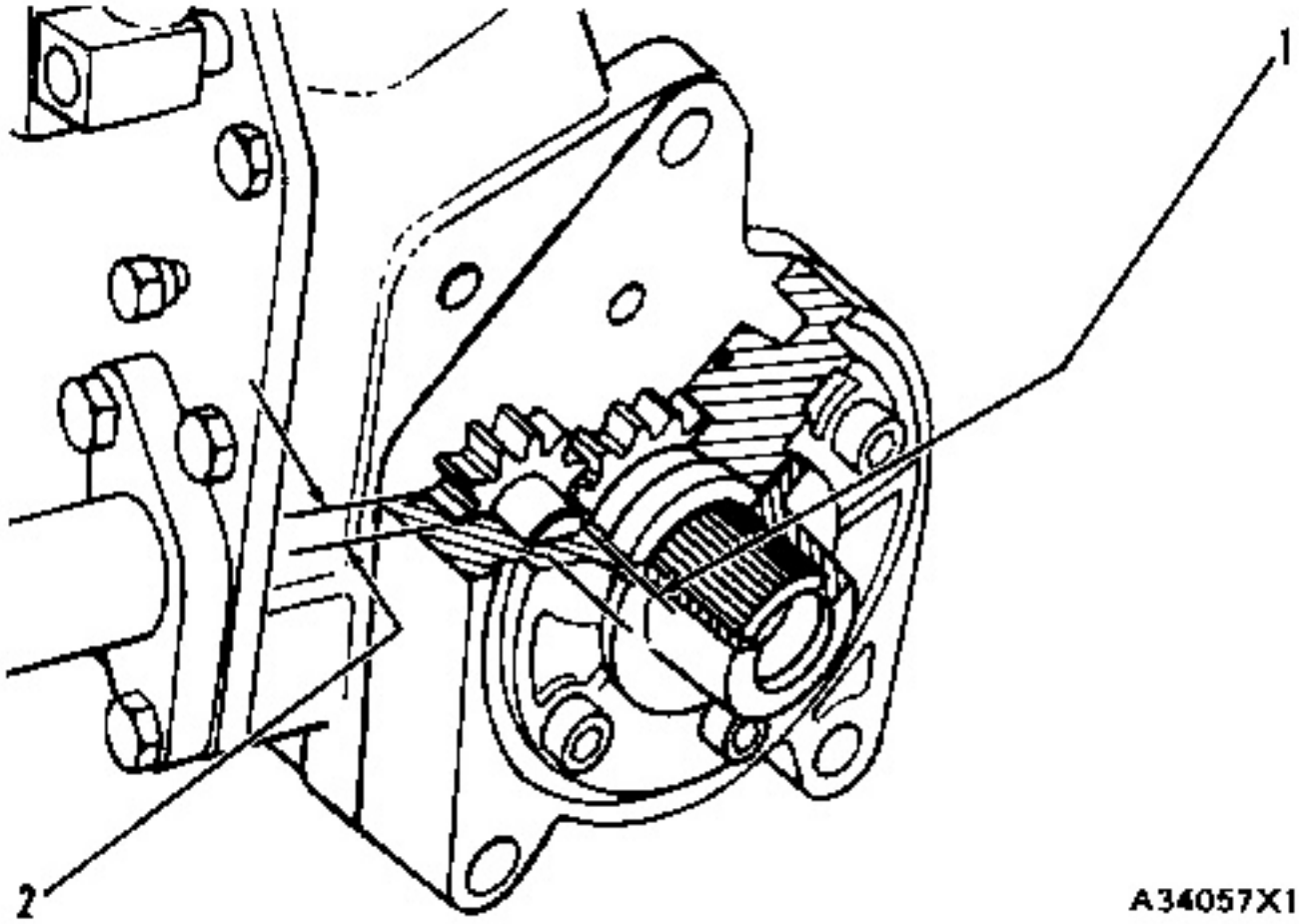

(1) Diameter of shaft for idler gear (new) ... .4914 ± .0003 in.(12.482 ± 0.008 mm)

Bore in idler gear (new) ... .4926 ± .0003 in.(12.512 ± 0.008 mm)

(2) Thickness of gears (new) ... .3736 ± .0003 in.(9.489 ± 0.008 mm)

Depth of counterbore (new) ... .3750 ± .0005 in.(9.525 ± 0.013 mm)

Clearance between end of gears and surface of pump body (new) ... .0006 to .0022 in.(0.015 to 0.056 mm)

Fuel Ratio Control

SMCS - 1405-016

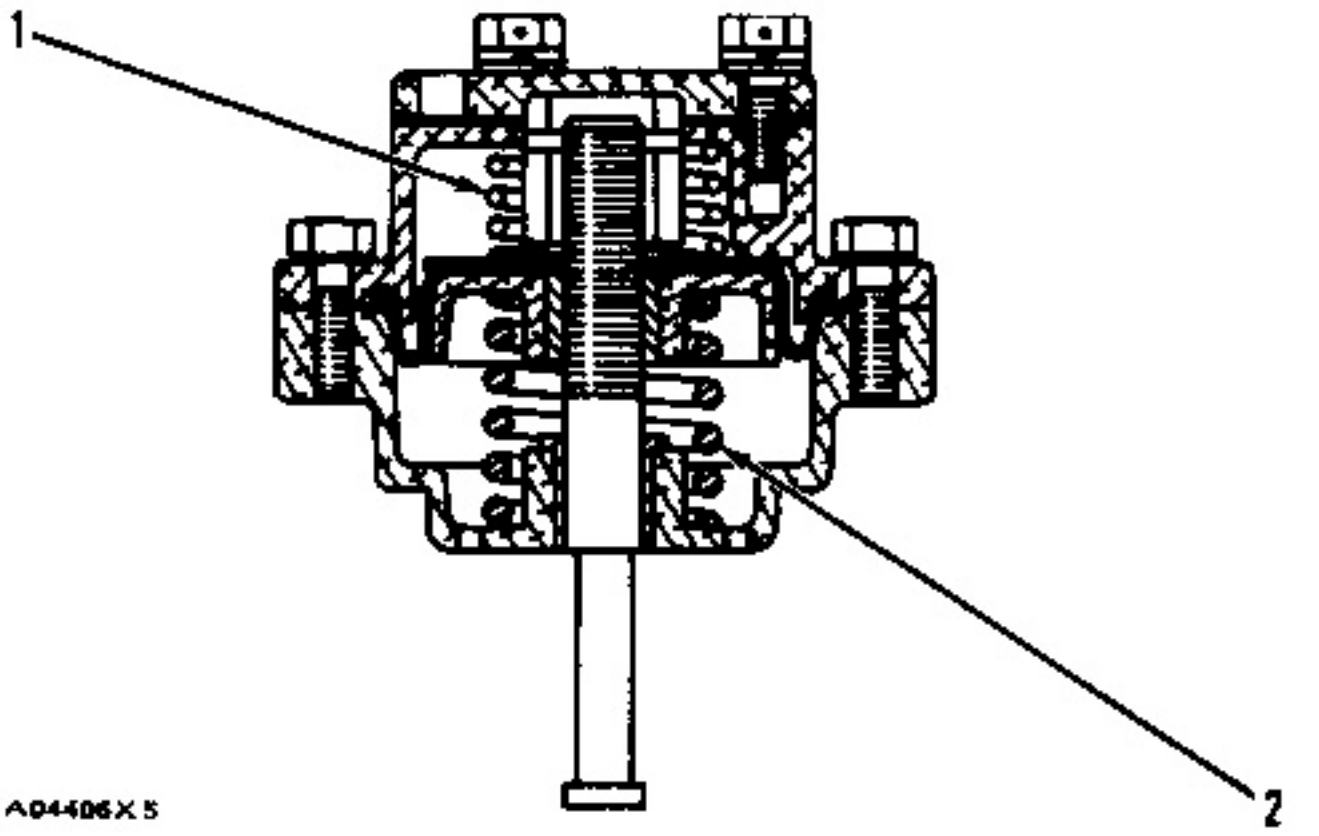

SPRINGS FOR FUEL RATIO CONTROL		
	(1)	(2)
Part No.	**6N1606**	**6N968**
Length under test force	.61 in. (15.5 mm)	1.325 in. (33.8 mm)
Test force	14.0 ± .4 lb. (63 ± 2 N)	21 ± 1 lb. (95 ± 4 N)
Free length after test	1.38 in. (35.1 mm)	1.50 in. (38.1 mm)
Outside diameter	1.268 in. (32.21 mm)	1.28 in. (32.5 mm)
Diameter of wire	.086 in. (2.18 mm)	.142 in. (3.61 mm)

https://barringtondieselclub.co.za/

Fuel System Timing (Engines With Timing Pointer)

SMCS - 1405-016

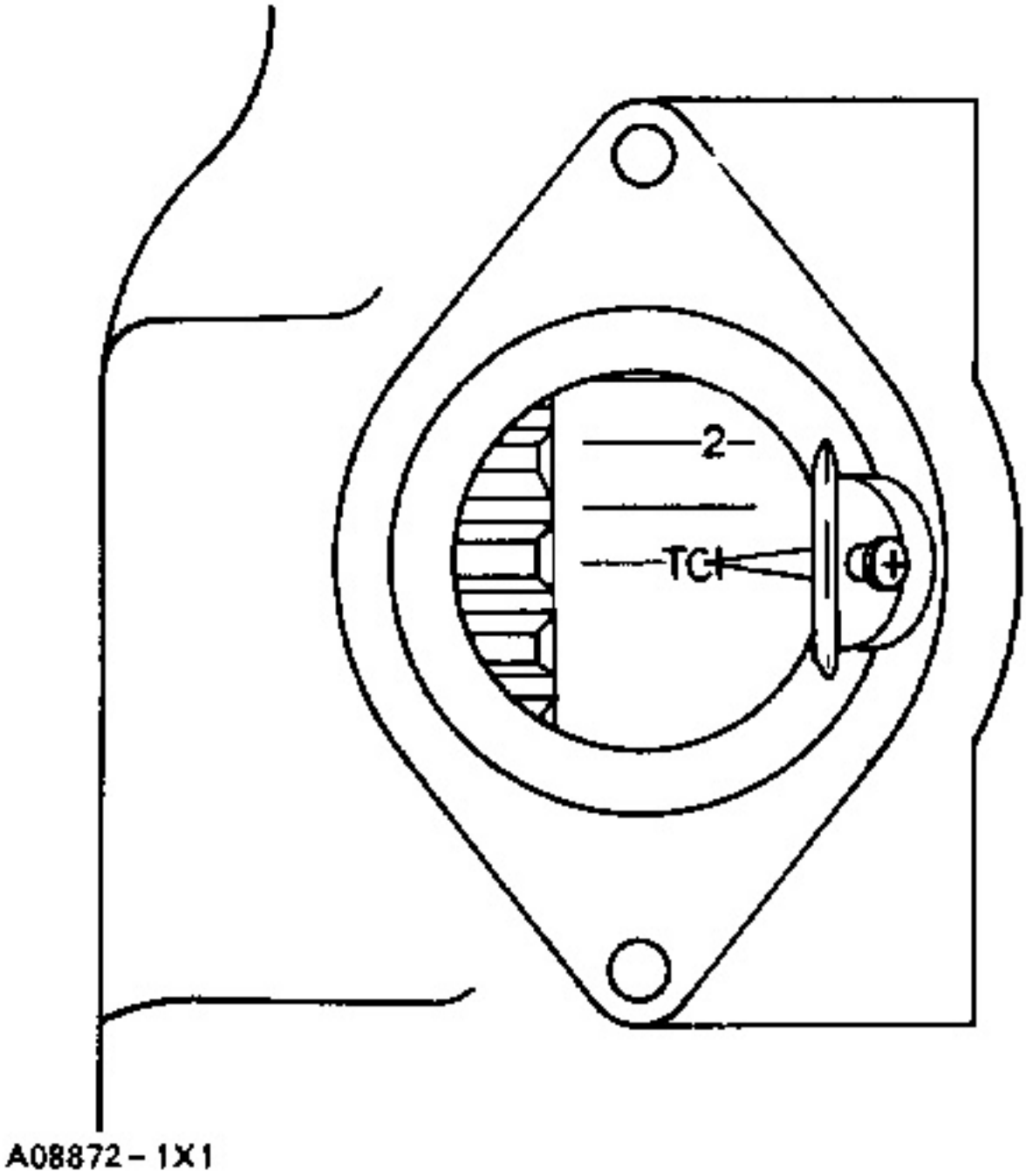

With the timing pin installed in the fuel injection pump camshaft, the timing pointer must be in alignment with the mark TC 1 on the flywheel.

Automatic Timing Advance Unit

SMCS - 1405-016

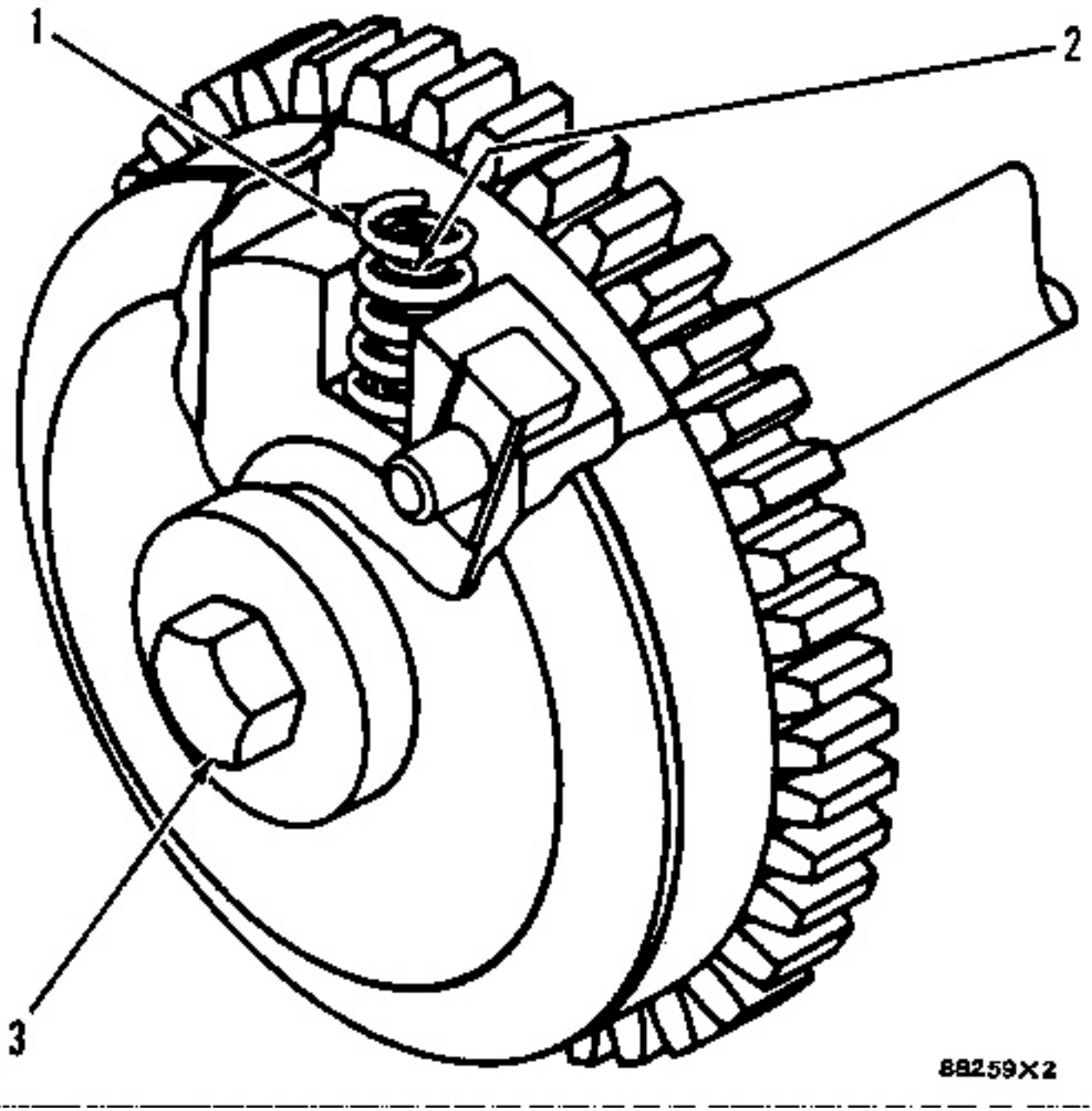

This unit moves forward (advances) the fuel system timing 6° from 1200 to 2200 engine rpm.

SPRINGS FOR TIMING ADVANCE UNIT		
Part No.	(1) **4N2321** **(outer)**	(2) **4N2320** **(inner)**
Length under test force	1.72 in. (43.7 mm)	1.25 in. (31.8 mm)
Test force	6.0 ± .3 lb. (27 ± 1 N)	3.0 ± .2 lb. (13 ± 1 N)
Free length after test	1.92 in. (48.8 mm)	1.39 in. (35.3 mm)
Outside diameter	.61 in. (15.5 mm)	.43 in. (10.9 mm)

(3) Torque for bolt ... 110 ± 5 lb. ft.(149 ± 7 N·m)

https://barringtondieselclub.co.za/

On Engine Test For Correct Installation Of Timing Gears

SMCS - 1405-016

A. With the valve clearance correctly adjusted, put the No. 1 piston at TC (top center) compression.

B. Put a dial indicator in position to measure valve movement for one of the valves on No. 1 cylinder.

C. Put the dial indicator at "0".

D. Turn the engine crankshaft 360°. This puts the No. 1 piston at TC (top center) between the intake and exhaust strokes.

E. Make a comparison of the dial indicator reading with the dimensions given:

Intake valve ... .070 ± .020 in.(1.78 ± 0.51 mm)

Exhaust valve ... .063 ± .020 in.(1.60 ± 0.51 mm)

Timing Gears (3306 Engines)

SMCS - 1405-016

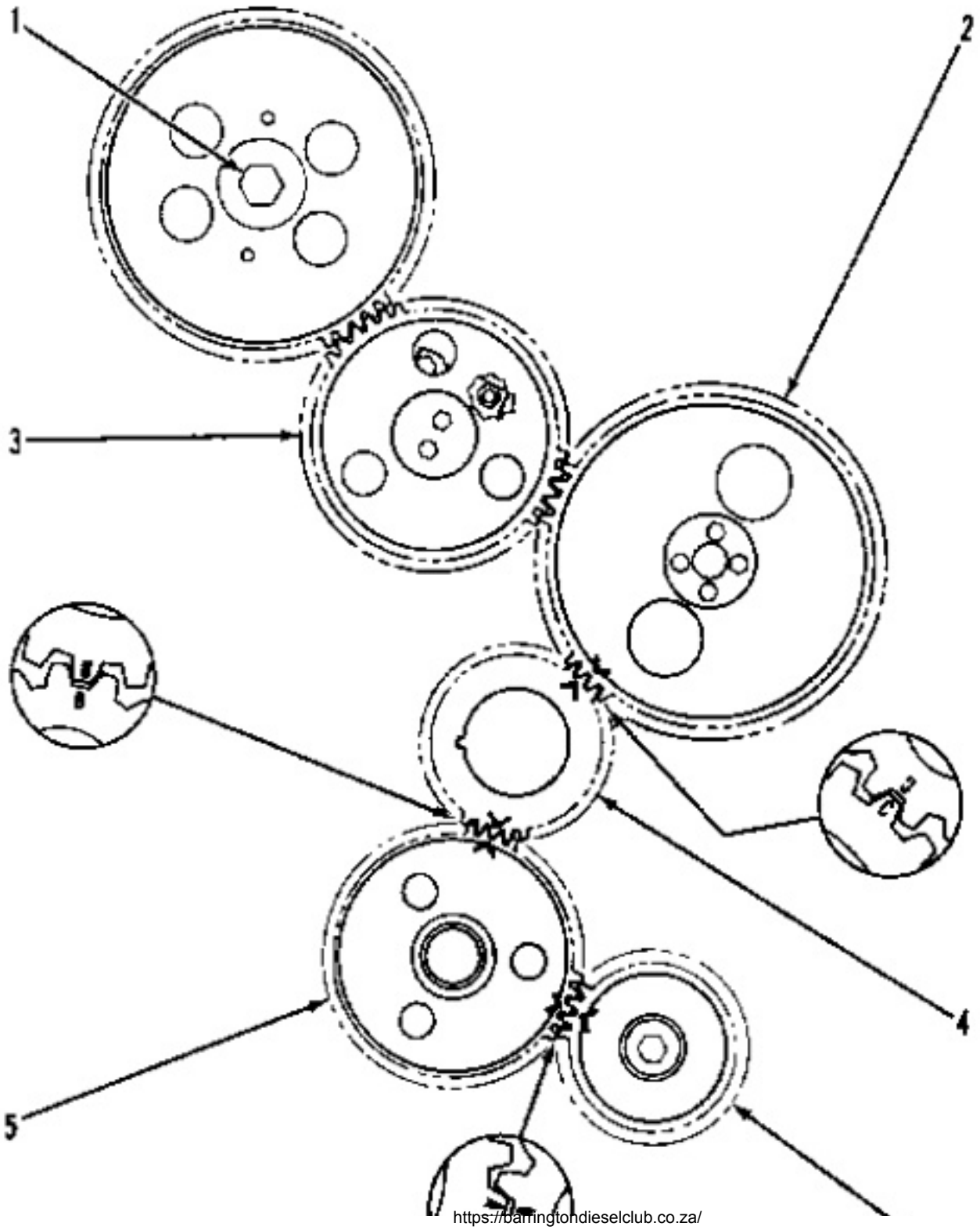

https://barringtondieselclub.co.za/



Tighten bolts which fasten into front plate to ... 17 ± 3 lb. ft.(23 ± 4 N·m)

Six studs and nuts hold the cover for the fuel injection pump drive gear. Put 9S3263 Thread Sealant on the threads of the studs before installing them in the front housing.

Tighten six nuts holding cover for fuel pump drive gear to ... 20 ± 5 lb. ft.(25 ± 7 N·m)

(1) With the timing pin and timing bolt correctly installed, put a clockwise force on the drive gear for the fuel pump and tighten bolt (1) to ... 110 ± lb. ft.(149 ± 7 N·m)

(2) Camshaft gear.

(3) End play for the idler gear (new) ... .004 to .016 in.(0.10 to 0.41 mm)

Maximum permissible end play (worn) ... .034 in.(0.86 mm)

Bore in bearing for the idler gear (new) ... 1.3781 ± .0019 in.(35.004 ± 0.048 mm)

Diameter of shaft for idler gear (new) ... 1.3741 ± .0005 in.(34.902 ± 0.013 mm)

Clearance between shaft and bearing (new) ... .0016 to .0064 in.(0.041 to 0.163 mm)

Maximum permissible clearance between shaft and bearing (worn) ... .009 in.(0.23 mm)

(4) Crankshaft gear:

Make reference to CRANKSHAFT.

(5) Idler gear for oil pump.

(6) Drive gear for oil pump.

https://barringtondieselclub.co.za/

Camshaft

SMCS - 1405-016

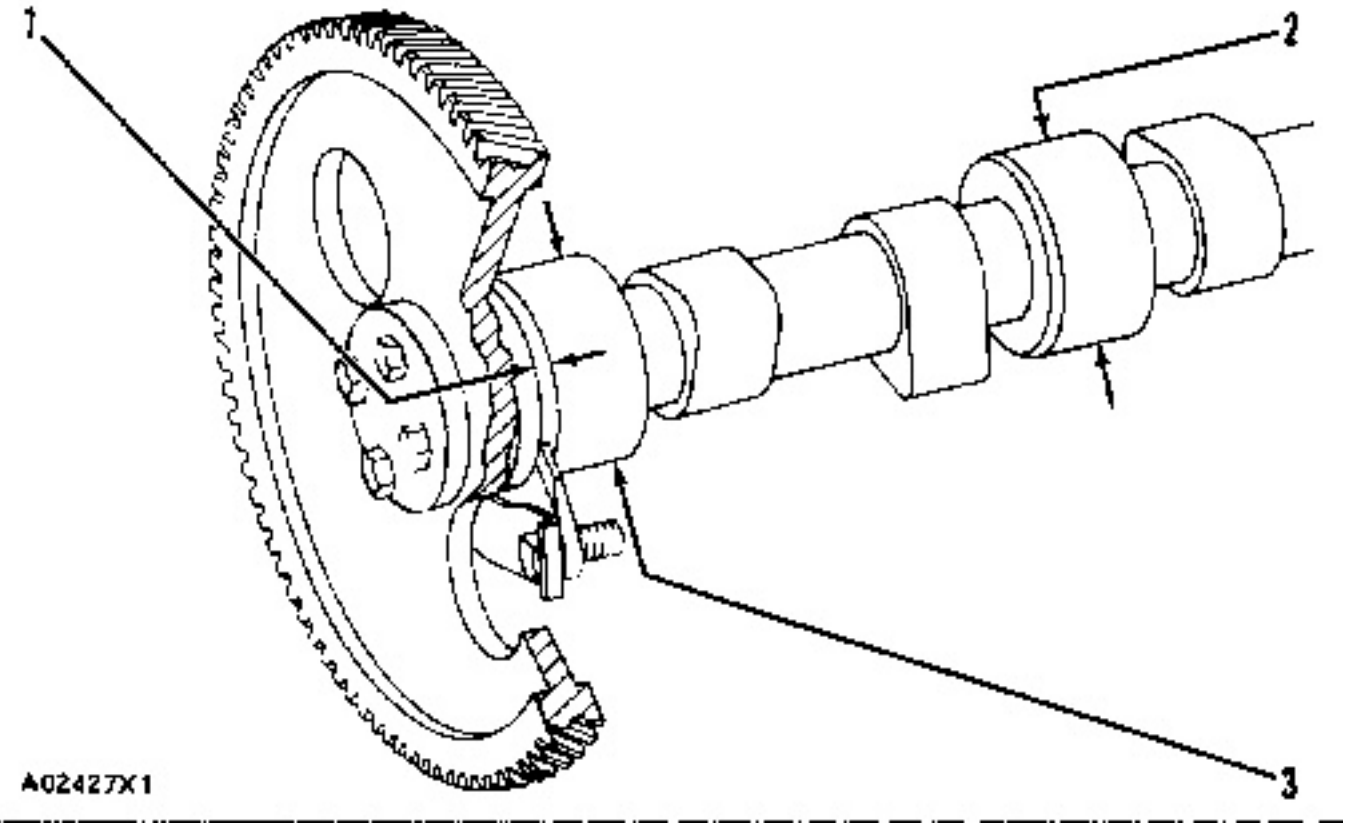

NOTE: Put a layer of 5P960 Grease or graphite grease on lobes of camshaft when installing.

(1) Width of groove in camshaft for thrust washer (new) ... .190 ± .002 in.(4.83 ± 0.05 mm)

Thickness of thrust washer (new) ... .183 ± .001 in.(4.65 ± 0.03 mm)

End play of the camshaft (new) ... .007 ± .003 in.(0.18 ± 0.08 mm)

Maximum permissible end play (worn) ... .025 in.(0.635 mm)

(2) Diameter of camshaft bearing surface (journal) (new) ... 2.3110 ± .0005 in.(58.699 ± 0.013 mm)

(3) Bore in bearing for camshaft (new) ... 2.3150 ± .0020 in.(58.800 ± 0.051 mm)

Clearance between bearing and bearing surface (journal) (new) ... .0015 to .0065 in.(0.038 to 0.165

mm)

Maximum permissible clearance between bearing and bearing surface (journal) (worn) ... .008 in. (0.20 mm)

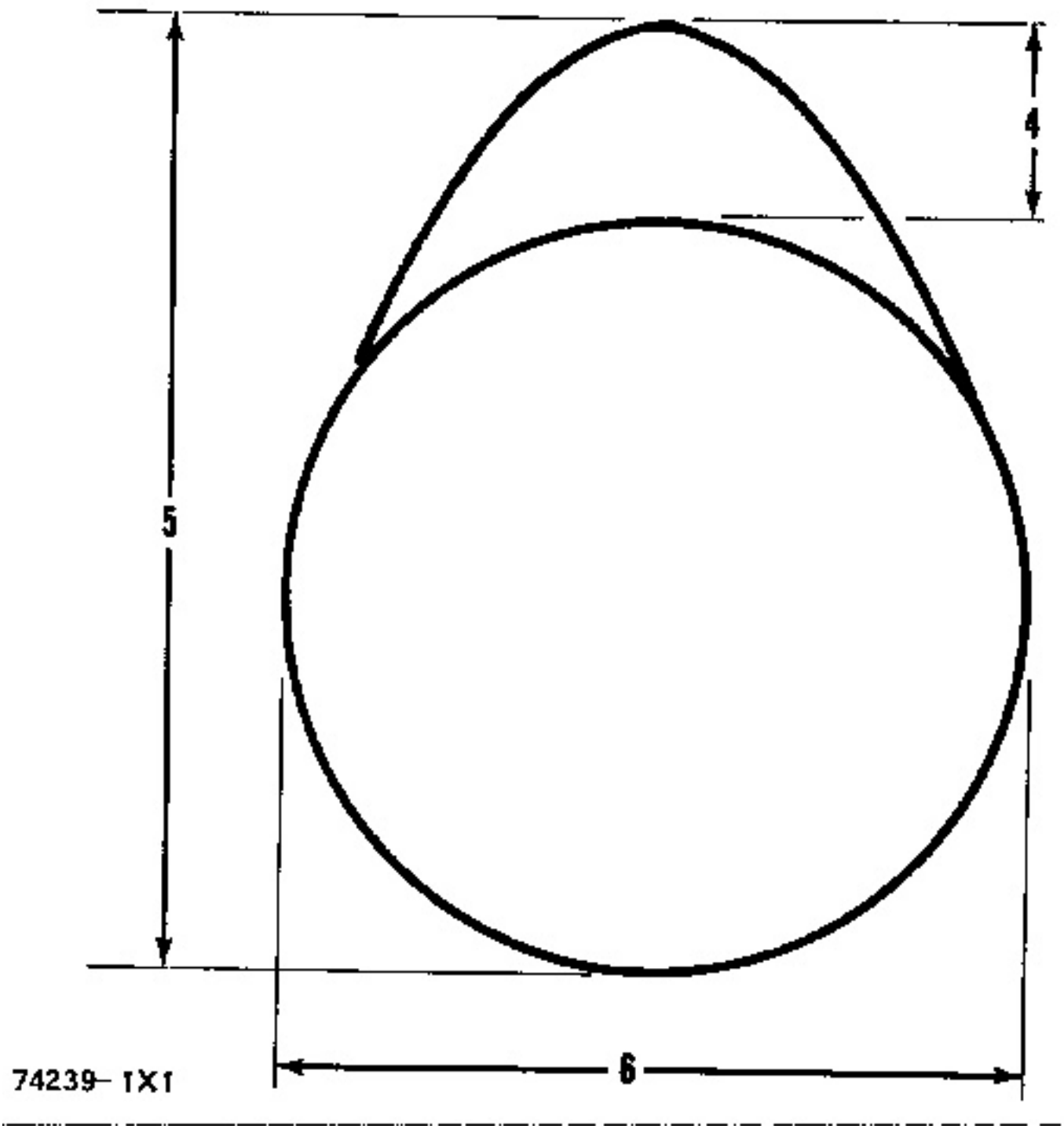

(5) Height of camshaft lobes.

To find the lobe lift, use the following procedure:

A. Measure camshaft lobe height (5).

B. Measure base circle (6).

C. Subtract base circle (STEP B) from lobe height (STEP A). The difference is actual lobe lift (4).

D. Specified camshaft lobe lift (4) is: ... .3300 in.(8.382 mm)

Maximum permissible difference between actual lobe lift (STEP C) and specified lobe lift (STEP D) is .010 in. (0.25 mm).

Valve Rocker Arms And Lifters

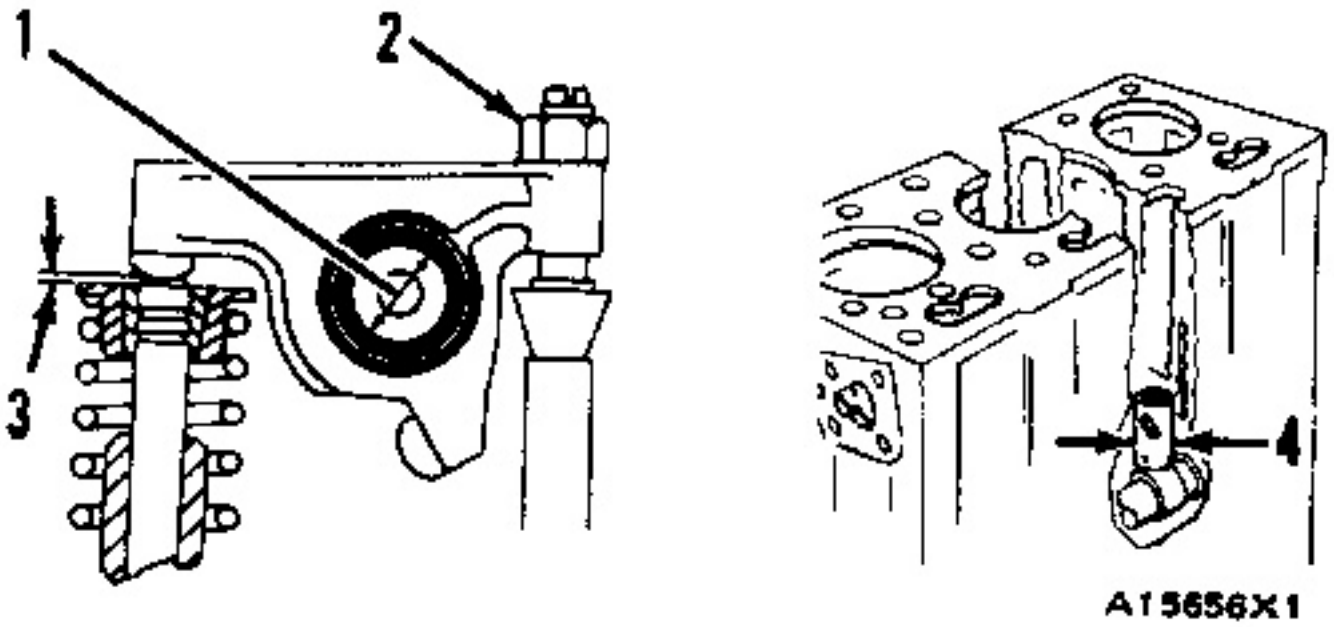

(1) Bore in bearing for shaft (new) ... .7263 ± .0005 in.(18.448 ± 0.013 mm)

Diameter of shaft (new) ... .7245 ± .0005 in.(18.402 ± 0.013 mm)

Maximum permissible clearance between bearing and shaft (worn) ... .008 in.(0.20 mm)

(2) Torque for locknut on valve adjustment screw ... 22 ± 3 lb. ft.(28 ± 4 N·m)

(3) Clearance for valves:

Intake valves ... .015 in.(0.38 mm)

Exhaust valves ... .025 in.(0.64 mm)

(4) Diameter of valve lifter (new) ... 1.3105 ± .0005 in.(33.287 ± 0.013 mm)

Bore in block for valve lifter (new) ... 1.3145 ± .0010 in.(33.388 ± 0.025 mm)

Maximum permissible clearance between lifter and bore for valve lifter (worn) ... .012 in.(0.30 mm)

Valves

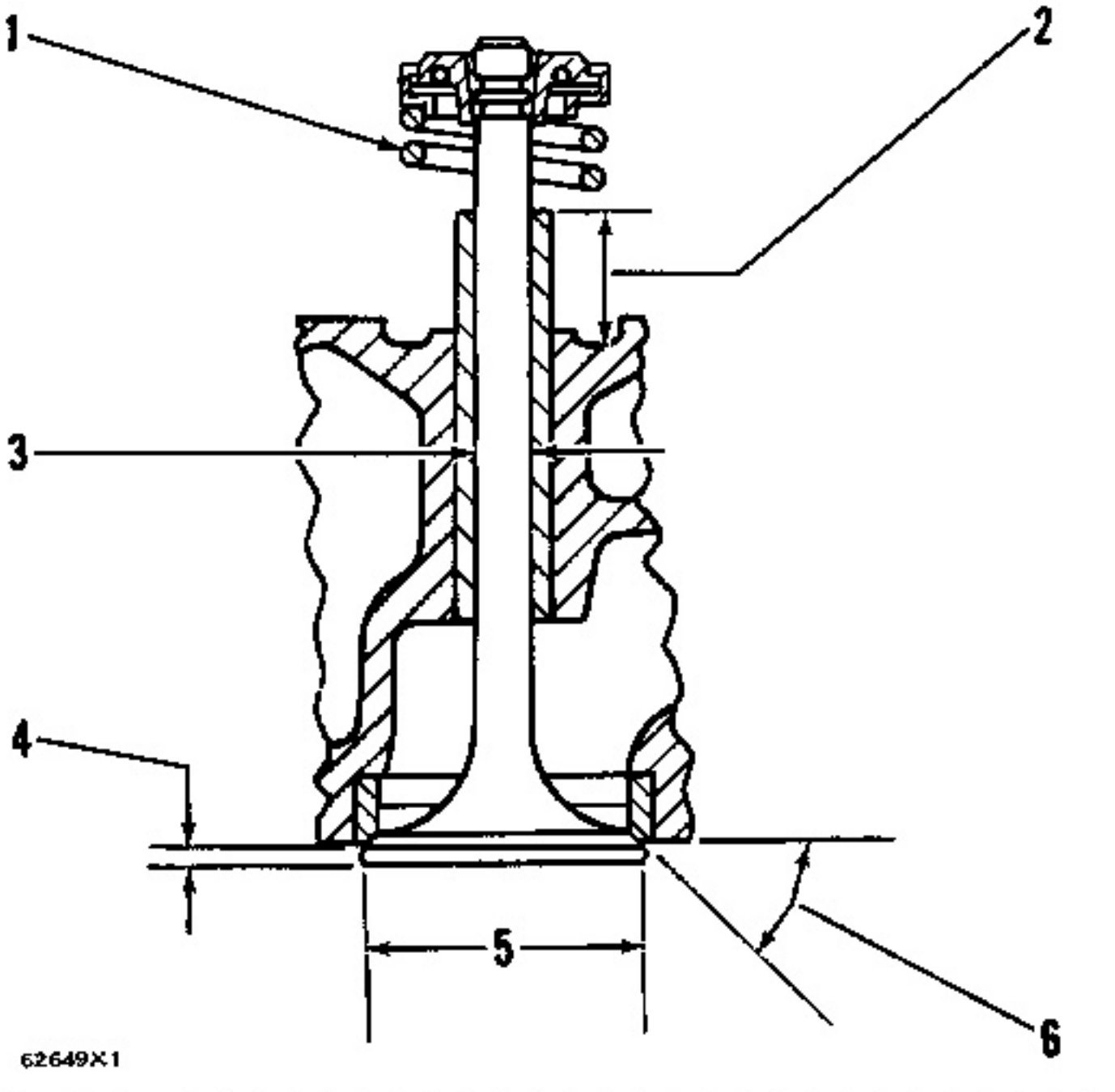

NOTE: GUIDELINE FOR REUSABLE PARTS, VALVES AND VALVE SPRINGS, Forms SEBF8002 and SEBF8034, have the procedure and specifications necessary for checking used valves and valve springs.

(1) 7S7144 Spring for valves (new):

Length under test force ... 1.766 in.(44.86 mm)

Test force ... 57.7 ± 4.5 lb.(257 ± 20 N)

Use again minimum load at length under test force ... 46.5 lb.(207 N)

Length of spring at valve open position ... 1.271 in.(32.28 mm)

Use again minimum load at valve open position ... 144 lb.(640 N)

Free length after test ... 2.05 in.(52.1 mm)

Outside diameter ... 1.386 in.(35.20 mm)

Spring must not be bent more than ... .072 in.(1.83 mm)

(2) Height to top of valve guide ... .875 in.(22.23 mm)

(3) Diameter of valve stem (new) ... .3717 ± .0003 in.(9.441 ± 0.008 mm)

Use again minimum diameter ... .3704 in.(9.408 mm)

Bore in valve guide with guide installed in the head (new) ... .3733 ± .0010 in.(9.482 ± 0.025 mm)

Maximum permissible bore (worn) ... .3771 in.(9.578 mm)

(4) Valve lip thickness:

8N875 Exhaust Valve

Use again minimum ... .119 in.(3.02 mm)

5S7232 Exhaust Valve

Use again minimum ... .106 in.(2.69 mm)

5S6449 Exhaust Valve

Use again minimum ... .096 in.(2.44 mm)

7S8809 Intake Valve

Use again minimum ... .106 in.(2.69 mm)

5S6452 Intake Valve

Use again minimum ... .096 in.(2.44 mm)

(5) Diameter of valve head:

Exhaust valve ... 1.896 ± .005 in.(48.16 ± 0.13 mm)

Intake valve ... 2.020 ± .005 in.(51.31 ± 0.13 mm)

(6) Angle of valve face ... 291/4°

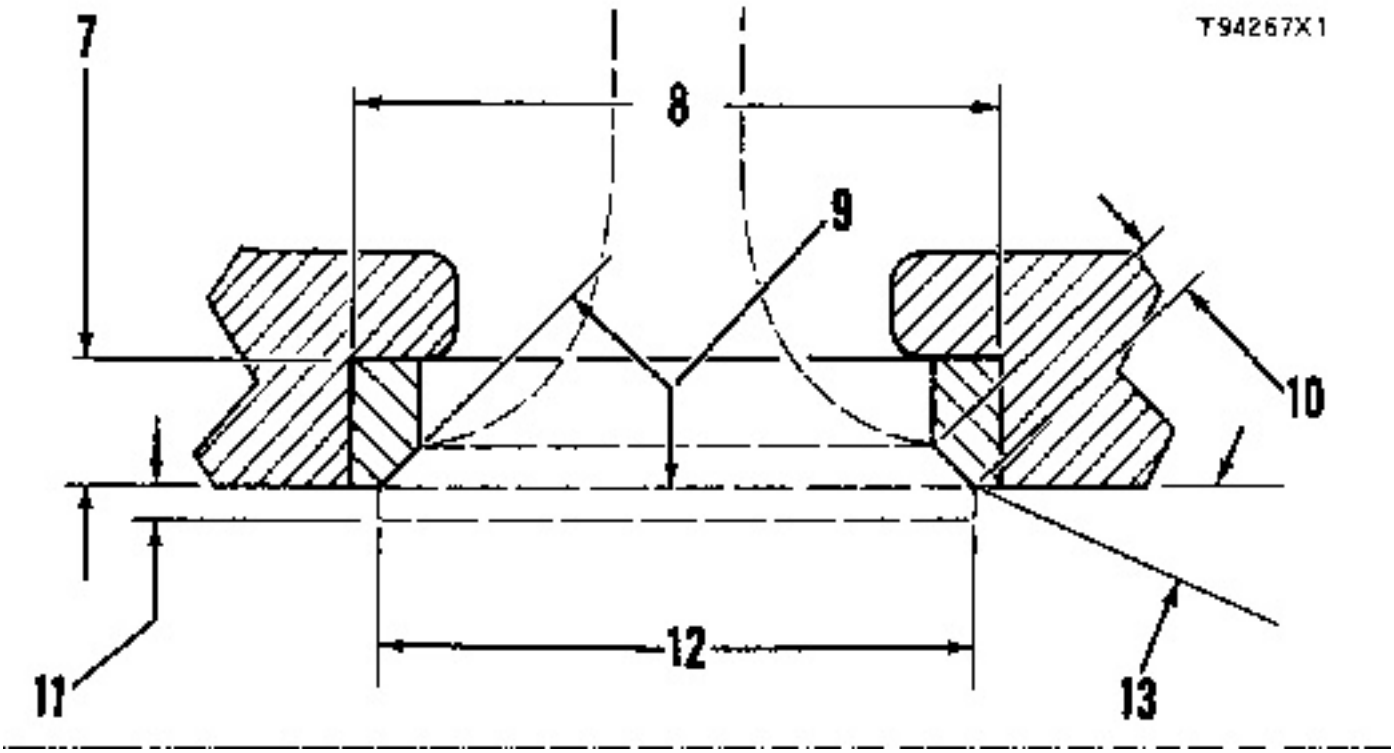

(7) Depth of bore in head for valve seat insert:

Exhaust

5S7221 and 1P6837 ... .449 ± .005 in.(11.40 ± 0.13 mm)

Intake

5S7218 ... .449 ± .005 in.(11.40 ± 0.13 mm)

7N4448 ... .349 ± .005 in.(8.86 ± 0.13 mm)

(8) Diameter of valve seat insert:

Exhaust

5S7221 and 1P6837 ... 2.0035 ± .0005 in.(50.889 ± 0.013 mm)

Intake

5S7218 ... 2.1285 ± .0005 in.(54.064 ± 0.013 mm)

7N4448 ... 2.0485 ± .0005 in.(52.032 ± 0.013 mm)

Bore in head for valve seat insert:

Exhaust

5S7221 and 1P6837 ... 2.0005 ± .0005 in.(50.813 ± 0.013 mm)

Intake

5S7218 ... 2.1255 ± .0005 in.(53.988 ± 0.013 mm)

7N4448 ... 2.0457 ± .0005 in.(51.961 ± 0.013 mm)

(9) Angle of face of valve seat insert ... 30°

(10) Maximum permissible width of valve seat (intake and exhaust) ... .076 in.(1.93 mm)

Minimum permissible width of valve seat (intake and exhaust) ... .045 in.(1.14 mm)

(11) Dimension from top of closed valve to face of head:

Maximum permissible dimension for 5S6449 or 5S7232 Exhaust Valves ... .140 in.(3.56 mm)

Minimum permissible dimension for 5S6449 or 5S7232 Exhaust Valves ... .056 in.(1.42 mm)

Maximum permissible dimension for 8N875 Exhaust Valve ... .163 in.(4.14 mm)

Minimum permissible dimension for 8N875 Exhaust Valve ... .079 in.(2.01 mm)

Maximum permissible dimension for 5S6452 or 7S8809 Intake Valve ... .140 in.(3.56 mm)

Minimum permissible dimension for 5S6452 or 7S8809 Intake Valve ... .066 in.(1.68 mm)

(12) Outside diameter of the face of the valve seat insert:

Minimum permissible, exhaust seat ... 1.810 in.(45.97 mm)

Maximum permissible, exhaust seat ... 1.860 in.(47.24 mm)

Minimum permissible, intake seat ... 1.934 in.(49.12 mm)

Maximum permissible, intake seat ... 1.984 in.(50.39 mm)

(13) Angle to grind seat face of the insert to get a reduction of maximum seat diameter ... 15°

Cylinder Head

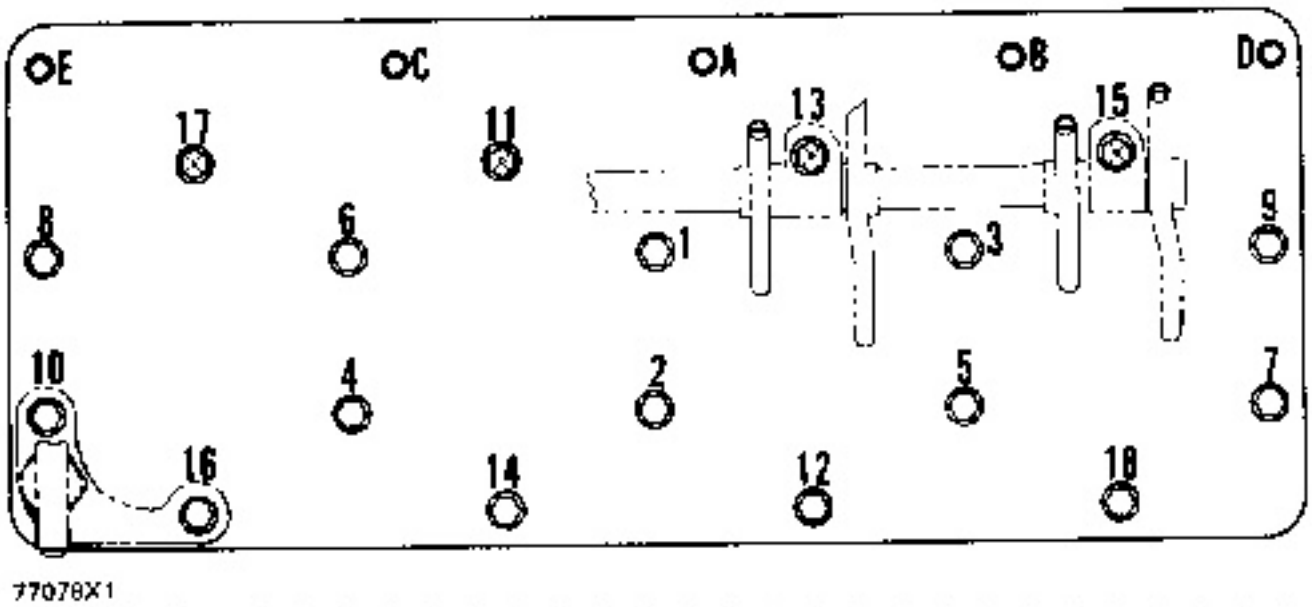

3304 ENGINE VIEW FROM RIGHT SIDE OF ENGINE

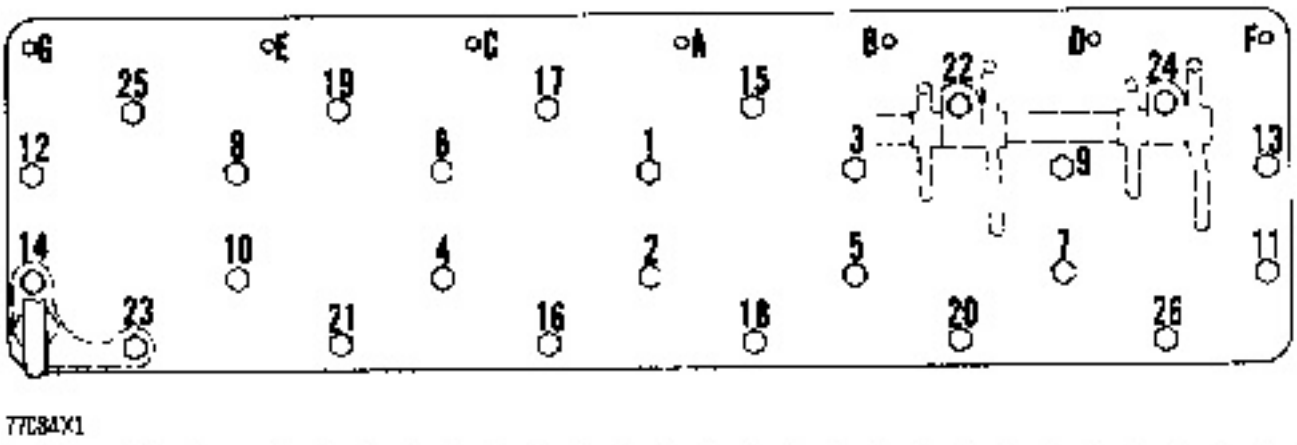

3306 ENGINE VIEW FROM RIGHT SIDE OF ENGINE

Thickness of cylinder head (new) ... 3.938 ± .030 in.(100.03 ± 0.76 mm)

NOTE: Dimension from top of closed valve to face of cylinder head must be according to the specifications in VALVES.

Put 5P3931 Anti-Seize Compound on threads and tighten bolts in the following Step sequence:

1. Tighten all bolts in number sequence to ... 115 lb. ft.(155 N·m)

2. Again tighten all bolts in number sequence to ... 185 ± 13 lb. ft.(250 ± 17 N·m)

3. Again tighten all bolts in number sequence (hand torque only) to ... 185 ± 13 lb. ft.(250 ± 17 N·m)

4. Tighten all bolts in letter sequence (hand torque only) to ... 32 ± 5 lb. ft.(43 ± 7 N·m)

Valve Cover

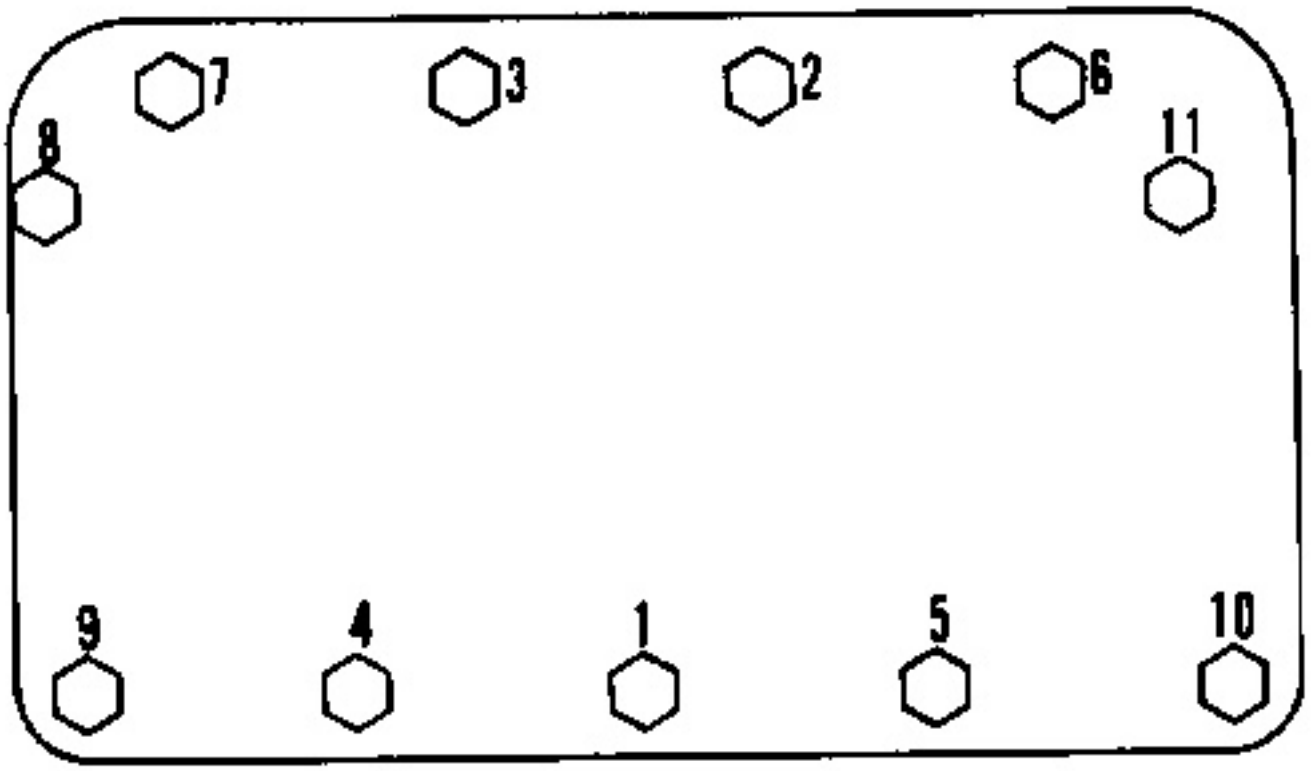

77077X1

3304 ENGINE VIEW FROM RIGHT SIDE OF ENGINE

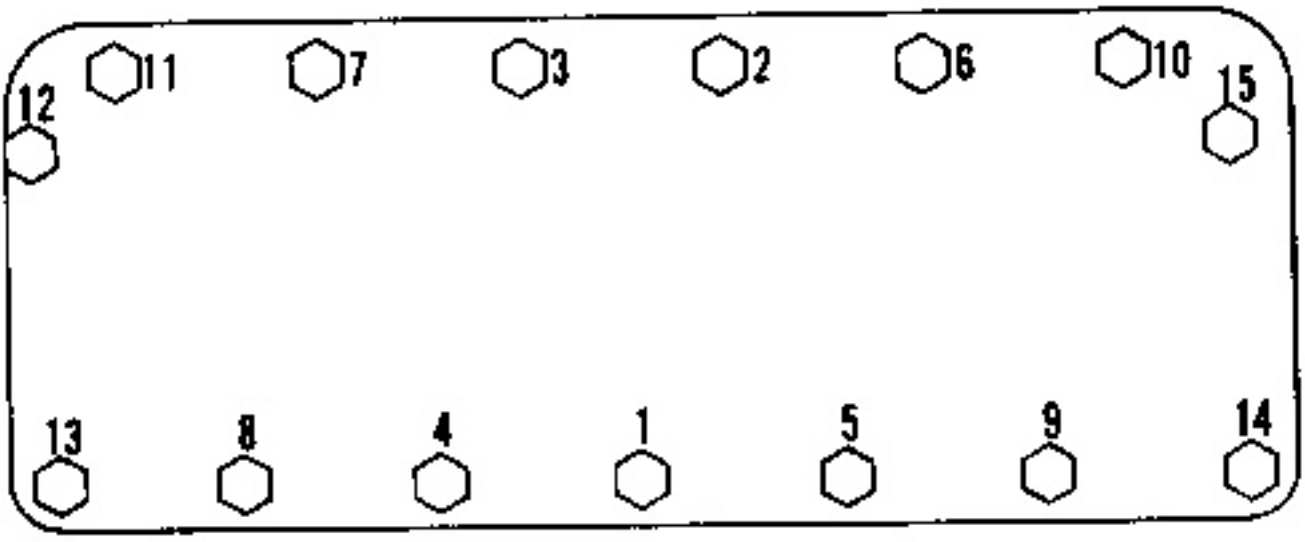

77083X1

3306 ENGINE VIEW FROM RIGHT SIDE OF ENGINE

Put 5H2471 Cement on the face of valve cover and top side of gasket.

Tighten bolts by number in order shown to ... 96 ± 24 lb. in.(10.9 ± 2.8 N·m)

https://barringtondieselclub.co.za/

Glow Plug Positioning

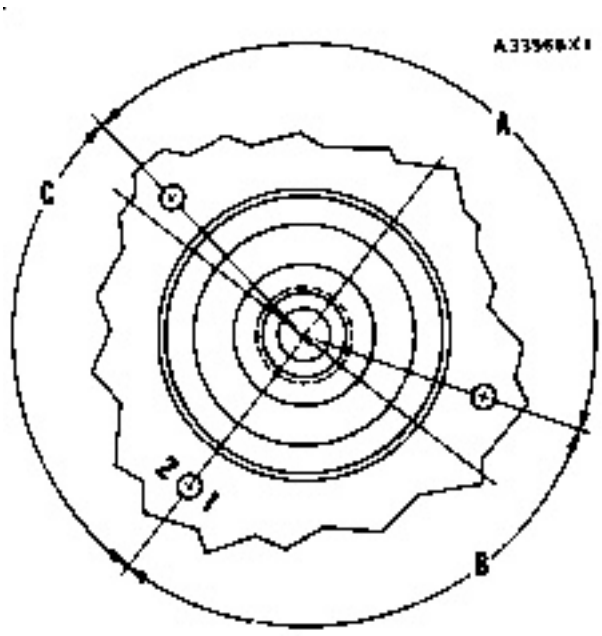

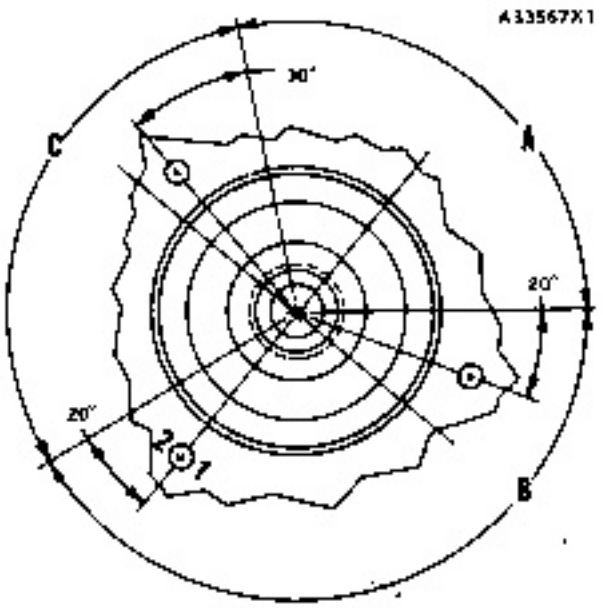

Cyl. Nos. 1, 2, and 3—3304*
Cyl. Nos. 1, 2, 3, 4, and 5—3306*
Cyl. Nos. 1 thru 4—3304**
Cyl. Nos. 1 thru 6—3306**

Cyl. No. 4—3304*
Cyl. No. 6—3306*

***Engines with counterbored block.**
****Engines with spacer plate.**

(A) Correct range for glow plug opening.

Put 5P3931 Anti-Seize Compound on the threads of the precombustion chamber.

Put 5M2667 Gasket, with "2C" on it, on the precombustion chamber. Install the precombustion chamber in the cylinder head and tighten to ... 150 ± 10 lb. ft.(205 ± 14 N·m)

NOTE: If the hole for the glow plug is not in range (A), remove the precombustion chamber. Remove the gasket.

If the hole was in range (B) install 2S8959 Gasket, with "2S" on it, on the precombustion chamber. Install the precombustion chamber in the cylinder head and tighten to ... 150 ± 10 lb. ft.(205 ± 14 N·m)

If the hole was in range (C) install 2S8960 Gasket, with "2X" on it, on the precombustion chamber. Install the precombustion chamber in the cylinder head and tighten to ... 150 ± 10 lb. ft.(205 ± 14 N·m)

Exhaust Pipe And Muffler

Put 5P3931 Anti-Seize Compound on threads of bolts holding exhaust flanges and tighten to ... 40 ± 4 lb. ft.(55 ± 5 N·m)

Put 5P3931 Anti-Seize Compound on threads of bolts for clamps and tighten to ... 10 lb. ft.(14 N·m)

Air Cleaner

Tighten bolts and nuts holding air filter to housing for air filter to ... 20 ± 5 lb. ft.(25 ± 7 N·m)

Dust Ejector

Put 5P3931 Anti-Seize Compound on the threads of the studs which hold the tube to the muffler. Tighten the nuts on these studs to ... 20 ± 5 lb. ft.(25 ± 7 N·m)

Exhaust Manifold

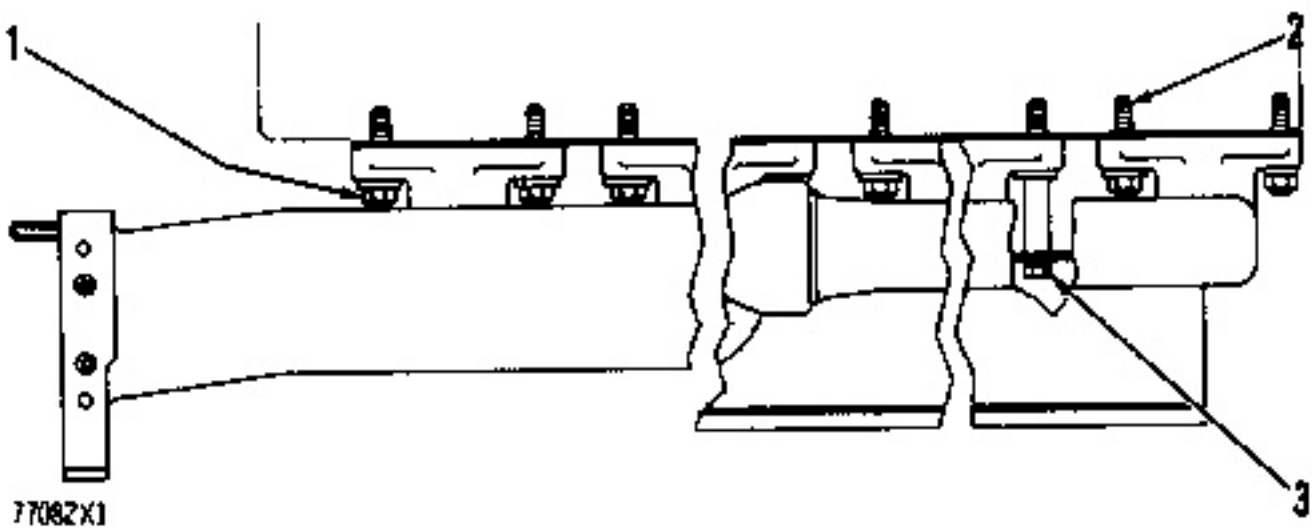

(1) Torque for nuts holding the manifold to the cylinder head:

a. Put 5P3931 Anti-Seize Compound on threads of stud.

b. Hand tighten nuts to ... 32 ± 3 lb. ft.(45 ± 4 N·m)

(2) Tighten taperlock studs to ... 20 ± 3 lb. ft.(25 ± 4 N·m)

(3) Put 5P3931 Anti-Seize Compound on bolt threads.

Tighten bolts to ... 32 ± 5 lb. ft.(45 ± 7 N·m)

Turbocharger (AiResearch T04B91)

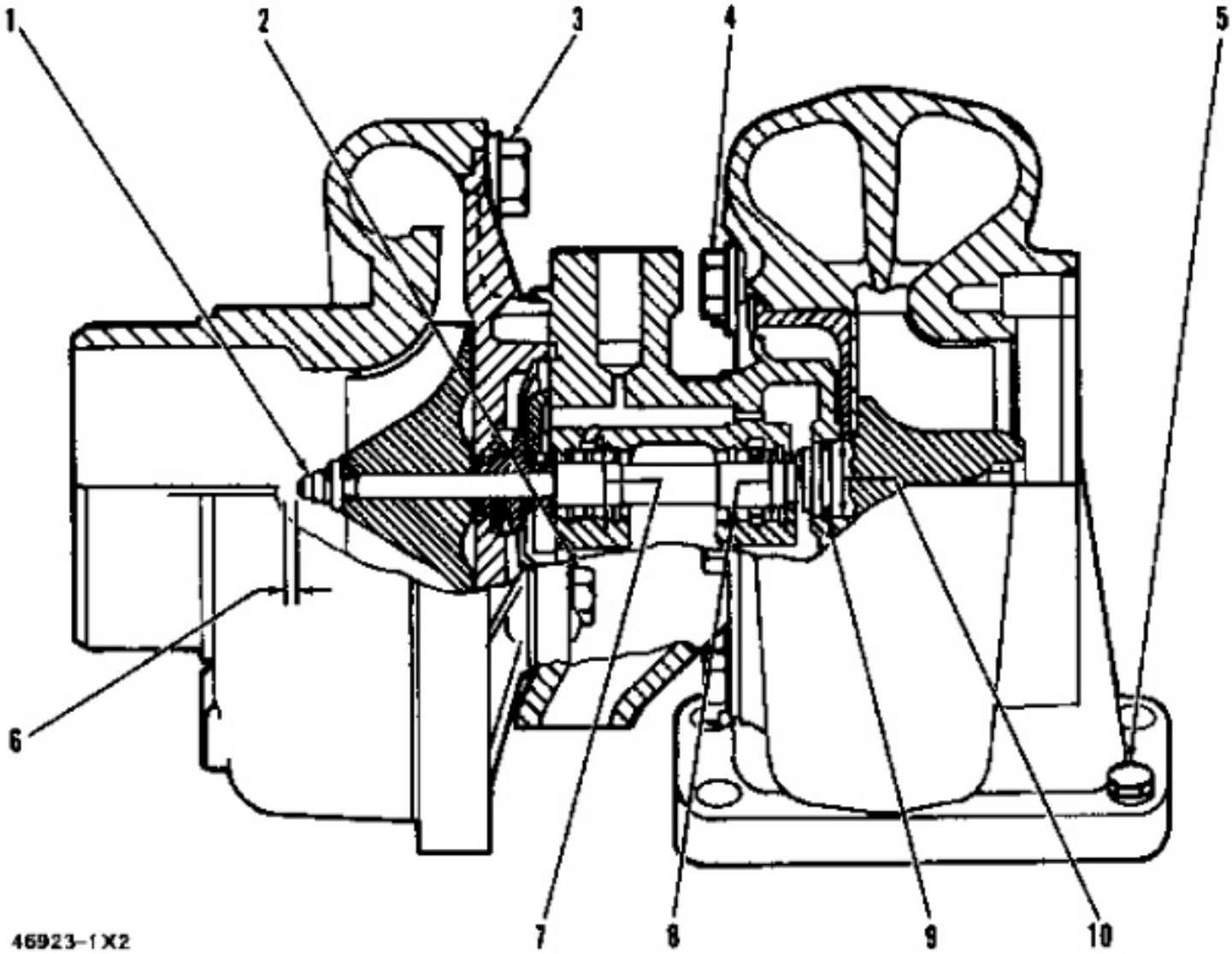

Make reference to ANALYZING TURBOCHARGER FAILURE, Form No. FEG45138.

(1) Torque for impeller nut ... 20 lb. in.(2.3 N·m)

Tighten nut an added ... 100°

(2) Torque for bolts holding back plate ... 75 to 90 lb. in.(8.5 to 10.2 N·m)

(3) Put 5P3931 Anti-Seize Compound on threads and tighten bolts holding compressor housing to center section to ... 115 ± 15 lb. in.(13.0 ± 1.7 N·m)

(4) Put 5P3931 Anti-Seize Compound on threads and tighten bolts holding turbine housing to center section to ...

115 ± 15 lb. in.(13.0 ± 1.7 N·m)

(5) Put 5P3931 Anti-Seize Compound on threads and tighten bolts holding turbocharger to manifold to ... 40 ± 4 lb. ft.(55 ± 5 N·m)

(6) End play for shaft:

Minimum permissible end play ... .001 in.(0.03 mm)

Maximum permissible end play ... .004 in.(0.10 mm)

(7) Radial play for shaft:

Minimum permissible radial play ... .003 in.(0.08 mm)

Maximum permissible radial play ... .006 in.(0.15 mm)

(8) Bore in the bearing ... .4010 to .4014 in.(10.185 to 10.196 mm)

Diameter of surface on shaft (journal) for the bearing ... .3997 to .4000 in.(10.152 to 10.160 mm)

(9) Bore in housing ... .6220 to .6223 in.(15.799 to 15.806 mm)

Outside diameter of the bearing ... .6182 to .6187 in.(15.702 to 15.715 mm)

(10) Clearance between ends of oil seal ring ... .008 to .015 in.(0.20 to 0.38 mm)

Diameter of bore for oil seal ring ... .709 to .711 in.(18.01 to 18.06 mm)

Turbocharger Impeller Installation (AiResearch Only)

Test For Type Of Impeller Installation

1. Install the proper thrust collar and seal carrier spacer on the shaft-wheel assembly to be used.

2. Install impeller on shaft by hand.

3. Measure the distance between impeller and seal carrier at the point where impeller no longer moves freely on shaft.

4. If the distance is:

(a) more than .31 in., use heat for installation. *

(b) .31 in. or less, use room temperature installation. **

INSTALLATION PROCEDURE CHART

Type of Installation	Step by Step Procedure	Turbochargers	
		T12, TW61	T18, TV61, TV81, TW81
*Impeller Heated	A. Heat impeller to (for 10 minutes max):	350 ± 25° F (177 ± 14° C)	350 ± 25° F (177 ± 14° C)
	B. Install impeller on shaft.		
	C. Tighten nut to:	120 lb. in. (14 N·m)	150 lb. in. (17 N·m)
	D. Let impeller become cool to below:	150° F (70° C)	150° F (70° C)
	E. Loosen nut and put oil on shaft threads and nut face.		
	F. Tighten nut again to:	30 lb. in. (3 N·m)	30 lb. in. (3 N·m)
	G. Tighten nut more:	120°	90°
**Impeller at Room Temperature	A. Put impeller on shaft.		
	B. Tighten nut to:	120 lb. in. (14 N·m)	150 lb. in. (17 N·m)
	C. Loosen the nut and put oil on nut seat face and threads.		
	D. Tighten the nut again to:	30 lb. in. (3 N·m)	30 lb. in. (3 N·m)
	E. Tighten the nut more:	120°	90°

NOTE: Do not bend or add stress to the shaft when nut is tightened.

https://barringtondieselclub.co.za/

Turbocharger (AiResearch TV61)

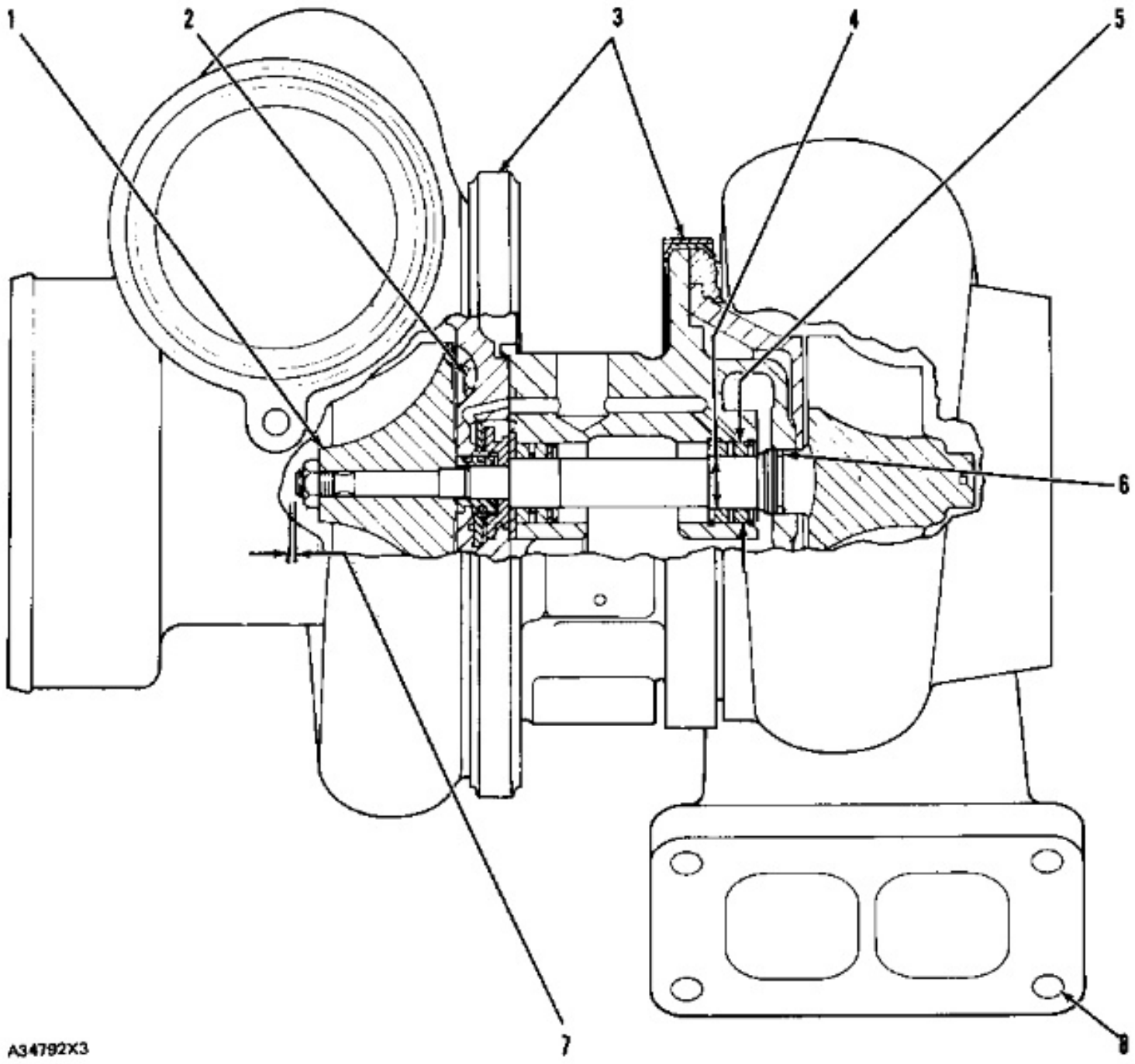

Make reference to ANALYZING TURBOCHARGER FAILURE, Form No. FEG45138.

(1) See TURBOCHARGER IMPELLER INSTALLATION.

(2) Torque for the two bolts that hold the backplate ... 90 ± 10 lb. in.(10.2 ± 1.1 N·m)

(3) Torque for the clamp bolts ... 120 ± 10 lb. in.(13.6 ± 1.1 N·m)

(4) Bore in the bearings ... .6268 to .6272 in.(15.921 to 15.931 mm)

Diameter for the surfaces (journals) on the shaft for the bearings ... .6250 to .6254 in.(15.875 to 15.885 mm)

(5) Bore in the housing ... .9827 to .9832 in.(24.961 to 24.973 mm)

Outside diameter of the bearings ... .9782 to .9787 in.(24.846 to 24.859 mm)

(6) Clearance between the ends of the oil seal ring ... .008 to .015 in.(0.20 to 0.38 mm)

(7) End play for the shaft ... .003 to .010 in.(0.08 to 0.25 mm)

(8) Torque for support nuts (put 5P3931 Anti-Seize Compound on the stud threads) ... 40 ± 4 lb. ft.(55 ± 5 N·m)

https://barringtondieselclub.co.za/

Turbocharger (AiResearch TW61)

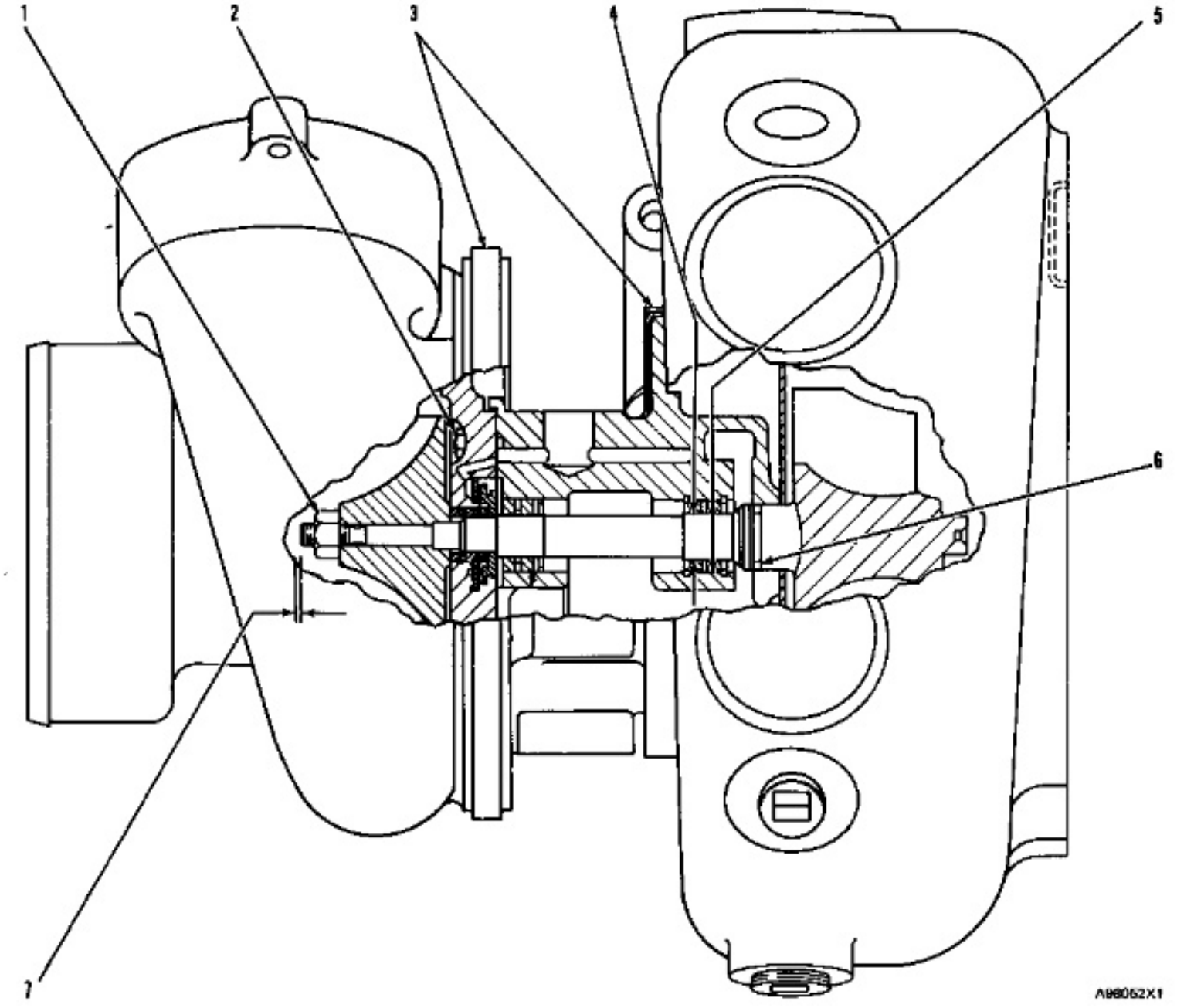

Make reference to ANALYZING TURBOCHARGER FAILURE, Form No. FEG45138.

Torque for support nuts ... 40 ± 4 lb. ft.(54 ± 5 N·m)

(1) See TURBOCHARGER IMPELLER INSTALLATION.

(2) Torque for the two bolts that hold the backplate ... 90 ± 10 lb. in.(10.2 ± 1.1 N·m)

(3) Torque for the clamp bolts ... 120 ± 10 lb. in.(13.6 ± 1.1 N·m)

(4) Bore in the bearings ... .6268 to .6272 in.(15.921 to 15.931 mm)

Diameter for the surfaces (journals) on the shaft for the bearings ... .6250 to .6254 in.(15.875 to 15.885 mm)

(5) Bore in the housing ... .9827 to .9832 in.(24.961 to 24.973 mm)

Outside diameter of the bearings ... .9782 to .9787 in.(24.846 to 24.859 mm)

(6) Clearance between the ends of the oil seal ring ... .008 to .015 in.(0.20 to 0.38 mm)

(7) End play for the shaft ... .003 to .010 in.(0.08 to 0.25 mm)

Turbocharger
(AiResearch T1210, T1224, and T1226)

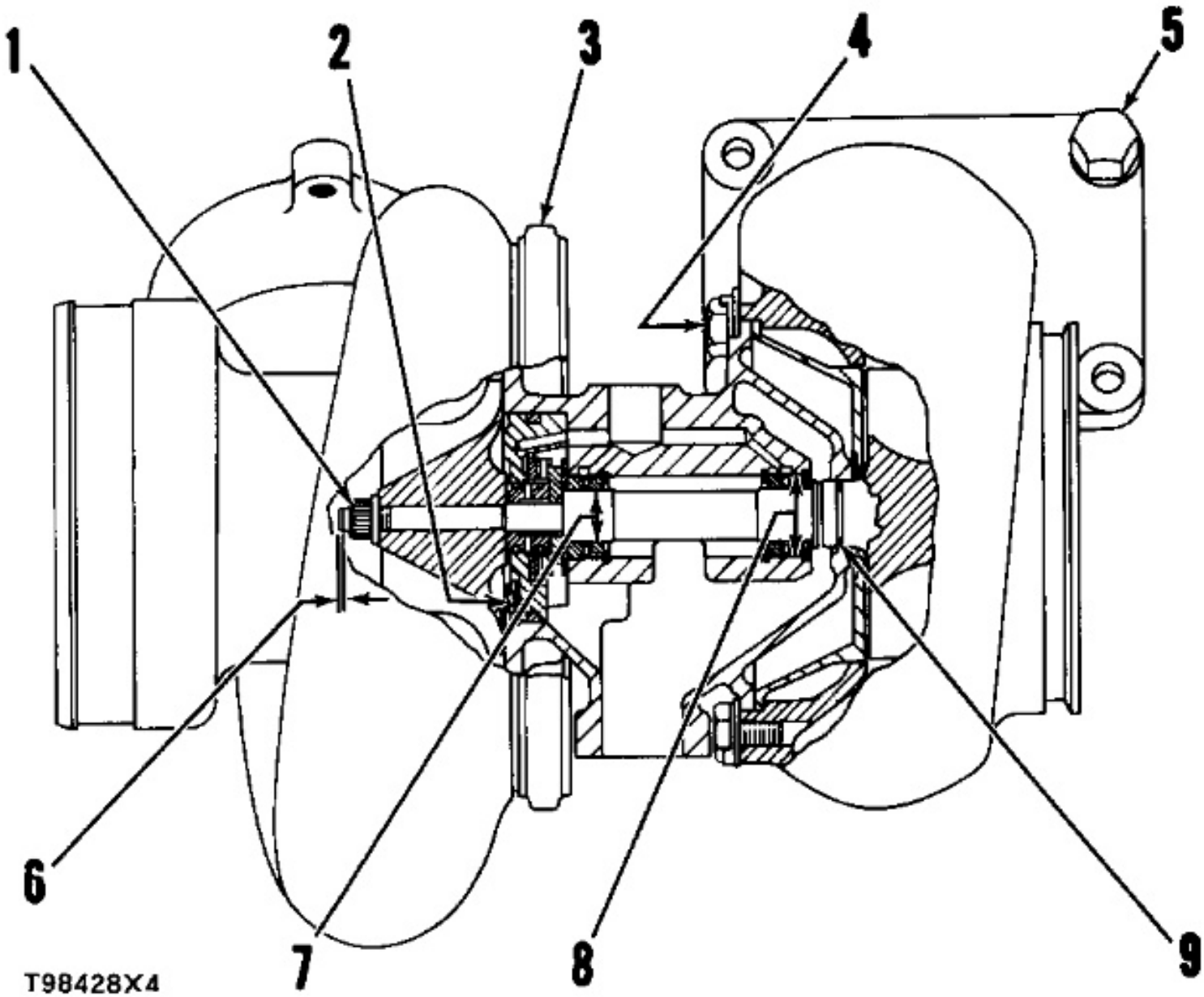

Make reference to ANALYZING TURBOCHARGER FAILURE, Form No. FEG45138.

Put 5P3931 Anti-Seize Compound on threads of plug for exhaust elbow.

Put 5P3931 Anti-Seize Compound on bolts holding support for exhaust and tighten to ... 45 ± 5 lb. ft.(60 ± 7 N·m)

(1) See TURBOCHARGER IMPELLER INSTALLATION.

(2) Torque for bolts holding thrust plate ... 35 ± 4 lb. in.(4.0 ± 0.5 N·m)

(3) Tighten bolt holding band clamp to ... 120 ± 10 lb. in.(13.6 ± 1.1 N·m)

(4) Put 5P3931 Anti-Seize Compound on threads of bolts holding turbine housing and tighten to ... 175 ± 15 lb. in. (19.8 ± 1.7 N·m)

(5) Put 5P3931 Anti-Seize Compound on threads of bolts holding turbocharger to manifold and tighten to ... 40 ± 4 lb. ft.(55 ± 5 N·m)

(6) End play for shaft (new) ... .006 to .011 in.(0.15 to 0.27 mm)

(7) Bore in the bearing ... .6268 to .6272 in.(15.921 to 15.931 mm)

Diameter of surface on shaft (journal) for the bearing ... .6250 to .6254 in.(15.875 to 15.885 mm)

(8) Bore in housing ... .9827 to .9832 in.(24.961 to 24.973 mm)

Outside diameter of the bearing ... .9780 to .9785 in.(24.841 to 24.854 mm)

(9) Clearance between ends of oil seal ring ... .008 to .015 in.(0.20 to 0.38 mm)

Turbocharger Impeller Installation

Schwitzer ONLY

Installation Procedure Chart

A. Put 6V1541 Quick Pure Primer on the nut and the shaft threads to clean them, if necessary.

B. Put a small amount of 9S3265 Retaining Compound on the nut and shaft threads.

CAUTION

Do not let the retaining compoun get into the compressor wheel bore on the shaft, because it can make removal of the compressor wheel difficult during future turbocharger disassembly.

C. Put a small amount of lubricant, such as Lubriplate, on the nut seat area on the compressor. Do not put lubricant on the threads.

D. Tighten the compressor wheel retainer nut to ..... 44 ± 2 lb. ft. (60 ± 3 N•m)

NOTE: Do not bend or add stress to the shaft when the nut is tightened.

Turbocharger
(Schwitzer F444, 4LF504 and E Models)

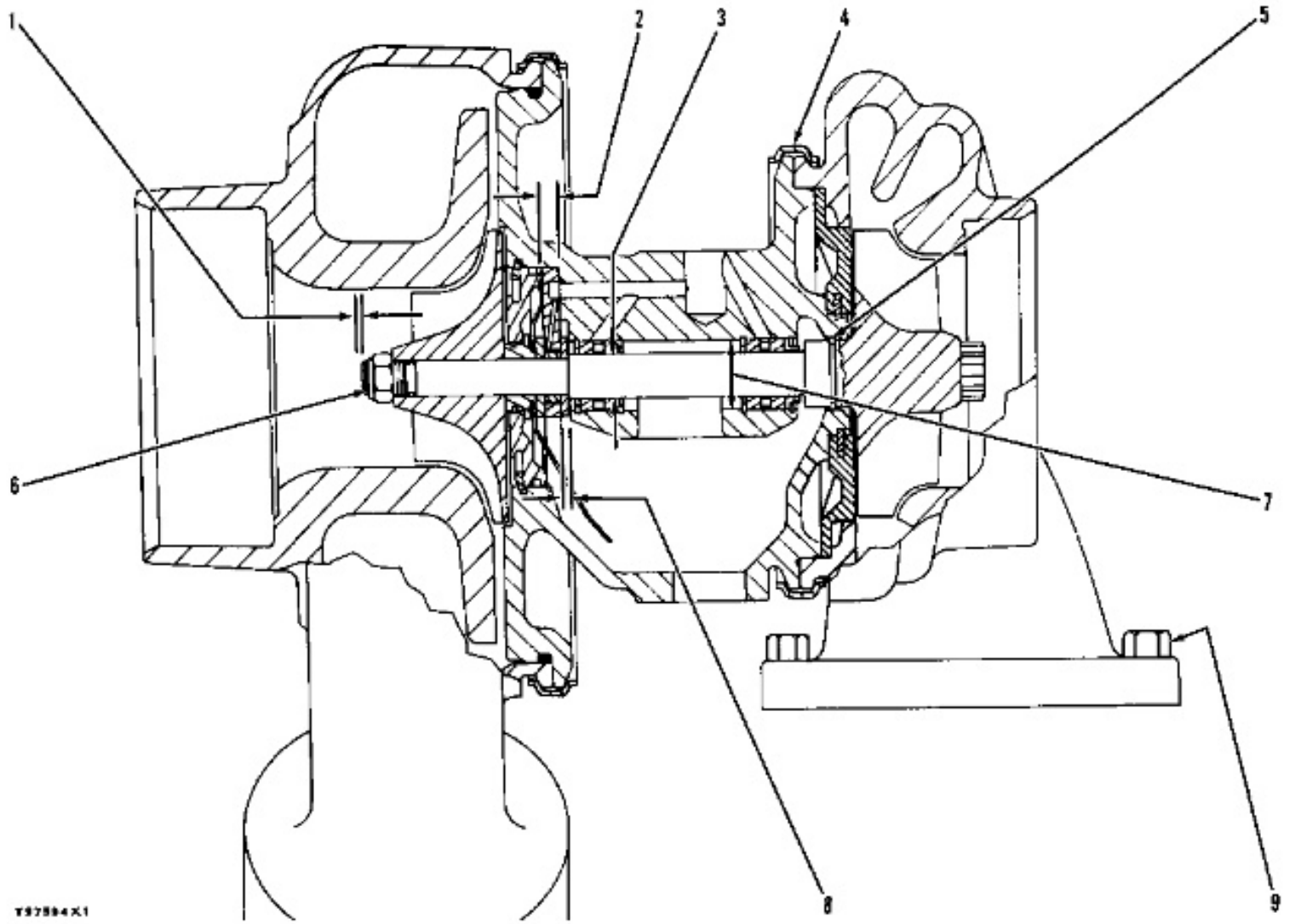

Make reference to ANALYZING TURBOCHARGER FAILURE, Form No. FEG45138.

(1) End play for shaft (new) ... .0045 ± .0015 in.(0.114 ± 0.038 mm)

Maximum permissible end play (worn) ... .008 in.(0.20 mm)

(2) Thickness of thrust bearing ... .211 ± .001 in.(5.36 ± 0.03 mm)

(3) Diameter of surface on shaft (journal) for the bearing (new) ... .5612 to .5615 in.(14.254 to 14.262 mm)

Bore in the bearing (new) ... .5627 to .5630 in.(14.293 to 14.300 mm)

Maximum permissible clearance between bearing and shaft (worn) ... .003 in.(0.08 mm)

(4) Put 5P3931 Anti-Seize Compound on threads and tighten bolt holding band clamp to ... 120 lb. in.(13.6 N·m)

(5) Maximum permissible gap of oil seal ring, measured in bore of housing ... .009 in.(0.23 mm)

(6) See TURBOCHARGER IMPELLER INSTALLATION.

(7) Bore in housing (new) ... .8762 to .8767 in.(22.255 to 22.268 mm)

Outside diameter of the bearing (new) ... .8718 to .8722 in.(22.144 to 22.154 mm)

Maximum permissible clearance between bearing and bore in housing (worn) ... .006 in.(0.15 mm)

(8) Thickness of each thrust ring ... .1005 ± .0005 in.(2.553 ± 0.013 mm)

(9) Put 5P3931 Anti-Seize Compound on threads and tighten bolts holding turbocharger to manifold to ... 40 ± 4 lb. ft.(55 ± 5 N·m)

Turbocharger (Schwitzer 3LM)

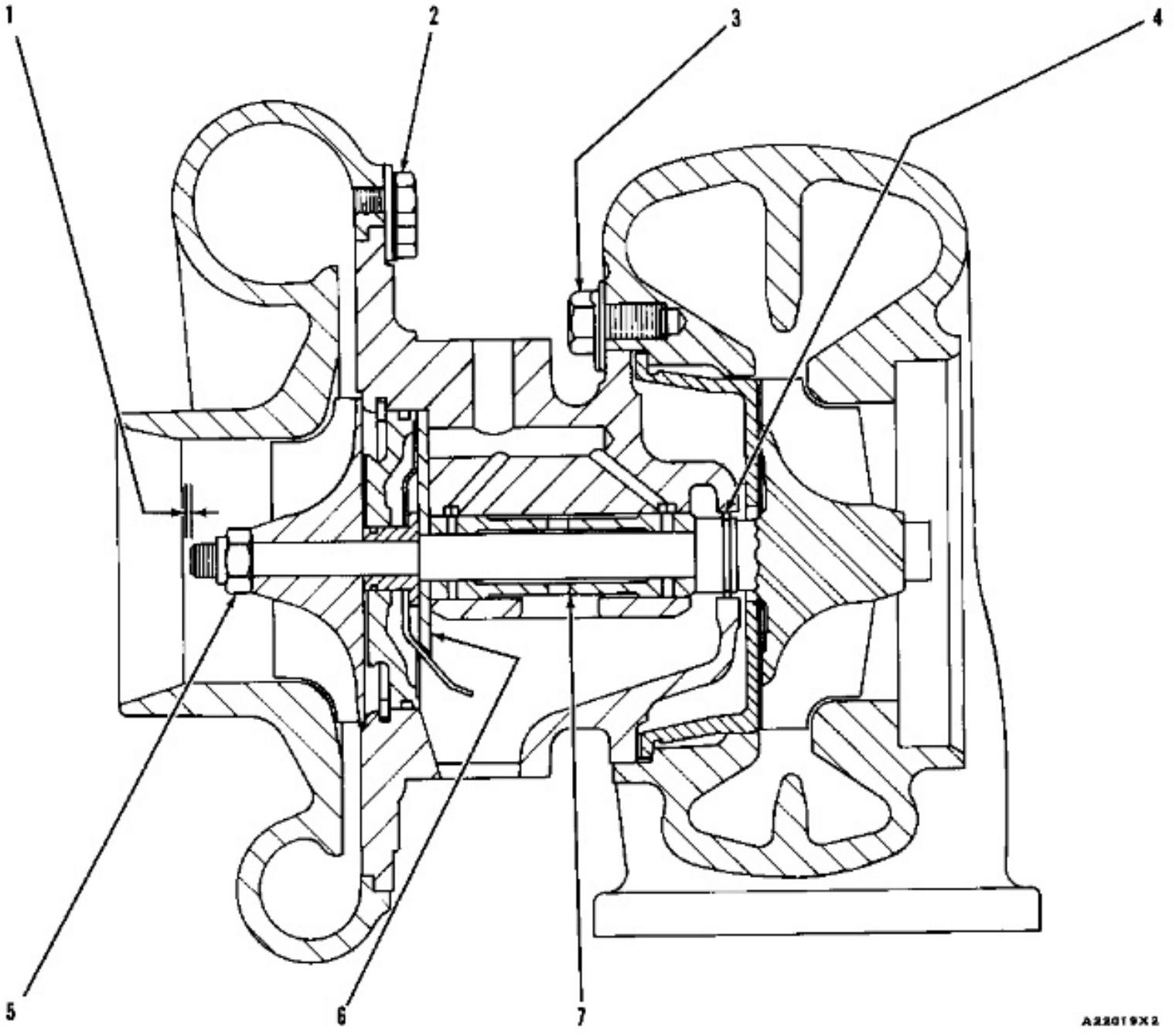

Make reference to ANALYZING TURBOCHARGER FAILURE, Form No. FEG45138.

(1) End play for shaft (new) ... .002 to .005 in.(0.05 to 0.13 mm)

(2) Put 5P3931 Anti-Seize Compound on threads and tighten bolts holding impeller housing to ... 60 lb. in.(6.8 N·m)

(3) Put 5P3931 Anti-Seize Compound on threads and tighten bolts holding turbine housing to ... 11 to 12 lb. ft.(15 to 17 N·m)

(4) Maximum permissible gap of oil seal ring, measured in bore of housing ... .007 in.(0.18 mm)

(5) See TURBOCHARGER IMPELLER INSTALLATION.

(6) Thickness of thrust bearing ... .107 to .108 in.(2.72 to 2.74 mm)

(7) Bearing:

Bore in housing for bearing ... .7500 to .7505 in.(19.050 to 19.063 mm)

Diameter of surface of bearing for housing ... .7460 to .7465 in.(18.948 to 18.961 mm)

Diameter of surface of bearing for shaft ... .4415 to .4418 in.(11.214 to 11.222 mm)

Diameter of surface of shaft for bearing (journal) ... .4400 to .4403 in.(11.176 to 11.184 mm)

Length of bearing ... 2.425 to 2.426 in.(61.60 to 61.62 mm)

https://barringtondieselclub.co.za/

Oil Pump

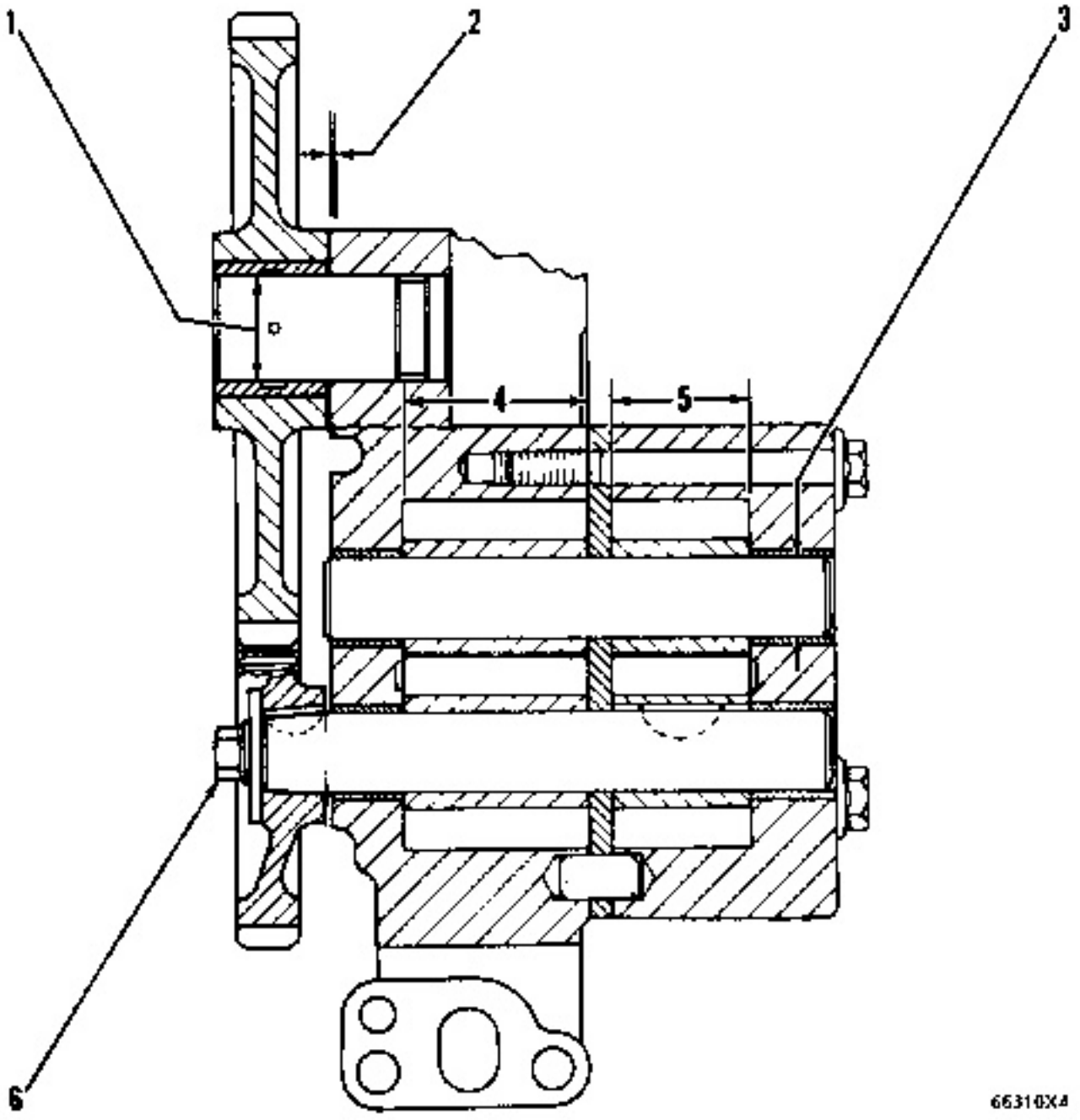

(1) Bore in bearing of idler gear ... 1.1260 ± .0024 in.(28.600 ± 0.061 mm)

Diameter of shaft for the idler gear ... 1.1255 ± .0005 in.(28.588 ± 0.013 mm)

Clearance between bearing and shaft ... .0035 ± .0029 in.(0.089 ± 0.074 mm)

(2) Clearance between gears and body of pump ... .002 to .026 in.(0.05 to 0.66 mm)

(3) Diameter of shafts for pump ... .8747 ± .0002 in.(22.217 ± 0.005 mm)

Bore in bearings for shafts ... .8763 ± .0003 in.(22.258 ± 0.008 mm)

Clearance between shafts and bearings ... .0016 ± .0005 in.(0.041 ± 0.013 mm)

(4) Length of gears ... 2.0003 ± .0010 in.(50.808 ± 0.025 mm)

Depth of bore in pump body for gears ... 2.0053 ± .0008 in.(50.935 ± 0.020 mm)

Clearance between end of gears and pump body ... .0050 ± .0018 in.(0.127 ± 0.046 mm)

(5) Length of gears ... 1.4988 ± .0010 in.(38.070 ± 0.025 mm)

Depth of bore in pump body for gears ... 1.5038 ± .0008 in.(38.197 ± 0.020 mm)

Clearance between end of gears and pump body ... .0050 ± .0018 in.(0.127 ± 0.046 mm)

(6) Torque for bolt holding drive gear to drive shaft ... 32 ± 5 lb. ft.(43 ± 7 N·m)

Oil Filter

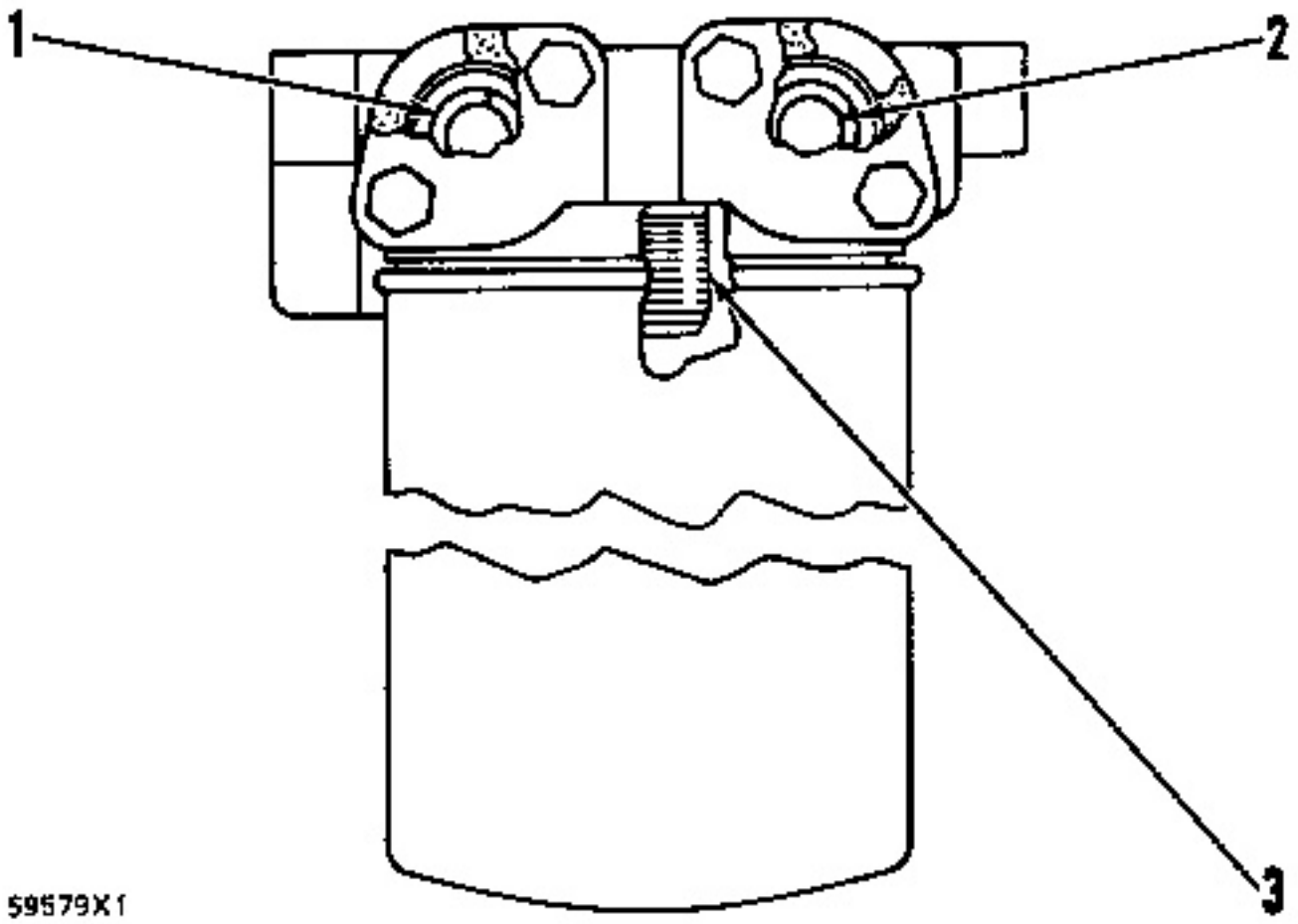

Oil cooler bypass valve and oil filter bypass valve must open at a pressure difference of ... 25 ± 3 psi (1.76 ± 0.21 kg/cm^2) (172 ± 21 kPa)

(1) (2) 8M3182 Spring for bypass valves:

Length under test force ... 2.5 in.(63.5 mm)

Test force ... 8.92 lb.(40 N)

Free length after test ... 3.61 in.(91.7 mm)

Outside diameter ... .81 in.(20.6 mm)

(3) Torque for stud:

Put 9S3263 Thread Lock Compound on threads of the stud and tighten the stud to ... 50 ± 5 lb. ft.(70 ± 7 N·m)

Engine Oil Pressure

All steps of this procedure must be followed for the pressure findings to be usable.

1. Be sure that the engine is filled to the correct level with either SAE 10 or SAE 30 oil. If any other viscosity of oil is used, the information in the ENGINE OIL PRESSURE CHART does not apply.

2. Find a location on the engine oil manifold to install a tee. The easiest method is to remove the sending unit for the present gauge and install a tee at this location. Install a probe from the 9S9102 Thermistor Thermometer Group in one side of the tee. Connect a 8M2744 Gauge from the 5P6225 Hydraulic Test Box to the other side of the tee.

3. Run the engine to get the oil temperature at 210° F (99° C).

NOTE: A 5° F (3° C) increase in oil temperature gives approximately 1 psi (7 kPa) decrease in oil pressure.

4. Keep the engine oil temperature constant. With the engine at the rpm from the chart, read the pressure gauge.

Make a comparison between the pressure reading on the test gauge and the minimum permissible pressure from the ENGINE OIL PRESSURE CHART. If the pressure reading on the test gauge is below the minimum permissible pressure, find the cause and correct it. Operation of the engine with **low oil pressure** can be the cause of engine failure or of a reduction in engine life.

ENGINE OIL PRESSURE CHART

ENGINE	TEST rpm	SAE NO. OF TEST OIL	MINIMUM PERMISSIBLE PRESSURE psi	kPa
3304 & 3306	1500 rpm or above	10	20	140
		30	24	165
	600 to 800 rpm	10	6	40
		30	7	50

Oil Breather Cap

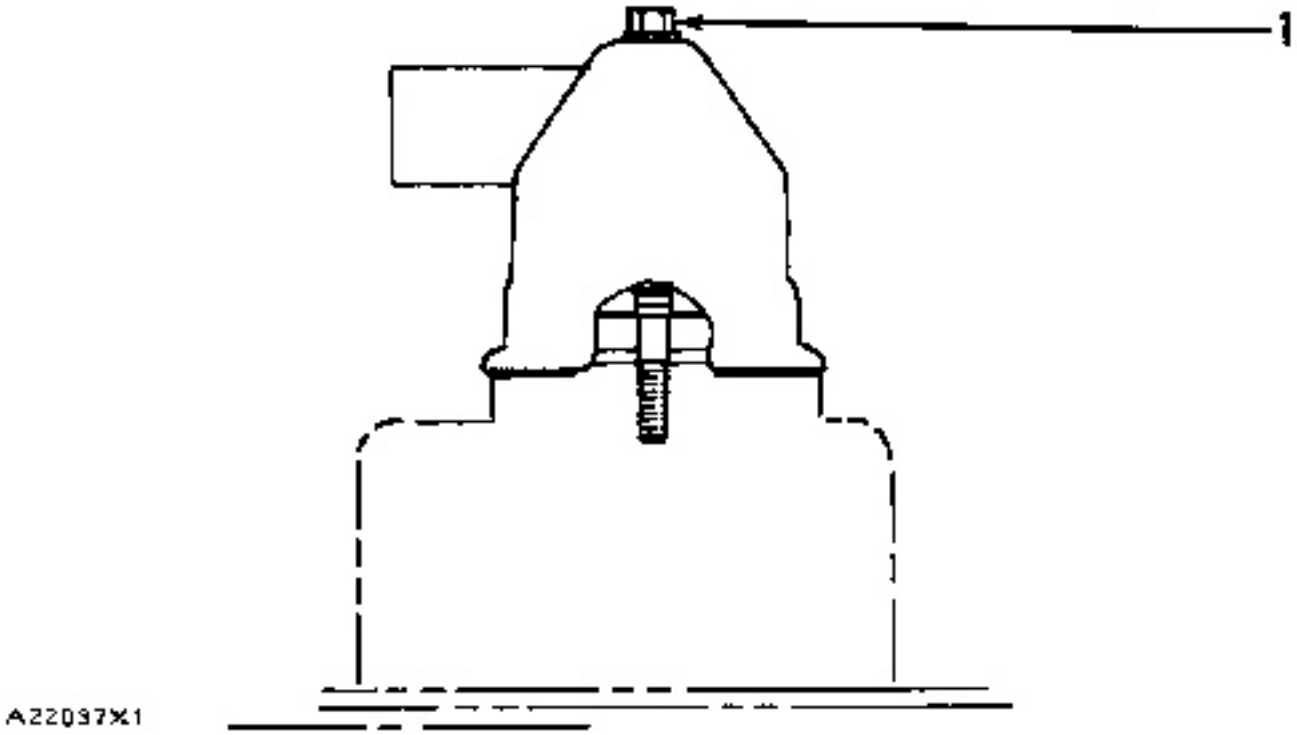

(1) Torque for bolt holding breather cap ... 120 ± 24 lb. in.(13.6 ± 2.8 N·m)

Coolant Flow Switch

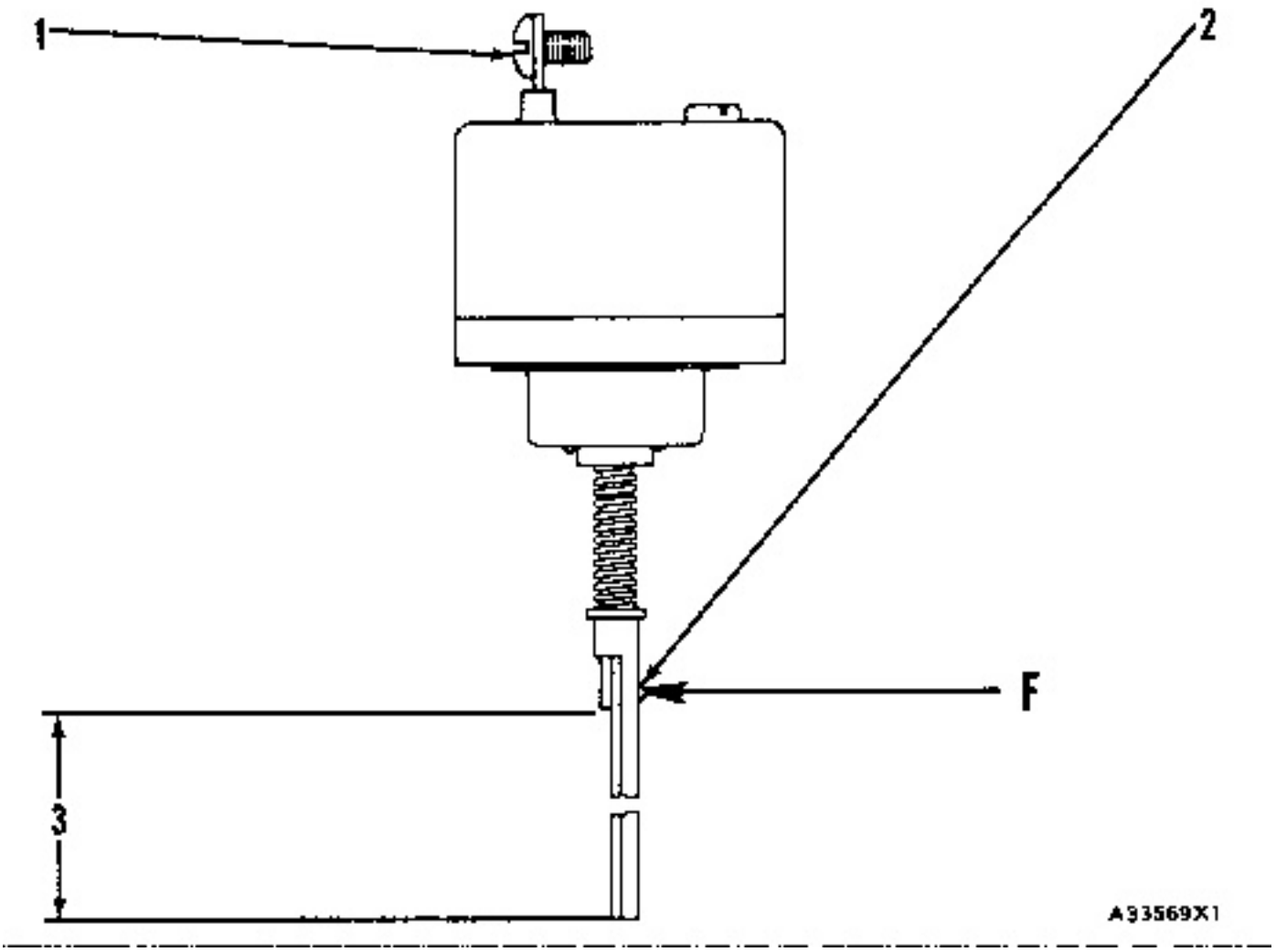

4N9072 Switch (John W. Hobbs Number 22258)

(1) Terminal connected to insulated contact. The other contact is connected to the body of the switch. Switch contacts are normally closed.

(2) With paddle in vertical position, the force (F) on rivet head (2) necessary to open contacts of switch ... 1.2 ± 0.1 oz.(34 ± 3 grams)

(3) Length of paddle ... 2.58 in.(65.5 mm)

NOTE: When the switch is installed in engine cooling system, the flow of coolant at cranking speed of the engine does not have enough force to activate the switch. When the engine is running at low

idle the flow of coolant has enough force to activate the switch.

Water Temperature Regulator (4L7615)

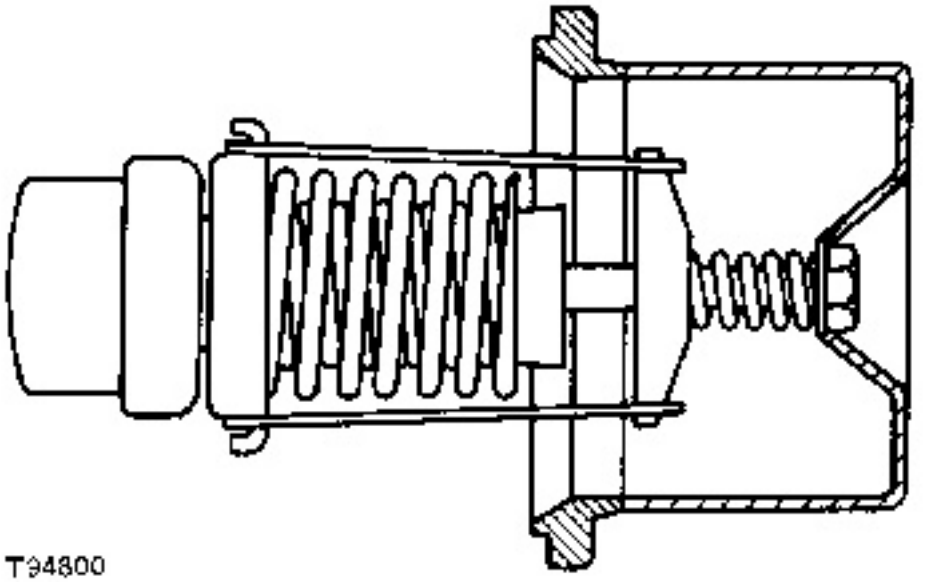

4L7615 Regulator:

Temperature when completely open ... 195° F(90° C)

Minimum completely open distance ... .375 in.(9.53 mm)

Water Temperature Regulator (7N208)

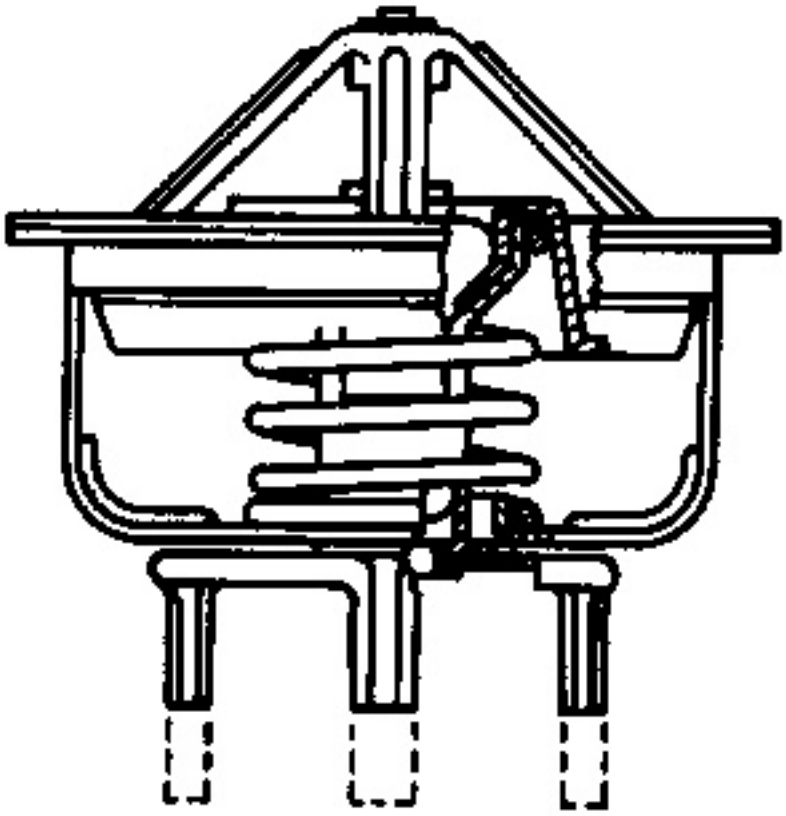

7N208 Regulator:

Temperature when completely open ... 195° F(90° C)

Minimum completely open distance ... .375 in.(9.53 mm)

Water Temperature Regulator (6N1848 and 2P3768, 6L5851; 9S9160)

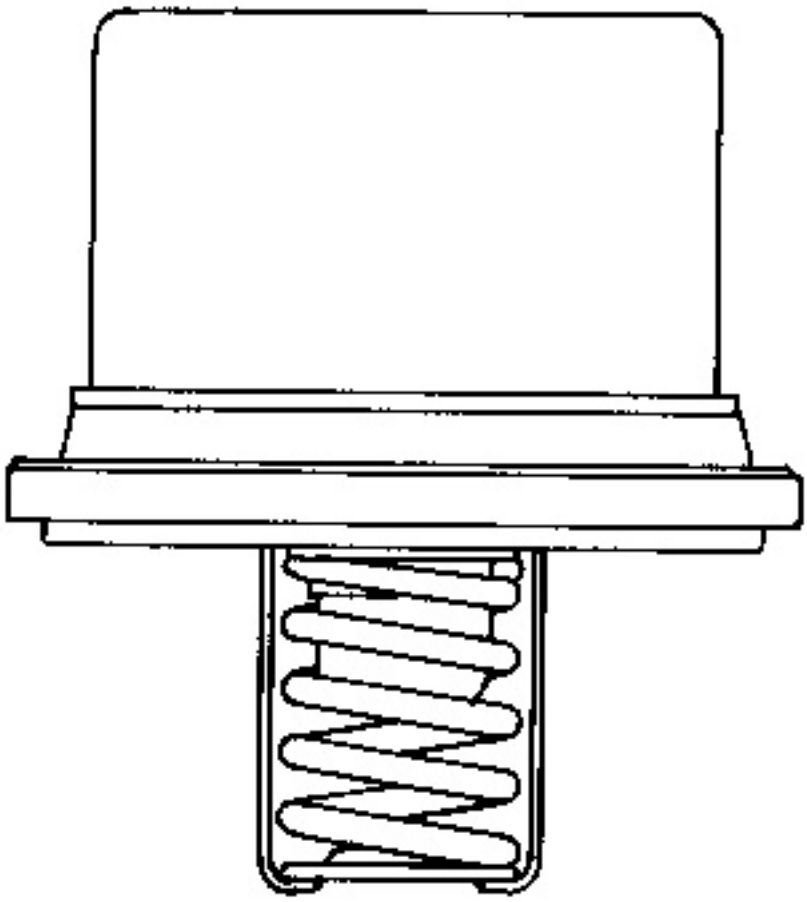

6N1848 and 2P3768 Regulator:

Temperature when completely open ... 195° F(90° C)

Minimum completely open distance ... .375 in.(9.53 mm)

6L5851 Regulator:

Temperature when completely open ... 197° F(92° C)

Minimum completely open distance ... .375 in.(9.53 mm)

9S9160 Regulator:

Temperature when completely open ... 187° F(86° C)

Minimum completely open distance ... .375 in.(9.53 mm)

Water Pump

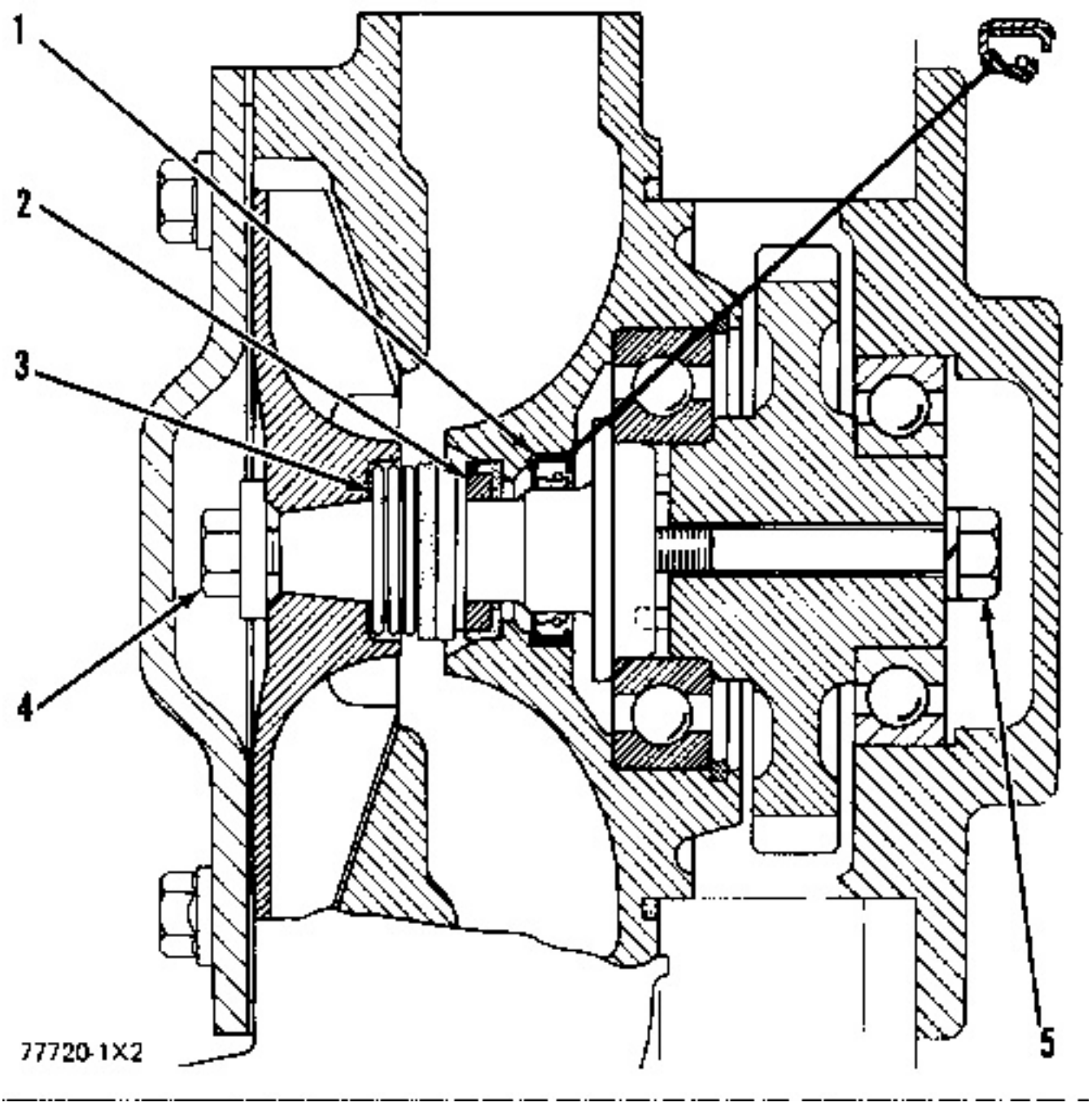

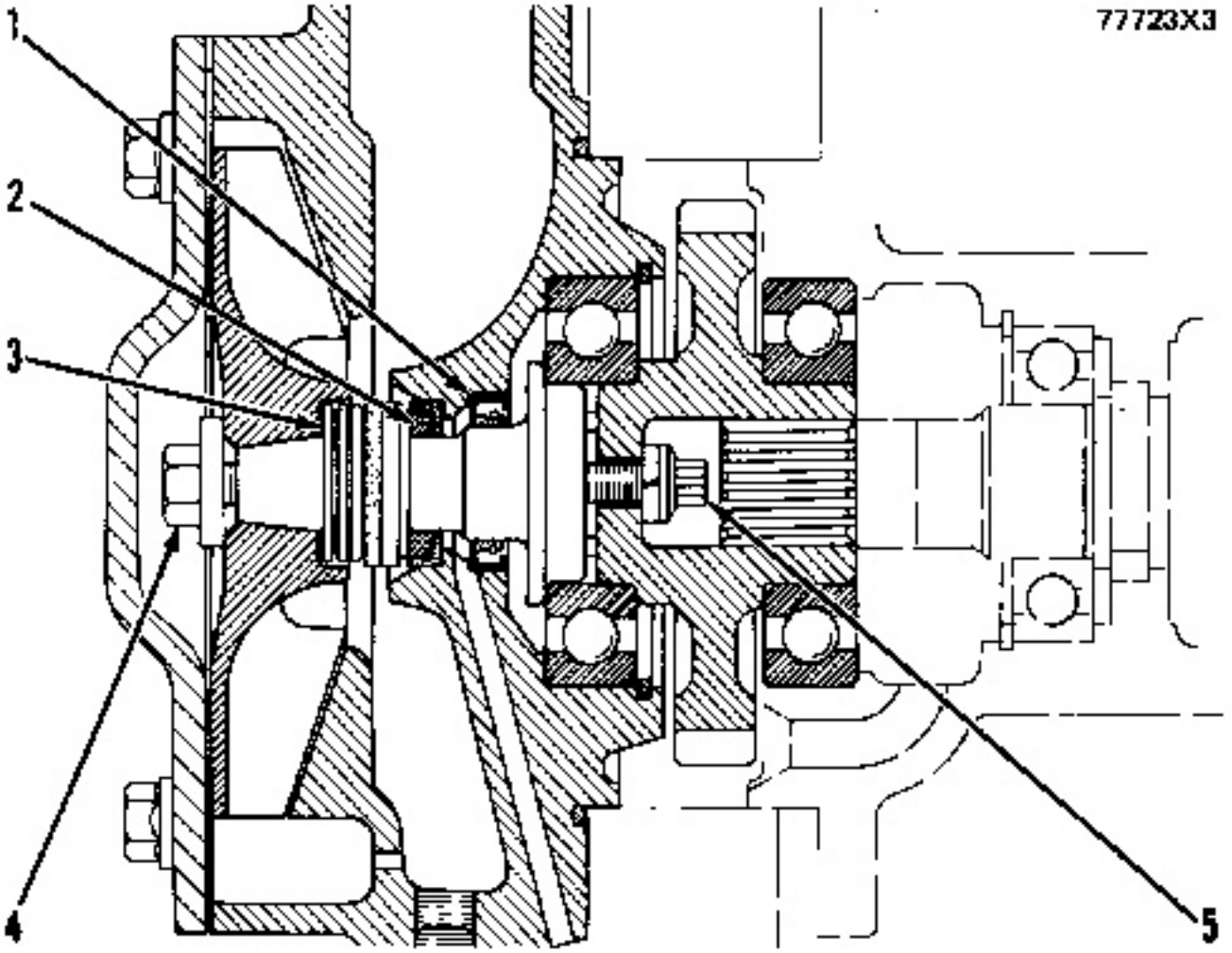

(1) Oil seal. Put engine oil on the seal lip. Assemble with the lip toward the bearings.

(2) Water seal and ring:

a. Put water on the seal.

b. Install the seal and ring together in the housing bore, with the shiny face of the ring outside.

(3) Seal assembly:

a. Remove the spring from the seal.

b. Put water inside the seal assembly.

c. Install the seal assembly around the shaft, with the 7N7843 Installation Tool, (the tool is with the seal group) until the carbon face makes contact with the shiny face of the ring (2).

d. Install the spring.

(4) Torque for bolt that holds the impeller ... 28 ± 1 lb. ft.(39 ± 1 N·m)

(5) Torque for bolt that holds the gear ... 32 ± 5 lb. ft.(43 ± 7 N·m)

V-Belt Tension Chart

V-BELT TENSION CHART										
BELT SIZE	WIDTH BELT TOP		WIDTH TOP OF PULLEY GROOVE		BELT TENSION "INITIAL"* GAUGE READING		BELT TENSION "USED"** GAUGE READING		BORROUGHS GAUGE NUMBERS	
	in.	mm	in.	mm	lb.	N	lb.	N	OLD GAUGE NO.	NEW GAUGE NO.
3/8	.422	10.72	.380	9.65	100 ± 5	445 ± 22	90 ± 5	400 ± 22	BT-33-73F	BT-33-95
1/2	.547	13.89	.500	12.70	120 ± 5	534 ± 22	90 ± 10	400 ± 44	BT-33-96-4-16	BT-33-95
5V	.625	15.88	.600	15.24	120 ± 5	534 ± 22	90 ± 10	400 ± 44	BT-33-72-4-15	BT-33-72C
11/16	.688	17.48	.625	15.88	120 ± 5	534 ± 22	90 ± 10	400 ± 44	BT-33-72-4-15	BT-33-72C
3/4	.750	19.05	.690	17.53	120 ± 5	534 ± 22	90 ± 10	400 ± 44	BT-33-72-4-15	BT-33-72C
15/16	.938	23.83	.878	22.30	120 ± 5	534 ± 22	90 ± 10	400 ± 44	BT-33-72-4-15	BT-33-72C
MEASURE TENSION OF BELT FARTHEST FROM THE ENGINE										

*"INITIAL" BELT TENSION is for a new belt.
**"USED" BELT TENSION is for a belt which has more than 30 minutes of operation at rated speed of engine. A10232X5

Radiator

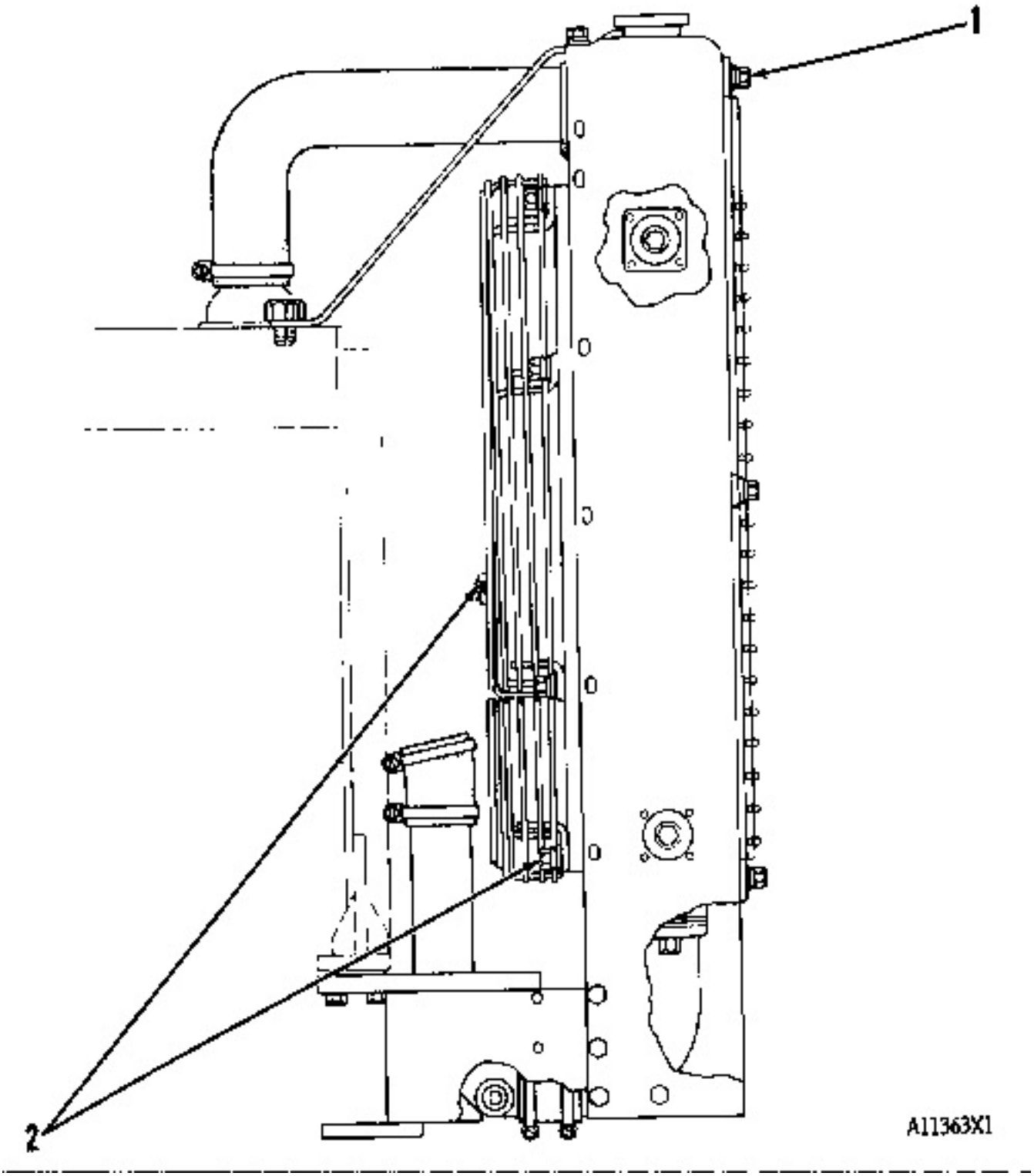

(1) Torque for bolts holding flange or guard to front of radiator ... 20 ± 5 lb. ft.(25 ± 7 N·m)

(2) Torque for bolts holding guard to rear of radiator ... 15 ± 5 lb. ft.(20 ± 7 N·m)

Fan Drive Belt Tightener

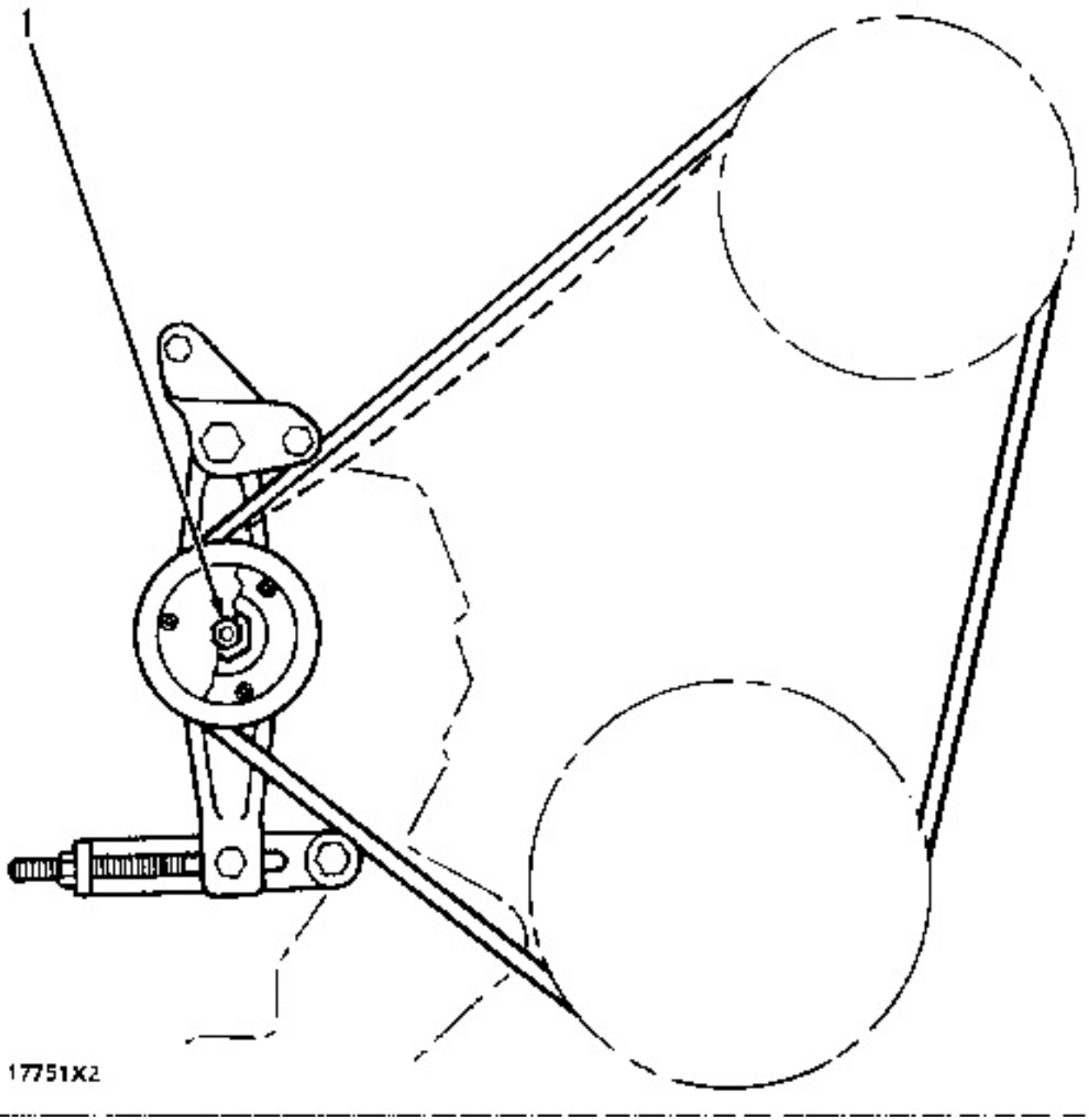

(1) Fill chamber between bearings half full of 1P808 Grease and tighten nut to ... 25 ± 5 lb. ft.(35 ± 7 N·m)

Cylinder Block (Counterbored)

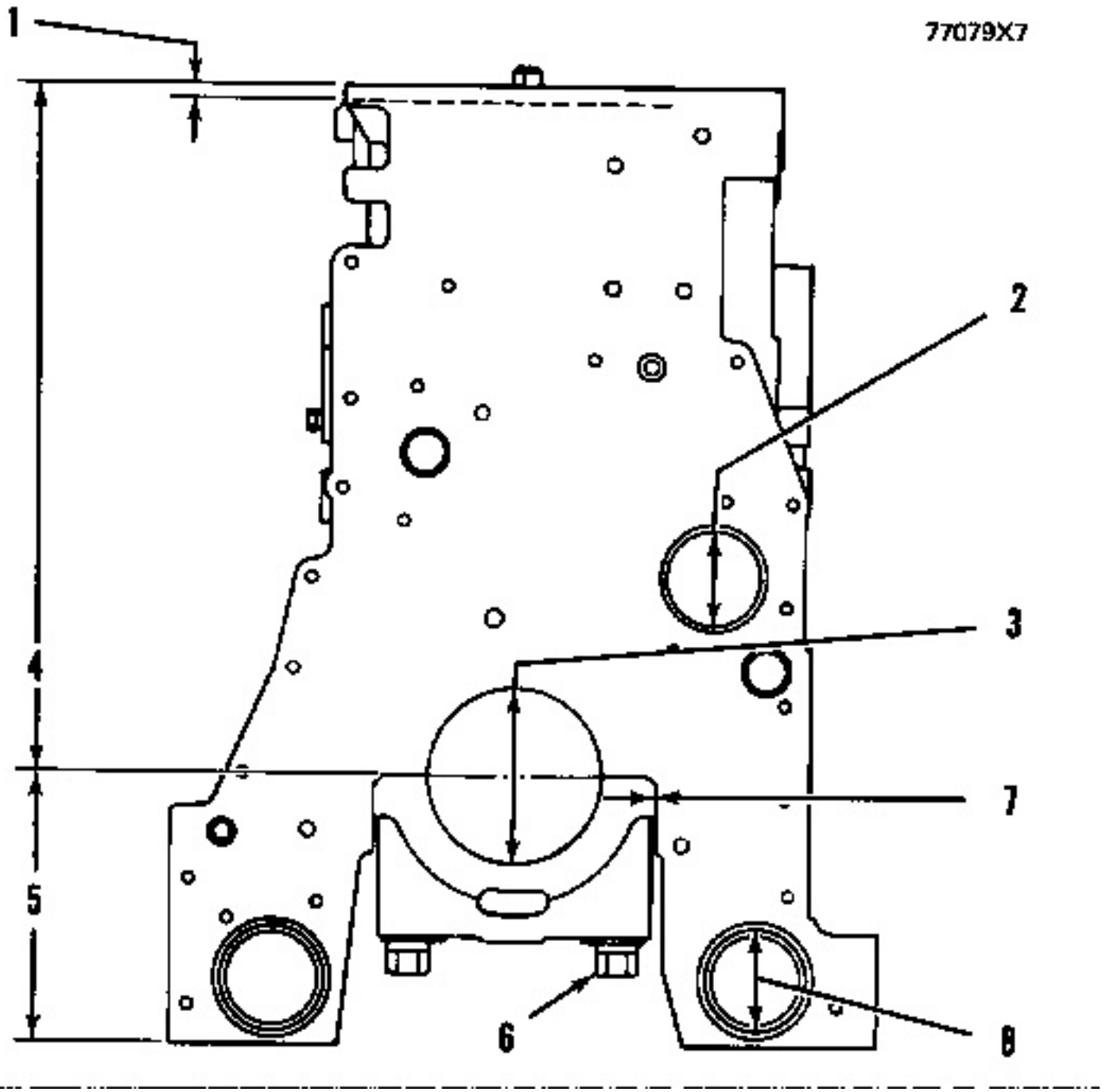

(1) Depth of bore in block for liner ... .401 ± .001 in.(10.19 ± 0.03 mm)

NOTE: Measure depth of each bore in block for liner at four places which are equally spaced around the bore.

Maximum permissible difference between all the measurements in the same bore is ... .001 in.(0.03 mm)

NOTE: For height of liner over top of block make reference to CYLINDER LINER PROJECTION.

(2) Camshaft bearing bore (installed) ... 2.3150 ± .0020 in.(58.801 ± 0.051 mm)

Bore in block for camshaft bearings ... 2.5630 ± .0010 in.(65.100 ± 0.025 mm)

Depth to install camshaft bearings at both ends of block ... .06 ± .02 in.(1.5 ± 0.5 mm)

NOTE: The camshaft bearing at the front of the block must be installed with oil holes in a horizontal position and joint at top within ± 15° from vertical.

(3) Bore in block for main bearings (standard size) ... 3.8160 ± .0005 in.(96.926 ± 0.013 mm)

Bore in block for main bearings .020 in. (0.51 mm oversize) ... 3.8360 ± .0005 in.(97.434 ± 0.013 mm)

(4) Dimension from center of main bearing bore to top of cylinder block (new) ... 15.5000 ± .0065 in. (393.700 ± 0.165 mm)

(5) Dimension from center of main bearing bore to bottom of cylinder block (new) ... 6.0625 ± .0040 in.(153.988 ± 0.102 mm)

(6) Torque for bolts holding bearing caps for main bearings:

a. Put engine oil on threads and washer face.

b. Tighten all bolts to ... 30 ± 3 lb. ft.(40 ± 4 N·m)

c. Put a mark on each bolt and cap.

d. Tighten all bolts from mark ... 90°

NOTE: Install bearing caps with the part number toward the front of the engine. Be sure that the mark (number) on the bearing cap next to the bolt hole is in agreement with the mark in the cylinder block.

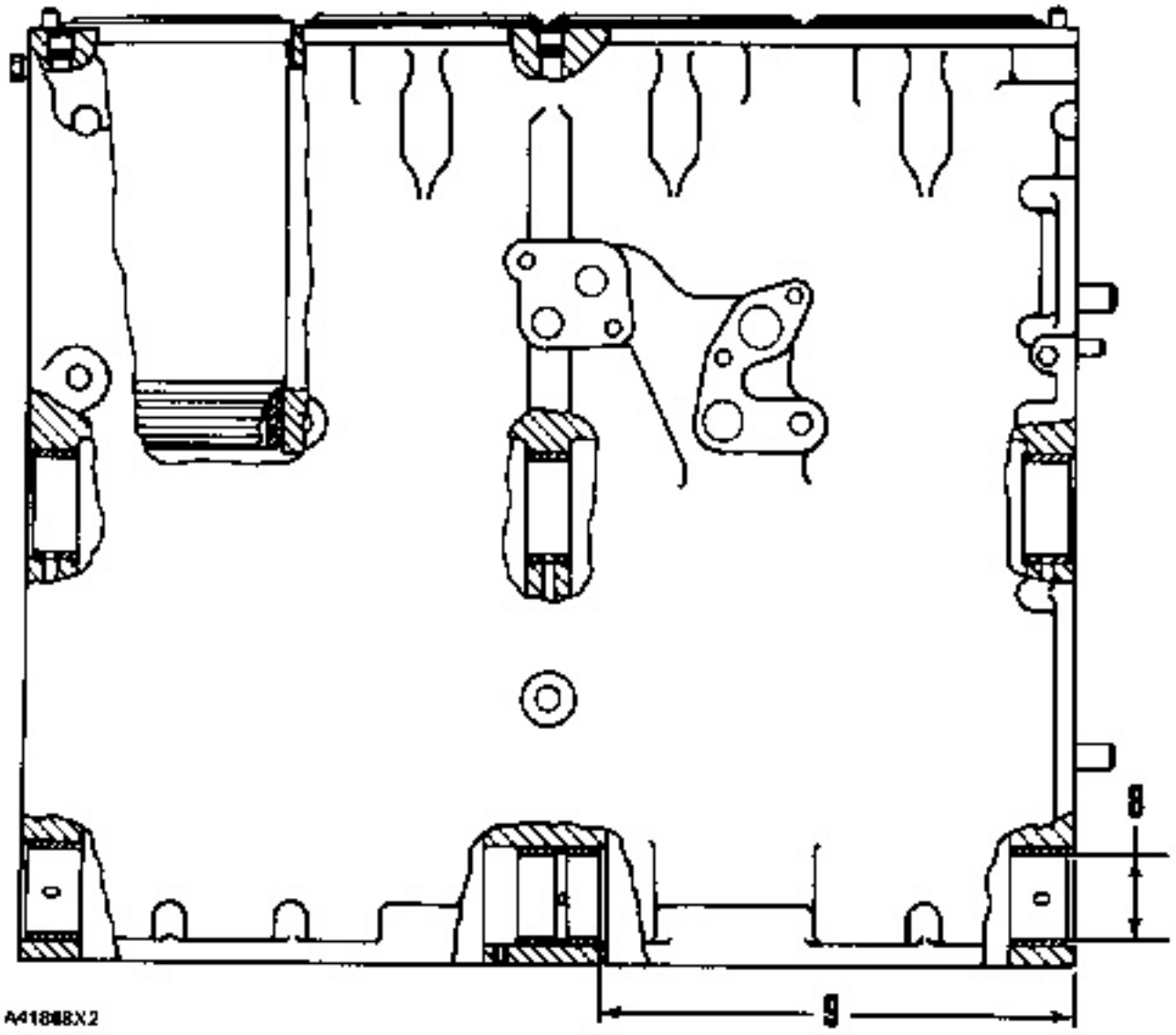
8
9
A41868X2

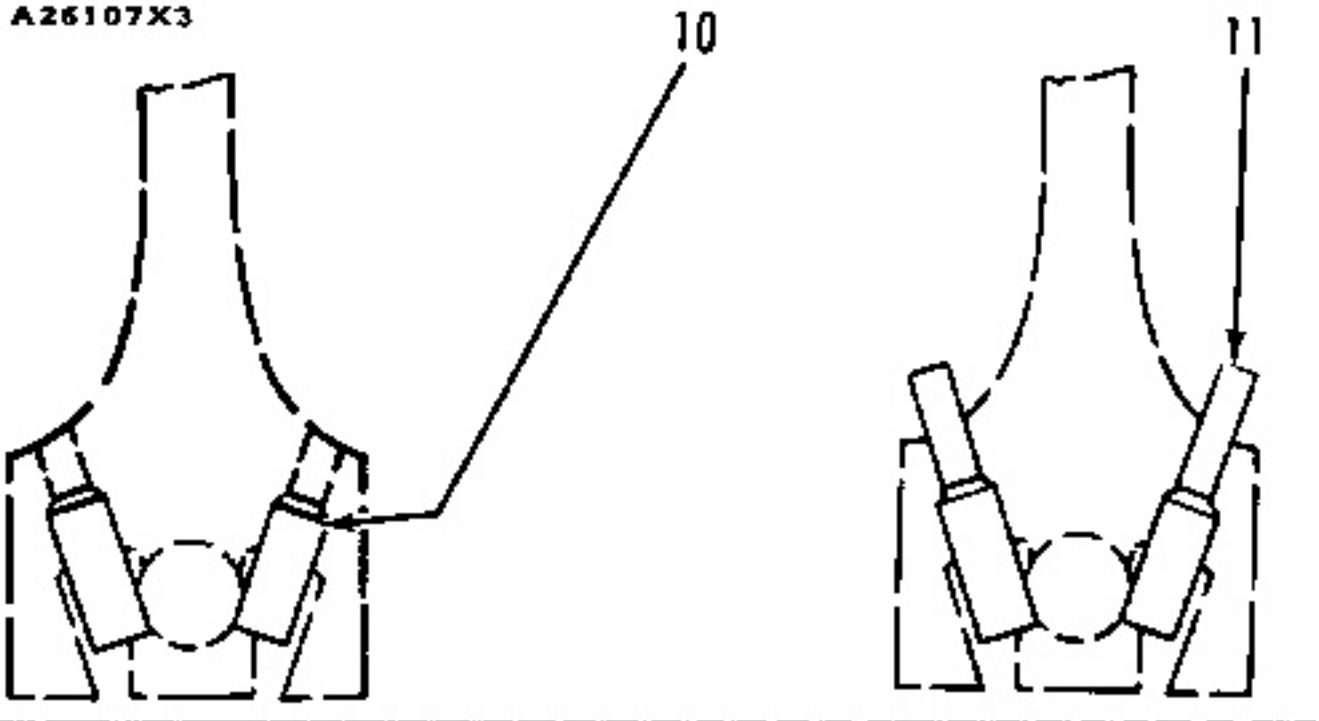
A26107X3
10
11

NOTICE

There are holes in the bores for the main bearings, between the cylinders for piston cooling orifices. These holes must have either orifices (11) or plugs (10) installed.

NOTE: If a turbocharger is installed on the engine, be sure to install orifices (11) and an engine oil cooler.

NOTE: If the engine has an engine oil cooler and no turbocharger, be sure to install orifices (11).

(7) Clearance between slot in block and bearing cap ... .0017 in.(0.043 mm) loose to ... .0013 in. (0.033 mm) tight

(8) Bore in bearing for balancer shaft (installed) ... 2.0886 ± .0024 in.(53.050 ± 0.061 mm)

Bore in block for bearings ... 2.2776 ± .0010 in.(57.851 ± 0.025 mm)

Depth to install bearings at both ends of block ... .03 ± .02 in.(0.8 ± 0.5 mm)

(9) Depth from front of block to install center bearings ... 11.44 ± .02 in.(290.6 ± 0.5 mm)

Cylinder Liner

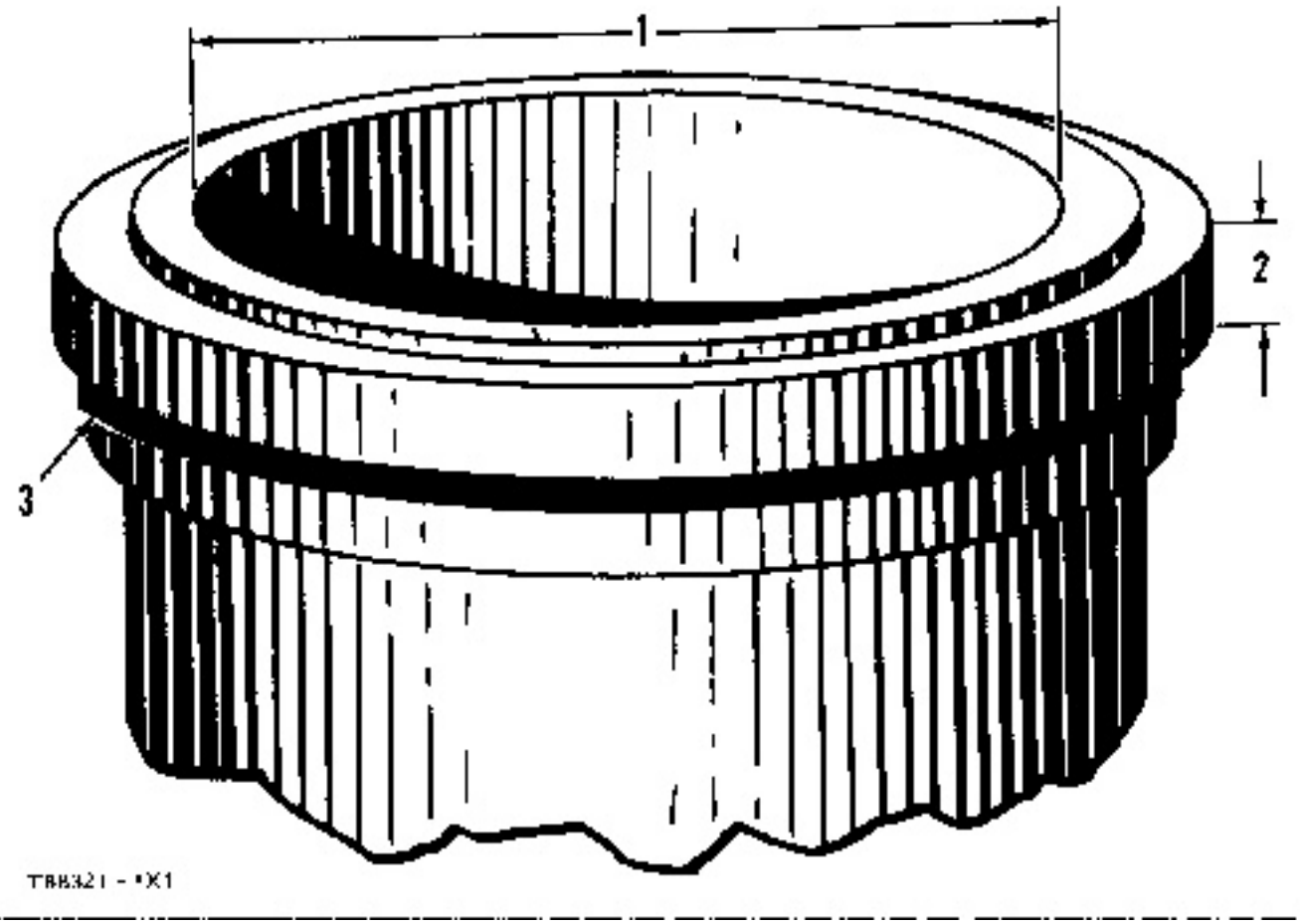

NOTE: Make reference to GUIDELINE FOR REUSABLE PARTS; PISTONS AND CYLINDER LINERS, Form No. SEBF8001.

(1) Bore in liner (new) ... 4.751 ± .001 in.(120.68 ± 0.025 mm)

Use again maximum bore when measured near upper end of the wear surface of the cylinder liner ... 4.755 in.(120.78 mm)

(2) Thickness of flange on liner ... .4048 ± .0008 in.(10.282 ± 0.020 mm)

(3) Filler band.

Cylinder Liner Installation

Put liquid soap on bottom liner bore in block, on grooves in lower liner, and on O-rings. Install O-

rings on liner. Put filler band (3) in engine oil for a moment and install on liner. Immediately install liner in cylinder block (before expansion of filler band).

Cylinder Liner Projection (Counterbored Block)

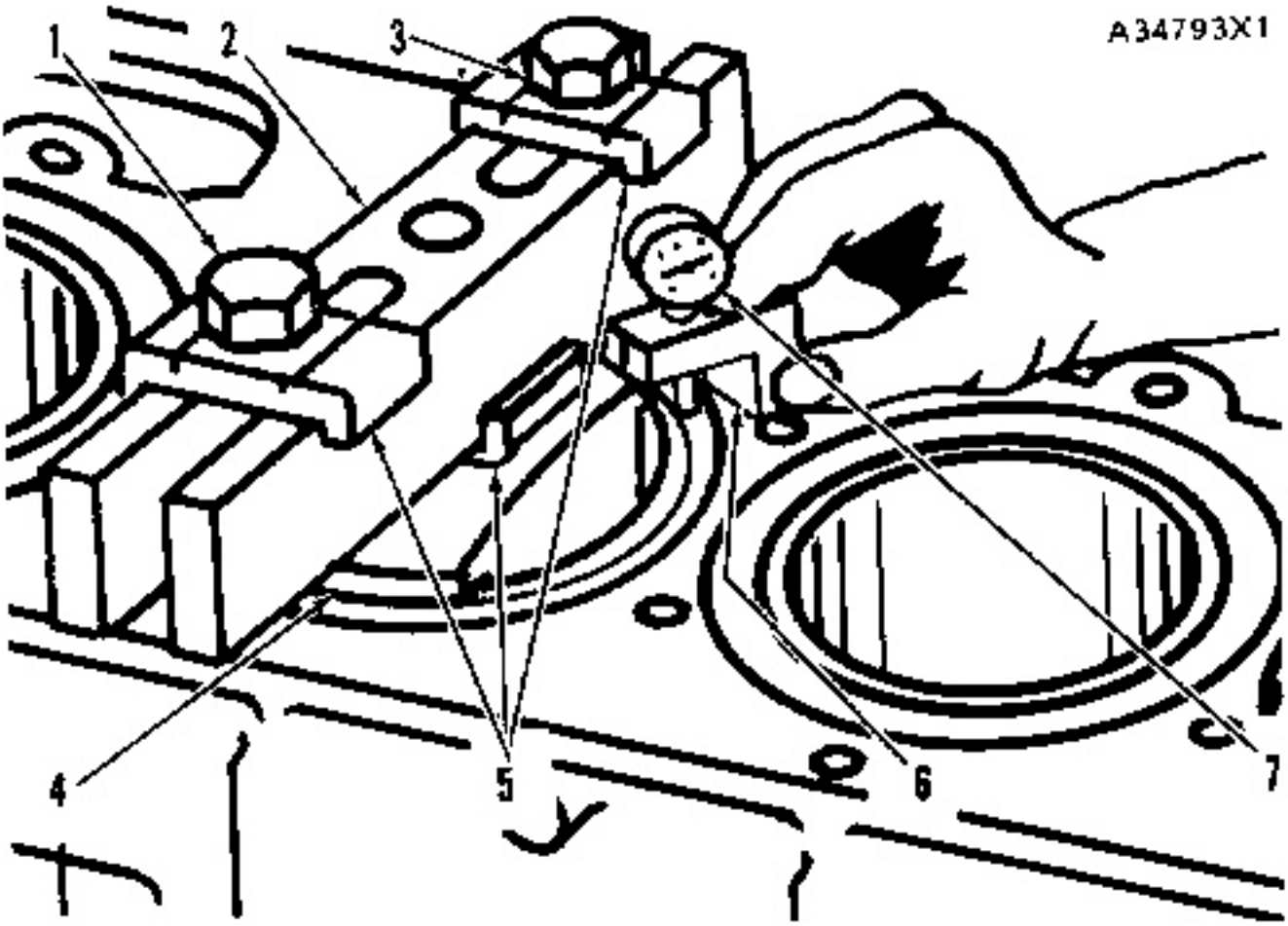

SHIM THICKNESS, COLOR CODE, AND PART NUMBER				
.007 in. (0.18 mm)	.008 in. (0.20 mm)	.009 in. (0.23 mm)	.015 in. (0.38 mm)	.030 in. (0.76 mm)
BLACK	RED	GREEN	BROWN	BLUE
8S6045	8S6046	8S6047	8S6048	8S6049

Make reference to CYLINDER LINER PROJECTION in Testing and Adjusting for the complete

procedure.

1. Install tooling as shown. Tighten bolts (1) evenly in four steps:

1st step ... 5 lb. ft.(7 N·m)

2nd step ... 15 lb. ft.(20 N·m)

3rd step ... 25 lb. ft.(35 N·m)

4th step ... 50 lb. ft.(70 N·m)

2. Measure cylinder liner projection with dial indicator (7) clamped in 1P2402 Block (6) as shown. Measure at four places around each cylinder liner near the clamped area.

Cylinder liner projection measurements for any cylinder liner must be ... .0020 to .0056 in.(0.051 to 0.141 mm)

Maximum permissible difference between all four measurements ... .002 in.(0.05 mm)

Maximum permissible difference between average projection of any two cylinders next to each other ... .002 in.(0.05 mm)

Maximum permissible difference between average projection of all cylinder liners under one cylinder head:

3304 ... .003 in.(0.08 mm)

3306 ... .004 in.(0.10 mm)

NOTE: If liner projection is not correct, turn the liner to a new position within the bore. If projection can not be corrected this way, move the liner to a different bore. If the projection can not be corrected this way, make reference to Special Instruction, Form No. FM055228 for complete instructions on the use of 8S3140 Counterboring Tool Arrangement.

(1) Bolts [5/8" NC, 5.5 in. (140 mm) long].

(2) Crossbar (from 8B7548 Push-Puller)

(3) 4B4281 Washers

(4) 1P2394 Adapter Plate

(5) 3H465 Plates

(6) 1P2402 Block

(7) 1P2403 Dial Indicator

Cylinder Block (With Spacer Plate)

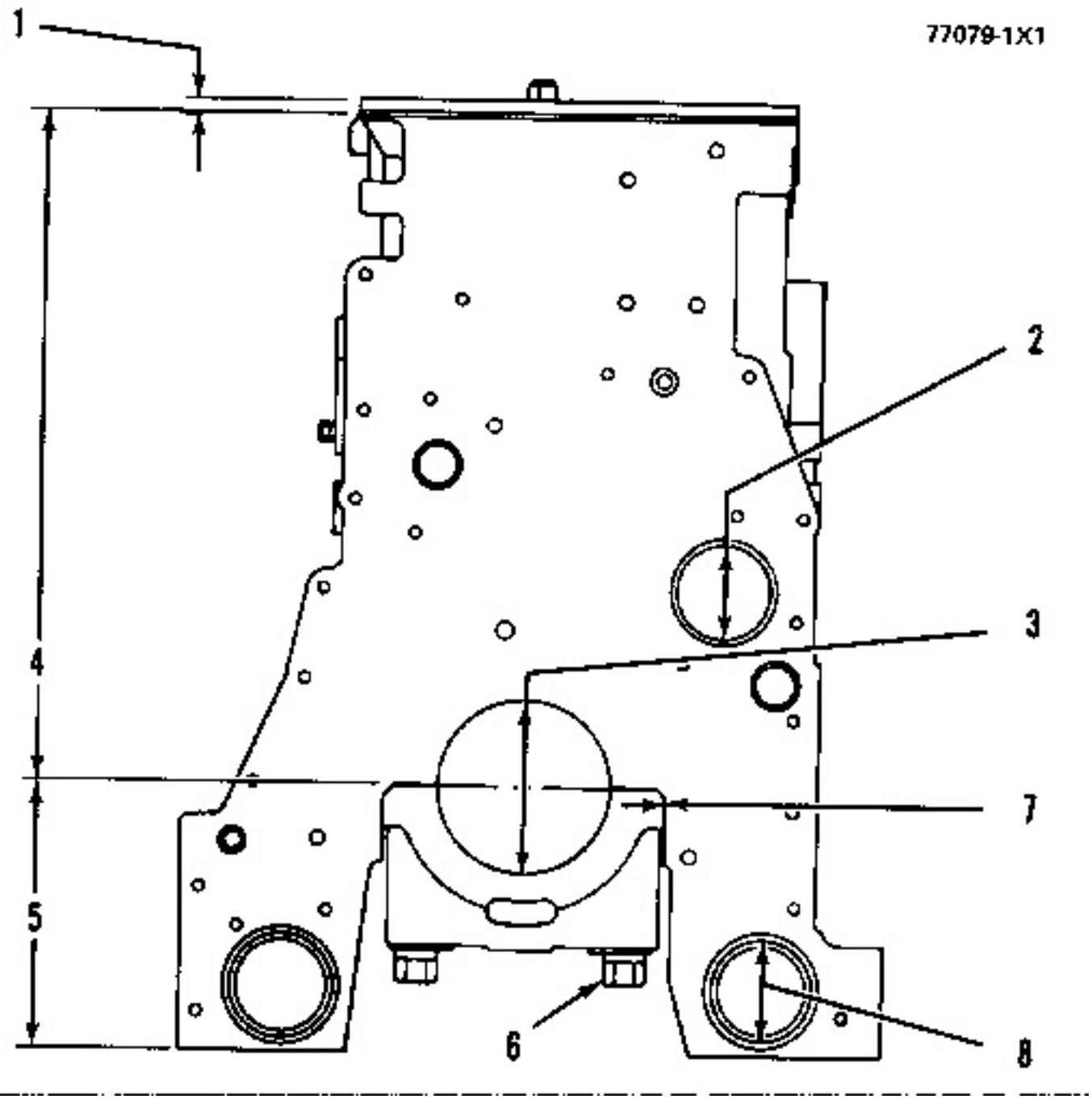

(1) Thickness of spacer plate ... .3925 ± .0010 in.(9.970 ± 0.025 mm)

Thickness of spacer plate gasket ... .0082 ± .0010 in.(0.208 ± 0.025 mm)

NOTE: For height of liner over top of block make reference to CYLINDER LINER PROJECTION.

(2) Camshaft bearing bore (installed) ... 2.3150 ± .0020 in.(58.801 ± 0.051 mm)

Bore in block for camshaft bearings ... 2.5630 ± .0010 in.(65.100 ± 0.025 mm)

Depth to install camshaft bearings at both ends of block ... .06 ± .02 in.(1.5 ± 0.5 mm)

NOTE: The camshaft bearing at the front of the block must be installed with oil holes in a horizontal position and joint at top within ± 15° from vertical.

(3) Bore in block for main bearings (standard size) ... 3.8160 ± .0005 in.(96.926 ± 0.013 mm)

Bore in block for main bearings .020 in. (0.51 mm oversize) ... 3.8360 ± .0005 in.(97.434 ± 0.013 mm)

(4) Dimension from center of main bearing bore to top of cylinder block (new) ... 15.099 ± .006 in. (383.51 ± 0.15 mm)

(5) Dimension from center of main bearing bore to bottom of cylinder block (new) ... 6.063 ± .004 in. (154.00 ± 0.10 mm)

(6) Torque for bolts holding bearing caps for main bearings:

a. Put engine oil on threads and washer face.

b. Tighten all bolts to ... 30 ± 3 lb. ft.(40 ± 4 N·m)

c. Put a mark on each bolt and cap.

d. Tighten all bolts from mark ... 90°

NOTE: Install bearing caps with the part number toward the front of the engine. Be sure that the mark (number) on the bearing cap next to the bolt hole is in agreement with the mark in the cylinder block.

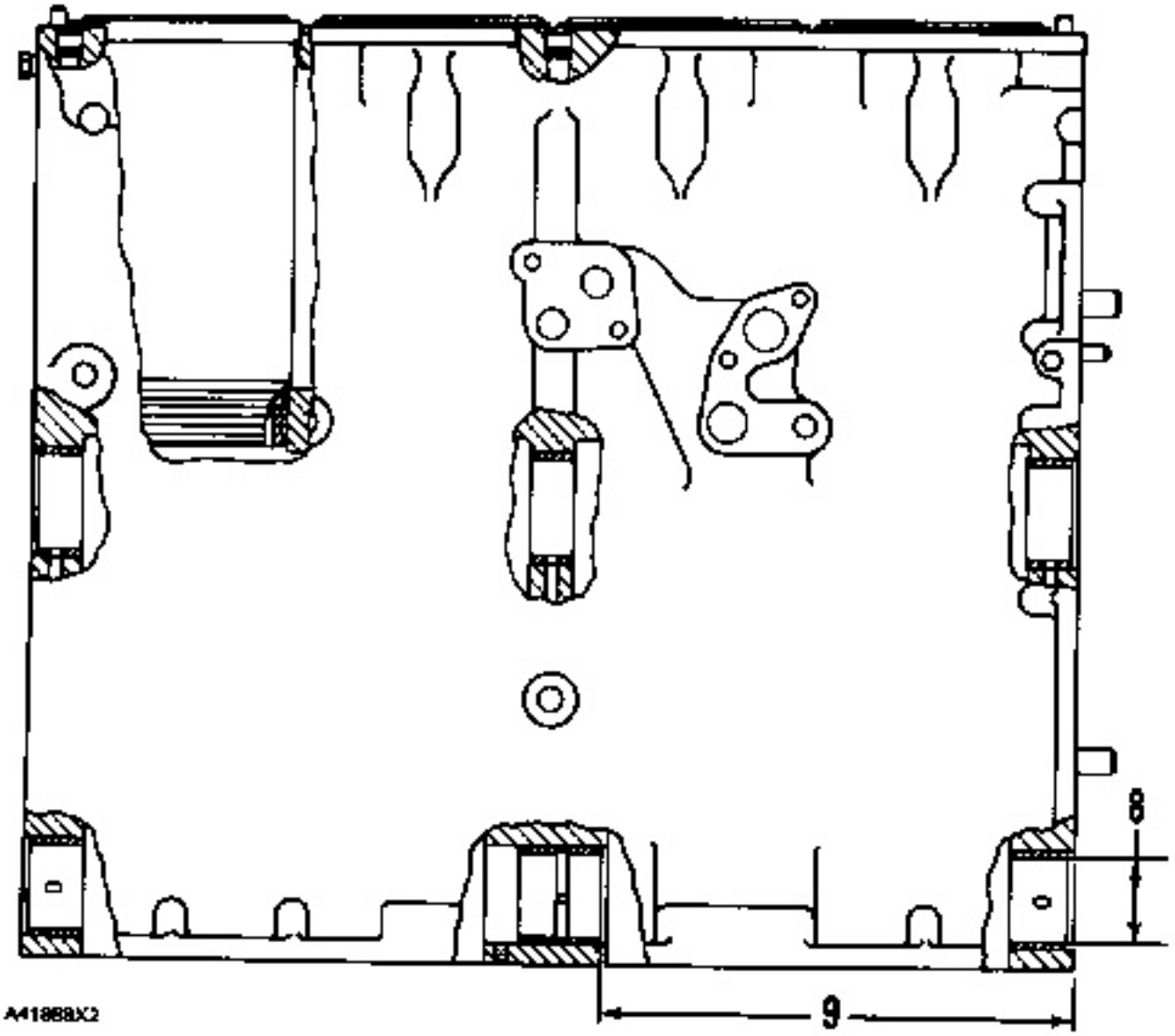
8
9
A41888X2

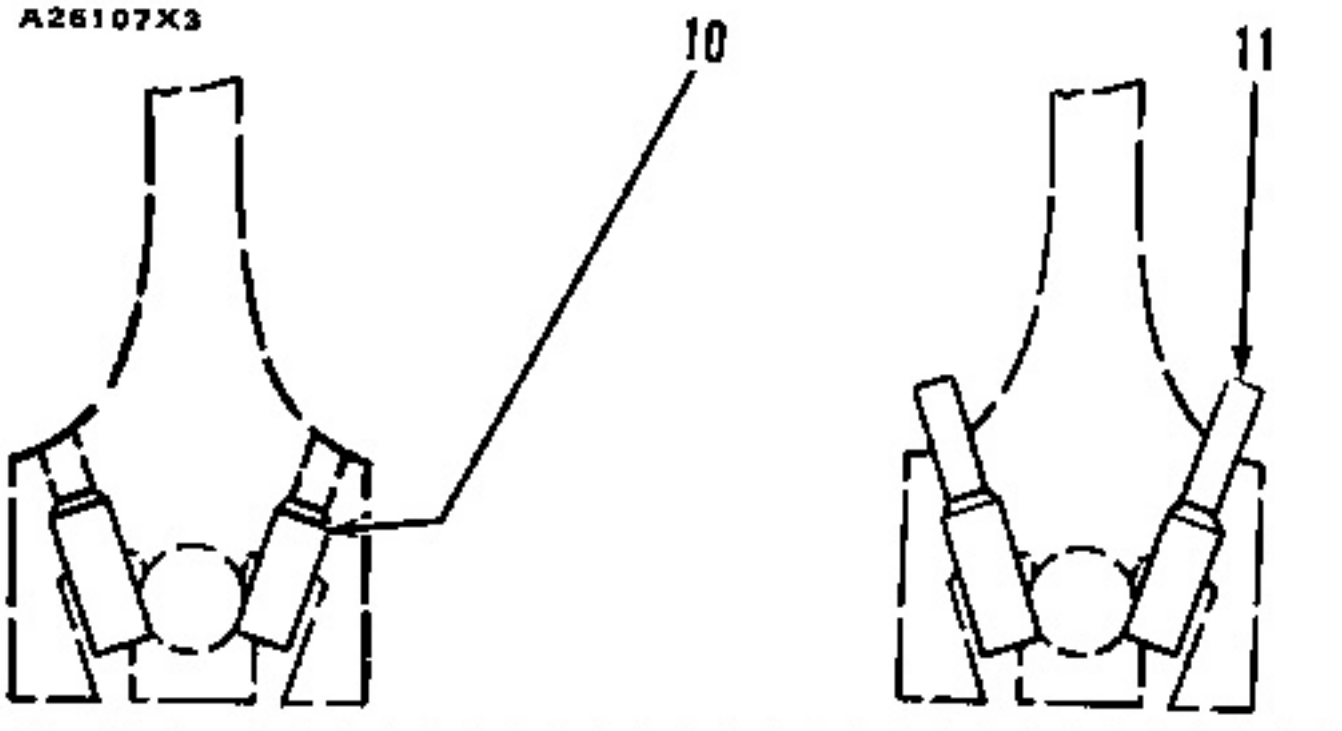
A26107X3
10
11

NOTICE

There are holes in the bores for the main bearings, between the cylinders for piston cooler orifices. These holes must have either orifices (11) or plugs (10) installed.

NOTE: If a turbocharger is installed on the engine, be sure to install orifices (11) and an engine oil cooler.

NOTE: If the engine has an engine oil cooler and no turbocharger, be sure to install orifices (11).

(7) Clearance between slot in block and bearing cap ... .0017 in.(0.043 mm) loose to ... .0013 in. (0.033 mm) tight

(8) Bore in bearing for balancer shaft (installed) ... 2.0886 ± .0024 in.(53.050 ± 0.061 mm)

Bore in block for bearings ... 2.2776 ± .0010 in.(57.851 ± 0.025 mm)

Depth to install bearings at both ends of block ... .03 ± .02 in.(0.8 ± 0.5 mm)

(9) Depth from front face of block to install center bearings ... 11.44 ± .02 in.(290.6 ± 0.5 mm)

Cylinder Liner Projection (With Spacer Plate)

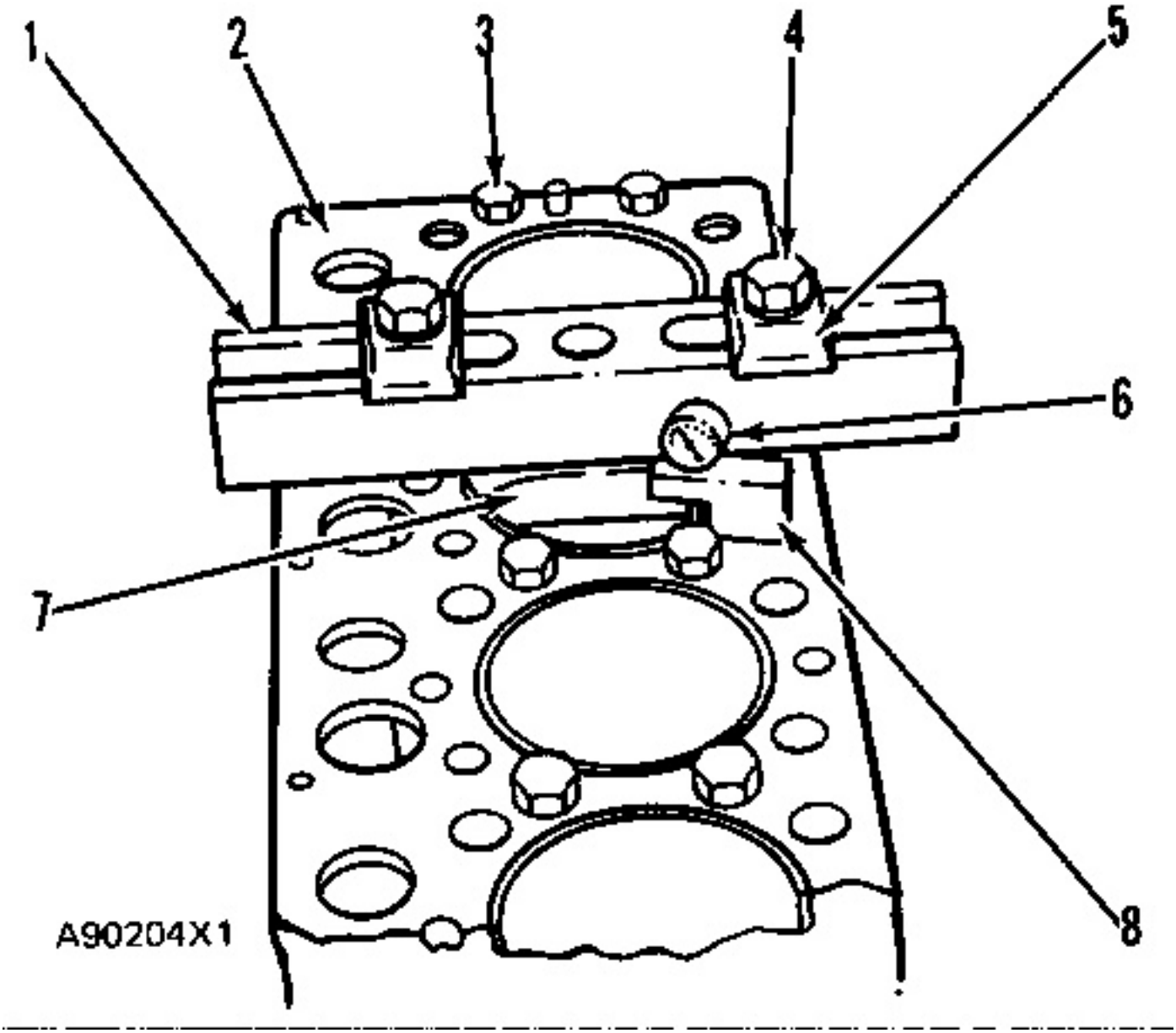

Make reference to CYLINDER LINER PROJECTION in Testing and Adjusting for the complete procedure.

1. Install gasket and spacer plate (2) with bolts (3) and two 1S379 Washers. Tighten bolts (3) evenly in four steps:

1st step ... 10 lb. ft.(14 N·m)

2nd step ... 25 lb. ft.(35 N·m)

3rd step ... 50 lb. ft.(70 N·m)

4th step ... 70 lb. ft.(95 N·m)

2. Install tools as shown. Tighten bolts (4) evenly in four steps:

1st step ... 5 lb. ft.(7 N·m)

2nd step ... 15 lb. ft.(20 N·m)

3rd step ... 25 lb. ft.(35 N·m)

4th step ... 50 lb. ft.(70 N·m)

3. Measure cylinder liner projection with dial indicator (6) in 1P2402 Block (8) as shown. Measure at four places around each cylinder liner near the clamped area.

Cylinder liner projection measurements for any cylinder liner must be ... .0013 to .0069 in.(0.033 to 0.175 mm)

Maximum permissible difference between all four measurements ... .002 in.(0.05 mm)

Maximum permissible difference between average projection of any two cylinder liners next to each other ... .002 in.(0.05 mm)

Maximum permissible difference between average projection of all cylinder liners under one cylinder head:

3304 ... .003 in.(0.08 mm)

3306 ... .004 in.(0.10 mm)

NOTE: If liner projection is not correct, turn the liner to a new position within the bore. If projection can not be corrected this way, move the liner to a different bore. If the projection can not be corrected this way, make reference to Special Instruction, Form No. FM055228 for complete instructions on the use of 8S3140 Counterboring Tool Arrangement.

https://barringtondieselclub.co.za/

SHIM THICKNESS, COLOR CODE, AND PART NUMBER				
.007 in. (0.18 mm)	.008 in. (0.20 mm)	.009 in. (0.23 mm)	.015 in. (0.38 mm)	.030 in. (0.76 mm)
BLACK	RED	GREEN	BROWN	BLUE
8S6045	8S6046	8S6047	8S6048	8S6049

4. Minimum permissible depth to machine counterbore to adjust cylinder liner projection ... .030 in. (0.76 mm)

Maximum permissible depth to machine counterbore to adjust cylinder liner projection ... .045 in. (1.14 mm)

Install a .030 in. (0.76 mm) shim plus any added shims necessary to get the correct cylinder liner projection.

NOTE: Be sure that the .030 in. (0.76 mm) shim is directly under the cylinder liner flange.

Put 7M7260 Liquid Gasket on the top of the top shim and on the bottom of the bottom shim before installing.

(1) Crossbar (from 8B7548 Puller).

(2) Spacer plate.

(3) S1589 Bolt with two 1S379 Washers.

(4) 1D4595 Bolt.

(5) 3H465 Plate.

(6) 1P2403 Dial Indicator.

(7) 1P2394 Adapter Plate.

(8) 1P2402 Gauge Body.

Pistons And Rings
(With Keystone Piston Ring Groove)

Make reference to GUIDELINE FOR REUSABLE PARTS; PISTONS AND CYLINDER LINERS, Form No. SEBF8001.

PISTONS AND PISTON RINGS			
	(1) TOP RING	(2) INTERMEDIATE RING	(3) OIL CONTROL RING
Part No.	*9L6932	*9L6933	**9L6934
Width of groove in piston for piston ring (new).	*** —	*** —	.1255 ± .0005 in. (3.188 ± 0.013 mm)
Thickness of piston ring (new).	*** —	*** —	.1235 ± .0005 in. (3.137 ± 0.013 mm)
Clearance between groove and piston ring (new).	*** —	*** —	.0020 ± .0010 in. (0.051 ± 0.025 mm)
Maximum permissible clearance (worn).	*** —	*** —	.006 in. (0.15 mm)
Clearance between ends of piston ring when installed in a cylinder liner with a bore size of 4.7500 in. (120.650 mm)	.0245 ± .0075 in. (0.622 ± 0.191 mm)	.0245 ± .0075 in. (0.622 ± 0.191 mm)	.0225 ± .0075 in. (0.572 ± 0.191 mm)
Increase in clearance between ends of piston ring for each .001 in. (0.03 mm) increase in cylinder liner bore size.	.003 in. (0.08 mm)		

*Install piston ring with "UP" side toward top of piston.

NOTE: 9L6932 Top Ring (1) has the mark "UP-1."
9L6933 Intermediate Ring (2) has the mark "UP-2."

**Install 9L6934 Oil Control Ring (3) with the gap in the spring 180° away from the gap in the ring

***"Keystone" style piston rings and grooves in pistons. The 5P4812 KEYSTONE PISTON RING GROOVE GAUGE is necessary for measuring these grooves. Put the pin end (A) of gauge "2" in the groove at four places around the circumference. Do this to both grooves. The flat edge (B) of the gauge must be between grooves (1) and (2). If there is clearance between the flat edge (B) of the gauge and the piston at all test locations, for both grooves, the piston is reusable. If the flat edge (B) is in contact with the piston, at any of the test locations, the piston is not reusable. Install a new piston.

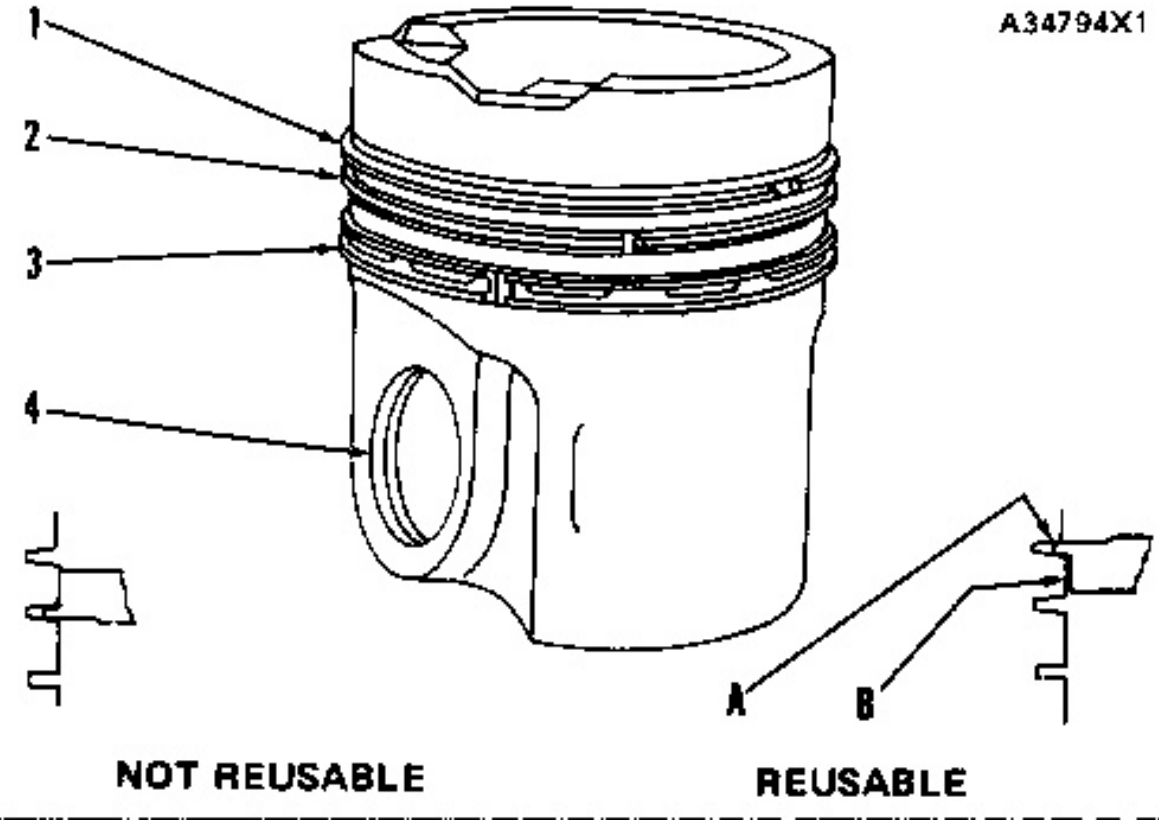

(4) Bore in piston for pin ... 1.7006 ± .0003 in.(43.195 ± 0.008 mm)

Clearance between pin and bore in piston ... .0003 to .0013 in.(0.008 to 0.033 mm)

Maximum permissible clearance (worn) ... .002 in.(0.05 mm)

Pin diameter ... 1.6998 ± .0002 in.(43.175 ± 0.005 mm)

NOTE: When installed in the engine, the "V" mark on top of the piston must be in alignment with the "V" mark on the cylinder block.

Pistons And Rings

Make reference to GUIDELINE FOR REUSABLE PARTS; PISTONS AND CYLINDER LINERS, Form No. SEBF8001.

PISTONS AND PISTON RINGS			
	(1) TOP RING	(2) INTERMEDIATE RING	(3) OIL CONTROL RING
	*9S3029 & 7S8378	*5S6750	**9S7788
Width of groove in piston for piston ring (new).	.1273 ± .0005 in. (3.233 ± 0.013 mm)	.0963 ± .0005 in. (2.446 ± 0.013 mm)	.2195 ± .0005 in. (5.575 ± 0.013 mm)
Thickness of piston ring (new).	.1240; +.0000 to −.0008 in. (3.150; +0.000 to −0.020 mm)	.0935; +.0000 to −.0008 in. (2.375; +0.000 to −0.020 mm)	.2170 ± .0005 in. (5.512 ± 0.013 mm)
Clearance between groove and piston ring (new).	.0028 to .0046 in. (0.071 to 0.117 mm)	.0023 to .0041 in. (0.058 to 0.104 mm)	.0015 to .0035 in. (0.038 to 0.089 mm)
Maximum permissible clearance (worn).		.006 in. (0.15 mm)	
Clearance between ends of piston ring when installed in a cylinder liner with a bore size of 4.7500 in. (120.650 mm)	.0245 ± .0075 in. (0.622 ± 0.191 mm)	.0245 ± .0075 in. (0.622 ± 0.191 mm)	.0206 ± .0075 in. (0.521 ± 0.191 mm)
Increase in clearance between ends of piston ring for each .001 in. (0.03 mm) increase in cylinder liner bore size.		.003 in. (0.08 mm)	

*Install piston ring with "UP" side toward top of piston.

NOTE: 9S3029 & 7S8378 Top Ring (1) have the mark "UP-1."
6S6750 Intermediate Ring (2) has the mark "UP-2."

**Install 9S7788 Oil Control Ring (3) with the gap in the spring 180° away from the gap in the ring.

NOTE: Use 5P3519 PISTON RING GROOVE GAUGE to check top and center ring grooves with straight sides. For instructions on the use of the gauge, see the GUIDELINE FOR REUSABLE PARTS; PISTONS AND CYLINDER LINERS, Form No. SEBF8001.

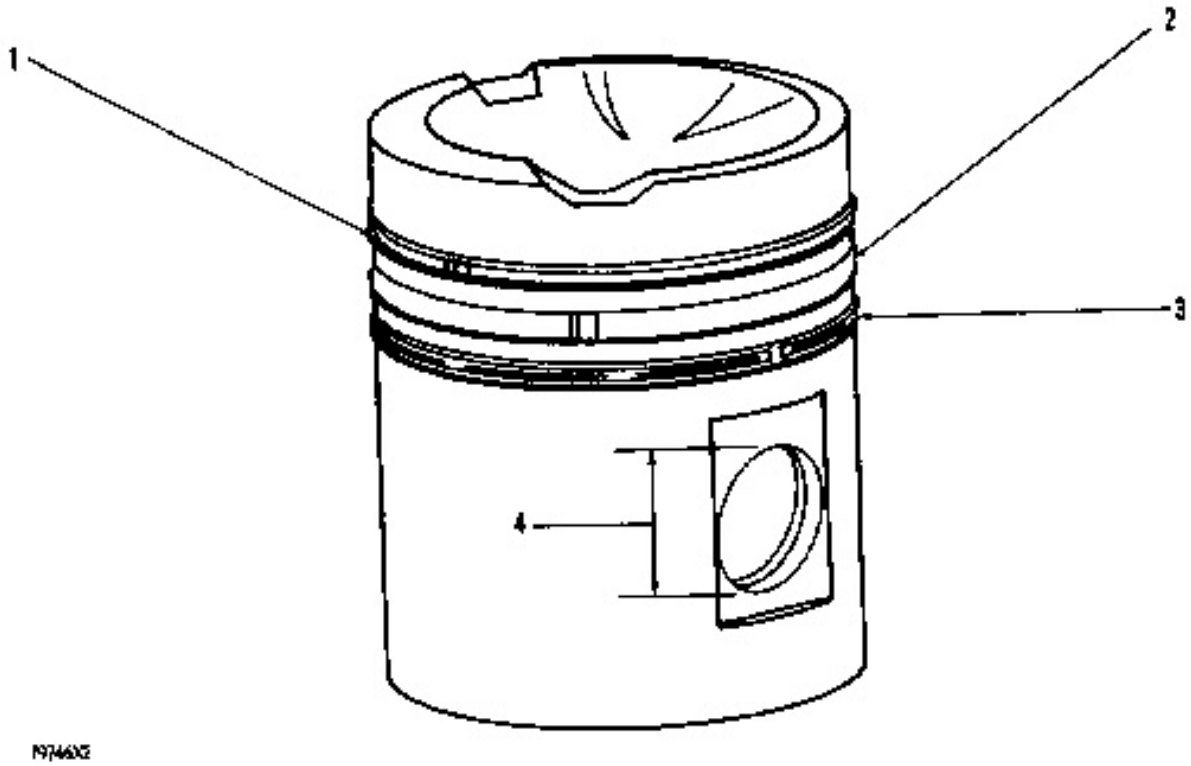

(4) Bore in piston for pin:

9S8913 Piston ... 1.5011 ± .0002 in.(38.128 ± 0.005 mm)

4N4029 Piston ... 1.5011 ± .0002 in.(38.128 ± 0.005 mm)

8N3181 Piston ... 1.5011 ± .0002 in.(38.128 ± 0.005 mm)

4N9258 Piston ... 1.7006 ± .0003 in.(43.195 ± 0.008 mm)

9N5251 Piston ... 1.7006 ± .0003 in.(43.195 ± 0.008 mm)

Clearance between pin and bore in piston ... .0003 to .0013 in.(0.008 to 0.033 mm)

Maximum permissible clearance (worn) ... .002 in.(0.05 mm)

NOTE: When installed in the engine, the "V" mark on top of the piston must be in alignment with the "V" mark on the cylinder block.

Connecting Rod

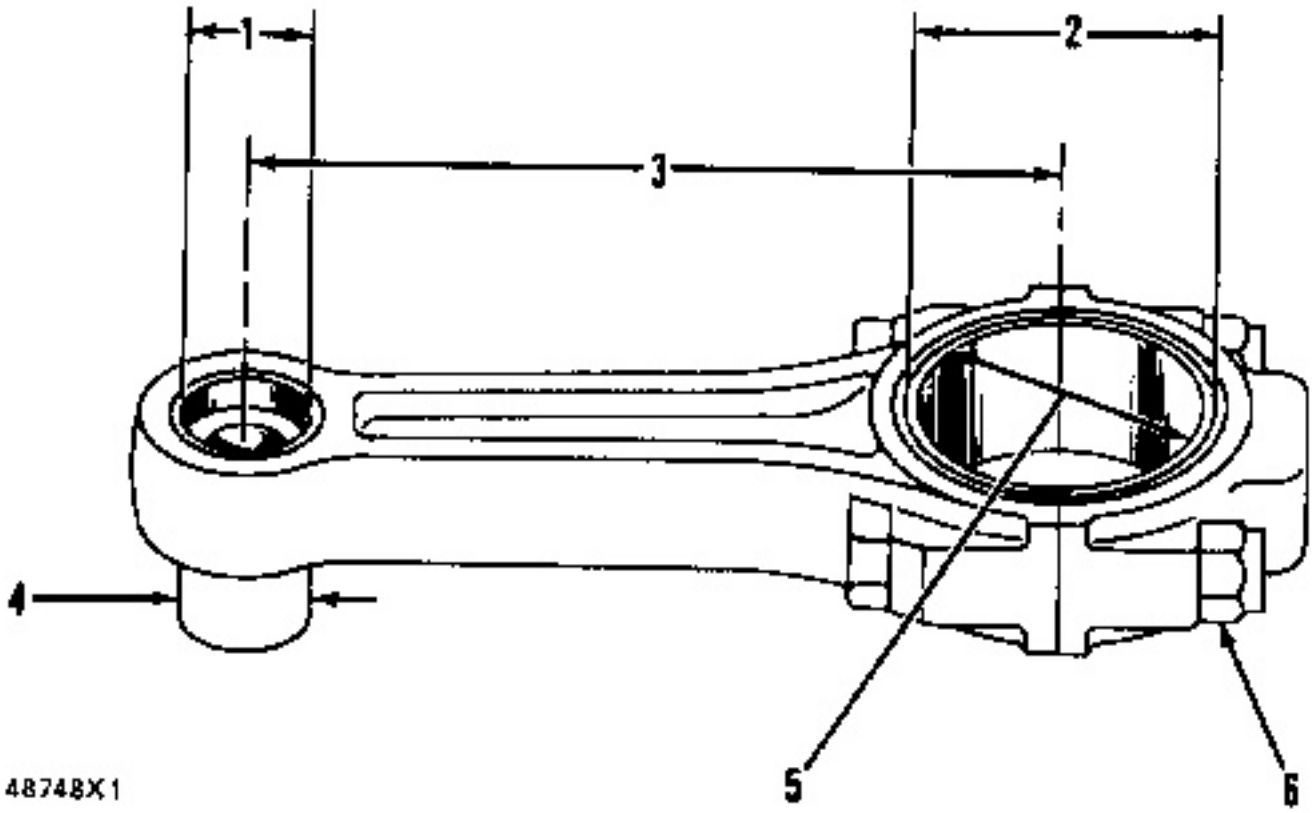

(1) Bore in bearing for piston pin (new):

5S6360 Rod ... 1.5017 ± .0003 in.(38.143 ± 0.008 mm)

8N1894 Rod ... 1.5017 ± .0003 in.(38.143 ± 0.008 mm)

5S2793 Rod ... 1.7012 ± .0003 in.(43.210 ± 0.008 mm)

6N8069 Rod ... 1.7012 ± .0003 in.(43.210 ± 0.008 mm)

Maximum permissible clearance between bearing and piston pin (worn) ... .003 in.(0.08 mm)

(2) Bore in connecting rod for bearing ... 3.2500 ± .0005 in.(82.550 ± 0.013 mm)

(3) Distance between center of piston pin and center of crankshaft bearing (new) ... 9.595 ± .001 in. (243.71 ± 0.02 mm)

(4) Diameter of piston pin (new):

9H4016 Pin ... 1.5003 ± .0002 in.(38.108 ± 0.005 mm)

7N9804 Pin ... 1.5003 ± .0002 in.(38.108 ± 0.005 mm)

8M6487 Pin ... 1.6998 ± .0002 in.(43.175 ± 0.005 mm)

7N9805 Pin ... 1.6998 ± .0002 in.(43.175 ± 0.005 mm)

(5) Clearance between connecting rod bearing and crankshaft bearing surface (journal) ... .0030 to .0066 in.(0.076 to 0.168 mm)

Maximum permissible clearance between bearing and crankshaft (worn) ... .010 in.(0.25 mm)

(6) Torque on nut for connecting rod:

a. Put engine oil on threads and nut seat.

b. Tighten both nuts to ... 30 ± 3 lb. ft.(40 ± 4 N·m)

c. Mark each nut and end of bolt.

d. Again tighten both nuts (from mark) ... 90°

Install the connecting rod in the piston with the slot for the bearing tab on the same side as the V mark on the piston.

Make reference to Special Instructions, Form No. GMG02394 and SMHS7366 for information about checking and reconditioning connecting rods.

Crankshaft

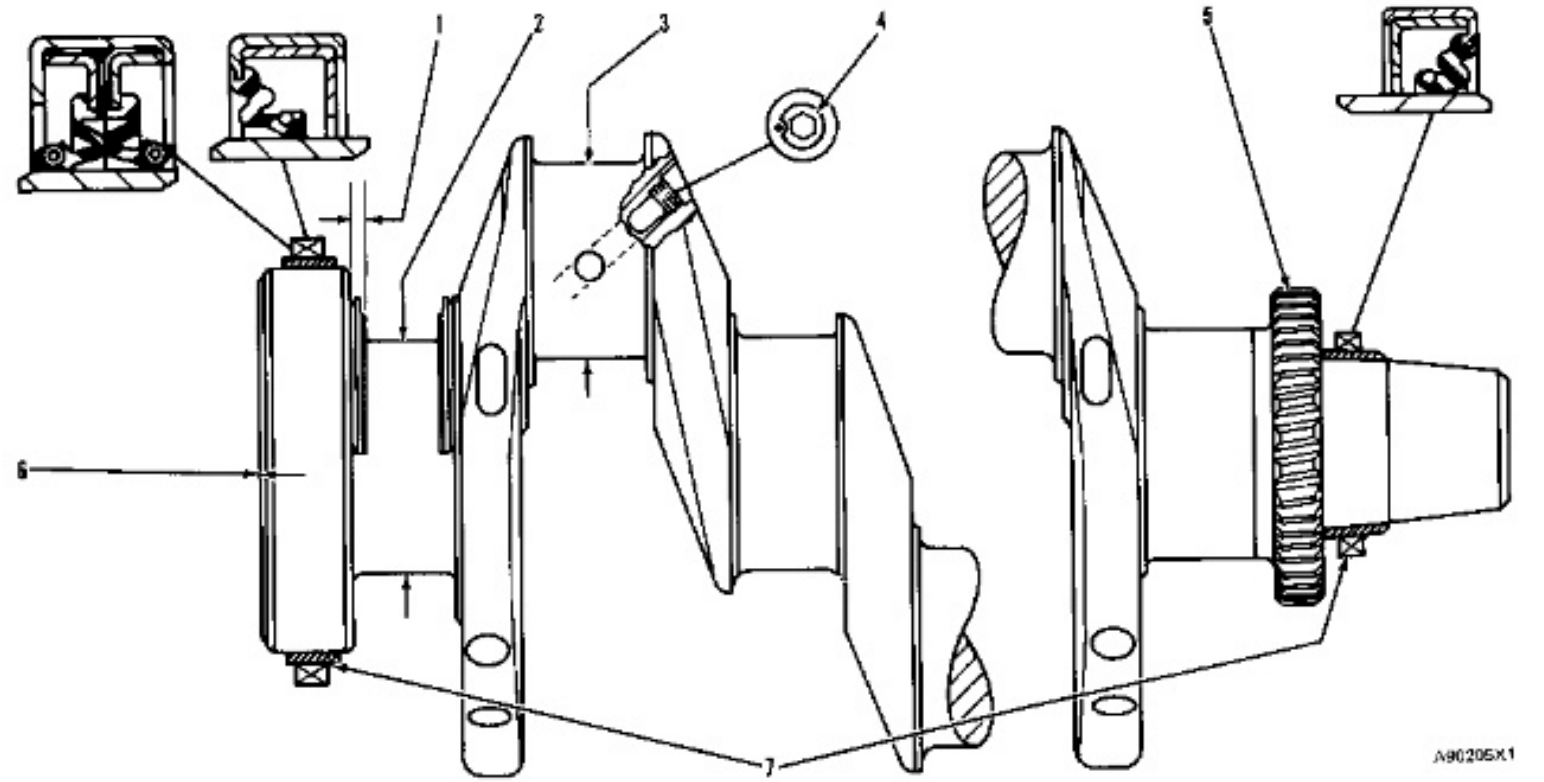

(1) Thickness of thrust plates (new):

Without tabs

6N8940 ... .1850 ± .0015 in.(4.699 ± 0.038 mm)

9S3037 ... .2320 ± .0015 in.(5.893 ± 0.038 mm)

With tabs

7N9342 ... .2150 ± .0015 in.(5.461 ± 0.038 mm)

7N9343 ... .2620 ± .0015 in.(6.655 ± 0.038 mm)

THRUST PLATE USAGE CHART		
CRANKSHAFT JOURNAL WIDTH	THRUST PLATE PART NO.	
	COUNTERBORE BLOCK	SPACER PLATE BLOCK
*1.5935 +.0055 −.0025 in. (40.475 +0.140 −0.064 mm)	6N8940	7N9342
**1.6875 ± .0025 in. (42.863 ± 0.064 mm)	9S3037	7N9343

*Current Production Engines
**Earlier Engines

NOTE: Make reference to THRUST PLATE USAGE CHART for the correct thrust plate to use.

(2) Make reference to MAIN BEARINGS and BEARING SURFACE (JOURNAL) FOR MAIN BEARINGS.

(3) Make reference to CONNECTING ROD BEARINGS and BEARING SURFACE (JOURNAL) FOR CONNECTING RODS.

(4) Tighten plugs to ... 17 ± 3 lb. ft.(23 ± 4 N·m)

Then "stake" the crankshaft to hold plugs in place. "STAKE" use a center punch and a hammer to change the shape of the hole as shown.

(5) Crankshaft gear:

Do not heat gear to more than 600°F (316°C).

(6) End play for crankshaft (new) ... .0025 to .0145 in.(0.064 to 0.368 mm)

Maximum permissible end play for crankshaft (worn) ... .025 in.(0.64 mm)

(7) Wear sleeve and seal installation:

Push wear sleeve and seal into position with correct tooling. Make reference to Special Instruction, Form No. SMHS7100 for instructions and the correct tooling for installing wear sleeves and seals.

Bearing Surface (Journal) For Main Bearings

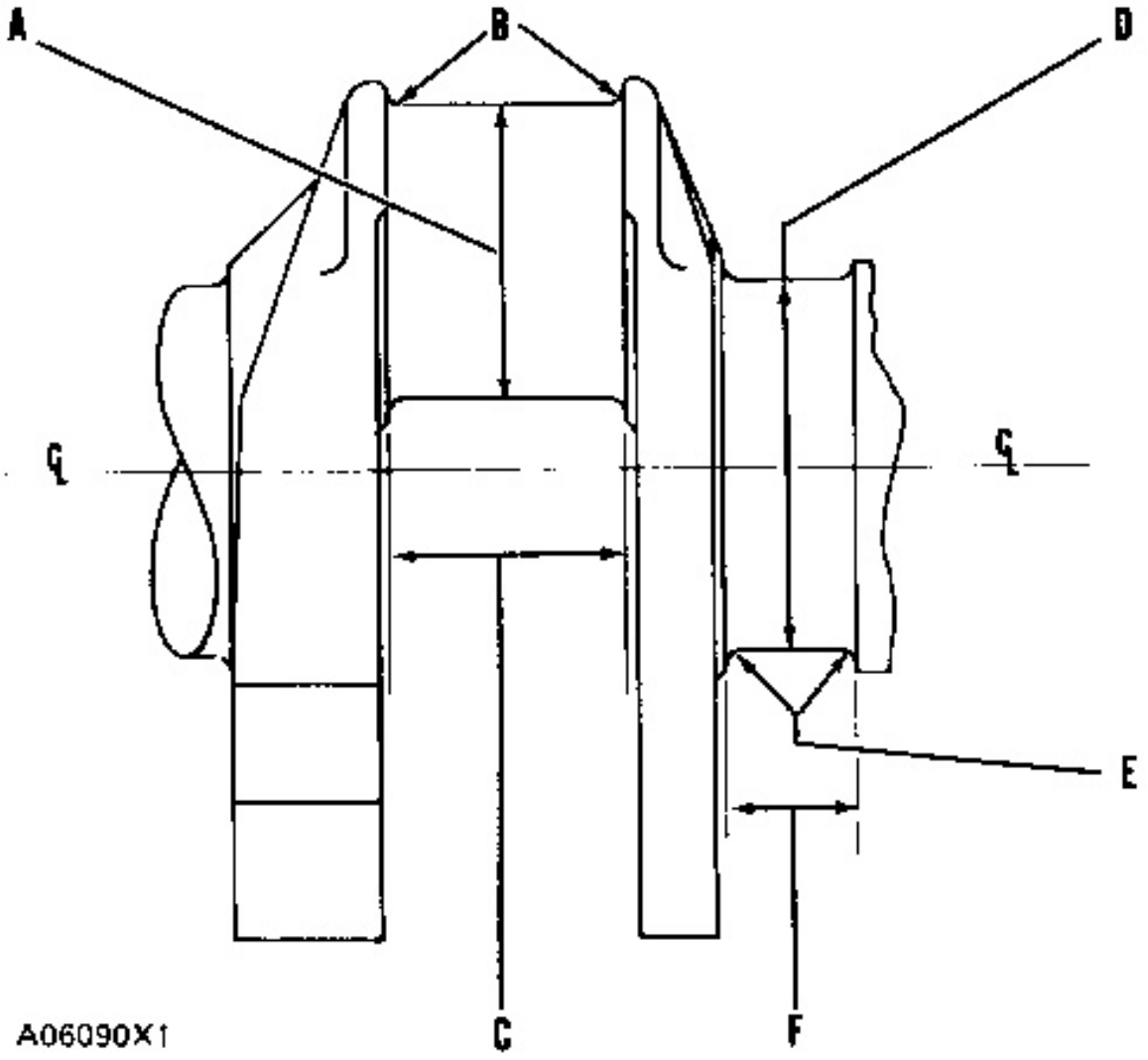

BEARING SURFACE (JOURNAL) FOR MAIN BEARINGS				
	ORIGINAL SIZE JOURNAL	**.010 in. (0.25 mm) UNDERSIZE (SMALLER) JOURNAL**	**0.20 in. (0.51 mm) UNDERSIZE (SMALLER) JOURNAL**	**.030 in. (0.76 mm) UNDERSIZE (SMALLER) JOURNAL**
(D) Diameter of Journal	3.4992 ± .0008 in. (88.880 ± 0.020 mm)	3.4892 ± .0008 in. (88.626 ± 0.020 mm)	3.4792 ± .0008 in. (88.372 ± 0.020 mm)	3.4692 ± .0008 in. (88.118 ± 0.020 mm)
Surface finish on diameter of journal	10 micro inches or smoother (0.25 micrometre)			
*(E) Radius	Rear Journal	.226 ± .008 in. (5.74 ± 0.020 mm)	All Others	.218 ± .008 in. (5.54 ± 0.20 mm)
Surface finish in radius	63 micro inches or smoother (1.6 micrometres)			
(F) Maximum width of journals, except front and rear journal	1.712 in. (43.485 mm)			
Width of rear journal	1.5935 + .0055 − .0025 in. (40.475 + 0.140 − 0.064 mm)			
Surface finish on thrust faces of rear journal	18 micro inches or smoother (0.46 micrometre)			

*Radius must blend smoothly (have no sharp edges) with the machined surfaces of the journals.

https://barringtondieselclub.co.za/

Bearing Surface (Journal) For Connecting Rods

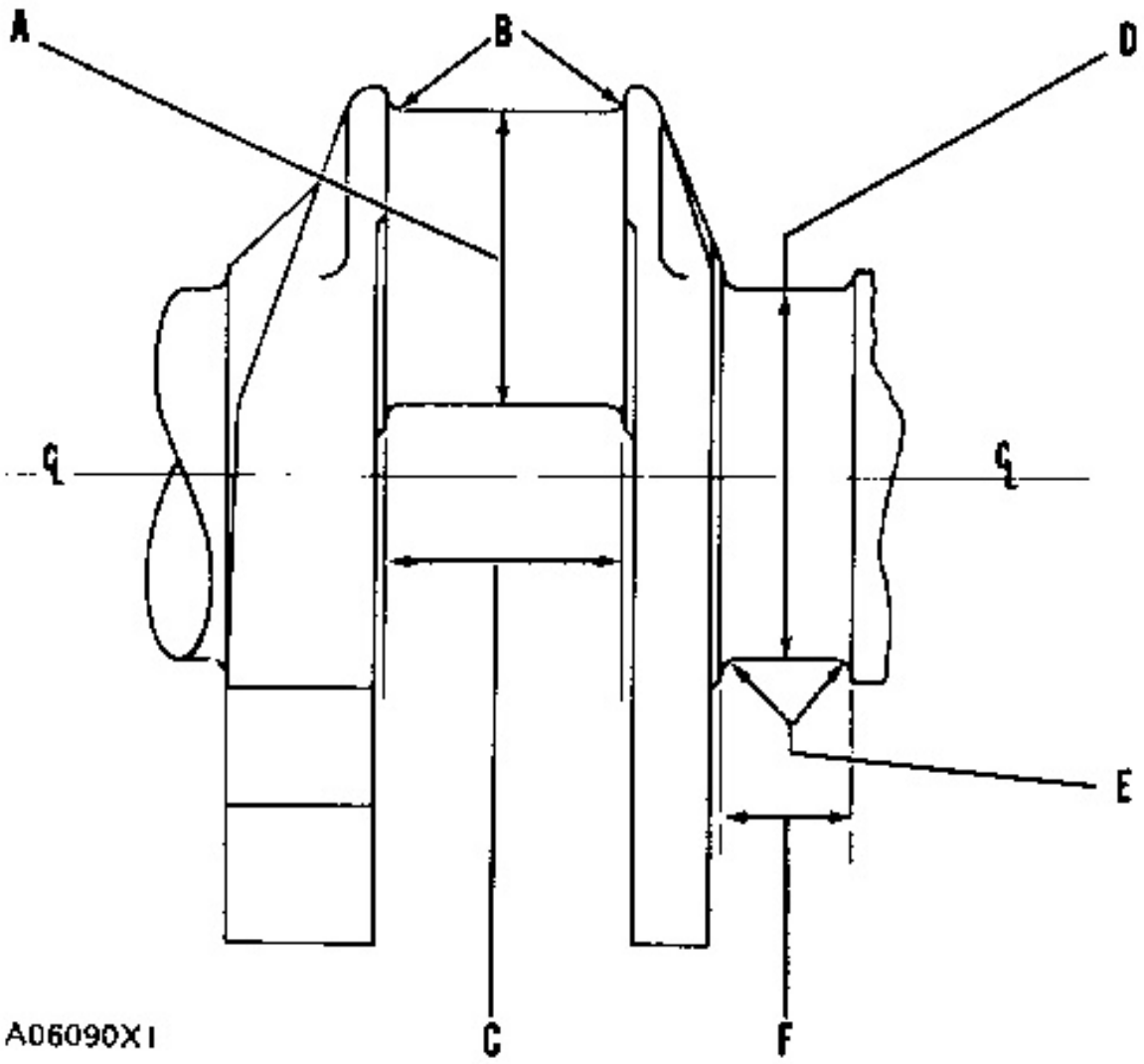

BEARING SURFACE (JOURNAL) FOR CONNECTING RODS				
	ORIGINAL SIZE	.010 in. (0.25 mm) UNDERSIZE (SMALLER) JOURNAL	.020 in. (0.51 mm) UNDERSIZE (SMALLER) JOURNAL	.030 in. (0.76 mm) UNDERSIZE (SMALLER) JOURNAL
(A) Diameter of crankshaft journal (bearing surface) for connecting rod.	2.9992 ± .0008 in. (76.180 ± 0.020 mm)	2.9892 ± .0008 in. (75.926 ± 0.020 mm)	2.9792 ± .0008 in. (75.672 ± 0.020 mm)	2.9692 ± .0008 in. (75.418 ± 0.020 mm)
Surface finish on diameter of journal	10 micro inches or smoother (0.25 micrometre)			
*(B) Radius	.226 ± .008 in. (5.74 ± 0.20 mm)			
Surface finish in radius	63 micro inches or smoother (1.6 micrometres)			
(C) Width of journal	1.8775 ± .0055 in. (47.689 ± 0.140 mm)			

*Radius (B) must blend smoothly (have no sharp edges) with the machined surfaces of the journals.

https://barringtondieselclub.co.za/

Main Bearings And Connecting Rod Bearings

Make reference to GUIDELINE FOR REUSABLE PARTS: MAIN BEARINGS AND CONNECTING ROD BEARINGS, Form No. SEBF8009.

CONNECTING ROD BEARINGS				
	ORIGINAL SIZE JOURNAL	.010 in. (0.25 mm) UNDERSIZE (SMALLER) JOURNAL	.020 in. (0.51 mm) UNDERSIZE (SMALLER) JOURNAL	.030 in. (0.76 mm) UNDERSIZE (SMALLER) JOURNAL
Diameter of crankshaft journal (bearing surface) for connecting rod.	2.9992 ± .0008 in. (76.180 ± 0.020 mm)	2.9892 ± .0008 in. (75.926 ± 0.020 mm)	2.9792 ± .0008 in. (75.672 ± 0.020 mm)	2.9692 ± .0008 in. (75.418 ± 0.020 mm)
Clearance between bearing and journal (new)	.0030 to .0066 in. (0.076 to 0.168 mm)			
Maximum permissible clearance between bearing and journal.	.010 in. (0.25 mm)			

MAIN BEARINGS				
	ORIGINAL SIZE JOURNAL	.010 in. (0.25 mm) UNDERSIZE (SMALLER) JOURNAL	.020 in. (0.51 mm) UNDERSIZE (SMALLER) JOURNAL	.030 in. (0.76 mm) UNDERSIZE (SMALLER) JOURNAL
Diameter of crankshaft journal (bearing surface) for main bearings.	3.4992 ± .0008 in. (88.880 ± 0.020 mm)	3.4892 ± .0008 in. (88.626 ± 0.020 mm)	3.4792 ± .0008 in. (88.372 ± 0.020 mm)	3.4692 ± .0008 in. (88.118 ± 0.020 mm)
Clearance between bearing and journal (new)	.0030 to .0065 in. (0.076 to 0.165 mm)			
Maximum permissible clearance between bearing and journal.	.010 in. (0.25 mm)			

Crankshaft Hub And Damper

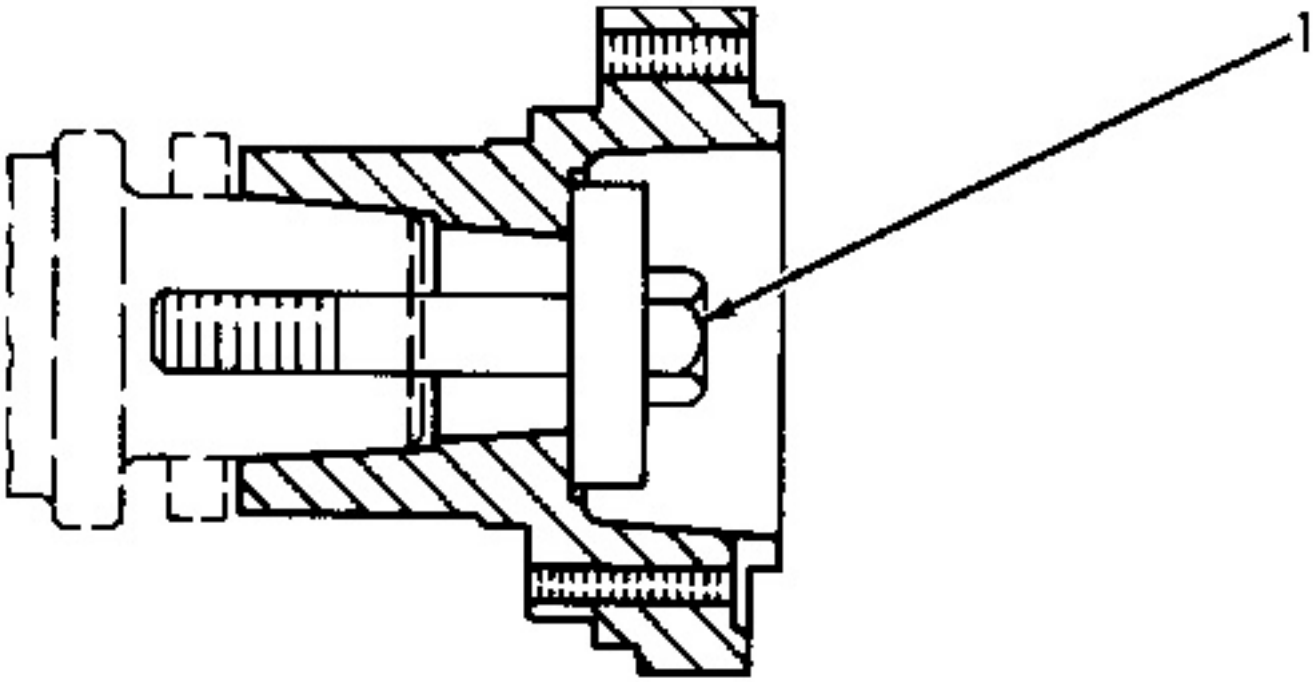

A23401X1

(1) Torque for bolt holding hub to crankshaft to ... 230 ± 20 lb. ft.(307 ± 25 N·m)

Hit bolt with hammer and again tighten bolt to ... 230 ± 20 lb. ft.(307 ± 25 N·m)

NOTE: Install washer with the maximum flat area next to the hub.

Engine Support (2N8485)

Assemble the bearing and engine support around the trunnion. Measure clearance between flanges of top and bottom halves of support. Install the correct number of shims between the flanges to give a bearing clearance of ... -.003 to +.002 in.(-0.08 to +0.05 mm)

Then fill the groove in the top half of the support with 1P808 or 5P960 Grease and install the top half of the support.

Flywheel Ring Gear

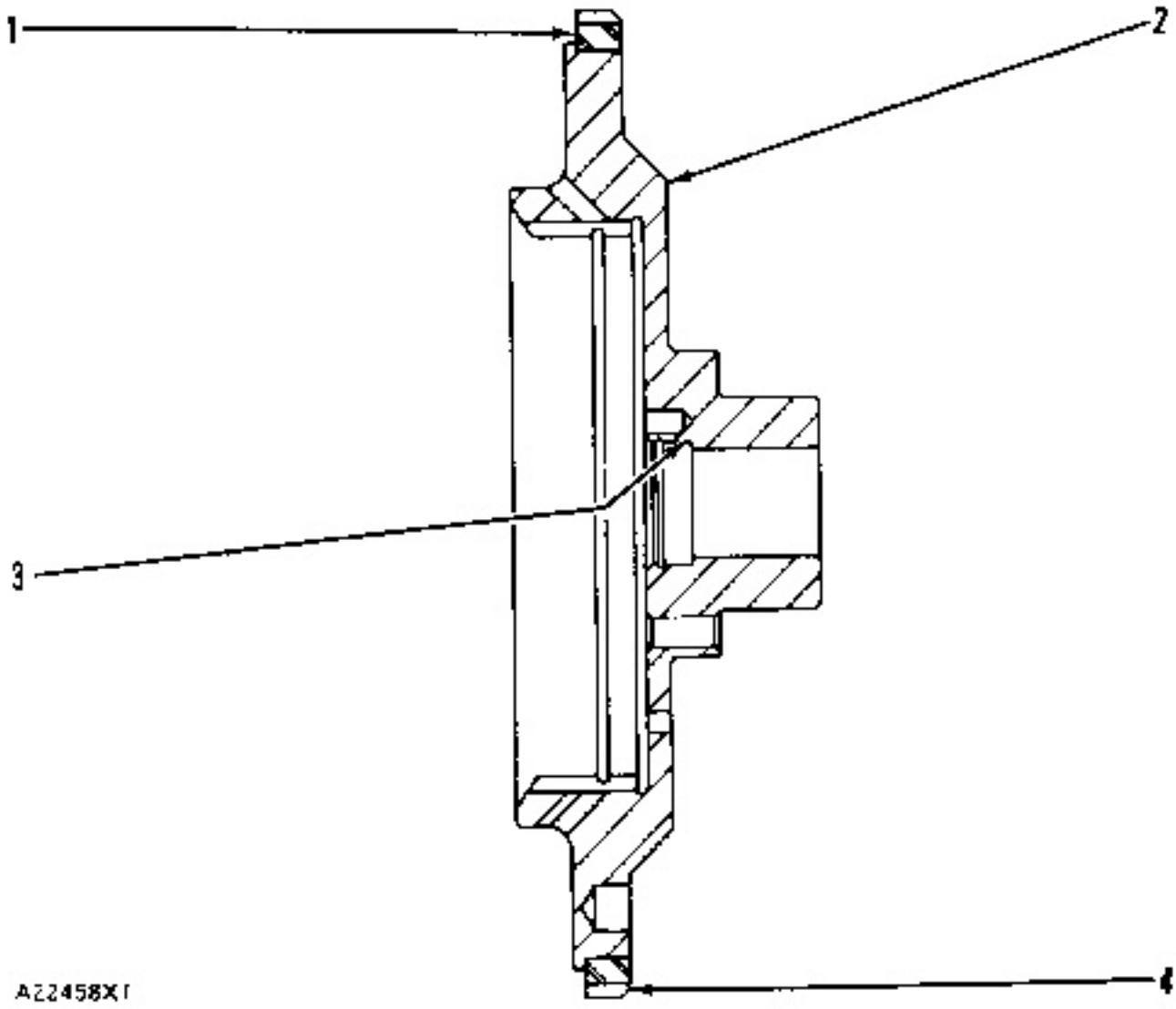

(1) Ring gear.

(2) Flywheel.

(3) Pilot bearing bore.

(4) Chamfer side of ring gear (1).

Install ring gear (1) on flywheel (2) so that the chamfer side (4) of ring gear (1) is as shown.

NOTICE

Do not heat ring gear to more than 600° F (316° C) before installing on the flywheel.

Flywheel Housing Tightening

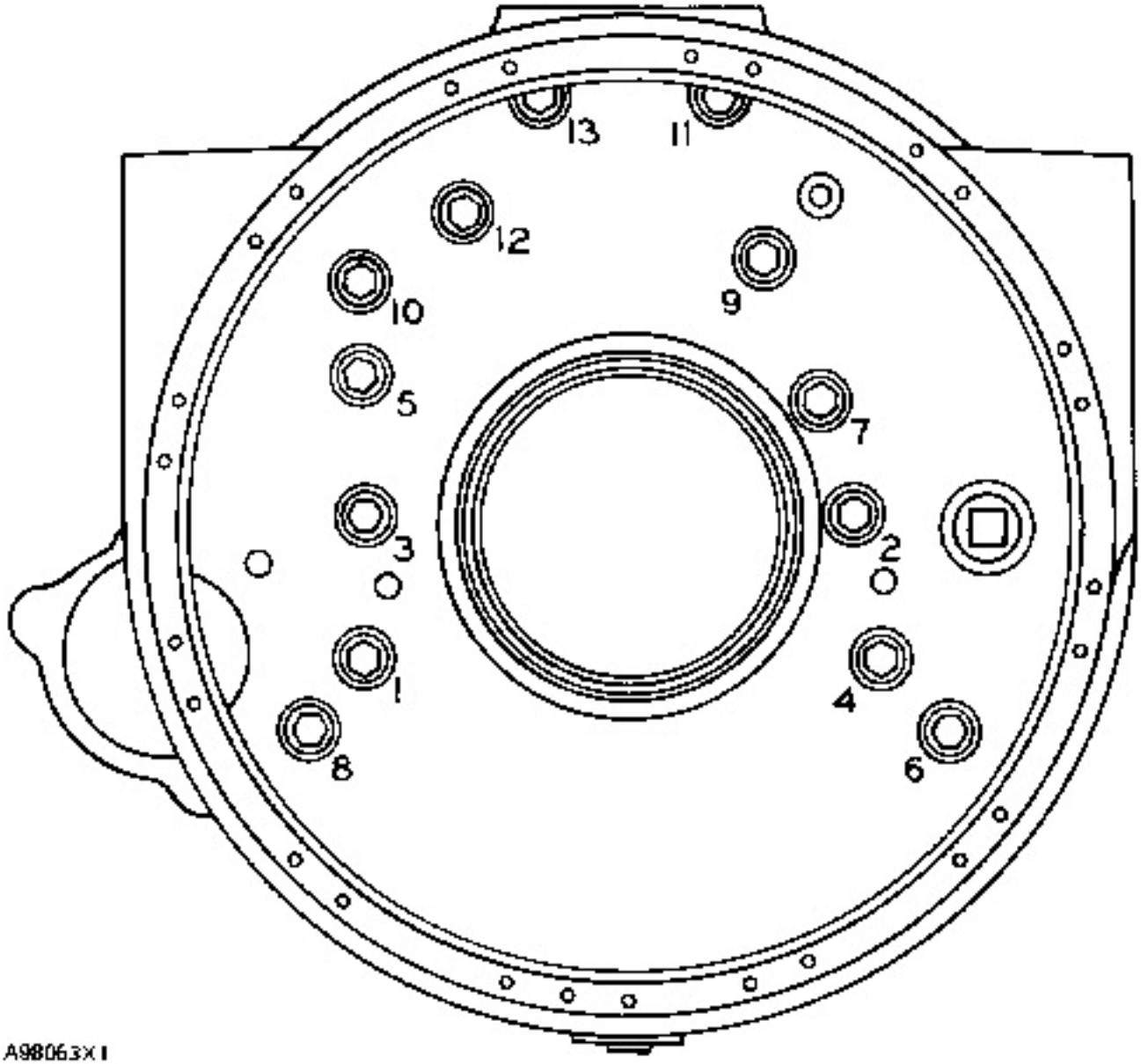

Tighten bolts in number sequence to ... 75 ± 10 lb. ft.(100 ± 14 N·m)

Flywheel

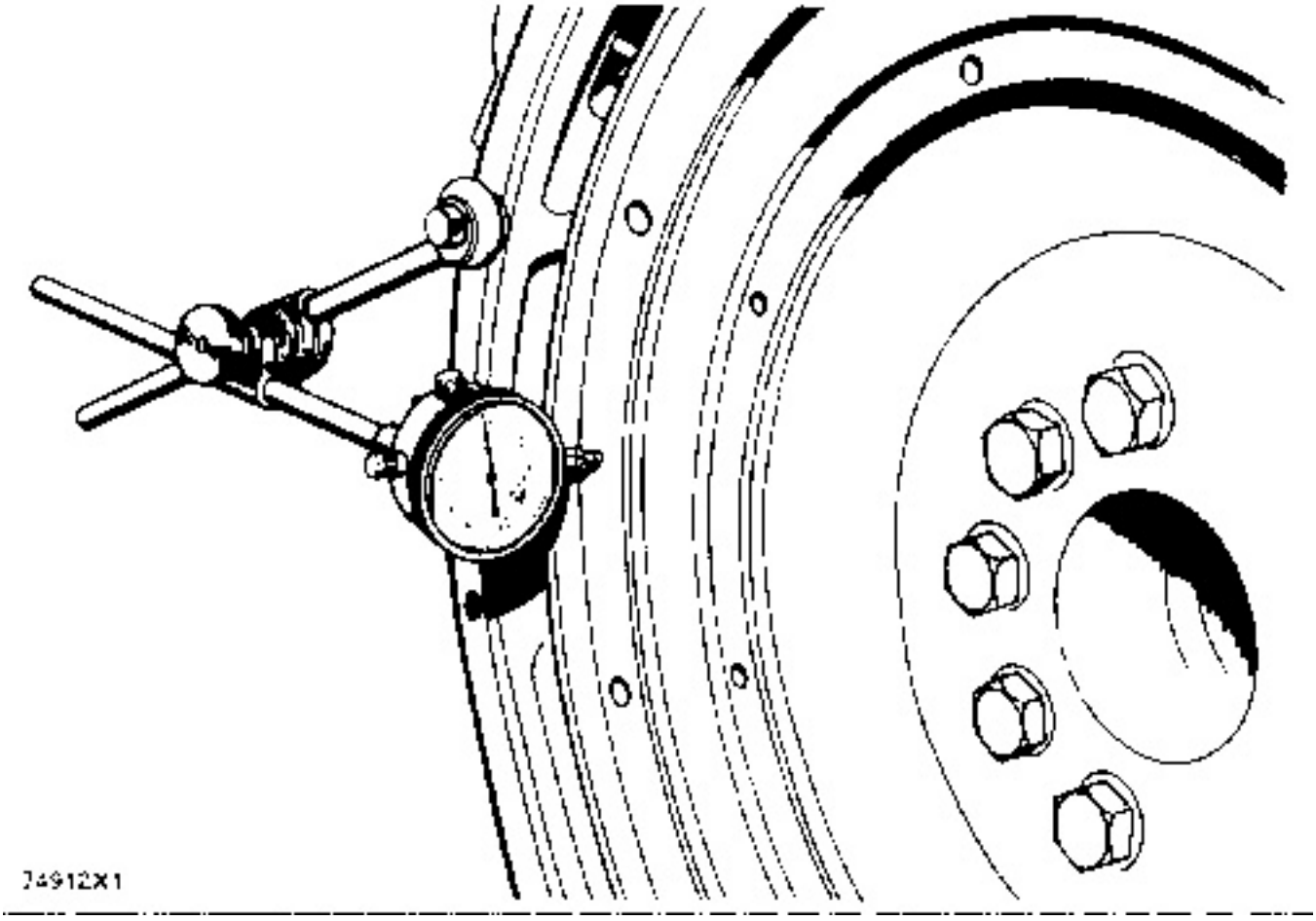

CHECKING FACE RUNOUT OF THE FLYWHEEL

Face Runout (axial eccentricity) of the Flywheel:

1. Install the dial indicator as shown. Put a force on the flywheel toward the rear.

2. Set the dial indicator to read .000 in. (0.0 mm).

3. Turn the flywheel and read the indicator every 90°. Put a force on the flywheel to the rear before each reading.

4. The difference between the lower and higher measurements taken at all four points must not be more than .006 in. (0.15 mm), which is the maximum permissible face runout (axial eccentricity) of the flywheel.

Bore Runout (radial eccentricity) of the Flywheel:

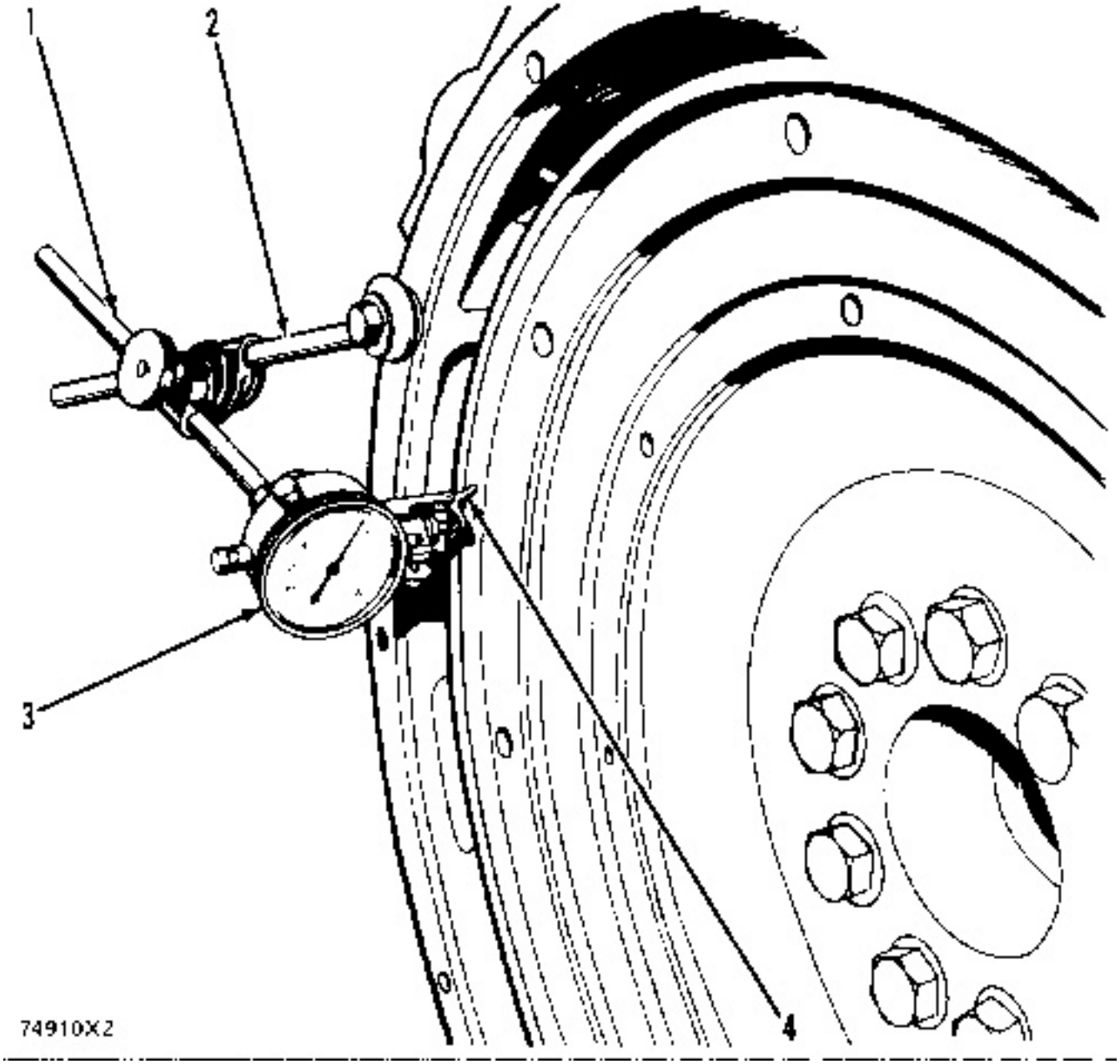

CHECKING FLYWHEEL BORE

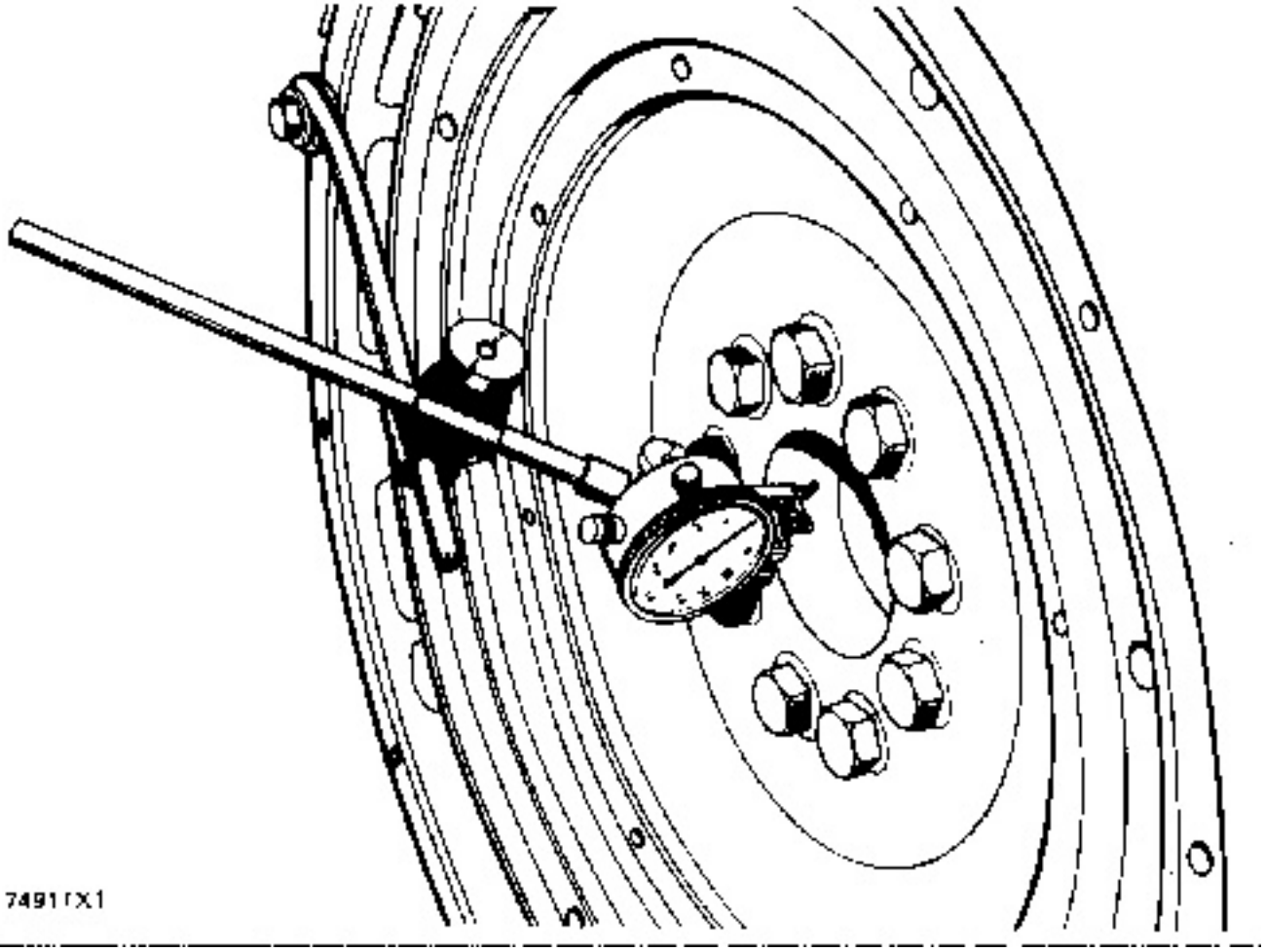

CHECKING FLYWHEEL CLUTCH PILOT BEARING BORE

1. Install the dial indicator (3) and make an adjustment of the universal attachment (4) so it makes contact as shown.

2. Set the dial indicator to read .000 in. (0.0 mm).

3. Turn the flywheel and read the indicator every 90°.

4. The difference between the lower and higher measurements taken at all four points must not be more than .006 in. (0.15 mm), which is the maximum permissible bore runout (radial eccentricity) of the flywheel.

5. Runout (eccentricity) of the bore for the pilot bearing for the flywheel clutch, must not exceed .005 in. (0.13 mm).

Flywheel Housing

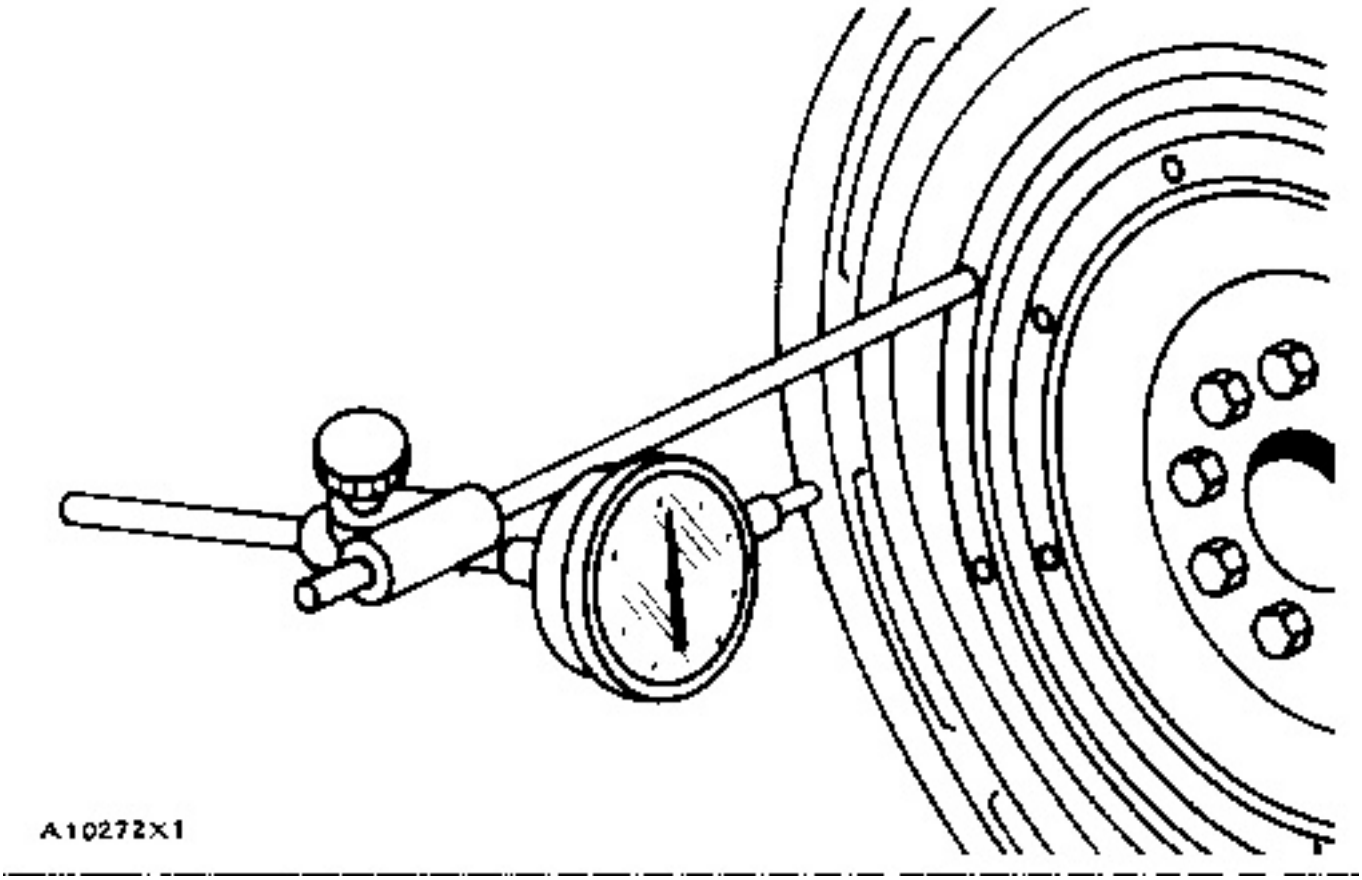

8S2328 DIAL INDICATOR GROUP INSTALLED

Face Runout (axial eccentricity) of the Flywheel Housing:

1. Fasten a dial indicator to the crankshaft flange so the anvil of the indicator will touch the face of the flywheel housing.

2. Put a force on the crankshaft toward the rear before reading the indicator at each point.

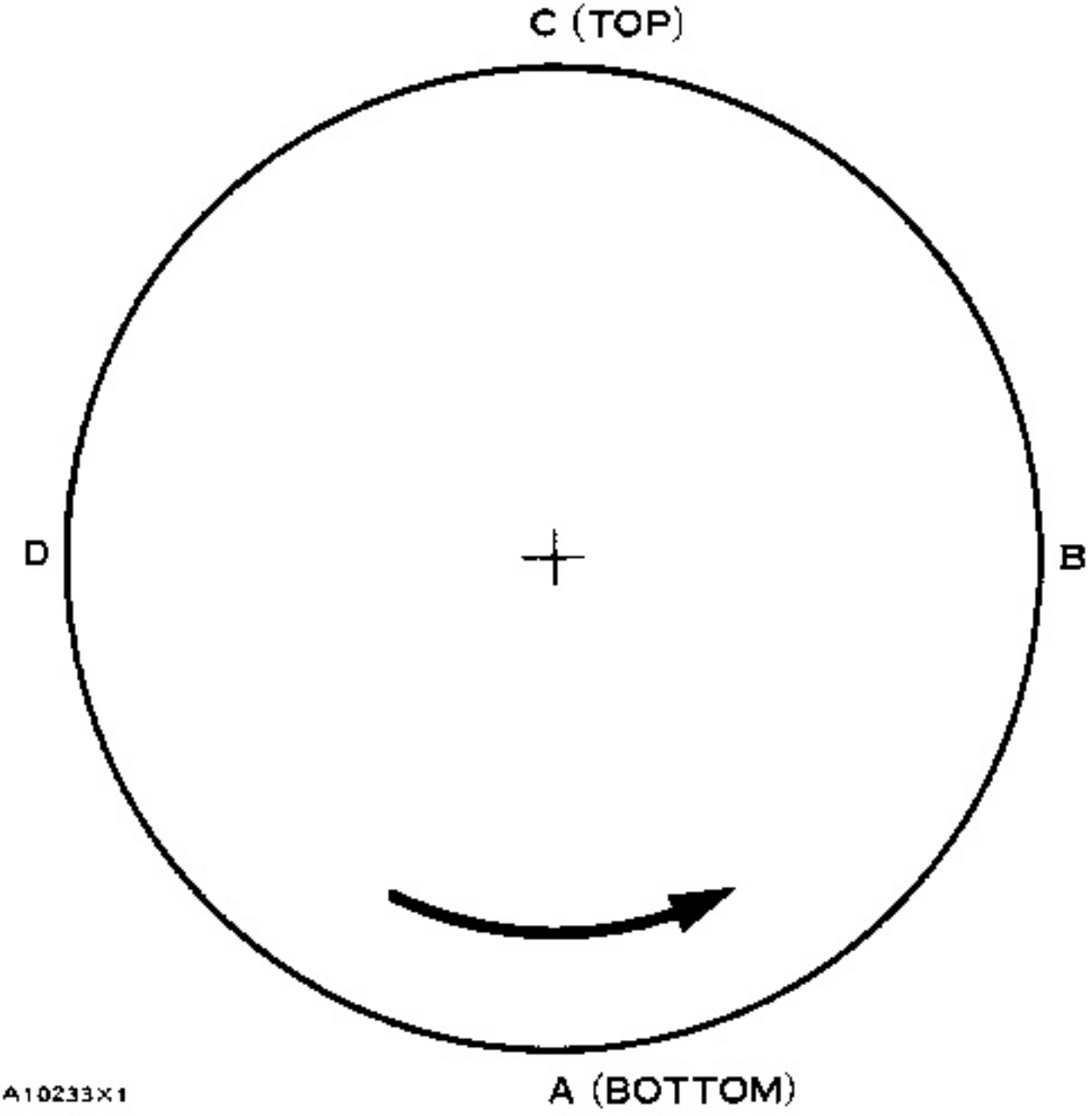

3. With dial indicator set at .000 in. (0.0 mm) at location (A), turn the crankshaft and read the indicator at locations (B), (C) and (D).

4. The difference between lower and higher measurements taken all four points must not be more than .012 in. (0.30 mm), which is the maximum permissible face run out (axial eccentricity) of the flywheel housing.

Flywheel Housing Bore

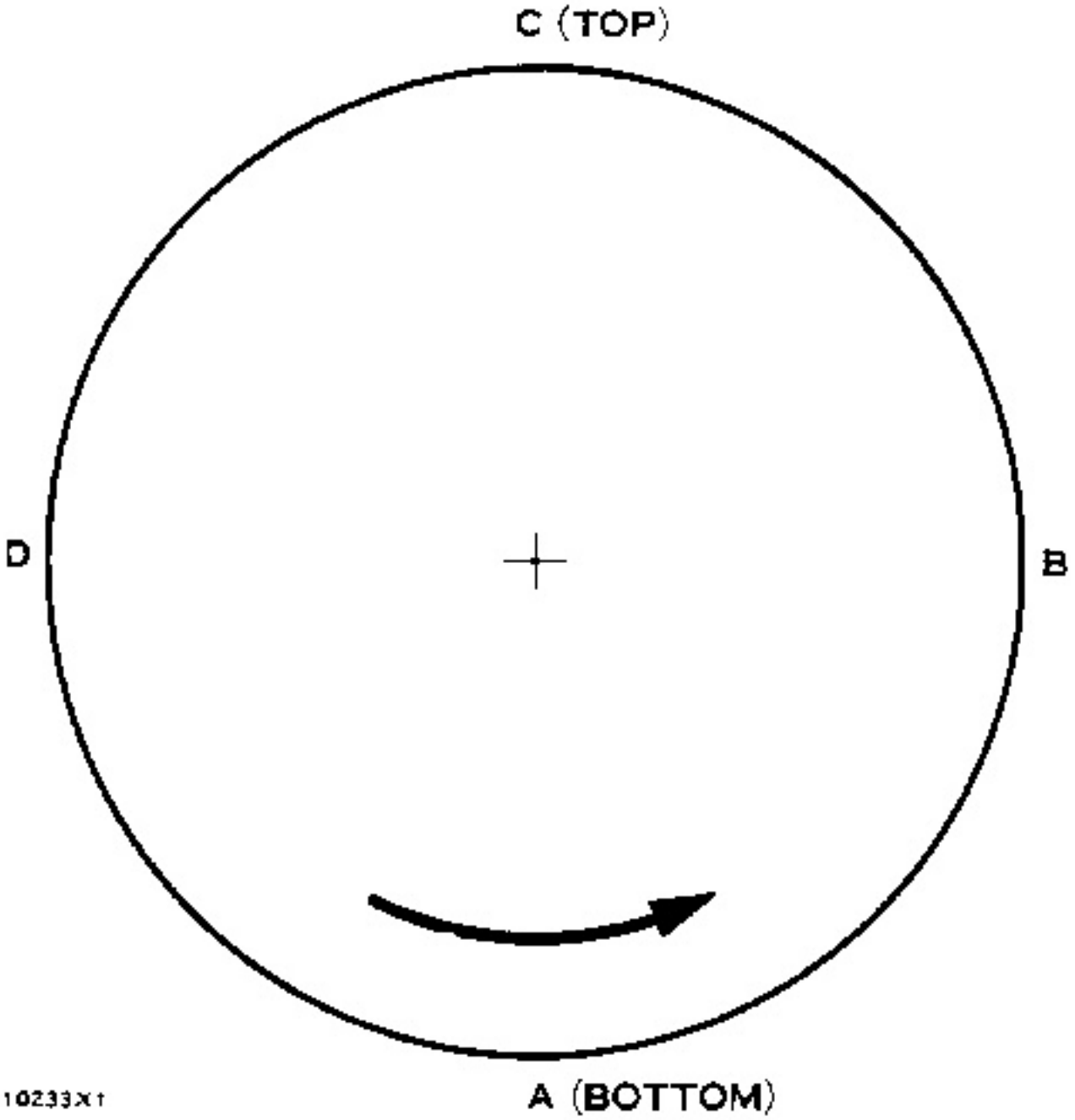

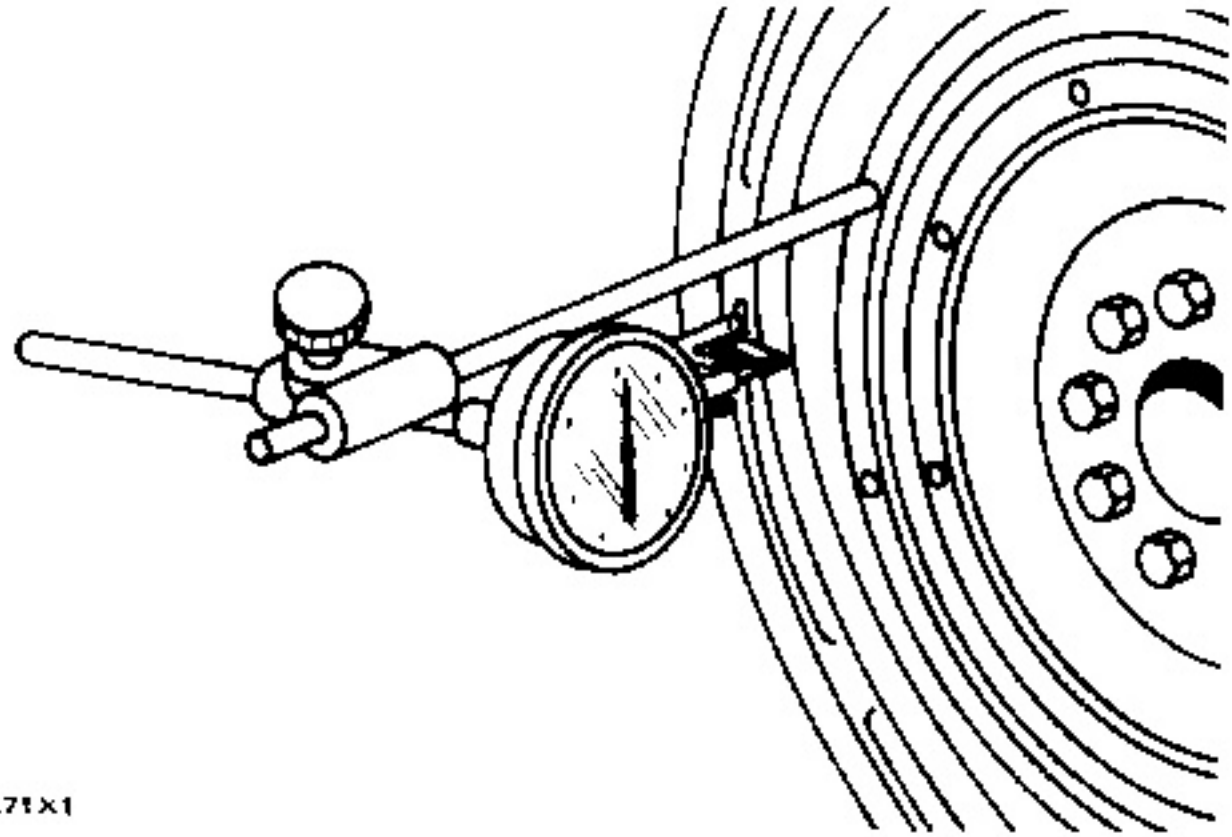

NOTE: Write the dial indicator measurements with their positive (+) and negative (-) notation (signs). This notation is necessary for making the calculations in the chart correctly.

1. With the dial indicator in position at (C), adjust the dial indicator to "0" (zero). Push the crankshaft up against the top bearing. Write the measurement for bearing clearance on line 1 in column (C).

2. Divide the measurement from Step 1 by 2. Write this number on line 1 in columns (B) & (D).

3. Turn the crankshaft to put the dial indicator at (A). Adjust the dial indicator to "0" (zero).

4. Turn the crankshaft counterclockwise to put the dial indicator at (B). Write the measurement in the chart.

5. Turn the crankshaft counterclockwise to put the dial indicator at (C). Write the measurement in the chart.

6. Turn the crankshaft counterclockwise to put the dial indicator at (D). Write the measurement in the chart.

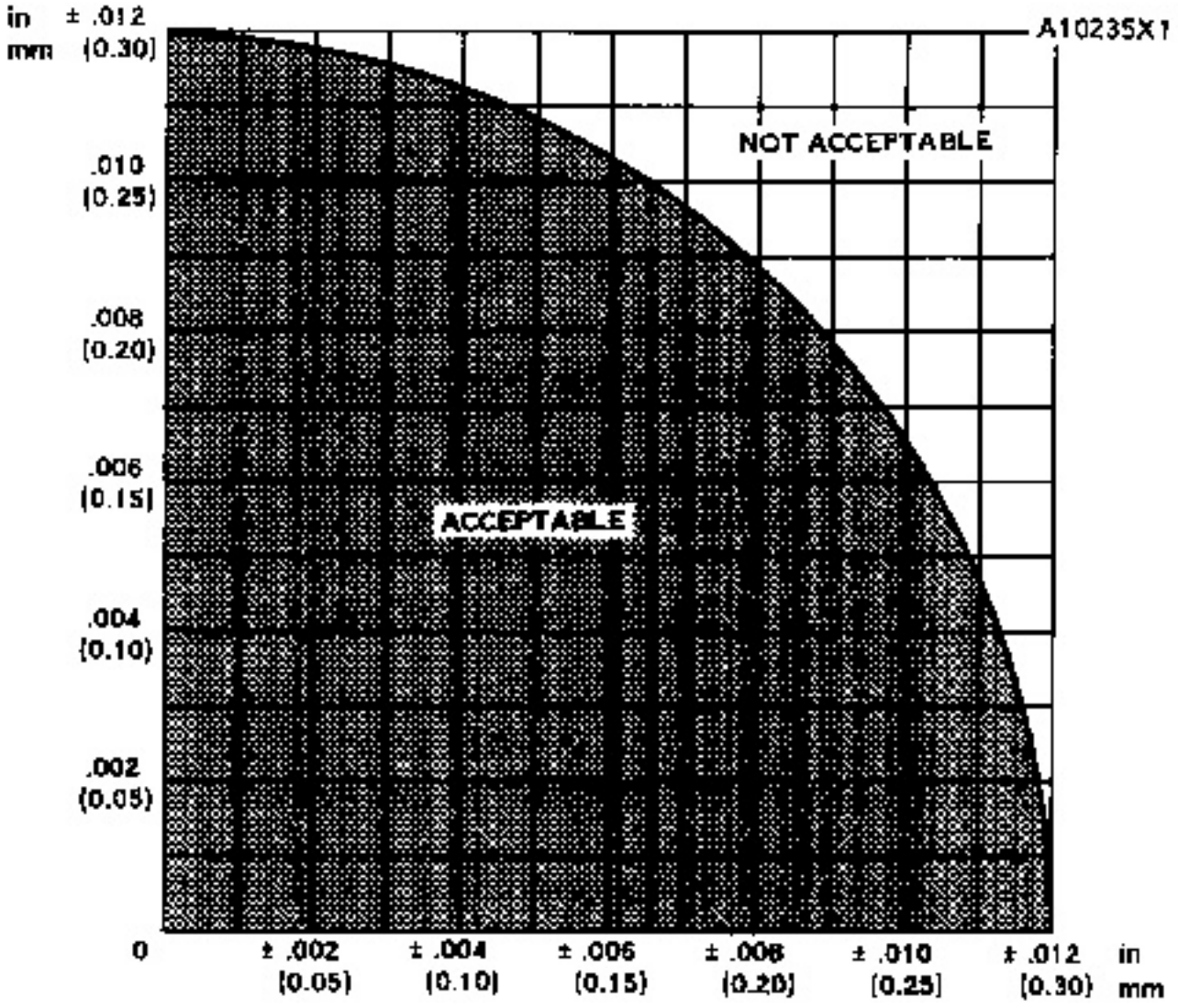

7. Add lines I & II by columns.

8. Subtract the smaller number from the larger number in line III in columns (B) & (D). The result is the horizontal "eccentricity" (out of round). Line III, column (C) is the vertical eccentricity.

CHART FOR DIAL INDICATOR MEASUREMENTS					
	Position of dial indicator				
	Line No.	A	B	C	D
Correction for bearing clearance	I	0			
Dial Indicator Reading	II	0			
Total of Line I & 2	III	0	**	*	**

*Total Vertical eccentricity (out of round).
**Subtract the smaller No. from the larger No. The difference is the total horizontal eccentricity.

A10234X1

9. On the graph for total eccentricity find the point of intersection of the lines for vertical eccentricity and horizontal eccentricity.

10. If the point of intersection is in the range marked "Acceptable" the bore is in alignment. If the point of intersection is in the range marked "Not Acceptable" the flywheel housing must be changed.

Alternators (2N6397, 2N6398 And 2N7759)

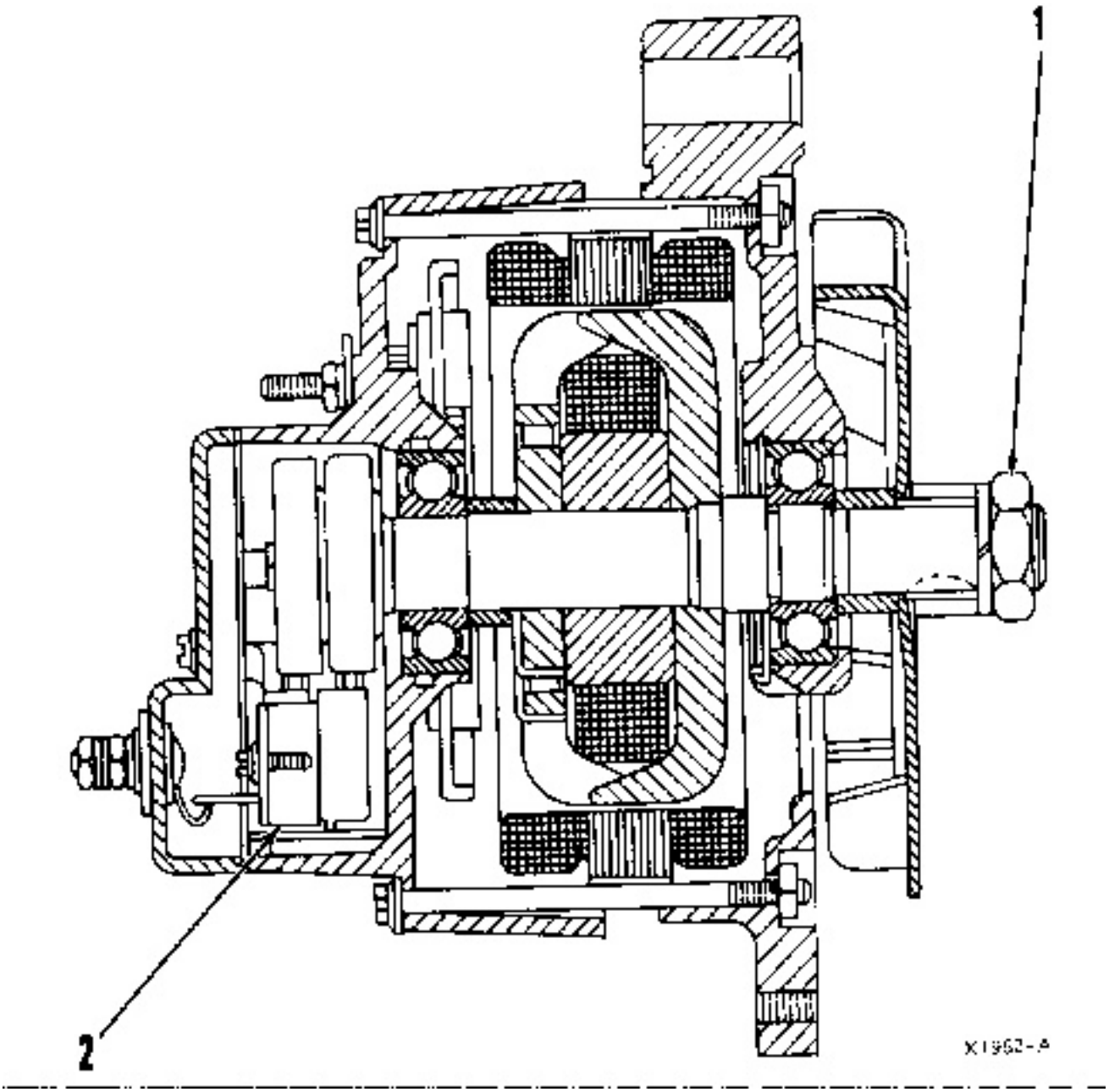

2N6397 24V (Motorola Number MA24-902A or 8MA3006F), 2N6398 24V (Motorola Number MH24-902A or 8MH3005F)

Rotation is clockwise when seen from drive end.

Output at 1800 rpm and 28 V (cold) ... *21.5 A

Output at 2500 rpm and 28 V (cold) ... *31 A

---

*6.5 to 9.3% higher with no regulator.

Rated output (hot) in air temperature of 77°F (25°C) ... 35 A

Speed at 5000 rpm and when temperature and output are not changing:

2N6397 ... 32.6 A

2N6398 ... 31.2 A

Field current at 24 V and 80° (27°C) ... 1.7 A

(1) Torque for nut ... 45 ± 5 lb. ft.(60 ± 7 N·m)

(2) Tension of brush spring ... 6 to 8 oz.(1.67 to 2.22 N)

Torque for electrical connections on alternator ... 20 ± 2 lb. in.(2.3 ± 0.2 N·m)

2N7759 12V (Motorola Number 8MH-2003K)

Rotation is either direction.

Output at 5000 rpm and 14 V, cold (connect a carbon pile to the battery to get maximum output) ... 50 A

Rated output (hot) ... 50 A

Field current at 12 V and 75°F (24°C) ... Maximum 3 A

(1) Torque for nut ... 45 ± 5 lb. ft.(60 ± 7 N·m)

(2) Tension of brush spring ... 5.5 to 7 oz.(1.53 to 1.95 N)

Torque for electrical connections on alternator ... 20 ± 2 lb. in.(2.3 ± 0.2 N·m)

Alternators (4N3986 And 4N3987)

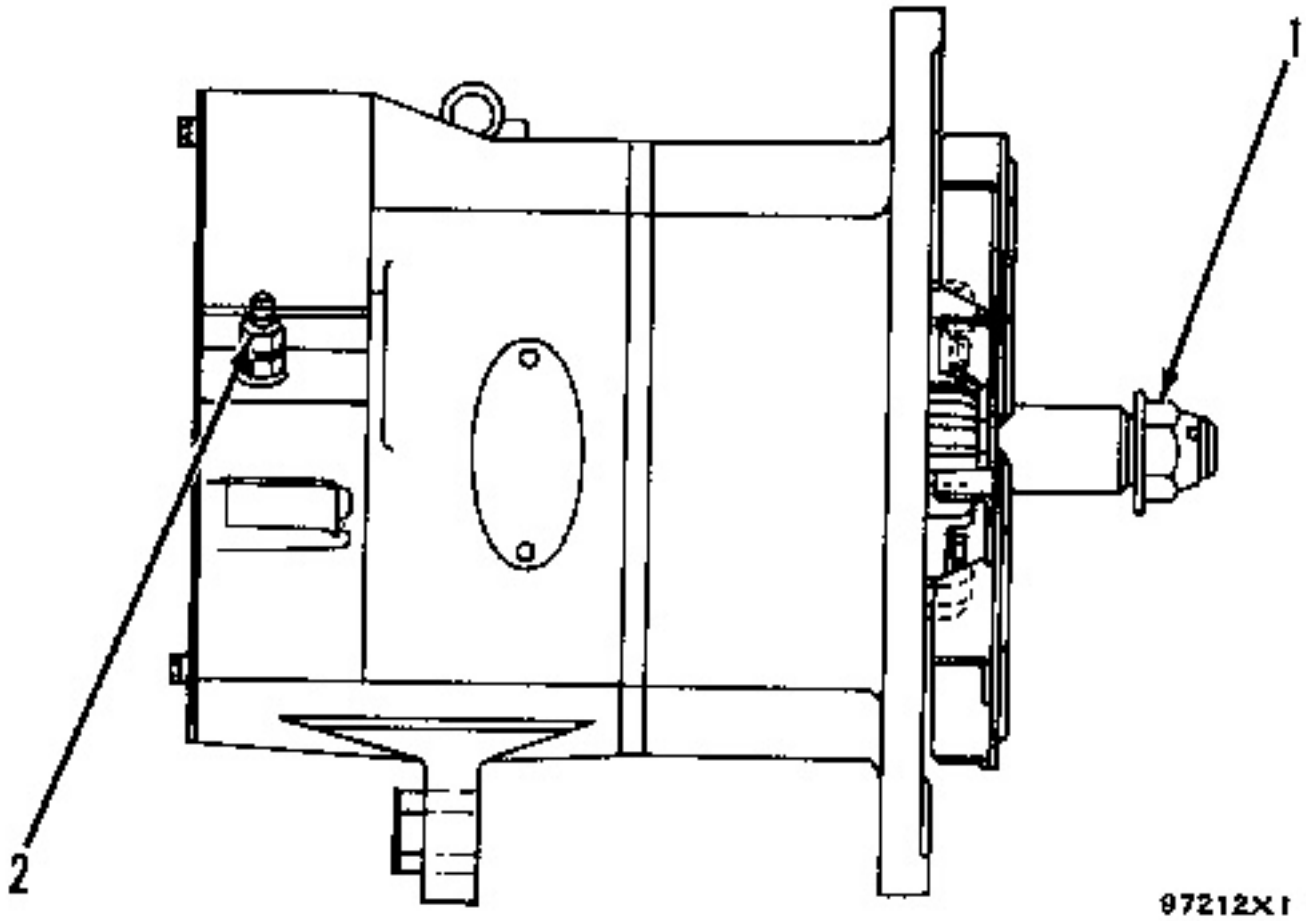

4N3986 24V (Delco-Remy Number 1117734)

Rotation can be either direction.

Polarity: negative, positive or insulated.

Circuit ... B

Output at 26V and 2600 rpm (cold) ... 46 A

Output at 26V and 6500 rpm (cold) ... 60 A

Rated output, hot ... 60 A

Field current at 24V and 80°F (27°C) ... 2.2 to 2.7 A

Voltage regulator:

Voltage setting range ... 26 to 30 V

Adjust voltage setting to ... 28 V

then increase speed to get maximum output ... 60 A

(1) Torque for nut holding pulley ... 75 ± 5 lb. ft.(100 ± 7 N·m)

(2) Torque for output terminal ... 55 to 75 lb. in.(6.3 to 8.5 N·m)

4N3987 30 or 32V (Delco-Remy Number 1117733)

Polarity: negative, positive or insulated.

Circuit ... B

Rotation can be either direction.

Output at 36V and 2000 rpm (cold) ... 25 A

Output at 36V and 6500 rpm (cold) ... 60 A

Rated output, hot ... 60 A

Field current at 32V and 80°F (27°C) ... 1.4 to 1.7 A

Voltage regulator:

Voltage setting range ... 33.7 to 37.7 V

Adjust voltage setting to:

for 32V operation ... 36.7 V

for 30V operation ... 34.7 V

then increase speed to get maximum output ... 60 A

(1) Torque for nut holding pulley ... 75 ± 5 lb. ft.(100 ± 7 N·m)

(2) Torque for output terminal ... 55 to 75 lb. in.(6.3 to 8.5 N·m)

Alternators (1N9406 And 5S9088)

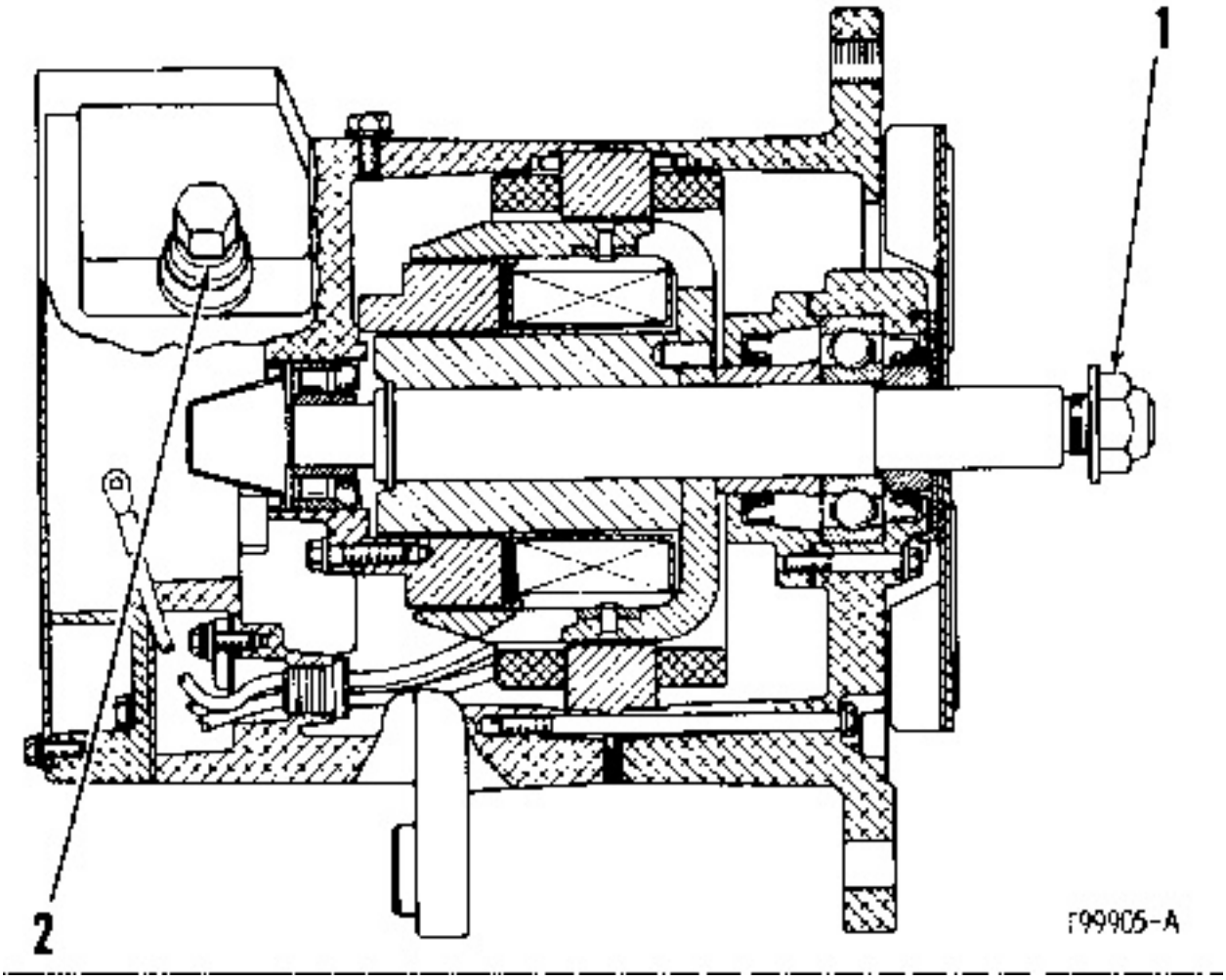

1N9406 30 or 32V (Delco-Remy Number 1117237)

Polarity is negative ground.

Circuit ... B

Speed for testing ... 5000 rpm

Rotation can be either direction.

Output when cold:

Fasten carbon pile to battery to get maximum output ... 54 A

Rated output, hot ... 50 A

Field current at 32 V and 80°F (27°C) ... 1.6 to 1.7 A

Voltage regulator:

Voltage setting range ... 33.7 to 37.7 V

Adjust voltage setting to:

for 32 V operation ... 36.7 V

for 30 V operation ... 34.7 V

then increase speed to get maximum output ... 50 A

(1) Torque for nut holding pulley ... 75 ± 5 lb. ft.(100 ± 7 N·m)

(2) Torque for output terminal ... 10 ± 1 lb. ft.(14 ± 1 N·m)

Torque for "ground" terminal on top of alternator ... 50 to 60 lb. in.(5.7 to 6.8 N·m)

5S9088 24V (Delco-Remy Number 1117226 or 1117236)

Polarity is negative ground.

Circuit ... B

Speed for testing ... 5000 rpm

Rotation can be either direction.

Output when cold:

Fasten carbon pile to battery to get maximum output ... 54 A

Rated output, hot ... 50 A

Field current at 24 V and 80°F (27°C) ... 2.5 to 2.9 A

Voltage regulator:

Voltage setting range ... 26 to 30 V

Adjust voltage setting to ... 28 V

then increase speed to get maximum output ... 50 A

(1) Torque for nut holding pulley ... 75 ± 5 lb. ft.(100 ± 7 N·m)

(2) Torque for output terminal ... 10 ± 1 lb. ft.(14 ± 1 N·m)

Torque for bolts holding bottom of alternator to bracket ... 24 ± 3 lb. ft.(30 ± 4 N·m)

Torque for bolt holding top of alternator to adjusting strap ... 56 ± 7 lb. ft.(75 ± 10 N·m)

Alternators (9L5938)

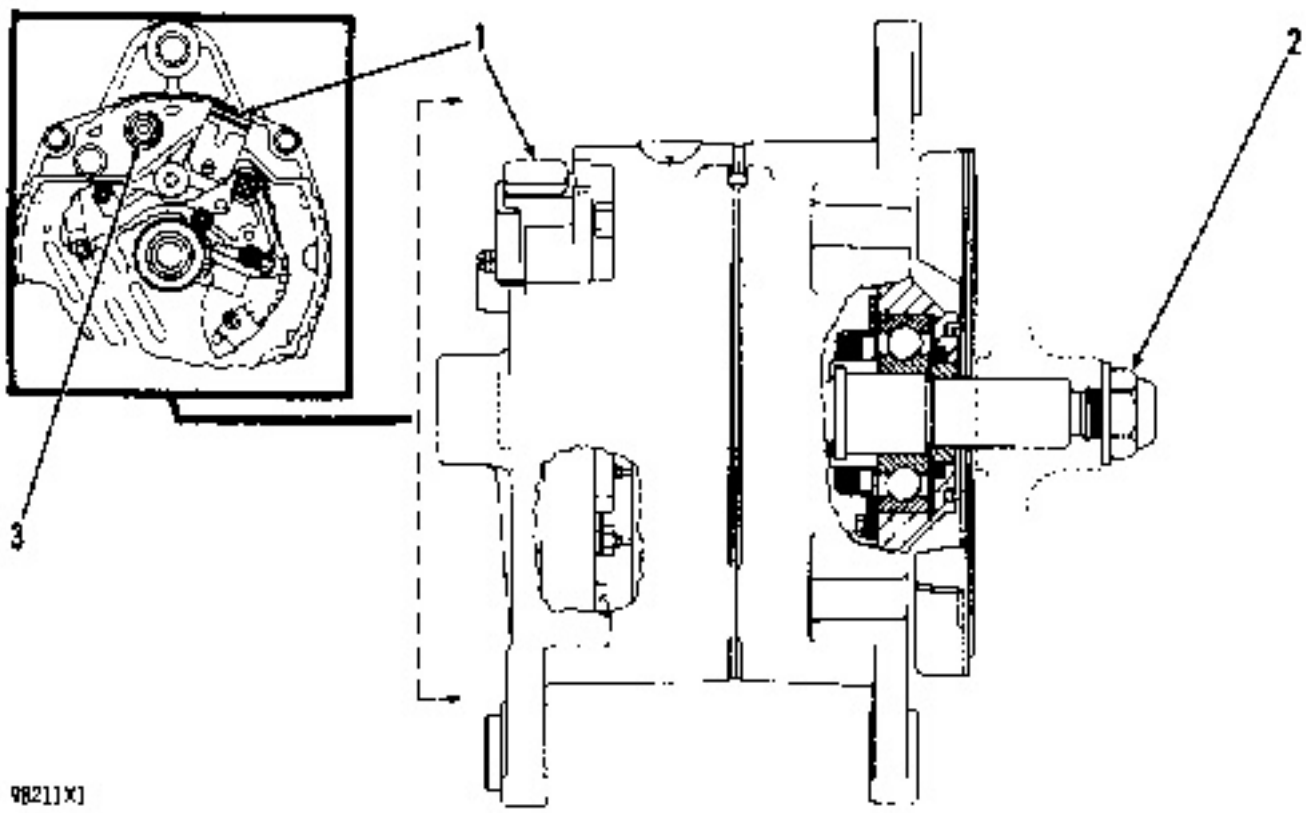

9L5938 12V (Delco-Remy Number 1100081)

Polarity is negative ground.

Rotation can be either direction.

Output at 14V and 2000 rpm (cold) ... 46 A

Output at 14V and 5000 rpm (cold) ... 58 A

Rated output (hot) ... 65 A

Field current at 12V and 80°F (27°C) ... 4.4 to 4.9 A

(1) Four position cap for voltage adjustment.

(2) Torque for pulley nut ... 75 ± 5 lb. ft.(100 ± 7 N·m)

(3) Torque for stud nut for battery connection ... 25 to 40 lb. in.(2.8 to 4.5 N·m)

https://barringtondieselclub.co.za/

Specifications
3304 & 3306 INDUSTRIAL & MARINE ENGINES
Media Number -SEBR0539-00 Publication Date -28/09/1992 Date Updated -11/10/2001

Alternator Regulators

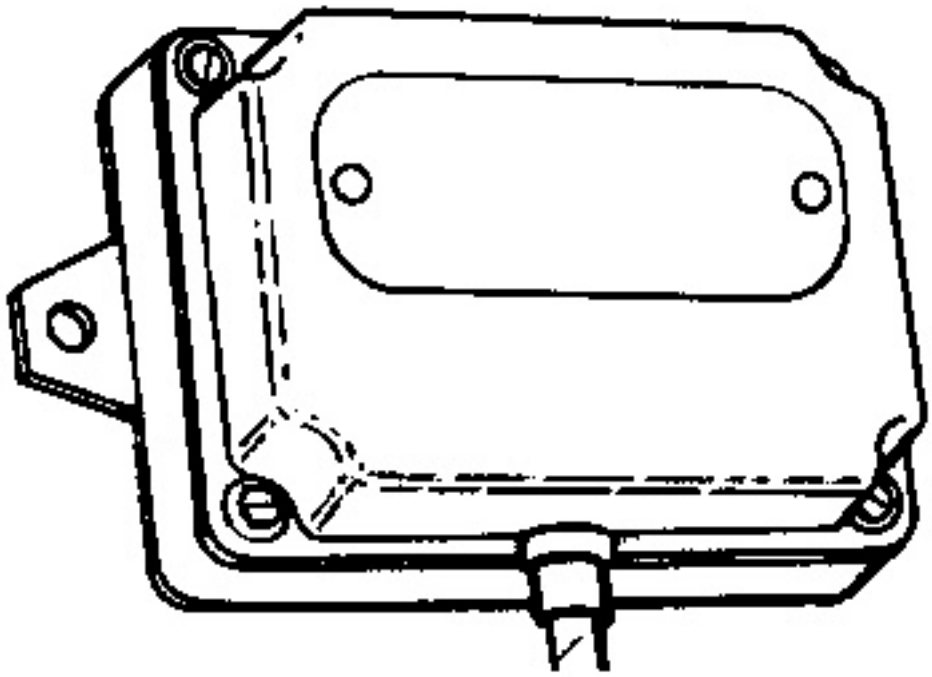

6N3161 12V (Motorola Number 8RD3018)

Polarity is negative ground or insulated.

SWITCH POSITION	1	2	3	4	5
VOLTAGE SETTING	14.4 +.3 −.2	14.1 ± .2	13.8 ± .2	13.5 ± .2	13.2 ± .2

Original setting is ... 13.8 ± .2 Volt

Clockwise rotation of adjusting screw gives increase in voltage.

6N3160 24V (Motorola Number 8RD3019)

Polarity is negative ground or insulated.

SWITCH POSITION	1	2	3	4	5
VOLTAGE SETTING	29.2 +.4 −.3	28.6 ± .3	28.0 ± .3	27.4 ± .3	26.8 ± .3

Original setting is ... 28.0 ± .3 Volt

Clockwise rotation of adjusting screw gives increase in voltage.

2N7278 12V (Motorola Number TVR12-33C)

Polarity is negative ground or insulated.

Voltage setting range ... 13 to 16 V

Adjust voltage setting to ... 14.4 V

2N7279 24V (Motorola Number TVR24-29C)

Polarity is negative ground or insulated.

Voltage setting range ... 27 to 35 V

Adjust voltage setting to ... 28.4 V

Starter Motors (6L7894, 9L3597 And 2S900)

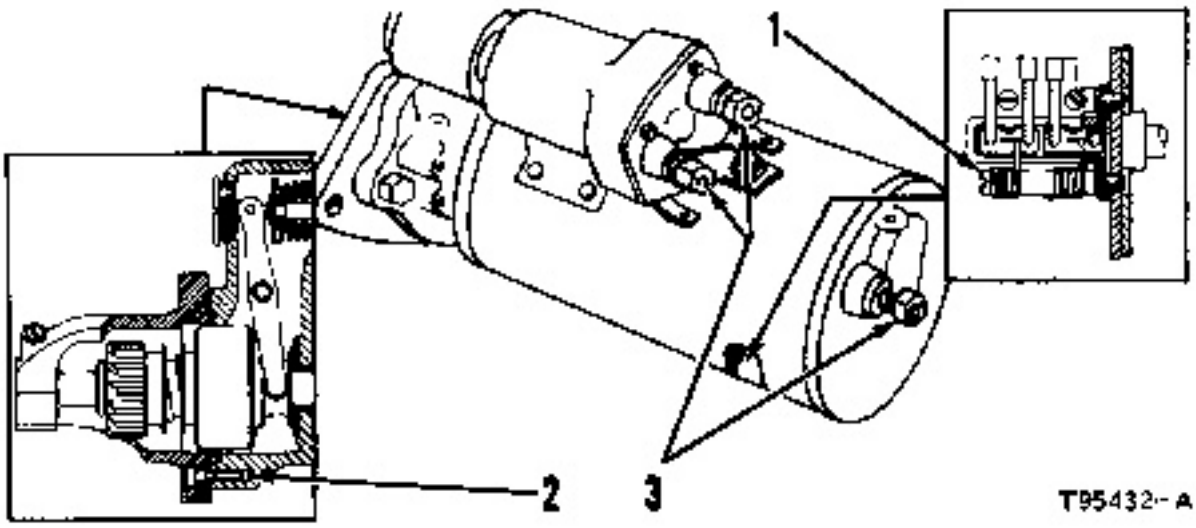

NOTE: Make reference to STARTER SOLENOID.

6L7894 32V (Delco-Remy Number 1113945 or 1114707)

Rotation is clockwise when seen from drive end.

Minimum speed with no load ... 3250 rpm

Maximum speed with no load ... 4000 rpm

Current consumption (draw) at no load:

Minimum with solenoid at 28 V ... 75 A

Maximum with solenoid at 28 V ... 95 A

Clearance between pinion and housing (pinion clearance) ... .36 in.(9.1 mm)

(1) Tension of brush spring ... 80 oz.(22.2 N)

(2) Torque for screws holding nose housing to lever housing ... 13 to 17 lb. ft.(18 to 23 N·m)

(3) Torque for terminal nuts ... 20 to 25 lb. ft.(25 to 35 N·m)

9L3597 12V (Delco-Remy Number 1114158, 1114129 or 1114708)

Rotation is clockwise when seen from drive end.

Minimum speed with no load ... 4000 rpm

Maximum speed with no load ... 7000 rpm

Current consumption (draw) at no load:

Minimum with solenoid at 9 V ... 140 A

Maximum with solenoid at 9 V ... 190 A

Clearance between pinion and housing (pinion clearance) ... .36 in.(9.1 mm)

(1) Tension of brush spring ... 80 oz.(22.2 N)

(2) Torque for screws holding nose housing to lever housing ... 13 to 17 lb. ft.(18 to 23 N·m)

(3) Torque for terminal nuts ... 20 to 25 lb. ft.(25 to 35 N·m)

2S900 24V (Delco-Remy Number 1113969, 1113942, 1114706 or 1114942)

Rotation is clockwise when seen from drive end.

Minimum speed with no load ... 5500 rpm

Maximum speed with no load ... 9000 rpm

Current consumption (draw) at no load:

Minimum with solenoid at 20 V ... 70 A

Maximum with solenoid at 20 V ... 110 A

Clearance between pinion and housing (pinion clearance) ... .36 in.(9.1 mm)

(1) Tension of brush spring** ... 80 oz.(22.2 N)

(2) Torque for screws holding nose housing to lever housing ... 13 to 17 lb. ft.(18 to 23 N·m)

(3) Torque for terminal nuts ... 20 to 25 lb. ft.(25 to 35 N·m) ... 28 to 36 oz.(7.78 to 10.01 N)

**Leaf spring

Starter Motors (4N3180, 7N6503 And 4N3181)

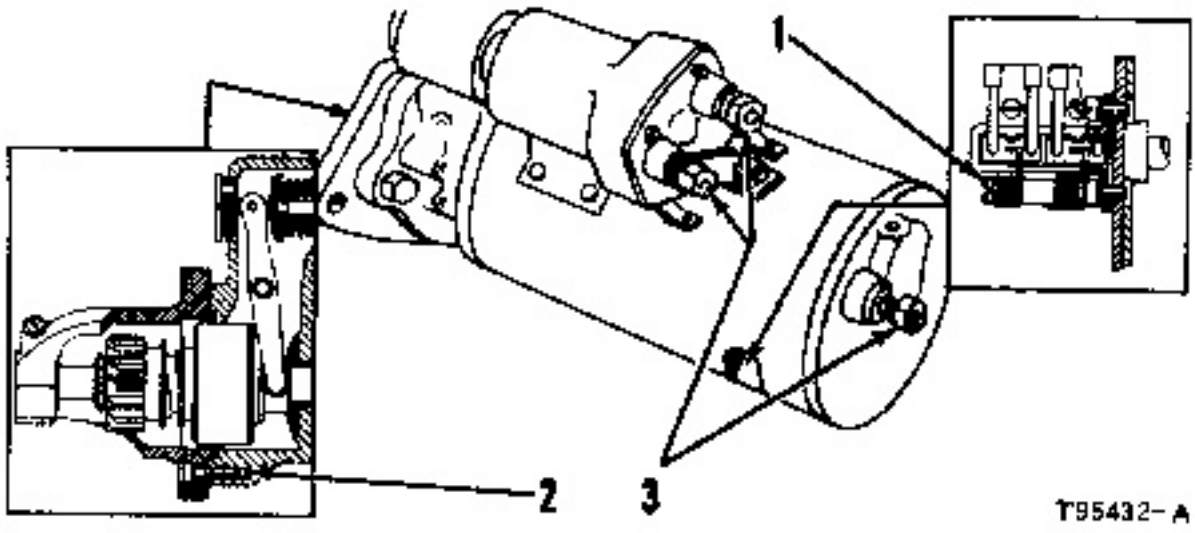

NOTE: Make reference to STARTER SOLENOID.

4N3180 24V (Delco-Remy Number 1109640)

Rotation is clockwise when seen from drive end.

Minimum speed with no load ... 5500 rpm

Maximum speed with no load ... 7500 rpm

Current consumption (draw) at no load:

Minimum with solenoid at 20V ... 140 A

Maximum with solenoid at 20V ... 170 A

Clearance between pinion and housing (pinion clearance) ... .36 in.(9.1 mm)

(1) Tension of brush spring ... 80 oz.(22.2 N)

(2) Torque for screws holding nose housing to lever housing ... 13 to 17 lb. ft.(18 to 23 N·m)

(3) Torque for terminal nuts ... 20 to 25 lb. ft.(25 to 35 N·m)

7N6503 12V (Delco-Remy Number 1114748)

Rotation is clockwise when seen from drive end.

Minimum speed with no load ... 4000 rpm

Maximum speed with no load ... 7000 rpm

Current consumption (draw) at no load:

Minimum with solenoid at 9 V ... 140 A

Maximum with solenoid at 9 V ... 215 A

Clearance between pinion and housing (pinion clearance) ... .36 in.(9.1 mm)

(1) Tension of brush spring ... 80 oz.(22.2 N)

(2) Torque for screws holding nose housing to lever housing ... 13 to 17 lb. ft.(18 to 23 N·m)

(3) Torque for terminal nuts ... 20 to 25 lb. ft.(25 to 35 N·m)

4N3181 24V (Delco-Remy Number 1113853)

Rotation is clockwise when seen from drive end.

Minimum speed with no load ... 5500 rpm

Maximum speed with no load ... 7500 rpm

Current consumption (draw) at no load:

Minimum with solenoid at 20V ... 75 A

Maximum with solenoid at 20V ... 95 A

Clearance between pinion and housing (pinion clearance) ... .36 in.(9.1 mm)

(1) Tension of brush spring ... 80 oz.(22.2 N)

(2) Torque for screws holding nose housing to lever housing ... 13 to 17 lb. ft.(18 to 23 N·m)

(3) Torque for terminal nuts ... 20 to 25 lb. ft.(25 to 35 N·m)

Starter Solenoids

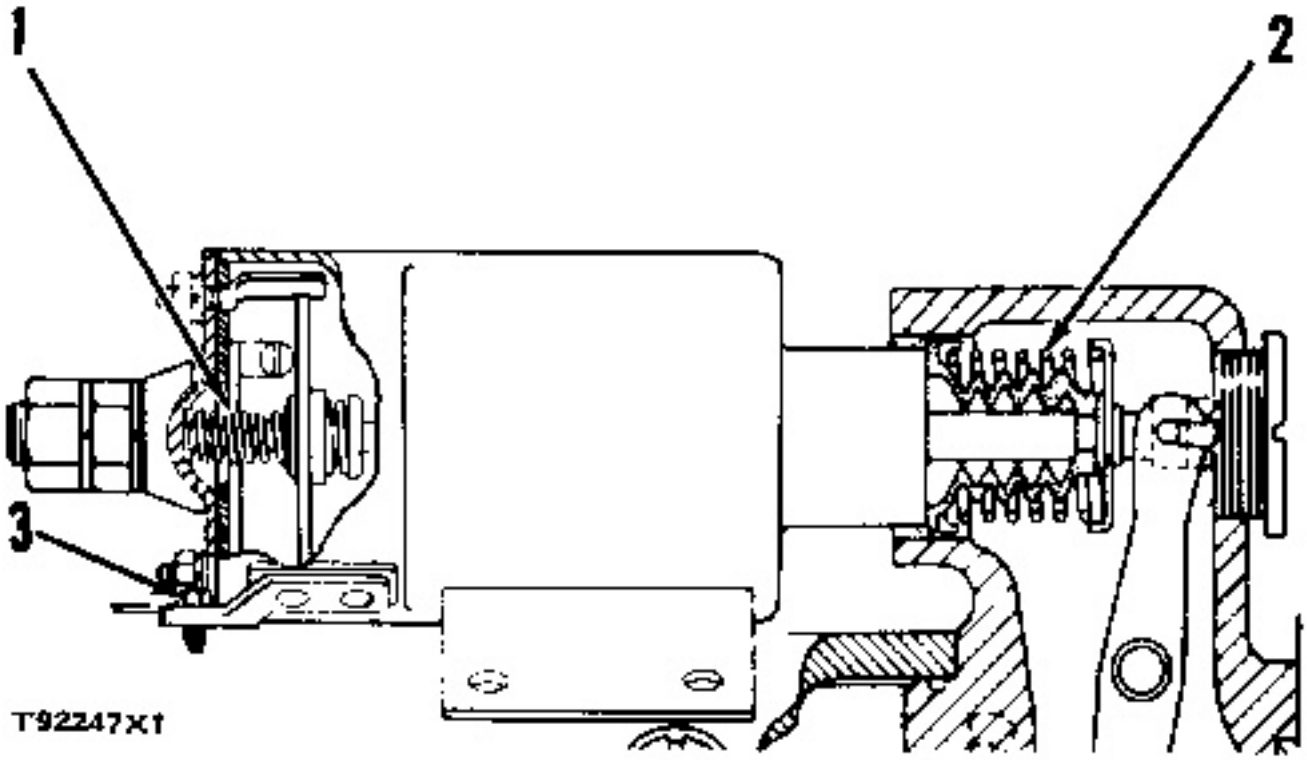

7L6586 12V (Delco-Remy Number 1119879)

Current consumption (draw):

Current pull in windings at 5 V ... 21.3 to 35.7 A

Current pull in windings at 10 to 12 V ... 62.6 to 85.7 A

Current hold in windings at 10 V ... 14.3 to 15.4 A

Current hold in windings at 10 to 12 V ... 14.3 to 18.5 A

4M1812 24V (Delco-Remy Number 1119848 or 1119832)

Current consumption (draw):

Current pull in windings at 5 V ... 10 to 11.5 A

Current pull in windings at 20 to 24 V ... 40 to 55.2 A

Current hold in windings at 20 to 24 V ... 8.2 A

1P9181 24V (Delco-Remy Number 1115526), 6N5123 24V (Delco-Remy Number 1115544)

Current consumption (draw):

Current at 20 V ... 40 to 45.5 A

Current at 20 to 24 V ... 40 to 54.6 A

7L6586, 4M1812, 1P9181 and 6N5123

(1) 4M1815 Spring for contact release:

Length under test force ... .42 in.(10.7 mm)

Test force ... 8.5 to 9.5 lb.(38 to 42 N)

Free length after test ... .83 ± .015 in.(21.1 ± 0.38 mm)

Outside diameter ... .375 ± .010 in.(9.53 ± 0.25 mm)

(2) 9M7609 Spring to return the clutch lever:

Length under test force ... 1.56 in.(39.6 mm)

Test force ... 14 ± .5 lb.(62 ± 2 N)

Free length after test ... 2.79 in.(70.9 mm)

Outside diameter ... 1.393 ± .015 in.(35.38 ± 0.38 mm)

(3) Torque for terminal screws ... 16 to 30 lb. in.(1.8 to 3.4 N·m)

Starter Magnetic Switches

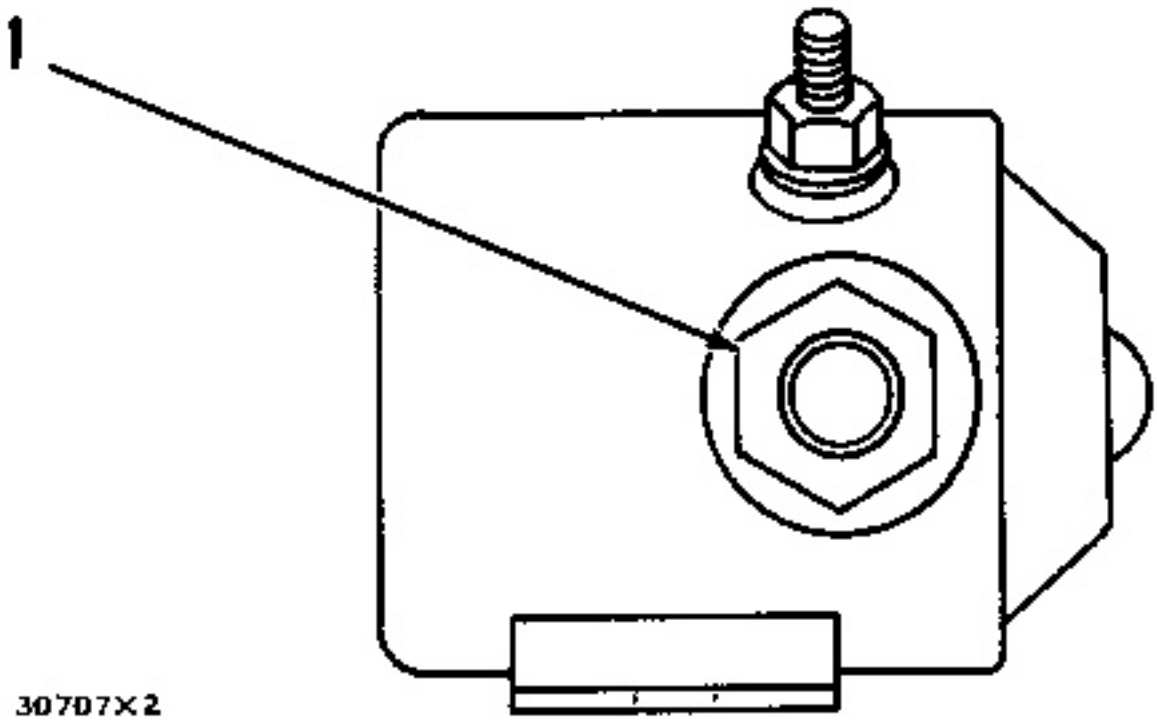

9F3099 24V (Delco-Remy Number 0001481)

Current consumption (draw) both windings at 24 V ... .83 to .89 A

(1) Torque for large terminal nuts ... 35 ± 5 lb. in.(4.0 ± 0.6 N·m)

5L5886 12V (Delco-Remy Number 0001486)

Rating ... 12 V

Current consumption (draw) hold in windings at 8 V ... 2.1 to 2.3 A

(1) Torque for large terminal nuts ... 35 ± 5 lb. in.(4.0 ± 0.6 N·m)

Series Parallel Switches

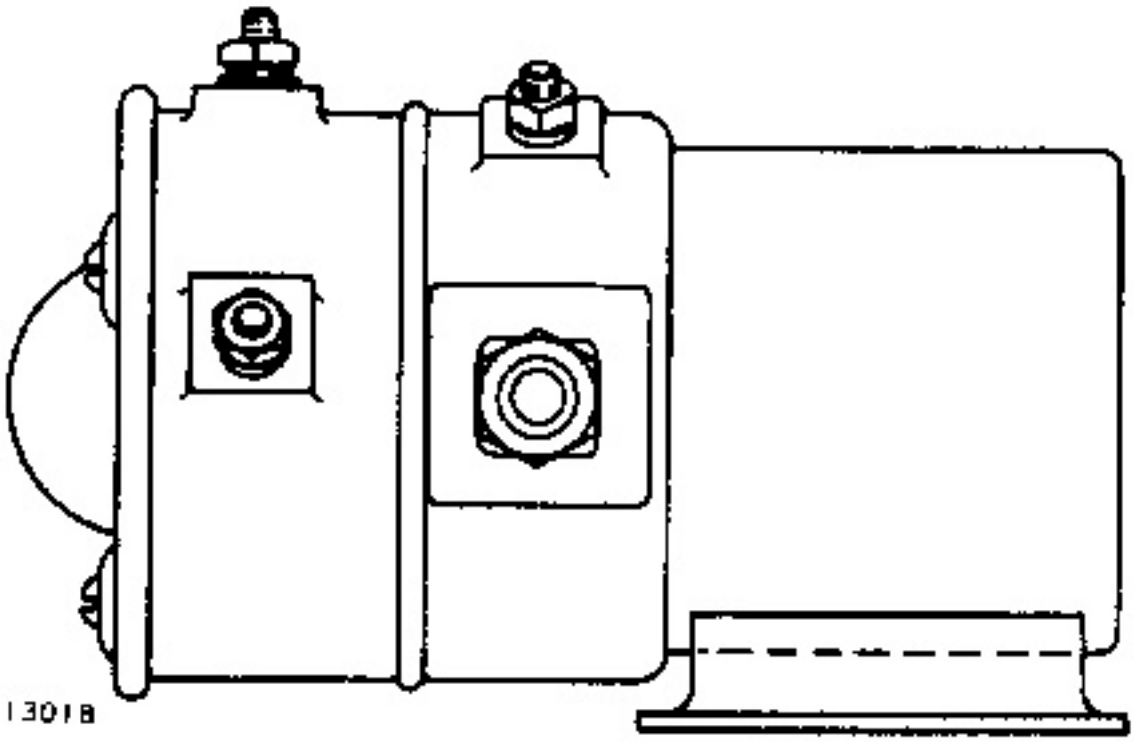

9L4590 12V (Delco-Remy Number 1119845)

Current consumption (draw) at 12 V ... 4.7 to 5 A

Current consumption (draw) at 10 to 12 V ... 3.9 to 5 A

Shutoff Solenoid

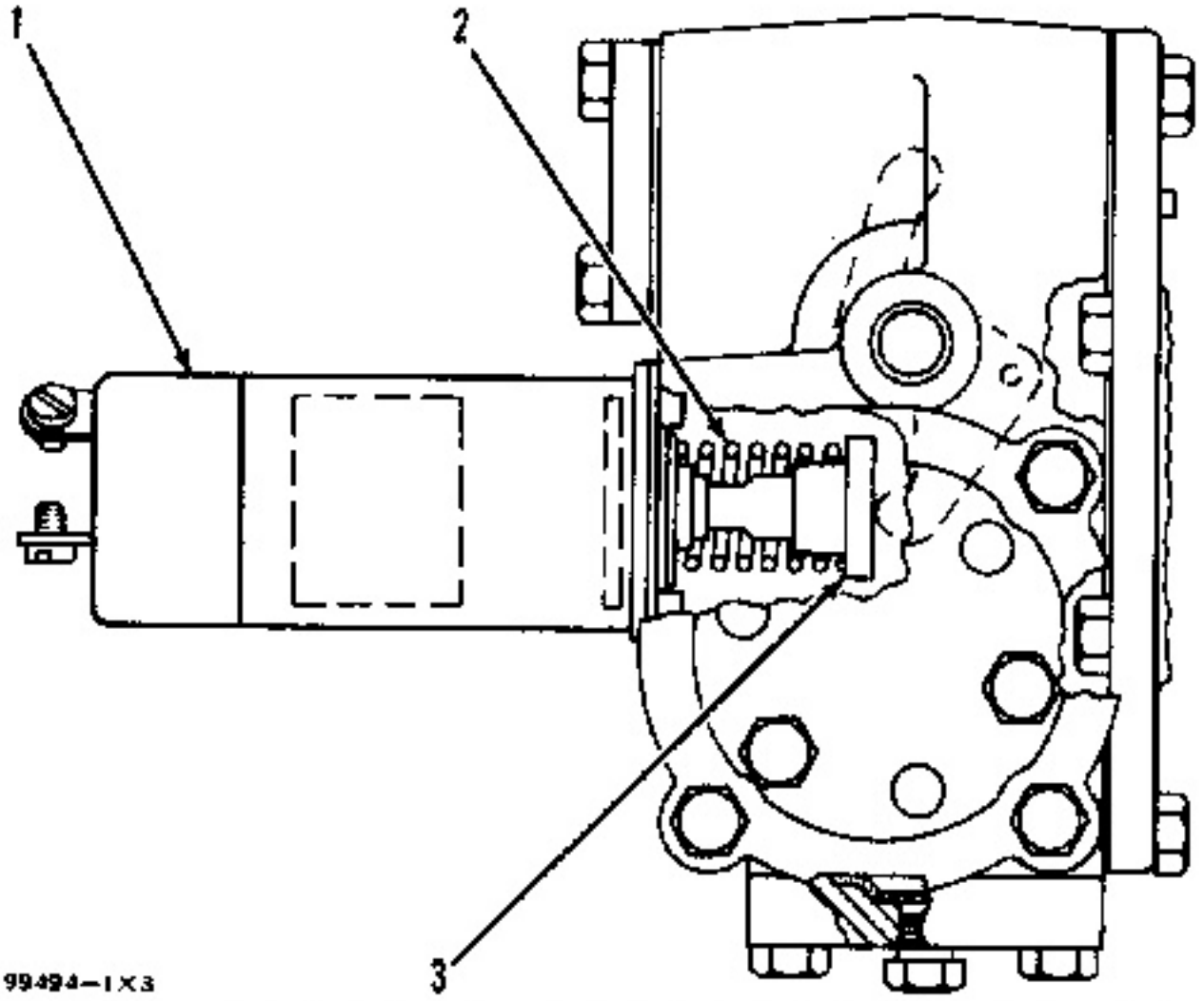

SYNCHRO-START SOLENOID ILLUSTRATED

(1) SHUTOFF SOLENOID			
Part No.	*Rated Voltage	Manufacturer	*Test Specifications
**6N3748	12 V	**Laketown Mfr. Corp.	2 to 3.5 A at 10 to 12 V
**6N7035	24 V		1 to 2 A at 20 to 24 V
**6N7034	30 to 32 V		1 to 1.5 A at 27 to 32 V
4N3889	12 V	Synchro-Start Number Series 1500	21 A at 12 V (Pull-in windings) Less than 1 A at 14.3 V (Hold-in windings)
4N3890	24 to 32 V		10 A at 24 V (Pull-in windings) Less than 1 A at 28 V (Hold-in windings)
*DC voltage. **Do not use these solenoids on engines with Woodward Governor.			

(2) 9L6588 Spring, used with "activated to run" solenoid.

Length under test force ... 1.54 in.(39.1 mm)

Test force ... 2.50 ± .20 lb.(11.12 ± 0.89 N)

Free length after test ... 2.43 in.(61.7 mm)

Outside diameter ... .70 in.(17.8 mm)

(3) 3N2835 & 7N9635 Shaft used with "activated to run" solenoid.

Tighten shaft to ... 9 ± 3 lb. ft.(12 ± 4 N·m)

https://barringtondieselclub.co.za/

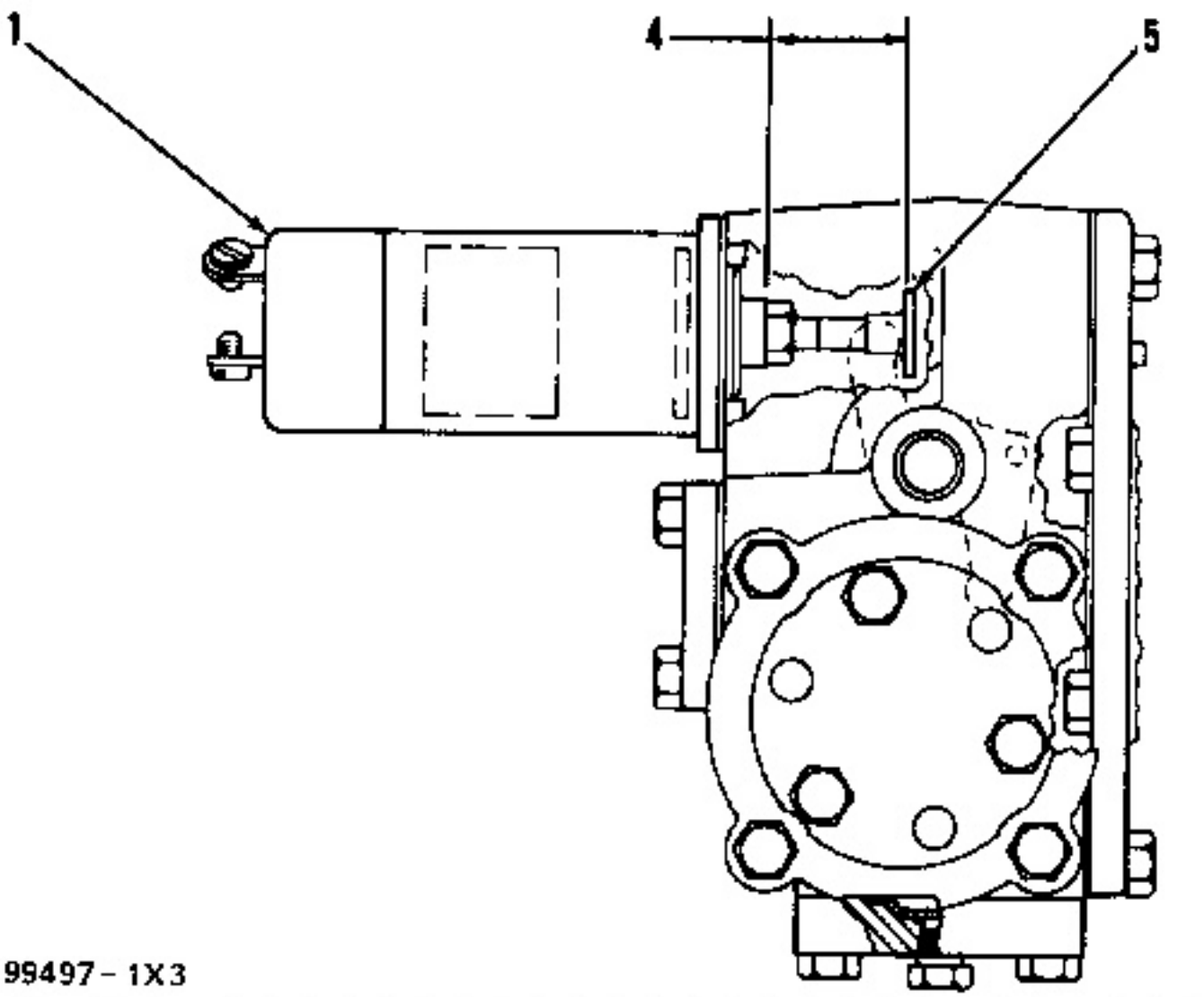

SYNCHRO-START SOLENOID ILLUSTRATED

(4) Distance from face to shaft shoulder* ... 1.02 in.(25.88 mm)

(5) 3N2836 & 6N591 Shaft used with "activated to shutoff" solenoid.

---

*A test on the engine can show need for more adjustment. The hold in test on engine must take less than 1 A.

CATERPILLAR®

SEBR0539-00



Systems Operation

3304 & 3306 INDUSTRIAL and MARINE ENGINE

http://engine.od.ua

https://barringtondieselclub.co.za/

Systems Operation

General Information

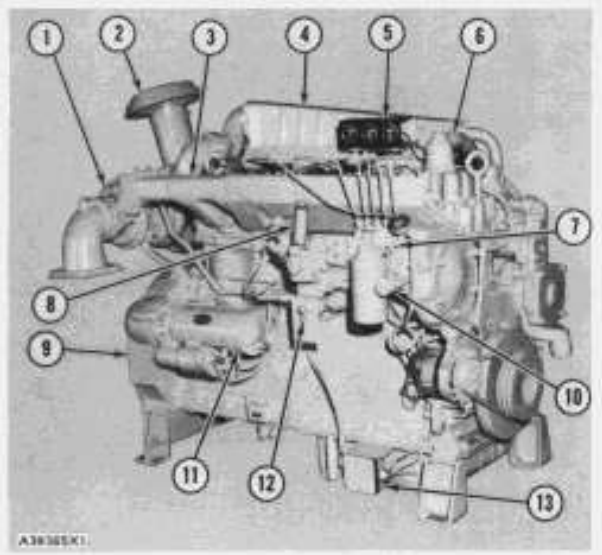

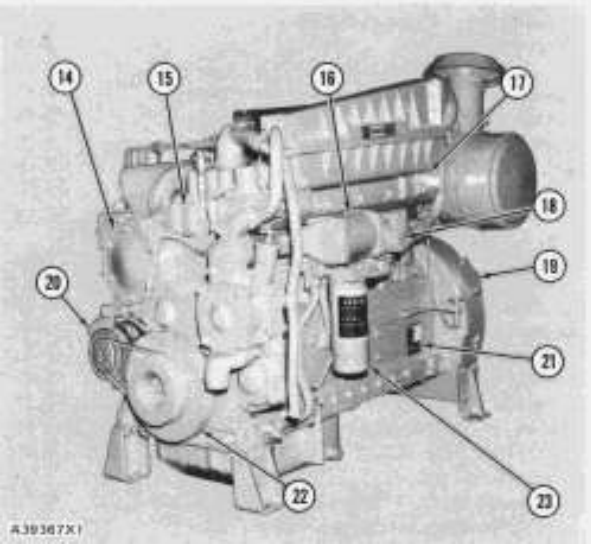

AFTERCOOLED ENGINE ARRANGEMENT SHOWN
1. Turbocharger. 2. Air filter. 3. Exhaust manifold. 4. Aftercooler. 5. Gauges (an attachment). 6. Oil breather. 7. Bleed valve for fuel injection pump. 8. Governor control lever. 9. Flywheel housing. 10. Priming pump. 11. Electric starting motor. 12. Heat-Start switch. 13. Oil pressure switch. 14. Cover for drive gear for fuel injection pump or automatic timing advance unit. 15. Cylinder head. 16. Engine oil cooler. 17. Inlet manifold [a part of cylinder head (15)]. 18. Coolant flow switch. 19. Cover for timing pointer. 20. Alternator. 21. Engine information plates. 22. Damper. 23. Engine oil filter.

The 3304 and 3306 Industrial and Marine Engines are part of a series of 4.75" (120.6 mm) bore, 6.00" (152.4 mm) stroke, in line engines. This book is for engines equipped with sleeve metering fuel systems. They are available either naturally aspirated (without turbocharger), with a turbocharger, or with a turbocharger and an aftercooler. All of these engines run counterclockwise when seen from the flywheel end.

The 3304 Engine has four cylinders with a 425 cu. in. (7.0 liter) displacement. The firing order is 1, 3, 4, 2. The engine weight is approximately 1600 lb. (720 kg) without coolant or oil.

The 3306 Engine has six cylinders with a 638 cu. in. (10.5 liter) displacement. The firing order is 1, 5, 3, 6, 2, 4. The engine weight is approximately 1940 lb. (880 kg) without coolant or oil.

Fuel System

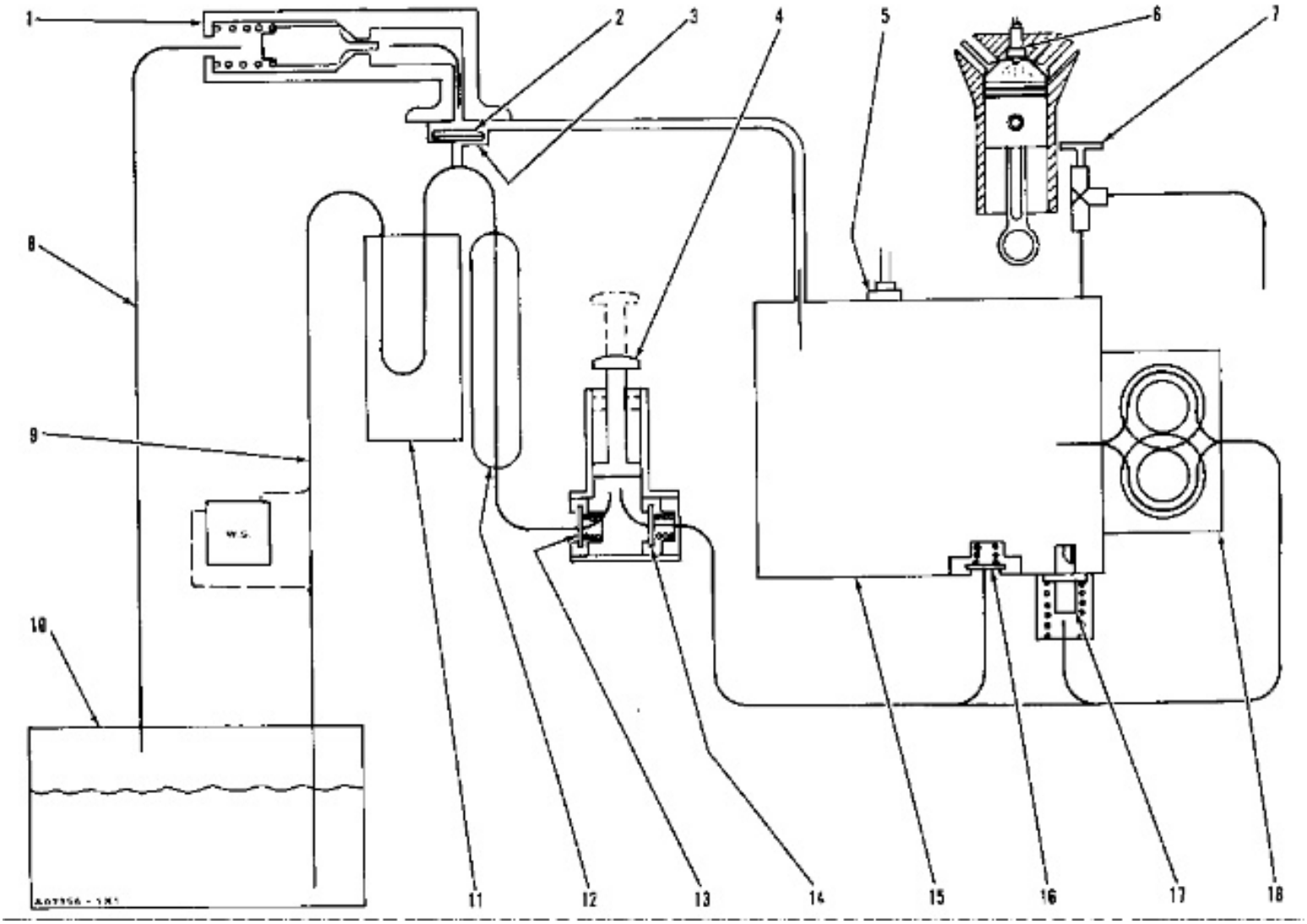

SCHEMATIC OF FUEL SYSTEM
1. Constant bleed valve. 2. Disc. 3. Siphon break orifice. 4. Priming pump. 5. Fuel injection pump. 6. Fuel injection valve. 7. Bleed valve. 8. Fuel return line. 9. Fuel supply line [optional water separator (W.S.) installation is shown by dash lines]. 10. Fuel tank. 11. Fuel filter. 12. Channel. 13. Check valve. 14. Check valve. 15. Housing for the fuel injection pumps. 16. Check valve. 17. Bypass valve. 18. Transfer pump.

Introduction

The Sleeve Metering Fuel System is a pressure type fuel system. The name for the system is from the method used to control the amount of fuel in the fuel injection charge. This system has an injection pump and an injection valve for each cylinder. The injection pumps are in the fuel injection pump housing on the right side of the engine. The injection valves are in the precombustion chambers in the cylinder head.

Water Separator

Some engines have a water separator. The water separator is installed between the fuel tank and the rest of the fuel system. For efficiency in the action of the water separator the fuel flow must come directly from the fuel tank and through the water separator. This is because the action of going through a pump or valves before the water separator lowers the efficiency of the water separator.

The water separator can remove 95% of the water in a fuel flow of up to 33 gph (125 liter/hr) if the concentration of the water in the fuel is 10% or less. It is important to check the water level in the water separator frequently. The maximum amount of water which the water separator can hold is 0.8 pt. (0.4 liter). At this point the water fills the glass to 3/4 full. Do not let the water separator have this much water before draining the water. After the water level is at 3/4 full, the water separator loses its efficiency and the water in the fuel can go through the separator and cause damage to the fuel injection pump.

Drain the water from the water separator every day or when the water level gets to 1/2 full. This gives the system protection from water in the fuel. If the fuel has a high concentration of water, or if the flow rate of fuel through the water separator is high, the water separator fills with water faster and must be drained more often.

To drain the water separator, open the valve in the drain line and the valve at the top of the water separator. Let the water drain until it is all out of the water separator. Close both valves.

Fuel System Timing

The timing of the fuel system is according to the camshaft installed in the housing for the fuel injection pumps (15). The difference between the camshafts is in the different angle between the lobes on the camshaft and the slot for the timing pin. The charts give the camshaft for the fuel injection pump and governor group and the timing which the engine has with the camshaft installed.

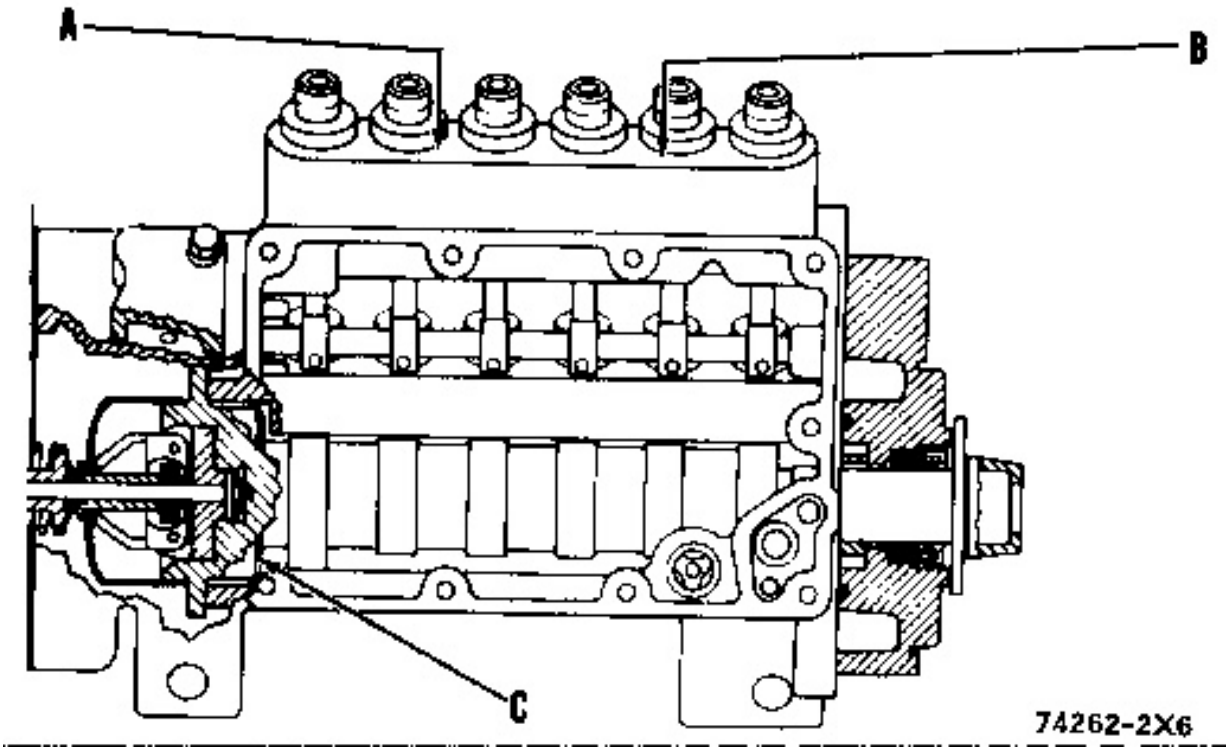

IDENTIFICATION MARKS
A. Part number of fuel injection pump and governor group. B. Identification number on housing. C. Location of part number marks on camshaft.

NOTE: Early camshafts had no part number marks on the camshafts. All 4 cylinder camshafts without part number marks at location (C) are 4N4312.

NOTE: If the part number of the fuel injection pump and governor group is not in the chart or if it has a different camshaft, make reference to the parts book, or to TECHNICAL PARTSGRAM; COMMON USAGE IN SLEEVE METERING FUEL SYSTEMS, 4 and 6 PUMP GROUPS, Form No. FEG00707.

The 3306 Engine can have either one of two different camshafts for the fuel injection pump. The 8.5° camshaft is for the 3306 Engines which have a turbocharger, an aftercooler and an automatic timing advance unit. ALL other 3306 INDUSTRIAL AND MARINE ENGINES use the 13.5° camshaft.

TIMING CHART FOR 3306 ENGINES

(A) PART NUMBER OF FUEL INJECTION PUMP AND GOVERNOR GROUP	PART NUMBER OF CAMSHAFT IN THE FUEL INJECTION PUMP AND GOVERNOR GROUP	TIMING DEGREE BEFORE TC (top center)
6N3688 6N6100 6N6265 7N5304 9N1292	6N5322	8.5 ± 1°
6N172 6N313 6N314 6N2828 6N2829 6N6213 6N6214 6N6265 6N7606 6N7607 7N22 7N578 7N1870 7N5303 7N5947 7N6439	4N4313	13.5 ± 1°

The 3304 Engine can have either one of two different camshafts for the fuel injection pump. The 13.5° camshaft is installed in all the later 3304 fuel injection pump and governor groups. It gives better fuel combustion characteristics than the 12.5° camshaft.

TIMING CHART FOR 3304 ENGINES		
(B) IDENTIFICATION NUMBER ON HOUSING	PART NUMBER OF CAMSHAFT IN THE FUEL INJECTION PUMP AND GOVERNOR GROUP	TIMING DEGREE BEFORE TC (top center)
1 to 44899	4N4312 (original camshaft)	12.5 ± 1°
	6N6567 (replacement for 4N4312 camshaft)	13.5 ± 1°
44900—Up	6N6567	13.5 ± 1°

Automatic Timing Advance Unit

On some engines, an automatic timing advance unit connects the drive sleeve on the end of the camshaft to the timing gears in the front of the engine. The unit changes the timing of the fuel system according to the engine speed to give better combustion of the fuel at all levels of engine operation. The unit in these engines changes injection timing from 8° 30' BTC, at 1200 rpm, to 14° 30' BTC, at 2200 rpm.

Fuel Flow With Engine Running

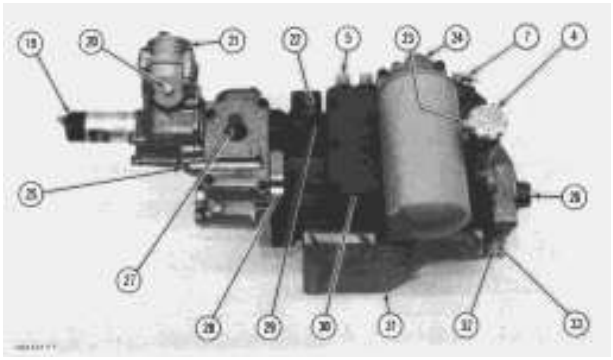

SLEEVE METERING FUEL INJECTION PUMP
4. Priming pump. 5. Fuel injection pump. 7. Bleed valve. 19. Shutoff solenoid. 20. Position for oil pressure shutoff (attachment). 21. Fuel ratio control. 22. Brass screw terminal. 23. Position for measurement of fuel pressure in housing. 24. Filter base. 25. Timing pin in storage position. 26. Drive sleeve. 27. Governor control shaft. 28. Cover for high idle stop and low idle stop. 29. Position for using timing pin. 30. Cover for housing. 31. 2P8315 Bracket Assembly. 32. Transfer pump drain. 33. Inlet for lubricating oil for automatic timing advance unit.

When the engine is running, transfer pump (18) pulls fuel from fuel tank (10), through fuel filter (11), and into channel (12) behind cover (30). From the channel, the fuel goes through check valve (13) into the bottom of priming pump (4), through the priming pump, out check valve (14) and into passage (34) in the housing. The fuel in the passage is the supply for transfer pump (18). The output of the transfer pump goes into housing (15).

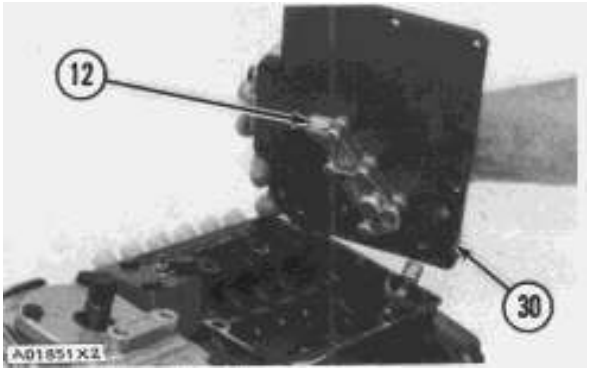

SLEEVE METERING FUEL PUMP
12. Channel. 30. Cover for housing.

The fuel in the housing is the supply for the injection pumps and the lubricant for all the moving parts in the housing. Fuel can go from the housing in three ways.

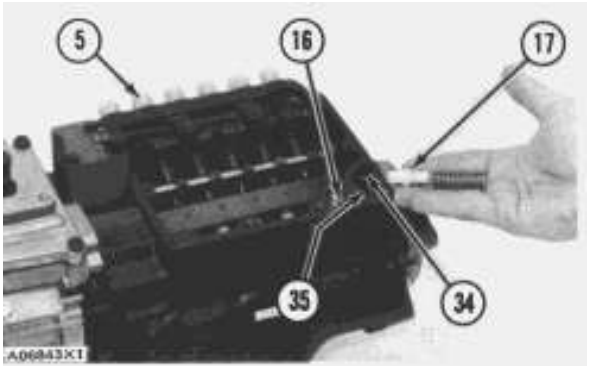

SLEEVE METERING FUEL PUMP
5. Fuel injection pump. 16. Check valve. 17. Bypass valve. 34. Passage (to transfer pump inlet). 35. Passage to check valve.

1. Fuel injection pumps (5) send some fuel to the cylinders during injection.
2. Constant bleed valve (1) lets approximately 9 gal./hr. of fuel go back to the fuel tank, through return line (8) when the pressure in the housing is 25 to 32 psi (170 to 220 kPa). This flow takes air and heat away from the housing.
3. Bypass valve (17) keeps the pressure of the fuel in the housing at a maximum of 25 to 32 psi (170 to 220 kPa) at 2200 rpm. Fuel which goes through the bypass valve mixes with the fuel flow from the tank in passage (34). From here the mixture of fuel goes through the transfer pump and back into the housing.

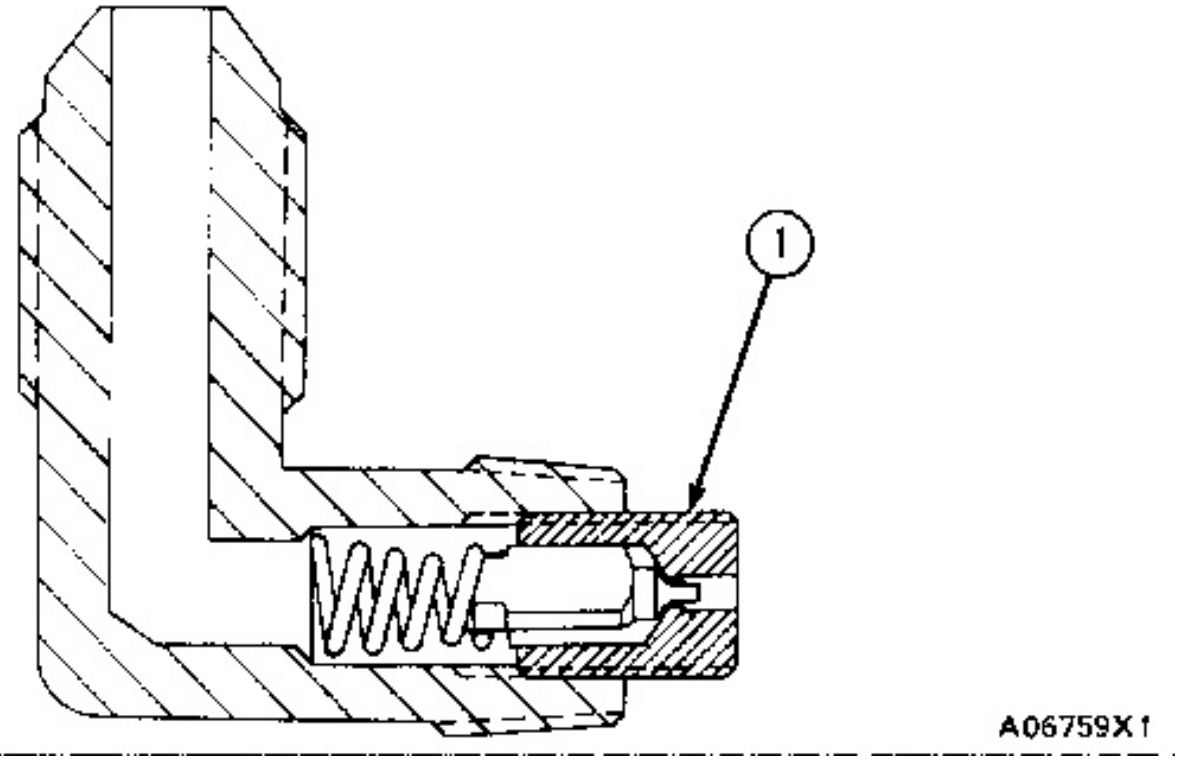

CONSTANT BLEED VALVE
1. Constant bleed valve (in fitting).

Fuel Flow Using The Priming Pump And Bleed Valve

When the priming pump handle is pulled out, negative air pressure in the pump makes check valve (13) open and pulls fuel from the tank. Pushing the handle in closes check valve (13) and opens check valve (14). This pushes air and/or fuel into the housing through passage (35) and check valve (16). More operation of the priming pump will pull fuel from the tank until fuel supply line (9), fuel filter (11) and housing (15) are full of fuel. At this time the fuel flow from the bleed valve (7) will have no air bubbles.

Fuel Flow After Engine Stops Running

When the engine is running, the pressure in the housing holds some air in the fuel in a mixture. When the engine stops, the air comes out of the fuel and goes to the top of the housing. The air goes out of the housing through hole (36) in the cover and into passages (37) and (38) in the filter base. The air goes under disc (2) through scratch (39) and down through passages (40), (41), (42). Then the air goes through the top of the filter housing and the remainder of the fuel stays in the housing and filter.

When the engine starts the next time, the fuel in the housing and in the filter will be the supply for the engine until the transfer pump pulls the fuel from the tank.

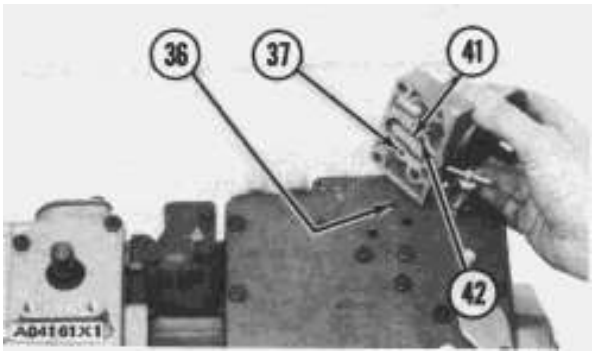

SIPHON BREAK HOUSING
36. Hole. 37. Passage. 41. Passage. 42. Passage

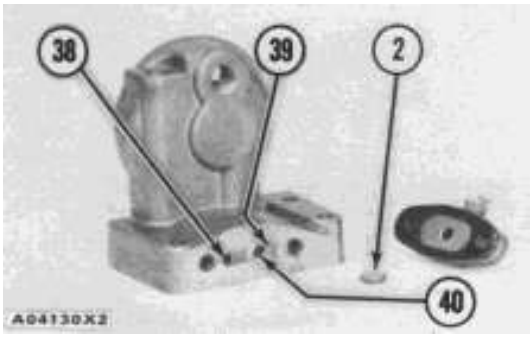

SIPHON BREAK FUEL FILTER BASE
2. Disc. 38. Passage. 39. Scratch. 40. Passage.

Fuel Transfer Pump

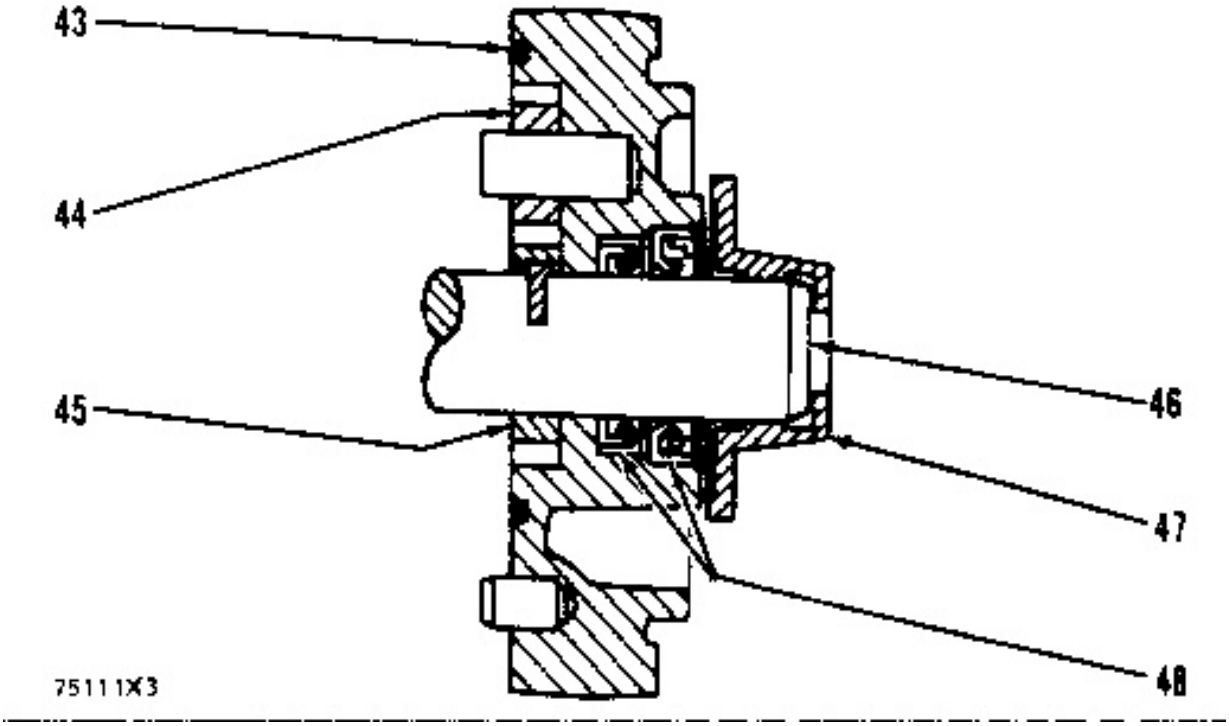

FUEL TRANSFER PUMP
43. Seal. 44. Driven gear. 45. Drive gear. 46. Camshaft for the fuel injection pump. 47. Drive sleeve. 48. Lip-type seals.

Fuel transfer pump (18) is on the front end of housing (15) for the fuel injection pumps. The output of the pump is more than the engine needs for combustion. Camshaft (46) for the fuel injection pump turns drive gear (45) in the

transfer pump. Two lip-type seals (48) on the camshaft keep the fuel in the transfer pump apart from the engine oil in the compartment for the timing gears. The area between the two seals is connected to transfer pump drain (50). The drain has two functions. One function is to be an outlet for fuel or lubrication oil leakage. The other function is to give a visual indication of seal or bearing failure before the failure can be a cause for any other failures.

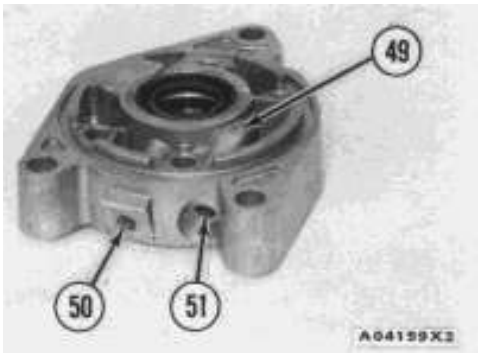

FUEL TRANSFER PUMP BODY
49. Outlet for lubrication oil to automatic timing advance unit. 50. Transfer pump drain. 51. Inlet for lubrication oil for automatic timing advance unit.

Fuel Priming Pump

The priming pump is on the cover of the sleeve metering fuel system. The purpose of the pump is to fill the fuel system with fuel. Operation of the pump with bleed valve (7) open will remove air from the fuel injection pump housing.

Fuel Injection Pump Operation

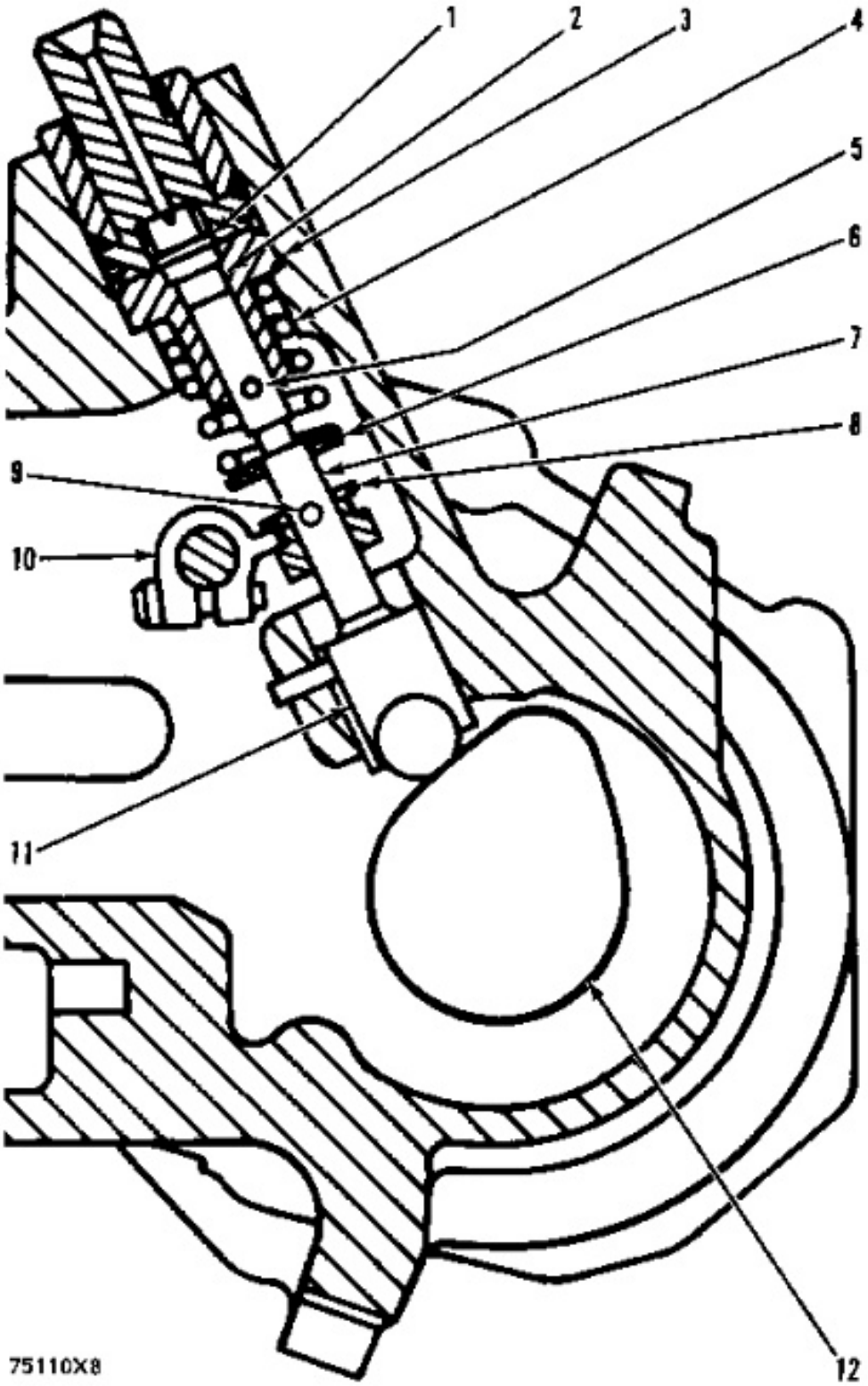

FUEL INJECTION PUMP OPERATION
1. Reverse flow check valve. 2. Chamber. 3. Barrel. 4. Spring. 5. Fuel inlet (fill port). 6. Retainer. 7. Plunger. 8. Sleeve. 9. Fuel outlet (spill port). 10. Sleeve control lever. 11. Lifter. 12. Camshaft.

The main components of a fuel injection pump in the sleeve metering fuel system are: plunger (7), barrel (3), and sleeve (8). The plunger moves up and down inside the barrel and sleeve. The barrel is stationary while the sleeve is moved up and down around the plunger to make a change in the amount of fuel for injection.

The plunger, barrel, and sleeve are a fitted set and they must be kept together. Lifter (11) and plunger (7) are lifted through a full stroke by each revolution of the camshaft (12). The force of spring (4) on plunger (7) through retainer (6) holds the lifter against the camshaft through the full stroke cycle.

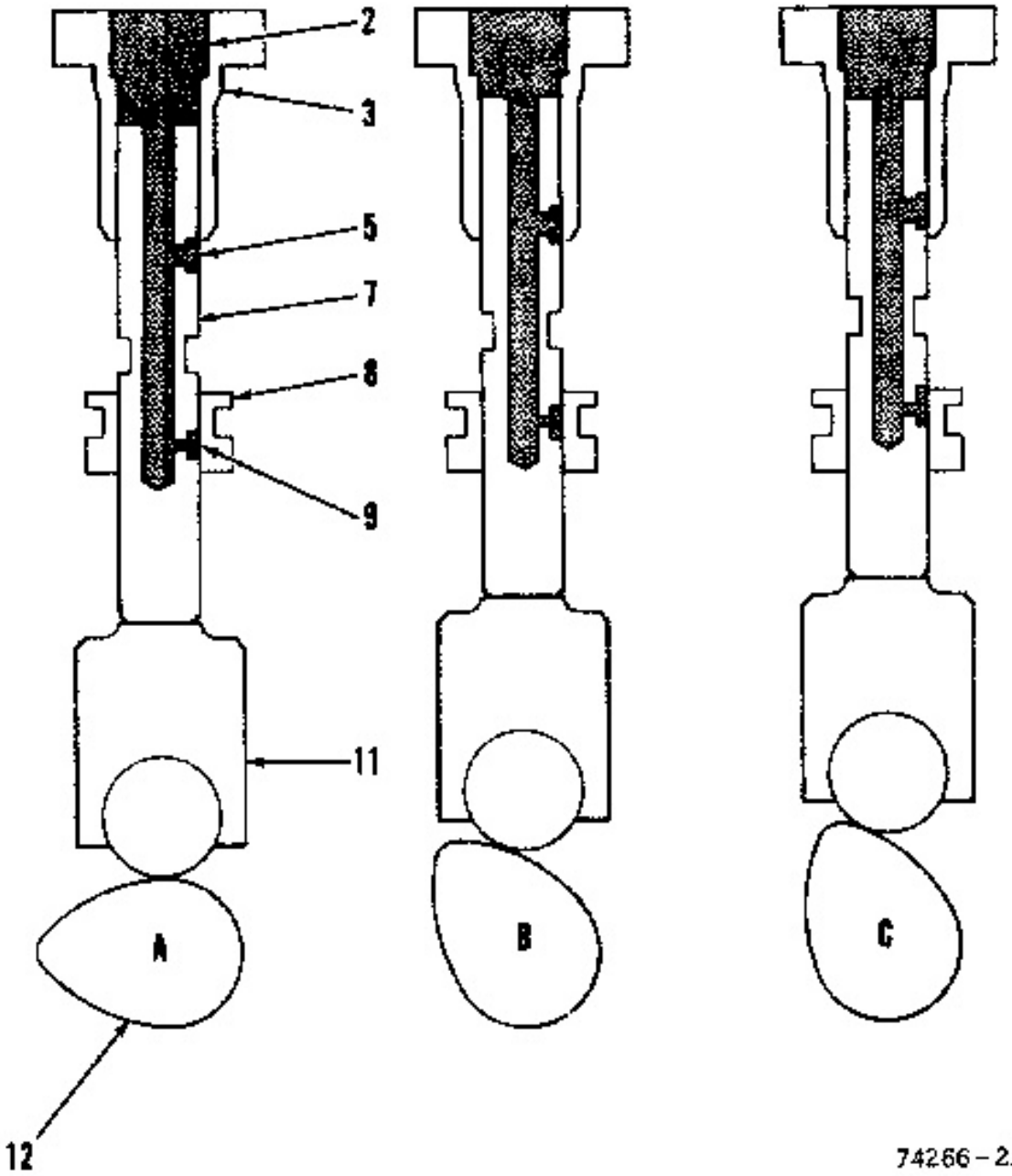

FUEL INJECTION PUMP OPERATION
2. Chamber. 3. Barrel. 5. Fuel inlet (fill port). 7. Plunger. 8. Sleeve. 9. Fuel outlet (spill port). 11. Lifter. 12. Camshaft. A. Before injection. B. Start of injection. C. End of injection.

Before Injection

Before the engine can start or run correctly, the housing and fuel injection lines must be full of fuel and the sleeve (8) must be high enough on the plunger to close the fuel outlet (9) (spill port) during part of the stroke cycle. Chamber (2) fills with fuel through the fuel inlet (5) (fill port) which is under the level of the fuel in the housing.

Injection

Injection starts after the rotation of the camshaft lifts plunger (7) far enough into barrel (3) to close fuel inlet (5). At this time, both the fuel inlet and fuel outlet are closed. As more rotation of the camshaft lifts the plunger farther into the chamber of the barrel, the fuel in the chamber is put under more and more pressure. This pressure is felt by reverse flow check valve (1) and the fuel injection valve. When the pressure is high enough to open the fuel

injection valve, injection starts. Injection stops when the rotation of the camshaft has lifted the plunger far enough to open fuel outlet (9). This puts the fuel outlet above the top of sleeve (8).

When the fuel outlet opens, it lets pressure off of the fuel in the chamber. The pressure of the fuel in the line closes the reverse flow check valve (1). With no more flow of fuel, injection valve at the other end of the line closes. This makes the injection complete. The volume of fuel in the injection charge is equal to the volume of the plunger which is lifted into the barrel between the start of injection and the end of injection.

After Injection

After injection has stopped, the camshaft lifts the plunger the rest of the way to the top of the stroke. The plunger is pushed out of the chamber by spring (4). The fuel in the housing fills the space in the chamber through the fuel outlet (9) until the sleeve closes it on the down stroke. More rotation of the camshaft lets the spring push the plunger down farther which opens fuel inlet (5). Fuel fills the rest of the chamber through the fuel inlet (5). Then the stroke cycle starts again.

Sleeve Position

The position of the sleeve on the plunger controls the amount of fuel for injection. When the position of the sleeve on the plunger is low enough that it does not cover the fuel outlet during any part of the stroke, the pump can not make pressure for injection. This is the "fuel off" position for the sleeve.

If the sleeve is in a higher position on the plunger, the pump can make pressure for injection. This is the "fuel on" position. As the sleeve position is made higher, more fuel is put into the injection charge.

Adjustments To The Sleeve Metering Fuel System

Fuel Pump Calibration

For good engine performance, it is very important to make the setting of all of the injection pumps be the same. The procedure for this is called Fuel Pump Calibration. See the Testing and Adjusting section of this book.

Fuel System Setting

The maximum injection charge is controlled by the Fuel System Setting. The correct procedure and tooling lists for adjustments to the fuel system are in the Testing and Adjusting section of this book. The correct measurement for the fuel system setting is in RACK SETTING INFORMATION.

Fuel System Operation

Engine Running

When the engine is running, any movement of the governor control shaft (1) makes a change in the speed of the engine. Counterclockwise movement (A) causes an increase in engine speed until the movement is held by the high idle stop (2). Clockwise movement (B) makes a decrease in engine speed until the movement is held by the low idle stop (3). More clockwise movement (B) moves the linkage beyond the detent (4) in the control. Still more clockwise movement (B) causes the pumps to stop injection and, because no fuel goes to the cylinders, the engine stops.

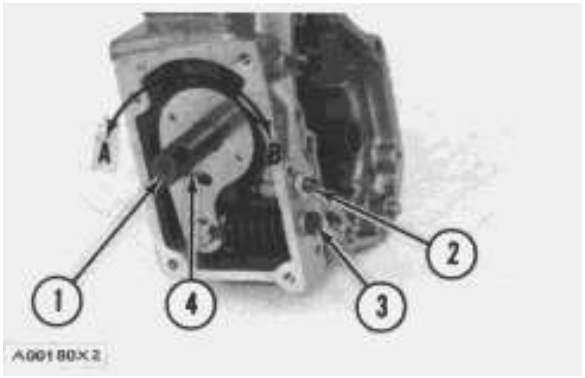

FUEL SYSTEM OPERATION
1. Governor control shaft. 2. High idle stop. 3. Low idle stop. 4. Detent. A. Counterclockwise movement. B. Clockwise movement.

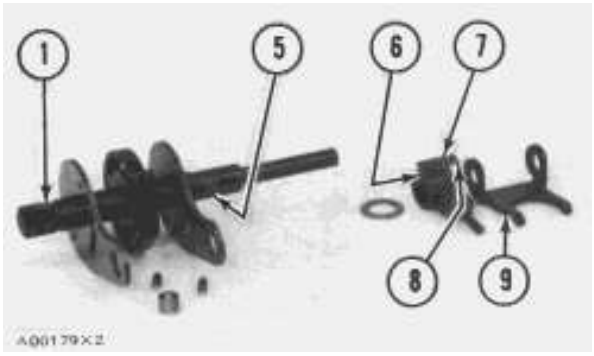

GOVERNOR CONTROL SHAFT
1. Governor control shaft. 5. Groove. 6. Tooth. 7. Lever. 8. Edge of lever (7). 9. Lever.

Governor control shaft (1) has a groove (5) which fits a tooth (6) in lever (7). Any movement of shaft (1) moves lever (7) in the same direction. If the shaft and lever have counterclockwise movement (A), an edge (8) of lever (7) comes into contact with lever (9).

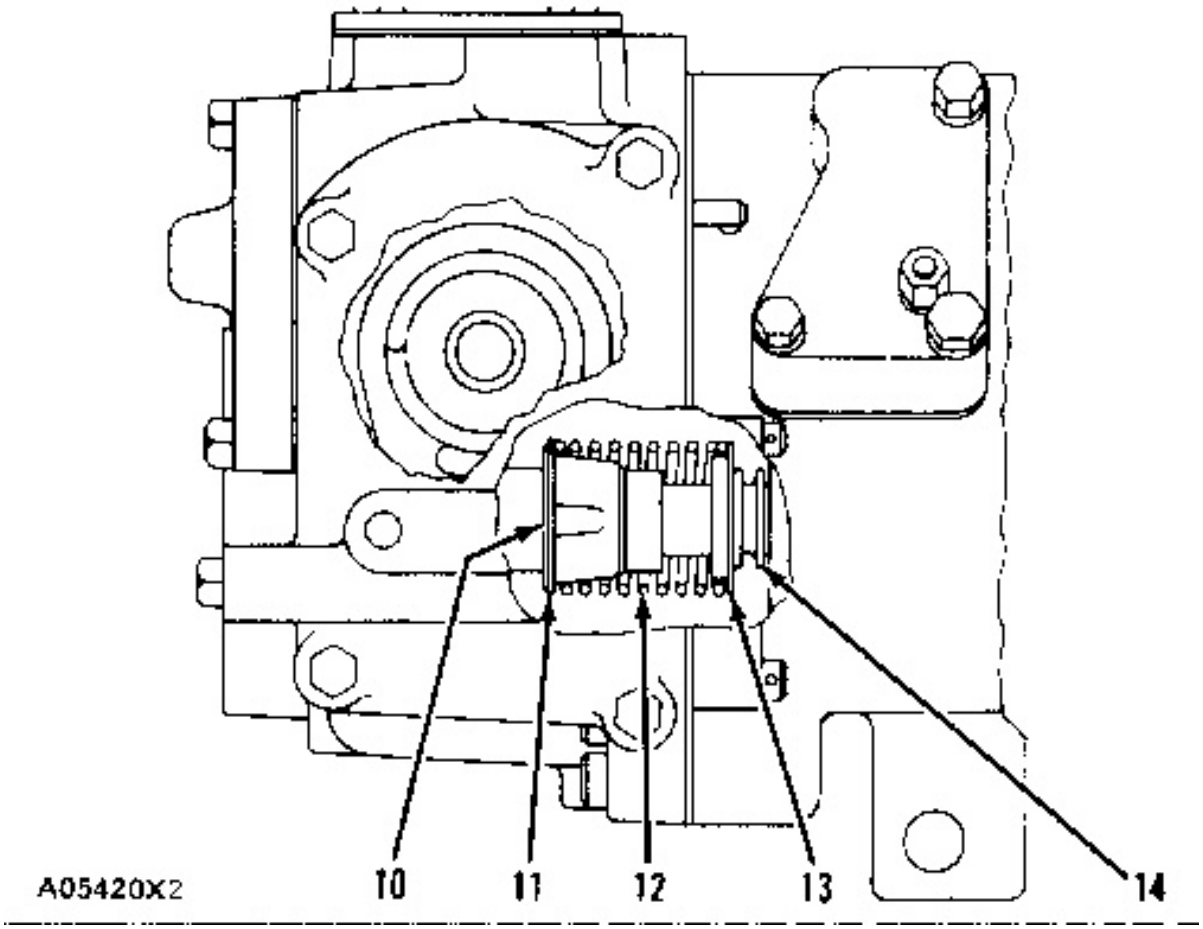

FUEL SYSTEM OPERATION
10. Seat. 11. Washer. 12. Governor spring. 13. Seat. 14. Riser.

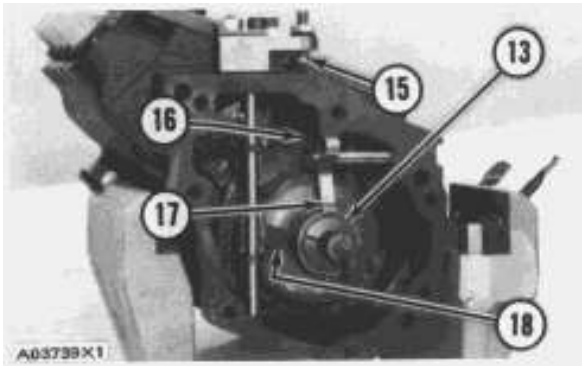

FUEL SYSTEM OPERATION
13. Seat. 15. Load stop. 16. Load stop pin. 17. Lever. 18. Lever.

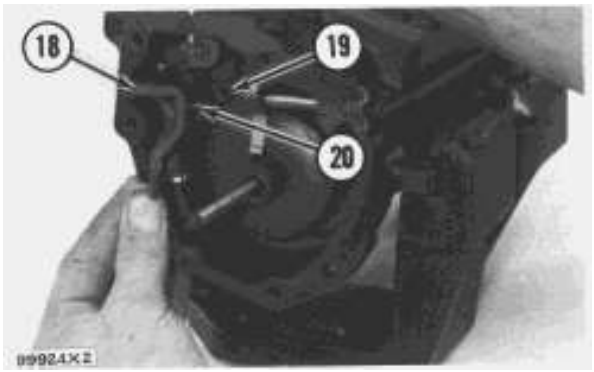

FUEL SYSTEM OPERATION
18. Lever. 19. Hole. 20. Pin.

More counterclockwise movement (A) pushes lever (9) against seat (10), washer (11), governor spring (12), seat (13), and riser (14). The movement of seat (13) pushes against lever (17) which works like a bellcrank and pushes load stop pin (16) up. The load stop pin (16) can be pushed up until it is in contact with the load stop (15). This is the limit for the movement toward maximum fuel for injection. At the same time the lower end of lever (18) is in the groove in riser (14). As the riser moves, lever (18) works like a bellcrank and moves pin (20) which is in the top end of the lever. The outer end of pin (20) has the shape of a ball. It fits in a hole (19) in the bottom part of lever (23). The turning of lever (23) makes lever (24) turn the fuel control shaft (21) through spring (22). This makes an increase in the fuel for injection to the cylinder.

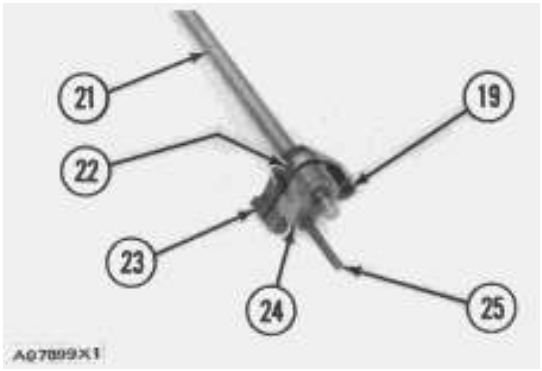

FUEL CONTROL SHAFT
19. Hole. 21. Fuel control shaft. 22. Spring. 23. Lever. 24. Lever. 25. Pin.

Starting the Engine

When starting the engine, the governor control shaft is in the middle position. The linkages in the housing work in almost the same manner as when the engine is running. The only difference is in the function of a spring (C) which is between seat (13) and riser (14). When the engine is running, the force from the weights in the governor is enough to cause compression of spring (C) until the seat (13) and riser (14) are in contact. For starting, the force of spring (C) is enough to push the riser to the full fuel position. This lets the engine have the maximum amount of fuel for injection for starting. The limit for the amount of fuel for injection is the position of the air-fuel ratio control.

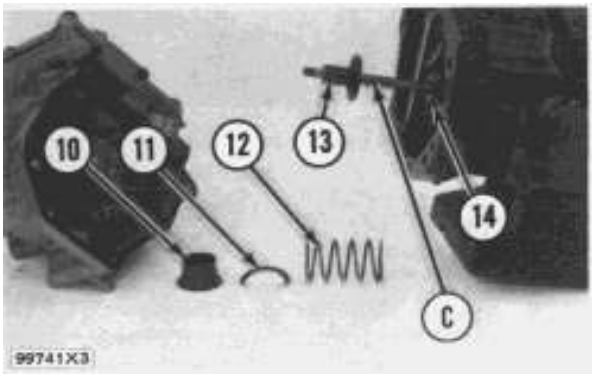

FUEL SYSTEM OPERATION
10. Seat. 11. Washer. 12. Governor spring. 13. Seat. 14. Riser. C. Spring.

Before the speed of the engine is up to low idle speed, the governor weights make enough force to push spring (C) together and riser (14) and seat (13) come into contact. From this time on, the governor works to control engine speed.

Stopping the Engine Manually

Pushing the governor control lever past the detent manually stops the engine.

Maximum clockwise movement (B) of the governor control shaft stops the engine. If the governor control shaft (1) is not at the low idle position, clockwise movement (B) lets lever (9) move back away from the governor spring (12). Less compression in governor spring (12) lets riser (14) and seat (13) move away from the weight end of the shaft. The lower end of lever (18) is in the groove in riser (14). As the riser moves, lever (18) works like a bellcrank and moves pin (20) which is in the top end of the lever. The outer end of pin (20) has the shape of a ball. It fits in a hole (19) in the bottom part of lever (23). The turning of lever (18) makes lever (23) push against lever (24) which turns the fuel control shaft (21).

This makes a decrease in the amount of fuel for injection to the cylinder.

When the governor control shaft (1) is in the low idle position, more clockwise movement (B) makes pin (27) in the end of lever (28) move against lever (26). Lever (26) works as a bellcrank. As it turns from the pressure of pin (27) the other end of the lever (26) moves against the pin (25) in lever (24). Lever (24) is tight on the fuel control shaft (21) and more movement in that direction causes the pumps to stop injection and, because no fuel goes to the cylinders, the engine stops.

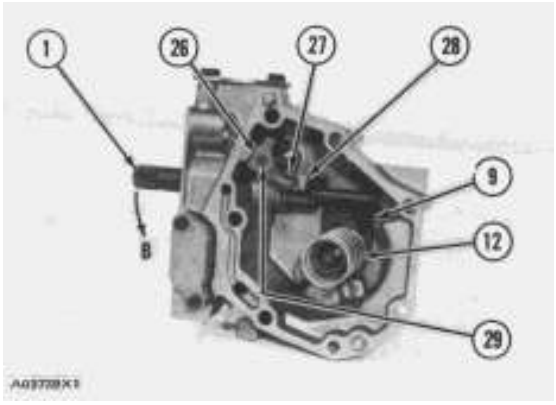

FUEL SYSTEM OPERATION
1. Governor control shaft. 9. Lever. 12. Governor spring. 26. Lever. 27. Pin. 28. Lever. 29. Shaft. B. Clockwise movement.

In some applications, a contact switch on the control panel for the operator activates the electric shutoff solenoid to stop the engine.

Stopping the Engine with Solenoid Shutoff

Activate To Run Solenoid

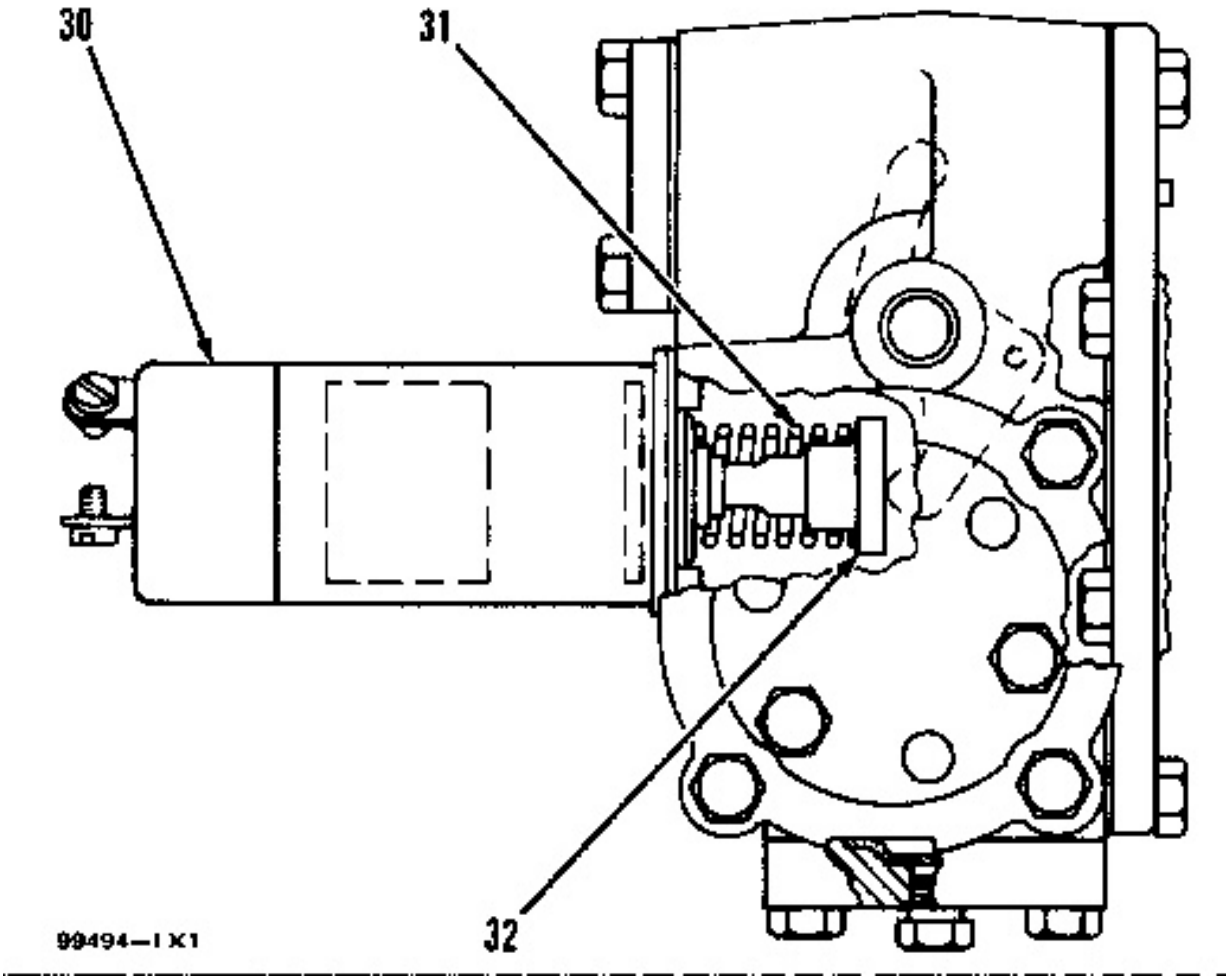

SHUTOFF SOLENOID (Activate To Run)
30. Solenoid. 31. Spring. 32. Shaft.

The function of the shutoff solenoid is similar whether it is an "activate to run" or "activate to shutoff" type. With either shutoff solenoid, the engine can be stopped without effect from the position of the governor control. The activate to run solenoid is always connected to electrical power while the engine is running. The solenoid (30) pulls in shaft (32) putting spring (31) in compression. When the eletrical power to the solenoid stops, spring (31) pushes shaft (32) against lever (34). Lever (34) has a pin (33) which comes in contact with edge (35) of lever (36) and pushes lever (36) in the direction shown.

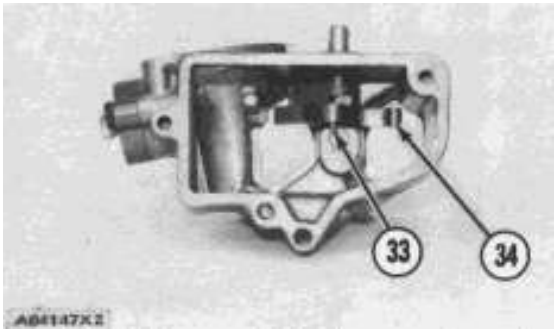

SHUTOFF HOUSING
33. Pin. 34. Lever.

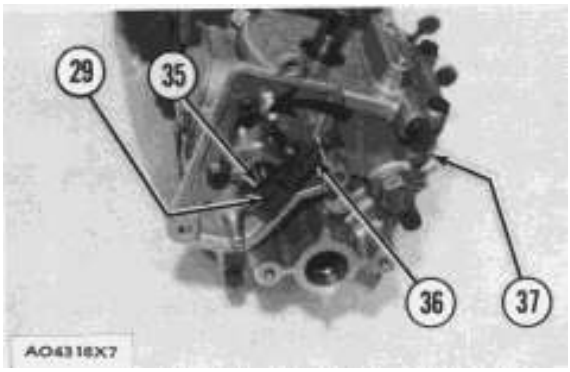

FUEL SYSTEM OPERATION
29. Shaft. 35. Edge. 36. Lever. 37. Housing.

Lever (36) is tight on shaft (29) which is through housing (37). On the other end of shaft (29), lever (26) moves in the same direction. Lever (26) pushes against pin (25) in lever (24). Lever (24) is tight on the end of the fuel control shaft (21). The turning of lever (26) makes lever (24) turn the fuel control shaft (21) in the same direction. This stops the engine by putting the sleeves low on the plungers so there is no injection. This movement is independent of governor action because a spring (22) connects lever (23) and lever (24) on the fuel control shaft (21). Lever (24) can turn the fuel control shaft to the fuel off position by bending spring (22) without changing the position of the parts of the governor first.

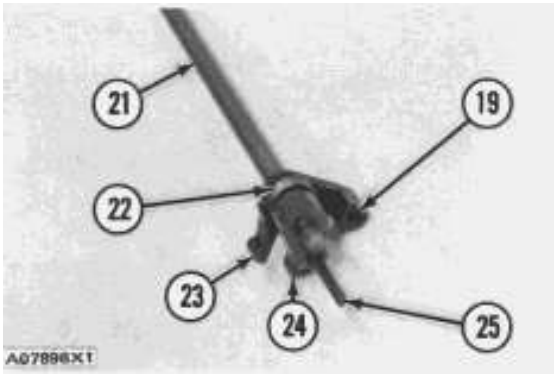

FUEL CONTROL SHAFT
19. Hole. 21. Fuel control shaft. 22. Spring. 23. Lever. 24. Lever. 25. Pin.

Activate To Shutoff Solenoid

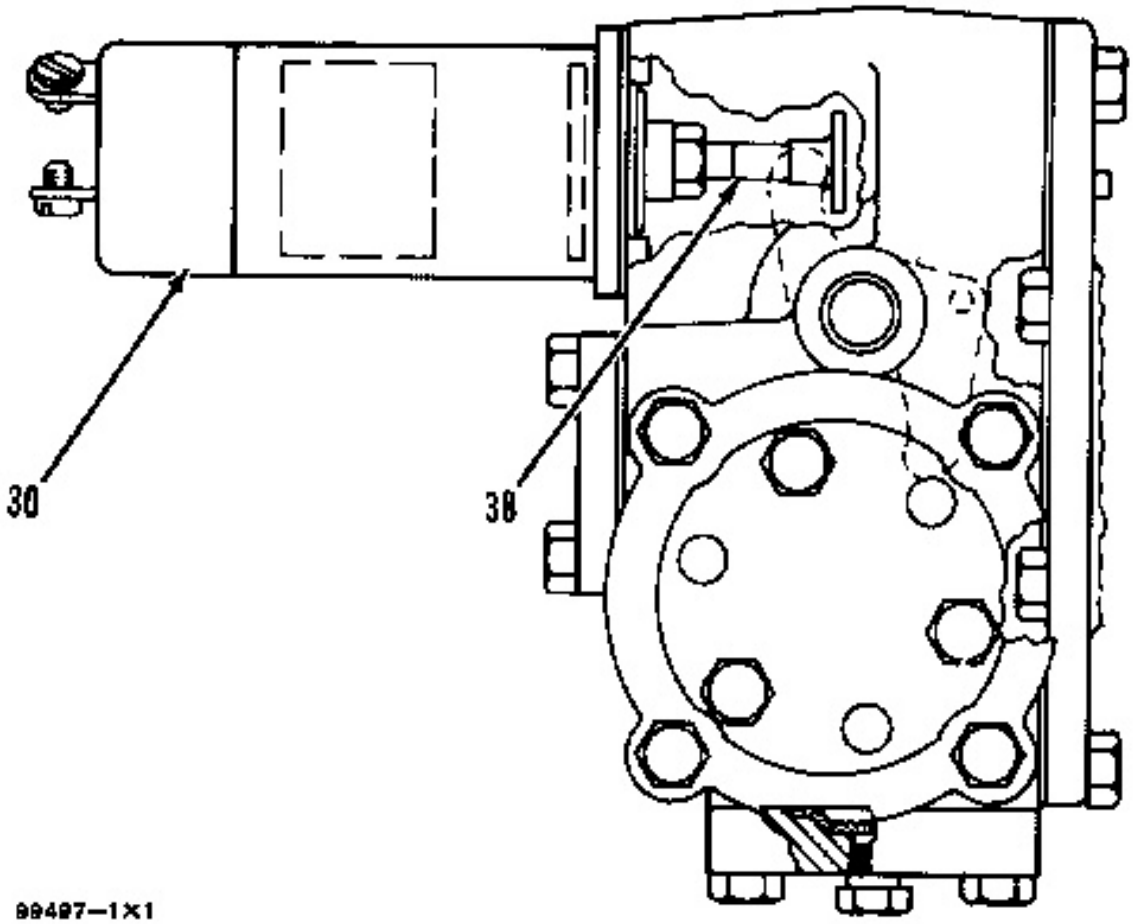

SHUTOFF SOLENOID (Activate To Shutoff)
30. Solenoid. 38. Shaft.

The activate to shutoff solenoid works on the other end of lever (34). The end of shaft (38) is behind lever (34). When the electrical power is on, the solenoid pulls in on shaft (38). This moves lever (34) in the same direction as an activate to run solenoid would move the lever. The rest of the linkage moves in the same way to stop the engine.

Governor (Used On Earlier Engines)

This governor for the Sleeve Metering Fuel System is of the mechanical type. It works to keep the speed of the engine from changing when there is an increase or decrease in load when the engine is running with governor control shaft stationary.

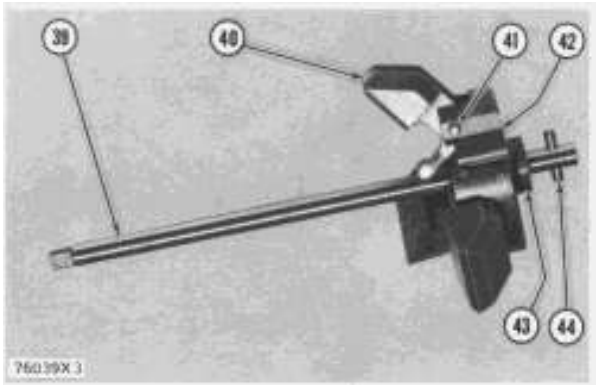

GOVERNOR
39. Tachometer drive shaft. 40. Weights. 41. Pin. 42. Carrier. 43. Slot. 44. Pin.

The carrier (42) for weights (40) is held on one end of the camshaft by bolts. The tachometer drive shaft (39) is through the center of the governor parts. The shaft has a radial hole through the driven end. A pin (41) is through this hole and fits into the slot (43) in the carrier on both sides of the shaft.

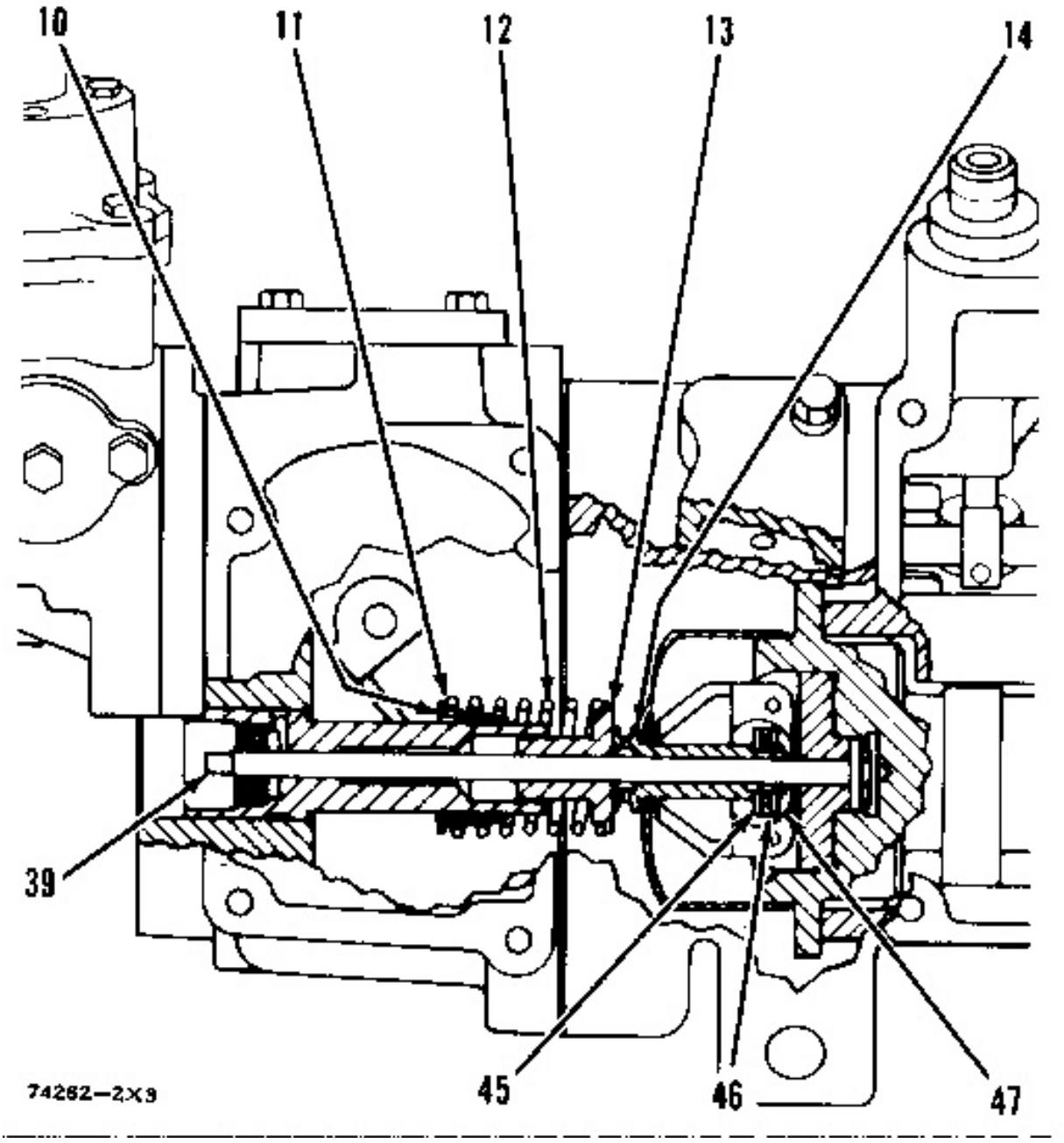

GOVERNOR
10. Seat. 11. Washer. 12. Governor spring. 13. Seat. 14. Riser. 39. Tachometer drive shaft. 45. Race. 46. Bearing. 47. Race.

The weights (40) are connected to the carrier (42) by pins (41). The weights (40) and pins (41) work like bellcranks and pivots. When the camshaft and carrier (42) turn, the outer parts of the weights (40) move out from the center. The inner parts push against race (45), bearing (46), and race (47) (thrust bearing). The thrust bearing removes the turning movement but puts the thrust against the shoulder of riser (14). The riser (14) is against seat (13) which is against governor spring (12).

Governor spring (12) and washer (11) are in compression between seat (10) and seat (13). Seat (10) is held in position by lever (9) on the governor control shaft (1). There is a balance between the forces from the weights (40) and the governor spring (12) as long as the load on the engine does not change.

When there is a decrease in the load on the engine the engine starts to make an increase in speed. The weights in

the governor turn faster causing the outer parts of the weights to move out farther. This puts more force against the thrust bearing. The thrust bearing pushes riser (14) which puts more compression on governor spring (12). At the same time the lower end of lever (18) is in the groove in riser (14).

The movement of riser (14) moves lever (18) to make a decrease in the amount of fuel for injection. With less fuel, the engine has a decrease in speed. The governor has this action again and again until the governor is in balance. When the governor is in balance the engine speed will be the same as it was before there was a decrease in load.

If there is an increase in the load on the engine, the engine starts to make a decrease in speed. The weights in the governor turn slower. The thrust from the weights against the riser will be less, so the spring pushes the riser to the right.

The movement of the riser (14) makes lever (18) move the fuel control shaft (21) to make an increase in the amount of fuel for injection. With more fuel, the engine runs faster. The governor has this action again and again until the governor is in balance. When the governor is in balance the engine speed is the same as it was before the engine had an increase in load.

"Non-Adjustable Dashpot" Governor (Used On Later Engines)

The non-adjustable dashpot governor is the standard governor for the later engines. It controls engine rpm with less hunting (oscillation of engine rpm between faster and slower than desired rpm) than the earlier standard governor.

The "non-adjustable dashpot" governor gets its name from the function of some of the parts in the governor. These parts work together like a "dashpot" or shock absorber to make the rpm of the engine steady. Governor piston (6) moves in cylinder (3) which is filled with fuel. The movement of piston (6) in cylinder (3) either pulls fuel into cylinder (3) or pushes it out. In either direction the flow of fuel is through hole (2) in the bottom of cylinder (3) and through orifice (1) to the inside of the housing. The restriction to the flow of the fuel by orifice (1) gives the governor its "dashpot" function. The fixed size of orifice (1) makes the "dashpot" function non-adjustable.

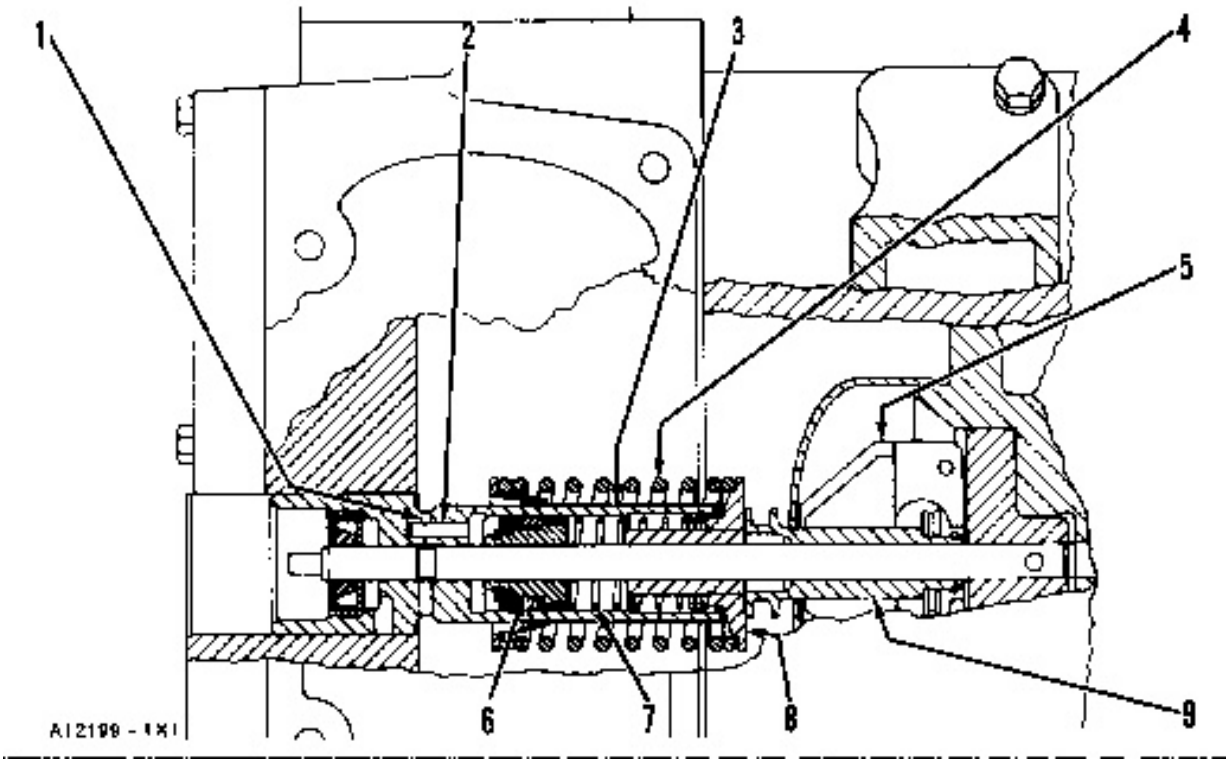

NON-ADJUSTABLE DASHPOT GOVERNOR
1. Orifice. 2. Hole in bottom of cylinder. 3. Cylinder. 4. Governor spring. 5. Weights. 6. Piston. 7. Dashpot spring. 8. Seat. 9.

Riser.

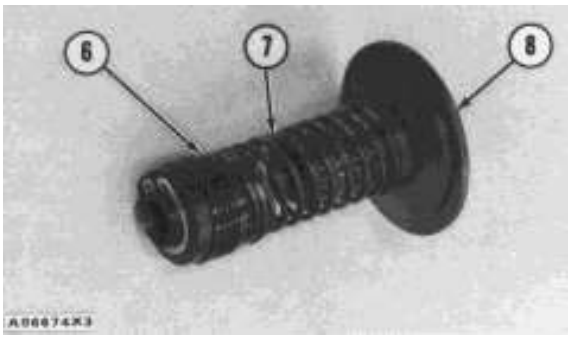

DASHPOT GOVERNOR PISTON
6. Piston. 7. Dashpot spring. 8. Seat.

When the engine has a decrease in load, the engine starts to run faster. The governor weights push against riser (9). Riser (9) pushes against governor spring (4) with more force. The additional force starts to move riser (9). This puts more compression on governor spring (4) and starts to put dashpot spring (7) in compression.

Dashpot spring (7) is in compression because the fuel in cylinder (3) behind piston (6) can only go out through hole (2) in the bottom of cylinder (3). The rate of flow through hole (2) and orifice (1) controls how fast piston (6) moves. As the fuel goes out of cylinder (3), piston (6) moves into the space from the fuel. This lets compression off of dashpot spring (7) gradually.

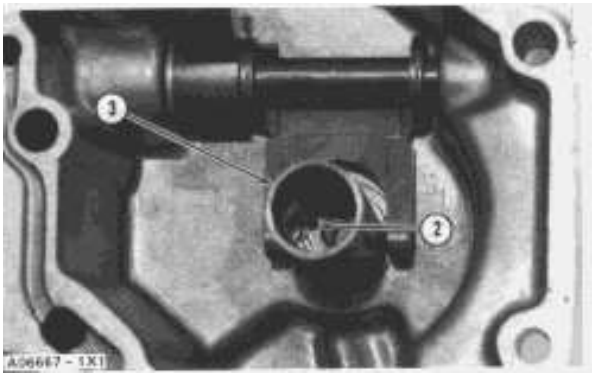

NON-ADJUSTABLE DASHPOT GOVERNOR CYLINDER
2. Hole in bottom of cylinder. 3. Cylinder.

When governor spring (4) and dashpot spring (7) are both in compression, their forces work together against the force of the governor weights. This gives the effect of having a governor spring with a high spring rate. A governor spring with a high spring rate keeps the engine rpm from having oscillations during load changes. When the engine rpm and the engine load are both steady, governor spring (4) works alone to keep the engine rpm steady. This gives the engine more sensitive rpm control under steady load conditions.

When the engine has an increase in load, the engine starts to run slower. The governor weights push against riser (9) and seat (8) for governor spring (4) with less force. Governor spring (4) starts to push seat (8) and riser (9) to give the engine more fuel for injection. Seat (8) is connected to piston (6) through dashpot spring (7). When seat (8) and riser (9) start to move, the action puts dashpot spring (7) in tension. Piston (6) has to pull fuel into cylinder (3) from the governor housing to take its space so that it can move. This makes the movement of seat (8) for the governor spring (4) and riser (9) more gradual.

During this condition, dashpot spring (7) is pulling against governor spring (4). This gives the effect of a governor spring with a high spring rate. A governor spring with a high spring rate keeps the engine speed from having

oscillations during load changes. It lets the engine have just enough fuel for injection to keep the engine speed steady.

The functions of the other parts in the governor housing are the same as in the earlier standard governor.

"Adjustable Dashpot" Governor

(For Electric Set Engines)

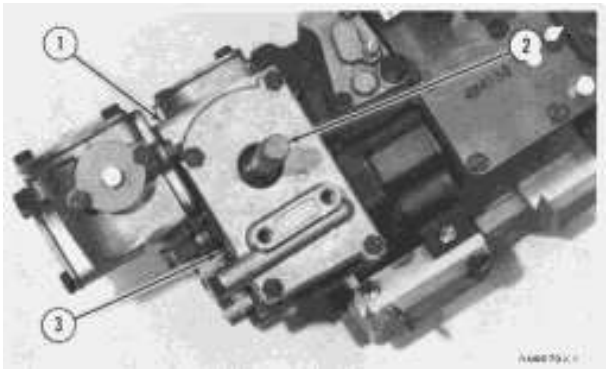

"ADJUSTABLE DASHPOT" GOVERNOR
1. Governor housing. 2. Governor control shaft. 3. Needle valve.

The "adjustable dashpot" governor is for electric set engines which must operate at very near constant rpm under changing loads.

The "adjustable dashpot" governor gets its name from the function of some of the parts in the governor. They work together like a "dashpot" or shock absorber to make the rpm of the engine steady. The governor has a piston (6) that moves in a cylinder (5) which is filled with fuel. The movement of piston (6) in cylinder (5) either pulls fuel into cylinder (5) or pushes it out. In either direction, the flow of fuel is through a hole (9) in the bottom of cylinder (5) and through passages in the governor housing which are connected by needle valve (3). The passages in governor housing (1) connect the fuel in governor housing (1) with the fuel in cylinder (5) through hole (8).

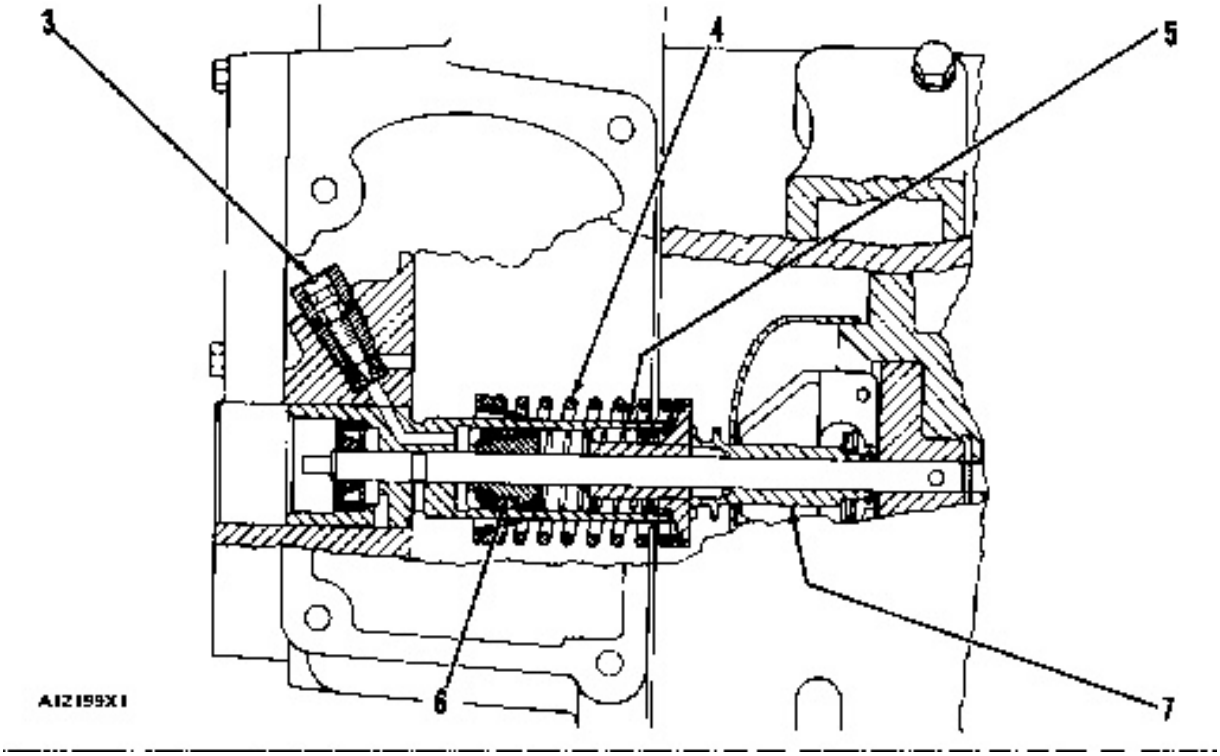

"ADJUSTABLE DASHPOT" GOVERNOR
3. Needle valve. 4. Governor spring. 5. Cylinder. 6. Piston. 7. Riser.

When the engine has a decrease in load, the engine starts to run faster. The governor weights push against riser (7) and seat (11) for governor spring (4) with more force. The additional force starts to move riser (7) and seat (11) which puts more compression on governor spring (4) and starts to put dashpot spring (10) in compression.

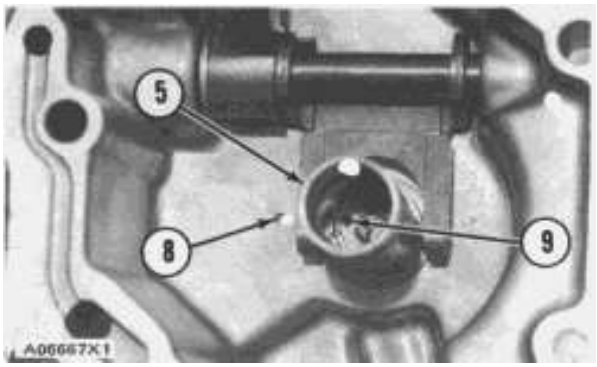

"ADJUSTABLE DASHPOT" GOVERNOR CYLINDER
5. Cylinder. 8. Hole (in governor housing). 9. Hole (in bottom of cylinder).

Dashpot spring (10) is in compression because the fuel in cylinder (5) behind piston (6) can only go out through hole (9) in the bottom of cylinder (5). The rate of flow through hole (9) controls how fast piston (6) moves. As the fuel goes out of cylinder (5), piston (6) moves into the space from the fuel. This lets compression off of dashpot spring (10) gradually.

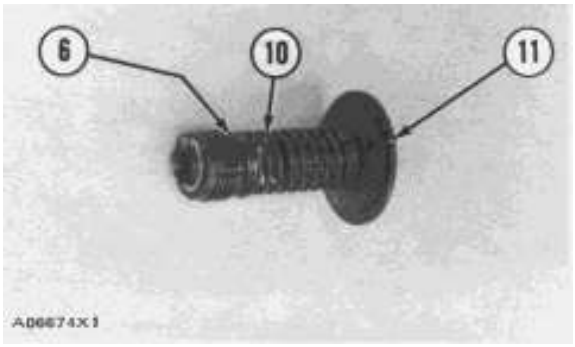

DASHPOT GOVERNOR PISTON
6. Piston. 10. Dashpot spring. 11. Seat.

When governor spring (4) and dashpot spring (10) are both in compression, their forces work together against the force of the governor weights. This gives the effect of having a governor spring with a high spring rate. A governor spring with a high spring rate keeps the engine speed from having oscillations during load changes. It lets the engine have just enough fuel for injection to keep the engine speed steady.

When the engine has an increase in load, the engine starts to run slower. The governor weights push against riser (7) and seat (11) for governor spring (4) with less force. Governor spring (4) starts to push seat (11) and riser (7) to give the engine more fuel for injection. Seat (11) is connected to piston (6) through dashpot spring (10). When seat (11) and riser (7) start to move, the action puts dashpot spring (10) in tension. Piston (6) has to pull fuel into cylinder (5) from governor housing (1) to take its space so that it can move. This makes the movement of seat (11) for the governor spring (4) and riser (7) more gradual.

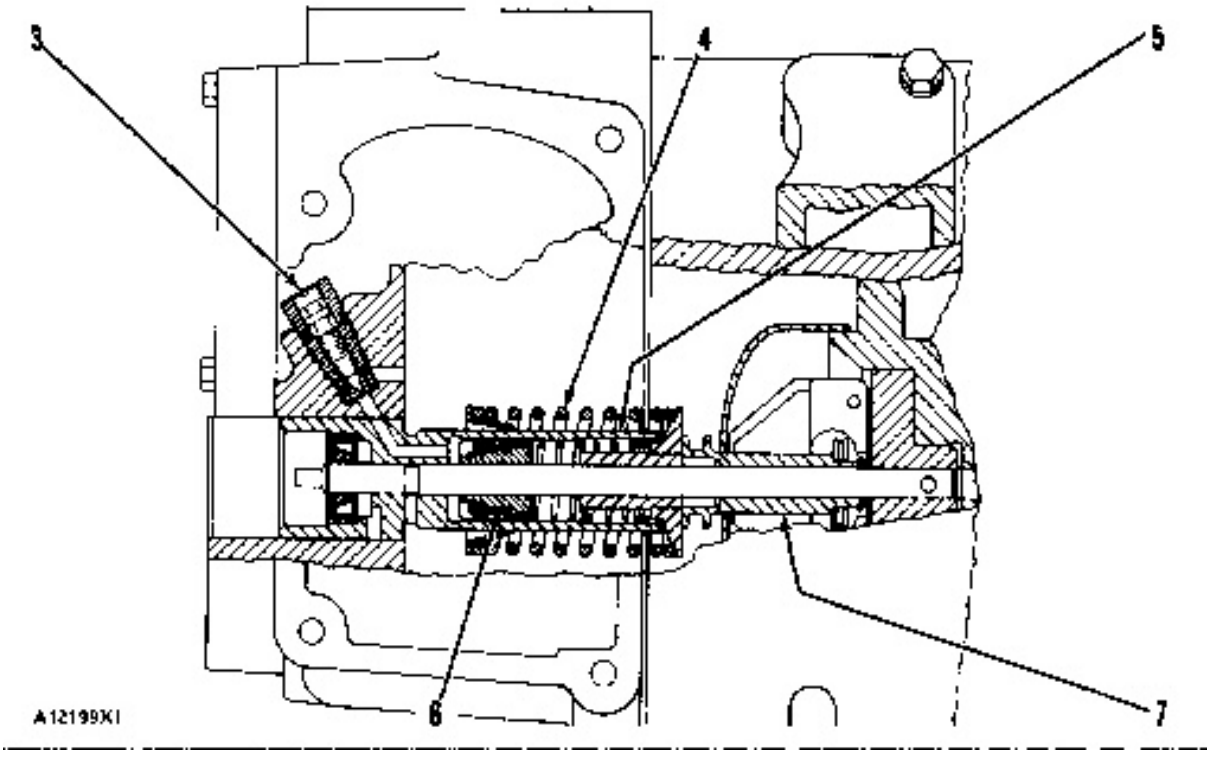

"ADJUSTABLE DASHPOT" GOVERNOR
3. Needle valve. 4. Governor spring. 5. Cylinder. 6. Piston. 7. Riser.

During this condition, dashpot spring (10) is pulling against governor spring (4). This gives the effect of a governor spring with a high spring rate. A governor spring with a high spring rate keeps the engine speed from having oscillations during load changes. It lets the engine have just enough fuel for injection to keep the engine speed steady.

The rate of flow of the fuel into and out of cylinder (5) is controlled by the adjustment of needle valve (3). While the engine is running, the needle valve is adjusted so that the governor action is fast enough to keep the engine running at a steady speed under changing loads. The rest of the parts in the dashpot governor and their functions are the same as in the earlier standard governor.

Fuel Ratio Control

The fuel ratio control is on the fuel system as a limit for the amount of fuel for injection during an increase in engine speed (acceleration). The purpose is to keep the amount of smoke in the exhaust gas at a minimum.

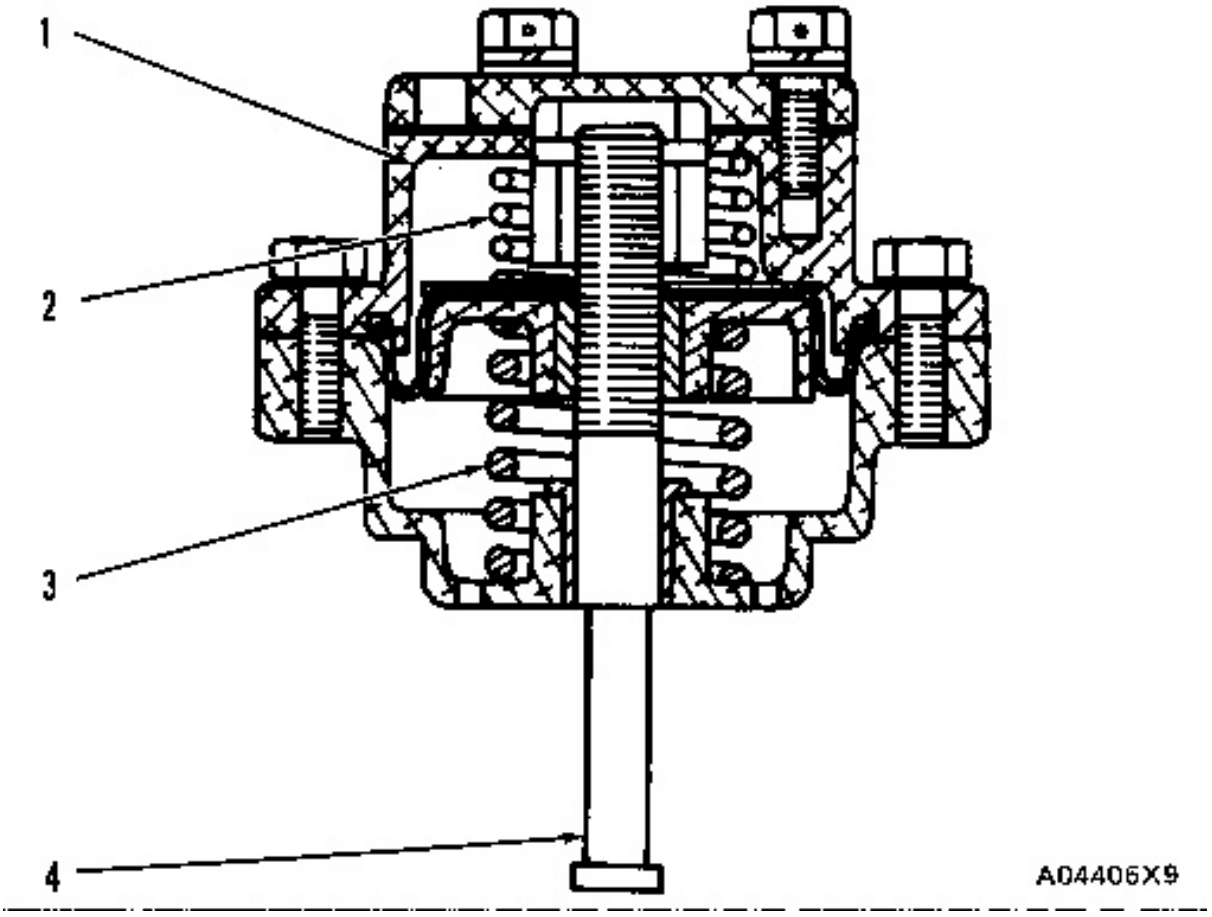

FUEL RATIO CONTROL
1. Chamber. 2. Spring. 3. Spring. 4. Bolt.

When the engine is running, air pressure from the inlet manifold is in chamber (1) of the control. The combination of the force from the air pressure and spring (2) makes a balance with spring (3). The balance controls the position of bolt (4). When the governor control is moved to make an increase in engine speed, the linkage moves to turn the fuel control shaft to put more fuel into each injection.

When the adjustment of the fuel ratio control is correct there will be enough increase in the fuel for injection to make the engine accelerate rapidly. If the adjustment is correct, there will not be too much smoke in the exhaust when the engine accelerates.

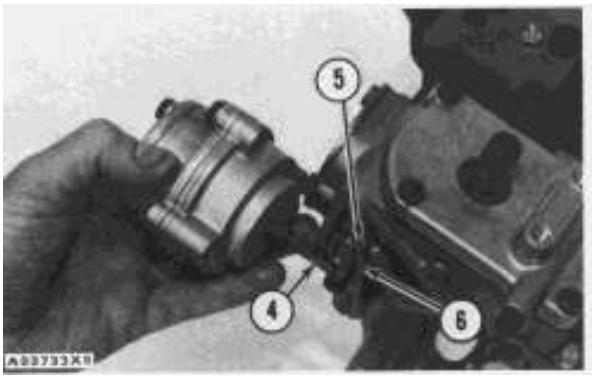

FUEL RATIO CONTROL
4. Bolt. 5. Lever. 6. Pin.

Fuel Injection Valve

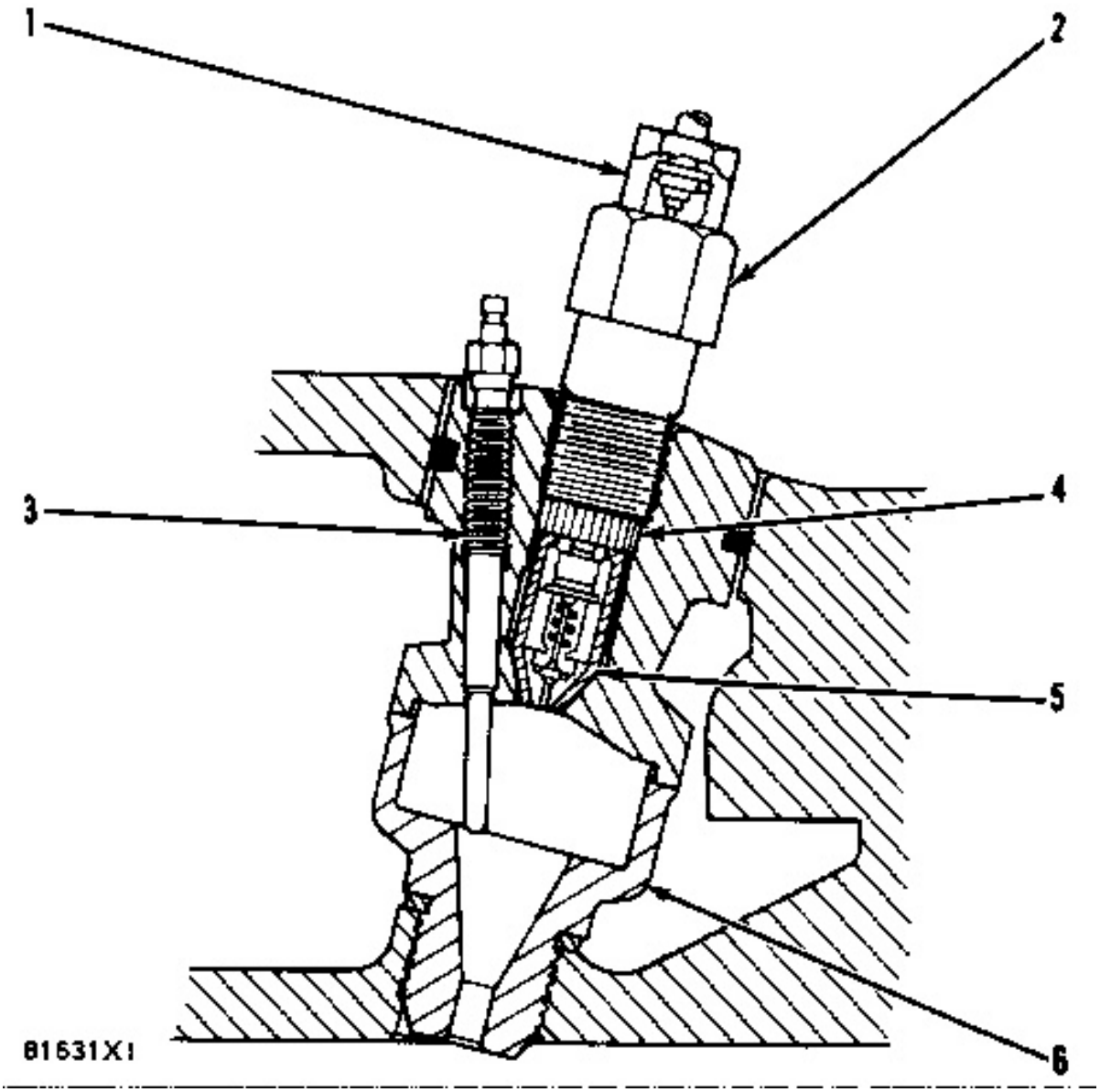

CROSS SECTION OF THE PRECOMBUSTION CHAMBER AND FUEL INJECTION VALVE
1. Fuel injection line. 2. Nut. 3. Glow plug. 4. Body. 5. Nozzle assembly. 6. Precombustion chamber.

Fuel, under high pressure from the injection pumps, is sent through the fuel lines to the fuel injection valves. When the fuel under high pressure goes into the nozzle assembly, the check valve inside the nozzle opens and the fuel

goes into the precombustion chamber. The injection valve changes the fuel to many very small drops of fuel. This gives the fuel the correct characteristics for good combustion.

Glow Plugs

Glow plugs are an aid for cold weather starting. During cold weather starting, the pressure in the cylinders made by the compression stroke is not enough to start combustion of the fuel injection charge. Activating the glow plugs for the correct length of time heats the precombustion chambers to the temperature which is necessary for combustion when the engine is turned for starting. After combustion starts and the starting motor is no longer necessary to keep the engine running, more operation of the glow plugs heats the precombustion chambers until the engine is running smoothly.

Air Inlet And Exhaust System

Engines With Turbocharger

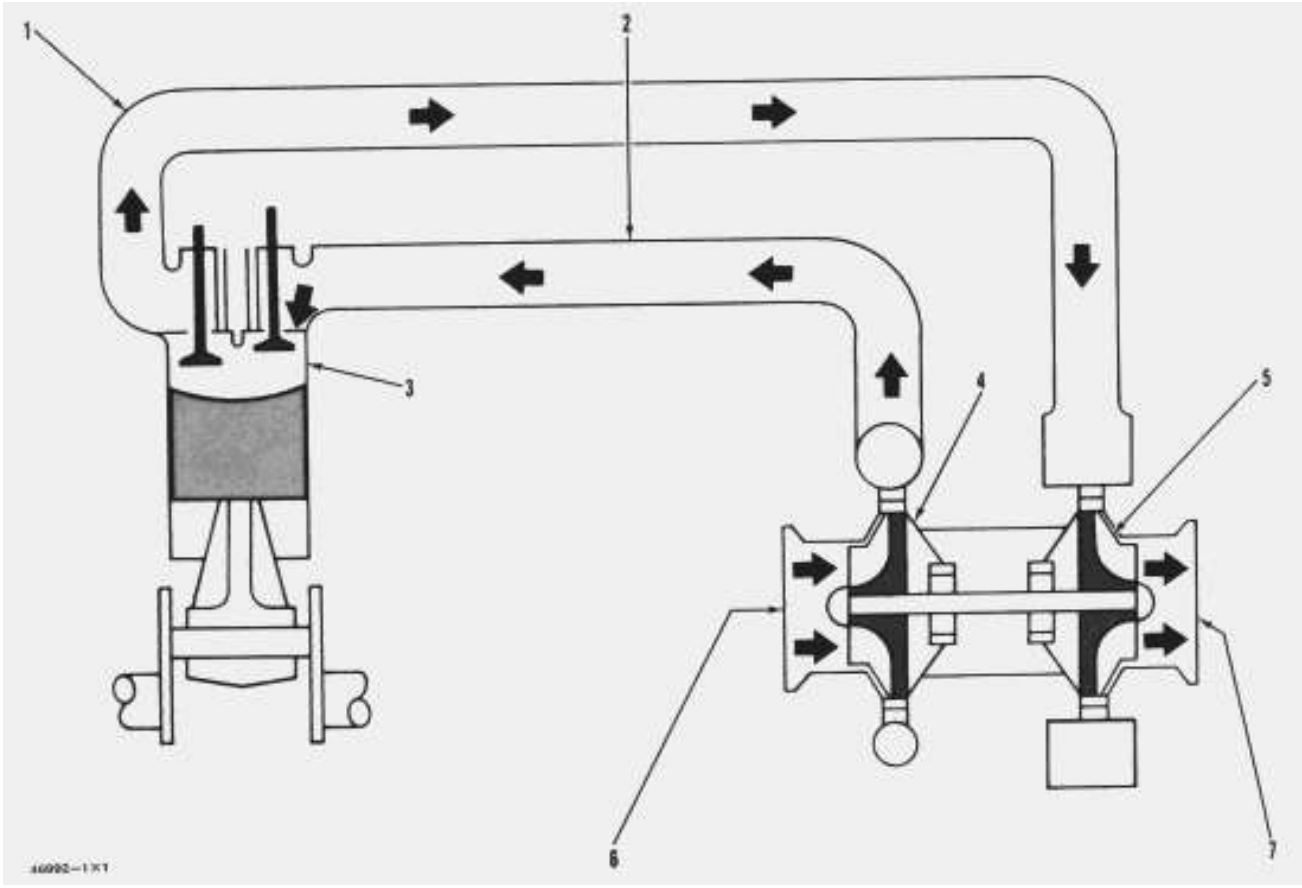

AIR INLET AND EXHAUST SYSTEM
1. Exhaust manifold. 2. Inlet manifold. 3. Engine cylinder. 4. Turbocharger compressor wheel. 5. Turbocharger turbine wheel. 6. Air inlet. 7. Exhaust outlet.

The air inlet and exhaust system components are: air cleaner, inlet manifold, cylinder head, valves and valve system components, exhaust manifold, and turbocharger.

Clean inlet air from the air cleaner is pulled through the air inlet (6) of the turbocharger by the turning compressor wheel (4). The compressor wheel causes a compression of the air. The air then goes to the inlet manifold (2) of the engine. When the intake valves open, the air goes into the engine cylinder (3) and is mixed with the fuel for combustion. When the exhaust valves open, the exhaust gases go out of the engine cylinder and into the exhaust

manifold (1). From the exhaust manifold, the exhaust gases go through the blades of the turbine wheel (5). This causes the turbine wheel and compressor wheel to turn. The exhaust gases then go out the exhaust outlet (7) of the turbocharger.

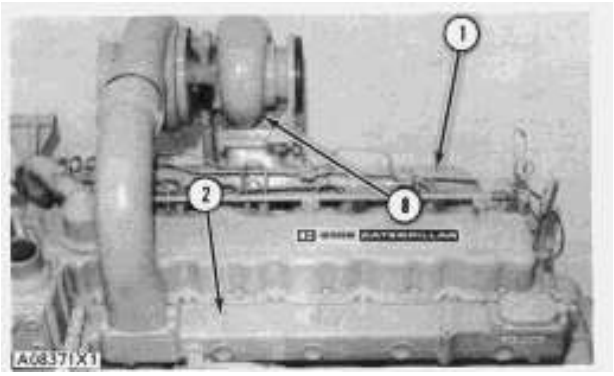

AIR INLET AND EXHAUST SYSTEM (Typical Example)
1. Exhaust manifold. 2. Inlet manifold. 8. Turbocharger.

Engines With Turbocharger And Aftercooler

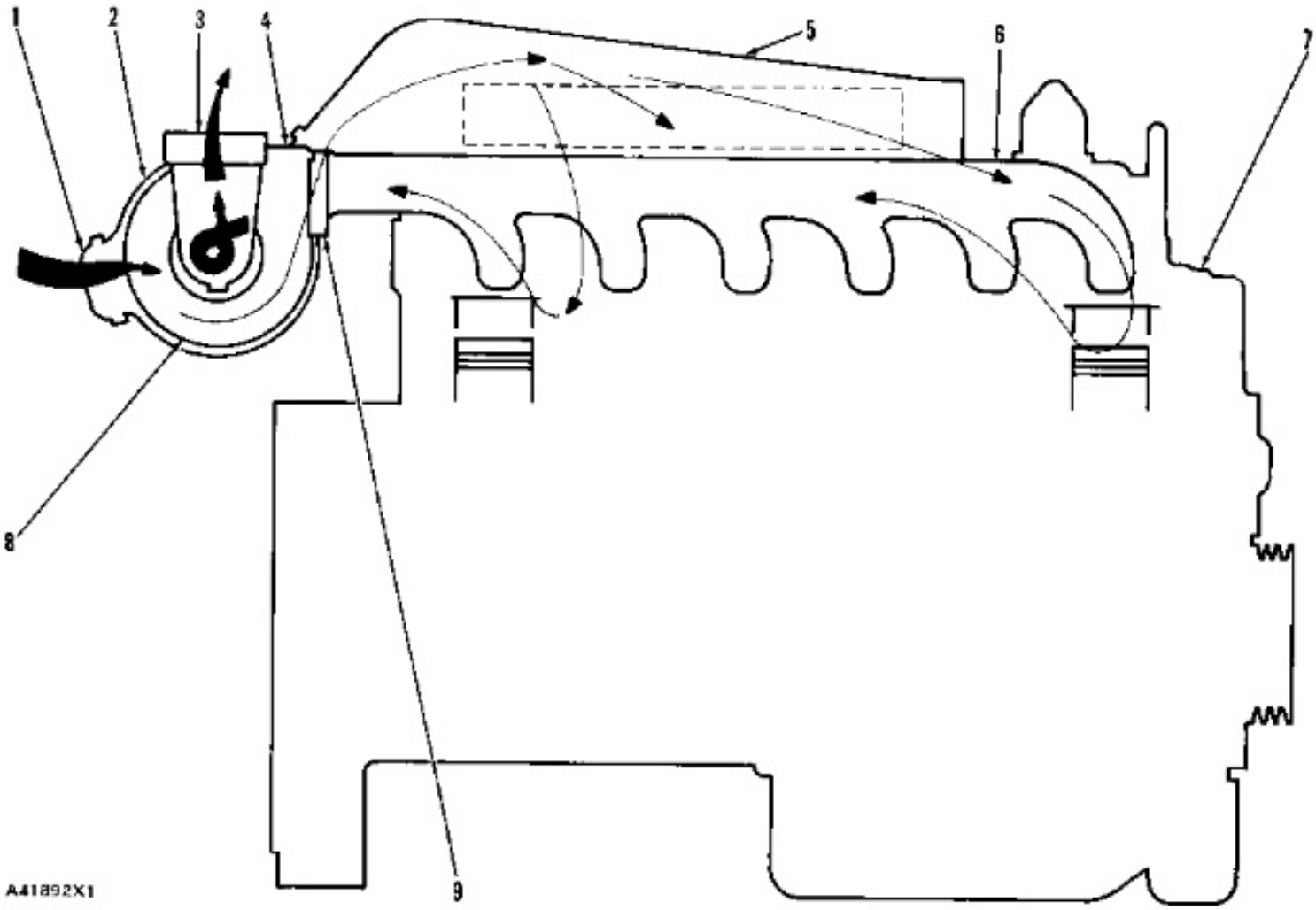

TURBOCHARGER AND AFTERCOOLER INSTALLED (TYPICAL ILLUSTRATION)

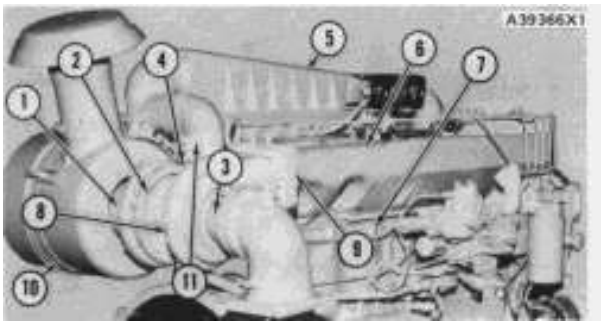

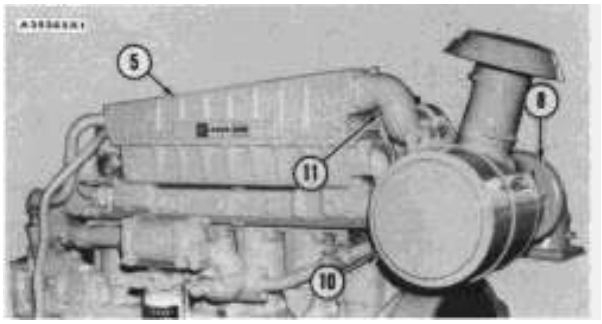

1. Air inlet. 2. Compressor wheel housing. 3. Exhaust outlet. 4. Air outlet. 5. Aftercooler housing. 6. Exhaust manifold. 7. Cylinder head. 8. Turbine wheel housing. 9. Exhaust inlet. 10. Air filter. 11. Inlet air pipe for aftercooler.

The air inlet and exhaust system components are: air cleaner, aftercooler, inlet manifold, cylinder head, valves and valve system components, exhaust manifold, and turbocharger.

Clean inlet air from air filter (10) is pulled through air inlet (1) of the turbocharger by the turning compressor wheel. The compressor wheel causes a compression of the air. The air next goes through inlet air pipe (11) to aftercooler housing (5). The aftercooler cools the air. The air then goes to the inlet manifold which is part of cylinder head (7). When the intake valves open, the air goes into the engine cylinder and is mixed with the fuel for combustion. When the exhaust valves open, the exhaust gases go out of the engine cylinder and into exhaust manifold (6). From the exhaust manifold, the exhaust gases go through the blades of the turbine wheel. This causes the turbine wheel and compressor wheel to turn. The exhaust gases then go out exhaust outlet (3) of the turbocharger.

Aftercooler

The aftercooler cools the air coming out of the turbocharger before it goes into the inlet manifold. The purpose of this is to make the air going into the combustion chambers more dense. The more dense the air is, the more fuel the engine can burn efficiently. This gives the engine more power.

Turbocharger

The turbocharger is installed on the exhaust manifold. The turbocharger is located either at the rear or on top of the engine. All the exhaust gases from the engine go through the turbocharger.

The exhaust gases go through the blades of the turbine wheel. This causes the turbine wheel and compressor wheel to turn which causes a compression of the inlet air.

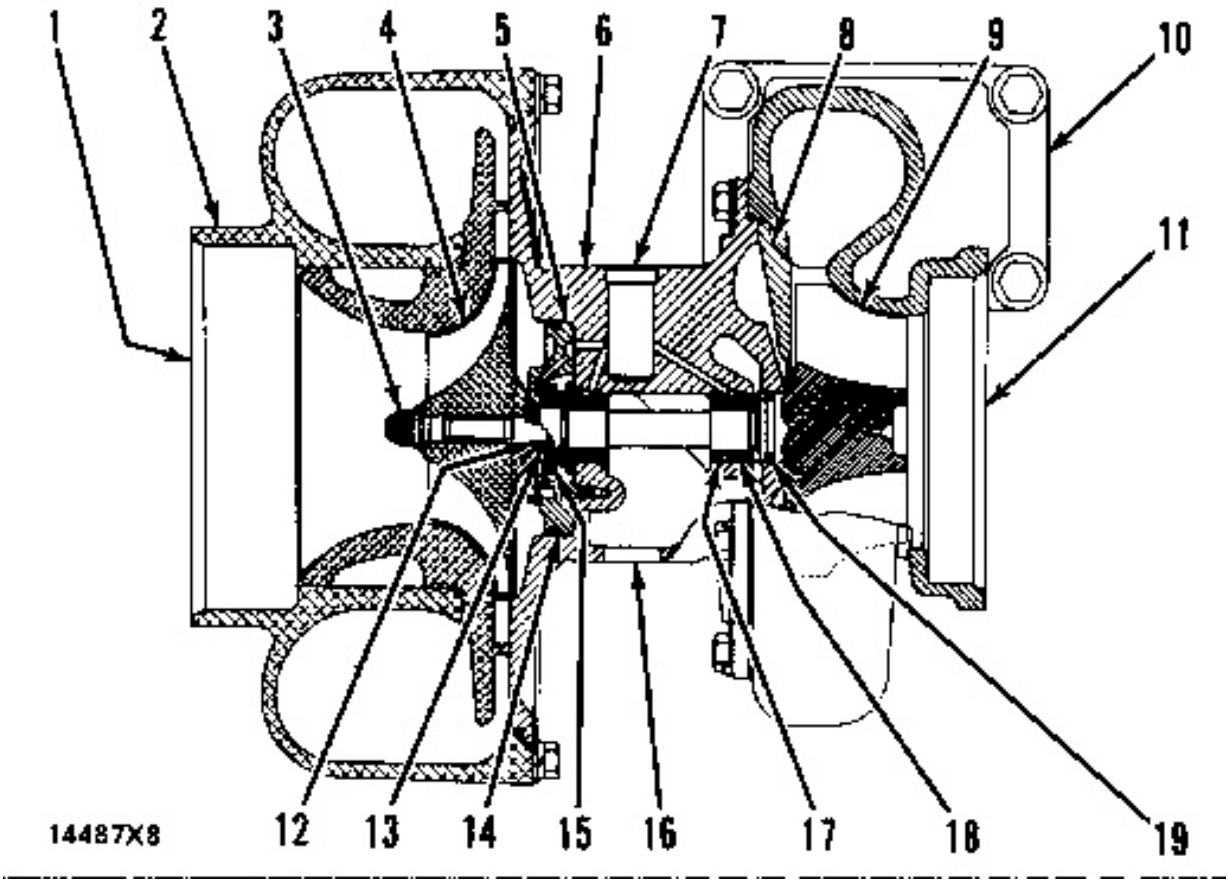

TURBOCHARGER (Typical Illustration)
1. Air inlet. 2. Compressor housing. 3. Nut. 4. Compressor wheel. 5. Thrust plate. 6. Center housing. 7. Lubrication inlet port. 8. Shroud. 9. Turbine wheel and shaft. 10. Turbine housing. 11. Exhaust outlet. 12. Spacer. 13. Ring. 14. Seal. 15. Collar. 16. Lubrication outlet port. 17. Ring. 18. Bearing. 19. Ring.

When the load on the engine goes up more fuel is put into the engine. This makes more exhaust gases and will cause the turbine and compressor wheels of the turbocharger to turn faster. As the turbocharger turns faster, it gives more inlet air and makes it possible for the engine to burn more fuel and will give the engine more power.

Maximum rpm of the turbocharger is controlled by the fuel setting, the high idle speed setting and the height above seal level at which the engine is operated.

WARNING

If the high idle rpm or the fuel system setting is higher than given in the RACK SETTING INFORMATION (for the height above seal level at which the engine is operated), there can be damage to engine or turbocharger parts.

The bearings for the turbocharger use engine oil under pressure for lubrication. The oil comes in through the oil inlet port and goes through passages in the center section for lubrication of the bearings. Oil from the turbocharger goes out through the oil outlet port in the bottom of the center section and goes back to the engine lubricating system.

The fuel system adjustment is done at the factory for a specific engine application. The governor housing and turbocharger are sealed to prevent changes in the adjustment of the fuel setting and the high idle speed setting.

Engines Without Turbocharger

The air inlet and exhaust system components are: air cleaner, inlet manifold, cylinder head, valves and valve system components and exhaust manifold.

When the engine is running, each time a piston moves through the intake stroke, it pulls air into the cylinder. The air flow is through the air filter, inlet manifold, passages in the cylinder head and past the open inlet valve into the cylinder. Too much restriction in the inlet air system makes the efficiency of the engine less.

When the engine is running, each time a piston moves through the exhaust stroke, it pushes hot exhaust gases from the cylinder. The exhaust gas flow is out of the cylinder between the open exhaust valve and the exhaust valve seat. Then it goes through passages in the cylinder head, through the exhaust manifold and out through the exhaust pipe. Too much restriction in the exhaust system makes the efficiency of the engine less.

Valves And Valve Mechanism

The valves and valve mechanism control the flow of air and exhaust gases in the cylinder during engine operation.

The intake and exhaust valves are opened and closed by movement of these components; crankshaft, camshaft, valve lifters (cam followers), push rods, rocker arms, and valve springs. Rotation of the crankshaft causes rotation of the camshaft. The camshaft gear is driven by, and timed to, a gear on the front of the crankshaft. When the camshaft turns, the cams on the camshaft also turn and cause the valve lifters (cam followers) to go up and down. This movement makes the push rods move the rocker arms. The movement of the rocker arms will make the intake and exhaust valves in the cylinder head open according to the firing order (injection sequence) of the engine. A valve spring for each valve pushes the valve back to the closed position.

Valve rotators cause the valves to have rotation while the engine is running. This rotation of the valves keeps the deposit of carbon on the valves to a minimum and gives the valves longer service life.

Timing Gears

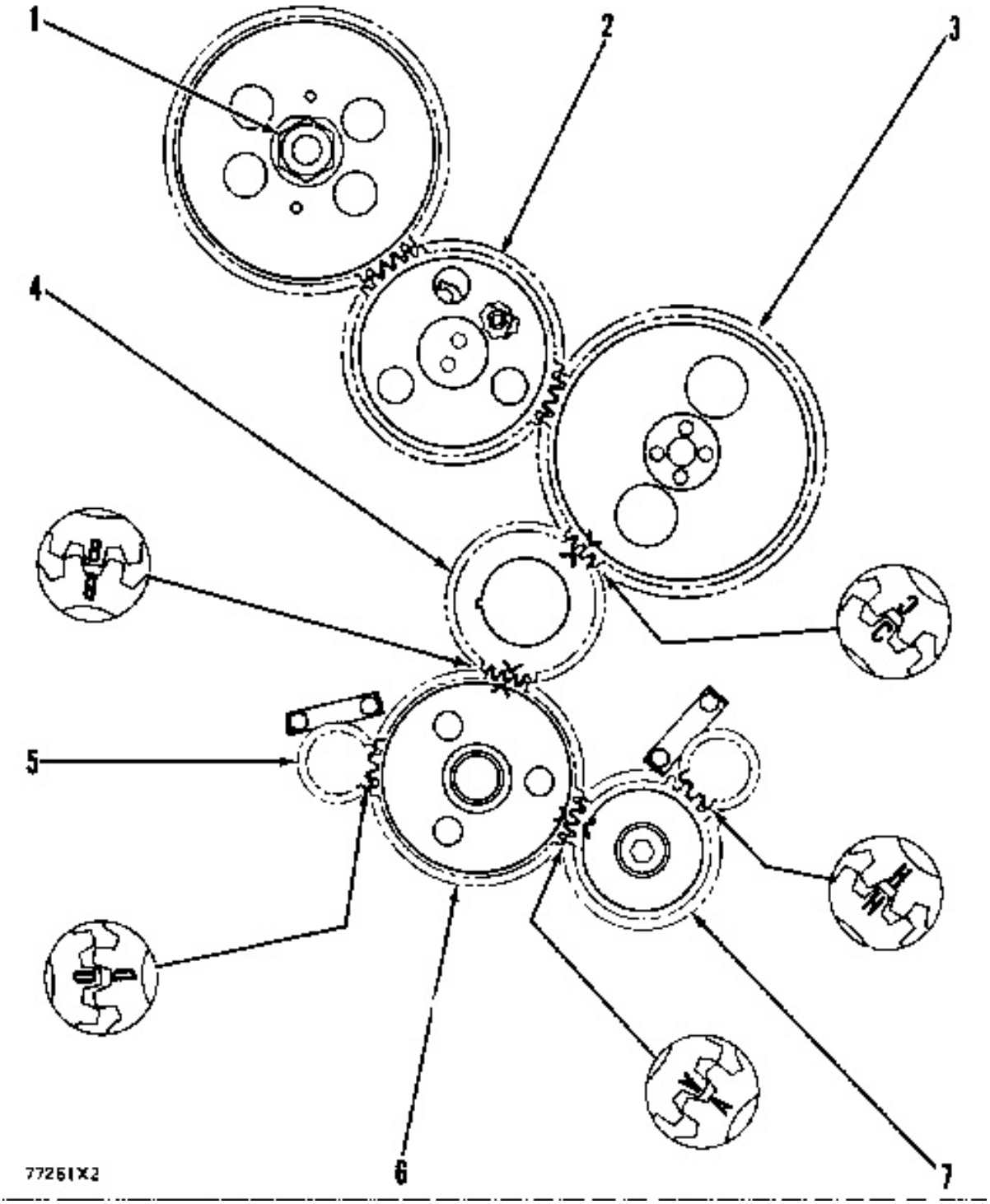

TIMING GEARS
1. Drive gear for fuel injection pump. 2. Idler gear for fuel injection pump. 3. Camshaft gear. 4. Crankshaft gear. 5. Balancer shafts (3304 Engines only). 6. Idler gear for oil pump. 7. Drive gear for oil pump.

The timing gears are at the front of the cylinder block. Their cover is the housing for the timing gears. The timing gears keep the rotation of the crankshaft, camshaft, and fuel injection pump in the correct relation to each other. The timing gears are driven by the crankshaft gear.

Lubrication System

Lubrication System Schematics

3306 Engines

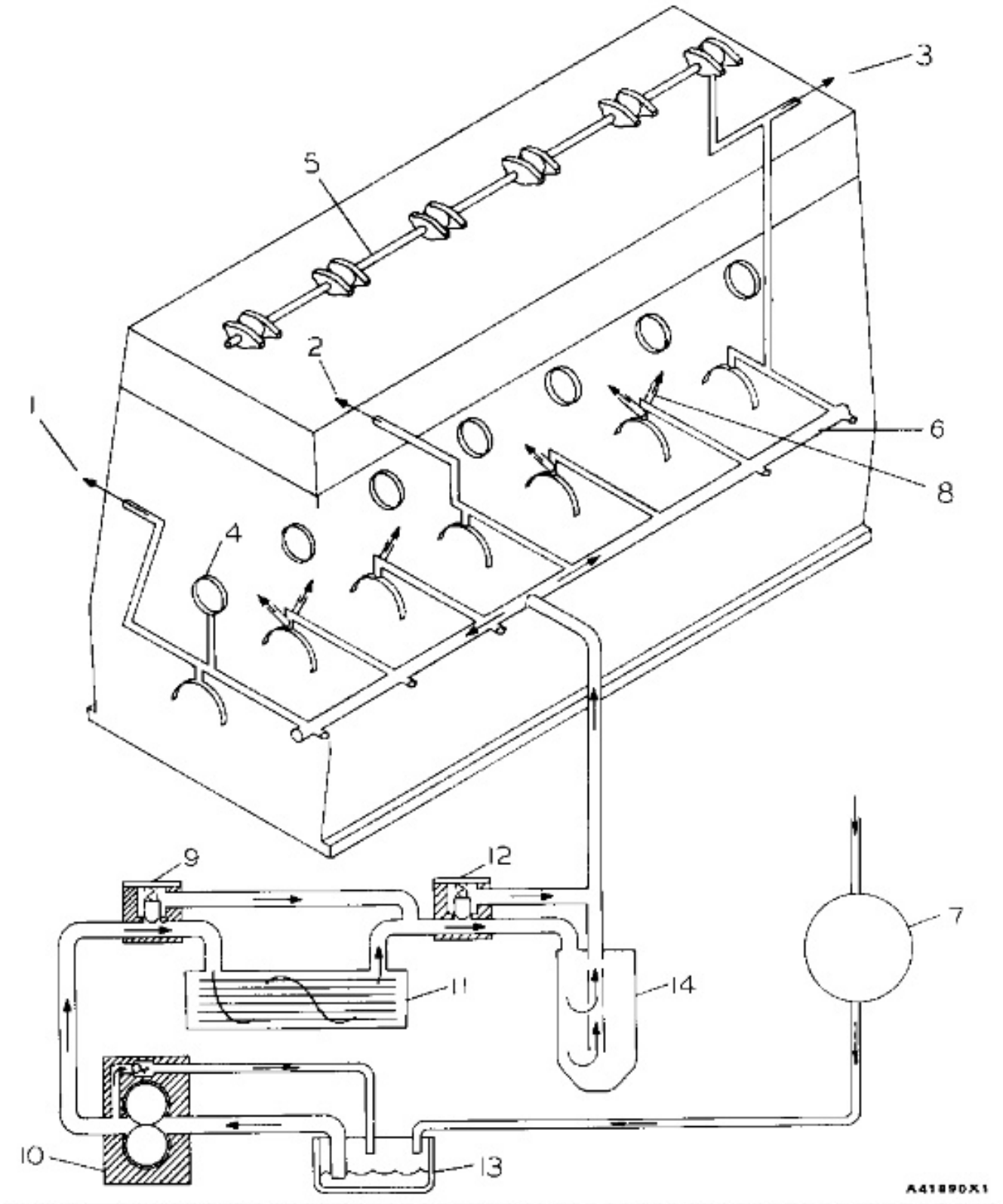

3306 LUBRICATION SYSTEM SCHEMATIC
1. Oil supply for variable timing mechanism. 2. Oil supply for turbocharger. 3. Oil pressure connection. 4. Camshaft bores. 5. Oil passage through rocker shaft to rocker arm. 6. Oil manifold. 7. Turbocharger. 8. Piston cooling. 9. Oil cooler bypass. 10. Oil pump. 11. Oil cooler. 12. Filter bypass. 13. Oil sump. 14. Oil filter.

3304 Engines

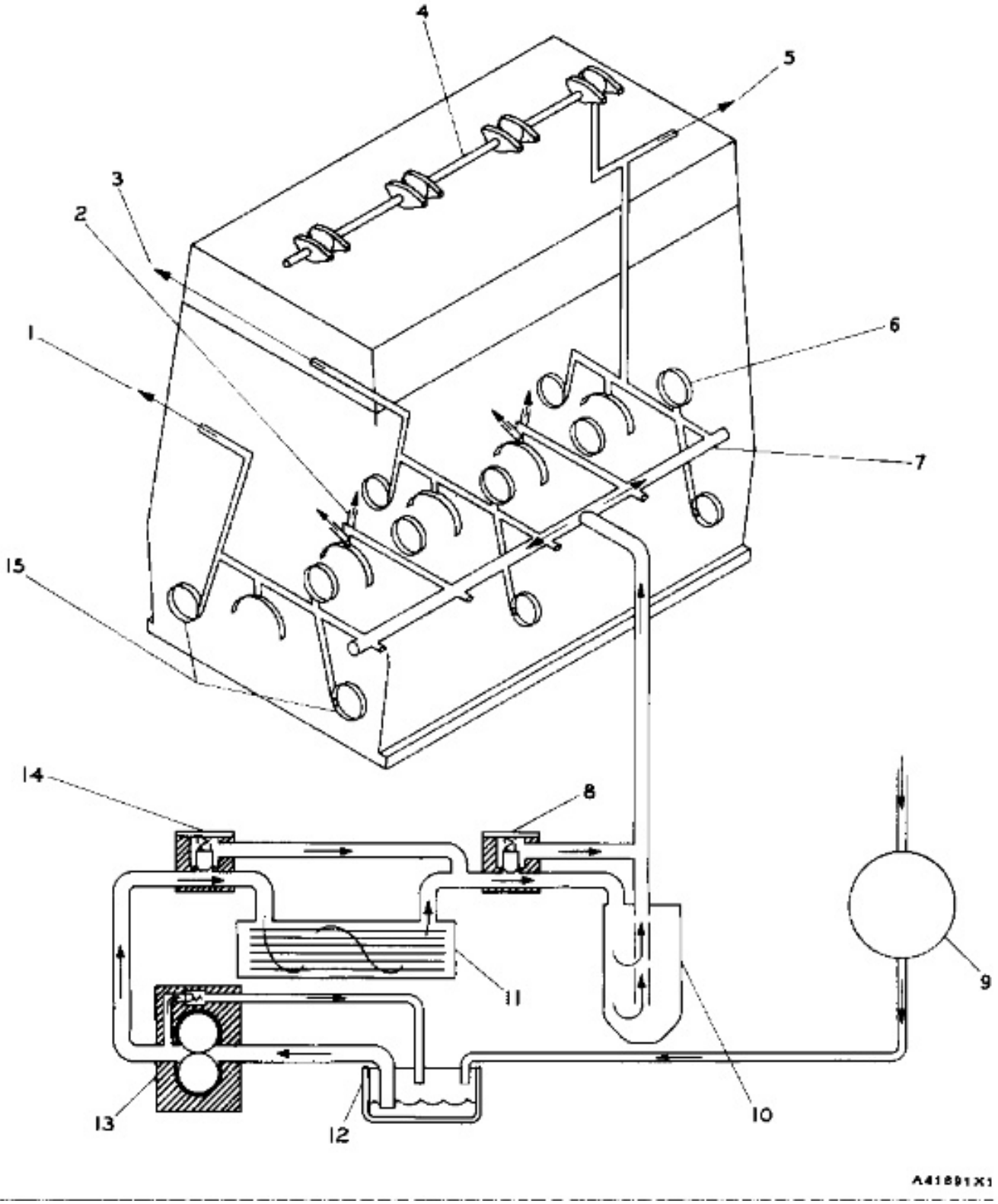

3304 LUBRICATION SYSTEM SCHEMATIC
1. Oil pressure connection. 2. Piston cooling. 3. Oil supply for turbocharger. 4. Oil passage through rocker shaft to rocker arms. 5. Oil pressure connection. 6. Camshaft bores. 7. Oil manifold. 8. Filter bypass. 9. Turbocharger. 10. Oil filter. 11. Oil cooler. 12. Oil sump. 13. Oil pump. 14. Oil cooler bypass. 15. Counter balance shaft bores.

Lubrication System Components

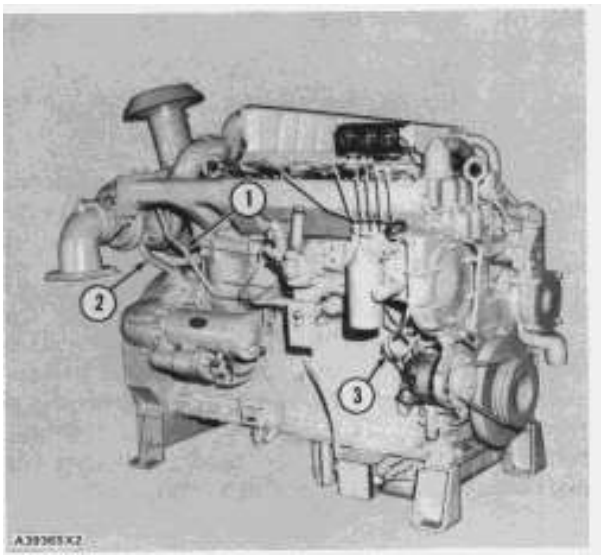

LUBRICATION SYSTEM COMPONENTS (Typical Example)
1. Supply line for turbocharger. 2. Return line for turbocharger. 3. Supply line for automatic timing advance unit.

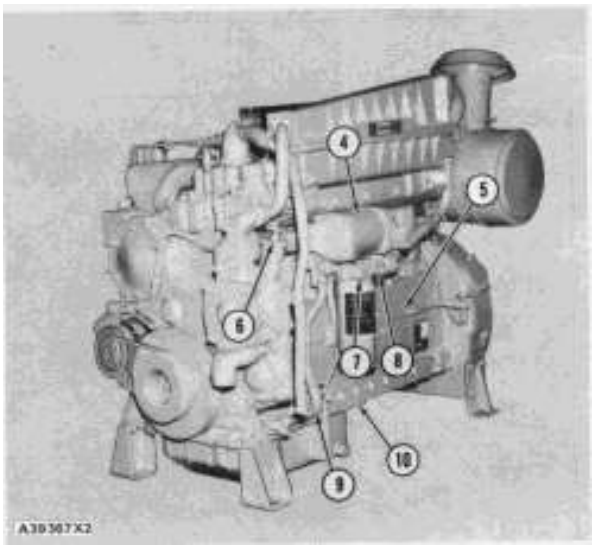

LUBRICATION SYSTEM COMPONENTS (Typical Example)
4. Oil cooler. 5. Oil manifold in cylinder block. 6. Oil filler cap. 7. Bypass valve for oil cooler. 8. Bypass valve for oil filter. 9. Oil line to cooler and filter. 10. Oil pan.

The lubrication system has the following components: oil pan, oil pump, oil cooler, oil filter, oil passages in the cylinder block, and lines to engine components and attachments such as turbocharger, Woodward governor, air compressor and others.

Oil Flow Through The Oil Filter And Oil Cooler

With the engine warm (normal operation), oil comes from the oil pan (6) through the suction bell (9) to the oil pump (7). The oil pump sends warm oil to the oil cooler (10) and then to the oil filter (4). From the oil filter, oil is sent to the oil manifold (1) in the cylinder block.

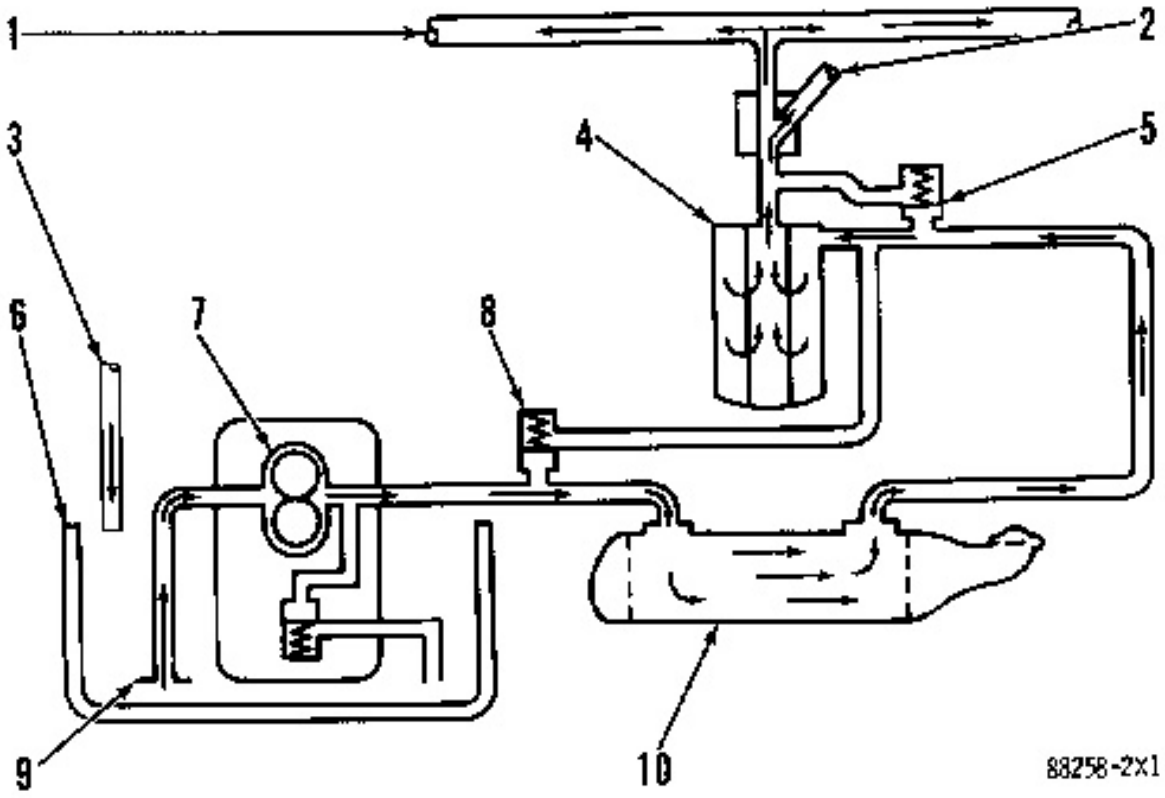

FLOW OF OIL (ENGINE WARM)
1. Oil manifold in cylinder block. 2. Oil supply line to turbocharger. 3. Oil return line from turbocharger. 4. Oil filter. 5. Bypass valve for the oil filter. 6. Oil pan. 7. Oil pump. 8. Bypass valve for the oil cooler. 9. Suction bell. 10. Oil cooler.

With the engine cold (starting conditions), oil comes from the oil pan (6) through the suction bell (9) to the oil pump (7). When the oil is cold, an oil pressure difference in the bypass valve (installed in the oil filter housing) causes the valves to open.

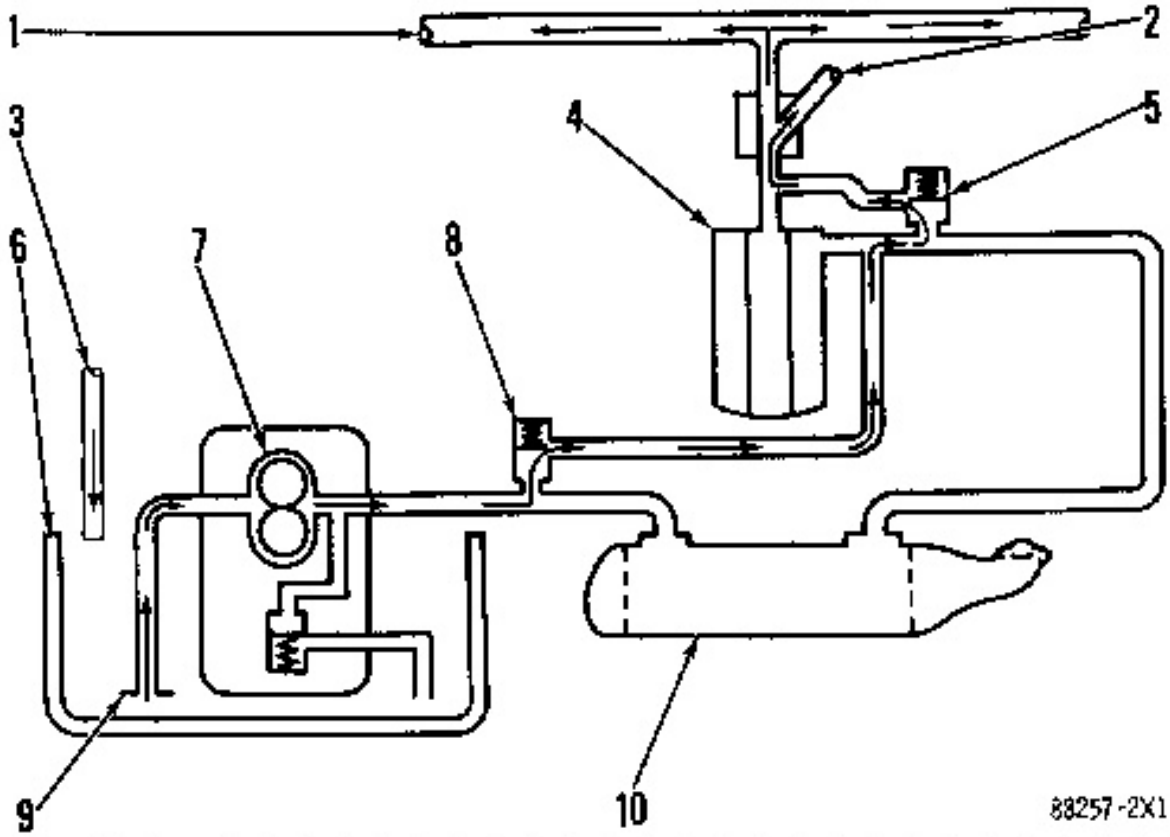

FLOW OF OIL (ENGINE COLD)
1. Oil manifold in cylinder block. 2. Oil supply line to turbocharger. 3. Oil return line from turbocharger. 4. Oil filter. 5. Bypass valve for the oil filter. 6. Oil pan. 7. Oil pump. 8. Bypass valve for the oil cooler. 9. Suction bell. 10. Oil cooler.

These bypass valves give immediate lubrication to all components when cold oil with high viscosity causes a restriction to the oil flow through the oil cooler (10) and oil filter (4). The oil pump then sends the cold oil through the bypass valve for the oil cooler (8) and through the bypass valve for the oil filter (5) to the oil manifold (1) in the cylinder block.

When the oil gets warm, the pressure difference in the bypass valves decrease and the bypass valves close. Now there is a normal oil flow through the oil cooler and oil filter.

Oil Flow In The Engine

There is a bypass valve in the oil pump. This bypass valve controls the pressure of the oil coming from the oil pump. The oil pump can put more oil into the system than is needed. When there is more oil than needed, the oil pressure goes up and the bypass valve opens. This lets the oil that is not needed go back to the oil pan.

The output of the oil pump goes to the oil manifold in the cylinder block. The oil manifold is the source for oil under pressure for the engine and its attachments. Connecting drilled passages from the oil manifold are the way for the oil to get to the main bearings, timing gear bearings, and the bearings for the rocker arm shaft.

The flow of oil which goes to the main bearings is divided. Some of the oil is the lubricant between the main bearings and the bearing surfaces (journals) of the crankshaft. Some of the oil goes through passages drilled in the crankshaft. This oil is the lubricant between the connecting rod bearings and the bearing surfaces (journals) of the crankshaft. The rest of the oil goes out through orifices in the block near the main bearings. This oil is both a coolant and a lubricant for the pistons, piston pins, cylinder walls and the piston rings.

Oil also goes through connecting passages in the cylinder block and cylinder head. This oil is the lubricant for the rocker arm shaft and bearings and for the rocker arms. Some of the oil is the lubricant for the valve stems. The rest of the oil drains on the cylinder head where it is the lubricant for the push rods and valve lifters and the cams for the camshaft.

On the 3306 Engines, this oil is the lubricant for the intermediate and rear camshaft bearings.

On the 3304 Engines, the bearings for the camshaft get lubrication oil under pressure through passages drilled in the cylinder block to the oil manifold.

The oil supply passage for the rocker arms is in a different location in the engine w/ spacer plate. Engines w/o a spacer plate have an oil passage from the rear of the cylinder block to a head bolt hole in the block. The oil flows around the head bolt, up through the cylinder head and rocker arm shaft bracket, to the rocker arm shaft.

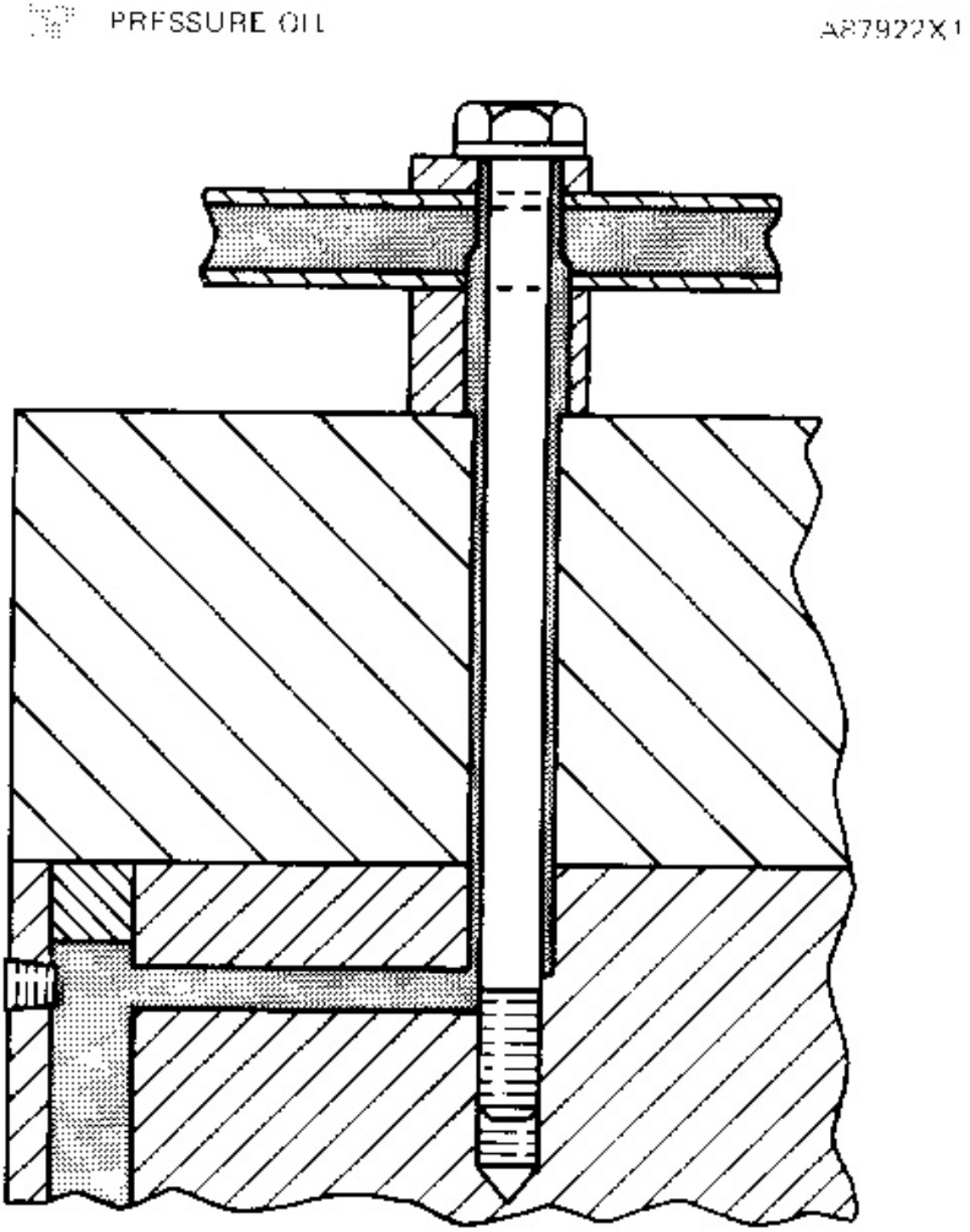

ROCKER ARM OIL SUPPLY (Engines without spacerplate)

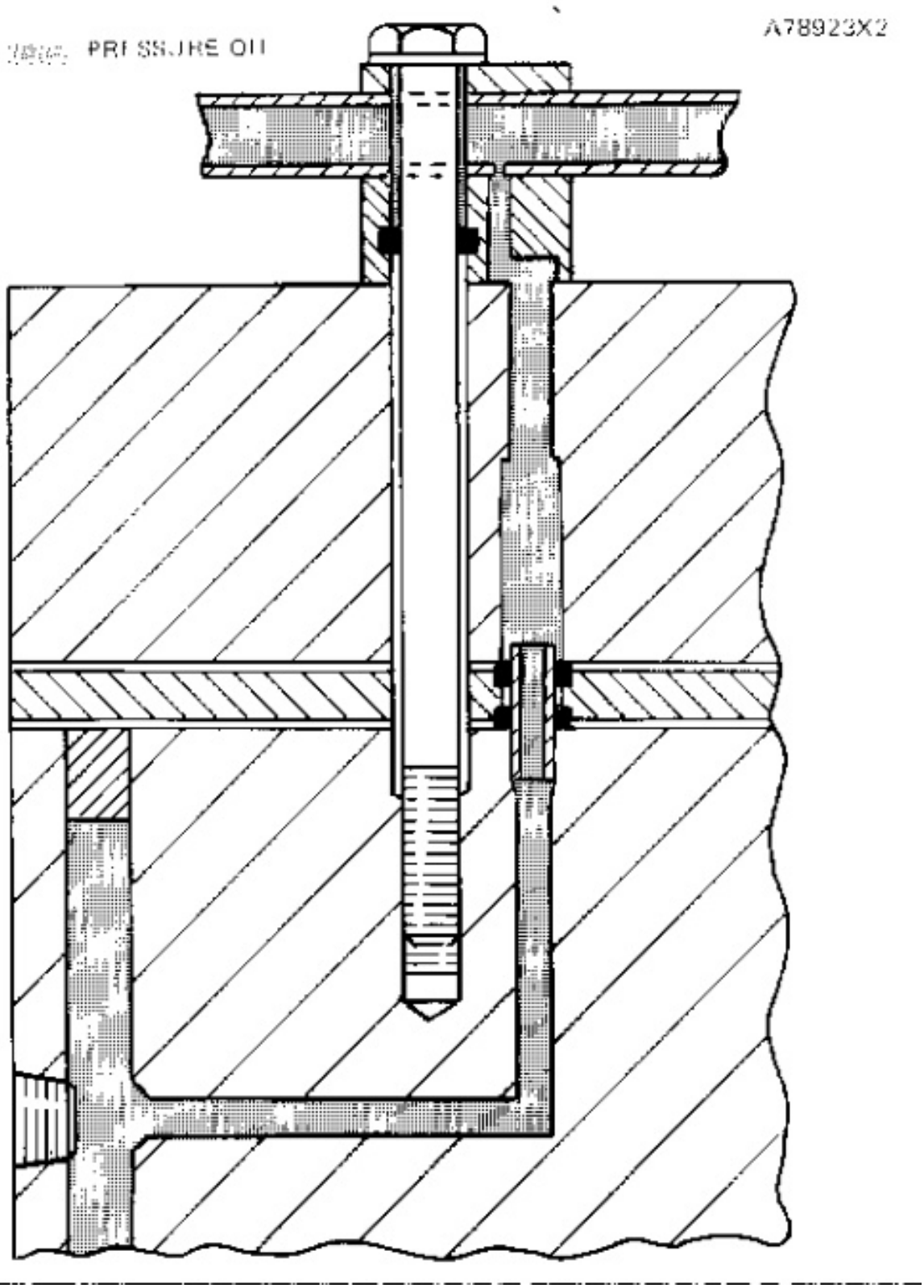

ROCKER ARM OIL SUPPLY (Engine w/ spacer plate)

Engines w/ spacer plate have an oil passage from the rear of the cylinder block that goes below the head bolt hole and connects with a drilled passage that goes up next to the head bolt hole. A hollow dowel connects the vertical oil passage in the cylinder block to the oil passage in the head. The spacer plate has a hole with a counterbore on each side that the hollow dowel goes through. An O-ring is in each counterbore to prevent oil leakage around the hollow dowel. Oil flows through the hollow dowel into a vertical passage in the cylinder head to the rocker arm shaft bracket. The rocker arm shaft has an orifice to restrict the oil flow to the rocker arms. The rear rocker arm bracket also has an O-ring that seals against the head bolt. This seal prevents oil from going down around the head bolt and leaking past the head gasket or spacer plate gasket. The O-ring must be replaced each time the head bolt is removed from the rear rocker arm bracket.

All the timing gear bearings get lubricant under pressure from the oil manifold through connecting drilled passages.

Oil goes to the components and attachments on the outside of the engine through supply lines which connect to the oil manifold. These components and attachments are: turbocharger, air compressor, Woodward governor and others.

After the lubrication oil has done its work, it goes back to the engine oil pan.

Cooling System

Radiator Cooling System

(Engines Without Aftercooler)

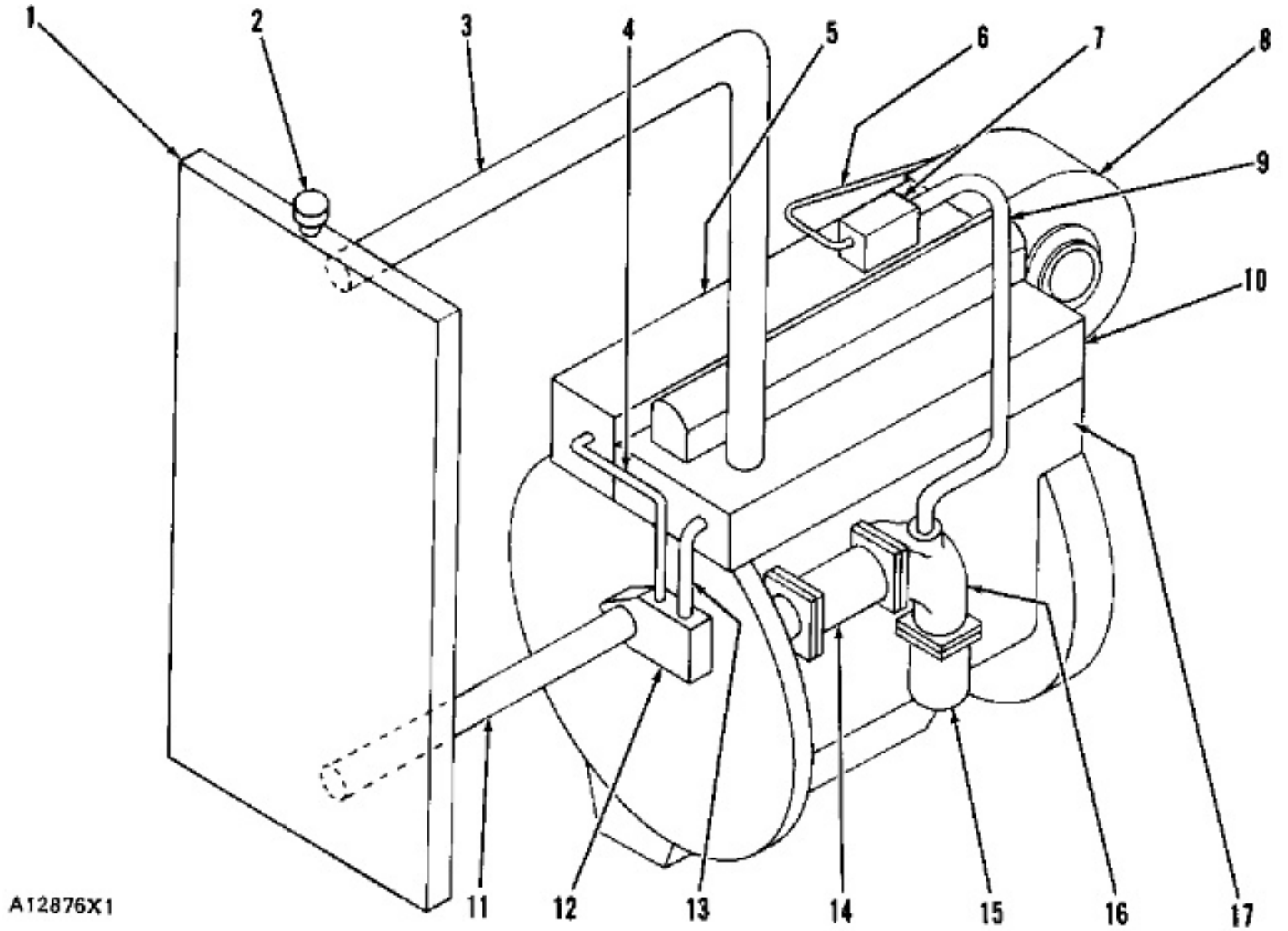

COOLANT FLOW FOR RADIATOR COOLING SYSTEM
1. Radiator. 2. Pressure cap. 3. Inlet line for radiator. 4. Inlet line. 5. Water cooled manifold or water cooled shield for manifold. 6. Outlet line. 7. Block. 8. Water cooled shield for turbocharger. 9. Return line. 10. Cylinder head. 11. Supply line for water pump. 12. Water pump. 13. Internal bypass (shunt) line. 14. Engine oil cooler. 15. Oil cooler for torque converter or marine gear. 16. Bonnet. 17. Cylinder block.

The water pump (12) is on the left front side of the engine. It is gear driven by the timing gears. Coolant from the bottom of the radiator (1) goes to the water pump inlet. The rotation of the impeller in the water pump (12) pushes the coolant through the system.

All of the coolant flow from the water pump (12) in the standard system, goes through the engine oil cooler (14). The bonnet (16) on the outlet side of the engine oil cooler (14) connects to the side of the cylinder block (17).

On engines with an additional oil cooler (15), a different bonnet (16) is on the engine oil cooler (14). This bonnet (16) sends the coolant flow through the other cooler which is for attachments such as torque converters or marine gears. The flow goes through one side on the way into the cooler. At the bottom of the cooler the flow turns and goes back up through the other side and into the bonnet (16) again. Then the bonnet (16) sends the coolant into the cylinder block (17).

An engine can have a water cooled manifold or a water cooled shield for the manifold (5). If it has either one of these it can also have a water cooled shield for the turbocharger (8). The coolant flow from the water pump (12) is divided. Some of the coolant goes through the standard system and some goes into the water cooled manifold or water cooled shield for the manifold (5) at the front of the engine. It comes out at the rear of the engine and goes through return line (9) to the bonnet (16) on the engine oil cooler (14). It mixes with the rest of the coolant from the standard system in the bonnet (16) and goes into the cylinder block (17).

If the engine has a water cooled shield for the turbocharger (8), the supply of coolant for it comes from the bottom of the rear end of the water cooled manifold or water cooled shield for the manifold (5). The coolant goes through the water cooled shield for the turbocharger (8). It goes out through outlet line (6) to block (7) at the top of the water cooled manifold or water cooled shield for the manifold (5). In the block (7) it mixes with the rest of the coolant on the way to the bonnet (16).

Inside the cylinder block (17) the coolant goes around the cylinder liners and up through the water directors into the cylinder head (10). The water directors send the flow of coolant around the valves and the passages for exhaust gases in the cylinder head (10). The coolant goes to the front of the cylinder head (10). Here the water temperature regulator controls the direction of the flow. If the coolant temperature is less than normal for engine operation, the water temperature regulator is closed. The only way for the coolant to get out of the cylinder head (10) is through the internal bypass (shunt) line (13). The coolant from this line goes into the water pump (12) which pushes it through the cooling system again. The coolant from the internal bypass (shunt) line (13) also works to prevent cavitation (air bubbles) in the coolant. When the coolant gets to the correct temperature, the water temperature regulator opens and coolant flow is divided. Some goes through the radiator (1) for cooling. The rest goes through the internal bypass (shunt) line (13) to the water pump (12). The proportion of the two flows is controlled by the water temperature regulator.

NOTE: The water temperature regulator is an important part of the cooling system. It divides the coolant flow between radiator (1) and internal bypass (13), as necessary, to maintain the correct operating temperature. If the regulator is not installed, there is no mechanical control, and most of the coolant will take the path of least resistance thru internal bypass line (13). This will cause the engine to overheat in hot weather. In cold weather, even the small amount of coolant that goes thru radiator (1) is too much, and the engine will not get up to normal operating temperature.

The internal bypass (shunt) line (13) has another function when the cooling system is being filled. It lets the coolant go into the cylinder head (10) and cylinder block (17) without going through the water pump (12).

The radiator (1) has a pressure cap (2). This cap controls pressure in the cooling system.

Radiator Cooling System

(Engines With Aftercooler)

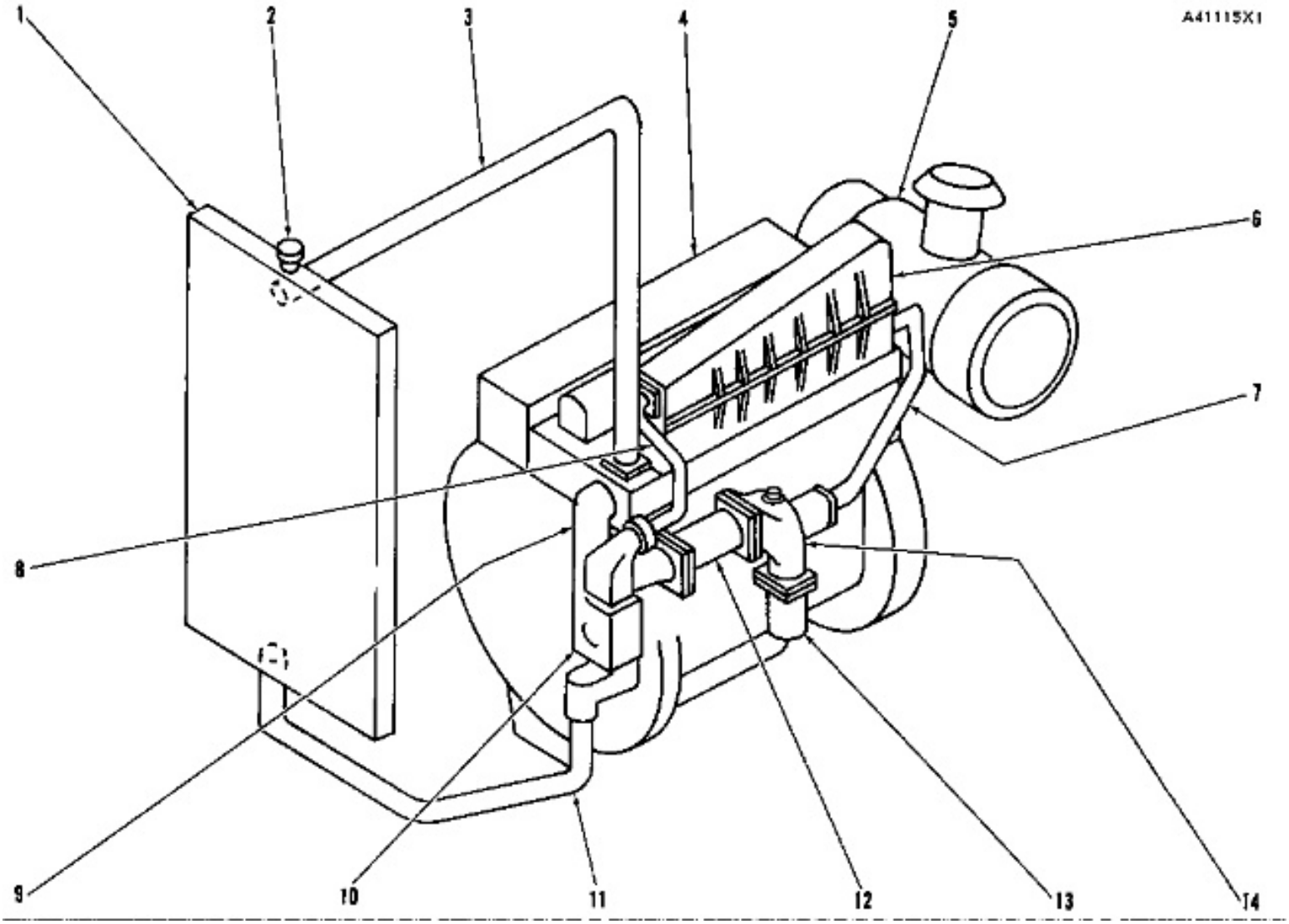

COOLANT FLOW FOR RADIATOR COOLING SYSTEM (Jacket Water Aftercooled - JWAC)
1. Radiator. 2. Pressure cap. 3. Inlet line for radiator. 4. Exhaust manifold. 5. Turbocharger. 6. Aftercooler. 7. Return line from aftercooler. 8. Aftercooler inlet line. 9. Internal bypass (shunt) line. 10. Water pump. 11. Inlet line for water pump. 12. Engine oil cooler. 13. Auxiliary oil cooler. 14. Bonnet.

Water pump (10) is on the left front side of the engine. It is gear driven by the timing gears. Coolant from the bottom of radiator (1) goes to the water pump inlet. The rotation of the impeller in water pump (10) pushes the coolant through the system.

The coolant flow from water pump (10) is divided. Some goes through engine oil cooler (12). Bonnet (14) on the outlet side of engine oil cooler (12) connects to the side of the cylinder block.

On engines with an auxiliary oil cooler (13) a different bonnet (14) is on engine oil cooler (12). This bonnet (14) sends the coolant flow through auxiliary cooler (13) which is for attachments such as torque converters or marine gears. The flow goes through one side on the way into auxiliary oil cooler (13). At the bottom of auxiliary oil cooler (13) the flow turns and goes back up through the other side and into bonnet (14) again. Then bonnet (14) sends the coolant into the cylinder block.

The remainder of the coolant flow goes through aftercooler inlet line (8) into the core of aftercooler (6). The core of aftercooler (6) is a group of plates and fins. The coolant goes through the plates. The inlet air for the engine goes around the fins. This cools the inlet air. The coolant comes out of the aftercooler (6) at the rear of the engine and goes through return line (7) to bonnet (14) on engine oil cooler (12). It mixes with the rest of the coolant from engine oil cooler (12) in bonnet (14) and goes into the cylinder block.

Inside the cylinder block, the coolant goes around the cylinder liners and up through the water directors into the cylinder head. The water directors send the flow of coolant around the valves and the passages for exhaust gases in the cylinder head. The coolant goes to the front of the cylinder head. Here the water temperature regulator controls the direction of the flow. If the coolant temperature is less than normal for engine operation, the water temperature regulator is closed. The only way for the coolant to get out of the cylinder head is through internal bypass (shunt) line (9). The coolant from this line goes into water pump (10) which pushes it through the cooling system again. The coolant from internal bypass (shunt) line (9) also works to prevent cavitation (air bubbles) in the coolant. When the coolant gets to the correct temperature, the water temperature regulator opens and coolant flow is divided. Some goes through radiator (1) for cooling. The rest goes through internal bypass (shunt) line (9) to water pump (10). The proportion of the two flows is controlled by the water temperature regulator.

NOTE: The water temperature regulator is an important part of the cooling system. It divides the coolant flow between radiator (1) and internal bypass (9), as necessary, to maintain the correct operating temperature. If the regulator is not installed, there is no mechanical control, and most of the coolant will take the path of least resistance thru internal bypass line (9). This will cause the engine to overheat in hot weather. In cold weather, even the small amount of coolant that goes thru radiator (1) is too much, and the engine will not get up to normal operating temperature.

Internal bypass (shunt) line (9) has another function when the cooling system is being filled. It lets the coolant go into the cylinder head and cylinder block without going through water pump (10).

Radiator (1) has a pressure cap (2). This cap controls pressure in the cooling system.

Keel Cooling System

(Engines Without Aftercooler)

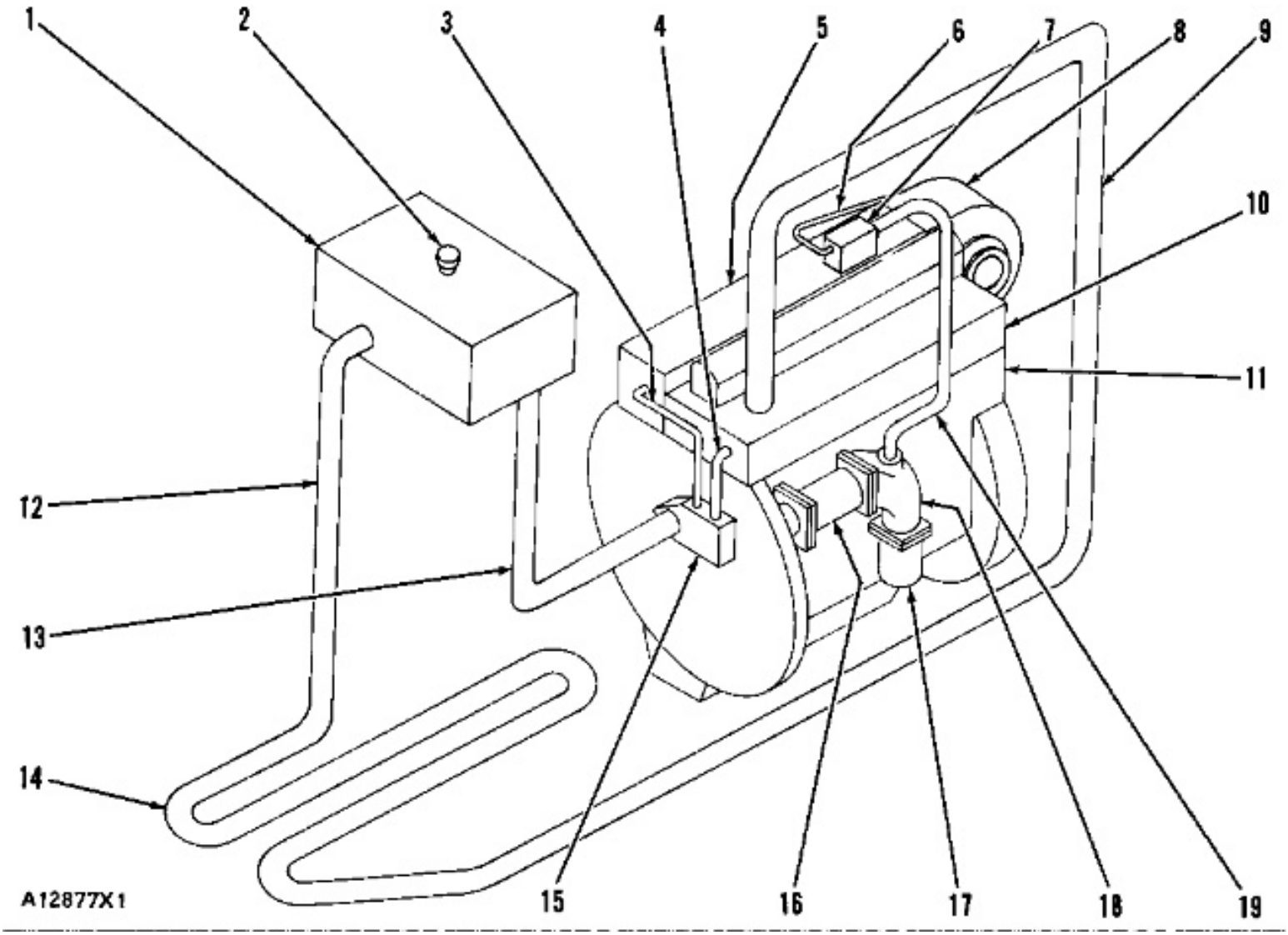

COOLANT FLOW FOR KEEL COOLING SYSTEM
1. Expansion tank. 2. Pressure cap. 3. Inlet line. 4. Internal bypass (shunt) line. 5. Water cooled manifold or water cooled shield for manifold. 6. Outlet line. 7. Block. 8. Water cooled shield for turbocharger. 9. Line to keel cooler. 10. Cylinder head. 11. Cylinder block. 12. Return line from keel cooler. 13. Supply line for water pump. 14. Keel cooler tubes. 15. Water pump. 16. Engine oil cooler. 17. Oil cooler for torque converter or marine gear. 18. Bonnet. 19. Return line.

The water pump (15) is on the left front side of the engine. It is gear driven by the timing gears. Coolant from the bottom of the expansion tank (1) goes to the water pump inlet. The rotation of the impeller in the water pump (15) pushes the coolant through the system.

All of the coolant flow from the water pump (15) in the standard system, goes through the engine oil cooler (16). The bonnet (18) on the outlet side of the engine oil cooler (16) connects to the side of the cylinder block (11).

On engines with an additional oil cooler (17), a different bonnet (18) is on the engine oil cooler (16). This bonnet (18) sends the coolant flow through the other oil cooler which is for attachments such as torque converters or marine gears. The flow goes through one side on the way into the cooler. At the bottom of the cooler the flow turns and goes back up through the other side and into the bonnet (18) again. The bonnet (18) sends the coolant into the cylinder block (11).

An engine can have a water cooled manifold or a water cooled shield for the manifold (5). If it has either one of these it can also have a water cooled shield for the turbocharger (8). The coolant flow from the water pump (15) is divided. Some of the coolant goes through the standard system and some goes into the water cooled manifold or water cooled shield for the manifold (5) at the front of the engine. It comes out at the rear of the engine and goes

through a return line (19) to the bonnet (18) on the engine oil cooler (16). It mixes with the rest of the coolant from the standard system in the bonnet (18) and goes into the cylinder block (11).

If the engine has a water cooled shield for the turbocharger (8), the supply of coolant for it comes from the bottom of the rear end of the water cooled manifold or water cooled shield for the manifold (5). The coolant goes through the water cooled shield for the turbocharger (8). It goes out through outlet line (6) to block (7) at the top of the water cooled manifold or water cooled shield for the manifold (5). In the block (7) it mixes with the rest of the coolant on the way to the bonnet (18).

Inside the cylinder block (11) the coolant goes around the cylinder liners and up through the water directors into the cylinder head (10). The water directors send the flow of coolant around the valves and the passages for exhaust gases in the cylinder head (10). The coolant goes to the front of the cylinder head (10). Here the water temperature regulator controls the direction of the flow. If the coolant temperature is less than normal for engine operation, the water temperature regulator is closed. The only way for the coolant to get out of the cylinder head (10) is through the internal bypass (shunt) line (4). The coolant from this line goes into the water pump (15) which pushes it through the cooling system again. The coolant from the internal bypass (shunt) line (4) also works to prevent cavitation (air bubbles in the coolant). When the coolant gets to the correct temperature, the water temperature regulator opens and the coolant flow is divided. Some goes through the keel cooler tubes (14) for cooling. The rest goes through the internal bypass (shunt) line (4) to the water pump (15). The proportion of the two flows is controlled by the water temperature regulator.

NOTE: The water temperature regulator is an important part of the cooling system. It divides the coolant flow between keel cooler tubes (14) and internal bypass (4), as necessary, to maintain the correct operating temperature. If the regulator is not installed, there is no mechanical control, and most of the coolant will take the path of least resistance thru internal bypass line (4). This will cause the engine to overheat in hot weather. In cold weather, even the small amount of coolant that goes thru the keel cooler tubes (14) is too much, and the engine will not get up to normal operating temperature.

The internal bypass (shunt) line (4) has another function when the cooling system is being filled. It lets the coolant go into the cylinder head (10) and cylinder block (11) without going through the water pump (15).

The keel cooler tubes (14) are normally installed on the bottom of the hull. They are usually made of a metal which has resistance to corrosion because they give off heat from the engine coolant to the sea water which the hull is in. The efficiency of this action is in relation to: the surface area of the keel cooler tubes (14) the rate at which sea water goes around the outside of the keel cooler tubes (14), the temperature of the sea water, and the rate of flow of the engine coolant through the keel cooler tubes (14).

After going through the keel cooler tubes (14) the coolant goes to an expansion tank (1). The expansion tank (1) is a reservoir for the coolant. It is the highest place in the cooling system. It is the place where the volume of the coolant can change because of heating or cooling without causing too much or too little coolant for the cooling system. The expansion tank (1) has a pressure cap (2) to control the pressure in the cooling system for better operation.

Keel Cooling System

(Jacket Water Aftercooled - JWAC)

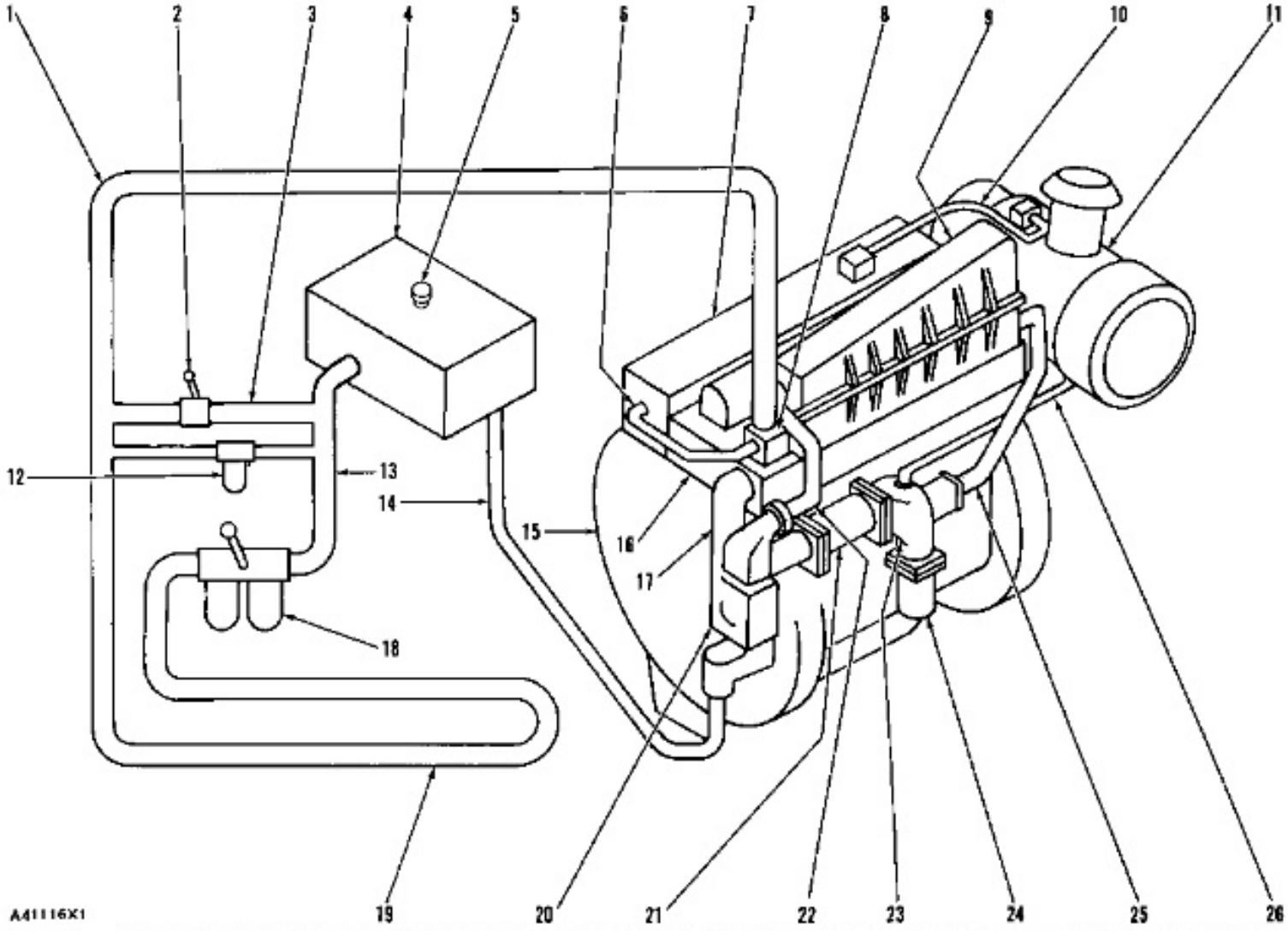

COOLING SYSTEM SCHEMATIC (Jacket Water Aftercooled - JWAC)
1. Outlet line. 2. Bypass valve. 3. Bypass line. 4. Expansion tank. 5. Pressure cap. 6. Outlet line. 7. Water cooled manifold. 8. Regulator housing. 9. Aftercooler housing. 10. Outlet line. 11. Water cooled turbocharger. 12. Bypass filter. 13. Inlet line. 14. Inlet line. 15. Cylinder block. 16. Cylinder head. 17. Internal bypass (shunt) line. 18. Duplex strainer. 19. Keel cooler tubes. 20. Water pump. 21. Engine oil cooler. 22. Aftercooler inlet line. 23. Bonnet. 24. Auxiliary oil cooler. 25. Aftercooler outlet line. 26. Turbocharger inlet line.

Water pump (20) is on the left front side of the engine. It is gear driven by the timing gears. Coolant from the bottom of expansion tank (4) goes to the water pump inlet. The rotation of the impeller in water pump (20) pushes the coolant through the system.

The coolant flow from water pump (20) is divided. Some of the coolant flow goes through the engine oil cooler (21). The remainder of the coolant flow goes through aftercooler inlet line (22) into the core of the aftercooler. The core of the aftercooler is a group of tubes. These tubes are in position inside aftercooler housing (9). The coolant goes through the tubes. The inlet air for the engine goes around the tubes. This cools the inlet air. The coolant comes out at the rear of the engine and goes through aftercooler outlet line (25) to bonnet (23). In bonnet (23), the coolant from the aftercooler mixes with the coolant flow from engine oil cooler (21).

The coolant flow which comes through engine oil cooler (21) goes through bonnet (23). If the engine has a water cooled turbocharger (11), some of the coolant flow from engine oil cooler (21) goes through turbocharger inlet line (26). The coolant flow goes in at the bottom of water cooled turbocharger (11) and comes out at the top. It goes through outlet line (10) to the top of water cooled manifold (7). It goes through water cooled manifold (7) to the front of the engine. It comes out through outlet line (6) and goes into regulator housing (8). The coolant flow mixes with the rest of the coolant from the engine.

The remaining coolant flow through bonnet (23) goes into one side of auxiliary oil cooler (24). At the bottom, the coolant flow turns and goes up the other side of auxiliary oil cooler (24) and into bonnet (23) again. The bonnet sends this flow into cylinder block (15).

Inside cylinder block (15) the coolant goes around the cylinder liners and up through the water directors into cylinder head (16). The water directors send the flow of coolant around the valves and the passages for exhaust gases in cylinder head (16). The coolant goes to the front of cylinder head (16). Here the water temperature regulator controls the direction of the flow. If the coolant temperature is less than normal for engine operation, the water temperature regulator is closed. The only way for the coolant to get out of cylinder head (16) is through internal bypass (shunt) line (17). The coolant from this line goes into water pump (20) which pushes it through the cooling system again. The coolant from internal bypass (shunt) line (17) also works to prevent cavitation (air bubbles in the coolant). When the coolant gets to the correct temperature, the water temperature regulator opens and the coolant flow is divided. Some goes through keel cooler tubes (19) for cooling. The rest goes through internal bypass (shunt) line (17) to water pump (20). The proportion of the two flows is controlled by the water temperature regulator.

NOTE: The water temperature regulator is an important part of the cooling system. It divides the coolant flow between keel cooler tubes (19) and internal bypass (17), as necessary, to maintain the correct operating temperature. If the regulator is not installed, there is no mechanical control, and most of the coolant will take the path of least resistance thru internal bypass line (17). This will cause the engine to overheat in hot weather. In cold weather, even the small amount of coolant that goes thru the keel cooler tubes (19) is too much, and the engine will not get up to normal operating temperature.

Internal bypass (shunt) line (17) has another function when the cooling system is being filled. It lets the coolant go into cylinder head (16) and cylinder block (15) without going through water pump (20).

Keel cooler tubes (19) are normally installed on the bottom of the hull. They are usually made of a metal which has resistance to corrosion because they give off heat from the engine coolant to the sea water which the hull is in. The efficiency of this action is in relation to: the surface area of keel cooler tubes (19), the rate at which sea water goes around the outside of keel cooler tubes (19), the temperature of the sea water, and the rate of flow of the engine coolant through keel cooler tubes (19).

After going through keel cooler tubes (19), the coolant goes to an expansion tank (4). Expansion tank (4) is a reservoir for the coolant. It is the highest place in the cooling system. It is the place where the volume of the coolant can change because of heating or cooling without causing too much or too little coolant for the cooling system. Expansion tank (4) has a pressure cap (5) to control the pressure in the cooling system for better operation.

Some cooling systems have a duplex strainer (18) installed in the line from keel cooler tubes (19). Duplex strainer (18) has two sides. Each side has a strainer which is large enough for the full flow of the cooling system. When the pressure drop across one of the strainers starts to get an increase, the full flow can be changed to the other strainer without stopping the engine.

Some cooling systems also have a bypass filter (12). This is installed between the inlet and outlet lines for keel cooler tubes (19). In this position a small part of the coolant flow goes through bypass filter (12). This flow removes the particles which are too small for removal by duplex strainer (18).

Many cooling systems have a bypass valve (2) and bypass line (3) installed as shown. The bypass valve can be either manually adjusted or automatically adjusted. Both kinds of valves have the same function. They control the temperature of the coolant which goes to the inlet of water pump (20). The valves control the temperature of the coolant by controlling the amount of the coolant which can go through bypass line (3) instead of through keel

cooler tubes (19). The coolant which goes through bypass line (3) is hot. It mixes with the coolant from the keel cooler tubes as it goes into the water pump inlet. Correctly adjusting the flow through bypass line (3) keeps the coolant temperature hot enough for good engine operation and at the same time, cool enough for good aftercooler operation. This adjustment is important for maximum engine performance.

Keel Cooling System

(Separate Circuit Aftercooled)

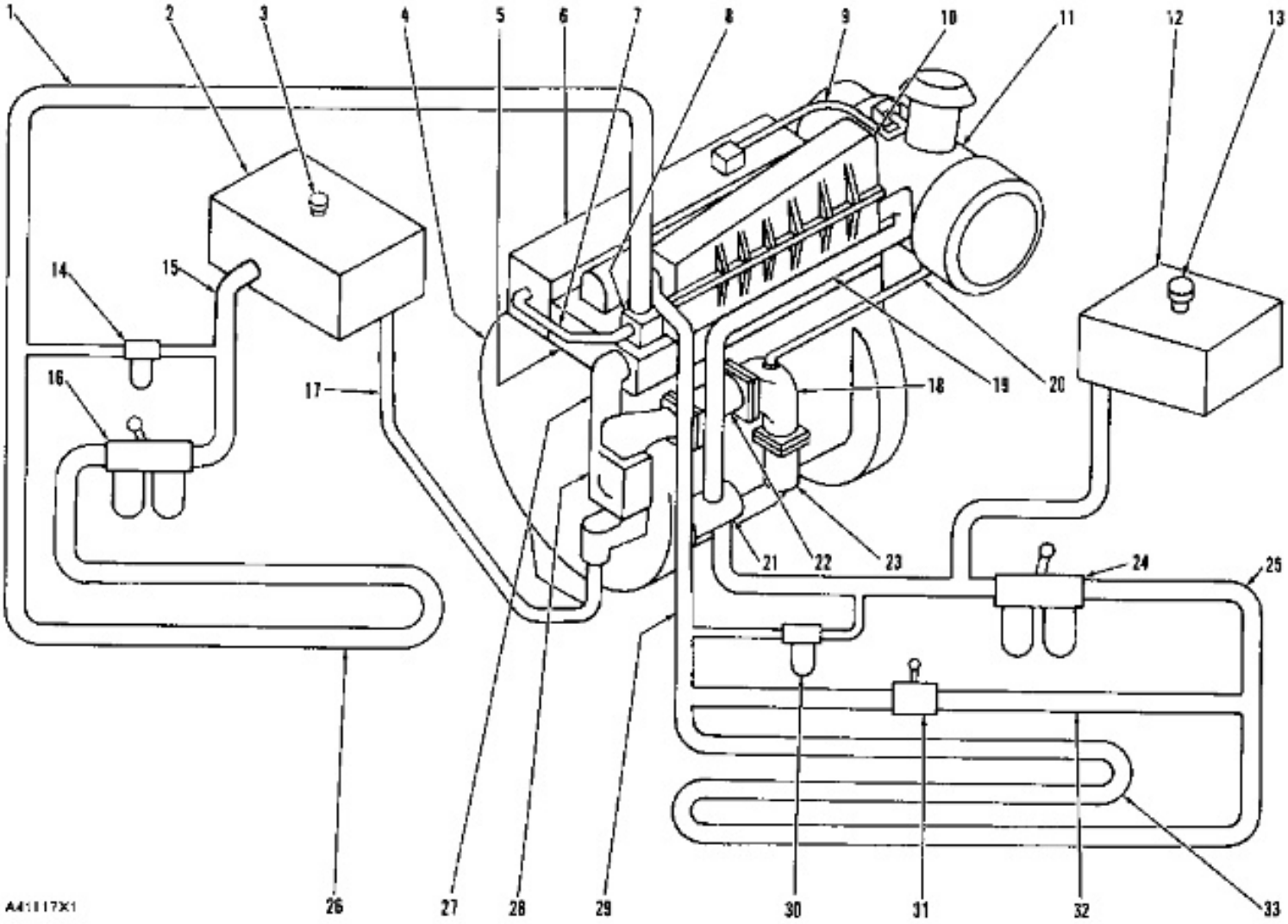

COOLING SYSTEM SCHEMATIC
1. Outlet line. 2. Expansion tank. 3. Pressure cap. 4. Cylinder block. 5. Cylinder head. 6. Water cooled manifold. 7. Outlet line. 8. Regulator housing. 9. Outlet line. 10. Aftercooler housing. 11. Water cooled turbocharger. 12. Expansion tank. 13. Pressure cap. 14. Bypass filter. 15. Inlet line. 16. Duplex strainer. 17. Inlet line. 18. Bonnet. 19. Inlet line. 20. Inlet line. 21. Auxiliary pump. 22. Engine oil cooler. 23. Auxiliary oil cooler. 24. Duplex strainer. 25. Inlet line. 26. Keel cooler tubes. 27. Internal bypass (shunt) line. 28. Water pump. 29. Outlet line. 30. Bypass filter. 31. Bypass valve. 32. Bypass line. 33. Keel cooler tubes.

This cooling system has two completely separate cooling circuits. One of these circuits is the engine coolant (jacket water) circuit. Normally this circuit cools the engine and all the attachments. The other circuit is the aftercooler circuit. It normally cools the aftercooler only. This type of cooling system keeps the temperatures of the coolant in the two circuits in the correct ranges for the maximum horsepower output.

Aftercooler Circuit

The aftercooler circuit uses auxiliary pump (21). It is on the left front side of the engine below engine oil cooler (22). Auxiliary pump (21) is gear driven by the timing gears. Coolant from keel cooler tubes (33) goes to the inlet of auxiliary pump (21). The rotation of the impeller pushes the coolant through the aftercooler circuit.

All of the coolant flow goes through inlet line (19). Inlet line (19) connects to the aftercooler at the rear of the engine. The coolant goes through the core of the aftercooler to the front of the engine. The core of the aftercooler is a group of tubes. These tubes are in position inside aftercooler housing (10). The coolant goes through the tubes. The inlet air for the engine goes around the tubes. This cools the inlet air. The coolant comes out of the cover of the aftercooler at the front of the engine and into outlet line (29). Outlet line (29) connects to keel cooler tubes (33).

Keel cooler tubes (33) are normally installed on the bottom of the hull in front of the keel cooler tubes for the engine coolant (jacket water) circuit. This position gives the maximum cooling. Keel cooler tubes (33) are usually made of a metal which has resistance to corrosion because they give off heat from the coolant to the sea water which the hull is in. The efficiency of this action is in relation to: the surface area of keel cooler tubes (33), the rate at which sea water goes around the outside of the keel cooler tubes (33), the temperature of the sea water, and the rate of flow of the coolant through keel cooler tubes (33).

After going through keel cooler tubes (33), the coolant goes to the inlet for auxiliary pump (21). An expansion tank (12) is connected to inlet line (25). Expansion tank (12) has the necessary room for the coolant when it expands (uses more space) from being heated.

This system can have duplex strainer (24) installed in the line from keel cooler tubes (33). Duplex strainer (24) has two sides. Each side has a strainer which is large enough for the full flow of the cooling system. When the pressure drop across one of the strainers starts to get an increase, the full flow can be changed to the other strainer without stopping the engine.

Some cooling systems have a bypass filter (30). This is installed between the inlet and outlet lines for keel cooler tubes (33). In this position, a small part of the coolant flow goes through bypass filter (30). This flow removes the particles which are too small for removal by duplex strainer (24).

Many cooling systems have a bypass valve (31) and bypass line (32) installed as shown. The bypass valve can be either manually adjusted or automatically adjusted. Both kinds of valves have the same function. They control the minimum temperature of the coolant which goes to the aftercooler. Bypass valve (31) controls the temperature of the coolant by controlling the amount of coolant which can go through the bypass line (32) instead of through keel cooler tubes (33). The coolant which goes through bypass line (32) is hot. It mixes with the coolant from keel cooler tubes (33) as it goes to the inlet for auxiliary pump (21). When bypass valve (32) is correctly adjusted, the coolant temperature is as cool as possible without having condensation inside the aftercooler. (Condensation is water which comes out of the air when the air comes in contact with a cool surface.) This adjustment gives the engine the coolest inlet air for use at maximum horsepower ratings.

Engine Coolant (Jacket Water) Circuit

Water pump (28) for this circuit is on the left front side of the engine. It is gear driven by the timing gears. Coolant from the bottom of expansion tank (2) goes to the water pump inlet. The rotation of the impeller in water pump (28) pushes the coolant through the circuit.

All of the coolant flow from water pump (28) in this circuit, goes through engine oil cooler (22). Bonnet (18) on the outlet side of engine oil cooler (22) connects to the side of cylinder block (4).

On engines with an auxiliary oil cooler (23), a different bonnet (18) is on the engine oil cooler (22). This bonnet (18) sends the coolant flow through auxiliary oil cooler (23) which is for attachments such as torque converters or marine gears. The flow goes through one side on the way in.

At the bottom of auxiliary oil cooler (23) the flow turns and goes back up through the other side and into bonnet (18) again. Bonnet (18) sends the coolant into cylinder block (4).

Some of the coolant which goes through bonnet (18) is sent through inlet line (20) to the bottom of the water cooled turbocharger (11) at the rear of the engine. This coolant goes up through the water cooled turbocharger and out at the top through outlet line (9). Outlet line (9) connects to the top of water cooled manifold (6) near the rear of the engine. The coolant goes through water cooled manifold (6) to the front of the engine. At the front of the engine, the coolant goes through outlet line (7) and into regulator housing (8) where the coolant mixes with the coolant from cylinder head (5).

Inside cylinder block (4) the coolant goes around the cylinder liners and up through the water directors into cylinder head (5). The water directors send the flow of coolant around the valves and the passages for exhaust gases in cylinder head (5). The coolant goes to the front of cylinder head (5). Here the water temperature regulator controls the direction of the flow. If the coolant temperature is less than normal for engine operation, the water temperature regulator is closed. The only way for the coolant to get out of cylinder head (5) is through internal bypass (shunt) line (27). The coolant from this line goes into water pump (28) which pushes it through the cooling system again. The coolant from internal bypass (shunt) line (27) also works to prevent cavitation (air bubbles in the coolant). When the coolant gets to the correct temperature, the water temperature regulator opens and the coolant flow is divided. Some goes through keel cooler tubes (26) for cooling. The rest goes through internal bypass (shunt) line (27) to water pump (28). The proportion of the two flows is controlled by the water temperature regulator.

NOTE: The water temperature regulator is an important part of the cooling system. It divides the coolant flow between keel cooler tubes (26) and internal bypass (27), as necessary, to maintain the correct operating temperature. If the regulator is not installed, there is no mechanical control, and most of the coolant will take the path of least resistance thru internal bypass line (27). This will cause the engine to overheat in hot weather. In cold weather, even the small amount of coolant that goes thru the keel cooler tubes (26) is too much, and the engine will not get up to normal operating temperature.

Internal bypass (shunt) line (27) has another function when the cooling system is being filled. It lets the coolant go into cylinder head (5) and cylinder block (4) without going through water pump (28).

Keel cooler tubes (26) are normally installed on the bottom of the hull. They are usually made of a metal which has resistance to corrosion because they give off heat from the engine coolant to the sea water which the hull is in. The efficiency of this action is in relation to: the surface area of keel cooler tubes (26), the rate at which sea water goes around the outside of keel cooler tubes (26), the temperature of the sea water, and the rate of flow of the engine coolant through keel cooler tubes (26).

After going through keel cooler tubes (26), the coolant goes to an expansion tank (2). Expansion tank (2) is a reservoir for the coolant. It is the highest place in the cooling circuit. It is the place where the volume of the coolant can change because of heating or cooling without causing too much or too little coolant for the cooling system. Expansion tank (2) has a pressure cap (3) to control the pressure in the cooling system for better operation.

Heat Exchanger Cooling System

(Engines Without Aftercooler)

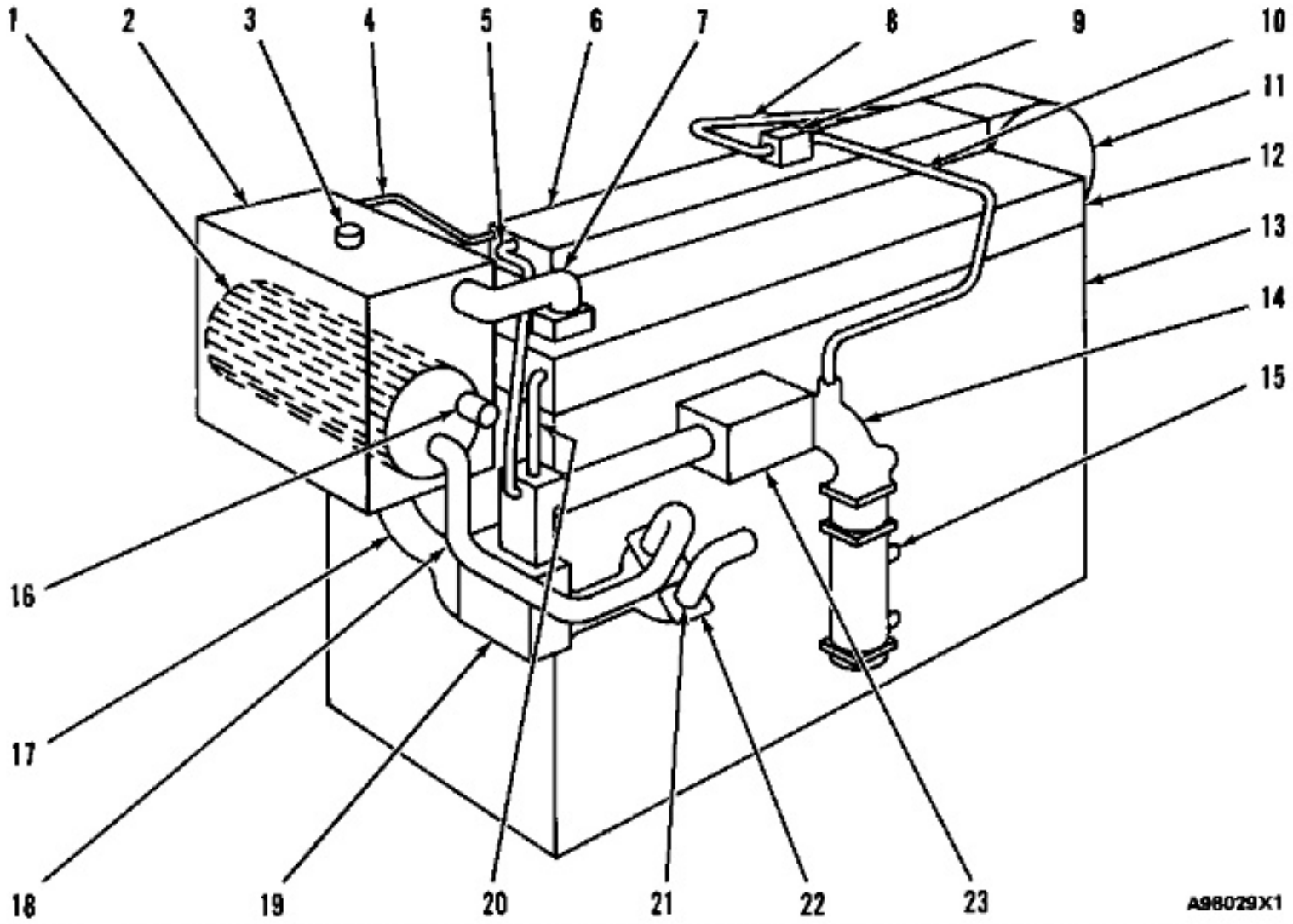

COOLANT FLOW FOR HEAT EXCHANGER COOLING SYSTEM
1. Heat exchanger. 2. Expansion tank. 3. Pressure cap. 4. Vent line. 5. Inlet line. 6. Water cooled manifold or water cooled shield for manifold. 7. Outlet line. 8. Outlet line. 9. Block. 10. Return line. 11. Water cooled shield for turbocharger. 12. Cylinder head. 13. Cylinder block. 14. Bonnet. 15. Oil cooler for torque converter or marine gear. 16. Sea water outlet. 17. Supply line to water pump. 18. Supply line. 19. Water pump. 20. Internal bypass (shunt) line. 21. Sea water inlet. 22. Sea water pump. 23. Engine oil cooler.

Water pump (19) is on the left front side of the engine. It is gear driven by the timing gears. Coolant from the bottom of expansion tank (2) goes to the water pump inlet. The rotation of the impeller in water pump (19) pushes the coolant through the system.

All of the coolant flow from water pump (19) in the standard system, goes through engine oil cooler (23). Bonnet (14) on the outlet side of engine oil cooler (23) connects to the side of cylinder block (13).

On engines with an additional oil cooler (15), a different bonnet (14) is on engine oil cooler (23). This bonnet (14) sends the coolant flow through the other oil cooler which is for attachments such as torque converters or marine gears. The flow goes through one side on the way into the cooler. At the bottom of the cooler the flow turns and goes back up through the other side and into bonnet (14) again. Bonnet (14) sends the coolant into cylinder block (13).

An engine can have a water cooled manifold or a water cooled shield for manifold (6). If it has either one of these it can also have a water cooled shield for turbocharger (11). The coolant flow from the water pump is divided. Some of the coolant goes through the standard system and some goes into the water cooled manifold or water

cooled shield for manifold (6) at the front of the engine. It comes out at the rear of the engine and goes through return line (10) to bonnet (14) on engine oil cooler (23). It mixes with the rest of the coolant from the standard system in bonnet (14) and goes into cylinder block (13).

If the engine has a water cooled shield for turbocharger (11), the supply of coolant for it comes from the bottom of the rear end of the water cooled manifold or water cooled shield for manifold (6). The coolant goes through the water cooled shield for turbocharger (11). It goes out through outlet line (8) to block (9) at the top of the water cooled manifold or water cooled shield for manifold (6). In block (9) it mixes with the rest of the coolant on the way to bonnet (14).

Inside cylinder block (13) the coolant goes around the cylinder liners and up through the water directors into cylinder head (12). The water directors send the flow of coolant around the valves and the passages for exhaust gases in cylinder head (12). The coolant goes to the front of cylinder head (12). Here the water temperature regulator controls the direction of the flow. If the coolant temperature is less than normal for engine operation, the water temperature regulator is closed. The only way for the coolant to get out of cylinder head (12) is through internal bypass (shunt) line (20). The coolant from this line goes into water pump (19) which pushes it through the cooling system again. The coolant from internal bypass (shunt) line (20) also works to prevent cavitation (air bubbles in the coolant). When the coolant gets to the correct temperature, the water temperature regulator opens and coolant flow is divided. Some goes through expansion tank (2) and around heat exchanger (1), for cooling. The rest goes through internal bypass (shunt) line (20) to water pump (19). The proportion of the two flows is controlled by the water temperature regulator.

NOTE: The water temperature regulator is an important part of the cooling system. It divides the coolant flow between heat exchanger (1) and internal bypass (20), as necessary, to maintain the correct operating temperature. If the regulator is not installed, there is no mechanical control, and most of the coolant will take the path of least resistance thru internal bypass line (20). This will cause the engine to overheat in hot weather. In cold weather, even the small amount of coolant that goes thru heat exchanger (1) is too much, and the engine will not get up to normal operating temperature.

Internal bypass (shunt) line (20) has another function when the cooling system is being filled. It lets the coolant go into cylinder head (12) and cylinder block (13) without going through water pump (19).

The coolant flow from the engine goes through outlet line (7) to expansion tank (2) and heat exchanger (1). Heat exchanger (1) is cooled by sea water sent by sea water pump (22) through supply line (18). The sea water cools the engine coolant in expansion tank (2) and goes out through sea water outlet (16).

Expansion tank (2) is the reservoir for the cooling system. It is the highest place in the cooling system. It is the place where the volume of the coolant can change because of heating or cooling without causing too much or too little coolant for the cooling system. Expansion tank (2) has a pressure cap (3) to control the pressure in the cooling system for better operation.

Heat Exchanger Cooling System

(Jacket Water Aftercooled - JWAC)

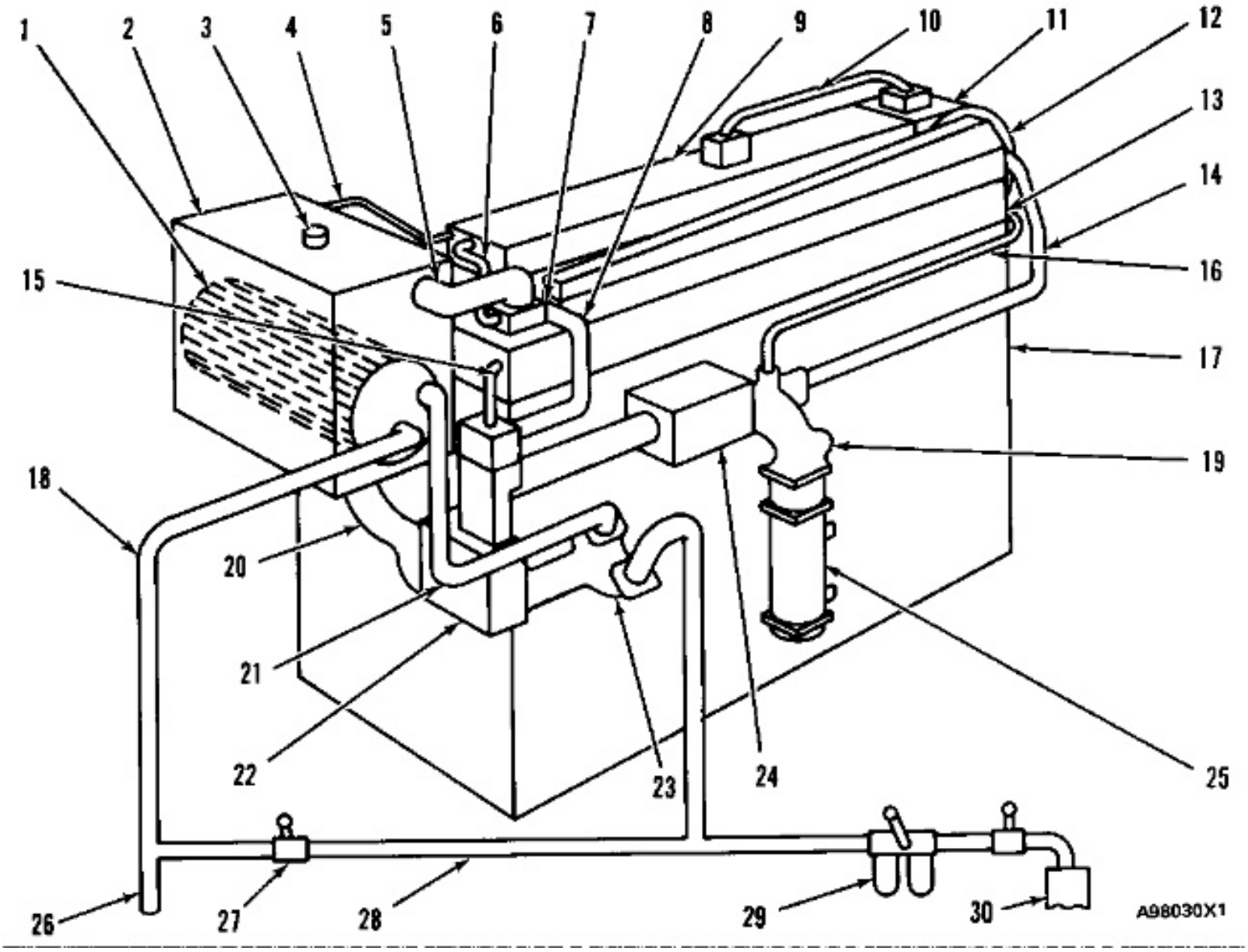

COOLING SYSTEM SCHEMATIC
1. Heat exchanger. 2. Expansion tank. 3. Pressure cap. 4. Vent line. 5. Outlet line. 6. Outlet line. 7. Regulator housing. 8. Aftercooler inlet line. 9. Water cooled manifold. 10. Outlet line. 11. Water cooled turbocharger. 12. Aftercooler housing. 13. Cylinder head. 14. Aftercooler outlet line. 15. Internal bypass (shunt) line. 16. Turbocharger inlet line. 17. Cylinder block. 18. Outlet line. 19. Bonnet. 20. Inlet line. 21. Inlet line. 22. Water pump. 23. Sea water pump. 24. Engine oil cooler. 25. Auxiliary oil cooler. 26. Outlet for sea water circuit. 27. Bypass valve. 28. Bypass line. 29. Duplex strainer. 30. Inlet for sea water circuit.

This cooling system has two circuits which work together. The engine coolant (jacket water) circuit cools the aftercooler, the engine and the auxiliary oil cooler. The coolant from this circuit can go through expansion tank (2). In expansion tank (2) this coolant goes around the tubes of heat exchanger (1) while the coolant from the sea water circuit goes through the tubes. In this way the sea water cools the engine coolant (jacket water). The sea water goes through heat exchanger (1) when the engine is running. The engine coolant (jacket water) only goes through expansion tank (2) and around the tubes of heat exchanger (1) when the water temperature regulator in the engine is open.

Sea Water Circuit

The sea water comes in through inlet (30). Sea water pump (21) is driven by the timing gears. The location of sea water pump (23) is on the left front side of the engine below engine oil cooler (24). Rotation of the impeller pushes the sea water through inlet line (21) to heat exchanger (1). In heat exchanger (1) the sea water goes through the tubes and out through outlet line (18) and outlet (26). The engine coolant (jacket water) goes through expansion

tank (2) and around the tubes of heat exchanger (1). This cools the engine coolant (jacket water).

Engine Coolant (Jacket Water) Circuit

Water pump (22) for this circuit is on the left front side of the engine. It is gear driven by the timing gears. Coolant from expansion tank (2) goes through inlet line (20) to the water pump inlet. The rotation of the impeller in water pump (22) pushes the coolant (jacket water) through the circuit.

The coolant flow from water pump (22) is divided. Some of the coolant flow goes through engine oil cooler (24). The remainder of the coolant flow goes through aftercooler inlet line (8) into the core of the aftercooler. The core of the aftercooler is a group of tubes. These tubes are in a position inside aftercooler housing (12). The coolant goes through the tubes. This inlet air for the engine goes around the tubes. This cools the inlet air. The coolant comes out at the rear of the engine and goes through aftercooler outlet line (14) to bonnet (19). In bonnet (19) the coolant flow mixes with the coolant flow from engine oil cooler (24).

The coolant flow which comes through engine oil cooler (24) goes through bonnet (19). If the engine has a water cooled turbocharger (11), some of the coolant flow from engine oil cooler (24) goes through turbocharger inlet line (16). The coolant flow goes in at the bottom of water cooled turbocharger (11) and comes out at the top. It goes through outlet line (10) to the top of water cooled manifold (9). It goes through water cooled manifold (9) to the front of the engine. It comes out through outlet line (6) and goes into regulator housing (7). The coolant flow mixes with the rest of the coolant from the engine.

The remainder of coolant flow through bonnet (19) goes into one side of auxiliary oil cooler (25). At the bottom the coolant flow turns and goes up the other side of auxiliary oil cooler (25) and into bonnet (19) again. Bonnet (19) sends this flow into cylinder block (17).

Inside cylinder block (17) the coolant goes around the cylinder liners and up through the water directors into cylinder head (13). The water directors send the flow of coolant around the valves and the passages for exhaust gases in cylinder head (13). The coolant goes to the front of cylinder head (13). Here the water temperature regulator controls the direction of the flow. If the coolant temperature is less than normal for engine operation, the water temperature regulator is closed. The only way for the coolant to get out of cylinder head (13) is through internal bypass (shunt) line (15). The coolant from this line goes into water pump (22) which pushes it through the cooling system again. The coolant from internal bypass (shunt) line (15) also works to prevent cavitation (air bubbles in the coolant). When the coolant gets to the correct temperature, the water temperature regulator opens and coolant flow is divided. Some goes through expansion tank (2) and around heat exchanger (1) for cooling. The rest goes through internal bypass (shunt) line (15) to water pump (22). The proportion of the two flows is controlled by the water temperature regulator.

NOTE: The water temperature regulator is an important part of the cooling system. It divides the coolant flow between heat exchanger (1) and internal bypass (15), as necessary, to maintain the correct operating temperature. If the regulator is not installed, there is no mechanical control, and most of the coolant will take the path of least resistance thru internal bypass line (15). This will cause the engine to overheat in hot weather. In cold weather, even the small amount of coolant that goes thru heat exchanger (1) is too much, and the engine will not get up to normal operating temperature.

Internal bypass (shunt) line (15) has another function when the cooling system is being filled. It lets the coolant go into cylinder head (13) and cylinder block (17) without going through water pump (22).

The coolant flow from the engine goes through outlet line (5) to expansion tank (2) and heat exchanger (1). Heat exchanger (1) is cooled by sea water sent by sea water pump (23) through inlet line (21). The sea water cools the engine coolant in expansion tank (2) and goes out through the outlet for sea water circuit (26).

Expansion tank (2) is the reservoir for the cooling system. It is the highest place in the cooling system. It is the place where the volume of the coolant can change because of heating or cooling without causing too much or too little coolant for the cooling system. Expansion tank (2) has a pressure cap (3) to control the pressure in the cooling system for better operation.

Heat Exchanger Cooling System

(Sea Water Aftercooled - SWAC)

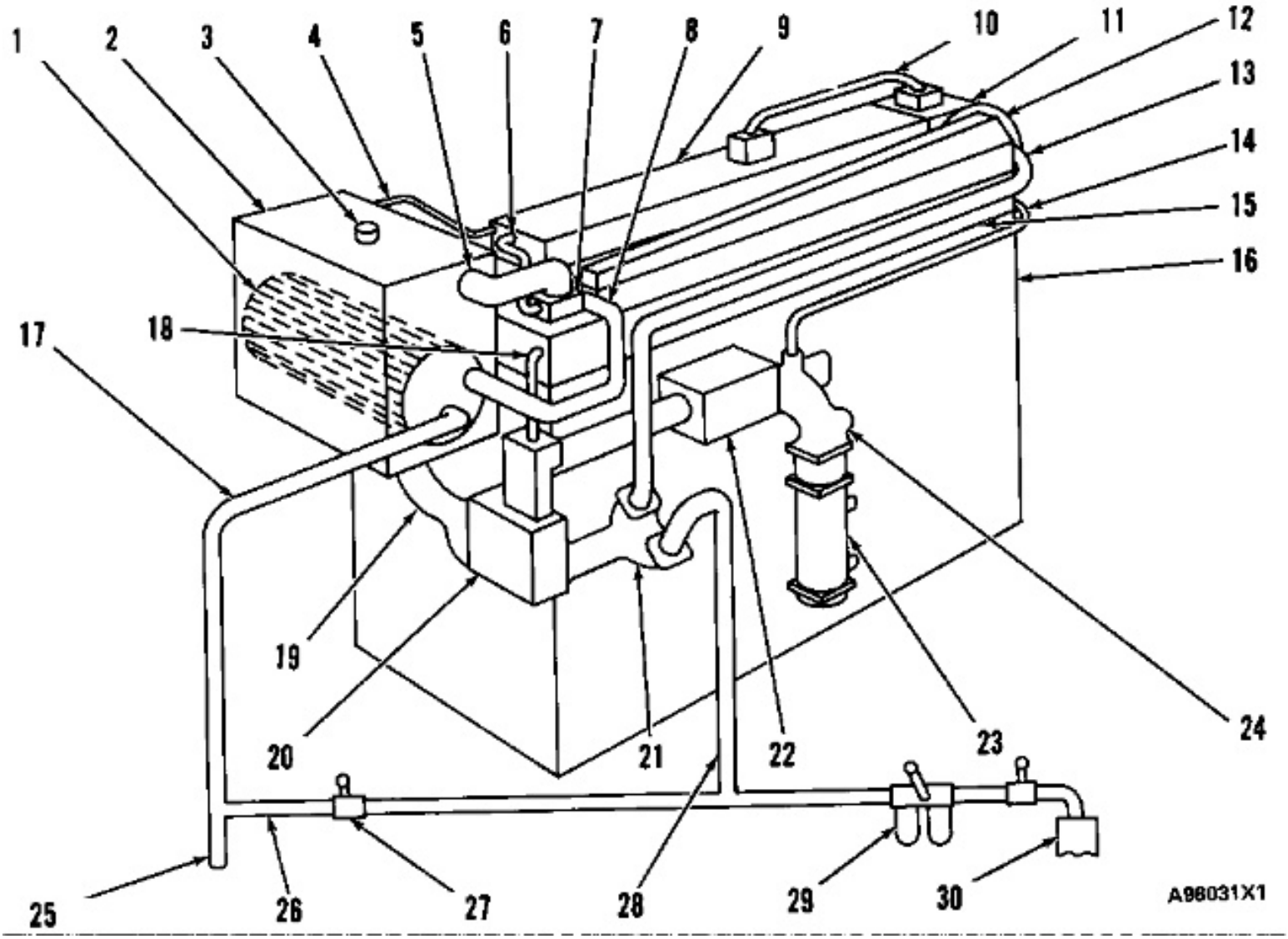

COOLING SYSTEM SCHEMATIC
1. Heat exchanger. 2. Expansion tank. 3. Pressure cap. 4. Vent line. 5. Outlet line. 6. Outlet line. 7. Regulator housing. 8. Aftercooler outlet line. 9. Water cooled manifold. 10. Outlet line. 11. Water cooled turbocharger. 12. Aftercooler housing. 13. Aftercooler inlet line. 14. Turbocharger inlet line. 15. Cylinder head. 16. Cylinder block. 17. Outlet line. 18. Internal bypass (shunt) line. 19. Inlet line. 20. Water pump. 21. Sea water pump. 22. Engine oil cooler. 23. Auxiliary oil cooler. 24. Bonnet. 25. Outlet for sea water circuit. 26. Bypass line. 27. Bypass valve. 28. Inlet line. 29. Duplex strainer. 30. Inlet for sea water circuit.

Heat Exchanger Cooling System

(Sea Water Aftercooled - SWAC)

This cooling system has two cooling circuits. One of these circuits is the engine coolant (jacket water) circuit. Normally this circuit cools the engine and attachments. The other circuit is the sea water circuit. In this system the sea water cools the aftercooler before it goes to heat exchanger (1) in expansion tank (2). In expansion tank (2), heat exchanger (1) cools the coolant from the engine coolant (jacket water) circuit.

Sea Water Circuit

The sea water comes in through inlet (30). Sea water pump (21) is driven by the timing gears. The location of sea water pump (21) is on the left front side of the engine below engine oil cooler (22). Rotation of the impeller pushes the sea water through aftercooler inlet line (13) to the rear of the engine. Aftercooler inlet line (13) connects to the aftercooler core. The core of the aftercooler is a group of tubes. These tubes are in a position inside aftercooler housing (12). The sea water goes through the tubes. The inlet air for the engine goes around the tubes. This cools the inlet air for the engine. The sea water comes out at the front of the engine. The sea water goes through aftercooler outlet line (8) to heat exchanger (1). Inside heat exchanger (1), the sea water goes through the tubes. The engine coolant (jacket water) goes through expansion tank (2) around the tubes of heat exchanger (1). This cools the engine coolant (jacket water). The sea water comes out of heat exchanger (1) through outlet line (17). Outlet line (17) sends the sea water through the outlet for sea water circuit (25).

This system can have duplex strainer (29) installed as shown. Duplex strainer (29) has two sides. Each side has a strainer which is large enough for the full flow of the sea water circuit. When the pressure drop across one of the strainers starts to get an increase, the full flow can be changed to the other strainer without stopping the engine.

Many cooling systems have a bypass valve (27) and a bypass line (26) installed as shown. Bypass valve (27) can be manually adjusted or automatically adjusted. Both kinds of valves have the same function. They work to control the minimum temperature of the sea water which goes through the aftercooler. The sea water going through outlet line (17) is hot. Bypass valve (27) controls the amount of the hot sea water which goes through bypass line (26). The hot sea water from bypass line (26) mixes with the sea water from the inlet for sea water circuit (30) as it goes to the inlet line (28) of sea water pump (21). When bypass valve (27) is correctly adjusted, the temperature of the sea water going into the aftercooler is as cool as possible without having condensation inside the aftercooler. (Condensation is water which comes out of the air when the air comes in contact with a cool surface.) This adjustment gives the engine the coolest inlet air for use at maximum horsepower ratings.

Engine Coolant (Jacket Water) Circuit

Water pump (20) for this circuit is on the left front side of the engine. It is gear driven by the timing gears. Coolant from expansion tank (2) goes through inlet line (19) to the water pump inlet. The rotation of the impeller in water pump (20) pushes the coolant (jacket water) through the circuit.

The coolant flow from water pump (20) goes through engine oil cooler (22) and bonnet (24). Bonnet (24) is on the outlet side of engine oil cooler (22) and connects to the side of cylinder block (16). On engines with auxiliary oil cooler (23), a different bonnet (24) is on the outlet of engine oil cooler (22). This bonnet (24) sends the coolant into one side of auxiliary oil cooler (23). At the bottom the coolant flow turns and goes up the other side of auxiliary oil cooler (23) and into bonnet (24) again. Then bonnet (24) sends this flow into cylinder block (16).

On engines with a water cooled turbocharger (11) some of the coolant in bonnet (24) goes through turbocharger inlet line (14). This coolant goes in at the bottom of water cooled turbocharger (11). The coolant goes up through water cooled turbocharger (11) and out through outlet line (10). Outlet line (10) sends the coolant into water cooled manifold (9) at the rear of the engine. The coolant goes through water cooled manifold (9) to the front of the engine. At the front of the engine the coolant comes out through outlet line (6) and goes into regulator housing (7). Inside regulator housing (7) the coolant mixes with the remainder of the coolant in cylinder head (15).

Inside cylinder block (16) the coolant goes around the cylinder lines and up through the water directors into cylinder head (15). The water directors send the flow of coolant around the valves and the passages for exhaust gases in cylinder head (15). The coolant goes to the front of cylinder head (15). Here the water temperature regulator controls the direction of the flow. If the coolant temperature is less than normal for engine operation, the water temperature regulator is closed. The only way for the coolant to get out of cylinder head (15) is through internal bypass (shunt) line (18). The coolant from this line goes into water pump (20) which pushes it through the cooling system again. The coolant from internal bypass (shunt) line (18) also works to prevent cavitation (air bubbles in the coolant). When the coolant gets to the correct temperature, the water temperature regulator opens and coolant flow is divided. Some goes through expansion tank (2) and around heat exchanger (1) for cooling. The rest goes through internal bypass (shunt) line (18) to water pump (20). The proportion of the two flows is controlled by the water temperature regulator.

NOTE: The water temperature regulator is an important part of the cooling system. It divides the coolant flow between heat exchanger (1) and internal bypass (18), as necessary, to maintain the correct operating temperature. If the regulator is not installed, there is no mechanical control, and most of the coolant will take the path of least resistance thru internal bypass line (18). This will cause the engine to overheat in hot weather. In cold weather, even the small amount of coolant that goes thru heat exchanger (1) is too much, and the engine will not get up to normal operating temperature.

Internal bypass (shunt) line (18) has another function when the cooling system is being filled. It lets the coolant go into cylinder head (15) and cylinder block (16) without going through water pump (20).

The coolant flow from the engine goes through outlet line (5) to expansion tank (2) and heat exchanger (1). Heat exchanger (1) is cooled by sea water from sea water pump (21) through aftercooler (12) and inlet line (28). The sea water cools the engine coolant (jacket water) in expansion tank (2) and goes out through sea water outlet (25).

Expansion tank (2) is the reservoir for the cooling system. It is the highest place in the cooling system. It is the place where the volume of the coolant can change because of heating or cooling without causing too much or too little coolant for the cooling system. Expansion tank (2) has a pressure cap (3) to control the pressure in the cooling system for better operation.

Cooling System Components

Water Pump

The centrifugal-type water pump has two seals, one prevents leakage of water and the other prevents leakage of lubricant.

An opening in the bottom of the pump housing allows any leakage at the water seal or the rear bearing oil seal to escape.

Fan

The fan is driven by two V-belts, from a pulley on the crankshaft. Belt tension is adjusted by moving the clamp assembly which includes the fan mounting and pulley.

Coolant For Air Compressor

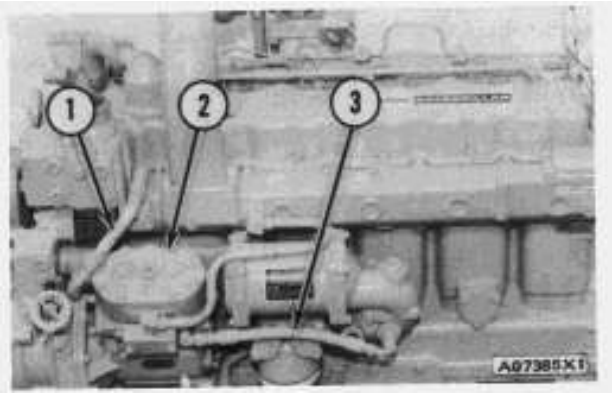

COOLANT FLOW IN AIR COMPRESSOR
1. Outlet hose. 2. Air compressor. 3. Inlet hose.

The coolant for the air compressor (2) comes from the cylinder block through hose (3) and into the air compressor. The coolant goes from the air compressor through hose (1) back into the front of the cylinder head.

Basic Block

Cylinder Block And Liners

A steel spacer plate is used between the cylinder head and the block to eliminate liner counterbore and to provide maximum liner flange support area (the liner flange sits directly on the cylinder block).

Engine coolant flows around the liners to cool them. Three O-ring seals at the bottom and a filler band at the top of each cylinder liner form a seal between the liner and the cylinder block.

Pistons, Rings And Connecting Rods

The piston has three rings; two compression and one oil ring. All rings are located above the piston pin bore. The two compression rings seat in an iron band which is cast into the piston. Pistons in *earlier* engines used compression rings with straight sides. Pistons in *later* engines use compression rings which are of the KEYSTONE type. KEYSTONE rings have a tapered shape and the movement of the rings in the piston groove (also of tapered shape) results in a constantly changing clearance (scrubbing action) between the ring and the groove. This action results in a reduction of carbon deposit and possible sticking of rings.

The oil ring is a standard (conventional) type and is spring loaded. Holes in the oil ring groove provide for the return of oil to the crankcase.

The full-floating piston pin is held in place by two snap rings which fit in grooves in the pin bore.

Piston cooling jets, located on the cylinder block main bearing supports, throw oil to cool and give lubrication to the piston components and cylinder walls.

Crankshaft

The crankshaft changes the combustion forces in the cylinders into usable rotating torque which powers the machine. There is a timing gear at each end of the crankshaft which drives the respective timing gears.

The bearing surfaces on the crankshaft get oil for lubrication through passages drilled in the crankshaft.

Vibration Damper

The twisting of the crankshaft, due to the regular power impacts along its length, is called twisting (torsional) vibration. The vibration damper is installed on the front end of the crankshaft. It is used for reduction of torsional vibrations and stops the vibration from building up to amounts that cause damage.

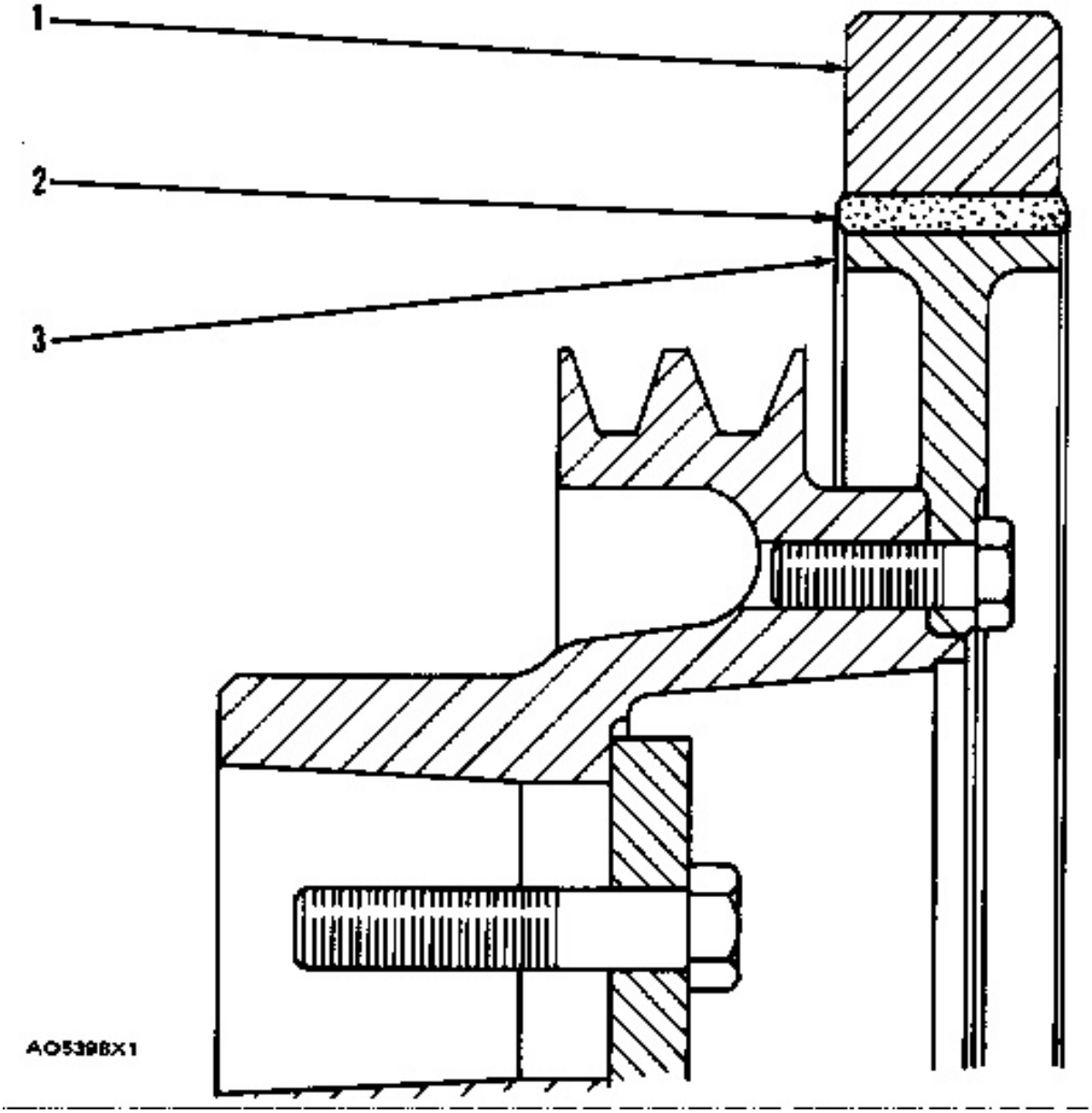

CROSS SECTION OF TYPICAL RUBBER VIBRATION DAMPER
1. Flywheel ring. 2. Rubber ring. 3. Inner hub.

The rubber damper is made of a flywheel ring (1) connected to an inner hub (3) by a rubber ring (2). The rubber makes a flexible coupling between the flywheel ring and the inner hub.

The viscous damper is made of a weight (1) in a metal case (3). The small space (2) between the case and weight is filled with a thick fluid. The fluid permits the weight to move in the case to cause a reduction of vibrations of the crankshaft.

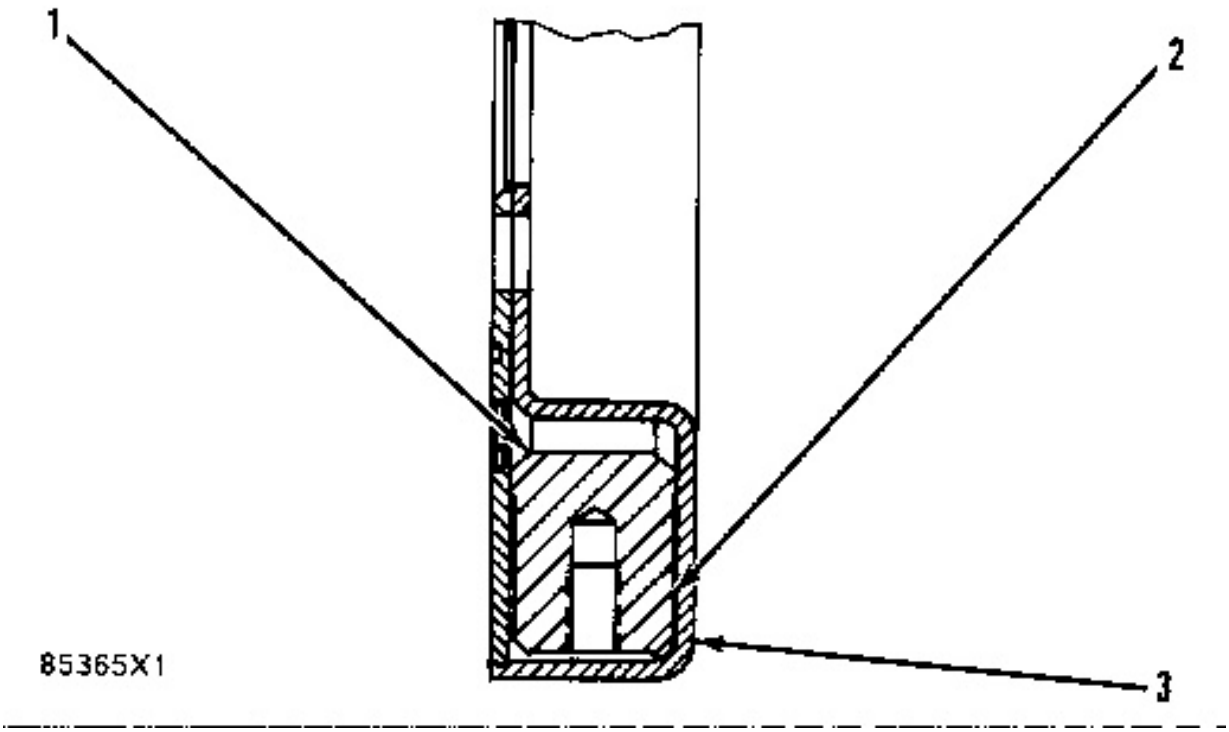

CROSS SECTION OF A TYPICAL VISCOUS VIBRATION DAMPER
1. Solid cast iron weight. 2. Space between weight and case. 3. Case.

Electrical System

The electrical system has three separate circuits: the charging circuit, the starting circuit and the low amperage circuit. Some of the electrical system components are used in more than one circuit. The battery (batteries), disconnect switch, circuit breaker, ammeter, cables and wires from the battery are all common in each of the circuits.

The charging circuit is in operation when the engine is running. An alternator makes electricity for the charging circuit. A voltage regulator in the circuit controls the electrical output to keep the battery at full charge.

NOTICE

The disconnect switch, if so equipped, must be in the ON position to let the electrical system function. There will be damage to some of the charging circuit components if the engine is running with the disconnect switch in the OFF position.

If the engine has a disconnect switch, the starting circuit can operate only after the disconnect switch is put in the ON position.

The starting circuit is in operation only when the start switch is activated.

The starting circuit can have a glow plug for each cylinder. Glow plugs are small heating units in the precombustion chambers. Glow plugs make ignition of the fuel easier when the engine is started in cold temperatures.

The low amperage circuit and the charging circuit are both connected through the ammeter. The starting circuit is not connected through the ammeter.

Charging System Components

Alternator (Delco-Remy)

The alternator is driven by V-type belts from the crankshaft pulley. This alternator is a three phase, self-rectifying charging unit, and the regulator is part of the alternator.

This alternator design has no need for slip rings or brushes, and the only part that has movement is the rotor assembly. All conductors that carry current are stationary. The conductors are: the field winding, stator windings, six rectifying diodes, and the regulator circuit components.

The rotor assembly has many magnetic poles like fingers with air space between each opposite pole. The poles have residual magnetism (like permanent magnets) that produce a small amount of magnet-like lines of force (magnetic field) between the poles. As the rotor assembly begins to turn between the field winding and the stator windings, a small amount of alternating current (AC) is produced in the stator windings from the small magnetic lines of force made by the residual magnetism of the poles. This AC current is changed to direct current (DC) when it passes through the diodes of the rectifier bridge. Most of this current goes to charge the battery and to supply the low amperage circuit, and the remainder is sent on to the field windings. The DC current flow through the field windings (wires around an iron core) now increases the strength of the magnetic lines of force. These stronger lines of force now increase the amount of AC current produced in the stator windings. The increased speed of the rotor assembly also increases the current and voltage output of the alternator.

The voltage regulator is a solid state (transistor, stationary parts) electronic switch. It feels the voltage in the system and switches on and off many times a second to control the field current (DC current to the field windings) for the alternator to make the needed voltage output.

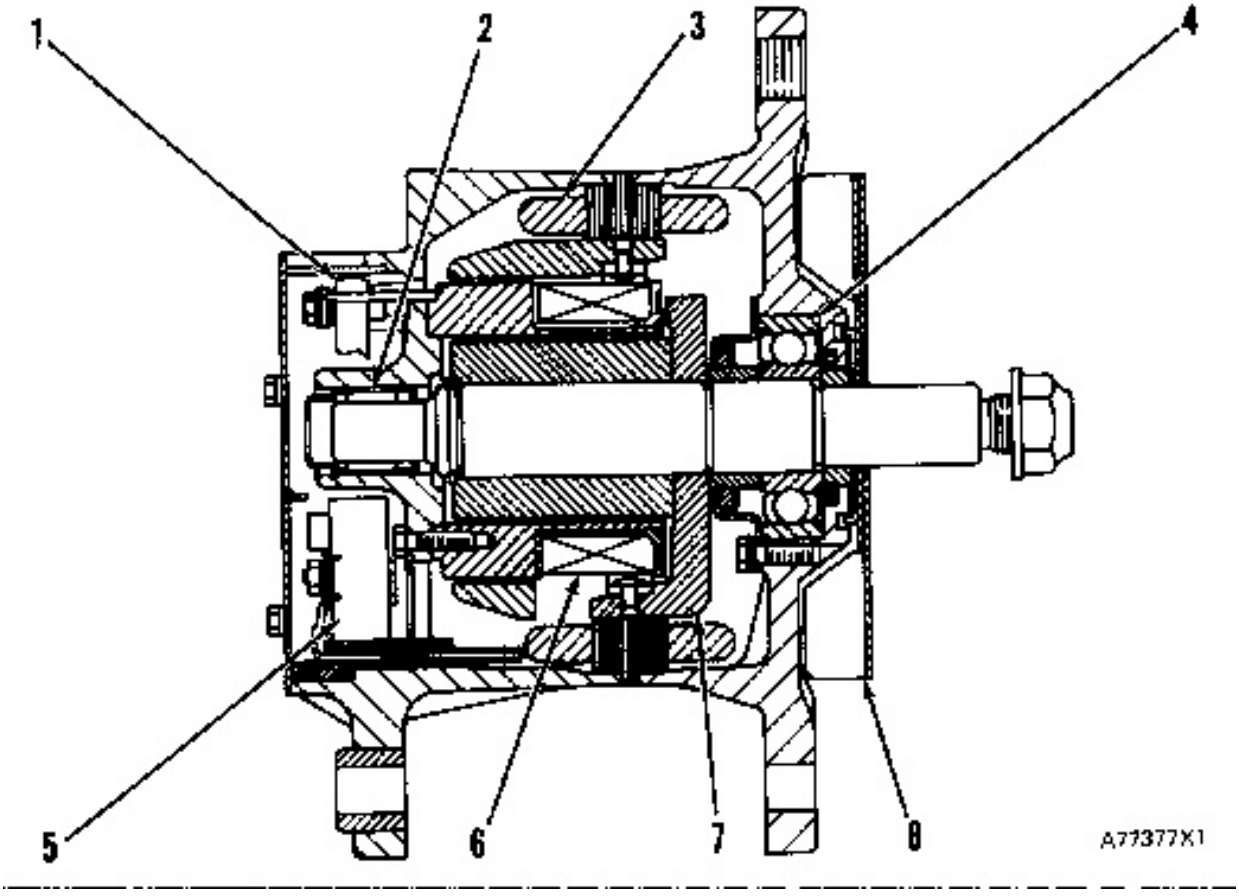

DELCO-REMY ALTERNATOR (Typical Example)
1. Regulator. 2. Roller bearing. 3. Stator winding. 4. Ball bearing. 5. Rectifier bridge. 6. Field winding. 7. Rotor assembly. 8. Fan.

Alternator (Motorola)

The alternator is a three phase, self-rectifying charging unit that is driven by V-type belts. The only part of the alternator that has movement is the rotor assembly. Rotor assembly (4) is held in position by a ball bearing at each end of the rotor shaft.

The alternator is made up of a front frame at the drive end, rotor assembly (4), stator assembly (3), rectifier assembly, brushes and holder assembly (5), slip rings (1) and rear end frame. Fan (2) provides heat removal by the movement of air thru the alternator.

Rotor assembly (4) has field windings (wires around an iron core) that make magnetic lines of force when direct current (DC) flows thru them. As the rotor assembly turns, the magnetic lines of force are broken by stator assembly (3). This makes alternator current (AC) in the stator. The rectifier assembly has diodes that change the alternating current (AC) from the stator to direct current (DC). Most of the DC current goes to charge the battery and make a supply for the low amperage circuit. The remainder of the DC current is sent to the field windings thru the brushes.

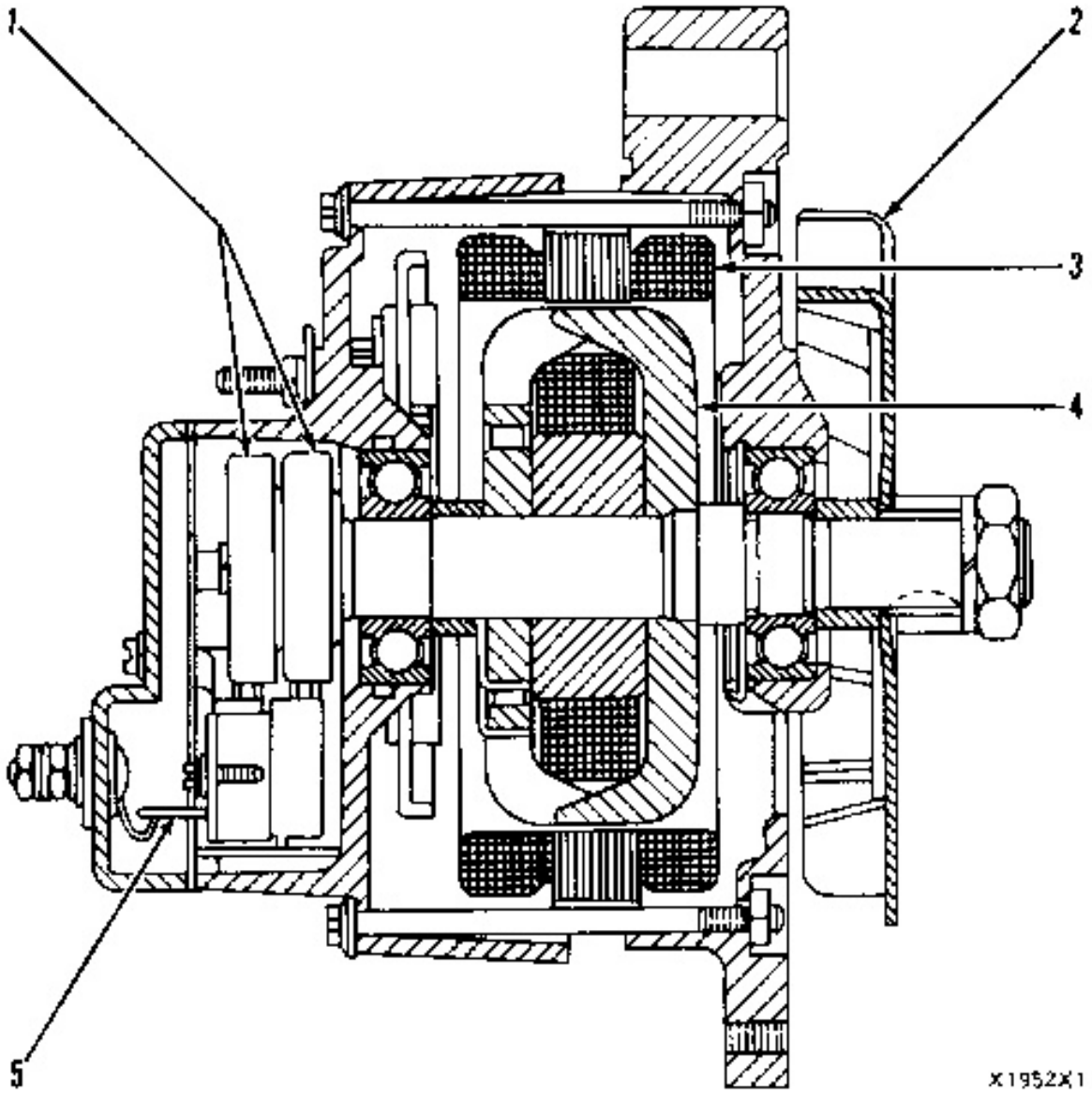

ALTERNATOR
1. Slip rings. 2. Fan. 3. Stator assembly. 4. Rotor assembly. 5. Brush and holder assembly.

Voltage Regulator (Motorola)

The voltage regulator is not fastened to the alternator, but is mounted separately and is connected to the alternator with wires. The regulator is a solid state (transistor, stationary parts) electronic switch. It feels the voltage in the system and switches on and off many times a second to control the field current (DC current to the field windings) for the alternator to make the needed voltage output. There is a voltage adjustment for this regulator to change the alternator output.

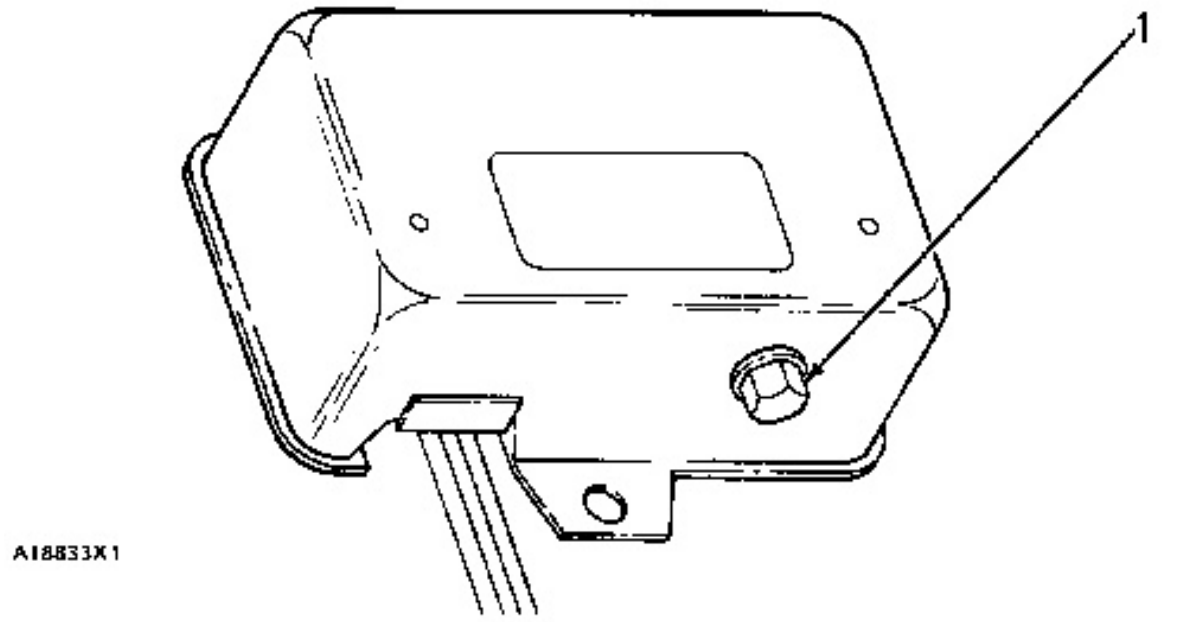

ALTERNATOR REGULATOR (MOTOROLA)
1. Cap for adjustment screw.

Starting System Components

Starter Motor

The starter motor is used to turn the engine flywheel fast enough to get the engine running.

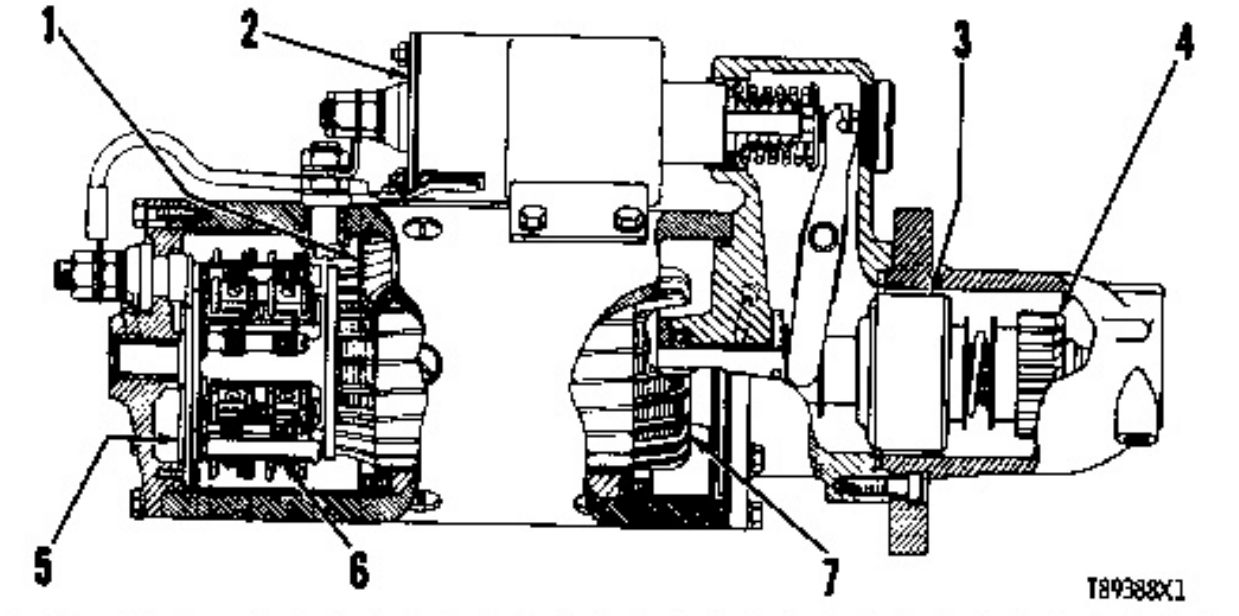

STARTER MOTOR
1. Field. 2. Solenoid. 3. Clutch. 4. Pinion. 5. Comutator. 6. Brush assembly. 7. Armature.

The starter motor has a solenoid. When the start switch is activated, electricity from the electrical system will cause the solenoid to move the starter pinion to engage with the ring gear on the flywheel of the engine. The starter pinion will engage with the ring gear before the electric contacts in the solenoid close the circuit between the battery and the starter motor. When the start switch is released, the starter pinion will move away from the ring gear of the flywheel.

Solenoid

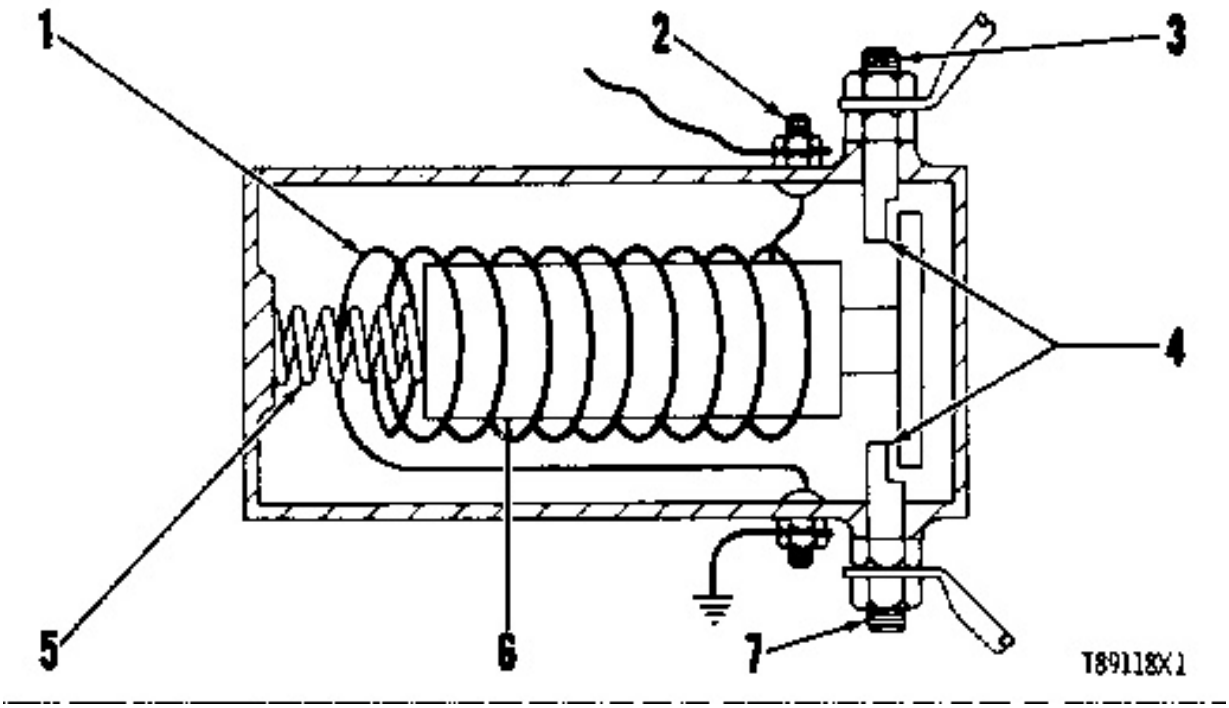

SCHEMATIC OF A SOLENOID
1. Coil. 2. Switch terminal. 3. Battery terminal. 4. Contacts. 5. Spring. 6. Core. 7. Component terminal.

A solenoid is a magnetic switch that uses low current to close a high current circuit. The solenoid has an electromagnet with a core (6) which moves.

There are contacts (4) on the end of core (6). The contacts are held in the open position by spring (5) that pushes core (6) from the magnetic center of coil (1). Low current will energize coil (1) and make a magnetic field. The magnetic field pulls core (6) to the center of coil (1) and the contacts close.

Magnetic Switch

A magnetic switch (relay) is used sometimes for the starter solenoid or glow plug circuit. Its operation electrically, is the same as the solenoid. Its function is to reduce the low current load on the start switch and control low current to the starter solenoid or high current to the glow plugs.

Other Components

Circuit Breaker

The circuit breaker is a safety switch that opens the battery circuit if the current in the electrical system goes higher than the rating of the circuit breaker.

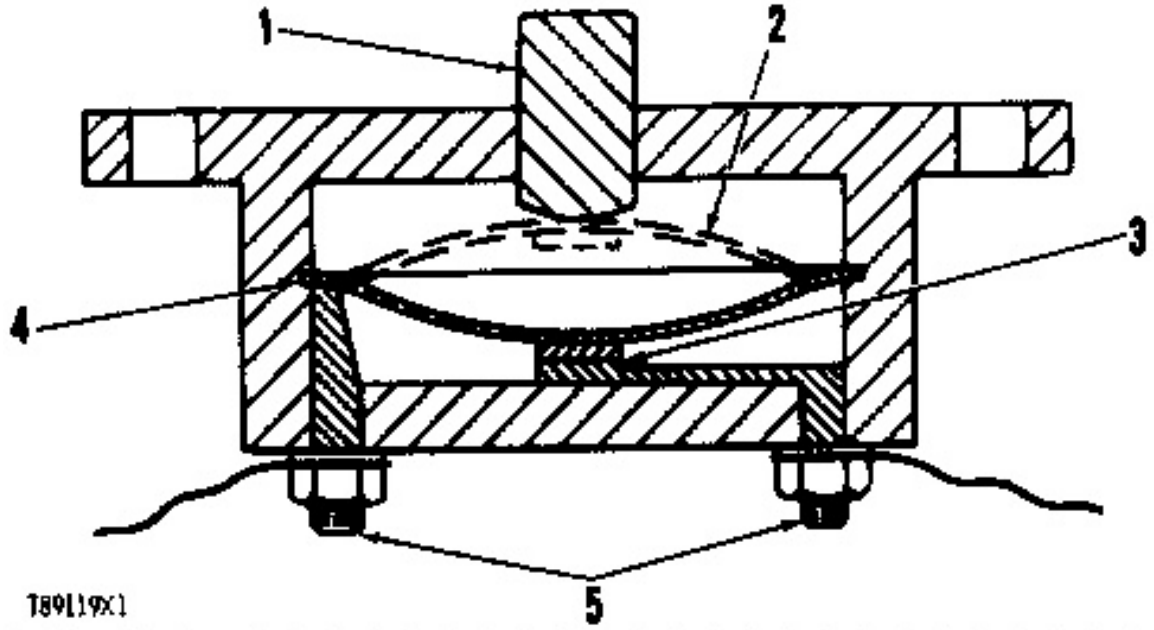

CIRCUIT BREAKER SCHEMATIC
1. Reset button. 2. Disc in open position. 3. Contacts. 4. Disc. 5. Battery circuit terminals.

A heat activated metal disc with a contact point completes the electric circuit through the circuit breaker. If the current in the electrical system gets too high, it causes the metal disc to get hot. This heat causes a distortion of the metal disc which opens the contacts and breaks the circuit. A circuit breaker that is open can be reset after it cools. Push the reset button to close the contacts and reset the circuit breaker.

Shutoff Solenoid

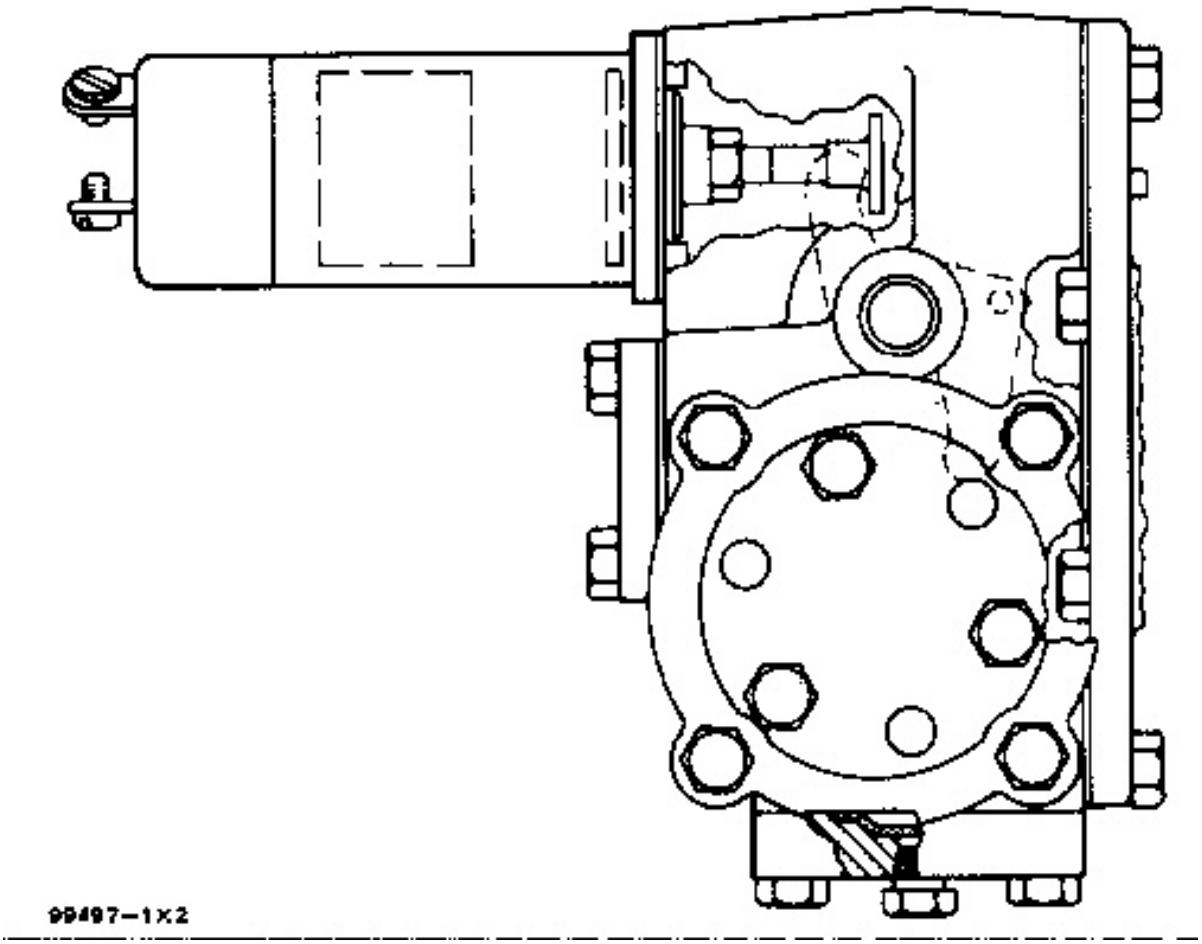

ACTIVATE TO SHUTOFF SOLENOID

When activated, the activate to shutoff solenoid moves the fuel control shaft to the fuel off position. The solenoid can be activated by any one of several sources. The most common is the manually operated momentary switch activated by the operator.

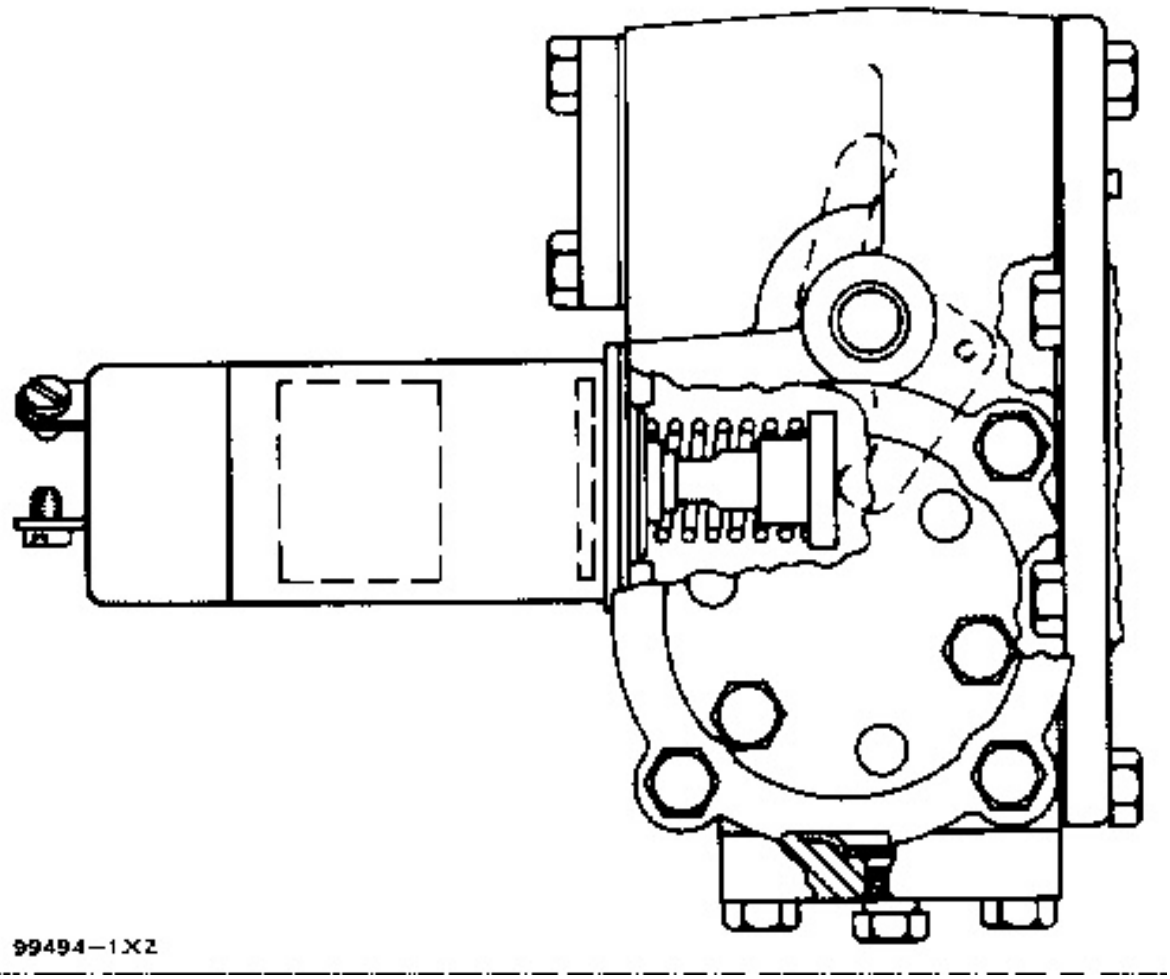

ACTIVATE TO RUN SOLENOID

When shut off, the activate to run shutoff solenoid moves the fuel control shaft to the fuel off position. The solenoid can be shut off by any one of several sources. The most common is the manually operated key switch activated by the operator.

Wiring Diagrams

There are many wiring diagrams for these engines. The diagrams are together by the type of electrical system. The diagrams for the charging systems are together by the alternator type.

ALL of the diagrams are usable for 12, 24, 30 and 32 volt systems.

These engines can have electric, air, or hydraulic starting and charging systems. These engines can also have combinations of these systems. Be sure that the diagram is correct for the engine.

NOTE: Automatic Start-Stop systems use different wiring diagrams. Make reference to the Service Manual for the generator or to the books for the attachments for this information.

The chart gives the correct wire sizes and color codes. All wires marked #Y will be #10 wire.

COLOR CODE	MAXIMUM RECOMMENDED TOTAL BATTERY CABLE LENGTH			WIRES MARKED #X	
B - Black W - White R - Red O - Orange BR - Brown LT GN - Light Green PU - Purple W/B White with W/S Black Stripe X3560-1X1	CABLE SIZE	ELECTRIC STARTING		CHARGING UNIT OUTPUT	WIRE SIZE
		12 VOLT	24-32 VOLT	0-18 amps.	#14
	0	4.0 FEET	15.0 FEET	19-30 amps.	#10
	00	5.0 FEET	18.0 FEET	31-45 amps.	# 8
	000	6.0 FEET	21.0 FEET	46-65 amps.	# 6
	0000	7.5 FEET	27.0 FEET	NUMBER FOLLOWING COLOR CODE IS RECOMMENDED WIRE SIZE	

Insulated Electrical Systems

(Delco-Remy) (Regulator Inside Alternator)

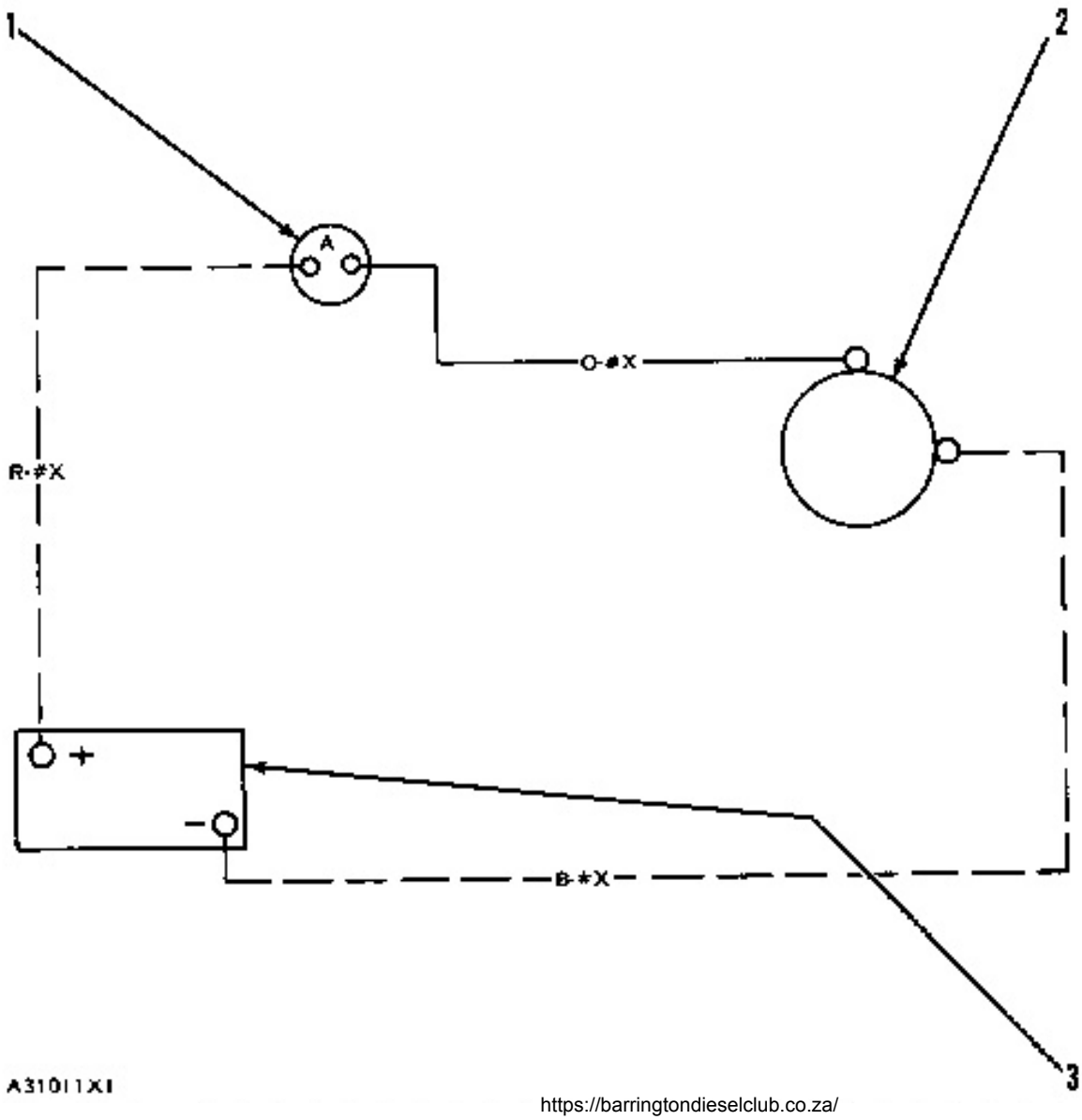

CHARGING SYSTEM
1. Ammeter. 2. Alternator. 3. Battery.

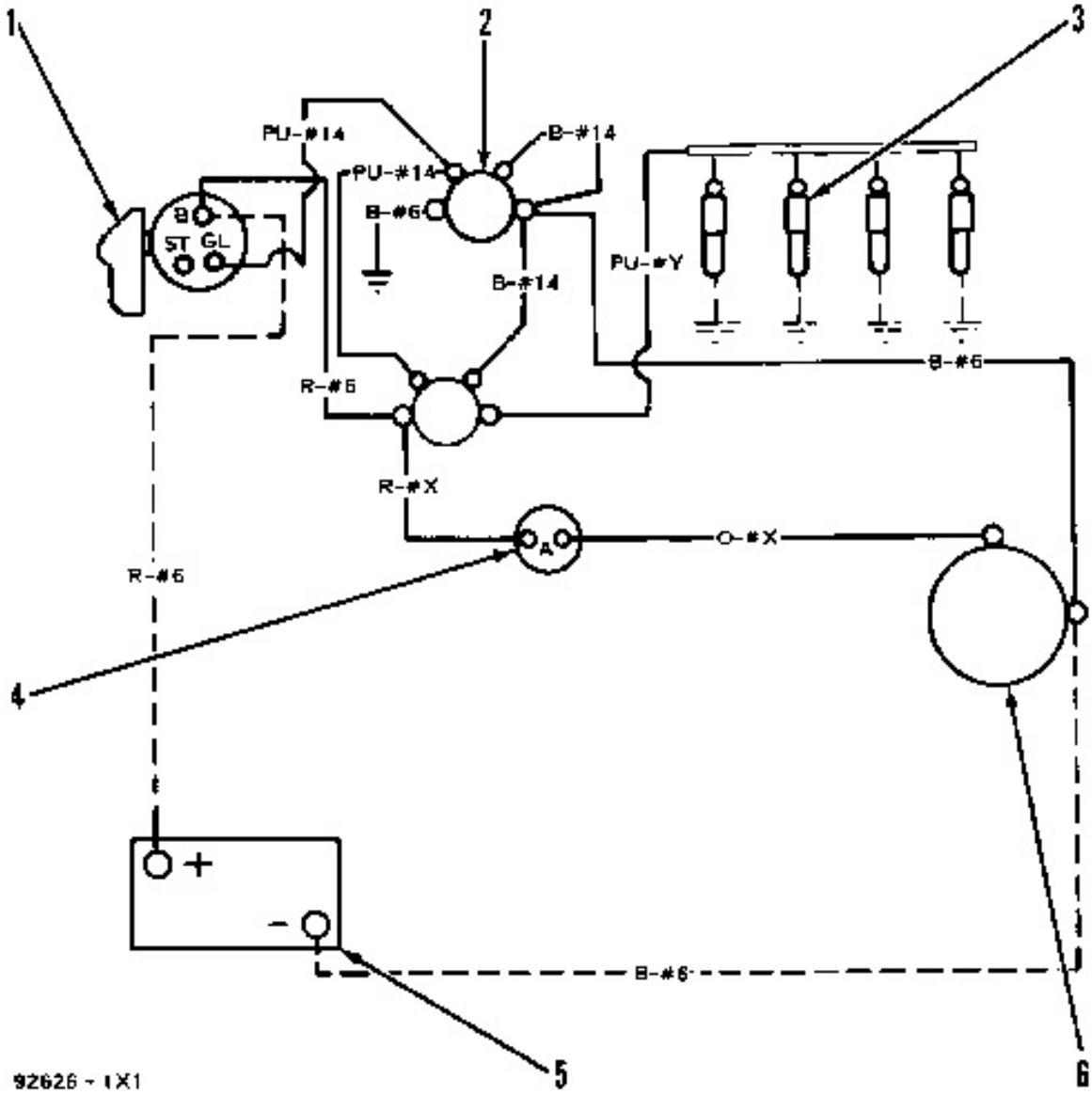

CHARGING SYSTEM WITH GLOW PLUGS (Optional Circuit For Completely Insulated System)
1. Heat-Start switch. 2. Magnetic switch (two). 3. Glow plugs. 4. Ammeter. 5. Battery. 6. Alternator.

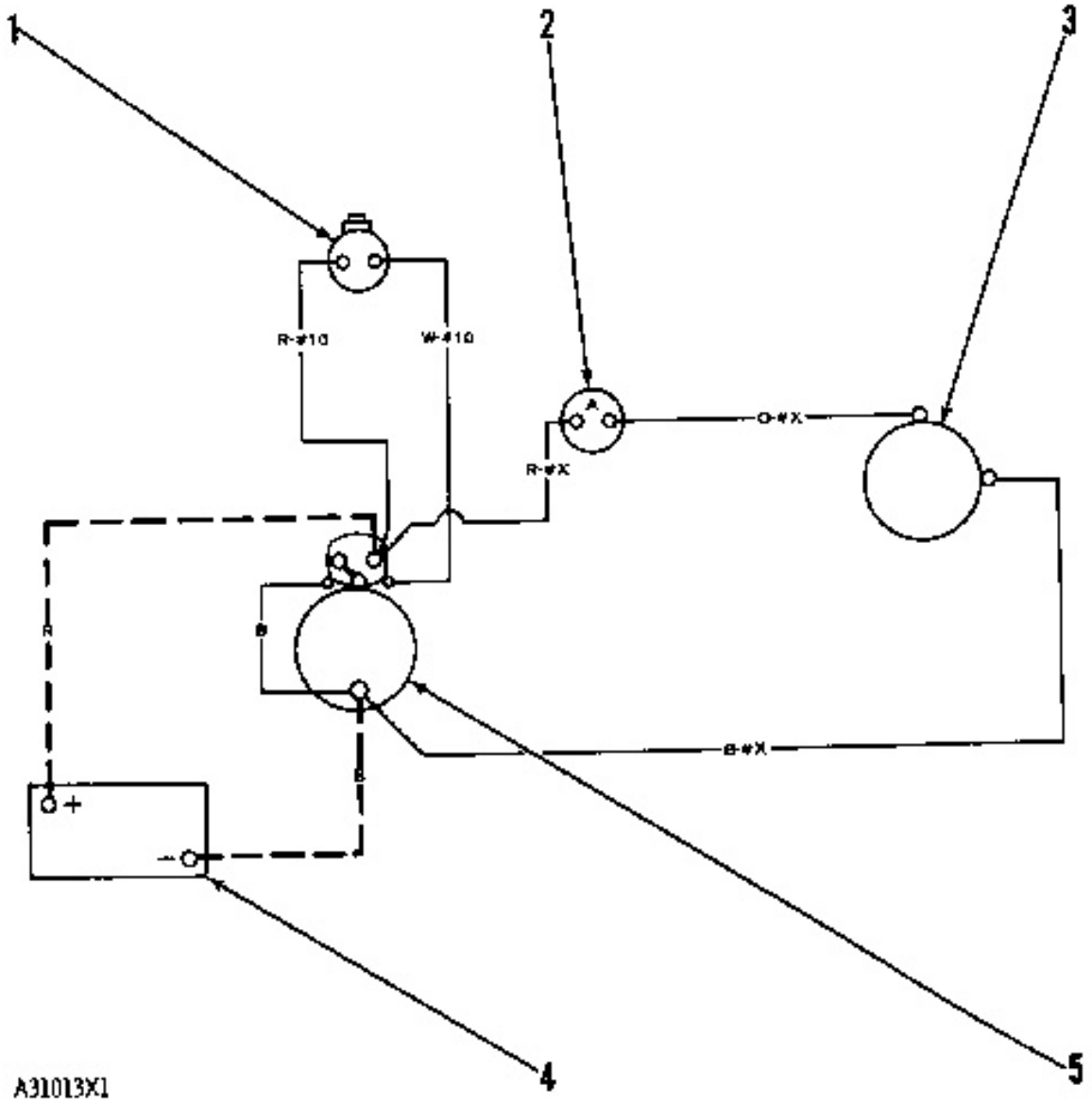

CHARGING SYSTEM WITH ELECTRIC STARTING MOTOR
1. Start switch. 2. Ammeter. 3. Alternator. 4. Battery. 5. Starting motor.

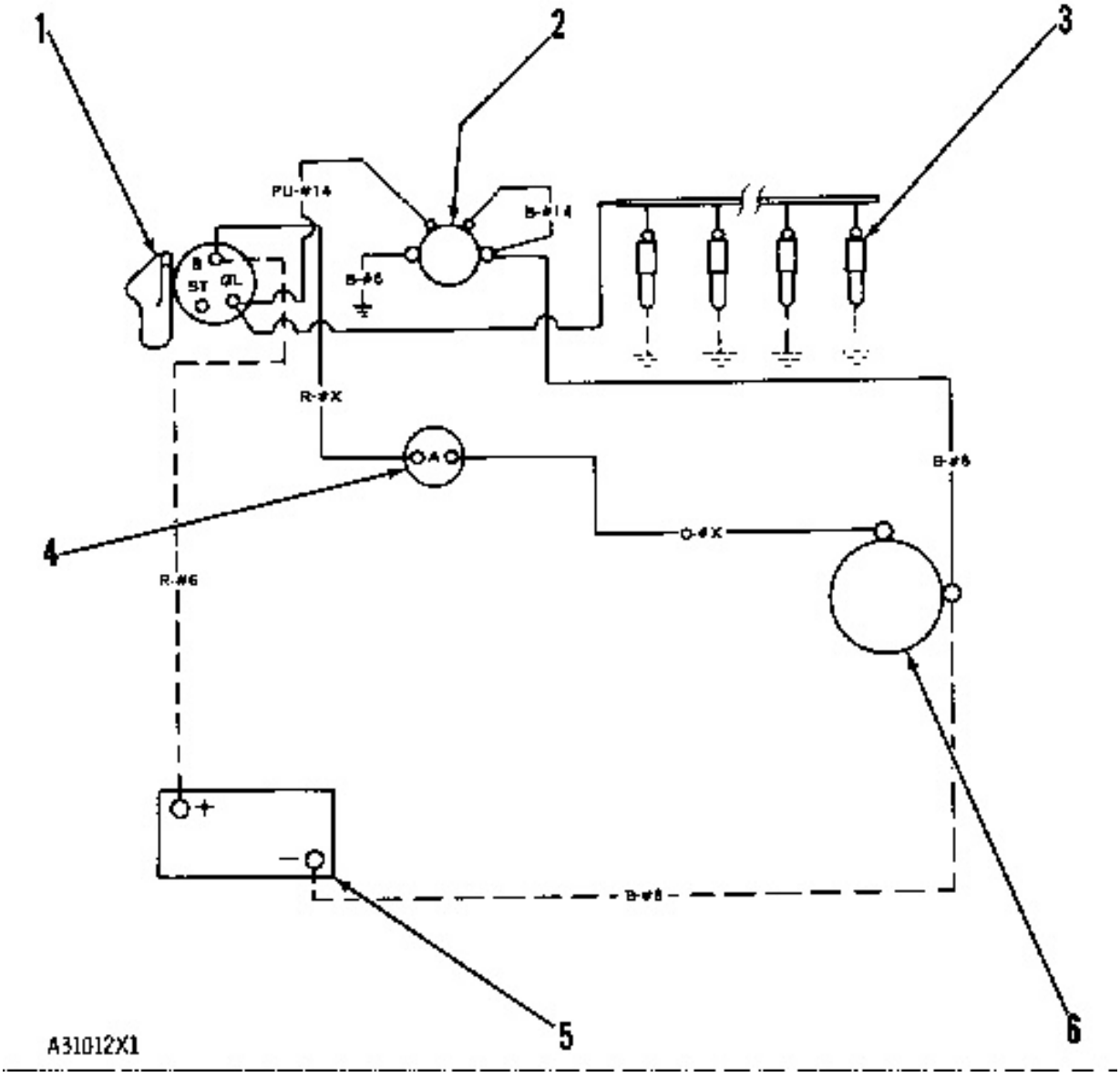

CHARGING SYSTEM WITH GLOW PLUGS (Standard Circuit)
1. Heat-Start switch. 2. Magnetic switch. 3. Glow plugs. 4. Ammeter. 5. Battery. 6. Alternator.

NOTE: If the standard circuit has a problem with electrolysis, or radio or other electrical interference, install another magnetic switch (2) as shown in the Optional Circuit For Completely Insulated System.

(Delco-Remy) (Regulator Inside Alternator)

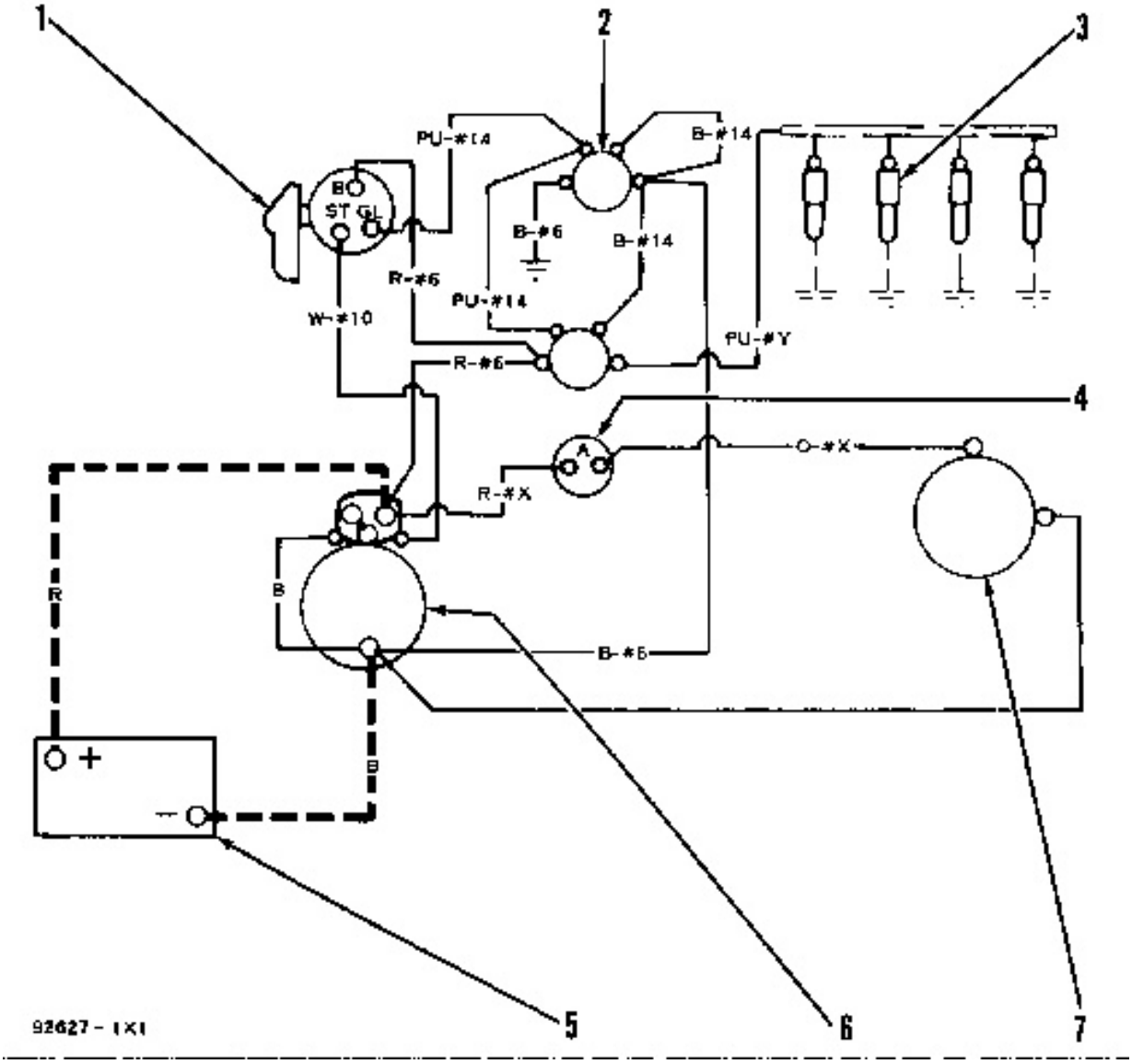

CHARGING SYSTEM WITH ELECTRIC STARTING MOTOR AND GLOW PLUGS (Optional Circuit For Completely Insulated System)

1. Heat-Start switch. 2. Magnetic switch (two). 3. Glow plugs. 4. Ammeter. 5. Battery. 6. Starting motor. 7. Alternator.

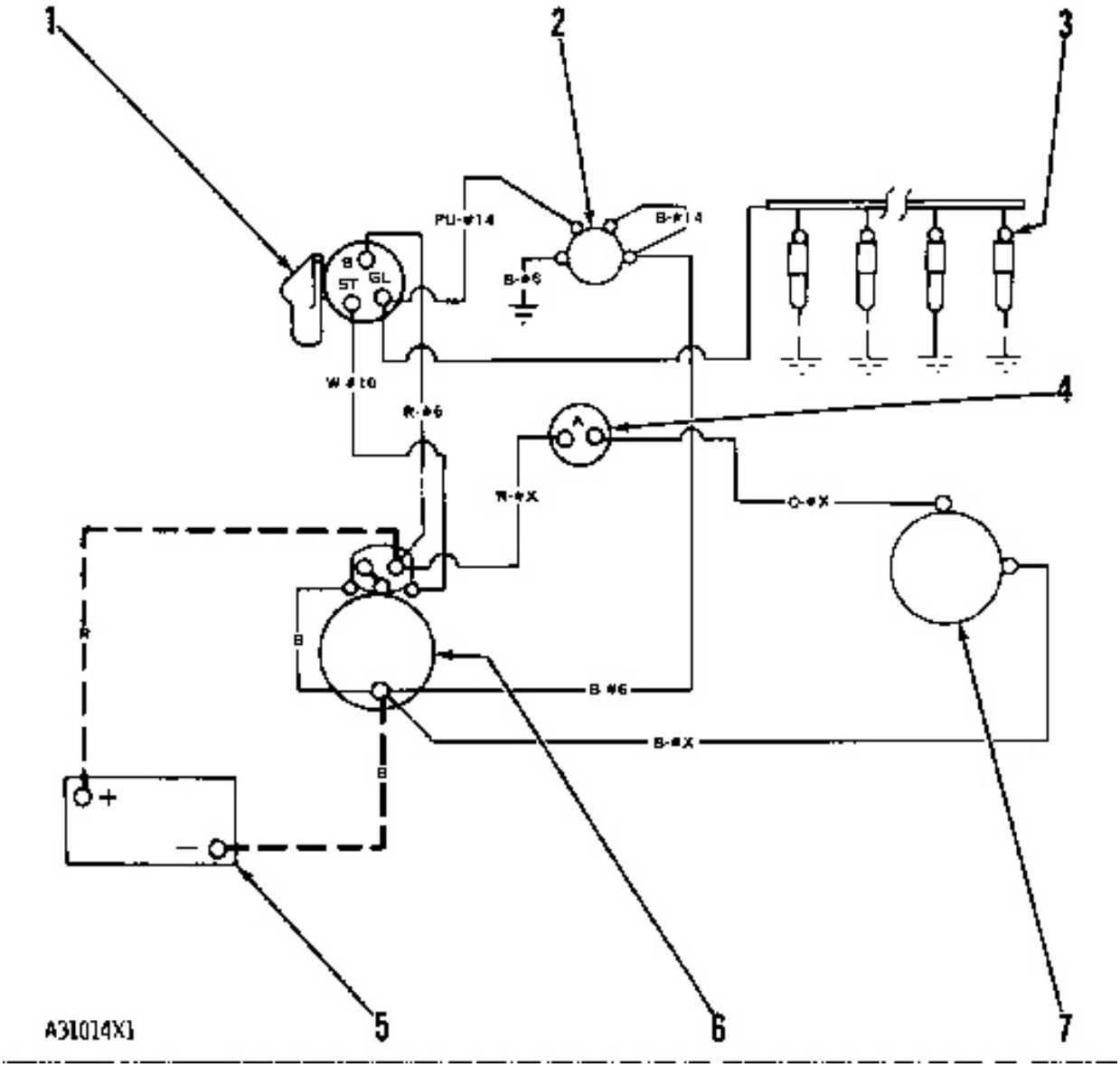

CHARGING SYSTEM WITH ELECTRIC STARTING MOTOR AND GLOW PLUGS (Standard Circuit)
1. Heat-Start switch. 2. Magnetic switch. 3. Glow plugs. 4. Ammeter. 5. Battery. 6. Starting motor. 7. Alternator.

NOTE: If the Standard Circuit has a problem with electrolysis or radio or other electrical interference, install another magnetic switch (2) as shown in the Optional Circuit For Completely Insulated System.

(Delco-Remy) (Regulator Separate From Alternator)

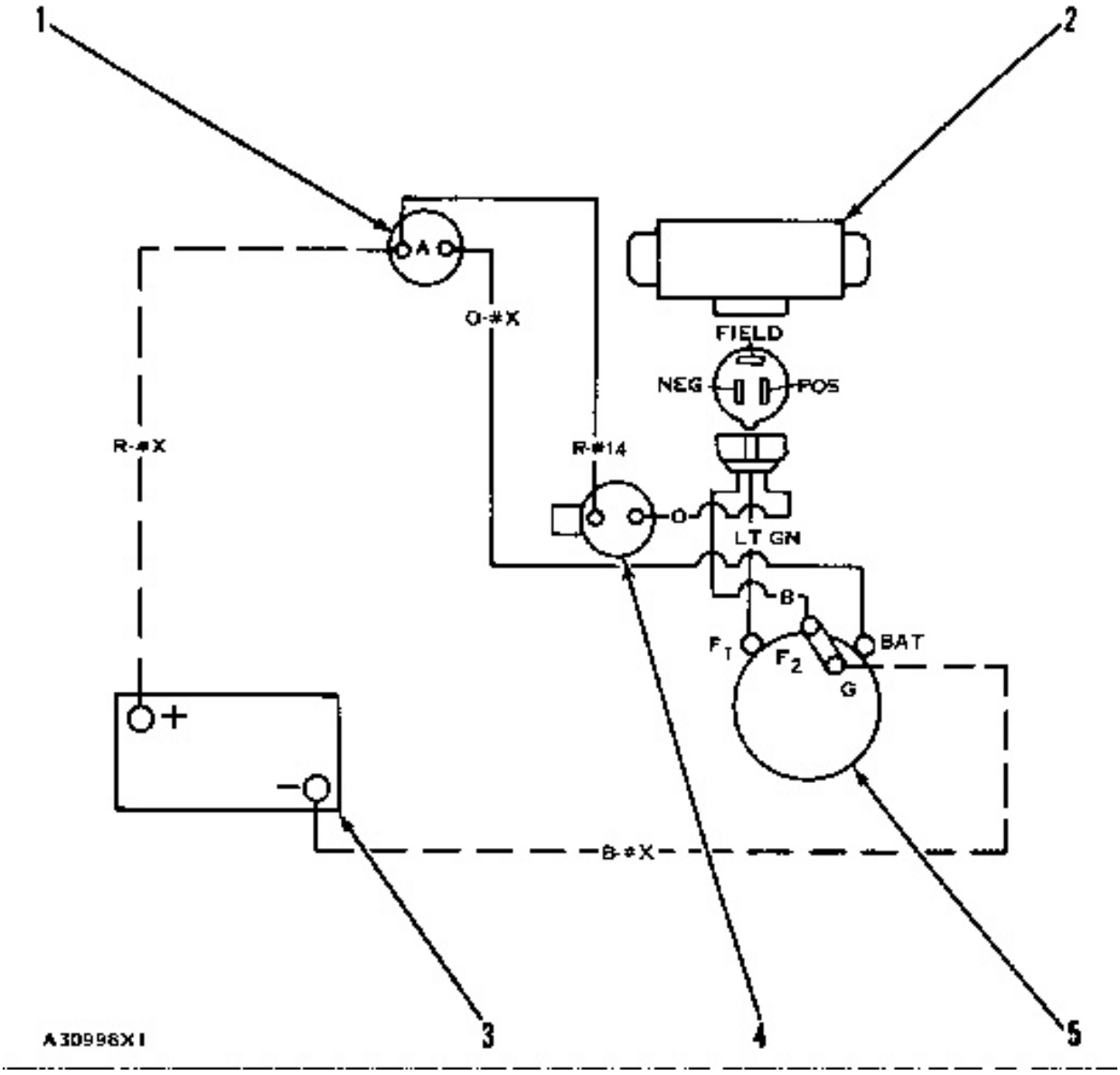

CHARGING SYSTEM

1. Ammeter. 2. Regulator. 3. Battery. 4. Pressure switch. 5. Alternator.

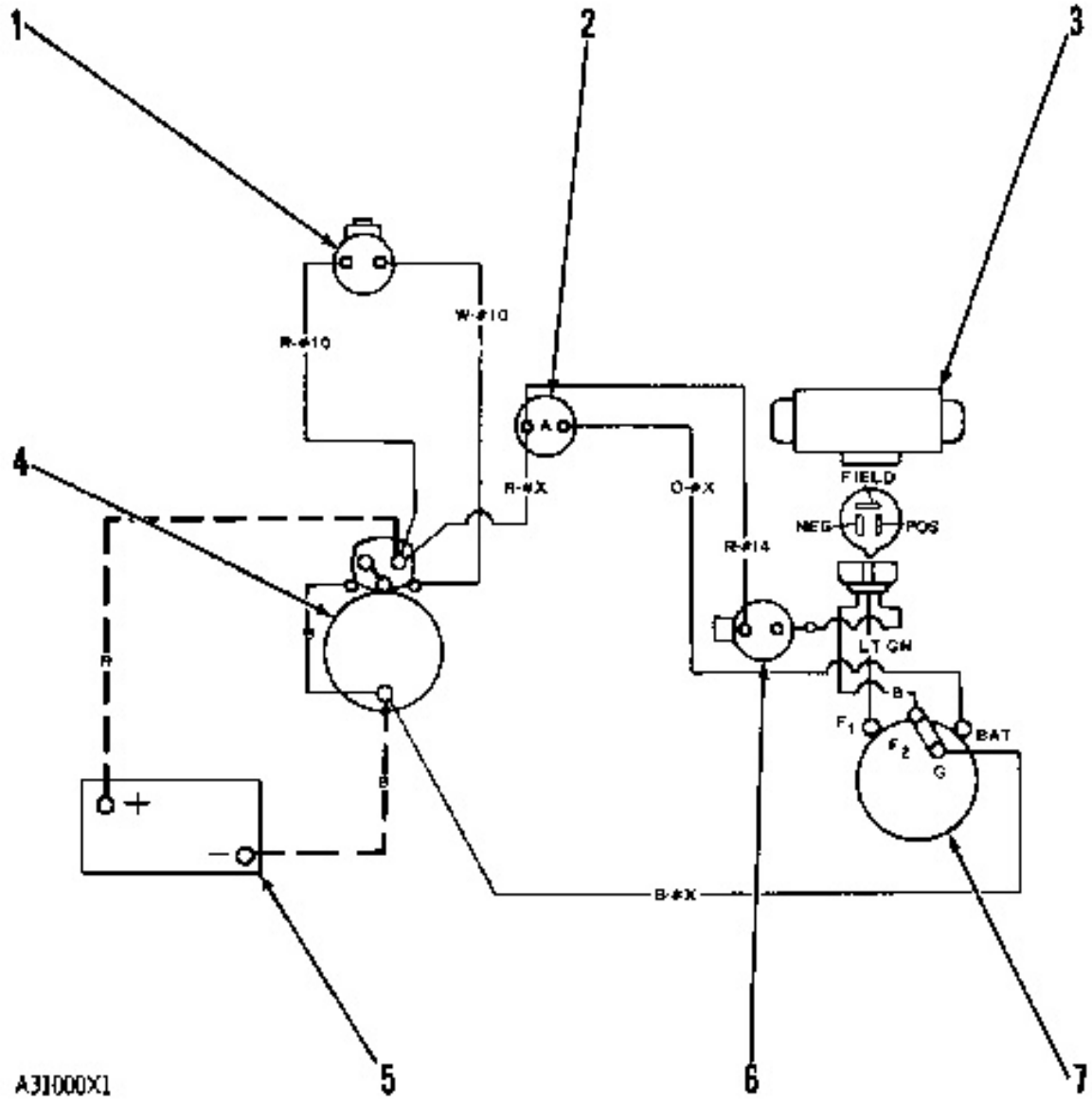

CHARGING SYSTEM WITH ELECTRIC STARTING MOTOR

1. Start switch. 2. Ammeter. 3. Regulator. 4. Starting motor. 5. Battery. 6. Pressure switch. 7. Alternator.

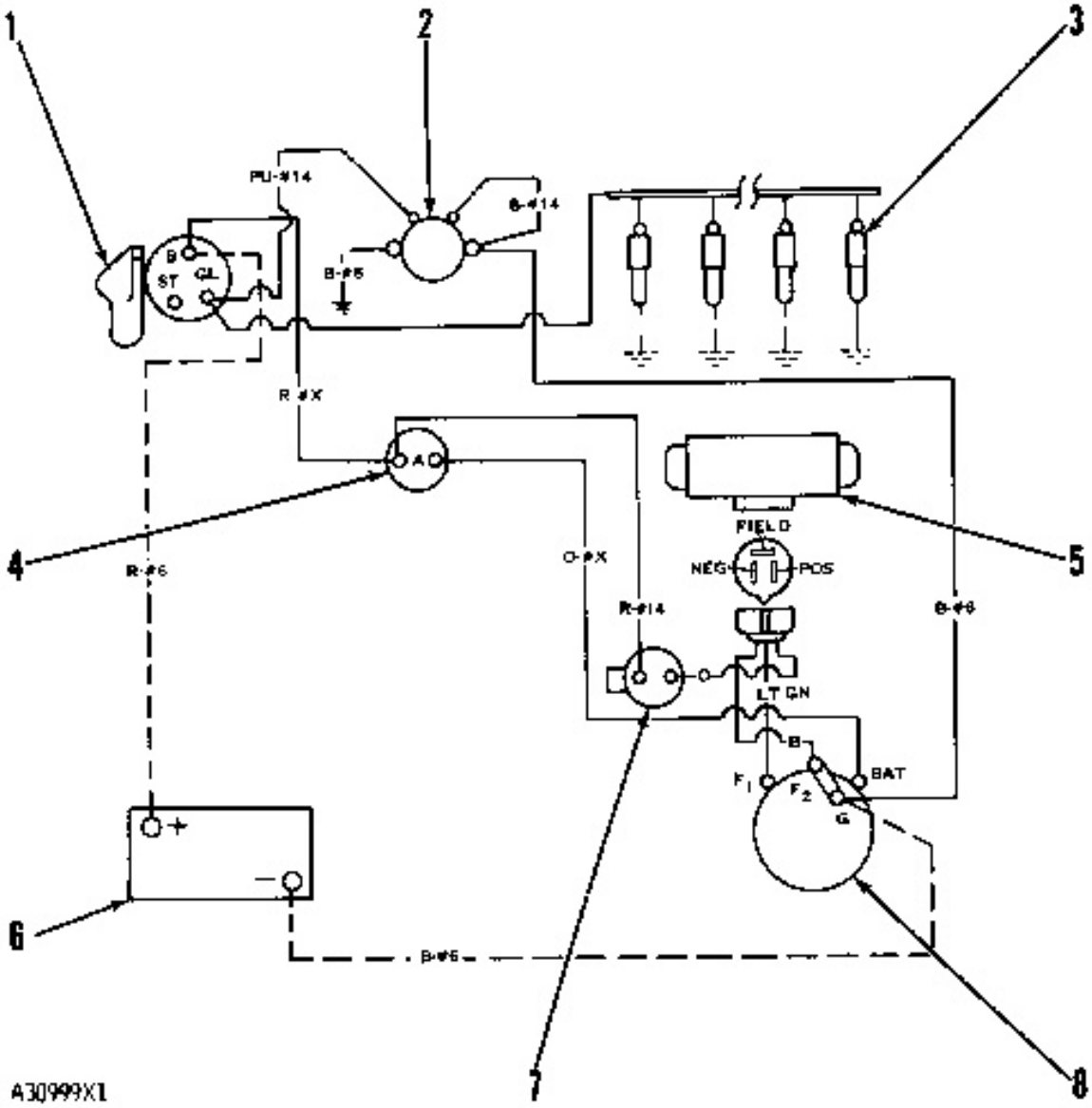

CHARGING SYSTEM WITH GLOW PLUGS

1. Heat-Start switch. 2. Magnetic switch. 3. Glow plugs. 4. Ammeter. 5. Regulator. 6. Battery. 7. Pressure switch. 8. Alternator.

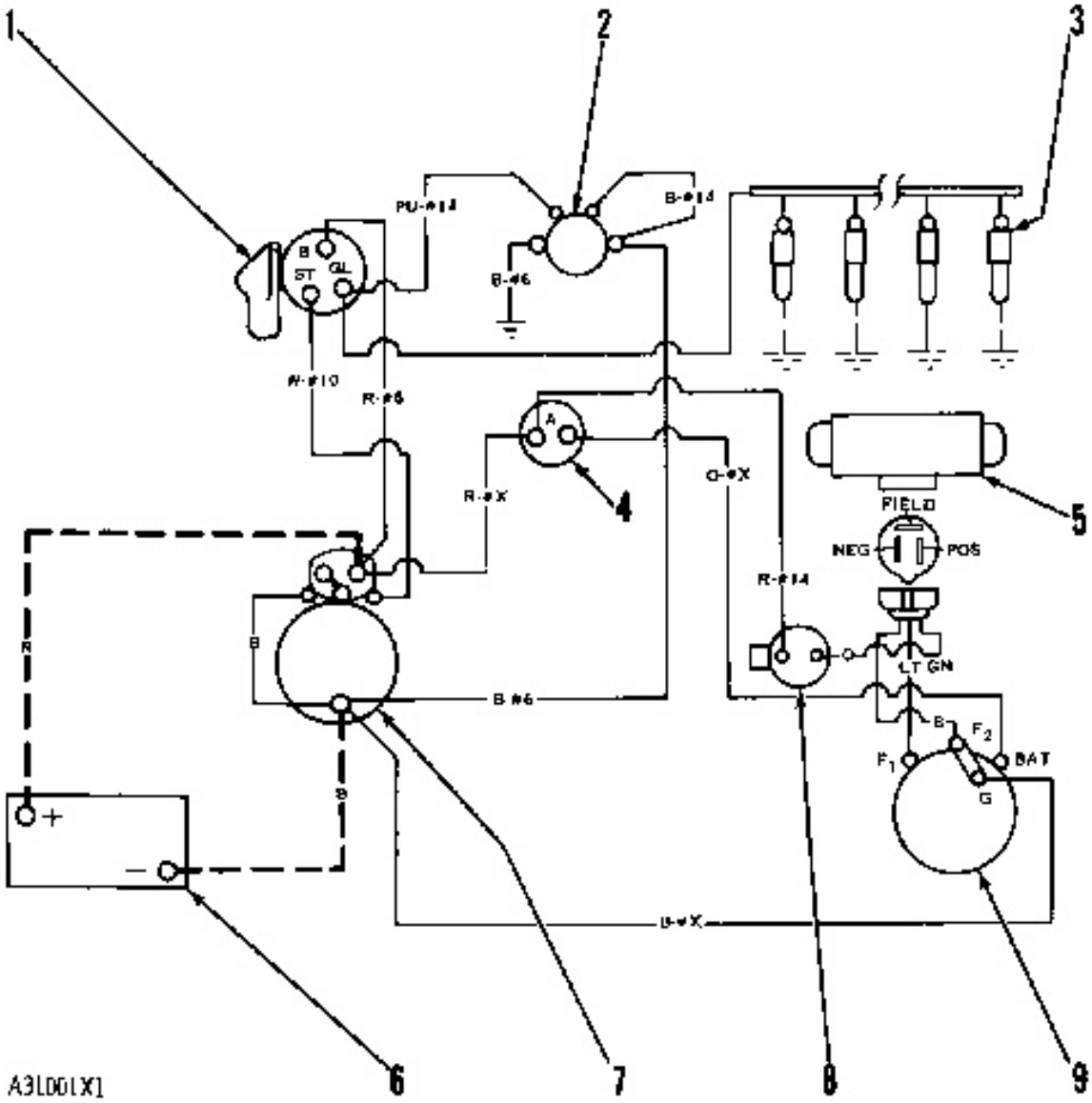

CHARGING SYSTEM WITH ELECTRIC STARTING MOTOR AND GLOW PLUGS
1. Heat-Start switch. 2. Magnetic switch. 3. Glow plugs. 4. Ammeter. 5. Regulator. 6. Battery. 7. Starting motor. 8. Pressure switch. 9. Alternator.

(Motorola)

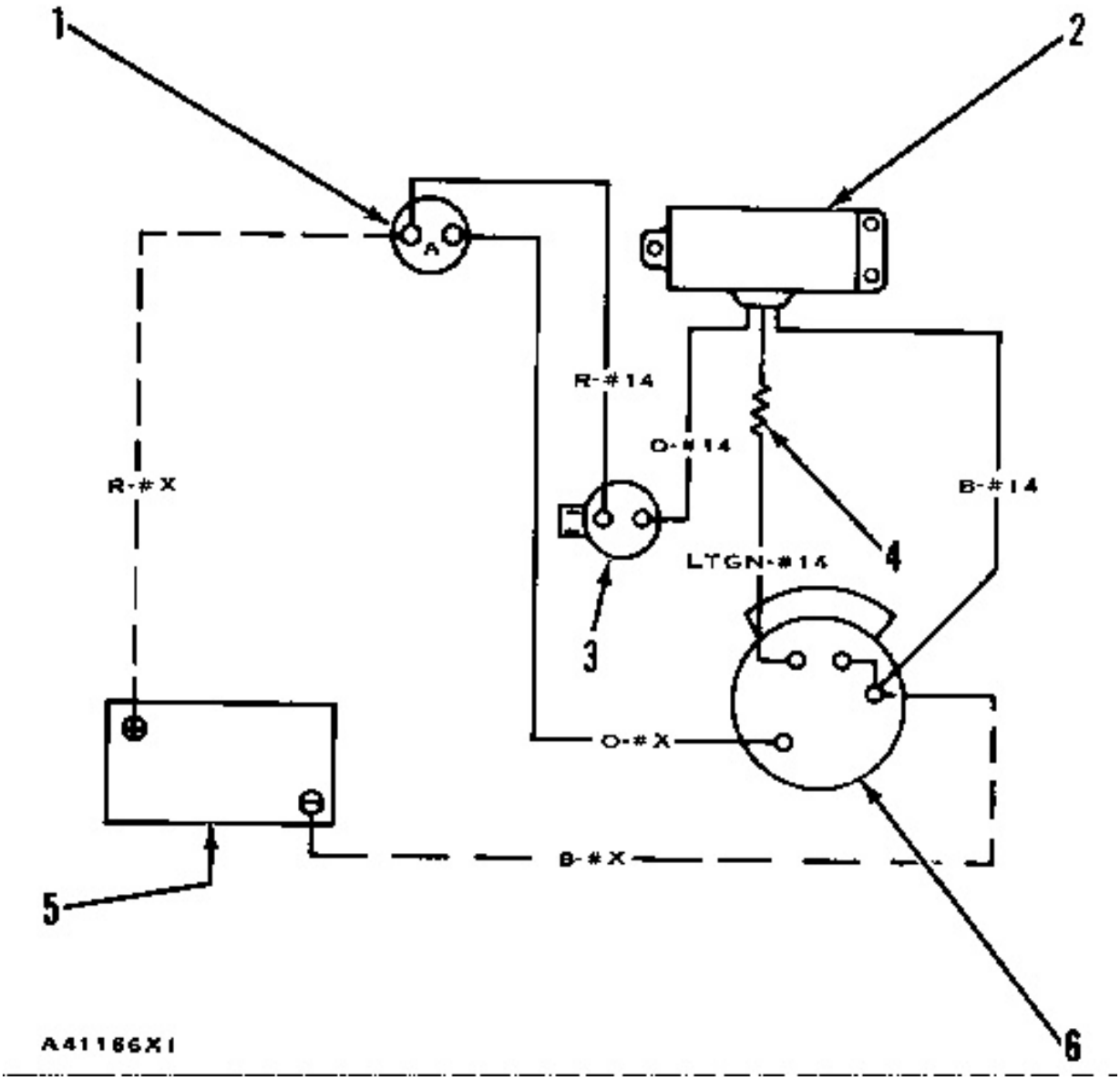

CHARGING SYSTEM

1. Ammeter. 2. Regulator. 3. Pressure switch (N.O.). 4. Resistor (installed only on 30 and 32 volt systems. On 12 and 24 volt systems, the alternator and regulator are connected without the resistor). 5. Battery. 6. Alternator.

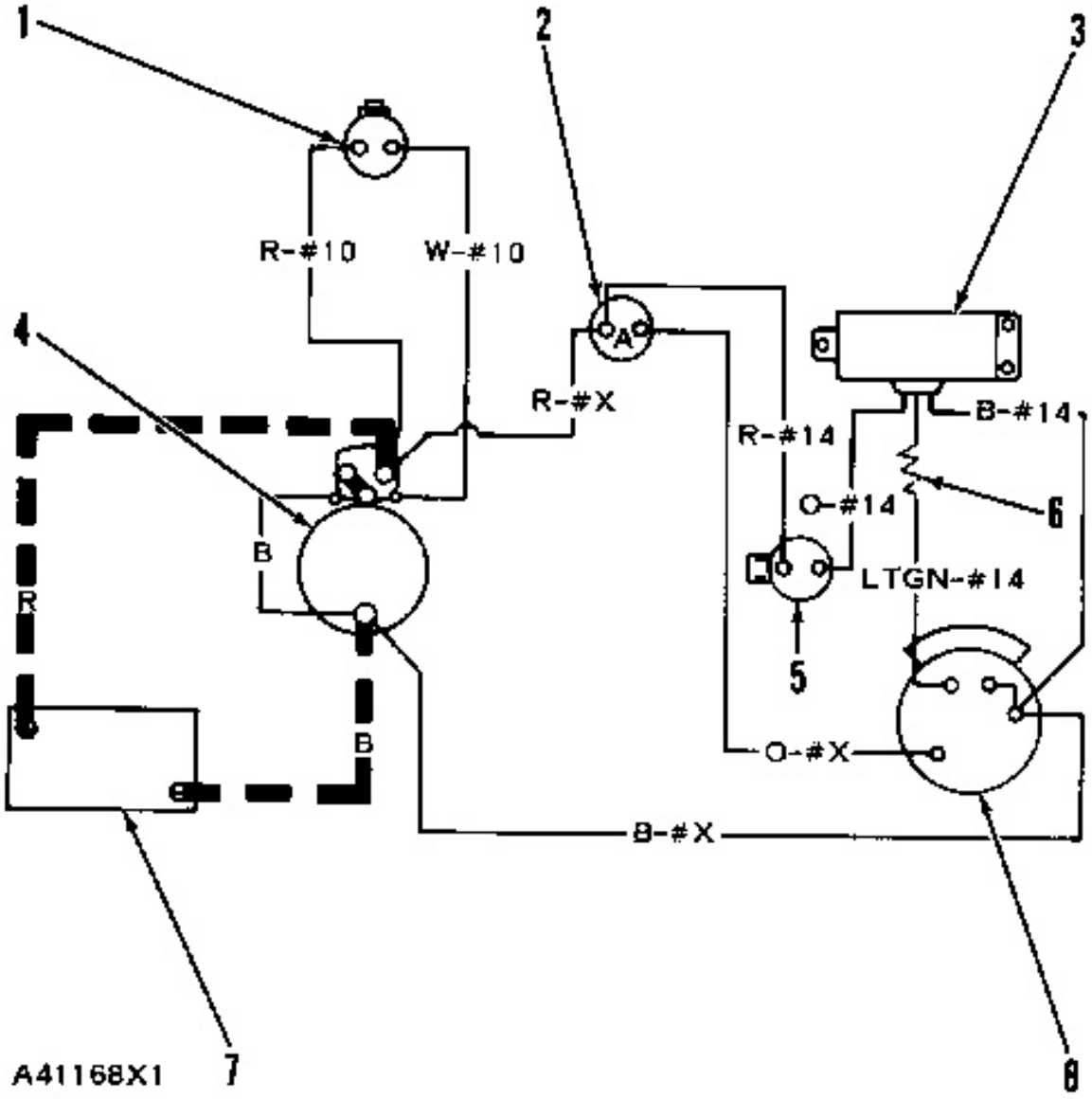

CHARGING SYSTEM WITH ELECTRICAL STARTING MOTOR

1. Start switch. 2. Ammeter. 3. Regulator. 4. Starting motor. 5. Pressure switch (N.O.). 6. Resistor (installed only on 30 and 32 volt systems. On 12 and 24 volt systems, the alternator and regulator are connected without the resistor). 7. Battery. 8. Alternator.

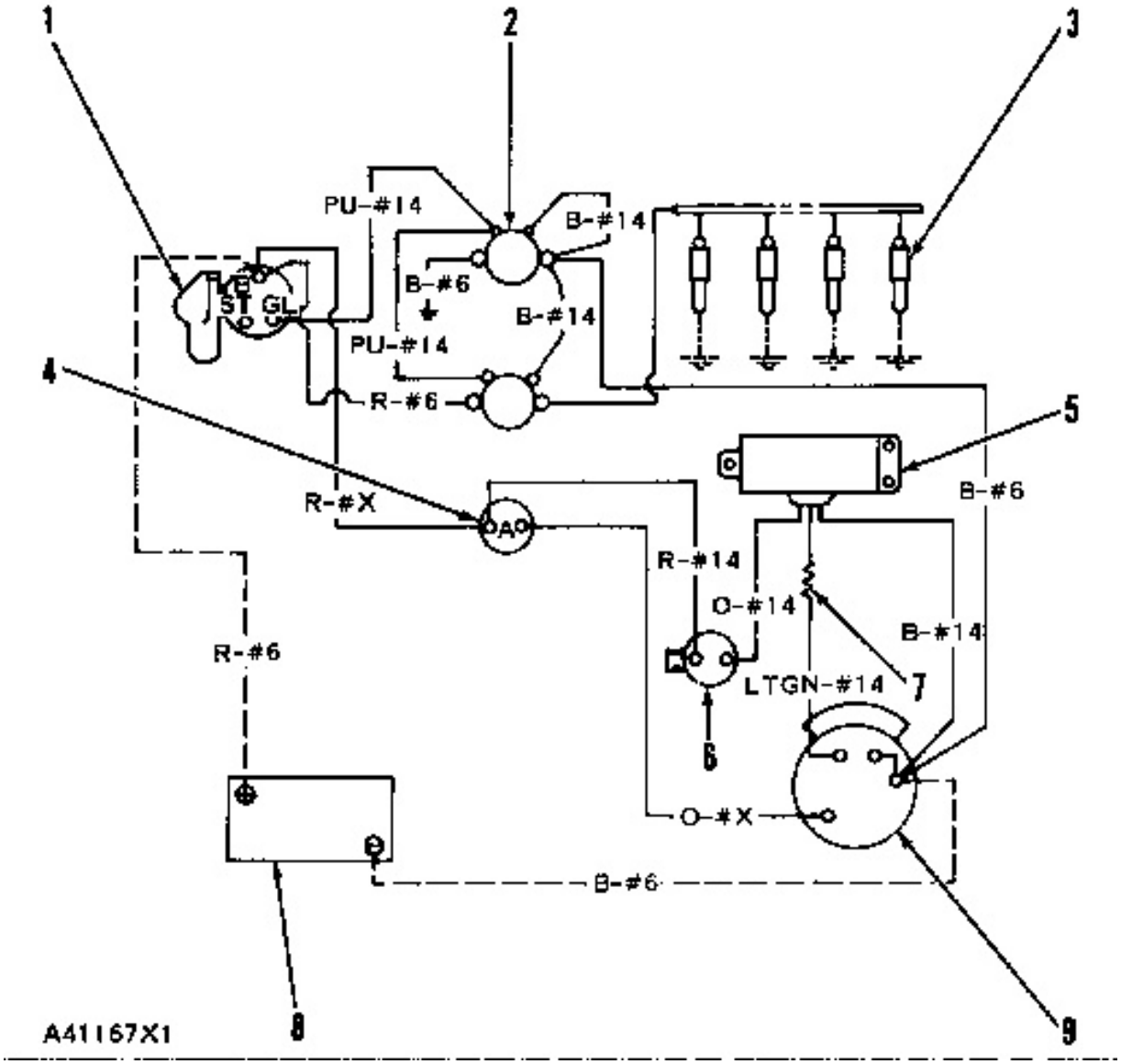

CHARGING SYSTEM WITH GLOW PLUGS

1. Heat-Start switch. 2. Magnetic switch (two). 3. Glow plugs. 4. Ammeter. 5. Regulator. 6. Pressure switch (N.O.). 7. Resistor (installed only on 30 and 32 volt systems. On 12 and 24 volt systems, the alternator and regulator are connected without the resistor). 8. Battery. 9. Alternator.

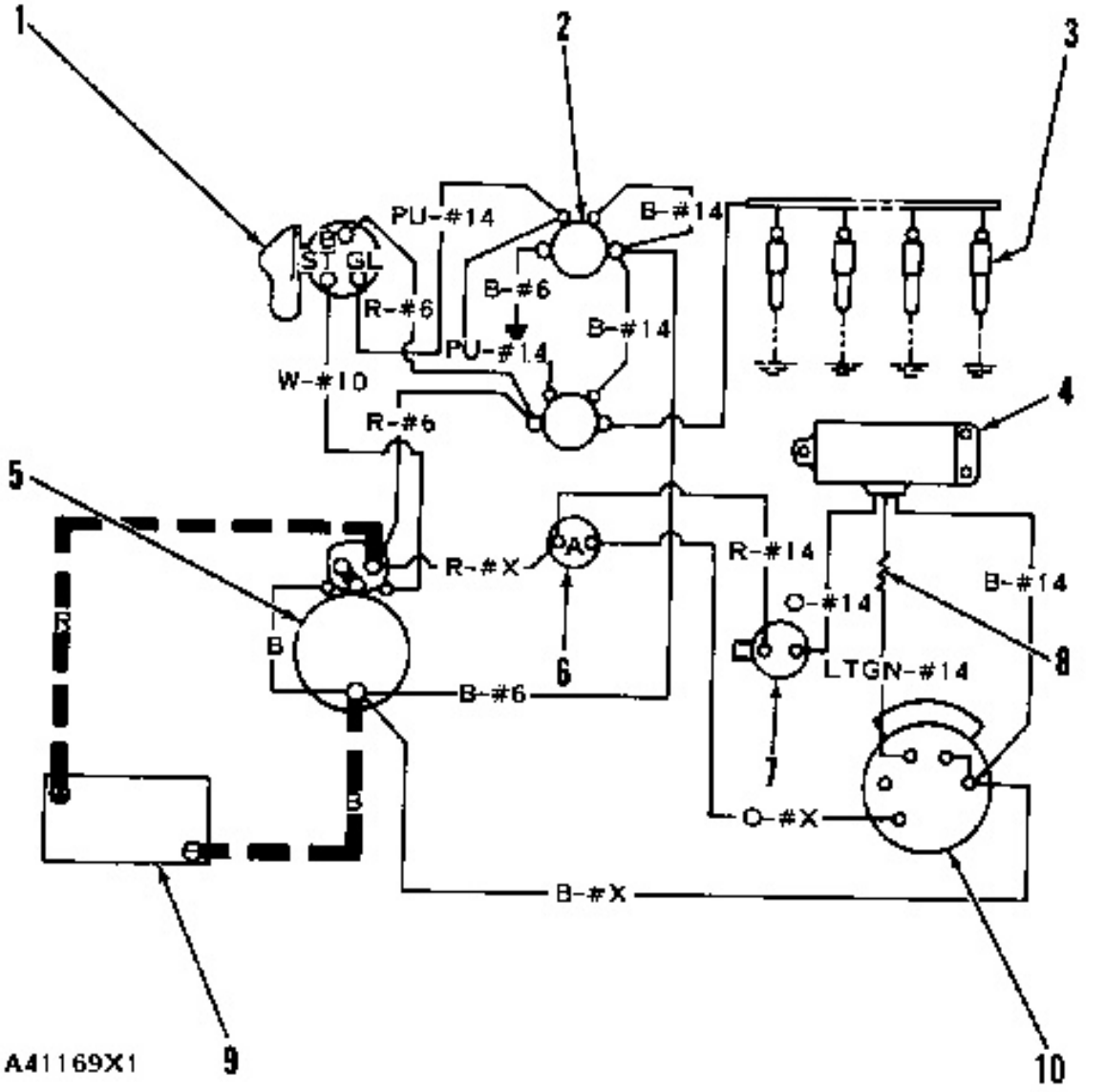

CHARGING SYSTEM WITH ELECTRIC STARTING MOTOR AND GLOW PLUGS
1. Heat-Start switch. 2. Magnetic switch (two). 3. Glow plugs. 4. Regulator. 5. Starting motor. 6. Ammeter. 7. Pressure switch (N.O.). 8. Resistor (installed only on 30 and 32 volt systems. On 12 and 24 volt systems, the alternator and regulator are connected without the resistor). 9. Battery. 10. Alternator.

(Starting Systems)

A41170X1

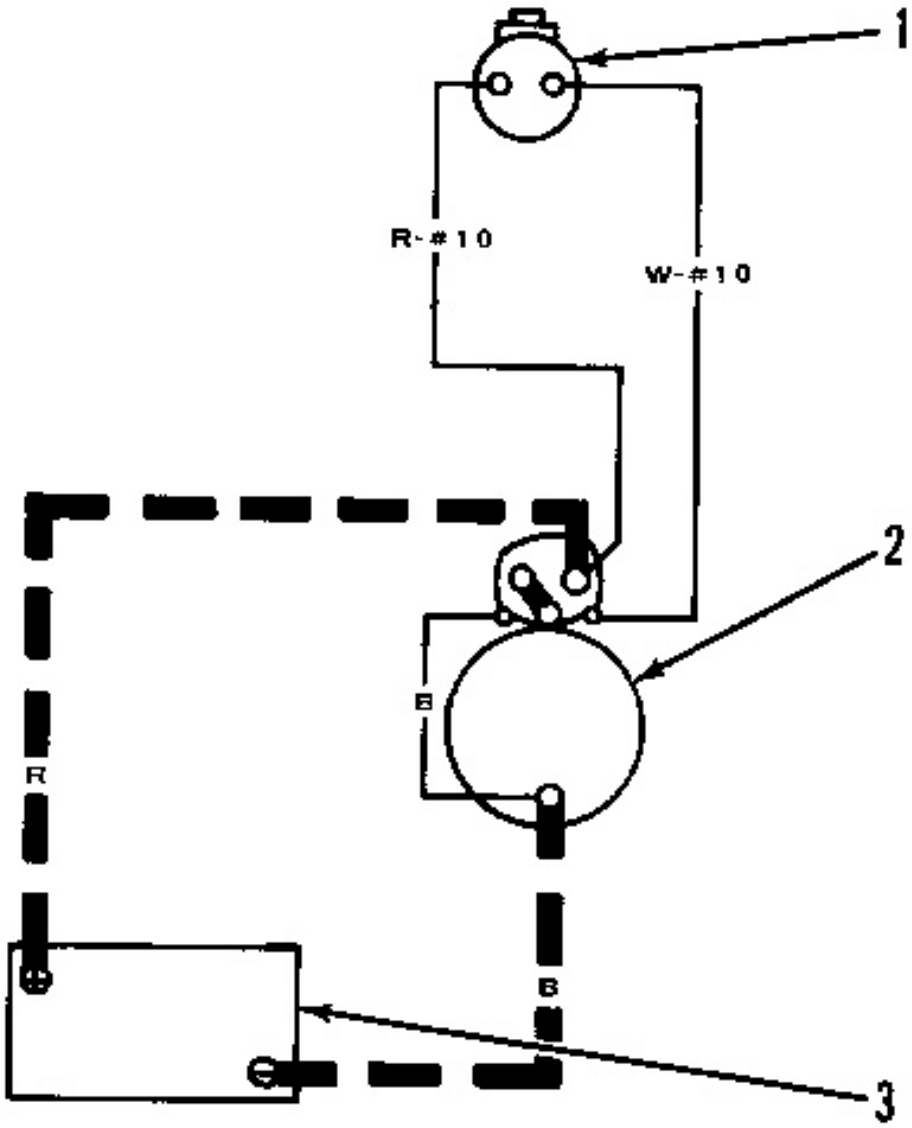

STARTING SYSTEM
1. Start switch. 2. Starting motor. 3. Battery.

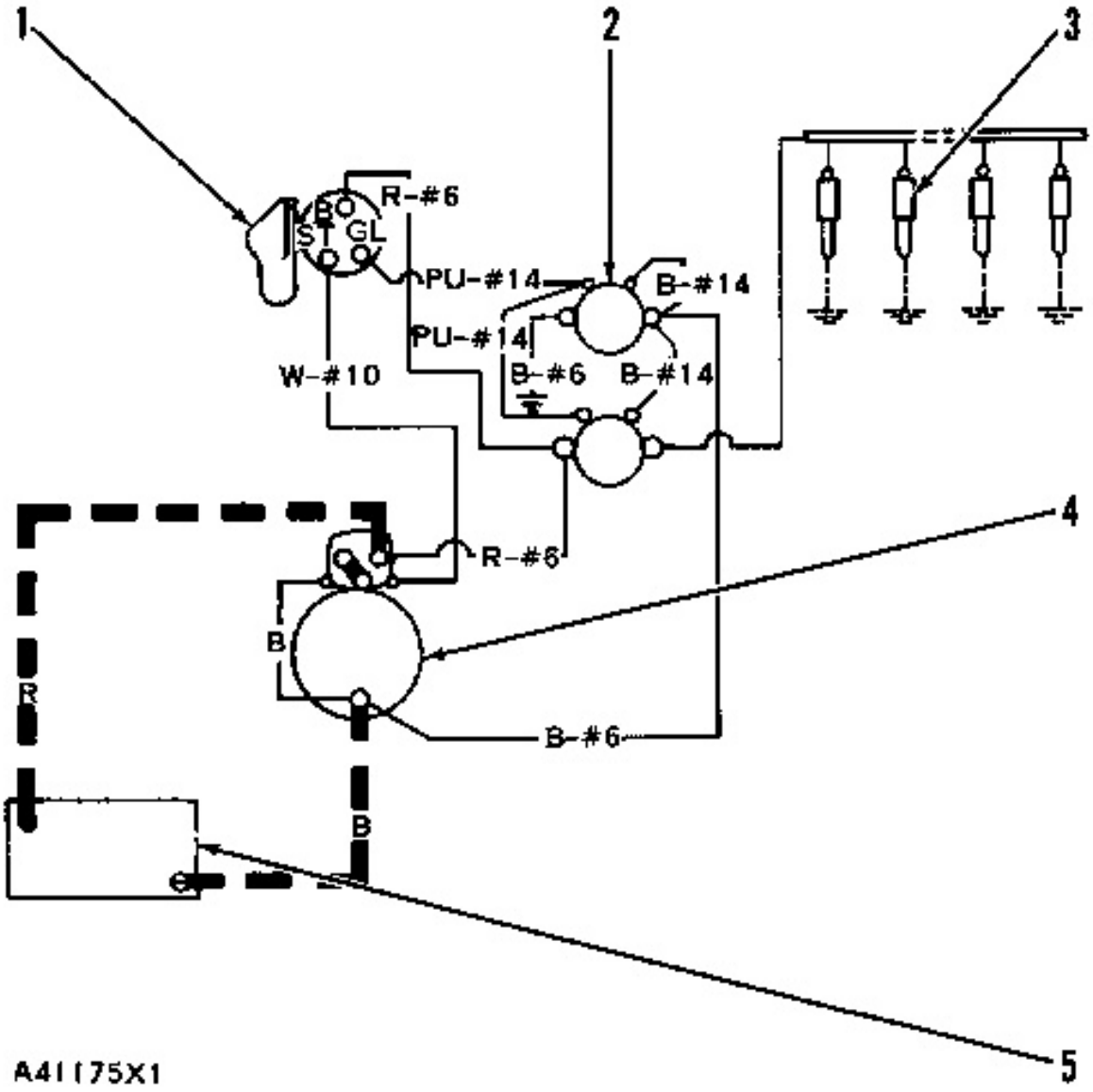

STARTING SYSTEM WITH GLOW PLUGS
1. Heat-Start switch. 2. Magnetic switch (two). 3. Glow plugs. 4. Starting motor. 5. Battery.

Grounded Electrical Systems

(Delco-Remy) (Regulator Inside Alternator)

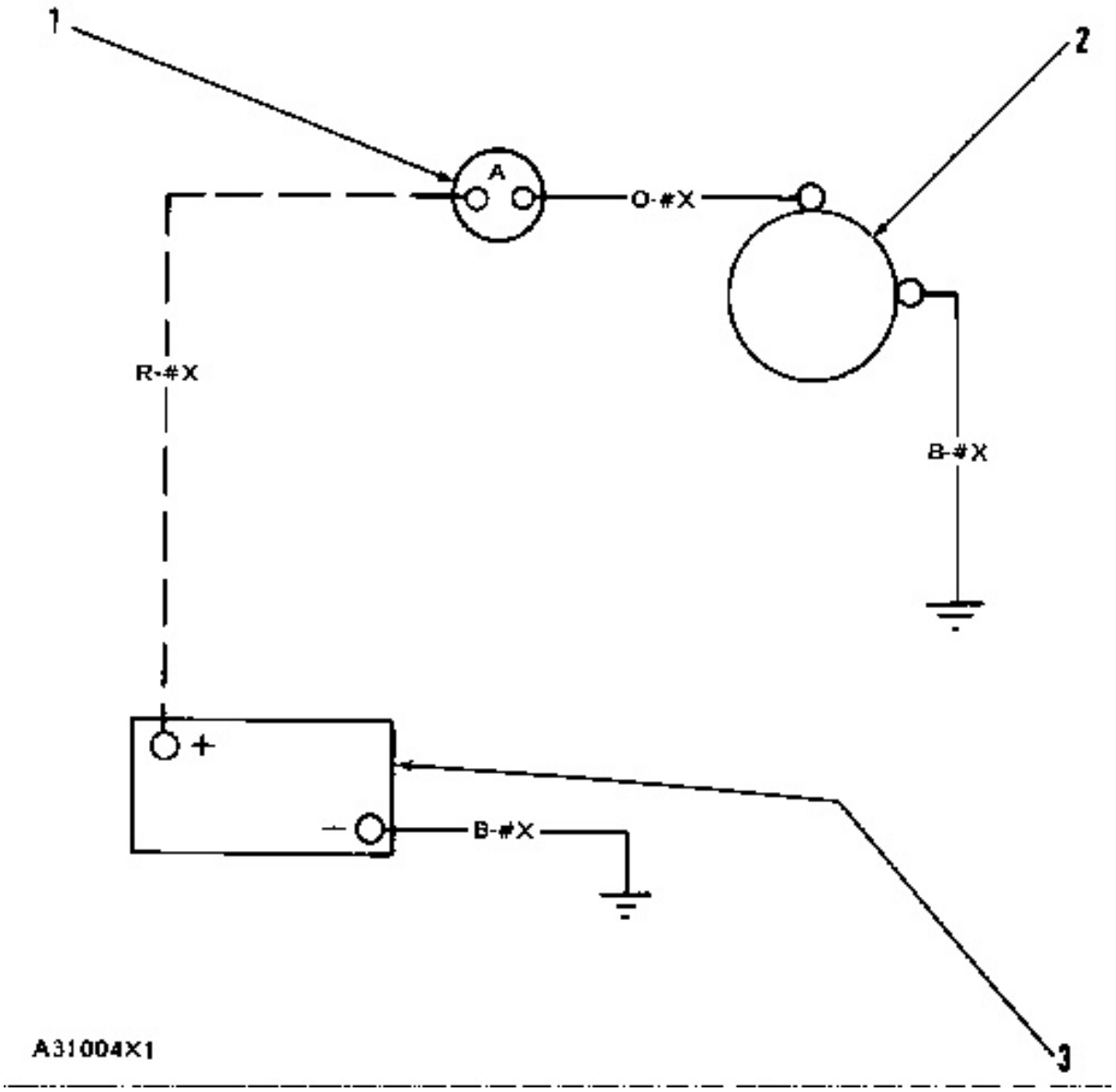

CHARGING SYSTEM
1. Ammeter. 2. Alternator. 3. Battery.

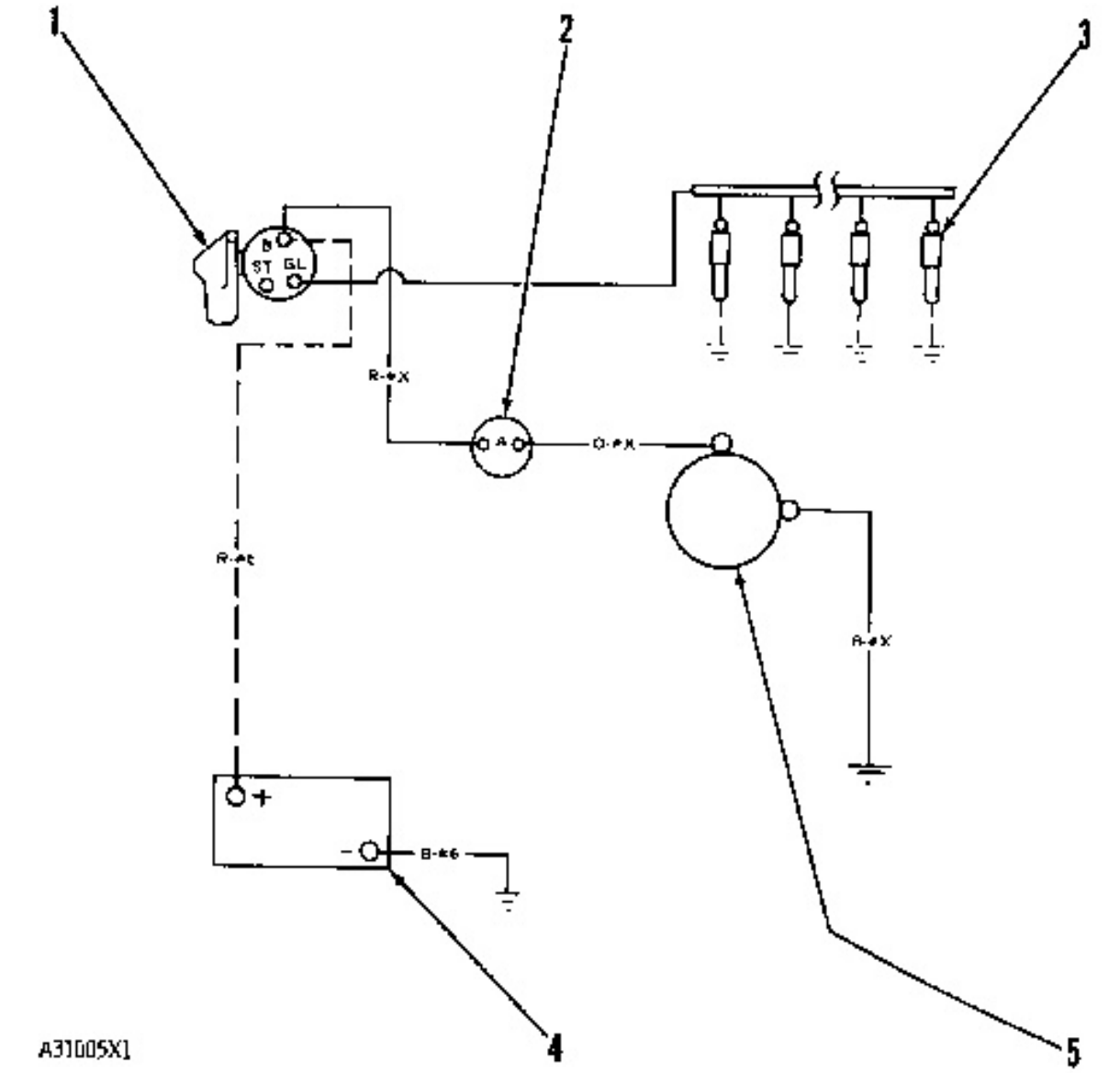

CHARGING SYSTEM WITH GLOW PLUGS
1. Heat-Start switch. 2. Ammeter. 3. Glow plugs. 4. Battery. 5. Alternator.

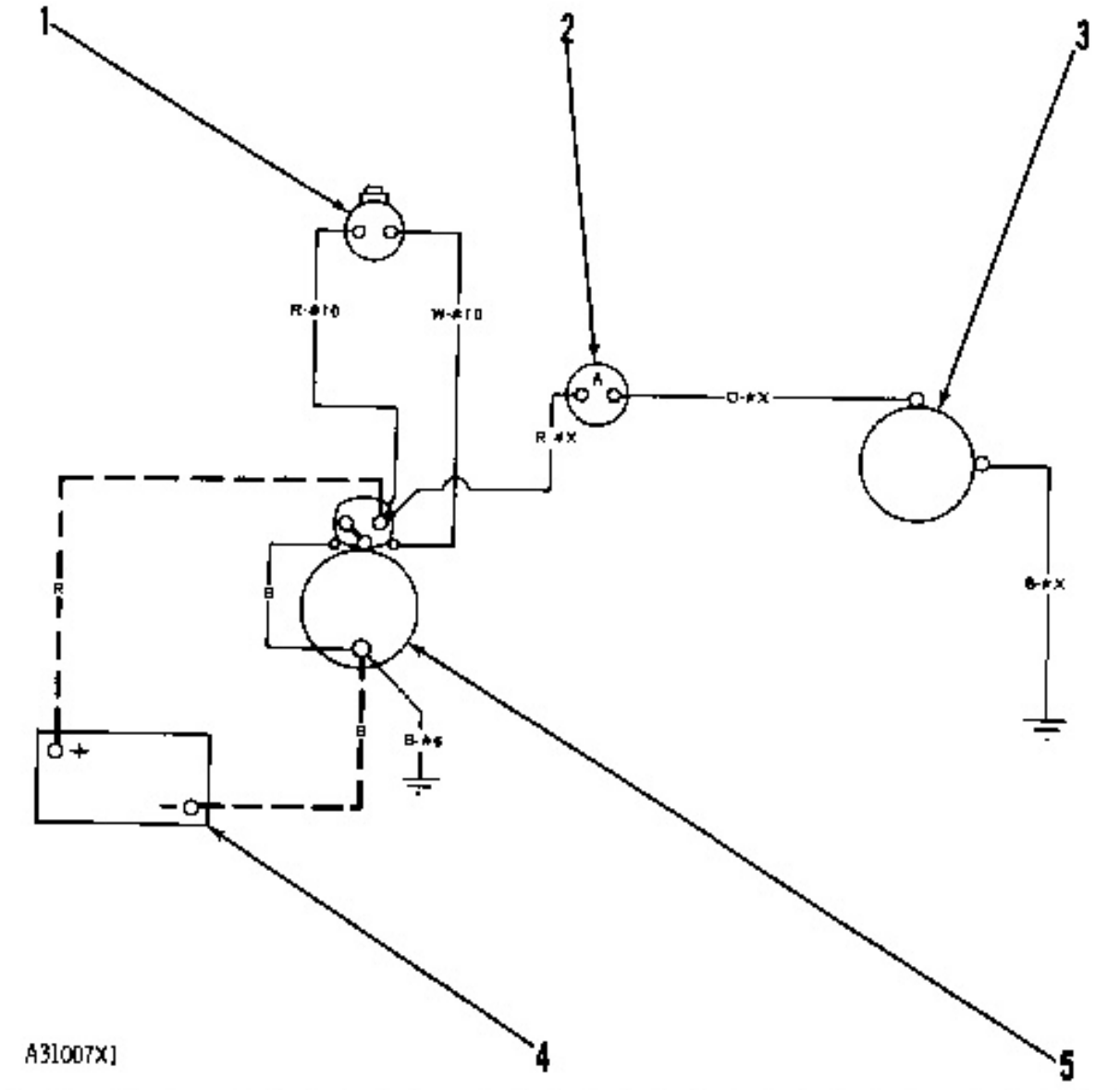

CHARGING SYSTEM WITH ELECTRIC STARTING MOTOR
1. Start switch. 2. Ammeter. 3. Alternator. 4. Battery. 5. Starting motor.

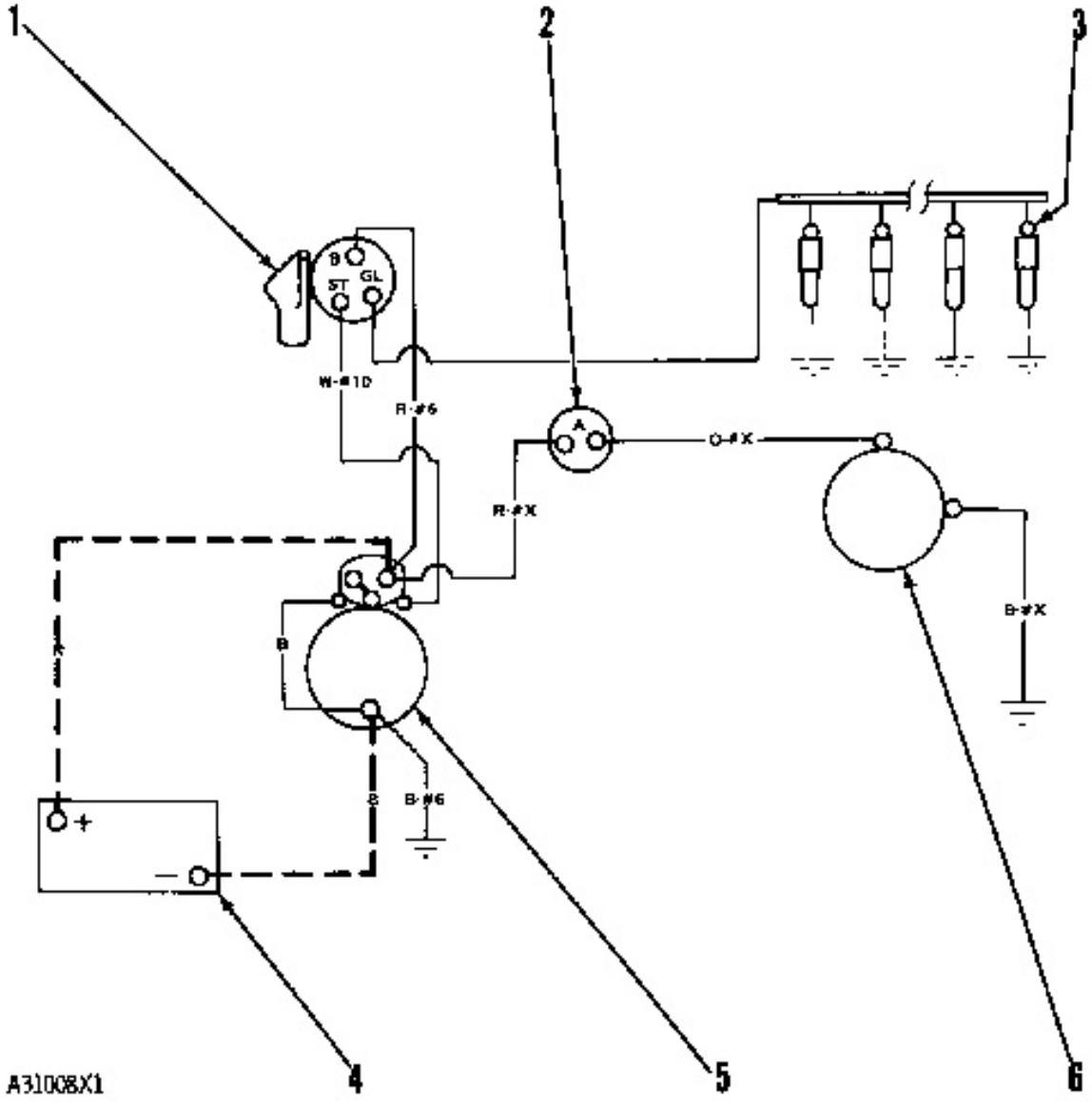

CHARGING SYSTEM WITH ELECTRIC STARTING MOTOR AND GLOW PLUGS
1. Heat-Start switch. 2. Ammeter. 3. Glow plugs. 4. Battery. 5. Starting motor. 6. Alternator.

(Delco-Remy) (Regulator Separate From Alternator)

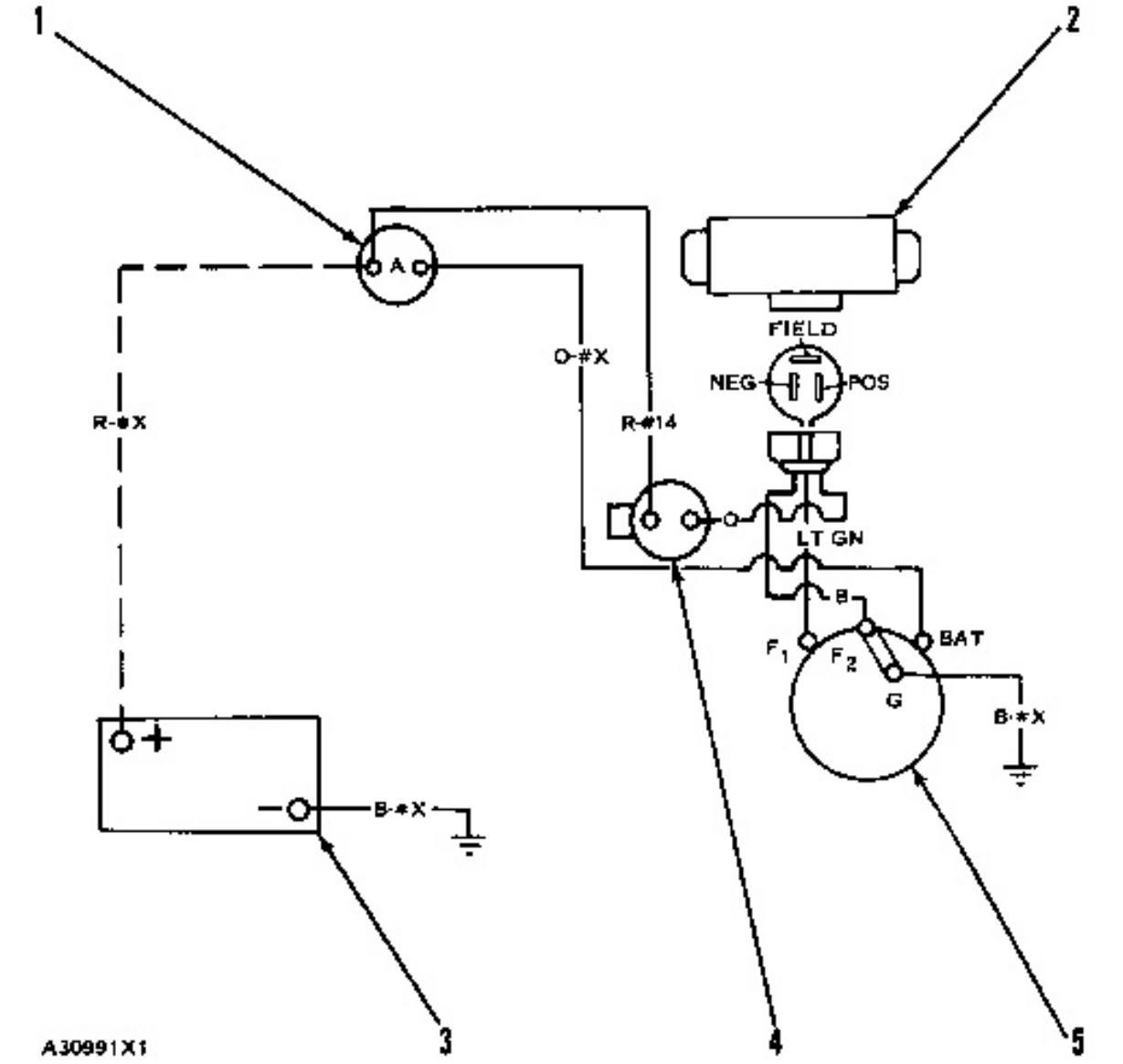

CHARGING SYSTEM

1. Ammeter. 2. Regulator. 3. Battery. 4. Pressure switch. 5. Alternator.

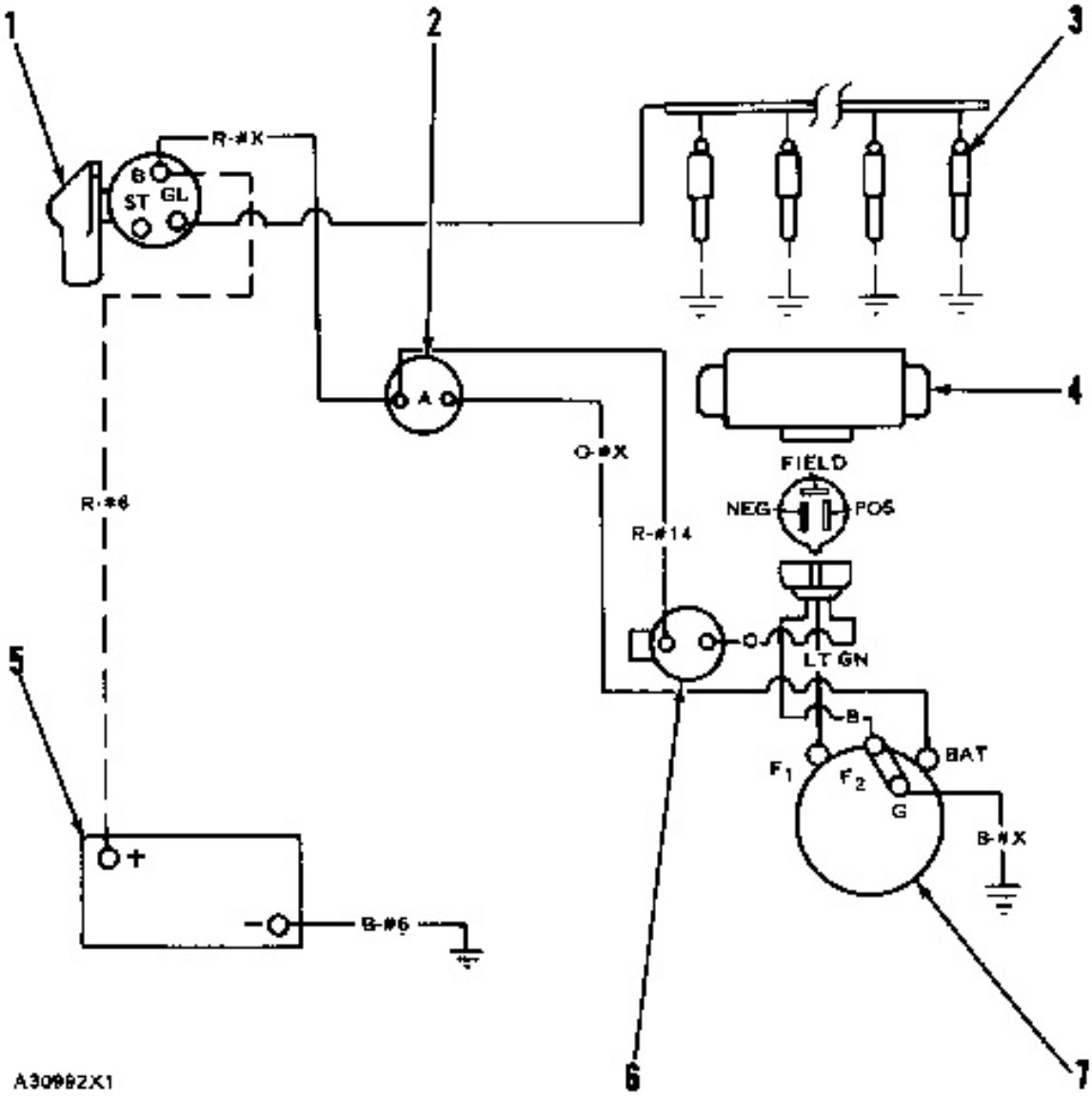

CHARGING SYSTEM WITH GLOW PLUGS

1. Heat-Start switch. 2. Ammeter. 3. Glow plugs. 4. Regulator. 5. Battery. 6. Pressure switch. 7. Alternator.

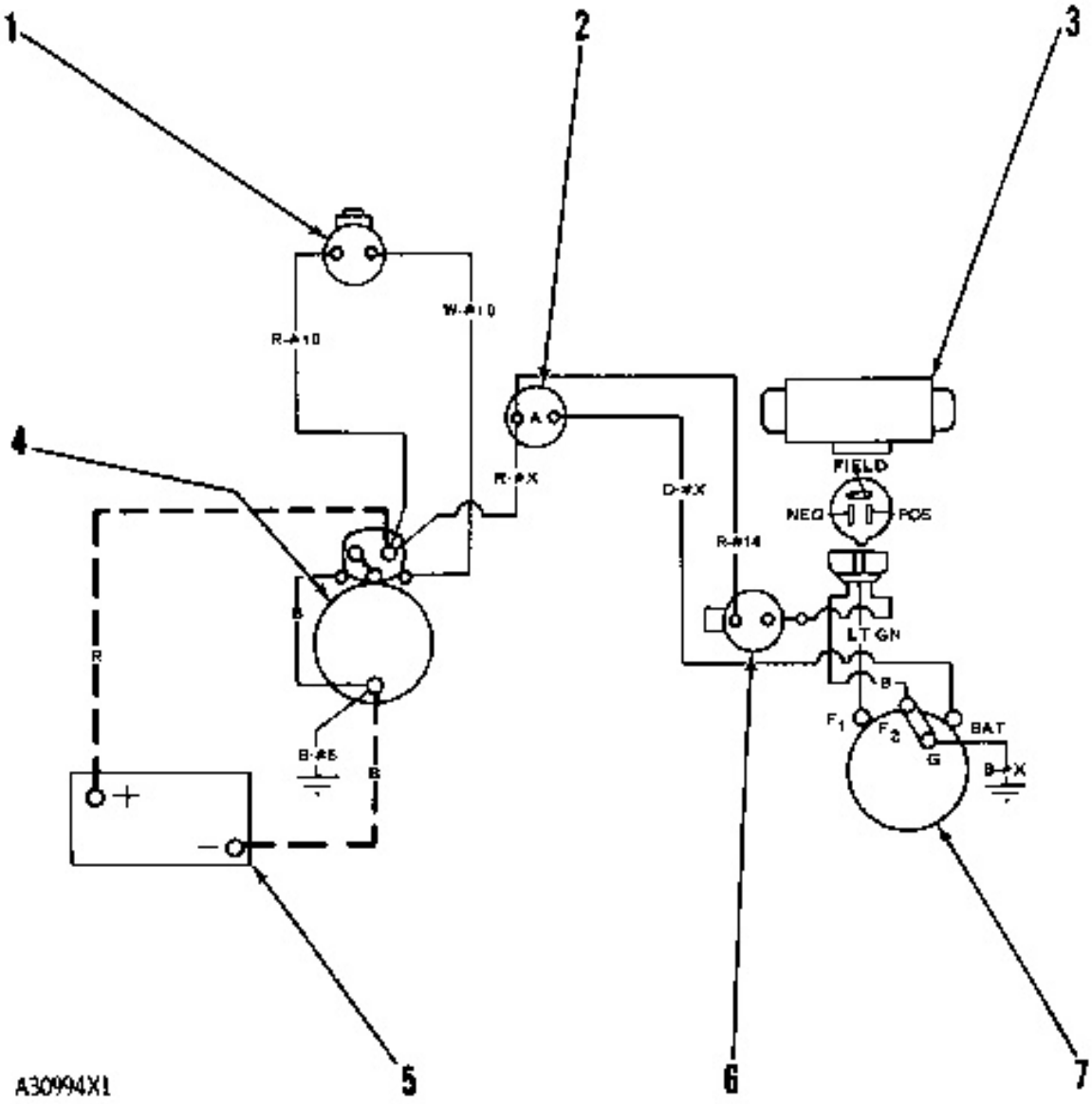

CHARGING SYSTEM WITH ELECTRIC STARTING MOTOR

1. Start switch. 2. Ammeter. 3. Regulator. 4. Starting motor. 5. Battery. 6. Pressure switch. 7. Alternator.

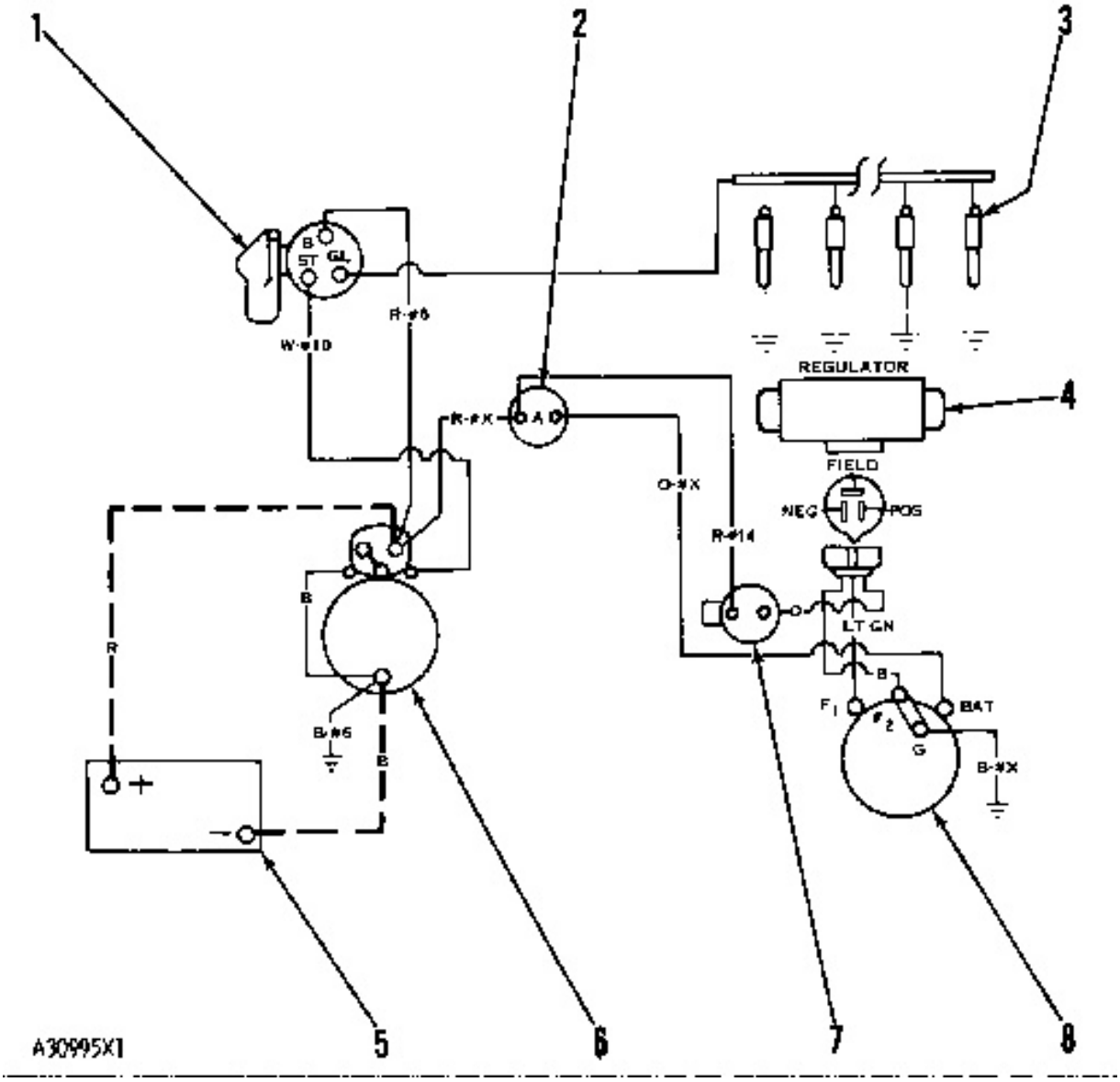

CHARGING SYSTEM WITH ELECTRIC STARTING MOTOR AND GLOW PLUGS
1. Heat-Start switch. 2. Ammeter. 3. Glow plugs. 4. Regulator. 5. Battery. 6. Starting motor. 7. Pressure switch. 8. Alternator.

(Motorola)

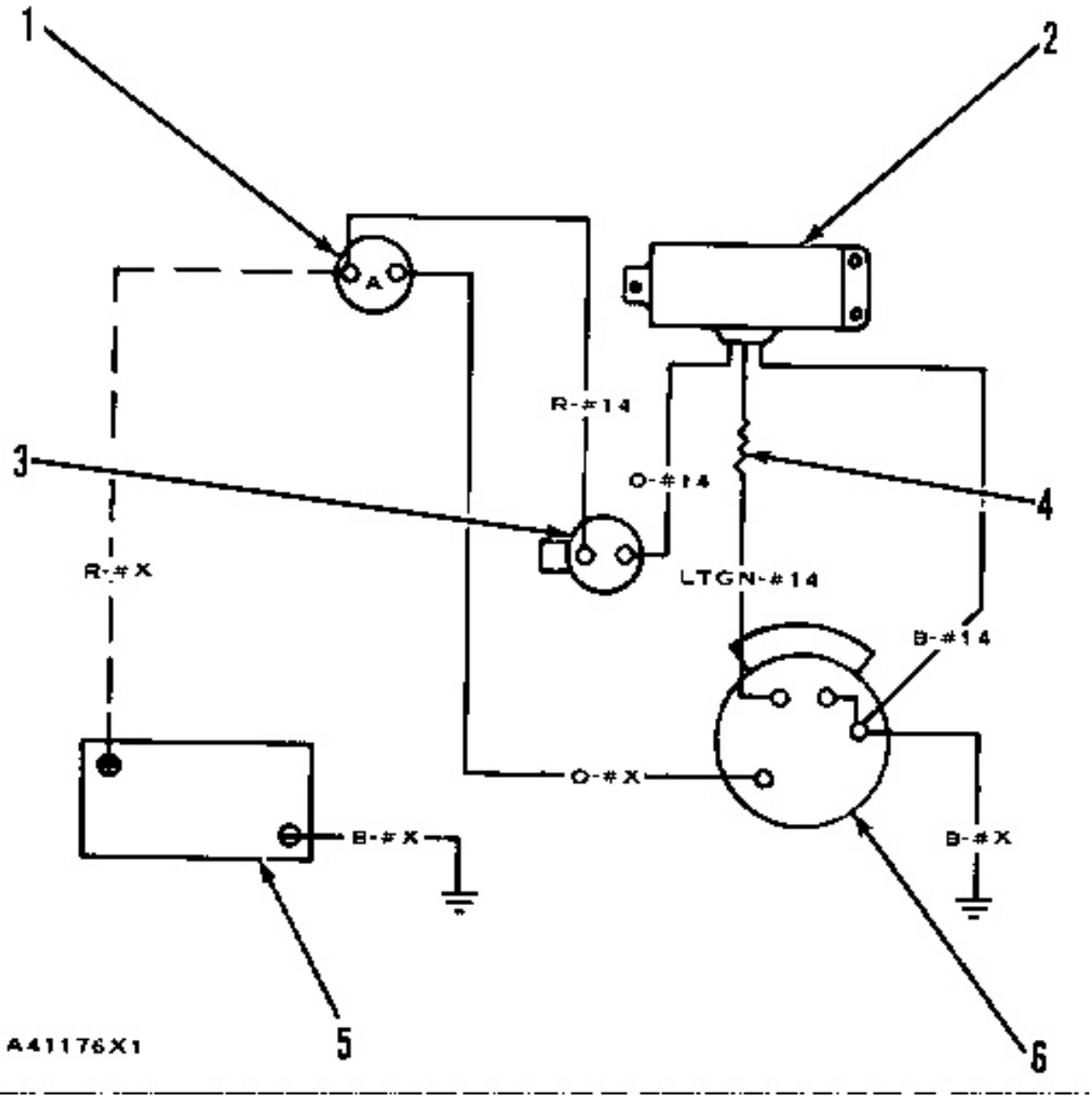

CHARGING SYSTEM

1. Ammeter. 2. Regulator. 3. Pressure switch (N.O.). 4. Resistor (installed only on 30 and 32 volt systems. On 12 and 24 volt systems, the alternator and regulator are connected without the resistor). 5. Battery. 6. Alternator.

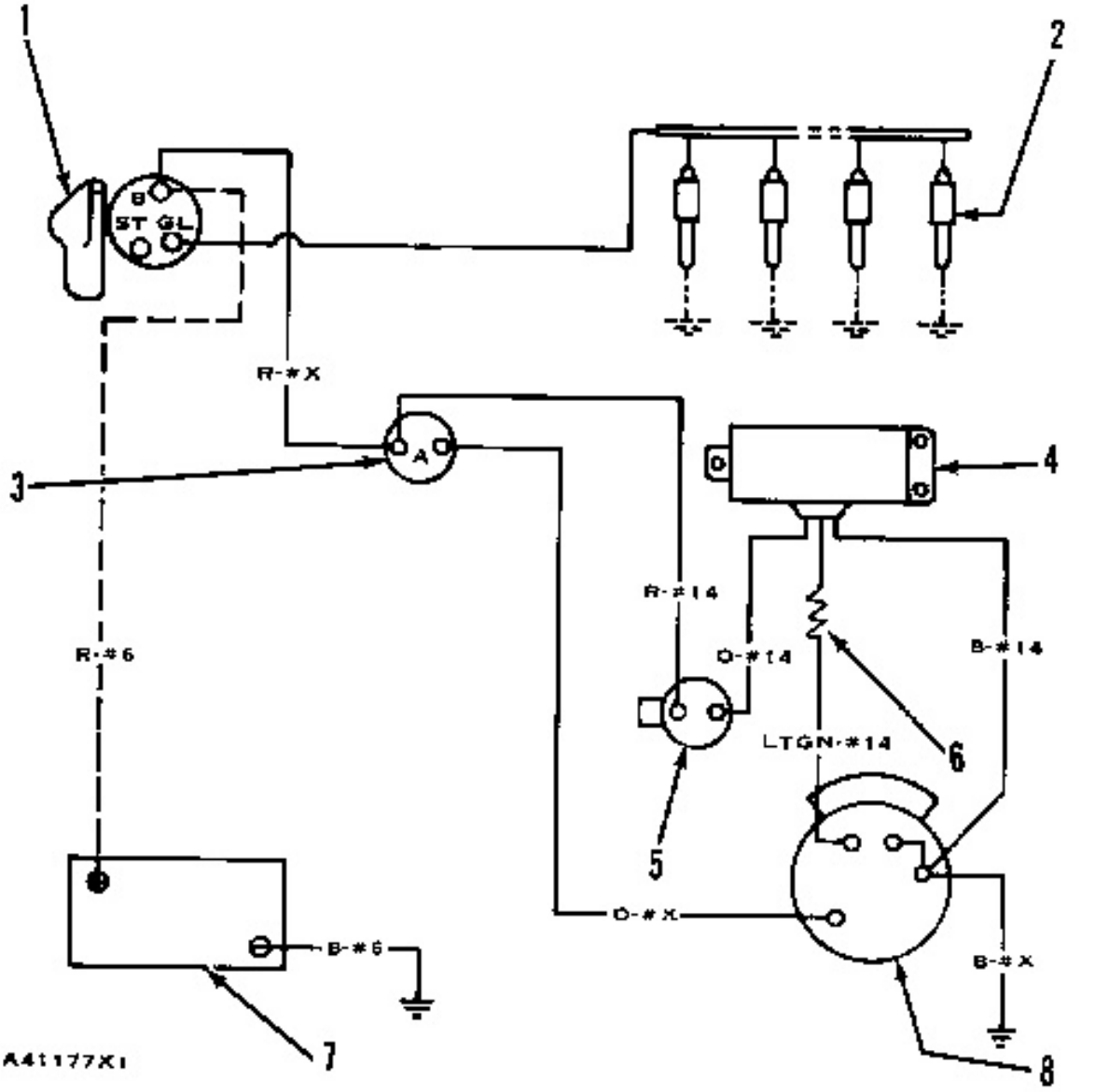

CHARGING SYSTEM WITH GLOW PLUGS

1. Heat-Start switch. 2. Glow plugs. 3. Ammeter. 4. Regulator. 5. Pressure switch (N.O.). 6. Resistor (installed only on 30 and 32 volt systems. On 12 and 24 volt systems, the alternator and regulator are connected without the resistor). 7. Battery. 8. Alternator.

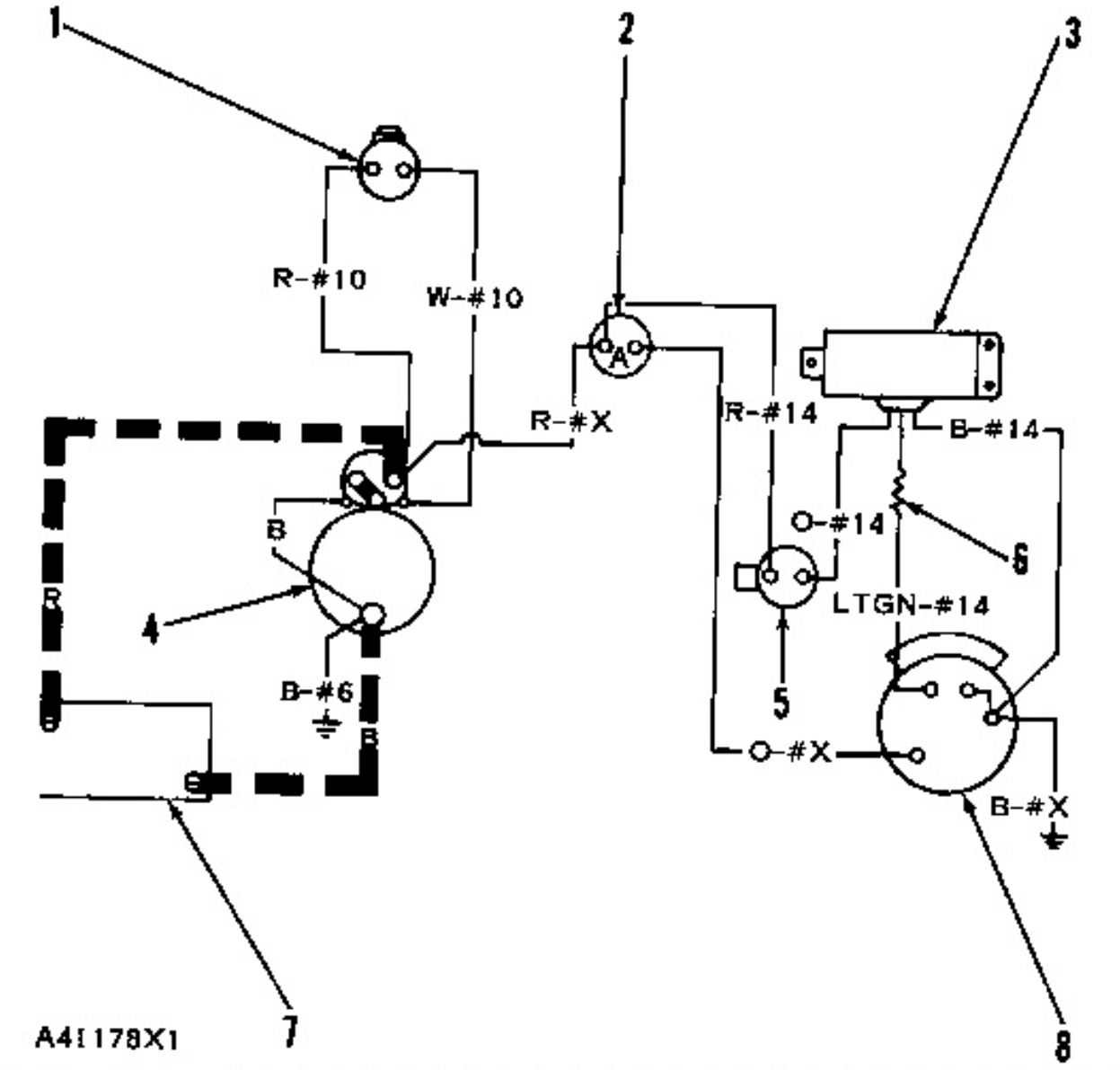

CHARGING SYSTEM WITH ELECTRIC STARTING MOTOR

1. Start switch. 2. Ammeter. 3. Regulator. 4. Starting motor. 5. Pressure switch (N.O.). 6. Resistor (installed only on 30 and 32 volt systems. On 12 and 24 volt systems, the alternator and regulator are connected without the resistor). 7. Battery. 8. Alternator.

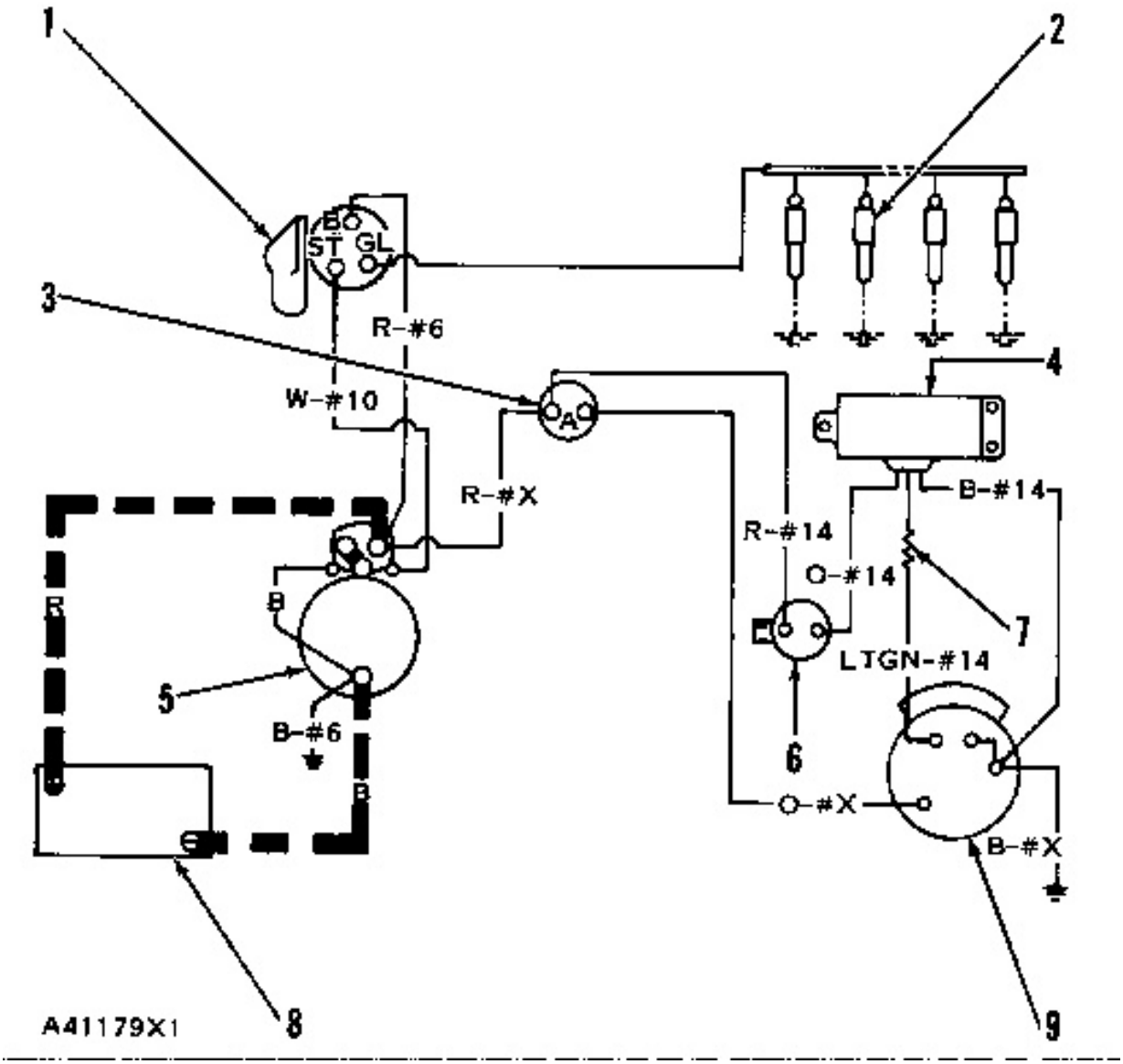

CHARGING SYSTEM WITH ELECTRIC STARTING MOTOR AND GLOW PLUGS
1. Heat-Start switch. 2. Glow plugs. 3. Ammeter. 4. Regulator. 5. Starting motor. 6. Pressure switch (N.O.). 7. Resistor (installed only on 30 and 32 volt systems. On 12 and 24 volt systems, the alternator and regulator are connected without the resistor). 8. Battery. 9. Alternator.

(Starting Systems)

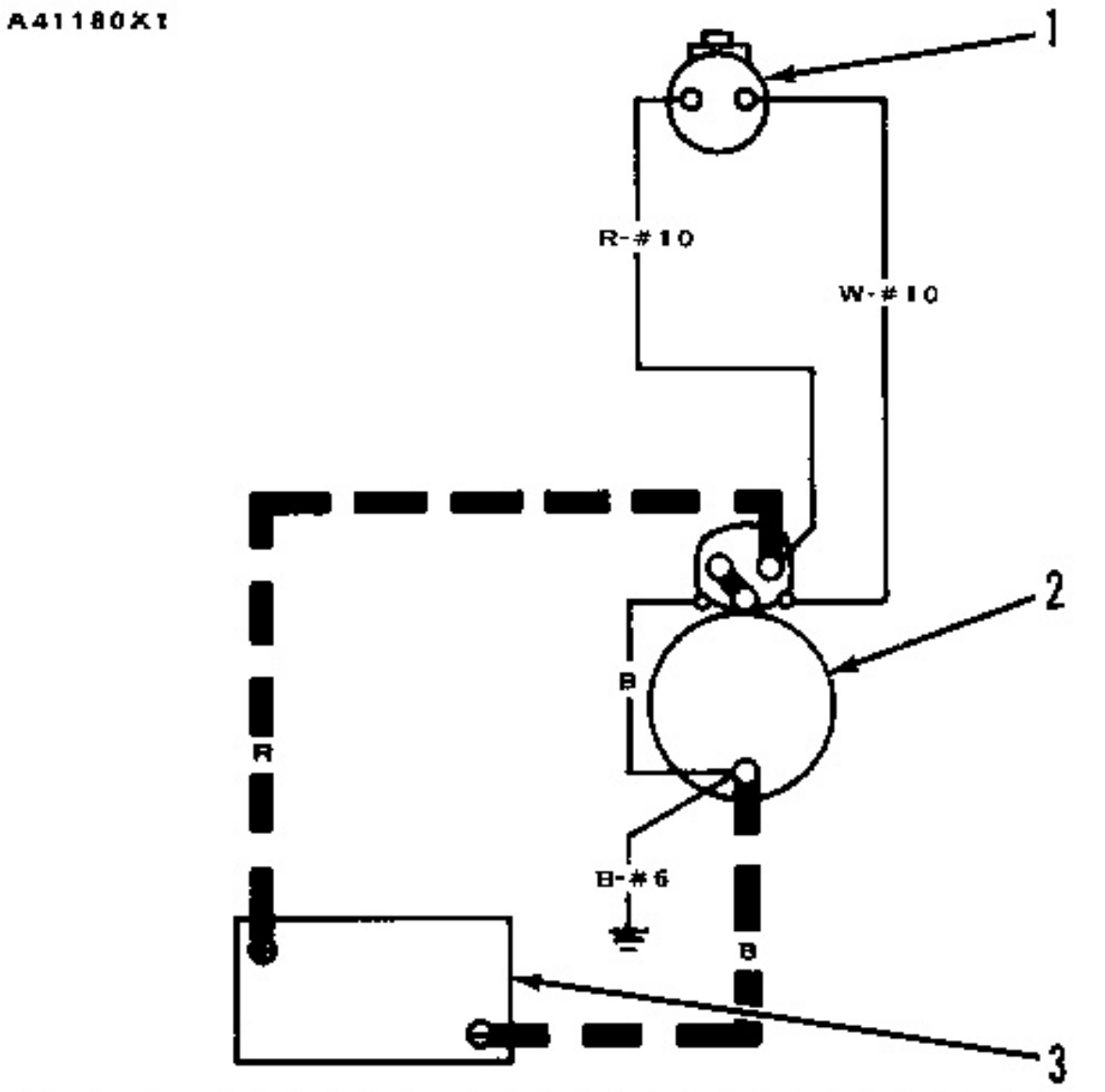

STARTING SYSTEM
1. Start switch. 2. Starting motor. 3. Battery.

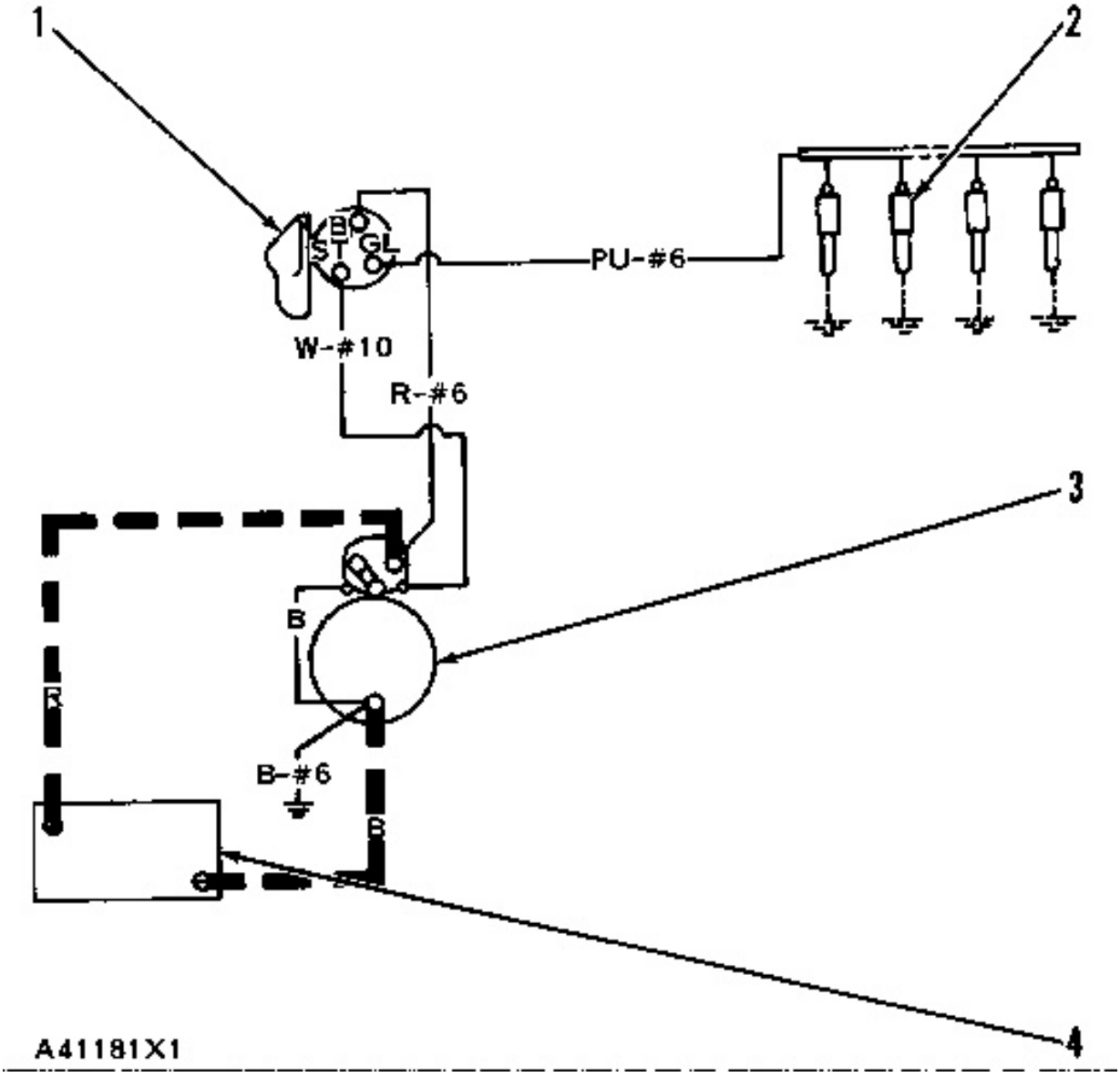

STARTING SYSTEM WITH GLOW PLUGS
1. Heat-Start switch. 2. Glow plugs. 3. Starting motor. 4. Battery.

Air Starting System

The air starting motor is used to turn the engine flywheel fast enough to get the engine running.

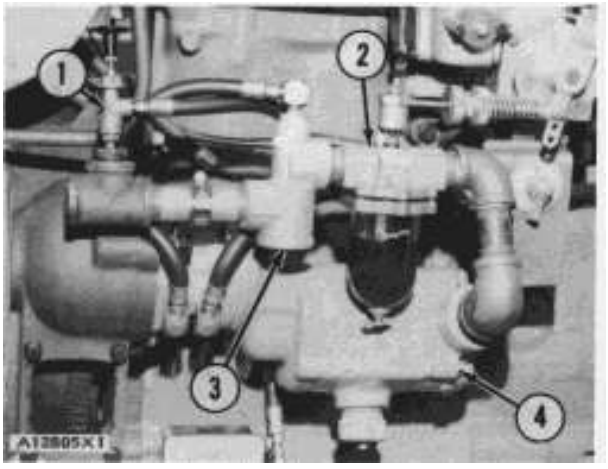

AIR STARTING SYSTEM

1. Starter control valve. 2. Oiler. 3. Relay valve. 4. Air starting motor.

The air starting motor is on the right side of the engine. Normally the air for the starting motor is from a storage tank which is filled by an air compressor installed on the left front of the engine. The air storage tank holds 10.5 cu. ft. (297 liter) of air at 250 psi (1720 kPa) when filled.

For engines which do not have heavy loads when starting, the regulator setting is approximately 100 psi (690 kPa). This setting gives a good relationship between cranking speeds fast enough for easy starting and the length of time the air starting motor can turn the engine before the air supply is gone.

If the engine has a heavy load which can not be disconnected during starting, the setting of the air pressure regulating valve needs to be higher in order to get high enough speed for easy starting.

The air consumption is directly related to speed, the air pressure is related to the effort necessary to turn the engine flywheel. The setting of the air pressure regulator can be up to 150 psi (1030 kPa) if necessary to get the correct cranking speed for a heavily loaded engine. With the correct setting, the air starting motor can turn the heavily loaded engine as fast and as long as it can turn a lightly loaded engine.

Other air supplies can be used if they have the correct pressure and volume. For good life of the air starting motor, the supply should be free of dirt and water. The maximum pressure for use in the air starting motor is 150 psi (1030 kPa). Higher pressures can cause safety problems. The 1L5011 Regulating and Pressure Reducing Valve Group has the correct characteristics for use with the air starting motor. Most other types of regulators do not have the correct characteristics. Do not use a different style of valve in its place.

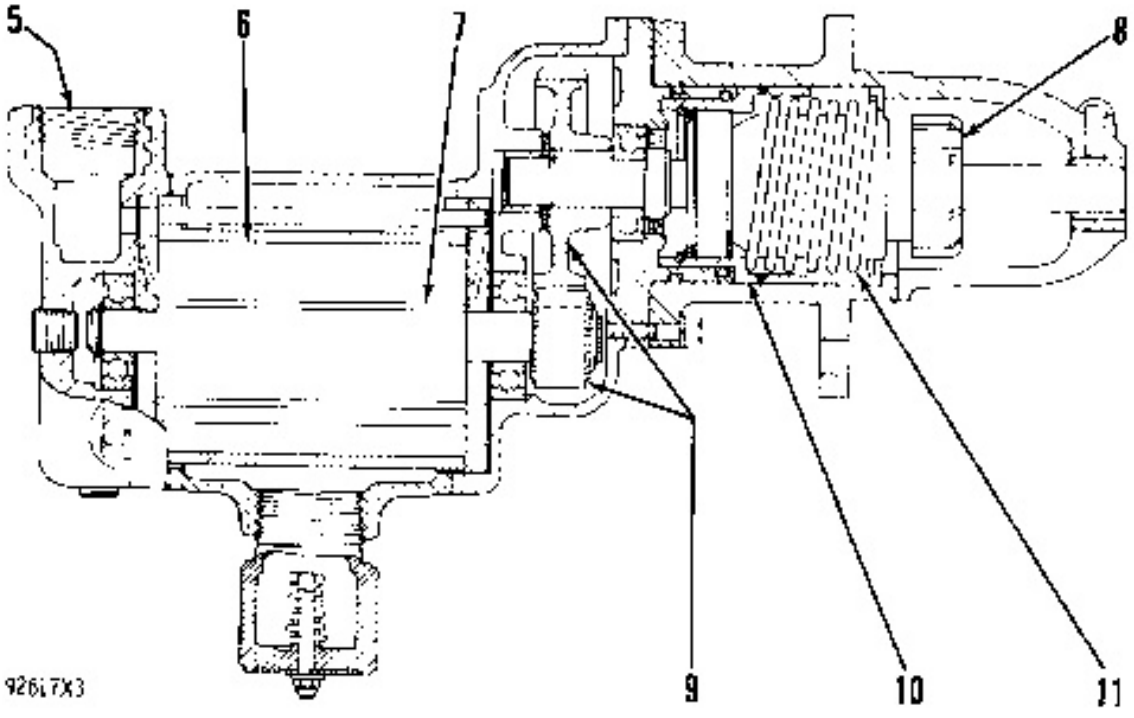

AIR STARTING MOTOR
5. Air inlet. 6. Rotor. 7. Vanes. 8. Pinion. 9. Gears. 10. Piston. 11. Pinion spring.

The air from the supply goes to relay valve (3). The starter control valve (1) is connected to the line before the relay valve (3). The flow of air is stopped by the relay valve (3) until the starter control valve (1) is activated. Then air from the starter control valve (1) goes to the piston (10) behind the pinion (8) for the starter. The air pressure on the piston (10) puts the spring (11) in compression and puts the pinion (8) in engagement with the flywheel gear.

When the pinion is in engagement, air can go out through another line to the relay valve (3). The air activates the relay valve (3) which opens the supply line to the air starting motor.

The flow of air goes through the oiler (2) where it picks up lubrication oil for the air starting motor.

The air with lubrication oil goes into the air motor. The pressure of the air pushes against the vanes (7) in the rotor (6). This turns the rotor which is connected by gears (9) to the starter pinion (8) which turns the engine flywheel.

When the engine starts running the flywheel will start to turn faster than the starter pinion (8). The pinion (8) retracts under this condition. This prevents damage to the motor, pinion (8) or flywheel gear.

When the starter control valve (1) is released, the air pressure and flow to the piston (10) behind the starter pinion (8) is stopped, the pinion spring (11) retracts the pinion (8). The relay valve (3) stops the flow of air to the air starting motor.

Hydraulic Starting System

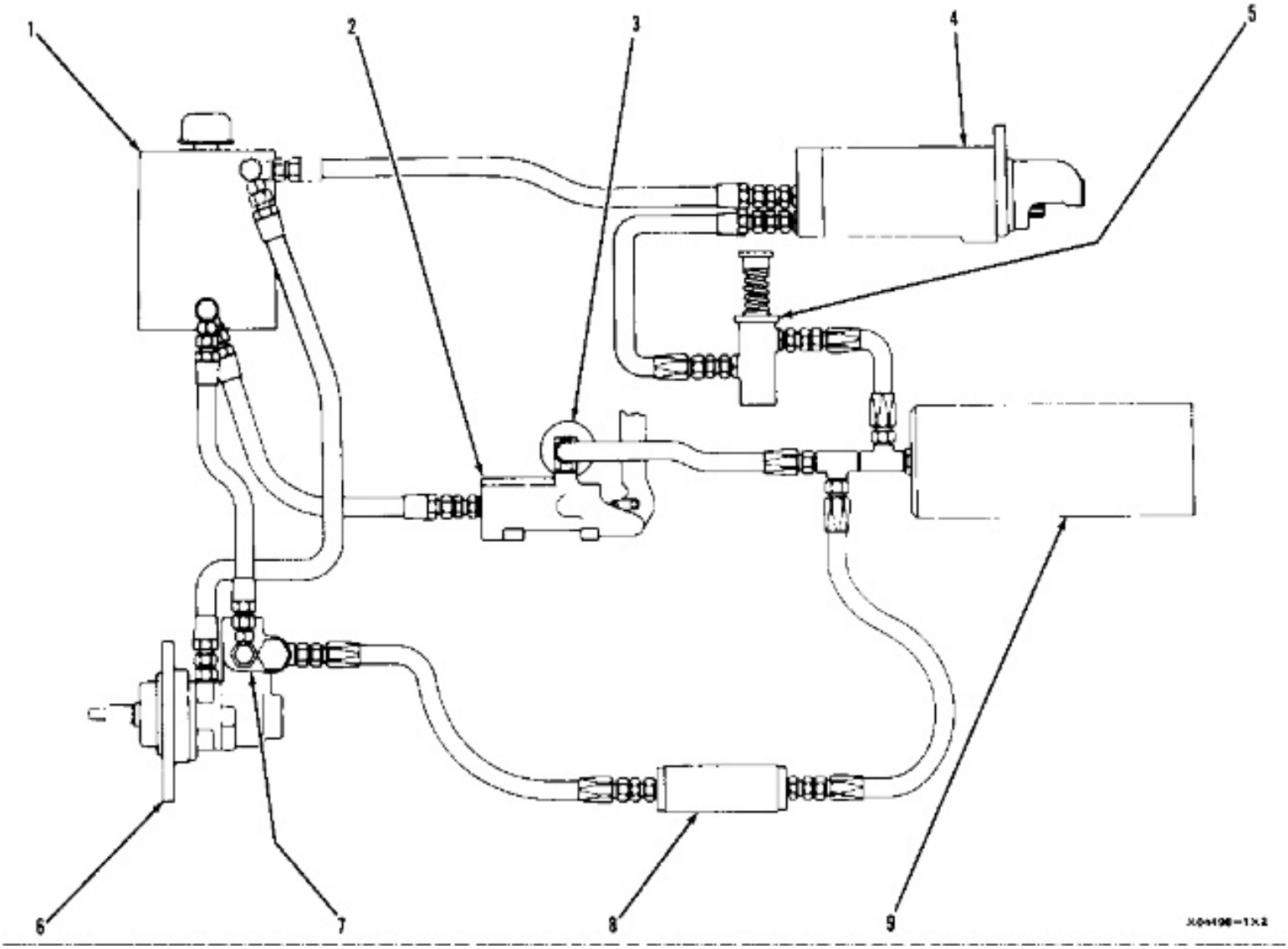

HYDRAULIC STARTING SYSTEM DIAGRAM
1. Reservoir. 2. Hand pump. 3. Pressure gauge. 4. Hydraulic starting motor. 5. Starter control valve. 6. Hydraulic pump (driven by engine timing gears). 7. Unloading valve. 8. Filter. 9. Accumulator.

The hydraulic starting motor (4) is used to turn the engine flywheel fast enough to get the engine started. When the engine is running, the hydraulic pump (6) pushes oil through the filter (8) into the accumulator (9). The accumulator (9) is a thick wall cylinder. It has a piston which is free to move axially in the cylinder. A charge of nitrogen gas (N_2) is sealed in one end of the cylinder by the piston. The other end of the cylinder is connected to the hydraulic pump (6) and the hydraulic starting motor (4). The oil from the hydraulic pump (6) pushes on the piston which puts more compression on the nitrogen gas (N_2) in the cylinder. When the oil pressure gets to 3000 psi (20 700 kPa), the accumulator (9) has a full charge. At this point the piston is approximately in the middle of the cylinder.

The unloading valve (7) feels the pressure in the accumulator (9). When the pressure is 3000 psi (20 700 kPa) the unloading valve (7) sends the hydraulic pump (6) output back to the reservoir (1). At the same time it stops the flow of oil from the accumulator (9) back to hydraulic pump (6). At this time there is 3000 psi (20 700 kPa) pressure on the oil in the accumulator (9), in the line to the unloading valve (7), in the lines to the hand pump (2) and to the hydraulic starting motor (4).

Before starting the engine, the pressure on the pressure gauge (3) should be 3000 psi (20 700 kPa). When the starter control valve (5) is activated, the oil is pushed from the accumulator (9) by the nitrogen gas (N_2). The oil flow is through the hydraulic starting motor (4), where the energy from the compression of the fluid is changed to mechanical energy for turning the engine flywheel.

Hydraulic Starting Motor

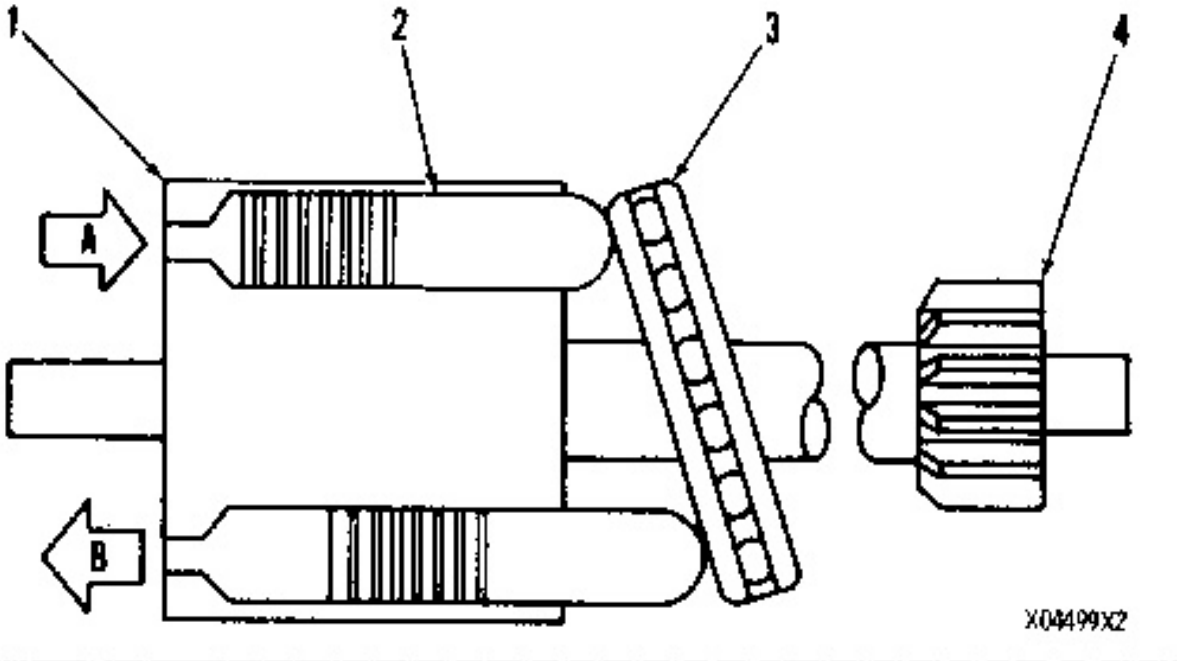

HYDRAULIC STARTING MOTOR
1. Rotor. 2. Piston. 3. Thrust bearing. 4. Starter pinion. A. Oil inlet. B. Oil outlet.

The hydraulic starting motor is an axial piston hydraulic motor. The lever for the starter control valve pushes the starter pinion (4) into engagement with the engine flywheel at the same time it opens the way for high pressure oil to get into the hydraulic starting motor.

When the high pressure oil goes into the hydraulic starting motor, it goes behind a series of pistons (2) in a rotor (1). The rotor (1) is a cylinder which is connected by splines to the drive shaft for the starter pinion (4). When the

pistons (2) feel the force of the oil they move until they are against the thrust bearing (3). The thrust bearing (3) is at an angle to the axis of the rotor (1). This makes the pistons (2) slide around the thrust bearing (3). As they slide, they turn the rotor (1) which connects through the drive shaft and starter pinion (4) to the engine flywheel. The pressure of the oil makes the rotor (1) turn very fast. This turns the engine flywheel fast enough for quick starting.

CATERPILLAR®

SEBR0539-00



Testing and Adjusting

3304 & 3306 INDUSTRIAL and MARINE ENGINE

http://engine.od.ua

https://barringtondieselclub.co.za/

Testing And Adjusting

Troubleshooting

Troubleshooting can be difficult. The TROUBLESHOOTING INDEX gives a list of possible problems. To make a repair to a problem, make reference to the cause and correction on the pages that follow.

This list of problems, causes, and corrections will only give an indication of where a possible problem can be, and what repairs are needed. Normally, more or other repair work is needed beyond the recommendations in the list.

Remember that a problem is not normally caused only by one part, but by the relation of one part with other parts. This list is only a guide and can not give all possible problems and corrections. The serviceman must find the problem and its source, then make the necessary repairs.

Troubleshooting Index

1. Engine Crankshaft Will Not Turn When Start Switch Is On.
2. Engine Will Not Start.
3. Engine Misfires or Runs Rough.
4. Stall at Low rpm.
5. Sudden Changes In Engine rpm.
6. Not Enough Power.
7. Too Much Vibration.
8. Loud Combustion Noise.
9. Valve Train Noise (Clicking).
10. Oil In Cooling System.
11. Mechanical Noise (Knock) In Engine.
12. Fuel Consumption Too High.
13. Loud Valve Train Noise.
14. Too Much Valve Lash.
15. Valve Rotocoil or Spring Lock is Free.
16. Oil at the Exhaust.
17. Little or No Valve Clearance.
18. Engine Has Early Wear.
19. Coolant in Lubrication Oil.
20. Too Much Black or Gray Smoke.
21. Too Much White or Blue Smoke.
22. Engine Has Low Oil Pressure.
23. Engine Uses Too Much Lubrication Oil.
24. Engine Coolant Is Too Hot.
25. Exhaust Temperature Is Too High.
26. Starter Motor Does Not Turn.
27. Alternator Gives No Charge.
28. Alternator Charge Rate Is Low or Not Regular.

29. Alternator Charge Is Too High.
30. Alternator Has Noise.
31. Rack Solenoid Does Not Stop Engine.

Engine Crankshaft Will Not Turn When Start Switch Is On

Cause	Correction
Battery Has Low Output	Make Reference to Item 26.
Wires or Switches Have Defect.	Make Reference to Item 26.
Starter Motor Solenoid Has A Defect	Make Reference to Item 26.
Starter Motor Has A Defect	Make Reference to Item 26.
Inside Problem Prevents Engine Crankshaft From Turning	If the crankshaft can not be turned after the driven equipment is disconnected, remove the fuel nozzles and check for fluid in the cylinders when the crankshaft is turned. If fluid in the cylinders is not the problem, the engine must be disassembled to check for other inside problems. Some of these inside problems are bearing seizure, piston seizure, or wrong pistons installed in the engine.

Engine Will Not Start

Cause	Correction
Starter Motor Turns Too Slow	Make Reference to Item 27.
Dirty Fuel Filter	Install new fuel filter.
Dirty or Broken Fuel Lines	Clean or install new fuel lines as necessary.
Fuel Transfer Pump	At starting rpm, the minimum fuel pressure for fuel transfer pump must be 3 psi (20 kPa). If fuel pressure is less than 3 psi (20 kPa), change the fuel filter element. Look for air in the fuel system. If fuel pressure is still low, install a new fuel transfer pump.
No Fuel To Cylinders	Put fuel in fuel tank. "Prime" (remove the air and/or low quality fuel) the fuel system.
Bad Quality Fuel	Remove the fuel from the fuel tank. Install a new fuel filter element. Put a good grade of clean fuel in the fuel tank.
Wrong Fuel Injection Timing	Make adjustment to timing.
Shutoff Solenoid (Either Type) Holding Fuel Control Shaft in Fuel Off Position	Operate the control for the shutoff solenoid and see if the solenoid makes a noise (clicking sound). If this sound can be heard and the engine will not start, remove the solenoid. Now see if the engine will start. If the engine starts, the shutoff solenoid is bad. Replacement of the solenoid is necessary. Check governor linkage for free movement. Sleeves must turn freely on pump plungers in all positions of sleeve control shaft. The thrust collar must turn freely on the governor shaft at all positions between shutoff and full load. If linkage does not move freely under these conditions, clean all parts thoroughly. Inspect all parts for wear and make replacement where needed.
Over Fuel Spring Not Installed	Install over fuel spring.

Engine Misfires Or Runs Rough

https://barringtondieselclub.co.za/

Cause	Correction
Fuel Pressure is Low	Make sure there is fuel in the fuel tank. Look for leaks or bad bends in the fuel line between fuel tank and fuel transfer pump. Look for air in the fuel system. Check fuel pressure. The outlet pressure of the fuel transfer pump must be as follows: Full load; 30 psi (205 kPa). If fuel pressure is lower than 20 psi (140 kPa), install a new filter element. If fuel pressure is still low, install a new fuel transfer pump. Check if the orifice check valve is working correctly. Check if pressure relief valve is working correctly.
Air in Fuel System	Find the air leak in the fuel system and correct it. If air is in the fuel system, it will probably get in on the suction side of fuel transfer pump.
Leak or Break in Fuel Line Between Injection Pump and Injection Valve	Install a new fuel line.
Wrong Valve Clearance	Make adjustment according to the Subject, VALVE CLEARANCE.
Defect in Fuel Injection Valve(s) or Injection Pump(s)	Run engine at rpm that misfires the most and runs the roughest. Then loosen a fuel line nut on the injection valve for each cylinder, one at a time. Find the cylinder where a loosened fuel line nut does not change the way the engine runs. Test the injection pump and injection valve for that cylinder. Install new parts where needed.
Wrong Fuel Injection Timing	Make Adjustment to timing.
Bent or Broken Push Rod	Replacement of push rod is necessary.
Fuel Has "Cloud Point" Higher Than Atmospheric Temperature ("Cloud Point"= Temperature Which Makes Wax Form In Fuel.)	Drain the fuel tank, lines, and fuel injection pump housing. Change the fuel filter. Fill the tank with fuel which has the correct "cloud point" and remove the air from the system with the priming pump.

Stall At Low RPM

Cause	Correction
Fuel Pressure is Low	Make sure there is fuel in the fuel tank. Look for leaks or bad bends in the fuel line between fuel tank and fuel transfer pump. Look for air in the fuel system. Check fuel pressure. The outlet pressure of the fuel transfer pump must be as follows: Full load; 30 psi (205 kPa). If fuel pressure is lower than 20 psi (140 kPa), install a new fuel filter element. If fuel pressure is still low, install a new fuel transfer pump.

(Cont. next page)

https://barringtondieselclub.co.za/

Cause	Correction
Idle rpm Too Low	Make adjustment to governor so idle rpm is the same as given in the RACK SETTING INFORMATION.
Defect in Fuel Injection Valve(s)	Install a new fuel injection valve.
Engine Accessories	Check engine accessories for damage and correct adjustment. If necessary, disconnect the accessories and test the engine.
Defect in Fuel Injection Pump(s)	Install new parts if needed.

Sudden Changes In Engine Speed (rpm)

Cause	Correction
Failure of Governor or Fuel Injection Pump	Look for damaged or broken springs, linkage or other parts. Remove the governor. Check rotation of fuel control shaft. Be sure fuel injection pumps are installed correctly. Check for correct governor spring. Install new parts for those that have damage or defects.

Not Enough Power

Cause	Correction
Bad Quality Fuel	Remove the fuel from the fuel tank. Install a new filter element. Put a good grade of clean fuel in the fuel tank.
Fuel Pressure is Low	Make sure there is fuel in the fuel tank. Look for leaks, or bad bends in the fuel line between fuel tank and fuel transfer pump. Look for air in the fuel system. Check fuel pressure. The outlet pressure of the fuel transfer pump must be as follows: Full load; 30 psi (205 kPa). If fuel pressure is lower than 20 psi (140 kPa), install a new fuel filter element. If fuel pressure is still low, install a new fuel transfer pump.
Leaks in Air Inlet System	Check the pressure in the air inlet manifold. Look for restrictions in the air cleaner.
Governor Linkage	Make adjustment to get full travel of linkage. Install new parts for those that have damage or defects.
Wrong Valve Clearance	Make adjustments according to the Subject, VALVE CLEARANCE.
Solenoid or Shutoff Linkage Stopping Fuel Control Shaft Rotation	Check for correct full power with solenoid removed. If engine has power then, problem is in solenoid or shutoff housing linkage. Check for free travel of shutoff housing linkage.
Constant Bleed Valve Stays Open or Closed	Install new parts if needed.

https://barringtondieselclub.co.za/

(Cont. next page)

Cause	Correction
Defect in Fuel Injection Valve(s) or Fuel Injection Pump(s)	Run engine at rpm that misfires the most or runs the roughest. Then loosen a fuel line nut on the injection pump for each cylinder, one at a time. Find the cylinder where a loosened fuel line nut does not change the way the engine runs. Test the injection pump and injection valve for that cylinder. Install new parts where needed.
Wrong Fuel Injection Timing	Make adjustment to timing.
Defect in Aftercooler	Check temperature of inlet and outlet water supply. Remove any external or internal restrictions.
Air-Fuel Ratio Control	Control either needs an adjustment or it is damaged and a new control is needed.
Turbocharger Has Carbon Deposits or Other Causes of Friction	Make inspection and repair of turbocharger as necessary.

Too Much Vibration

Cause	Correction
Loose Bolt or Nut For Pulley or Damper	Tighten bolt or nut.
Pulley or Damper Has A Defect	Install a new pulley or damper.
Engine Supports Are Loose, Worn, or Have A Defect	Tighten all bolts that hold engine supports. Install new components if necessary.
Engine Misfires or Runs Rough	Make Reference to Item 3.

Loud Combustion Noise (Sound)

Cause	Correction
Bad Quality Fuel	Remove the fuel from the fuel tank. Install a new fuel filter element. Put a good grade of clean fuel in the fuel tank.
Defect in Fuel Injection Valve(s)	Install new fuel injection valve(s).
Defect in Fuel Injection Pump(s)	Install new fuel injection pump(s).
Wrong Fuel Injection Timing	Make adjustment to timing.

https://barringtondieselclub.co.za/

Valve Train Noise (Clicking)

Cause	Correction
Damage to Valve Spring(s), Locks, or Broken or Worn Valve Lifter	Install new parts where necessary. Broken locks can cause the valve to get into the cylinder. This will cause much damage.
Not Enough Lubrication	Check lubrication in valve compartment. There must be a strong flow of oil at engine high rpm, but only a small flow of oil at low rpm. Oil passages must be clean, especially those that send oil to the cylinder head.
Too Much Valve Clearance	Make adjustment according to the Subject, VALVE CLEARANCE.
Damage to Valve(s)	Make a replacement of the valve(s) and make an adjustment as necessary.

Oil In Cooling System

Cause	Correction
Defect In Core of Engine Oil Cooler	Install a new engine oil cooler.
Failure of Cylinder Head Gasket or Water Seals	Install a new head gasket and new water seals in spacer plate.

Mechanical Noise (Knock) In Engine

Cause	Correction
Failure of Bearing For Connecting Rod	Inspect the bearing for the connecting rod and the bearing surface (journal) on the crankshaft. Install new parts where necessary.
Damaged Timing Gears	Install new parts where necessary.
Damaged Crankshaft	Make replacement of the crankshaft.
Defect in Attachment	Repair or install new components.

Fuel Consumption Too High

Cause	Correction
Fuel System Leaks	Tighten or make replacement of parts at points of leakage.
Fuel and Combustion Noise (Knock)	Make Reference to Item 3 and Item 6.
Wrong Fuel Injection Timing	Make adjustment to timing.

Loud Valve Train Noise

Cause	Correction
Damage to Valve Spring(s)	Make replacement of parts with damage.
Damage to Camshaft	Make replacement of parts with damage. Clean engine thoroughly. If replacement of camshaft is made, new valve lifters are also necessary.
Damage to Valve Lifter	Clean engine thoroughly. Make a replacement of the damaged valve lifters. Inspect camshaft lobes for damage. Look for valves that do not move freely. Make an adjustment to valve clearance according to the Subject, VALVE CLEARANCE.

Too Much Valve Lash

https://barringtondieselclub.co.za/

Cause	Correction
Not Enough Lubrication	Check lubrication in valve compartment. There must be a strong flow of oil at engine high rpm, but only a small flow at low rpm. Oil passages must be clean, especially those that send oil to the cylinder head.
Rocker Arms Worn at Face That Makes Contact With Valve	If there is too much wear, install new parts or rocker arms. Make adjustment of valve clearance according to the Subject, VALVE CLEARANCE.
End of Valve Stem Worn	If there is too much wear, install new valves. Make adjustment to valve clearance according to the Subject, VALVE CLEARANCE.
Worn Push Rods	If there is too much wear, install new push rods. Make adjustment of valve clearance according to the Subject, VALVE CLEARANCE.
Broken or Worn Valve Lifters	Install new valve lifters. Check camshaft for wear. Check for free movement of valves or bent valve stem. Clean engine thoroughly. Make adjustment of valve clearance according to the Subject, VALVE CLEARANCE.
Worn Cams on Camshaft	Install a new camshaft. Install new valve lifters. Check for free movement of valves or bent valve stems. Make adjustment of valve clearance according to the Subject, VALVE CLEARANCE.

Valve Rotocoil Or Spring Lock Is Free

Cause	Correction
Broken Locks	Broken locks can cause the valve to get into the cylinder. This will cause much damage.
Broken Valve Spring(s)	Install new valve spring(s).
Broken Valve	Replace valve and other damaged parts.

Oil At The Exhaust

Cause	Correction
Too Much Oil in the Valve Compartment	Look at both ends of the rocker arm shaft. Be sure a plug is in each end of the shaft.
Worn Valve Guides	Reconditioning of the cylinder head is needed.
Worn Piston Rings	Inspect and install new parts as needed.

Little Or No Valve Clearance

https://barringtondieselclub.co.za/

Cause	Correction
Worn Valve Seat or Face of Valve	Reconditioning of cylinder head is needed. Make adjustment of valve clearance according to the Subject, VALVE CLEARANCE.

Engine Has Early Wear

Cause	Correction
Dirt in Lubrication Oil	Remove dirty lubrication oil. Install a new oil filter element. Put clean oil in the engine.
Air Inlet Leaks	Inspect all gaskets and connections. Make repairs if leaks are found.
Fuel Leakage Into Lubrication Oil	This will cause high fuel consumption and low engine oil pressure. Make repairs if leaks are found. Install new parts where needed.

Coolant In Lubrication Oil

Cause	Correction
Failure of Engine Oil Cooler Core	Install a new engine oil cooler. Drain crankcase and refill with clean lubricant. Install new oil filter element.
Failure of Cylinder Head Gasket or Water Seals	Install a new cylinder head gasket and new water seals in the spacer plate. Tighten the bolts that hold the cylinder head according to the Specifications.

(Cont. next page)

Cause	Correction
Crack or Defect in Cylinder Head	Install a new cylinder head.
Crack or Defect in Cylinder Block	Install a new cylinder block.
Damaged Seals For Cylinder Liners	Make a replacement of the seals.

Too Much Black Or Gray Smoke

https://barringtondieselclub.co.za/

Cause	Correction
Not Enough Air For Combustion	Check air cleaner for restrictions.
Bad Fuel Injection Valve(s)	Install new fuel injection valve(s).
Wrong Fuel Injection Timing	Make adjustment of timing.
Defect in Fuel Ratio Control	Make adjustment to or install new control.

Too Much White Or Blue Smoke

Cause	Correction
Too Much Lubrication Oil in Engine	Remove extra oil. Find where extra oil comes from. Put correct amount of oil in engine.
Engine Misfires or Runs Rough	Make Reference to Item 3.
Wrong Fuel Injection Timing	Make adjustment to timing.
Worn Valve Guides	Reconditioning of cylinder head is needed.
Worn Piston Rings	Install new parts as necessary.
Failure of Turbocharger Oil Seal	Check inlet manifold for oil and repair to turbocharger if necessary.

Engine Has Low Oil Pressure

Cause	Correction
Dirty Oil Filter or Oil Cooler	Install new oil filter. Clean or install new engine oil cooler. Remove dirty oil from engine. Put clean oil in engine.

(Cont. next page)

https://barringtondieselclub.co.za/

Cause	Correction
Diesel Fuel in Lubrication Oil	Find the place where diesel fuel gets into the lubrication oil. Make repairs as needed. Remove the lubrication oil that has diesel fuel in it. Install a new oil filter element. Put clean oil in the engine.
Too Much Clearance Between Rocker Arm Shaft and Rocker Arms	Check lubrication in valve compartment. Install new parts as necessary.
Oil Pump Suction Pipe Has A Defect	Replacement of pipe is needed.
Pressure Regulating Valve Does Not Close	Clean valve and housing. Install new parts as necessary.
Oil Pump is Worn or Has A Defect	Repair or make replacement of necessary parts.
Too Much Clearance Between Crankshaft and Crankshaft Bearings	Inspect the bearings and make replacement as necessary.
Defect in Oil Pressure Gauge	Install new gauge.
Too Much Bearing Clearance for Idler Gear	Inspect bearing and make replacement as necessary.

Engine Uses Too Much Lubrication Oil

Cause	Correction
Too Much Lubrication Oil in Engine	Remove extra oil. Find where extra oil comes from. Put correct amount of oil in engine.
Oil Leaks	Find all oil leaks. Make repairs as needed.
Oil Temperature is Too High	Check operation of engine oil cooler. Install new parts if necessary. Clean the core of the engine oil cooler.
Too Much Oil in the Valve Compartment	Look at both ends of the rocker arm shaft. Be sure a plug is in each end of the shaft.
Worn Valve Guides	Reconditioning of the cylinder head is needed.
Worn Piston Rings and Cylinder Liners	Inspect and install new parts as needed. Reconditioning of the cylinder block can be necessary.
Failure of Seal Rings in Turbocharger	Check inlet manifold for oil and make repair to turbocharger if necessary.

Engine Coolant Is Too Hot

https://barringtondieselclub.co.za/

Cause	Correction
Restriction To Flow of Coolant Through Radiator Core Tubes or Heat Exchanger	Clean and flush radiator or heat exchanger.
Restriction To Air Flow Through Radiator	Remove all restrictions of air flow.
Low Fan Speed	Check for worn or loose fan belt.
Not Enough Coolant in System	Add coolant to cooling system.
Pressure Cap Has A Defect	Check operation of pressure cap. Install a new pressure cap if necessary.
Combustion Gases in Coolant	Find out where gases get into the cooling system. Make repairs as needed.
Water Temperature Regulator (Thermostat) or Temperature Gauge Has A Defect	Check water temperature regulator for correct operation. Check temperature gauge operation. Install new parts as necessary.
Water Pump Has A Defect	Make repairs or replacement of the water pump as necessary. Put correct tension on drive belt for water pump.
Too Much Load On The System	Make a reduction to the load.
Wrong Fuel Injection Timing	Make adjustment to timing.

Exhaust Temperature Is Too High

Cause	Correction
Air Inlet or Exhaust System Has A Restriction	Remove restriction.
Wrong Fuel Injection Timing	Make an adjustment to the timing.

Starter Motor Does Not Turn

https://barringtondieselclub.co.za/

Cause	Correction
Battery Has Low Output	Check condition of battery. Charge battery or make replacement as necessary.
Wires or Switch Has Defect	Make repairs or replacement as necessary.
Starter Motor Solenoid Has A Defect	Install a new solenoid.
Starter Motor Has A Defect	Make repair or replacement of starter motor.

Alternator Gives No Charge

Cause	Correction
Loose Drive Belt For Alternator	Make an adjustment to put the correct tension on the drive belt.
Charging or Ground Return Circuit or Battery Connections Have A Defect	Inspect all cables and connections. Clean and tighten all connections. Make replacement of parts with defect.
Brushes Have A Defect	Install new brushes.
Rotor (Field Coil) Has A Defect	Install a new rotor.

Alternator Charge Rate Is Low Or Not Regular

Cause	Correction
Loose Drive Belt For Alternator	Make an adjustment to put the correct tension on the drive belt.
Charging or Ground Return Circuit or Battery Connections Have A Defect	Inspect all cables and connections. Clean and tighten all connections. Make replacement of parts with defects.
Alternator Regulator Has A Defect	Install a new alternator regulator.
Alternator Brushes Have A Defect	Install new brushes.
Rectifier Diodes Have A Defect	Make replacement of rectifier diode that has a defect.
Rotor (Field Coil) Has A Defect	Install a new rotor.

Alternator Charge Is Too High

https://barringtondieselclub.co.za/

Cause	Correction
Alternator or Alternator Regulator Has Loose Connections	Tighten all connections to alternator or alternator regulator.
Alternator Regulator Has A Defect	Install a new alternator regulator.

Alternator Has Noise

Cause	Correction
Drive Belt For Alternator is Worn or Has A Defect	Install a new drive belt for the alternator.
Loose Alternator Drive Pulley	Check groove in pulley for key that holds pulley in place. If groove is worn, install a new pulley. Tighten pulley nut according to Specifications.
Drive Belt and Drive Pulley For Alternator Are Not In Alignment	Make an adjustment to put drive belt and drive pulley in correct alignment.
Worn Alternator Bearings	Install new bearings in the alternator.
Rotor Shaft is Bent	Make a replacement of the rotor shaft.
Rectifiers in the Alternator Are Shorted	Make a replacement of the diode assembly.

Shutoff Solenoid Does Not Stop Engine.

Cause	Correction
Electrical Connections Are Not Correct	Correct electrical connections and wiring.
Adjustment for Plunger Shaft is Not Correct	Make an adjustment to the plunger shaft.
Wrong Plunger in Solenoid	Install the correct plunger in the solenoid.
Not Enough Plunger Travel	Make an adjustment to the plunger shaft or make a replacement of the solenoid if necessary.
Defect in Solenoid Wiring	Make a replacement of the solenoid.

Fuel System

Either too much fuel or not enough fuel for combustion can be the cause of a problem in the fuel system.

Many times work is done on the fuel system when the problem is really with some other part of the engine. Finding the source of the problem is difficult, especially when smoke is coming from the exhaust. Smoke coming from the exhaust can be caused by a bad fuel injection valve, but it can also be caused by the following:

a. Not enough air for good combustion.
b. An overload at high altitude.
c. Burning of too much oil.
d. Not enough compression.

Fuel System Inspection

1. Look at the reading on the gauge for fuel pressure. Not enough fuel pressure is an indication of a problem with the components that send fuel to the engine.

2. Check the fuel level in the fuel tank. Look at the cap for the fuel tank to make sure the vent is not filled with dirt.

3. Check the fuel lines for fuel leakage. Be sure the fuel supply line does not have a restriction or a bad bend.

4. Install a new fuel filter. Clean the primary fuel filter if so equipped.

5. Remove any dirt that may be in the fuel system.

6. Check fuel flow from orifice check valve. Flow should be about 8 oz. in 25 seconds (250 ml in 22 seconds) with the pressure in the housing for the fuel injection pumps at 30 ± 5 psi (205 ± 35 kPa).

Testing Fuel Injection Equipment

An easy check can be made to find the cylinder that is misfiring, or running rough, and causing black smoke to come out of the exhaust pipe.

Run the engine at the speed that gives misfiring. Loosen the fuel line nut at a fuel injection pump. This will stop the flow of fuel to that cylinder. Do this for each cylinder until a loosened fuel line is found that makes no difference in engine misfiring. Be sure to tighten each fuel line nut after the test before the next fuel line nut is loosened. Check each cylinder by this method. When a cylinder is found where the loosened fuel line nut does not make a difference in engine running, test the injection pump and injection valve for that cylinder.

Fuel Injection Lines

Fuel from the fuel injection pumps is sent through the fuel injection lines to the fuel injection valves.

Each fuel injection line of an engine has a special design and must be installed in a certain location. When fuel injection lines are removed from an engine, put identification marks or tags on the fuel lines as they are removed, so they can be put in the correct location when they are installed.

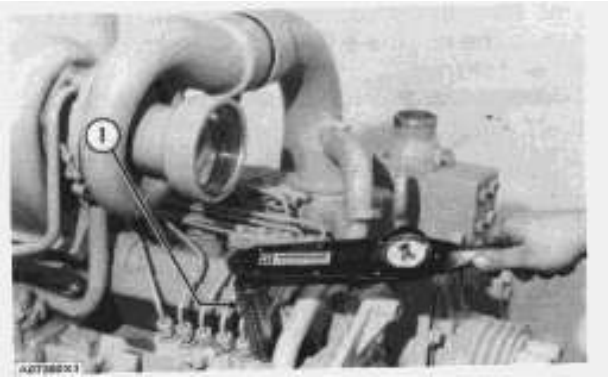

TIGHTENING THE NUT OF A FUEL INJECTION LINE
1. 5P144 Fuel Line Socket.

The nuts that hold a fuel injection line to an injection valve and injection pump must be kept tight. Use a torque wrench and the 5P144 Fuel Line Socket (1) to tighten the fuel line nuts to 30 ± 5 lb. ft. (40 ± 7 N·m).

Injection Pumps

When injection pumps, sleeves and lifters are removed from the injection pump housing, keep the parts of each pump together so they can be installed back in their original location.

Be careful when disassembling injection pumps. Do not damage the surface on the plunger. The plunger, sleeve and barrel for each pump are made as a set. Do not put the plunger of one pump in the barrel or sleeve of another pump. If one part is worn, install a complete new pump assembly. Be careful when putting the plunger in the bore of the barrel or sleeve.

Be sure that all the sleeves are installed correctly on the plungers. When an injection pump is installed correctly, the plunger is through the sleeve and the adjustment lever is engaged with the groove on the sleeve. The bushing that holds the injection pump in the pump housing must be kept tight. Tighten the bushing to 70 ± 5 lb. ft. (95 ± 7 N·m). Damage to the housing will result if the bushing is too tight. If the bushing is not tight enough, the pump will leak.

WARNING

If the sleeves on one or more of the fuel injection pumps have been installed wrong, it is possible for the engine to run out of control when started. When any of the fuel injection pumps have been removed and installed with the fuel injection pump housing on the engine, take the precautions (steps) that follow to stop the engine if it starts to overspeed (run out of control).

WARNING!

a. Remove the air cleaner leaving the air inlet pipe open as shown.

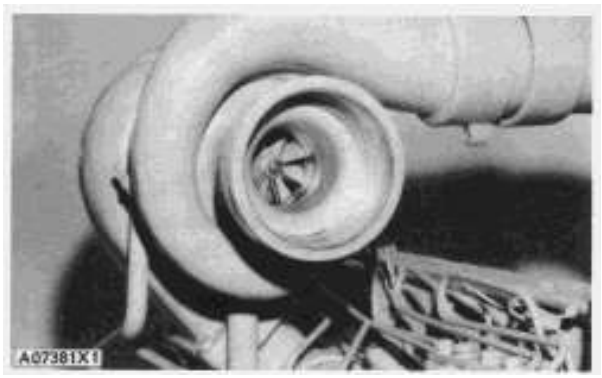

AIR INLET PIPE

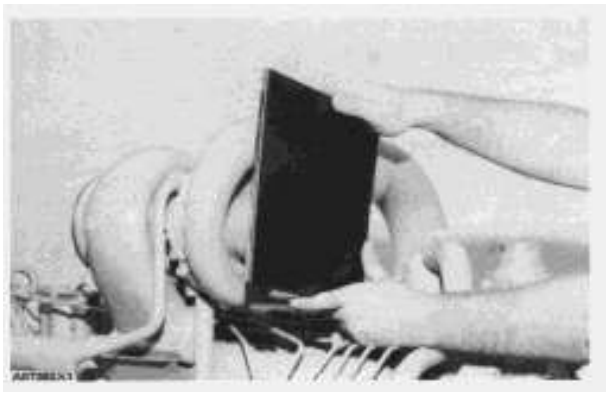

STOPPING THE ENGINE

b. If the sleeve on pump has been installed wrong and the engine operates in a not regular way, put a steel plate over the air inlet opening as shown to stop the engine.

Checking The Fuel Injection Valves

Check the fuel injection valves for:

1. Too much carbon on the tip of the nozzle or in the nozzle orifice.

2. Wear of the orifice.

3. Nozzle screen being dirty or broken.

Use the Caterpillar Diesel Fuel Injection Test Bench to test the nozzle.

Check the seat of the nozzle and the seat in the precombustion chamber before installing the fuel injection valve. It is important to keep the correct torque on the nut that holds the fuel nozzle in the precombustion chamber. Tighten the nut to 105 ± 5 lb. ft. (140 ± 7 N·m). There will be damage to the nozzle if the nut is too tight. If the nut is not tight enough the nozzle can leak.

Finding Top Center Compression Position for No. 1 Piston

For Engines With Timing Pointer

5P7307 Engine Turning Tool Group.

No. 1 piston at top center (TC) on the compression stroke is the starting point for all timing procedures.

NOTE: The engine is seen from the flywheel end when direction of crankshaft rotation is given.

1. Remove starter motor.

2. Install tooling as shown.

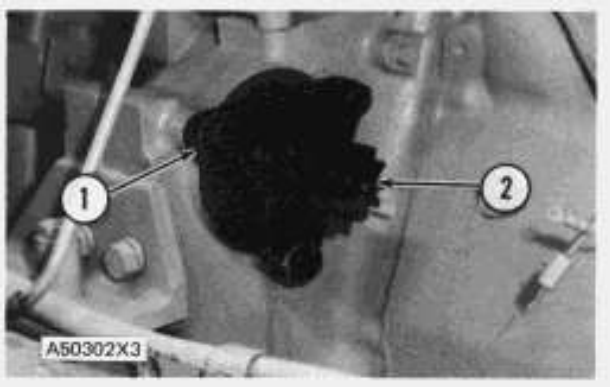

ENGINE TURNING TOOLS INSTALLED
1. 5P7306 Housing. 2. 5P7305 Gear.

3. To find top center compression stroke for No. 1 piston, first turn the flywheel clockwise (opposite the direction of engine rotation) approximately 30 degrees. The reason for making this step is to be sure the play is removed from the timing gears when the engine is put on top center.

4. Turn the flywheel counterclockwise until the mark TC 1 on the flywheel is in alignment with the timing pointer (3). The No. 1 piston is on top center.

NOTE: If the TC 1 mark on the flywheel is turned beyond the timing pointer in the flywheel housing, turn the flywheel back (clockwise) a minimum of 30° before turning counterclockwise toward alignment again.

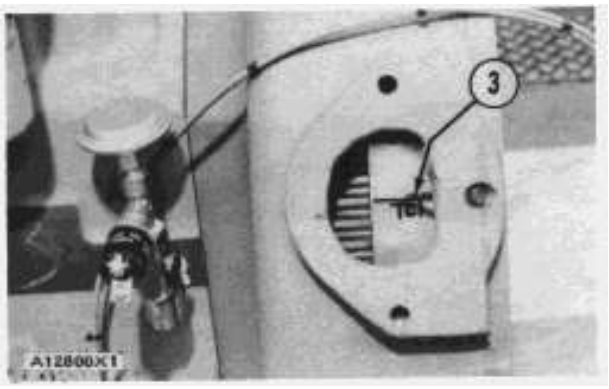

FINDING TOP CENTER
3. Timing pointer (in alignment with mark on flywheel).

5. To see if No. 1 piston is on the compression stroke, look at the valves of No. 1 cylinder. The valves will be closed if No. 1 cylinder is on the compression stroke. You should be able to move the rocker arms (4) up and down with your hand.

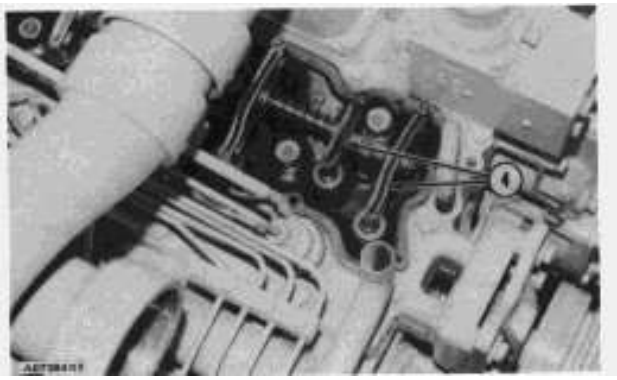

VALVE COVER REMOVED
4. Rocker arms.

6. If No. 1 piston is not on the compression stroke, turn the flywheel 360° counterclockwise and bring the TC 1 & 6 cyl. mark in alignment with the timing pointer again.

For Engines With Timing Bolt Hole

5P7307 Engine Turning Tool Group.

No. 1 piston at top center (TC) on the compression stroke is the starting point for all timing procedures.

NOTE: The engine is seen from the flywheel end when direction of crankshaft rotation is given.

1. Remove starter motor.

2. Install tooling as shown.

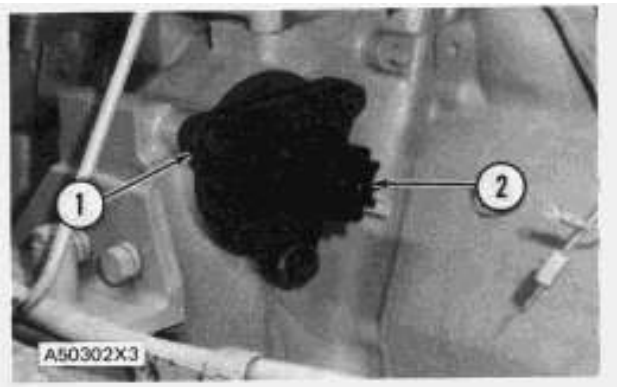

ENGINE TURNING TOOLS INSTALLED
1. 5P7306 Housing. 2. 5P7305 Gear.

3. To find top center (TC) compression stroke for No.1 piston, first turn the flywheel clockwise (opposite the direction of engine rotation) approximately 30 degrees. The reason for making this step is to be sure the play is removed from the timing gears when the engine is put on top center.

4. Remove the plug (3). Turn the flywheel counterclockwise until a 3/8" - 16NC bolt can be installed in the flywheel through the hole in the flywheel housing. The No. 1 piston is on top center.

NOTE: If the flywheel is turned beyond the point where the 3/8"-16 NC bolt (3) can be installed in the flywheel turn the flywheel back (clockwise) a minimum of 30° before turning counterclockwise toward alignment again.

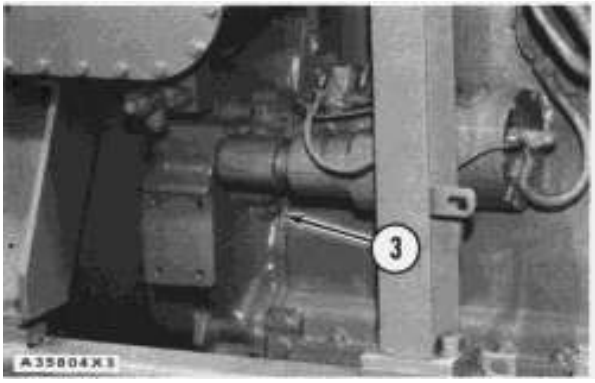

LOCATION OF TIMING HOLE
3. Plug.

5. To see if No.1 piston is on the compression stroke, look at the valves of No. 1 cylinder. The valves will be closed if No. 1 cylinder is on the compression stroke. You should be able to move the rocker arms (4) up and down with your hand.

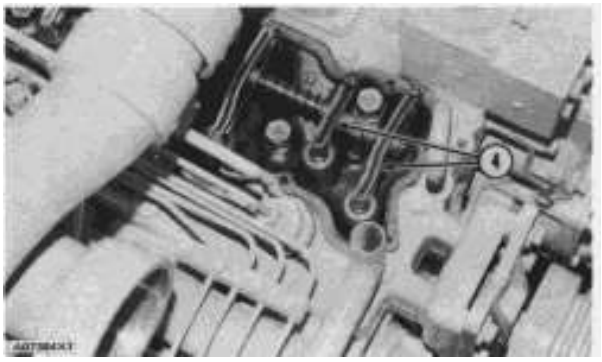

VALVE COVER REMOVED
4. Rocker arms.

6. If No.1 piston is not on the compression stroke, remove the 3/8"-16 NC bolt and turn the flywheel 360° counterclockwise. Install the 3/8"-16 NC bolt as before. The No.1 piston is now at top center on the compression stroke (TC1).

Fuel System Adjustments

Checking Timing By Timing Pin Method

Tools Needed	Engines With Automatic Timing Advance Unit	Engines Without Automatic Timing Advance Unit
5P2371 Puller	1	
¼"—20 bolts, 1¾" long	2	
¼" Flat washers	2	
8S2264 Puller Group.		1
3/8"—24 bolts, 3 1/2" long.		2
3/8" Flat washer.		2
8B7560 Step Plate.		1

1. Put No.1 piston at TC 1 compression position. Make reference to FINDING TOP CENTER COMPRESSION POSITION FOR NO.1 PISTON.

2. Remove bolt (2).

3. Remove timing pin (1) from the cover of the governor housing.

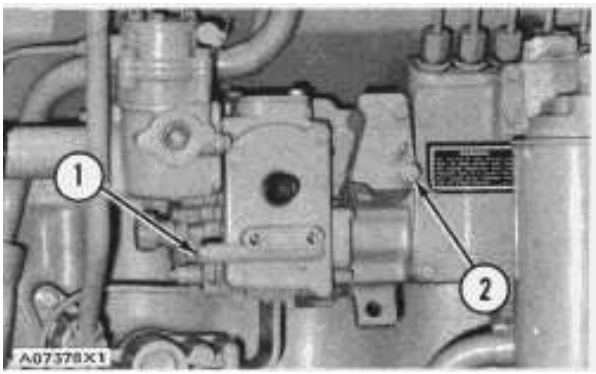

TIMING PIN
1. Timing pin. 2. Bolt.

4. Put timing pin (1) in hole (3). If timing pin goes into the notch in the camshaft, the timing of the fuel injection pump is correct.

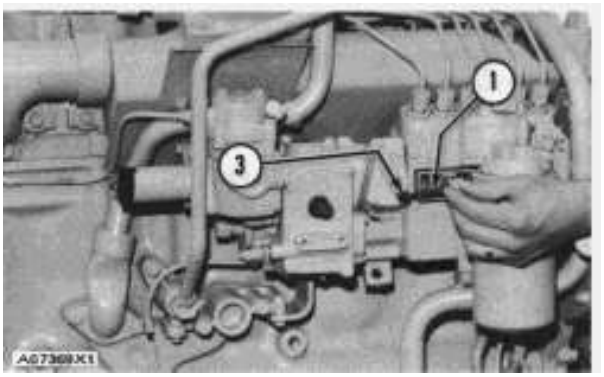

INSTALLING TIMING PIN
1. Timing pin. 3. Hole for timing pin.

5. If the timing pin does not go into the notch in the camshaft with the No.1 piston at top center, turn the engine until the pin goes into the notch.

NOTE: If the engine uses a timing bolt in the flywheel, be sure to remove the timing bolt before turning the flywheel.

6. Remove cover (4) from the front housing.

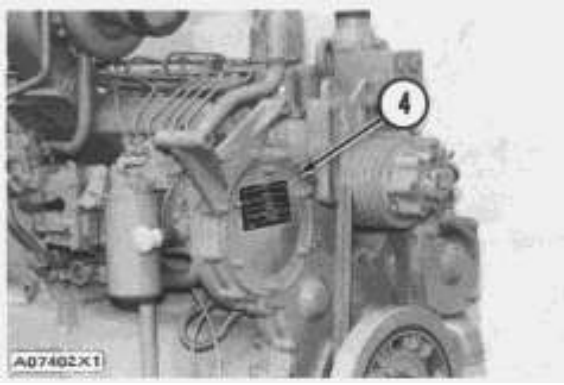

COVER
4. Cover.

7. Loosen bolt (5).

8. Look at the engine and the pictures which show bolt (5). The pictures show the difference between the automatic timing advance unit and the drive gear for the fuel injection pump.

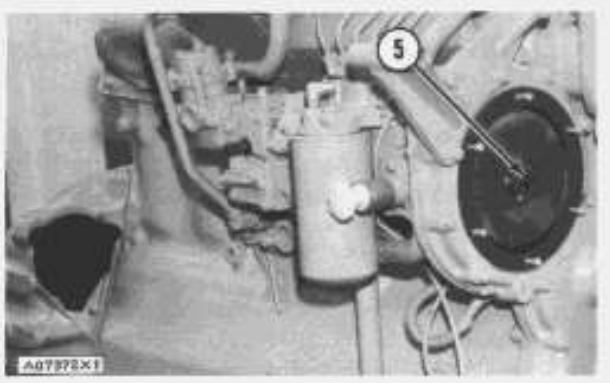

AUTOMATIC TIMING ADVANCE UNIT
5. Bolt.

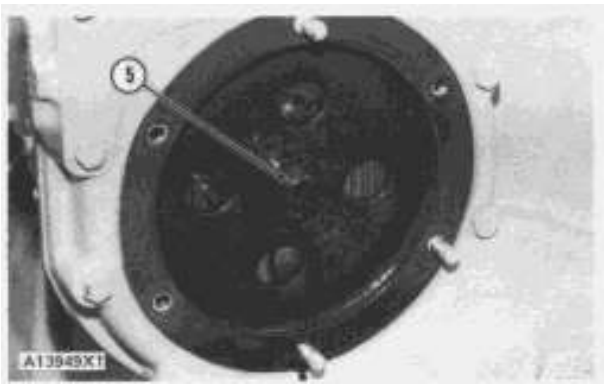

DRIVE GEAR FOR THE FUEL INJECTION PUMP
5. Bolt.

9. Make reference to the chart for Tools Needed. Install the tooling for the engine as shown.

10. Make the automatic timing advance unit or the drive gear loose from the drive sleeve for the fuel injection pump.

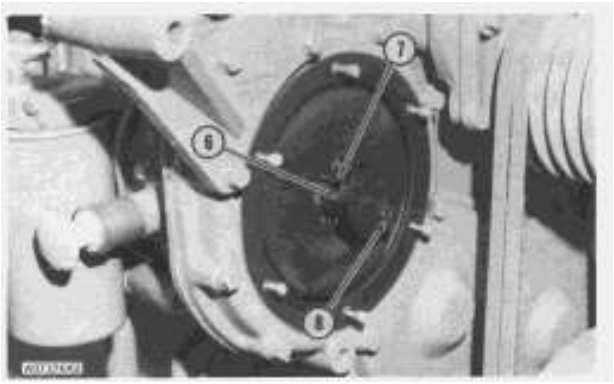

5P2371 PULLER INSTALLED
6. 5P2371 Puller. 7. 1/4"-20 bolt, 13/4" long. 8. 1/4" Flat washer.

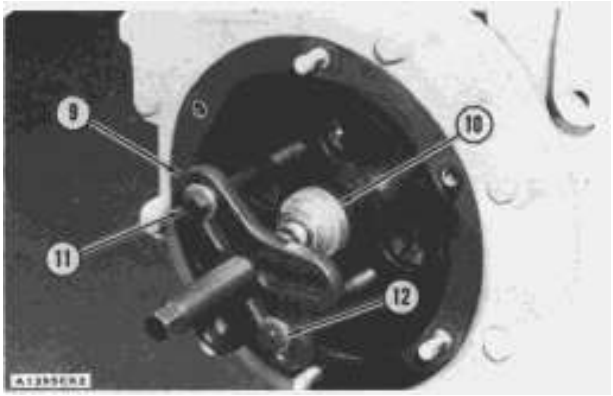

PULLER TOOLS INSTALLED
9. 8S2264 Puller Group. 10. 8B7560 Step Plate. 11. 3/8"-24 bolts, 3 1/2" long. 12. 3/8" Flat washer.

11. Turn the engine flywheel clockwise at least 60°.

12. Turn the flywheel counterclockwise until the No.1 piston is at TC (top center) compression position.

For engines which use a timing bolt in the flywheel, this is the point where a 3/8-16 bolt (13) can be installed in the flywheel as shown.

For engines which use a timing pointer, this is the point where the pointer is in alignment with the TC1 mark on the flywheel as shown.

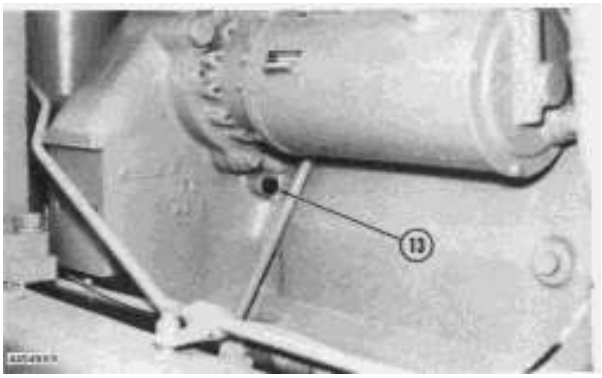

TIMING BOLT INSTALLED
13. Timing bolt.

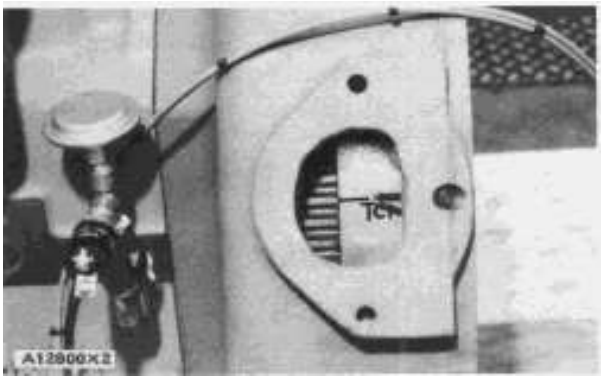

TIMING MARKS

13. Tighten the bolt (5) to 110 ± 5 lb. ft. (150 ± 7 N·m). Remove the timing pin (1). Remove the 3/8"-16 bolt from the flywheel (if installed).

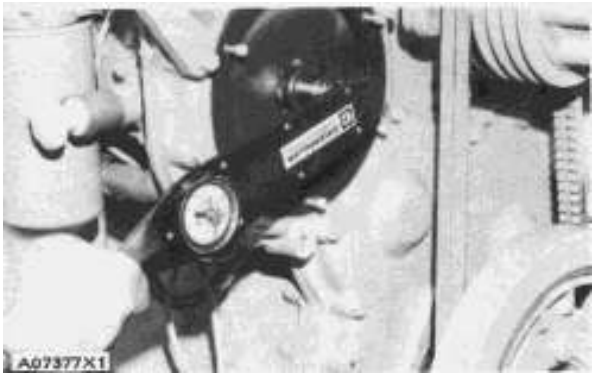

TIGHTENING AUTOMATIC TIMING ADVANCE UNIT

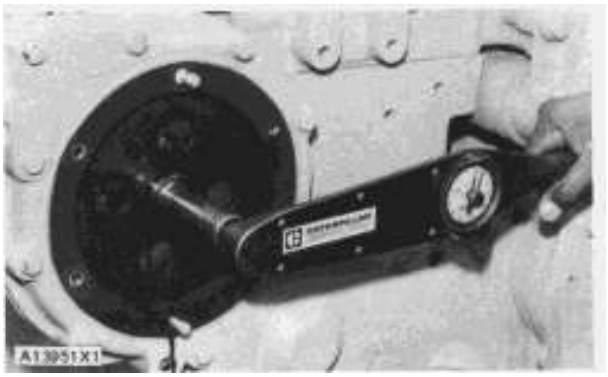

TIGHTENING DRIVE GEAR FOR FUEL INJECTION PUMP

14. Turn the engine flywheel two complete revolutions in the counterclockwise direction. The timing is correct if the timing pin (1) goes into the notch in the camshaft for the fuel injection pump at the same time that either the TC1 mark on the flywheel is in alignment with the timing pointer or that timing bolt (13) can be installed in the flywheel. If timing pin (1) cannot be installed, do steps (5) thru 13, again.

Checking Timing by Fuel Flow Method

1P540 Flow Checking Tool Group.3S2954 Engine Timing Indicator Group.5P2371 Puller.

See Special Instruction Form No. SMHS7083 for complete instructions for the fuel flow method of engine timing (injection sequence).

Travel of piston (6), from point of closing inlet port (5) to top center, can be found by using the tools listed under Tools Needed. Make a conversion of travel of piston (6) to degrees and determine if timing is correct.

NOTE: The fuel system timing has a tolerance of ± 1°.

1. Put No. 1 piston at top center (TC) on the compression stroke. Make reference to FINDING TOP CENTER COMPRESSION POSITION FOR NO. 1 PISTON.

2. Remove the fuel nozzle from the precombustion chamber for No. 1 cylinder.

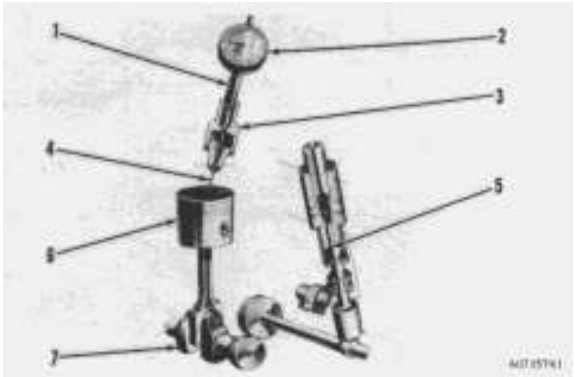

MEASURING PISTON TRAVEL
1. 3S3263 Adapter Assembly. 2. 9M9268 Dial Indicator. 3. Precombustion chamber. 4. 3S3264 Rod. 5. Inlet port. 6. Piston. 7. Crankshaft.

3. Put the 3S3264 Rod in the 3S3263 Adapter Assembly. Put the 3S3263 Adapter Assembly in the precombustion chamber and tighten the adapter finger tight.

NOTICE

Do not use a wrench to tighten the adapter. There will be damage to the nozzle seat if the adapter is too tight.

4. Put the 9M9268 Dial Indicator in the adapter assembly. Make an adjustment to the dial indicator so both pointers are on "0" (zero).

5. Turn the crankshaft a minimum of 45° in the CLOCKWISE direction.

NOTE: The direction of rotation is given as seen from the flywheel end of the engine.

6. Turn the crankshaft in the counterclockwise direction until the No. 1 piston is at the top of its stroke. Adjust the dial indicator if necessary to put both of the dials at "0" (zero).

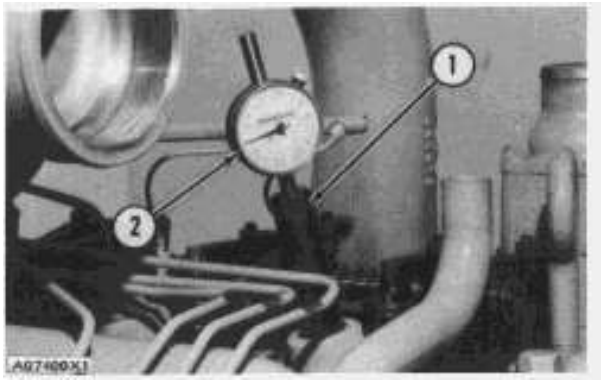

TIMING INDICATOR GROUP INSTALLED
1. 3S3263 Adapter Assembly. 2. 9M9268 Dial Indicator.

7. Disconnect the fuel line for No. 1 injection pump at the injection pump housing. Put the 7M1999 Tube Assembly (8) on No. 1 injection pump and tighten the nut. The position of the end of tube assembly (8) must be a little above horizontal as shown.

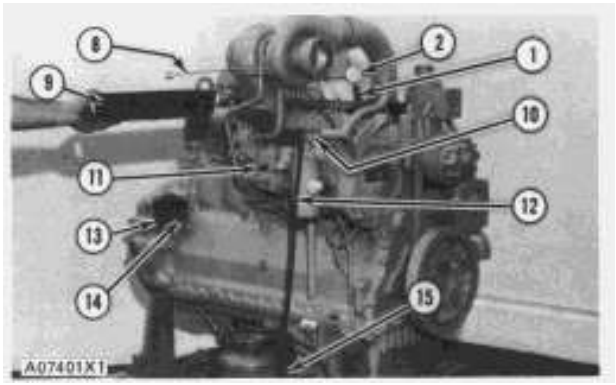

TYPICAL ARRANGEMENT FOR FUEL FLOW CHECK OF TIMING
1. 3S3263 Adapter Assembly. 2. 9M9268 Dial Indicator. 8. 7M1999 Tube Assembly. 9. Pan for holding fuel. 10. Orifice check valve. 11. Governor control shaft. 12. 5J4634 Hose Assembly. 13. 2P8294 Housing. 14. 2P8298 Gear Assembly. 15. Pressure tank.

8. Disconnect fuel supply line at the fuel filter. Use an adapter to connect the 5J4634 Hose Assembly to the fuel

filter.

9. Disconnect the fuel return line from the orifice check valve. Put a cap on the orifice check valve.

10. Turn the crankshaft approximately 45° in a clockwise direction with the engine turning tools.

11. With 1 gal. (3.8 liter) of clean fuel in the pressure tank (15), move the governor control to full FUEL-ON position. Put 15 psi (105 kPa) of air pressure in the tank by using the hand pump or shop air.

NOTICE

If shop air is used, be sure to make an adjustment to the regulator so there is no more than 15 psi (105 kPa) air pressure in the tank.

---

12. Put a pan (9) under the end of tube assembly (8) for the fuel that comes out of the end of the line.

13. Turn the crankshaft slowly in counterclockwise direction. Do this until the flow of fuel coming from the end of the tube assembly (8) is 12 to 18 drops per minute. This is the point of closing inlet port.

14. Stop rotation of the crankshaft when the flow of fuel is 12 to 18 drops per minute. Take a reading of the measurement on the dial indicator.

15. Disconnect the 5J4634 Hose Assembly from the fuel filter.

https://barringtondieselclub.co.za/

Timing Angle ± 1° (Degrees Before Top Center)	Indicator Reading	
	in.	mm
6°	.023	0.58
7°	.031	0.79
7.5°	.036	0.91
8°	.041	1.04
* 8.5°	.046	1.16
9°	.052	1.32
9.5°	.054	1.47
10°	.064	1.63
10.5°	.070	1.77
11.0°	.077	1.95
11.5°	.084	2.13
12.0°	.092	2.33
** 12.5°	.099	2.51
13.0°	.107	2.71
*** 13.5°	.116	2.94
14.0°	.124	3.14
14.5°	.133	3.37
15.0°	.142	3.60
15.5°	.152	3.86

*6N5322 Camshaft.
**4N4312 Camshaft.
***6N6567, 4N4313 Camshafts.

16. Make a comparison of the reading on the dial indicator with the chart.

17. If the reading on the dial indicator (2) is the same as the chart, the timing of the fuel system is correct. If the reading on the dial indicator (2) is different from the chart by more than 1° make adjustment to the timing. Make reference to Checking Timing By Timing Pin Method for the correct method for adjusting the timing of the fuel system.

18. After adjusting the timing by the timing pin method, a check by the fuel flow method should show that the timing is correct. If the two methods do not give the same result, look for the reason and correct it.

TIMING CHART FOR 3304 ENGINES		
(B) IDENTIFICATION NUMBER ON HOUSING	PART NUMBER OF CAMSHAFT IN THE FUEL INJECTION PUMP AND GOVERNOR GROUP	TIMING DEGREE BEFORE TC (top center)
1 to 44899	4N4312 (original camshaft)	12.5 ± 1°
	6N6567 (replacement for 4N4312 camshaft)	13.5 ± 1°
44900—Up	6N6567	13.5 ± 1°

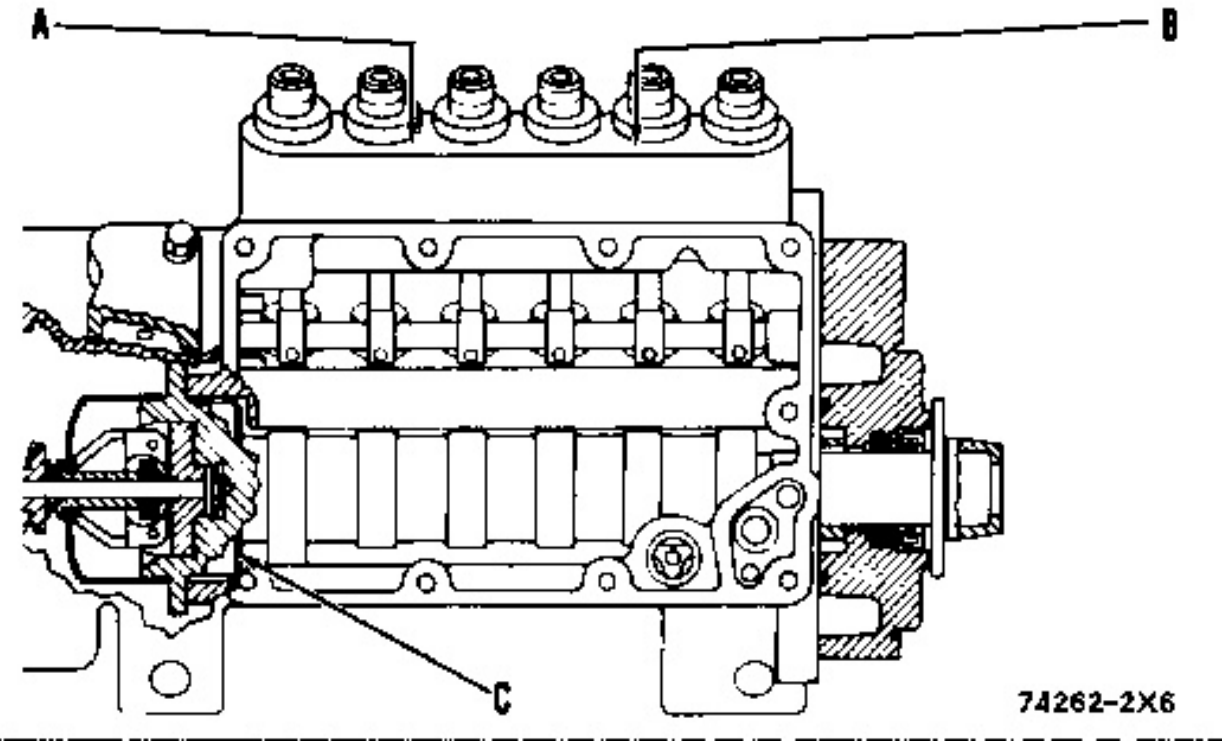

IDENTIFICATION MARKS

A. Part number of fuel injection pump and governor group. B. Identification number on housing. C. Location of part number marks on camshaft.

NOTE: Early camshafts had no part number marks on the camshafts. All 4 cylinder camshafts without part number marks at location (C) are 4N4312.

TIMING CHART FOR 3306 ENGINES		
(A) PART NUMBER OF FUEL INJECTION PUMP AND GOVERNOR GROUP	PART NUMBER OF CAMSHAFT IN THE FUEL INJECTION PUMP AND GOVERNOR GROUP	TIMING DEGREE BEFORE TC (top center)
6N3688 6N6100 6N6265 7N5304 9N1292	6N5322	8.5 ± 1°
6N172 6N313 6N314 6N2828 6N2829 6N6213 6N6214 6N6265 6N7606 6N7607 7N22 7N578 7N1870 7N5303 7N5947 7N6439	4N4313	13.5 ± 1°

NOTE: If the part number of the fuel injection pump and governor group is not in the chart or if it has a different camshaft, make reference to the parts book, or to TECHNICAL PARTSGRAM; COMMON USAGE IN SLEEVE METERING FUEL SYSTEMS, 4 and 6 PUMP GROUPS, Form No. FEG00707.

Checking Timing Advance By Timing Light Method

1P3500 Injection Timing Group.



1P3500 INJECTION TIMING GROUP

This group can be used to check the automatic timing advance. Special Instruction Form No. SMHS6964 is part of the group and has detailed instructions for its use.

1. Put the engine at top center (TC) compression position for No.1 piston. Make reference to FINDING TOP CENTER COMPRESSION POSITION FOR NO.1 PISTON.

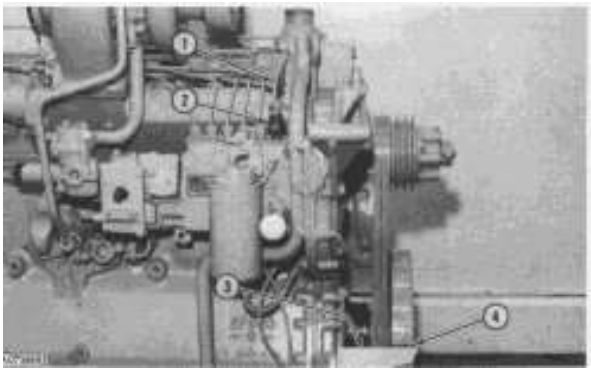

TRANSDUCER AND POINTER IN POSITION
1. Fuel injection line for No. 1 cylinder. 2. Transducer. 3. Pointer. 4. Mark.

2. Make a mark (4) on the damper in alignment with "pointer (3)". (A stationary object for reference.)

3. Disconnect the fuel injection line (1) for the No. 1 cylinder at the easiest place for access.

4. Install a transducer (2) in the line.

5. Remove the air from the line.

6. Connect the lines as shown.

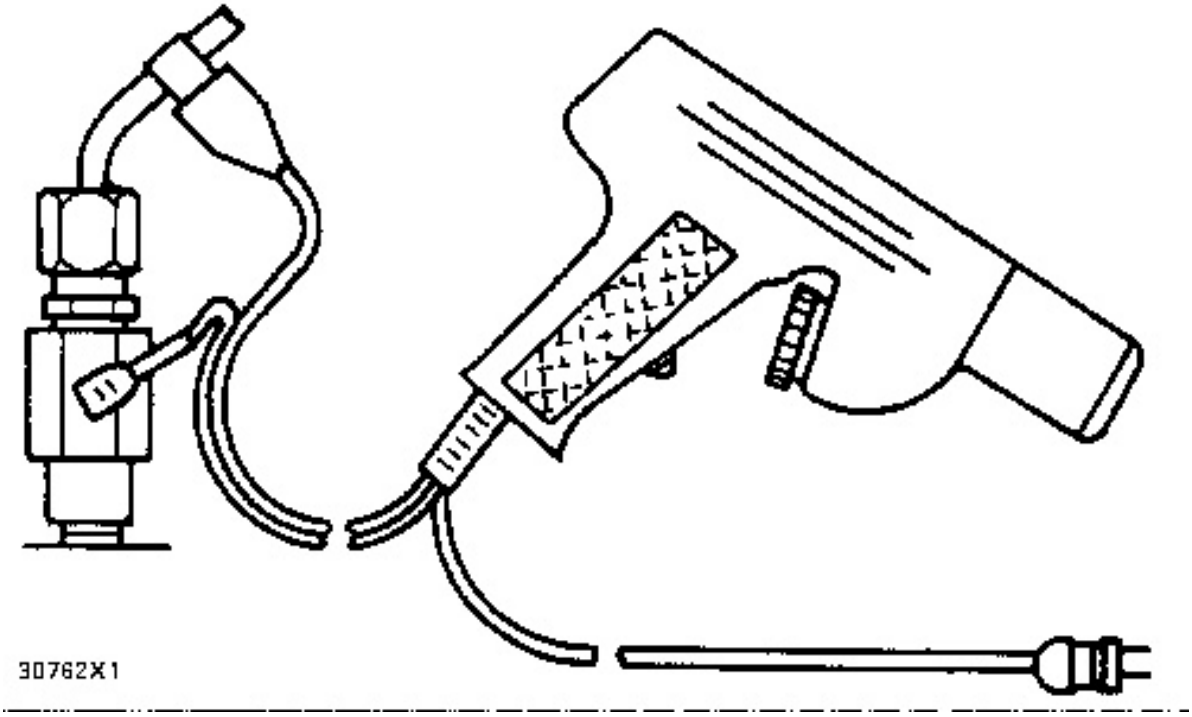

CONNECTIONS FOR TIMING LIGHT

7. Start the engine. With the engine at operating temperature, run the engine at low idle speed.

8. Put the light in the direction of the mark on the damper. Put switch (7) in "ADV" position.

9. Turn knob (6) to put the mark on the damper in alignment with the reference point on the engine.

10. Make a record of the reading on the dial (5).

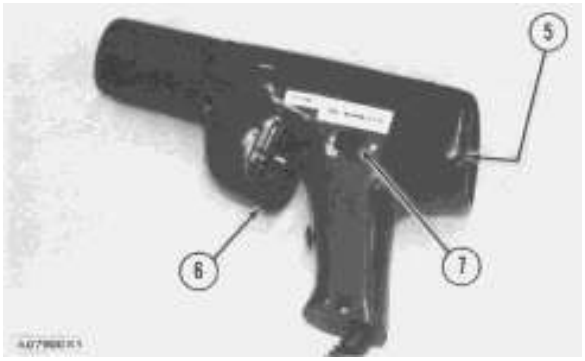

TIMING LIGHT
5. Dial. 6. Knob. 7. Switch.

11. Run the engine at high idle. Turn the knob (6) again to put the mark on the damper in alignment with the reference point.

12. Make a record of the reading on the dial (5).

13. Put the knob (6) in the time position. See the way the mark on the damper moves when the engine speed goes from low idle to high idle. If the mark (4) moves smoothly the function of the automatic timing advance unit is correct.

14. Make a comparison of the readings from the timing light with the chart.

ENGINE TIMING		
ENGINE SPEED	LOW IDLE	HIGH IDLE
Transducer at injection pump	8.5° ± 1°	19.5° ± 2°
Transducer at injection valve	7.5° ± 1°	12.5° ± 2°

If the difference between the reading at high idle and at low idle (timing advance) is correct and the function of the automatic timing advance is smooth, the unit is good.

NOTE: Make sure that the high and low idle speeds are correct when checking the operation of the automatic timing advance unit.

Make a replacement of the automatic timing advance unit if either the function is not smooth or the timing advance is not correct.

Make reference to Checking Timing by Timing Pin Method for the correct procedure for checking and changing the timing.

Governor Adjustments

NOTICE

A mechanic that has the proper training is the only one to make the adjustment of low idle and high idle rpm. The correct low idle and high idle rpm, and the measurement for adjustment of fuel system setting are in the RACK SETTING INFORMATION.

Check engine rpm with a tachometer that has good accuracy. If the low idle or high idle rpm needs an adjustment, use the procedure that follows:

1. Remove cover (3).

2. to make an adjustment to the high idle rpm, loosen locknut (2) and turn adjustment screw (1). Turning the screw in makes the engine run slower. Turning the screw out makes the engine run faster. Hold screw (1) and tighten locknut (2) after adjustment procedure is done.

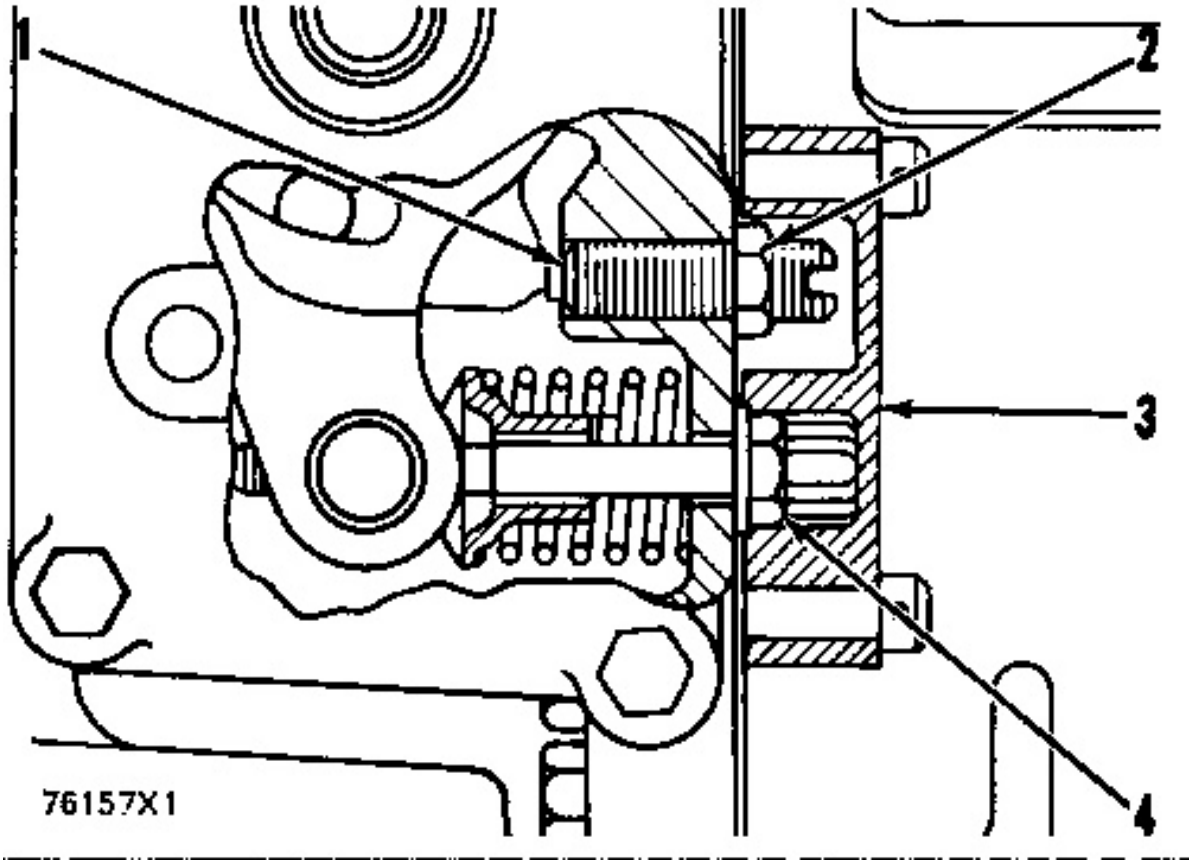

LOCATION OF IDLE ADJUSTMENT SCREWS
1. High idle adjustment screw. 2. Locknut. 3. Cover. 4. Low idle adjustment bolt.

3. To make an adjustment to the low idle rpm, turn bolt (4). Turning the bolt in makes the engine run faster. Turning the bolt out makes the engine run slower. Grooves in cover (3) hold bolt (4) and keep it from turning after adjustment is done and the cover is installed.

4. After each idle adjustment is made, move the governor lever to change the rpm of the engine. Now move the governor lever back to the point of first adjustment to check the idle adjustment. Keep doing the adjustment procedure until the low idle and high idle rpm are the same as given in the RACK SETTING INFORMATION.

Measuring Engine Speed

Remove the service meter from the rear of the fuel injection pump housing. Install the necessary parts of a 5P1759 Tachometer Drive Group in its place. Then connect the tachometer part of one of the following:

5P2150 Engine Horsepower Meter4S6553 Instrument Group1P5500 Portable Phototach Group1P3500 Injection Timing Group



5P2150 ENGINE HORSEPOWER METER

The 5P2150 Engine Horsepower Meter can measure engine speed from the tachometer drive on the engine. Special Instruction Form No. SMHS7050 has instructions for its use.

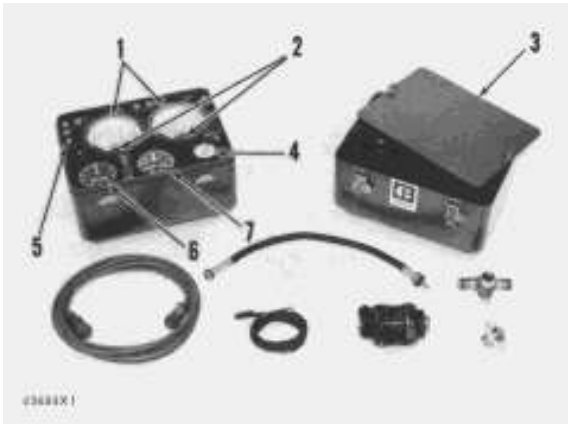

4S6553 INSTRUMENT GROUP
1. 4S6992 Differential Pressure gauges. 2. Zero adjustment screw. 3. Lid. 4. 8M2743 Gauge. 5. Pressure tap fitting. 6. 4S6991 Tachometer. 7. 4S6997 Manifold Pressure Gauge.

Special Instruction Form No. SEHS7341 is with the 4S6553 Engine Test Group and gives instructions for the test procedure.



1P5500 PORTABLE PHOTOTACH GROUP

The 1P5500 Portable Phototach Group can measure engine speed from the tachometer drive on the engine. It also has the ability to measure engine speed from visible rotating parts of the engine. Special Instruction Form No. SMHS7015 has instructions for its use.



1P3500 INJECTION TIMING GROUP

Special Instruction Form No. SMHS6964 is with this group and has instructions for its use.

Checking Balance Point (Full Load Speed)

Checking the Balance Point of the engine is a fast way to make a diagnosis of engine performance.

If the balance point and the high idle speed are correct, the fuel system of the engine is operating correctly. The balance point for the engine is:

1. At full load speed.
2. The point where the load stop pin is against the load stop.
3. The point where the engine gets the maximum amount of fuel per stroke.
4. The point where the engine has the most horsepower output.
5. The point where an increase in load on the engine puts the engine in a lug condition (a condition in which a small increase in load makes the engine speed get much less).

Procedure for Checking Balance Point

1. Connect a tachometer which has good accuracy to adapter (1) on the end of the fuel injection pump.

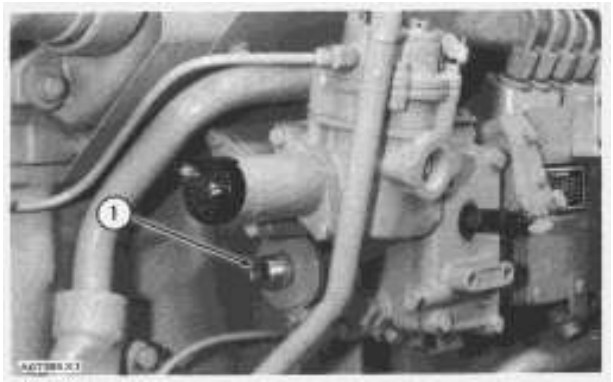

CHECKING BALANCE POINT
1. Adapter.

2. Connect a continuity light (2) to the brass terminal screw (3) on the cover for the load stop. Connect the other end of the light to a place on the fuel system which is a good electrical connection.

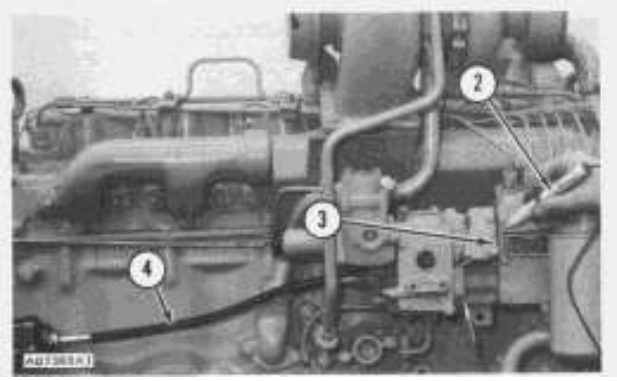

CHECKING BALANCE POINT
2. Continuity light. 3. Brass terminal screw. 4. Tachometer drive shaft.

3. Start the engine.

4. With the engine at operating conditions, run the engine at high idle.

5. Make a record of the speed of the engine at high idle.

6. Add load on the engine slowly until the continuity light just comes on. This is the balance point.

7. Make a record of the speed at the balance point.

8. Repeat Step 6 several times to make sure that the reading is correct.

9. Stop engine. Make a comparison of the records from Steps 5 and 7 with the information from the ENGINE INFORMATION plates on the side of the engine or with RACK SETTING INFORMATION.

10. If the full load speed is not correct, adjust the HIGH IDLE speed to make a change in the full load speed.

11. If the high idle speed is out of tolerance and the full load speed is correct, look for a weak governor spring or the wrong governor spring. Both the full load speed and the high idle speed must be in the tolerance given in the RACK SETTING INFORMATION.

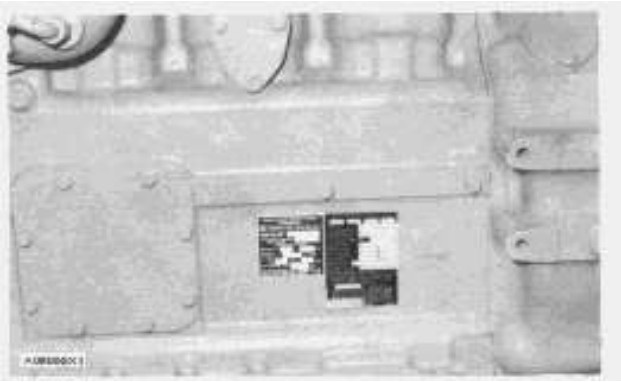

ENGINE INFORMATION PLATES (Typical Example)

Adjustment Procedure For "Dashpot" Governor (For Electric Set Engines Only)

Start with the engine running at normal operating conditions. Turn the adjustment screw (1) in until it is against the seat. Turn it out 1/4 turn (90°).

Listen to the sound of the engine. If the engine is operating correctly, sudden changes in load will not change the sound of the engine. If sudden changes in load do change the sound of the engine, make a reference to TROUBLESHOOTING for a list of possible causes and their corrections.

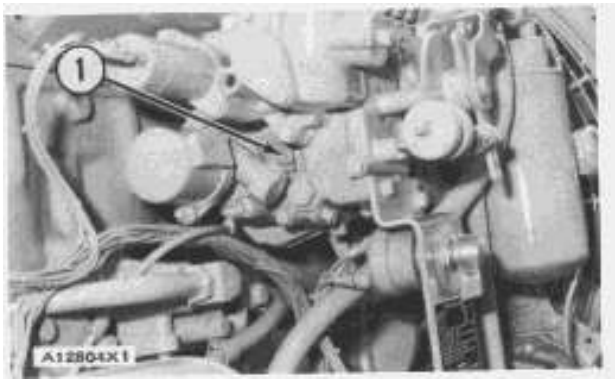

"DASHPOT" GOVERNOR
1. Adjustment screw.

Fuel System Setting

5P4203 Field Service Tool Group or3P1550 Field Service Tool Group.

Special Instruction Form No. SMHS7013 is with this group and has instructions for its use.

The following procedure for fuel system setting can be done with the housing for the fuel injection pumps either on or off the engine.

1. Disconnect the governor control linkage.

2. Remove the shutoff solenoid (1).

3. Remove the fuel ratio control (2).

4. Remove cover (3).

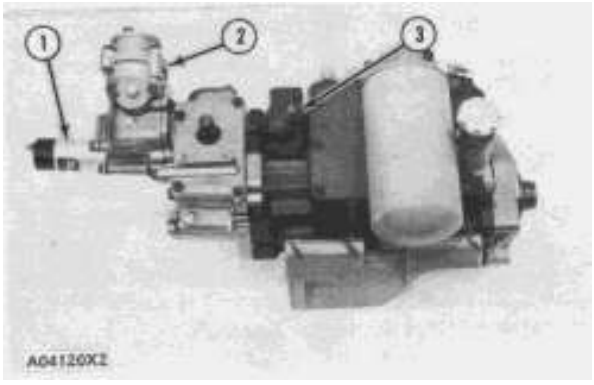

FUEL SYSTEM SETTING
1. Shutoff solenoid. 2. Fuel ratio control. 3. Cover.

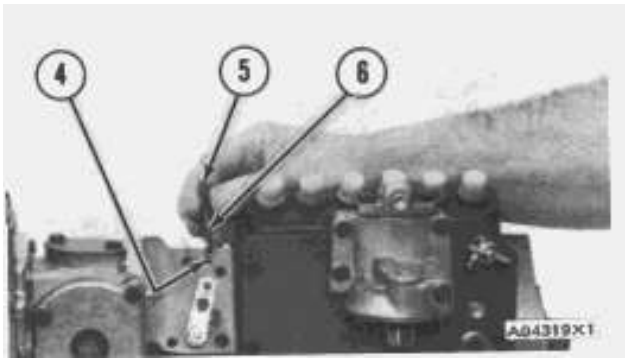

INSTALLATION OF PIN AND SPRING
4. Hole. 5. Spring. 6. 5P299 Pin, with 19.2831 on it.

5. Put 5P299 Pin (6) into hole (4).

6. Put cover (14) and spring (5) over pin (6). Use a 1D4533 Bolt and 1D4538 Bolt to hold cover (14) to the injection pump housing.

7. Put 8S7271 Screw in the hole over pin (6) and spring (5). Tighten the screw until, the pin is held against the injection pump housing.

NOTE: The 5P6602 Adapter (A) is a replacement for the 5P4226 Adapter and 2P8331 Cover (14). Either adapter or the cover can be used for this procedure.

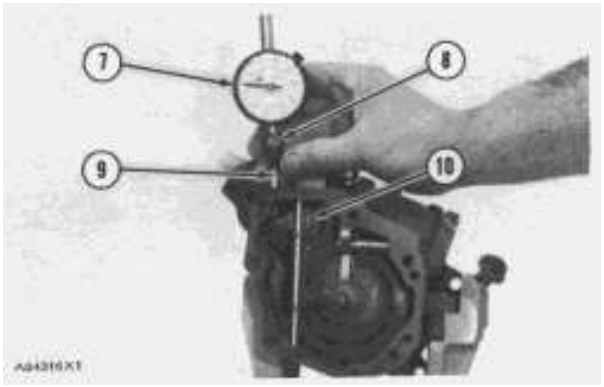

DIAL INDICATOR IN CONTACT WITH FUEL CONTROL SHAFT
7. Dial indicator. 8. Clamp. 9. Magnetic point. 10. Fuel control shaft.

8. Put clamp (8) in 2P8331 Cover (14) or 5P6602 Adapter (A). Put 3P1569 Magnetic Point or 5P4809 Point on indicator (7) and install indicator (7) in clamp (8).

NOTE: If the indicator automatically goes to the extended position, use the 5P4809 Point. If the indicator does not automatically go to the extended position, use the 3P1569 Magnetic Point.

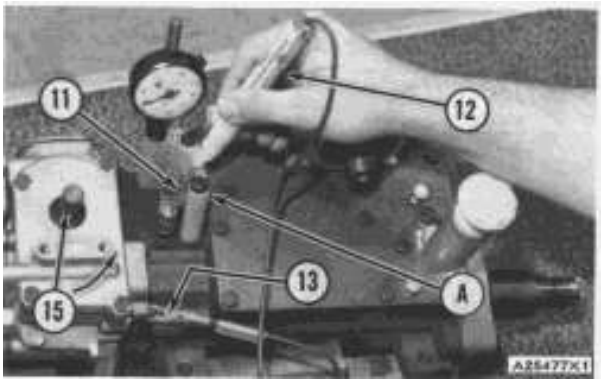

FUEL SYSTEM SETTING (With 5P6602 Adapter)
11. Contact. 12. 8S4627 Circuit Continuity Tester Light. 13. Clip. 15. Governor control shaft. A. 5P6602 Adapter.

9. Turn the governor control shaft (15) in the direction shown and hold it at the full load position.

10. Make an adjustment to put both dials of the dial indicator (7) at zero.

11. Connect the clip end (13) of continuity light (12) to a good electrical ground. Put the other end of continuity light (12) in contact with the contact (11) as shown.

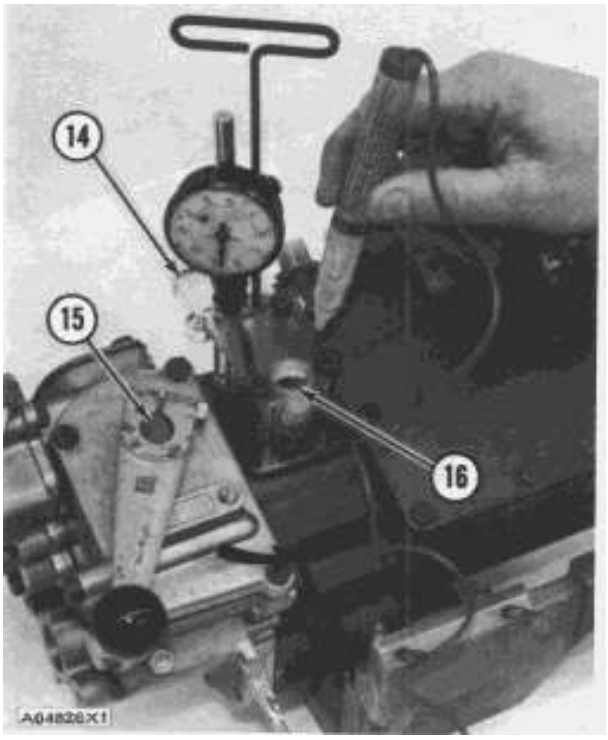

FUEL SYSTEM SETTING (With 2P8331 Cover)
14. 2P8331 Cover. 15. Governor control shaft. 16. Hole.

12. Turn the 8S7271 Screw counterclockwise. Turn it slowly until the continuity light just goes on.

13. Make a record of the reading on the dial indicator (7).

14. Do this procedure several times to make sure that the reading is correct.

15. Make a comparison of this reading and the FUEL SYSTEM SETTING on the Engine Information Plate or from RACK SETTING INFORMATION. If the reading is not the same, make sure the governor control shaft is in the full load position. Then do Steps 7 through 14 again.

16. If the reading on the dial indicator is not correct, do the following:

Load Stop Adjustment:

a. Put the 3P2210 Socket on locknut (18). Loosen the locknut and turn the torque control screw (17) with a screwdriver until the reading on the dial indicator (7) is correct. Tighten the locknut (18).

b. Check the adjustment by doing Steps 7 through 14 again.

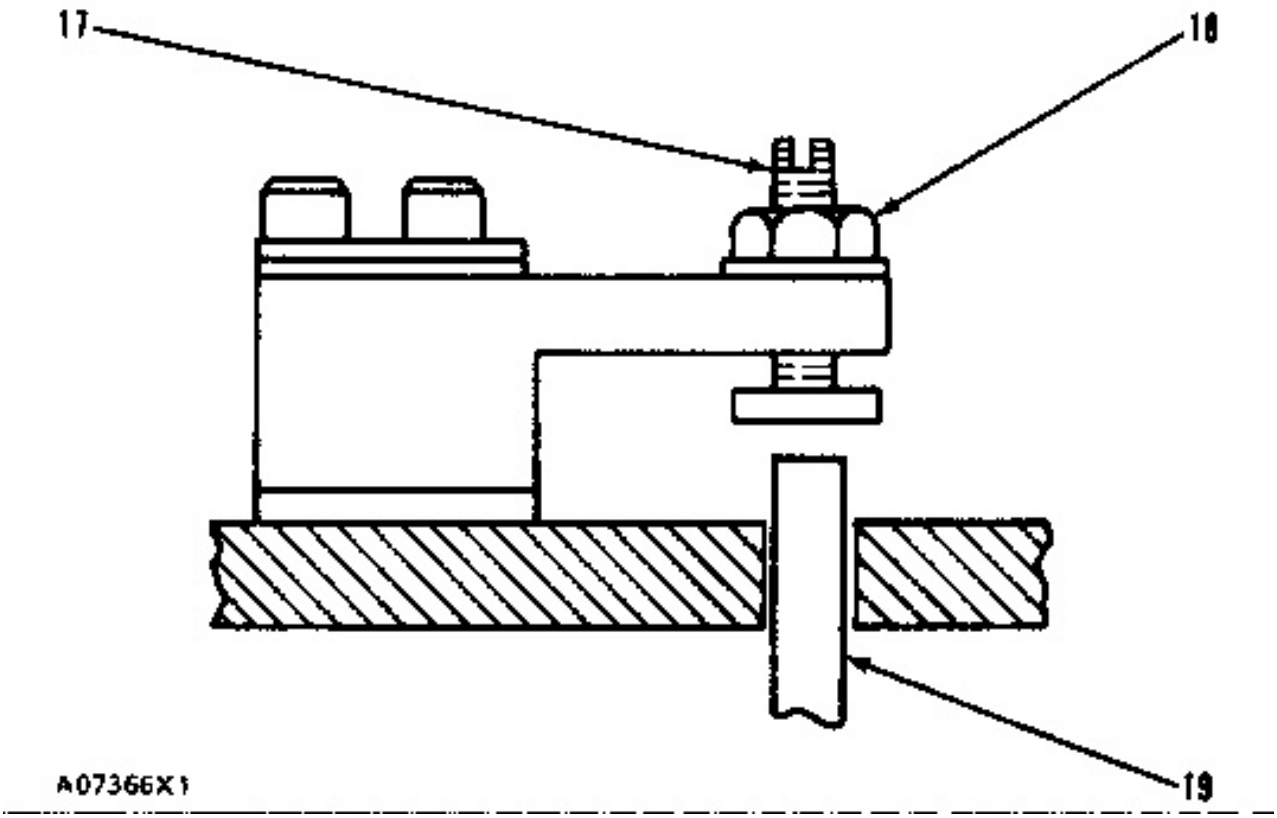

ADJUSTMENT FOR FUEL SYSTEM SETTING
17. Torque control screw. 18. Locknut. 19. Load stop pin or coil spring torque spring.

c. When the adjustment is correct, install the fuel ratio control (2).

NOTE: The arrangement of the tooling for checking the fuel ratio control is the same as for checking the fuel setting. Make reference to Fuel Ratio Control Setting at this point if a check of the fuel ratio control setting is desired.

d. Remove the tooling and install the cover (3) and shutoff solenoid (1).

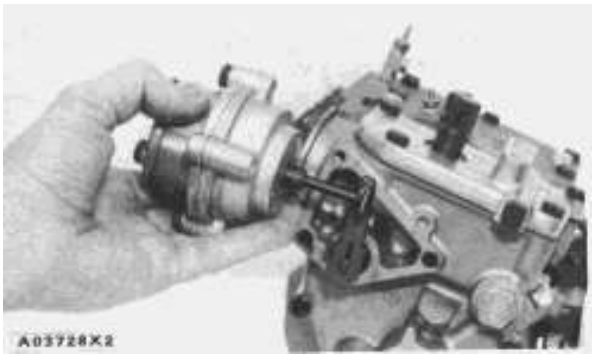

FUEL RATIO CONTROL IN POSITION WITH LEVER

NOTE: When installing the fuel ratio control, move the governor control to the shutoff position. Then put the bottom end of the fuel ratio control in position under the pin in the lever as shown.

Leaf Type Torque Spring:

a. Write down the dimension that is on the dial indicator.

b. Write down the dimension given in the RACK SETTING INFORMATION or on the Engine Information Plate.

c. Remove the test tools [cover (14), spring (5) and dial indicator (7)] from the injection pump housing.

d. Install or remove shims at location (20) to get the correct dimension. The difference between the dimensions in (a) and (b) is the thickness and amount of shims to remove or install to get the correct setting.

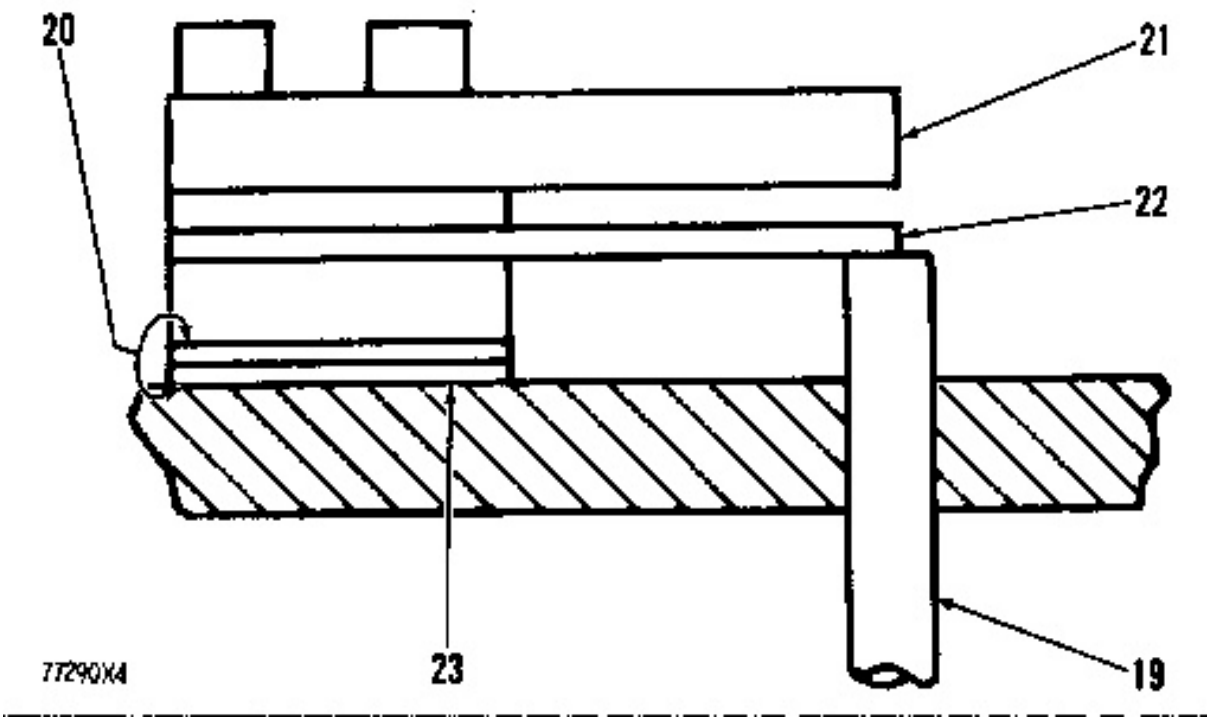

LEAF TYPE TORQUE SPRING
19. Load stop pin. 20. Location of shims. 21. Stop bar. 22. Leaf type torque spring. 23. Shims.

e. Install correct amount of shims (23) torque spring (22) and stop bar (21) on the injection pump housing. Install the test tools on the injection pump housing and do the test procedure again. Remember the tester light must come on when the correct dimension is on the dial indicator.

f. Do the test procedure until the dimension on the dial indicator is the same as the dimension given in the RACK SETTING INFORMATION or on the Engine Information Plate. After fuel system setting is correct, remove the fuel system setting tools and install cover (3).

Fuel Ratio Control Setting

NOTE: The following procedure can be done with the fuel system either on or off the engine. In either way, damage to the fuel system can be the result if dirt gets into the fuel system.

The adjustment of the Fuel Setting must be correct before making checks or adjustments to the Fuel Ratio Control.

Make a reference to Fuel System Setting for the correct procedure for checking and making adjustments to the Fuel System Setting.

1. With the tooling still installed from the procedure Fuel System Setting, turn the 8S7271 Screw in until the 5P299 Pin is against the fuel injection housing.

2. Make an adjustment if necessary to make the reading of both dials on the dial indicator be zero.

3. Turn 8S7271 Screw out 6 or more turns. Move the governor control shaft to the full load position. The reading on the dial indicator must be the same as the Fuel Ratio Control Setting in Rack Setting Information or on the Engine Information Plate.

NOTE: The reading on the dial indicator has a tolerance of ± 0.10 mm. This tolerance is for the turning of bolt (1) for the alignment of the bolt holes in the cover (2).

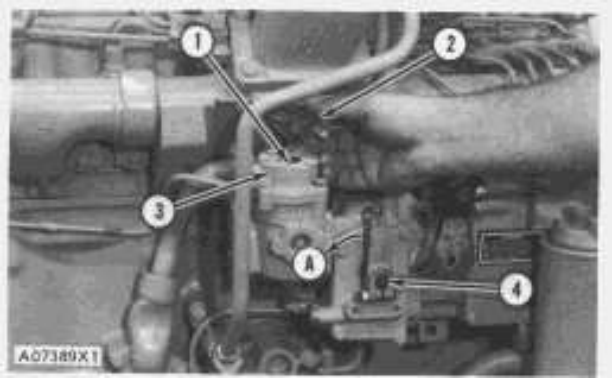

MAKING ADJUSTMENT TO FUEL RATIO CONTROL
1. Bolt. 2. Cover. 3. Body. 4. Governor control shaft. A. Direction for full fuel position.

4. If the reading is not correct, remove the cover (2). Turn the bolt (1) with the cover (2) until the reading on the dial indicator is correct. Be sure that the governor control shaft (4) is turned to the full fuel position.

5. Install cover (2).

NOTE: If the bolt holes in the cover (2) are not in alignment with bolt holes in the body (3), turn the bolt (1) with the cover (2) to put the bolt holes in the cover in alignment with the nearest holes on the body (3).

6. Remove the tooling and install cover (5), shutoff solenoid (6) and governor control linkage.

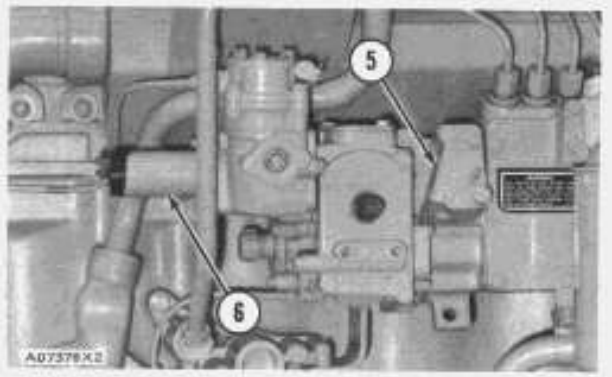

FUEL SYSTEM
5. Cover. 6. Shutoff solenoid.

Fuel Pump Calibration

3P2200 Tool Group8S2243 Wrench* 5P6602, 5P4226 Adapter* or 2P8331 Cover* 5P4205 Wrench* 5P4206 Wrench** 1D4533 Bolt* 1D4538 Bolt* 5P4209 Gauge* 8S7271 Screw* 2P8264 Socket** 6V190 Clamp** 5P7253 Socket Assembly **

---

*Part of 5P4203 Tool Group

**Not part of a Tool Group

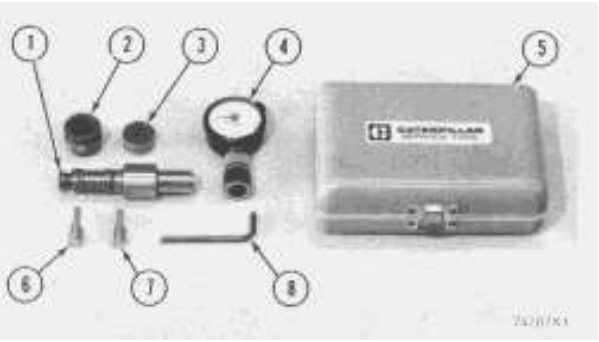

3P2200 TOOL GROUP
1. 3P1540 Calibration Pump. 2. 4N218 Bushing. 3. 1P7379 Microgage. 4. 3P1568 Dial Indicator with 3P2226 Collet. 5. 5P6510 Box. 6. 3P1545 Calibration Pin with 17.3734 on it, (in-line engines). 7. 3P1546 Calibration Pin with 15.9410 on it. (Vee engines). 8. 1S9836 Wrench.

NOTE: 3P1540 Calibration pump must have the 5P6557 Spring installed instead of the 1P7377 Spring.

Checking Fuel Pump Calibration

The following procedure for fuel pump calibration can be done with the housing for the fuel injection pumps either on or off the engine.

NOTICE

Before doing any service work on this fuel system, the outside of the injection pump housing and all parts connected to it must be clean.

---

1. Remove plug (11) from the cover (10) of the housing for the fuel injection pumps.

2. Hold a container under the pump housing for the fuel that comes out of the hole for plug (11).

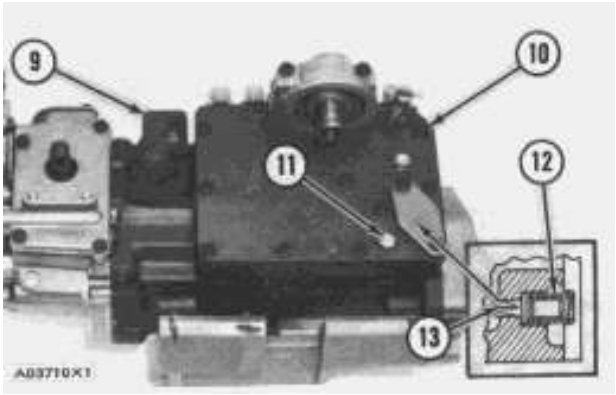

REMOVAL OF COVERS
9. Cover. 10. Cover for injection pump housing. 11. Plug. 12. Spring for bypass valve. 13. Bypass valve.

3. Remove the fuel ratio control, cover (9), and cover (10).

NOTE: Cover (10) has a bypass valve and spring behind it in the injection pump housing.

4. Put the 3P1545 Calibration Pin, (6) with 17.3734 on it, in calibration hole as shown.

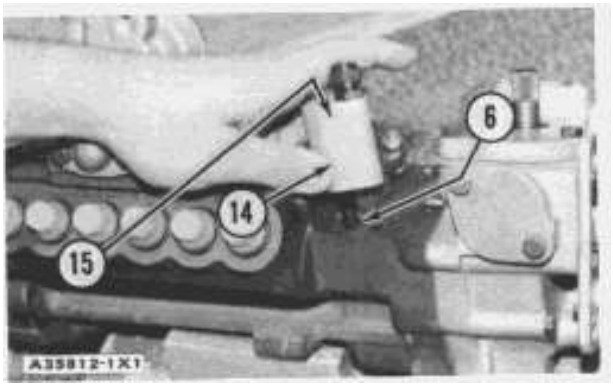

INSTALLING CALIBRATION PIN AND ADAPTER
6. 3P1545 Calibration Pin with 17.3734 on it. 14. 5P6602 Adapter. 15. Hole.

NOTE: The 5P6602 Adapter is a replacement for the 5P4226 Adapter and 2P8331 Cover. Either adapter or the cover can be used for this procedure.

5. Install the 5P6602 Adapter (14) as shown. Fasten it in position with a 1D4533 Bolt and a 1D4538 Bolt.

6. Put the 8S7271 Screw (setscrew) in the hole (15) over the calibration pin (6). Tighten the setscrew to 20 to 25 lb. in. (2.3 to 2.8 N·m) with the 2P8264 Socket.

7. Install a lever if necessary, and turn the governor control shaft (16) to the full load position (fully counterclockwise) and fasten it in this position.

8. Use the 8S2243 Wrench and remove the fuel injection pump to be checked.

9. Clean the barrel and plunger of calibration pump (1). Put clean diesel fuel on the calibration pump (1) for lubrication.

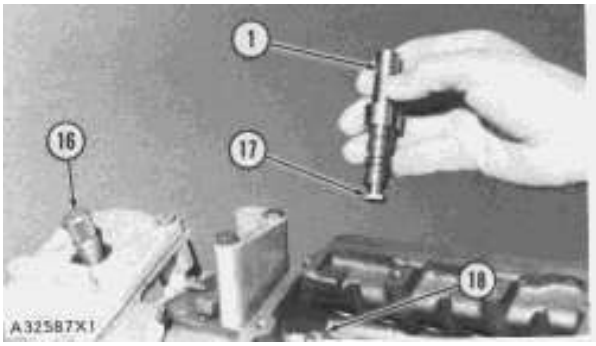

INSTALLING CALIBRATION PUMP
1. 3P1540 Calibration pump. 16. Governor control shaft. 17. Flat place on plunger. 18. Lever.

10. Put the calibration pump (1) in the place of the pump to be checked with the flat place (17) on the plunger toward the tang (19) on lever (18). When the calibration pump (1) is all the way in the bore, turn it 180° in either clockwise or counterclockwise direction. The tang (19) on lever (18) is now in the groove of the calibration pump (1). Then install the 4N218 Bushing (2) using the 8S2243 Wrench and a torque wrench to tighten it to 70 ± 5 lb. ft. (95 ± 7 N·m).

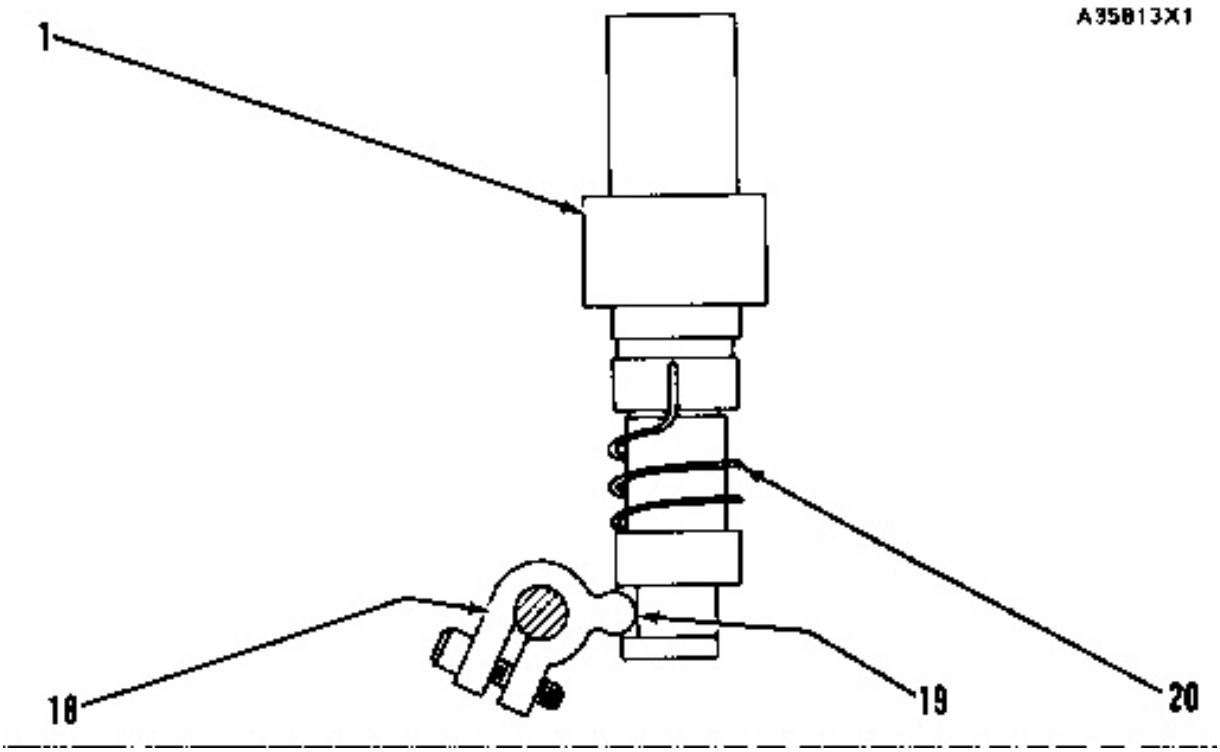

CALIBRATION PUMP INSTALLED
1. 3P1540 Calibration pump. 18. Lever. 19. Tang. 20. Spring.

NOTE: Turning calibration pump (1) 180° gives the same reference point for all measurements.

NOTE: Use the 4N218 Bushing (2) and the calibration pump (1) together. The contact surfaces of the standard bushing, fuel injection pump and the housing for the fuel injection pumps are sealing surfaces. Keep them clean and free of scratches, to prevent leaks.

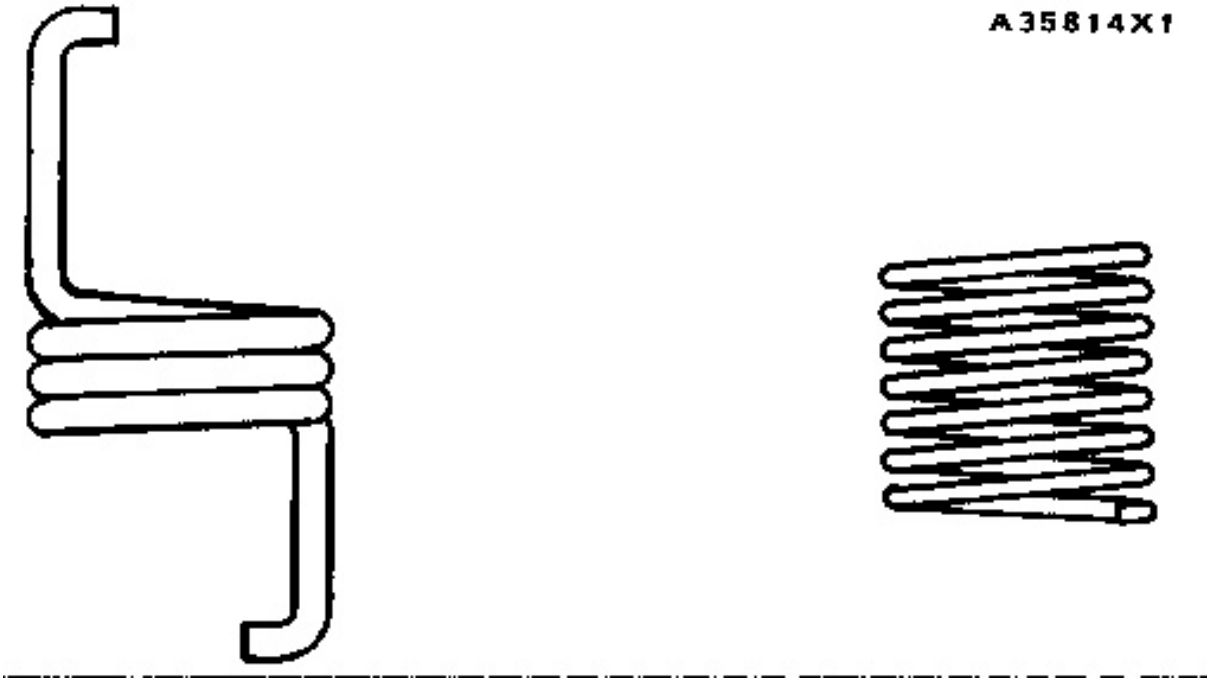

NOTE: Be sure that spring (20) on calibration pump (1) is the 5P6557 Spring instead of the 1P7377 Spring which was installed on earlier calibration pumps.

11. Put dial indicator (4) on microgage (3) and hold them together tightly. Loosen lockscrew (21) and turn the face of dial indicator (4) to put the pointer at "O". Tighten lockscrew (21).

Remove dial indicator (4) from microgage (3). Look at the face of dial indicator (4) and put dial indicator (4) on microcage (3) again. The pointer must move through one to one and one half revolutions before stopping at exactly "O". If the number of revolutions is not correct, loosen the locknut on the 3P2226 Collet, and adjust the position of the 3P2226 Collet until the pointer has the correct number of revolutions. Then do the check again. When the adjustment is correct do step 12.

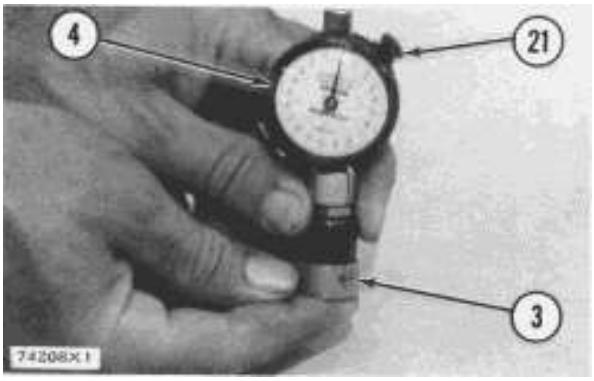

PUTTING DIAL INDICATOR ON ZERO
3. 1P7379 Microgage. 4. 3P1568 Indicator with 3P2226 Base. 21. Lockscrew.

NOTICE

If the locknut on the 3P2226 Collet is too tight, it can cause interference in the operation of the dial indicator.

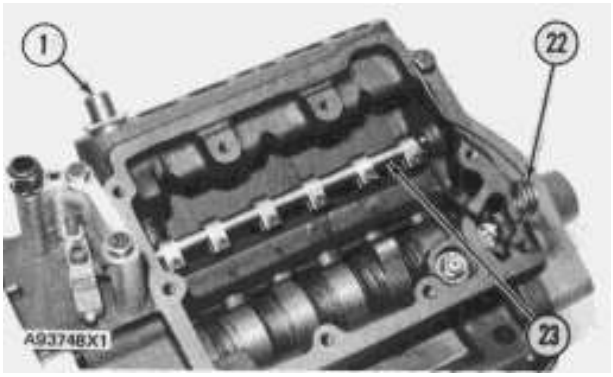

6V190 CLAMP INSTALLED
1. Calibration pump. 22. 6V190 Clamp. 23. Shaft.

12. Put 6V190 Clamp (22) in the position shown, next to the transfer pump end. 6V190 Clamp (22) pushes shaft (23) down against the bottom of its bearing. The other end of the shaft (23) is held down against its bearing by 3P1545 Calibration Pin (6) which is held by 8S7271 Screw. The combination of forces from 6V190 Clamp (22) and 3P1545 Calibration Pin (6) is necessary to hold shaft (23) in its normal operating position against the lifting force from spring (20) in calibration pump (1).

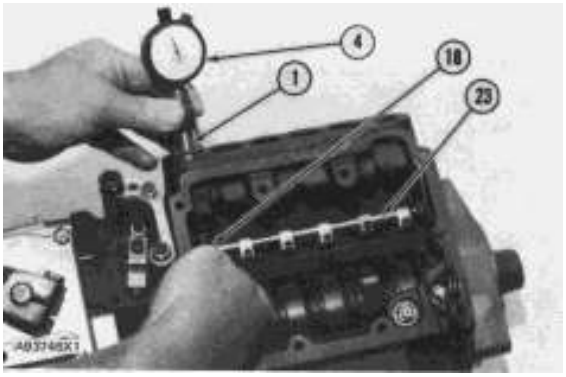

DIAL INDICATOR POSITION
1. Calibration pump. 4. Dial indicator. 18. Lever. 23. Shaft.

13. Put dial indicator (4) on the calibration pump (1) as shown. Hold it tightly in place. Move shaft (23) toward the governor end to remove end play. Push on lever (18) as shown (toward shutoff) several times. This removes any clearance in the linkage. Then look at the reading on the dial indicator (4).

14. If the dial indicator (4) reading is more than ± 0.050 mm from "0.000" (outside the TOTAL TOLERANCE), do steps 16 to 20, ADJUSTING FUEL PUMP CALIBRATION.

If the dial indicator (4) reading is near either end of the TOTAL TOLERANCE, check another pump. If the next reading is outside the TOTAL TOLERANCE or if the two readings have a difference of 0.050 mm or more, do the Steps 16 to 20, ADJUSTING FUEL PUMP CALIBRATION.

NOTE: The mechanic doing the checking must make the decisions of which and how many pumps to check according to the symptoms of the fuel injection pump being tested.

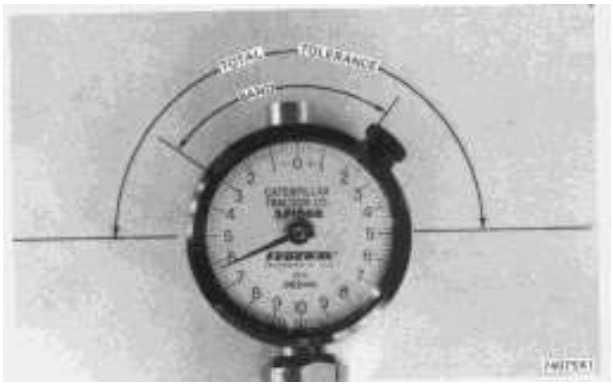

DIAL INDICATOR READING
Desired reading for all pumps is "0.000". Maximum permissible tolerance for all readings is ± 0.050 mm. Maximum permissible difference between any two pumps is 0.050 mm.
TOTAL TOLERANCE shows the maximum permissible range of pointer positions which are acceptable. If the reading is outside the range of TOTAL TOLERANCE, do ADJUSTING FUEL PUMP CALIBRATION for all pumps.
BAND is an example only. It shows a 0.050 mm range. This range shows the maximum permissible difference between any two readings for all the pumps. If any two readings are farther apart than the 0.050 mm range, do ADJUSTING FUEL PUMP CALIBRATION for all pumps.

NOTE: For troubleshooting purposes, if the dial indicator (4) reading is "O" or near "O", the calibration of the other pumps is probably in the tolerance.

15. If dial indicator (4) readings for all the pumps are within the limits in step 14, the calibration is acceptable. Remove the tooling, and install the parts which were removed.

Adjusting Fuel Pump Calibration

16. Remove all pumps with 8S2243 Wrench.

17. Install calibration pump (1) in the place of one of the pumps according to the procedure in Steps 9 and 10.

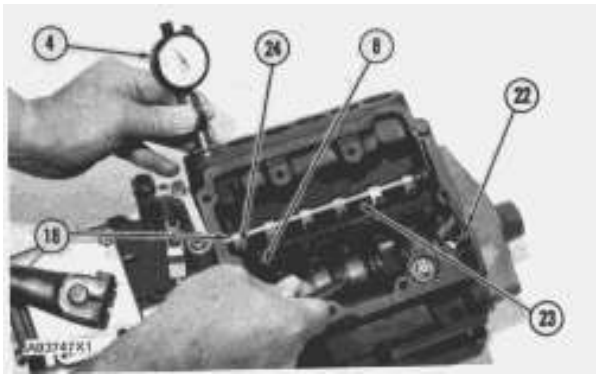

ADJUSTING FUEL PUMP CALIBRATION
4. Dial indicator. 8. 1S9836 Wrench. 18. Lever. 22. 6V190 Clamp. 23. Shaft. 24. Bolt.

18. Loosen bolt (24) with 1S9836 Wrench (8) or 5P4206 Wrench. Turn the lever (18) on shaft (23) enough to move the top of plunger (25) of calibration pump (1) below top surface (26) of calibration pump (1). Tighten bolt (24) just enough for lever (18) to hold plunger (25) stationary.

NOTE: When bolt (24) has the correct torque, pushing with a small amount of force on lever (18) through the wrench moves plunger (25) up in calibration pump (1).

19. Move shaft (23) toward the governor to remove end play. Then push down on lever (18) through the wrench until top of plunger (25) is almost even with top surface (26) of calibration pump (1) as shown.

20. Check dial indicator (4) according to step (11). Then put dial indicator (4) in place over the center of calibration pump (1) and hold it there tightly. Now move plunger (25) of calibration pump (1) by pushing on lever (18) through the wrench. Stop moving the plunger when the dial indicator is at approximately 0.000 mm. Tighten bolt (24) to 24 ± 2 lb. in. (2.8 ± 0.2 N·m) with the 5P7253 Socket Assembly.

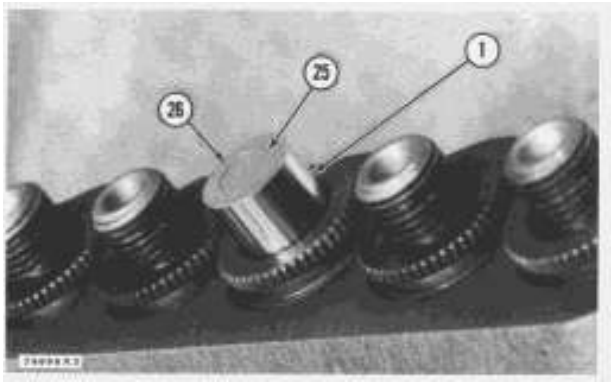

PLUNGER POSITION
1. Calibration pump. 25. Plunger. 26. Top surface of calibration pump.

NOTE: When moving plunger (25), make sure that the last direction of plunger (25) movement is in the up direction. If plunger (25) goes up too far, move plunger (25) down to a position below that desired. Then move plunger (25) up to the desired position.

NOTE: The action of tightening bolt (24) usually changes the reading on dial indicator (4) by approximately 0.010 mm. Stop moving plunger (25) up at the necessary point to get the reading on dial indicator (4) at 0.000 ± 0.010 mm after tightening bolt (24).

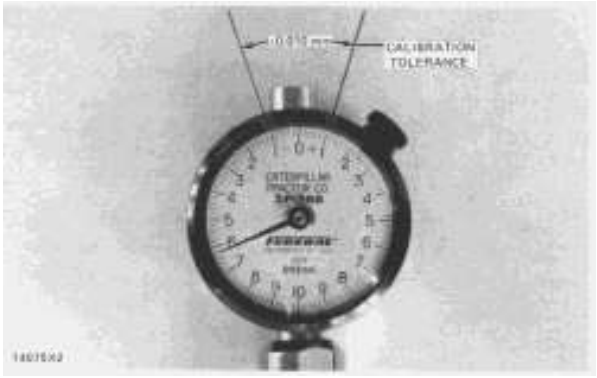

± 0.010 mm CALIBRATION TOLERANCE

Move shaft (23) toward shutoff several times to remove clearance in the linkage. Dial indicator (4) reading must be 0.000 ± 0.010 mm as shown.

When the pump calibration is correct make a record and then do the same procedure for all of the other pumps.

Air Inlet And Exhaust System

Restriction Of Air Inlet And Exhaust

There will be a reduction of horsepower and efficiency of the engine if there is a restriction in the air inlet or exhaust system.

Air flow through the air cleaner must not have a restriction of more than 30 in. (762 mm) of water difference in pressure.

Back pressure from the exhaust (pressure difference measurement between exhaust outlet elbow and atmosphere) must not be more than shown in the chart.

ENGINES WITH TURBOCHARGERS	ENGINES WITHOUT TURBOCHARGERS
27" H_2O (686 mm)	34" H_2O (864 mm)

Measurement Of Pressure In Inlet Manifold

By checking the pressure in the inlet manifold the efficiency of an engine can be checked by making a comparison with the information given in the RACK SETTING INFORMATION. This test is used when there is a decrease of horsepower from the engine, yet there is no real sign of a problem with the engine.

The correct pressure for the inlet manifold is given in the RACK SETTING INFORMATION. Development of this information is done with these conditions: 29.4 in. (746.7 mm) of mercury barometric pressure, 85° F (29° C) outside air temperature and 35 API rated fuel. Any change from these conditions can change the pressure in the inlet manifold. Outside air that has higher temperature and lower barometric pressure than given above will cause a lower horsepower and inlet manifold pressure measurement, than given in the RACK SETTING INFORMATION. Outside air that has a lower temperature and higher barometric pressure will cause a higher horsepower and inlet manifold pressure measurement.

A difference in fuel rating will also change horsepower and the pressure in the inlet manifold. If the fuel is rated above 35 API, pressure in the inlet manifold can be less than given in the RACK SETTING INFORMATION. If the fuel is rated below 35 API, the pressure in the inlet manifold can be more than given in the RACK SETTING INFORMATION. BE SURE THAT THE AIR INLET AND EXHAUST DO NOT HAVE A RESTRICTION WHEN MAKING A CHECK OF PRESSURE IN THE INLET MANIFOLD.

Use the 4S6553 Instrument Group to check engine rpm, the pressure in the inlet manifold and pressure in the exhaust system. Special Instruction Form No. SEHS7341 is with the tool group and gives instructions for the test procedure.

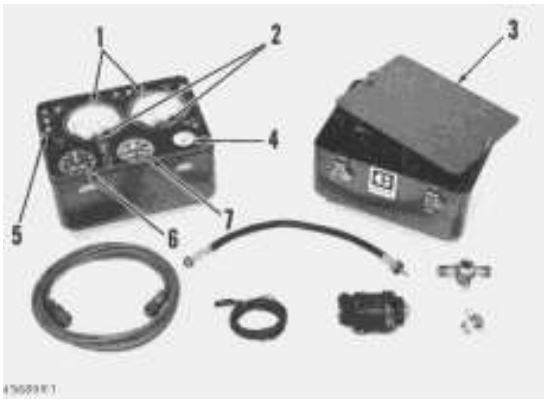

4S6553 INSTRUMENT GROUP
1. 4S6992 Differential Pressure gauges. 2. Zero adjustment screw. 3. Lid. 4. 8M2743 Gauge. 5. Pressure tap fitting. 6. 4S6991 Tachometer. 7. 4S6997 Manifold Pressure Gauge.

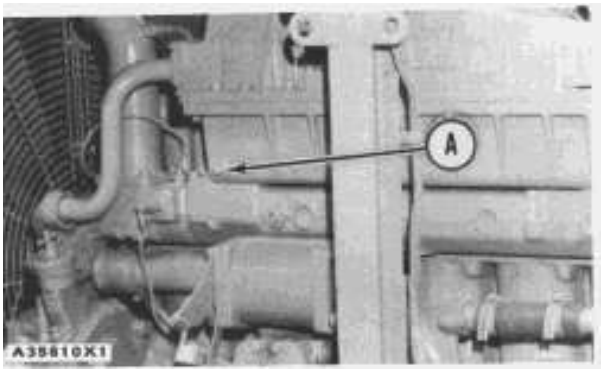

POSITION FOR PRESSURE TEST
A. Remove plug and install a tee for testing.

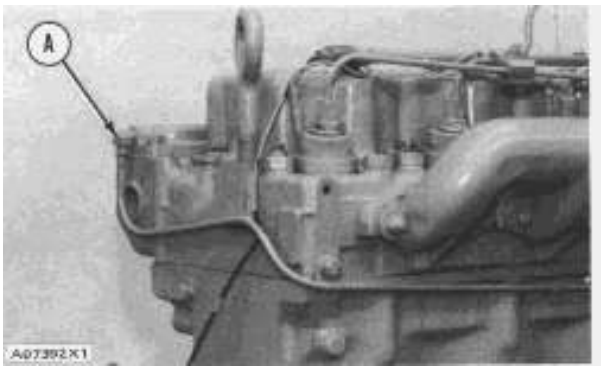

POSITION FOR PRESSURE TEST
A. Remove elbow and install a tee for testing.

Checking Aftercooler Operation

Use the 9S9102 Thermistor Thermometer Group to check the operation of the aftercooler.

Special Instruction Form No. SMHS7140 gives the procedures for using the 9S9102 Thermistor Thermometer Group.

Special Instruction Form No. GEG01024 gives the operating conditions for engines with watercooled aftercoolers.

NOTE: These conditions are for engines on dynamometer tests but the operating ranges are approximately the

same.



9S9102 THERMISTOR THERMOMETER GROUP

Turbocharger

Every 7200 hours or if any unusual sound or vibration in the turbocharger is noticed, a quick check of bearing condition can be made without disassembling the turbocharger. This can be done by removing the piping from the turbocharger and inspecting the compressor impeller, turbine wheel and compressor cover. Rotate the compressor and turbine wheel assembly by hand and observe by feeling excess end play and radial clearance. The rotating assembly should rotate freely with no rubbing or binding. If there is any indication of the impeller rubbing the compressor cover or the turbine wheel rubbing the turbine housing, recondition the turbocharger or replace with a new or rebuilt one.

End clearance is best checked with a dial indicator. Attach a dial indicator with the indicator point on the end of the shaft. Move the shaft from end to end making note of the total indicator reading.

End play for TV61 and TW61 Turbochargers should be .003 to .010 in. (0.08 to 0.25 mm). End play for T12 Turbochargers should be .006 to .011 in. (0.15 to 0.27 mm). If end play is more than the maximum end play rebuild or replace the turbocharger. End play less than the minimum end play could indicate carbon build up on the turbine wheel and should be disassembled for cleaning and inspection.



CHECKING TURBOCHARGER ROTATING ASSEMBLY END PLAY (Typical Example)

A more reliable check of bearing condition can be made only when the turbocharger is disassembled and the bearings, shaft journal and housing bore diameters can actually be measured.

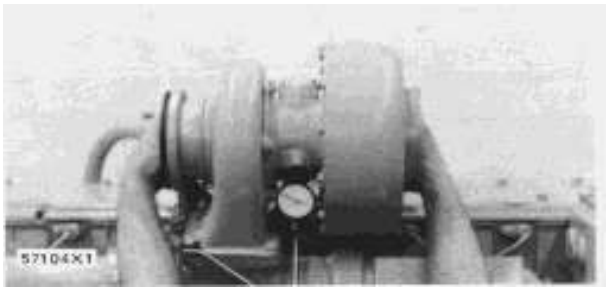

CHECKING TURBOCHARGER RADIAL CLEARANCE (Typical Example)

Radial clearance can also be checked with a dial indicator. Remove the oil return line from the turbocharger. Attach a dial indicator with an extension indicator point long enough to contact the shaft through the oil return hole. Make sure the contact point is centered on the shaft (highest indicator reading). Raise both ends of the shaft all the way then push down in the opposite direction. Total movement of the indicator should be between .004 in. (0.10 mm) and .009 in. (0.23 mm). If radial clearance exceeds .009 in. (0.23 mm) or minimum clearance is under .004 in. (0.10 mm), the turbocharger should be disassembled and the bearings checked.

NOTE: Care must be taken not to cock the shaft or a false reading will be obtained.

Crankcase (Crankshaft Compartment) Pressure

Pistons or piston rings that have damage can be the cause of too much pressure in the crankcase. This condition will cause the engine to run rough. There will also be more than the normal amount of fumes coming from the crankcase breather. This crankcase pressure can also cause the element for the crankcase breather to have a restriction in a very short time. It can also be the cause of oil leakage at gaskets and seals that would not normally have leakage.

Normal crankcase pressure with a clean crankcase breather is 2 in. (50.8 mm) of H_2O or less.

Measurement Of Exhaust Temperatures

Use the 1P3060 Pyrometer Group to check exhaust temperature. Special Instruction Form No. SMHS7179 is with the tool group and gives instructions for the test procedure.

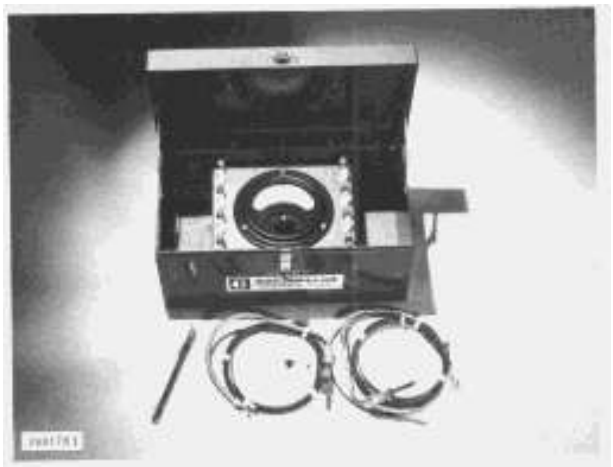

1P3060 PYROMETER GROUP

Compression

An engine that runs rough can have a leak at the valves, or have valves that need adjustment. Use the test that follows for a fast and easy method to find a cylinder that has low compression, or does not have good fuel combustion. Find the speed that the engine runs the roughest, and keep the engine at this rpm until the test is finished. Loosen a fuel line nut at fuel injection pump to stop the flow of fuel to that cylinder. Do this for each cylinder until a loosened fuel line is found that makes no difference in engine performance. Be sure to tighten each fuel line nut after the test before the next fuel line nut is loosened. This test can also be an indication that the fuel injection is wrong, so the cylinder will have to be checked thoroughly.

NOTE: The test that follows cannot be used with engines that have pistons with keystone rings.

A cylinder leakage test that uses air pressure in the cylinder can be used to indicate the condition of the piston rings, valves, and valve seats. Make reference to Special Instruction Form No. GMG00694 for a list of tools needed and the test procedure. Removal of the head and inspection of the valves and valve seats is necessary to find those small defects that do not normally cause a problem. Repair of these problems is normally done when reconditioning the engine.

Cylinder Head

The cylinder head has valves, valve seat inserts, and valve guides that can be removed when they are worn or have damage. Replacement of these components can be made with the tools that follow:

Valves

Valve removal and installation is easier with use of the 5P1330 Valve Spring Compressor Assembly and 5S1322 Valve Keeper Inserter.

Valve Seat Inserts

Tools needed to remove and install seat inserts are in the 9S3080 Valve Insert Puller Group. Special Instruction Form No. GMG02114 gives an explanation for this procedure. For easier installation, lower the temperature of the insert before it is installed in the head.

Valve Guides

Tools needed to install valve guides are the 7S8858 Driver Bushing and 7S8859 Driver. The counterbore in the driver bushing installs the guide to the correct height. Use a 1P7451 Valve Guide Honing Group to make a finished bore in the valve guide after installation of the guide in the head. Special Instruction Form No. GMG00966 gives an explanation for this procedure. Grind the valves after the new valve guides are installed.

Checking Valve Guide Bore

Use the 5P3536 Valve Guide Gauge Group to check the bore of the valve guides. Special Instruction Form No. GMG02562 gives complete and detailed instructions for use of the 5P3536 Valve Guide Gauge Group.

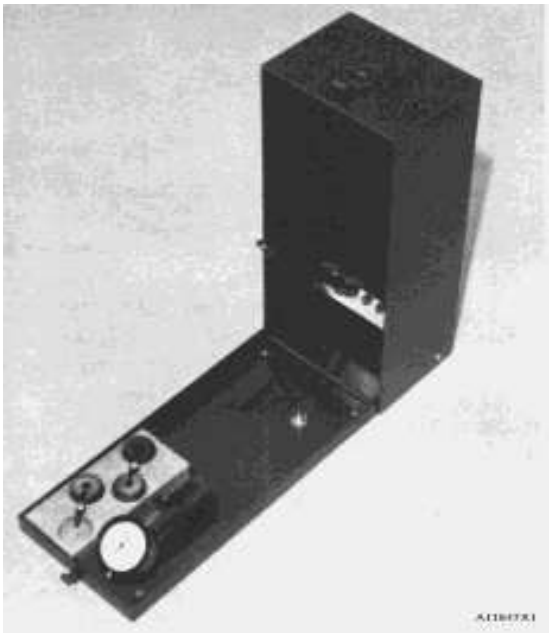

5P3536 VALVE GUIDE GAUGE GROUP

Valve Clearance

NOTE: Valve clearance is measured between the rocker arm and the valves.

VALVE CLEARANCE CHECK: ENGINE STOPPED	
Exhaust	.022 to .028 in. (0.56 to 0.71 mm)
Intake	.012 to .018 in. (0.30 to 0.46 mm)

NOTE: When the valve lash (clearance) is checked, adjustment is NOT NECESSARY if the measurement is in the range given in the chart for VALVE CLEARANCE CHECK: ENGINE STOPPED. If the measurement is outside this range, adjustment is necessary. See the chart for VALVE CLEARANCE SETTING: ENGINE STOPPED, and make the setting to the nominal (desired) specifications in this chart.

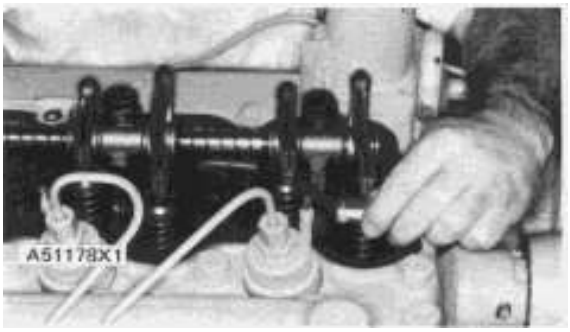

VALVE CLEARANCE CHECK

VALVE CLEARANCE SETTING WITH ENGINE STOPPED	
Exhaust	.025 in. (0.64 mm)
Intake	.015 in. (0.38 mm)

3306 Engine

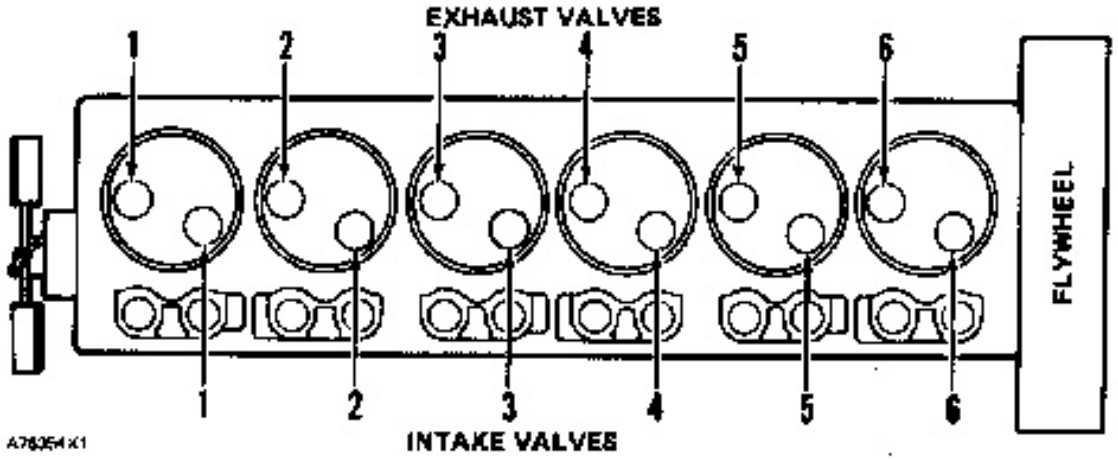

CYLINDER AND VALVE IDENTIFICATION

1. Put No. 1 piston at top center (TC) on the compression stroke. Make reference to FINDING TOP CENTER COMPRESSION POSITION FOR NO. 1 PISTON.

2. Make an adjustment to valve clearance on the intake valves for cylinders 1, 2, and 4. Make an adjustment to the valve clearance on the exhaust valves for cylinders 1, 3, and 5.

3. Turn the flywheel 360° in the direction of engine rotation. This will put No. 6 piston at top center (TC) on the compression stroke.

4. Make an adjustment to the valve clearance on the intake valve for cylinder 3, 5, and 6. Make an adjustment to the valve clearance on the exhaust valves for cylinders 2, 4, and 6.

5. After valve adjustment is correct, tighten the nuts for the valve adjustment screws to 22 ± 3 lb. ft. (28 ± 4 N·m).

3304 Engines

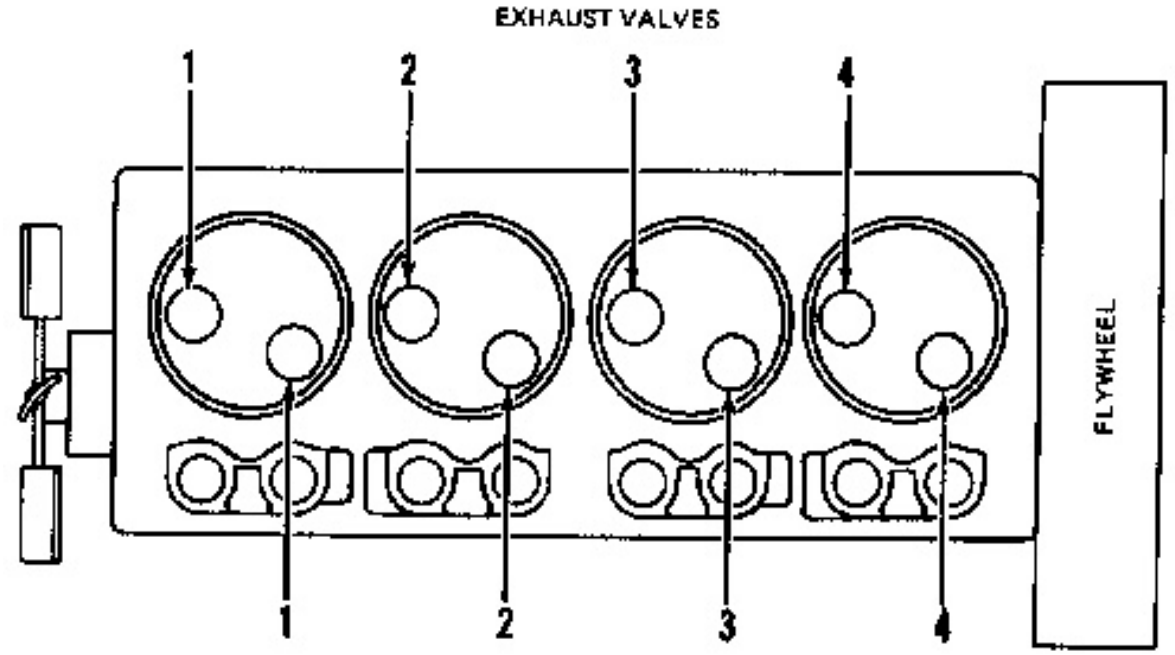

CYLINDER AND VALVE IDENTIFICATION

1. Put No. 1 piston at top center (TC) on the compression stroke. Make reference to FINDING TOP CENTER COMPRESSION POSITION FOR NO. 1 PISTON.

2. Make an adjustment to the valve clearance on the intake valves for cylinders 1 and 2. Make an adjustment to the valve clearance on the exhaust valves for cylinders 1 and 3.

3. Turn the flywheel 360° in the direction of engine rotation. This will put No. 6 piston at top center (TC) on the compression stroke.

4. Make an adjustment to the valve clearance on the intake valves for cylinders 3 and 4. Make an adjustment to the valve clearance on the exhaust valves for cylinders 2 and 4.

5. After valve adjustment is correct, tighten the nuts for the valve adjustment screws to 22 ± 3 lb. ft. (28 ± 4 N·m).

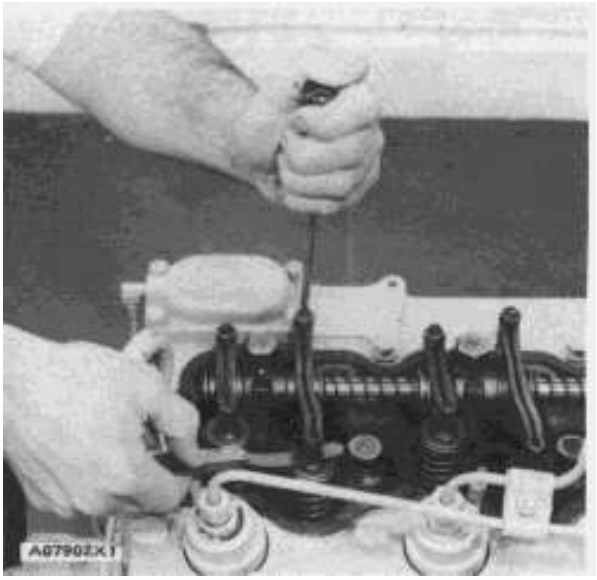

Precombustion Chamber Position

Use 5F8353 Wrench to remove and install chamber.

Put 5M2667 Gasket, with "2C" on it, on the precombustion chamber. Put 5P3931 Anti-Seize Compound on the threads of the precombustion chamber. Install the precombustion chamber in the cylinder head and tighten to 150 ± 10 lb. ft. (205 ± 14 N·m). If the opening for the glow plug is not in the "A range", remove the precombustion chamber and 5M2667 Gasket. If the opening for the glow plug was in the "B range" use 2S8959 Gasket with "2S" on it. If the opening for the glow plug was in the "C range" use 2S8960 Gasket with "2X" on it. Put 5P3931 Anti-Seize Compound on the threads of the precombustion chamber. Install the precombustion chamber with che correct gasket and tighten the precombustion chamber to 150 ± 10 lb. ft. (205 ± 14 N·m).

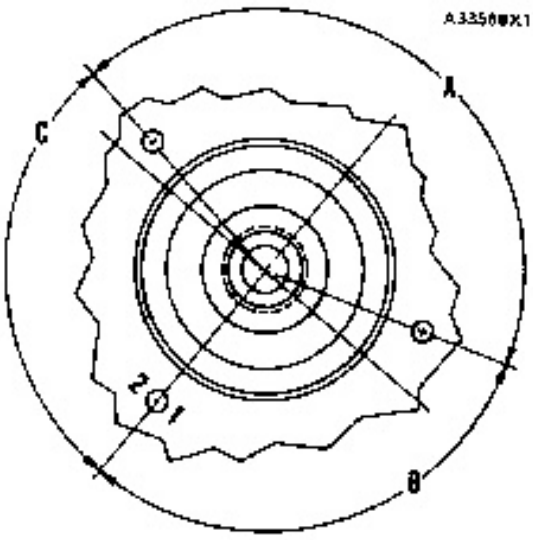

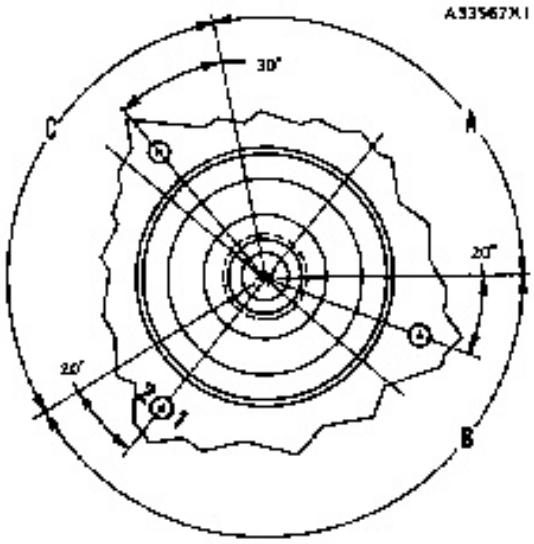

Cyl. Nos. 1, 2, and 3—3304*
Cyl. Nos. 1, 2, 3, 4, and 5—3306*
Cyl. Nos. 1 thru 4—3304**
Cyl. Nos. 1 thru 6—3306**

Cyl. No. 4—3304*
Cyl. No. 6—3306*

***Engines with counterbored block.**
****Engines with spacer plate.**

Procedure For Measuring Camshaft Lobes

To find lobe lift, use the procedure that follows:

A. Measure camshaft lobe height (B) of one exhaust and one intake lobe.

B. Measure base circle (C) of one exhaust and one intake lobe.

C. Subtract base circle (STEP B) from lobe height (STEP A). The difference is actual lobe lift (A).

D. Specified camshaft lobe lift (A) is .3300 in. (8.382 mm).

Maximum permissible difference between actual lobe lift (STEP C) and specified lobe lift (STEP D) is .010 in. (0.25 mm).

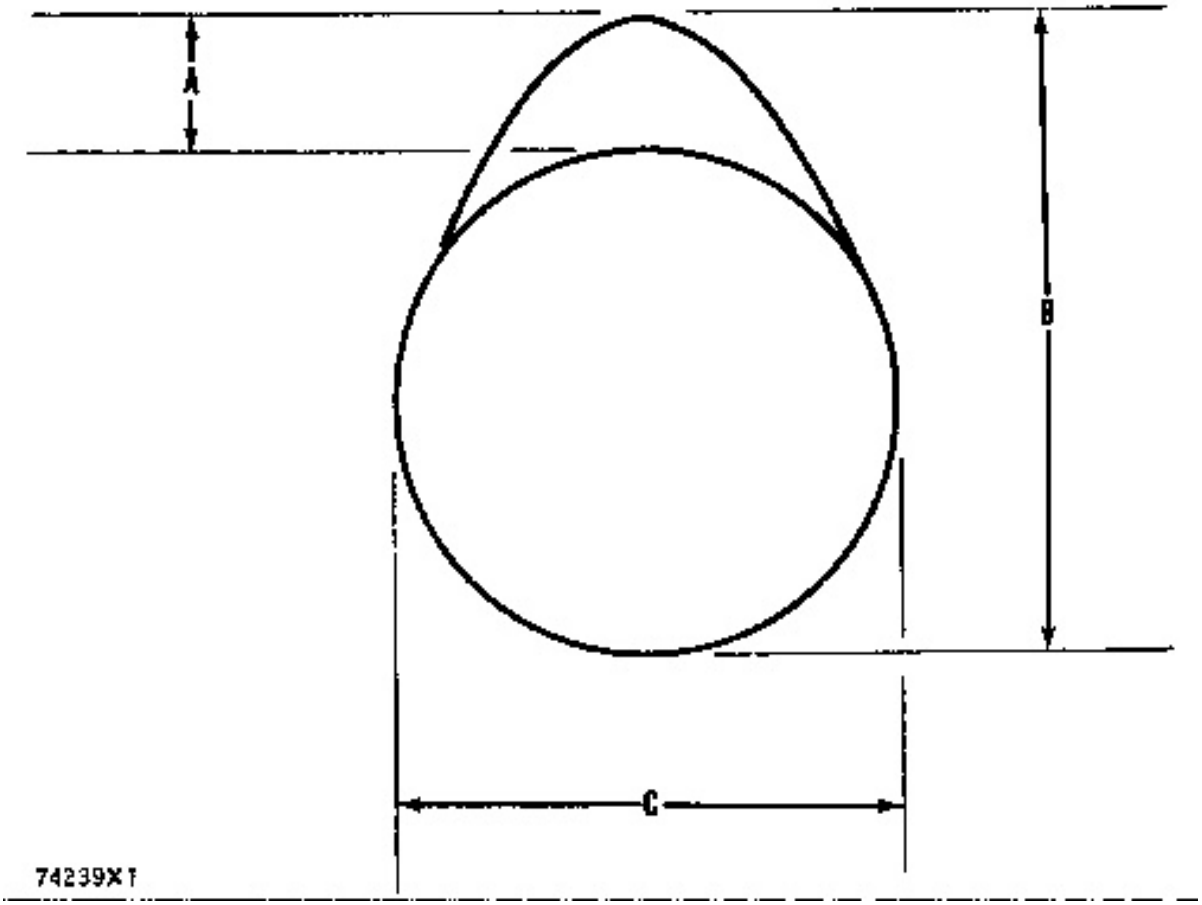

CAMSHAFT LOBE
A. Lobe lift. B. Lobe height. C. Base circle.

Lubrication System

One of the problems in the following list will generally be an indication of a problem in the lubrication system for the engine.

TOO MUCH OIL CONSUMPTION

OIL PRESSURE IS LOW

OIL PRESSURE IS HIGH

TOO MUCH BEARING WEAR

Too Much Oil Consumption

Oil Leakage on Outside of Engine

Check for leakage at the seals at each end of the crankshaft. Look for leakage at the oil pan gasket and all lubrication system connections. Check to see if oil is coming out of the crankcase breather. This can be caused by

combustion gas leakage around the pistons. A dirty crankcase breather will cause high pressure in the crankcase, and this will cause gasket and seal leakage.

Oil Leakage Into Combustion Area of Cylinders

Oil leakage into the combustion area of the cylinders can be the cause of blue smoke. There are four possible ways for oil leakage into the combustion area of the cylinders:

1. Oil leakage between worn valve guides and valve stems.

2. Worn or damaged piston rings or dirty oil return holes.

3. Compression ring not installed correctly.

4. Oil leakage past the seal rings in the impeller end of the turbocharger shaft.

Too much oil consumption can also be the result of using oil with the wrong viscosity. Oil with a thin viscosity can be caused by fuel getting in the crankcase, or by the engine getting too hot.

Oil Pressure Is Low

An oil pressure gauge that has a defect can give an indication of low oil pressure. Check the gauge with a test gauge.

Use the following procedure to check engine oil pressure. Do the procedure exactly or the pressure measurements are not good for comparison with the chart.

1. Be sure that the engine is filled to the correct level with either SAE 10 or SAE 30 oil. If any other viscosity of oil is used, the information in the engine oil pressure chart does not apply.

2. Find a location on the engine oil manifold to install a tee. The easiest method is to remove the sending unit for the present gauge and install a tee at this location. Install a probe from the 9S9102 Thermistor Thermometer Group in one side of the tee. Connect an 8M2744 Gauge from the 5P6225 Hydraulic Test Box to the other side of the tee.

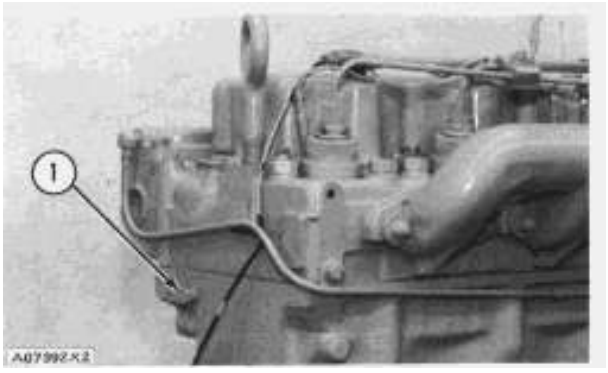

OIL MANIFOLD
1. Pressure Test Location.

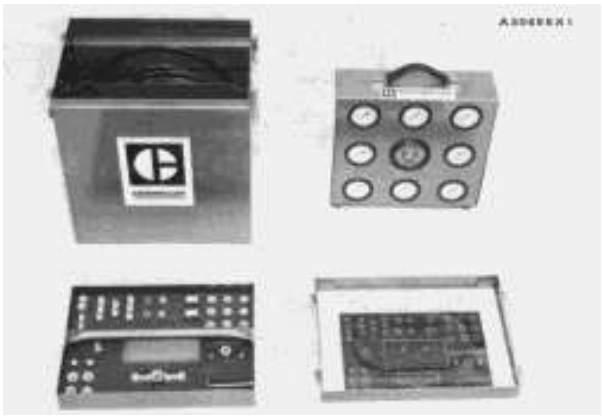

5P6225 HYDRAULIC TEST BOX

3. Run the engine to get the engine oil temperature at 210° F (99° C).

NOTE: A 5° F (3° C) increase in temperature gives approximately 1 psi (7 kPa) decrease in engine oil pressure.

4. Keep the engine oil temperature constant. With the engine at the rpm from the chart, read the pressure gauge. Make a comparison between the pressure reading on the test gauge and the minimum permissible pressure from the ENGINE OIL PRESSURE CHART. If the pressure reading on the test gauge is below the minimum permissible pressure, find the cause and correct it. Operation of the engine with low oil pressure can be the cause of engine failure or of a reduction in engine life.

ENGINE OIL PRESSURE CHART

ENGINE	TEST rpm	SAE NO. OF TEST OIL	MINIMUM PERMISSIBLE PRESSURE psi	kPa
3304 & 3306	1500 rpm or above	10	20	140
		30	24	165
	600 to 800 rpm	10	6	40
		30	7	50

Crankcase Oil Level

Check the level of the oil in the crankcase. Add oil if needed. It is possible for the oil level to be too far below the oil pump supply tube. This will cause the oil pump to not have the ability to supply enough lubrication to the engine components.

Oil Pump Does Not Work Correctly

The inlet screen of the supply tube for the oil pump can have a restriction. This will cause cavitation (the sudden making of low pressure bubbles in liquids by mechanical forces) and a loss of oil pressure. Air leakage in the supply side of the oil pump will also cause cavitation and loss of oil pressure. If the bypass valve for the oil pump is held in the open (unseated) position, the lubrication system can not get to maximum pressure. Oil pump gears that have too much wear will cause a reduction in oil pressure.

Oil Filter and Oil Cooler Bypass Valves

If the bypass valve for the oil filter or oil cooler is held in the open position (unseated) and the oil filter or oil cooler has a restriction, a reduction in oil pressure can be result. To correct this problem, install a new Caterpillar oil filter.

Too Much Clearance at Engine Bearings Or Open (Broken or Disconnected Oil Line or Passage) Lubrication System

Components that are worn and have too much bearing clearance can cause oil pressure to be low. Low oil pressure can also be caused by an oil line or oil passage that is open, broken or disconnected.

Oil Cooler

Look for a restriction in the oil passages of the oil cooler. If the oil cooler has a restriction, the oil temperature will be higher than normal when the engine is running. The oil pressure of the engine will not get low just because the oil cooler has a restriction.

Oil Pressure Is High

Oil pressure will be high if the bypass valve for the oil pump can not move from the closed position.

Too Much Bearing Wear

When some components of the engine show bearing wear in a short time, the cause can be a restriction in an oil passage. A broken oil passage can also be the cause.

If the gauge for oil pressure shows enough good oil pressure, but a component is worn because it is not getting enough lubrication, look at the passage for oil supply to that component. A restriction in a supply passage will not let enough lubrication get to a component and this will cause early wear.

Oil Pump Installation (Four Cylinder Engines Only)

The oil pump can be removed for inspection and service without removing the timing gear cover. With the cover in place, timing marks are not easy to see. Therefore, time both balancer shafts, with respect to No. 1 piston at TC or compression stroke, in the following steps.

1. Rotate the crankshaft to bring No. 1 piston to TC on compression stroke.

2. Drive dowel (7) back so it is flush with mounting face of oil pump mounting bracket.

3. Rotate both balancer shafts so the flat portion is away from the oil pan plate. Install bolts (6) so they enter in countersunk holes in balancer shafts and limit shaft movement. The bolts should not be tight against the shaft countersunk hole bottom.

4. Position oil pump on bottom of engine block and install the mounting bolts loosely.

5. Install shims if necessary, between pump mounting pads and cylinder block to adjust backlash to .002 to .006 in.

(0.05 to 0.15 mm) between gear (4) and (5) and between gears (2) and (3).

6. Drive dowel (7) back in place, through mounting bracket and into cylinder block. Tighten the mounting bolts.

7. Remove bolts (6) and check to see that the countersunk holes are aligned with holes in oil pan plate when No. 1 cylinder is in TC position.

Timing mark alignment information shown in the SPECIFICATIONS is to be used when the timing gear cover is removed.

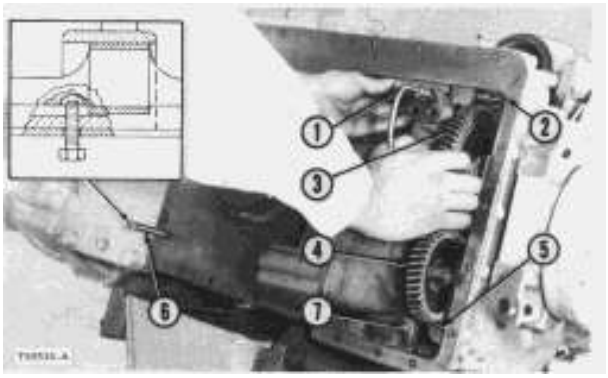

OIL PUMP INSTALLATION (Typical Example)
1. Right side balancer shaft. 2. Right side balancer shaft gear. 3. Idler gear. 4. Oil pump drive gear. 5. Left side balancer shaft gear. 6. Bolt. 7. Dowel.

Cooling System

This engine has a pressure type cooling system. A pressure type cooling system gives two advantages. The first advantage is that the cooling system can have safe operation at a temperature that is higher than the normal boiling (steam) point of water. The second advantage is that this type system prevents cavitation (the sudden making of low pressure bubbles in liquids by mechanical forces) in the water pump. With this type system, it is more difficult for an air or steam pocket to be made in the cooling system.

The cause for an engine getting too hot is generally because regular inspections of the cooling system were not made. Make a visual inspection of the cooling system before testing with testing equipment.

Visual Inspection Of The Cooling System

1. Check coolant level in the cooling system.

2. Look for leaks in the system.

3. Look for bent radiator fins. Be sure that air flow through the radiator does not have a restriction.

4. Inspect the drive belt for the fan.

5. Check for damage to the fan blades.

6. Look for air or combustion gas in the cooling system.

7. Inspect the pressure cap and the sealing surface for the cap. The sealing surface must be clean.

Testing The Cooling System

Remember that temperature and pressure work together. When making a diagnosis of a cooling system problem, temperature and pressure must both be checked. Cooling system pressure will have an effect on cooling system temperatures. For an example, look at the chart to see the effect of pressure and height above sea level on the boiling (steam) point of water.

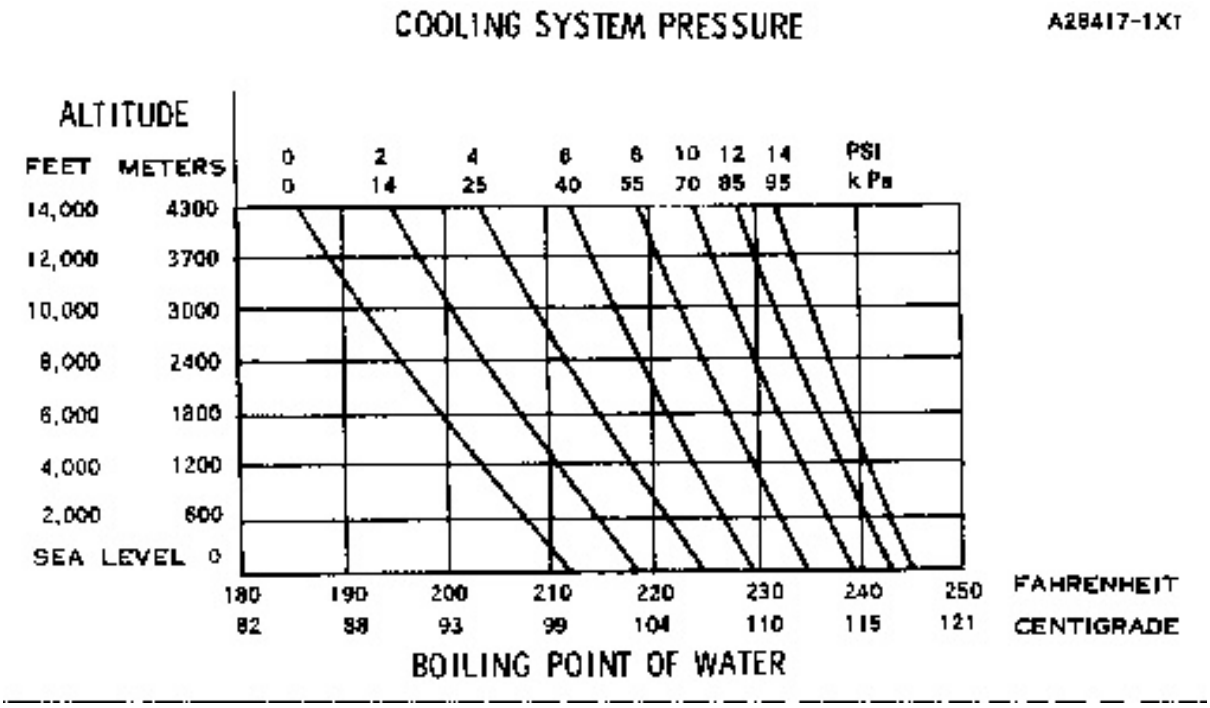

Test Tools for Cooling System

9S9102 Thermistor Thermometer Group.9S7373 Air Meter Group.1P5500 Portable Phototach Group.9S8140 Cooling System Pressurizing Pump Group.

The 9S9102 Thermistor Thermometer Group is used in the diagnosis of overheating (engine running too hot) or overcooling (engine runs too cool) problems. This group can be used to check temperatures in several different parts of the cooling system. The testing procedure is in Special Instruction Form No. SMHS7140.



9S9102 THERMISTOR THERMOMETER GROUP

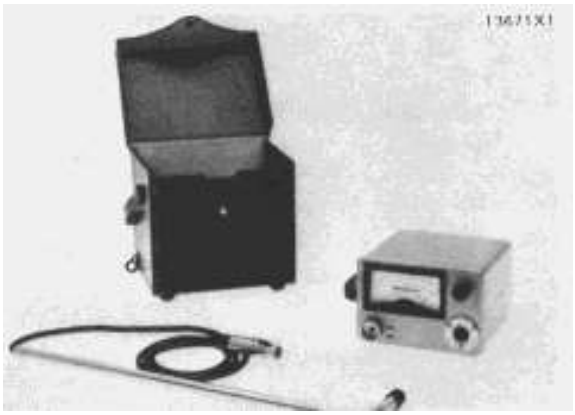

9S7373 AIR METER GROUP

The 9S7373 Air Meter Group is used to check the air flow through the radiator core. The testing procedure is in Special Instruction Form No. SMHS7063.

WARNING

To help prevent an accident, make all checks at engine LOW IDLE and on the side of the radiator opposite the fan. Wear eye protection.

The 1P5500 Portable Phototach Group is used to check the fan speed. The testing procedure is in Special Instruction Form No. SMHS7015.



1P5500 PORTABLE PHOTOTACH GROUP

The 9S8140 Cooling System Pressurizing Pump Group is used to test pressure caps and pressure relief valves, and to pressure check the cooling system for leaks.



9S8140 COOLING SYSTEM PRESSURING PUMP GROUP

Gauge for Water Temperature

9S9102 Thermistor Thermometer Group.

or 2F7112 Thermometer and 6B5072 Bushing.

If the engine gets too hot and a loss of coolant is a problem, a pressure loss in the cooling system could be the cause. If the gauge for water temperature shows that the engine is getting too hot, look for coolant leakage. If a place can not be found where there is coolant leakage, check the accuracy of the gauge for water temperature. Use the 9S9102 Thermistor Thermometer Group or the 2F7112 Thermometer and 6B5072 Bushing.

WARNING

To help prevent an accident caused by parts in rotation, work carefully around an engine that has been started.

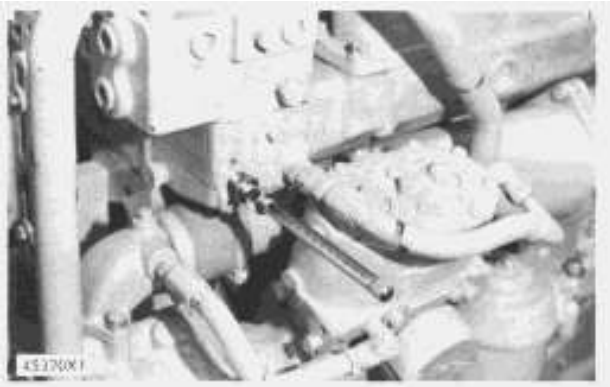

2F7112 THERMOMETER INSTALLED



9S9102 THERMISTOR THERMOMETER GROUP

Start the engine. The reading on the gauge for water temperature should be the same as the reading on the thermistor thermometer.

Pressure Cap

One cause for a pressure loss in the cooling system can be a bad seal on the pressure cap of the system. Inspect the pressure cap carefully. Look for damage to the seal or the sealing surface. Any foreign material or deposits on the cap, seal or sealing surface must be removed.

To check the pressure cap for the pressure that makes the pressure cap open, use the following procedure:

1. Remove the pressure cap from the radiator.

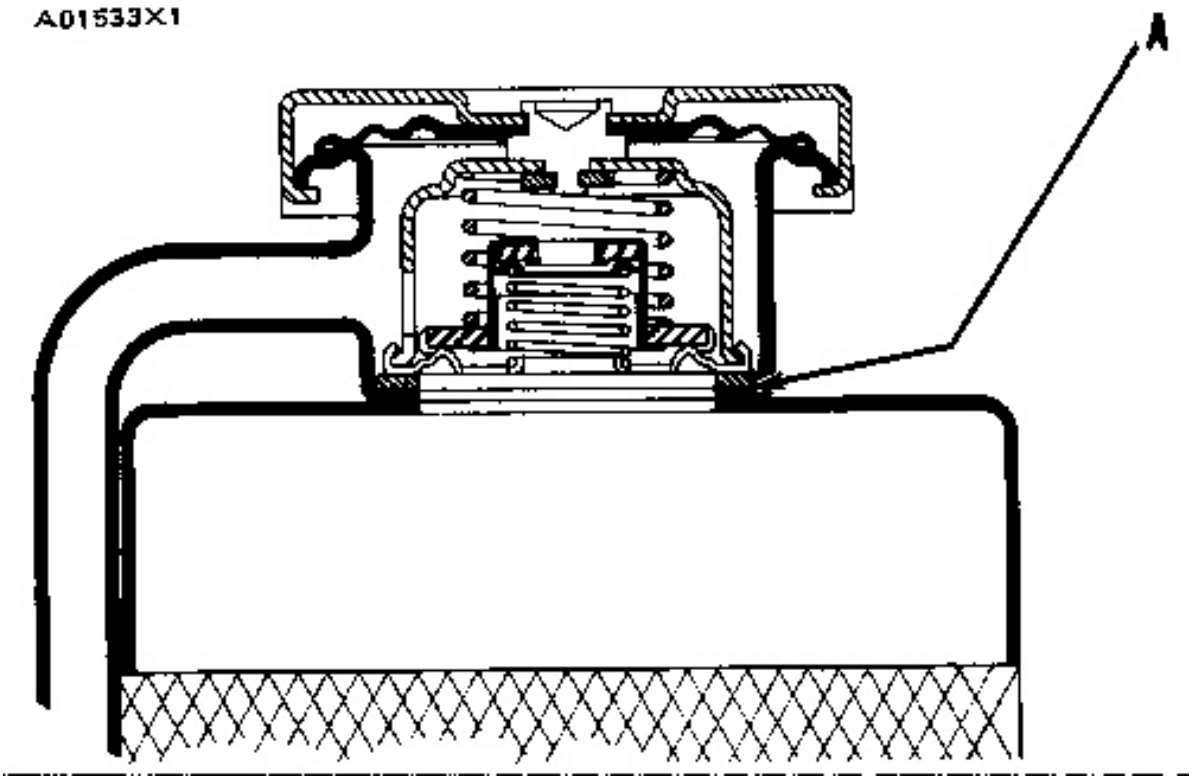

SCHEMATIC OF PRESSURE CAP
A. Sealing surface of cap and radiator.

WARNING

Always stop the engine to inspect the cooling system. Loosen the pressure cap to the first stop and let the pressure out of the cooling system, then remove the pressure cap. Hot coolant and steam can cause personal injury. Let coolant become cool before is is drained.

2. Put the pressure cap on the 9S8140 Cooling System Pressurizing Pump Group.

3. Look at the gauge for the exact pressure that makes the pressure cap open.

4. Make a comparison of the reading on the gauge with the correct pressure at which the pressure cap must open.

NOTE: The correct pressure that makes the pressure cap open is on the pressure cap and is also in the SPECIFICATIONS.

5. If the pressure cap is bad, install a new pressure cap.

Testing Radiator and Cooling System for Leaks

To test the radiator and cooling system for leaks, use the procedure that follows:



Always stop the engine to inspect the cooling system. Loosen the pressure cap to the first stop and let the pressure out of the cooling system, then remove the pressure cap. Hot coolant and steam can cause personal injury. Let coolant become cool before it is drained.

1. Remove the pressure cap from the radiator.

2. Make sure the coolant is over the top of the radiator core.

3. Put the 9S8140 Cooling System Pressurizing Pump Group on the radiator.

4. Get the pressure reading on the gauge to 3 psi (20 kPa) more than the pressure on the pressure cap.

5. Check the radiator for outside leakage.

6. Check all connections and hoses of the cooling system for outside leakage.

7. If you do not see any outside leakage and the pressure reading on the gauge is still the same after 5 minutes, the radiator and cooling system does not have leakage. If the reading on the gauge goes down and you do not see any outside leakage, there is leakage on the inside of the cooling system. Make repairs as necessary.

Water Temperature Regulators

1. Remove the regulator from the engine.

2. Heat water in a pan until the temperature is correct for opening the regulator according to the chart. Move the water around in the pan to make it all be the same temperature.

3. Hang the regulator in the pan of water. The regulator must be below the surface of the water and it must be away from the sides and bottom of the pan.

4. Keep the water at the correct temperature for 10 minutes.

5. Remove the regulator from the water. Immediately make a measurement of the distance the regulator is open.

6. If the regulator is open to a distance less than given in the chart, install a new regulator.

WATER TEMPERATURE REGULATORS				
Part No.	Minimum Open Distance		Temperature	
	in.	mm	°F	°C
6L5851	.375	9.53	197°	92°
4L7615 6N1848 2P3768 7N208	.375	9.53	195°	90°
9S9160	.375	9.53	187°	86°

Basic Block

Piston Ring Groove Gauge

(Pistons That Use Keystone Rings)

Make reference to GUIDELINE FOR REUSABLE PARTS; PISTONS AND CYLINDER LINERS, Form No. SEBF8001.

The 5P4812 KEYSTONE PISTON RING GAUGE GROUP is necessary for measuring these grooves. Put the pin end of gage "2" in the groove at four places around the circumference. Do this to both grooves. The flat edge of the gauge must be between the grooves. If there is clearance between the flat edge of the gauge and the piston at all test locations, for both grooves, the piston is reusable. If the flat edge is in contact with the piston, at any of the test locations, the piston is not reusable. Install a new piston.

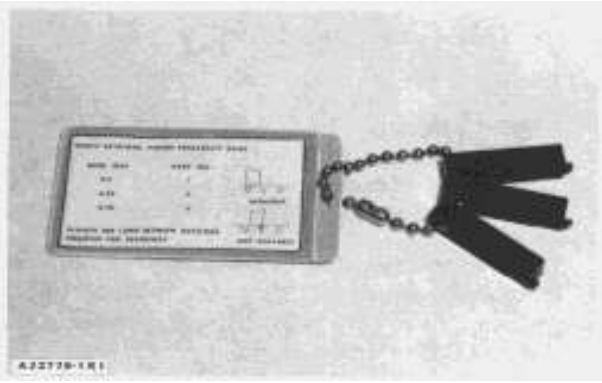

5P4812 KEYSTONE PISTON RING GROOVE GAUGE GROUP

(Pistons With Straight Sides in Ring Grooves)

A 5P3519 Piston Ring Groove Gauge is available for checking ring grooves with straight sides. For instructions on

the use of the gauge, see the GUIDELINE FOR REUSABLE PARTS; PISTONS AND CYLINDER LINERS, Form No. SEBF8001.



PISTON RING GROOVE GAUGE

Connecting Rods And Pistons

Use the 7S9470 Piston Ring Expander to remove or install piston rings.

Use the 5P3525 Piston Ring Compressor to install pistons into cylinder block.

Tighten the connecting rod bolts in the following step sequence:

1. Put engine oil on threads.

2. Tighten both nuts to 30 ± 3 lb. ft. (40 ± 4 N·m).

3. Put a mark on each nut and cap.

4. Tighten each nut 90° from the mark.

The connecting rod bearings should fit tightly in the bore in the rod. If bearing joints or backs are worn (fretted), check for bore size as this is an indication of wear because of looseness.

Connecting Rod And Main Bearings

Bearings are available with .010 in. (0.25 mm), .020 in. (0.51 mm) and .030 in. (0.76 mm) smaller inside diameter than the original size bearings. These bearings are for crankshafts that have been "ground" (made smaller) than the original size.

Cylinder Liner Projection

(Counterbored Block)

1P2394 Adapter Plate.Two 3H465 Plates.Crossbar (from 8B7548 Push-Puller).Two 5/8"-11 NC bolts, 5.5 in. (140 mm) long.Two 4B4281 Washers.1P5510 Liner Projection Tool Group.

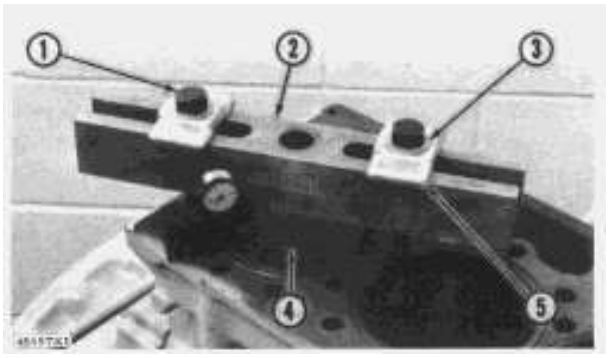

CHECKING LINER PROJECTION
1. Bolts (two). 2. Crossbar. 3. 4B4281 Washers (two). 4. 1P2394 Adapter Plate. 5. 3H465 Plates (two).

Check liner height projection as follows:

1. Make sure that the bore in block and the cylinder liner flange are clean.

2. Put adapter plate (4) on top the cylinder liner. Put crossbar (2) on the adapter plate. Using bolts (1), washers (3) and plates (5), install the crossbar to the cylinder block as shown. Tighten bolts (1) in four steps to: 5 lb. ft. (7 N·m), 15 lb. ft. (20 N·m), 25 lb. ft. (35 N·m) and then to 50 lb. ft. (70 N·m). Distance from bottom edge of crossbar, to top of cylinder block, must be the same on both sides of the cylinder liner.

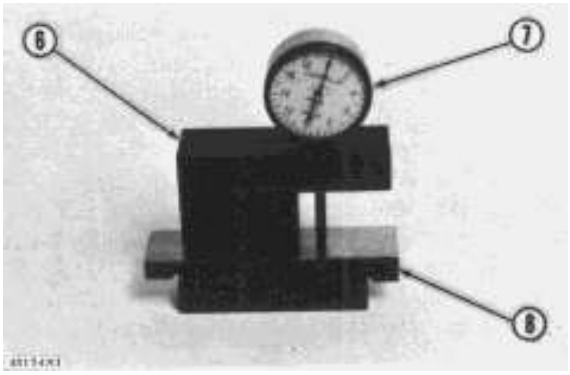

ZEROING INDICATOR
6. 1P2402 Block. 7. 1P2403 Dial Indicator. 8. 1P5507 Gauge.

3. Put the dial indicator (7) on zero using the back of gauge (8) with dial indicator (7) installed in block (6).

4. Use a 1P5510 Liner Projection Tool Group to get a measurement of liner projection. Special Instruction Form No. GMG00623 is with the tool.

5. Make a measurement of the cylinder liner projection in at least four locations around the cylinder liner. Projection must be within .0020 to .0056 in. (0.051 to 0.142 mm) and the four measurements should not vary more than .002 in. (0.05 mm). The average projection between adjacent cylinders must not vary more than .002 in. (0.05 mm). The average projection of all cylinder liners under one head must not vary more than .004 in. (0.10 mm) for the 3306 Engine and .003 in. (0.08 mm) for the 3304 Engine.

NOTE: If liner projection changes from point to point around the liner, turn the liner to a new position within the bore. If still not within specifications move liner to a different bore.

NOTE: When liner projection is correct, put a temporary mark on the liner and top plate so when seals and band are installed, the liner can be installed in the correct position.

6. Use the 8S3140 Counterboring Tool Arrangement to machine the contact face on block if needed. Special Instruction Form No. FM055228 gives an explanation of the use of the 8S3140 Counterboring Tool Arrangement.

SHIM THICKNESS, COLOR CODE, AND PART NUMBER				
.007 in. (0.18 mm)	.008 in. (0.20 mm)	.009 in. (0.23 mm)	.015 in. (0.38 mm)	.030 in. (0.76 mm)
BLACK	RED	GREEN	BROWN	BLUE
8S6045	8S6046	8S6047	8S6048	8S6049

Cylinder Liner Projection

(Spacer Plate Block)

1P5510 Liner Projection Tool Group1P2403 Dial Indicator1P5512 Contact Point .88 in. (22.4 mm) long1P2402 Gauge Body1P5507 Gauge1P2394 Adapter Plate8B7548 Push-Puller (crossbar only)3H465 Plates (2)S1589 Bolt 5/8-11 NC-1.75 in. (44.5 mm) long1S379 Washer (copper)1D4595 Bolt 5/8-11 NC-6.00 in. (152.4 mm) long2S736 Washer

The correct cylinder liner projection is important to prevent a leak between the liner, cylinder head, and block. Check cylinder liner projection above the spacer plate as follows:

1. Be sure that the surfaces of the cylinder block, cylinder liner, and the spacer plate are clean.

2. Install the spacer plate gasket and spacer plate (4) on the cylinder block. Use S1589 Bolts (1) with two 1S379 Washers on each bolt to hold the spacer plate to the cylinder block. Put two bolts with washers on each side of the opening for the cylinder liner. Tighten the bolts evenly, in four steps; 10 lb. ft. (14 N·m, 25 lb. ft. (35 N·m), 50 lb. ft. (70 N·m), and 70 lb. ft. (95 N·m).

NOTE: To keep from moving bolts and washers as each liner is checked install two bolts with washers on each side of each cylinder liner, along the complete length of the spacer plate.

3. Install the cylinder liner without seals in the cylinder block. Put adapter plate (7) on the cylinder liner as shown. Install crossbar (2) with 1D4595 Bolts (3), and 2S736 Washers, and 3H465 Plates (5) as shown. Tighten the bolts evenly, in four steps; 5 lb. ft. (7 N·m), 15 lb. ft. (20 N·m), 25 lb. ft. (35 N·m), and 50 lb. ft. (70 N·m). The measurement from the bottom of crossbar (2) to the spacer plate, must be the same on both sides of the cylinder liner.

4. Install the 1P5512 Contact Point on dial indicator (6). Put the dial indicator in the 1P2402 Gauge Body. To adjust the dial indicator to zero, put dial indicator and gauge body on the 1P5507 Gauge. Move the dial indicator until the hand moves 1/4 turn. Tighten bolt on body to hold the dial indicator in this position. Turn the dial face until the zero is in alignment with the hand.

5. Measure the cylinder liner projection as close as possible to the four corners of the adapter plate on the liner. The liner projection must be .0013 to .0069 in. (0.033 to 0.175 mm). The difference between the four

measurements must not be more than .002 in. (0.05 mm). The difference in the average cylinder liner projection of liners next to each other must not be more than .002 in. (0.05 mm). The difference between the average projection of all cylinder liners under one head must not be more than .004 in. (0.10 mm) for the 3306 Engine and .003 in. (0.08 mm) for the 3304 Engine.

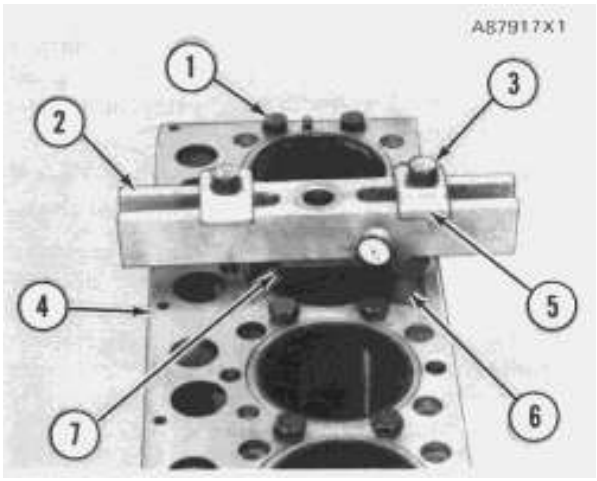

MEASURING CYLINDER LINER PROJECTION
1. S1589 Bolt with two 1S379 Washers. 2. Crossbar. 3. 1D4595 Bolt. 4. Spacer plate. 5. 3H465 Plates. 6. 1P2403 Dial Indicator. 7. 1P2394 Adapter plate.

NOTE: If the liner projection changes from point to point around the liner, turn the liner to a new position in the bore. If the liner projection is still not to specifications, move the liner to a different bore.

6. When the cylinder liner projection is correct, put a temporary mark on the liner and the spacer plate so at final installation the liner can be installed in the correct position.

Cylinder liner projection can be adjusted by the removal of material from (machining) the contact face of the cylinder block with the use of 8S3140 Cylinder Block Counterboring Tool Arrangement. The instructions for the use of the tool group are in Special Instruction Form No. FM955228.

Cylinder Block

The bore in the block for main bearings can be checked with the main bearing caps installed without bearings. Tighten the nuts holding the caps to the torque shown in the SPECIFICATIONS. Alignment error in the bores must not be more than .003 in. (0.08 mm). Special Instruction Form No. SMHS7606 gives instructions for the use of 1P4000 Line Boring Tool Group for making alignment in the main bearing bores. 1P3537 Dial Bore Gauge Group can be used to check the size of the bores. Special Instruction Form No. GMG00981 is with the group.



1P3537 DIAL BORE GAUGE GROUP

Flywheel And Flywheel Housing

Installing Ring Gear

Heat the ring gear to install it. Do not heat to more than 600°F (315°C). Install the ring gear so the chamfer on the gear teeth are next to the starter pinion when the flywheel is installed.

Face Runout (axial eccentricity) of the Flywheel Housing

8S2328 Dial Indicator Group.

If any method other than given here is used, always remember bearing clearances must be removed to get correct measurements.

1. Fasten a dial indicator to the crankshaft flange so the anvil of the indicator will touch the face of the flywheel housing.

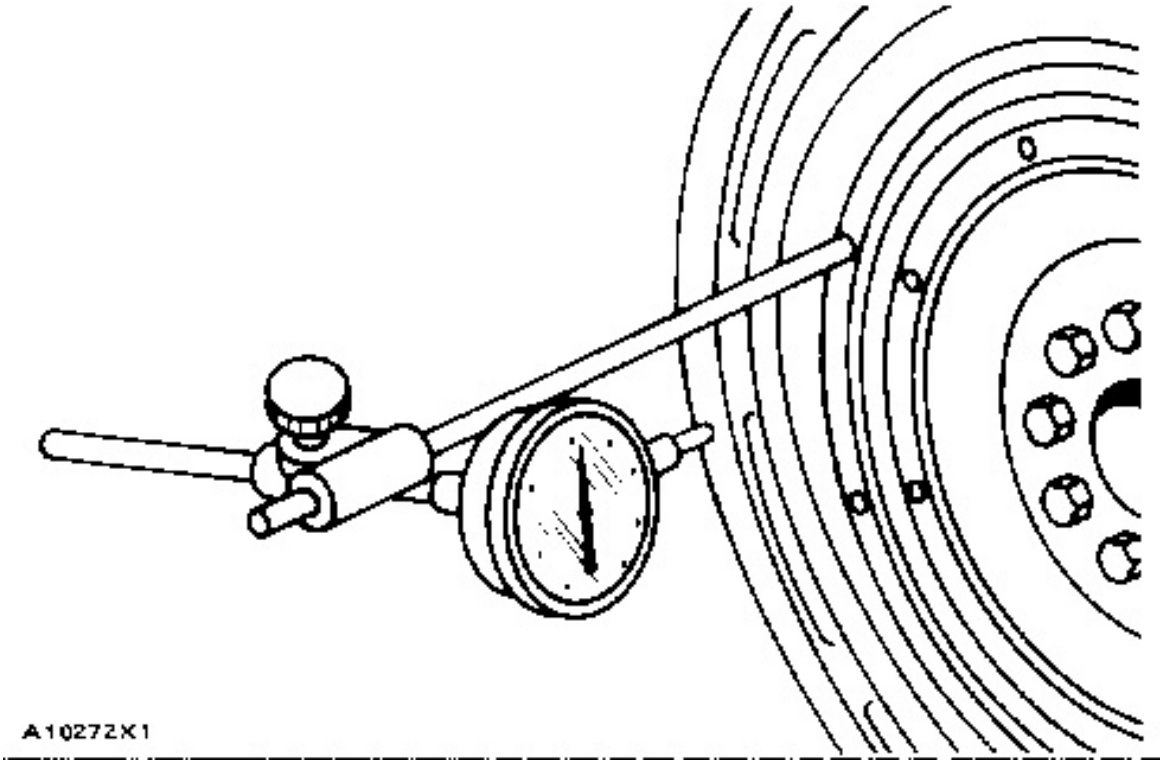

8S2328 DIAL INDICATOR GROUP INSTALLED

2. Put a force on the crankshaft toward the rear before reading the indicator at each point.

3. With dial indicator set at .000 in. (0.0 mm) at location (A), turn the crankshaft and read the indicator at locations (B), (C) and (D).

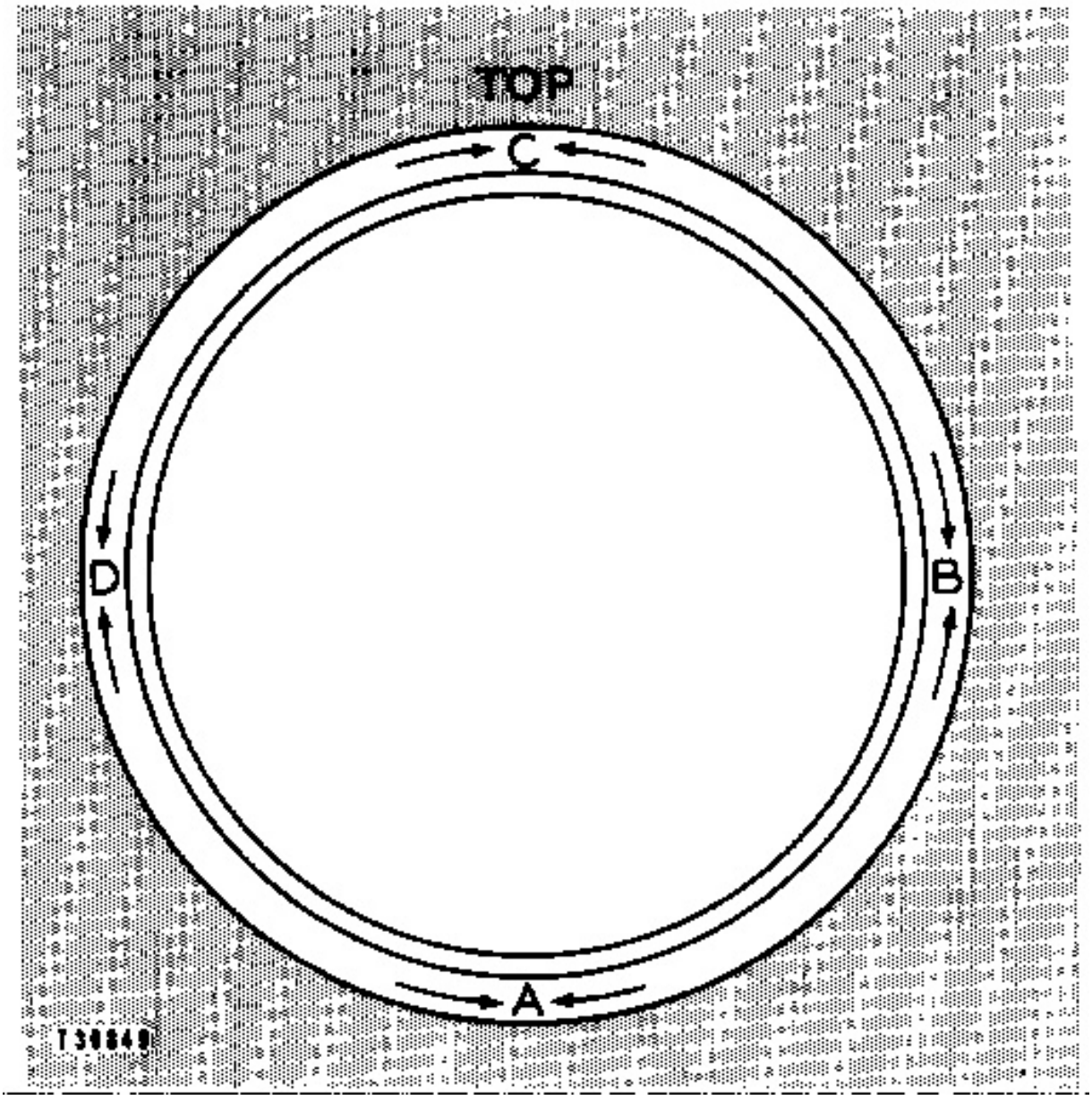

CHECKING FACE RUNOUT OF THE FLYWHEEL HOUSING
A. Bottom. B. Right side. C. Top. D. Left side.

4. The difference between lower and higher measurements taken all four points must not be more than .012 in. (0.30 mm), which is the maximum permissible face run out (axial eccentricity) of the flywheel housing.

Bore Runout (radial eccentricity) of the Flywheel Housing

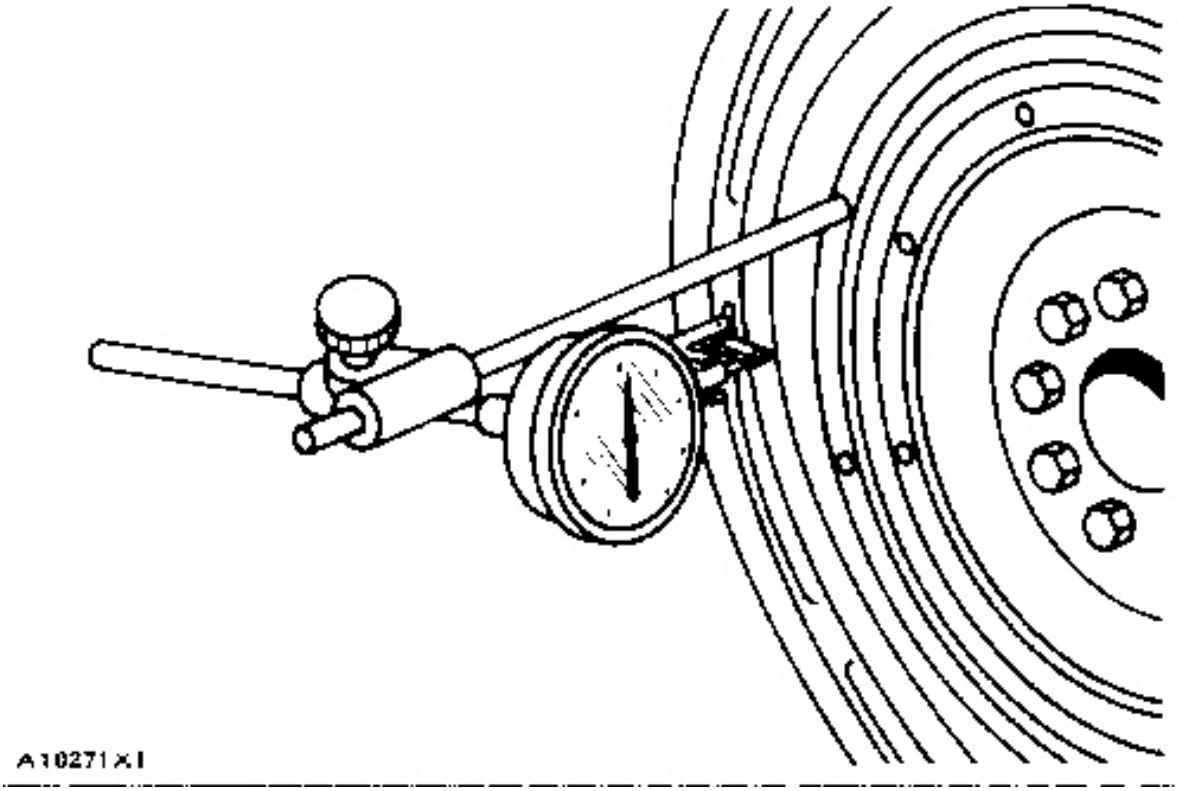

8S2328 DIAL INDICATOR GROUP INSTALLED

1. With the dial indicator in position at (C), adjust the dial indicator to "0" (zero). Push the crankshaft up against the top bearing. Write the measurement for bearing clearance on line 1 in column (C).

NOTE: Write the dial indicator measurements with their positive (+) and negative (-) notation (signs). This notation is necessary for making the calculations in the chart correctly.

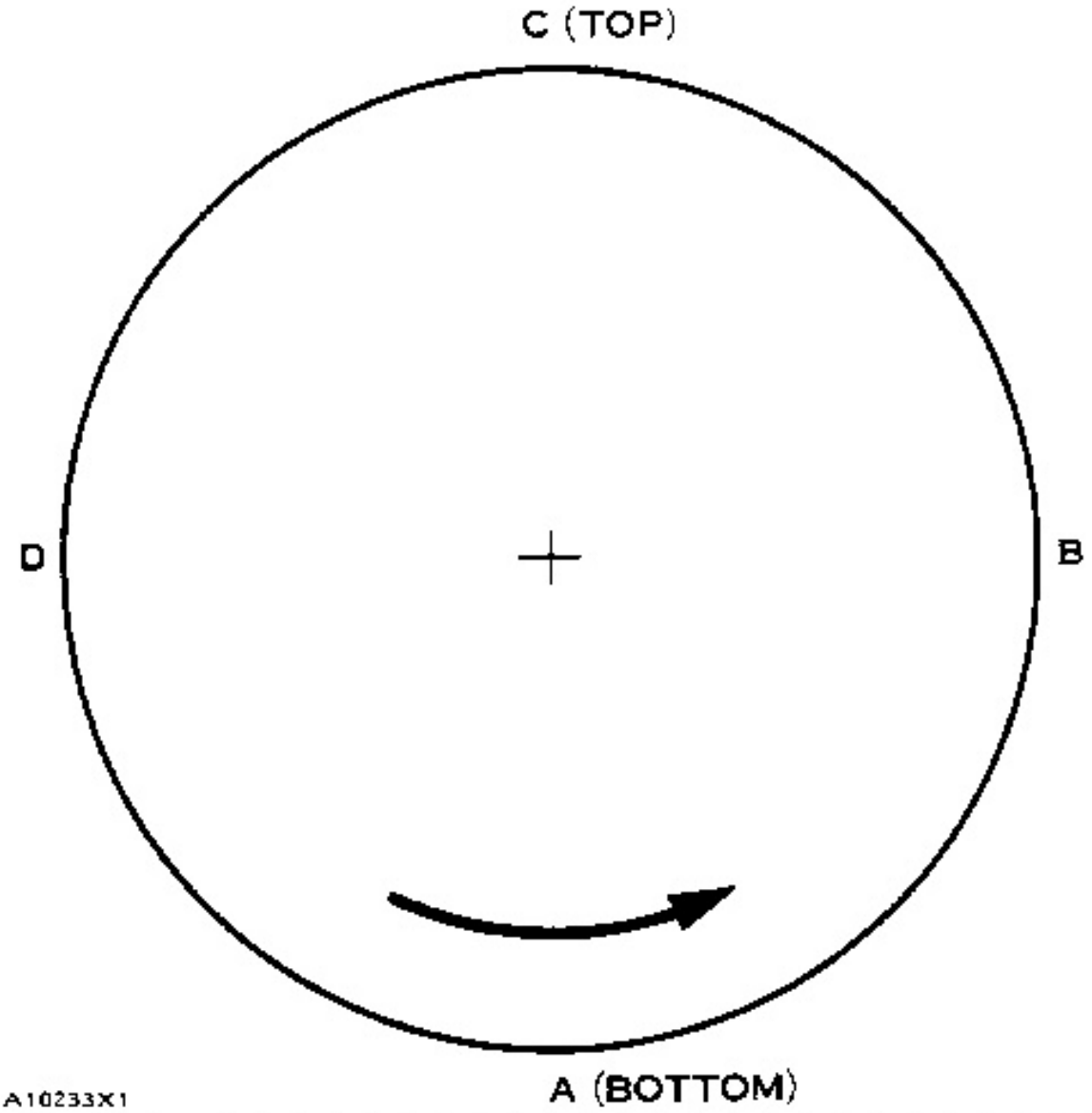

CHECKING BORE RUNOUT OF THE FLYWHEEL HOUSING

CHART FOR DIAL INDICATOR MEASUREMENTS					
	Position of dial indicator				
	Line No.	A	B	C	D
Correction for bearing clearance	I	0			
Dial Indicator Reading	II	0			
Total of Line 1 & 2	III	0	**	*	**

*Total Vertical eccentricity (out of round).
**Subtract the smaller No. from the larger No. The difference is the total horizontal eccentricity.

A10234X1

2. Divide the measurement from Step 1 by 2. Write this number on line 1 in columns (B) & (D).

3. Turn the crankshaft to put the dial indicator at (A). Adjust the dial indicator to "0" (zero).

4. Turn the crankshaft counterclockwise to put the dial indicator at (B). Write the measurement in the chart.

5. Turn the crankshaft counterclockwise to put the dial indicator at (C). Write the measurement in the chart.

6. Turn the crankshaft counterclockwise to put the dial indicator at (D). Write the measurement in the chart.

7. Add lines I & II by columns.

8. Subtract the smaller number from the larger number in line III in columns (B) & (D). The result is the horizontal "eccentricity" (out of round). Line III, column (C) is the vertical eccentricity.

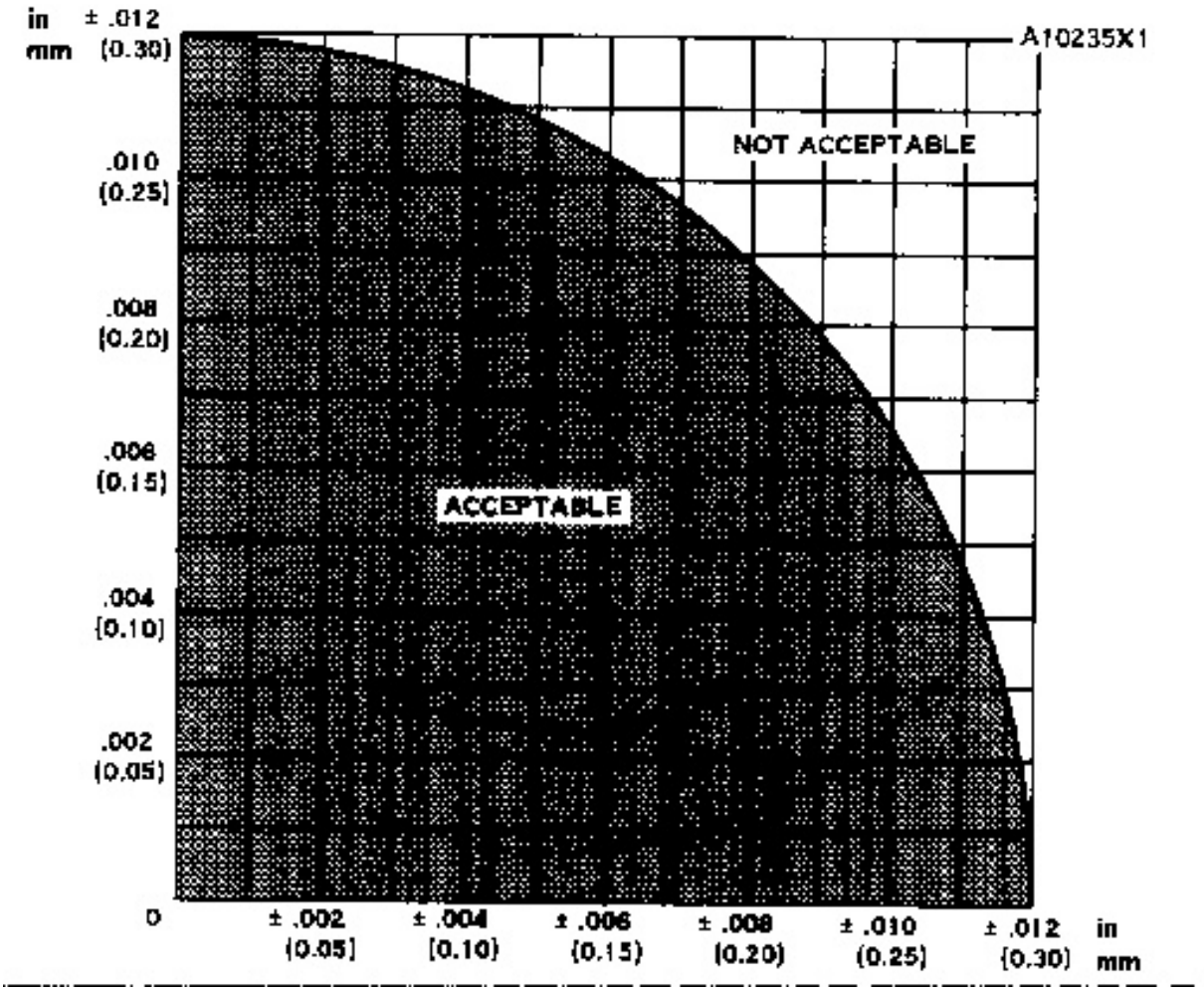

GRAPH FOR TOTAL ECCENTRICITY

9. On the graph for total eccentricity find the point of intersection of the lines for vertical eccentricity and horizontal eccentricity.

10. If the point of intersection is in the range marked "Acceptable" the bore is in alignment. If the point of intersection is in the range marked "Not Acceptable" the flywheel housing must be changed.

Face Runout (axial eccentricity) of the Flywheel

1. Install the dial indicator as shown. Put a force on the crankshaft the same way before the indicator is read to be sure the crankshaft end clearance (movement) is always removed.

2. Set the dial indicator to read .000 in. (0.0 mm).

3. Turn the flywheel and read the indicator every 90°.

4. The difference between the lower and higher measurements taken at all four points must not be more than .006 in. (0.15 mm), which is the maximum permissible face runout (axial eccentricity) of the flywheel.

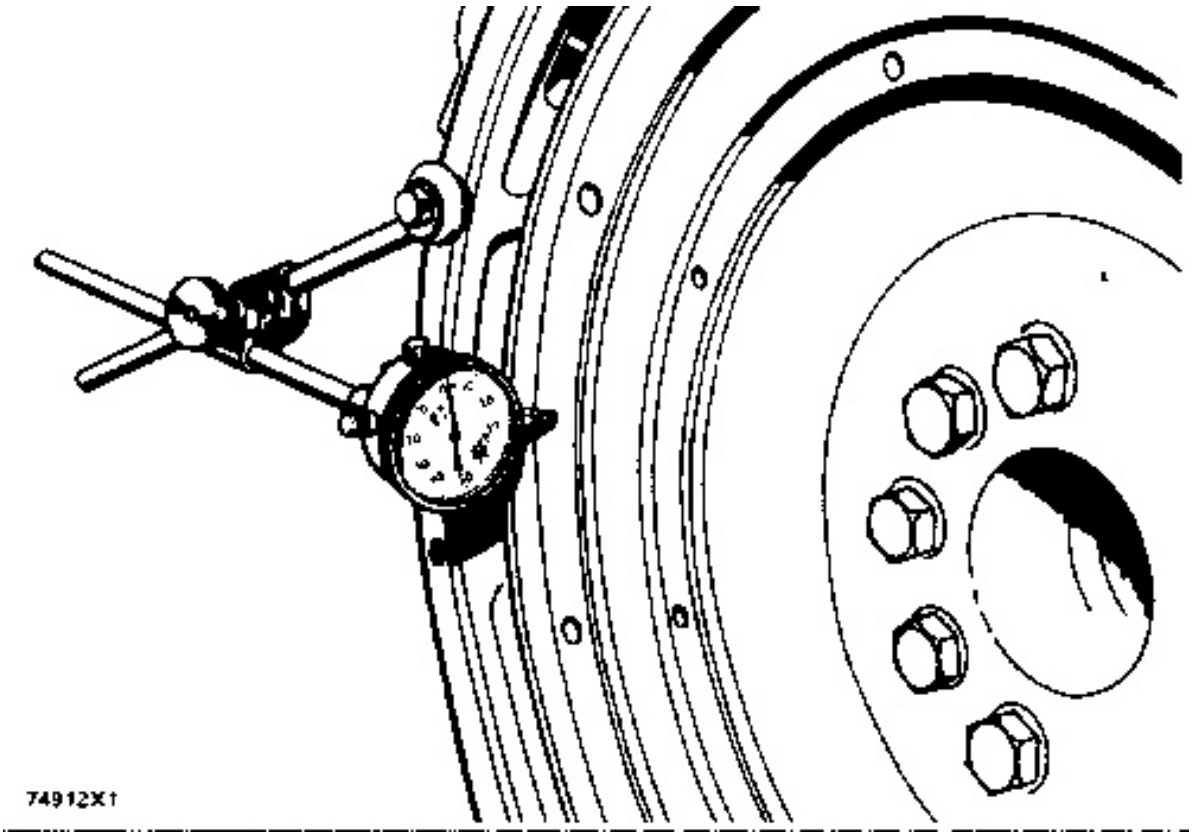

CHECKING FACE RUNOUT OF THE FLYWHEEL

Bore Runout (radial eccentricity) of the Flywheel

1. Install the dial indicator (3) and make an adjustment of the universal attachment (4) so it makes contact as shown.

2. Set the dial indicator to read .000 in. (0.0 mm).

3. Turn the flywheel and read the indicator every 90°.

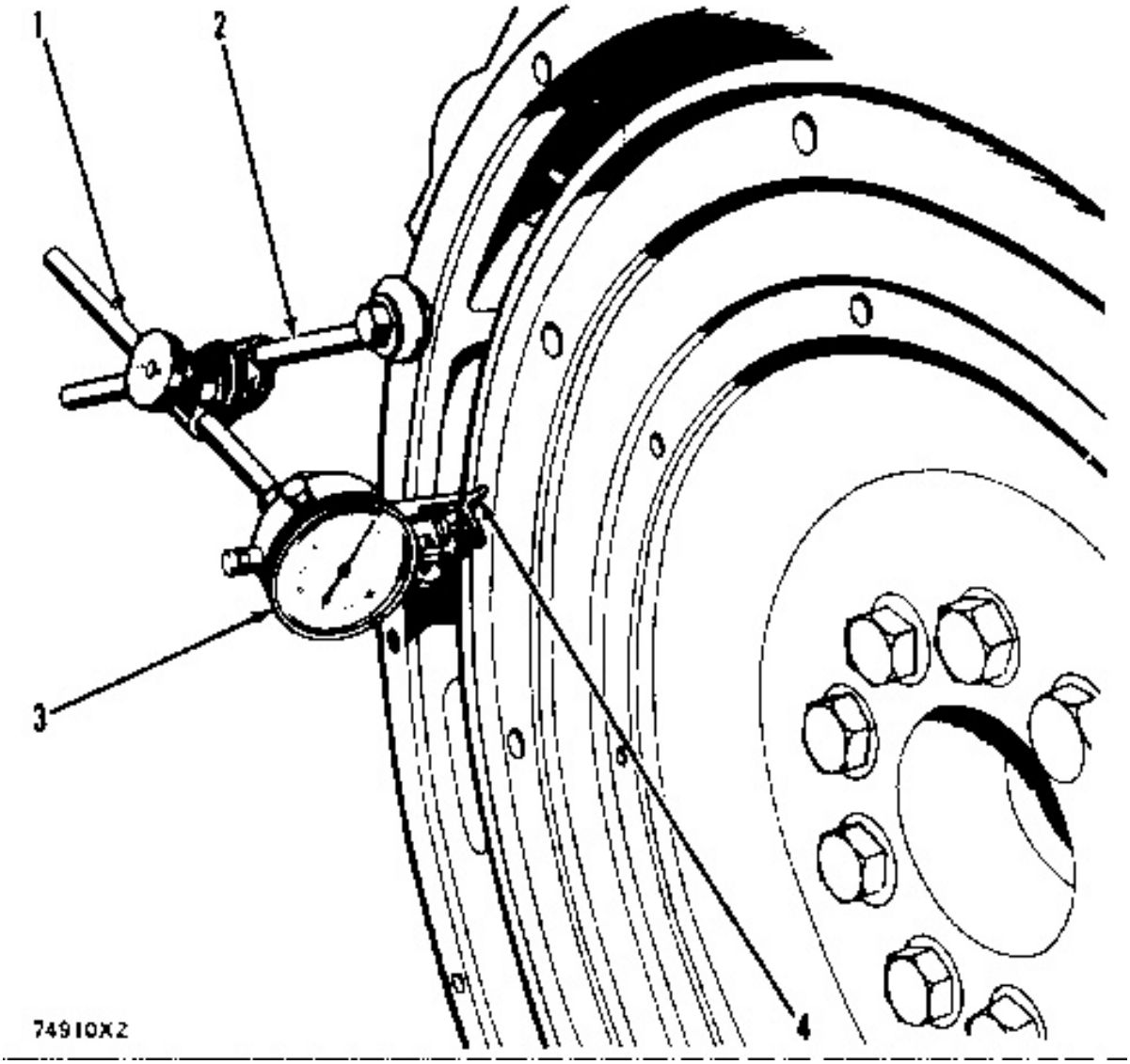

CHECKING BORE RUNOUT OF THE FLYWHEEL
1. 7H1945 Holding Rod. 2. 7H1645 Holding Rod. 3. 7H1942 Indicator. 4. 7H1940 Universal Attachment.

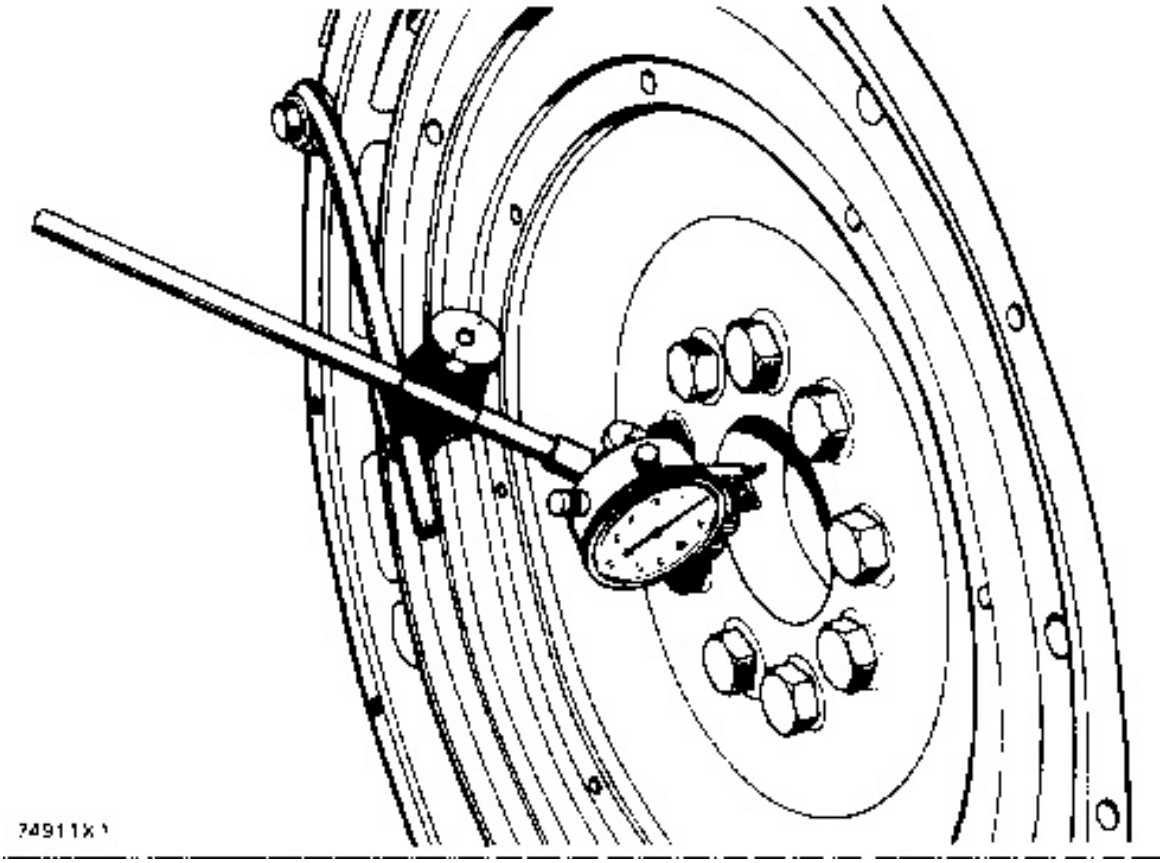

CHECKING FLYWHEEL CLUTCH PILOT BEARING BORE

4. The difference between the lower and higher measurements taken at all four points must not be more than .006 in. (0.15 mm), which is the maximum permissible bore runout (radial eccentricity) of the flywheel.

5. Runout (eccentricity) of the bore for the pilot bearing for the flywheel clutch, must not exceed .005 in. (0.13 mm).

Vibration Damper

Damage to or failure of the damper will increase vibrations and result in damage to the crankshaft. It will cause more gear train noise at variable points in the speed range.

Electrical System

Most of the tests of the electrical system can be done on the engine. The wiring insulation must be in good condition, the wire and cable connections must be clean and tight, and the battery must be fully charged. If the on the engine test shows a defect in a component, remove the components for more testing.

The service manual TESTING AND ADJUSTING ELECTRICAL COMPONENTS, Form No. REG00636 has complete specifications and procedures for the components of the starting circuit and the charging circuit.

There are several wiring diagrams which can be used with these engines. The standard wiring diagrams are in Systems Operation.

Battery

5P300 Electrical Tester.9S1990 or 1P7400 Battery Charger-Tester.5P957 or 5P3414 Coolant and Battery Tester.

NOTE: Make reference to Special Instruction Form No. SEHS7006, and to the instructions inside the cover of the tester, when the 5P300 Electrical Tester is used.

The battery circuit is an electrical load on the charging unit. The load is variable because of the condition of the charge in the battery. Damage to the charging unit will result, if the connections, (either positive or negative) between the battery and charging unit are broken while the charging unit is charging. This is because the battery load is lost and there is an increase in charging voltage. High voltage will damage, not only the charging unit but also the regulator and other electrical components.

WARNING

Never disconnect any charging unit circuit or battery circuit cable from battery when the charging unit is operated. A spark can cause an explosion from the flammable vapor mixture of hydrogen and oxygen that is released from the electrolyte through the battery outlets. Injury to personnel can be the result.

Load test a battery that does not hold a charge when in use. To do this, put a resistance, across the main connections (terminals) of the battery. For a 6V battery, put a resistance of two times the ampere/hour rating. For a 12V battery, put a resistance of three times the ampere/hour rating. Let the resistance remove the charge (discharge) of the battery for 15 seconds and immediately test the battery voltage. A 6V battery in good condition will show 4.5V; a 12V battery in good condition will show 9V.

Make reference to Special Instruction Form No. SEHS6891 when checking the battery with the 9S1990 or 1P7400 Battery Charger-Testers.



9S1990 BATTERY CHARGER-TESTER

Charging System

5P300 Electrical Tester.

NOTE: Make reference to Special Instruction form No. SEHS7006, and to the instructions inside of the cover of the tester, when testing with the 5P300 Electrical Tester.

The condition of charge in the battery at each regular inspection will show if the charging system operates correctly. An adjustment is necessary when the battery is constantly in a low condition of charge or a large amount of water is needed (more than one ounce of water per cell per week or per every 50 service hours).

Make a test of the charging unit and voltage regulator on the engine, when possible, using wiring and components that are a permanent part of the system. Off-engine (bench) testing will give a test of the charging unit and voltage regulator operation. This testing will give an indication of needed repair. After repairs are made, again make a test to give proof that the units are repaired to their original condition of operation.

Before the start of on-engine testing, the charging system and battery must be checked as shown in the Steps that follow:

1. Battery must be at least 75% (1.240 Sp. Gr.) fully charged and held tightly in place. The battery holder must not put too much stress on the battery.

2. Cables between the battery, starter and engine ground must be the correct size. Wires and cables must be free of corrosion and have cable support clamps to prevent stress on battery connections (terminals).

3. Leads, junctions, switches and panel instruments that have direct relation to the charging circuit must give correct circuit control.

4. Inspect the drive components for the charging unit to be sure they are free of grease and oil and have the ability to operate the charging unit.

Alternator Regulator Adjustment

When an alternator is charging the battery too much or not enough, an adjustment can be made to the charging rate of the alternator.

Earlier Delco-Remy 24V 50A (5S9088 Alternator)

Remove the plug from the cover of the alternator regulator and turn the inside adjustment with a screwdriver. Turn the adjustment one or two notches to change the alternator charging rate.

Later Delco-Remy 24V 50A (5S9088 Alternator) and Delco-Remy 32V 50A (1N9406 Alternator)

The later 5S9088 Alternator has a different location for the voltage adjustment screw than the early 5S9088 Alternator. The voltage adjustment screw for the later 5S9088 Alternator is located under the end plate. The adjustment screw for the 1N9406 Alternator is also under the end plate.

To adjust the voltage setting on these alternators, use the procedure that follows:

1. Remove end plate (2) and cover (3) from the alternator.

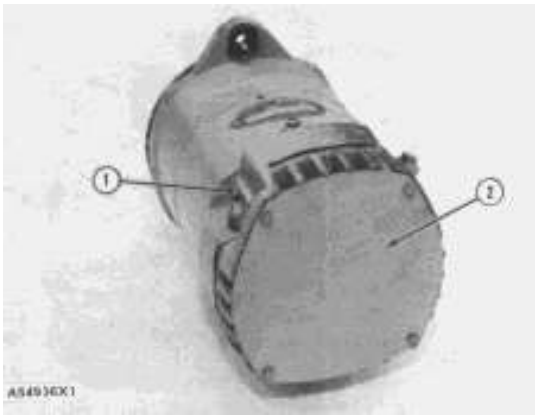

5S9088 ALTERNATOR
1. Adjustment screw under plug (earlier regulator). 2. End plate.

2. Remove the rubber sealant from the adjustment screw (4).

3. Use a voltmeter to measure alternator voltage output.

4. Turn adjustment screw (4) counterclockwise to lower the voltage setting. Turn adjustment screw (4) clockwise to raise the voltage setting.

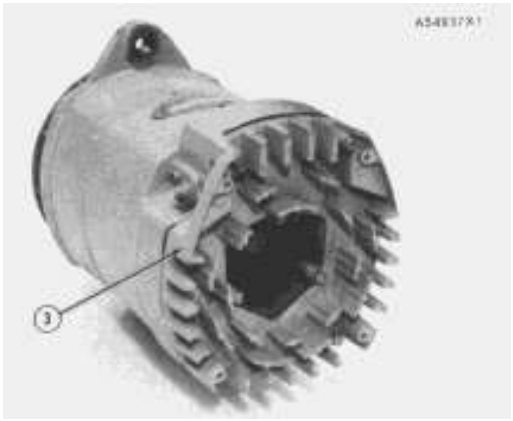

LOCATION OF COVER
3. Cover

5. Put 3S6252 Rubber Sealant on adjustment screw (4) and install cover (3) and end plate (2).

NOTICE

Make certain that field wire (5) is not located over transistor pins (6). The pins can make a hole in the insulation of the wire.

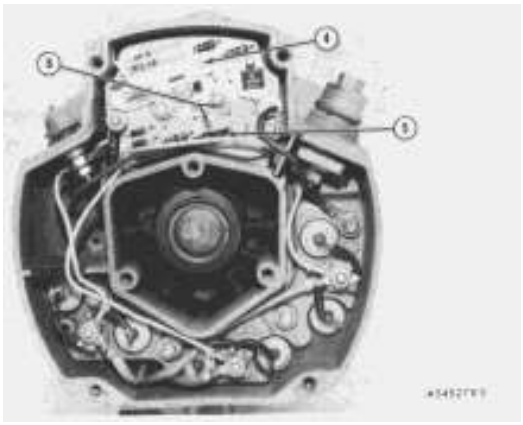

ALTERNATOR REGULATOR
4. Voltage adjustment screw. 5. Field wire. 6. Transistor pins.

Delco-Remy 12V 65A (9L5938 Alternator), Delco-Remy 24V 60A (4N3986 Alternator), Delco-Remy 32V 60A (4N3987 Alternator)

To make an adjustment to the voltage output on these alternators, remove the voltage adjustment cap (1) from the alternator, turn the cap 90°, and install it again into the alternator. The voltage adjustment cap has four positions: HI, LO, and two positions between the high and the low setting.

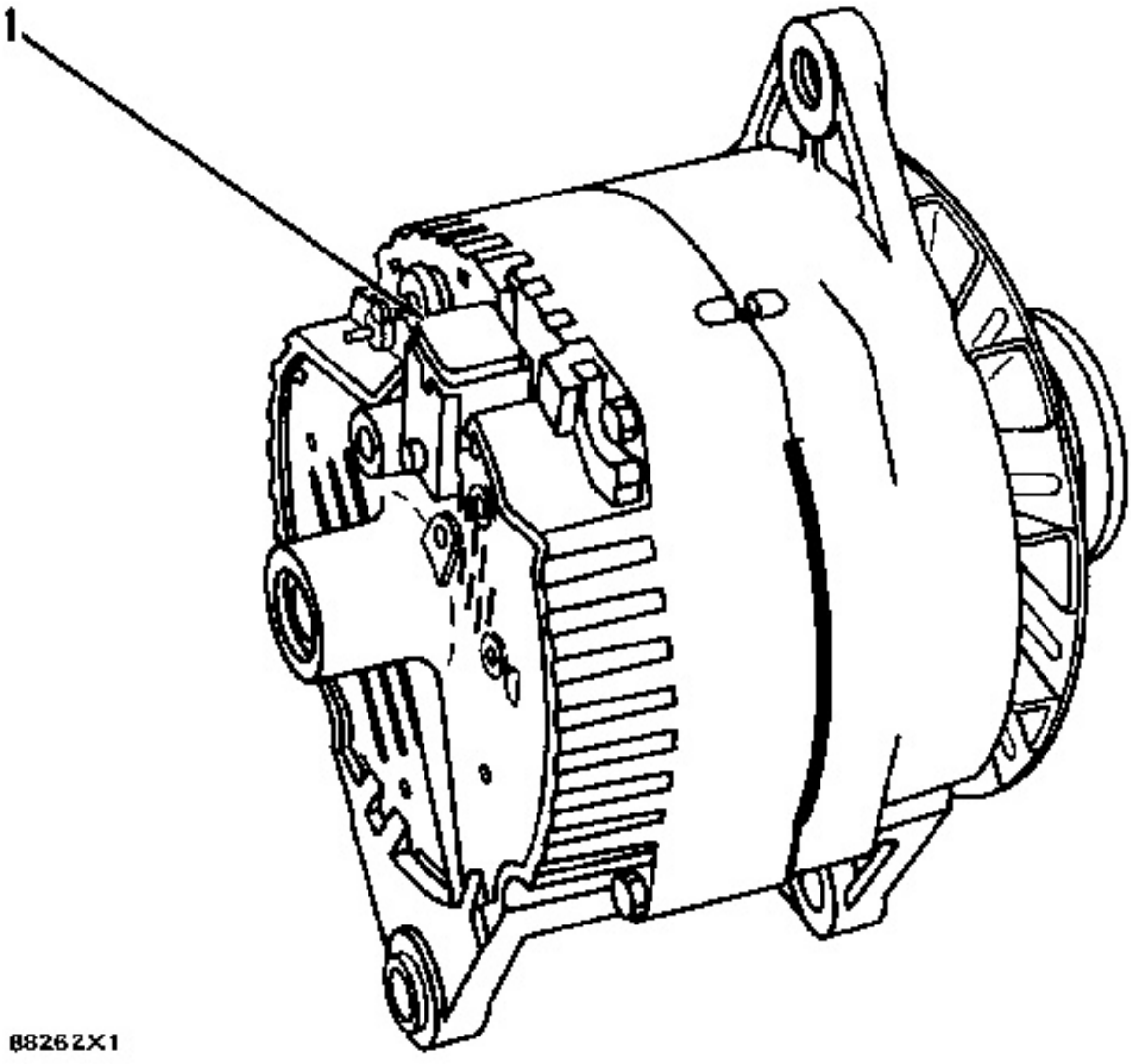

ALTERNATOR REGULATOR ADJUSTMENT

1. Voltage adjustment cap.

Alternator Regulator (Motorola)

When the alternator is either charging the battery too much or not enough, an adjustment can be made to the alternator charging rate. To make an adjustment to the voltage output, remove the cap (1) from the alternator regulator and change the regulator adjustment with a screwdriver.

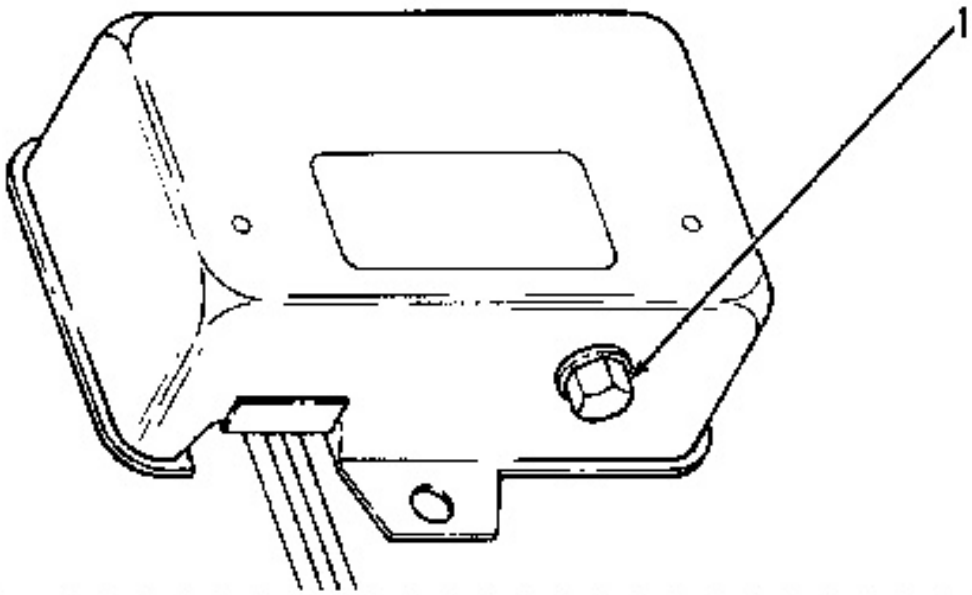

ALTERNATOR REGULATOR (MOTOROLA)
1. Cap for adjustment screw.

To increase the voltage turn the adjustment screw clockwise. The adjustment screw under cap (1) has five positions (number 1 is the last position clockwise).

Adjustment Position	1	2	3	4	5
Regulator Voltage (12V)	14.4 +.3 −.2	14.1 ±.2	13.8 ±.2	13.5 ±.2	13.2 +.2
Regulator Voltage (24V)	29.2 +.4 −.3	28.6 ±.3	28.0 +.3	27.4 ±.3	26.8 ±.3

Alternator Regulator (Motorola)

When the alternator is either charging the battery too much or not enough, an adjustment can be made to the alternator charging rate. To make an adjustment to the voltage output, remove the cover from the voltage regulator and change the location of the metal strap (1).

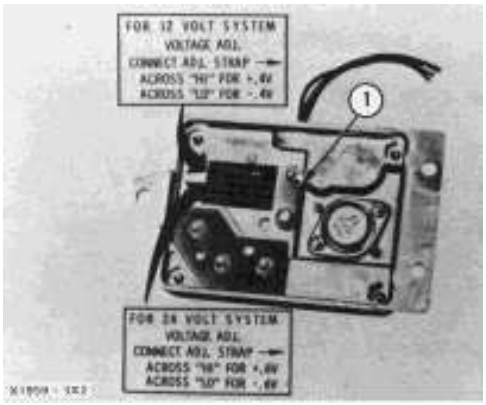

VOLTAGE ADJUSTMENT
1. Metal strap.

To make an increase in the voltage (approximately .4 volt in a 12 volt system and .6 volt in a 24 volt system), remove the nuts from the two studs nearest to the word "HI". Install the metal strap on these studs and install the nuts.

To make a decrease in the voltage (approximately .4 volt in a 12 volt system and .6 volt in a 24 volt system), remove the nuts from the two studs nearest to the word "LO". Install the metal strap on these studs and install the nuts.

A fine adjustment can be made by removing cover screw (2) from the insulator and turning the adjustment screw with a screwdriver. Turn clockwise to make an increase in voltage.



FINE VOLTAGE ADJUSTMENT
2. Cover screw.

NOTE: Total adjustment is one half a turn.

NOTICE

Do not let screwdriver make contact with cover.

Delco-Remy Alternator; Pulley Nut Tightening

Tighten nut that holds the pulley to a torque of 75 ± 5 lb. ft. (100 ± 7 N·m) with the tools shown.

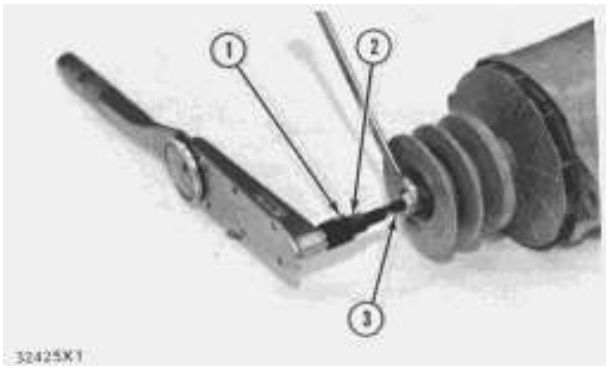

ALTERNATOR PULLEY INSTALLATION
1. 8S1588 Adapter (1/2" female to 3/8" male). 2. 8S1590 Socket (5/16" with 3/8" drive). 3. 1P2977 Tool Group. 8H8555 Socket (15/16" with 1/2" drive) not shown.

Starting System

5P300 Electrical Tester.

NOTE: Make reference to Special Instruction Form No. SEHS7006, and to the instructions inside of the cover of the tester, when the 5P300 Electrical Tester is used.

Use a D.C. Voltmeter to find starting system components which do not function.

Move the start control switch to activate the starter solenoid. Starter solenoid operation can be heard as the pinion of the starter motor is engaged with the ring gear on the engine flywheel.

If the solenoid for the starter motor will not operate, it is possible that the current from the battery did not get to the solenoid. Fasten one lead of the voltmeter to the connection (terminal) for the battery cable on the solenoid. Put the other lead to a good ground. No voltmeter reading shows there is a broken circuit from the battery. More testing is necessary when there is a reading on the voltmeter.

The solenoid operation also closes the electric circuit to the motor. Connect one lead of the voltmeter to the solenoid connection (terminal) that is fastened to the motor. Put the other lead to a good ground. Activate the starter solenoid and look at the voltmeter. A reading of battery voltage shows the problem is in the motor. The motor must be removed for further testing. No reading on the voltmeter shows that the solenoid contacts do not close. This is an indication of the need for repair to the solenoid or an adjustment to be made to the starter pinion clearance. Pinion clearance is .36 in. (9.14 mm).

Make a test with one voltmeter lead fastened to the connection (terminal) for the small wire at the solenoid, and the other lead to the ground. Look at the voltmeter and activate the starter solenoid. A voltmeter reading shows that the problem is in the solenoid. No voltmeter reading shows that the problem is in the start switch or the wires for the start switch.

Fasten one voltmeter lead to the start switch at the connection (terminal) for the wire from the battery. Fasten the other lead to a good ground. No voltmeter reading indicates a broken circuit from the battery. Make a check of the circuit breaker and wiring. If there is a voltmeter reading, the problem is in the start switch or in the wires for the start switch.

Fasten one lead of the voltmeter to the battery wire connection of the starter switch and put the other lead to a good ground. A voltmeter reading indicates a failure in the switch.

A starter motor that operates too slow can have an overload because of too much friction in the engine being started. Slow operation of the starter motor can also be caused by a short circuit, loose connections and/or dirt in the motor.

Pinion Clearance Adjustment (Delco-Remy)

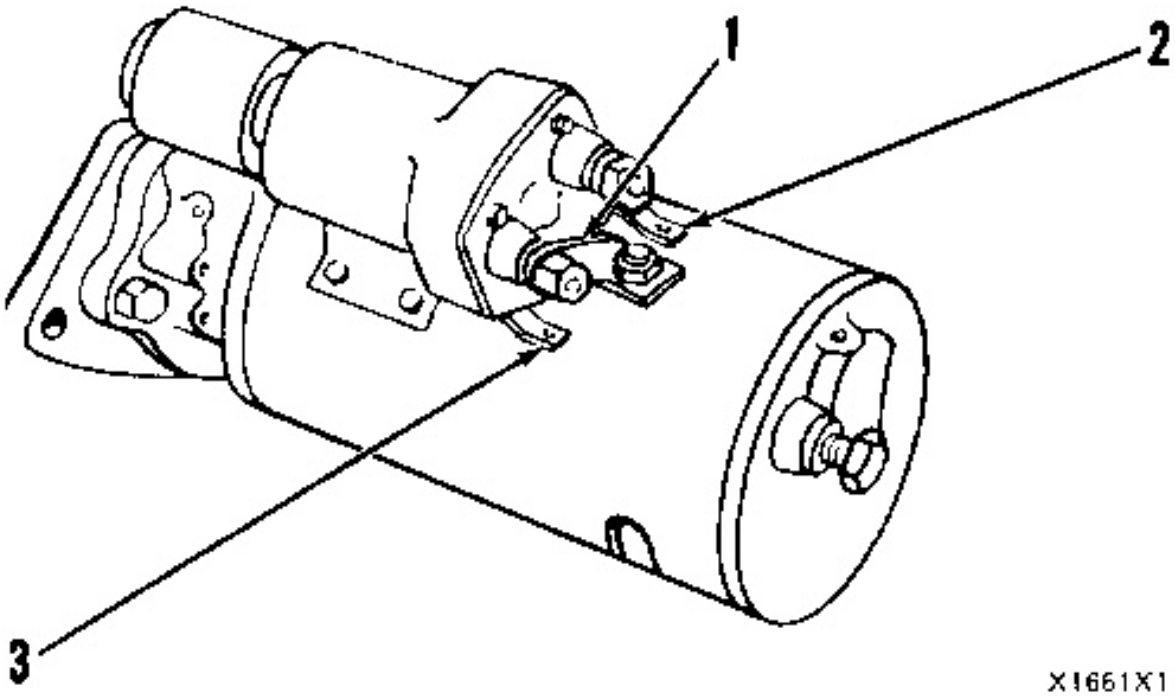

CONNECTION FOR CHECKING PINION CLEARANCE
1. Connector from MOTOR terminal on solenoid to motor. 2. SW terminal. 3. Ground terminal.

Whenever the solenoid is installed, make an adjustment of the pinion clearance. The adjustment can be made with the starting motor removed.

1. Install the solenoid without connector (1) from the MOTOR connection (terminal) on solenoid to the motor.

2. Connect a battery, of the same voltage as the solenoid, to the terminal (2), marked SW.

3. Connect the other side of battery to ground terminal (3).

4. Connect for a moment, a wire from the solenoid connection (terminal) marked MOTOR to the ground connection (terminal). The pinion will shift to crank position and will stay there until the battery is disconnected.

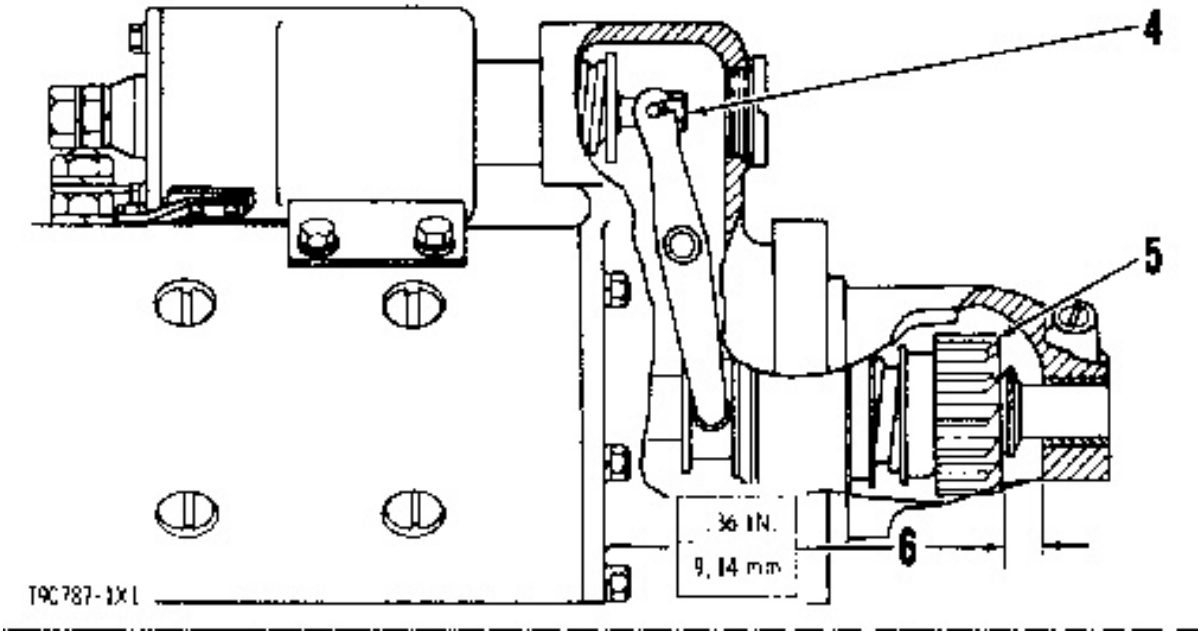

PINION CLEARANCE ADJUSTMENT
4. Shaft nut. 5. Pinion. 6. Pinion clearance.

5. Push the pinion toward commutator end to remove free movement.

6. Pinion clearance (6) must be .36 in. (9.1 mm).

7. Pinion clearance adjustment is made by removing plug and turning nut (4).

Shutoff Solenoid

Two checks must be made on the engine to give proof that the solenoid adjustment is correct.

1. The adjustment must give the piston enough travel to move the sleeve control shaft to the shutoff position.
2. The adjustment must give the piston enough travel to cause only the "hold in" windings of the solenoid to be activated when the sleeve control shaft held in the fuel closed position. Use a thirty ampere ammeter to make sure the plunger is in the "hold in" position. Current needed must be less than one ampere.

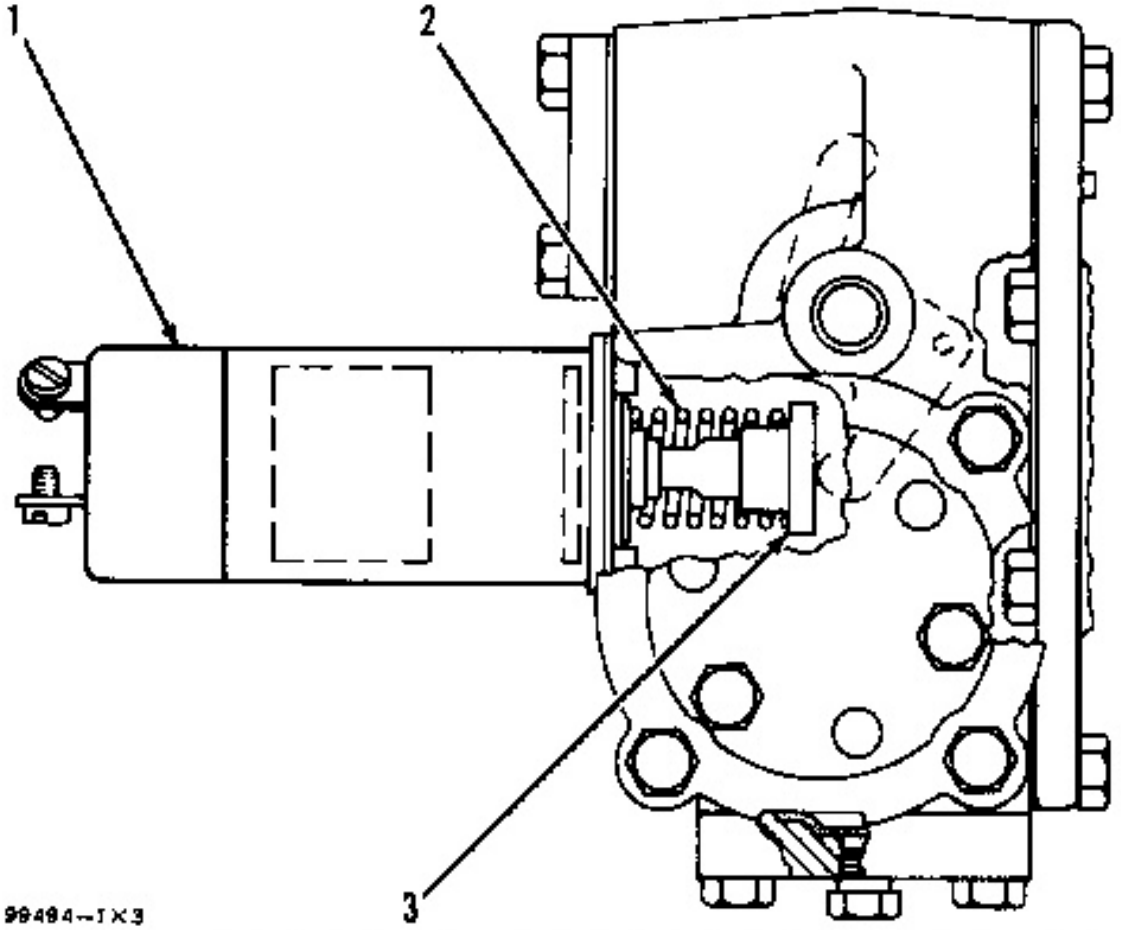

ACTIVATE TO RUN

1. Shutoff solenoid. 2. 9L6588 Spring. 3. 3N2835 and 7N9635 Shaft.

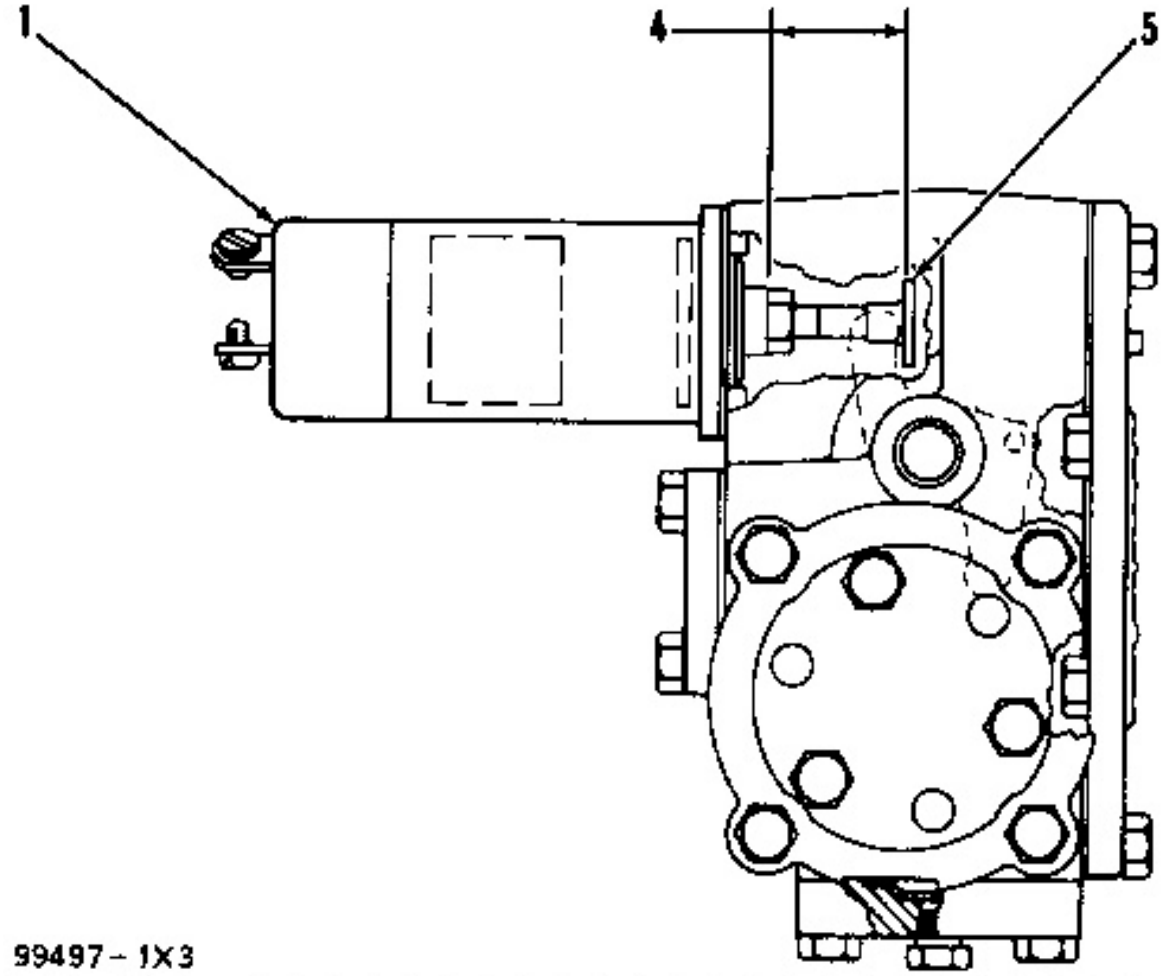

ACTIVATE TO SHUTOFF
1. Shutoff solenoid. 4. Distance from face of piston to inside face of shaft (5). 5. 3N2836 and 6N591 Shaft.

Air Starting System

Pressure Regulating Valve

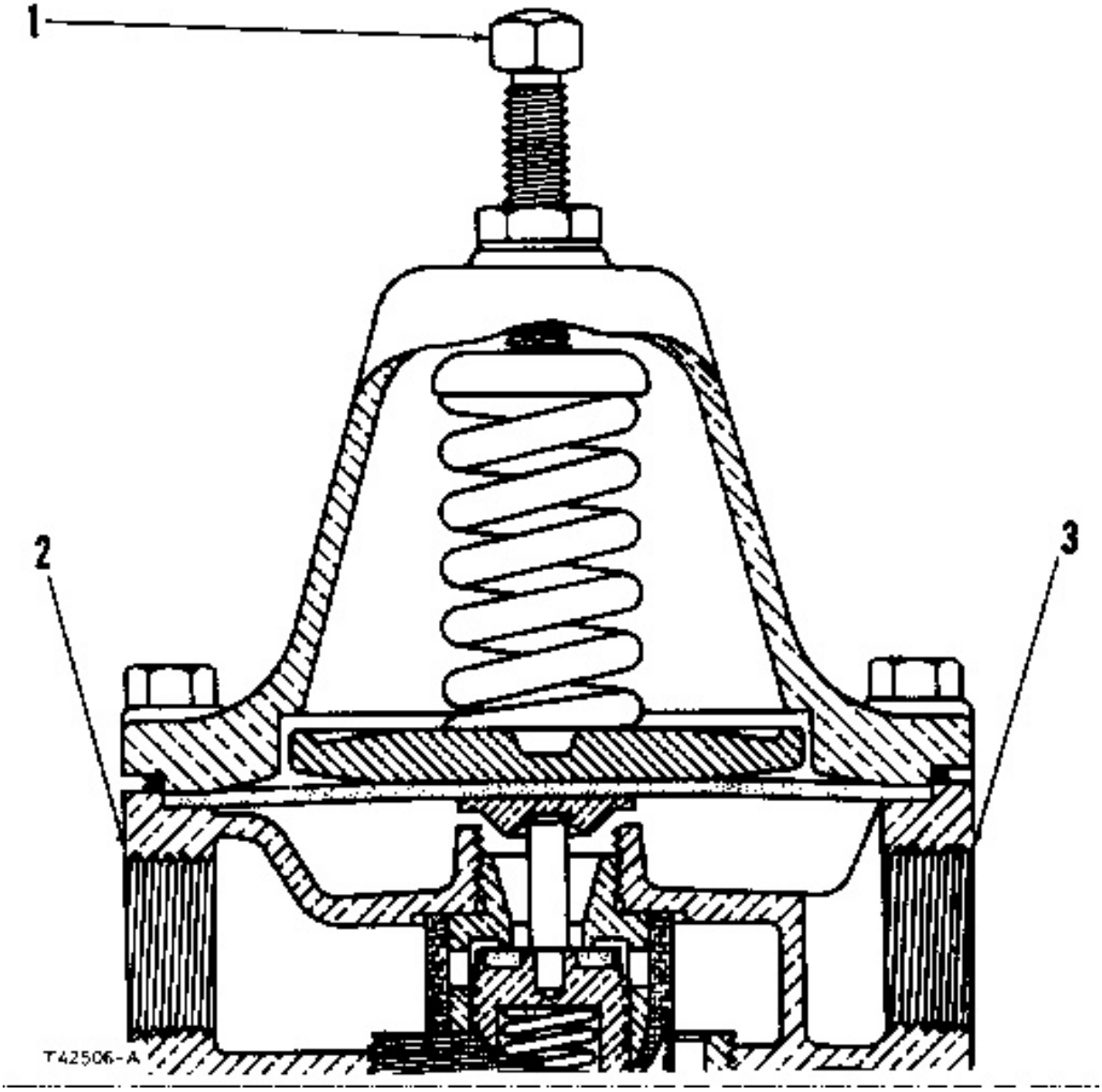

PRESSURE REGULATING VALVE (TYPICAL ILLUSTRATION)
1. Adjustment screw. 2. Regulator inlet. 3. Regulator outlet.

Use the procedure that follows to check and adjust the pressure regulating valve.

1. Drain the line to the pressure regulating valve or drain the air storage tank.

2. Disconnect the regulator from the starter control valve.

3. Connect an 8M2885 Pressure Gauge to the regulator outlet.

4. Put air pressure in the line or tank.

5. Check the pressure.

6. Adjust the pressure regulating valve according to Chart For Air Pressure Setting.

7. Remove the air pressure from the line or tank.

8. Remove the 8M2885 Pressure Gauge and connect the air pressure regulator to the line to the air starting motor.

CHART FOR AIR PRESSURE SETTING			
Motor		Minimum	Maximum
Ingersoll-Rand	psi kPa	100 690	150 1035

Each engine application will have to be inspected to get the most acceptable starting results. Some of the factors that affect regulating valve pressure setting are: attachment loads pulled by engine during starting, ambient temperature conditions, oil viscosity, capacity of air reservoir, and condition of engine (new or worn).

The advantage of setting the valve at the higher pressures is increased torque for starting motor and faster rotation of engine. The advantage of setting the valve at the lower pressures is longer time of engine rotation for a given reservoir capacity of supply air.

Lubrication

Always use an air line lubricator with these Starters.

For temperatures above 32° F (0° C), use a good quality SAE 10 motor oil.

For temperatures below 32° F (0° C), use diesel fuel.

To maintain the efficiency of the starting motor, flush it at regular intervals. Pour approximately 1 pt. (0.5 liter) of diesel fuel into the air inlet of the starting motor and operate the motor. This will remove the dirt, water and oil mixture (gummy coating) from the vanes of the motor.

Air Starting Motor (Ingersoll-Rand)

The cylinder (12) must be assembled over the rotor (15) and on the front end plate (16) so the dowel hole (12A) and the inlet passages (12B) for the air are as shown in the rear view illustration of the cylinder and rotor. If the installation is not correct, the starter drive (42) will turn in the wrong direction.

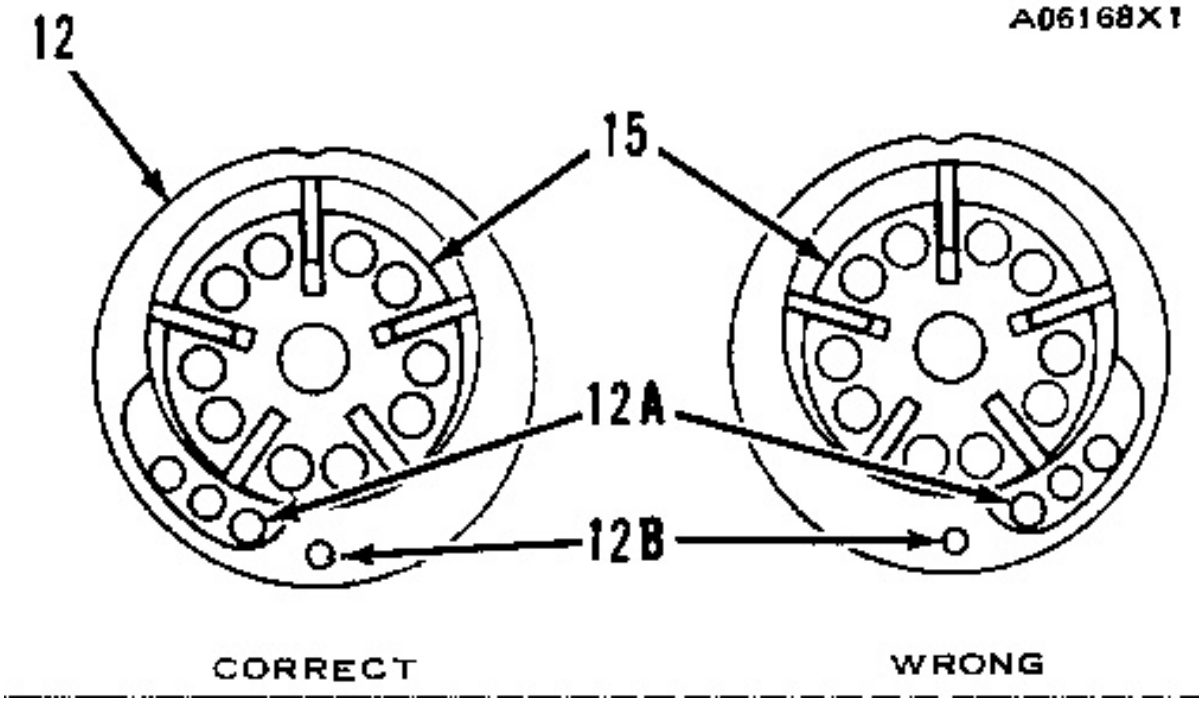

REAR VIEW OF THE CYLINDER AND ROTOR FOR CLOCKWISE ROTATION
12. Cylinder. 12A. Air inlet passages. 12B. Dowel hole. 15. Rotor.

Tighten the bolts (6) of the rear cover in small increases of torque for all bolts until all bolts are tightened to 20 to 25 lb. ft. (25 to 35 N·m).

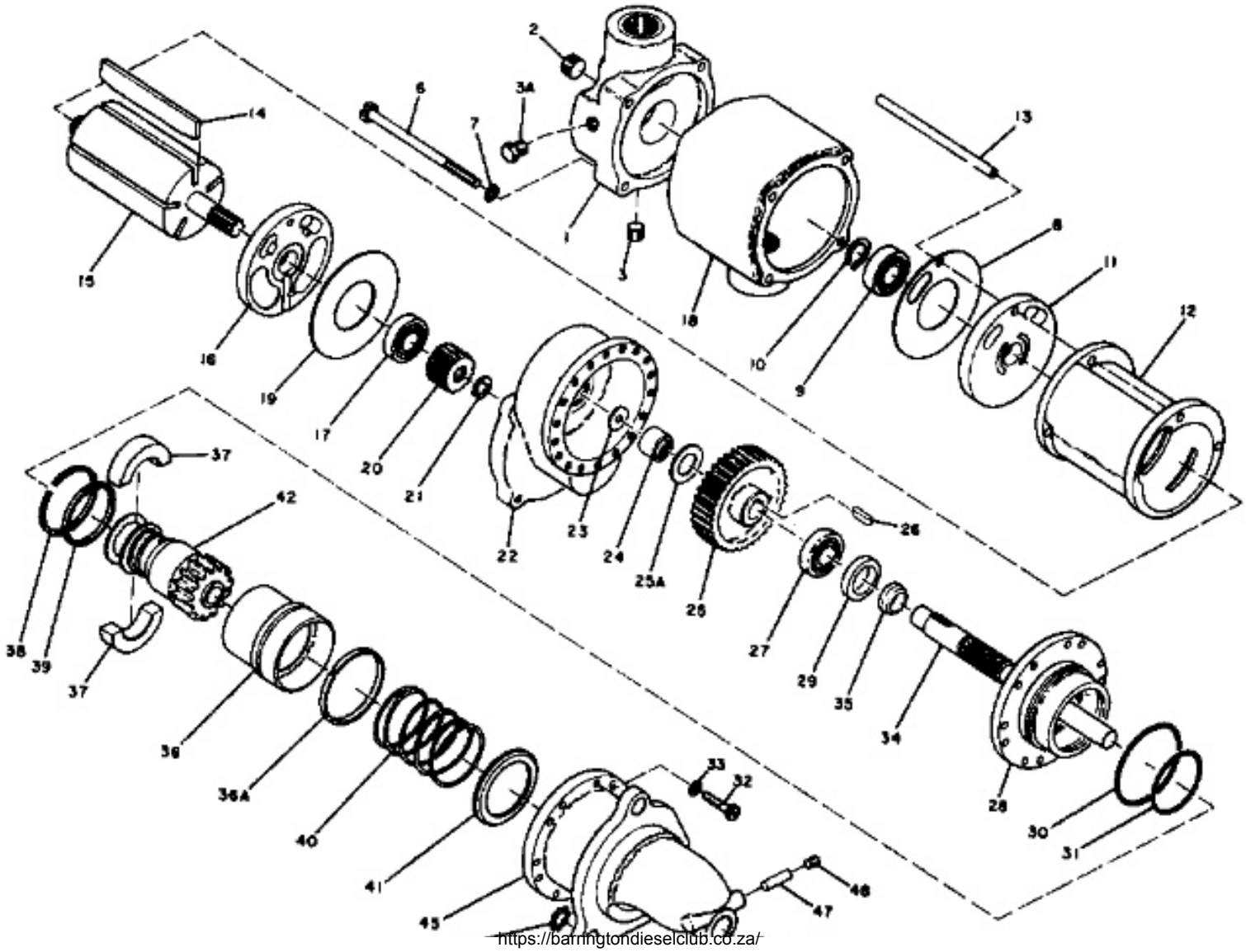

https://barringtondieselclub.co.za/



COMPONENTS OF THE AIR STARTER (INGERSOLL-RAND, SIZE 150 BMP, MODEL C OR E)
1. Motor housing cover. 2. Plug. 3. Plug. 3A. Plug. 6. Bolt (cap screw). 7. Lockwasher. 8. Gasket. 9. Rotor rear bearing. 10. Bearing retainer. 11. Rear end plate. 12. Cylinder. 13. Dowel. 14. Rotor vane. 15. Rotor. 16. Front end plate. 17. Rotor front bearing. 18. Motor housing. 19. Gear case gasket. 20. Rotor pinion. 21. Rotor pinion retainer. 22. Gear case. 23. Bearing ejecting washer. 24. Rear bearing for the drive shaft. 25. Drive gear. 25A. Thrust washer. 26. Key for the drive gear. 27. Front bearing for the drive shaft. 28. Gear case cover. 29. Grease seal for the drive shaft. 30. Cover seal. 31. Piston seal. 32. Bolt. 33. Lockwasher. 34. Drive shaft. 35. Drive shaft collar. 36. Piston. 36A. Piston ring. 37. Shift ring. 38. Shift ring retainer. 39. Shift ring spacer. 40. Piston return spring. 41. Return spring seat. 42. Starter drive (pinion). 43. Lockwasher. 44. Bushing for the bolts. 45. Drive housing. 46. Drive housing bushing. 47. Oiler felt for the bushing. 48. Oiler plug.

Put a thin layer of lubricant on the lip of the seal (29) and on the outside of the collar (35), for installation of drive shaft (34). After installation of the shaft through the cover (28) check the lip of the grease seal (29). It must be turned correctly toward the drive gear (25). If the shaft turned the seal lip in the wrong direction, remove the shaft and install again. Use a tool with a thin point to turn the seal lip in the correct direction.

Tighten the bolts (32) of the drive housing in small increases of torque for all bolts until all bolts are tightened to 100 lb. in. (11.3 N·m).

Check the motor for correct operation. Connect an air hose to the motor inlet (49) and make the motor turn slowly. Look at the drive pinion (42) from the front of the drive housing (45). The pinion must turn clockwise.

Connect an air hose to the small hole with threads in the drive housing (45), nearer the gear case (22). When a little air pressure goes to the drive housing, the drive pinion (42) must move forward to the engaged position. Also, the air must get out through the other hole with threads nearer the mounting flange (51).

Hydraulic Starting System

Hydraulic Starting System

WARNING

Do not disconnect lines or remove plugs from the system until the oil pressure has been released. The system can have 3000 psi (20 700 kPa) pressure. After all the system pressure is released, the accumulator still can have 1625 psi (11 200 kPa) pressure.

Do not work on the accumulator, unless you have the correct service tools and service information. Service or service information is available from the manufacturer.

CATERPILLAR®

SEBR0539-00



Engine Attachment Specification

3304 & 3306 INDUSTRIAL & MARINE ENGINE

http://engine.od.ua

Introduction

The specifications given in this book are on the basis of information available at the time the book was written. These specifications give the torques, operating pressure, measurements of new parts, adjustments and other items that will affect the service of the product.

When the words "use again" are in the description, the specification given can be used to determine if a part can be used again. If the part is equal to or within the specification given, use the part again.

When the word "permissible" is in the description, the specification given is the "maximum or minimum" tolerance permitted before adjustment, repair and/or new parts are needed.

A comparison can be made between the measurements of a worn part, and the specifications of a new part to find the amount of wear. A part that is worn can be safe to use if an estimate of the remainder of its service life is good. If a short service life is expected, replace the part.

NOTE: The specifications given for "use again" and "permissible" are intended for guidance only and Caterpillar Tractor Co. hereby expressly denies and excludes any representation, warranty or implied warranty of the reuse of any component.

Specifications
3304 & 3306 INDUSTRIAL & MARINE ENGINES
Media Number -SEBR0539-00 Publication Date -28/09/1992 Date Updated -11/10/2001

Woodward PSG Governor

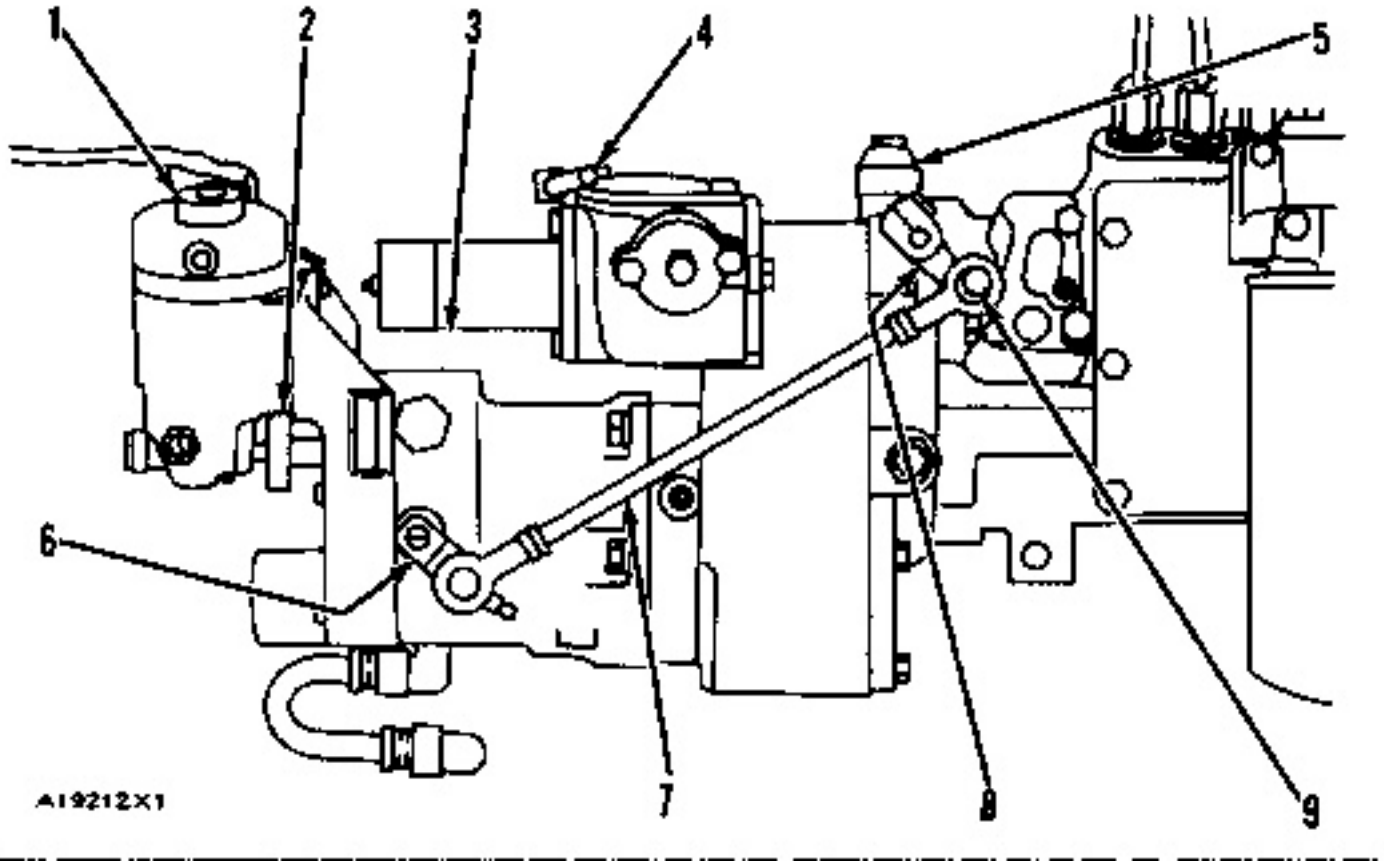

(1) Voltage for governor synchronizing motor ... 24V DC

(2) Manual control knob.

(3) Adjustment screw for high idle speed.

(4) Manual shutoff lever:

(Full movement in direction shown must cause engine to stop.)

(5) Cover for adjustment screw for fuel setting.

(6) Lever for governor control.

NOTE: Put terminal shaft in shutoff position. Install lever (6) on shaft at 45° 00' ± 00° 15' from horizontal as shown. Lever (6) is installed with a pin to prevent movement on the shaft.

(7) Rod for governor control.

Adjustment procedure for rod (7):

A. Disconnect rod (7) from lever (8).

B. Turn both lever (6) and lever (8) to full counterclockwise movement.

C. Adjust the length of rod (7) to put the bolt holes in the ends of rod (7) and lever (8) in alignment.

D. Tighten locknuts and connect rod (7) to lever (8) with bolt (9).

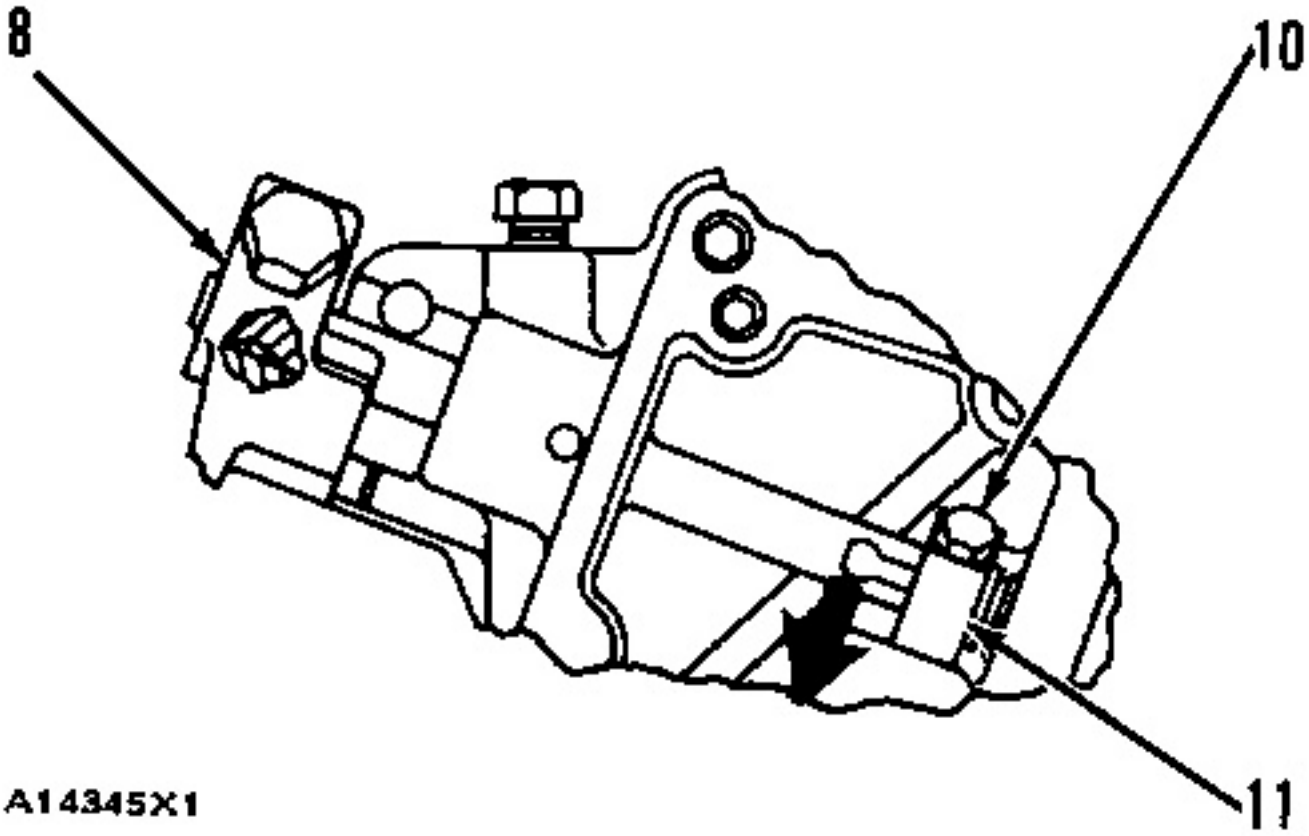

(8) Lever for fuel injection pump.

(9) Bolt.

(10) Bolt.

(11) Lever.

Hold lever (8) and turn lever (11) as far as possible before tightening bolt (10).

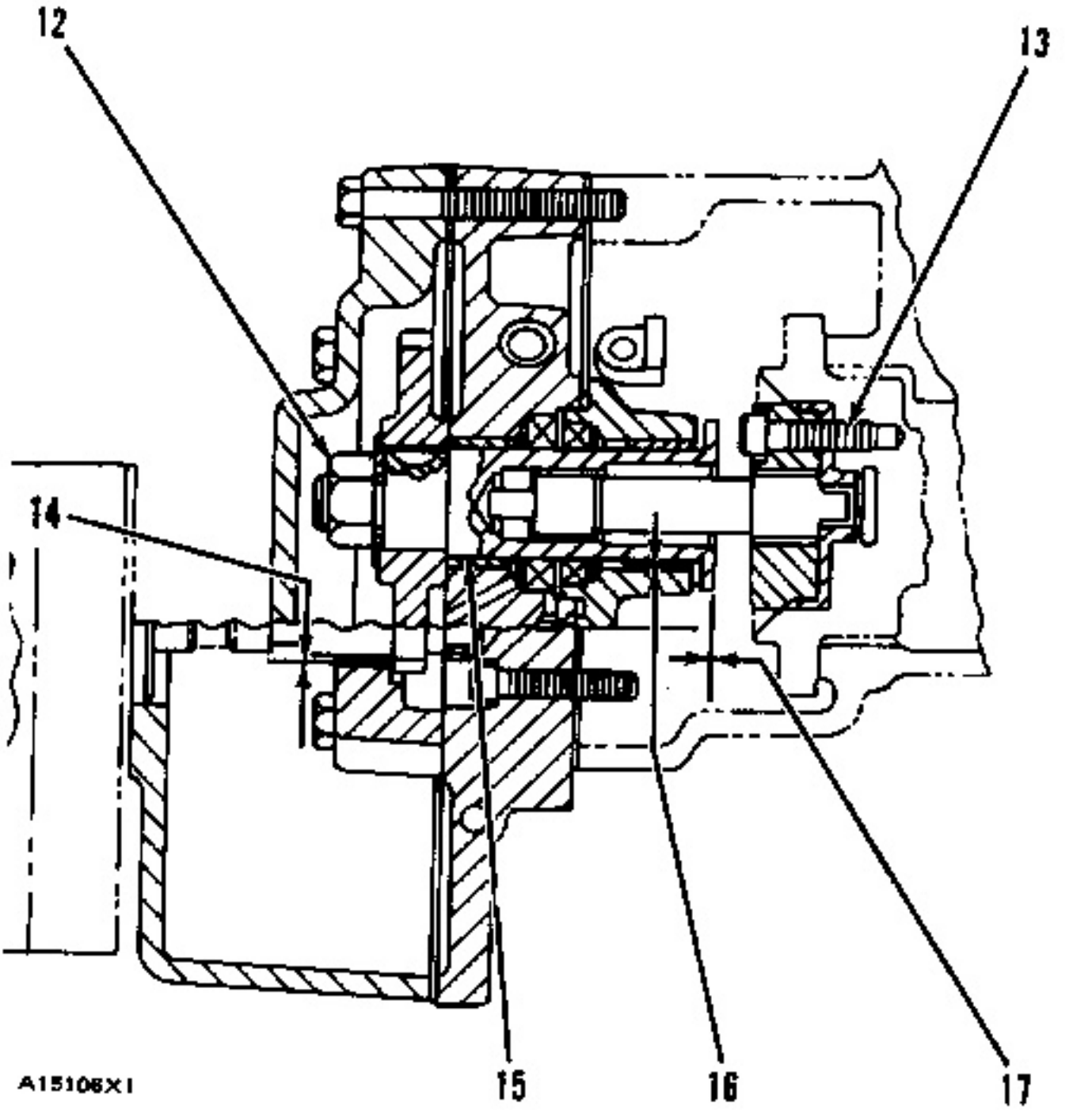

(12) Torque for nut holding large drive gear for governor ... 75 ± 10 lb. ft.(100 ± 14 N·m)

(13) Torque for bolts holding adapter to camshaft of fuel injection pump ... 108 ± 36 lb. in.(12.2 ± 4.1 N·m)

(14) Gear clearance (backlash) ... .007 ± .004(0.18 ± 0.10 mm)

(15) Drive shaft.

(16) Bearing clearance for drive shaft (13) (all bearings) ... .0045 ± .0035 in.(0.114 ± 0.089 mm)

https://barringtondieselclub.co.za/

(17) End play for drive shaft (13) ... .038 ± .031 in.(0.97 ± 0.79 mm)

Woodward PSG Governor (8N6774)

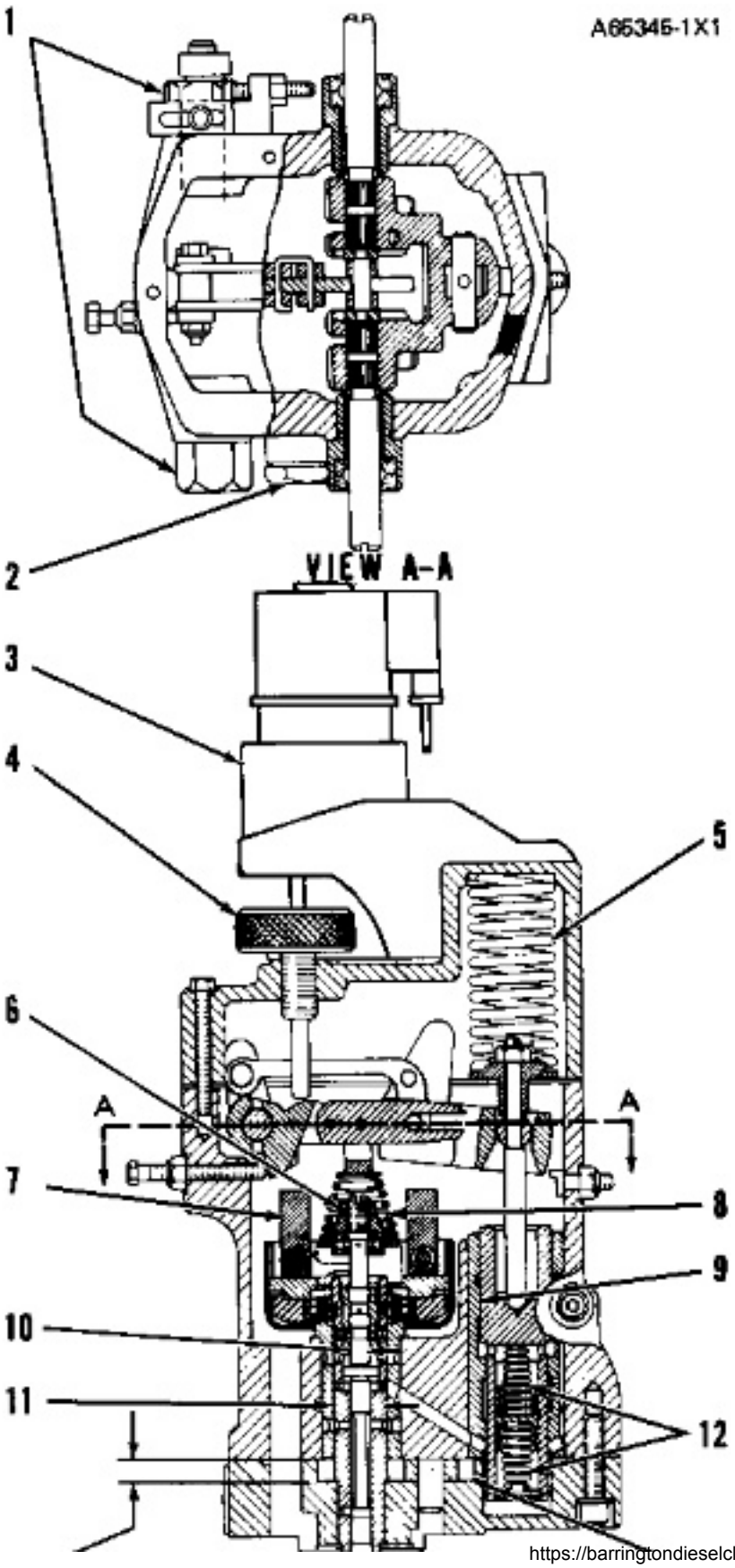

https://barringtondieselclub.co.za/



(1) Torque for sleeves ... 30 lb. ft.(40 N·m)

(2) Governor oil pump relief valve must open at ... 175 psi(1200 kPa)

(3) Synchronizing motor rating ... 24 V

(4) Adjust clutch assembly to slip at ... 6.0 ± .5 lb. in.(0.7 ± 0.06 N·m)

(5) 3N5723 Return Spring:

Free length ... 4.13 to 4.25 in.(104.9 to 108.0 mm)

Outside diameter ... .995 to 1.015 in.(25.27 to 25.78 mm)

(6) Torque for nut on pilot valve ... 70 lb. in.(7.9 N·m)

(7) Flyweight rotation as seen from the top ... counterclockwise

(8) 7N6052 Speeder Spring and Fork Assembly:

Free length ... .97 to 10.3 in.(24.6 to 26.2 mm)

Outside diameter (large end) ... .952 ± .010 in.(24.18 ± 0.25 mm)

(9) Diameter of the power piston (new) ... .8584 to .8589 in.(21.803 to 21.816 mm)

Bore in the bushing (new) ... .8594 to .8599 in.(21.829 to 21.841 mm)

(10) Diameter of five pilot valve lands (new) ... .2490 to .2495 in.(6.325 to 6.337 mm)

Bore for pilot valve lands (new) ... .2500 to .2505 in.(6.350 to 6.363 mm)

(11) Diameter of pilot valve bushing (new) ... .6239 to .6242 in.(15.847 to 15.855 mm)

Bore for pilot valve housing (new) ... .6250 to .6254 in.(15.875 to 15.885 mm)

(12) 6L3990 Damper Spring:

Color Code ... one purple stripe

https://barringtondieselclub.co.za/

Free length ... 1.31 to 1.37 in.(33.3 to 34.8 mm)

Outside diameter (large end) ... .420 ± .010 in.(10.67 ± 0.25 mm)

(13) Depth of the counterbore ... .2630 to .2635 in.(6.680 to 6.693 mm)

Thickness of gears ... .2617 to .2622 in.(6.647 to 6.660 mm)

(14) Bore in oil pump idler gear ... .3045 to .3050 in.(7.734 to 7.747 mm)

Diameter of shaft ... .3035 to .3038 in.(7.709 to 7.717 mm)

Install the shaft with the oil hole as shown.

The distance between the top of the shaft and the bottom of the counterbore must be ... .252 to .254 in. (6.40 to 6.45 mm)

Governor Control

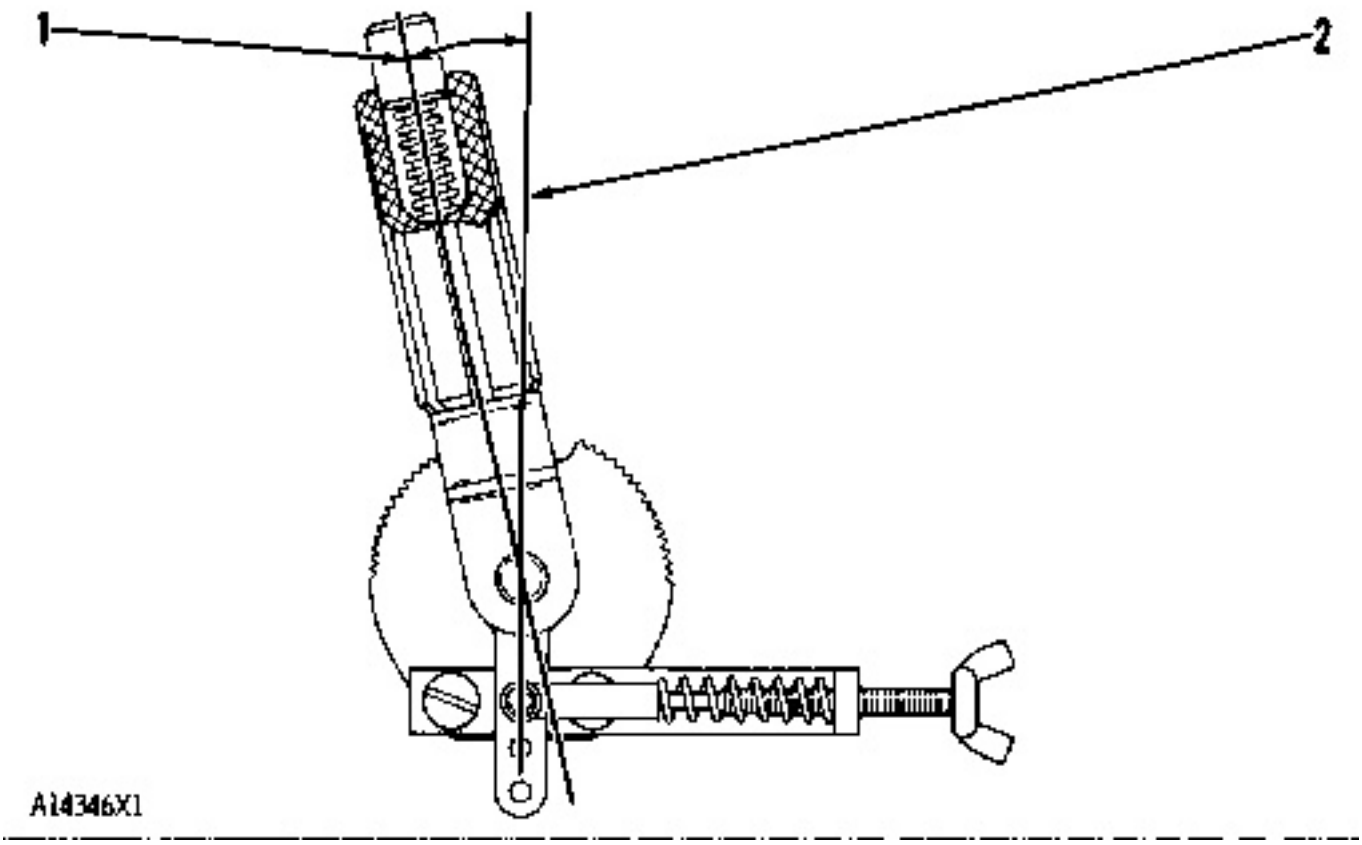

Adjustment:

With governor control shaft in full load position, install the governor control so that the angle (1), measured from vertical line (2), is approximately ... 12° 30'

Primary Fuel Filter

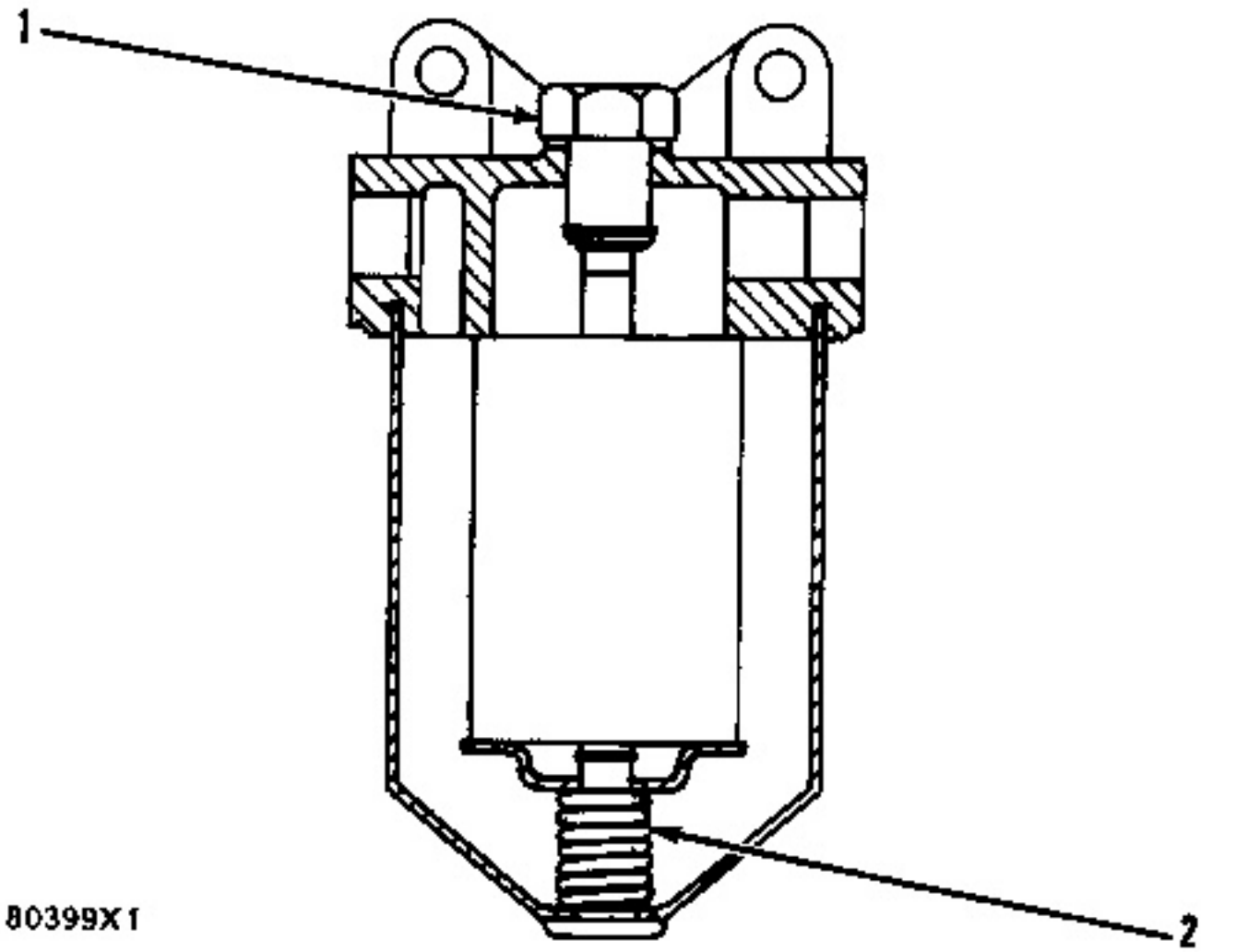

(1) Torque for nut ... 18 ± 3 lb. ft.(24 ± 4 N·m)

(2) 7S9323 Spring:

Length under test force ... 1.10 in.(27.9 mm)

Test force ... 27.7 to 32.3 lb.(123 to 144 N)

Free length after test ... 1.68 in.(42.7 mm)

Outside diameter ... .68 in.(17.3 mm)

Electric Service Meter

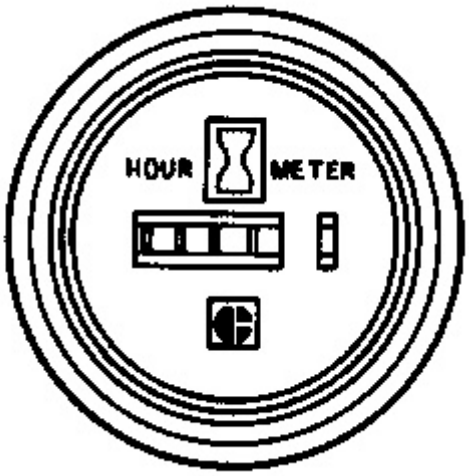

A17562X1

Polarity is negative ground.

Minimum operating voltage ... 4 V DC

Maximum operating voltage ... 50 V DC

Pressure Switch For Electric Service Meter

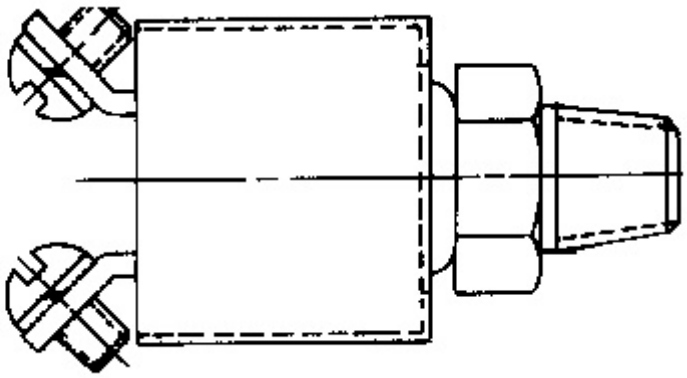

A18B26X1

2N7744 Switch

Test switch at a temperature of ... 77°F(25°C)

With an increase in pressure, switch closes at ... 6.4 ± 2.7 psi(44 ± 19 kPa)

With a decrease in pressure, switch opens at ... 3.9 ± 3.3 psi(27 ± 23 kPa)

Service Meter

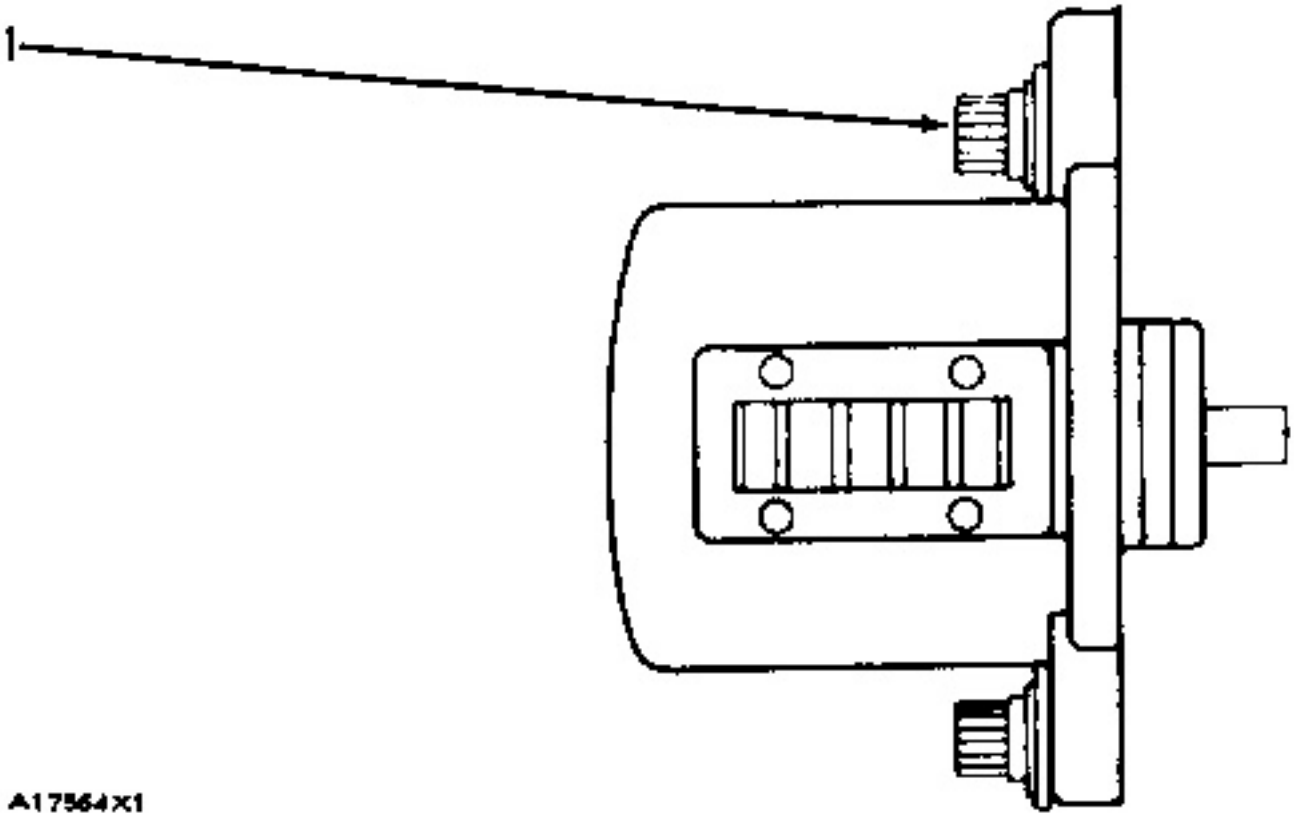

(1) Torque for bolts which hold service meter ... 96 ± 24 lb. in.(10.9 ± 2.8 N·m)

Tachometer

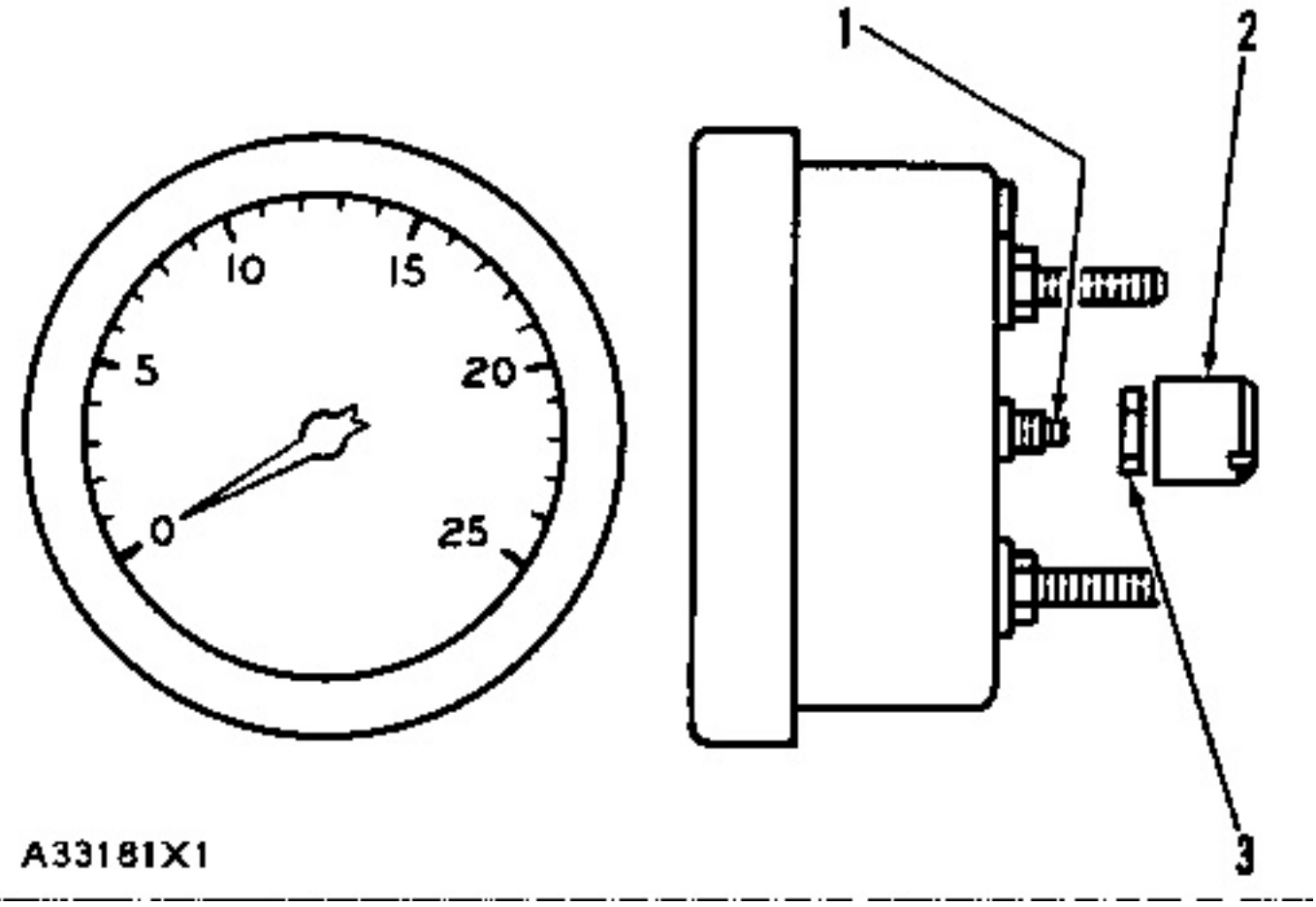

3N7288 (Faria Number B-1594-2); Use with 3N4430 Sending Unit

Output to input ratio ... 2 to 1

Range ... 0 to 2500 rpm

Check at full load engine rpm.

Maximum adjustment ... ± 7.5%

Maximum external circuit resistance ... 20 ohms

Maximum operating temperature ... 180°F(82° C)

Maximum of two tachometers to be operated from one sending unit.

(1) Adjustment screw.

(2) Cap.

(3) Rubber washer.

Mechanical Gauges For Water Temperature

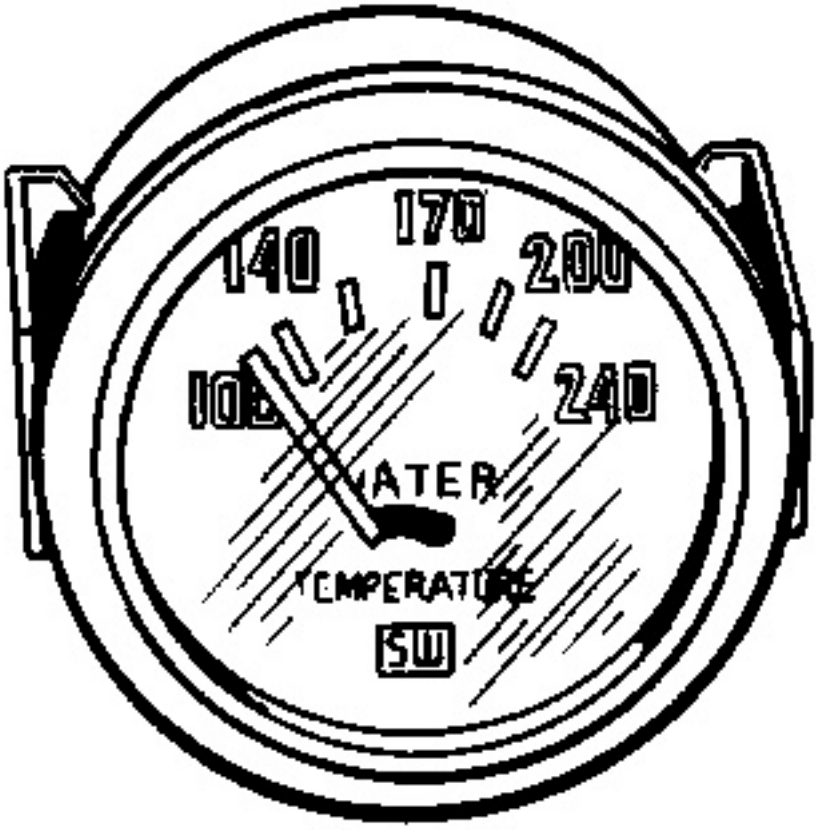

48735X1

5L9109, 5L9416 and 3N6365 Direct Reading Gauges

Direct reading gauges must show the same temperature as on the test thermometer.

7H9603, 7H9604, 7H9607, 2N2412, and 2N2413 Gauges with Color Codes

POINTER POSITIONER	TEST THERMOMETER TEMPERATURE READING	
	F.°	C.°
1	210 TO 218	98.9 TO 103.3

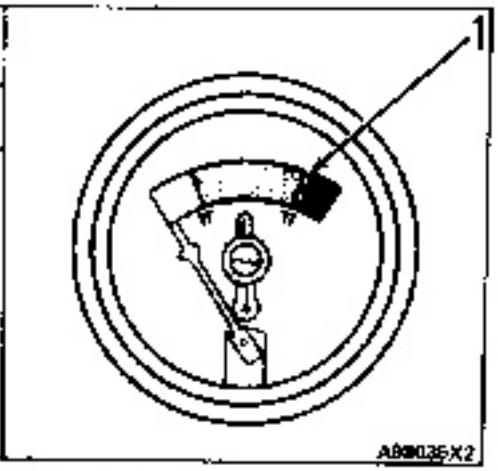

https://barringtondieselclub.co.za/

Water Temperature Gauge (6L2311)

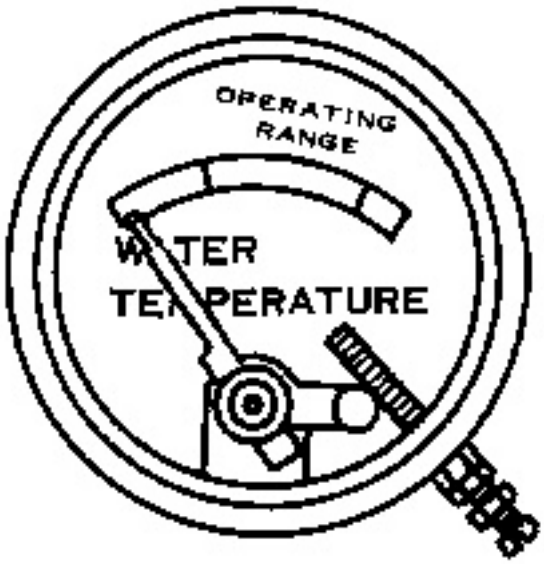

Switch adjustment range ... 100° to 220°F(37 to 104°C)

Temperature for contact setting ... 210°F(99°C)

Gauges For Water Temperature

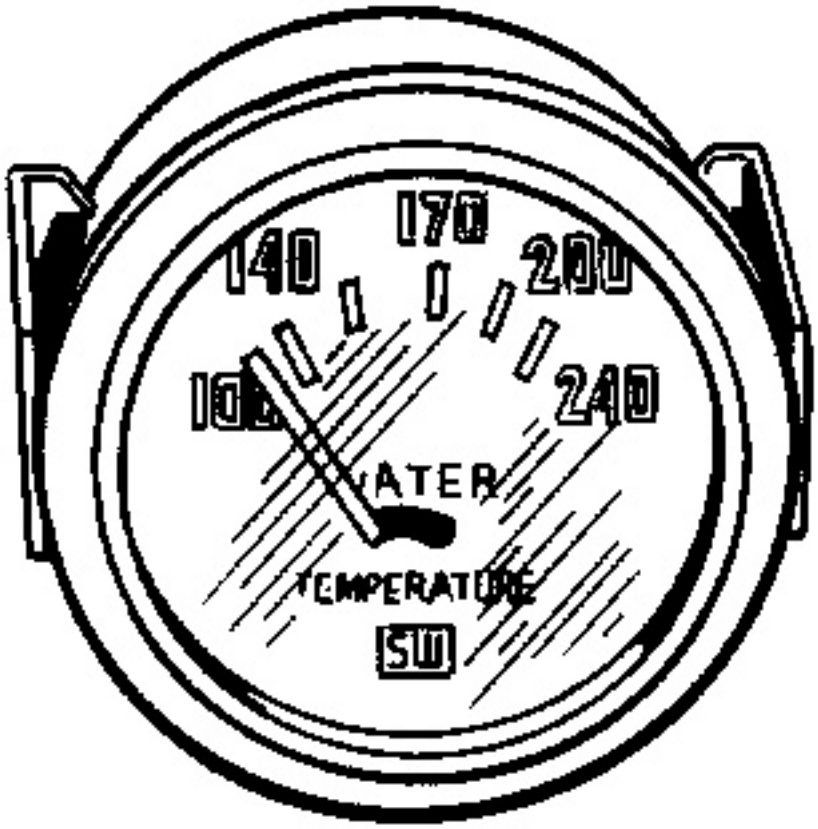

48735X1

5L7446 Gauge 12V; Use with 5L7443 Sending Unit

Range ... 100 to 240° F(38 to 116° C)

Test voltage ... 14V

TEST RESISTANCE (ohms)	349	84	30
POINTER POSITION	100	170	240
TOLERANCE*	± .03 in. (0.8 mm)		

*Measure tolerance from the end of the pointer to the center-line of the mark on the face of the gauge.

5L7444 Gauge 24V**; Use with 5L7442 Sending Unit

Range ... 100 to 240° F(38 to 116° C)

Test voltage ... 28.5 V

TEST RESISTANCE (ohms)	3388	1050	460
POINTER POSITION	100	170	240
TOLERANCE*	± .03 in. (0.8 mm)		

*Measure tolerance from the end of the pointer to the center-line of the mark on the face on the gauge.

**For 32V systems the 5L7441 Resistor (65 ohms) is used with this gauge.

Sending Units For Water Temperature

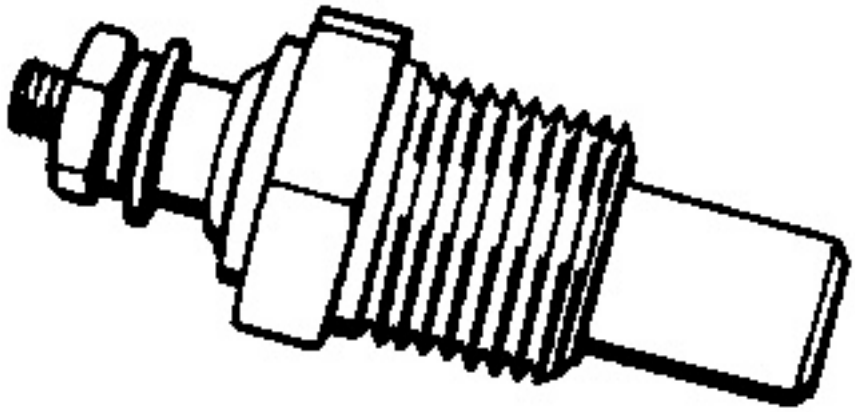

5L7442 Sending Unit

Resistance at:

200° F (93° C) ... 800 to 900 ohms

5L7443 Sending Unit

Resistance at:

100° F (38° C) ... 403 to 493 ohms

160° F (71° C) ... 118 to 138 ohms

220° F (104° C) ... 44 to 49 ohms

Gauges For Engine Oil Pressure

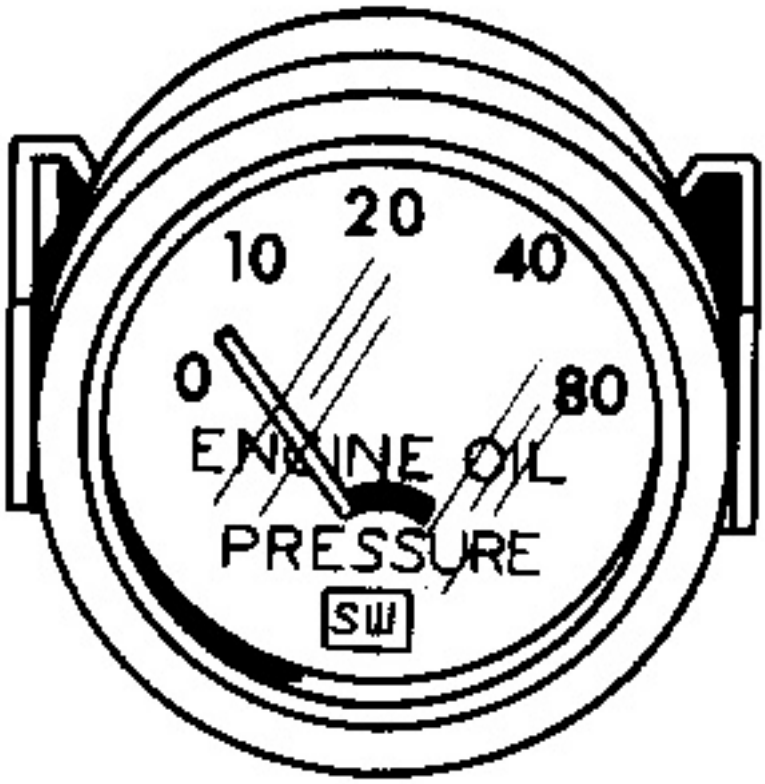

95584X1

5L7455 Gauge 12V; Use with 5L7450 Sending Unit

Range ... 0 to 80 psi(0 to 550 kPa)

Test voltage ... 14V

TEST RESISTANCE (ohms)	0	13.5	30
POINTER POSITION	0	20	80
TOLERANCE*	± .03 in. (0.8 mm)		

*Measure tolerance from the end of the pointer to the centerline of the mark on the face of the gauge.

5L7456 Gauge 24**; Use with 5L7450 Sending Unit

Range ... 0 to 80 psi(0 to 550 kPa)

Test voltage ... 28.5V

TEST RESISTANCE (ohms)	0	13.5	30
POINTER POSITION	0	20	80
TOLERANCE*	± .03 in. (0.8 mm)		

*Measure tolerance from the end of the pointer to the centerline of the mark on the face of the gauge.

**For 32V systems the 5L7441 Resistor (65 ohms) is used with this gauge.

Sending Units For Oil Pressure

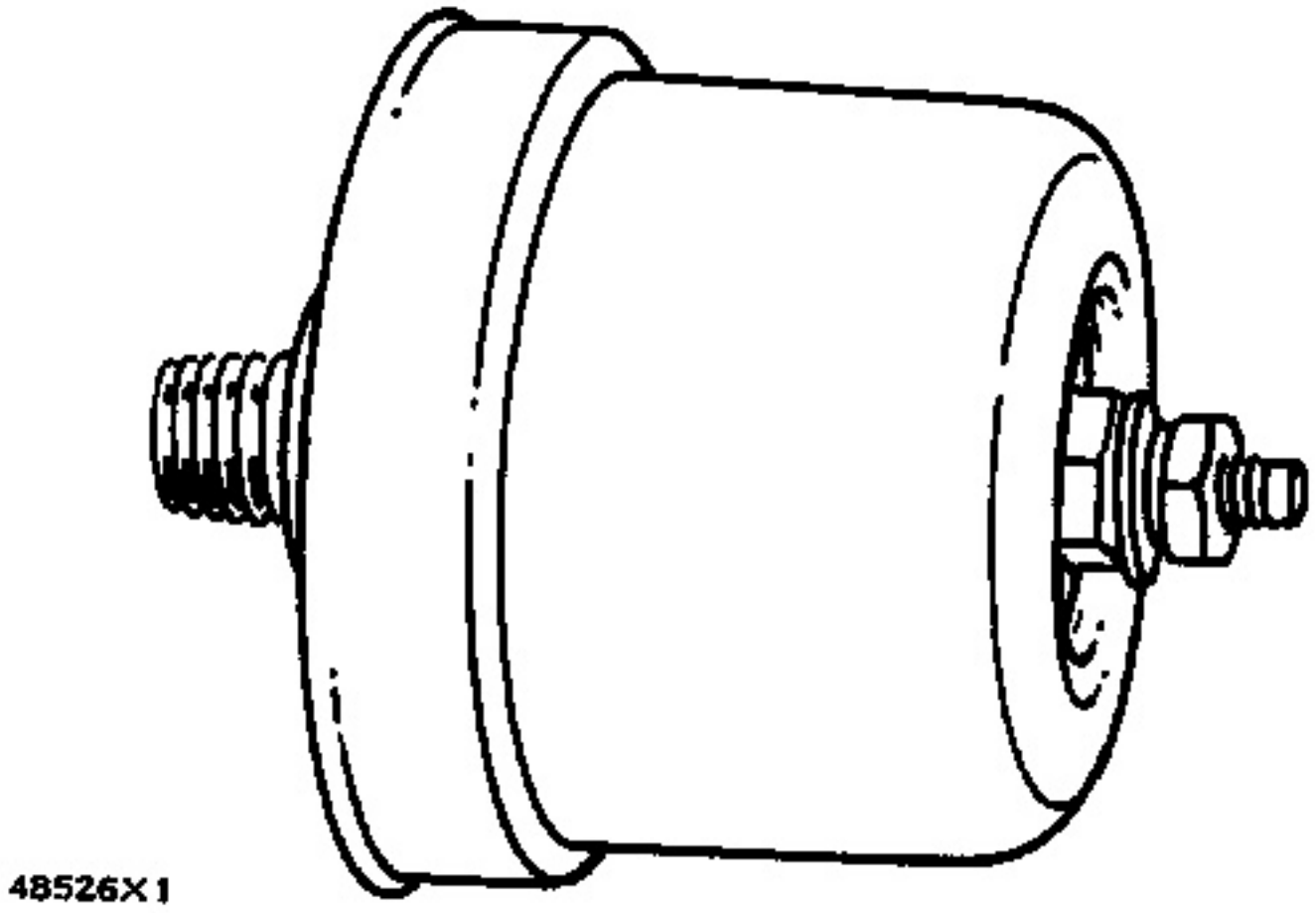

5L7450 Sending Unit 12V, 24V or 32V systems

Resistance at:

0 psi (0 kPa) ... 0 ohms

20 psi (140 kPa) ... 13.5 ohms

80 psi (550 kPa) ... 30 ohms

Mechanical Gauges For Oil Pressure

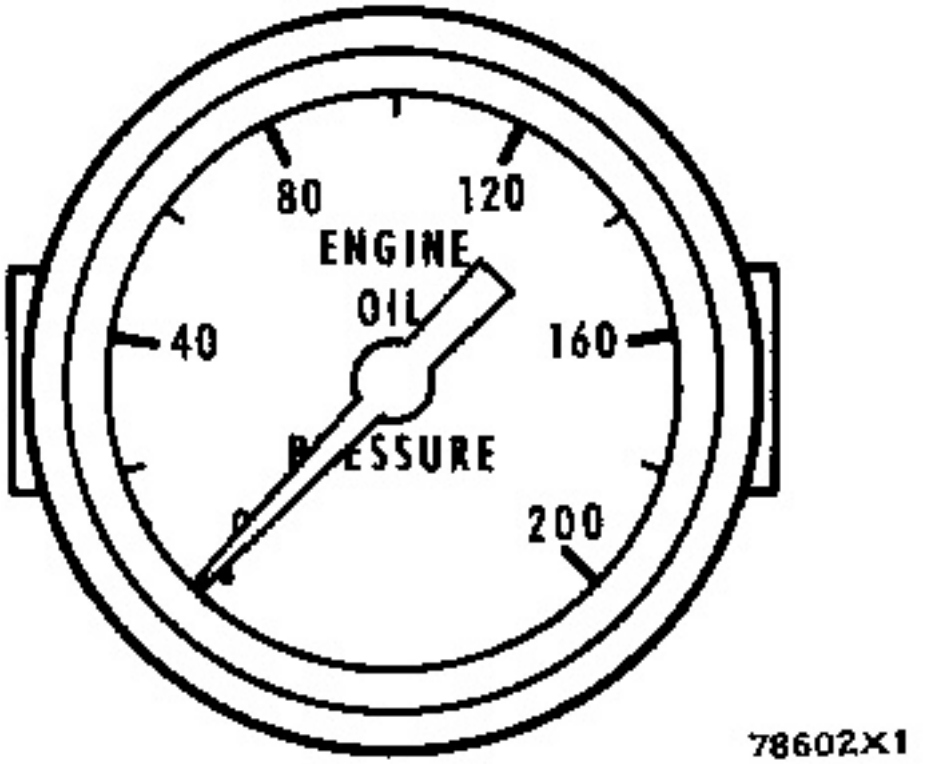

5L9897, 5L9889, 8L3504, 4N3405, 4N3565 and 3R874 Direct Reading Gauges for Engine Oil Pressure and Gear Oil Pressure:

Direct reading gauges must show the same pressure as on the gauge of the test equipment.

3H2906, 5M1065 and 2N2414 Gauges with Color Codes

POINTER POSITION	TEST GAUGE PRESSURE READING	
	psi	kPa
1	10±1	70±7
2	20±1	140±7

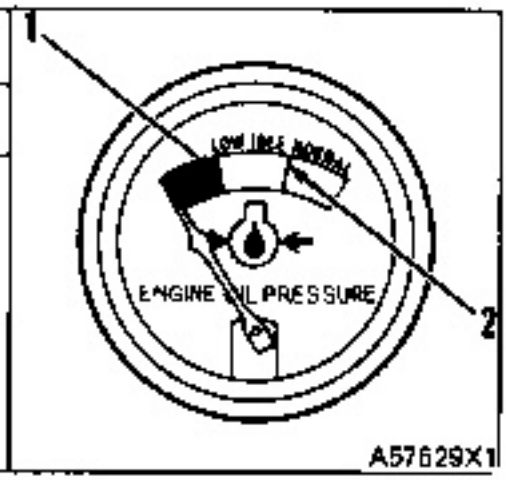

POINTER POSITION	TEST GAUGE PRESSURE READING	
	psi	kPa
1	5 ± 1	35 ± 7

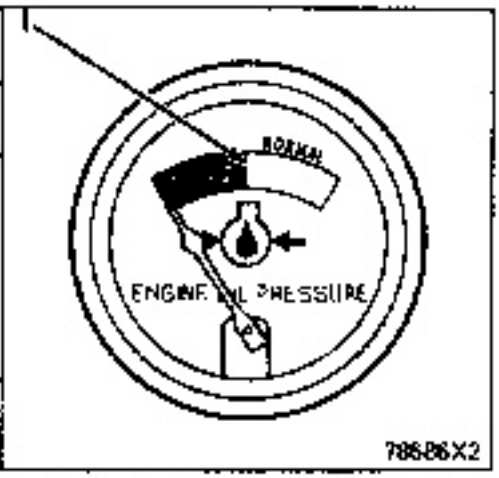

https://barringtondieselclub.co.za/

Oil Pressure Gauge (6L2310)



Switch adjustment range ... 0 to 75 psi(0 to 520 kPa)

Pressure for contact setting ... 8 psi(55 kPa)

Pressure for lockout setting ... 15 psi(105 kPa)

Gauges For Gear Oil Pressure

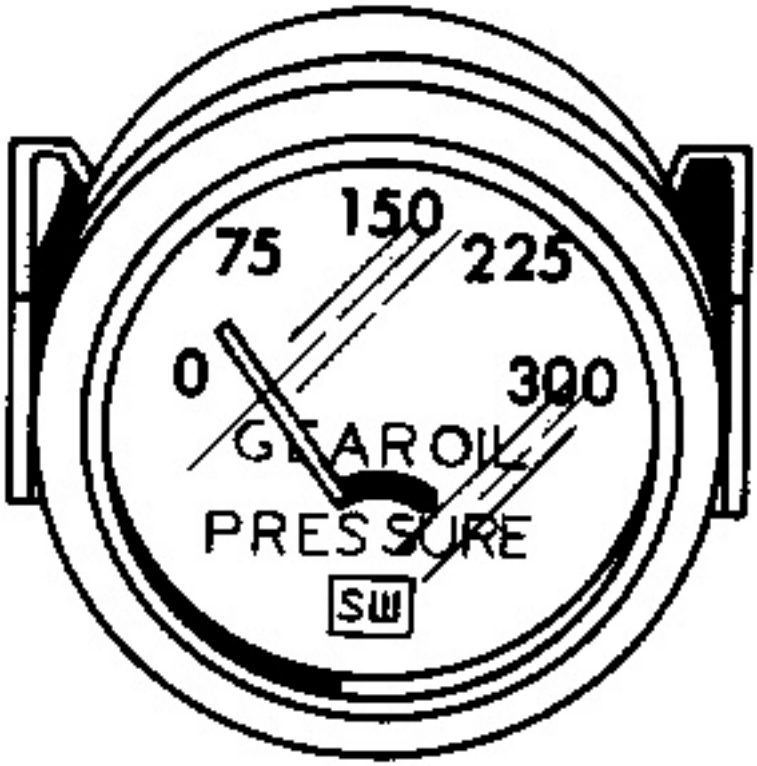

95583X1

5L7454 Gauge 12V; Use with 5L7449 Sending Unit

Range ... 0 to 300 psi(0 to 2050 kPa)

Test voltage ... 14V

TEST RESISTANCE (ohms)	0	15	30
POINTER POSITION	0	150	300
TOLERANCE*	± .03 in. (0.8 mm)		

*Measure tolerance from the end of the pointer to the centerline of the mark on the face of the gauge.

5L7451 Gauge 24**; Use with 5L7449 Sending Unit

Range ... 0 to 300 psi(0 to 2050 kPa)

Test voltage ... 28.5V

TEST RESISTANCE (ohms)	0	15	30
POINTER POSITION	0	150	300
TOLERANCE*	± .03 in. (0.8 mm)		

*Measure tolerance from the end of the pointer to the centerline of the mark on the face of the gauge.

**For 32V systems the 5L7441 Resistor (65 ohms) is used with this gauge.

Sending Unit For Gear Oil Pressure

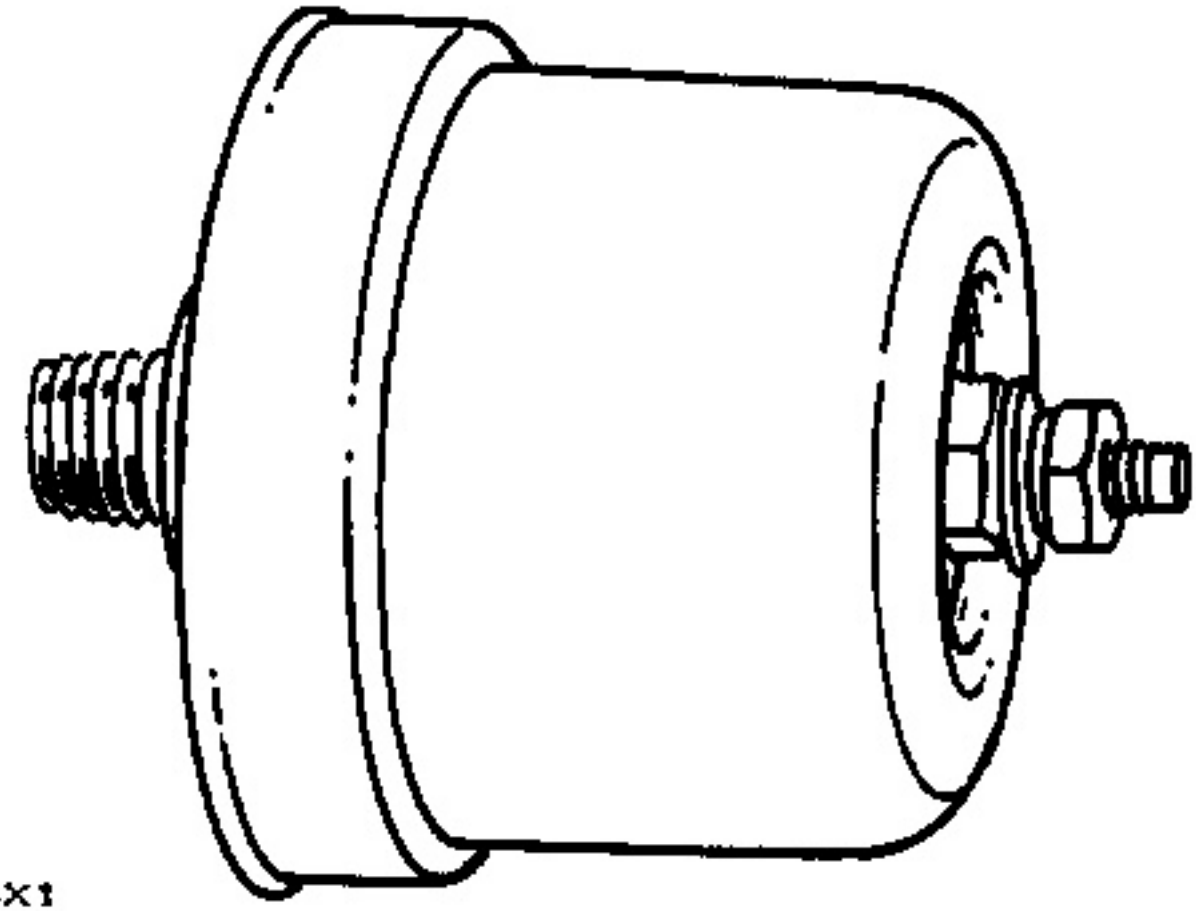

5L7449 Sending Unit 12V, 24V or 32V system

Resistance at:

0 psi (0 kPa) ... 0 to 1 ohm

60 psi (415 kPa) ... 4.5 to 6.5 ohms

300 psi (2050 kPa) ... 28 to 31 ohms

5L7441 Resistor (For Use With 32V Systems)

Approximate resistance ... 65 ohms

Pressure Switches (5L5500)

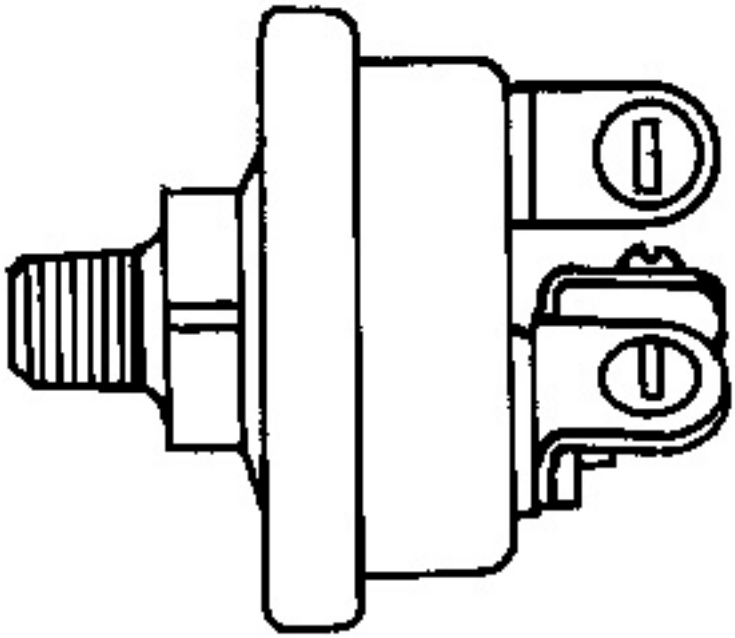

78589X1

5L5500 Switch

With an increase in pressure, switch closes at ... 12 psi(85 kPa)

With a decrease in pressure, switch opens at ... 10 psi(70 kPa)

Pressure Switches (2L3402 And 3L6306)

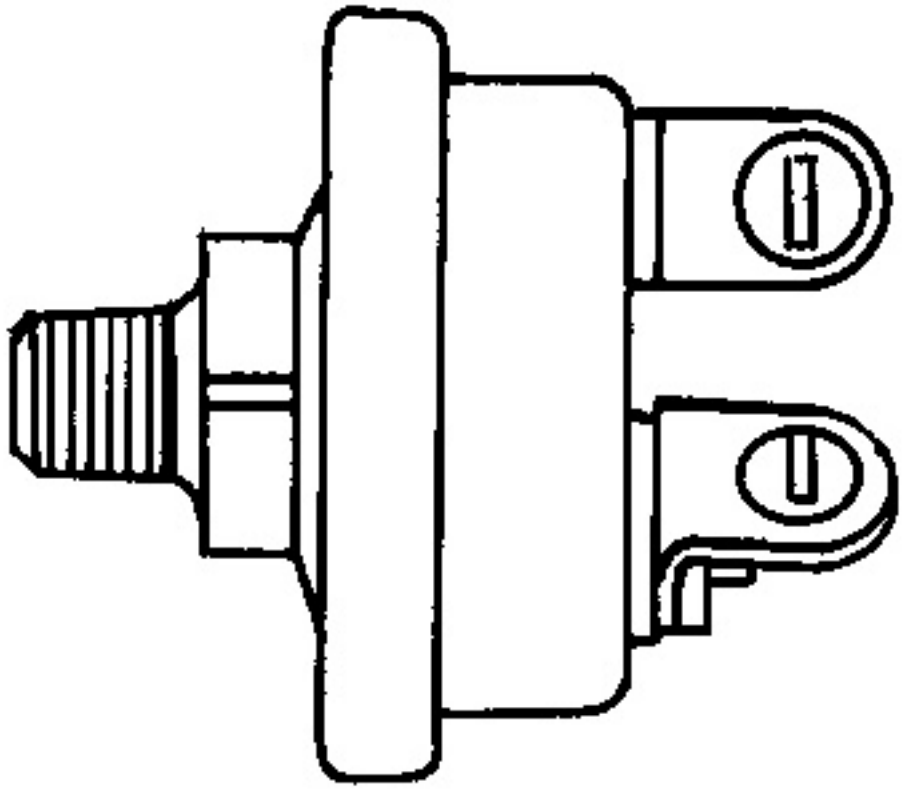

2L3402 Switch

With an increase in pressure, switch closes at ... 3 to 4 psi(20 to 25 kPa)

3L6306 Switch

With a decrease in pressure, switch closes at ... 8 ± 2 psi(55 ± 14 kPa)

Pressure Switches (2N7744 And 4N4696)

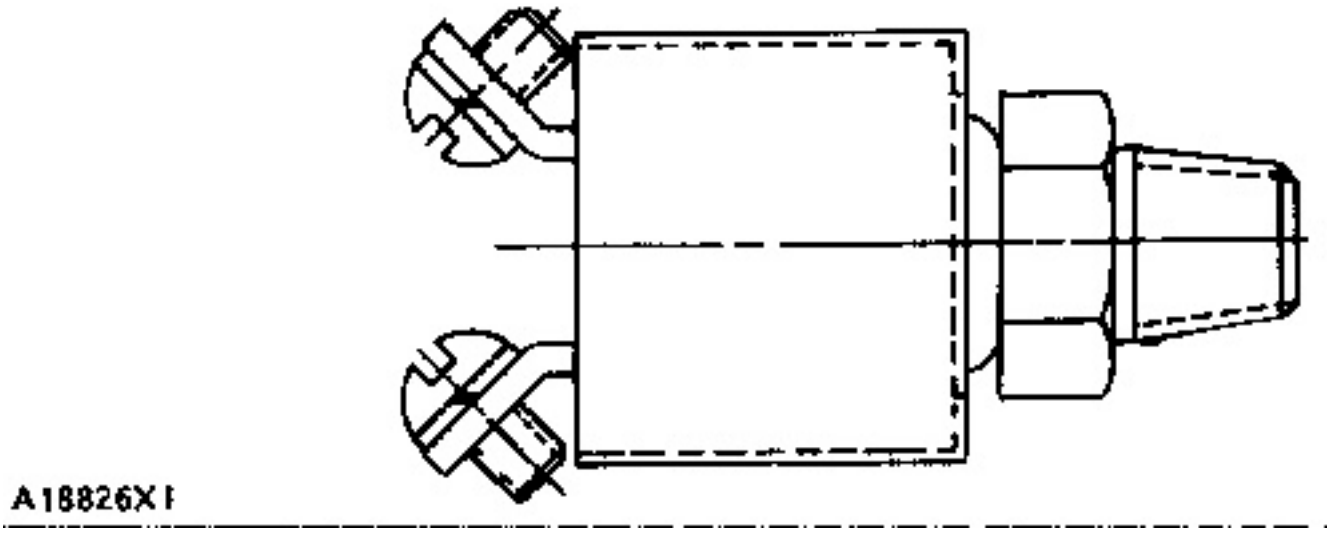

2N7744 ILLUSTRATED

2N7744 Switch

Test switch at a temperature of ... 77° F(25° C)

With an increase in pressure, switch closes at ... 6.4 ± 2.7 psi(44 ± 19 kPa)

With a decrease in pressure, switch opens at ... 3.9 ± 3.3 psi(27 ± 23 kPa)

4N4696 Switch

Test switch at a temperature of ... 77° F(25° C)

With an increase in pressure, switch closes at ... 6.1 ± 4.3 psi(41 ± 29 kPa)

With a decrease in pressure, switch opens at ... 3.2 ± 1.5 psi(22 ± 10 kPa)

Oil Pressure Switch

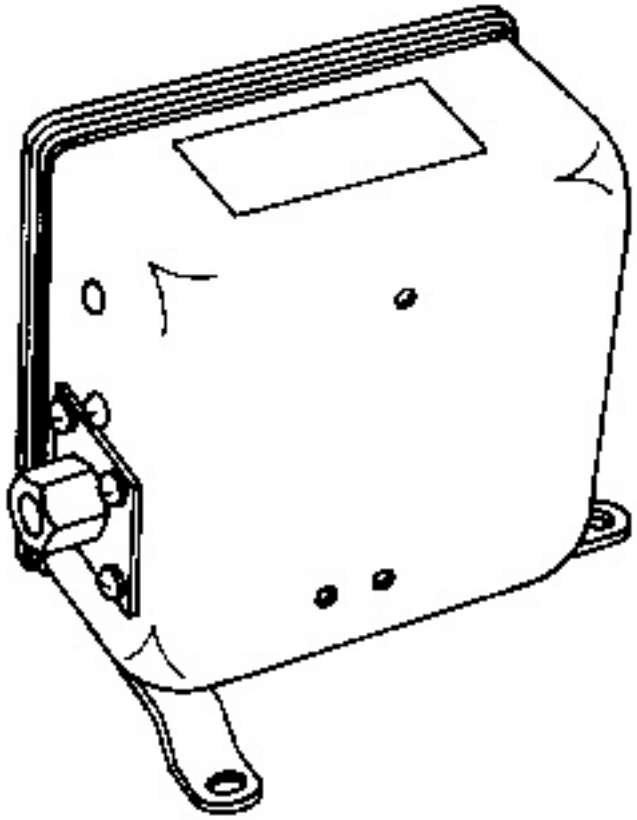

2N6955 Switch

With an increase of pressure, switch operates at ... 10 to 14 psi(70 to 95 kPa)

With a decrease of pressure, switch operates at ... 8 to 10 psi(55 to 70 kPa)

2N7124 Switch

With an increase of pressure, switch operates at ... 22 to 24 psi(150 to 165 kPa)

With a decrease of pressure, switch operates at ... 10 to 11 psi(70 to 75 kPa)

3N7443 Switch

With an increase of pressure, switch operates at ... 19 to 21 psi(130 to 145 kPa)

With a decrease of pressure, switch operates at ... 15 to 16 psi(105 to 110 kPa)

Oil Pressure Switch (Time Delay)

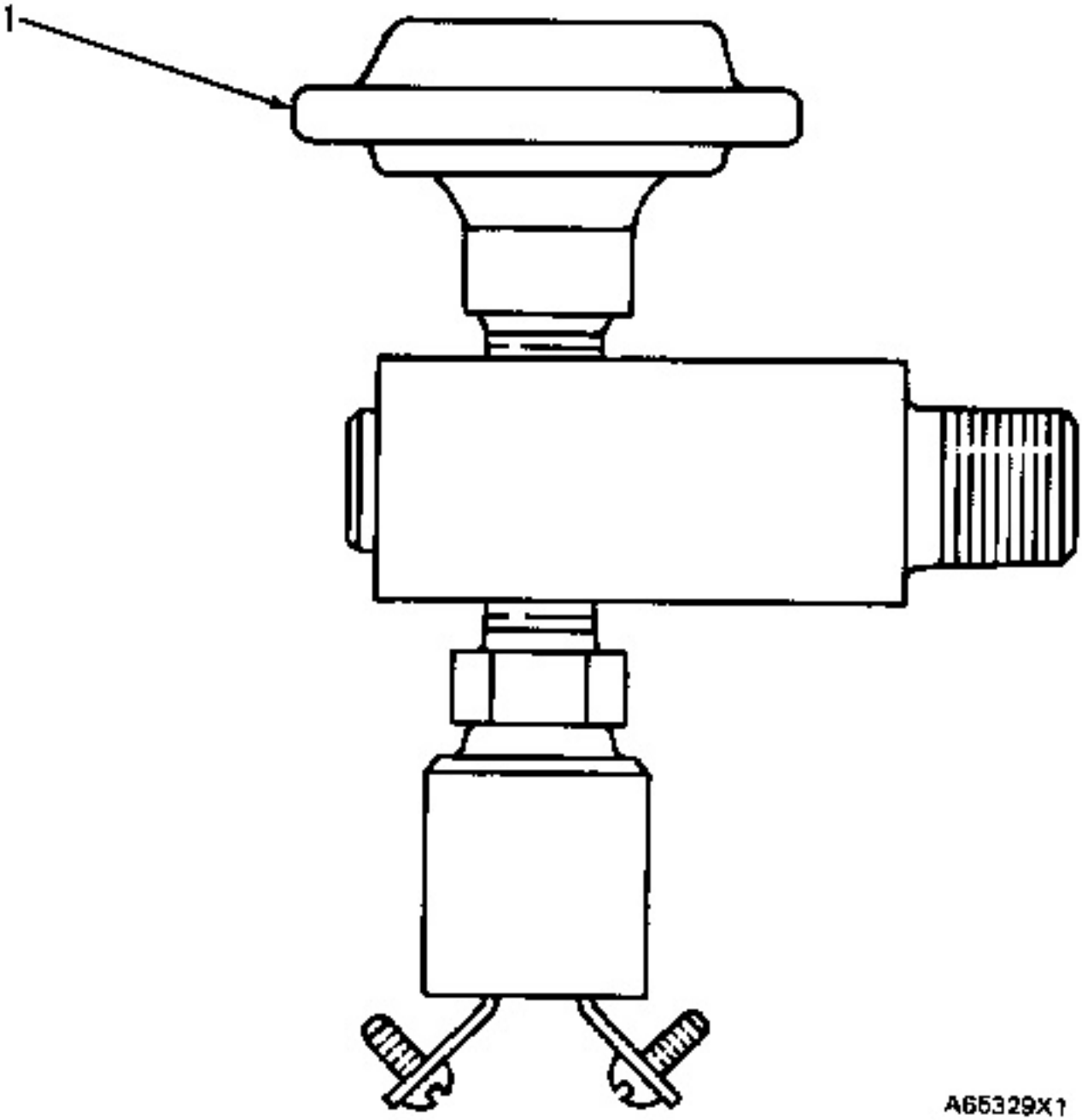

5N3014 (Control Power Products Number DCV-013-2-1)

(1) Damper.

Install the switch with the damper up. Use SAE 10 oil at 70° F (21° C) to check switch.

Procedure:

1. Increase oil pressure to 15 ± 1 psi (105 ± 7 kPa), switch must close within one second.

2. Decrease oil pressure to 8 + 0 - 1 psi (55 + 0 - 7 kPa), hold at this level for five minutes.

3. Decrease oil pressure rapidly to 0 psi (0 kPa), switch must keep closed for a minimum of 30 seconds and a maximum of 15 minutes.

Water Temperature Switches (5L6435 And 3N7529)

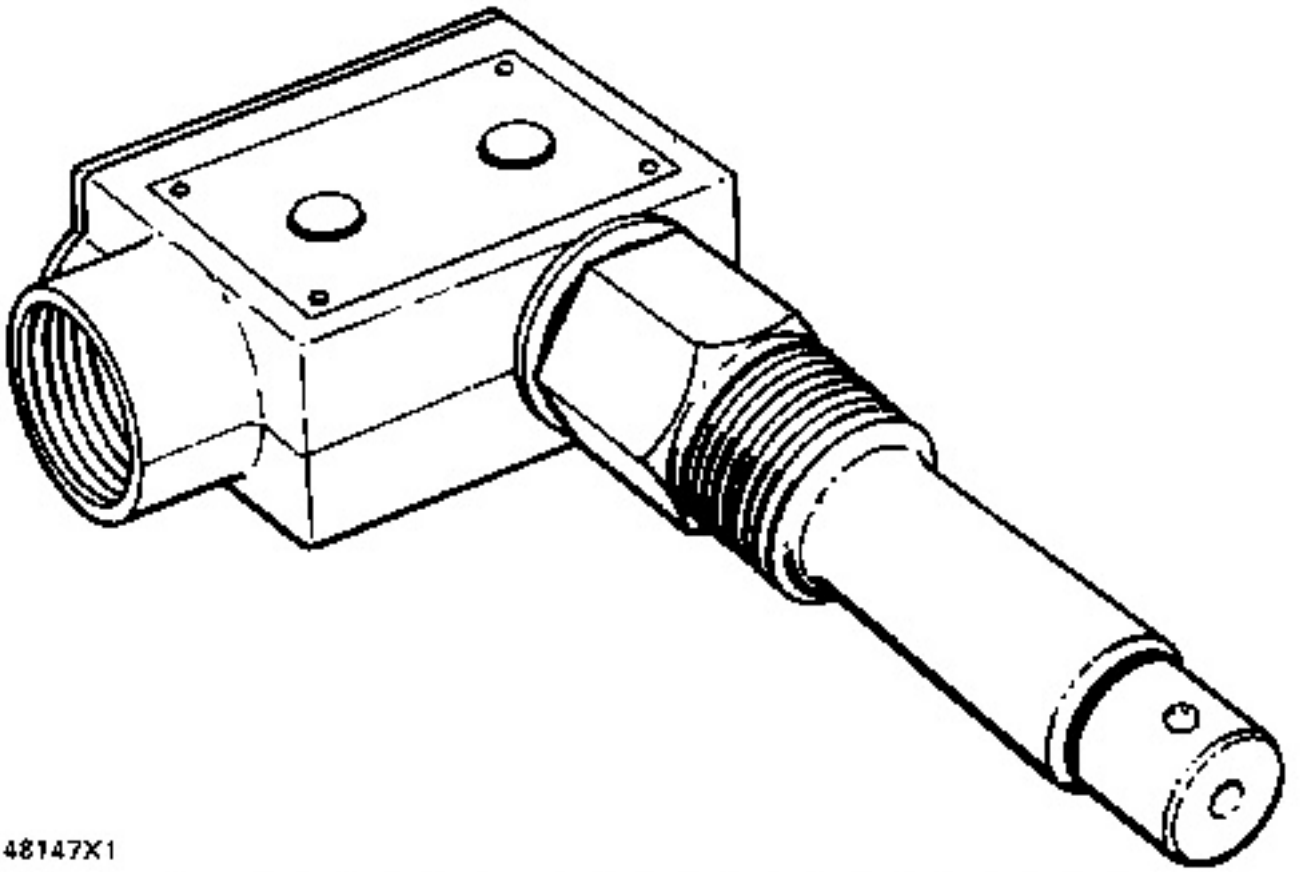

5L6435 (Robert Shaw-Fulton Number 99168-D2)

Switch operates when the temperature increases to ... 209° ± 1°F(90° ± 1°C)

3N7529 (Texas Instruments Number 21545)

With an increase of temperature, switch must close between ... 194° and 200°F(90° and 95°C)

With a decrease of temperature, switch must open at the temperature at which it closed minus ... 5°F (3°C)

Water Temperature Switches (3N7442)

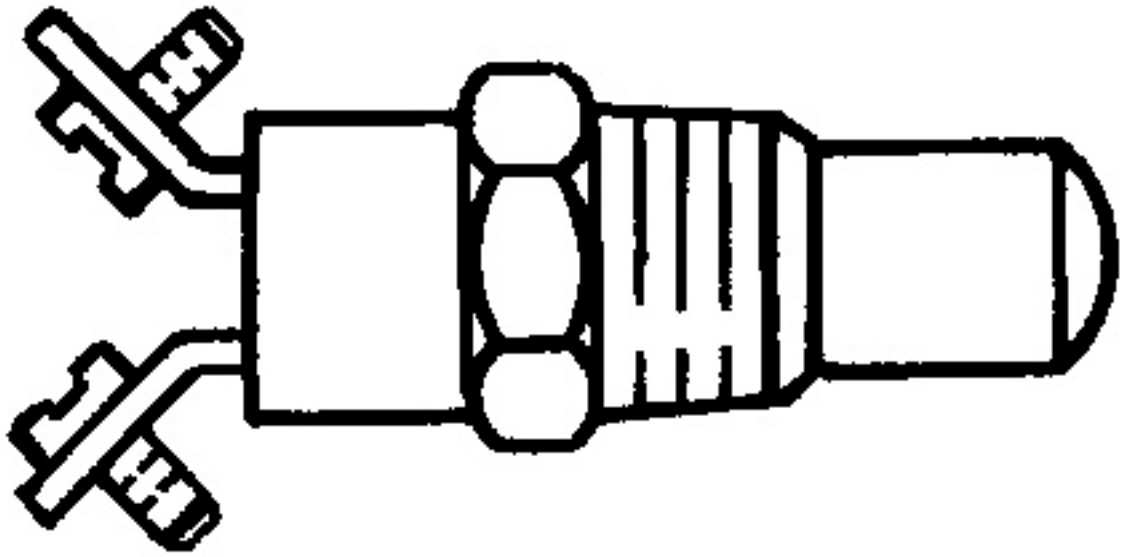

A65332X1

3N7442 Low Water Temperature Switch

Switch must open between ... 75° and 84°F(24° and 29°C)

Switch must close between ... 64° and 75°F(18° and 24°C)

Water Temperature Shutoff Valve (4L7108)

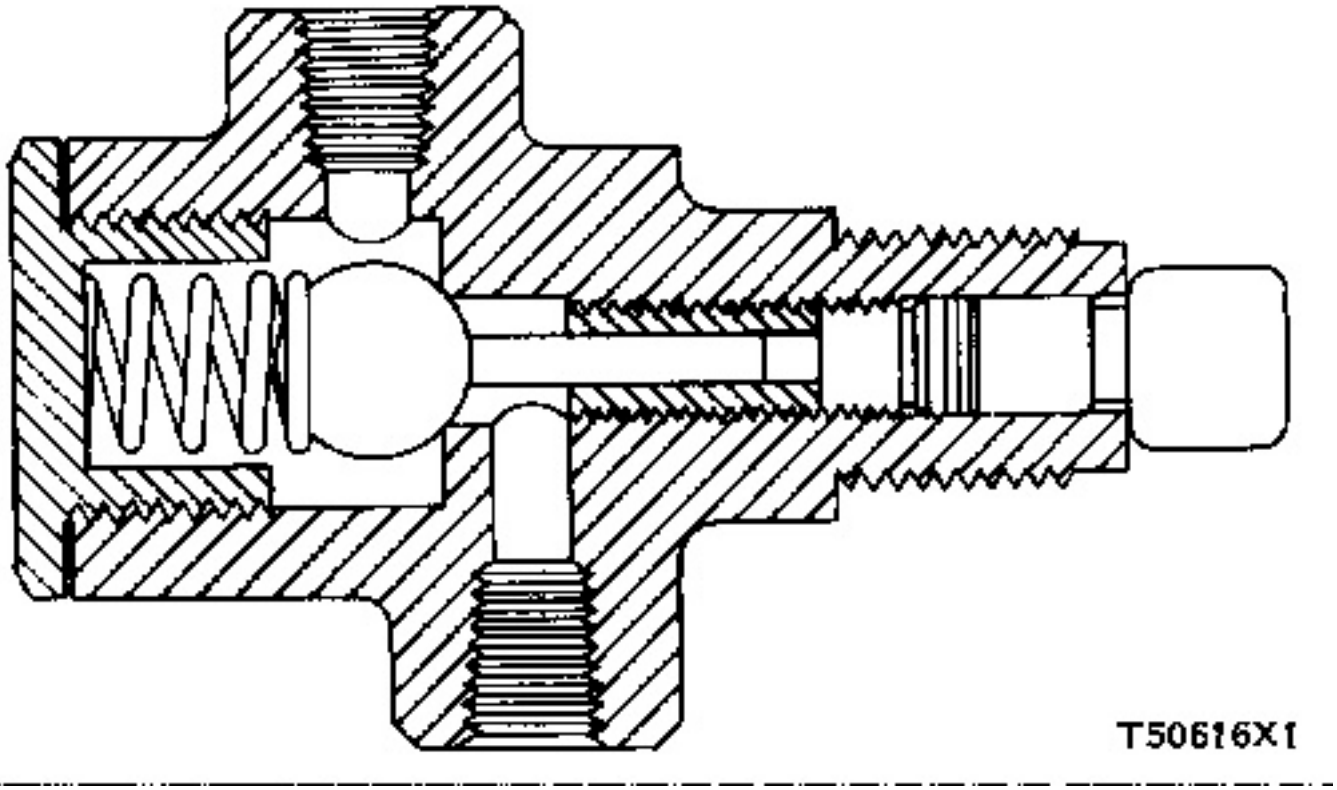

Temperature at which valve opens ... 210° ± 3°F(99° ± 2°C)

Oil Pressure Switch

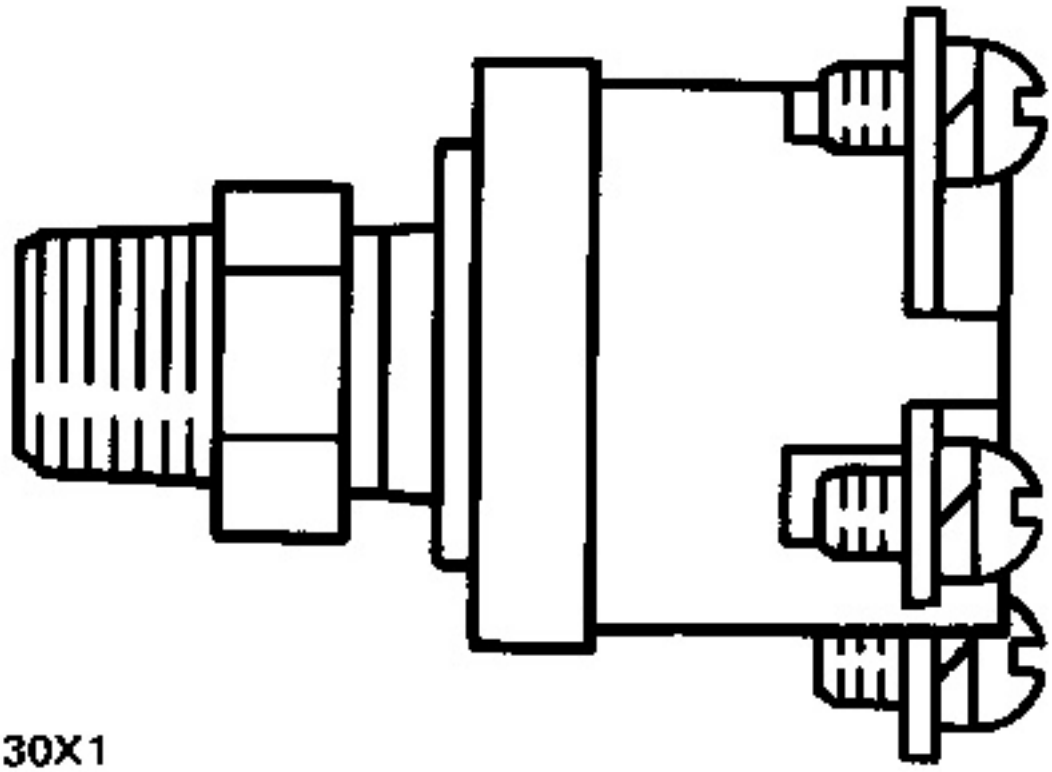

7N5946 or 3N9598 (Metals and Controls Number 25P514-1)

Switch operates when the pressure increases to ... 21 psi(145 kPa)

Switch operates when the pressure decreases to ... 11 ± 3 psi(75 ± 20 kPa)

Circuit Breaker

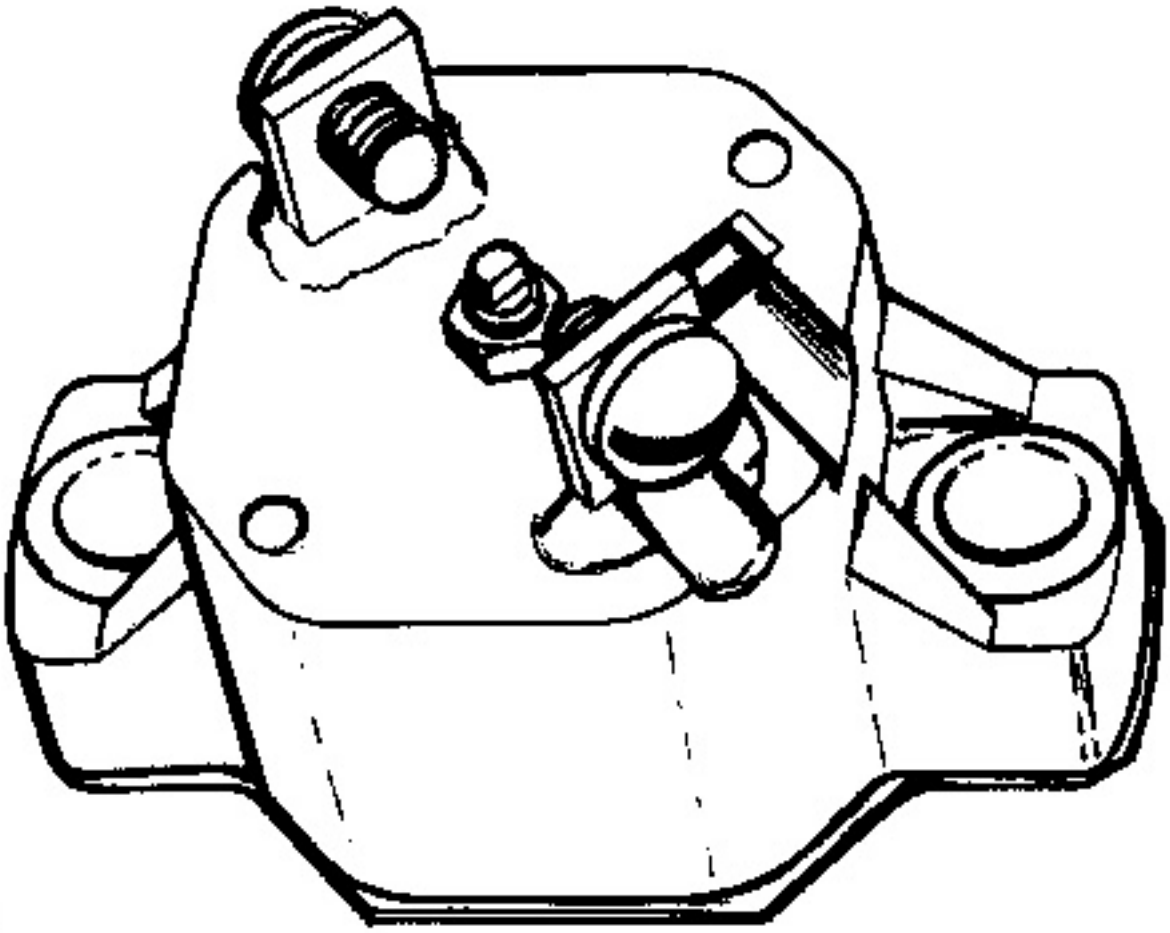

1N9770

Current ... 12.5 A

Overspeed Contactor Group

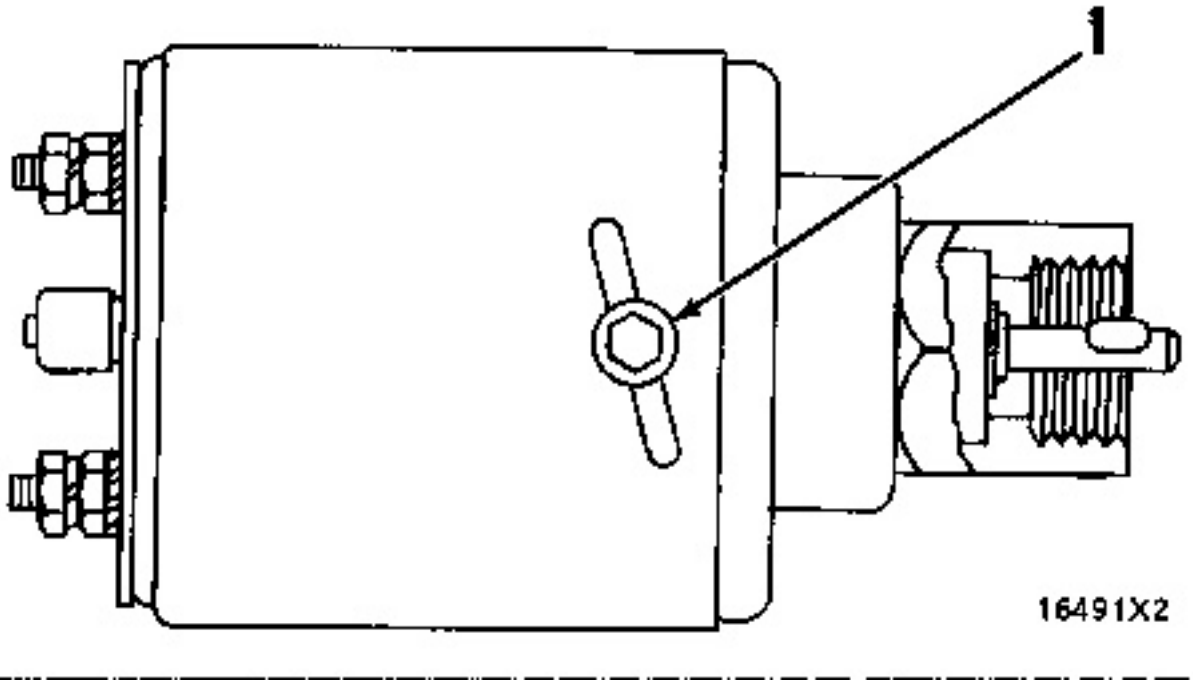

3N4026

(1) Lockscrew. To adjust, loosen the lockscrews and turn the cap clockwise (as seen from the terminal end) to lower the overspeed setting.

If the full load rpm of the engine is 1500 the contacts must close at:

On engine ... 1770 ± 25 rpm

On bench ... 885 ± 10 rpm

If the full load rpm of the engine is 1800 the contacts must close at:

On engine ... 2124 ± 25 rpm

On bench ... 1065 ± 10 rpm

Magnetic Pickup

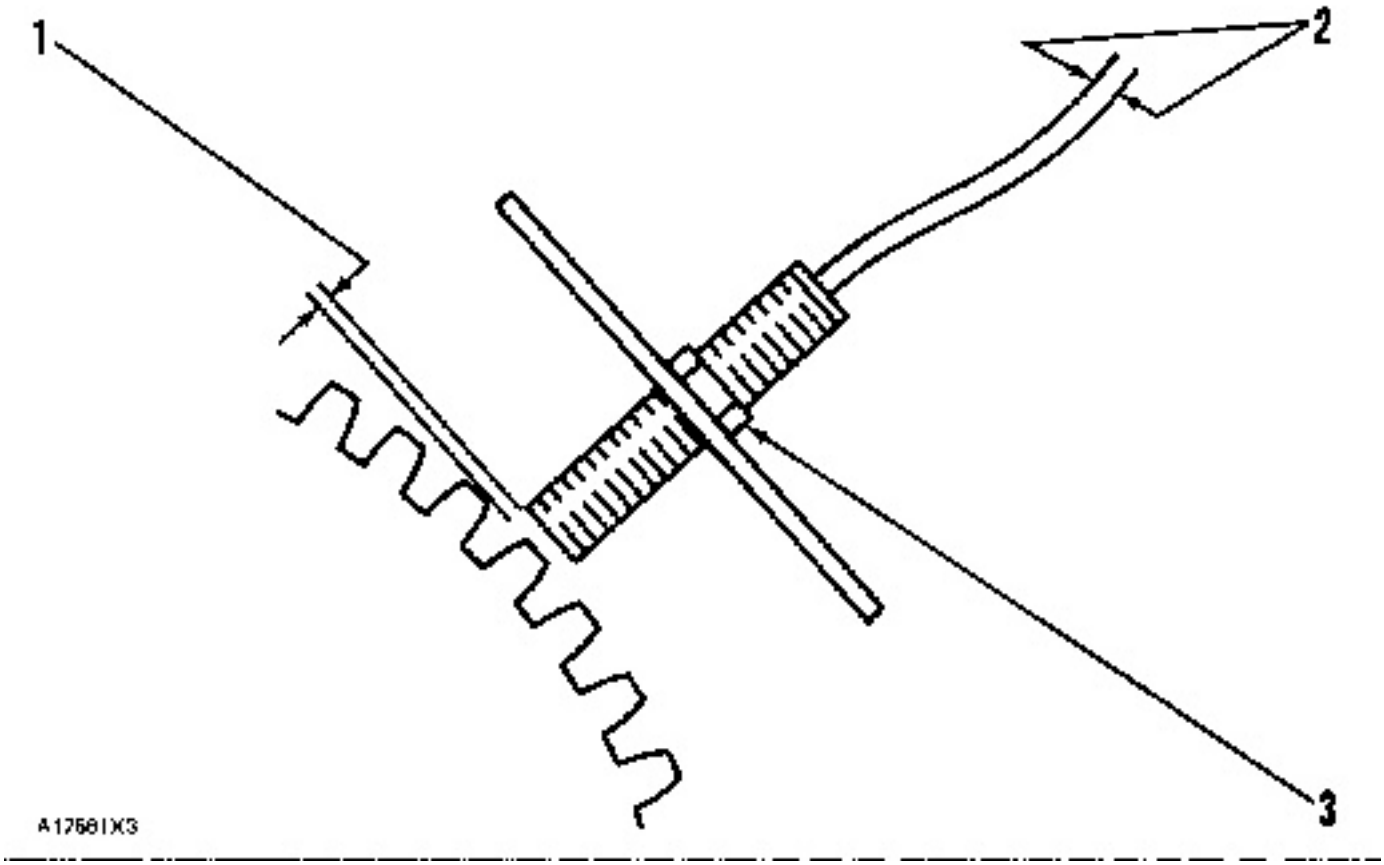

(1) Clearance between flywheel gear tooth and end of magnetic pickup when installed ... .022 to .033 in.(0.56 to 0.84 mm)

Turn the magnetic pickup in until it has contact with the flywheel, then turn it out 1/2 turn. This gives approximately the correct clearance.

(2) With the wires from the magnetic pickup disconnected from the electronic speed switch and the engine running at 1500 rpm, the minimum voltage between the wires from the magnetic pickup is ... 10 V AC

(2) With the wires from the magnetic pickup disconnected from the electronic speed switch and the engine stopped, the correct resistance between the wires is ... 180 to 220 ohms

(3) Torque for lock nut ... 50 ± 10 lb. ft.(70 ± 14 N·m)

Electronic Speed Switch (3N7874 and 3N9595)

The normal overspeed setting for the electronic speed switch is 18% above full load speed.

For setting and checking, install a temporary jumper wire between terminal 1 (VERIFY) and terminal 2 (SHLD). This makes the electronic overspeed switch activate. Later switches have a push button to check the setting.

SPEED SWITCH ADJUSTMENT

FULL LOAD RPM	18% OVERSPEED SETTING RPM	OVERSPEED TEST RPM 25% SPEED SWITCH	OVERSPEED TEST RPM 75% SPEED SWITCH	CRANKING *RPM SETTING—3N9595 SPEED SWITCH ONLY
1000	1180	295	885	600
1100	1298	324	974	600
1200	1416	354	1062	600
1300	1534	384	1151	600
1400	1652	413	1239	600
1500	1770	443	1328	600
1600	1888	472	1416	600
1700	2006	502	1505	600
1800	2124	531	1593	600
1900	2242	561	1682	600
2000	2360	590	1770	600
2100	2478	620	1859	600
2200	2596	649	1947	600
2300	2714	679	2036	600
2400	2832	708	2124	600

*CRANKING RPM SETTING IS THE SPEED AT WHICH THE STARTING MOTOR PINION WILL DISENGAGE FROM THE FLYWHEEL.

Enclosed Clutches Rear Clutch (2N7078, 2N6961)

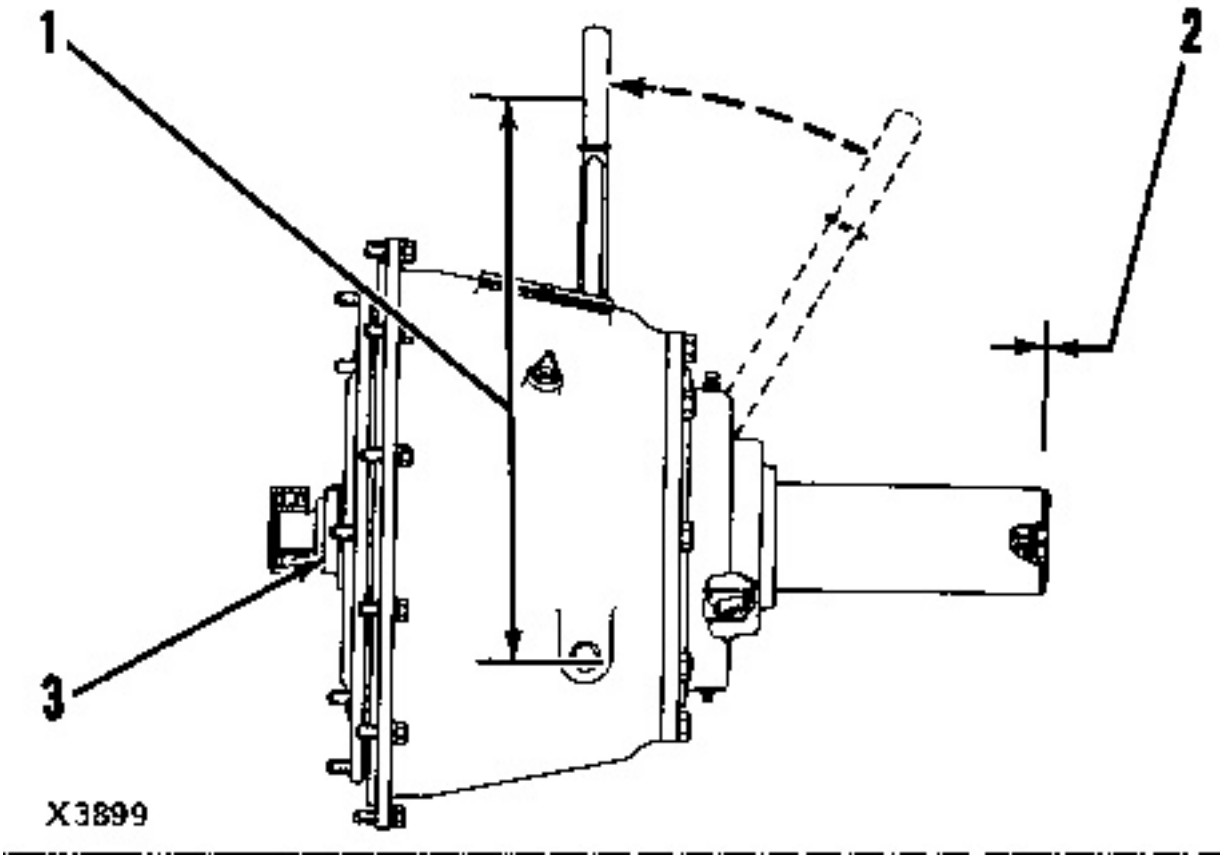

After clutch installation check crankshaft end play.

Thickness of new clutch plate (each) ... .620 to .630 in.(15.75 to 16.00 mm)

(1) Adjustment of clutch lever pull:

2N7078, 2N6961

Force at 21.3 in. (541 mm) distance from center of shaft ... 123 to 163 lbs.(545 to 725 N)

*Torque on shaft for engagement ... 262.5 lb. ft.(355 N·m)

(2) End clearance ... .006 to .010 in.(0.15 to 0.25 mm)

(3) Torque for nut ... 30 lb. ft.(40 N·m)

Then tighten additional ... 150° to 180°

---

*For determining remote control equipment.

Front Power Take-Off (1N7309, 2F8223)

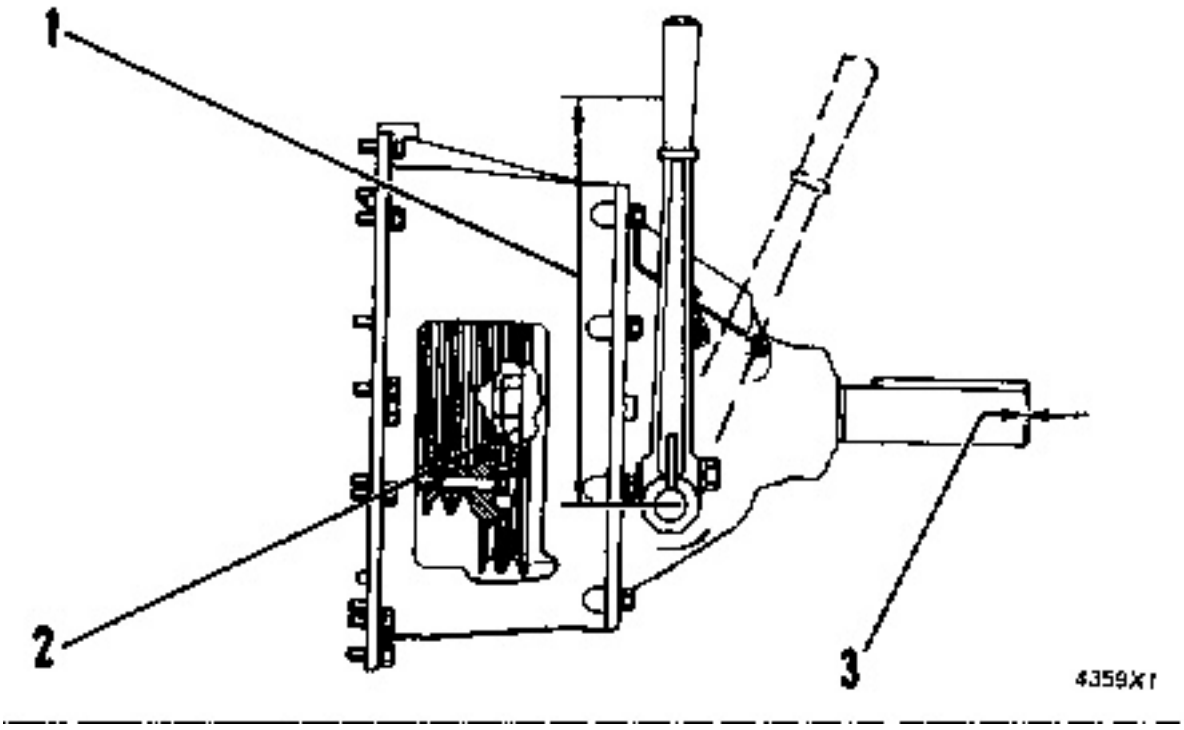

After installation of power take-off check crankshaft end play.

Torque for bolt holding hub ... 210 to 250 lb. ft.(280 to 340 N·m)

Hit with hammer and again tighten to ... 210 to 250 lb. ft.(280 to 340 N·m)

Thickness of new clutch plate ... .44 in.(11.18 mm)

(1) Clutch lever pull adjustment:

Force at 13.6 in. (345.4 mm) distance from center of shaft ... 63 to 83 lbs.(280 to 370 N)

*Torque on shaft for engagement ... 86 lb. ft.(115 N·m)

(2) Torque for nut ... 30 lb. ft.(40 N·m)

Then tighten additional ... 60° to 90°

(3) End clearance ... .004 to .007 in.(0.10 to 0.18 mm)

---

*For determining remote control equipment.

4L6553 Coupling Group (For Generator Drive)

Procedure to Find the Correct Thickness of Shims:

1. Push engine crankshaft to the farthest position toward the front of the engine.

2. Measure dimension from face of flywheel housing to face of flywheel where the 2N7026 Plate Assembly fits.

3. Measure thickness of 2N7026 Plate Assembly.

4. Add 1.257 in. (31.93 mm) to thickness of 2N7026 Plate Assembly.

5. Subtract the dimension found in Step 4 from the dimension from Step 2. This is the correct thickness of shims to install.

(Step 2 minus Step 4 = Thickness of shims)

NOTE: The tolerance for the thickness of shims to install is ... ± .015 in.(0.38 mm)

6L3916 Coupling Group (For Generator Drive)

Procedure to Find the Correct Thickness of Shims.

1. Push engine crankshaft to the farthest position toward the front of the engine.

2. Measure dimension from face of flywheel housing to face of flywheel where the 2N7025 Plate Assembly fits.

3. Measure thickness of 2N7025 Plate Assembly.

4. Add .6562 in. (15.880 mm) to thickness of 2N7025 Plate Assembly.

5. Subtract the dimension found in Step 4 from the dimension from Step 2. This is the correct thickness of shims to install.

(Step 2 minus Step 4 = Thickness of shims)

NOTE: The tolerance for the thickness of shims to install is ... ± .015 in.(0.38 mm)

Auxiliary Drive Group

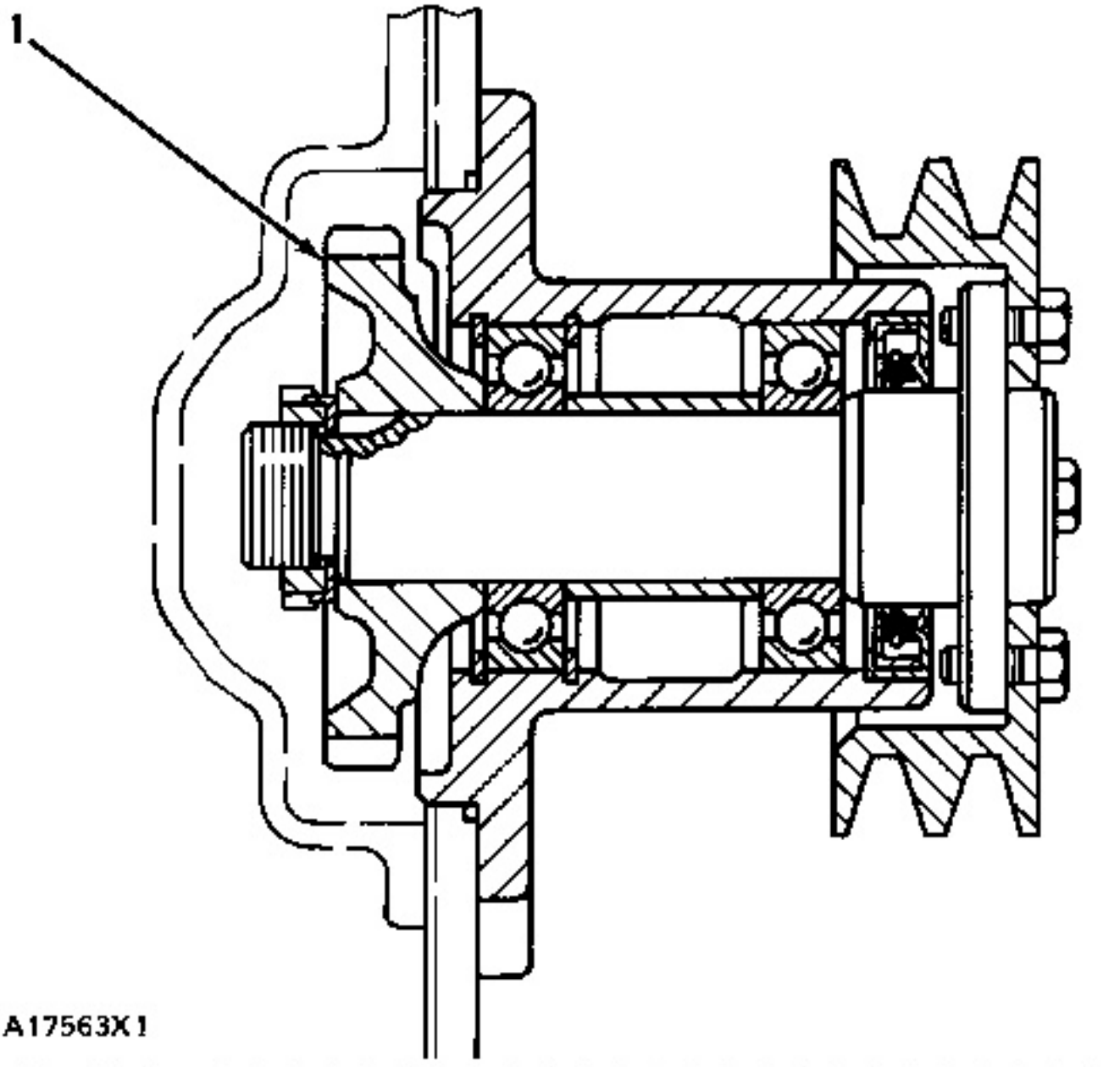

Maximum temperature to heat gear (1) for installation on the shaft ... 400°F (204°C)

CATERPILLAR®

SEBR0539-00



Attachments Systems Operation

3304 & 3306 INDUSTRIAL & MARINE ENGINES

http://engine.od.ua

Attachment Systems Operation

Glossary

arcing
: a discharge of electricity across a gap

acceleration
: rate at which speed increases

bus
: an electrical conductor

compare
: look at for differences

cranking
: rotation of the engine by the starter motor

circuit
: connected electric components

deactivate
: stop a function

deceleration
: rate at which speed decreases

de-energized
: power off

energized
: power on

failsafe
: circuit that gives protection

hertz
: cycles per second

hunt
: speed changes

hydra-mechanical
: hydraulically controlled mechanical action

inversely
: the opposite of directly

isochronous
: desired engine speed does not change because of a change in load

jumper
: electrical connection

kilowatt
: measure of electric power

overspeed
: engine speed higher than rated speed

override
: cause normal electrical signals to be canceled

nonparallel
: single

paralleled
: electrically connected together to drive a common load

paralleling
: all positive poles are connected to one conducter and all negative poles are connected to another conductor

proportion
: a ratio

proportional
: two factors that have a constant ratio

potentiometer
: electric component that has variable resistance

ramp
: circuit that controls movement from one level to another

response
: time and stability characteristic of a change in output

sensing phasing
: measurement and comparison of output with other units in the system

short
: any connection between two or more electrical components that is not desired

shielding
: steel braid for protection of a wire

sharing
: two or more engines used to drive a common load

speed droop
: no load engine rpm minus full load rpm

standby
: ready for use during an emergency

transfer
: change from one to another

Woodward PSG Governors

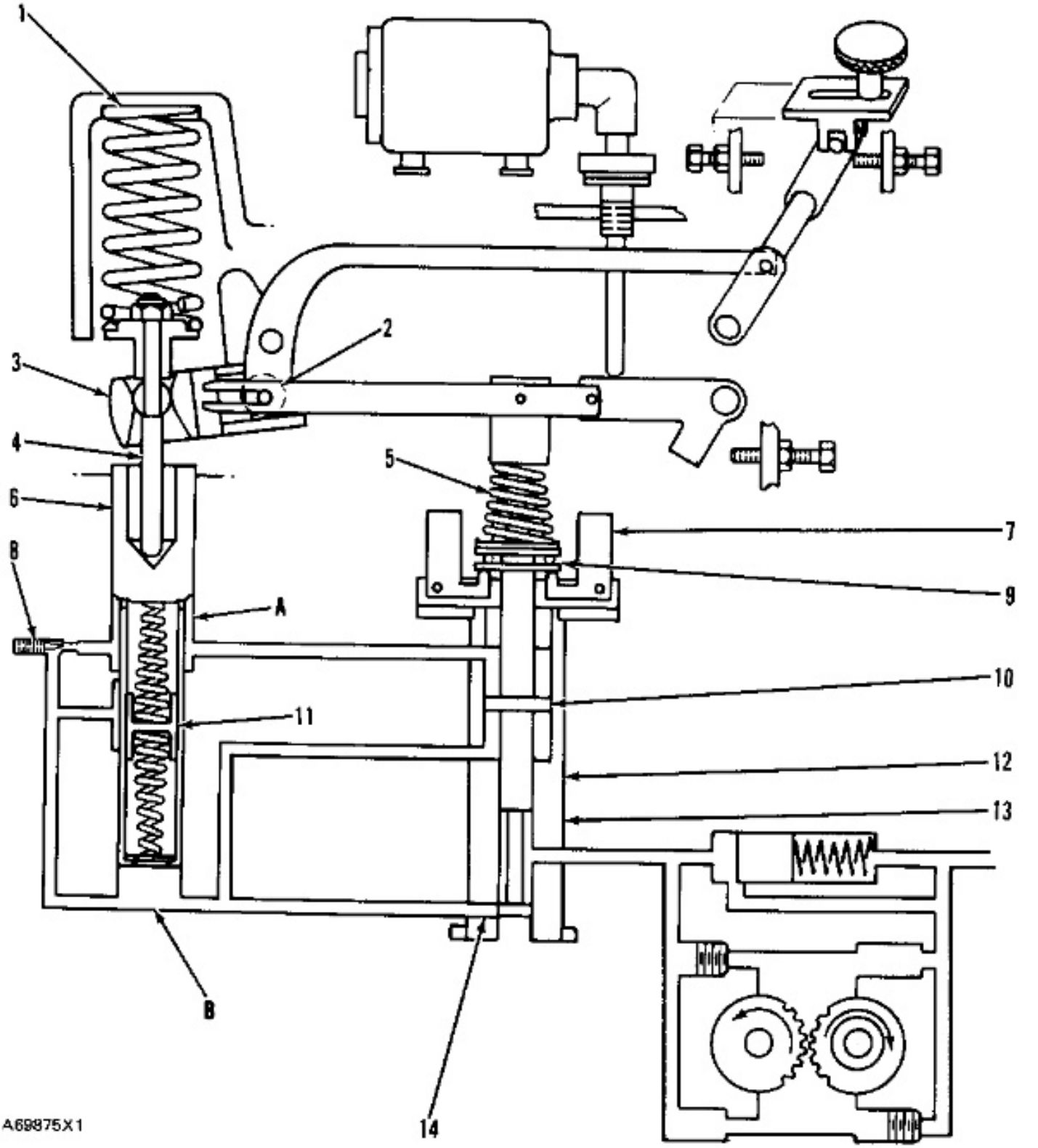

SCHEMATIC OF LATEST PSG GOVERNOR
1. Return spring. 2. Output shaft. 3. Output shaft lever. 4. Strut assembly. 5. Speeder spring. 6. Power piston. 7. Flyweights. 8. Needle valve. 9. Thrust bearing. 10. Pilot valve compensating land. 11. Buffer piston. 12. Pilot valve. 13. Pilot valve bushing. 14. Control ports. A. Chamber. B. Chamber.

Introduction

The Woodward PSG (Pressure compensated Simple Governor) can operate as an isochronous or a speed droop type governor. It uses engine lubrication oil, increased to a pressure of 175 psi (1200 kPa) by a gear type pump inside the governor, to give hydra/mechanical speed control.

Pilot Valve Operation

The fuel injection pump camshaft drives a governor drive unit. This unit turns pilot valve bushing (13) clockwise as seen from the drive unit end of the governor. The pilot valve bushing is connected to a spring driven ballhead. Flyweights (7) are fastened to the ballhead by pivot pins. The centrifugal force caused by the rotation of the pilot valve bushing causes the flyweights to pivot out. This action of the flyweights changes the centrifugal force to axial force against speeder spring (5). There is a thrust bearing (9) between the toes of the flyweights and the seat for the speeder spring. Pilot valve (12) is fastened to the seat for the speeder spring. Movement of the pilot valve is controlled by the action of the flyweights against the force of the speeder spring.

The engine is at the governed (desired) rpm when the axial force of the flyweights is the same as the force of compression in the speeder spring. The flyweights will be in the position shown. Control ports (14) will be closed by the pilot valve.

Fuel Increase

When the force of compression in the speeder spring increases (operator increases desired rpm) or the axial force of the flyweights decreases (load on the engine increases) the pilot valve will move in the direction of the drive unit. This opens control ports (14). Pressure oil flows through a passage in the base to chamber (B). The increased pressure in chamber (B) causes power piston (6) to move. The power piston pushes strut assembly (4), that is connected to output shaft lever (3). The action of the output shaft lever causes clockwise rotation of output shaft (2). This moves fuel control linkage (15) in the FUEL ON direction.

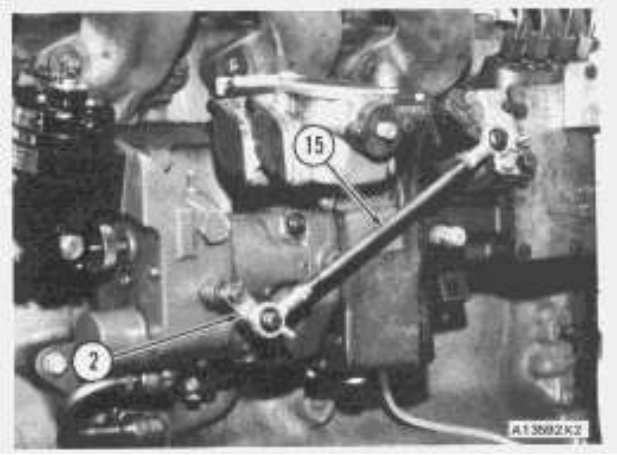

PSG GOVERNOR INSTALLED
2. Output shaft. 15. Fuel control linkage.

As the power piston moves in the direction of return spring (1) the volume of chamber (A) increases. The pressure in chamber (A) decreases. This pulls the oil from the chamber inside the power piston, above buffer piston (11) into chamber (A). As the oil moves out from above buffer piston (11) to fill chamber (A) the buffer piston moves up in the bore of the power piston. Chambers (A and B) are connected respectively to the chambers above and below the pilot valve compensating land (10). The pressure difference felt by the pilot valve compensating land adds to the axial force of the flyweights to move the pilot valve up and close the control ports. When the flow of pressure oil to chamber (B) stops so does the movement of the fuel control linkage.

Fuel Decrease

When the force of compression in the speeder spring decreases (operator decreases desired rpm) or the axial force of the flyweights increases (load on the engine decreases) the pilot valve will move in the direction of speeder

spring (5). This opens control ports (14). Oil from chamber (B) and pressure oil from the pump will dump through the end of the pilot valve bushing. The decreased pressure in chamber (B) will let the power piston move in the direction of the drive unit. Return spring (1) pushes against strut assembly (4). This moves output shaft lever (3). The action of the output shaft lever causes counterclockwise rotation of output shaft (2). This moves fuel control linkage (15) in the FUEL OFF direction.

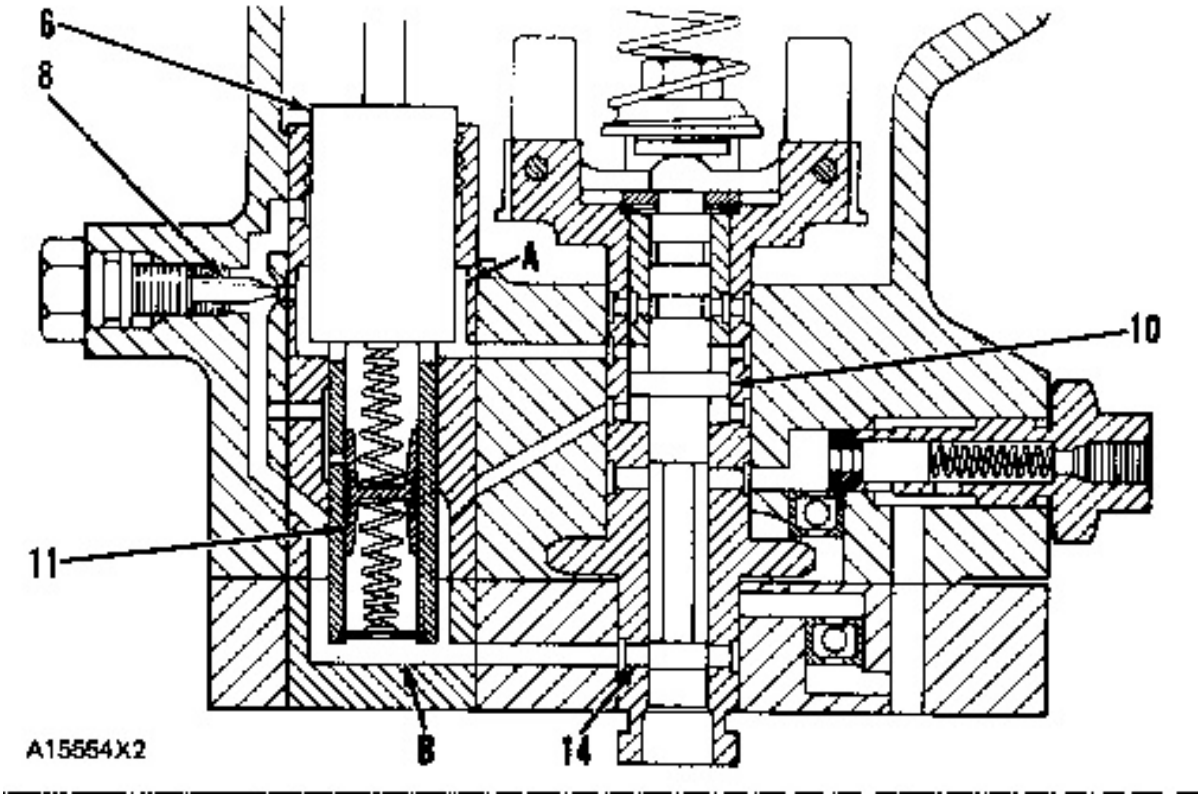

EARLIER PSG GOVERNOR
6. Power piston. 8. Needle valve. 10. Pilot valve compensating land. 11. Buffer piston. 14. Control ports. A. Chamber. B. Chamber.

As power piston (6) moves in the direction of the drive unit the volume of chamber (A) decreases. This pushes the oil in chamber (A) into the chamber above buffer piston (11). As the oil from chamber (A) flows into the power piston it moves the buffer piston down in the bore of the power piston. The pressure at chamber (A) is more than the pressure at chamber (B). Chambers (A and B) are connected respectively to chambers above and below the pilot valve compensating land (10). The pressure difference felt by the pilot valve compensating land adds to the force of the speeder spring to move the pilot valve down and close the control ports. When the flow of oil from chamber (B) stops so does the movement of the fuel control linkage.

Hunting

There is a moment between the time the fuel control linkage stops its movement and the time the engine actually stops its increases or decrease of rpm. During this moment there is a change in two forces on the pilot valve, the pressure difference at the pilot valve compensating land and the axial force of the flyweights.

The axial force of the flyweights changes until the engine stops its increase or decrease of rpm. The pressure difference at the pilot valve compensating land changes until the buffer piston returns to its original position. A needle valve (8) in a passage between space (A) and (B) controls the rate at which the pressure difference changes. The pressure difference makes compensation for the axial force of the flyweights until the engine stops it increase or decrease of rpm. If the force on the pilot valve compensating land plus the axial force of the flyweights is not equal to the force of the speeder spring the pilot valve will move. This movement is known as hunting (movement

of the pilot valve that is not the result of a change in load or desired rpm of the engine).

The governor will hunt each time the engine actually stops its increase or decrease of rpm at any other rpm than that desired. The governor will hunt more after a rapid or large change of load or desired rpm than after a gradual or small change.

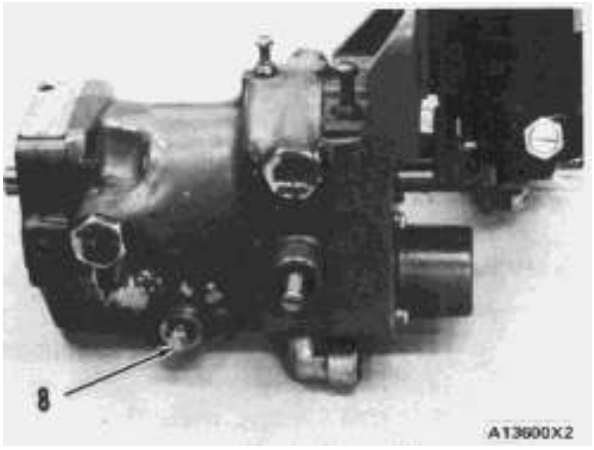

PSG GOVERNOR
8. Needle valve.

NOTE: The Woodward PSG Governor is removed from the engine to show the needle valve (8). When the governor is installed on the engine, the needle valve (8) is between the governor and the cylinder block.

Speed Adjustment

The earliest PSG governors use a screw (1). When the screw is turned clockwise it pushes the link assembly (2) down. This causes an increase in the force of speeder spring (3) and pilot valve (4) will move down. See PILOT VALVE OPERATION. The engine will increase speed until it gets to the desired rpm. When the screw is turned counterclockwise the link assembly moves up. This causes a decrease in the force of the speeder spring and the pilot valve will move up. The engine will decrease speed until it gets to the desired rpm.

Later PSG governors use a clutch assembly (6) driven by a 110V AC/DC or 24V DC reversible synchronizing motor (5) to move link assembly (7) up or down. The clutch assembly protects the motor if the adjustment is run against the stops. The motor is controlled by a switch that is remotely mounted. The clutch assembly can be turned manually if necessary.

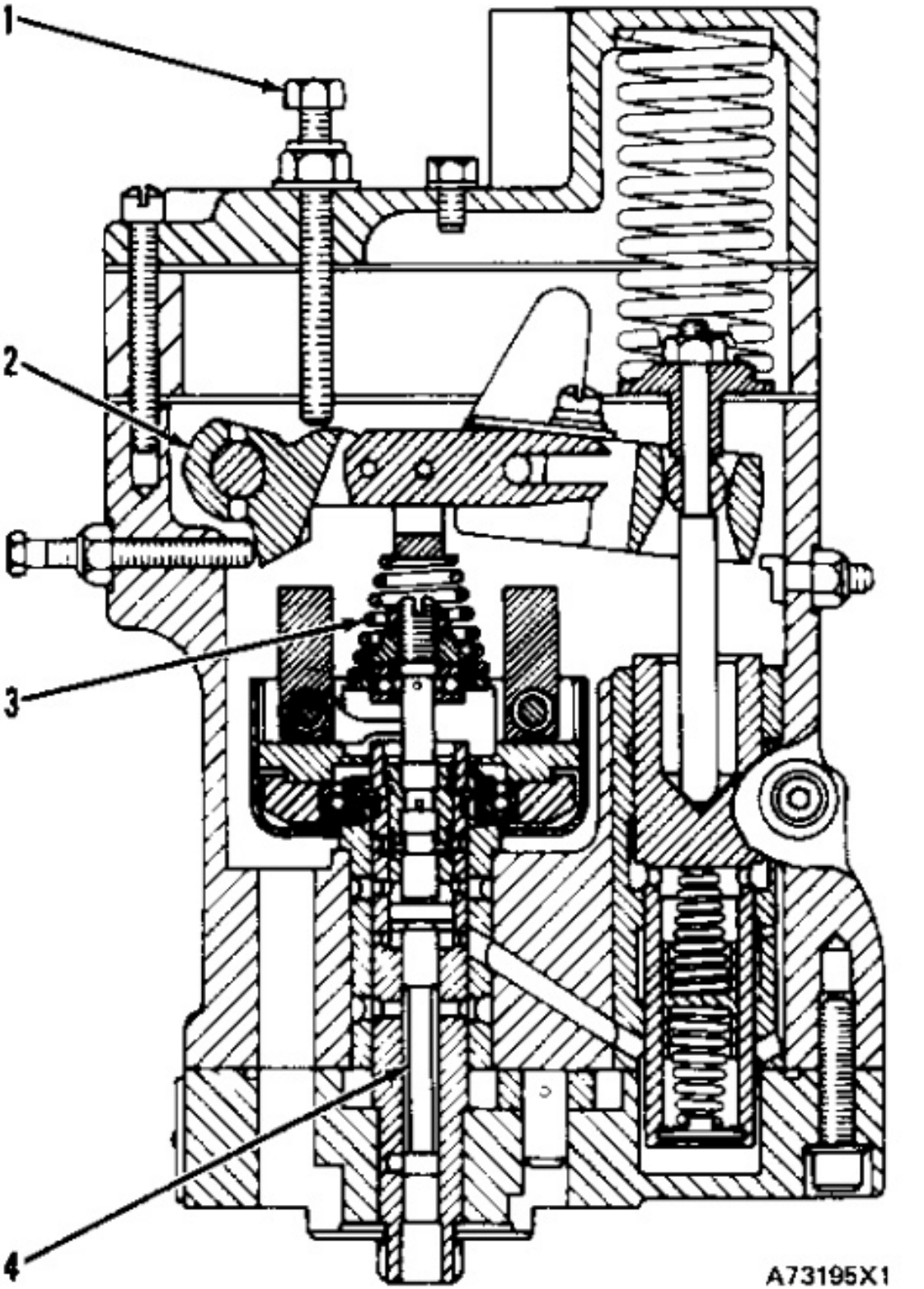

EARLIEST PSG GOVERNOR
1. Screw. 2. Link assembly. 3. Speeder spring. 4. Pilot valve.

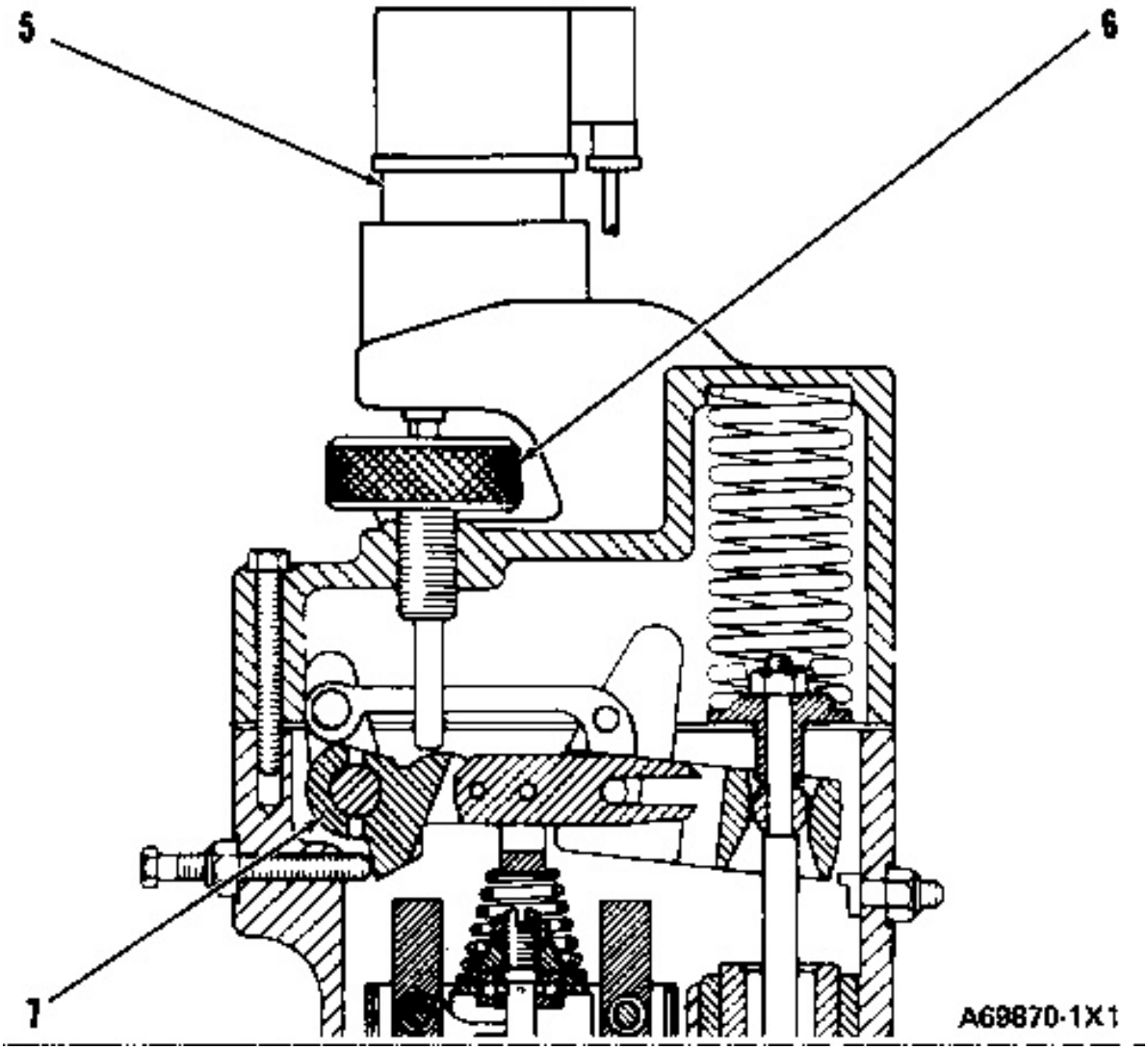

LATER PSG GOVERNOR
5. Synchronizing motor. 6. Clutch assembly. 7. Link assembly.

Speed Droop

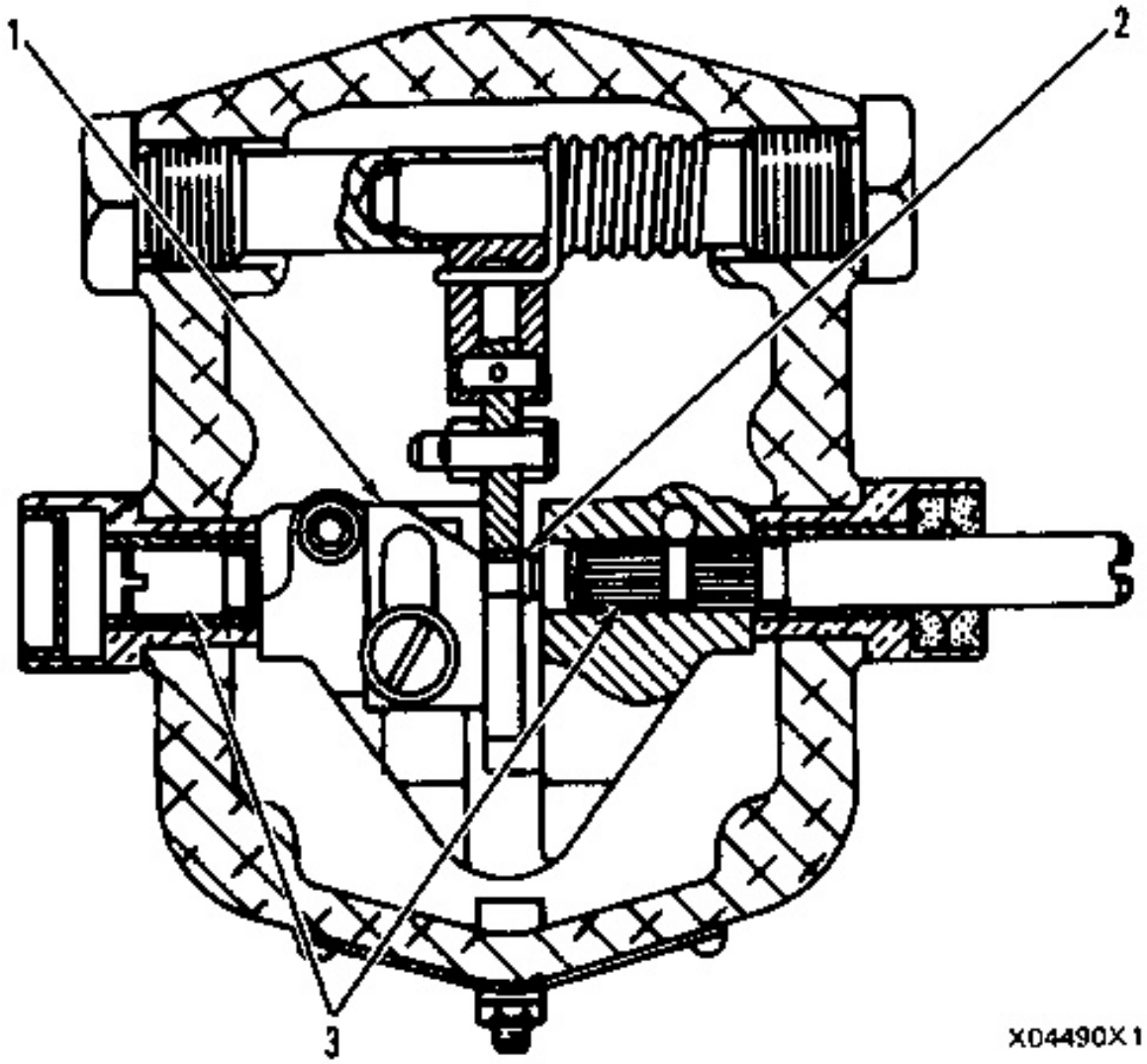

EARLIER PSG GOVERNOR
1. Bracket. 2. Pivot pin. 3. Output shafts.

Speed droop is the difference between no load rpm and full load rpm. This difference in rpm divided by the full load rpm and multiplied by 100 is the percent of speed droop.

$$\frac{\text{No load speed - Full load speed}}{\text{Full load speed}} \times 100 = \%\ \text{of speed droop}$$

The speed droop of the PSG governor can be adjusted. The governor is isochronous when it is adjusted so that the no load and full load rpm is the same. Speed droop permits load division between two or more engines that drive generators connected in parallel or generators connected to a single shaft.

Speed droop adjustment on PSG governors is made by movement of pivot pin (2). When the pivot pin is put in alignment with the output shafts, movement of the output shaft lever will not change the force of the speeder spring. When the force of the speeder spring is kept constant the desired rpm will be kept constant. See PILOT VALVE OPERATION. When the pivot pin is moved out of alignment with the output shafts, movement of the output shaft lever will change the force of the speeder spring proportional to the load on the engine. When the force of the speeder spring is changed the desired rpm of the engine will change.

On earlier PSG governors the cover must be removed to adjust the speed droop. Later models have an adjustment lever outside the governor connected to pivot pin (2) by link (4).

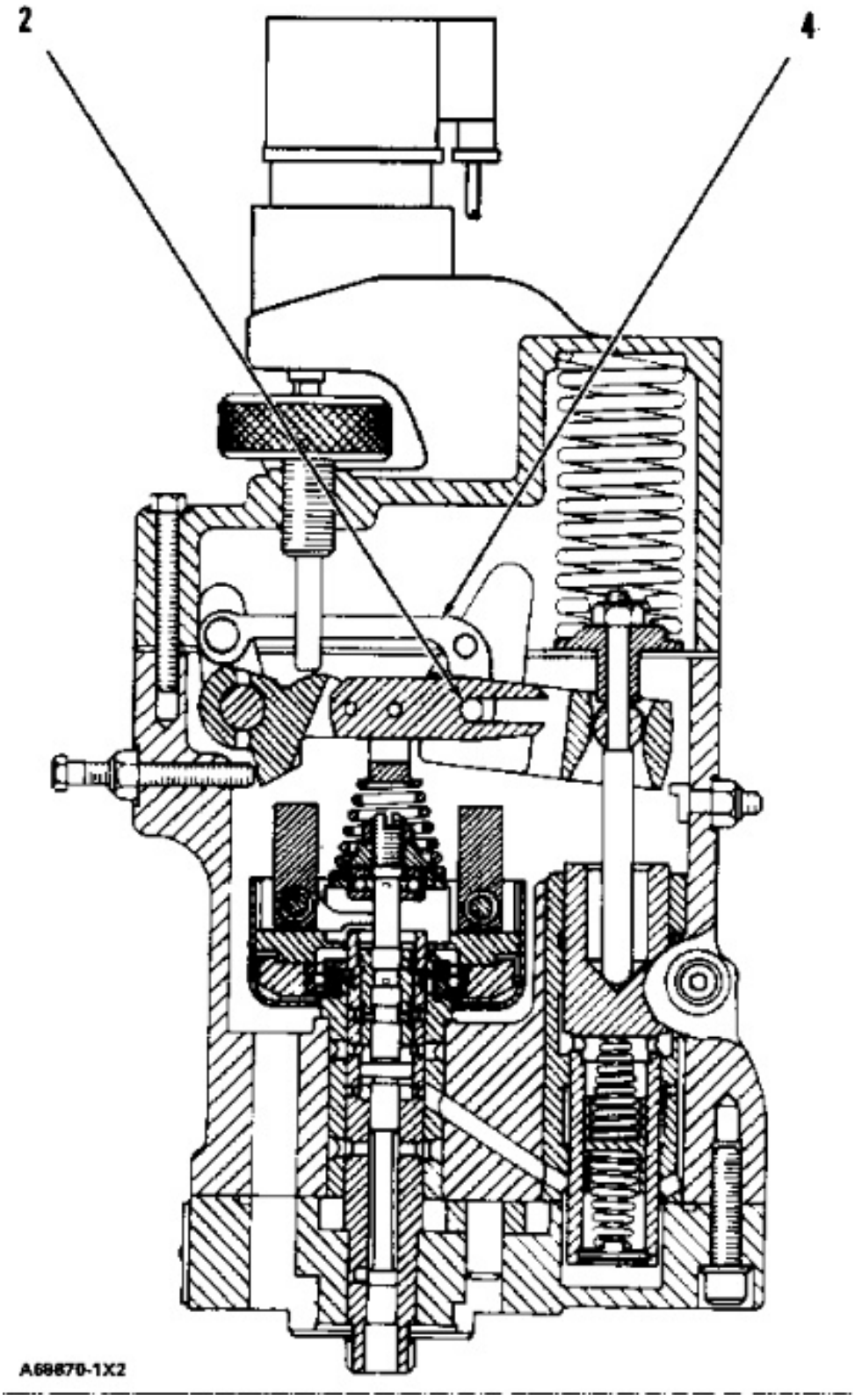

LATER PSG GOVERNOR
2. Pivot pin. 4. Link.

Shutoff And Alarm Systems

Alarm Contactor System

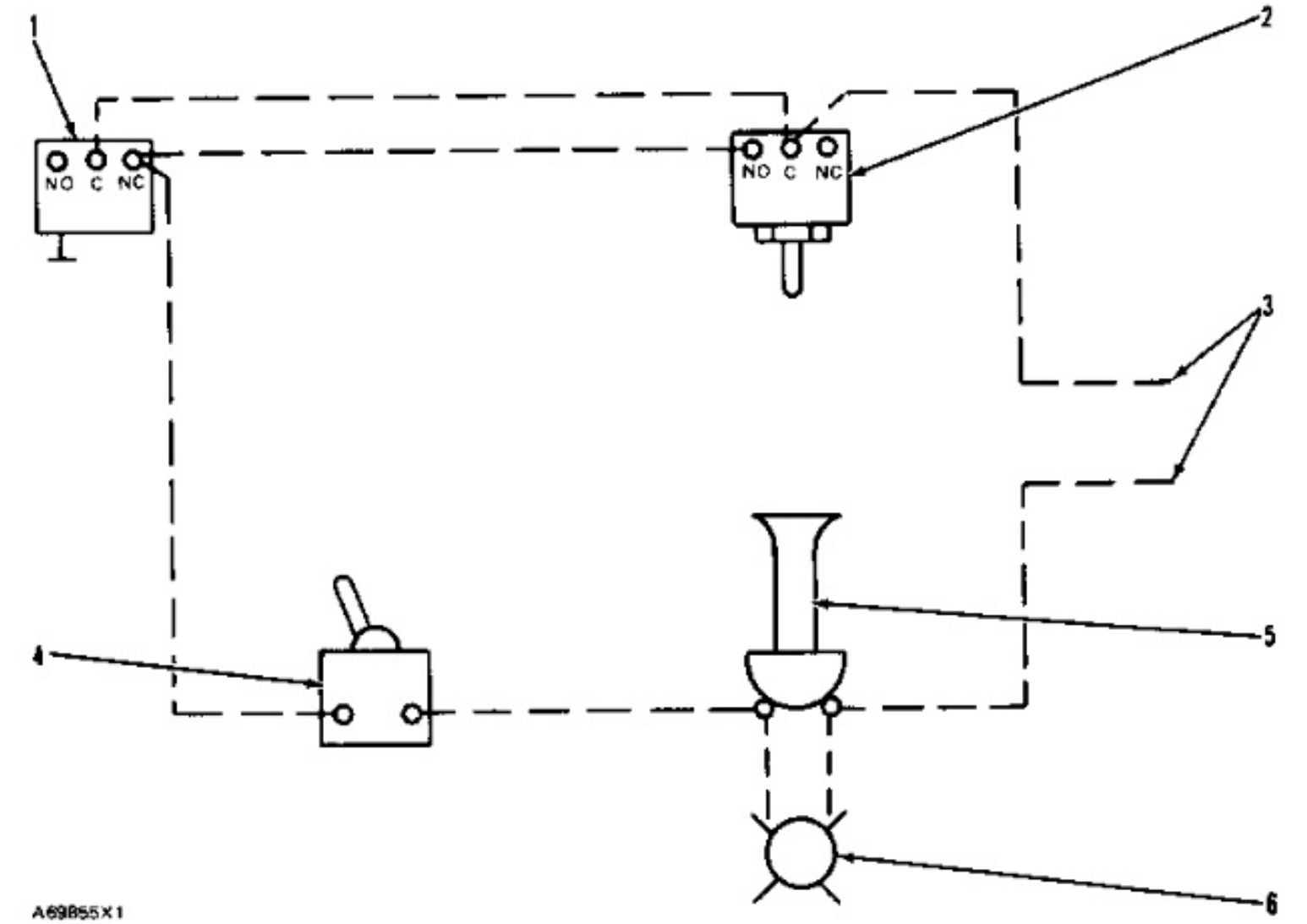

WIRING SCHEMATIC (Typical Example)
1. Oil pressure switch (switch with manual override shown). 2. Water temperature contactor. 3. Source voltage. 4. Toggle switch (optional). 5. Alarm. 6. Signal lights.

If the oil pressure is too low or the water temperature is too high this system will activate alarm (5) and signal lights (6).

NOTICE

When the alarm and signal lights activate stop the engine immediately. This will help prevent damage to the engine from heat or not enough lubrication. Find and correct the problem that caused the alarm and signal lights to activate.

Before the engine is started it will be necessary to override the oil pressure switch (1) or the alarm will activate. This is done by either a manual override button on the oil pressure switch or toggle switch (4). Oil pressure will return the manual override button to the run position. The toggle switch must be manually closed when the engine has oil pressure.

Water Temperature And Oil Pressure Shutoff System

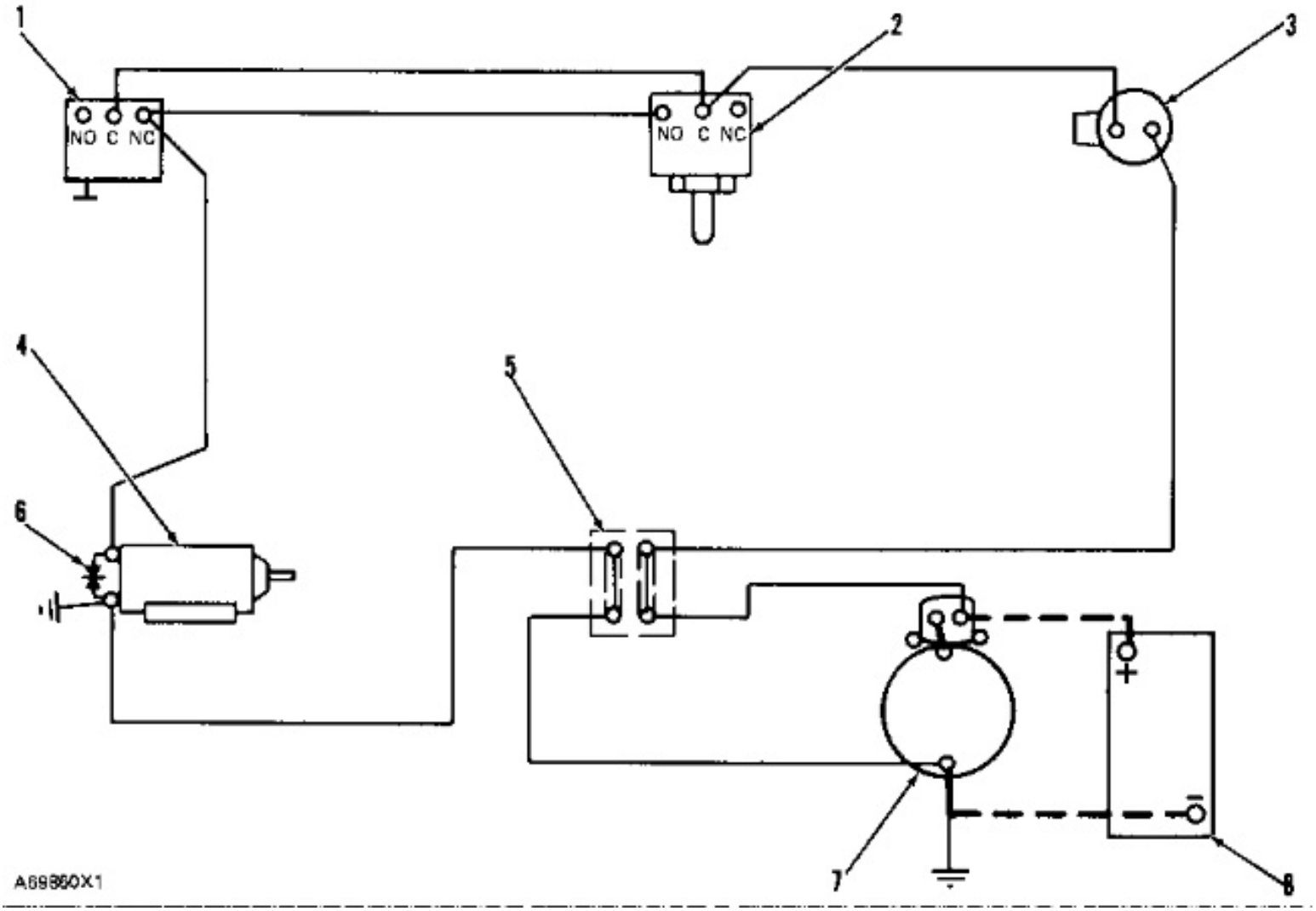

WIRING SCHEMATIC (Typical Example)
1. Oil pressure switch (switch with manual override shown). 2. Water temperature contactor. 3. Oil pressure (time delay) or fuel pressure switch. 4. Shutoff solenoid. 5. Terminal block. 6. Diode assembly. 7. Starter. 8. Battery.

If the oil pressure is too low or the water temperature is too high this system will activate shutoff solenoid (4). The solenoid is connected to the fuel control shaft by linkage. When it is activated it will move to stop the flow of fuel to the engine. The engine will stop.

NOTICE

Find the correct the problem that caused the engine to stop. This will help prevent damage to the engine from heat or not enough lubrication.

Before the engine can be started it will be necessary to push the manual override button on oil pressure switch (1). Oil pressure will return the manual override button to the run position.

Diode assembly (6) is used to stop arcing, for protection of the system.

Oil pressure delay or fuel pressure switch (3) is used to prevent discharge of battery (8) through the solenoid when the engine is stopped. The optional grounds to engine shown are used with grounded systems only.

Electronic Overspeed Shutoff System

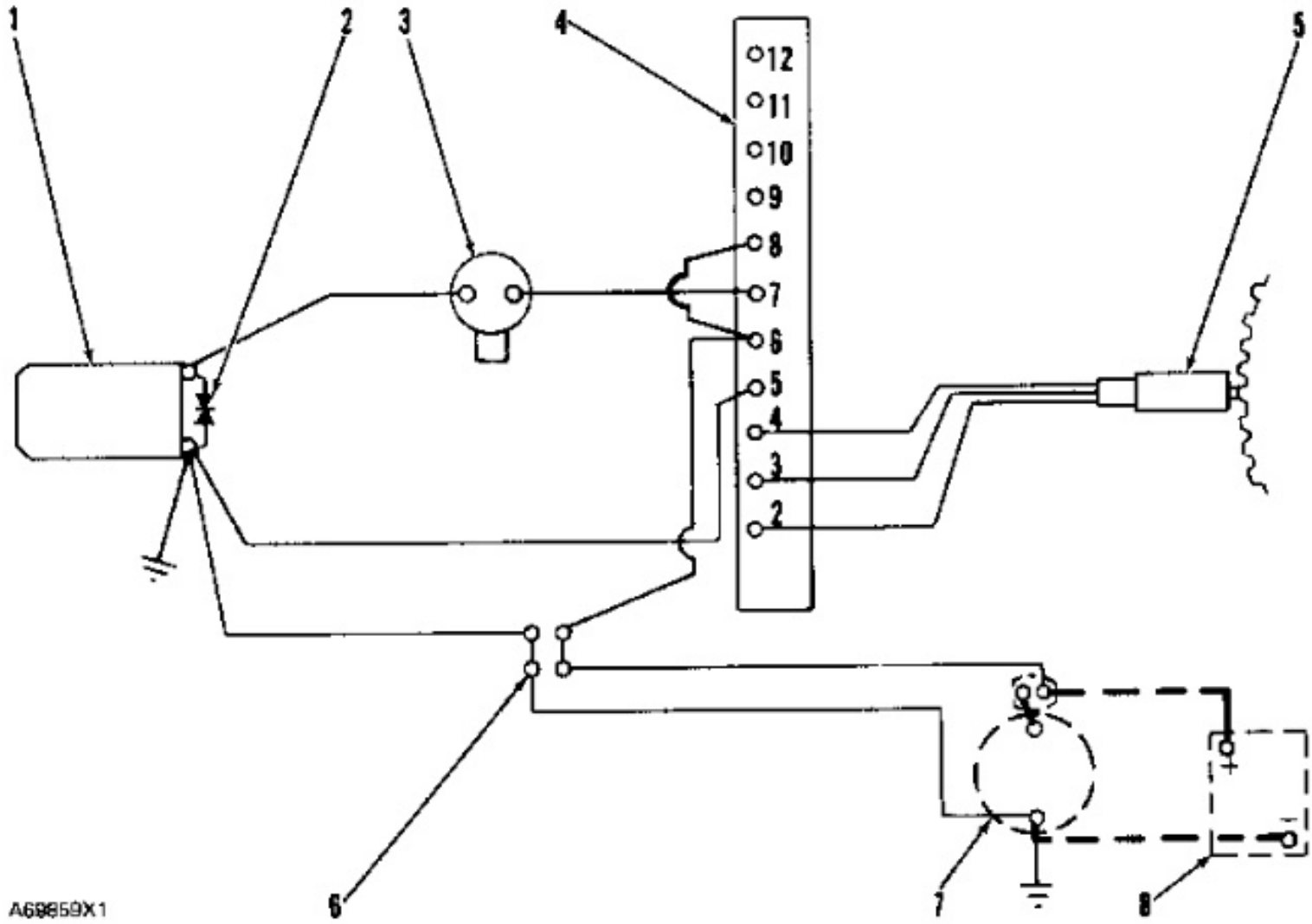

WIRING SCHEMATIC (Typical Example)
1. Shutoff solenoid. 2. Diode assembly. 3. Oil pressure (time delay) or fuel pressure switch. 4. Overspeed switch. 5. Magnetic pickup. 6. Terminal block. 7. Starter. 8. Battery.

Magnetic pickup (5) sends a voltage to overspeed switch (4). The frequency of this voltage tells the overspeed switch the speed of the engine. If the speed of the engine gets too high the overspeed switch sends a signal to activate shutoff solenoid (1).

The shutoff solenoid is connected to the fuel control shaft by linkage. When it is activated it will move to stop the flow of fuel to the engine.

NOTICE

Find and correct the problem that caused the engine to overspeed. This will help prevent damage to the engine.

After an overspeed shutdown the overspeed switch must be reset before the engine can start.

Diode assembly (2) is used to stop arcing, for protection of the system.

The optional grounds to the engine shown are used with grounded systems only.

An oil pressure (time delay) or fuel pressure switch (3) is used to prevent discharge of battery (8) through the solenoid when the engine is stopped. The electronic overspeed switch can be connected to the battery constantly because it uses less than 20 MA of current when the engine is stopped.

Water Temperature, Oil Pressure And Electronic Overspeed Shutoff System

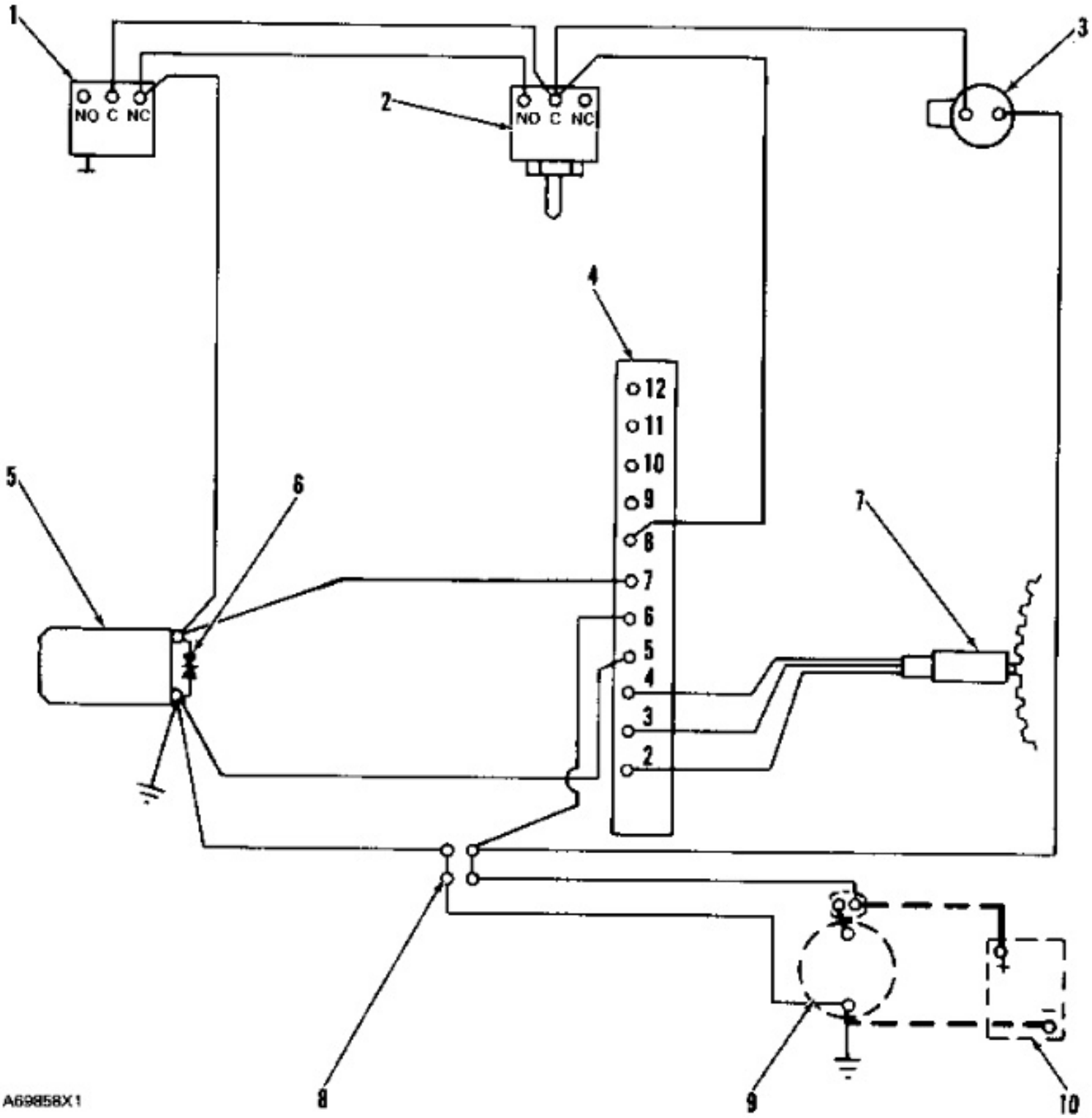

WIRING SCHEMATIC (Typical Example)
1. Oil pressure switch (switch with manual override shown). 2. Water temperature contactor. 3. Oil pressure (time delay) or fuel pressure switch. 4. Overspeed switch. 5. Shutoff solenoid. 6. Diode assembly. 7. Magnetic pickup. 8. Terminal block. 9. Starter. 10. Battery.

The shutoff solenoid can be activated by oil pressure switch (1), water temperature contactor (2) or overspeed switch (4). See WATER TEMPERATURE AND OIL PRESSURE SHUTOFF SYSTEM and ELECTRONIC OVERSPEED SHUTOFF SYSTEM.

Mechanical Overspeed Shutoff System

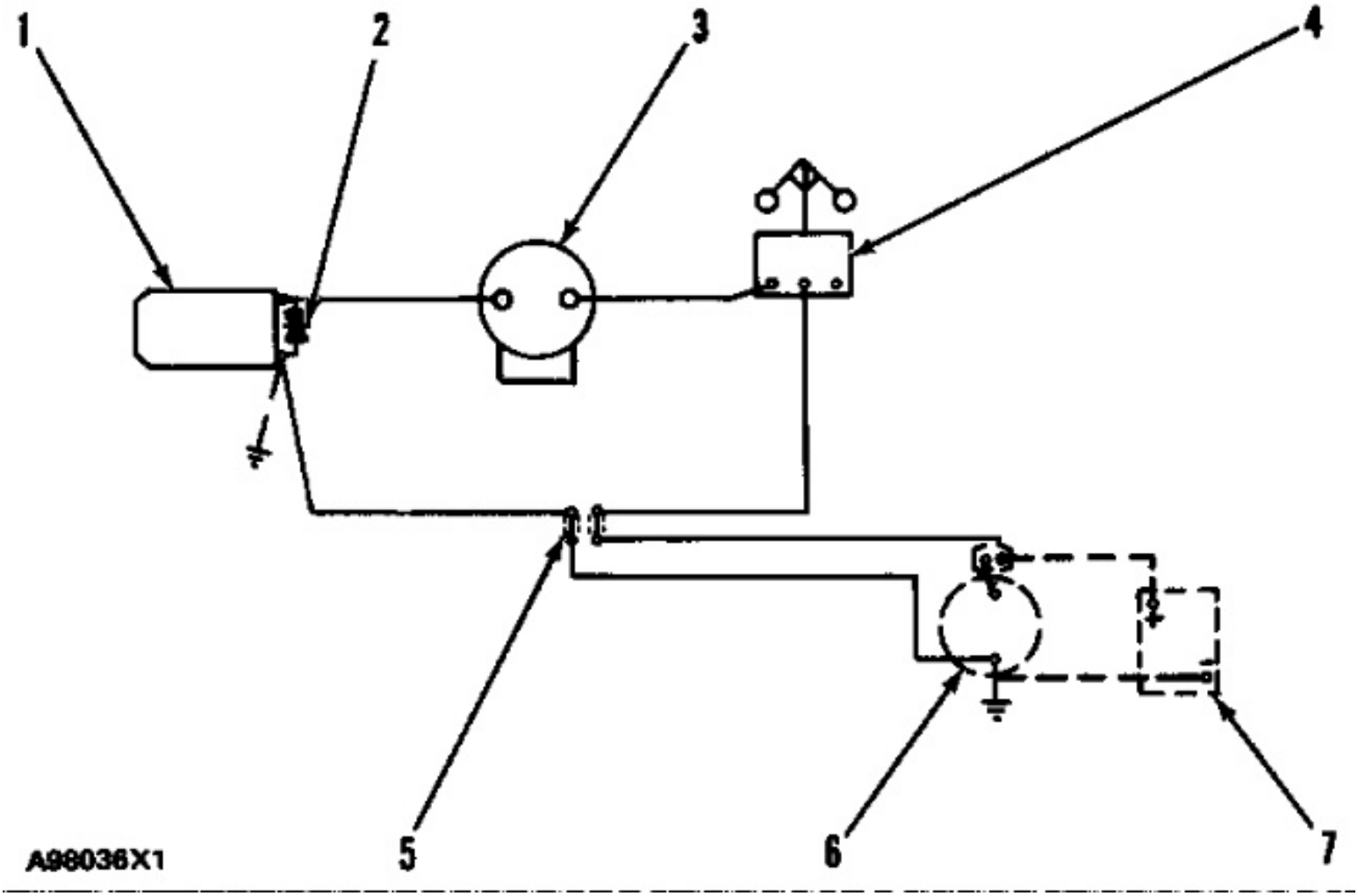

WIRING SCHEMATIC (Typical Example)
1. Shutoff solenoid. 2. Diode assembly. 3. Oil pressure (time delay) or fuel pressure switch. 4. Overspeed switch. 5. Terminal block. 6. Starter. 7. Battery.

The mechanical overspeed switch (4) is fastened to the tachometer drive on the engine. Wires connect the switch to the fuel shutoff solenoid. If the speed of the engine gets too high the overspeed switch sends a signal to activate shutoff solenoid (1).

The shutoff solenoid is connected to the fuel control shaft by linkage. When it is activated it will move to stop the flow of fuel to the engine.

NOTICE

https://barringtondieselclub.co.za/

Find and correct the problem that caused the engine to overspeed. This will help prevent damage to the engine.

After an overspeed shutdown the overspeed switch must be reset before the engine can start.

Diode assembly (2) is used to stop arcing, for protection of the system.

The optional grounds to the engine shown are used with grounded systems only.

An oil pressure (time delay) or fuel pressure switch (3) is used to prevent discharge of battery (7) through the solenoid when the engine is stopped.

Water Temperature, Oil Pressure And Mechanical Overspeed Shutoff System

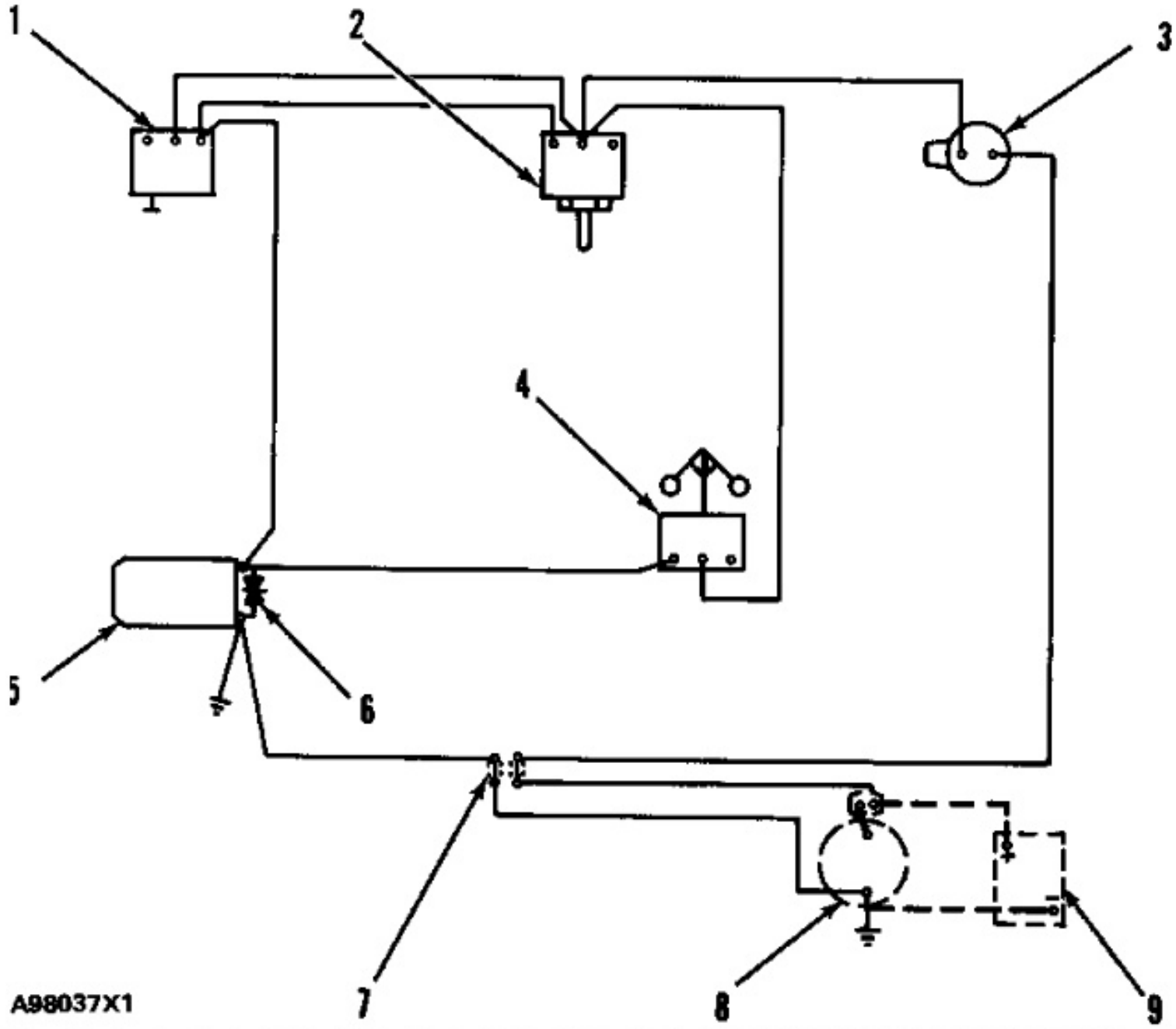

WIRING SCHEMATIC (Typical Example)
1. Oil pressure switch (switch with manual override shown). 2. Water temperature contactor. 3. Oil pressure (time delay) or fuel pressure switch. 4. Overspeed switch. 5. Shutoff solenoid. 6. Diode assembly. 7. Terminal block. 8. Starter. 9. Battery.

The shutoff solenoid can be activated by oil pressure switch (1), water temperature contactor (2) or overspeed switch (4). See WATER TEMPERATURE AND OIL PRESSURE SHUTOFF SYSTEM and MECHANICAL OVERSPEED SHUTOFF SYSTEM.

Mechanical Oil Pressure And Water Temperature Shutoff

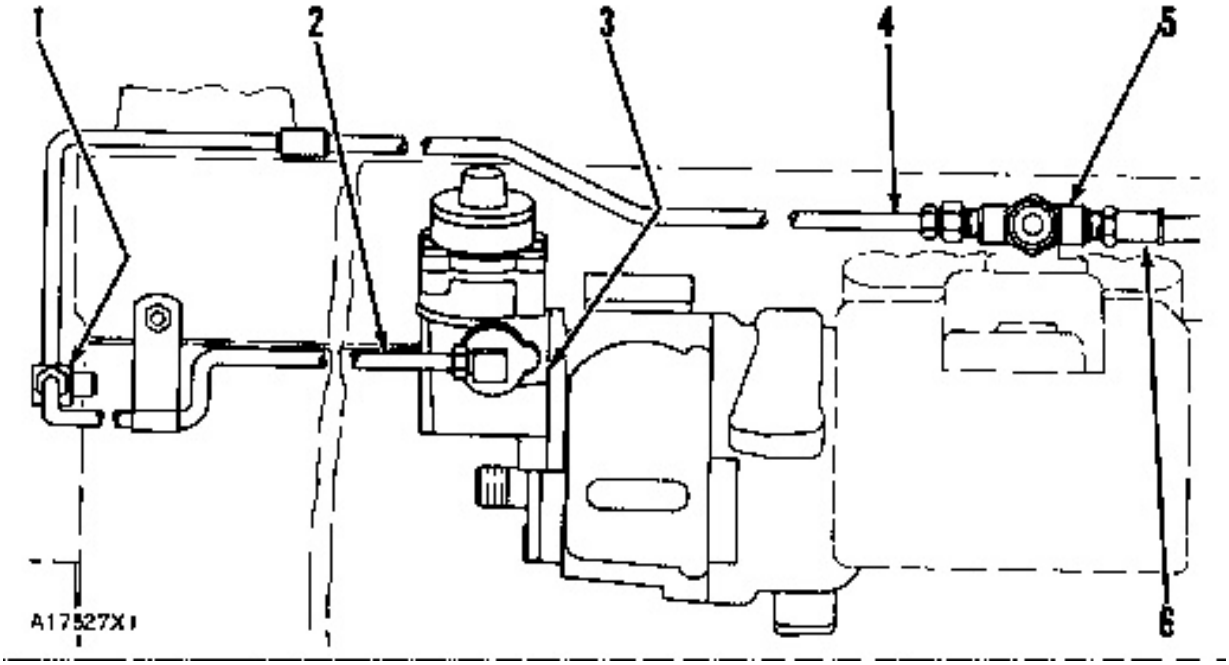

MECHANICAL SHUTOFF GROUP
1. Tee. 2. Oil line. 3. Shutoff housing. 4. Oil line. 5. Control valve. 6. To timing gear cover.

The oil pressure shutoff housing (3) is fastened to the governor. Lever (12) is connected by a shaft to shutoff levers (13) and (14).

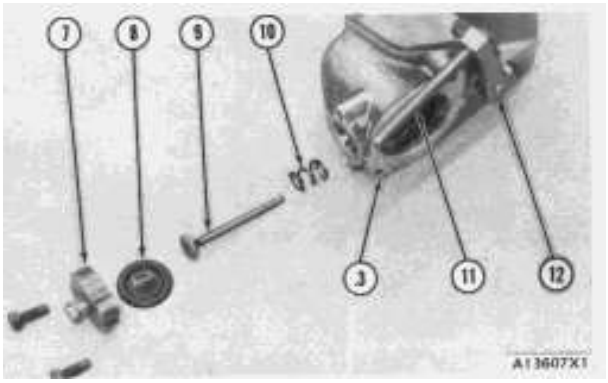

OIL PRESSURE SHUTOFF
3. Shutoff housing. 7. Cover. 8. Diaphragm. 9. Plunger. 10. Spring. 11. Stud. 12. Lever.

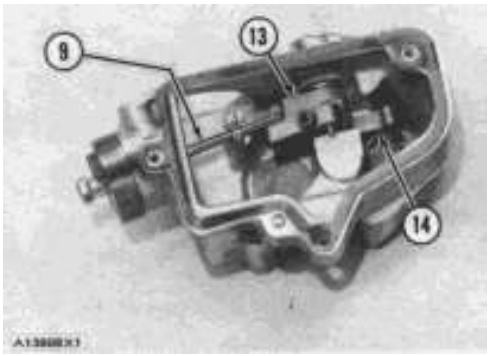

NORMAL OPERATING CONDITIONS
9. Plunger. 13. Lever. 14. Lever.

Before the engine can be started, lever (12) is used to turn spring loaded lever (13) away from the shutoff position. With lever (13) in this position the engine can be started.

When the engine starts, pressure oil flows through cover (7) moving plunger (9) into position to hold lever (13). As long as the engine has enough oil pressure the fuel control shaft can be controlled by the governor.

If the oil pressure gets too low, spring (10) moves plunger (9) away from lever (13). Lever (13) returns to the shutoff position and causes the engine to stop.

NOTE: With lever (13) held in the normal operating position as shown, lever (14) is used to shutdown the engine if necessary. This can be done manually or with a shutoff solenoid if so equipped.

NOTICE

Find and correct the problem that caused the engine to stop. This will help prevent damage to the engine from not enough lubrication.

Water temperature shutoff (5) is a control valve for the oil pressure shutoff.

When the water temperature becomes too high thermostat assembly (17) causes stem (16) to move ball (18) off of its seat. Pressure oil at inlet port (15) will go through the valve and drain into the engine crankcase. This will cause the oil pressure to decrease. The oil pressure shutoff will activate and stop the engine.

NOTICE

Find and correct the problem that caused the engine to stop. This will help prevent damage to the engine from too much heat.

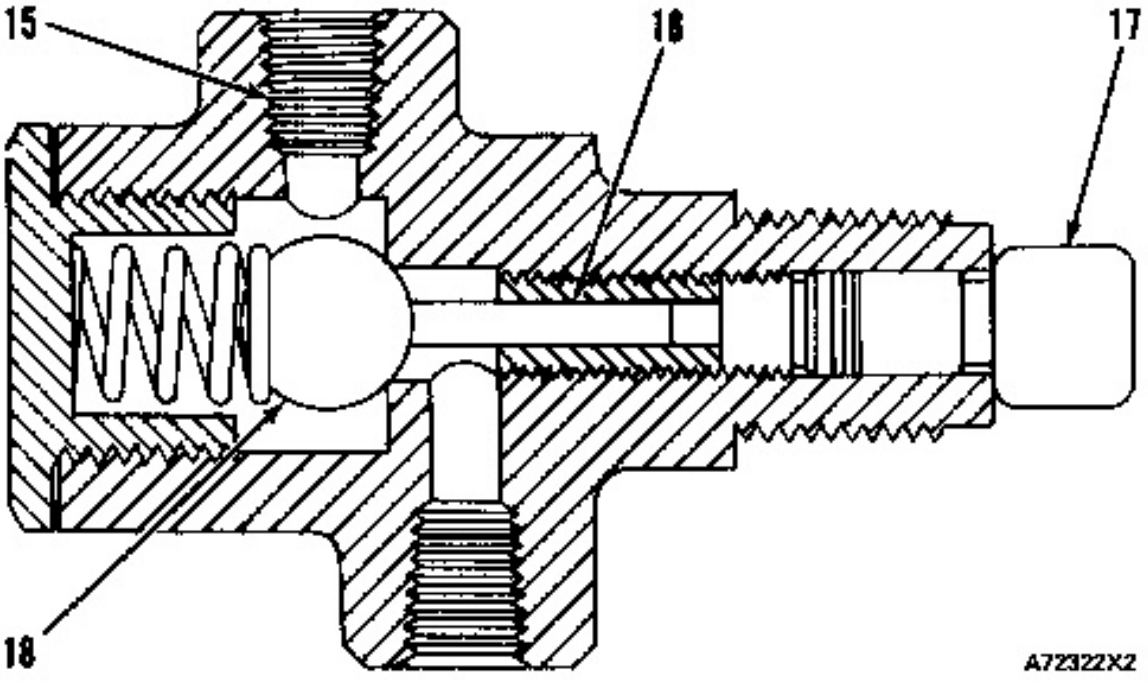

TEMPERATURE SHUTOFF
15. Inlet port. 16. Stem. 17. Thermostat assembly. 18. Ball.

Shutoff And Alarm System Components

Oil Pressure Switch

Micro Switch Type

The oil pressure switch is used to give protection to the engine from damage because of low oil pressure. When oil pressure lowers to the pressure specifications of the switch, the switch closes and activates the fuel shutoff solenoid.

On automatic start/stop installations, this switch closes to remove the starting system from the circuit when the engine is running with normal oil pressure.

The switch for oil pressure can be connected in a warning system for indication of low oil pressure with a light or horn.

As pressure of the oil in bellows (6) becomes higher, arm (4) is moved against the force of spring (3). When projection (10) of arm (4) makes contact with arm (9), pressure in the bellows moves both arms. This also moves button (8) of the micro switch to activate the micro switch.

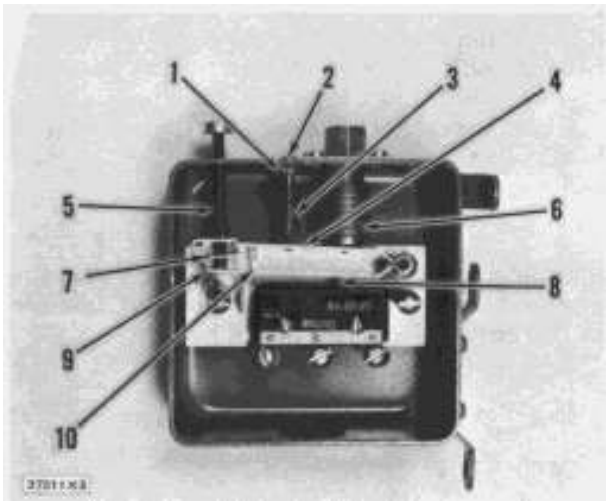

OIL PRESSURE SWITCH (Micro Switch Type)
1. Locknut. 2. Adjustment screw. 3. Spring. 4. Arm. 5. Spring. 6. Bellows. 7. Latch plate. 8. Button for micro switch. 9. Arm. 10. Projection of arm.

Some of these switches have a "Set For Start" button. When the button is pushed in, the micro switch is in the START position. This is done because latch plate (7) holds arm (9) against button (8) of the micro switch and the switch operates as if the oil pressure was normal. When the engine is started, pressure oil flows into bellows (6). The bellows move arm (4) into contact with latch plate (7). The latch plate releases the "Set For Start" button and spring (5) moves it to the RUN position. This puts the switch in a ready to operate condition.

Earlier Type Switch

Early type switches for oil pressure have a control knob (1). The knob must be turned (reset) every time the engine is stopped. Turn the knob counterclockwise to the OFF position before the engine is started. The knob will move to the RUN position when the oil pressure is normal.

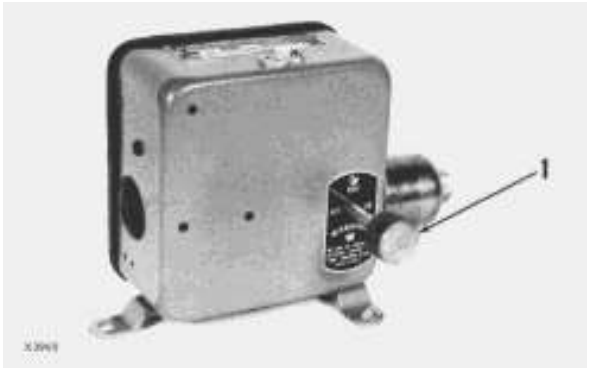

OIL PRESSURE SWITCH (Earlier Type)
1. Control knob.

Pressure Switch With Time Delay

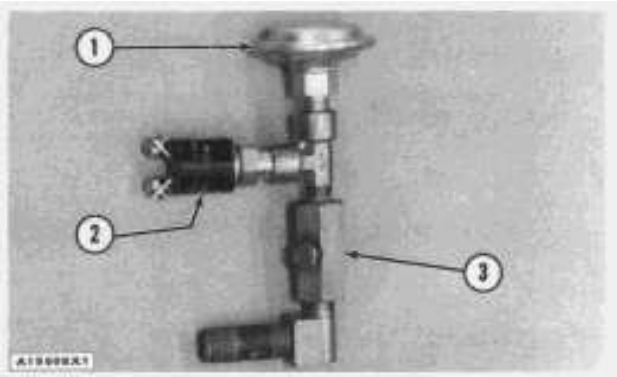

PRESSURE SWITCH WITH TIME DELAY
1. Damper. 2. Pressure switch. 3. Valve.

The pressure switch with time delay has three main parts. The damper (1) is a reservoir for air and oil. The pressure switch (2) is a switch which activates from engine oil pressure. The valve (3) is a check valve with an orifice.

When the engine starts running the oil pressure in the engine increases. The oil goes through the valve (3) easily because the ball is off its seat from flow in that direction. There is air in the damper (1). The oil through the valve (3) goes into the damper (1). The oil puts compression on the air in the damper (1) until the pressure in the damper (1) is equal to engine oil pressure. This action takes a very short time. As the pressure in the damper (1) increases, the pressure switch (2) has the same pressure. At the correct pressure, the pressure (2) switch closes.

When the oil pressure in the engine decreases, there is a different set of conditions. The oil pressure in the engine is lower than the pressure in the damper (1). The high pressure in the damper (1) pushes oil out of the damper (1). The ball is on its seat. The pressure holds it there. Now the oil can only get out through the orifice. The orifice is a very small hole which is drilled through the body of the valve (3). It connects the oil in the damper (1) with the oil in the engine. The orifice is a restriction to the flow of oil out of the damper (1). The pressure in damper (1) takes a longer time to decrease than the oil pressure in the engine. This difference is the delay. When the engine is stopped under normal conditions, the delay is a minimum of approximately 4 seconds after the engine stops turning.

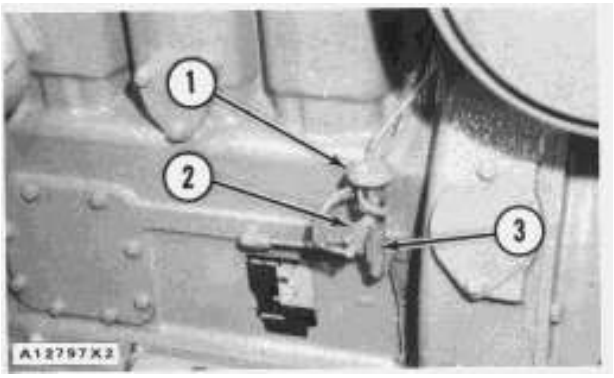

PRESSURE SWITCH WITH TIME DELAY INSTALLED
1. Damper. 2. Pressure switch. 3. Valve.

NOTE: Damper (1) must be installed vertically as shown to work correctly.

Pressure Switch

These type pressure switches are used for several purposes and are available with different specifications. They are used in the oil system and in the fuel system. One use of the switch is to open the circuit between the battery and

the fuel shutoff solenoid after the oil pressure is below the pressure specifications of the switch. It also closes when the engine starts.



PRESSURE SWITCH

Another use of the switch is to close and activate the battery charging circuit when the pressure is above the pressure specification of the switch. It also disconnects the circuit when the engine is stopped.

Some switches of this type have three terminal connections. They are used to do two operations with one switch. They open one circuit and close another with the single switch.

Water Temperature Contactor Switch

The contactor switch for water temperature is installed in the water manifold. No adjustment to the temperature range of the contactor can be made. The element feels the temperature of the coolant and then operates the micro switch in the contactor when the coolant temperature is too high, the element must be in contact with the coolant to operate correctly. If the cause for the engine being too hot is because of low coolant level or no coolant, the contactor switch will not operate.

The contactor switch is connected to the fuel shutoff solenoid to stop the engine. The switch can also be connected to an alarm system. When the temperature of the coolant lowers to the operating range, the contactor switch opens automatically.



WATER TEMPERATURE CONTACTOR SWITCH

Circuit Breaker

The circuit breaker gives protection to an electrical circuit. Circuit breakers are rated as to how much current they will permit to flow. If the current in a circuit gets too high it will cause heat in disc (3). Heat will cause distortion of the disc and contacts (2) will open. No current will flow in the circuit.

NOTICE

Find and correct the problem that caused the circuit breaker to open. This will help prevent damage to the circuit components from too much current.

An open circuit breaker will close (reset) automatically when it becomes cooler.

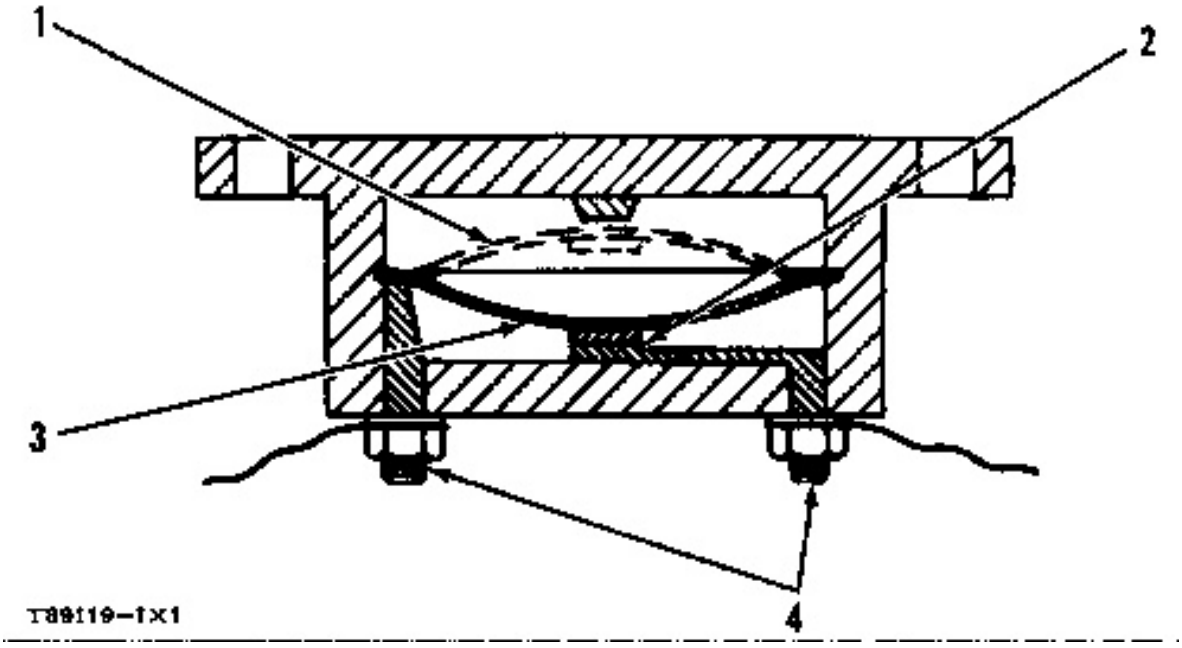

CIRCUIT BREAKER SCHEMATIC
1. Disc in open position. 2. Contacts. 3. Disc. 4. Circuit terminals.

Shutoff Solenoid

A shutoff solenoid changes electrical input into mechanical output. It is used to move the fuel control shaft to a no fuel position. This stops the engine.

The shutoff solenoid can be activated by any one of many sources. The most usual are: water temperature contactor, oil pressure switch, overspeed switch (electronic or mechanical) and remote manual control switch.

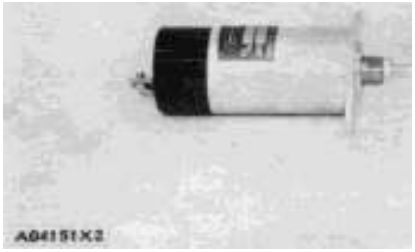

ACTIVATE TO SHUTOFF SOLENOID

When activated, the activate to shutoff solenoid moves the fuel control shaft to the fuel off position.

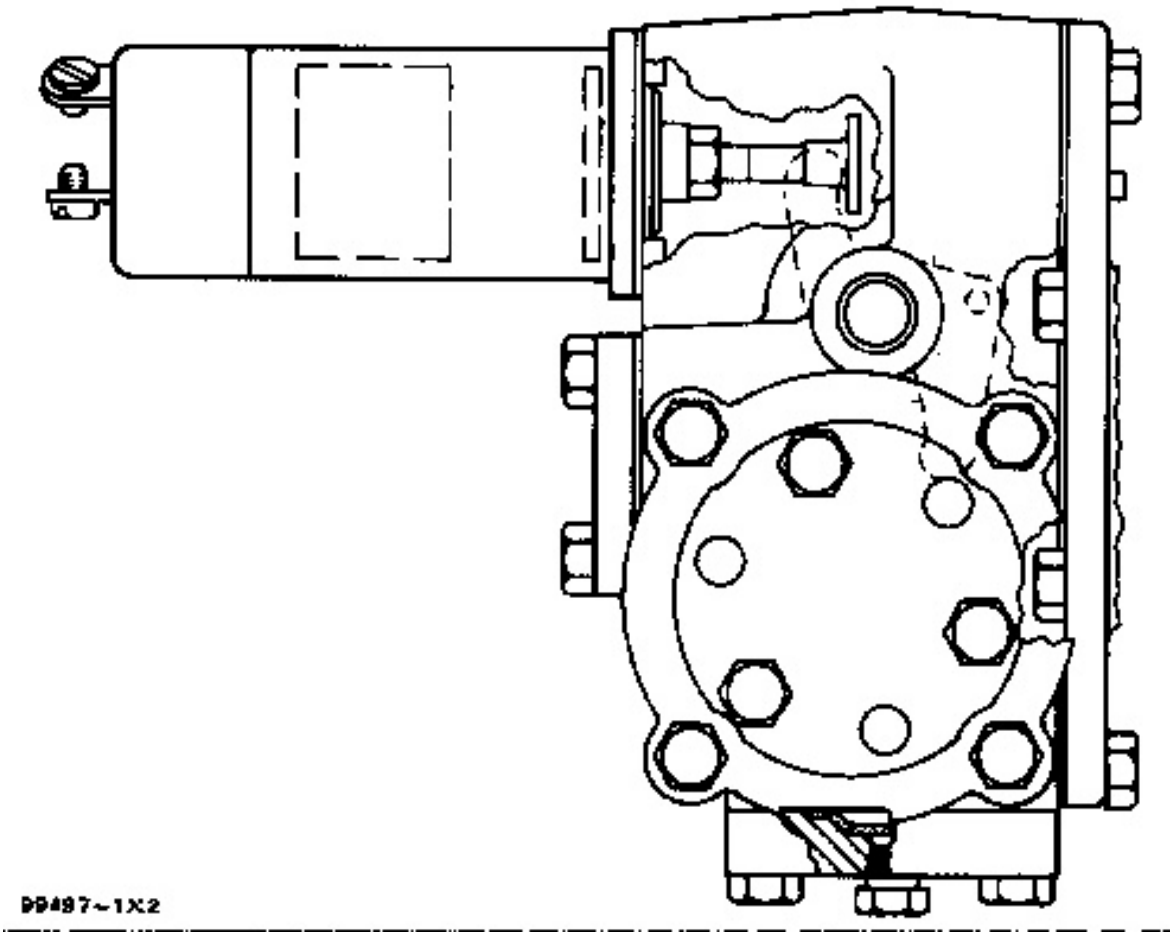

ACTIVATE TO SHUTOFF SOLENOID INSTALLED

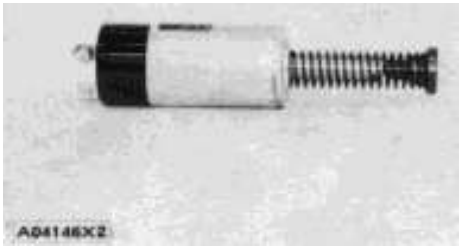

ACTIVATE TO RUN SOLENOID

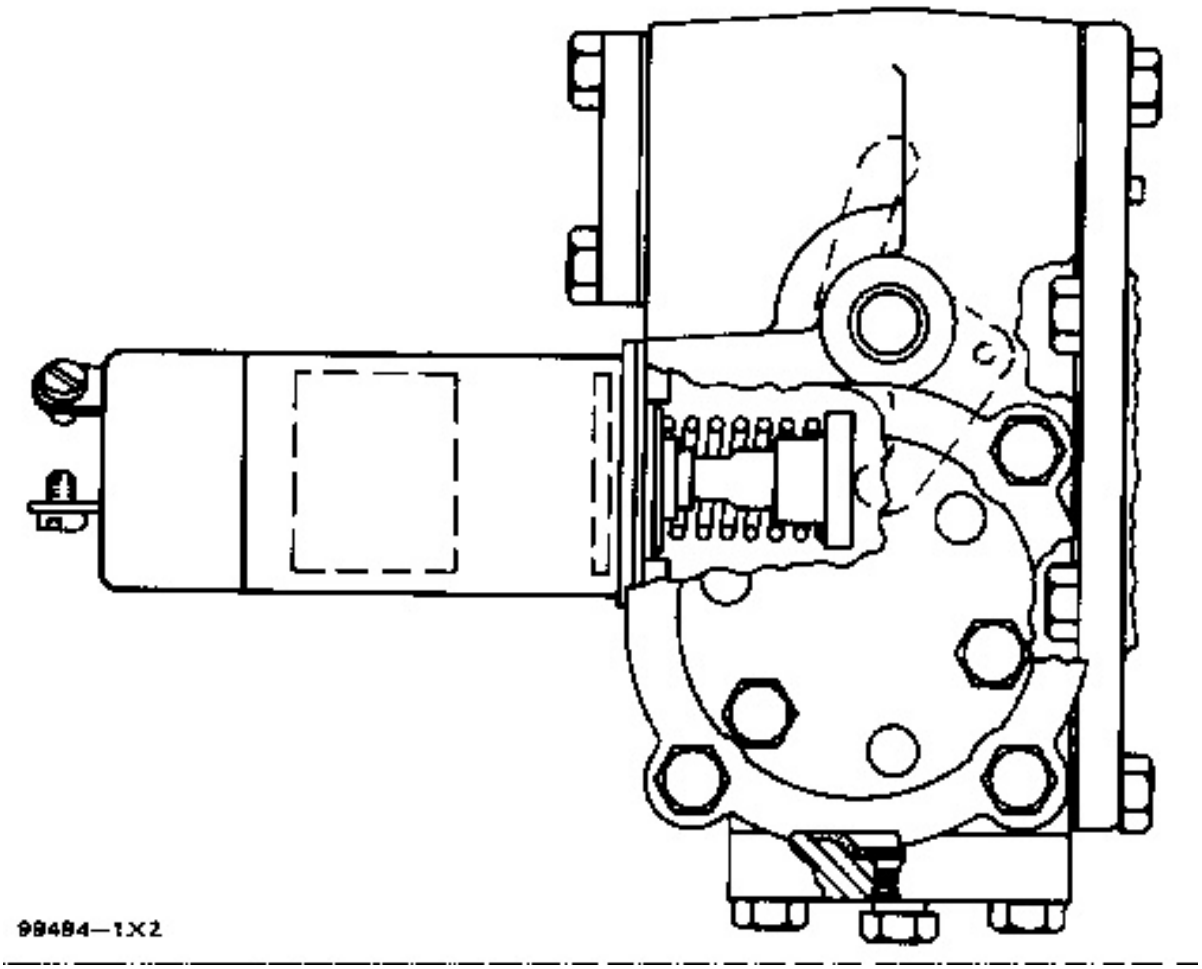

ACTIVATE TO RUN SOLENOID INSTALLED

When shut off, the activate to run shutoff solenoid moves the fuel control shaft to the fuel off position.

Mechanical Overspeed Switch

The overspeed switch is installed on the tachometer drive shaft on the fuel injection pump. The switch activates when the engine speed is equal to the overspeed setting. When the overspeed switch has activated, the contacts do not automatically return to their normal positions. The reset button (1) must be pushed by the operator to make the switch contacts return to their normal positions. The usual setting for the overspeed switch is 18% higher than the rated speed of the engine.

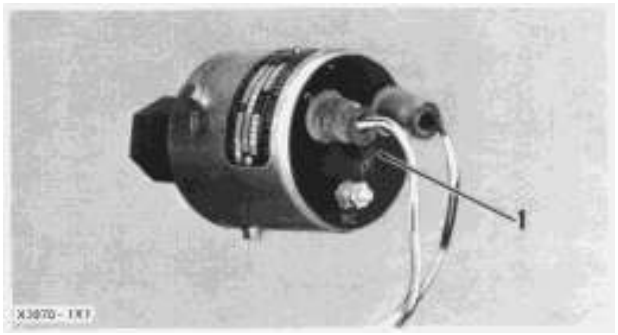

MECHANICAL OVERSPEED SWITCH
1. Button.

Some overspeed switches also have underspeed contacts. These contacts close at approximately 600 rpm as the

engine speed increases. The underspeed setting is not adjustable.

Electronic Speed Switch

The electronic speed switch (dual speed switch) activates the shutoff solenoid when the engine speed gets approximately 18% higher than the rated full load speed of the engine. It also causes the starter motor pinion to move away from the flywheel.

NOTE: Some earlier electronic speed switches do not have the crank disconnect.

The electronic speed switch makes a comparison between the output frequency of magnetic pickup (2) and the setting of the electronic speed switch. When they are equal, the normally open contacts in the electronic speed switch close. On earlier models handle (1) moves to the overspeed position. On later models lamp (4) will go on. The switch also has a fail safe circuit that will cause the engine to shutdown if there is an open in the magnetic pickup circuit.

When the engine is stopped by the earlier electronic speed switch it will be necessary to move handle (1) to the run position before the engine can be started. On later model switches push reset button (3).

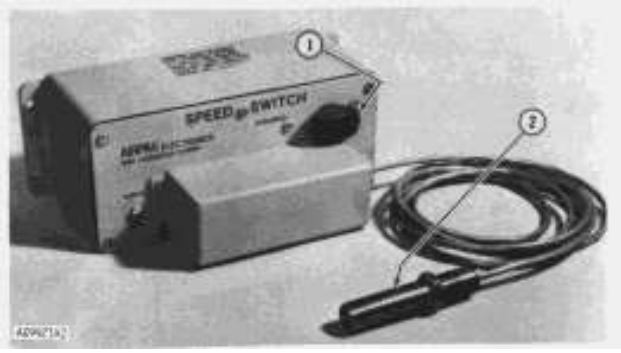

ELECTRONIC SPEED SWITCH (EARLIER)
1. Handle. 2. Magnetic pickup.

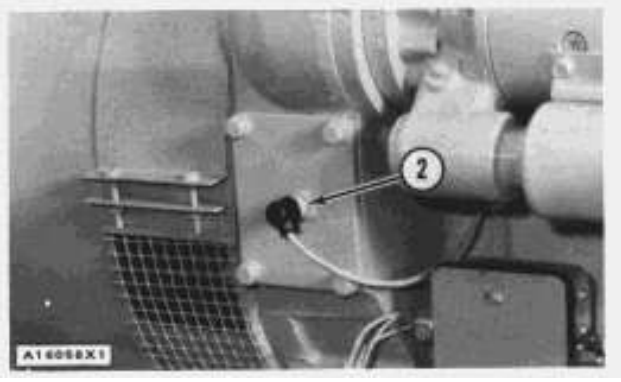

MAGNETIC PICKUP INSTALLED
2. Magnetic pickup.

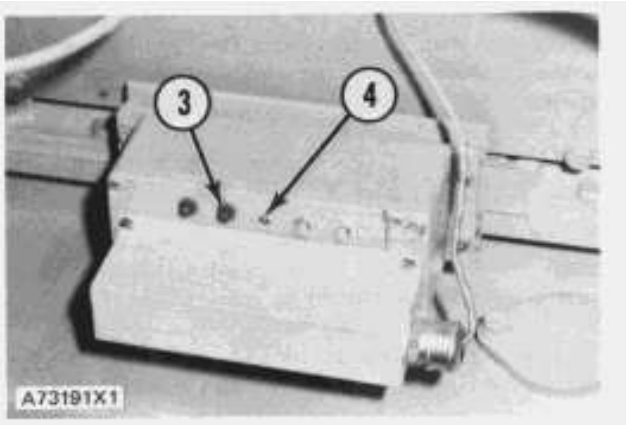

ELECTRONIC SPEED SWITCH (LATER)
3. Reset button. 4. Lamp.

Power Take-Off Clutches

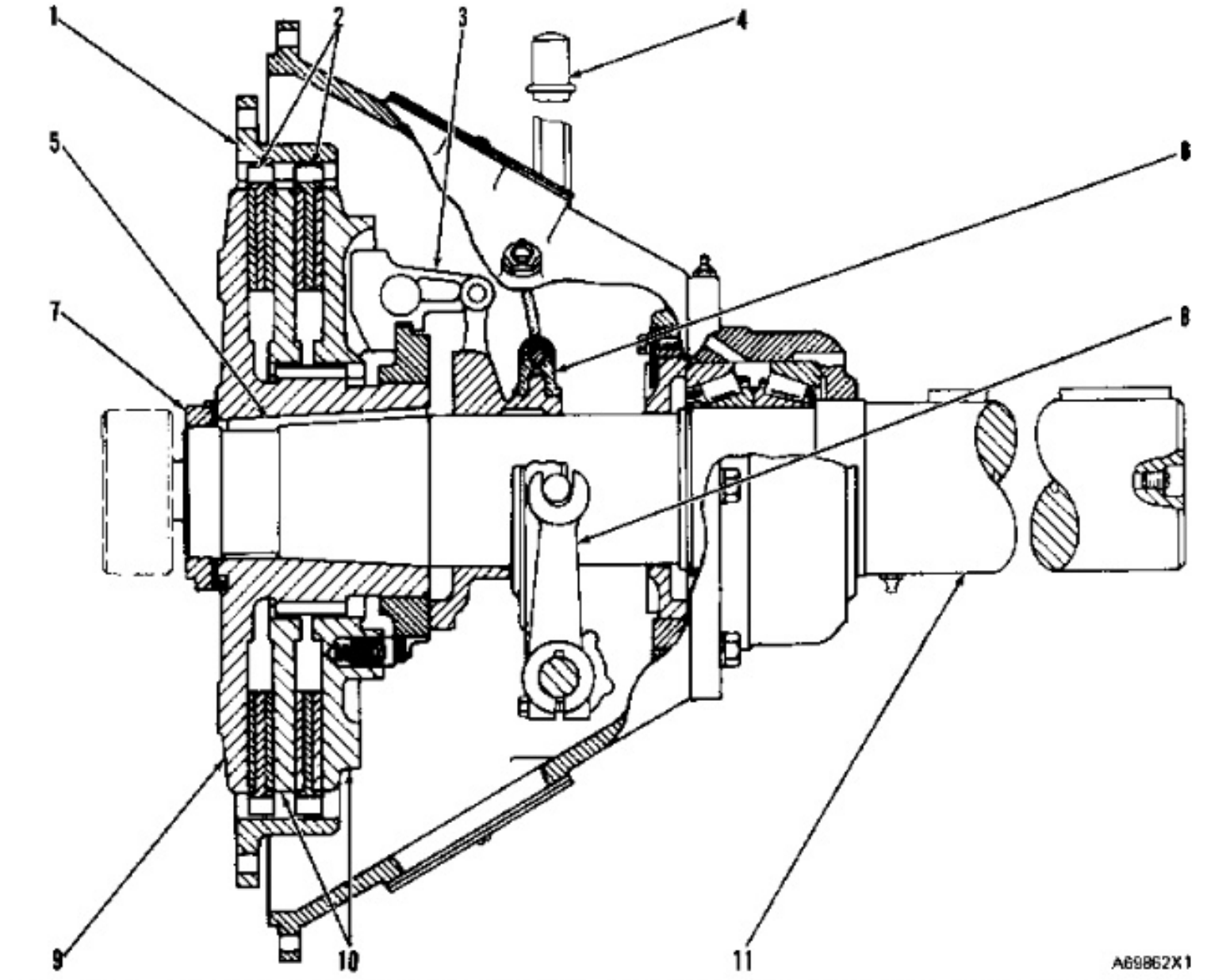

POWER TAKE-OFF CLUTCH (Typical Illustration)
1. Ring. 2. Driven discs. 3. Link assemblies. 4. Lever. 5. Key. 6. Collar assembly. 7. Nut. 8. Yoke assembly. 9. Hub. 10.

Plates. 11. Output shaft.

Power take-off clutches (PTO's) are used to send power from the engine to accessory components. For example, a PTO can be used to drive an air compressor or a water pump.

The PTO is driven by a ring (1) that has spline teeth around the inside diameter. The ring can be connected to the front or rear of the engine crankshaft by an adapter.

NOTE: On some PTO's located at the rear of the engine, ring (1) is a part of the flywheel.

The spline teeth on the ring engage with the spline teeth on the outside diameter of driven discs (2). When lever (4) is moved to the ENGAGED position, yoke assembly (8) moves collar assembly (6) in the direction of the engine. The collar assembly is connected to four link assemblies (3). The action of the link assemblies will hold the faces of driven discs (2), drive plates (10) and hub (9) tight together. Friction between these faces permits the flow of torque from ring (1), through driven discs (2), to plates (10) and hub (9). Spline teeth on the inside diameter of the plates drive the hub. The hub is held in position on the output shaft (11) by a taper, nut (7) and key (5).

NOTE: A PTO can have from one to three driven discs (2) with a respective number of plates.

When lever (4) is moved to the NOT ENGAGED position, yoke assembly (8) moves collar assembly (6) to the left. The movement of the collar assembly will release link assemblies (3). With the link assemblies released there will not be enough friction between the faces of the clutch assembly to permit a flow of torque.

Automatic Start/Stop System (Non-Package Generator Sets)

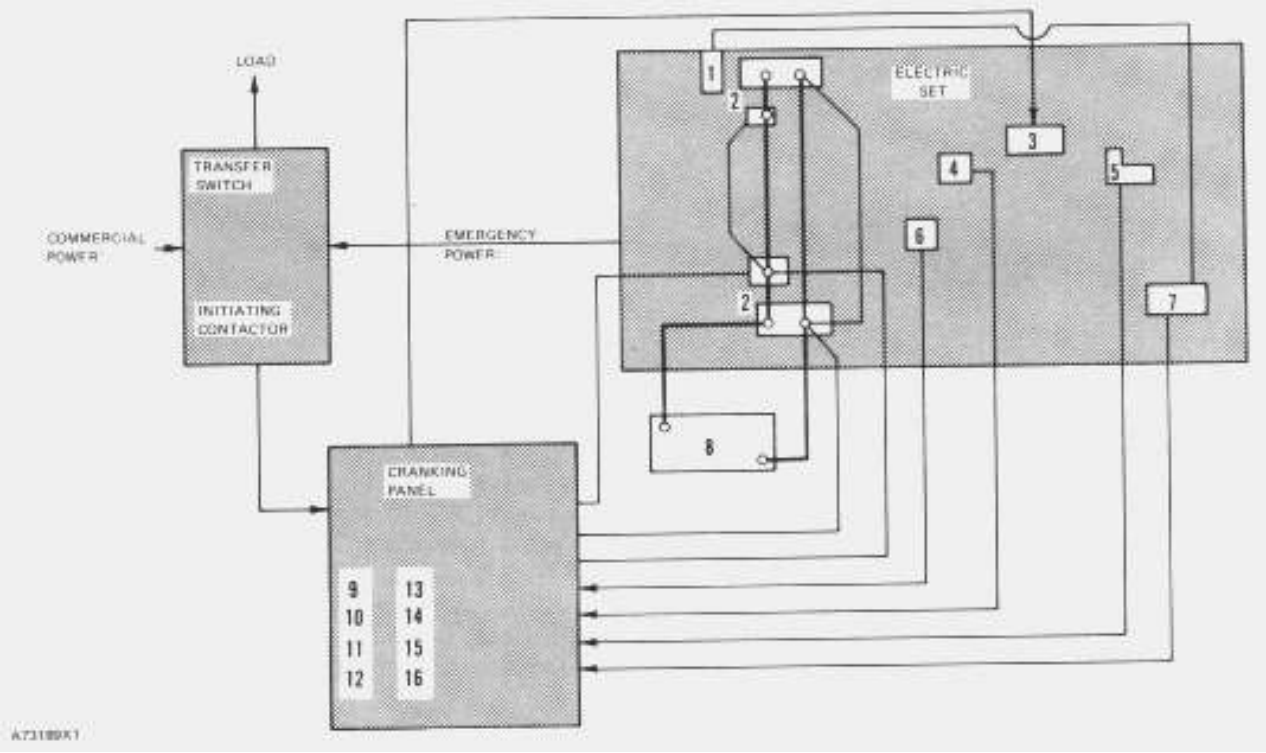

AUTOMATIC START/STOP SYSTEM SCHEMATIC (Hydraulic Governor)
1. Magnetic pickup. 2. Starter motor and solenoid. 3. Shutoff solenoid. 4. Oil pressure switch. 5. Water temperature switch. 6. Oil pressure time delay switch. 7. Electronic overspeed switch. 8. Battery. 9. Initiating relay (IR). 10. Shutdown relay (SR). 11. Auxiliary relay (AR). 12. Overcrank timer (OCT). 13. Time delay relay (TD). 14. ON/OFF/STOP switch (SW2).

15. AUTOMATIC/MANUAL switch (SW1). 16. Terminal board (TS1).

An automatic start/stop system is used when a standby electric set has to give power to a system if the normal (commercial) power supply has a failure. There are three main sections in the system. They are: the automatic transfer switch, the cranking panel and the electric set.

Automatic Transfer Switch

The automatic transfer switch normally connects the 3-phase normal (commercial) power supply to the load. When the commercial power supply has a failure the switch will transfer the load to the standby electric set. The transfer switch will not transfer the load from commercial to emergency power until the emergency power gets to the rated voltage and frequency. The reason for this is the solenoid that causes the transfer of power operates on the voltage from the standby electric set. When the normal power returns to the rated voltage and frequency and the time delay (if so equipped) is over, the transfer switch will return the load to the normal power supply.

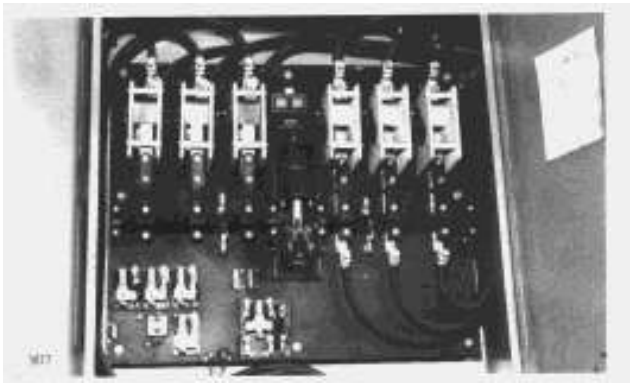

AUTOMATIC TRANSFER SWITCH

Cranking Panel

The main function of the cranking panel is to control the start and shutoff of the electric set.

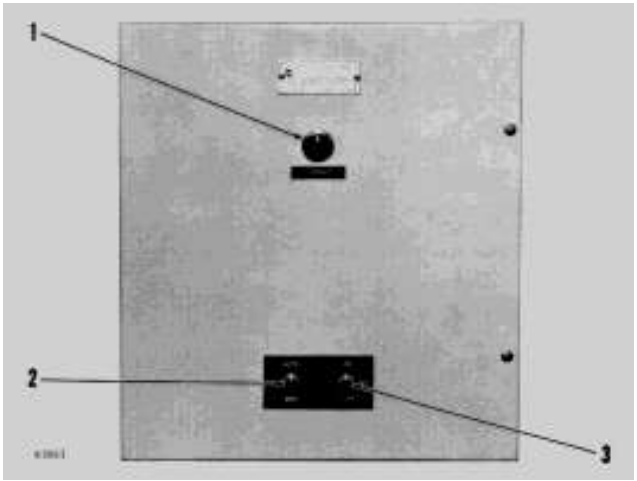

BASIC CRANKING PANEL
1. Indicator light. 2. Manual-Automatic switch. 3. ON-OFF-STOP switch.

LOCKOUT indicator light (1) will activate if, the engine does not start, or if a protection device gives the signal to shutoff during operation.

Switch (2) gives either AUTOMATIC or MANUAL starting. In the diagrams shown later this switch is called SW1. Switch (3) has three positions "ON", "OFF" and "STOP". This switch is called SW2 in the diagrams. Move SW2 (3) to ON and SW1 (2) to MAN to start the engine immediately. Move SW2 (3) to OFF on an electric set in operation to start the shutoff sequence. If the system is equipped with a time delay the engine will not stop immediately. When SW2 (3) is moved to the STOP position the engine stops immediately. The switch must be held in the STOP position until the engine stops. When the switch is released a spring returns it to the OFF position. With SW2 (3) in the ON position and SW1 (2) in the AUTO position the control is ready for standby operation.

There are several attachments that can be ordered for this panel. A description of how each one works and the effect it has on the operation of the standard system is given after the explanations of the standard system.

Electric Set

The components of the electric set are: the engine, the generator, the starting motor, the battery, the shutoff solenoid and signal switches on the engine. The electric set gives emergency power to drive the load.

An explanation of each of the signal components is given in separate topics.

Hydraulic Governor Application

The circuit illustrations that follow are basic schematics. DO NOT use them as complete wiring diagrams.

AR
: Auxiliary relay

CB
: Circuit breaker

CR
: Cranking relay

CT
: Cranking terminate relay (part of OS)

D
: Diode

IR
: Initiating relay

MS
: Magnetic switch

OCT
: Overcrank timer

OPS
: Oil pressure shutdown switch

OPTD
: Oil pressure time delay switch

OS
: Overspeed shutdown switch

PS
: Pinion solenoid

RR
: Run relay

RS

Fuel Shutoff Solenoid

SM

Starting motor

SR

Shutdown relay

SW1

Automatic/Manual switch

SW2

On/Off/Stop switch

WT

Water temperature shutdown switch

Automatic Starting Operations

When emergency power is needed, the initiating contactor closes. This energizes the initiating relay and the run relay. The current flow through the initiating relay contacts then energizes the magnetic switch, which energizes the pinion solenoid. The starting motor is now connected to the battery. The starting operation starts. At the same time the overcrank timer is energized and starts to run.

At 600 rpm the cranking terminate relay closes. Oil pressure causes oil pressure shutdown switch (OPS) to activate. The normally closed contacts open and the normally open contacts close. When oil pressure shutdown switch (OPS) activates, the auxiliary relay is energized and current flow to the magnetic switch and pinion solenoid is stopped. The starting operation then stops.

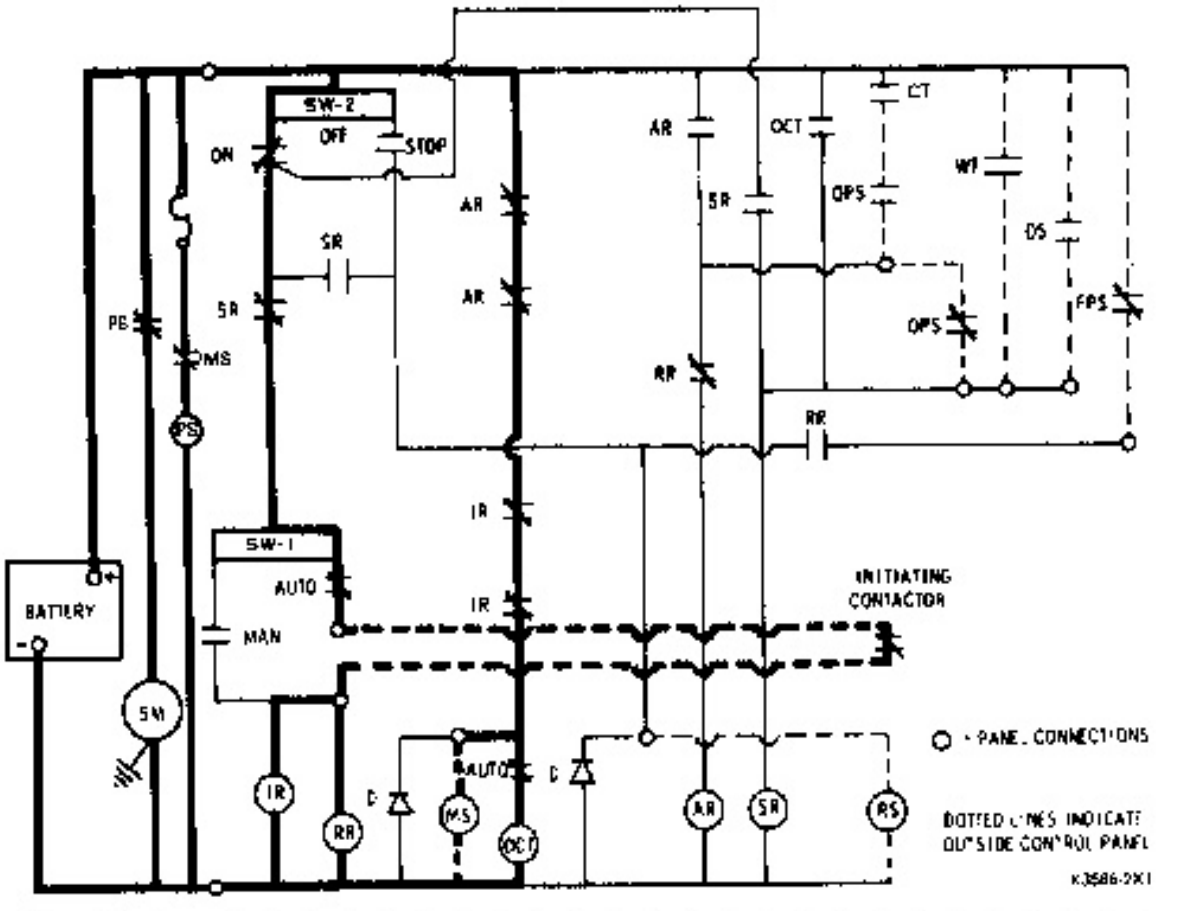

CONTROL PANEL CONTROLS IN AUTOMATIC POSITION; ENGINE STARTING

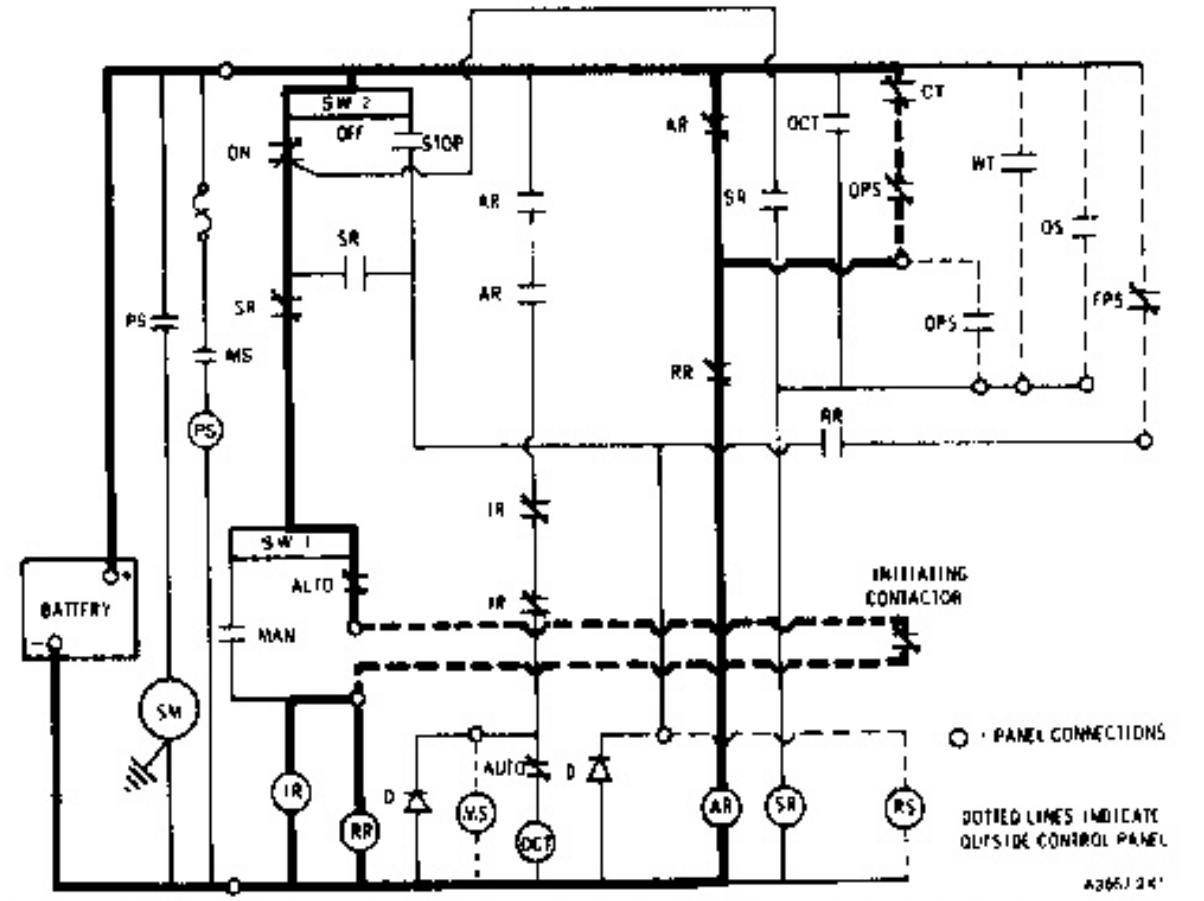

CONTROL PANEL CONTROLS IN AUTOMATIC POSITION; ENGINE STARTS

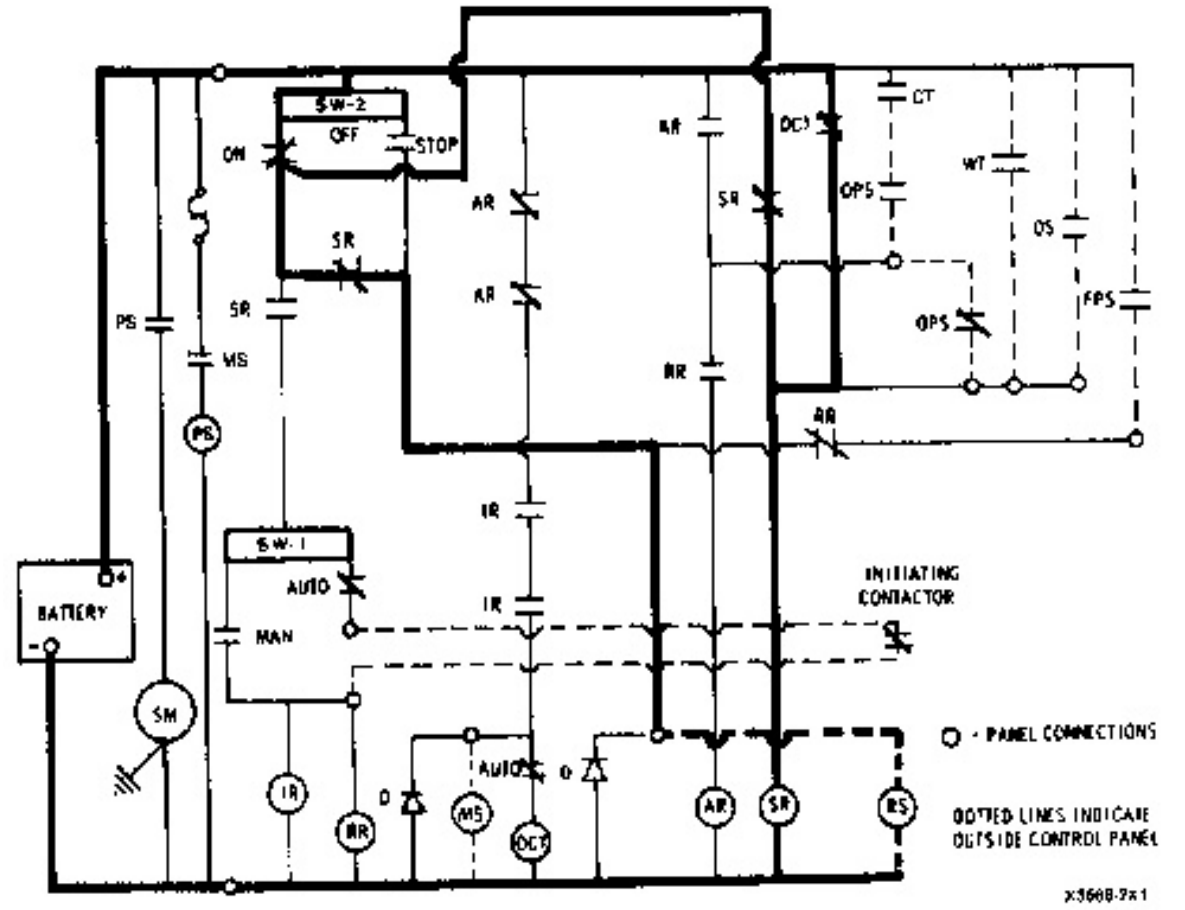

CONTROL PANEL CONTROLS IN AUTOMATIC POSITION; ENGINE DOES NOT START

If the engine does not start in 30 seconds, the overcrank timer contact closes. This energizes the shutdown relay and the alarm light. The shutdown relay stops current flow to the initiating relay and the run relay. De-energizing the run relay also stops current flow to the auxiliary relay. When the shutdown relay is energized, the magnetic switch and the pinion solenoid are de-energized. The starting operation then stops. The shutdown relay also energizes the shutoff solenoid to move the fuel control shaft to the fuel OFF position. The shutdown relay is energized until switch (SW2) is manually turned to the OFF position.

Automatic Stopping Operations

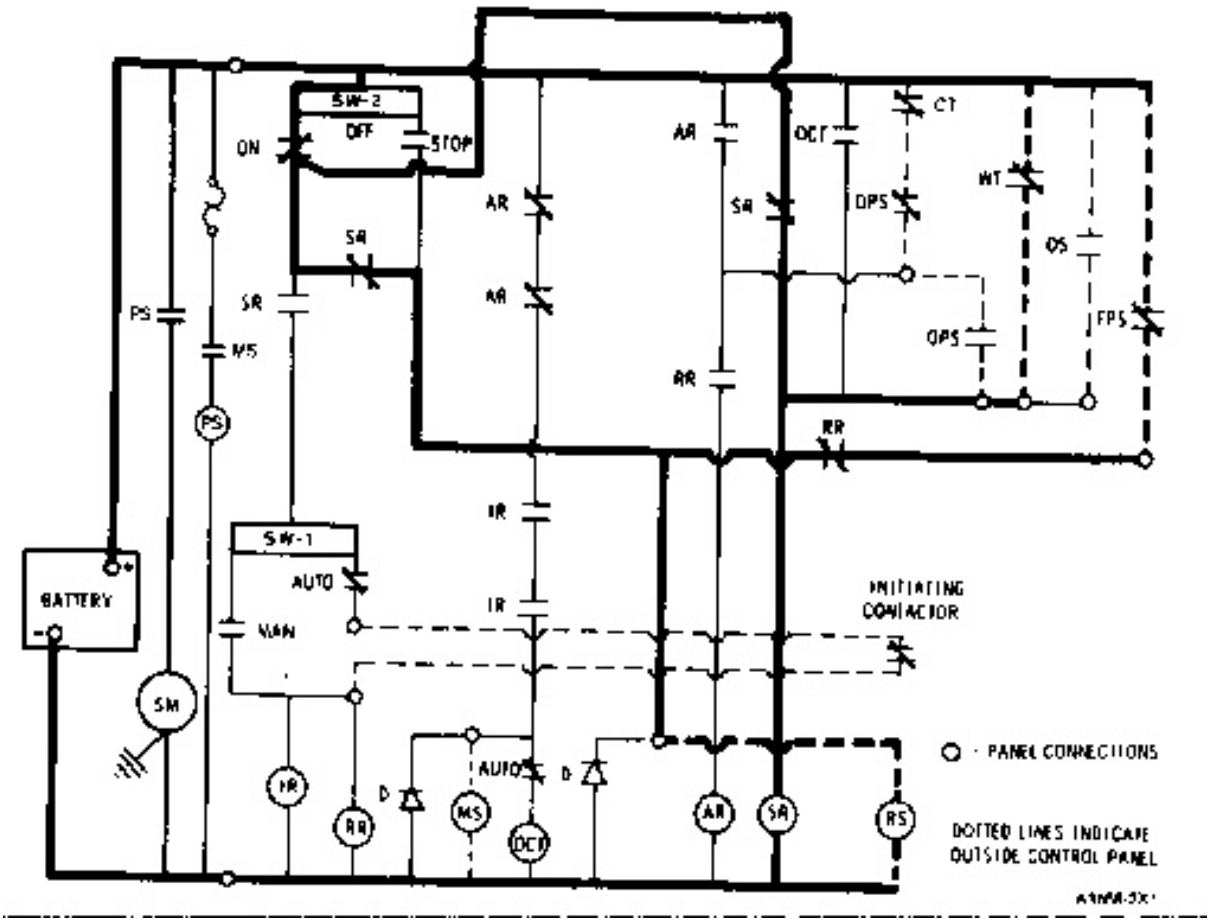

CONTROL PANEL CONTROLS IN AUTOMATIC POSITION; SHUTDOWN BY PROTECTION COMPONENT

When the contacts for any of the shutdown switches close, the shutdown relay and the alarm light are energized. This de-energizes the initiating relay, run relay and auxiliary relay. The shutoff solenoid is energized to move the fuel control shaft to the fuel OFF position. A parallel circuit through the fuel pressure switch and the normally closed contact of the run relay is also completed to the shutoff solenoid. The shutdown relay is energized until switch (SW2) is manually turned to the OFF position.

When commercial power is started again, the initiating contactor opens. This de-energizes the initiating relay, the run relay and the auxiliary relay. Current then goes through the normally closed contact of the run relay to the shutoff solenoid. The shutoff solenoid is energized to move the fuel control shaft to the FUEL OFF position.

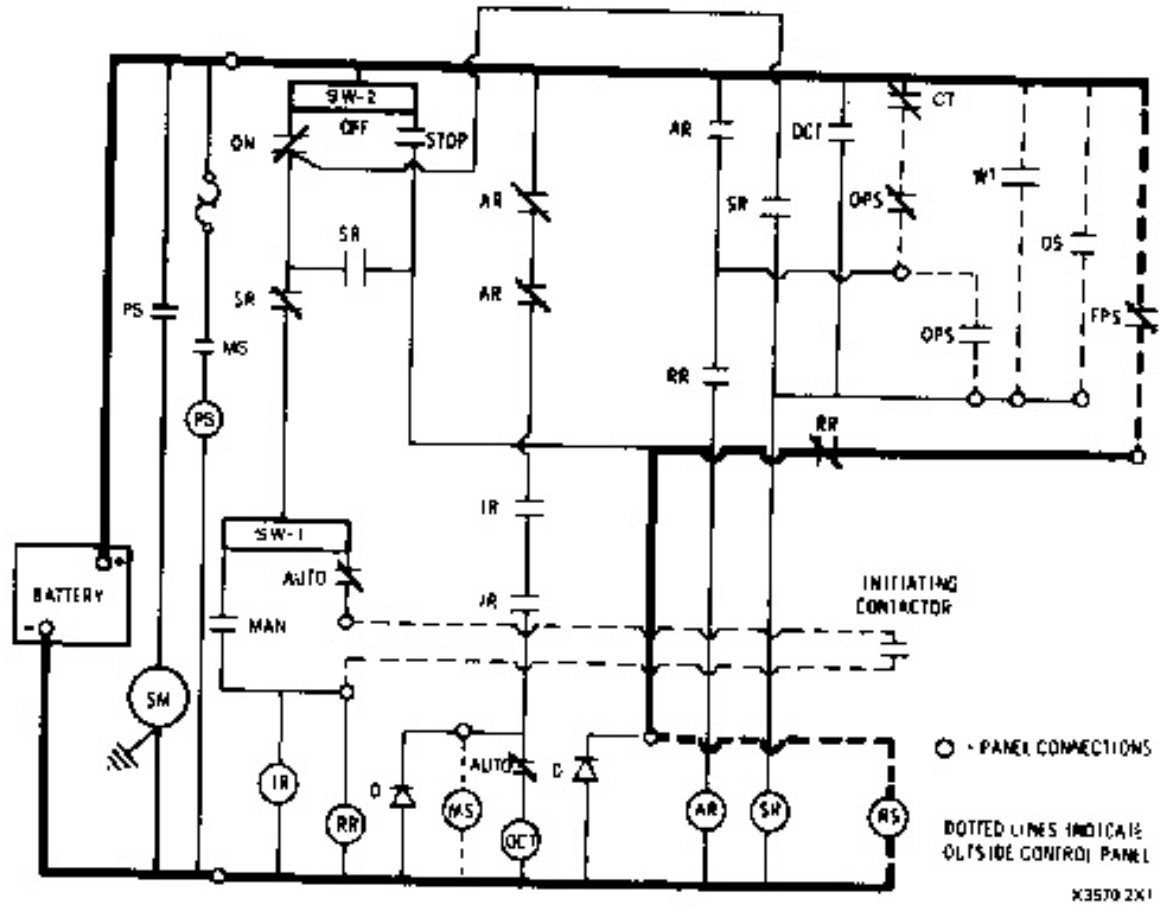

CONTROL PANEL CONTROLS IN AUTOMATIC POSITION; EMERGENCY POWER NOT NEEDED

Manual Starting Operation

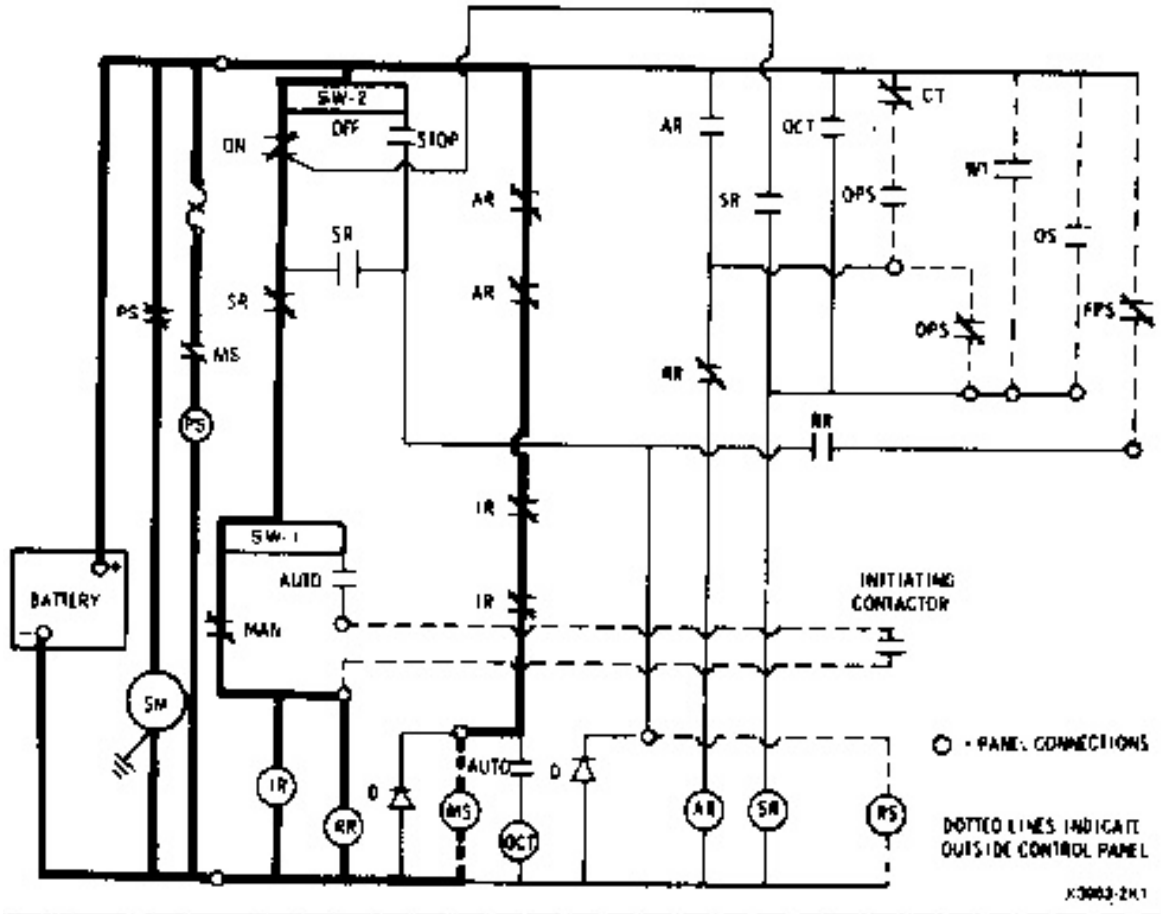

CONTROL PANEL CONTROLS IN MANUAL POSITION; ENGINE STARTING

Switch (SW1), in the MANUAL position, removes the initiating contactor from the circuit. In the MANUAL Position the initiating relay and the run relay are energized. This energizes the magnetic switch and the pinion solenoid. The starting motor is now connected to the battery. The starting operation starts. The overcrank timer is not in this circuit, so if the engine does not start, either switch (SW1) or (SW2) must be turned to another position to stop the starting operation. When the engine starts, the magnetic switch and the pinion solenoid are de-energized in the same way they are de-energized when the engine starts in the AUTOMATIC position.

Manual Stopping Operation

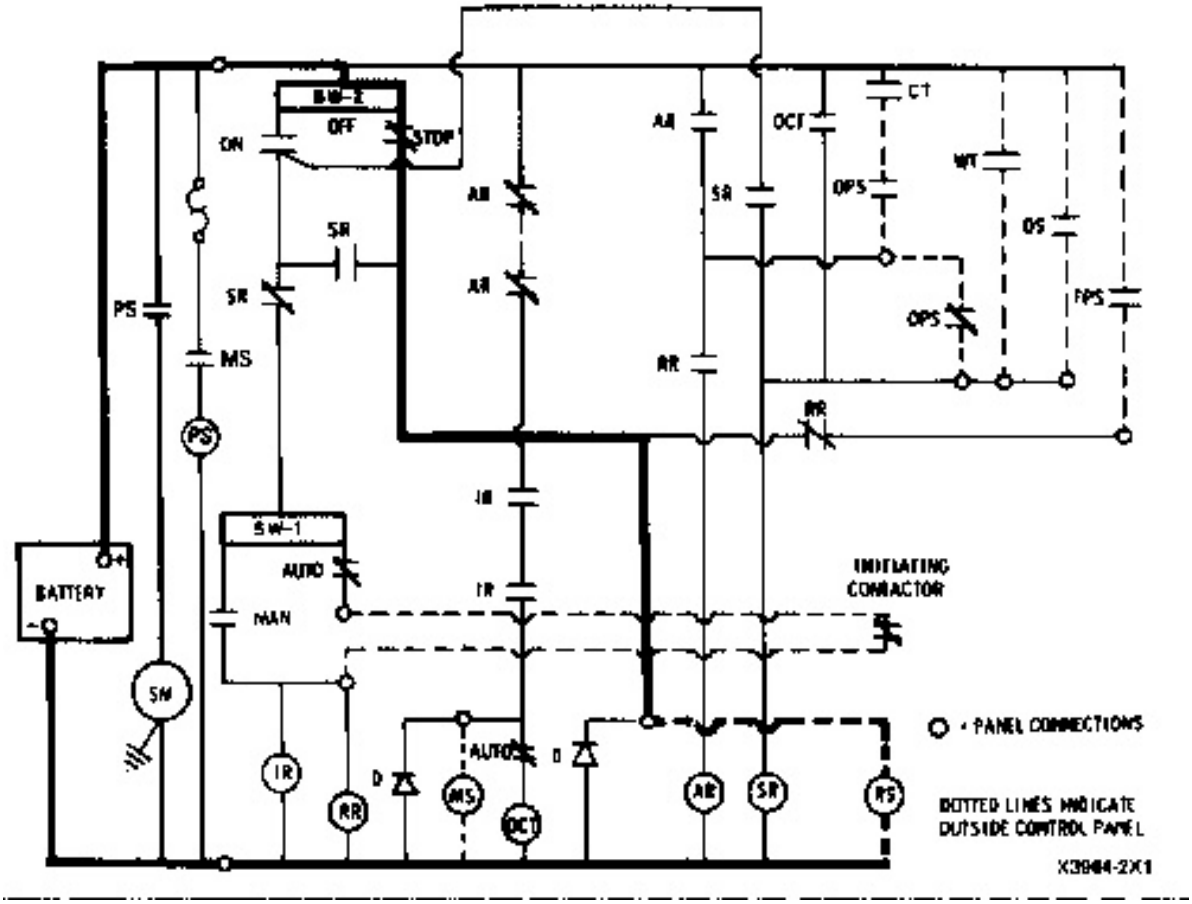

CONTROL PANEL CONTROLS IN AUTOMATIC POSITION; MANUAL SHUTDOWN

When switch (SW2) is move to the STOP position, current flow is directly to the shutoff solenoid. The shutoff solenoid moves the fuel control shaft to the fuel OFF position. The initiating relay, run relay and auxiliary relay are de-energized. Switch (SW2) must be held in the STOP position until the engine stops.

Attachments For Cranking Panel

Separate Alarm Lights

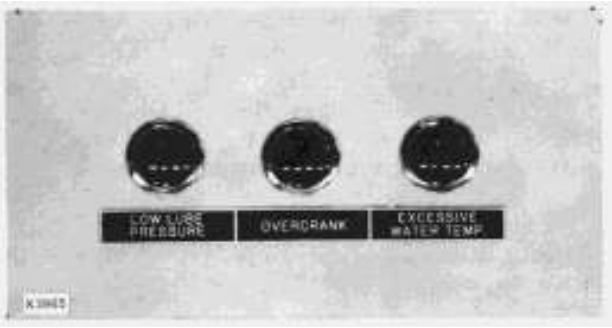

SEPARATE ALARM LIGHTS

This attachment shows the reason for shutdown.

Cycle Cranking Timer

The cycle cranking timer has a cycle crank module (CC). It permits adjustment of the amount of time that the starting motor operates. It can be set for 30 seconds of constant operation to 5 cycles of 10 seconds of operation with a 10 second delay between each cycle of operation. When the cranking cycles set in the timer are completed, cycle crank module (CC) closes the circuit to the overcrank relay (OCT).

Time Delay Relay

This attachment causes a 2 minute delay in the activation of the shutoff solenoid (RS) when the engine is automatically being stopped because of the return of (commercial) normal power.

The purpose of this time delay is to let the engine cool more slowly after running.

When the (commercial) normal power starts again, the initiating contactor (1) opens. This opens the circuit to the run relay (RR) and initiating relay (IR). The run relay (RR) has normally closed contacts which connect the oil pressure time delay switch (OPTD) with the time delay relay (TD). The oil pressure time delay switch (OPTD) is closed at this time. The time delay relay (TD) starts to measure time. After 2 more minutes of engine operation, the time delay relay (TD) activates. It closes its normally open contacts in the circuit between the oil pressure time delay switch (OPTD) and the shutoff solenoid (RS). Because the oil pressure time delay switch (OPTD) is closed, the circuit is now closed to the shutoff solenoid (RS): The shutoff solenoid (RS) activates. It moves the fuel control shaft to the FUEL OFF position. This makes the engine stop running.

If the (commercial) normal power stops before the engine stops turning, the engine can start running again immediately. This is because the initiating contactor (I) closes again. This closes the circuit to run relay (RR) and initiating relay (IR). The run relay (RR) activates and opens its normally closed contacts in the circuit with the time delay relay (TD). The time delay relay (TD) is now disconnected so it opens its normally open contacts in the circuit with the shutoff solenoid (RS). The shutoff solenoid (RS) releases the fuel in the fuel injection pump. The governor now controls the fuel supply to the engine. The governor gives the engine more fuel to make the speed increase to the correct speed for the engine.

If the initiating contactor (I) closes just as the engine stops turning, the starting motor can activate almost immediately. This is because the oil pressure switch (OPS) is activated by engine oil pressure. When the engine stops running, the oil pressure decreases faster than the engine stops its motion. If the engine does not start running again because of the force of rotation of the flywheel, the engine oil pressure does not increase to activate the oil pressure switch (OPS). If the oil pressure switch (OPS) does not activate, the starting motor (SM) activates when the initiating relay (IR) closes its contacts.

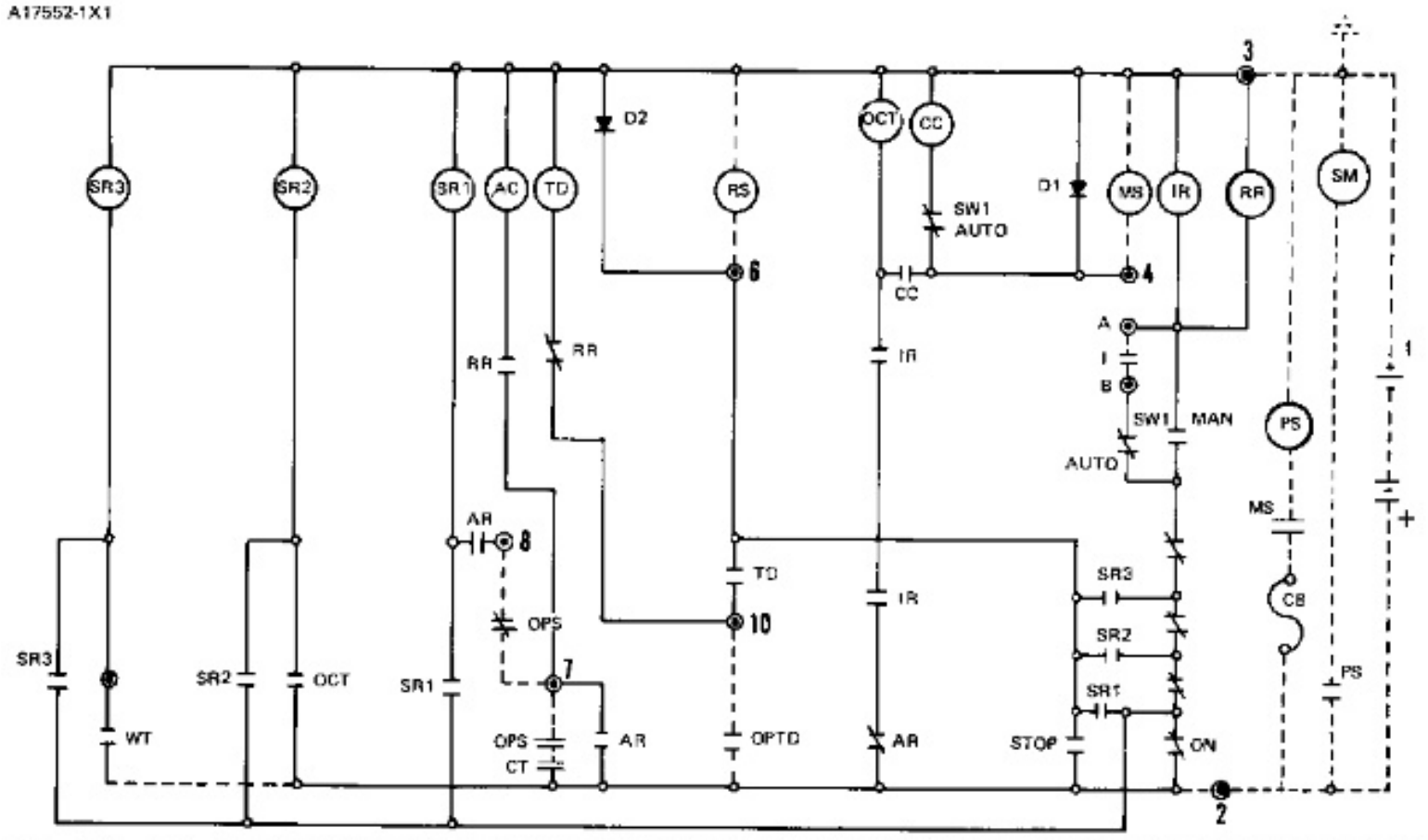

SCHEMATIC OF CONTROL PANEL (SHOWS ALL STANDARD ATTACHMENTS) (ALL COMPONENTS ARE SHOWN IN NORMAL CONDITIONS)

The components are:

AR	Auxiliary relay
BATT	Battery
CC	Cycle cranking timer
CT	Cranking terminate relay (part of OS)
D1 and D2	Diodes
I	Initiating contactor
IR	Initiating relay
MS	Magnetic switch
OCT	Overcrank timer
OPS	Oil pressure shutdown switch
OPTD	Oil pressure time delay switch
RR	Run relay
RS	Fuel shutoff solenoid
SM	Starting motor
SR-1, 2, 3	Shutdown relays
SW1	Automatic/Manual switch
SW2	On/Off/Stop switch
TD	Time delay relay
WT	Water temperature shutoff switch
⊙	Terminals in cranking panel

NOTE: Dotted lines show components outside the cranking panel.

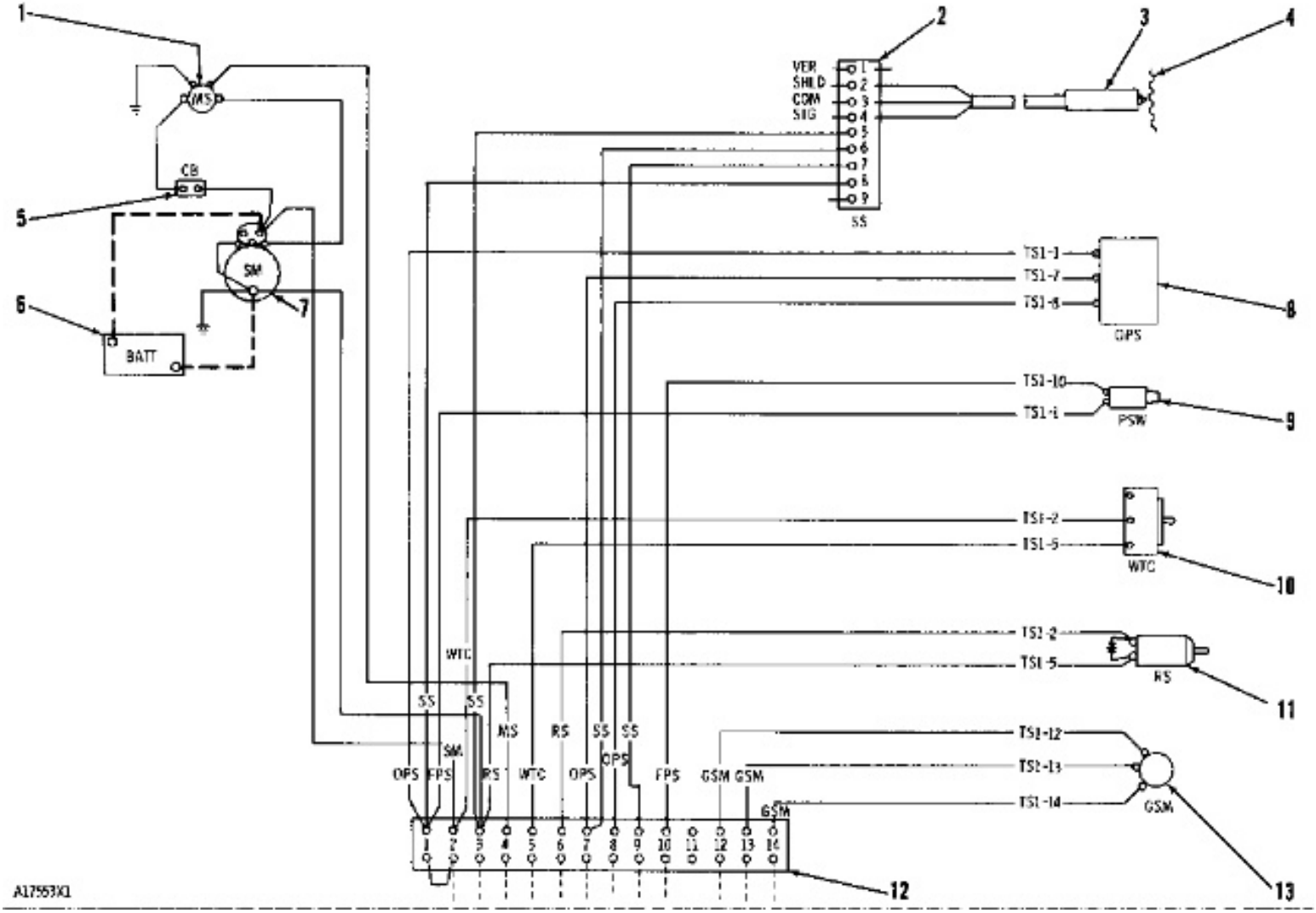

WIRING DIAGRAM FOR AUTOMATIC START-STOP SYSTEM (EARLIER)

1. Magnetic switch. 2. Terminals (on electronic speed switch). 3. Magnetic pickup. 4. Flywheel. 5. Circuit breaker. 6. Battery. 7. Starting motor. 8. Oil pressure switch. 9. Pressure switch with time delay. 10. Water temperature contactor. 11. Shutoff solenoid. 12. TS1. 13. Synchronizing motor for Woodward PSG Governor.

https://barringtondieselclub.co.za/

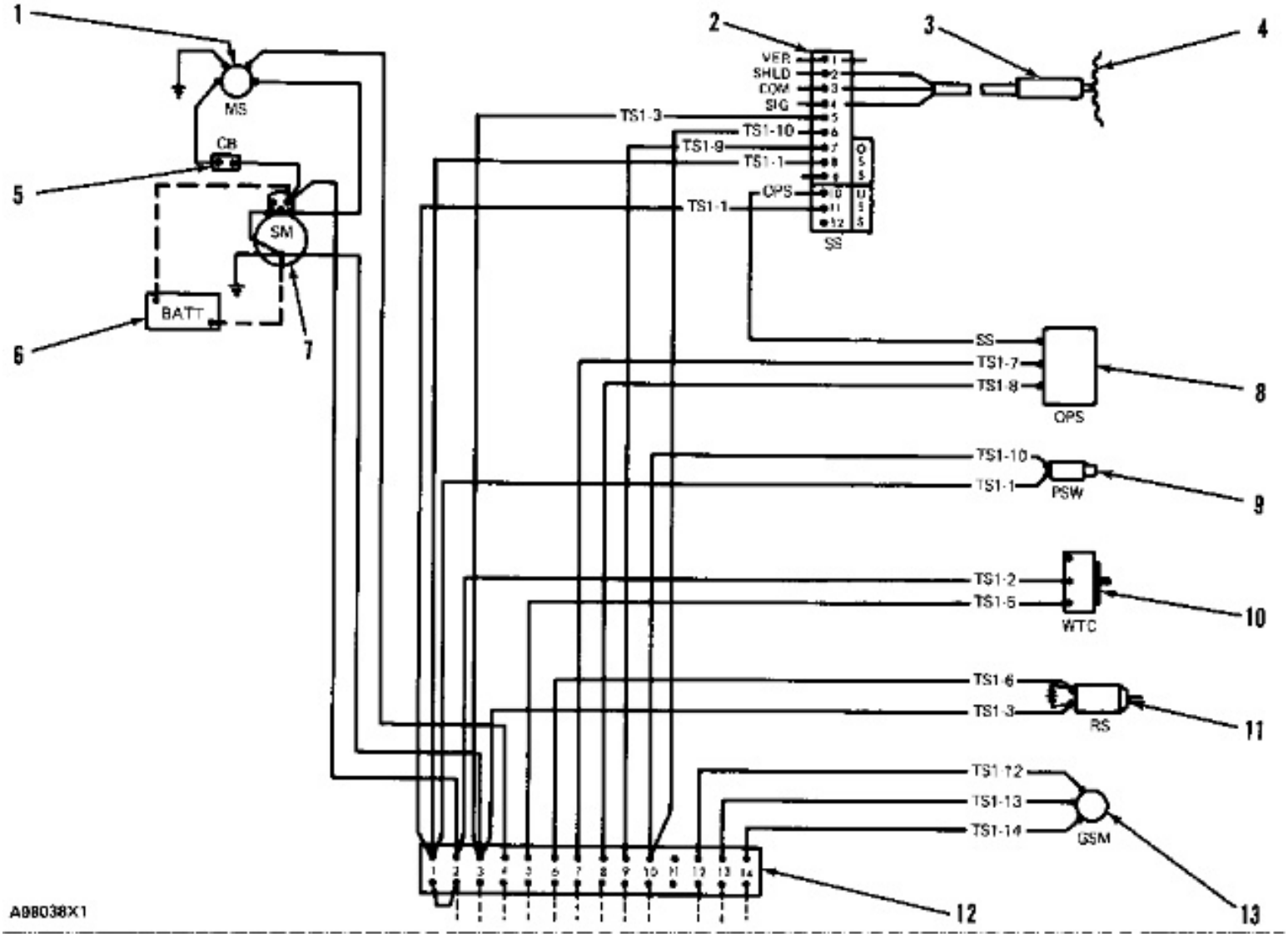

WIRING DIAGRAM FOR AUTOMATIC START-STOP SYSTEM (LATER)
1. Magnetic switch. 2. Terminals (on electronic speed switch). 3. Magnetic pickup. 4. Flywheel. 5. Circuit breaker. 6. Battery. 7. Starting motor. 8. Oil pressure switch. 9. Pressure switch with time delay. 10. Water temperature contactor. 11. Shutoff solenoid. 12. TS1. 13. Synchronizing motor for Woodward PSG Governor.

Instrument Panel

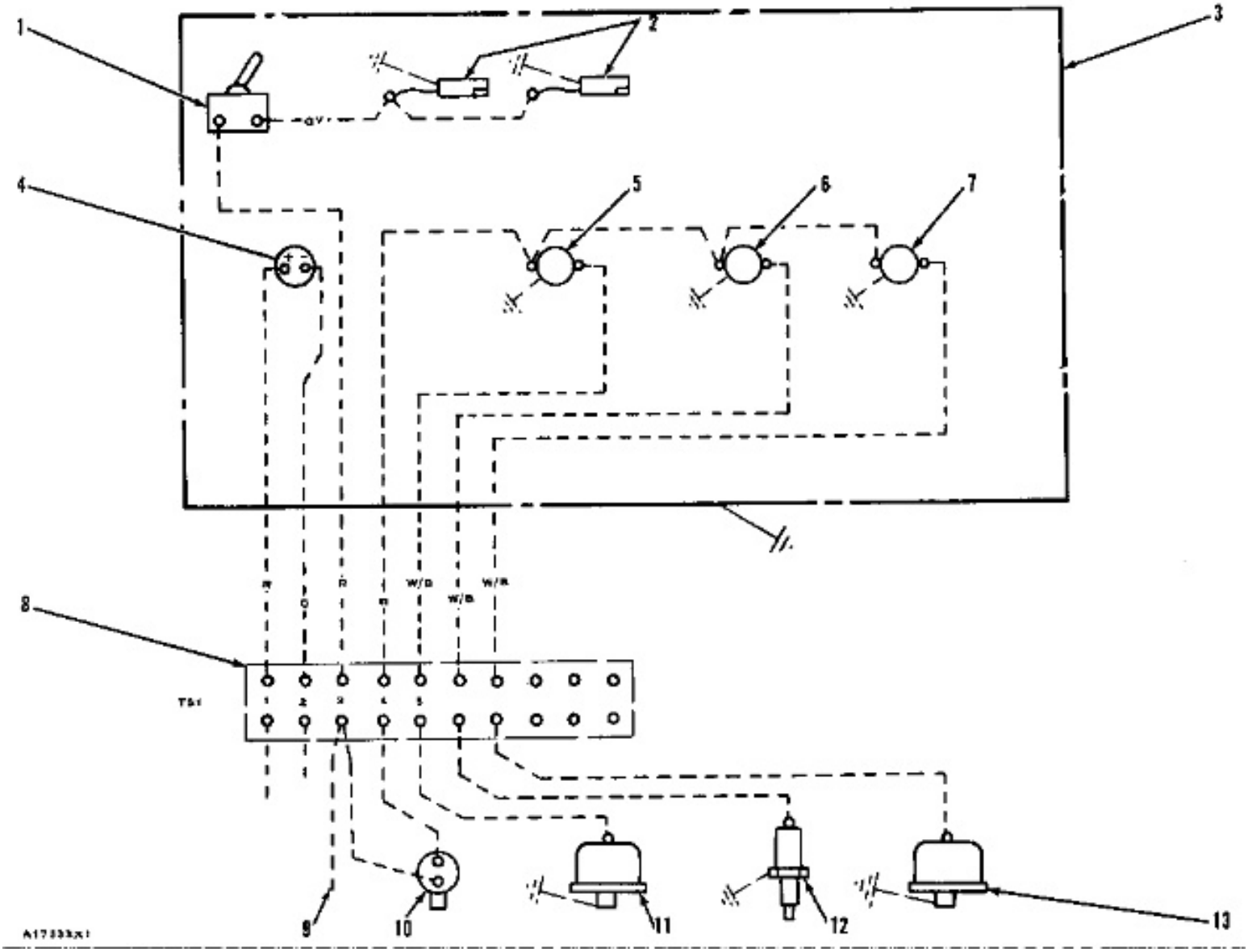

WIRING DIAGRAM FOR INSTRUMENT PANEL

1. Light switch. 2. Panel lights. 3. Instrument panel. 4. Ammeter. 5. Oil pressure gauge. 6. Water temperature gauge. 7. Gear oil pressure gauge. 8. Terminal strip. 9. Wire to battery. 10. Oil pressure switch with time delay. 11. Sending unit for oil pressure. 12. Sending unit for water temperature. 13. Sending unit for gear oil pressure.

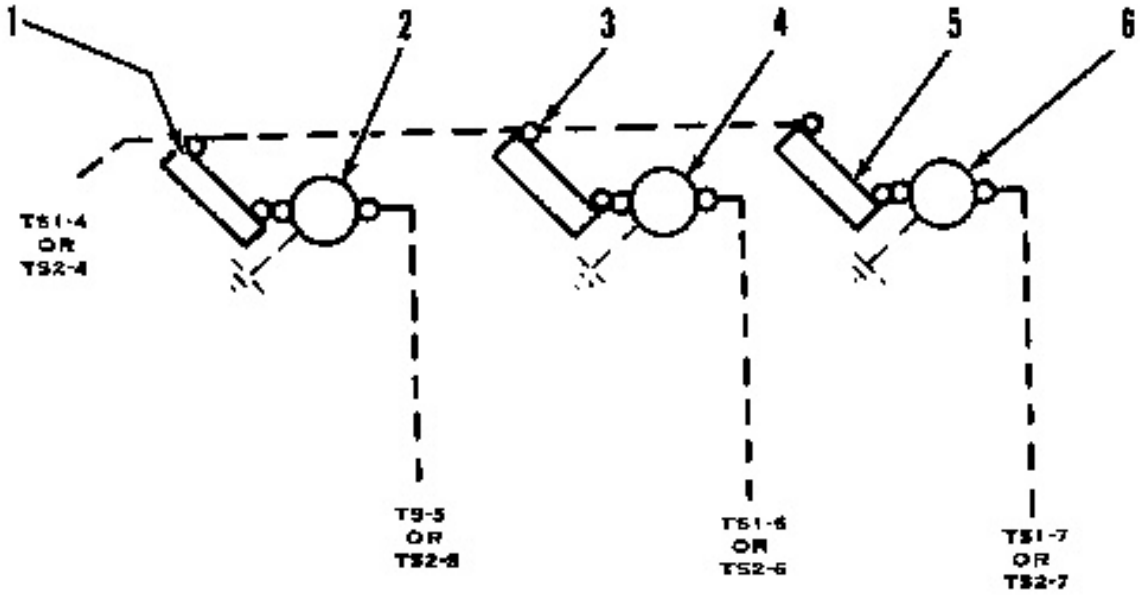

GAUGES WITH RESISTORS FOR 32 VOLT SYSTEM
1. Resistor. 2. 0-80 psi oil pressure gauge. 3. Resistor. 4. 100°-240° F water temperature gauge. 5. Resistor. 6. 0-300 psi gear oil pressure gauge.

Electrical Gauges And Sending Units

The electrical gauges and sending units operate in electrical balance. Because of this, the voltage and resistance ratings are important to get the correct indications on the gauges. The chart shows components that operate together.

GAUGE	12V	24V	32V
WATER TEMPERATURE			
Sender Gauge Resistor	5L7443 5L7446 _____	5L7442 5L7444 _____	5L7442 5L7444 5L7441
OIL PRESSURE			
Sender Gauge Resistor	5L7450 5L7455 _____	5L7450 5L7456 _____	5L7450 5L7456 5L7441
GEAR OIL PRESSURE			
Sender Gauge Resistor	5L7449 5L7454 _____	5L7449 5L7451 _____	5L7449 5L7451 5L7441

Sending Unit for Water Temperature

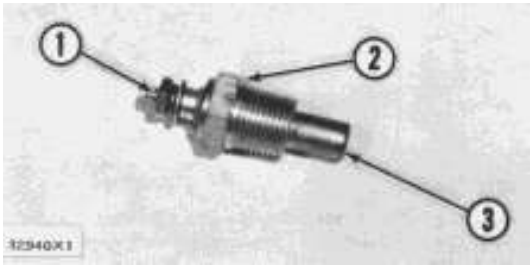

SENDING UNIT FOR WATER TEMPERATURE
1. Connection. 2. Bushing. 3. Bulb.

The sending unit for water temperature is an electrical resistance. It changes the value of its resistance according to the temperature which the bulb (3) feels.

The sending unit is in a series circuit with the electrical gauge. When the temperature is high, the resistance is high. This makes the gauge have a high reading.

The sending unit must be in contact with the coolant. If the coolant level is too low because of a sudden loss of coolant while the engine is running or because the level is too low before starting the engine, the sending unit will not work correctly.

Sending Unit for Oil Pressure

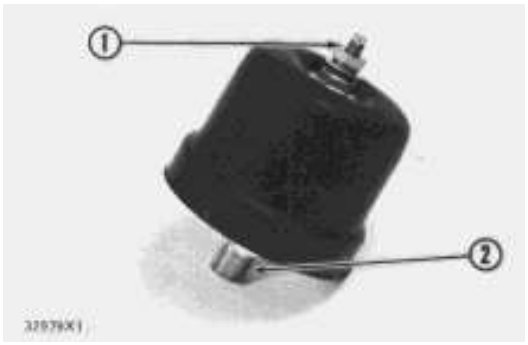

SENDING UNIT FOR OIL PRESSURE
1. Connection. 2. Fitting.

The sending unit for oil pressure is an electrical resistance. It has a material which changes electrical resistance according to pressure which it feels.

The sending unit for oil pressure is in a series circuit with the electrical gauge. As the pressure on the sending unit changes, the reading on the gauge changes in the same way.

Electric Hour Meter

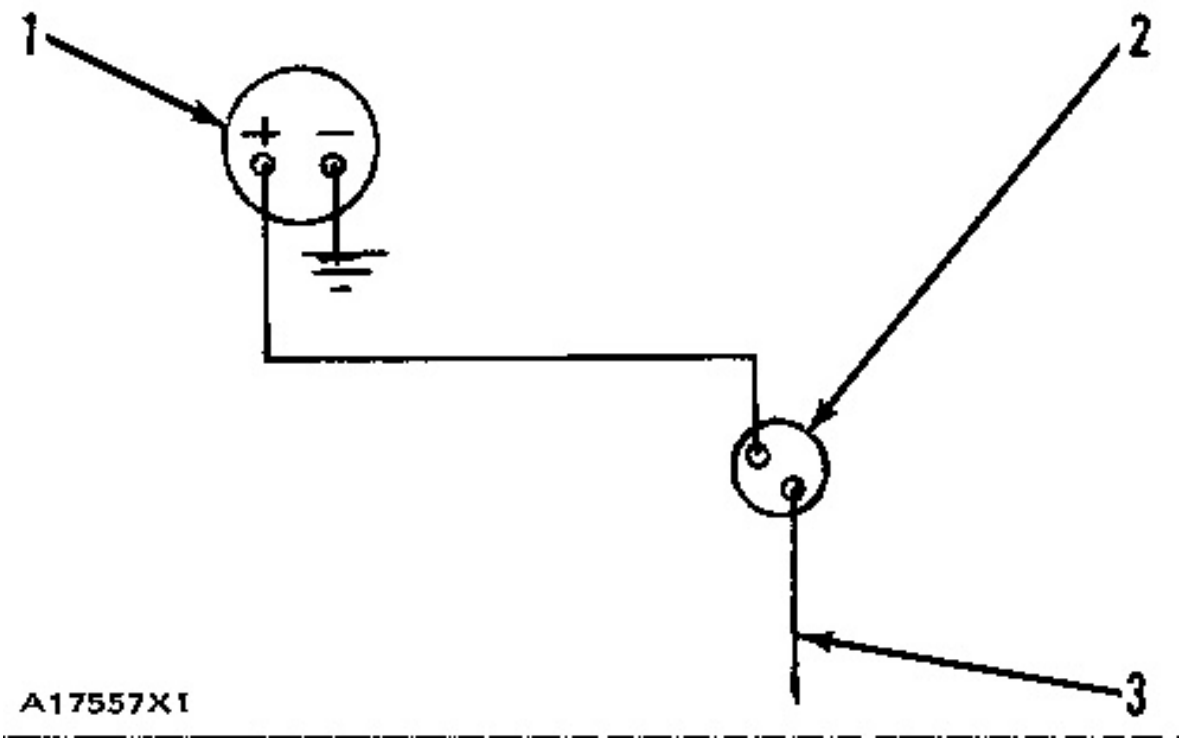

WIRING DIAGRAM FOR ELECTRIC HOUR METER
1. Electrical hour meter. 2. Pressure switch. 3. To alternator or battery.

The electric hour meter (1) measures the clock hours that the engine operates. The electric hour meter (1) activates when the pressure switch (2) closes. The pressure switch (2) closes the circuit from the positive terminal on the alternator or battery when the engine oil pressure is above approximately 6 psi (40 kPa).

Wiring Diagrams

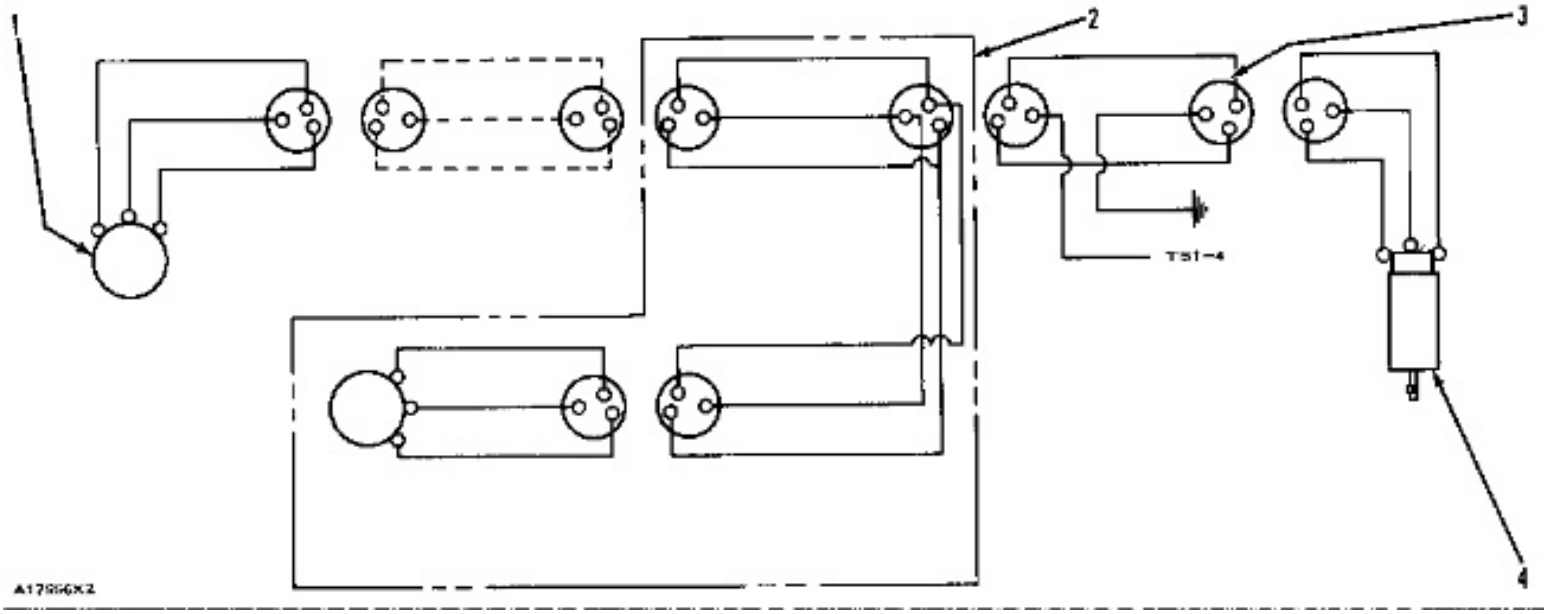

TACHOMETER WIRING DIAGRAM (EARLIER)
1. Tachometer. 2. "Y" connecting harness (used only for engines with two tachometers). 3. Cable and socket assembly. 4. Tachometer sending unit.

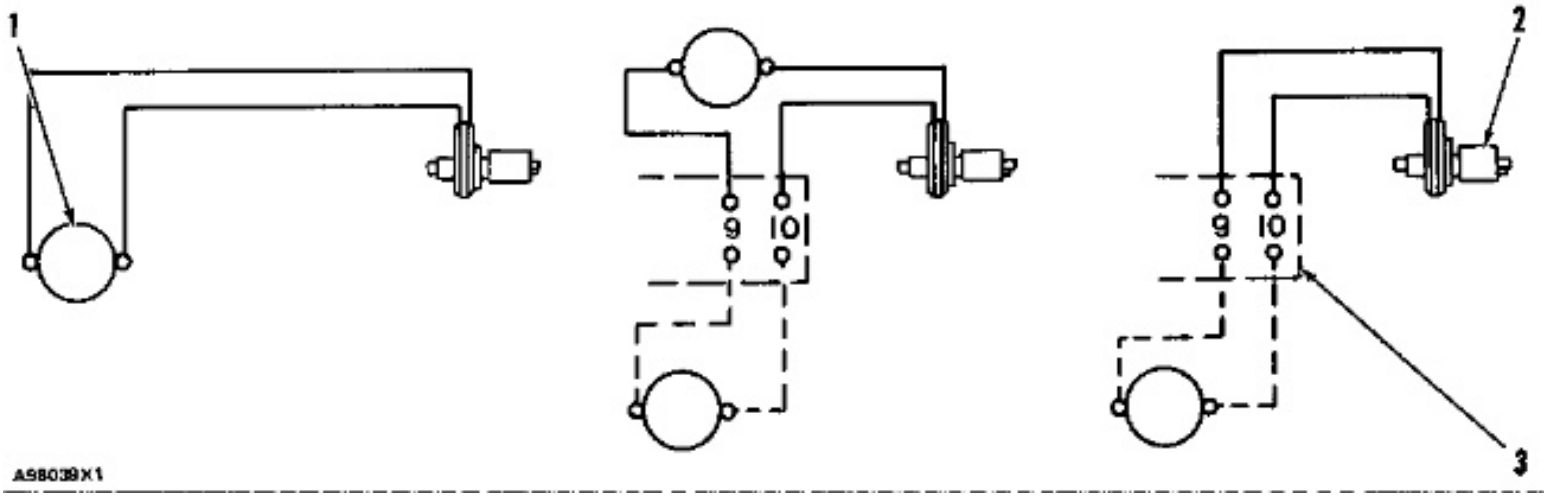

TACHOMETER WIRING DIAGRAM (LATER)
1. Tachometer. 2. Sending Unit. 3. TS1.

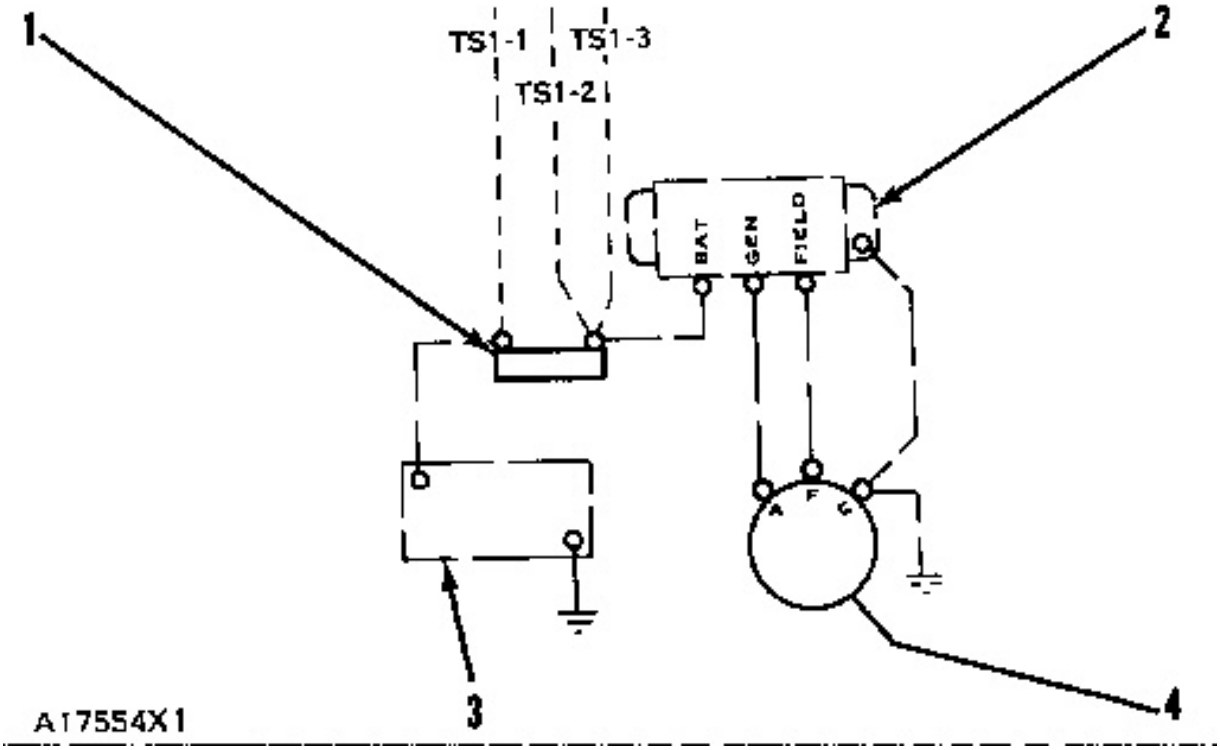

CHARGING SYSTEM
1. Shunt. 2. Regulator. 3. Battery. 4. Alternator.

TABLE OF CALIBRATED LEADS	
LENGTH OF EACH LEAD (AMMETER TO SHUNT) IN FEET.	WIRE SIZE (AWG NO.)
7.7	18
12.2	16
19.4	14
31.0	12
49.0	10
78.0	8
124.0	6
IF LENGTHS OTHER THAN THOSE GIVEN ON THIS TABLE ARE REQUIRED THE TOTAL RESISTANCE OF BOTH LEADS TO BE .100 OHM.	

Troubleshooting

Troubleshooting can be difficult. On the following pages there is a list of possible problems. To make a repair to a problem, make reference to the cause and correction.

This list of problems, causes, and corrections, will only give an indication of where a possible problem can be, and what repairs are needed. Normally, more or other repair work is needed beyond the recommendations in the list. Remember that a problem is not normally caused only by one part, but by the relation of one part with other parts. This list can not give all possible problems and corrections. The serviceman must find the problem and its source, then make the necessary repairs.

1. Contactor Switch for Water Temperature Does Not Activate Shutoff Solenoid.
2. Contactor Switch for Water Temperature Activates Shutoff Solenoid at Wrong Temperature.
3. Contactor Switch for Oil Pressure Fails to Activate Shutoff Solenoid.
4. Contactor Switch for Overspeed Fails to Activate Shutoff Solenoid.
5. Contactor Switch for Overspeed Activates Shutoff Solenoid at Wrong Speed.
6. Shutoff Solenoid Fails to Stop Engine.
7. Shutoff Solenoid Prevents Engine Start.
8. Clutch Will Not Engage (Slips), Heats or Lever Moves to Released Position.
9. Clutch Shaft Has Too Much End Play.
10. Clutch Bearings Have Short Service Life.
11. Mechanical Shutoff Fails To Stop Engine Because Of Low Oil Pressure.
12. Mechanical Shutoff Does Not Stop Engine When Coolant Temperature Is Too High.
13. Mechanical Shutoff Will Not Let Engine Start.
14. Electrical Gauges Give Wrong Readings.
15. PSG Governors.
a. Engine Speed Does Not Have Stability.
b. Vibration At Governor Output Shaft.
c. Fuel Control Response When The Engine Is Started Is Not Acceptable.
d. Engine Has Slow Response To A Change In Speed Setting Or Load.
e. No Output From Governor.
f. Engine Will Not Drive Full Rated Load.
g. Load Sharing Between Paralleled Units Is Not Correct (One unit on zero droop all others on droop).
h. Load Sharing Between Paralleled Units Is Not Correct (all units on droop).
16. Automatic Start/Stop Systems.

Contactor Switch For Water Temperature Does Not Activate Shutoff Solenoid

Cause	Correction
Wrong Connections	Connect battery to C and shutoff solenoid to NO connections. Check connections to other components or make installation of new wiring.
Failure of Shutoff Solenoid	Check the shutoff solenoid.
Low Water Level in Cooling System	Fill the cooling system.
Wrong Setting of Switch	Make a test of temperature setting and if necessary install new contactor switch with correct setting. See specifications.

Contactor Switch For Water Temperature Activates Shutoff Solenoid At Wrong Temperature.

Cause	Correction
Wrong Setting of Switch	Make a test of temperature setting and if necessary install new contactor switch with correct setting. See specifications.

Contactor Switch For Oil Pressure Fails To Activate Shutoff Solenoid

Cause	Correction
Wrong Connections	Check connections, wiring and correct where necessary.
Wrong Setting of Switch	Test contactor switch. If necessary install new contactor switch.

Contactor Switch For Overspeed Fails To Activate Shutoff Solenoid.

Cause	Correction
Wrong Connections	Check connections, wiring and correct where necessary.
Wrong Setting of Switch	Make adjustment to setting or install new contactor switch if necessary. Make a reference to TESTING AND ADJUSTING.

Contactor Switch For Overspeed Activates Shutoff Solenoid At Wrong Speed.

Cause	Correction
Wrong Setting	Make adjustment to setting or install new contactor switch if necessary.

Shutoff Solenoid Fails To Stop Engine.

Cause	Correction
Wrong Connections	Check connections and wiring.
Plunger Shaft Adjustment Wrong	Make adjustment to plunger shaft.
Wrong Plunger in Shutoff Solenoid	Install the correct plunger shaft.
Not Enough Plunger Travel	Make adjustment to plunger shaft or replace solenoid if necessary.

Shutoff Solenoid Prevents Engine Start

Cause	Correction
Shutoff Solenoid Does Not Operate Correctly	Activate to shutoff or Activate to run type: Operate the control for the shutoff solenoid. Listen for a noise. A shutoff solenoid makes noise when it works. If it makes noise but the engine still does not start, remove the shutoff solenoid. Try to start the engine. If the engine starts, the shutoff solenoid is either not installed correctly or it is bad. Make a reference to TESTING AND ADJUSTING.

Clutch Will Not Engage (Slips), Heats Or Lever Moves To Released Position.

Cause	Correction
Wrong Adjustment	Make adjustment to clutch engagement lever pull.
Alignment of Flywheel and Flywheel Housing Mounting Face and Bores	Check and make adjustment to alignment.
Overload on Clutch	Reduce load or reduce engine speed when engaging clutch.

Clutch Shaft Has Too Much End Play.

Cause	Correction
Bearing Worn or Adjustment Wrong	Replace and/or make adjustment to shaft bearing.

Clutch Bearings Have Short Service Life.

Cause	Correction
Too Much Bearing Clearance	Replace and/or make adjustment to shaft bearing.
Side Load Too High	Make a reduction of side load.

Mechanical Shutoff Fails To Stop Engine Because Of Low Oil Pressure.

Cause	Correction
Plunger is Held in Normal Run Position or A Spring is Broken	Disassemble and clean parts. Install new parts if needed.

Mechanical Shutoff Does Not Stop Engine When Coolant Temperature Is Too High.

Cause	Correction
Oil Lines Have a Restriction	Clean oil lines, make replacements as necessary.
Control Valve Does Not Work Correctly	Clean control valve, make a replacement if necessary.
Defect In Oil Pressure Shutoff	Clean oil pressure shutoff. Install new parts if necessary.

Mechanical Shutoff Will Not Let Engine Start.

https://barringtondieselclub.co.za/

Cause	Correction
Control Has Not Been Set for Start	Set the control for start.
Spring is Broken	Install new spring.
High Water Temperature	Let engine cool.

Electrical Gauges Give Wrong Readings.

Cause	Correction
Wrong Connections	Check wiring connections to be sure they are correct.
Sending Units Have a Failure	Check the sending units and install new ones if necessary.
Resistor in 32 Volt Systems Has a Failure	Install a new resistor.
Wrong Sending Unit in System	Install correct sending unit.
Wrong Gauge	Install correct gauge.

Engine Speed Does Not Have Stability.

Cause	Correction
Compensation Needle Valve Opened Too Far	Adjust the needle valve.
Bad Lubrication Oil	Remove, drain and clean the governor. Make sure air is not held in the oil supply. Change the oil and make a replacement of the filter.
Fuel Control Linkage Worn or not Correctly Adjusted	Inspect and adjust the fuel control linkage. Make repairs as necessary.

(Cont. next page)

https://barringtondieselclub.co.za/

Cause	Correction
Engine Fuel System Has a Failure	Use the FUEL SYSTEM section in TESTING AND ADJUSTING as a reference. Make repairs as necessary.
Negative Droop Set into Governor	Adjust droop setting.
Oil does not Drain Correctly from the Governor	Make sure governor drain passages have no restrictions.
Buffer Springs Have a Failure	Make a replacement of the buffer springs.
Governor Parts Worn	Disassemble and inspect pilot valve, power piston, flyweight pins, pin bearings, flyweight toes, flyweight head thrust bearing and centering bearing. Operation of all parts should be smooth and free. Make repairs as necessary.
Pilot Valve not Correctly Adjusted	Adjust the pilot valve.

Vibration At Governor Output Shaft.

Cause	Correction
Rough Governor Drive	Inspect the gear drive. Make repairs as necessary.
Spring Driven Flyweight Head Has a Failure	Clean and inspect flyweight head. Make repairs as necessary.
Gear Drive not in Correct Alignment	Make sure governor is installed correctly.

Fuel Control Response When The Engine Is Started Is Not Acceptable.

Cause	Correction
Low Governor Oil Pressure	Remove, drain and clean the governor. Make sure air is not held in the oil supply. Change the oil and make a replacement of the filter. Inspect the governor oil pressure relief valve. Make a replacement if necessary. Inspect pump check valves (if so equipped). Make replacements if necessary. Inspect governor oil pump. Make repairs as necessary.

Engine Has Slow Response To A Change In Speed Setting Or Load.

https://barringtondieselclub.co.za/

Cause	Correction
Compensation Needle Valve Closed Too Far	Adjust the needle valve.
Engine Has an Overload	Decrease the load.
Operation of Buffer Piston is not Smooth	Remove, drain and clean the governor. Make sure air is not held in the oil supply. Change the oil and make a replacement of the filter.
Oil does not Drain Correctly from the Governor	Make sure governor drain passages have no restrictions.

(Cont. next page)

Cause	Correction
Low Governor Oil Pressure	Remove, drain and clean the governor. Make sure air is not held in the oil supply. Change the oil and make a replacement of the filter.
	Inspect the governor oil pressure relief valve. Make a replacement if necessary.
	Inspect pump check valves (if so equipped). Make replacement if necessary.
	Inspect governor oil pump. Make repairs as necessary.
Wrong Buffer Springs in Governor	Install correct buffer springs.
Engine Fuel System Has a Failure	Use the FUEL SYSTEM section of TESTING AND ADJUSTING as a reference. Make repairs as necessary.

No Output From Governor.

Cause	Correction
Bad Lubrication Oil	Remove, drain and clean the governor. Make sure air is not held in the oil supply. Change the oil and make a replacement of the filter.
No Governor Oil Pressure	Inspect the governor oil pressure relief valve. Make a replacement if necessary.
	Inspect pump check valves (if so equipped). Make replacements if necessary.
	Inspect governor oil pump. Make repairs as necessary.
Governor Drive Has a Failure	Repair the governor drive.
Fuel Control Linkage Has a Failure	Inspect and adjust linkage. Make repairs as necessary.

Engine Will Not Drive Full Rated Load.

https://barringtondieselclub.co.za/

Cause	Correction
Fuel Control Linkage not Correctly Adjusted	Adjust the linkage.
Engine Fuel System Has a Failure	Use the FUEL SYSTEM section of TESTING AND ADJUSTING as a reference. Make repairs as necessary.
Low Governor Oil Pressure	Remove, drain and clean the governor. Make sure air is not held in the oil supply. Change the oil and make a replacement of the filter. Inspect the governor oil pressure relief valve. Make a replacement if necessary. Inspect pump check valves (if so equipped). Make replacements as necessary. Inspect governor oil pump. Make repairs as necessary.
Voltage Regulator does not Work Correctly	Adjust or repair the voltage regulator.

Load Sharing Between Paralleled Units Is Not Correct (one unit on zero droop all the others on droop).

Cause	Correction
Droop Setting is Too Low on Some Units	Increase droop setting on these units until the load is constant on each droop unit.
Different Speed Settings on the Units	Adjust speed settings on droop units. No load speed on all droop units should be the same.

Load Sharing Between Paralleled Units Is Not Correct (all units on droop).

Cause	Correction
Speed Droop Setting on One or More Units is not Correct	Adjust droop on each unit to get the desired division of load. NOTE: Increase droop to decrease load sharing by the unit.
Different Speed Settings on the Units	Adjust the speed settings. No load speed on all units should be the same.

Automatic Start/Stop System

https://barringtondieselclub.co.za/

NO SUPPLY OF STANDBY CURRENT

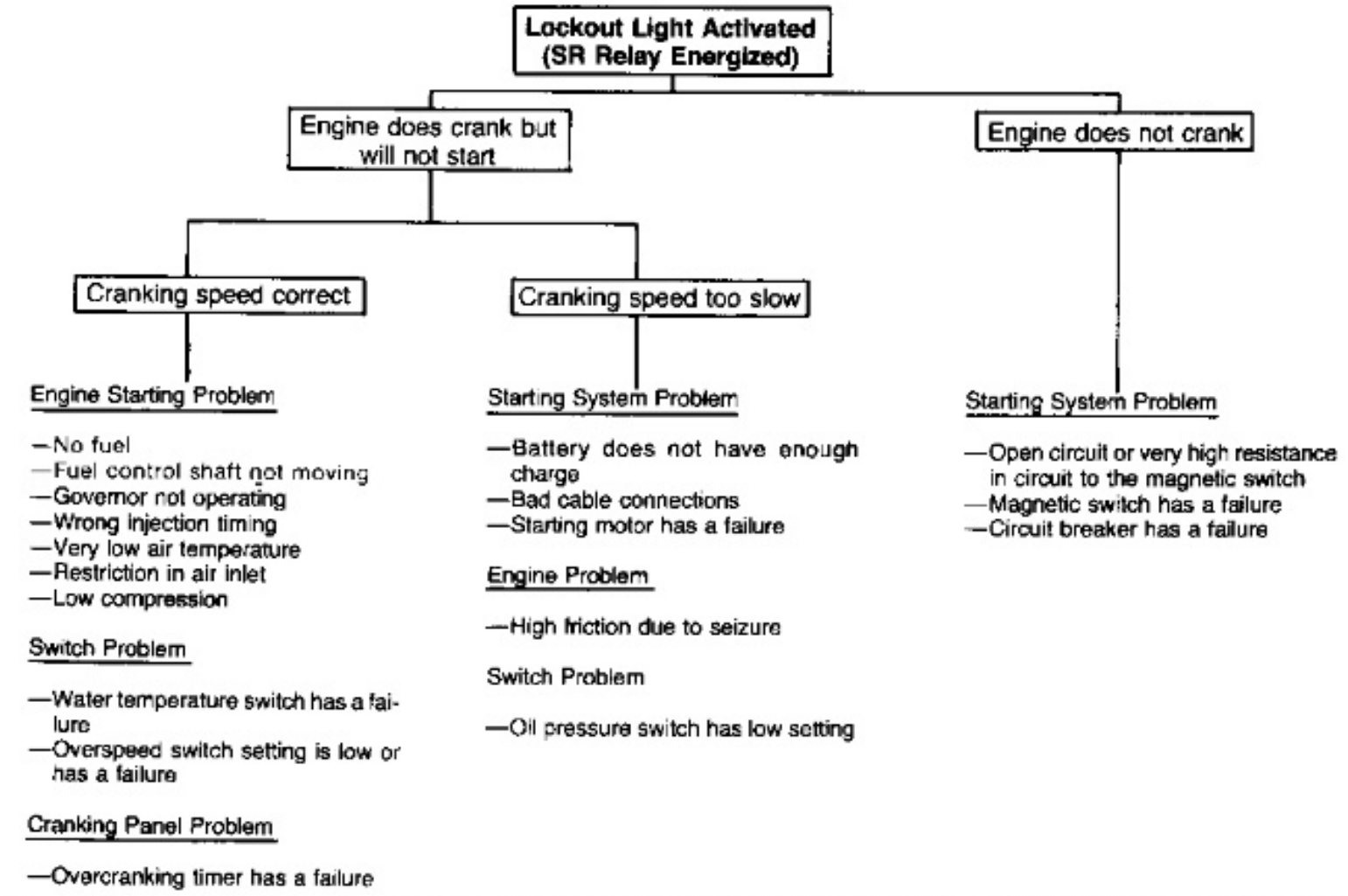

The charts that follow give some of the problems and probable causes for trouble with automatic start/stop systems.

https://barringtondieselclub.co.za/

NO SUPPLY OF STANDBY CURRENT

No Lockout Light (SR Relay Not Energized)

- **Engine does not crank**
  - Transfer Switch Problem
    - —SE relay has a failure
    - —Open circuit in initiating contactor circuit
    - —1V, 2V and 3V contactor shorted
  - Cranking Panel Problem
    - —Toggle switches SW-1 and SW-2 are in the wrong position or have a failure
    - —NC contact of SE relay has a failure
    - —IR relay open circuit
- **Engine does operate**
  - **No Voltage from Generator**
    - Generator Problem
      - —See topic "No AC Voltage" in Troubleshooting section of the Generator Service Manual
  - **Generator does give Voltage**
    - Transfer Switch Problem
      - —SE relay contacts bad
      - —TS relay contacts bad
      - —Lo relay or related circuit has a failure
      - —Diodes in rectifier bridge for TS solenoid have a failure
    - Wiring Problem
      - —Phase EA or EC not connected (open) to transfer switch

STANDBY CURRENT SUPPLY STOPS BEFORE NORMAL CURRENT RETURNS

- **Lockout Light Activated (SR Relay Energized)**
  - Engine Problem
    - —High water temperature
    - —Low oil pressure
    - —Overspeed
    - —No fuel
    - —Overload
    - —Mechanical failure
- **No Lockout Light (SR Relay Not Energized)**
  - Generator Problem
    - —Malfunction developed during operation—see topic "No AC Voltage" in Troubleshooting section of Generator Service Manual

https://barringtondieselclub.co.za/

OPERATION OF STANDBY SYSTEM
WHEN STANDBY CURRENT IS NO LONGER NEEDED

Standby System still gives power

Transfer Switch Problem

—1V, 2V or 3V relay contacts not closing or bad contact
—SE relay has a failure
—TS switch and/or contacts not operating
—Time delay relay (if fitted) has a failure

Standby System does not give power, but engine keeps operating

Cranking Panel Problem

—IR relay has a failure
—RR relay has a failure (not always fitted)
—TD relay has a failure

Problem on Engine

—Fuel pressure switch has a failure
—Fuel shutoff solenoid has a failure or open in its circuit
—Fuel control shaft seizure in the open position (overspeed possible)

Transfer Switch Problem

—SE contacts welded

No current to the load, standby system stopped

Transfer Switch Problem

—TS main contacts welded
—TS auxiliary contacts bad
—SE relay contacts bad

Measuring Engine Speed

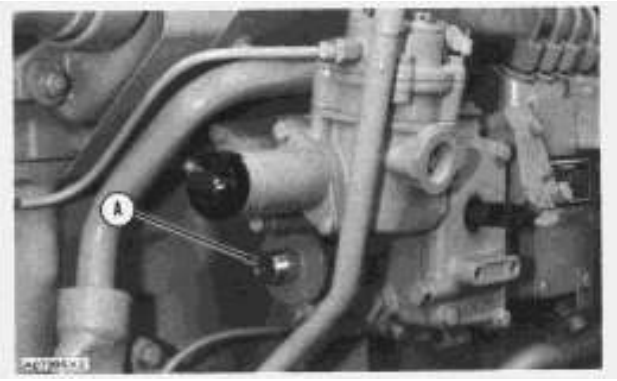

LOCATION FOR TACHOMETER DRIVE ADAPTER
A. Tachometer drive adapter.

Most engines have a location where a tachometer drive adapter can be installed. Install an adapter. Then connect it to the tachometer in the 4S6553 Engine Test Group, the 5P2150 Engine Horsepower Meter or the 1P5500 Portable Phototach Group.

NOTE: On some engines the service meter must be removed.

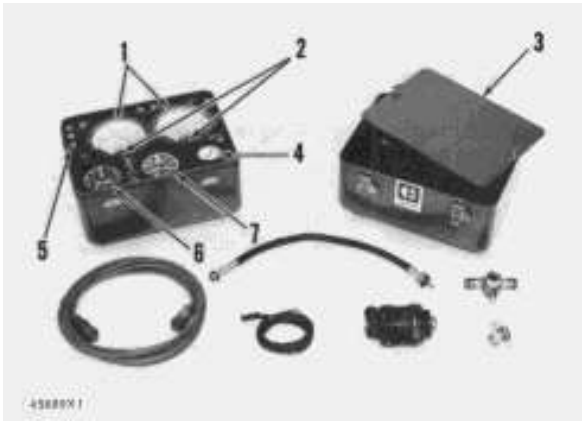

4S6553 ENGINE TEST GROUP
1. 4S6992 Differential Pressure Gauges. 2. Zero adjustment screw. 3. Lid. 4. 8M2743 Gauge. 5. Pressure tap fitting. 6. 4S6991 Tachometer. 7. 4S6997 Manifold Pressure Gauge.

Special Instruction Form SEHS7341 is with the 4S6553 Engine Test Group. It has instructions on how to use the group.

The 1P5500 Portable Phototach Group can measure engine speed from the tachometer drive on the engine. It can also measure the speed of the engine parts (fan, flywheel, etc.) that have rotation. For the best accuracy the rpm of the part that is measured must be the same as the rpm of the engine. Special Instruction Form SMHS7015 has instructions on how to use the group.



1P5500 PORTABLE PHOTOTACH GROUP



5P2150 ENGINE HORSEPOWER METER

The 5P2150 Engine Horsepower Meter can measure engine speed from the tachometer drive on the engine. It can also measure engine speed from the signal made by a magnetic pickup when the teeth of the flywheel go by it. Special Instruction Form SMHS7050 has instructions for its use. The necessary information to use a magnetic pickup with the 5P2150 Engine Horsepower Meter is given in the following procedures.

Engines With Woodward PSG Governor

Engines which have the Woodward PSG Governor need a different method for measuring engine speed. This is because the adapter for the Woodward PSG Governor takes the place of the tachometer drive shaft. There are several methods for measuring engine speed. Use the one which is best for the work being done.

Tachometer in the Control Panel

If equipped, use the tachometer on the control panel.

Frequency Meter

If the engine is the drive for a generator with a frequency meter use it to measure the engine speed. The frequency meter reading is 60 Hertz at 1800 engine rpm. The frequency meter reading is 50 Hertz at 1500 engine rpm.

1P5500 Portable Phototach Group

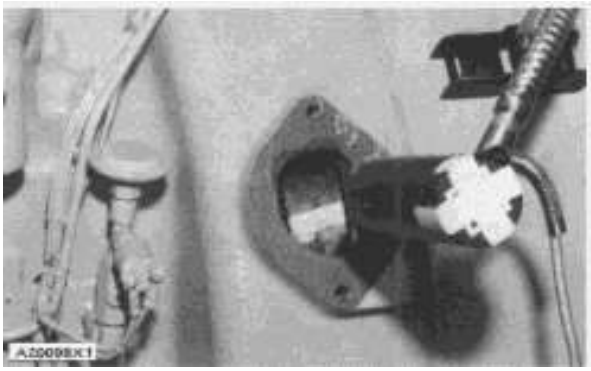

1P5500 PORTABLE PHOTOTACH GROUP INSTALLED

The 1P5500 Portable Phototach Group can measure the speed of a rotating part of the engine if it is visible. For more accurate readings, use a part which rotates at the same speed as the engine. Special Instruction Form SMHS7015 has instructions for its use.

Magnetic Pickup

The flywheel housings used on these engines all have an opening for timing the engine. The adapter and magnetic pickup for testing can be installed at this location on all engines for test purposes. In addition, most of the flywheel housings also have a location for installation of the magnetic pickup for use with the electronic speed switch. If there is a magnetic pickup already installed and being used with the electronic speed switch, its signal can be used with an electronic counter or with the 5P2150 Engine Horsepower Meter. The operation of the magnetic pickup is the same for any of the installations.

The signal from the magnetic pickup is an AC voltage. Every tooth on the flywheel makes the signal have one cycle. Each revolution of the flywheel gives the signal one cycle per tooth. When the engine is running the number of teeth on the flywheel multiplied by the number of revolutions per minute gives the number of cycles per minute in the signal. Divide this number by 60 seconds per minute to get the number of Hertz (cycles per second).

$$\frac{\text{Number of teeth on the flywheel} \times \text{Number of revolutions per minute}}{\text{60 seconds per minute}} = \text{Hertz (cycles per second)}$$

The voltage output of the magnetic pickup is normally between 10 to 20 volts AC. If necessary, the voltage can be increased by turning the magnetic pickup in so that it is closer to the flywheel gear. The maximum voltage is approximately 80 Volts AC. These voltages are at normal engine speeds (approximately 1500 rpm).

NOTICE

Be careful when adjusting the magnetic pickup. Not enough clearance can cause damage to the magnetic pickup.

The voltage also changes with engine speed. Higher speed makes a signal with higher voltage.

Installation Procedure for Magnetic Pickup

The magnetic pickup (2) is to be installed so that the clearance dimension is .022 to .030 in. (0.56 to 0.76 mm) away from the flywheel gear teeth (5).

With the engine stopped, turn the magnetic pickup (2) in until it just has contact with a tooth. Then turn it out 1/2 of a turn. Tighten the locknut (4). This gives approximately the correct clearance dimension.

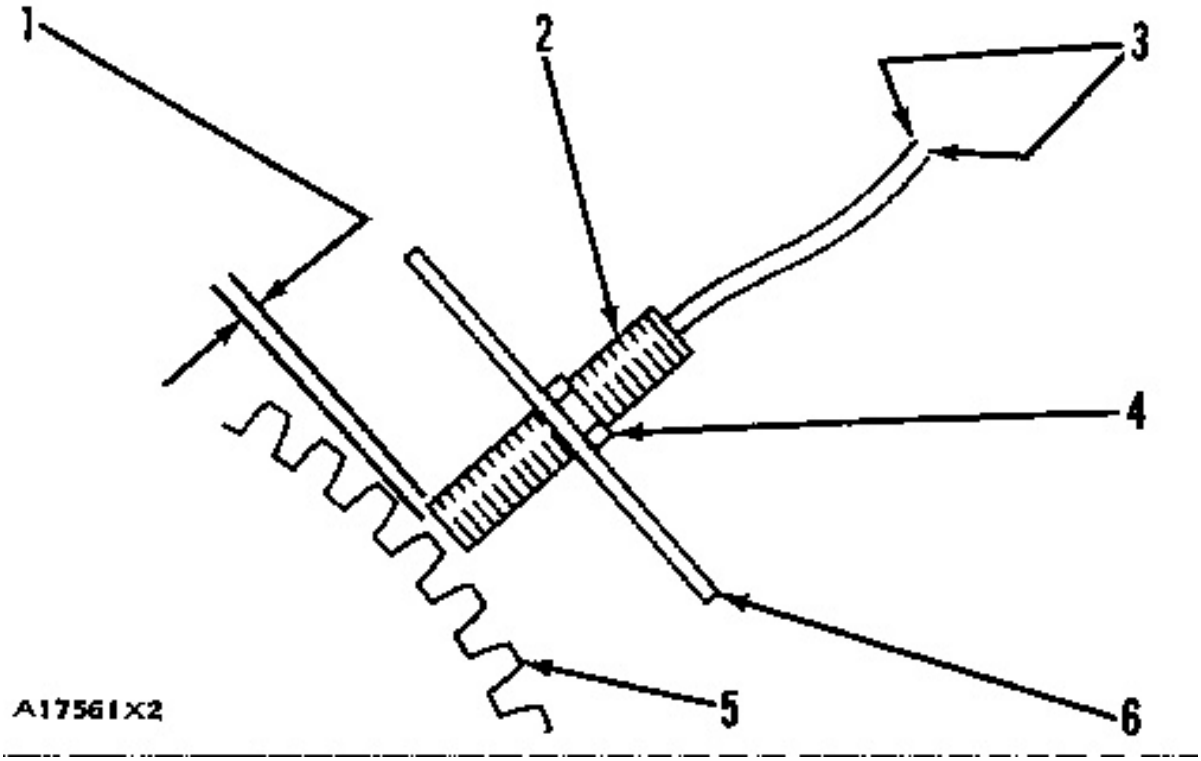

INSTALLATION OF MAGNETIC PICKUP
1. Clearance dimension. 2. Magnetic pickup. 3. Wires. 4. Locknut. 5. Flywheel gear teeth. 6. Adapter.

Checking the Magnetic Pickup

There are two ways to check a magnetic pickup (2).

One way is to measure the resistance through the magnetic pickup (2) with an accurate ohmmeter. The correct resistance is in the specifications.

The other way is to measure the voltage output with the engine running. This measurement is made with a voltmeter between the wires (3) when the engine is at normal operation speed. The wires (3) must be disconnected from any other circuit during the test. The voltage output must be according to the specifications. If the voltage is not correct and the installation is correct, make a replacement of the magnetic pickup (2).

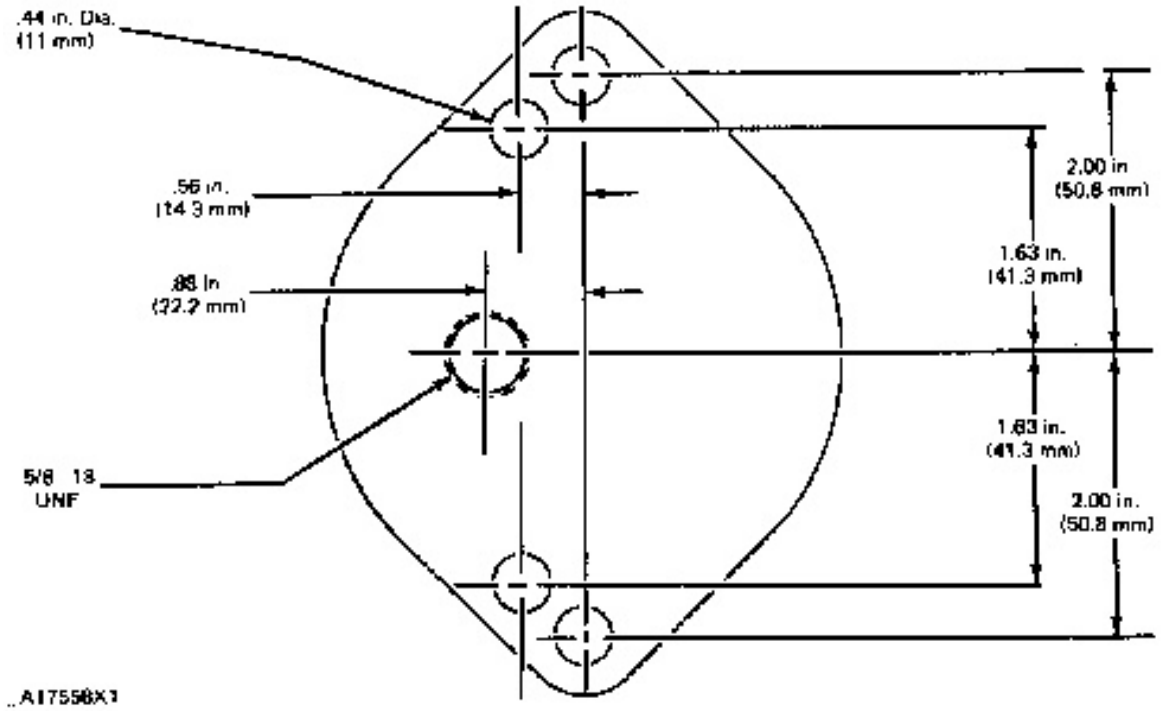

ADAPTER

A cover for the timing pointer (3B817) which has been drilled and tapped as shown makes an adapter (6) which can fit all of these engines. A magnetic pickup (2) with a 1.5 megohm resistor in series with one of its wires and a phono plug on the end makes a magnetic pickup for testing. Together with the adapter, they make installation quick and easy.

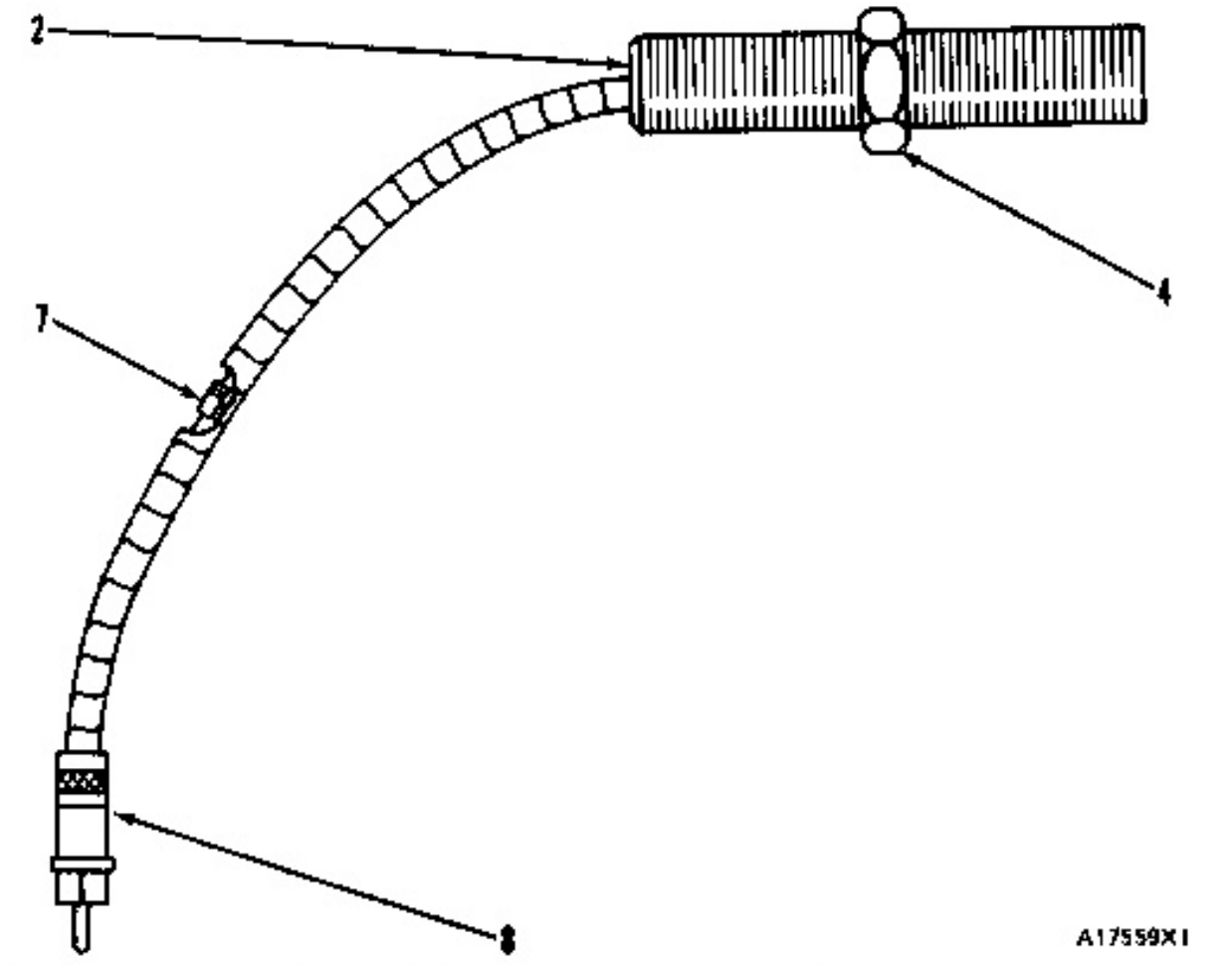

MAGNETIC PICKUP FOR TESTING
2. Magnetic pickup. 4. Locknut. 7. 1.5 megohm resistor (5% or 10%) soldered in series with one wire. 8. Phono plug.

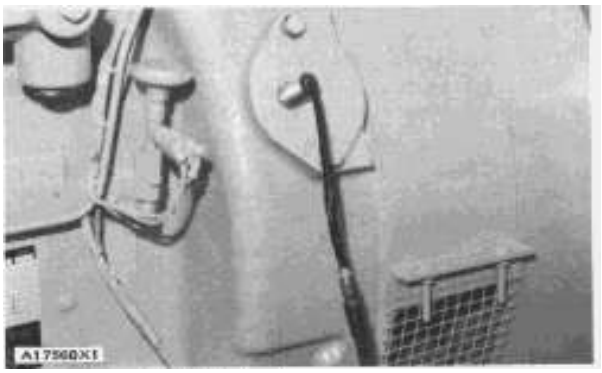

ADAPTER AND MAGNETIC PICKUP FOR TESTING INSTALLED

Electronic Counter

The electronic counter must be able to operate in the range of the signal from the magnetic pickup. The frequency range is 1100 to 6500 Hertz (cycles per second). The voltage range of the magnetic pickup is approximately 4 to 80 volts. If the engine has an electronic speed switch, keep the voltage input to it at 10 to 20 volts AC.

The input resistance of the electronic counter must be more than 1000 ohms if it is used in a parallel circuit with the electronic speed switch. Measure the resistance with an accurate ohmmeter. It is permissible to install resistors in series with the electronic counter to get the correct minimum resistance. This is necessary to keep the signal strong enough for the electronic speed switch to operate correctly.

If the frequency range is not correct, it is permissible to install an electronic frequency multiplier or divider to get the signal in the correct range. If the engine has an electronic speed switch, make sure that the installation does not change the signal which goes to the electronic speed switch. Also be sure that the input resistance of the electronic counter has more than 1000 ohms of resistance.

If the voltage range is not correct, it is permissible to change the adjustment of the magnetic pickup and to add more resistors to the circuit to get the correct voltage. Be sure to keep the voltage of the signal which goes to the electronic speed switch correct.

NOTE: Do not adjust the clearance of the magnetic pickup with the engine running. The end of the magnetic pickup can be damaged by contact with the turning flywheel gear.

When the items are correct according to the description given above, connect the electronic counter to the circuit. Start the engine. The number which is on the electronic counter is in relation to the engine speed. The relation between the engine speed and number on the electronic counter is the result of engine speed, the number of flywheel gear teeth, the factor for the counter and the use of an electronic divider or multiplier on the signal. The factor for the counter can be found easily. Connect the counter to a source of a known frequency. This can be to normal (commercial) or generator set power or to a frequency generator. Look at the number on the electronic counter. This number is in relation to the frequency of the power source by some factor. Use this factor with the information already given to get another factor which is the relation between the number on the electronic counter and the engine speed.

NOTE: When connecting the electronic counter to the source of a known frequency, be sure to keep the input voltage to the electronic counter in the range of the electronic counter.

5P2150 Engine Horsepower Meter



5P2150 ENGINE HORSEPOWER METER

The 5P2150 Engine Horsepower Meter has an electronic counter. It can count the number of Hertz (cycles per second) in the signal from the magnetic pickup. It is necessary to install a resistor in series with one of the wires from the magnetic pickup to keep from damaging the parts in the 5P2150 Engine Horsepower Meter. The magnetic pickup for testing has the correct resistance.

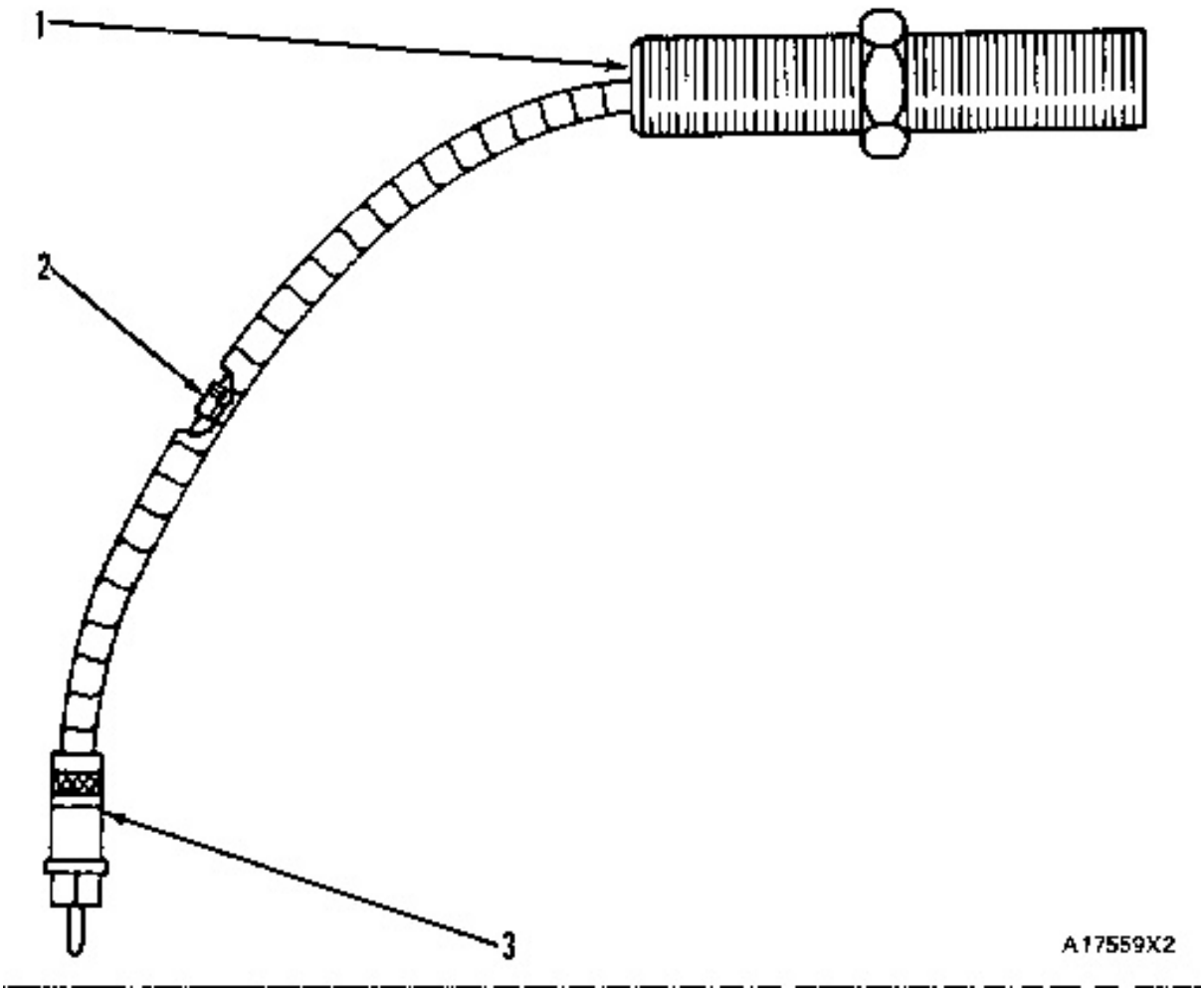

MAGNETIC PICKUP FOR TESTING
1. Magnetic pickup. 2. 1.5 megohm resistor (5 or 10%) soldered in series with one of the wires. 3. Phono plug.

On engines with an electronic speed switch, the signal from its magnetic pickup is strong enough to operate the electronic speed switch and the electronic counter at the same time. Connect the input wires from the 5P2150 Engine Horsepower Meter to the "SIG" and "COM" terminals on the electronic speed switch. Install a 1.5 megohm resistor in series with one of the input wires. This decreases the input voltage to keep from damaging the parts in the 5P2150 Engine Horsepower Meter. The minimum voltage input to the electronic counter is 1.5 volts. If the voltage is too low make an adjustment to the magnetic pickup to get the minimum voltage. Do not make a change to the circuit that causes the voltage at the terminal strip to be less than 10 volts at 1500 engine rpm.

The 5P2150 Engine Horsepower Meter automatically shows the correct engine rpm when it is used with the standard tachometer generator. When it is used with the magnetic pickup, it does not show engine speed directly. This is because the signal from the magnetic pickup has more cycles per revolution of the engine than the standard tachometer generator. The signal from the standard tachometer generator has 10 cycles for each revolution of the engine. The signal from the magnetic pickup has one cycle for each flywheel gear tooth for each revolution of the engine. For example, if the flywheel gear has 156 teeth, there are 156 cycles for each revolution. The number which the meter shows is larger by a factor of 156 ÷ 10 or 15.6. This factor is the factor for the flywheel gear. At lower engine speeds, the number on the meter divided by the factor for the flywheel gear gives the engine speed. At higher engine speeds, the number is too big for the meter. The meter shows the four digits nearest to the decimal point. In the example, 15987, the first digit is 1. The number that the meter shows is 5987.

Look at the chart for the approximate engine rpm. The chart has the correct meter reading for that engine rpm according to the number of flywheel gear teeth. If the number has more than four digits, put the fifth digit from the chart with the number which is shown on the meter. Divide this number by the factor for the flywheel gear. The result is the correct engine rpm. Remember that a change of 1 rpm in engine speed makes a change of 13.2 or 15.6 in the rpm shown on the meter.

ENGINE RPM	NUMBER OF FLYWHEEL GEAR TEETH	
	132	156
	METER READING	
	*	*
600	7920	9360
700	9240	10920
800	10560	12480
900	11880	14040
1000	13200	15600
1100	14520	17160
1200	15840	18720
1300	17160	20280
1400	18480	21840
1500	19800	23400
1600	21120	24960
1700	22440	26520
1800	23760	28080
1900	25080	29640
2000	26400	31200
2100	27720	32760
2200	29040	34320

https://barringtondieselclub.co.za/

2100	27720	32760
2200	29040	34320
2300	30360	35880
2400	31680	37440

* First digit

Example:

Number of flywheel gear teeth	=	156
approximate engine speed	=	1500
meter reading	=	3456
+ first digit from the chart	=	23456
÷ by 15.6 (factor for the		23456
number of flywheel gear teeth)	=	15.6
Result = actual engine rpm	=	1503

Fuel System - (Engines With Woodward PSG Governor)

Refer to the TESTING AND ADJUSTING section of the 3304 and 3306 Industrial and Marine Engine Form No. SENR7053 for all procedures not covered in this section.

Fuel System Setting

5P4203 Field Service Tool Group or3P1550 Field Service Tool Group.

Special Instruction Form No. SMHS7013 is with this group and has instructions for its use.

The following procedure for fuel system setting can be done with the housing for the fuel injection pumps either on or off the engine.

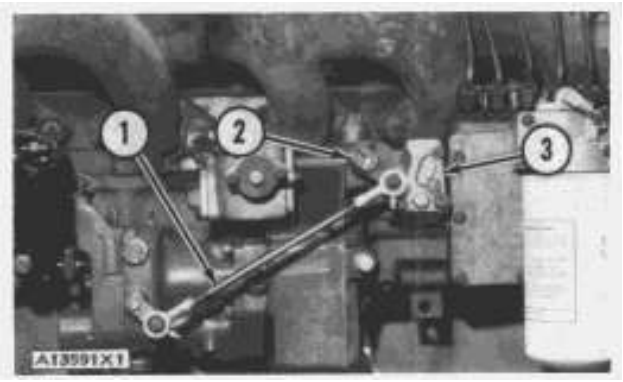

FUEL SYSTEM SETTING
1. Governor control linkage. 2. Lever. 3. Cover.

1. Disconnect the governor control linkage (1) from lever (2).

2. Remove the shutoff solenoid and the fuel ratio control.

3. Remove cover (3).

4. Put the 5P299 Pin (4) into hole (5) as shown.

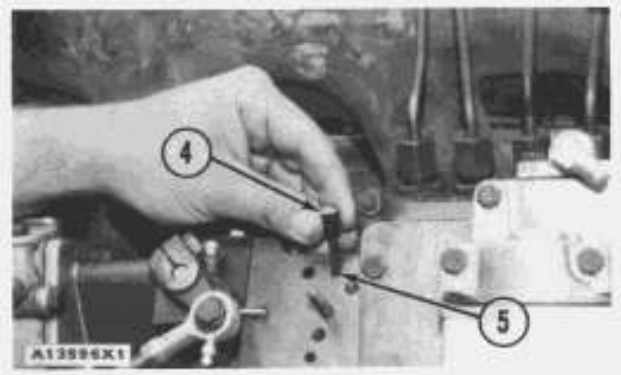

INSTALLATION OF PIN
4. 5P299 Pin. 5. Hole.

5. Put cover (6) and 3J6956 Spring over pin (4). Use a 1D4533 Bolt and a 1D4538 Bolt to hold cover (6) to the housing for the fuel injection pumps.

NOTE: The 5P6602 Adapter (A) is a replacement for the 5P4226 Adapter and the 2P8331 Cover (6). Either adapter or the cover can be used for this procedure.

6. Put a 8S7271 screw in the hole over the 5P299 Pin (4) and 3J6956 Spring. Tighten the 8S7271 screw until it holds 5P299 Pin (4) against the housing for the fuel injection pumps.

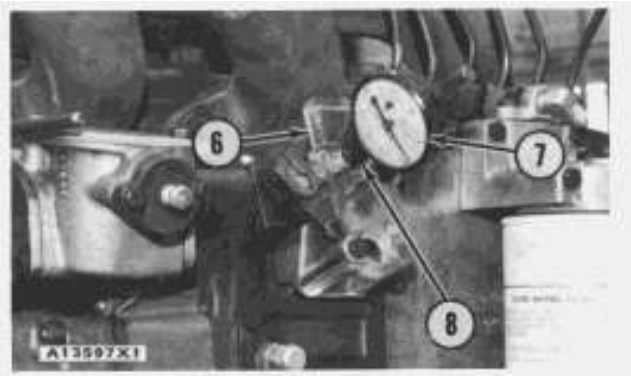

TOOLS INSTALLED
6. Cover. 7. Dial indicator. 8. Clamp.

7. Put clamp (8) in 2P8331 Cover (6) or 5P6602 Adapter (A). Put 3P1569 Magnetic Point or 5P4809 Point on indicator (7) and install indicator (7) in clamp (8).

NOTE: If the indicator automatically goes to the extended position, use the 5P4809 Point. If the indicator does not automatically go to the extended position, use the 3P1569 Magnetic Point.

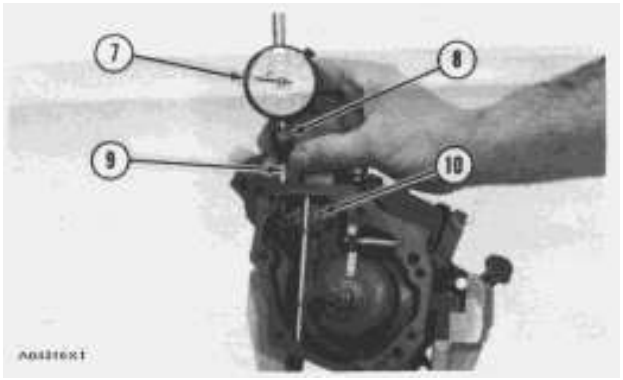

DIAL INDICATOR IN CONTACT WITH FUEL CONTROL SHAFT
7. Dial indicator. 8. Clamp. 9. 3P1569 Magnetic point. 10. Fuel control shaft.

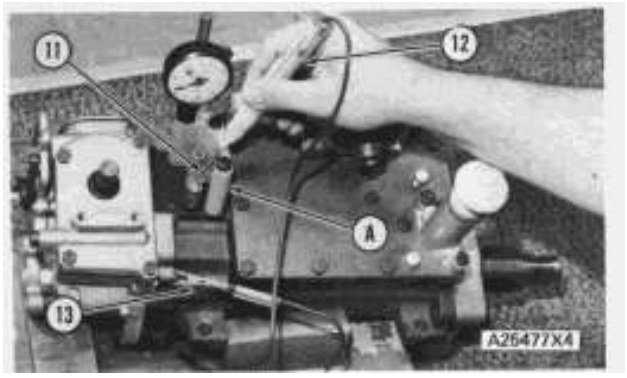

FUEL SYSTEM SETTING (Typical Example)
11. Contact. 12. 8S4627 Circuit Continuity Tester Light. 13. Clip. A. 5P6602 Adapter.

8. Turn lever (2) in a clockwise direction. This puts the fuel control shaft (10) against the 5P299 Pin (4).

9. Hold lever (2) in that position and adjust both dials on the dial indicator (7) to zero.

10. Connect the clip end (13) of continuity light (12) to a good electrical ground. Put the other end of continuity light (12) in contact with the contact (11) as shown.

11. Turn the 8S7271 Screw counterclockwise. Turn it slowly until the continuity light just goes on.

12. Make a record of the reading on the dial indicator (7).

13. Do this procedure several times to make sure that the reading is correct.

14. Make a comparison of this reading and the FUEL SYSTEM SETTING on the Engine Information Plate or from RACK SETTING INFORMATION. If the reading is not the same, make sure the governor control shaft is in the full load position. Then do Steps 7 through 14 again.

15. If the reading on the dial indicator (7) is not correct, remove the cover from the load stop adjusting screw (14).

16. Loosen locknut (15). Turn it away from the housing for the fuel injection pumps until the star washer (16) can turn without being held by pin (17).

17. Hold star washer (16) above the pin (17), turn the load stop adjusting screw (14), as necessary, to get the correct reading on dial indicator (7). Remember to push lever (2) in the clockwise direction when reading the dial indicator (7).

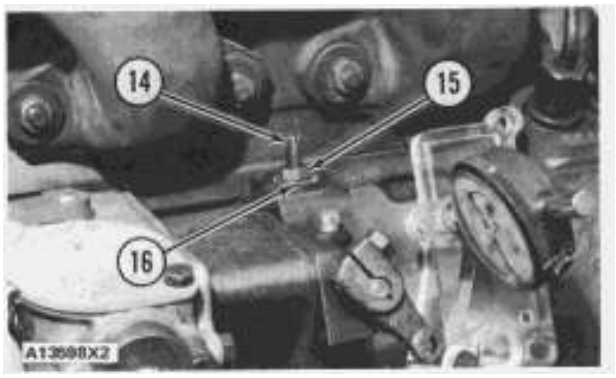

LOAD STOP ADJUSTING SCREW
14. Load stop adjusting screw. 15. Locknut. 16. Star washer.

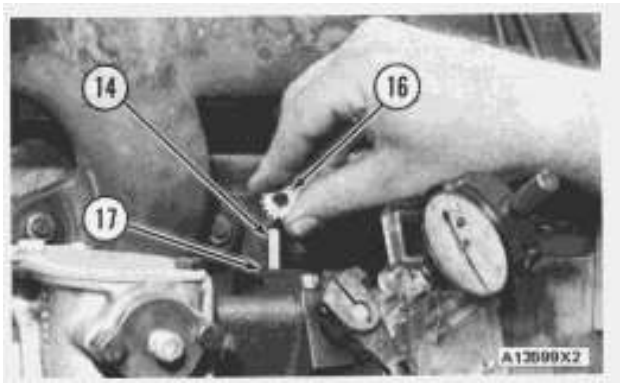

STAR WASHER
14. Load stop adjusting screw. 16. Star washer. 17. Pin.

NOTE: If the pin (17) is not in alignment with one of the notches in the star washer (16), turn the speed adjusting screw (14) to put the nearest notch in alignment with pin (17).

18. Tighten the locknut (15). Check the adjustment by going through Steps 7 through 13 again.

19. When the adjustment is correct, install the cover for the load stop adjusting screw (14).

20. Install the fuel ratio control.

NOTE: The arrangement of the tooling for checking the fuel ratio control is the same as for checking the fuel setting. Make reference to Fuel Ratio Control Setting at this time if a check of the fuel ratio control setting is desired.

21. Remove the tooling and install the cover (3) and the shutoff solenoid.

22. Connect the governor control linkage (1) to lever (2) according to the procedure in WOODWARD PSG GOVERNOR.

Fuel Ratio Control Setting

NOTE: The following procedure can be done with the fuel system either on or off the engine. In either way, damage to the fuel system can be the result if dirt gets into the fuel system.

The adjustment of the Fuel Setting must be correct before making checks or adjustments to the Fuel Ratio Control.

Make reference to FUEL SYSTEM SETTING for the correct procedure for checking and making adjustments to the Fuel System Setting.

1. With the tooling still installed from the procedure Fuel System Setting, turn the 8S7271 Screw in until the 5P299 Pin is against the fuel injection housing.

2. Make an adjustment if necessary to make the reading of both dials on the dial indicator be zero.

3. Turn 8S7271 Screw out 6 or more turns. Move the governor control shaft clockwise to the full load position. The reading on the dial indicator must be the same as the Fuel Ratio Control Setting on the ENGINE INFORMATION plates or in RACK SETTING INFORMATION.

NOTE: The reading on the dial indicator has a tolerance of ± .004 in. (± 0.10 mm). This tolerance is for the turning of bolt (1) for the alignment of the bolt holes in the cover (2).

4. If the reading is not correct, remove the cover (2). Turn the bolt (1) with the cover (2) until the reading on the dial indicator is correct. Be sure that the governor control shaft is turned to the full fuel position.

5. Install cover (2).

NOTE: If the bolt holes in the cover (2) are not in alignment with bolt holes in the body (3), turn the bolt (1) with the cover (2) to put the bolt holes in the cover in alignment with the nearest holes on the body (3).

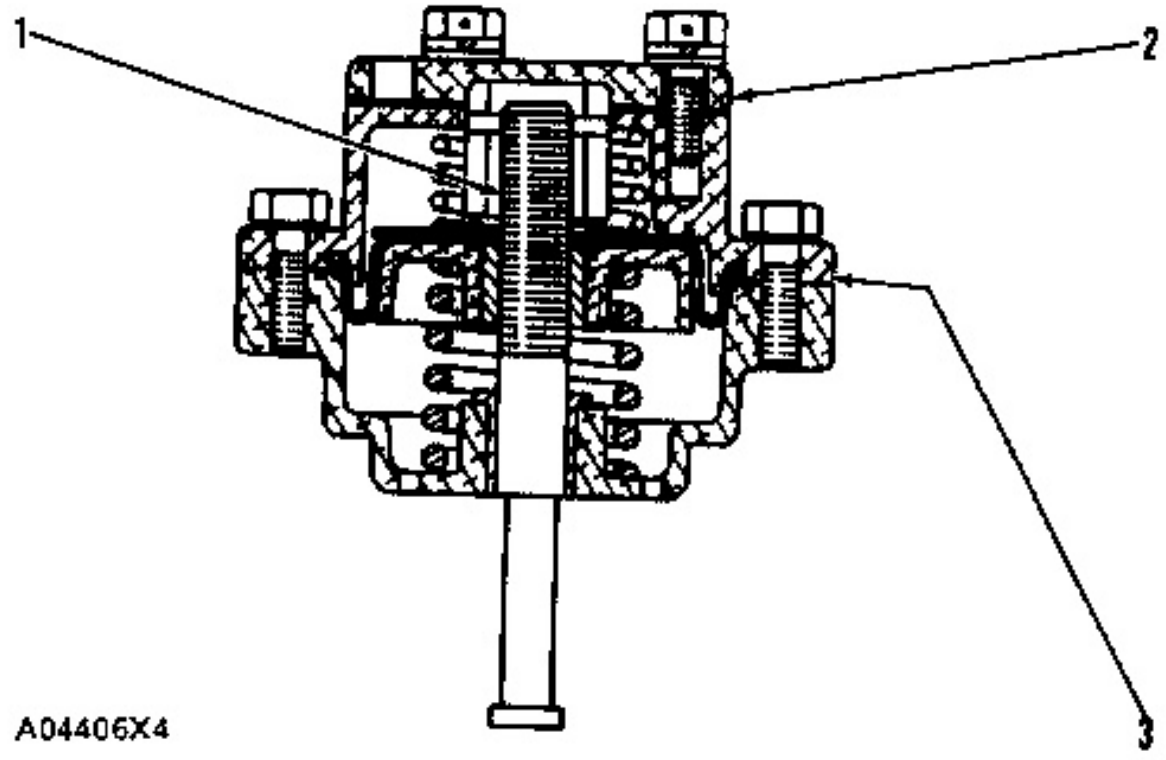

FUEL RATIO CONTROL
1. Bolt. 2. Cover. 3. Body.

Woodward PSG Governor

NOTE: Make sure that the adjustment of the governor control linkage is correct before making any other adjustments.

Adjusting Governor Control Linkage

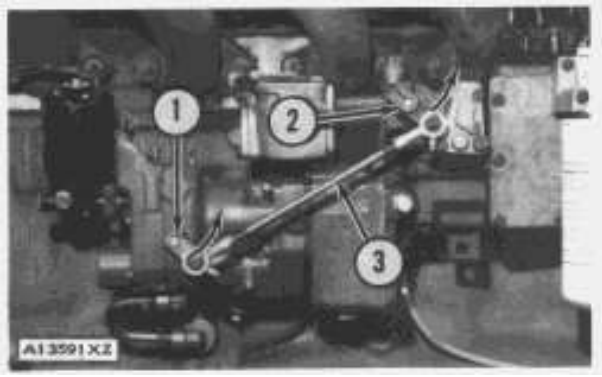

GOVERNOR CONTROL LINKAGE
1. Lever. 2. Lever. 3. Governor control linkage.

1. Turn lever (2) to its farthest counterclockwise position.

2. Turn lever (1) on the Woodward PSG Governor to its farthest counterclockwise position.

3. Adjust the governor control linkage (3), if necessary, to put the bolt hole in the end of the governor control linkage (3) in alignment with the bolt hole in lever (2).

Adjusting The Needle Valve

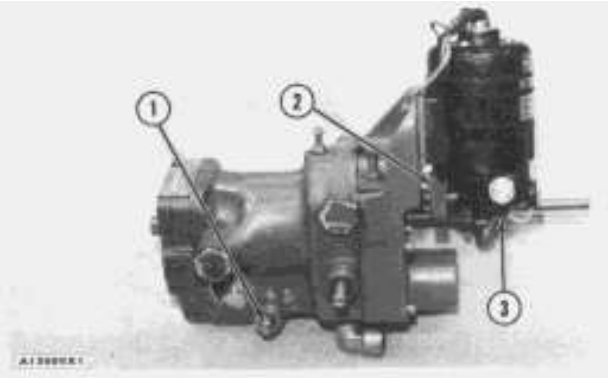

WOODWARD PSG GOVERNOR
1. Needle valve. 2. Knurled knob. 3. Synchronizing motor.

NOTE: The Woodward PSG Governor is removed from the engine to show the needle valve (1). When the governor is installed on the engine, the needle valve (1) is between the governor and the cylinder block.

1. Start the engine and let it run at normal operating conditions. Adjust the engine speed with the knurled knob (2) if necessary to get the engine running at the normal engine speed.

2. Turn compensating needle valve (1) two or three turns counterclockwise. Let the engine hunt for about 30 seconds. This lets air out of the hydraulic circuit in the governor.

3. Turn the needle valve slowly clockwise until the engine speed has stability. Put a near full load on the engine. Again turn the needle valve slowly clockwise until the engine speed has stability.

NOTE: 1/4 turn out from the seat is the approximate point of best stability.

4. Check the action of the governor by moving lever (4) to the shutoff position as shown. When the engine speed starts to decrease, release lever (4). If the governor is operating correctly, there should be a rapid return to the normal engine speed with only a small amount of overshoot (engine runs faster than normal).

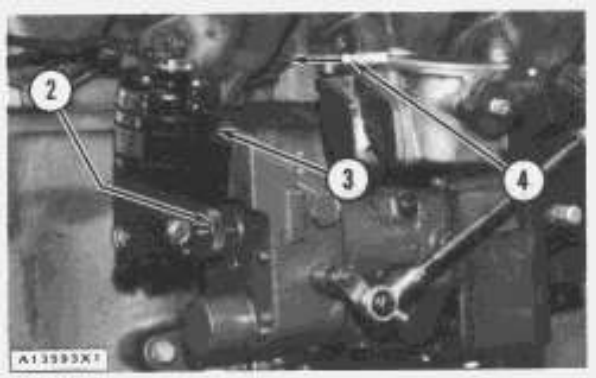

WOODWARD PSG GOVERNOR INSTALLED
2. Knurled knob. 3. Synchronizing motor. 4. Lever.

5. If the engine hunts more than a small amount before it has stability turn the needle valve clockwise. If the engine is slow to return to the desired speed turn the needle valve counterclockwise. Do steps 4 and 5 until the engine returns to the desired speed and has stability in the shortest amount of time.

Adjusting The High Idle Stop

1. Start the engine and let it run until the coolant temperature is normal.

2. Loosen locknut (3). Turn stop screw (2) counterclockwise approximately two turns.

NOTICE

With the stop screw in this position the engine can overspeed. This can cause damage to engine components. Be ready to shutdown the engine if it has an overspeed condition.

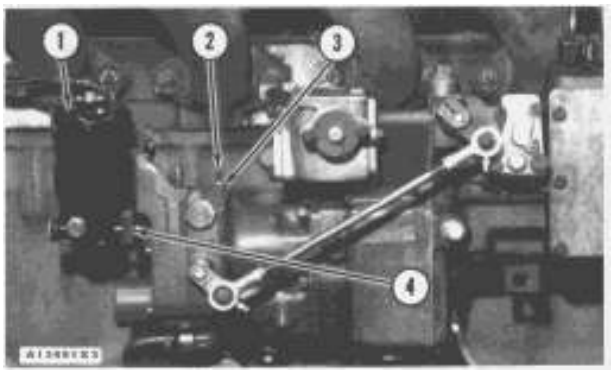

WOODWARD PSG GOVERNOR INSTALLED
1. Synchronizing motor. 2. Stop screw. 3. Locknut. 4. Knurled knob.

3. Use knurled knob (4) or synchronizing motor (1) to adjust the engine to the desired speed.

NOTE: Early models use a manual adjustment screw.

4. Turn stop screw (2) clockwise until it stops. Tighten locknut (3).

5. If the engine speed is still correct, the adjustment is correct.

Check Speed Droop

The speed droop can be adjusted between zero and seven percent. The desired speed droop will be different for different applications. Percent of speed droop is the percent difference between the engine speed at no load and full load. To calculate speed droop use the formula:

$$\frac{\text{No load speed - Full load speed}}{\text{Full load speed}} \times 100 = \text{\% of speed droop}$$

1. Get the desired speed droop for the application.

2. Multiply the full load speed by the desired speed droop. Add the number from this multiplication to the full load speed to get the no load speed.

3. Start the engine and let it run until the temperature of the coolant is normal.

4. Adjust the engine speed to get the no load speed from Step 2.

5. Connect a known load to the engine. The load must be less than the full capacity of the engine. Make a record of the decrease in engine speed.

6. Make a ratio between the load on the engine and the full load capacity of the engine. This ratio must be the same as the ratio between the decrease in engine speed from Step 5 and the number from the multiplication in Step 2. For example:

$$\frac{\text{50 HP (known load)}}{\text{100 HP (full load capacity)}} =$$

$$\frac{\text{45 rpm (decrease in engine speed from step 5)}}{\text{90 rpm (number from multiplication in step 2)}}$$

7. If the ratios are not the same an adjustment of the speed droop is necessary. Remove the load and stop the engine. If the engine speed decreased too much according to the ratio decrease the amount of speed droop. If the decrease in engine speed is not enough increase the amount of speed droop. See SPEED DROOP ADJUSTMENT.

Speed Droop Adjustment (Later PSG Governors)

1. Make a mark on cover (1) to show the original position of bracket (3). This will show how much a change in bracket position changes the speed droop.

2. Loosen knob (2) that holds bracket (3) and speed droop lever (4) in position.

3. To increase the speed droop turn lever (4) counterclockwise. To decrease the speed droop turn lever (4) clockwise.

NOTE: If the lever is turned clockwise beyond the point where the speed droop is zero the engine will hunt a large amount and will not get stability.

4. Tighten knob (2) to hold the lever and bracket in position. After an adjustment is made check the speed droop. See CHECK SPEED DROOP. Several adjustments can be necessary to get the desired speed droop.

5. When lever (4) is in the position that gives the desired speed droop, set stop screw (5) against the pin on lever (4). This will make it easy to return the speed droop lever to the desired position after disassembly and assembly of the governor.

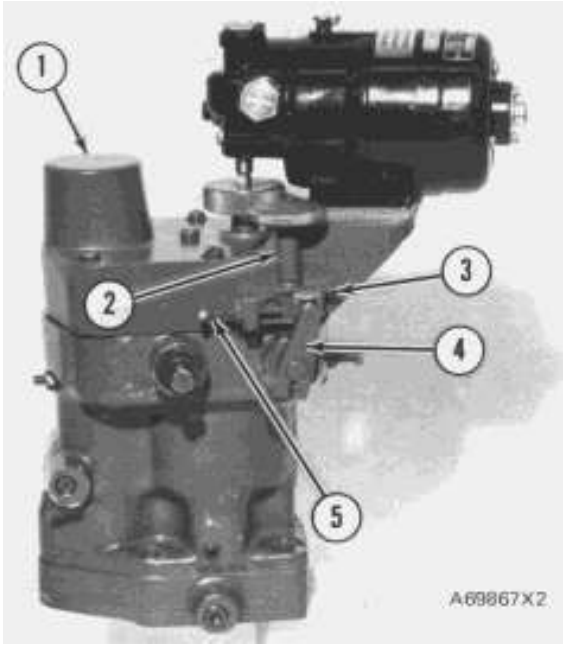

PSG GOVERNOR (Later)
1. Cover. 2. Knob. 3. Bracket. 4. Speed droop lever. 5. Stop screw.

Speed Droop Adjustment (Earlier PSG Governors)

9S215 Dial Indicator5P7285 Adjusting Bracket3P1565 Collet

1. Remove cover (1) from the governor.

WARNING

Cover (1) is pushed away from the body of the governor by a strong spring (5). Loosen all the bolts that hold the cover in position evenly to decrease the force of compression in spring (5).

2. Make a mark on output shaft lever (4) to show the original position of bracket (3). This will show how much a change in bracket position changes the speed droop.

3. Loosen screw (7) that holds bracket (3) in position.

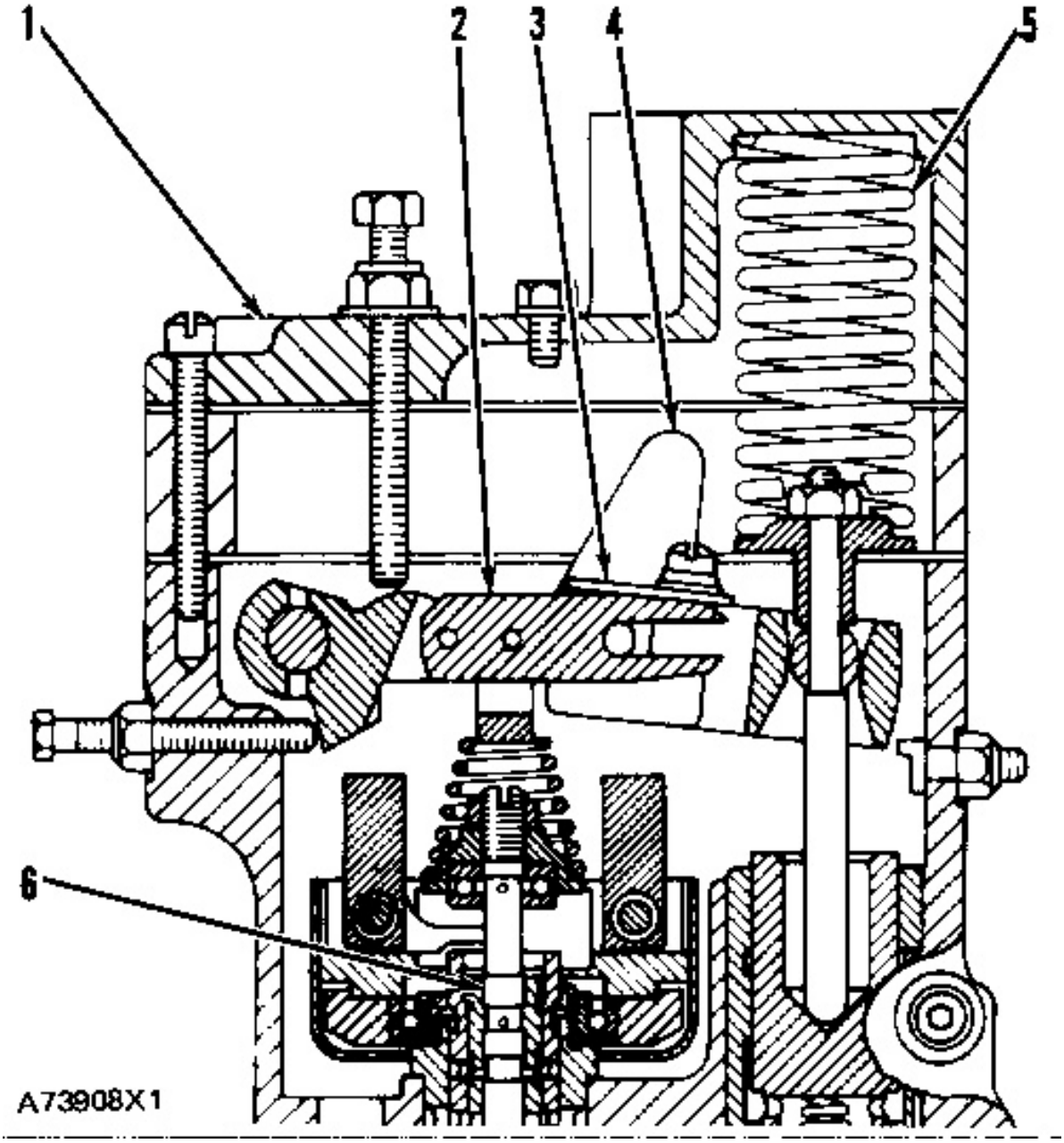

PSG GOVERNOR (EARLIER)
1. Cover. 2. Lever. 3. Bracket. 4. Output shaft lever. 5. Spring. 6. Pilot valve.

4. To increase the speed droop move bracket (3) in the direction shown by the arrow. To decrease the speed droop move the bracket in the opposite direction.

NOTE: If the bracket is moved in the direction opposite the arrow beyond the point where the speed droop is zero the engine will hunt a large amount and will not get stability.

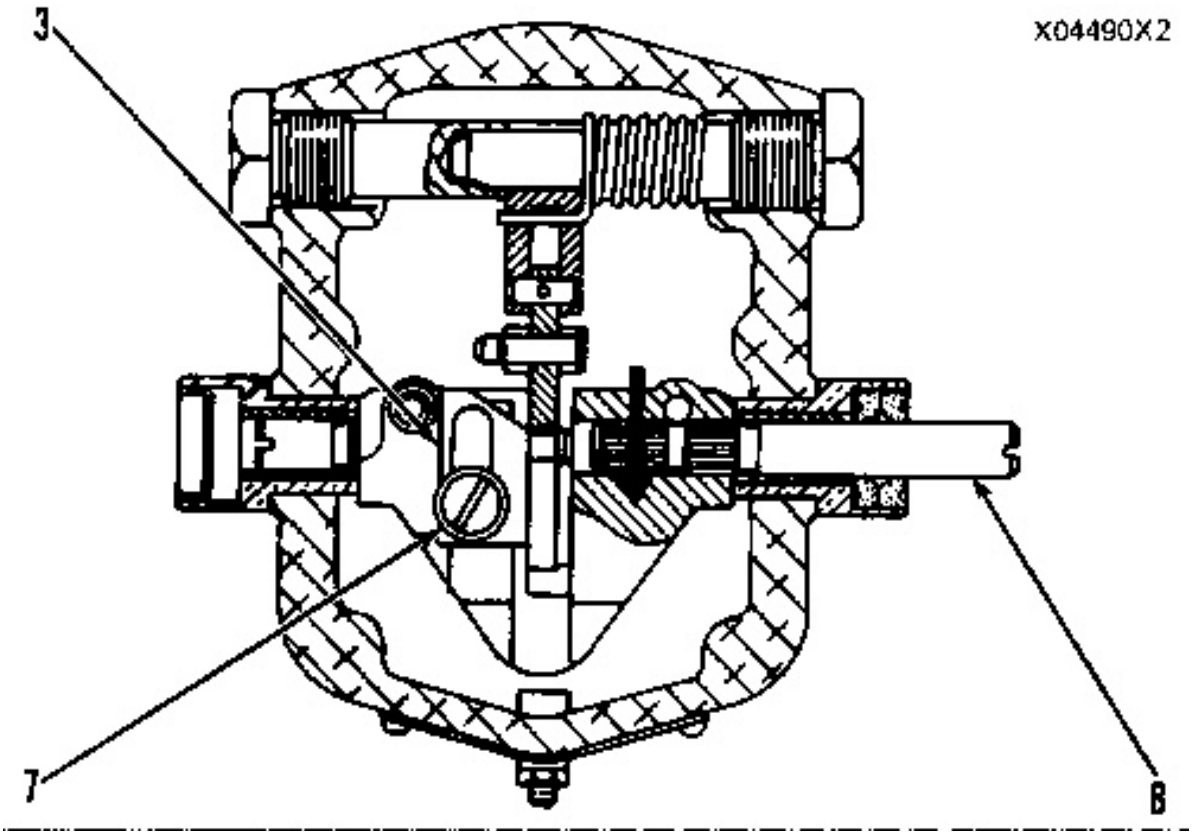

SPEED DROOP ADJUSTMENT
3. Bracket. 7. Screw. 8. Output shaft.

NOTE: Zero droop position can be set by the use of a 5P7285 Adjusting Bracket (10), 3P1565 Collet (11) and 9S215 Dial Indicator (9). Install the bracket and collet on the governor. Install the indicator in the collet. Put the tip of the indicator on lever (2) above pilot valve (6). Turn output shaft (8) and look at the indicator. Adjust bracket (3) until rotation of the output shaft causes no movement of the indicator.

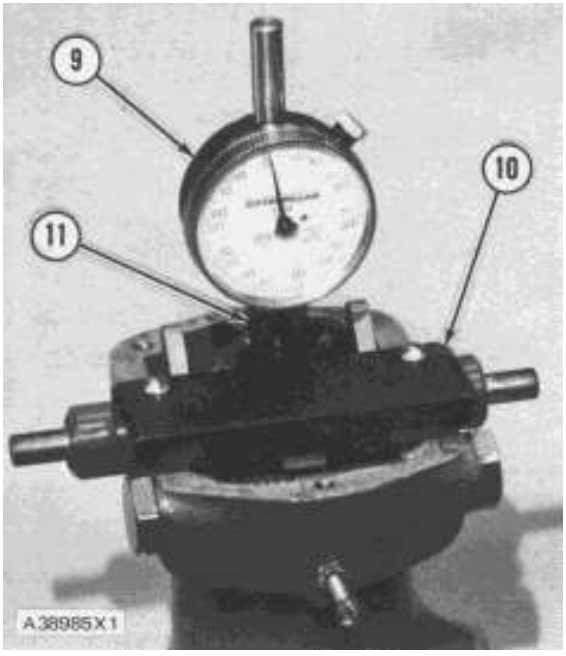

TOOLS INSTALLED
9. 9S215 Dial indicator. 10. 5P7285 Adjusting Bracket. 11. 3P1565 Collet.

Pilot Valve Adjustment

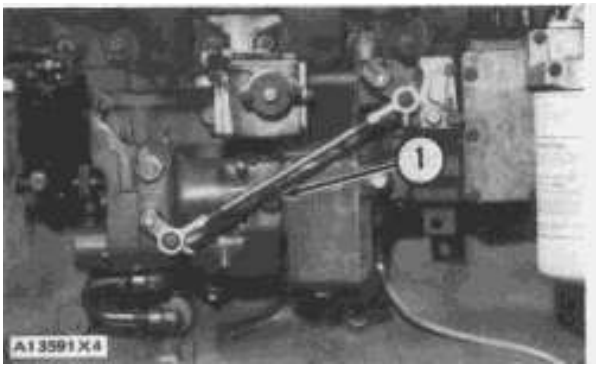

WOODWARD PSG GOVERNOR INSTALLED
1. Pipe plug opening.

Check the adjustment of the pilot valve when the governor is disassembled (linkage and top cover removed).

WARNING

The top cover is pushed away from the body of the governor by a strong spring. Loosen all the bolts that hold the cover in position evenly to decrease the force of compression of the spring.

1. Remove the pipe plug from inspection opening (1).

2. Use a light to look for the control opening in pilot valve bushing (2) and regulating land (3) on the pilot valve.

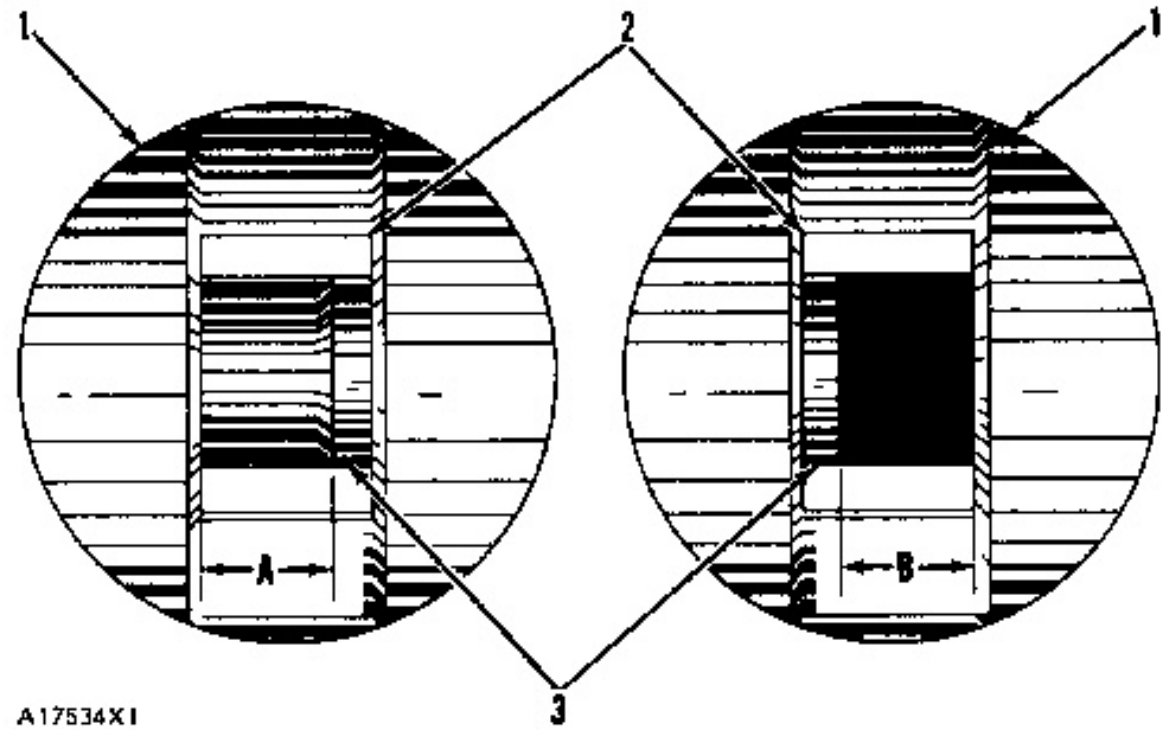

CONTROL OPENING
1. Inspection opening. 2. Pilot valve bushing. 3. Regulating land. A. Port opening. B. Port opening.

3. Push pilot valve (6) in the direction of the drive end as far as possible. Check the length of port opening (A).

4. Pull the pilot valve in the opposite direction as far as possible. Check the length of port opening (B).

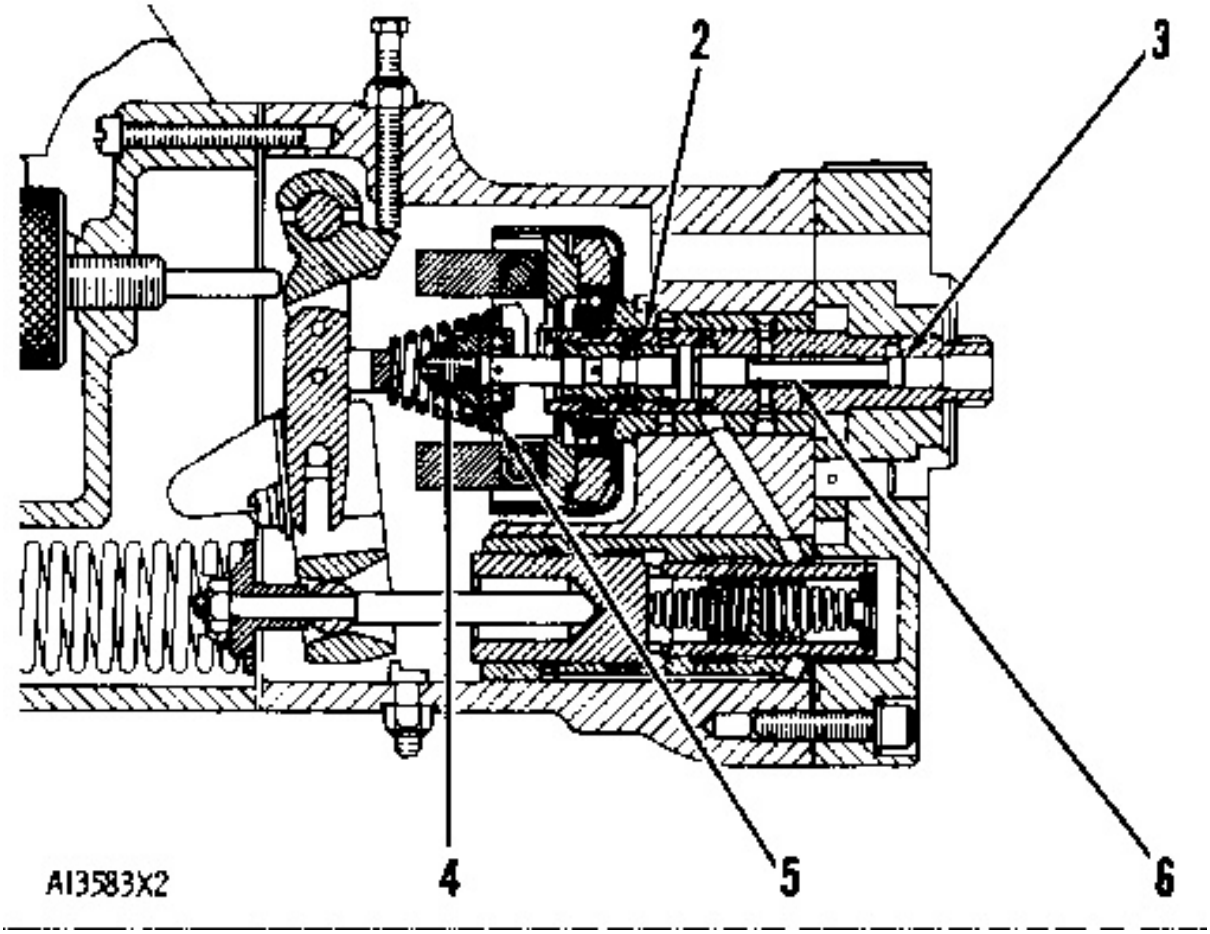

PSG GOVERNOR
2. Pilot valve bushing. 3. Regulating land. 4. Locknut. 5. Spring seat. 6. Pilot valve.

5. The length of port opening (A) must be the same, within .010 in. (0.25 mm), as port opening (B).

6. If the lengths of the port openings are not correct hold spring seat (5) with 1P87 Adjusting Wrench. Loosen locknut (4). Turn the pilot valve as necessary to get the correct adjustment.

NOTE: Turn the pilot valve clockwise to increase port opening (A) and decrease port opening (B). Turn it counterclockwise to decrease port opening (A) and increase port opening (B).

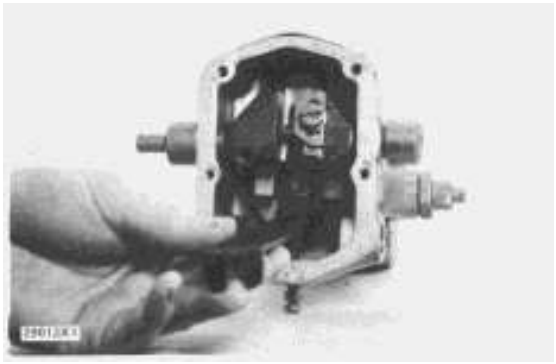

1P87 ADJUSTING WRENCH USED TO HOLD SPRING SEAT

7. Tighten locknut (4) and remove the wrench.

8. Check the adjustment according to Steps 3, 4 and 5.

NOTICE

If this adjustment is not correct the engine can have an overspeed condition. This can cause damage to engine components.

---

9. When the adjustment is correct, put 8H5137 Gasket Sealant on the threads of the pipe plug and install it in pipe plug opening.

Procedure To Remove Adapter For Woodward PSG Governor

1. Remove bolt (5) holding rod (3) to lever (4). Remove the oil line (7). Disconnect the control wire (6) to the synchronizing motor (1). Remove 4 nuts (2) holding Woodward PSG Governor (8) to the cover assembly (9). Remove governor.

2. Remove the bolts holding cover assembly (9) to housing assembly (10). Remove the cover assembly (9).

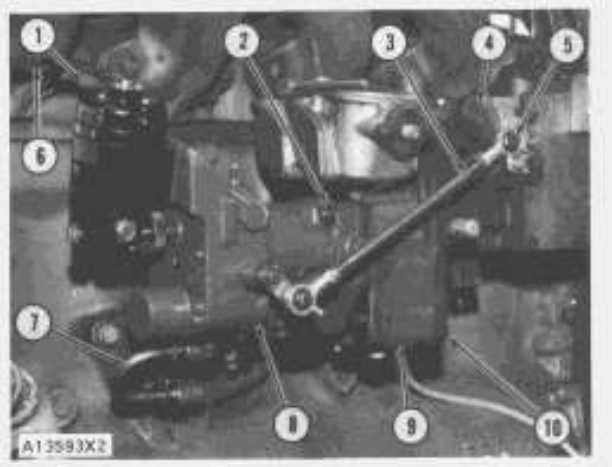

WOODWARD PSG GOVERNOR INSTALLED
1. Synchronizing motor. 2. Nut. 3. Rod. 4. Lever. 5. Bolt. 6. Control wire. 7. Oil line. 8. Woodward PSG Governor. 9. Cover assembly. 10. Housing assembly.

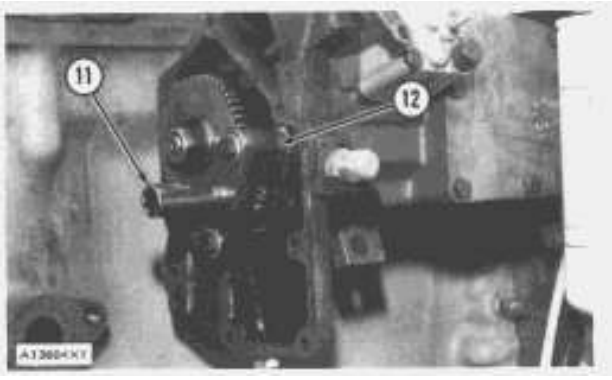

SUPPORT ASSEMBLY INSTALLED
11. Drive sleeve. 12. Support assembly.

3. Remove drive sleeve (11). Remove the support assembly (12).

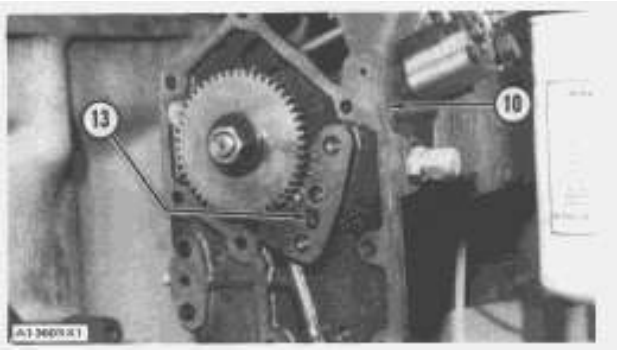

HOUSING ASSEMBLY
10. Housing assembly. 13. Bolt.

4. Remove bolt (13). Remove housing assembly (10).

5. Remove shaft (14) and adapter (15). Remove shaft (16) and lever assembly (17).

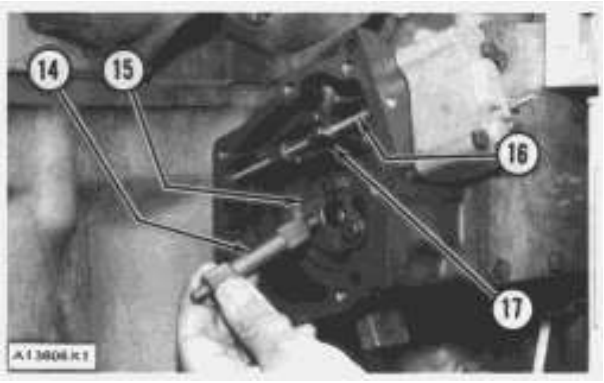

REMOVING SHAFT FROM ADAPTER
14. Shaft. 15. Adapter. 16. Shaft. 17. Lever.

Procedure To Install The Adapter For The Woodward PSG Governor

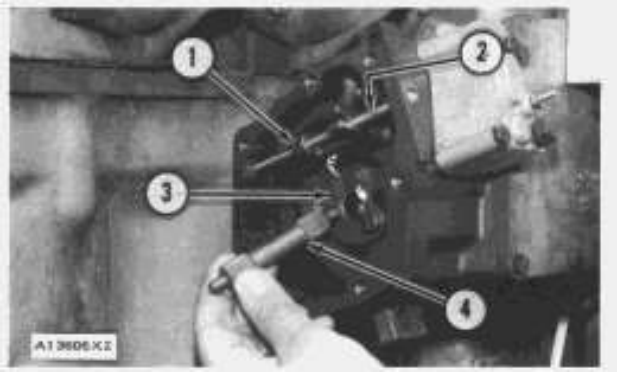

INSTALLING SHAFT
1. Lever assembly. 2. Shaft. 3. Adapter. 4. Shaft.

1. Install the lever assembly (1) and shaft (2) in the fuel injection pump housing.

2. Install adapter (3) with three bolts. Install shaft (4) in the adapter (3).

3. Loosen the bolt holding lever (5) on shaft with lever (6).

4. With lever (6) against the housing assembly (7) push the pin in lever (5) in the direction shown. Tighten the bolt holding lever (5). This lets the linkage from the governor move the linkage in the fuel injection pump for the maximum amount of fuel.

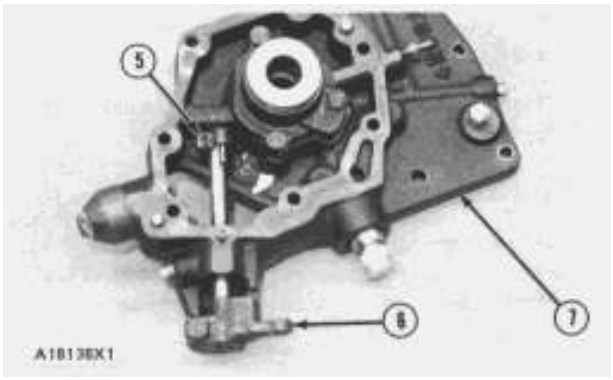

HOUSING ASSEMBLY
5. Lever. 6. Lever. 7. Housing assembly.

5. Install the housing assembly (7) on the housing for the fuel injection pump with bolt (8).

6. Install the support assembly (9) and drive sleeve (10).

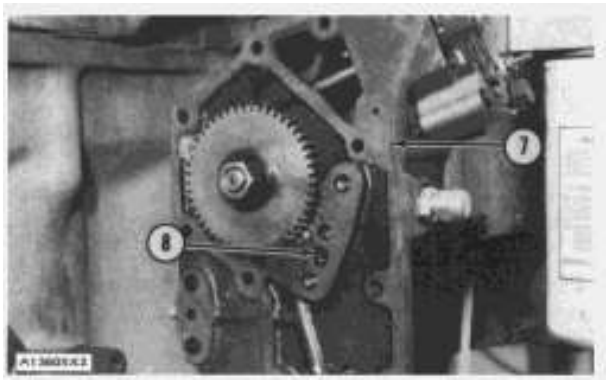

HOUSING ASSEMBLY INSTALLED
7. Housing assembly. 8. Bolt.

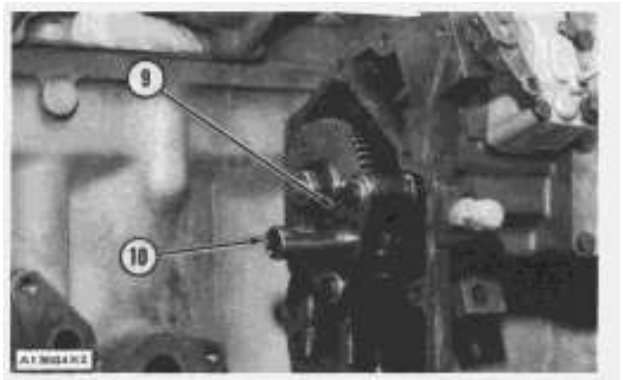

SUPPORT ASSEMBLY
9. Support assembly. 10. Drive sleeve.

7. Install the cover assembly (11). If there is a fuel ratio control, make reference to FUEL RATIO CONTROL

SETTING.

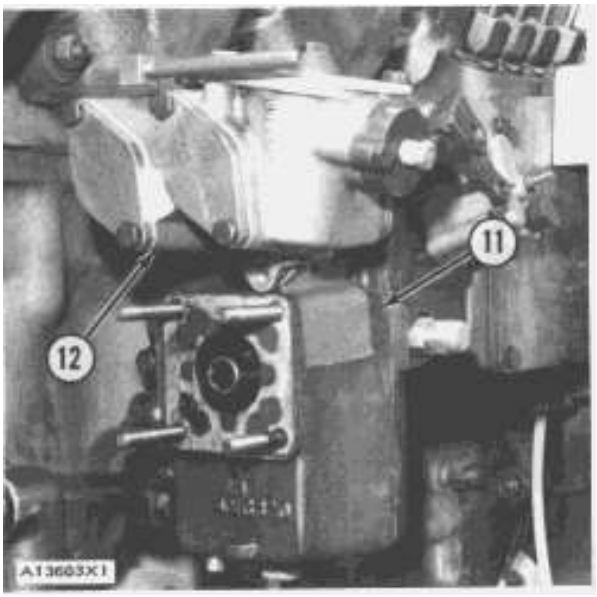

COVER ASSEMBLY INSTALLED
11. Cover assembly. 12. Shutoff housing.

8. Make sure that the levers in the shutoff housing (12) operate correctly after the cover assembly (11) is installed.

9. Install the Woodward PSG Governor (20) on the cover assembly (11). Install the oil line (19) and connect the rod (15) to lever (16) with bolt (17). Make reference to GOVERNOR LINKAGE ADJUSTMENT. Connect the control wires (18) to the synchronizing motor (13).

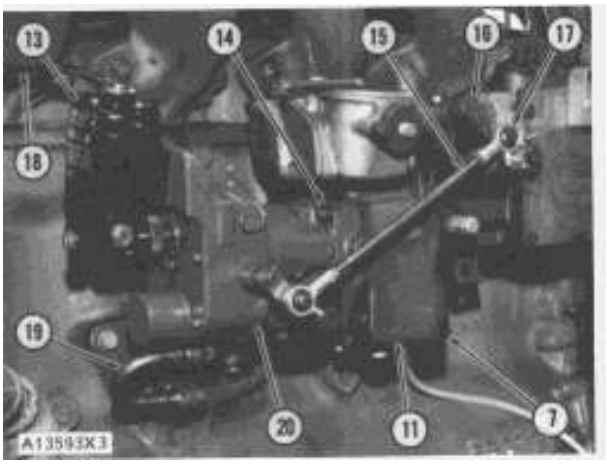

WOODWARD PSG GOVERNOR INSTALLED
7. Housing Assembly. 11. Cover Assembly. 13. Synchronizing motor. 14. Nuts. 15. Rod. 16. Lever. 17. Bolt. 18. Control wire. 19. Oil line. 20. Woodward PSG Governor.

Shutoff And Alarm System Components

Contactor Switch For Oil Pressure

3P1564 Pressure Gauge (0 to 60 psi).3B7734 Pipe Nipple, 1/8 in. X 3.5 in.3B6483 Cap.Two 3B7263 Pipe Nipples, 1/8 in. X 2 in.Two 3B9389 Shutoff Cock Fittings.Two 1F9369 Tees.44914 Tee.Two 5K3772 Hose Assemblies.8S4627 Circuit Tester.

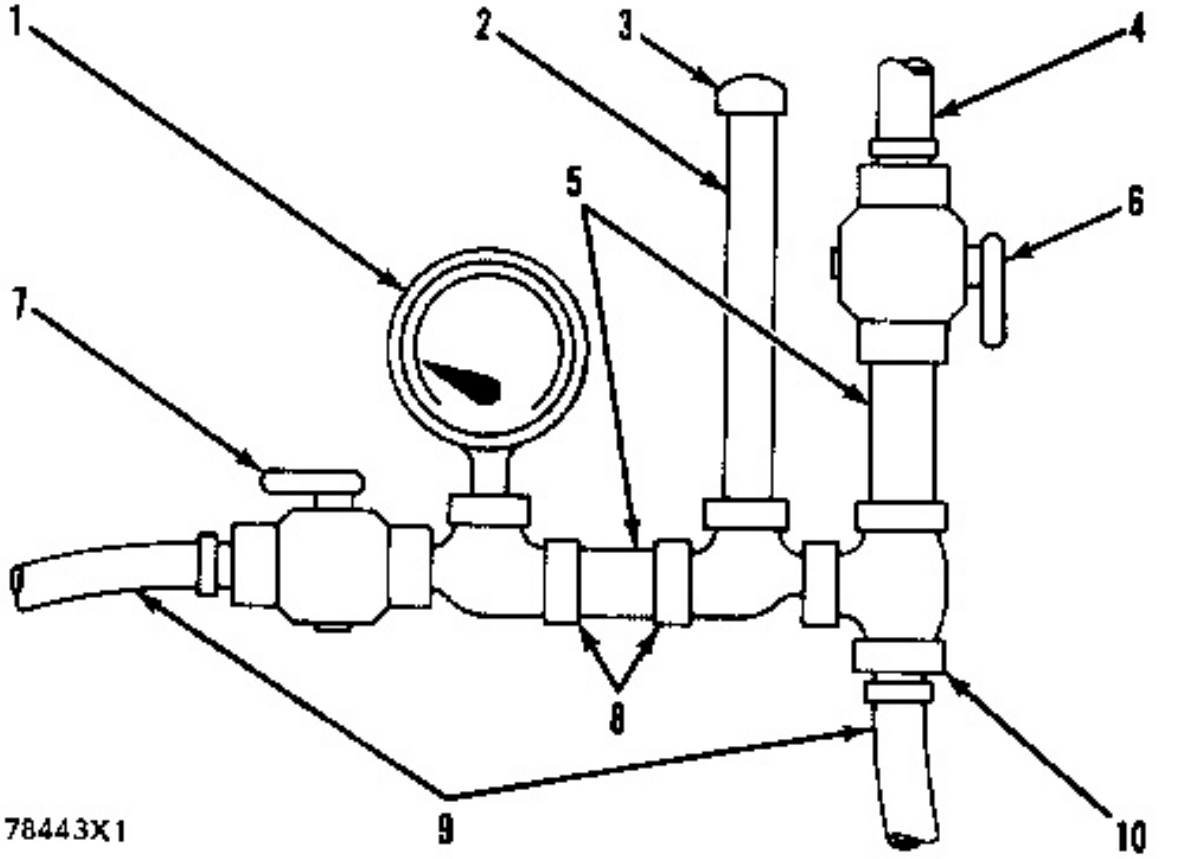

TEST EQUIPMENT
1. 3P1564 Pressure gauge (0 to 60 psi). 2. 3B7734 Pipe nipple. 3. 3B6483 Cap. 4. Oil supply line. 5. 3B7263 Pipe nipple. 6. 3B9389 Shutoff cock fitting. 7. 3B9389 Shutoff cock fitting. 8. 1F9369 Tees. 9. 5K3772 Hose Assemblies. 10. 44914 Tee.

Test Procedure

1. Remove the cover of the contactor switch and disconnect the wires from the normally closed (B or Blue) terminal.

2. Disconnect the oil supply line from the contactor switch and install the test equipment as shown.

3. Connect the 5K3772 Hose from tee (10) to the contactor switch. Put the end of the other 5K3772 Hose in a pan.

4. Connect the 8S4627 Circuit Tester between the common terminal and the normally closed terminal. The light of the circuit tester will be activated.

5. Close shutoff fitting (7) and open shutoff fitting (6).

6. Look at the pressure gauge, start the engine and run it at low idle rpm. The light must go out, with an increase in oil pressure, at the specification of the switch.

7. Close shutoff fitting (6) and slowly open shutoff fitting (7). The light must be activated, with a decrease in oil pressure, at the specification of the switch.

8. Stop the engine.

9. Connect the wire(s) to the normally closed terminal.

10. On contactor switches with a button or a control knob either push the button or turn the knob to the OFF position.

11. Close shutoff fitting (7) and open shutoff fitting (6).

12. Start the engine and run it at low idle rpm.

13. Put a jumper wire between the common terminal and the normally closed terminal. This will check the system beyond the contactor switch.

14. Remove the jumper wire.

Adjustment of Earlier Type Switch

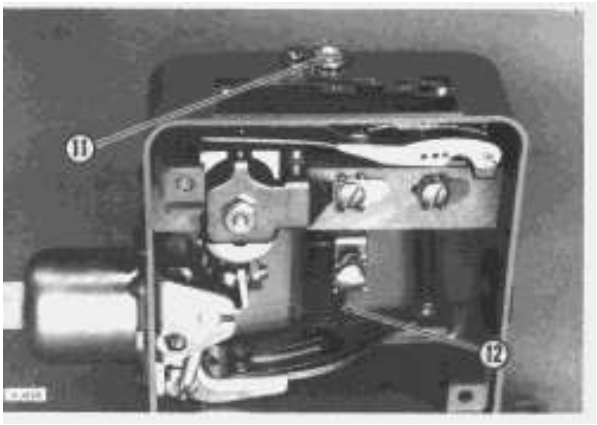

CONTACTOR SWITCH FOR OIL PRESSURE (Earlier Type)
11. Adjustment screw. 12. Main spring.

1. Turn adjustment screw (11) counterclockwise to make a decrease in the tension of main spring (12).

2. Disconnect the wires from the normally closed terminal of the switch.

3. Start the engine and run it at low idle rpm.

4. Close shutoff fitting (6) and slowly open shutoff fitting (7) until the pressure gauge shows the pressure specification at which the switch must close with a decrease in pressure. Close shutoff fitting (7).

5. Make sure the control knob is in RUN position, if so equipped.

6. Connect the 8S4627 Circuit Tester between the common terminal and the noramlly closed terminal. The light of the circuit tester must not be activated.

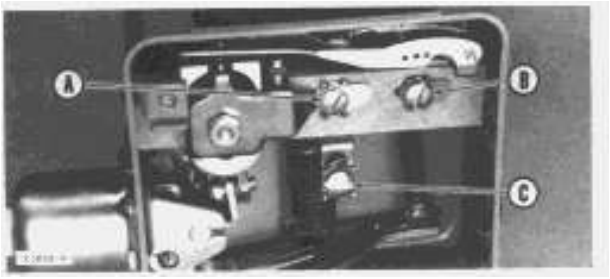

WIRING CONNECTIONS
A. Normally open terminal. B. Common terminal. C. Normally closed terminal.

7. Turn screw (11) clockwise until the light of the circuit tester is activated.

8. To check the adjustment, close shutoff fitting (7) and open shutoff fitting (6).

9. Connect the wires to the normally closed terminal.

10. Close shutoff fitting (6) and slowly open shutoff fitting (7) until the engine stops or the alarm operates.

11. The pressure gauge must show the correct pressure specification of the switch as the engine stops or the alarm operates.

Adjustment of Micro Switch Type

1. Loosen locknut (16) and turn adjustment screw (14) counterclockwise to make a decrease in the tension of spring (15).

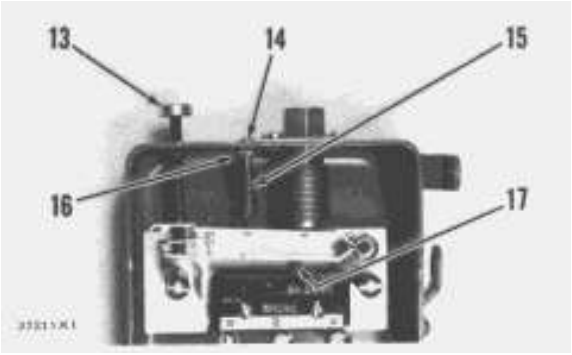

CONTACTOR SWITCH FOR OIL PRESSURE (Micro Switch Type)
13. Set for start button. 14. Adjustment screw. 15. Spring. 16. Locknut. 17. Contact button.

2. Disconnect the wires from the normally closed terminal of the switch.

3. Start the engine and run it at low idle rpm.

4. Close shutoff fitting (6) and slowly open shutoff fitting (7) until the pressure gauge shows the pressure specification at which the switch must close with a decrease in pressure. Close shutoff fitting (7).

5. Make sure the set for start button (13) is in the RUN position.

6. Connect the 8S4627 Circuit Tester between the common terminal and the normally closed terminal. The light of the circuit tester must not be activated.

7. Turn screw (14) clockwise until the light of the circuit tester is activated.

8. Tighten the locknut.

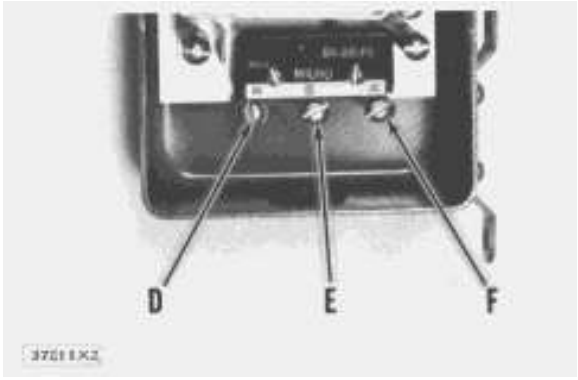

WIRING CONNECTIONS
D. Normally closed B terminal. E. Normally open W terminal. F. Common R terminal.

9. To check the adjustment, close shutoff fitting (7) and open shutoff fitting (6).

10. Connect the wires to the normally closed terminal.

11. Close shutoff fitting (6) and slowly open shutoff fitting (7) until the engine stops or the alarm operates.

12. The pressure gauge must show the correct pressure specification of the switch as the engine stops or the alarm operates.

Contactor Switch For Water Temperature

Fabricated heat sink.2F7112 Thermometer.3J5389 Plug.8S4627 Circuit Tester.

Method of Checking

1. Make a heat sink as shown. Material can be brass, steel or cast iron. Drill a 23/32 in. hole through the plate and use a tap to make 1/2 in. NPT threads.

2. Put marks on the two contactor wires that connect the contactor to the circuit. Disconnect the two wires.

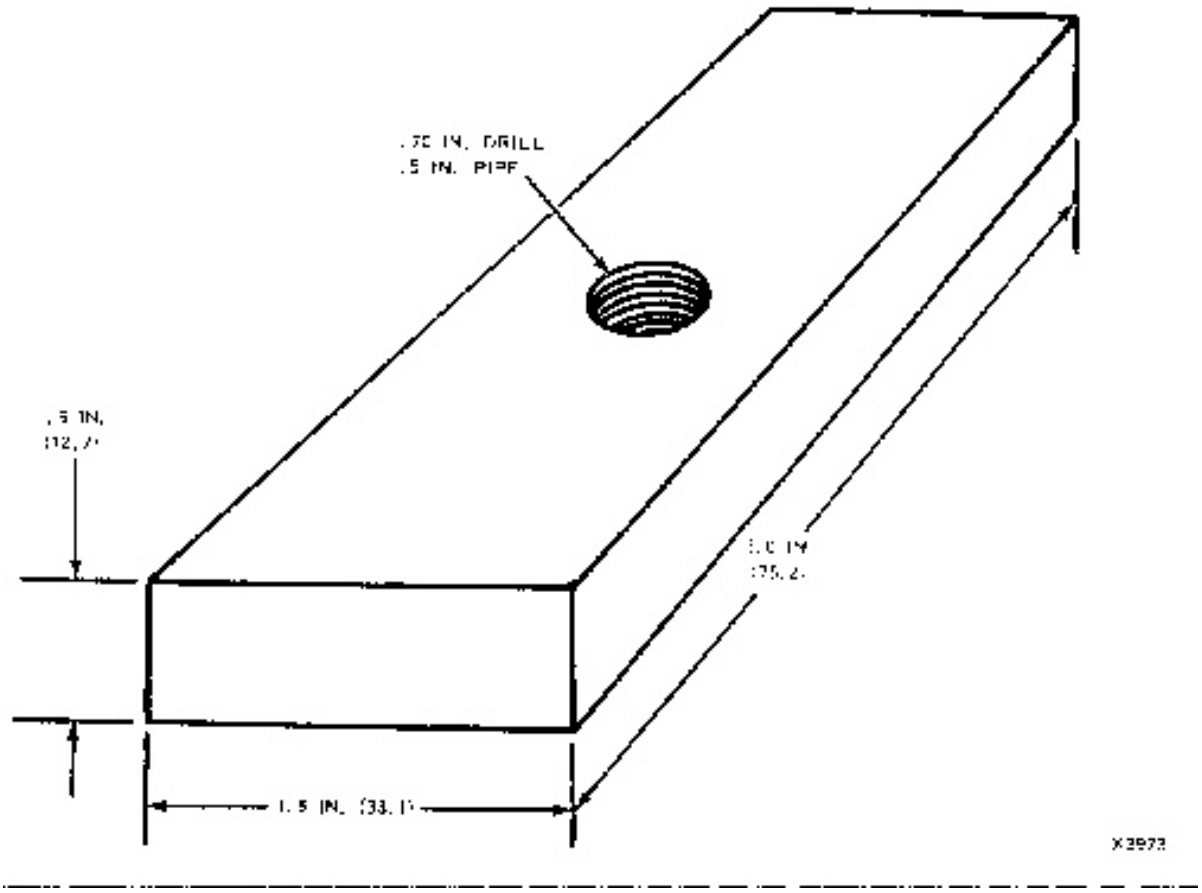

HEAT SINK [Dimensions in inches (mm)].

3. Remove the contactor and install a 3J5389 Plug. Install the contactor switch in the heat sink.

4. Put the heat sink and contactor in water as shown. Use blocks to support the heat sink at surface level.

5. Connect the 8S4627 Circuit Tester between the wires that connected the contactor to the circuit.

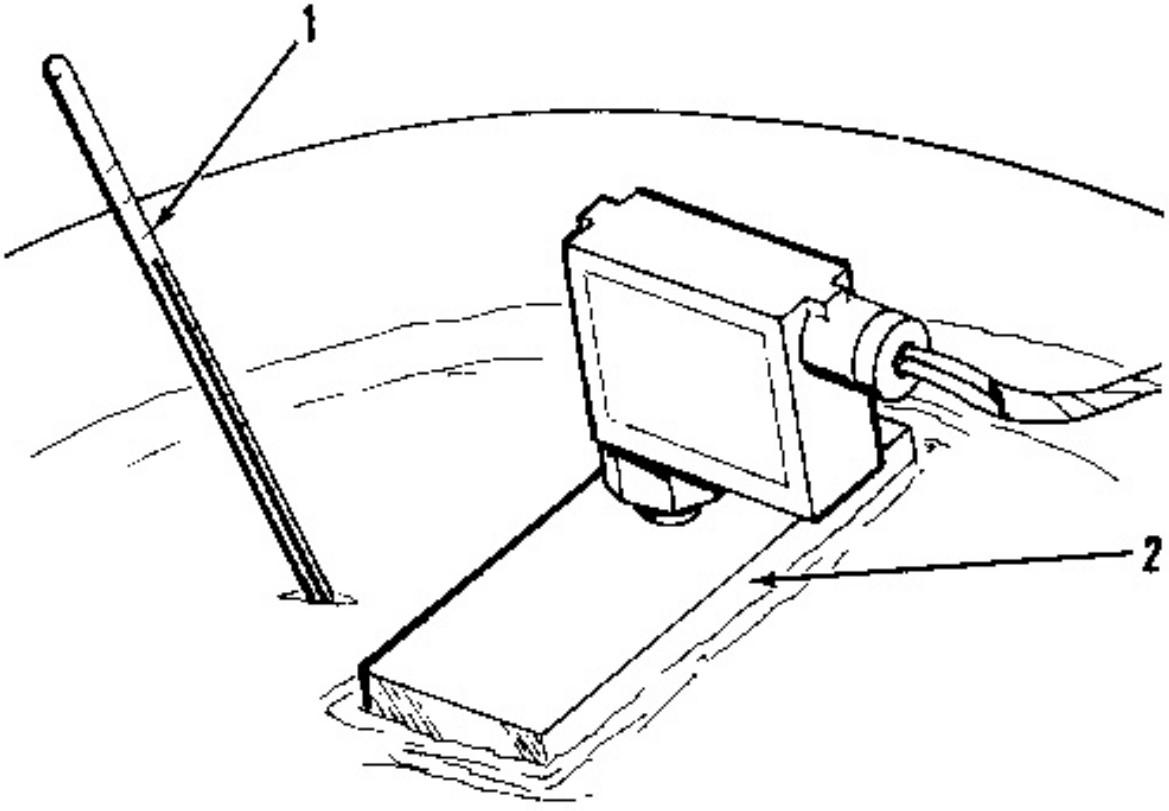

TEST OF CONTACTOR SWITCH
1. 2F7112 Thermometer. 2. Fabricated heat sink.

6. Put the 2F7112 Thermometer in the water.

7. Use a torch to heat the water to the temperature range at which the contactor must activate. If the circuit tester light does not come on within the temperature range given in the specifications make a replacement of the contactor.

8. Let the water temperature go down. If the circuit tester light does not go out within the temperature range given in the specifications make a replacement of the contactor.

Pressure Switch With Time Delay

8M2743 Gauge.8S4627 Circuit Tester.

1. Remove the pressure switch (2) from the tee.

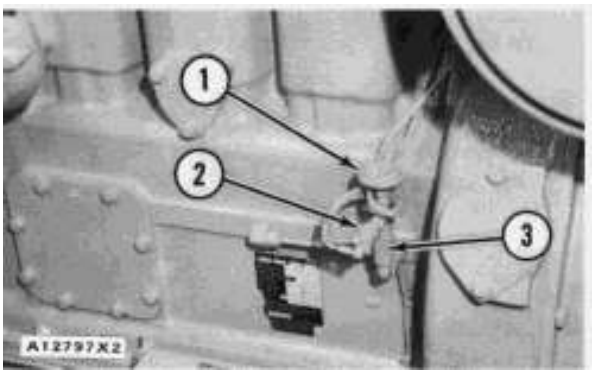

OIL PRESSURE SWITCH WITH TIME DELAY INSTALLED
1. Damper. 2. Pressure switch. 3. Valve.

2. Install a short nipple, shutoff valve and short nipple and another tee in the place of the pressure switch (2). Make sure that the valve is closed.

3. Install the pressure switch (2) and a 8M2743 Gauge in the open ends of the tee.

4. Connect the 8S4627 Circuit Tester between the terminals of the pressure switch.

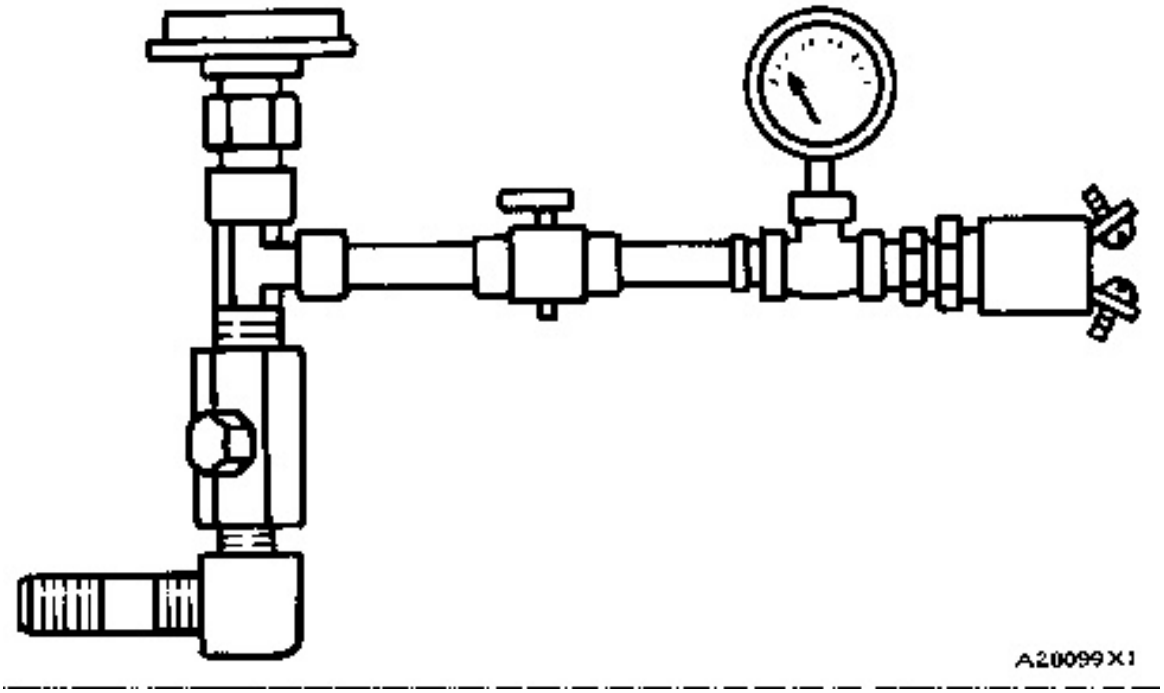

TEST TOOLING INSTALLED

5. Start the engine. Open the shutoff valve a small amount. Look at the pressure on the 8M2743 Gauge. When the pressure gets to the range given in the specifications the circuit tester light must go on.

6. Close the shutoff valve. Stop the engine. Open the shutoff valve a small amount. Look at the pressure on the 8M2743 Gauge. When the pressure gets to the range given in the specifications close the valve. After five minutes open the valve fully. The circuit tester light must stay on a minimum of 30 seconds and a maximum of 15 minutes after the valve is fully opened.

Shutoff Solenoid

Two checks must be made on the engine to give proof that the solenoid adjustment is correct.

1. The adjustment must give the piston enough travel to move the sleeve control shaft to the shutoff position.

2. The adjustment must give the piston enough travel to cause only the "hold in" windings of the solenoid to be activated when the sleeve control shaft is held in the fuel closed position. Use a thirty ampere ammeter to make sure the plunger is in the "hold in" position. Current needed must be less than one ampere.

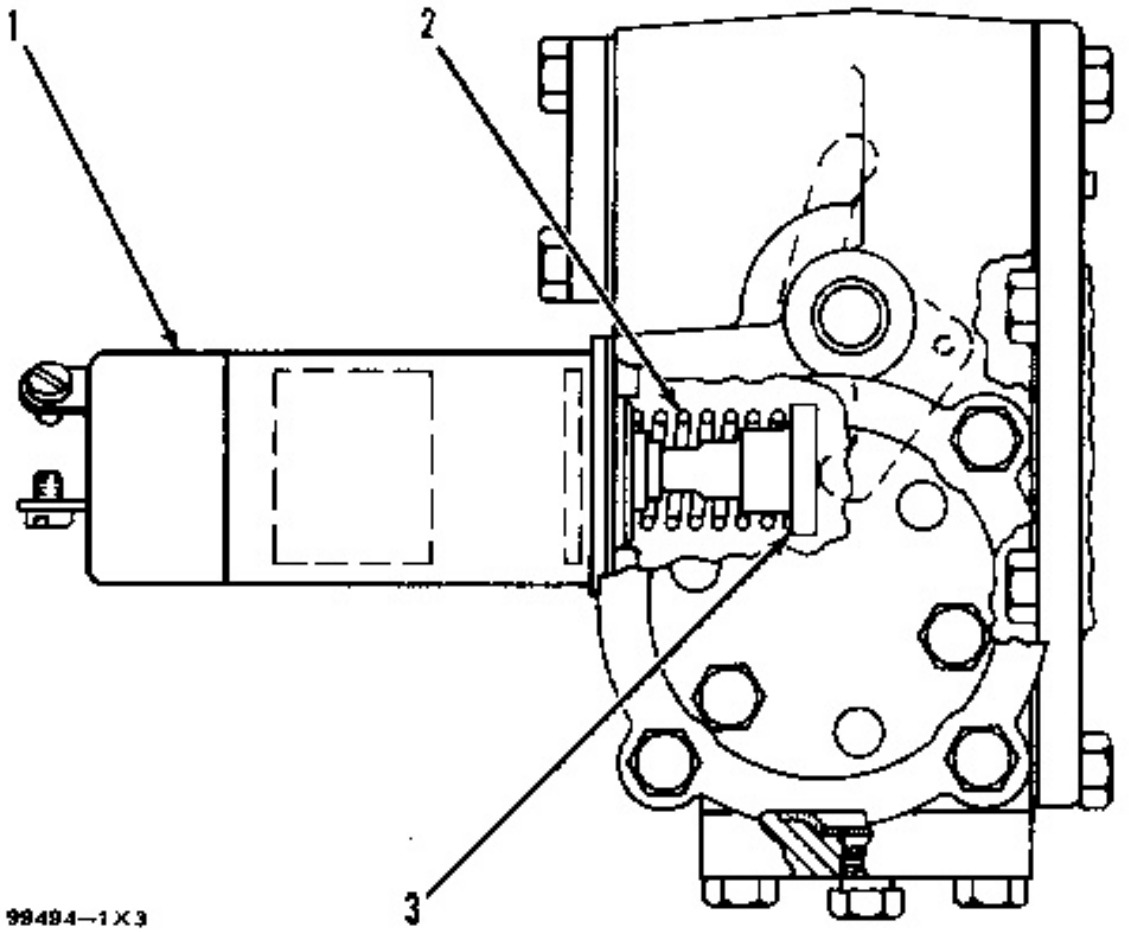

ACTIVATE TO RUN
1. Shutoff Solenoid. 2. 9L6588 Spring. 3. 3N2835 Shaft.

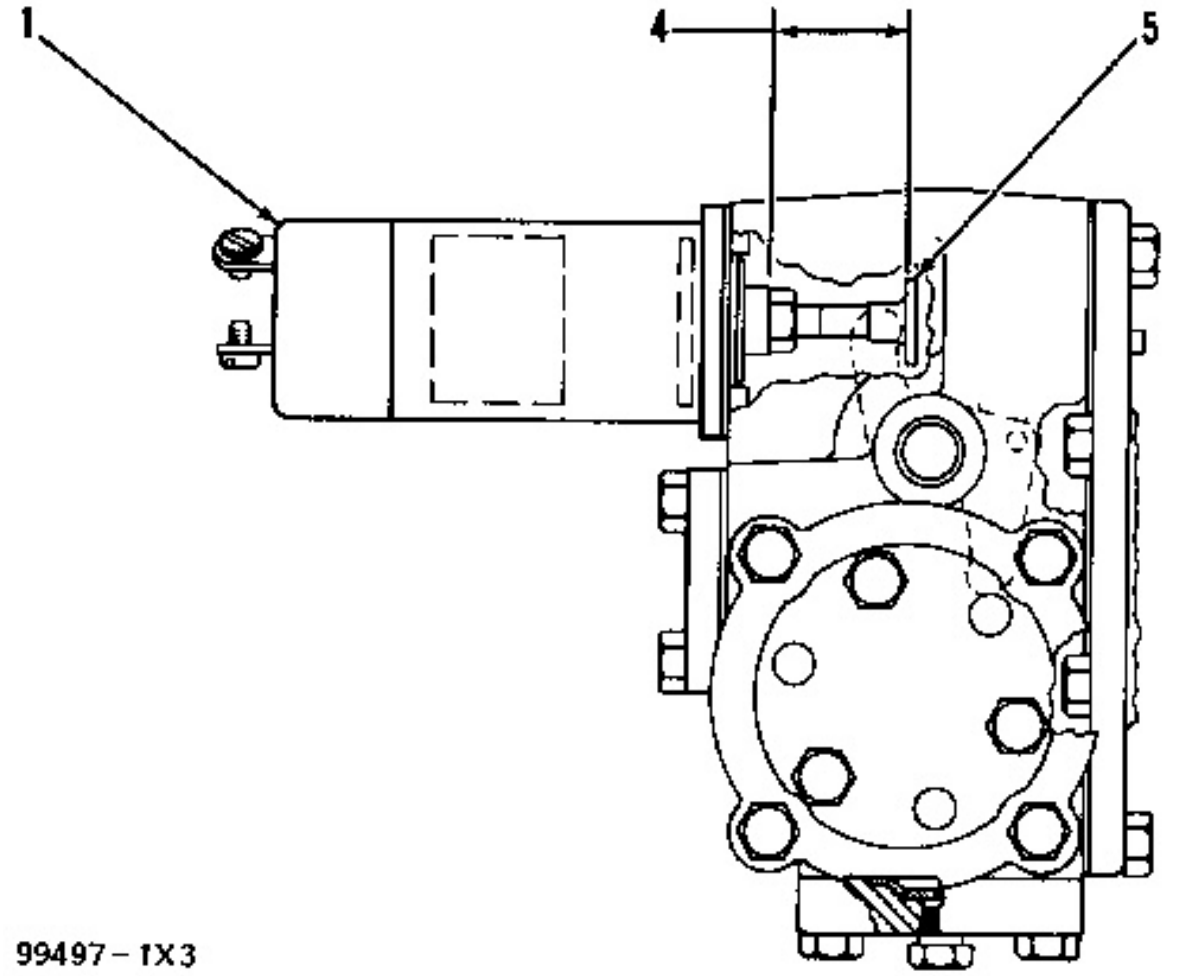

ACTIVATE TO SHUTOFF
1. Shutoff solenoid. 4. Distance from face of piston to inside face of shaft (5). 5. 3N2836 Shaft.

Oil Pressure And Water Temperature Shutoff (Mechanical)

9S9102 Thermistor Thermometer Group,2F7112 or a 7F6785 Thermometer.

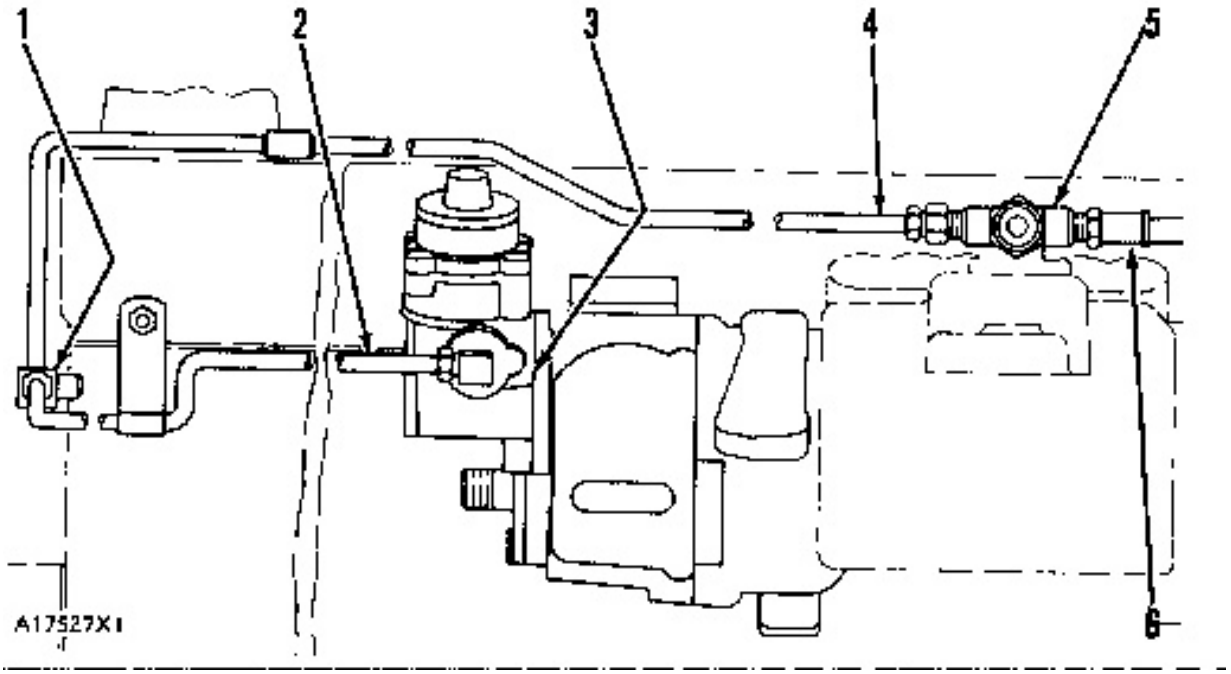

MECHANICAL SHUTOFF GROUP
1. Tee. 2. Oil line. 3. Shutoff housing. 4. Oil line. 5. Control valve. 6. To timing gear cover.

1. Make a restriction to the flow of air through the radiator or to the flow of coolant through the engine.

2. Install a probe or a thermometer as close as possible to the control valve.

3. Run the engine. The engine must stop in less than one minute from the time that the temperature of the coolant gets to the opening temperature for the control valve.

4. If the engine stops at the correct temperature, both the control valve and the oil pressure shutoff are operating correctly. If the engine does not stop at the correct temperature, do the following steps:

5. Loosen one of the connections on the oil supply line for the oil pressure shutoff. If the engine stops running, make a replacement of the control valve. If the engine does not stop running from loosening the nut, stop the engine.

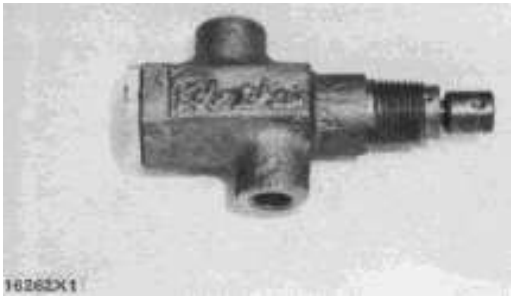

CONTROL VALVE FOR MECHANICAL SHUTOFF

6. Check the lines and fittings and the parts in the shutoff housing for a problem. Make reference to the Systems Operation for information on how the parts work together.

7. Make replacements as necessary and go through Steps 1 through 4 again.

Contactor Switch For Overspeed

The original setting of the contactor switch for overspeed will stop the engine when the engine rpm is more than 18% above full load rpm. DO NOT check the adjustment of the contactor switch on the engine.

Off Engine Adjustment

4S6553 Engine Test Group.8S4627 Circuit Tester.5L2277 Adapter.Reversible Variable Speed Drill.

1. Connect the 1P7443 or 4S6991 Tachometer of the 4S6553 Group to the tachometer generator (2).

2. Connect the 5L2277 Adapter (3) to the contactor switch and tachometer generator (2).

3. Install variable speed drill (4) to the adapter as shown.

4. Connect the 8S4627 Circuit tester (5) between the NO and the C terminals of the contactor switch. The light must be off. If the light is on, push reset button (6).

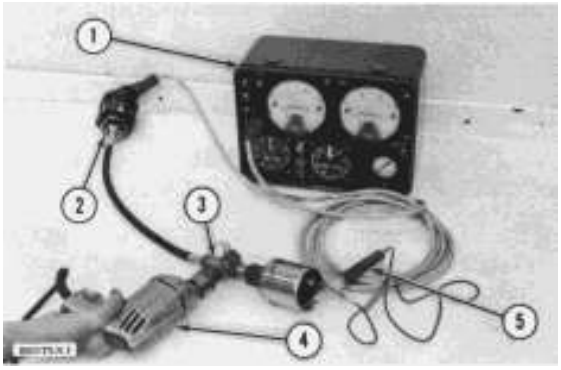

CHECKING CONTACTOR SWITCH FOR OVERSPEED
1. 4S6553 Engine Test Group. 2. Tachometer generator. 3. 5L2277 Adapter. 4. Variable speed drill. 5. 8S4627 Circuit Tester.

5. Gradually make an increase in the rpm. Read the rpm on the tachometer at the moment the light of the circuit tester is activated. The reading will give the engine rpm (2 rpm on the scale for each rpm the input shaft is turned).

OVERSPEED ADJUSTMENT	
FULL LOAD ± 10 RPM	**OVERSPEED SETTING ± 25 RPM**
1000	1180
1100	1298
1200	1416
1300	1534
1400	1652
1500	1770
1600	1888
1700	2006
1800	2124
1900	2242
2000	2360
2100	2478
2200	2596
2300	2714
2400	2832

6. If needed, make an adjustment to the contactor switch by loosening lock screws (7). Turn the cap clockwise to lower the overspeed setting. Tighten the lock screws.

7. To check other components in the system, put a jumper wire between the "C" and "NO" terminals of the contactor switch.

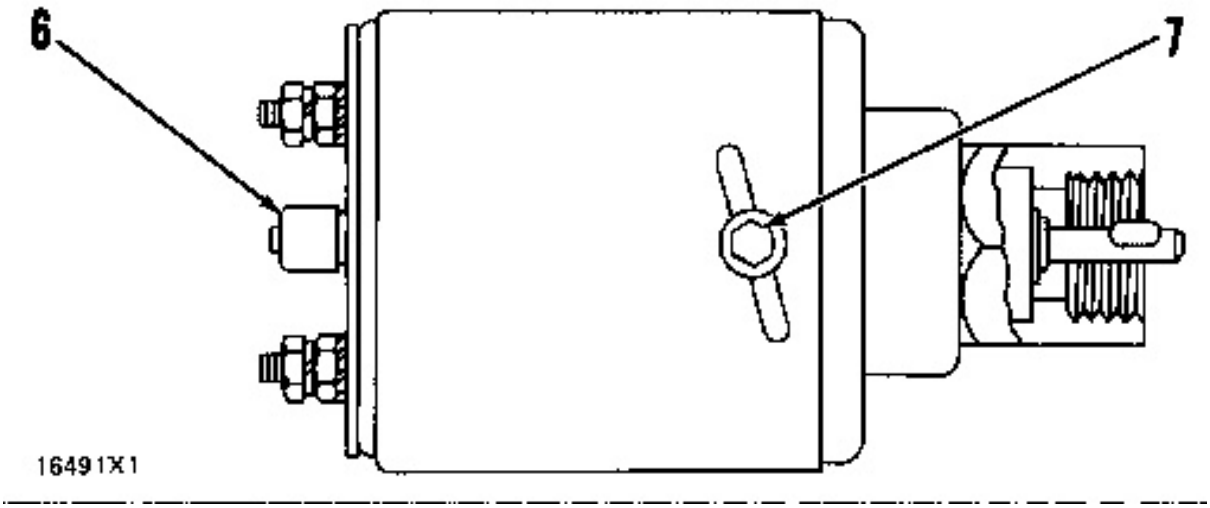

OVERSPEED CONTACTOR SWITCH
6. Reset button. 7. Lock screws.

Electronic Speed Switch (Earlier)

NOTE: Some of the early 3N7478 Overspeed Contactor Groups have a speed switch that activates and stops the engine at 25% of the overspeed set point. A method of identification for these early 25% speed switches is to look at terminals 7 and 9. The electrical code letters for these terminals are wrong. Terminal 7 has the letters (NC) and terminal 9 has the letters (NO). Make a change to these two terminals so the letters for terminal 7 are (NO) and the letters for terminal 9 are (NC). After the change is made, put a mark on the speed switch to show the change to the terminals and also make a mark so it is known that it is a 25% speed switch. The speed switch in the 3N9595 Overspeed Contactor Group and in the later 3N7478 Overspeed Contactor Groups activate at 75% of the overspeed set point. The speed switch in each of these groups has an identification mark to show it is a 75% speed switch.

There are two components to check if there is problem with the operation of the electronic speed switch; the magnetic pickup and the switch operation.

Checking the Magnetic Pickup

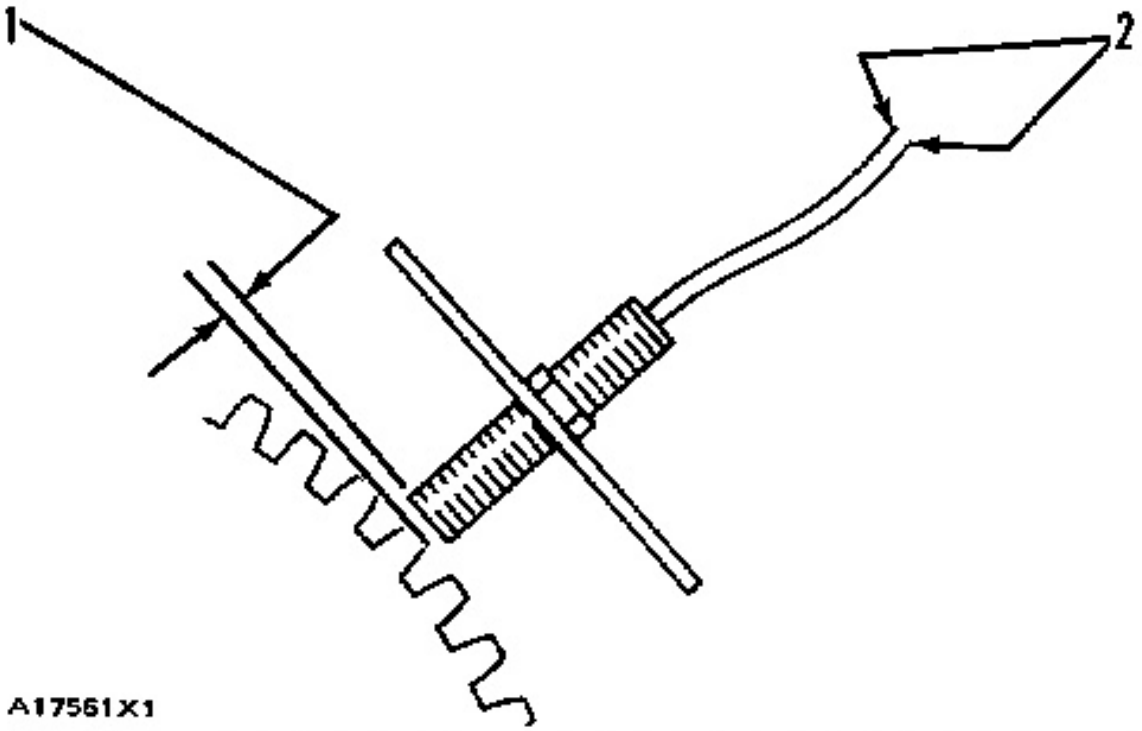

MAGNETIC PICKUP
1. Clearance. 2. Wires.

1. Check the resistance of the magnetic pickup with the wires (2) disconnected and the engine stopped. The resistance must be according to specifications.

2. Start the engine. Check the voltage output of the magnetic pickup with the engine running at normal speed. The output must be according to specifications.

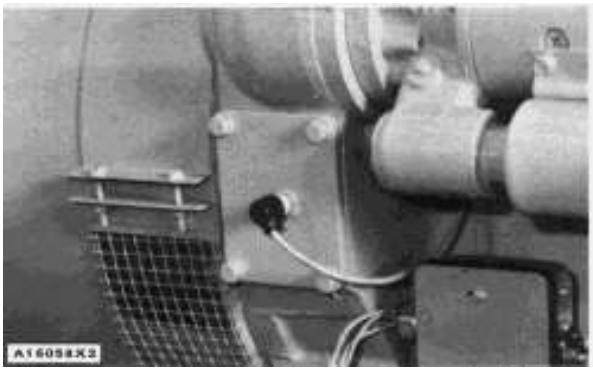

MAGNETIC PICKUP INSTALLED

NOTE: If the voltage output is not correct according to specifications, check for the correct clearance (1) between the magnetic pickup and the flywheel gear teeth.

3. If the operation of the magnetic pickup is correct according to the specifications after the tests above, connect the wires and check the operation of the electronic speed switch.

Overspeed Adjustment

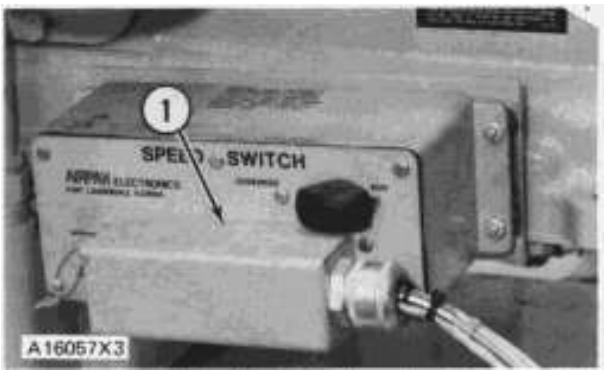

ELECTRONIC SPEED SWITCH (EARLIER)
1. Cover.

1. Remove cover (1). Make a temporary connection between terminals 1 and 2 of the speed switch.

2. Make reference to ENGINE SPEED MEASUREMENT. Use one of the methods given to measure the engine speed.

3. Start the engine. Make reference to the overspeed adjustment chart. Slowly increase the speed of the engine. The engine must stop at the overspeed setting according to the rated full load speed of the engine. For example, if the rated full load speed is 1800 rpm, the engine should stop at 531 rpm or 1593 rpm.

4. If the speed switch does not stop the engine at the correct overspeed test rpm remove screw (3). Use a small screwdriver to turn the adjustment screw behind screw (3).

NOTE: Turn the adjustment screw clockwise to increase or counterclockwise to decrease the rpm at which the engine will stop.

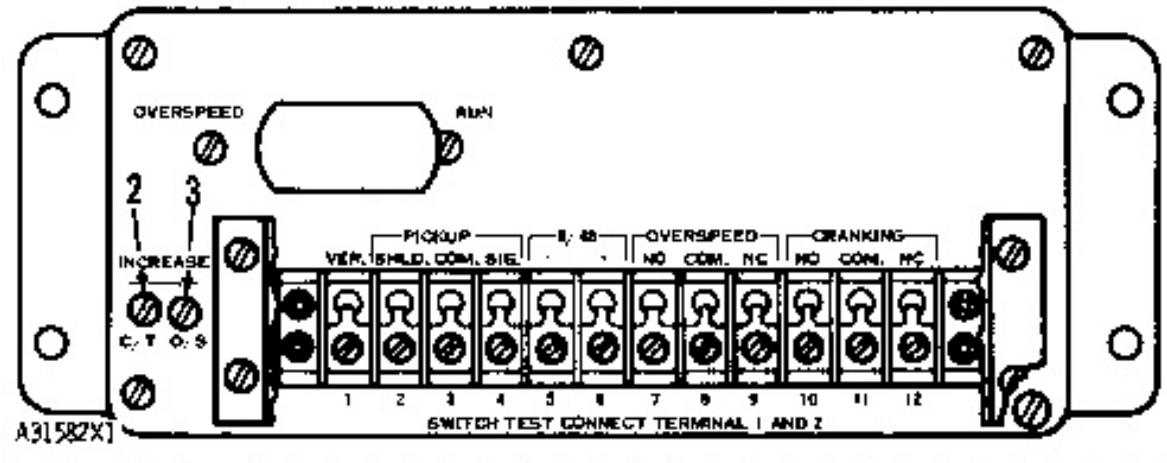

ADJUSTMENT LOCATIONS
2. Screw. 3. Screw.

Cranking Adjustment

NOTE: Some earlier electronic speed switches do not have a cranking adjustment.

1. If the starter motor pinion does not move away from the flywheel at 600 rpm screw (2). Use a small screwdriver to turn the adjustment screw behind screw (2).

NOTE: Turn the adjustment screw clockwise to increase or counterclockwise to decrease the rpm at which the starter motor pinion moves away from the flywheel.

SPEED SWITCH ADJUSTMENT				
FULL LOAD RPM	18% OVERSPEED SETTING RPM	OVERSPEED TEST RPM 25% SPEED SWITCH	OVERSPEED TEST RPM 75% SPEED SWITCH	CRANKING *RPM SETTING—3N9595 SPEED SWITCH ONLY
1000	1180	295	885	600
1100	1298	324	974	600
1200	1416	354	1062	600
1300	1534	384	1151	600
1400	1652	413	1239	600
1500	1770	443	1328	600
1600	1888	472	1416	600
1700	2006	502	1505	600
1800	2124	531	1593	600
1900	2242	561	1682	600
2000	2360	590	1770	600
2100	2478	620	1859	600
2200	2596	649	1947	600
2300	2714	679	2036	600
2400	2832	708	2124	600

*CRANKING RPM SETTING IS THE SPEED AT WHICH THE STARTING MOTOR PINION WILL DISENGAGE FROM THE FLYWHEEL.

Electronic Overspeed Switch

Wiring Diagram

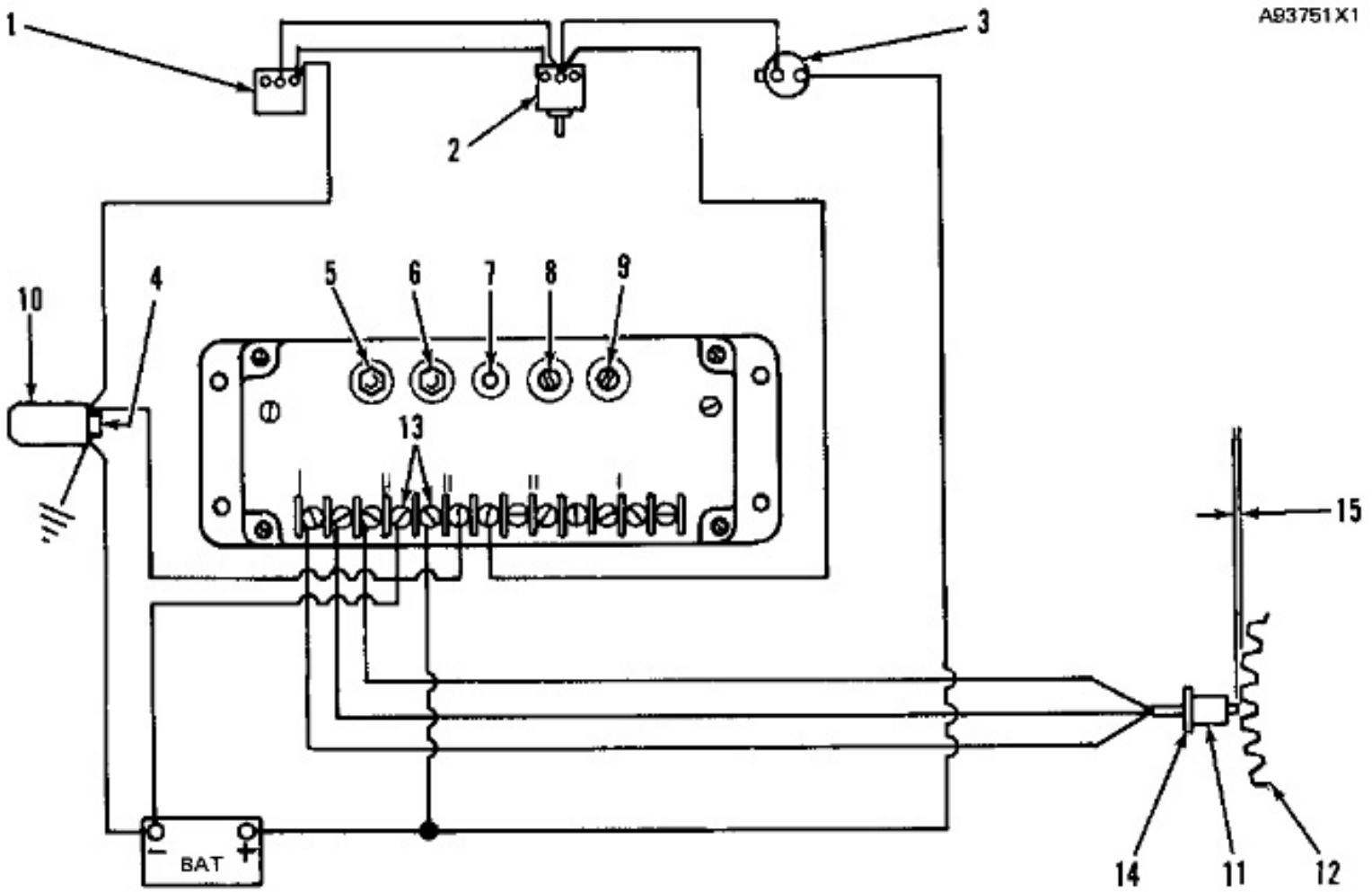

SHUTOFF SYSTEM WIRING DIAGRAM
1. Oil pressure switch. 2. Water temperature contactor. 3. Time delay switch. 4. Diode assembly. 5. 75% verify button. 6. Reset button. 7. "LED" overspeed light. 8. Seal screw plug (overspeed). 9. Seal screw plug (crank terminate). 10. Shutoff solenoid. 11. Magnetic pickup. 12. Engine flywheel. 13. Voltage input. 14. Locknut. 15. Air gap.

Troubleshooting Procedure (Overspeed)

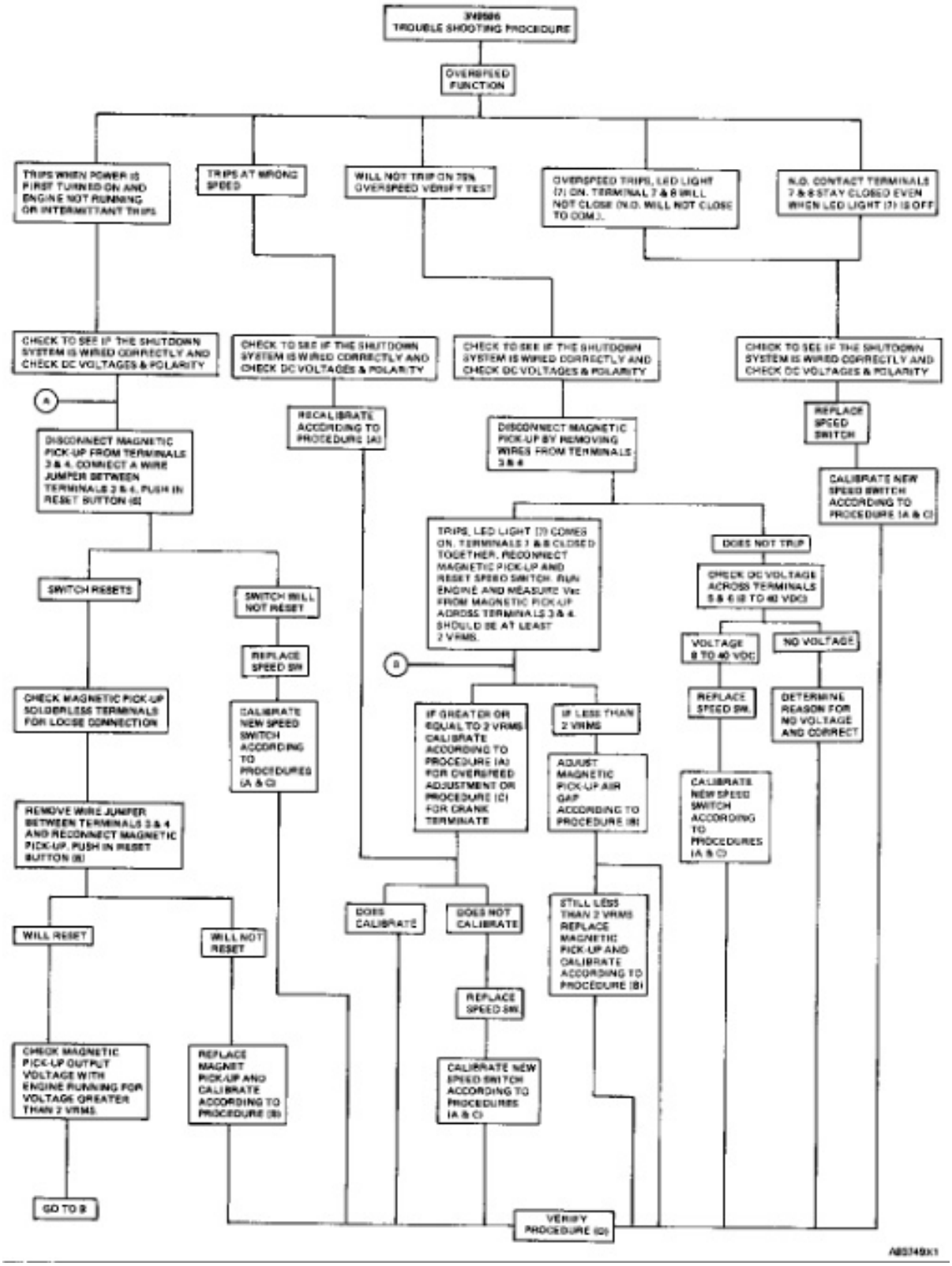

Troubleshooting Procedure (Crank Terminate)

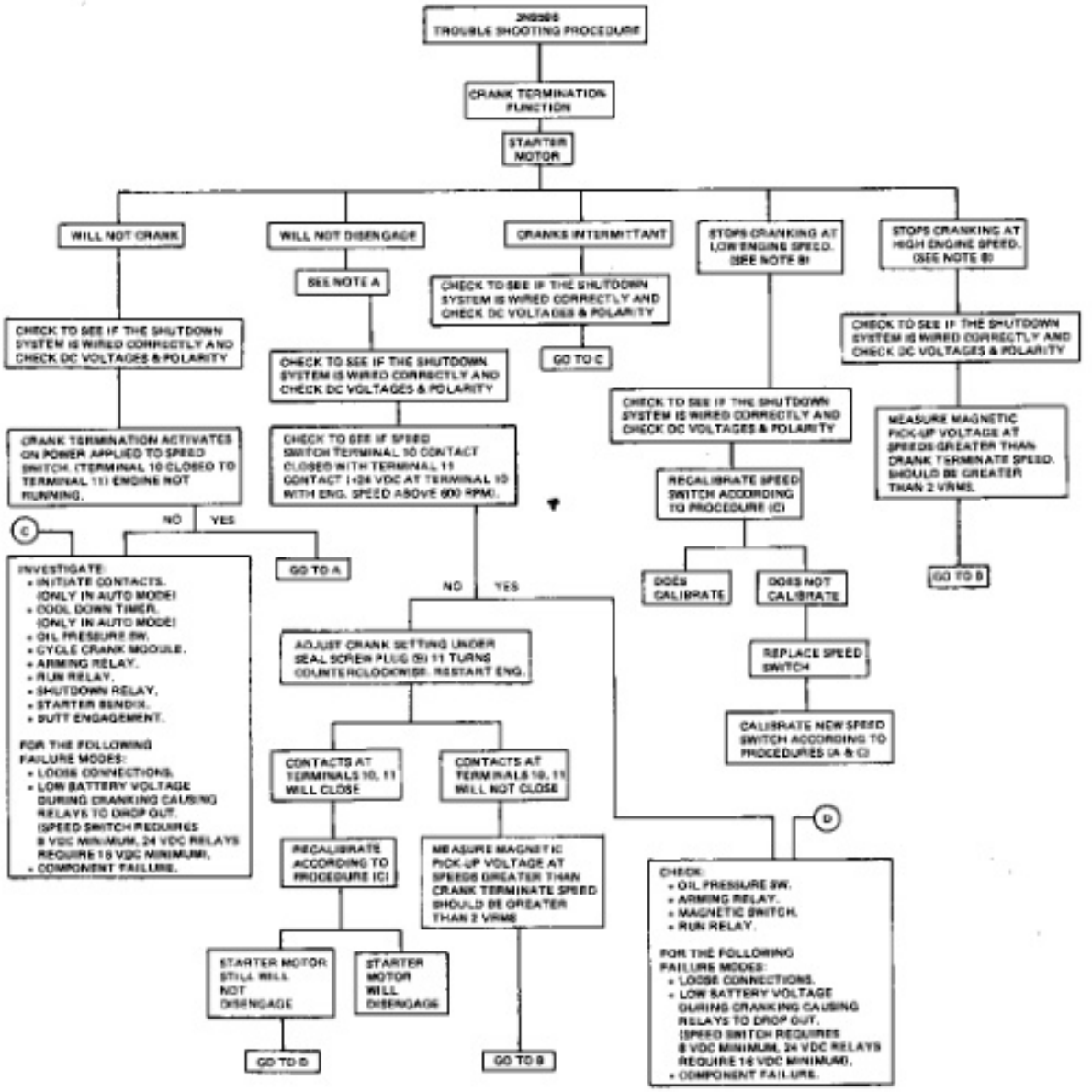

NOTE A: DO NOT LEAVE STARTER MOTOR ENGAGED WITH THE ENGINE RUNNING.

To perform test measurements use one of the three methods that follows to disengage the starter motor:

1. Connect speed switch terminal 10 to terminal 11 to disengage the starter motor.
2. Use a toggle switch to control the magnetic switch. Connect toggle switch in series with the magnetic switch coil lead.
3. Connect a starter tester that has a manual disconnect control.

NOTE B: Make reference to the SPEED SPECIFICATION CHART for the correct overspeed or crank terminate speed setting.

ag07568X1

NOTE A. DO NOT LEAVE STARTER MOTOR ENGAGED WITH THE ENGINE RUNNING.

To perform test measurements use one of the three methods that follows to disengage the starter motor:

1. Connect speed switch terminal 10 to terminal 11 to disengage the starter motor.

2. Use a toggle switch to control the magnetic switch. Connect toggle switch in series with the magnetic switch coil lead.

3. Connect a starter tester that has a manual disconnect control.

https://barringtondieselclub.co.za/

NOTE B. Make reference to the SPEED SPECIFICATION CHART for the correct overspeed or crank terminate speed setting

Procedure A

Overspeed Setting Calibration

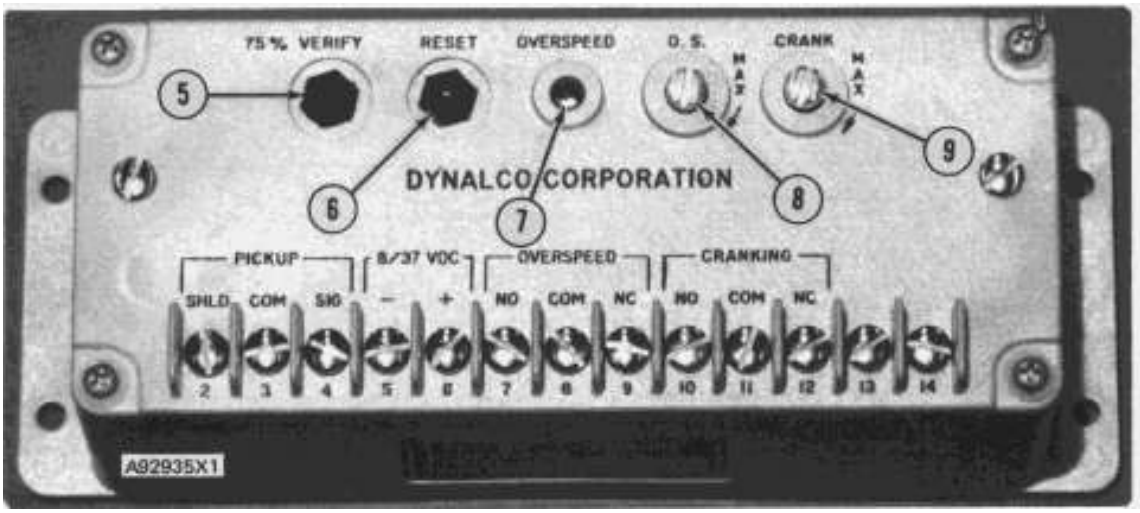

ELECTRONIC OVERSPEED SWITCH
5. Verify button. 6. Reset button. 7. "LED" overspeed light. 8. Seal screw plug (overspeed). 9. Seal screw plug (crank terminate).

1. Remove lockwire and seal from seal screws (8 & 9). Remove seal screw (8) from access hole for overspeed adjustment screw.

2. Use a small screwdriver and lightly turn O.S. (overspeed) adjustment potentiometer twenty turns in the direction of "MAX ARROW" (clockwise).

NOTE: The overspeed adjustment screw is made so that it can not cause damage to the potentiometer or be removed if the adjustment screw is turned too much.

3. Run engine at 75% of desired overspeed setting rpm. Make reference to the SPEED SPECIFICATION CAHRT.

4. With engine at 75% of overspeed setting rpm, push VERIFY pushbutton (5) and hold in. Turn O.S. (overspeed) adjustment potentiometer in the direction opposite of "MAX ARROW" (counterclockwise) slowly until "LED" overspeed light (7) comes on. Engine will shut down if speed switch is connected to the fuel shutoff solenoid.

5. To reset speed switch, push in reset button (6). Air inlet shutoffs must be manually reset.

6. Slowly turn O.S. (overspeed) adjustment potentiometer approximately one turn clockwise and do Steps 3, 4 and 5 again.

NOTE: More adjustment may be needed to get the correct setting. Turn adjustment potentiometer clockwise to increase speed setting and counterclockwise to decrease speed setting. Turn adjustment potentiometer very slowly only a small amount at a time until adjustment is correct.

7. When the speed setting is correct, install seal screw (8) for overspeed adjustment hole and install lockwire and seal.

Procedure B

Magnetic Pickup Adjustment

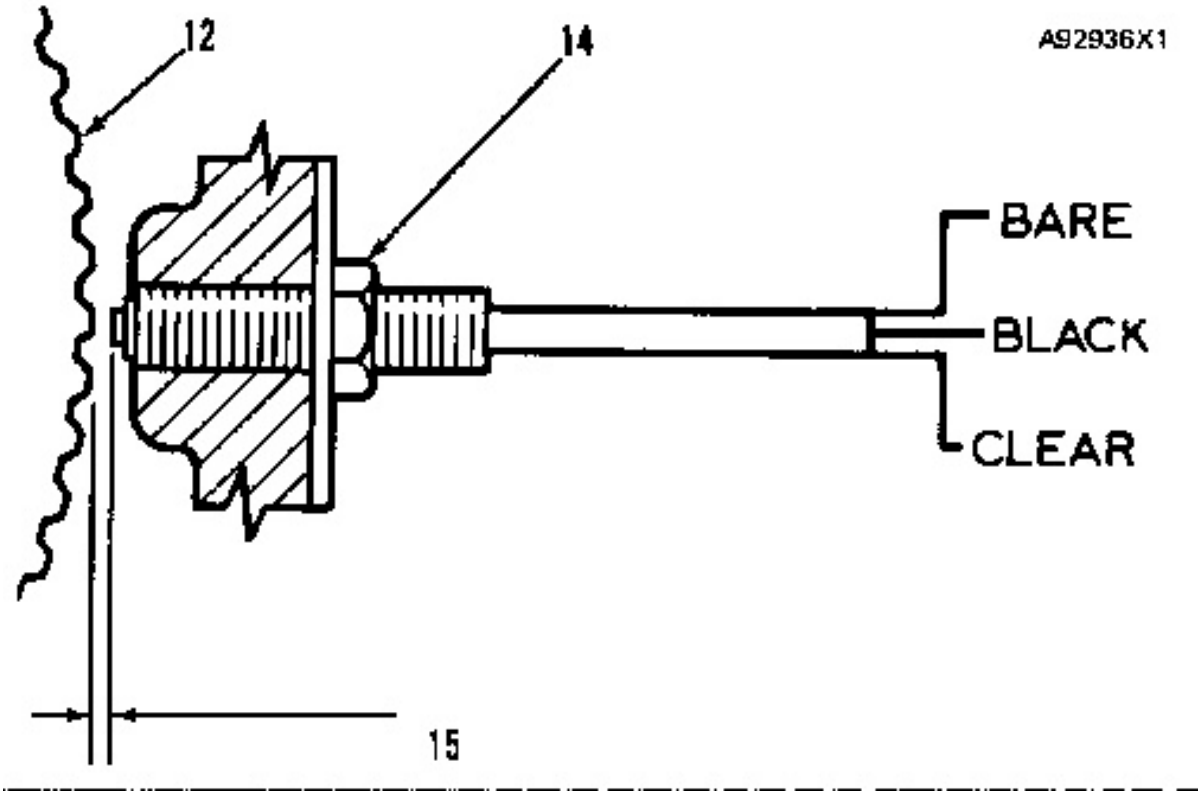

MAGNETIC PICK-UP
12. Engine flywheel. 14. Locknut. 15. Air gap.

1. Stop engine.

2. Loosen magnetic pick-up locknut (14).

3. Turn the magnetic pick-up clockwise until contact is made with the teeth of the engine flywheel ring gear (12).

4. Turn the magnetic pick-up counterclockwise one-half turn. This will give approximately .022 to .033 in. (0.56 to 0.84 mm) clearance at location (15), between the end of the magnetic pick-up and the teeth of the flywheel ring gear.

5. After the clearance is correct, tighten the magnetic pick-up locknut to a torque of 50 ± 10 lb. ft. (70 ± 14 N·m).

NOTE: Be sure the magnetic pick-up does not turn when the locknut is tightened.

Procedure C

Crank Terminate Speed Adjustment

1. Remove lockwire and seal from seal screws (8 & 9). Remove seal screw (9) from access hole for crank terminate adjustment screw.

2. Use a small screwdriver and lightly turn C.T. (crank terminate) adjustment potentiometer twenty turns in the direction of "MAX ARROW" (clockwise).

NOTE: The crank terminate adjustment screw is made so that it can not cause damage to the potentiometer or be removed if the adjustment screw is turned too much.

3. Turn the crank terminate adjustment potentiometer twelve turns in a direction opposite of "MAX ARROW" (counterclockwise) for an approximate crank terminate setting.

4. Start engine and make a note of the speed at which the starter disengages. See the SPEED SPECIFICATION CHART for the correct crank terminate speed.

NOTE: If setting is not correct do Steps 5 and 6. If setting was correct do Step 7.

5. Stop engine and turn adjustment potentiometer (clockwise to increase and counterclockwise to decrease) crank terminate speed.

6. Start and make a note of the speed at which the starter disengages. If needed, make more small adjustments until the crank terminate speed is correct.

7. Install seal screw (9) for crank terminate adjustment hole and install lockwire and seal.

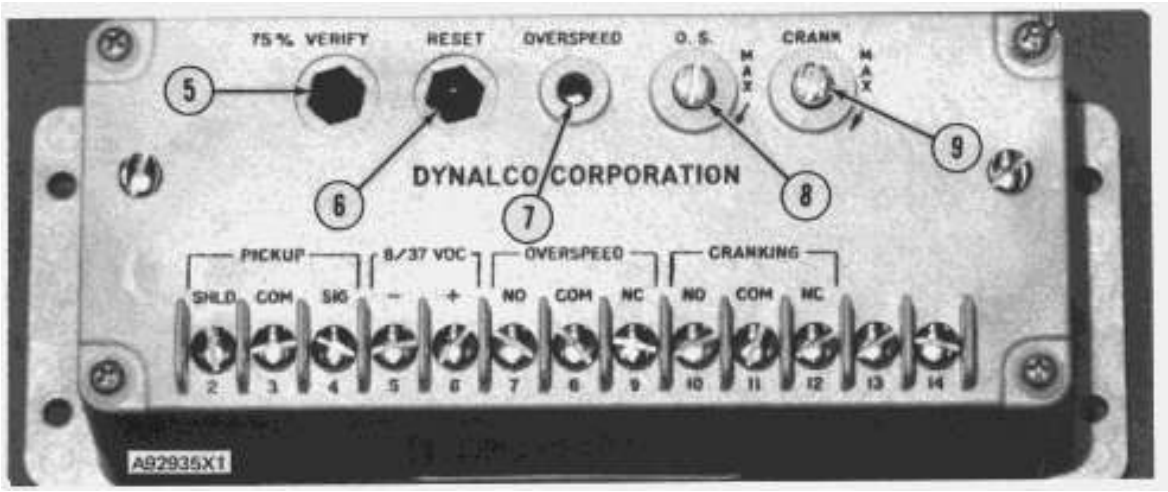

ELECTRONIC OVERSPEED SWITCH
5. Verify button. 6. Reset button. 7. "LED" overspeed light. 8. Seal screw plug (overspeed). 9. Seal screw plug (crank terminate).

Procedure D

Overspeed Verify Test

1. Run engine at rated speed, push verify button (5) in for a moment. This will cause the speed switch to activate and shut down the engine.

NOTE: Any time the engine speed is 75% or more of the overspeed setting, the engine will shut down if the verify button is pushed.

EXAMPLE: For an engine with a rated speed of 1500 rpm the overspeed setting is 1770 rpm. The overspeed verify test will shut down the engine at 75% of the overspeed setting of 1770 rpm. In this example 75% of 1770 rpm is 1328 rpm. If the verify button is pushed at an engine speed of 1328 rpm or above the engine will shut down.

The "LED" overspeed light (7) will come on and stay on until the reset button is pushed after an overspeed switch shut down. To restart the engine, push in reset button (6) for a moment. This will reset the speed switch and the rack shutoff solenoid. The "LED" overspeed light (7) will go off. The air inlet shutoff must be manually reset.

SPEED SPECIFICATION CHART

ENGINE MODEL	NO. OF TEETH ON RING GEAR	TYPICAL RATED ENGINE SPEED (RPM)	OVERSPEED SETTING		75% OVERSPEED (VERIFY)		CRANKING TERMINATION SETTING	
			ENGINE SPEED (RPM) NOTE E	MAGNETIC PICKUP FREQUENCY (HZ) NOTE F	ENGINE SPEED (RPM) NOTE C & E	MAGNETIC PICKUP FREQUENCY (HZ) NOTE C & F	ENGINE SPEED (RPM)	MAGNETIC PICKUP FREQUENCY (HZ) NOTE F
3304 and 3306	132	1800	2124	4673 ± 25	1593	3505 ± 25	600	1320 ± 25
		1500	1770	3894 ± 25	1328	2921 ± 25		
	156	1800	2124	5522 ± 25	1593	4142 ± 25	600	1560 ± 25
		1500	1770	4602 ± 25	1328	3452 ± 25		

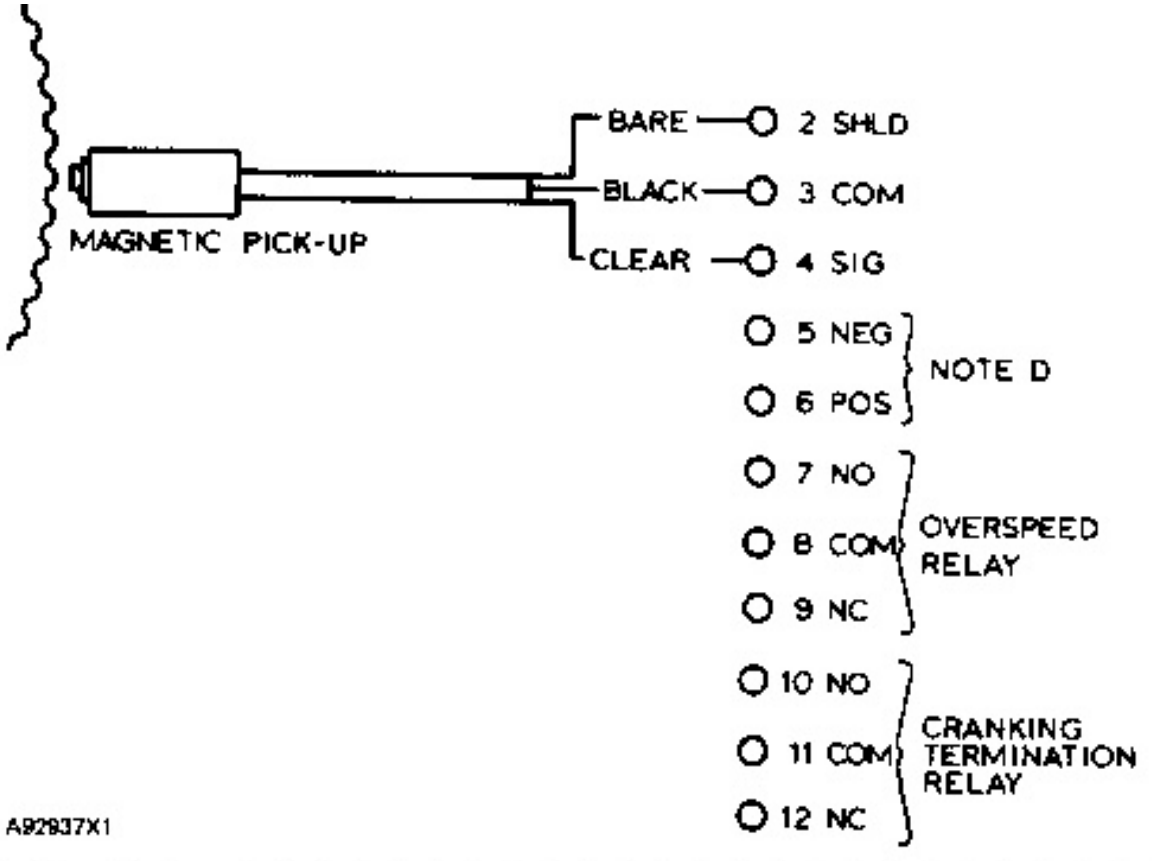

NOTE C: To verify overspeed shutdown system operation, push in for a moment the verify push button. The engine must shut down at 75% or more of overspeed setting.

NOTE D: Input Voltage: Maximum 37 VDC Minimum 8 VDC.

NOTE E: The engine overspeed setting rpm is 118% of rated engine rpm.

NOTE F: The magnetic pick-up frequency (HZ) at the overspeed or cranking termination setting is calculated with the formula that follows:

$$\text{MAGNETIC PICKUP FREQUENCY} = \frac{\text{NO. OF TEETH ON RING GEAR} \times \text{OVERSPEED OR CRANKING TERMINATION RPM SETTING}}{60}$$

If the rated speed of the engine is other than shown in the chart, the magnetic pick-up frequency for the overspeed setting can be found according to NOTES E and F.

If a 2301 Governor is used, only one magnetic pick-up is needed. Use the magnetic pick-up from the overspeed group. Connect the wires from the magnetic pick-up to the overspeed switch and then connect wires from the speed switch to the 2301 Governor. The overspeed switch can be installed close to the 2301 Governor if needed.

To reset overspeed switch, push in reset button for a moment.

Power Takeoff Clutches

Clutch Adjustment

The force (pull) needed to engage the clutch gives an indication of clutch adjustment. The correct lever pull is shown in the chart.

CLUTCH ASSEMBLY	PULL NEEDED TO ENGAGE CLUTCH	DISTANCE FROM CENTER OF SHAFT AT WHICH PULL IS MEASURED
2N6961	123-163 lb. (545 to 725 N)	21.3 in. (541 mm)
2N7078	123-163 lb. (545 to 725 N)	21.3 in. (541 mm)
1N7309	63-83 lb. (280 to 370 N)	13.6 in. (345 mm)
2F8223	63-83 lb. (280 to 370 N)	13.6 in. (345 mm)

These clutches use two types of adjustment lock pins. Pin (1) must be pushed in and the adjustment ring turned. Pin (2) must be pulled out and the adjustment ring turned.

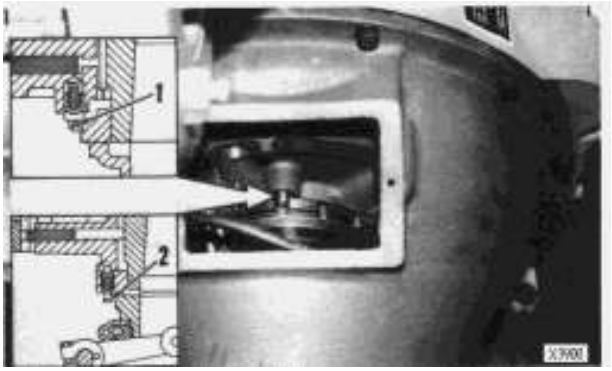

CLUTCH ADJUSTMENT
1. Lock pin (push type). 2. Lock pin (pull type).

Assembly Adjustments

End Play For Shaft Bearings

1. With the bearings installed on the shaft, install the shaft in the housing.

2. Tighten the bearing retainer until there is no end play of the shaft.

3. Turn the bearing retainer out the number of notches shown in the chart.

4. Hit the output end of the shaft with a soft hammer to move the bearing cup against the retainer.

5. Measure the end play for the shaft. The correct end play is shown in the chart.

CLUTCH ASSEMBLY	SHAFT BEARING END PLAY	NOTCHES BACKED OFF FROM TIGHT
1N7309	.004 to .007 in. (0.10 to 0.18 mm)	3 1/4 - 4 1/4
2F8223	.004 to .007 in. (0.10 to 0.18 mm)	3 1/4 - 4 1/4
2N7078	.006 to .010 in. (0.15 to 0.25 mm)	2 - 3
2N6961	.006 to .010 in. (0.15 to 0.25 mm)	2 - 3

6. If necessary make an adjustment to the retainer to get the correct end play using the procedure in Steps 2 through 5.

7. Install the lock for the retainer.

Installing Hub Nut

1. Tighten hub nut to 30 lb. ft. (40 N·m).

2. For 2N7078 and 2N6961 Clutches, tighten the hub nut 150° to 180° more.

3. For 1N7309 and 2F8223 Clutches, tighten the hub nut 60° to 90° more.

Checking Flywheel And Flywheel Housing

Before installing the clutch, make a check of the bore and face of the flywheel and flywheel housing.

Make reference to the Testing and Adjusting section for the correct procedures and specifications.

Instruments And Gauges

Oil Pressure Sending Units



SENDING UNIT FOR OIL PRESSURE
1. Terminal. 2. Fitting.

1. Connect the sending unit to a pressure source that can be measured with accuracy.

2. Connect an ohmmeter between fitting (2) and terminal (1).

3. Take resistance readings at the pressure shown in the chart.

5L7449 SENDING UNIT FOR GEAR OIL PRESSURE	
PRESSURE	**RESISTANCE (OHMS)**
0 psi (0 kPa) 60 psi (415 kPa) 300 psi (2050 kPa)	0 to 1 4.5 to 6.5 28 to 31
5L7450 SENDING UNIT FOR OIL PRESSURE	
PRESSURE	**RESISTANCE (OHMS)**
0 psi (0 kPa) 20 psi (415 kPa) 80 psi (550 kPa)	0 13.5 30

4. If a unit does not have the correct resistance readings make a replacement of the unit.

Water Temperature Sending Unit

1. Connect an ohmmeter between terminal (1) and nut (2). Put bulb (3) in a pan of water. Do not let the bulb have contact with the pan.



SENDING UNIT FOR WATER TEMPERATURE
1. Terminal. 2. Nut. 3. Bulb.

2. Put a thermometer in the water to measure the temperature.

3. Take resistance readings at the temperatures shown in the chart.

PART NO.	TEMPERATURE	RESISTANCE (OHMS)
5L7442	200°F (93°C)	800 to 900
5L7443	100°F (38°C)	403 to 493
	160°F (71°C)	118 to 138

4. If a unit does not have the correct resistance readings make a replacement of the unit.

Electric Gauges

1. Put the gauge in position with the letters horizontal and the face 30° back from vertical.

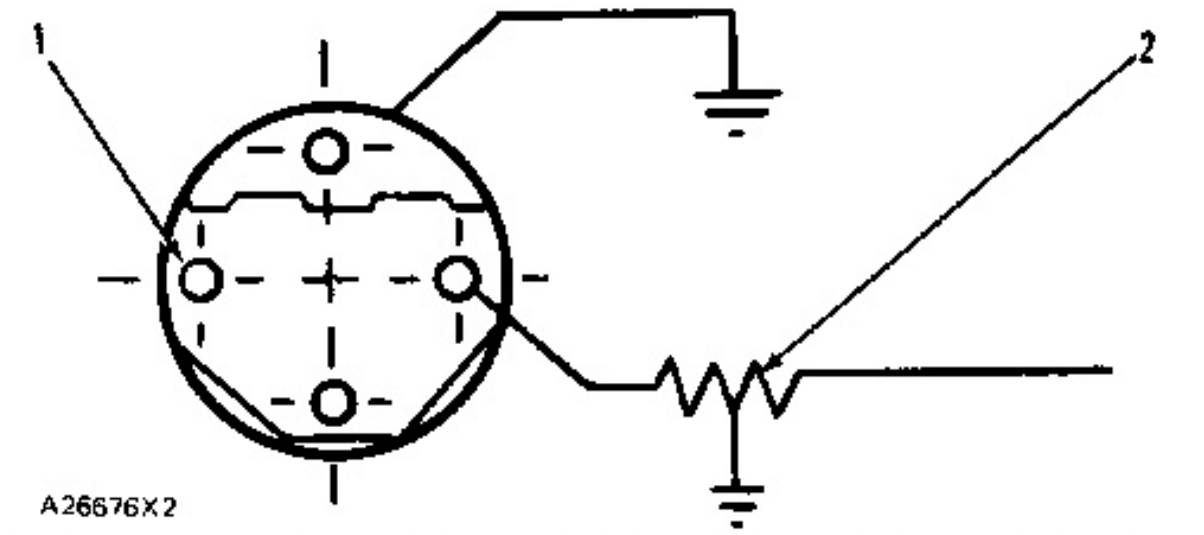

WIRING DIAGRAM FOR TEST
1. Terminal (for test voltage). 2. Test resistance.

2. Connect the gauge in series with the power source and the middle test resistance shown in the chart.

3. Let the gauge heat at the middle resistance for 5 minutes, then check the pointer position for all of the resistances given.

CHART FOR TESTING TEMPERATURE GAUGE

GAUGE PART NUMBER	TEST VOLTAGE	TEST RESISTANCE	TEMPERATURE	SENDER	*RESISTOR
5L7446	14	349 Ohms	100°F (38°C)	5L7443	NONE
	14	84 Ohms	170°F (77°C)	5L7443	NONE
	14	30 Ohms	240°F (116°C)	5L7443	NONE
5L7444	28.5	3388 Ohms	100°F (38°C)	5L7442	5L7441
	28.5	1050 Ohms	170°F (77°C)	5L7442	5L7441
	28.5	460 Ohms	240°F (116°C)	5L7442	5L7441

*In 32 volt systems the resistor is needed.

CHART FOR TESTING ENGINE OIL PRESSURE GAUGE

GAUGE PART NUMBER	TEST VOLTAGE	TEST RESISTANCE	PRESSURE	SENDER	*RESISTOR
5L7455	14	0 Ohms	0 psi (0 kPa)	5L7450	NONE
	14	13.5 Ohms	20 psi (140 kPa)	5L7450	NONE
	14	30 Ohms	80 psi (550 kPa)	5L7450	NONE
5L7456	28.5	0 Ohms	0 psi (0 kPa)	5L7450	5L7441
	28.5	13.5 Ohms	20 psi (140 kPa)	5L7450	5L7441
	28.5	30 Ohms	80 psi (550 kPa)	5L7450	5L7441

*In 32 volt systems the resistor is needed.

CHART FOR TESTING GEAR OIL PRESSURE GAUGE

GAUGE PART NUMBER	TEST VOLTAGE	TEST RESISTANCE	PRESSURE	SENDER	*RESISTOR
5L7454	14	0 Ohms	0 psi (0 kPa)	5L7449	NONE
	14	15 Ohms	150 psi (1030 kPa)	5L7449	NONE
	14	30 Ohms	300 psi (2050 kPa)	5L7449	NONE
5L7451	28.5	0 Ohms	0 psi (0 kPa)	5L7449	5L7441
	28.5	15 Ohms	150 psi (1030 kPa)	5L7449	5L7441
	28.5	30 Ohms	300 psi (2050 kPa)	5L7449	5L7441

*In 32 volt systems the resistor is needed.

Mechanical Gauges For Temperature

Two types of mechanical gauges are available. The first type has a direct reading face. The second type has color codes on the face to show different ranges of operation. White, green and red show the cold, normal and hot ranges respectively.

To check both types of gauges, put the bulb of the gauge in a pan of oil. Do not let the bulb touch the pan. Put a thermometer in the oil to measure the temperature. Make a comparison of temperatures on the thermometer with the temperatures on the direct reading gauge or with temperature as shown on the chart for gauges with color codes.

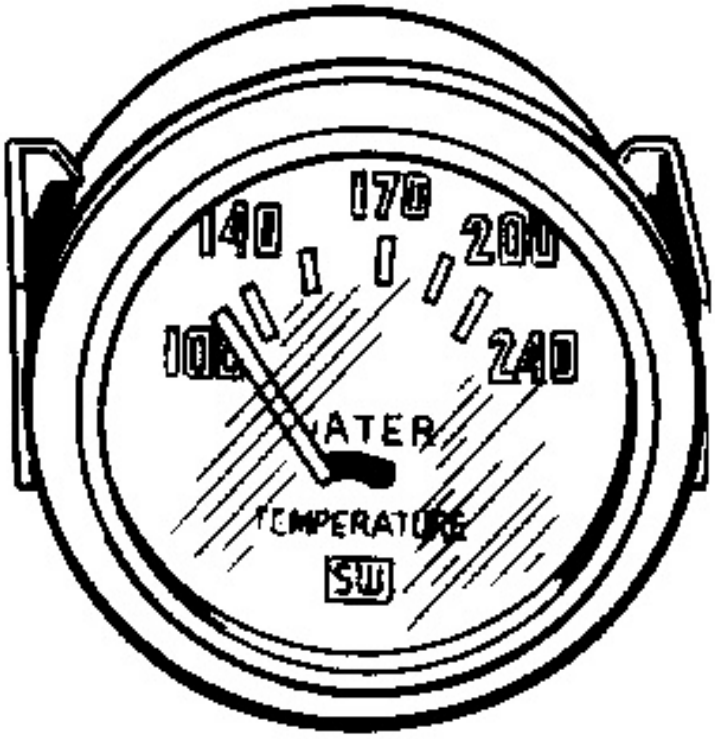

DIRECT READING GAUGE

POINTER POSITIONER	TEST THERMOMETER TEMPERATURE READING	
	F.°	C.°
1	210 TO 218	98.9 TO 103.3

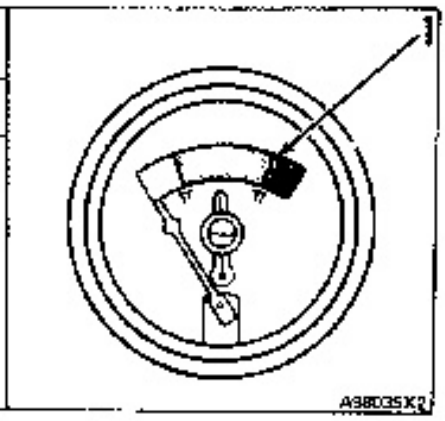

GAUGE WITH COLOR CODE

Mechanical Gauges For Oil Pressure

Two types of mechanical gauges are available. The first type has a direct reading face. The second type has color codes on the face to show different ranges of operation. Red, white and green show the low pressure, pressure at low idle rpm and normal pressure ranges respectively. Some of the direct reading gauges are for gear oil pressure.

NOTE: Some gauges with color codes have only two ranges. Red for low pressure and green for normal pressure.

To check both types of gauges connect the gauge to a pressure source that can be measured with accuracy. Make a comparison of pressures on the gauge of test equipment with the pressures on the direct reading gauge or with the pressures as shown on the chart for gauges with color codes.

POINTER POSITION	TEST GAUGE PRESSURE READING	
	psi	kPa
1	10±1	70±7
2	20±1	140±7

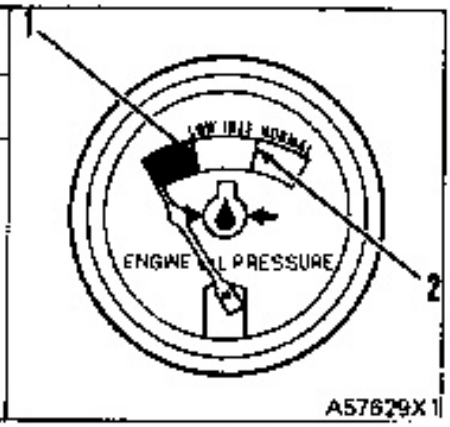

GAUGE WITH COLOR CODE

POINTER POSITION	TEST GAUGE PRESSURE READING	
	psi	kPa
1	5 ± 1	35 ± 7

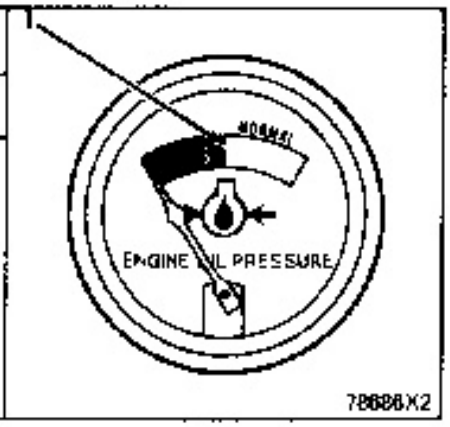

GAUGE WITH COLOR CODE

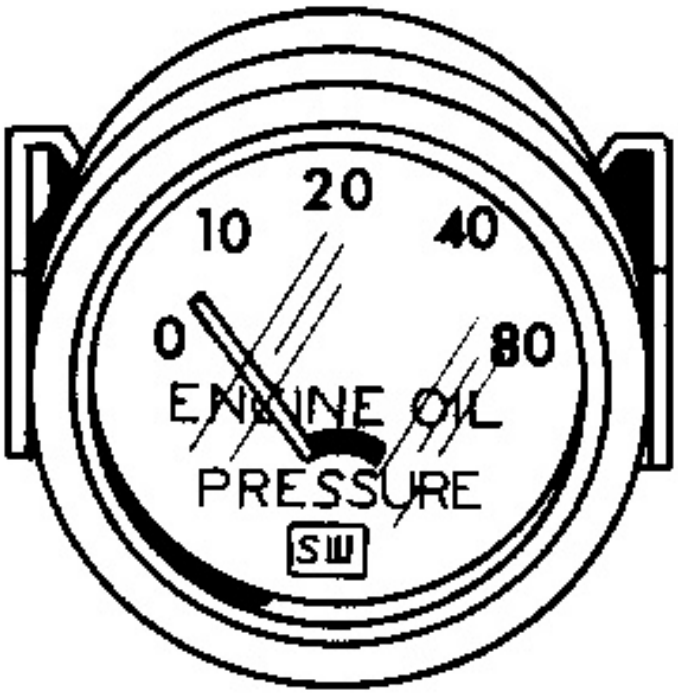

DIRECT READING GAUGE

CATERPILLAR®

SEBR0539-00



General Service Information

3304 & 3306 INDUSTRIAL & MARINE ENGINES

http://engine.od.ua

General Instructions

The following instructions will prove helpful to disassemble and assemble engine components. The information should be read and then referred to as necessary.

Cleanliness

Whenever hydraulic, fuel, lubricating oil or air lines are disconnected, clean the point of disconnection and the adjacent area. As soon as the disconnection is made, cap, plug or tape the line or opening to prevent entry of foreign material. The same recommendations for cleaning and covering apply when access covers or inspection plates are removed.

Clean and inspect all parts. Be sure all passages and holes are open. Cover all parts to keep them clean. Be sure parts are clean when installed. Leave new parts in their containers until ready for assembly.

Removal And Installation

Unless otherwise specified, all removals should be accomplished using an adjustable lifting beam. All supporting members (chains and cables) should be parallel to each other and as near perpendicular as possible to the top of the object being lifted.

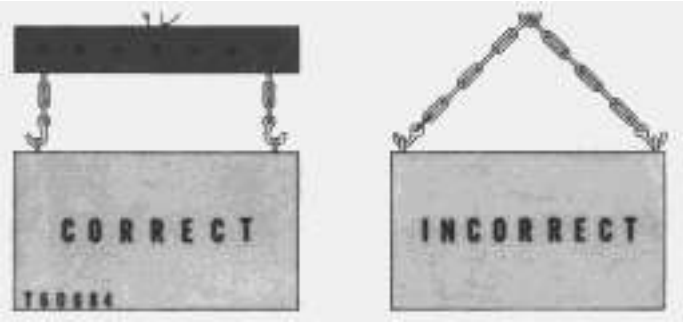

When it is necessary to remove a component on an angle, remember that the capacity of an eyebolt diminishes as the angle between the supporting members and the object becomes less than 90°. Eyebolts and brackets should never be bent and should only have stress in tension. A length of pipe and a washer can be used, as shown, to help relieve these stresses on eyebolts.

Forged eyebolts are available. Each size eyebolt has a maximum load recommendation.

Some removals require the use of lifting fixtures to obtain proper balance and to provide safe

handling.

If a part resists removal, check to be certain all nuts and bolts have been removed and that an adjacent part is not interfering.

EYEBOLT LOAD RECOMMENDATION			
SIZE	PART NO.	MAXIMUM LOAD	
		lbs.	kg
¼"—20	1P7403	600	272.3
5/16"—18	1P7404	1125	510.6
⅜"—16	1P7405	1625	737.6
7/16"—14	1P7406	2250	1021.3
½"—13	1P7407	3000	1361.7
⅝"—11	2D1201	5000	2269.5
¾"—10	1P7409	6250	2836.9

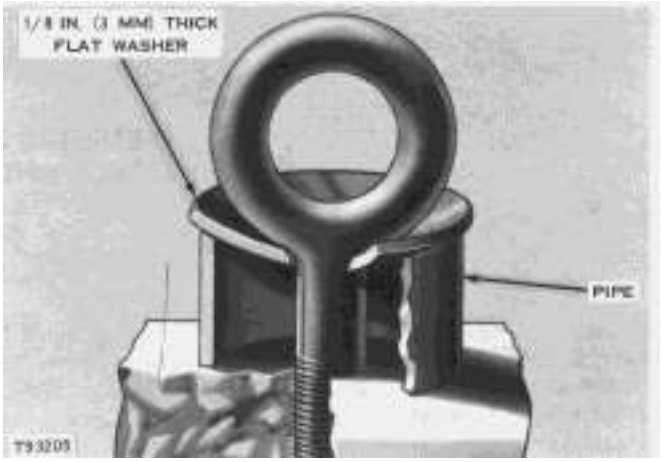

Disassembly And Assembly

When assembling an engine, complete each step in turn. Do not partially assemble one part and start assembling some other part. Make all adjustments as recommended. Always check the job after it is completed to see nothing has been overlooked.

Lubrication For A Rebuilt Engine

It is very important for a rebuilt engine to have "adequate" (needed) lubrication during the first seconds of operation. A "dry start" (without needed lubrication) on a rebuilt engine can cause bearing damage.

When an engine is rebuilt with new parts, oil is put on each part as it is installed. This is generally enough lubrication for engine start-up. However, this lubrication may not be enough or may be lost if the rebuilt engine is placed in storage for any length of time.

To prevent the possibility of a "dry start" and bearing damage during the first seconds of running, use the 1P540 Flow Checking Tool Group and shop air pressure to pressure lubricate (fill the main oil passage with oil under pressure) all rebuilt engines.

Procedure for Pressure Lubrication

1. Clean the tank of the 1P540 Flow Checking Tool Group thoroughly, and set the pressure regulator to 35 ± 5 psi (240 ± 35 kPa).

WARNING

Air pressure should not be more than 50 psi (345 kPa) at any time.

2. Put engine oil in the tank.

3. Connect the tooling to the main oil passage of the engine.

4. Add air pressure to the tank, with the regulator set at 35 ± 5 psi (240 ± 35 kPa). Although the tank does have a hand pump, it is difficult to get enough air pressure to do the job with the hand pump. Therefore, use of shop air is recommended.

5. Let the engine oil flow into the oil passage under pressure.

Fill the crankcase with the correct oil. The amount of oil used in the pressure lubrication procedure must be subtracted from the recommended refill capacity in the Lubrication and Maintenance Guide. If the engine is not going to be used for a long time, do the above procedure again before the first starting.

If shop air is not available for charging the tank, the hand pump may be used to get the minimum required pressure.

NOTICE

Do not use the same 1P540 Flow Checking Tool Group for both "pressure lubrication application" and for checking fuel flow. Incorrect cleaning is probable if the tool is used for both fuel and lube oil. Even a minute amount of dirt in the fuel system can cause fuel nozzle failure.

Initial Operation After Engine Reconditioning

The quality of oil control components used in Caterpillar engines is such that, following engine reconditioning (with Caterpillar Service Parts), only an initial operational check is necessary before continued operation in normal service.

The purpose of this initial operational check is to: insure that the engine has been assembled properly; determine if proper pressures and temperatures are maintained in the lubrication, cooling and fuel systems; correct any leaks; perform necessary adjustments (such as valve clearance, governor high and low idle speeds, etc.); check the power setting of the engine.

To provide a safe, uniform initial operational check, the following procedure is recommended:

1. Motor engine at cranking speed until oil pressure is observed.

2. Operate engine for 10 minutes at low idle.

3. Operate engine for 15 minutes at half-load and 3/4 rated speed.

4. Operate engine for 30 minutes at rated load and speed.

Service Tools

Puller Assembly (2 or 3 Arm)

Two or three arm puller assemblies can be used to remove gears, bearing cages, hubs, bearings, shafts, etc.

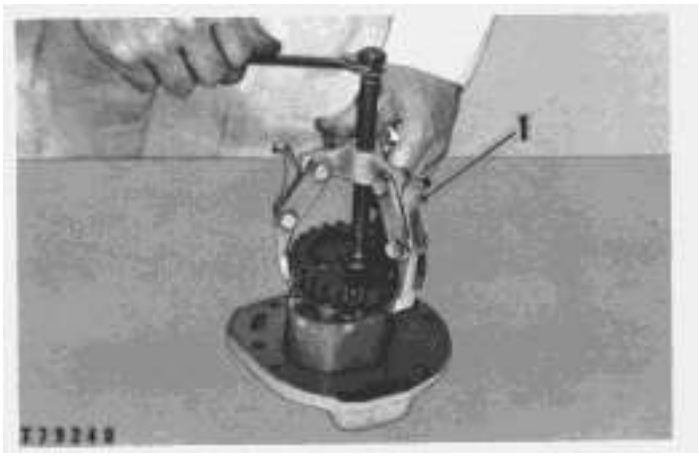

TYPICAL EXAMPLE
1. Puller.

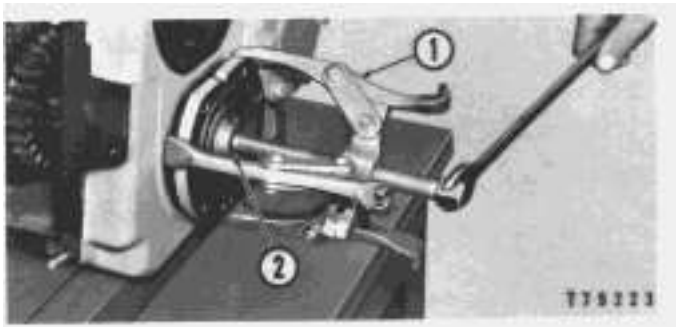

TYPICAL EXAMPLE
1. Puller. 2. Step Plate.

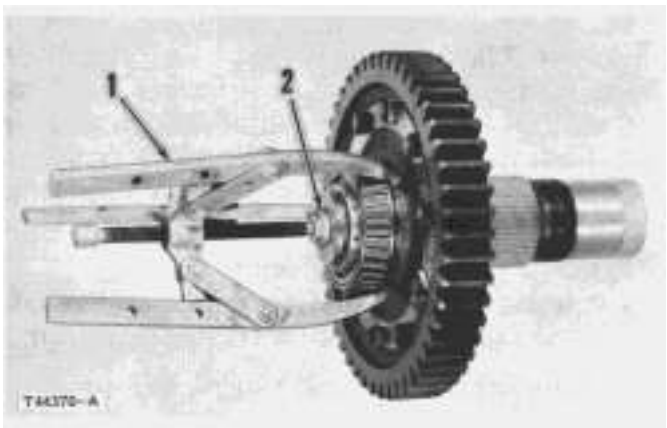

TYPICAL EXAMPLE
1. Puller. 2. Step Plate.

Push Pullers

Push Pullers can be used to remove pulleys, gears, shafts, etc., and can be used in a variety of pulling combinations.

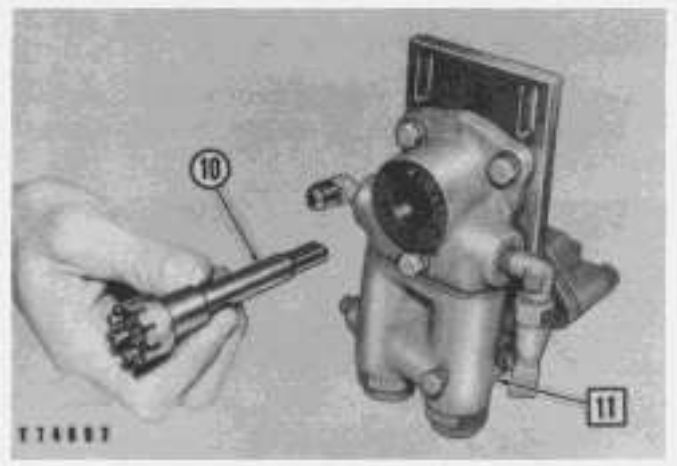

TYPICAL EXAMPLE

*1. Adapters. 2. Ratchet Box Wrench. 3. Push Puller. 4. Step Plate. 5. Legs.

---

*Use as required.

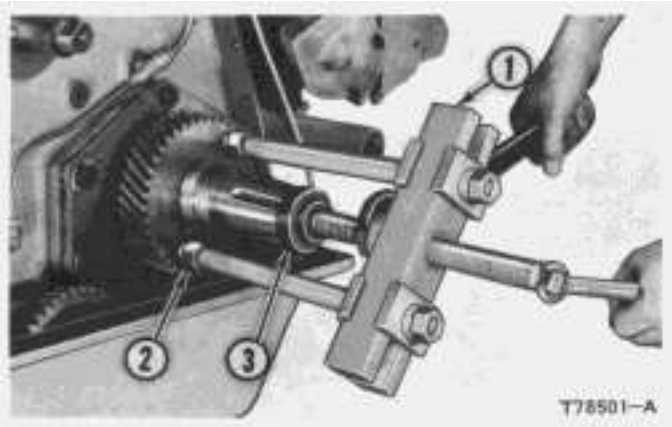

TYPICAL EXAMPLE

1. Push Puller. 2. Adapter. 3. Step Plate.



TYPICAL EXAMPLE

1. Ratchet Box Wrench. 2. Push Puller. 3. Reducing Adapter.

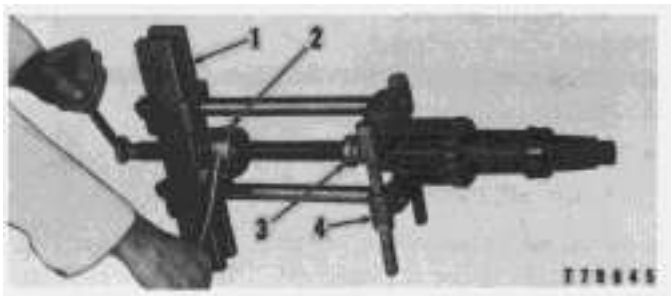

TYPICAL EXAMPLE
1. Push Puller. 2. Ratchet Box Wrench. 3. Step Plate. 4. Bearing Pulling Attachment.

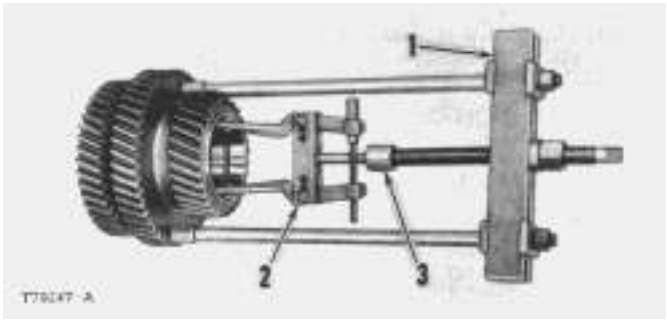

TYPICAL EXAMPLE
1. Push Puller. 2. Bearing Cup Pulling Attachment. 3. Reducing Adapter.

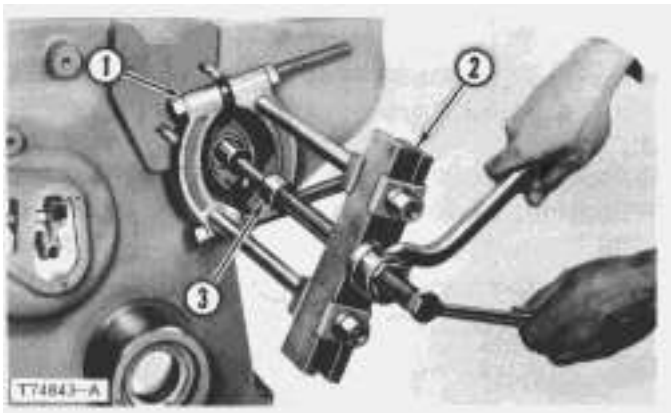

TYPICAL EXAMPLE
1. Bearing Pulling Attachment. 2. Push Puller. 3. Reducing Adapter.

Bearing Pulling Attachment

Bearing Pulling Attachments can be used with forcing bolts, to remove shafts, bearings, gears, etc. They can be used with Push Pullers to provide a variety of pulling combinations.

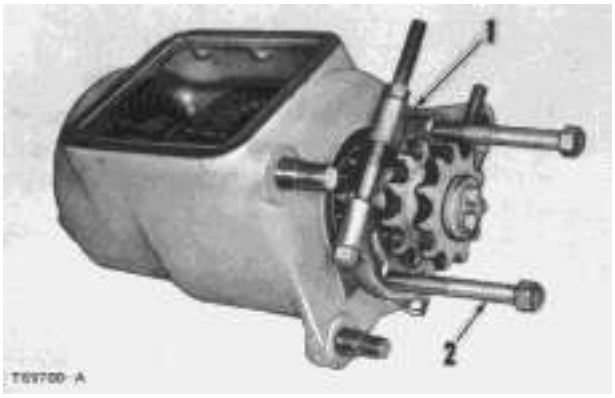

TYPICAL EXAMPLE
1. Bearing Pulling Attachment. 2. Forcing Bolts.

Bearing Cup Pulling Attachment

Bearing Cup Pulling Attachments are used to remove bearing races or cups, sleeve-type bearings, bearings, seats, etc. and can be used with Push Pullers.

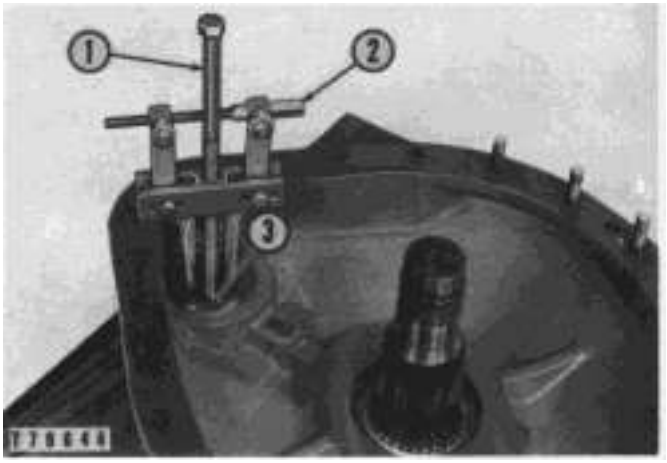

TYPICAL EXAMPLE
1. Screw. 2. Bearing Cup Pulling Attachment. 3. Step Plate.

Rules For Use Of Tools

RULE 1: Always use safe tools.RULE 2: Keep tools in safe working condition.RULE 3: Use the correct tool for the job.RULE 4: Common sense with tools pays off.

Pressing Parts

When pressing one part into another, use 5P3931 Anti-Seize Compound or a molybdenum disulfide base compound to lubricate the mating surfaces.

Assemble tapered parts dry. Before assembling parts with tapered splines, be sure the splines are clean, dry and free from burrs. Position the parts together by hand to mesh the splines before applying

pressure.

If parts which are fitted together with tapered splines are not tight, inspect the tapered splines and discard if worn.

Bolts And Bolt Torque

A bolt which is too long may "bottom" before the head is tight against the part it is to hold. The threads can be damaged when a "long" bolt is removed.

If a bolt is too short, there may not be enough threads engaged to hold the part securely.

Apply proper torque values to all bolts and nuts when assembling Caterpillar equipment. When a specific torque value is required, the value is listed in the SPECIFICATIONS section of the Service Manual. Tighten all other bolts and nuts for general usage, hydraulic valve bodies, or taperlock studs to the torque values given in the torque charts.

T-T-T Procedure

A torque-turn-tighten (T-T-T) procedure is used in many specifications and instructions.

1. Clean the bolt and nut threads.

2. Put lubricant on the threads and the seat face of the bolt and the nut.

3. Turn the bolt or the nut tight according to the torque specification.

4. Put a location mark on the part and on the bolt or the nut.

5. Turn the bolt or the nut tighter the amount of degrees according to the specifications.

TURN TIGHTER CHART	
TURN (BOLT OR NUT)	TURN DEGREES
1	360°
1/2	180°
1/3	120°
1/4	90°
1/6	60°
1/12	30°

NOTE: The side of a nut or bolt head can be used for reference if a mark can not be put on.

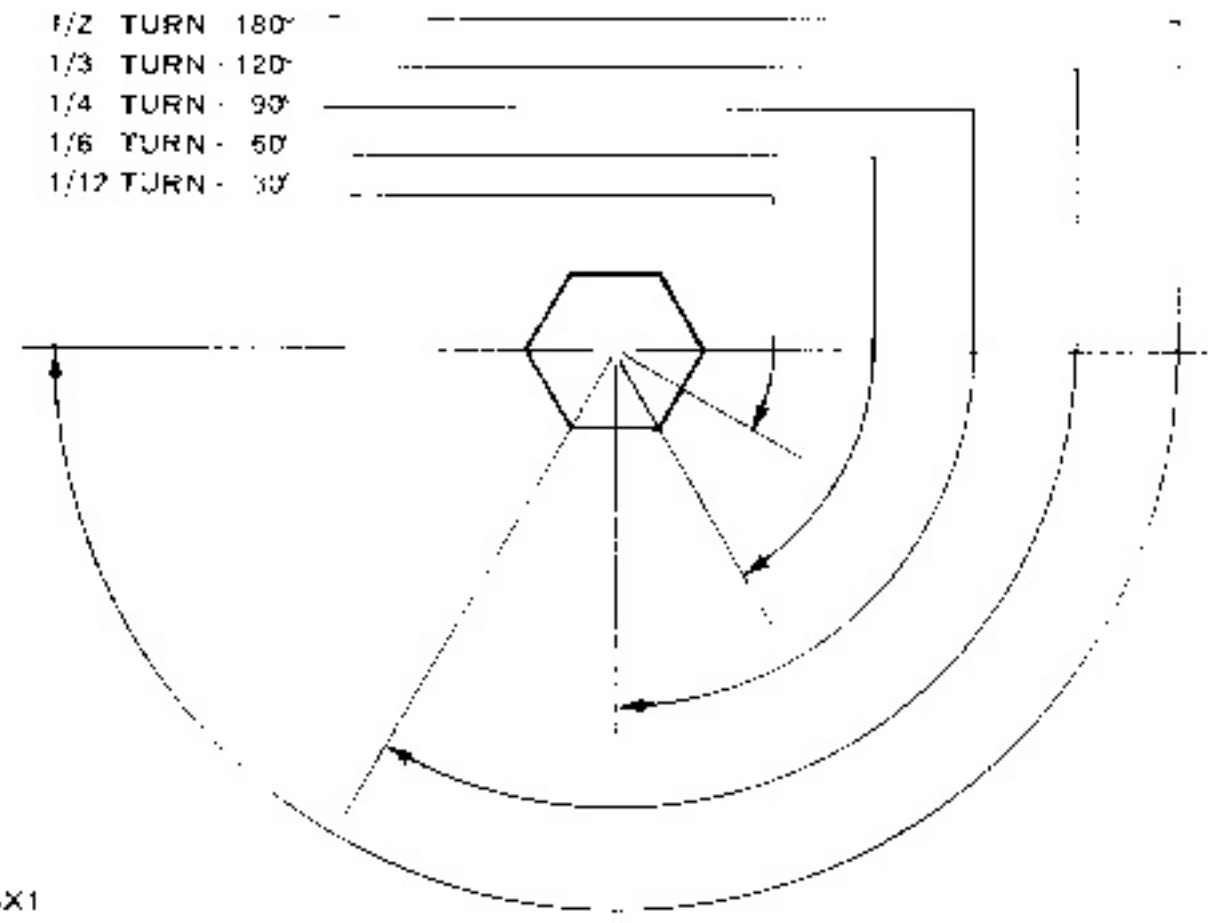

Torque Wrench Extension

When a torque wrench extension is used with a torque wrench, the torque indication on the torque wrench will be less than the real torque.

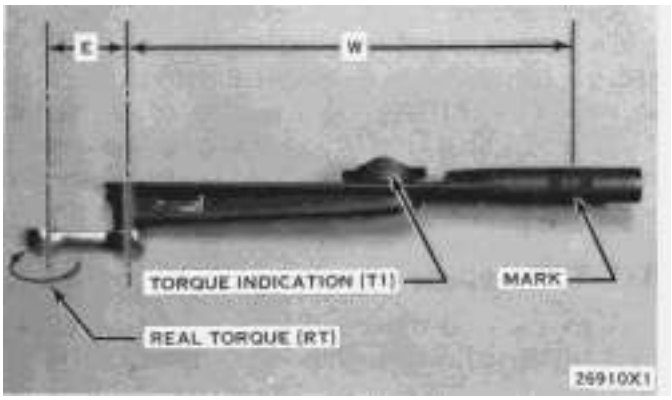

TORQUE WRENCH WITH TORQUE WRENCH EXTENSION
E: Torque wrench drive axis-to-torque wrench extension drive axis. W: Mark on handle-to-torque wrench drive axis.

1. Put a mark on the handle. Measure the handle from the mark to the axis of the torque wrench drive (W).

2. Measure the torque wrench extension from the torque wrench drive to the axis of the torque wrench extension drive (E).

3. To get correct torque indication (TI) when the real torque (RT) is known:

$$TI = \frac{RT \times W}{W + E}$$

Example: W = 12 in. (304.8 mm); E = 2.56 in. (65.0 mm); RT (from specifications) = 125 lb. ft. (170 N·m).

$$TI = \frac{125 \times 12}{12 + 2.56} \text{ or } 103 \text{ lb. ft.}$$

$$TI = \frac{(170 \times 304.8)}{(304.8 + 65.0)} \text{ or } (140 \text{ N·m})$$

4. Hold the torque wrench handle with the longest finger of the hand over the mark on the handle to get the real torque (RT) with low torque indication (TI) on the torque wrench.

Locks

Flat metal locks must be installed properly to be effective. Bend one end of the lock around the edge of the part. Bend the other end against one flat surface of the nut or bolt head.

Always install new locks in compartments which house moving parts.

If lockwashers are installed on housings made of aluminum, use a flat washer between the lockwasher and the housing.

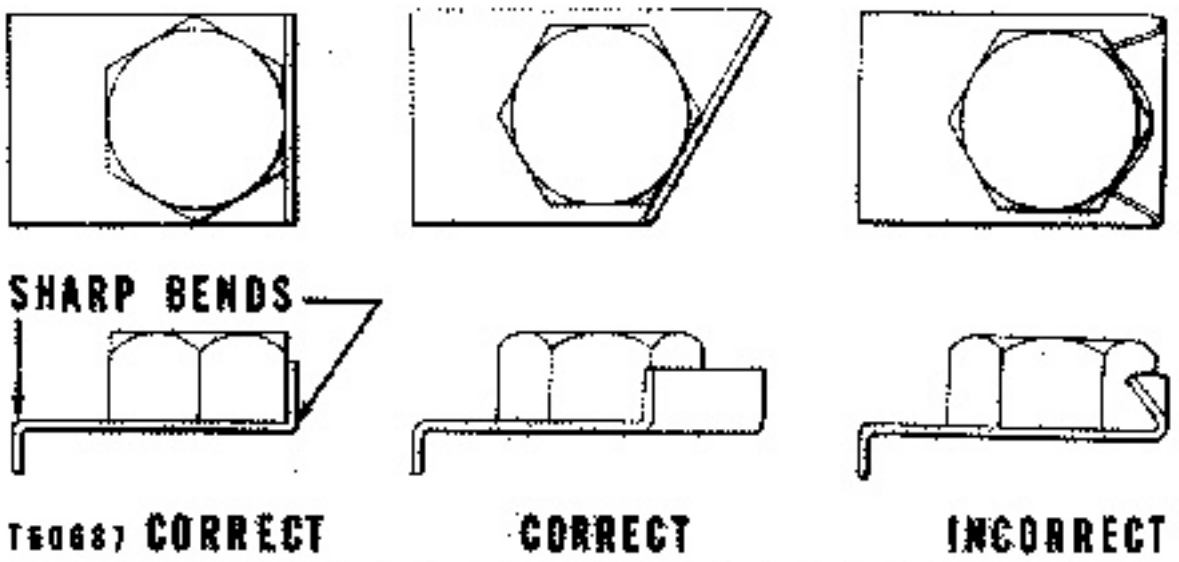

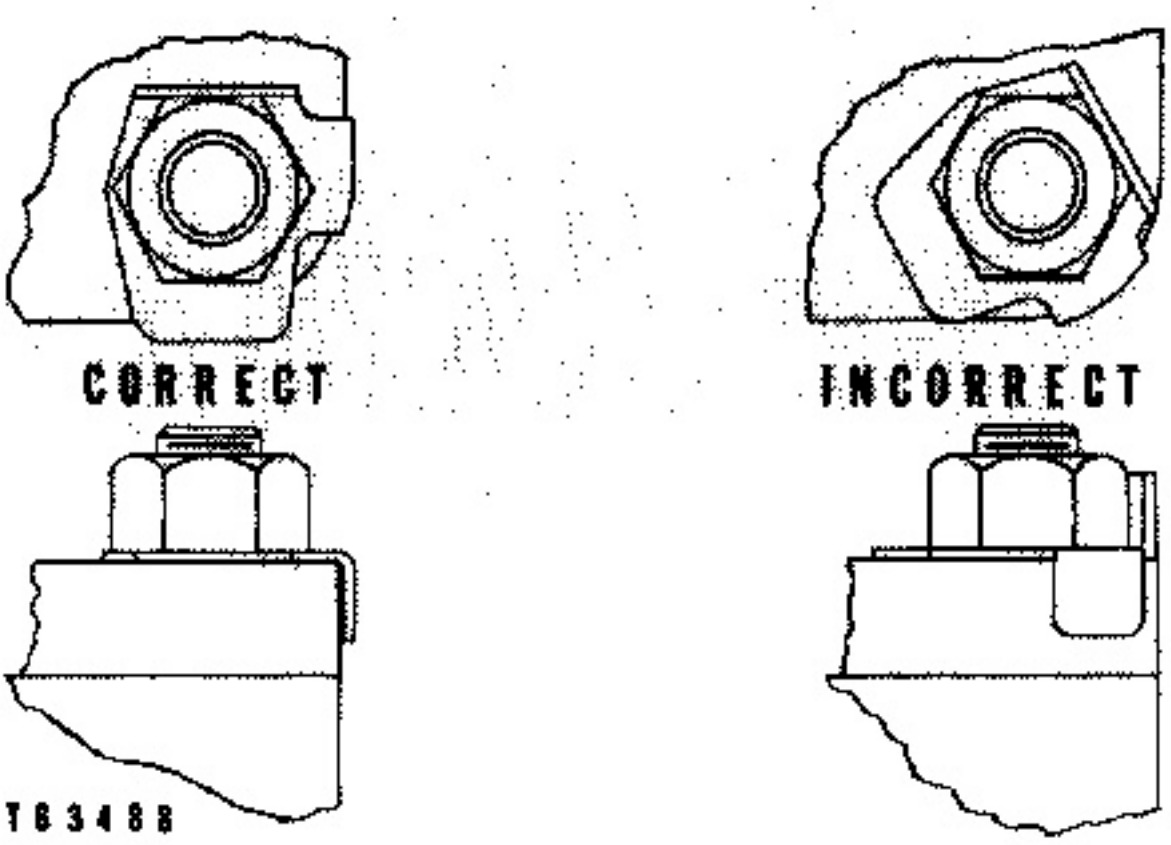

Lines And Wires

When removing or disconnecting a group of lines or wires, tag each one to assure proper assembly.

Lubrication

Where applicable, fill the compartments of the components serviced with the amount, type and grade of lubricant recommended in the Lubrication and Maintenance Guide.

Rust Preventive Compound

Clean the rust preventive compound from all machined surfaces of new parts before installing them.

Shims

When shims are removed, tie them together and identify them as to location. Keep shims clean and flat until they are reinstalled.

Bearings

Anti-Friction Bearings

When an anti-friction bearing is removed, cover it to keep out dirt and abrasives. Wash bearings in nonflammable cleaning solution and allow them to drain dry. The bearing may be dried with compressed air, but DO NOT SPIN THE BEARING.

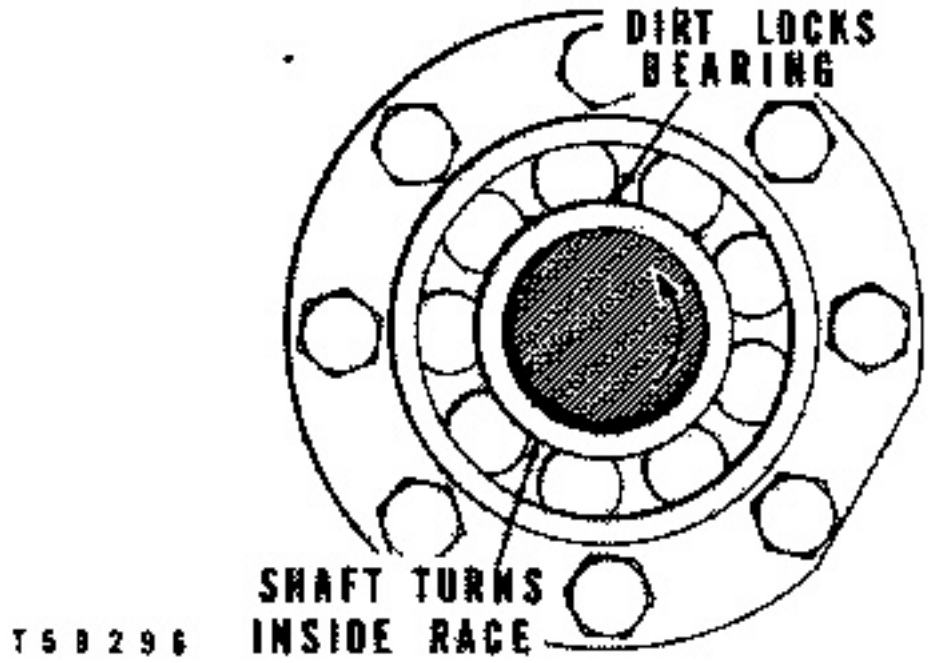

Discard the bearings if the races and balls or rollers are pitted, scored or burned. If the bearing is serviceable, coat it with oil and wrap it in clean paper. Do not unwrap new bearings until time of installation.

The life of an anti-friction bearing will be shortened if not properly lubricated.

Double Row, Tapered Roller

Double row, tapered roller bearings are precision fit during manufacture and the components are not interchangeable. The cups, cones and spacers are usually etched with the same serial number and letter designator. If no letter designators are found, wire the components together to assure correct installation. Reusable bearing components should be installed in their original positions.

Heating Bearings

Bearings which require expansion for installation should be heated in oil not to exceed 250°F. (121° C.). When more than one part is heated to aid in assembly, they must be allowed to cool and then pressed together again. Parts often separate as they cool and shrink.

Installation

Lubricate new or used bearings before installation. Bearings that are to be preloaded must have a film of oil over the entire assembly to obtain accurate preloading. When installing a bearing, spacer or washer against a shoulder on a shaft, be sure the chamfered side is toward the shoulder.

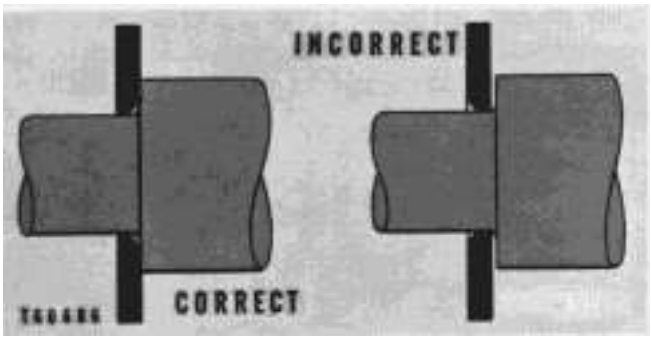

When pressing bearings into a retainer or bore, apply pressure to the outer race. If the bearing is pressed on the shaft, apply pressure on the inner race.

Preload

Preload is an initial force placed on the bearing at the time of assembly.

Determine preload or end clearance from the SPECIFICATIONS. Care should be exercised in applying preload. Misapplication of preload to bearings requiring end clearance can result in bearing failure.

Sleeve Bearings

DO NOT INSTALL SLEEVE BEARINGS WITH A HAMMER. Use a press, if possible, and apply the pressure directly in line with the bore. If it is necessary to drive on a bearing, use a driver or a bar with a smooth flat end. If a sleeve bearing has an oil hole, align it with the oil hole in the mating part.

Gaskets

Be sure the holes in the gaskets correspond with the lubricant passages in the mating parts. If it is necessary to make gaskets, select stock of the proper type and thickness. Be sure to cut holes properly. Blank gaskets can cause serious damage.

Batteries

Clean batteries by scrubbing with a solution of baking soda and water. Rinse with clear water. After cleaning, dry thoroughly and coat terminals and connections with anti-corrosion compound or grease.

If an engine is not to be used for a long period of time, remove the batteries. Store them in a cool, dry place. A small charge should be introduced periodically to keep the specific gravity rating at recommended level.

Seals (Lip-Type)

Generally the toe or spring-loaded lip of an oil seal faces the oil being sealed or the oil having the higher pressure. The toe or lip of a grease seal faces away from the lubricant being sealed. Unless otherwise specified, use the preceding rules for installing lip-type seals.

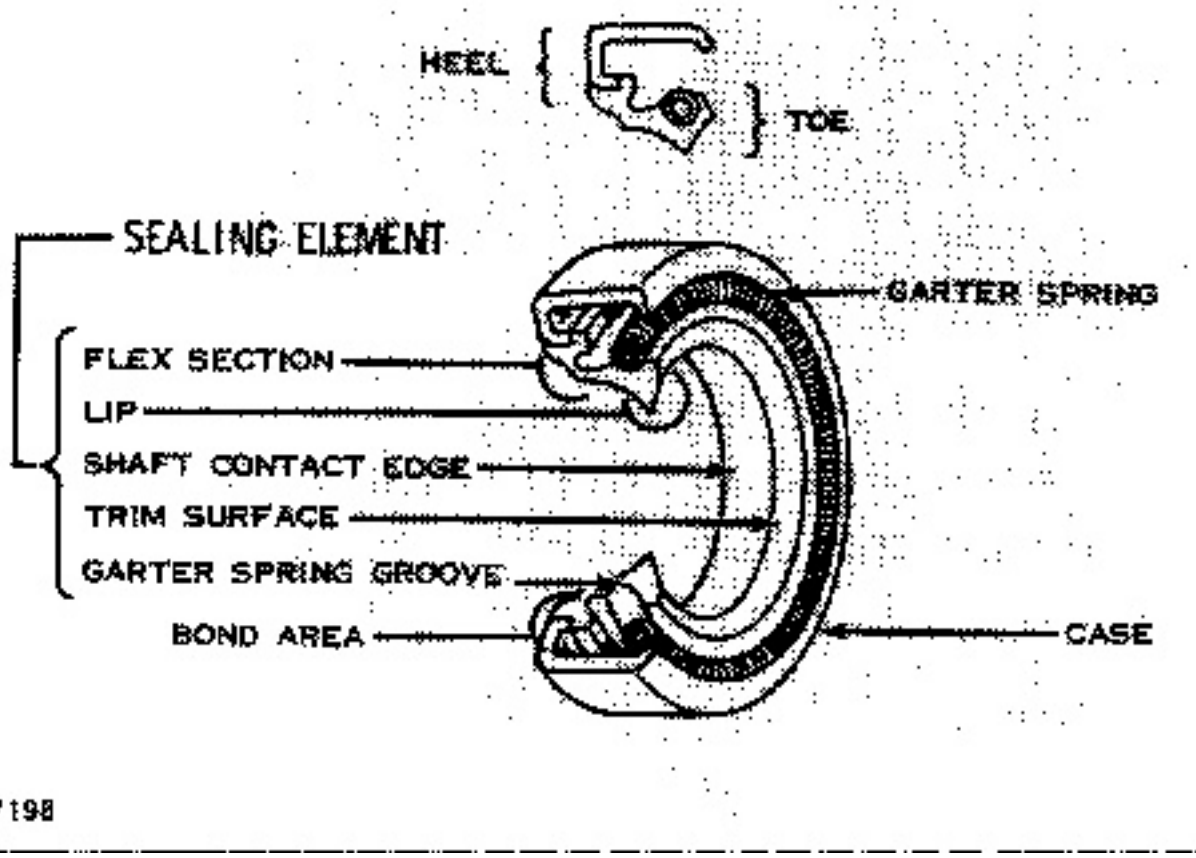

The main parts of a lip-type seal are the case, sealing element, and garter spring. The picture illustrates the construction of a simple lip-type seal. The cross sections show the terms "heel" and "toe" used to identify the sides of various types of seals.

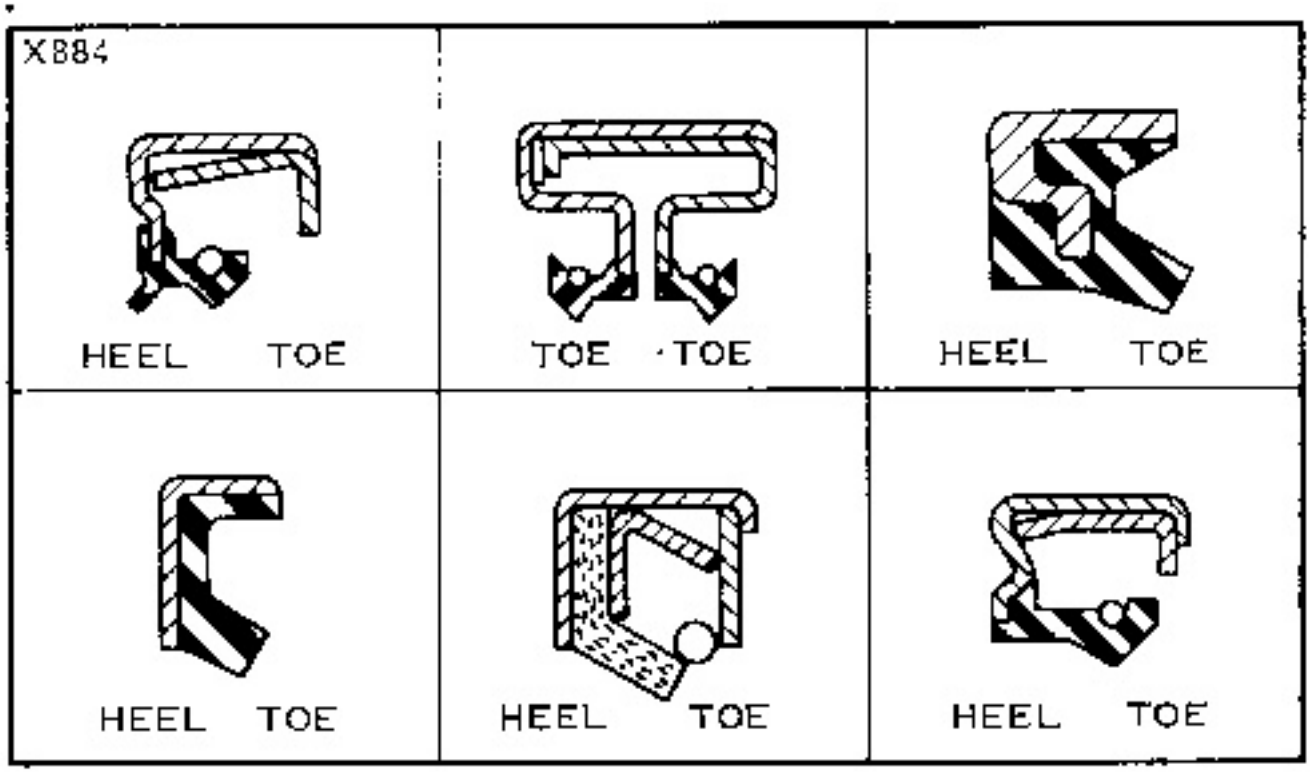

Lubricate the lips of lip-type seals before installation. Use the same type lubricant in which the seal will be operating. Do not use grease on any seal except a grease seal.

If, during installation, the seal lip must pass over a shaft that has splines, a keyway, rough surface or a sharp edge, the lip can be easily damaged. Shim stock or other such material can be formed around the area to provide a smooth surface over which to slide the seal.

inches	mm
1/64	0.40
1/32	0.79
3/64	1.19
1/16	1.59
5/64	1.98
3/32	2.38
.100	2.54
7/64	2.78
1/8	3.18
9/64	3.57
5/32	3.97
11/64	4.37
3/16	4.76
13/64	5.16
7/32	5.56
15/64	5.95
1/4	6.35
17/64	6.75
9/32	7.14
19/64	7.54
5/16	7.94
21/64	8.33
11/32	8.73
23/64	9.13
3/8	9.53
25/64	9.92
.400	10.16
13/32	10.32
27/64	10.72
7/16	11.11
29/64	11.51
15/32	11.91
31/64	12.30
1/2	12.70

inches	mm
33/64	13.10
17/32	13.49
35/64	13.89
9/16	14.29
37/64	14.68
19/32	15.08
.600	15.24
39/64	15.48
5/8	15.88
41/64	16.27
21/32	16.67
43/64	17.07
11/16	17.46
45/64	17.86
23/32	18.26
47/64	18.65
3/4	19.05
49/64	19.45
25/32	19.84
51/64	20.24
13/16	20.64
53/64	21.03
27/32	21.43
55/64	21.83
7/8	22.23
57/64	22.62
.900	22.86
29/32	23.02
59/64	23.42
15/16	23.81
61/64	24.21
31/32	24.61
63/64	25.00
1	25.40

T93967—A

https://barringtondieselclub.co.za/

CATERPILLAR®

SEBR0539-00



Disassembly and Assembly

3304 and 3406 Industrial & Marine Engines

http://engine.od.ua
https://barringtondieselclub.co.za/

Alternator

SMCS - 1405-11; 1405-12

Remove Alternator (Industrial Engine)

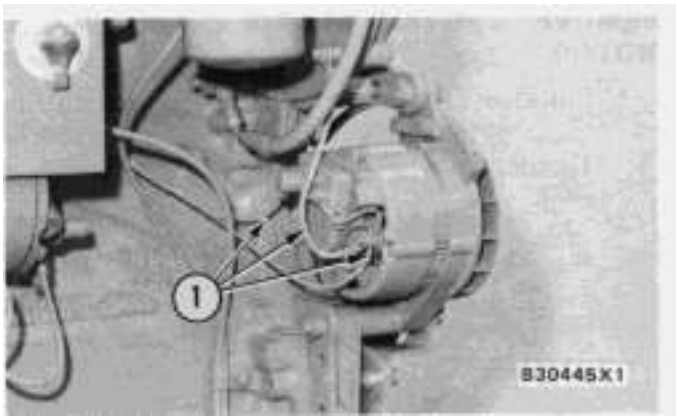

1. Disconnect and put identification on all alternator wires (1).

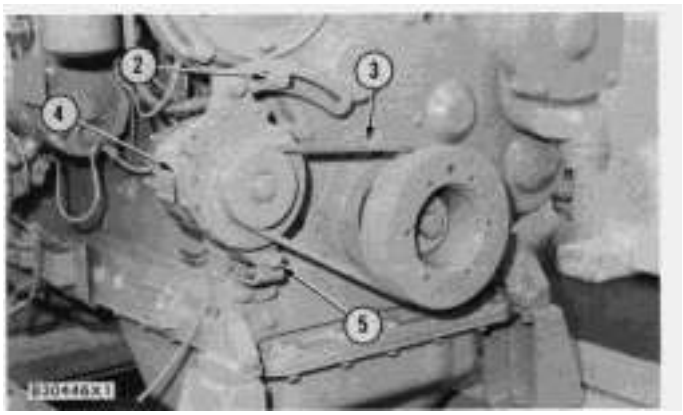

2. Remove bolt (2) that holds the alternator to the timing gear cover.

3. Remove nut and bolt (5) from bracket.

4. Remove alternator (4) and belt (3).

Install Alternator (Industrial Engine)

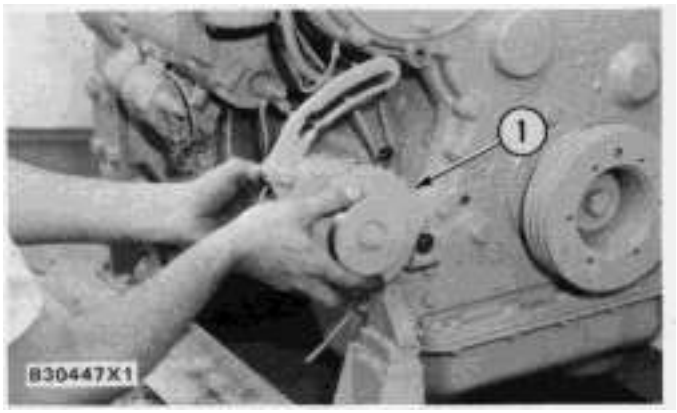

1. Put the alternator (1) in position on the engine and install bolt that holds the alternator to bracket. Install bolt hand tight to hold alternator strap to timing gear cover.

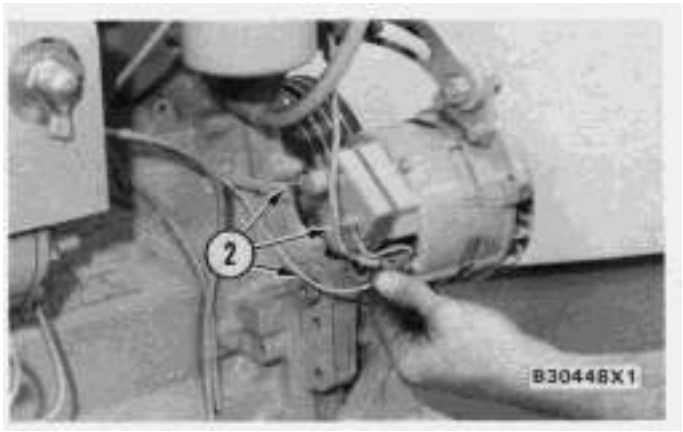

2. Install three wires (2) on the alternator.

3. Put vee belt in position on the alternator pulley.

4. Use a belt tension gauge such as a Borroughs Tool Company Part No. BT-33-72C or an equivalent and make an adjustment of vee belt. Tighten new belt until gauge indication is 120 ± 5 lb. (535 ± 22 N). Operate the engine at high idle for a minimum of 30 minutes. Make another adjustment of the belt tension. The correct gauge indication for a used belt is 90 ± 10 lb. (400 ± 44 N). Tighten the bolts that hold the alternator in position.

Electric Starting Motor

SMCS - 1453-11; 1453-12

Remove Electric Starting Motor

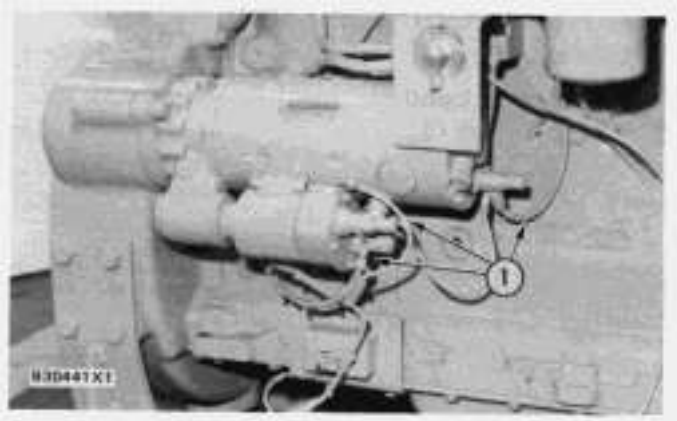

1. Put identification on the wires for the starting motor as to their location on the starting motor. Disconnect wires (1) to the starting motor.

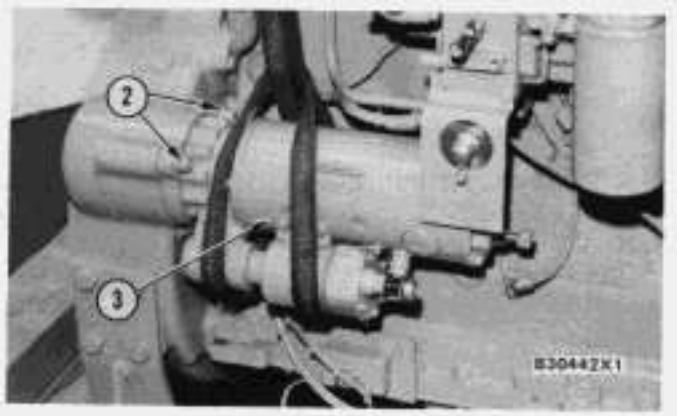

2. Fasten a strap and hoist to remove the starting motor. Remove three bolts (2), starting motor (3) and gasket. The weight of the starter is 64 lb. (29 kg).

Install Electric Starting Motor

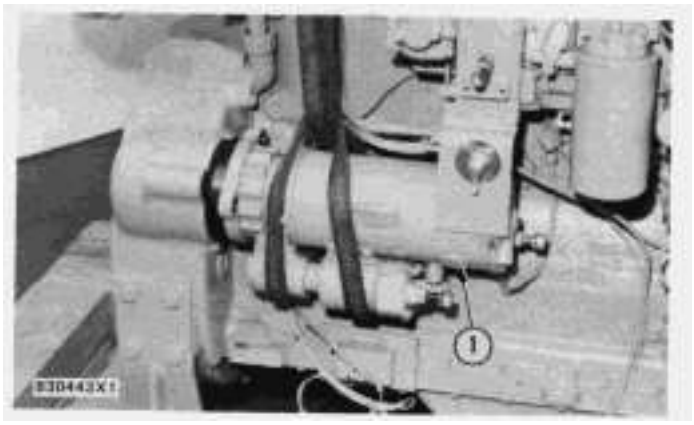

1. Install gasket and starting motor (1) in position in flywheel housing. Install three bolts to hold starting motor in place.

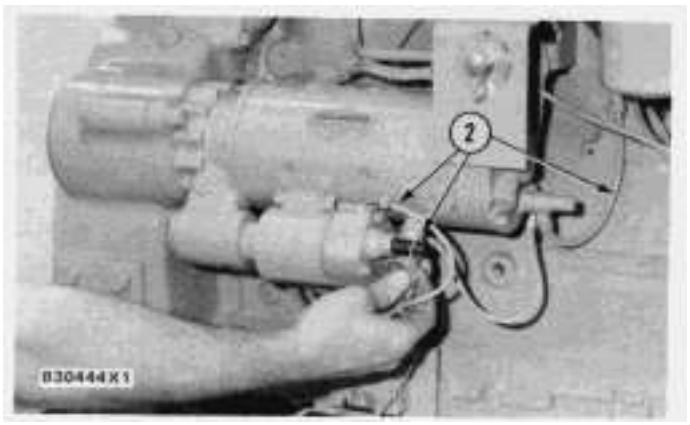

2. Connect wires (2) to the starting motor.

Fuel Ratio Control

SMCS - 1278-15; 1278-16; 1278-10

Remove And Install Fuel Ratio Control

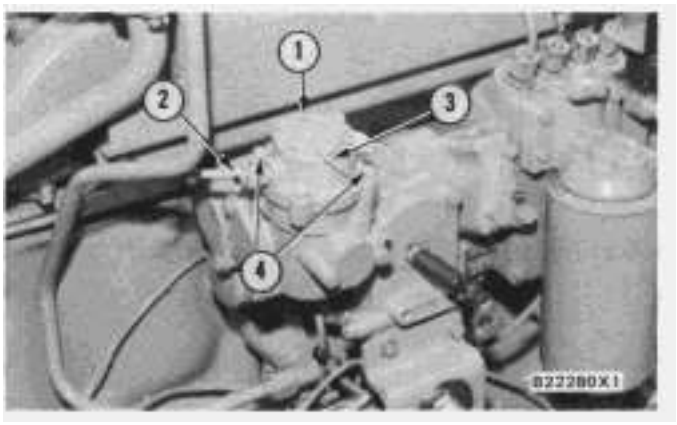

1. Disconnect pressure line (2) from the fuel ratio control.

2. Remove lockwires (3).

3. Remove two bolts (4) and the fuel ratio control (1) from the housing adapter.

4. Inspect the gasket for damage and make a replacement if necessary.

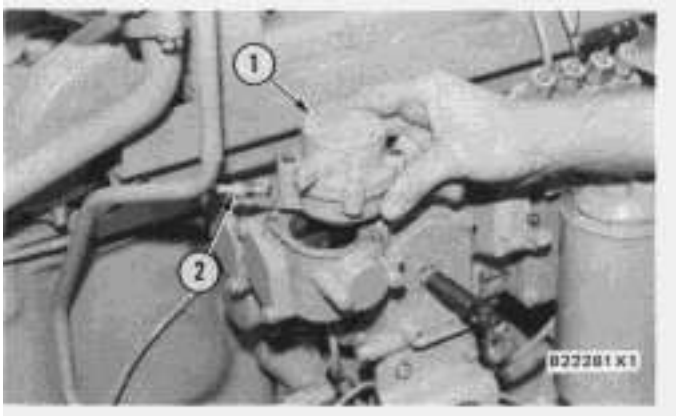

5. Install fuel ratio control (1) in the housing adapter.

6. Install a new lockwire and seal.

7. Connect pressure line (2) to the fuel ratio control.

8. Make an adjustment to the fuel ratio control. See FUEL RATIO CONTROL SETTING in TESTING AND ADJUSTING section.

Disassemble Fuel Ratio Control

start by:

a) remove fuel ratio control

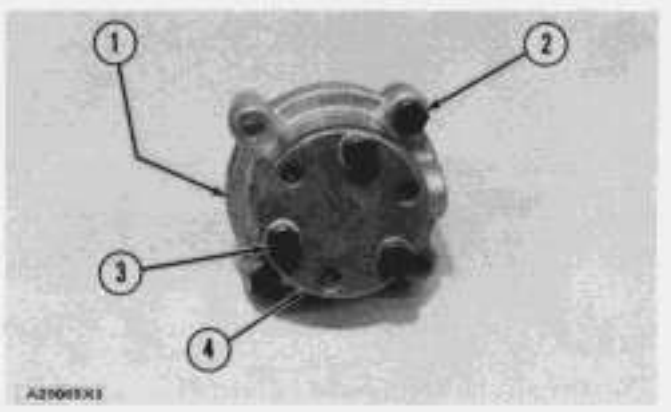

1. Remove three bolts (3) and cover (4).

2. Remove two bolts (2) and cover (1). Remove the spring from under cover (1).

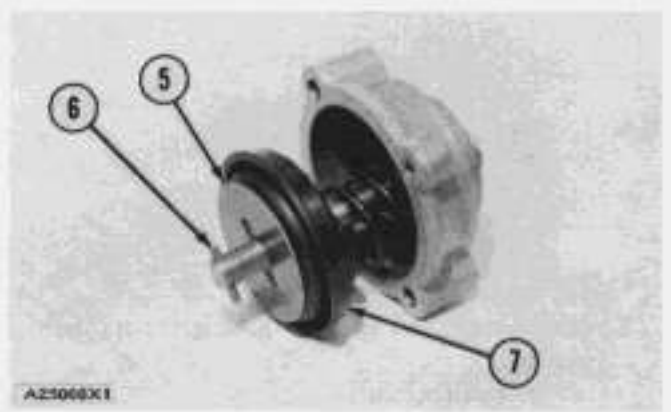

3. Remove pin (6) from the bolt.

4. Remove washer (5).

5. Remove diaphragm (7) from the retainer.

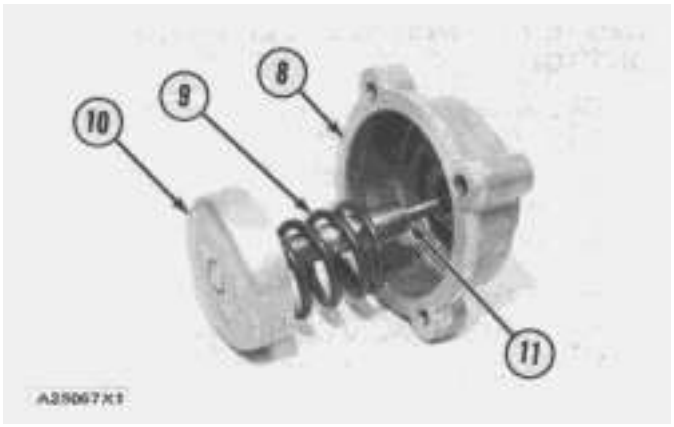

6. Remove retainer (10), spring (9) and bolt (11) from cover (8).

Assemble Fuel Ratio Control

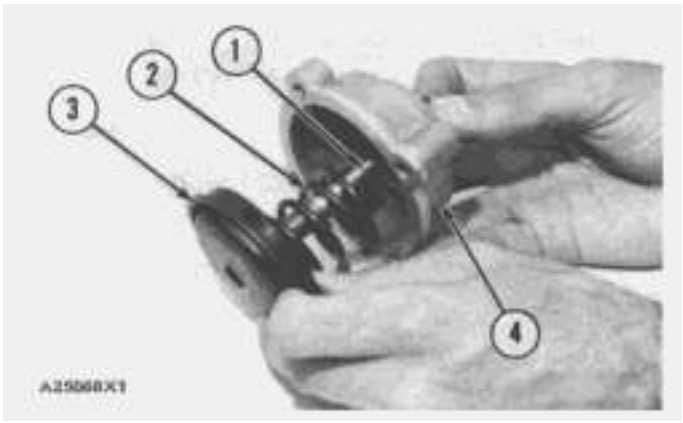

1. Install the retainer on bolt (1).

2. Install spring (2) on the bolt.

3. Install diaphragm (3) on the retainer as shown.

4. Install the bolt through cover (4) as shown.

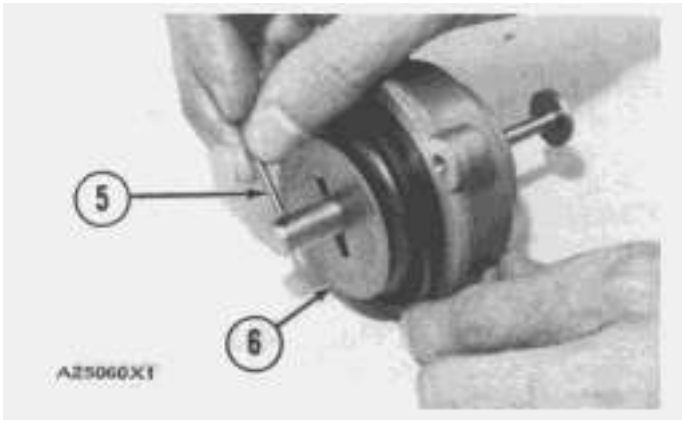

5. Install washer (6) on the bolt. Install pin (5) in the bolt.

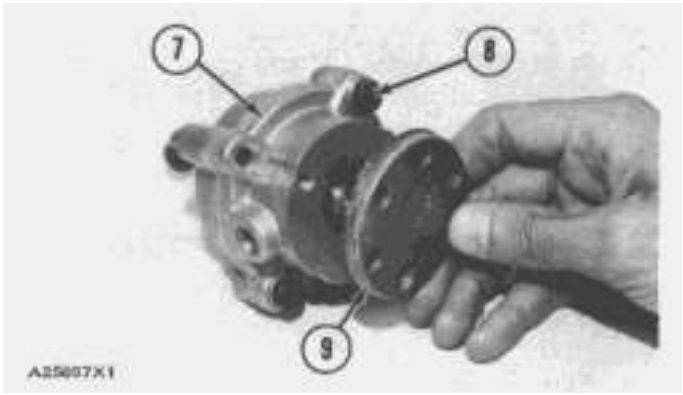

6. Install the spring and cover (7).

7. Install two bolts (8).

8. Install cover (9) and the three bolts that hold it.

end by:

a) install fuel ratio control

Adapter Housing And Levers

SMCS - 1278-15; 1278-16; 1278-10

Remove Adapter Housing And Levers

	Tools Needed	A
2P8315	Bracket Assembly	1
9S6363	Turbocharger Fixture Group	1

start by:

a) remove fuel ratio control

NOTE: The fuel injection pump housing and governor does not have to be removed from the machine for the removal of the adapter housing and levers.

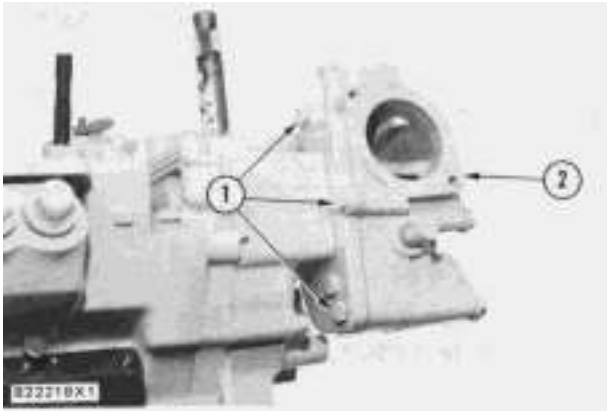

1. Install the fuel injection pump housing and governor in tool (A). Remove four bolts (1) that hold adapter housing (2) in position. Remove the adapter housing and gasket.

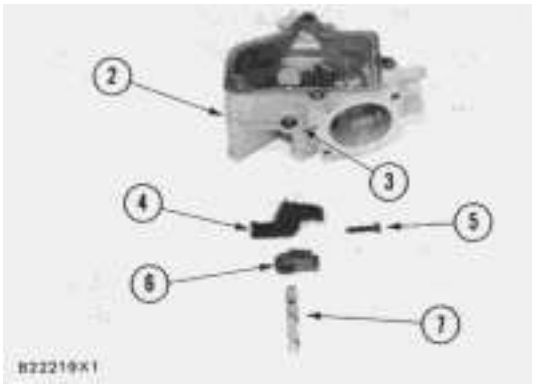

2. Remove bolt (5), shaft (7) and lever assemblies (4) and (6).

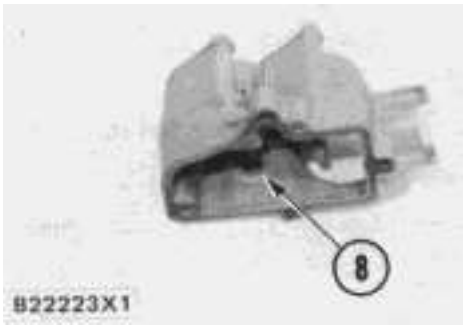

3. Remove seal (3) and two bearings (8) from the adapter housing.

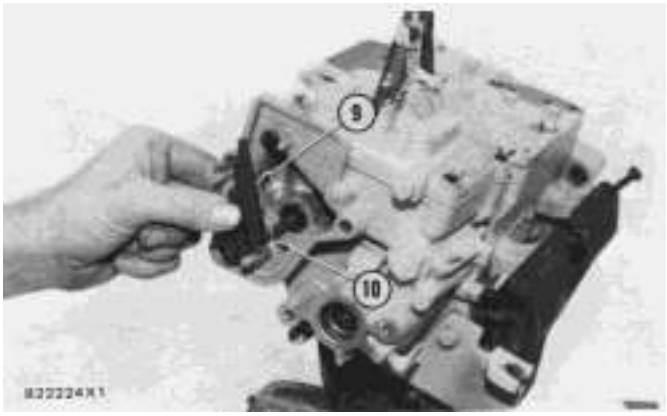

4. Loosen bolt (10) and remove lever assembly (9) from shaft.

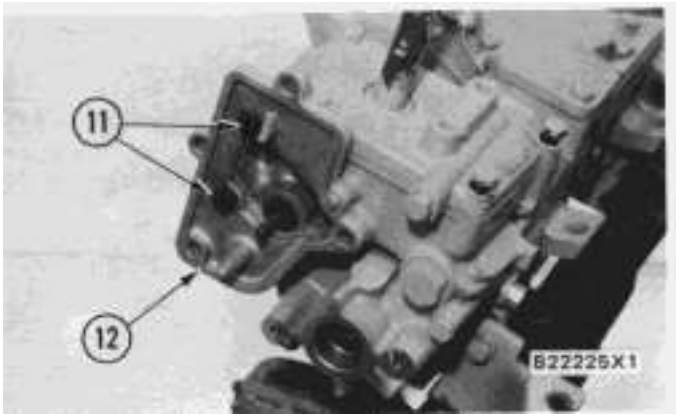

5. Remove two bolts (11), adapter plate base (12) and gasket from the governor.

Install Adapter Housing And Levers

	Tools Needed	A	B
1P510	Driver Group	1	
2P8315	Bracket Assembly		1
9S6363	Turbocharger Fixture Group	1	

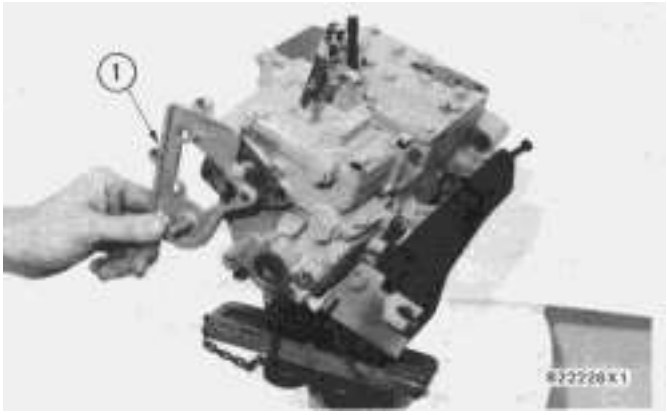

1. Install adapter plate base (1) and gasket on the governor housing.

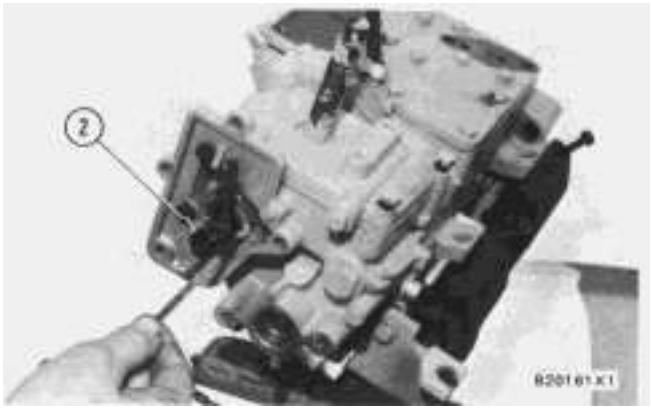

2. Install lever assembly (2) on the shaft until the distance between the rear sid of the lever assembly (2) and the governor housing is .437 in. (11.10 mm). Make sure the shaft assembly is pushed in against the governor housing when the dimension is measured.

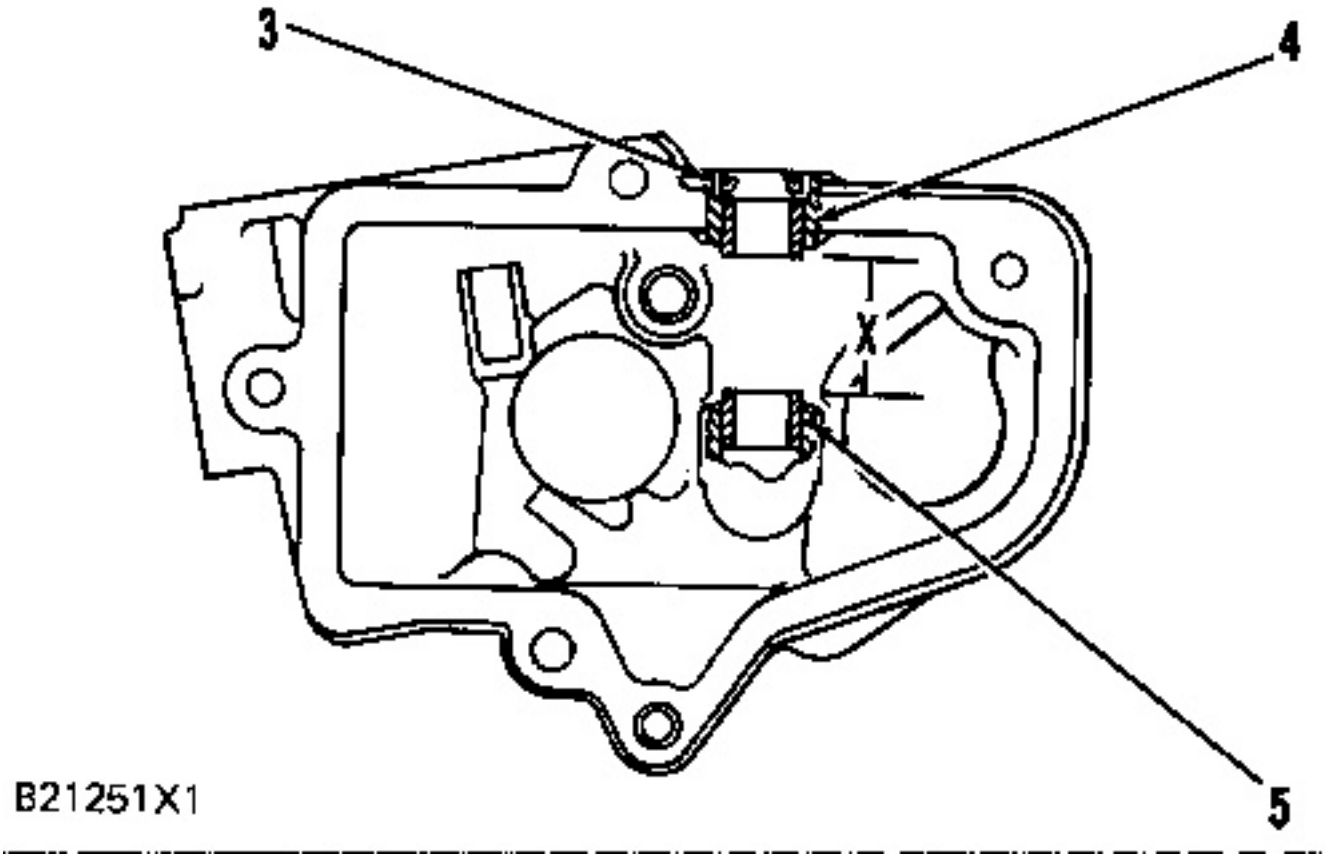

3. Install bearing (4) with tool (A) even with the bottom of the seal counterbore. Install bearing (5) with tool (A) and punch until dimension (X), the distance between the edges of the bearings, is .800 in. (20.32 mm).

4. Install the seal (3) with tool (A).

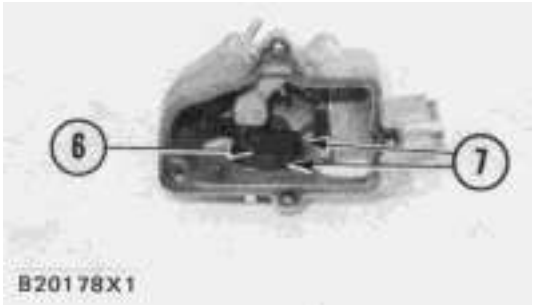

5. Put lever assemblies (7) in position in housing and install shaft. Install bolt (6) through shaft.



6. Install adapter housing (8) and gasket on adapter plate base.

end by:

a) install fuel ratio control

Fuel Injection Pump Housing And Governor

SMCS - 1286-12; 1286-29; 1286-11

Remove Fuel Injection Pump Housing And Governor

	Tools Needed	A	B	C
5P7307	Engine Turning Tool Group	1		
3P1544	Pin		1	
8S2264	Puller Group			1
9S9155	Step Plate			1
L478	Bolt			2
4B5271	Washer			2

start by:

a) remove electric starting motor

b) remove fuel injection lines

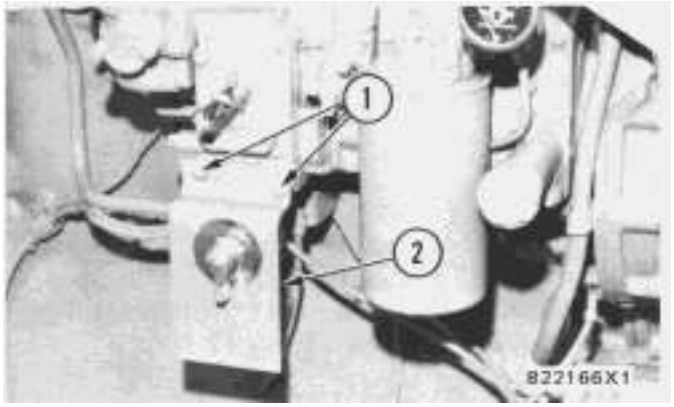

1. Remove two bolts (1) and start switch (2) from the governor housing. Let start switch hang on engine.

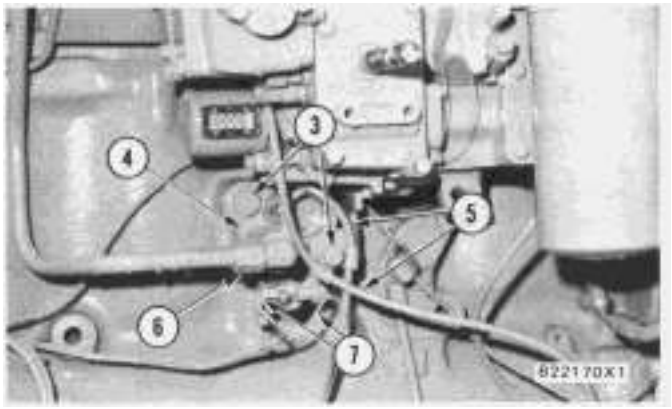

2. Put identification on two wires (7) and remove from switch. Disconnect tube assembly (6) from adapter (4). Remove two bolts (3) and adapter (4) from cylinder block.

3. Remove two hoses (5).

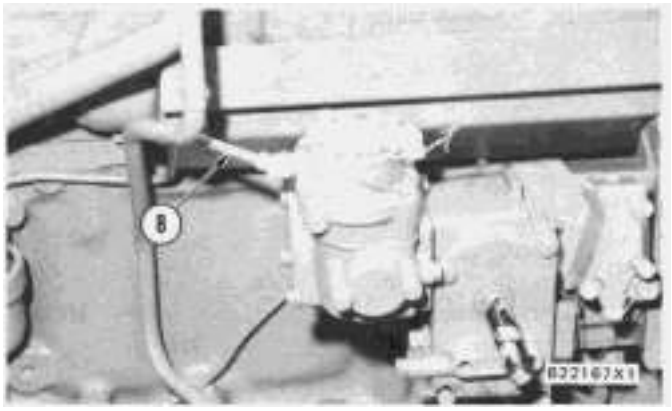

4. Disconnect tube assembly (8) from the fuel ratio control.

NOTE: No. 1 piston at top center (TC) on the compression stroke is the starting point for all timing procedures.

NOTE: The engine is seen from the flywheel end when direction of crankshaft rotation is given.

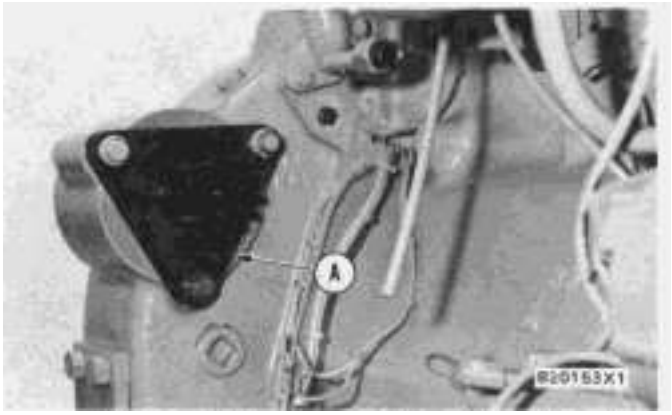

5. Install tooling (A) on flywheel housing as shown.

6. To find top center compression stroke for No. 1 piston, first turn the flywheel clockwise (opposite the direction of engine rotation) approximately 30 degrees. This procedure is to remove all play from the timing gears.

7. Turn the flywheel counterclockwise until a 3/8"-16 NC bolt (1) can be installed in the flywheel through the hole in the flywheel housing. The No. 1 piston is at top center.

NOTICE

If you go past the bolt hole you must start over with Step No. 6.

NOTE: To see if the No. 1 piston is on the compression stroke, you can remove the valve cover and look at the valves of the No. 1 cylinder. The valves will be closed if No. 1 cylinder is on the compression stroke. You must be able to move the rocker arms up and down with your hand.

8. If No. 1 piston is not on the compression stroke, remove the 3/8"-16 NC bolt and turn the flywheel 360° counterclockwise. Install the 3/8" bolt as before. The No. 1 piston is now at top center on the compression stroke (TC1).

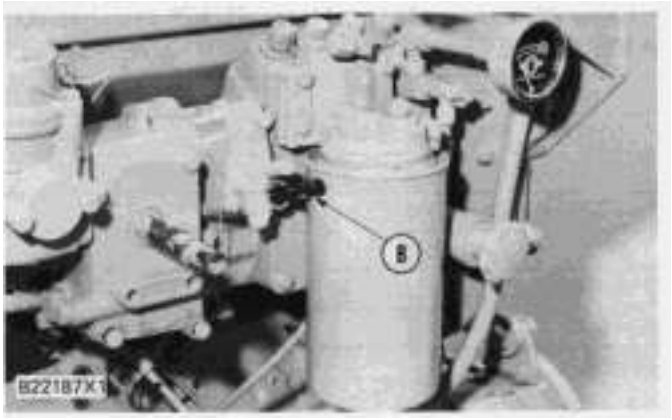

9. To install tool (B) in the fuel injection housing assembly, remove the 3/8"-16 NC bolt from the flywheel and turn the flywheel approximately 30° clockwise.

10. Remove bolt and install tool (B) in the governor housing. Turn the flywheel slowly in a counterclockwise direction until pin (B) goes into the notch in the camshaft.

11. Put the 3/8"-16 NC bolt in the timing hole in the flywheel housing. If the bolt can be installed in the hole in the flywheel, the timing on the fuel injection pump is correct.

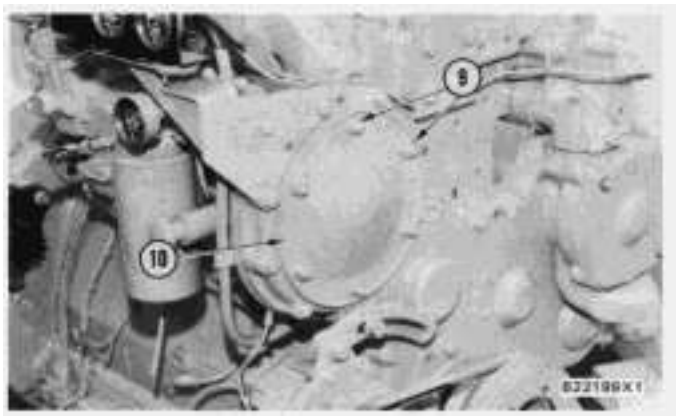

12. Remove nuts (9) and cover (10) from the front of the timing gear cover.

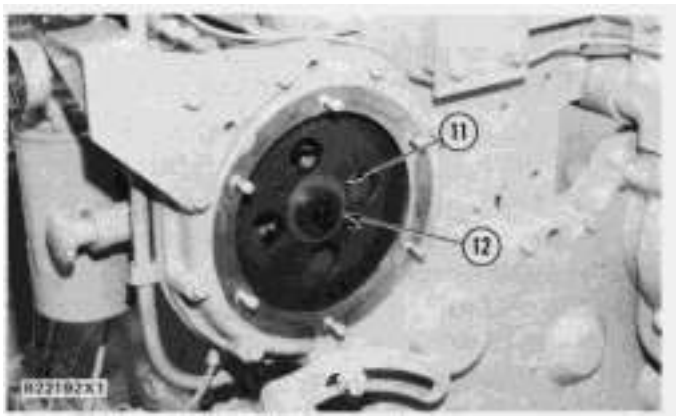

13. Remove bolt (12) and washer (11) that holds the drive gear to the fuel injection pump.



14. Install tooling (C) to loosen drive gear from the drive sleeve.

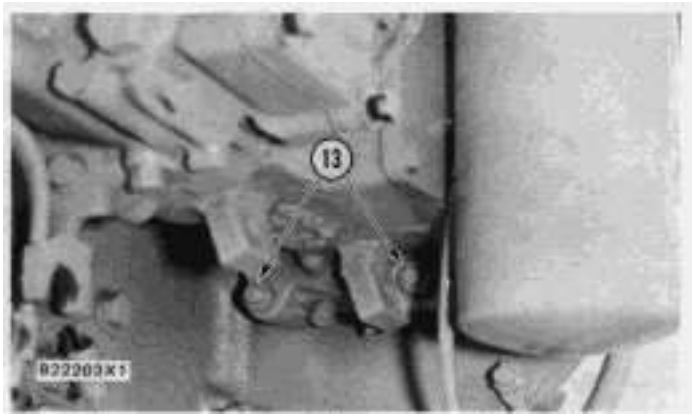

15. Remove three nuts (13) from studs. Remove the fuel injection pump housing and governor from engine.

Install Fuel Injection Pump Housing And Governor

	Tools Needed	A	B
5P7307	Engine Turning Tool Group	1	
3P1544	Pin		1

1. Inspect the transfer pump housing O-ring seal for damage. Make a replacement if necessary.

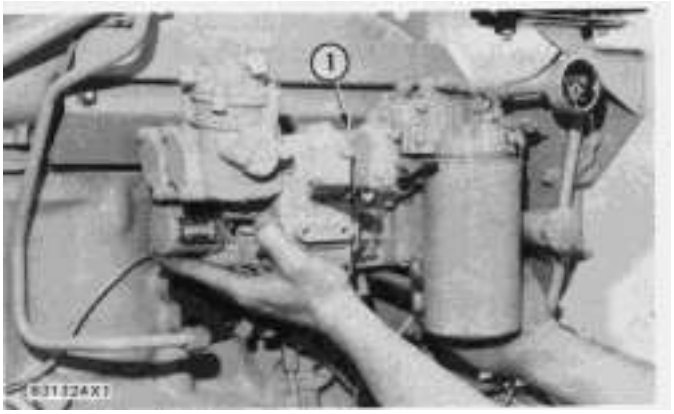

2. Put the fuel injection pump housing and governor (1) in position on the engine and against the timing gear plate.

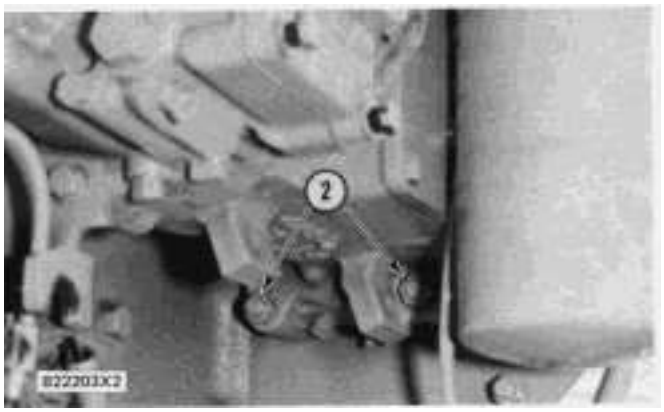

3. Install the three nuts (2) that hold the fuel injection pump housing to the timing gear plate. Do not tighten nuts until adapter (4) is installed.

4. Inspect the two O-ring seals on adapter and make replacements if necessary.

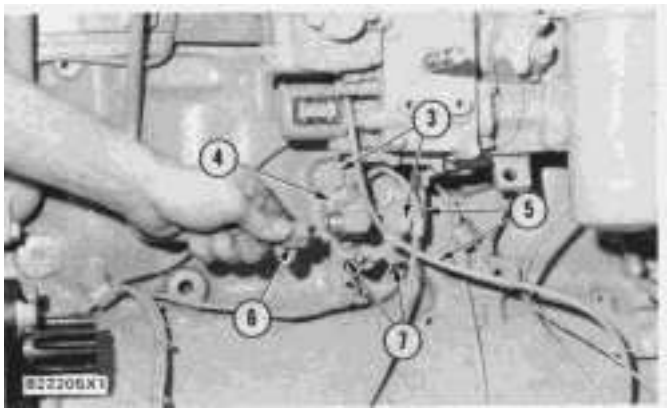

5. Put adapter (4) and two hoses (5) in position and install two bolts (3) to hold the adapter to block. Tighten three nuts (2).

6. Install two wires (7) on switch. Install tube assembly (6) on adapter.

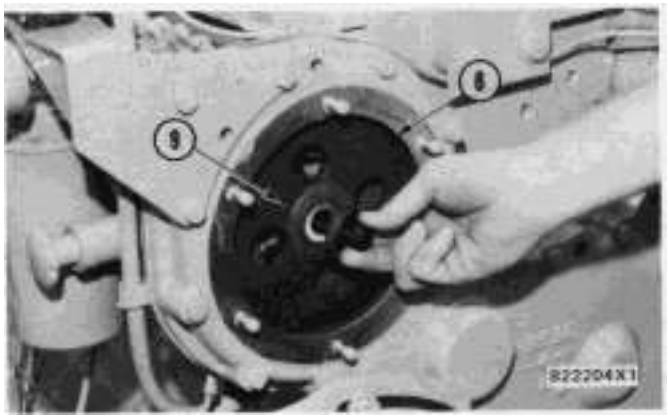

7. Put the drive gear (8) in position on the fuel injection pump and install washer and bolt finger tight. Be sure that tooling (B) is in the notch in the fuel injection camshaft.

8. Install a 3/8"-24 NF, 1/2 in. long bolt in one of the holes (9) in the drive gear (8).



9. Put a torque wrench on the 3/8" bolt with the wrench in line with the center of the drive gear, and give it a torque of 45 to 50 lb.ft. (60 to 70 N·m). While this torque is held, tighten the drive gear bolt to a torque of 110 ± 5 lb.ft. (149 ± 7 N·m). Remove pin (B) from the fuel pump and the 3/8"-16 NC bolt from the flywheel.

10. Turn the engine flywheel two complete revolutions with tooling (A). If the 3/8"-16 NC bolt goes in the hole in the flywheel when the timing pin is installed in the notch in the camshaft, the timing is correct.

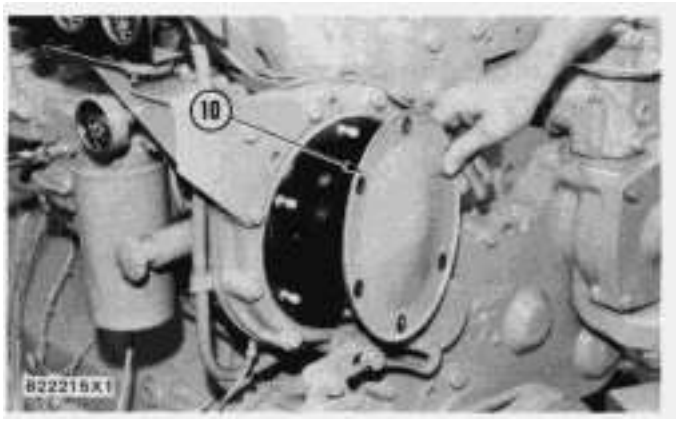

11. Put gasket and cover (10) in position on the timing gear cover. Install nuts. Tighten nuts to a torque of 17 ± 3 lb.ft. (23 ± 4 N·m).

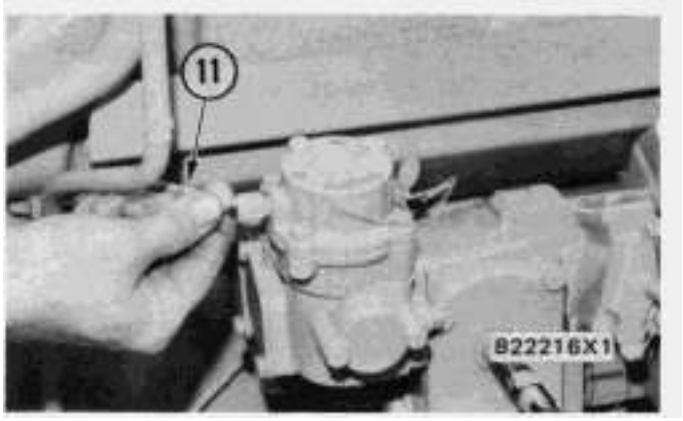

12. Install fuel line (11) to the fuel ratio control.



13. Put the start switch (12) in position on the governor housing and install two bolts to hold it in place.

14. Remove tooling (A) and the 3/8"-16 NC bolt (16) from the flywheel housing.

Separation Of Governor From Fuel Injection Pump Housing

	Tools Needed	A	B
9S6363	Turbocharger Fixture Group	1	
2P8315	Bracket Assembly	1	
5P302	Bar		1

start by:

a) remove fuel injection pump housing and governor

b) remove adapter housing

c) remove service meter group

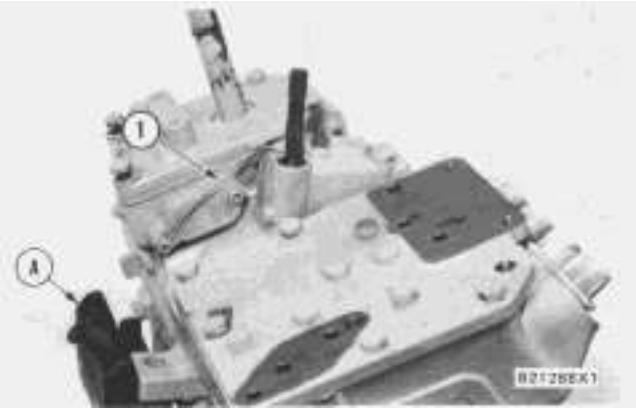

1. Put the fuel injection pump housing and governor in position on tool (A).

2. Remove seal wire (1) from cover bolts.

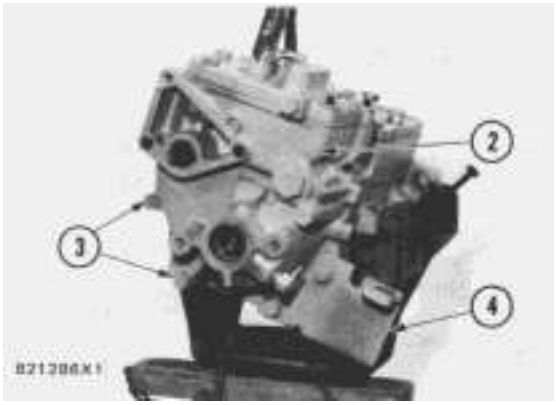

3. Remove four bolts (3) and bracket (4). Remove governor housing (2) from the fuel injection pump housing.

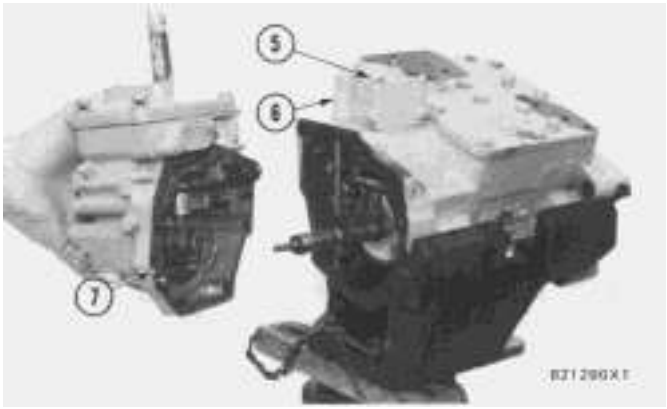

4. Remove two bolts (5) from cover (6). Remove cover (6) from over the torque spring.

5. If damaged, remove gasket (7) from the governor housing.

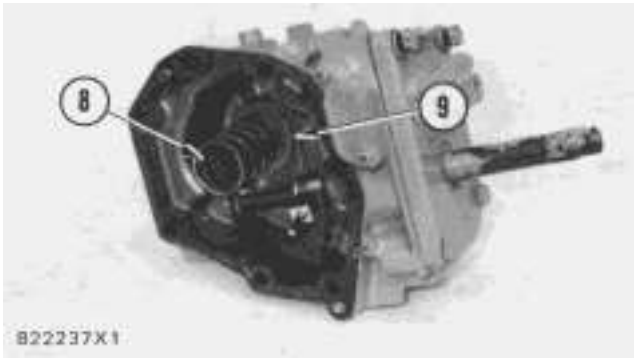

6. Remove spring (8), three washers (9) and seat from housing.

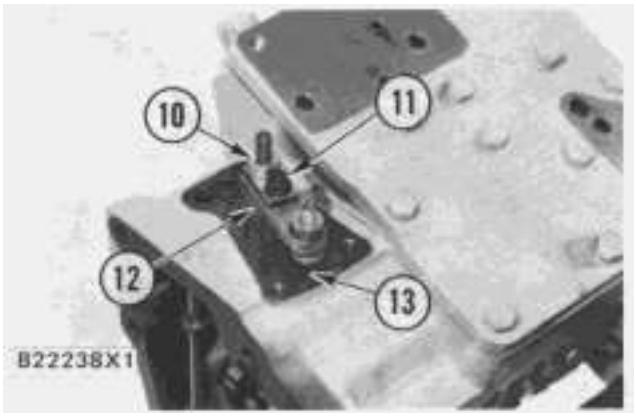

7. Remove bolt (11) and nut (10) from the torque spring (12). Remove the torque spring.

8. Remove pin (13) from the hole in the fuel injection pump housing.

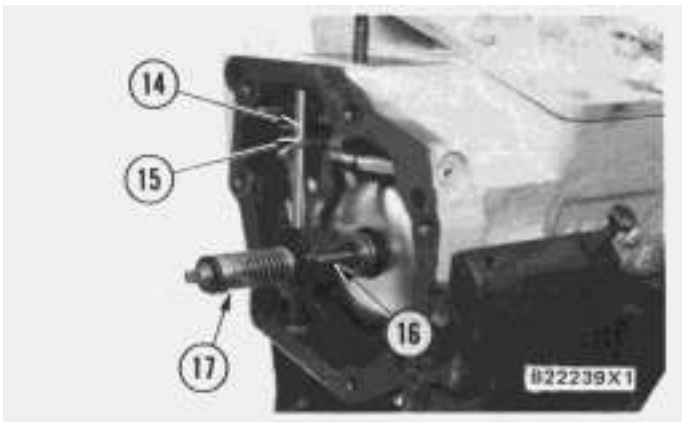

9. Remove seat assembly (17) and spring (16) from shaft.

10. Pull shaft (14) up and remove lever (15).

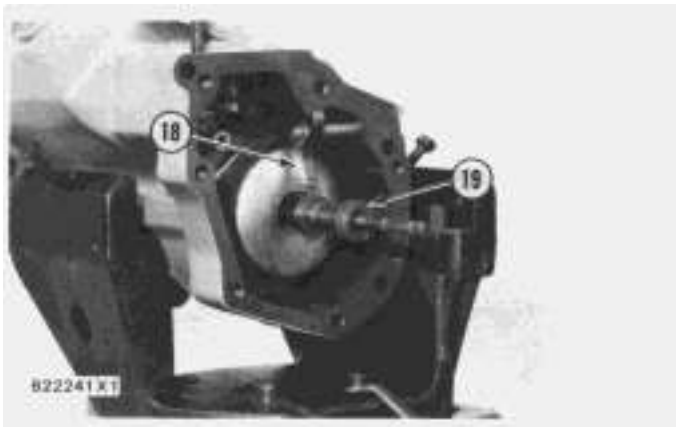

11. Remove riser (follower) (19) from the shaft.

12. Remove ring and lever (18) from the dowel.

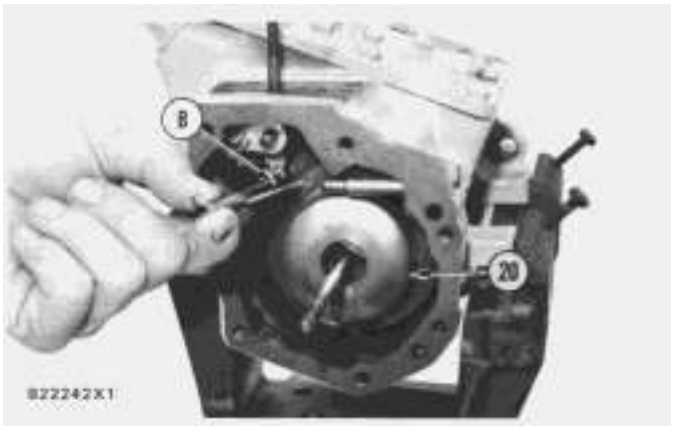

13. Remove cover (20) with tool (B).

NOTE: Tool (B) can cause damage to cover. Always inspect the cover for damage and install a new cover if needed.

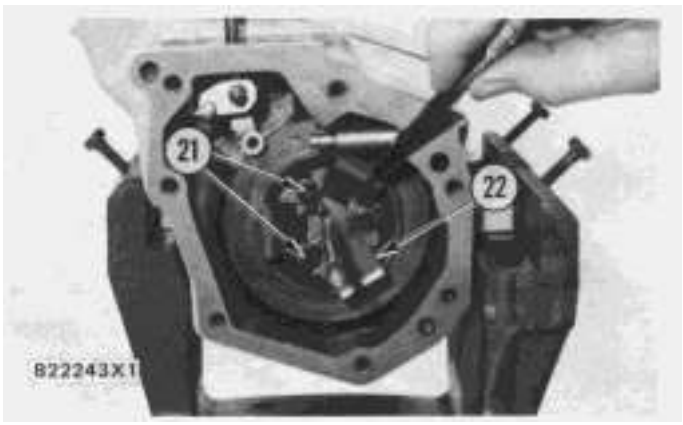

14. Remove three bolts (21) that hold the flyweight assembly in position.

15. Remove flyweight assembly (22).

Connection Of Governor To Fuel Injection Pump Housing

	Tools Needed	A	B	C
9S6363	Turbocharger Fixture Group	1		
2P8315	Bracket Assembly	1		
3P1544	Pin		1	
5P302	Bar			1

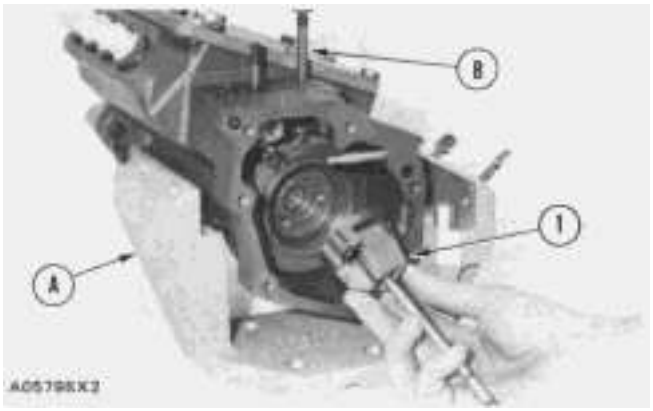

1. Put the fuel injection pump housing on tool (A).

2. Install timing pin (B) to hold the camshaft so it will not turn.

3. Put flyweight assembly (1) in position on the camshaft.

NOTICE

Make sure the pin that holds the shaft in the flyweight assembly is in position before the flyweight assembly is installed.

---

4. Install three new bolts that hold the flyweight assembly to the camshaft.

NOTE: The bolts that hold the flyweight assembly to the camshaft have a locking material on the threads. The bolts must not be used more than one time.



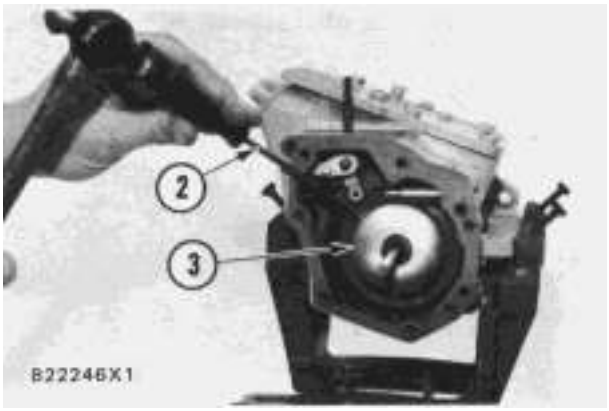

5. Install cover (3) over the flyweight assembly with tool (C).

6. Use a screwdriver (2) to make a mark (stake) on the flyweight cover in four places.

NOTICE

Never install a used flyweight cover that is bent.

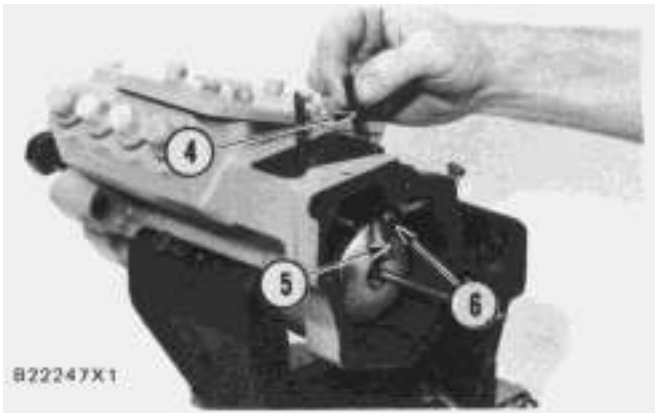

7. Put lever (5) on the dowel. Install ring (6).

8. Install pin (4) in the fuel injection pump housing with the round edge down.



9. Put the riser (follower) (7) in position between the flyweights. Lift the flyweights up with a piece of wire and push the (follower) forward.

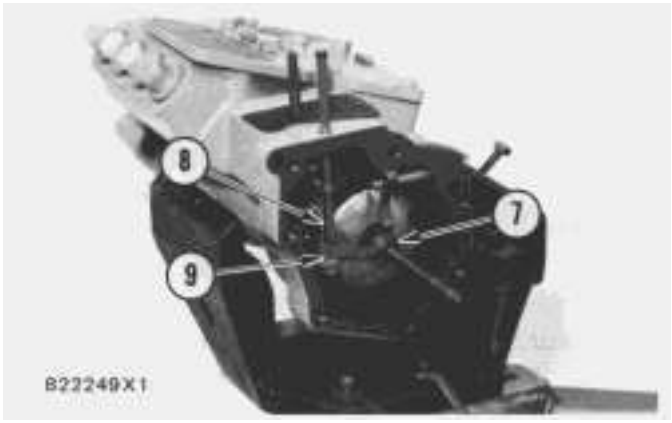

10. Put lever (9) in position in the groove of the riser (follower) (7). Install shaft (8) that holds the lever in position.

NOTICE

If lever (9) is not installed correctly, the governor can not operate and cause the engine to overspeed.

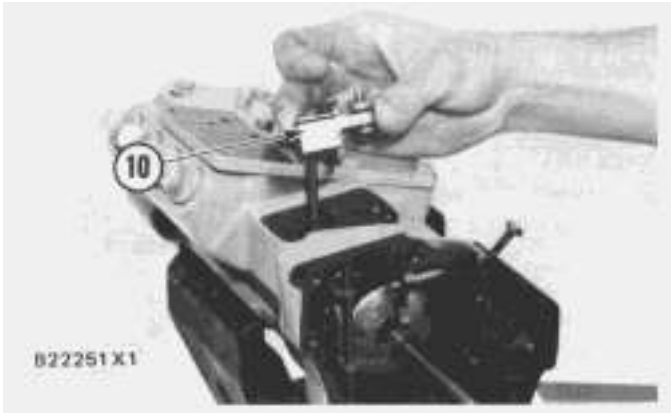

11. Install the torque spring (10). Install the bolt and nut that hold the torque spring in position.

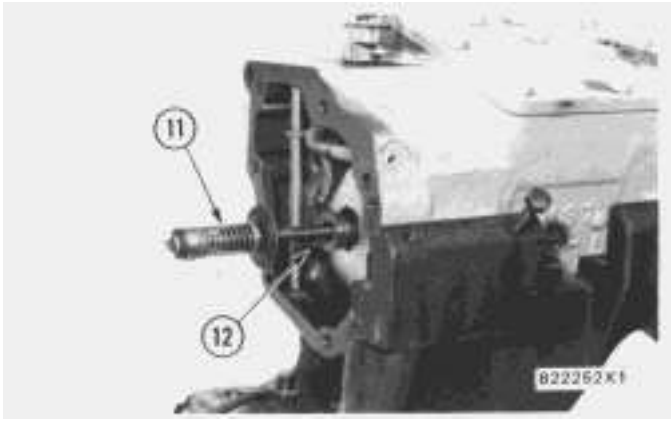

12. Install the overfueling spring (12) and seat assembly (11) on the shaft.

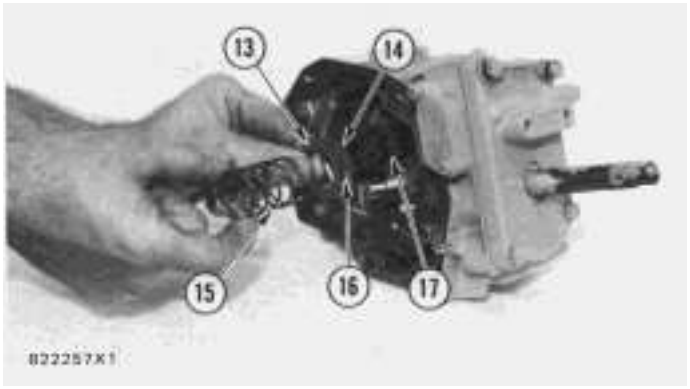

13. Install seat (17), washer (14), wave washer (16), washer (13) and spring (15) in position in the governor housing.

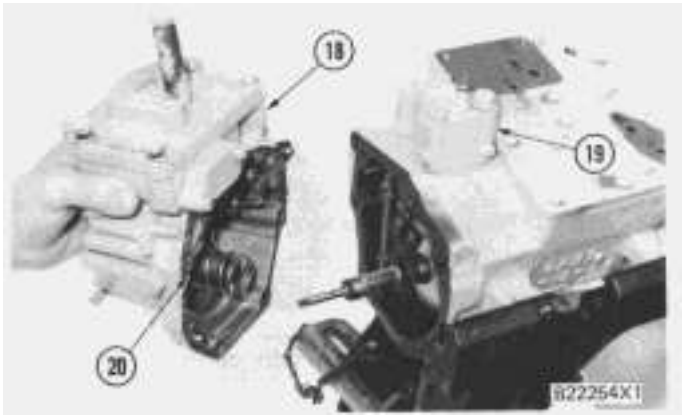

14. Install cover (19) over the torque spring. Install the two bolts that hold the cover in position.

15. Put a new gasket (20) on the governor housing.

16. Put the governor housing (18) on the fuel injection pump housing. Install the bolts that hold the governor housing in position.

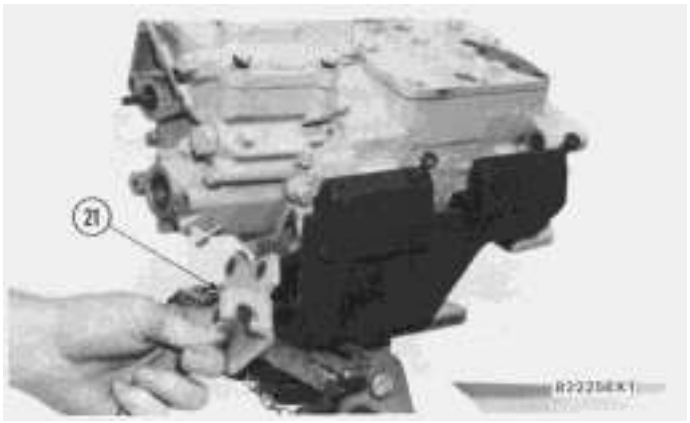

17. Install bracket (21) on the governor housing.

end by:

a) install service meter group

b) install adapter housing

c) install fuel injection pump housing and governor

Service Meter

SMCS - 1286-12; 1286-29; 1286-11

Remove And Install Service Meter

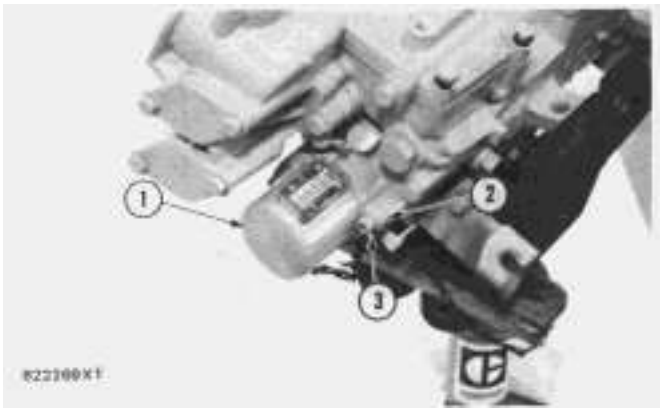

1. Remove two bolts (3), clamps (2) and service meter (1) from the governor housing.

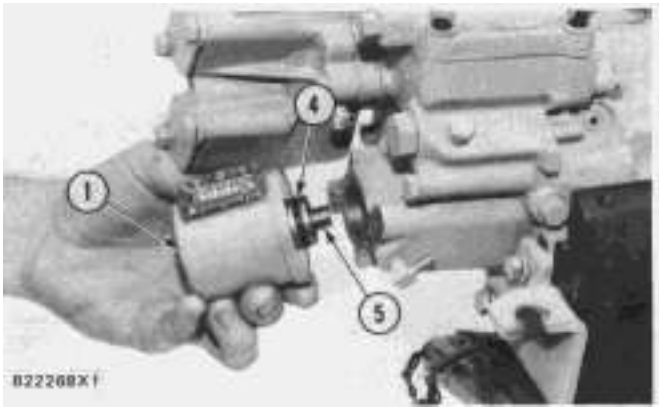

2. Inspect the O-ring seal (4) for damage and make a replacement if necessary.

3. Make sure the coupling (5) on service meter is in alignment with the drive shaft in the governor housing.

4. Put the service meter in position in the governor housing and install the clamps and bolts to hold it in place.

Fuel Check Valve And Bypass Valve

SMCS - 1286-12; 1286-29; 1286-11

Remove Fuel Check Valve And Bypass Valve

	Tools Needed	A
9S6363	Turbocharger Fixture Group	1
2P8315	Bracket Assembly	1

NOTICE

Clean the outer surface of the fuel injection pump housing and governor before the fuel check valve and bypass valve are removed.

1. Remove the fuel from the fuel injection pump housing. Install the fuel injection pump housing and governor on tool (A).

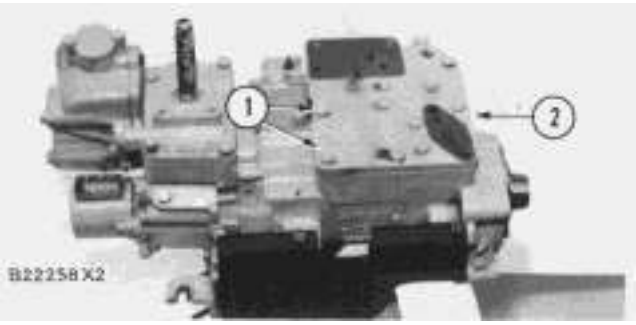

2. Remove five bolts (1) and cover (2) from fuel injection pump housing.

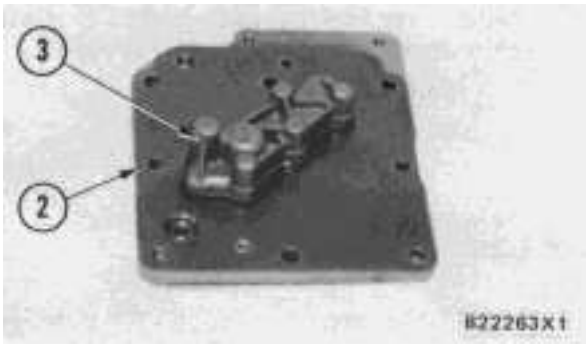

3. Remove fuel channel (3) from the cover (2).

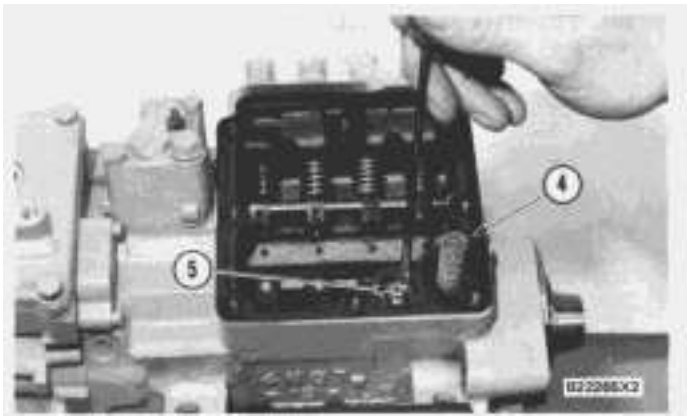

4. Remove check valve (5).

5. Remove spring (4) and bypass valve.

Install Fuel Check Valve And Bypass Valve

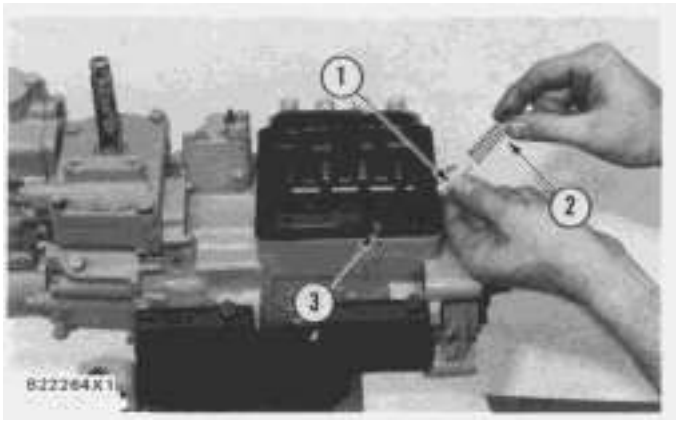

1. Install check valve (3) in the fuel injection pump housing. Make sure the check valve is installed evenly in the fuel injection pump housing.

NOTE: Do not install a check valve that is bent.

2. Install bypass valve (1) and spring (2) in the fuel injection pump housing.

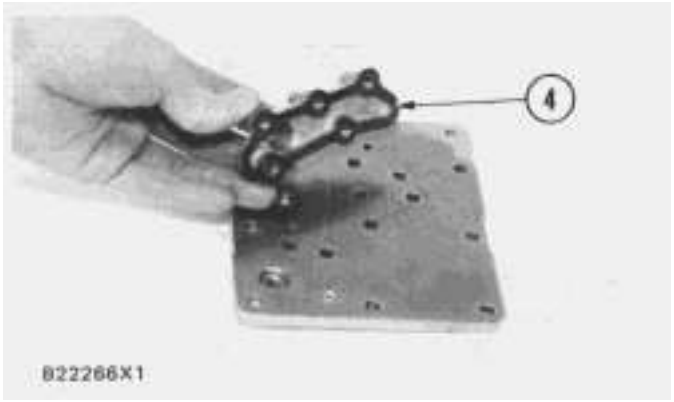

3. Inspect the fuel channel gasket and make a replacement if necessary. Install the fuel channel (4) on cover.

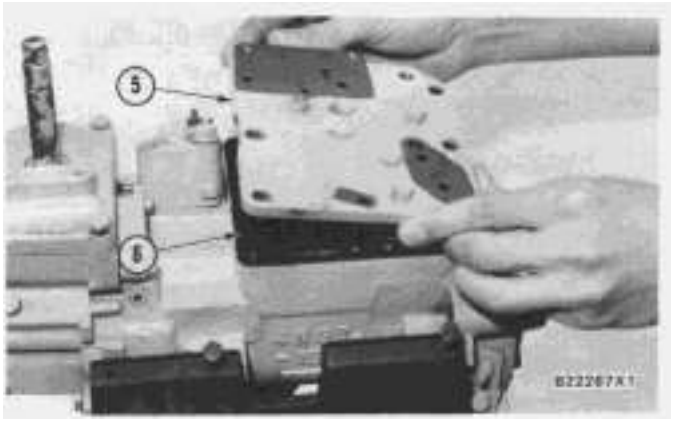

4. Inspect the cover gasket (6) for damage and install the cover (5) on the fuel pump housing.

Governor

SMCS - 1264-16; 1264-15

Disassemble Governor

start by:

a) separation of governor from fuel injection pump housing

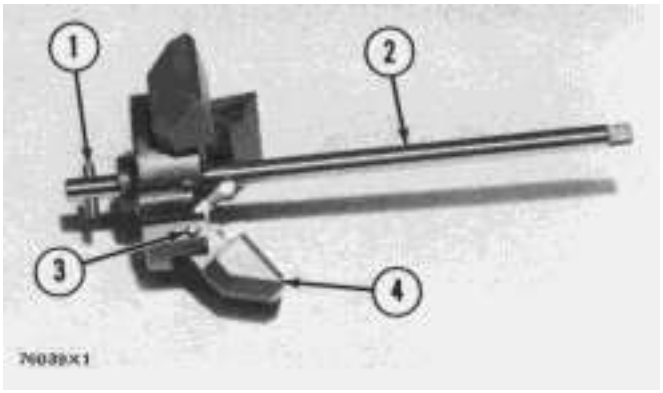

1. Remove shaft (2). Remove pin (1) from the shaft.

2. Remove pins (3) from the flyweights. Remove flyweights (4).

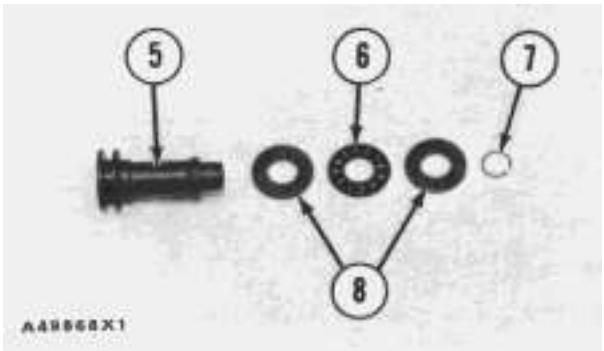

3. Remove ring (7), races (8) and bearing (6) from riser (follower) (5).

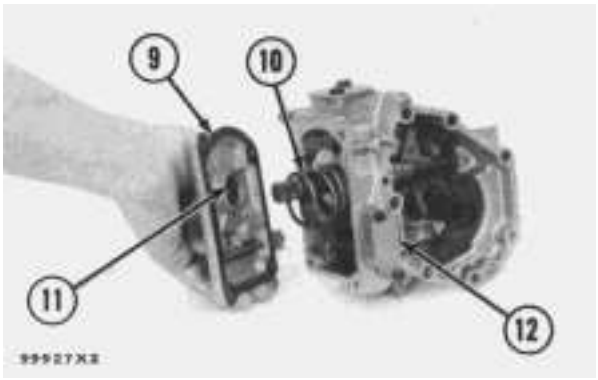

4. Remove cover (9) and spring (10) from the governor housing.

NOTE: There is force on the cover from the spring.

5. Remove seal (11) from the cover.

6. Remove cover (12) for the low and high idle adjustments.

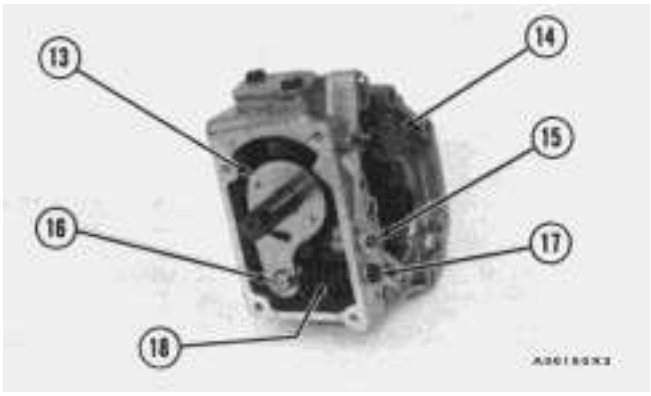

7. Remove locknut and screw (15) for the high idle adjustment.

8. Remove bolt (17) and the washers for the low idle adjustment.

9. Remove spring (18) and the guide.

10. Remove pin (16) and plate (13).

11. Remove shaft (14) from the housing.

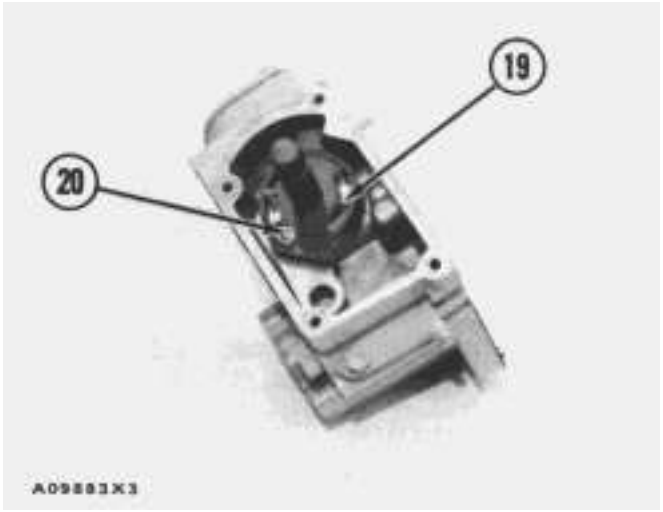

12. Remove two spacers (19) and (20) from the shaft.

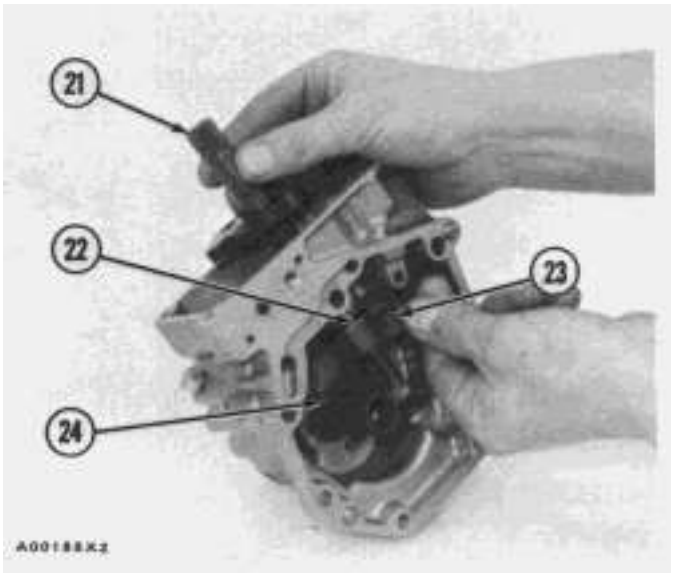

13. Remove shaft (21) from the governor housing.

14. Remove washer (22) and levers (23) and (24) from the governor housing.

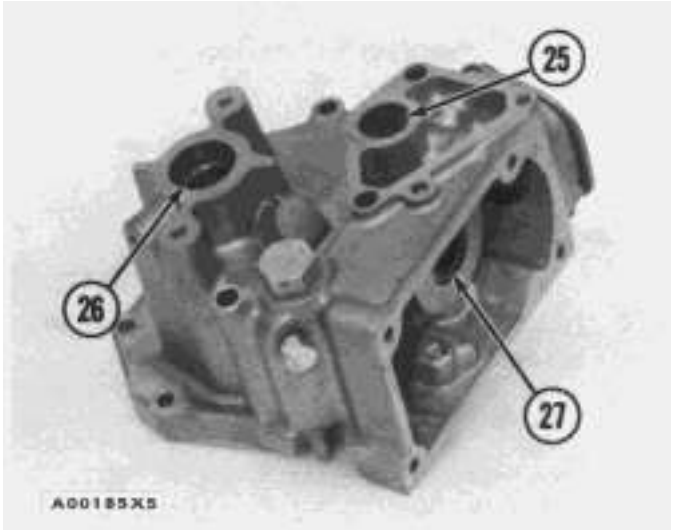

15. Remove seal (25) and the bearing.

16. Remove seals (26) and (27) from the governor housing.

Assemble Governor

Tools Needed		A
1P510	Driver Group	1

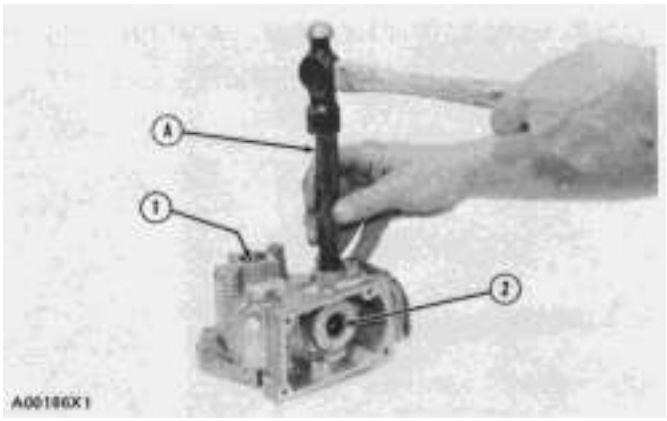

1. Install the bearing and seal in the housing with tooling (A). The lip of the seal must be toward the bearing.

2. Install seal (1) in housing with tooling (A). The lip of the seal must be toward inside of housing.

3. Install seal (2) in the housing with tooling (A). The lip of the seal must be toward the inside of the housing.

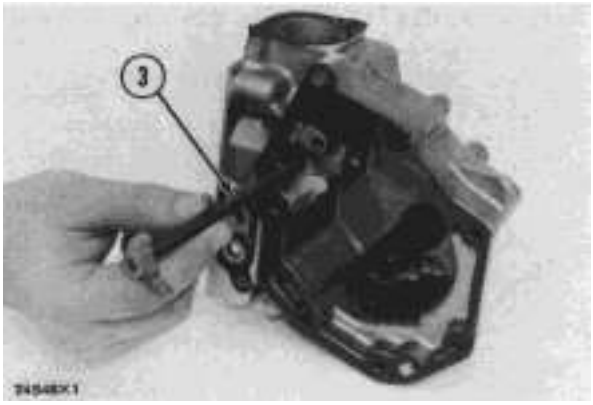

4. Install shaft (3) in the housing.

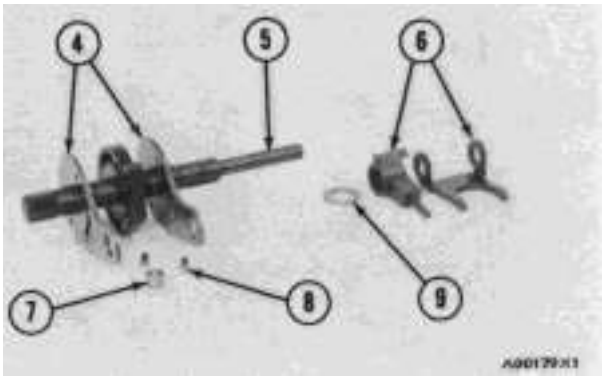

5. Install plates (4), spacers (8) and pin (7) on shaft (5).

6. Install shaft (5) in the housing and through washer (9) and levers (6).

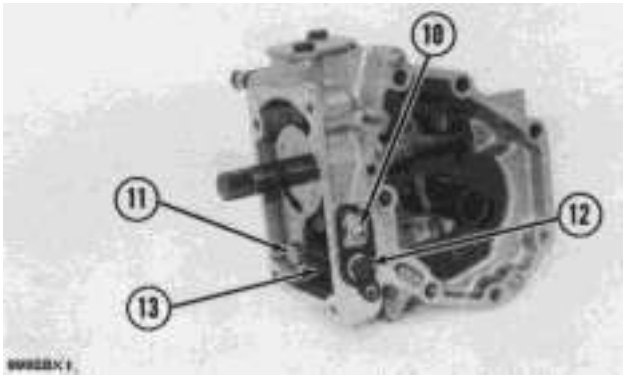

7. Install pin (11) in the holes of the plates.

8. Install screw (10) and the locknut for the high idle adjustment.

9. Install spring (13) and the guide.

10. Install bolt (12) and the washer for the low idle adjustment.

11. Push plate and pin (11) over toward bolt (12) and tighten the bolt.

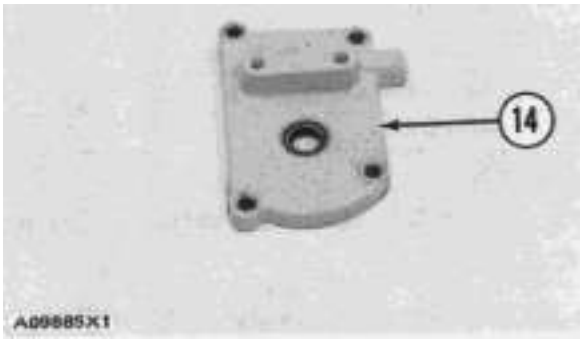

12. Install the seal in cover (14) with tooling (A). The lip of the seal must be toward the inside.

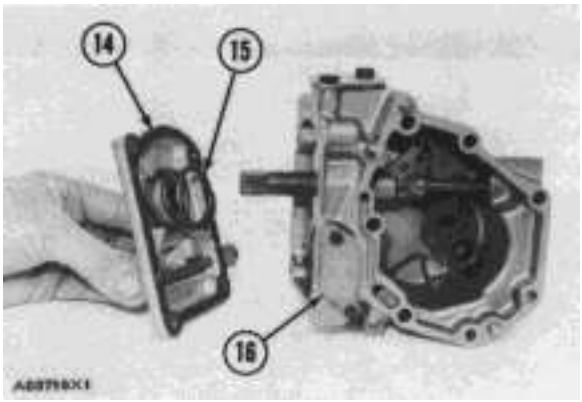

13. Install spring (15) in the cover. Install cover (14) on the housing.

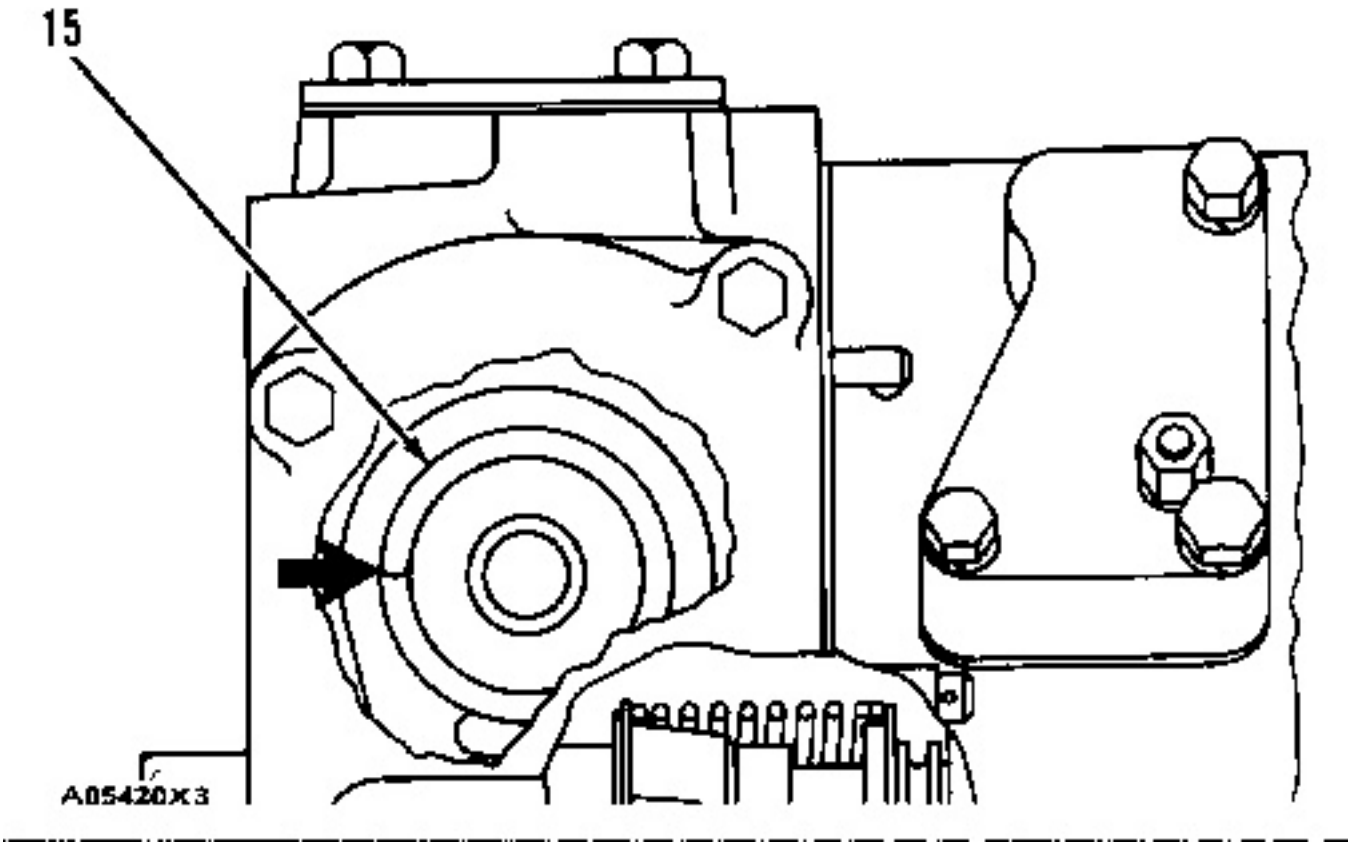

NOTICE

Spring (15) must be installed with the end of the spring in the position shown.

14. Install the cover (16) for the idle adjustment screws.

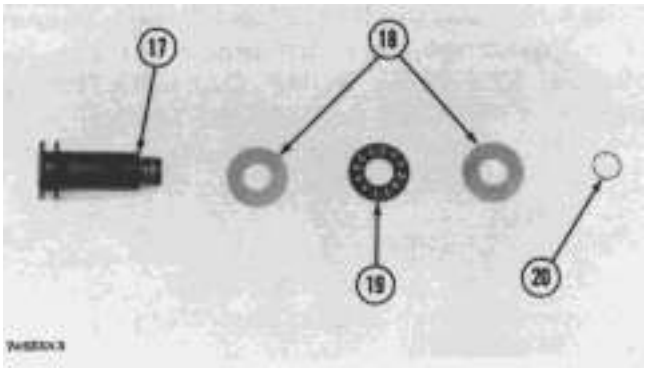

15. Install bearing (19) between races (18) on riser (follower) (17). Install ring (20). Ring (20) holds the washers on the riser (follower).

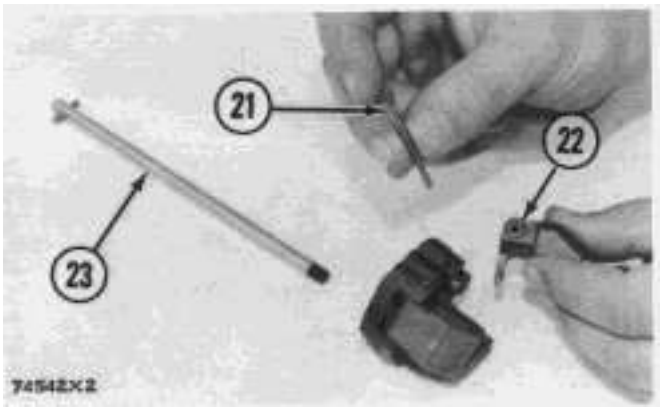

16. Install the pin in shaft (23).

17. Install flyweights (22) and pin (21).

18. Install shaft (23) in the flyweight assembly.

end by:

a) connection of governor to fuel injection pump housing

b) make adjustment of fuel system setting (See Fuel System Setting in Testing and Adjusting)

Fuel Injection Pump

SMCS - 1251-12; 1251-11

Remove Fuel Injection Pump

	Tools Needed	A	B
9S6363	Turbocharger Fixture Group	1	
2P8315	Bracket Assembly	1	
8S2243	Wrench		1

start by:

a) remove fuel injection pump housing and governor

NOTICE

Thoroughly clean the outside of the fuel injection pump housing before the fuel pumps are removed.

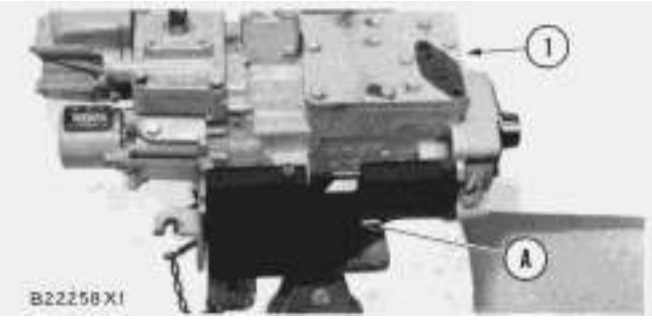

1. Put the pump housing in position on tool (A). Remove cover (1) from the pump housing.



2. Loosen the bushing from the pump housing with tool (B).

NOTE: Do not loosen screws (2). If the screws are loosened, the fuel pump adjustment will be changed.

3. Remove the fuel injection pump from the housing. The sleeve on the plunger will slide off the lever as the pump is removed.

NOTE: Keep the plunger and sleeve with their respective barrel for installation. Do not use plunger, sleeves or barrels with other plungers, sleeves or barrels.

Install Fuel Injection Pumps

	Tools Needed	A	B
9S6363	Turbocharger Fixture Group	1	
2P8315	Bracket Assembly	1	
8S2243	Wrench		1

NOTICE

Make sure the sleeve is installed with the thin edge up.

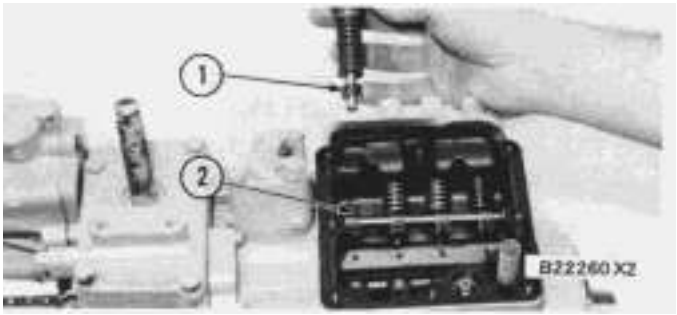

1. Put the fuel injection pump in the bore in the pump housing so sleeve (1) is engaged with lever (2).

NOTICE

If the screws in the levers have been loosened, an adjustment must be made for the fuel pumps. See FUEL PUMP CALIBRATION as shown in TESTING AND ADJUSTING.

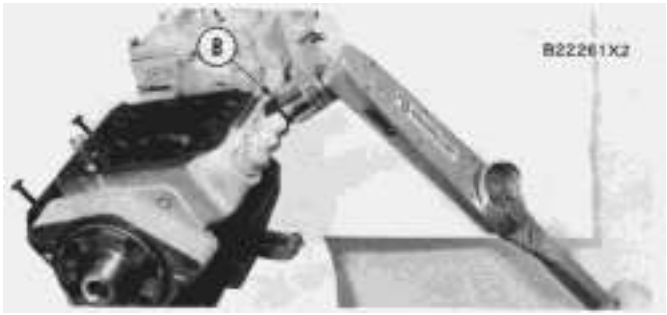

2. Tighten the bushing for the fuel pump with wrench (B) to a torque of 70 ± 5 lb.ft. (95 ± 7 N·m).



3. Install cover (3) and make sure the spring is in the correct position in the cover.

4. Remove pump housing from tool (A).

end by:

a) install fuel injection pump housing and governor

Fuel Injection Pumps

SMCS - 1251-16; 1251-15

Disassemble Fuel Injection Pumps

start by:

a) remove fuel injection pumps

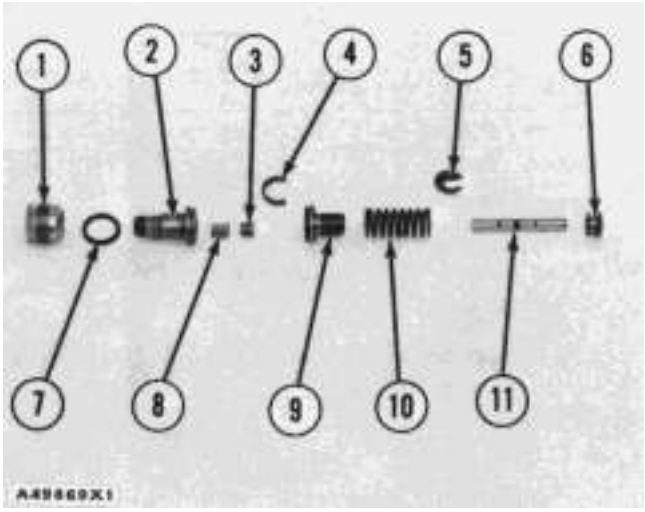

1. Remove bushing (1) and seal (7) from bonnet (2).

2. Remove ring (4) from the bonnet and barrel (9). Remove check valve (3) and spring (8) from the bonnet.

3. Remove spring (10) and washer (5). Remove plunger (11) and sleeve (6).

NOTE: Keep the plunger and sleeve with their respective barrel for installation. Do not use plungers, sleeves or barrels with other plungers, sleeves or barrels.

Assemble Fuel Injection Pumps

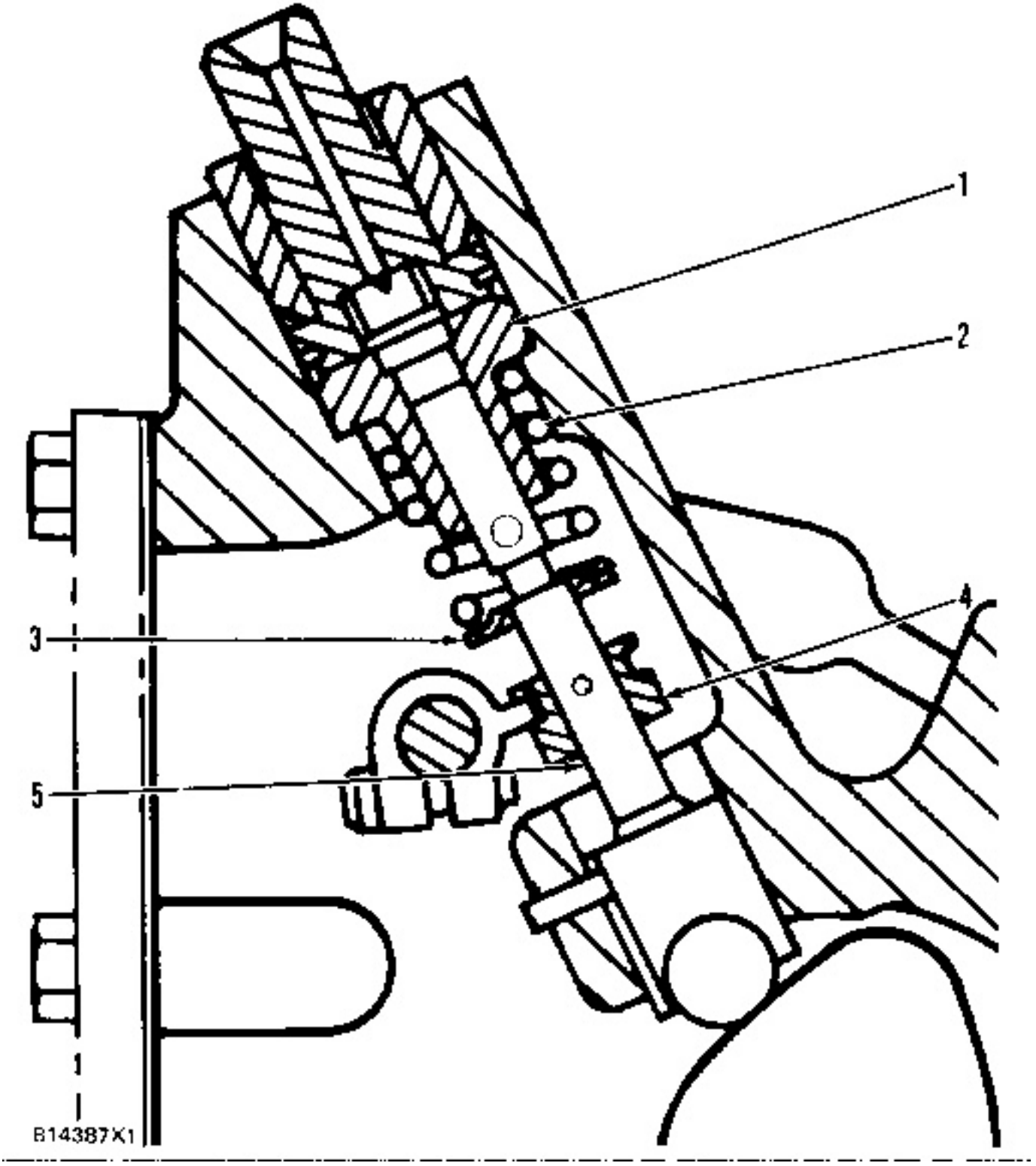

1. Install sleeve (4), plunger (5), spring (2) and washer (3) on barrel (1).

NOTICE

Make sure the sleeve is installed with the thin edge up.

NOTE: Be sure the sleeve and plunger are installed in their original barrel. Make sure the large hole

in the plunger is up.

2. Install the check valve and spring in the bonnet. Connect the barrel and bonnet and install the ring. Install the seal and bushing on the bonnet.

end by:

a) install fuel injection pumps

Fuel Transfer Pump

SMCS - 1256-12; 1256-11

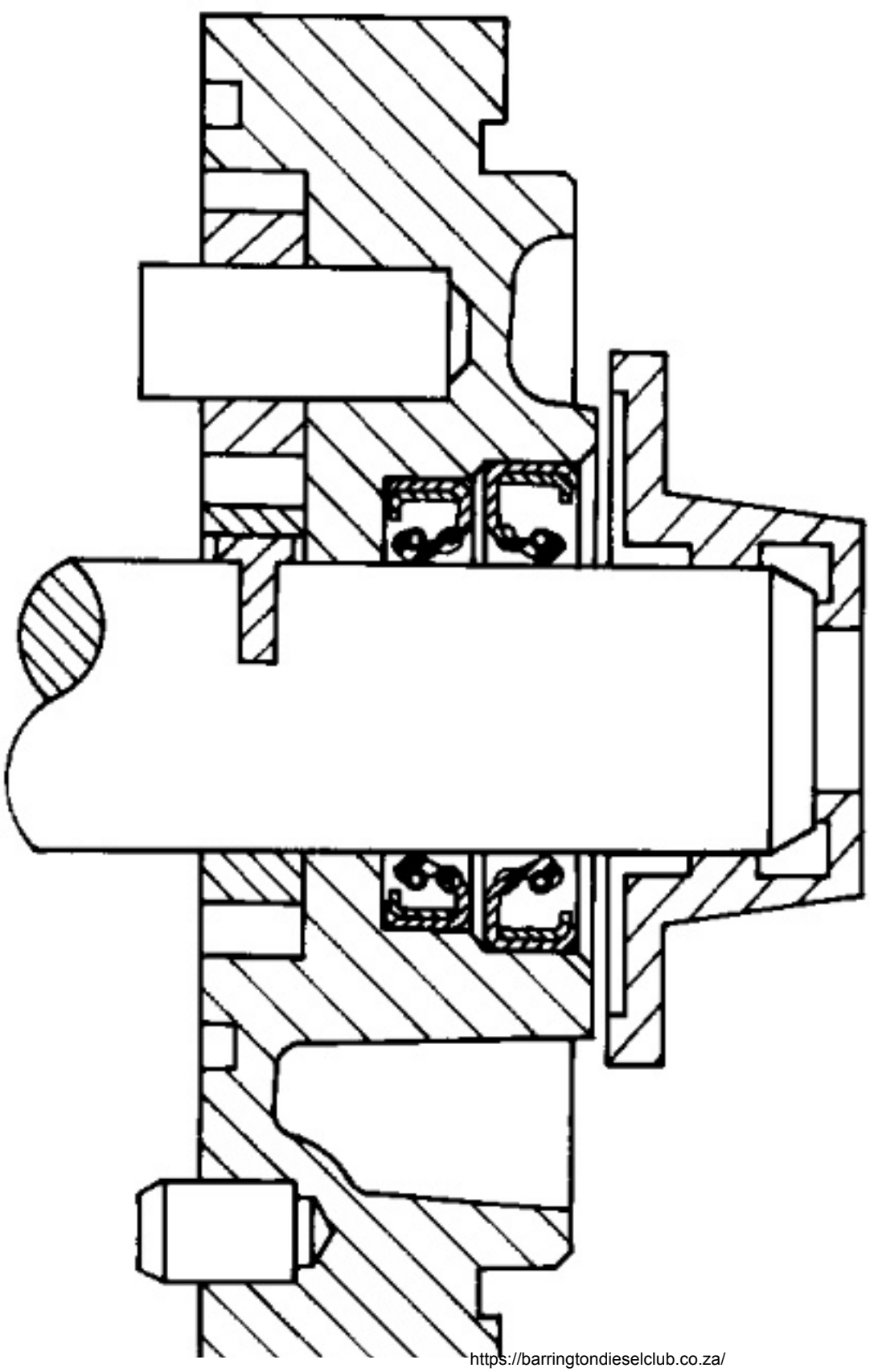

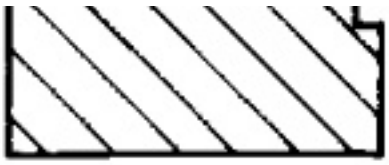

A04533X3

Remove Fuel Transfer Pump

	Tools Needed	A	B	C
9S6363	Turbocharger Fixture Group	1		
2P8315	Bracket Assembly	1		
3P1544	Pin		1	
2H3740	Bolt			1

* Bolt is modified to prevent thread damage. To do this, grind a 2 to 4 mm (.079 to .157 in.) bevel on the end of the bolt.

start by:

a) remove fuel injection pump housing and governor

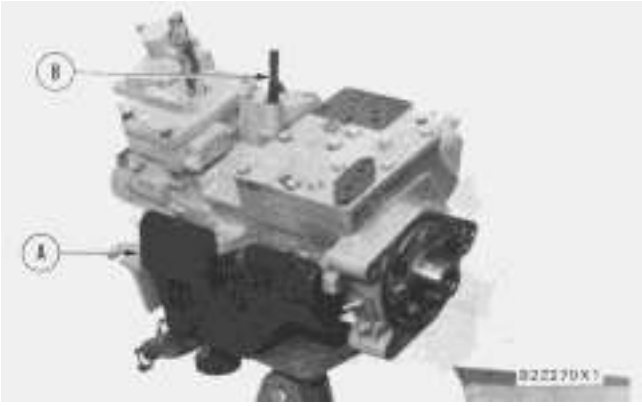

1. Put the fuel injection pump housing and governor in position on tool (A).

2. Remove the bolt from the cover over the torque spring. Turn the injection pump camshaft until tool (B) can be installed in the groove (slot) in the injection pump camshaft.

NOTE: The timing pin prevents rotation of the injection pump camshaft during removal of the sleeve.

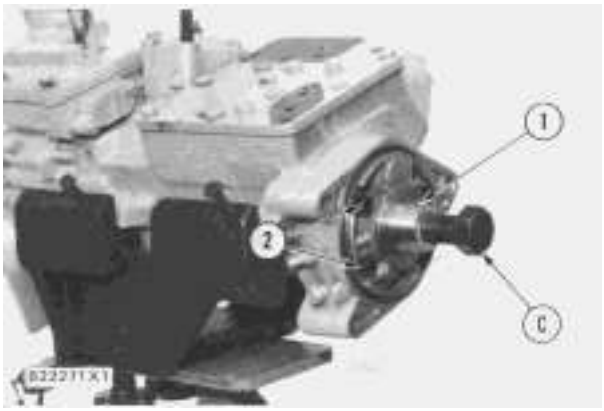

3. Install bolt (C) in the threads of sleeve (1). Tighten the bolt and remove the sleeve.

NOTICE

Do not hit the bolt or the sleeve. Damage to the unit can be the result.

---

4. Remove the bolts (2) that hold body to the housing. Remove the body from the housing.

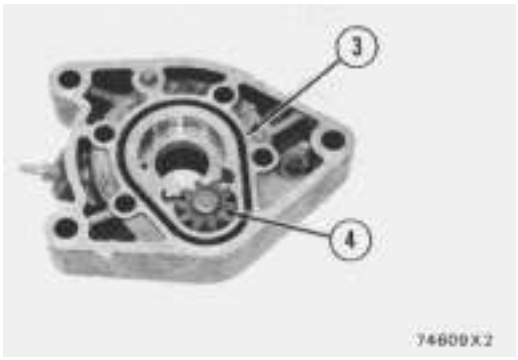

5. Remove idler gear (4) from the body.

6. Remove O-ring seal (3) and the two lip type seals from the body.

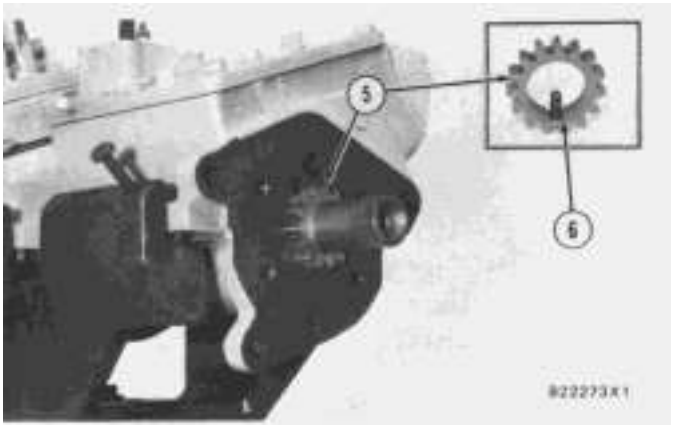

7. Remove drive gear (5) and key (6) from the injection pump camshaft.

Install Fuel Transfer Pump

	Tools Needed	A	B	C	D
1P510	Driver Group	1			
6V3071	Seal Guide		1		
3P1544	Pin			1	
S1603	Bolt				1
4B4280	Washer				1
4N3371	Washer				1

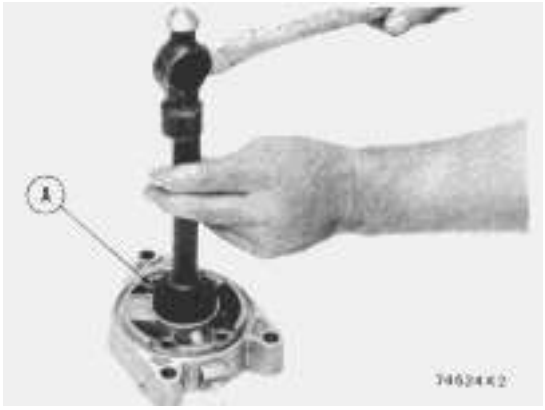

1. Install the inner seal in the body with tool (A). Install the outer seal with tool (A). The lip of the inner seal must be toward the pump gears. The lip of the outer seal must be toward the outside.



2. Install O-ring seal (2) and idler gear (1) on the body.



3. Install key (4) and drive gear (3) on the shaft.

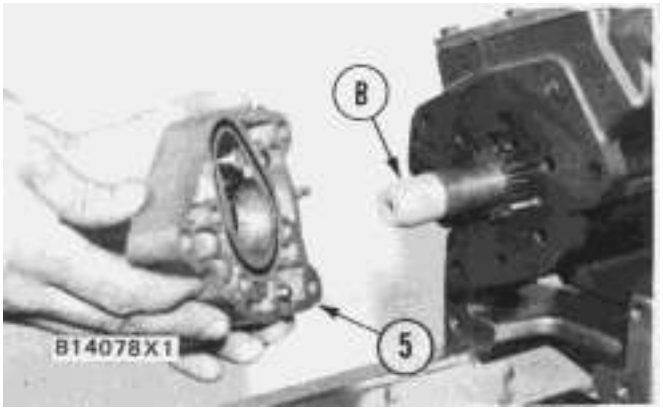

4. Put tool (B) in position on shaft and install body (5) on the housing. Install the bolts that hold the body to the housing.

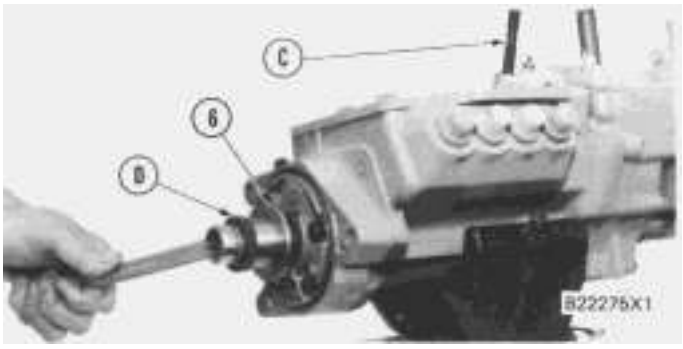

NOTE: The pin (C) must be in position in the camshaft so the camshaft will not turn during assembly.

5. Install a new sleeve (6) on the camshaft with tooling (D).

NOTE: Any time the drive sleeve is removed from the camshaft a new one must be installed. The camshaft has serrations (splines) that cut grooves into the drive sleeve when it is installed to give a positive drive connection. If a formerly used drive sleeve is installed again, it can slip (slide around) on the camshaft.

NOTICE

Do not hit the sleeve with the hammer to install it. This will put end force on the camshaft and cause damage to the other components in the pump housing.

6. The end clearance of the camshaft must be .023 ± .018 in. (0.58 ± 0.46 mm) after sleeve (6) is installed.

end by:

a) install fuel injection pump housing and governor

Fuel Injection Pump Housing

SMCS - 1253-16; 1253-15

Disassemble Fuel Injection Pump Housing

start by:

a) separation of governor from fuel injection pump housing

b) remove fuel transfer pump

c) remove fuel injection pumps

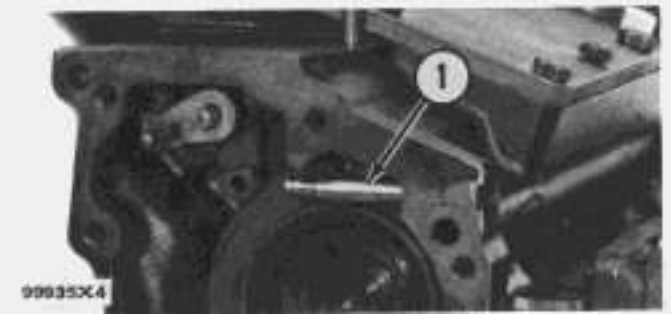

1. Remove dowel (1) from the housing.

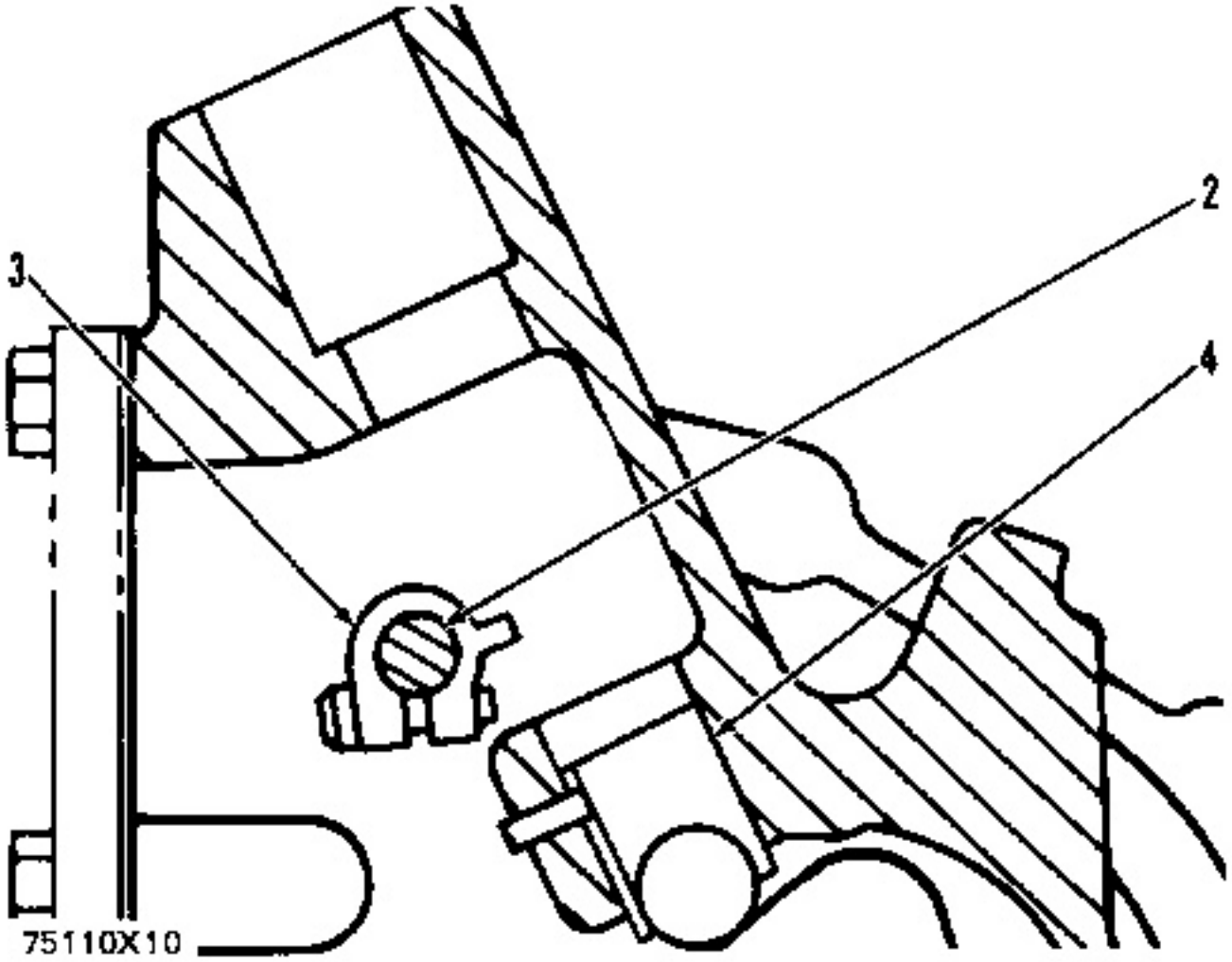

2. Loosen the screws that hold levers (3) to sleeve control shaft (2).

3. Remove sleeve control shaft (2) from the housing.

4. Remove lifter and roller assemblies (4).

NOTE: Put identification numbers on the lifter and roller assemblies. Identification numbers are necessary for correct installation of the lifters and rollers.

5. Remove the camshaft from the housing.

Assemble Fuel Injection Pump Housing

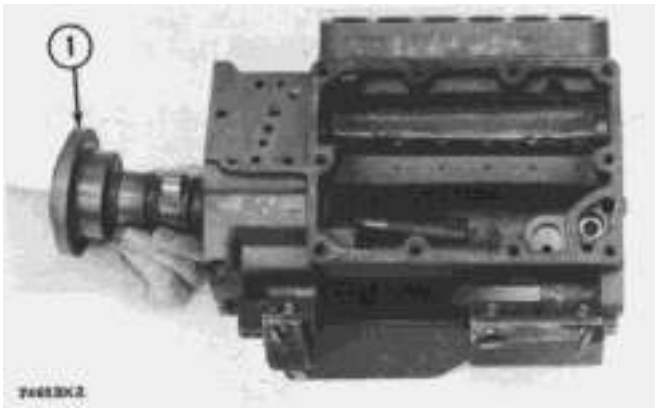

1. Install camshaft (1) in the housing.

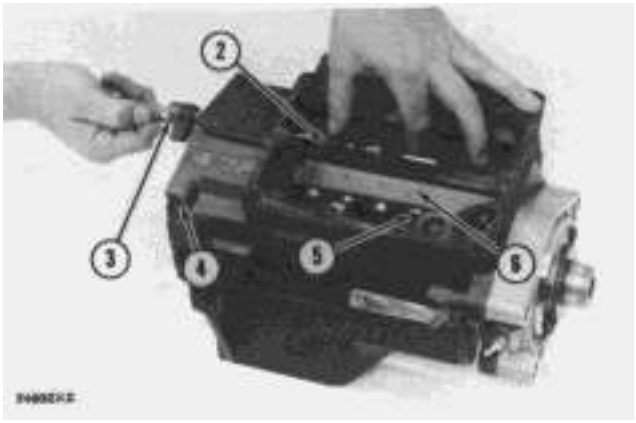

2. Install lifters and roller assemblies (5) in their respective bores.

NOTE: Install the lifters with the grooves of the lifters in alignment with pins (6).

3. Put sleeve control shaft (3) in the housing. Slide levers (2) on the shaft. Push the shaft in the correct position.

4. Install dowel (4) in the housing.

end by:

a) install fuel transfer pump

b) connection of governor to fuel injection pump housing

c) make adjustment to the sleeve control shaft (See Testing and Adjusting for correct procedure)

d) install fuel injection pumps

Engine Oil Cooler, Oil Filter Base And Torque Converter Oil Cooler

SMCS - 1375-12; 1375-11; 1378; 3068

Remove Engine Oil Cooler Oil Filter Base And Torque Converter Oil Cooler As A Unit (Marine Engine)

1. Remove coolant from cooling system. Capacity is 11 U.S. Gal. (41.6 liter).

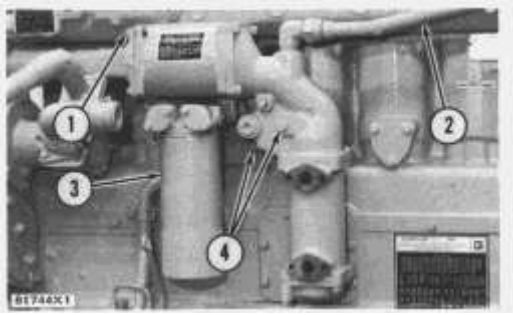

2. Remove the oil filter case and element (3).

3. Disconnect the water supply line (2).

4. Remove the bolts (4) that hold the oil cooler to the cylinder block.

5. Remove four bolts (1) that hold the oil cooler to the bonnet.

6. Remove engine oil cooler, oil filter base and torque converter oil cooler as a unit. Weight of the unit is 45 lb. (20 kg).

Install Engine Oil Cooler, Oil Filter Base And Torque Converter Oil Cooler As A Unit (Marine Engine)



1. Put engine oil cooler, oil filter base and torque converter oil cooler in position on bonnet (1).

2. Install the four bolts that hold the oil cooler to the bonnet.

3. Install the bolts that hold the oil cooler to the cylinder block.

4. Connect the water supply line.

5. Fill the cooling system with coolant to the correct level.

Engine Oil Cooler

SMCS - 1378-12; 1378-11

Remove Engine Oil Cooler (Industrial Engine)

1. Remove the coolant from the cooling system.

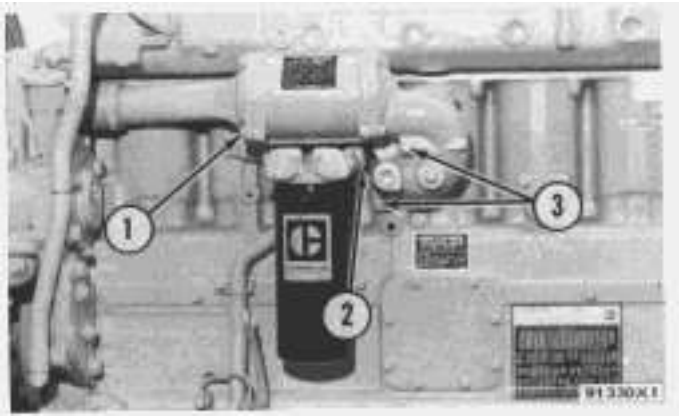

2. Remove two bolts (3) that hold oil cooler to the cylinder block.

3. Remove four bolts (1) that hold oil cooler to bonnet.

4. Remove four bolts (2) that hold oil cooler to oil filter base.

5. Remove engine oil cooler.

Install Engine Oil Cooler (Industrial Engine)



1. Put oil cooler in position on the oil filter base and install the bolts that hold it.

2. Install the four bolts that hold the oil cooler to the bonnet.

3. Install two bolts that hold the oil cooler to the cylinder block.

4. Fill the engine cooling system to the correct level.

Oil Filter Base

SMCS - 1306-16; 1306-15

Disassemble Oil Filter Base

start by:

a) remove engine oil cooler, oil filter base* and torque converter oil cooler as a unit

NOTE: The oil filter base can be removed separately if desired.

---

*

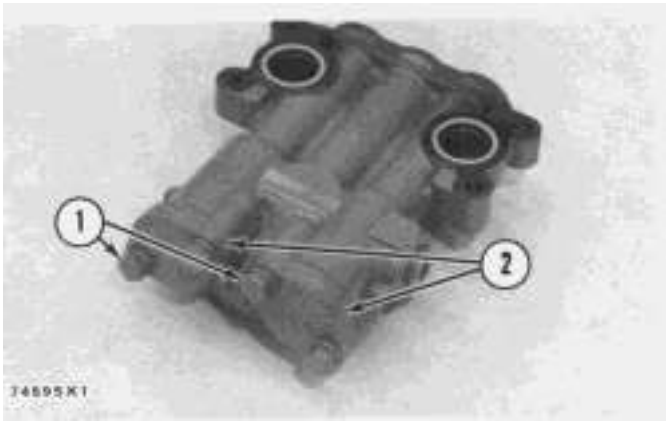

1. Remove the bolts (1) and covers (2) for the bypass valves.

2. Remove the springs and plungers.

Assemble Oil Filter Base

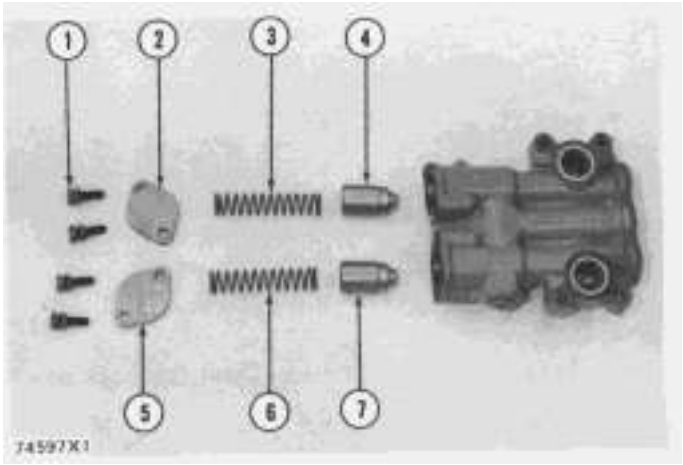

1. Install plunger (4), spring (3), cover (2) and bolts (1) of bypass valve for oil cooler in oil filter base.

2. Install plunger (7), spring (6), cover (5) and bolts of bypass valve for oil filter in oil filter base.

end by:

a) install engine oil cooler, oil filter base and torque converter oil cooler as a unit

Heat Exchanger

SMCS - 1379-12; 1379-11

Remove Heat Exchanger (Marine Engine)

1. Remove coolant from the engine cooling system.

2. Remove the sea water from the system.

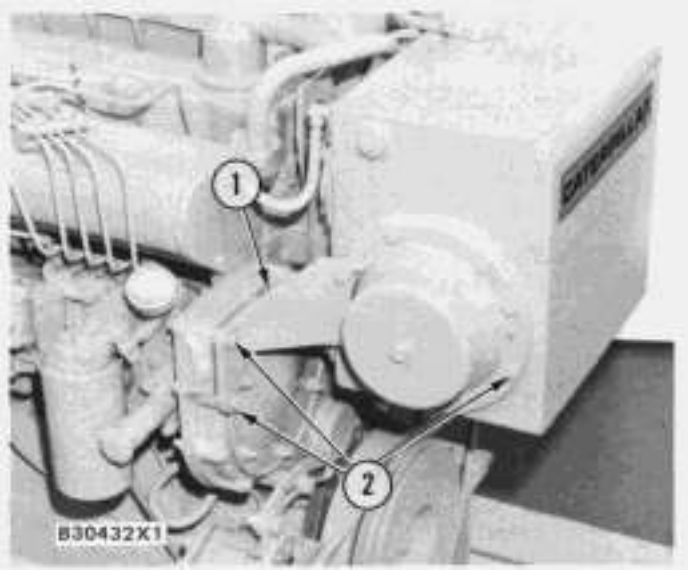

3. Remove bolts (2) and support (1) from timing gear cover and bonnet.

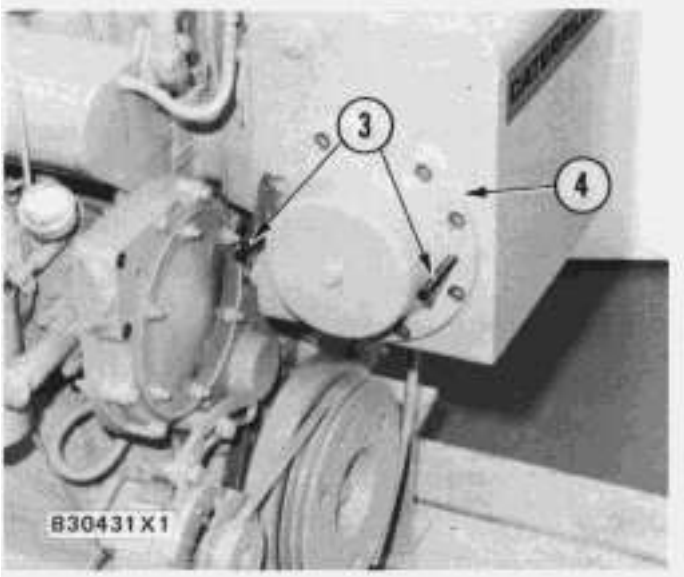

4. Install two 3/8"-16 NC forcing screws (3) in bonnet. Remove bonnet (4).

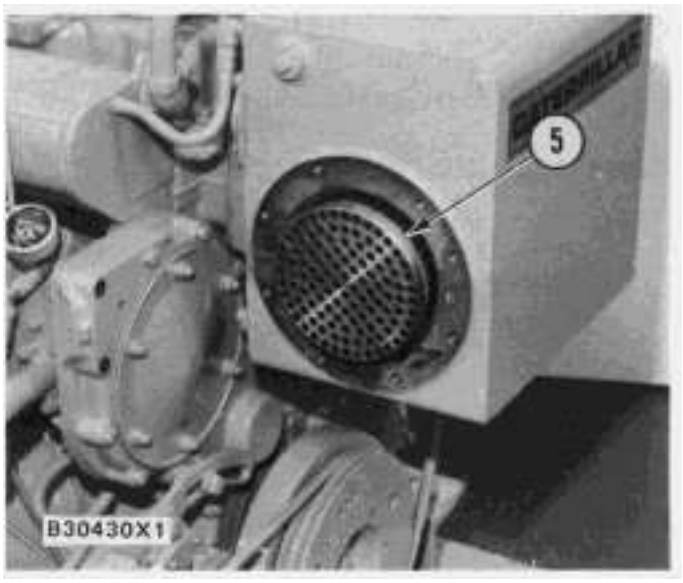

5. Remove tube bundle (5) from the tank assembly.

Install Heat Exchanger (Marine Engine)

1. Inspect O-ring seal and gasket for damage and make a replacement if necessary.

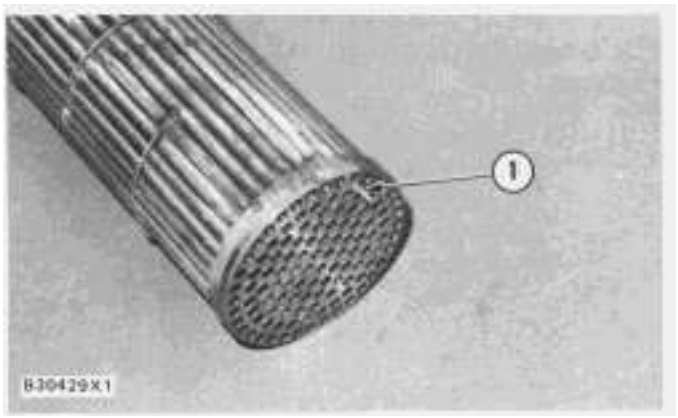

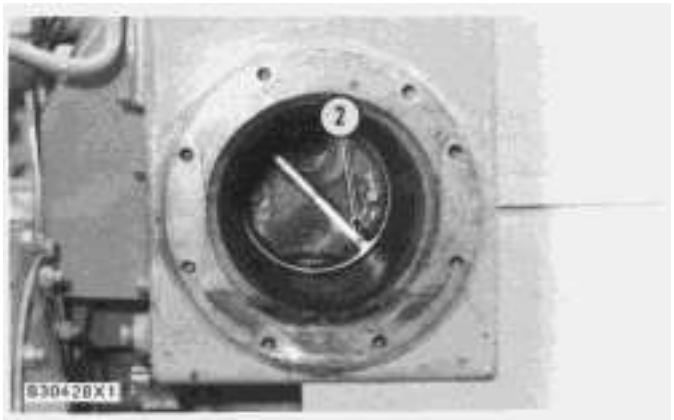

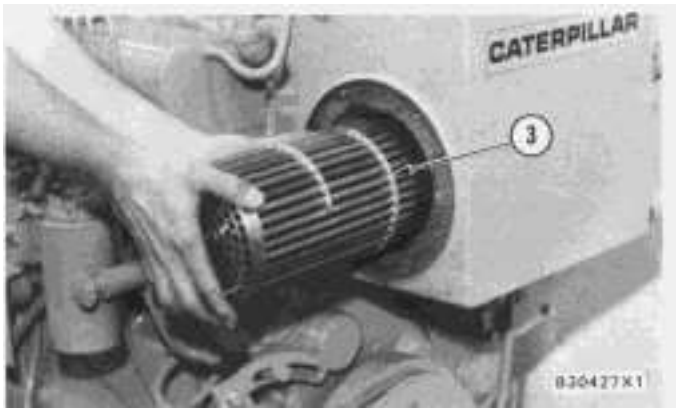

2. Put the tube bundle (3) in the left bonnet assembly with the dowel pin (1) in alignment with the hole (2) in the bonnet.



3. Put the bonnet (4) in position on the tank assembly.

4. Put the support in position on the timing gear cover and bonnet. Install bolts.

5. Fill the engine cooling system to the correct level.

Expansion Tank And Heat Exchanger

SMCS - 1354; 1379-11; 1379-12

Remove Expansion Tank And Heat Exchanger (Marine Engine)

1. Remove coolant from the engine cooling system.

2. Remove the sea water from the system.

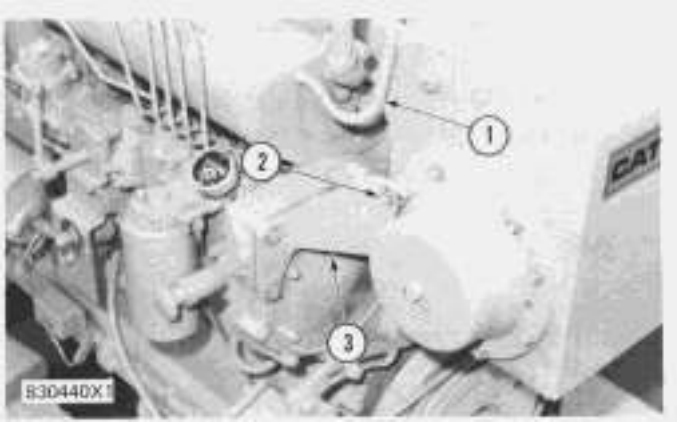

3. Remove bolts (2) from support (3) on the expansion tank bonnet.

4. Disconnect vent line (1) from expansion tank.

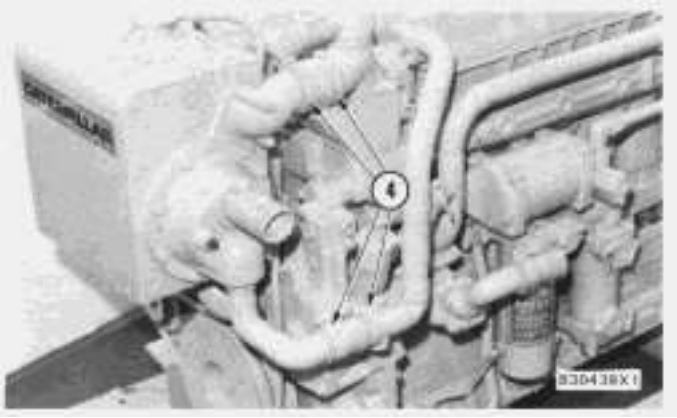

5. Loosen clamps (4) on the expansion tank inlet lines.

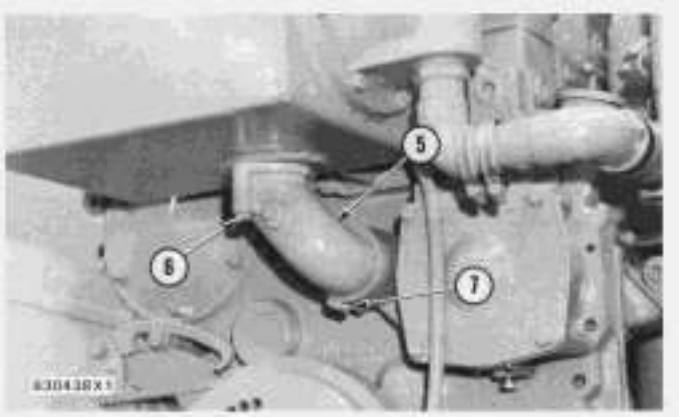

6. Remove two bolts (6) from the inlet elbow (5). Remove gasket and loosen hose clamp (7).

7. Fasten a strap and hoist to the expansion tank.

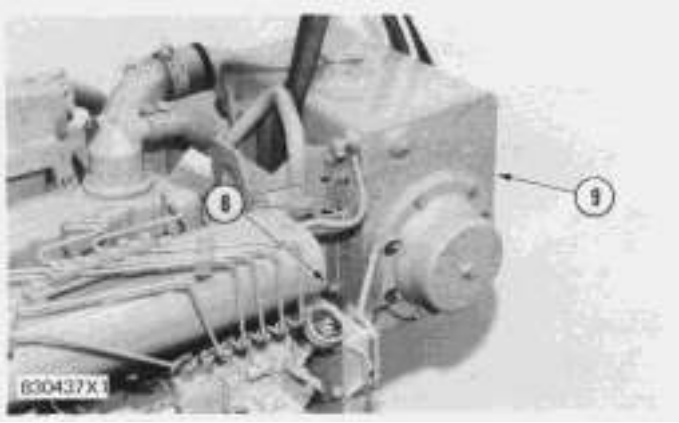

8. Remove six bolts (8) that fasten the expansion tank to bracket assembly. Remove the expansion tank and heat exchanger (9). Weight of expansion tank and heat exchanger is 150 lb. (68 kg).

Install Expansion Tank And Heat Exchanger (Marine Engine)



1. Put the expansion tank (1) and heat exchanger in position on the bracket assembly and install six bolts.

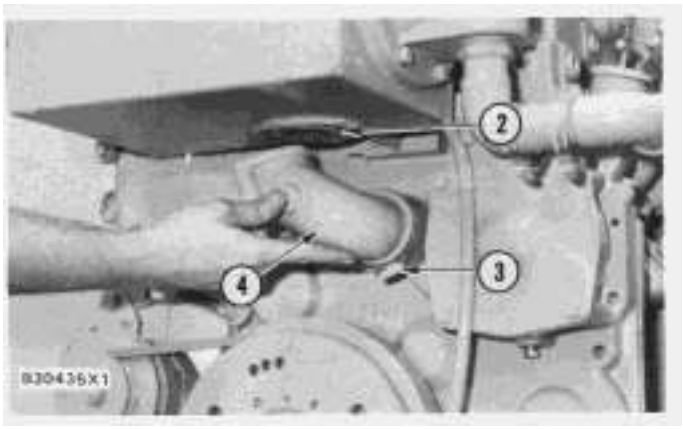

2. Make a replacement of the elbow gasket (2) if necessary, and install inlet elbow (4) in position on the expansion tank. Tighten hose clamp (3).

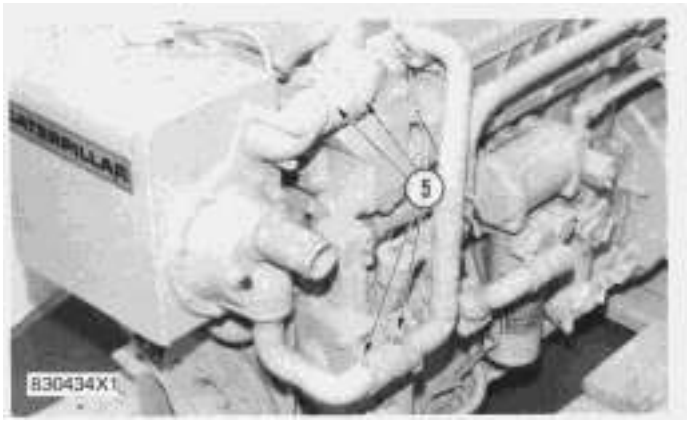

3. Install hoses and clamps (5) on the inlet tube assemblies.

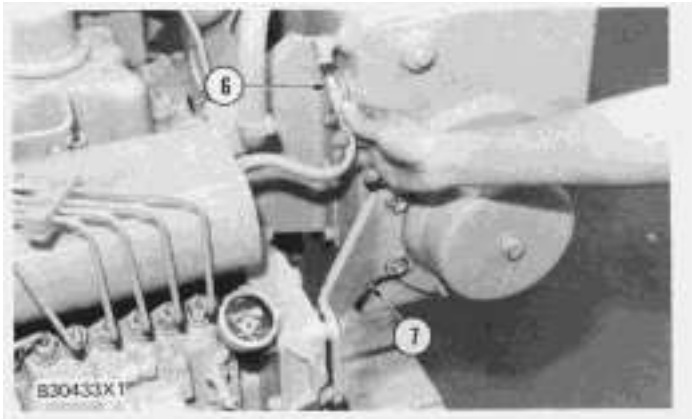

4. Install support (7) on the timing gear cover and the expansion tank bonnet.

5. Install the vent line (6) to the expansion tank.

6. Fill the engine cooling system with coolant to the correct level.

Aftercooler

SMCS - 1063-12; 1063-11

Remove Aftercooler (Marine Engine)

1. Remove coolant from the engine.

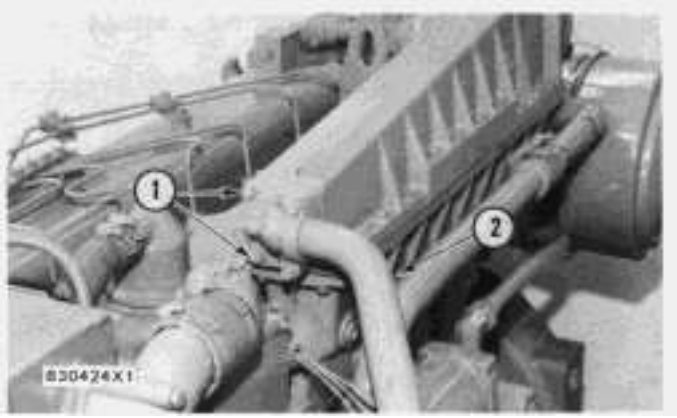

2. Remove four bolts (1) and turn tube assembly (2) from aftercooler.

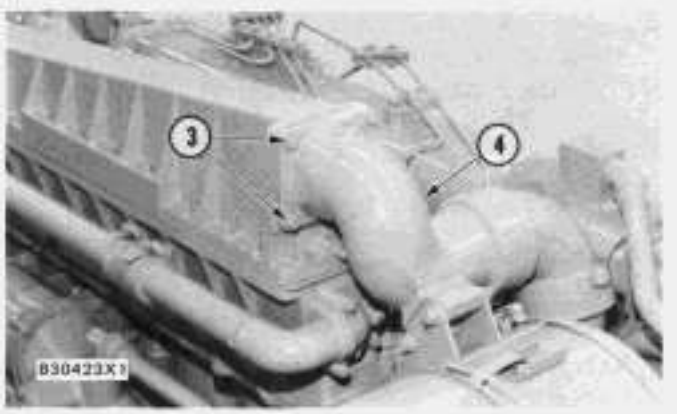

3. Remove four bolts (3) and gasket from elbow (4). Remove two bolts that hold the air cleaner assembly to the elbow.

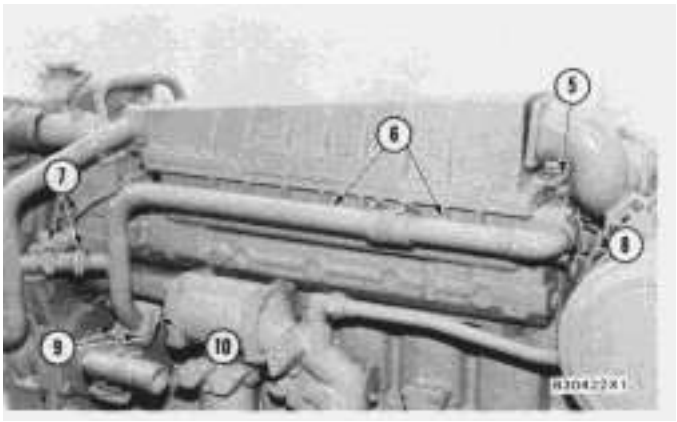

4. Loosen hose clamps (7) and slide hose from tube assembly. Remove bolts (8), (9) and tube assemblies (6) from engine. Remove gasket from the sea water pump flange (10).

5. Disconnect tube (5) from fuel ratio control.

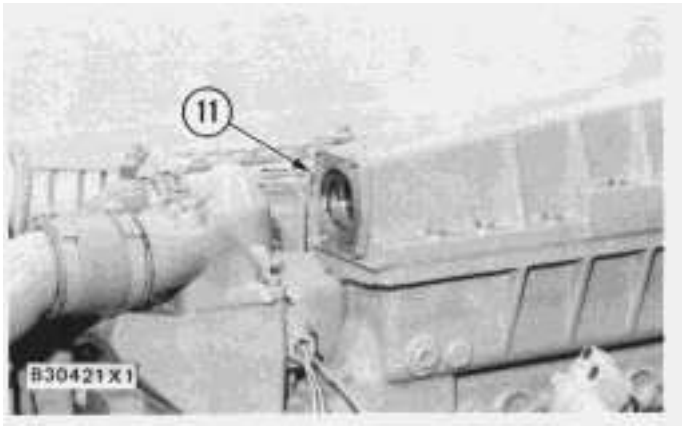

6. Remove adapter (11) and gasket from the aftercooler cover.

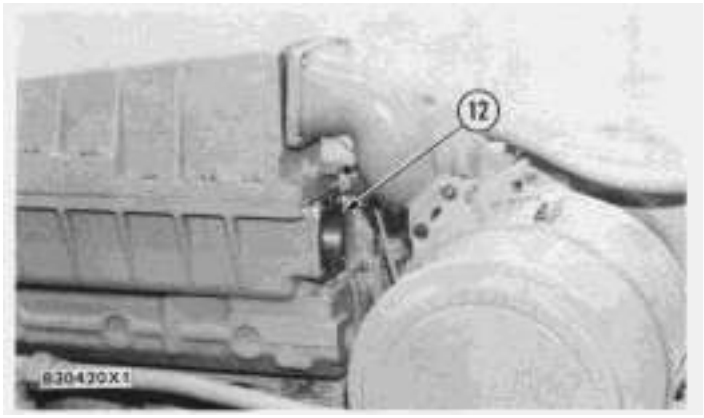

7. Remove adapter (12) and gasket from the aftercooler housing.

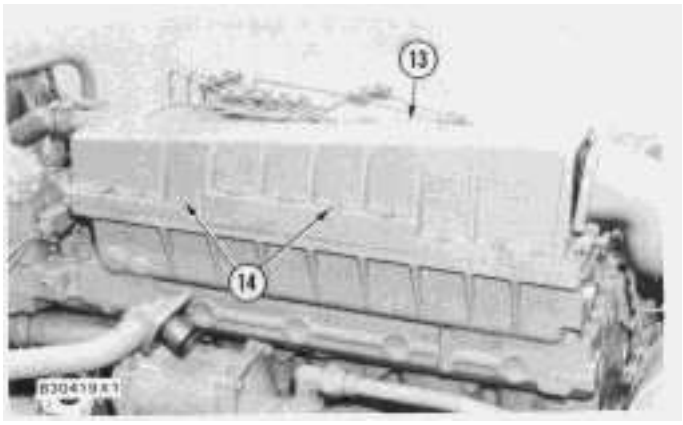

8. Remove bolts (14), aftercooler cover (13) and gasket.

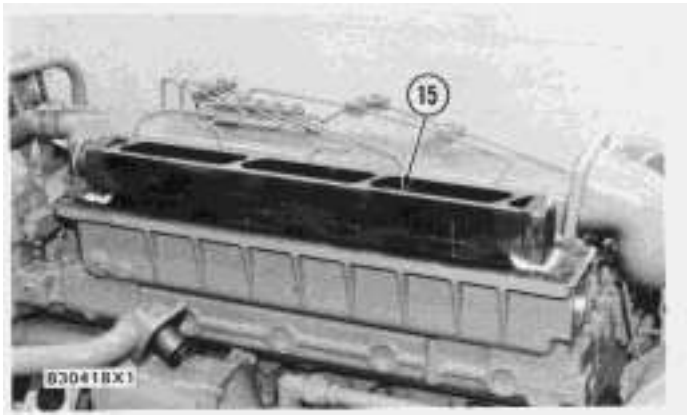

9. Remove core assembly (15) from housing.

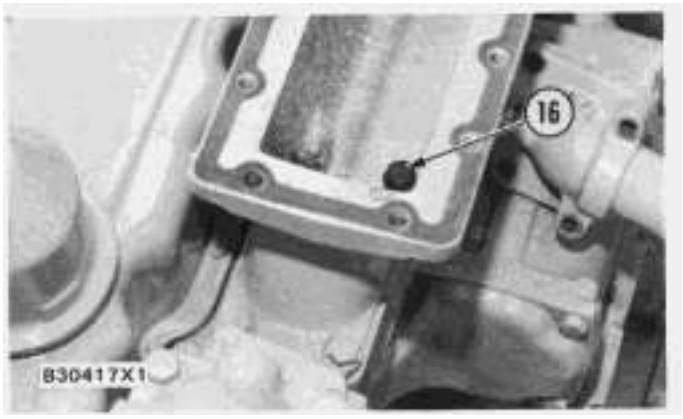

10. Remove two bolts (16) on the inside of the aftercooler housing, one on each end of housing.

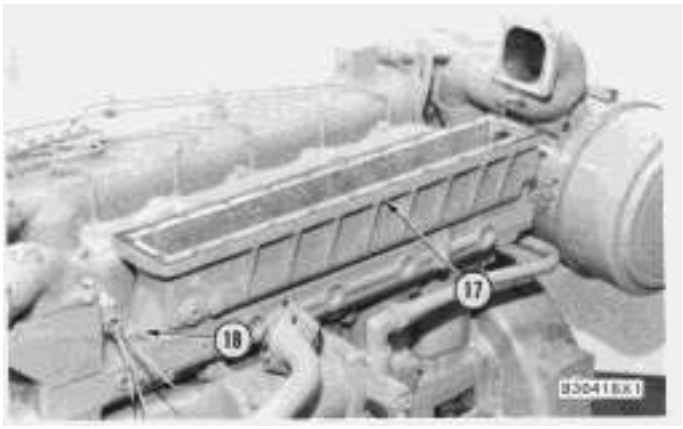

11. Remove three bolts (18) from each end of housing. Remove housing (17) and gasket.

Install Aftercooler (Marine Engine)

NOTE: Put a thin layer of clean engine oil on all O-ring seals and the bores of each adapter.

NOTE: Inspect all O-ring seals and gaskets and make replacements if worn or damaged.

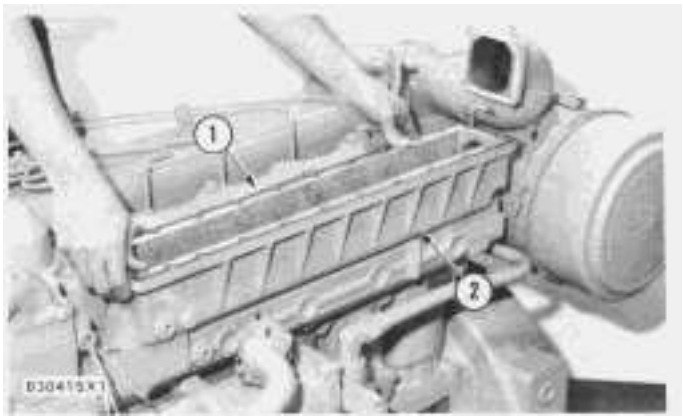

1. Put aftercooler housing gaskets in position on the cylinder head and install aftercooler housing (2).

2. Install an aftercooler core gasket (1) on housing.

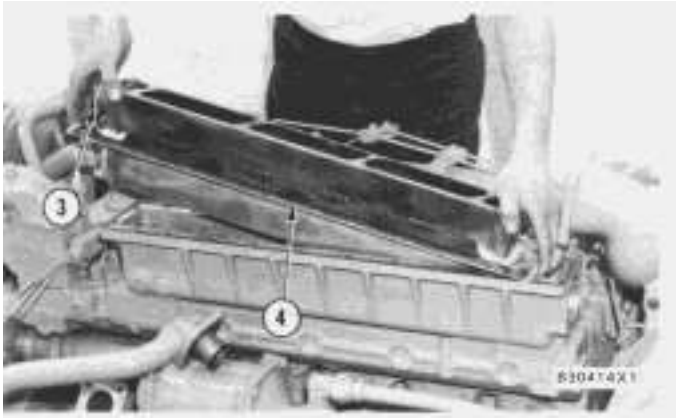

3. Install O-ring seals (3) on the aftercooler core (4).

4. Put the aftercooler core (4) in position in the housing.

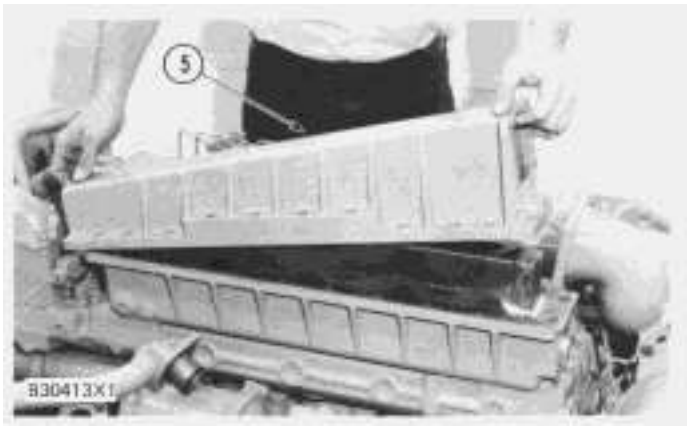

5. Put gasket and aftercooler cover (5) in position on the housing. Install bolts but do not tighten.

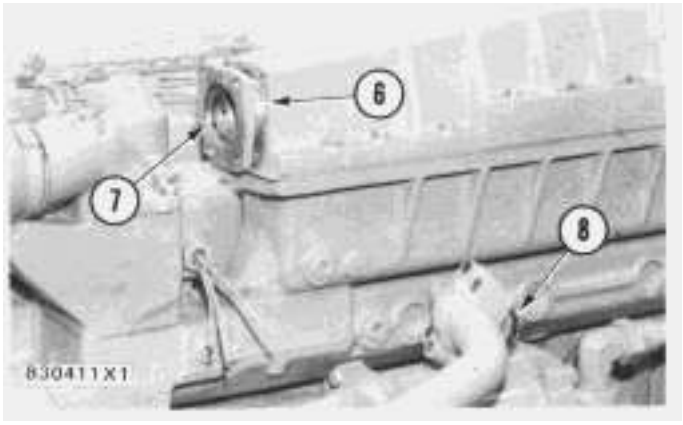

6. Install gasket (6) and adapter (7) in the aftercooler cover.

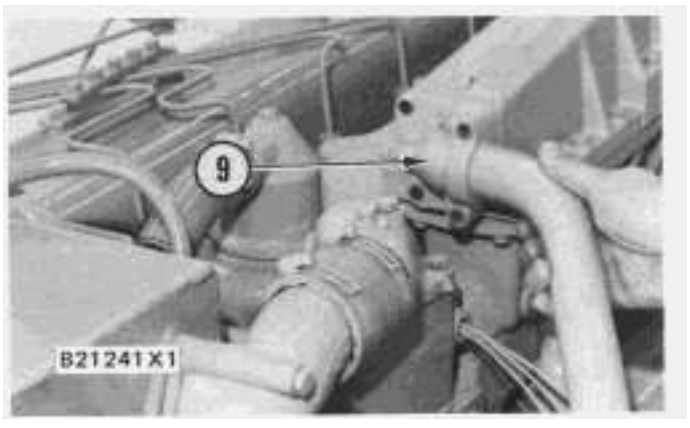

7. Put O-ring seal (8) in position and install elbow (9) on the aftercooler cover.

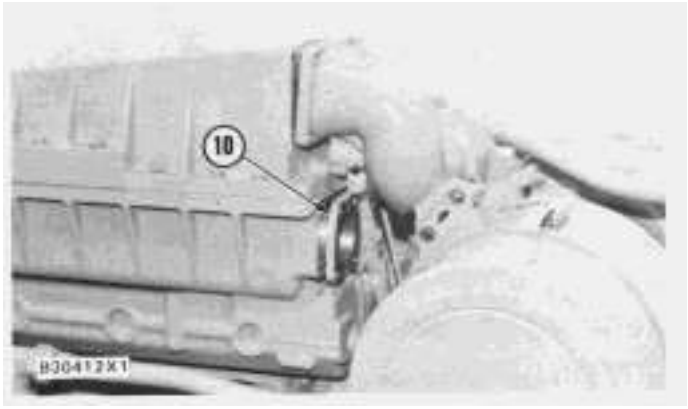

8. Put gasket and adapter (10) in the aftercooler cover.

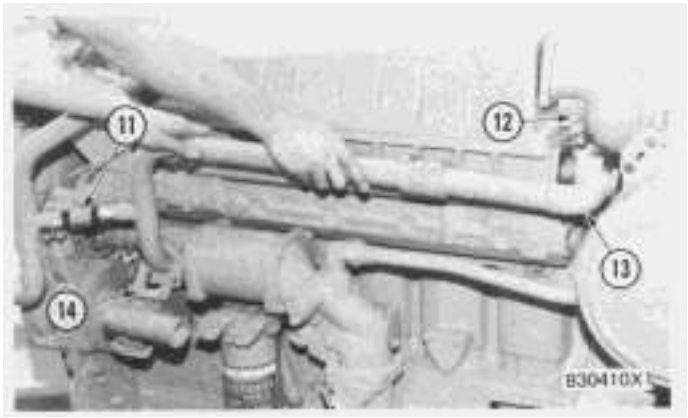

9. Install O-ring seal on tube assembly (13).

10. Put gasket on the sea water pump (14) and install tube assemblies in position. Slide hose (11) in position and install hose clamps.

11. Connect tube (12) from the fuel ratio control to the aftercooler cover.



12. Put gasket and elbow (15) on turbocharger cover and install the four bolts to hold elbow in position.

13. Install two bolts to hold the air cleaner assembly to elbow (15).

14. Tighten aftercooler cover to housing bolts

Water Temperature Regulator

SMCS - 1355-12; 1355-11

Remove Water Temperature Regulator (Industrial Engine)

1. Drain the coolant from the cooling system.

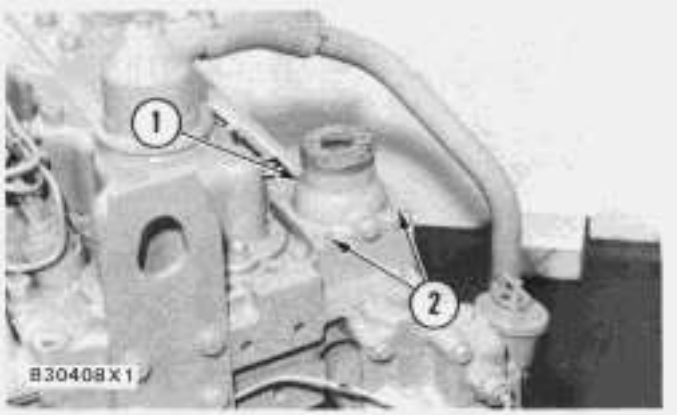

2. Remove bolts (2) and pipe (1) from the cylinder head.

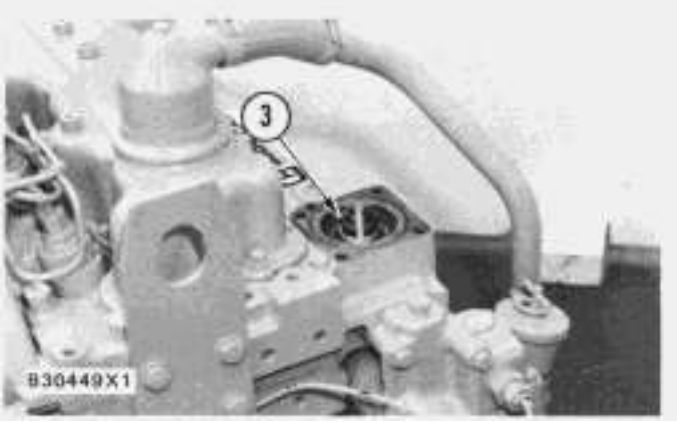

3. Remove water temperature regulator (3) and gaskets.

Install Water Temperature Regulator (Industrial Engine)

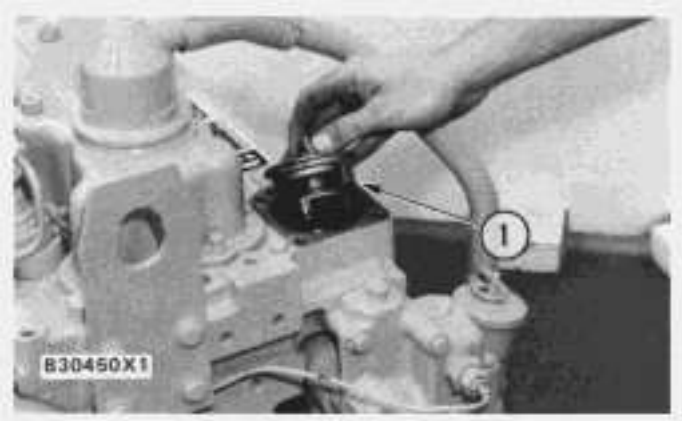

1. Put the water temperature regulator (1) in position in the cylinder head as shown.

NOTICE

If the water temperature regulator is installed wrong, it will cause the engine to overheat.

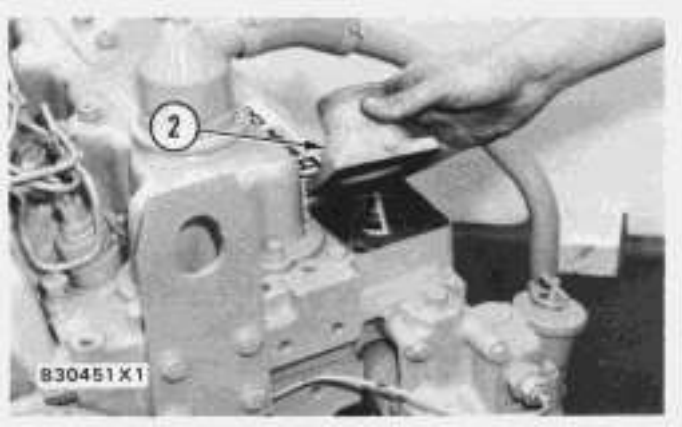

2. Install a new gasket and pipe (2) over the water temperature regulator.

3. Install four bolts to hold pipe in place.

4. Fill the cooling system to the correct level.

Remove Water Temperature Regulator (Marine Engine)

1. Remove coolant from engine.

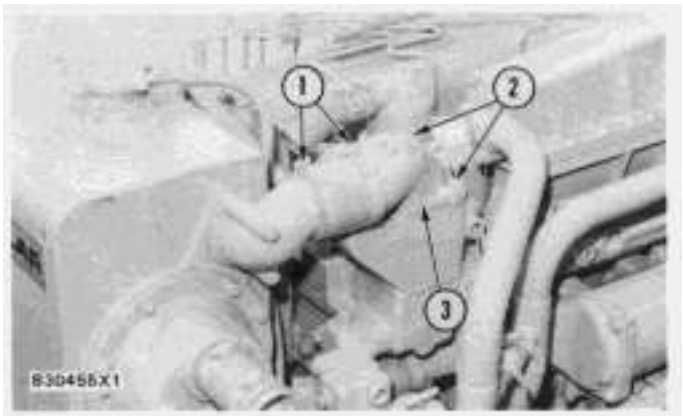

2. Loosen clamps (1) and slide hose on elbow.

3. Remove four bolts (2) and elbow (3) from the cylinder head.

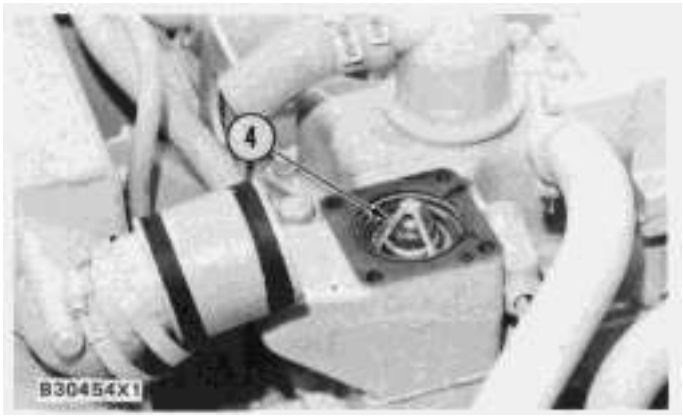

4. Remove water temperature regulator (4) and gasket.

Install Water Temperature Regulator (Marine Engine)



1. Put the water temperature regulator (2) in the cylinder head with the spring toward the head.

NOTICE

if the water temperature regulator is installed wrong, it will cause the engine to overheat.

---

2. Install a new gasket (1) over the water temperature regulator.

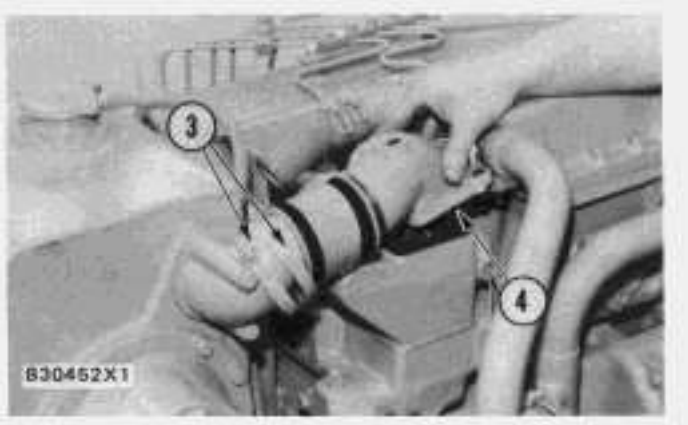

3. Put the elbow (4) in position and install the bolts to hold it in place.

4. Slide hose on elbow and install two clamps (3).

5. Fill the cooling system to the correct level.

Fan And Fan Drive

SMCS - 1359-12; 1359-11

Remove Fan And Fan Drive (Industrial Engine)

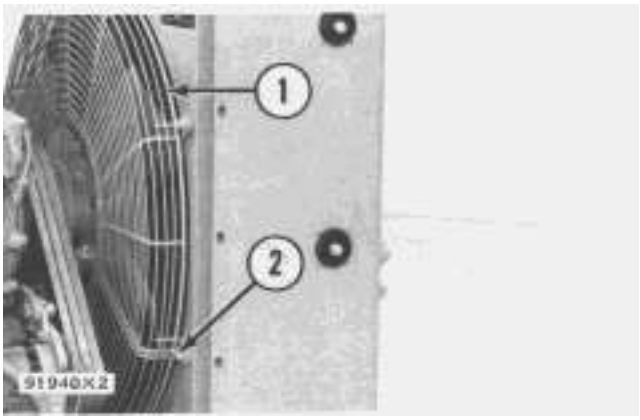

1. Remove fan guard (1) after bolts (2) are removed.

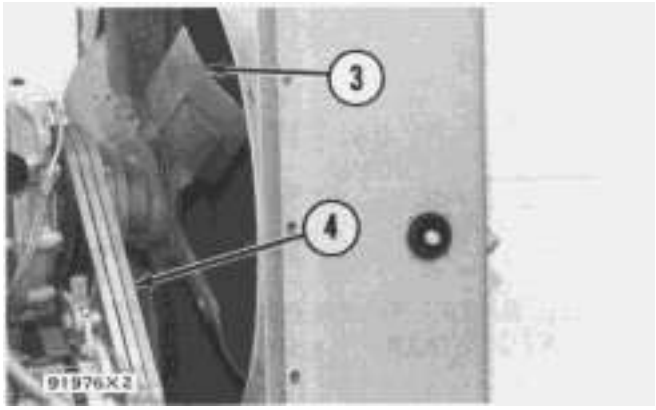

2. Remove bolts that hold fan (3) to fan drive. Loosen four fan drive bolts to remove belts (4).

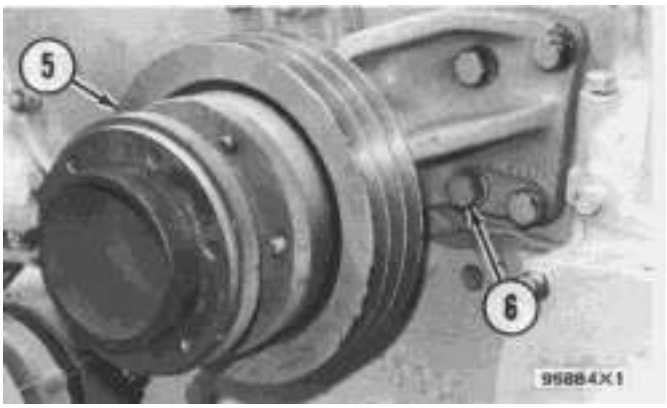

3. Remove the four fan drive bolts (6) and remove fan drive (5).

Install Fan And Fan Drive (Industrial Engine)

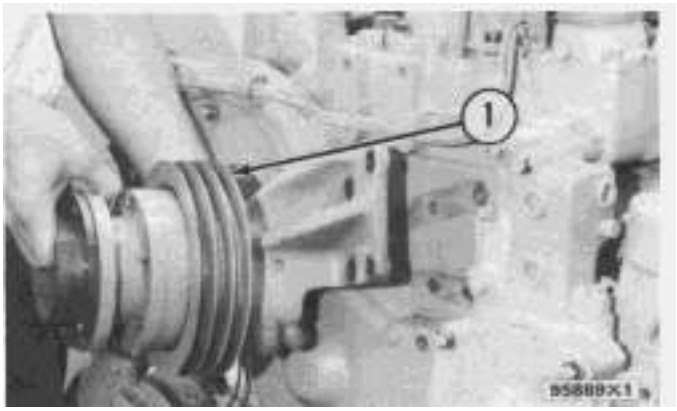

1. Put fan drive (1) in position on the cylinder block. Install bolts but do not tighten. Install fan belts then tighten the four bolts.

2. Install the alternator belt. Make an adjustment of the belt tension with a belt tension gauge such as Borroughs Tool Company Part No. BT-33-95 or an equivalent. The correct gauge indication is 120 ± 5 lb. (535 ± 22 N) for new belt. Used belt gauge indication is 90 ± 10 lb. (400 ± 45 lb.)..

3. Install fan and bolts. Install fan guard and bolts.

Fan Drive

SMCS - 1359-16; 1359-15

Disassemble Fan Drive (Industrial Engine)

start by:

a) remove fan and fan drive



1. Remove adapter (1).

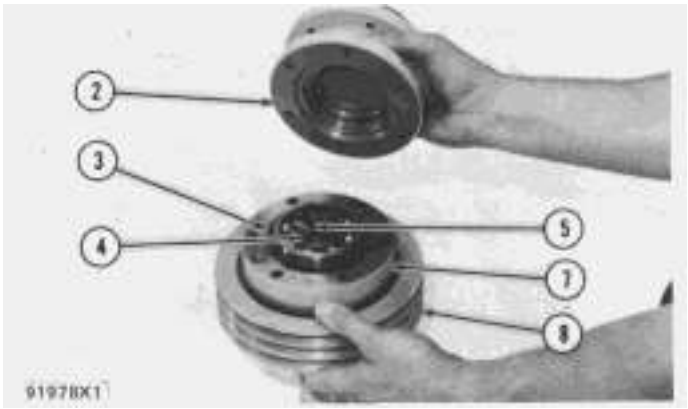

2. Remove hub (2) from pulley (8). Remove and inspect O-ring seal (3). Remove hub (7) from pulley (8). Remove bolts (5) and lock and remove washer (4).

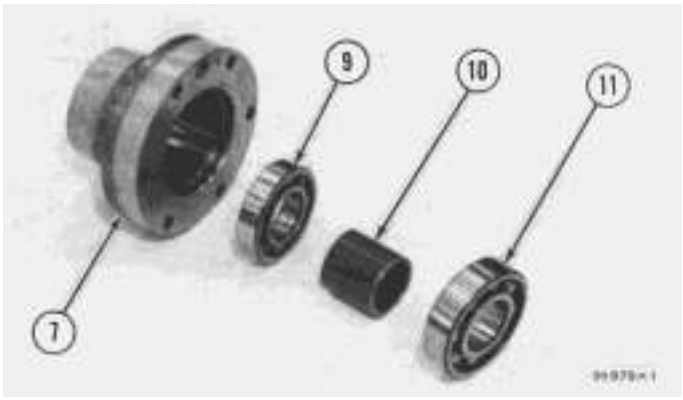

3. Remove bearing (11), spacer (10) and bearing (9) from hub (7). Remove seal from hub.

Assemble Fan Drive (Industrial Engine)

Tools Needed		A
1P531	Handle	1
1P487	Drive Plate	1

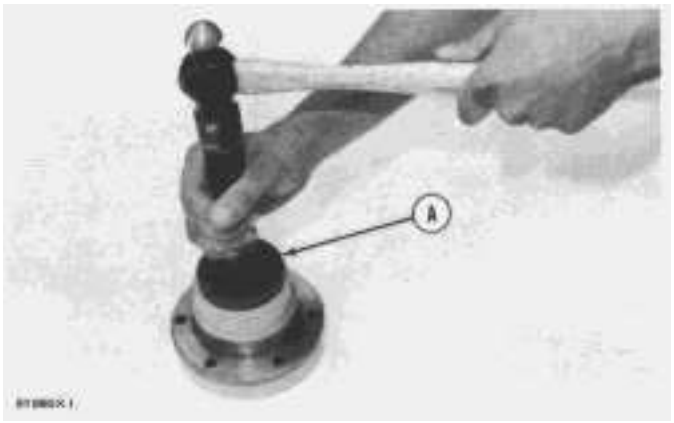

1. Install seal into hub with tooling (A).

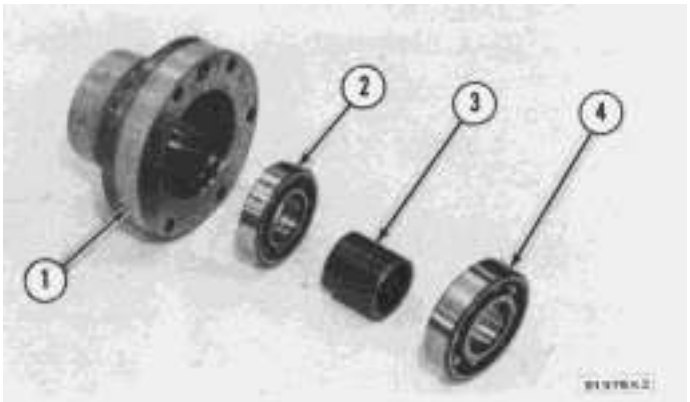

2. Install bearing (2), spacer (3) and bearing (4) into hub (1). Install hub into pulley.

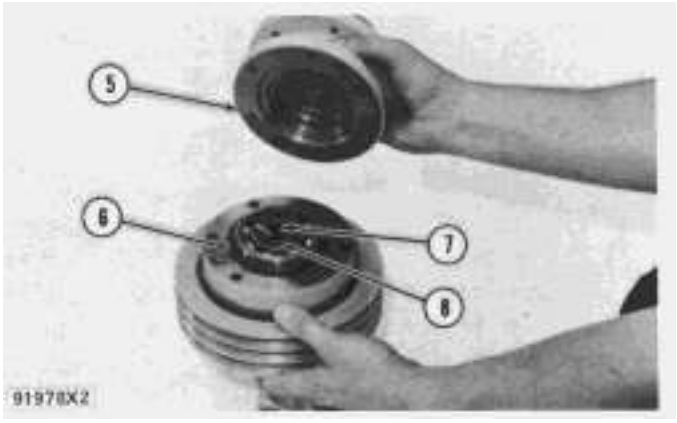

3. Install O-ring seal (6), washer (8), lock and bolts (7). Install hub (5).

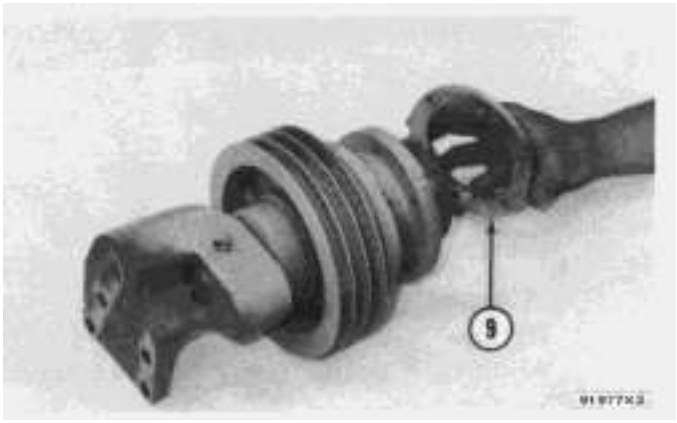

4. Install adapter (9) on hub (5).

end by:

a) install fan drive

Crankshaft Pulley

SMCS - 1205-12; 1205-11

Remove Crankshaft Pulley (Industrial Engine)

	Tools Needed	A
FT915	Adapter	1
9S1366	Bolt, ½"-13 NC x 2" long	6
5F7342	Adapter	2
5F7369	Leg	2
3H465	Plate	4
1B4207	Nut	2
8B7560	Step Plate	1
1P820	Hydraulic Puller	1
5P3100	Pump Group (or electric)	1

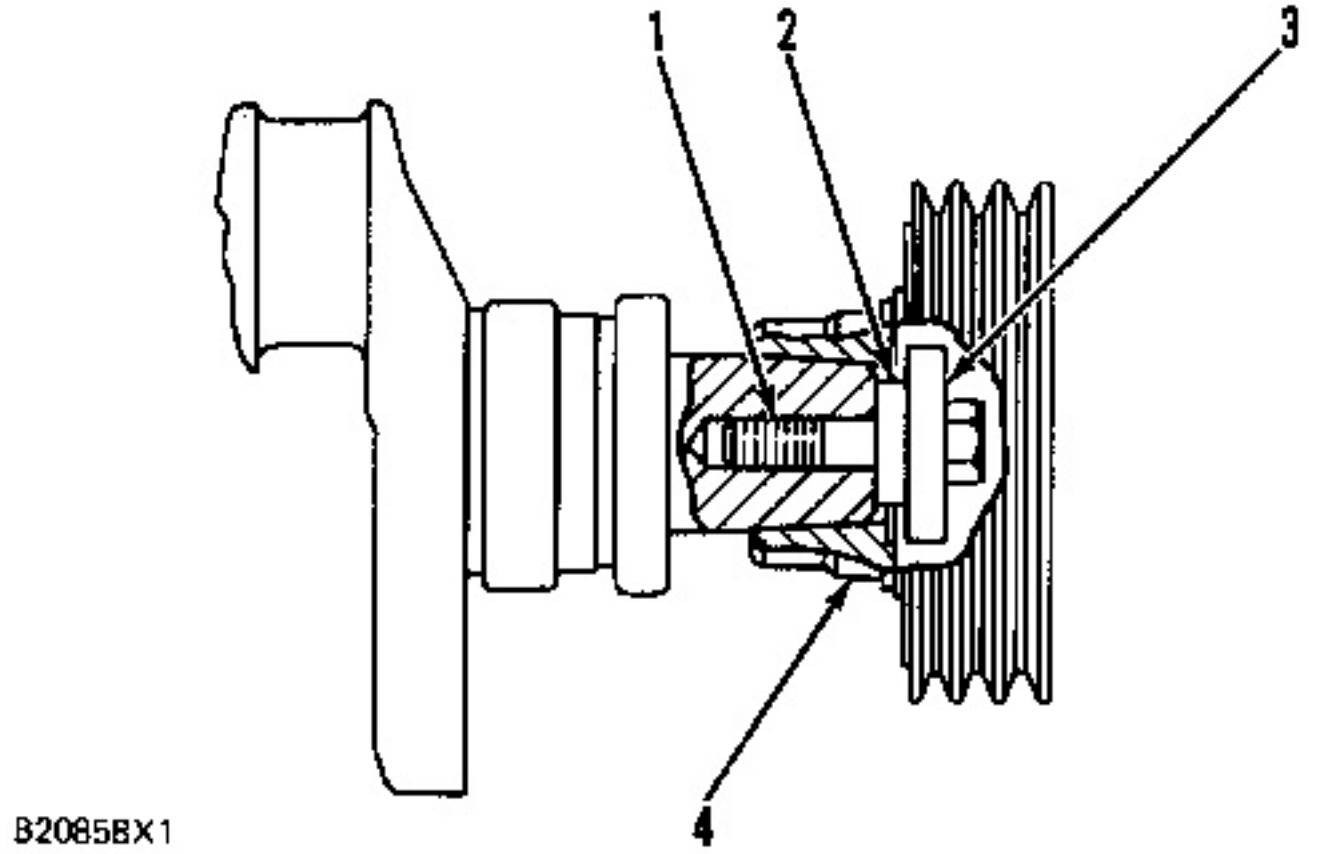

1. Remove hub retaining bolt (1) and washer (3) from end of crankshaft. Install a spacer (2), washer (3) and bolt (1) on crankshaft. The spacer is installed behind the washer to get about 1/8 in. (3.2 mm) clearance between washer (3) and pulley (4).

NOTE: With the spacer installed, force during pulley removal will be on the end of the crankshaft rather than the bolt threads if the spacer were not used.

NOTICE

If the spacer is not used, damage to the bolt thread can be the result.

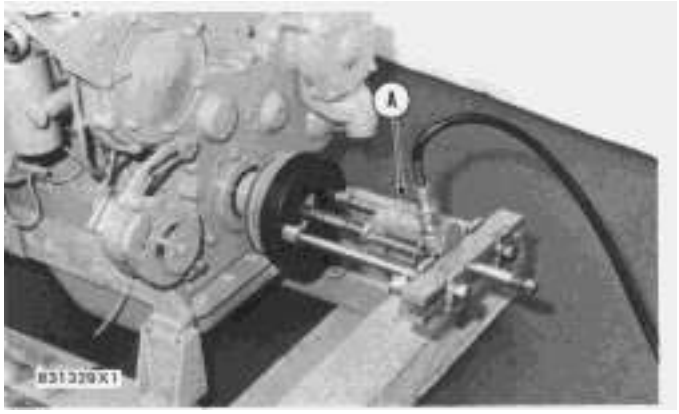

2. Install tooling (A) and loosen pulley from the crankshaft.

3. Remove tooling (A).

4. Remove bolt, washer, spacer and crankshaft pulley from crankshaft.

Install Crankshaft Pulley (Industrial Engine)

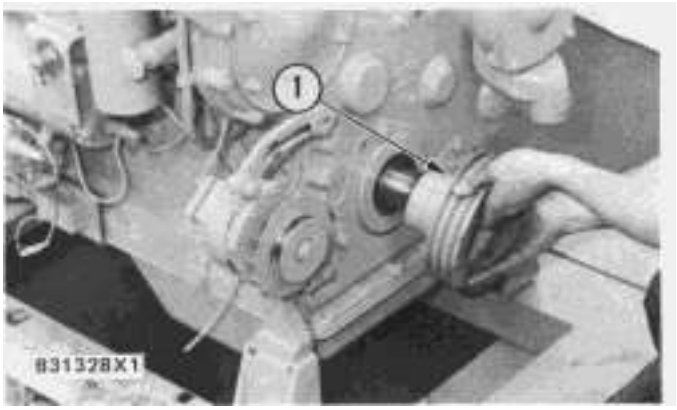

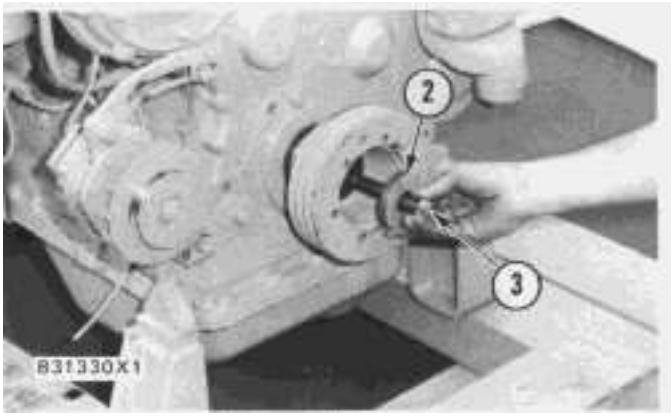

1. Install crankshaft pulley (1), washer (2) and bolt (3).

2. Tighten bolt (3) to a torque of 210 to 250 lb.ft. (284 to 340 N·m). Hit the bolt with a hammer. Tighten bolt again to a torque of 210 to 250 lb.ft. (284 to 340 N·m).

Vibration Damper And Pulley

SMCS - 1228-12; 1228-11

Remove Vibration Damper And Pulley (Marine Engine)

	Tools Needed	A
FT915	Adapter	1
	Bolt 3/8"-16 NC x 2 ½" long	6
5F7369	Leg	2
3H465	Plate	4
1B4207	Nut	2
8B7560	Step Plate	1
3H467	Washer	1
1P820	Hydraulic Puller	1
5P3100	Pump Group (or electric)	1

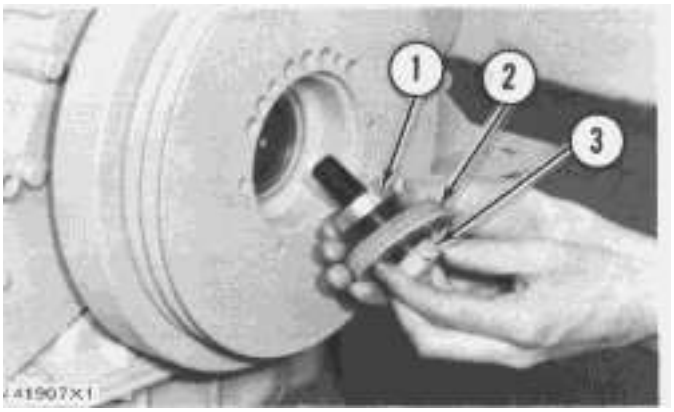

1. Remove the vibration damper and pulley bolt (3) and plate (2).

2. Install the washer (1) on the bolt.

3. Install the bolt, plate and washer on the engine and tighten the bolt.

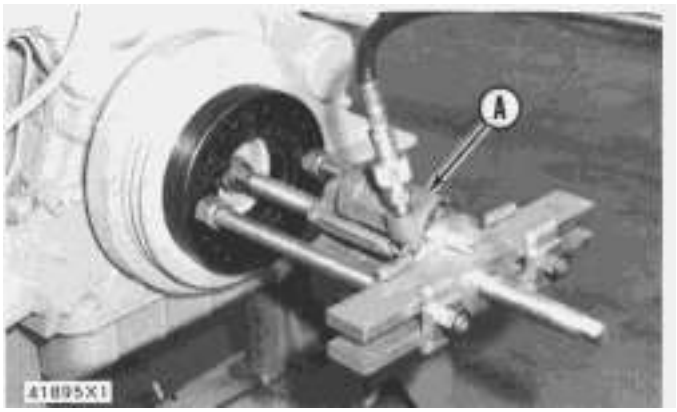

4. Make a separation between the vibration damper and pulley from the crankshaft with tooling (A).

5. Remove tooling (A) and the bolt, plate and washer.

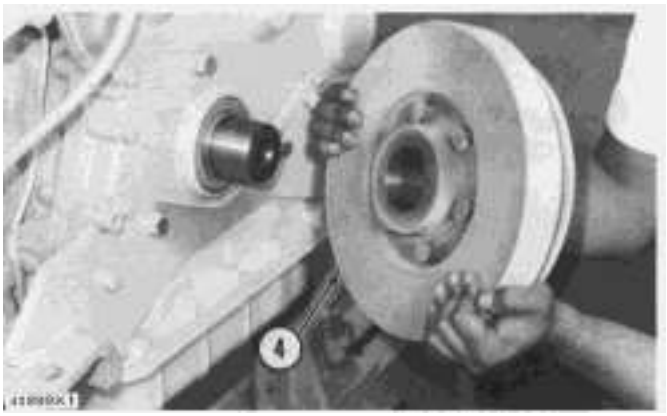

6. Remove the vibration damper and pulley (4). Weight is 65 lb. (29 kg).

Install Vibration Damper And Pulley (Marine Engine)

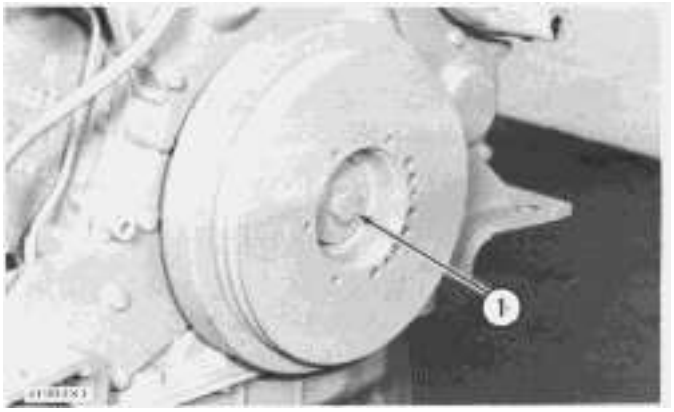

1. Put the vibration damper and pulley on the crankshaft and install the plate and bolt.

2. Tighten the bolt to a torque of 230 ± 20 lb.ft. (307 ± 25 N·m). Hit the bolt with a hammer and tighten it again to 230 ± 20 lb.ft. (307 ± 25 N·m).

Crankshaft Drive Gear

SMCS - 1204-12; 1204-11

Remove Crankshaft Drive Gear

	Tools Needed	A
8B7551	Bearing Puller Attachment	1
8B7549	Leg	2
3H465	Plate	4
1B4207	Nut	2
8B7560	Step Plate	1
1P820	Hydraulic Puller	1
5P3100	Pump Group (or electric)	1

start by:

a) remove oil pump

b) remove crankshaft front seal wear sleeve

c) remove timing gears and plate

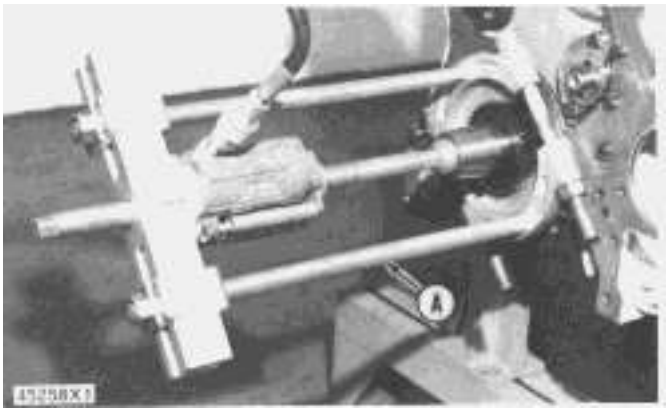

1. Pull the crankshaft drive gear with tooling (A).

Install Crankshaft Drive Gear

1. Heat the crankshaft gear to a maximum temperature of 600°F (316°C). Install gear on crankshaft.

end by:

a) install timing gears and plate

b) install crankshaft front seal wear sleeve

c) install oil pump

Fuel Injection Valves

SMCS - 1254-12; 1254-11

Remove Fuel Injection Valves (Industrial Engine)

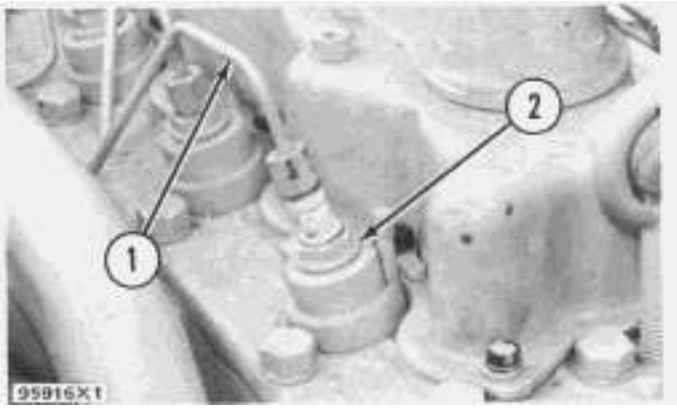

1. Disconnect fuel injection line (1). Put a cap on the opening. Remove nut (2).

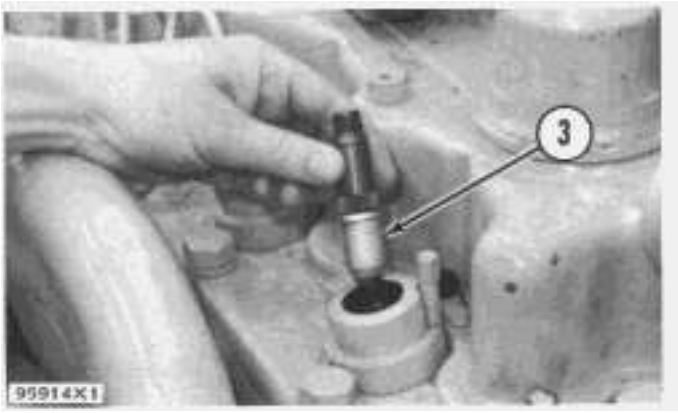

2. Remove the fuel injection valve and body (3) from precombustion chamber.

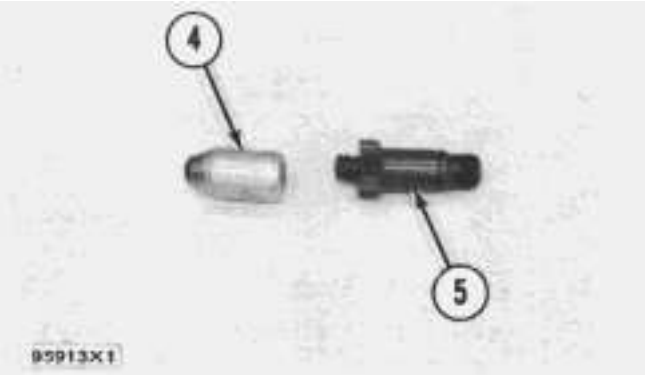

3. Remove fuel injection valve (4) from body (5).

Install Fuel Injection Valves (Industrial Engine)



1. Assemble fuel injection valve and body. Install fuel injection valve and body into precombustion chamber.

2. Install and tighten nut to a torque of 105 ± 5 lb.ft. (142 ± 7 N·m).

3. Remove cap from fuel injection line. Connect line and tighten nut to a torque of 30 ± 5 lb.ft. (40 ± 7 N·m).

Remove Fuel Injection Valves (Marine Engine)

1. Remove the fuel injection lines.

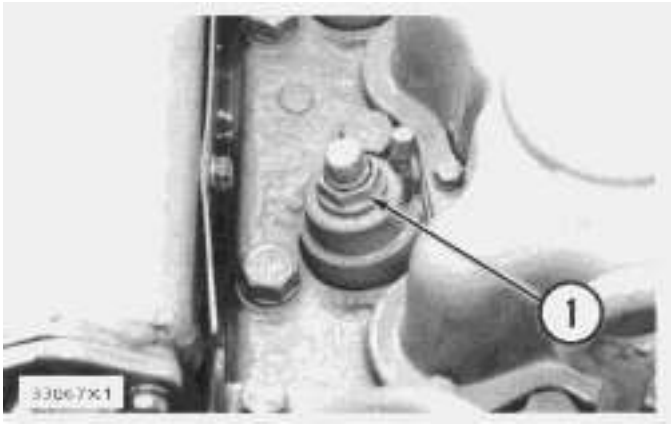

2. Remove the nut (1) that holds the fuel injection valve.

3. Remove the fuel injection valve and body from the precombustion chamber.



4. Remove the fuel injection valve (2) from body (3).

Install Fuel Injection Valves (Marine Engine)

1. Install the fuel injection valve finger tight on the body.

2. Install the fuel injection valve assembly in the precombustion chamber.

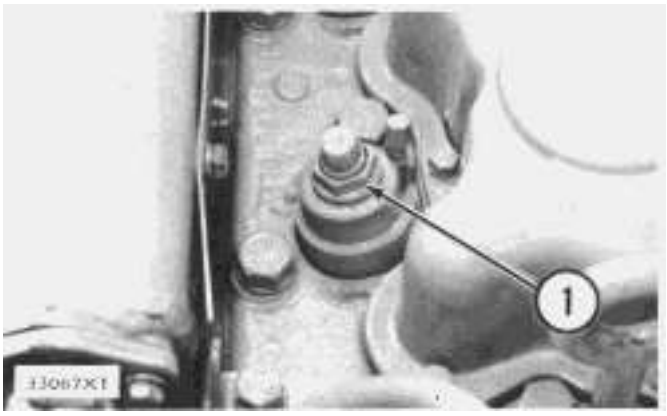

3. Install the nut (1) that holds the fuel injection valve. Tighten the nut to a torque of 105 ± 5 lb.ft. (142 ± 7 N·m).

4. Install the fuel injection lines. Tighten the nuts to a torque of 30 ± 5 lb.ft. (40 ± 7 N·m).

Precombustion Chambers

SMCS - 1106-12; 1106-11

Remove Precombustion Chambers

Tools Needed		A
5F8353	Wrench	1

start by:

a) remove fuel injection valve

1. Remove the coolant from the cooling system. Capacity is 11 U.S. gal. (41 liter).

2. Remove the glow plug from the precombustion chamber.

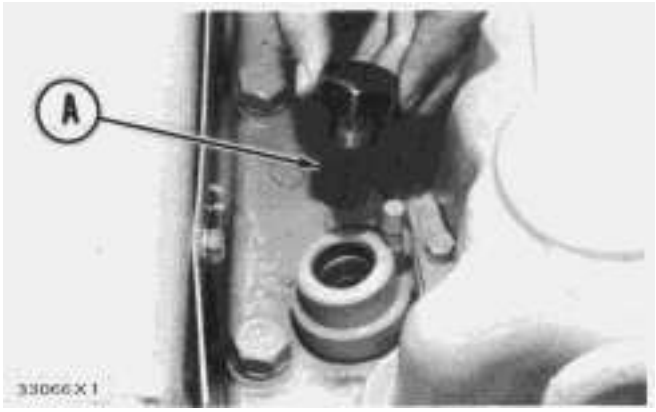

3. Remove the precombustion chamber from the cylinder head with tool (A).

4. Remove the precombustion chamber gasket. Remove the O-ring seals from the chamber.

Install Precombustion Chambers

	Tools Needed	A
5F8353	Wrench	1

1. Install new O-ring seal on precombustion chamber.

2. Put 5P3931 Anti-Seize Compound on the precombustion chamber threads.

3. Install the 5M2667 Gasket, with "2C" on it, on the precombustion chamber.

4. Install the precombustion chamber in the cylinder head. Tighten chamber to a torque of 150 ± 50 lb. ft. (205 ± 70 N·m) with tool (A).

5. If the opening for the glow plug is not in the "A range," remove the precombustion chamber. If the opening was in the "B range," use 2S8959 Gasket with "2S" on it. If the opening was in the "C range" use 2S8960 Gasket with "2X" on it.

6. Put 5P3931 Anti-Seize Compound on the glow plug threads.

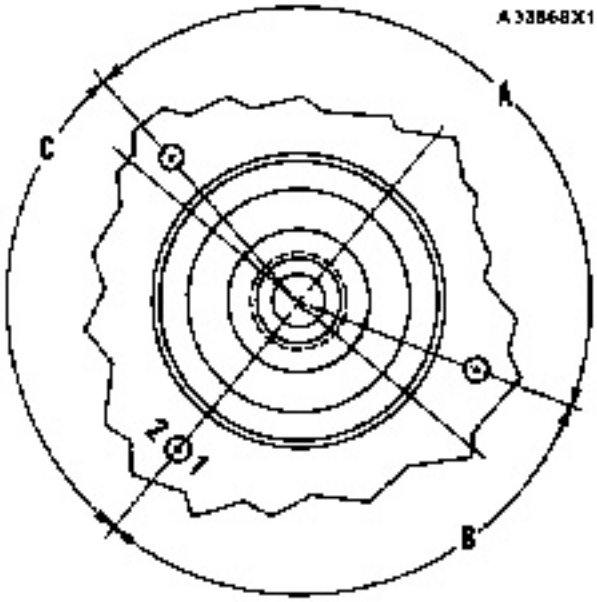

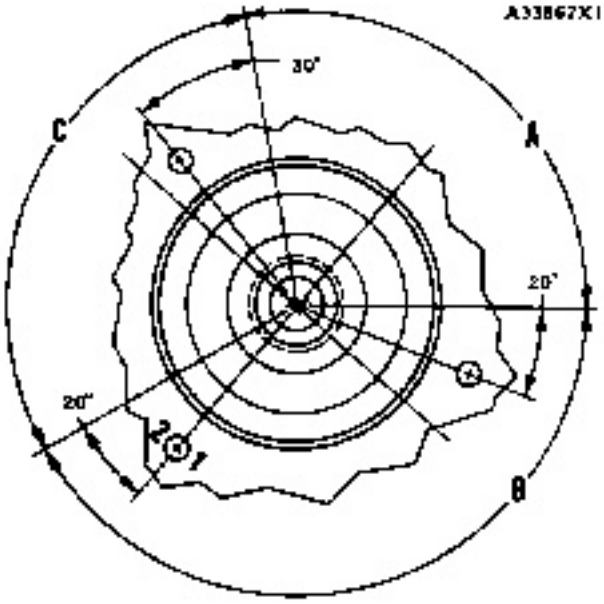

Cyl. Nos. 1, 2, and 3—3304*
Cyl. Nos. 1, 2, 3, 4, and 5—3306*
Cyl. Nos. 1 thru 4—3304**
Cyl. Nos. 1 thru 6—3306**

Cyl. No. 4—3304*
Cyl. No. 6—3306*

***Engines with counterbored block.**
****Engines with spacer plate.**

7. Install glow plugs in the precombustion chambers. Tighten glow plugs to a torque of 120 ± 24 lb. in. (14 ± 3 N·m).

8. Fill the cooling system with coolant to the correct level.

end by:

a) install fuel injection valves

Engine Front Support

SMCS - 1153-10

Remove And Install Engine Front Support

start by:

a) remove crankshaft pulley (industrial)

b) remove vibration damper and pulley (marine)

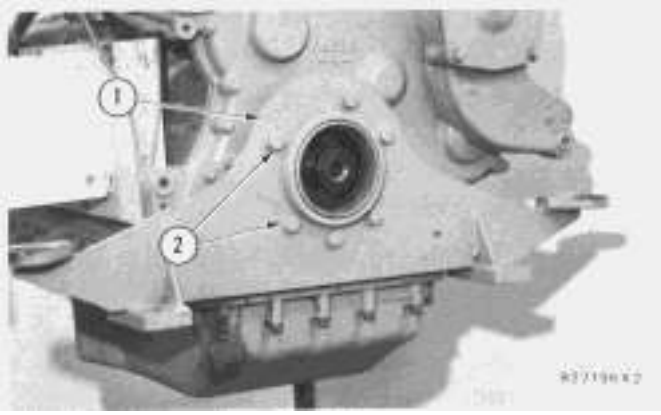

1. Remove six bolts (2) and support assembly (1) from the engine.

2. Put the engine front support (1) in position and install the bolts that hold it to the trunnion.

Air Cleaner

SMCS - 1051-10

Air Cleaner Assembly Remove And Install Air Cleaner Assembly (Industrial Engine)

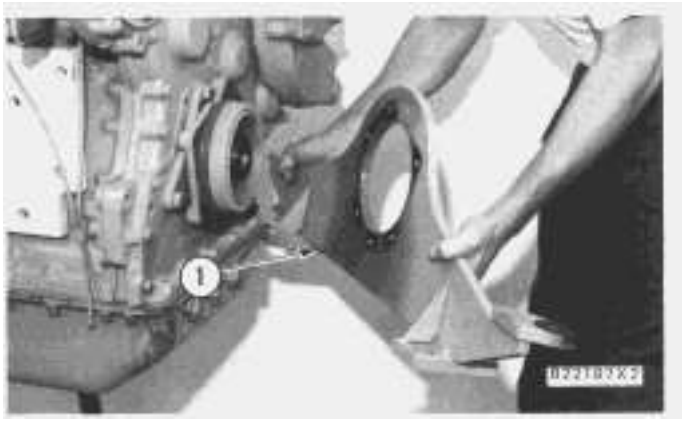

1. Release clamp and remove cover assembly (1) from body assembly.

2. Remove air cleaner element from body assembly.

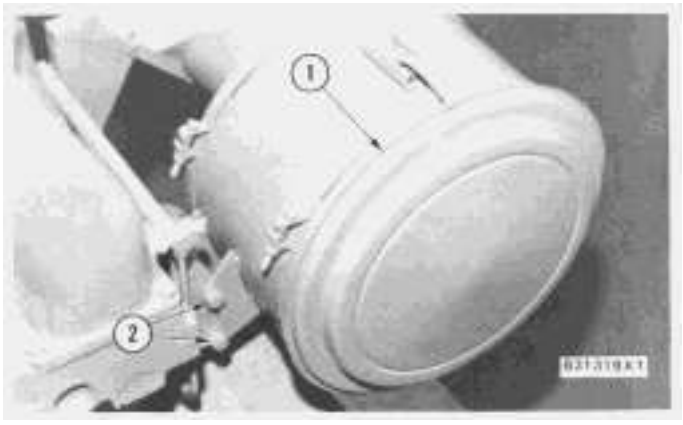

3. Remove two bolts (2) that hold body assembly to bracket. Remove body assembly.

4. Inspect O-ring seals for damage and make replacements if necessary.



5. Put body assembly (3) in position on pipe and install two bolts to hold housing assembly in bracket.



6. Install air cleaner element (4) and cover assembly.

Air Cleaner Assembly

SMCS - 1051-12; 1051-11

Remove Air Cleaner (Marine Engine)

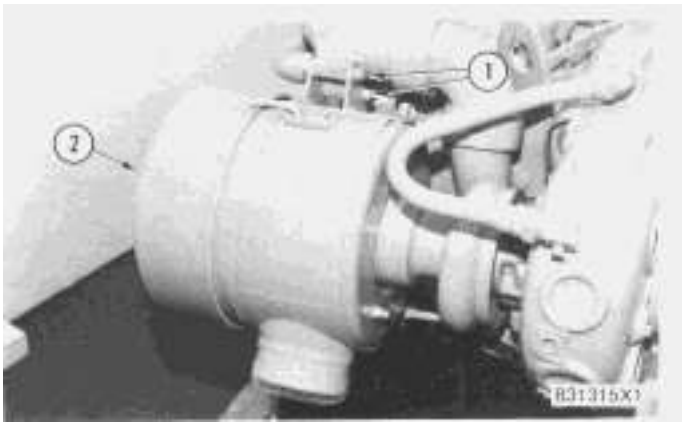

1. Remove two bolts (1) from bracket assembly.

2. Remove air cleaner assembly (2) from turbocharger.

Install Air Cleaner (Marine Engine)

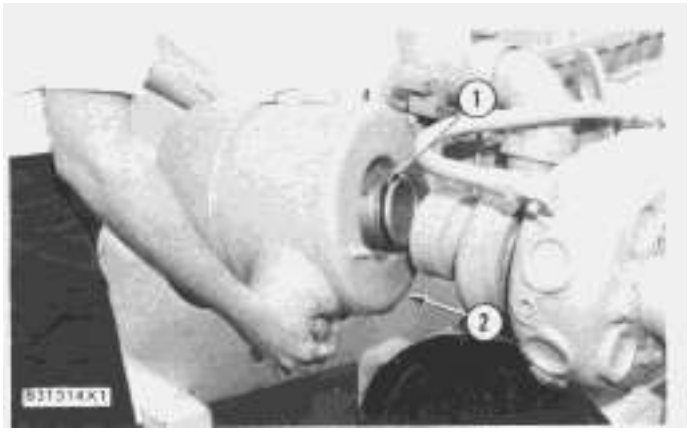

1. Inspect the O-ring seal (1) on coupling for damage. Make a replacement if necessary.

2. Install the air cleaner assembly (2) on the turbocharger.

3. Install two bolts to fasten housing to elbow bracket.

Turbocharger Shield

SMCS - 1073-12; 1073-11

Remove Turbocharger Shield (Marine Engine) (If So Equipped)

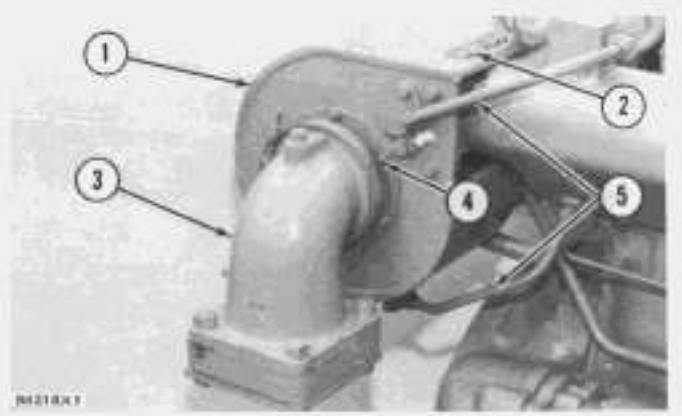

1. Remove elbow (3) after nuts (4) are removed.

2. Disconnect lines (5).

3. Remove four bolts (2) that hold turbocharger shield.

4. Remove turbocharger shield (1).

Install Turbocharger Shield (Marine Engine)



1. Put the turbocharger shield in position on the turbocharger.

2. Put 5P3931 Anti-Seize Compound on the four bolts that hold the shield and install the bolts.

3. Connect two lines to the shield.

4. Install the elbow and the nuts that hold it.

Turbocharger

SMCS - 1052-11; 1052-12

Remove Turbocharger (Industrial Engine)

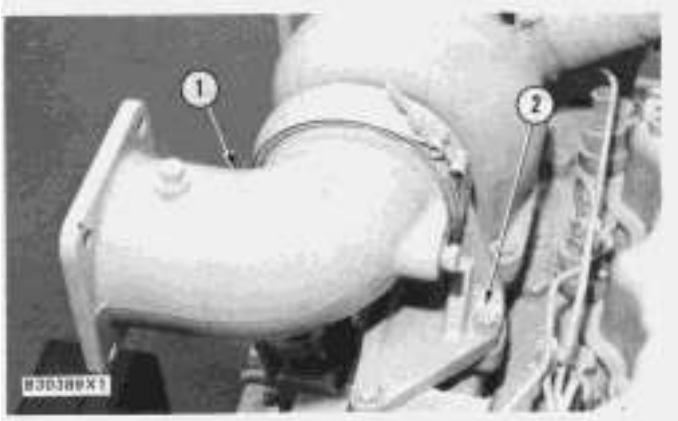

1. Remove bolts (2) and remove exhaust elbow and support (1) as a unit.



2. Remove coupling (3) from the turbocharger housing.

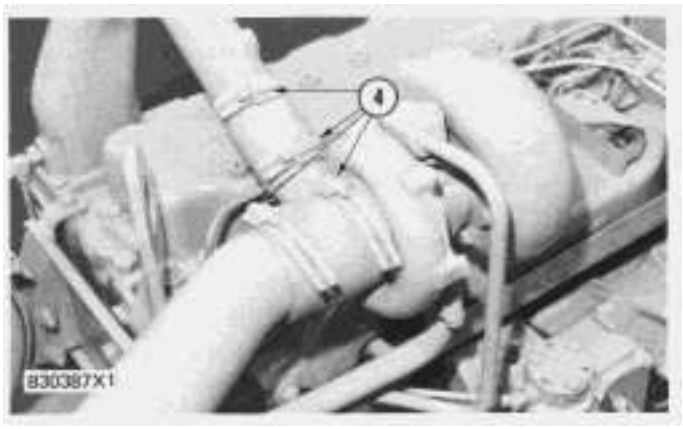

3. Loosen clamps (4) and remove from hoses.

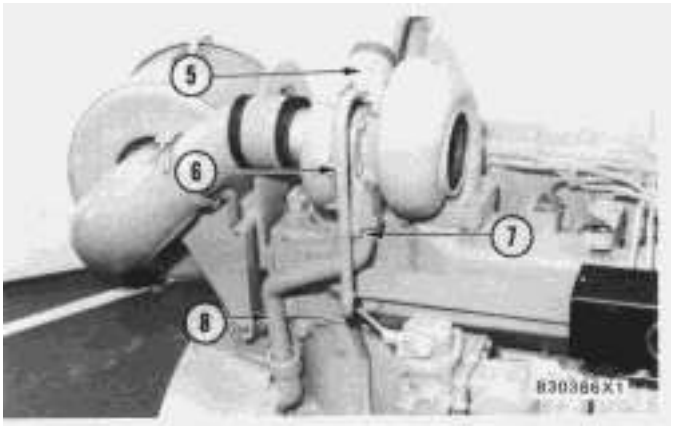

4. Remove two bolts (7) and disconnect oil drain tube (8) from the turbocharger. Remove gasket.

5. Remove two bolts (5) and oil supply tube (6) and gasket from the turbocharger.



6. Remove four bolts (10), turbocharger group (9) and gasket from manifold.

Install Turbocharger (Industrial Engine)

1. Check gaskets for damage and make a replacement if necessary.

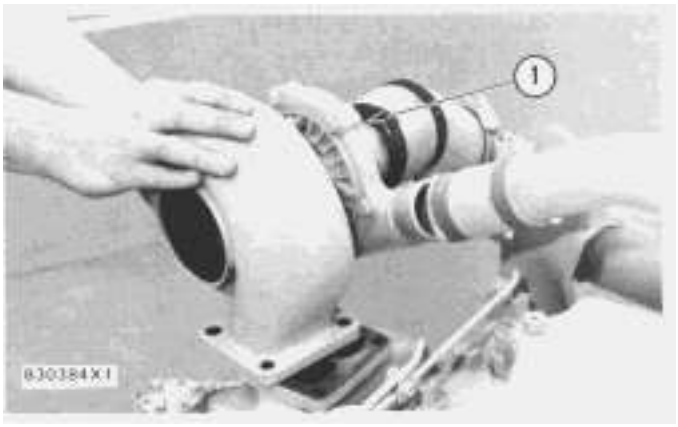

2. Install turbocharger (1) in position on the engine. Put 5P3931 Anti-Seize Compound on the threads of the bolts that hold the turbocharger to the manifold. Tighten the bolts to a torque of 40 ± 4 lb.ft. (54 ± 5 N·m).



3. Put the gaskets between the oil drain tube (3), the oil supply tube (2) and the turbocharger. Install the bolts that fasten the tubes to the turbocharger.

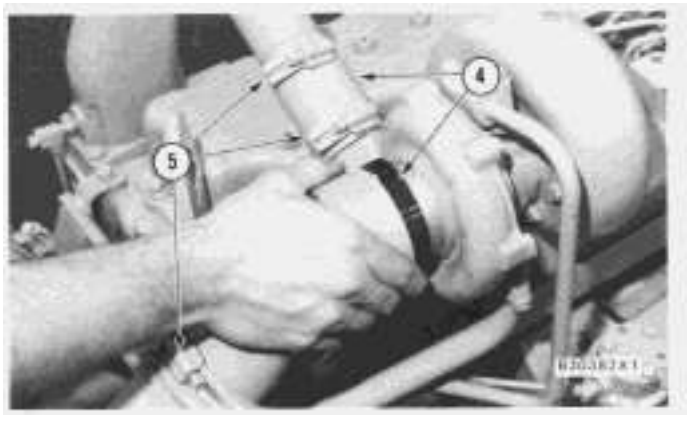

4. Install two hoses (4) on turbocharger and install clamps (5).

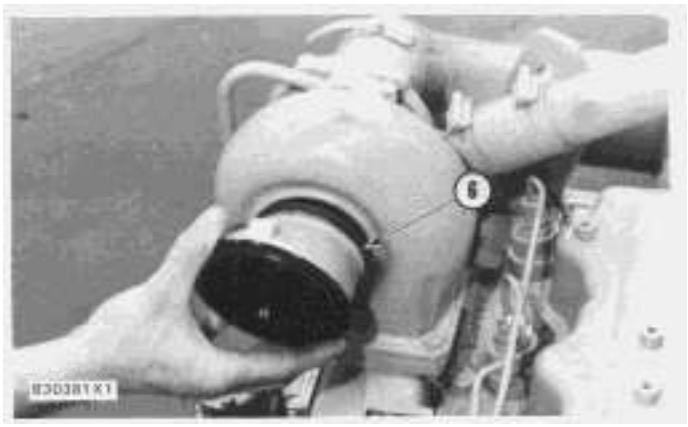

5. Install coupling (6) on the turbocharger.

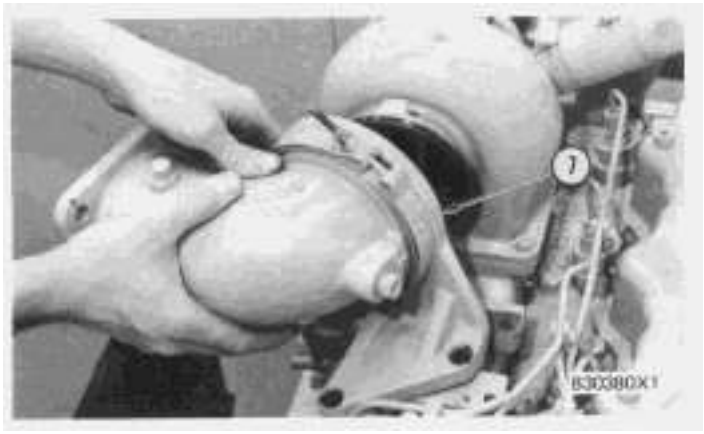

6. Put exhaust elbow and support (7) in position on coupling, and put 5P3931 Anti-Seize Compound on the threads of the bolts. Install two bolts to hold support assembly in place.

Remove Turbocharger (Marine Engine)

start by:

a) remove air cleaner

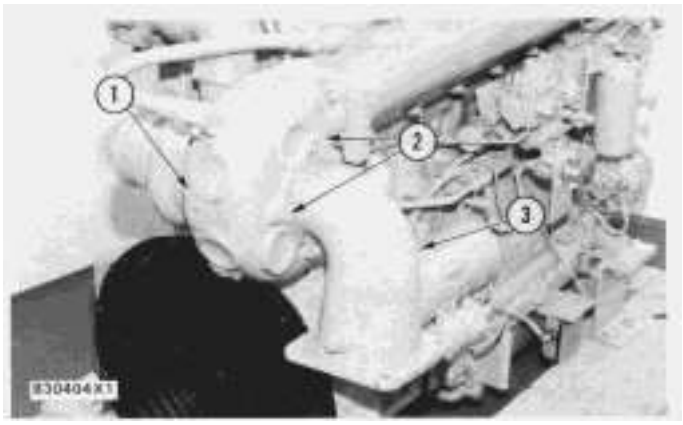

1. Remove four bolts (2) and clips that hold the exhaust elbow to the turbocharger group (1). Remove elbow (3).

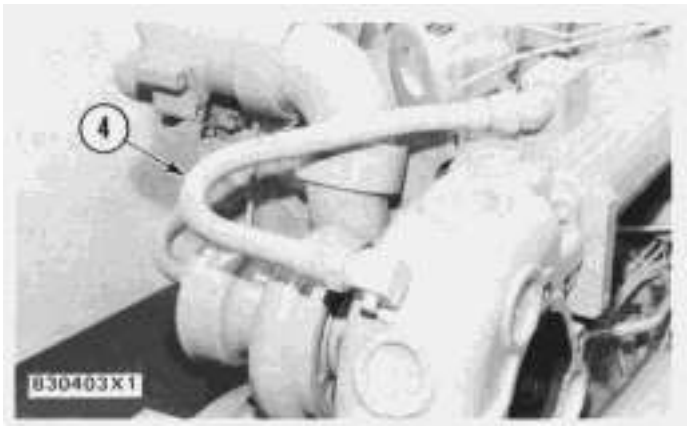

2. Remove tube assembly (4) from aftercooler and turbocharger.

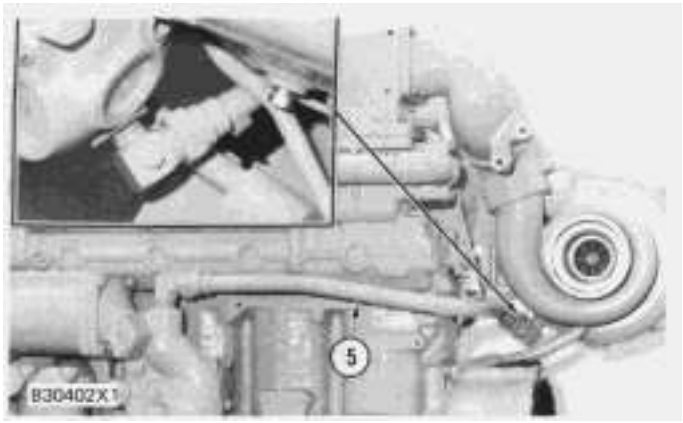

3. Disconnect couplings from each end of tube assembly. Remove tube assembly (5) from engine.

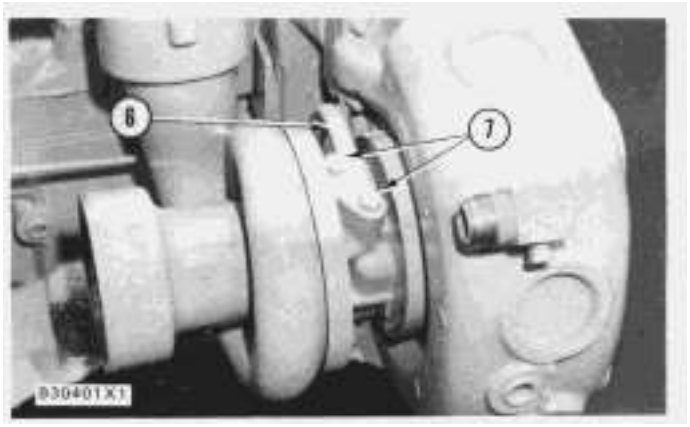

4. Remove two bolts (7) and disconnect opposite end of tube from the cylinder block adaptor. Remove oil supply tube (6) and gasket from turbocharger.

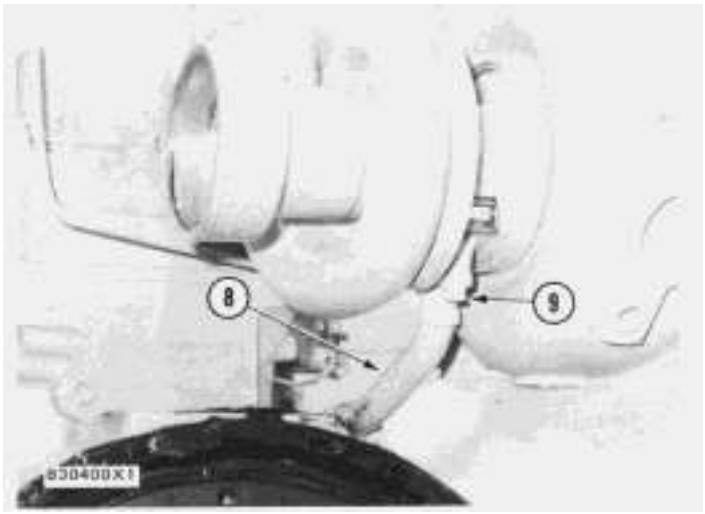

5. Remove two bolts (9), turbocharger drain tube (8) and gasket from flywheel housing.

6. Install a strap and hoist on the turbocharger and remove four nut that fasten the turbocharger to the exhaust manifold and the four bolts that fasten the air lines group to the aftercooler.

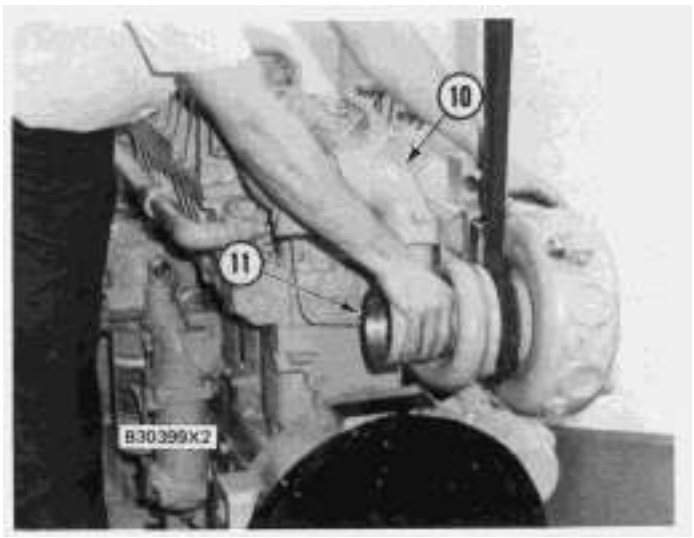

7. Remove turbocharger (11), air lines group (10) and gaskets from engine. The weight of the unit is 100 lb. (45 kg).

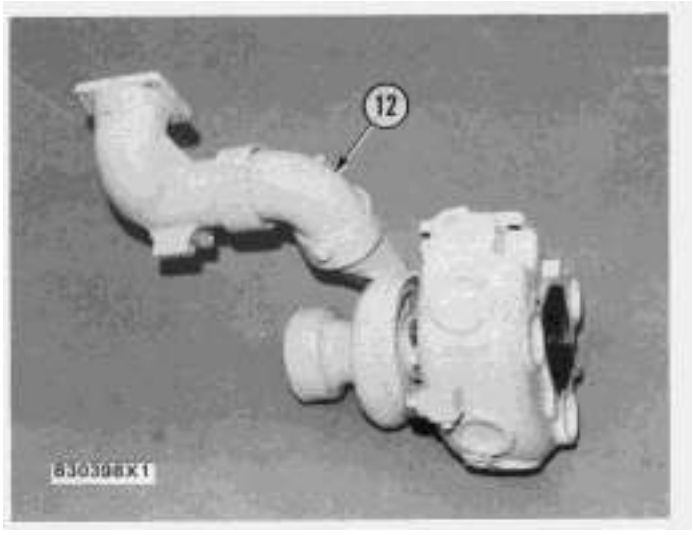

8. Remove pipe assembly (12) from the turbocharger.

Install Turbocharger (Marine Engine)

1. Inspect O-ring seals on the pipes. Install new seals if needed. Put clean engine oil on the O-ring seal.

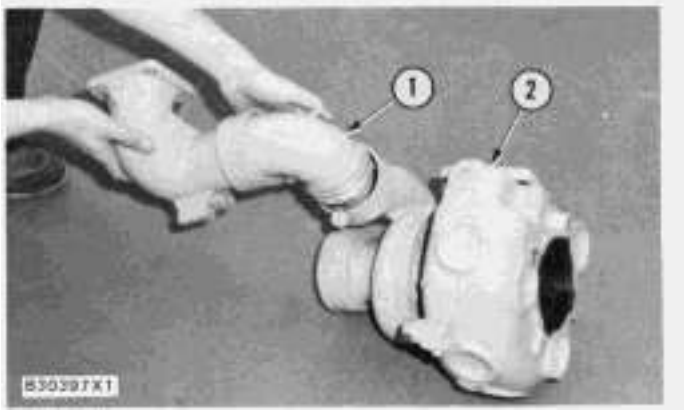

2. Install the pipe assembly (1) in position on the turbocharger (2).

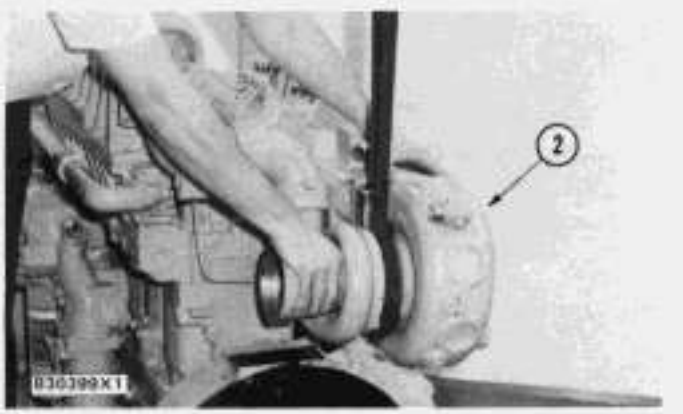

3. Install a strap and hoist on the turbocharger (2) and put turbocharger and gasket in position on the exhaust manifold.

4. Put 5P3931 Anti-Seize Compound on the threads of the studs that hold the turbocharger to the exhaust manifold. Install four nuts. Tighten nuts to a torque of 40 ± 4 lb.ft. (54 ± 5 N·m).

5. Inspect the O-ring seal on the drain line tube and make a replacement if necessary.

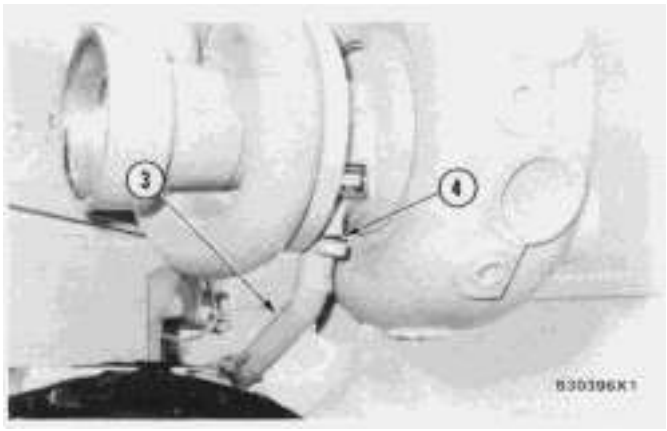

6. Put the gasket (4) in place between oil drain tube (3) and the turbocharger. Install the two bolts that hold the oil drain tube to the turbocharger.

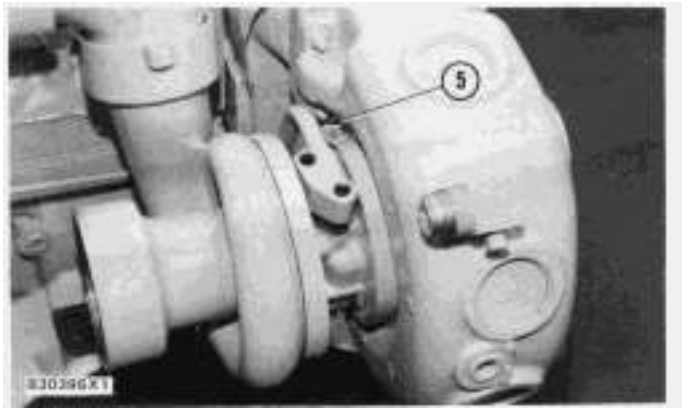

7. Put the gasket in place between oil supply tube (5) and the turbocharger. Install oil supply tube (5).

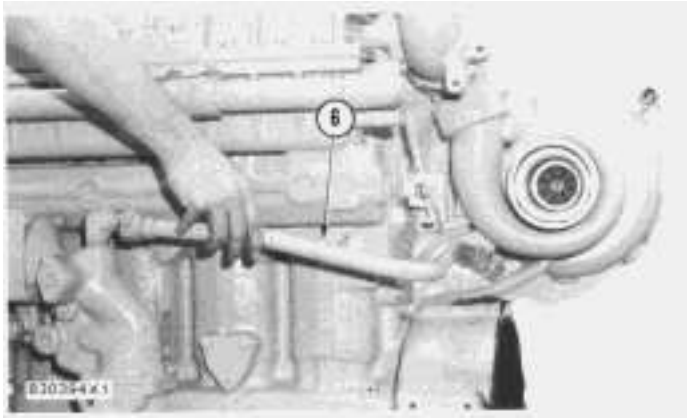

8. Put tube assembly (6) in position on engine and connect the couplings on each end of tube assembly to fittings.

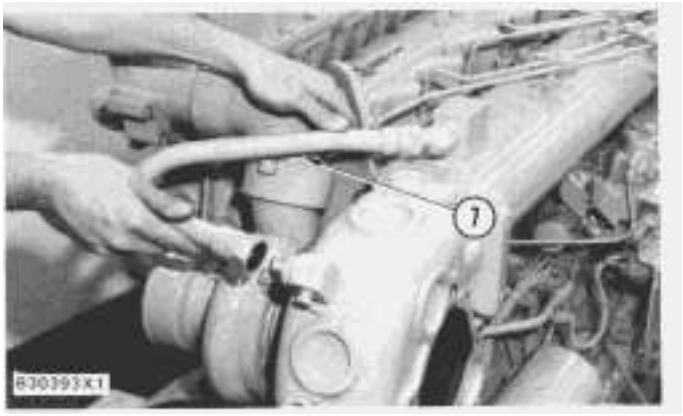

9. Install tube assembly (7) between the turbocharger and the exhaust manifold.

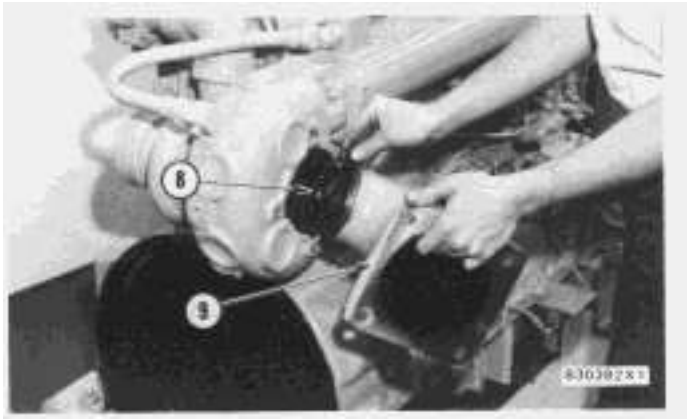

10. Inspect the ring (8) on the elbow for damage and make replacements if needed.

11. Put the elbow (9) in position on the turbocharger and install the four clips and bolts to fasten it to the turbocharger.

end by:

a) install air cleaner

Turbocharger (Airesearch T12)

SMCS - 1052-15; 1052-16

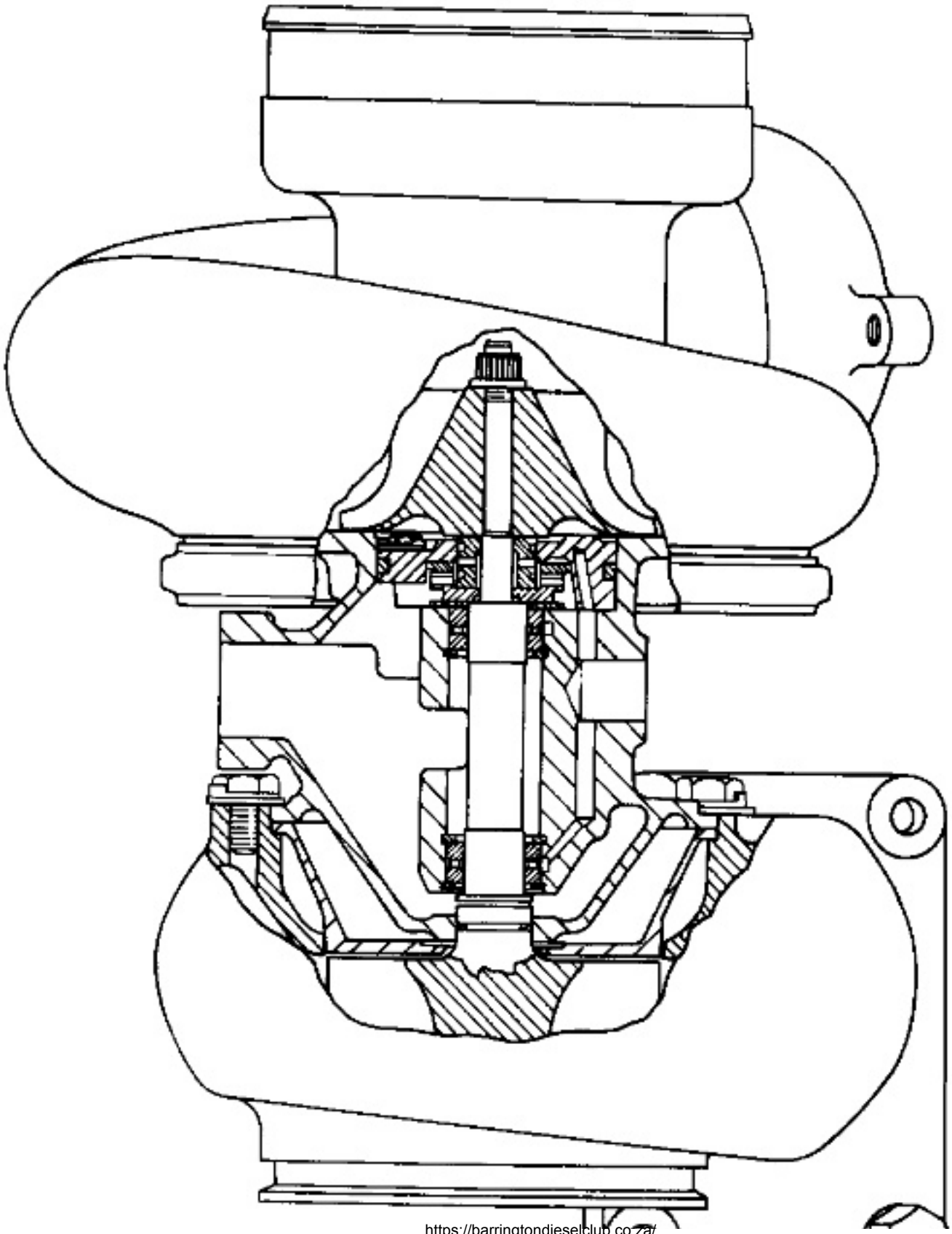

https://barringtondieselclub.co.za/

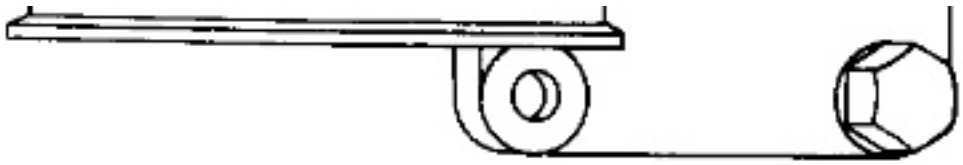

Disassemble Turbocharger (Airesearch T12)

	Tools Needed	A	B	C	D	E	F	G	H
9S6363	Holding and Positioning Fixture	1							
9S6343	Cartridge Fixture		1						
8S9944	Holder Oil Cooker (Thermostat Controlled)			1	1				
FT808	Adapter					1			
FT165	Fixture						1		
FT174	Driver Tool							1	
5P6518	Fixture Group								1

start by:

a) remove turbocharger

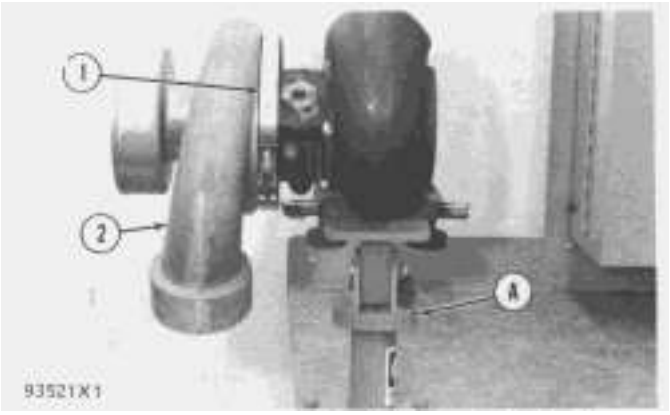

1. Install the turbocharger on tool (A).

2. Put marks on the housing for correct installation at assembly.

3. Loosen clamp (1). Remove compressor housing (2). Remove the clamp.

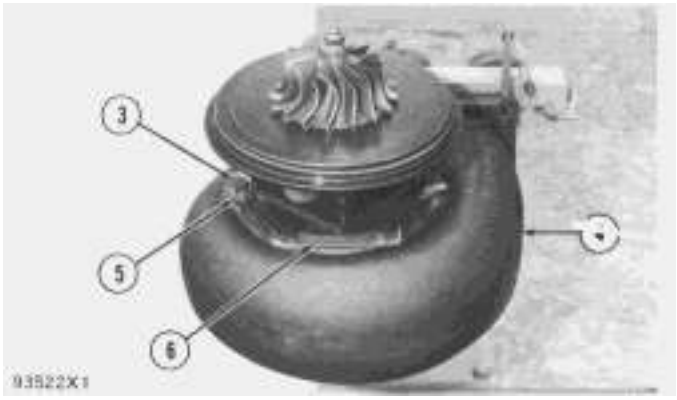

4. Remove bolts (3), locks (6) and plate (5).

5. Remove the center section from turbine housing (4).

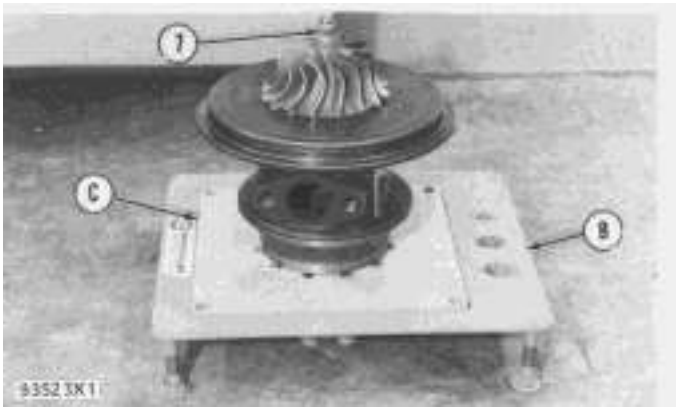

6. Install tool (C) in tool (B). Install the center section in tool (C) as shown.

7. Remove nut (7) that holds the compressor wheel to the shaft and wheel assembly.

NOTICE

When nut (7) is loosened, do not put a side force on the shaft.

NOTE: The compressor wheel can be removed from the cartridge assembly without the use of the oil cooker. The oil cooker can be used for easier disassembly.

NOTICE

If removal of the compressor wheel is too difficult, damage to parts can be the result.

WARNING

The oil used to heat the compressor wheel must have a flash point (the temperature at which the oil will burn) above 400°F (204°C).



8. Install tool (E) on tool (D). Heat tool (D) to a temperature of 350°F ± 25°F (176° ± 14°C). Install the cartridge assembly on tool (E) so only the compressor wheel is in the oil. Heat the compressor wheel for no more than ten minutes.

NOTICE

Do not let the turbine wheel hit the bottom of the press.

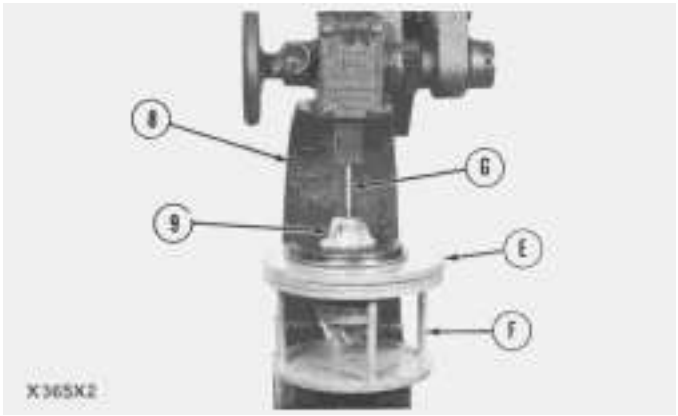

9. Install tool (E) with the center section of tool (F). Remove compressor wheel (9) with an arbor press (8) and tool (G).

NOTE: Step 9 must be done before the impeller gets cold.

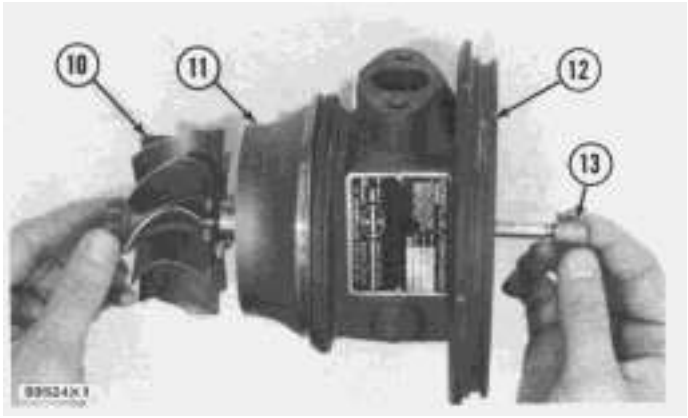

10. Remove shaft and wheel assembly (10), shroud (1) and spacer (13) from center housing.

11. After removal of shaft and wheel assembly from the center housing, install on tool (H). See SPECIAL INSTRUCTION Form SMHS6998-01 to make sure the turbocharger shaft is straight.

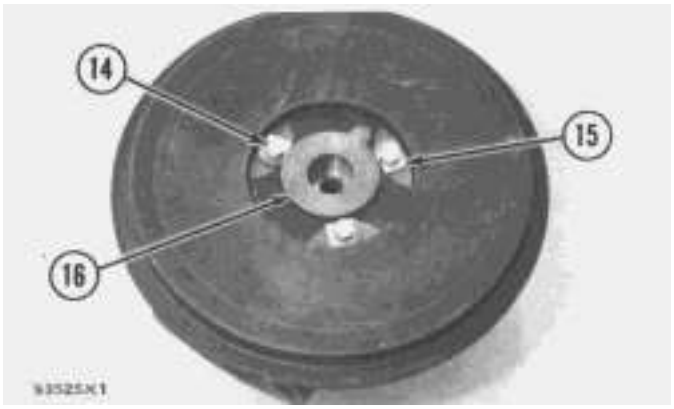

12. Remove bolts (14), locks (15) and plate (16) from the center housing.



13. Remove collar (17).

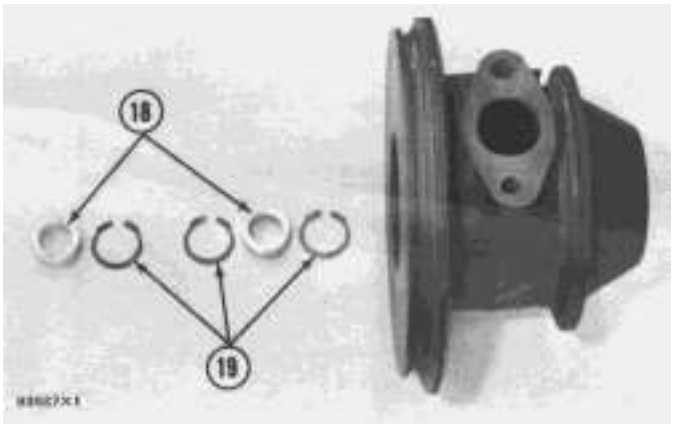

14. Remove two bearings (18) and three snap rings (19) from the center housing.

15. Check all parts of the turbocharger for damage. Make replacements if necessary. See SPECIAL INSTRUCTION Form No. SMHS6854 for turbocharger reconditioning. Also see GUIDELINE FOR REUSABLE PARTS Form No. SEBF8018.

Assemble Turbocharger (Airesearch T12)

	Tools Needed	A	B	C	D	E
9S6363	Holding and Positioning Fixture	1				
9S6343	Cartridge Fixture		1			
8S9944	Holder			1		
FT165	Fixture				1	
FT174	Driver Tool					1

1. Clean all parts thoroughly before the turbocharger is assembled.

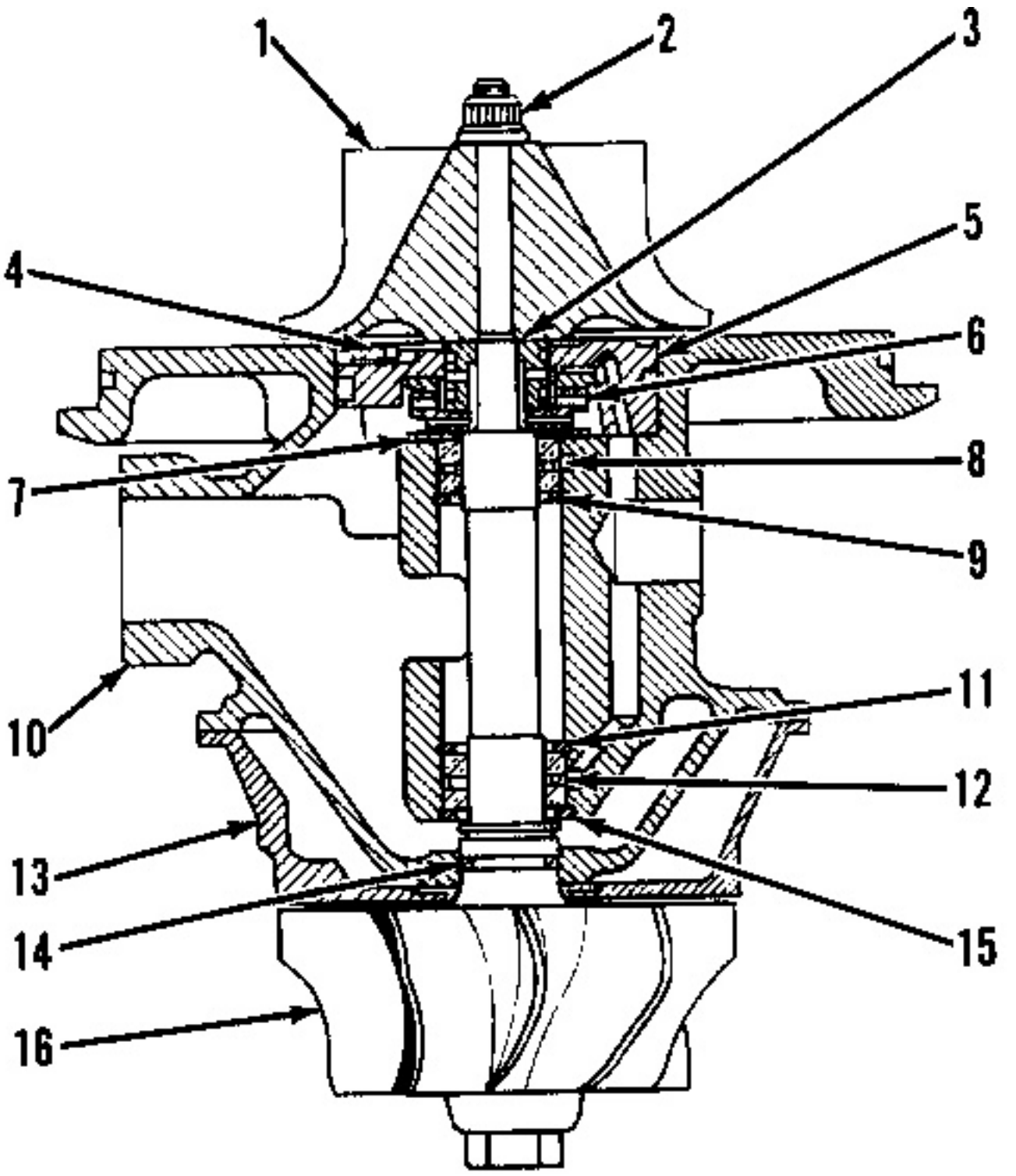

94749X1

2. Install snap ring (15), bearing (12) and snap ring (11) in center housing (10). Install snap ring (9) and bearing (8).

3. Install shroud (13), shaft and wheel assembly (16) in the center housing.

NOTE: Put 6V2055 High Vacuum Grease in the groove for ring seal (14) at assembly to one half or more of the depth of the groove all the way around.

https://barringtondieselclub.co.za/

NOTICE

Do not cause damage to ring seal (14) when the shaft and wheel assembly is installed.

4. Install spacer (7) and collar (6).

5. Put plate (5) in position on the center housing. Install bolts (4). Tighten the bolts to a torque of 40 ± 5 lb.in. (4.5 ± 0.6 N·m).

6. Install spacer (3). Make sure the small inside diameter of the spacer is toward the compressor wheel end of the shaft and wheel assembly.

NOTICE

If spacer (3) is installed with its small inside diameter toward the center housing, it will cause a restriction in the flow of oil to the chambers and ring. This will cause a failure to the turbocharger.

7. Install tool (C) in tool (B). Install the center section in tool (B).

8. Use the following steps for compressor wheel installation:

a) Install the compressor wheel on the shaft by hand.

b) Measure the distance between the compressor wheel and the backplate at the point where the compressor wheel no longer moves freely on the shaft.

c) If the distance between compressor wheel and backplate is more than .310 in. (7.87 mm), use tool (B) and the following procedure:

1) Heat compressor wheel to 350°F ± 25°F (176° ± 14°C) for a maximum of ten minutes.

2) Install compressor wheel on shaft and tighten nut to 120 lb.in. (14 N·m).

3) Let compressor wheel cool to below 150°F (65°C).

4) Loosen nut and put oil on the shaft threads and nut face.

5) Tighten nut again to 30 lb.in. (3 N·m) + 120°.

d) If the distance between compressor wheel and backplate is .310 in. (7.87 mm) or less, proceed as follows:

1) Put the compressor wheel on shaft and tighten nut to a torque of 120 lb.in. (13.6 N·m).

2) Loosen nut and put oil on the shaft threads and nut face.

3) Tighten nut again to 30 lb.in. (3 N·m) + 120° more.

NOTICE

Do not put a side force on the shaft when the nut is installed or removed.

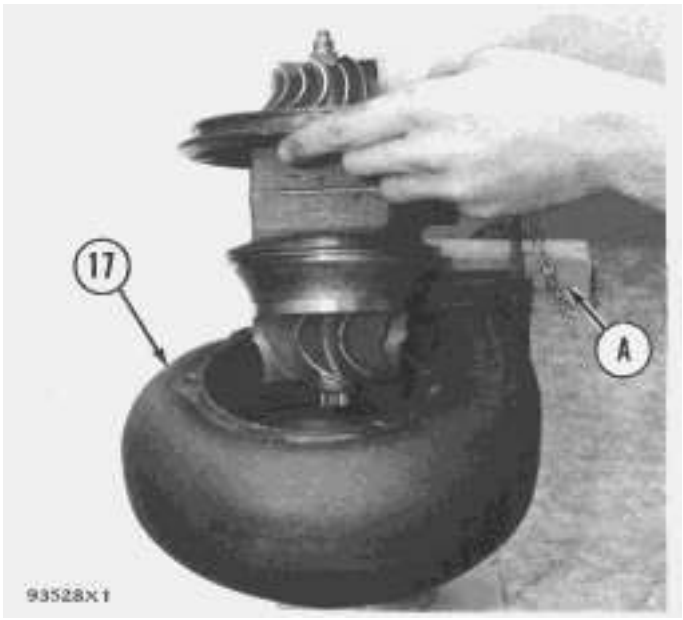

9. Install turbine housing (17) on tool (A). Install the center section in the turbine housing.

NOTE: Put the marks that were made at disassembly in alignment to make sure the housings are in their original position.

https://barringtondieselclub.co.za/

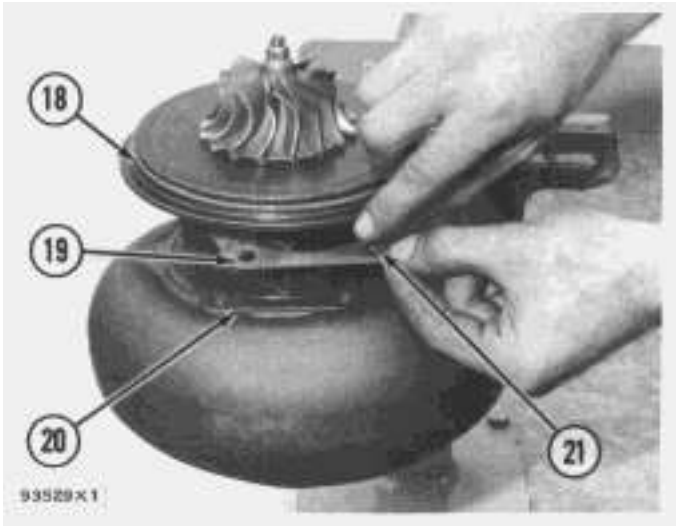

10. Put 5P3931 Anti-Seize Compound on the threads of bolts (21). Install plates (20), locks (19) and the bolts. Tighten the bolts to a torque of 175 ± 15 lb.in. (19.8 ± 1.7 N·m).

11. Install a new O-ring seal (18) on the center housing.

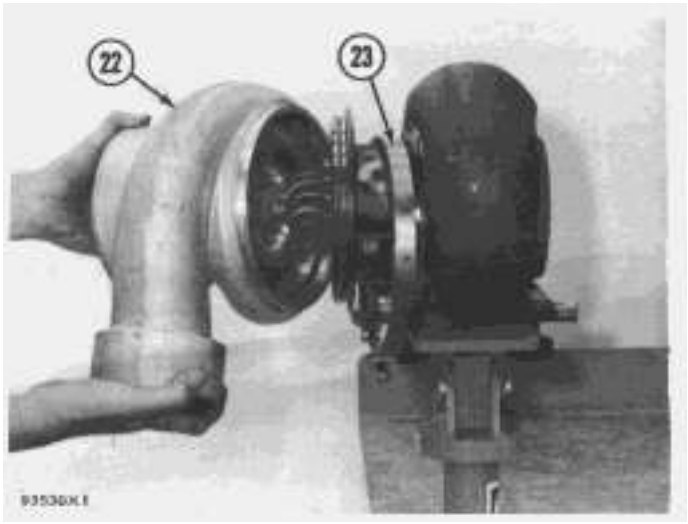

12. Put clamp (23) over the center section. Put compressor housing (22) in alignment with the marks made at disassembly. Put the clamp in position over the housing. Tighten the clamp to a torque of 10 ± 1 lb. ft. (14 ± 1 N·m).

13. Put oil in the center section and turn the shaft and wheel assembly.

end by:

a) install turbocharger

Turbocharger (Airesearch T18)

SMCS - 1052-15; 1052-16

Disassemble Turbocharger (Airesearch T18)

	Tools Needed	A	B	C	D	E	F	G	H
9S6363	Turbocharger Fixture Group	1							
8S9946	Holder		1						
9S6343	Fixture Assembly			1					
FT168	Adapter				1				
FT165	Fixture (Modified)					1			
FT174	Driver						1		
FT745	Modified Pliers							1	
5P6518	Fixture Group								1

start by:

a) remove turbocharger

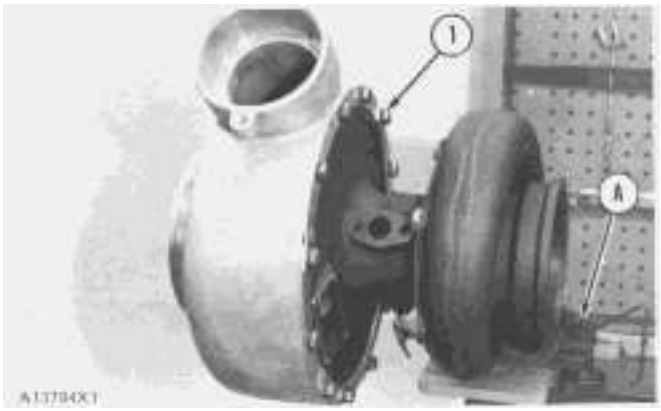

1. Put the turbocharger in position on tool (A).

2. Put a mark on the compressor cover and housings for installation purpose.

3. Remove bolts (1) and plates from compressor housing.

4. Remove the compressor housing.

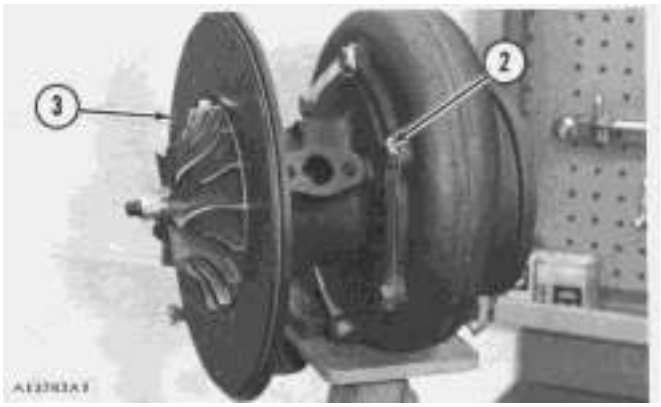

5. Remove bolts (2) and locks from turbine housing.

6. Remove cartridge (3) from turbine housing.



7. Install tool (B) in tool (C). Install cartridge in tool (C).

8. Remove nut (4) from the compressor wheel.

NOTICE

When the nut is loosened, do not put a side force on the shaft.

NOTE: The compressor wheel can often be removed from the cartridge assembly without the use of the oil cooker. The oil cooker can be used for easier disassembly.

NOTICE

If removal of the compressor wheel is too difficult, damage to parts can be the result.

WARNING

The oil used to heat the compressor wheel must have a flash point (the temperature at which the oil will burn) above 400°F (204°C).



9. Install tool (D) on an oil heater. Heat the oil to 350°F (176°C). Install the cartridge on tool (D) with only the compressor wheel in the hot oil. Keep the compressor wheel in the hot oil for ten minutes.

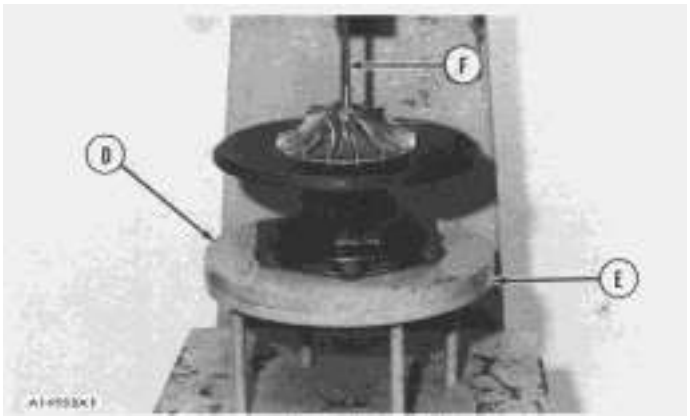

10. Put tool (D) and cartridge on tool (E) under a press. Install driver (F) and push the shaft out of the compressor wheel.

NOTE: Step 10 must be done before the compressor wheel gets cold.

11. Remove compressor wheel and shroud. Remove turbine wheel and shaft.

12. After removal of shaft and wheel assembly from housing, install on tool (H). See SPECIAL INSTRUCTION Form No. SMHS6998-01 to make sure the turbocharger shaft is straight.

13. Remove compressor wheel and shroud. Remove turbine wheel and shaft.

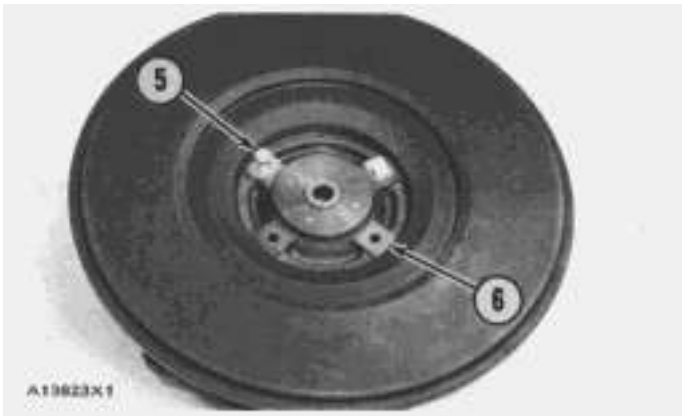

14. Remove the four bolts (5) and locks from plate (6).

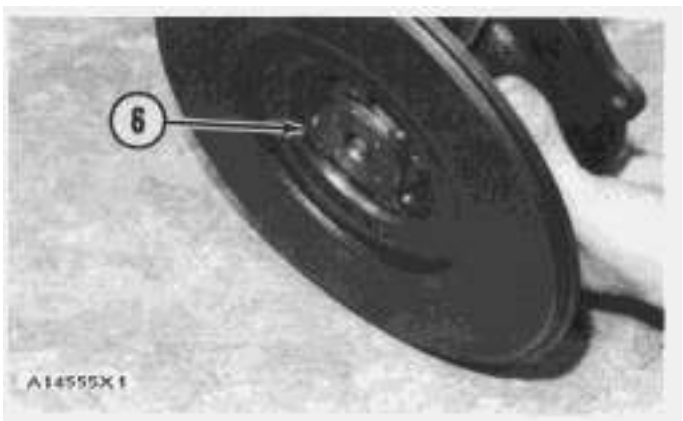

15. Remove plate (6), spacer, collar and thrust bearing from cartridge.

16. Remove seal from plate and ring from spacer.

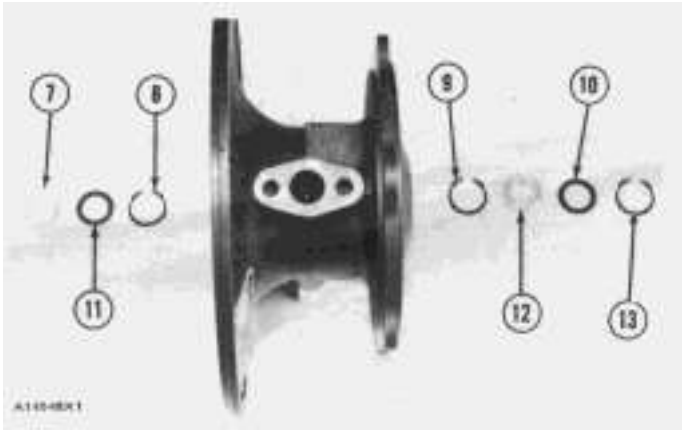

17. Remove bearing (7), washer (11) and snap ring (8) from compressor side of cartridge.

18. Remove snap ring (13), washer (10), bearing (12) and snap ring (9) from turbine side of cartridge.

19. Check all the parts of the turbocharger for damage. If the parts have damage, use new parts for replacement. See SPECIAL INSTRUCTION, Form No. SMHS6854 for TURBOCHARGER RECONDITIONING. Also see GUIDELINE FOR REUSABLE PARTS, Form No. SEBF8018.

Assemble Turbocharger (Airesearch T18)

	Tools Needed	A	B	C
FT745	Modified Pliers	1		
9S6343	Fixture Assembly		1	
8S9946	Holder			1

1. Make sure all oil passages are open and clean. Put clean engine oil on all parts before assembly

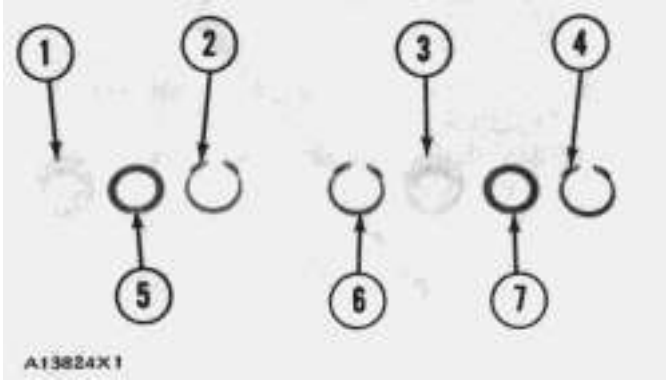

2. Install snap ring (6), bearing (3), washer (7) and snap ring (4) in turbine side of cartridge. Install the two snap rings with tool (A).

NOTE: Install the snap rings with the rounded edge toward the bearing.

3. Install snap ring (2), washer (5) and bearing (1) in compressor side of cartridge.

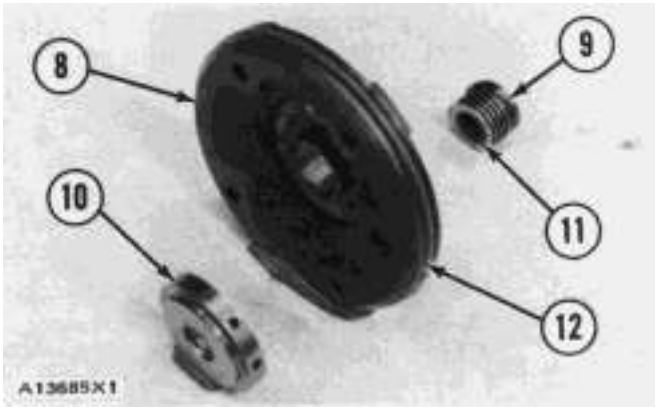

4. Install seal (12) on plate (8) and ring (9) on spacer.

5. Install collar (10) in plate and spacer (11) in collar.

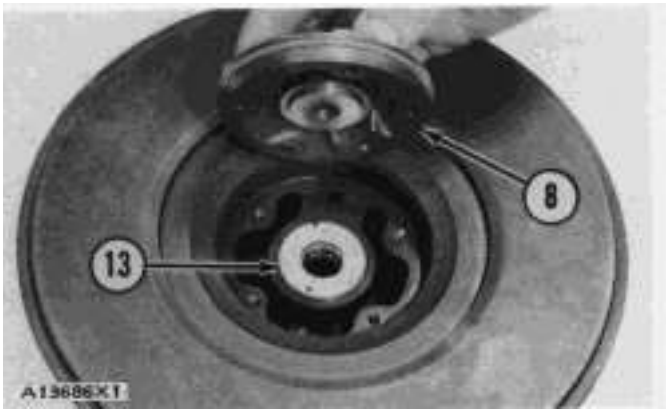

6. Install thrust bearing (13) with the three radial grooves toward the outside.

7. Install plate (8), bolts and locks. Tighten bolts to a torque of 35 ± 5 lb. in. (4.0 ± 0.6 N·m).

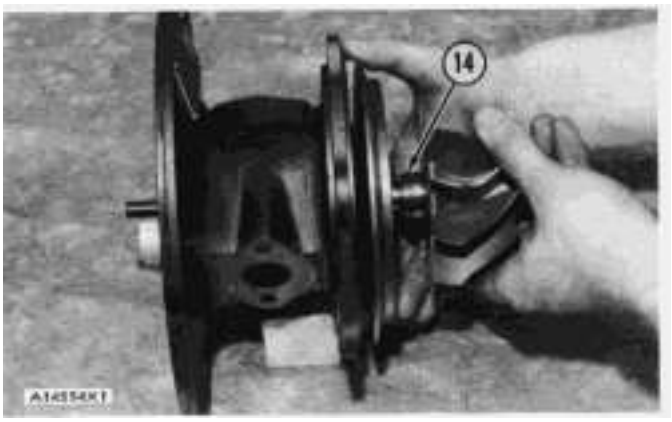

NOTE: Put 6V2055 High Vacuum Grease in the groove for seal ring (14) at assembly to one half or more of the depth of the groove all the way around.

8. Install ring (14) on turbine wheel.

9. Install turbine wheel and shaft in cartridge.

NOTE: Be careful not to break ring (14) when installing shaft.

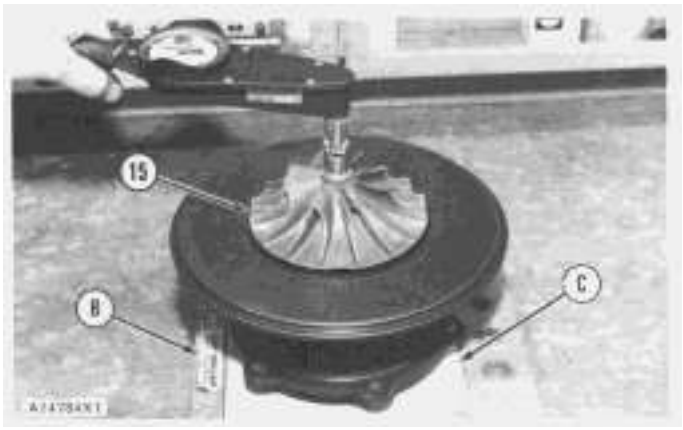

10. Put cartridge on tool (C) and tool (C) on tool (B).

11. Use the following steps for compressor wheel (15) installation:

a) Install the compressor wheel on the shaft by hand.

b) Measure the distance between the compressor wheel and the backplate at the point where the compressor wheel no longer moves freely on the shaft.

c) If the distance between compressor wheel and backplate is more than .310 (7.87 mm), use the procedure as follows:

1) Heat compressor wheel to 350°F ± 25°F (176 ± 14°C) for a maximum of ten minutes.

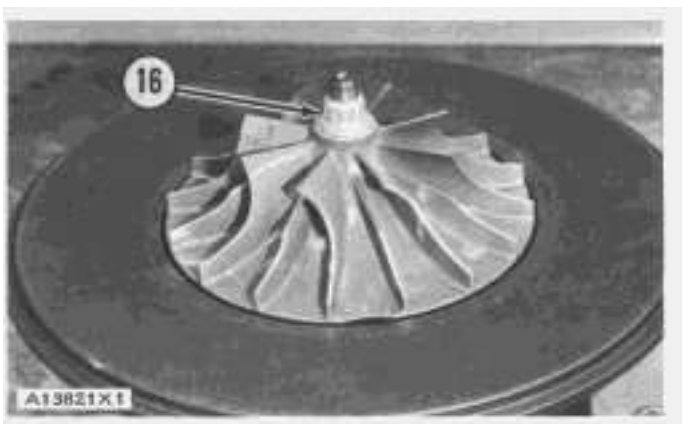

2) Install compressor wheel on shaft and tighten nut (16) to 120 lb. in. (13.6 N·m).

3) Let compressor wheel become cool to below 150°F (65°C).

4) Loosen nut (16) and put oil on the shaft threads and nut face.

5) Tighten nut (16) again to 30 lb. in. (3.4 N·m) + 90°

d) If the distance between compressor wheel and backplate is .310 in. (7.87 mm) or less, proceed as follows:

1) Put the compressor wheel on shaft and tighten nut (16) to a torque of 150 lb. in. (17 N·m).

2) Loosen nut (16) and put oil on the shaft threads and nut face.

3) Tighten nut (16) again to 30 lb. in. (3.4 N·m) + 90°.

NOTICE

Do not put a side force on the shaft when the nut is installed or removed.

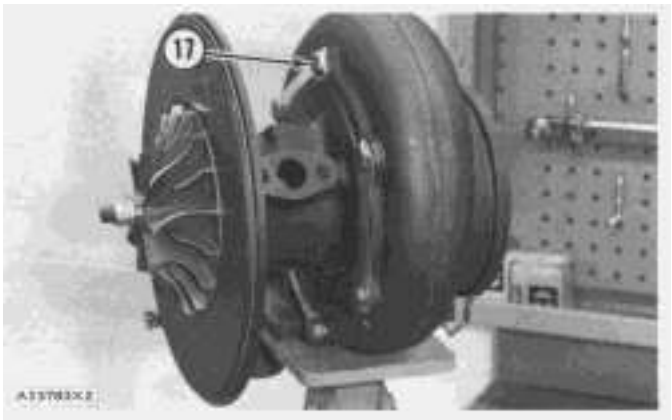

12. Install the cartridge in the turbine housing. Put 5P3931 Anti-Seize Compound on the bolts. Install the locks and bolts (17) in the turbine housing. Tighten the bolts to a torque of 175 ± 15 lb.in. (19.8 ± 1.7 N·m).

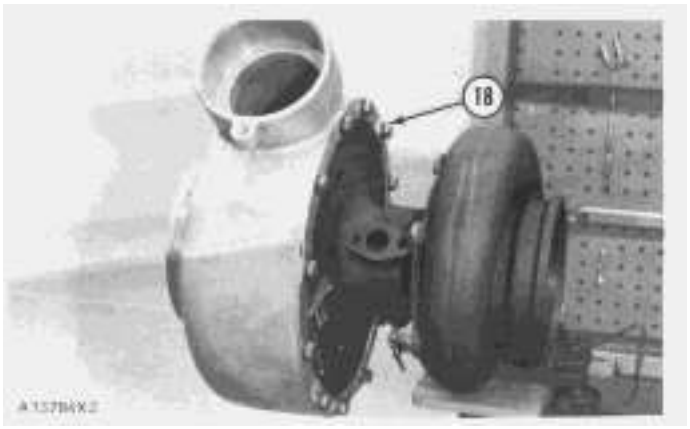

13. Install the compressor housing on the cartridge. Put 8S6747 Gasket Sealer on the threads of bolts (18). Install bolts (18) and tighten to a torque of 105 ± 5 lb.in. (11.9 ± 0.6 N·m).

end by:

a) install turbocharger

Turbocharger (Airesearch TV81)

SMCS - 1052-15; 1052-16

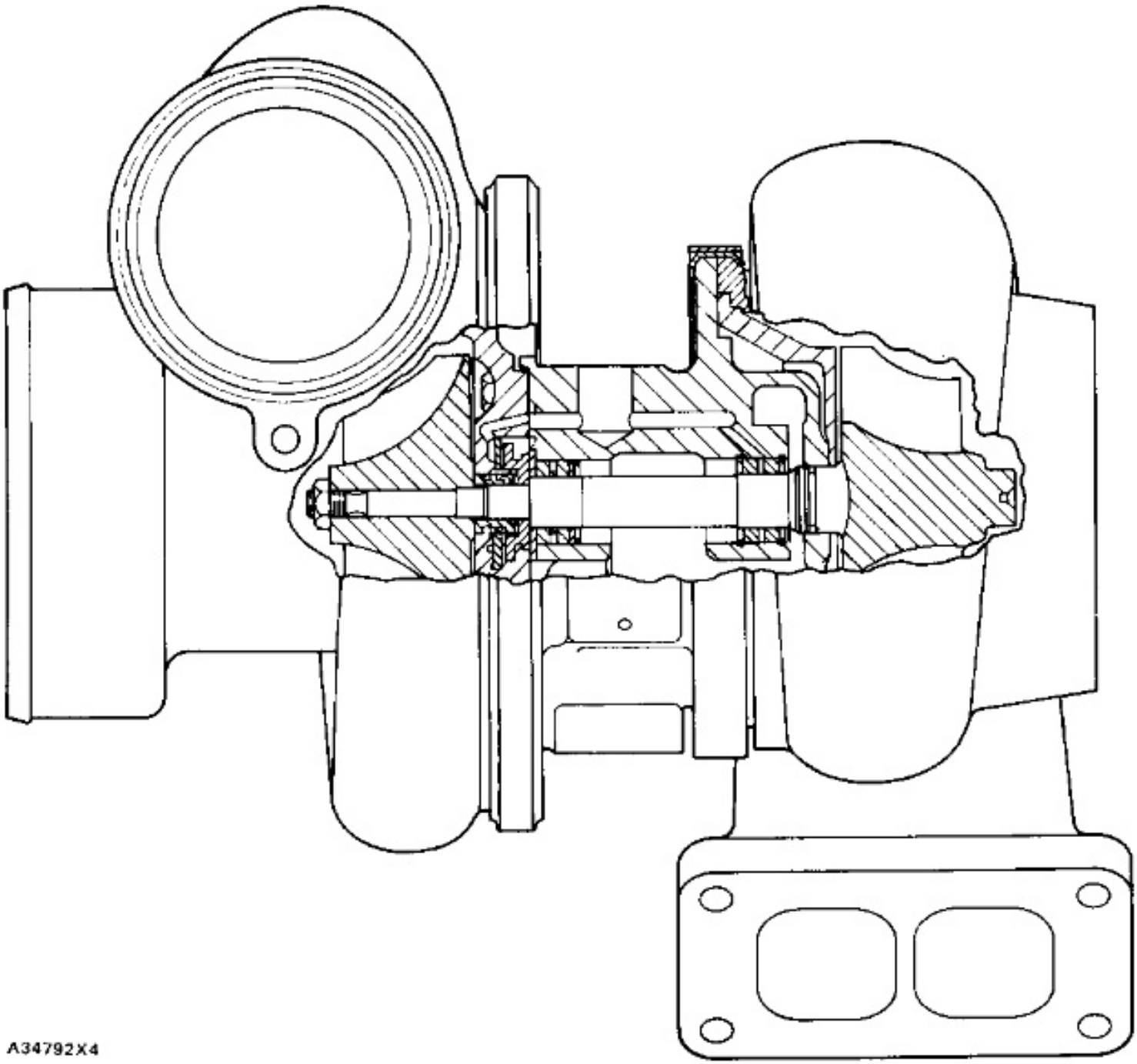

Disassemble Turbocharger

	Tools Needed	A	B	C	D	E	F	G	H	J	K
9S6363	Turbocharger Fixture Group	1									
9S6343	Fixture Group		1								
8S9946	Holder			1							
5S9566	T-Wrench				1						
	Oil Cooker (Thermostat Controlled)					1					
FT174	Driver Tool						1				
FT165	Fixture							1			
FT1354	Adapter								1		
5P6518	Fixture Group									1	
FT745	Modified Pliers										1

start by:

a) remove turbocharger

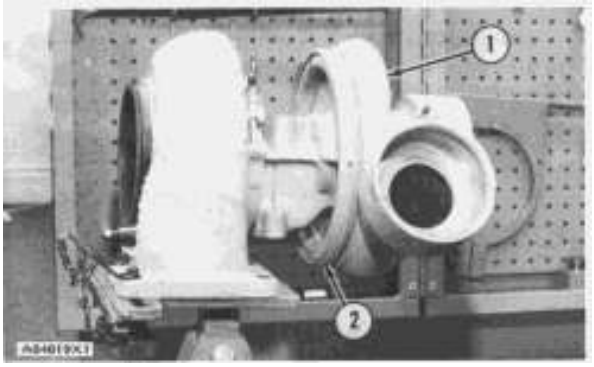

1. Install turbocharger in tool group (A). Put marks on the three housings of the turbocharger for correct installation and alignment at assembly. Remove "V" clamp (2) and compressor housing (1).

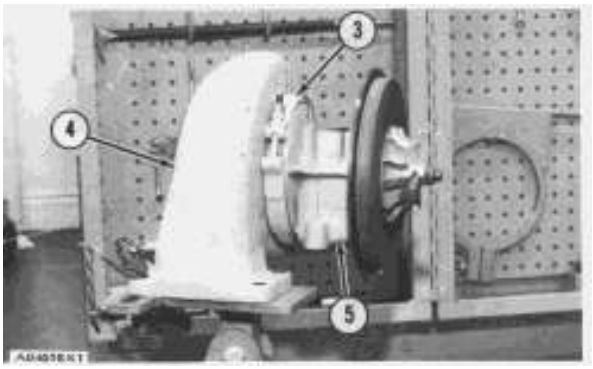

2. Remove "V" clamp (3). Remove the cartridge housing (5) from the turbine housing.

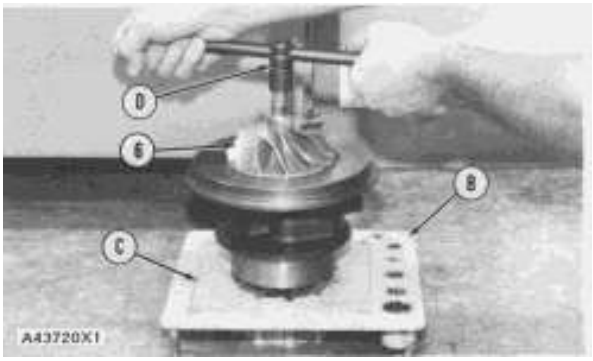

3. Install tool (C) in tool (B) and put the cartridge assembly in tool (C) as shown. Use tool (D) to remove the nut that holds compressor wheel (6).

NOTICE

When the nut is loosened, do not put a side force on the shaft.

NOTE: The compressor wheel can often be removed from the cartridge assembly without the use of the oil cooker. The oil cooker can be used for easier disassembly.

NOTICE

If removal of the compressor wheel is too difficult, damage to parts can be the result.

WARNING

The oil used to heat the compressor wheel must have a flashpoint (the temperature at which the oil will burn) above 400°F (204°C).

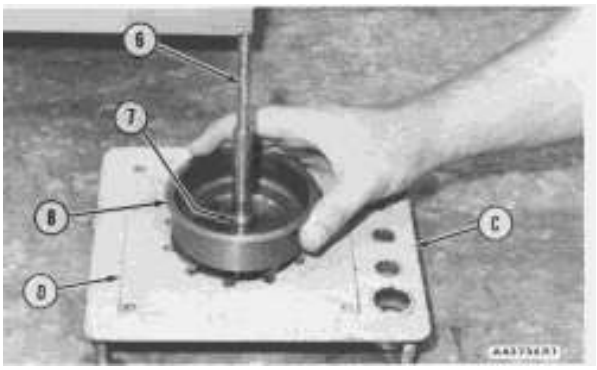

4. Install tool (H) on tool (E). Heat tool (E) to a temperature of 350°C ± 25°F (176°C ± 14°C). Install the cartridge assembly on tool (H) so that only the compressor wheel is in the oil. Heat the compressor wheel for no more than ten minutes.

NOTICE

Do not let the turbine wheel hit the bottom of the press.

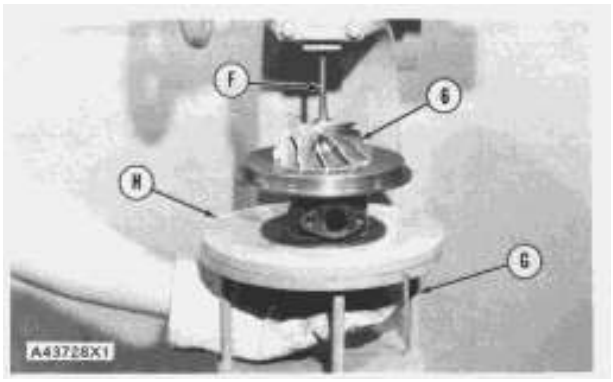

5. Install tool (H) on tool (G). Put the cartridge assembly in tool (H) as shown. Remove compressor wheel (6) with an arbor press and tool (F).

NOTE: Step 5 must be done before the compressor wheel becomes cooler.

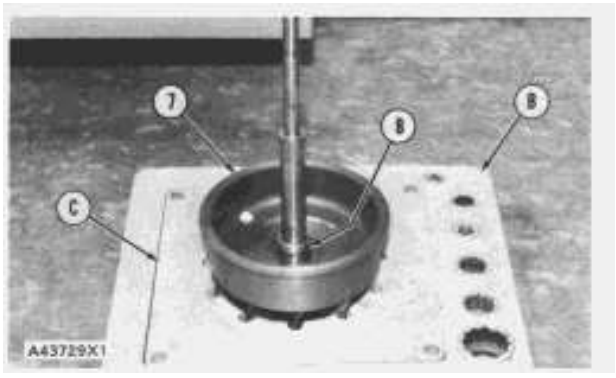

6. Put the turbine wheel in tool (C). Remove seal ring (8) and shroud (7) from the shaft.

7. Use tool (J) to make sure the turbocharger shaft is straight. See SPECIFICATIONS Form SMHS6998-01.

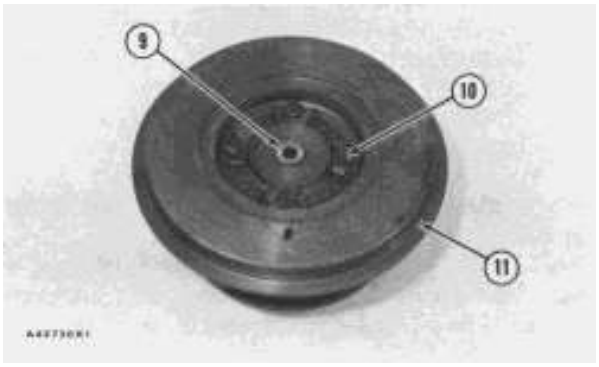

8. Bend the tabs of the locks from bolts (10) and remove the bolts and locks.

9. Remove backplate assembly (11) from the cartridge housing. Remove spacer (9) from backplate assembly (11). Remove the seal rings from spacer (9).

10. Remove the collar from behind backplate assembly (11).

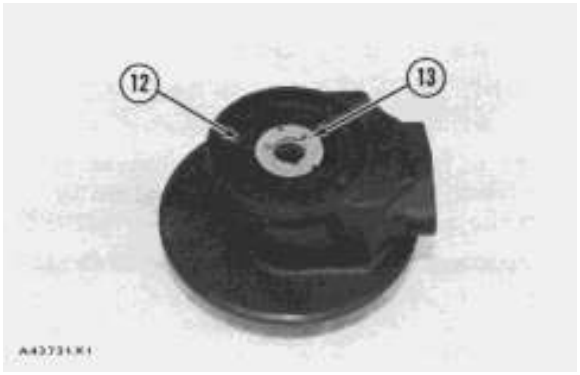

11. Remove thrust bearing (13) and O-ring seal (12) from the cartridge housing.

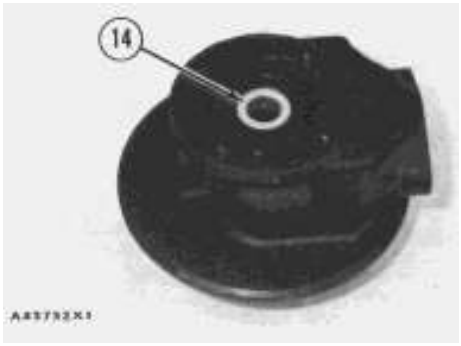

12. Remove top bearing (14) and the washer from the cartridge housing. Put a long dye mark on the top face of bearing (14).

13. Use tool (J) and remove the two rings that hold top and bottom bearings in position. Remove the bottom bearing and washer. Put a short dye mark on the bearing.

NOTE: The dye marks are used for identification of the bearings when they are installed.

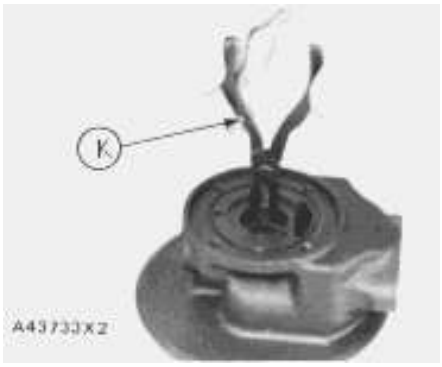

14. Use tool (K) and remove the last ring that holds the bottom bearing in position from the cartridge housing.

15. Check all the parts of the turbocharger for damage. If the parts have damage, use new parts for replacement. See SPECIAL INSTRUCTION FORM NO. SMHS6854 for TURBOCHARGER RECONDITIONING. Also see GUIDELINE FOR REUSABLE PARTS FORM No. SEBF8018.

Assemble Turbocharger (Airesearch TV81)

	Tools Needed	A	B	C	D	E	F	G
FT745	Modified Pliers	1						
	Oil Cooker (Thermostat Controlled)		1					
9S6343	Fixture Assembly			1				
8S9946	Holder				1			
8S2328	Dial Test Indicator Group					1		
5S9566	T-Wrench						1	
9S6363	Turbocharger Fixture Group							1

1. Make sure that all of the oil passages in the turbocharger cartridge housing are clean and free of dirt and foreign material.

2. Put clean engine oil on all parts of the cartridge assembly.

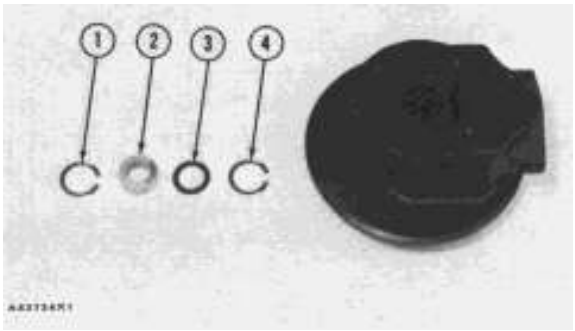

NOTICE

Rings (1), (4) and (5) must be installed with the round edge of the rings toward the bearings.

3. Install ring (4) in the cartridge housing with tool (A).

4. Install washer (3) and bearing (2) in the cartridge housing. Make sure the short dye mark on bearing (2) is up.

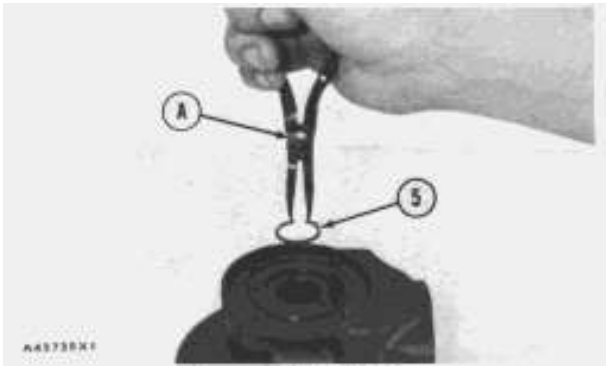

5. Install rings (1) and (5) in the cartridge housing with tool (A).

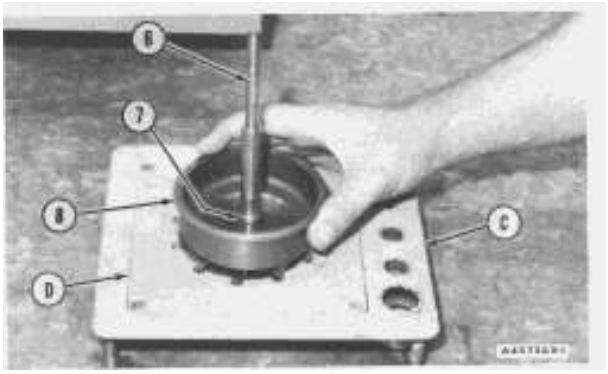

NOTE: Put 6V2055 High Vacuum Grease in the groove for seal ring (7) at assembly to one half or more of the depth of the groove all the way around.

6. Install tool (D) in tool (C). Install turbine shaft (6) in tool (D). Install seal ring (7) and shroud (8) on turbine shaft (6).



7. Install turbine shaft (6) in the cartridge housing.

NOTICE

Make sure the seal ring on turbine shaft (6) is fitted correctly in the cartridge housing.

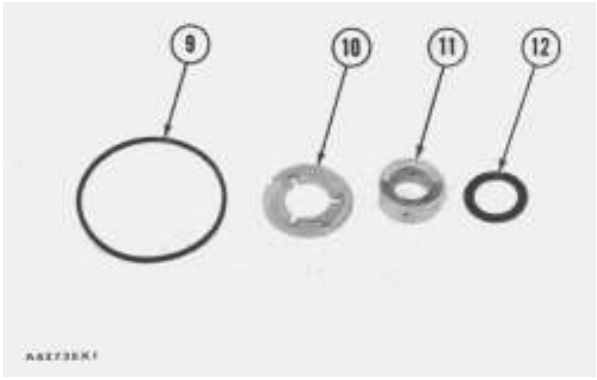

8. Install washer (12), bearing (11) with the long dye mark up, thrust washer (10) with the three lubrication grooves up and O-ring seal (9) in the cartridge housing.

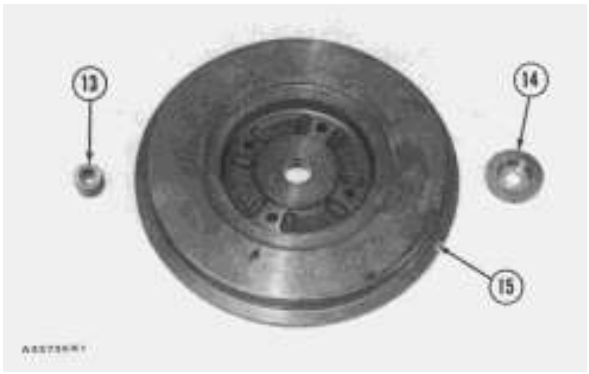

9. Install the seal rings on spacer (13). Install spacer (13) in backplate assembly (15). Make sure the chamfer end of spacer (13) is toward the inside of the cartridge assembly when the backplate assembly is installed.

10. Install collar (14) and backplate assembly (15) on the cartridge assembly with the oil hole in the backplate assembly in alignment with the oil hole in the cartridge housing.

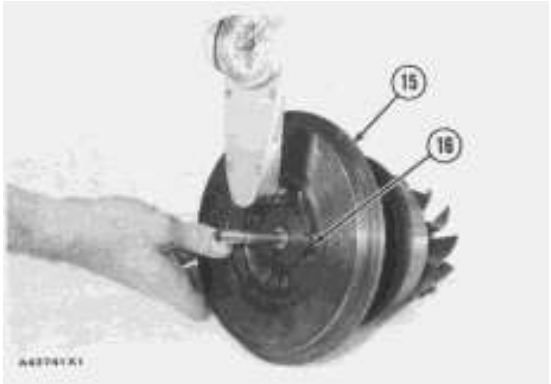

11. Install the locks and bolts (16) that hold backplate assembly (15) in position. Tighten the bolts to a torque of 90 ± 10 lb.in. (10.2 ± 1.1 N·m).

12. Use the following steps for the compressor wheel installation:

a) Install the compressor wheel on the shaft by hand.

b) Measure the distance between the compressor wheel and the backplate at the point where the compressor wheel no longer moves freely on the shaft.

c) If the distance between compressor wheel and backplate is more than .310 in. (7.87 mm), use tool (B) and do the procedure as follows:

1) Heat compressor wheel to 350°F ± 25°F (176 ± 14°C) for a maximum of ten minutes.

2) Install compressor wheel on shaft and tighten nut to 120 lb.in. (13.6 N·m) as shown.

3) Let compressor wheel become cool to below 150°F (65°C).

4) Loosen nut and put oil on the shaft threads and nut face.

5) Tighten nut again to 30 lb.in. (3.4 N·m) + 90°.



d) If the distance between compressor wheel and backplate is .310 in. (7.87 mm) or less, do the procedure as follows:

1) Put the compressor wheel on shaft and tighten nut to a torque of 150 lb.in. (17 N·m) as shown.

2) Loosen nut and put oil on the shaft threads and nut face.

3) Tighten nut again to 30 lb.in. (3.4 N·m) + 90°.

NOTICE

Do not put a side force on the shaft when the nut is installed or removed.

---

13. Make sure the compressor wheel is clean and dry.

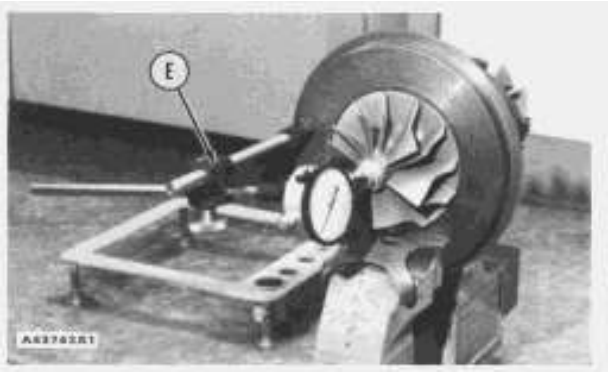

14. Put the cartridge housing in a vise as shown. Check the shaft end play with tool (E). The end play must be .003 to .010 in. (0.08 to 0.25 mm) (new). If the shaft end play is not the correct dimension, the inside parts of the center housing must be checked for too much wear. See TURBOCHARGER (AIRESEARCH TV81) in SPECIFICATIONS.

15. Install the turbine housing on tool group (G). Put the cartridge assembly in position in the turbine housing. Make sure the marks on the housing are in alignment with each other. Put 5P3931 Anti-Seize Compound on the threads of the "V" clamp and tighten the bolt to a torque of 120 ± 10 lb.in. (13.6 ± 1.1 N·m).

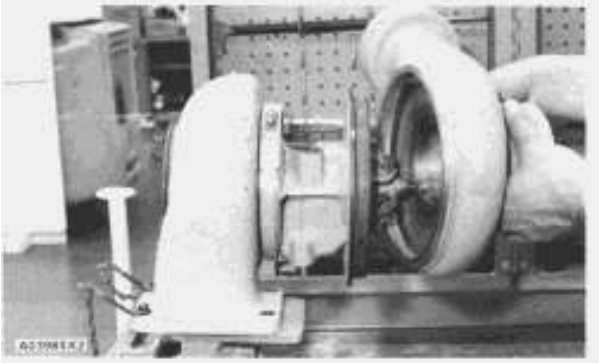

16. Install the compressor housing to the cartridge assembly. Install the "V" clamp that holds the compressor housing to the cartridge housing and tighten the bolt to a torque of 120 ± 10 lb.in. (13.6 ± 1.1 N·m).

end by:

a) install turbocharger

Turbocharger (Airesearch TW61)

SMCS - 1052-15; 1052-16

Disassemble Turbocharger (Airesearch TW61)

	Tools Needed	A	B	C	D	E	F	G	H	J	K
9S6363	Turbocharger Fixture Group	1									
9S6343	Fixture Group		1								
8S9946	Holder			1							
5S9566	T-Wrench Oil Cooker (Thermostat Controlled)				1	1					
FT174	Driver Tool						1				
FT165	Fixture							1			
FT1354	Adapter								1		
5P6518	Fixture Group									1	
FT745	Modified Pliers										1

start by:

a) remove turbocharger

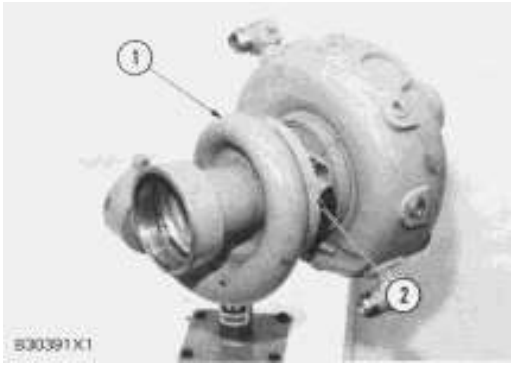

1. Install turbocharger in tool group (A). Put marks on the three housings of the turbocharger for correct installation and alignment at assembly. Remove "V" clamp (2) and compressor housing (1).

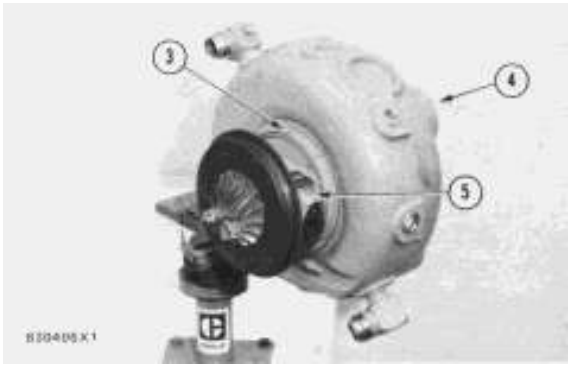

2. Remove "V" clamp (3). Remove the cartridge housing (5) from turbine housing (4).

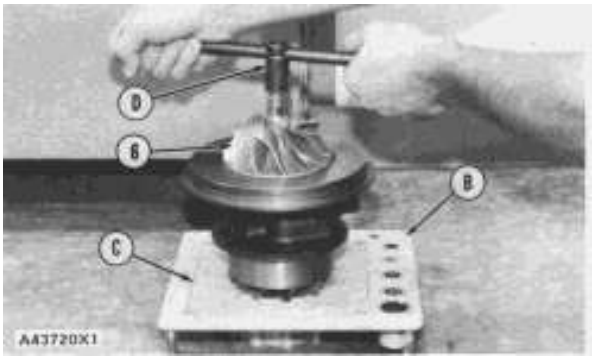

3. Install tool (C) in tool (B) and put the cartridge assembly in tool (C) as shown. Use tool (D) to remove the nut that holds compressor wheel (6).

NOTICE

When the nut is loosened, do not put a side force on the shaft.

NOTE: The compressor wheel can often be removed from the cartridge assembly without the use of the oil cooker. The oil cooker can be used for easier disassembly.

NOTICE

If removal of the compressor wheel is too difficult, damage to parts can be the result.

WARNING

The oil used to heat the compressor wheel must have a flash point (the temperature at which the oil will burn) above 400°F (204°C).

WARNING!



4. Install tool (H) on tool (E). Heat tool (E) to a temperature of 350°F ± 25°F (176°C ± 14°C). Install the cartridge assembly on tool (H) so only the compressor wheel is in the oil. Heat the compressor wheel for no more than ten minutes.

NOTICE

Do not let the turbine wheel hit the bottom of the press.

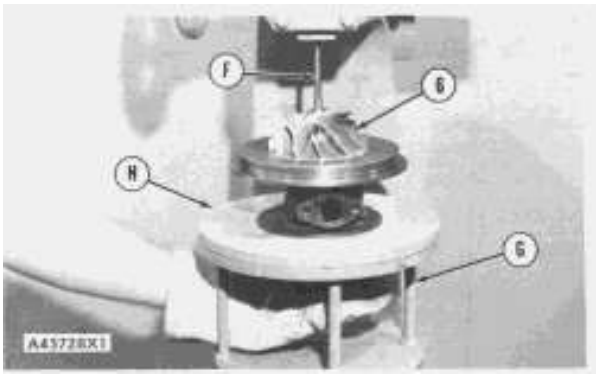

5. Install tool (H) on tool (G). Put the cartridge assembly in tool (H) as shown. Remove compressor wheel (6) with an arbor press and tool (F).

NOTE: Step 5 must be done before the compressor wheel becomes cooler.

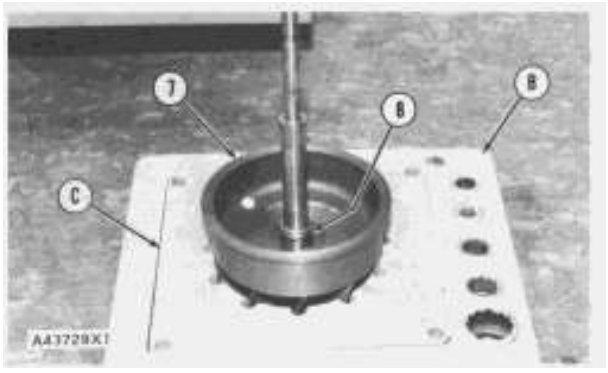

6. Put the turbine wheel in tool (C). Remove seal ring (8) and shroud (7) from the shaft.

7. Use tool (K) to make sure the turbocharger shaft is straight. See SPECIAL INSTRUCTION Form SMHS6998-01.

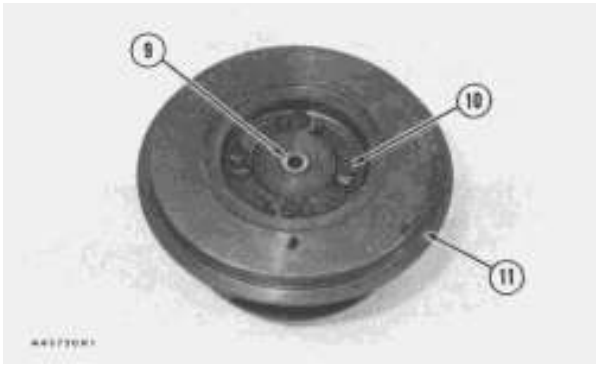

8. Bend the tabs of the locks from bolts (10) and remove the bolts and locks.

9. Remove backplate assembly (11) from the cartridge housing. Remove spacer (9) from backplate assembly (11). Remove the seal rings from spacer (9).

10. Remove collar from behind backplate assembly (11).

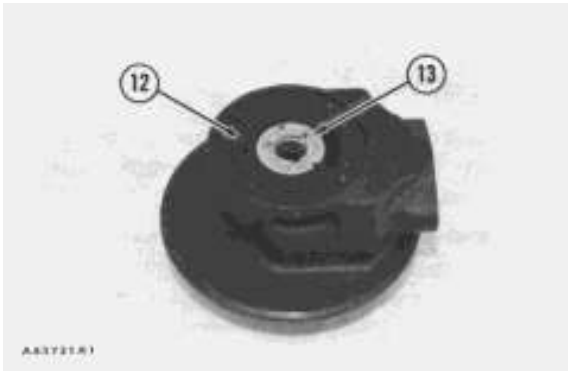

11. Remove thrust bearing (13) and O-ring seal (12) from the cartridge housing.

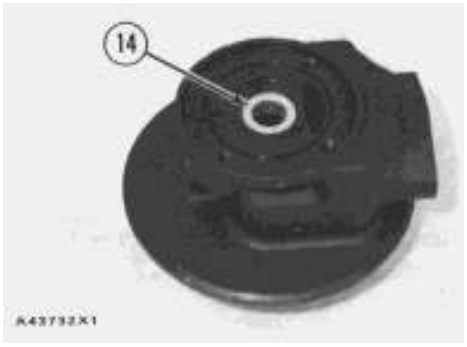

12. Remove top bearing (14) and the washer from the cartridge housing. Put a long dye mark on the top face of bearing (14).

13. Use tool (J) and remove the two rings that hold top and bottom bearings in position. Remove the bottom bearing and washer. Put a short dye mark on the bearing.

NOTE: The dye marks are used for identification of the bearings when they are installed.

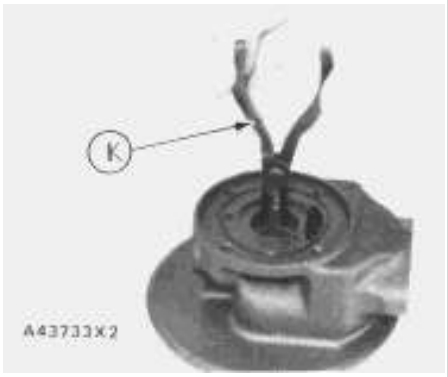

14. Use tool (K) and remove the last ring that holds the bottom bearing in position from the cartridge housing.

15. Check all the parts of the turbocharger for damage. If the parts have damage, use new parts for replacement. See SPECIAL INSTRUCTION FORM NO. SMHS6854 for TURBOCHARGER RECONDITIONING. Also see GUIDELINE FOR REUSABLE PARTS Form No. SEBF8018.

Assemble Turbocharger (Airesearch TW61)

	Tools Needed	A	B	C	D	E	F	G
FT745	Modified Pliers	1						
	Oil Cooker (Thermostat Controlled)		1					
9S6343	Fixture Assembly			1				
8S9946	Holder				1			
8S2328	Dial Test Indicator Group					1		
5S9566	T-Wrench						1	
9S6363	Turbocharger Fixture Group							1

1. Make sure that all of the oil passages in the turbocharger cartridge housing are clean and free of dirt and foreign material.

2. Put clean engine oil on all parts of the cartridge assembly.

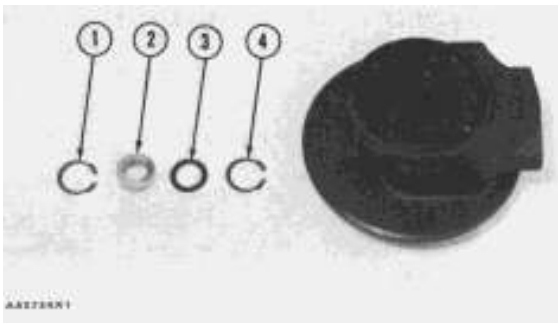

NOTICE

Rings (1), (4) and (5) must be installed with the round edge of the rings toward the bearings.

3. Install ring (4) in the cartridge housing with tool (A).

4. Install washer (3) and bearing (2) in the cartridge housing. Make sure the short dye mark on bearing (2) is up.

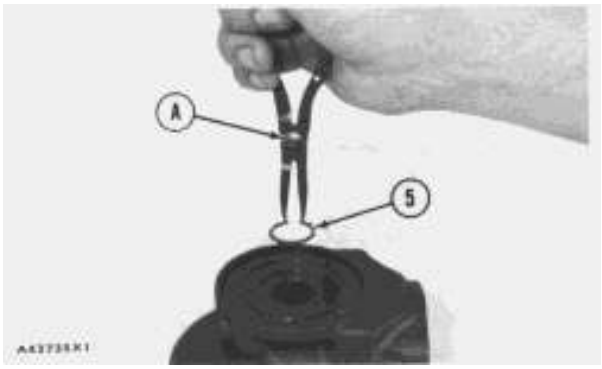

5. Install rings (1) and (5) in the cartridge housing with tool (A).

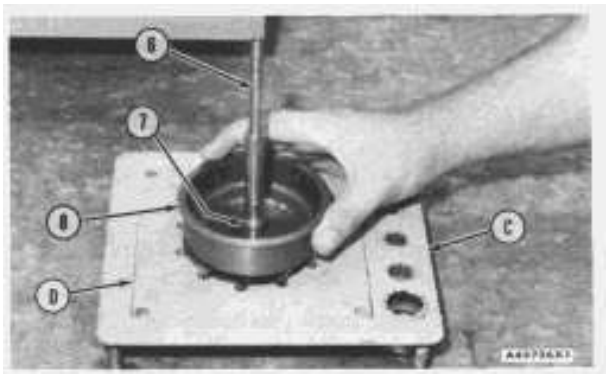

NOTE: Put 6V2055 High Vacuum Grease in the groove for seal ring (7) at assembly to one half or more of the depth of the groove all the way around.

6. Install tool (D) in tool (C). Install turbine shaft (6) in tool (D). Install seal ring (7) and shroud (8) on turbine shaft (6).

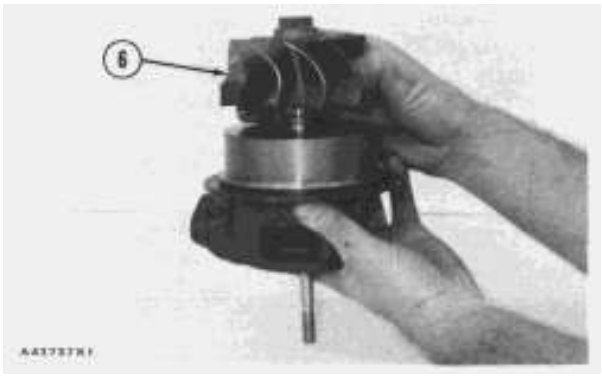

7. Install turbine shaft (6) in the cartridge housing.

NOTICE

Make sure the seal ring on turbine shaft (6) is fitted correctly in the cartridge housing.

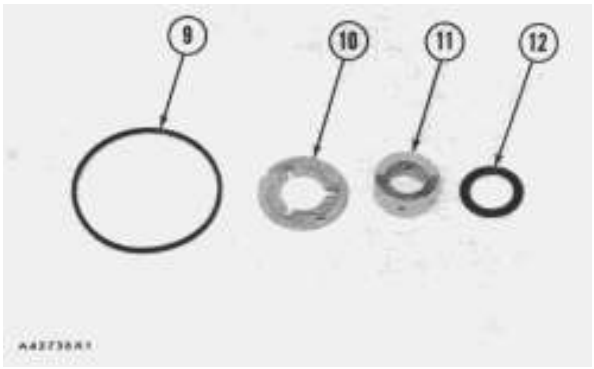

8. Install washer (12), bearing (11) with the long dye mark up, thrust washer (10) with the three lubrication grooves up and O-ring seal (9) in the cartridge housing.



9. Install the seal rings on spacer (13). Install spacer (13) in backplate assembly (15). Make sure the chamfer end of spacer (13) is toward the inside of the cartridge assembly when the backplate assembly is installed.

10. Install collar (14) and backplate assembly (15) on the cartridge assembly with the oil hole in the backplate assembly in alignment with the oil hole in the cartridge housing.

11. Install the locks and bolts (16) that hold backplate assembly (15) in position. Tighten the bolts to a torque of 90 ± 10 lb.in. (10.2 ± 1.1 N·m).

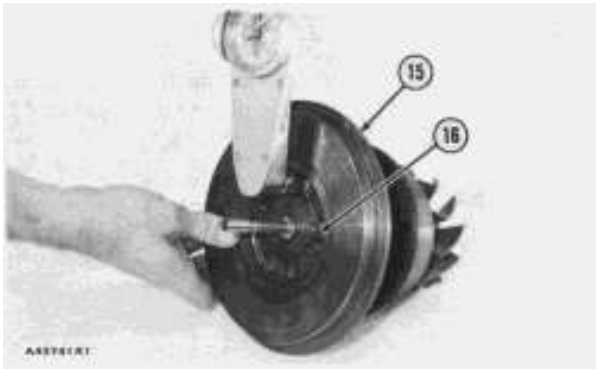

12. Use the following steps for the compressor wheel installation:

a) Install the compressor wheel on the shaft by hand.

b) Measure the distance between the compressor wheel and the backplate at the point where the compressor wheel no longer moves freely on the shaft.

c) If the distance between compressor wheel and backplate is more than .310 in. (7.87 mm), use tool (B) and do the procedure as follows:

1) Heat compressor wheel to 350°F ± 25°F (176 ± 14°C) for a maximum of ten minutes.

2) Install compressor wheel on shaft and tighten nut to 120 lb.in. (13.6 N·m) as shown.

3) Let compressor wheel become cool to below 150°F (65°C).

4) Loosen nut and put oil on the shaft threads and nut face.

5) Tighten nut again to 30 lb.in. (3.4 N·m) + 20°.



d) If the distance between compressor wheel and backplate is .310 in. (7.87 mm) or less, do the procedure as follows:

1) Put the compressor wheel on shaft and tighten nut to a torque of 120 lb.in. (14 N·m) as shown.

2) Loosen nut and put oil on the shaft threads and nut face.

3) Tighten nut again to 30 lb.in. (13.6 N·m) + 120°.

NOTICE

Do not put a side force on the shaft when the nut is installed or removed.

---

13. Make sure the compressor wheel is clean and dry.

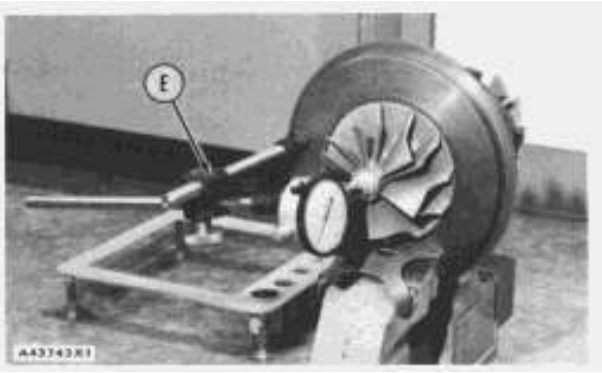

14. Put the cartridge housing in a vise as shown. Check the shaft end play with tool (E). The end play must be .003 to .010 in. (0.08 to 0.25 mm) (new). If the shaft end play is not the correct dimension, the inside parts of the center housing must be checked for too much wear. See TURBOCHARGER (AIRESEARCH TW61) in SPECIFICATIONS.

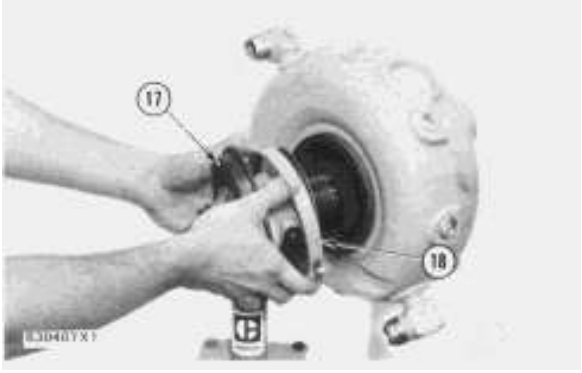

15. Install the turbine housing on tool group (G). Put the cartridge assembly in position in the turbine housing. Make sure the marks on the housing are in alignment with each other. Put 5P3931 Anti-Seize Compound on the threads of the "V" clamp (18) and tighten the bolt to a torque of 120 ± 10 lb.in. (13.6 ± 1.1 N·m).

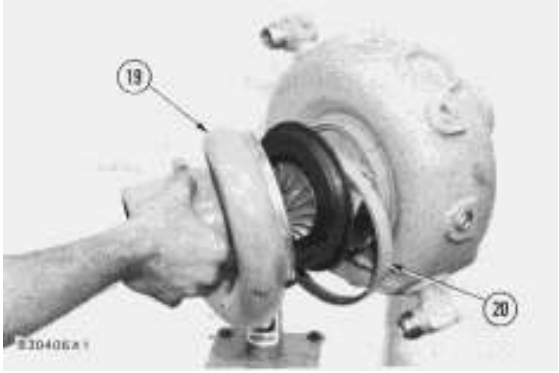

16. Install the compressor housing to the cartridge assembly. Install the "V" clamp that holds the compressor housing to the cartridge housing and tighten the bolt to a torque of 120 ± 10 lb.in. (13.6 ± 1.1 N·m).

end by:

a) install turbocharger

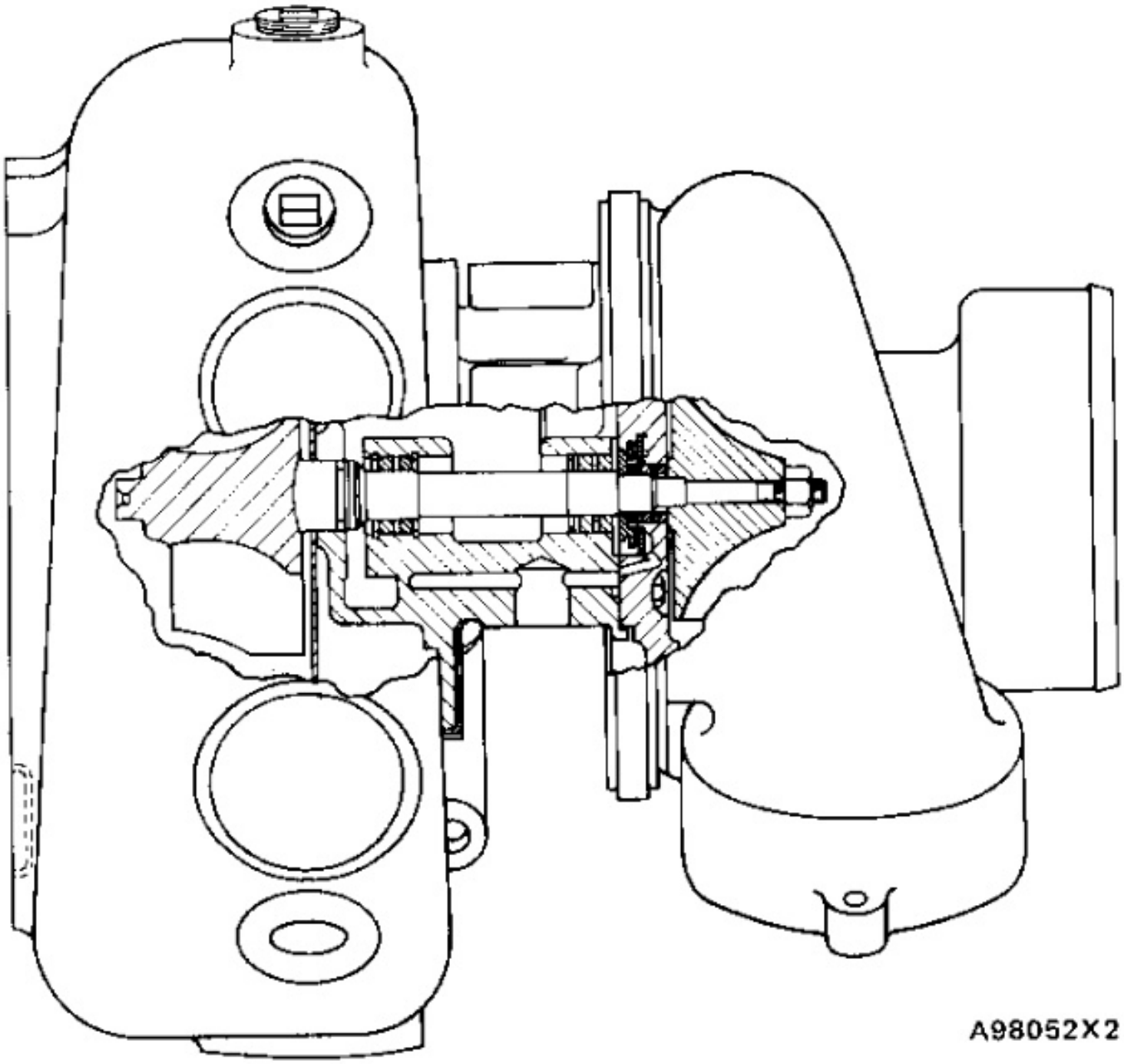

https://barringtondieselclub.co.za/

Turbocharger (Schwitzer F444, 4L504 and E Models)

SMCS - 1052-15; 1052-16

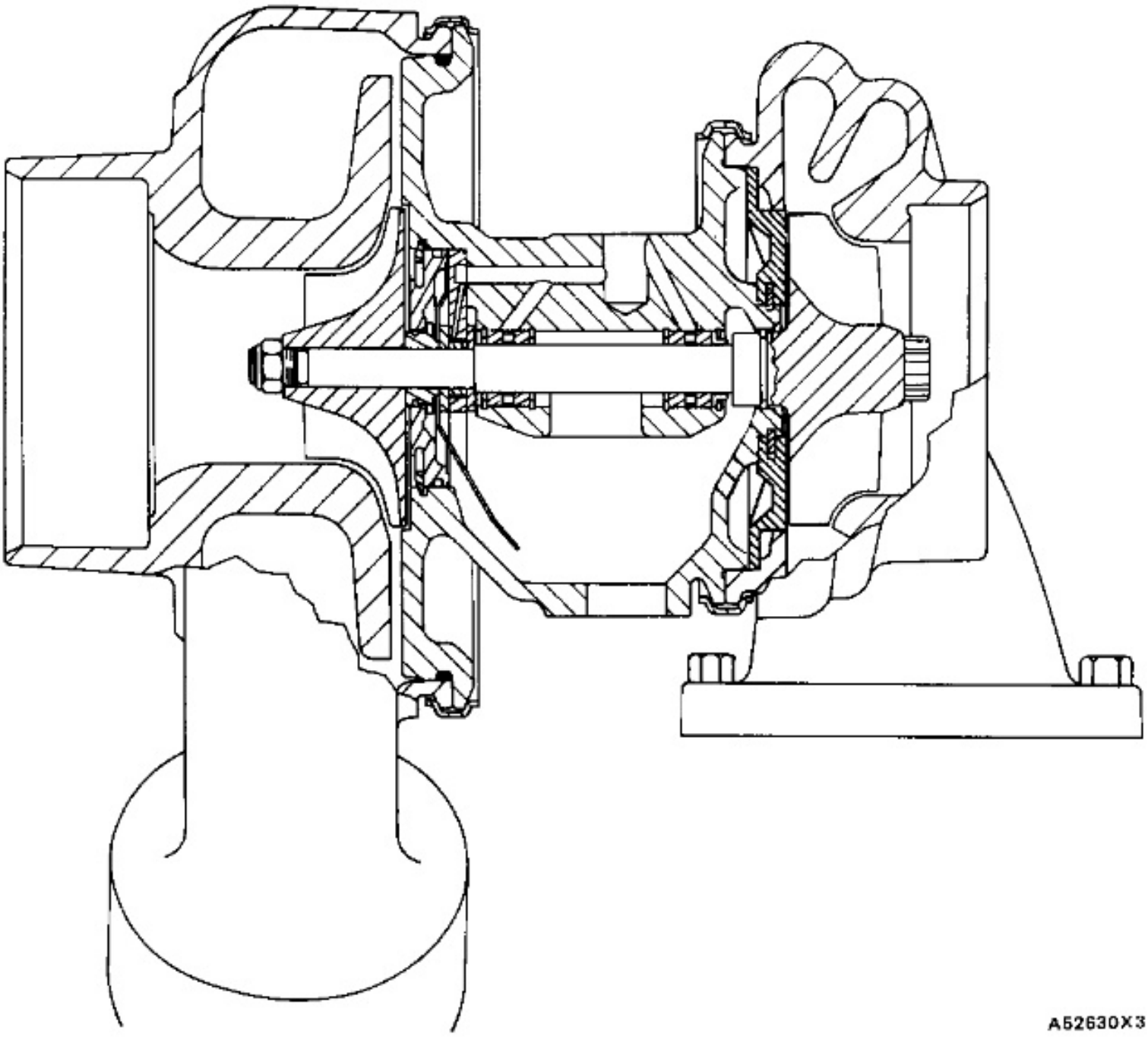

Disassemble Turbocharger

Tools Needed		A	B	C
9S6363	Tubrocharger Fixture Group	1		
9S6343	Fixture Assembly		1	
FT745	Modified Pliers			1

start by:

a) remove turbocharger

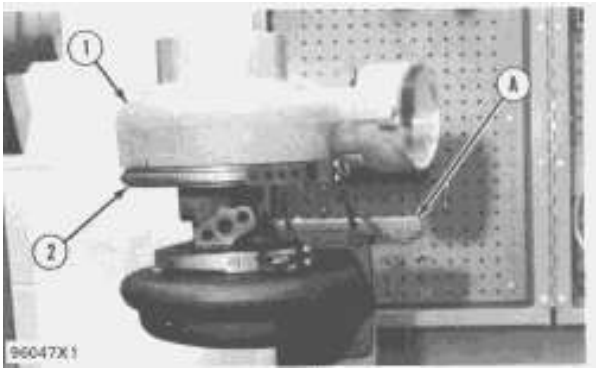

1. Put the turbocharger in position on tool (A).

2. Put a mark on the compressor cover and housings for installation purpose.

3. Remove "V" clamp (2) and remove compressor cover (1).

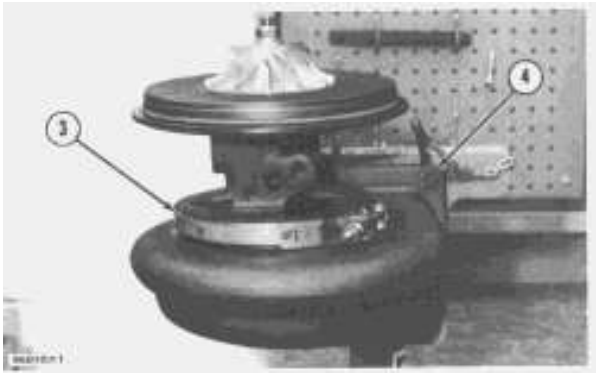

4. Remove "V" clamp (3) and remove shaft housing from turbine housing (4).

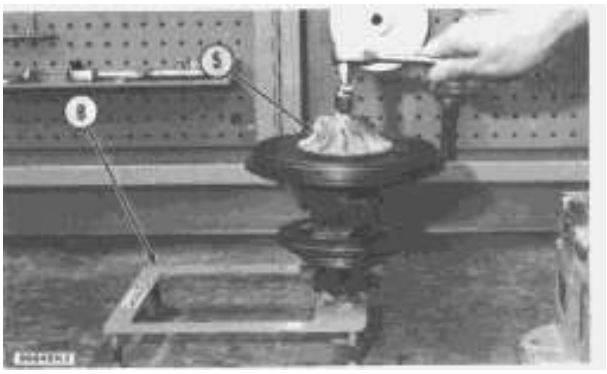

5. Put shaft housing in tool (B). Remove nut and compressor wheel (5) from the shaft.

NOTICE

Do not put a side force on the turbine shaft when the nut is loosened.

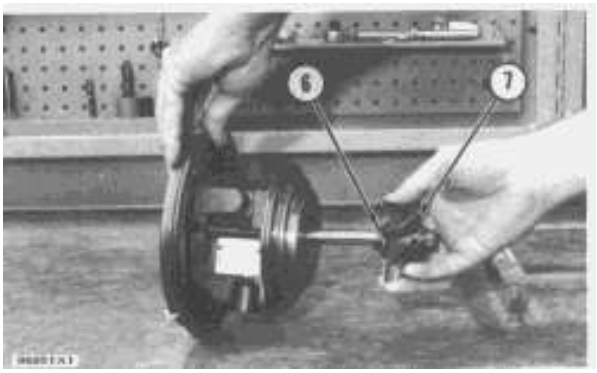

6. Remove shaft housing from tool (B) and remove turbine wheel (7) and shaft from housing.

7. Remove seal ring (6) from the turbine wheel.

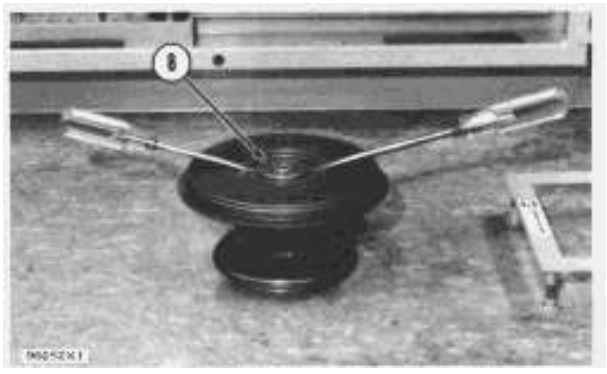

8. Remove snap ring and insert (8) from the housing



9. Push the sleeve (9) out of the insert. Remove the two seal rings from the sleeve.

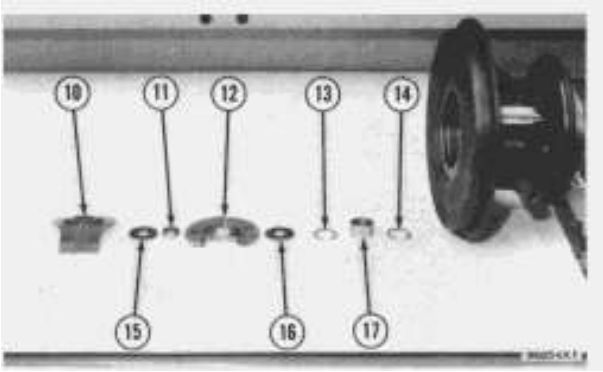

10. Remove deflector (10), ring (15), sleeve (11), bearing (12), ring (16), snap ring (13), bearing (17) and snap ring (14) from the housing. Remove snap rings (13) and (14) with tool (C).

NOTE: Check the oil hole in bearing (12). If the oil hole is not open this will cause a bearing failure.

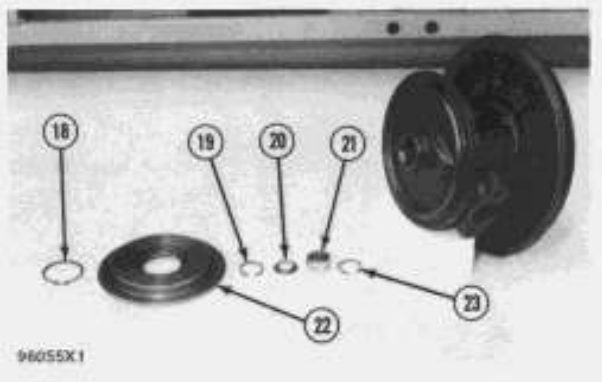

11. Turn the housing around and remove snap ring (18) and shroud (22).

12. Remove snap ring (19), sleeve (20), bearing (21), and snap ring (23). Remove the two snap rings with tool (C).

13. Inspect all parts and install new parts as needed.

Assemble Turbocharger

	Tools Needed	A	B	C
FT745	Modified Pliers	1		
9S6343	Fixture Assembly		1	
9S6363	Turbocharger Fixture Group			1

1. Make sure all oil passages are open and clean. Put clean engine oil on all parts before assembly.

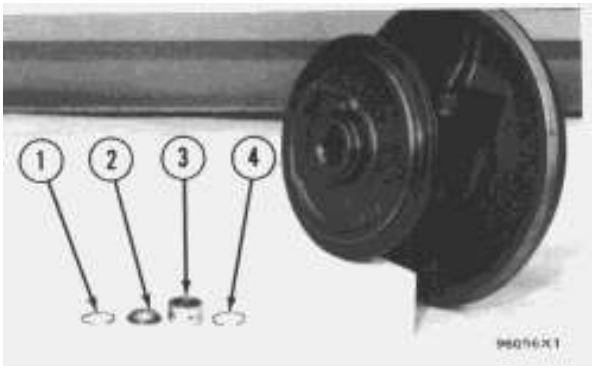

2. Install snap ring (4), bearing (3), sleeve (2) and snap ring (1). Use tool (A) to install the two snap rings with the round side of the rings toward the bearing.

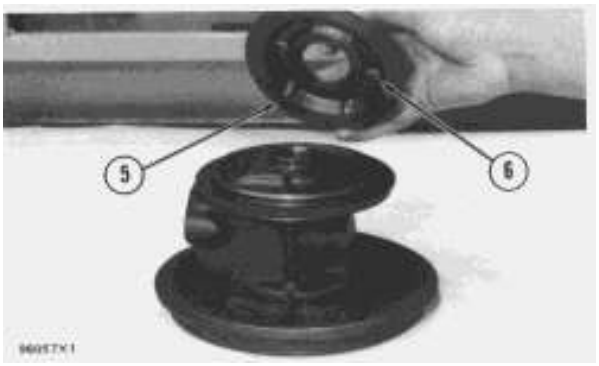

3. Install shroud (5) on the housing. Turn the shroud to make sure it is down on the housing even. The high part (web) (6) on shroud will keep the shroud from turning on the housing after assembly.

4. Install snap ring that holds the shroud in place.

5. Install the bearing and two snap rings in the compressor end of the housing. Use tool (A) to install the two snap rings with the round side of the rings toward the bearing.

NOTE: Put 6V2055 High Vacuum Grease in the groove for seal ring (15) at assembly to one half or more of the depth of the groove all the way around the shaft.

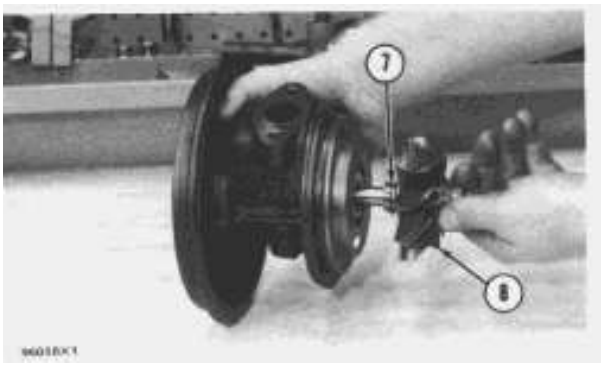

6. Install seal ring (7) on the shaft. Install turbine wheel (8) and shaft in the housing.

7. Put housing in position on tool (B).

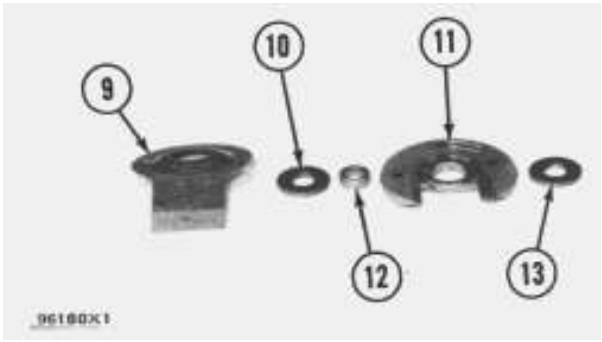

8. Install ring (13), bearing (11), sleeve (12), ring (10) and deflector (9) in the housing.

NOTICE

The oil hole in bearing (11) must be open and clean.

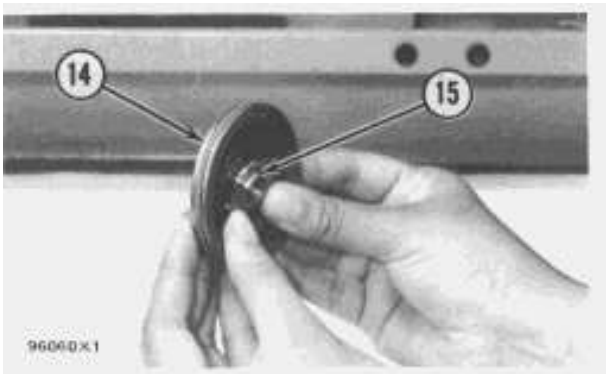

9. Install the seal rings on sleeve (15). Install sleeve in insert (14).



10. Install insert in the housing and install snap ring (17).

11. Install compressor wheel (16) on shaft.



12. Put clean engine oil on the threads of the shaft. Install the nut (18) and tighten to a torque of 15 ± 1 lb.ft. (20 ± 1 N·m).

NOTICE

Do not put a side force on the shaft when the nut is tightened.

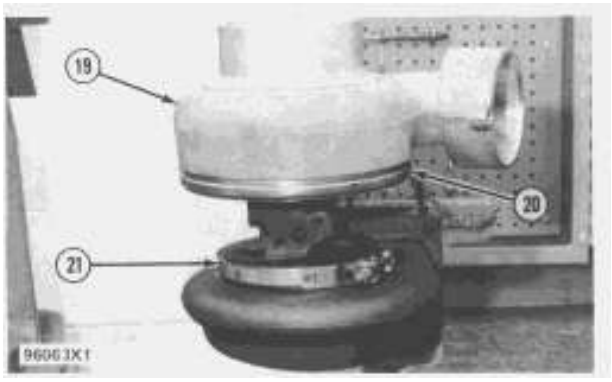

13. Install shaft housing into the turbine housing. Install "V" clamp (21) and tighten clamp to a torque of 120 lb.in. (14 N·m).

14. Install compressor cover (19) and "V" clamp (20). Tighten "V" clamp to a torque of 120 lb.in. (14 N·m).

end by:

a) install turbocharger

Turbocharger (Schwitzer 3LM)

SMCS - 1052-15; 1052-16

Disassemble Turbocharger

	Tools Needed	A	B	C	D
9S6363	Turbocharger Fixture Group	1			
9S6343	Fixture Assembly		1		
5S9566	T-Wrench			1	
1P1861	Snap Ring Pliers				1

start by:

a) remove turbocharger

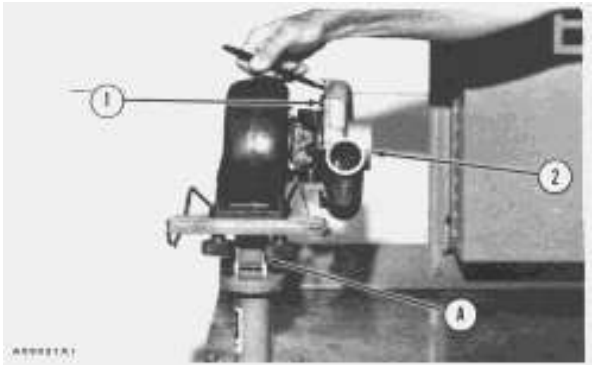

1. Install turbocharger on tool group (A). Put marks on the three housings of the turbocharger for correct installation and alignment at assembly.

2. Remove eight bolts (1) and lockwashers. Remove four plates and compressor housing (2).

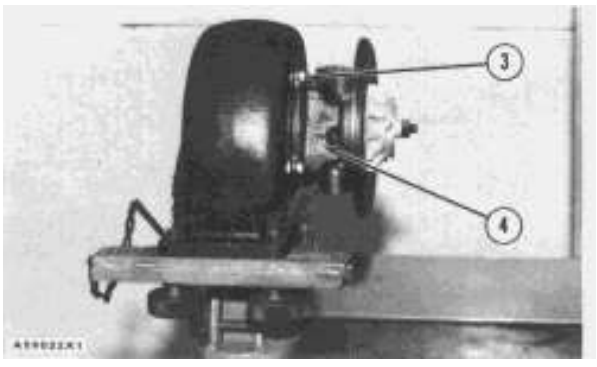

3. Remove two locks, two plates and four bolts (3) that hold the cartridge housing to the turbine housing. Remove cartridge housing (4).

NOTICE

Do not put a side force on the shaft when the nut is loosened.

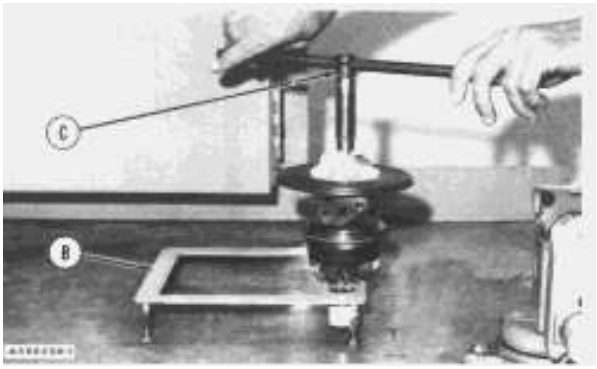

4. Put the cartridge assembly on tool (B) as shown. Use tool (C) and the correct size socket to remove the nut that holds compressor wheel (5) on the shaft.



5. Hold the cartridge assembly down in tool (B) and lift and turn the compressor wheel (5) at the same time to remove it from the shaft.

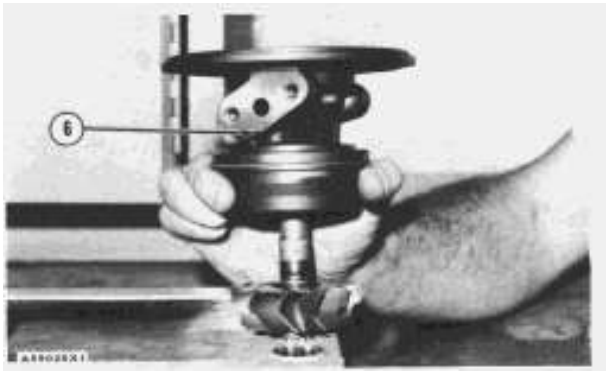

6. Remove cartridge assembly (6) from the shaft.

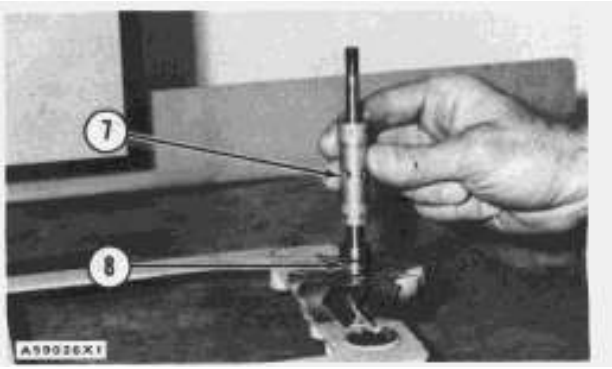

7. Remove bearing (7) and ring (8) from the shaft.



8. Remove ring (9) from the housing assembly with tool (D).



9. Remove the insert, sleeve and deflector from the housing assembly as a unit. Use two screwdrivers to remove the unit.

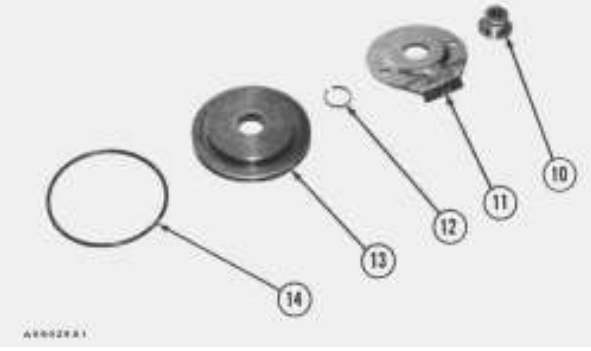

10. Remove O-ring seal (14) from insert (13). Remove sleeve (10) from the insert and deflector (11). Remove ring (12) from the sleeve.



11. Remove bearing (15) from the housing assembly.

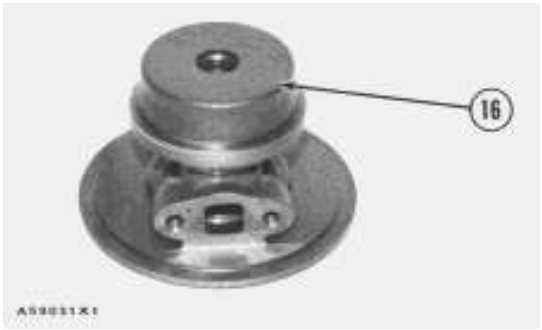

12. Turn the housing assembly over. Remove shroud (16) and the gasket from the housing assembly.

Assemble Turbocharger

	Tools Needed	A	B	C
9S6343	Fixture Assembly	1		
1P1861	Snap Ring Pliers		1	
9S6363	Turbocharger Fixture Group			1

1. Make sure that all of the oil passages in the cartridge housing assembly are clean and free of dirt and foreign material. Put clean oil on all the parts of the cartridge assembly.

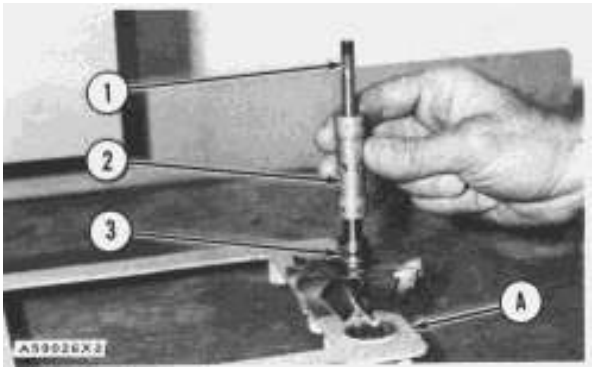

2. Put shaft (1) in position in tool (A). Install ring (3) and bearing (2) in the shaft as shown.

NOTE: Put 6V2055 High Vacuum Grease in the groove for seal ring (3) at assembly to one half or more of the depth of the groove all the way around the shaft.

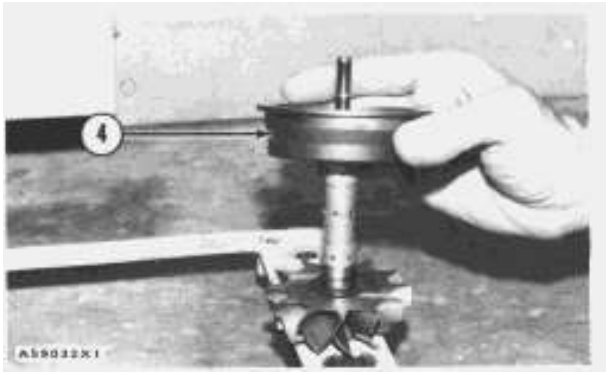

3. Put shroud (4) in position on the shaft as shown.



4. Put gasket (6) in position on the shroud. Install housing assembly (5) over the shaft.



5. Install bearing (7) in the housing assembly. Make sure the bronze side of the bearing is up.

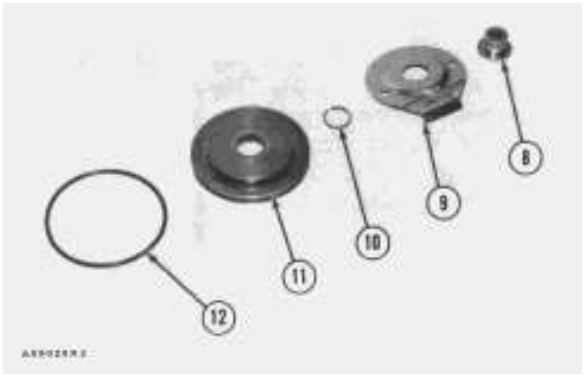

6. Put deflector (9) in position over sleeve (8).

7. Install ring (10) in the groove on the sleeve. Push the sleeve into insert (11). Install O-ring seal (12) on the insert.



8. Install the insert, deflector and sleeve as a unit in the housing assembly as shown.



9. Install ring (13) in the groove in the housing assembly with tool (B).



10. Put compressor wheel (14) in position on the shaft.



TYPICAL EXAMPLE

NOTICE

Do not put a side force on the shaft when the nut that holds the compressor wheel in position is tightened.

11. Install the nut that holds the compressor wheel in position. Tighten the nut to a torque of 165 ± 15 lb.in. (18.7 ± 1.7 N·m).

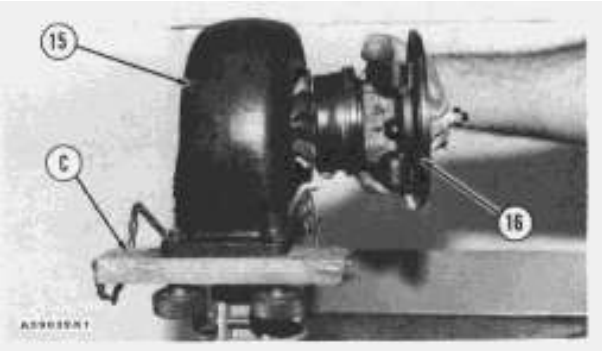

12. Put turbine housing (15) in position on tool (C). Put cartridge assembly (16) in position in the housing. Make sure the mark on the cartridge assembly is in alignment with the mark on the housing. Put 5P3931 Anti-Seize Compound on the threads of the bolts that hold cartridge assembly to the turbine housing. Install the two locks, two plates and four bolts that hold the cartridge assembly to the turbine housing. Tighten the bolts to a torque of 11 to 12 lb.ft. (15 to 17 N·m). Bend the locks over the bolts.

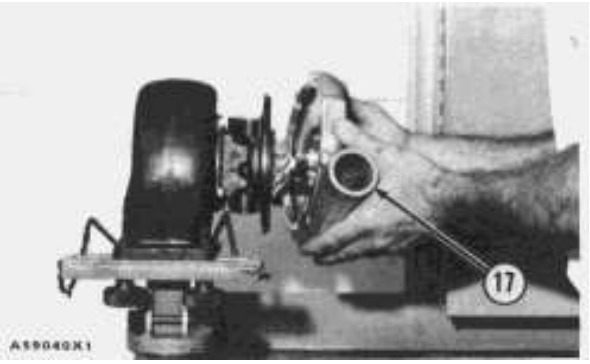

13. Put compressor housing (17) in position on the cartridge assembly. Make sure the mark on the housing is in alignment with mark on the cartridge assembly. Put 5P3931 Anti-Seize Compound on the threads of the bolts that hold the compressor housing to the cartridge assembly. Install the four plates and eight bolts and lockwashers that hold the compressor housing in position. Tighten the eight bolts to a torque of 60 lb.in. (6.8 N·m).

end by:

a) install turbocharger

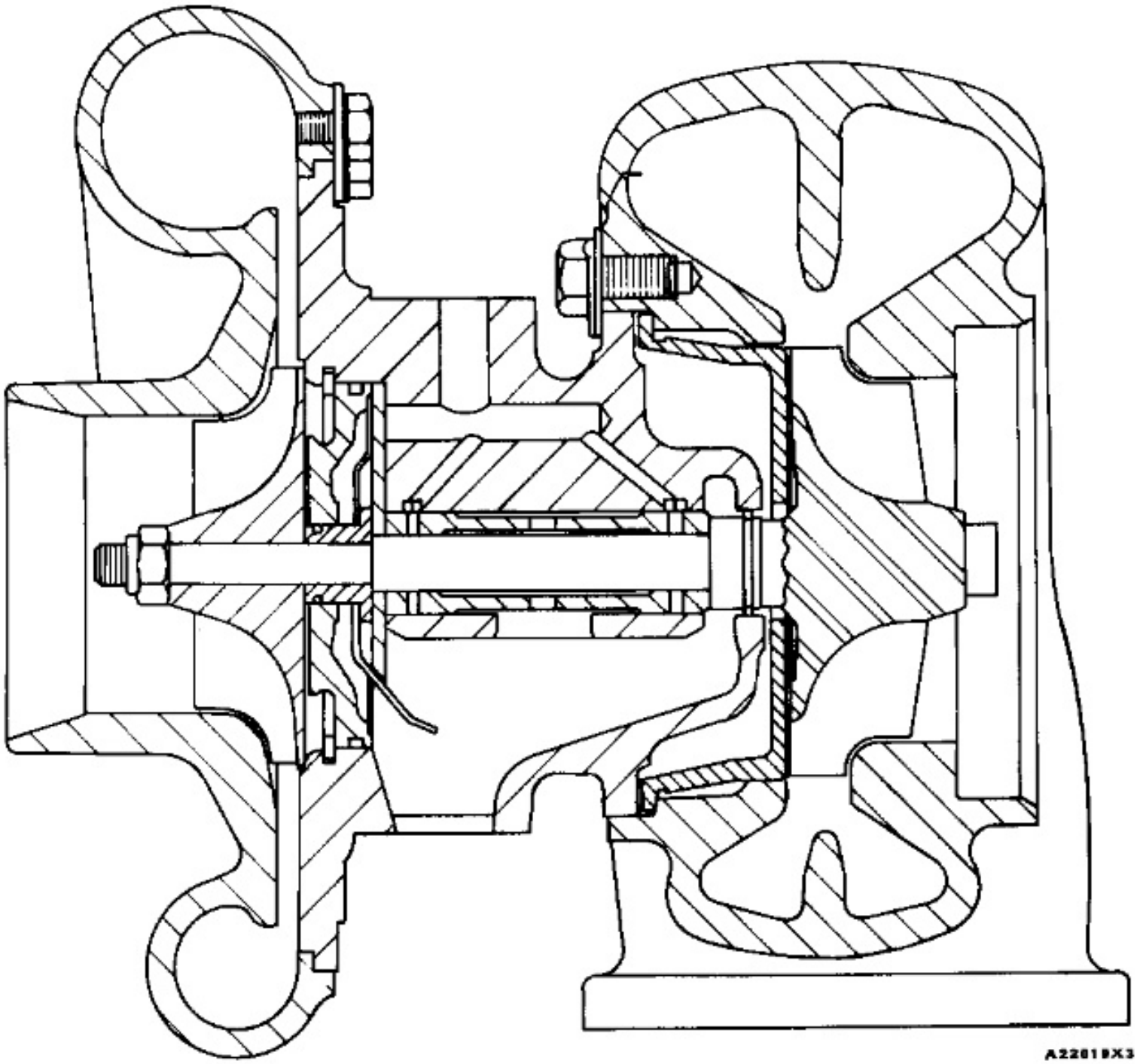
A22618X3

Exhaust Manifold

SMCS - 1059-11; 1059-12

Remove Exhaust Manifold (Industrial Engine)

start by:

a) remove turbocharger

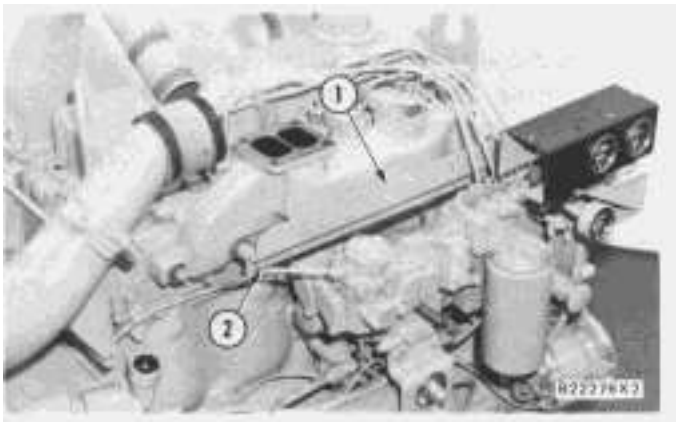

1. Remove two nuts (2) and shield (1) from engine.

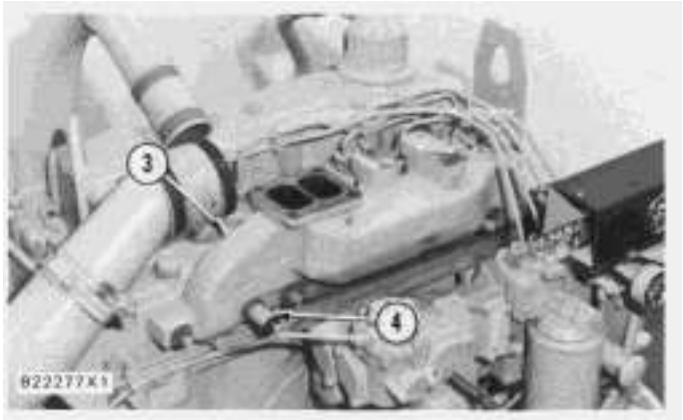

2. Remove two spacers (4) and six nuts from exhaust manifold.

3. Remove the exhaust manifold (3) and gaskets from engine.

Install Exhaust Manifold (Industrial Engine)

1. If the exhaust manifold studs are loose or a replacement is necessary, put 5P3931 Anti-Seize Compound on the threads of the studs and tighten to a torque of 20 ± 3 lb.ft. (25 ± 4 N·m).

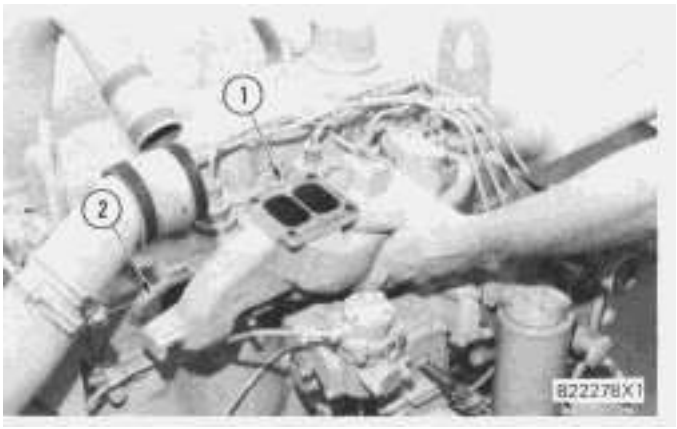

2. Make a replacement of the gaskets (2).

3. Put 5P3931 Anti-Seize Compound on the bolt threads and install manifold (1) in position on the cylinder head. Tighten nut to torque of 32 ± 3 lb.ft. (45 ± 4 N·m).

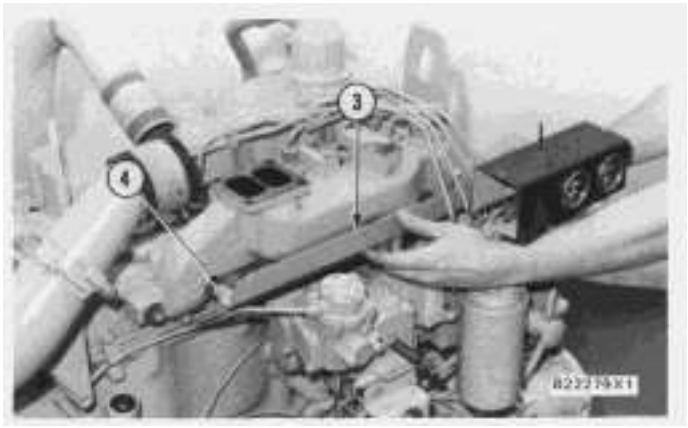

4. Put spacers (4) and shield (3) in position and install the nuts and tighten to a torque of 32 ± 3 lb.ft. (45 ± 4 N·m).

end by:

a) install turbocharger

Remove Exhaust Manifold (Marine Engine)

Tools Needed		A
5P9736	Bracket-Link	2

start by:

a) remove turbocharger

b) remove fuel lines

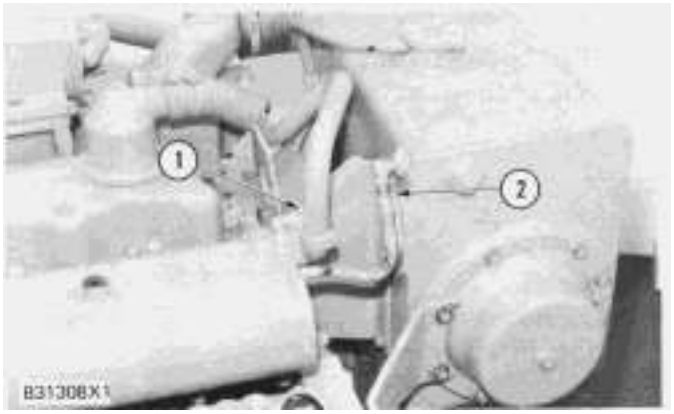

1. Disconnect line (2) to expansion tank. Remove two bolts and tube assembly (1) from exhaust manifold.

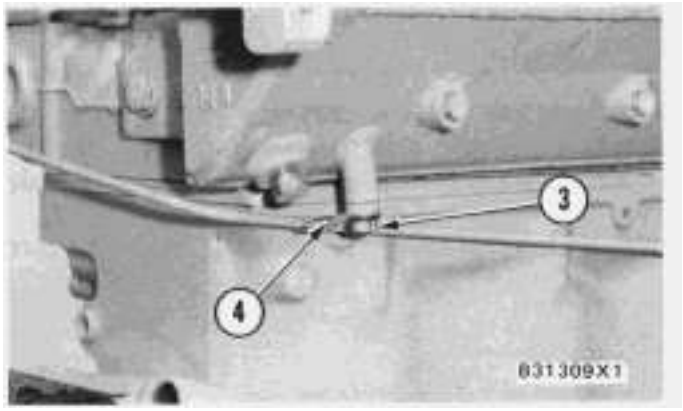

2. Remove bolt (3) and clip (4) from the bottom of the exhaust manifold.

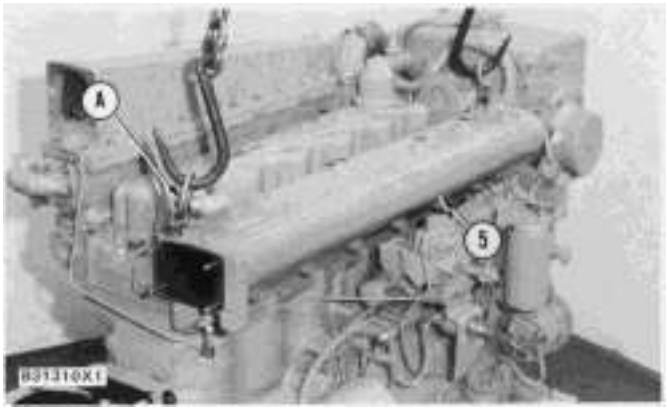

3. Fasten a hoist and tooling (A) on the exhaust manifold.

4. Remove bolts and exhaust manifold (5) from engine. Weight of the exhaust manifold is 100 lb. (45

kg).

Install Exhaust Manifold (Marine Engine)

	Tools Needed	A
5P9736	Bracket-Link	2

1. Make sure the exhaust manifold studs are tightened to a torque of 20 ± 3 lb.ft. (27 ± 4 N·m) in the cylinder head.

2. Make a replacement of gaskets.

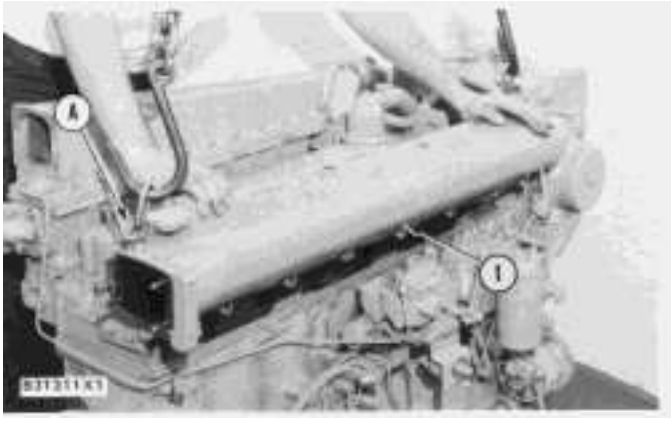

3. Put 5P3931 Anti-Seize Compound on the threads of the studs and nuts for the manifold. Fasten a hoist and tooling (A) to the manifold, and put manifold (1) in position on the cylinder head and tighten nuts to a torque of 32 ± 3 lb.ft. (45 ± 4 N·m).

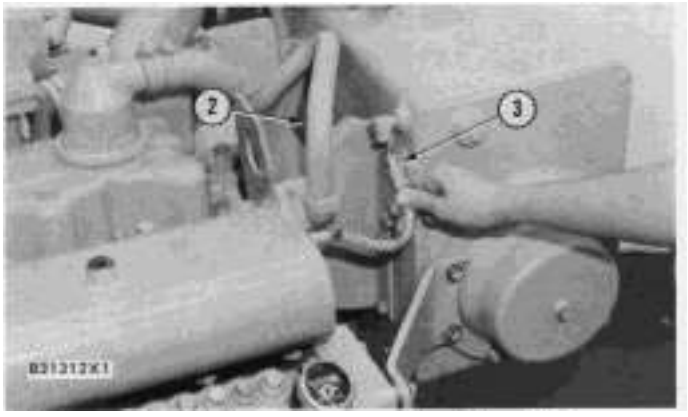

4. Inspect gasket on tube assembly and make a replacement if damaged. Install tube assembly (2) or manifold and tube (3) in place on expansion tank.

5. Install the clip on the fuel ratio control tube to the exhaust manifold.

Fuel Injection Lines

SMCS - 1252-11; 1252-12

Remove Fuel Injection Lines

1. Thoroughly clean the area around each fuel line connection before the removal of any fuel lines.

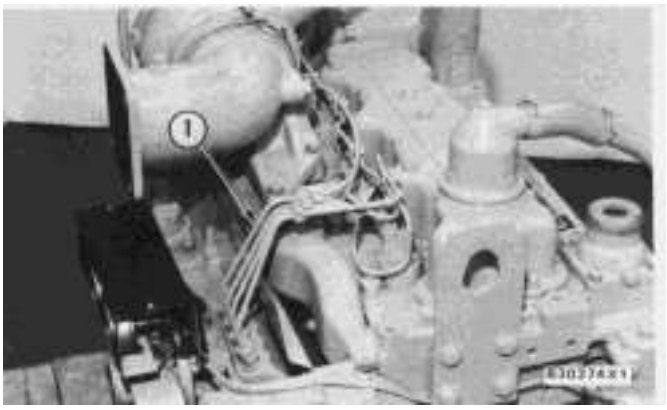

INDUSTRIAL ENGINE

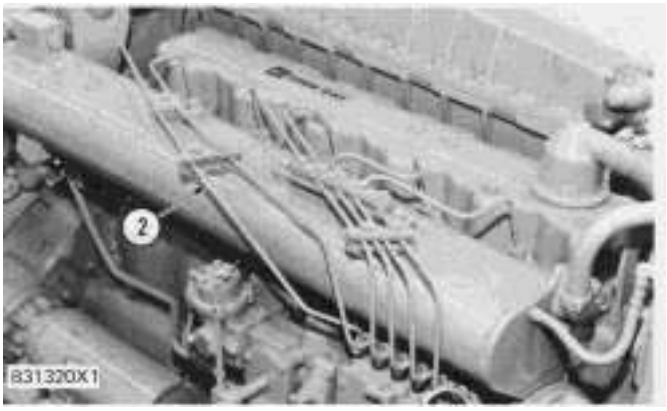

MARINE ENGINE

2. Remove fuel lines as a unit (1) and (2) from the fuel injection pumps.

NOTICE

Put caps (5F3807) and plugs (2F2990) on the fuel lines, pump and the fuel injection nozzles to keep dirt and foreign material out of the fuel system.

Install Fuel Injection Lines

	Tools Needed	A
5P144	Socket	1

1. Remove the plugs and caps from the fuel line connections.

2. Make sure the fuel injection lines are clean and dry.

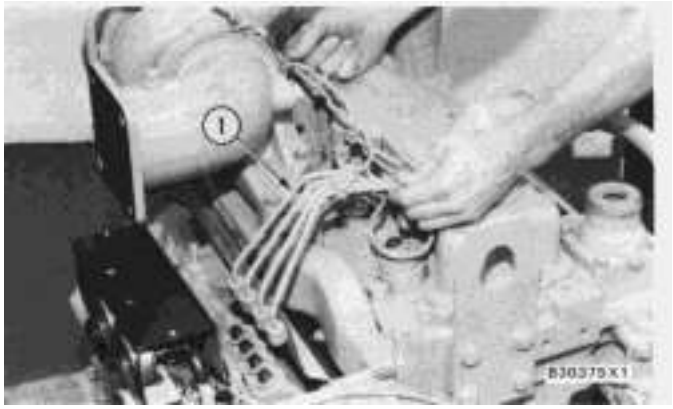

INDUSTRIAL ENGINE

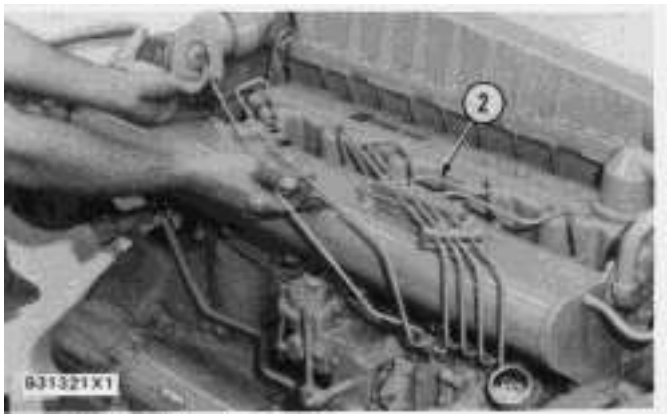

MARINE ENGINE

3. Put the fuel injection lines (1) and (2) in position and tighten the nuts with tool (A) to a torque of 30 ± 5 lb.ft. (40 ± 7 N·m).

4. Remove (bleed) the air from the fuel system.

Fuel Filter Base

SMCS - 1262-11; 1262-12

Remove Fuel Filter Base

	Tools Needed	A
2P8250	Strap Wrench	1

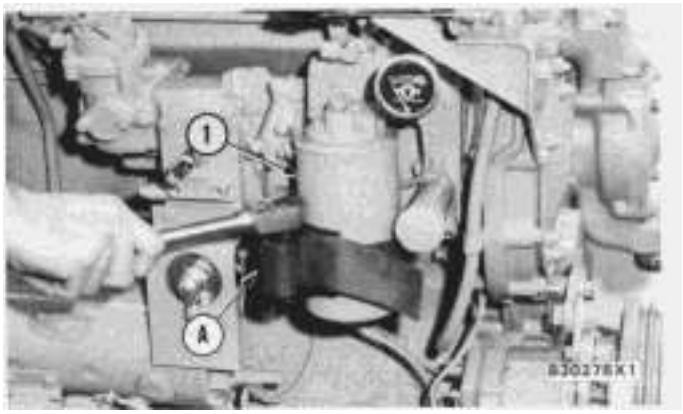

1. Remove fuel filter (1) with tool (A).

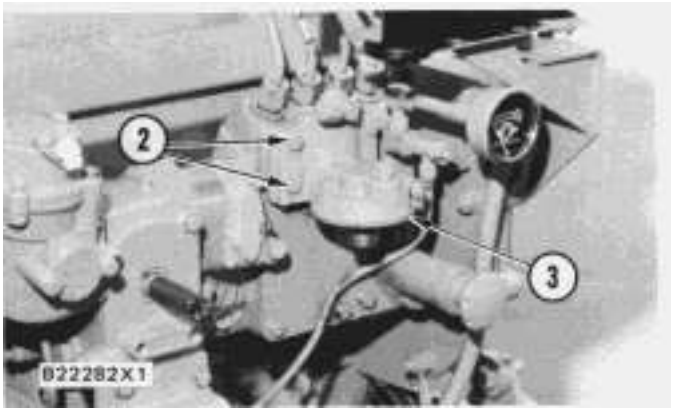

2. Remove bolts (2) that hold the fuel filter base (3) to the fuel injection pump. Remove the fuel filter base (3).

Install Fuel Filter Base

1. Inspect the fuel filter gasket and make a replacement if necessary.

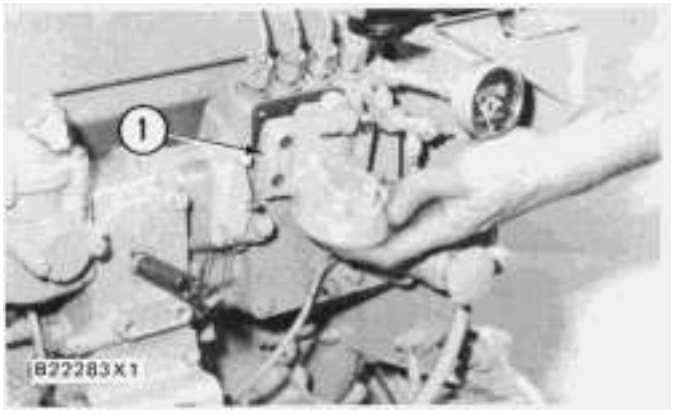

2. Put the fuel filter base (1) in position and install the bolts that hold it.



3. Install the fuel filter (2).

Fuel Priming Pump

SMCS - 1262-10

Remove And Install Fuel Priming Pump

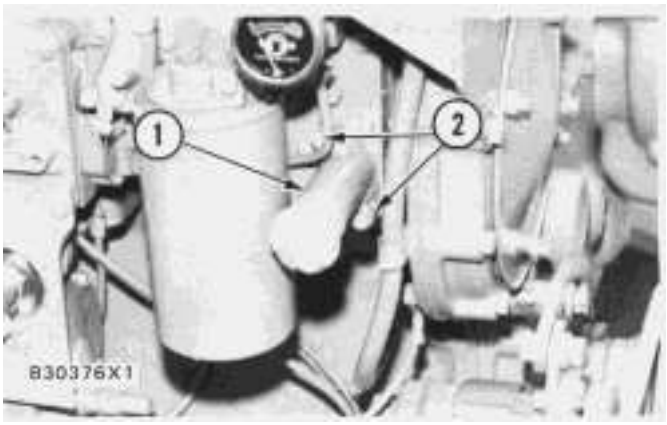

1. Remove bolts (2) that hold the fuel priming pump to the fuel injection pump housing cover. Remove fuel priming pump (1).

2. Inspect gasket and make a replacement if necessary.

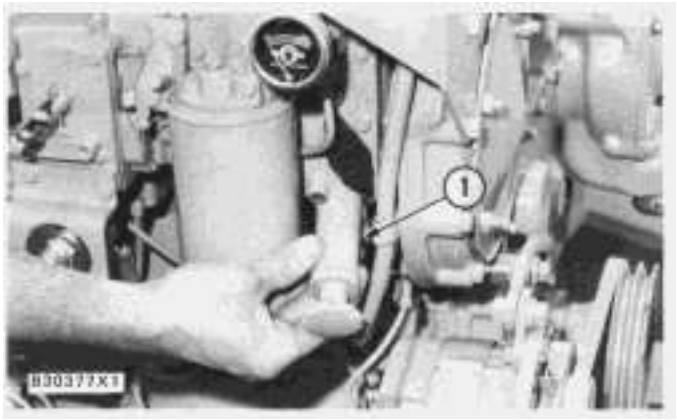

3. Put fuel priming pump (1) in position on the fuel injection pump housing cover. Install the bolts that hold it

Valve Covers

SMCS - 1107-11; 1107-12

Remove Valve Covers

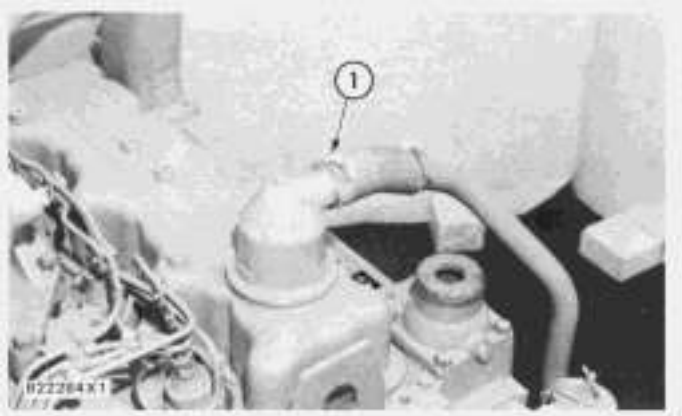

1. Loosen hose clamp (1) and slide hose from breather.

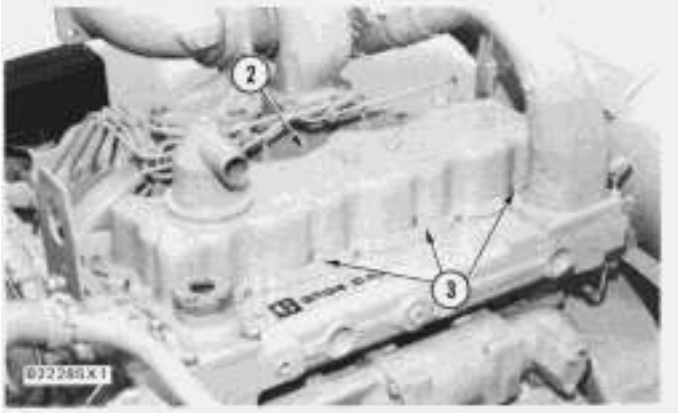

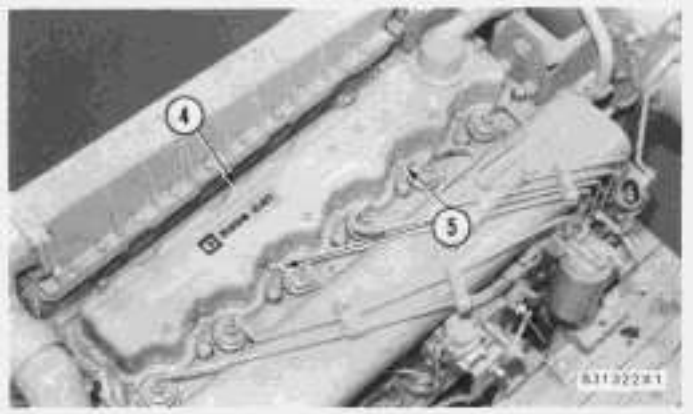

2. Remove bolts (3) and (5) that hold the valve covers to the cylinder head. Remove the valve covers (2) and (4).

Install Valve Covers

1. Install a new gasket for the valve covers if needed. Put 5H2471 Cement on the contact surfaces of the gasket and valve covers when a new gasket is installed.

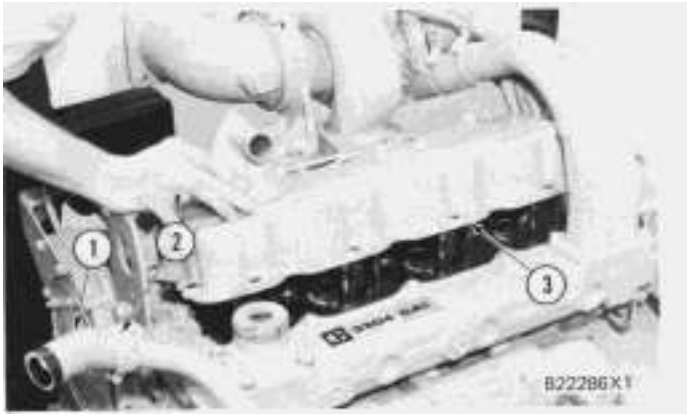

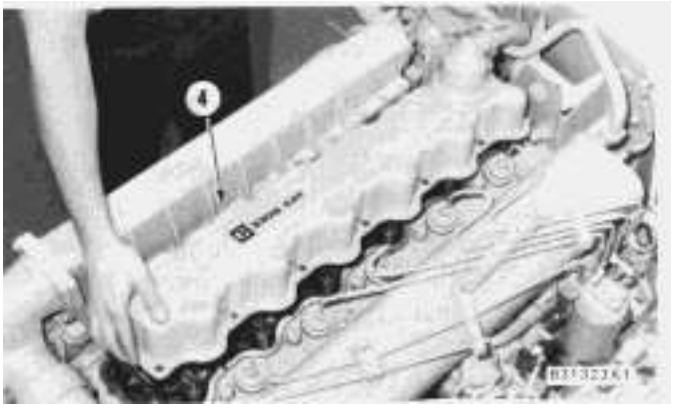

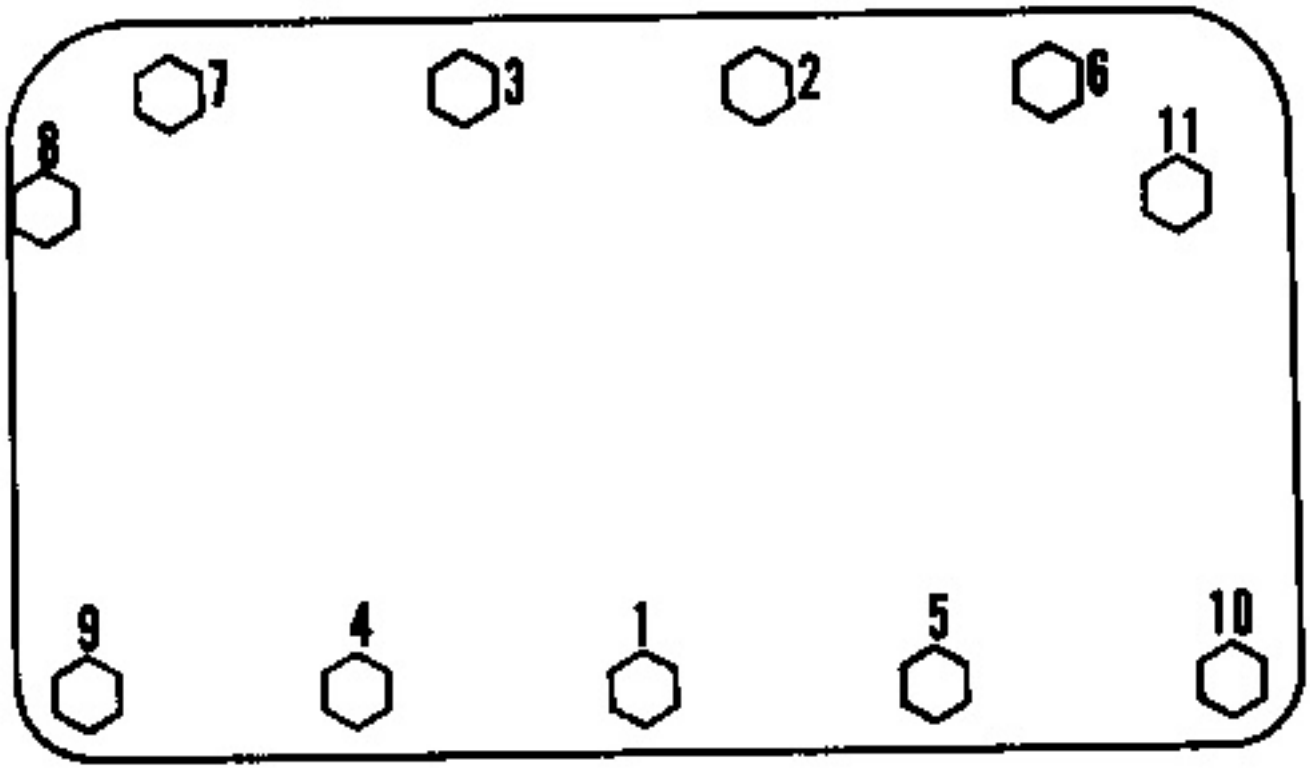

77077X1

3304 VALVE COVER

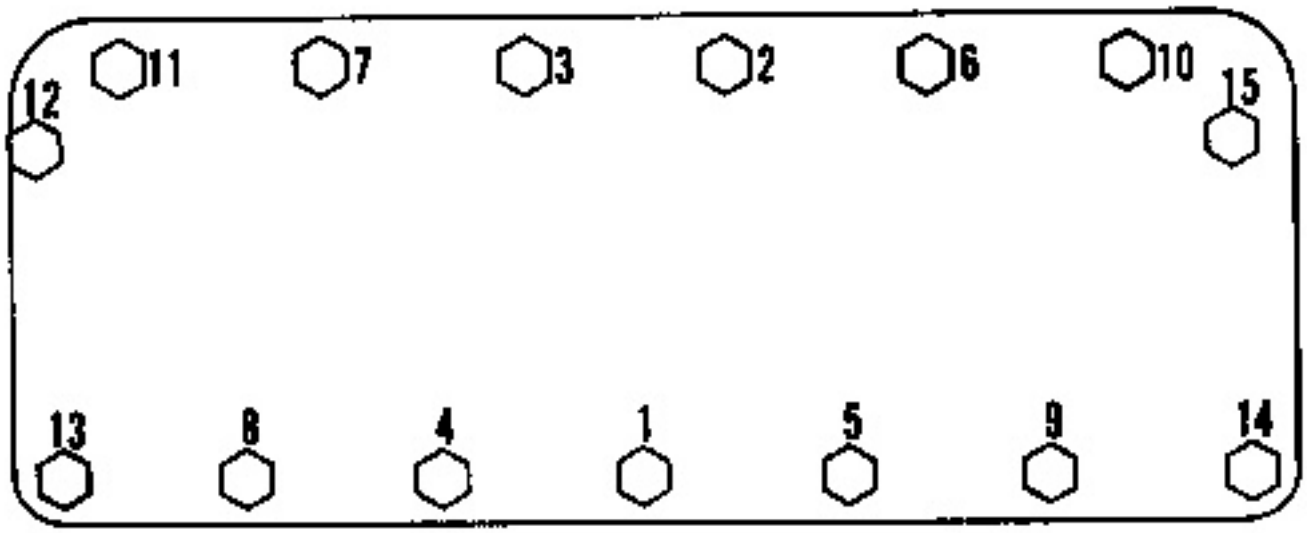

77083X1

3306 VALVE COVER

2. Put valve covers (3) and (4) in position on the cylinder head. Install the bolts that hold the valve cover in place. Tighten the bolts in number sequence to a torque of 8 ± 2 lb.ft. (11 ± 3 N·m).

3. Install hose (1) to connect the breather to the tube assembly with clamp (2).

Rocker Shaft And Push Rods

SMCS - 1102; 1208-11; 1208-12

Remove Rocker Shaft And Push Rods

start by:

a) remove valve cover

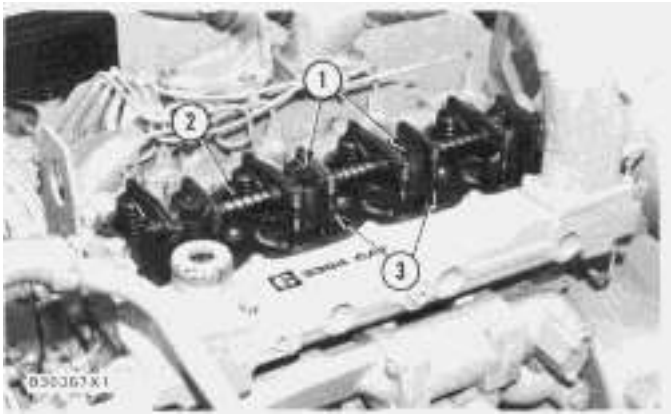

1. Remove the rocker shaft bolts (1) and washers from the rocker shaft.

2. Remove the rocker shaft assembly (2) from the cylinder head.

3. Remove the push rods (3) from the engine.

Install Rocker Shaft And Push Rods

1. Loosen the adjusting screws on the rocker arms for valve clearance. This will prevent a bent valve or push rod at installation.

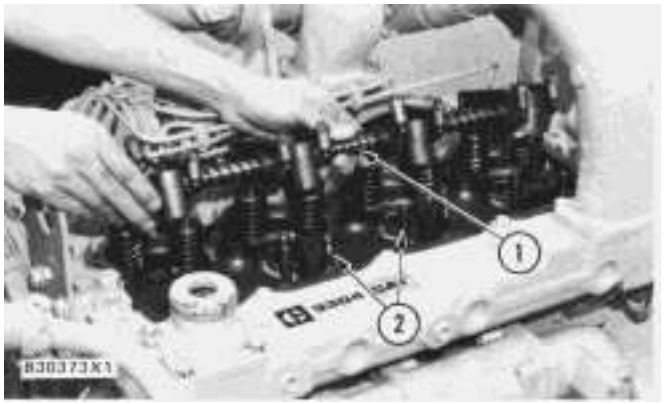

2. Install push rods (2).

3. Put rocker shaft (1) in position on the cylinder head.

4. Put 5P3931 Anti-Seize Compound on the threads of the bolts that hold the rocker shaft in position. Install the rocker shaft bolts and washers.

NOTE: Make sure the rocker arms are on all the push rods.

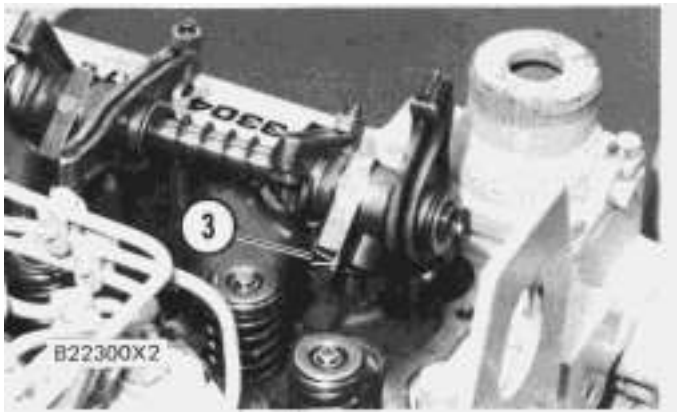

NOTICE

The dowels (3) on each end of the rocker shaft assembly must be in alignment with the holes in the cylinder head assembly. If the dowels and holes are not in alignment when the rocker shaft assembly is tightened, damage to the rocker shaft assembly will be the result.

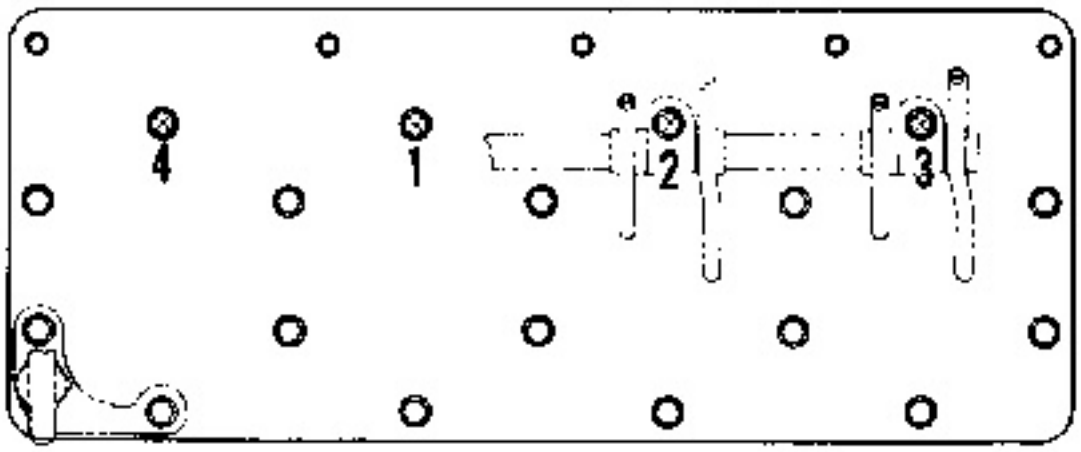

77078X3

3304 ENGINE

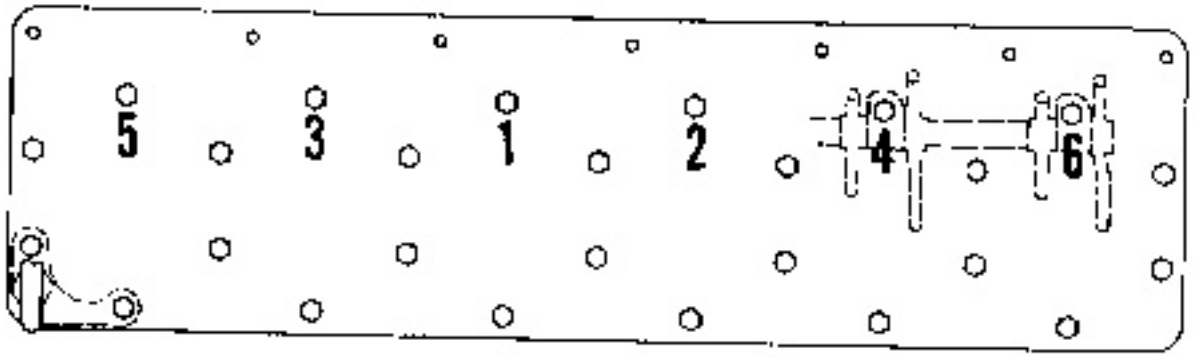

77084X3

3306 ENGINE

5. Tighten the bolts for the rocker shaft as follows:

a) Tighten bolts in number sequence to a torque of 115 lb.ft. (155 N·m).

b) Tighten bolts again in number sequence to a torque of 185 ± 13 lb.ft. (250 ± 17 N·m).

c) Tighten bolts again and for the last time in number sequence (hand tighten only) to a torque of 185 ± 13 lb.ft. (250 ± 17 N·m).

6. Make adjustment until the intake valve clearance is .015 in. (0.38 mm) and the exhaust valve clearance is .025 in. (0.64 mm). See VALVE CLEARANCE SETTING in TESTING AND ADJUSTING. Tighten the locknuts for the adjusting screws to a torque of 22 ± 3 lb.ft. (28 ± 4 N·m).

end by:

a) install valve cover

Rocker Shaft (Later)

SMCS - 1102-15; 1102-16

Disassemble Rocker Shaft

start by:

a) remove rocker shaft and push rods

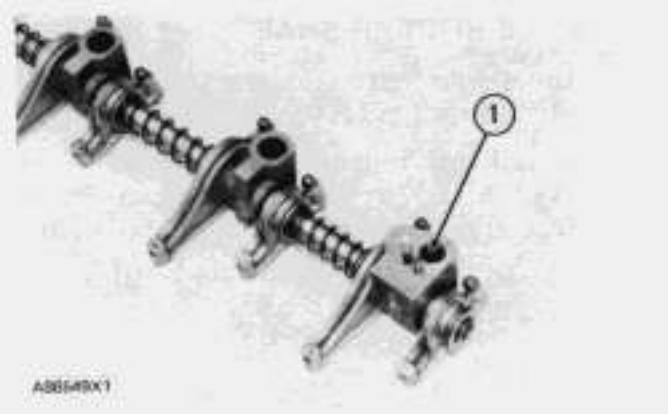

1. Remove O-ring seal (1) from the rear support bracket.

NOTE: A replacement of the O-ring seal must be made each time the head bolt is removed from the rear support bracket.

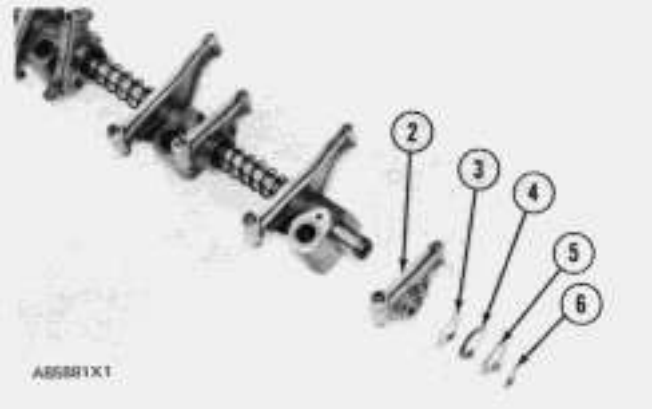

2. Remove retainer ring (6), washer (5), spring (4) and washer (3) from each end of rocker shaft. Remove rocker arm (2).

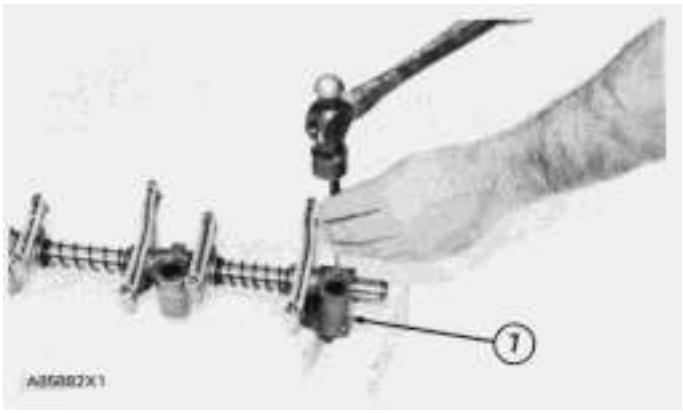

3. Remove pin from rear support bracket with a hammer and punch. Remove rear support bracket (7) from shaft.

4. Remove remainder of rocker arms, springs, washers and brackets.

5. Remove plugs from each end of the shaft if necessary.

Assemble Rocker Shaft

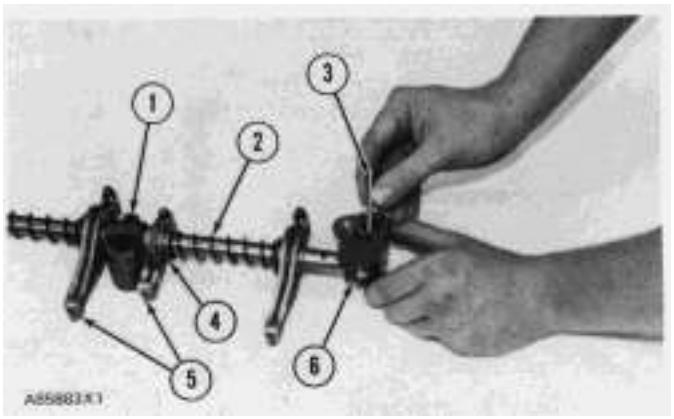

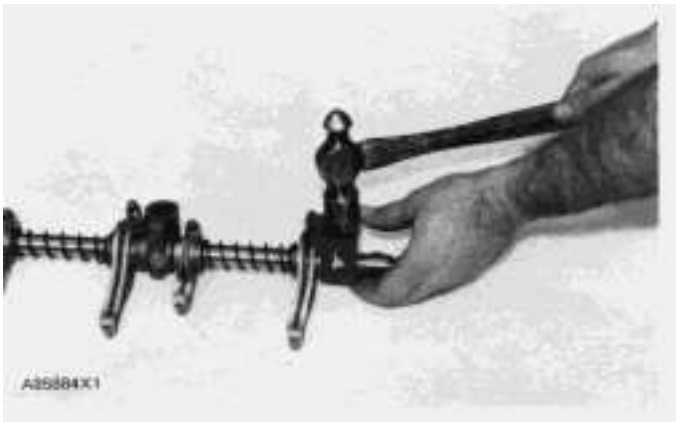

1. Install rocker arms (5), brackets (1), washers (4) and springs (2) on the rocker shaft.

2. Install rear support bracket (6) on rocker shaft. Make sure hole in rear support bracket is in alignment with hole in rocker shaft.

3. Put pin (3) in position in the bracket.

4. Install pin (3) through bracket and shaft with a hammer.

5. Pin (3) must extend .378 in. (9.60 mm) above the bracket.

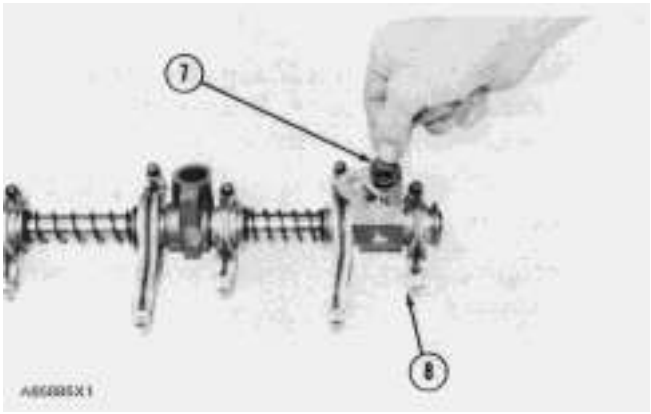

6. Install O-ring seal (7) in the rear support bracket. Install rocker arm (8), washer, spring, washer and retainer ring on the rocker shaft.

7. Install the plugs in each end of the rocker shaft if they were removed.

end by:

a) install rocker shaft and push rods

Cylinder Head (Marine Engine)

SMCS - 1100-11; 1100-12

Remove Cylinder Head

	Tools Needed	A
5P9736	Bracket-Link	1

start by:

a) remove rocker arm

b) remove aftercooler

c) remove exhaust manifold

NOTE: 3306 Engine is shown.

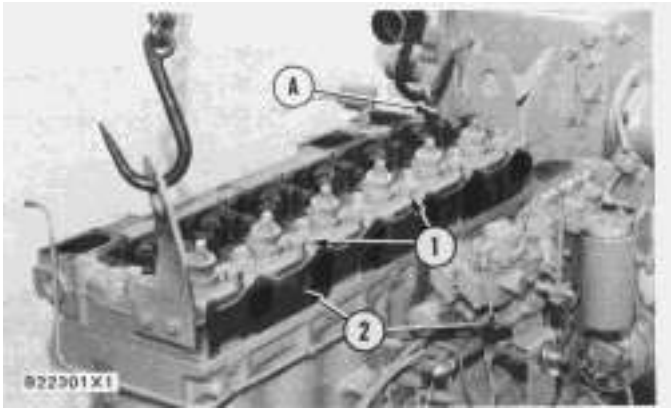

1. Fasten a hoist and tooling (A) to the cylinder head. Remove all cylinder head bolts (1).

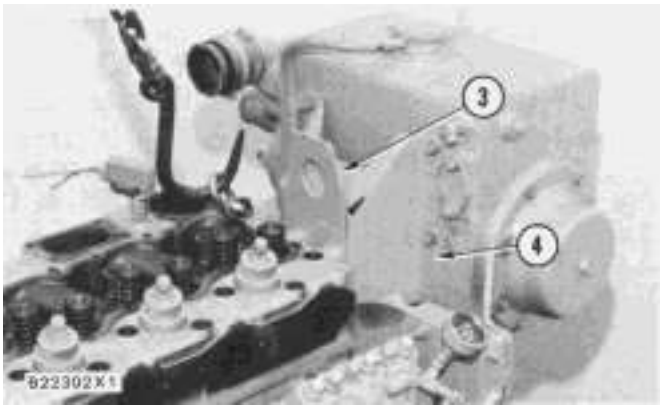

2. Remove four bolts that are needed to fasten bracket assembly (4) and lift bracket (3) to the cylinder head. Remove lift bracket (3).

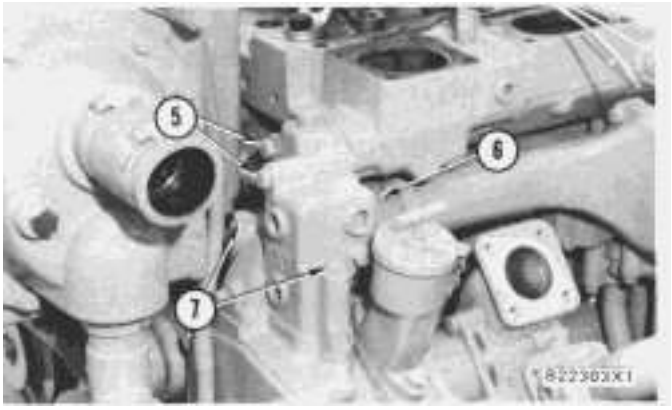

3. Remove two bolts (5) from water temperature elbow (6). Loosen two bolts (7).

4. Remove the cylinder head (2) and gasket. The weight of the cylinder head is 200 lb. (90 kg).

NOTE: When the cylinder head is removed, a new spacer plate gasket must be installed. See REMOVE AND INSTALL SPACER PLATE.

Install Cylinder Head

	Tools Needed	A
5P9736	Bracket-Link	1

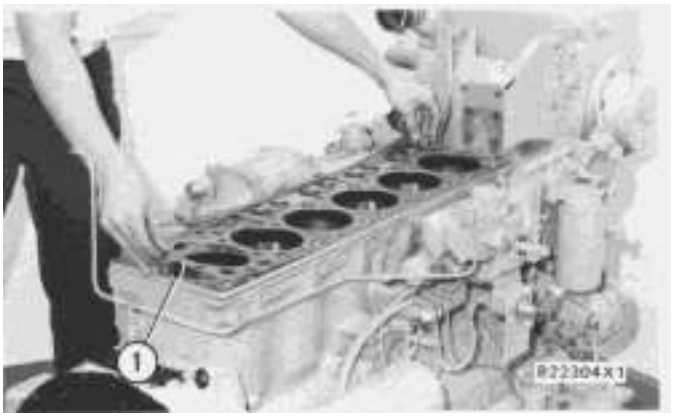

1. Clean the surfaces of the cylinder head and the cylinder block that make contact with each other. Make sure the surfaces are clean and dry. Install a new, dry gasket (1) on the cylinder block.

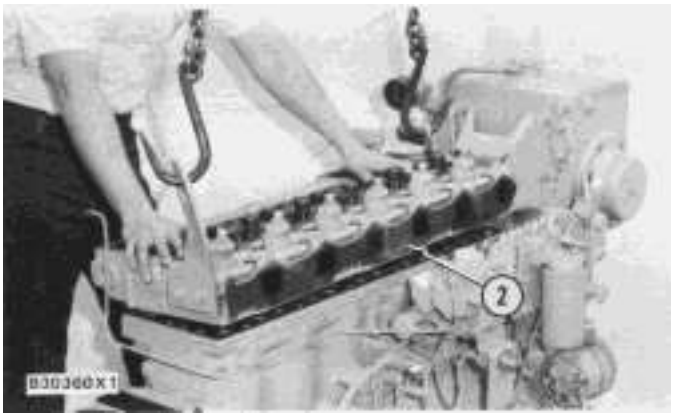

2. Fasten a hoist and tooling (A) to the cylinder head (2) and put it in position on the cylinder block. Remove tooling (A).

3. Put 5P3931 Anti-Seize Compound on all the head bolts and rocker shaft bolts. Install the head bolts and washers that hold the head in place.

NOTE: Do not tighten the bolts at this time.

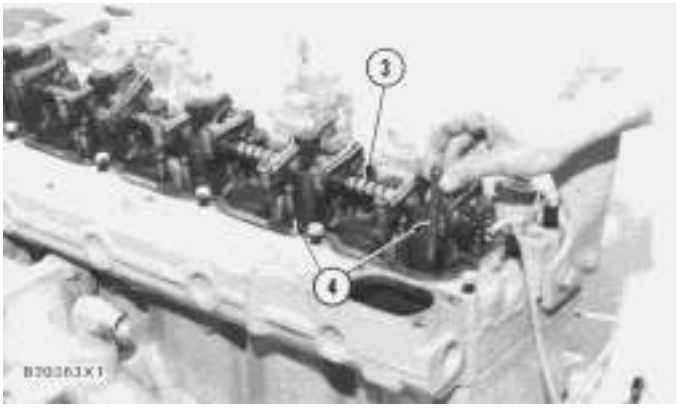

4. Install the push rods (4) and rocker shaft (3) in position on the cylinder head.



NOTE: Make sure the dowel (5) in the bracket assembly is in alignment with the cylinder head.

5. Install the bolts and washers that hold the rocker shaft assembly in place.

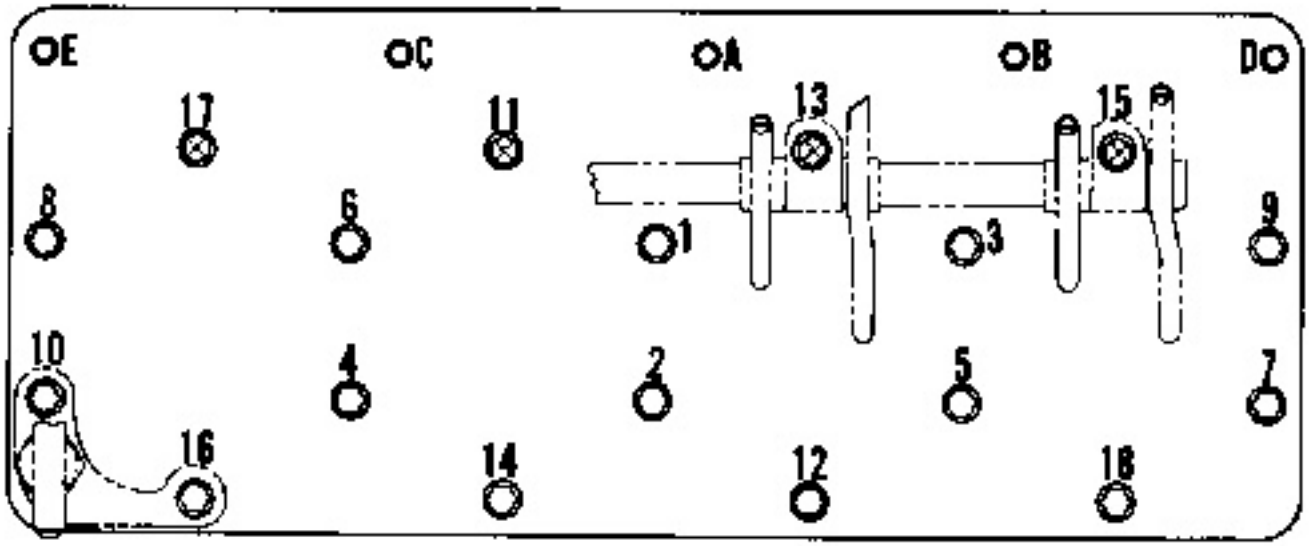

3304 ENGINE

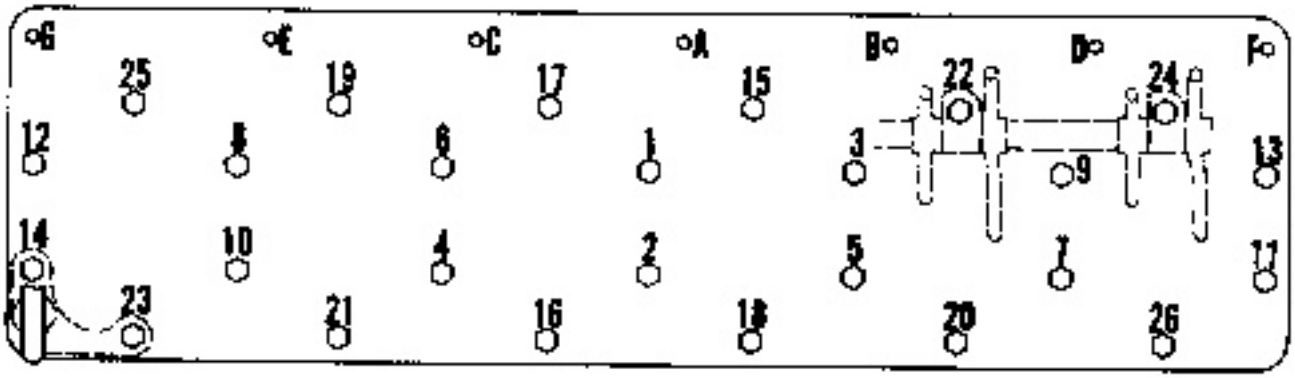

3306 ENGINE

6. Tighten the head bolts as follows:

a) Tighten bolts in number sequence to a torque of 115 lb.ft. (155 N·m).

b) Tighten bolts again in number sequence to a torque of 185 ± 3 lb.ft. (250 ± 17 N·m).

c) Tighten bolts again in number sequence to a torque of 185 ± 13 lb.ft. (250 ± 17 N·m).

d) Tighten bolts in letter sequence to a torque of 32 ± 5 lb.ft. (43 ± 7 N·m).

e) Tighten bolts again in letter sequence to a torque of 32 ± 5 lb.ft. (43 ± 7 N·m).

7. Make adjustment until the intake valve is .015 in. (0.38 mm) and the exhaust valve clearance is .025 in. (0.64 mm). See ENGINE VALVE LASH as shown in operation LUBRICATION AND MAINTENANCE GUIDE. Tighten the locknuts for the adjustment screws to a torque of 22 ± 3 lb.ft. (28 ± 4 N·m).

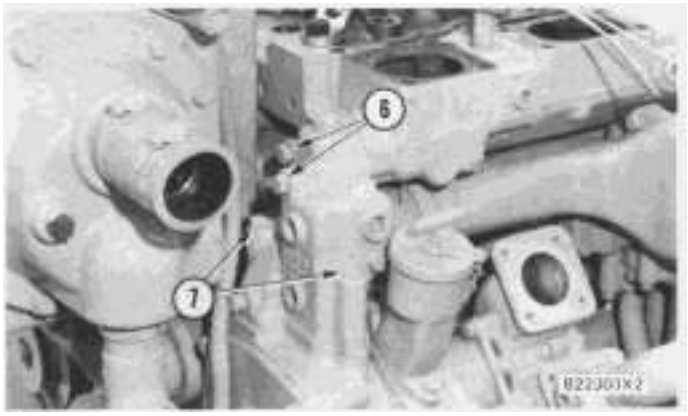

8. Inspect the gasket between the elbow and the cylinder head and make a replacement if necessary. Install two bolts (6) to hold the elbow to the cylinder head and tighten bolts (7).

end by:

a) install exhaust manifold

b) install aftercooler

Valve Lifters

SMCS - 1209-10

Remove And Install Valve Lifters

start by:

a) remove cylinder head



1. Remove valve lifter (2) with magnet (1).

2. Put identification on each lifter for use at installation of the valve lifters.

3. Put clean engine oil on the valve lifters and camshaft lobes. Install the valve lifters in their original positions in the cylinder block.

end by:

a) install cylinder head

Spacer Plate

SMCS - 1221-11; 1221-12

Remove Spacer Plate

start by:

a) remove cylinder head

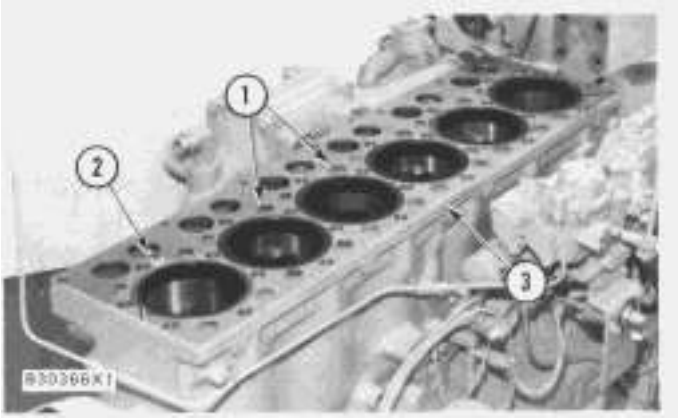

1. Remove water seals (1) and O-ring seal (2) from the spacer plate.

2. Remove spacer plate (3).

NOTICE

Do not cause damage to the dowels as the spacer plate is removed.

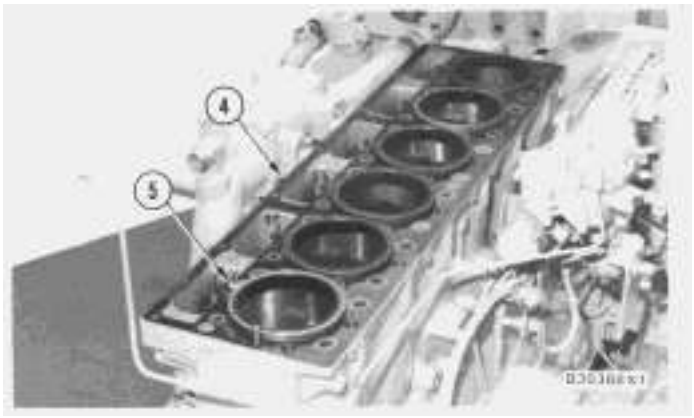

3. Remove O-ring seal (5) and spacer plate gasket (4).

Install Spacer Plate

1. Thoroughly clean the plate and cylinder block surface.

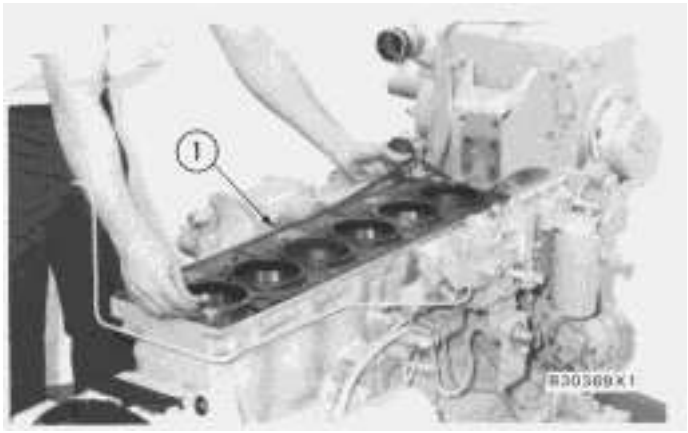

2. Install a new spacer plate gasket (1).

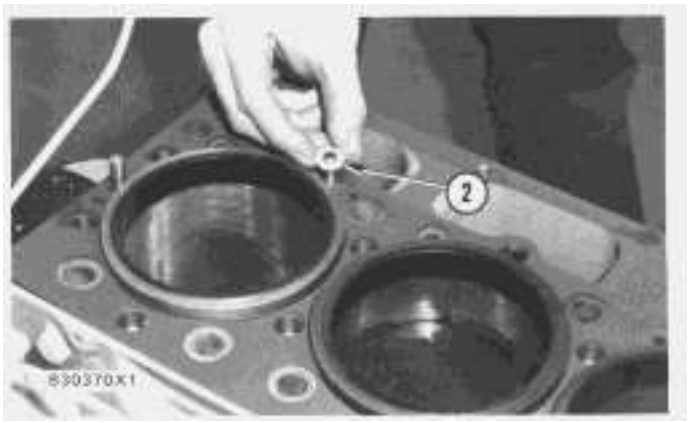

3. Install a new O-ring seal (2) on dowel.



4. Install spacer plate (3).

NOTICE

Both surfaces of spacer plate, top of cylinder block and both sides of spacer plate gasket must be clean and dry. Do not use any gasket adhesive or other substances on these surfaces.

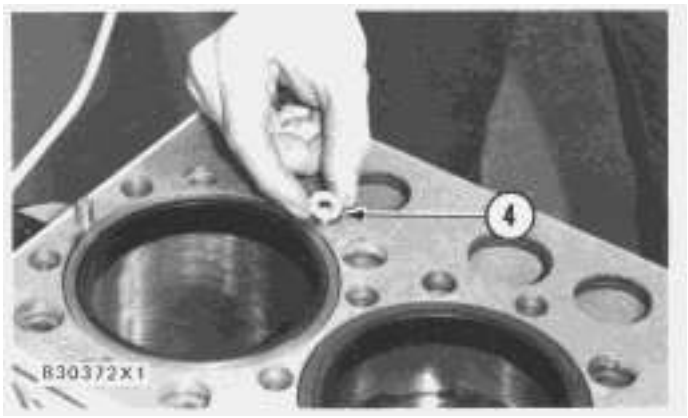

5. Install a new O-ring seal (4) on dowel.

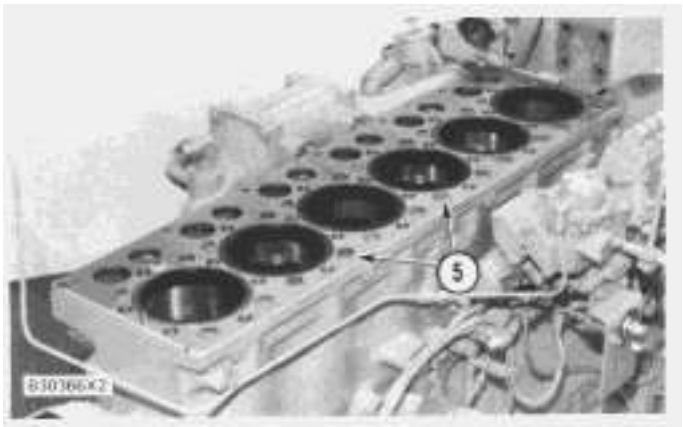

6. Install new water seals (5) in the spacer plate.

7. Check the cylinder liner projection. See INSTALL CYLINDER LINERS.

end by:

a) install cylinder head

Valves

SMCS - 1105-12; 1105-11

Remove Valves

	Tools Needed	A	B
5S1330	Valve Spring Compressor	1	
8S2263	Valve Spring Tester		1

start by:

a) remove cylinder head

b) remove precombustion chambers

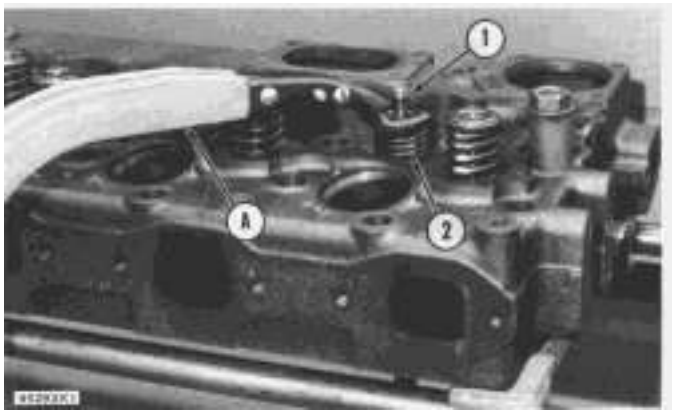

1. Put compression on valve spring (2) with tool (A) and remove locks (1).

2. Remove tool (A), rotocoil, spring and valve. Put identification on valves with respect to their location in the cylinder head.

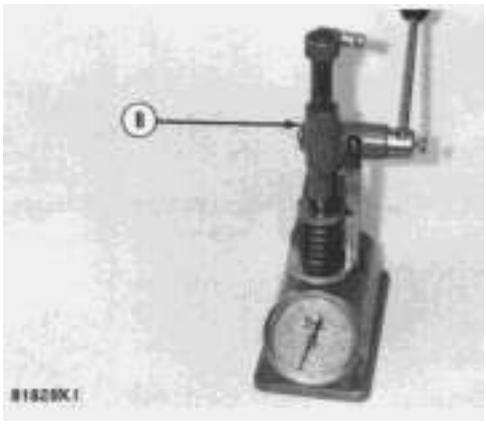

3. Check the spring force with tool (B). The spring force is 57.7 ± 2.9 lb. (256.7 ± 12.9 N). The length of spring under test force is 1.766 in. (44.86 mm). The free length after test is 2.05 in. (52.1 mm).

4. Do Steps 1 through 3 again for remainder of valves.

Install Valves

Tools Needed		A
5S1330	Valve Spring Compressor	1

1. Put clean engine oil on valve stems. Install valve, spring and rotocoil in the cylinder head.

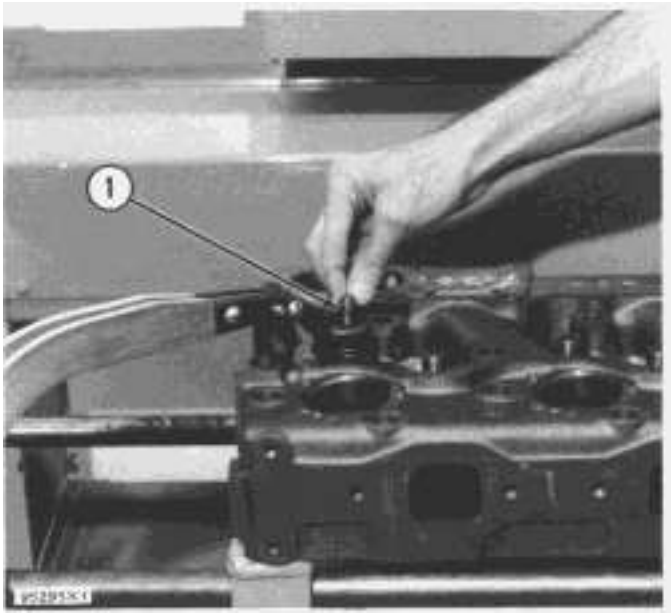

2. Put tool (A) in position on valve spring and install the locks (1).

WARNING

Locks can be thrown from valve when compressor is released, if they are not in their correct position on valve stem.

3. Remove tool (A) and hit the top of valve with a plastic hammer to be sure the locks are in their correct position on valve.

4. Do Steps 1 through 3 again for remainder of valves.

end by:

a) install precombustion chambers

b) install cylinder head

Valve Seat Inserts

SMCS - 1103-10

Remove And Install Valve Seat Inserts

Tools Needed		A
9S3080	Valve Seat Insert Group	1

start by:

a) remove valves

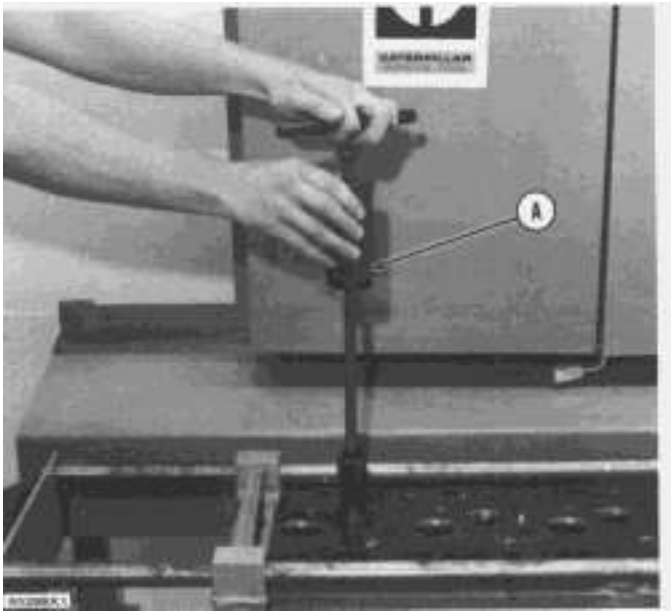

1. Remove valve seat insert with tool group (A).

2. Clean and remove burrs from the valve seat bore.

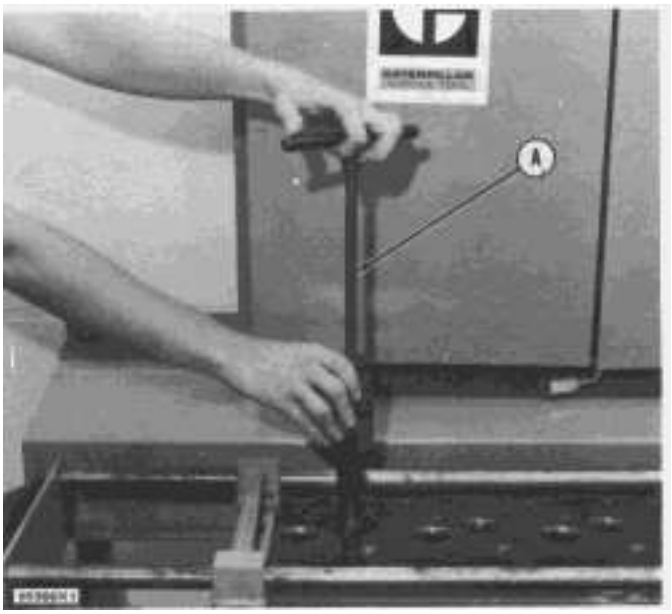

3. Install the new valve seat insert with tool group (A). Do not increase diameter of extractor in valve seat insert when the insert is installed in the head.

4. Grind valve seat insert according to specifications given in SPECIFICATIONS SECTION.

end by:

a) install valves

Water Directors

SMCS - 1115-10

Remove And Install Water Directors

start by:

a) remove cylinder heads

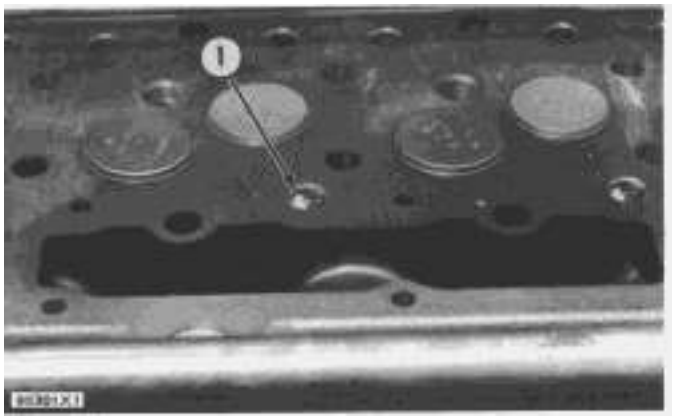

1. Remove old water directors (1) from the cylinder head.

2. Clean the cylinder head.

3. Install new water directors in the cylinder head. Install the directors so the hole in the directors is in alignment with the "V" mark on cylinder head.

NOTE: For reconditioning of cylinder head see STMG FORM JEG02327.

Valve Guides

SMCS - 1104-10

Remove And Install Valve Guides

	Tools Needed	A	B
7S8859	Guide Driver	1	
7S8856	Bushing		1

start by:

a) remove valves

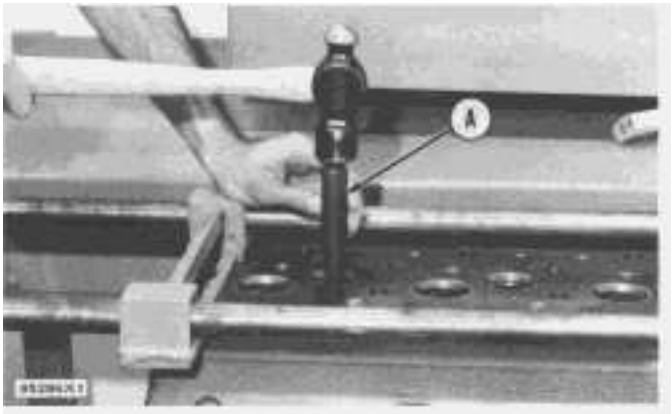

1. Remove valve guides from the cylinder head with tool (A).

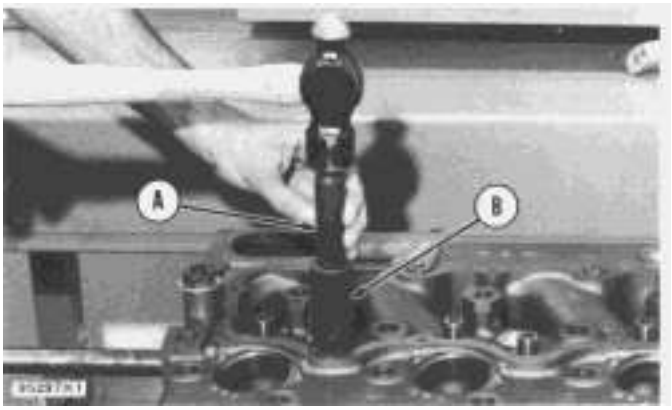

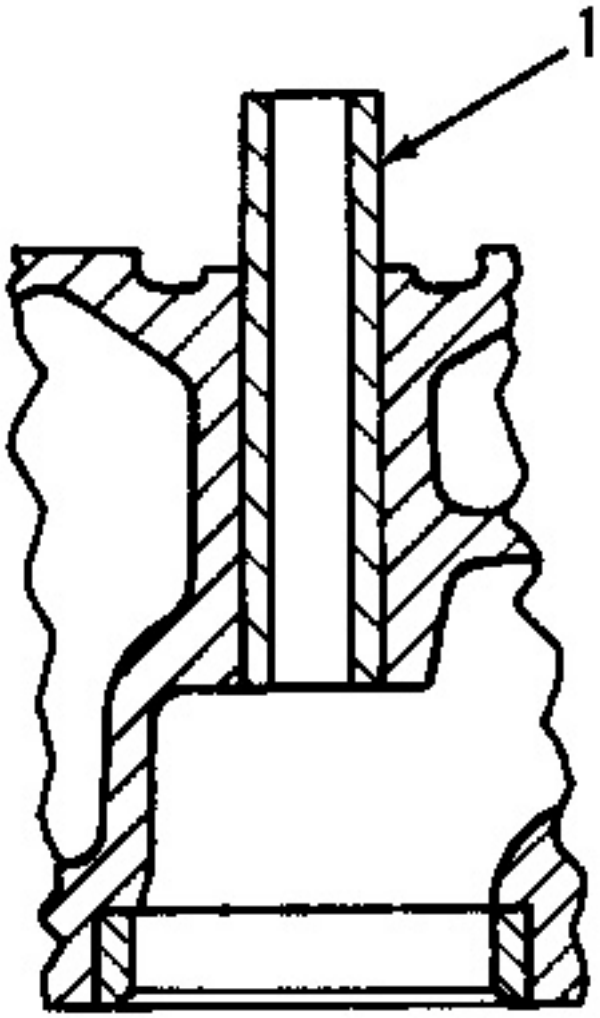

A08021X1

2. Put clean engine oil on the outside diameter of the valve guide. Install valve guide (1) with tools (A) and (B).

3. The inside diameter of the valve guides after installation must be .3734 ± .0010 in. (9.48 ± .025 mm).

end by:

a) install valves

Pistons

SMCS - 1214-12; 1214-15; 1214-16; 1214-11

Remove Pistons

start by:

a) remove cylinder head

b) remove oil pan plate

1. Remove the ring of carbon from the top inner surface of the cylinder liner.

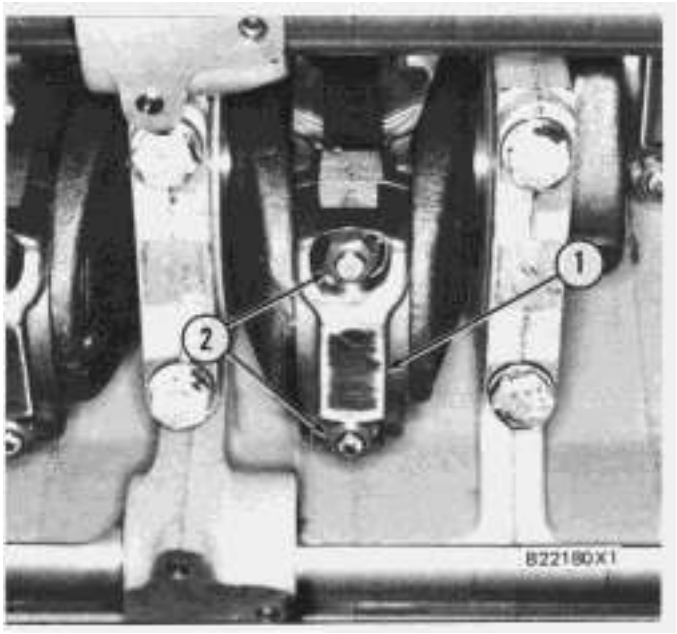

2. Turn the crankshaft until two pistons are at bottom center. Remove two nuts (2) and connecting rod cap (1) from the connecting rod.

3. Put tape or pieces of rubber hose over the threads of the connecting rod bolts. This will prevent damage to the crankshaft during removal of pistons.

NOTICE

Do not let the connecting rods hit the bottom edge of the cylinder liners or the crankshaft during removal and installation of the pistons.



4. Push the piston and connecting rod away from the crankshaft until the piston rings are above the cylinder liner. Remove the piston (3) and the connecting rods from the engine.

5. Keep each connecting rod cap with its respective connecting rod and piston. Put identification on each connecting rod as to its location in the engine for use at assembly of the engine.

6. Do Steps 2 through 5 for the remainder of the pistons.

Install Pistons

	Tools Needed	A
5P3525	Ring Compressor	1

1. Turn the crankshaft until the bearing journals for the piston to be installed are at bottom center.

2. Put clean engine oil on the crankshaft journals and on the inside of the cylinder liners. Put clean engine oil on the piston rings and connecting rod bearings.

3. Move the rings on the piston until the ring openings are approximately 90° apart.

NOTICE

Never install the ring compressor on the piston unless the cylinder liner is used as a guide. Damage to the piston rings can be the result.



4. Put ring compressor (A) in position on the cylinder liner. Put the connecting rod and piston in position in the same cylinder liner from which it was removed and into the ring compressor. Make sure the "V" mark on the piston is in alignment with the "V" mark on the cylinder block.

NOTE: If a replacement rod or piston is to be used, the bearing tab notch on the rod must be on the same side of the assembly as the cutout (depression) on the top of pistons.

5. Push the piston into place as the connecting rod is put in position on the crankshaft.



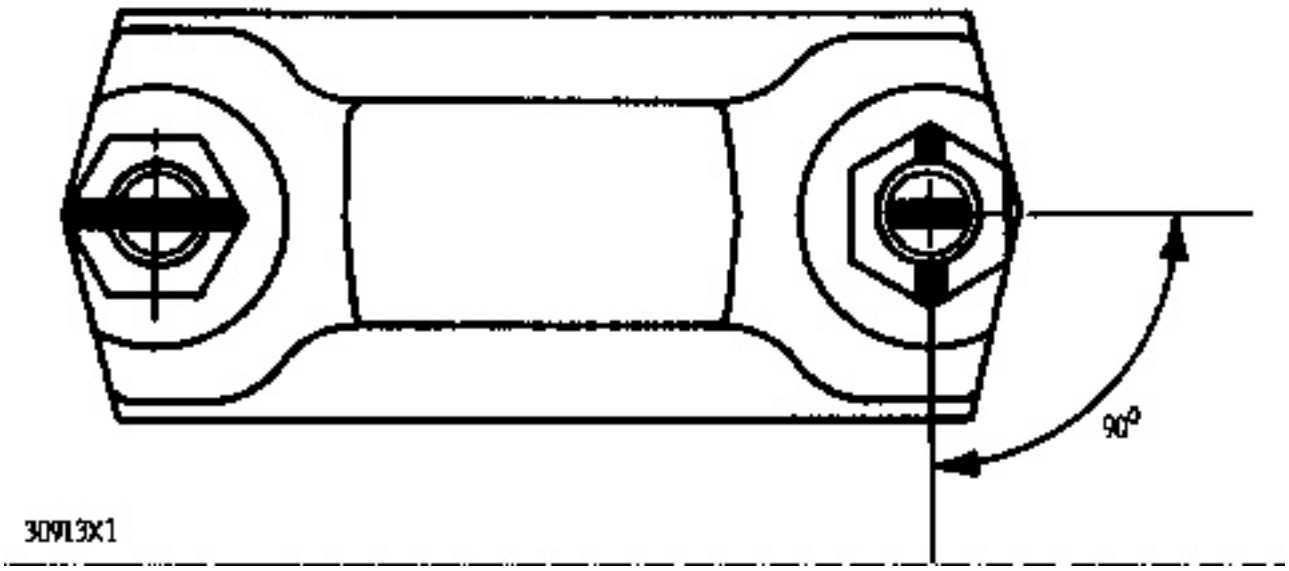

6. Put clean engine oil on bearings, bolt threads and surfaces of the nuts that make contact with the connecting rod caps. Put caps (1) in position on the connecting rods and install the nuts. Tighten the nuts to a torque of 30 ± 3 lb.ft. (40 ± 4 N·m). Put a mark on each nut and the end of each bolt. Tighten the nuts 90° ± 5° more.

NOTICE

When connecting rod caps are installed, make sure the number on the side of the cap is next to and respective with the number on the side of the connecting rod.

---

7. Follow the same above procedure for installation of the remainder of the pistons.

end by:

a) install oil pan plate

b) install cylinder head

Disassemble Pistons

	Tools Needed	A	B
7S9470	Ring Expander	1	
5F3639	Press Group		1
8F24	Hose Assembly		1
1P2375	Coupler Assembly		1
1P2376	Coupler Assembly		1
5F8719	Hand Pump (or electric)		1
6V2050	Tool Group		1

start by:

a) remove pistons

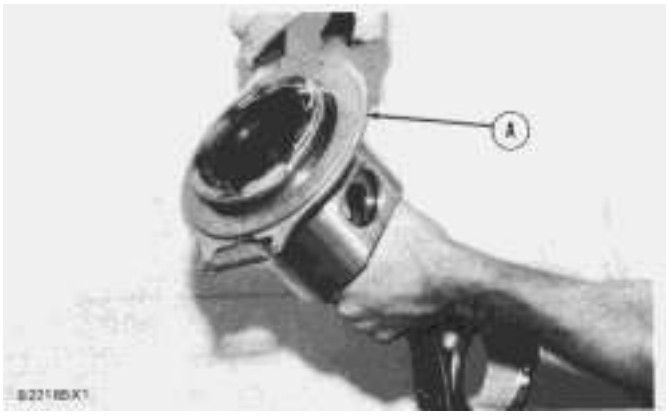

1. Remove the rings from the piston with tool (A).

2. Remove the bearings from the connecting rod and connecting rod cap.



3. Remove retaining rings (3), pin (1) and connecting rod (2) from the piston.

4. See USE OF PISTON PIN BEARING REMOVAL AND INSTALLATION TOOLS, SPECIAL INSTRUCTIONS, Form No. SMHS7295-02 for more information of removal and installation of piston pin bearings.

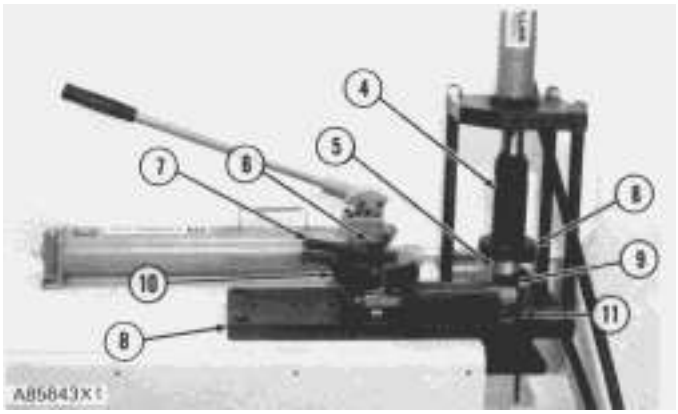

5. Heat the connecting rod to a temperature of 350 to 500°F (176 to 260°C). Put 6V3029 Spacer (11) in the base plate. Put the connecting rod on the base plate of tooling (B).

6. Put the connecting rod piston pin bearing end in the center of the port assembly of tooling (B). Install pin (6) in the center of the bore for the connecting rod bearings.

7. Install 6V2049 Adapter (9). Put the hole in the adapter in alignment with the hole in the base plate of tooling (B).

8. Install clamp bar (10) and clamp pin (7).

9. Install new piston pin bearing (5) on adapter (9).

NOTE: The old bearing is pushed out by tooling (B) as the new bearing is installed.

10. Put 5P8645 Adapter (8) in position as shown with the taper side down. The piston pin bearing joint must be in alignment with the hole in adapter (9) and the base plate of tooling (B).

11. Put pusher (4) on adapter (8).

12. Use tooling (B) to push the new piston pin bearing into the connecting rod until adapter (8) of tooling (B) makes full contact with the connecting rod surface.

13. Remove the connecting rod and the old piston bearing from tooling (B).

14. Check the piston pin bearing bore diameter after the bearing is installed. The correct dimension is 1.7012 ± .0003 in. (43.210 ± 0.008 mm).

Assemble Pistons

Tools Needed		A
7S9470	Ring Expander	1

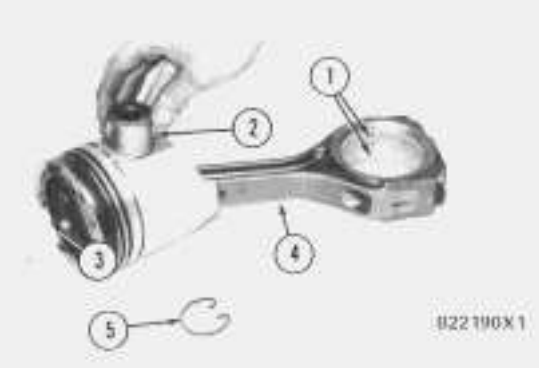

1. Install the connecting rod (4) in the piston with the bearing tab groove (slot) (1) on the same side as the cutout (depression) (3) on the head of the piston.

2. Install piston pin (2) and retaining rings (5) in piston.

3. When old pistons are to be used, clean the piston grooves with an acceptable piston groove cleaning tool.



4. Install the spring for the oil ring. Install the oil ring with tool (A). The gap in the ring must be approximately 180° from the oil ring spring connections.

5. The two compression rings have marks "UP-1" and "UP-2". The rings must be installed with these marks toward the top of the piston with "UP-1" as the top ring. After installation of all three piston rings, put piston rings in position so gaps in ring are 120° apart.

NOTE: Compression rings that do not have identification can be installed either way.

6. To check the clearance between the piston ring grooves and rings, see SPECIFICATIONS.

7. See SPECIFICATINS to check the clearance between the ends of the piston rings (end gap).

end by:

a) install pistons

Sea Water Pump (Marine Engine)

SMCS - 1371-12; 1371-11

Remove Sea Water Pump (Marine Engine)

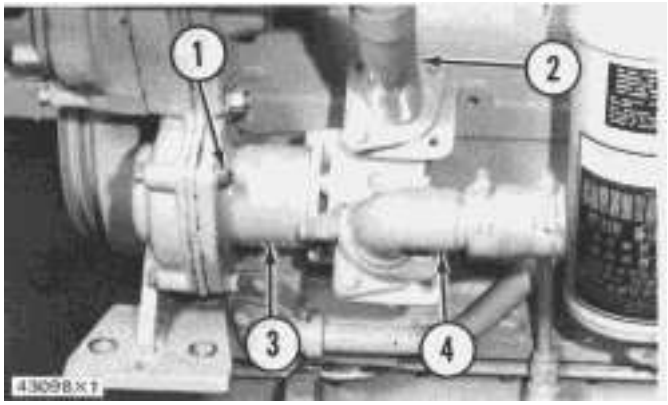

1. Disconnect sea water inlet line (4).

2. Disconnect sea water outlet line (2).

3. Remove four nuts (1) and remove sea water pump (3).

Install Sea Water Pump (Marine Engine)



1. Install the sea water pump and nuts.

2. Connect the sea water inlet line.

3. Connect the sea water outlet line.

Sea Water Pump

SMCS - 1371-15

Disassemble Sea Water Pump (Marine Engine)

start by:

a) remove sea water pump

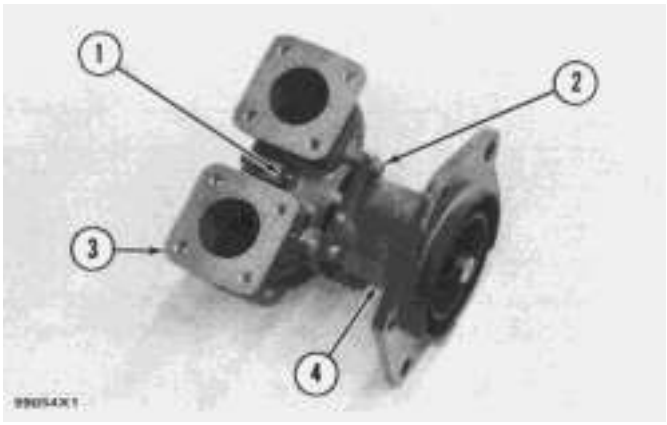

1. Make a separation between the bearing housing (4) and pump body (3) after removing bolts (2).

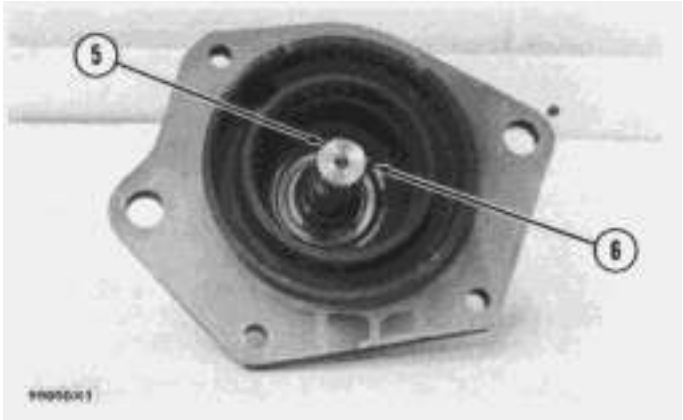

2. Remove the shaft (5) and bearing from the housing after removing the snap ring (6).

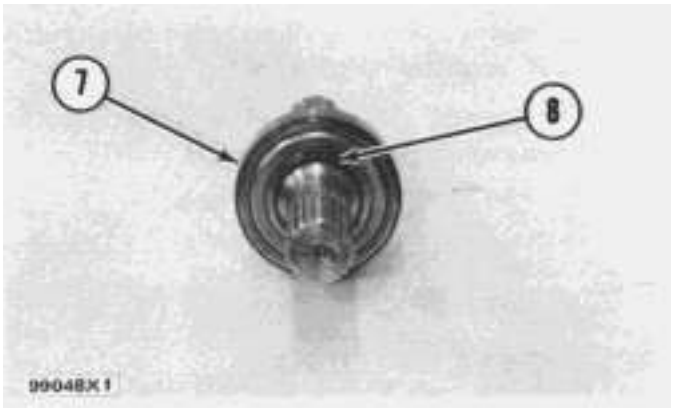

3. Remove the snap ring (8) and remove the bearing (7). Remove the lip-type seal from the bearing housing.

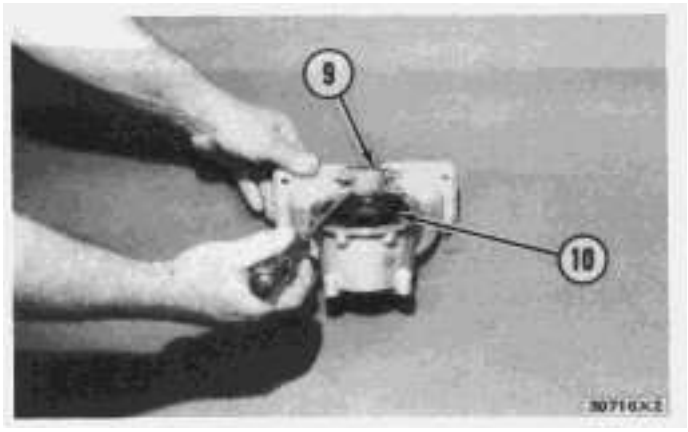

4. Remove the end cover from the pump body. Remove the cam screw (1). Remove cam (9) from the pump body. Remove the impeller (10) and spline seal from the body. Remove the wear plate and the seal assembly from the pump body.

Sea Water Pump

SMCS - 1371-16

Assemble Sea Water Pump (Marine Engine)

Tools Needed		A	B
1P531	Handle	1	
1P478	Drive Plate	1	
1P471	Drive Plate	1	
1Y7426	Ring Compressor		1

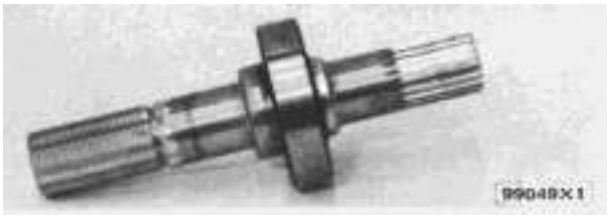

1. Install bearing on shaft. Install the snap ring that holds it.

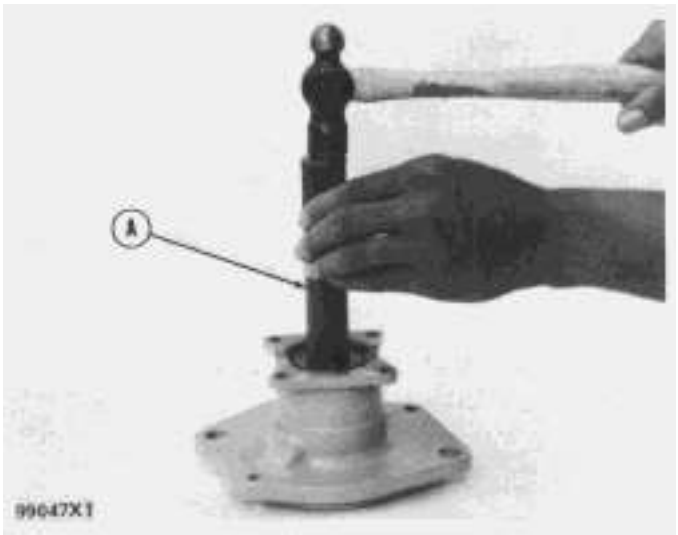

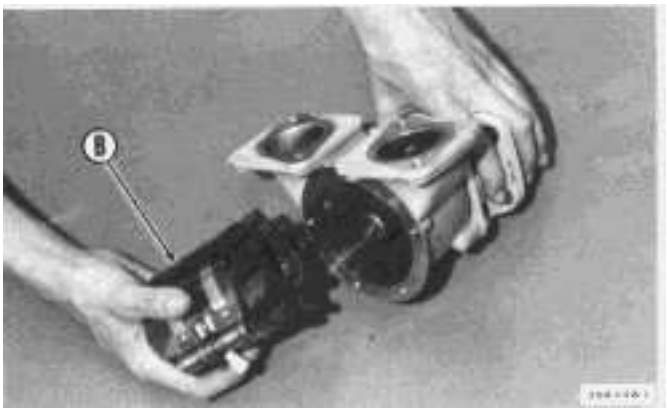

2. Install seal in bearing housing with tool (A). The lip of the seal must be toward the bearing.

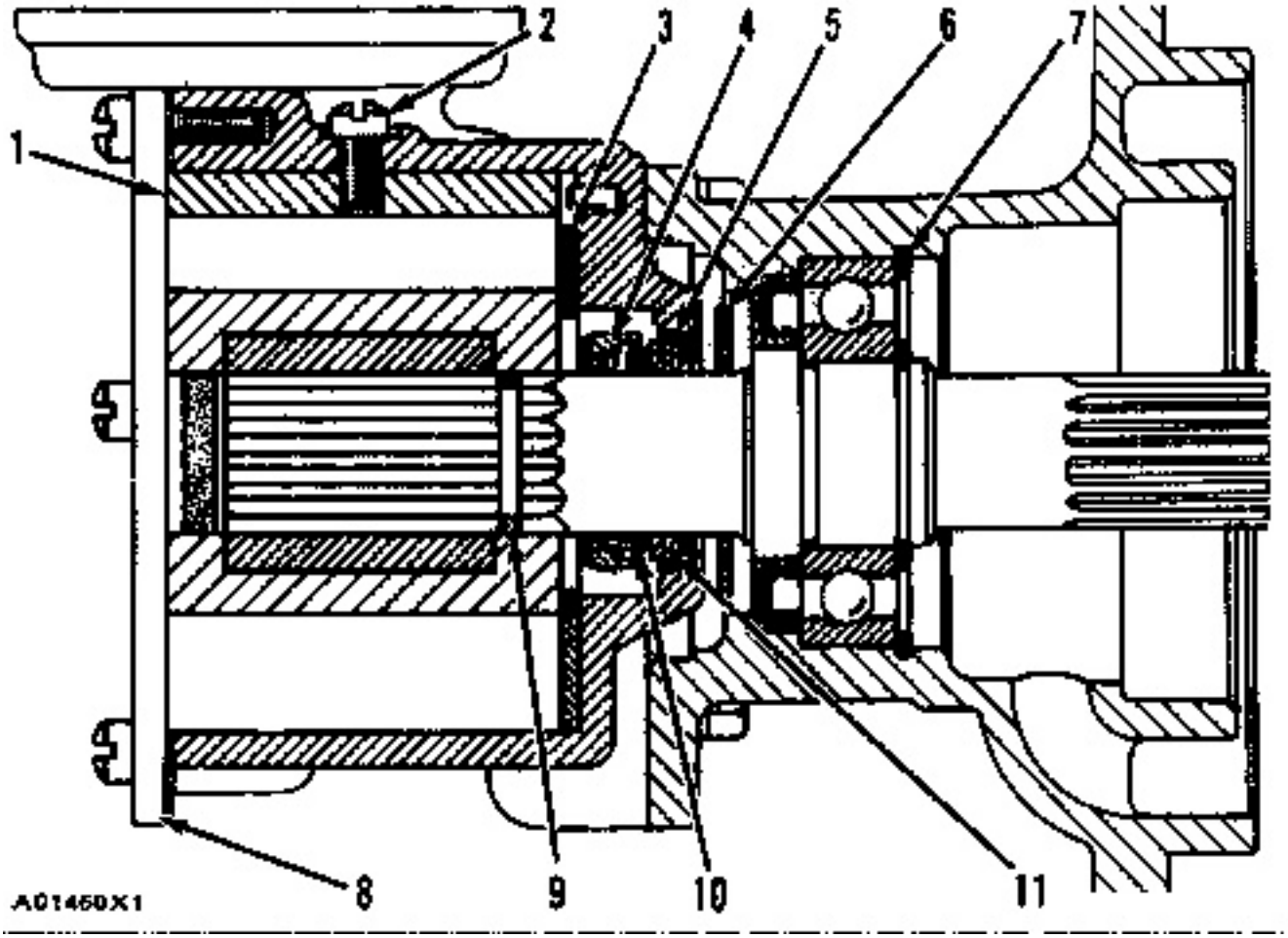

3. Put the shaft and bearing in position in the housing and install the snap ring (7).

4. Install the ceramic ring (11) and rubber seal (5) as follows:

a) Put water on the ceramic ring, rubber cup, and bore of the pum body.

b) Install the rubber seal in the pump body.

c) Install ceramic ring (finger pressure only) inside of the rubber cup with the shiny surface toward the impeller end of the pump body.

5. Install wear plate (3) in body. Install cam (1) in body and install the cam screw (2).

6. Install slinger (6) on shaft. Put the pump housing in position on the bearing housing and install the bolts that hold them together.

7. Install remainder of seal assembly as follows:

a) Put water on inside of seal assembly (4) and pump shaft.

b) Push the seal assembly (finger pressure only) on the shaft until shiny surface of carbon seal (10) makes contact with shiny surface of the ceramic ring (11).

8. Install the O-ring seal (9) on shaft. Install the impeller in pump with tool (B). Install cover (8) and screws.

end by:

a) install sea water pump

Jacket Water Pump

SMCS - 1361-11; 1361-12; 1361-15; 1361-16

Remove Jacket Water Pump (Marine Engine)

1. Remove coolant from the engine cooling system.



2. Remove two bolts (1) that hold the elbow to the water pump.

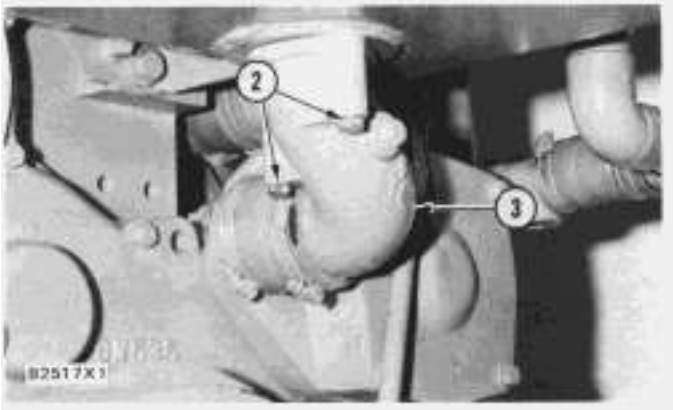

3. Remove two bolts (2) that hold elbow (3) to the expansion tank.

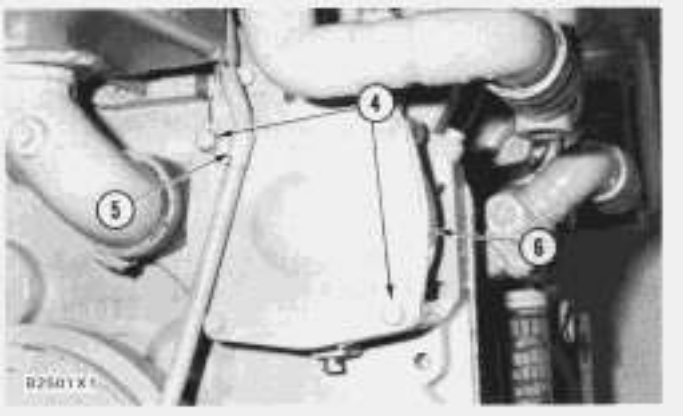

4. Remove two bolts (4), clip (5) and water pump (6) from the front timing cover. Remove gaskets.

Install Jacket Water Pump (Marine Engine)

1. Inspect water pump elbow gaskets and O-ring seal and make replacements if necessary.



2. Put the water pump (1) and clip in position and install the two bolts that hold them.

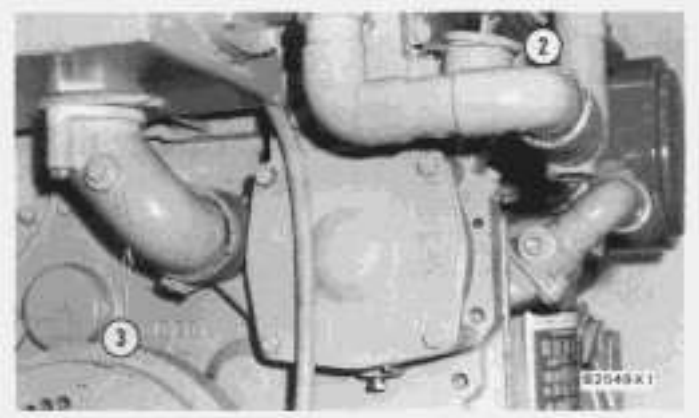

3. Install elbow (3) with two bolts to the bottom of the expansion tank.

4. Put elbow (2) in position and install two bolts to hold it to the water pump.

5. Fill engine with coolant to the correct level.

Disassemble Jacket Water Pump (Marine Engine)

	Tools Needed	A	B	C	D
1H3107	Puller Assembly	1			
8H684	Ratchet Box Wrench	1			
8B7550	Leg	2			
8B7551	Bearing Puller Assembly	1	1		
L2070	Bolt (3/8"-16 NC X 2 ¼")	1			
1P510	Driver Group	1	1	1	1
1P1861	Pliers			1	

start by:

a) remove jacket water pump

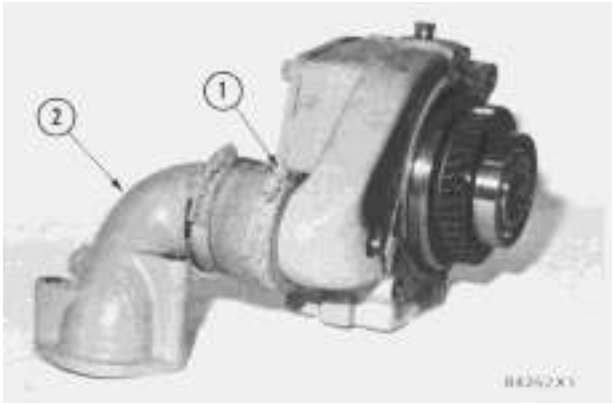

1. Loosen clamp (1) and remove hose elbow (2) from the pump housing.

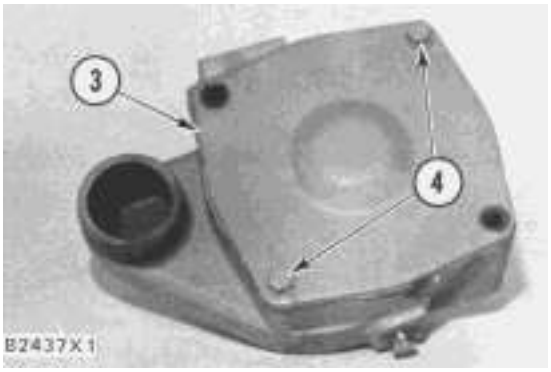

2. Remove two bolts (4) and cover (3) from housing.

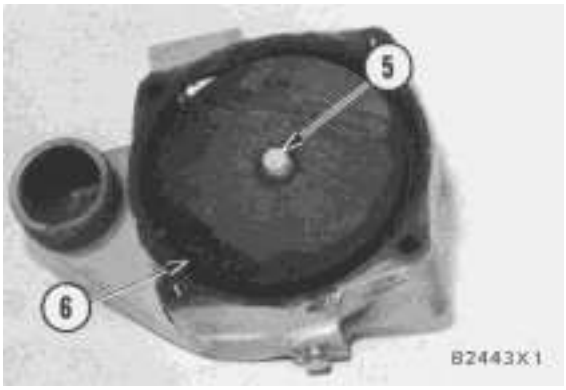

3. Loosen bolt (5) approximately .25 in. (6.35 mm). Hit the bolt with a soft hammer to remove impeller (6) from the shaft. Remove the bolt (5) and impeller (6).

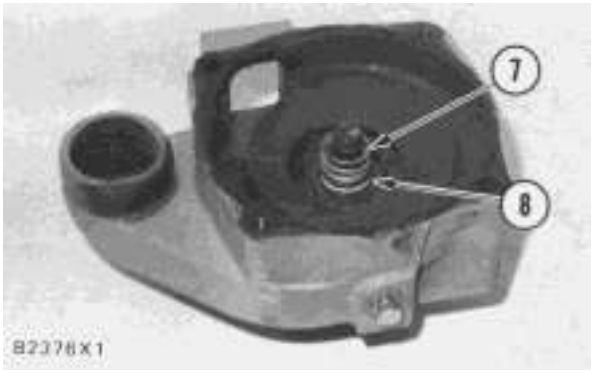

4. Remove spring (7) and seal assembly (8) from the shaf

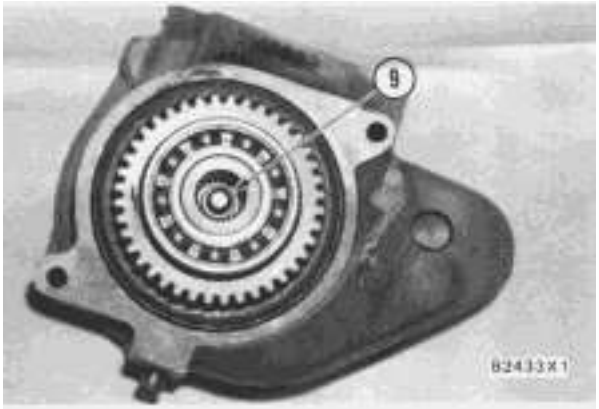

5. Turn the housing over and remove bolt (9).

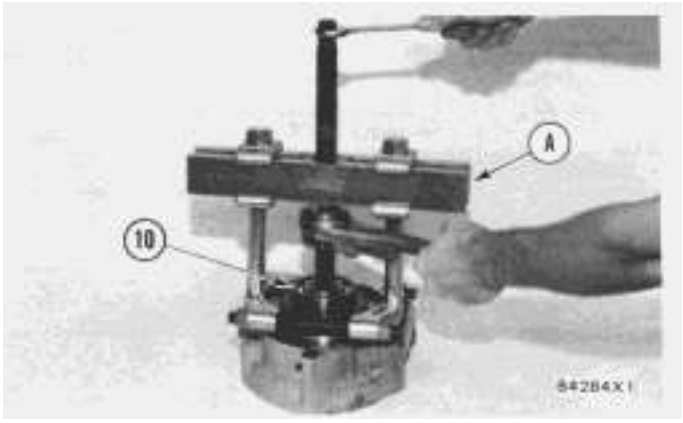

6. After the removal of bolt (9) install bolt from tooling (A) in shaft and gear assembly (10).

7. Put plate from driver group in tooling (A) on top of bolt, and install the remainder of tooling (A) on gear and bearing assembly as shown.

8. Remove gear and bearing assembly (10) with tooling (A).

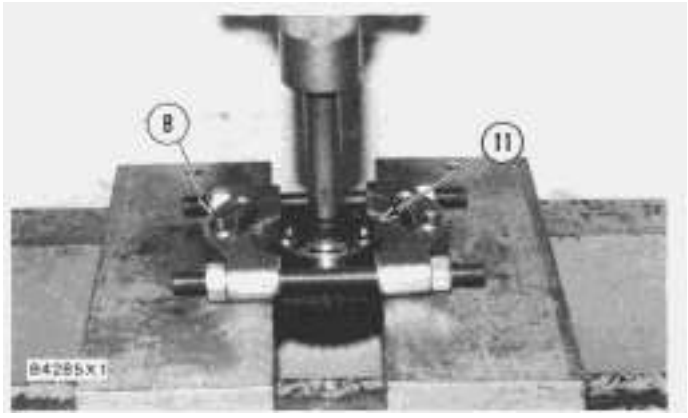

9. If necessary, remove bearing (11) from the gear with tool (B).

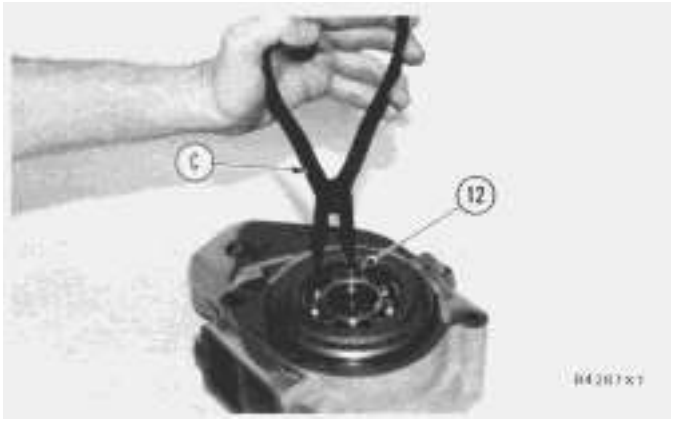

10. Remove retaining ring (12) from housing with tooling (C). Remove the bearing and shaft assembly.

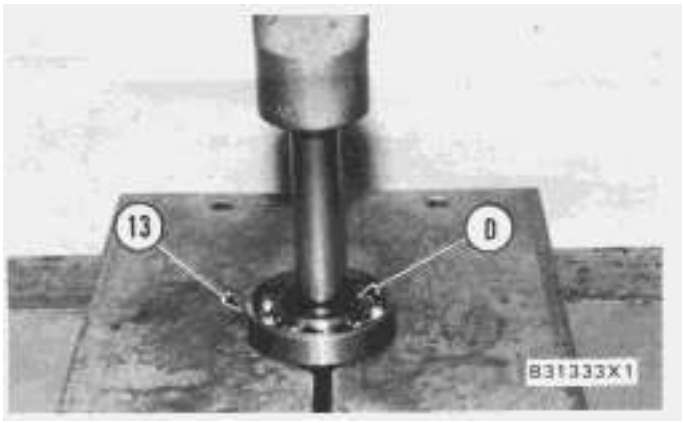

11. If necessary, remove bearing (13) from shaft with tooling (D) and a press.

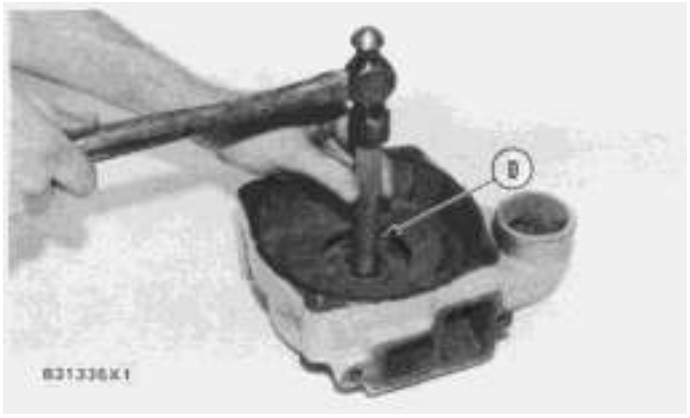

12. Turn the housing over and remove seal with tooling (D).

Assemble Jacket Water Pump (Marine Engine)

	Tools Needed	A	B
1P510	Driver Group	1	
1P1861	Pliers		1

NOTE: The seal must be installed with the lip toward the bearings.

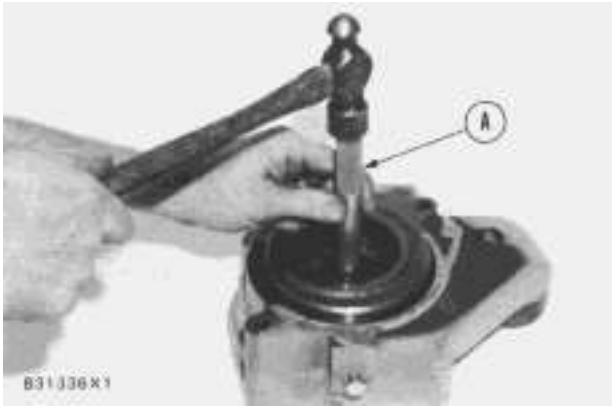

1. Install the lip type seal in the housing with tooling (A) to the bottom of the seal counterbore. Put a thin layer of engine oil on the lip of the seal.

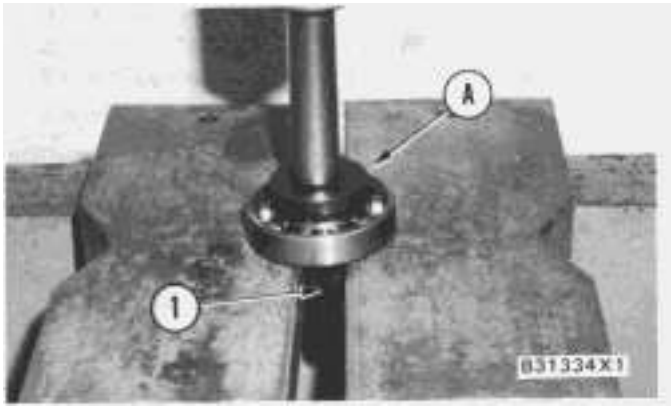

2. Use a press and tooling (A) to install bearing on shaft (1).

3. Install the shaft and bearing assembly in housing.

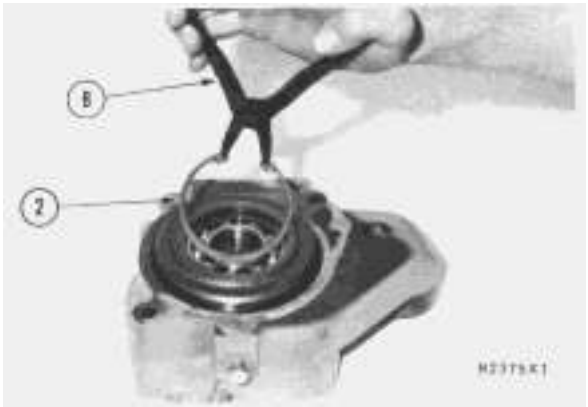

4. Install retaining ring (2) in housing with tooling (B).

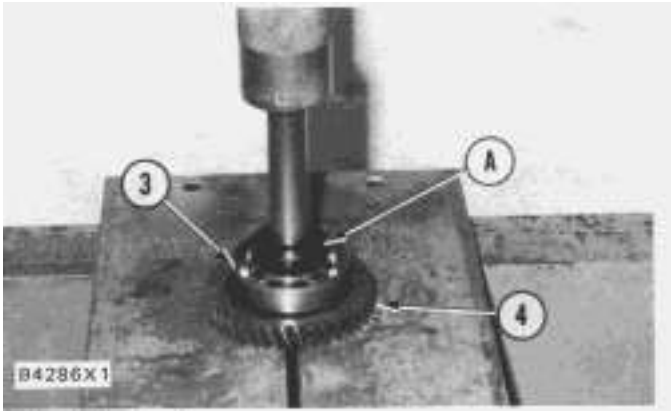

5. Use a press and tooling (A) to install bearing (3) on gear (4).

NOTICE

When gear is installed, make sure the pins on the gear engage the holes in the shaft.

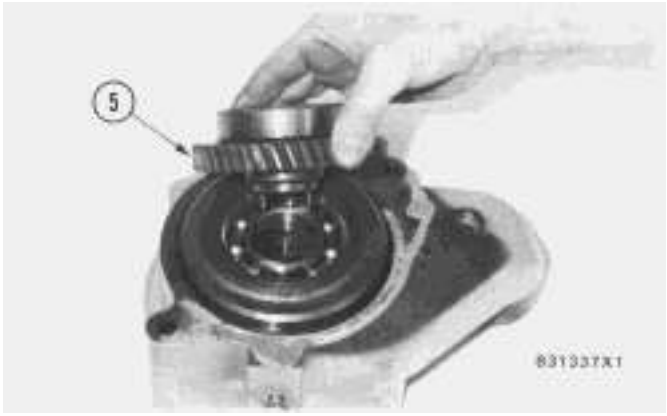

6. Put gear (5) and bearing in position on the shaft and install the washer and bolt.

NOTICE

Clean water only is permitted for use as a lubricant for assistance at installation. Do not damage or permit any foreign material on the wear surface of the carbon or the ceramic ring. Install the ceramic ring with the smoothest face of the ring toward the carbon seal assembly.

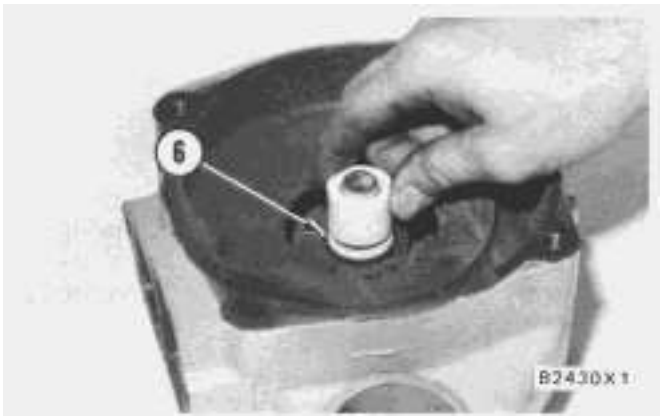

7. Put the ceramic ring (6) in position in the rubber seal. Use hand pressure and tool (which is with the replacement ring) to install the ceramic ring and rubber seal.

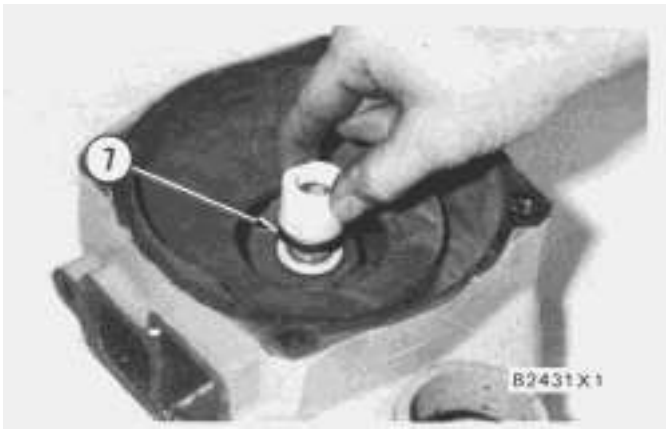

8. Remove the spring from the seal assembly (7). Use hand pressure and the tool (which is with the replacement ring) to install the seal assembly. Push seal assembly (7) on the shaft until the seal face makes light contact.

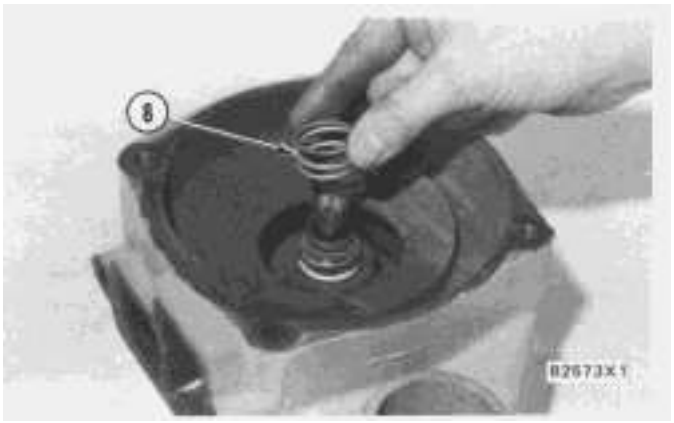

9. Install spring (8) on the seal assembly.

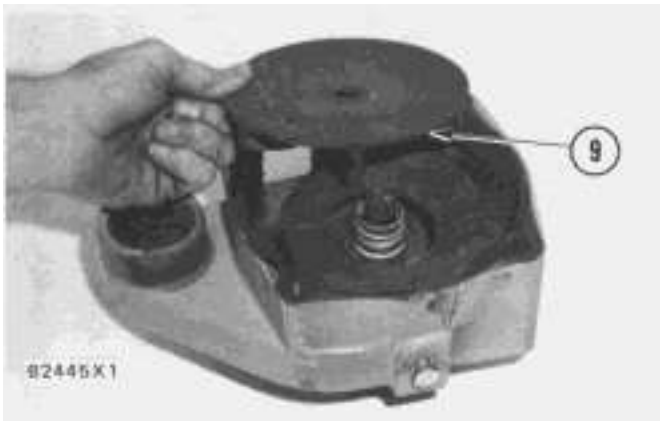

10. Put impeller (9) in position on the shaft.

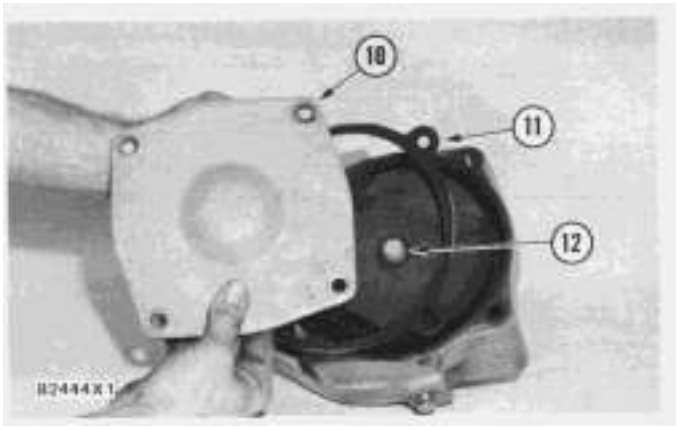

11. Install washer and bolt (12). Tighten the bolt to a torque of 28 ± 1 lb.ft. (38 ± 1 N·m).

12. Install a new gasket (11) and cover (10) on the housing.

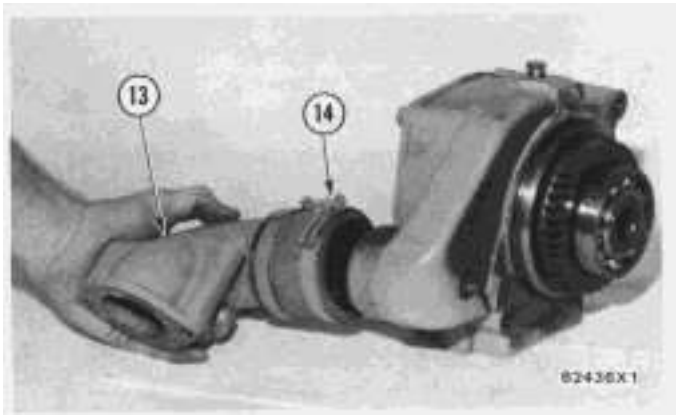

13. Put hose and elbow (13) in position on water pump. Install hose clamp (14).

end by:

a) install jacket water pump

Cylinder Liners

SMCS - 1216-11; 1216-12

Remove Cylinder Liners

	Tools Needed	A
5P8665	Cylinder Liner Puller	1

start by:

a) remove pistons

1. Remove the coolant from the cylinder block.

2. Put covers on journals of crankshaft for protection from dirt or water.

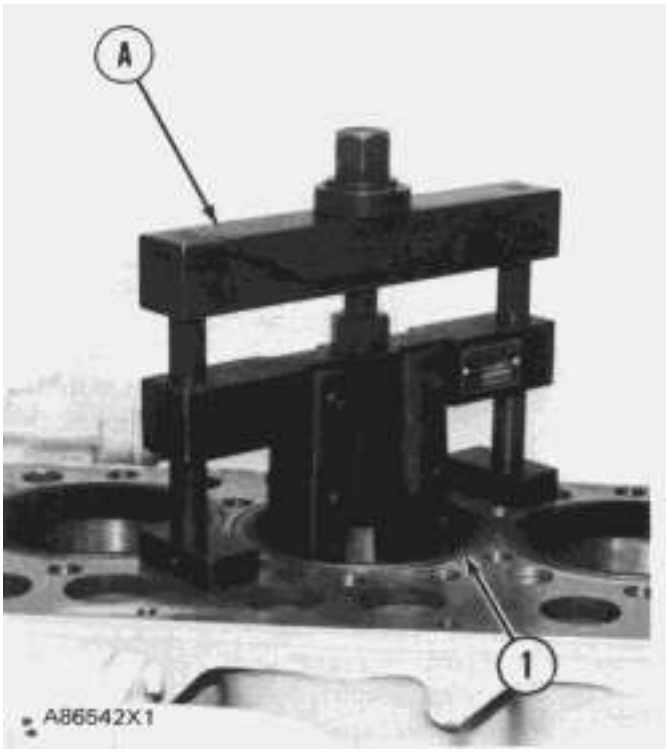

3. Remove cylinder liners (1) with tooling (A).

Install Cylinder Liners

	Tools Needed	A	B	C
2P8260	Cylinder Liner Installation Tool	1		
1P5510	Liner Projection Tool			1
8B7548	Puller Crossbar		1	
1P2394	Adapter Plate		1	
3H465	Plate		2	
S1589	Bolt 5/8-11 NC—1.75 in. (44.5 mm) long		12	
1S379	Washer (copper)		12	
1D4595	Bolt 5/8-11 NC—6.00 in. (152.4 mm) long		2	
2S736	Washer		2	

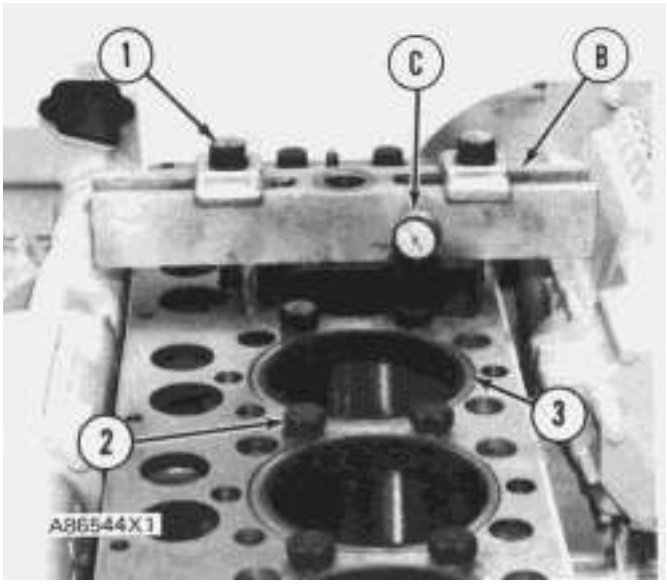

1. Clean the cylinder liners (3) and the liner bores in the cylinder block.

2. Install the cylinder liners in the block without the O-ring seals or filler bands.

3. Check the cylinder liner projection as follows:

a) Install the S1589 Bolts (2) and 1S379 Washers of tooling (B) on the cylinder block next to each liner. Tighten the bolts evenly, in four steps: 10 lb. ft. (14 N·m), 25 lb. ft. (35 N·m), 50 lb. ft. (70 N·m) and 70 lb. ft. (95 N·m).

b) Put adapter plate on top of the liner and install the remainder of tooling (B). Tighten the 1D4595 Bolts (1) evenly in four steps: 5 lb. ft. (7 N·m), 15 lb. ft. (20 N·m), 25 lb. ft. (35 N·m) and 50 lb. ft. (70 N·m).

c) Check to be sure the distance from the bottom edge of the crossbar to the top of the cylinder block is the same on both sides of the liner.

d) Check the cylinder liner projection with tool group (C) at four locations around the liner.

e) Liner projection must be .002 to .008 in. (0.05 to 0.020 mm) (make the measurement to the top of the liner flange, not the inner ring). The maximum differential between high and low measurements made at four places around each liner is .002 in. (0.05 mm). The average projection of liners next to each other must not be more than .002 in. (0.05 mm). The maximum difference in the average projection of all cylinder liners under each cylinder head must not be more than .003 in. (0.08 mm).

NOTE: If the liner is turned in the bore, it can make a difference in the liner projection.

4. If the liner projection is not .0013 to .0069 in. (0.033 to 0.175 mm), check the thickness of the following parts: spacer plate, spacer plate gasket and cylinder liner flange. The thickness of the spacer plate must be .3925 ± .0010 in. (9.970 ± 0.025 mm). The thickness of the spacer plate gasket must be .0082 ± .0010 in. (0.208 ± 0.025 mm). The thickness of the cylinder liner flange must be .4048 ± .0008 in. (10.282 ± 0.020 mm).

NOTE: If the liner projection changes from point to point around the liner, turn the liner to a new position in the bore. If the liner projection is still not to specifications, move the liner to a different bore.

5. When the cylinder projection is correct, put a mark on the liner and block so the liner can be installed in the same position from which it was removed.

NOTE: Cylinder liner projection can be adjusted by the removal of material from (machining) the contact face of the cylinder block with the use of the 8S3140 Cylinder Block Counterboring Tool Arrangement. Machine to a minimum depth of .030 in. (0.76 mm) and to a maximum depth of .045 in. (1.14 mm). The instructions for the use of the tool group are in Special Instruction Form No. FM055228. Shims are available for the adjustment of the liner projection. See CYLINDER LINER PROJECTION in TESTING AND ADJUSTING for the shim thickness and part number.

6. Remove tooling (B) and (C). Remove the liner.

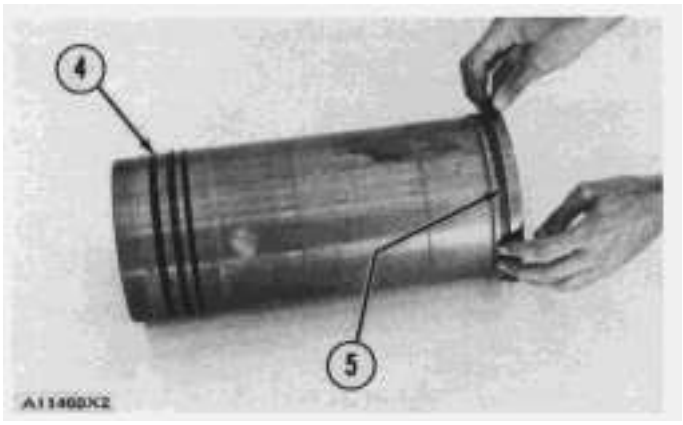

7. Put liquid soap on bottom liner bore in block, on grooves in lower liner and on O-ring seals (4). Install O-ring seals on the liner.

8. Put filler band (5) in clean SAE 30 oil for a moment and install on liner. Install cylinder liner immediately in the cylinder block (before expansion of filler band).

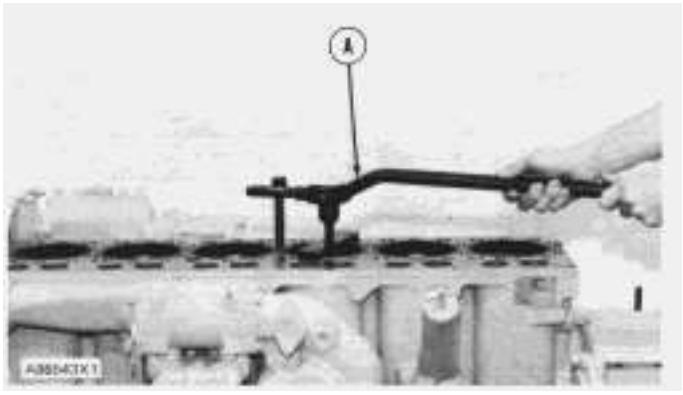

9. Make sure the mark on liner is in alignment with the mark on the block. Use tooling (A) to push the liner into position.

10. Do Steps 5 through 9 for the remainder of the cylinder liners.

end by:

a) install pistons

Flywheel

SMCS - 1156-11; 1156-12

Remove Flywheel

Tools Needed		A
FT120	Lifting Bracket	1



1. Turn the flywheel until threaded hole (1) is at the top.

2. Remove upper five bolts (2).



3. Install two 5/8"-18 NF guide bolts (3) as shown.

4. Fasten tool (A) to a hoist and to the flywheel using a 1/2"-13 NC x 1 3/4" bolt in threaded hole (1).

5. Remove the other four bolts that hold the flywheel to the crankshaft.

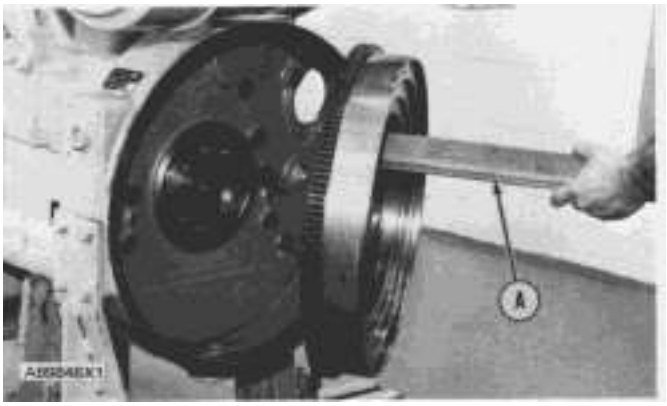

6. Remove the flywheel with tool (A). Weight of the flywheel is 160 lb. (72 kg).

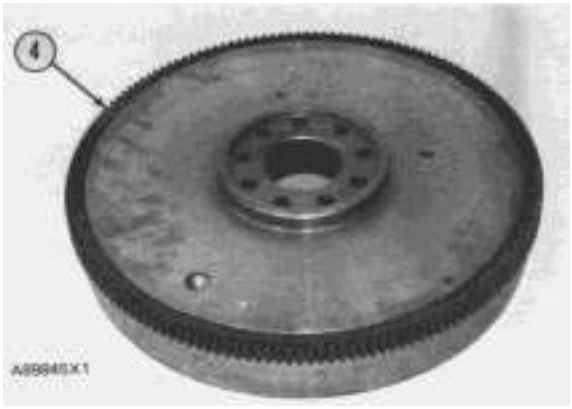

7. Remove gear (4) from the flywheel.

Install Flywheel

	Tools Needed	A
FT120	Lifting Bracket	1

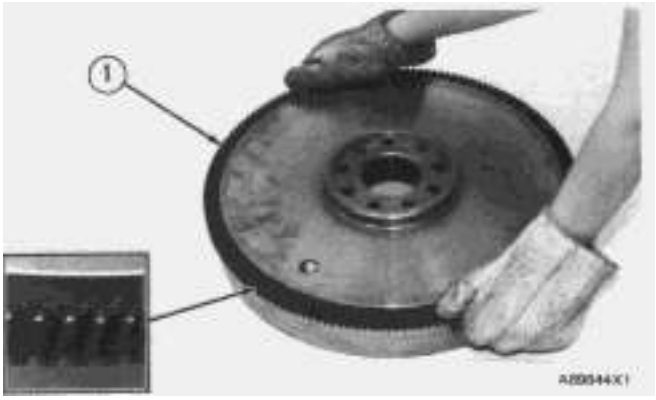

NOTICE

When flywheel ring gear (1) is installed on the flywheel, the tooth chamfer side must be installed away from the flywheel.

---

1. Heat the flywheel ring gear (1) to a maximum temperature of 600°F (315°C). Install the flywheel ring gear on the flywheel.

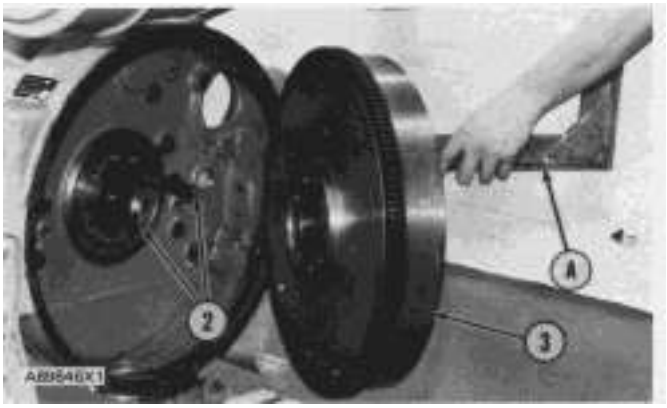

2. Install two 5/8"-18 NF guide bolts (2) in the crankshaft as shown.

3. Fasten tool (A) to the flywheel (3) and a hoist.

4. Use tool (A) to put flywheel (3) in position over guide bolts (2). Weight of the flywheel is 160 lb. (72 kg).

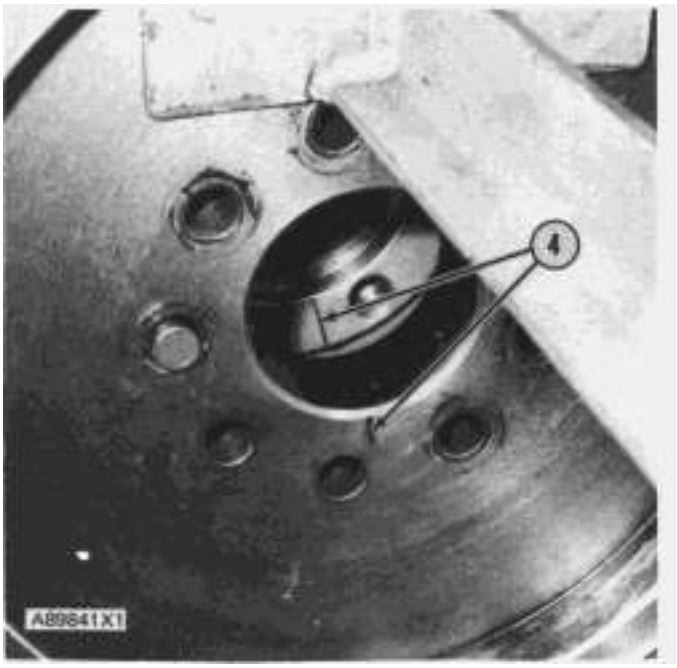

5. Make an alignment of marks (4) on the end of the crankshaft and flywheel.

6. Install the bottom four of nine bolts.

7. Remove tool (A) and the two guide bolts.

8. Install the other five bolts that hold the flywheel in place.

Crankshaft Front Seal And Wear Sleeve

SMCS - 1160-11; 1160-12

Remove Crankshaft Front Seal And Wear Sleeve

	Tools Needed	A	B	C
1P3075	Puller Assembly	1		
5P7312	Distorter		1	
5P7315	Ring			1

start by:

a) remove engine front support

NOTE: When a replacement of the front seal is made, a replacement of the wear sleeve is to be made also.

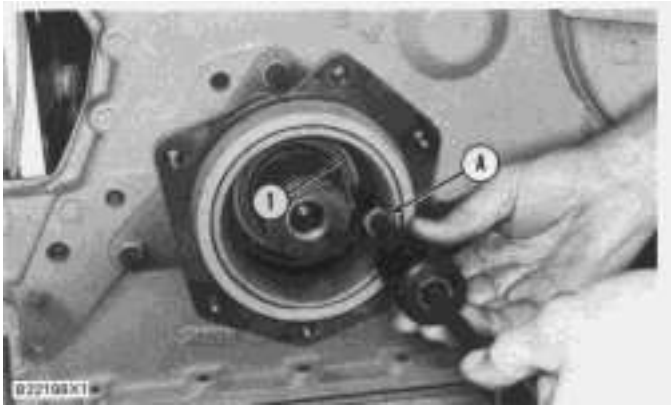

1. Remove the crankshaft front seal (1) with tooling (A).

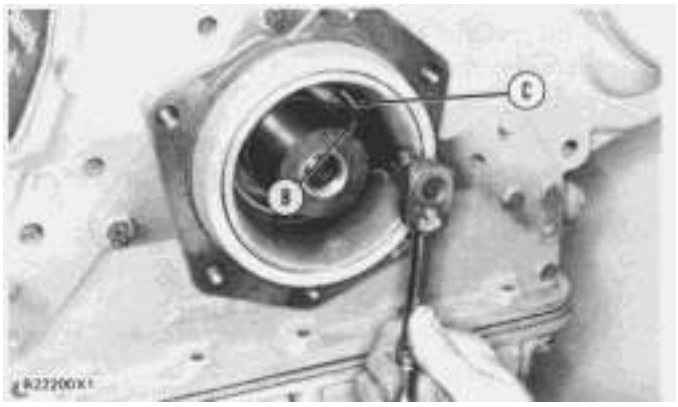

2. Install tool (C) into seal bore.

3. Install tool (B) between tool (C) and the wear sleeve. Turn tool (B) until the edge of the tool makes a flat place (crease) in the wear sleeve. Do this in two or more places until the wear sleeve is loose.

4. Remove tool (C) and the wear sleeve by hand.

Install Crankshaft Front Seal And Wear Sleeve

	Tools Needed	A
5P7299	Installer	1
7F8022	Bolt	1

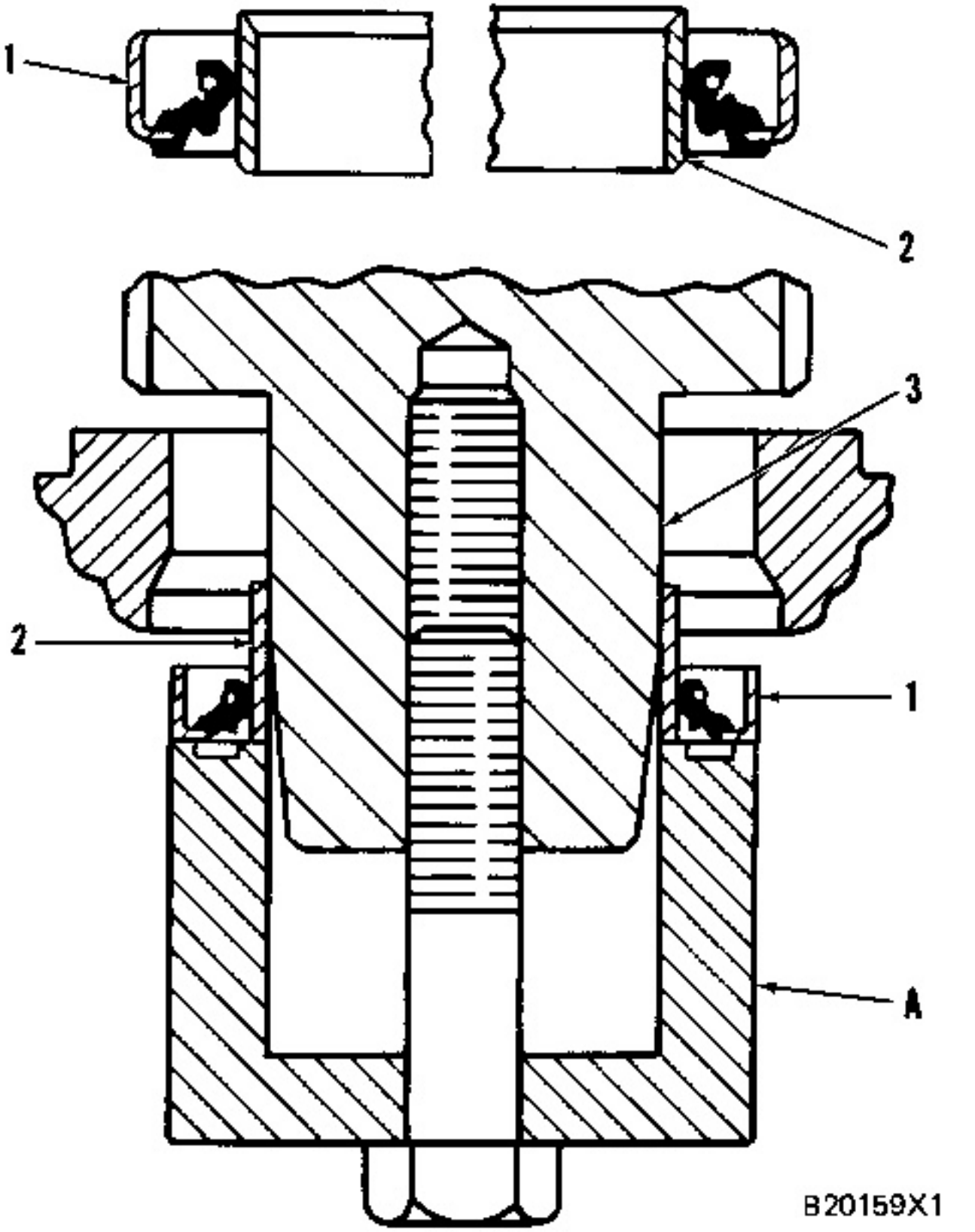

1. Install the crankshaft front seal and wear sleeve with tooling (A) as follows:

a) Put clean engine oil on the seal lip of seal (1) and on the outside diameter of wear sleeve (2). Install seal (1) on wear sleeve (2) as shown.

b) Use 6V1541 Quick Cure Primer to clean the outside diameter of crankshaft (3) and the inside diameter of wear sleeve (2).

c) Put 9S3265 Retaining Compound on the outside diameter of crankshaft (3) and the inside diameter of wear sleeve (2).

NOTE: Make sure the lip of the seal is toward the engine and the outside diameter bevel of the wear sleeve is toward the outside of the engine.

d) Put wear sleeve (2) with seal (1) on the front of the crankshaft as shown in Figure 1. Install tooling (A). Tighten the bolt in tooling (A) until the inside surface of the installer in tooling (A) makes contact with the end of the crankshaft.

end by:

a) install engine front support

Flywheel Housing

SMCS - 1157-11; 1157-12

Remove Flywheel Housing

start by:

a) remove starter

b) remove flywheel

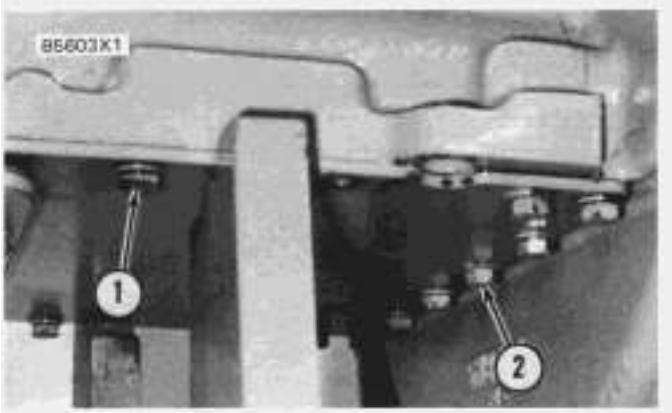

1. Remove the bolts (2) and washers that hold the oil pan plate to the flywheel housing. Loosen the bolts (1) that hold the oil pan to the cylinder block.

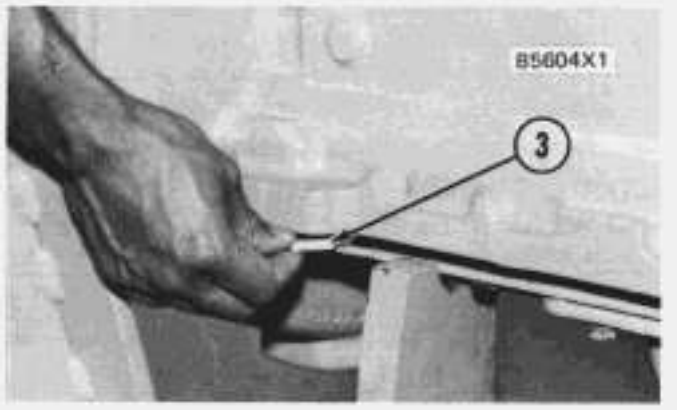

2. Fasten a hoist to the engine. Lift the engine and install shims (3) on each side of the engine between the cylinder block and the oil pan plate.

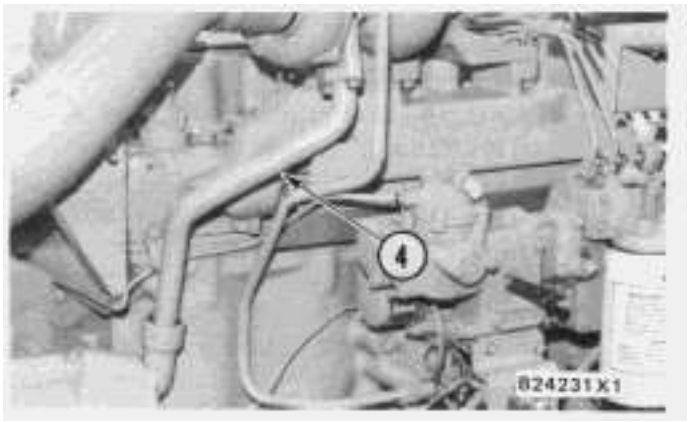

3. Remove the turbocharger oil drain tube (4) (if equipped with a turbocharger).

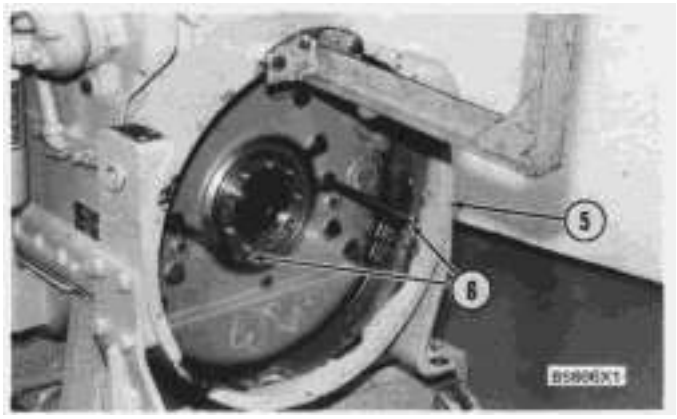

4. Fasten an approved lifting bracket to flywheel housing (5) and a hoist.

5. Install two 1/2"-13 NC guide bolts (6) in the cylinder block as shown.

6. Remove the bolts that hold the flywheel housing to the cylinder block. Remove the flywheel housing (5). The weight of the flywheel housing is 160 lb. (72 kg).

Install Flywheel Housing

1. Clean the old gasket from the surfaces of the cylinder block and flywheel housing that make contact with each other. Put a new gasket in position.

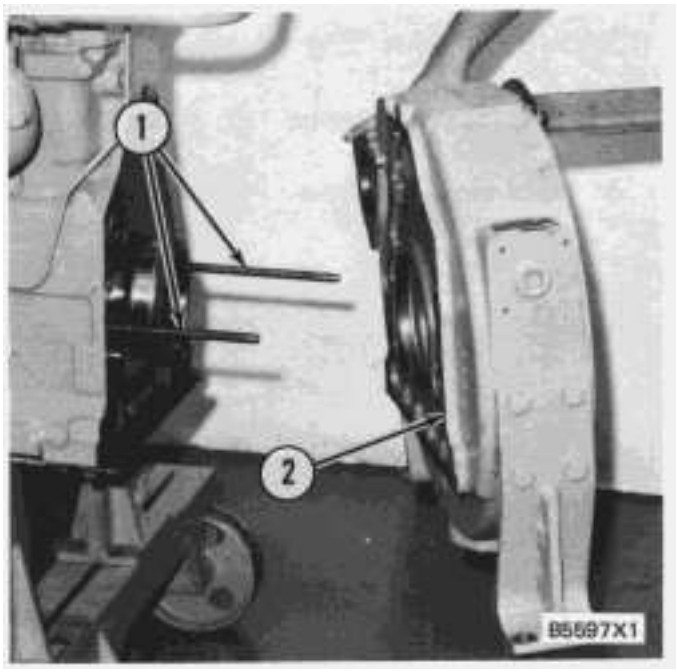

2. Install two 1/2"-13 NC guide bolts (1) in the cylinder block as shown. Fasten tool (A) to the flywheel housing (2) and a hoist. Weight of the flywheel housing is 160 lb. (72 kg).

3. Put a small amount of clean engine oil on the lip of the seal in the flywheel housing.

NOTICE

Be careful when the flywheel housing is installed so the seal is not damaged.

---

4. Put the flywheel housing (2) in position on the guide bolts (1). Install all but two bolts in the flywheel housing. Remove tool (A) and guide bolts (1). Install the other two bolts.

5. Cut the bottom of the gasket off even with the flywheel housing and cylinder block. Put 5H2471 Gasket Cement on the bottom of the gasket where the gasket makes contact with the gasket for the oil pan plate.

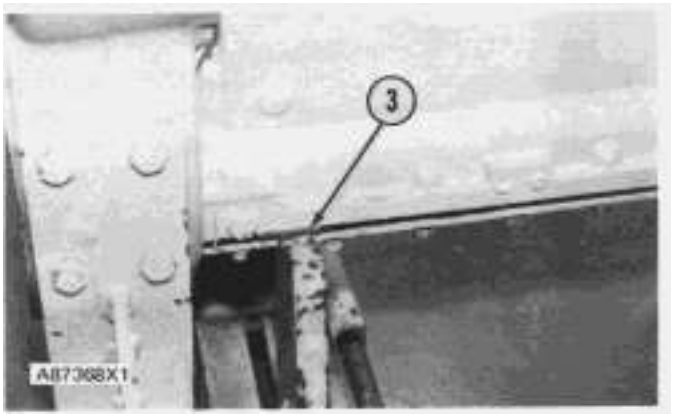

6. Remove shims (3) from each side of the engine. Tighten all of the oil pan bolts. Install the bolts

that hold the oil pan plate to the flywheel housing.

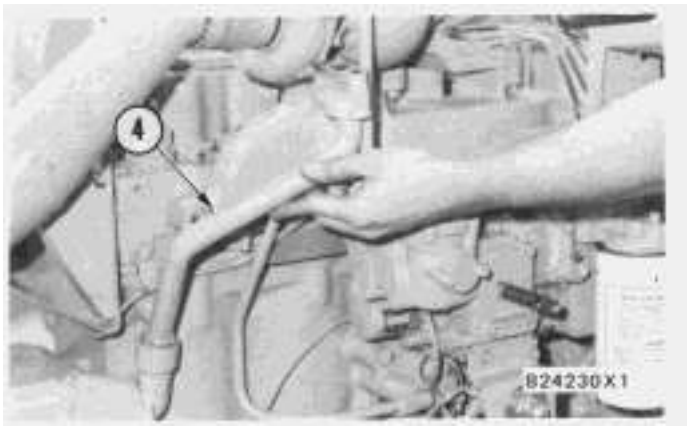

7. Install turbocharger oil drain tube (4) (if equipped with a turbocharger).

end by:

a) install flywheel

b) install starting motor

Oil Pan

SMCS - 1302-11; 1302-12

Remove Oil Pan

NOTE: Photos shown are on 3306 engine.

1. Drain the oil from the oil pan.

2. Remove the oil level gauge.

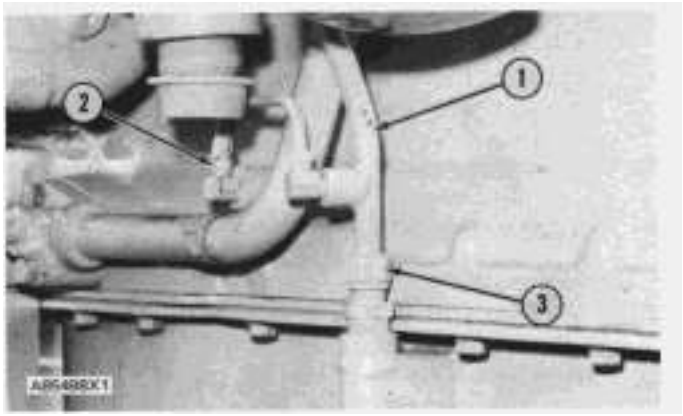

3. Disconnect tube (2) from the engine block.

4. Disconnect nut (3) from the oil pan and remove tubes (1) and (2) as a unit.

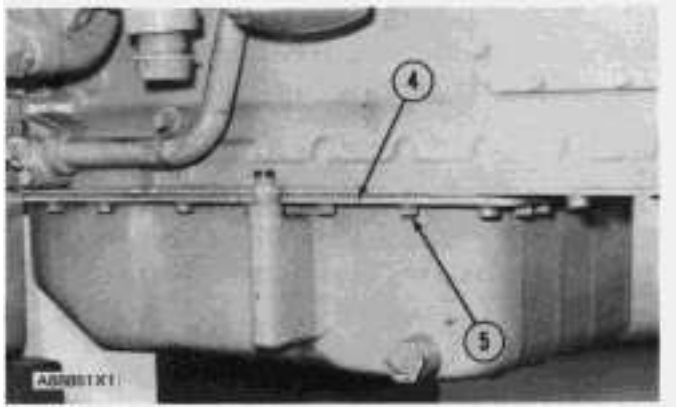

5. Remove bolts (5) and washers that hold oil pan (4) in position and remove the oil pan. Remove the old gasket from the oil pan.

Install Oil Pan



1. Install a new gasket (1) on oil pan (2).

2. Put oil pan (2) in position on the engine and install the washers and bolts that hold it.

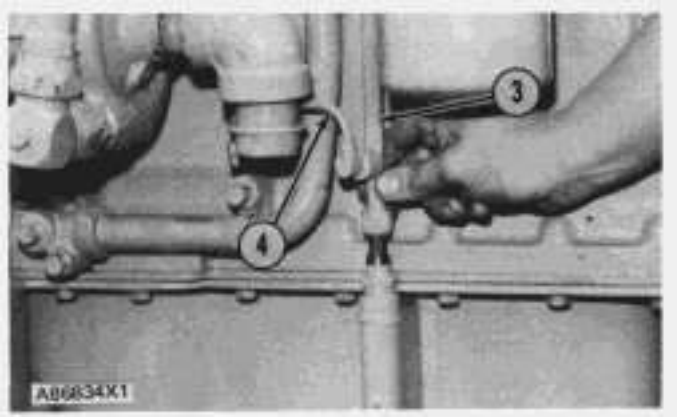

3. Connect oil gauge tube (3) and tube (4).

4. Fill the crankcase with oil to the correct level. See LUBRICATION AND MAINTENANCE

Oil Pan Plate

SMCS - 1302-11; 1302-12

Remove Oil Pan Plate

start by:

a) remove oil pan

NOTE: Photos shown are on 3306 engine.



1. Remove bolt (3) and lock. Remove bolts (2) and lock.

2. Remove suction bell and tube (1).

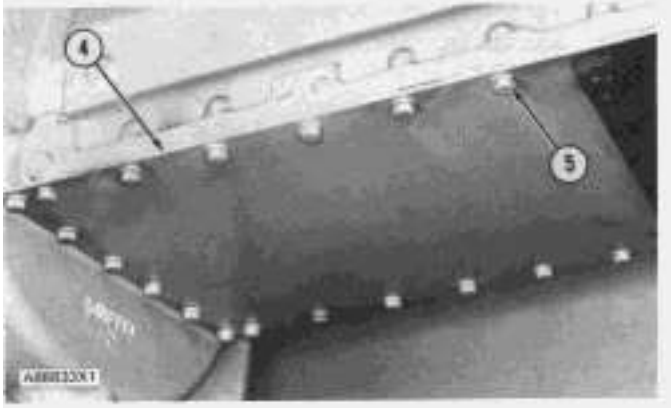

3. Remove the bolts (5) and washers that hold the oil pan plate to the cylinder block. Remove oil pan plate (4) and gasket.

Install Oil Pan Plate

NOTE: Photos shown are on 3306 engine.

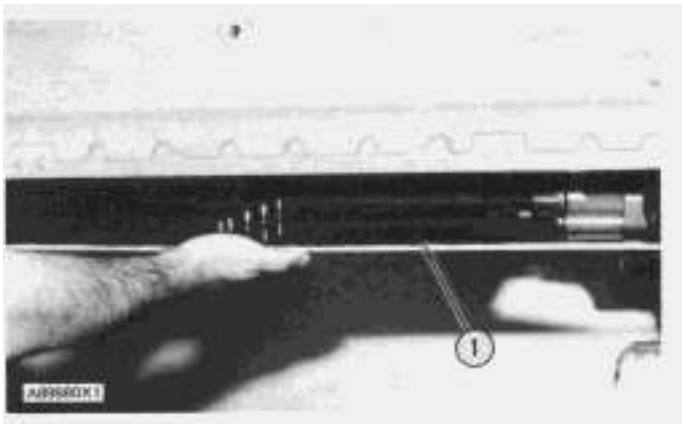

1. Put a new gasket and oil pan plate (1) in position and install the bolts and washers that hold it to the cylinder block.

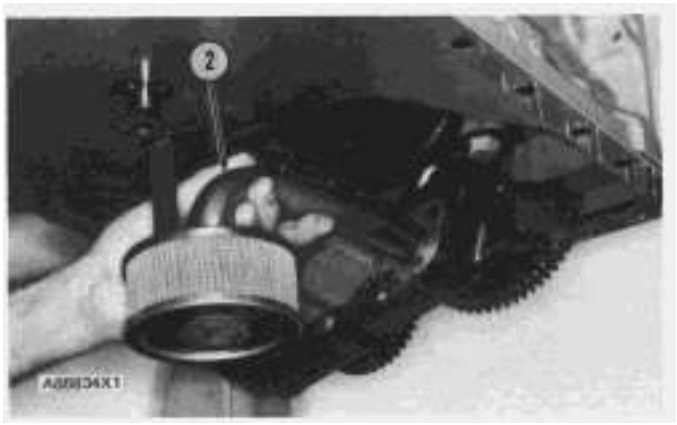

2. Put suction bell and tube (2) in position on the oil pump and install the locks and bolts that hold it in position.

end by:

a) install oil pan

Oil Pump (3306)

SMCS - 1304-11; 1304-12

Remove Oil Pump

start by:

a) remove oil pan

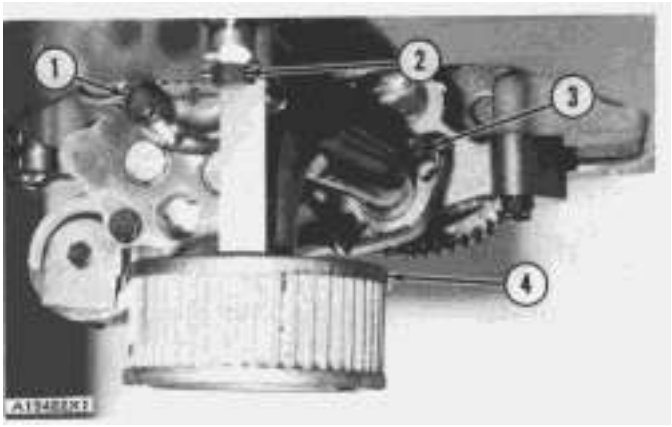

1. Remove bolts (2) that holds suction bell (4) to the oil pan plate.

2. Remove bolts (1) that hold the oil pump to the scavenge tube. Remove the gasket. Bend the locks away from bolts (3). Remove bolts (3) that hold the suction tube to the oil pump. Remove the gasket from between the suction tube flange and the oil pump.

NOTE: The suction tube, suction bell and oil pump can be removed as a unit.



3. Bend the locks away from bolts (6) that hold the oil pump to the cylinder block. Remove bolts (6).

4. Remove oil pump (5). Weight is 30 lb. (14 kg).

Install Oil Pump



1. Put oil pump (1) in position under the cylinder block. Install a new gasket between the oil pump and the scavenge tube. Install bolts (3) that hold the oil pump to the scavenge tube.

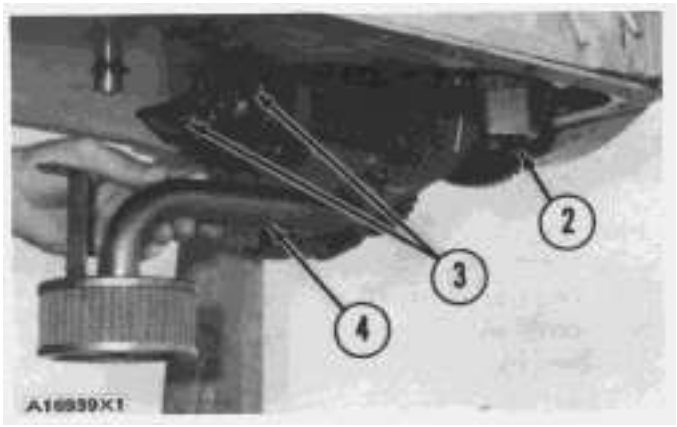

2. Install bolts (2), the washers and the locks that hold the oil pump to the cylinder block.

3. Put suction tube (4) in position on the oil pump. Make sure there is a new gasket between the flange on the oil tube and the oil pump.

4. Install the bolts that hold the suction tube to the oil pump. Bend the locks against the bolts. Install the bolt that holds the bracket on the suction bell to the oil pan plate.

end by:

a) install oil pan

Oil Pump

SMCS - 1304-15; 1304-16

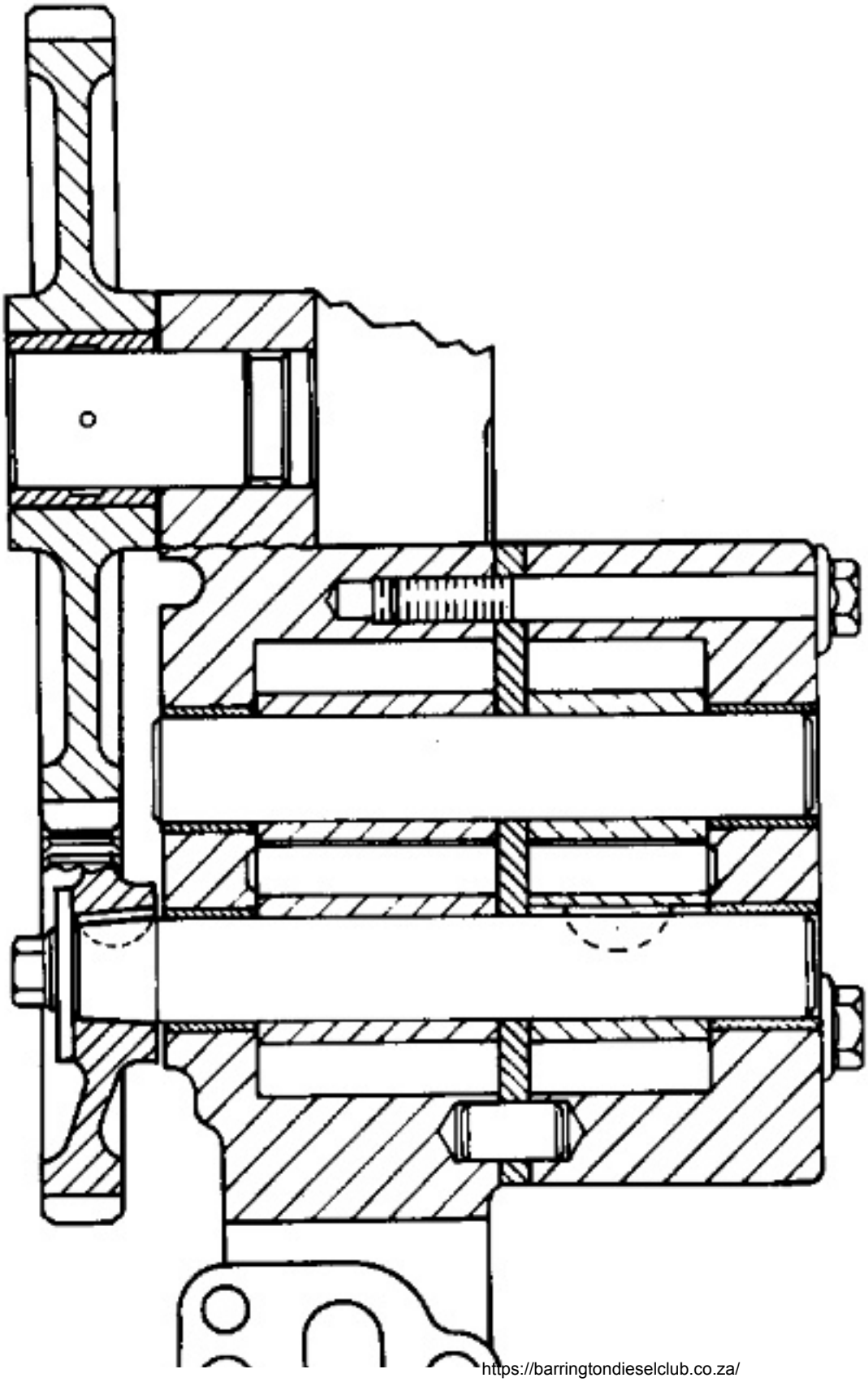



66310X7

Disassemble Oil Pump

	Tools Needed	A	B	C
1P2320	Puller Assembly	1		
8B7560	Step Plate	1		
1P529	Handle		1	1
1P468	Drive Plate		1	
1P465	Drive Plate		1	
1P462	Drive Plate			1
1P461	Drive Plate			1

start by:

a) remove oil pump

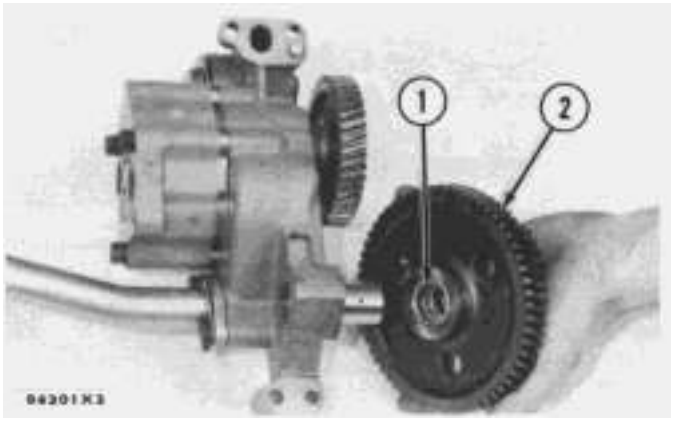

TYPICAL EXAMPLE

1. Remove idler gear (2).

2. Remove bearing (1) from gear (2) with tooling (B).

3. Remove the bolt and the washer from the oil pump drive gear.

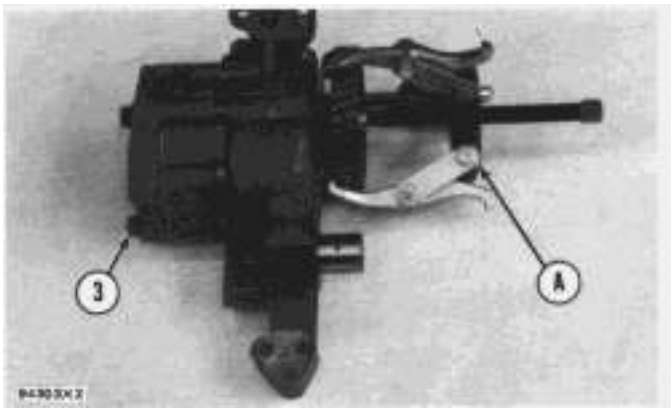

4. Remove the drive gear from the shaft with tooling (A).

5. Remove the key from the pump shaft.

6. Remove bolts (3) from the pump body.

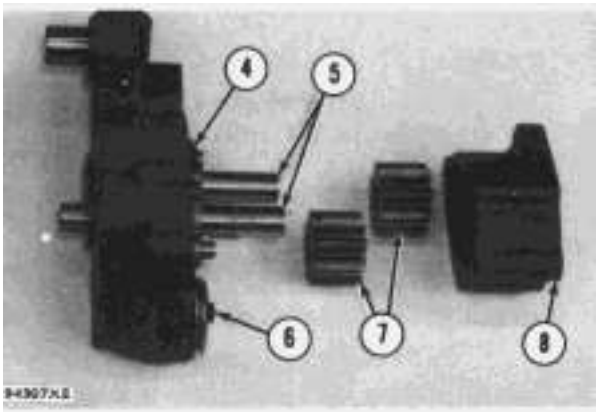

7. Remove body (8), two gears (7), keys and spacer (4) from the pump.

8. Remove two shafts (5) and the gears.

9. Remove bolts (6), the cover and the pressure relief valve from the body.

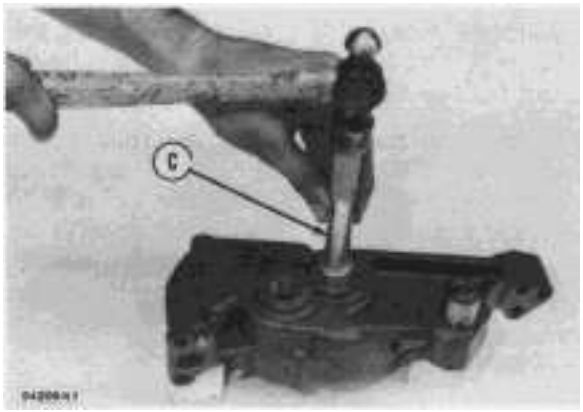

10. Remove the bearings from the oil pump body assembly and the scavenge pump body assembly with tooling (C).

Assemble Oil Pump

	Tools Needed	A	B
1P529	Handle	1	1
1P461	Drive Plate	1	
1P462	Drive Plate	1	
1P465	Drive Plate		1
1P468	Drive Plate		1

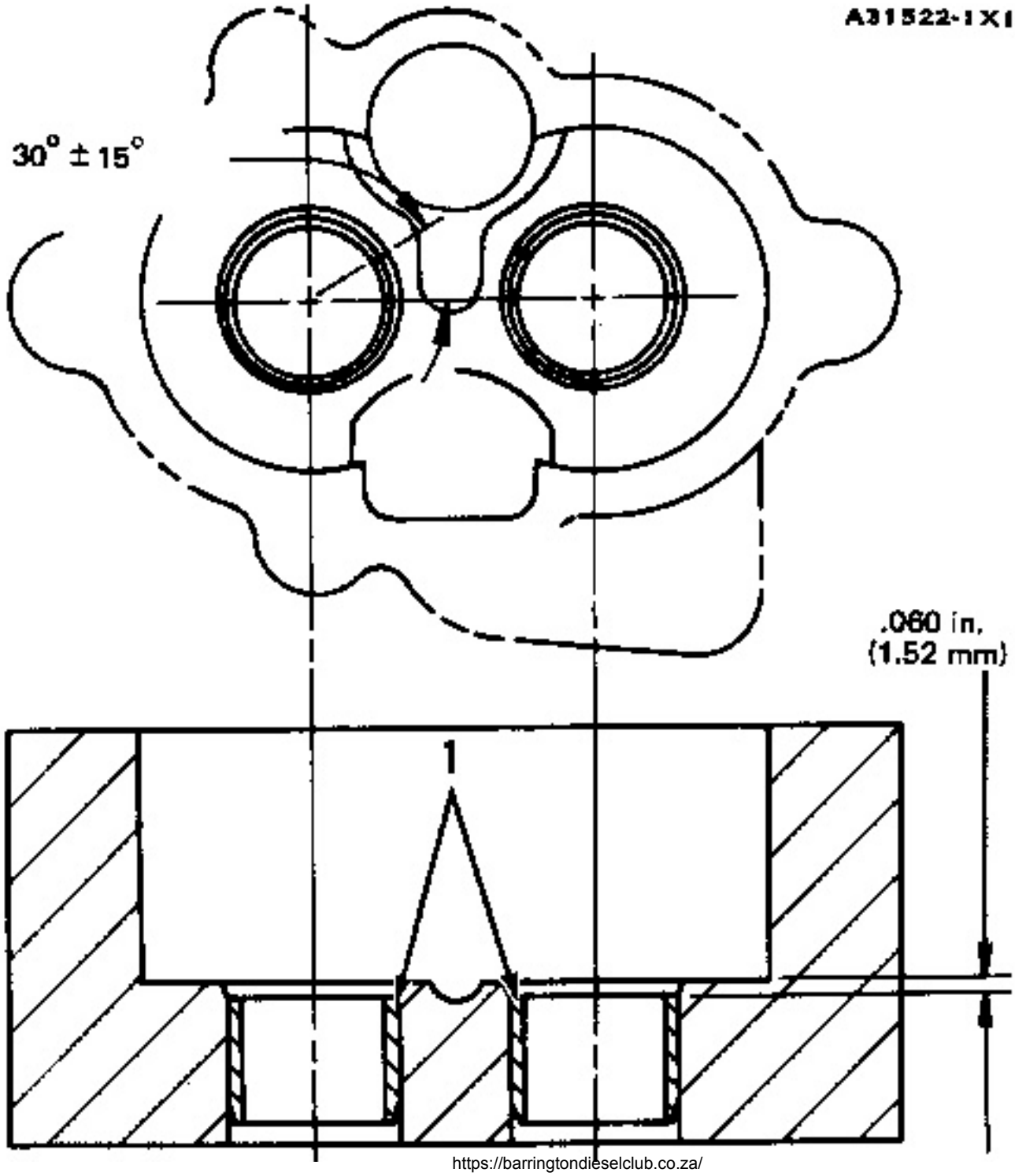

https://barringtondieselclub.co.za/

1. Install the bearings in the scavenge pump body assembly with tooling (A) as follows:

a) Put bearings (1) in position on the inside of the scavenge pump body assembly with the chamfer on the bearing toward the outside of the pump body. Install the bearing until it is .060 in. (1.52 mm) below the inside machined surface of the scavenge pump body assembly. Make sure the joints in the bearings are at an angle of 30° ± 15° from the center line through the bores in the scavenge pump body and toward the outlet passage of the pump. The outlet passage has a cavity between the bearing bores.

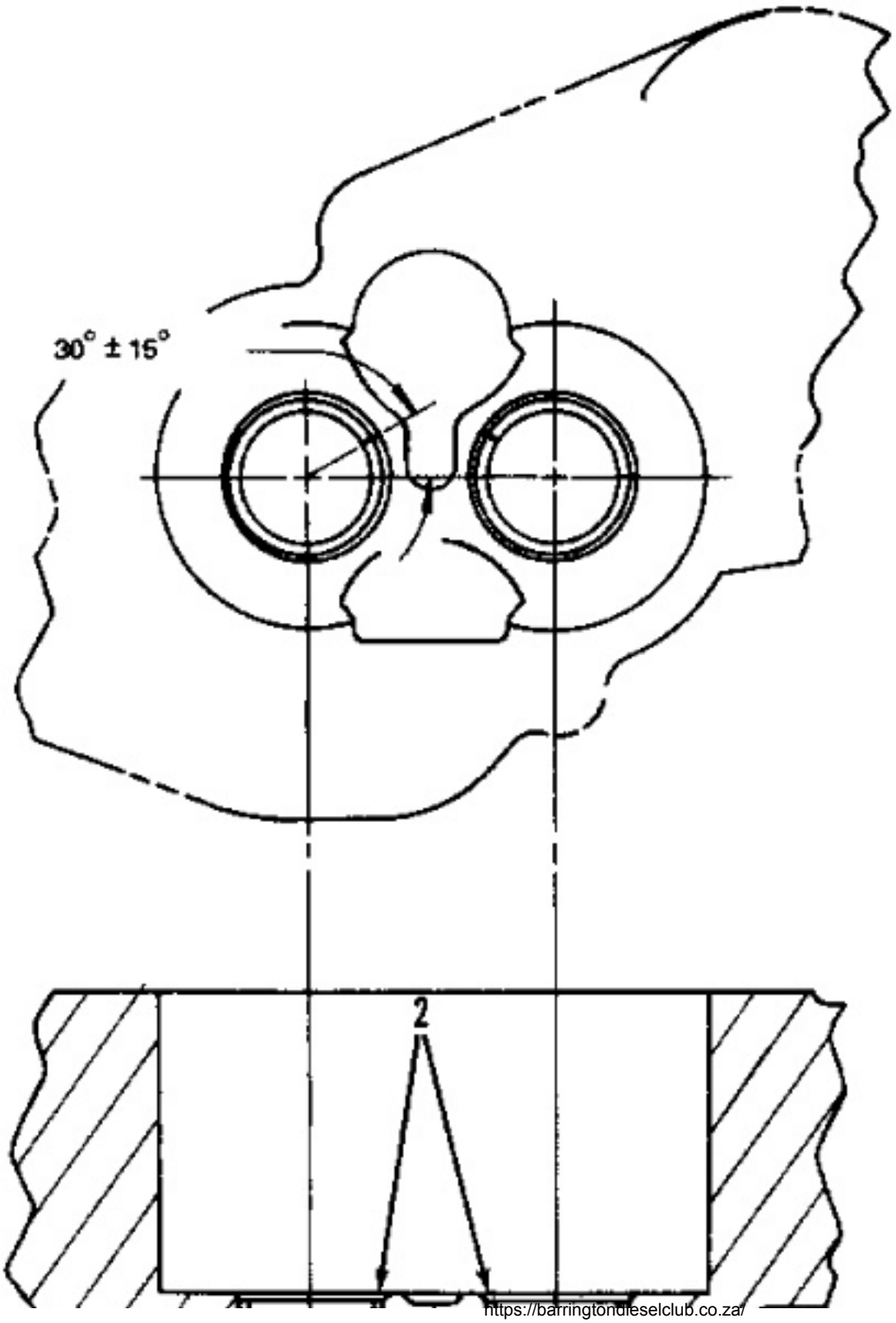

https://barringtondieselclub.co.za/

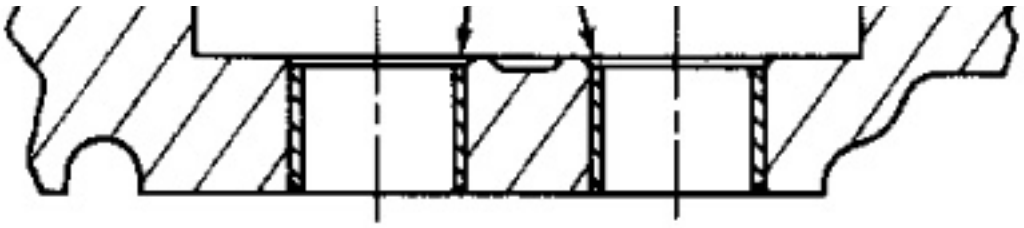

2. Install the bearings in oil pump body assembly with tooling (A) as follows:

a) Put bearings (2) in position on the inside of the oil pump body assembly with the chamfer on the bearings toward the outside of the pump body. Install the bearings until they are even with the outside of the pump body. Make sure the joints in the bearings are at an angle of 30° ± 15° from the centerline through the bearing bores and toward the outlet passage of the pump. The outlet passage has a cavity between the bearing bores.

3. Check the condition of the relief valve. Check the condition and specifications for all the parts of the oil pump before it is assembled. See OIL PUMP (2P1785) in SPECIFICATIONS.

4. Put clean engine on all of the parts of the oil pump.

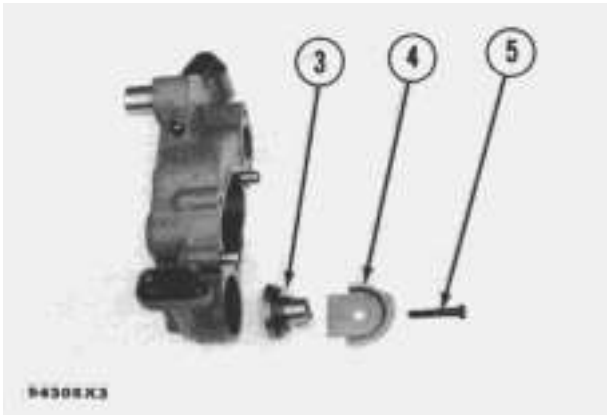

5. Install pressure relief valve (3), cover (4) and bolt (5) in the oil pump body assembly.

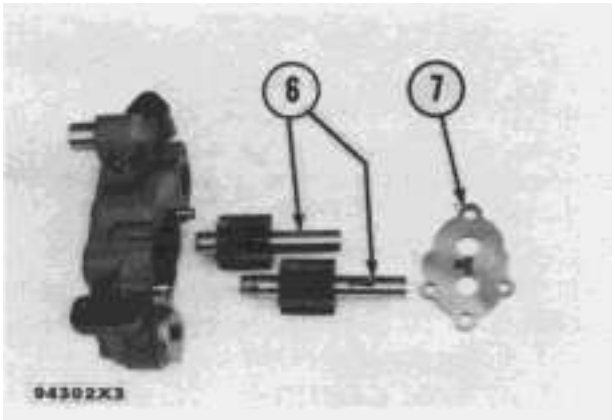

6. Install gears and shafts (6) in the oil pump body assembly.

7. Install spacer (7) and the two keys in shafts (6).

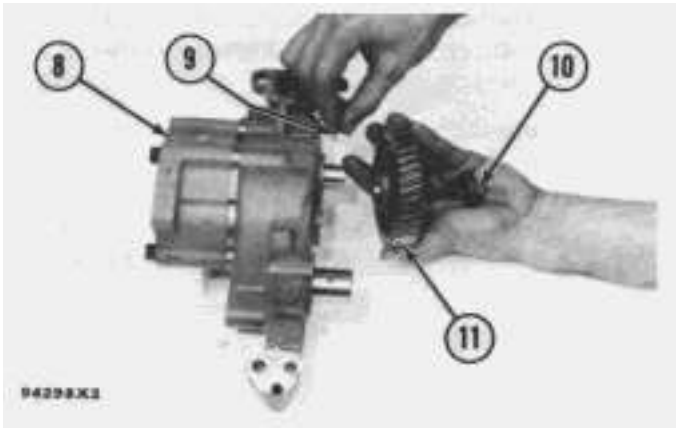

8. Install two gears and scavenge pump body assembly (8).

9. Install key (9), drive gear (11), the washer and bolt (10). Tighten the bolt to a torque of 32 ± 5 lb.ft. (43.4 ± 6.8 N·m).

10. Install the bearing in the idler gear with tooling (B) until it is even with the outside surface of the gear.

11. Install the idler gear.

NOTICE

The oil pump must turn freely by hand after it is assembled.

---

end by:

a) install oil pump

Connecting Rod Bearings

SMCS - 1219-10

Remove And Install Connecting Rod Bearings

Tools Needed	A
Plastigage	*

start by:

a) remove oil pan plate

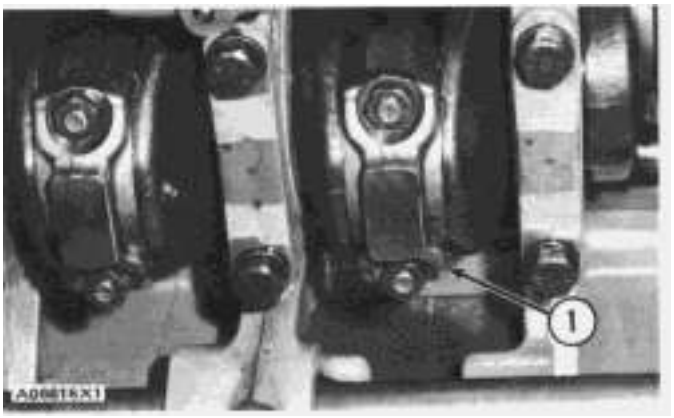

1. Turn the crankshaft until two pistons are at bottom center. Remove connecting rod caps (1) from the two connecting rods. Remove the lower half of the bearings from the caps.

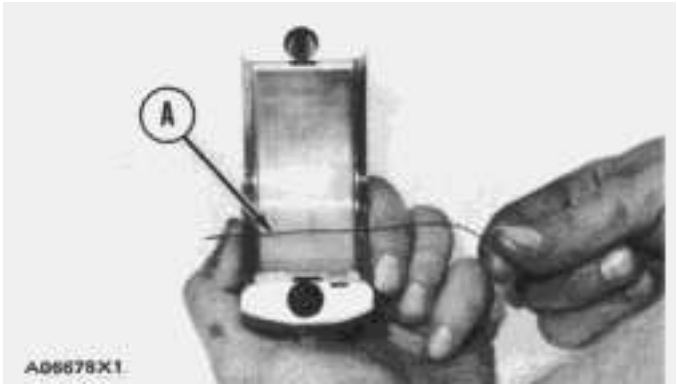

2. Push the connecting rods away from the crankshaft and remove the upper half of the bearings.

3. Clean the surfaces where the bearings fit. Install the upper half of the new bearings in the rods. Put clean SAE 30 oil on the bearings and crankshaft journals. Put the connecting rods in position on the crankshaft.

4. Clean the surfaces where the bearings fit. Install the lower half of the new bearings in the caps. Put clean SAE 30 oil on the bearings, bolt threads and contact surfaces of the nuts.

NOTICE

When connecting rod caps are installed, make sure the number on the side of the cap is next to and respective with the number on the side of the connecting rod.

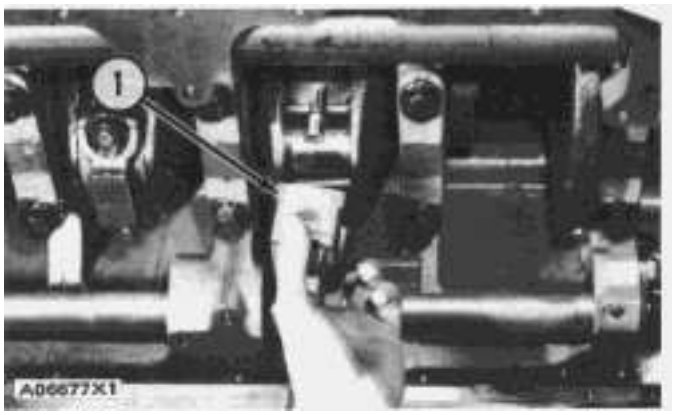

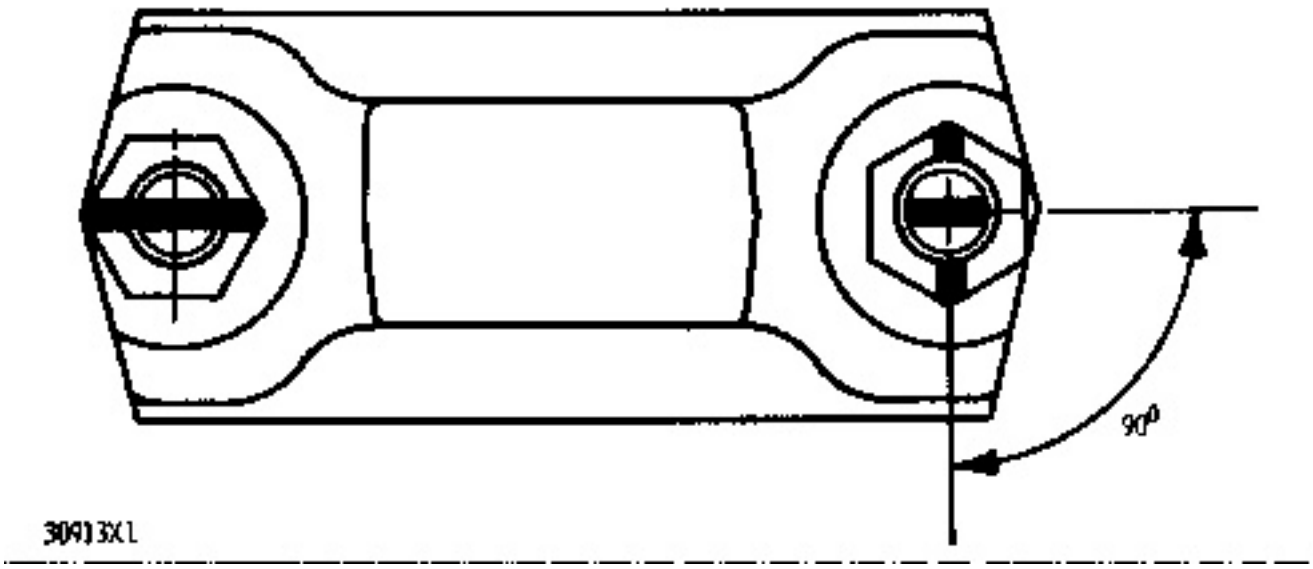

5. Check the bearing clearance with Plastigage. Put caps (1) in position on the connecting rods and install the nuts. Tighten the nuts to a torque of 30 ± 3 lb.ft. (40 ± 4 N·m). Put a mark on each nut and the end of each bolt. Tighten the nuts 90° more.

6. Remove the cap. Measure the thickness of the Plastigage. The rod bearing clearance (Plastigage thickness) must be .0030 to .0066 in. (0.076 to 0.168 mm) with new bearings. The maximum

permissible clearance is .010 in. (0.25 mm) with used bearings.

7. Put the caps in position on the connecting rods and install the nuts. Tighten the nuts to a torque of 30 ± 3 lb.ft. (40 ± 4 N·m). Put a mark on each nut and the end of each bolt. Tighten the nuts 90° more.

8. Do Steps 1 through 7 again for the other bearings.

end by:

a) install oil pan plate

Crankshaft Main Bearings

SMCS - 1203-11

Remove And Install Crankshaft Main Bearings

	Tools Needed	A	B	C
2P5518	Main Bearing Removal Tool	1		
Plastigage			*	
8S2328	Dial Test Indicator Group			1

start by:

a) remove oil pan plate

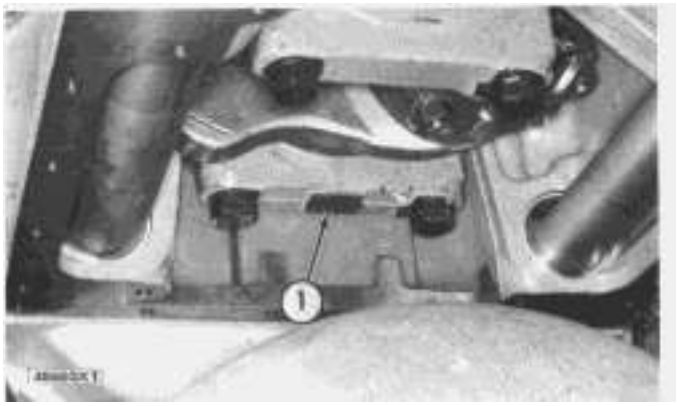

TYPICAL EXAMPLE

1. Remove the Nos. 1, 3 and 5 main bearing caps (1). Remove the crankshaft thrust bearings from No. 5 main bearing. Remove lower halves of bearings from the caps.

2. Install tool (A) in the oil hole in the crankshaft journal and remove the upper halves of the main bearings as the crankshaft is turned the bearing is moved out of the cylinder block with tool (A).

3. Put clean SAE 30 oil on the upper halves of the new bearings. Install the upper halves on the main bearings with tool (A).

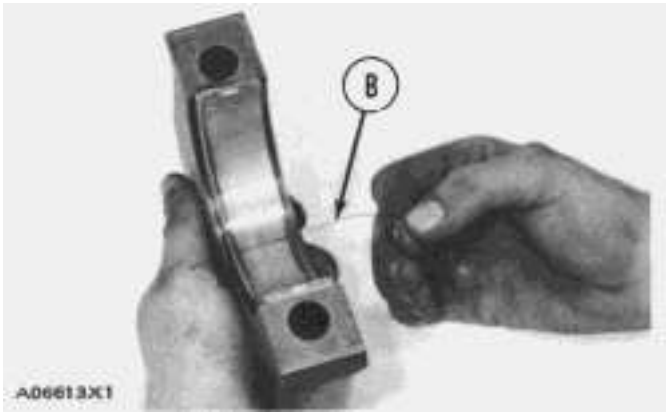

4. Put clean SAE 30 oil on the new crankshaft thrust bearings and install the bearings with the steel back against the cylinder block.

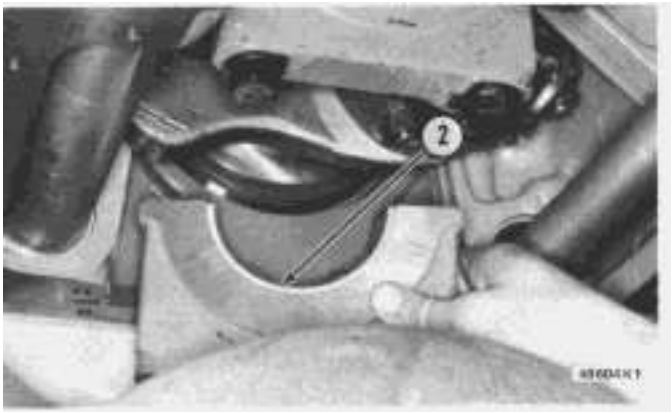

TYPICAL EXAMPLE

5. Clean the main the bearing caps and install new lower bearing halves (2). Put clean SAE 30 oil on the bearings, bolt threads and surfaces that make contact with the washers.

NOTICE

Make sure part number on cap is toward front of engine, and number on bottom of cap is the same as number on cap saddle when caps are installed.

NOTE: The crankshaft must be held up against the upper halves of the bearings before the clearance in the bearings can be checked.

6. Check the bearing clearance with Plastigage. Install the caps and tighten the bolts to a torque of 30 ± 3 lb.ft. (40.7 ± 4.1 N·m). Put a mark on each bolt head and the bearing caps. Tighten the bolts 90° more. Remove bearing caps and measure the width of the Plastigage. The main bearing clearance (Plastigage width) with new bearing must be .0030 to .0065 in. (0.076 to 0.165 mm). Maximum permissible clearance with used bearings is .010 in. (0.25 mm).

7. Put caps (1) in position on the engine and install the washers and bolts. Tighten the bolts to a torque of 30 ± 3 lb.ft. (40 ± 4 N·m). Put a mark on each bolt head and the bearing caps. Tighten the bolts 90° more.

8. Remove the Nos. 2 and 4 main bearing caps. Do Steps 2, 3, 5, 6 and 7 for the Nos. 2 and 4 main bearings.

9. Check the crankshaft end play with tooling (C). The end play is controlled by the thrust bearings on the No. 5 main bearing. End play with new bearings must be .0025 to .0145 in. (0.064 to 0.368 mm). The maximum permissible end play with used bearings is .025 in. (0.64 mm).

end by:

a) install oil pump

b) install oil pan plate

Timing Gear Cover

SMCS - 1166-10

Remove And Install Timing Gear Cover

start by:

a) remove oil pan plate

b) remove engine front support

c) remove water pump

NOTICE

Use care when the trunnion is removed and installed to prevent damage to the crankshaft front seal.

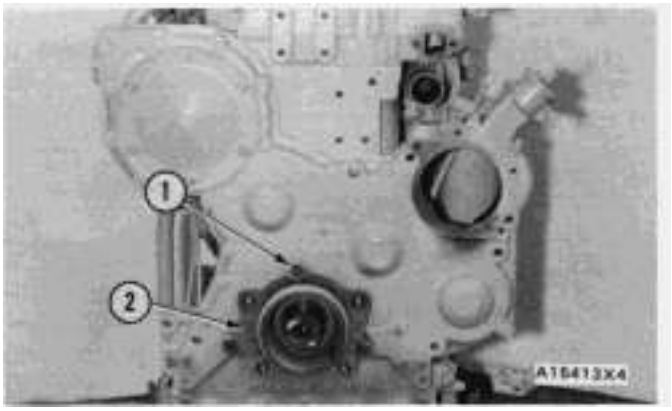

1. Remove the three bolts (1) that hold trunnion (2) to the timing gear cover. Remove the trunnion. Remove the O-ring seal from the trunnion.

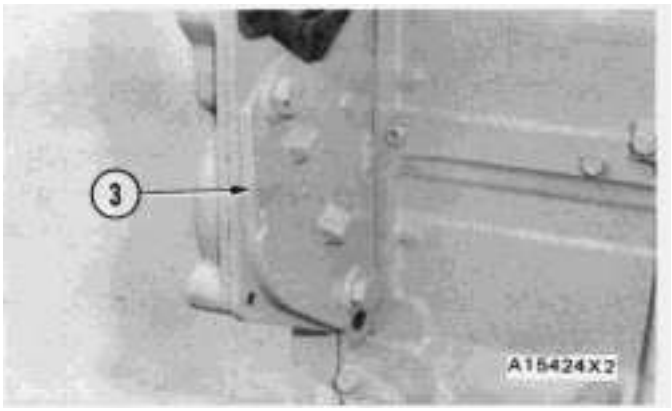

2. Remove cover (3) and the O-ring seal from the timing gear plate.

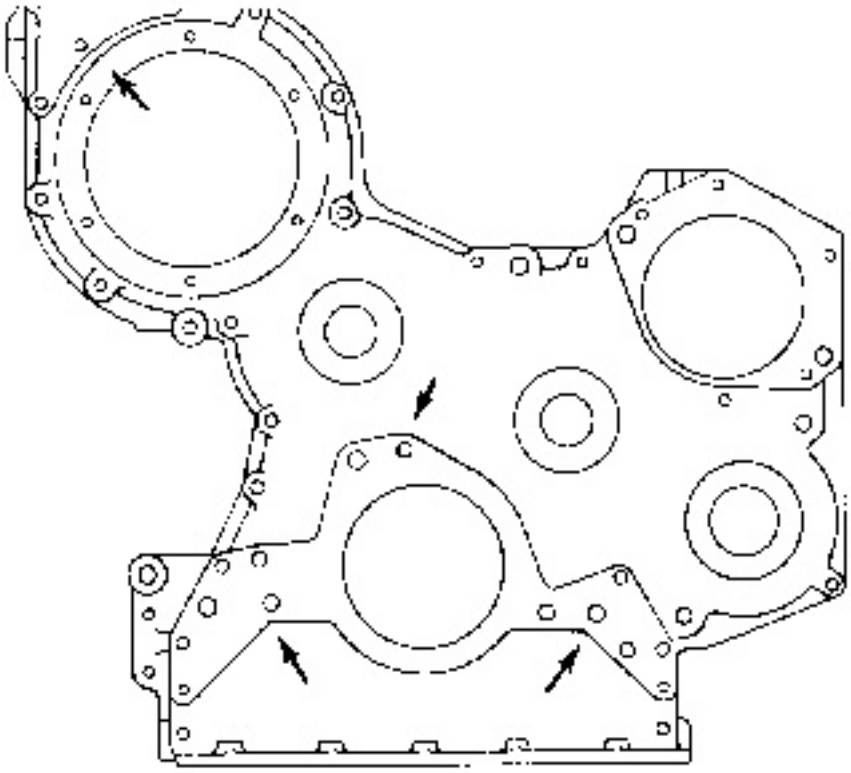

NOTE: A new front timing gear cover and gaskets are used on all 3304 and 3306 Engines. The later timing gear cover has a different bolt arrangement as shown by arrows.

3. Remove the bolts that hold timing gear cover in place. Carefully loosen the cover from the dowels and remove the cover. Weight of the timing gear cover is 48 lb. (22 kg).

4. Clean the old gasket from the contact surface of the timing gear cover and timing gear plate.

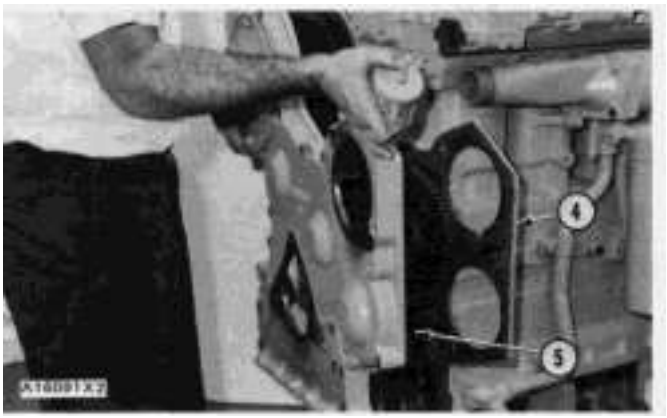

5. Install a new gasket (4) on the timing gear plate. Cut the gasket even with the bottom face of the cylinder block. Put 5H2471 Gasket Cement on the bottom of the gasket where the gasket makes contact with the gasket for the oil pan plate.

6. Put timing gear cover (5) in position on the timing gear plate and install the bolts that hold it in place. Make sure the bolts are tightened to a torque of 17 ± 3 lb.ft. (23 ± 4 N·m).

7. Install cover (4) and the O-ring seal on the timing gear plate.

8. Put clean engine oil on the outside diameter of the crankshaft, the lip of the crankshaft seal and the O-ring for the trunnion.

9. Install trunnion (2) and the O-ring seal in position on the timing gear cover.

end by:

a) install water pump

b) install engine front support

c) install pan plate

Timing Gears

SMCS - 1206-11; 1206-12

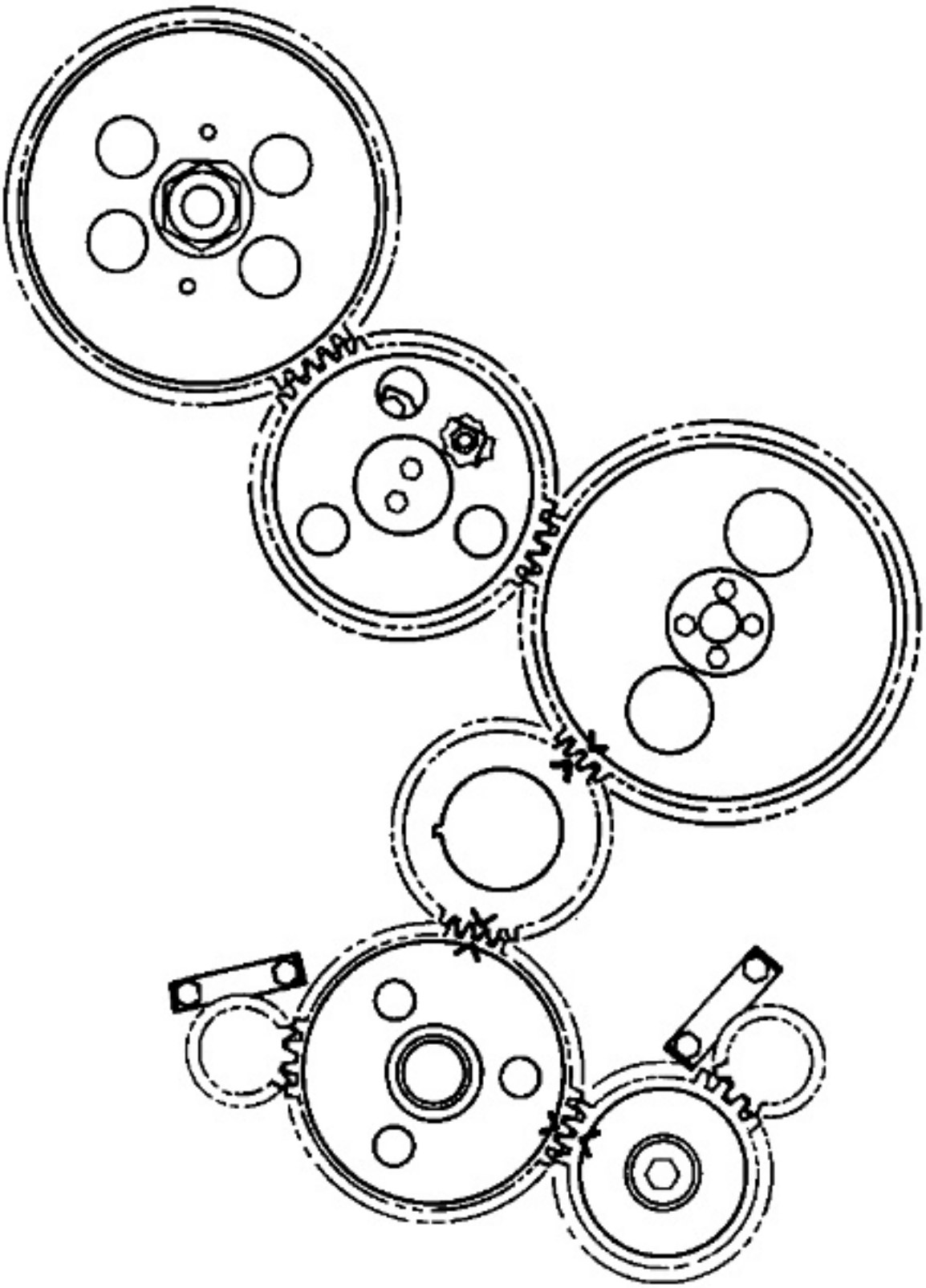

3304 SHOWN 7726t×3

3304 SHOWN

Remove Timing Gears

	Tools Needed	A	B	C
8S2264	Puller Group	1		
9S9155	Step Plate	1		
	Bolt (3/8"-24 NF x 3 1/4" long)	2		
	Flat Washer	2		
1P510	Driver Group		1	
1P2321	Puller Assembly			1

start by:

a) remove timing cover

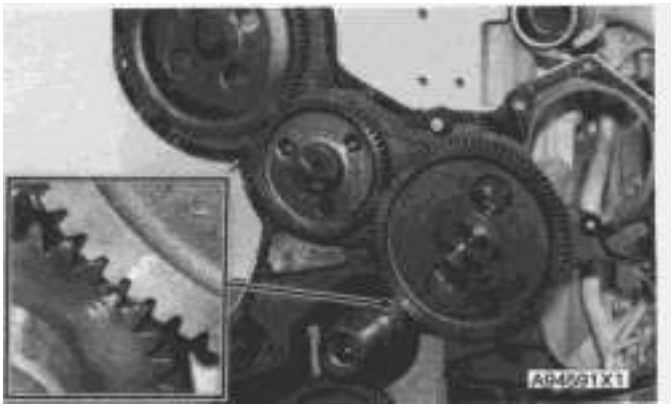

NOTE: Photos shown are on 3306 engine.

1. Turn the crankshaft until No. 1 piston is at top center compression position and the "C" mark on the crankshaft gear is in alignment with the "C" mark on the camshaft gear.

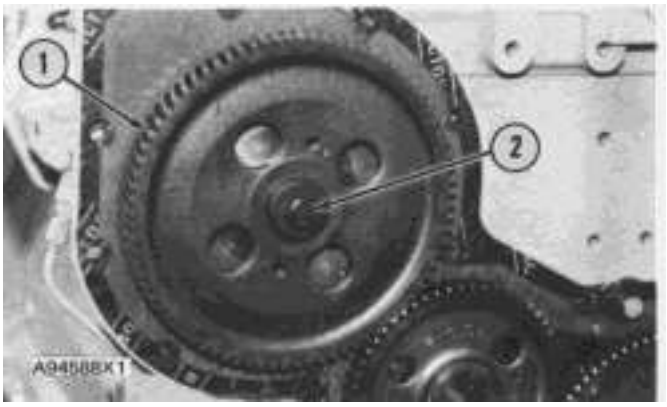

2. Remove bolt (2) and washer from magneto drive gear (1).

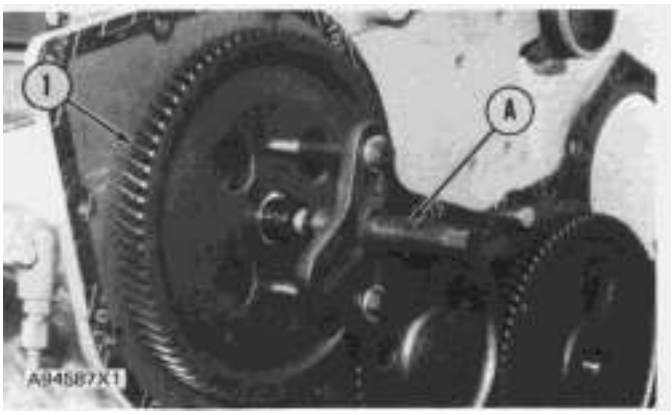

WARNING

Hold puller with hand to prevent injury when gear (1) is removed from the shaft.

3. Install tooling (A) on gear (1). Remove gear (1) from the magneto drive shaft.

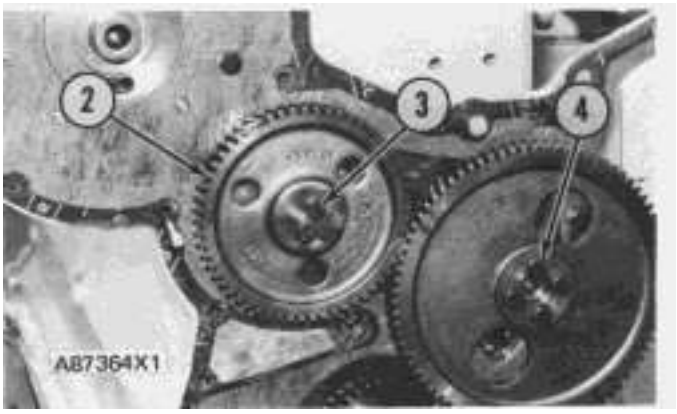

4. Remove bolts (3) and the plate. Remove idler gear (2). Remove bolts (4) from the camshaft gear.

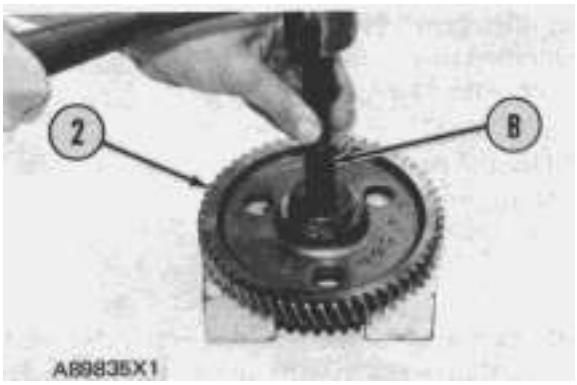

5. Remove the bearing from the idler gear (2) with tooling (B).



6. Install tooling (C) on camshaft gear (5). Remove camshaft gear (5) with tooling (C).

Install Timing Gears

	Tools Needed	A
1P510	Driver Group	1

NOTE: Photos shown are on 3306 engine.

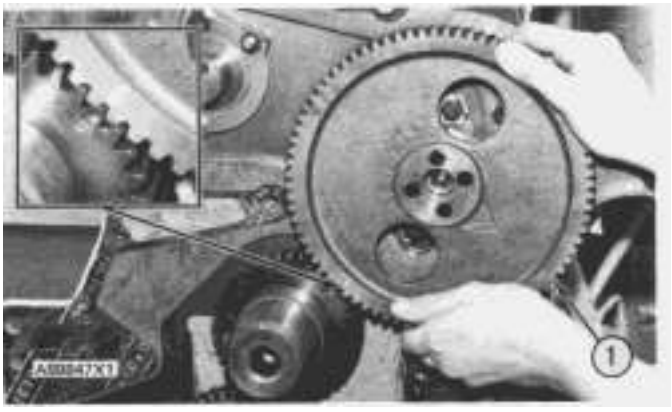

1. Install camshaft drive gear (1). Make sure the "C" mark on the crankshaft gear is in alignment with the "C" mark on the camshaft drive gear. Install the four bolts that hold the camshaft drive gear.

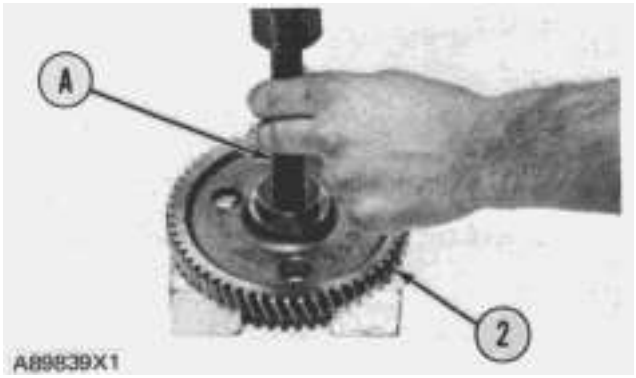

2. Use tool (A) to install the bearing in idler gear (2).



3. Put idler gear (2) in position on shaft (3). Put machined side of the plate toward the gear and fasten with two bolts.

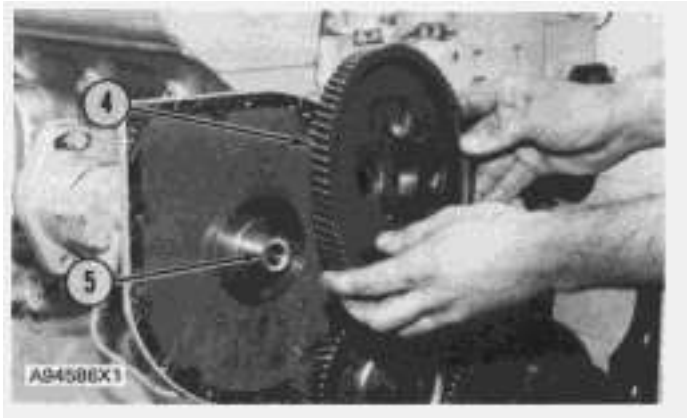

NOTE: Use the procedure given in the topic, Install Fuel Injection Pump Housing and Governor to tighten the bolt that holds gear (4).

4. Put drive gear (4) in position over drive shaft (5). Install washer with the chamfered edge away from the gear and fasten with the bolt. Tighten the bolt to a torque of 110 ± 5 lb.ft. (149 ± 7 N·m).

end by:

a) install timing cover

Timing Gear Plate

SMCS - 1206-10

Remove And Install Timing Gear Plate

start by:

a) remove timing gears

b) remove fuel injection pump housing and governor

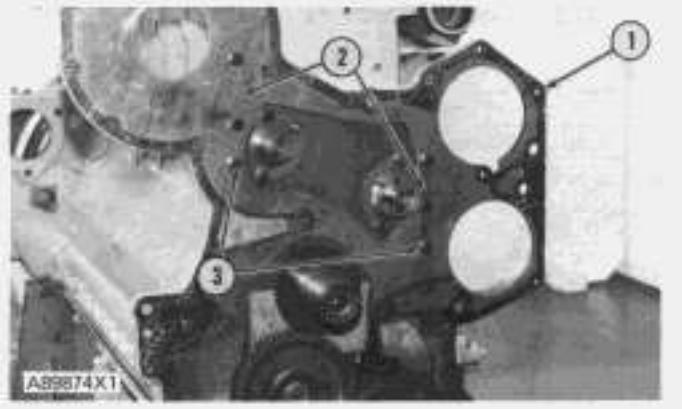

1. Remove six bolts (3) and two locks (2) that hold the timing gear plate (1) to the cylinder block. Remove the timing gear plate and gasket.

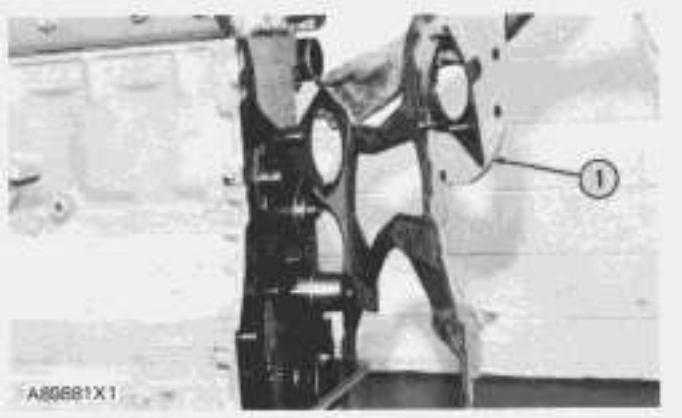

2. Install timing gear plate (1) and gasket. Install the two locks (2) and six bolts (3).

end by:

a) install timing gears

b) install fuel injection pump housing and governor

Camshaft

SMCS - 1210-11; 1210-12

Remove Camshaft

start by:

a) remove valve lifters

b) remove timing gear cover

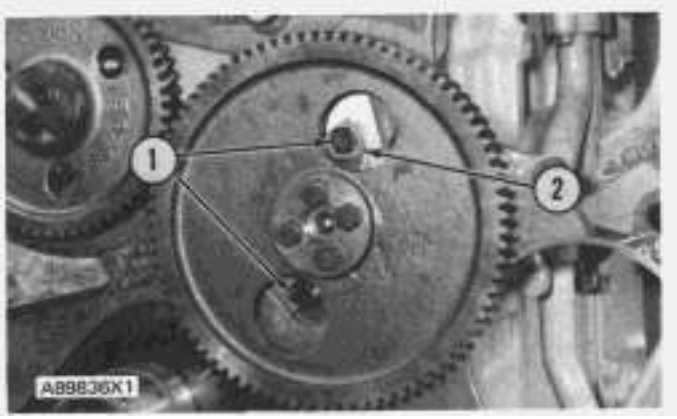

1. Bend lock (tabs) (2) and remove bolts (1).

2. Turn the crankshaft until the "C" mark on the crankshaft gear is in alignment with the "C" mark on the camshaft gear.

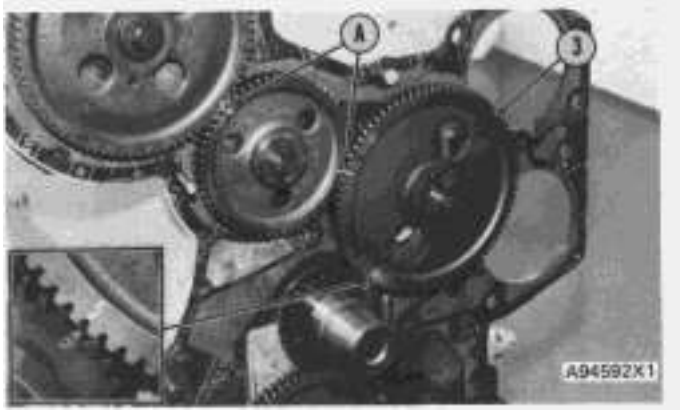

NOTE: To keep the engine timing correct during removal and installation of the camshaft, put a

mark on the teeth of the idler gear, camshaft gear (3) and magneto drive gear at locations (A).

3. Remove the camshaft and gear. Do not cause damage to the lobes or bearings when the camshaft is removed.

4. Remove the bolts that hold the camshaft gear to the camshaft. Remove the camshaft gear (3).

Install Camshaft

1. Install the camshaft drive gear on the end of the camshaft. Put clean SAE 30 oil on the lobes and bearing journals of the camshaft.

NOTICE

Do not cause damage to the lobes or bearing journals when the camshaft is installed.

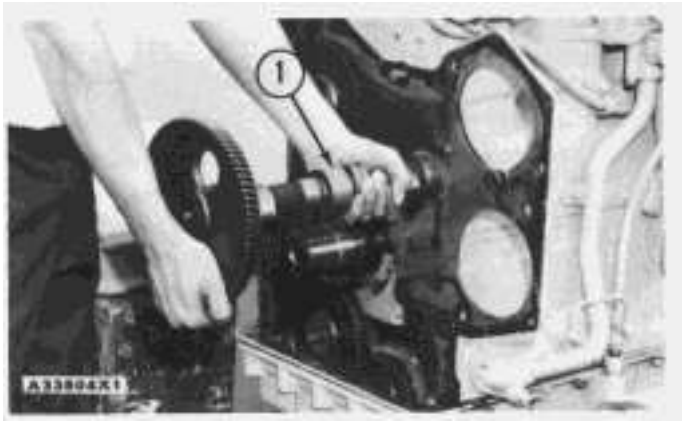

TYPICAL EXAMPLE

2. Make an alignment of the "C" marks and marks put on during removal. Install camshaft (1) in the cylinder block.

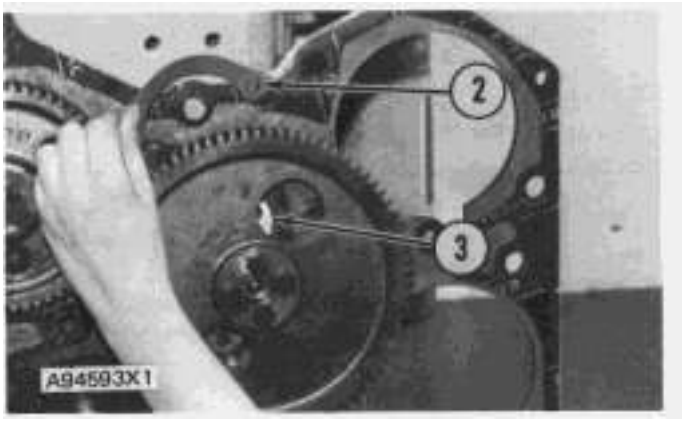

3. Install thrust washer (3), lock (2) and the bolts that hold the camshaft in place.

end by:

a) install valve lifters

b) install timing gear cover

Crankshaft Rear Seal And Wear Sleeve

SMCS - 1161-11; 1161-12

Remove Crankshaft Rear Seal And Wear Sleeve

	Tools Needed	A	B	C
1P3075	Puller Group	1		
5P7312	Distorter		1	
5P7313	Ring			1

start by:

a) remove flywheel

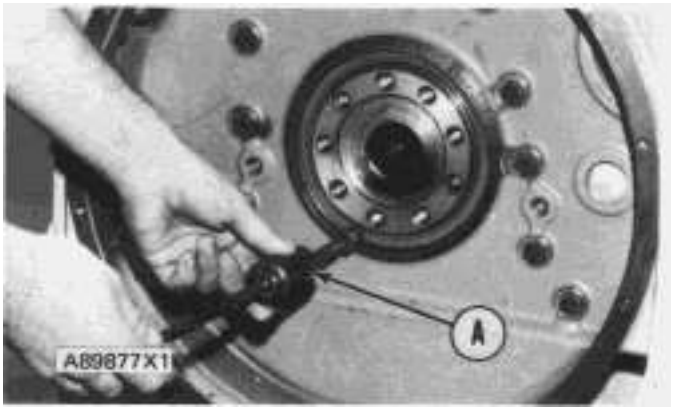

1. Use tool (A) to remove the crankshaft rear seal.

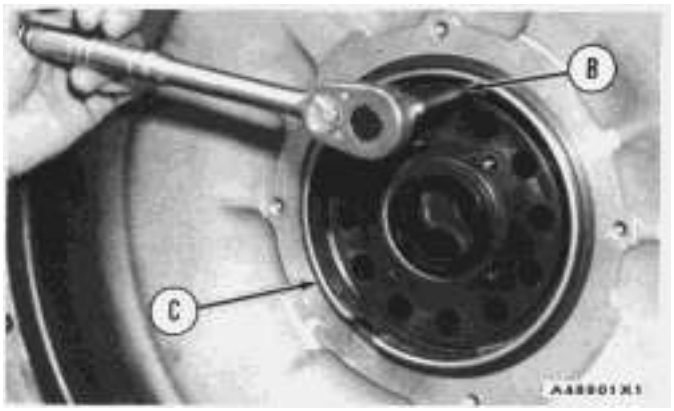

2. Install tool (C) in the rear seal bore.

3. Install tool (B) between tool (C) and the wear sleeve. Turn tool (B) until the ends of the tool make a flat piece (crease) in the wear sleeve. Do this in two or more places until the wear sleeve is loose.

4. Remove tool (C) and the wear sleeve by hand.

Install Crankshaft Rear Seal And Wear Sleeve

	Tools Needed	A
9S8871	Locator	1
9S8858	Nut	1
9S8690	Bolt	3
5P7298	Installer	1

1. Install the crankshaft rear seal and wear sleeve with tooling (A) as follows:

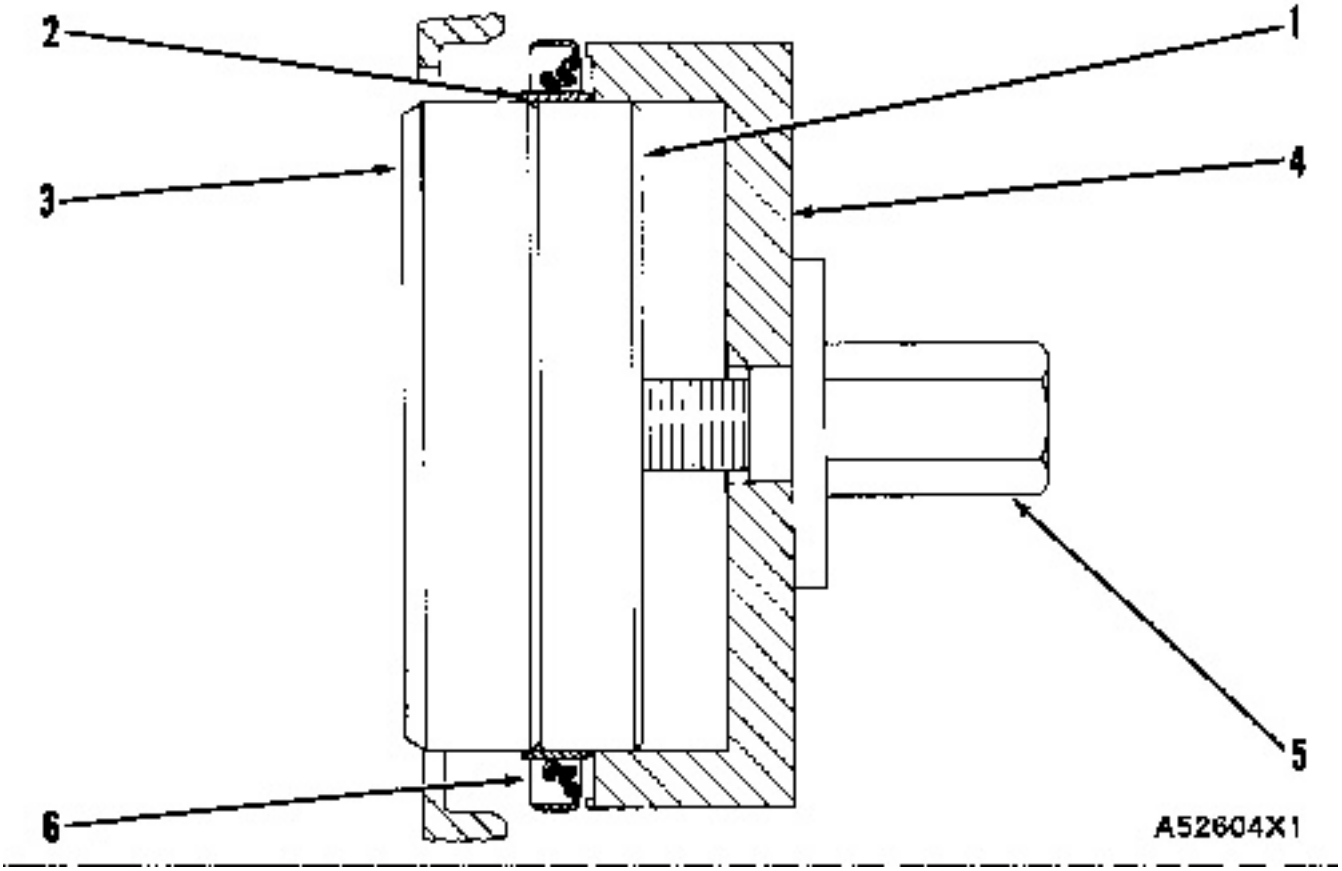

a) Put locator (1) in position on the crankshaft and install the three bolts that hold it in place.

b) Put clean engine oil on the seal lip of seal (6) and on the outside diameter of wear sleeve (2).

c) Install seal (6) on wear sleeve (2) from the end of the wear sleeve that has the bevel on the outside diameter. Make sure the lip of the seal is toward the inside of the engine and the bevel that is on the outside diameter of the wear sleeve is toward the outside of the engine when installed.

d) Use 6V1541 Quick Cure Primer to clean the outside diameter of the crankshaft flange (3) and inside diameter of wear sleeve (2).

e) Put 9S3265 Retaining Compound on the outside diameter of crankshaft flange (3) and the inside diameter of wear sleeve (2).

NOTE: Make sure the lip of the seal is toward the inside of the engine and the outside diameter bevel of the wear sleeve is toward the outside of the engine.

f) Put wear sleeve (2) with seal (6) on locator (1). Put installer (4) on locator (1) and install nut (5). Put lubrication on the face of the washer and the nut.

g) Tighten nut (5) until installer (4) comes in contact with locator (1).

h) Remove tooling (A) and check the wear sleeve and seal for correct installation.

https://barringtondieselclub.co.za/

end by:

a) install flywheel

Camshaft Bearings

SMCS - 1211-11; 1211-12

Remove Camshaft Bearings

	Tools Needed	A
8S2241	Camshaft Bearing Tool Group	1
8H684	Ratchet Box Wrench	1

start by:

a) remove flywheel housing

b) remove camshaft

c) remove oil pan plate

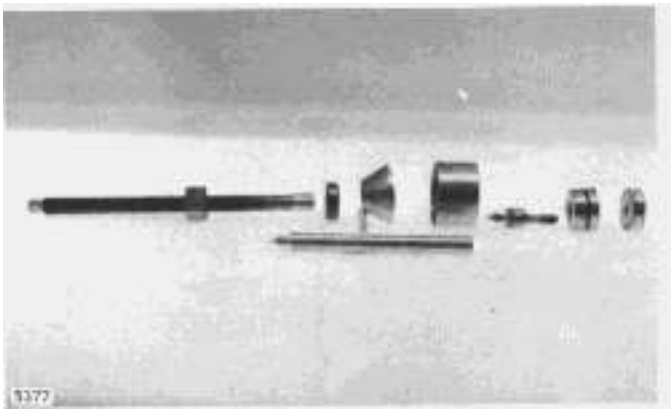

1. Remove the camshaft bearings from the cylinder block with tool group (A) and wrench (B). Start with the front bearing.

Install Camshaft Bearings

	Tools Needed	A
8S2241	Camshaft Bearing Tool Group	1
8H684	Ratchet Box Wrench	1



TYPICAL EXAMPLE

1. Install camshaft bearings (1) in the cylinder block. Start with the front bearing with tool group (A) and wrench (B). The bearings must be installed with the oil hole in each bearing in alignment with the oil holes in the cylinder block.

2. The front and rear bearings must be .06 ± .02 in. (.15 ± 0.5 mm) inside the ends of the cylinder block after installation.

end by:

a) install oil pan plate

b) install camshaft

c) install flywheel housing

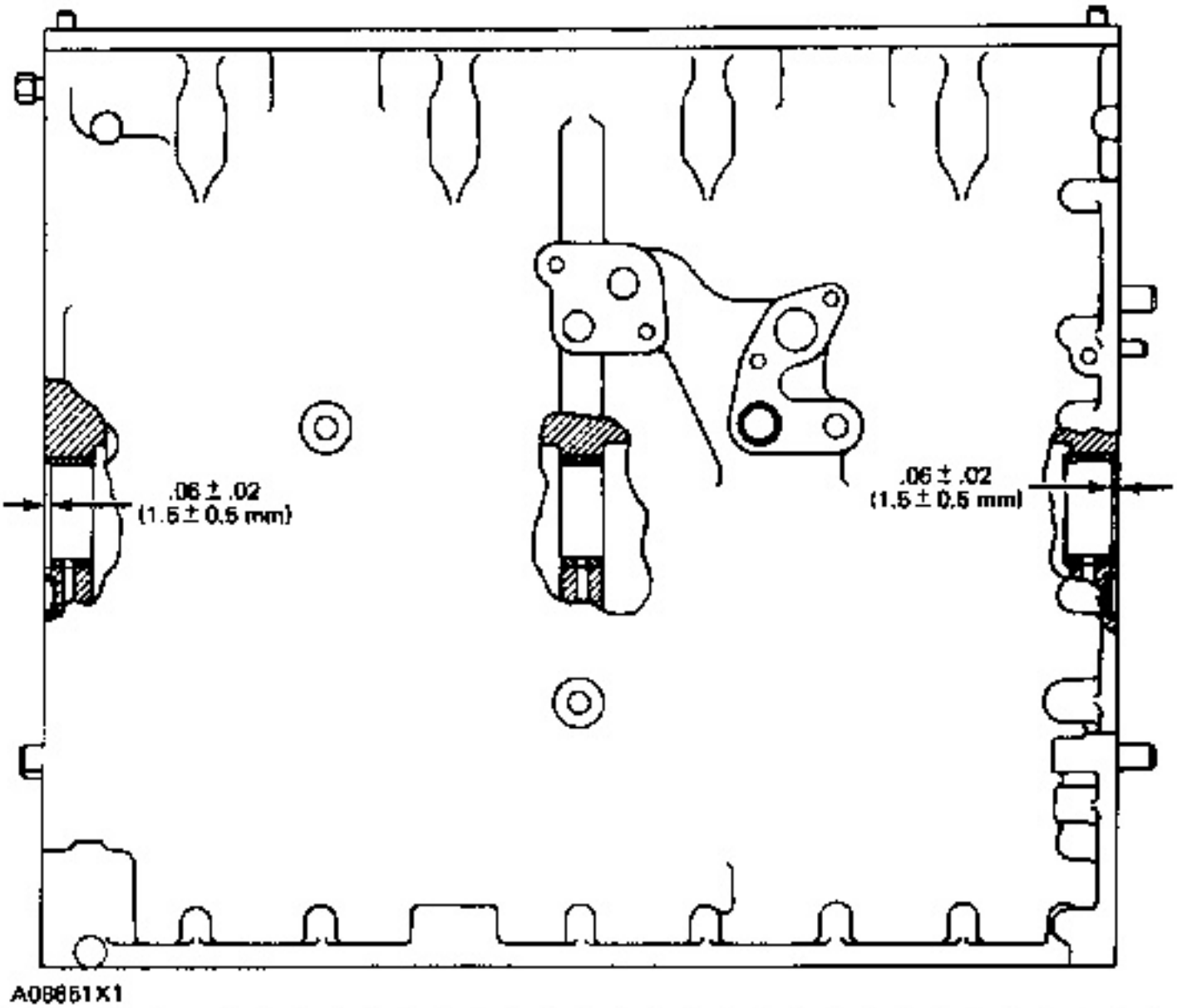

https://barringtondieselclub.co.za/

Crankshaft

SMCS - 1202-11; 1202-12

Remove Crankshaft

start by:

a) remove flywheel housing

b) remove timing gear cover

c) remove pistons



1. Turn the crankshaft until the "C" mark on crankshaft gear (2) is in alignment with the "C" mark on camshaft gear (1).

NOTE: To keep the engine timing correct during removal and installation of the crankshaft, put a mark on the teeth of the fuel injection pump drive gear and idler gear at location (A). Put a mark on the teeth of the idler gear and camshaft gear at location (B). The engine timing will be correct when the marks at locations (A) and (B) are in alignment and the "C" marks on the crankshaft and camshaft gears are in alignment.

2. Install a 3/4"-16 NF bolt in the gear end of the crankshaft. Install two 5/8"-18 NF bolts in the flywheel end of the crankshaft. Fasten a hoist to the crankshaft.

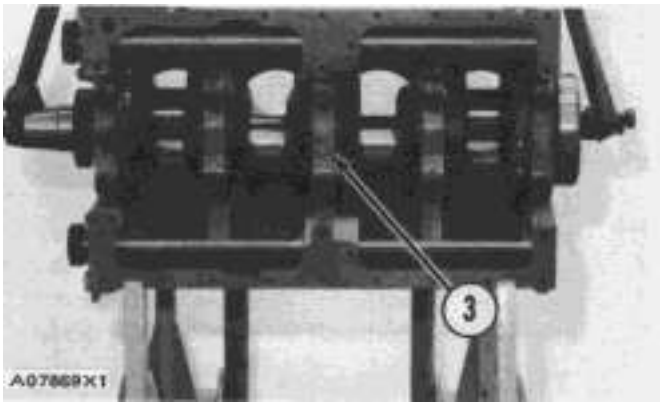

3. Remove main bearing caps (3).

4. Remove the crankshaft from the cylinder block. The weight of the crankshaft is 145 lb. (65 kg).

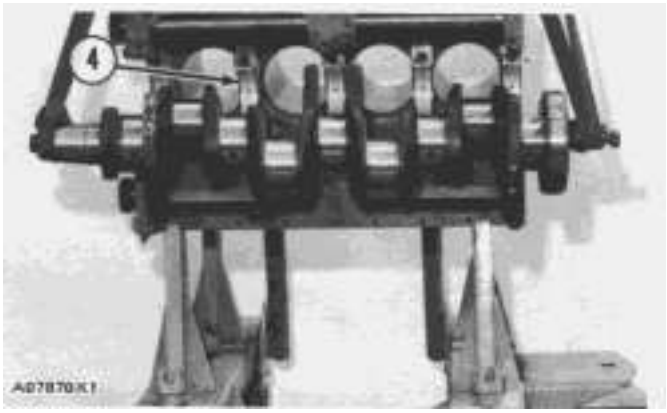

5. Remove main bearings (4) from the block and from the caps. Remove the thrust bearings.

Install Crankshaft

	Tools Needed	A	B
Plastigage		*	
8S2328	Dial Test Indicator Group		1

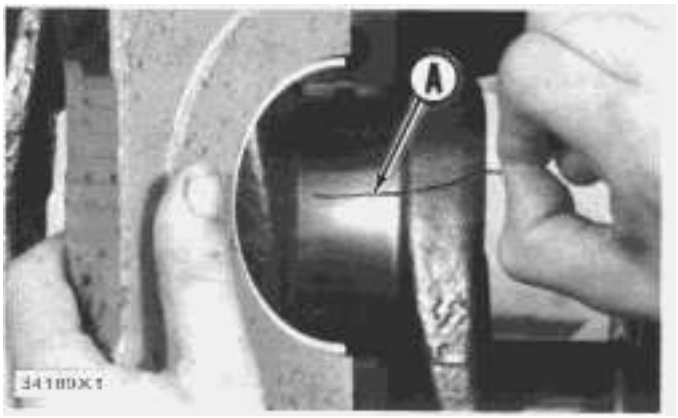

1. Clean the surfaces on the cylinder block for the main bearings. Install the upper halves of the main bearings in the block. Put clean engine oil on the bearings.

2. Put the crankshaft in position in the cylinder block with a hoist. Make sure all of the timing marks are in alignment.

3. Clean the Nos. 1 and 5 main bearing caps. Install new bearings in caps. Put clean engine oil on bearings. Temporarily install caps to hold crankshaft in place.

NOTICE

Make sure part number on cap is toward front of engine, and number on bottom of cap is the same as number on block when caps are installed.

---

4. Clean the Nos. 2, 3 and 4 main bearing caps. Install new bearings in the caps. Put clean engine oil on the bearings, bolts threads and surfaces of the washers that contact the caps.

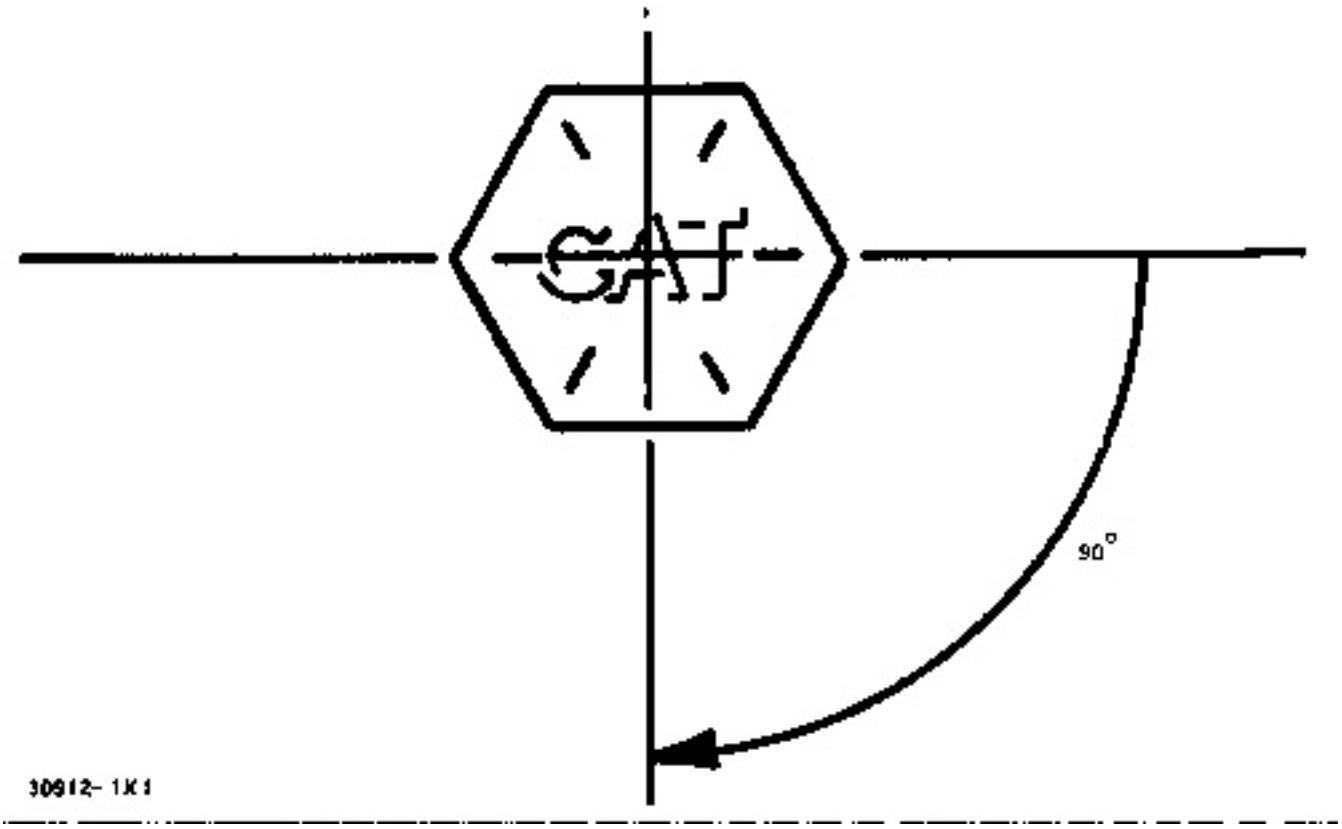

5. Check the bearing clearance with Plastigage (A). Install the caps and tighten the bolts to a torque of 30 ± 3 lb.ft. (40 ± 4 N·m). Put a mark on each bolt head and the bearing caps. Tighten the bolts 90° more. Remove the bearing caps and measure the width of the wire. The main bearing clearance Plastigage width with new bearings must be .0030 to .0065 in. (0.076 to 0.165 mm). The maximum permissible clearance with used bearings is .010 in. (0.25 mm).

6. Put the caps in position on the engine and install the washers and bolts. Tighten the bolts to a torque of 30 ± 3 lb.ft. (40 ± 4 N·m). Put a mark on each bolt head and the bearing caps. Tighten the bolts 90° more.

7. Remove the Nos. 1 and 5 main bearing caps. Follow the procedure in Steps 4 and 5 and check the main bearing clearance for the Nos. 1 and 5 main bearings.

8. Follow the procedure in Step 6 and install the No. 1 main bearing cap.

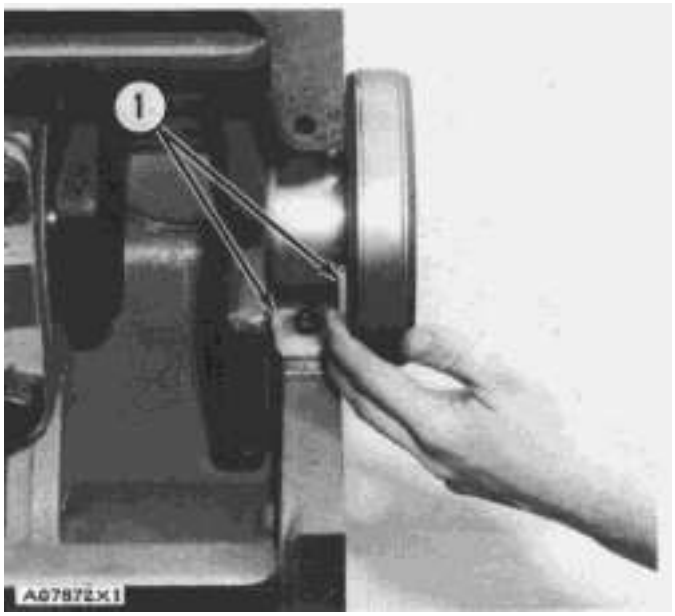

9. Put clean engine oil on thrust bearings (1). Install the bearings with the steel back against the crankshaft. Install the No. 5 main bearing cap. Tighten the bolts for the cap with the procedure in Step 6.

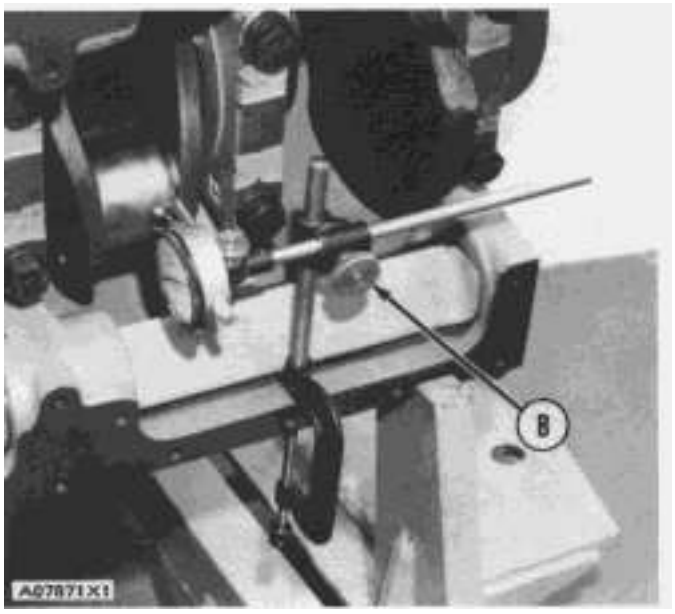

10. Check the crankshaft end play with tool group (B). The end play is controlled by the thrust bearings on the No. 5 main. The end play with new bearings must be .0025 to .0145 in. (0.064 to 0.368 mm). The maximum permissible end play with used bearings is .025 in. (0.64 mm).

NOTE: If a replacement has been made for any of the timing gears, it will be necessary to check the engine timing to make sure it is correct. See INSTALL FUEL INJECTION PUMP HOUSING AND GOVERNOR.

end by:

a) install pistons

b) install timing gear cover

c) install flywheel housing

Piston Cooling Orifices

SMCS - 1307-10

Remove And Install Piston Cooling Orifices

	Tools Needed	A
FT1542	Orifice Driver	1

start by:

a) remove crankshaft and gear

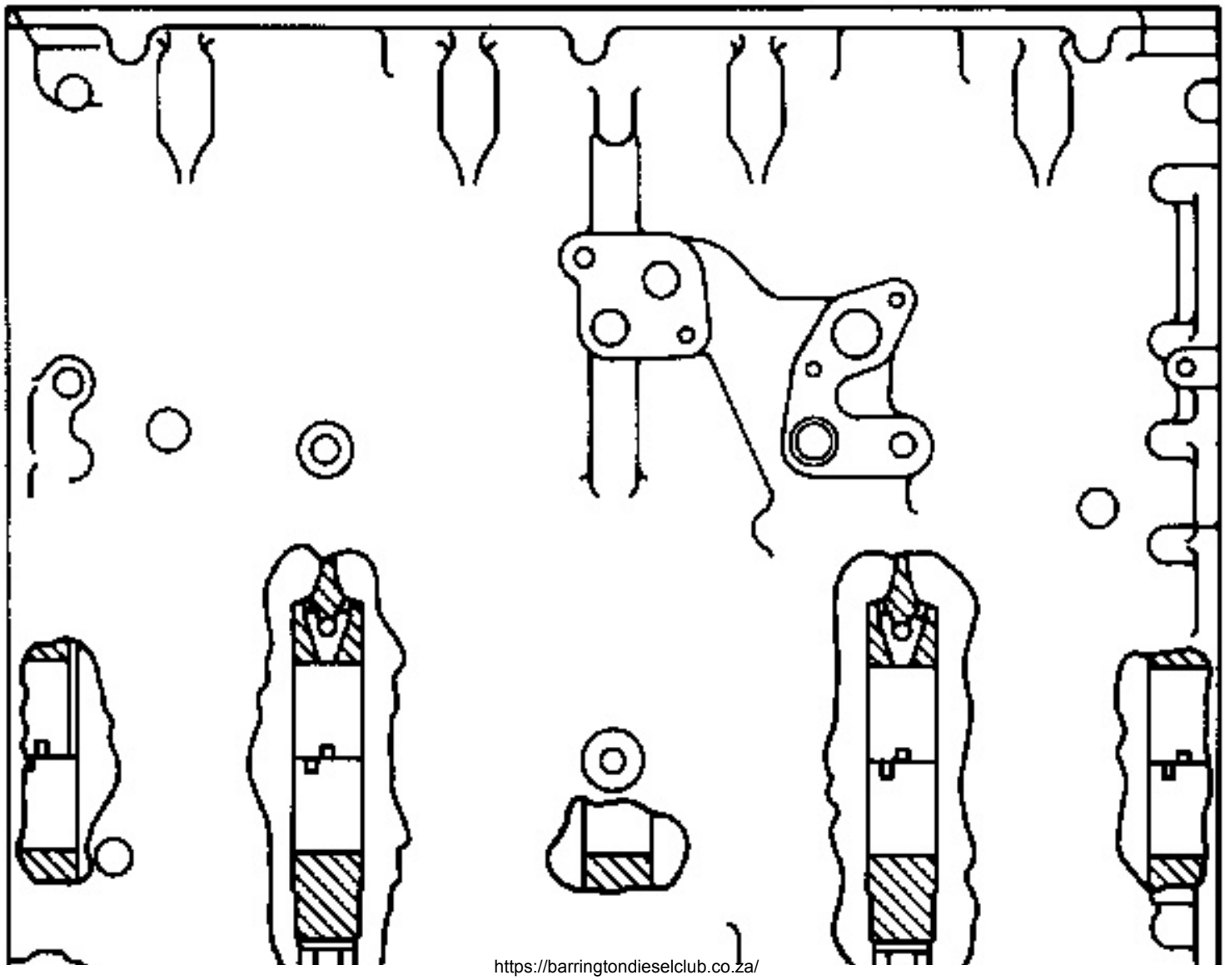



FOUR CYLINDER ENGINE

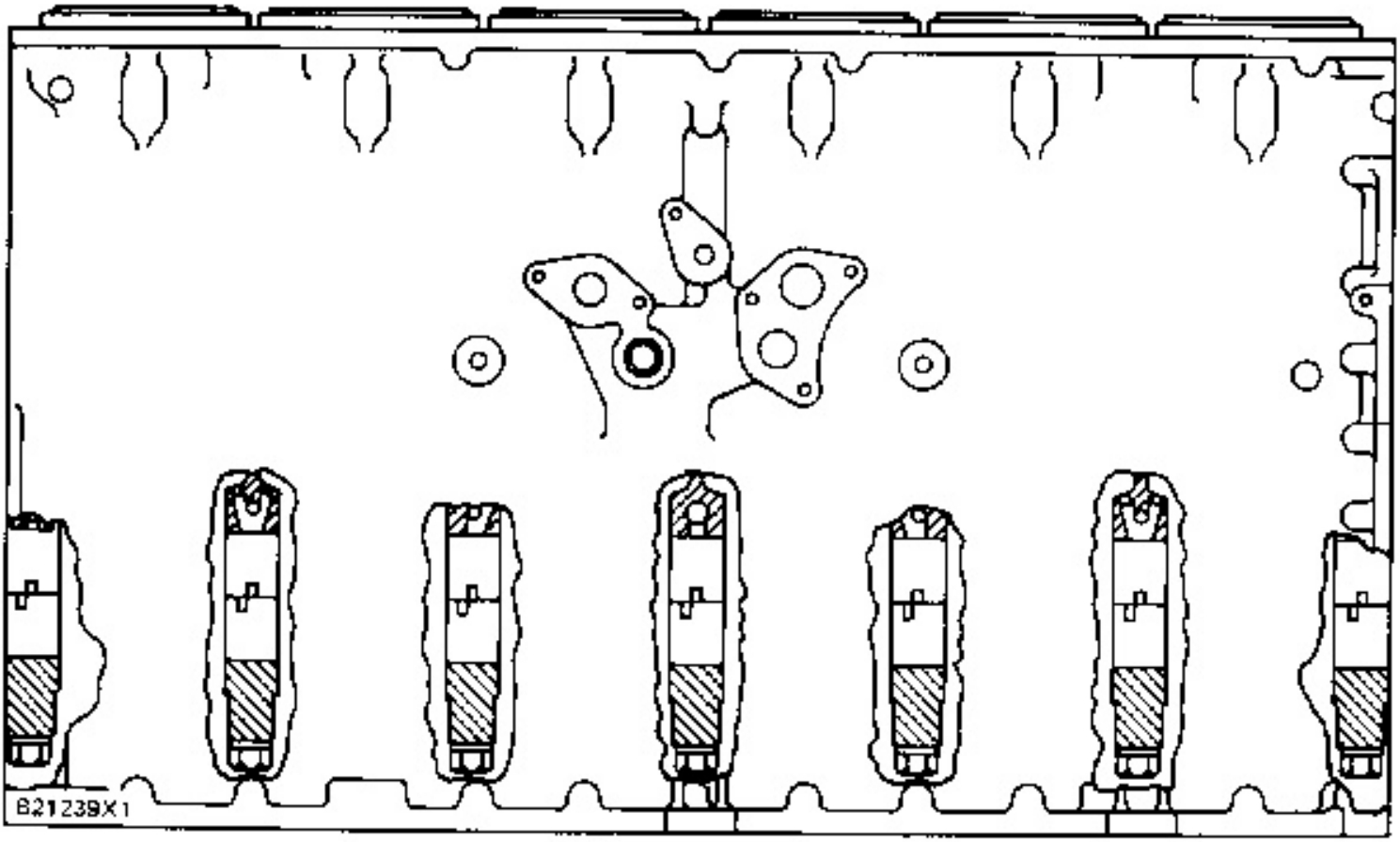

SIX CYLINDER ENGINE

NOTE: On the 3304 the piston cooling orifices are installed in the No. 2 and 4 main bearing bosses in the cylinder block. On the 3306 the No. 2 and 6 main bearing bosses each have two orifices. The No. 3 and 5 main bearing bosses each have one orifice. A replacement is necessary only if they are damaged. Normally it will only be necessary to be sure the orifices are clean.

1. Use a soft punch to remove the orifices from the cylinder block.

2. Use tool (A) to install the orifices in main bearing bosses No. 2 and 4 until they are against the counterbore. Be sure the orifices are open after they are installed.

end by:

a) install crankshaft and gear