CATERPILLAR®

XEBP7631-03

RUTHZIL TRATOR COMERCIAL DE PEÇAS LTDA 11 97083-6812 ROLANDO CITRANGULO

330B 330BL

# Parts Manual

## 330B & 330B L TRACK-TYPE EXCAVATORS

s/n **9HN1-UP, 8SR1-UP**

# Product and Dealer Information

**Note:** For product identification plate locations, see the section "Product Identification Information" in the Operation and Maintenance Manual.

**Delivery Date:** _____

## Product Information

Model: _____

Product Identification Number: _____

Engine Serial Number: _____

Transmission Serial Number: _____

Generator Serial Number: _____

Attachment Serial Numbers: _____

Attachment Information: _____

Customer Equipment Number: _____

Dealer Equipment Number: _____

## Dealer Information

Name: _____ Branch: _____

Address: _____

_____

_____

| | Dealer Contact | Phone Number | Hours |
|---|---|---|---|
| Sales: | _____ | _____ | _____ |
| Parts: | _____ | _____ | _____ |
| Service: | _____ | _____ | _____ |

# MEMORANDA

# GENERAL INFORMATION

### 1. ENGINE IDENTIFICATION

Caterpillar engines are identified with Serial Numbers and Arrangement Numbers. In some cases, Modification Numbers are also used. The serial number plate which shows these numbers is mounted on the engine.

Caterpillar dealers need this information to determine which components were included on the engine when it was assembled at the factory. This permits accurate identification of replacement part numbers.

### 2. ORDERING PARTS

**⚠ WARNING**

**When replacement parts are required for this product Caterpillar recommends using Caterpillar replacement parts or parts with equivalent specifications including, but not limited to, physical dimensions, type, strength and material.**

**Failure to heed this warning can lead to premature failures, product damage, personal injury or death.**

Quality Caterpillar replacement parts are available from Caterpillar dealers throughout the world. Their parts inventories are up to date and include all parts normally required to protect your investment in Caterpillar Engines. Dealers may offer repair kits or remanufactured parts to allow selection of the most effective repair alternative for a particular situation. When ordering parts, your order should specify the quantity, part number, part name, and the serial number/product identification number of the engine for which the parts are needed.

*NOTE:* This engine was designed and manufactured using a positive-build product structure, which requires some of the major components or systems to be attachment parts. To determine which major component or system is on your engine, copy the serial number from the engine and consult Technical Marketing Information (TMI) for As Shipped Consist in Engine History Information. The As Shipped Consist will not reflect any modifications done to the product after it has left the factory.

### 3. PARTS MANUAL ORGANIZATION

Product information in this manual is presented as "information elements" that represent all of the components for the specific model. An Engine Arrangement is an example of an information element. The information elements are organized alphabetically by part name and secondarily by part number within each major section of the manual.

### 4. TABLE OF CONTENTS

A table of contents (TOC) is found at the beginning of the manual. The TOC lists each section of the manual with a complete list of all information elements organized as they appear in the manual. Page numbers are provided for quick reference to detailed parts identification illustrations and serviceable consist lists.

### 5. MAINTENANCE PARTS INDEX

The Maintenance Parts Index, located near the beginning of the manual, references most frequently used maintenance part numbers, providing description, quantity, usage and page number. This information is organized alphabetically by part description.

### 6. INDEX

The index located near the front of the manual is an alphabetical listing of all information elements included in the manual. Page numbers are provided for quick reference to detailed parts identification illustrations and serviceable consist lists.

### 7. PART NUMBER INDEX

A numerical index listing all part numbers and the corresponding page number(s) appears at the back of the manual.

### 8. CAPTIONS

Captions located at the beginning of each information element identify the part number, part name, and engineering change level(s) worked to the component shown, along with additional descriptive information. Use the change level from As Shipped Consist to determine the correct replacement parts. Field replacement options, identification of optional attachment components, and where used ('part of') information is also provided.

The first line of a caption is shown in larger type font to indicate the beginning of an information element. Captions for additional pages that may be required to illustrate an information element will be shown in standard type font and will include the term *(contd.)*
.

**9. NON-SERVICED PARTS**

In some instances it is necessary to display non-serviced parts that are a link to lower level serviceable consist lists. These non-serviced part numbers are shown in *italic* type indicating that they are not available. All consist lists have not been converted to reflect this enhancement.

**10. PARTS LIST REFERENCE NUMBERS**

Numbers shown in the Ref No column correspond to numbers used in the associated graphic(s). An alphabetic suffix may be added to a reference number to identify lower level consist items. Numbers shown in the Graphic Ref column refer to the graphic number identifier displayed in the lower left corner of each illustration. The Graphic Ref number may be used in combination with the item Ref No to determine the correct part number. There may be intentional omission of a Ref No in a consist list as information is updated to reflect the latest serviceable part numbers.

**11. INDENTED PART NAMES**

When a part name is indented in a parts list, it is part of (included in) the group or assembly under which it is indented.

**12. ILLUSTRATION REFERENCE LETTERS**

When necessary, illustrations contain reference letters (A, B, C etc.) that are intended to track lines and harnesses from one point to another. They are also used to show where to reconnect illustrations that have been separated.

**13. ABBREVIATIONS AND SYMBOLS**

O.D. – Outside Diameter
I.D. – Inside Diameter
**A** – Not Part Of This Group
**B** – Use As Required
**C** – Change From Previous Type
**D** – Order By The Meter
E – Order By The Centimeter
F – Not Shown
**G** – Order By The Inch
I – See Hose Fabrication Guide
**M** – Metric Part
R – Remfg Part May Be Available
**Y** – Separate Illustration
**Z** – Not Serviced Separately

SIS *New Feature*

**14. <END>**

This symbol indicates the end of an information element.

**NOTE:**

**Continuing improvement and advancement of product design may cause changes to your engine which may not be included in this publication. Whenever a question arises regarding your Caterpillar product or this publication, please consult your Caterpillar dealer for the latest available information.**

## ELECTRICAL AND STARTING SYSTEM

*153-7650* **LINES GP-AIR START** (CHG -00 THRU -02,-04)
**S/N 99U7598**

SMCS-1451 i01137908

| NOTE | REF NO | GRAPHIC REF | PART NUMBER | QTY | PART NAME 1 2 3 4 5 6 (PROD... TYE) | SEE PAGE |
|---|---|---|---|---|---|---|
| | 1 | 2 | 05-1571 | 2 | BOLT (3/8-16X1.75IN) | |
| | 2 | 1 | 08-1587 | 2 | BOLT (1/2-13X1.75IN) | |
| | 3 | 2 | 08-1615 | 2 | BOLT (1/4-20X.75 IN) | |
| | 4 | 1 | 20-7326 | 1 | TEE-PIPE | |
| | 5 | 1 | 3J-5390 | 1 | PLUG (3/8-18 THD) | |
| | 6 | 1 | 3J-7355 | 1 | UNION-FLARED | |
| C | 7 | 2 | 3P-0764 | 1 | PLUG | |
| B | 8 | 1 | 3S-2093 | 2 | STRAP-CABLE | |
| I | 9 | 2 | 3T-3648 | 1 | HOSE AS | |
| C | 10 | 2 | 3V-3308 | 2 | WASHER (2.5MM THK) | |
| I | 11 | 2 | 3V-6153 | 1 | HOSE AS | |
| | 12 | 1 | 4D-6988 | 2 | CLIP (9/16 HOLE) | |
| | 13 | 1 | 4F-7957 | 4 | BOLT (1/4-20X.875IN) | |
| C | 14 | 1,2 | 4S-6399 | 5 | CONNECTOR | |
| I | 15 | 1 | 4W-4905 | 1 | HOSE AS | |
| | 16 | 2 | 5K-3294 | 1 | CLIP (12.7MM ID) | |
| C | 17 | 2 | 5M-6213 | 1 | PLUG-PIPE (1/4-18 NPTF THD) | |
| | 18 | 1,2 | 5P-0537 | 10 | WASHER (2MM THK) | |
| | 19 | 1,2 | 5P-8245 | 4 | WASHER-HARD (3MM THK) | |
| I | 20 | 1 | 5T-4374 | 1 | HOSE AS | |
| I | 21 | 1 | 5T-4375 | 1 | HOSE AS | |
| | 22 | 2 | 6D-3479 | 1 | CLIP (14.28MM ID) | |
| | 23 | 1 | 6K-1972 | 1 | ELBOW-FLARED (1/4 NPT) | |
| | 24 | 2 | 6N-8659 | 1 | HOSE AS | |
| | 25 | 2 | 6Y-4589 | 1 | SEAL-O-RING (19.18MM ID) | |
| | 26 | 2 | 7C-0372 | 2 | BRACKET | |
| | 27 | 2 | 7C-0822 | 1 | TUBE AS | |
| | 28 | 1 | 7E-0872 | 1 | BRACKET AS | |
| | 29 | 2 | 7K-6462 | 2 | ELBOW | |
| C | 30 | 1,2 | 7X-9197 | 2 | ELBOW | |
| | 31 | 1 | 8L-6005 | 1 | TEE-PIPE | |
| | 32 | 2 | 9N-8471 | 2 | CLAMP-TUBE | |
| | 33 | 1 | [illegible]-8750 | 4 | NUT-FULL (1/4-20 THD) | |
| C | 34 | 1 | 9X-7206 | 1 | VALVE-SOLENOID | |
| C | 35 | 2 | 9X-[illegible]73 | 2 | BOLT (1/2-13X2.25IN) | |
| | 36 | 1 | 001-64[illegible] | 2 | CONNECTOR-FLARED | |
| | 37 | 1 | 003-2149 | 1 | ELBOW | |
| | 38 | 2 | 030-7946 | 2 | ELBOW (7/16-20 STR THD) | |
| | 39 | 2 | 030-7961 | | ELBOW | |
| | 40 | 2 | 061-7538 | 2 | SEAL-O-RING (7.65 MM ID) | |
| | 41 | 2 | 067-6495 | 1 | ELBOW-FLARED | |
| | 42 | 2 | 150-1240 | 1 | WITCH AS-PRESSURE | |
| | | 2 | 102-6602 | 1 | KIT-RECEPTACLE (2 PIN) (INCLUDES RECEPTACLE AS & WEDGE) | |
| | | 2 | [illegible]E-3365 | 1 | WEDGE | |
| | | 2 | 81-[illegible]39 | 2 | PIN-CONNECTOR | |
| | 43 | 2 | 153-7651 | 1 | TUBE AS | |
| | 44 | 2 | 153-7652 | 1 | TUBE AS | |
| C | 45 | 1 | 165-7656 | 1 | CONNECTOR-PLUG | |
| C | 46 | 1 | 165-7657 | 1 | CONNECTOR-SOCKET | |
| C | 47 | 1 | 165-7658 | 1 | GASKET | |

B-USE AS REQUIRED
C-CHANGE FROM PREVIOUS TYPE
I-SEE HOSE FABRICATION GUIDE



## ELECTRICAL AND STARTING SYSTEM

*153-7650* **LINES GP-AIR START** *(contd.)* i01137908

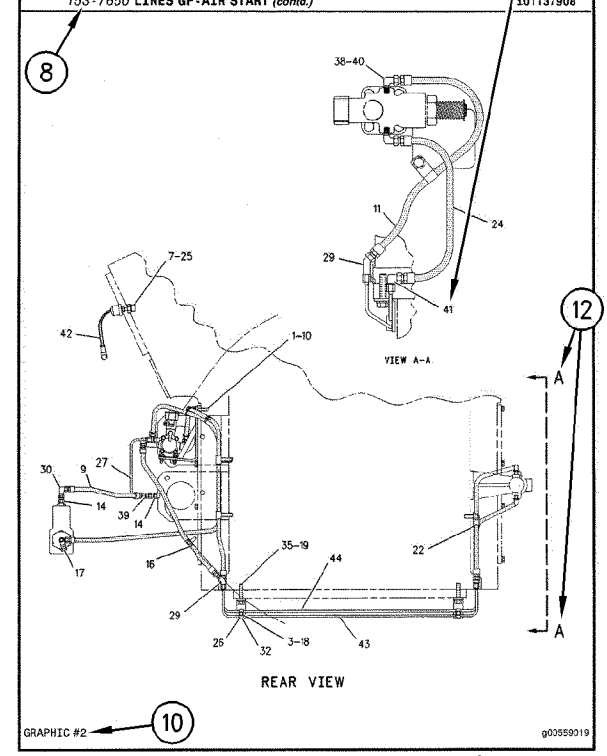




## ELECTRICAL AND STARTING SYSTEM

*153-7650* **LINES GP-AIR START** *(contd.)* i01137908

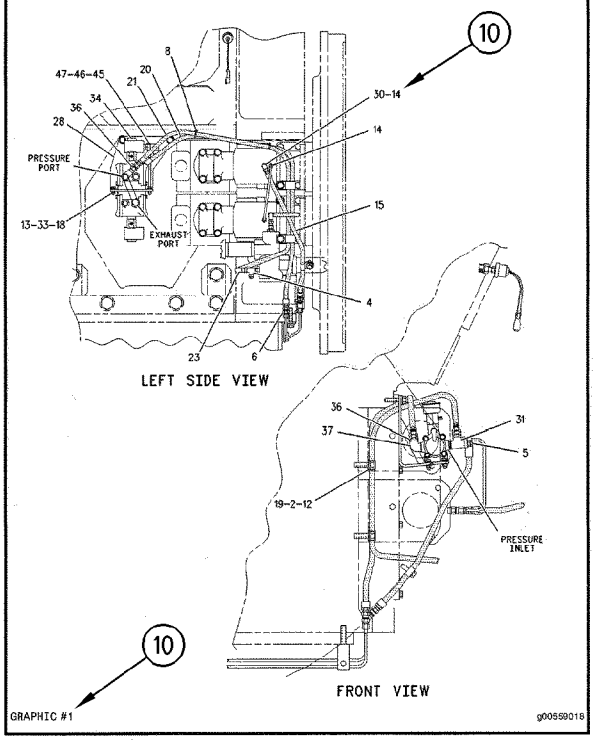

# TABLE OF CONTENTS


| PART NUMBER | PART NAME | PAGE |
|---|---|---|
| | **ENGINE ARRANGEMENT** | |
| 1099399 | ENGINE AR | 1 |
| 1229789 | ENGINE AR-GENERAL-PART 1 OF 2 | 2 |
| 1229789 | ENGINE AR-GENERAL-PART 2 OF 2 | 3 |
| 1167568 | ENGINE AR-PART 1 OF 3 | 4 |
| 1167568 | ENGINE AR-PART 2 OF 3 | 5 |
| 1167568 | ENGINE AR-PART 3 OF 3 | 6 |
| 1167568 | ENGINE AR-PART 1 OF 3 | 7 |
| 1167568 | ENGINE AR-PART 2 OF 3 | 8 |
| 1167568 | ENGINE AR-PART 3 OF 3 | 9 |
| | **BASIC ENGINE** | |
| 8N5286 | CYLINDER BLOCK GP | 10 |
| 1N3576 | CYLINDER BLOCK GP | 11 |
| 7N1342 | COVER GP-CYLINDER BLOCK | 12 |
| 9Y2062 | LIFTING GP-ENGINE | 13 |
| 6I4560 | COVER GP-VALVE MECHANISM | 14 |
| 4P9856 | CRANKSHAFT GP | 15 |
| 2P6224 | SEAL GP-CRANKSHAFT | 16 |
| 1N4406 | CAMSHAFT GP | 17 |
| 9Y8219 | PISTON & ROD GP | 18 |
| 1415103 | PISTON & ROD GP | 19 |
| 7N8026 | VALVE MECHANISM GP | 20 |
| 8N0107 | TRUNNION GP-ENGINE | 21 |
| 4P5817 | SUPPORT GP-ENGINE | 22 |
| 8N0246 | CYLINDER HEAD GP | 23 |
| 8N6796 | CYLINDER HEAD GP | 24 |
| 7N9536 | FASTENER GP-CYLINDER HEAD | 25 |
| 8N0303 | HOUSING GP-FRONT | 26 |
| 8N0872 | FASTENER GP-FRONT HOUSING | 27 |
| 4N5162 | COVER GP-FRONT HOUSING | 28 |
| 1W7733 | DAMPER GP | 29 |
| 4P9858 | GEAR GP-FRONT TIMING | 30 |
| 7C4441 | FLYWHEEL GP | 31 |
| 7N2879 | PULLEY GP-CRANKSHAFT | 32 |
| 1241737 | PULLEY GP-FAN DRIVE | 33 |
| 1035868 | DRIVE GP-FAN | 34 |
| 8N2395 | HOUSING GP-FLYWHEEL | 35 |
| 1280070 | PAN GP-OIL | 36 |
| 2P6200 | FASTENER GP-OIL PAN | 37 |
| 1206618 | DRIVE GP-AUXILIARY | 38 |
| 1099407 | MOUNTING GP-ENGINE | 39 |
| | **LUBRICATION SYSTEM** | |
| 9Y6105 | GAUGE GP-OIL LEVEL (DIPSTICK) | 40 |
| 1P4244 | BREATHER GP | 41 |
| 1318917 | BREATHER GP | 42 |
| 1318917 | BREATHER GP | 43 |
| 1068957 | PUMP GP-ENGINE OIL | 44 |
| 6I1346 | PUMP GP-ENGINE OIL | 45 |
| 2P6105 | LINES GP-ENGINE OIL | 46 |
| 4P7096 | BASE GP-OIL FILTER | 47 |
| 1261670 | FILTER GP-ENGINE OIL-PART 1 OF 2 | 48 |
| 1261670 | FILTER GP-ENGINE OIL-PART 2 OF 2 | 49 |
| 1255865 | LINES GP-TURBOCHARGER OIL | 50 |
| 1318916 | LINES GP-DRAIN | 51 |
| 1241625 | MOUNTING GP-ENGINE OIL FILTER | 52 |
| | **COOLING SYSTEM** | |
| 1099403 | RADIATOR & HYD OIL COOLER GP | 53 |
| 1241700 | RADIATOR & HYD OIL COOLER GP | 54 |
| 1205025 | COOLING AR | 55 |

# TABLE OF CONTENTS


| PART NUMBER | PART NAME | PAGE |
|---|---|---|
| 1167968 | PUMP GP-WATER | 56 |
| 1167967 | PUMP GP-WATER | 57 |
| 1261669 | COOLER GP-FLTR BASE & ENG OIL | 58 |
| 1261668 | COOLER GP-FLTR BASE & ENG OIL | 59 |
| 8N0888 | REGULATOR GP-TEMPERATURE | 60 |
| 4W6157 | LINES GP-WATER | 61 |
| 6N8492 | LINES GP-WATER | 62 |
| 7Y0863 | FAN GP-SUCTION | 63 |


## AIR INLET AND EXHAUST SYSTEM


| | | |
|---|---|---|
| 1099405 | MOUNTING GP-AIR CLEANER | 64 |
| 1460516 | CLEANER AR | 65 |
| 1241708 | AIR CLEANER GP | 66 |
| 1347085 | AIR CLEANER GP | 67 |
| 1099410 | LINES GP-AIR | 68 |
| 7C4634 | LINES GP-AIR | 69 |
| 1189725 | LINES GP-AIR | 70 |
| 1347084 | LINES GP-AIR | 71 |
| 4N8267 | AFTERCOOLER GP-WATER | 72 |
| 4N8267 | AFTERCOOLER GP-WATER | 73 |
| 1167564 | MANIFOLD GP-EXHAUST | 74 |
| 7E5682 | FASTENER GP-EXHAUST MANIFOLD | 75 |
| 1118035 | TURBOCHARGER GP | 76 |
| 1067407 | TURBOCHARGER GP | 77 |
| 1138315 | CARTRIDGE GP-TURBOCHARGER | 78 |
| 1099401 | MUFFLER GP | 79 |
| 1099401 | MUFFLER GP | 80 |
| 1099401 | MUFFLER GP | 81 |
| 7Y0870 | LINES GP-DRAIN | 82 |


## FUEL SYSTEM


| | | |
|---|---|---|
| 1288806 | PUMP GP-GOV & FUEL INJ | 83 |
| 2W2410 | GOVERNOR GP-PART 1 OF 3 | 84 |
| 2W2410 | GOVERNOR GP -PART 2 OF 3 | 85 |
| 2W2410 | GOVERNOR GP-PART 3 OF 3 | 86 |
| 1115162 | CONTROL GP-FUEL RATIO | 87 |
| 1113769 | PUMP GP-FUEL INJECTION | 88 |
| 4P9827 | PUMP GP-FUEL INJECTION | 89 |
| 1113770 | CAMSHAFT AS-FUEL INJECTION PUMP | 90 |
| 4P9840 | HOUSING AS-FUEL PUMP | 91 |
| 6I1003 | PUMP GP-FUEL PRM & PRIM FILTER | 92 |
| 8N7276 | TORQUE CONTROL GP | 93 |
| 1W6351 | FILTER GP-PRIMARY FUEL | 94 |
| 2W1011 | FILTER GP-SECONDARY FUEL | 95 |
| 1198731 | FILTER GP-FUEL INJECTION | 96 |
| 2W4160 | PUMP GP-FUEL TRANSFER | 97 |
| 1W1695 | PUMP GP-FUEL TRANSFER | 98 |
| 1060208 | CONTROL GP-GOVERNOR-PART 1 OF 2 | 99 |
| 1060208 | CONTROL GP-GOVERNOR-PART 2 OF 2 | 100 |
| 1161637 | LINES GP-FUEL | 101 |
| 1146222 | LINES GP-FUEL | 102 |
| 1089845 | PUMP GP-FUEL TRANSFER | 103 |
| 1089845 | PUMP GP-FUEL TRANSFER | 104 |
| 1161640 | PUMP GP-FUEL TRANSFER | 105 |
| 1161635 | TANK & MTG GP-FUEL | 106 |
| 1540409 | TANK GP-FUEL | 107 |
| 1146214 | TANK GP-FUEL | 108 |
| 1089846 | TANK AR-ADDITIONAL | 109 |
| 1161492 | PUMP AR-FUEL TRANSFER | 110 |
| 1174159 | PUMP AR-FUEL TRANSFER | 111 |


## ELECTRICAL AND STARTING SYSTEM


| | | |
|---|---|---|
| 1114858 | BATTERY & WIRING GP-PART 1 OF 2 | 112 |

# TABLE OF CONTENTS


| PART NUMBER | PART NAME | PAGE |
|---|---|---|
| 1114858 | BATTERY & WIRING GP-PART 2 OF 2 | 113 |
| 1114858 | BATTERY & WIRING GP-PART 1 OF 2 | 114 |
| 1114858 | BATTERY & WIRING GP-PART 2 OF 2 | 115 |
| 1114858 | BATTERY & WIRING GP-PART 1 OF 2 | 116 |
| 1114858 | BATTERY & WIRING GP-PART 2 OF 2 | 117 |
| 1288954 | HARNESS AS-PART 1 OF 3 | 118 |
| 1288954 | HARNESS AS-PART 2 OF 3 | 119 |
| 1288954 | HARNESS AS-PART 3 OF 3 | 120 |
| 1532562 | HARNESS AS-PART 1 OF 3 | 121 |
| 1532562 | HARNESS AS-PART 2 OF 3 | 122 |
| 1532562 | HARNESS AS-PART 3 OF 3 | 123 |
| 1288969 | HARNESS AS-PART 1 OF 3 | 124 |
| 1288969 | HARNESS AS-PART 2 OF 3 | 125 |
| 1288969 | HARNESS AS-PART 3 OF 3 | 126 |
| 1364056 | HARNESS AS-PART 1 OF 3 | 127 |
| 1364056 | HARNESS AS-PART 2 OF 3 | 128 |
| 1364056 | HARNESS AS-PART 3 OF 3 | 129 |
| 1506998 | HARNESS AS-PART 1 OF 3 | 130 |
| 1506998 | HARNESS AS-PART 2 OF 3 | 131 |
| 1506998 | HARNESS AS-PART 3 OF 3 | 132 |
| 1211115 | HARNESS AS | 133 |
| 1160163 | HARNESS AS | 134 |
| 1160080 | CABLE AS | 135 |
| 1160162 | CABLE AS | 136 |
| 1160161 | CABLE AS | 137 |
| 1254727 | CABLE AS | 138 |
| 1288948 | PANEL GP-CIRCUIT BREAKER-PART 1 OF 2 | 139 |
| 1288948 | PANEL GP-CIRCUIT BREAKER-PART 2 OF 2 | 140 |
| 1288948 | PANEL GP-CIRCUIT BREAKER-PART 1 OF 2 | 141 |
| 1288948 | PANEL GP-CIRCUIT BREAKER-PART 2 OF 2 | 142 |
| 1288948 | PANEL GP-CIRCUIT BREAKER-PART 1 OF 2 | 143 |
| 1288948 | PANEL GP-CIRCUIT BREAKER-PART 2 OF 2 | 144 |
| 1288948 | PANEL GP-CIRCUIT BREAKER-PART 1 OF 2 | 145 |
| 1288948 | PANEL GP-CIRCUIT BREAKER-PART 2 OF 2 | 146 |
| 1321868 | HARNESS AS | 147 |
| 1364076 | HARNESS AS | 148 |
| 1532554 | HARNESS AS | 149 |
| 1673590 | HARNESS AS | 150 |
| 1114870 | TIMER AS | 151 |
| 1060206 | CONTROL & MTG GP-ELECTRONIC | 152 |
| 1176264 | CONTROL & MTG GP-WINDSHIELD | 153 |
| 1060054 | WIRING GP-CAB | 154 |
| 1060054 | WIRING GP-CAB | 155 |
| 1060054 | WIRING GP-CAB | 156 |
| 1114795 | HARNESS AS-WIRING | 157 |
| 1114796 | HARNESS AS-WIRING | 158 |
| 1506992 | HARNESS AS-WIRING | 159 |
| 1506989 | HARNESS AS-WIRING | 160 |
| 1532555 | HARNESS AS-WIRING | 161 |
| 1506993 | HARNESS AS-WIRING | 162 |
| 1506994 | HARNESS AS-WIRING | 163 |
| 1502556 | HARNESS AS-WIRING | 164 |
| 1532557 | HARNESS AS-WIRING | 165 |
| 1506990 | HARNESS AS-WIRING | 166 |
| 1506991 | HARNESS AS-WIRING | 167 |
| 1160094 | WIRING GP-RADIO | 168 |
| 1507025 | WIRING GP-RADIO | 169 |
| 1160136 | CONVERTER GP-ELECTRICAL | 170 |
| 1507021 | CONVERTER GP-ELECTRICAL | 171 |
| 1385127 | HARNESS AS | 172 |
| 1507022 | HARNESS AS | 173 |
| 1507023 | HARNESS AS | 174 |

# TABLE OF CONTENTS


| PART NUMBER | PART NAME | PAGE |
|---|---|---|
| 1507024 | HARNESS AS | 175 |
| 1507030 | SPEAKER GP-RADIO | 176 |
| 1160159 | WIRING GP | 177 |
| 1160258 | HARNESS AS | 178 |
| 1160259 | HARNESS AS | 179 |
| 1160260 | HARNESS AS | 180 |
| 1114695 | WIRING GP-LOWER WIPER | 181 |
| 1211099 | WIRING GP | 182 |
| 1364018 | WIRING GP-CONSOLE | 183 |
| 1060057 | WIRING GP-CONSOLE | 184 |
| 1060057 | WIRING GP-CONSOLE | 185 |
| 1364019 | WIRING GP-CONSOLE | 186 |
| 1364019 | WIRING GP-CONSOLE | 187 |
| 1321892 | HARNESS AS-CONSOLE | 188 |
| 1321893 | HARNESS AS-CONSOLE | 189 |
| 1321894 | HARNESS AS-CONSOLE | 190 |
| 1532491 | HARNESS AS-CONSOLE | 191 |
| 1506999 | HARNESS AS-CONSOLE | 192 |
| 1288966 | HARNESS AS-CONSOLE-PART 1 OF 2 | 193 |
| 1288966 | HARNESS AS-CONSOLE-PART 2 OF 2 | 194 |
| 1507000 | HARNESS AS-CONSOLE-PART 1 OF 2 | 195 |
| 1507000 | HARNESS AS-CONSOLE-PART 2 OF 2 | 196 |
| 1507001 | HARNESS AS-CONSOLE-PART 1 OF 2 | 197 |
| 1507001 | HARNESS AS-CONSOLE-PART 2 OF 2 | 198 |
| 5C6108 | SWITCH AS | 199 |
| 7N0718 | SWITCH AS-DISCONNECT | 200 |
| 7N0719 | SWITCH AS-DISCONNECT | 201 |
| 9G7641 | SWITCH GP-START | 202 |
| 1114799 | SWITCH AS | 203 |
| 1060107 | SWITCH AS-ROTARY | 204 |
| 1160095 | SWITCH AS | 205 |
| 1160097 | SWITCH AS | 206 |
| 1251302 | SWITCH AS-MAGNETIC | 207 |
| 1752313 | SWITCH AS-MAGNETIC | 208 |
| 1752314 | SWITCH AS-MAGNETIC | 209 |
| 1160083 | WIRING GP-REFUELING PUMP | 210 |
| 1160083 | WIRING GP-REFUELING PUMP | 211 |
| 1160167 | WIRING GP-REFUELING PUMP | 212 |
| 1160167 | WIRING GP-REFUELING PUMP | 213 |
| 1364017 | WIRING GP-FINE SWING | 214 |
| 1160206 | WIRING GP | 215 |
| 1160206 | WIRING GP | 216 |
| 1114862 | BATTERY & WIRING GP-COLD WEATH | 217 |
| 1107884 | SWITCH AS-TOGGLE | 218 |
| 1140421 | SWITCH AS-TOGGLE | 219 |
| 1288970 | HARNESS AS | 220 |
| 1673562 | HARNESS AS | 221 |
| 1288971 | HARNESS AS | 222 |
| 1673565 | HARNESS AS | 223 |
| 1211109 | HARNESS AS | 224 |
| 1160091 | HARNESS AS | 225 |
| 1211033 | HARNESS AS | 226 |
| 1211034 | HARNESS AS | 227 |
| 1673589 | HARNESS AS | 228 |
| 1160242 | CABLE AS | 229 |
| 1321827 | WIRE AS | 230 |
| 6I2108 | SOLENOID GP-SHUTOFF | 231 |
| 7S3622 | STARTING MOTOR GP-ELECTRIC | 232 |
| 6V5227 | STARTING MOTOR GP-ELECTRIC | 233 |
| 1068552 | STARTING MOTOR GP-ELECTRIC | 234 |
| 6V5537 | STARTING MOTOR GP-ELECTRIC-PART 1 OF 2 | 235 |
| 6V5537 | STARTING MOTOR GP-ELECTRIC-PART 2 OF 2 | 236 |

# TABLE OF CONTENTS


| PART NUMBER | PART NAME | PAGE |
|---|---|---|
| 6V5538 | STARTING MOTOR GP-ELECTRIC | 237 |
| 1275209 | STARTING AR-COLD WEATHER | 238 |
| 8S3886 | STARTING MOTOR GP-ELECTRIC | 239 |
| 7E9406 | ALTERNATOR GP-CHARGING | 240 |
| 1005047 | ALTERNATOR GP-CHARGING | 241 |
| 1005045 | ALTERNATOR GP-CHARGING | 242 |
| 1005046 | ALTERNATOR GP-CHARGING | 243 |
| 1099413 | STARTING AID GP-ETHER-PART 1 OF 2 | 244 |
| 1099413 | STARTING AID GP-ETHER-PART 2 OF 2 | 245 |
| 1160115 | ALARM GP-TRAVEL | 246 |
| 3E7738 | ALARM AS-BACKUP | 247 |
| 4I5409 | LIGHTING GP-CHASSIS | 248 |
| 4I5409 | LIGHTING GP-CHASSIS | 249 |
| 1254774 | LIGHTING GP-CHASSIS | 250 |
| 1114694 | LIGHTING GP-CAB | 251 |
| 1114860 | LIGHTING GP-BOOM | 252 |
| 1114860 | LIGHTING GP-BOOM | 253 |
| 1160243 | HARNESS AS | 254 |
| 1160146 | HARNESS AS | 255 |
| 5I8251 | LAMP GP-FLOOD | 256 |
| 1532523 | LAMP GP-FLOOD | 257 |
| 5I8250 | LAMP GP-FLOOD | 258 |
| 1506978 | LAMP GP-FLOOD | 259 |
| 1532452 | LAMP GP-FLOOD | 260 |
| 1532521 | LAMP GP-FLOOD | 261 |
| 1114813 | LAMP GP-FLOOD | 262 |


## POWER TRAIN


| | | |
|---|---|---|
| 1161317 | FASTENER GP-SWING & FINAL DR | 263 |
| 7Y0763 | SPROCKET GP-NONSEGMENTED | 264 |
| 1141477 | FINAL DRIVE GP | 265 |
| 1145541 | FINAL DRIVE GP | 266 |
| 1425541 | FINAL DRIVE GP | 267 |
| 1141478 | FINAL DRIVE GP-PART 1 OF 2 | 268 |
| 1141478 | FINAL DRIVE GP-PART 2 OF 2 | 269 |
| 1141478 | FINAL DRIVE GP-PART 1 OF 2 | 270 |
| 1141478 | FINAL DRIVE GP-PART 2 OF 2 | 271 |
| 1913241 | FINAL DRIVE GP-PART 1 OF 2 | 272 |
| 1913241 | FINAL DRIVE GP-PART 2 OF 2 | 273 |


## FRAME AND BODY


| | | |
|---|---|---|
| 1161634 | HOOD & GUARD GP-PART 1 OF 3 | 274 |
| 1161634 | HOOD & GUARD GP-PART 2 OF 3 | 275 |
| 1161634 | HOOD & GUARD GP-PART 3 OF 3 | 276 |
| 1161634 | HOOD & GUARD GP-PART 1 OF 3 | 277 |
| 1161634 | HOOD & GUARD GP-PART 2 OF 3 | 278 |
| 1161634 | HOOD & GUARD GP-PART 3 OF 3 | 279 |
| 1161634 | HOOD & GUARD GP-PART 1 OF 3 | 280 |
| 1161634 | HOOD & GUARD GP-PART 2 OF 3 | 281 |
| 1161634 | HOOD & GUARD GP-PART 3 OF 3 | 282 |
| 1161808 | HOOD GP-ENGINE | 283 |
| 1161786 | DOOR GP-HOOD | 284 |
| 1161786 | DOOR GP-HOOD | 285 |
| 1161780 | DOOR GP-HOOD | 286 |
| 1161780 | DOOR GP-HOOD | 287 |
| 1161783 | DOOR GP-HOOD | 288 |
| 1161783 | DOOR GP-HOOD | 289 |
| 1224096 | DOOR GP-HOOD | 290 |
| 1357522 | DOOR GP-HOOD | 291 |
| 1357516 | HOOD GP-PERFORATED | 292 |
| 1317640 | GUARD AR-BOTTOM | 293 |
| 1224067 | HOOD & GUARD GP | 294 |
| 1460517 | HOOD GP | 295 |

# TABLE OF CONTENTS


| PART NUMBER | PART NAME | PAGE |
|---|---|---|
| 1161633 | GUARD GP-BOTTOM | 296 |
| 1161633 | GUARD GP-BOTTOM | 297 |
| 1161633 | GUARD GP-BOTTOM | 298 |
| 1161638 | GUARD GP-BOTTOM | 299 |
| 1161638 | GUARD GP-BOTTOM | 300 |
| 1224027 | GUARD GP-BOTTOM | 301 |
| 1764978 | GUARD GP-BOTTOM | 302 |
| 1348856 | GUARD GP-SWIVEL | 303 |
| 1089835 | HANDHOLD GP | 304 |
| 1089835 | HANDHOLD GP | 305 |
| 1372290 | HANDHOLD GP | 306 |
| 1089839 | BOX & MTG GP-STORAGE | 307 |
| 1089839 | BOX & MTG GP-STORAGE | 308 |
| 1224022 | BOX & MTG GP-STORAGE | 309 |
| 1224022 | BOX & MTG GP-STORAGE | 310 |
| 1089844 | BOX & MOUNTING GP | 311 |
| 1089840 | BOX GP-STORAGE | 312 |
| 1089840 | BOX GP-STORAGE | 313 |
| 1540566 | BOX GP-STORAGE | 314 |
| 1224023 | BOX GP-STORAGE | 315 |
| 1224023 | BOX GP-STORAGE | 316 |
| 1540654 | BOX GP-STORAGE | 317 |
| 1223877 | HANDLE GP-STORAGE DOOR | 318 |
| 1146300 | FENDER & COVER GP | 319 |
| 1464966 | FENDER & COVER GP | 320 |
| 1161699 | COUNTERWEIGHT GP | 321 |
| 1174247 | COUNTERWEIGHT GP | 322 |
| 1161700 | COUNTERWEIGHT GP | 323 |
| 1174248 | COUNTERWEIGHT GP | 324 |
| 1141315 | GEAR & BEARING GP-PART 1 OF 2 | 325 |
| 1141315 | GEAR & BEARING GP-PART 2 OF 2 | 326 |
| 1912557 | GEAR & BEARING GP | 327 |
| 1912558 | GEAR & BEARING GP | 328 |
| 1141435 | GEAR & BEARING GP | 329 |
| 1552661 | FRAME GP-UPPER | 330 |
| 1552661 | FRAME GP-UPPER | 331 |
| 1152661 | FRAME GP-UPPER | 332 |
| 1152657 | FRAME AS-UNDERCARRIAGE | 333 |
| 1152658 | FRAME AS-UNDERCARRIAGE | 334 |
| 1156343 | IDLER GP-FRONT | 335 |
| 1156344 | IDLER GP-FRONT | 336 |
| 1362422 | IDLER GP-FRONT | 337 |
| 7Y0073 | IDLER GP-FRONT | 338 |
| 7Y1457 | ADJUSTMENT GP-HYDRAULIC TRACK | 339 |
| 1235442 | GUARD GP-TRACK GUIDE | 340 |
| 1235443 | GUARD GP-TRACK GUIDE | 341 |
| 1235444 | GUARD GP-TRACK GUIDE | 342 |
| 1235445 | GUARD GP-TRACK GUIDE | 343 |
| 1156347 | ROLLER AR-TRACK & CARRIER | 344 |
| 1156348 | ROLLER AR-TRACK & CARRIER | 345 |
| 6Y5323 | ROLLER AR-TRACK & CARRIER | 346 |
| 1791486 | ROLLER GP-TRACK-SINGLE FLANGE | 347 |
| 1235441 | GUARD GP-TRACK GUIDE | 348 |
| 1152660 | GUARD GP-TRAVEL MOTOR | 349 |
| 1271423 | GUARD GP-TRAVEL MOTOR | 350 |
| 1944687 | TRACK GP | 351 |
| 1161260 | TRACK GP | 352 |
| 1161261 | TRACK GP | 353 |
| 1164686 | TRACK GP | 354 |
| 1161262 | TRACK GP | 355 |
| 1161265 | TRACK GP | 356 |
| 1187300 | LINK AS-TRACK | 357 |

# TABLE OF CONTENTS


| PART NUMBER | PART NAME | PAGE |
|---|---|---|
| 1187301 | LINK AS-TRACK | 358 |
| 2019118 | LINK AS-TRACK | 359 |
| 2019119 | LINK AS-TRACK | 360 |


## HYDRAULIC SYSTEM


| | | |
|---|---|---|
| 1120067 | TANK & MTG GP-HYDRAULIC | 361 |
| 1232160 | TANK & FILTER GP-HYDRAULIC (PART 1 OF 2) | 362 |
| 1232160 | TANK & FILTER GP-HYDRAULIC (PART 2 OF 2) | 363 |
| 1076996 | SCREEN GP | 364 |
| 1140665 | DRIVE GP-PUMP | 365 |
| 1297998 | DRIVE GP-PUMP | 366 |
| 5I4081 | DRIVE GP-ACCESSORY | 367 |
| 1297999 | DRIVE GP-ACCESSORY | 368 |
| 1099411 | PUMP & MOUNTING GP | 369 |
| 7Y0872 | COUPLING GP-PUMP | 370 |
| 1232235 | PUMP GP-DOUBLE PISTON | 371 |
| 1843955 | PUMP GP-HYDRAULIC | 372 |
| 1336912 | PUMP GP-GEAR | 373 |
| 1336898 | PUMP GP-GEAR | 374 |
| 1262147 | PUMP GP-GEAR | 375 |
| 1336907 | PUMP GP-GEAR | 376 |
| 1843956 | ROTATING GP-PUMP | 377 |
| 1843957 | ROTATING GP-PUMP | 378 |
| 1425520 | ROTATING GP-PUMP | 379 |
| 1211374 | HEAD GP-PUMP CONTROL | 380 |
| 1211377 | HEAD GP-PUMP CONTROL | 381 |
| 1211486 | HEAD GP-PUMP CONTROL | 382 |
| 1231376 | COVER GP-PUMP CONTROL | 383 |
| 1843930 | FILTER GP-HYDRAULIC | 384 |
| 1262075 | FILTER GP-HYDRAULIC | 385 |
| 1076995 | FILTER GP-HYDRAULIC | 386 |
| 1733503 | BLOCK GP-HYDRAULIC | 387 |
| 1262080 | FILTER GP-HYDRAULIC | 388 |
| 1843997 | HOUSING GP-FILTER | 389 |
| 1843995 | FILTER AR | 390 |
| 1884148 | FILTER GP-HYDRAULIC | 391 |
| 0874456 | ACCUMULATOR GP | 392 |
| 4I1536 | ACCUMULATOR GP | 393 |
| 5I8416 | ACCUMULATOR GP | 394 |
| 0874454 | ACCUMULATOR GP | 395 |
| 1163432 | CYLINDER & LINES GP-BOOM | 396 |
| 1163433 | CYLINDER & LINES GP-BOOM | 397 |
| 1336798 | CYLINDER & LINES GP-BOOM | 398 |
| 1336799 | CYLINDER & LINES GP-BOOM | 399 |
| 1163434 | CYLINDER & LINES GP-STICK | 400 |
| 1336800 | CYLINDER & LINES GP-STICK | 401 |
| 1163435 | CYLINDER & LINES GP-BUCKET | 402 |
| 1336801 | CYLINDER & LINES GP-BUCKET | 403 |
| 1336801 | CYLINDER & LINES GP-BUCKET | 404 |
| 1163577 | CYLINDER & SEAL GP BOOM | 405 |
| 1163637 | CYLINDER & SEAL GP-STICK | 406 |
| 1336803 | CYLINDER & SEAL GP-BOOM | 407 |
| 1336804 | CYLINDER & SEAL GP-STICK | 408 |
| 1183920 | CYLINDER & SEAL GP-BUCKET | 409 |
| 1336806 | CYLINDER & SEAL GP-BUCKET | 410 |
| 1336805 | CYLINDER & SEAL GP-BUCKET | 411 |
| 1163578 | CYLINDER GP-BOOM | 412 |
| 1336808 | CYLINDER GP-BOOM | 413 |
| 1913118 | CYLINDER GP-STICK | 414 |
| 1913127 | CYLINDER GP-STICK | 415 |
| 1183921 | CYLINDER GP-BUCKET | 416 |
| 1336810 | CYLINDER GP-BUCKET | 417 |

# TABLE OF CONTENTS


| PART NUMBER | PART NAME | PAGE |
|---|---|---|
| 1336811 | CYLINDER GP-BUCKET | 418 |
| 1158690 | LINES GP-BOOM CYLINDER | 419 |
| 1158691 | LINES GP-BOOM CYLINDER | 420 |
| 1158692 | LINES GP-STICK CYLINDER | 421 |
| 1158693 | LINES GP-BUCKET CYLINDER | 422 |
| 1158694 | LINES GP-BUCKET CYLINDER | 423 |
| 1136865 | LINES GP-BOOM CYLINDER | 424 |
| 1460562 | VALVE GP-CHECK & RELIEF | 425 |
| 1460563 | VALVE GP-CHECK | 426 |
| 1315691 | VALVE GP-LOAD CONTROL | 427 |
| 1136846 | LINES GP-BOOM | 428 |
| 1136849 | LINES GP-BOOM | 429 |
| 1211927 | LINES GP-AUXILIARY HYDRAULIC | 430 |
| 1136851 | LINES GP-STICK | 431 |
| 1136853 | LINES GP-STICK | 432 |
| 1136855 | LINES GP-STICK | 433 |
| 1136859 | LINES GP-STICK | 434 |
| 1211931 | LINES AR-AUXILIARY HYDRAULIC | 435 |
| 1211931 | LINES AR-AUXILIARY HYDRAULIC | 436 |
| 1211937 | LINES AR-AUXILIARY HYDRAULIC | 437 |
| 1211937 | LINES AR-AUXILIARY HYDRAULIC | 438 |
| 1211932 | LINES GP-AUXILIARY HYDRAULIC | 439 |
| 1426672 | LINES GP-AUXILIARY HYDRAULIC | 440 |
| 1169001 | LINES GP-AUXILIARY HYDRAULIC | 441 |
| 1426673 | LINES GP-AUXILIARY HYDRAULIC | 442 |
| 1371594 | VALVE AS-BALL | 443 |
| 1384243 | VALVE AS-BALL | 444 |
| 1384244 | VALVE AS | 445 |
| 1136822 | LINES GP-TRAVEL MOTOR | 446 |
| 1136823 | LINES GP-TRAVEL MOTOR | 447 |
| 1136839 | LINES GP-PUMP-PART 1 OF 2 | 448 |
| 1136839 | LINES GP-PUMP-PART 2 OF 2 | 449 |
| 1232571 | INSTALLATION AR-AUXILIARY | 450 |
| 1178433 | CONTROL AR-FLOW | 451 |
| 1178432 | CONTROL AR-FLOW | 452 |
| 1211925 | CONTROL AR-AUXILIARY | 453 |
| 1211926 | CONTROL AR-AUXILIARY | 454 |
| 1096190 | CONTROL AR-AUXILIARY | 455 |
| 1096192 | CONTROL AR-AUXILIARY | 456 |
| 1153096 | VALVE AR-CHECK & RELIEF | 457 |
| 1136735 | LINES GP-PILOT | 458 |
| 1136735 | LINES GP-PILOT | 459 |
| 1136735 | LINES GP-PILOT | 460 |
| 1136735 | LINES GP-PILOT | 461 |
| 1136735 | LINES GP-PILOT | 462 |
| 1136736 | LINES GP-PILOT | 463 |
| 1136736 | LINES GP-PILOT | 464 |
| 1136736 | LINES GP-PILOT | 465 |
| 1136737 | LINES GP-PILOT | 466 |
| 1136828 | LINES GP-PILOT | 467 |
| 1136832 | LINES GP-PILOT | 468 |
| 1192520 | LINES GP-PILOT | 469 |
| 1136836 | LINES GP-PILOT | 470 |
| 1136836 | LINES GP-PILOT | 471 |
| 1136833 | LINES GP-PILOT | 472 |
| 1192521 | LINES GP-PILOT | 473 |
| 1287492 | LINES GP-PILOT | 474 |
| 1136835 | LINES GP-PILOT | 475 |
| 1136867 | LINES GP-PILOT | 476 |
| 1136826 | LINES GP-FRONT-PART 1 OF 2 | 477 |
| 1136826 | LINES GP-FRONT-PART 2 OF 2 | 478 |
| 1136826 | LINES GP-FRONT-PART 1 OF 2 | 479 |

# TABLE OF CONTENTS


| PART NUMBER | PART NAME | PAGE |
|---|---|---|
| 1136826 | LINES GP-FRONT-PART 2 OF 2 | 480 |
| 1385073 | LINES GP-FRONT-PART 1 OF 2 | 481 |
| 1385073 | LINES GP-FRONT-PART 2 OF 2 | 482 |
| 1385073 | LINES GP-FRONT-PART 1 OF 2 | 483 |
| 1385073 | LINES GP-FRONT-PART 2 OF 2 | 484 |
| 1385073 | LINES GP-FRONT-PART 1 OF 2 | 485 |
| 1385073 | LINES GP-FRONT-PART 2 OF 2 | 486 |
| 1385072 | LINES GP-FRONT-PART 1 OF 2 | 487 |
| 1385072 | LINES GP-FRONT-PART 2 OF 2 | 488 |
| 1385072 | LINES GP-FRONT-PART 1 OF 2 | 489 |
| 1385072 | LINES GP-FRONT-PART 2 OF 2 | 490 |
| 1287491 | LINES GP-FRONT | 491 |
| 1136840 | LINES GP-RETURN & FILTER-PART 1 OF 2 | 492 |
| 1136840 | LINES GP-RETURN & FILTER-PART 2 OF 2 | 493 |
| 1136840 | LINES GP-RETURN & FILTER-PART 1 OF 2 | 494 |
| 1136840 | LINES GP-RETURN & FILTER-PART 2 OF 2 | 495 |
| 1136840 | LINES GP-RETURN & FILTER-PART 1 OF 2 | 496 |
| 1136840 | LINES GP-RETURN & FILTER-PART 2 OF 2 | 497 |
| 1136866 | LINES GP-RETURN & FILTER | 498 |
| 1335832 | LINES GP-SWING MOTOR | 499 |
| 1141306 | DRIVE GP-SWING | 500 |
| 1141305 | DRIVE GP-SWING | 501 |
| 1140661 | MOTOR & MTG GP-SWING | 502 |
| 1140661 | MOTOR & MTG GP-SWING | 503 |
| 1077054 | MOTOR GP-SWING | 504 |
| 1077054 | MOTOR GP-SWING | 505 |
| 1077054 | MOTOR GP-SWING | 506 |
| 1843829 | MOTOR GP-SWING | 507 |
| 1211564 | MOTOR GP-SWING-PART 1 OF 2 | 508 |
| 1211564 | MOTOR GP-SWING-PART 2 OF 2 | 509 |
| 1843834 | MOTOR GP-SWING-PART 1 OF 2 | 510 |
| 1843834 | MOTOR GP-SWING-PART 2 OF 2 | 511 |
| 4I7788 | VALVE GP-RELIEF | 512 |
| 1540403 | VALVE GP-RELIEF | 513 |
| 1843830 | VALVE GP-RELIEF | 514 |
| 1077028 | MOTOR & MTG GP-TRAVEL | 515 |
| 1347130 | MOTOR & MTG GP-TRAVEL | 516 |
| 1077029 | MOTOR GP-TRAVEL | 517 |
| 1347131 | MOTOR GP-TRAVEL | 518 |
| 1373718 | VALVE GP-TRACTION CONTROL | 519 |
| 1597841 | SWIVEL GP | 520 |
| 4I6263 | ROTOR GP-SWIVEL | 521 |
| 1232146 | VALVE GP-PILOT | 522 |
| 1232147 | VALVE GP-PILOT | 523 |
| 1764985 | VALVE GP-PILOT | 524 |
| 1764986 | VALVE GP-PILOT | 525 |
| 1337899 | CONTROL GP-PILOT OPERATED HYD | 526 |
| 1337900 | CONTROL GP-PILOT OPERATED HYD | 527 |
| 1282132 | KNOB AS | 528 |
| 1282133 | KNOB AS | 529 |
| 1116284 | CONTROL GP-PILOT OPERATED HYD | 530 |
| 1116284 | CONTROL GP-PILOT OPERATED HYD | 531 |
| 1540569 | CONTROL GP-PILOT OPERATED HYD | 532 |
| 1096031 | CONTROL GP-HYDRAULIC | 533 |
| 1116428 | CONTROL GP-HYDRAULIC | 534 |
| 1352272 | CONTROL GP-HYDRAULIC | 535 |
| 1077037 | MOUNTING GP-VALVE | 536 |
| 1077010 | VALVE GP-MAIN CONTROL | 537 |
| 1425521 | VALVE GP-MAIN CONTROL | 538 |
| 1077011 | VALVE GP-CONTROL-PART 1 OF 2 | 539 |
| 1077011 | VALVE GP-CONTROL-PART 2 OF 2 | 540 |
| 1077011 | VALVE GP-CONTROL-PART 1 OF 2 | 541 |

# TABLE OF CONTENTS


| PART NUMBER | PART NAME | PAGE |
|---|---|---|
| 1077011 | VALVE GP-CONTROL-PART 2 OF 2 | 542 |
| 1077012 | VALVE GP-CONTROL | 543 |
| 1077013 | VALVE GP-CONTROL | 544 |
| 1077013 | VALVE GP-CONTROL | 545 |
| 1120039 | VALVE GP-CONTROL | 546 |
| 1120039 | VALVE GP-CONTROL | 547 |
| 6E4816 | PLUG GP | 548 |
| 1163600 | VALVE GP-RELIEF | 549 |
| 6E4793 | PLUG GP | 550 |
| 6E2746 | PLUG GP | 551 |
| 1095152 | VALVE GP-RELIEF | 552 |
| 1474163 | VALVE GP-RELIEF | 553 |
| 1077014 | VALVE GP-CONTROL-PART 1 OF 2 | 554 |
| 1077014 | VALVE GP-CONTROL-PART 2 OF 2 | 555 |
| 1077014 | VALVE GP-CONTROL-PART 1 OF 2 | 556 |
| 1077014 | VALVE GP-CONTROL-PART 2 OF 2 | 557 |
| 1425522 | VALVE GP-CONTROL-PART 1 OF 2 | 558 |
| 1425522 | VALVE GP-CONTROL-PART 2 OF 2 | 559 |
| 1077015 | VALVE GP-CONTROL | 560 |
| 1425523 | VALVE GP-CONTROL | 561 |
| 1077016 | VALVE GP-CONTROL | 562 |
| 1077016 | VALVE GP-CONTROL | 563 |
| 1425524 | VALVE GP-CONTROL | 564 |
| 1713266 | VALVE GP-PILOT | 565 |
| 1120040 | VALVE GP-CONTROL | 566 |
| 1120040 | VALVE GP-CONTROL | 567 |
| 1540527 | VALVE GP-CONTROL | 568 |
| 1092667 | VALVE GP-RELIEF | 569 |
| 1474161 | VALVE GP-RELIEF | 570 |
| 1298030 | VALVE GP-RELIEF | 571 |
| 7I8136 | VALVE GP-CHECK | 572 |
| 4I5525 | VALVE GP-CHECK | 573 |
| 1232433 | VALVE GP-RELIEF | 574 |
| 6E4281 | VALVE GP-PRESSURE CONTROL | 575 |
| 1140652 | VALVE AR-4 WAY | 576 |
| 1140651 | VALVE AR-2 WAY | 577 |
| 1133422 | PEDAL AR-THIRD | 578 |
| 1133422 | PEDAL AR-THIRD | 579 |
| 1119916 | VALVE GP-PRESS REDUCING SOL | 580 |
| 1077056 | VALVE GP-SOLENOID | 581 |
| 1211490 | VALVE GP-SOLENOID | 582 |
| 1211491 | VALVE GP-SOLENOID | 583 |
| 1211565 | VALVE GP-SOLENOID | 584 |
| 1373637 | VALVE GP-SOLENOID | 585 |
| 1216303 | VALVE GP-SOLENOID | 586 |
| 1528340 | VALVE GP-SOLENOID | 587 |
| 1163526 | VALVE GP-SOLENOID | 588 |
| 1077058 | VALVE GP-SELECTOR | 589 |
| 1224459 | VALVE GP-PRESSURE CONTROL | 590 |
| 1163601 | VALVE GP-PILOT RELIEF | 591 |
| 1710030 | VALVE GP-RELIEF | 592 |
| 1332848 | VALVE GP-RELIEF | 593 |
| 1185410 | VALVE GP-RELIEF | 594 |
| 1425516 | VALVE GP-CHECK | 595 |
| 1843831 | VALVE GP-CHECK | 596 |
| 4I0890 | VALVE GP-CHECK | 597 |
| 4I6301 | VALVE GP-CHECK & RELIEF | 598 |
| 6E5234 | VALVE GP-RELIEF | 599 |
| 1119950 | VALVE GP-MANIFOLD & REDUCING | 600 |
| 0856455 | VALVE GP-PILOT | 601 |
| 1232148 | VALVE GP-PILOT | 602 |
| 1315914 | VALVE GP-PILOT | 603 |

# TABLE OF CONTENTS


| PART NUMBER | PART NAME | PAGE |
|---|---|---|
| 1764984 | VALVE GP-PILOT | 604 |
| 1843899 | VALVE GP-PILOT | 605 |
| 1843900 | VALVE GP-PILOT | 606 |
| 1232604 | VALVE GP-PILOT | 607 |
| 1195219 | VALVE GP-PILOT | 608 |
| 1232419 | VALVE GP-PILOT | 609 |
| 1183917 | VALVE GP-PILOT | 610 |
| 1556996 | VALVE GP-PILOT | 611 |
| 1185984 | VALVE GP-PILOT | 612 |
| 4I7836 | VALVE GP-FLOW CONTROL | 613 |
| 1232510 | VALVE GP-FLOW CONTROL | 614 |
| 5I8706 | VALVE GP-FLOW CONTROL | 615 |
| 1120083 | VALVE GP-SHUTTLE | 616 |
| 1232549 | VALVE GP-SHUTTLE | 617 |
| 6C6746 | VALVE GP | 618 |
| 1271322 | VALVE AS | 619 |
| 1373066 | VALVE AS | 620 |
| 1271323 | VALVE AS | 621 |
| 1349153 | VALVE AS | 622 |
| 1349304 | BLOCK AS | 623 |
| 4I6363 | VALVE AS-BALL | 624 |
| 1913149 | VALVE AS-BALL | 625 |


# IMPLEMENTS


| | | |
|---|---|---|
| 1263783 | LUBRICATION AR-AUTOMATIC | 626 |
| 1317670 | BOOM AR-1 PIECE LONG | 627 |
| 1205003 | BOOM AR | 628 |
| 1317672 | BOOM AR-1 PIECE | 629 |
| 1317671 | BOOM AR-1 PIECE | 630 |
| 1317673 | BOOM AR-1 PIECE | 631 |
| 1370945 | LUBRICATION AR-AUTOMATIC | 632 |
| 1370946 | BOOM AR-1 PIECE LONG | 633 |
| 1161480 | STICK AR-HOE | 634 |
| 1161482 | STICK AR-HOE | 635 |
| 1205006 | STICK AR-HOE | 636 |
| 1161488 | STICK AR-HOE | 637 |
| 1161484 | STICK AR-HOE | 638 |
| 1205022 | LINKAGE AR-BUCKET | 639 |
| 1370918 | LINKAGE AR-BUCKET | 640 |
| 1370917 | LINKAGE AR-BUCKET | 641 |
| 1152646 | BOOM GP | 642 |
| 1218674 | BOOM GP | 643 |
| 1152648 | BOOM GP | 644 |
| 1152651 | STICK GP-HOE | 645 |
| 1152652 | STICK GP-HOE | 646 |
| 1211933 | STICK GP | 647 |
| 1218692 | STICK GP-HOE | 648 |
| 1211938 | STICK GP | 649 |
| 1152653 | STICK GP-HOE | 650 |
| 1152655 | STICK GP-HOE | 651 |
| 1152655 | STICK GP-HOE | 652 |
| 1218675 | LINES GP-GREASE | 653 |
| 1218675 | LINES GP-GREASE | 654 |
| 1218675 | LINES GP-GREASE | 655 |
| 1152649 | LINES GP-GREASE | 656 |
| 1152650 | LINES GP-GREASE | 657 |
| 1218693 | LINES GP-GREASE | 658 |
| 1218693 | LINES GP-GREASE | 659 |
| 1205113 | PUMP GP-LUBRICATION-AUTO | 660 |
| 1275264 | PUMP AS | 661 |
| 1332435 | LINKAGE GP-BUCKET | 662 |
| 1332442 | LINKAGE GP-BUCKET | 663 |

# TABLE OF CONTENTS


| PART NUMBER | PART NAME | PAGE |
|---|---|---|
| 6I5024 | BUCKET & ADJUSTER GP | 664 |
| 6I5026 | BUCKET & ADJUSTER GP | 665 |
| 6I5069 | BUCKET & ADJUSTER GP | 666 |
| 6I5027 | BUCKET & ADJUSTER GP | 667 |
| 1110061 | BUCKET & ADJUSTER GP | 668 |
| 1233545 | BUCKET & ADJUSTER GP | 669 |
| 1178966 | BUCKET & ADJUSTER GP | 670 |
| 1285355 | BUCKET & ADJUSTER GP | 671 |
| 1285356 | BUCKET & ADJUSTER GP | 672 |
| 6I5034 | BUCKET & ADJUSTER GP | 673 |
| 6I5035 | BUCKET & ADJUSTER GP | 674 |
| 6I5036 | BUCKET & ADJUSTER GP | 675 |
| 7Y7569 | BUCKET AS-TRENCHING | 676 |
| 5I3483 | BUCKET AS-EXCAVATION | 677 |
| 1035121 | BUCKET AS-EXCAVATION | 678 |
| 7Y7470 | BUCKET AS-MASS EXCAVATION | 679 |
| 1235385 | BUCKET AS-MASS EXCAVATION | 680 |
| 1233217 | BUCKET AS | 681 |
| 1285358 | BUCKET AS | 682 |
| 1285371 | BUCKET AS | 683 |
| 7Y9140 | BUCKET AS-EXCAVATION | 684 |
| 7Y9141 | BUCKET AS-EXCAVATION | 685 |
| 7Y9143 | BUCKET AS-MASS EXCAVATION | 686 |
| 7Y3476 | ADJUSTER GP-BUCKET | 687 |
| 0875960 | ADJUSTER GP-BUCKET | 688 |
| 7Y0366 | SIDECUTTER GP | 689 |
| 7Y2148 | SIDECUTTER GP | 690 |
| 1270716 | TIP GP-LONG | 691 |
| 6Y5472 | TIP GP-LONG | 692 |
| 1270715 | TIP GP-SHORT | 693 |
| 8E0837 | TIP GP-ABRASION | 694 |
| 8E0838 | TIP GP-PENETRATION | 695 |
| 8E0840 | TIP GP | 696 |
| 8E0839 | TIP GP | 697 |
| 8E0836 | TIP GP-WIDE | 698 |
| 9N4562 | TIP GP-LONG | 699 |
| 9N4563 | TIP GP-LONG | 700 |
| 9N4561 | TIP GP-SHORT | 701 |
| 8E3758 | TIP GP-ABRASION | 702 |
| 9N4564 | TIP GP-PENETRATION | 703 |
| 9N4566 | TIP GP | 704 |
| 9N4565 | TIP GP | 705 |
| 9N4560 | TIP GP-WIDE | 706 |


## OPERATOR STATION


| | | |
|---|---|---|
| 1116270 | CAB GP | 707 |
| 1116293 | CAB GP | 708 |
| 1540674 | CAB GP | 709 |
| 1244012 | CAB GP | 710 |
| 1556995 | CAB GP | 711 |
| 1116271 | CAB GP (BASIC)-PART 1 OF 2 | 712 |
| 1116271 | CAB GP (BASIC)-PART 2 OF 2 | 713 |
| 1116294 | CAB GP (BASIC)-PART 1 OF 2 | 714 |
| 1116294 | CAB GP (BASIC)-PART 2 OF 2 | 715 |
| 1557019 | CAB GP (BASIC)-PART 1 OF 2 | 716 |
| 1557019 | CAB GP (BASIC)-PART 2 OF 2 | 717 |
| 1244013 | CAB GP (BASIC)-PART 1 OF 2 | 718 |
| 1244013 | CAB GP (BASIC)-PART 2 OF 2 | 719 |
| 1557020 | CAB GP (BASIC)-PART 1 OF 2 | 720 |
| 1557020 | CAB GP (BASIC)-PART 2 OF 2 | 721 |
| 4I6973 | DOOR GP-CAB | 722 |
| 1557053 | DOOR GP-CAB | 723 |

# TABLE OF CONTENTS


| PART NUMBER | PART NAME | PAGE |
|---|---|---|
| 4I6974 | DOOR GP-CAB | 724 |
| 1557054 | DOOR GP-CAB | 725 |
| 4I6966 | WINDOW AS-DOOR | 726 |
| 1557058 | WINDOW AS-DOOR | 727 |
| 4I1273 | HATCH GP | 728 |
| 4I4204 | HATCH GP | 729 |
| 6I5444 | BOX GP-STORAGE | 730 |
| 1116273 | WINDOW GP | 731 |
| 1557043 | WINDOW GP | 732 |
| 1246963 | WINDOW GP | 733 |
| 1557045 | WINDOW GP | 734 |
| 1116272 | WIPER GP-WINDOW | 735 |
| 1557041 | WIPER GP-WINDOW | 736 |
| 1229602 | ARM AS-WIPER | 737 |
| 1229603 | MOTOR AS-WINDOW WIPER | 738 |
| 1557039 | COVER GP | 739 |
| 1133452 | MOTOR AS-WINDOW WIPER | 740 |
| 1116277 | COVER GP-STORAGE | 741 |
| 1557027 | COVER GP-STORAGE | 742 |
| 1116277 | COVER GP-STORAGE | 743 |
| 1060176 | MONITOR GP-OPERATOR | 744 |
| 1116310 | WINDSHIELD AR-AUTO | 745 |
| 1557061 | WINDSHIELD AR-AUTO | 746 |
| 1176262 | WINDOW GP | 747 |
| 1557062 | WINDOW GP | 748 |
| 1557064 | COVER GP | 749 |
| 1176263 | DRIVE GP-WINDSHIELD-AUTO | 750 |
| 1557063 | DRIVE GP-WINDSHIELD-AUTO | 751 |
| 1229646 | DRIVE AS-WINDSHIELD-AUTO | 752 |
| 1282123 | DRIVE AS-WINDSHIELD-AUTO | 753 |
| 1116267 | WASHER GP-WINDOW | 754 |
| 4I0559 | TANK AS-WINDOW WASHER | 755 |
| 1116314 | WIPER AR-LOWER | 756 |
| 1116316 | WASHER GP-WINDOW | 757 |
| 8R1774 | BOTTLE GP-WINDOW WASHER | 758 |
| 1116315 | WIPER & WASHER GP-WINDOW | 759 |
| 1204955 | GUARD AR-VANDALISM | 760 |
| 1263798 | GUARD AR-OVERHEAD | 761 |
| 1024740 | GUARD AR-VANDALISM | 762 |
| 1244007 | GUARD GP-VANDALISM | 763 |
| 1218658 | GUARD GP-OVERHEAD | 764 |
| 1116321 | GUARD GP-VANDALISM | 765 |
| 1116313 | VISOR GP-SUN | 766 |
| 6I5387 | VISOR GP-PROTECTION-RAIN | 767 |
| 1089836 | MIRROR GP-REAR VIEW | 768 |
| 1557001 | MIRROR GP-REAR VIEW | 769 |
| 7Y3813 | HORN GP-ELECTRIC | 770 |
| 1116285 | PLATFORM GP-OPERATOR | 771 |
| 1540591 | PLATFORM GP-OPERATOR | 772 |
| 1116278 | CONSOLE GP-OPERATOR | 773 |
| 1116278 | CONSOLE GP-OPERATOR | 774 |
| 1116280 | CONSOLE GP | 775 |
| 1557084 | CONSOLE GP | 776 |
| 1116279 | CONSOLE GP | 777 |
| 1557008 | CONSOLE GP | 778 |
| 1176265 | LEVER AS | 779 |
| 1597744 | LEVER AS | 780 |
| 1116281 | SUPPORT GP-SEAT | 781 |
| 1116282 | SEAT GP | 782 |
| 1116283 | SEAT GP | 783 |
| 1229625 | SEAT BELT GP | 784 |
| 1519617 | SEAT GP | 785 |

# TABLE OF CONTENTS


| PART NUMBER | PART NAME | PAGE |
|---|---|---|
| 1597672 | SEAT AS | 786 |
| 1540775 | SEAT AS | 787 |
| 1243925 | SEAT GP | 788 |
| 1502200 | SEAT GP | 789 |
| 1116391 | SUSPENSION GP-SEAT | 790 |
| 1243926 | SUSPENSION GP-SEAT | 791 |
| 1300340 | SUSPENSION AS-SEAT | 792 |
| 1229648 | HEADREST AS | 793 |
| 7Y0059 | LITERATURE GP | 794 |
| 1099462 | COMPRESSOR GP-REFRIGERANT | 795 |
| 1540418 | COMPRESSOR GP-REFRIGERANT | 796 |
| 1133421 | CONDENSER & MTG GP-AIR COND | 797 |
| 1540415 | CONDENSER & MTG GP-AIR COND | 798 |
| 1229681 | AIR CONDITIONER GP | 799 |
| 1557021 | AIR CONDITIONER GP | 800 |
| 1352230 | HEATER AR | 801 |
| 1540684 | HEATER AR | 802 |
| 1116305 | AIR CONDITIONER & MOUNTING GP | 803 |
| 1557022 | AIR CONDITIONER & MOUNTING GP | 804 |
| 1116413 | AIR CONDITIONER GP | 805 |
| 1597855 | AIR CONDITIONER GP | 806 |
| 1474833 | BLOWER GP | 807 |
| 1680808 | AIR CONDITIONER GP | 808 |
| 4I1170 | DUCT GP-AIR | 809 |
| 1116289 | DUCT GP-DEFROST | 810 |
| 1282148 | DUCT GP-DEFROST | 811 |
| 1116291 | DUCT GP-AIR | 812 |
| 1243982 | DUCT AS | 813 |
| 1243985 | DUCT GP-AIR | 814 |
| 1282149 | DUCT GP-AIR | 815 |
| 1282150 | DUCT GP-AIR | 816 |
| 1680746 | DISTRIBUTOR AS | 817 |
| 1397150 | DUCT GP-AIR | 818 |
| 1397151 | DUCT AS | 819 |
| 1352255 | DUCT AS | 820 |
| 1229684 | LINES GP-AIR CONDITIONER-PART 1 OF 2 | 821 |
| 1229684 | LINES GP-AIR CONDITIONER-PART 2 OF 2 | 822 |
| 1540471 | LINES GP-AIR CONDITIONER-PART 1 OF 2 | 823 |
| 1540471 | LINES GP-AIR CONDITIONER-PART 2 OF 2 | 824 |
| 1116287 | HEATER & MOUNTING GP | 825 |
| 1540678 | HEATER & MOUNTING GP | 826 |
| 1116288 | HEATER GP | 827 |
| 1597856 | HEATER GP | 828 |
| 1680809 | HEATER GP | 829 |
| 1352231 | LINES GP-HEATER | 830 |
| 1540685 | LINES GP-HEATER | 831 |


# SERVICE EQUIPMENT AND SUPPLIES


| | | |
|---|---|---|
| 1161513 | PLATE & FILM GP-PART 1 OF 3 | 832 |
| 1161513 | PLATE & FILM GP-PART 2 OF 3 | 833 |
| 1161513 | PLATE & FILM GP-PART 3 OF 3 | 834 |
| 1161513 | PLATE & FILM GP-PART 1 OF 3 | 835 |
| 1161513 | PLATE & FILM GP-PART 2 OF 3 | 836 |
| 1161513 | PLATE & FILM GP-PART 3 OF 3 | 837 |
| 1161513 | PLATE & FILM GP-PART 1 OF 3 | 838 |
| 1161513 | PLATE & FILM GP-PART 2 OF 3 | 839 |
| 1161513 | PLATE & FILM GP-PART 3 OF 3 | 840 |
| 1161514 | PLATE & FILM GP-PART 1 OF 3 | 841 |
| 1161514 | PLATE & FILM GP-PART 2 OF 3 | 842 |
| 1161514 | PLATE & FILM GP-PART 3 OF 3 | 843 |
| 1161514 | PLATE & FILM GP-PART 1 OF 3 | 844 |
| 1161514 | PLATE & FILM GP-PART 2 OF 3 | 845 |

# TABLE OF CONTENTS


| PART NUMBER | PART NAME | PAGE |
|---|---|---|
| 1161514 | PLATE & FILM GP-PART 3 OF 3 | 846 |
| 1161514 | PLATE & FILM GP-PART 1 OF 3 | 847 |
| 1161514 | PLATE & FILM GP-PART 2 OF 3 | 848 |
| 1161514 | PLATE & FILM GP-PART 3 OF 3 | 849 |
| 1205094 | FILM GP | 850 |
| 1205101 | FILM GP | 851 |
| 1205095 | FILM GP | 852 |
| 1205100 | FILM GP | 853 |
| 1275333 | FILM GP | 854 |
| 1275336 | FILM GP | 855 |
| 1275310 | FILM GP | 856 |

## 1099399 ENGINE AR

**Key:** Y - Separate Illustration

**SMCS**

| NOTE | REF NO | GRAPHIC REF | PART NUMBER | QTY | PART NAME 1 2 3 4 5 6 (PRODUCT LEVEL) | PRICE USD |
|---|---|---|---|---|---|---|
| Y | | | 7Y-0863 | 1 | FAN GP (SUCTION) | |
| Y | | | 109-9401 | 1 | MUFFLER GP | |
| Y | | | 122-9789 | 1 | ENGINE AR (GENERAL) | |

# 1229789 ENGINE AR-GENERAL-PART 1 OF 2

PART OF 1099399-Page 11

**Key:** Y - Separate Illustration

**SMCS**

| NOTE | REF NO | GRAPHIC REF | PART NUMBER | QTY | PART NAME<br>1 2 3 4 5 6 (PRODUCT LEVEL) | PRICE USD |
|---|---|---|---|---|---|---|
| Y | | | 116-7568 | 1 | ENGINE AR | |
| Y | | | 103-5868 | 1 | DRIVE GP (FAN) | |
| Y | | | 8N-0888 | 1 | REGULATOR GP (TEMPERATURE) | |
| Y | | | 7S-3622 | 1 | STARTING MOTOR GP (ELECTRIC) | |
| Y | | | 7E-9406 | 1 | ALTERNATOR GP (CHARGING) | |
| Y | | | 120-6618 | 1 | DRIVE GP (AUXILIARY) | |

# 1229789 ENGINE AR-GENERAL-PART 2 OF 2

PART OF 1099399-Page 11

**Key:**

**SMCS**

| NOTE | REF NO | GRAPHIC REF | PART NUMBER | QTY | PART NAME 1 2 3 4 5 6 (PRODUCT LEVEL) | PRICE USD |
|---|---|---|---|---|---|---|
| | | | 128-8945 | 1 | SENDER | |
| | | | 4I-5490 | 2 | SCREW | |
| | | | 095-0826 | 2 | LOCKWASHER | |
| | | | 3E-6455 | 1 | SWITCH AS (REAR OF THIRD POSITION MAIN OIL GALLARY) | |
| | | | 102-8803 | 1 | RECEPTACLE KIT | |
| | | | 8T-8729 | 3 | PIN | |
| | | | 3E-3371 | 1 | WEDGE | |
| | | | 8T-3285 | 1 | ADAPTER | |
| | | | 6V-2455 | 1 | SENSOR GP | |
| | | | 102-8802 | 1 | RECEPTACLE KIT | |
| | | | 8T-8729 | 1 | PIN | |
| | | | 3E-3365 | 1 | WEDGE | |
| | | | 9X-0344 | 1 | STRAP | |
| | | | 3J-1907 | 2 | SEAL-O-RING (ID=11.89mm) | |
| | | | 7M-4715 | 1 | V-BELT SET | |

# 1167568 ENGINE AR-PART 1 OF 3

ENGINE S/N 10Z 31027-34514
PART OF 1229789-Page 12

**Key:** Y - Separate Illustration

**SMCS**

| NOTE | REF NO | GRAPHIC REF | PART NUMBER | QTY | PART NAME 1 2 3 4 5 6 (PRODUCT LEVEL) | PRICE USD |
|---|---|---|---|---|---|---|
| Y | | | 8N-5286 | 1 | CYLINDER BLOCK GP | |
| Y | | | 7N-1342 | 1 | COVER GP (CYLINDER BLOCK) | |
| Y | | | 4P-9856 | 1 | CRANKSHAFT GP | |
| Y | | | 2P-6224 | 1 | SEAL GP (CRANKSHAFT) | |
| Y | | | 9Y-8219 | 6 | PISTON & ROD GP | |
| Y | | | 1N-4406 | 1 | CAMSHAFT GP | |
| YR | | | 8N-0246 | 1 | CYLINDER HEAD GP | |
| | R | | 0R-2549 | 1 | HEAD GP-CYLINDER | |
| Y | | | 7N-9536 | 1 | FASTENER GP (CYLINDER HEAD) | |
| Y | | | 7N-8026 | 1 | VALVE MECHANISM GP | |
| Y | | | 6I-4560 | 1 | COVER GP (VALVE MECHANISM) | |
| Y | | | 9Y-2062 | 1 | LIFTING GP (ENGINE) | |
| Y | | | 8N-0303 | 1 | HOUSING GP (FRONT) | |
| Y | | | 4N-5162 | 1 | COVER GP (FRONT HOUSING) | |
| Y | | | 8N-0872 | 1 | FASTENER GP (FRONT HOUSING) | |
| Y | | | 4P-9858 | 1 | GEAR GP (FRONT TIMING) | |
| Y | | | 8N-0107 | 1 | TRUNNION GP (ENGINE) | |
| Y | | | 4P-5817 | 1 | SUPPORT GP (ENGINE) | |
| Y | | | 1W-7733 | 1 | DAMPER GP | |
| Y | | | 7N-2879 | 1 | PULLEY GP (CRANKSHAFT) | |
| Y | | | 8N-2395 | 1 | HOUSING GP (FLYWHEEL) | |

# 1167568 ENGINE AR-PART 2 OF 3

ENGINE S/N 10Z 31027-34514
PART OF 1229789-Page 12

**Key:** Y - Separate Illustration

**SMCS**

| NOTE | REF NO | GRAPHIC REF | PART NUMBER | QTY | PART NAME 1 2 3 4 5 6 (PRODUCT LEVEL) | PRICE USD |
|---|---|---|---|---|---|---|
| Y | | | 7C-4441 | 1 | FLYWHEEL GP | |
| Y | | | 128-0070 | 1 | PAN GP (OIL) | |
| Y | | | 2P-6200 | 1 | FASTENER GP (OIL PAN) | |
| Y | | | 125-5865 | 1 | LINES GP (TURBOCHARGER OIL) | |
| Y | | | 9Y-6105 | 1 | GAUGE GP (OIL LEVEL) (DIPSTICK) | |
| Y | | | 106-8957 | 1 | PUMP GP (ENGINE OIL) | |
| Y | | | 2P-6105 | 1 | LINES GP (ENGINE OIL) | |
| Y | | | 1P-4244 | 1 | BREATHER GP | |
| Y | | | 126-1670 | 1 | FILTER GP (ENGINE OIL) | |
| Y | | | 116-7968 | 1 | PUMP GP (WATER) | |
| Y | | | 4W-6157 | 1 | LINES GP (WATER) | |
| Y | | | 126-1669 | 1 | COOLER GP (FLTR BASE & ENG OIL) | |
| Y | | | 6N-8492 | 1 | LINES GP (WATER) | |

# 1167568 ENGINE AR-PART 3 OF 3

ENGINE S/N 10Z 31027-34514
PART OF 1229789-Page 12

**Key:** Y - Separate Illustration

**SMCS**

| NOTE | REF NO | GRAPHIC REF | PART NUMBER | QTY | PART NAME 1 2 3 4 5 6 (PRODUCT LEVEL) | PRICE USD |
|---|---|---|---|---|---|---|
| Y | | | 118-9725 | 1 | LINES GP (AIR) | |
| Y | | | 116-7564 | 1 | MANIFOLD GP (EXHAUST) | |
| Y | | | 7E-5682 | 1 | FASTENER GP (EXHAUST MANIFOLD) | |
| Y | | | 111-8035 | 1 | TURBOCHARGER GP | |
| Y | | | 7C-4634 | 1 | LINES GP (AIR) | |
| | | | 4N-8467 | 1 | AFTERCOOOLER GP (WATER) | |
| YR | | | 128-8806 | 1 | PUMP GP (GOV & FUEL INJ) | |
| | R | | 10R-4495 | 1 | PUMP GP-GOV& -A | |
| Y | | | 119-8731 | 1 | LINES GP (FUEL INJECTION) | |
| Y | | | 2W-4160 | 1 | PUMP GP (FUEL TRANSFER) | |
| Y | | | 6I-1003 | 1 | PUMP GP (FUEL PRM & PRIM FILTER) | |
| Y | | | 2W-1011 | 1 | FILTER GP (SECONDARY FUEL) | |
| Y | | | 6I-2108 | 1 | SOLENOID GP (SHUTOFF) | |

# 1167568 ENGINE AR-PART 1 OF 3

ENGINE S/N 10Z 34515-UP
PART OF 1229789-Page 12

**Key:** Y - Separate Illustration

**SMCS**

| NOTE | REF NO | GRAPHIC REF | PART NUMBER | QTY | PART NAME 1 2 3 4 5 6 (PRODUCT LEVEL) | PRICE USD |
|---|---|---|---|---|---|---|
| Y | | | 8N-5286 | 1 | CYLINDER BLOCK GP | |
| Y | | | 7N-1342 | 1 | COVER GP (CYLINDER BLOCK) | |
| Y | | | 4P-9856 | 1 | CRANKSHAFT GP | |
| Y | | | 2P-6224 | 1 | SEAL GP (CRANKSHAFT) | |
| Y | | | 141-5103 | 6 | PISTON & ROD GP | |
| Y | | | 1N-4406 | 1 | CAMSHAFT GP | |
| YR | | | 8N-0246 | 1 | CYLINDER HEAD GP | |
| | R | | 0R-2549 | 1 | HEAD GP-CYLINDER | |
| Y | | | 7N-9536 | 1 | FASTENER GP (CYLINDER HEAD) | |
| Y | | | 7N-8026 | 1 | VALVE MECHANISM GP | |
| Y | | | 6I-4560 | 1 | COVER GP (VALVE MECHANISM) | |
| Y | | | 9Y-2062 | 1 | LIFTING GP (ENGINE) | |
| Y | | | 8N-0303 | 1 | HOUSING GP (FRONT) | |
| Y | | | 4N-5162 | 1 | COVER GP (FRONT HOUSING) | |
| Y | | | 8N-0872 | 1 | FASTENER GP (FRONT HOUSING) | |
| Y | | | 4P-9858 | 1 | GEAR GP (FRONT TIMING) | |
| Y | | | 8N-0107 | 1 | TRUNNION GP (ENGINE) | |
| Y | | | 4P-5817 | 1 | SUPPORT GP (ENGINE) | |
| Y | | | 1W-7733 | 1 | DAMPER GP | |
| Y | | | 7N-2879 | 1 | PULLEY GP (CRANKSHAFT) | |
| Y | | | 8N-2395 | 1 | HOUSING GP (FLYWHEEL) | |

# 1167568 ENGINE AR-PART 2 OF 3

ENGINE S/N 10Z 34515-UP
PART OF 1229789-Page 12

**Key:** Y - Separate Illustration

**SMCS**

| NOTE | REF NO | GRAPHIC REF | PART NUMBER | QTY | PART NAME<br>1 2 3 4 5 6 (PRODUCT LEVEL) | PRICE USD |
|---|---|---|---|---|---|---|
| Y | | | 7C-4441 | 1 | FLYWHEEL GP | |
| Y | | | 128-0070 | 1 | PAN GP (OIL) | |
| Y | | | 2P-6200 | 1 | FASTENER GP (OIL PAN) | |
| Y | | | 125-5865 | 1 | LINES GP (TURBOCHARGER OIL) | |
| Y | | | 9Y-6105 | 1 | GAUGE GP (OIL LEVEL) (DIPSTICK) | |
| Y | | | 106-8957 | 1 | PUMP GP (ENGINE OIL) | |
| Y | | | 2P-6105 | 1 | LINES GP (ENGINE OIL) | |
| Y | | | 1P-4244 | 1 | BREATHER GP | |
| Y | | | 126-1670 | 1 | FILTER GP (ENGINE OIL) | |
| Y | | | 116-7968 | 1 | PUMP GP (WATER) | |
| Y | | | 4W-6157 | 1 | LINES GP (WATER) | |
| Y | | | 126-1669 | 1 | COOLER GP (FLTR BASE & ENG OIL) | |
| Y | | | 6N-8492 | 1 | LINES GP (WATER) | |

# 1167568 ENGINE AR-PART 3 OF 3

ENGINE S/N 10Z 34515-UP
PART OF 1229789-Page 12

**Key:** Y - Separate Illustration

**SMCS**

| NOTE | REF NO | GRAPHIC REF | PART NUMBER | QTY | PART NAME 1 2 3 4 5 6 (PRODUCT LEVEL) | PRICE USD |
|---|---|---|---|---|---|---|
| Y | | | 118-9725 | 1 | LINES GP (AIR) | |
| Y | | | 116-7564 | 1 | MANIFOLD GP (EXHAUST) | |
| Y | | | 7E-5682 | 1 | FASTENER GP (EXHAUST MANIFOLD) | |
| Y | | | 111-8035 | 1 | TURBOCHARGER GP | |
| Y | | | 7C-4634 | 1 | LINES GP (AIR) | |
| | | | 4N-8467 | 1 | AFTERCOOOLER GP (WATER) | |
| YR | | | 128-8806 | 1 | PUMP GP (GOV & FUEL INJ) | |
| | R | | 10R-4495 | 1 | PUMP GP-GOV& -A | |
| Y | | | 119-8731 | 1 | LINES GP (FUEL INJECTION) | |
| Y | | | 2W-4160 | 1 | PUMP GP (FUEL TRANSFER) | |
| Y | | | 6I-1003 | 1 | PUMP GP (FUEL PRM & PRM FILTER) | |
| Y | | | 2W-1011 | 1 | FILTER GP (SECONDARY FUEL) | |
| | | | 1W-2481 | 1 | DRIVE GP (TACHOMETER) | |
| Y | | | 6I-2108 | 1 | SOLENOID GP (SHUTOFF) | |

# 8N5286 CYLINDER BLOCK GP

PART OF 1137568-Page 13
1N3576-Page 16

**Key:** Y - SEPARATE ILLUSTRATION

**SMCS**

| NOTE | REF NO | GRAPHIC REF | PART NUMBER | QTY | PART NAME 1 2 3 4 5 6 (PRODUCT LEVEL) | PRICE USD |
|---|---|---|---|---|---|---|
| | 1 | | 2W-6134 | 6 | BAND | |
| | 2 | | 3S-5496 | 1 | SEAL (ID=9.53mm) | |
| | 3 | | 4B-5387 | 1 | PLUG | |
| | 4 | | 5M-6214 | 1 | PLUG | |
| | 5 | | 7N-7998 | 1 | PLATE | |
| | 6 | | 7W-7546 | 1 | GASKET | |
| Y | 7 | | 1N-3576 | 1 | BLOCK GP | |
| | 8 | | 7H-3171 | 1 | PLUG | |
| | 9 | | 5M-6213 | 4 | PLUG | |
| | 10 | | 2B-0858 | 2 | PLUG | |
| | 11 | | 8M-9307 | 1 | PLUG | |
| | | | 6F-7062 | 1 | WASHER | |
| | 12 | | 2P-8889 | 6 | LINER | |
| | 13 | | 5S-6670 | 18 | SEAL (ID=117.10mm) | |

## 8N5286 CYLINDER BLOCK GP

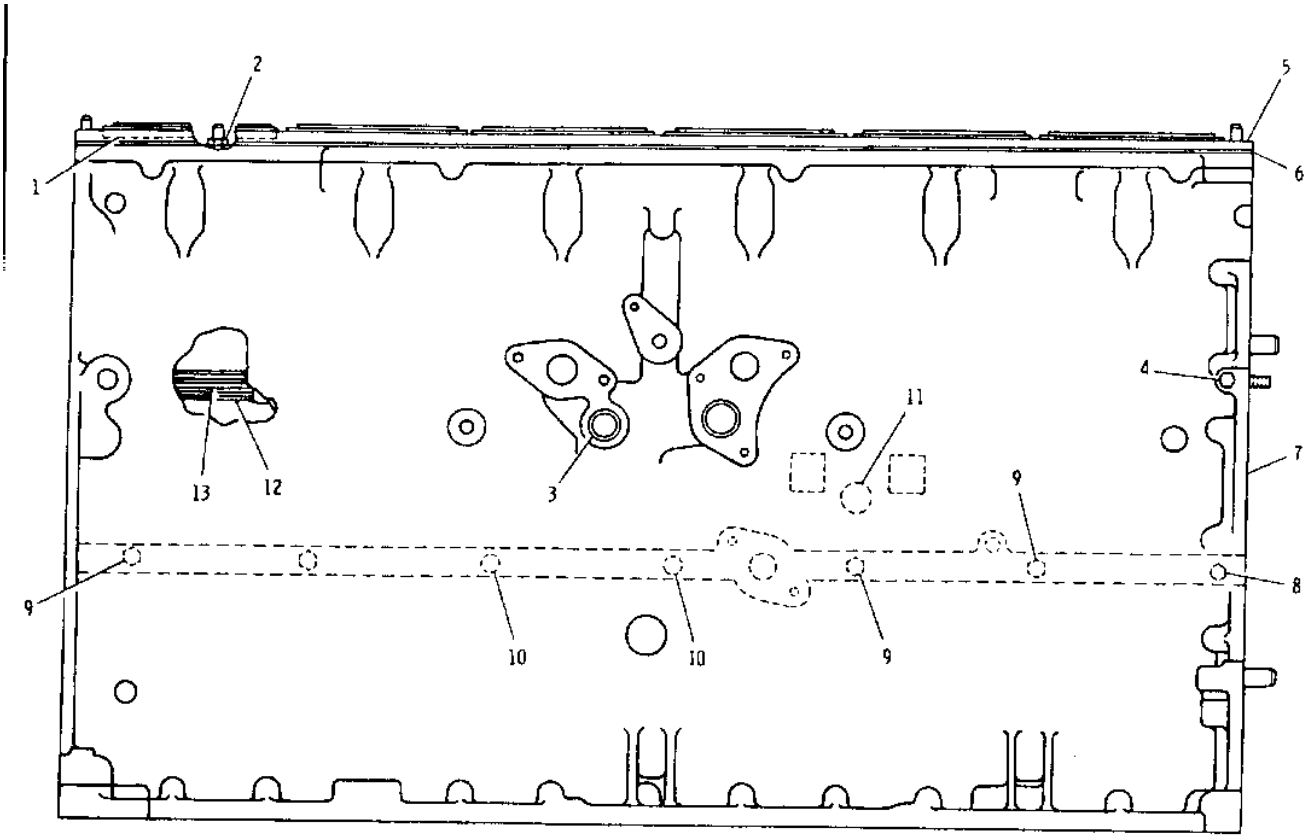


| NOTE | No. | PART No. | QTY | PART NAME | NOTE | No. | PART No. | QTY | PART NAME |
|---|---|---|---|---|---|---|---|---|---|
| | 1 | 2W-6134 | 6 | BAND | | | | | |
| | 2 | 3S-5496 | 1 | SEAL (ID=9.53mm) | | | | | |
| | 3 | 4B-5387 | 1 | PLUG | | | | | |
| | 4 | 5M-6214 | 1 | PLUG | | | | | |
| | 5 | 7N-7998 | 1 | PLATE | | | | | |
| | 6 | 7W-7546 | 1 | GASKET | | | | | |
| Y | 7 | 1N-3576 | 1 | BLOCK GP | | | | | |
| | 8 | 7H-3171 | 1 | PLUG | | | | | |
| | 9 | 5M-6213 | 4 | PLUG | | | | | |
| | 10 | 2B-0858 | 2 | PLUG | | | | | |
| | 11 | 8M-9307 | 1 | PLUG | | | | | |
| | | 6F-7062 | 1 | WASHER | | | | | |
| | 12 | 2P-8889 | 6 | LINER | | | | | |
| | 13 | 5S-6670 | 18 | SEAL (ID=117.10mm) | | | | | |

Y-SEE SEPARATE ILLUSTRATION

H51674E

# 1N3576 CYLINDER BLOCK GP

PART OF 8N5286-Page 15

**Key:**

**SMCS**

| NOTE | REF NO | GRAPHIC REF | PART NUMBER | QTY | PART NAME<br>1 2 3 4 5 6 (PRODUCT LEVEL) | PRICE USD |
|---|---|---|---|---|---|---|
| | 1 | | 3J-6019 | 1 | PLUG | |
| | 2 | | 8K-1207 | 2 | DOWEL | |
| | 3 | | 5B-7652 | 2 | DOWEL | |
| | 4 | | 1S-9540 | 1 | DOWEL | |
| | 5 | | 4B-5387 | 1 | PLUG | |
| | 6 | | 8B-6349 | 2 | DOWEL | |
| | 7 | | 5S-8462 | 1 | STUD | |
| | 8 | | 8N-4110 | 1 | BEARING | |
| | 8 | | 4B-3938 | 1 | PLUG | |
| | 10 | | 4B-9782 | 1 | BALL | |
| | 11 | | 6N-8003 | 7 | CAP | |
| | 12 | | 7S-3224 | 14 | BOLT (L=133mm) | |
| | | | 2S-5658 | 14 | WASHER | |
| | 13 | | 7M-4046 | 4 | BEARING | |
| | | | | | THE FOLLOWING REPAIR KITS ARE AVAILABLE: | |
| | | | 6N-7727 | 1 | KIT (CYLINDER BLOCK HARDWARE) (INCLUDES ORIFICE, | |

## 1N3576 CYLINDER BLOCK GP

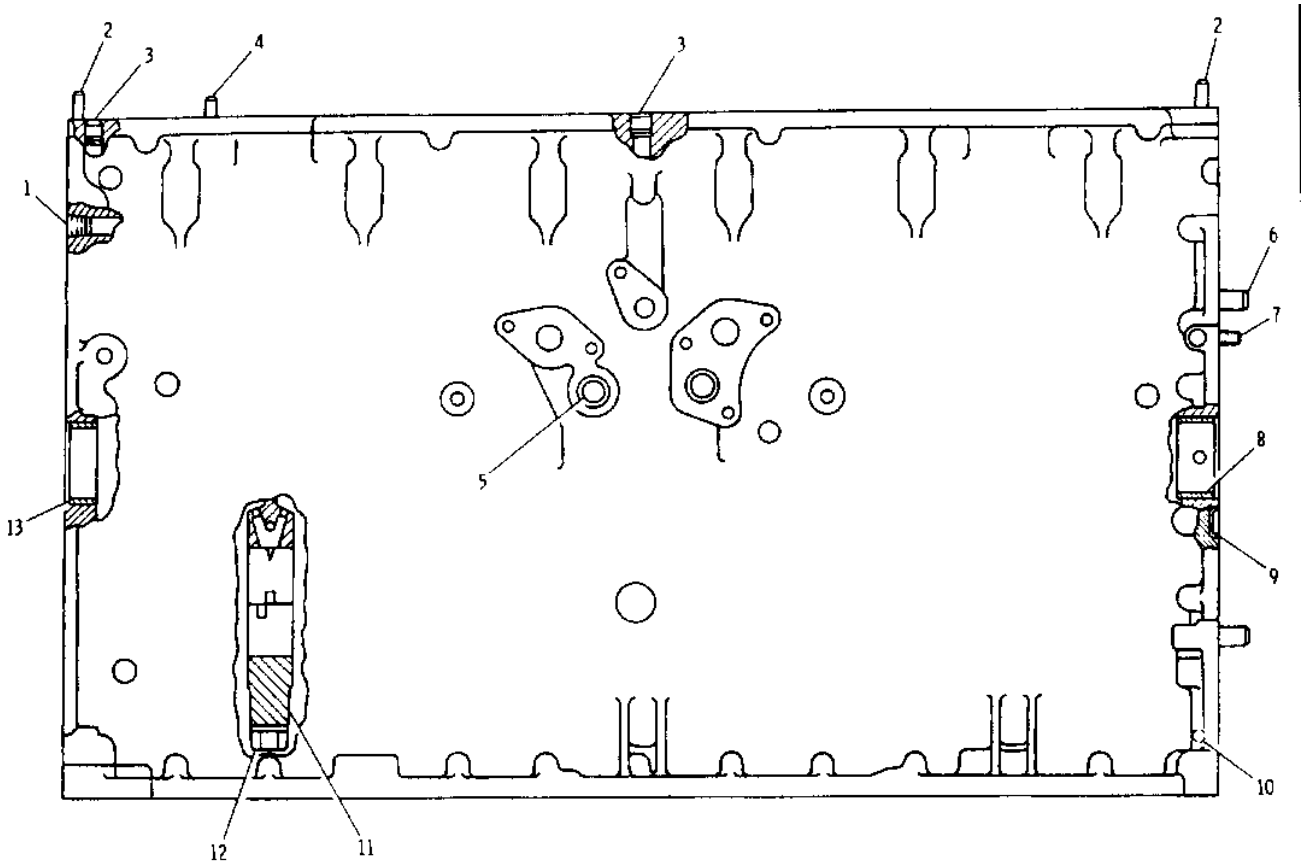


| NOTE | No. | PART No. | QTY | PART NAME |
|---|---|---|---|---|
| | 1 | 3J-6019 | 1 | PLUG |
| | 2 | 8K-1207 | 2 | DOWEL |
| | 3 | 5B-7652 | 2 | DOWEL |
| | 4 | 1S-9540 | 1 | DOWEL |
| | 5 | 4B-5387 | 1 | PLUG |
| | 6 | 8B-6349 | 2 | DOWEL |
| | 7 | 5S-8462 | 1 | STUD |
| | 8 | 8N-4110 | 1 | BEARING |
| | 9 | 4B-3938 | 1 | PLUG |
| | 10 | 4B-9782 | 1 | BALL |
| | 11 | 1P-2717 | 7 | CAP |
| | 12 | 7S-3224 | 14 | BOLT(L=133mm) |
| | | 2S-5658 | 14 | WASHER |
| | 13 | 7M-4046 | 4 | BEARING |

| NOTE | No. | PART No. | QTY | PART NAME |
|---|---|---|---|---|
| | | | | THE FOLLOWING REPAIR |
| | | 6N-7727 | 1 | KIT (CYLINDER BLOCK HARDWARE) (INCLUDES ORIFICE, PLUG, DOWEL&SLEEVE) |
| | | | 1 | FORM (XJIS6809) (JAPANESE) |
| | | | 1 | FORM (SMIS6809) (ENGLISH) (INSTALLATION INSTRUCTION OF CYLINDER BLOCK) |
| | | | | KITS ARE AVAILABLE : |

H51675E

GRAPHIC #1

h51675e

# 7N1342 COVER GP-CYLINDER BLOCK

PART OF 1167568-Page 13

**Key:**

**SMCS**

| NOTE | REF NO | GRAPHIC REF | PART NUMBER | QTY | PART NAME 1 2 3 4 5 6 (PRODUCT LEVEL) | PRICE USD |
|---|---|---|---|---|---|---|
| | 1 | | 8L-8662 | 1 | COVER | |
| | 2 | | 5S-8055 | 1 | GASKET | |
| | 3 | | 8M-3267 | 1 | SCREW | |
| | 4 | | 0L-1351 | 2 | BOLT (L=22mm) | |
| | 5 | | 5M-2894 | 2 | WASHER | |
| | 6 | | 4B-3938 | 1 | PLUG | |
| | 7 | | 2A-3798 | 2 | DOWEL | |

## 7N1342 COVER GP-CYLINDER BLOCK

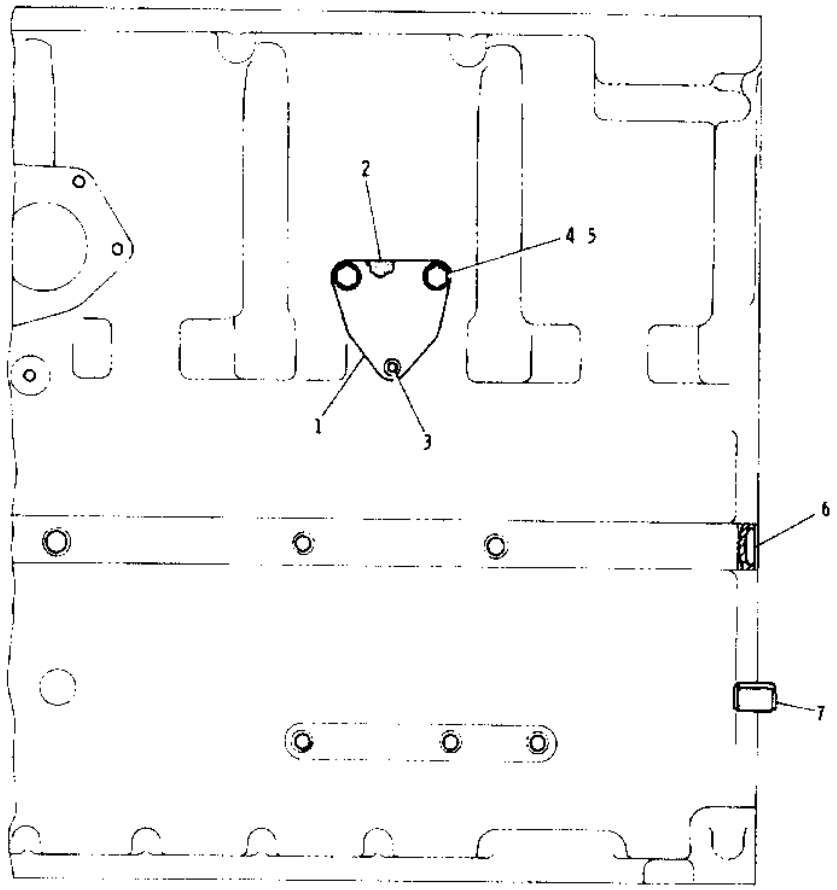


| NOTE | No. | PART No. | QTY | PART NAME |
|---|---|---|---|---|
| | 1 | 8L-8662 | 1 | COVER |
| | 2 | 5S-8055 | 1 | GASKET |
| | 3 | 8M-3267 | 1 | SCREW |
| | 4 | 0L-1351 | 2 | BOLT (L=22mm) |
| | 5 | 5M-2894 | 2 | WASHER |
| | 6 | 4B-3938 | 1 | PLUG |
| | 7 | 2A-3798 | 2 | DOWEL |

H51676E

# 9Y2062 LIFTING GP-ENGINE

PART OF 1167568-Page 13

**Key:**

**SMCS**

| NOTE | REF NO | GRAPHIC REF | PART NUMBER | QTY | PART NAME 1 2 3 4 5 6 (PRODUCT LEVEL) | PRICE USD |
|---|---|---|---|---|---|---|
| | 1 | | 5P-8245 | 4 | WASHER | |
| | 2 | | 9Y-2061 | 1 | PLATE | |
| | 3 | | 8N-8721 | 1 | PLATE | |
| | 4 | | 0S-1566 | 2 | BOLT (L=38mm) | |
| | 5 | | 8D-5054 | 2 | WASHER | |
| | 6 | | 4B-3823 | 4 | BOLT | |

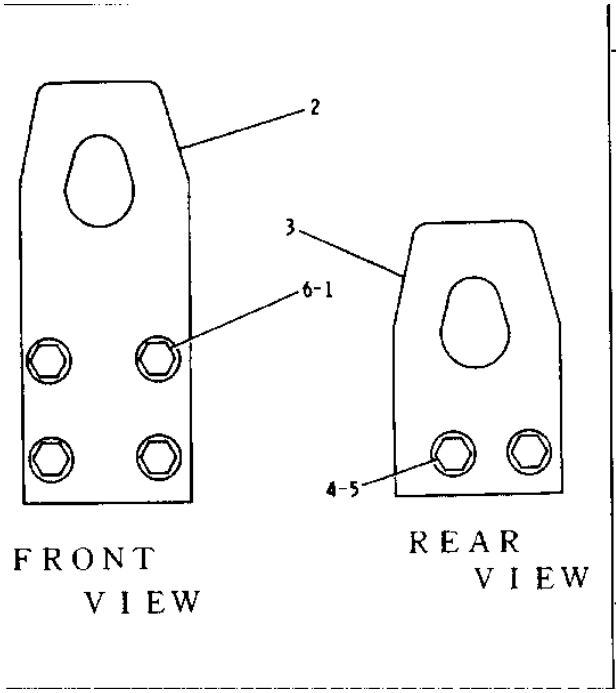


| NOTE | No. | PART No. | QTY | PART NAME |
|---|---|---|---|---|
| | 1 | 5P-8245 | 4 | WASHER |
| | 2 | 9Y-2061 | 1 | PLATE |
| | 3 | 8N-8721 | 1 | PLATE |
| | 4 | 0S 1566 | 2 | BOLT (L=38mm) |
| | 5 | 8D-5054 | 2 | WASHER |
| | 6 | 4B-3823 | 4 | BOLT |

H51677E

GRAPHIC #1 h51677e

# 6I4560 COVER GP-VALVE MECHANISM

PART OF 1167568-Page 13

**Key:**

**SMCS**

| NOTE | REF NO | GRAPHIC REF | PART NUMBER | QTY | PART NAME 1 2 3 4 5 6 (PRODUCT LEVEL) | PRICE USD |
|---|---|---|---|---|---|---|
| | 1 | | 6I-4561 | 1 | COVER AS | |
| | 2 | | 0S-1617 | 15 | BOLT (L=19mm) | |
| | 3 | | 9M-1974 | 15 | WASHER | |
| | 4 | | 8S-1605 | 1 | GASKET | |
| | 5 | | 5L-2952 | 1 | CAP AS | |
| | | | 6L-2609 | 1 | SEAL | |

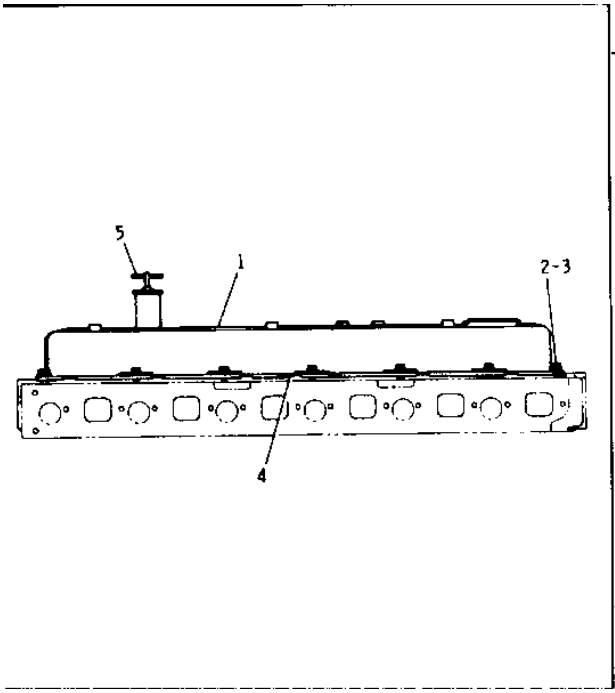


| NOTE | No. | PART No. | QTY | PART NAME |
|---|---|---|---|---|
| | 1 | 6I-4561 | 1 | COVER AS |
| | 2 | 0S 1617 | 15 | BOLT (L=19mm) |
| | 3 | 9M-1974 | 15 | WASHER |
| | 4 | 8S-1605 | 1 | GASKET |
| | 5 | 5L-2952 | 1 | CAP AS |
| | | 6L-2609 | 1 | SEAL |

H51678E

GRAPHIC #1 h51678e

# 4P9856 CRANKSHAFT GP

PART OF 1187568-Page 13

**Key:** A - NOT PART OF THIS GROUP

**SMCS**

| NOTE | REF NO | GRAPHIC REF | PART NUMBER | QTY | PART NAME 1 2 3 4 5 6 (PRODUCT LEVEL) | PRICE USD |
|---|---|---|---|---|---|---|
| | 1 | | 7N-9342 | 2 | PLATE | |
| | 2 | | 4W-5738 | 7 | BEARING (STANDARD) | |
| A | | | 8N-8225 | 7 | BEARING (US=0.25mm) | |
| A | | | 8N-8226 | 7 | BEARING (US=0.51mm) | |
| A | | | 8N-8227 | 7 | BEARING (US=0.76mm) | |
| R | 3 | | 4P-9857 | 1 | CRANKSHAFT AS | |
| | R | | 0R-4805 | 1 | CRANKSH.020IN US | |
| | R | | 0R-4806 | 1 | CRANKSHUTN | |
| | 4 | | 9F-2247 | 6 | PLUG | |
| | 5 | | 5H-2671 | 1 | KEY | |
| | 6 | | 4P-7827 | 1 | GEAR (Z=33) | |

## 4P9856 CRANKSHAFT GP

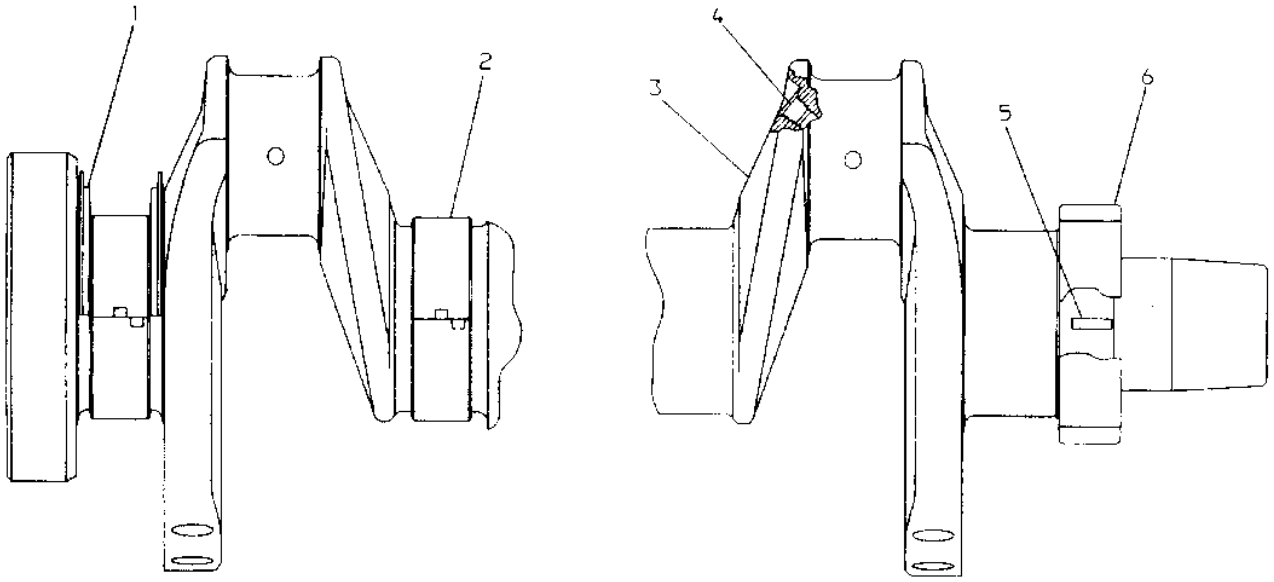


| NOTE | No. | PART No. | QTY | PART NAME |
|---|---|---|---|---|
| | 1 | 7N-9342 | 2 | PLATE |
| | 2 | 4W-5738 | 7 | BEARING (STANDARD) |
| A | | 8N-8225 | 7 | BEARING (US=0.25mm) |
| A | | 8N-8226 | 7 | BEARING (US=0.51mm) |
| A | | 8N-8227 | 7 | BEARING (US=0.76mm) |
| | 3 | 4P-9857 | 1 | CRANKSHAFT AS |
| | 4 | 9F-2247 | 6 | PLUG |
| | 5 | 5H-2671 | 1 | KEY |
| | 6 | 4P-7827 | 1 | GEAR (Z=33) |

| NOTE | No. | PART No. | QTY | PART NAME |
|---|---|---|---|---|

A-NOT PARTS OF THIS GROUP

H51679E

GRAPHIC #1

h51679e

# 2P6224 SEAL GP-CRANKSHAFT

PART OF 1167568-Page 13

**Key:**

**SMCS**

| NOTE | REF NO | GRAPHIC REF | PART NUMBER | QTY | PART NAME 1 2 3 4 5 6 (PRODUCT LEVEL) | PRICE USD |
|---|---|---|---|---|---|---|
| | 1 | | 4W-0452 | 1 | SEAL GP (ID=81.92mm) | |
| | 2 | | 9Y-9895 | 1 | SEAL GP | |

## 2P6224 SEAL GP-CRANKSHAFT

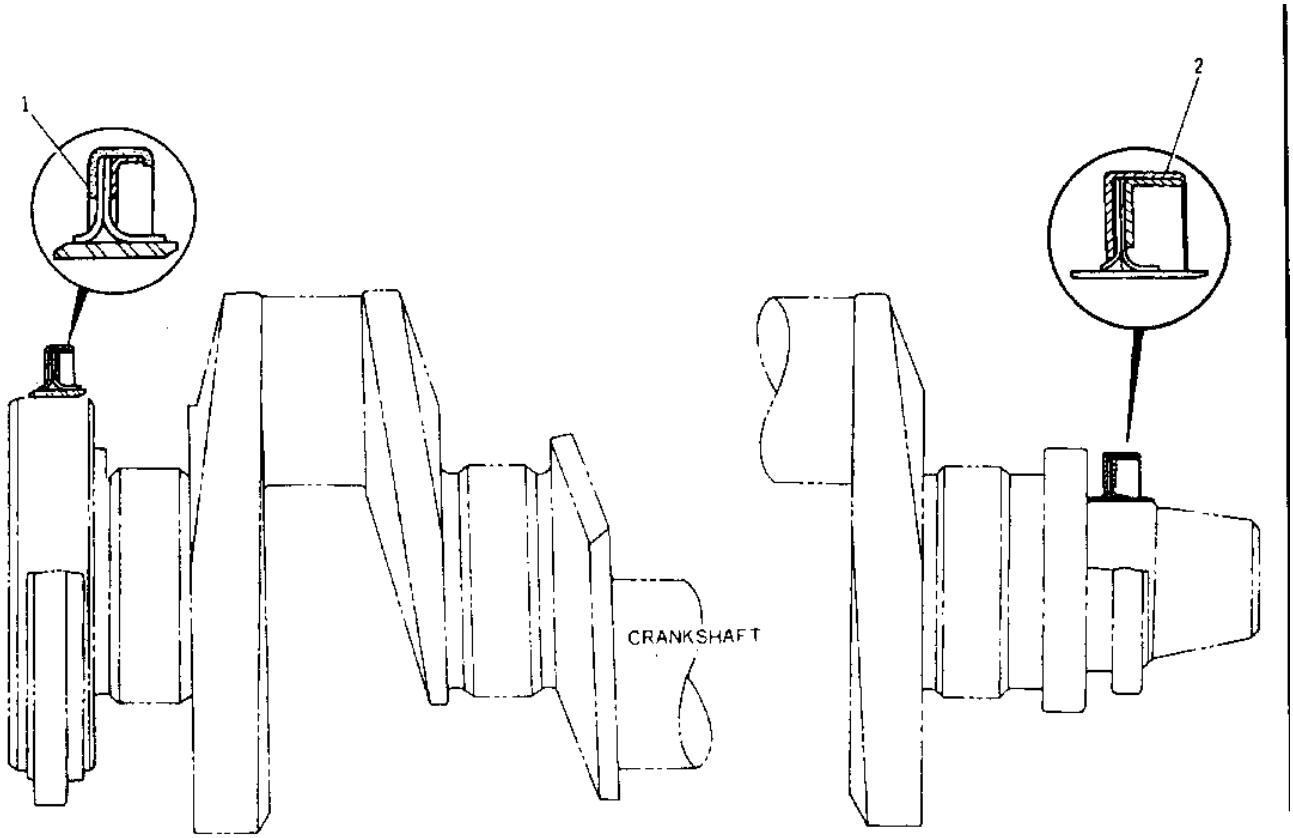


| NOTE | No. | PART No. | QTY | PART NAME | NOTE | No. | PART No. | QTY | PART NAME |
|---|---|---|---|---|---|---|---|---|---|
| | 1 | 4W-0452 | 1 | SEAL GP (ID=81.92mm) | | | | | |
| | 2 | 9Y-9895 | 1 | SEAL GP | | | | | |

H51680E

GRAPHIC #1 h51680e

# 1N4406 CAMSHAFT GP

PART OF 1167568-Page 13

**Key:**

**SMCS**

| NOTE | REF NO | GRAPHIC REF | PART NUMBER | QTY | PART NAME 1 2 3 4 5 6 (PRODUCT LEVEL) | PRICE USD |
|---|---|---|---|---|---|---|
| | 1 | | 7E-9980 | 1 | CAMSHAFT | |
| | 2 | | 7S-2204 | 1 | WASHER | |
| | 3 | | 0S-0509 | 2 | BOLT (L=19mm) | |
| | 4 | | 8S-1491 | 1 | LOCK | |

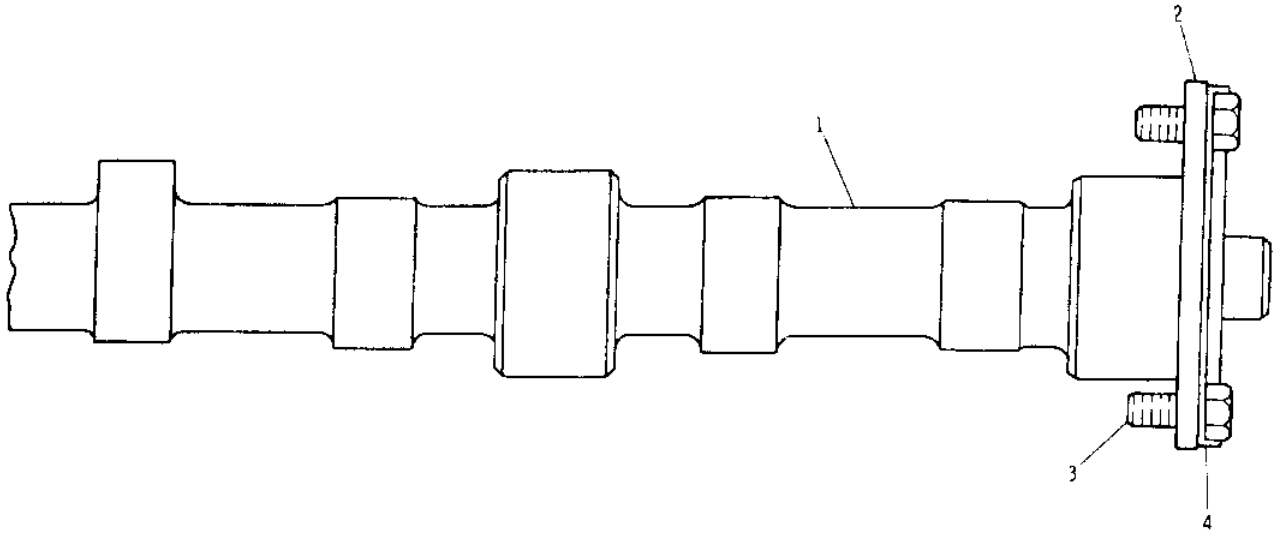


| NOTE | No. | PART No. | QTY | PART NAME | NOTE | No. | PART No. | QTY | PART NAME |
|---|---|---|---|---|---|---|---|---|---|
| | 1 | 7E-9980 | 1 | CAMSHAFT | | | | | |
| | 2 | 7S-2204 | 1 | WASHER | | | | | |
| | 3 | 0S-0509 | 2 | BOLT (L=19mm) | | | | | |
| | 4 | 8S-1491 | 1 | LOCK | | | | | |

H51681E

# 9Y8219 PISTON & ROD GP

ENGINE S/N 10Z 31027-34514
PART OF 1167568-Page 13

**Key:** A - NOT PART OF THIS GROUP, R - REMFG PART MAY BE AVAILABLE

**SMCS**

| NOTE | REF NO | GRAPHIC REF | PART NUMBER | QTY | PART NAME 1 2 3 4 5 6 (PRODUCT LEVEL) | PRICE USD |
|---|---|---|---|---|---|---|
| R | 1 | | 9Y-8217 | 1 | BODY AS | |
| | R | | 0R-3043 | 1 | CYLINDER PACK DI | |
| | 2 | | 2W-1707 | 1 | RING (TOP) | |
| | 3 | | 2W-1708 | 1 | RING (INTERMEDIATE) | |
| | 4 | | 7E-6047 | 1 | RING (OIL) | |
| | 5 | | 1S-9543 | 2 | RETAINER | |
| | 6 | | 7N-9805 | 1 | PIN | |
| | 7 | | 4W-5739 | 1 | BEARING (STANDERD) | |
| A | | | 8N-8221 | 1 | BEARING (US=0.25mm) | |
| A | | | 8N-8222 | 1 | BEARING (US=0.51mm) | |
| A | | | 8N-8223 | 1 | BEARING (US=0.76mm) | |
| R | 8 | | 8N-1721 | 1 | CONECTING ROD AS | |
| | R | | 0R-1695 | 1 | CYLINDER PACK DI | |
| | R | | 0R-1696 | 1 | CYLINDER PACK | |
| | R | | 0R-3043 | 1 | CYLINDER PACK DI | |
| | R | | 0R-4284 | 1 | CYLINDER PACK | |
| | R | | 0R-1694 | 1 | CYLINDER PACK DI | |
| | R | | 0R-0914 | 1 | ROD AS-CONN | |
| | R | | 0R-4488 | 1 | CYLINDER PACK DI | |
| | R | | 0R-1697 | 1 | CYLINDER PACK DI | |
| | | | 8N-1849 | 1 | BEARING | |
| | 9 | | 1P-9956 | 2 | BOLT | |
| | | | 5S-6348 | 2 | NUT | |

## 9Y8219 PISTON & ROD GP

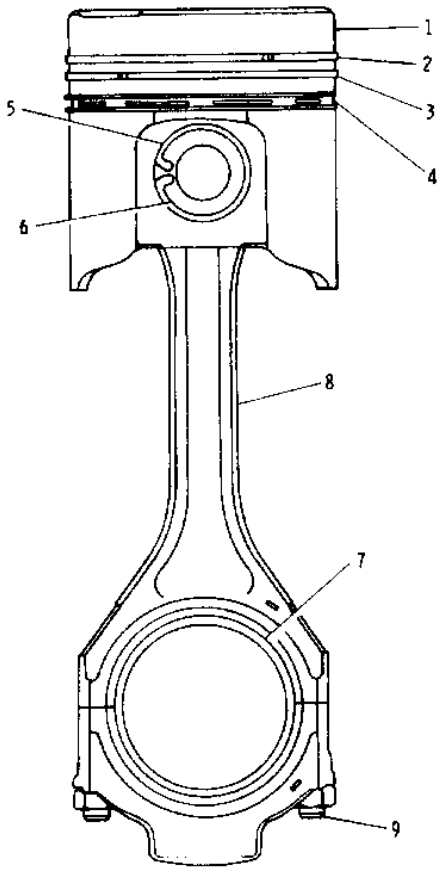


| NOTE | No. | PART No. | QTY | PART NAME |
|---|---|---|---|---|
| | 1 | 9Y-8217 | 1 | BODY AS |
| | 2 | 2W 1707 | 1 | RING (TOP) |
| | 3 | 2W 1708 | 1 | RING (INTERMEDIATE) |
| | 4 | 7E-6047 | 1 | RING (OIL) |
| | 5 | 1S-9543 | 2 | RETAINER |
| | 6 | 7N 9805 | 1 | PIN |
| | 7 | 4W-5739 | 1 | BEARING (STANDERD) |
| A | | 8N-8221 | 1 | BEARING (US=0.25mm) |
| A | | 8N-8222 | 1 | BEARING (US=0.51mm) |
| A | | 8N-8223 | 1 | BEARING (US=0.76mm) |
| | 8 | 8N 1721 | 1 | CONECTING ROD AS |
| | | 8N-1849 | 1 | BEARING |
| | 9 | 1P 9956 | 2 | BOLT |
| | | 5S 6348 | 2 | NUT |

| NOTE | No. | PART No. | QTY | PART NAME |
|---|---|---|---|---|

A-NOT PARTS OF THIS GROUP

H51682E

GRAPHIC #1

h51682e

# 1415103 PISTON & ROD GP

ENGINE S/N 10Z 34515-UP
PART OF 1167568-Page 14.02

**Key:** A - NOT PART OF THIS GROUP

**SMCS**

| NOTE | REF NO | GRAPHIC REF | PART NUMBER | QTY | PART NAME 1 2 3 4 5 6 (PRODUCT LEVEL) | PRICE USD |
|---|---|---|---|---|---|---|
| R | 1 | | 156-8263 | 1 | BODY AS | |
| | R | | 10R-3637 | 1 | CYLINDER PACK AS | |
| | 2 | | 2W-1707 | 1 | RING (TOP) | |
| | 3 | | 5S-6750 | 1 | RING (INTERMEDIATE) | |
| | 4 | | 6I-0497 | 1 | RING (OIL) | |
| | 5 | | 1S-9543 | 2 | RETAINER | |
| | 6 | | 7N-9805 | 1 | PIN | |
| | 7 | | 4W-5739 | 1 | BEARING (STANDARD) | |
| A | | | 8N-8221 | 1 | BEARING (US=0.25mm) | |
| A | | | 8N-8222 | 1 | BEARING (US=0.51mm) | |
| A | | | 8N-8223 | 1 | BEARING (US=0.76mm) | |
| R | 8 | | 8N-1721 | 1 | ROD AS | |
| | R | | 0R-1695 | 1 | CYLINDER PACK DI | |
| | R | | 0R-1696 | 1 | CYLINDER PACK | |
| | R | | 0R-3043 | 1 | CYLINDER PACK DI | |
| | R | | 0R-4284 | 1 | CYLINDER PACK | |
| | R | | 0R-1694 | 1 | CYLINDER PACK DI | |
| | R | | 0R-0914 | 1 | ROD AS-CONN | |
| | R | | 0R-4488 | 1 | CYLINDER PACK DI | |
| | R | | 0R-1697 | 1 | CYLINDER PACK DI | |
| | | | 8N-1849 | 1 | BEARING | |
| | 9 | | 1P-9956 | 2 | BOLT | |
| | | | 5S-6348 | 2 | NUT | |

# 7N8026 VALVE MECHANISM GP

PART OF 1167568-Page 13

**Key:**

**SMCS**

| NOTE | REF NO | GRAPHIC REF | PART NUMBER | QTY | PART NAME 1 2 3 4 5 6 (PRODUCT LEVEL) | PRICE USD |
|---|---|---|---|---|---|---|
| | 1 | | 5M-4606 | 1 | DOWEL | |
| | 2 | | 0L-1026 | 2 | PLUG | |
| | 3 | | 7N-8015 | 1 | BRACKET | |
| | 4 | | 8N-3251 | 1 | SHAFT | |
| | 5 | | 4B-4910 | 5 | SPRING | |
| | 6 | | 9H-1110 | 12 | WASHER | |
| | 7 | | 7W-7556 | 6 | ARM AS (INLET) | |
| | 8 | | 9N-5980 | 6 | ARM AS (EXHAUST) | |
| | 9 | | 8S-1499 | 1 | BRACKET AS | |
| | | | 1L-5072 | 1 | DOWEL | |
| | 10 | | 9M-9886 | 2 | WASHER | |
| | | | 9H-1112 | 2 | SPRING | |
| | 11 | | 9H-1113 | 2 | RING | |
| | 12 | | 3S-2713 | 12 | NUT | |
| | 13 | | 5S-5917 | 12 | SCREW | |
| | 14 | | 5S-5918 | 12 | ROD | |
| | 15 | | 7S-3161 | 12 | RIFTER | |
| | 16 | | 5S-5879 | 4 | BRACKET | |
| | 17 | | 1B-7709 | 1 | BOLT (L=203mm) | |
| | | | 2S-0736 | 1 | WASHER | |
| | 18 | | 8M-4448 | 1 | SEAL (ID=15.47mm) | |

## 7N8026 VALVE MECHANISM GP

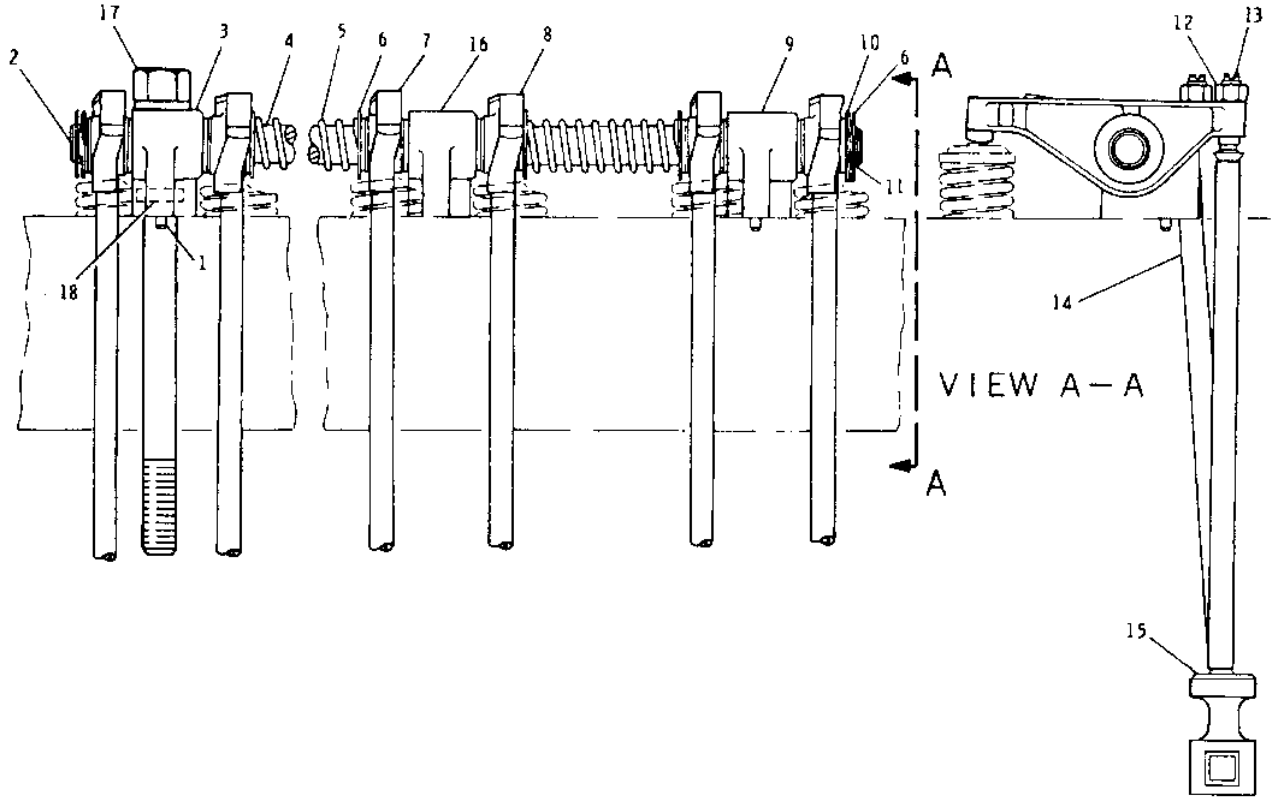


| NOTE | No. | PART No. | QTY | PART NAME | NOTE | No. | PART No. | QTY | PART NAME |
|---|---|---|---|---|---|---|---|---|---|
| | 1 | 5M-4606 | 1 | DOWEL | | 18 | 8M-4448 | 1 | SEAL (ID=15.47mm) |
| | 2 | 0L-1026 | 2 | PLUG | | | | | |
| | 3 | 7N-8015 | 1 | BRACKET | | | | | |
| | 4 | 8N-3251 | 1 | SHAFT | | | | | |
| | 5 | 4B-4910 | 5 | SPRING | | | | | |
| | 6 | 9H-1110 | 12 | WASHER | | | | | |
| | 7 | 7W-7556 | 6 | ARM AS (INLET) | | | | | |
| | 8 | 9N-5980 | 6 | ARM AS (EXHAUST) | | | | | |
| | 9 | 8S-1499 | 1 | BRACKET AS | | | | | |
| | | 1L-5072 | 1 | DOWEL | | | | | |
| | 10 | 9M-9886 | 2 | WASHER | | | | | |
| | | 9H-1112 | 2 | SPRING | | | | | |
| | 11 | 9H-1113 | 2 | RING | | | | | |
| | 12 | 3S-2713 | 12 | NUT | | | | | |
| | 13 | 5S-5917 | 12 | SCREW | | | | | |
| | 14 | 5S-5918 | 12 | ROD | | | | | |
| | 15 | 7S-3161 | 12 | RIFTER | | | | | |
| | 16 | 5S-5879 | 4 | BRACKET | | | | | |
| | 17 | 1B-7709 | 1 | BOLT (L=203mm) | | | | | |
| | | 2S-0736 | 1 | WASHER | | | | | |

H51683E

GRAPHIC #1 h51683e

# 8N0107 TRUNNION GP-ENGINE

PART OF 1167568-Page 13

**Key:**

**SMCS**

| NOTE | REF NO | GRAPHIC REF | PART NUMBER | QTY | PART NAME 1 2 3 4 5 6 (PRODUCT LEVEL) | PRICE USD |
|---|---|---|---|---|---|---|
| | 1 | | 8N-0105 | 1 | TRUNNION AS | |
| | 2 | | 0L-1329 | 6 | BOLT (L=76mm) | |
| | 3 | | 2P-1692 | 1 | SEAL (ID=133.02mm) | |

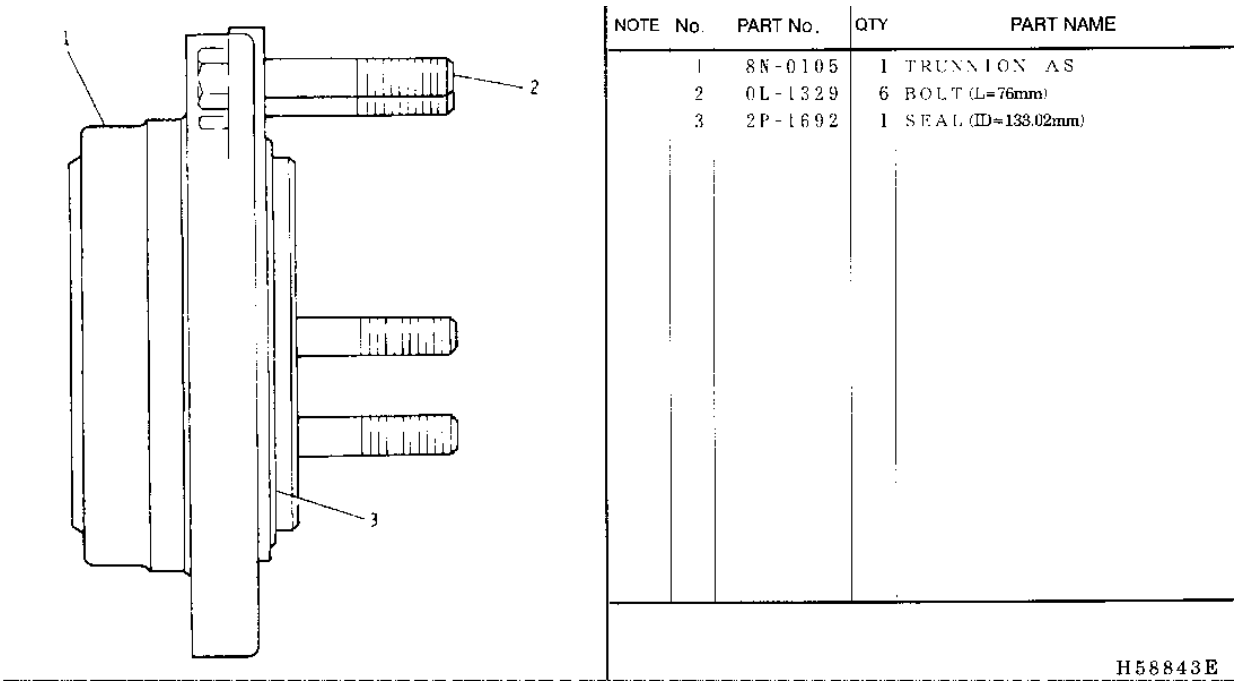


GRAPHIC #1 h58843e

# 4P5817 SUPPORT GP-ENGINE

PART OF 1167568-Page 13

**Key:**

**SMCS**

| NOTE | REF NO | GRAPHIC REF | PART NUMBER | QTY | PART NAME 1 2 3 4 5 6 (PRODUCT LEVEL) | PRICE USD |
|---|---|---|---|---|---|---|
| | 1 | | 0S-1585 | 6 | BOLT (L=38mm) | |
| | 2 | | 5P-8245 | 6 | WASHER | |
| | 3 | | 4P-5806 | 1 | SUPPORT | |

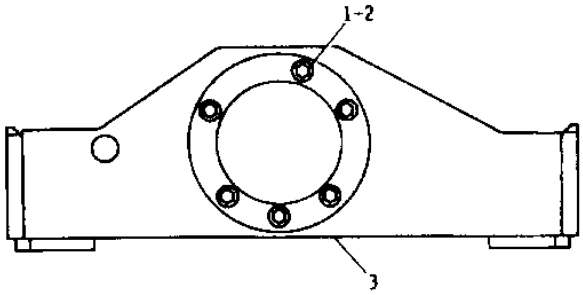


| NOTE | No. | PART No. | QTY | PART NAME |
|---|---|---|---|---|
| | 1 | 0S-1585 | 6 | BOLT (L=38mm) |
| | 2 | 5P-8245 | 6 | WASHER |
| | 3 | 4P-5806 | 1 | SUPPORT |

H51685E

GRAPHIC #1 h51685e

# 8N0246 CYLINDER HEAD GP

PART OF 1167568-Page 13
8N6796-Page 26

**Key:** R - REMFG PART MAY BE AVAILABLE, Y - SEPARATE ILLUSTRATION

**SMCS**

| NOTE | REF NO | GRAPHIC REF | PART NUMBER | QTY | PART NAME 1 2 3 4 5 6 (PRODUCT LEVEL) | PRICE USD |
|---|---|---|---|---|---|---|
| RY | 1 | | 8N-6796 | 1 | CYLINDER HEAD GP | |
| | R | | 0R-0836 | 1 | HEAD AS-CYLINDER | |
| | 2 | | 7E-6167 | 1 | GASKET | |
| | 3 | | 8N-7782 | 12 | ROTOCOIL AS | |
| | 4 | | 6N-9916 | 6 | VALVE | |
| | 5 | | 2A-4429 | 24 | LOCK | |
| | 6 | | 2W-2620 | 6 | VALVE | |
| | 7 | | 7S-7144 | 12 | SPRING | |
| | 8 | | 3S-5496 | 1 | SEAL (ID=9.53mm) | |
| | 9 | | 9Y-1798 | 18 | SEAL | |
| | 10 | | 7N-8018 | 6 | SEAL | |

## 8N0246 CYLINDER HEAD GP

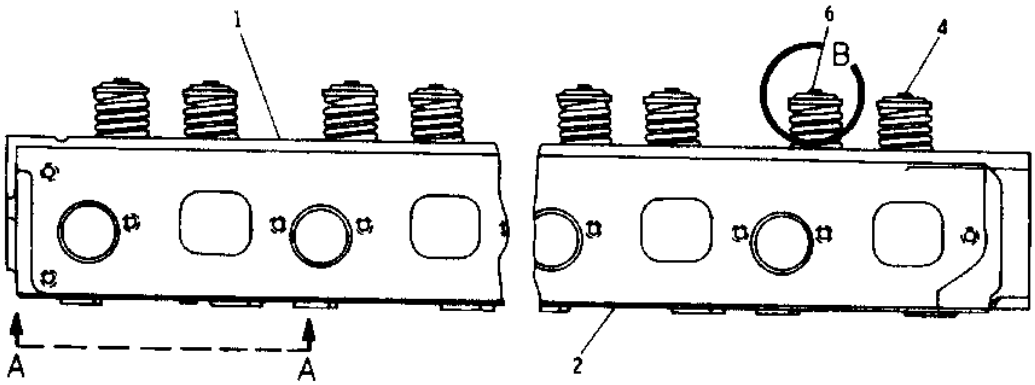


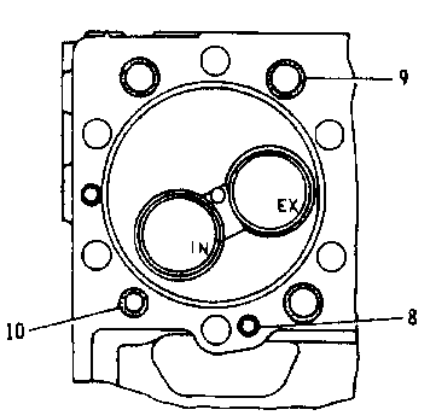


VIEW A–A

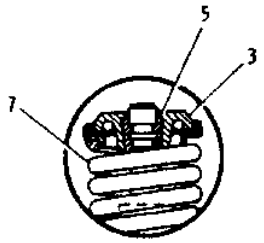


DETAIL OF B

| NOTE | No. | PART No. | QTY | PART NAME |
|---|---|---|---|---|
| Y | 1 | 8N-6796 | 1 | CYLINDER HEAD GP |
| | 2 | 7E-6167 | 1 | GASKET |
| | 3 | 8N-7782 | 12 | ROTOCOIL AS |
| | 4 | 6N-9916 | 6 | VALVE |
| | 5 | 2A 4429 | 24 | LOCK |
| | 6 | 2W-2620 | 6 | VALVE |
| | 7 | 7S-7144 | 12 | SPRING |
| | 8 | 3S-5496 | 1 | SEAL (ID=9.53mm) |
| | 9 | 9Y-1798 | 18 | SEAL |
| | 10 | 7N-8018 | 6 | SEAL |

| NOTE | No. | PART No. | QTY | PART NAME |
|---|---|---|---|---|

Y–SEE SEPARATE ILLUSTRATION

H51686E

GRAPHIC #1 h51686e

# 8N6796 CYLINDER HEAD GP

PART OF 8N0246-Page 25

**Key:**

**SMCS**

| NOTE | REF NO | GRAPHIC REF | PART NUMBER | QTY | PART NAME 1 2 3 4 5 6 (PRODUCT LEVEL) | PRICE USD |
|---|---|---|---|---|---|---|
| | 1 | | 3P-1896 | 12 | PLUG | |
| | 2 | | 8N-4485 | 1 | VALVE AS | |
| | 3 | | 3B-0623 | 6 | PLUG | |
| | 4 | | 7N-4448 | 6 | INSERT (INTAKE) | |
| | 5 | | 2W-4837 | 6 | INSERT (EXHAUST) | |
| | 6 | | 2P-1262 | 12 | GUIDE | |
| | 7 | | 7H-3171 | 1 | PLUG | |
| | 8 | | 2B-0858 | 3 | PLUG | |
| | 9 | | 3S-8313 | 7 | PLUG | |
| | 10 | | 0S-1594 | 4 | BOLT (L=25mm) | |
| | | | 5M-2894 | 4 | WASHER | |
| | 11 | | 5S-6735 | 1 | GASKET | |
| | 12 | | 1P-6367 | 1 | COVER | |

## 8N6796 CYLINDER HEAD GP

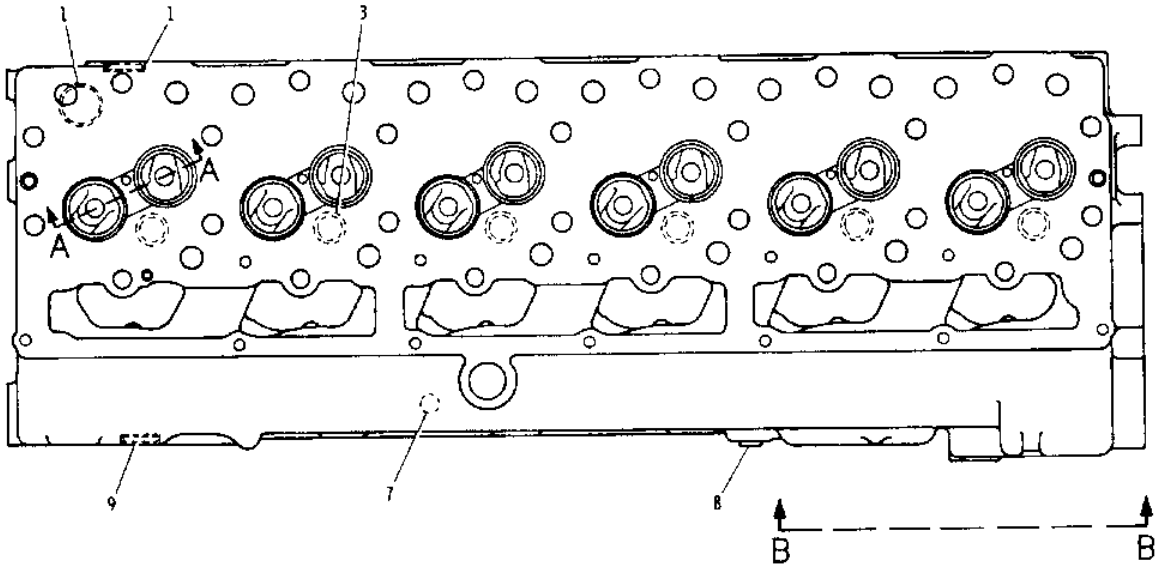


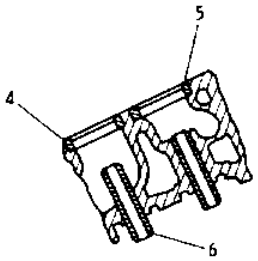


SECTION A–A

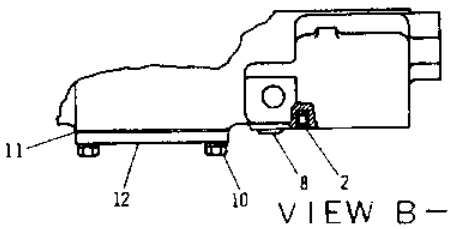


VIEW B–B

| NOTE | No. | PART No. | QTY | PART NAME | NOTE | No. | PART No. | QTY | PART NAME |
|---|---|---|---|---|---|---|---|---|---|
| | 1 | 3P-1896 | 12 | PLUG | | | | | |
| | 2 | 8N-4485 | 1 | VALVE AS | | | | | |
| | 3 | 3B-0623 | 6 | PLUG | | | | | |
| | 4 | 7N-4448 | 6 | INSERT (INTAKE) | | | | | |
| | 5 | 2W-4837 | 6 | INSERT (EXHAUST) | | | | | |
| | 6 | 2P-1262 | 12 | GUIDE | | | | | |
| | 7 | 7H-3171 | 1 | PLUG | | | | | |
| | 8 | 2B-0858 | 3 | PLUG | | | | | |
| | 9 | 3S-8313 | 7 | PLUG | | | | | |
| | 10 | 0S-1594 | 4 | BOLT (L=25mm) | | | | | |
| | | 5M-2894 | 4 | WASHER | | | | | |
| | 11 | 5S-6735 | 1 | GASKET | | | | | |
| | 12 | 1P-6367 | 1 | COVER | | | | | |

H51687E

GRAPHIC #1

h51687e

# 7N9536 FASTENER GP-CYLINDER HEAD

PART OF 1167568-Page 13

**Key:**

**SMCS**

| NOTE | REF NO | GRAPHIC REF | PART NUMBER | QTY | PART NAME 1 2 3 4 5 6 (PRODUCT LEVEL) | PRICE USD |
|---|---|---|---|---|---|---|
| | 1 | | 5B-9603 | 7 | BOLT (L=127mm) | |
| | 2 | | 1B-7709 | 5 | BOLT (L=203mm) | |
| | 3 | | 2S-0736 | 25 | WASHER | |
| | 4 | | 1D-4595 | 20 | BOLT (L=152mm) | |

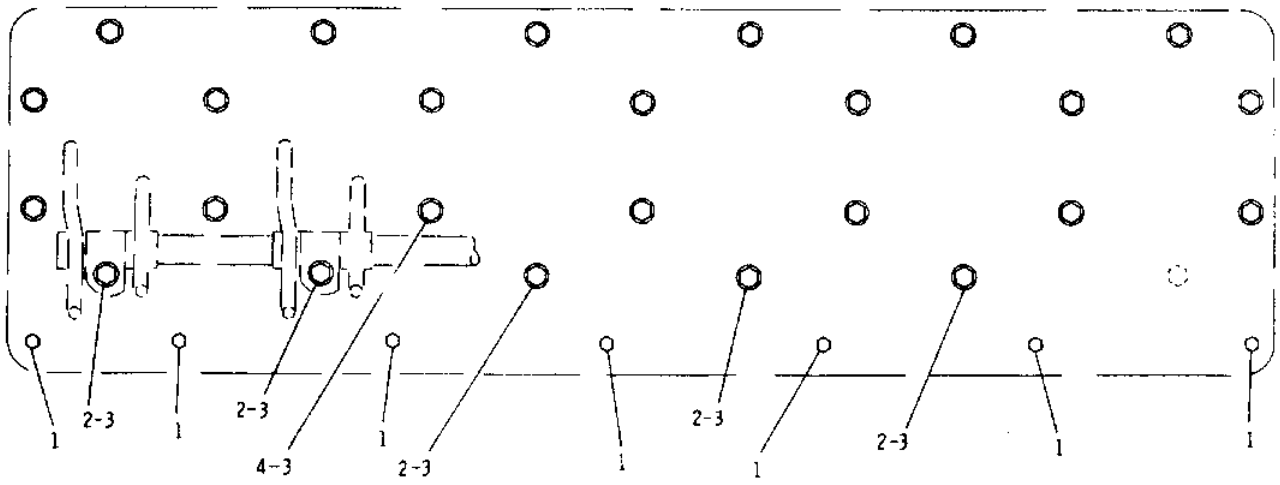


| NOTE | No. | PART No. | QTY | PART NAME | NOTE | No. | PART No. | QTY | PART NAME |
|---|---|---|---|---|---|---|---|---|---|
| | 1 | 5B-9603 | 7 | BOLT (L=127mm) | | | | | |
| | 2 | 1B-7709 | 6 | BOLT (L=203mm) | | | | | |
| | 3 | 2S-0763 | 26 | WASHER | | | | | |
| | 4 | 1D-4595 | 20 | BOLT (L=152mm) | | | | | |

H51688E

## 7N9536 FASTENER GP-CYLINDER HEAD

GRAPHIC #1 h51688e

# 8N0303 HOUSING GP-FRONT

PART OF 1167568-Page 13

**Key:**

**SMCS**

| NOTE | REF NO | GRAPHIC REF | PART NUMBER | QTY | PART NAME 1 2 3 4 5 6 (PRODUCT LEVEL) | PRICE USD |
|---|---|---|---|---|---|---|
| | 1 | | 8N-0110 | 1 | GASKET | |
| | 2 | | 1W-7110 | 1 | PLATE | |
| | 3 | | 6H-0192 | 3 | STUD | |
| | 4 | | 1W-3900 | 1 | GASKET | |
| | 5 | | 6I-0923 | 1 | HOUSING AS | |
| | 6 | | 9X-2485 | 6 | STUD | |
| | 7 | | 5M-6214 | 1 | PLUG | |

## 8N0303 HOUSING GP-FRONT

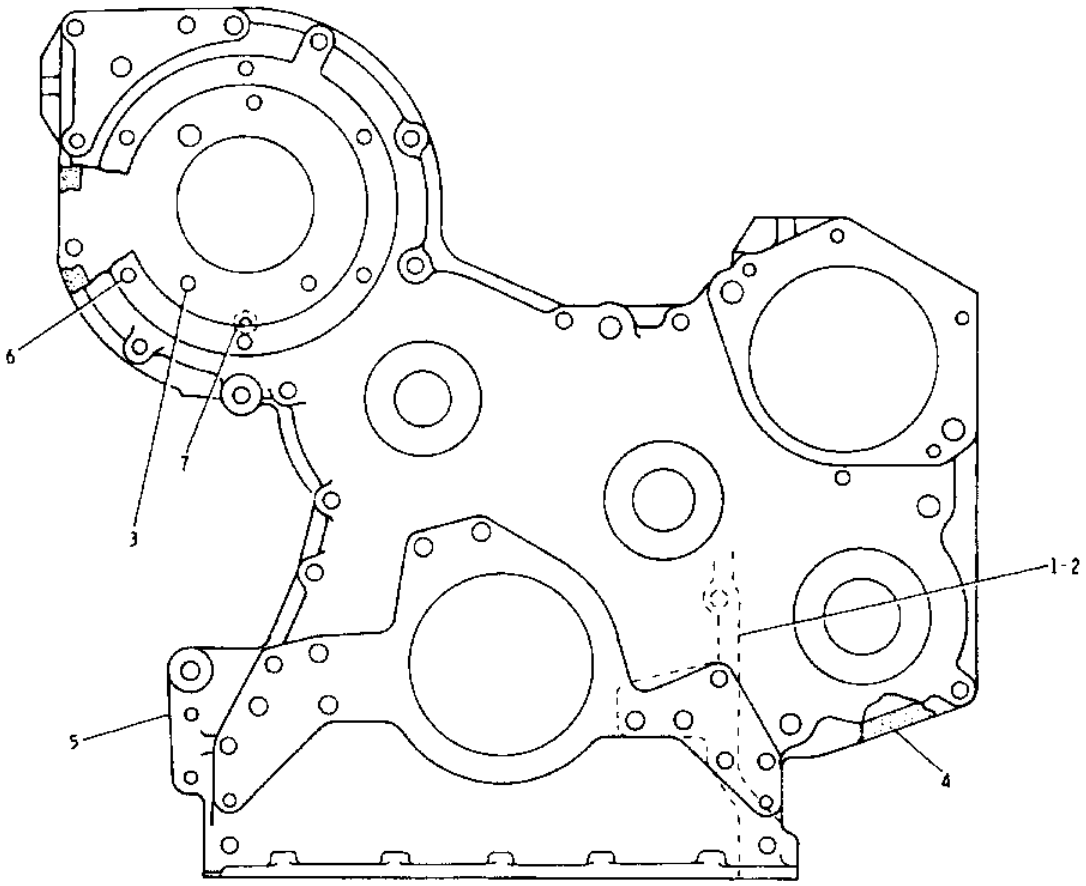


| NOTE | No. | PART No. | QTY | PART NAME | NOTE | No. | PART No. | QTY | PART NAME |
|---|---|---|---|---|---|---|---|---|---|
| | 1 | 8N-0110 | 1 | GASKET | | | | | |
| | 2 | 1W-7110 | 1 | PLATE | | | | | |
| | 3 | 6H-0192 | 3 | STUD | | | | | |
| | 4 | 1W-3900 | 1 | GASKET | | | | | |
| | 5 | 6I-0923 | 1 | HOUSING AS | | | | | |
| | 6 | 9X-2485 | 6 | STUD | | | | | |
| | 7 | 5M-6214 | 1 | PLUG | | | | | |

H51689E

GRAPHIC #1 h51689e

# 8N0872 FASTENER GP-FRONT HOUSING

PART OF 1167568-Page 13

**Key:**

**SMCS**

| NOTE | REF NO | GRAPHIC REF | PART NUMBER | QTY | PART NAME 1 2 3 4 5 6 (PRODUCT LEVEL) | PRICE USD |
|---|---|---|---|---|---|---|
| | 1 | | 0L-2070 | 20 | BOLT (L=57mm) | |
| | 2 | | 1D-4717 | 8 | NUT | |
| | | | 5M-2894 | 8 | WASHER | |
| | 3 | | 1C-2251 | 2 | BOLT (L=48mm) | |
| | 4 | | 030-8535 | 6 | BOLT | |

## 8N0872 FASTENER GP-FRONT HOUSING

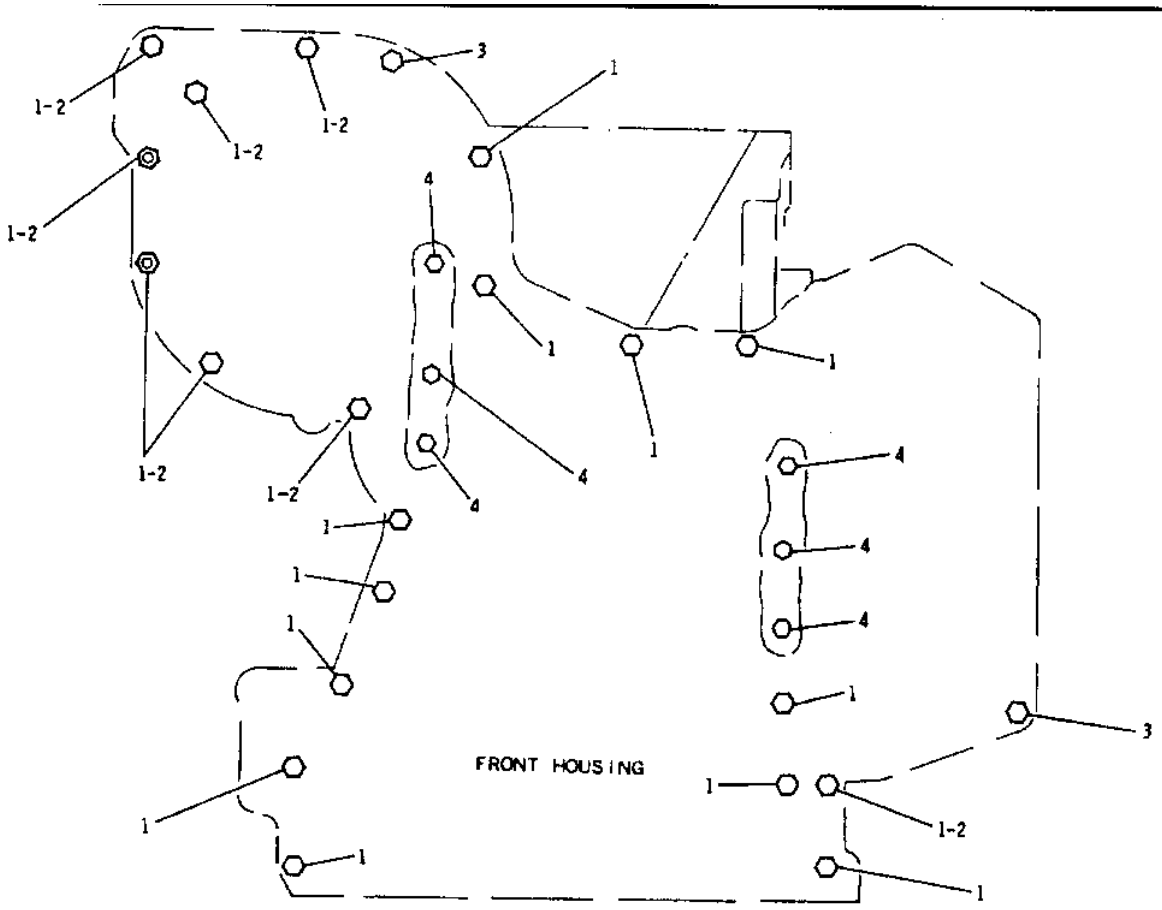


| NOTE | No. | PART No. | QTY | PART NAME |
|---|---|---|---|---|
| | 1 | 0L 2070 | 20 | BOLT (L=57mm) |
| | 2 | 1D-4717 | 8 | NUT |
| | | 5M-2894 | 8 | WASHER |
| | 3 | 1C-2251 | 2 | BOLT (L=48mm) |
| | 4 | 030-8535 | 6 | BOLT |

| NOTE | No. | PART No. | QTY | PART NAME |
|---|---|---|---|---|

H51690E

GRAPHIC #1

h51690e

# 4N5162 COVER GP-FRONT HOUSING

PART OF 1167568-Page 13

**Key:**

**SMCS**

| NOTE | REF NO | GRAPHIC REF | PART NUMBER | QTY | PART NAME 1 2 3 4 5 6 (PRODUCT LEVEL) | PRICE USD |
|---|---|---|---|---|---|---|
| | 1 | | 2P-2720 | 1 | GASKET | |
| | 2 | | 4N-4526 | 1 | COVER | |
| | 3 | | 0L-1351 | 2 | BOLT (L=22mm) | |
| | 4 | | 5M-2894 | 4 | WASHER | |
| | 5 | | 2P-0220 | 1 | GASKET | |
| | 6 | | 0S-1566 | 4 | BOLT (L=38mm) | |
| | 7 | | 5P-8247 | 4 | WASHER | |
| | 8 | | 3B-1915 | 3 | BOLT (L=35mm) | |
| | 9 | | 1W-4542 | 1 | COVER | |
| | 10 | | 7N-8374 | 1 | COVER | |
| | 11 | | 5F-3106 | 1 | SEAL (ID=126.59mm) | |
| | 12 | | 9N-5769 | 1 | COVER | |
| | 13 | | 6N-7887 | 1 | GASKET | |
| | 14 | | 1B-4203 | 6 | NUT | |
| | 15 | | 8M-9024 | 6 | WASHER | |

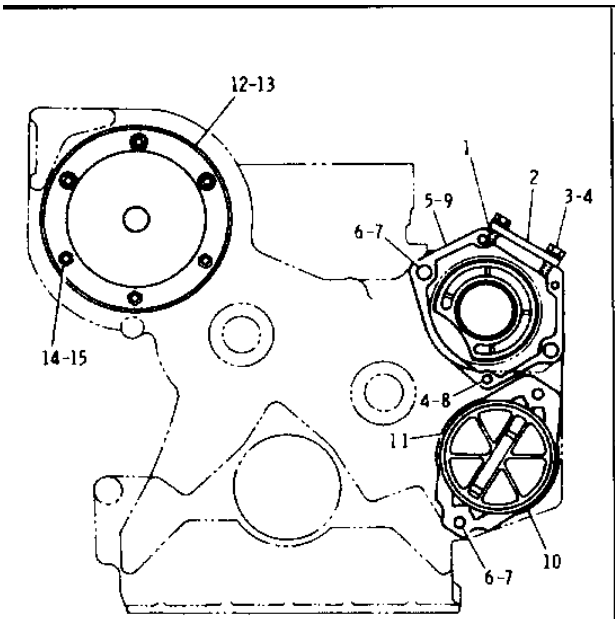


| NOTE | No. | PART No. | QTY | PART NAME |
|---|---|---|---|---|
| | 1 | 2P-2720 | 1 | GASKET |
| | 2 | 4N-4526 | 1 | COVER |
| | 3 | 0L-1351 | 2 | BOLT (L=22mm) |
| | 4 | 5M-2894 | 4 | WASHER |
| | 5 | 2P-0220 | 1 | GASKET |
| | 6 | 0S-1566 | 4 | BOLT (L=38mm) |
| | 7 | 5P-8247 | 4 | WASHER |
| | 8 | 3B-1915 | 3 | BOLT (L=35mm) |
| | 9 | 1W-4542 | 1 | COVER |
| | 10 | 7N-8374 | 1 | COVER |
| | 11 | 5F-3106 | 1 | SEAL (ID=126.59mm) |
| | 12 | 9N-5769 | 1 | COVER |
| | 13 | 6N-7887 | 1 | GASKET |
| | 14 | 1B-4203 | 6 | NUT |
| | 15 | 8M-9024 | 6 | WASHER |

H51691E

GRAPHIC #1 h51691e

# 1W7733 DAMPER GP

PART OF 1167568-Page 13

**Key:**

**SMCS**

| NOTE | REF NO | GRAPHIC REF | PART NUMBER | QTY | PART NAME 1 2 3 4 5 6 (PRODUCT LEVEL) | PRICE USD |
|---|---|---|---|---|---|---|
| | 1 | | 7W-5687 | 1 | HUB | |
| | 2 | | 4W-2446 | 1 | DAMPER AS | |
| | 3 | | 1N-4375 | 1 | ADAPTER | |
| | 4 | | 0S-1587 | 6 | BOLT (L=44mm) | |
| | 5 | | 7B-5163 | 1 | BOLT (L=121mm) | |
| | 6 | | 1W-9281 | 1 | WASHER | |

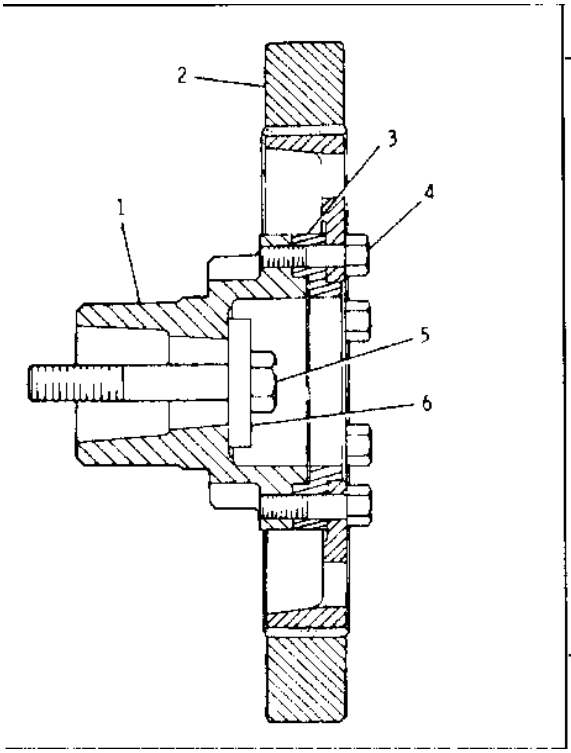


| NOTE | No. | PART No. | QTY | PART NAME |
|---|---|---|---|---|
| | 1 | 7W-5687 | 1 | HUB |
| | 2 | 4W-2446 | 1 | DAMPER AS |
| | 3 | 1N 4375 | 1 | ADAPTER |
| | 4 | 0S-1587 | 6 | BOLT (L=44mm) |
| | 5 | 7B-5163 | 1 | BOLT (L=121mm) |
| | 6 | 1W-9281 | 1 | WASHER |

H51692E

GRAPHIC #1 h51692e

# 4P9858 GEAR GP-FRONT TIMING

PART OF 1167568-Page 13

**Key:**

**SMCS**

| NOTE | REF NO | GRAPHIC REF | PART NUMBER | QTY | PART NAME 1 2 3 4 5 6 (PRODUCT LEVEL) | PRICE USD |
|---|---|---|---|---|---|---|
| | 1 | | 7N-2602 | 1 | BOLT | |
| | | | 7N-2994 | 1 | WASHER | |
| | 2 | | 4P-7822 | 1 | WEIGHT AS (Z=66) | |
| | 3 | | 8N-0498 | 1 | SEAL | |
| | 4 | | 6F-4718 | 1 | SEAL (ID=164.69mm) | |
| | 5 | | 1W-5878 | 2 | SPRING | |
| | 6 | | 1W-5879 | 2 | SPRING | |
| | 7 | | 4B-1273 | 2 | SCREW | |
| | 8 | | 9N-5765 | 1 | PLATE | |
| | 9 | | 9N-5767 | 2 | SLIDE | |
| | 10 | | 0S-1748 | 4 | BOLT (L=51mm) | |
| | 11 | | 0S-1594 | 2 | BOLT (L=25mm) | |
| | | | 5M-2894 | 2 | WASHER | |
| | 12 | | 107-2206 | 1 | GEAR AS | |
| | | | 2S-6692 | 1 | BEARING | |
| | 13 | | 5B-9079 | 1 | NUT | |
| | 14 | | 4P-7826 | 1 | GEAR | |
| | 15 | | 105-9772 | 1 | SHAFT | |
| | 16 | | 8N-4960 | 1 | PLATE | |
| | 17 | | 0S-1618 | 2 | BOLT (L=25mm) | |
| | 18 | | 4P-7828 | 1 | GEAR AS | |
| | | | 2P-1168 | 1 | BEARING | |

## 4P9858 GEAR GP-FRONT TIMING

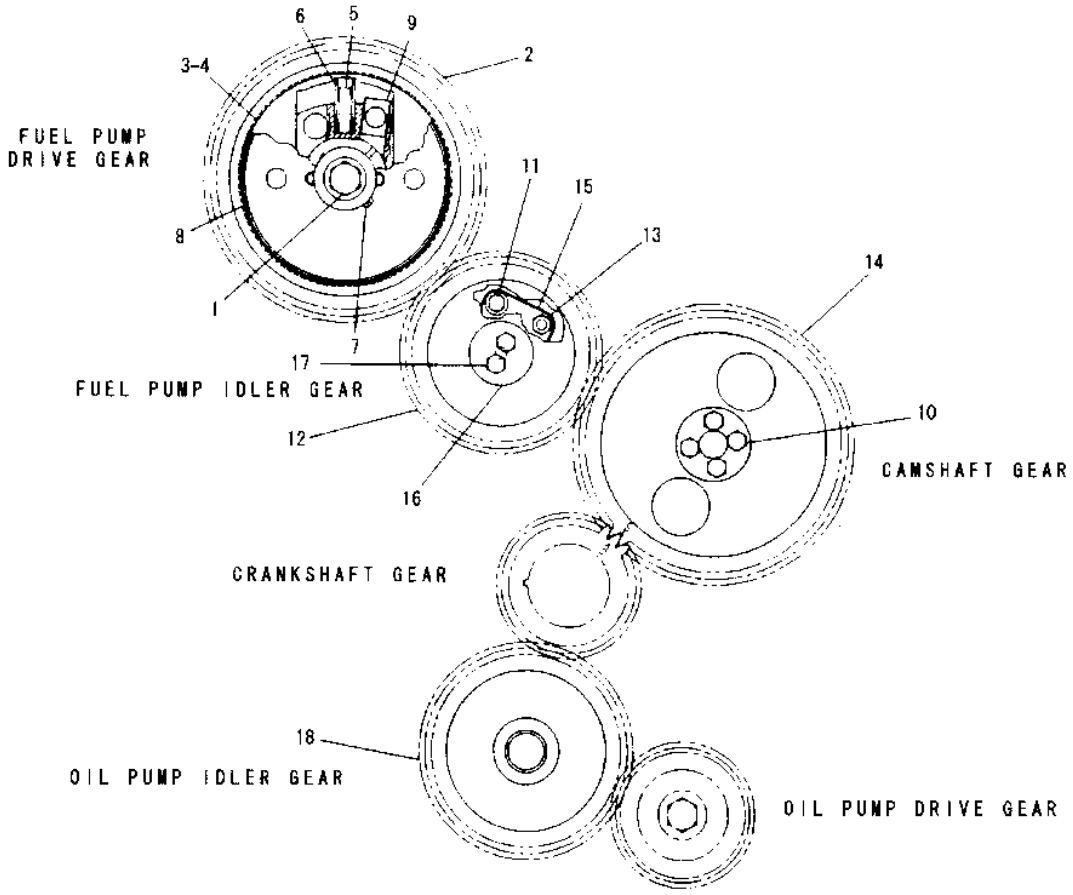


| NOTE | No. | PART No. | QTY | PART NAME | NOTE | No. | PART No. | QTY | PART NAME |
|---|---|---|---|---|---|---|---|---|---|
| | 1 | 7N-2602 | 1 | BOLT | | 18 | 4P-7828 | 1 | GEAR AS |
| | | 7N-2994 | 1 | WASHER | | | 2P-1168 | 1 | BEARING |
| | 2 | 4P-7822 | 1 | WEIGHT AS(Z=66) | | | | | |
| | 3 | 8N-0498 | 1 | SEAL | | | | | |
| | 4 | 6F-4718 | 1 | SEAL(ID=164.69mm) | | | | | |
| | 5 | 1W-5878 | 2 | SPRING | | | | | |
| | 6 | 1W-5879 | 2 | SPRING | | | | | |
| | 7 | 4B-1273 | 2 | SCREW | | | | | |
| | 8 | 9N-5765 | 1 | PLATE | | | | | |
| | 9 | 9N-5767 | 2 | SLIDE | | | | | |
| | 10 | 0S-1748 | 4 | BOLT(L=51mm) | | | | | |
| | 11 | 0S-1594 | 2 | BOLT(L=25mm) | | | | | |
| | | 5M-2894 | 2 | WASHER | | | | | |
| | 12 | 107-2206 | 1 | GEAR AS | | | | | |
| | | 2S-6692 | 1 | BEARING | | | | | |
| | 13 | 5B-9079 | 1 | NUT | | | | | |
| | 14 | 4P-7826 | 1 | GEAR | | | | | |
| | 15 | 105-9772 | 1 | SHAFT | | | | | |
| | 16 | 8N-4960 | 1 | PLATE | | | | | |
| | 17 | 0S-1618 | 2 | BOLT(L=25mm) | | | | | |

H51693E

GRAPHIC #1

h51693e

# 7C4441 FLYWHEEL GP

PART OF 1167568-Page 14

**Key:**

**SMCS**

| NOTE | REF NO | GRAPHIC REF | PART NUMBER | QTY | PART NAME 1 2 3 4 5 6 (PRODUCT LEVEL) | PRICE USD |
|---|---|---|---|---|---|---|
| | 1 | | 0S-1600 | 9 | BOLT | |
| | 2 | | 7C-4442 | 1 | FLYWHEEL AS | |
| | | | 7N-9146 | 1 | GEAR (Z=156) | |

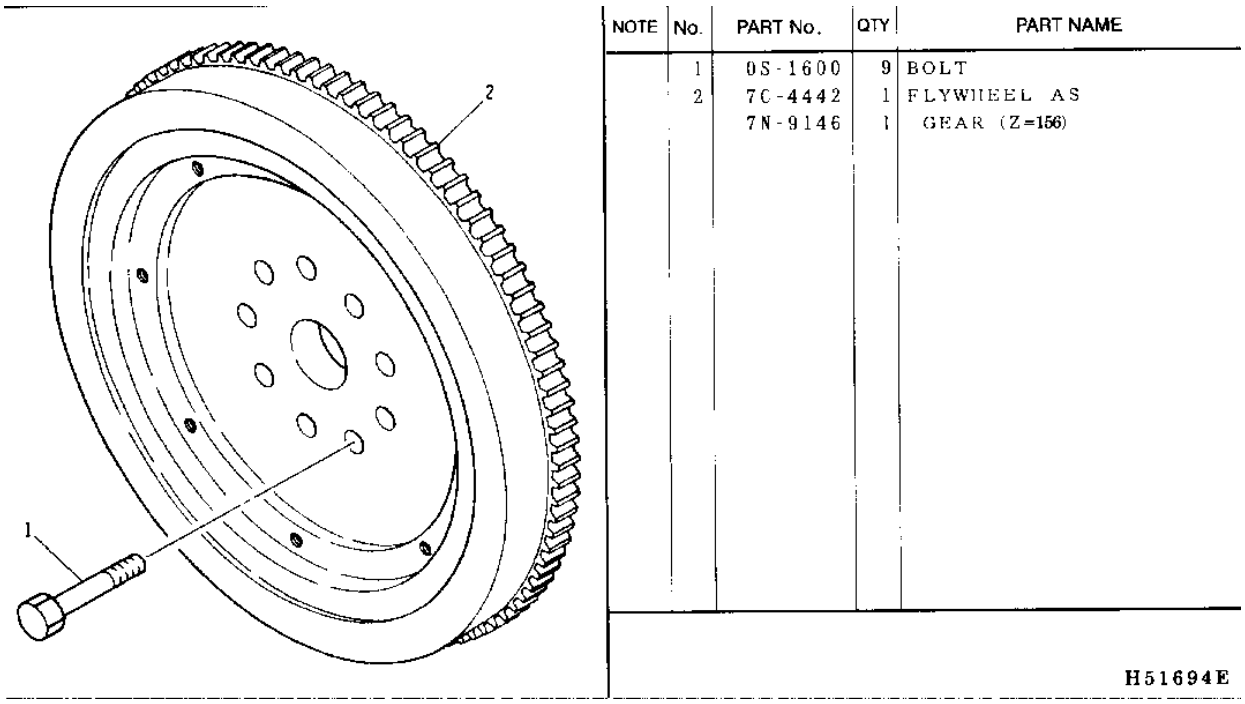


GRAPHIC #1 h51694e

# 7N2879 PULLEY GP-CRANKSHAFT

PART OF 1167568-Page 13

**Key:**

**SMCS**

| NOTE | REF NO | GRAPHIC REF | PART NUMBER | QTY | PART NAME 1 2 3 4 5 6 (PRODUCT LEVEL) | PRICE USD |
|---|---|---|---|---|---|---|
| | 1 | | 0S-1594 | 6 | BOLT (L=25mm) | |
| | 2 | | 5M-2894 | 6 | WASHER | |
| | 3 | | 7N-1152 | 1 | PULLEY | |

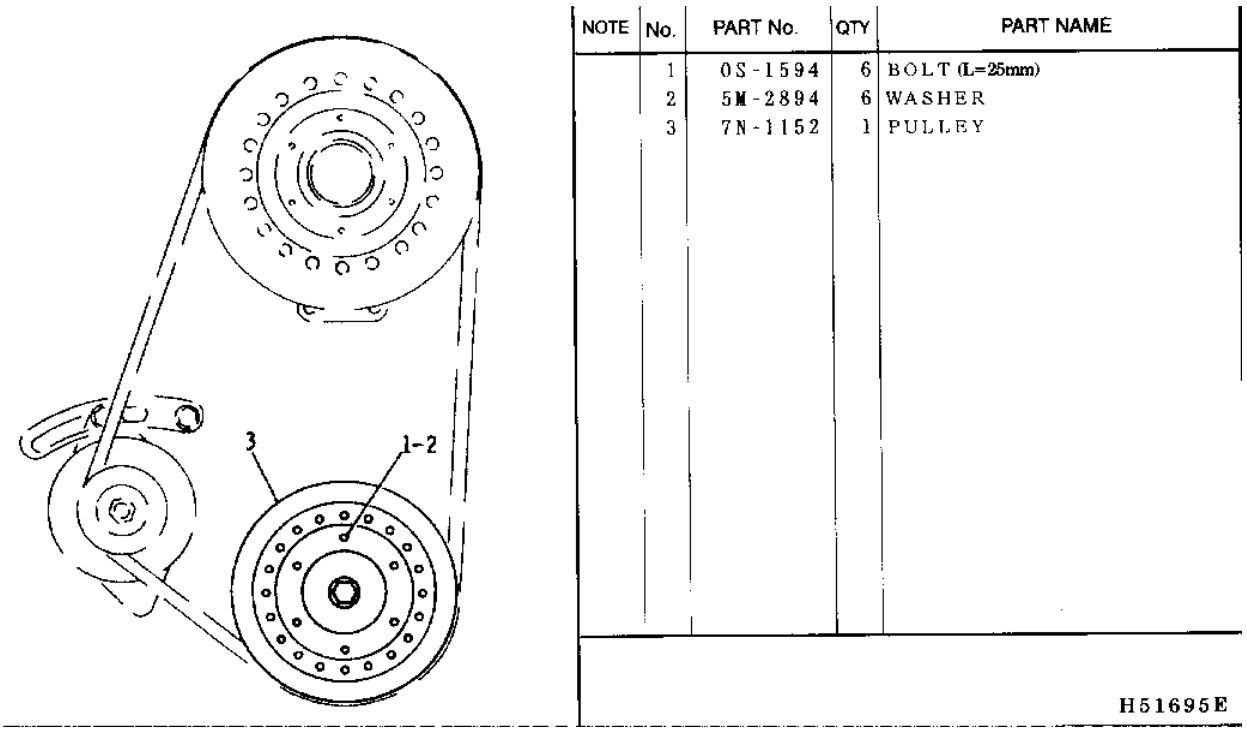


GRAPHIC #1 h51695e

# 1241737 PULLEY GP-FAN DRIVE

HIGH AMBIENT
PART OF 1205025-Page 51
AN ATTACHMENT

**Key:**

**SMCS**

| NOTE | REF NO | GRAPHIC REF | PART NUMBER | QTY | PART NAME 1 2 3 4 5 6 (PRODUCT LEVEL) | PRICE USD |
|---|---|---|---|---|---|---|
| | 1 | | 4Y-7527 | 1 | PULLEY | |
| | 2 | | 4N-6529 | 1 | BELT SET | |

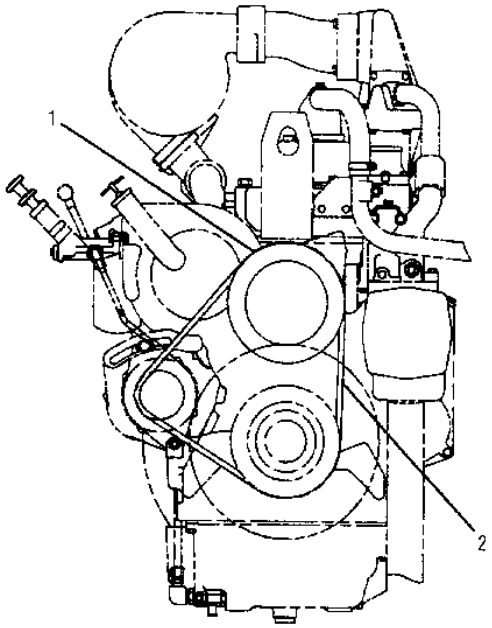


FRONT VIEW OF ENGINE

| NOTE | No. | PART No. | QTY | PART NAME |
|---|---|---|---|---|
| | 1 | 4Y-7527 | 1 | PULLEY |
| | 2 | 4N-6529 | 1 | BELT SET |

H58683E

GRAPHIC #1 h58683e

# 1035868 DRIVE GP-FAN

PART OF 1229789-Page 12

**Key:**

**SMCS**

| NOTE | REF NO | GRAPHIC REF | PART NUMBER | QTY | PART NAME 1 2 3 4 5 6 (PRODUCT LEVEL) | PRICE USD |
|---|---|---|---|---|---|---|
| | 1 | | 1P-9143 | 1 | BRACKET AS | |
| | | | 5B-5812 | 1 | DOWEL | |
| | 2 | | 9S-6703 | 1 | SHAFT | |
| | 3 | | 2P-1757 | 1 | HUB | |
| | 4 | | 5S-7264 | 1 | WASHER | |
| | 5 | | 5M-6214 | 1 | PLUG | |
| | 6 | | 0S-1587 | 3 | BOLT (L=44mm) | |
| | 7 | | 6V-4626 | 2 | BOLT (L=51mm) | |
| | 8 | | 4K-5175 | 1 | BOLT (L=38mm) | |
| | 9 | | 5S-9062 | 1 | SPACER | |
| | 10 | | 3L-1425 | 1 | BEARING | |
| | 11 | | 8N-5305 | 1 | SPACER | |
| | 12 | | 8H-9789 | 1 | BEARING | |
| | 13 | | 5S-2106 | 1 | SEAL (ID=50.60mm) | |
| | 14 | | 0S-1619 | 6 | BOLT (L=76mm) | |
| | 15 | | 1D-4717 | 6 | NUT | |
| | 16 | | 2P-8928 | 1 | SPACER | |
| | 17 | | 9F-4446 | 1 | SEAL (ID=78.74mm) | |
| | 18 | | 7Y-1411 | 1 | SPACER AS | |
| | 19 | | 4N-4782 | 1 | PULLEY | |
| | 20 | | 5M-2894 | 6 | WASHER | |

## 1035868 DRIVE GP-FAN

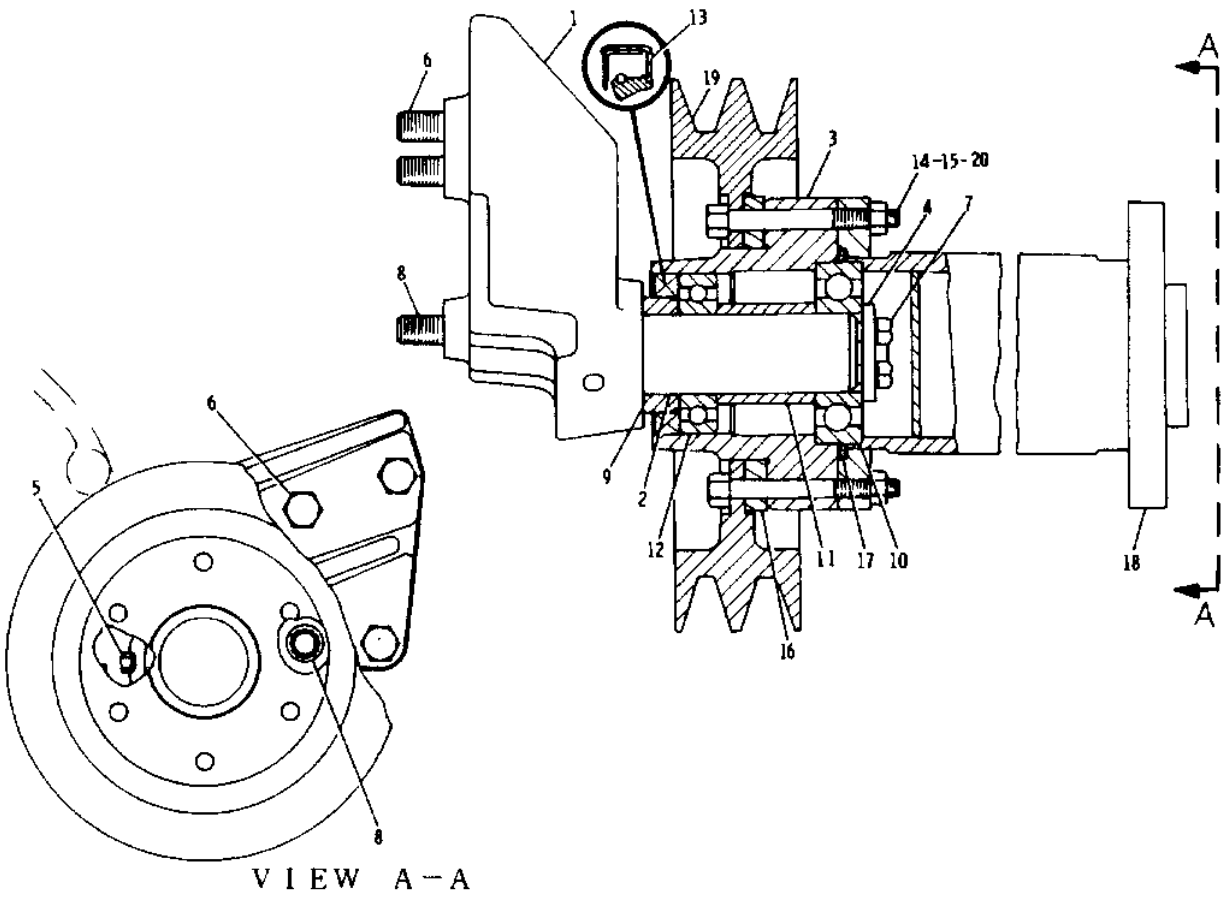


VIEW A−A

| NOTE | No. | PART No. | QTY | PART NAME | NOTE | No. | PART No. | QTY | PART NAME |
|---|---|---|---|---|---|---|---|---|---|
| | 1 | 1P-9143 | 1 | BRACKET AS | | 20 | 5M-2894 | 6 | WASHER |
| | | 5B-5812 | 1 | DOWEL | | | | | |
| | 2 | 9S-6703 | 1 | SHAFT | | | | | |
| | 3 | 2P-1757 | 1 | HUB | | | | | |
| | 4 | 5S-7264 | 1 | WASHER | | | | | |
| | 5 | 5M-6214 | 1 | PLUG | | | | | |
| | 6 | 0S-1587 | 3 | BOLT (L=44mm) | | | | | |
| | 7 | 6V-4626 | 2 | BOLT (L=51mm) | | | | | |
| | 8 | 4K-5175 | 1 | BOLT (L=38mm) | | | | | |
| | 9 | 5S-9062 | 1 | SPACER | | | | | |
| | 10 | 3L 1425 | 1 | BEARING | | | | | |
| | 11 | 8N-5305 | 1 | SPACER | | | | | |
| | 12 | 8H-9789 | 1 | BEARING | | | | | |
| | 13 | 5S-2106 | 1 | SEAL (ID=50.60mm) | | | | | |
| | 14 | 0S-1619 | 6 | BOLT (L=76mm) | | | | | |
| | 15 | 1D-4717 | 6 | NUT | | | | | |
| | 16 | 2P-8928 | 1 | SPACER | | | | | |
| | 17 | 9F-4446 | 1 | SEAL (ID=78.74mm) | | | | | |
| | 18 | 7Y 1411 | 1 | SPACER AS | | | | | |
| | 19 | 4N-4782 | 1 | PULLEY | | | | | |

H51696E

# 8N2395 HOUSING GP-FLYWHEEL

PART OF 1167568-Page 13

**Key:**

**SMCS**

| NOTE | REF NO | GRAPHIC REF | PART NUMBER | QTY | PART NAME 1 2 3 4 5 6 (PRODUCT LEVEL) | PRICE USD |
|---|---|---|---|---|---|---|
| | 1 | | 9H-5921 | 1 | GASKET | |
| | 2 | | 3B-0645 | 1 | PLUG | |
| | 3 | | 7W-9324 | 1 | FLYWHEEL | |
| | 4 | | 1A-1460 | 13 | BOLT (L=51mm) | |
| | 5 | | 5M-6213 | 1 | PLUG | |
| | 6 | | 5F-0304 | 1 | PLUG | |
| | 7 | | 2A-1162 | 1 | GASKET | |

## 8N2395 HOUSING GP-FLYWHEEL

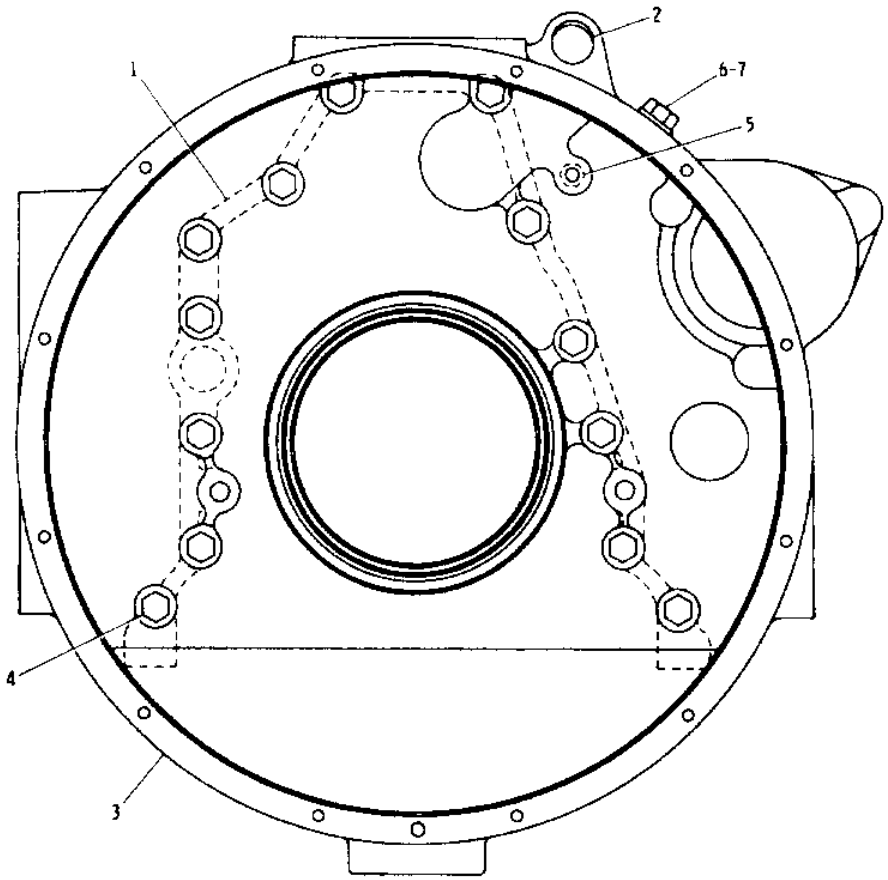


| NOTE | No. | PART No. | QTY | PART NAME |
|---|---|---|---|---|
| | 1 | 9H-5921 | 1 | GASKET |
| | 2 | 3B-0645 | 1 | PLUG |
| | 3 | 7W-9324 | 1 | FLYWHEEL |
| | 4 | 1A-1460 | 13 | BOLT(L=51mm) |
| | 5 | 5M 6213 | 1 | PLUG |
| | 6 | 5F-0304 | 1 | PLUG |
| | 7 | 2A-1162 | 1 | GASKET |

H51697E

GRAPHIC #1

h51697e

# 1280070 PAN GP-OIL

PART OF 1167568-Page 14

**Key:**

**SMCS**

| NOTE | REF NO | GRAPHIC REF | PART NUMBER | QTY | PART NAME 1 2 3 4 5 6 (PRODUCT LEVEL) | PRICE USD |
|---|---|---|---|---|---|---|
| | 1 | | 2P-1738 | 1 | PLATE AS | |
| | | | 1S-5304 | 1 | LUG | |
| | 2 | | 4D-9376 | 1 | BOSS | |
| | 3 | | 8S-1965 | 1 | GASKET | |
| | 4 | | 4M-2969 | 1 | GASKET | |
| | 5 | | 128-0069 | 1 | PAN | |
| | 6 | | 6B-5262 | 2 | PLUG | |
| | 7 | | 2A-3398 | 2 | GASKET | |
| | 8 | | 7E-4761 | 1 | VALVE | |
| | 9 | | 8L-2786 | 1 | SEAL (ID=16.36mm) | |
| | 10 | | 111-4759 | 1 | SWITCH AS | |
| | | | 3E-3390 | 2 | PIN | |
| | | | 3E-3365 | 1 | WEDGE | |
| | | | 102-8802 | 1 | RECEPTACLE KIT | |
| | 11 | | 4K-1388 | 1 | SEAL (ID=26.59mm) | |
| | 12 | | 3J-5389 | 2 | PLUG | |

## 1280070 PAN GP-OIL

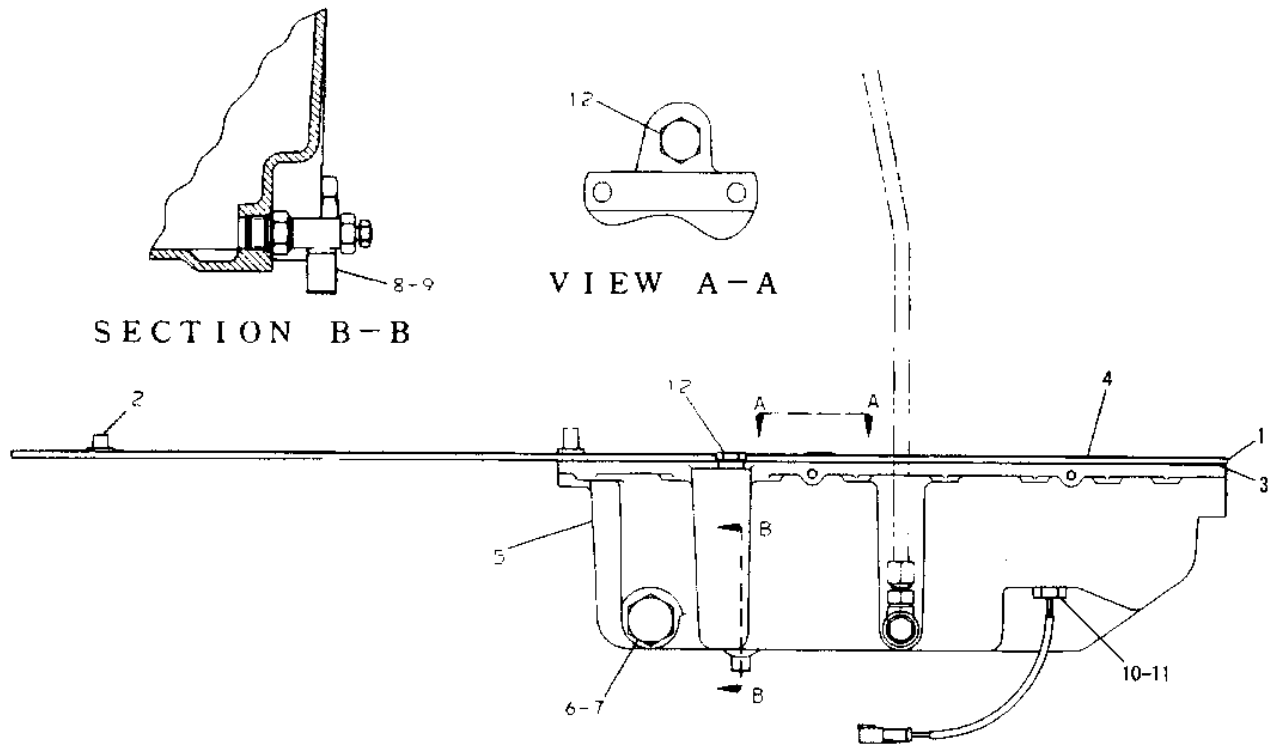


| NOTE | No. | PART No. | QTY | PART NAME | NOTE | No. | PART No. | QTY | PART NAME |
|---|---|---|---|---|---|---|---|---|---|
| | 1 | 2P-1738 | 1 | PLATE AS | | | | | |
| | | 1S-5304 | 1 | LUG | | | | | |
| | 2 | 4D-9376 | 1 | BOSS | | | | | |
| | 3 | 8S-1965 | 1 | GASKET | | | | | |
| | 4 | 4M-2969 | 1 | GASKET | | | | | |
| | 5 | 128-0069 | 1 | PAN | | | | | |
| | 6 | 6B-5262 | 2 | PLUG | | | | | |
| | 7 | 2A-3398 | 2 | GASKET | | | | | |
| | 8 | 7E-4761 | 1 | VALVE | | | | | |
| | 9 | 8L-2786 | 1 | SEAL(ID=16.36mm) | | | | | |
| | 10 | 111-4759 | 1 | SWITCH AS | | | | | |
| | | 3E-3390 | 2 | PIN | | | | | |
| | | 3E-3365 | 1 | WEDGE | | | | | |
| | | 102-8802 | 1 | RECEPTACLE KIT | | | | | |
| | 11 | 4K-1388 | 1 | SEAL(ID=26.59mm) | | | | | |
| | 12 | 3J-5389 | 2 | PLUG | | | | | |

H51698E

GRAPHIC #1 h51698e

# 2P6200 FASTENER GP-OIL PAN

PART OF 1167568-Page 14

**Key:**

**SMCS**

| NOTE | REF NO | GRAPHIC REF | PART NUMBER | QTY | PART NAME 1 2 3 4 5 6 (PRODUCT LEVEL) | PRICE USD |
|---|---|---|---|---|---|---|
| | 1 | | 0T-0573 | 5 | BOLT (L=70mm) | |
| | 2 | | 5M-2894 | 46 | WASHER | |
| | 3 | | 0L-1352 | 3 | BOLT (L=83mm) | |
| | 4 | | 0S-1591 | 20 | BOLT (L=38mm) | |
| | 5 | | 0L-1351 | 18 | BOLT (L=22mm) | |

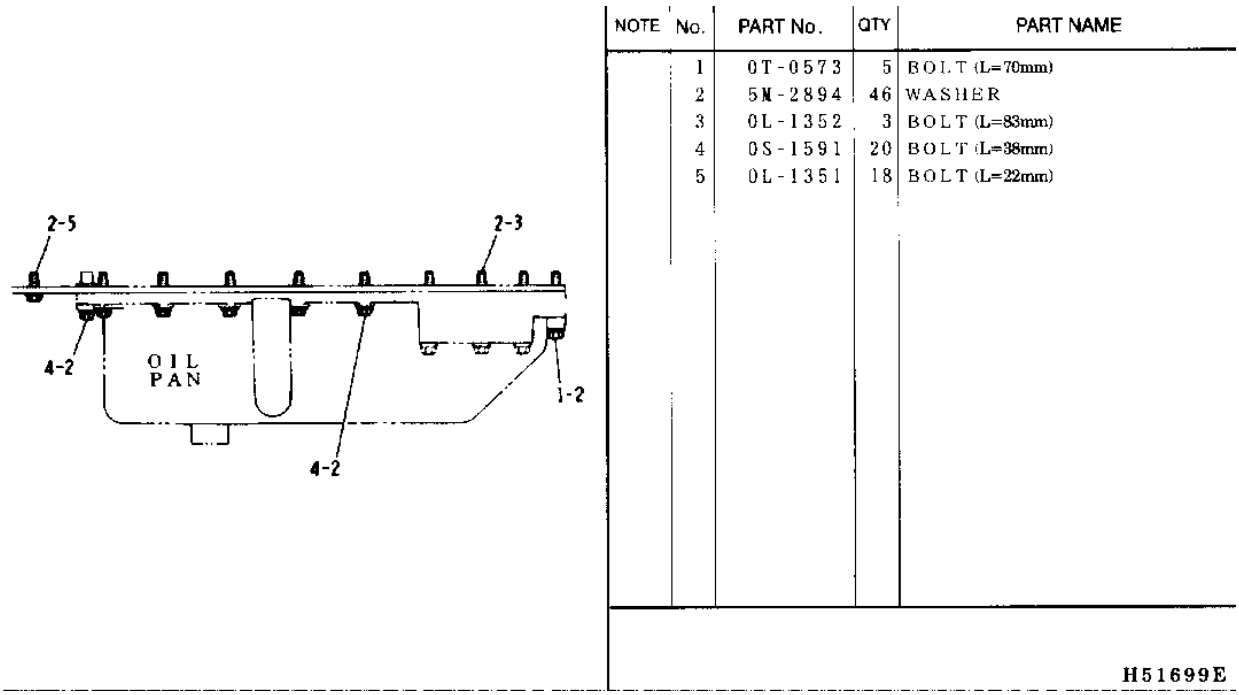


GRAPHIC #1 h51699e

# 1206618 DRIVE GP-AUXILIARY

PART OF 1229789-Page 12

**Key:**

**SMCS**

| NOTE | REF NO | GRAPHIC REF | PART NUMBER | QTY | PART NAME 1 2 3 4 5 6 (PRODUCT LEVEL) | PRICE USD |
|---|---|---|---|---|---|---|
| | 1 | | 2H-3776 | 1 | NUT | |
| | 2 | | 2H-3779 | 1 | LOCK | |
| | 3 | | 120-6619 | 1 | GEAR | |
| | 4 | | 5F-3106 | 1 | SEAL (ID=126.59mm) | |
| | 5 | | 2H-5549 | 2 | RING | |
| | 6 | | 8H-9789 | 2 | BEARING | |
| | 7 | | 1W-6254 | 1 | ADAPTER | |
| | 8 | | 7C-2165 | 1 | PULLY | |
| | 9 | | 8L-4889 | 1 | SHAFT | |
| | 10 | | 4M-0061 | 6 | BOLT (L=19mm) | |
| | 11 | | 2H-3910 | 1 | SEAL | |
| | 12 | | 8L-4949 | 1 | SPACER | |

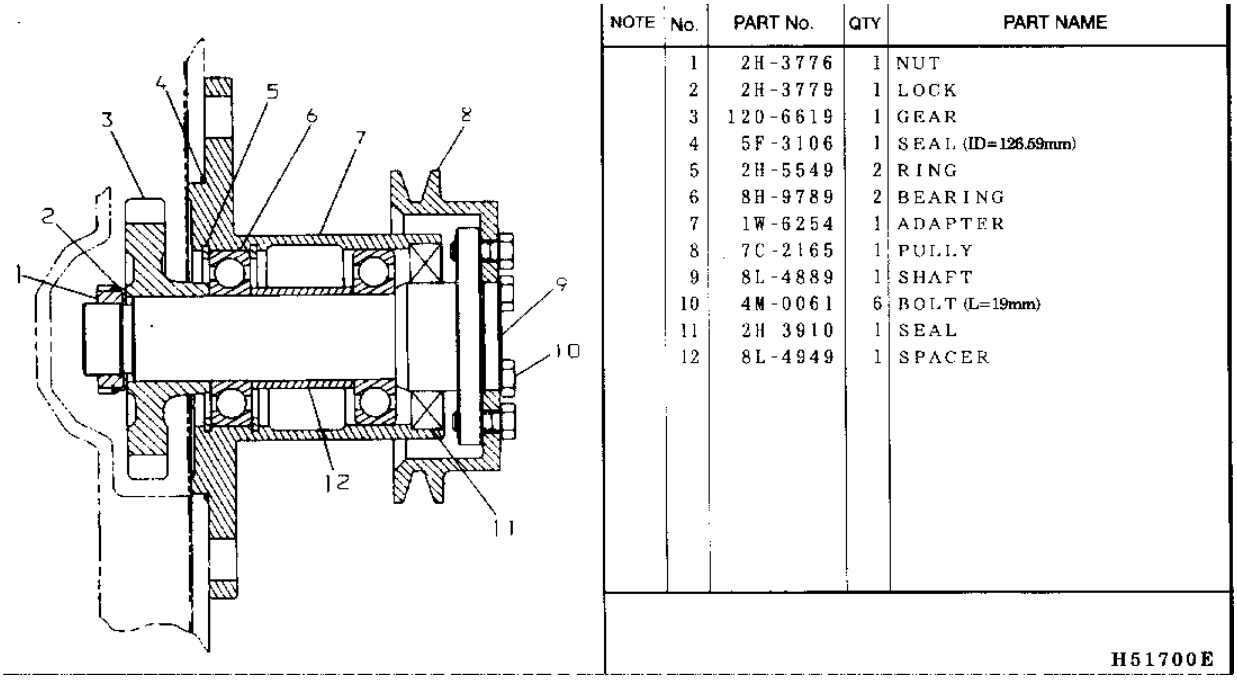


| NOTE | No. | PART No. | QTY | PART NAME |
|---|---|---|---|---|
| | 1 | 2H-3776 | 1 | NUT |
| | 2 | 2H-3779 | 1 | LOCK |
| | 3 | 120-6619 | 1 | GEAR |
| | 4 | 5F-3106 | 1 | SEAL (ID=126.59mm) |
| | 5 | 2H-5549 | 2 | RING |
| | 6 | 8H-9789 | 2 | BEARING |
| | 7 | 1W-6254 | 1 | ADAPTER |
| | 8 | 7C-2165 | 1 | PULLY |
| | 9 | 8L-4889 | 1 | SHAFT |
| | 10 | 4M-0061 | 6 | BOLT (L=19mm) |
| | 11 | 2H 3910 | 1 | SEAL |
| | 12 | 8L-4949 | 1 | SPACER |

H51700E

GRAPHIC #1 h51700e

# 1099407 MOUNTING GP-ENGINE

**Key:**

**SMCS**

| NOTE | REF NO | GRAPHIC REF | PART NUMBER | QTY | PART NAME 1 2 3 4 5 6 (PRODUCT LEVEL) | PRICE USD |
|---|---|---|---|---|---|---|
| | 1 | | 124-1704 | 1 | BRACKET AS | |
| | 2 | | 8T-9393 | 4 | BOLT (L=38mm) | |
| | 3 | | 8T-4122 | 8 | WASHER | |
| | 4 | | 7X-0346 | 4 | BOLT (L=51mm) | |
| | 5 | | 109-9437 | 4 | WASHER | |
| | 6 | | 109-9447 | 1 | BRACKET AS | |
| | 7 | | 109-9438 | 2 | BRACKET AS | |
| | 8 | | 7X-2553 | 8 | BOLT (L=40mm) | |
| | 9 | | 9X-8257 | 8 | WASHER | |
| | 10 | | 7X-2567 | 4 | BOLT (L=160mm) | |
| | 11 | | 8T-4167 | 8 | WASHER | |
| | 12 | | 109-9446 | 4 | MOUNT | |
| | 13 | | 109-9445 | 4 | MOUNT | |
| | 14 | | 124-1597 | 4 | SUPPORT AS | |

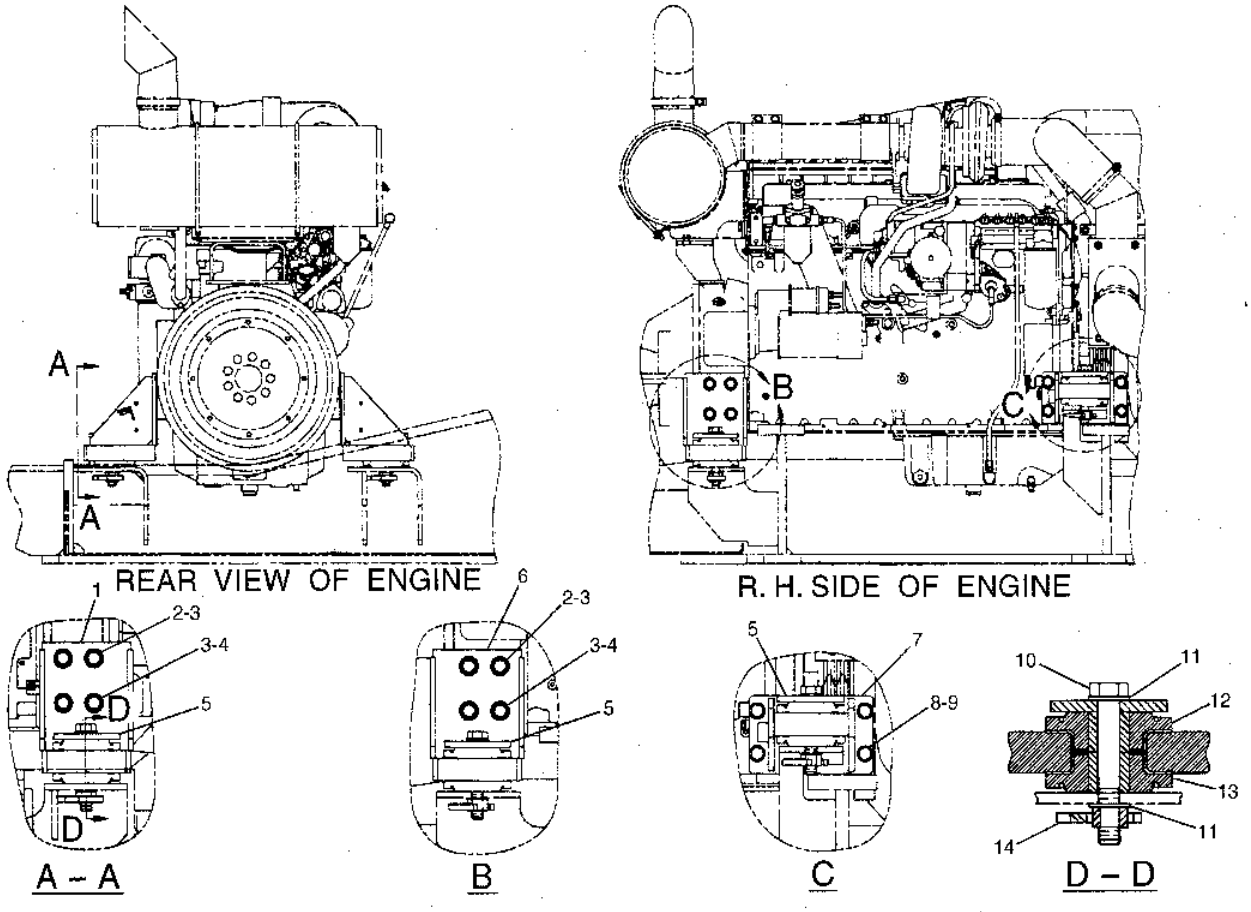


GRAPHIC #1

h79235e

# 9Y6105 GAUGE GP-OIL LEVEL (DIPSTICK)

PART OF 1167568-Page 14

**Key:**

**SMCS**

| NOTE | REF NO | GRAPHIC REF | PART NUMBER | QTY | PART NAME 1 2 3 4 5 6 (PRODUCT LEVEL) | PRICE USD |
|---|---|---|---|---|---|---|
| | 1 | | 6I-1380 | 1 | GAUGE AS | |
| | 2 | | 7E-4505 | 1 | TUBE AS | |
| | 3 | | 6I-1381 | 1 | TUBE AS | |
| | 4 | | 8S-1326 | 1 | CONNECTOR AS | |
| | | | 5P-4448 | 1 | NUT | |
| | | | 5P-4443 | 1 | SLEEVE | |
| | 5 | | 6L-3616 | 2 | CONNECTOR | |
| | 6 | | 6V-1085 | 1 | ELBOW | |
| | 7 | | 2M-9780 | 1 | SEAL (ID=19.18mm) | |
| | 8 | | 2S-1865 | 1 | BRACKET | |
| | 9 | | 5P-0537 | 1 | WASHER | |
| | 10 | | 0S-1594 | 1 | BOLT (L=25mm) | |
| | 11 | | 9S-8752 | 1 | NUT | |
| | 12 | | 5M-2894 | 2 | WASHER | |
| | 13 | | 4D-9517 | 1 | CLIP | |
| | 14 | | 8T-9368 | 1 | BOLT (L=57mm) | |

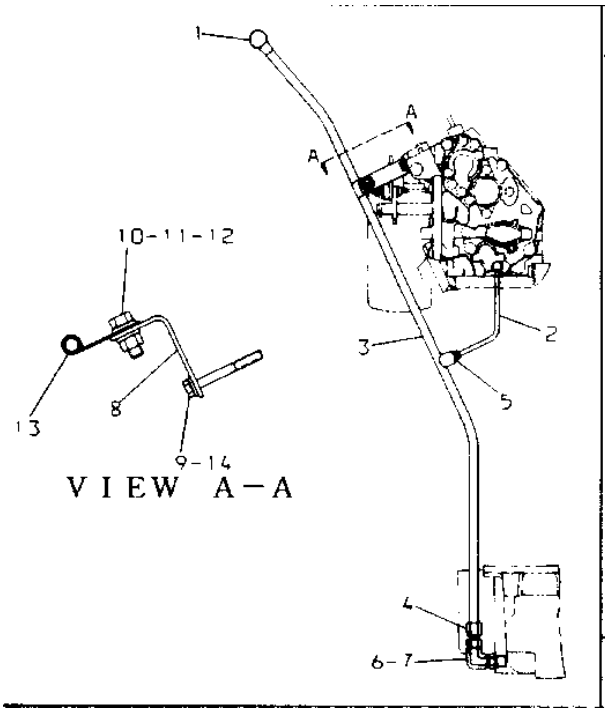


| NOTE | No. | PART No. | QTY | PART NAME |
|---|---|---|---|---|
| | 1 | 6I-1380 | 1 | GAUGE AS |
| | 2 | 7E-4505 | 1 | TUBE AS |
| | 3 | 6I-1381 | 1 | TUBE AS |
| | 4 | 8S-1326 | 1 | CONNECTOR AS |
| | | 5P-4448 | 1 | NUT |
| | | 5P-4443 | 1 | SLEEVE |
| | 5 | 6L-3616 | 2 | CONNECTOR |
| | 6 | 6V-1085 | 1 | ELBOW |
| | 7 | 2M 9780 | 1 | SEAL (ID=19.18mm) |
| | 8 | 2S-1865 | 1 | BRACKET |
| | 9 | 5P-0537 | 1 | WASHER |
| | 10 | 0S-1594 | 1 | BOLT (L=25mm) |
| | 11 | 9S-8752 | 1 | NUT |
| | 12 | 5M-2894 | 2 | WASHER |
| | 13 | 4D-9517 | 1 | CLIP |
| | 14 | 8T-9368 | 1 | BOLT (L=57mm) |

H51701E

GRAPHIC #1

h51701e

# 1P4244 BREATHER GP

PART OF 1167568-Page 14

**Key:**

**SMCS**

| NOTE | REF NO | GRAPHIC REF | PART NUMBER | QTY | PART NAME 1 2 3 4 5 6 (PRODUCT LEVEL) | PRICE USD |
|---|---|---|---|---|---|---|
| | 1 | | 3H-3243 | 1 | BOLT (L=121mm) | |
| | 2 | | 9N-0869 | 1 | WASHER | |
| | 3 | | 2W-9162 | 1 | BREATHER AS | |
| | 4 | | 4L-9564 | 1 | SEAL (ID=81.92mm) | |

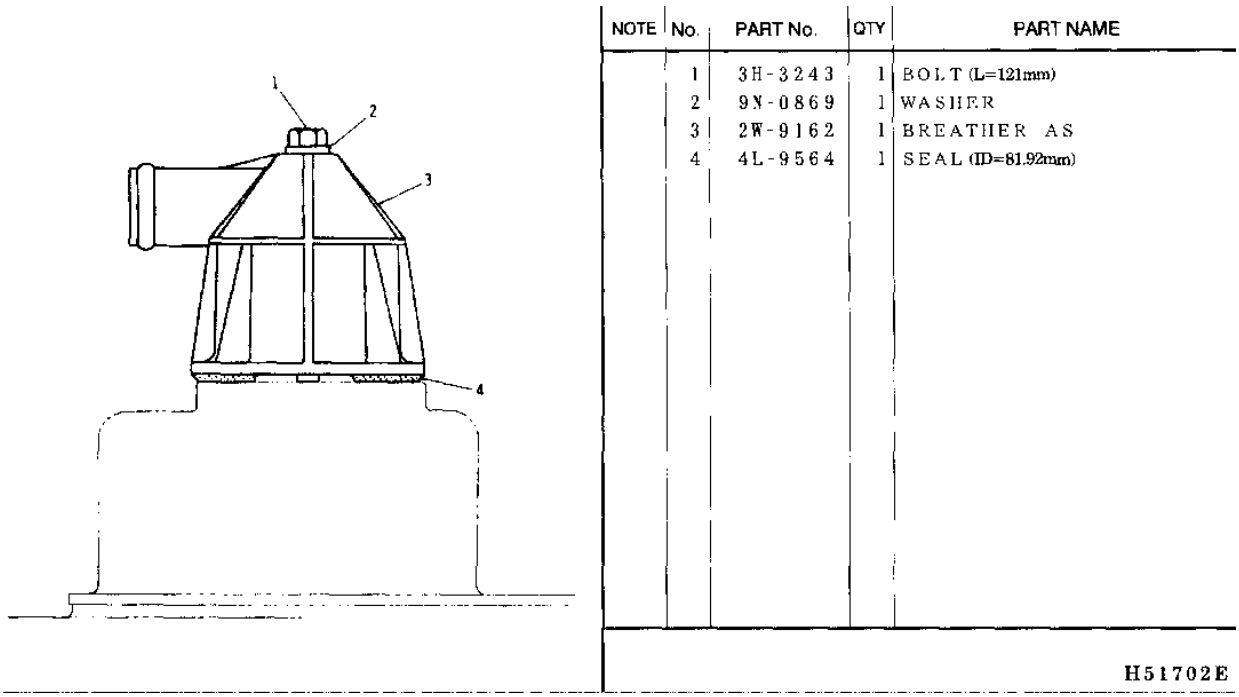


GRAPHIC #1 h51702e

# 1318917 BREATHER GP

S/N 8SR 1-(D99.03), 8TR 1-(D99.03)

**Key:** E - ORDER BY THE CENTIMETER

**SMCS**

| NOTE | REF NO | GRAPHIC REF | PART NUMBER | QTY | PART NAME 1 2 3 4 5 6 (PRODUCT LEVEL) | PRICE USD |
|---|---|---|---|---|---|---|
| | 1 | | 7Y-1359 | 1 | HOSE | |
| | 2 | | 095-9785 | 3 | CLAMP | |
| | 3 | | 7Y-1419 | 1 | TUBE AS | |
| | 4 | | 8T-4136 | 2 | BOLT (L=25mm) | |
| | 5 | | 8T-4223 | 1 | WASHER | |
| E | 6 | | 7Y-1418 | | HOSE (39cm) | |
| | 7 | | 8T-4956 | 1 | BOLT (L=35mm) | |
| | 8 | | 8T-4244 | 1 | NUT | |
| | 9 | | 8T-9393 | 2 | BOLT (L=38mm) | |
| | 10 | | 8T-4122 | 2 | WASHER | |
| | 11 | | 4I-7448 | 1 | PLATE | |
| | 12 | | 8T-4121 | 2 | WASHER | |

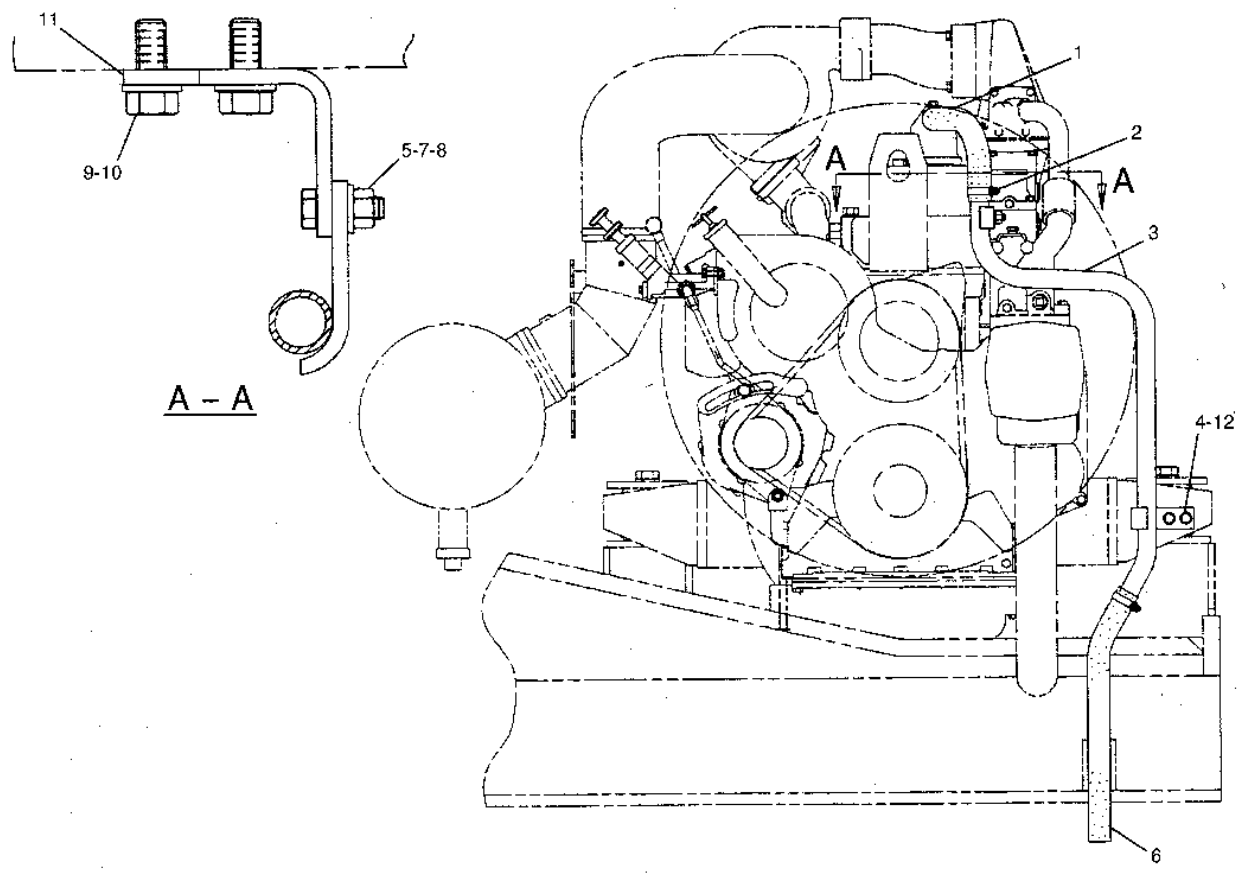


GRAPHIC #1

h79236e

## 1318917 BREATHER GP

S/N 8SR (D99.04)-UP, 8TR (D99.04)-UP

**Key:** E - ORDER BY THE CENTIMETER

**SMCS**

| NOTE | REF NO | GRAPHIC REF | PART NUMBER | QTY | PART NAME 1 2 3 4 5 6 (PRODUCT LEVEL) | PRICE USD |
|---|---|---|---|---|---|---|
| | 1 | | 4I-7501 | 1 | HOSE | |
| | 2 | | 095-9785 | 3 | CLAMP | |
| | 3 | | 7Y-2018 | 1 | TUBE AS | |
| | 4 | | 9B-7237 | 2 | BOLT (L=32mm) | |
| | 5 | | 7X-0292 | 1 | BOLT (L=114mm) | |
| E | 6 | | 7Y-1418 | | HOSE (33cm) | |
| | 7 | | 8T-4896 | 2 | WASHER | |

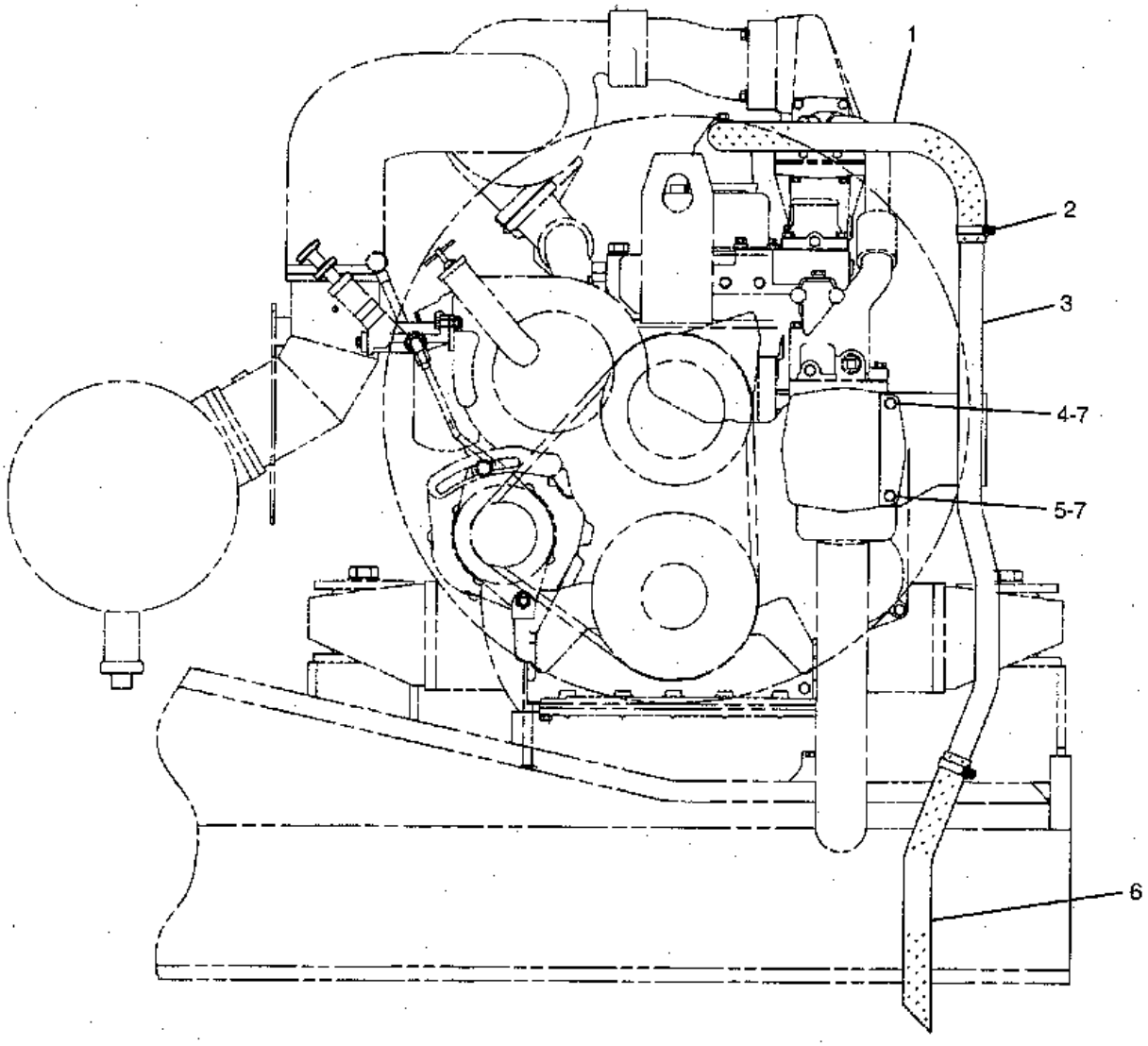


GRAPHIC #1 h79237e

# 1068957 PUMP GP-ENGINE OIL

PART OF 1167568-Page 14
6I1346-Page 45

**Key:** R - REMFG PART MAY BE AVAILABLE, Y - SEPARATE ILLUSTRATION

**SMCS**

| NOTE | REF NO | GRAPHIC REF | PART NUMBER | QTY | PART NAME 1 2 3 4 5 6 (PRODUCT LEVEL) | PRICE USD |
|---|---|---|---|---|---|---|
| RY | 1 | | 6I-1346 | 1 | PUMP GP | |
| | R | | 0R-0920 | 1 | PUMP GP-OIL -A | |
| | 2 | | 3B-1915 | 2 | BOLT (L=35mm) | |
| | 3 | | 4N-5353 | 1 | ELBOW | |
| | 4 | | 2P-8746 | 1 | GASKET | |
| | 5 | | 0S-1619 | 1 | BOLT (L=76mm) | |
| | 6 | | 0S-1590 | 4 | BOLT (L=51mm) | |
| | 7 | | 5M-2894 | 4 | WASHER | |
| | 8 | | 4P-7830 | 1 | GEAR (Z=30) | |
| | 9 | | 1P-7346 | 1 | WASHER | |

## 1068957 PUMP GP-ENGINE OIL

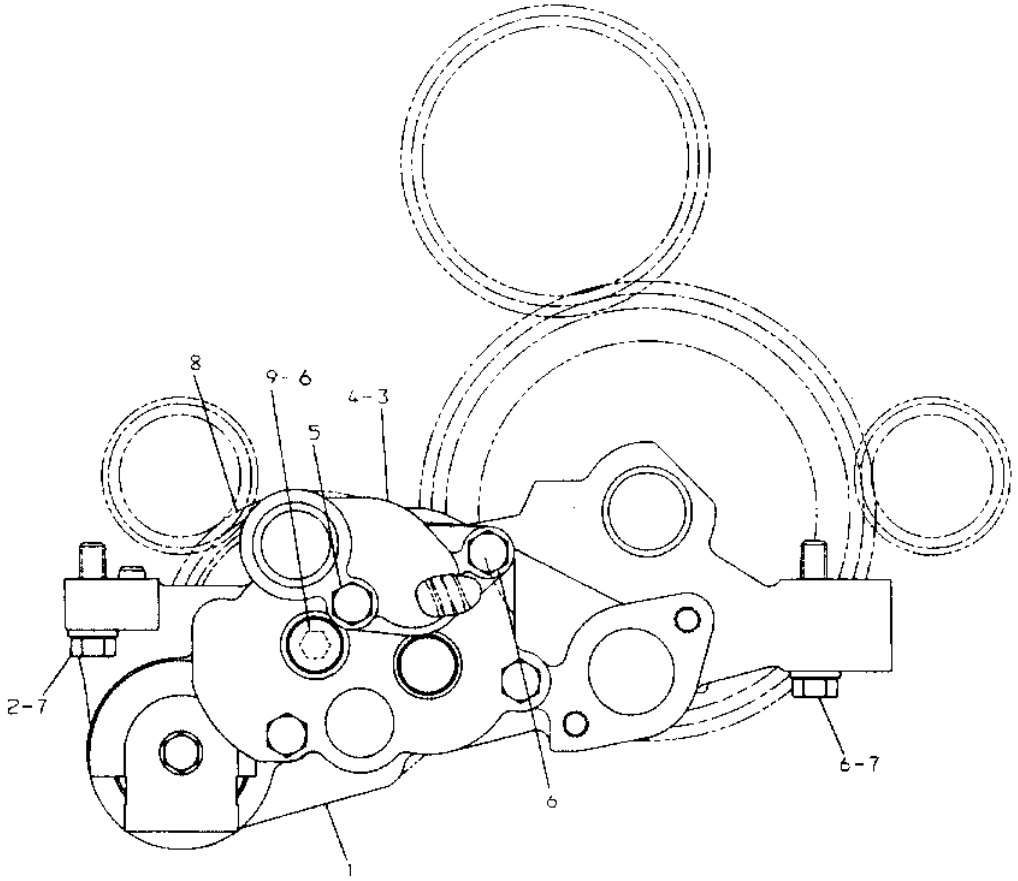


| NOTE | No. | PART No. | QTY | PART NAME | NOTE | No. | PART No. | QTY | PART NAME |
|---|---|---|---|---|---|---|---|---|---|
| Y | 1 | 6I-1346 | 1 | PUMP GP | | | | | |
| | 2 | 3B-1915 | 2 | BOLT (L=35mm) | | | | | |
| | 3 | 4N-5353 | 1 | ELBOW | | | | | |
| | 4 | 2P 8746 | 1 | GASKET | | | | | |
| | 5 | 0S 1619 | 1 | BOLT (L=76mm) | | | | | |
| | 6 | 0S 1590 | 4 | BOLT (L=51mm) | | | | | |
| | 7 | 5M-2894 | 4 | WASHER | | | | | |
| | 8 | 4P-7830 | 1 | GEAR (Z=30) | | | | | |
| | 9 | 1P-7346 | 1 | WASHER | | | | | |

Y-SEE SEPARATE ILLUSTRATION

H51703E

GRAPHIC #1

h51703e

# 6I1346 PUMP GP-ENGINE OIL

PART OF 1068957-Page 44

**Key:**

**SMCS**

| NOTE | REF NO | GRAPHIC REF | PART NUMBER | QTY | PART NAME 1 2 3 4 5 6 (PRODUCT LEVEL) | PRICE USD |
|---|---|---|---|---|---|---|
| | 1 | | 4W-2322 | 1 | BODY AS | |
| | 2 | | 2P-1170 | 1 | SHAFT AS | |
| | 3 | | 4B-9782 | 1 | BALL | |
| | 4 | | 4B-9880 | 1 | BALL | |
| | 5 | | 1F-1006 | 1 | DOWEL | |
| | 6 | | 8S-6511 | 2 | BEARING | |
| | 7 | | 2P-1781 | 1 | SPACER | |
| | 8 | | 4P-3546 | 1 | VALVE AS | |
| | 9 | | 2B-2694 | 1 | BOLT (L=51mm) | |
| | | | 9M-1974 | 1 | WASHER | |
| | 10 | | 4N-3732 | 1 | COVER | |
| | 11 | | 6N-1036 | 2 | GEAR (Z=8) | |
| | 12 | | 0T-0065 | 3 | BOLT (L=89mm) | |
| | 13 | | 8S-0493 | 1 | SHAFT AS | |
| | 14 | | 6I-1345 | 1 | SHAFT AS | |
| | 15 | | 4W-2321 | 1 | BODY AS | |
| | 16 | | 8S-6511 | 2 | BEARING | |
| | 17 | | 1B-8709 | 1 | KEY | |

## 6I1346 PUMP GP-ENGINE OIL

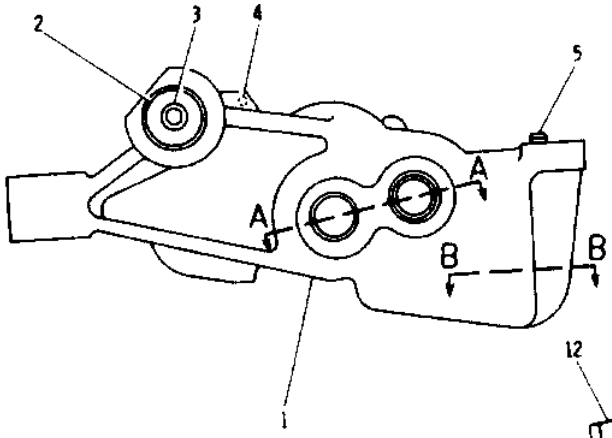


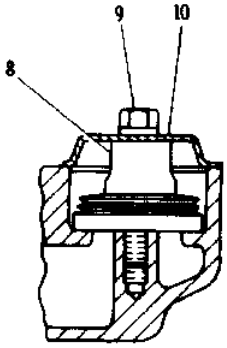


SECTION B−B

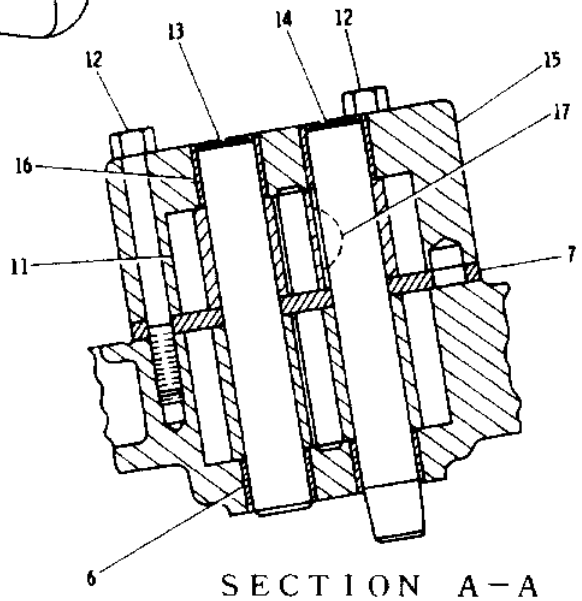


SECTION A−A

| NOTE | No. | PART No. | QTY | PART NAME | NOTE | No. | PART No. | QTY | PART NAME |
|---|---|---|---|---|---|---|---|---|---|
| | 1 | 4W-2322 | 1 | BODY AS | | | | | |
| | 2 | 2P-1170 | 1 | SHAFT AS | | | | | |
| | 3 | 4B-9782 | 1 | BALL | | | | | |
| | 4 | 4B-9880 | 1 | BALL | | | | | |
| | 5 | 1F-1006 | 1 | DOWEL | | | | | |
| | 6 | 8S-6511 | 2 | BEARING | | | | | |
| | 7 | 2P-1781 | 1 | SPACER | | | | | |
| | 8 | 4P-3546 | 1 | VALVE AS | | | | | |
| | 9 | 2B-2694 | 1 | BOLT (L=51mm) | | | | | |
| | | 9M-1974 | 1 | WASHER | | | | | |
| | 10 | 4N-3732 | 1 | COVER | | | | | |
| | 11 | 6N-1036 | 2 | GEAR (Z=8) | | | | | |
| | 12 | 0T-0065 | 3 | BOLT (L=89mm) | | | | | |
| | 13 | 8S-0493 | 1 | SHAFT AS | | | | | |
| | 14 | 6I-1345 | 1 | SHAFT AS | | | | | |
| | 15 | 4W-2321 | 1 | BODY AS | | | | | |
| | 16 | 8S-6511 | 2 | BEARING | | | | | |
| | 17 | 1B-8709 | 1 | KEY | | | | | |

H51704E

# 2P6105 LINES GP-ENGINE OIL

PART OF 1167568-Page 14

**Key:**

**SMCS**

| NOTE | REF NO | GRAPHIC REF | PART NUMBER | QTY | PART NAME 1 2 3 4 5 6 (PRODUCT LEVEL) | PRICE USD |
|---|---|---|---|---|---|---|
| | 1 | | 9M-4849 | 3 | SEAL (L=23.16mm) | |
| | 2 | | 0S-1594 | 3 | BOLT (L=25mm) | |
| | 3 | | 8N-7315 | 1 | TUBE AS | |
| | 4 | | 0T-0102 | 2 | BOLT (L=16mm) | |
| | | | 0L-0364 | 2 | LOCK | |
| | 5 | | 2P-1739 | 1 | TUBE AS | |
| | 6 | | 7W-9020 | 1 | BELL AS | |
| | 7 | | 8S-8874 | 1 | LOCK | |
| | 8 | | 8M-0904 | 1 | GASKET | |
| | 9 | | 8N-7318 | 1 | TUBE AS | |
| | 10 | | 5M-6213 | 1 | PLUG | |
| | 11 | | 1A-2029 | 1 | BOLT (L=29mm) | |
| | 12 | | 0L-2070 | 1 | BOLT (L=57mm) | |
| | 13 | | 4L-3641 | 1 | CLIP | |
| | 14 | | 2S-1541 | 6 | ORIFICE | |
| | 15 | | 0S-1590 | 1 | BOLT (L=51mm) | |
| | 16 | | 5M-2894 | 1 | WASHER | |
| | 17 | | 6B-7469 | 1 | SPACER | |
| | 18 | | 4Y-9737 | 1 | GASKET | |
| | 19 | | 2M-5407 | 1 | GASKET | |

## 2P6105 LINES GP-ENGINE OIL

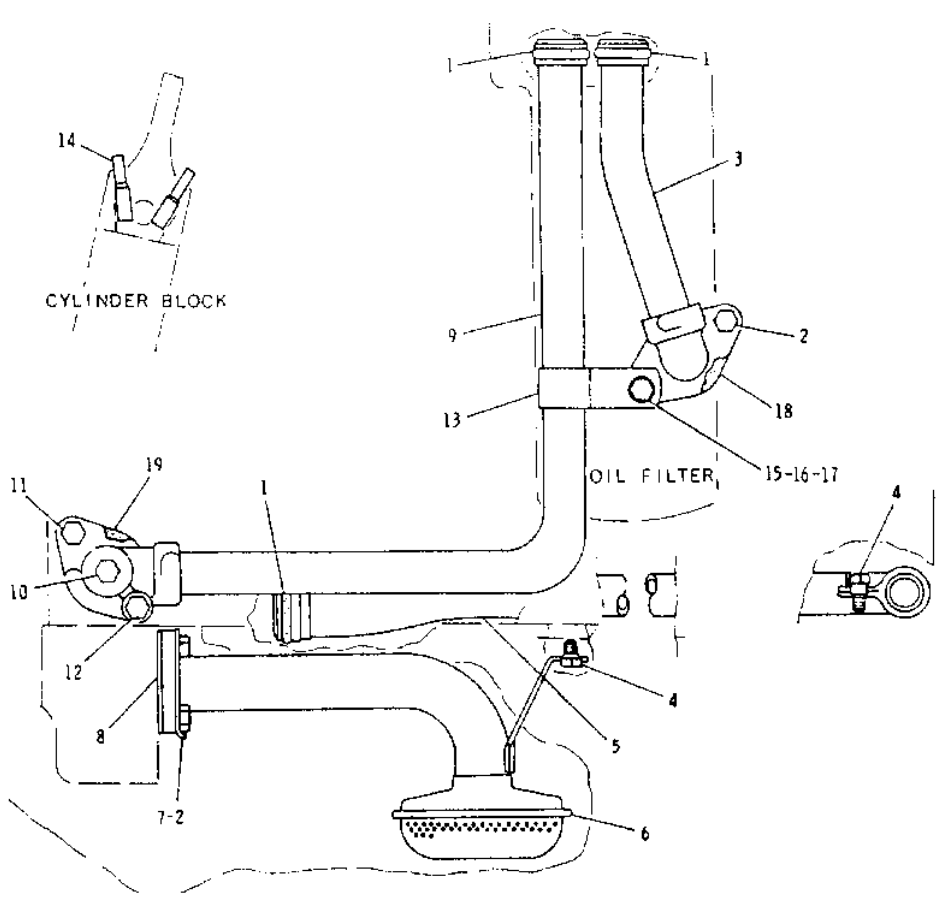


| NOTE | No. | PART No. | QTY | PART NAME | NOTE | No. | PART No. | QTY | PART NAME |
|---|---|---|---|---|---|---|---|---|---|
| | 1 | 9M-4849 | 3 | SEAL (ID=23.16mm) | | | | | |
| | 2 | 0S-1594 | 3 | BOLT (L=25mm) | | | | | |
| | 3 | 8N-7315 | 1 | TUBE AS | | | | | |
| | 4 | 0T-0102 | 2 | BOLT (L=16mm) | | | | | |
| | | 0L-0364 | 2 | LOCK | | | | | |
| | 5 | 2P-1739 | 1 | TUBE AS | | | | | |
| | 6 | 7W-9020 | 1 | BELL AS | | | | | |
| | 7 | 8S-8874 | 1 | LOCK | | | | | |
| | 8 | 8M-0904 | 1 | GASKET | | | | | |
| | 9 | 8N-7318 | 1 | TUBE AS | | | | | |
| | 10 | 5M-6213 | 1 | PLUG | | | | | |
| | 11 | 1A-2029 | 1 | BOLT (L=29mm) | | | | | |
| | 12 | 0L 2070 | 1 | BOLT (L=57mm) | | | | | |
| | 13 | 4L-3641 | 1 | CLIP | | | | | |
| | 14 | 2S-1541 | 6 | ORIFICE | | | | | |
| | 15 | 0S-1590 | 1 | BOLT (L=51mm) | | | | | |
| | 16 | 5M-2894 | 1 | WASHER | | | | | |
| | 17 | 6B-7469 | 1 | SPACER | | | | | |
| | 18 | 4Y-9737 | 1 | GASKET | | | | | |
| | 19 | 2M-5407 | 1 | GASKET | | | | | |

H51705E

GRAPHIC #1

h51705e

# 4P7096 BASE GP-OIL FILTER

PART OF 1261668-Page 54

**Key:**

**SMCS**

| NOTE | REF NO | GRAPHIC REF | PART NUMBER | QTY | PART NAME 1 2 3 4 5 6 (PRODUCT LEVEL) | PRICE USD |
|---|---|---|---|---|---|---|
| | 1 | | 4P-7097 | 1 | BASE AS | |
| | | | 3B-0645 | 3 | PLUG | |
| | 2 | | 2B-0858 | 1 | PLUG | |
| | 3 | | 4P-9107 | 1 | STUD | |
| | 4 | | 1B-2790 | 2 | BOLT (L=35mm) | |
| | 5 | | 2B-2694 | 1 | BOLT (L=51mm) | |
| | 6 | | 4P-8453 | 1 | COVER | |
| | 7 | | 8C-3446 | 1 | VALVE | |
| | 8 | | 8C-3445 | 1 | CAP | |
| | 9 | | 4P-9103 | 1 | ADAPTER | |
| | 10 | | 7F-0216 | 1 | NUT | |
| | 11 | | 5P-8066 | 1 | SEAL (ID=32.92mm) | |
| | 12 | | 9Y-6860 | 1 | GASKET | |
| | 13 | | 8M-3182 | 2 | SPRING | |
| | 14 | | 8H-7521 | 1 | SEAL (ID=91.67mm) | |
| | 15 | | 1B-9575 | 1 | BOLT (L=44mm) | |
| | 16 | | 3J-7354 | 1 | SEAL (ID=8.92mm) | |

## 4P7096 BASE GP-OIL FILTER

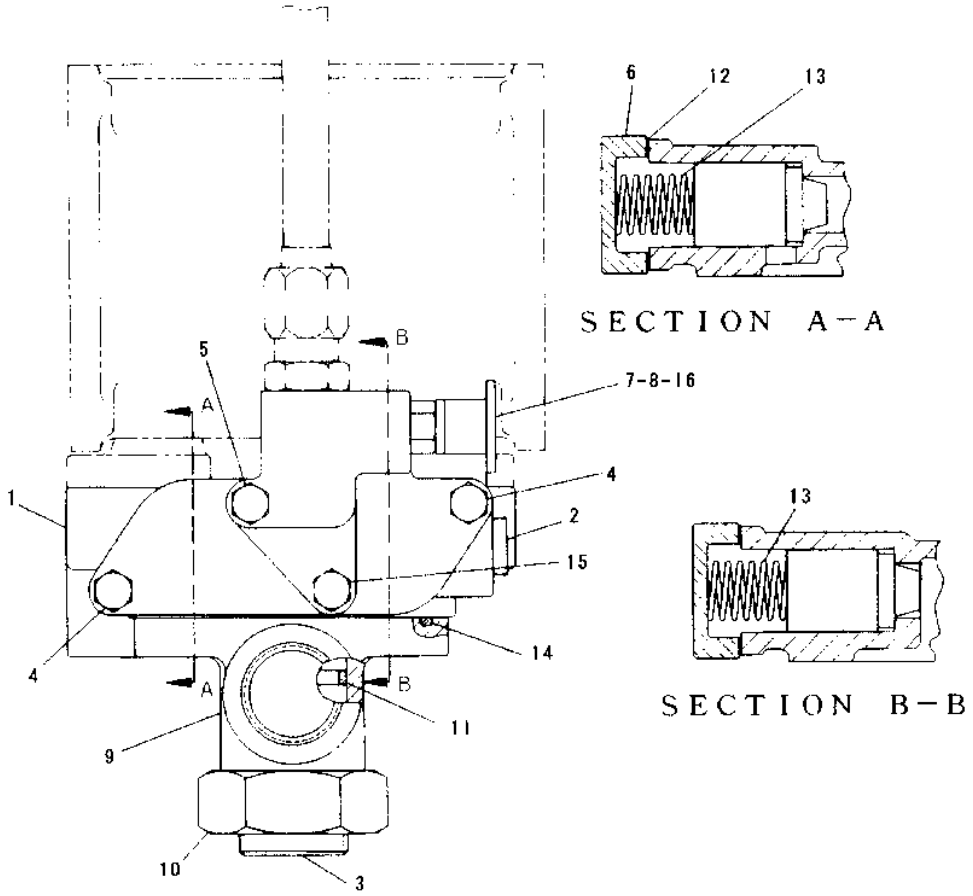


| NOTE | No. | PART No. | QTY | PART NAME | NOTE | No. | PART No. | QTY | PART NAME |
|---|---|---|---|---|---|---|---|---|---|
| | 1 | 4P 7097 | 1 | BASE AS | | | | | |
| | | 3B-0645 | 3 | PLUG | | | | | |
| | 2 | 2B-0858 | 1 | PLUG | | | | | |
| | 3 | 4P 9107 | 1 | STUD | | | | | |
| | 4 | 1B 2790 | 2 | BOLT (L=35mm) | | | | | |
| | 5 | 2B-2694 | 1 | BOLT (L=51mm) | | | | | |
| | 6 | 4P-8453 | 1 | COVER | | | | | |
| | 7 | 8C-3446 | 1 | VALVE | | | | | |
| | 8 | 8C-3445 | 1 | CAP | | | | | |
| | 9 | 4P-9103 | 1 | ADAPTER | | | | | |
| | 10 | 7F-0216 | 1 | NUT | | | | | |
| | 11 | 5P-8066 | 1 | SEAL (ID=32.92mm) | | | | | |
| | 12 | 9Y-6860 | 1 | GASKET | | | | | |
| | 13 | 8M-3182 | 2 | SPRING | | | | | |
| | 14 | 8H 7521 | 1 | SEAL (ID=91.67mm) | | | | | |
| | 15 | 1B 9575 | 1 | BOLT (L=44mm) | | | | | |
| | 16 | 3J-7354 | 1 | SEAL (ID=8.92mm) | | | | | |

H51709E

# 1261670 FILTER GP-ENGINE OIL-PART 1 OF 2

PART OF 1167568-Page 14

**Key:**

**SMCS**

| NOTE | REF NO | GRAPHIC REF | PART NUMBER | QTY | PART NAME 1 2 3 4 5 6 (PRODUCT LEVEL) | PRICE USD |
|---|---|---|---|---|---|---|
| | 1 | | 5F-9657 | 3 | SEAL (ID=36.09mm) | |
| | 2 | | 9M-1974 | 5 | WASHER | |
| | 3 | | 6V-5219 | 3 | BOLT (L=40mm) | |
| | 4 | | 6V-2317 | 2 | BOLT (L=30mm) | |
| | 5 | | 1R-0739 | 1 | FILTER AS | |

## 1261670 FILTER GP-ENGINE OIL-PART 1 OF 2

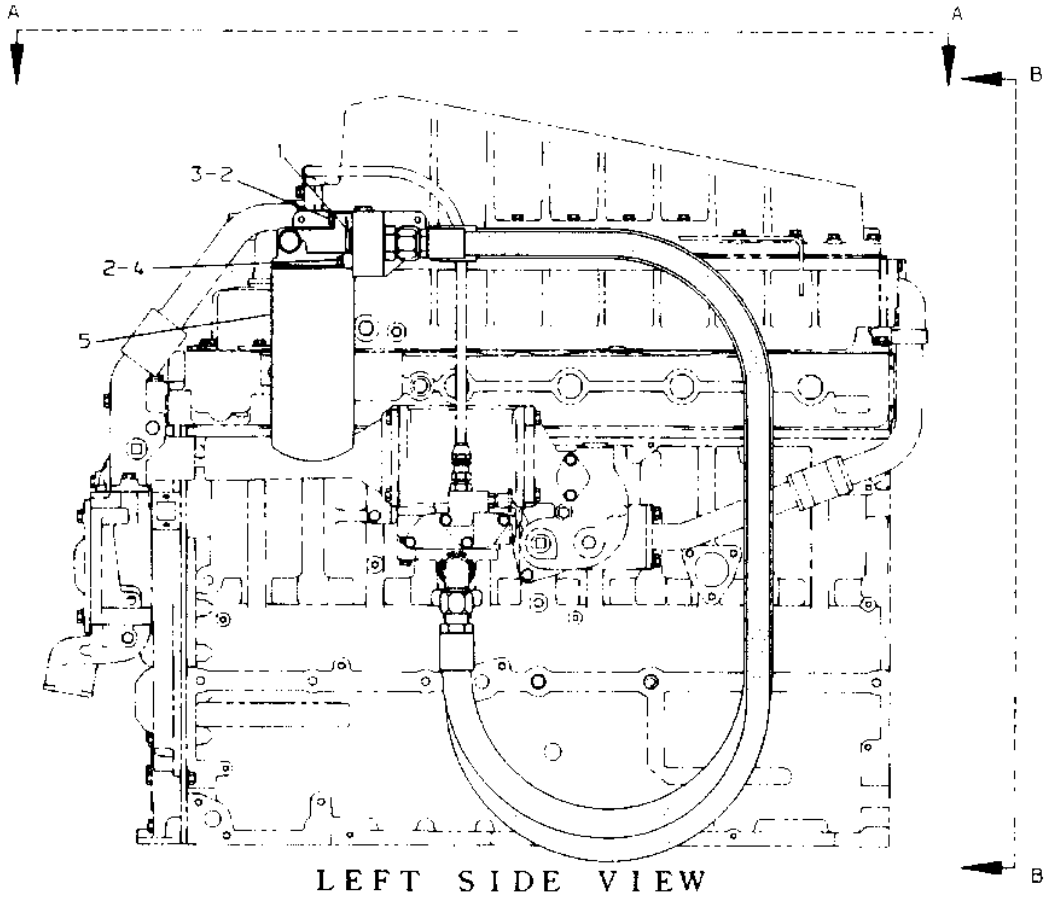


LEFT SIDE VIEW

| NOTE | No. | PART No. | QTY | PART NAME | NOTE | No. | PART No. | QTY | PART NAME |
|---|---|---|---|---|---|---|---|---|---|
| | 1 | 5F-9657 | 3 | SEAL (ID=36.09mm) | | | | | |
| | 2 | 9M-1974 | 5 | WASHER | | | | | |
| | 3 | 6V-5219 | 3 | BOLT (L=40mm) | | | | | |
| | 4 | 6V-2317 | 2 | BOLT (L=30mm) | | | | | |
| | 5 | 1R-0739 | 1 | FILTER AS | | | | | |

H51750E

GRAPHIC #1

h51750e

# 1261670 FILTER GP-ENGINE OIL-PART 2 OF 2

PART OF 1167568-Page 14

**Key:**

**SMCS**

| NOTE | REF NO | GRAPHIC REF | PART NUMBER | QTY | PART NAME 1 2 3 4 5 6 (PRODUCT LEVEL) | PRICE USD |
|---|---|---|---|---|---|---|
| | 1 | | 121-0307 | 1 | BASE | |
| | 2 | | 7W-9028 | 1 | BASE | |
| | | | 2P-2537 | 1 | STUD | |
| | 3 | | 9S-4191 | 1 | PLUG | |
| | 4 | | 3J-1907 | 1 | SEAL (ID=11.89mm) | |
| | 5 | | 9S-4188 | 1 | PLUG | |
| | 6 | | 5P-8196 | 1 | PLUG | |
| | 7 | | 2M-9780 | 1 | SEAL (ID=19.18mm) | |
| | 8 | | 7C-1493 | 1 | VALVE | |
| | 9 | | 9L-9188 | 1 | SPRING | |
| | 10 | | 4K-1388 | 2 | SEAL (ID=26.59mm) | |
| | 11 | | 2R-6276 | 2 | CONNECTOR | |
| | 12 | | 3D-2824 | 2 | SEAL (ID=23.47mm) | |
| | 13 | | 5P-3237 | 1 | CONNECTOR | |
| | 14 | | 1B-9575 | 2 | BOLT (L=44mm) | |
| | 15 | | 9M-1974 | 2 | WASHER | |
| | 16 | | 9C-1294 | 1 | HOSE AS | |
| | 17 | | 8X-3421 | 1 | HOSE AS | |

## 1261670 FILTER GP-ENGINE OIL-PART 2 OF 2

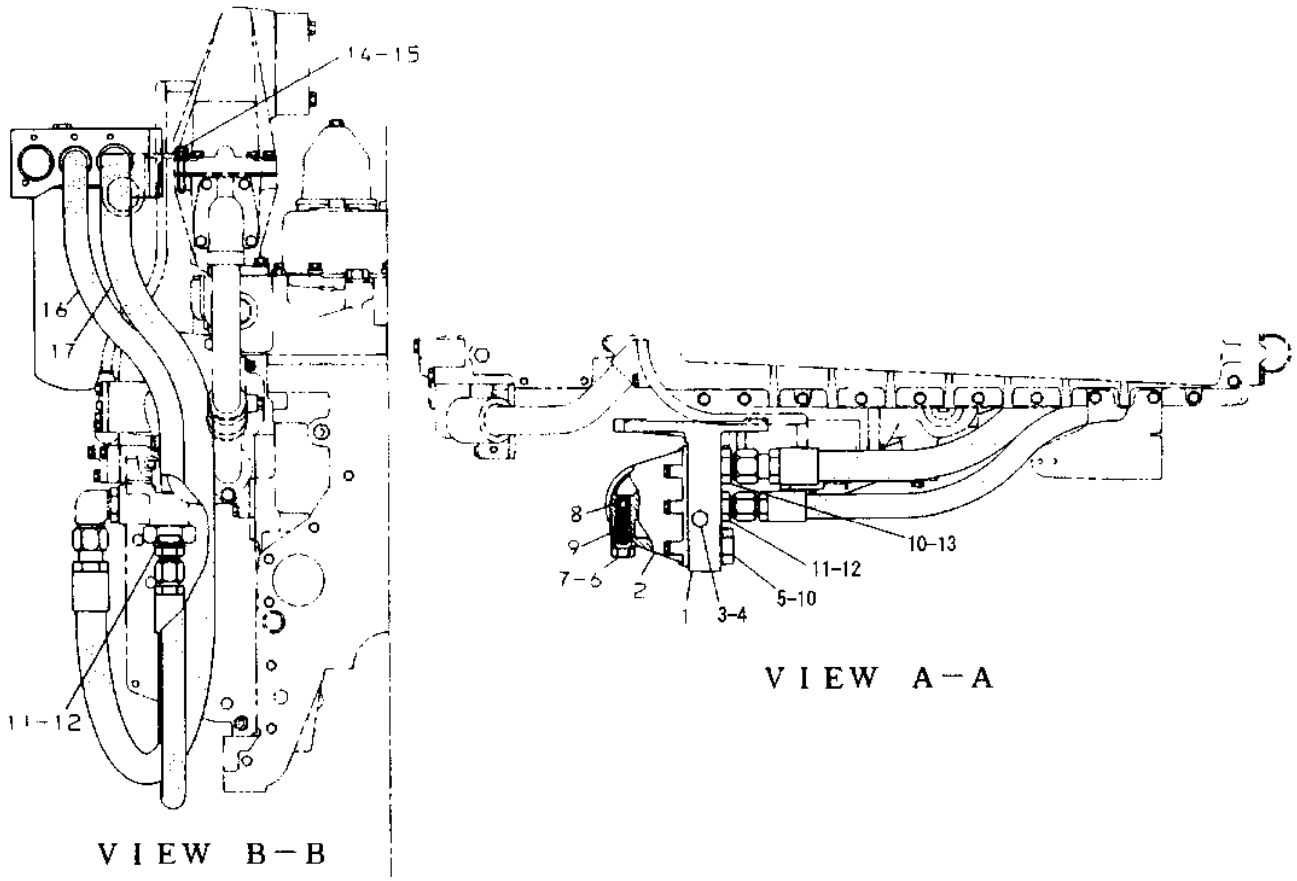


| NOTE | No. | PART No. | QTY | PART NAME | NOTE | No. | PART No. | QTY | PART NAME |
|---|---|---|---|---|---|---|---|---|---|
| | 1 | 121-0307 | 1 | BASE | | | | | |
| | 2 | 7W-9028 | 1 | BASE | | | | | |
| | | 2P-2537 | 1 | STUD | | | | | |
| | 3 | 9S-4191 | 1 | PLUG | | | | | |
| | 4 | 3J-1907 | 1 | SEAL (ID=11.89mm) | | | | | |
| | 5 | 9S-4188 | 1 | PLUG | | | | | |
| | 6 | 5P-8196 | 1 | PLUG | | | | | |
| | 7 | 2M-9780 | 1 | SEAL (ID=19.18mm) | | | | | |
| | 8 | 7C-1493 | 1 | VALVE | | | | | |
| | 9 | 9L-9188 | 1 | SPRING | | | | | |
| | 10 | 4K-1388 | 2 | SEAL (ID=26.59mm) | | | | | |
| | 11 | 2R-6276 | 2 | CONNECTOR | | | | | |
| | 12 | 3D-2824 | 2 | SEAL (ID=23.47mm) | | | | | |
| | 13 | 5P-3237 | 1 | CONNECTOR | | | | | |
| | 14 | 1B-9575 | 2 | BOLT (L=44mm) | | | | | |
| | 15 | 9M-1974 | 2 | WASHER | | | | | |
| | 16 | 9C-1294 | 1 | HOSE AS | | | | | |
| | 17 | 8X-3421 | 1 | HOSE AS | | | | | |

H51751E

GRAPHIC #1

h51751e

# 1255865 LINES GP-TURBOCHARGER OIL

PART OF 1167568-Page 14

**Key:**

**SMCS**

| NOTE | REF NO | GRAPHIC REF | PART NUMBER | QTY | PART NAME 1 2 3 4 5 6 (PRODUCT LEVEL) | PRICE USD |
|---|---|---|---|---|---|---|
| | 1 | | 130-0407 | 1 | TUBE AS | |
| | 2 | | 102-5868 | 1 | HOSE AS | |
| | 3 | | 0S-1594 | 2 | BOLT (L=25mm) | |
| | 4 | | 5M-2894 | 2 | WASHER | |
| | 5 | | 9Y-3595 | 1 | GASKET | |
| | 6 | | 4M-6480 | 1 | GASKET | |
| | 7 | | 8H-9788 | 1 | GASKET | |
| | 8 | | 9N-5328 | 1 | ADAPTER | |
| | 9 | | 0L-1143 | 1 | BOLT (L=64mm) | |
| | 10 | | 1A-2029 | 3 | BOLT (L=29mm) | |
| | 11 | | 3J-5390 | 1 | PLUG | |
| | 12 | | 9M-4849 | 1 | SEAL (ID=23.16mm) | |
| | 13 | | 8N-1653 | 1 | SUPPORT | |
| | 14 | | 8M-5253 | 1 | SEAL (ID=18.72mm) | |
| | 15 | | 5M-6213 | 1 | PLUG | |
| | 16 | | 8M-5248 | 2 | SEAL (ID=28.17mm) | |
| | 17 | | 6K-3607 | 1 | CONNECTOR | |
| | 18 | | 2M-9780 | 1 | SEAL (ID=19.18mm) | |
| | 19 | | 102-5869 | 1 | TUBE AS | |
| | 20 | | 1B-2790 | 1 | BOLT (L=35mm) | |
| | 21 | | 4B-3388 | 1 | BOLT | |
| | 22 | | 3E-4352 | 1 | WASHER | |
| | 23 | | 1H-5514 | 1 | BOLT (L=41mm) | |
| | 24 | | 124-0174 | 1 | CLIP | |
| | 25 | | 9S-4185 | 2 | PLUG | |
| | 26 | | 3K-0360 | 2 | SEAL (ID=16.36mm) | |

## 1255865 LINES GP-TURBOCHARGER OIL

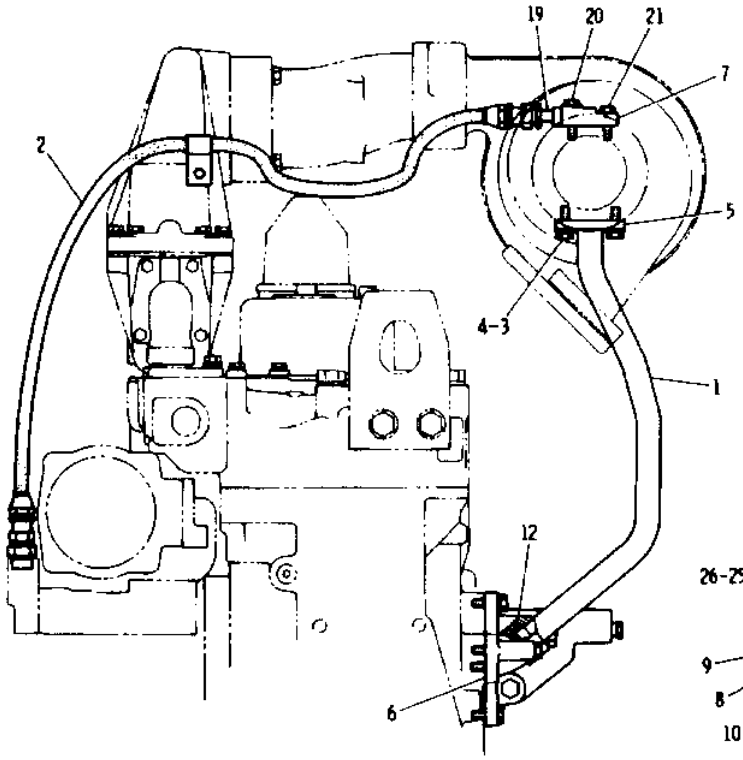


REAR VIEW

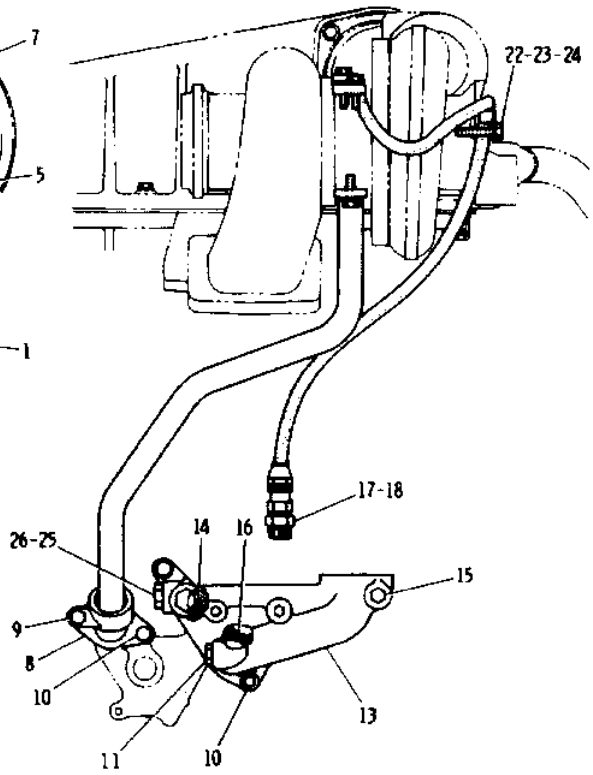


RIGHT SIDE VIEW

| NOTE | No. | PART No. | QTY | PART NAME | NOTE | No. | PART No. | QTY | PART NAME |
|---|---|---|---|---|---|---|---|---|---|
| | 1 | 130-0407 | 1 | TUBE AS | | 21 | 4B-3388 | 1 | BOLT |
| | 2 | 102-5868 | 1 | HOSE AS | | 22 | 3E-4352 | 1 | WASHER |
| | 3 | 0S 1594 | 2 | BOLT (L=25mm) | | 23 | 1H-5514 | 1 | BOLT (L=41mm) |
| | 4 | 5M-2894 | 2 | WASHER | | 24 | 8M-2270 | 1 | CLIP |
| | 5 | 9Y-3595 | 1 | GASKET | | 25 | 9S-4185 | 2 | PLUG |
| | 6 | 4M-6480 | 1 | GASKET | | 26 | 3K-0360 | 2 | SEAL (ID=16.36mm) |
| | 7 | 8H-9788 | 1 | GASKET | | | | | |
| | 8 | 9N-5328 | 1 | ADAPTER | | | | | |
| | 9 | 0L-1143 | 1 | BOLT (L=64mm) | | | | | |
| | 10 | 1A-2029 | 3 | BOLT (L=29mm) | | | | | |
| | 11 | 3J-5390 | 1 | PLUG | | | | | |
| | 12 | 9M-4849 | 1 | SEAL (ID=23.16mm) | | | | | |
| | 13 | 8N-1653 | 1 | SUPPORT | | | | | |
| | 14 | 8M-5253 | 1 | SEAL (ID=18.72mm) | | | | | |
| | 15 | 5M-6213 | 1 | PLUG | | | | | |
| | 16 | 8M-5248 | 2 | SEAL (ID=28.17mm) | | | | | |
| | 17 | 6K-3607 | 1 | CONNECTOR | | | | | |
| | 18 | 2M-9780 | 1 | SEAL (ID=19.18mm) | | | | | |
| | 19 | 102-5869 | 1 | TUBE AS | | | | | |
| | 20 | 1B-2790 | 1 | BOLT (L=35mm) | | | | | |

H51715E

## 1318916 LINES GP-DRAIN

**Key:** E - ORDER BY THE CENTIMETER

**SMCS**

| NOTE | REF NO | GRAPHIC REF | PART NUMBER | QTY | PART NAME 1 2 3 4 5 6 (PRODUCT LEVEL) | PRICE USD |
|---|---|---|---|---|---|---|
| | 1 | | 095-1388 | 1 | CLAMP | |
| E | 2 | | 5P-0743 | | HOSE (28cm) | |

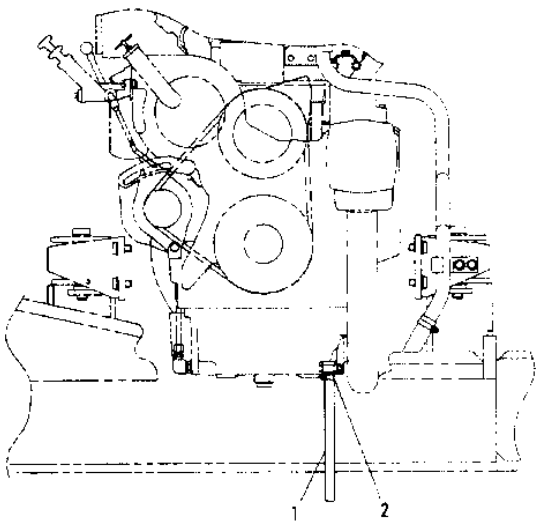


LEFT SIDE VIEW OF VEHICLE

| NOTE | No. | PART No. | QTY | PART NAME |
|---|---|---|---|---|
| | 1 | 095-1388 | 1 | CLAMP |
| E | 2 | 5P-0743 | | HOSE ···(28cm) |

E-ORDER BY THE CENTIMETER

H50725E

GRAPHIC #1 h50725e

# 1241625 MOUNTING GP-ENGINE OIL FILTER

**Key:**

**SMCS**

| NOTE | REF NO | GRAPHIC REF | PART NUMBER | QTY | PART NAME 1 2 3 4 5 6 (PRODUCT LEVEL) | PRICE USD |
|---|---|---|---|---|---|---|
| | 1 | | 8T-4121 | 3 | WASHER-HARD | |
| | 2 | | 8T-4196 | 3 | BOLT (L=35mm) | |
| | 3 | | 9D-1829 | 1 | CLIP | |
| | 4 | | 8T-4192 | 1 | BOLT (L=25mm) | |
| | 5 | | 8T-4223 | 1 | WASHER-HARD | |

## 1241625 MOUNTING GP-ENGINE OIL FILTER

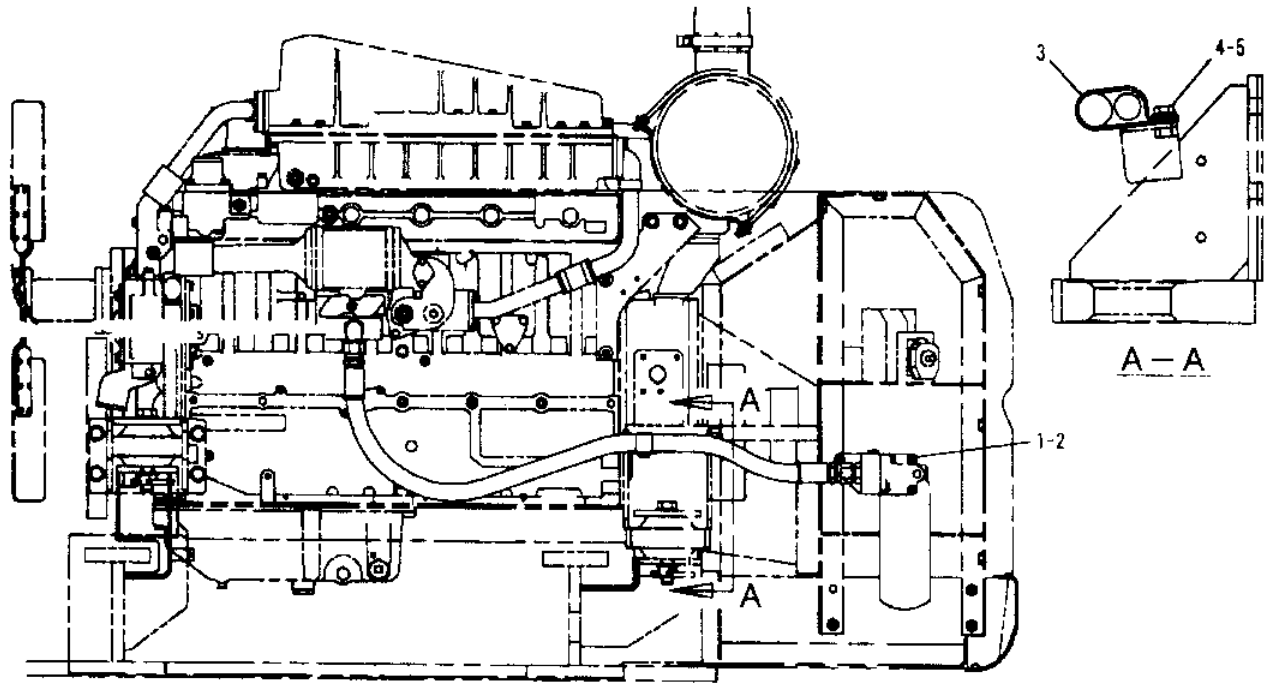


| NOTE | No. | PART No. | QTY | PART NAME | NOTE | No. | PART No. | QTY | PART NAME |
|---|---|---|---|---|---|---|---|---|---|
| | 1 | 8T-4121 | 3 | WASHER-HARD | | | | | |
| | 2 | 8T-4196 | 3 | BOLT (L=35mm) | | | | | |
| | 3 | 9D-1829 | 1 | CLIP | | | | | |
| | 4 | 8T-4192 | 1 | BOLT (L=25mm) | | | | | |
| | 5 | 8T-4223 | 1 | WASHER-HARD | | | | | |

H51893E

# 1099403 RADIATOR & HYD OIL COOLER GP

1241700-Page 48

**Key:** D - ORDER BY THE METER, E - ORDER BY THE CENTIMETER, Y - SEE SEPARATE ILLUSTRATION

**SMCS**

| NOTE | REF NO | GRAPHIC REF | PART NUMBER | QTY | PART NAME 1 2 3 4 5 6 (PRODUCT LEVEL) | PRICE USD |
|---|---|---|---|---|---|---|
| | 1 | | 135-5773 | 1 | RADIATOR GP | |
| Y | | | 124-1700 | 1 | RADIATOR GP | |
| | 2 | | 8T-4136 | 1 | BOLT (L=25mm) | |
| | 3 | | 124-1701 | 1 | HOSE | |
| | 4 | | 5P-4868 | 4 | CLAMP | |
| | 5 | | 124-1703 | 2 | BRACE | |
| | 6 | | 124-1702 | 1 | HOSE | |
| | 7 | | 7X-2553 | 4 | BOLT (L=40mm) | |
| | 8 | | 9X-8257 | 4 | WASHER | |
| D | 9 | | 6V-5030 | | SEAL (0.75m) | |
| E | 10 | | 7Y-1976 | | HOSE (73cm) | |
| | 11 | | 196-8224 | 1 | TANK AS | |
| | 12 | | 171-3370 | 1 | CAP AS | |
| | 13 | | 204-0920 | 1 | CAP AS | |
| | 14 | | 8T-4223 | 4 | WASHER | |
| | 15 | | 8T-4192 | 4 | BOLT (L=25mm) | |
| | 16 | | 124-1595 | 2 | GUARD AS | |
| | 17 | | 8T-4137 | 10 | BOLT (L=20mm) | |
| | 18 | | 8T-4121 | 12 | WASHER | |
| | 19 | | 109-9461 | 1 | BAND | |
| | 20 | | 8T-4191 | 1 | BOLT (L=16mm) | |
| | 21 | | 096-4035 | 1 | CLIP | |
| | 22 | | 096-0061 | 3 | STRAP | |

## 1099403 RADIATOR & HYD OIL COOLER GP

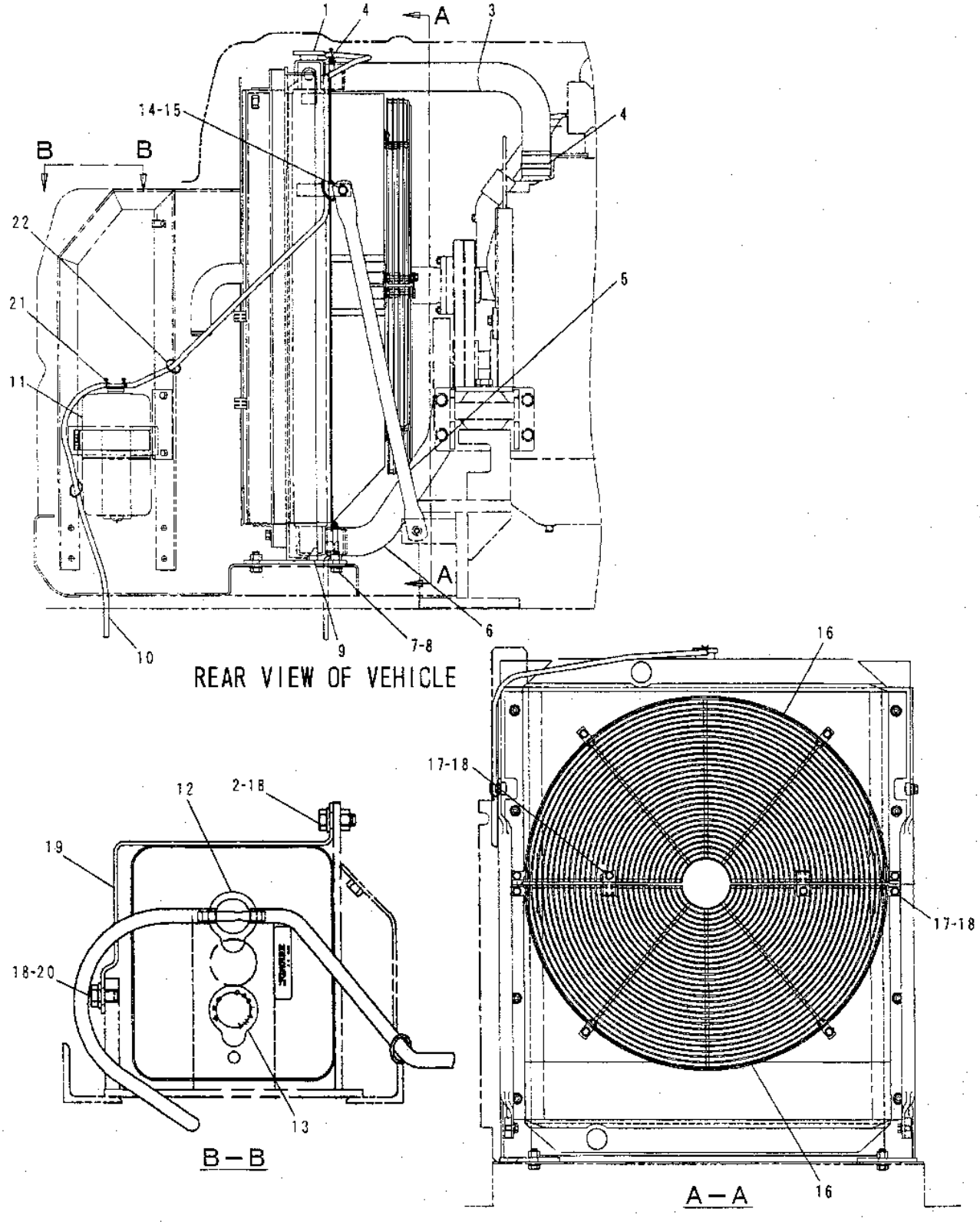


GRAPHIC #1

h79239e

# 1241700 RADIATOR & HYD OIL COOLER GP

PART OF 1099403-Page 47.02

**Key:** E - ORDER BY THE CENTIMETER

**SMCS**

| NOTE | REF NO | GRAPHIC REF | PART NUMBER | QTY | PART NAME 1 2 3 4 5 6 (PRODUCT LEVEL) | PRICE USD |
|---|---|---|---|---|---|---|
| | 1 | | 124-1768 | 2 | SEAL | |
| | 2 | | 124-1762 | 1 | CORE AS (RADIATOR) | |
| | 3 | | 124-1613 | 1 | CAP AS | |
| | 4 | | 124-1764 | 1 | FRAME AS | |
| | 5 | | 8T-4121 | 22 | WASHER | |
| | 6 | | 8T-4192 | 22 | BOLT (L=25mm) | |
| | 7 | | 124-1769 | 2 | SEAL | |
| E | 8 | | 7Y-1976 | | HOSE (20cm) | |
| | 9 | | 093-5432 | 1 | COCK AS | |
| | 10 | | 096-4035 | 2 | CLIP | |
| | 11 | | 124-1765 | 1 | SHROUD AS | |
| | 12 | | 124-1770 | 2 | SEAL | |
| | 13 | | 124-1599 | 2 | SEAL | |
| | 14 | | 096-4034 | 2 | BOLT | |
| | 15 | | 124-1771 | 1 | SEAL | |
| | 16 | | 124-1766 | 1 | SCREEN AS | |
| | 17 | | 124-1772 | 2 | SEAL | |
| | 18 | | 124-1763 | 1 | CORE AS (OIL COOLER) | |
| E | 19 | | 7Y-1976 | | HOSE (160cm) | |

## 1241700 RADIATOR & HYD OIL COOLER GP

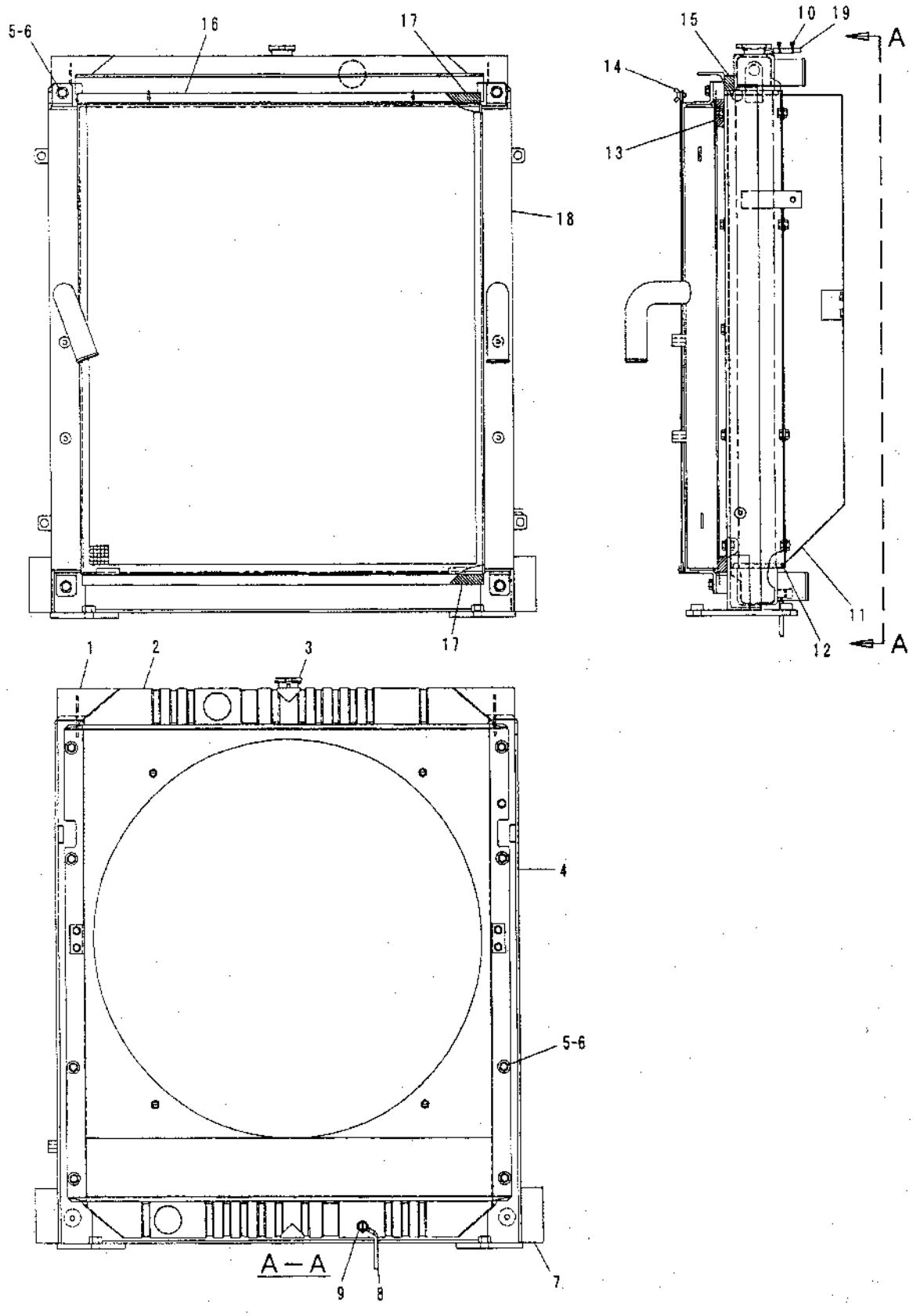


GRAPHIC #1

h79241e

# 1205025 COOLING AR

HIGH AMBIENT
AN ATTACHMENT

**Key:** Y - Separate Illustration

**SMCS**

| NOTE | REF NO | GRAPHIC REF | PART NUMBER | QTY | PART NAME 1 2 3 4 5 6 (PRODUCT LEVEL) | PRICE USD |
|---|---|---|---|---|---|---|
| Y | | | 135-7516 | 1 | HOOD GP (PERFORATED) | |
| Y | | | 124-1737 | 1 | PULLEY GP (FAN DRIVE) | |
| | | | 164-8257 | 1 | CONTROL GP | |
| | | | 131-7557 | 1 | PLATE AS | |
| | | | 099-7857 | 1 | HINGE AS | |
| | | | 131-7561 | 1 | PLATE AS | |

# 1167968 PUMP GP-WATER

PART OF 1167568-Page 14
1167967-Page 52.01

**Key:** Y - Separate Illustration

**SMCS**

| NOTE | REF NO | GRAPHIC REF | PART NUMBER | QTY | PART NAME 1 2 3 4 5 6 (PRODUCT LEVEL) | PRICE USD |
|---|---|---|---|---|---|---|
| Y | 1 | | 116-7967 | 1 | PUMP GP | |
| | 2 | | 5F-3106 | 1 | SEAL-O-RING (ID=126.59mm) | |
| | 3 | | 1A-5964 | 2 | BOLT (L=114mm) | |
| | 4 | | 5M-2894 | 2 | WASHER | |

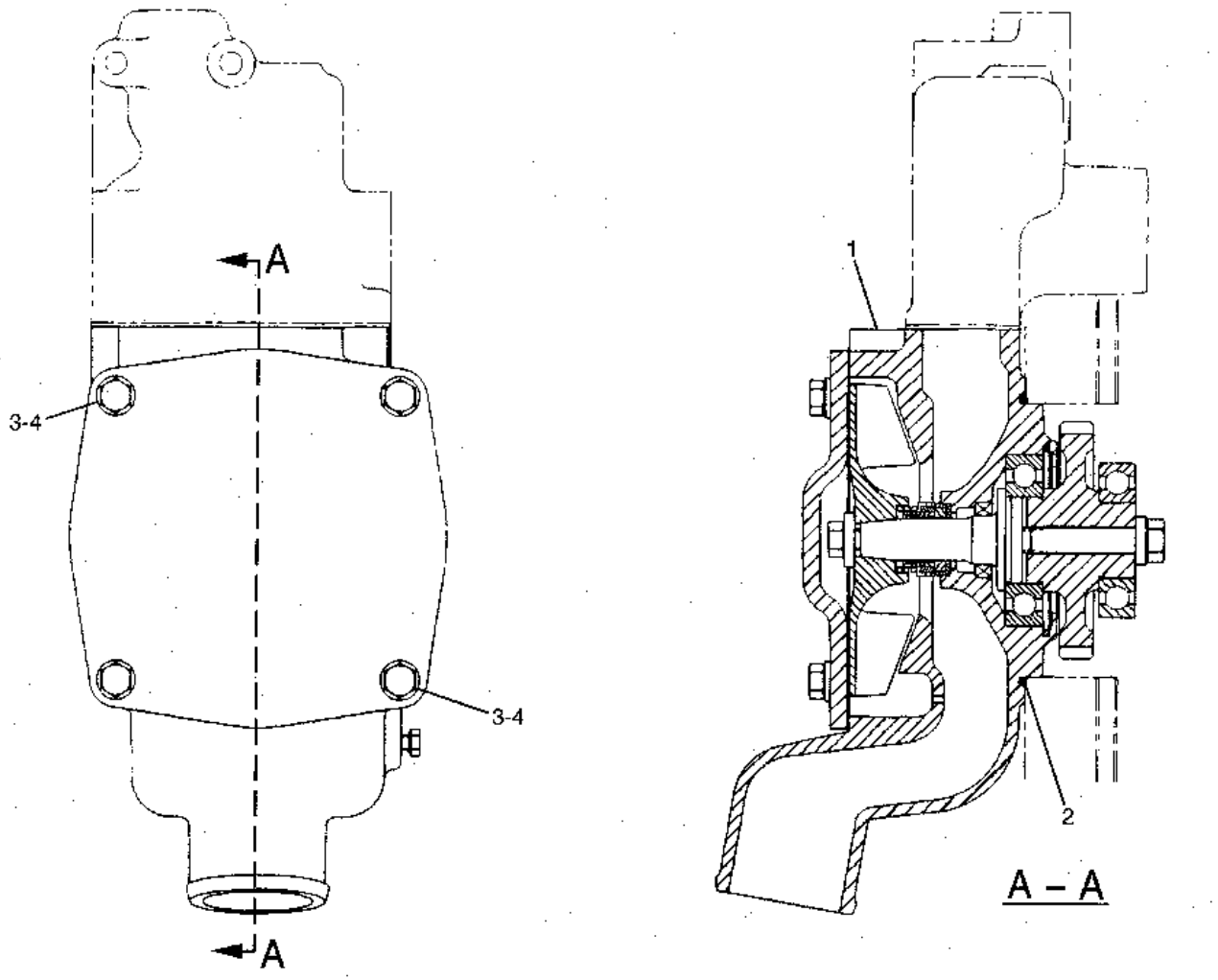


GRAPHIC #1 h74734e

# 1167967 PUMP GP-WATER

PART OF 1167968-Page 52

**Key:**

**SMCS**

| NOTE | REF NO | GRAPHIC REF | PART NUMBER | QTY | PART NAME 1 2 3 4 5 6 (PRODUCT LEVEL) | PRICE USD |
|---|---|---|---|---|---|---|
| | 1 | | 1W-4619 | 1 | HOUSING | |
| | 2 | | 137-1791 | 1 | GASKET | |
| | 3 | | 8N-5929 | 1 | COVER | |
| | 4 | | 7N-5910 | 1 | IMPELLER | |
| | 5 | | 2W-7255 | 1 | SHAFT | |
| | 6 | | 0S-1594 | 1 | BOLT (L=26mm) | |
| | 7 | | 4W-3864 | 1 | SEAL GP | |
| | 8 | | 154-4482 | 1 | SEAL | |
| | 9 | | 1K-6985 | 1 | RING | |
| | 10 | | 3B-8428 | 1 | BOLT (L=83mm) | |
| | 11 | | 6H-3957 | 1 | BEARING | |
| | 12 | | 116-7966 | 1 | GEAR (Z=33) | |
| | 13 | | 4S-9191 | 1 | WASHER | |
| | 14 | | 4N-5834 | 1 | FILTER | |
| | 15 | | 5M-6213 | 1 | PLUG | |
| | 16 | | 0L-1351 | 2 | BOLT (L=22mm) | |
| | 17 | | 5M-2894 | 2 | WASHER | |
| | 18 | | 8H-9789 | 1 | BEARING | |
| | 19 | | 9M-6527 | 1 | WASHER | |

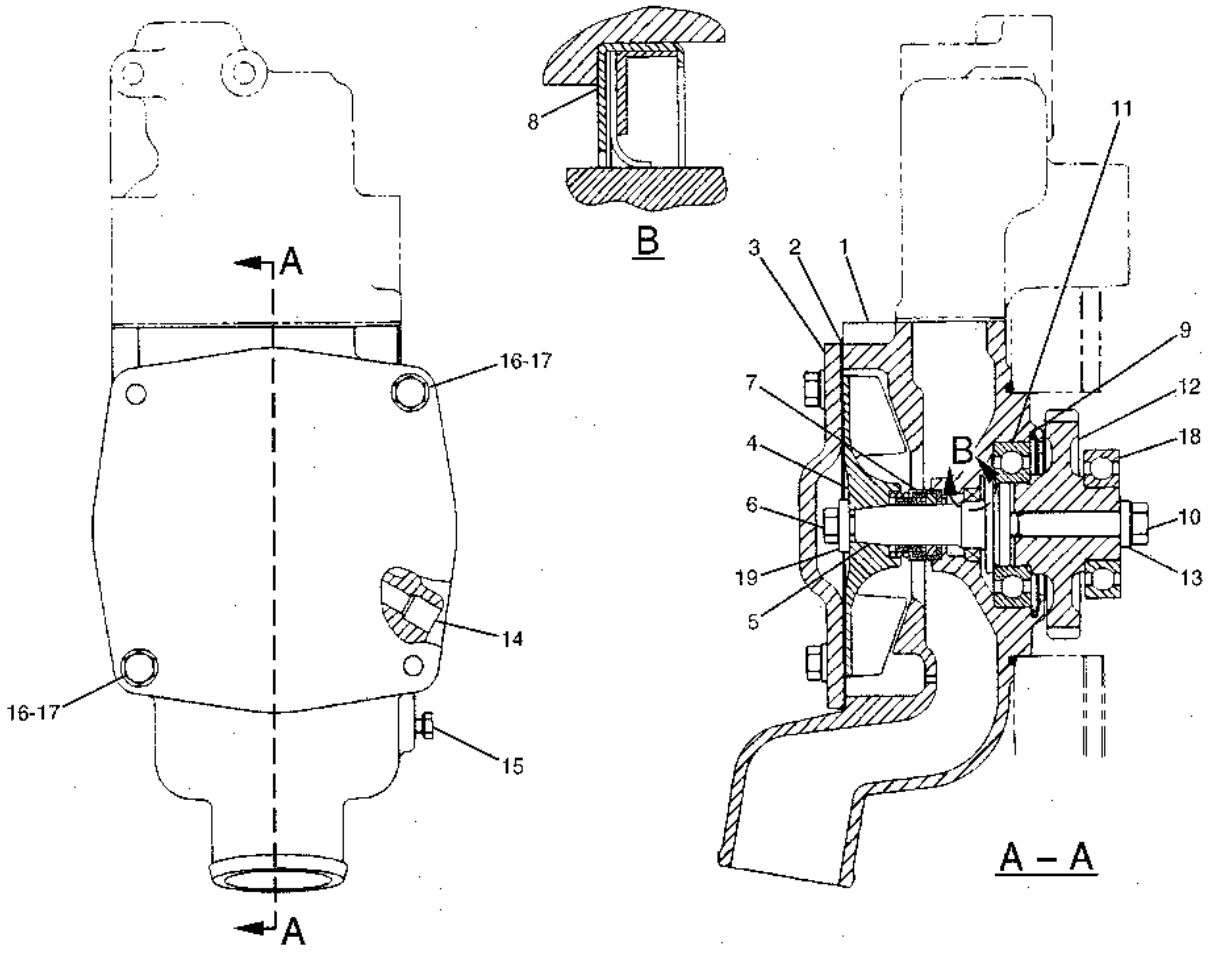


GRAPHIC #1

h74735e

# 1261669 COOLER GP-FLTR BASE & ENG OIL

PART OF 1167568-Page 14
1261668-Page 54

**Key:** Y - SEPARATE ILLUSTRATION

**SMCS**

| NOTE | REF NO | GRAPHIC REF | PART NUMBER | QTY | PART NAME 1 2 3 4 5 6 (PRODUCT LEVEL) | PRICE USD |
|---|---|---|---|---|---|---|
| Y | 1 | | 126-1668 | 1 | COOLER GP | |
| | 2 | | 5F-4899 | 1 | BOLT (L=140mm) | |
| | 3 | | 2W-4561 | 1 | GASKET | |
| | 4 | | 0S-1591 | 2 | BOLT (L=38mm) | |

## 1261669 COOLER GP-FLTR BASE & ENG OIL

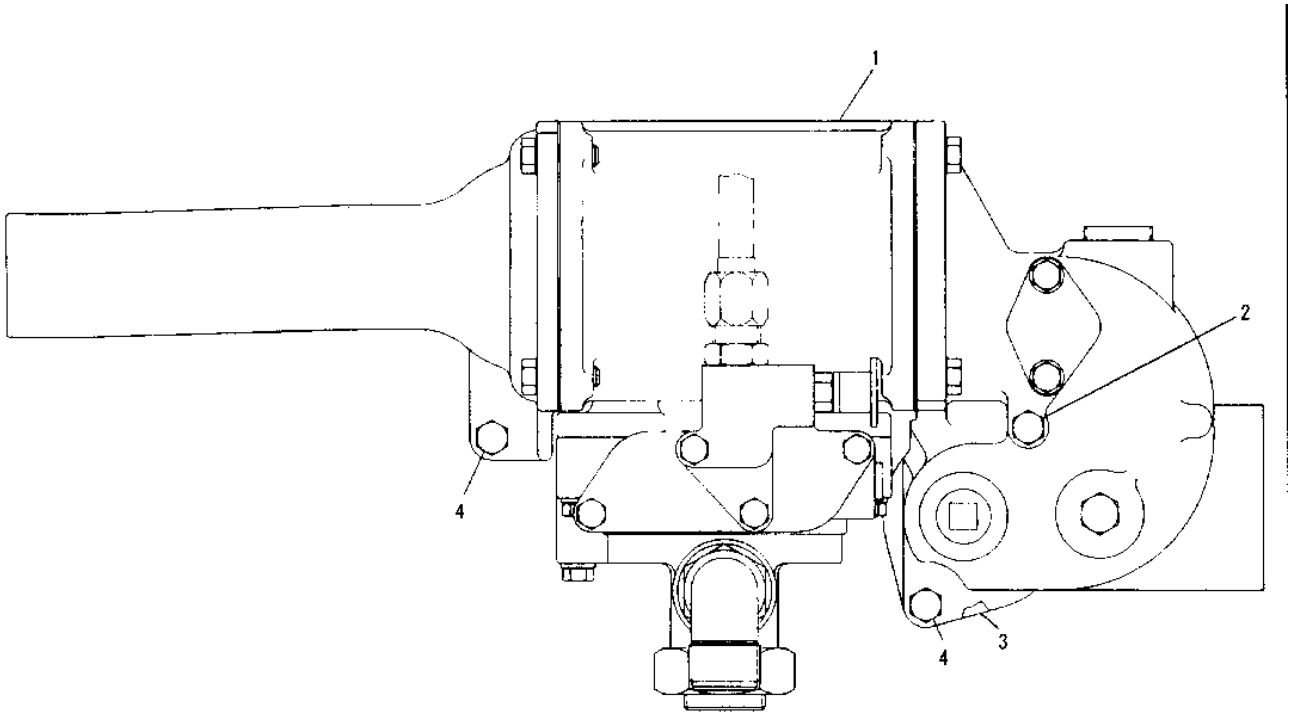


| NOTE | No. | PART No. | QTY | PART NAME | NOTE | No. | PART No. | QTY | PART NAME |
|---|---|---|---|---|---|---|---|---|---|
| Y | 1 | 126-1668 | 1 | COOLER GP | | | | | |
| | 2 | 5F-4899 | 1 | BOLT (L=140mm) | | | | | |
| | 3 | 2W-4561 | 1 | GASKET | | | | | |
| | 4 | 0S-1591 | 2 | BOLT (L=38mm) | | | | | |

Y-SEE SEPARATE ILLUSTRATION

H51707E

GRAPHIC #1 h51707e

# 1261668 COOLER GP-FLTR BASE & ENG OIL

PART OF 1261669-Page 53
4P7096-Page 46.01

**Key:** R - REMFG PART MAY BE AVAILABLE, Y - SEPARATE ILLUSTRATION

**SMCS**

| NOTE | REF NO | GRAPHIC REF | PART NUMBER | QTY | PART NAME 1 2 3 4 5 6 (PRODUCT LEVEL) | PRICE USD |
|---|---|---|---|---|---|---|
| | 1 | | 2P-8870 | 1 | PIPE | |
| | 2 | | 1A-2029 | 8 | BOLT (L=29mm) | |
| | 3 | | 8S-5409 | 2 | GASKET | |
| R | 4 | | 7N-0110 | 1 | CORE AS | |
| | R | | 0R-3501 | 1 | CORE AS-OIL CLR | |
| | 5 | | 3B-0551 | 1 | PLUG | |
| | 6 | | 9L-5910 | 1 | BONNET | |
| | 7 | | 8T-6767 | 1 | PLUG | |
| | 8 | | 1B-5174 | 1 | PLUG | |
| | 9 | | 2P-7734 | 1 | ELBOW | |
| | 10 | | 8M-4432 | 2 | SEAL | |
| Y | 11 | | 4P-7096 | 1 | BASE GP | |
| | 12 | | 1D-4540 | 1 | BOLT (L=70mm) | |
| | 13 | | 9M-1974 | 6 | WASHER | |
| | 14 | | 1H-5514 | 3 | BOLT (L=41mm) | |
| | 15 | | 2P-7732 | 1 | ELBOW | |
| | 16 | | 8M-4988 | 2 | SEAL | |
| | 17 | | 1T-0765 | 2 | BOLT | |
| | 18 | | 5M-2894 | 2 | WASHER | |
| | 19 | | 0S-1591 | 2 | BOLT (L=38mm) | |
| | 20 | | 0S-1617 | 2 | BOLT (L=19mm) | |
| | 21 | | 4N-3840 | 1 | COVER | |
| | 22 | | 4N-3841 | 1 | GASKET | |

## 1261668 COOLER GP-FLTR BASE & ENG OIL

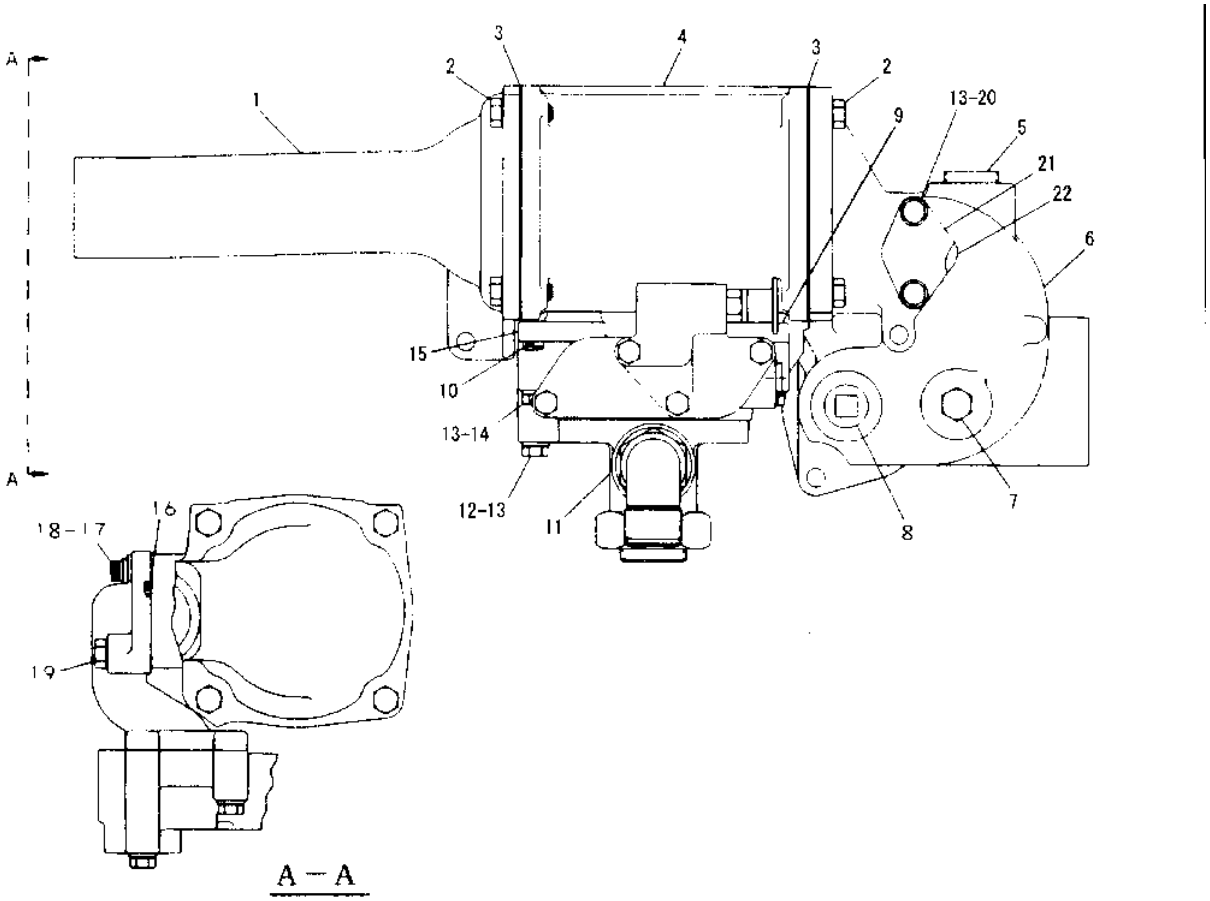


| NOTE | No. | PART No. | QTY | PART NAME | NOTE | No. | PART No. | QTY | PART NAME |
|---|---|---|---|---|---|---|---|---|---|
| | 1 | 2P-8870 | 1 | PIPE | | 21 | 4N-3840 | 1 | COVER |
| | 2 | 1A-2029 | 8 | BOLT (L=29mm) | | 22 | 4N-3841 | 1 | GASKET |
| | 3 | 8S-5409 | 2 | GASKET | | | | | |
| | 4 | 7N-0110 | 1 | CORE AS | | | | | |
| | 5 | 3B-0551 | 1 | PLUG | | | | | |
| | 6 | 9L-5910 | 1 | BONNET | | | | | |
| | 7 | 8T-6767 | 1 | PLUG | | | | | |
| | 8 | 1B-5174 | 1 | PLUG | | | | | |
| | 9 | 2P-7734 | 1 | ELBOW | | | | | |
| | 10 | 8M-4432 | 2 | SEAL | | | | | |
| Y | 11 | 4P-7096 | 1 | BASE GP | | | | | |
| | 12 | 1D-4540 | 1 | BOLT (L=70mm) | | | | | |
| | 13 | 9M-1974 | 6 | WASHER | | | | | |
| | 14 | 1H-5514 | 3 | BOLT (L=41mm) | | | | | |
| | 15 | 2P-7732 | 1 | ELBOW | | | | | |
| | 16 | 8M-4988 | 2 | SEAL | | | | | |
| | 17 | 1T-0765 | 2 | BOLT | | | | | |
| | 18 | 5M-2894 | 2 | WASHER | | | | | |
| | 19 | 0S-1591 | 2 | BOLT (L=38mm) | | | | | |
| | 20 | 0S-1617 | 2 | BOLT (L=19mm) | | | | | |

Y-SEE SEPARATE ILLUSTRATION

H51708E

# 8N0888 REGULATOR GP-TEMPERATURE

PART OF 1229789-Page 12

**Key:**

**SMCS**

| NOTE | REF NO | GRAPHIC REF | PART NUMBER | QTY | PART NAME 1 2 3 4 5 6 (PRODUCT LEVEL) | PRICE USD |
|---|---|---|---|---|---|---|
| | 1 | | 111-8010 | 1 | REGULATOR | |
| | 2 | | 7N-0944 | 1 | GASKET | |
| | 3 | | 7H-3171 | 1 | PLUG | |
| | 4 | | 8N-0743 | 1 | PIPE | |
| | 5 | | 4L-6454 | 4 | BOLT (L=25mm) | |
| | 6 | | 8N-4485 | 1 | VALVE AS | |

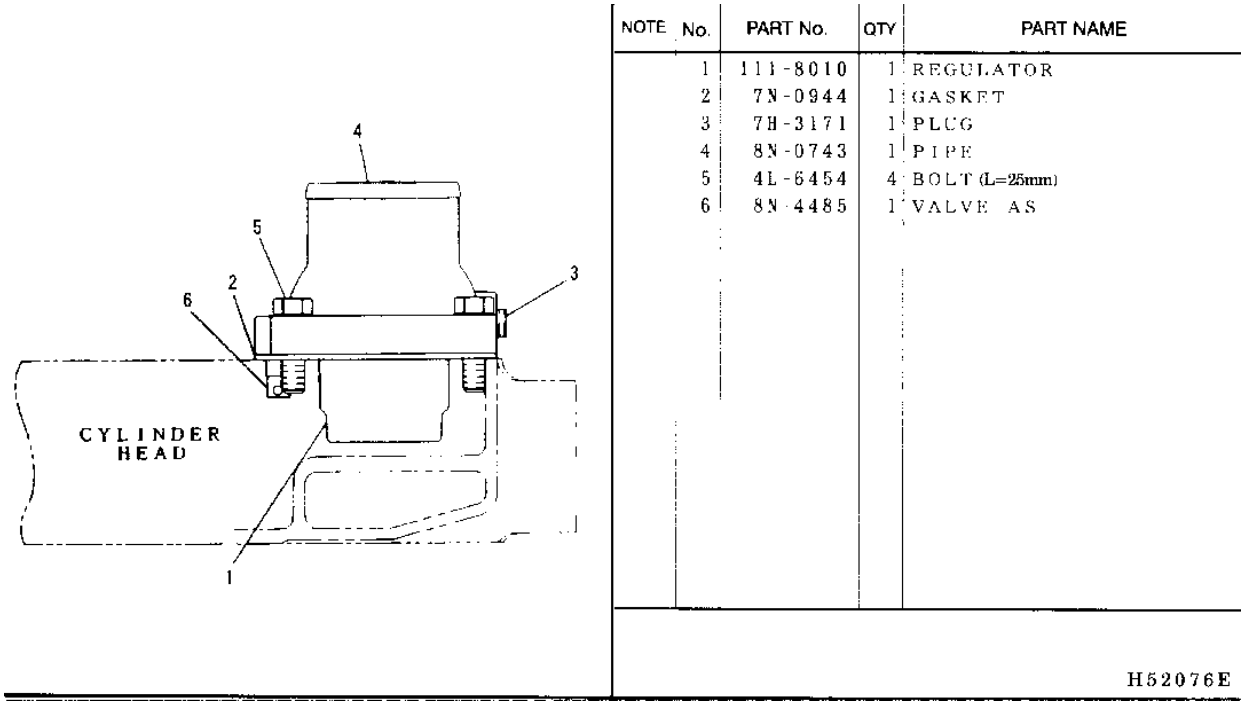


GRAPHIC #1 h52076e

# 4W6157 LINES GP-WATER

PART OF 1167568-Page 14

**Key:** E - ORDER BY THE CENTIMETER

**SMCS**

| NOTE | REF NO | GRAPHIC REF | PART NUMBER | QTY | PART NAME 1 2 3 4 5 6 (PRODUCT LEVEL) | PRICE USD |
|---|---|---|---|---|---|---|
| | 1 | | 7N-5856 | 1 | ELBOW | |
| | 2 | | 1B-5174 | 2 | PLUG | |
| | 3 | | 5M-6213 | 1 | PLUG | |
| | 4 | | 3J-5390 | 2 | PLUG | |
| | 5 | | 0S-1590 | 1 | BOLT (L=51mm) | |
| | 6 | | 0T-0065 | 2 | BOLT (L=89mm) | |
| | 7 | | 0S-1588 | 1 | BOLT | |
| | 8 | | 7N-0200 | 1 | GASKET | |
| | 9 | | 2P-6132 | 1 | GASKET | |
| E | 10 | | 5P-1260 | | HOSE (8cm) | |
| | 11 | | 5P-4868 | 2 | CLAMP | |

## 4W6157 LINES GP-WATER

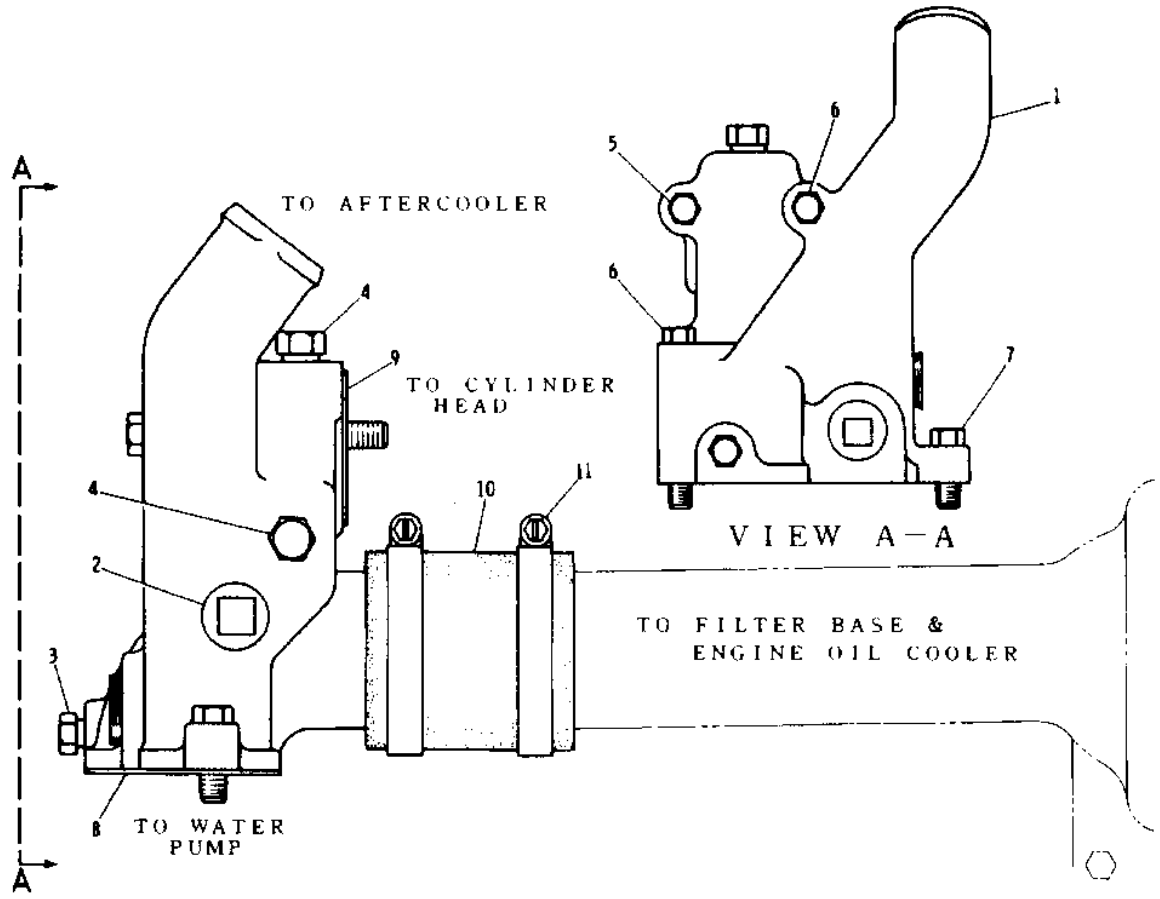


| NOTE | No. | PART No. | QTY | PART NAME |
|---|---|---|---|---|
| | 1 | 7N-5856 | 1 | ELBOW |
| | 2 | 1B-5174 | 2 | PLUG |
| | 3 | 5M-6213 | 1 | PLUG |
| | 4 | 3J-5390 | 2 | PLUG |
| | 5 | 0S-1590 | 1 | BOLT (L=51mm) |
| | 6 | 0T-0065 | 2 | BOLT (L=89mm) |
| | 7 | 0S-1588 | 1 | BOLT |
| | 8 | 7N 0200 | 1 | GASKET |
| | 9 | 2P-6132 | 1 | GASKET |
| E | 10 | 5P-1260 | | HOSE ···(8cm) |
| | 11 | 5P-4868 | 2 | CLAMP |

| NOTE | No. | PART No. | QTY | PART NAME |
|---|---|---|---|---|

E-ORDER BY THE CENTIMETER

H51712E

# 6N8492 LINES GP-WATER

AFTERCOOLER
PART OF 1167568-Page 14

**Key:** E - ORDER BY THE CENTIMETER

**SMCS**

| NOTE | REF NO | GRAPHIC REF | PART NUMBER | QTY | PART NAME 1 2 3 4 5 6 (PRODUCT LEVEL) | PRICE USD |
|---|---|---|---|---|---|---|
| | 1 | | 7N-0816 | 1 | TUBE AS | |
| | 2 | | 5M-5860 | 2 | SEAL (ID=34.29mm) | |
| | 3 | | 1A-9579 | 8 | BOLT (L=38mm) | |
| | 4 | | 9L-6764 | 1 | TUBE AS | |
| E | 5 | | 5P-1255 | | HOSE (10cm) | |
| | 6 | | 5P-0597 | 2 | CLAMP | |
| | 7 | | 9L-6753 | 1 | TUBE AS | |
| | 8 | | 2A-3541 | 1 | GASKET | |
| | 9 | | 0S-1594 | 2 | BOLT (L=25mm) | |
| | 10 | | 5M-2894 | 2 | WASHER | |
| | 11 | | 5M-6214 | 1 | PLUG | |
| | 12 | | 9M-1974 | 1 | WASHER | |
| E | 13 | | 5P-1257 | | HOSE (7cm) | |
| | 14 | | 5P-2230 | 2 | CLAMP | |

## 6N8492 LINES GP-WATER

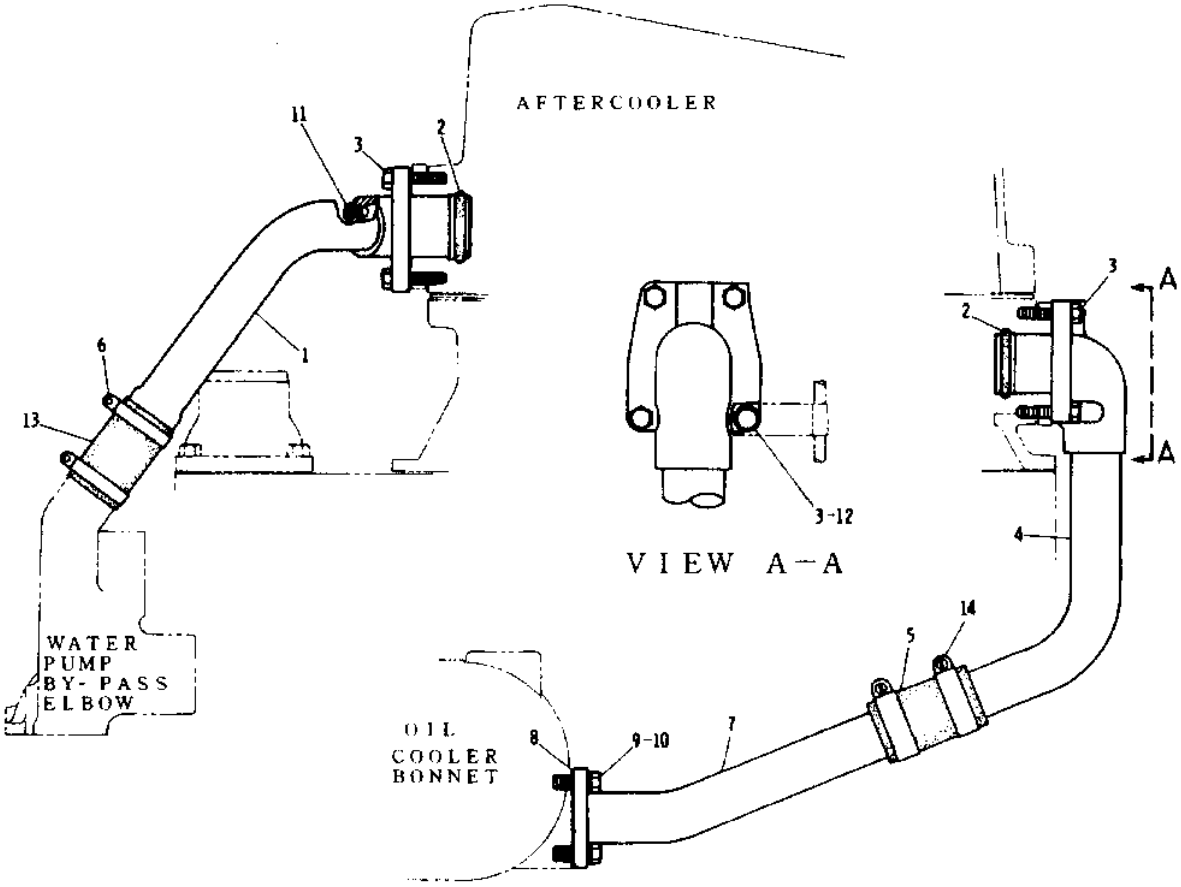


| NOTE | No. | PART No. | QTY | PART NAME | NOTE | No. | PART No. | QTY | PART NAME |
|---|---|---|---|---|---|---|---|---|---|
| | 1 | 7N-0816 | 1 | TUBE AS | | | | | |
| | 2 | 5M-5860 | 2 | SEAL (ID=34.29mm) | | | | | |
| | 3 | 1A-9579 | 8 | BOLT (L=38mm) | | | | | |
| | 4 | 9L-6764 | 1 | TUBE AS | | | | | |
| E | 5 | 5P-1255 | | HOSE ···(10cm) | | | | | |
| | 6 | 5P-0597 | 2 | CLAMP | | | | | |
| | 7 | 9L-6753 | 1 | TUBE AS | | | | | |
| | 8 | 2A-3541 | 1 | GASKET | | | | | |
| | 9 | 0S-1594 | 2 | BOLT (L=25mm) | | | | | |
| | 10 | 5M-2894 | 2 | WASHER | | | | | |
| | 11 | 5M-6214 | 1 | PLUG | | | | | |
| | 12 | 9M-1974 | 1 | WASHER | | | | | |
| E | 13 | 5P-1257 | | HOSE ···(7cm) | | | | | |
| | 14 | 5P-2230 | 2 | CLAMP | | | | | |

E-ORDER BY THE CENTIMETER

H51713E

# 7Y0863 FAN GP-SUCTION

PART OF 1099399-Page 11

**Key:**

**SMCS**

| NOTE | REF NO | GRAPHIC REF | PART NUMBER | QTY | PART NAME 1 2 3 4 5 6 (PRODUCT LEVEL) | PRICE USD |
|---|---|---|---|---|---|---|
| | 1 | | 4N-2572 | 1 | SPIDER AS | |
| | 2 | | 8T-4195 | 6 | BOLT (L=30mm) | |
| | 3 | | 8T-4121 | 6 | WASHER-HARD | |

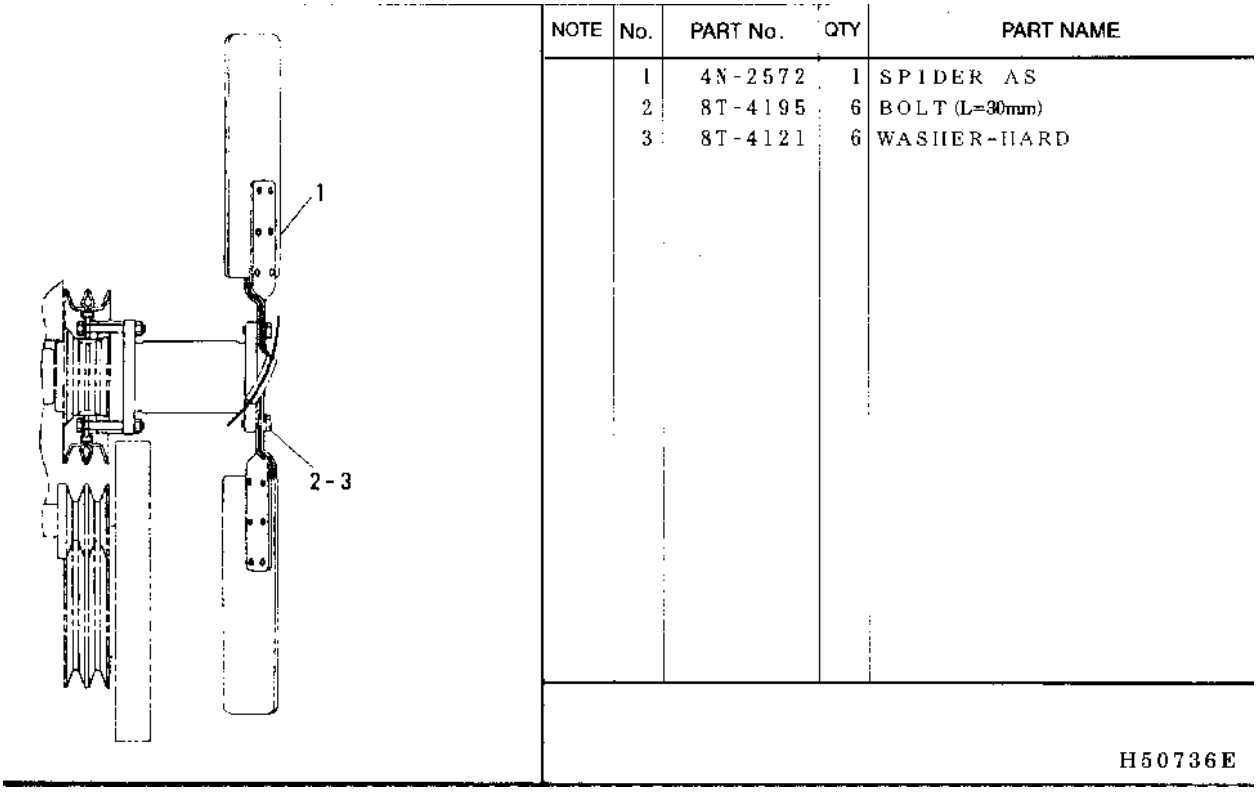


GRAPHIC #1 h50736e

# 1099405 MOUNTING GP-AIR CLEANER

1241708-Page 65

**Key:** Y - SEPARATE ILLUSTRATION

**SMCS**

| NOTE | REF NO | GRAPHIC REF | PART NUMBER | QTY | PART NAME 1 2 3 4 5 6 (PRODUCT LEVEL) | PRICE USD |
|---|---|---|---|---|---|---|
| Y | 1 | | 124-1708 | 1 | CLEANER GP | |
| | 2 | | 8T-4136 | 4 | BOLT (L=25mm) | |
| | 3 | | 8T-4121 | 4 | WASHER-HARD | |

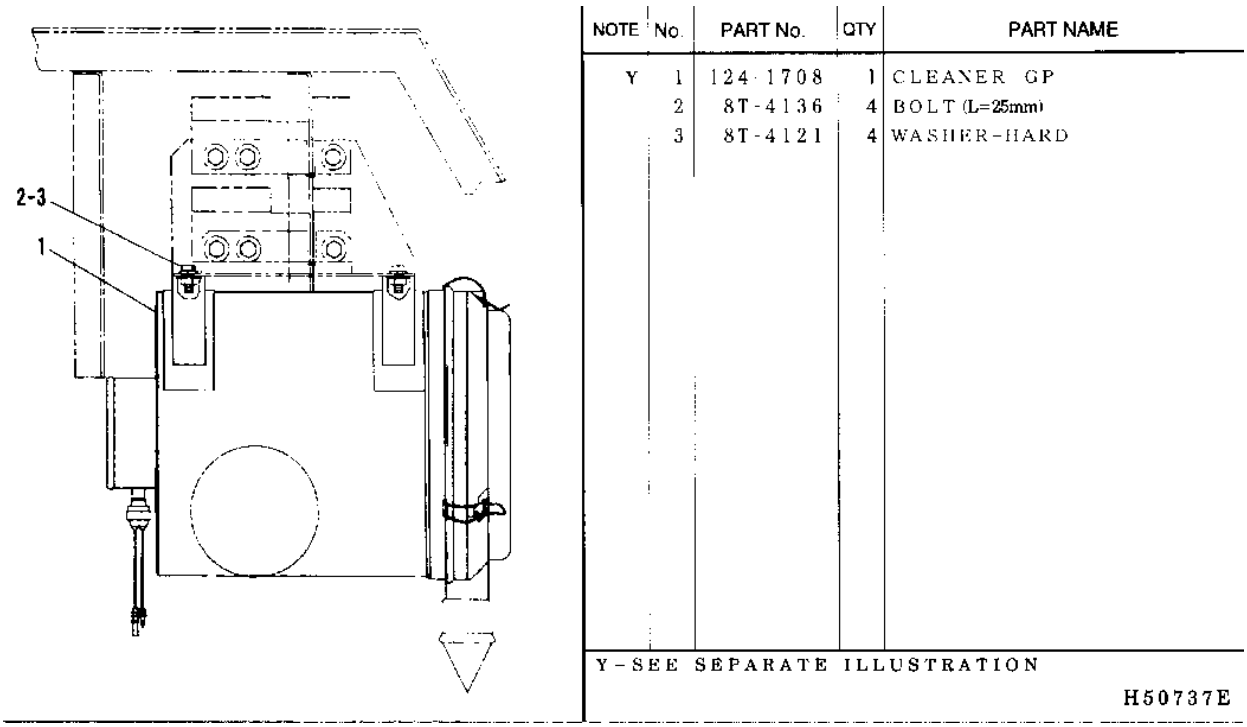


GRAPHIC #1 h50737e

# 1460516 CLEANER AR

PRECLEANER
AN ATTACHMENT

**Key:** Y - Separate Illustration

**SMCS**

| NOTE | REF NO | GRAPHIC REF | PART NUMBER | QTY | PART NAME 1 2 3 4 5 6 (PRODUCT LEVEL) | PRICE USD |
|---|---|---|---|---|---|---|
| Y | | | 134-7084 | 1 | LINES GP (AIR) | |
| Y | | | 146-0517 | 1 | HOOD GP | |

# 1241708 AIR CLEANER GP

PART OF 1099405-Page 64

**Key:**

**SMCS**

| NOTE | REF NO | GRAPHIC REF | PART NUMBER | QTY | PART NAME 1 2 3 4 5 6 (PRODUCT LEVEL) | PRICE USD |
|---|---|---|---|---|---|---|
| | 1 | | 131-8825 | 1 | BODY AS | |
| | 2 | | 6I-2503 | 1 | ELEMENT AS | |
| | 3 | | 6I-2504 | 1 | ELEMENT AS | |
| | 4 | | 159-7667 | 1 | SEAL-O-RING (ID=301.00mm) | |
| | 5 | | 131-8828 | 1 | COVER AS | |
| | 6 | | 139-8794 | 3 | LATCH | |
| | 7 | | 131-8829 | 1 | VALVE (VACUATOR) | |
| | 8 | | 154-0498 | 1 | INDICATOR AS | |
| | 9 | | 131-8826 | 1 | FILM | |
| | 10 | | 6I-3233 | 1 | FITTING | |

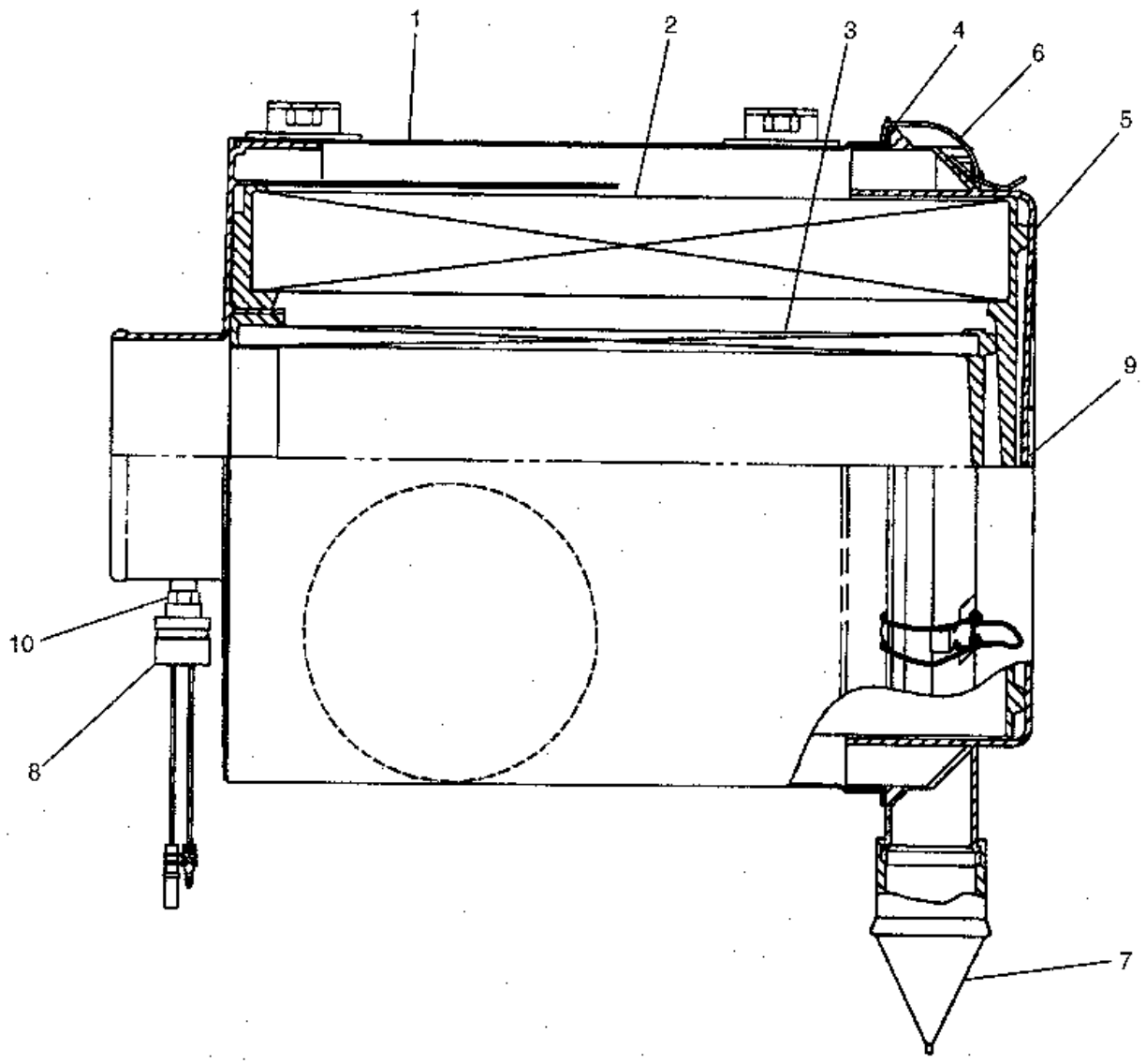


GRAPHIC #1

h84034e

# 1347085 AIR CLEANER GP

PART OF 1347084-Page 67.02
AN ATTACHMENT

**Key:**

**SMCS**

| NOTE | REF NO | GRAPHIC REF | PART NUMBER | QTY | PART NAME 1 2 3 4 5 6 (PRODUCT LEVEL) | PRICE USD |
|---|---|---|---|---|---|---|
| | 1 | | 134-7086 | 1 | BODY AS | |
| | 2 | | 6I-2504 | 1 | ELEMENT AS | |
| | 3 | | 6I-2503 | 1 | ELEMENT AS | |
| | 4 | | 6I-4464 | 1 | COVER AS | |
| | | | 4P-5524 | 1 | SEAL-O-RING (ID=313.00mm) | |
| | | | 101-2850 | 1 | FILM | |
| | 5 | | 154-0498 | 1 | INDICATOR AS | |

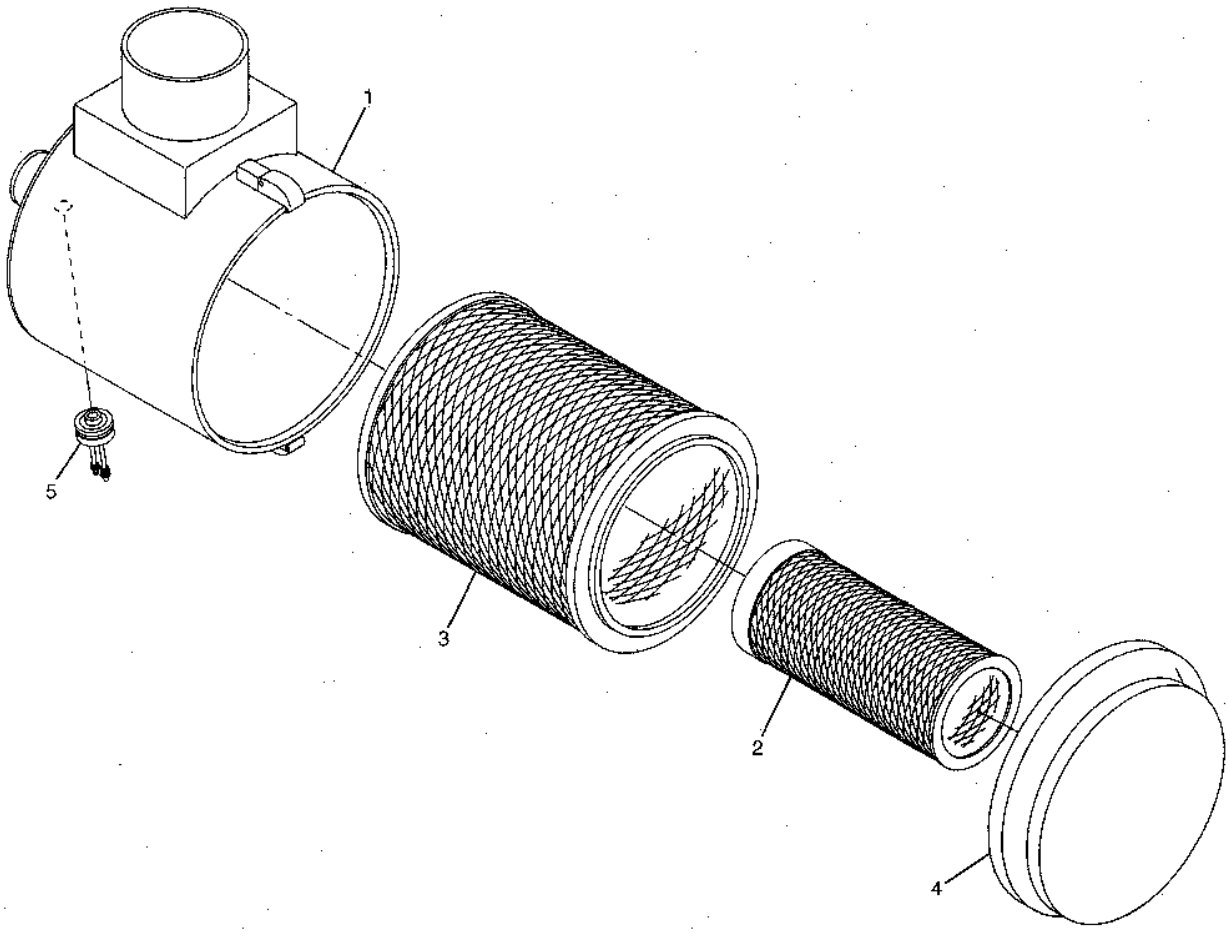


GRAPHIC #1 h79244e

## 1099410 LINES GP-AIR

**Key:**

**SMCS**

| NOTE | REF NO | GRAPHIC REF | PART NUMBER | QTY | PART NAME 1 2 3 4 5 6 (PRODUCT LEVEL) | PRICE USD |
|---|---|---|---|---|---|---|
| | 1 | | 109-9459 | 1 | HOSE | |
| | 2 | | 5P-0599 | 3 | CLAMP | |
| | 3 | | 124-1653 | 1 | HOSE | |
| | 4 | | 109-9453 | 1 | PIPE AS | |
| | 5 | | 8T-4139 | 4 | BOLT (L=30mm) | |
| | 6 | | 8T-4223 | 4 | WASHER | |
| | 7 | | 8T-6675 | 1 | CLAMP | |

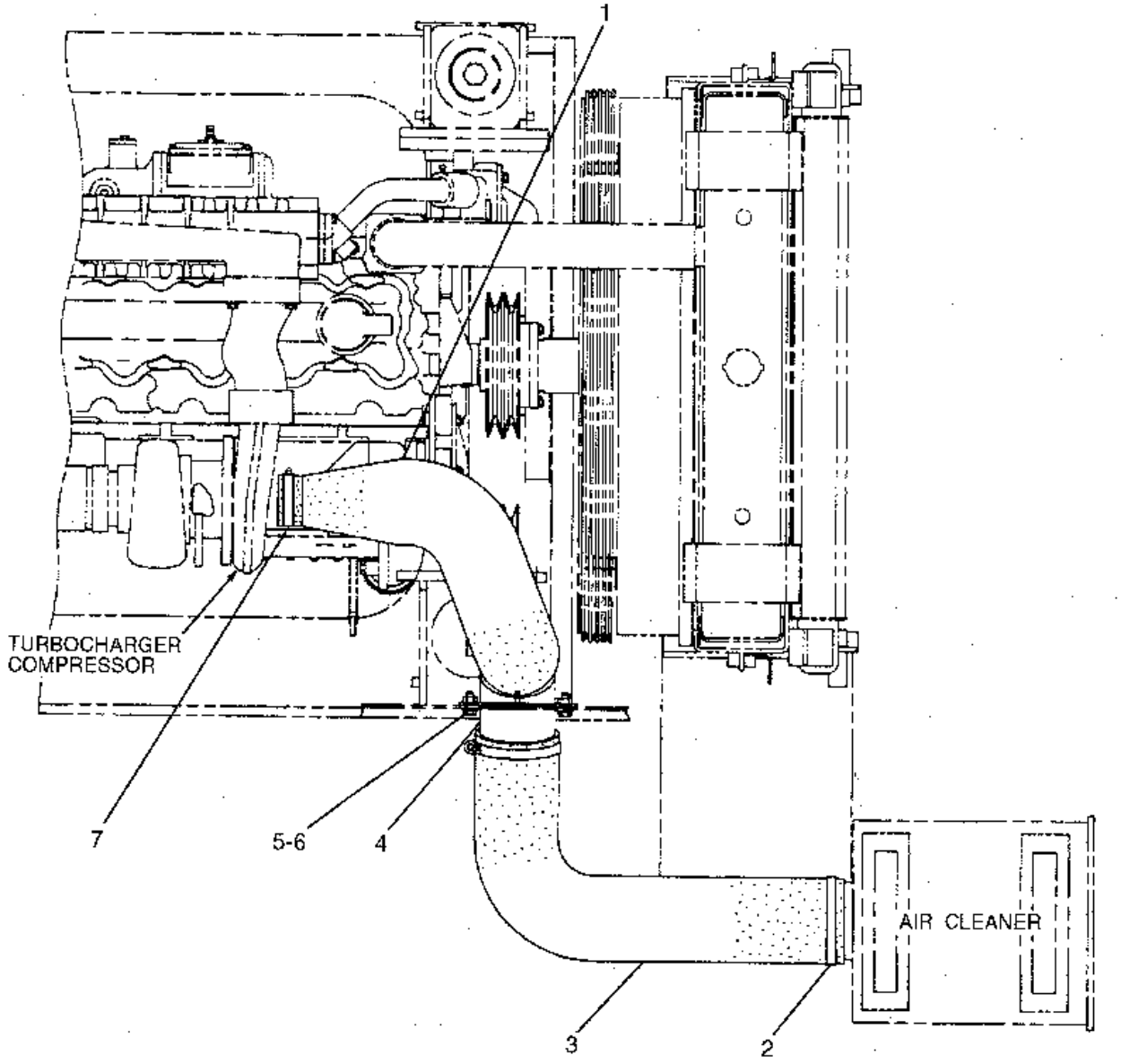


GRAPHIC #1

h79245e

# 7C4634 LINES GP-AIR

PART OF 1167568-Page 14.01

**Key:**

**SMCS**

| NOTE | REF NO | GRAPHIC REF | PART NUMBER | QTY | PART NAME 1 2 3 4 5 6 (PRODUCT LEVEL) | PRICE USD |
|---|---|---|---|---|---|---|
| | 1 | | 7C-4633 | 1 | SUPPORT | |
| | 2 | | 2N-2766 | 2 | LOCKNUT | |
| | 3 | | 8M-2295 | 1 | BOLT (L=41mm) | |
| | 4 | | 6N-0009 | 1 | SEAL (ID=90.5mm) | |
| | 5 | | 8N-9402 | 1 | COUPLING | |
| | 6 | | 6N-0992 | 1 | SEAL (ID=93.010mm) | |

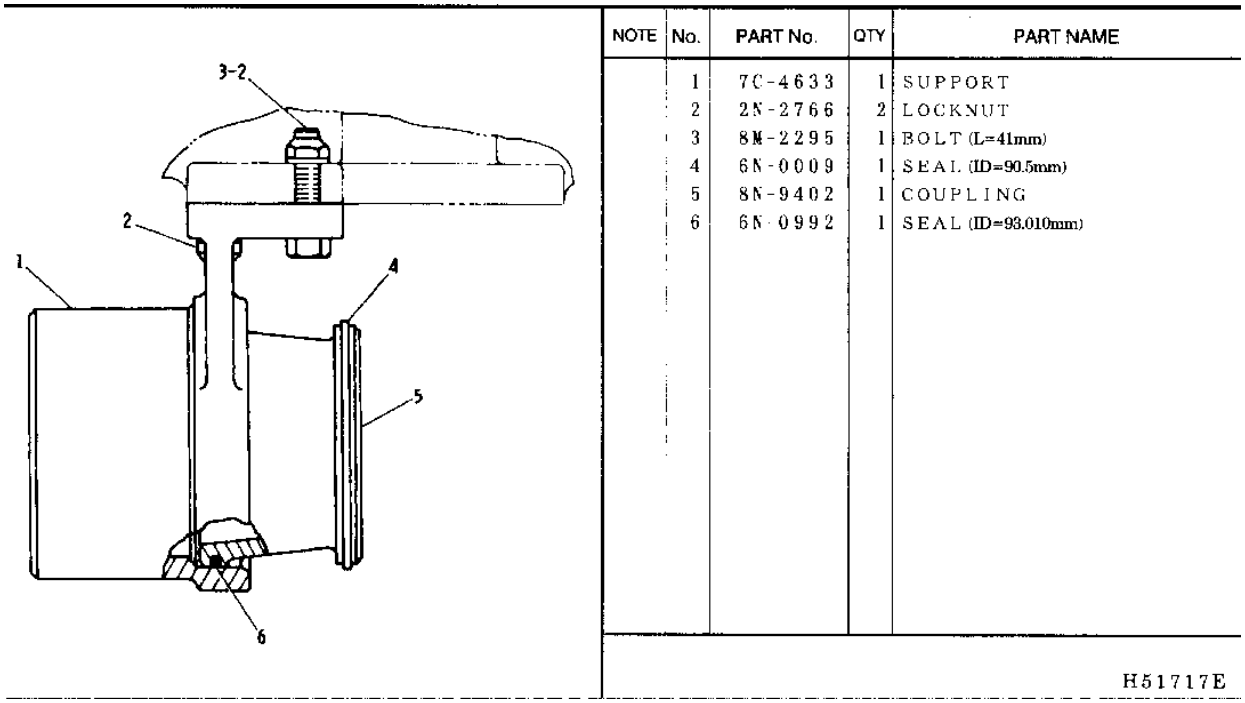


| NOTE | No. | PART No. | QTY | PART NAME |
|---|---|---|---|---|
| | 1 | 7C-4633 | 1 | SUPPORT |
| | 2 | 2N-2766 | 2 | LOCKNUT |
| | 3 | 8M-2295 | 1 | BOLT (L=41mm) |
| | 4 | 6N-0009 | 1 | SEAL (ID=90.5mm) |
| | 5 | 8N-9402 | 1 | COUPLING |
| | 6 | 6N-0992 | 1 | SEAL (ID=93.010mm) |

H51717E

GRAPHIC #1 h51717e

# 1189725 LINES GP-AIR

PART OF 1167568-Page 14.01

**Key:**

**SMCS**

| NOTE | REF NO | GRAPHIC REF | PART NUMBER | QTY | PART NAME 1 2 3 4 5 6 (PRODUCT LEVEL) | PRICE USD |
|---|---|---|---|---|---|---|
| | 1 | | 118-9724 | 1 | PIPE | |
| | 2 | | 5H-7704 | 2 | SEAL (ID=94.61mm) | |
| | 3 | | 7W-1945 | 1 | RETAINER | |
| | 4 | | 5P-4479 | 1 | ELBOW | |
| | 5 | | 7M-8322 | 1 | CLIP | |
| | 6 | | 0S-1618 | 1 | BOLT (L=25mm) | |
| | 7 | | 3J-7352 | 1 | CONNECTOR | |
| | 8 | | 3J-7354 | 1 | SEAL (ID=8.92mm) | |
| | 9 | | 5S-0003 | 1 | NUT | |
| | 10 | | 5M-2894 | 1 | WASHER | |
| | 11 | | 3K-1290 | 1 | CLIP | |
| | 12 | | 2B-2404 | 1 | CLIP | |
| | 13 | | 4N-9216 | 1 | HOSE | |
| | 14 | | 5P-0597 | 2 | CLAMP | |
| | 15 | | 0L-1143 | 1 | BOLT (L=64mm) | |
| | 16 | | 4B-3388 | 1 | BOLT | |
| | 17 | | 8A-8563 | 1 | BOSS | |
| | 18 | | 106-7633 | 1 | TUBE AS | |
| | 19 | | 9M-1974 | 4 | WASHER | |

## 1189725 LINES GP-AIR

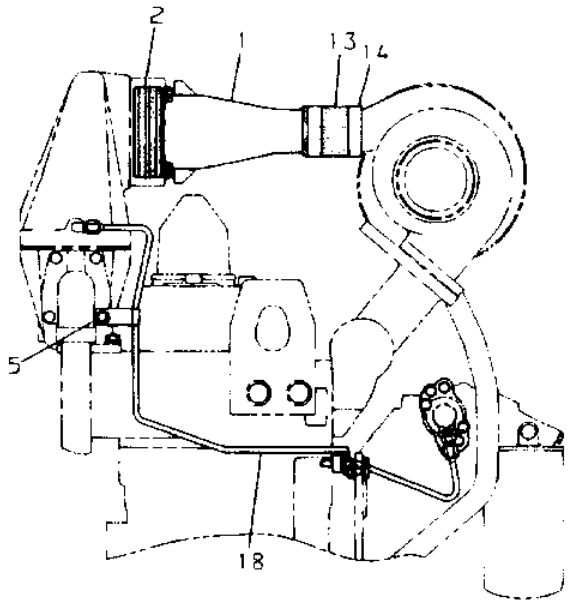


REAR VIEW

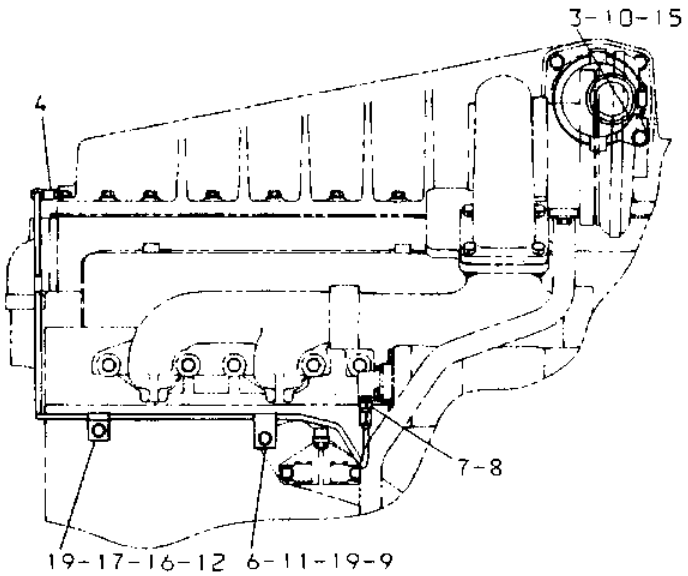


RIGHT SIDE VIEW

| NOTE | No. | PART No. | QTY | PART NAME | NOTE | No. | PART No. | QTY | PART NAME |
|---|---|---|---|---|---|---|---|---|---|
| | 1 | 118-9724 | 1 | PIPE | | | | | |
| | 2 | 5H-7704 | 2 | SEAL (ID=94.61mm) | | | | | |
| | 3 | 7W-1945 | 1 | RETAINER | | | | | |
| | 4 | 5P-4479 | 1 | ELBOW | | | | | |
| | 5 | 7D-1728 | 1 | CLIP | | | | | |
| | 6 | 0S-1618 | 1 | BOLT (L=25mm) | | | | | |
| | 7 | 3J-7352 | 1 | CONNECTOR | | | | | |
| | 8 | 3J-7354 | 1 | SEAL (ID=8.92mm) | | | | | |
| | 9 | 6V-8189 | 1 | NUT | | | | | |
| | 10 | 5M-2894 | 1 | WASHER | | | | | |
| | 11 | 3K-1290 | 1 | CLIP | | | | | |
| | 12 | 2B-2404 | 1 | CLIP | | | | | |
| | 13 | 4N-9216 | 1 | HOSE | | | | | |
| | 14 | 5P-0597 | 2 | CLAMP | | | | | |
| | 15 | 0L-1143 | 1 | BOLT (L=64mm) | | | | | |
| | 16 | 4B-3388 | 1 | BOLT | | | | | |
| | 17 | 8A-8563 | 1 | BOSS | | | | | |
| | 18 | 106-7633 | 1 | TUBE AS | | | | | |
| | 19 | 9M-1974 | 4 | WASHER | | | | | |

H51716E

# 1347084 LINES GP-AIR

PRECLEANER
PART OF 1460516-Page 64.01
1347085-Page 65.01
AN ATTACHMENT

**Key:** Y - SEE SEPARATE ILLUSTRATION

**SMCS**

| NOTE | REF NO | GRAPHIC REF | PART NUMBER | QTY | PART NAME 1 2 3 4 5 6 (PRODUCT LEVEL) | PRICE USD |
|---|---|---|---|---|---|---|
| Y | 1 | | 134-7085 | 1 | CLEANER GP | |
| | 2 | | 130-3280 | 1 | PRECLEANER | |
| | | | 174-5415 | 1 | CLAMP | |
| | 3 | | 134-7082 | 1 | HOSE | |
| | 4 | | 134-7088 | 1 | PIPE AS | |
| | 5 | | 134-7089 | 1 | CLAMP | |
| | 6 | | 8T-6726 | 1 | CLAMP | |
| | 7 | | 8T-4223 | 6 | WASHER | |
| | 8 | | 8T-4139 | 6 | BOLT (L=30mm) | |
| | 9 | | 8T-4121 | 4 | WASHER | |
| | 10 | | 8T-4137 | 4 | BOLT (L=20mm) | |
| | 11 | | 116-2659 | 1 | DAMPER | |

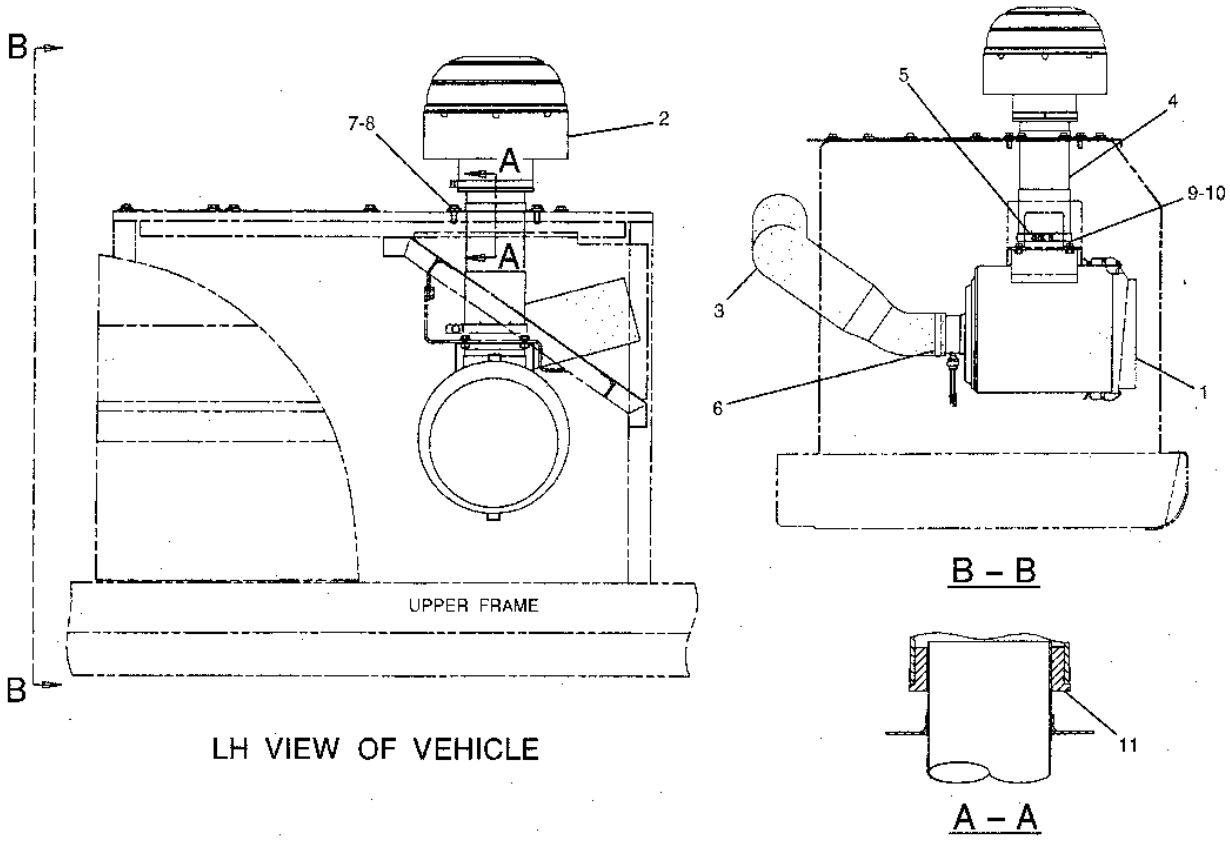


GRAPHIC #1

h79246e

# 4N8267 AFTERCOOLER GP-WATER

ENGINE S/N 10Z 31027-33640
PART OF 1167568-Page 14.01

**Key:**

**SMCS**

| NOTE | REF NO | GRAPHIC REF | PART NUMBER | QTY | PART NAME 1 2 3 4 5 6 (PRODUCT LEVEL) | PRICE USD |
|---|---|---|---|---|---|---|
| | 1 | | 1N-4539 | 4 | BOLT | |
| | 2 | | 9M-1974 | 24 | WASHER | |
| | 3 | | 9N-0847 | 1 | COVER AS | |
| | 4 | | 1H-6525 | 4 | INSERT | |
| | 5 | | 1A-9579 | 20 | BOLT (L=38mm) | |
| | 6 | | 5M-6214 | 1 | PLUG | |
| | 7 | | 7W-0491 | 1 | CORE AS | |
| | 8 | | 6L-1648 | 2 | SEAL | |
| | 9 | | 9L-5903 | 2 | ADAPTER | |
| | | | 2W-3679 | 2 | GASKET | |
| | 10 | | 031-0219 | 4 | BOLT | |
| | 11 | | 5M-2894 | 16 | WASHER | |
| | 12 | | 5S-6735 | 2 | GASKET | |
| | 13 | | 2B-0858 | 1 | PLUG | |
| | 14 | | 9L-6765 | 1 | HOUSING | |
| | 15 | | 9L-5908 | 2 | GASKET | |
| | 16 | | 9L-2625 | 1 | FLANGE | |
| | | | 1N-9372 | 1 | GASKET | |
| | 17 | | 0L-2070 | 4 | BOLT (L=57mm) | |
| | 18 | | 5M-6213 | 1 | PLUG | |
| | 19 | | 4N-0205 | 4 | SPACER | |
| | 20 | | 034-3557 | 4 | BOLT | |

## 4N8267 AFTERCOOLER GP-WATER

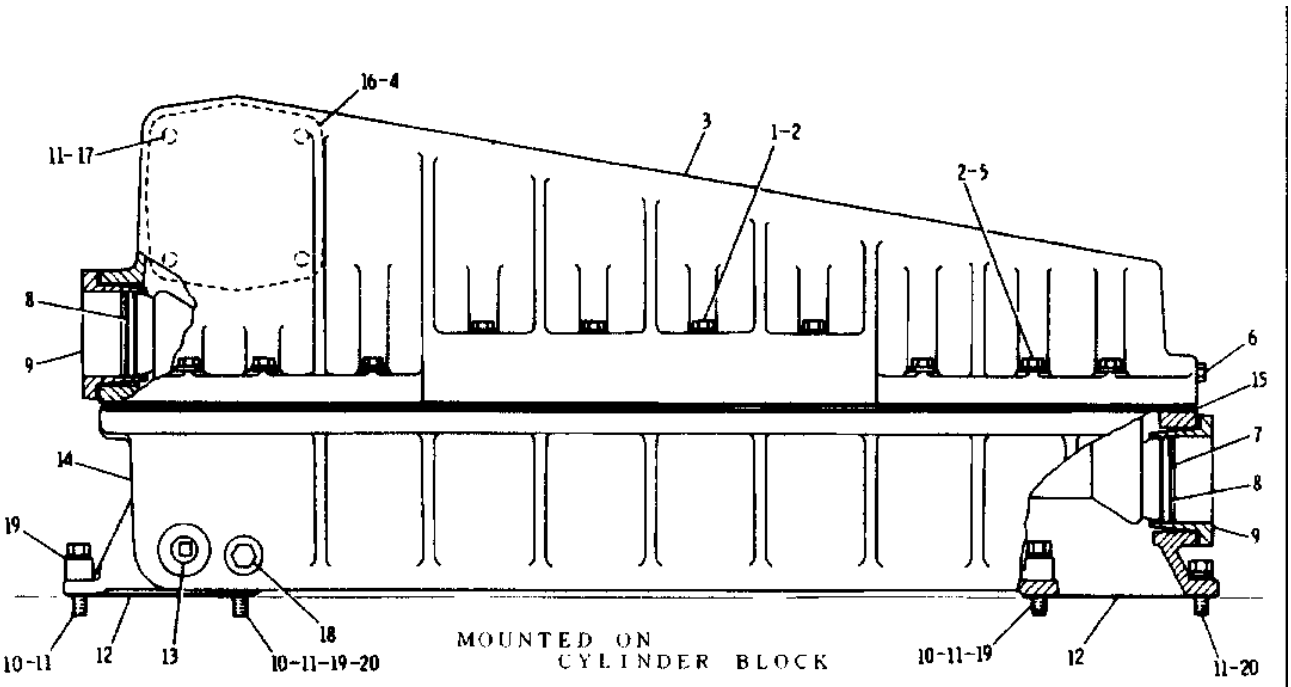


| NOTE | No. | PART No. | QTY | PART NAME | NOTE | No. | PART No. | QTY | PART NAME |
|---|---|---|---|---|---|---|---|---|---|
| | 1 | 1N-4539 | 4 | BOLT | | 19 | 4N-0205 | 4 | SPACER |
| | 2 | 9M-1974 | 24 | WASHER | | 20 | 034 3557 | 4 | BOLT (L=28.58mm) |
| | 3 | 9N-0847 | 1 | COVER AS | | | | | |
| | 4 | 1H-6525 | 4 | INSERT | | | | | |
| | 5 | 1A-9579 | 20 | BOLT (L=38mm) | | | | | |
| | 6 | 5M 6214 | 1 | PLUG | | | | | |
| | 7 | 7W-0491 | 1 | CORE AS | | | | | |
| | 8 | 6L-1648 | 2 | SEAL | | | | | |
| | 9 | 9L 5903 | 2 | ADAPTER | | | | | |
| | | 2W 3679 | 2 | GASKET | | | | | |
| | 10 | 031 0219 | 4 | BOLT (L=44.45mm) | | | | | |
| | 11 | 5M-2894 | 16 | WASHER | | | | | |
| | 12 | 5S-6735 | 2 | GASKET | | | | | |
| | 13 | 2B 0858 | 1 | PLUG | | | | | |
| | 14 | 9L 6765 | 1 | HOUSING | | | | | |
| | 15 | 9L-5908 | 2 | HOUSING | | | | | |
| | 16 | 9L-2625 | 1 | FLANGE | | | | | |
| | | 1N-9372 | 1 | GASKET | | | | | |
| | 17 | 0L-2070 | 4 | BOLT (L=57mm) | | | | | |
| | 18 | 5M 6213 | 1 | PLUG | | | | | |

H51714E

GRAPHIC #1

h51714e

# 4N8267 AFTERCOOLER GP-WATER

ENGINE S/N 10Z 33641-UP
PART OF 1167568-Page 14.01

**Key:**

**SMCS**

| NOTE | REF NO | GRAPHIC REF | PART NUMBER | QTY | PART NAME 1 2 3 4 5 6 (PRODUCT LEVEL) | PRICE USD |
|---|---|---|---|---|---|---|
| | 1 | | 126-1689 | 1 | COVER AS | |
| | | | 1H-6525 | 4 | INSERT | |
| | 2 | | 1A-9579 | 24 | BOLT (L=38mm) | |
| | 3 | | 9M-1974 | 24 | WASHER | |
| | 4 | | 9L-5908 | 2 | GASKET | |
| | 5 | | 7W-0491 | 1 | CORE AS | |
| | 6 | | 5S-6735 | 2 | GASKET | |
| | 7 | | 8T-6762 | 1 | PLUG | |
| | 8 | | 7X-3338 | 4 | BOLT | |
| | 9 | | 5M-2894 | 15 | WASHER | |
| | 10 | | 126-1688 | 1 | HOUSING | |
| | 11 | | 9L-5903 | 2 | ADAPTER | |
| | | | 2W-3679 | 2 | GASKET | |
| | 12 | | 6L-1648 | 2 | SEAL | |
| | 13 | | 2W-3679 | 2 | GASKET | |
| | 14 | | 6L-2625 | 1 | FLANGE | |
| | | | 1N-9372 | 1 | GASKET | |
| | 15 | | 0L-2070 | 3 | BOLT (L=57mm) | |
| | 16 | | 1N-9372 | 1 | GASKET | |
| | 17 | | 034-3557 | 4 | BOLT (L=28.58mm) | |
| | 18 | | 4N-0205 | 4 | SPACER | |
| | 19 | | 5M-6213 | 1 | PLUG | |

## 4N8267 AFTERCOOLER GP-WATER

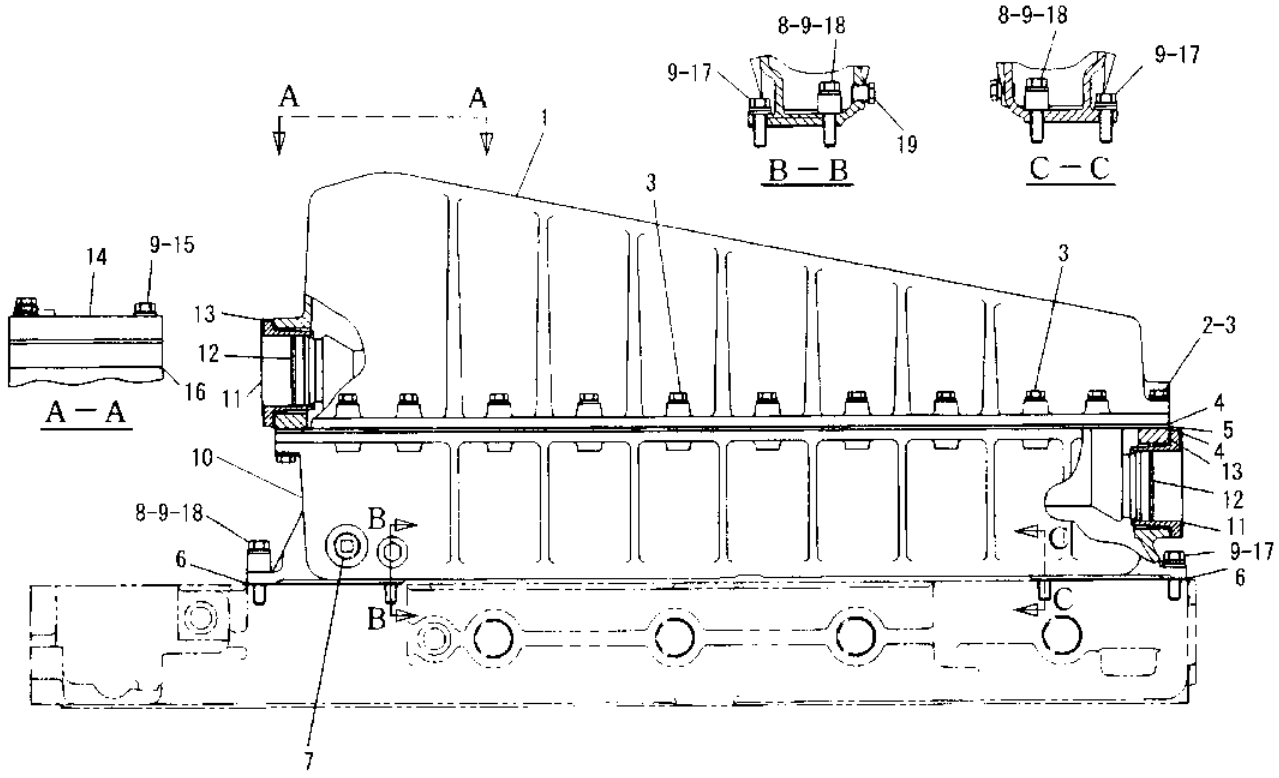


| NOTE | No. | PART No. | QTY | PART NAME | NOTE | No. | PART No. | QTY | PART NAME |
|---|---|---|---|---|---|---|---|---|---|
| | 1 | 126-1689 | 1 | COVER AS | | 18 | 4N-0205 | 4 | SPACER |
| | | 1H-6525 | 4 | INSERT | | 19 | 5M-6213 | 1 | PLUG |
| | 2 | 1A-9579 | 24 | BOLT(L=38mm) | | | | | |
| | 3 | 9M-1974 | 24 | WASHER | | | | | |
| | 4 | 9L-5908 | 2 | GASKET | | | | | |
| | 5 | 7W-0491 | 1 | CORE AS | | | | | |
| | 6 | 5S-6735 | 2 | GASKET | | | | | |
| | 7 | 8T-6762 | 1 | PLUG | | | | | |
| | 8 | 7X-3338 | 4 | BOLT | | | | | |
| | 9 | 5M-2894 | 15 | WASHER | | | | | |
| | 10 | 126-1688 | 1 | HOUSING | | | | | |
| | 11 | 9L-5903 | 2 | ADAPTER | | | | | |
| | | 2W-3679 | 2 | GASKET | | | | | |
| | 12 | 6L-1648 | 2 | SEAL | | | | | |
| | 13 | 2W-3679 | 2 | GASKET | | | | | |
| | 14 | 6L-2625 | 1 | FLANGE | | | | | |
| | | 1N-9372 | 1 | GASKET | | | | | |
| | 15 | 0L-2070 | 3 | BOLT(L=57mm) | | | | | |
| | 16 | 1N-9372 | 1 | GASKET | | | | | |
| | 17 | 034-3557 | 4 | BOLT(L=28.58mm) | | | | | |

H58850E

# 1167564 MANIFOLD GP-EXHAUST

PART OF 1167568-Page 14.01

**Key:**

**SMCS**

| NOTE | REF NO | GRAPHIC REF | PART NUMBER | QTY | PART NAME 1 2 3 4 5 6 (PRODUCT LEVEL) | PRICE USD |
|---|---|---|---|---|---|---|
| | 1 | | 7W-8585 | 1 | MANIFOLD | |
| | 2 | | 9Y-3530 | 1 | MANIFOLD | |
| | 3 | | 9Y-1979 | 3 | GASKET | |
| | 4 | | 7W-8583 | 1 | MANIFOLD | |

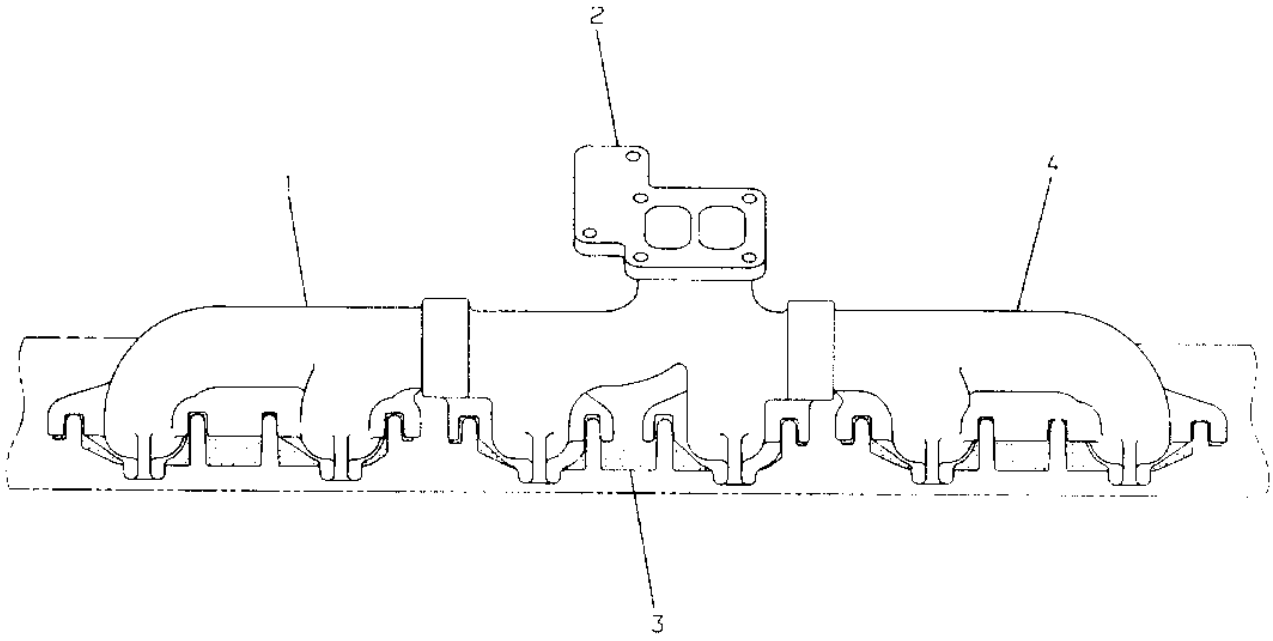


| NOTE | No. | PART No. | QTY | PART NAME | NOTE | No. | PART No. | QTY | PART NAME |
|---|---|---|---|---|---|---|---|---|---|
| | 1 | 7W-8585 | 1 | MANIFOLD | | | | | |
| | 2 | 9Y-3530 | 1 | MANIFOLD | | | | | |
| | 3 | 9Y-1979 | 3 | GASKET | | | | | |
| | 4 | 7W-8583 | 1 | MANIFOLD | | | | | |

## 1167564 MANIFOLD GP-EXHAUST

GRAPHIC #1

h51718e

# 7E5682 FASTENER GP-EXHAUST MANIFOLD

PART OF 1167568-Page 14.01

**Key:**

**SMCS**

| NOTE | REF NO | GRAPHIC REF | PART NUMBER | QTY | PART NAME 1 2 3 4 5 6 (PRODUCT LEVEL) | PRICE USD |
|---|---|---|---|---|---|---|
| | 1 | | 2N-2766 | 12 | LOCKNUT | |
| | 2 | | 8M-7145 | 11 | WASHER | |
| | 3 | | 6V-1426 | 9 | STUD | |
| | 4 | | 6V-1427 | 2 | STUD | |
| | 5 | | 5M-2894 | 2 | WASHER | |
| | 6 | | 1M-7643 | 1 | SPACER | |
| | 7 | | 6B-7469 | 1 | SPACER | |
| | 8 | | 9L-1658 | 1 | STUD | |
| | 9 | | 9M-6527 | 1 | WASHER | |
| | 10 | | 7E-9301 | 1 | SHIELD | |

## 7E5682 FASTENER GP-EXHAUST MANIFOLD

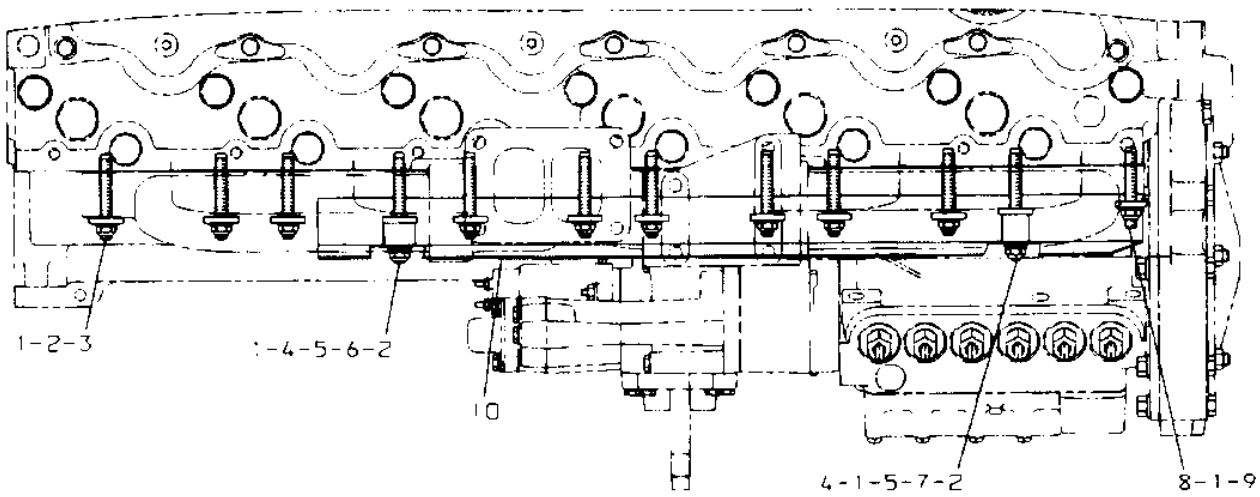


TOP VIEW

| NOTE | No. | PART No. | QTY | PART NAME | NOTE | No. | PART No. | QTY | PART NAME |
|---|---|---|---|---|---|---|---|---|---|
| | 1 | 2N-2766 | 12 | LOCKNUT | | | | | |
| | 2 | 8M-7145 | 11 | WASHER | | | | | |
| | 3 | 6V-1426 | 9 | STUD | | | | | |
| | 4 | 6V-1427 | 2 | STUD | | | | | |
| | 5 | 5M-2894 | 2 | WASHER | | | | | |
| | 6 | 1M-7643 | 1 | SPACER | | | | | |
| | 7 | 6B-7469 | 1 | SPACER | | | | | |
| | 8 | 9L-1658 | 1 | STUD | | | | | |
| | 9 | 9M-6527 | 1 | WASHER | | | | | |
| | 10 | 7E-9301 | 1 | SHIELD | | | | | |

H51719E

GRAPHIC #1

h51719e

# 1118035 TURBOCHARGER GP

PART OF 1167568-Page 14.01
1067407-Page 72

**Key:** Y - SEPARATE ILLUSTRATION

**SMCS**

| NOTE | REF NO | GRAPHIC REF | PART NUMBER | QTY | PART NAME 1 2 3 4 5 6 (PRODUCT LEVEL) | PRICE USD |
|---|---|---|---|---|---|---|
| RY | 1 | | 106-7407 | 1 | TURBOCHARGER GP | |
| | R | | 0R-6889 | 1 | TURBO GP-BASIC | |
| | 2 | | 1P-0451 | 1 | GASKET | |
| | 3 | | 7L-6443 | 2 | BOLT (L=57mm) | |
| | 4 | | 2N-2766 | 4 | LOCKNUT | |
| | 5 | | 9L-2295 | 2 | BOLT (L=38mm) | |

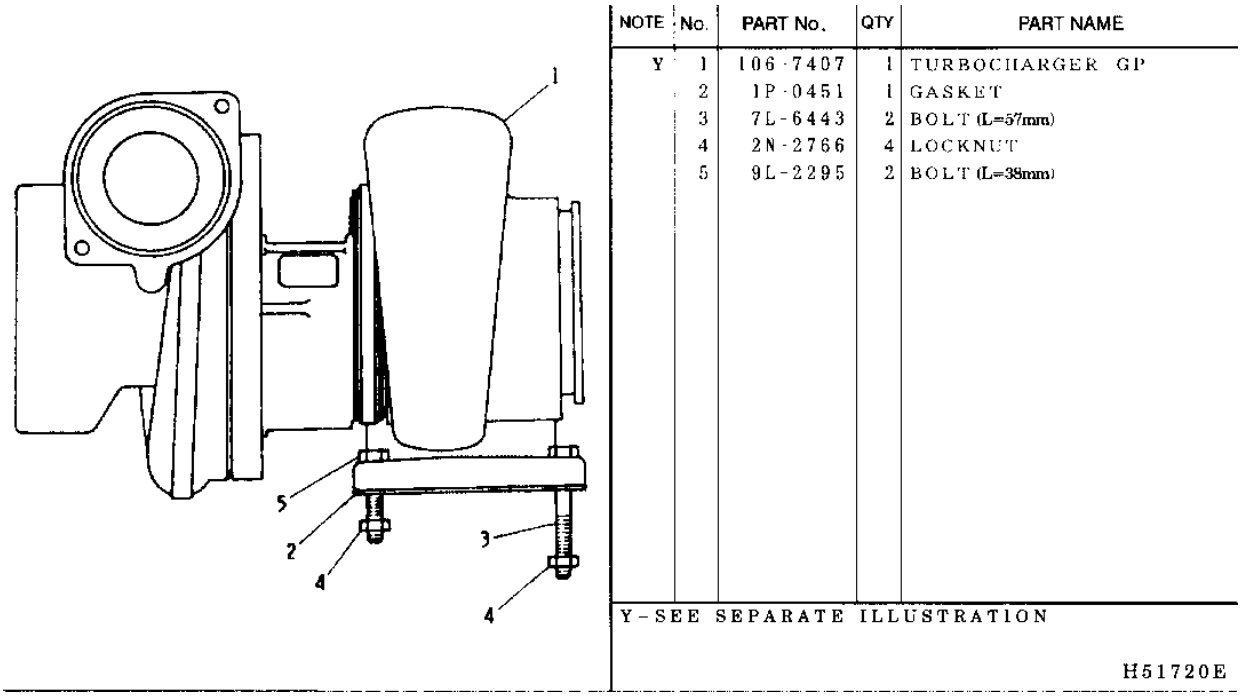


GRAPHIC #1 h51720e

# 1067407 TURBOCHARGER GP

PART OF 1118035-Page 71
1138315-Page 73

**Key:** Y - SEPARATE ILLUSTRATION

**SMCS**

| NOTE | REF NO | GRAPHIC REF | PART NUMBER | QTY | PART NAME 1 2 3 4 5 6 (PRODUCT LEVEL) | PRICE USD |
|---|---|---|---|---|---|---|
| RY | 1 | | 113-8315 | 1 | CARTRIDGE GP | |
| | R | | 0R-6883 | 1 | CARTRIDGE GP | |
| | 2 | | 113-8317 | 1 | COVER (COMPRESSOR) | |
| | 3 | | 113-8318 | 1 | HOUSING (TURBINE) | |
| | 4 | | 7C-9538 | 1 | CLAMP | |
| | | | 7M-9918 | 1 | NUT | |
| | 5 | | 7C-9532 | 1 | CLAMP AS | |
| | | | 7M-9918 | 1 | NUT | |

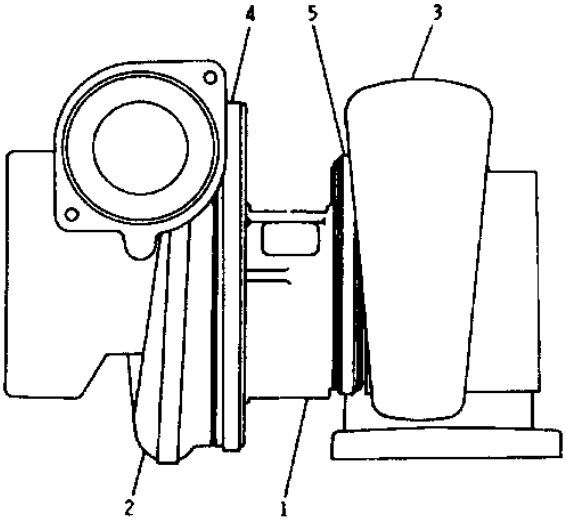


| NOTE | No. | PART No. | QTY | PART NAME |
|---|---|---|---|---|
| Y | 1 | 113-8315 | 1 | CARTRIDGE GP |
| | 2 | 113-8317 | 1 | COVER (COMPRESSOR) |
| | 3 | 113-8318 | 1 | HOUSING (TURBINE) |
| | 4 | 7C-9538 | 1 | CLAMP |
| | | 7M-9918 | 1 | NUT |
| | 5 | 7C-9532 | 1 | CLAMP AS |
| | | 7M-9918 | 1 | NUT |

Y-SEE SEPARATE ILLUSTRATION

H51721E

GRAPHIC #1 h51721e

# 1138315 CARTRIDGE GP-TURBOCHARGER

PART OF 1067407-Page 72

**Key:**

**SMCS**

| NOTE | REF NO | GRAPHIC REF | PART NUMBER | QTY | PART NAME 1 2 3 4 5 6 (PRODUCT LEVEL) | PRICE USD |
|---|---|---|---|---|---|---|
| | 1 | | 113-9330 | 1 | NUT | |
| | 2 | | 113-9331 | 1 | WHEEL | |
| | 3 | | 6N-1526 | 1 | RING | |
| | 4 | | 7C-9539 | 1 | INSERT | |
| | 5 | | 5P-5757 | 1 | SEAL (ID=64.77mm) | |
| | 6 | | 7C-9537 | 1 | BEARING | |
| | 7 | | 7C-9536 | 1 | SLEEVE | |
| | 8 | | 4P-9595 | 1 | HOUSING AS | |
| | 9 | | 113-9329 | 1 | SHAFT AS | |
| | 10 | | 4W-7354 | 1 | RING | |
| | 11 | | 7C-9531 | 1 | BACKPLATE | |
| | 12 | | 7C-9540 | 1 | DEFLECTOR | |
| | 13 | | 7C-9535 | 2 | RING | |
| | 14 | | 5S-4546 | 1 | RING | |
| | 15 | | 7C-9541 | 1 | SLEEVE | |
| | | | | | THE FOLLOWING REPAIR | |
| | | | 4P-4308 | 1 | BEARING KIT | |

## 1138315 CARTRIDGE GP-TURBOCHARGER

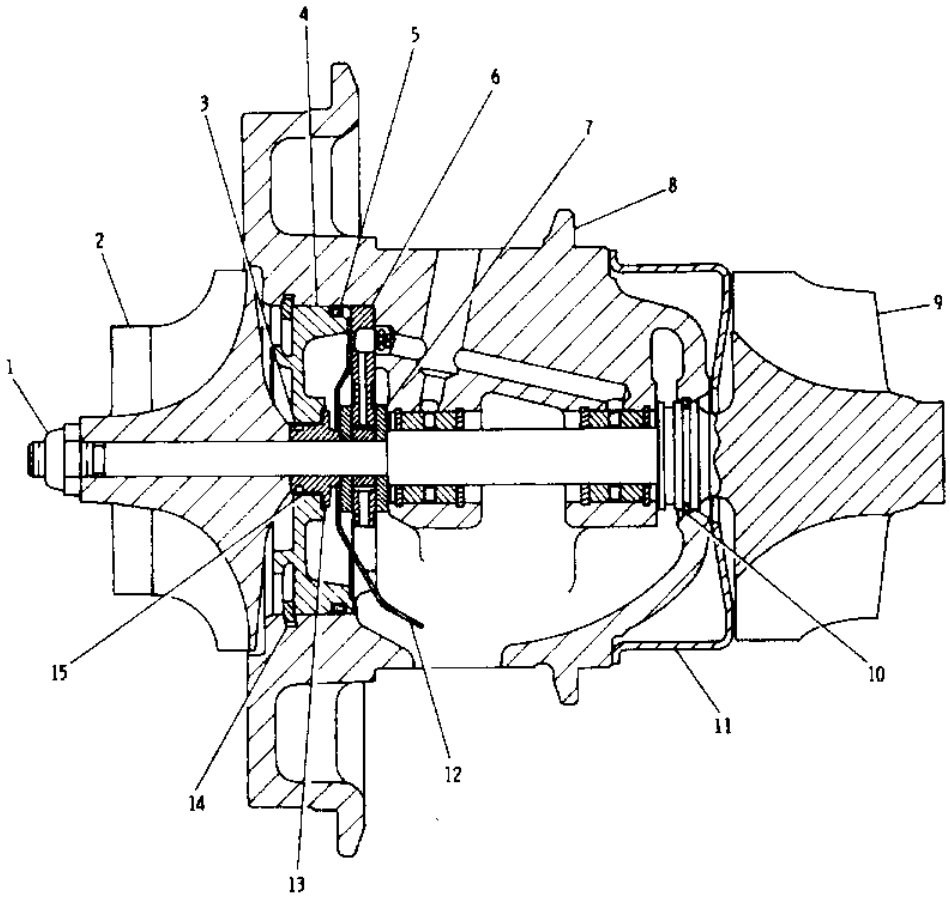


| NOTE | No. | PART No. | QTY | PART NAME |
|---|---|---|---|---|
| | 1 | 113-9330 | 1 | NUT |
| | 2 | 113-9331 | 1 | WHEEL |
| | 3 | 6N-1526 | 1 | RING |
| | 4 | 7C-9539 | 1 | INSERT |
| | 5 | 5P-5757 | 1 | SEAL (ID=64.77mm) |
| | 6 | 7C-9537 | 1 | BEARING |
| | 7 | 7C-9536 | 1 | SLEEVE |
| | 8 | 4P-9595 | 1 | HOUSING AS |
| | 9 | 113-9329 | 1 | SHAFT AS |
| | 10 | 4W-7354 | 1 | RING |
| | 11 | 7C-9531 | 1 | BACKPLATE |
| | 12 | 7C-9540 | 1 | DEFLECTOR |
| | 13 | 7C-9535 | 2 | RING |
| | 14 | 5S-4546 | 1 | RING |
| | 15 | 7C-9541 | 1 | SLEEVE |
| | | | | THE FOLLOWING REPAIR |
| | | 4P-4308 | 1 | BEARING KIT |

H51722E

GRAPHIC #1

h51722e

# 1099401 MUFFLER GP

S/N 8SR 1-00387, 8TR 1-00410
PART OF 1099399-Page 11

**Key:**

**SMCS**

| NOTE | REF NO | GRAPHIC REF | PART NUMBER | QTY | PART NAME 1 2 3 4 5 6 (PRODUCT LEVEL) | PRICE USD |
|---|---|---|---|---|---|---|
| | 1 | | 7Y-1319 | 2 | U-BOLT | |
| | 2 | | 7X-0345 | 2 | BOLT (L=44mm) | |
| | 3 | | 4D-3704 | 2 | WASHER | |
| | 4 | | 8M-7145 | 11 | WASHER | |
| | 5 | | 8T-2502 | 2 | BOLT (L=29mm) | |
| | 6 | | 8T-4186 | 2 | BOLT (L=40mm) | |
| | 7 | | 8T-4133 | 9 | NUT | |
| | 8 | | 8T-4121 | 8 | WASHER | |
| | 9 | | 7Y-1315 | 1 | PIPE AS | |
| | 10 | | 6F-8815 | 1 | CLAMP | |
| | 11 | | 6I-6425 | 1 | MUFFLER AS | |
| | 12 | | 124-1592 | 1 | BRACKET AS | |
| | 13 | | 7Y-1305 | 1 | BRACKET AS | |
| | 14 | | 4I-7560 | 1 | BRACKET AS | |
| | | | 4N-6406 | 1 | RING | |
| | 15 | | 4M-6425 | 1 | BOLT (L=25mm) | |
| | 16 | | 5P-1075 | 2 | WASHER | |
| | 17 | | 8T-4195 | 3 | BOLT (L=30mm) | |
| | 18 | | 135-5762 | 1 | GUARD AS | |
| | 19 | | 8T-4185 | 1 | BOLT (L=50mm) | |
| | 20 | | 135-5763 | 1 | GUARD AS | |
| | 21 | | 109-9464 | 1 | PIPE | |
| | 22 | | 8T-4200 | 3 | BOLT (L=16mm) | |
| | 23 | | 5P-4116 | 3 | WASHER | |
| | 24 | | 5P-4115 | 3 | WASHER | |
| | 25 | | 7X-0579 | 2 | WASHER | |
| | 26 | | 8C-6876 | 1 | BOLT (L=41mm) | |
| | 27 | | 8T-4970 | 3 | BOLT (L=14mm) | |
| | 28 | | 142-5505 | 1 | BRACKET AS | |
| | 29 | | 7E-3870 | 2 | CLAMP | |
| | 30 | | 131-8896 | 1 | SUPPORT AS | |
| | 31 | | 131-8904 | 1 | PLATE | |
| | 32 | | 135-5759 | 1 | COVER AS | |
| | 33 | | 8T-4196 | 2 | BOLT (L=35mm) | |
| | 34 | | 8C-9987 | 6 | WASHER | |
| | 35 | | 8T-4189 | 6 | BOLT (L=20mm) | |

## 1099401 MUFFLER GP

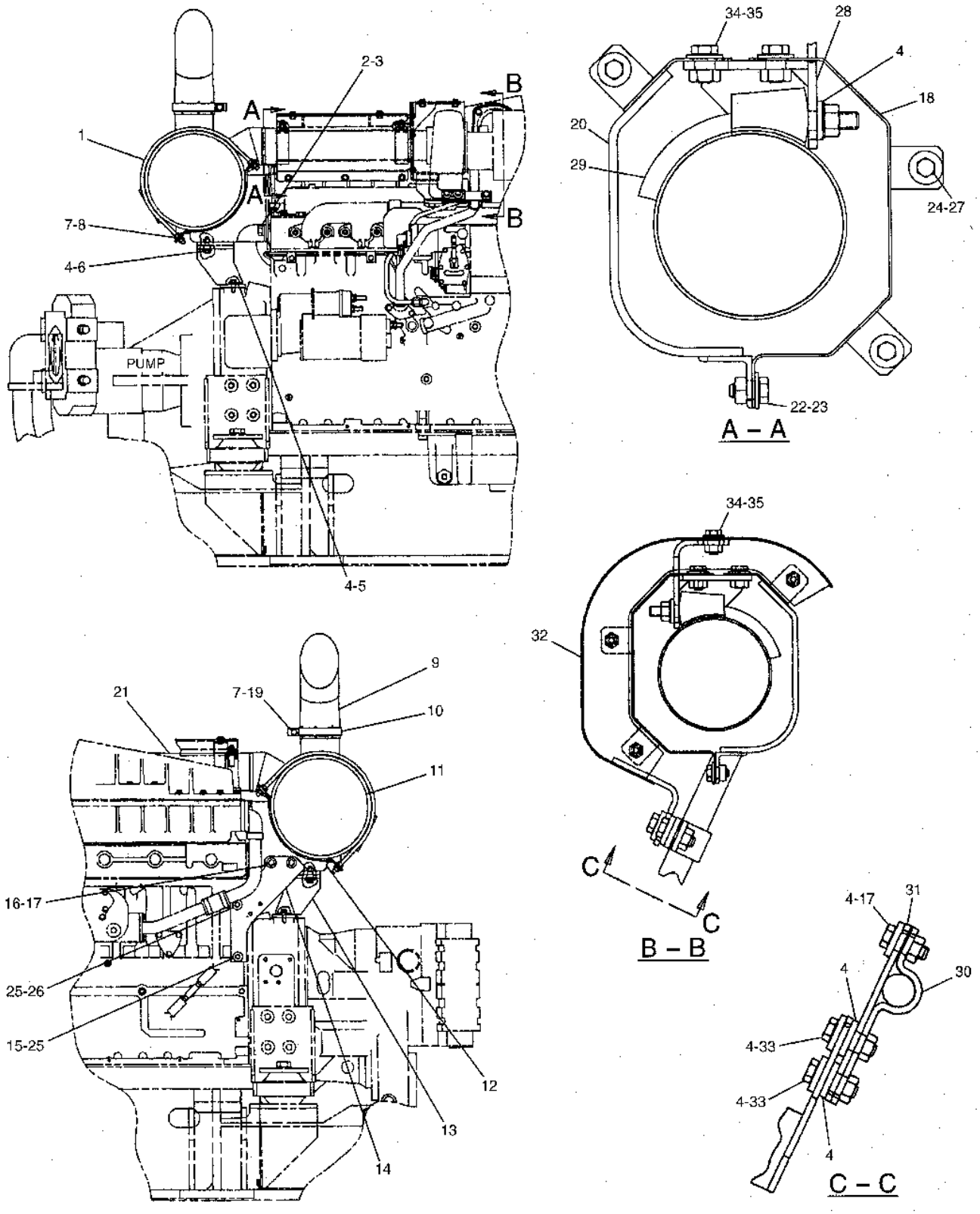


GRAPHIC #1

h56303e

# 1099401 MUFFLER GP

S/N 8SR 00388-00560, 8TR 00411-00715
PART OF 1099399-Page 11

**Key:**

**SMCS**

| NOTE | REF NO | GRAPHIC REF | PART NUMBER | QTY | PART NAME 1 2 3 4 5 6 (PRODUCT LEVEL) | PRICE USD |
|---|---|---|---|---|---|---|
| | 1 | | 7Y-1319 | 2 | U-BOLT | |
| | 2 | | 7X-0345 | 2 | BOLT (L=44mm) | |
| | 3 | | 4D-3704 | 2 | WASHER | |
| | 4 | | 8M-7145 | 10 | WASHER | |
| | 5 | | 8T-2502 | 2 | BOLT (L=29mm) | |
| | 6 | | 8T-4186 | 2 | BOLT (L=40mm) | |
| | 7 | | 8T-4133 | 9 | NUT | |
| | 8 | | 8T-4121 | 8 | WASHER | |
| | 9 | | 7Y-1315 | 1 | PIPE AS | |
| | 10 | | 6F-8815 | 1 | CLAMP | |
| | 11 | | 6I-6425 | 1 | MUFFLER AS | |
| | 12 | | 124-1592 | 1 | BRACKET AS | |
| | 13 | | 7Y-1305 | 1 | BRACKET AS | |
| | 14 | | 4I-7560 | 1 | BRACKET AS | |
| | | | 4N-6406 | 1 | RING | |
| | 15 | | 4M-6425 | 1 | BOLT (L=25mm) | |
| | 16 | | 5P-1075 | 2 | WASHER | |
| | 17 | | 8T-4195 | 3 | BOLT (L=30mm) | |
| | 18 | | 135-5762 | 1 | GUARD AS | |
| | 19 | | 8T-4185 | 1 | BOLT (L=50mm) | |
| | 20 | | 135-5763 | 1 | GUARD AS | |
| | 21 | | 109-9464 | 1 | PIPE AS | |
| | 22 | | 8T-4200 | 3 | BOLT (L=18mm) | |
| | 23 | | 5P-4116 | 3 | WASHER | |
| | 24 | | 5P-4115 | 3 | WASHER | |
| | 25 | | 7X-0579 | 2 | WASHER | |
| | 26 | | 8C-6876 | 1 | BOLT (L=41mm) | |
| | 27 | | 8T-4970 | 3 | BOLT (L=14mm) | |
| | 28 | | 131-8892 | 1 | BRACKET AS | |
| | 29 | | 7E-3870 | 2 | CLAMP | |
| | 30 | | 131-8896 | 1 | SUPPORT AS | |
| | 31 | | 131-8904 | 1 | PLATE | |
| | 32 | | 135-5759 | 1 | COVER AS | |
| | 33 | | 8T-4196 | 2 | BOLT (L=35mm) | |
| | 34 | | 8C-9987 | 6 | WASHER | |
| | 35 | | 8T-4189 | 6 | BOLT (L=20mm) | |
| | 36 | | 142-5507 | 1 | PLATE | |
| | 37 | | 8T-4136 | 2 | BOLT (L=25mm) | |
| | 38 | | 7X-7729 | 2 | WASHER | |
| | 39 | | 8T-4908 | 2 | BOLT (L=25mm) | |
| | | | 171-3359 | 1 | SUPPORT AS | |
| | | | 5P-7128 | 1 | BOLT (L=51mm) | |
| | | | 2N-2766 | 1 | LOCKNUT | |
| | | | 8T-4196 | 1 | BOLT (L=35mm) | |
| | | | 8M-7145 | 2 | WASHER | |

## 1099401 MUFFLER GP

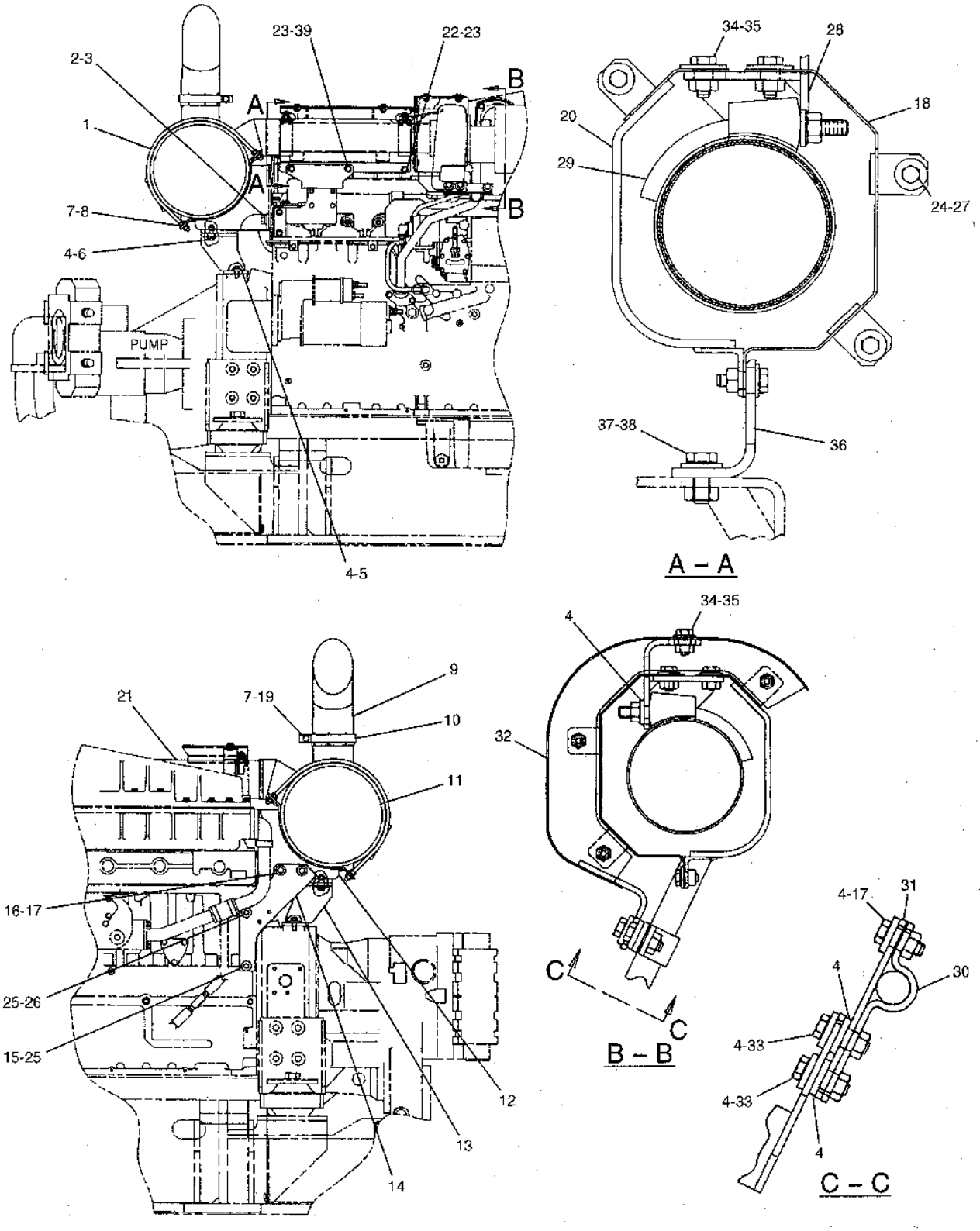


GRAPHIC #1

h79248e

# 1099401 MUFFLER GP

S/N 8SR 00561-UP, 8TR 00716-UP
PART OF 1099399-Page 11

**Key:**

**SMCS**

| NOTE | REF NO | GRAPHIC REF | PART NUMBER | QTY | PART NAME 1 2 3 4 5 6 (PRODUCT LEVEL) | PRICE USD |
|---|---|---|---|---|---|---|
| | 1 | | 7Y-1319 | 2 | U-BOLT | |
| | 2 | | 7X-0345 | 2 | BOLT (L=44mm) | |
| | 3 | | 7X-0513 | 2 | WASHER | |
| | 4 | | 7X-0503 | 4 | WASHER | |
| | 5 | | 8T-2502 | 2 | BOLT (L=29mm) | |
| | 6 | | 8T-4186 | 2 | BOLT (L=40mm) | |
| | 7 | | 8T-4133 | 9 | NUT | |
| | 8 | | 8T-4121 | 8 | WASHER | |
| | 9 | | 7Y-1315 | 1 | PIPE AS | |
| | 10 | | 6F-8815 | 1 | CLAMP | |
| | 11 | | 6I-6425 | 1 | MUFFLER AS | |
| | 12 | | 124-1592 | 1 | BRACKET AS | |
| | 13 | | 7Y-1305 | 1 | BRACKET AS | |
| | 14 | | 4I-7560 | 1 | BRACKET AS | |
| | | | 4N-6406 | 1 | RING | |
| | 15 | | 4M-6425 | 1 | BOLT (L=25mm) | |
| | 16 | | 5P-1075 | 2 | WASHER | |
| | 17 | | 8T-4195 | 3 | BOLT (L=30mm) | |
| | 18 | | 176-4922 | 1 | GUARD AS | |
| | 19 | | 8T-4185 | 1 | BOLT (L=50mm) | |
| | 20 | | 176-4996 | 1 | GUARD AS | |
| | 21 | | 176-4926 | 1 | PIPE | |
| | 22 | | 6V-6753 | 3 | BOLT (L=35mm) | |
| | 23 | | 5P-4116 | 3 | WASHER | |
| | 24 | | 2N-2766 | 2 | LOCKNUT | |
| | 25 | | 7X-0579 | 2 | WASHER | |
| | 26 | | 8C-6876 | 1 | BOLT (L=41mm) | |
| | 27 | | 8T-7547 | 2 | BOLT (L=30mm) | |
| | 28 | | 176-4920 | 1 | BRACKET AS | |
| | 29 | | 7E-3870 | 2 | CLAMP | |
| | 30 | | 176-4924 | 1 | SUPPORT AS | |
| | 31 | | 1W-2431 | 1 | CLAMP | |
| | 32 | | 176-4917 | 1 | COVER AS | |
| | 33 | | 8T-4908 | 2 | BOLT (L=25mm) | |
| | 34 | | 8C-9987 | 9 | WASHER | |
| | 35 | | 8T-4189 | 8 | BOLT (L=20mm) | |
| | 36 | | 142-5507 | 1 | PLATE | |
| | 37 | | 8T-4136 | 2 | BOLT (L=25mm) | |
| | 38 | | 7X-7729 | 3 | WASHER | |
| | | | 171-3359 | 1 | SUPPORT AS | |
| | | | 5P-7128 | 1 | BOLT (L=51mm) | |
| | | | 2N-2766 | 1 | LOCKNUT | |
| | | | 8T-4196 | 1 | BOLT (L=35mm) | |
| | | | 8M-7145 | 2 | WASHER | |

## 1099401 MUFFLER GP

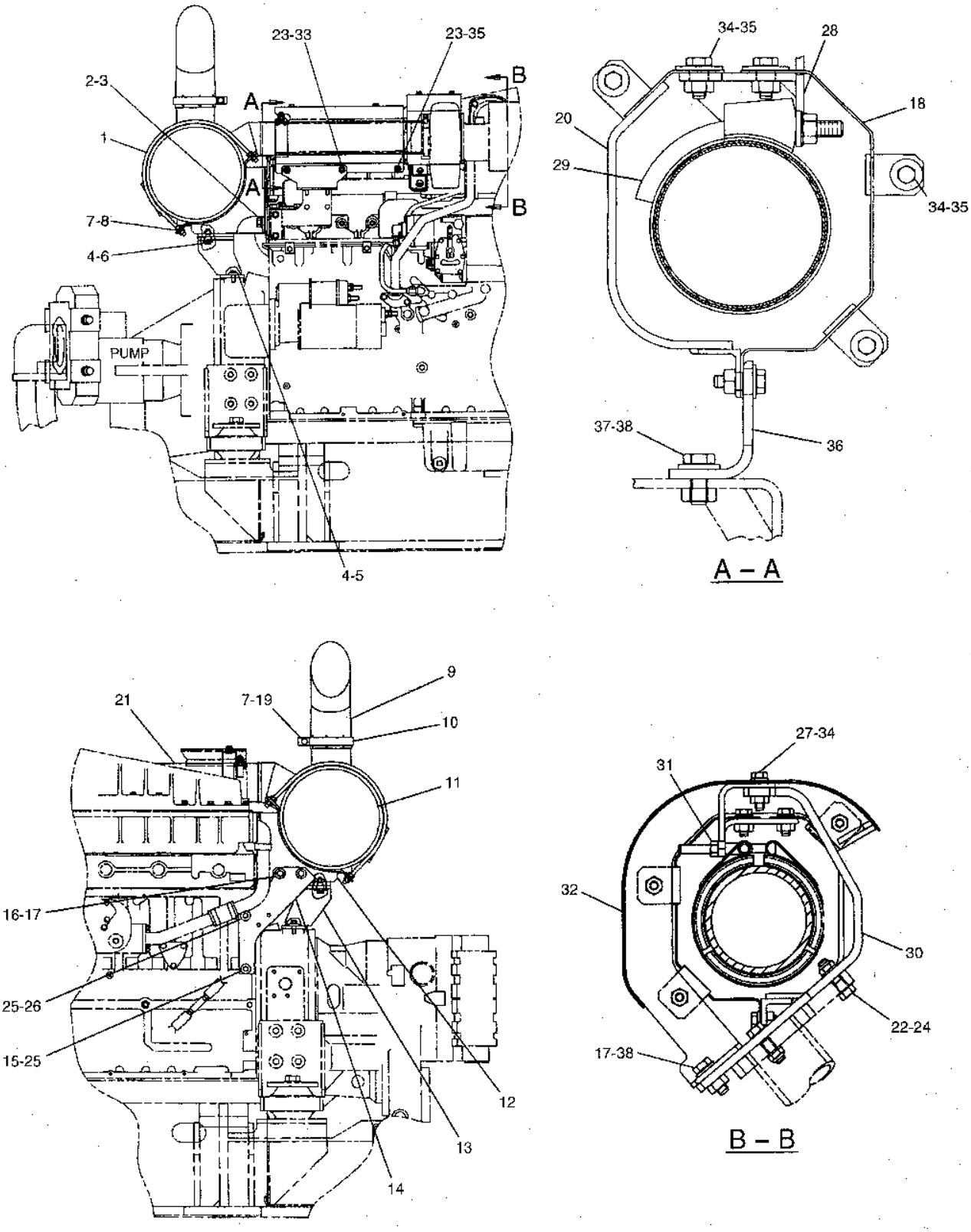


GRAPHIC #1

h79250e

## 7Y0870 LINES GP-DRAIN

**Key:** E - ORDER BY THE CENTIMETER

**SMCS**

| NOTE | REF NO | GRAPHIC REF | PART NUMBER | QTY | PART NAME 1 2 3 4 5 6 (PRODUCT LEVEL) | PRICE USD |
|---|---|---|---|---|---|---|
| | 1 | | 8T-4136 | 2 | BOLT (L=25mm) | |
| | 2 | | 8T-4121 | 2 | WASHER-HARD | |
| | 3 | | 7Y-1229 | 1 | CONNECTOR | |
| | 4 | | 142-5508 | 1 | TUBE AS | |
| | 5 | | 096-4841 | 1 | CLAMP | |
| E | 6 | | 5P-0767 | | HOSE (90cm) | |

## 7Y0870 LINES GP-DRAIN

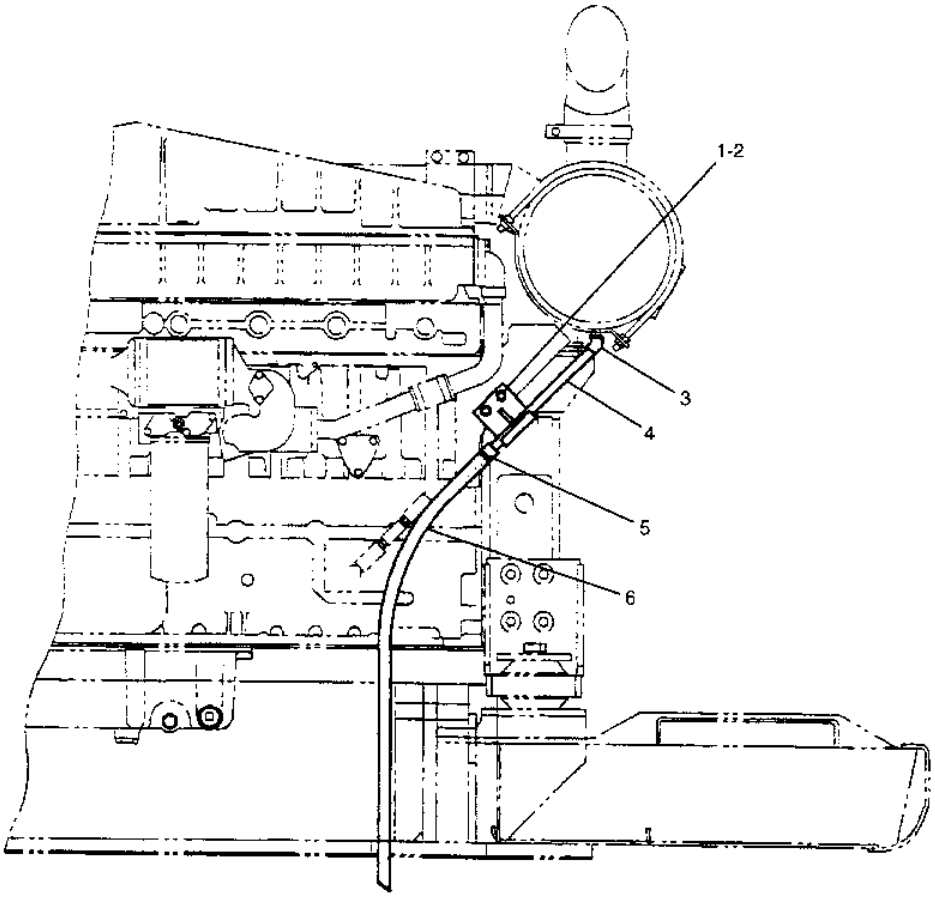


| NOTE | No. | PART No. | QTY | PART NAME |
|---|---|---|---|---|
| | 1 | 8T-4136 | 2 | BOLT (L=25mm) |
| | 2 | 8T-4121 | 2 | WASHER-HARD |
| | 3 | 7Y-1229 | 1 | CONNECTOR |
| | 4 | 142-5508 | 1 | TUBE AS |
| | 5 | 096-4841 | 1 | CLAMP |
| E | 6 | 5P-0767 | | HOSE ···(90cm) |

E-ORDER BY THE CENTIMETER

H63980E

# 1288806 PUMP GP-GOV & FUEL INJ

PART OF 1167568-Page 14.01
2W2410-Page 78, 1115162-Page 81, 1113769-Page 82, 8N7276-Page 86

**Key:** Y - SEE SEPARATE ILLUSTRATION

**SMCS**

| NOTE | REF NO | GRAPHIC REF | PART NUMBER | QTY | PART NAME 1 2 3 4 5 6 (PRODUCT LEVEL) | PRICE USD |
|---|---|---|---|---|---|---|
| | 1 | | 4W-5735 | 1 | LEVER AS | |
| | | | 6V-6835 | 1 | SETSCREW | |
| | | | 8L-5832 | 1 | NUT | |
| | | | 4W-5734 | 1 | LEVER AS | |
| | 2 | | 9S-4191 | 1 | PLUG | |
| | | | 3J-1907 | 1 | SEAL-O-RING (ID=11.89mm) | |
| | 3 | | 5H-6552 | 1 | SETSCREW | |
| | | | 4B-2049 | 1 | NUT | |
| | 4 | | 8J-8343 | 1 | SEAL-O-RING (ID=6.02mm) | |
| | 5 | | 033-5879 | 1 | SEAL-O-RING (ID=10.82mm) | |
| | 6 | | 8N-3088 | 1 | SHAFT AS | |
| Y | 7 | | 2W-2410 | 1 | GOVERNOR GP | |
| Y | 8 | | 111-3769 | 1 | FUEL INJECTION PUMP | |
| | 9 | | 7N-2176 | 1 | PIN | |
| | 10 | | 2W-9657 | 1 | SPRING | |
| | 11 | | 7N-1052 | 1 | DOWEL | |
| Y | 12 | | 8N-7276 | 1 | CONTROL GP | |
| | 13 | | 7L-8056 | 1 | SPRING | |
| | 14 | | 2W-5448 | 1 | COVER | |
| | | | 7E-6785 | 1 | GASKET | |
| | 15 | | 4F-7957 | 8 | BOLT (L=22mm) | |
| | 16 | | 8M-8515 | 1 | SEAL-O-RING (ID=32.99mm) | |
| | 17 | | 6B-4198 | 2 | BOLT (L=106mm) | |
| | 18 | | 5P-6620 | 1 | SEAL-O-RING (ID=14.00mm) | |
| | 19 | | 4N-1761 | 4 | BOLT (L=165mm) | |
| | 20 | | 2S-7383 | 1 | BOLT (L=83mm) | |
| | 21 | | 8F-8178 | 2 | BOLT (L=83mm) | |
| | 22 | | 7N-9907 | 1 | COVER | |
| | | | 7N-9554 | 1 | GASKET | |
| | | | 8N-5784 | 1 | DEFLECTOR | |
| | | | 0S-1614 | 3 | BOLT (L=13mm) | |
| | 23 | | 8B-2377 | 4 | BOLT (L=51mm) | |
| | 24 | | 7N-8768 | 1 | GASKET | |
| | 25 | | 2D-6392 | 1 | SEAL-O-RING (ID=6.07mm) | |
| | 26 | | 5P-0537 | 2 | WASHER | |
| | 27 | | 6V-5894 | 2 | BOLT (L=95mm) | |
| | 28 | | 8N-6680 | 1 | SCREEN AS | |
| Y | 29 | | 111-5162 | 1 | CONTROL GP | |

## 1288806 PUMP GP-GOV & FUEL INJ

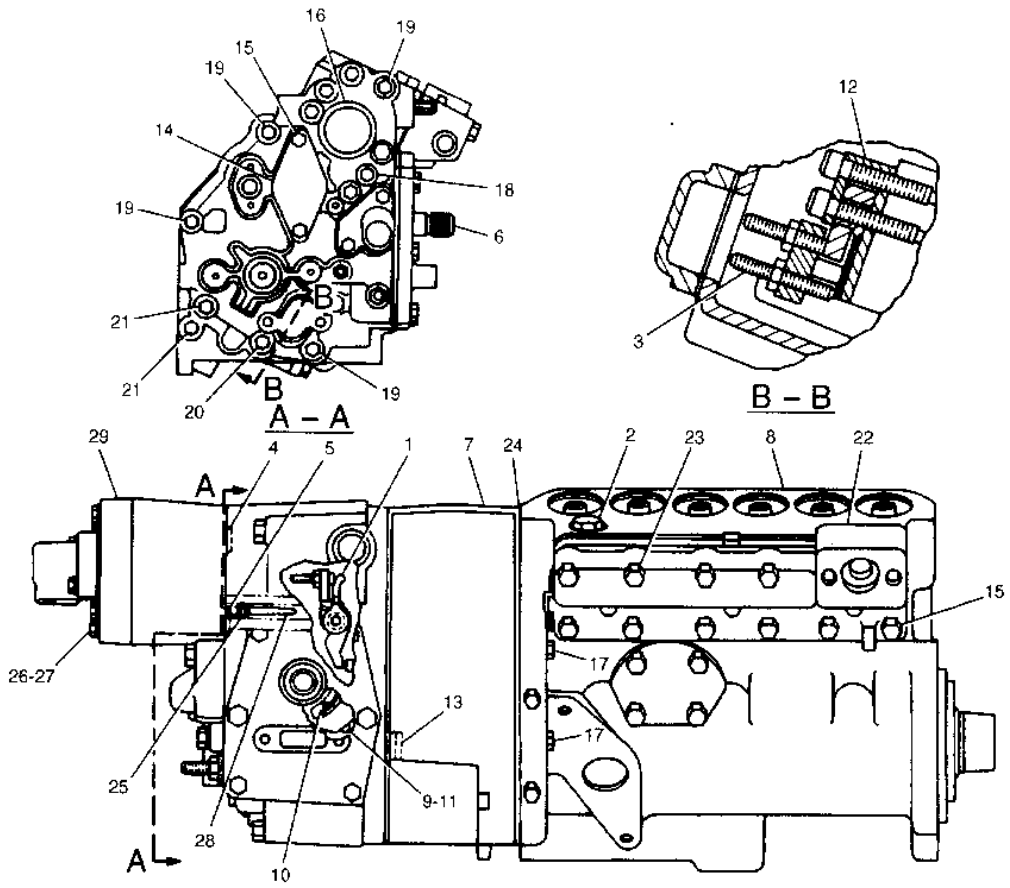


| NOTE | No. | PART No. | QTY | PART NAME |
|---|---|---|---|---|
| | 1 | 4W-5735 | 1 | LEVER AS |
| | | 6V-6835 | 1 | SETSCREW |
| | | 8L-5832 | 1 | NUT |
| | | 4W-5734 | 1 | LEVER AS |
| | 2 | 9S-4191 | 1 | PLUG |
| | | 3J-1907 | 1 | SEAL-O-RING (ID=11.89mm) |
| | 3 | 5H-6552 | 1 | SETSCREW |
| | | 4B-2049 | 1 | NUT |
| | 4 | 8J-8343 | 1 | SEAL-O-RING (ID=6.02mm) |
| | 5 | 033-5879 | 1 | SEAL-O-RING (ID=10.82mm) |
| | 6 | 8N-3088 | 1 | SHAFT AS |
| Y | 7 | 2W-2410 | 1 | GOVERNOR GP |
| Y | 8 | 111-3769 | 1 | FUEL INJECTION PUMP |
| | 9 | 7N-2176 | 1 | PIN |
| | 10 | 2W-9657 | 1 | SPRING |
| | 11 | 7N-1052 | 1 | DOWEL |
| Y | 12 | 8N-7276 | 1 | CONTROL GP |
| | 13 | 7L-8056 | 1 | SPRING |
| | 14 | 2W-5448 | 1 | COVER |
| | | 7E-6785 | 1 | GASKET |

| NOTE | No. | PART No. | QTY | PART NAME |
|---|---|---|---|---|
| | 15 | 4F-7957 | 8 | BOLT (L=22mm) |
| | 16 | 8M-8515 | 1 | SEAL-O-RING (ID=32.99mm) |
| | 17 | 6B-4198 | 2 | BOLT (L=106mm) |
| | 18 | 5P-6620 | 1 | SEAL-O-RING (ID=14.00mm) |
| | 19 | 4N-1761 | 4 | BOLT (L=165mm) |
| | 20 | 2S-7383 | 1 | BOLT (L=83mm) |
| | 21 | 8F-8178 | 2 | BOLT (L=83mm) |
| | 22 | 7N-9907 | 1 | COVER |
| | | 7N-9554 | 1 | GASKET |
| | | 8N-5784 | 1 | DEFLECTOR |
| | | 0S-1614 | 3 | BOLT (L=13mm) |
| | 23 | 8B-2377 | 4 | BOLT (L=51mm) |
| | 24 | 7N-8768 | 1 | GASKET |
| | 25 | 2D-6392 | 1 | SEAL-O-RING (ID=6.07mm) |
| | 26 | 5P-0537 | 2 | WASHER |
| | 27 | 6V-5894 | 2 | BOLT (L=95mm) |
| | 28 | 8N-6680 | 1 | SCREEN AS |
| Y | 29 | 111-5162 | 1 | CONTROL GP |

Y-SEE SEPARATE ILLUSTRATION

H51723E

# 2W2410 GOVERNOR GP-PART 1 OF 3

PART OF 1288806-Page 77

**Key:**

**SMCS**

| NOTE | REF NO | GRAPHIC REF | PART NUMBER | QTY | PART NAME 1 2 3 4 5 6 (PRODUCT LEVEL) | PRICE USD |
|---|---|---|---|---|---|---|
| | 1 | | 1W-6523 | 1 | PLUG | |
| | 2 | | 8N-3259 | 1 | COVER | |
| | | | 6I-2003 | 1 | GASKET | |
| | 3 | | 5P-6945 | 2 | BOLT (L=29mm) | |
| | | | 5P-0537 | 2 | WASHER | |
| | 4 | | 7N-2594 | 1 | SETSCREW | |
| | | | 7N-8775 | 1 | NUT | |
| | 5 | | 3J-7354 | 1 | SEAL-O-RING (ID=8.92mm) | |
| | 6 | | 4N-5485 | 1 | BODY | |
| | | | 5F-9144 | 1 | SEAL-O-RING (ID=7.65mm) | |
| | 7 | | 4N-5484 | 1 | VALVE | |
| | | | 6H-9691 | 1 | SEAL-O-RING (ID=2.90mm) | |
| | 8 | | 0S-1616 | 6 | BOLT (L=25mm) | |
| | 9 | | 7N-8780 | 1 | COVER AS | |
| | 10 | | 5P-3272 | 1 | SEAL-O-RING (ID=6.35mm) | |
| | 11 | | 7N-8779 | 1 | GASKET | |
| | 12 | | 3P-0009 | 1 | INSULATOR | |
| | 13 | | 1P-2497 | 2 | BOLT (L=25mm) | |
| | | | 8T-0328 | 2 | WASHER | |
| | 14 | | 8N-3258 | 1 | COVER | |
| | | | 6I-2004 | 1 | GASKET | |

## 2W2410 GOVERNOR GP-PART 1 OF 3

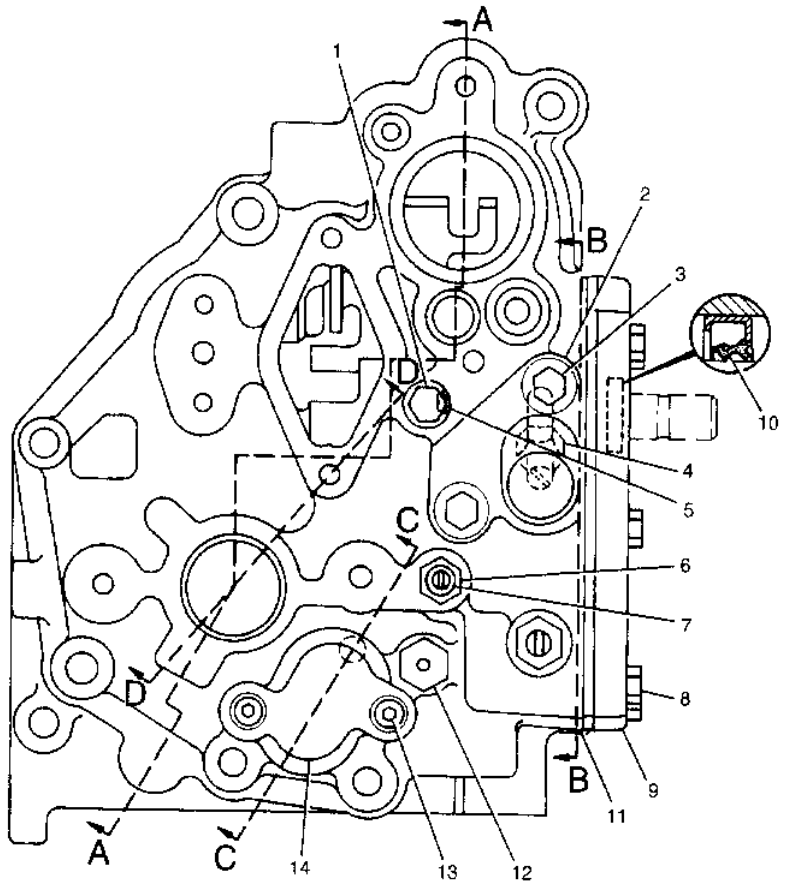


| NOTE | No. | PART No. | QTY | PART NAME |
|---|---|---|---|---|
| | 1 | 1W-6523 | 1 | PLUG |
| | 2 | 8N-3259 | 1 | COVER |
| | | 6I-2003 | 1 | GASKET |
| | 3 | 5P-6945 | 2 | BOLT (L=29mm) |
| | | 5P-0537 | 2 | WASHER |
| | 4 | 7N-2594 | 1 | SETSCREW |
| | | 7N-8775 | 1 | NUT |
| | 5 | 3J-7354 | 1 | SEAL-O-RING (ID=8.92mm) |
| | 6 | 4N-5485 | 1 | BODY |
| | | 5F-9144 | 1 | SEAL-O-RING (ID=7.65mm) |
| | 7 | 4N-5484 | 1 | VALVE |
| | | 6H-9691 | 1 | SEAL-O-RING (ID=2.90mm) |
| | 8 | 0S-1616 | 6 | BOLT (L=25mm) |
| | 9 | 7N-8780 | 1 | COVER AS |
| | 10 | 5P-3272 | 1 | SEAL-O-RING (ID=6.35mm) |
| | 11 | 7N-8779 | 1 | GASKET |
| | 12 | 3P-0009 | 1 | INSULATOR |
| | 13 | 1P-2497 | 2 | BOLT (L=25mm) |
| | | 8T-0328 | 2 | WASHER |
| | 14 | 8N-3258 | 1 | COVER |
| | | 6I-2004 | 1 | GASKET |

H51724E

GRAPHIC #1 h51724e

# 2W2410 GOVERNOR GP -PART 2 OF 3

PART OF 1288806-Page 77

**Key:**

**SMCS**

| NOTE | REF NO | GRAPHIC REF | PART NUMBER | QTY | PART NAME 1 2 3 4 5 6 (PRODUCT LEVEL) | PRICE USD |
|---|---|---|---|---|---|---|
| | 1 | | 7N-8785 | 1 | SHAFT | |
| | 2 | | 1N-3800 | 1 | SLEEVE | |
| | 3 | | 4N-0432 | 1 | SEAT | |
| | 4 | | 2W-2216 | 1 | SPRING | |
| | 5 | | 2M-7819 | 2 | RING | |
| | 6 | | 1N-3802 | 1 | SEAT | |
| | 7 | | 8N-2507 | 1 | PISTON AS | |
| | | | 8N-2505 | 1 | VALVE | |
| | | | 7N-7271 | 1 | LEVER | |
| | | | 3G-3835 | 1 | PIN | |
| | 8 | | 1W-4098 | 1 | PISTON | |
| | 9 | | 7W-0250 | 1 | SLEEVE | |
| | 10 | | 5P-9757 | 1 | SEAL (ID=18.77mm) | |
| | 11 | | 031-0216 | 3 | BOLT (L=19mm) | |
| | 12 | | 4N-2953 | 1 | RING | |
| | 13 | | 7E-4892 | 2 | RASE | |
| | 14 | | 7M-7219 | 1 | BEARING | |
| | 15 | | 4W-6868 | 1 | RISER | |
| | 16 | | 3K-5733 | 1 | SPRING | |
| | 17 | | 8N-2495 | 1 | HOUSING | |
| | | | 8S-6814 | 4 | DOWEL | |
| | | | 4F-6024 | 2 | DOWEL | |
| | 18 | | 8N-2503 | 1 | DASHPOT AS | |
| | | | 4N-6407 | 1 | SPOOL | |
| | | | 4N-6406 | 1 | RING | |
| | 19 | | 4N-6404 | 1 | RING | |
| | 20 | | 8N-2496 | 1 | GASKET | |
| | 21 | | 2N-0828 | 2 | WASHER | |
| | 22 | | 2P-9556 | 1 | WASHER | |
| | 23 | | 6N-3504 | 1 | SEAT | |
| | 24 | | 7N-8821 | 2 | RING | |
| | 25 | | 7N-7270 | 2 | SLEEVE | |
| | 26 | | 8N-2501 | 1 | HOUSING | |
| | | | 1P-2298 | 1 | VALVE AS | |
| | 27 | | 8N-2499 | 1 | GUIDE | |
| | 28 | | 3D-8317 | 1 | RING | |
| | 29 | | 4N-0260 | 1 | SEAL | |

## 2W2410 GOVERNOR GP -PART 2 OF 3

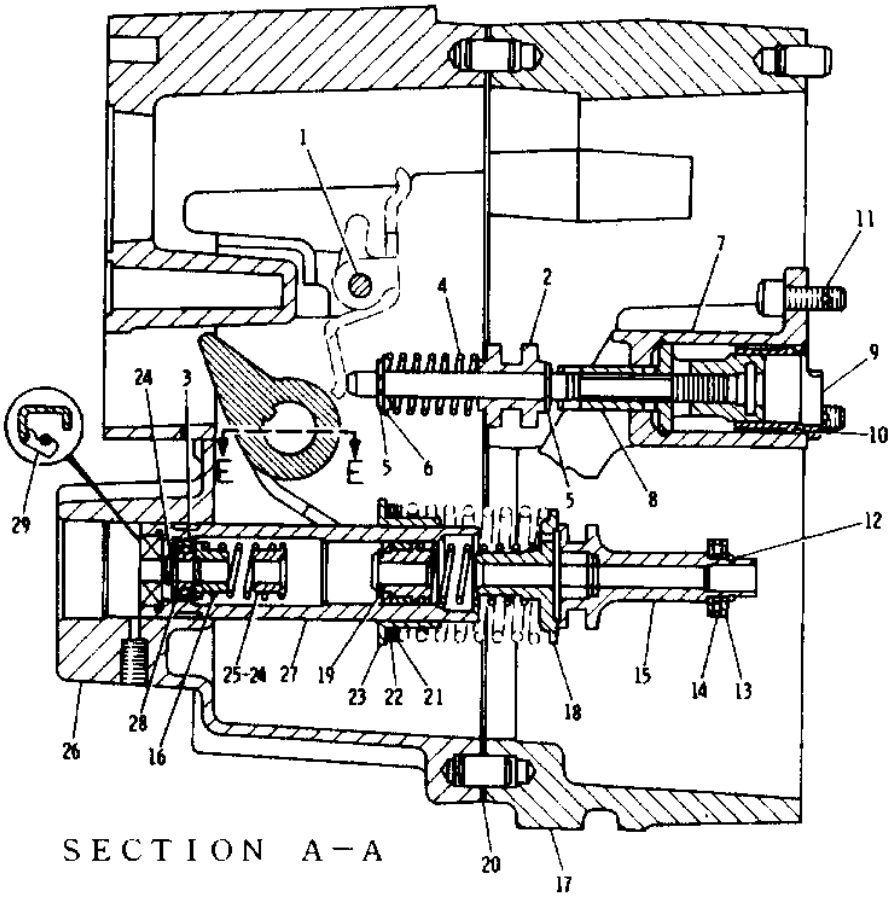


| NOTE | No. | PART No. | QTY | PART NAME | NOTE | No. | PART No. | QTY | PART NAME |
|---|---|---|---|---|---|---|---|---|---|
| | 1 | 7N-8785 | 1 | SHAFT | | 17 | 8N-2495 | 1 | HOUSING |
| | 2 | 1N-3800 | 1 | SLEEVE | | | 8S 6814 | 4 | DOWEL |
| | 3 | 4N-0432 | 1 | SEAT | | | 4F-6024 | 2 | DOWEL |
| | 4 | 2W-2216 | 1 | SPRING | | 18 | 8N-2503 | 1 | DASHPOT AS |
| | 5 | 2M-7819 | 2 | RING | | | 4N-6407 | 1 | SPOOL |
| | 6 | 1N-3802 | 1 | SEAT | | | 4N-6406 | 1 | RING |
| | 7 | 8N-2507 | 1 | PISTON AS | | 19 | 4N-6404 | 1 | RING |
| | | 8N-2505 | 1 | VALVE | | 20 | 8N-2496 | 1 | GASKET |
| | | 7N-7271 | 1 | LEVER | | 21 | 2N-0828 | 2 | WASHER |
| | | 3G-3835 | 1 | PIN | | 22 | 2P-9556 | 1 | WASHER |
| | 8 | 1W-4098 | 1 | PISTON | | 23 | 6N-3504 | 1 | SEAT |
| | 9 | 7W-0250 | 1 | SLEEVE | | 24 | 7N-8821 | 2 | RING |
| | 10 | 5P-9757 | 1 | SEAL (ID=18.77mm) | | 25 | 7N 7270 | 2 | SLEEVE |
| | 11 | 031-0216 | 3 | BOLT (L=19mm) | | 26 | 8N-2501 | 1 | HOUSING |
| | 12 | 4N-2953 | 1 | RING | | | 1P-2298 | 1 | VALVE AS |
| | 13 | 7E-4892 | 2 | RASE | | 27 | 8N-2499 | 1 | GUIDE |
| | 14 | 7M-7219 | 1 | BEARING | | 28 | 3D-8317 | 1 | RING |
| | 15 | 4W-6868 | 1 | RISER | | 29 | 4N-0260 | 1 | SEAL |
| | 16 | 3K-5733 | 1 | SPRING | | | | | |

H51725E

GRAPHIC #1

h51725e

# 2W2410 GOVERNOR GP-PART 3 OF 3

PART OF 1288806-Page 77

**Key:**

**SMCS**

| NOTE | REF NO | GRAPHIC REF | PART NUMBER | QTY | PART NAME 1 2 3 4 5 6 (PRODUCT LEVEL) | PRICE USD |
|---|---|---|---|---|---|---|
| | 1 | | 6D-3897 | 1 | BOLT (L=13mm) | |
| | 2 | | 6L-5897 | 2 | BOLT (L=22mm) | |
| | 3 | | 2W-6104 | 1 | BLOCK AS | |
| | | | 2W-6103 | 1 | DOWEL | |
| | 4 | | 8N-2488 | 1 | BOLT | |
| | 5 | | 8N-3256 | 1 | COLLAR | |
| | 6 | | 8L-5832 | 1 | NUT | |
| | 7 | | 9Y-4701 | 1 | SETSCREW | |
| | 8 | | 7N-8821 | 1 | RING | |
| | 9 | | 2W-7400 | 1 | SPRING | |
| | 10 | | 8N-3087 | 1 | STOP | |
| | 11 | | 7N-2172 | 2 | PIN | |
| | 12 | | 7N-2171 | 4 | RING | |
| | 13 | | 7N-2594 | 1 | SETSCREW | |
| | | | 7W-4272 | 1 | NUT | |
| | 14 | | 2W-9305 | 2 | PLATE | |
| | 15 | | 8N-3168 | 1 | LEVER | |
| | 16 | | 2W-6102 | 1 | LEVER | |
| | 17 | | 1W-4243 | 1 | SPRING | |

## 2W2410 GOVERNOR GP-PART 3 OF 3

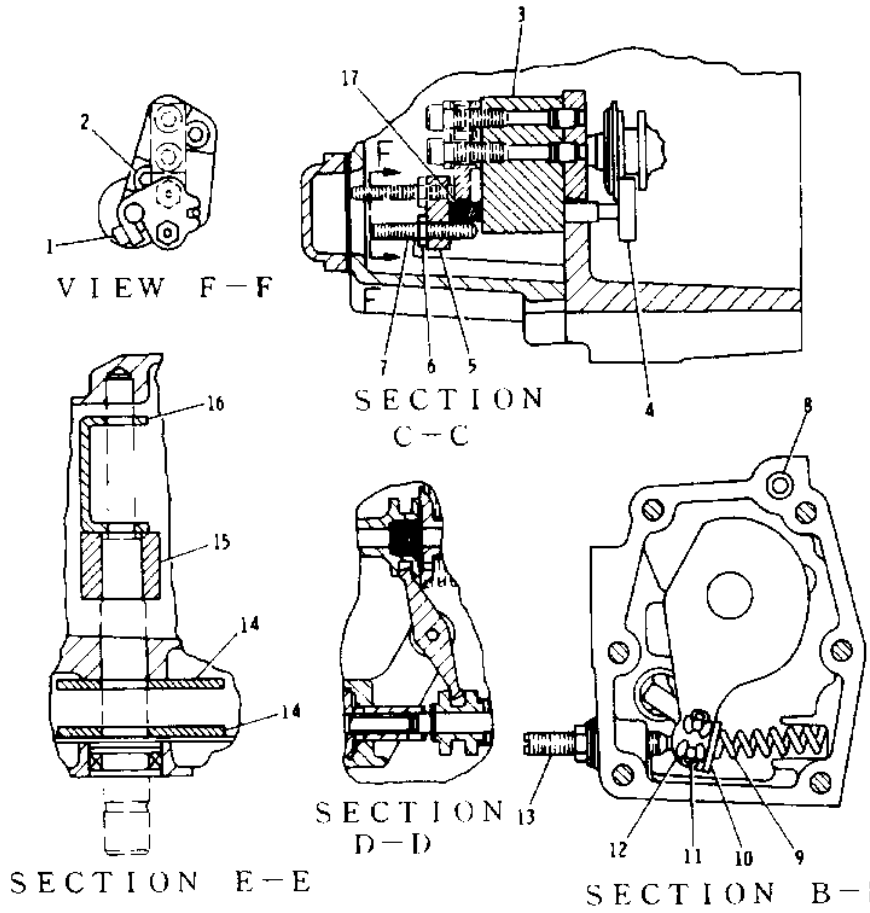


| NOTE | No. | PART No. | QTY | PART NAME |
|---|---|---|---|---|
| | 1 | 6D-3897 | 1 | BOLT (L=13mm) |
| | 2 | 6L-5897 | 2 | BOLT (L=22mm) |
| | 3 | 2W 6104 | 1 | BLOCK AS |
| | | 2W-6103 | 1 | DOWEL |
| | 4 | 8N-2488 | 1 | BOLT |
| | 5 | 8N 3256 | 1 | COLLAR |
| | 6 | 8L-5832 | 1 | NUT |
| | 7 | 9Y-4701 | 1 | SETSCREW |
| | 8 | 7N-8821 | 1 | RING |
| | 9 | 2W 7400 | 1 | SPRING |
| | 10 | 8N-3087 | 1 | STOP |
| | 11 | 7N-2172 | 2 | PIN |
| | 12 | 7N 2171 | 4 | RING |
| | 13 | 7N-2594 | 1 | SETSCREW |
| | | 7W-4272 | 1 | NUT |
| | 14 | 2W-9305 | 2 | PLATE |
| | 15 | 8N 3168 | 1 | LEVER |
| | 16 | 2W-6102 | 1 | LEVER |
| | 17 | 1W-4243 | 1 | SPRING |

H51726E

# 1115162 CONTROL GP-FUEL RATIO

PART OF 1288806-Page 77

**Key:**

**SMCS**

| NOTE | REF NO | GRAPHIC REF | PART NUMBER | QTY | PART NAME 1 2 3 4 5 6 (PRODUCT LEVEL) | PRICE USD |
|---|---|---|---|---|---|---|
| | 1 | | 9S-8748 | 1 | NUT | |
| | 2 | | 4W-0924 | 1 | RETAINER | |
| | 3 | | 7W-2826 | 1 | SPRING | |
| | 4 | | 4P-7274 | 1 | COVER | |
| | 5 | | 4P-7275 | 1 | COVER | |
| | 6 | | 7W-1691 | 1 | WASHER | |
| | 7 | | 7N-9062 | 1 | HOUSING | |
| | 8 | | 8N-5763 | 1 | SEAL | |
| | 9 | | 8N-5764 | 1 | PISTON | |
| | 10 | | 2W-9315 | 2 | WASHER | |
| | 11 | | 8F-4610 | 1 | RING | |
| | 12 | | 2A-5546 | 2 | BOLT (L=35mm) | |
| | 13 | | 5P-0537 | 4 | WASHER | |
| | 14 | | 5P-6945 | 2 | BOLT (L=29mm) | |
| | 15 | | 2W-9316 | 1 | VALVE AS | |
| | 16 | | 9Y-8088 | 1 | VALVE | |
| | 17 | | 8N-5765 | 1 | SPRING | |
| | 18 | | 7N-9035 | 1 | RETAINER | |
| | 19 | | 7W-2015 | 1 | EXTENSION | |
| | 20 | | 7W-2828 | 1 | SPRING | |
| | 21 | | 9N-1754 | 1 | SPRING | |
| | 22 | | 6I-1564 | 1 | DIAPHRAGM | |
| | 23 | | 3E-6760 | 1 | SEAL (ID=7.65mm) | |
| | 24 | | 5P-8210 | 1 | SEAL (ID=31.34mm) | |

## 1115162 CONTROL GP-FUEL RATIO

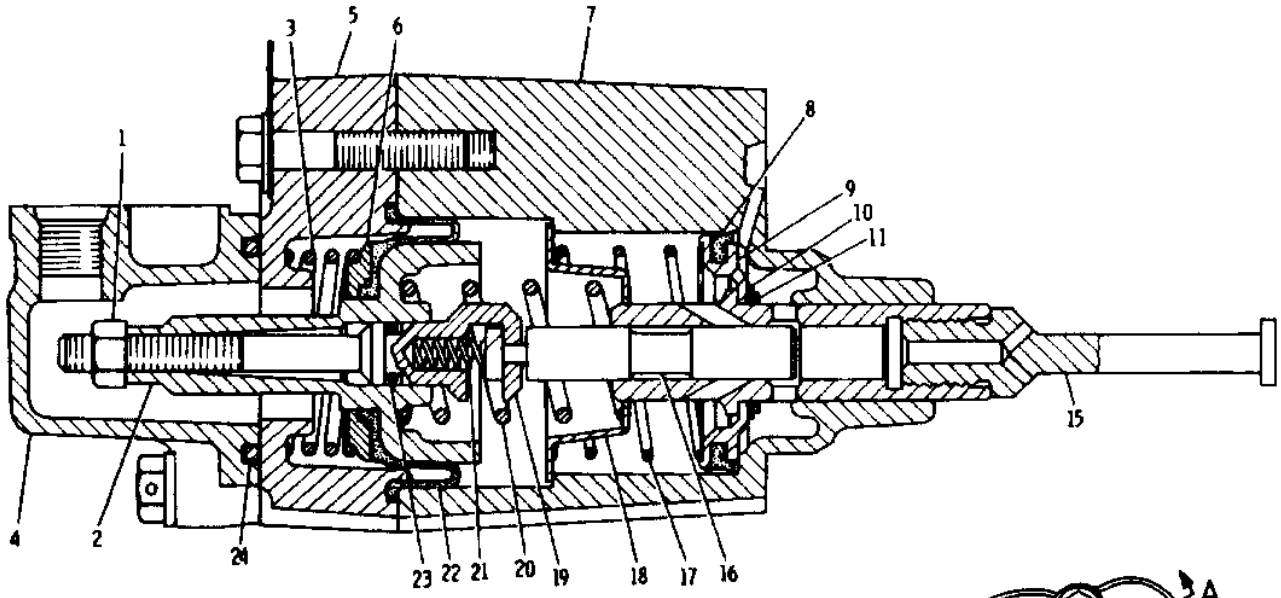


SECTION A–A

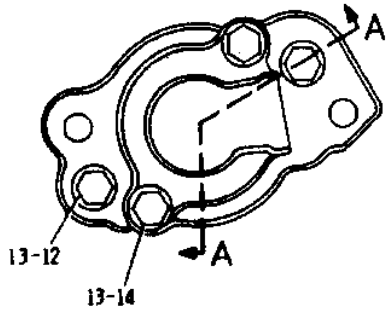


| NOTE | No. | PART No. | QTY | PART NAME | NOTE | No. | PART No. | QTY | PART NAME |
|---|---|---|---|---|---|---|---|---|---|
| | 1 | 9S-8748 | 1 | NUT | | 21 | 9N-1754 | 1 | SPRING |
| | 2 | 4W-0924 | 1 | RETAINER | | 22 | 6I-1564 | 1 | DIAPHRAGM |
| | 3 | 7W-2826 | 1 | SPRING | | 23 | 3E-6760 | 1 | SEAL (ID=7.65mm) |
| | 4 | 4P-7274 | 1 | COVER | | 24 | 5P-8210 | 1 | SEAL (ID=31.34mm) |
| | 5 | 4P-7275 | 1 | COVER | | | | | |
| | 6 | 7W-1691 | 1 | WASHER | | | | | |
| | 7 | 7N-9062 | 1 | HOUSING | | | | | |
| | 8 | 8N-5763 | 1 | SEAL | | | | | |
| | 9 | 8N-5764 | 1 | PISTON | | | | | |
| | 10 | 2W-9315 | 2 | WASHER | | | | | |
| | 11 | 8F-4610 | 1 | RING | | | | | |
| | 12 | 2A-5546 | 2 | BOLT (L=35mm) | | | | | |
| | 13 | 5P-0537 | 4 | WASHER | | | | | |
| | 14 | 5P-6945 | 2 | BOLT (L=29mm) | | | | | |
| | 15 | 2W-9316 | 1 | VALVE AS | | | | | |
| | 16 | 9Y-8088 | 1 | VALVE | | | | | |
| | 17 | 8N-5765 | 1 | SPRING | | | | | |
| | 18 | 7N-9035 | 1 | RETAINER | | | | | |
| | 19 | 7W-2015 | 1 | EXTENSION | | | | | |
| | 20 | 7W-2828 | 1 | SPRING | | | | | |

H51727E

# 1113769 PUMP GP-FUEL INJECTION

PART OF 1288806-Page 77
4P9627, 1113770-Page 83, 4P9840-Page 84

**Key:** Y - SEPARATE ILLUSTRATION

**SMCS**

| NOTE | REF NO | GRAPHIC REF | PART NUMBER | QTY | PART NAME 1 2 3 4 5 6 (PRODUCT LEVEL) | PRICE USD |
|---|---|---|---|---|---|---|
| Y | 1 | | 4P-9840 | 1 | HOUSING AS | |
| Y | 2 | | 4P-9827 | 6 | PUMP GP | |
| | 3 | | 8N-5117 | 6 | BUSHING | |
| | 4 | | 114-8718 | 6 | SEAL (ID=26.64mm) | |
| Y | 5 | | 111-3770 | 1 | CAMSHAFT AS | |
| | 6 | | 4P-9832 | 6 | LIFTER AS | |
| | 7 | | 7N-8421 | 1 | RING | |
| | 8 | | 8N-2487 | 1 | WASHER | |
| | 9 | | 7N-1047 | 1 | COVER | |
| | 10 | | 7N-1046 | 1 | GASKET | |
| | 11 | | 0S-1615 | 4 | BOLT (L=19mm) | |
| | 12 | | 9S-4180 | 2 | PLUG | |
| | 13 | | 4J-7533 | 2 | SEAL (ID=6.07mm) | |
| | 14 | | 4W-6869 | 6 | SPACER | |
| | 15 | | 1W-3286 | 1 | RACK | |

## 1113769 PUMP GP-FUEL INJECTION

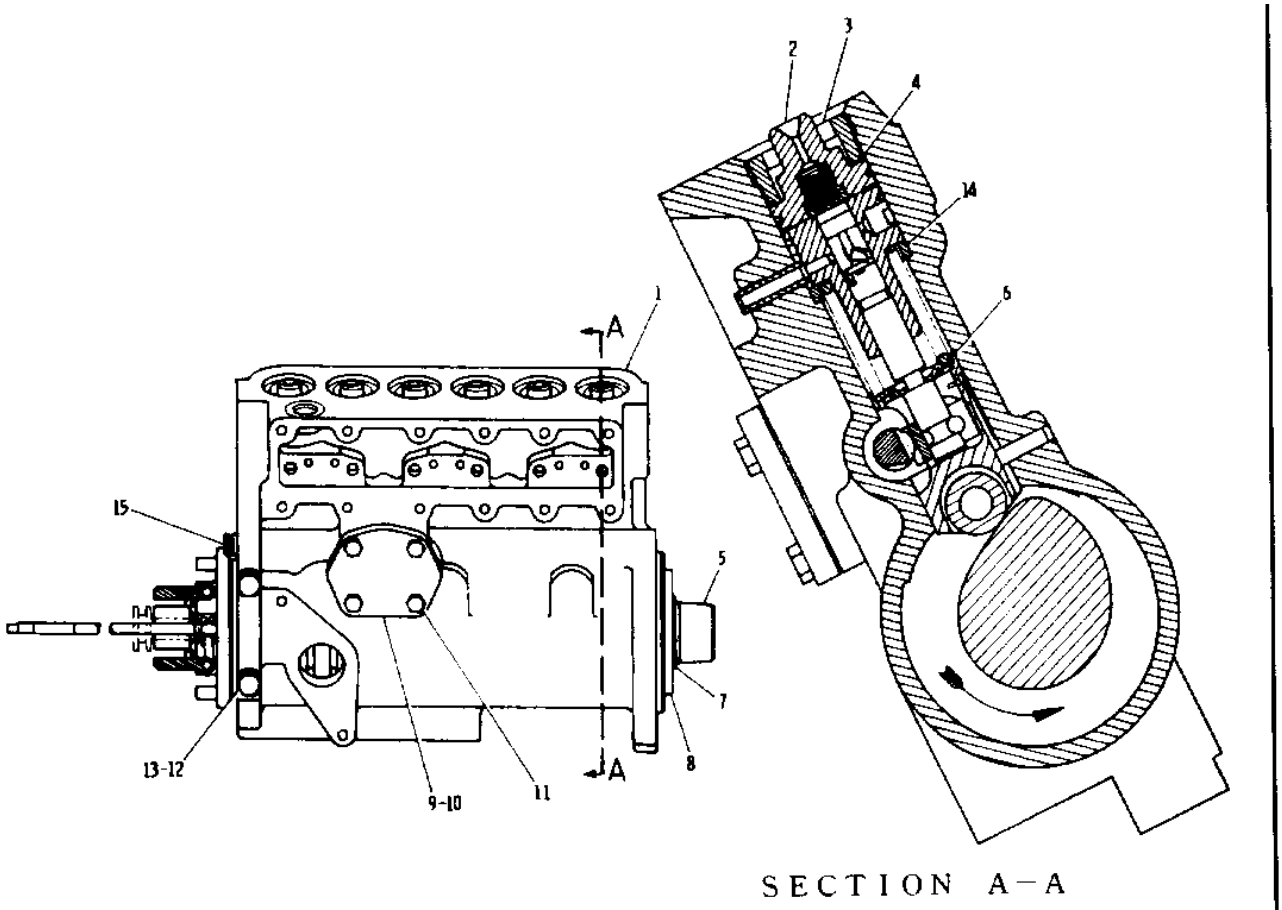


SECTION A–A

| NOTE | No. | PART No. | QTY | PART NAME |
|---|---|---|---|---|
| Y | 1 | 4P-9840 | 1 | HOUSING AS |
| Y | 2 | 4P-9827 | 6 | PUMP GP |
| | 3 | 8N-5117 | 6 | BUSHING |
| | 4 | 114-8718 | 6 | SEAL (ID=26.64mm) |
| Y | 5 | 111-3770 | 1 | CAMSHAFT AS |
| | 6 | 4P-9832 | 6 | LIFTER AS |
| | 7 | 7N-8421 | 1 | RING |
| | 8 | 8N-2487 | 1 | WASHER |
| | 9 | 7N-1047 | 1 | COVER |
| | 10 | 7N-1046 | 1 | GASKET |
| | 11 | 0S-1615 | 4 | BOLT (L=19mm) |
| | 12 | 9S-4180 | 2 | PLUG |
| | 13 | 4J-7533 | 2 | SEAL (ID=6.07mm) |
| | 14 | 4W-6869 | 6 | SPACER |
| | 15 | 1W-3286 | 1 | RACK |

| NOTE | No. | PART No. | QTY | PART NAME |
|---|---|---|---|---|

Y-SEE SEPARATE ILLUSTRATION

H51728E

GRAPHIC #1

h51728e

# 4P9827 PUMP GP-FUEL INJECTION

PART OF 1113769-Page 82

**Key:**

**SMCS**

| NOTE | REF NO | GRAPHIC REF | PART NUMBER | QTY | PART NAME 1 2 3 4 5 6 (PRODUCT LEVEL) | PRICE USD |
|---|---|---|---|---|---|---|
| | 1 | | 6I-1327 | 1 | BONNET | |
| | 2 | | 1W-6987 | 1 | VALVE AS | |
| | 3 | | 8N-1415 | 1 | SPRING | |
| | 4 | | 7W-1927 | 1 | RING | |
| | 5 | | 4P-9830 | 1 | PLUNGER & BARREL AS | |
| | 6 | | 7C-9966 | 1 | INSERT | |

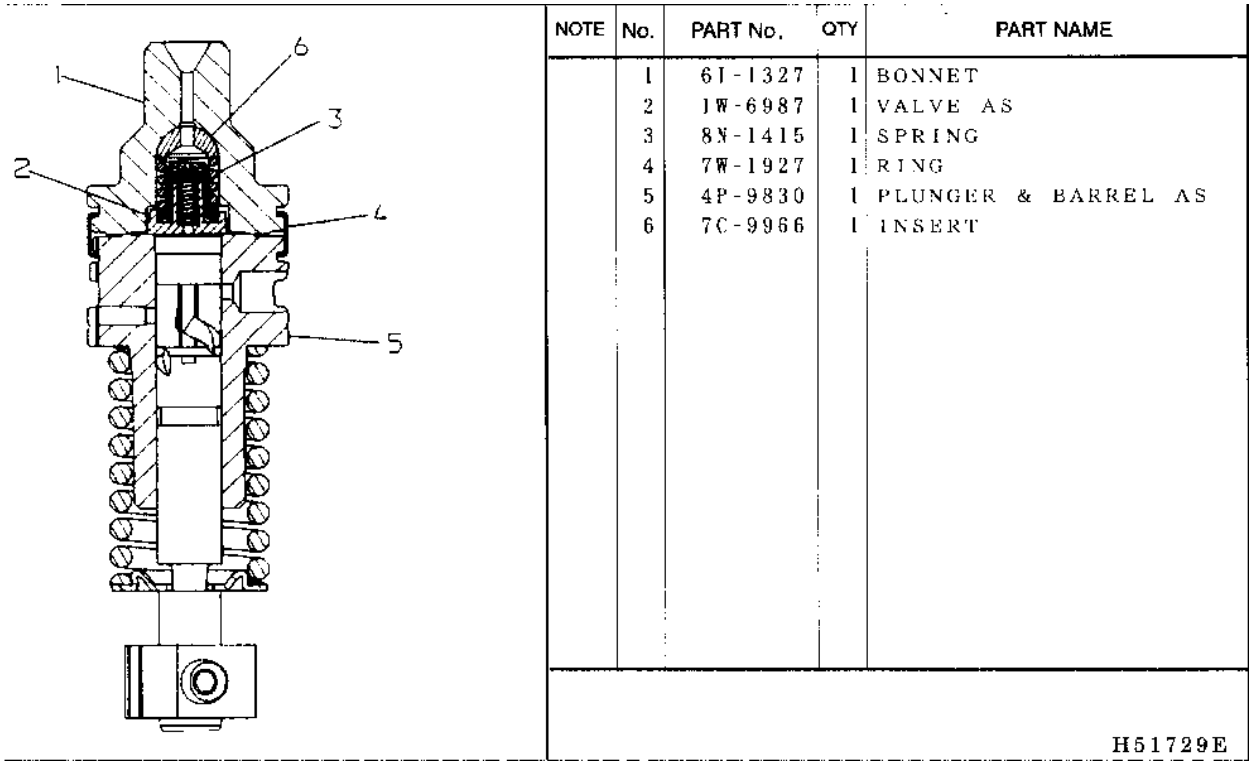


GRAPHIC #1 h51729e

# 1113770 CAMSHAFT AS-FUEL INJECTION PUMP

PART OF 1113769-Page 82

**Key:**

**SMCS**

| NOTE | REF NO | GRAPHIC REF | PART NUMBER | QTY | PART NAME 1 2 3 4 5 6 (PRODUCT LEVEL) | PRICE USD |
|---|---|---|---|---|---|---|
| | 1 | | 7N-7264 | 4 | WEIGHT | |
| | 2 | | 9Y-7037 | 4 | BOLT (L=32mm) | |
| | 3 | | 1S-5440 | 4 | DOWEL | |
| | 4 | | 4N-9019 | 1 | DOWEL | |
| | 5 | | 7E-3986 | 1 | CARRIER | |
| | 6 | | 113-3771 | 1 | CAMSHAFT | |
| | 7 | | 7L-3326 | 1 | BEARING | |
| | 8 | | 8N-2510 | 1 | SHAFT | |
| | 9 | | 7N-7166 | 2 | RACE | |

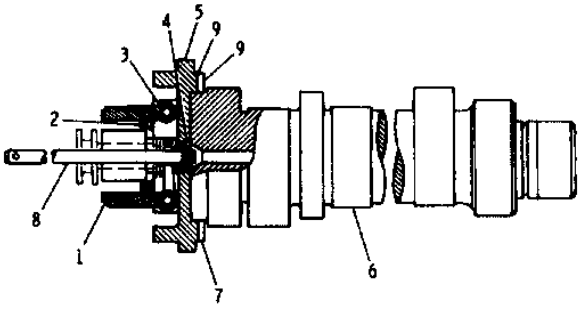


| NOTE | No. | PART No. | QTY | PART NAME |
|---|---|---|---|---|
| | 1 | 7N-7264 | 4 | WEIGHT |
| | 2 | 9Y-7037 | 4 | BOLT (L=32mm) |
| | 3 | 1S-5440 | 4 | DOWEL |
| | 4 | 4N-9019 | 1 | DOWEL |
| | 5 | 7E-3986 | 1 | CARRIER |
| | 6 | 113-3771 | 1 | CAMSHAFT |
| | 7 | 7L-3326 | 1 | BEARING |
| | 8 | 8N-2510 | 1 | SHAFT |
| | 9 | 7N-7166 | 2 | RACE |

H51752E

GRAPHIC #1 h51752e

# 4P9840 HOUSING AS-FUEL PUMP

PART OF 1113769-Page 82

**Key:**

**SMCS**

| NOTE | REF NO | GRAPHIC REF | PART NUMBER | QTY | PART NAME 1 2 3 4 5 6 (PRODUCT LEVEL) | PRICE USD |
|---|---|---|---|---|---|---|
| | 1 | | 4P-9828 | 1 | BEARING | |
| | 2 | | 1S-1953 | 1 | BEARING | |
| | 3 | | 6I-0979 | 6 | DOWEL | |
| | 4 | | 1W-3285 | 1 | BEARING | |
| | 5 | | 4P-8480 | 6 | PIN | |
| | 6 | | 7N-7970 | 1 | BEARING | |

## 4P9840 HOUSING AS-FUEL PUMP

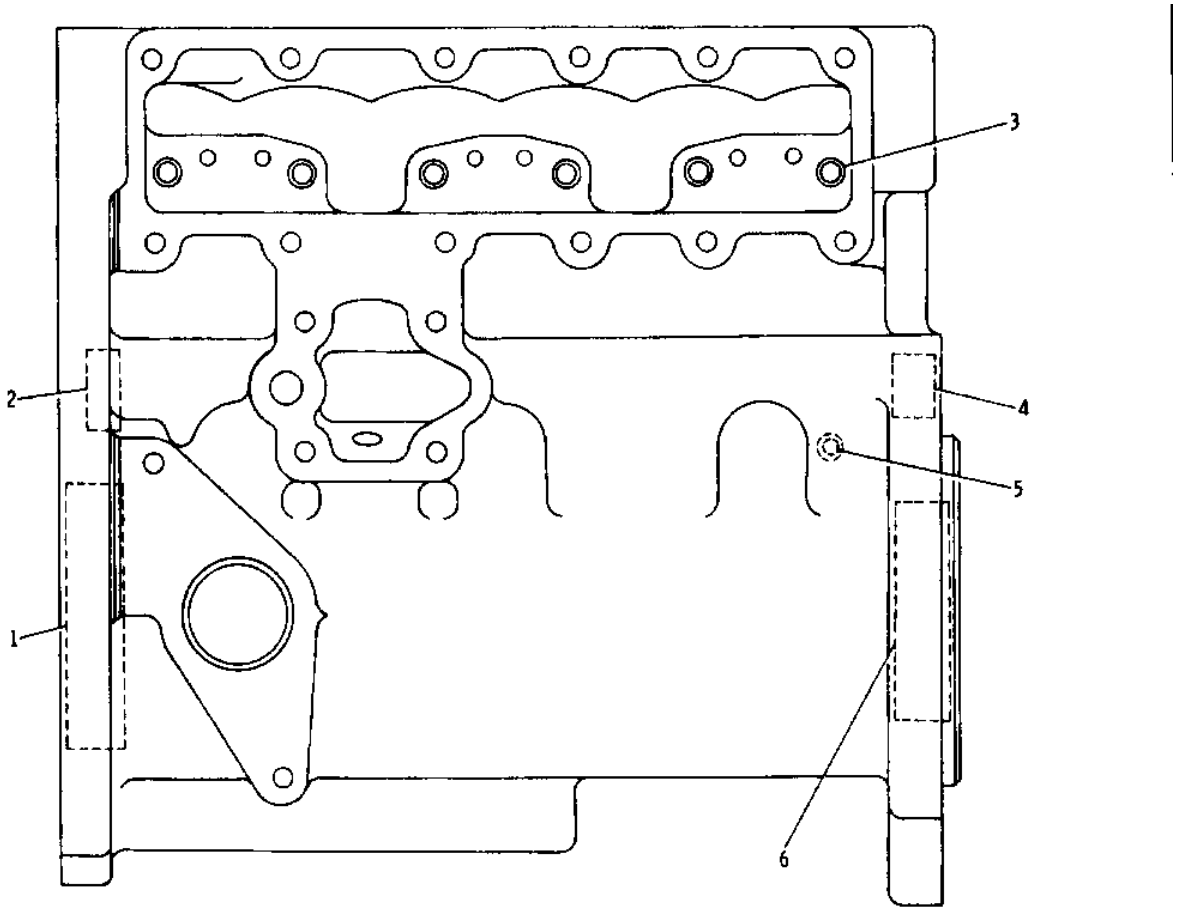


| NOTE | No. | PART No. | QTY | PART NAME |
|---|---|---|---|---|
| | 1 | 4P-9828 | 1 | BEARING |
| | 2 | 1S-1953 | 1 | BEARING |
| | 3 | 6I 0979 | 6 | DOWEL |
| | 4 | 1W-3285 | 1 | BEARING |
| | 5 | 4P-8480 | 6 | PIN |
| | 6 | 7N-7970 | 1 | BEARING |

H51732E

GRAPHIC #1 h51732e

# 6I1003 PUMP GP-FUEL PRM & PRIM FILTER

PART OF 1167568-Page 14.01
1W6351-Page 87

**Key:** Y - SEPARATE ILLUSTRATION

**SMCS**

| NOTE | REF NO | GRAPHIC REF | PART NUMBER | QTY | PART NAME 1 2 3 4 5 6 (PRODUCT LEVEL) | PRICE USD |
|---|---|---|---|---|---|---|
| | 1 | | 130-2215 | 1 | BRACKET AS | |
| | | | 8T-5912 | 2 | NUT | |
| | 2 | | 5S-7379 | 2 | BOLT (L=22mm) | |
| | 3 | | 8T-4896 | 6 | WASHER | |
| | 4 | | 9B-7237 | 2 | BOLT (L=32mm) | |
| | 5 | | 8T-9101 | 1 | BOLT (L=70mm) | |
| Y | 6 | | 1W-6351 | 1 | FILTER GP | |
| | 7 | | 1P-0436 | 1 | GASKET | |
| | 8 | | 5P-1075 | 1 | WASHER | |
| | 9 | | 105-2508 | 1 | PUMP AS | |
| | 10 | | 1B-7182 | 1 | BOLT (L=32mm) | |
| | 11 | | 9M-1974 | 1 | WASHER | |
| | 12 | | 7B-2742 | 1 | BOLT (L=32mm) | |
| | 13 | | 5P-0537 | 1 | WASHER | |
| | 14 | | 009-3215 | 1 | INSERT | |
| | 15 | | 3P-0011 | 1 | SPACER | |
| | 16 | | 5P-6944 | 1 | ADAPTER | |
| | 17 | | 5P-4924 | 1 | ELBOW | |
| | 18 | | 030-8194 | 1 | CONNECTOR | |
| | 19 | | 6I-0683 | 1 | TUBE AS | |
| | 20 | | 7B-9919 | 2 | CLIP | |
| | 21 | | 7X-0291 | 1 | BOLT (L=95mm) | |
| | 22 | | 030-7947 | 1 | ELBOW | |
| | 23 | | 5P-2645 | 1 | ELBOW | |
| | 24 | | 2M-9780 | 1 | SEAL (ID=19.18mm) | |
| | 25 | | 3K-0360 | 1 | SEAL (ID=16.36mm) | |
| | 26 | | 3J-1907 | 2 | SEAL (ID=11.89mm) | |
| | 27 | | 3J-7354 | 1 | SEAL (ID=8.92mm) | |
| | 28 | | 0S-1619 | 1 | BOLT (L=76mm) | |
| | 29 | | 2K-5870 | 1 | SPACER | |

## 6I1003 PUMP GP-FUEL PRM & PRIM FILTER

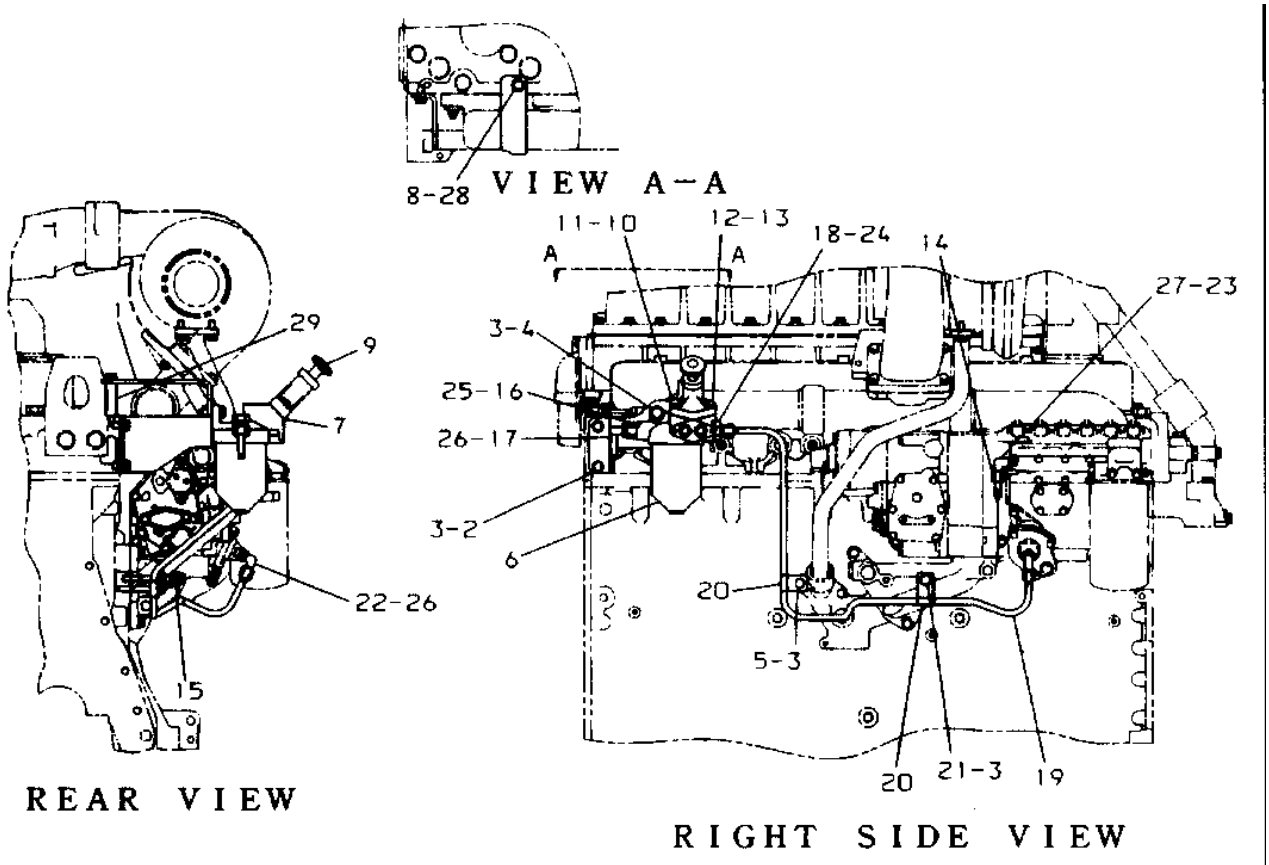


| NOTE | No. | PART No. | QTY | PART NAME | NOTE | No. | PART No. | QTY | PART NAME |
|---|---|---|---|---|---|---|---|---|---|
| | 1 | 130-2215 | 1 | BRACKET AS | | 20 | 7B-9919 | 2 | CLIP |
| | | 8T-5912 | 2 | NUT | | 21 | 7X-0291 | 1 | BOLT (L=95mm) |
| | 2 | 5S-7379 | 2 | BOLT (L=22mm) | | 22 | 030-7947 | 1 | ELBOW |
| | 3 | 8T-4896 | 6 | WASHER | | 23 | 5P-2645 | 1 | ELBOW |
| | 4 | 9B-7237 | 2 | BOLT (L=32mm) | | 24 | 2M-9780 | 1 | SEAL (ID=19.18mm) |
| | 5 | 8T-9101 | 1 | BOLT (L=70mm) | | 25 | 3K-0360 | 1 | SEAL (ID=16.36mm) |
| Y | 6 | 1W-6351 | 1 | FILTER GP | | 26 | 3J-1907 | 2 | SEAL (ID=11.89mm) |
| | 7 | 1P-0436 | 1 | GASKET | | 27 | 3J-7354 | 1 | SEAL (ID=8.92mm) |
| | 8 | 5P-1075 | 1 | WASHER | | 28 | 0S-1619 | 1 | BOLT (L=76mm) |
| | 9 | 105-2508 | 1 | PUMP AS | | 29 | 2K-5870 | 1 | SPACER |
| | 10 | 1B-7182 | 1 | BOLT (L=32mm) | | | | | |
| | 11 | 9M-1974 | 1 | WASHER | | | | | |
| | 12 | 7B-2742 | 1 | BOLT (L=32mm) | | | | | |
| | 13 | 5P-0537 | 1 | WASHER | | | | | |
| | 14 | 009-3215 | 1 | INSERT | | | | | |
| | 15 | 3P-0011 | 1 | SPACER | | | | | |
| | 16 | 5P-6944 | 1 | ADAPTER | | | | | |
| | 17 | 5P-4924 | 1 | ELBOW | | | | | |
| | 18 | 030-8194 | 1 | CONNECTOR | | | | | |
| | 19 | 6I-0683 | 1 | TUBE AS | | | | | |

Y-SEE SEPARATE ILLUSTRATION

H51733E

GRAPHIC #1

h51733e

# 8N7276 TORQUE CONTROL GP

PART OF 1288806-Page 77

**Key:**

**SMCS**

| NOTE | REF NO | GRAPHIC REF | PART NUMBER | QTY | PART NAME 1 2 3 4 5 6 (PRODUCT LEVEL) | PRICE USD |
|---|---|---|---|---|---|---|
| | 1 | | 7N-1796 | 1 | SPACER | |
| | 2 | | 8N-7519 | 1 | SPRING | |
| | 3 | | 2W-7234 | 1 | BAR | |
| | 4 | | 6L-5897 | 2 | BOLT (L=22mm) | |
| | 5 | | 8M-9062 | 1 | RETAINER | |
| | 6 | | 2P-2685 | 1 | SPACER | |
| | 7 | | 1P-6452 | 1 | INSULATOR | |
| | 8 | | 7W-5700 | 1 | CONTACT | |

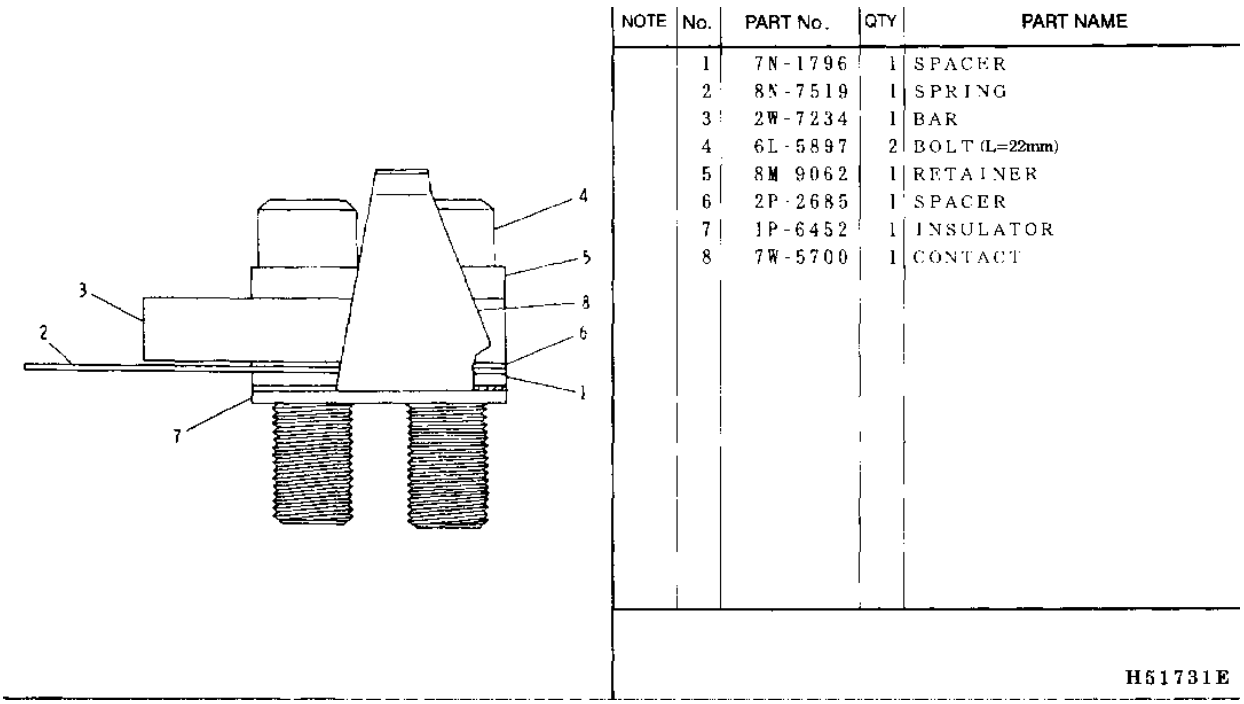


GRAPHIC #1 h51731e

# 1W6351 FILTER GP-PRIMARY FUEL

PART OF 6I1003-Page 85

**Key:**

**SMCS**

| NOTE | REF NO | GRAPHIC REF | PART NUMBER | QTY | PART NAME 1 2 3 4 5 6 (PRODUCT LEVEL) | PRICE USD |
|---|---|---|---|---|---|---|
| | 1 | | 8N-0803 | 1 | BASE | |
| | 2 | | 8H-2807 | 1 | NUT | |
| | 3 | | 2J-0157 | 1 | SEAL (ID=15.47mm) | |
| | 4 | | 8H-2778 | 1 | GASKET | |
| | 5 | | 1L-3769 | 1 | RING | |
| | 6 | | 9M-2341 | 1 | ELEMENT | |
| | 7 | | 7H-9678 | 1 | RETAINER | |
| | 8 | | 7S-9323 | 1 | SPRING | |
| | 9 | | 8H-2810 | 1 | CASE AS | |
| | 10 | | 9S-8003 | 2 | PLUG (2/1) | |
| | | | 1J-9671 | 2 | SEAL (ID=10.52mm) | |
| | 11 | | 7E-5346 | 1 | VALVE AS | |
| | 12 | | 2H-3429 | 1 | RING | |

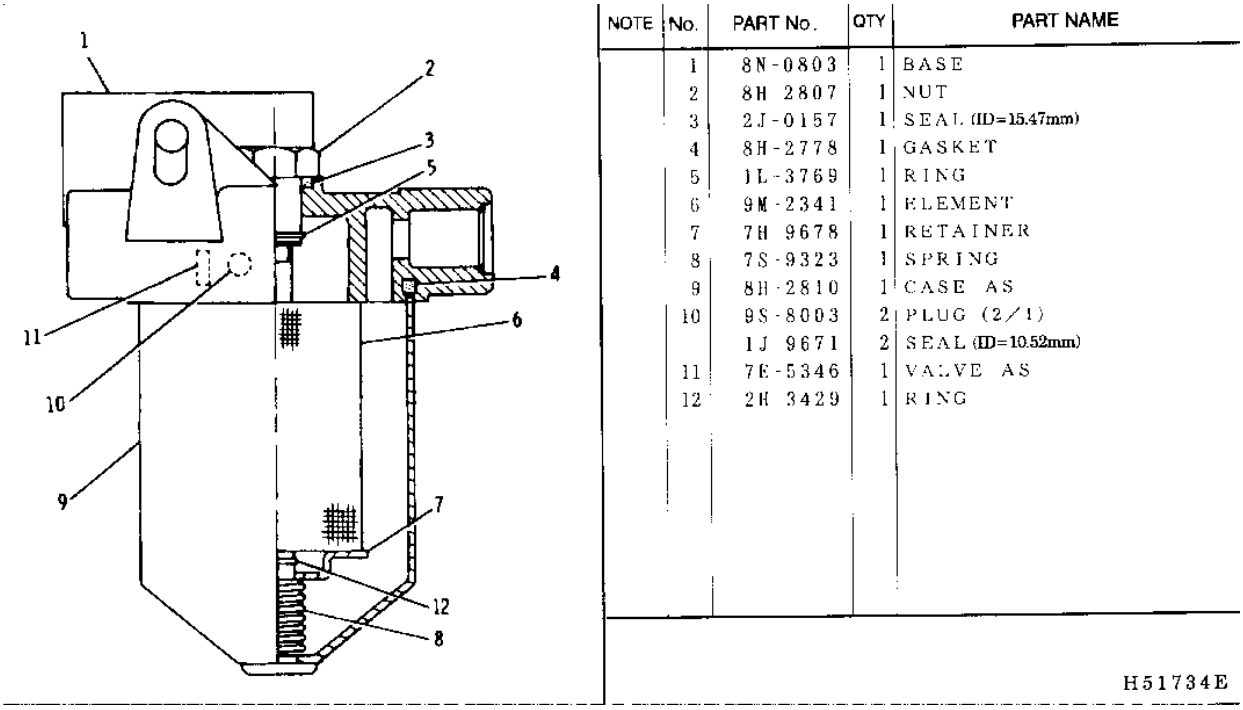


| NOTE | No. | PART No. | QTY | PART NAME |
|---|---|---|---|---|
| | 1 | 8N-0803 | 1 | BASE |
| | 2 | 8H 2807 | 1 | NUT |
| | 3 | 2J-0157 | 1 | SEAL (ID=15.47mm) |
| | 4 | 8H-2778 | 1 | GASKET |
| | 5 | 1L-3769 | 1 | RING |
| | 6 | 9M-2341 | 1 | ELEMENT |
| | 7 | 7H 9678 | 1 | RETAINER |
| | 8 | 7S-9323 | 1 | SPRING |
| | 9 | 8H-2810 | 1 | CASE AS |
| | 10 | 9S-8003 | 2 | PLUG (2/1) |
| | | 1J 9671 | 2 | SEAL (ID=10.52mm) |
| | 11 | 7E-5346 | 1 | VALVE AS |
| | 12 | 2H 3429 | 1 | RING |

H51734E

GRAPHIC #1 h51734e

# 2W1011 FILTER GP-SECONDARY FUEL

PART OF 1167568-Page 14.01

**Key:**

**SMCS**

| NOTE | REF NO | GRAPHIC REF | PART NUMBER | QTY | PART NAME 1 2 3 4 5 6 (PRODUCT LEVEL) | PRICE USD |
|---|---|---|---|---|---|---|
| | 1 | | 4W-9057 | 1 | TUBE AS | |
| | 2 | | 1R-0740 | 1 | FILTER AS | |
| | 3 | | 7N-9520 | 1 | GASKET | |
| | 4 | | 3J-1907 | 2 | SEAL (ID=11.89mm) | |
| | | | 030-7947 | 2 | ELBOW | |
| | 5 | | 6B-4198 | 2 | BOLT (L=106mm) | |
| | 6 | | 5P-0537 | 2 | WASHER | |
| | 7 | | 7N-9519 | 1 | BASE AS | |
| | | | 9S-4167 | 1 | STUD | |
| | 8 | | 5M-6214 | 1 | PLUG | |
| | 9 | | 9S-4191 | 1 | PLUG (9/16) | |
| | | | 3J-1907 | 1 | SEAL (ID=11.89mm) | |

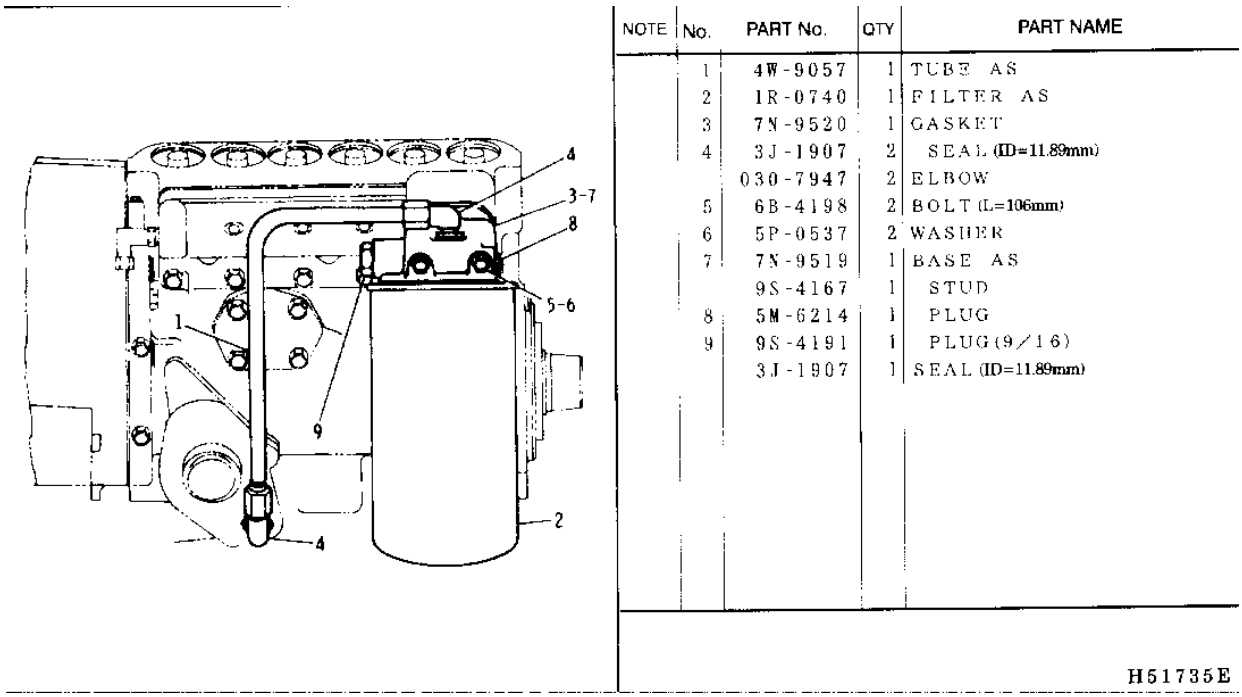


| NOTE | No. | PART No. | QTY | PART NAME |
|---|---|---|---|---|
| | 1 | 4W-9057 | 1 | TUBE AS |
| | 2 | 1R-0740 | 1 | FILTER AS |
| | 3 | 7N-9520 | 1 | GASKET |
| | 4 | 3J-1907 | 2 | SEAL (ID=11.89mm) |
| | | 030-7947 | 2 | ELBOW |
| | 5 | 6B-4198 | 2 | BOLT (L=106mm) |
| | 6 | 5P-0537 | 2 | WASHER |
| | 7 | 7N-9519 | 1 | BASE AS |
| | | 9S-4167 | 1 | STUD |
| | 8 | 5M-6214 | 1 | PLUG |
| | 9 | 9S-4191 | 1 | PLUG(9/16) |
| | | 3J-1907 | 1 | SEAL (ID=11.89mm) |

H51735E

GRAPHIC #1 h51735e

# 1198731 FILTER GP-FUEL INJECTION

PART OF 1167568-Page 14.01

**Key:**

**SMCS**

| NOTE | REF NO | GRAPHIC REF | PART NUMBER | QTY | PART NAME 1 2 3 4 5 6 (PRODUCT LEVEL) | PRICE USD |
|---|---|---|---|---|---|---|
| | 1 | | 100-7552 | 6 | NOZZLE AS | |
| | 2 | | 4B-4274 | 4 | WASHER | |
| | 3 | | 4P-2578 | 1 | BRACKET | |
| | 4 | | 4P-9386 | 1 | LINE AS(NO.6) | |
| | 5 | | 4P-9385 | 1 | LINE AS(NO.5) | |
| | 6 | | 104-4254 | 1 | LINE AS(NO.4) | |
| | 7 | | 104-4253 | 1 | LINE AS(NO.3) | |
| | 8 | | 4P-9382 | 1 | LINE AS(NO.2) | |
| | 9 | | 4P-9381 | 1 | LINE AS(NO.1) | |
| | 10 | | 3S-2713 | 3 | NUT | |
| | 11 | | 2H-3934 | 1 | SEAL (ID=98.02mm) | |
| | 12 | | 6V-6921 | 1 | SEAL (ID=16.76mm) | |
| | 13 | | 5F-7054 | 1 | SEAL (ID=18.64mm) | |
| | 14 | | 0L-2070 | 2 | BOLT (L=57mm) | |
| | 15 | | 2H-3932 | 1 | SEAL (ID=28.17mm) | |
| | 16 | | 1W-9169 | 12 | CLAMP | |
| | 17 | | 1T-0416 | 6 | BOLT (L=19mm) | |
| | 18 | | 8N-5132 | 6 | CLAMP | |
| | 19 | | 122-9405 | 1 | BRACKET AS | |
| | 20 | | 9N-3388 | 5 | SCREW | |
| | 21 | | 8T-9379 | 1 | BOLT (L=108mm) | |
| | 22 | | 5M-2894 | 5 | WASHER | |
| | 23 | | 5P-4939 | 8 | SCREW | |
| | 24 | | 7C-7614 | 1 | BRACKET AS | |
| | 25 | | 0S-1591 | 1 | BOLT (L=38mm) | |
| | 26 | | 1W-9168 | 11 | CLAMP | |
| | 27 | | 1W-9167 | 3 | CLAMP AS | |
| | 28 | | 8H-9204 | 6 | WASHER | |
| | 29 | | 0S-0509 | 1 | BOLT (L=19mm) | |
| | | | 5P-1075 | 1 | WASHER | |
| | 30 | | 9Y-7524 | 1 | PLATE | |

## 1198731 FILTER GP-FUEL INJECTION

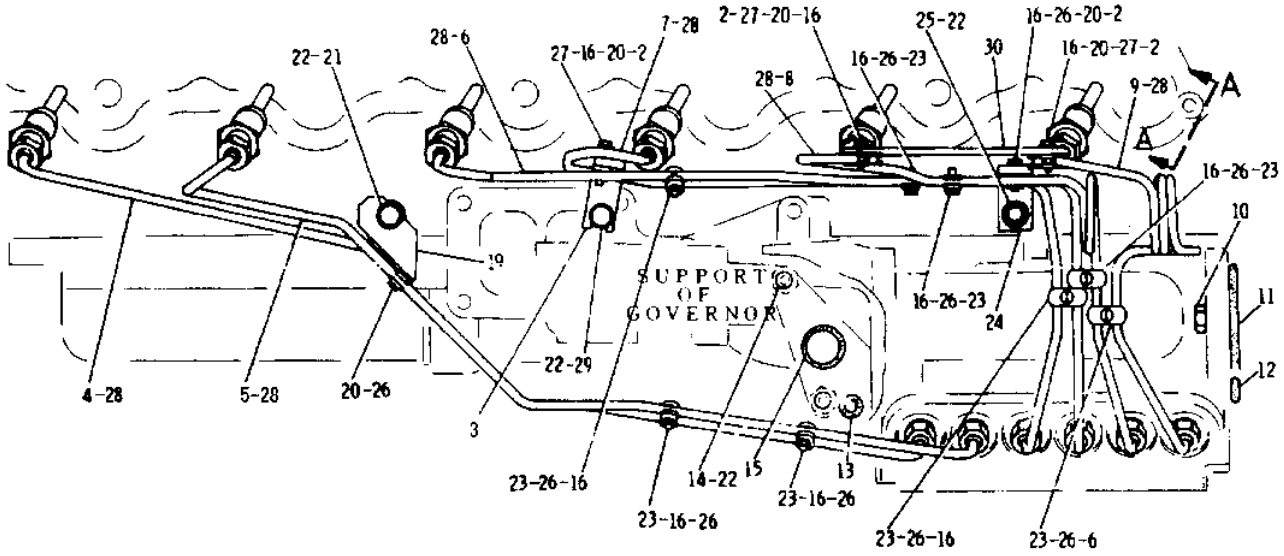


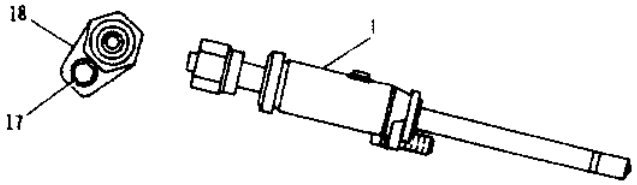


VIEW A−A

| NOTE | No. | PART No. | QTY | PART NAME | NOTE | No. | PART No. | QTY | PART NAME |
|---|---|---|---|---|---|---|---|---|---|
| | 1 | 100-7552 | 6 | NOZZLE AS | | 21 | 8T-9379 | 1 | BOLT(L=108mm) |
| | 2 | 4B-4274 | 4 | WASHER | | 22 | 5M-2894 | 5 | WASHER |
| | 3 | 4P-2578 | 1 | BRACKET | | 23 | 5P-4939 | 8 | SCREW |
| | 4 | 4P-9386 | 1 | LINE AS(NO.6) | | 24 | 7C-7614 | 1 | BRACKET AS |
| | 5 | 4P-9385 | 1 | LINE AS(NO.5) | | 25 | 0S 1591 | 1 | BOLT(L=38mm) |
| | 6 | 104-4254 | 1 | LINE AS(NO.4) | | 26 | 1W-9168 | 11 | CLAMP |
| | 7 | 100-4253 | 1 | LINE AS(NO.3) | | 27 | 1W-9167 | 3 | CLAMP AS |
| | 8 | 4P-9382 | 1 | LINE AS(NO.2) | | 28 | 8H-9204 | 6 | WASHER |
| | 9 | 4P-9381 | 1 | LINE AS(NO.1) | | 29 | 0S-0509 | 1 | BOLT(L=19mm) |
| | 10 | 3S-2713 | 3 | NUT | | | 5P-1075 | 1 | WASHER |
| | 11 | 2H-3934 | 1 | SEAL(ID=98.02mm) | | 30 | 9Y-7524 | 1 | PLATE |
| | 12 | 6V-6921 | 1 | SEAL(ID=16.76mm) | | | | | |
| | 13 | 5F-7054 | 1 | SEAL(ID=18.64mm) | | | | | |
| | 14 | 0L-2070 | 2 | BOLT(L=57mm) | | | | | |
| | 15 | 2H-3932 | 1 | SEAL(ID=28.17mm) | | | | | |
| | 16 | 1W-9169 | 12 | CLAMP | | | | | |
| | 17 | 1T-0416 | 6 | BOLT(L=19mm) | | | | | |
| | 18 | 8N-5132 | 6 | CLAMP | | | | | |
| | 19 | 122-9405 | 1 | BRACKET AS | | | | | |
| | 20 | 9N-3388 | 5 | SCREW | | | | | |

H51736E

# 2W4160 PUMP GP-FUEL TRANSFER

PART OF 1167568-Page 14.01
1W1695-Page 91

**Key:** R - REMFG PART MAY BE AVAILABLE, Y - SEPARATE ILLUSTRATION

**SMCS**

| NOTE | REF NO | GRAPHIC REF | PART NUMBER | QTY | PART NAME 1 2 3 4 5 6 (PRODUCT LEVEL) | PRICE USD |
|---|---|---|---|---|---|---|
| | 1 | | 4F-7957 | 1 | BOLT (L=22mm) | |
| | 2 | | 5P-0537 | 2 | WASHER | |
| | 3 | | 4J-8997 | 1 | SEAL (ID=28.17mm) | |
| RY | 4 | | 1W-1695 | 1 | PUMP GP | |
| | R | | 0R-3537 | 1 | PUMP GP-F TFR | |
| | 5 | | 4B-9365 | 1 | BOLT (L=76mm) | |

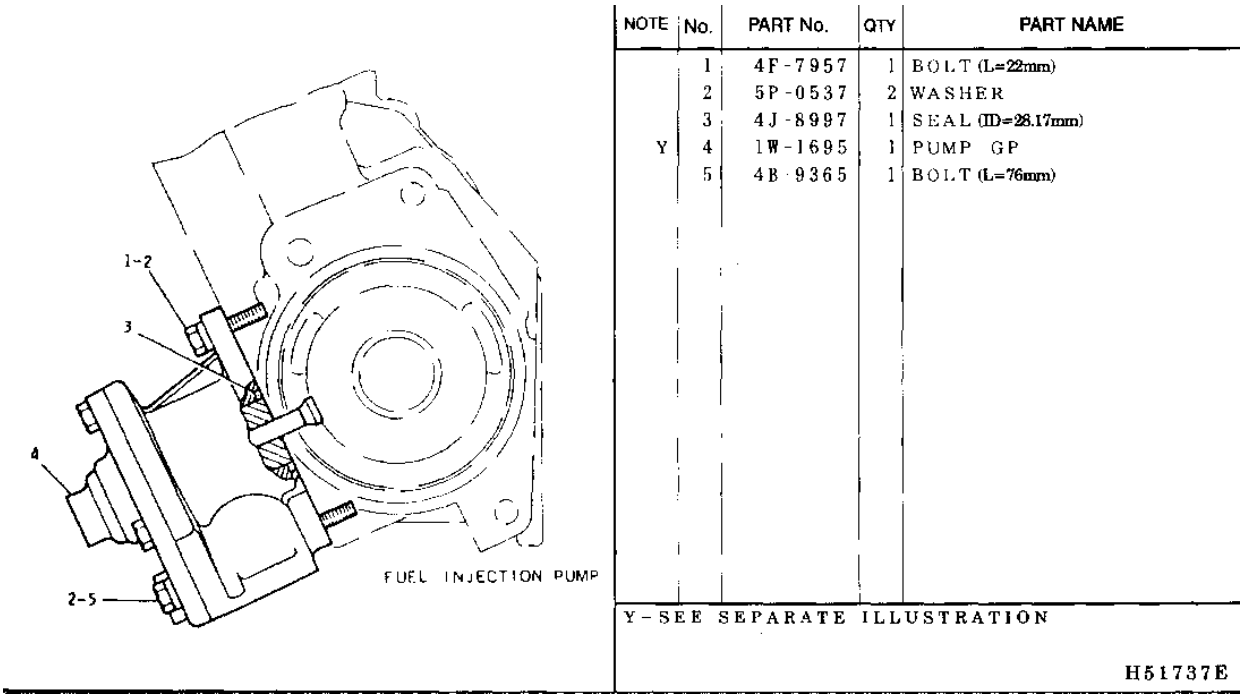


GRAPHIC #1 h51737e

# 1W1695 PUMP GP-FUEL TRANSFER

PART OF 2W4160-Page 89

**Key:**

**SMCS**

| NOTE | REF NO | GRAPHIC REF | PART NUMBER | QTY | PART NAME 1 2 3 4 5 6 (PRODUCT LEVEL) | PRICE USD |
|---|---|---|---|---|---|---|
| | 1 | | 6J-2419 | 1 | SEAL (ID=36.17mm) | |
| | 2 | | 1W-5912 | 1 | GUIDE & TAPPET AS | |
| | | | 7N-8821 | 1 | RING | |
| | 3 | | 7E-2464 | 3 | VALVE AS | |
| | 4 | | 3D-2824 | 1 | SEAL (ID=23.47mm) | |
| | 5 | | 6D-8498 | 2 | SCREW | |
| | 6 | | 8N-2640 | 1 | COVER | |
| | 7 | | 6F-6672 | 1 | SEAL (ID=17.12mm) | |
| | 8 | | 3D-2898 | 1 | SEAL (ID=48.90mm) | |
| | 9 | | 5P-8215 | 1 | SEAL (ID=39.34mm) | |
| | 10 | | 7W-0134 | 1 | SPRING | |
| | 11 | | 0S-1615 | 2 | BOLT (L=19mm) | |
| | 12 | | 8N-2637 | 1 | WASHER | |
| | 13 | | 7E-3667 | 1 | SPACER | |
| | 14 | | 8N-2641 | 1 | SLEEVE | |
| | 15 | | 1W-1669 | 1 | PISTON | |
| | 16 | | 1W-1698 | 1 | HOUSING | |
| | 17 | | 1W-1699 | 1 | COVER | |
| | 18 | | 7E-4656 | 1 | RETAINER | |

## 1W1695 PUMP GP-FUEL TRANSFER

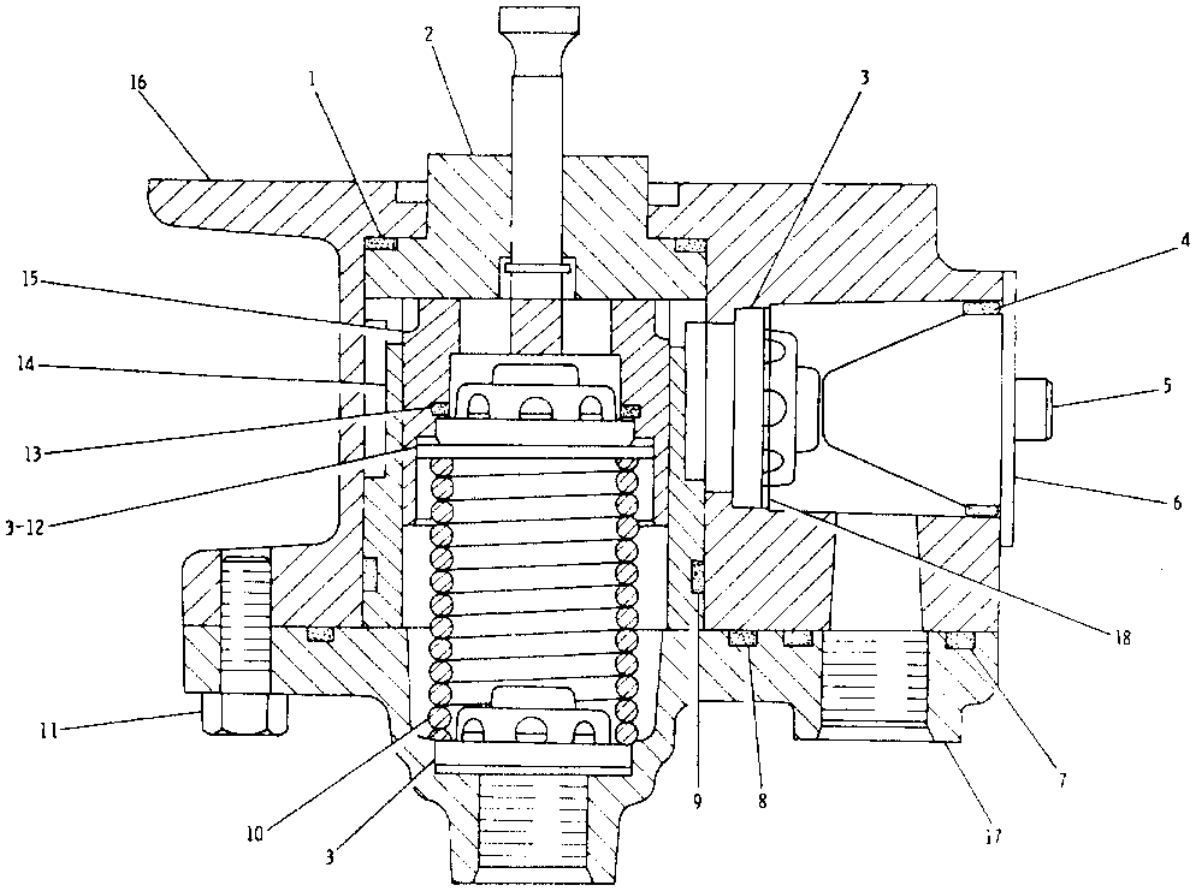


| NOTE | No. | PART No. | QTY | PART NAME | NOTE | No. | PART No. | QTY | PART NAME |
|---|---|---|---|---|---|---|---|---|---|
| | 1 | 6J-2419 | 1 | SEAL (ID=36.17mm) | | | | | |
| | 2 | 1W-5912 | 1 | GUIDE & TAPPET AS | | | | | |
| | | 7N-8821 | 1 | RING | | | | | |
| | 3 | 7E-2464 | 3 | VALVE AS | | | | | |
| | 4 | 3D-2824 | 1 | SEAL (ID=23.47mm) | | | | | |
| | 5 | 6D-8498 | 2 | SCREW | | | | | |
| | 6 | 8N-2640 | 1 | COVER | | | | | |
| | 7 | 6F-6672 | 1 | SEAL (ID=17.12mm) | | | | | |
| | 8 | 3D-2898 | 1 | SEAL (ID=48.90mm) | | | | | |
| | 9 | 5P-8215 | 1 | SEAL (ID=39.34mm) | | | | | |
| | 10 | 7W-0134 | 1 | SPRING | | | | | |
| | 11 | 0S 1615 | 2 | BOLT (L=19mm) | | | | | |
| | 12 | 8N-2637 | 1 | WASHER | | | | | |
| | 13 | 7E-3667 | 1 | SPACER | | | | | |
| | 14 | 8N-2641 | 1 | SLEEVE | | | | | |
| | 15 | 1W-1669 | 1 | PISTON | | | | | |
| | 16 | 1W-1698 | 1 | HOUSING | | | | | |
| | 17 | 1W-1699 | 1 | COVER | | | | | |
| | 18 | 7E-4656 | 1 | RETAINER | | | | | |

H51739E

GRAPHIC #1

h51739e

# 1060208 CONTROL GP-GOVERNOR-PART 1 OF 2

**Key:**

**SMCS**

| NOTE | REF NO | GRAPHIC REF | PART NUMBER | QTY | PART NAME 1 2 3 4 5 6 (PRODUCT LEVEL) | PRICE USD |
|---|---|---|---|---|---|---|
| | 1 | | 8T-4224 | 2 | WASHER | |
| | 2 | | 151-9325 | 1 | MOTOR AS | |
| | | | 102-8805 | 1 | RECEPTACLE KIT | |
| | | | 3E-3383 | 1 | WEDGE | |
| | | | 9W-0852 | 5 | PIN | |
| | | | 8T-8737 | 1 | PLUG | |
| | | | 157-3160 | 1 | JOINT | |
| | 3 | | 8T-4197 | 2 | BOLT (L=40mm) | |
| | 4 | | 106-0227 | 1 | BRACKET AS | |
| | 5 | | 8T-4137 | 2 | BOLT (L=20mm) | |
| | 6 | | 8T-4121 | 2 | WASHER | |

## 1060208 CONTROL GP-GOVERNOR-PART 1 OF 2

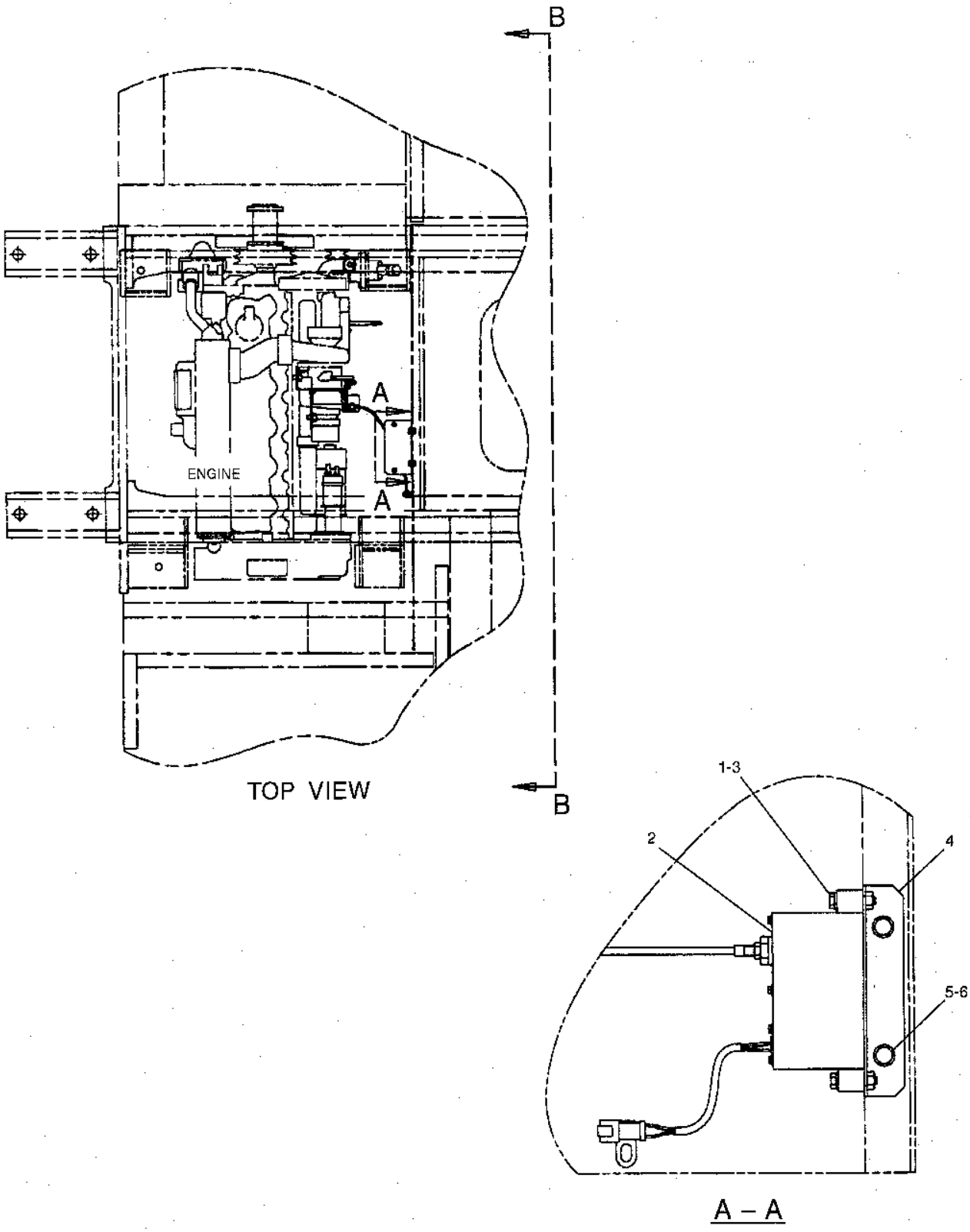


GRAPHIC #1

h63982e

# 1060208 CONTROL GP-GOVERNOR-PART 2 OF 2

**Key:**

**SMCS**

| NOTE | REF NO | GRAPHIC REF | PART NUMBER | QTY | PART NAME 1 2 3 4 5 6 (PRODUCT LEVEL) | PRICE USD |
|---|---|---|---|---|---|---|
| | 1 | | 106-0070 | 1 | SPRING | |
| | 2 | | 9X-8257 | 2 | WASHER | |
| | 3 | | 5C-6266 | 2 | BOLT (L=25mm) | |
| | 4 | | 145-3050 | 1 | BRACKET AS | |
| | 5 | | 139-4006 | 1 | LEVER AS | |
| | 6 | | 8T-4224 | 2 | WASHER | |
| | 7 | | 5C-7261 | 1 | NUT | |
| | 8 | | 8T-4121 | 1 | WASHER | |
| | 9 | | 8T-4186 | 1 | BOLT (L=40mm) | |
| | 10 | | 8T-4133 | 1 | NUT | |

## 1060208 CONTROL GP-GOVERNOR-PART 2 OF 2

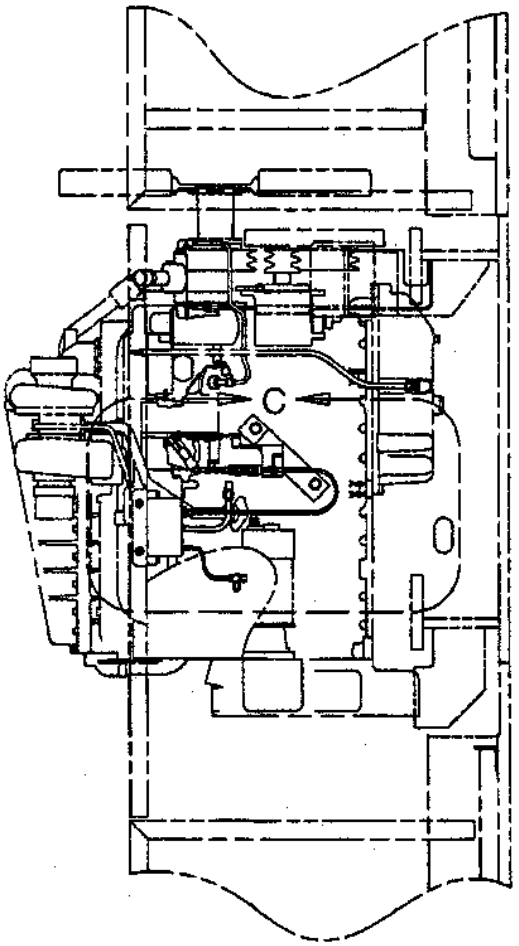


B – B

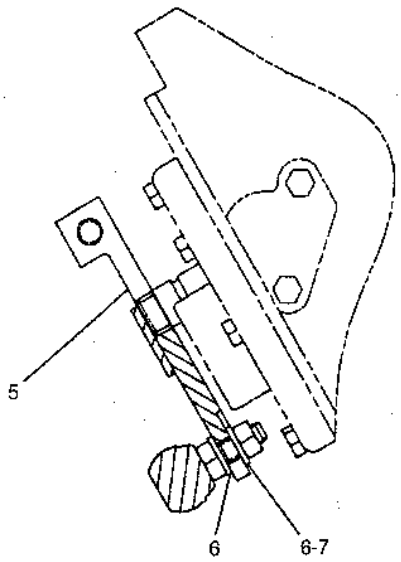


E – E

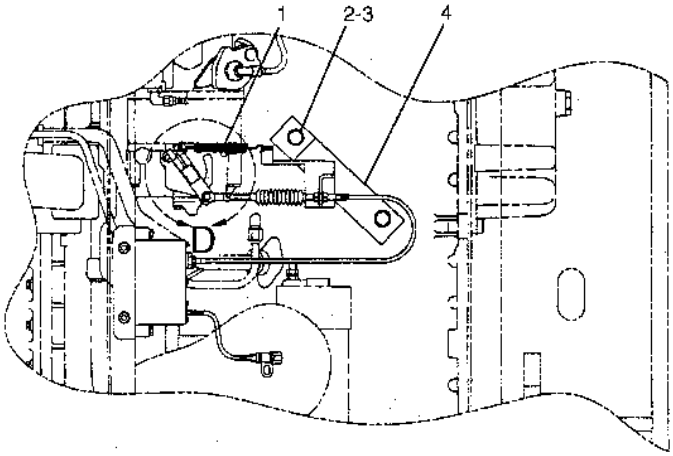


C

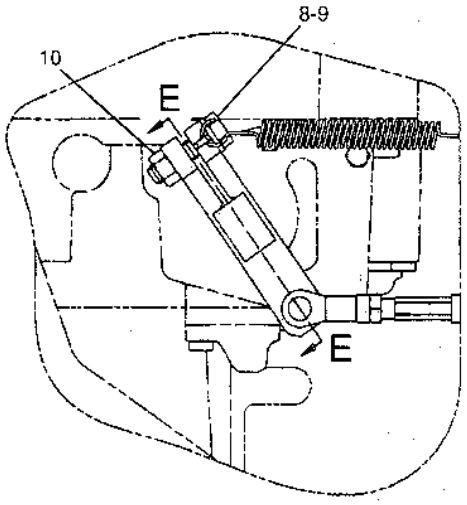


D

GRAPHIC #1

h63984e

# 1161637 LINES GP-FUEL

**Key:** E - ORDER BY THE CENTIMETER

**SMCS**

| NOTE | REF NO | GRAPHIC REF | PART NUMBER | QTY | PART NAME 1 2 3 4 5 6 (PRODUCT LEVEL) | PRICE USD |
|---|---|---|---|---|---|---|
| | 1 | | 7I-1675 | 1 | SEPARATOR AS | |
| | | | 7I-1677 | 1 | VALVE | |
| | | | 6V-7659 | 1 | SEAL-O-RING (ID=74.40mm) | |
| | | | 095-1517 | 4 | SEAL-O-RING (ID=13.80mm) | |
| | 2 | | 122-3986 | 1 | SUPPORT AS | |
| E | 3 | | 5P-1442 | | HOSE (410cm) | |
| | 4 | | 096-5863 | 1 | GROMMET | |
| | 5 | | 095-1386 | 7 | CLAMP | |
| | 6 | | 5K-8451 | 6 | CLIP | |
| | 7 | | 9M-8406 | 7 | CLIP | |
| | 8 | | 8T-4121 | 16 | WASHER | |
| | 9 | | 8T-4191 | 9 | BOLT (L=16mm) | |
| | 10 | | 6K-0806 | 1 | STRAP | |
| | 11 | | 8T-4195 | 5 | BOLT (L=30mm) | |
| | 12 | | 122-4038 | 1 | SUPPORT AS | |
| | 13 | | 7Y-8167 | 2 | GROMMET | |
| E | 14 | | 5P-1442 | | HOSE (420cm) | |
| E | 15 | | 5P-1442 | | HOSE (285cm) | |
| E | 16 | | 5P-1442 | | HOSE (15cm) | |
| | 17 | | 8T-4185 | 2 | BOLT (L=50mm) | |
| | 18 | | 6G-2263 | 2 | SPACER | |

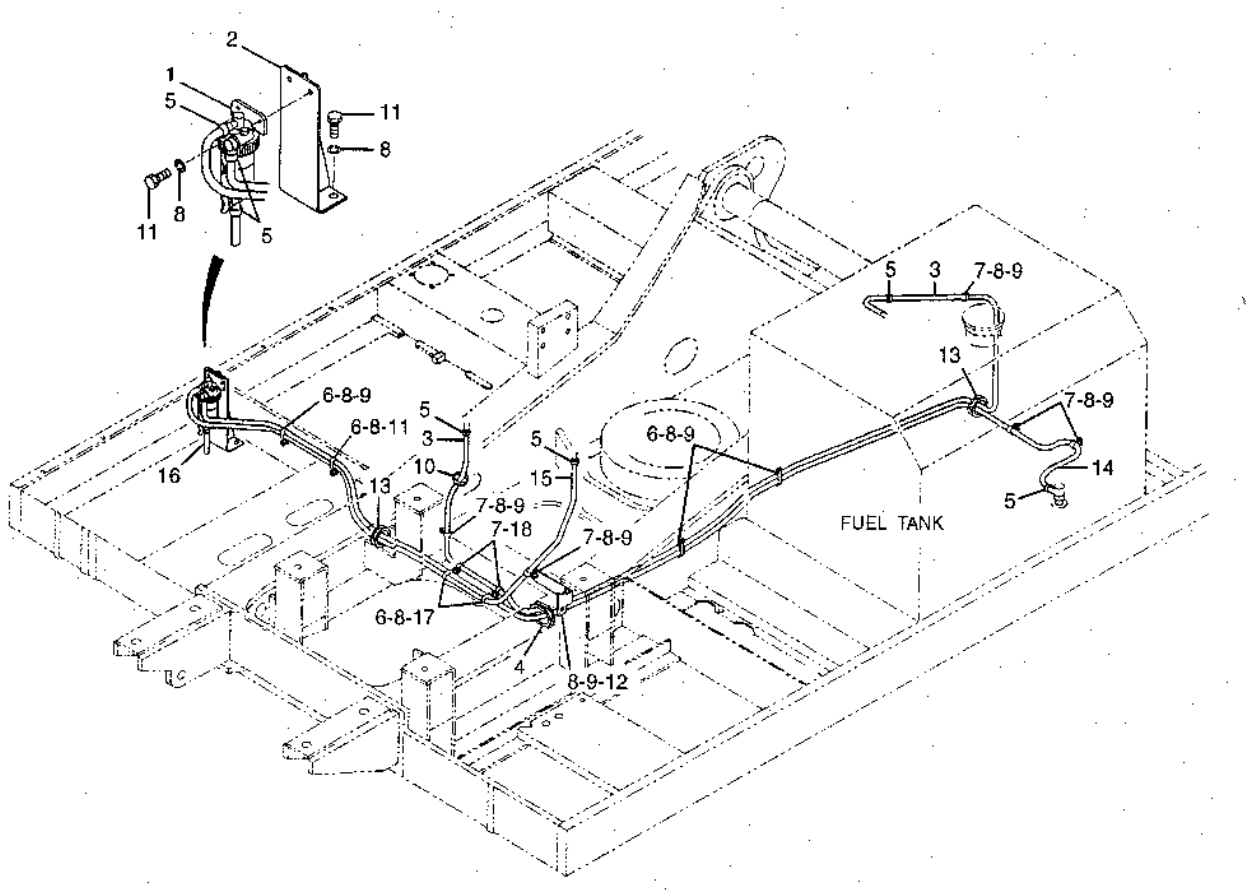


GRAPHIC #1

h79251e

# 1146222 LINES GP-FUEL

ADDITIONAL TANK
PART OF 1089846-Page 101
AN ATTACHMENT

**Key:** E - ORDER BY THE CENTIMETER

**SMCS**

| NOTE | REF NO | GRAPHIC REF | PART NUMBER | QTY | PART NAME 1 2 3 4 5 6 (PRODUCT LEVEL) | PRICE USD |
|---|---|---|---|---|---|---|
| | 1 | | 2S-3440 | 3 | CLAMP | |
| E | 2 | | 5P-0743 | | HOSE (33cm) | |
| | 3 | | 006-5707 | 2 | ELBOW | |
| | 4 | | 093-2064 | 1 | GROMMET | |
| | 5 | | 102-6170 | 2 | CONNECTOR | |
| E | 6 | | 8C-8773 | | HOSE 73cm) | |

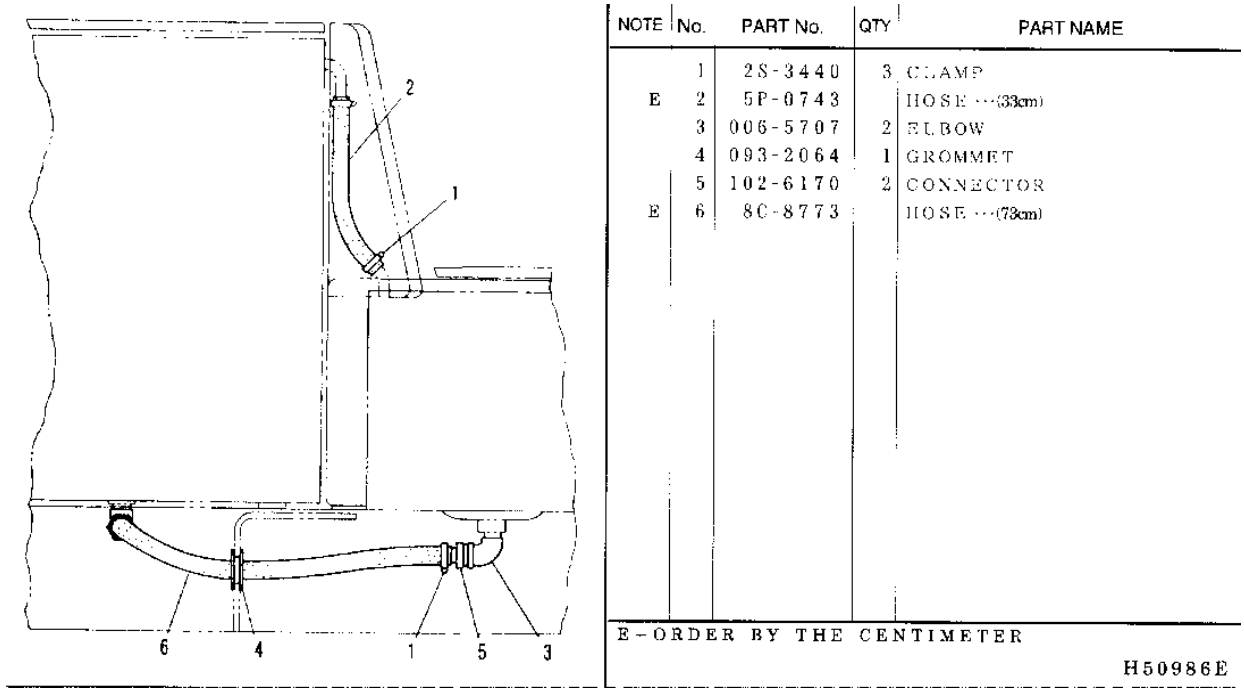


GRAPHIC #1 h50986e

# 1089845 PUMP GP-FUEL TRANSFER

S/N 8SR 1-(D97.03), 8TR 1-(D97.03)
PART OF 1174159-Page 103
5C6108-Page 130
AN ATTACHMENT

**Key:** E - ORDER BY THE CENTIMETER, Y - SEPARATE ILLUSTRATION

**SMCS**

| NOTE | REF NO | GRAPHIC REF | PART NUMBER | QTY | PART NAME 1 2 3 4 5 6 (PRODUCT LEVEL) | PRICE USD |
|---|---|---|---|---|---|---|
| E | 1 | | 103-2556 | | HOSE (400cm) | |
| | 2 | | 114-6196 | 1 | SUPPORT AS | |
| | 3 | | 123-3929 | 1 | PUMP GP | |
| | | | 9W-0852 | 2 | PIN | |
| | | | 3E-3365 | 1 | WEDGE | |
| | 4 | | 8T-4195 | 2 | BOLT (L=30mm) | |
| | 5 | | 8T-4121 | 5 | WASHER-HARD | |
| | 6 | | 8T-4133 | 2 | NUT | |
| | 7 | | 105-6701 | 2 | CONNECTOR | |
| | 8 | | 2S-3440 | 4 | CLAMP | |
| | 9 | | 8T-4137 | 3 | BOLT | |
| | 10 | | 4D-7388 | 3 | CLIP | |
| | 11 | | 122-4021 | 1 | COVER | |
| Y | 12 | | 5C-6108 | 1 | SWITCH AS | |
| E | 13 | | 103-2556 | | HOSE (190cm) | |
| | 14 | | 140-0580 | 1 | FOOT VALVE | |
| | 15 | | 4B-9030 | 1 | ELBOW | |
| | 16 | | 105-6701 | 1 | CONNECTOR | |
| | 17 | | 105-6717 | 1 | VALVE (CHECK) | |
| | 18 | | 122-4125 | 1 | SHEET AS | |
| | 19 | | 8T-4179 | 4 | BOLT (L=20mm) | |
| | 20 | | 5P-1076 | 4 | WASHER-HARD | |
| | 21 | | 120-5114 | 1 | FILM (INSTRUCTION) | |

## 1089845 PUMP GP-FUEL TRANSFER

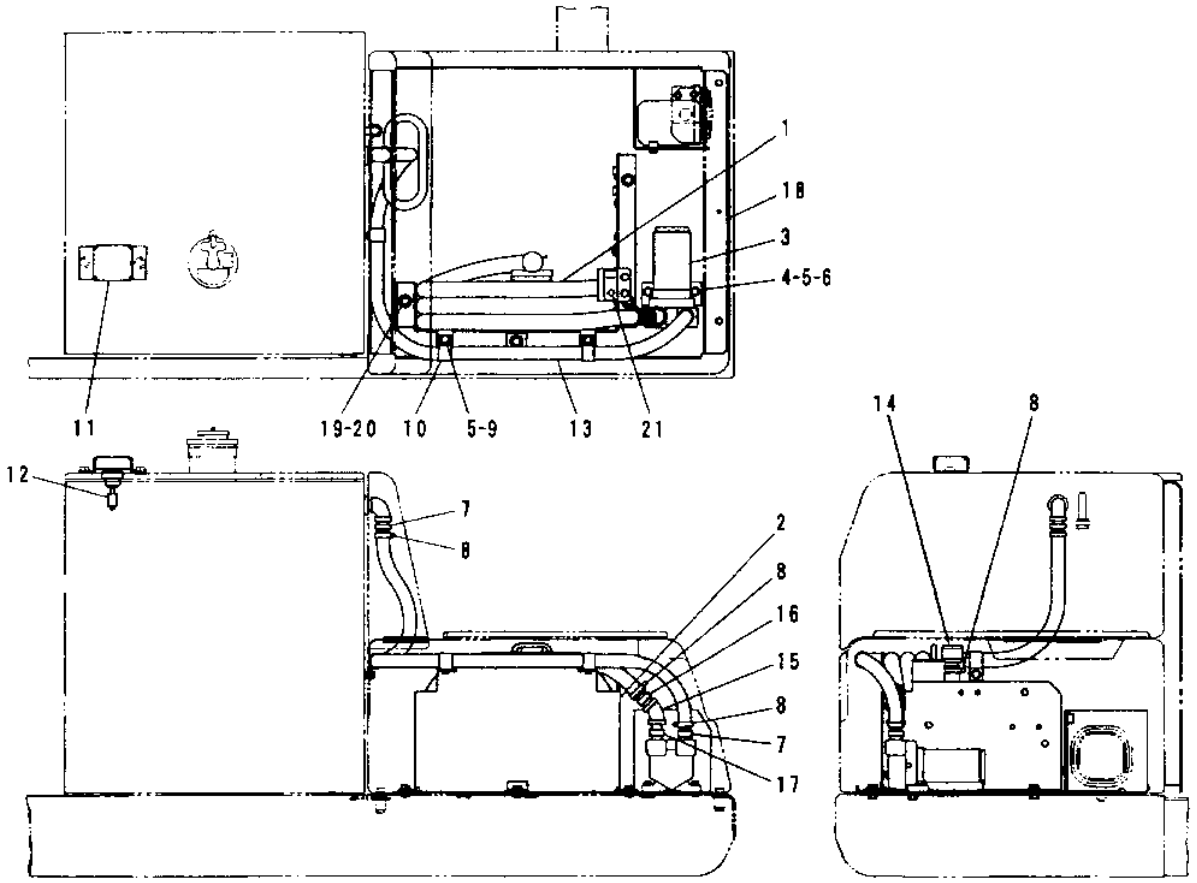


| NOTE | No. | PART No. | QTY | PART NAME | NOTE | No. | PART No. | QTY | PART NAME |
|---|---|---|---|---|---|---|---|---|---|
| E | 1 | 103 2556 | | HOSE ···(400cm) | | 19 | 8T-4179 | 4 | BOLT (L=20mm) |
| | 2 | 114 6196 | 1 | SUPPORT AS | | 20 | 5P-1076 | 4 | WASHER-HARD |
| | 3 | 123-3929 | 1 | PUMP GP | | 21 | 120-5114 | 1 | FILM (INSTRUCTION) |
| | | 9W-0852 | 2 | PIN | | | | | |
| | | 3E-3365 | 1 | WEDGE | | | | | |
| | 4 | 8T-4195 | 2 | BOLT (L=30mm) | | | | | |
| | 5 | 8T 4121 | 5 | WASHER-HARD | | | | | |
| | 6 | 8T-4133 | 2 | NUT | | | | | |
| | 7 | 105-6701 | 2 | CONNECTOR | | | | | |
| | 8 | 2S-3440 | 4 | CLAMP | | | | | |
| | 9 | 8T-4137 | 3 | BOLT | | | | | |
| | 10 | 4D 7388 | 3 | CLIP | | | | | |
| | 11 | 122-4021 | 1 | COVER | | | | | |
| Y | 12 | 5C-6108 | 1 | SWITCH AS | | | | | |
| E | 13 | 103-2556 | | HOSE ···(190cm) | | | | | |
| | 14 | 140-0580 | 1 | FOOT VALVE | | | | | |
| | 15 | 4B-9030 | 1 | ELBOW | | | | | |
| | 16 | 105-6701 | 1 | CONNECTOR | | | | | |
| | 17 | 105-6717 | 1 | VALVE (CHECK) | | | | | |
| | 18 | 122 4125 | 1 | SHEET AS | | | | | |

E-ORDER BY THE CENTIMETER
Y-SEE SEPARATE ILLUSTRATION

H53596E

# 1089845 PUMP GP-FUEL TRANSFER

S/N 8SR (D97.04)-UP, 8TR (D97.04)-UP
PART OF 1174159-Page 103
5C6108-Page 130
AN ATTACHMENT

**Key:** D - ORDER BY THE METER, E - ORDER BY THE CENTIMETER, Y - SEE SEPARATE ILLUSTRATION

**SMCS**

| NOTE | REF NO | GRAPHIC REF | PART NUMBER | QTY | PART NAME 1 2 3 4 5 6 (PRODUCT LEVEL) | PRICE USD |
|---|---|---|---|---|---|---|
| E | 1 | | 103-2556 | | HOSE (400cm) | |
| | 2 | | 140-0559 | 1 | SUPPORT AS | |
| | 3 | | 165-1436 | 1 | PUMP GP | |
| | | | 9W-0852 | 2 | PIN | |
| | | | 3E-3365 | 1 | WEDGE | |
| | 4 | | 8T-4196 | 2 | BOLT (L=35mm) | |
| | 5 | | 8T-4121 | 5 | WASHER-HARD | |
| | 6 | | 8T-4133 | 2 | NUT | |
| | 7 | | 105-6701 | 3 | CONNECTOR | |
| | 8 | | 2S-3440 | 4 | CLAMP | |
| | 9 | | 8T-4137 | 3 | BOLT (L=20mm) | |
| | 10 | | 4P-7581 | 3 | CLIP | |
| | 11 | | 122-4021 | 1 | COVER | |
| Y | 12 | | 5C-6108 | 1 | SWITCH AS | |
| E | 13 | | 103-2556 | | HOSE (175cm) | |
| | 14 | | 140-0580 | 1 | FOOT VALVE | |
| D | 15 | | 5P-8309 | | SEAL (0.6m) | |
| | 16 | | 5P-1076 | 4 | WASHER-HARD | |
| | 17 | | 120-5114 | 1 | FILM (INSTRUCTION) | |
| | 18 | | 140-0562 | 1 | SHEET AS | |
| | 19 | | 8T-4179 | 4 | BOLT (L=20mm) | |
| | 20 | | 7K-1181 | 3 | STRAP | |

## 1089845 PUMP GP-FUEL TRANSFER

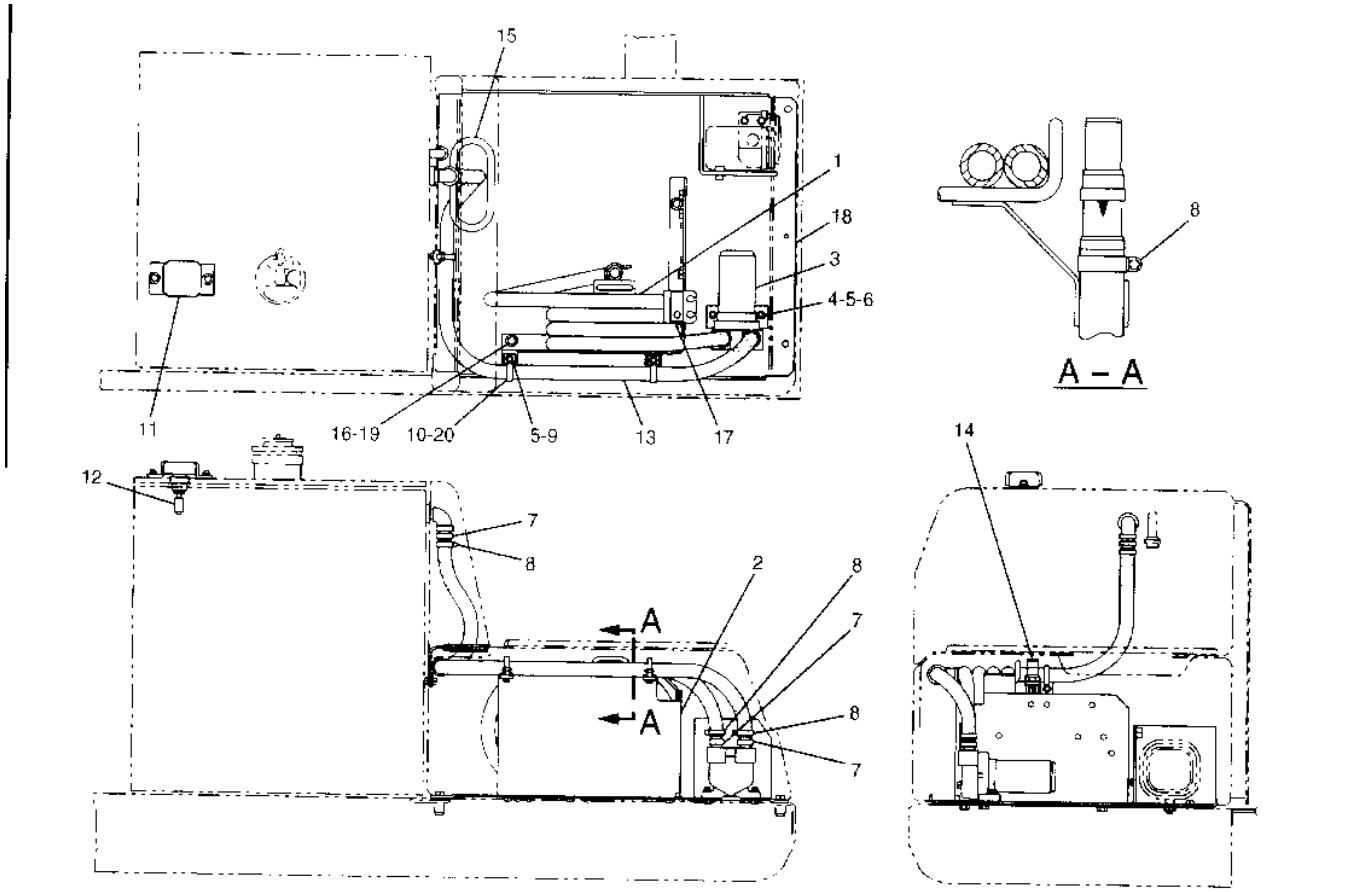


| NOTE | No. | PART No. | QTY | PART NAME |
|---|---|---|---|---|
| E | 1 | 103-2556 | | HOSE ···(400cm) |
| | 2 | 140-0559 | 1 | SUPPORT AS |
| | 3 | 165-1436 | 1 | PUMP GP |
| | | 9W-0852 | 2 | PIN |
| | | 3E-3365 | 1 | WEDGE |
| | 4 | 8T-4196 | 2 | BOLT(L=35mm) |
| | 5 | 8T-4121 | 5 | WASHER-HARD |
| | 6 | 8T-4133 | 2 | NUT |
| | 7 | 105 6701 | 3 | CONNECTOR |
| | 8 | 2S-3440 | 4 | CLAMP |
| | 9 | 8T-4137 | 3 | BOLT(L=20mm) |
| | 10 | 4P-7581 | 3 | CLIP |
| | 11 | 122-4021 | 1 | COVER |
| Y | 12 | 5C-6108 | 1 | SWITCH AS |
| E | 13 | 103-2556 | | HOSE ···(175cm) |
| | 14 | 140-0580 | 1 | FOOT VALVE |
| D | 15 | 5P-8309 | | SEAL ···(0.6m) |
| | 16 | 5P-1076 | 4 | WASHER-HARD |
| | 17 | 120-5114 | 1 | FILM-INSTRUCTION |
| | 18 | 140-0562 | 1 | SHEET AS |
| | 19 | 8T-4179 | 4 | BOLT(L=20mm) |
| | 20 | 7K-1181 | 3 | STRAP |

D-ORDER BY THE METER
E-ORDER BY THE CENTIMETER
Y-SEE SEPARATE ILLUSTRATION

H65401E

GRAPHIC #1

h65401e

# 1161640 PUMP GP-FUEL TRANSFER

WITH ADDITIONAL TANK
PART OF 1161492-Page 102
5C6108-Page 130
AN ATTACHMENT

**Key:** D - ORDER BY THE METER, E - ORDER BY THE CENTIMETER, Y - SEE SEPARATE ILLUSTRATION

**SMCS**

| NOTE | REF NO | GRAPHIC REF | PART NUMBER | QTY | PART NAME 1 2 3 4 5 6 (PRODUCT LEVEL) | PRICE USD |
|---|---|---|---|---|---|---|
| E | 1 | | 103-2556 | | HOSE (400cm) | |
| | 2 | | 105-6701 | 3 | CONNECTOR | |
| | 3 | | 2S-3440 | 4 | CLAMP | |
| D | 4 | | 5P-8309 | | SEAL (0.6m) | |
| | 5 | | 6K-0806 | 1 | STRAP | |
| | 6 | | 7Y-4528 | 1 | GROMMET | |
| | 7 | | 3B-6498 | 1 | ELBOW | |
| | 8 | | 005-8615 | 1 | NIPPLE | |
| | 9 | | 8T-4186 | 2 | BOLT (L=40mm) | |
| | 10 | | 8T-4121 | 5 | WASHER-HARD | |
| | 11 | | 117-4263 | 1 | PLATE AS | |
| | 12 | | 8T-4191 | 3 | BOLT (L=16mm) | |
| Y | 13 | | 5C-6108 | 1 | SWITCH AS | |
| | 14 | | 4D-7388 | 2 | CLIP | |
| | 15 | | 122-4021 | 1 | COVER | |
| E | 16 | | 103-2556 | | HOSE (195cm) | |
| | 17 | | 140-0580 | 1 | FOOT VALVE AS | |
| | 18 | | 7Y-3281 | 1 | GROMMET | |
| | 19 | | 165-1436 | 1 | PUMP GP | |

## 1161640 PUMP GP-FUEL TRANSFER

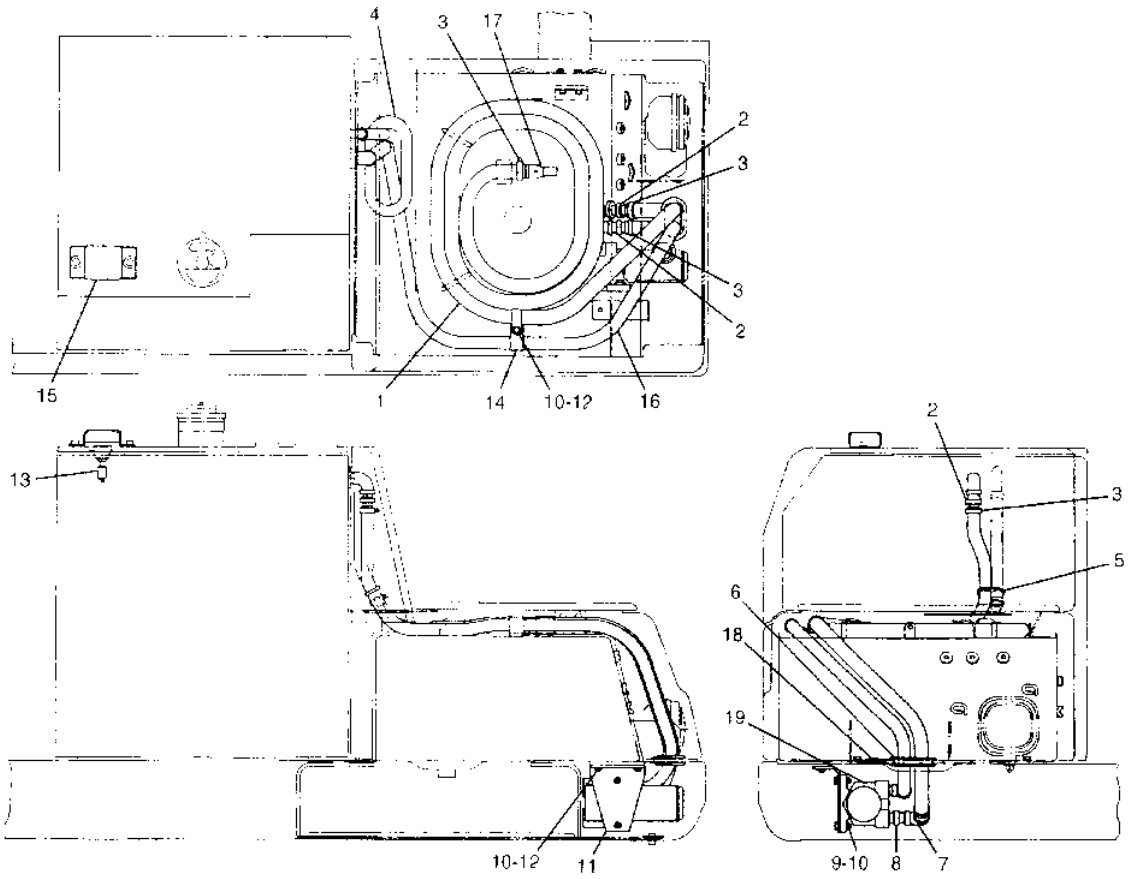


| NOTE | No. | PART No. | QTY | PART NAME | NOTE | No. | PART No. | QTY | PART NAME |
|---|---|---|---|---|---|---|---|---|---|
| E | 1 | 103 2556 | | HOSE ···(400cm) | | | | | |
| | 2 | 105 6701 | 3 | CONNECTOR | | | | | |
| | 3 | 2S 3440 | 4 | CLAMP | | | | | |
| D | 4 | 5P-8309 | | SEAL ···(0.6m) | | | | | |
| | 5 | 6K-0806 | 1 | STRAP | | | | | |
| | 6 | 7Y 4528 | 1 | GROMMET | | | | | |
| | 7 | 3B-6498 | 1 | ELBOW | | | | | |
| | 8 | 005 8615 | 1 | NIPPLE | | | | | |
| | 9 | 8T 4186 | 2 | BOLT(L=40mm) | | | | | |
| | 10 | 8T 4121 | 5 | WASHER-HARD | | | | | |
| | 11 | 117-4263 | 1 | PLATE AS | | | | | |
| | 12 | 8T-4191 | 3 | BOLT(L=16mm) | | | | | |
| Y | 13 | 5C-6108 | 1 | SWITCH AS | | | | | |
| | 14 | 4D-7388 | 2 | CLIP | | | | | |
| | 15 | 122-4021 | 1 | COVER | | | | | |
| E | 16 | 103-2556 | | HOSE ···(195cm) | | | | | |
| | 17 | 140 0580 | 1 | FOOT VALVE AS | | | | | |
| | 18 | 7Y 3281 | 2 | GROMMET | | | | | |
| | 19 | 165 1436 | 1 | PUMP GP | | | | | |

D-ORDER BY THE METER
E-ORDER BY THE CENTIMETER
Y-SEE SEPARATE ILLUSTRATION

H65576E

# 1161635 TANK & MTG GP-FUEL

1540409-Page 99

**Key:** Y - SEE SEPARATE ILLUSTRATION

**SMCS**

| NOTE | REF NO | GRAPHIC REF | PART NUMBER | QTY | PART NAME 1 2 3 4 5 6 (PRODUCT LEVEL) | PRICE USD |
|---|---|---|---|---|---|---|
| Y | 1 | | 154-0409 | 1 | TANK GP | |
| | 2 | | 8T-4140 | 4 | BOLT (L=60mm) | |
| | 3 | | 6I-6123 | 4 | SPACER | |
| | 4 | | 5P-8502 | 1 | PADLOCK GP | |
| | | | 5P-8500 | 1 | KEY | |
| | | | 8Y-6364 | 1 | SLEEVE | |

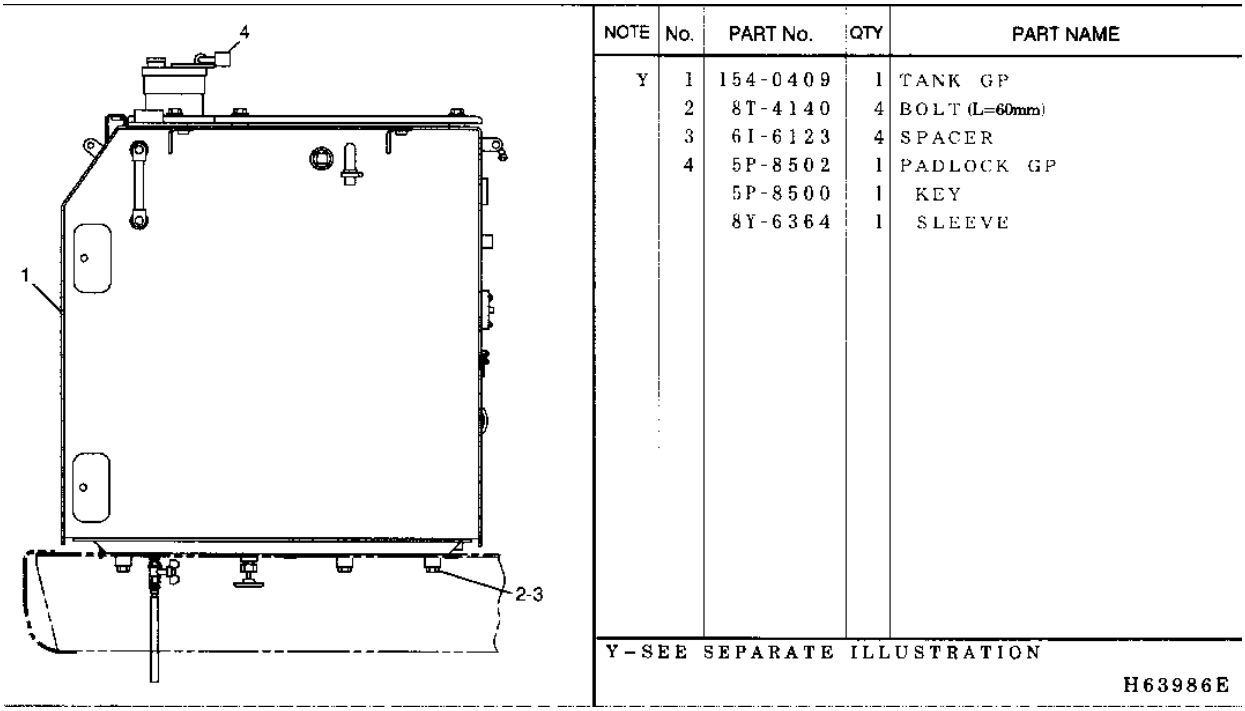


GRAPHIC #1 h63986e

# 1540409 TANK GP-FUEL

CAPACITY 560 LITERS
PART OF 1161635-Page 98

**Key:** E - ORDER BY THE CENTIMETER

**SMCS**

| NOTE | REF NO | GRAPHIC REF | PART NUMBER | QTY | PART NAME 1 2 3 4 5 6 (PRODUCT LEVEL) | PRICE USD |
|---|---|---|---|---|---|---|
| | 1 | | 8T-4192 | 7 | BOLT (L=25mm) | |
| | 2 | | 004-6683 | 1 | NIPPLE | |
| | 3 | | 4I-0379 | 1 | VALVE | |
| | 4 | | 4I-0378 | 1 | PACKING | |
| | 5 | | 095-0736 | 5 | SCREW-MACHINE | |
| | 6 | | 8T-0328 | 5 | WASHER-HARD | |
| | 7 | | 9P-7121 | 1 | STRAINER | |
| | 8 | | 7X-7700 | 1 | CAP AS | |
| | | | 9X-2205 | 1 | FILTER KIT | |
| | | | 9X-8600 | 1 | SEAL-O-RING (ID=110.49mm) | |
| | 9 | | 5P-1076 | 7 | WASHER-HARD | |
| | 10 | | 105-9911 | 1 | SENSOR-FUEL LEVEL | |
| | | | 8T-8729 | 2 | PIN | |
| | | | 102-8802 | 1 | RECEPTACLE KIT | |
| | 11 | | 9S-6130 | 1 | PLUG | |
| | 12 | | 2S-4078 | 1 | SEAL-O-RING (ID=37.47mm) | |
| | 13 | | 128-4411 | 1 | VALVE AS | |
| | 14 | | 003-7764 | 2 | END-HOSE | |
| | 15 | | 2S-3440 | 1 | CLAMP | |
| | 16 | | 087-3832 | 1 | CAP | |
| | 17 | | 6S-8620 | 1 | CLAMP | |
| E | 18 | | 103-2529 | | HOSE (18cm) | |
| | 19 | | 3B-0551 | 2 | PLUG | |
| | 20 | | 122-3977 | 1 | COVER AS | |
| | 21 | | 7Y-2398 | 1 | GAUGE AS | |
| | 22 | | 095-1514 | 4 | SEAL-O-RING (ID=9.80mm) | |
| | 23 | | 095-1517 | 4 | SEAL-O-RING (ID=13.80mm) | |
| | 24 | | 4I-0123 | 1 | PIPE | |
| | 25 | | 7Y-4754 | 2 | BLOCK | |
| | 26 | | 094-3247 | 2 | BOLT (L=36mm) | |
| | 27 | | 4I-0050 | 1 | PIPE | |
| | 28 | | 7Y-2262 | 1 | PIPE | |
| | 29 | | 8J-9208 | 1 | BOSS | |
| | 30 | | 6B-8692 | 1 | BOSS | |
| | 31 | | 7T-1099 | 3 | LINK | |
| | 32 | | 8T-3490 | 2 | NUT | |
| | 33 | | 9R-3924 | 3 | BOSS | |
| | 34 | | 8T-4133 | 2 | NUT | |

## 1540409 TANK GP-FUEL

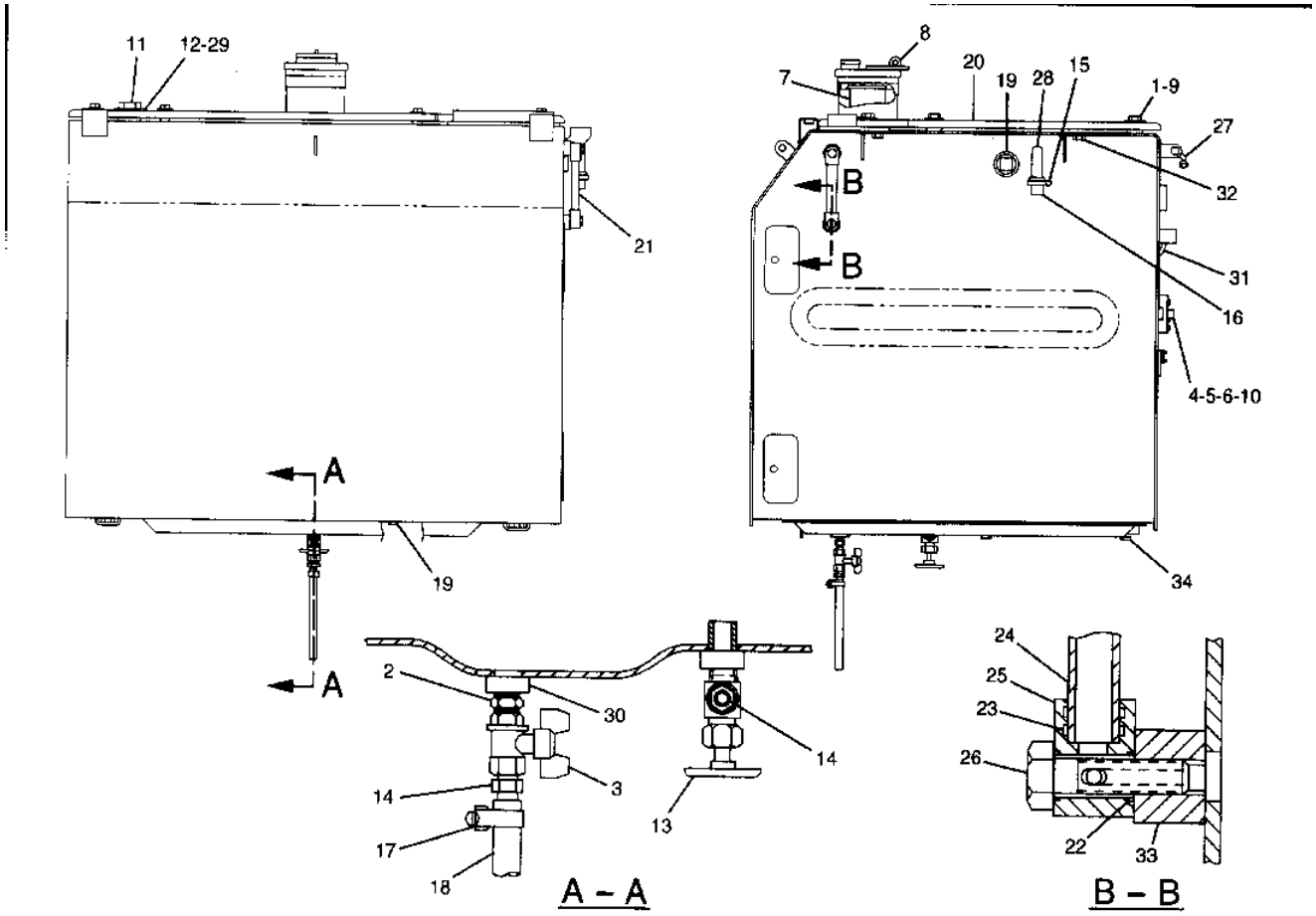


| NOTE | No. | PART No. | QTY | PART NAME |
|---|---|---|---|---|
| | 1 | 8T-4192 | 7 | BOLT (L=25mm) |
| | 2 | 004-6683 | 1 | NIPPLE |
| | 3 | 4I-0379 | 1 | VALVE |
| | 4 | 4I-0378 | 1 | PACKING |
| | 5 | 095-0736 | 5 | SCREW-MACHINE |
| | 6 | 8T-0328 | 5 | WASHER-HARD |
| | 7 | 9P-7121 | 1 | STRAINER |
| | 8 | 7X-7700 | 1 | CAP AS |
| | | 9X-2205 | 1 | FILTER KIT |
| | | 9X-8600 | 1 | SEAL-O-RING (ID=110.49mm) |
| | 9 | 5P-1076 | 7 | WASHER-HARD |
| | 10 | 105-9911 | 1 | SENSOR-FUEL LEVEL |
| | | 8T-8729 | 2 | PIN |
| | | 102-8802 | 1 | RECEPTACLE KIT |
| | 11 | 9S-6130 | 1 | PLUG |
| | 12 | 2S-4078 | 1 | SEAL-O-RING (ID=37.47mm) |
| | 13 | 128-4411 | 1 | VALVE AS |
| | 14 | 003-7764 | 2 | END-HOSE |
| | 15 | 2S-3440 | 1 | CLAMP |
| | 16 | 087-3832 | 1 | CAP |
| | 17 | 6S-8620 | 1 | CLAMP |
| E | 18 | 103-2529 | | HOSE ···(18cm) |
| | 19 | 3B-0551 | 2 | PLUG |
| | 20 | 122-3977 | 1 | COVER AS |
| | 21 | 7Y-2398 | 1 | GAUGE AS |
| | 22 | 095-1514 | 4 | SEAL-O-RING (ID=9.80mm) |
| | 23 | 095-1517 | 4 | SEAL-O-RING (ID=13.80mm) |
| | 24 | 4I-0123 | 1 | PIPE |
| | 25 | 7Y-4754 | 2 | BLOCK |
| | 26 | 094-3247 | 2 | BOLT (L=36mm) |
| | 27 | 4I-0050 | 1 | PIPE |
| | 28 | 7Y-2262 | 1 | PIPE |
| | 29 | 8J-9208 | 1 | BOSS |
| | 30 | 6B-8692 | 1 | BOSS |
| | 31 | 7T-1099 | 3 | LINK |
| | 32 | 8T-3490 | 2 | NUT |
| | 33 | 9R-3924 | 3 | BOSS |
| | 34 | 8T-4133 | 2 | NUT |

E – ORDER BY THE CENTIMETER

H63987E

# 1146214 TANK GP-FUEL

CAPACITY 143 LITERS, ADDITIONAL TANK
PART OF 1089846-Page 101
AN ATTACHMENT

**Key:**

**SMCS**

| NOTE | REF NO | GRAPHIC REF | PART NUMBER | QTY | PART NAME 1 2 3 4 5 6 (PRODUCT LEVEL) | PRICE USD |
|---|---|---|---|---|---|---|
| | 1 | | 7T-1099 | 5 | LINK | |
| | 2 | | 095-0736 | 5 | SCREW-MACHINE | |
| | 3 | | 8T-0328 | 5 | WASHER-HARD | |
| | 4 | | 122-3970 | 1 | PLATE | |
| | 5 | | 4I-0378 | 1 | PACKING | |

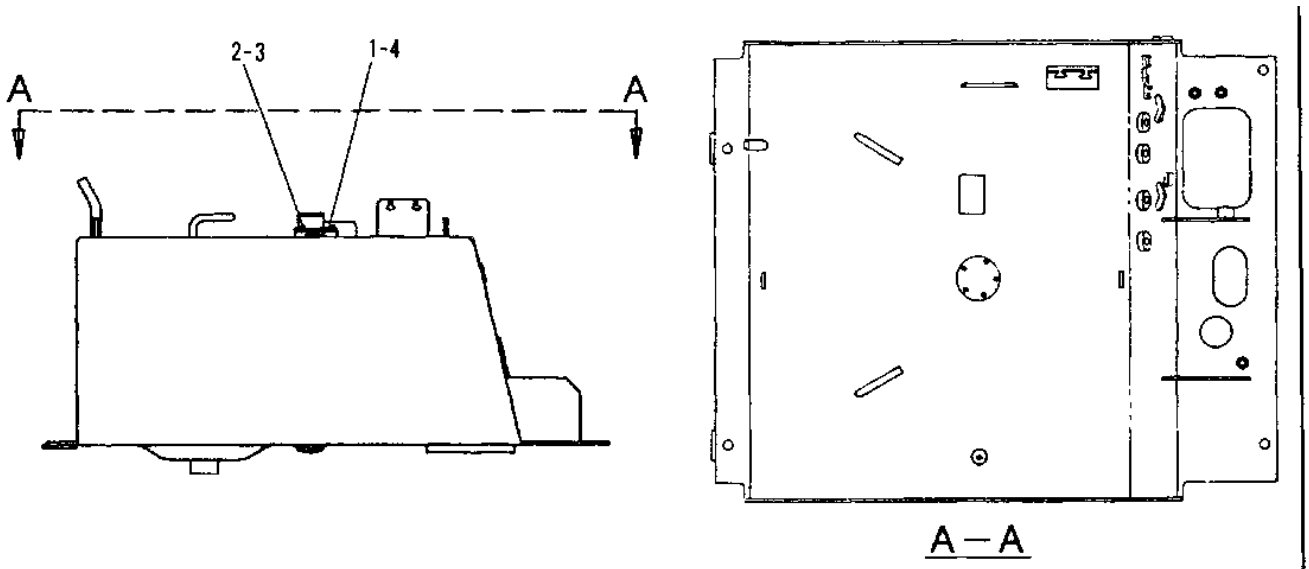


| NOTE | No. | PART No. | QTY | PART NAME |
|---|---|---|---|---|
| | 1 | 4I-0378 | 1 | PACKING |
| | 2 | 095-0736 | 5 | SCREW-MACHINE |
| | 3 | 8T-0328 | 5 | WASHER-HARD |
| | 4 | 122-3970 | 1 | PLATE |

| NOTE | No. | PART No. | QTY | PART NAME |
|---|---|---|---|---|

H50988E

## 1146214 TANK GP-FUEL

GRAPHIC #1

h50988e

# 1089846 TANK AR-ADDITIONAL

AN ATTACHMENT

**Key:** Y - Separate Illustration

**SMCS**

| NOTE | REF NO | GRAPHIC REF | PART NUMBER | QTY | PART NAME 1 2 3 4 5 6 (PRODUCT LEVEL) | PRICE USD |
|---|---|---|---|---|---|---|
| Y | | | 114-6214 | 1 | TANK GP (FUEL) | |
| Y | | | 114-6222 | 1 | LINES GP (FUEL) | |
| Y | | | 122-4022 | 1 | BOX & MTG GP (STORAGE) | |
| Y | | | 122-4027 | 1 | GUARD GP (BOTTOM) | |
| Y | | | 125-4774 | 1 | LIGHTING GP (CHASSIS) | |

# 1161492 PUMP AR-FUEL TRANSFER

WITH ADDITIONAL TANK
AN ATTACHMENT

**Key:** Y - Separate Illustration

**SMCS**

| NOTE | REF NO | GRAPHIC REF | PART NUMBER | QTY | PART NAME 1 2 3 4 5 6 (PRODUCT LEVEL) | PRICE USD |
|---|---|---|---|---|---|---|
| Y | | | 116-0167 | 1 | WIRING GP (REFUELING PUMP) | |
| Y | | | 116-1640 | 1 | PUMP GP (FUEL TRANSFER) | |

# 1174159 PUMP AR-FUEL TRANSFER

AN ATTACHMENT

**Key:** Y - Separate Illustration

**SMCS**

| NOTE | REF NO | GRAPHIC REF | PART NUMBER | QTY | PART NAME 1 2 3 4 5 6 (PRODUCT LEVEL) | PRICE USD |
|---|---|---|---|---|---|---|
| Y | | | 108-9845 | 1 | PUMP GP (FUEL TRANSFER) | |
| Y | | | 116-0083 | 1 | WIRING GP (REFUELING PUMP) | |
| Y | | | 122-4022 | 1 | BOX & MTG GP (STORAGE) | |
| | | | 126-4774 | 1 | LIGHTING GP (CHASSIS) | |

# 1114858 BATTERY & WIRING GP-PART 1 OF 2

S/N 8SR 1-00147, 8TR 1-00162
1288954-Page 108, 1288969-Page 111, 1211115-Page 114, 1160080-Page 116, 1254727-Page 117, 1288948-Page 118

**Key:** Y - SEE SEPARATE ILLUSTRATION

**SMCS**

| NOTE | REF NO | GRAPHIC REF | PART NUMBER | QTY | PART NAME 1 2 3 4 5 6 (PRODUCT LEVEL) | PRICE USD |
|---|---|---|---|---|---|---|
| | 1 | | 111-4836 | 25 | CLIP | |
| | 2 | | 8T-4136 | 11 | BOLT (L=25mm) | |
| | 3 | | 8T-4121 | 69 | WASHER | |
| | 4 | | 8T-4195 | 5 | BOLT (L=30mm) | |
| | 5 | | 111-4837 | 16 | CLIP | |
| Y | 6 | | 128-8954 | 1 | HARNESS AS | |
| | 7 | | 3T-5760 | 2 | BATTERY | |
| | 8 | | 6W-6005 | 1 | HOLDDOWN | |
| Y | 9 | | 128-8969 | 1 | HARNESS AS | |
| | 10 | | 8T-4137 | 36 | BOLT (L=20mm) | |
| | 11 | | 111-4881 | 1 | CABLE AS | |
| | | | 1S-7251 | 1 | TERMINAL | |
| | | | 1S-7252 | 1 | TERMINAL | |
| Y | 12 | | 128-8948 | 1 | PANEL GP | |
| | 13 | | 7Y-3196 | 3 | GROMMET | |
| | 14 | | 8T-4191 | 12 | BOLT (L=16mm) | |
| | 15 | | 7X-2621 | 4 | BOLT (L=12mm) | |
| | 16 | | 116-0118 | 4 | CLIP | |
| | 17 | | 7G-1060 | 1 | STRAP AS | |
| | 18 | | 8T-4133 | 1 | NUT | |
| | 19 | | 8T-4226 | 1 | WASHER | |
| | 20 | | 5I-8304 | 1 | ROD | |
| | 21 | | 5C-7261 | 1 | NUT | |
| Y | 22 | | 125-4727 | 1 | CABLE AS | |
| | 23 | | 3S-2093 | 5 | STRAP | |
| Y | 24 | | 116-0080 | 1 | CABLE AS | |
| | 25 | | 111-4883 | 1 | BRACKET AS | |
| | 26 | | 8T-4185 | 1 | BOLT (L=50mm) | |
| | 27 | | 4I-4366 | 1 | GROMMET | |
| | 28 | | 4I-3503 | 1 | GROMMET | |
| | 29 | | 7Y-8168 | 1 | GROMMET | |
| | 30 | | 6G-2256 | 1 | CLAMP | |
| | 31 | | 6G-2263 | 2 | SPACER | |
| | 32 | | 2G-8767 | 1 | WASHER | |
| | 33 | | 8T-4182 | 1 | BOLT (L=45mm) | |
| | 34 | | 7I-2673 | 1 | STRAP | |
| | 35 | | 111-4838 | 7 | CLIP | |
| | 36 | | 111-4839 | 7 | STRAP | |
| | 37 | | 131-7546 | 1 | GROMMET | |
| | 38 | | 116-0229 | 2 | BRACKET AS | |
| | 39 | | 116-0068 | 1 | BRACKET | |
| | 40 | | 102-7886 | 1 | SLEEVE | |
| | 41 | | 8T-4198 | 1 | BOLT (L=100mm) | |
| Y | 42 | | 121-1115 | 1 | HARNESS AS | |
| | 43 | | 116-0230 | 1 | BRACKET AS | |

## 1114858 BATTERY & WIRING GP-PART 1 OF 2

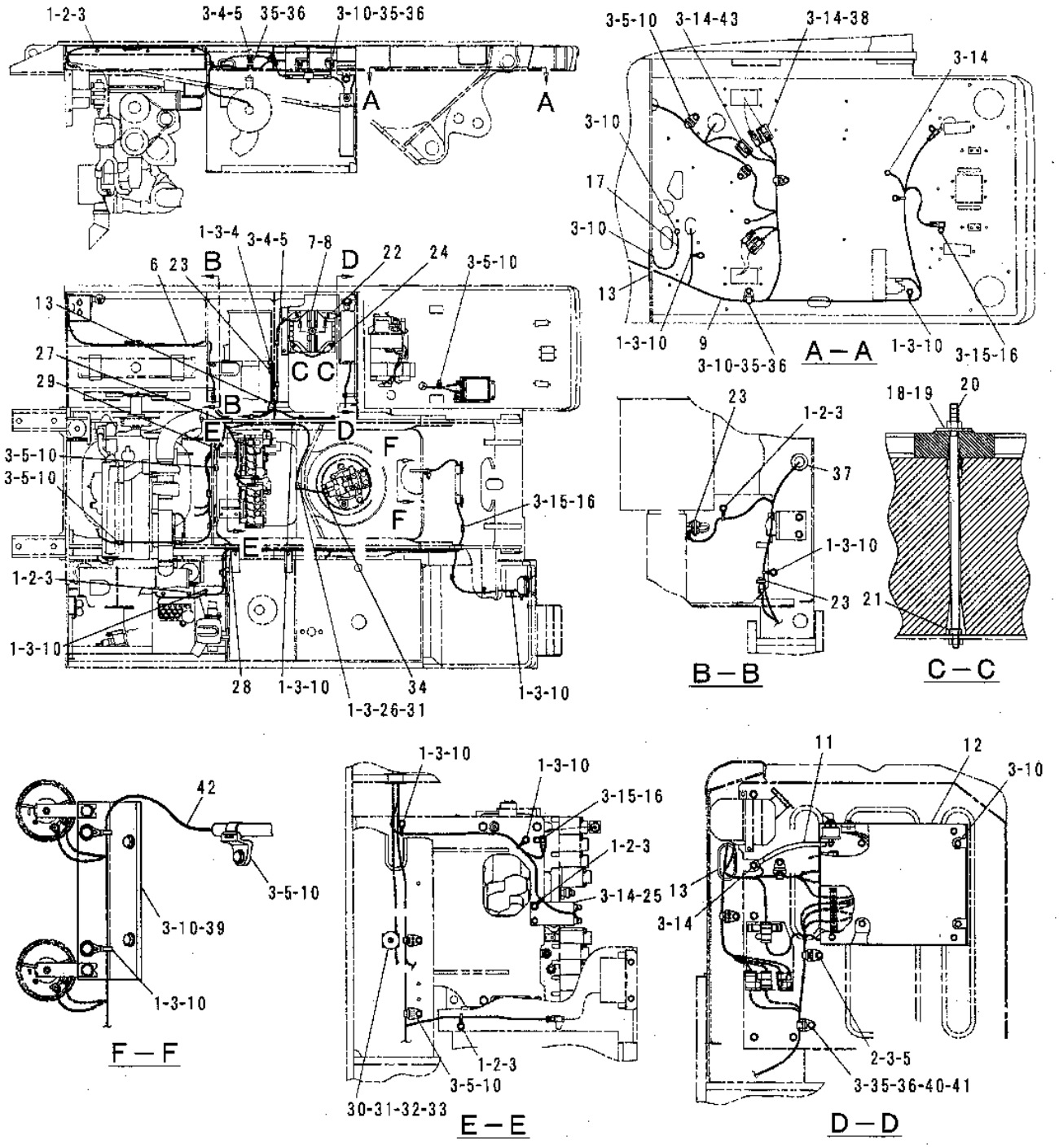


GRAPHIC #1

h51563e

# 1114858 BATTERY & WIRING GP-PART 2 OF 2

S/N 8SR 1-00147, 8TR 1-00162
1160163-Page 115, 1160161-Page 117

**Key:** Y - SEE SEPARATE ILLUSTRATION

**SMCS**

| NOTE | REF NO | GRAPHIC REF | PART NUMBER | QTY | PART NAME 1 2 3 4 5 6 (PRODUCT LEVEL) | PRICE USD |
|---|---|---|---|---|---|---|
| | 1 | | 111-4836 | 14 | CLIP | |
| | 2 | | 8T-4136 | 6 | BOLT (L=25mm) | |
| | 3 | | 8T-4121 | 20 | WASHER | |
| | 4 | | 8T-4195 | 3 | BOLT (L=30mm) | |
| | 5 | | 111-4837 | 5 | CLIP | |
| | 6 | | 8T-4137 | 8 | BOLT (L=20mm) | |
| | 7 | | 7Y-8167 | 1 | GROMMET | |
| | 8 | | 7X-2621 | 1 | BOLT (L=12mm) | |
| | 9 | | 116-0118 | 4 | CLIP | |
| | 10 | | 3S-2093 | 7 | STRAP | |
| | 11 | | 8T-4185 | 1 | BOLT (L=50mm) | |
| | 12 | | 6G-2256 | 1 | CLAMP | |
| | 13 | | 6G-2263 | 1 | SPACER | |
| | 14 | | 2G-8767 | 2 | WASHER | |
| | 15 | | 4M-6425 | 1 | BOLT (L=25mm) | |
| | 16 | | 116-0182 | 1 | SUPPORT AS | |
| | 17 | | 116-0169 | 1 | BRACKET AS | |
| | 18 | | 8T-4224 | 4 | WASHER | |
| | 19 | | 4N-0205 | 1 | SPACER | |
| | 20 | | 5K-0906 | 3 | BOLT (L=16mm) | |
| | 21 | | 102-7957 | 1 | BRACKET AS | |
| | 22 | | 7I-2673 | 1 | STRAP | |
| | 23 | | 4N-0061 | 2 | BOLT (L=19mm) | |
| Y | 24 | | 116-0161 | 1 | CABLE AS | |
| | 25 | | 7Y-8132 | 1 | CABLE AS | |
| | | | 1S-7251 | 2 | TERMINAL | |
| | 26 | | 5M-3062 | 1 | BOLT (L=19mm) | |
| | 27 | | 116-0171 | 1 | SHEET AS | |
| Y | 28 | | 116-0163 | 1 | HARNESS AS | |
| | 29 | | 093-2068 | 1 | GROMMET | |
| | 30 | | 121-1044 | 1 | HARNESS AS | |
| | | | 102-8804 | 1 | RECEPTACLE KIT | |
| | | | 3E-3377 | 1 | WEDGE | |
| | | | 8T-8729 | 2 | PIN | |
| | | | 8T-8737 | 2 | PLUG | |
| | 31 | | 8C-3121 | 1 | BOLT (L=38mm) | |
| | 32 | | 5P-4116 | 4 | WASHER | |
| | 33 | | 8T-4189 | 1 | BOLT (L=20mm) | |
| | 34 | | 6D-4244 | 1 | CLIP | |

## 1114858 BATTERY & WIRING GP-PART 2 OF 2

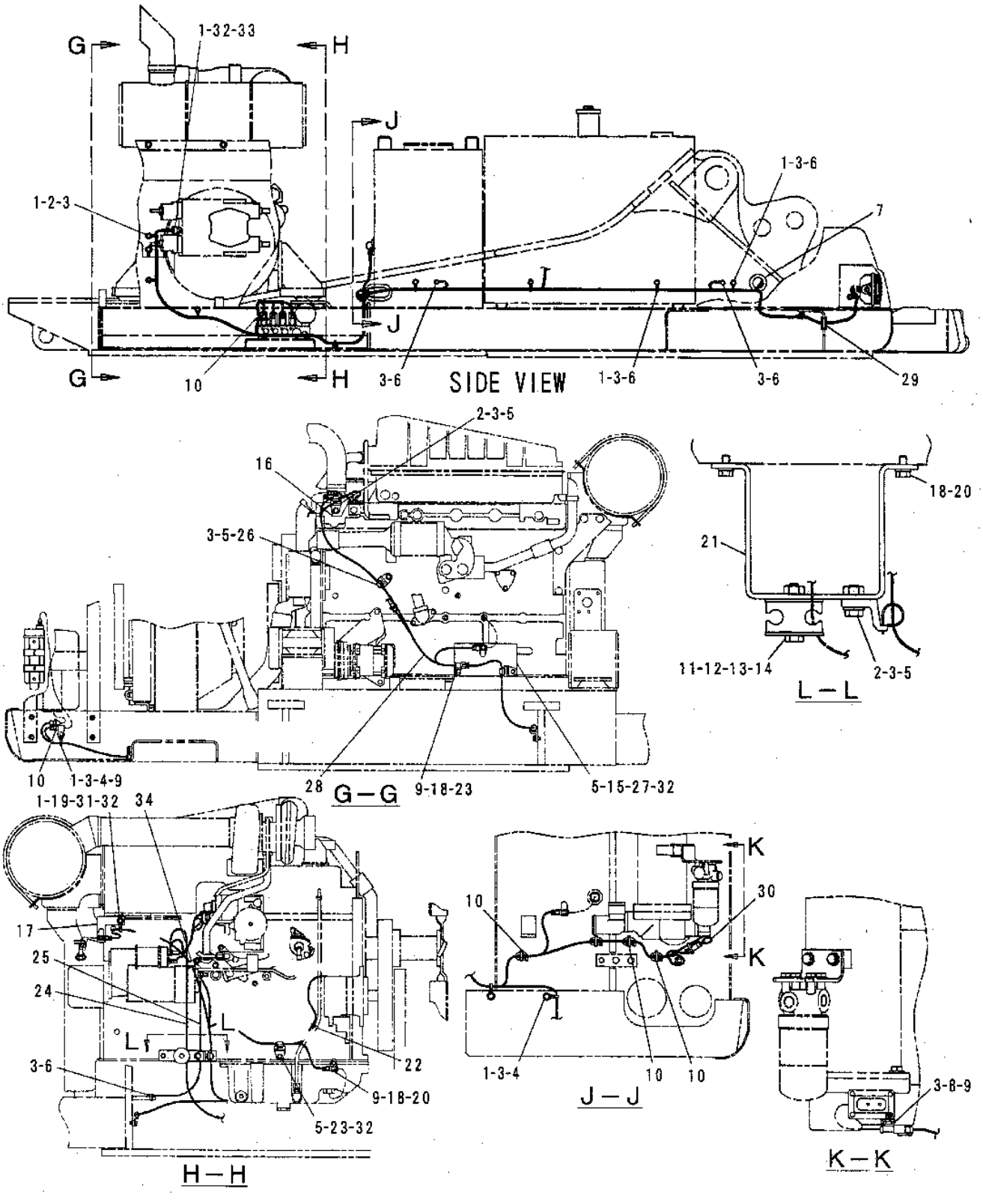


GRAPHIC #1

h51565e

# 1114858 BATTERY & WIRING GP-PART 1 OF 2

S/N 8SR 00148-00417, 8TR 00163-00485

1288954-Page 108, 1364056-Page 113.01, 1211115-Page 114, 1160080-Page 116, 1254727-Page 117, 1288948-Page 119.01

**Key:** Y - SEE SEPARATE ILLUSTRATION

**SMCS**

| NOTE | REF NO | GRAPHIC REF | PART NUMBER | QTY | PART NAME 1 2 3 4 5 6 (PRODUCT LEVEL) | PRICE USD |
|---|---|---|---|---|---|---|
| | 1 | | 111-4836 | 20 | CLIP | |
| | 2 | | 8T-4136 | 8 | BOLT (L=25mm) | |
| | 3 | | 8T-4121 | 61 | WASHER | |
| | 4 | | 8T-4195 | 7 | BOLT (L=30mm) | |
| | 5 | | 111-4837 | 14 | CLIP | |
| Y | 6 | | 128-8954 | 1 | HARNESS AS | |
| | 7 | | 3T-5760 | 2 | BATTERY | |
| | 8 | | 6W-6005 | 1 | HOLDDOWN | |
| Y | 9 | | 136-4056 | 1 | HARNESS AS | |
| | 10 | | 8T-4137 | 30 | BOLT (L=20mm) | |
| | 11 | | 132-1805 | 1 | STRAP AS | |
| Y | 12 | | 128-8948 | 1 | PANEL GP | |
| | 13 | | 7Y-3196 | 2 | GROMMET | |
| | 14 | | 8T-4191 | 11 | BOLT (L=16mm) | |
| | 15 | | 7X-2621 | 4 | BOLT (L=12mm) | |
| | 16 | | 116-0118 | 4 | CLIP | |
| | 17 | | 7G-1060 | 1 | STRAP | |
| | 18 | | 8T-4133 | 1 | NUT | |
| | 19 | | 8T-4226 | 1 | WASHER | |
| | 20 | | 5I-8304 | 1 | ROD | |
| | 21 | | 5C-7261 | 1 | NUT | |
| Y | 22 | | 125-4727 | 1 | CABLE AS | |
| | 23 | | 3S-2093 | 5 | STRAP | |
| Y | 24 | | 116-0080 | 1 | CABLE AS | |
| | 25 | | 111-4883 | 1 | BRACKET AS | |
| | 26 | | 8T-4185 | 1 | BOLT (L=50mm) | |
| | 27 | | 5I-4366 | 1 | GROMMET | |
| | 28 | | 4I-3503 | 1 | GROMMET | |
| | 29 | | 7Y-8168 | 1 | GROMMET | |
| | 30 | | 6G-2256 | 1 | CLAMP | |
| | 31 | | 6G-2263 | 2 | SPACER | |
| | 32 | | 2G-8767 | 1 | WASHER | |
| | 33 | | 8T-4182 | 1 | BOLT (L=45mm) | |
| | 34 | | 7I-2673 | 1 | STRAP | |
| | 35 | | 111-4838 | 7 | CLIP | |
| | 36 | | 111-4839 | 7 | STRAP | |
| | 37 | | 131-7546 | 1 | GROMMET | |
| | 38 | | 116-0229 | 2 | BRACKET AS | |
| | 39 | | 116-0068 | 1 | BRACKET | |
| | 40 | | 102-7886 | 1 | SLEEVE | |
| | 41 | | 8T-4198 | 1 | BOLT (L=100mm) | |
| Y | 42 | | 121-1115 | 1 | HARNESS AS | |
| | 43 | | 116-0230 | 1 | BRACKET AS | |
| | 44 | | 4I-7889 | 1 | SPACER | |
| | 45 | | 8T-5005 | 1 | BOLT (L=70mm) | |

## 1114858 BATTERY & WIRING GP-PART 1 OF 2

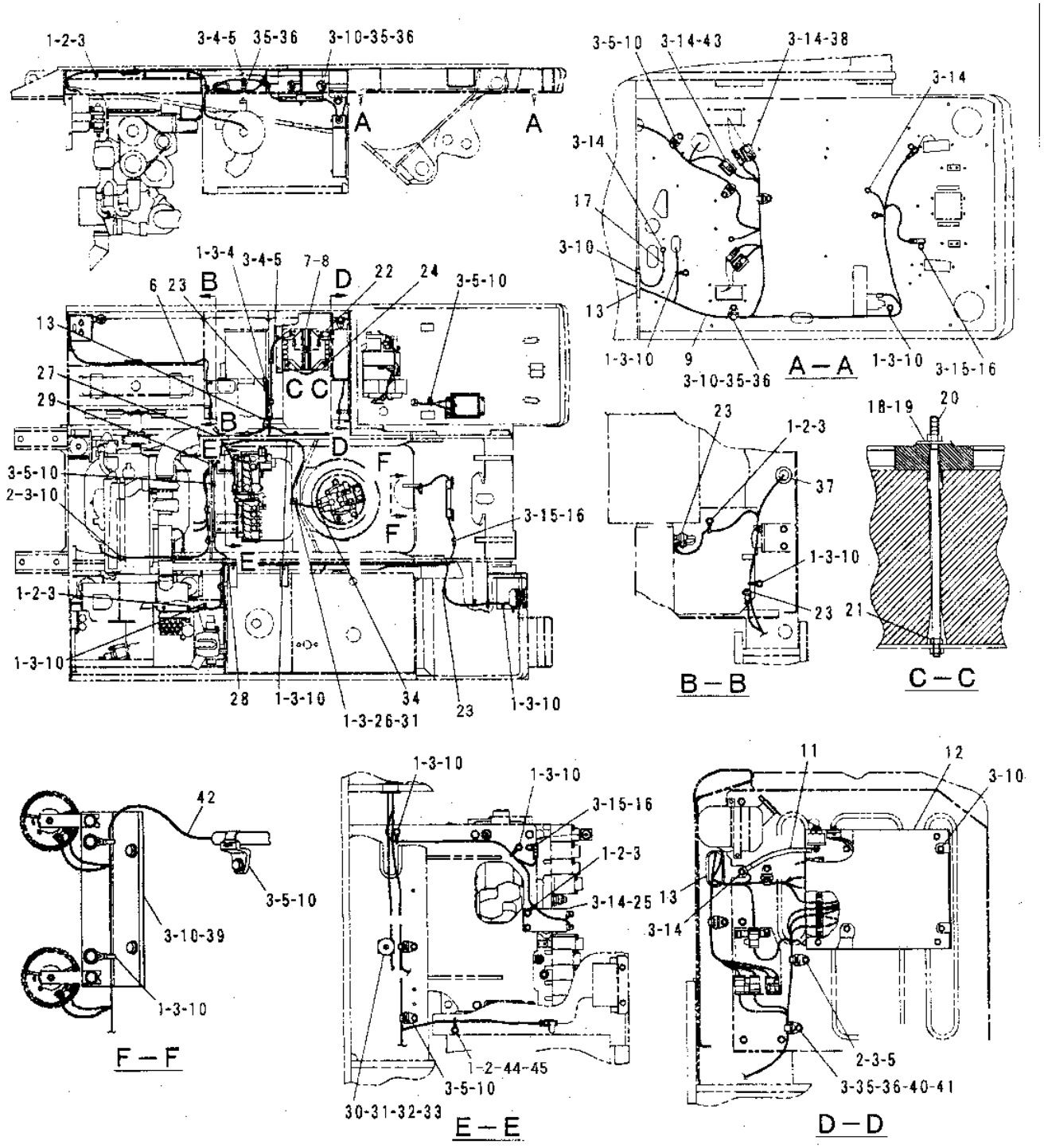


GRAPHIC #1

h56312e

# 1114858 BATTERY & WIRING GP-PART 2 OF 2

S/N 8SR 00148-00417, 8TR 00163-00485
1160163-Page 115, 1160161-Page 117

**Key:** Y - SEE SEPARATE ILLUSTRATION

**SMCS**

| NOTE | REF NO | GRAPHIC REF | PART NUMBER | QTY | PART NAME 1 2 3 4 5 6 (PRODUCT LEVEL) | PRICE USD |
|---|---|---|---|---|---|---|
| | 1 | | 111-4836 | 16 | CLIP | |
| | 2 | | 8T-4136 | 9 | BOLT (L=25mm) | |
| | 3 | | 8T-4121 | 25 | WASHER | |
| | 4 | | 8T-4195 | 1 | BOLT (L=30mm) | |
| | 5 | | 111-4837 | 5 | CLIP | |
| | 6 | | 8T-4137 | 12 | BOLT (L=20mm) | |
| | 7 | | 7Y-8167 | 1 | GROMMET | |
| | 8 | | 7X-2621 | 1 | BOLT (12mm) | |
| | 9 | | 116-0118 | 4 | CLIP | |
| | 10 | | 3S-2093 | 7 | STRAP | |
| | 11 | | 8T-4185 | 1 | BOLT (L=50mm) | |
| | 12 | | 6G-2256 | 1 | CLAMP | |
| | 13 | | 6G-2263 | 2 | SPACER | |
| | 14 | | 2G-8767 | 2 | WASHER | |
| | 15 | | 8T-9043 | 1 | BOLT (L=22mm) | |
| | 16 | | 116-0182 | 1 | SUPPORT AS | |
| | 17 | | 116-0169 | 2 | BRACKET AS | |
| | 18 | | 8T-4224 | 5 | WASHER | |
| | 19 | | 4N-0205 | 1 | SPACER | |
| | 20 | | 5K-0906 | 3 | BOLT (L=16mm) | |
| | 21 | | 102-7957 | 1 | BRACKET AS | |
| | 22 | | 7I-2673 | 1 | STRAP | |
| | 23 | | 4M-0061 | 2 | BOLT (L=19mm) | |
| Y | 24 | | 116-0161 | 1 | CABLE AS | |
| | 25 | | 7Y-8132 | 1 | CABLE AS | |
| | | | 1S-7251 | 2 | TERMINAL | |
| | 26 | | 5M-3062 | 1 | BOLT (L=19mm) | |
| | 27 | | 4D-8123 | 1 | CLIP | |
| Y | 28 | | 116-0163 | 1 | HARNESS AS | |
| | 29 | | 093-2068 | 1 | GROMMET | |
| | 30 | | 121-1044 | 1 | HARNESS | |
| | | | 102-8804 | 1 | RECEPTACLE KIT | |
| | | | 3E-3377 | 1 | WEDGE | |
| | | | 8T-8729 | 2 | PIN | |
| | | | 8T-8737 | 2 | PLUG | |
| | 31 | | 6V-8918 | 1 | BOLT (L=32mm) | |
| | 32 | | 5P-4116 | 3 | WASHER | |
| | 33 | | 8T-4189 | 1 | BOLT (L=20mm) | |
| | 34 | | 6K-8178 | 1 | CLIP | |
| | 35 | | 136-4083 | 1 | STRIP AS | |
| | 36 | | 8T-9377 | 1 | BOLT (L=57mm) | |

## 1114858 BATTERY & WIRING GP-PART 2 OF 2

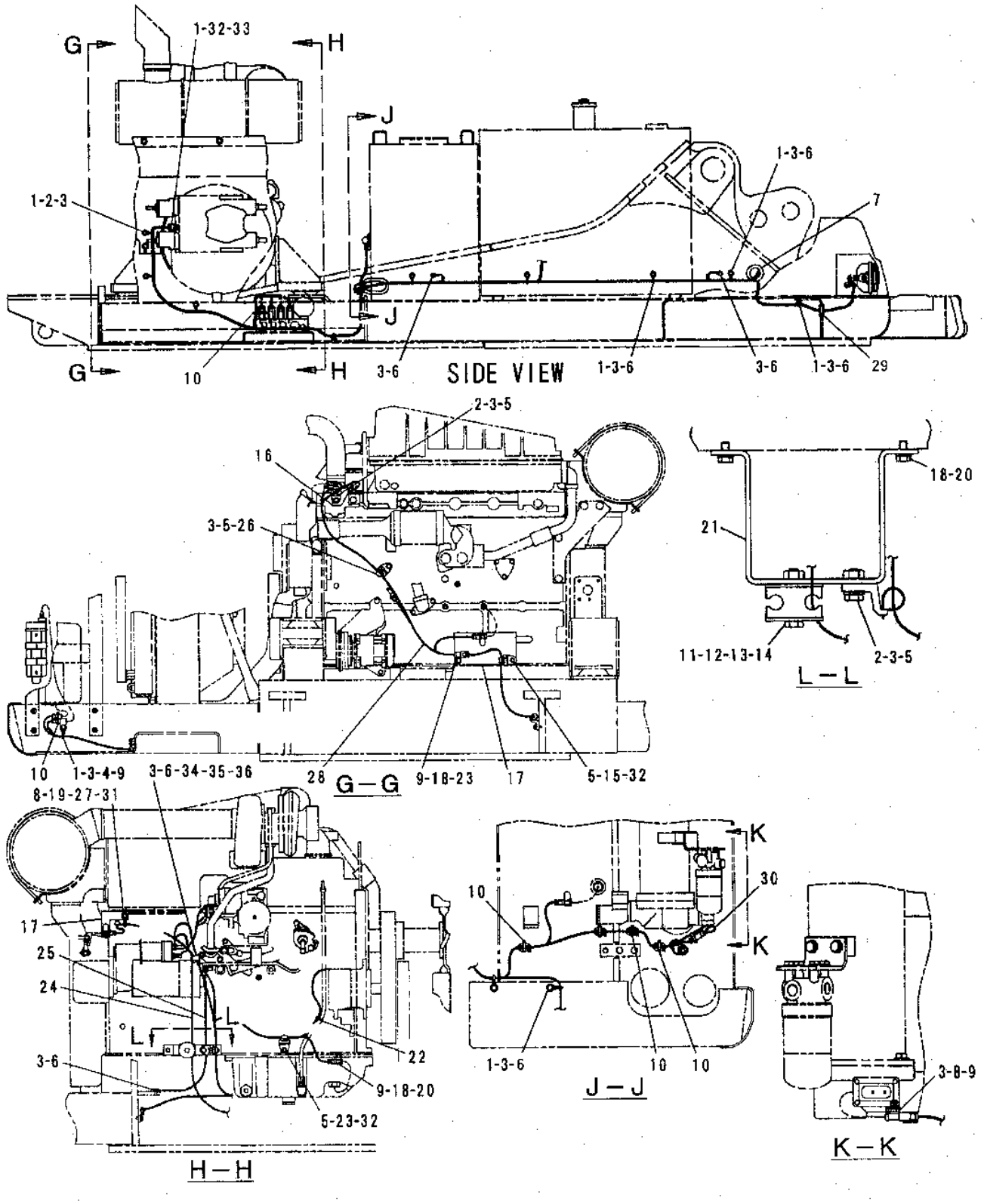


GRAPHIC #1

h56314e

# 1114858 BATTERY & WIRING GP-PART 1 OF 2

S/N 8SR 00418-UP, 8TR 00486-UP

32562-Page 110.01, 1506998-Page 113.04, 1211115-Page 114, 1160080-Page 116, 1254727-Page 117, 1288948-Page 119.(

**Key:** Y - SEE SEPARATE ILLUSTRATION

**SMCS**

| NOTE | REF NO | GRAPHIC REF | PART NUMBER | QTY | PART NAME 1 2 3 4 5 6 (PRODUCT LEVEL) | PRICE USD |
|---|---|---|---|---|---|---|
| | 1 | | 111-4836 | 27 | CLIP | |
| | 2 | | 8T-4136 | 11 | BOLT (L=25mm) | |
| | 3 | | 8T-4121 | 70 | WASHER | |
| | 4 | | 8T-4195 | 5 | BOLT (L=30mm) | |
| | 5 | | 111-4837 | 14 | CLIP | |
| Y | 6 | | 153-2562 | 1 | HARNESS AS | |
| | 7 | | 3T-5760 | 2 | BATTERY | |
| | 8 | | 6W-6005 | 1 | HOLDDOWN | |
| Y | 9 | | 150-6998 | 1 | HARNESS AS | |
| | 10 | | 8T-4137 | 35 | BOLT (L=20mm) | |
| | 11 | | 132-1805 | 1 | STRAP AS | |
| Y | 12 | | 128-8948 | 1 | PANEL GP | |
| | 13 | | 7T-3196 | 1 | GROMMET | |
| | 14 | | 8T-4191 | 12 | BOLT (L=16mm) | |
| | 15 | | 7X-2621 | 4 | BOLT (L=12mm) | |
| | 16 | | 116-0118 | 4 | CLIP | |
| | 17 | | 7G-1060 | 1 | STRAP AS | |
| | 18 | | 8T-4133 | 1 | NUT | |
| | 19 | | 8T-4226 | 1 | WASHER | |
| | 20 | | 5I-8304 | 1 | ROD | |
| | 21 | | 5C-7261 | 1 | NUT | |
| Y | 22 | | 125-4727 | 1 | CABLE AS | |
| | 23 | | 3S-2093 | 5 | STRAP | |
| Y | 24 | | 116-0080 | 1 | CABLE AS | |
| | 25 | | 111-4883 | 1 | BRACKET AS | |
| | 26 | | 8T-4185 | 1 | BOLT (L=50mm) | |
| | 27 | | 5I-4366 | 1 | GROMMET | |
| | 28 | | 4I-3503 | 1 | GROMMET | |
| | 29 | | 7Y-8168 | 1 | GROMMET | |
| | 30 | | 6G-2256 | 1 | CLAMP | |
| | 31 | | 6G-2263 | 2 | SPACER | |
| | 32 | | 2G-8767 | 1 | WASHER | |
| | 33 | | 8T-4182 | 1 | BOLT (L=45mm) | |
| | 34 | | 7I-2673 | 1 | STRAP | |
| | 35 | | 111-4838 | 7 | CLIP | |
| | 36 | | 111-4839 | 7 | STRAP | |
| | 37 | | 131-7546 | 1 | GROMMET | |
| | 38 | | 116-0229 | 2 | BRACKET AS | |
| | 39 | | 116-0068 | 1 | BRACKET | |
| | 40 | | 102-7886 | 1 | SLEEVE | |
| | 41 | | 8T-4198 | 1 | BOLT (L=100mm) | |
| Y | 42 | | 121-1115 | 1 | HARNESS AS | |
| | 43 | | 116-0230 | 1 | BRACKET AS | |
| | 44 | | 4I-7889 | 1 | SPACER | |
| | 45 | | 8T-5005 | 1 | BOLT (L=70mm) | |
| | 46 | | 145-5536 | 2 | GROMMET | |

## 1114858 BATTERY & WIRING GP-PART 1 OF 2

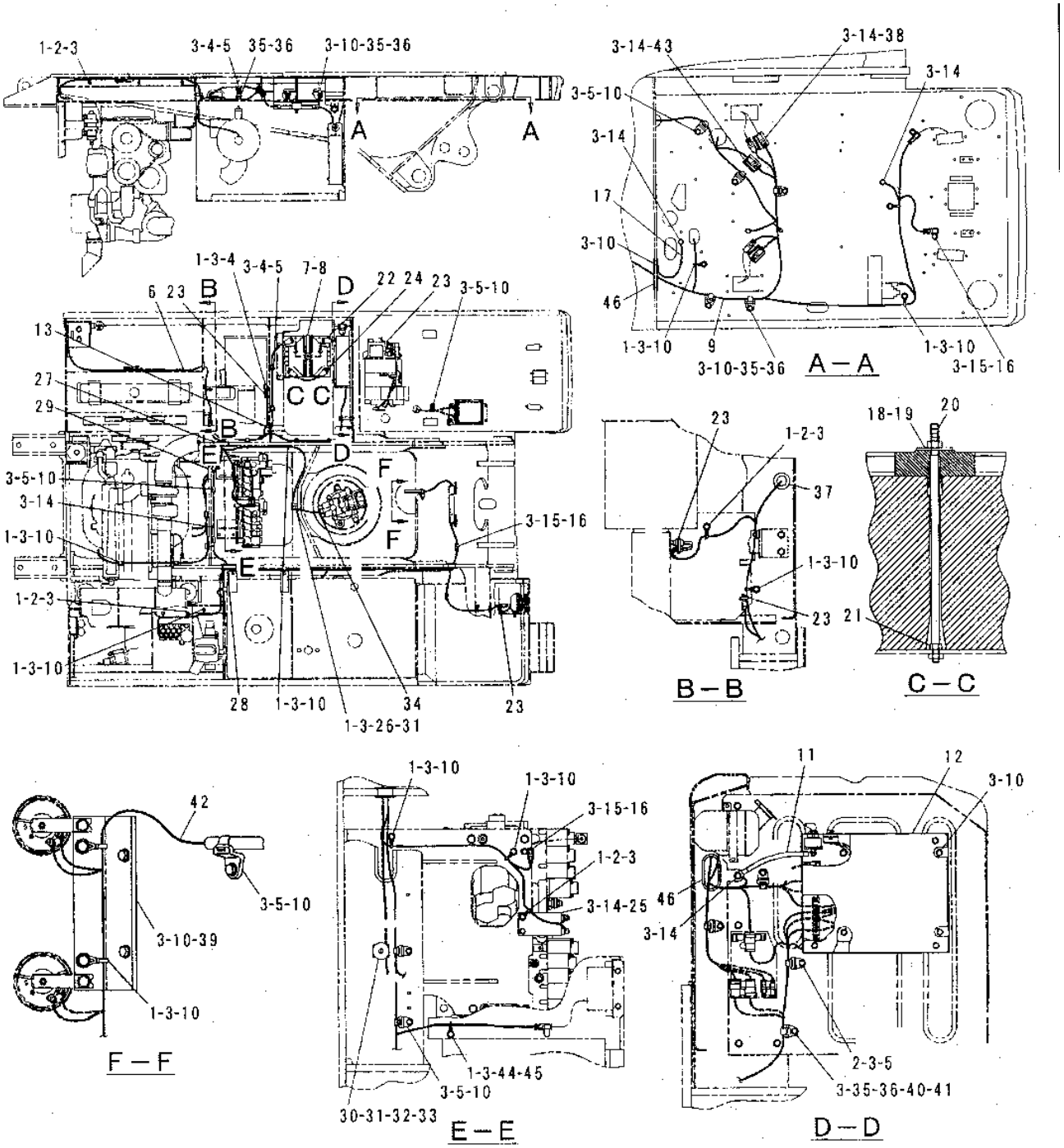


GRAPHIC #1

h79253e

# 1114858 BATTERY & WIRING GP-PART 2 OF 2

S/N 8SR 00418-UP, 8TR 00486-UP
1160163-Page 115, 1160161-Page 117

**Key:** Y - SEE SEPARATE ILLUSTRATION

**SMCS**

| NOTE | REF NO | GRAPHIC REF | PART NUMBER | QTY | PART NAME 1 2 3 4 5 6 (PRODUCT LEVEL) | PRICE USD |
|---|---|---|---|---|---|---|
| | 1 | | 111-4836 | 13 | CLIP | |
| | 2 | | 8T-4136 | 5 | BOLT (L=25mm) | |
| | 3 | | 8T-4121 | 21 | WASHER | |
| | 4 | | 8T-4195 | 1 | BOLT (L=30mm) | |
| | 5 | | 111-4837 | 1 | CLIP | |
| | 6 | | 8T-4137 | 11 | BOLT (L=12mm) | |
| | 7 | | 7Y-8167 | 1 | GROMMET | |
| | 8 | | 7X-2621 | 1 | BOLT (L=12mm) | |
| | 9 | | 116-0118 | 4 | CLIP | |
| | 10 | | 3S-2093 | 1 | STRAP | |
| | 11 | | 8T-4185 | 1 | BOLT (L=50mm) | |
| | 12 | | 6G-2256 | 1 | CLAMP | |
| | 13 | | 6G-2263 | 2 | SPACER | |
| | 14 | | 2G-8767 | 2 | WASHER | |
| | 15 | | 8T-9043 | 1 | BOLT (L=22mm) | |
| | 16 | | 116-0182 | 1 | SUPPORT AS | |
| | 17 | | 116-0169 | 2 | BRACKET AS | |
| | 18 | | 8T-4224 | 4 | WASHER | |
| | 19 | | 4N-0205 | 1 | SPACER | |
| | 20 | | 5K-0906 | 3 | BOLT (L=16mm) | |
| | 21 | | 102-7957 | 1 | BRACKET AS | |
| | 22 | | 7I-2673 | 1 | STRAP | |
| | 23 | | 4M-0061 | 2 | BOLT (L=19mm) | |
| Y | 24 | | 116-0161 | 1 | CABLE AS | |
| | 25 | | 7Y-8132 | 1 | CABLE AS | |
| | | | 1S-7251 | 2 | TERMINAL | |
| | 26 | | 5M-3062 | 1 | BOLT (L=19mm) | |
| | 27 | | 033-8248 | 1 | CLIP | |
| Y | 28 | | 116-0163 | 1 | HARNESS AS | |
| | 29 | | 093-2068 | 1 | GROMMET | |
| | 30 | | 121-1044 | 1 | HARNESS AS | |
| | | | 102-8804 | 4 | RECEPTACLE KIT | |
| | | | 3E-3377 | 1 | WEDGE | |
| | | | 8T-8729 | 2 | PIN | |
| | | | 8T-8737 | 2 | PLUG | |
| | 31 | | 8T-8911 | 1 | BOLT (L=51mm) | |
| | 32 | | 5P-4116 | 4 | WASHER | |
| | 33 | | 8T-4189 | 1 | BOLT (L=20mm) | |
| | 34 | | 6K-8178 | 1 | CLIP | |
| | 35 | | 136-4083 | 1 | STRIP AS | |
| | 36 | | 8T-9377 | 1 | BOLT (L=57mm) | |
| | 37 | | 7K-1188 | 5 | STRAP | |

## 1114858 BATTERY & WIRING GP-PART 2 OF 2

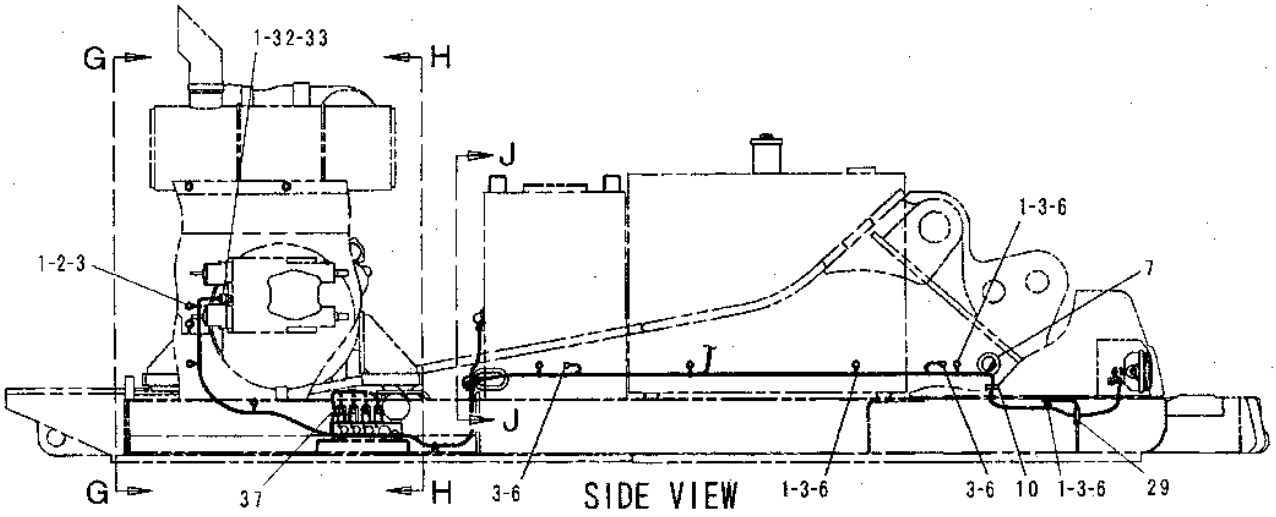


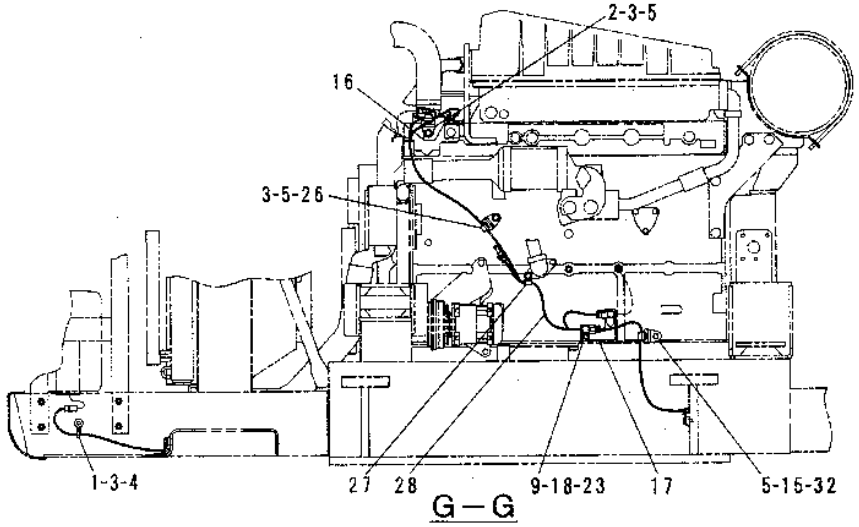


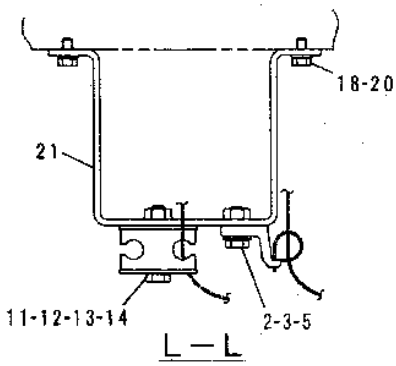


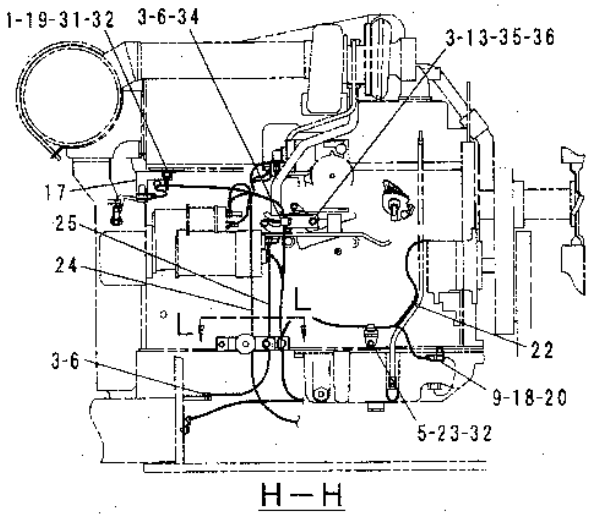


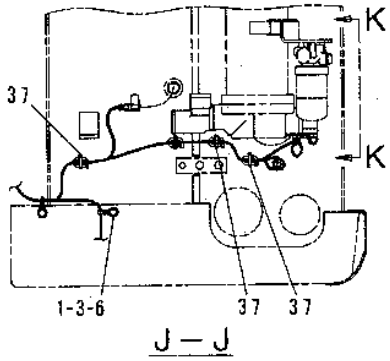


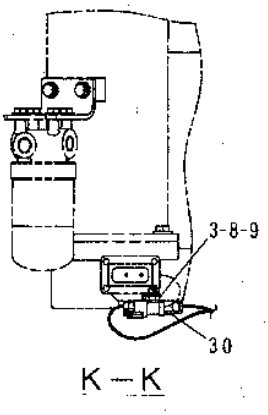


GRAPHIC #1

h79255e

# 1288954 HARNESS AS-PART 1 OF 3

S/N 8SR 1-00417, 8TR 1-00485
PART OF 1114858-Page 105

**Key:**

**SMCS**

| NOTE | REF NO | GRAPHIC REF | PART NUMBER | QTY | PART NAME 1 2 3 4 5 6 (PRODUCT LEVEL) | PRICE USD |
|---|---|---|---|---|---|---|
| | 1 | | 8T-8730 | 25 | SOCKET | |
| | 2 | | 102-8807 | 6 | PLUG KIT | |
| | 3 | | 3E-3362 | 6 | WEDGE | |
| | 4 | | 9W-0844 | 4 | SOCKET | |
| | 5 | | 3S-2093 | 4 | STRAP | |
| | 6 | | 102-8802 | 6 | RECEPTACLE KIT | |
| | 7 | | 8T-8737 | 18 | PLUG-SEAL | |
| | 8 | | 2L-8050 | 3 | TERMINAL | |
| | 9 | | 8T-8729 | 23 | PIN | |
| | 10 | | 9W-0852 | 2 | PIN | |
| | 11 | | 3E-3365 | 2 | WEDGE | |
| | 12 | | 7Y-3962 | 1 | TERMINAL | |
| | | | 7Y-3964 | 1 | TUBE | |
| | 13 | | 7Y-3963 | 1 | TERMINAL | |
| | | | 7Y-3965 | 1 | TUBE | |
| | 14 | | 3E-5180 | 2 | WEDGE | |
| | 15 | | 102-8801 | 2 | RECEPTACLE KIT | |
| | 16 | | 102-8800 | 2 | PLUG KIT | |
| | 17 | | 3E-5177 | 2 | WEDGE | |
| | 18 | | 7Y-3951 | 2 | TERMINAL | |

## 1288954 HARNESS AS-PART 1 OF 3

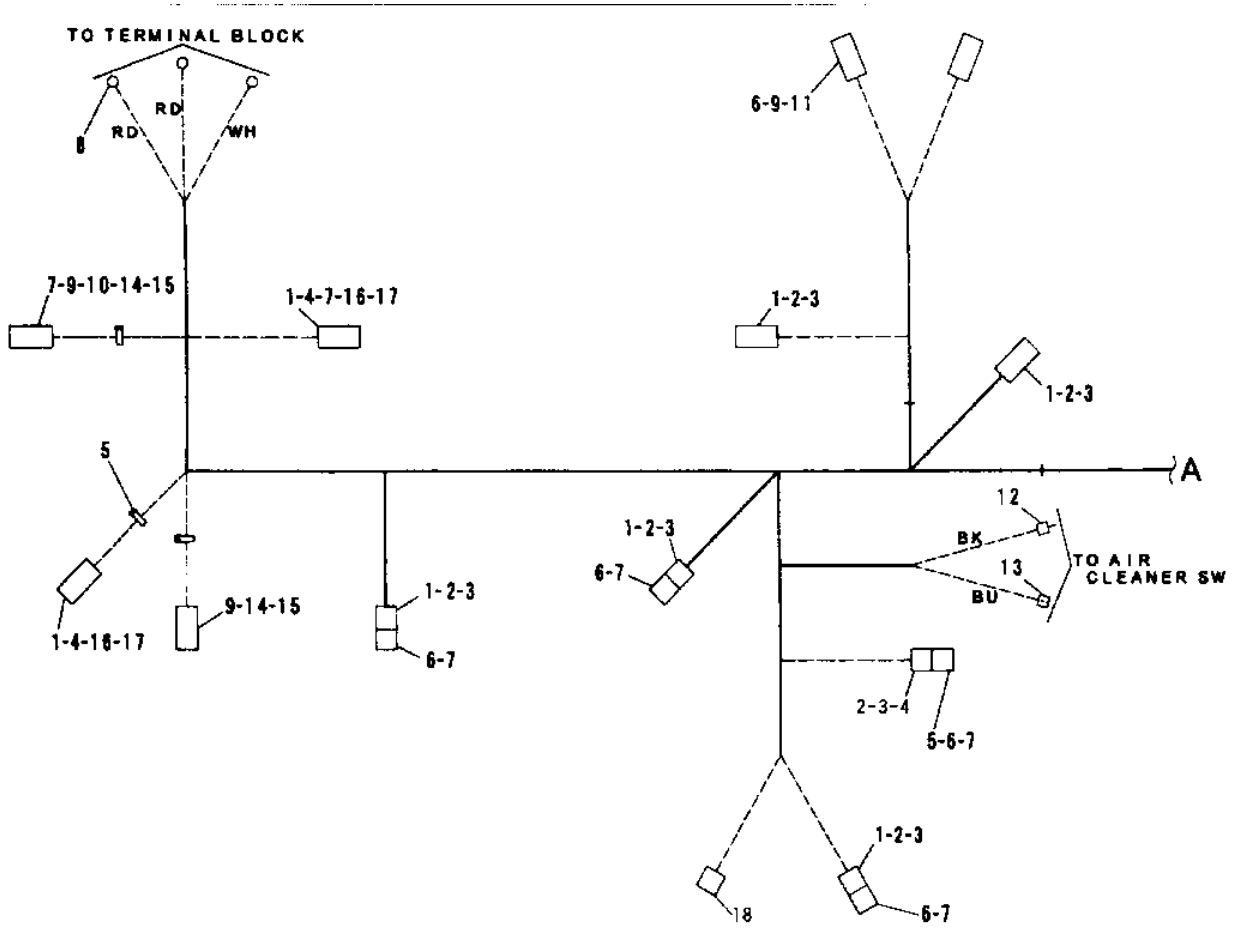


| NOTE | No. | PART No. | QTY | PART NAME | NOTE | No. | PART No. | QTY | PART NAME |
|---|---|---|---|---|---|---|---|---|---|
| | 1 | 8T-8730 | 25 | SOCKET | | | | | |
| | 2 | 102-8807 | 6 | PLUG KIT | | | | | |
| | 3 | 3E-3362 | 6 | WEDGE | | | | | |
| | 4 | 9W-0844 | 4 | SOCKET | | | | | |
| | 5 | 3S-2093 | 4 | STRAP | | | | | |
| | 6 | 102-8802 | 6 | RECEPTACLE KIT | | | | | |
| | 7 | 8T-8737 | 18 | PLUG-SEAL | | | | | |
| | 8 | 2L-8050 | 3 | TERMINAL | | | | | |
| | 9 | 8T-8729 | 23 | PIN | | | | | |
| | 10 | 9W-0852 | 2 | PIN | | | | | |
| | 11 | 3E-3365 | 2 | WEDGE | | | | | |
| | 12 | 7Y-3962 | 1 | TERMINAL | | | | | |
| | | 7Y-3964 | 1 | TUBE | | | | | |
| | 13 | 7Y-3963 | 1 | TERMINAL | | | | | |
| | | 7Y-3965 | 1 | TUBE | | | | | |
| | 14 | 3E-5180 | 2 | WEDGE | | | | | |
| | 15 | 102-8801 | 2 | RECEPTACLE KIT | | | | | |
| | 16 | 102-8800 | 2 | PLUG KIT | | | | | |
| | 17 | 3E-5177 | 2 | WEDGE | | | | | |
| | 18 | 7Y-3951 | 2 | TERMINAL | | | | | |

H56592E

# 1288954 HARNESS AS-PART 2 OF 3

S/N 8SR 1-00417, 8TR 1-00485
PART OF 1114858-Page 105

**Key:**

**SMCS**

| NOTE | REF NO | GRAPHIC REF | PART NUMBER | QTY | PART NAME 1 2 3 4 5 6 (PRODUCT LEVEL) | PRICE USD |
|---|---|---|---|---|---|---|
| | 1 | | 3T-4696 | 2 | TERMINAL | |
| | 2 | | 8T-8730 | 13 | SOCKET | |
| | 3 | | 102-8807 | 2 | PLUG KIT | |
| | 4 | | 3E-3362 | 2 | WEDGE | |
| | 5 | | 2L-8076 | 1 | TERMINAL | |
| | 6 | | 9W-0844 | 1 | SOCKET | |
| | 7 | | 2L-8075 | 2 | TERMINAL | |
| | 8 | | 8T-8737 | 9 | PLUG-SEAL | |
| | 9 | | 2L-8054 | 2 | TERMINAL | |
| | 10 | | 2L-8071 | 1 | TERMINAL | |
| | 11 | | 129-5666 | 1 | TERMINAL | |
| | 12 | | 2L-8050 | 2 | TERMINAL | |
| | 13 | | 3T-4692 | 1 | TERMINAL | |
| | 14 | | 8T-8827 | 1 | BOOT | |
| | 15 | | 110-8769 | 1 | WIRE AS | |
| | 16 | | 102-8810 | 2 | PLUG KIT | |
| | 17 | | 3E-3380 | 2 | WEDGE | |

## 1288954 HARNESS AS-PART 2 OF 3

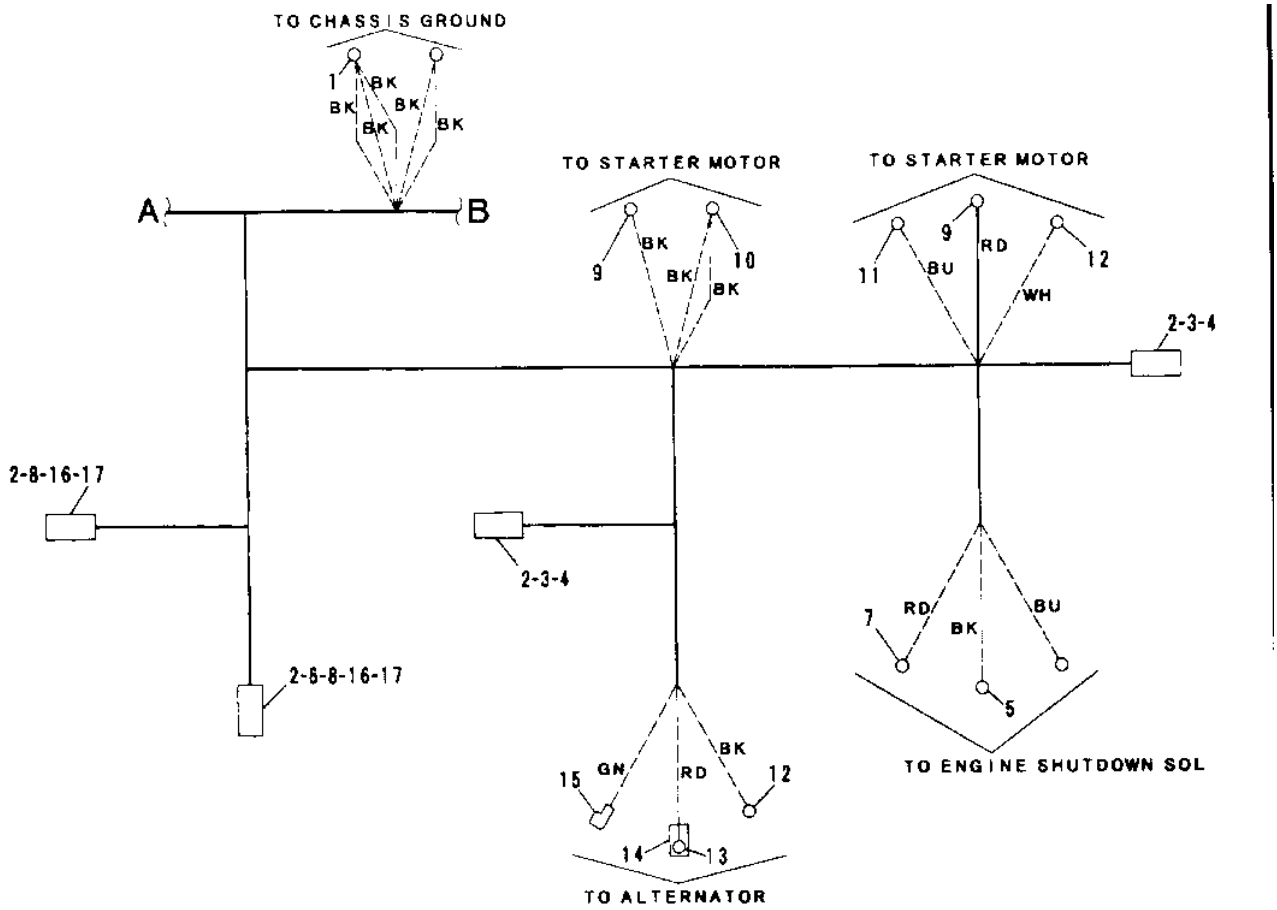


| NOTE | No. | PART No. | QTY | PART NAME | NOTE | No. | PART No. | QTY | PART NAME |
|---|---|---|---|---|---|---|---|---|---|
| | 1 | 3T-4696 | 2 | TERMINAL | | | | | |
| | 2 | 8T-8730 | 13 | SOCKET | | | | | |
| | 3 | 102-8807 | 2 | PLUG KIT | | | | | |
| | 4 | 3E-3362 | 2 | WEDGE | | | | | |
| | 5 | 2L-8076 | 1 | TERMINAL | | | | | |
| | 6 | 9W-0844 | 1 | SOCKET | | | | | |
| | 7 | 2L-8075 | 2 | TERMINAL | | | | | |
| | 8 | 8T-8737 | 9 | PLUG-SEAL | | | | | |
| | 9 | 2L-8054 | 2 | TERMINAL | | | | | |
| | 10 | 2L-8071 | 1 | TERMINAL | | | | | |
| | 11 | 129-5666 | 1 | TERMINAL | | | | | |
| | 12 | 2L-8050 | 2 | TERMINAL | | | | | |
| | 13 | 3T-4692 | 1 | TERMINAL | | | | | |
| | 14 | 8T-8827 | 1 | BOOT | | | | | |
| | 15 | 110-8769 | 1 | WIRE AS | | | | | |
| | 16 | 102-8810 | 2 | PLUG KIT | | | | | |
| | 17 | 3E-3380 | 2 | WEDGE | | | | | |

H56593E

GRAPHIC #1

h56593e

# 1288954 HARNESS AS-PART 3 OF 3

S/N 8SR 1-00417, 8TR 1-00485
PART OF 1114858-Page 105

**Key:**

**SMCS**

| NOTE | REF NO | GRAPHIC REF | PART NUMBER | QTY | PART NAME 1 2 3 4 5 6 (PRODUCT LEVEL) | PRICE USD |
|---|---|---|---|---|---|---|
| | 1 | | 3T-4696 | 3 | TERMINAL | |
| | 2 | | 8T-8730 | 20 | SOCKET | |
| | 3 | | 102-8807 | 6 | PLUG KIT | |
| | 4 | | 3E-3362 | 6 | WEDGE | |
| | 5 | | 9W-0844 | 4 | SOCKET | |
| | 6 | | 102-8809 | 2 | RECEPTACLE KIT | |
| | 7 | | 3E-3374 | 2 | WEDGE | |
| | 8 | | 2L-8075 | 4 | TERMINAL | |
| | 9 | | 102-8808 | 3 | PLUG KIT | |
| | 10 | | 3E-3368 | 3 | WEDGE | |
| | 11 | | 3S-2093 | 1 | STRAP | |
| | 12 | | 102-8803 | 1 | RECEPTACLE KIT | |
| | 13 | | 102-8802 | 1 | RECEPTACLE KIT | |
| | 14 | | 8T-8737 | 7 | PLUG-SEAL | |
| | 15 | | 8T-8729 | 1 | PIN | |
| | 16 | | 3E-3365 | 1 | WEDGE | |

## 1288954 HARNESS AS-PART 3 OF 3

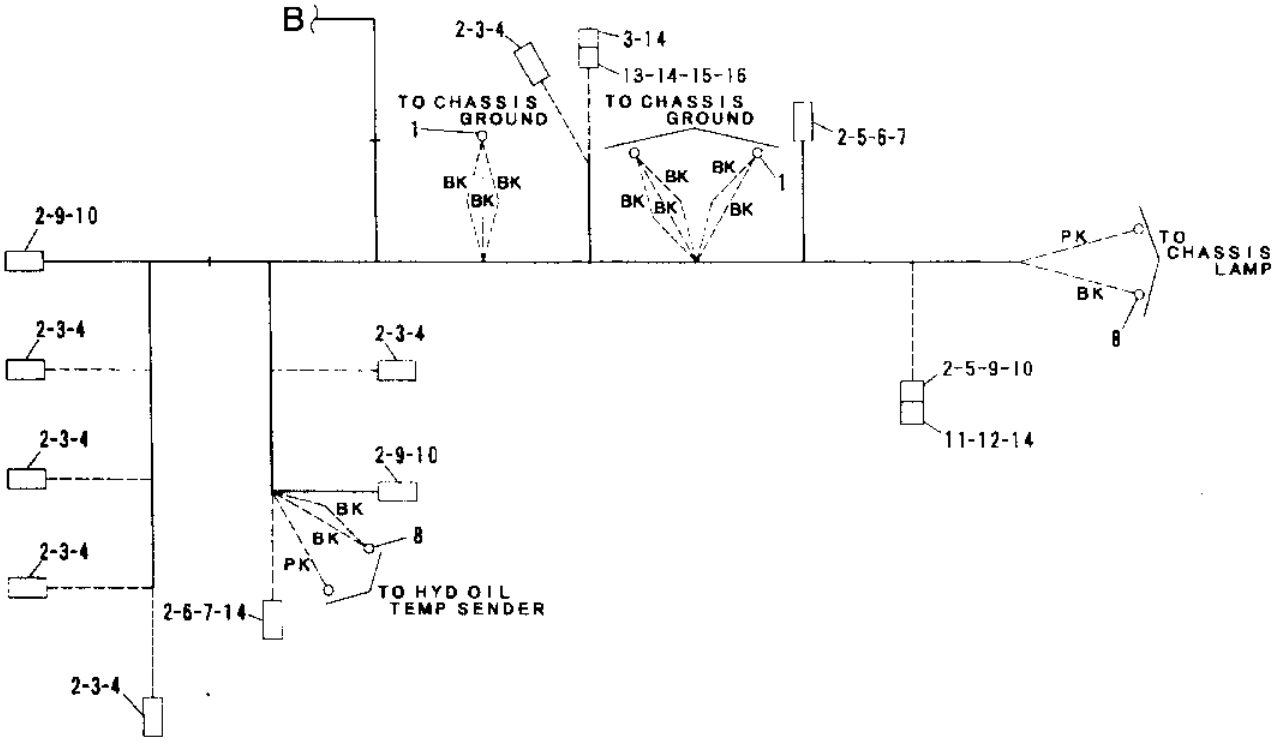


| NOTE | No. | PART No. | QTY | PART NAME | NOTE | No. | PART No. | QTY | PART NAME |
|---|---|---|---|---|---|---|---|---|---|
| | 1 | 3T-4696 | 3 | TERMINAL | | | | | |
| | 2 | 8T-8730 | 20 | SOCKET | | | | | |
| | 3 | 102-8807 | 6 | PLUG KIT | | | | | |
| | 4 | 3E-3362 | 6 | WEDGE | | | | | |
| | 5 | 9W-0844 | 4 | SOCKET | | | | | |
| | 6 | 102-8809 | 2 | RECEPTACLE KIT | | | | | |
| | 7 | 3E-3374 | 2 | WEDGE | | | | | |
| | 8 | 2L-8075 | 4 | TERMINAL | | | | | |
| | 9 | 102-8808 | 3 | PLUG KIT | | | | | |
| | 10 | 3E-3368 | 3 | WEDGE | | | | | |
| | 11 | 3S-2093 | 1 | STRAP | | | | | |
| | 12 | 102-8803 | 1 | RECEPTACLE KIT | | | | | |
| | 13 | 102-8802 | 1 | RECEPTACLE KIT | | | | | |
| | 14 | 8T-8737 | 7 | PLUG-SEAL | | | | | |
| | 15 | 8T-8729 | 1 | PIN | | | | | |
| | 16 | 3E-3365 | 1 | WEDGE | | | | | |

H56594E

GRAPHIC #1

h56594e

# 1532562 HARNESS AS-PART 1 OF 3

S/N 8SR 00418-UP, 8TR 00486-UP
PART OF 1114858-Page 107.06

**Key:**

**SMCS**

| NOTE | REF NO | GRAPHIC REF | PART NUMBER | QTY | PART NAME 1 2 3 4 5 6 (PRODUCT LEVEL) | PRICE USD |
|---|---|---|---|---|---|---|
| | 1 | | 8T-8730 | 23 | SOCKET | |
| | 2 | | 155-2270 | 5 | PLUG KIT | |
| | 3 | | 3E-3362 | 5 | WEDGE | |
| | 4 | | 9W-0844 | 4 | SOCKET | |
| | 5 | | 3S-2093 | 4 | STRAP | |
| | 6 | | 102-8802 | 5 | RECPTACLE KIT | |
| | 7 | | 8T-8737 | 16 | PLUG | |
| | 8 | | 2L-8050 | 3 | TERMINAL | |
| | 9 | | 8T-8729 | 23 | PIN | |
| | 10 | | 9W-0852 | 2 | PIN | |
| | 11 | | 3E-3365 | 2 | WEDGE | |
| | 12 | | 8Y-3962 | 1 | TERMINAL | |
| | | | 7Y-3964 | 1 | TUBE | |
| | 13 | | 7Y-3963 | 1 | TERMINAL | |
| | | | 7Y-3965 | 1 | TUBE | |
| | 14 | | 3E-5180 | 2 | WEDGE | |
| | 15 | | 102-8801 | 2 | RECEPTACLE KIT | |
| | 16 | | 102-8800 | 2 | PLUG KIT | |
| | 17 | | 3E-5177 | 2 | WEDGE | |
| | 18 | | 7Y-3951 | 2 | TERMINAL | |

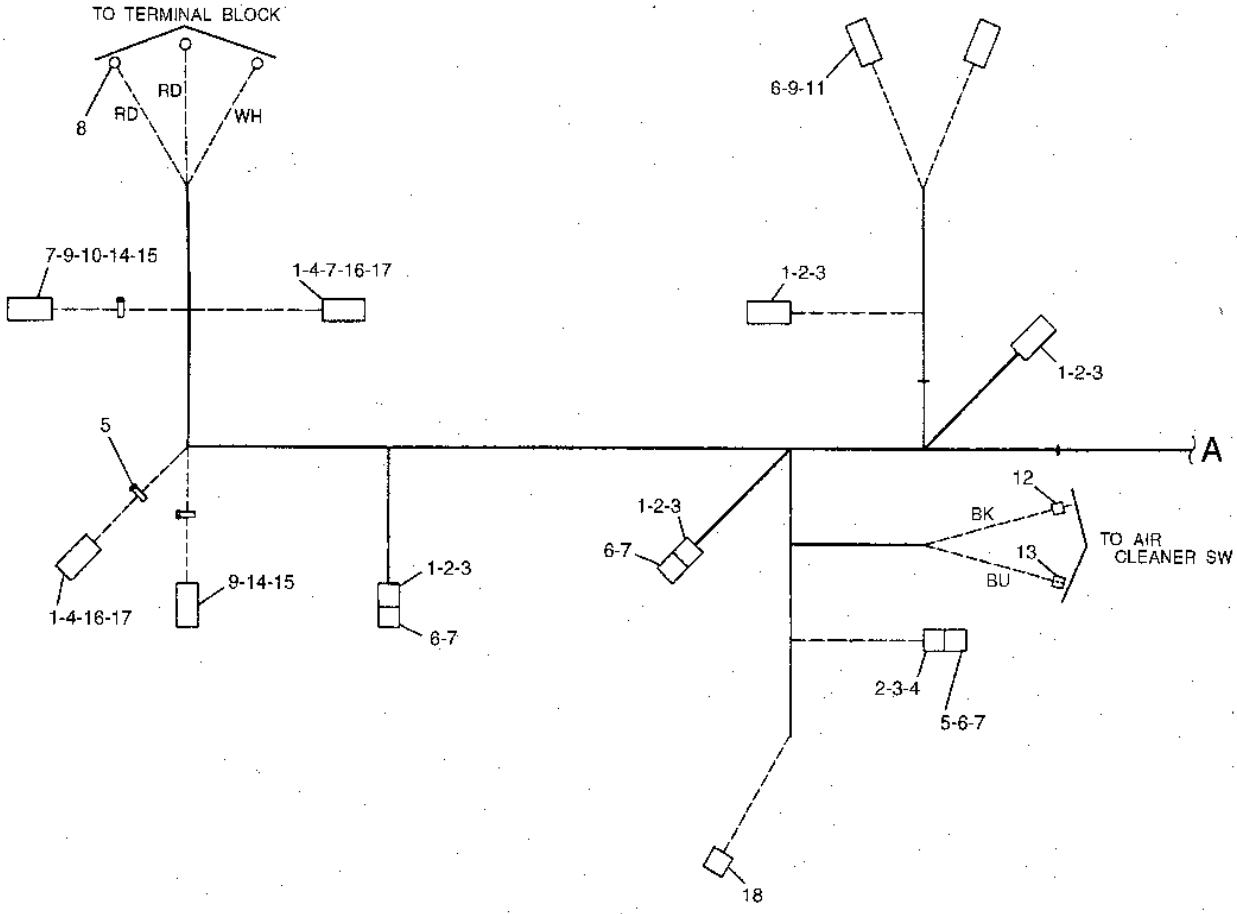


GRAPHIC #1

h79256e

# 1532562 HARNESS AS-PART 2 OF 3

S/N 8SR 00418-UP, 8TR 00486-UP
PART OF 1114858-Page 107.06

**Key:**

**SMCS**

| NOTE | REF NO | GRAPHIC REF | PART NUMBER | QTY | PART NAME 1 2 3 4 5 6 (PRODUCT LEVEL) | PRICE USD |
|---|---|---|---|---|---|---|
| | 1 | | 3T-4696 | 2 | TERMINAL | |
| | 2 | | 8T-8730 | 13 | SOCKET | |
| | 3 | | 155-2270 | 2 | PLUG KIT | |
| | 4 | | 3E-3362 | 2 | WEDGE | |
| | 5 | | 2L-8076 | 1 | TERMINAL | |
| | 6 | | 9W-0844 | 1 | SOCKET | |
| | 7 | | 2L-8075 | 2 | TERMINAL | |
| | 8 | | 8T-8737 | 2 | PLUG | |
| | 9 | | 2L-8054 | 2 | TERMINAL | |
| | 10 | | 2L-8071 | 1 | TERMINAL | |
| | 11 | | 2L-8081 | 1 | TERMINAL | |
| | 12 | | 2L-8050 | 2 | TERMINAL | |
| | 13 | | 3T-4692 | 1 | TERMINAL | |
| | 14 | | 8T-8827 | 1 | BOOT | |
| | 15 | | 8D-2579 | 1 | WIRE AS | |
| | 16 | | 102-8810 | 2 | PLUG KIT | |
| | 17 | | 3E-3380 | 2 | WEDGE | |

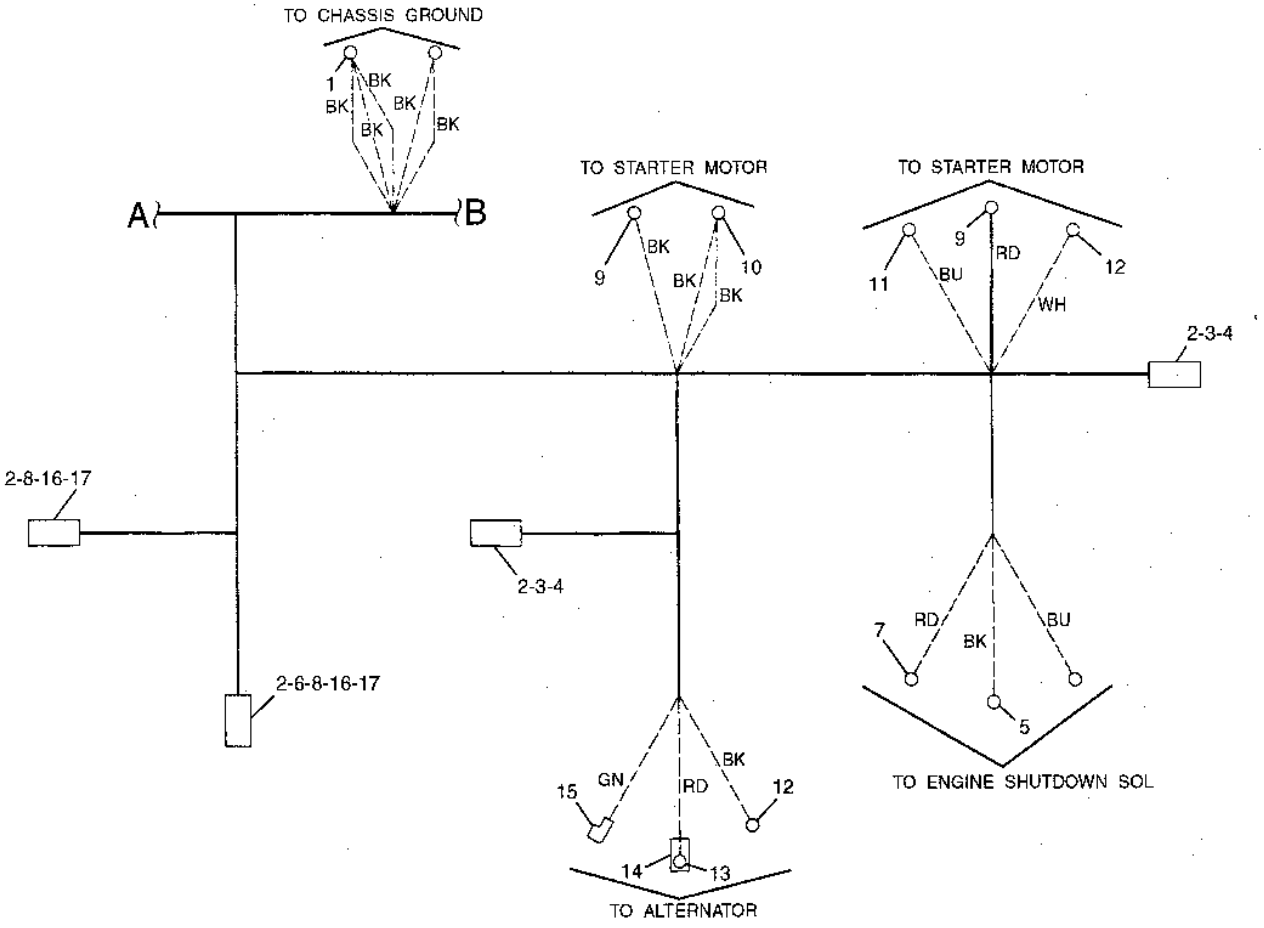


GRAPHIC #1

h79257e

# 1532562 HARNESS AS-PART 3 OF 3

S/N 8SR 00418-UP, 8TR 00486-UP
PART OF 1114858-Page 107.06

**Key:**

**SMCS**

| NOTE | REF NO | GRAPHIC REF | PART NUMBER | QTY | PART NAME 1 2 3 4 5 6 (PRODUCT LEVEL) | PRICE USD |
|---|---|---|---|---|---|---|
| | 1 | | 3T-4696 | 3 | TERMINAL | |
| | 2 | | 8T-8730 | 23 | SOCKET | |
| | 3 | | 155-2270 | 7 | PLUG KIT | |
| | 4 | | 3E-3362 | 6 | WEDGE | |
| | 5 | | 9W-0844 | 4 | SOCKET | |
| | 6 | | 102-8809 | 2 | PLUG KIT | |
| | 7 | | 3E-3374 | 2 | WEDGE | |
| | 8 | | 2L-8075 | 4 | TERMINAL | |
| | 9 | | 102-8808 | 3 | PLUG KIT | |
| | 10 | | 3E-3368 | 3 | STRAP | |
| | 11 | | 3S-2093 | 1 | STRAP | |
| | 12 | | 102-8803 | 1 | RECEPTACLE KIT | |
| | 13 | | 102-8802 | 1 | RECEPTACLE KIT | |
| | 14 | | 8T-8737 | 8 | PLUG | |
| | 15 | | 8T-8729 | 1 | PIN | |
| | 16 | | 3E-3365 | 1 | WEDGE | |

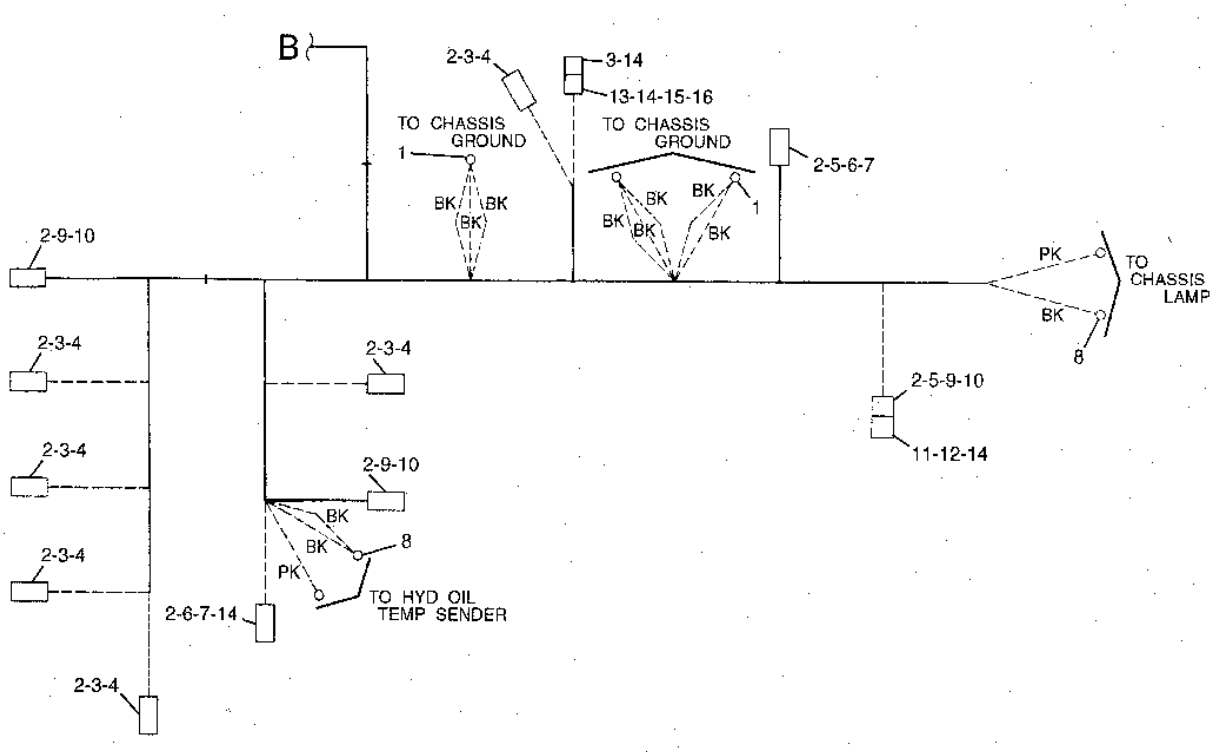


GRAPHIC #1

h79258e

# 1288969 HARNESS AS-PART 1 OF 3

S/N 8SR 1-00147, 8TR 1-00162
PART OF 1114858-Page 105

**Key:**

**SMCS**

| NOTE | REF NO | GRAPHIC REF | PART NUMBER | QTY | PART NAME 1 2 3 4 5 6 (PRODUCT LEVEL) | PRICE USD |
|---|---|---|---|---|---|---|
| | 1 | | 8T-8737 | 3 | PLUG-SEAL | |
| | 2 | | 9W-8044 | 3 | SOCKET | |
| | 3 | | 102-8810 | 1 | PLUG KIT | |
| | 4 | | 102-8815 | 1 | SEAL | |
| | 5 | | 3E-3380 | 1 | WEDGE | |
| | 6 | | 8T-8730 | 20 | SOCKET | |
| | 7 | | 3S-2093 | 2 | STRAP | |
| | 8 | | 102-8801 | 1 | RECEPTACLE KIT | |
| | 9 | | 3E-5180 | 1 | WEDGE | |
| | 10 | | 9W-0852 | 2 | PIN | |
| | 11 | | 8T-8729 | 34 | PIN | |
| | 12 | | 102-8805 | 1 | RECEPTACLE KIT | |
| | 13 | | 3E-3383 | 1 | WEDGE | |
| | 14 | | 102-8811 | 2 | PLUG KIT | |
| | 15 | | 102-8816 | 2 | SEAL | |
| | 16 | | 3E-3386 | 2 | WEDGE | |
| | 17 | | 102-8806 | 2 | RECEPTACLE KIT | |
| | 18 | | 3E-3389 | 2 | WEDGE | |
| | 19 | | 111-4763 | 1 | PLUG AS | |
| | 20 | | 111-4764 | 2 | WEDGE | |
| | 21 | | 111-4766 | 47 | SOCKET | |
| | 22 | | 111-4765 | 33 | PLUG-SEAL | |
| | 23 | | 111-4762 | 1 | PLUG AS | |
| | 24 | | 102-8808 | 1 | PLUG KIT | |
| | 25 | | 102-8813 | 1 | SEAL | |
| | 26 | | 3E-3368 | 1 | WEDGE | |
| | 27 | | 102-8803 | 1 | RECEPTACLE KIT | |
| | 28 | | 3E-3371 | 1 | WEDGE | |

## 1288969 HARNESS AS-PART 1 OF 3

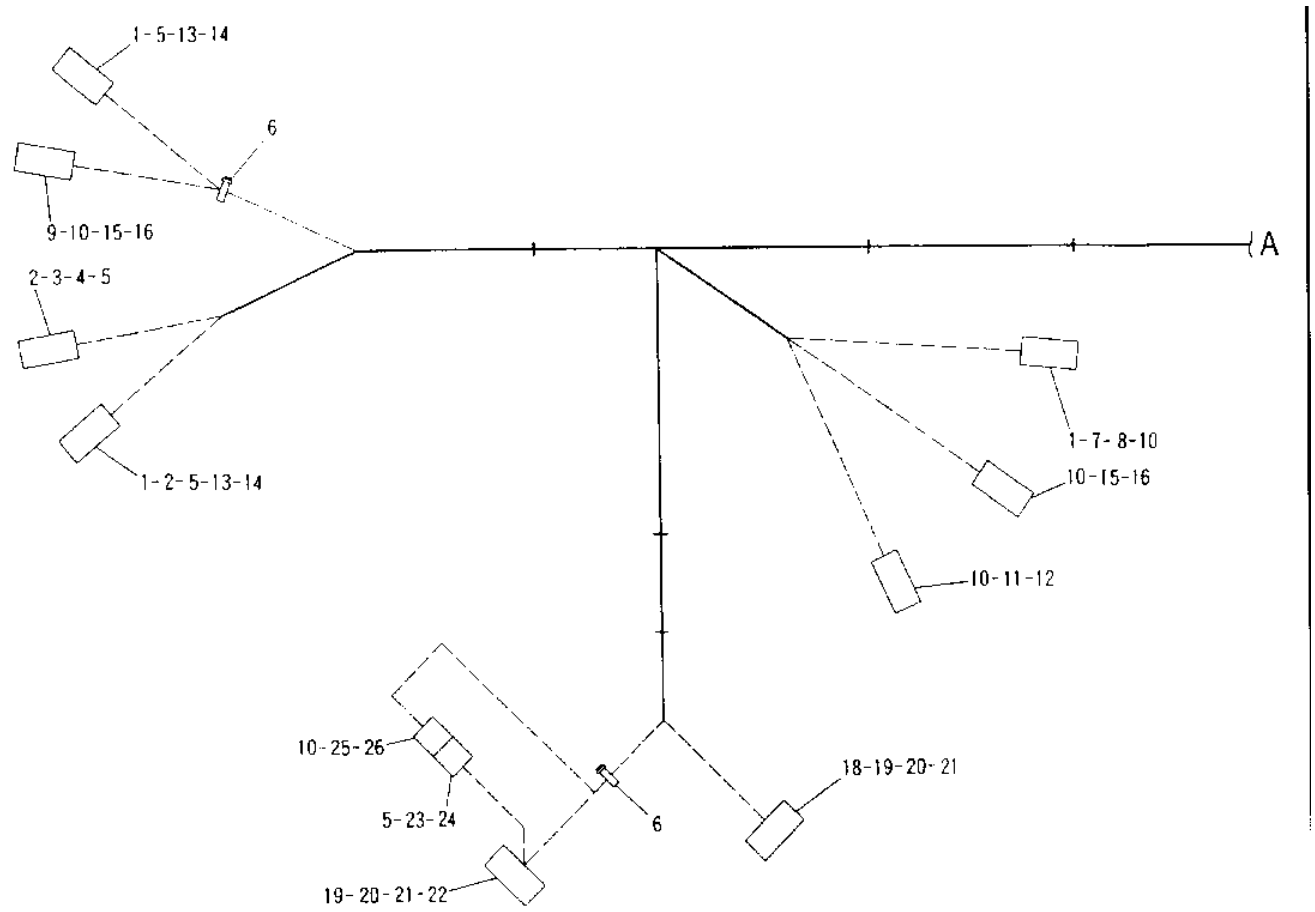


| NOTE | No. | PART No. | QTY | PART NAME |
|---|---|---|---|---|
| | 1 | 8T-8737 | 3 | PLUG-SEAL |
| | 2 | 9W-0844 | 3 | SOCKET |
| | 3 | 102-8810 | 1 | PLUG KIT |
| | 4 | 3E-3380 | 1 | WEDGE |
| | 5 | 8T-8730 | 20 | SOCKET |
| | 6 | 3S-2093 | 2 | STRAP |
| | 7 | 102-8801 | 1 | RECEPTACLE KIT |
| | 8 | 3E-5180 | 1 | WEDGE |
| | 9 | 9W-0852 | 2 | PIN |
| | 10 | 8T-8729 | 34 | PIN |
| | 11 | 102-8805 | 1 | RECEPTACLE KIT |
| | 12 | 3E-3383 | 1 | WEDGE |
| | 13 | 102-8811 | 2 | PLUG KIT |
| | 14 | 3E 3386 | 2 | WEDGE |
| | 15 | 102-8806 | 2 | RECEPTACLE KIT |
| | 16 | 3E-3389 | 2 | WEDGE |
| | 17 | 3E-3377 | 1 | WEDGE |
| | 18 | 111-4763 | 1 | PLUG AS |
| | 19 | 111 4764 | 2 | WEDGE |
| | 20 | 111-4766 | 47 | SOCKET |
| | 21 | 111-4765 | 33 | PLUG-SEAL |
| | 22 | 111-4762 | 1 | PLUG AS |
| | 23 | 102-8808 | 1 | PLUG KIT |
| | 24 | 3E-3368 | 1 | WEDGE |
| | 25 | 102-8803 | 1 | RECEPTACLE KIT |
| | 26 | 3E-3371 | 1 | WEDGE |

H50545E

# 1288969 HARNESS AS-PART 2 OF 3

S/N 8SR 1-00147, 8TR 1-00162
PART OF 1114858-Page 105

**Key:**

**SMCS**

| NOTE | REF NO | GRAPHIC REF | PART NUMBER | QTY | PART NAME 1 2 3 4 5 6 (PRODUCT LEVEL) | PRICE USD |
|---|---|---|---|---|---|---|
| | 1 | | 155-2270 | 1 | PLUG KIT | |
| | 2 | | 3E-3362 | 1 | WEDGE | |
| | 3 | | 8T-8737 | 7 | PLUG-SEAL | |
| | 4 | | 9W-8044 | 13 | SOCKET | |
| | 5 | | 102-8810 | 2 | PLUG KIT | |
| | 6 | | 3E-3380 | 2 | WEDGE | |
| | 7 | | 8T-8730 | 50 | SOCKET | |
| | 8 | | 3T-4696 | 1 | TERMINAL | |
| | 9 | | 102-8801 | 2 | RECEPTACLE KIT | |
| | 10 | | 3E-5180 | 2 | WEDGE | |
| | 11 | | 9W-0852 | 14 | PIN | |
| | 12 | | 8T-8729 | 28 | PIN | |
| | 13 | | 102-8800 | 3 | PLUG KIT | |
| | 14 | | 3E-5177 | 3 | WEDGE | |
| | 15 | | 102-8809 | 1 | PLUG KIT | |
| | 16 | | 3E-3374 | 1 | WEDGE | |
| | 17 | | 3T-4692 | 1 | TERMINAL | |
| | 18 | | 102-8811 | 3 | PLUG KIT | |
| | 19 | | 3E-3386 | 3 | WEDGE | |
| | 20 | | 102-8806 | 2 | RECEPTACLE KIT | |
| | 21 | | 3E-3389 | 2 | WEDGE | |
| | 22 | | 102-8804 | 1 | RECEPTACLE KIT | |
| | 23 | | 3E-3377 | 1 | WEDGE | |

## 1288969 HARNESS AS-PART 2 OF 3

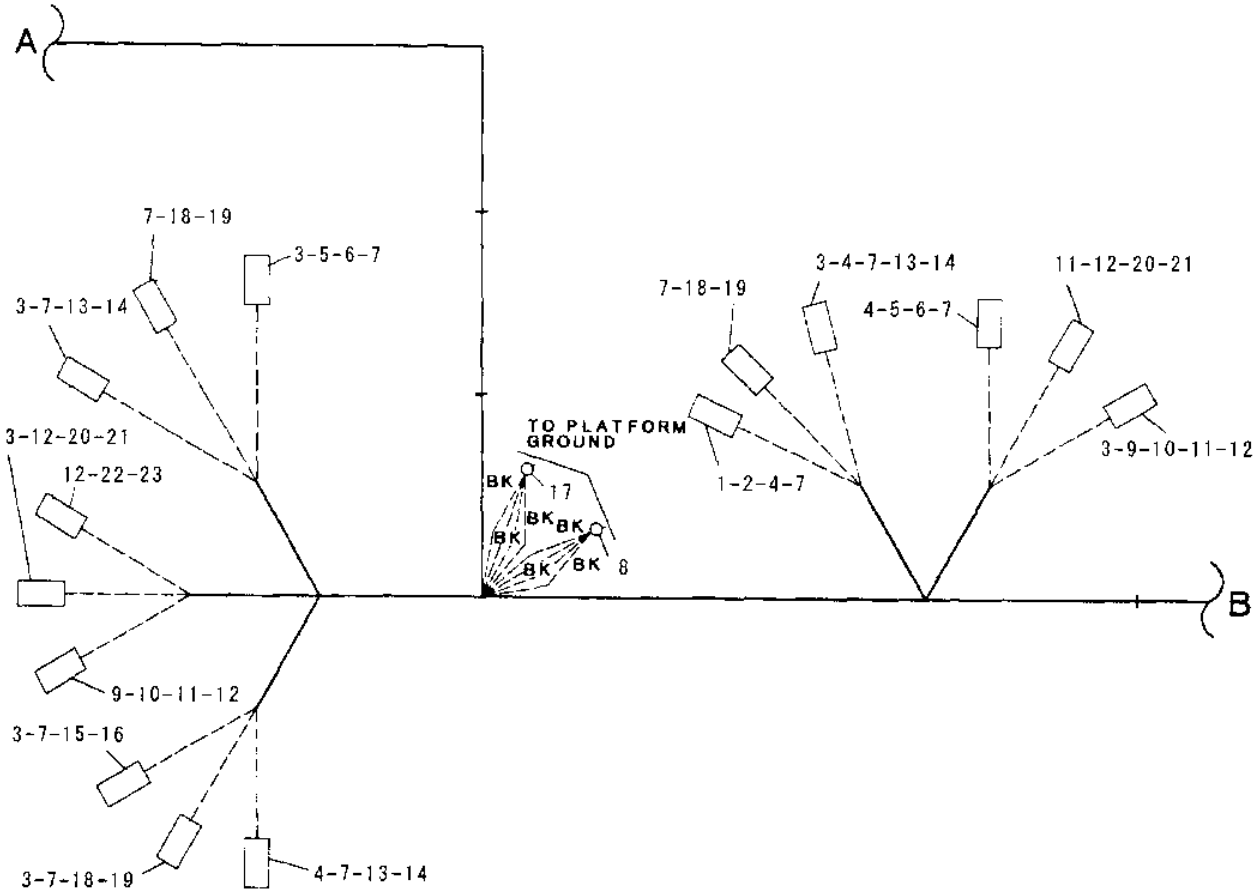


| NOTE | No. | PART No. | QTY | PART NAME |
|---|---|---|---|---|
| | 1 | 102-8807 | 1 | PLUG KIT |
| | 2 | 3E-3362 | 1 | WEDGE |
| | 3 | 8T-8737 | 7 | PLUG-SEAL |
| | 4 | 9W-0844 | 13 | SOCKET |
| | 5 | 102-8810 | 2 | PLUG KIT |
| | 6 | 3E-3380 | 2 | WEDGE |
| | 7 | 8T-8730 | 50 | SOCKET |
| | 8 | 3T-4696 | 1 | TERMINAL |
| | 9 | 102-8801 | 2 | RECEPTACLE KIT |
| | 10 | 3E-5180 | 2 | WEDGE |
| | 11 | 9W-0852 | 14 | PIN |
| | 12 | 8T-8729 | 28 | PIN |
| | 13 | 102-8800 | 3 | PLUG KIT |
| | 14 | 3E-5177 | 3 | WEDGE |
| | 15 | 102-8809 | 1 | PLUG KIT |
| | 16 | 3E-3374 | 1 | WEDGE |
| | 17 | 3T-4692 | 1 | TERMINAL |
| | 18 | 102-8811 | 3 | PLUG KIT |
| | 19 | 3E-3386 | 3 | WEDGE |
| | 20 | 102-8806 | 2 | RECEPTACLE KIT |

| NOTE | No. | PART No. | QTY | PART NAME |
|---|---|---|---|---|
| | 21 | 3E-3389 | 2 | WEDGE |
| | 22 | 102-8804 | 1 | RECEPTACLE KIT |
| | 23 | 3E-3377 | 1 | WEDGE |

H50546E

GRAPHIC #1

h50546e

# 1288969 HARNESS AS-PART 3 OF 3

S/N 8SR 1-00147, 8TR 1-00182
PART OF 1114858-Page 105

**Key:**

**SMCS**

| NOTE | REF NO | GRAPHIC REF | PART NUMBER | QTY | PART NAME 1 2 3 4 5 6 (PRODUCT LEVEL) | PRICE USD |
|---|---|---|---|---|---|---|
| | 1 | | 155-2270 | 5 | PLUG KIT | |
| | 2 | | 3E-3362 | 4 | WEDGE | |
| | 3 | | 102-8802 | 4 | RECEPTACLE KIT | |
| | 4 | | 8T-8737 | 16 | PLUG | |
| | 5 | | 9W-8044 | 9 | SOCKET | |
| | 6 | | 102-8810 | 1 | PLUG KIT | |
| | 7 | | 3E-3380 | 1 | WEDGE | |
| | 8 | | 8T-8730 | 43 | SOCKET | |
| | 9 | | 3S-2093 | 7 | STRAP | |
| | 10 | | 3T-4696 | 2 | TERMINAL | |
| | 11 | | 102-8801 | 2 | RECEPTACLE KIT | |
| | 12 | | 3E-5180 | 2 | WEDGE | |
| | 13 | | 9W-0852 | 9 | PIN | |
| | 14 | | 8T-8729 | 21 | PIN | |
| | 15 | | 102-8800 | 3 | PLUG KIT | |
| | 16 | | 3E-5177 | 3 | WEDGE | |
| | 17 | | 102-8805 | 1 | RECEPTACLE KIT | |
| | 18 | | 3E-3383 | 1 | WEDGE | |
| | 19 | | 2L-8050 | 1 | TERMINAL | |
| | 20 | | 3E-3365 | 1 | WEDGE | |
| | 21 | | 9X-0196 | 2 | TERMINAL AS | |
| | 22 | | 102-8804 | 1 | RECEPTACLE KIT | |
| | 23 | | 102-8809 | 1 | PLUG KIT | |
| | 24 | | 3E-3374 | 1 | WEDGE | |

## 1288969 HARNESS AS-PART 3 OF 3

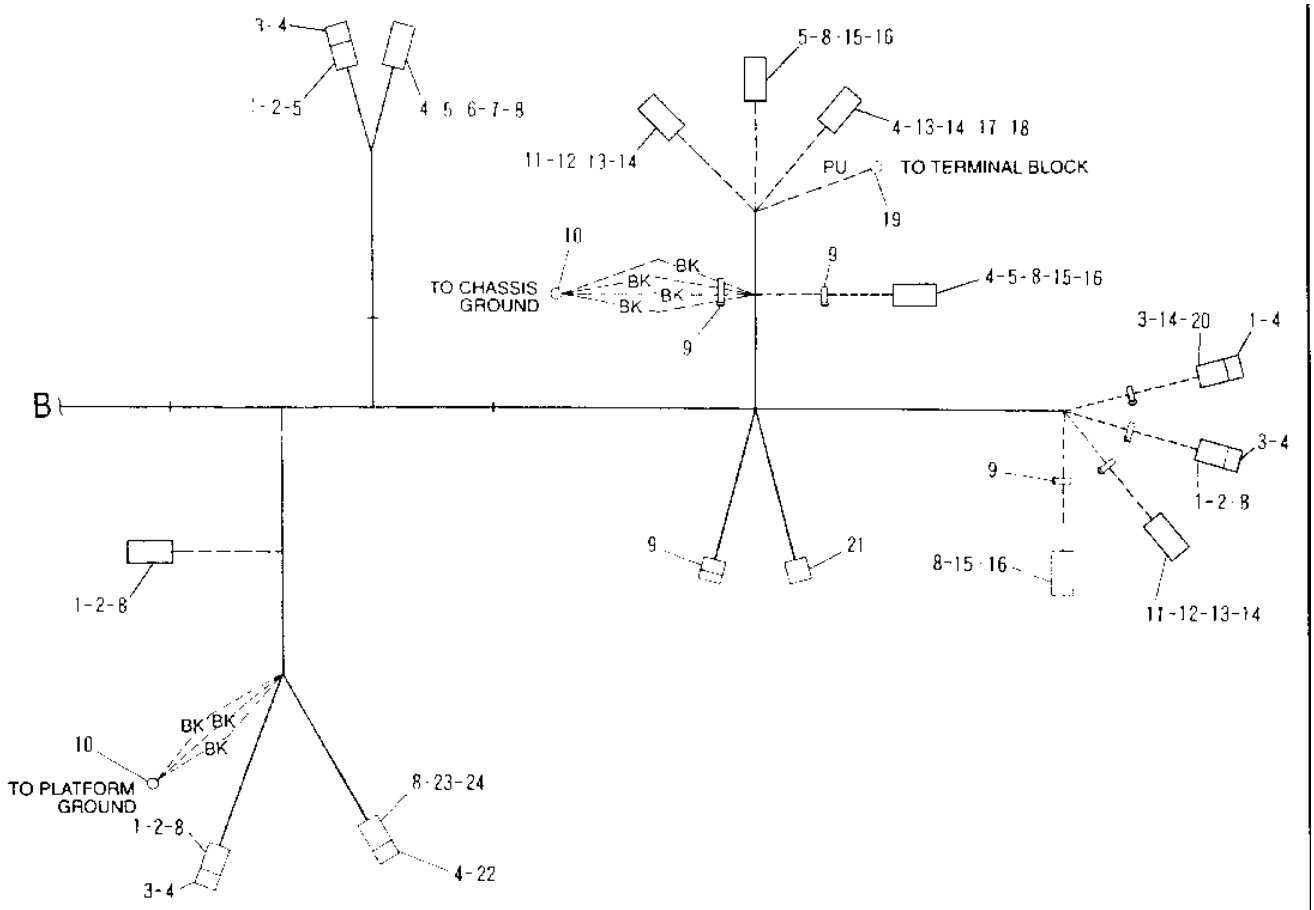


| NOTE | No. | PART No. | QTY | PART NAME |
|---|---|---|---|---|
| | 1 | 102-8807 | 5 | PLUG KIT |
| | 2 | 3E-3362 | 4 | WEDGE |
| | 3 | 102 8802 | 4 | RECEPTACLE KIT |
| | 4 | 8T 8737 | 16 | PLUG-SEAL |
| | 5 | 9W-0844 | 9 | SOCKET |
| | 6 | 102-8810 | 1 | PLUG KIT |
| | 7 | 3E-3380 | 1 | WEDGE |
| | 8 | 8T-8730 | 43 | SOCKET |
| | 9 | 3S-2093 | 7 | STRAP |
| | 10 | 3T-4696 | 2 | TERMINAL |
| | 11 | 102-8801 | 2 | RECEPTACLE KIT |
| | 12 | 3E-5180 | 2 | WEDGE |
| | 13 | 9W-0852 | 9 | PIN |
| | 14 | 8T-8729 | 21 | PIN |
| | 15 | 102-8800 | 3 | PLUG KIT |
| | 16 | 3E-5177 | 3 | WEDGE |
| | 17 | 102-8805 | 1 | RECEPTACLE KIT |
| | 18 | 3E-3383 | 1 | WEDGE |
| | 19 | 2L-8050 | 1 | TERMINAL |
| | 20 | 3E 3365 | 1 | WEDGE |
| | 21 | 9X-0196 | 2 | TERMINAL AS |
| | 22 | 102-8804 | 1 | RECEPTACLE KIT |
| | 23 | 102-8809 | 1 | PLUG KIT |
| | 24 | 3E-3374 | 1 | WEDGE |

H50547E

GRAPHIC #1

h50547e

# 1364056 HARNESS AS-PART 1 OF 3

S/N 8SR 00148-00417, 8TR 00163-00485
PART OF 1114858-Page 107.02

**Key:**

**SMCS**

| NOTE | REF NO | GRAPHIC REF | PART NUMBER | QTY | PART NAME 1 2 3 4 5 6 (PRODUCT LEVEL) | PRICE USD |
|---|---|---|---|---|---|---|
| | 1 | | 8T-8737 | 3 | PLUG | |
| | 2 | | 9W-0844 | 3 | SOCKET | |
| | 3 | | 102-8810 | 1 | PLUG KIT | |
| | 4 | | 3E-3380 | 1 | WEDGE | |
| | 5 | | 8T-8730 | 20 | SOCKET | |
| | 6 | | 3S-2093 | 3 | STRAP | |
| | 7 | | 102-8801 | 1 | RECEPTACLE KIT | |
| | 8 | | 3E-5180 | 1 | WEDGE | |
| | 9 | | 9W-0852 | 2 | PIN | |
| | 10 | | 8T-8729 | 34 | PIN | |
| | 11 | | 102-8805 | 1 | RECEPTACLE KIT | |
| | 12 | | 3E-3383 | 1 | WEDGE | |
| | 13 | | 102-8811 | 2 | PLUG KIT | |
| | 14 | | 3E-3386 | 2 | WEDGE | |
| | 15 | | 102-8806 | 2 | RECEPTACLE KIT | |
| | 16 | | 3E-3389 | 2 | WEDGE | |
| | 17 | | 3E-3371 | 1 | WEDGE | |
| | 18 | | 111-4763 | 1 | PLUG AS | |
| | 19 | | 111-4764 | 2 | WEDGE | |
| | 20 | | 111-4766 | 47 | SOCKET | |
| | 21 | | 111-4765 | 33 | PLUG | |
| | 22 | | 111-4762 | 1 | PLUG AS | |
| | 23 | | 102-8808 | 1 | PLUG KIT | |
| | 24 | | 3E-3368 | 1 | WEDGE | |
| | 25 | | 102-8803 | 1 | RECEPTACLE KIT | |

## 1364056 HARNESS AS-PART 1 OF 3

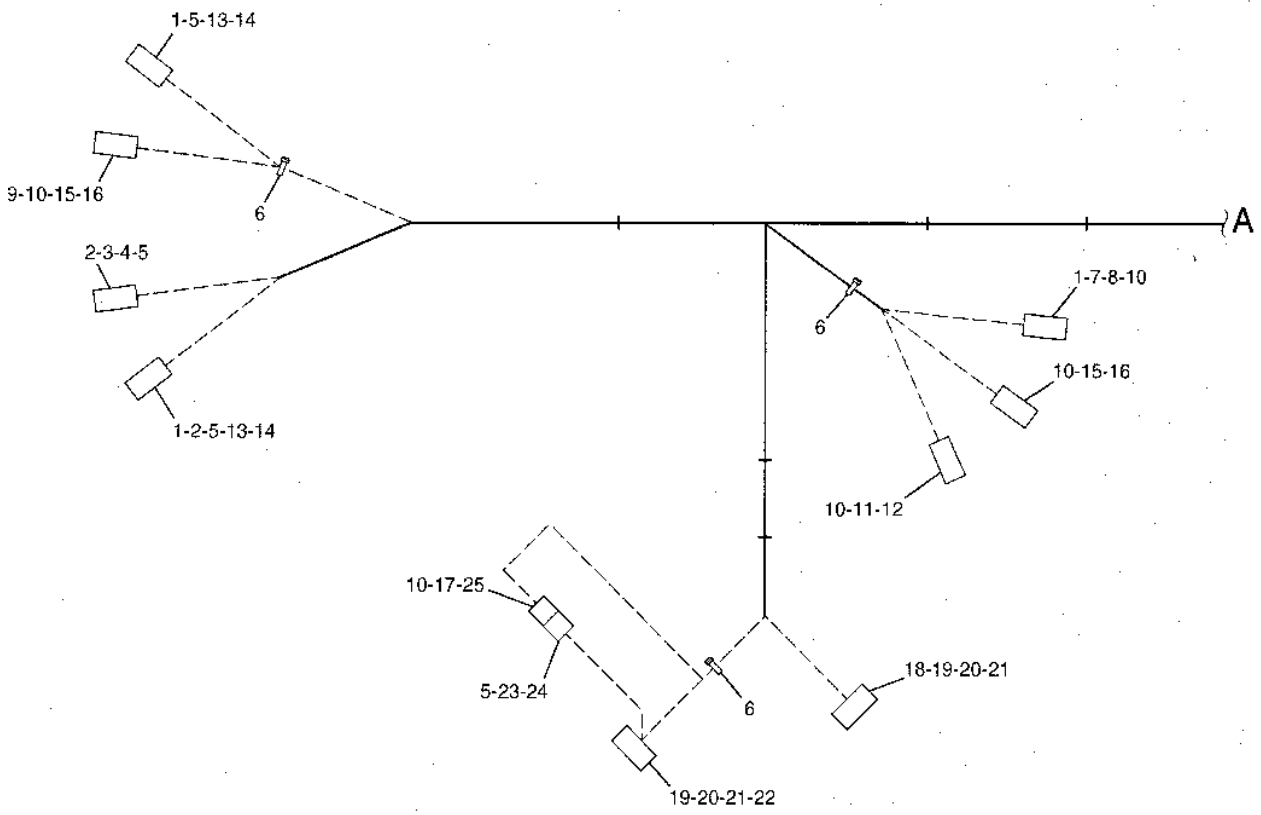


GRAPHIC #1 h83101e

# 1364056 HARNESS AS-PART 2 OF 3

S/N 8SR 00148-00417, 8TR 00163-00485
PART OF 1114858-Page 107.02

**Key:**

**SMCS**

| NOTE | REF NO | GRAPHIC REF | PART NUMBER | QTY | PART NAME 1 2 3 4 5 6 (PRODUCT LEVEL) | PRICE USD |
|---|---|---|---|---|---|---|
| | 1 | | 102-8807 | 1 | PLUG KIT | |
| | 2 | | 3E-3362 | 1 | WEDGE | |
| | 3 | | 8T-8737 | 10 | PLUG | |
| | 4 | | 9W-0844 | 15 | SOCKET | |
| | 5 | | 102-8810 | 2 | PLUG KIT | |
| | 6 | | 3E-3380 | 2 | WEDGE | |
| | 7 | | 8T-8730 | 55 | SOCKET | |
| | 8 | | 3T-4696 | 1 | TERMINAL | |
| | 9 | | 102-8801 | 2 | RECEPTACLE KIT | |
| | 10 | | 3E-5180 | 2 | WEDGE | |
| | 11 | | 9W-0852 | 15 | PIN | |
| | 12 | | 8T-8729 | 27 | PIN | |
| | 13 | | 102-8801 | 3 | RECEPTACLE KIT | |
| | 14 | | 3E-5177 | 3 | WEDGE | |
| | 15 | | 102-8809 | 1 | PLUG KIT | |
| | 16 | | 3E-3374 | 1 | WEDGE | |
| | 17 | | 3T-4692 | 1 | TERMINAL | |
| | 18 | | 102-8811 | 3 | PLUG KIT | |
| | 19 | | 3E-3386 | 3 | WEDGE | |
| | 20 | | 102-8806 | 2 | RECEPTACLE KIT | |
| | 21 | | 3E-3389 | 2 | WEDGE | |
| | 22 | | 102-8804 | 1 | RECEPTACLE KIT | |
| | 23 | | 3E-3377 | 1 | WEDGE | |
| | 24 | | 3S-2093 | 3 | STRAP | |

## 1364056 HARNESS AS-PART 2 OF 3

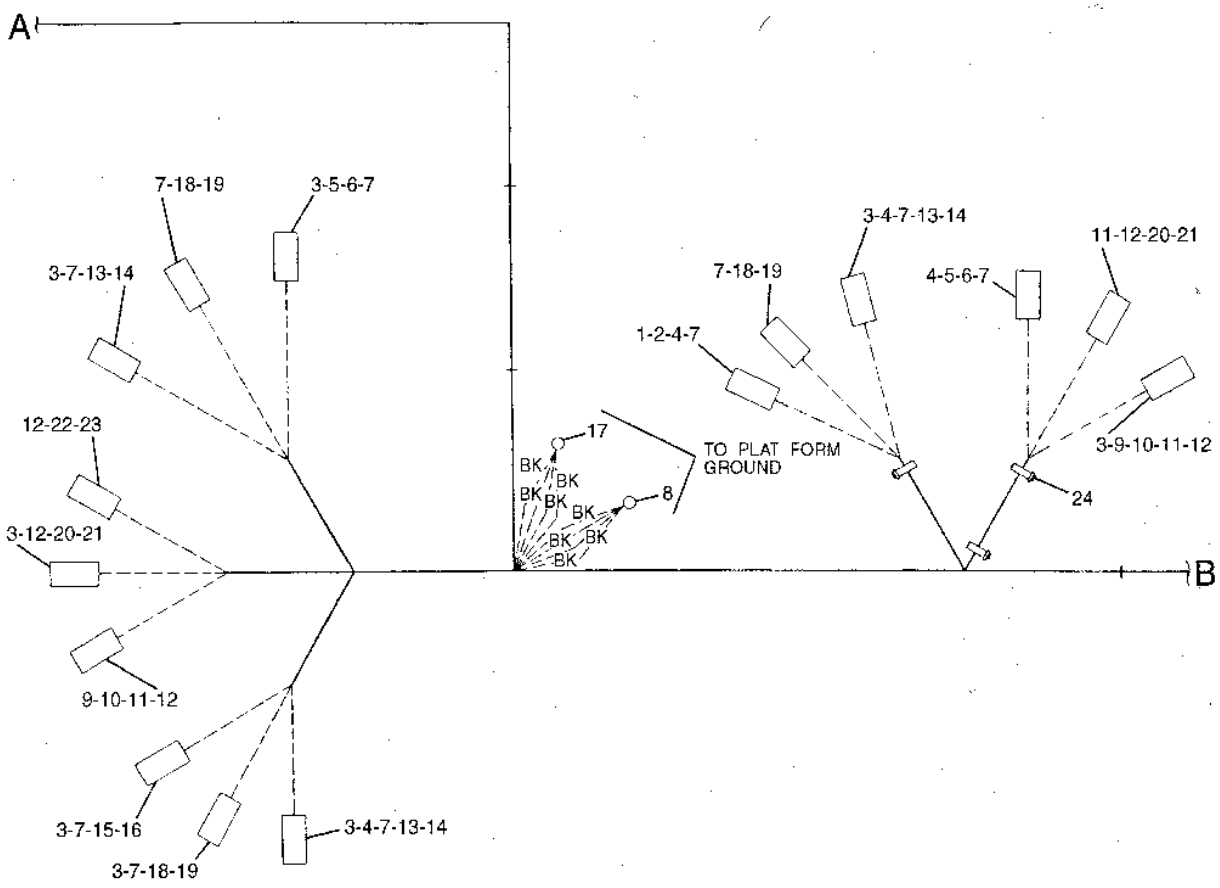


GRAPHIC #1

h83102e

# 1364056 HARNESS AS-PART 3 OF 3

S/N 8SR 00148-00417, 8TR 00163-00485
PART OF 1114858-Page 107.02

**Key:**

**SMCS**

| NOTE | REF NO | GRAPHIC REF | PART NUMBER | QTY | PART NAME 1 2 3 4 5 6 (PRODUCT LEVEL) | PRICE USD |
|---|---|---|---|---|---|---|
| | 1 | | 102-8807 | 5 | PLUG KIT | |
| | 2 | | 3E-3362 | 4 | WEDGE | |
| | 3 | | 102-8802 | 4 | RECEPTACLE KIT | |
| | 4 | | 8T-8737 | 16 | PLUG | |
| | 5 | | 9W-0844 | 9 | SOCKET | |
| | 6 | | 102-8810 | 1 | PLUG KIT | |
| | 7 | | 3E-3380 | 1 | WEDGE | |
| | 8 | | 8T-8730 | 43 | SOCKET | |
| | 9 | | 3S-2093 | 7 | STRAP | |
| | 10 | | 3T-4696 | 2 | TERMINAL | |
| | 11 | | 102-8801 | 2 | RECEPTACLE KIT | |
| | 12 | | 3E-5180 | 2 | WEDGE | |
| | 13 | | 9W-0852 | 9 | PIN | |
| | 14 | | 8T-8729 | 21 | PIN | |
| | 15 | | 102-8801 | 3 | RECEPTACLE KIT | |
| | 16 | | 3E-5177 | 3 | WEDGE | |
| | 17 | | 102-8805 | 1 | RECEPTACLE KIT | |
| | 18 | | 3E-3383 | 1 | WEDGE | |
| | 19 | | 2L-8050 | 1 | TERMINAL | |
| | 20 | | 3E-3365 | 1 | WEDGE | |
| | 21 | | 9X-0196 | 2 | TERMINAL AS | |
| | 22 | | 102-8804 | 1 | RECEPTACLE KIT | |
| | 23 | | 102-8809 | 1 | PLUG KIT | |
| | 24 | | 3E-3374 | 1 | WEDGE | |

## 1364056 HARNESS AS-PART 3 OF 3

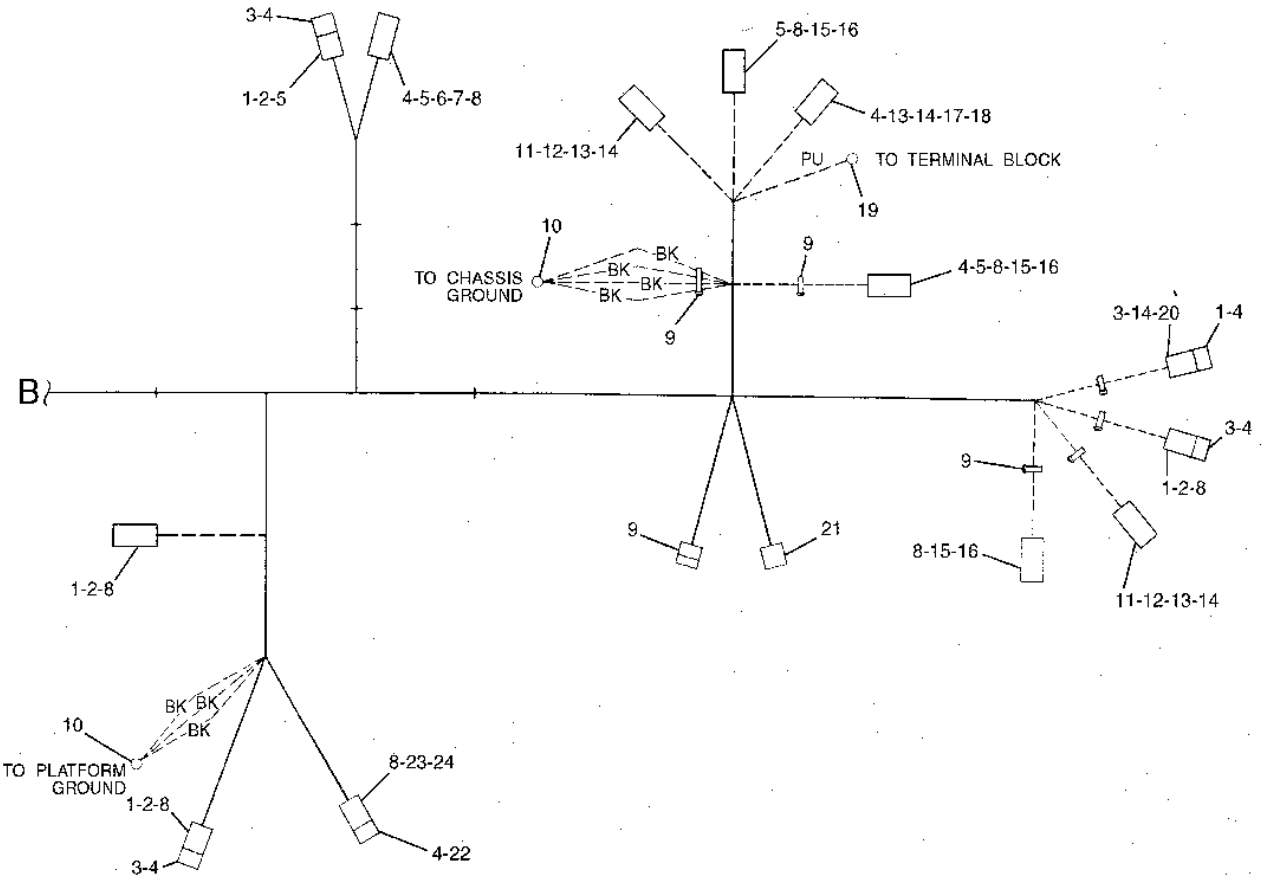


GRAPHIC #1

h83103e

# 1506998 HARNESS AS-PART 1 OF 3

S/N 8SR 00418-UP, 8TR 00486-UP
PART OF 1114858-Page 107.06

**Key:**

**SMCS**

| NOTE | REF NO | GRAPHIC REF | PART NUMBER | QTY | PART NAME 1 2 3 4 5 6 (PRODUCT LEVEL) | PRICE USD |
|---|---|---|---|---|---|---|
| | 1 | | 8T-8737 | 2 | PLUG | |
| | 2 | | 9W-0844 | 3 | SOCKET | |
| | 3 | | 155-2274 | 1 | PLUG KIT | |
| | | | 102-8814 | 1 | SEAL | |
| | 4 | | 3E-3380 | 1 | WEDGE | |
| | 5 | | 186-3736 | 21 | SOCKET | |
| | 6 | | 3S-2093 | 3 | STRAP | |
| | 7 | | 102-8801 | 1 | RECEPTACLE KIT | |
| | 8 | | 3E-5180 | 1 | WEDGE | |
| | 9 | | 9W-0852 | 2 | PIN | |
| | 10 | | 8T-8729 | 34 | PIN | |
| | 11 | | 102-8805 | 1 | RECEPTACLE KIT | |
| | 12 | | 3E-3383 | 1 | WEDGE | |
| | 13 | | 102-8811 | 1 | PLUG KIT | |
| | 14 | | 3E-3386 | 2 | WEDGE | |
| | 15 | | 102-8806 | 2 | RECEPTACLE KIT | |
| | 16 | | 3E-3389 | 2 | WEDGE | |
| | 17 | | 3E-3371 | 1 | WEDGE | |
| | 18 | | 111-4763 | 1 | PLUG AS | |
| | 19 | | 111-4764 | 2 | WEDGE | |
| | 20 | | 111-4766 | 47 | SOCKET | |
| | 21 | | 111-4765 | 33 | PLUG | |
| | 22 | | 111-4762 | 1 | PLUG AS | |
| | 23 | | 102-8808 | 1 | PLUG KIT | |
| | 24 | | 3E-3368 | 1 | WEDGE | |
| | 25 | | 102-8803 | 1 | RECEPTACLE KIT | |

## 1506998 HARNESS AS-PART 1 OF 3

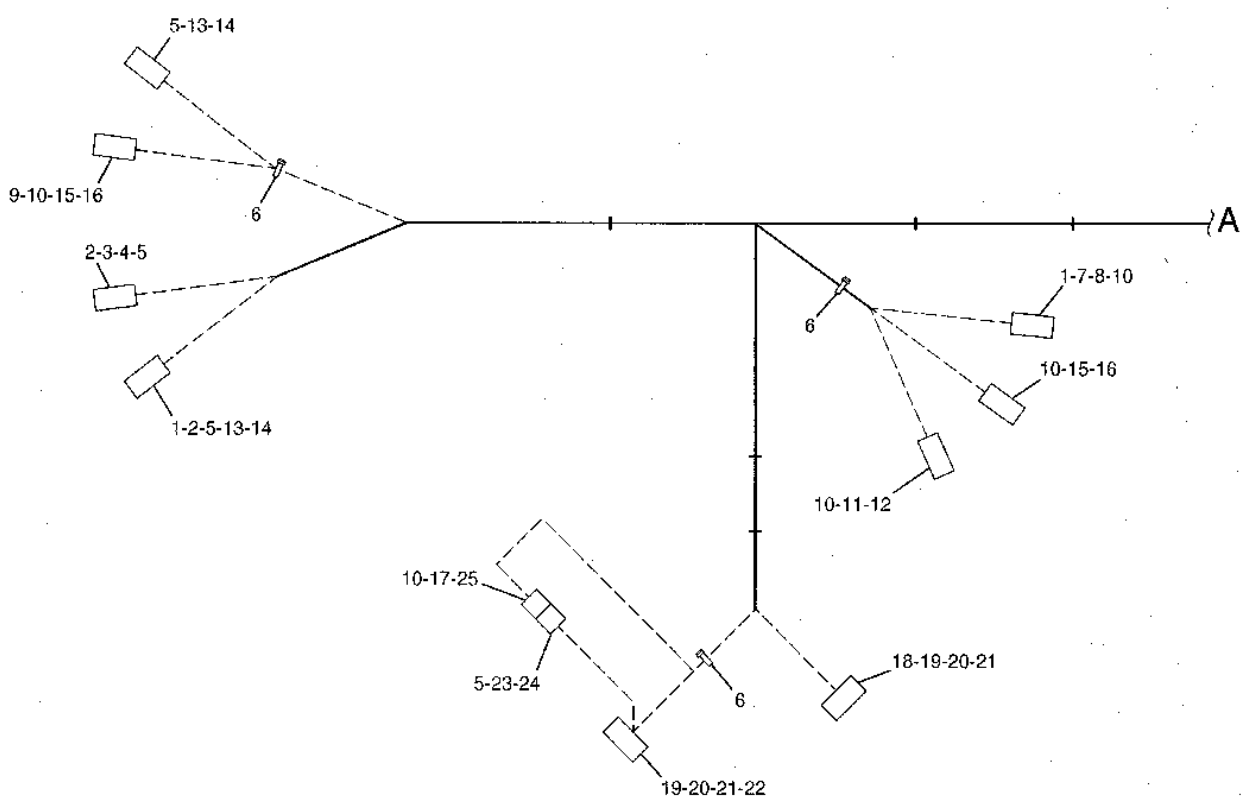


GRAPHIC #1 h83813e

# 1506998 HARNESS AS-PART 2 OF 3

S/N 8SR 00418-UP, 8TR 00486-UP
PART OF 1114858-Page 107.06

**Key:**

**SMCS**

| NOTE | REF NO | GRAPHIC REF | PART NUMBER | QTY | PART NAME 1 2 3 4 5 6 (PRODUCT LEVEL) | PRICE USD |
|---|---|---|---|---|---|---|
| | 1 | | 155-2270 | 1 | PLUG KIT | |
| | | | 102-8812 | 1 | SEAL | |
| | 2 | | 3E-3362 | 1 | WEDGE | |
| | 3 | | 8T-8737 | 7 | PLUG | |
| | 4 | | 9W-0844 | 17 | SOCKET | |
| | 5 | | 155-2274 | 2 | PLUG KIT | |
| | | | 102-8815 | 2 | SEAL | |
| | 6 | | 3E-3380 | 2 | WEDGE | |
| | 7 | | 186-3736 | 56 | SOCKET | |
| | 8 | | 3T-4696 | 4 | TERMINAL | |
| | 9 | | 102-8801 | 2 | RECEPTACLE KIT | |
| | 10 | | 3E-5180 | 2 | WEDGE | |
| | 11 | | 9W-0852 | 15 | PIN | |
| | 12 | | 186-3735 | 27 | PIN | |
| | 13 | | 155-2255 | 3 | PLUG KIT | |
| | | | 102-8817 | 3 | SEAL | |
| | 14 | | 3E-5177 | 3 | WEDGE | |
| | 15 | | 155-2271 | 1 | PLUG KIT | |
| | | | 102-8814 | 1 | SEAL | |
| | 16 | | 3E-3374 | 1 | WEDGE | |
| | 17 | | 3S-2093 | 3 | STRAP | |
| | 18 | | 102-8811 | 3 | PLUG KIT | |
| | 19 | | 3E-3386 | 3 | WEDGE | |
| | 20 | | 102-8806 | 2 | RECEPTACLE KIT | |
| | 21 | | 3E-3389 | 2 | WEDGE | |
| | 22 | | 102-8804 | 1 | RECEPTACLE KIT | |
| | 23 | | 3E-3377 | 1 | WEDGE | |

## 1506998 HARNESS AS-PART 2 OF 3

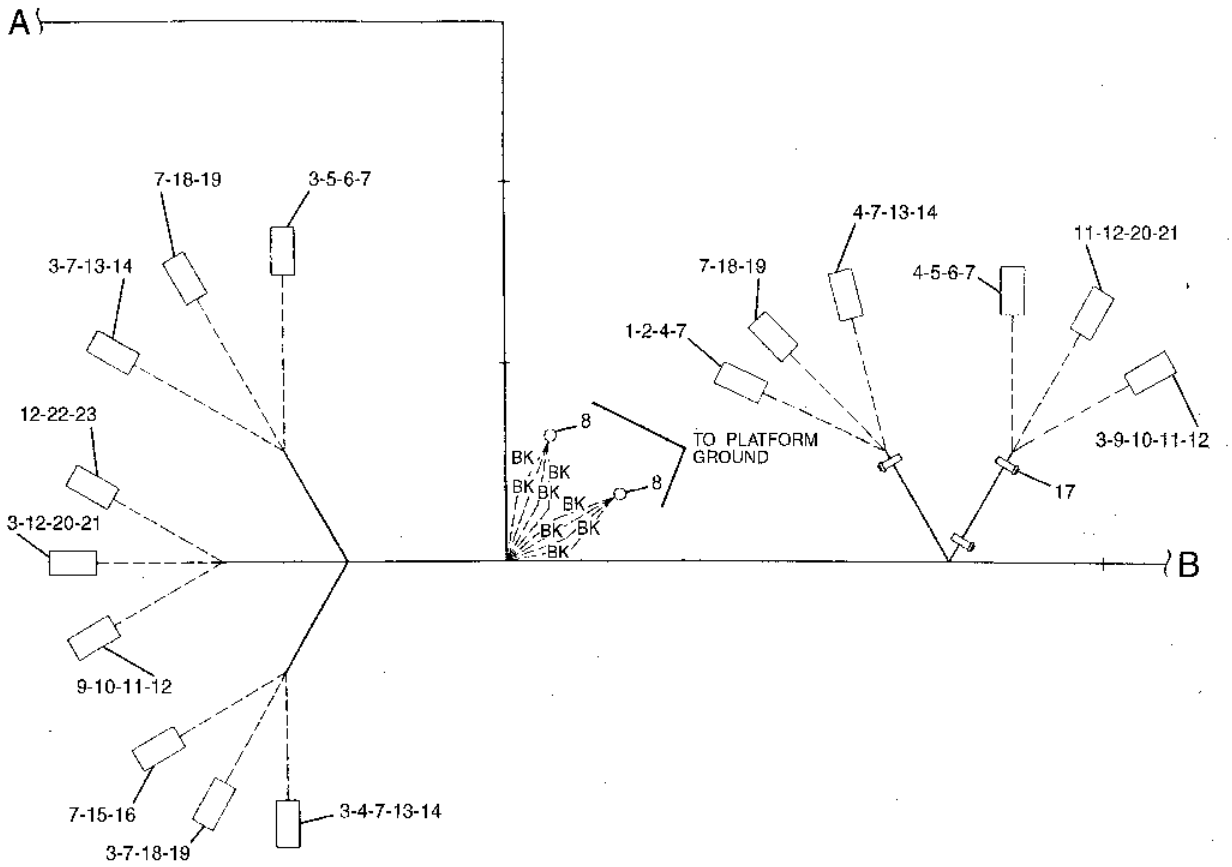


GRAPHIC #1 h83814e

# 1506998 HARNESS AS-PART 3 OF 3

S/N 8SR 00418-UP, 8TR 00486-UP
PART OF 1114858-Page 107.06

**Key:**

**SMCS**

| NOTE | REF NO | GRAPHIC REF | PART NUMBER | QTY | PART NAME 1 2 3 4 5 6 (PRODUCT LEVEL) | PRICE USD |
|---|---|---|---|---|---|---|
| | 1 | | 155-2270 | 5 | PLUG KIT | |
| | | | 102-8812 | 5 | SEAL | |
| | 2 | | 3E-3362 | 4 | WEDGE | |
| | 3 | | 102-8802 | 4 | RECEPTACLE KIT | |
| | 4 | | 8T-8737 | 20 | PLUG | |
| | 5 | | 9W-0844 | 11 | SOCKET | |
| | 6 | | 155-2274 | 1 | PLUG KIT | |
| | | | 102-8815 | 1 | SEAL | |
| | 7 | | 3E-3380 | 1 | WEDGE | |
| | 8 | | 186-3736 | 42 | SOCKET | |
| | 9 | | 3S-2093 | 7 | STRAP | |
| | 10 | | 3T-4696 | 2 | TERMINAL | |
| | 11 | | 102-8801 | 3 | RECEPTACLE KIT | |
| | 12 | | 3E-5180 | 3 | WEDGE | |
| | 13 | | 9W-0852 | 10 | PIN | |
| | 14 | | 186-3735 | 21 | PIN | |
| | 15 | | 155-2255 | 3 | PLUG KIT | |
| | | | 102-8817 | 3 | SEAL | |
| | 16 | | 3E-5177 | 3 | WEDGE | |
| | 17 | | 155-2271 | 1 | PLUG KIT | |
| | | | 102-8814 | 1 | SEAL | |
| | 18 | | 3E-3374 | 1 | WEDGE | |
| | 19 | | 2L-8050 | 1 | TERMINAL | |
| | 20 | | 3E-3365 | 1 | WEDGE | |
| | 21 | | 9X-0196 | 2 | TERMINAL AS | |
| | 22 | | 102-8804 | 1 | RECEPTACLE KIT | |

## 1506998 HARNESS AS-PART 3 OF 3

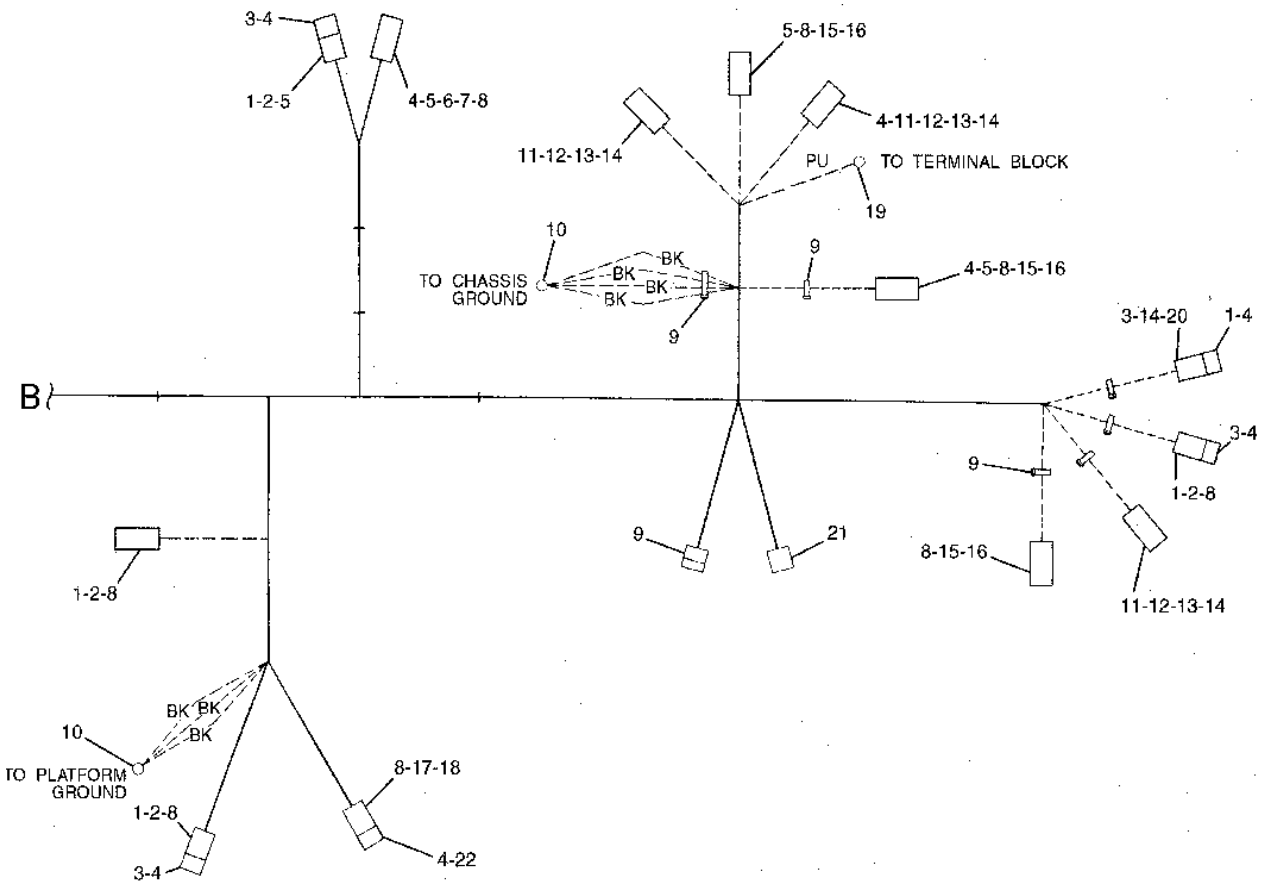


GRAPHIC #1

h83815e

# 1211115 HARNESS AS

PART OF 1114858-Page 105

**Key:** E - ORDER BY THE CENTIMETER

**SMCS**

| NOTE | REF NO | GRAPHIC REF | PART NUMBER | QTY | PART NAME 1 2 3 4 5 6 (PRODUCT LEVEL) | PRICE USD |
|---|---|---|---|---|---|---|
| | 1 | | 9W-0844 | 2 | SOCKET | |
| | 2 | | 102-8807 | 1 | PLUG KIT | |
| | 3 | | 3E-3362 | 1 | WEDGE | |
| E | 4 | | 103-2529 | | HOSE (110cm) | |
| | 5 | | 2L-8075 | 4 | TERMINAL | |
| | 6 | | 102-8804 | 1 | RECEPTACLE KIT | |
| | 7 | | 3E-3377 | 1 | WEDGE | |
| | 8 | | 9W-0852 | 2 | PIN | |
| | 9 | | 8T-8729 | 2 | PIN | |

## 1211115 HARNESS AS

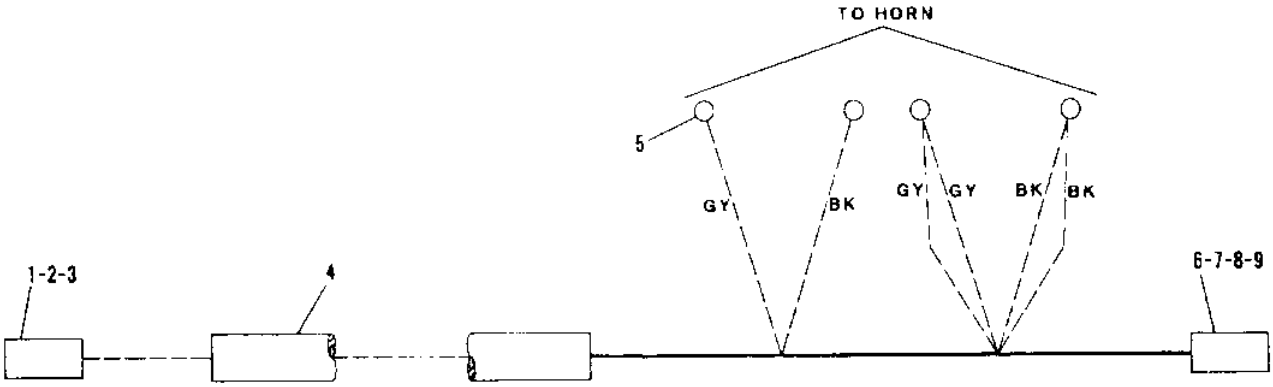


| NOTE | No. | PART No. | QTY | PART NAME |
|---|---|---|---|---|
| | 1 | 9W-0844 | 2 | SOCKET |
| | 2 | 102-8807 | 1 | PLUG KIT |
| | 3 | 3E-3362 | 1 | WEDGE |
| E | 4 | 103-2529 | | HOSE ···(110cm) |
| | 5 | 2L-8075 | 4 | TERMINAL |
| | 6 | 102-8804 | 1 | RECEPTACLE KIT |
| | 7 | 3E-3377 | 1 | WEDGE |
| | 8 | 9W-0852 | 2 | PIN |
| | 9 | 8T-8729 | 2 | PIN |

| NOTE | No. | PART No. | QTY | PART NAME |
|---|---|---|---|---|

E-ORDER BY THE CENTIMETER

H50754E

GRAPHIC #1 h50754e

# 1160163 HARNESS AS

PART OF 1114858-Page 107

**Key:**

**SMCS**

| NOTE | REF NO | GRAPHIC REF | PART NUMBER | QTY | PART NAME 1 2 3 4 5 6 (PRODUCT LEVEL) | PRICE USD |
|---|---|---|---|---|---|---|
| | 1 | | 102-8808 | 1 | PLUG KIT | |
| | 2 | | 3E-3368 | 1 | WEDGE | |
| | 3 | | 8T-8730 | 6 | SOCKET | |
| | 4 | | 8T-8737 | 6 | PLUG | |
| | 5 | | 102-8805 | 1 | RECEPTACLE KIT | |
| | 6 | | 3E-3383 | 1 | WEDGE KIT | |
| | 7 | | 9W-0852 | 1 | PIN | |
| | 8 | | 8T-8729 | 4 | PIN | |
| | 9 | | 155-2270 | 2 | PLUG KIT | |
| | 10 | | 3E-3362 | 2 | WEDGE | |
| | 11 | | 3S-2093 | 1 | STRAP | |
| | 12 | | 102-8802 | 2 | RECEPTACLE KIT | |
| | 13 | | 2L-8075 | 2 | TERMINAL | |

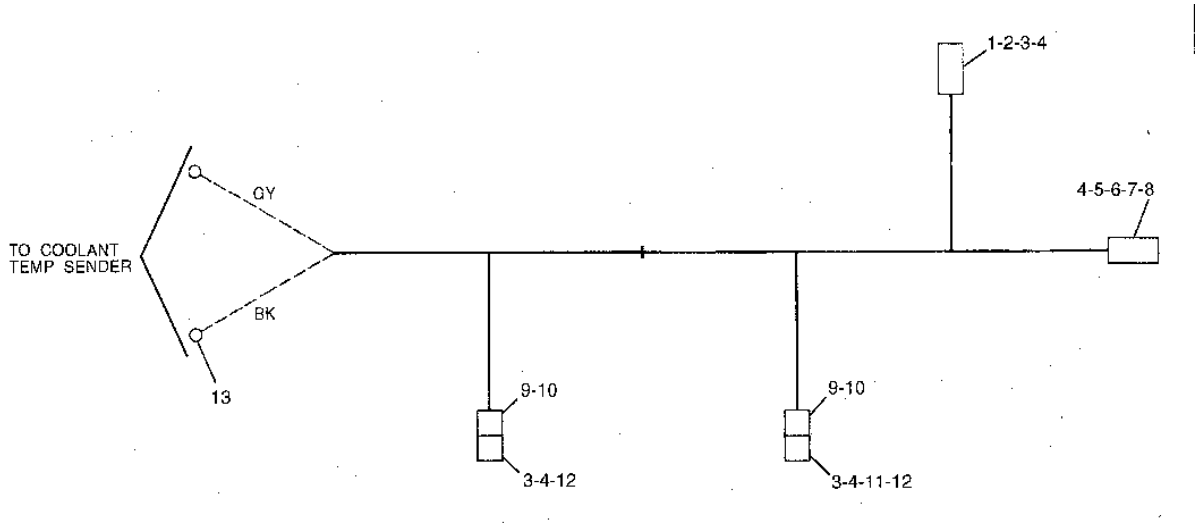


GRAPHIC #1 h60541e

# 1160080 CABLE AS

PART OF 1114858-Page 105, 1114862-Page 141

**Key:**

**SMCS**

| NOTE | REF NO | GRAPHIC REF | PART NUMBER | QTY | PART NAME 1 2 3 4 5 6 (PRODUCT LEVEL) | PRICE USD |
|---|---|---|---|---|---|---|
| | 1 | | 8N-1725 | 1 | COVER | |
| | 2 | | 3S-6049 | 1 | TERMINAL AS | |
| | | | 1M-6119 | 1 | BOLT (L=35mm) | |
| | | | 1M-6120 | 1 | NUT | |
| | 3 | | 7N-5274 | 1 | COVER | |
| | 4 | | 3S-6050 | 1 | TERMINAL AS | |
| | | | 1M-6119 | 1 | BOLT (L=35mm) | |
| | | | 1M-6120 | 1 | NUT | |

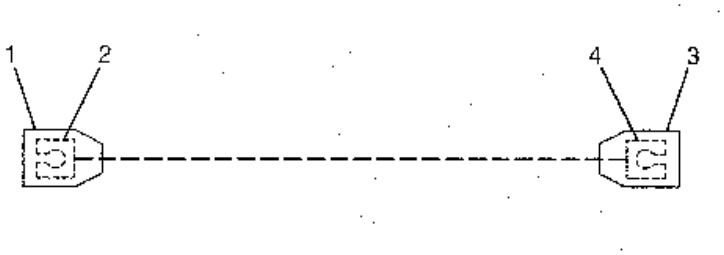


GRAPHIC #1 h50550e

# 1160162 CABLE AS

PART OF 1114862-Page 141
AN ATTACHMENT

**Key:**

**SMCS**

| NOTE | REF NO | GRAPHIC REF | PART NUMBER | QTY | PART NAME 1 2 3 4 5 6 (PRODUCT LEVEL) | PRICE USD |
|---|---|---|---|---|---|---|
| | 1 | | 8N-1725 | 1 | COVER | |
| | 2 | | 3S-6049 | 1 | TERMINAL AS | |
| | | | 1M-6119 | 1 | BOLT | |
| | | | 1M-6120 | 1 | NUT | |
| | 3 | | 1S-7251 | 1 | TERMINAL | |

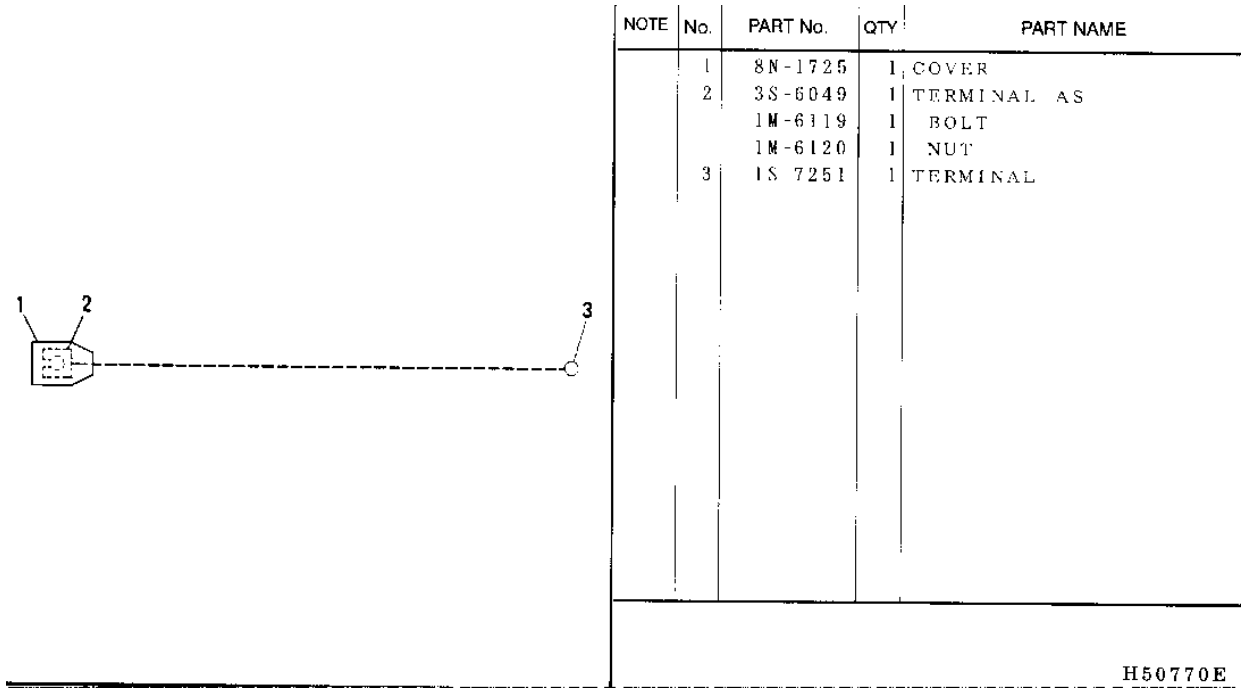


GRAPHIC #1 h50770e

# 1160161 CABLE AS

PART OF 1114858-Page 107

**Key:**

**SMCS**

| NOTE | REF NO | GRAPHIC REF | PART NUMBER | QTY | PART NAME 1 2 3 4 5 6 (PRODUCT LEVEL) | PRICE USD |
|---|---|---|---|---|---|---|
| | 1 | | 8N-1725 | 1 | COVER | |
| | 2 | | 3S-6049 | 1 | TERMINAL AS | |
| | | | 1M-6119 | | BOLT | |
| | | | 1M-6120 | | BOLT | |
| | 3 | | 1S-7251 | 1 | TERMINAL | |
| | 4 | | 8N-0869 | 1 | COVER | |

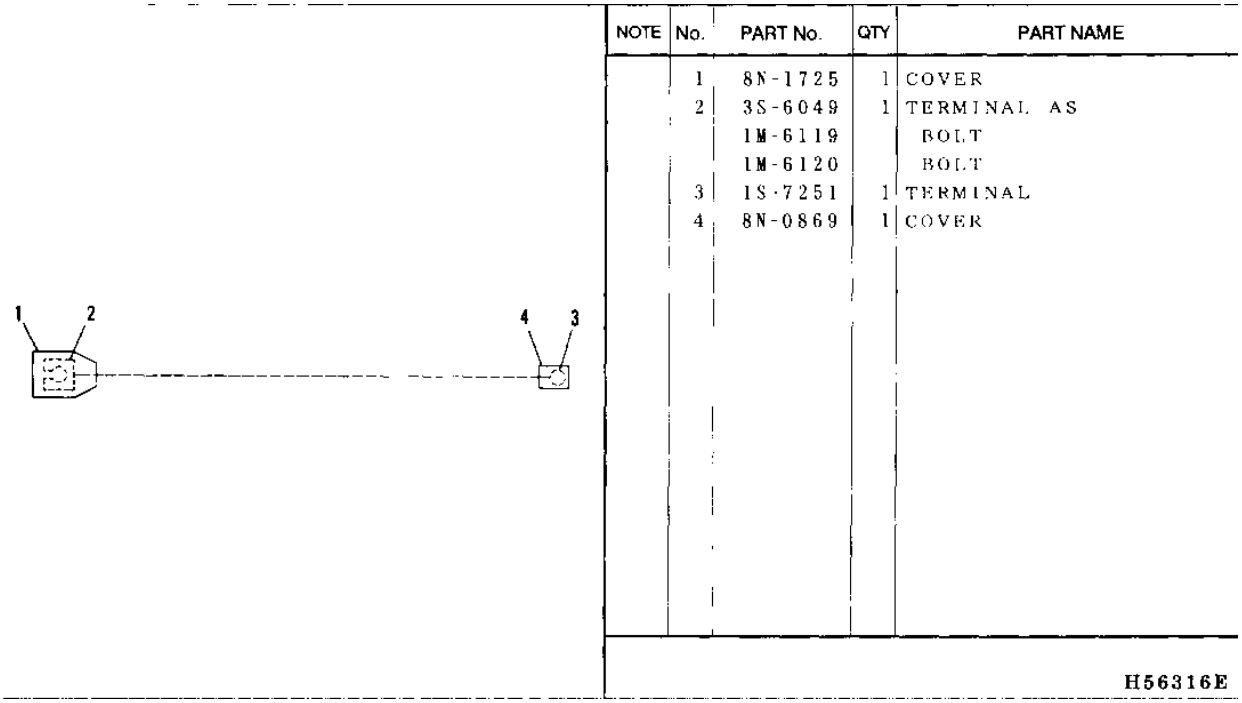


| NOTE | No. | PART No. | QTY | PART NAME |
|---|---|---|---|---|
| | 1 | 8N-1725 | 1 | COVER |
| | 2 | 3S-6049 | 1 | TERMINAL AS |
| | | 1M-6119 | | BOLT |
| | | 1M-6120 | | BOLT |
| | 3 | 1S-7251 | 1 | TERMINAL |
| | 4 | 8N-0869 | 1 | COVER |

H56316E

GRAPHIC #1 h56316e

# 1254727 CABLE AS

PART OF 1114858-Page 105

**Key:**

**SMCS**

| NOTE | REF NO | GRAPHIC REF | PART NUMBER | QTY | PART NAME 1 2 3 4 5 6 (PRODUCT LEVEL) | PRICE USD |
|---|---|---|---|---|---|---|
| | 1 | | 3S-6050 | 1 | TERMINAL AS | |
| | | | 1M-6119 | 1 | BOLT (L=35mm) | |
| | | | 1M-6120 | 1 | NUT | |
| | 2 | | 7N-5274 | 1 | COVER | |
| | 3 | | 1S-7252 | 1 | TERMINAL | |
| | 4 | | 9G-8909 | 1 | COVER | |

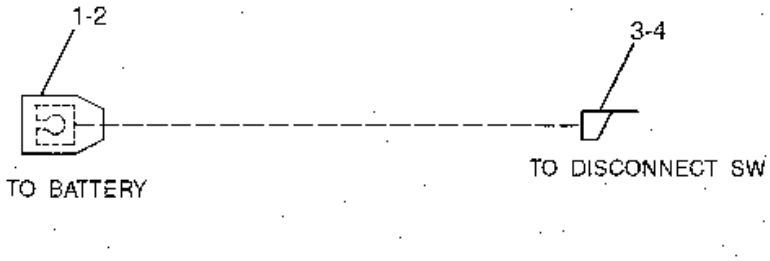


GRAPHIC #1 h50552e

# 1288948 PANEL GP-CIRCUIT BREAKER-PART 1 OF 2

S/N 8SR 1-00147, 8TR 1-00162
PART OF 1114858-Page 105
1321868-Page 120

**Key:** Y - SEPARATE ILLUSTRATION

**SMCS**

| NOTE | REF NO | GRAPHIC REF | PART NUMBER | QTY | PART NAME 1 2 3 4 5 6 (PRODUCT LEVEL) | PRICE USD |
|---|---|---|---|---|---|---|
| | 1 | | 8T-4191 | 4 | BOLT (L=16mm) | |
| | 2 | | 8T-4121 | 4 | WASHER-HARD | |
| | 3 | | 111-4874 | 1 | COVER | |
| | 4 | | 3T-0376 | 1 | SWITCH AS (MAGNETIC) | |
| | 5 | | 6V-8378 | 2 | NUT | |
| | 6 | | 4F-2294 | 2 | NUT | |
| | 7 | | 6V-8186 | 2 | NUT | |
| | 5 | | 8T-6411 | 5 | SCREW-MACHINE | |
| | 9 | | 9X-8256 | 8 | WASHER | |
| | 10 | | 111-4871 | 5 | RELAY | |
| | 11 | | 7X-2619 | 3 | BOLT (L=10mm) | |
| | 12 | | 8C-7581 | 4 | SCREW-MACHINE | |
| | 13 | | 096-6166 | 4 | WASHER-HARD | |
| | 14 | | 105-9981 | 4 | CLIP | |
| | 15 | | 3S-2093 | 5 | STRAP | |
| | 16 | | 128-8938 | 1 | WIRE AS | |
| | | | 2L-8051 | 1 | TERMINAL | |
| | | | 2L-8058 | 1 | TERMINAL | |
| | 17 | | 128-8937 | 1 | WIRE AS | |
| | | | 2L-8050 | 1 | TERMINAL | |
| | | | 2L-8051 | 1 | TERMINAL | |
| Y | 18 | | 132-1868 | 1 | HARNESS AS | |
| | 19 | | 132-1870 | 1 | BRACKET AS | |

## 1288948 PANEL GP-CIRCUIT BREAKER-PART 1 OF 2

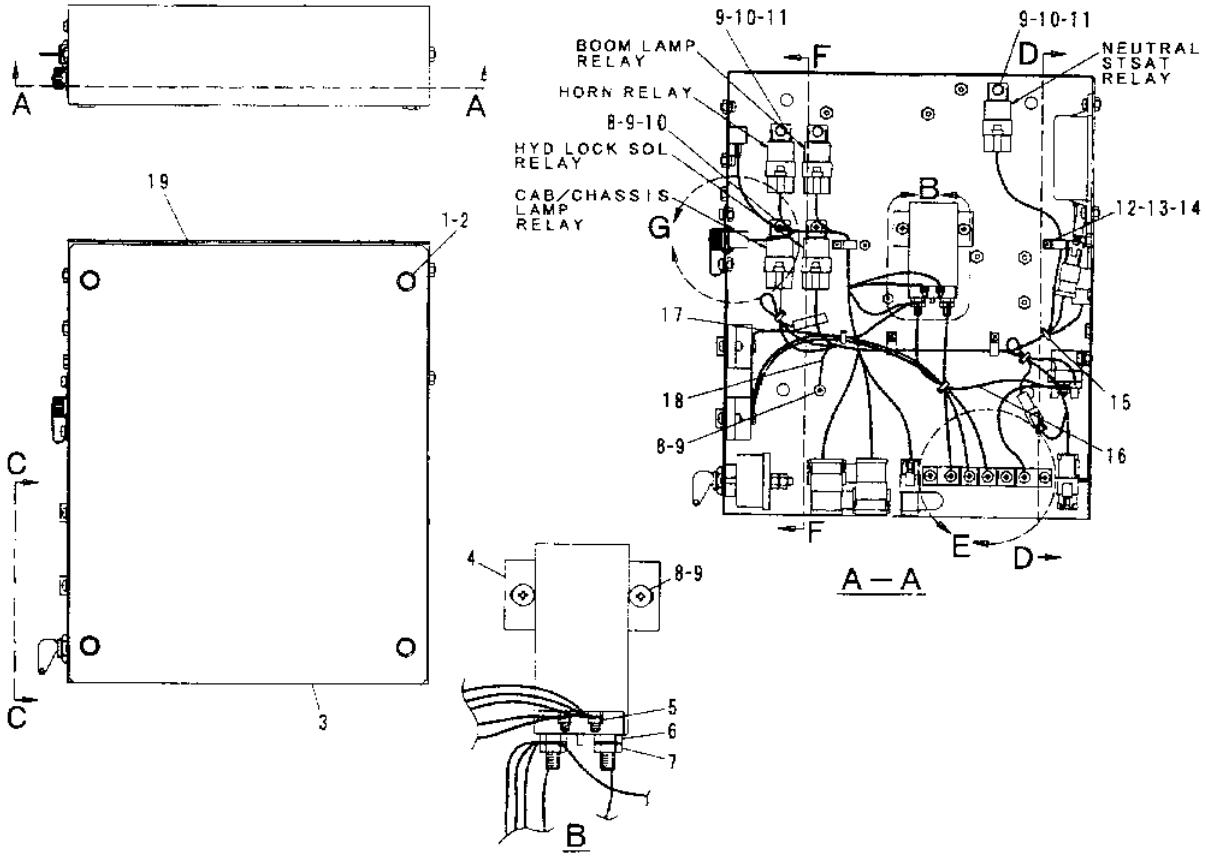


| NOTE | No. | PART No. | QTY | PART NAME |
|---|---|---|---|---|
| | 1 | 8T-4191 | 4 | BOLT (L=16mm) |
| | 2 | 8T-4121 | 4 | WASHER-HARD |
| | 3 | 111-4874 | 1 | COVER |
| | 4 | 3T-0376 | 1 | SWITCH AS (MAGNETIC) |
| | 5 | 6V-8378 | 2 | NUT |
| | 6 | 4F-2294 | 2 | NUT |
| | 7 | 6V-8186 | 2 | NUT |
| | 8 | 8T-6411 | 5 | SCREW-MACHINE |
| | 9 | 9X-8256 | 8 | WASHER |
| | 10 | 111-4871 | 5 | RELAY |
| | 11 | 7X-2619 | 3 | BOLT (L=10mm) |
| | 12 | 8C-7581 | 4 | SCREW-MACHINE |
| | 13 | 096-6166 | 4 | WASHER-HARD |
| | 14 | 105-9981 | 4 | CLIP |
| | 15 | 3S-2093 | 5 | STRAP |
| | 16 | 128-8938 | 1 | WIRE AS |
| | | 2L-8051 | 1 | TERMINAL |
| | | 2L-8058 | 1 | TERMINAL |
| | 17 | 128-8937 | 1 | WIRE AS |
| | | 2L-8050 | 1 | TERMINAL |
| | | 2L-8051 | 1 | TERMINAL |
| Y | 18 | 132-1868 | 1 | HARNESS AS |
| | 19 | 132-1870 | 1 | BRACKET AS |

Y—SEE SEPARATE ILLUSTRATION

H50755E

GRAPHIC #1

h50755e

# 1288948 PANEL GP-CIRCUIT BREAKER-PART 2 OF 2

S/N 8SR 1-00147, 8TR 1-00162
PART OF 1114858-Page 105
1114870-Page 121, 7N0718-Page 130, 1251302-Page 133.01

**Key:** Y - SEPARATE ILLUSTRATION

**SMCS**

| NOTE | REF NO | GRAPHIC REF | PART NUMBER | QTY | PART NAME 1 2 3 4 5 6 (PRODUCT LEVEL) | PRICE USD |
|---|---|---|---|---|---|---|
| | 1 | | 9S-0174 | 2 | BRACKET AS | |
| | | | 1H-3224 | 2 | LOCKWASHER | |
| | | | 6V-8365 | 2 | SCREW | |
| | 2 | | 3E-8320 | 1 | PLATE | |
| Y | 3 | | 7N-0718 | 1 | SWITCH AS (DISC) | |
| | 4 | | 6V-5645 | 4 | SCREW-MACHINE | |
| | 5 | | 8T-0328 | 4 | WASHER-HARD | |
| Y | 8 | | 125-1302 | 1 | SWITCH AS (MAGNETIC) | |
| | 9 | | 095-0742 | 2 | SCREW-MACHINE | |
| Y | 10 | | 111-4870 | 1 | TIMER AS | |
| | 11 | | 111-4826 | 1 | WIRE AS | |
| | | | 2L-8050 | 1 | TERMINAL | |
| | | | 2L-8051 | 1 | TERMINAL | |
| | 12 | | 111-4831 | 1 | WIRE AS | |
| | | | 2L-8050 | 2 | TERMINAL | |
| | 13 | | 111-4830 | 1 | WIRE AS | |
| | | | 2L-8050 | 2 | TERMINAL | |
| | 14 | | 111-4829 | 1 | WIRE AS | |
| | | | 2L-8050 | 1 | TERMINAL | |
| | | | 2L-8058 | 1 | TERMINAL | |
| | 15 | | 121-1023 | 1 | BLOCK | |
| | 16 | | 128-8936 | 1 | WIRE AS | |
| | | | 2L-8050 | 2 | TERMINAL | |
| | 17 | | 102-8017 | 1 | RESISTOR AS | |
| | 18 | | 132-1863 | 1 | STRIP | |
| | 19 | | 6V-9326 | 4 | SCREW-MACHINE | |
| | 20 | | 6V-8950 | 4 | NUT | |
| | 21 | | 3E-5165 | 1 | CAP AS | |

## 1288948 PANEL GP-CIRCUIT BREAKER-PART 2 OF 2

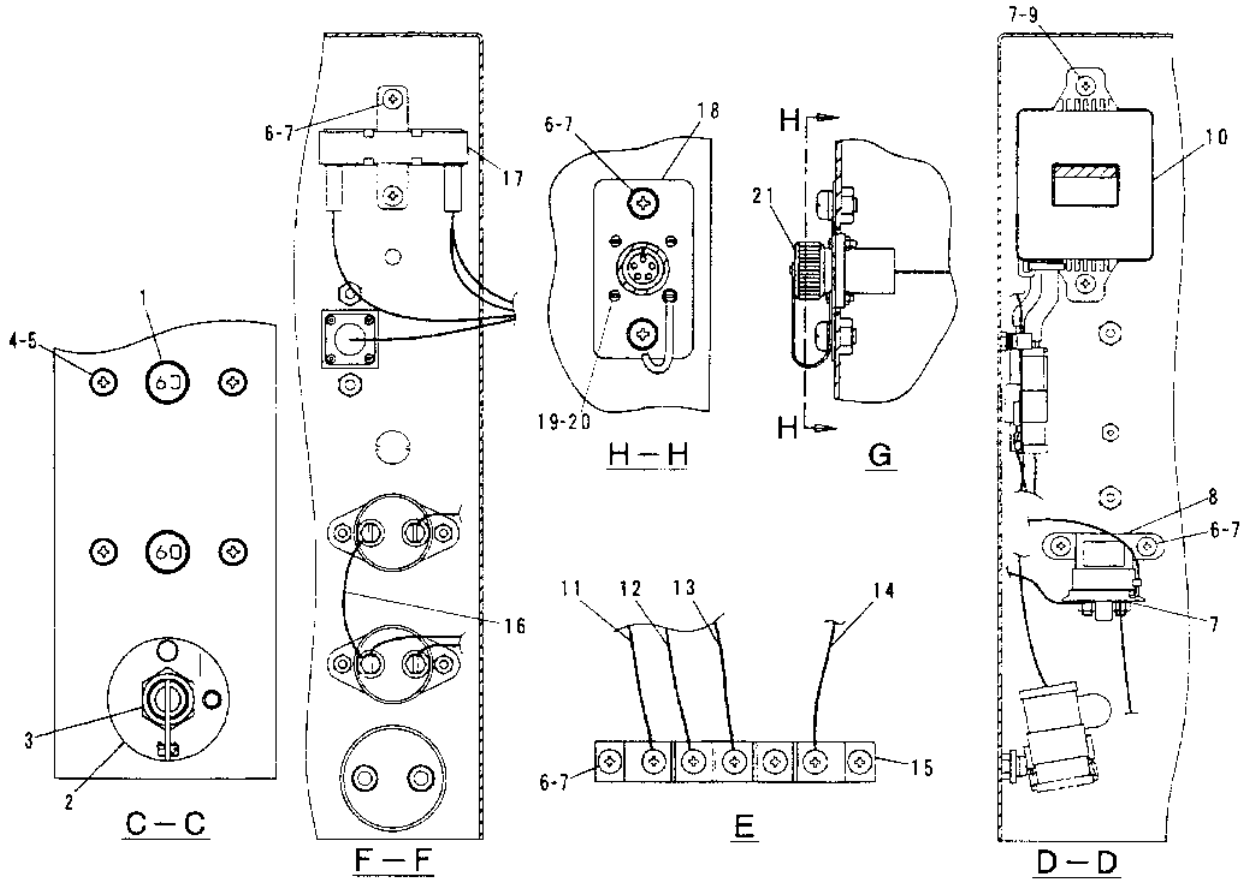


| NOTE | No. | PART No. | QTY | PART NAME |
|---|---|---|---|---|
| | 1 | 9S-0174 | 2 | BREAKER AS |
| | | 1H-3224 | 2 | LOCKWASHER |
| | | 6V-8365 | 2 | SCREW |
| | 2 | 3E-8320 | 1 | PLATE |
| Y | 3 | 7N 0718 | 1 | SWITCH AS (DISC) |
| | 4 | 6V-5645 | 4 | SCREW-MACHINE |
| | 5 | 8T-0328 | 4 | WASHER-HARD |
| | 6 | 8T-6411 | 13 | SCREW |
| | 7 | 9X-8256 | 17 | WASHER |
| | 8 | 125-1302 | 1 | SWITCH AS (MAGNETIC) |
| | 9 | 095-0742 | 2 | SCREW-MACHINE |
| Y | 10 | 111-4870 | 1 | TIMER AS |
| | 11 | 111-4826 | 1 | WIRE AS |
| | | 2L-8050 | 1 | TERMINAL |
| | | 2L-8051 | 1 | TERMINAL |
| | 12 | 111-4831 | 1 | WIRE AS |
| | | 2L-8050 | 2 | TERMINAL |
| | 13 | 111-4830 | 1 | WIRE AS |
| | | 2L-8050 | 2 | TERMINAL |
| | 14 | 111-4829 | 1 | WIRE AS |
| | | 2L-8050 | 1 | TERMINAL |
| | | 2L-8058 | 1 | TERMINAL |
| | 15 | 121-1023 | 1 | BLOCK |
| | 16 | 128-8936 | 1 | WIRE AS |
| | | 2L-8050 | 2 | TERMINAL |
| | 17 | 102-8017 | 1 | RESISTOR AS |
| | 18 | 132-1863 | 1 | STRIP |
| | 19 | 6V-9326 | 4 | SCREW-MACHINE |
| | 20 | 6V-8950 | 4 | NUT |
| | 21 | 3E-5165 | 1 | CAP AS |

Y-SEE SEPARATE ILLUSTRATION

H50756E

GRAPHIC #1

h50756e

# 1288948 PANEL GP-CIRCUIT BREAKER-PART 1 OF 2

S/N 8SR 00148-00417, 8TR 00163-00485
PART OF 1114858-Page 107.02
1364076-Page 120.01

**Key:** Y - SEE SEPARATE ILLUSTRATION

**SMCS**

| NOTE | REF NO | GRAPHIC REF | PART NUMBER | QTY | PART NAME 1 2 3 4 5 6 (PRODUCT LEVEL) | PRICE USD |
|---|---|---|---|---|---|---|
| | 1 | | 132-1902 | 1 | BRACKET AS | |
| | 2 | | 8T-4191 | 4 | BOLT (L=16mm) | |
| | 3 | | 8T-4121 | 4 | WASHER | |
| | 4 | | 111-4874 | 1 | COVER | |
| | 5 | | 3T-0376 | 1 | SWITCH AS (MAIN RELAY) | |
| | | | 6V-8378 | 2 | NUT | |
| | | | 4F-2294 | 2 | NUT | |
| | | | 6V-8186 | 2 | NUT | |
| Y | 6 | | 136-4076 | 1 | HARNESS AS | |
| | 7 | | 128-8937 | 1 | WIRE AS | |
| | | | 2L-8050 | 1 | TERMINAL | |
| | | | 2L-8051 | 1 | TERMINAL | |
| | 8 | | 105-9983 | 1 | CLIP | |
| | 9 | | 8T-6411 | 1 | SCREW | |
| | 10 | | 9X-8256 | 14 | WASHER | |
| | 11 | | 9X-8256 | 14 | WASHER | |
| | 12 | | 7X-2619 | 8 | BOLT | |
| | 13 | | 8C-7581 | 4 | SCREW | |
| | 14 | | 096-6166 | 4 | WASHER | |
| | 15 | | 105-9982 | 1 | CLIP | |
| | 16 | | 3S-2093 | 5 | STRAP | |
| | 17 | | 128-8938 | 1 | WIRE AS | |
| | | | 2L-8051 | 1 | TERMINAL | |
| | | | 2L-8058 | 1 | TERMINAL | |
| | 18 | | 111-4718 | 2 | CLIP | |

## 1288948 PANEL GP-CIRCUIT BREAKER-PART 1 OF 2

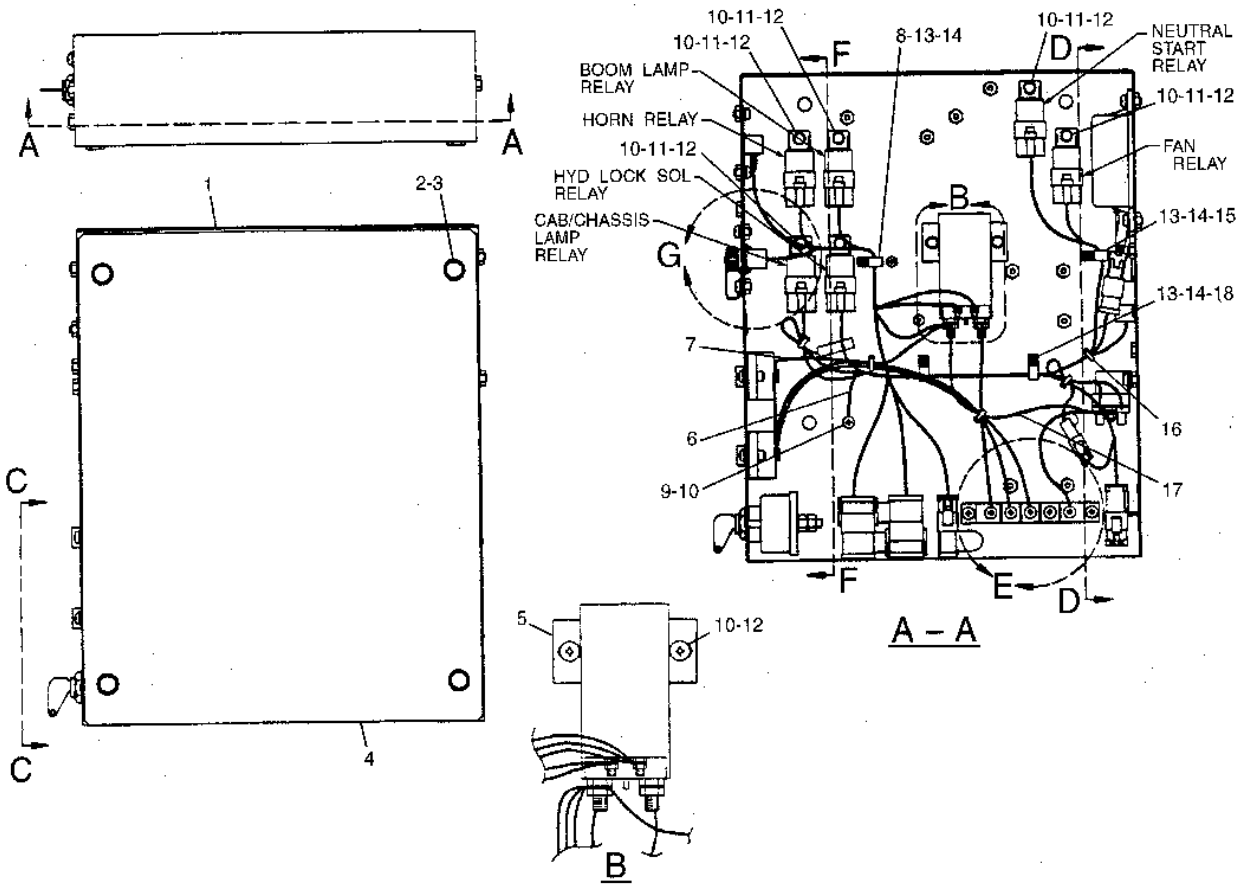


GRAPHIC #1

h84047e

# 1288948 PANEL GP-CIRCUIT BREAKER-PART 2 OF 2

S/N 8SR 00148-00417, 8TR 00163-00485
PART OF 1114858-Page 107.02
1114870-Page 121, 7N0718-Page 130, 1251302-Page 133.01

**Key:** Y - SEE SEPARATE ILLUSTRATION

**SMCS**

| NOTE | REF NO | GRAPHIC REF | PART NUMBER | QTY | PART NAME 1 2 3 4 5 6 (PRODUCT LEVEL) | PRICE USD |
|---|---|---|---|---|---|---|
| | 1 | | 9S-0174 | 2 | BREAKER AS | |
| | | | 1H-3244 | 2 | LOCKWASHER | |
| | | | 6V-8365 | 2 | SCREW | |
| | 2 | | 3E-8320 | 1 | PLATE (INSTRUCTION) | |
| Y | 3 | | 7N-0718 | 1 | SWITCH AS (DISCONNECT) | |
| | 4 | | 6V-5645 | 4 | SCREW | |
| | 5 | | 8T-0328 | 4 | WASHER | |
| | 6 | | 8T-6411 | 13 | SCREW | |
| | 7 | | 9X-8256 | 17 | WASHER | |
| Y | 8 | | 125-1302 | 1 | SWITCH AS (START RELAY) | |
| | 9 | | 095-0742 | 2 | SCREW | |
| Y | 10 | | 111-4870 | 1 | TIMER AS | |
| | 11 | | 111-4826 | 1 | WIRE AS | |
| | | | 2L-8050 | 1 | TERMINAL AS | |
| | | | 2L-8051 | 1 | TERMINAL | |
| | 12 | | 111-4831 | 1 | WIRE AS | |
| | | | 2L-8050 | 2 | TERMINAL | |
| | 13 | | 111-4830 | 1 | WIRE AS | |
| | | | 2L-8050 | 2 | TERMINAL | |
| | 14 | | 111-4829 | 1 | WIRE AS | |
| | | | 2L-8050 | 1 | TERMINAL | |
| | | | 2L-8058 | 1 | TERMINAL | |
| | 15 | | 121-1023 | 1 | BLOCK | |
| | 16 | | 102-8017 | 1 | RESISTOR AS | |
| | 17 | | 128-8936 | 1 | WIRE AS | |
| | | | 2L-8050 | 2 | TERMINAL | |
| | 18 | | 6V-9326 | 4 | SCREW | |
| | 19 | | 6V-8950 | 4 | NUT | |
| | 20 | | 3E-5165 | 1 | CAP AS | |
| | 21 | | 132-1863 | 1 | STRIP | |

## 1288948 PANEL GP-CIRCUIT BREAKER-PART 2 OF 2

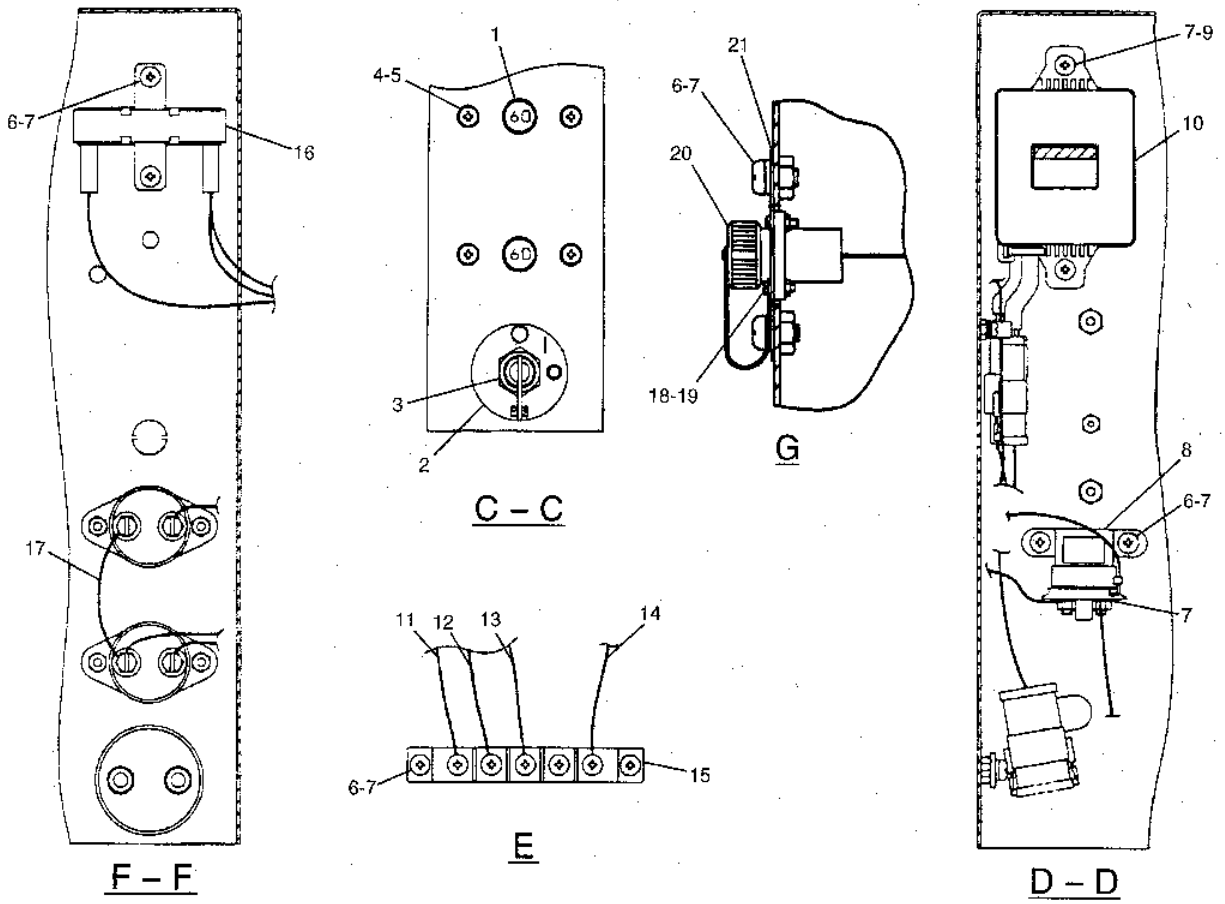


GRAPHIC #1

h84048e

# 1288948 PANEL GP-CIRCUIT BREAKER-PART 1 OF 2

S/N 8SR 00418-00478, 8TR 00486-00616
PART OF 1114858-Page 107.06
1532554-Page 120.02

**Key:** Y - SEE SEPARATE ILLUSTRATION

**SMCS**

| NOTE | REF NO | GRAPHIC REF | PART NUMBER | QTY | PART NAME 1 2 3 4 5 6 (PRODUCT LEVEL) | PRICE USD |
|---|---|---|---|---|---|---|
| | 1 | | 132-1902 | 1 | BRACKET AS | |
| | 2 | | 8T-4191 | 4 | BOLT (L=16mm) | |
| | 3 | | 8T-4121 | 4 | WASHER | |
| | 4 | | 111-4874 | 1 | COVER | |
| | 5 | | 3T-0376 | 1 | SWITCH AS (MAIN RELAY) | |
| | | | 6V-8378 | 2 | NUT | |
| | | | 4F-2294 | 2 | NUT | |
| | | | 6V-8186 | 2 | NUT | |
| Y | 6 | | 153-2554 | 1 | HARNESS AS | |
| | 7 | | 128-8937 | 1 | WIRE AS | |
| | | | 2L-8050 | 1 | TERMINAL | |
| | | | 2L-8051 | 1 | TERMINAL | |
| | 8 | | 105-9983 | 1 | CLIP | |
| | 9 | | 8T-6411 | 1 | SCREW | |
| | 10 | | 9X-8256 | 9 | WASHER | |
| | 11 | | 149-5050 | 6 | RELAY | |
| | 12 | | 7X-2619 | 8 | BOLT | |
| | 13 | | 8C-7581 | 4 | SCREW | |
| | 14 | | 096-6166 | 4 | WASHER | |
| | 15 | | 105-9982 | 1 | CLIP | |
| | 16 | | 3S-2093 | 5 | STRAP | |
| | 17 | | 128-8938 | 1 | WIRE AS | |
| | | | 2L-8051 | 1 | TERMINAL | |
| | | | 2L-8058 | 1 | TERMINAL | |
| | 18 | | 111-4718 | 2 | CLIP | |

## 1288948 PANEL GP-CIRCUIT BREAKER-PART 1 OF 2

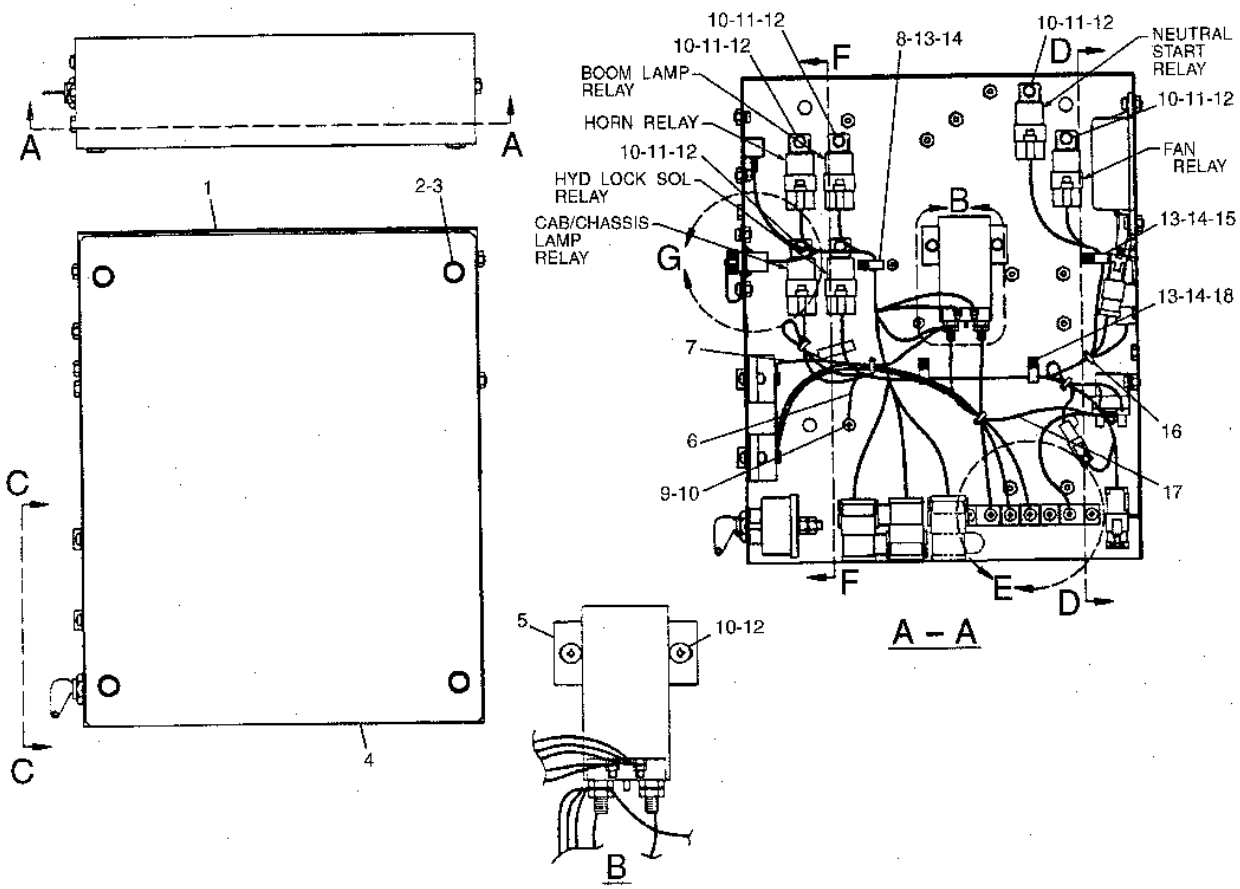


GRAPHIC #1

h84049e

# 1288948 PANEL GP-CIRCUIT BREAKER-PART 2 OF 2

S/N 8SR 00418-00478, 8TR 00486-00616
PART OF 1114858-Page 107.06
1114870-Page 121, 7N0718-Page 130, 1251302-Page 133.01

**Key:** Y - SEE SEPARATE ILLUSTRATION

**SMCS**

| NOTE | REF NO | GRAPHIC REF | PART NUMBER | QTY | PART NAME 1 2 3 4 5 6 (PRODUCT LEVEL) | PRICE USD |
|---|---|---|---|---|---|---|
| | 1 | | 9S-0174 | 2 | BREAKER AS | |
| | | | 1H-3244 | 2 | LOCKWASHER | |
| | | | 7X-3182 | 2 | BOLT (L=13MM) | |
| | | | 8T-4025 | 2 | WASHER | |
| | | | 0S-1570 | 2 | BOLT (L=16MM) | |
| Y | 3 | | 7N-0718 | 1 | SWITCH AS (DISCONNECT) | |
| | 4 | | 6V-5645 | 4 | SCREW | |
| | 5 | | 8T-0328 | 4 | WASHER | |
| | 6 | | 8T-6411 | 13 | SCREW | |
| | 7 | | 9X-8256 | 17 | WASHER | |
| Y | 8 | | 125-1302 | 1 | SWITCH AS (START RELAY) | |
| | 9 | | 095-0742 | 2 | SCREW | |
| Y | 10 | | 111-4870 | 1 | TIMER AS | |
| | 11 | | 111-4826 | 1 | WIRE AS | |
| | | | 2L-8050 | 1 | TERMINAL AS | |
| | | | 2L-8051 | 1 | TERMINAL | |
| | 12 | | 111-4831 | 1 | WIRE AS | |
| | | | 2L-8050 | 2 | TERMINAL | |
| | 13 | | 111-4830 | 1 | WIRE AS | |
| | | | 2L-8050 | 2 | TERMINAL | |
| | 14 | | 111-4829 | 1 | WIRE AS | |
| | | | 2L-8050 | 1 | TERMINAL | |
| | | | 2L-8058 | 1 | TERMINAL | |
| | 15 | | 121-1023 | 1 | BLOCK | |
| | 16 | | 102-8017 | 1 | RESISTOR AS | |
| | 17 | | 128-8936 | 1 | WIRE AS | |
| | | | 2L-8050 | 2 | TERMINAL | |
| | 18 | | 6V-9326 | 4 | SCREW | |
| | 19 | | 6V-8950 | 4 | NUT | |
| | 20 | | 3E-5165 | 1 | CAP AS | |
| | 21 | | 132-1863 | 1 | STRIP | |

## 1288948 PANEL GP-CIRCUIT BREAKER-PART 2 OF 2

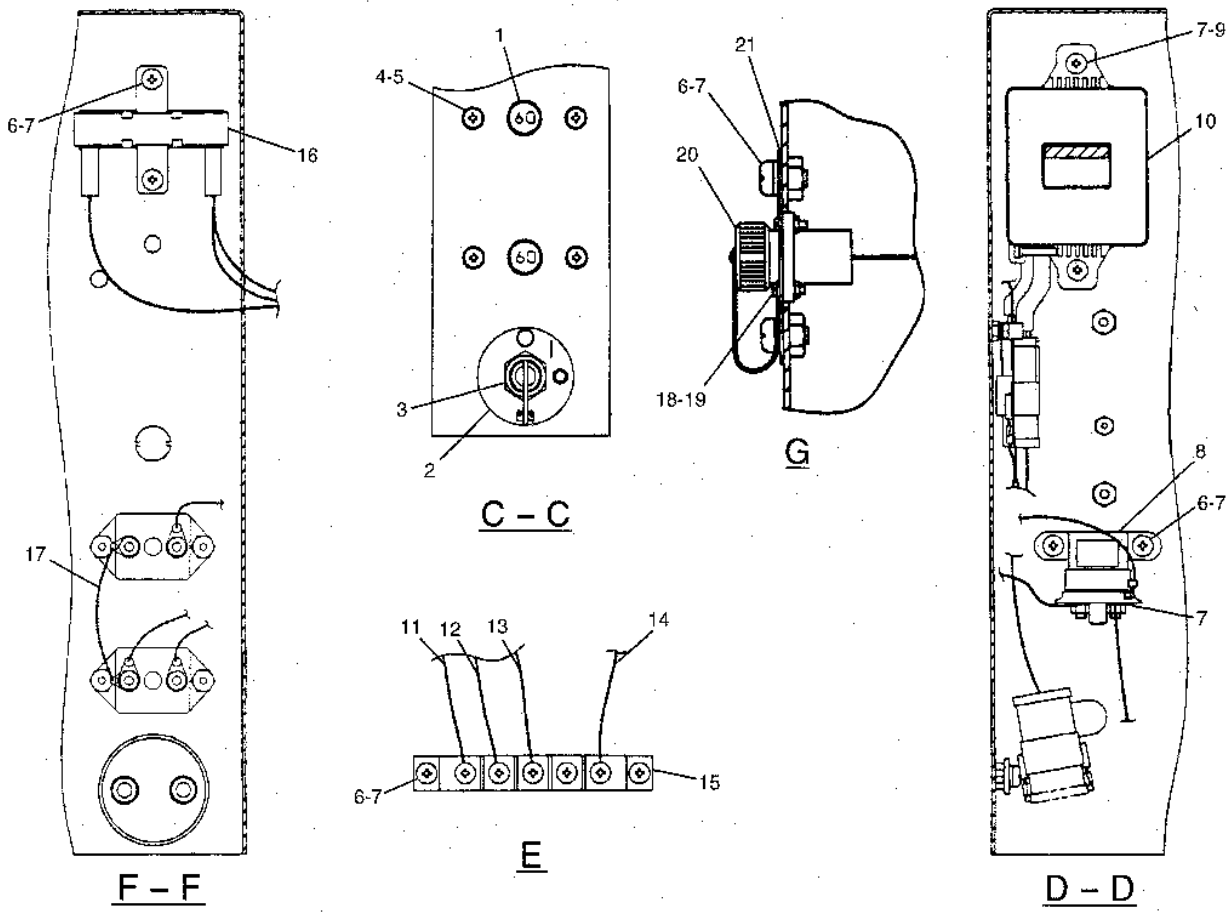


GRAPHIC #1

h84050e

# 1288948 PANEL GP-CIRCUIT BREAKER-PART 1 OF 2

S/N 8SR 00479-UP, 8TR 00617-UP
PART OF 1114858-Page 107.06
1673590-Page 120.03

**Key:** Y - SEE SEPARATE ILLUSTRATION

**SMCS**

| NOTE | REF NO | GRAPHIC REF | PART NUMBER | QTY | PART NAME 1 2 3 4 5 6 (PRODUCT LEVEL) | PRICE USD |
|---|---|---|---|---|---|---|
| | 1 | | 132-1902 | 1 | BRACKET AS | |
| | 2 | | 8T-4191 | 4 | BOLT (L=16mm) | |
| | 3 | | 8T-4121 | 4 | WASHER | |
| | 4 | | 111-4874 | 1 | COVER | |
| | 5 | | 3T-0376 | 1 | SWITCH AS (MAIN RELAY) | |
| | | | 6V-8378 | 2 | NUT | |
| | | | 4F-2294 | 2 | NUT | |
| | | | 6V-8186 | 2 | NUT | |
| Y | 6 | | 153-2554 | 1 | HARNESS AS | |
| | 7 | | 128-8937 | 1 | WIRE AS | |
| | | | 2L-8050 | 1 | TERMINAL | |
| | | | 2L-8051 | 1 | TERMINAL | |
| | 8 | | 105-9983 | 1 | CLIP | |
| | 9 | | 8T-6411 | 1 | SCREW | |
| | 10 | | 9X-8256 | 14 | WASHER | |
| | 11 | | 111-4871 | 6 | RELAY | |
| | 12 | | 7X-2619 | 4 | BOLT | |
| | 13 | | 8C-7581 | 4 | SCREW | |
| | 14 | | 096-6166 | 4 | WASHER | |
| | 15 | | 105-9982 | 1 | CLIP | |
| | 16 | | 3S-2093 | 5 | STRAP | |
| | 17 | | 128-8938 | 1 | WIRE AS | |
| | | | 2L-8051 | 1 | TERMINAL | |
| | | | 2L-8058 | 1 | TERMINAL | |
| | 18 | | 111-4718 | 2 | CLIP | |

## 1288948 PANEL GP-CIRCUIT BREAKER-PART 1 OF 2

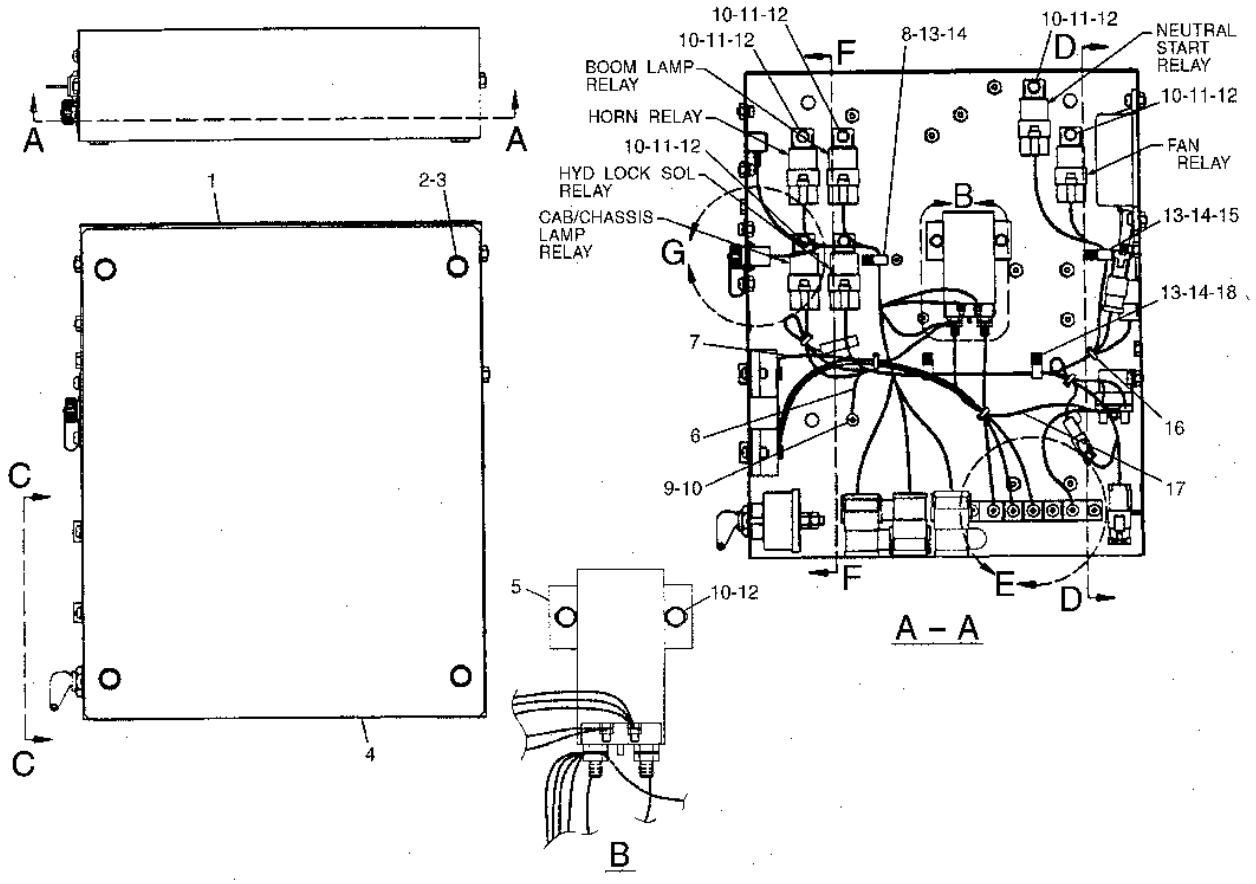


GRAPHIC #1

h84051e

# 1288948 PANEL GP-CIRCUIT BREAKER-PART 2 OF 2

S/N 8SR 00479-UP, 8TR 00617-UP
PART OF 1114858-Page 107.06
1114870-Page 121, 7N0718-Page 130, 1251302-Page 133.01

**Key:** Y - SEE SEPARATE ILLUSTRATION

**SMCS**

| NOTE | REF NO | GRAPHIC REF | PART NUMBER | QTY | PART NAME 1 2 3 4 5 6 (PRODUCT LEVEL) | PRICE USD |
|---|---|---|---|---|---|---|
| | 1 | | 9S-0174 | 2 | BREAKER AS | |
| | | | 1H-3244 | 2 | LOCKWASHER | |
| | | | 6V-8365 | 2 | SCREW | |
| | 2 | | 3E-8320 | 1 | PLATE (INSTRUCTION) | |
| Y | 3 | | 7N-0718 | 1 | SWITCH AS (DISCONNECT) | |
| | 4 | | 6V-5645 | 4 | SCREW | |
| | 5 | | 8T-0328 | 4 | WASHER | |
| | 6 | | 8T-6411 | 13 | SCREW | |
| | 7 | | 9X-8256 | 17 | WASHER | |
| Y | 8 | | 125-1302 | 1 | SWITCH AS (START RELAY) | |
| | 9 | | 095-0742 | 2 | SCREW | |
| Y | 10 | | 111-4870 | 1 | TIMER AS | |
| | 11 | | 111-4826 | 1 | WIRE AS | |
| | | | 2L-8050 | 1 | TERMINAL AS | |
| | | | 2L-8051 | 1 | TERMINAL | |
| | 12 | | 111-4831 | 1 | WIRE AS | |
| | | | 2L-8050 | 2 | TERMINAL | |
| | 13 | | 111-4830 | 1 | WIRE AS | |
| | | | 2L-8050 | 2 | TERMINAL | |
| | 14 | | 111-4829 | 1 | WIRE AS | |
| | | | 2L-8050 | 1 | TERMINAL | |
| | | | 2L-8058 | 1 | TERMINAL | |
| | 15 | | 121-1023 | 1 | BLOCK | |
| | 16 | | 102-8017 | 1 | RESISTOR AS | |
| | 17 | | 128-8936 | 1 | WIRE AS | |
| | | | 2L-8050 | 2 | TERMINAL | |
| | 18 | | 6V-9326 | 4 | SCREW | |
| | 19 | | 6V-8950 | 4 | NUT | |
| | 20 | | 3E-5165 | 1 | CAP AS | |
| | 21 | | 132-1863 | 1 | STRIP | |

## 1288948 PANEL GP-CIRCUIT BREAKER-PART 2 OF 2

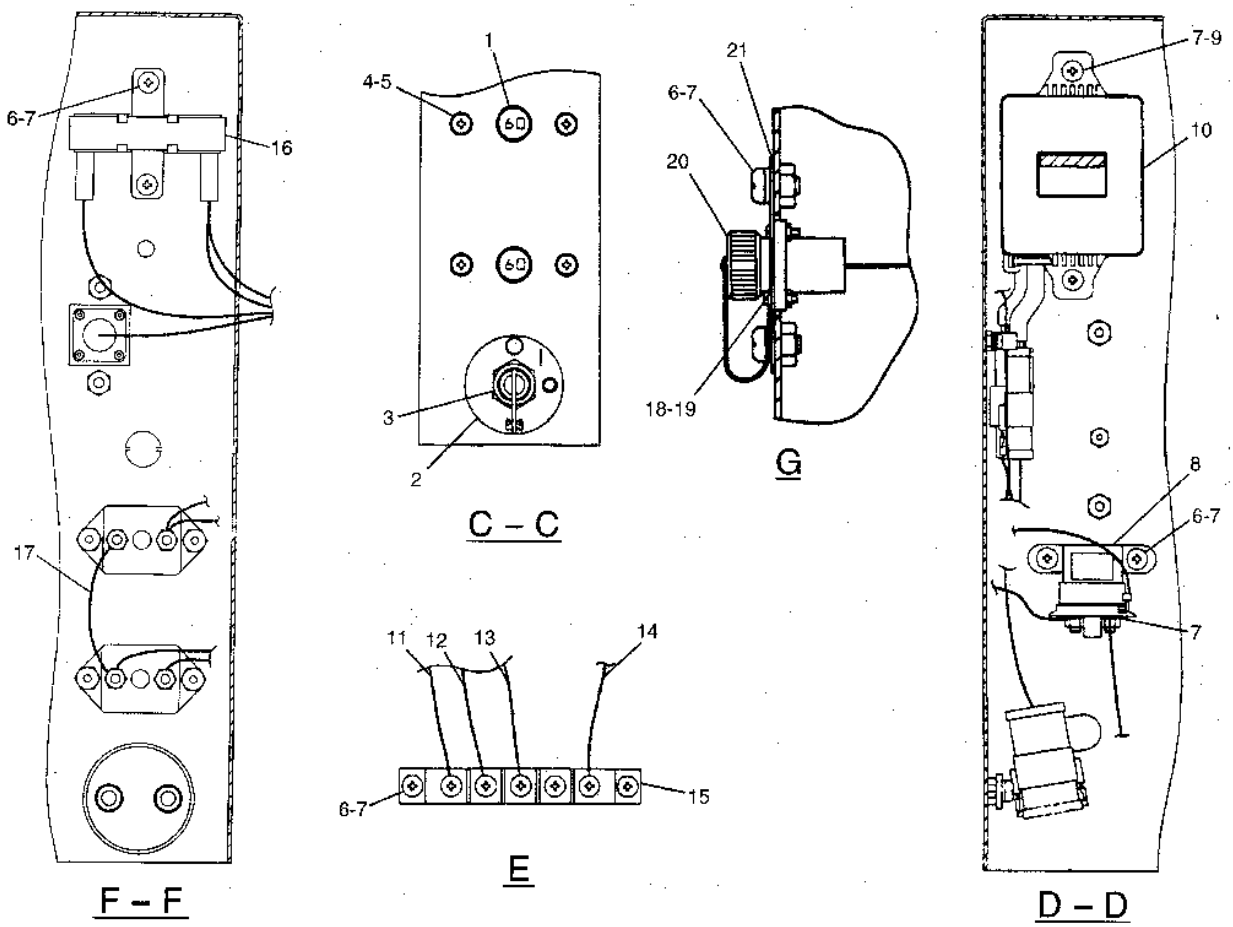


GRAPHIC #1

h84052e

# 1321868 HARNESS AS

S/N 8SR 1-00147, 8TR 1-00162
PART OF 1288948-Page 118

**Key:**

**SMCS**

| NOTE | REF NO | GRAPHIC REF | PART NUMBER | QTY | PART NAME 1 2 3 4 5 6 (PRODUCT LEVEL) | PRICE USD |
|---|---|---|---|---|---|---|
| | 1 | | 111-4875 | 5 | HOUSING | |
| | 2 | | 102-8809 | 1 | PLUG KIT | |
| | 3 | | 3E-3374 | 1 | WEDGE | |
| | 4 | | 8T-8730 | 12 | SOCKET | |
| | 5 | | 9W-0844 | 9 | SOCKET | |
| | 6 | | 116-0126 | 1 | HOUSING | |
| | 7 | | 116-0128 | 1 | SEAL | |
| | 8 | | 116-0255 | 2 | TERMINAL | |
| | 9 | | 102-8801 | 2 | RECEPTACLE KIT | |
| | 10 | | 3E-5180 | 2 | WEDGE | |
| | 11 | | 9W-0852 | 2 | PIN | |
| | 12 | | 8T-8737 | 12 | PLUG-SEAL | |
| | 13 | | 8T-8729 | 13 | PIN | |
| | 14 | | 102-8807 | 1 | PLUG KIT | |
| | 15 | | 3E-3362 | 1 | WEDGE | |
| | 16 | | 102-8810 | 1 | PLUG KIT | |
| | 17 | | 3E-3380 | 1 | WEDGE | |
| | 18 | | 102-8800 | 1 | PLUG KIT | |
| | 19 | | 3E-5177 | 1 | WEDGE | |
| | 20 | | 2L-8067 | 2 | TERMINAL | |
| | 21 | | 5P-6271 | 1 | CONNECTOR AS | |
| | 22 | | 3S-2093 | 21 | STRAP | |
| | 23 | | 121-1022 | 1 | DIODE | |
| | 24 | | 7Y-3952 | 1 | CONNECTOR | |
| | 25 | | 3E-5136 | 1 | RECEPTACLE AS | |
| | 26 | | 6T-6505 | 2 | HOUSING | |
| | 27 | | 6T-6506 | 2 | TERMINAL | |
| | 28 | | 2L-8066 | 1 | TERMINAL | |
| | 29 | | 2L-8076 | 1 | TERMINAL | |
| | 30 | | 2L-8051 | 1 | TERMINAL | |

## 1321868 HARNESS AS

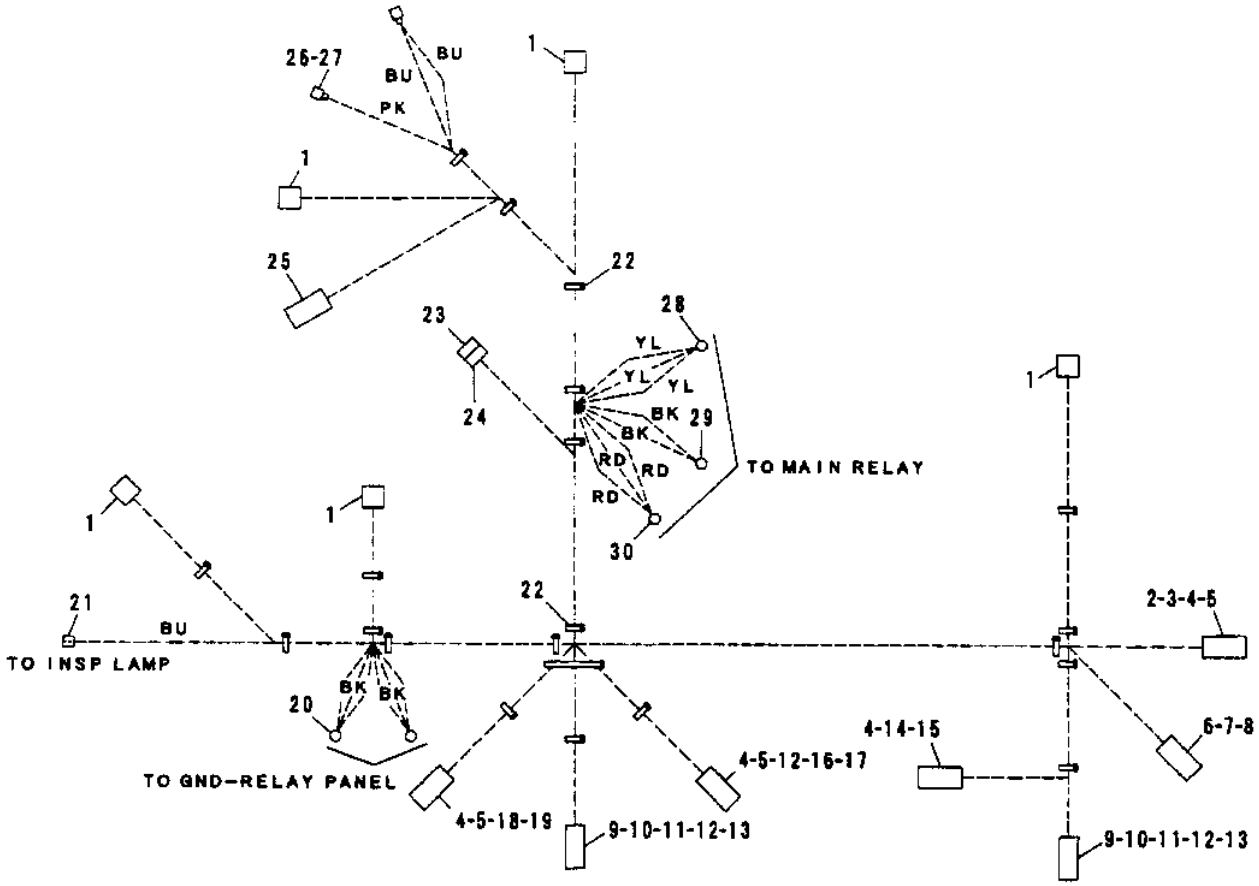


| NOTE | No. | PART No. | QTY | PART NAME |
|---|---|---|---|---|
| | 1 | 111-4875 | 5 | HOUSING |
| | 2 | 102-8809 | 1 | PLUG KIT |
| | 3 | 3E-3374 | 1 | WEDGE |
| | 4 | 8T-8730 | 12 | SOCKET |
| | 5 | 9W-0844 | 9 | SOCKET |
| | 6 | 116-0126 | 1 | HOUSING |
| | 7 | 116-0128 | 1 | SEAL |
| | 8 | 116-0255 | 2 | TERMINAL |
| | 9 | 102 8801 | 2 | RECEPTACLE KIT |
| | 10 | 3E-5180 | 2 | WEDGE |
| | 11 | 9W-0852 | 2 | PIN |
| | 12 | 8T-8737 | 12 | PLUG-SEAL |
| | 13 | 8T-8729 | 13 | PIN |
| | 14 | 102-8807 | 1 | PLUG KIT |
| | 15 | 3E-3362 | 1 | WEDGE |
| | 16 | 102-8810 | 1 | PLUG KIT |
| | 17 | 3E-3380 | 1 | WEDGE |
| | 18 | 102-8800 | 1 | PLUG KIT |
| | 19 | 3E-5177 | 1 | WEDGE |
| | 20 | 2L-8067 | 2 | TERMINAL |
| | 21 | 5P-6271 | 1 | CONNECTOR AS |
| | 22 | 3S-2093 | 21 | STRAP |
| | 23 | 121-1022 | 1 | DIODE |
| | 24 | 7Y-3952 | 1 | CONNECTOR |
| | 25 | 3E-5136 | 1 | RECEPTACLE AS |
| | 26 | 6T-6505 | 2 | HOUSING |
| | 27 | 6T-6506 | 2 | TERMINAL |
| | 28 | 2L-8066 | 1 | TERMINAL |
| | 29 | 2L-8076 | 1 | TERMINAL |
| | 30 | 2L-8051 | 1 | TERMINAL |

H50779E

GRAPHIC #1

h50779e

# 1364076 HARNESS AS

S/N 8SR 00148-00417, 8TR 00163-00485
PART OF 1288948-Page 119.01

**Key:**

**SMCS**

| NOTE | REF NO | GRAPHIC REF | PART NUMBER | QTY | PART NAME 1 2 3 4 5 6 (PRODUCT LEVEL) | PRICE USD |
|---|---|---|---|---|---|---|
| | 1 | | 111-4875 | 5 | HOUSING | |
| | 2 | | 102-8809 | 1 | PLUG KIT | |
| | 3 | | 3E-3374 | 1 | WEDGE | |
| | 4 | | 8T-8730 | 12 | SOCKET | |
| | 5 | | 9W-0844 | 9 | SOCKET | |
| | 6 | | 116-0126 | 1 | HOUSING | |
| | 7 | | 116-0128 | 1 | SEAL | |
| | 8 | | 116-0255 | 2 | TERMINAL | |
| | 9 | | 102-8801 | 2 | RECEPTACLE KIT | |
| | 10 | | 3E-5180 | 2 | WEDGE | |
| | 11 | | 9W-0852 | 2 | PIN | |
| | 12 | | 8T-8737 | 12 | PLUG-SEAL | |
| | 13 | | 8T-8729 | 13 | PIN | |
| | 14 | | 102-8807 | 1 | PLUG KIT | |
| | 15 | | 3E-3362 | 1 | WEDGE | |
| | 16 | | 102-8810 | 1 | PLUG KIT | |
| | 17 | | 3E-3380 | 1 | WEDGE | |
| | 18 | | 102-8800 | 1 | PLUG KIT | |
| | 19 | | 3E-5177 | 1 | WEDGE | |
| | 20 | | 2L-8067 | 2 | TERMINAL | |
| | 21 | | 5P-6271 | 1 | CONNECTOR AS | |
| | 22 | | 3S-2093 | 21 | STRAP | |
| | 23 | | 121-1022 | 1 | DIODE | |
| | 24 | | 7Y-3952 | 1 | CONNECTOR | |
| | 25 | | 3E-5136 | 1 | RECEPTACLE AS | |
| | 26 | | 6T-6505 | 2 | HOUSING | |
| | 27 | | 6T-6506 | 2 | TERMINAL | |
| | 28 | | 2L-8066 | 1 | TERMINAL | |
| | 29 | | 2L-8076 | 1 | TERMINAL | |
| | 30 | | 2L-8051 | 1 | TERMINAL | |

## 1364076 HARNESS AS

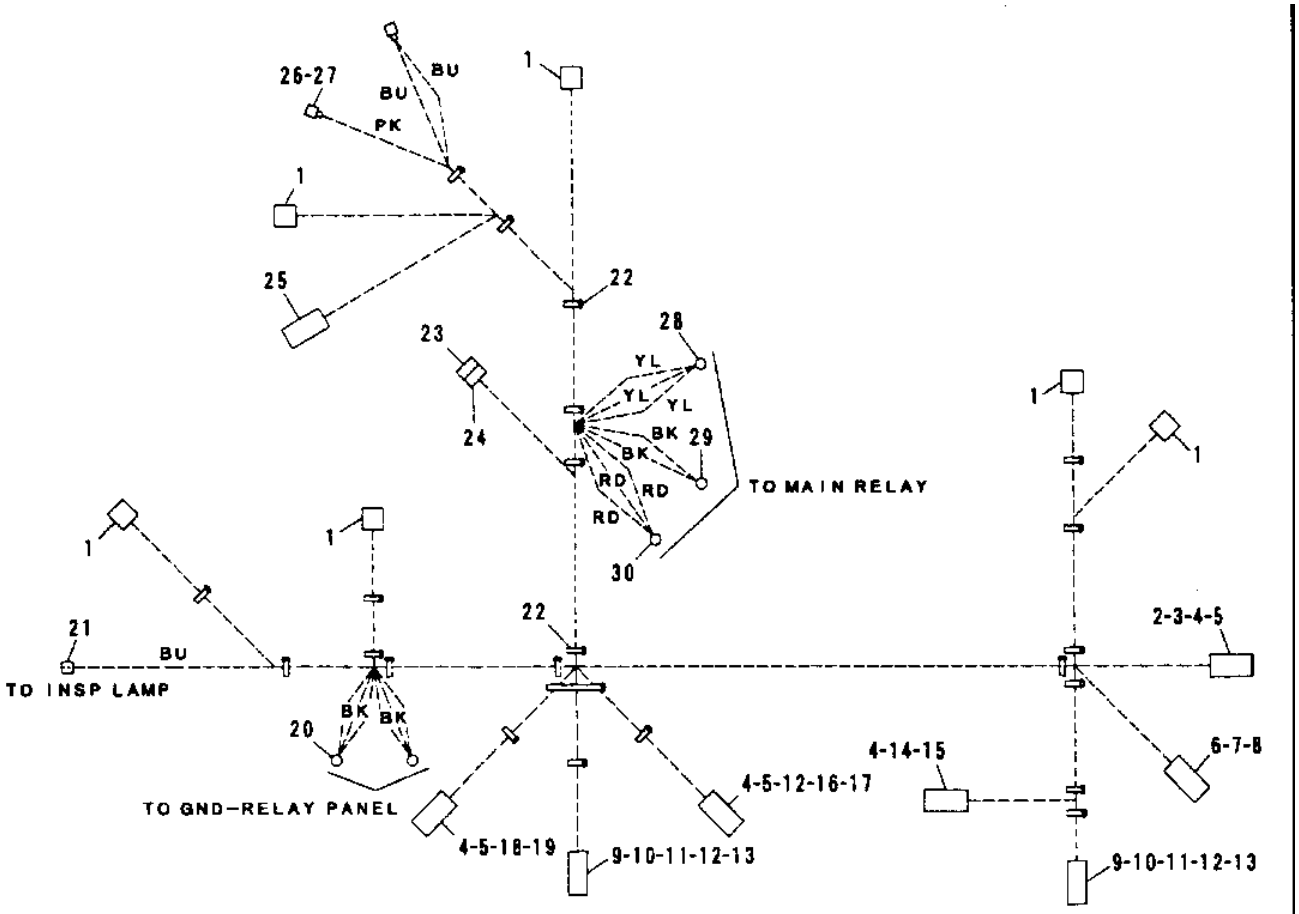


| NOTE | No. | PART No. | QTY | PART NAME | NOTE | No. | PART No. | QTY | PART NAME |
|---|---|---|---|---|---|---|---|---|---|
| | 1 | 111-4875 | 5 | HOUSING | | 21 | 5P-6271 | 1 | CONNECTOR AS |
| | 2 | 102-8809 | 1 | PLUG KIT | | 22 | 3S-2093 | 21 | STRAP |
| | 3 | 3E-3374 | 1 | WEDGE | | 23 | 121-1022 | 1 | DIODE |
| | 4 | 8T-8730 | 12 | SOCKET | | 24 | 7Y 3952 | 1 | CONNECTOR |
| | 5 | 9W-0844 | 9 | SOCKET | | 25 | 3E-5136 | 1 | RECEPTACLE AS |
| | 6 | 116-0126 | 1 | HOUSING | | 26 | 6T-6505 | 2 | HOUSING |
| | 7 | 116-0128 | 1 | SEAL | | 27 | 6T 6506 | 2 | TERMINAL |
| | 8 | 116-0255 | 2 | TERMINAL | | 28 | 2L 8066 | 1 | TERMINAL |
| | 9 | 102-8801 | 2 | RECEPTACLE KIT | | 29 | 2L-8076 | 1 | TERMINAL |
| | 10 | 3E-5180 | 2 | WEDGE | | 30 | 2L-8051 | 1 | TERMINAL |
| | 11 | 9W-0852 | 2 | PIN | | | | | |
| | 12 | 8T-8737 | 12 | PLUG-SEAL | | | | | |
| | 13 | 8T-8729 | 13 | PIN | | | | | |
| | 14 | 102-8807 | 1 | PLUG KIT | | | | | |
| | 15 | 3E-3362 | 1 | WEDGE | | | | | |
| | 16 | 102-8810 | 1 | PLUG KIT | | | | | |
| | 17 | 3E-3380 | 1 | WEDGE | | | | | |
| | 18 | 102-8800 | 1 | PLUG KIT | | | | | |
| | 19 | 3E-5177 | 1 | WEDGE | | | | | |
| | 20 | 2L-8067 | 2 | TERMINAL | | | | | |

H56588E

GRAPHIC #1 h56588e

# 1532554 HARNESS AS

S/N 8SR 00418-00478, 8TR 00486-00616
PART OF 1288948-Page 119.03

**Key:**

**SMCS**

| NOTE | REF NO | GRAPHIC REF | PART NUMBER | QTY | PART NAME 1 2 3 4 5 6 (PRODUCT LEVEL) | PRICE USD |
|---|---|---|---|---|---|---|
| | 1 | | 111-4875 | 6 | HOUSING | |
| | 2 | | 102-8809 | 1 | PLUG KIT | |
| | 3 | | 3E-3374 | 1 | WEDGE | |
| | 4 | | 8T-8730 | 12 | SOCKET | |
| | 5 | | 9W-0844 | 10 | SOCKET | |
| | 6 | | 116-0126 | 1 | HOUSING | |
| | 7 | | 116-0128 | 1 | SEAL | |
| | 8 | | 116-0255 | 2 | TERMINAL | |
| | 9 | | 102-8801 | 2 | RECEPTACLE KIT | |
| | 10 | | 3E-5180 | 2 | WEDGE | |
| | 11 | | 9W-0852 | 6 | PIN | |
| | 12 | | 8T-8737 | 16 | PLUG-SEAL | |
| | 13 | | 8T-8729 | 10 | PIN | |
| | 14 | | 102-8807 | 1 | PLUG KIT | |
| | 15 | | 3E-3362 | 1 | WEDGE | |
| | 16 | | 2L-8077 | 1 | TERMINAL | |
| | 17 | | 7Y-3951 | 23 | TERMINAL | |
| | 18 | | 102-8800 | 2 | PLUG KIT | |
| | 19 | | 3E-5177 | 2 | WEDGE | |
| | 20 | | 2L-8067 | 2 | TERMINAL | |
| | 21 | | 3M-6018 | 1 | TERMINAL | |
| | 22 | | 3S-2093 | 23 | STRAP | |
| | 23 | | 121-1022 | 1 | DIODE | |
| | 24 | | 7Y-3952 | 1 | CONNECTOR | |
| | 25 | | 3E-5136 | 1 | RECEPTACLE AS | |
| | 26 | | 6T-6505 | 2 | HOUSING | |
| | 27 | | 6T-6506 | 2 | TERMINAL | |
| | 28 | | 2L-8066 | 1 | TERMINAL | |
| | 29 | | 2L-8076 | 1 | TERMINAL | |
| | 30 | | 2L-8051 | 1 | TERMINAL | |

## 1532554 HARNESS AS

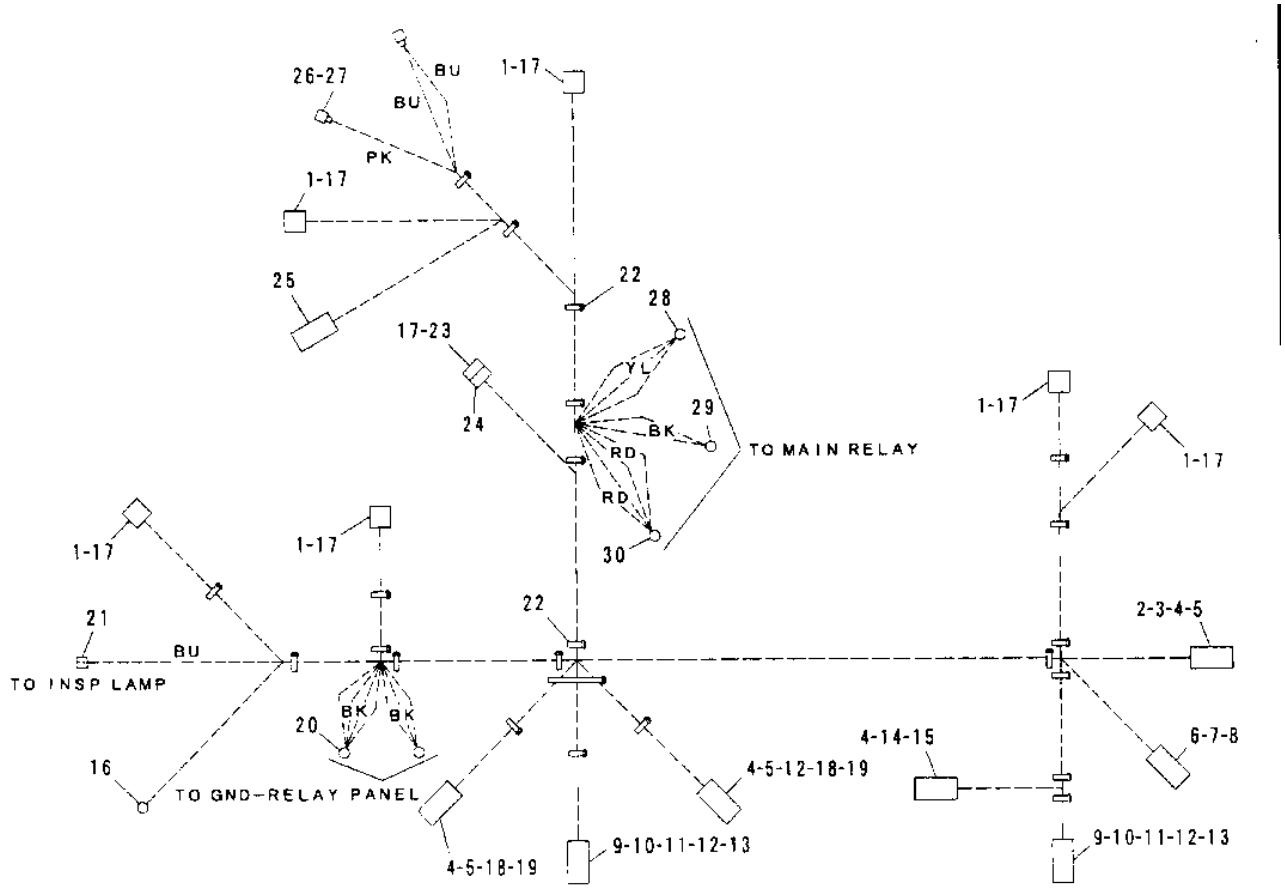


| NOTE | No. | PART No. | QTY | PART NAME |
|---|---|---|---|---|
| | 1 | 111-4875 | 6 | HOUSING |
| | 2 | 102-8809 | 1 | PLUG KIT |
| | 3 | 3E-3374 | 1 | WEDGE |
| | 4 | 8T-8730 | 12 | SOCKET |
| | 5 | 9W-0844 | 10 | SOCKET |
| | 6 | 116-0126 | 1 | HOUSING |
| | 7 | 116-0128 | 1 | SEAL |
| | 8 | 116-0255 | 2 | TERMINAL |
| | 9 | 102-8801 | 2 | RECEPTACLE KIT |
| | 10 | 3E-5180 | 2 | WEDGE |
| | 11 | 9W-0852 | 6 | PIN |
| | 12 | 8T-8737 | 16 | PLUG-SEAL |
| | 13 | 8T-8729 | 10 | PIN |
| | 14 | 102-8807 | 1 | PLUG KIT |
| | 15 | 3E-3362 | 1 | WEDGE |
| | 16 | 2L-8077 | 1 | TERMINAL |
| | 17 | 7Y-3951 | 23 | TERMINAL |
| | 18 | 102-8800 | 2 | PLUG KIT |
| | 19 | 3E-5177 | 2 | WEDGE |
| | 20 | 2L-8067 | 2 | TERMINAL |
| | 21 | 3M-6018 | 1 | TERMINAL |
| | 22 | 3S-2093 | 23 | STRAP |
| | 23 | 121-1022 | 1 | DIODE |
| | 24 | 7Y-3952 | 1 | CONNECTOR |
| | 25 | 3E-5136 | 1 | RECEPTACLE AS |
| | 26 | 6T-6505 | 2 | HOUSING |
| | 27 | 6T-6506 | 2 | TERMINAL |
| | 28 | 2L-8066 | 1 | TERMINAL |
| | 29 | 2L-8076 | 1 | TERMINAL |
| | 30 | 2L-8051 | 1 | TERMINAL |

H60542E

GRAPHIC #1

h60542e

# 1673590 HARNESS AS

S/N 8SR 00479-UP, 8TR 00617-UP
PART OF 1288948-Page 119.05

**Key:**

**SMCS**

| NOTE | REF NO | GRAPHIC REF | PART NUMBER | QTY | PART NAME 1 2 3 4 5 6 (PRODUCT LEVEL) | PRICE USD |
|---|---|---|---|---|---|---|
| | 1 | | 149-5051 | 6 | CONNECTOR | |
| | 2 | | 102-8809 | 1 | PLUG KIT | |
| | 3 | | 3E-3374 | 1 | WEDGE | |
| | 4 | | 8T-8730 | 12 | SOCKET | |
| | 5 | | 9W-0844 | 10 | SOCKET | |
| | 6 | | 116-0126 | 1 | HOUSING | |
| | 7 | | 116-0128 | 1 | SEAL | |
| | 8 | | 116-0255 | 2 | TERMINAL | |
| | 9 | | 102-8801 | 2 | RECEPTACLE KIT | |
| | 10 | | 3E-5180 | 2 | WEDGE | |
| | 11 | | 9S-0852 | 6 | PIN | |
| | 12 | | 8T-8737 | 16 | PLUG | |
| | 14 | | 155-2270 | 1 | PLUG KIT | |
| | 15 | | 3E-3362 | 1 | WEDGE | |
| | 16 | | 2L-8077 | 1 | TERMINAL | |
| | 17 | | 149-5070 | 12 | TERMINAL | |
| | 18 | | 102-8800 | 2 | PLUG KIT | |
| | 19 | | 3E-5177 | 2 | WEDGE | |
| | 20 | | 2L-8067 | 2 | TERMINAL | |
| | 21 | | 3M-6018 | 1 | TERMINAL | |
| | 22 | | 3S-2093 | 23 | STRAP | |
| | 23 | | 121-1022 | 1 | DIODE | |
| | 24 | | 7Y-3952 | 1 | CONNECTOR | |
| | 25 | | 3E-5136 | 1 | RECEPTACLE KIT | |
| | 26 | | 6T-6505 | 2 | HOUSING | |
| | 27 | | 6T-6506 | 1 | TERMINAL | |
| | 28 | | 2L-8066 | 1 | TERMINAL | |
| | 29 | | 2L-8076 | 1 | TERMINAL | |
| | 30 | | 2L-8051 | 1 | TERMINAL | |
| | 31 | | 7Y-3951 | 2 | TERMINAL | |
| | 32 | | 149-5069 | 9 | TERMINAL | |
| | 33 | | 149-5071 | 3 | TERMINAL | |

## 1673590 HARNESS AS

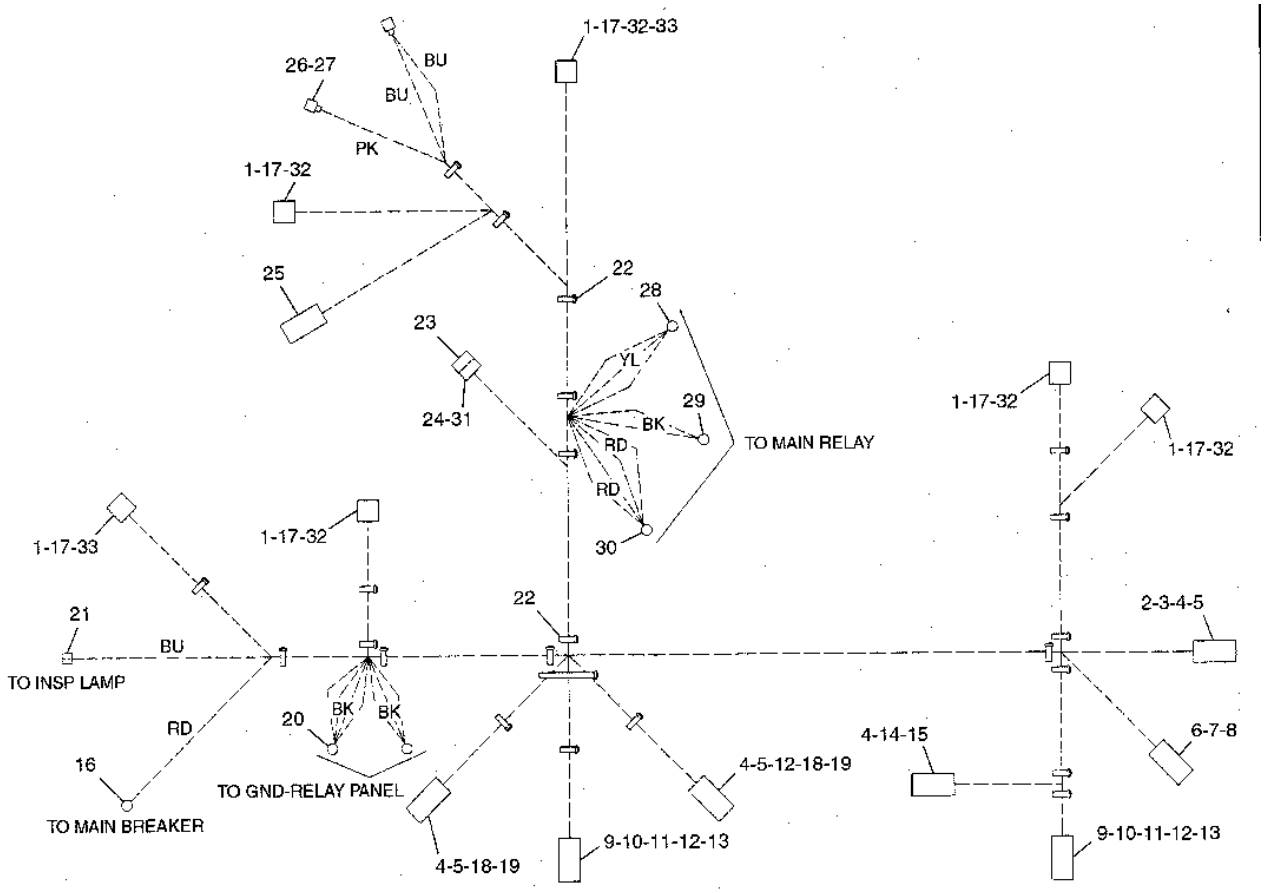


GRAPHIC #1

h79261e

# 1114870 TIMER AS

OFF DELAY
PART OF 1288948-Page 119

**Key:**

**SMCS**

| NOTE | REF NO | GRAPHIC REF | PART NUMBER | QTY | PART NAME 1 2 3 4 5 6 (PRODUCT LEVEL) | PRICE USD |
|---|---|---|---|---|---|---|
| | 1 | | 121-1038 | 1 | HOUSING | |
| | 2 | | 121-1039 | 2 | TERMINAL | |
| | 3 | | 102-8804 | 1 | RECEPTACLE KIT | |
| | 4 | | 8T-8729 | 4 | PIN | |
| | 5 | | 116-0128 | 1 | SEAL | |

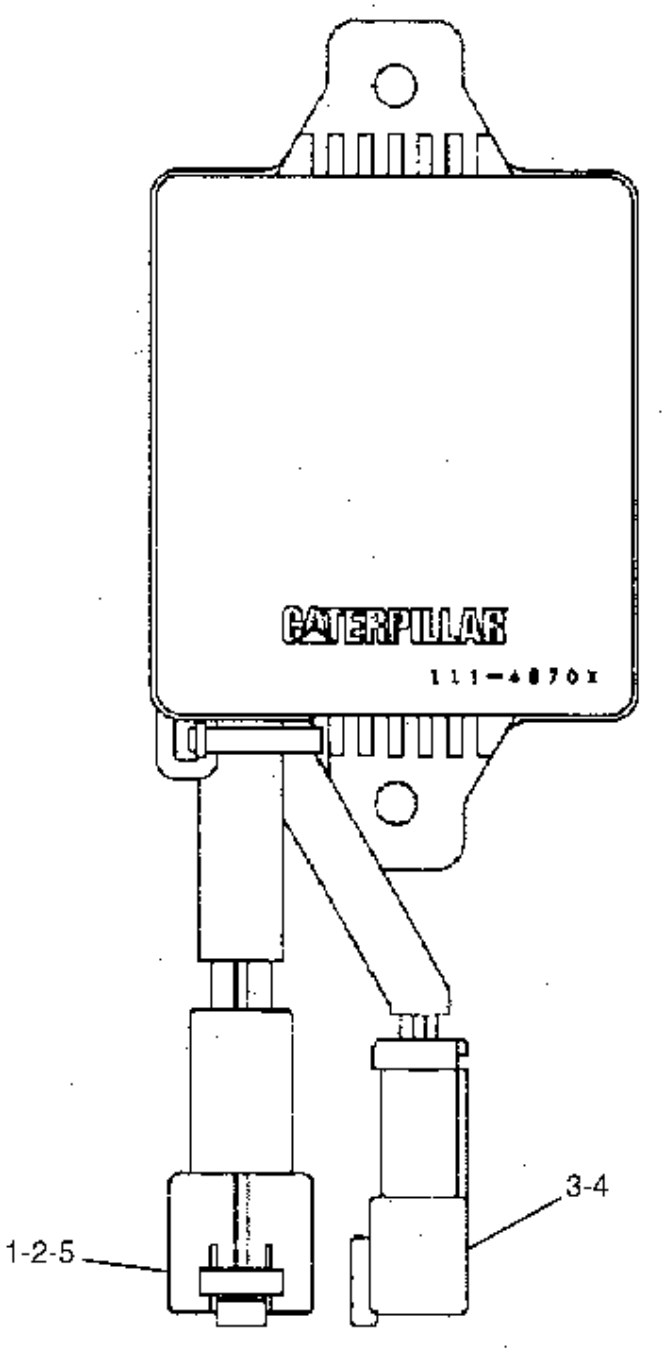


GRAPHIC #1

h54130e

## 1060206 CONTROL & MTG GP-ELECTRONIC

**Key:**

**SMCS**

| NOTE | REF NO | GRAPHIC REF | PART NUMBER | QTY | PART NAME 1 2 3 4 5 6 (PRODUCT LEVEL) | PRICE USD |
|---|---|---|---|---|---|---|
| | 1 | | 8T-4191 | 4 | BOLT (L=16mm) | |
| | 2 | | 8T-4121 | 4 | WASHER | |
| | 3 | | 106-0191 | 1 | BRACKET AS | |
| | 4 | | 164-8255 | 1 | CONTROL GP | |
| | 5 | | 8T-3844 | 4 | BOLT (L=70mm) | |
| | 6 | | 9X-8256 | 4 | WASHER | |

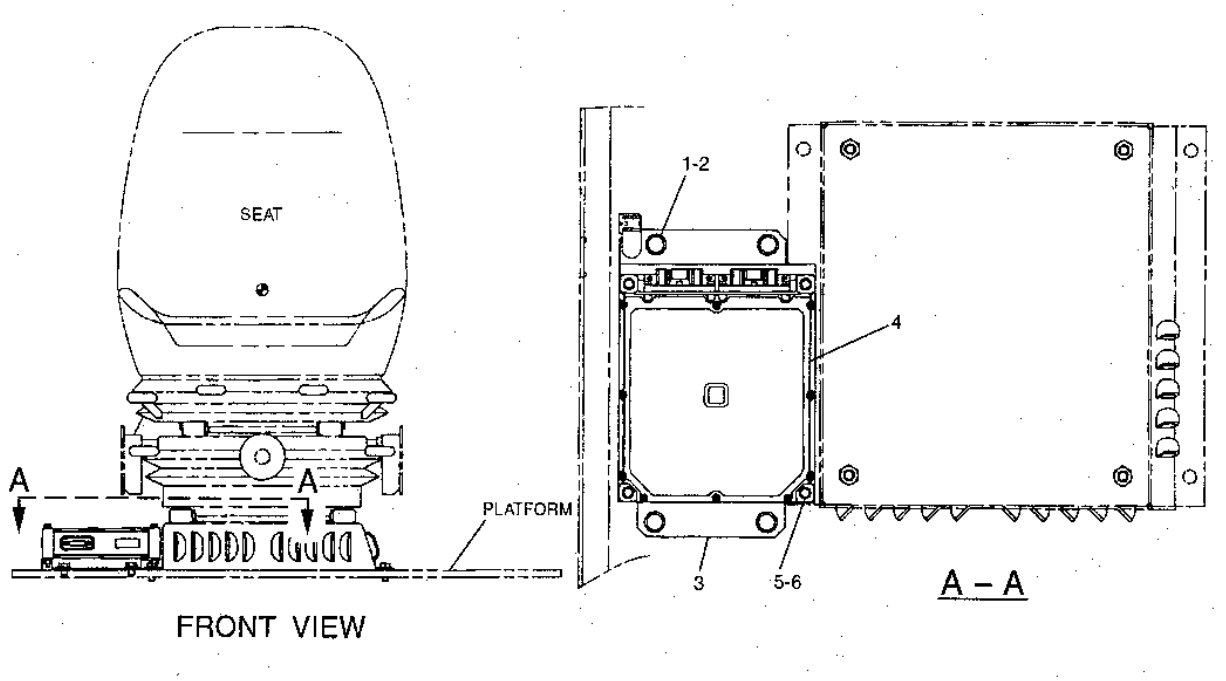


GRAPHIC #1

h79262e

# 1176264 CONTROL & MTG GP-WINDSHIELD

PART OF 1116310, 1557061-Page 432
AN ATTACHMENT

**Key:**

**SMCS**

| NOTE | REF NO | GRAPHIC REF | PART NUMBER | QTY | PART NAME 1 2 3 4 5 6 (PRODUCT LEVEL) | PRICE USD |
|---|---|---|---|---|---|---|
| | 1 | | 9X-2044 | 2 | SCREW | |
| | 2 | | 117-6305 | 1 | CONTROL GP | |

## 1176264 CONTROL & MTG GP-WINDSHIELD

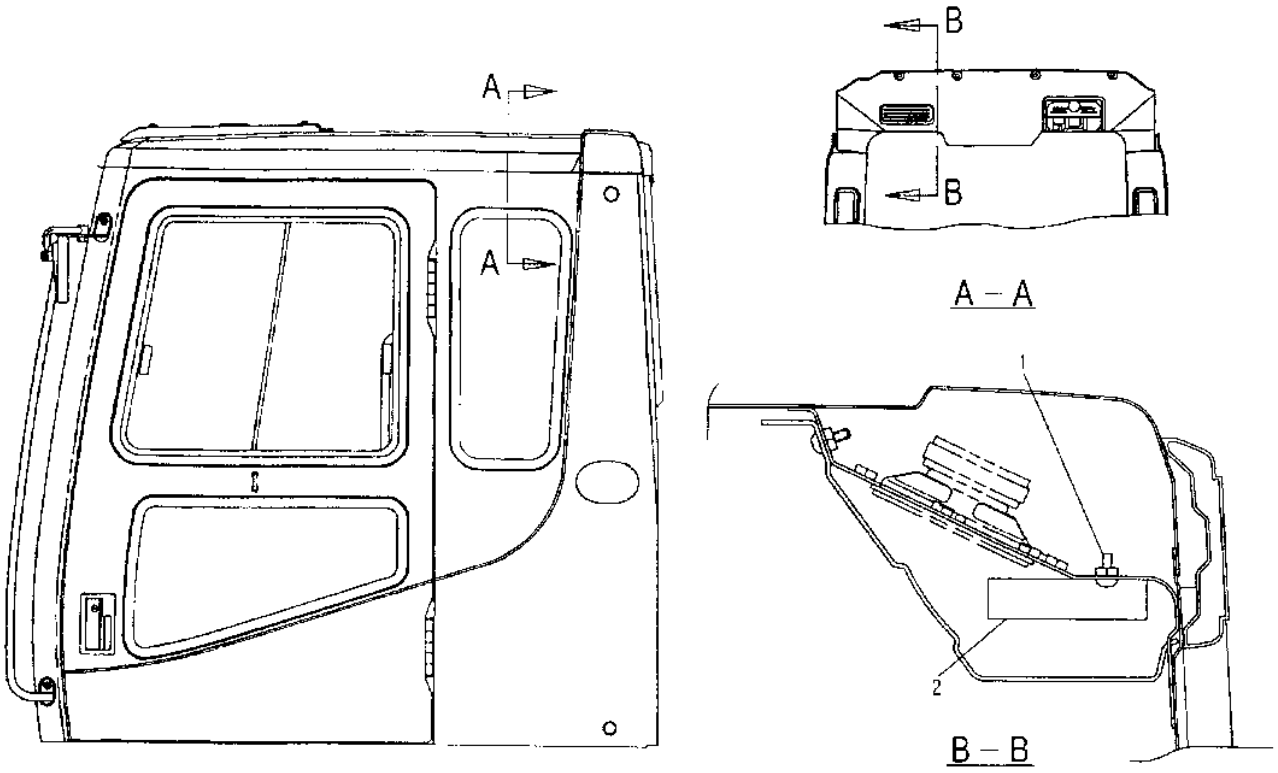


| NOTE | No. | PART No. | QTY | PART NAME |
|---|---|---|---|---|
| | 1 | 9X-2044 | 2 | SCREW |
| | 2 | 117-6305 | 1 | CONTROL GP |

| NOTE | No. | PART No. | QTY | PART NAME |
|---|---|---|---|---|

H57476E

GRAPHIC #1

h57476e

# 1060054 WIRING GP-CAB

S/N 8SR 1-(D97.10), 8TR 1-(D97.10)
PART OF 1116271-Page 401, 1116294-Page 405, 1244013-Page 409
1114795-Page 122.04, 1114796-Page 122.05

**Key:** E - ORDER BY THE CENTIMETER, Y - SEE SEPARATE ILLUSTRATION

**SMCS**

| NOTE | REF NO | GRAPHIC REF | PART NUMBER | QTY | PART NAME 1 2 3 4 5 6 (PRODUCT LEVEL) | PRICE USD |
|---|---|---|---|---|---|---|
| | 1 | | 4I-3043 | 2 | SCREW | |
| Y | 2 | | 111-4795 | 1 | HARNESS AS | |
| | 3 | | 9W-0335 | 1 | LIGHTER AS | |
| Y | 4 | | 111-4796 | 1 | HARNESS AS | |
| | 5 | | 121-1000 | 17 | STRAP | |
| | 6 | | 3S-2093 | 1 | STRAP | |
| E | 7 | | 4I-3064 | | GUARD (9cm) | |
| E | 8 | | 4I-3064 | | GUARD (11.5cmX2) | |

## 1060054 WIRING GP-CAB

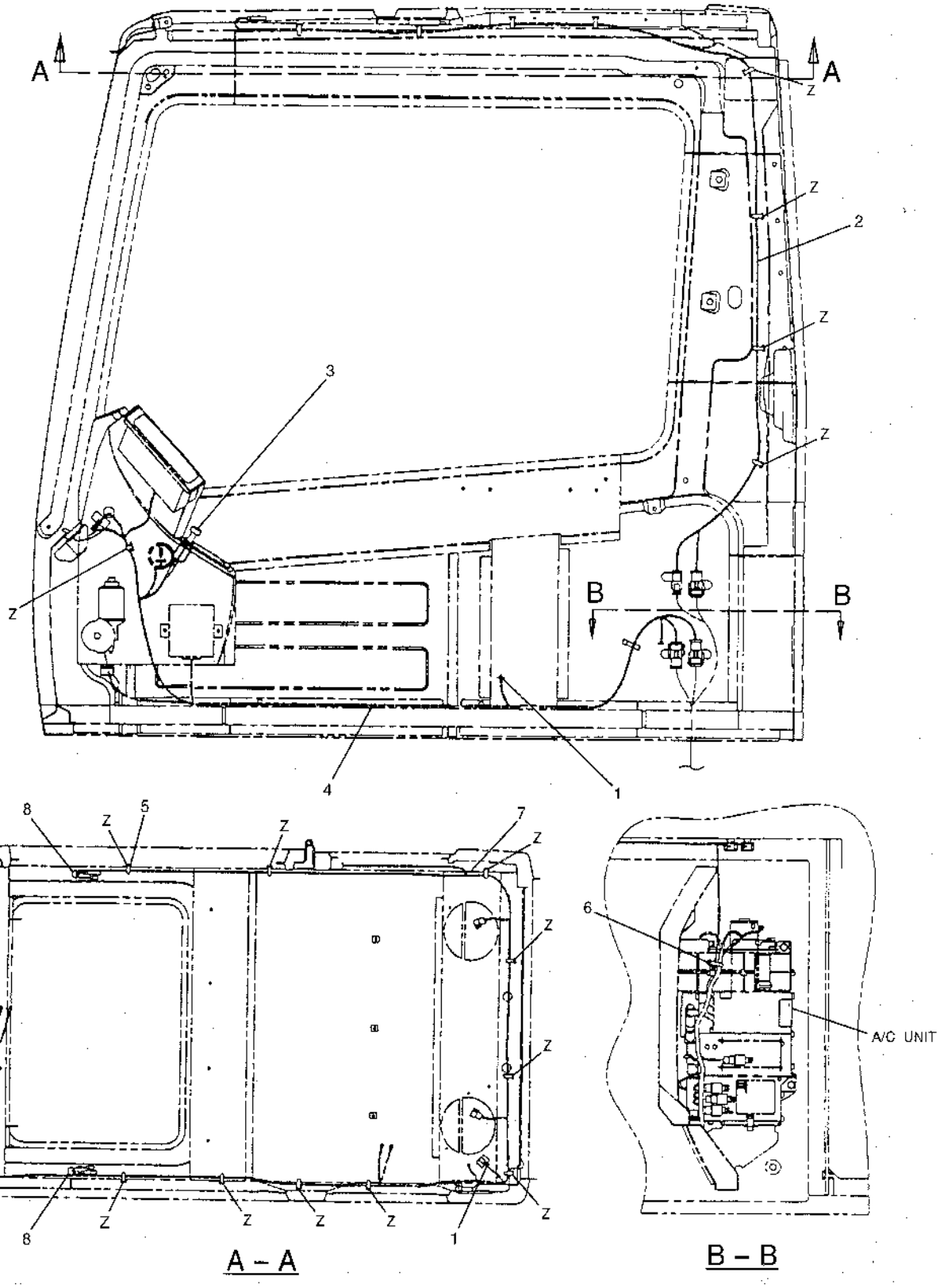


GRAPHIC #1

h53747e

# 1060054 WIRING GP-CAB

S/N 8SR (D97.11)-00417, 8TR (D97.11)-00485
PART OF 1116271-Page 401, 1116294-Page 405, 1244013-Page 409
1506989, 1506992-Page 122.05A

**Key:** E - ORDER BY THE CENTIMETER, Y - SEE SEPARATE ILLUSTRATION

**SMCS**

| NOTE | REF NO | GRAPHIC REF | PART NUMBER | QTY | PART NAME 1 2 3 4 5 6 (PRODUCT LEVEL) | PRICE USD |
|---|---|---|---|---|---|---|
| | 1 | | 4I-3043 | 2 | SCREW | |
| Y | 2 | | 150-6989 | 1 | HARNESS AS | |
| | 3 | | 9W-0335 | 1 | LIGHTER AS | |
| Y | 4 | | 150-6992 | 1 | HARNESS AS | |
| | 5 | | 121-1000 | 17 | STRAP | |
| | 6 | | 3S-2093 | 1 | STRAP | |
| E | 7 | | 4I-3064 | | GUARD (9cm) | |
| E | 8 | | 4I-3064 | | GUARD (11.5cmX2) | |

## 1060054 WIRING GP-CAB

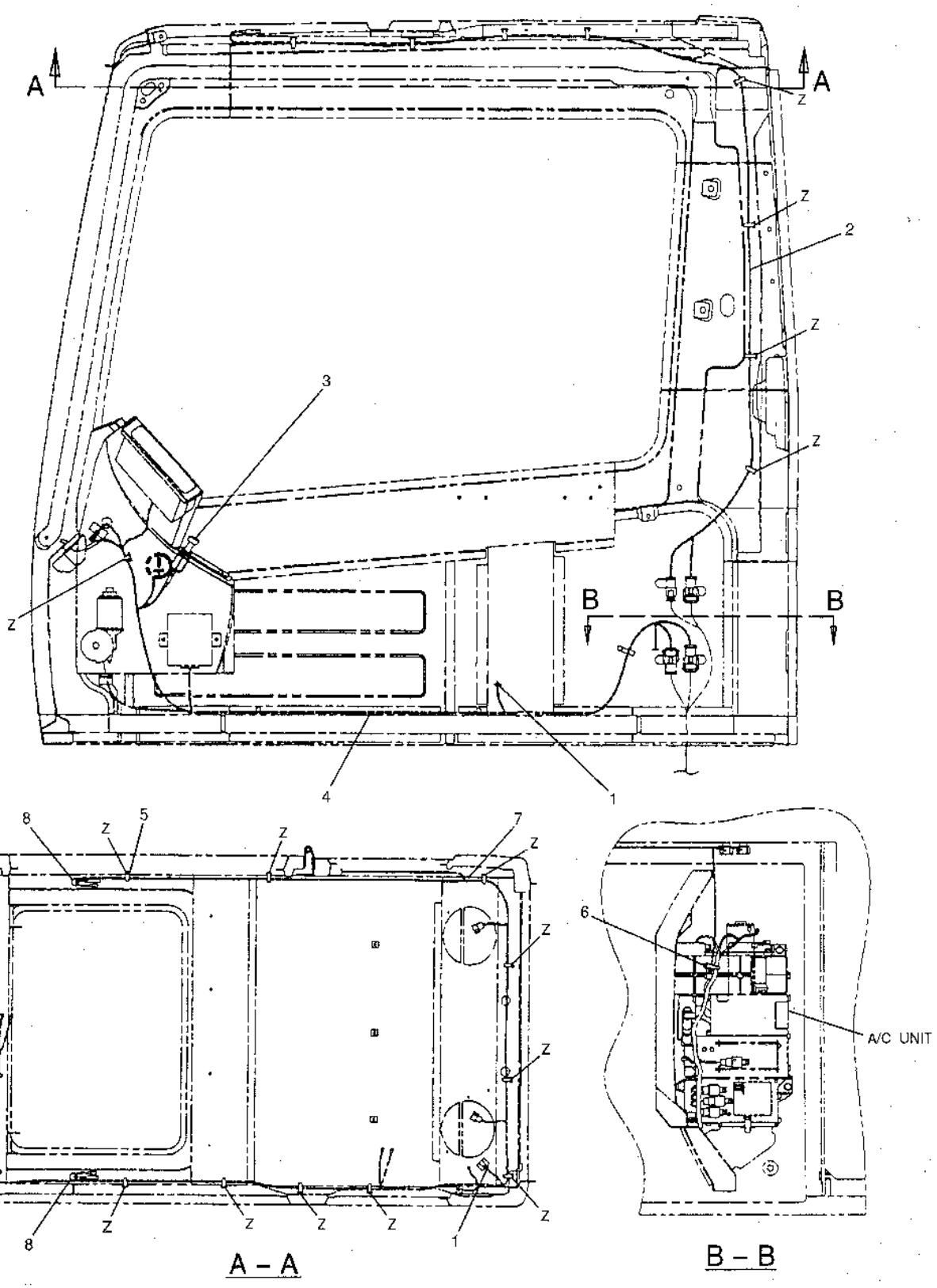


GRAPHIC #1

h59604e

# 1060054 WIRING GP-CAB

S/N 8SR 00418-UP, 8TR 00486-UP
PART OF 1557019-Page 405.04, 1557020-Page 409.04
1506989-Page 122.05A, 1532555-Page 122.05B

**Key:** Y - Separate Illustration

**SMCS**

| NOTE | REF NO | GRAPHIC REF | PART NUMBER | QTY | PART NAME 1 2 3 4 5 6 (PRODUCT LEVEL) | PRICE USD |
|---|---|---|---|---|---|---|
| | 1 | | 4I-3043 | 2 | SCREW | |
| Y | 2 | | 150-6989 | 1 | HARNESS AS | |
| | 3 | | 9W-0335 | 1 | LIGHTER AS | |
| Y | 4 | | 153-2555 | 1 | HARNESS AS | |
| | 5 | | 121-1000 | 17 | STRAP | |
| | 6 | | 3S-2093 | 1 | STRAP | |
| E | 7 | | 4I-3064 | | GUARD (9cm) | |
| E | 8 | | 4I-3064 | | GUARD (11.5cm x 2) | |

## 1060054 WIRING GP-CAB

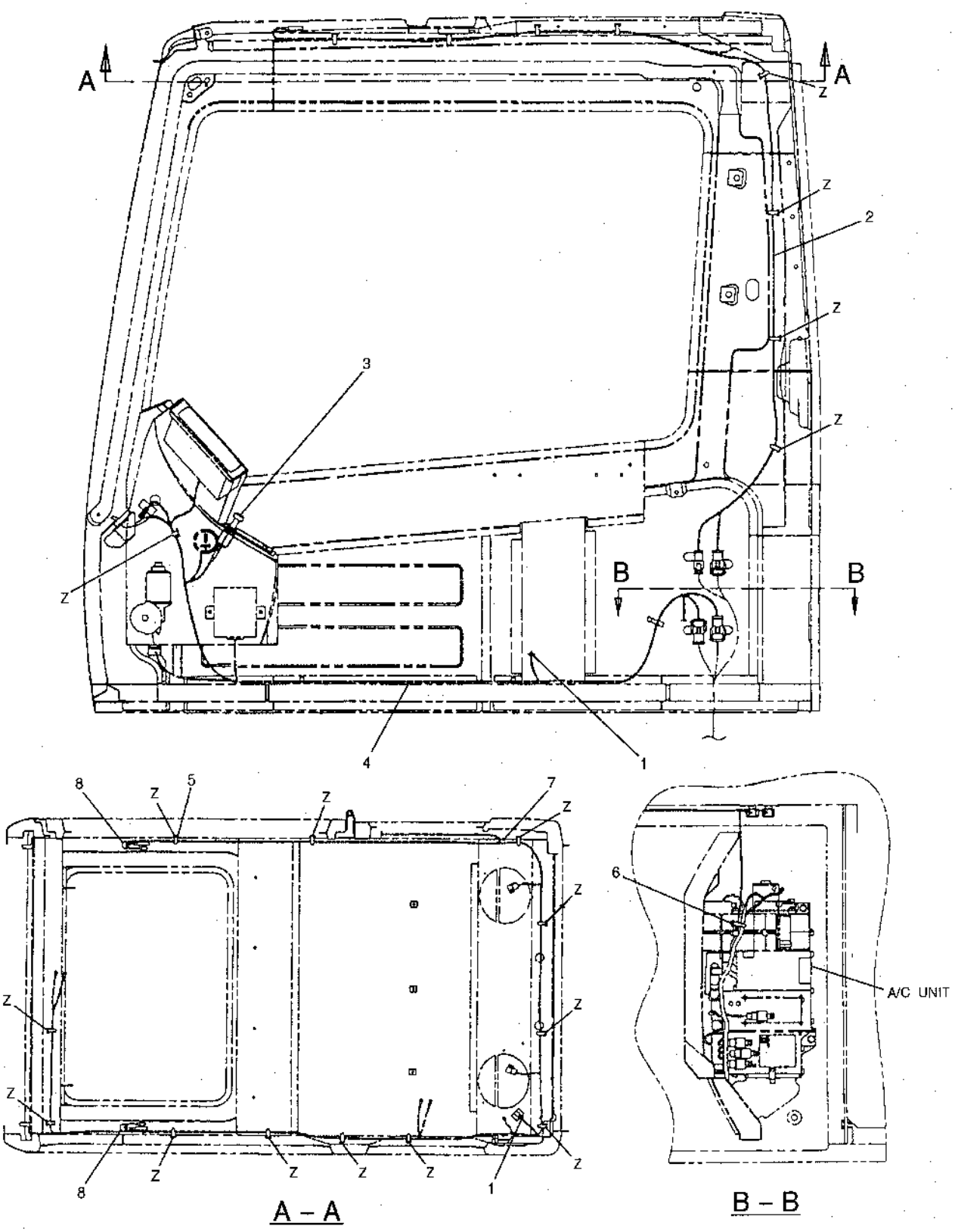


GRAPHIC #1

h60182e

# 1114795 HARNESS AS-WIRING

S/N 8SR 1-(D97.10), 8TR 1-(D97.10)
PART OF 1060054-Page 122.03

**Key:**

**SMCS**

| NOTE | REF NO | GRAPHIC REF | PART NUMBER | QTY | PART NAME 1 2 3 4 5 6 (PRODUCT LEVEL) | PRICE USD |
|---|---|---|---|---|---|---|
| | 1 | | 8T-8737 | 1 | PLUG | |
| | 2 | | 9W-0852 | 3 | PIN | |
| | 3 | | 2L-8066 | 2 | TERMINAL | |
| | 4 | | 7Y-3962 | 2 | TERMINAL | |
| | | | 7Y-3964 | 2 | TUBE | |
| | 5 | | 7Y-3963 | 2 | TERMINAL | |
| | | | 7Y-3965 | 2 | TUBE | |
| | 6 | | 1S-9593 | 33 | STRAP | |
| | 7 | | 9X-0196 | 1 | TERMINAL AS | |
| | 8 | | 102-8806 | 1 | RECEPTACLE KIT | |
| | 9 | | 102-8805 | 1 | RECEPTACLE KIT | |
| | 10 | | 3E-3389 | 1 | WEDGE | |
| | 11 | | 3E-3383 | 1 | WEDGE | |
| | 12 | | 2L-8075 | 2 | TERMINAL | |
| | 13 | | 5P-2321 | 2 | TERMINAL | |
| | 14 | | 8T-8729 | 10 | PIN | |

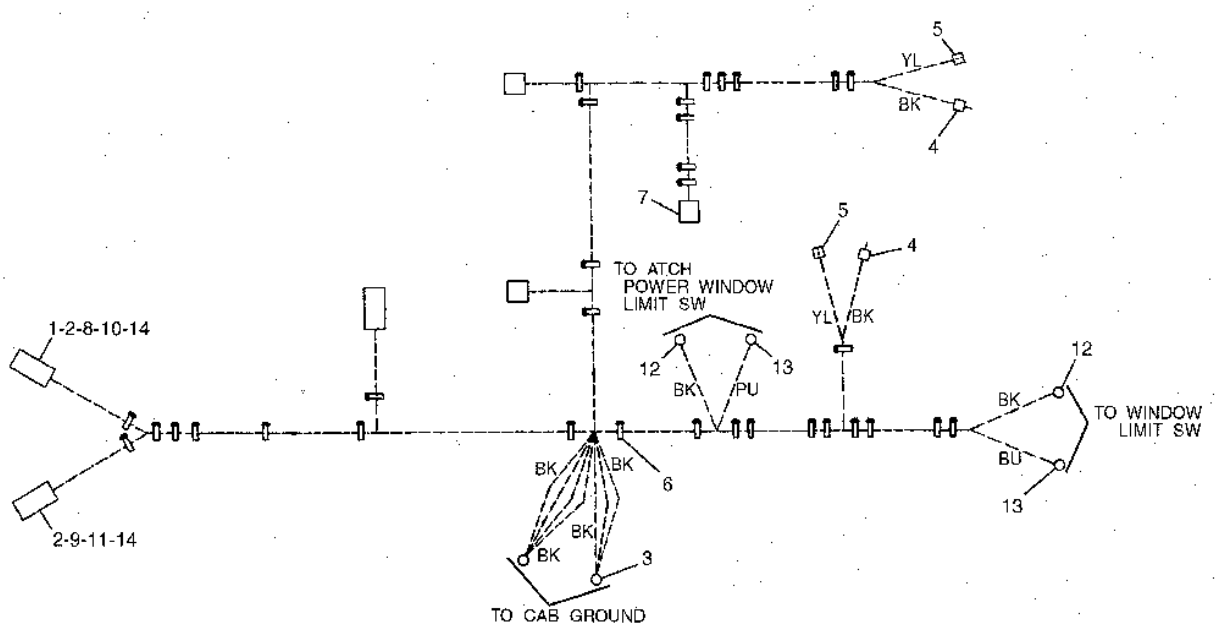


GRAPHIC #1

h50660e

# 1114796 HARNESS AS-WIRING

S/N 8SR 1-(D97.10), 8TR 1-(D97.10)
PART OF 1060054-Page 122.03

**Key:**

**SMCS**

| NOTE | REF NO | GRAPHIC REF | PART NUMBER | QTY | PART NAME 1 2 3 4 5 6 (PRODUCT LEVEL) | PRICE USD |
|---|---|---|---|---|---|---|
| | 1 | | 9X-0196 | 1 | TERMINAL AS | |
| | 2 | | 6T-6505 | 1 | HOUSING | |
| | 3 | | 6T-6506 | 1 | TERMINAL | |
| | 4 | | 111-4815 | 1 | CONNECTOR | |
| | 5 | | 9W-0844 | 2 | SOCKET | |
| | 6 | | 2L-8066 | 2 | TERMINAL | |
| | 7 | | 102-8811 | 1 | PLUG KIT | |
| | 8 | | 3E-3386 | 1 | WEDGE | |
| | 9 | | 5P-6271 | 1 | CONNECTOR AS | |
| | 10 | | 111-4816 | 1 | CONNECTOR | |
| | 11 | | 7Y-3958 | 1 | CONNECTOR | |
| | 12 | | 1S-9593 | 18 | STRAP | |
| | 13 | | 102-8806 | 1 | RECEPTACLE KIT | |
| | 14 | | 3E-3389 | 1 | WEDGE | |
| | 15 | | 8T-8730 | 6 | SOCKET | |
| | 16 | | 8T-8729 | 7 | PIN | |
| | 17 | | 102-7965 | 18 | TERMINAL | |
| | 18 | | 8T-8737 | 1 | PLUG | |
| | 19 | | 7Y-3963 | 1 | TERMINAL | |
| | | | 7Y-3965 | 1 | TUBE | |
| | 20 | | 2L-8075 | 1 | TERMINAL | |
| | 21 | | 121-1156 | 1 | CONNECTOR | |
| | 22 | | 121-1157 | 2 | TERMINAL | |
| | 23 | | 121-1159 | 2 | TERMINAL | |
| | 24 | | 121-1158 | 1 | CONNECTOR | |
| | 25 | | 125-4838 | 1 | WEDGE | |
| | 26 | | 125-4840 | 1 | WEDGE | |

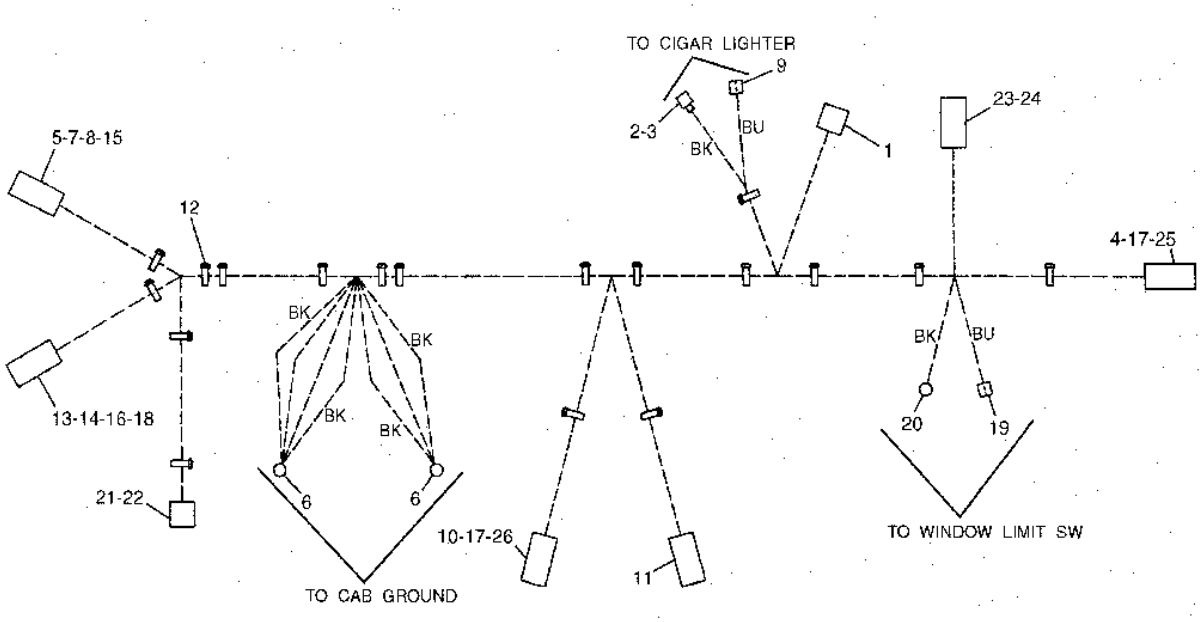


GRAPHIC #1

h50661e

# 1506992 HARNESS AS-WIRING

S/N 8SR (D97.11)-00417, 8TR (D97.11)-00485
PART OF 1060054-Page 122.03B

**Key:** Y - Separate Illustration

**SMCS**

| NOTE | REF NO | GRAPHIC REF | PART NUMBER | QTY | PART NAME 1 2 3 4 5 6 (PRODUCT LEVEL) | PRICE USD |
|---|---|---|---|---|---|---|
| Y | | | 150-6993 | 1 | HARNESS AS (WIRING) | |
| Y | | | 150-6994 | 1 | HARNESS AS (WIRING) | |

# 1506989 HARNESS AS-WIRING

S/N 8SR (D97.11)-UP, 8TR (D97.11)-UP
PART OF 1060054-Page 122.03B

**Key:** Y - Separate Illustration

**SMCS**

| NOTE | REF NO | GRAPHIC REF | PART NUMBER | QTY | PART NAME 1 2 3 4 5 6 (PRODUCT LEVEL) | PRICE USD |
|---|---|---|---|---|---|---|
| Y | | | 150-6990 | 1 | HARNESS AS (WIRING) | |
| Y | | | 150-6991 | 1 | HARNESS AS (WIRING) | |

# 1532555 HARNESS AS-WIRING

S/N 8SR 00418-UP, 8TR 00486-UP
PART OF 1060054-Page 122.03D

**Key:** Y - Separate Illustration

**SMCS**

| NOTE | REF NO | GRAPHIC REF | PART NUMBER | QTY | PART NAME 1 2 3 4 5 6 (PRODUCT LEVEL) | PRICE USD |
|---|---|---|---|---|---|---|
| | | | 153-2556 | 1 | HARNESS AS (WIRING) | |
| Y | | | 153-2557 | 1 | HARNESS AS (WIRING) | |

# 1506993 HARNESS AS-WIRING

S/N 8SR (D97.11)-00417, 8TR (D97.11)-00485
PART OF 1506992-Page 122.05A

**Key:**

**SMCS**

| NOTE | REF NO | GRAPHIC REF | PART NUMBER | QTY | PART NAME 1 2 3 4 5 6 (PRODUCT LEVEL) | PRICE USD |
|---|---|---|---|---|---|---|
| | 1 | | 9X-0196 | 1 | TERMINAL AS | |
| | 2 | | 6T-6505 | 1 | HOUSING | |
| | 3 | | 6T-6506 | 1 | TERMINAL | |
| | 4 | | 111-4815 | 1 | CONNECTOR | |
| | 5 | | 9W-0844 | 2 | SOCKET | |
| | 6 | | 2L-8066 | 2 | TERMINAL | |
| | 7 | | 5P-6006 | 2 | TUBE | |
| | 8 | | 102-8811 | 1 | PLUG KIT | |
| | 9 | | 102-8816 | 1 | SEAL | |
| | 10 | | 3E-3386 | 1 | WEDGE | |
| | 11 | | 3M-6018 | 1 | TERMINAL | |
| | 12 | | 111-4816 | 1 | CONNECTOR | |
| | 13 | | 7Y-3958 | 1 | CONNECTOR | |
| | 14 | | 7Y-3951 | 5 | TERMINAL | |
| | 15 | | 1S-9593 | 18 | STRAP | |
| | 16 | | 102-8806 | 1 | RECEPTACLE KIT | |
| | 17 | | 3E-3389 | 1 | WEDGE | |
| | 18 | | 8T-8730 | 6 | SOCKET | |
| | 19 | | 8T-8729 | 5 | PIN | |
| | 20 | | 102-7965 | 18 | TERMINAL | |
| | 21 | | 8T-8737 | 1 | PLUG | |
| | 22 | | 7Y-3963 | 1 | TERMINAL | |
| | 23 | | 7Y-3965 | 1 | TUBE | |
| | 24 | | 2L-8075 | 1 | TERMINAL | |
| | 25 | | 121-1156 | 1 | CONNECTOR | |
| | 26 | | 121-1157 | 2 | TERMINAL | |
| | 27 | | 121-1159 | 2 | TERMINAL | |
| | 28 | | 121-1158 | 1 | CONNECTOR | |
| | 29 | | 125-4838 | 1 | WEDGE | |
| | 30 | | 125-4840 | 1 | WEDGE | |
| | 31 | | 9W-0852 | 2 | PIN | |

## 1506993 HARNESS AS-WIRING

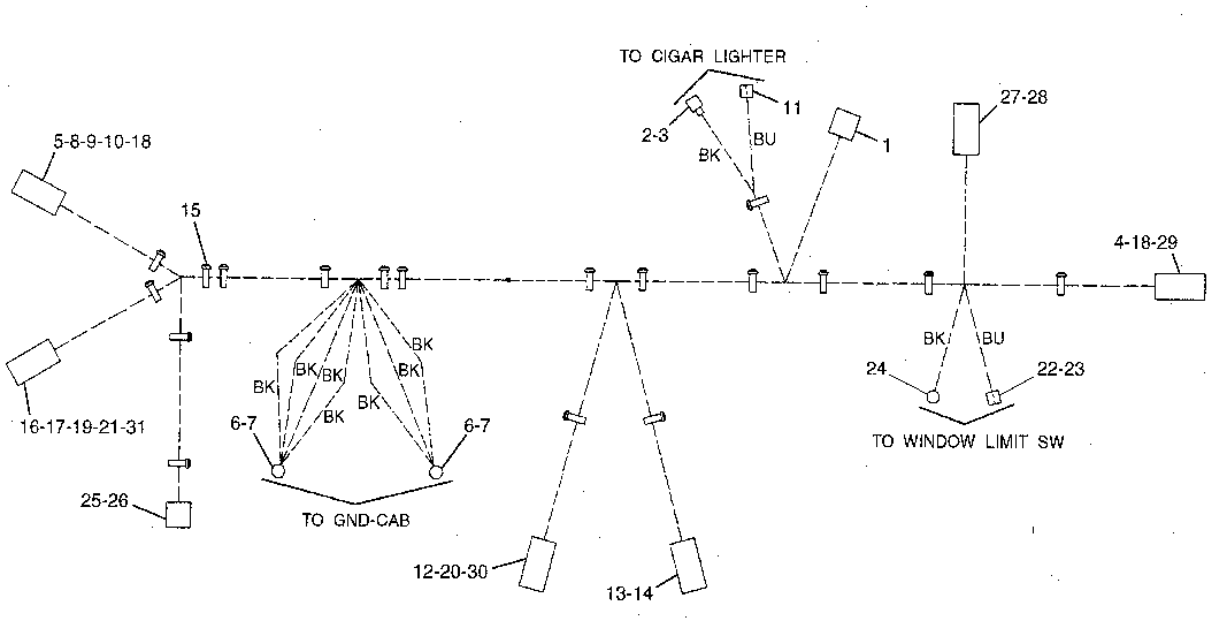


GRAPHIC #1

h83367e

# 1506994 HARNESS AS-WIRING

S/N 8SR (D97.11)-00417, 8TR (D97.11)-00485
PART OF 1506992-Page 122.05A

**Key:**

**SMCS**

| NOTE | REF NO | GRAPHIC REF | PART NUMBER | QTY | PART NAME 1 2 3 4 5 6 (PRODUCT LEVEL) | PRICE USD |
|---|---|---|---|---|---|---|
| | 1 | | 9X-0196 | 1 | TERMINAL AS | |
| | 2 | | 6T-6505 | 1 | HOUSING | |
| | 3 | | 6T-6506 | 1 | TERMINAL | |
| | 4 | | 111-4815 | 1 | CONNECTOR | |
| | 5 | | 9W-0844 | 2 | SOCKET | |
| | 6 | | 2L-8066 | 2 | TERMINAL | |
| | 7 | | 5P-6006 | 2 | TUBE | |
| | 8 | | 102-8811 | 1 | PLUG KIT | |
| | 9 | | 102-8816 | 1 | SEAL | |
| | 10 | | 3E-3386 | 1 | WEDGE | |
| | 11 | | 3M-6018 | 1 | TERMINAL | |
| | 12 | | 111-4816 | 1 | CONNECTOR | |
| | 13 | | 7Y-3958 | 1 | CONNECTOR | |
| | 14 | | 7Y-3951 | 5 | TERMINAL | |
| | 15 | | 1S-9593 | 18 | STRAP | |
| | 16 | | 102-8806 | 1 | RECEPTACLE KIT | |
| | 17 | | 3E-3389 | 1 | WEDGE | |
| | 18 | | 8T-8730 | 6 | SOCKET | |
| | 19 | | 8T-8729 | 5 | PIN | |
| | 20 | | 102-7965 | 18 | TERMINAL | |
| | 21 | | 8T-8737 | 1 | PLUG | |
| | 22 | | 7Y-3963 | 1 | TERMINAL | |
| | 23 | | 7Y-3965 | 1 | TUBE | |
| | 24 | | 2L-8075 | 1 | TERMINAL | |
| | 25 | | 121-1156 | 1 | CONNECTOR | |
| | 26 | | 121-1157 | 2 | TERMINAL | |
| | 27 | | 121-1159 | 2 | TERMINAL | |
| | 28 | | 121-1158 | 1 | CONNECTOR | |
| | 29 | | 125-4838 | 1 | WEDGE | |
| | 30 | | 125-4840 | 1 | WEDGE | |
| | 31 | | 9W-0852 | 2 | PIN | |

## 1506994 HARNESS AS-WIRING

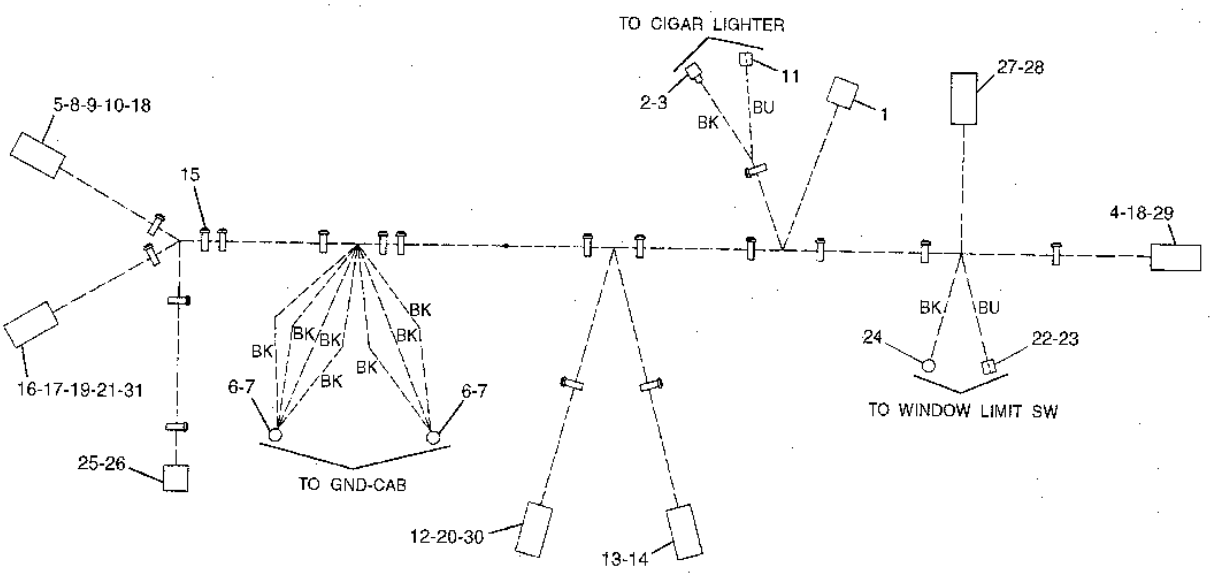


GRAPHIC #1

h83368e

# 1502556 HARNESS AS-WIRING

S/N 8SR 00418-UP, 8TR 00486-UP
PART OF 1532555-Page 122.05B

**Key:**

**SMCS**

| NOTE | REF NO | GRAPHIC REF | PART NUMBER | QTY | PART NAME 1 2 3 4 5 6 (PRODUCT LEVEL) | PRICE USD |
|---|---|---|---|---|---|---|
| | 1 | | 9X-0196 | 1 | TERMINAL AS | |
| | 2 | | 6T-6505 | 1 | HOUSING | |
| | 3 | | 6T-6506 | 1 | TERMINAL | |
| | 4 | | 111-4815 | 1 | CONNECTOR | |
| | 5 | | 9W-0844 | 2 | SOCKET | |
| | 6 | | 2L-8066 | 2 | TERMINAL | |
| | 7 | | 125-4838 | 1 | WEDGE | |
| | 8 | | 102-8811 | 1 | PLUG KIT | |
| | 9 | | 125-4840 | 1 | WEDGE | |
| | 10 | | 3E-3386 | 1 | WEDGE | |
| | 11 | | 5P-6271 | 1 | CONNECTOR AS | |
| | 12 | | 111-4816 | 1 | CONNECTOR | |
| | 13 | | 7Y-3958 | 1 | CONNECTOR | |
| | 14 | | 7Y-3951 | 5 | TERMINAL | |
| | 15 | | 1S-9593 | 18 | STRAP | |
| | 16 | | 102-8806 | 1 | RECEPTACLE KIT | |
| | 17 | | 3E-3389 | 1 | WEDGE | |
| | 18 | | 8T-8730 | 6 | SOCKET | |
| | 19 | | 8T-8729 | 6 | PIN | |
| | 20 | | 102-7965 | 19 | TERMINAL | |
| | 21 | | 9W-0852 | 2 | PIN | |
| | 22 | | 7Y-3963 | 1 | TERMINAL | |
| | 23 | | 7Y-3965 | 1 | TUBE | |
| | 24 | | 2L-8075 | 1 | TERMINAL | |
| | 25 | | 121-1156 | 1 | CONNECTOR | |
| | 26 | | 121-1157 | 2 | TERMINAL | |
| | 27 | | 121-1159 | 2 | TERMINAL | |
| | 28 | | 121-1158 | 1 | CONNECTOR | |

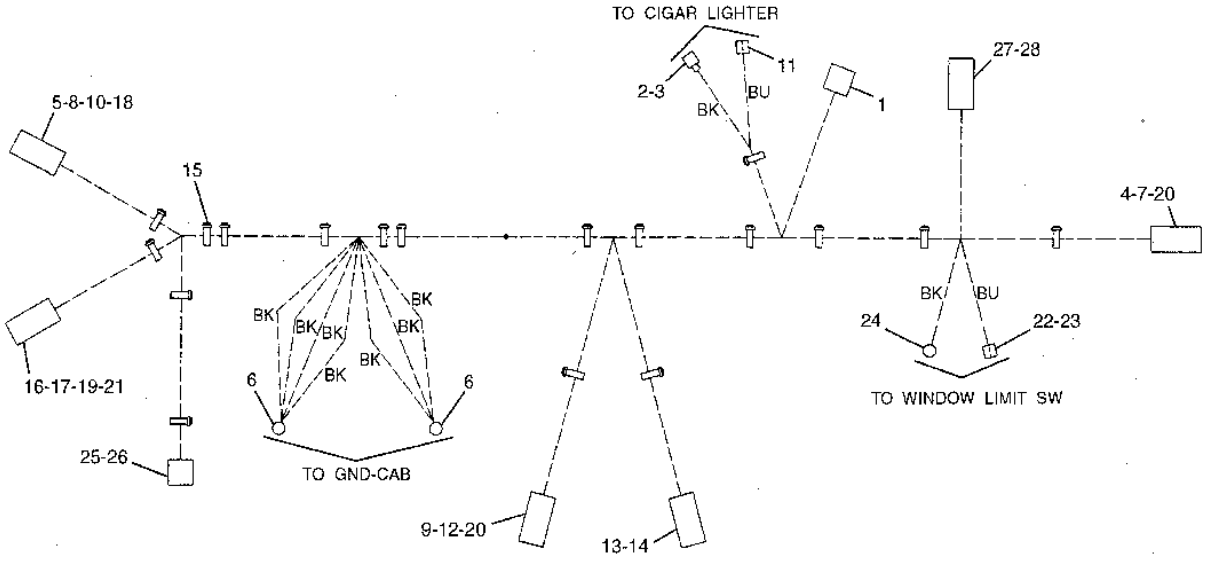


GRAPHIC #1

h85469e

# 1532557 HARNESS AS-WIRING

S/N 8SR 00418-UP, 8TR 00486-UP
PART OF 1532555-Page 122.05B

**Key:**

**SMCS**

| NOTE | REF NO | GRAPHIC REF | PART NUMBER | QTY | PART NAME 1 2 3 4 5 6 (PRODUCT LEVEL) | PRICE USD |
|---|---|---|---|---|---|---|
| | 1 | | 9X-0196 | 1 | TERMINAL AS | |
| | 2 | | 6T-6505 | 1 | HOUSING | |
| | 3 | | 6T-6506 | 1 | TERMINAL | |
| | 4 | | 111-4815 | 1 | CONNECTOR | |
| | 5 | | 9W-0844 | 2 | SOCKET | |
| | 6 | | 2L-8066 | 2 | TERMINAL | |
| | 7 | | 5P-6006 | 2 | TUBE | |
| | 8 | | 102-8811 | 1 | PLUG KIT | |
| | 9 | | 102-8816 | 1 | SEAL | |
| | 10 | | 3E-3386 | 1 | WEDGE | |
| | 11 | | 3M-6018 | 1 | TERMINAL | |
| | 12 | | 111-4816 | 1 | CONNECTOR | |
| | 13 | | 7Y-3958 | 1 | CONNECTOR | |
| | 14 | | 7Y-3951 | 5 | TERMINAL | |
| | 15 | | 1S-9593 | 18 | STRAP | |
| | 16 | | 102-8806 | 1 | RECEPTACLE KIT | |
| | 17 | | 3E-3389 | 1 | WEDGE | |
| | 18 | | 8T-8730 | 6 | SOCKET | |
| | 19 | | 8T-8729 | 6 | PIN | |
| | 20 | | 102-7965 | 19 | TERMINAL | |
| | 21 | | 9W-0852 | 2 | PIN | |
| | 22 | | 7Y-3963 | 1 | TERMINAL | |
| | 23 | | 7Y-3965 | 1 | TUBE | |
| | 24 | | 2L-8075 | 1 | TERMINAL | |
| | 25 | | 121-1156 | 1 | CONNECTOR | |
| | 26 | | 121-1157 | 2 | TERMINAL | |
| | 27 | | 121-1159 | 2 | TERMINAL | |
| | 28 | | 121-1158 | 1 | CONNECTOR | |
| | 29 | | 125-4838 | 1 | WEDGE | |
| | 30 | | 125-4840 | 1 | WEDGE | |

## 1532557 HARNESS AS-WIRING

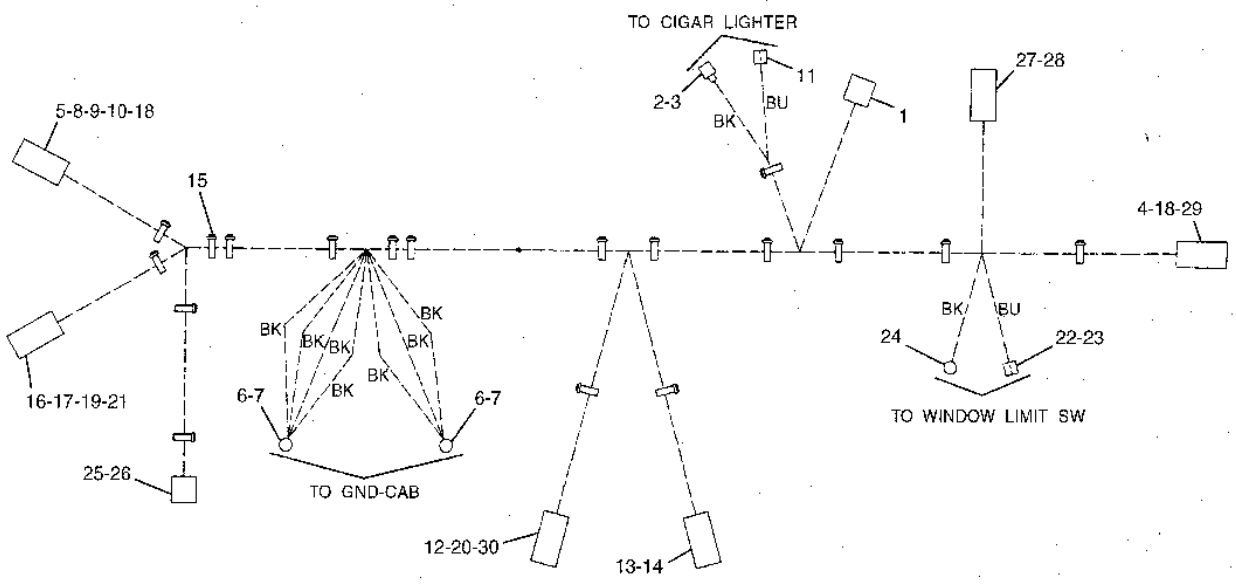


GRAPHIC #1 h83107e

# 1506990 HARNESS AS-WIRING

S/N 8SR (D97.11)-UP, 8TR (D97.11)-UP
PART OF 1506989-Page 122.05A

**Key:**

**SMCS**

| NOTE | REF NO | GRAPHIC REF | PART NUMBER | QTY | PART NAME 1 2 3 4 5 6 (PRODUCT LEVEL) | PRICE USD |
|---|---|---|---|---|---|---|
| | 1 | | 8T-8737 | 1 | PLUG | |
| | 2 | | 7Y-3950 | 4 | TERMINAL | |
| | 3 | | 9W-0852 | 5 | PIN | |
| | 4 | | 2L-8066 | 2 | TERMINAL | |
| | 5 | | 7Y-3962 | 2 | TERMINAL | |
| | 6 | | 7Y-3964 | 2 | TUBE | |
| | 7 | | 7Y-3963 | 2 | TERMINAL | |
| | 8 | | 7Y-3965 | 2 | TUBE | |
| | 9 | | 1S-9593 | 29 | STRAP | |
| | 10 | | 7Y-3952 | 1 | CONNECTOR | |
| | 11 | | 102-8806 | 1 | RECEPTACLE KIT | |
| | 12 | | 102-8805 | 1 | RECEPTACLE KIT | |
| | 13 | | 3E-3389 | 1 | WEDGE | |
| | 14 | | 3E-3383 | 1 | WEDGE | |
| | 15 | | 2L-8075 | 2 | TERMINAL | |
| | 16 | | 5P-2321 | 2 | TERMINAL | |
| | 17 | | 8T-8729 | 8 | PIN | |
| | 18 | | 7Y-3951 | 2 | TERMINAL | |

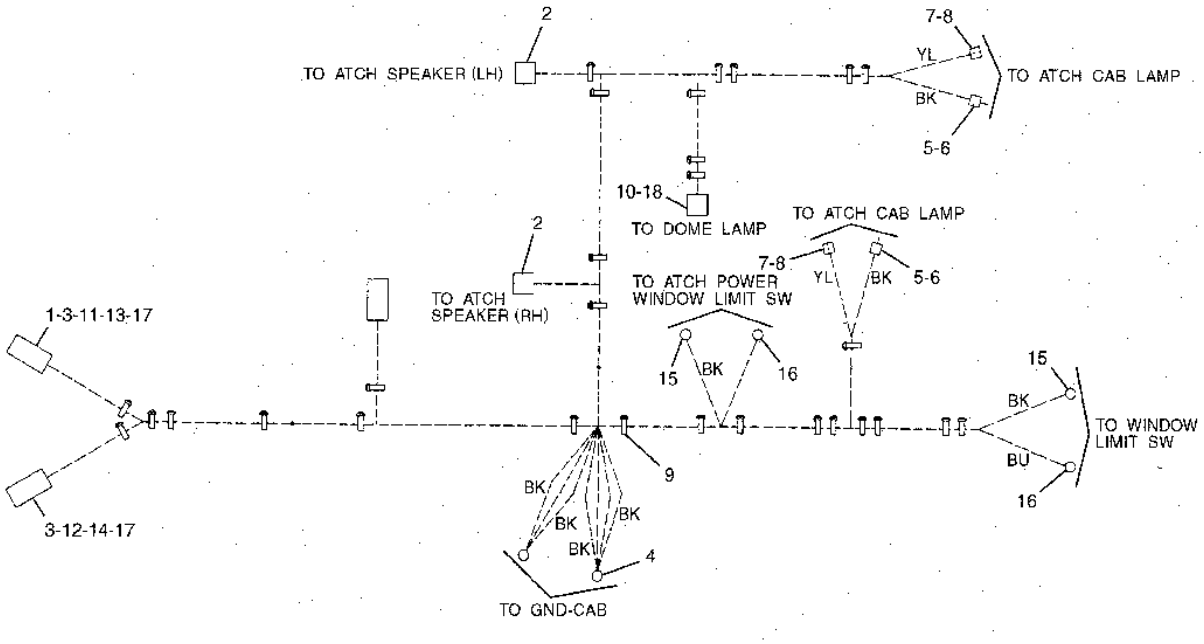


GRAPHIC #1

h65081e

# 1506991 HARNESS AS-WIRING

S/N 8SR (D97.11)-UP, 8TR (D97.11)-UP
PART OF 1506989-Page 122.05A

**Key:**

**SMCS**

| NOTE | REF NO | GRAPHIC REF | PART NUMBER | QTY | PART NAME 1 2 3 4 5 6 (PRODUCT LEVEL) | PRICE USD |
|---|---|---|---|---|---|---|
| | 1 | | 8T-8737 | 1 | PLUG | |
| | 2 | | 7Y-3950 | 4 | TERMINAL | |
| | 3 | | 9W-0852 | 5 | PIN | |
| | 4 | | 2L-8066 | 2 | TERMINAL | |
| | 5 | | 7Y-3962 | 2 | TERMINAL | |
| | 6 | | 7Y-3964 | 2 | TUBE | |
| | 7 | | 7Y-3963 | 2 | TERMINAL | |
| | 8 | | 7Y-3965 | 2 | TUBE | |
| | 9 | | 1S-9593 | 29 | STRAP | |
| | 10 | | 7Y-3952 | 1 | CONNECTOR | |
| | 11 | | 102-8806 | 1 | RECEPTACLE KIT | |
| | 12 | | 102-8805 | 1 | RECEPTACLE KIT | |
| | 13 | | 3E-3389 | 1 | WEDGE | |
| | 14 | | 3E-3383 | 1 | WEDGE | |
| | 15 | | 2L-8075 | 2 | TERMINAL | |
| | 16 | | 5P-2321 | 2 | TERMINAL | |
| | 17 | | 8T-8729 | 8 | PIN | |
| | 18 | | 7Y-3951 | 2 | TERMINAL | |

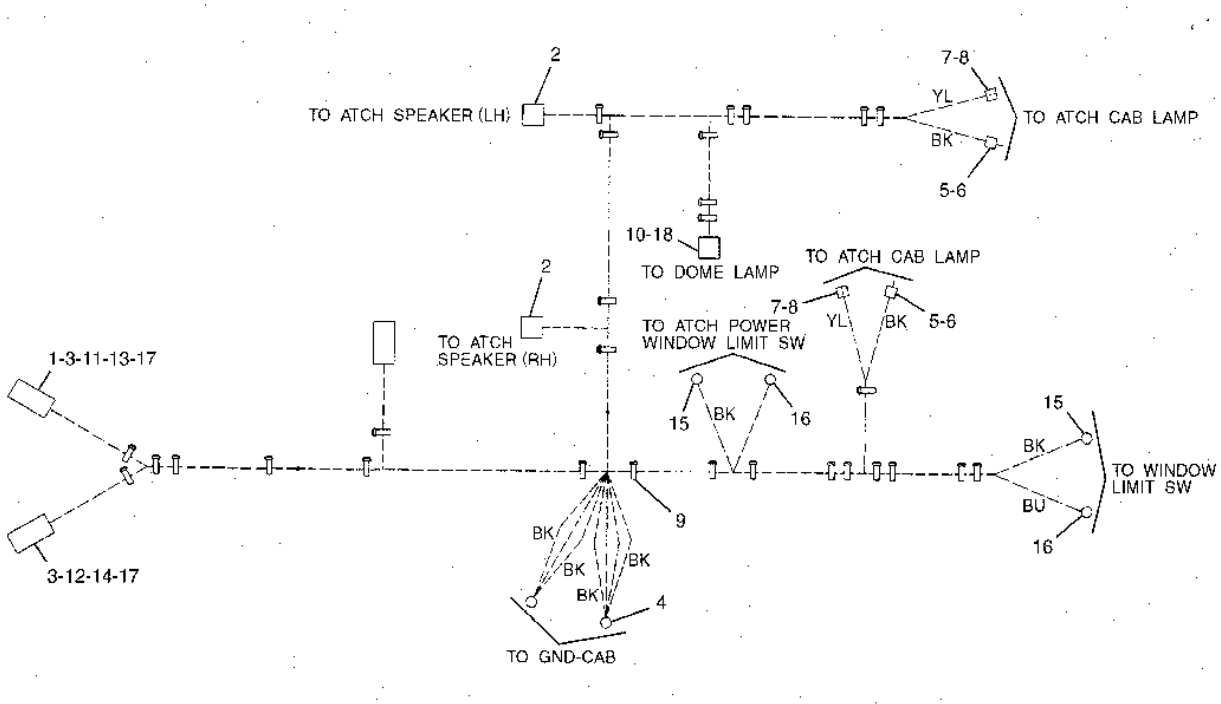


GRAPHIC #1

h65082e

# 1160094 WIRING GP-RADIO

RADIO MOUNTING
S/N 8SR 1-00417, 8TR 1-00485
PART OF 1116294-Page 405, 1244013-Page 409
1160136-Page 122.07

**Key:** E - ORDER BY THE CENTIMETER, Y - SEE SEPARATE ILLUSTRATION

**SMCS**

| NOTE | REF NO | GRAPHIC REF | PART NUMBER | QTY | PART NAME 1 2 3 4 5 6 (PRODUCT LEVEL) | PRICE USD |
|---|---|---|---|---|---|---|
| | 1 | | 106-0036 | 1 | ANTENNA AS | |
| | | | 7Y-5285 | 1 | SCREW AS | |
| | | | 106-0035 | 1 | ROD AS | |
| | 2 | | 3S-2093 | 2 | STRAP | |
| Y | 3 | | 116-0136 | 1 | CONVERTER GP | |
| | 4 | | 6V-9492 | 1 | SCREW (MACHINE) | |
| | 5 | | 6V-9491 | 1 | SCREW (MACHINE) | |
| | 6 | | 116-0118 | 1 | CLIP | |
| | 7 | | 8T-4121 | 1 | WASHER (HARD) | |
| | 8 | | 8T-4133 | 1 | NUT | |
| | 9 | | 9X-8256 | 2 | WASHER | |
| | 10 | | 8T-6411 | 2 | SCREW (MACHINE) | |
| E | 11 | | 101-2846 | | GUARD (9cmX2) | |

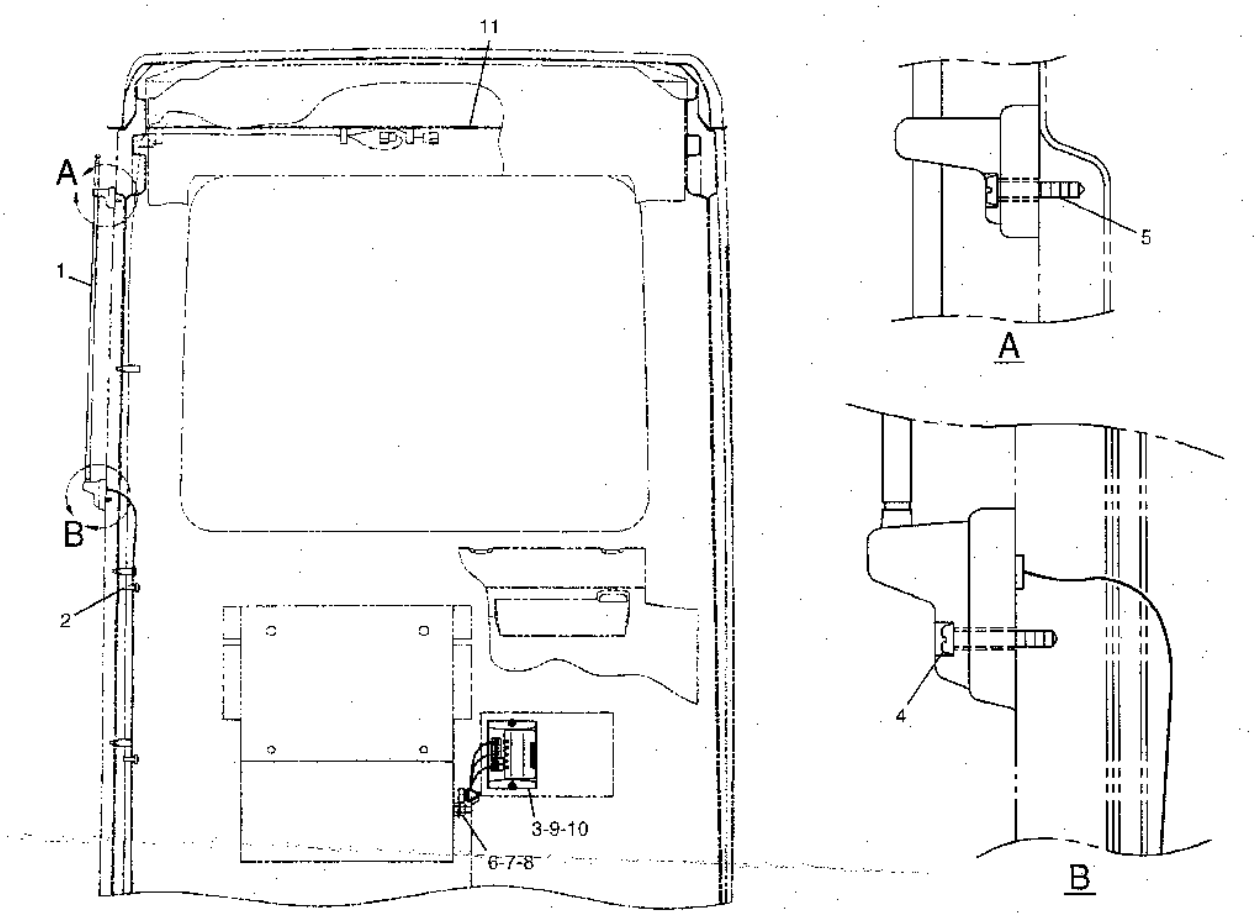


GRAPHIC #1 h52456e

# 1507025 WIRING GP-RADIO

RADIO MOUNTING
S/N 8SR 00418-UP, 8TR 00486-UP
PART OF 1557019-Page 405.04, 1557020-Page 409.04
1507021-Page 122.07

**Key:** E - ORDER BY THE CENTIMETER, Y - SEPARATE ILLUSTRATION

**SMCS**

| NOTE | REF NO | GRAPHIC REF | PART NUMBER | QTY | PART NAME 1 2 3 4 5 6 (PRODUCT LEVEL) | PRICE USD |
|---|---|---|---|---|---|---|
| | 1 | | 106-0036 | 1 | ANTENNA AS | |
| | | | 7Y-5285 | 1 | SCREW AS | |
| | | | 106-0035 | 1 | ROD AS | |
| | 2 | | 3S-2093 | 2 | STRAP | |
| Y | 3 | | 150-7021 | 1 | CONVERTER GP | |
| | 4 | | 6V-9492 | 1 | SCREW-MACHINE | |
| | 5 | | 6V-9491 | 1 | SCREW-MACHINE | |
| | 6 | | 116-0118 | 1 | CLIP | |
| | 7 | | 8T-4121 | 1 | WASHER-HARD | |
| | 8 | | 8T-4133 | 1 | NUT | |
| | 9 | | 9X-8256 | 2 | WASHER | |
| | 10 | | 8T-6411 | 2 | SCREW-MACHINE | |
| E | 11 | | 101-2846 | | GUARD (9cm X 2) | |

## 1507025 WIRING GP-RADIO

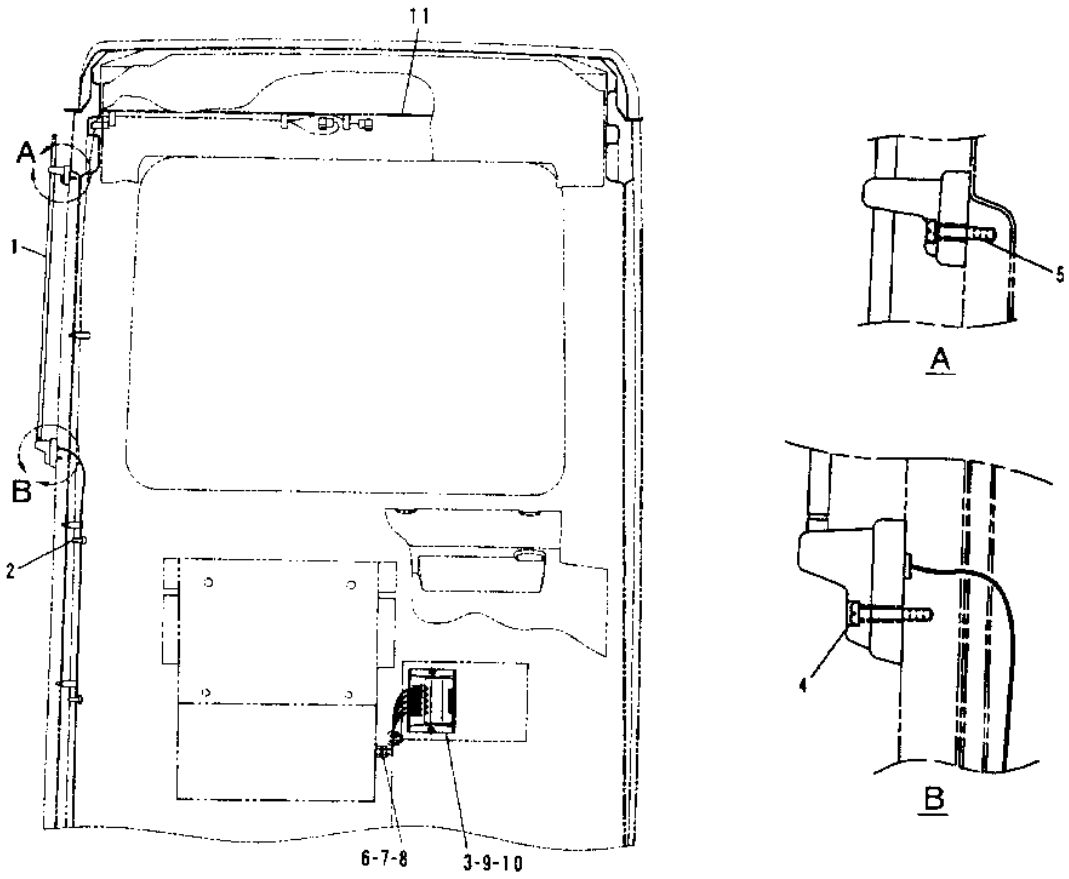


| NOTE | No. | PART No. | QTY | PART NAME | NOTE | No. | PART No. | QTY | PART NAME |
|---|---|---|---|---|---|---|---|---|---|
| | 1 | 106-0036 | 1 | ANTENNA AS | | | | | |
| | | 7Y-5285 | 1 | SCREW AS | | | | | |
| | | 106-0035 | 1 | ROD AS | | | | | |
| | 2 | 3S-2093 | 2 | STRAP | | | | | |
| Y | 3 | 150-7021 | 1 | CONVERTER GP | | | | | |
| | 4 | 6V-9492 | 1 | SCREW-MACHINE | | | | | |
| | 5 | 6V-9491 | 1 | SCREW-MACHINE | | | | | |
| | 6 | 116-0118 | 1 | CLIP | | | | | |
| | 7 | 8T-4121 | 1 | WASHER-HARD | | | | | |
| | 8 | 8T-4133 | 1 | NUT | | | | | |
| | 9 | 9X-8256 | 2 | WASHER | | | | | |
| | 10 | 8T-6411 | 2 | SCREW-MACHINE | | | | | |
| E | 11 | 101-2846 | | GUARD ···(9cm×2) | | | | | |

E-ORDER BY THE CENTIMETER
Y-SEE SEPARATE ILLUSTRATION

H59336E

# 1160136 CONVERTER GP-ELECTRICAL

S/N 8SR 1-00417, 8TR 1-00485
PART OF 1160094-Page 122.06
1385127-Page 122.07A

**Key:** Y - SEE SEPARATE ILLUSTRATION

**SMCS**

| NOTE | REF NO | GRAPHIC REF | PART NUMBER | QTY | PART NAME 1 2 3 4 5 6 (PRODUCT LEVEL) | PRICE USD |
|---|---|---|---|---|---|---|
| | 1 | | 134-1346 | 1 | CONVERTER GP | |
| Y | 2 | | 138-5127 | 1 | HARNESS AS | |

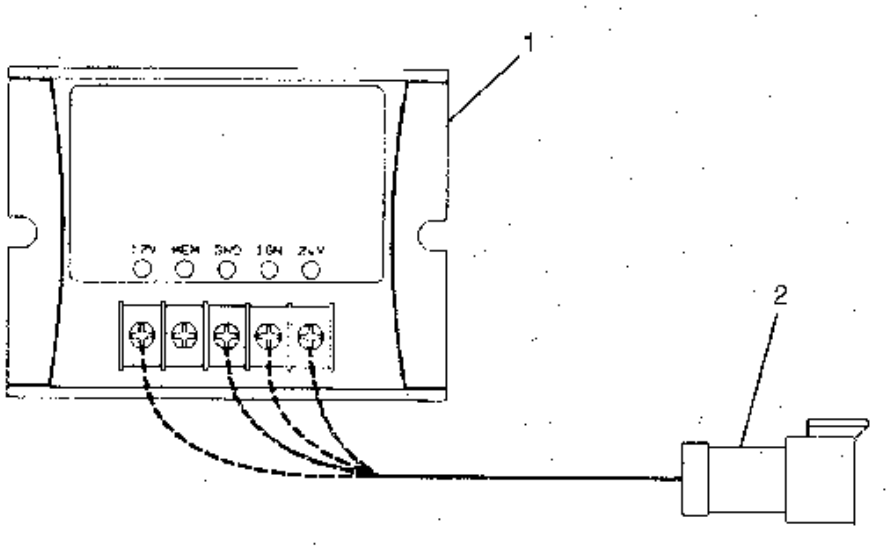


GRAPHIC #1 h52457e

# 1507021 CONVERTER GP-ELECTRICAL

S/N 8SR 00418-UP, 8TR 00486-UP
PART OF 1507025-Page 122.06A
1507022-Page 122.07B

**Key:** Y - SEPARATE ILLUSTRATION

**SMCS**

| NOTE | REF NO | GRAPHIC REF | PART NUMBER | QTY | PART NAME 1 2 3 4 5 6 (PRODUCT LEVEL) | PRICE USD |
|---|---|---|---|---|---|---|
| | 1 | | 134-1346 | 1 | CONVERTER GP | |
| Y | 2 | | 150-7022 | 1 | HARNESS AS | |

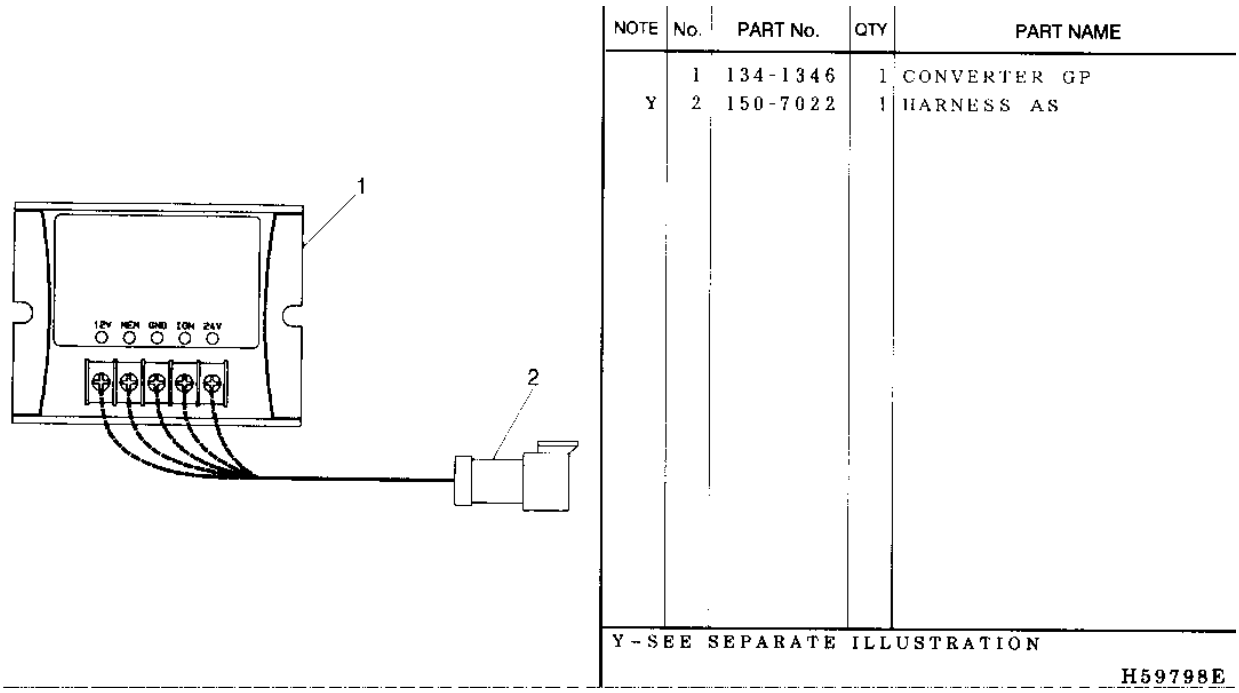


GRAPHIC #1 h59798e

# 1385127 HARNESS AS

S/N 8SR 1-00417, 8TR 1-00485
PART OF 1160136-Page 122.07

**Key:**

**SMCS**

| NOTE | REF NO | GRAPHIC REF | PART NUMBER | QTY | PART NAME 1 2 3 4 5 6 (PRODUCT LEVEL) | PRICE USD |
|---|---|---|---|---|---|---|
| | 1 | | 3S-2093 | 2 | STRAP | |
| | 2 | | 102-8803 | 1 | RECEPTACLE KIT | |
| | 3 | | 3E-3371 | 1 | WEDGE | |
| | 4 | | 8T-8729 | 3 | PIN | |
| | 5 | | 5P-2321 | 4 | TERMINAL | |

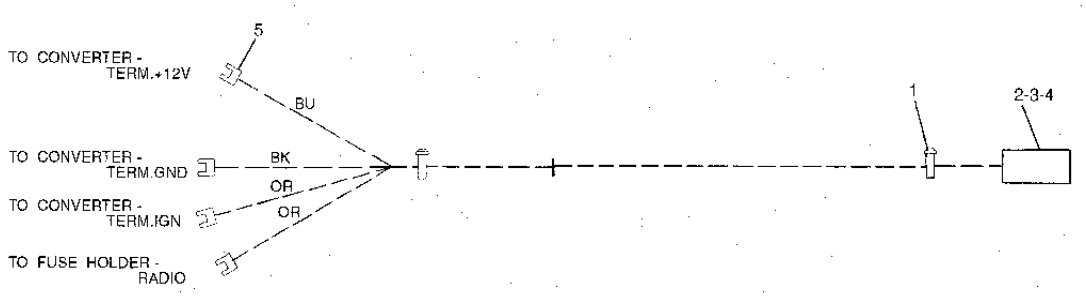


GRAPHIC #1 h52461e

# 1507022 HARNESS AS

S/N 8SR 00418-UP, 8TR 00486-UP
PART OF 1507021-Page 122.07

**Key:** Y - Separate Illustration

**SMCS**

| NOTE | REF NO | GRAPHIC REF | PART NUMBER | QTY | PART NAME 1 2 3 4 5 6 (PRODUCT LEVEL) | PRICE USD |
|---|---|---|---|---|---|---|
| Y | | | 150-7023 | 1 | HARNESS AS | |
| | | | | | -OR- | |
| Y | | | 150-7024 | 1 | HARNESS AS | |

# 1507023 HARNESS AS

S/N 8SR 00418-UP, 8TR 00486-UP
PART OF 1507022-Page 122.07B

**Key:**

**SMCS**

| NOTE | REF NO | GRAPHIC REF | PART NUMBER | QTY | PART NAME 1 2 3 4 5 6 (PRODUCT LEVEL) | PRICE USD |
|---|---|---|---|---|---|---|
| | 1 | | 5P-2321 | 5 | TERMINAL | |
| | 2 | | 3S-2093 | 2 | STRAP | |
| | 3 | | 102-8806 | 1 | RECEPTACLE KIT | |
| | 4 | | 3E-3383 | 1 | WEDGE | |
| | 5 | | 8T-8737 | 1 | PLUG-SEAL | |
| | 6 | | 8T-8729 | 5 | PIN | |

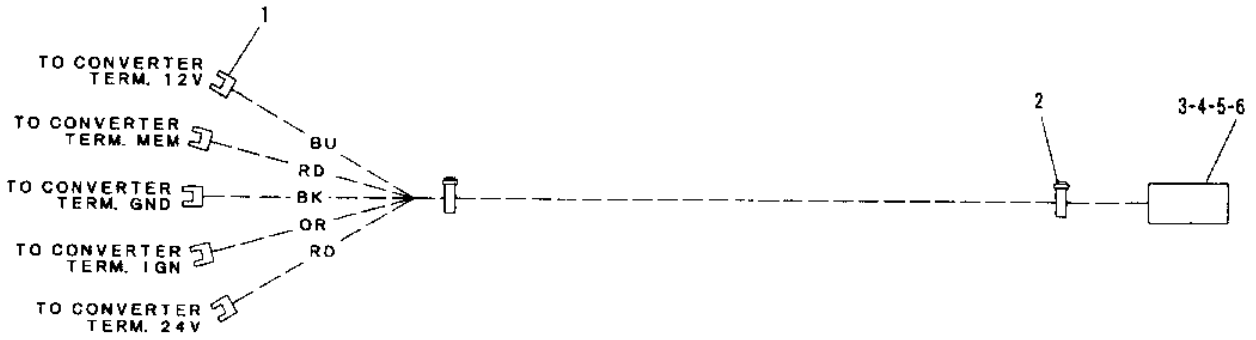


| NOTE | No. | PART No. | QTY | PART NAME | NOTE | No. | PART No. | QTY | PART NAME |
|---|---|---|---|---|---|---|---|---|---|
| | 1 | 5P-2321 | 5 | TERMINAL | | | | | |
| | 2 | 3S-2093 | 2 | STRAP | | | | | |
| | 3 | 102-8806 | 1 | RECEPTACLE KIT | | | | | |
| | 4 | 3E-3383 | 1 | WEDGE | | | | | |
| | 5 | 8T-8737 | 1 | PLUG-SEAL | | | | | |
| | 6 | 8T-8729 | 5 | PIN | | | | | |

H59334E

# 1507024 HARNESS AS

S/N 8SR 00418-UP, 8TR 00486-UP
PART OF 1507022-Page 122.07B

**Key:**

**SMCS**

| NOTE | REF NO | GRAPHIC REF | PART NUMBER | QTY | PART NAME 1 2 3 4 5 6 (PRODUCT LEVEL) | PRICE USD |
|---|---|---|---|---|---|---|
| | 1 | | 5P-2321 | 5 | TERMINAL | |
| | 2 | | 3S-2093 | 2 | STRAP | |
| | 3 | | 102-8803 | 1 | RECEPTACLE KIT | |
| | 4 | | 3E-3371 | 1 | WEDGE | |
| | 5 | | 8T-8737 | 1 | PLUG-SEAL | |
| | 6 | | 8T-8729 | 5 | PIN | |

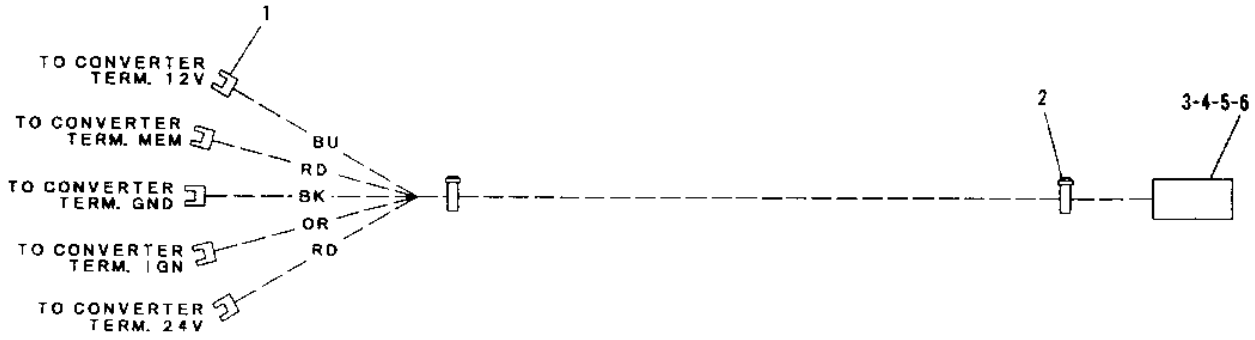


| NOTE | No. | PART No. | QTY | PART NAME | NOTE | No. | PART No. | QTY | PART NAME |
|---|---|---|---|---|---|---|---|---|---|
| | 1 | 5P-2321 | 5 | TERMINAL | | | | | |
| | 2 | 3S-2093 | 2 | STRAP | | | | | |
| | 3 | 102-8803 | 1 | RECEPTACLE KIT | | | | | |
| | 4 | 3E-3371 | 1 | WEDGE | | | | | |
| | 5 | 8T-8737 | 1 | PLUG-SEAL | | | | | |
| | 6 | 8T-8729 | 5 | PIN | | | | | |

H59335E

# 1507030 SPEAKER GP-RADIO

S/N 8SR 00418-UP, 8TR 00486-UP
AN ATTACHMENT

**Key:**

**SMCS**

| NOTE | REF NO | GRAPHIC REF | PART NUMBER | QTY | PART NAME 1 2 3 4 5 6 (PRODUCT LEVEL) | PRICE USD |
|---|---|---|---|---|---|---|
| | 1 | | 7Y-5505 | 2 | SPEAKER AS | |
| | | | 7Y-3951 | 2 | TERMINAL | |
| | 2 | | 099-7127 | 8 | SCREW-MACHINE | |
| | 3 | | 116-0210 | 4 | BRACKET AS | |
| | 4 | | 8C-7581 | 8 | SCREW-MACHINE | |

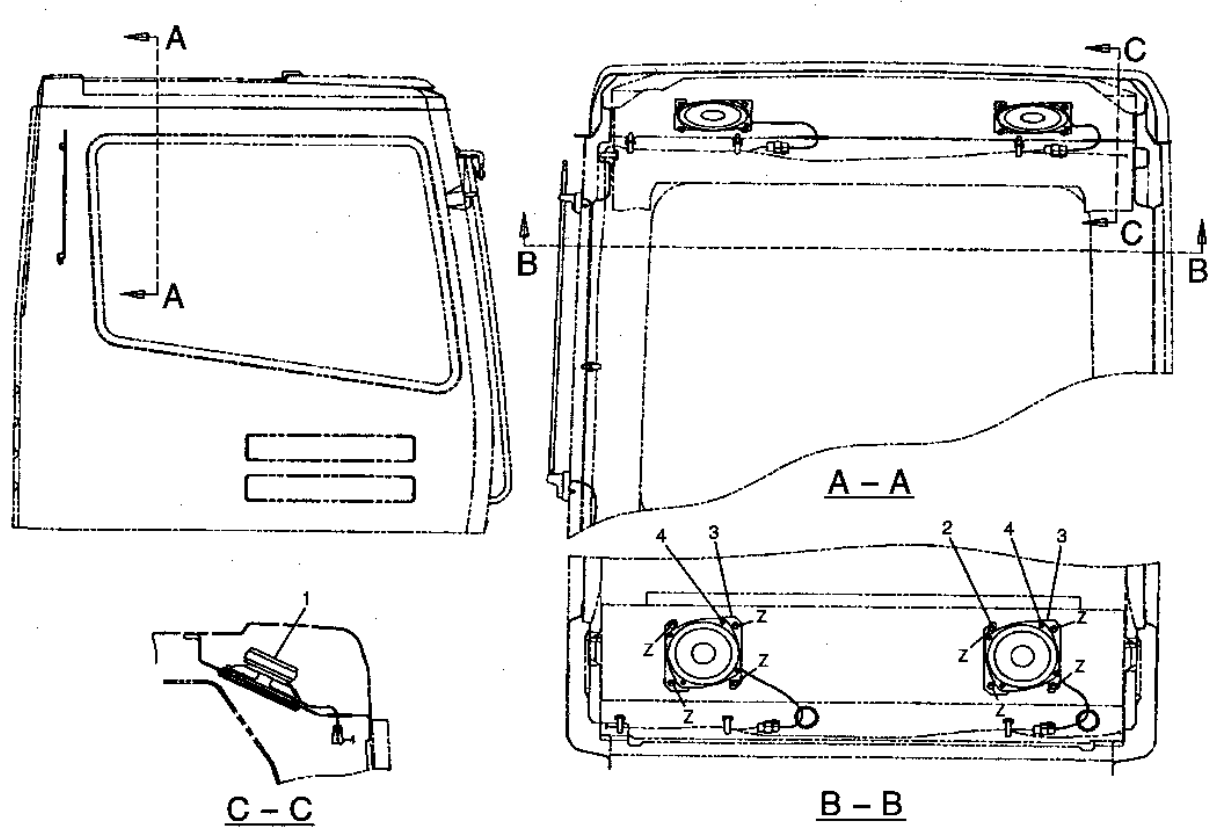


GRAPHIC #1

h59337e

# 1160159 WIRING GP

12V-5A POWER SUPPLY
1160258-Page 122.09
AN ATTACHMENT

**Key:** Y - SEE SEPARATE ILLUSTRATION

**SMCS**

| NOTE | REF NO | GRAPHIC REF | PART NUMBER | QTY | PART NAME 1 2 3 4 5 6 (PRODUCT LEVEL) | PRICE USD |
|---|---|---|---|---|---|---|
| | 1 | | 132-1903 | 1 | STRAP | |
| | 2 | | 121-0987 | 1 | SOCKET | |
| Y | 3 | | 116-0258 | 1 | HARNESS AS | |
| | 4 | | 119-1733 | 1 | CONVERTER | |
| | 5 | | 6V-9673 | 2 | SCREW-MACHINE | |
| | 6 | | 8T-0328 | 2 | WASHER-HARD | |

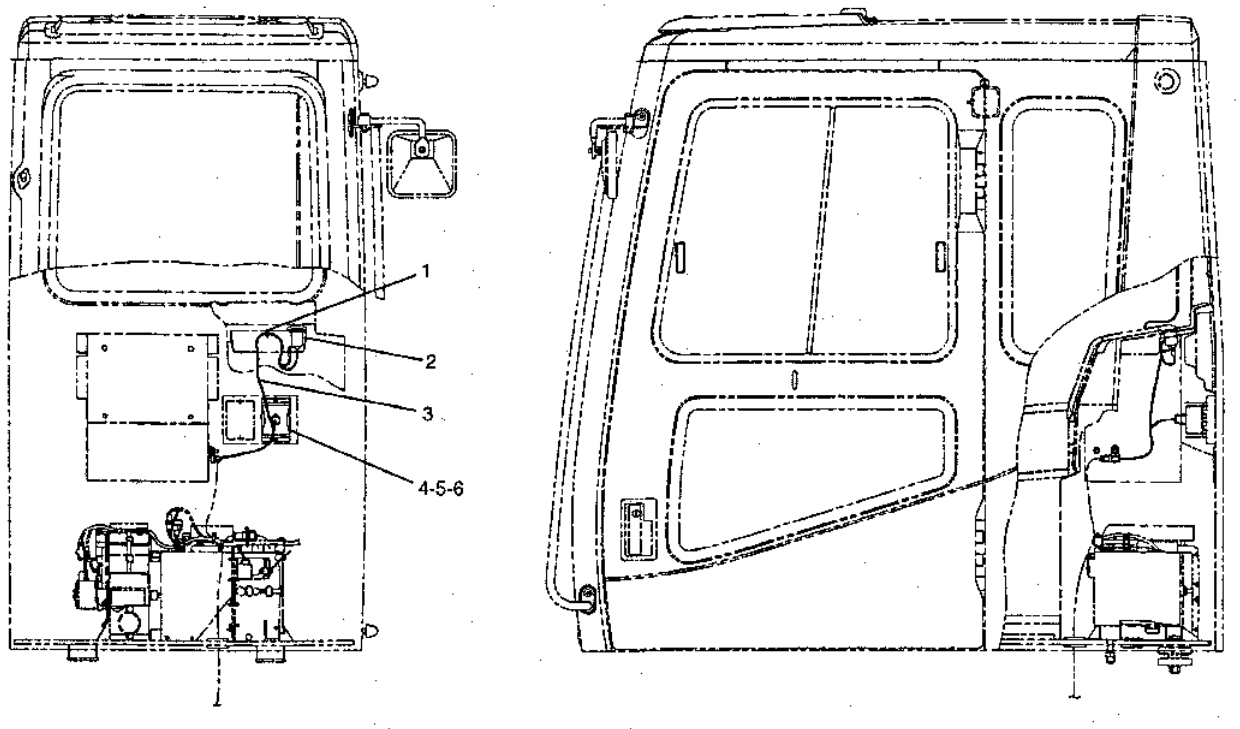


GRAPHIC #1 h52460e

# 1160258 HARNESS AS

PART OF 1160159-Page 122.08
AN ATTACHMENT

**Key:** Y - Separate Illustration

**SMCS**

| NOTE | REF NO | GRAPHIC REF | PART NUMBER | QTY | PART NAME 1 2 3 4 5 6 (PRODUCT LEVEL) | PRICE USD |
|---|---|---|---|---|---|---|
| Y | | | 116-0259 | 1 | HARNESS AS | |
| | | | | | -OR- | |
| Y | | | 116-0260 | 1 | HARNESS AS | |

# 1160259 HARNESS AS

PART OF 1160258-Page 122.09
AN ATTACHMENT

**Key:**

**SMCS**

| NOTE | REF NO | GRAPHIC REF | PART NUMBER | QTY | PART NAME 1 2 3 4 5 6 (PRODUCT LEVEL) | PRICE USD |
|---|---|---|---|---|---|---|
| | 1 | | 102-8810 | 1 | PLUG KIT | |
| | 2 | | 3E-3380 | 1 | WEDGE | |
| | 3 | | 6T-6506 | 1 | TERMINAL | |
| | 4 | | 6T-6505 | 1 | HOUSING | |
| | 5 | | 2L-8075 | 1 | TERMINAL | |
| | 6 | | 9W-0852 | 2 | PIN | |
| | 7 | | 102-8802 | 1 | RECEPTACLE KIT | |
| | 8 | | 3E-3365 | 1 | WEDGE | |
| | 9 | | 8T-8737 | 1 | PLUG | |
| | 10 | | 9W-0844 | 5 | SOCKET | |

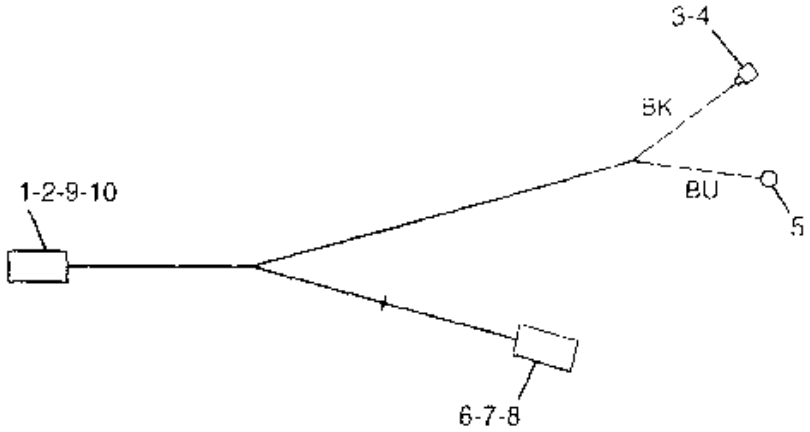


GRAPHIC #1

h57344e

# 1160260 HARNESS AS

PART OF 1160258-Page 122.09
AN ATTACHMENT

**Key:**

**SMCS**

| NOTE | REF NO | GRAPHIC REF | PART NUMBER | QTY | PART NAME 1 2 3 4 5 6 (PRODUCT LEVEL) | PRICE USD |
|---|---|---|---|---|---|---|
| | 1 | | 102-8810 | 1 | PLUG KIT | |
| | 2 | | 3E-3380 | 1 | WEDGE | |
| | 3 | | 6T-6506 | 1 | TERMINAL | |
| | 4 | | 6T-6505 | 1 | HOUSING | |
| | 5 | | 2L-8075 | 1 | TERMINAL | |
| | 6 | | 9W-0852 | 2 | PIN | |
| | 7 | | 102-8802 | 1 | RECEPTACLE KIT | |
| | 8 | | 3E-3365 | 1 | WEDGE | |
| | 9 | | 8T-8737 | 1 | PLUG | |
| | 10 | | 9W-0844 | 5 | SOCKET | |

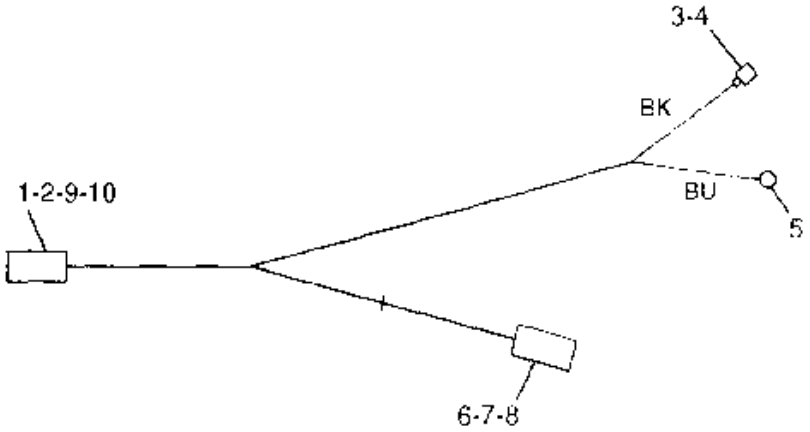


GRAPHIC #1 h65085e

# 1114695 WIRING GP-LOWER WIPER

PART OF 1116314-Page 439
AN ATTACHMENT

**Key:**

**SMCS**

| NOTE | REF NO | GRAPHIC REF | PART NUMBER | QTY | PART NAME 1 2 3 4 5 6 (PRODUCT LEVEL) | PRICE USD |
|---|---|---|---|---|---|---|
| | 1 | | 111-4785 | 1 | SWITCH AS (ROCKER) | |
| | | | 116-0173 | 1 | CONNECTOR | |
| | | | 116-0174 | 5 | TERMINAL | |
| | 2 | | 111-4786 | 1 | SWITCH AS (ROCKER) | |
| | | | 116-0173 | 1 | CONNECTOR | |
| | | | 116-0174 | 4 | TERMINAL | |

## 1114695 WIRING GP-LOWER WIPER

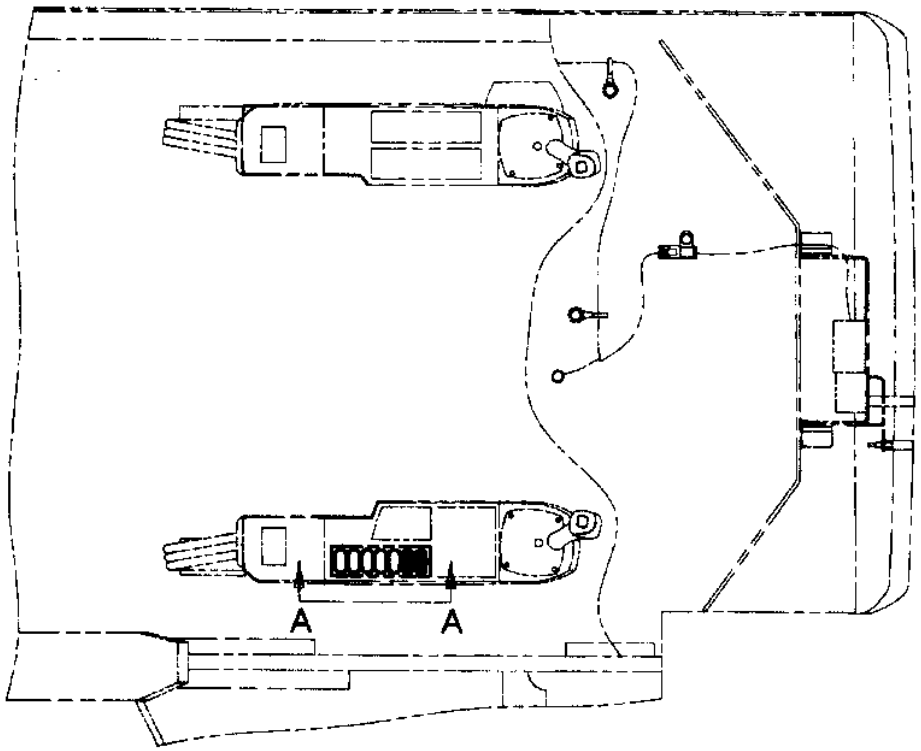


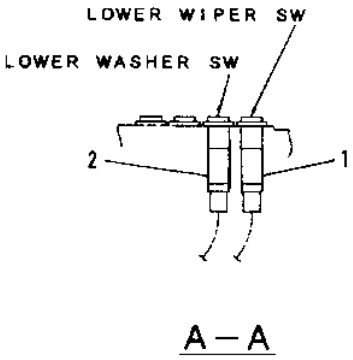


| NOTE | No. | PART No. | QTY | PART NAME | NOTE | No. | PART No. | QTY | PART NAME |
|---|---|---|---|---|---|---|---|---|---|
| | 1 | 111-4785 | 1 | SWITCH AS (ROCKER) | | | | | |
| | | 116-0173 | 1 | CONNECTOR | | | | | |
| | | 116-0174 | 5 | TERMINAL | | | | | |
| | 2 | 111-4786 | 1 | SWITCH AS (ROCKER) | | | | | |
| | | 116-0173 | 1 | CONNECTOR | | | | | |
| | | 116-0174 | 4 | TERMINAL | | | | | |

H51079E

GRAPHIC #1

h51079e

# 1211099 WIRING GP

PART OF 1116310, 1557061-Page 432
AN ATTACHMENT

**Key:**

**SMCS**

| NOTE | REF NO | GRAPHIC REF | PART NUMBER | QTY | PART NAME 1 2 3 4 5 6 (PRODUCT LEVEL) | PRICE USD |
|---|---|---|---|---|---|---|
| | 1 | | 111-4789 | 1 | SWITCH AS (ROCKER) | |
| | | | 116-0173 | 1 | CONNECTOR | |
| | | | 116-0174 | 5 | TERMINAL | |

## 1211099 WIRING GP

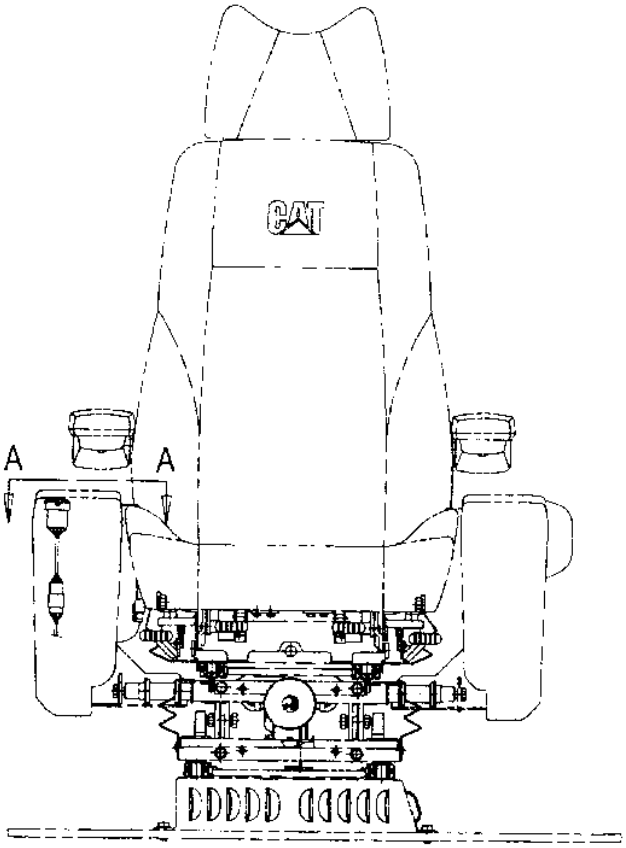


| NOTE | No. | PART No. | QTY | PART NAME |
|---|---|---|---|---|
| | 1 | 111-4789 | 1 | SWITCH AS (ROCKER) |
| | | 116-0173 | 1 | CONNECTOR |
| | | 116-0174 | 5 | TERMINAL |

| NOTE | No. | PART No. | QTY | PART NAME |
|---|---|---|---|---|

H57477E

GRAPHIC #1 h57477e

# 1364018 WIRING GP-CONSOLE

**Key:** Y - Separate Illustration

**SMCS**

| NOTE | REF NO | GRAPHIC REF | PART NUMBER | QTY | PART NAME 1 2 3 4 5 6 (PRODUCT LEVEL) | PRICE USD |
|---|---|---|---|---|---|---|
| Y | | | 106-0057 | 1 | WIRING GP (CONSOLE) | |
| Y | | | 136-4019 | 1 | WIRING GP (CONSOLE) | |

# 1060057 WIRING GP-CONSOLE

LEFT HAND
S/N 8SR 1-00417, 8TR 1-00485
PART OF 1364018-Page 123
1321892-Page 125.02, 1114799-Page 132

**Key:** Y - SEE SEPARATE ILLUSTRATION

**SMCS**

| NOTE | REF NO | GRAPHIC REF | PART NUMBER | QTY | PART NAME 1 2 3 4 5 6 (PRODUCT LEVEL) | PRICE USD |
|---|---|---|---|---|---|---|
| | 1 | | 119-5026 | 4 | SCREW | |
| | 2 | | 8T-9636 | 2 | FUSE (30A) | |
| | 3 | | 9W-1442 | 20 | (10A) | |
| | 4 | | 9W-1441 | 5 | FUSE (15A) | |
| | 5 | | 7Y-5493 | 1 | TOOL | |
| Y | 6 | | 111-4799 | 1 | SWITCH AS (NEUTRAL START LIMIT) | |
| | 7 | | 120-9027 | 2 | SCREW | |
| | 8 | | 096-5962 | 2 | WASHER | |
| Y | 9 | | 132-1892 | 1 | HARNESS AS | |
| | 10 | | 116-0082 | 2 | STRAP | |
| | 11 | | 125-4726 | 1 | CLIP | |
| | 12 | | 3S-2093 | 1 | STRAP | |

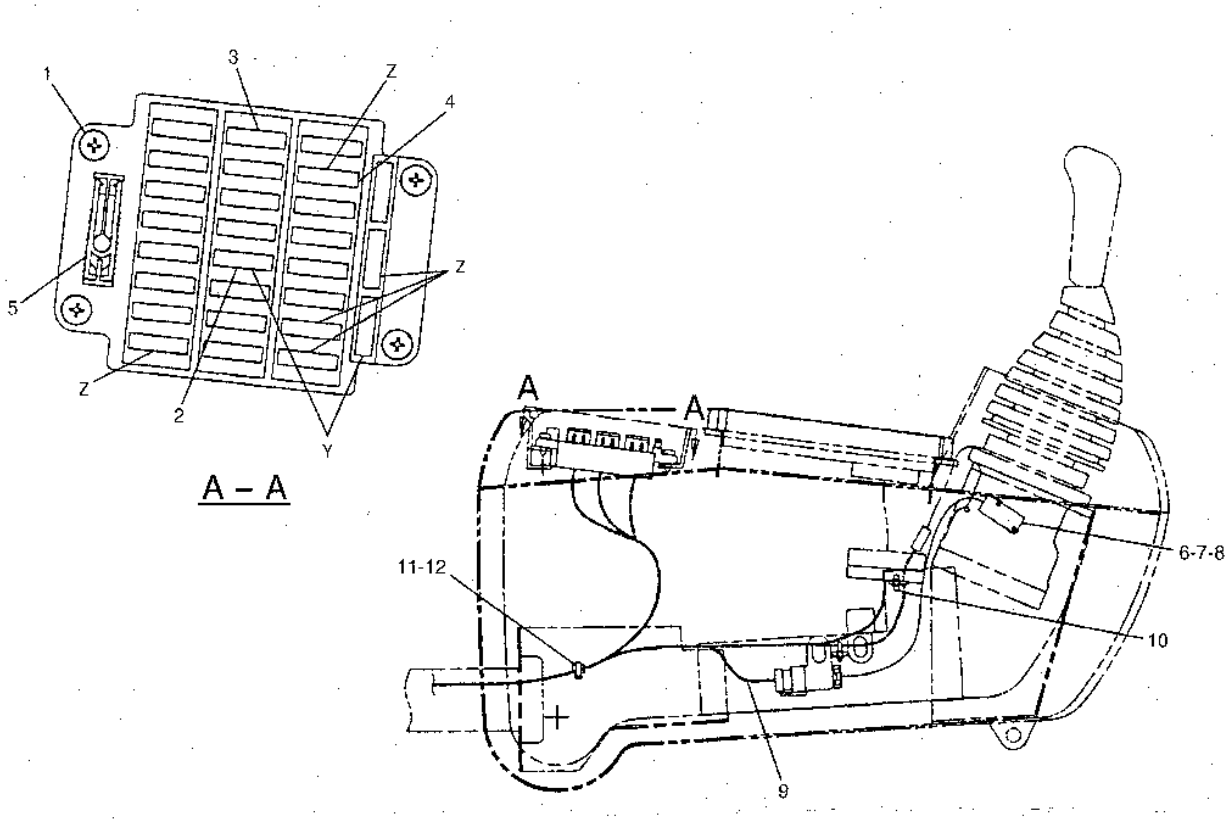


GRAPHIC #1

h52939e

# 1060057 WIRING GP-CONSOLE

LEFT HAND
S/N 8SR 00418-UP, 8TR 00486-UP
PART OF 1364018-Page 123
1532491-Page 127.03, 1114799-Page 132

**Key:** Y - SEE SEPARATE ILLUSTRATION

**SMCS**

| NOTE | REF NO | GRAPHIC REF | PART NUMBER | QTY | PART NAME 1 2 3 4 5 6 (PRODUCT LEVEL) | PRICE USD |
|---|---|---|---|---|---|---|
| | 1 | | 119-5026 | 4 | SCREW | |
| | 2 | | 8T-9636 | 2 | FUSE (30A) | |
| | 3 | | 9W-1442 | 19 | FUSE (10A) | |
| | 4 | | 9W-1441 | 5 | FUSE (15A) | |
| | 5 | | 7Y-5493 | 1 | TOOL | |
| Y | 6 | | 111-4799 | 1 | SWITCH AS (LIMIT) | |
| | | | | | (NEUTRAL START) | |
| | 7 | | 120-9027 | 2 | SCREW | |
| | 8 | | 096-5962 | 2 | WASHER | |
| Y | 9 | | 153-2491 | 1 | HARNESS AS | |
| | 10 | | 116-0082 | 2 | STRAP | |
| | 11 | | 125-4726 | 2 | CLIP | |
| | 12 | | 3S-2093 | 2 | STRAP | |
| | 13 | | 9W-1446 | 1 | FUSE (20A) | |

## 1060057 WIRING GP-CONSOLE

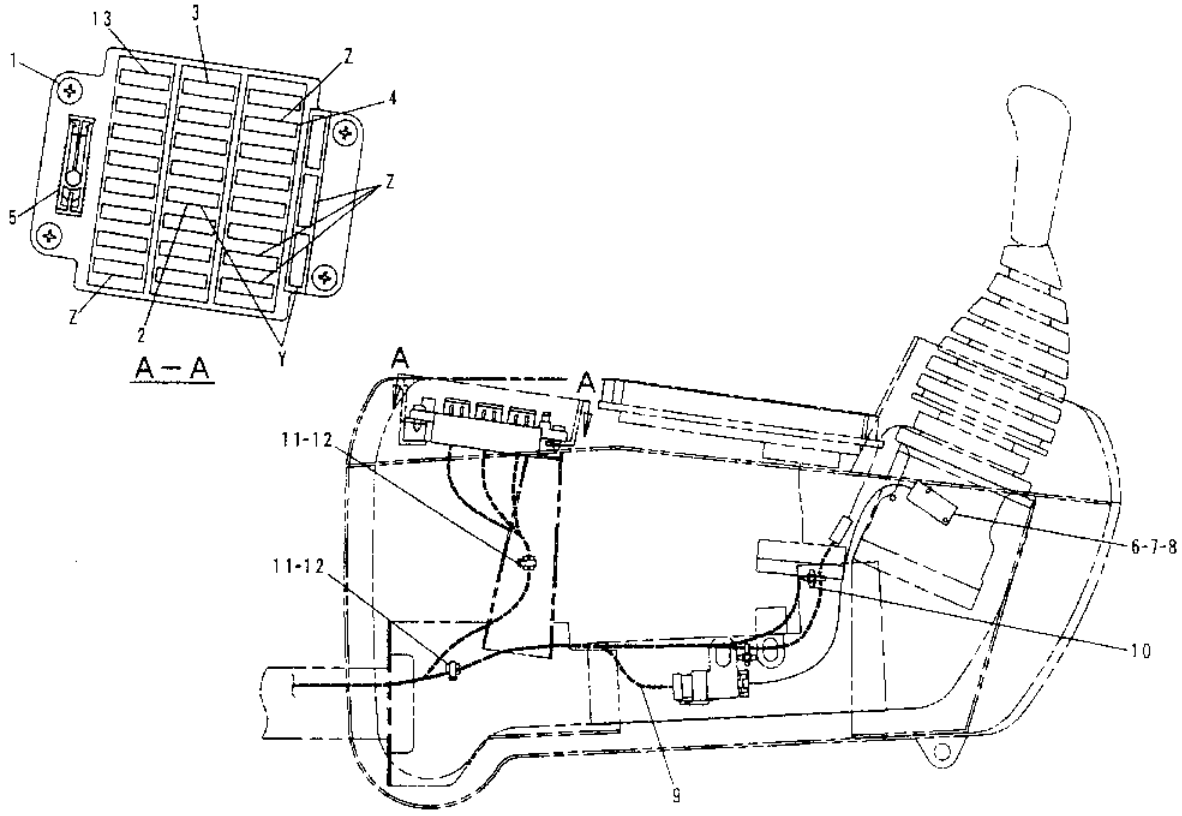


| NOTE | No. | PART No. | QTY | PART NAME | NOTE | No. | PART No. | QTY | PART NAME |
|---|---|---|---|---|---|---|---|---|---|
| | 1 | 119-5026 | 4 | SCREW | | | | | |
| | 2 | 8T-9636 | 2 | FUSE (30A) | | | | | |
| | 3 | 9W-1442 | 19 | FUSE (10A) | | | | | |
| | 4 | 9W-1441 | 5 | FUSE (15A) | | | | | |
| | 5 | 7Y-5493 | 1 | TOOL | | | | | |
| Y | 6 | 111-4799 | 1 | SWITCH AS (LIMIT) (NEUTRAL START) | | | | | |
| | 7 | 120-9027 | 2 | SCREW | | | | | |
| | 8 | 096-5962 | 2 | WASHER | | | | | |
| Y | 9 | 153-2491 | 1 | HARNESS AS | | | | | |
| | 10 | 116-0082 | 2 | STRAP | | | | | |
| | 11 | 125-4726 | 2 | CLIP | | | | | |
| | 12 | 3S 2093 | 2 | STRAP | | | | | |
| | 13 | 9W-1446 | 1 | FUSE (20A) | | | | | |

Y – SEE SEPARATE ILLUSTRATION

H60347E

# 1364019 WIRING GP-CONSOLE

RIGHT HAND
S/N 8SR 1-00417, 8TR 1-00485
PART OF 1364018-Page 123
1288966-Page 128, 9G7641-Page 131, 1060107-Page 132.01, 1107884, 1140421-Page 143

**Key:** Y - SEPARATE ILLUSTRATION

**SMCS**

| NOTE | REF NO | GRAPHIC REF | PART NUMBER | QTY | PART NAME 1 2 3 4 5 6 (PRODUCT LEVEL) | PRICE USD |
|---|---|---|---|---|---|---|
| Y | 1 | | 114-0421 | 1 | SWITCH AS (BACKUP) | |
| Y | 2 | | 110-7884 | 1 | SWITCH AS (BACKUP) | |
| | 3 | | 119-5026 | 3 | SCREW | |
| | 4 | | 125-4726 | 1 | CLIP | |
| | 5 | | 116-0082 | 4 | STRAP | |
| | 6 | | 121-1049 | 1 | BRACKET | |
| | 7 | | 111-4800 | 1 | PANEL AS | |
| Y | 8 | | 9G-7641 | 1 | SWITCH GP (ENGINE STARTER) | |
| | 9 | | 113-3453 | 1 | KNOB AS | |
| | 10 | | 6V-5210 | 4 | SCREW | |
| | 11 | | 096-6166 | 4 | WASHER | |
| Y | 12 | | 106-0107 | 1 | SWITCH AS (ACCELERATOR) | |
| | 13 | | 3S-2093 | 1 | STRAP | |
| | 14 | | 106-0211 | 1 | BRACKET AS | |
| Y | 15 | | 128-8966 | 1 | HARNESS AS | |
| | 16 | | 111-4788 | 1 | SWITCH AS | |
| | 17 | | 121-1160 | 1 | WASHER | |
| | 18 | | 113-0308 | 1 | SEAL | |

## 1364019 WIRING GP-CONSOLE

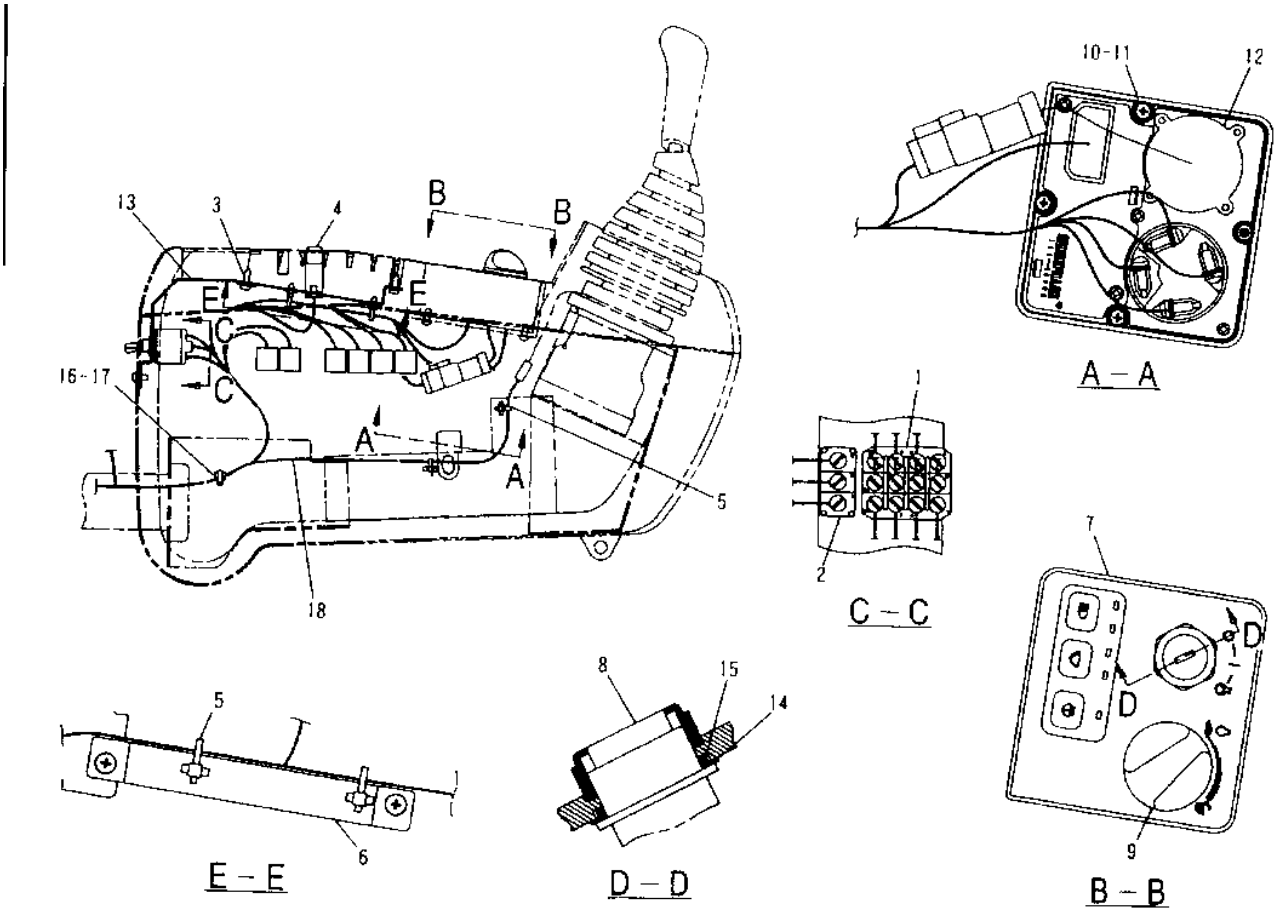


| NOTE | No. | PART No. | QTY | PART NAME |
|---|---|---|---|---|
| Y | 1 | 114-0421 | 1 | SWITCH AS (BACKUP) |
| Y | 2 | 110-7884 | 1 | SWITCH AS (BACKUP) |
| | 3 | 119-5026 | 3 | SCREW |
| Y | 4 | 111-4788 | 1 | SWITCH AS |
| | 5 | 116-0082 | 4 | STRAP |
| | 6 | 121-1049 | 1 | BRACKET |
| | 7 | 111-4800 | 1 | PANEL AS |
| Y | 8 | 9G-7641 | 1 | SWITCH GP (ENGINE STARTER) |
| | 9 | 113-3453 | 1 | KNOB AS |
| | | 124-4002 | 1 | SPRING |
| | | 124-4003 | 1 | PLATE |
| | 10 | 6V-5210 | 4 | SCREW |
| | 11 | 096-6166 | 4 | WASHER |
| Y | 12 | 106-0107 | 1 | SWITCH AS (ACCELERATOR) |
| | 13 | 106-0211 | 1 | BRACKET AS |
| | 14 | 121-1160 | 1 | WASHER |
| | 15 | 113-0308 | 1 | SEAL |
| | 16 | 125-4726 | 1 | CLIP |
| | 17 | 3S-2093 | 1 | STRAP |
| Y | 18 | 128-8966 | 1 | HARNESS AS |

Y–SEE SEPARATE ILLUSTRATION

H51653E

GRAPHIC #1 h51653e

# 1364019 WIRING GP-CONSOLE

RIGHT HAND
S/N 8SR 00418-UP, 8TR 00486-UP
PART OF 1364018-Page 123
1506999-Page 127.06, 9G7641-Page 131, 1060107-Page 132.01, 1007884, 1140421-Page 143

**Key:** Y - SEE SEPARATE ILLUSTRATION

**SMCS**

| NOTE | REF NO | GRAPHIC REF | PART NUMBER | QTY | PART NAME 1 2 3 4 5 6 (PRODUCT LEVEL) | PRICE USD |
|---|---|---|---|---|---|---|
| Y | 1 | | 114-0421 | 1 | SWITCH AS (BACKUP) | |
| Y | 2 | | 110-7884 | 1 | SWITCH AS (BACKUP) | |
| | 3 | | 119-5026 | 3 | SCREW | |
| | 4 | | 111-4788 | 1 | SWITCH AS | |
| | | | 116-0173 | 1 | CONNECTOR | |
| | | | 116-0174 | 5 | TERMINAL | |
| | 5 | | 116-0082 | 4 | STRAP | |
| | 6 | | 121-1049 | 1 | BRACKET | |
| | 7 | | 153-2500 | 1 | PANEL AS | |
| Y | 8 | | 9G-7641 | 1 | SWITCH GP (ENGINE STARTER) | |
| | 9 | | 113-3453 | 1 | KNOB AS | |
| | | | 124-4002 | 1 | SPRING | |
| | | | 124-4003 | 1 | PLATE | |
| | 10 | | 6V-5210 | 4 | SCREW | |
| | 11 | | 096-6166 | 4 | WASHER | |
| Y | 12 | | 106-0107 | 1 | SWITCH AS (ACCELERATOR) | |
| | 13 | | 106-0211 | 1 | BRACKET AS | |
| | 14 | | 121-1160 | 1 | WASHER | |
| | 15 | | 113-0308 | 1 | SEAL-O-RING (ID=26.00mm) | |
| | 16 | | 125-4726 | 1 | CLIP | |
| | 17 | | 3S-2093 | 2 | STRAP | |
| Y | 18 | | 150-6999 | 1 | HARNESS AS | |

## 1364019 WIRING GP-CONSOLE

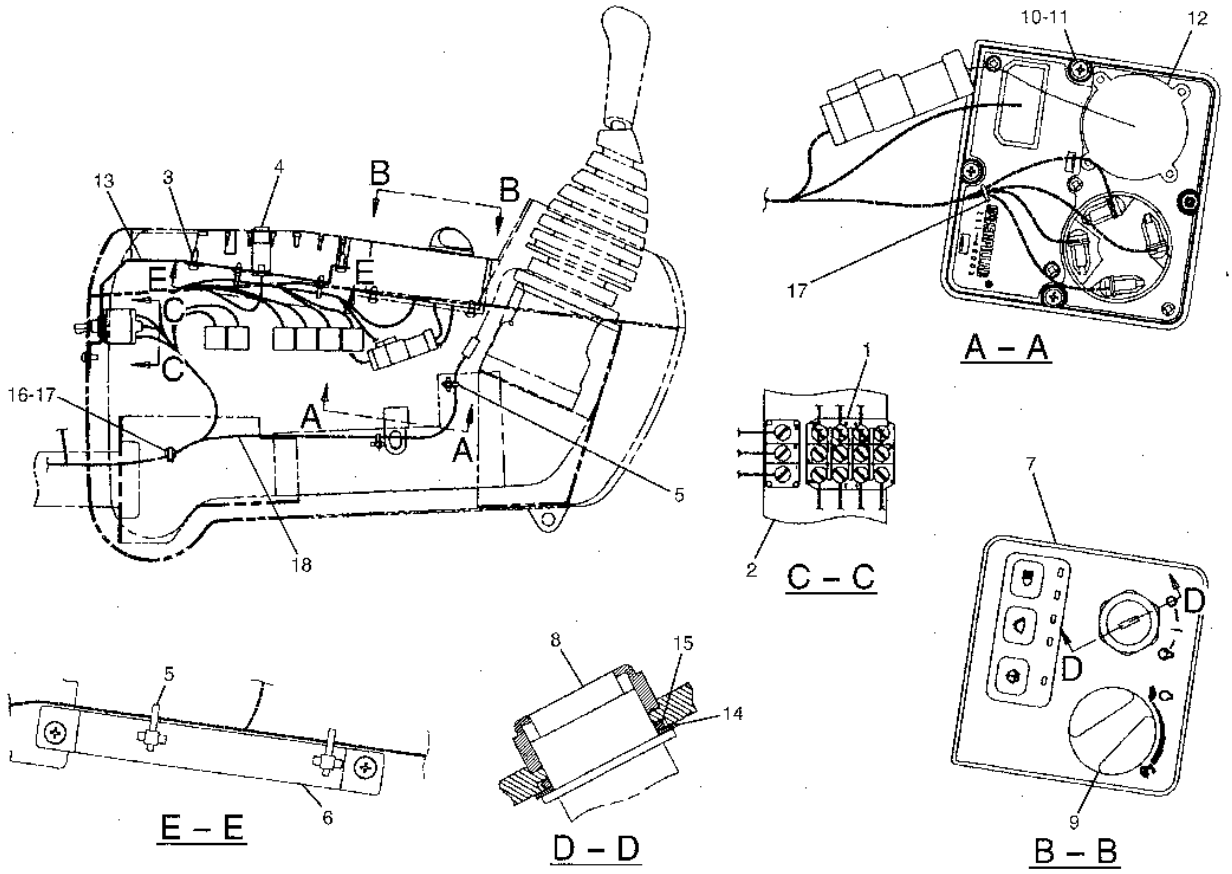


GRAPHIC #1

h67964e

# 1321892 HARNESS AS-CONSOLE

S/N 8SR 1-00417, 8TR 1-00485
PART OF 1060057-Page 124

**Key:** Y - Separate Illustration

**SMCS**

| NOTE | REF NO | GRAPHIC REF | PART NUMBER | QTY | PART NAME 1 2 3 4 5 6 (PRODUCT LEVEL) | PRICE USD |
|---|---|---|---|---|---|---|
| Y | | | 132-1893 | 1 | HARNESS AS (CONSOLE) | |
| | | | | | -OR- | |
| Y | | | 132-1894 | 1 | HARNESS AS (CONSOLE) | |

# 1321893 HARNESS AS-CONSOLE

S/N 8SR 1-00417, 8TR 1-00485
PART OF 1321892-Page 125.02

**Key:**

**SMCS**

| NOTE | REF NO | GRAPHIC REF | PART NUMBER | QTY | PART NAME 1 2 3 4 5 6 (PRODUCT LEVEL) | PRICE USD |
|---|---|---|---|---|---|---|
| | 1 | | 111-4812 | 1 | BASE | |
| | 2 | | 7Y-5494 | 16 | TERMINAL | |
| | 3 | | 3M-6018 | 2 | TERMINAL | |
| | 4 | | 102-8808 | 1 | PLUG KIT | |
| | 5 | | 3E-3368 | 1 | WEDGE | |
| | 6 | | 8T-8730 | 10 | SOCKET | |
| | 7 | | 7Y-3963 | 2 | TERMINAL | |
| | | | 7Y-3965 | 2 | TUBE | |
| | 8 | | 125-4841 | 1 | WEDGE | |
| | 9 | | 102-7964 | 1 | CONNECTOR | |
| | 10 | | 102-7965 | 18 | TERMINAL | |
| | 11 | | 8T-8729 | 8 | PIN | |
| | 12 | | 8T-8737 | 2 | PLUG | |
| | 13 | | 9W-0852 | 10 | PIN | |
| | 14 | | 102-8801 | 1 | RECEPTACLE KIT | |
| | 15 | | 3E-5180 | 1 | WEDGE | |
| | 16 | | 102-8802 | 1 | RECEPTACLE KIT | |
| | 17 | | 3E-3365 | 1 | WEDGE | |
| | 18 | | 102-8805 | 1 | RECEPTACLE KIT | |
| | 19 | | 3E-3383 | 1 | WEDGE | |
| | 20 | | 102-8811 | 1 | PLUG KIT | |
| | 21 | | 3E-3386 | 1 | WEDGE | |
| | 22 | | 9W-0844 | 13 | SOCKET | |
| | 23 | | 102-8800 | 1 | PLUG KIT | |
| | 24 | | 3E-5177 | 1 | WEDGE | |
| | 25 | | 121-1168 | 1 | CONNECTOR | |
| | 26 | | 121-1173 | 18 | TERMINAL | |
| | 27 | | 3S-2093 | 11 | STRAP | |
| | 28 | | 7Y-5495 | 5 | TERMINAL | |
| | 29 | | 7Y-5496 | 4 | TERMINAL | |
| | 30 | | 7Y-5475 | 9 | TERMINAL | |

## 1321893 HARNESS AS-CONSOLE

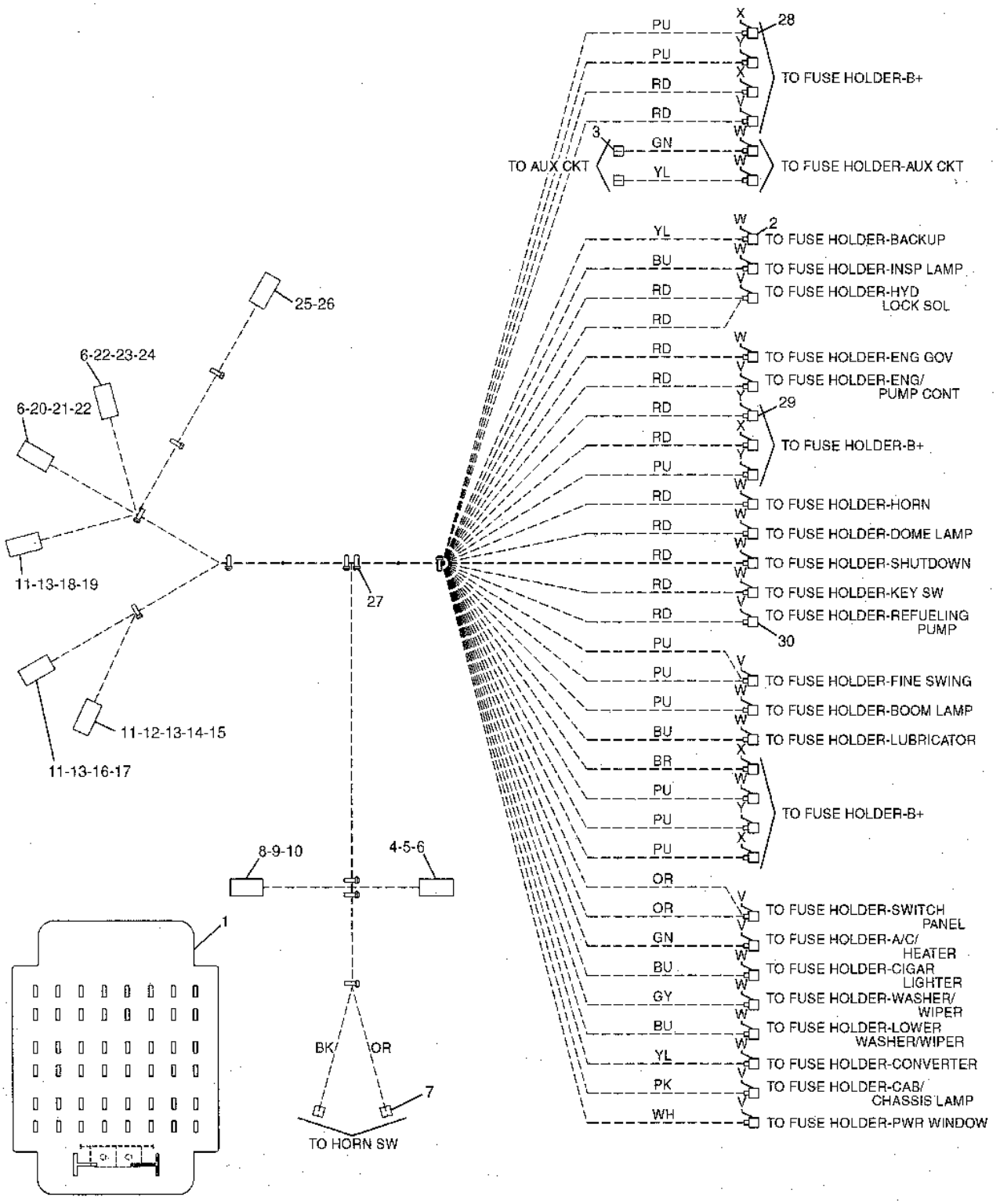


GRAPHIC #1 h63423e

# 1321894 HARNESS AS-CONSOLE

S/N 8SR 1-00417, 8TR 1-00485
PART OF 1321892-Page 125.02

**Key:**

**SMCS**

| NOTE | REF NO | GRAPHIC REF | PART NUMBER | QTY | PART NAME 1 2 3 4 5 6 (PRODUCT LEVEL) | PRICE USD |
|---|---|---|---|---|---|---|
| | 1 | | 111-4812 | 1 | BASE | |
| | 2 | | 7Y-5494 | 16 | TERMINAL | |
| | 3 | | 3M-6018 | 2 | TERMINAL | |
| | 4 | | 102-8808 | 1 | PLUG KIT | |
| | 5 | | 3E-3368 | 1 | WEDGE | |
| | 6 | | 8T-8730 | 10 | SOCKET | |
| | 7 | | 7Y-3963 | 2 | TERMINAL | |
| | | | 7Y-3965 | 2 | TUBE | |
| | 8 | | 125-4841 | 1 | WEDGE | |
| | 9 | | 102-7964 | 1 | CONNECTOR | |
| | 9 | | 102-7964 | 1 | CONNECTOR | |
| | 10 | | 102-7965 | 18 | TERMINAL | |
| | 11 | | 8T-8729 | 8 | PIN | |
| | 12 | | 8T-8737 | 2 | PLUG | |
| | 13 | | 9W-0852 | 10 | PIN | |
| | 14 | | 102-8801 | 1 | RECEPTACLE KIT | |
| | 15 | | 3E-5180 | 1 | WEDGE | |
| | 16 | | 102-8802 | 1 | RECEPTACLE KIT | |
| | 17 | | 3E-3365 | 1 | WEDGE | |
| | 18 | | 102-8805 | 1 | RECEPTACLE KIT | |
| | 19 | | 3E-3383 | 1 | WEDGE | |
| | 20 | | 102-8811 | 1 | PLUG KIT | |
| | 21 | | 3E-3386 | 1 | WEDGE | |
| | 22 | | 9W-0844 | 13 | SOCKET | |
| | 23 | | 102-8800 | 1 | PLUG KIT | |
| | 24 | | 3E-5177 | 1 | WEDGE | |
| | 25 | | 121-1168 | 1 | CONNECTOR | |
| | 26 | | 121-1173 | 18 | TERMINAL | |
| | 27 | | 3S-2093 | 11 | STRAP | |
| | 28 | | 7Y-5495 | 5 | TERMINAL | |
| | 29 | | 7Y-5496 | 4 | TERMINAL | |
| | 30 | | 7Y-5475 | 9 | TERMINAL | |

## 1321894 HARNESS AS-CONSOLE

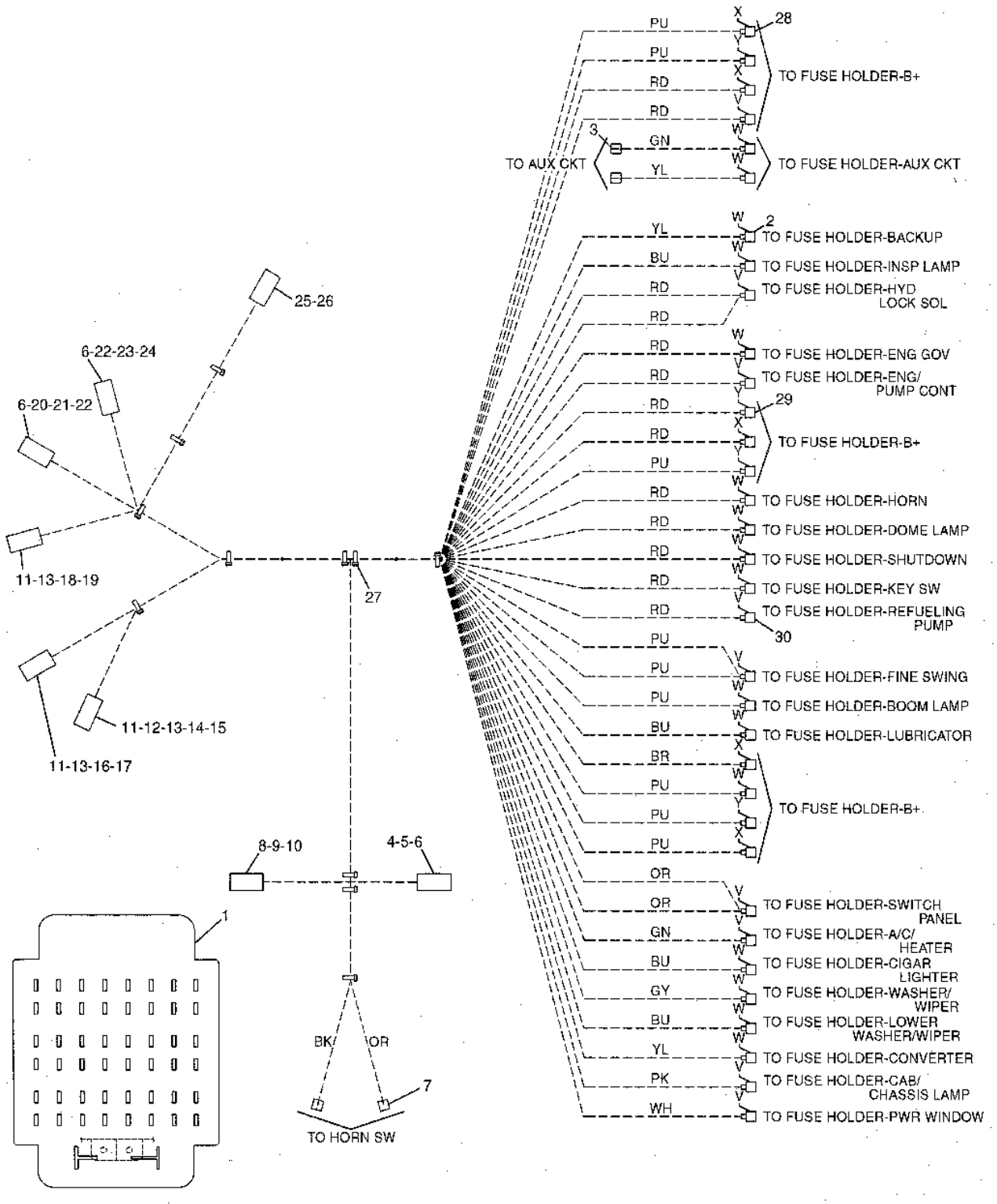


GRAPHIC #1

h63425e

# 1532491 HARNESS AS-CONSOLE

S/N 8SR 00418-UP, 8TR 00486-UP
PART OF 1060057-Page 124.01

**Key:**

**SMCS**

| NOTE | REF NO | GRAPHIC REF | PART NUMBER | QTY | PART NAME 1 2 3 4 5 6 (PRODUCT LEVEL) | PRICE USD |
|---|---|---|---|---|---|---|
| | 1 | | 111-4812 | 1 | BASE | |
| | 2 | | 7Y-5494 | 15 | TERMINAL | |
| | 3 | | 3M-6018 | 2 | TERMINAL | |
| | 4 | | 102-8808 | 1 | PLUG KIT | |
| | 5 | | 3E-3368 | 1 | WEDGE | |
| | 6 | | 8T-8730 | 10 | SOCKET | |
| | 7 | | 7Y-3963 | 2 | TERMINAL | |
| | | | 7Y-3965 | 2 | TUBE | |
| | 8 | | 7Y-5495 | 5 | TERMINAL | |
| | 9 | | 7Y-5496 | 4 | TERMINAL | |
| | 10 | | 7Y-5475 | 13 | TERMINAL | |
| | 11 | | 8T-8729 | 8 | PIN | |
| | 12 | | 3S-2093 | 9 | STRAP | |
| | 13 | | 9W-0852 | 12 | PIN | |
| | 14 | | 102-8801 | 1 | RECEPTACLE KIT | |
| | 15 | | 3E-5180 | 1 | WEDGE | |
| | 16 | | 102-8802 | 1 | RECEPTACLE KIT | |
| | 17 | | 3E-3365 | 1 | WEDGE | |
| | 18 | | 102-8805 | 1 | RECEPTACLE KIT | |
| | 19 | | 3E-3383 | 1 | WEDGE | |
| | 20 | | 102-8811 | 1 | PLUG KIT | |
| | 21 | | 3E-3386 | 1 | WEDGE | |
| | 22 | | 9W-0844 | 13 | SOCKET | |
| | 23 | | 102-8800 | 1 | PLUG KIT | |
| | 24 | | 3E-5177 | 1 | WEDGE | |

## 1532491 HARNESS AS-CONSOLE

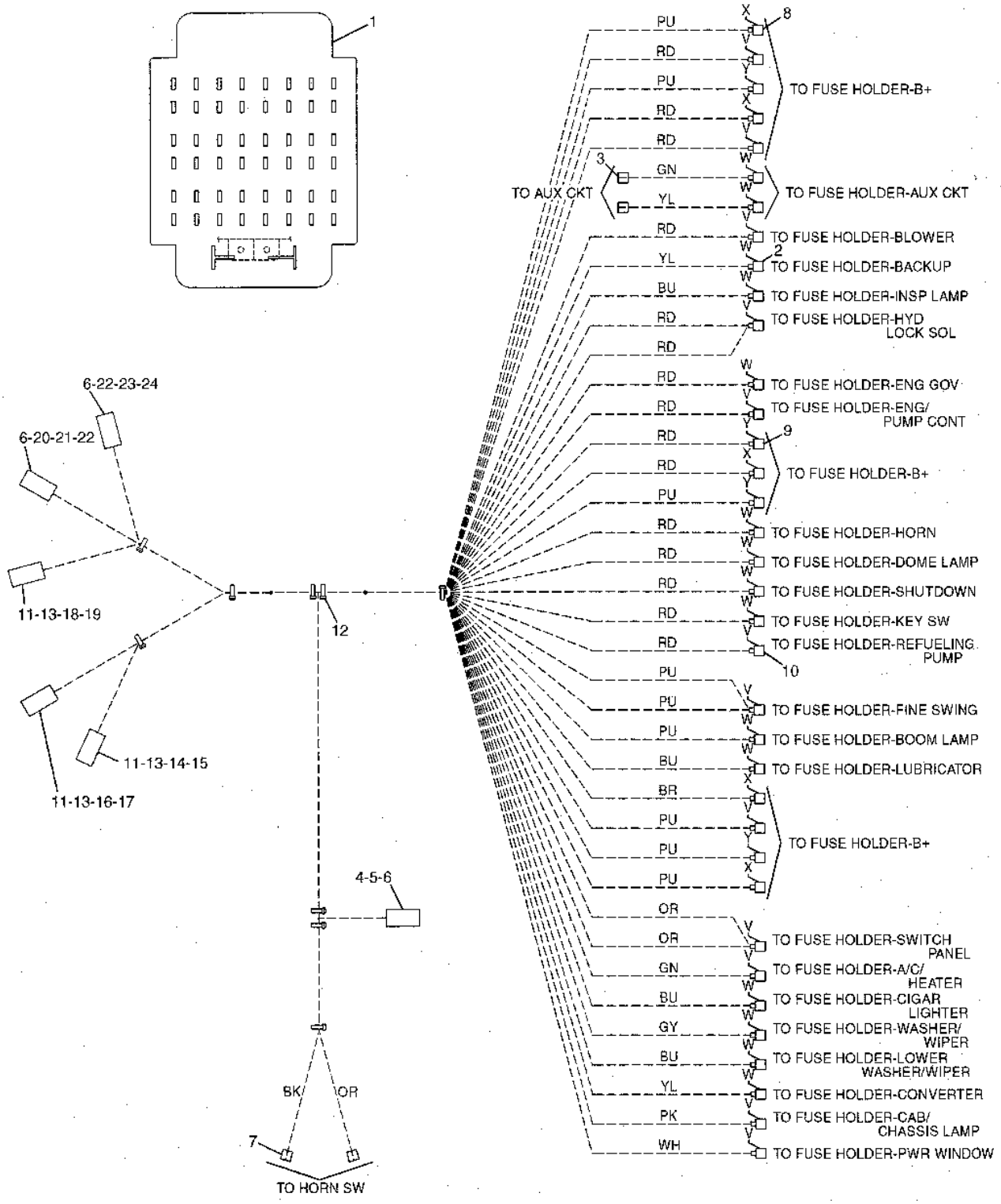


GRAPHIC #1

h60351e

# 1506999 HARNESS AS-CONSOLE

S/N 8SR 00418-UP, 8TR 00486-UP
PART OF 1364019-Page 125.01

**Key:** Y - Separate Illustration

**SMCS**

| NOTE | REF NO | GRAPHIC REF | PART NUMBER | QTY | PART NAME 1 2 3 4 5 6 (PRODUCT LEVEL) | PRICE USD |
|---|---|---|---|---|---|---|
| Y | | | 150-7000 | 1 | HARNESS AS (CONSOLE) | |
| | | | | | -OR- | |
| Y | | | 150-7001 | 1 | HARNESS AS (CONSOLE) | |

# 1288966 HARNESS AS-CONSOLE-PART 1 OF 2

S/N 8SR 1-00417, 8TR 1-00485
PART OF 1364019-Page 125

**Key:**

**SMCS**

| NOTE | REF NO | GRAPHIC REF | PART NUMBER | QTY | PART NAME 1 2 3 4 5 6 (PRODUCT LEVEL) | PRICE USD |
|---|---|---|---|---|---|---|
| | 1 | | 102-8804 | 1 | RECEPTACLE KIT | |
| | 2 | | 3E-3377 | 1 | WEDGE | |
| | 3 | | 8T-8737 | 5 | PLUG | |
| | 4 | | 8T-8729 | 20 | PIN | |
| | 5 | | 102-8806 | 1 | RECEPTACLE KIT | |
| | 6 | | 3E-3389 | 1 | WEDGE | |
| | 7 | | 9W-0852 | 2 | PIN | |
| | 8 | | 102-8801 | 1 | RECEPTACLE KIT | |
| | 9 | | 3E-5180 | 1 | WEDGE | |
| | 10 | | 8T-8730 | 24 | SOCKET | |
| | 11 | | 102-8802 | 1 | RECEPTACLE KIT | |
| | 12 | | 155-2270 | 1 | PLUG KIT | |
| | 13 | | 3E-3362 | 1 | WEDGE | |
| | 14 | | 7Y-3963 | 2 | TERMINAL | |
| | | | 7Y-3965 | 2 | TUBE | |
| | 15 | | 3S-2093 | 16 | STRAP | |
| | 16 | | 5P-2321 | 14 | TERMINAL | |
| | 17 | | 116-0087 | 2 | CONNECTOR | |
| | 18 | | 102-8809 | 1 | PLUG KIT | |
| | 19 | | 3E-3374 | 1 | WEDGE | |
| | 20 | | 102-8811 | 1 | PLUG KIT | |
| | 21 | | 3E-3386 | 1 | WEDGE | |
| | 22 | | 9S-0844 | 1 | SOCKET | |
| | 23 | | 102-8800 | 1 | PLUG KIT | |
| | 24 | | 3E-5177 | 1 | WEDGE | |

## 1288966 HARNESS AS-CONSOLE-PART 1 OF 2

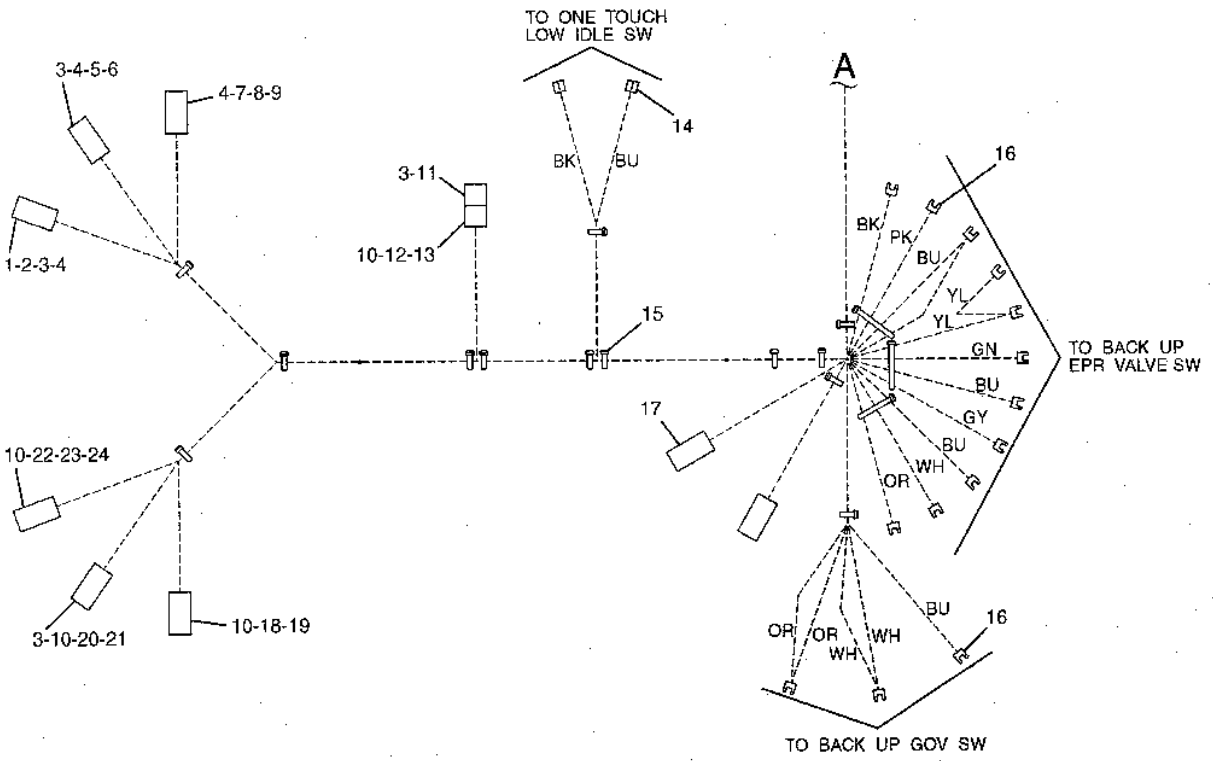


GRAPHIC #1 h84053e

# 1288966 HARNESS AS-CONSOLE-PART 2 OF 2

S/N 8SR 1-00417, 8TR 1-00485
PART OF 1364019-Page 125

**Key:**

**SMCS**

| NOTE | REF NO | GRAPHIC REF | PART NUMBER | QTY | PART NAME 1 2 3 4 5 6 (PRODUCT LEVEL) | PRICE USD |
|---|---|---|---|---|---|---|
| | 1 | | 8T-8737 | 1 | PLUG | |
| | 2 | | 8T-8730 | 5 | SOCKET | |
| | 3 | | 3S-2093 | 10 | STRAP | |
| | 4 | | 116-0087 | 5 | CONNECTOR | |
| | 5 | | 125-4839 | 1 | WEDGE | |
| | 6 | | 116-0086 | 1 | CONNECTOR | |
| | 7 | | 102-7965 | 7 | TERMINAL | |
| | 8 | | 2L-8075 | 5 | TERMINAL | |
| | 9 | | 102-8810 | 1 | PLUG KIT | |
| | 10 | | 3E-3380 | 1 | WEDGE | |

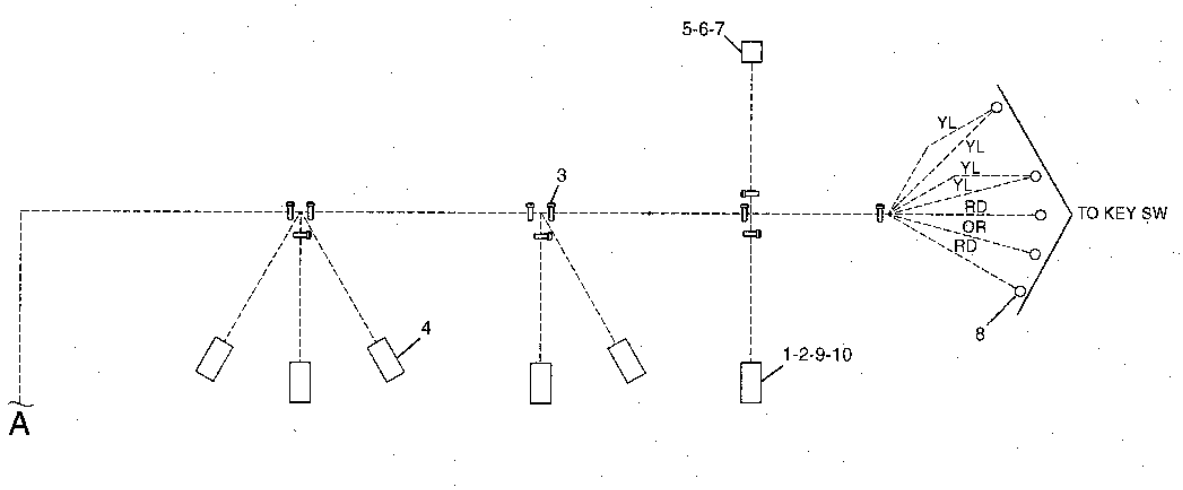


GRAPHIC #1

h84054e

# 1507000 HARNESS AS-CONSOLE-PART 1 OF 2

S/N 8SR 00418-UP, 8TR 00486-UP
PART OF 1506999-Page 127.06

**Key:**

**SMCS**

| NOTE | REF NO | GRAPHIC REF | PART NUMBER | QTY | PART NAME 1 2 3 4 5 6 (PRODUCT LEVEL) | PRICE USD |
|---|---|---|---|---|---|---|
| | 1 | | 102-8804 | 1 | RECEPTACLE KIT | |
| | 2 | | 3E-3377 | 1 | WEDGE | |
| | 3 | | 8T-8737 | 6 | PLUG | |
| | 4 | | 186-3735 | 17 | PIN | |
| | 5 | | 102-8806 | 1 | RECEPTACLE KIT | |
| | 6 | | 3E-3389 | 1 | WEDGE | |
| | 7 | | 9W-0852 | 4 | PIN | |
| | 8 | | 102-8801 | 1 | RECEPTACLE KIT | |
| | 9 | | 3E-5180 | 1 | WEDGE | |
| | 10 | | 8T-8730 | 24 | SOCKET | |
| | 11 | | 102-8802 | 1 | RECEPTACLE KIT | |
| | 12 | | 155-2270 | 1 | PLUG KIT | |
| | 13 | | 3E-3362 | 1 | WEDGE | |
| | 14 | | 7Y-3963 | 2 | TERMINAL | |
| | | | 7Y-3965 | 2 | TUBE | |
| | 15 | | 3S-2093 | 16 | STRAP | |
| | 16 | | 5P-2321 | 14 | TERMINAL | |
| | 17 | | 116-0087 | 2 | CONNECTOR | |
| | 18 | | 102-8809 | 1 | PLUG KIT | |
| | 19 | | 3E-3374 | 1 | WEDGE | |
| | 20 | | 102-8811 | 1 | PLUG KIT | |
| | 21 | | 3E-3386 | 1 | WEDGE | |
| | 22 | | 9W-0844 | 1 | SOCKET | |
| | 23 | | 102-8800 | 1 | PLUG KIT | |
| | 24 | | 3E-5177 | 1 | WEDGE | |

## 1507000 HARNESS AS-CONSOLE-PART 1 OF 2

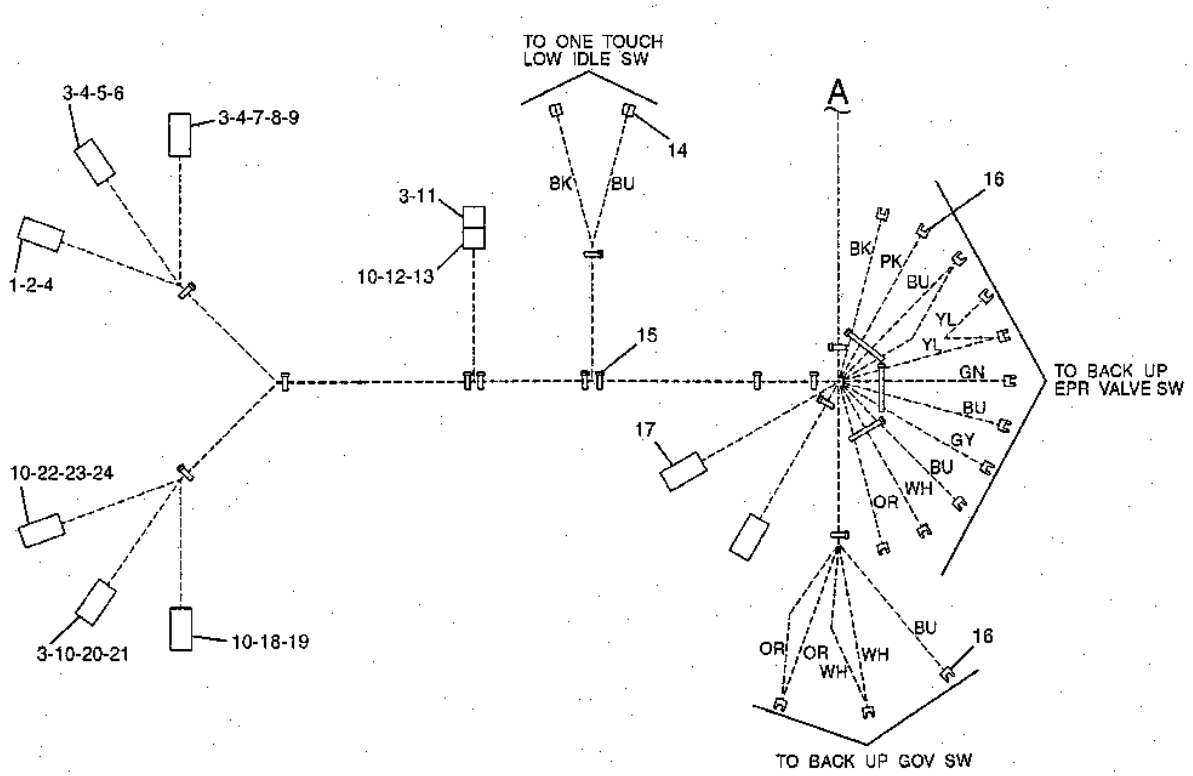


GRAPHIC #1

h60352e

# 1507000 HARNESS AS-CONSOLE-PART 2 OF 2

S/N 8SR 00418-UP, 8TR 00486-UP
PART OF 1506999-Page 127.06

**Key:**

**SMCS**

| NOTE | REF NO | GRAPHIC REF | PART NUMBER | QTY | PART NAME 1 2 3 4 5 6 (PRODUCT LEVEL) | PRICE USD |
|---|---|---|---|---|---|---|
| | 1 | | 8T-8737 | 1 | PLUG | |
| | 2 | | 8T-8730 | 5 | SOCKET | |
| | 3 | | 3S-2093 | 10 | STRAP | |
| | 4 | | 116-0087 | 5 | CONNECTOR | |
| | 5 | | 125-4839 | 1 | WEDGE | |
| | 6 | | 116-0086 | 1 | CONNECTOR | |
| | 7 | | 102-7965 | 8 | TERMINAL | |
| | 8 | | 2L-8075 | 4 | TERMINAL | |
| | 9 | | 102-8810 | 1 | PLUG KIT | |
| | 10 | | 3E-3380 | 1 | WEDGE | |

## 1507000 HARNESS AS-CONSOLE-PART 2 OF 2

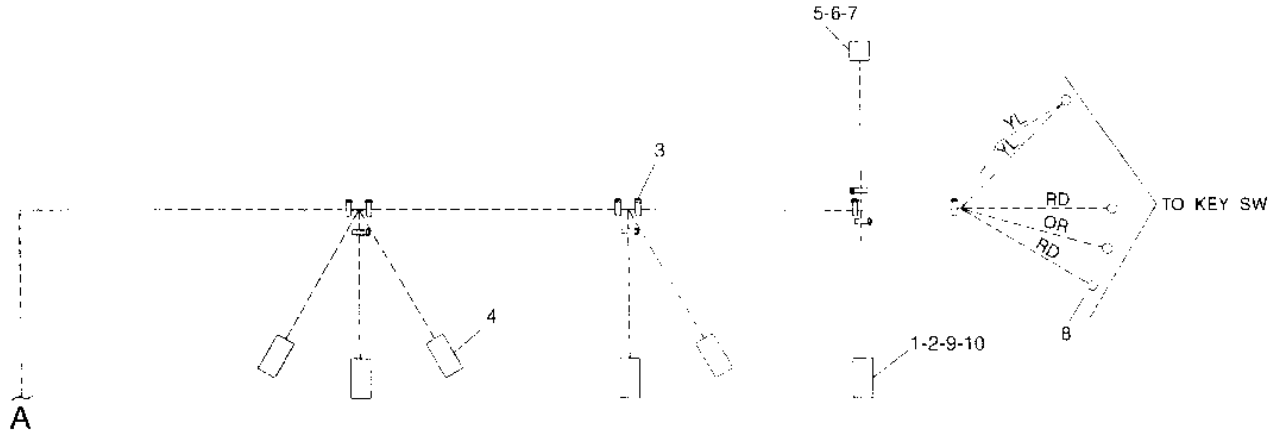


| NOTE | No. | PART No. | QTY | PART NAME |
|---|---|---|---|---|
| | 1 | 8T-8737 | 1 | PLUG |
| | 2 | 8T-8730 | 5 | SOCKET |
| | 3 | 3S-2093 | 10 | STRAP |
| | 4 | 116-0087 | 5 | CONNECTOR |
| | 5 | 125-4839 | 1 | WEDGE |
| | 6 | 116 0086 | 1 | CONNECTOR |
| | 7 | 102-7965 | 8 | TERMINAL |
| | 8 | 2L-8075 | 4 | TERMINAL |
| | 9 | 102-8810 | 1 | PLUG KIT |
| | 10 | 3E-3380 | 1 | WEDGE |

H60353E

GRAPHIC #1 h60353e

# 1507001 HARNESS AS-CONSOLE-PART 1 OF 2

S/N 8SR 00418-UP, 8TR 00486-UP
PART OF 1506999-Page 127.06

**Key:**

**SMCS**

| NOTE | REF NO | GRAPHIC REF | PART NUMBER | QTY | PART NAME 1 2 3 4 5 6 (PRODUCT LEVEL) | PRICE USD |
|---|---|---|---|---|---|---|
| | 1 | | 102-8804 | 1 | RECEPTACLE KIT | |
| | 2 | | 3E-3377 | 1 | WEDGE | |
| | 3 | | 8T-8737 | 6 | PLUG | |
| | 4 | | 186-3735 | 17 | PIN | |
| | 5 | | 102-8806 | 1 | RECEPTACLE KIT | |
| | 6 | | 3E-3389 | 1 | WEDGE | |
| | 7 | | 9W-0852 | 4 | PIN | |
| | 8 | | 102-8801 | 1 | RECEPTACLE KIT | |
| | 9 | | 3E-5180 | 1 | WEDGE | |
| | 10 | | 8T-8730 | 24 | SOCKET | |
| | 11 | | 102-8802 | 1 | RECEPTACLE KIT | |
| | 12 | | 155-2270 | 1 | PLUG KIT | |
| | 13 | | 3E-3362 | 1 | WEDGE | |
| | 14 | | 7Y-3963 | 2 | TERMINAL | |
| | | | 7Y-3965 | 2 | TUBE | |
| | 15 | | 3S-2093 | 16 | STRAP | |
| | 16 | | 5P-2321 | 14 | TERMINAL | |
| | 17 | | 116-0087 | 2 | CONNECTOR | |
| | 18 | | 102-8809 | 1 | PLUG KIT | |
| | 19 | | 3E-3374 | 1 | WEDGE | |
| | 20 | | 102-8811 | 1 | PLUG KIT | |
| | 21 | | 3E-3386 | 1 | WEDGE | |
| | 22 | | 9W-0844 | 1 | SOCKET | |
| | 23 | | 102-8800 | 1 | PLUG KIT | |
| | 24 | | 3E-5177 | 1 | WEDGE | |

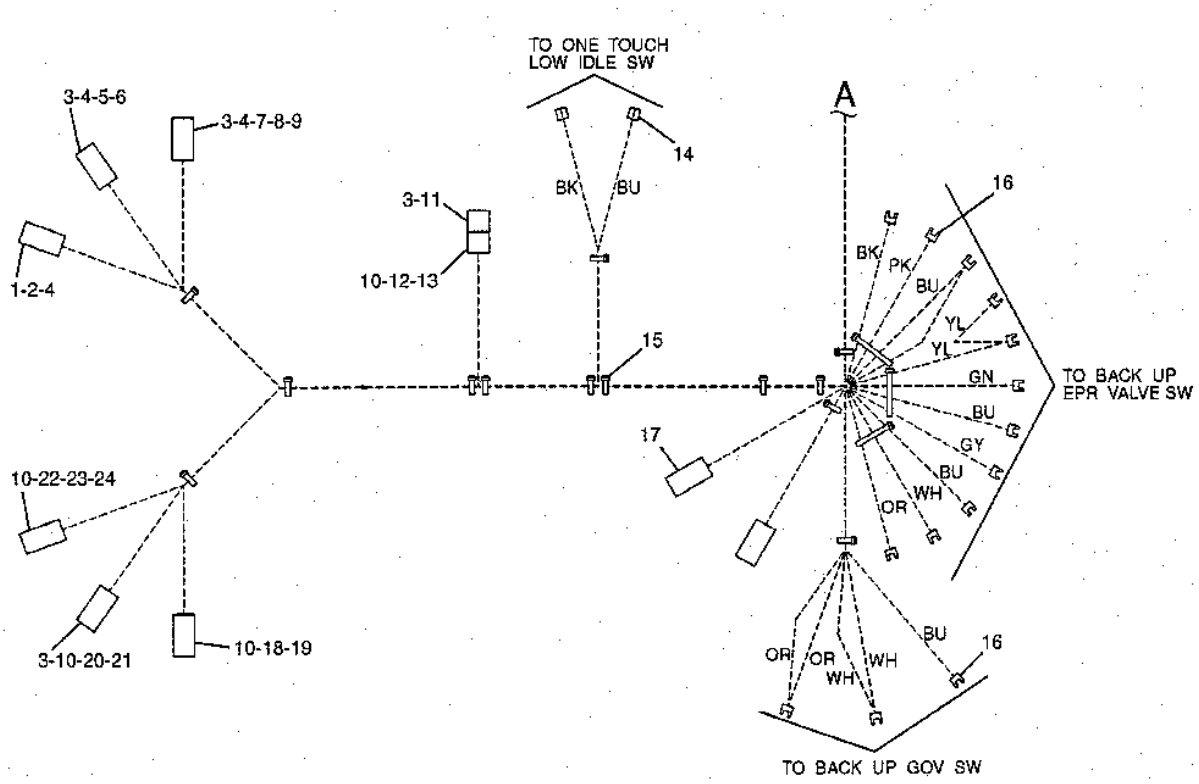

## 1507001 HARNESS AS-CONSOLE-PART 1 OF 2

GRAPHIC #1 h60354e

# 1507001 HARNESS AS-CONSOLE-PART 2 OF 2

S/N 8SR 00418-UP, 8TR 00486-UP
PART OF 1506999-Page 127.06

**Key:**

**SMCS**

| NOTE | REF NO | GRAPHIC REF | PART NUMBER | QTY | PART NAME 1 2 3 4 5 6 (PRODUCT LEVEL) | PRICE USD |
|---|---|---|---|---|---|---|
| | 1 | | 8T-8737 | 1 | PLUG | |
| | 2 | | 8T-8730 | 5 | SOCKET | |
| | 3 | | 3S-2093 | 10 | STRAP | |
| | 4 | | 116-0087 | 5 | CONNECTOR | |
| | 5 | | 125-4839 | 1 | WEDGE | |
| | 6 | | 116-0086 | 1 | CONNECTOR | |
| | 7 | | 102-7965 | 8 | TERMINAL | |
| | 8 | | 2L-8075 | 4 | TERMINAL | |
| | 9 | | 102-8810 | 1 | PLUG KIT | |
| | 10 | | 3E-3380 | 1 | WEDGE | |

## 1507001 HARNESS AS-CONSOLE-PART 2 OF 2

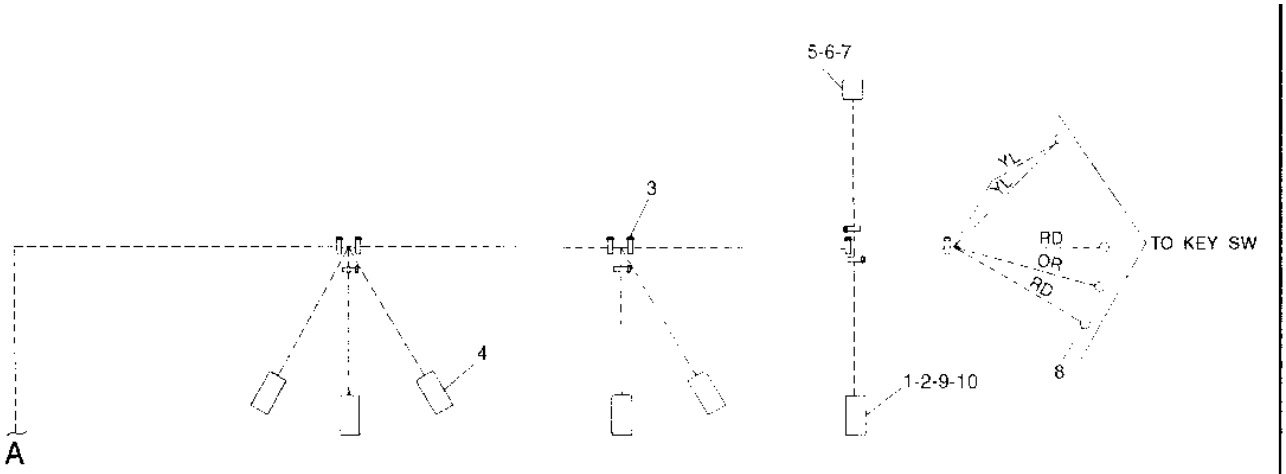


| NOTE | No. | PART No. | QTY | PART NAME | NOTE | No. | PART No. | QTY | PART NAME |
|---|---|---|---|---|---|---|---|---|---|
| | 1 | 8T-8737 | 1 | PLUG | | | | | |
| | 2 | 8T-8730 | 5 | SOCKET | | | | | |
| | 3 | 3S-2093 | 10 | STRAP | | | | | |
| | 4 | 116-0087 | 5 | CONNECTOR | | | | | |
| | 5 | 125-4839 | 1 | WEDGE | | | | | |
| | 6 | 116-0086 | 1 | CONNECTOR | | | | | |
| | 7 | 102-7965 | 8 | TERMINAL | | | | | |
| | 8 | 2L-8075 | 4 | TERMINAL | | | | | |
| | 9 | 102-8810 | 1 | PLUG KIT | | | | | |
| | 10 | 3E-3380 | 1 | WEDGE | | | | | |

H60355E

GRAPHIC #1

h60355e

# 5C6108 SWITCH AS

PART OF 1089845-Page 96, 1161640-Page 97
AN ATTACHMENT

**Key:**

**SMCS**

| NOTE | REF NO | GRAPHIC REF | PART NUMBER | QTY | PART NAME 1 2 3 4 5 6 (PRODUCT LEVEL) | PRICE USD |
|---|---|---|---|---|---|---|
| | 1 | | 8J-9236 | 1 | SWITCH | |
| | 2 | | 5C-6074 | 1 | FITTING | |
| | 3 | | 2S-4078 | 1 | SEAL-O-RING (ID=37.47mm) | |
| | 4 | | 3D-2824 | 1 | SEAL-O-RING (ID=23.47mm) | |
| | 5 | | 8S-1815 | 1 | PLUG | |
| | 6 | | 8S-1814 | 2 | INSULATOR | |
| | 7 | | 4B-2049 | 2 | NUT | |
| | 8 | | 8S-1812 | 1 | TERMINAL | |
| | 9 | | 9B-4499 | 1 | SCREW | |
| | 10 | | 2L-8076 | 1 | TERMINAL | |

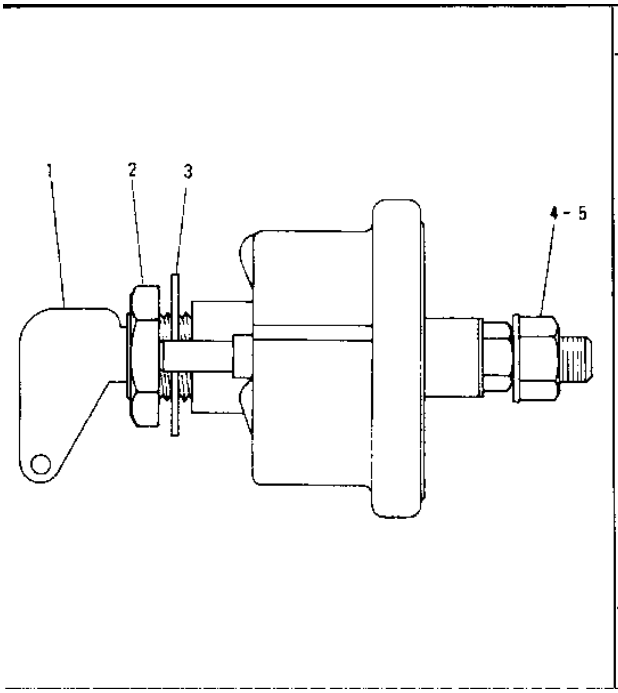


| NOTE | No. | PART No. | QTY | PART NAME |
|---|---|---|---|---|
| | 1 | 8H-5306 | 1 | KEY |
| | 2 | 8H-5303 | 1 | NUT |
| | 3 | 2H-3922 | 1 | LOCKWASHER |
| | 4 | 9F-5644 | 2 | LOCKWASHER |
| | 5 | 6F-7045 | 2 | NUT |

H50574E

GRAPHIC #1

h50576e

# 7N0718 SWITCH AS-DISCONNECT

PART OF 1288948-Page 119

**Key:**

**SMCS**

| NOTE | REF NO | GRAPHIC REF | PART NUMBER | QTY | PART NAME 1 2 3 4 5 6 (PRODUCT LEVEL) | PRICE USD |
|---|---|---|---|---|---|---|
| | 1 | | 2H-3922 | 2 | LOCKWASHER | |
| | 2 | | 8H-5303 | 1 | NUT | |
| | 3 | | 9F-5644 | 2 | LOCKWASHER | |
| | 4 | | 6F-7045 | 2 | NUT | |
| | 5 | | 8H-5306 | 1 | KEY | |

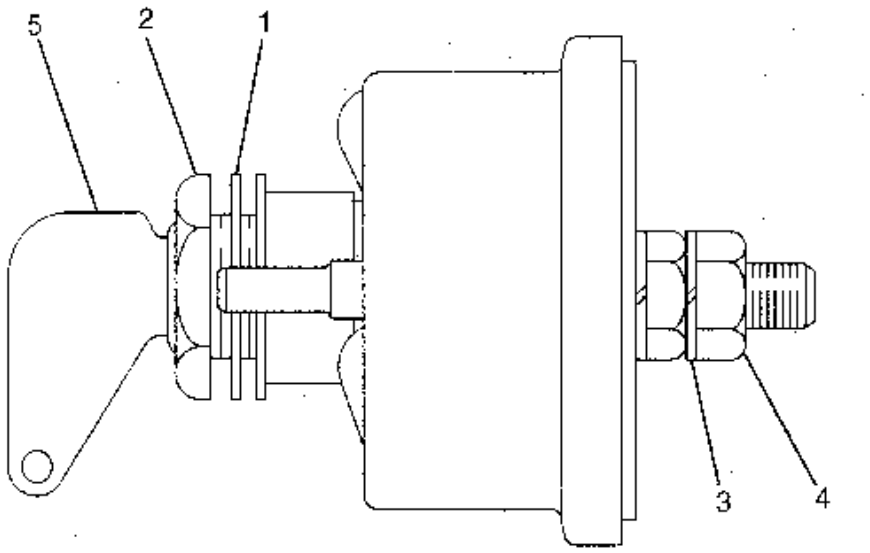


GRAPHIC #1 h56260e

# 7N0719 SWITCH AS-DISCONNECT

PART OF 1114862-Page 141
AN ATTACHMENT

**Key:**

**SMCS**

| NOTE | REF NO | GRAPHIC REF | PART NUMBER | QTY | PART NAME 1 2 3 4 5 6 (PRODUCT LEVEL) | PRICE USD |
|---|---|---|---|---|---|---|
| | 1 | | 2H-3922 | 1 | LOCKWASHER | |
| | 2 | | 8H-5303 | 1 | NUT | |
| | 3 | | 9F-5644 | 2 | LOCKWASHER | |
| | 4 | | 6F-7045 | 2 | NUT | |
| | 5 | | 8H-5306 | 1 | KEY | |

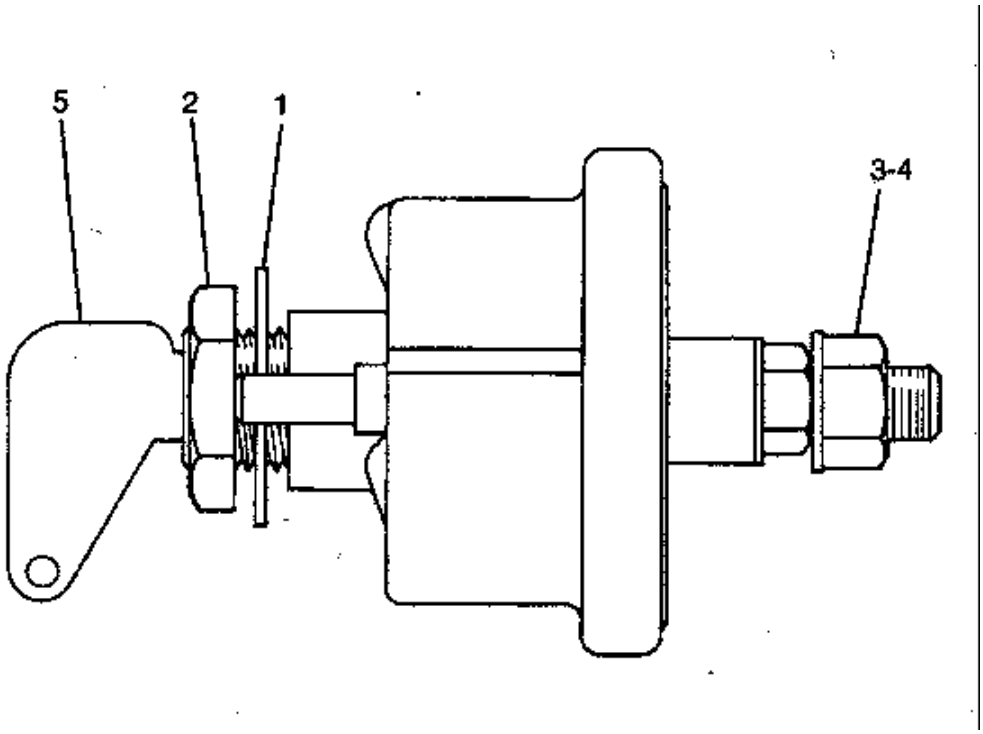


GRAPHIC #1 h81797e

# 9G7641 SWITCH GP-START

PART OF 1364019-Page 125

**Key:**

**SMCS**

| NOTE | REF NO | GRAPHIC REF | PART NUMBER | QTY | PART NAME 1 2 3 4 5 6 (PRODUCT LEVEL) | PRICE USD |
|---|---|---|---|---|---|---|
| | 1 | | 6V-8362 | 4 | SCREW | |
| | 2 | | 9B-7233 | 4 | LOCKWASHER | |
| | 3 | | 7T-6799 | 1 | NUT | |

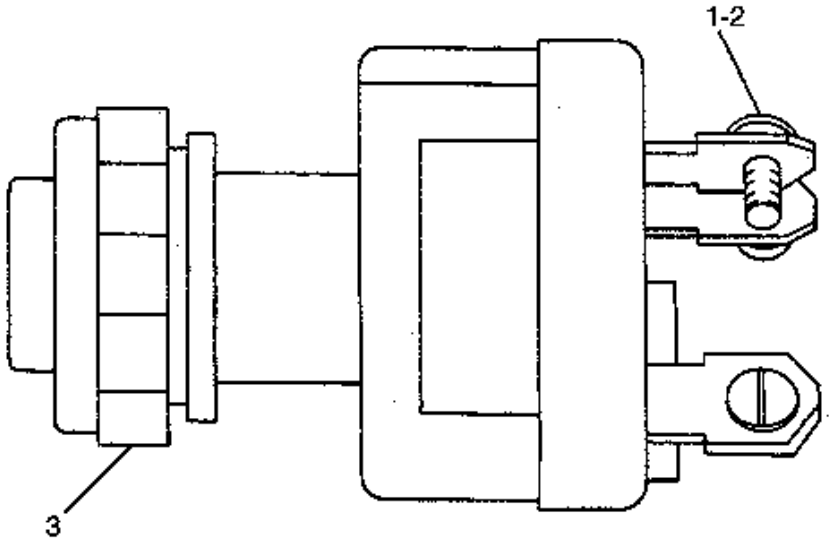


GRAPHIC #1 h50072e

# 1114799 SWITCH AS

LIMIT
PART OF 1060057-Page 124

**Key:** D - ORDER BY THE METER

**SMCS**

| NOTE | REF NO | GRAPHIC REF | PART NUMBER | QTY | PART NAME 1 2 3 4 5 6 (PRODUCT LEVEL) | PRICE USD |
|---|---|---|---|---|---|---|
| | 1 | | 8T-8729 | 3 | PIN | |
| | 2 | | 102-8803 | 1 | RECEPTACLE KIT | |
| D | 3 | | 5P-5998 | | TUBE (0.3m) | |

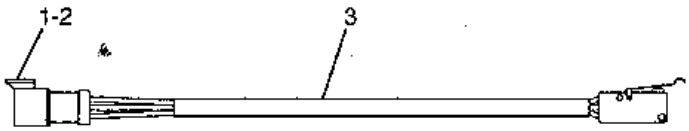


GRAPHIC #1 h72253e

# 1060107 SWITCH AS-ROTARY

PART OF 1364019-Page 125

**Key:**

**SMCS**

| NOTE | REF NO | GRAPHIC REF | PART NUMBER | QTY | PART NAME 1 2 3 4 5 6 (PRODUCT LEVEL) | PRICE USD |
|---|---|---|---|---|---|---|
| | 1 | | 8T-8737 | 1 | PLUG-SEAL | |
| | 2 | | 9X-3401 | 5 | PIN | |
| | 3 | | 102-8805 | 1 | RECEPTACLE AS | |
| | 4 | | 106-0210 | 1 | SEAL | |
| | 5 | | 7Y-5458 | 1 | NUT | |
| | 6 | | 7Y-5464 | 1 | WASHER | |

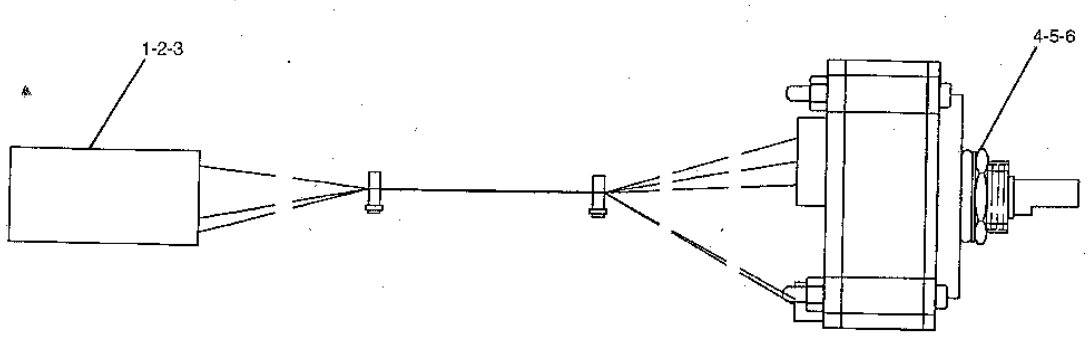


GRAPHIC #1 h74274e

# 1160095 SWITCH AS

PART OF 1160083-Page 135, 1160167-Page 137
AN ATTACHMENT

**Key:**

**SMCS**

| NOTE | REF NO | GRAPHIC REF | PART NUMBER | QTY | PART NAME 1 2 3 4 5 6 (PRODUCT LEVEL) | PRICE USD |
|---|---|---|---|---|---|---|
| | 1 | | 3E-3365 | 1 | WEDGE | |
| | 2 | | 102-8802 | 1 | RECEPTACLE KIT | |
| | 3 | | 8T-8729 | 2 | PIN | |
| | 4 | | 6T-9442 | 1 | SWITCH AS | |
| | | | 1S-0812 | 1 | SWITCH AS | |
| | 5 | | 1S-0812 | 2 | SCREW | |
| | 6 | | 8T-8748 | 1 | ADAPTER | |
| | 7 | | 6F-0253 | 1 | LOCKWASHER | |
| | 8 | | 3K-0835 | 1 | NUT | |

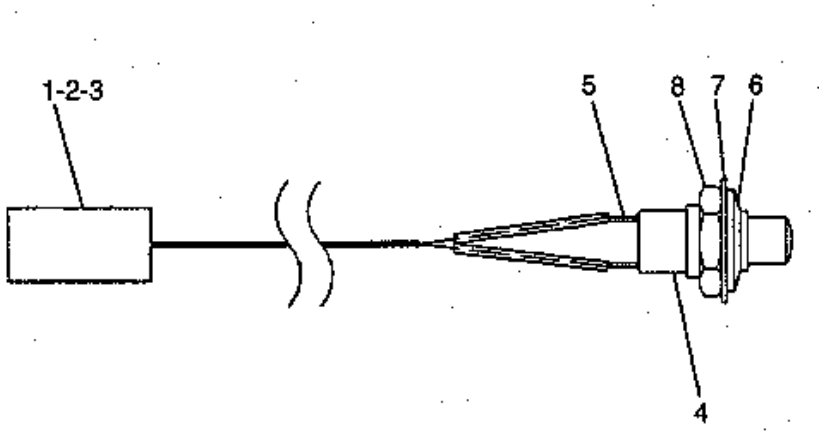


GRAPHIC #1 h51761e

# 1160097 SWITCH AS

PART OF 1160083-Page 135, 1160167-Page 137
AN ATTACHMENT

**Key:**

**SMCS**

| NOTE | REF NO | GRAPHIC REF | PART NUMBER | QTY | PART NAME 1 2 3 4 5 6 (PRODUCT LEVEL) | PRICE USD |
|---|---|---|---|---|---|---|
| | 1 | | 3E-3362 | 1 | WEDGE | |
| | 2 | | 155-2270 | 1 | PLUG KIT | |
| | 3 | | 8T-8730 | 2 | SOCKET | |
| | 4 | | 9X-4184 | 1 | SWITCH AS | |
| | | | 3E-7389 | 1 | SWITCH AS | |
| | 5 | | 1S-0812 | 2 | SCREW | |
| | 6 | | 8T-8748 | 1 | ADAPTER | |
| | 7 | | 6F-0253 | 1 | LOCKWASHER | |
| | 8 | | 3K-0835 | 1 | NUT | |

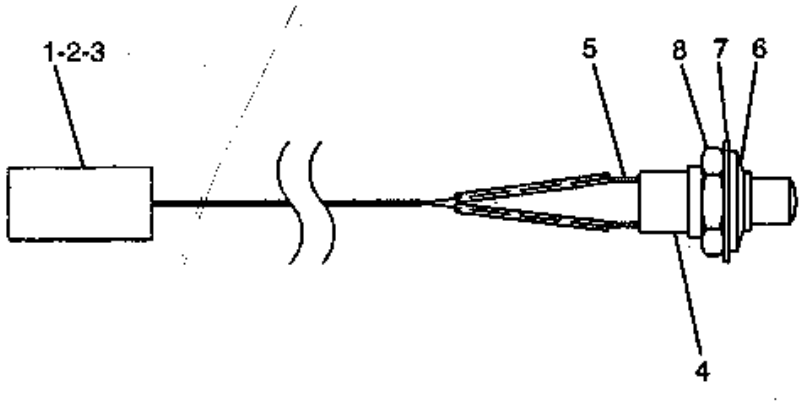


GRAPHIC #1

h51762e

# 1251302 SWITCH AS-MAGNETIC

PART OF 1288948-Page 119

**Key:** Y - Separate Illustration

**SMCS**

| NOTE | REF NO | GRAPHIC REF | PART NUMBER | QTY | PART NAME 1 2 3 4 5 6 (PRODUCT LEVEL) | PRICE USD |
|---|---|---|---|---|---|---|
| Y | | | 175-2314 | 1 | SWITCH AS (MAGNETIC) | |
| | | | | | -OR- | |
| Y | | | 175-2313 | 1 | SWITCH AS (MAGNETIC) | |

# 1752313 SWITCH AS-MAGNETIC

PART OF 1251302-Page 133.01

**Key:** E - ORDER BY THE CENTIMETER

**SMCS**

| NOTE | REF NO | GRAPHIC REF | PART NUMBER | QTY | PART NAME 1 2 3 4 5 6 (PRODUCT LEVEL) | PRICE USD |
|---|---|---|---|---|---|---|
| | 1 | | 5C-2890 | 2 | NUT | |
| E | 2 | | 9X-1813 | | SLEEVE (15.5cm) | |
| | 3 | | 102-8802 | 1 | RECEPTACLE KIT | |
| | 4 | | 186-3735 | 2 | PIN | |
| | 5 | | 3E-3365 | 1 | WEDGE | |

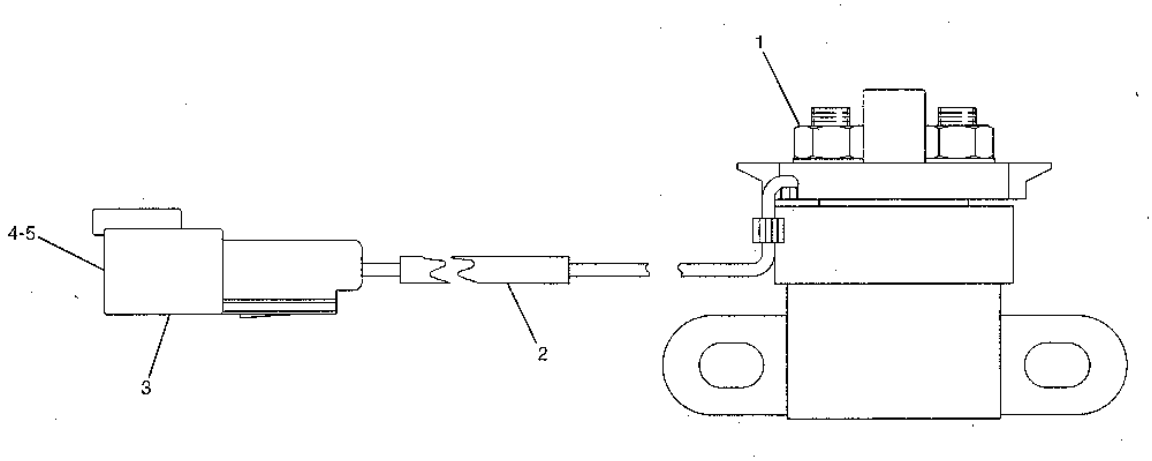


GRAPHIC #1 h68413e

# 1752314 SWITCH AS-MAGNETIC

PART OF 1251302-Page 133.01

**Key:** E - ORDER BY THE CENTIMETER

**SMCS**

| NOTE | REF NO | GRAPHIC REF | PART NUMBER | QTY | PART NAME 1 2 3 4 5 6 (PRODUCT LEVEL) | PRICE USD |
|---|---|---|---|---|---|---|
| | 1 | | 5C-2890 | 2 | NUT | |
| E | 2 | | 9X-1813 | | SLEEVE (15.5cm) | |
| | 3 | | 102-8802 | 1 | RECEPTACLE KIT | |
| | 4 | | 186-3735 | 2 | PIN | |
| | 5 | | 3E-3365 | 1 | WEDGE | |

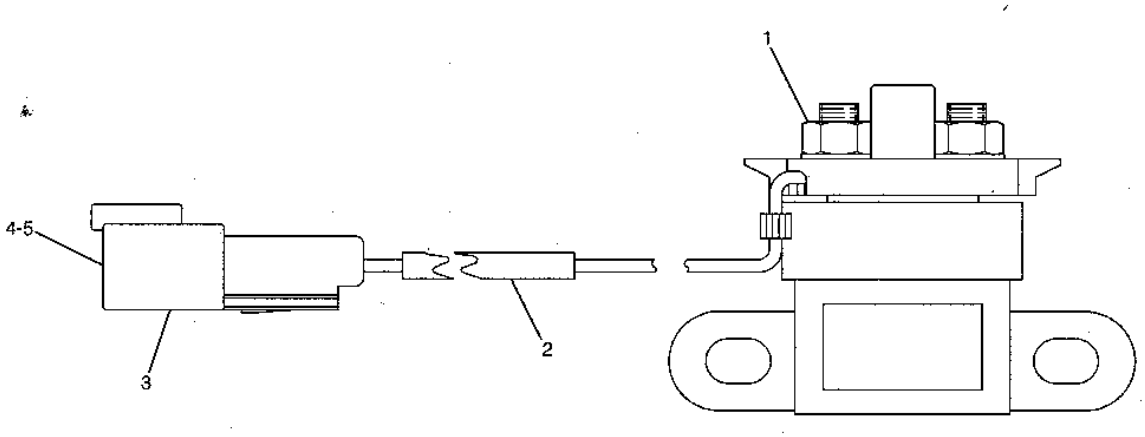


GRAPHIC #1 h68414e

# 1160083 WIRING GP-REFUELING PUMP

S/N 8SR 1-(D99.03), 8TR 1-(D99.03)
PART OF 1174159-Page 103
1160095, 1160097-Page 133, 1288970-Page 144, 1321827-Page 148
AN ATTACHMENT

**Key:** Y - SEPARATE ILLUSTRATION

**SMCS**

| NOTE | REF NO | GRAPHIC REF | PART NUMBER | QTY | PART NAME 1 2 3 4 5 6 (PRODUCT LEVEL) | PRICE USD |
|---|---|---|---|---|---|---|
| Y | 1 | | 128-8970 | 1 | HARNESS AS | |
| | 2 | | 3S-2093 | 3 | STRAP | |
| | 3 | | 111-4871 | 2 | RELAY | |
| | 4 | | 9X-8256 | 4 | WASHER | |
| | 5 | | 111-4836 | 3 | CLIP | |
| | 6 | | 8T-0328 | 1 | WASHER-HARD | |
| Y | 7 | | 116-0095 | 1 | SWITCH AS | |
| Y | 8 | | 116-0097 | 1 | SWITCH AS | |
| | 9 | | 8T-4121 | 5 | WASHER-HARD | |
| | 10 | | 3T-0376 | 1 | SWITCH AS (MAGNETIC) | |
| | | | 4F-2294 | 2 | NUT | |
| | | | 6V-8186 | 2 | NUT | |
| | | | 6V-8378 | 2 | NUT | |
| | 14 | | 8T-4171 | 4 | BOLT (L=12mm) | |
| | 15 | | 116-0118 | 4 | CLIP | |
| | 16 | | 8T-4137 | 5 | BOLT (L=20mm) | |
| Y | 17 | | 132-1827 | 1 | WIRE AS | |

## 1160083 WIRING GP-REFUELING PUMP

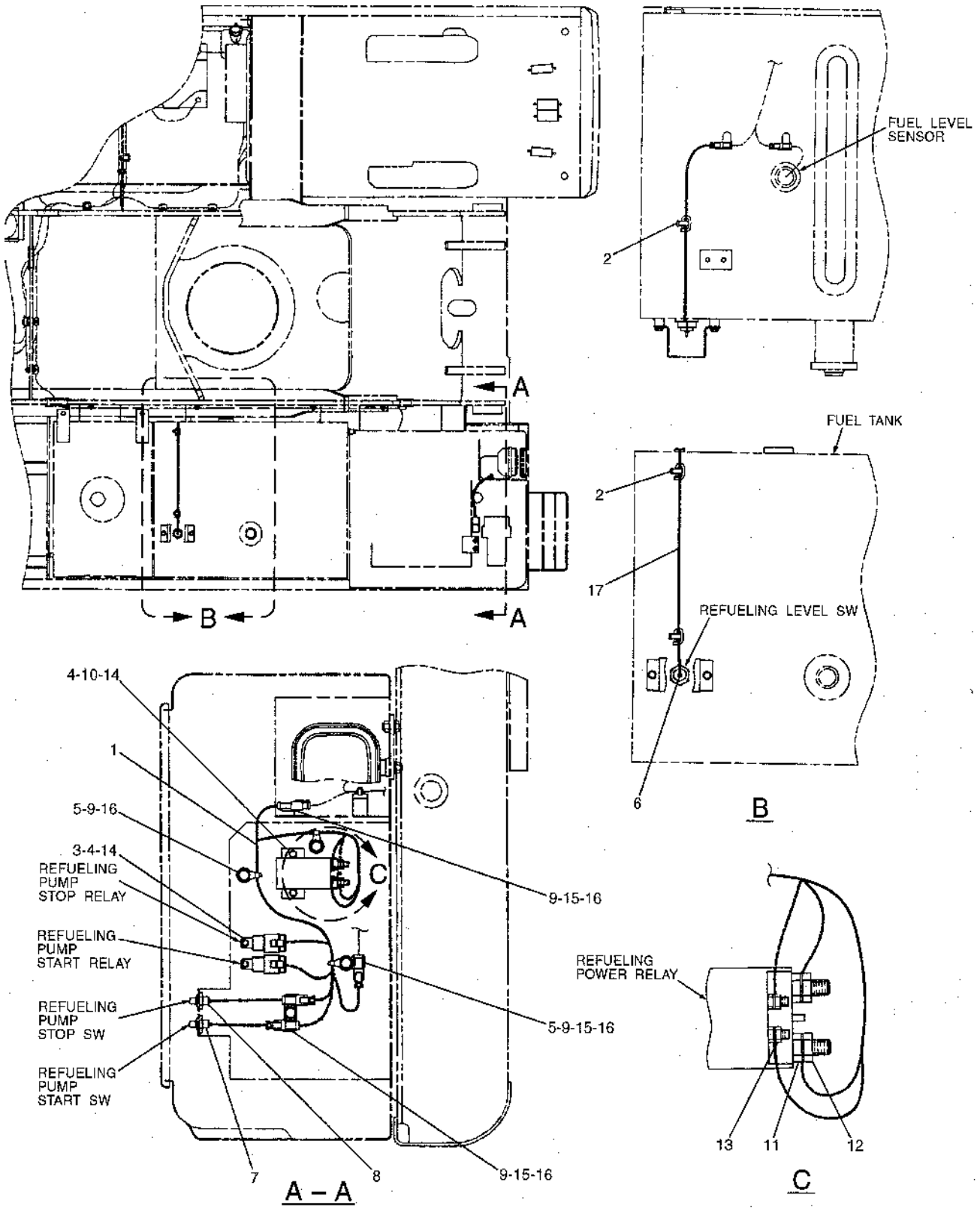


GRAPHIC #1

h51758e

# 1160083 WIRING GP-REFUELING PUMP

S/N 8SR (D99.04)-UP, 8TR (D99.04)-UP
PART OF 1174159-Page 103
1160095, 1160097-Page 133, 1673562-Page 144.01, 1321827-Page 148
AN ATTACHMENT

**Key:** Y - SEE SEPARATE ILLUSTRATION

**SMCS**

| NOTE | REF NO | GRAPHIC REF | PART NUMBER | QTY | PART NAME 1 2 3 4 5 6 (PRODUCT LEVEL) | PRICE USD |
|---|---|---|---|---|---|---|
| Y | 1 | | 167-3562 | 1 | HARNESS AS | |
| | 2 | | 3S-2093 | 3 | STRAP | |
| | 3 | | 149-5050 | 2 | RELAY | |
| | 4 | | 9X-8256 | 4 | WASHER | |
| | 5 | | 111-4836 | 3 | CLIP | |
| | 6 | | 8T-0328 | 1 | WASHER | |
| Y | 7 | | 116-0095 | 1 | SWITCH AS | |
| Y | 8 | | 116-0097 | 1 | SWITCH AS | |
| | 9 | | 8T-4121 | 5 | WASHER | |
| | 10 | | 165-4026 | 1 | SWITCH AS (MAGNETIC) | |
| | 11 | | 4F-2294 | 2 | NUT | |
| | 12 | | 6V-8186 | 2 | NUT | |
| | 13 | | 6V-8378 | 2 | NUT | |
| | 14 | | 8T-4171 | 4 | BOLT (L=12mm) | |
| | 15 | | 116-0118 | 4 | CLIP | |
| | 16 | | 8T-4137 | 5 | BOLT (L=20mm) | |
| Y | 17 | | 132-1827 | 1 | WIRE AS | |

## 1160083 WIRING GP-REFUELING PUMP

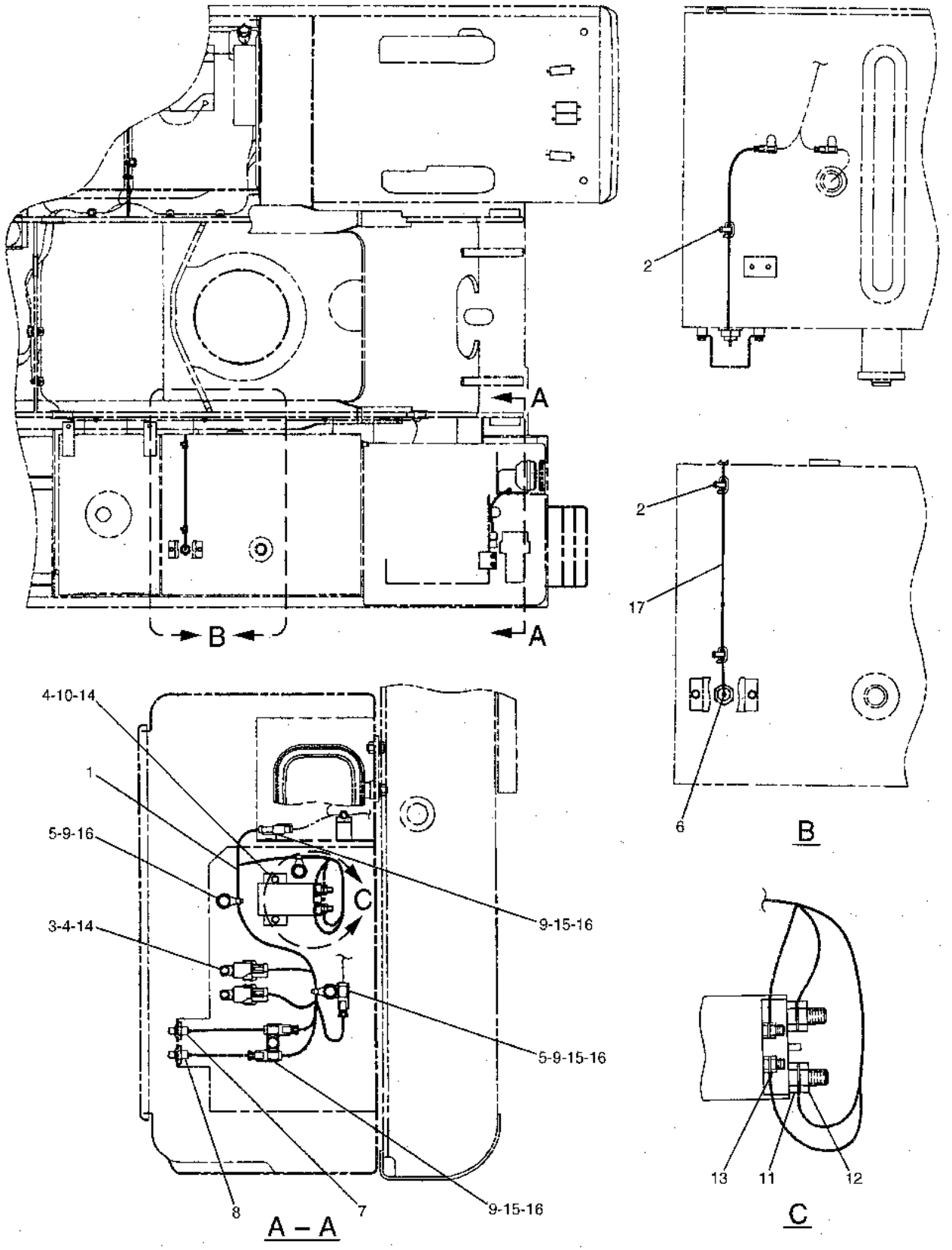


GRAPHIC #1

h65406e

# 1160167 WIRING GP-REFUELING PUMP

WITH ADDITIONAL TANK
S/N 8SR 1-(D99.03), 8TR 1-(D99.03)
PART OF 1161492-Page 102
1160095, 1160097-Page 133, 1288971-Page 145, 1321827-Page 148
AN ATTACHMENT

**Key:** Y - SEPARATE ILLUSTRATION

**SMCS**

| NOTE | REF NO | GRAPHIC REF | PART NUMBER | QTY | PART NAME 1 2 3 4 5 6 (PRODUCT LEVEL) | PRICE USD |
|---|---|---|---|---|---|---|
| | 1 | | 3S-2093 | 5 | STRAP | |
| | 2 | | 111-4871 | 2 | RELAY | |
| | 3 | | 9X-8256 | 4 | WASHER | |
| Y | 4 | | 116-0095 | 1 | SWITCH AS | |
| Y | 5 | | 116-0097 | 1 | SWITCH AS | |
| | 6 | | 3T-0376 | 1 | SWITCH AS (MAGNETIC) | |
| | 7 | | 4F-2294 | 2 | NUT | |
| | 8 | | 6V-8186 | 2 | NUT | |
| | 9 | | 6V-8378 | 2 | NUT | |
| | 10 | | 8T-4171 | 2 | BOLT (L=12mm) | |
| Y | 11 | | 128-8971 | 1 | HARNESS AS | |
| | 12 | | 8T-4121 | 1 | WASHER-HARD | |
| | 13 | | 8T-0328 | 1 | WASHER-HARD | |
| | 14 | | 7X-2619 | 2 | BOLT (L=10mm) | |
| | 15 | | 116-0118 | 1 | CLIP | |
| | 16 | | 8T-4137 | 1 | BOLT (L=20mm) | |
| Y | 17 | | 132-1827 | 1 | WIRE AS | |

## 1160167 WIRING GP-REFUELING PUMP

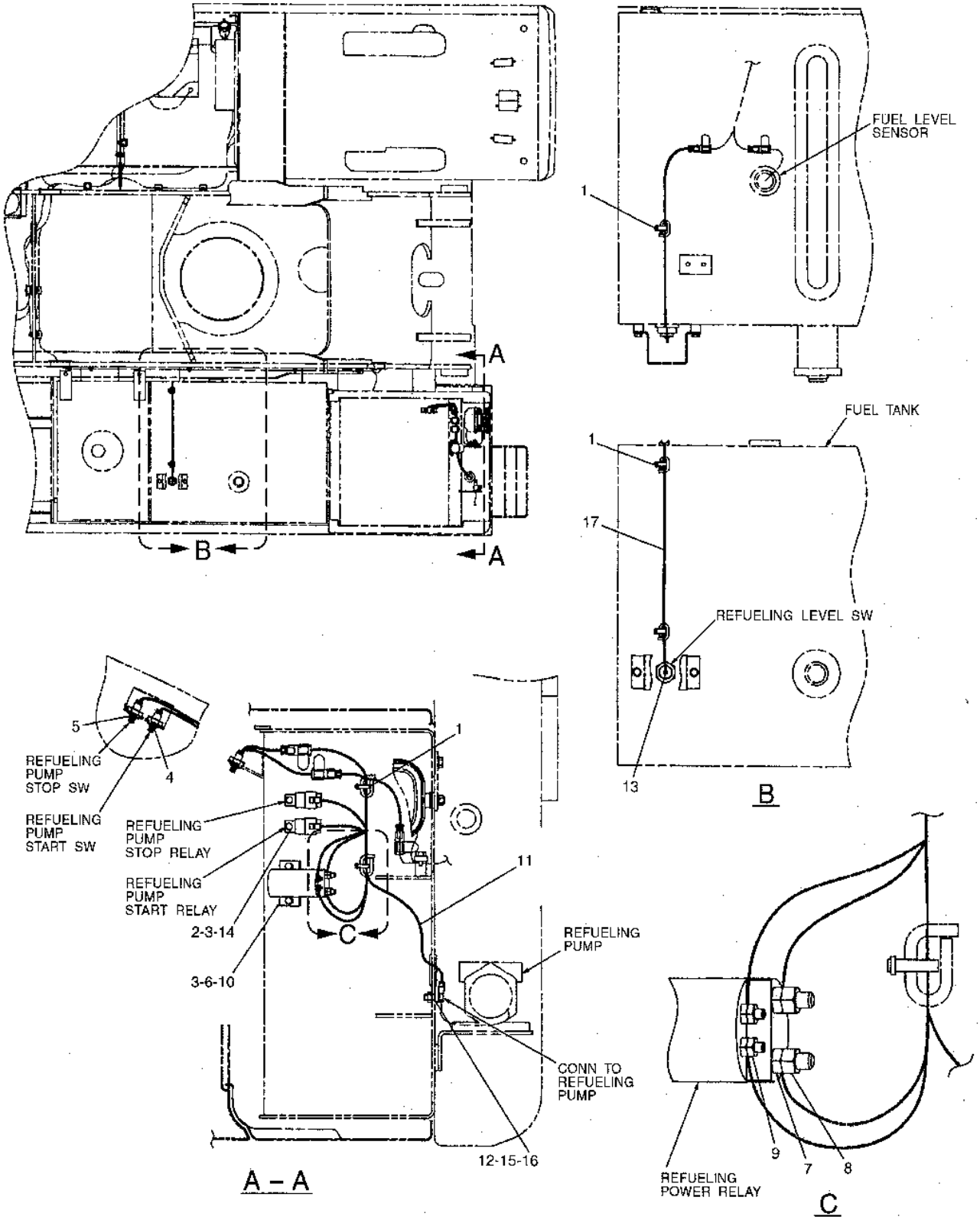


GRAPHIC #1

h51891e

# 1160167 WIRING GP-REFUELING PUMP

WITH ADDITIONAL TANK
S/N 8SR (D99.04)-UP, 8TR (D99.04)-UP
PART OF 1161492-Page 102
1160095, 1160097-Page 133, 1673565-Page 145.01, 1321827-Page 148
AN ATTACHMENT

**Key:** Y - SEE SEPARATE ILLUSTRATION

**SMCS**

| NOTE | REF NO | GRAPHIC REF | PART NUMBER | QTY | PART NAME 1 2 3 4 5 6 (PRODUCT LEVEL) | PRICE USD |
|---|---|---|---|---|---|---|
| | 1 | | 3S-2093 | 5 | STRAP | |
| | 2 | | 149-5050 | 2 | RELAY | |
| | 3 | | 9X-8256 | 4 | WASHER | |
| Y | 4 | | 116-0095 | 1 | SWITCH AS | |
| Y | 5 | | 116-0097 | 1 | SWITCH AS | |
| | 6 | | 165-4026 | 1 | SWITCH AS (MAGNETIC) | |
| | 7 | | 4F-2294 | 2 | NUT | |
| | 8 | | 6V-8186 | 2 | NUT | |
| | 9 | | 6V-8378 | 2 | NUT | |
| | 10 | | 8T-4171 | 2 | BOLT (L=12mm) | |
| Y | 11 | | 167-3565 | 1 | HARNESS AS | |
| | 12 | | 8T-4121 | 1 | WASHER-HARD | |
| | 13 | | 8T-0328 | 1 | WASHER-HARD | |
| | 14 | | 7X-2619 | 2 | BOLT (L=10mm) | |
| | 15 | | 116-0118 | 1 | CLIP | |
| | 16 | | 8T-4137 | 1 | BOLT (L=20mm) | |
| Y | 17 | | 132-1827 | 1 | WIRE AS | |

## 1160167 WIRING GP-REFUELING PUMP

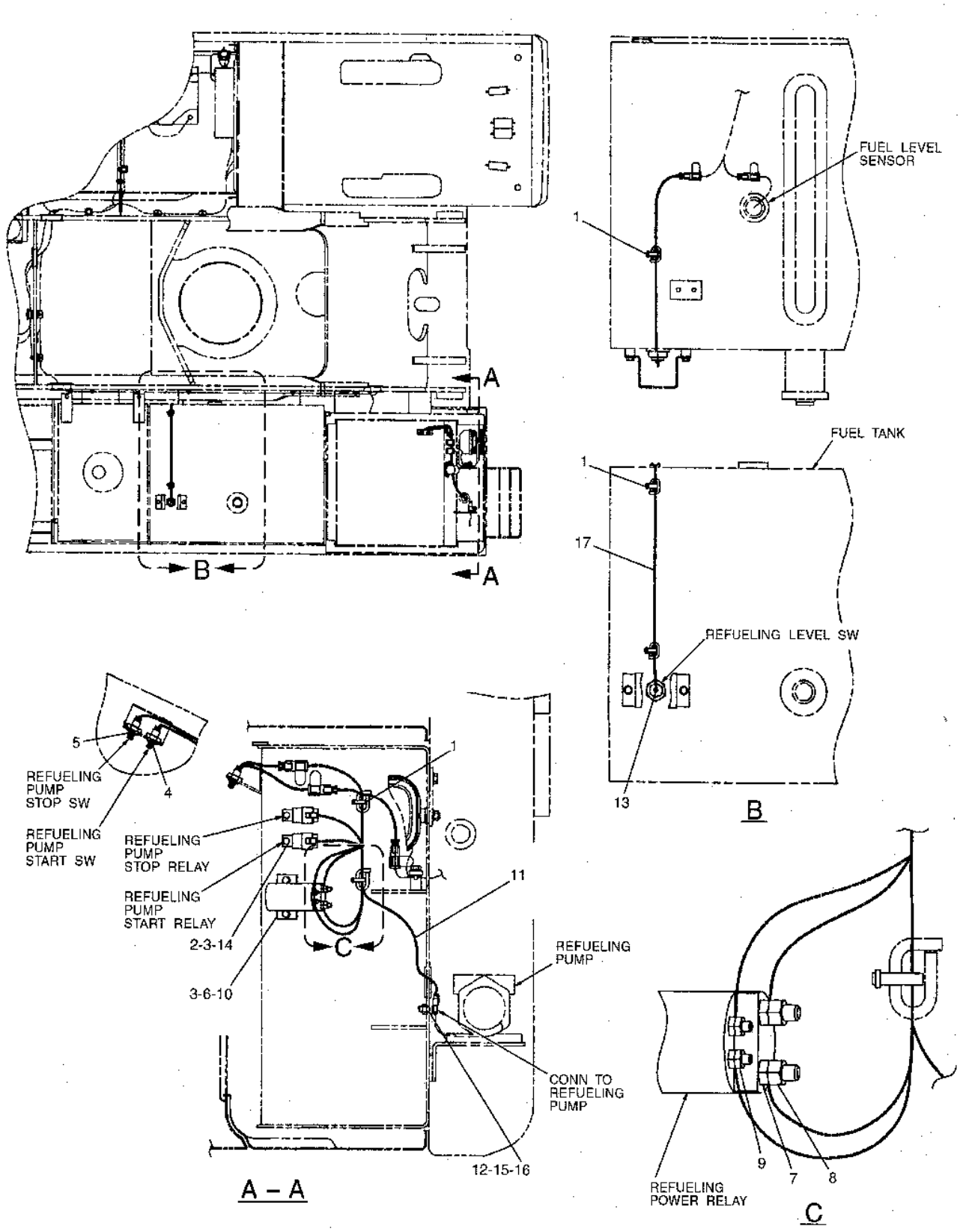


GRAPHIC #1

h65578e

# 1364017 WIRING GP-FINE SWING

1160091-Page 146

**Key:** Y - SEPARATE ILLUSTRATION

**SMCS**

| NOTE | REF NO | GRAPHIC REF | PART NUMBER | QTY | PART NAME 1 2 3 4 5 6 (PRODUCT LEVEL) | PRICE USD |
|---|---|---|---|---|---|---|
| | 1 | | 3S-2093 | 8 | STRAP | |
| | 2 | | 111-4836 | 1 | CLIP | |
| | 3 | | 8T-4137 | 3 | BOLT (L=20mm) | |
| | 4 | | 8T-4121 | 3 | WASHER | |
| | 5 | | 111-4837 | 2 | CLIP | |
| Y | 6 | | 116-0091 | 1 | HARNESS AS | |
| | 7 | | 7Y-8109 | 1 | BRACKET | |
| | 8 | | 7Y-8167 | 1 | GROMMET | |

## 1364017 WIRING GP-FINE SWING

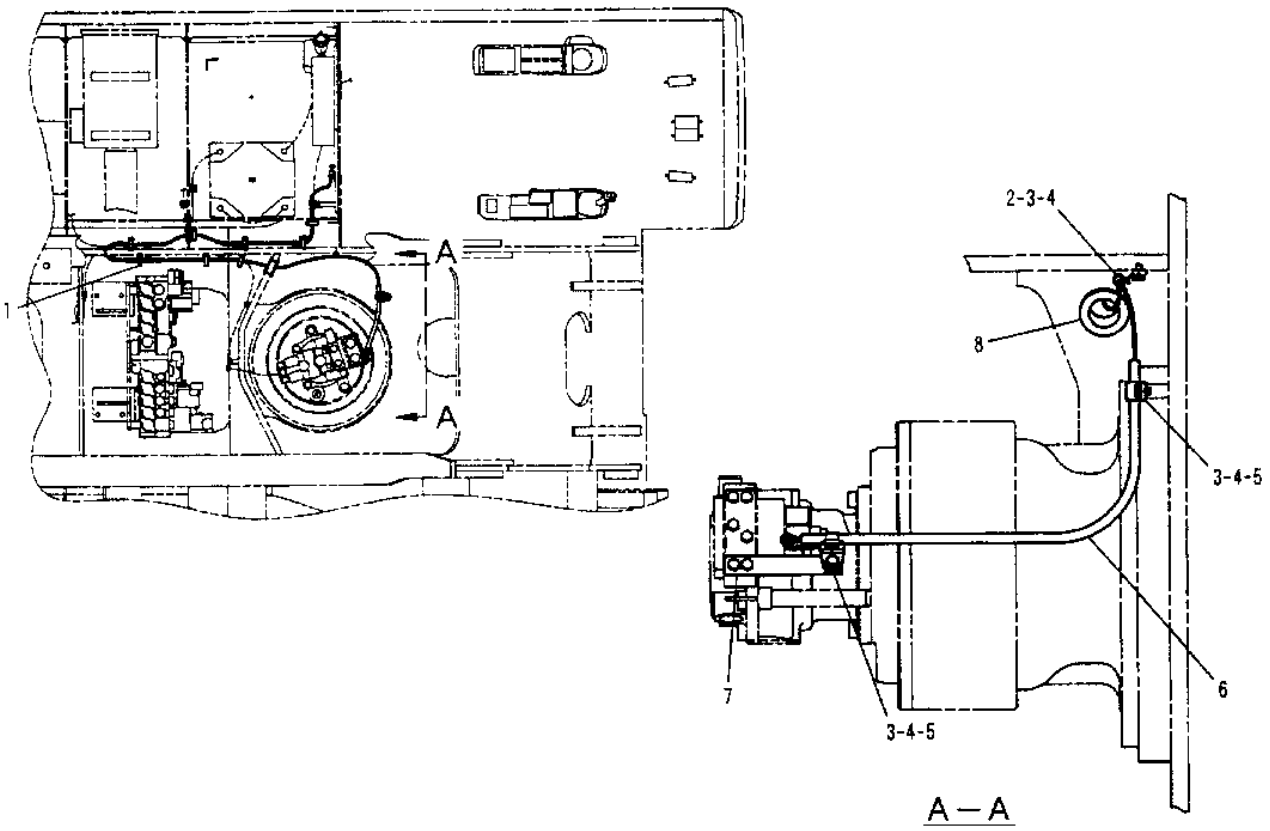


| NOTE | No. | PART No. | QTY | PART NAME | NOTE | No. | PART No. | QTY | PART NAME |
|---|---|---|---|---|---|---|---|---|---|
| | 1 | 3S-2093 | 8 | STRAP | | | | | |
| | 2 | 111-4836 | 1 | CLIP | | | | | |
| | 3 | 8T-4137 | 3 | BOLT(L=20mm) | | | | | |
| | 4 | 8T-4121 | 3 | WASHER | | | | | |
| | 5 | 111-4837 | 2 | CLIP | | | | | |
| Y | 6 | 116-0091 | 1 | HARNESS AS | | | | | |
| | 7 | 7Y-8109 | 1 | BRACKET | | | | | |
| | 8 | 7Y-8167 | 1 | GROMMET | | | | | |

Y—SEE SEPARATE ILLUSTRATION

H51656E

GRAPHIC #1

h51656e

# 1160206 WIRING GP

FLOW CONTROL
S/N 8SR 1-(D99.03), 8TR 1-(D99.03)
PART OF 1178433-Page 229, 1178432-Page 300
1211109-Page 146, 1211033, 1211034-Page 147
AN ATTACHMENT

**Key:** Y - SEPARATE ILLUSTRATION

**SMCS**

| NOTE | REF NO | GRAPHIC REF | PART NUMBER | QTY | PART NAME 1 2 3 4 5 6 (PRODUCT LEVEL) | PRICE USD |
|---|---|---|---|---|---|---|
| | 1 | | 3S-2093 | 25 | STRAP | |
| Y | 2 | | 121-1033 | 1 | HARNESS AS | |
| | 3 | | 116-0118 | 1 | CLIP | |
| | 4 | | 8T-4121 | 1 | WASHER-HARD | |
| | 5 | | 7X-2621 | 1 | BOLT (L=12mm) | |
| | 6 | | 111-4871 | 1 | RELAY | |
| | 7 | | 7X-2619 | 1 | BOLT (L=10mm) | |
| | 8 | | 9X-8256 | 1 | WASHER | |
| Y | 9 | | 121-1034 | 1 | HARNESS AS | |
| Y | 10 | | 121-1109 | 1 | HARNESS AS | |

## 1160206 WIRING GP

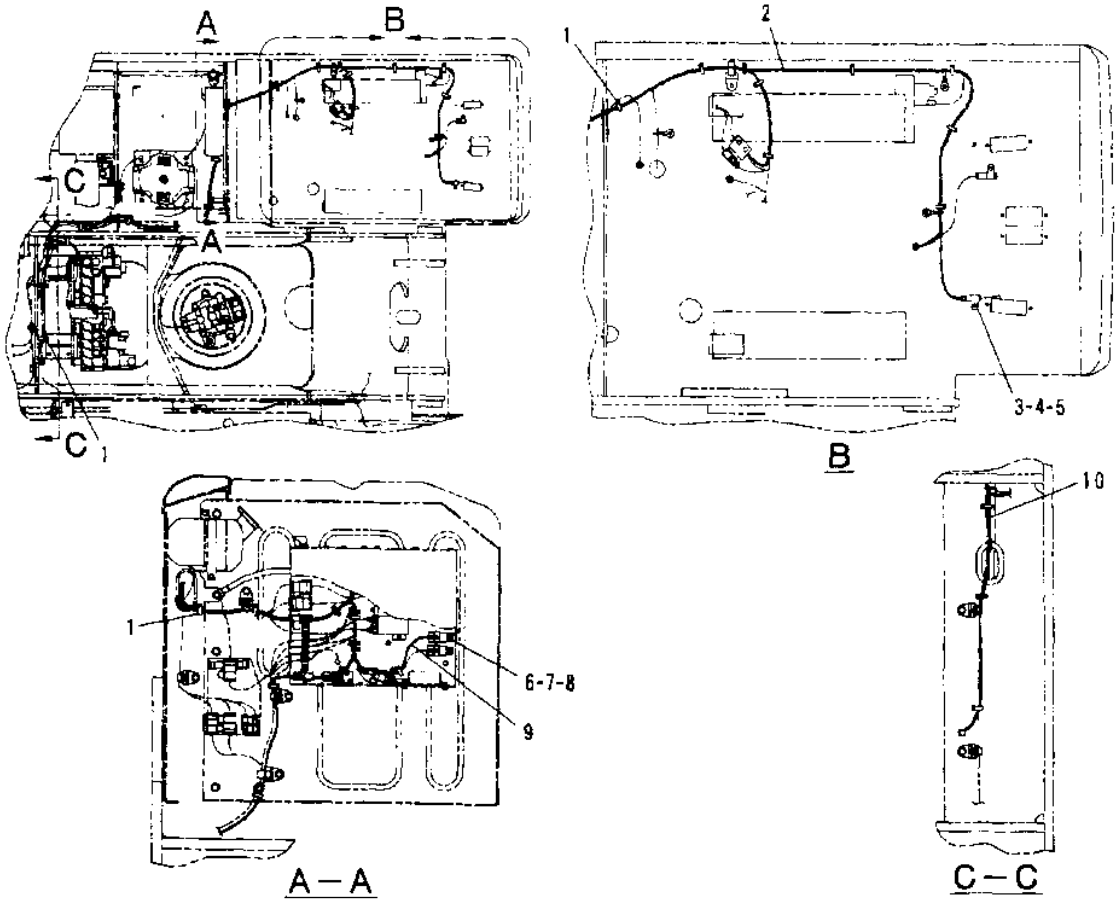


| NOTE | No. | PART No. | QTY | PART NAME | NOTE | No. | PART No. | QTY | PART NAME |
|---|---|---|---|---|---|---|---|---|---|
| | 1 | 3S-2093 | 25 | STRAP | | | | | |
| Y | 2 | 121-1033 | 1 | HARNESS AS | | | | | |
| | 3 | 116-0118 | 1 | CLIP | | | | | |
| | 4 | 8T-4121 | 1 | WASHER-HARD | | | | | |
| | 5 | 7X-2621 | 1 | BOLT(L=12mm) | | | | | |
| | 6 | 111-4871 | 1 | RELAY | | | | | |
| | 7 | 7X-2619 | 1 | BOLT(L=10mm) | | | | | |
| | 8 | 9X-8256 | 1 | WASHER | | | | | |
| Y | 9 | 121-1034 | 1 | HARNESS AS | | | | | |
| Y | 10 | 121-1109 | 1 | HARNESS AS | | | | | |

Y-SEE SEPARATE ILLUSTRATION

H50762E

GRAPHIC #1

h50762e

# 1160206 WIRING GP

FLOW CONTROL
S/N 8SR (D99.04)-UP, 8TR (D99.04)-UP
PART OF 1178433-Page 229, 1178432-Page 300
1211109-Page 146, 1211033-Page 147, 1673589-Page 147.01
AN ATTACHMENT

**Key:** Y - SEE SEPARATE ILLUSTRATION

**SMCS**

| NOTE | REF NO | GRAPHIC REF | PART NUMBER | QTY | PART NAME 1 2 3 4 5 6 (PRODUCT LEVEL) | PRICE USD |
|---|---|---|---|---|---|---|
| | 1 | | 3S-2093 | 25 | STRAP | |
| Y | 2 | | 121-1033 | 1 | HARNESS AS | |
| | 3 | | 116-0118 | 1 | CLIP | |
| | 4 | | 8T-4121 | 1 | WASHER | |
| | 5 | | 7X-2621 | 1 | BOLT (L=12mm) | |
| | 6 | | 149-5050 | 1 | RELAY | |
| | 7 | | 7X-2619 | 1 | BOLT (L=10mm) | |
| | 8 | | 9X-8256 | 1 | WASHER | |
| Y | 9 | | 167-3589 | 1 | HARNESS AS | |
| Y | 10 | | 121-1109 | 1 | HARNESS AS | |

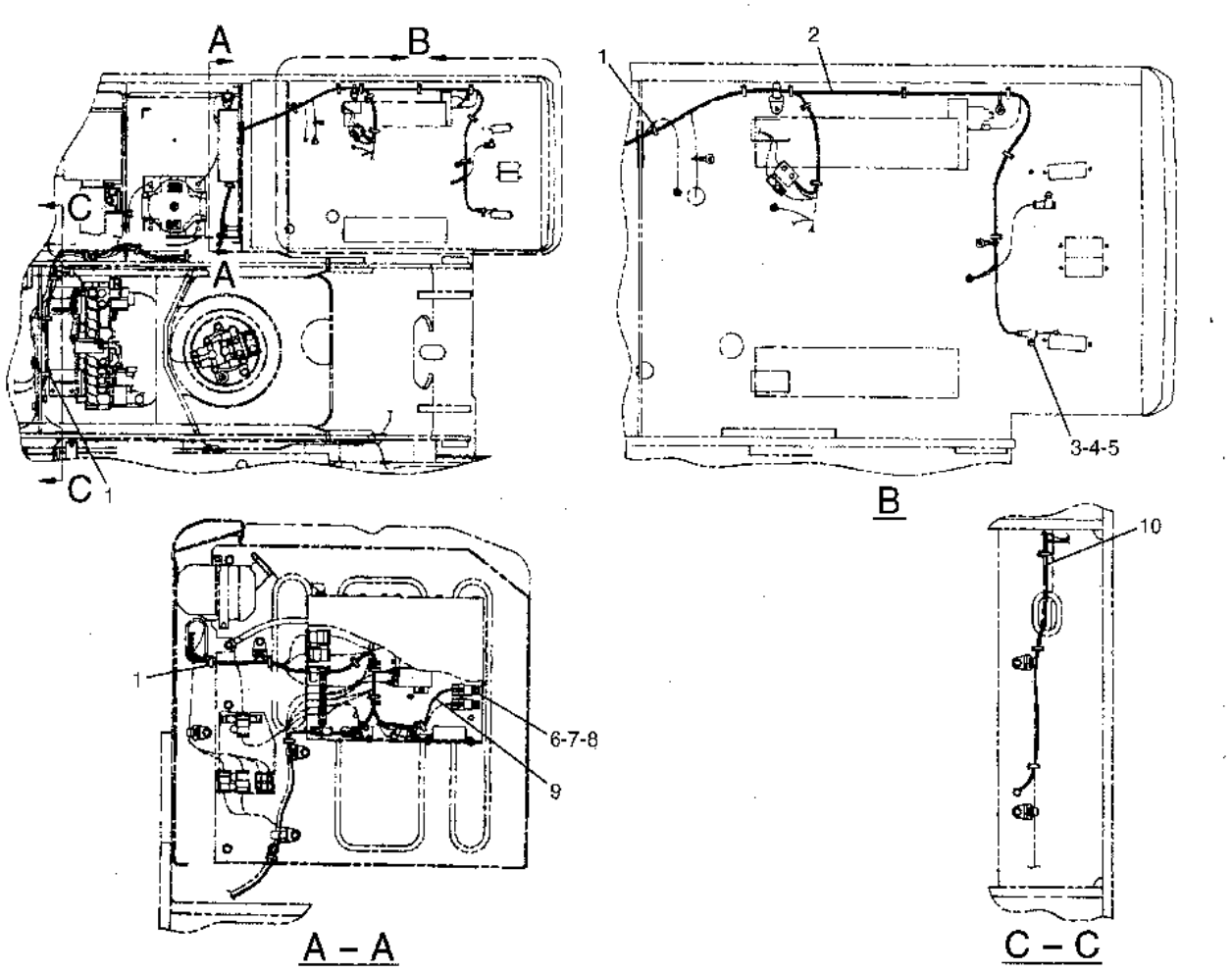


GRAPHIC #1

h79264e

# 1114862 BATTERY & WIRING GP-COLD WEATH

PART OF 1275209-Page 155
1160080, 1160162-Page 116, 7N0719-Page 131,1160242-Page 148
AN ATTACHMENT

**Key:** Y - SEPARATE ILLUSTRATION

**SMCS**

| NOTE | REF NO | GRAPHIC REF | PART NUMBER | QTY | PART NAME 1 2 3 4 5 6 (PRODUCT LEVEL) | PRICE USD |
|---|---|---|---|---|---|---|
| | 1 | | 111-4837 | 2 | CLIP | |
| | 2 | | 8T-4121 | 1 | WASHER-HARD | |
| | 3 | | 8T-4137 | 1 | BOLT (L=20mm) | |
| | 4 | | 8T-4196 | 1 | BOLT (L=35mm) | |
| Y | 5 | | 116-0162 | 1 | CABLE AS | |
| Y | 6 | | 116-0242 | 1 | CABLE AS | |
| | 7 | | 6W-6005 | 1 | HOLDDOWN (BATTERY) | |
| | 8 | | 3T-5760 | 2 | BATTERY | |
| | 9 | | 5C-7261 | 1 | NUT | |
| Y | 10 | | 116-0080 | 1 | CABLE AS | |
| Y | 11 | | 7N-0719 | 1 | SWITCH AS (DISC) | |
| | 12 | | 8T-4133 | 1 | NUT | |
| | 13 | | 8T-4226 | 1 | WASHER | |
| | 14 | | 5I-8304 | 1 | ROD | |

## 1114862 BATTERY & WIRING GP-COLD WEATH

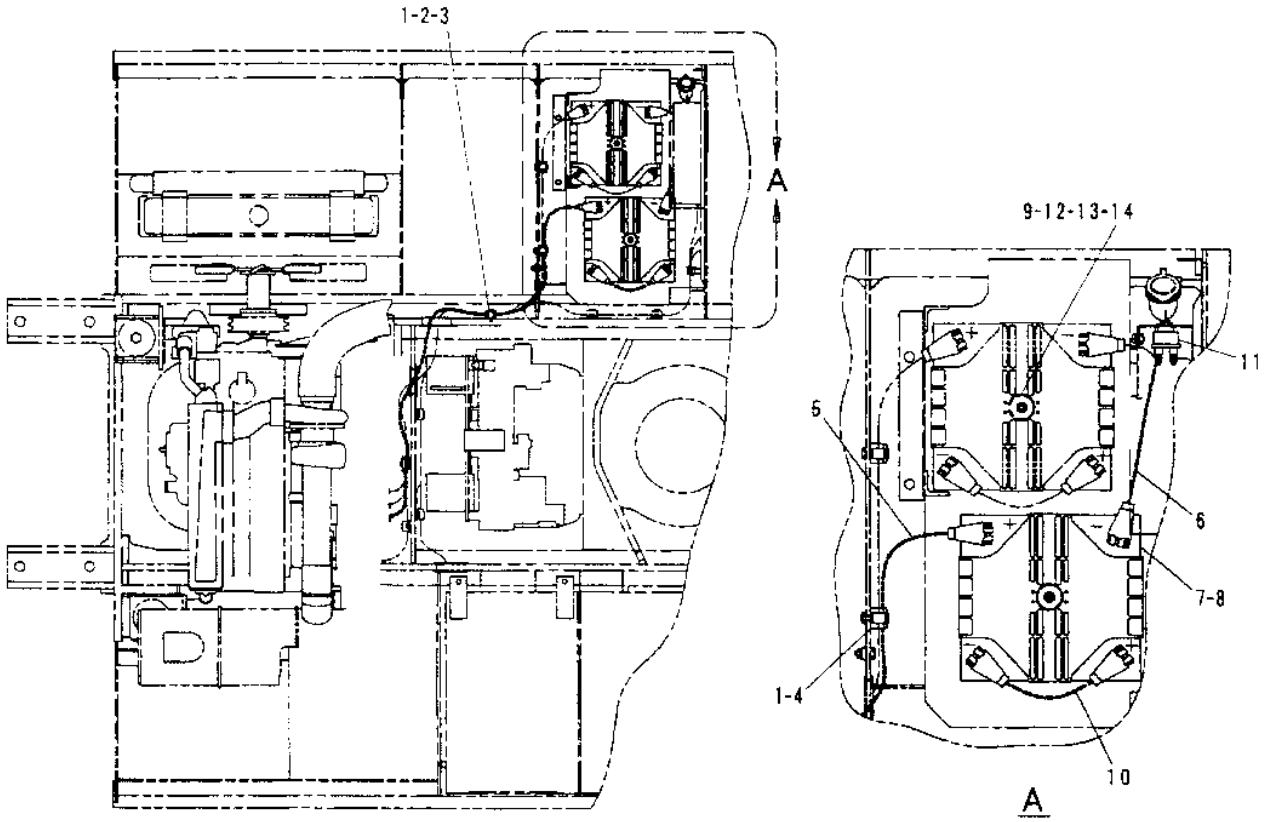


| NOTE | No. | PART No. | QTY | PART NAME |
|---|---|---|---|---|
| | 1 | 111-4837 | 2 | CLIP |
| | 2 | 8T-4121 | 1 | WASHER-HARD |
| | 3 | 8T-4137 | 1 | BOLT (L=20mm) |
| | 4 | 8T-4196 | 1 | BOLT (L=35mm) |
| Y | 5 | 116-0162 | 1 | CABLE AS |
| Y | 6 | 116-0242 | 1 | CABLE AS |
| | 7 | 6W-6005 | 1 | HOLDDOWN (BATTERY) |
| | 8 | 3T-5760 | 2 | BATTERY |
| | 9 | 5C-7261 | 1 | NUT |
| Y | 10 | 116 0080 | 1 | CABLE AS |
| Y | 11 | 7N-0719 | 1 | SWITCH AS (DISC) |
| | 12 | 8T-4133 | 1 | NUT |
| | 13 | 8T-4226 | 1 | WASHER |
| | 14 | 5I-8304 | 1 | ROD |

| NOTE | No. | PART No. | QTY | PART NAME |
|---|---|---|---|---|

Y-SEE SEPARATE ILLUSTRATION

H50763E

GRAPHIC #1

h50763e

# 1107884 SWITCH AS-TOGGLE

LOW CURRENT
PART OF 1364019-Page 125

**Key:**

**SMCS**

| NOTE | REF NO | GRAPHIC REF | PART NUMBER | QTY | PART NAME 1 2 3 4 5 6 (PRODUCT LEVEL) | PRICE USD |
|---|---|---|---|---|---|---|
| | 1 | | 6T-3631 | 2 | NUT | |
| | 2 | | 6T-3632 | 1 | LOCKWASHER | |
| | 3 | | 6T-3633 | 1 | RING | |
| | 4 | | 6V-8374 | 3 | SCREW | |
| | 5 | | 3L-8187 | 3 | LOCKWASHER | |

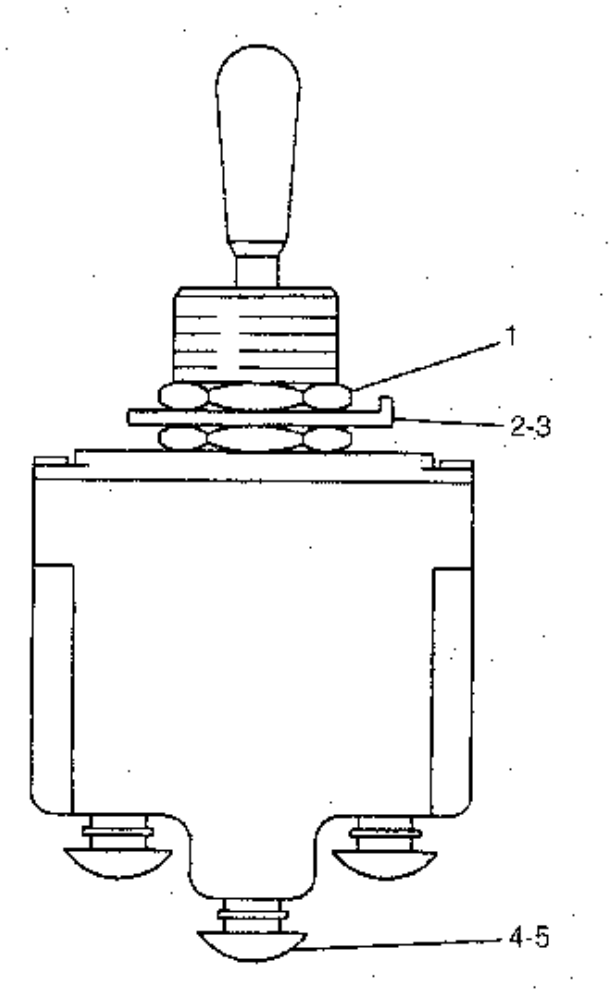


GRAPHIC #1

h50566e

# 1140421 SWITCH AS-TOGGLE

PART OF 1364019-Page 125

**Key:**

**SMCS**

| NOTE | REF NO | GRAPHIC REF | PART NUMBER | QTY | PART NAME 1 2 3 4 5 6 (PRODUCT LEVEL) | PRICE USD |
|---|---|---|---|---|---|---|
| | 1 | | 6T-3631 | 2 | NUT | |
| | 2 | | 6T-3632 | 1 | LOCKWASHER | |
| | 3 | | 6T-3633 | 1 | RING | |
| | 4 | | 6V-8374 | 12 | SCREW | |
| | 5 | | 3L-8187 | 12 | LOCKWASHER | |

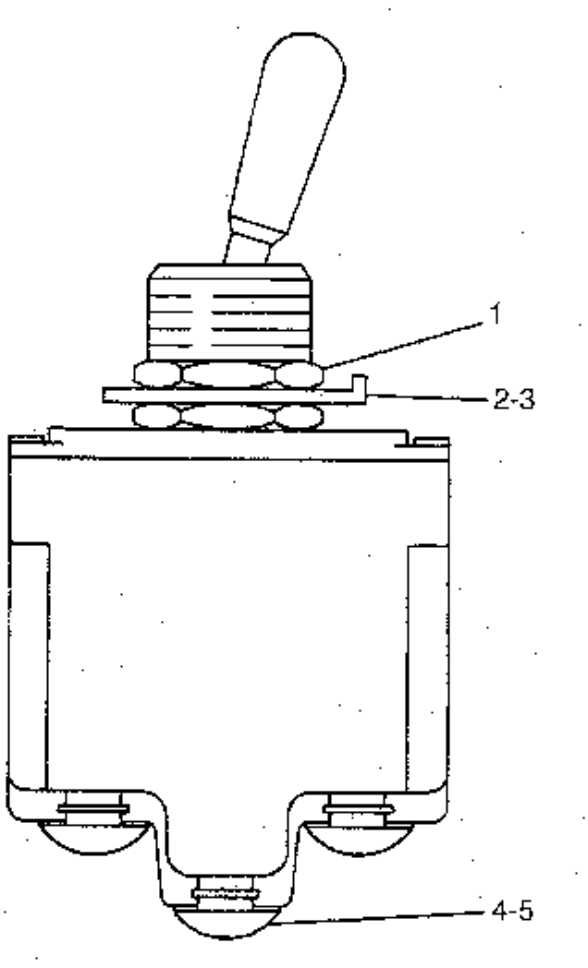


GRAPHIC #1

h50565e

# 1288970 HARNESS AS

S/N 8SR 1-(D99.03), 8TR 1-(D99.03)
PART OF 1160083-Page 135
AN ATTACHMENT

**Key:**

**SMCS**

| NOTE | REF NO | GRAPHIC REF | PART NUMBER | QTY | PART NAME 1 2 3 4 5 6 (PRODUCT LEVEL) | PRICE USD |
|---|---|---|---|---|---|---|
| | 1 | | 3S-2093 | 7 | STRAP | |
| | 2 | | 111-4875 | 2 | HOUSING | |
| | 3 | | 102-8803 | 1 | RECEPTACLE AS | |
| | 4 | | 3E-3371 | 1 | WEDGE | |
| | 5 | | 121-1022 | 1 | DIODE | |
| | 6 | | 7Y-3952 | 1 | CONNECTOR | |
| | 7 | | 2L-8076 | 1 | TERMINAL | |
| | 8 | | 2L-8078 | 1 | TERMINAL | |
| | 9 | | 1G-2044 | 1 | TERMINAL | |
| | 10 | | 155-2270 | 2 | PLUG KIT | |
| | 11 | | 3E-3362 | 2 | WEDGE | |
| | 12 | | 9W-0844 | 2 | SOCKET | |
| | 13 | | 102-8802 | 1 | RECEPTACLE KIT | |
| | 14 | | 3E-3365 | 1 | WEDGE | |
| | 15 | | 8T-8730 | 2 | SOCKET | |
| | 16 | | 2L-8066 | 1 | TERMINAL | |

## 1288970 HARNESS AS

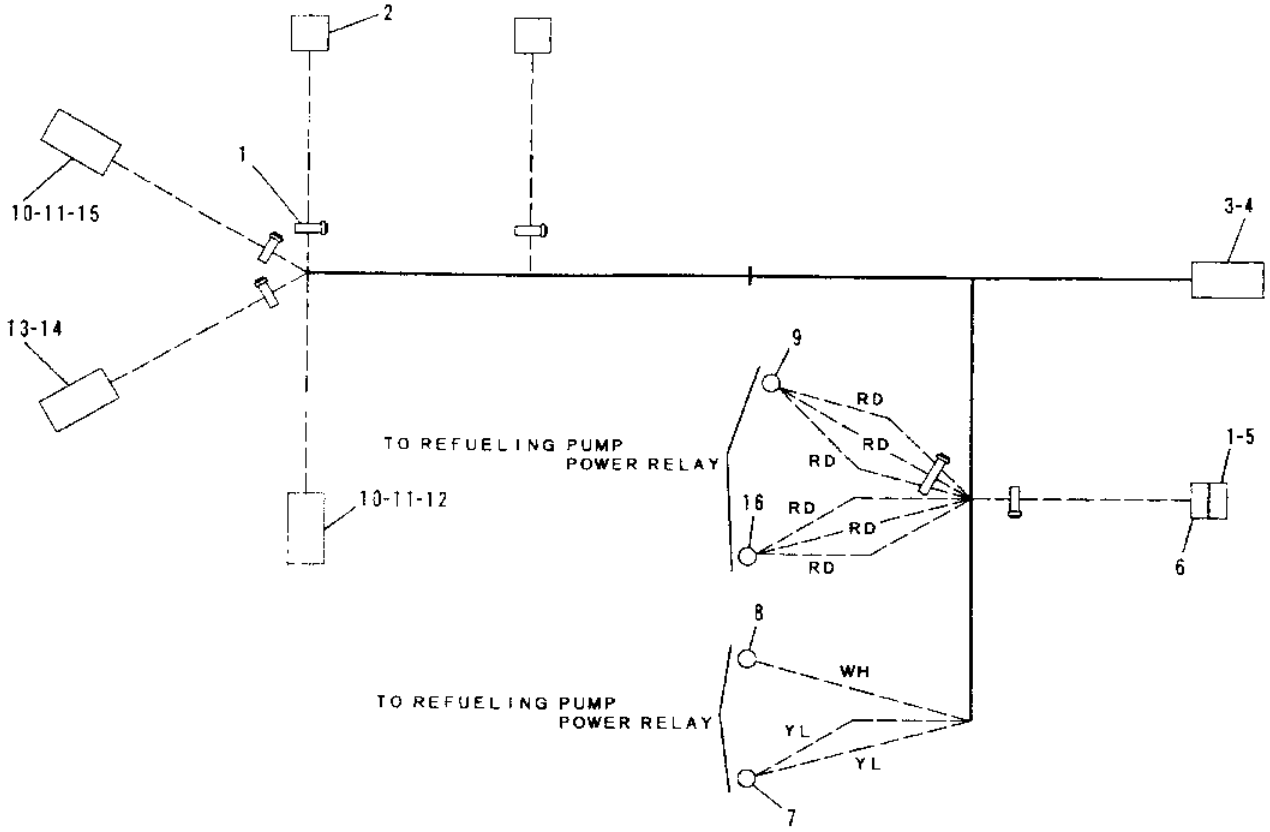


| NOTE | No. | PART No. | QTY | PART NAME | NOTE | No. | PART No. | QTY | PART NAME |
|---|---|---|---|---|---|---|---|---|---|
| | 1 | 3S-2093 | 7 | STRAP | | | | | |
| | 2 | 111-4875 | 2 | HOUSING | | | | | |
| | 3 | 102-8803 | 1 | RECEPTACLE AS | | | | | |
| | 4 | 3E-3371 | 1 | WEDGE | | | | | |
| | 5 | 121-1022 | 1 | DIODE | | | | | |
| | 6 | 7Y-3952 | 1 | CONNECTOR | | | | | |
| | 7 | 2L-8076 | 1 | TERMINAL | | | | | |
| | 8 | 2L-8078 | 1 | TERMINAL | | | | | |
| | 9 | 1G 2044 | 1 | TERMINAL | | | | | |
| | 10 | 102-8807 | 2 | PLUG KIT | | | | | |
| | 11 | 3E-3362 | 2 | WEDGE | | | | | |
| | 12 | 9W-0844 | 2 | SOCKET | | | | | |
| | 13 | 102-8802 | 1 | RECEPTACLE KIT | | | | | |
| | 14 | 3E-3365 | 1 | WEDGE | | | | | |
| | 15 | 8T-8730 | 2 | SOCKET | | | | | |
| | 16 | 2L 8066 | 1 | TERMINAL | | | | | |

H50981E

GRAPHIC #1

h50981e

# 1673562 HARNESS AS

S/N 8SR (D99.04)-UP, 8TR (D99.04)-UP
PART OF 1160083-Page 135.02
AN ATTACHMENT

**Key:**

**SMCS**

| NOTE | REF NO | GRAPHIC REF | PART NUMBER | QTY | PART NAME 1 2 3 4 5 6 (PRODUCT LEVEL) | PRICE USD |
|---|---|---|---|---|---|---|
| | 1 | | 3S-2093 | 7 | STRAP | |
| | 2 | | 149-5051 | 2 | CONNECTOR | |
| | 3 | | 102-8803 | 1 | RECEPTACLE KIT | |
| | 4 | | 3E-3371 | 1 | WEDGE | |
| | 5 | | 121-1022 | 1 | DIODE | |
| | 6 | | 7Y-3952 | 1 | CONNECTOR | |
| | 7 | | 2L-8076 | 1 | TERMINAL | |
| | 8 | | 2L-8078 | 1 | TERMINAL | |
| | 9 | | 1G-2044 | 1 | TERMINAL | |
| | 10 | | 155-2270 | 2 | PLUG KIT | |
| | 11 | | 3E-3362 | 2 | WEDGE | |
| | 12 | | 9W-0844 | 2 | SOCKET | |
| | 13 | | 102-8802 | 1 | RECEPTACLE KIT | |
| | 14 | | 3E-3365 | 1 | WEDGE | |
| | 15 | | 8T-8730 | 2 | SOCKET | |
| | 16 | | 2L-8066 | 1 | TERMINAL | |
| | 17 | | 7Y-3951 | 2 | TERMINAL | |
| | 18 | | 9W-0852 | 2 | PIN | |
| | 19 | | 8T-8729 | 3 | PIN | |
| | 20 | | 149-5069 | 4 | TERMINAL | |
| | 21 | | 149-5070 | 4 | TERMINAL | |

## 1673562 HARNESS AS

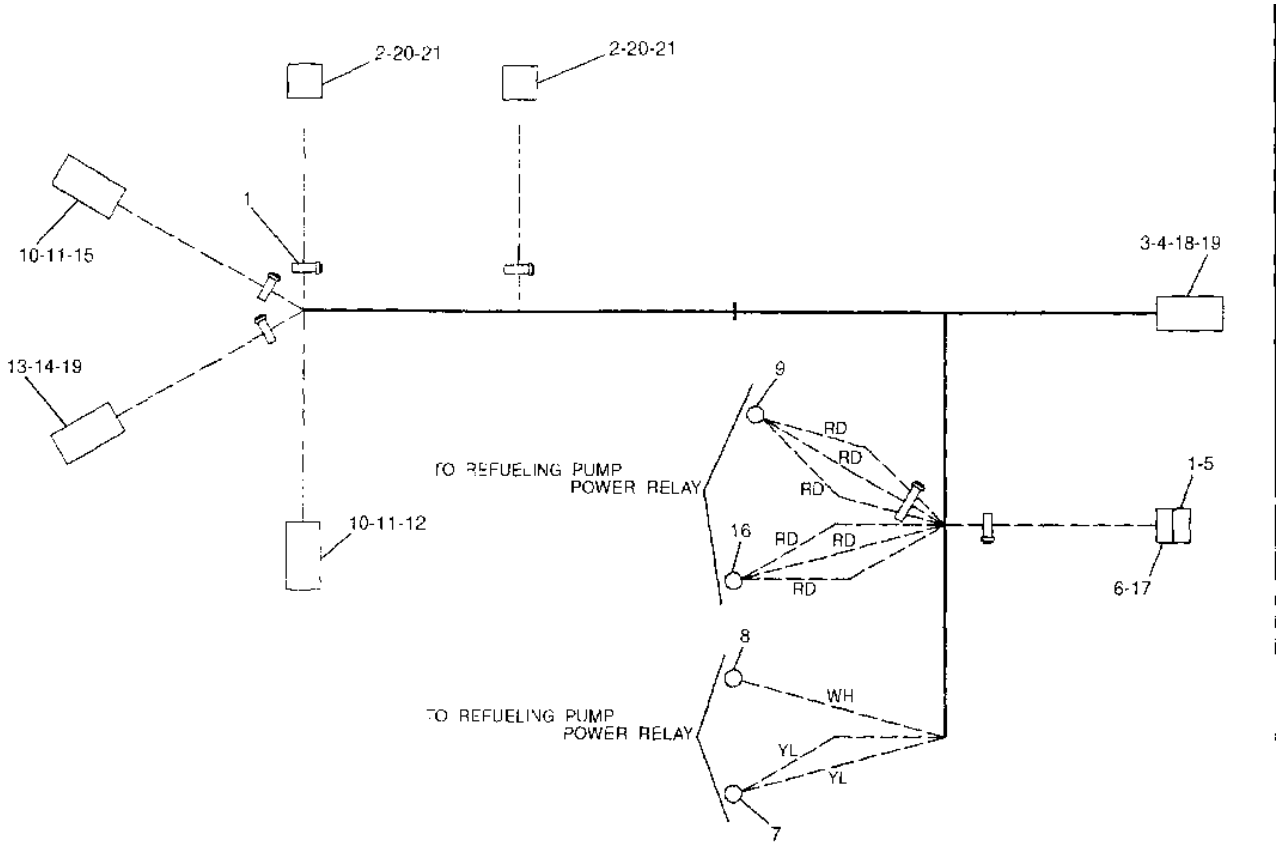


| NOTE | No. | PART No. | QTY | PART NAME |
|---|---|---|---|---|
| | 1 | 3S 2093 | 7 | STRAP |
| | 2 | 149-5051 | 2 | CONNECTOR |
| | 3 | 102-8803 | 1 | RECEPTACLE KIT |
| | 4 | 3E-3371 | 1 | WEDGE |
| | 5 | 121 1022 | 1 | DIODE |
| | 6 | 7Y-3952 | 1 | CONNECTOR |
| | 7 | 2L-8076 | 1 | TERMINAL |
| | 8 | 2L-8078 | 1 | TERMINAL |
| | 9 | 1G-2044 | 1 | TERMINAL |
| | 10 | 102-8807 | 2 | PLUG KIT |
| | 11 | 3E-3362 | 2 | WEDGE |
| | 12 | 9W-0844 | 2 | SOCKET |
| | 13 | 102-8802 | 1 | RECEPTACLE KIT |
| | 14 | 3E-3365 | 1 | WEDGE |
| | 15 | 8T-8730 | 2 | SOCKET |
| | 16 | 2L 8066 | 1 | TERMINAL |
| | 17 | 7Y-3951 | 2 | TERMINAL |
| | 18 | 9W 0852 | 2 | PIN |
| | 19 | 8T-8729 | 3 | PIN |
| | 20 | 149-5069 | 4 | TERMINAL |
| | 21 | 149-5070 | 4 | TERMINAL |

H65407E

# 1288971 HARNESS AS

S/N 8SR 1-(D99.03), 8TR 1-(D99.03)
PART OF 1160167-Page 137
AN ATTACHMENT

**Key:**

**SMCS**

| NOTE | REF NO | GRAPHIC REF | PART NUMBER | QTY | PART NAME 1 2 3 4 5 6 (PRODUCT LEVEL) | PRICE USD |
|---|---|---|---|---|---|---|
| | 1 | | 1G-2044 | 1 | TERMINAL | |
| | 2 | | 3S-2093 | 6 | STRAP | |
| | 3 | | 2L-8076 | 1 | TERMINAL | |
| | 4 | | 111-4875 | 2 | HOUSING | |
| | 5 | | 102-8807 | 2 | PLUG KIT | |
| | 6 | | 3E-3362 | 2 | WEDGE | |
| | 7 | | 8T-8730 | 2 | SOCKET | |
| | 8 | | 102-8802 | 1 | RECEPTACLE KIT | |
| | 9 | | 3E-3365 | 1 | WEDGE | |
| | 10 | | 8T-8729 | 3 | PIN | |
| | 11 | | 9W-0852 | 2 | PIN | |
| | 12 | | 102-8803 | 1 | RECEPTACLE AS | |
| | 13 | | 3E-3371 | 1 | WEDGE | |
| | 14 | | 121-1022 | 1 | DIODE | |
| | 15 | | 7Y-3952 | 1 | CONNECTOR | |
| | 16 | | 9W-0844 | 2 | SOCKET | |
| | 17 | | 2L-8078 | 1 | TERMINAL | |
| | 18 | | 2L-8066 | 1 | TERMINAL | |

## 1288971 HARNESS AS

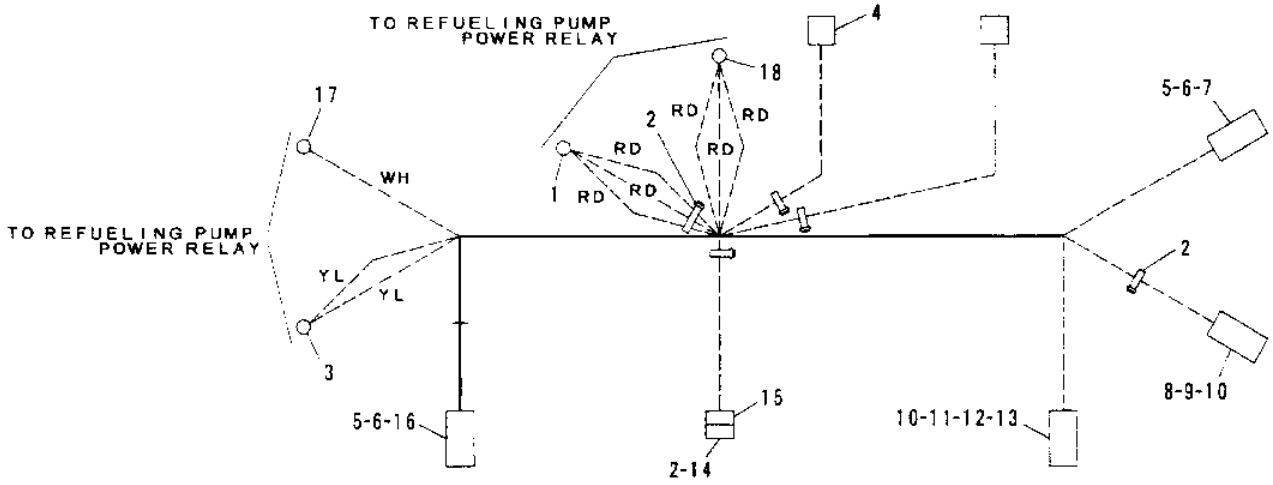


| NOTE | No. | PART No. | QTY | PART NAME | NOTE | No. | PART No. | QTY | PART NAME |
|---|---|---|---|---|---|---|---|---|---|
| | 1 | 1G-2044 | 1 | TERMINAL | | | | | |
| | 2 | 3S-2093 | 6 | STRAP | | | | | |
| | 3 | 2L-8076 | 1 | TERMINAL | | | | | |
| | 4 | 111-4875 | 2 | HOUSING | | | | | |
| | 5 | 102-8807 | 2 | PLUG KIT | | | | | |
| | 6 | 3E-3362 | 2 | WEDGE | | | | | |
| | 7 | 8T-8730 | 2 | SOCKET | | | | | |
| | 8 | 102-8802 | 1 | RECEPTACLE KIT | | | | | |
| | 9 | 3E-3365 | 1 | WEDGE | | | | | |
| | 10 | 8T-8729 | 3 | PIN | | | | | |
| | 11 | 9W-0852 | 2 | PIN | | | | | |
| | 12 | 102-8803 | 1 | RECEPTACLE AS | | | | | |
| | 13 | 3E 3371 | 1 | WEDGE | | | | | |
| | 14 | 121-1022 | 1 | DIODE | | | | | |
| | 15 | 7Y-3952 | 1 | CONNECTOR | | | | | |
| | 16 | 9W-0844 | 2 | SOCKET | | | | | |
| | 17 | 2L-8078 | 1 | TERMINAL | | | | | |
| | 18 | 2L 8066 | 1 | TERMINAL | | | | | |

H50777E

GRAPHIC #1 h50777e

# 1673565 HARNESS AS

S/N 8SR (D99.04)-UP, 8TR (D99.04)-UP
PART OF 1160167-Page 137.02
AN ATTACHMENT

**Key:**

**SMCS**

| NOTE | REF NO | GRAPHIC REF | PART NUMBER | QTY | PART NAME 1 2 3 4 5 6 (PRODUCT LEVEL) | PRICE USD |
|---|---|---|---|---|---|---|
| | 1 | | 1G-2044 | 1 | TERMINAL | |
| | 2 | | 3S-2093 | 6 | STRAP | |
| | 3 | | 2L-8076 | 1 | TERMINAL | |
| | 4 | | 7Y-3951 | 2 | TERMINAL | |
| | 5 | | 102-8807 | 2 | PLUG KIT | |
| | 6 | | 3E-3362 | 2 | WEDGE | |
| | 7 | | 8T-8730 | 2 | SOCKET | |
| | 8 | | 102-8802 | 1 | RECEPTACLE KIT | |
| | 9 | | 3E-3365 | 1 | WEDGE | |
| | 10 | | 8T-8729 | 3 | PIN | |
| | 11 | | 9W-0852 | 2 | PIN | |
| | 12 | | 102-8803 | 1 | RECEPTACLE AS | |
| | 13 | | 3E-3371 | 1 | WEDGE | |
| | 14 | | 121-1022 | 1 | DIODE | |
| | 15 | | 7Y-3952 | 1 | CONNECTOR | |
| | 16 | | 9W-0844 | 2 | SOCKET | |
| | 17 | | 2L-8078 | 1 | TERMINAL | |
| | 18 | | 2L-8066 | 1 | TERMINAL | |
| | 19 | | 149-5069 | 4 | TERMINAL | |
| | 20 | | 149-5070 | 4 | TERMINAL | |
| | 21 | | 149-5051 | 2 | CONNECTOR | |

## 1673565 HARNESS AS

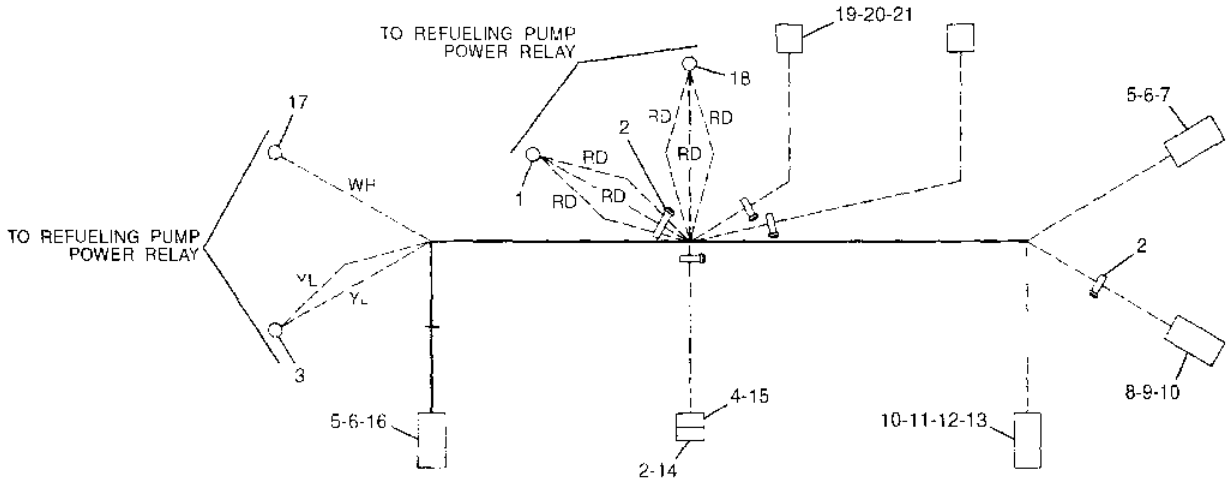


| NOTE | No. | PART No. | QTY | PART NAME |
|---|---|---|---|---|
| | 1 | 16 2044 | 1 | TERMINAL |
| | 2 | 3S 2093 | 6 | STRAP |
| | 3 | 2L-8076 | 1 | TERMINAL |
| | 4 | 7Y 3951 | 2 | TERMINAL |
| | 5 | 102 8807 | 2 | PLUG KIT |
| | 6 | 3E-3362 | 2 | WEDGE |
| | 7 | 8T 8730 | 2 | SOCKET |
| | 8 | 102 8802 | 1 | RECEPTACLE KIT |
| | 9 | 3E-3365 | 1 | WEDGE |
| | 10 | 8T-8729 | 3 | PIN |
| | 11 | 9W 0852 | 2 | PIN |
| | 12 | 102 8803 | 1 | RECEPTACLE AS |
| | 13 | 3E-3371 | 1 | WEDGE |
| | 14 | 121-1022 | 1 | DIODE |
| | 15 | 7Y-3952 | 1 | CONNECTOR |
| | 16 | 9W-0844 | 2 | SOCKET |
| | 17 | 2L-8078 | 1 | TERMINAL |
| | 18 | 2L-8066 | 1 | TERMINAL |
| | 19 | 149-5069 | 4 | TERMINAL |
| | 20 | 149 5070 | 4 | TERMINAL |
| | 21 | 149-5051 | 2 | CONNECTOR |

H65579E

GRAPHIC #1

h65579e

# 1211109 HARNESS AS

PART OF 1160206-Page 140
AN ATTACHMENT

**Key:**

**SMCS**

| NOTE | REF NO | GRAPHIC REF | PART NUMBER | QTY | PART NAME 1 2 3 4 5 6 (PRODUCT LEVEL) | PRICE USD |
|---|---|---|---|---|---|---|
| | 1 | | 102-8807 | 2 | PLUG KIT | |
| | 2 | | 3E-3362 | 2 | WEDGE | |
| | 3 | | 8T-8730 | 5 | SOCKET | |
| | 4 | | 3T-4696 | 1 | TERMINAL | |

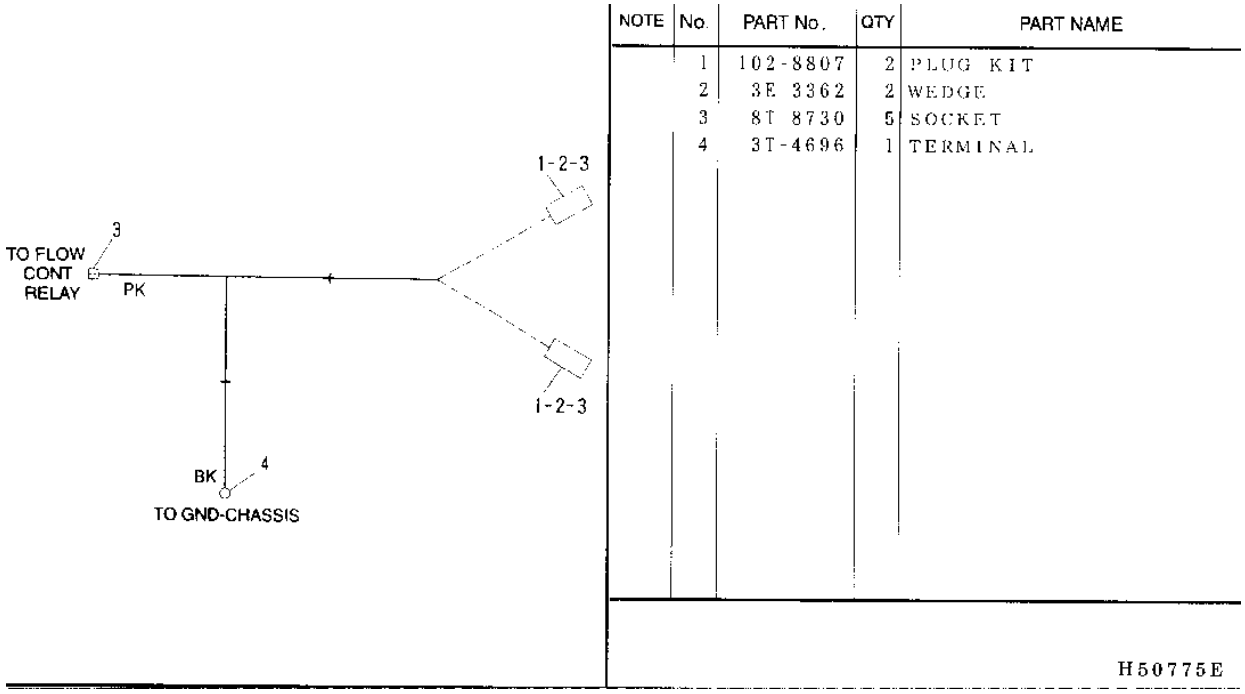


GRAPHIC #1 h50775e

# 1160091 HARNESS AS

PART OF 1364017-Page 138

**Key:** E - ORDER BY THE CENTIMETER

**SMCS**

| NOTE | REF NO | GRAPHIC REF | PART NUMBER | QTY | PART NAME 1 2 3 4 5 6 (PRODUCT LEVEL) | PRICE USD |
|---|---|---|---|---|---|---|
| | 1 | | 102-8807 | 2 | PLUG KIT | |
| | 2 | | 8T-8730 | 4 | SOCKET | |
| | 3 | | 3E-3362 | 2 | WEDGE | |
| E | 4 | | 103-2529 | 0 | HOSE (90cm) | |

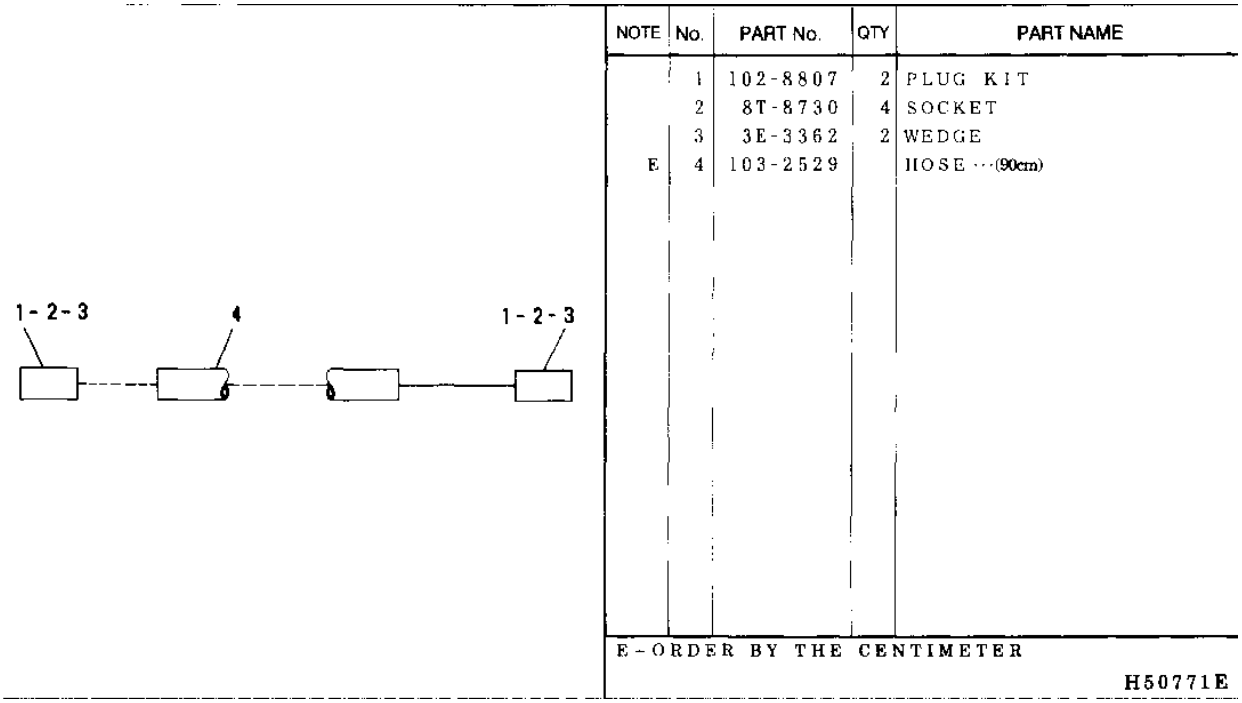


GRAPHIC #1 h50771e

# 1211033 HARNESS AS

PART OF 1160206-Page 140
AN ATTACHMENT

**Key:**

**SMCS**

| NOTE | REF NO | GRAPHIC REF | PART NUMBER | QTY | PART NAME 1 2 3 4 5 6 (PRODUCT LEVEL) | PRICE USD |
|---|---|---|---|---|---|---|
| | 1 | | 8T-8729 | 3 | PIN | |
| | 2 | | 155-2270 | 1 | PLUG KIT | |
| | 3 | | 3E-3362 | 1 | WEDGE | |
| | 4 | | 8T-8730 | 2 | SOCKET | |
| | 5 | | 3T-4696 | 1 | TERMINAL | |

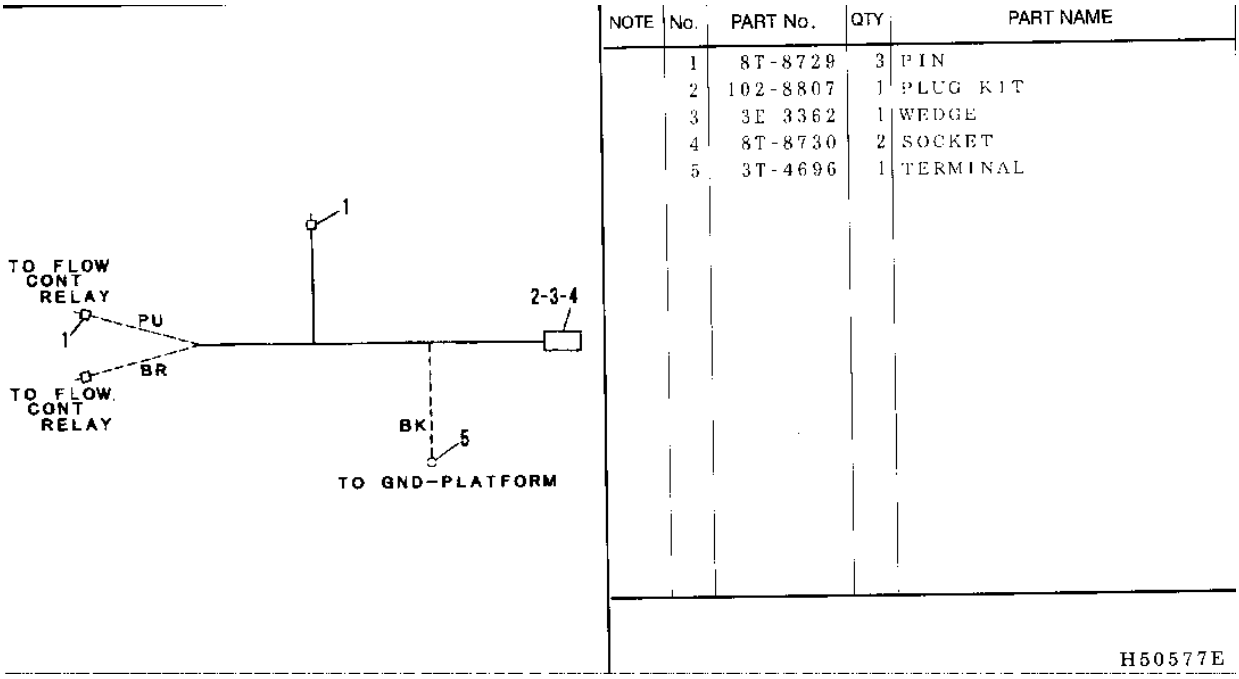


GRAPHIC #1 h50577e

# 1211034 HARNESS AS

S/N 8SR 1-(D99.03), 8TR 1-(99.03)
PART OF 1160206-Page 140
AN ATTACHMENT

**Key:**

**SMCS**

| NOTE | REF NO | GRAPHIC REF | PART NUMBER | QTY | PART NAME 1 2 3 4 5 6 (PRODUCT LEVEL) | PRICE USD |
|---|---|---|---|---|---|---|
| | 1 | | 8T-8730 | 2 | SOCKET | |
| | 2 | | 3S-2093 | 5 | STRAP | |
| | 3 | | 111-4875 | 1 | HOUSING | |
| | 4 | | 7Y-3951 | 4 | TERMINAL | |
| | 5 | | 8T-8729 | 1 | PIN | |

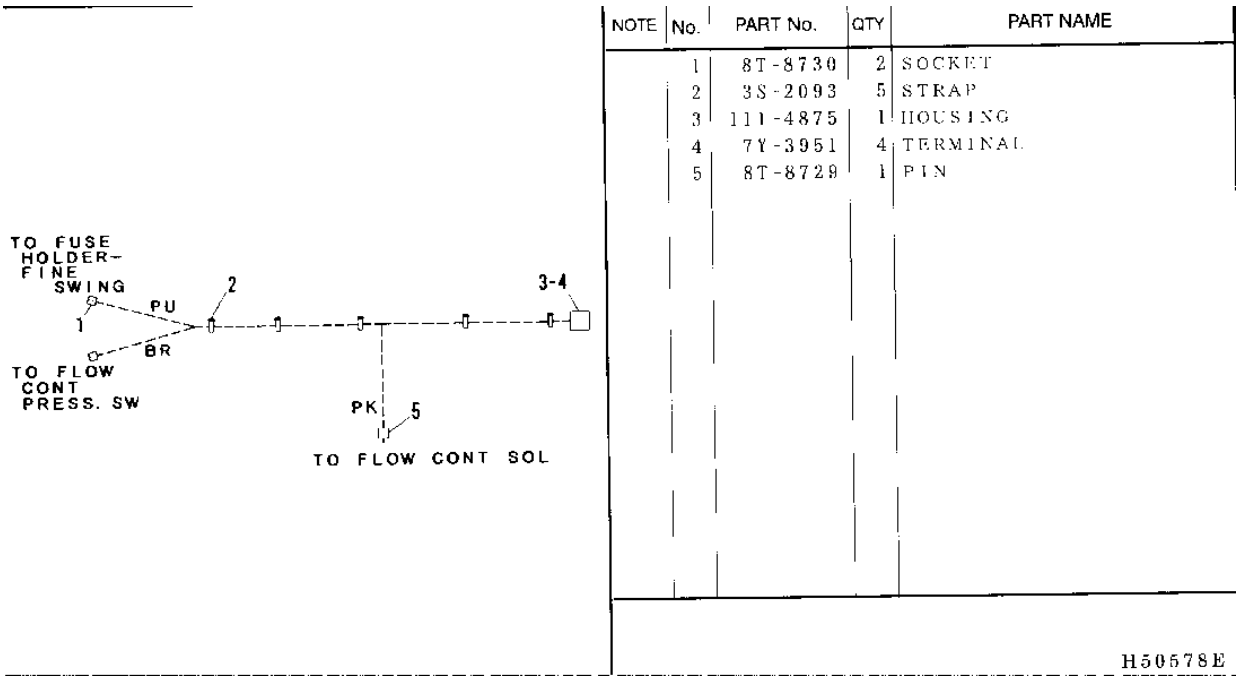


GRAPHIC #1 h50578e

# 1673589 HARNESS AS

S/N 8SR (D99.04)-UP, 8TR (99.04)-UP
PART OF 1160206-Page 140.01
AN ATTACHMENT

**Key:**

**SMCS**

| NOTE | REF NO | GRAPHIC REF | PART NUMBER | QTY | PART NAME 1 2 3 4 5 6 (PRODUCT LEVEL) | PRICE USD |
|---|---|---|---|---|---|---|
| | 1 | | 8T-8730 | 2 | SOCKET | |
| | 2 | | 3S-2093 | 5 | STRAP | |
| | 3 | | 149-5051 | 1 | CONNECTOR | |
| | 4 | | 149-5069 | 2 | TERMINAL | |
| | 5 | | 8T-8729 | 1 | PIN | |
| | 6 | | 149-5070 | 2 | TERMINAL | |

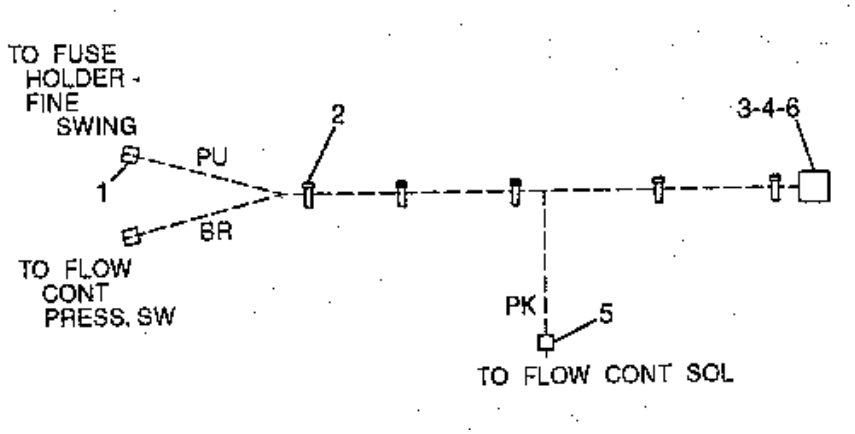


GRAPHIC #1 h65250e

# 1160242 CABLE AS

PART OF 1114862-Page 141
AN ATTACHMENT

**Key:**

**SMCS**

| NOTE | REF NO | GRAPHIC REF | PART NUMBER | QTY | PART NAME 1 2 3 4 5 6 (PRODUCT LEVEL) | PRICE USD |
|---|---|---|---|---|---|---|
| | 1 | | 7N-5274 | 1 | COVER | |
| | 2 | | 3S-6050 | 1 | TERMINAL AS | |
| | | | 1M-6119 | 1 | BOLT | |
| | | | 1M-6120 | 1 | NUT | |
| | 3 | | 1S-7252 | 1 | TERMINAL | |

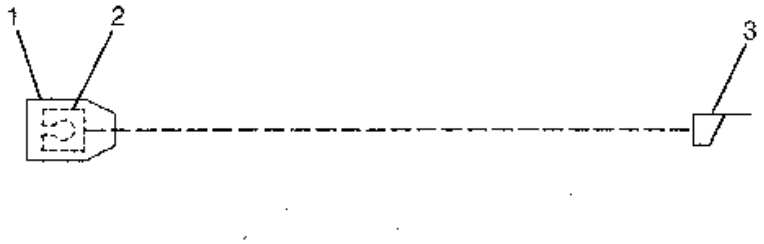


GRAPHIC #1 h50572e

# 1321827 WIRE AS

PART OF 1160083-Page 135, 1160167-Page 137
AN ATTACHMENT

**Key:**

**SMCS**

| NOTE | REF NO | GRAPHIC REF | PART NUMBER | QTY | PART NAME 1 2 3 4 5 6 (PRODUCT LEVEL) | PRICE USD |
|---|---|---|---|---|---|---|
| | 1 | | 8T-8737 | 1 | PLUG | |
| | 2 | | 8T-8730 | 1 | SOCKET | |
| | 3 | | 155-2270 | 1 | PLUG KIT | |
| | 4 | | 3E-3362 | 1 | WEDGE | |
| | 5 | | 2L-8076 | 1 | TERMINAL | |

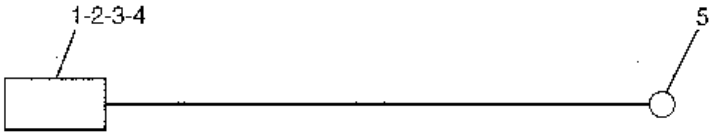


GRAPHIC #1

h50778e

# 6I2108 SOLENOID GP-SHUTOFF

PART OF 1167568-Page 14.01

**Key:**

**SMCS**

| NOTE | REF NO | GRAPHIC REF | PART NUMBER | QTY | PART NAME 1 2 3 4 5 6 (PRODUCT LEVEL) | PRICE USD |
|---|---|---|---|---|---|---|
| | 1 | | 5P-0537 | 2 | WASHER | |
| | 2 | | 3E-7985 | 1 | SOLENOID AS | |
| | 3 | | 6V-8377 | 2 | NUT | |
| | 4 | | 9B-7233 | 2 | LOCKWASHER | |
| | 5 | | 6V-8378 | 1 | NUT | |
| | 6 | | 4B-4274 | 1 | WASHER | |
| | 7 | | 6I-2002 | 1 | GASKET | |
| | 8 | | 2A-5546 | 2 | BOLT (L=35mm) | |

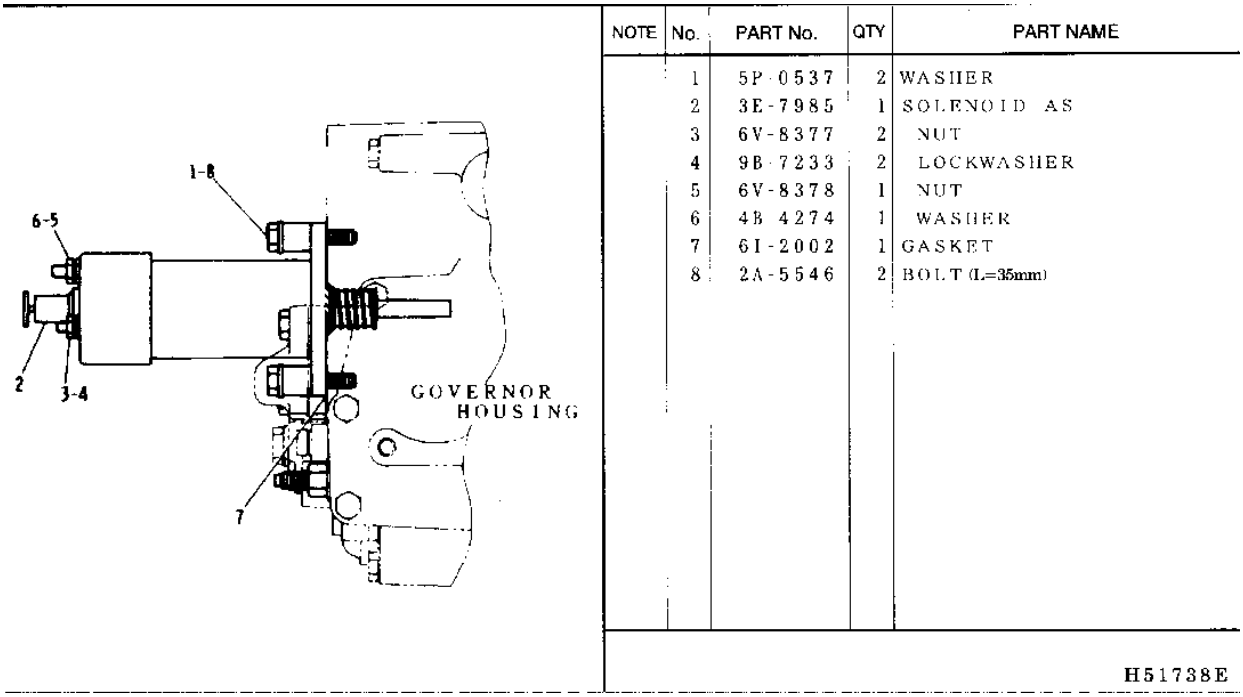


GRAPHIC #1 h51738e

# 7S3622 STARTING MOTOR GP-ELECTRIC

PART OF 1229789-Page 12
6V5227-Page 150

**Key:** Y - SEPARATE ILLUSTRATION

**SMCS**

| NOTE | REF NO | GRAPHIC REF | PART NUMBER | QTY | PART NAME 1 2 3 4 5 6 (PRODUCT LEVEL) | PRICE USD |
|---|---|---|---|---|---|---|
| | 1 | | 7J-8902 | 3 | BOLT (L=38mm) | |
| | 2 | | 7X-0591 | 3 | WASHER | |
| | 3 | | 4H-7869 | 1 | GASKET | |
| Y | 4 | | 6V-5227 | 1 | MOTOR GP | |
| | 5 | | 3N-0539 | 1 | WIRE AS | |
| | | | 2L-8052 | 1 | TERMINAL | |
| | | | 2L-8054 | 1 | TERMINAL | |

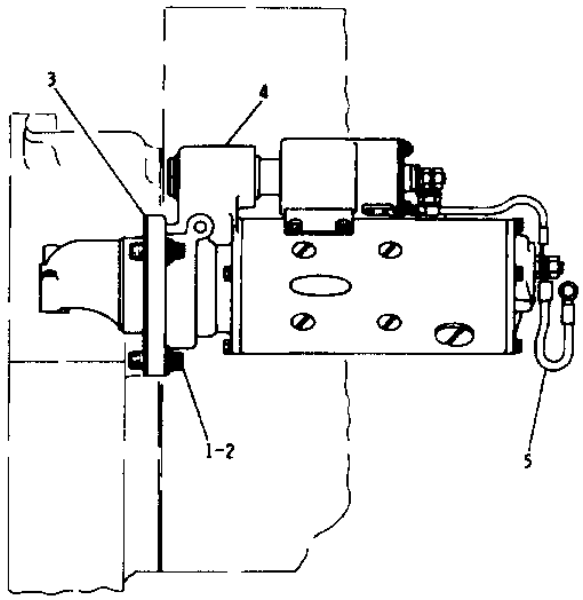


| NOTE | No. | PART No. | QTY | PART NAME |
|---|---|---|---|---|
| | 1 | 7J-8902 | 3 | BOLT (L=38mm) |
| | 2 | 7X-0591 | 3 | WASHER |
| | 3 | 4H-7869 | 1 | GASKET |
| Y | 4 | 6V-5227 | 1 | MOTOR GP |
| | 5 | 3N-0539 | 1 | WIRE AS |
| | | 2L-8052 | 1 | TERMINAL |
| | | 2L-8054 | 1 | TERMINAL |

Y-SEE SEPARATE ILLUSTRATION

H51740E

GRAPHIC #1 h51740e

# 6V5227 STARTING MOTOR GP-ELECTRIC

PART OF 7S3622-Page 149

**Key:** Y - Separate Illustration

**SMCS**

| NOTE | REF NO | GRAPHIC REF | PART NUMBER | QTY | PART NAME 1 2 3 4 5 6 (PRODUCT LEVEL) | PRICE USD |
|---|---|---|---|---|---|---|
| Y | | | 6V-5537 | 1 | STARTING MOTOR GP (ELECTRIC) | |
| Y | | | 106-8552 | 1 | STARTING MOTOR GP (ELECTRIC) | |
| Y | | | 6V-5538 | 1 | STARTING MOTOR GP (ELECTRIC) | |

# 1068552 STARTING MOTOR GP-ELECTRIC

ROBERT BOSCH
PART OF 6V5227-Page 150

**Key:**

**SMCS**

| NOTE | REF NO | GRAPHIC REF | PART NUMBER | QTY | PART NAME 1 2 3 4 5 6 (PRODUCT LEVEL) | PRICE USD |
|---|---|---|---|---|---|---|
| | 1 | | 7X-0562 | 5 | WASHER | |
| | 2 | | 8T-4244 | 5 | NUT | |
| | 3 | | 5C-2874 | 2 | NUT | |
| | 4 | | 8F-1434 | 2 | LOCKWASHER | |
| | 5 | | 8T-0328 | 2 | WASHER | |

## 1068552 STARTING MOTOR GP-ELECTRIC

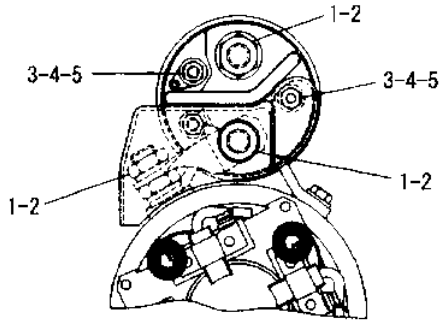


VIEW A-A

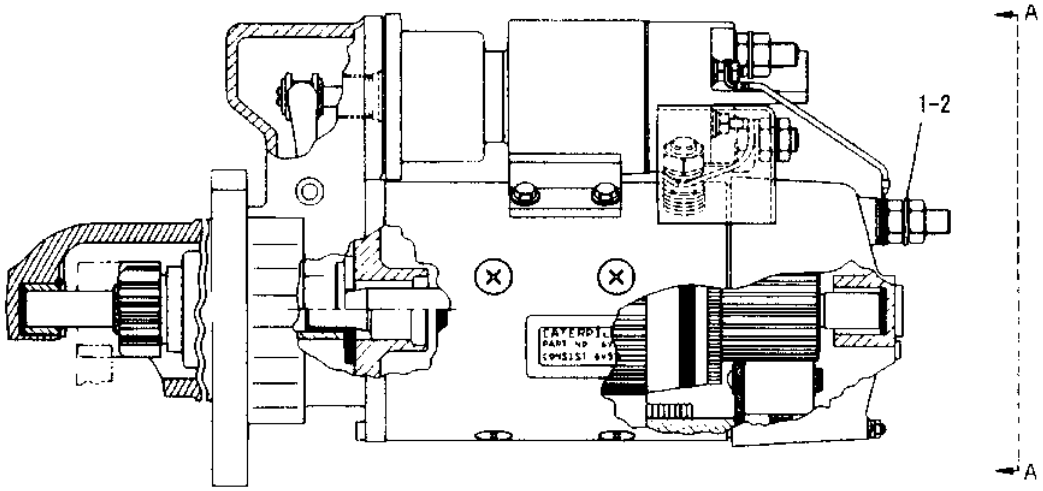


| NOTE | No. | PART No. | QTY | PART NAME | NOTE | No. | PART No. | QTY | PART NAME |
|---|---|---|---|---|---|---|---|---|---|
| | 1 | 7X-0562 | 5 | WASHER | | | | | |
| | 2 | 8T-4244 | 5 | NUT | | | | | |
| | 3 | 5C-2874 | 2 | NUT | | | | | |
| | 4 | 8F-1434 | 2 | LOCKWASHER | | | | | |
| | 5 | 8T-0328 | 2 | WASHER | | | | | |

H51742E

# 6V5537 STARTING MOTOR GP-ELECTRIC-PART 1 OF 2

DELCO REMY
PART OF 6V5227-Page 150

**Key:**

**SMCS**

| NOTE | REF NO | GRAPHIC REF | PART NUMBER | QTY | PART NAME 1 2 3 4 5 6 (PRODUCT LEVEL) | PRICE USD |
|---|---|---|---|---|---|---|
| | 1 | | 5S-7349 | 4 | BOLT (L=13mm) | |
| | 2 | | 7T-3270 | 1 | PLUNGER AS | |
| | 3 | | 2H-3429 | 1 | RING | |
| | 4 | | 4B-2049 | 2 | NUT | |
| | 5 | | 8F-1434 | 2 | LOCKWASHER | |
| | 6 | | 7T-3271 | 1 | CONNECTOR | |
| | 7 | | 8T-4205 | 4 | WASHER | |
| | 8 | | 036-9823 | 5 | BOLT | |
| | 9 | | 7T-3277 | 1 | COIL AS | |
| | 10 | | 3F-0379 | 8 | SCREW | |
| | 11 | | 7T-3276 | 1 | ARMATURE AS | |
| | 12 | | 8H-1141 | 4 | SHOE | |
| | 13 | | 7T-3454 | 1 | INSULATOR | |
| | 14 | | 7T-3279 | 1 | HOUSING AS | |
| | 15 | | 7T-3278 | 1 | HOLDER AS | |
| | 16 | | 7T-3422 | 1 | WIRE AS | |
| | 17 | | 8T-8566 | 1 | TERMINAL AS | |
| | 18 | | 7T-3269 | 1 | BOOT | |
| | 19 | | 6V-8188 | 4 | NUT | |
| | 20 | | 7X-0562 | 4 | WASHER | |
| | 21 | | 8T-0328 | 2 | WASHER | |
| | 22 | | 7T-3451 | 1 | INSULATOR | |
| | 23 | | 8T-8569 | 1 | INSULATOR | |
| | 24 | | 9X-9511 | 1 | SOLENOID AS | |
| | 25 | | 036-9821 | 1 | WASHER | |

## 6V5537 STARTING MOTOR GP-ELECTRIC-PART 1 OF 2

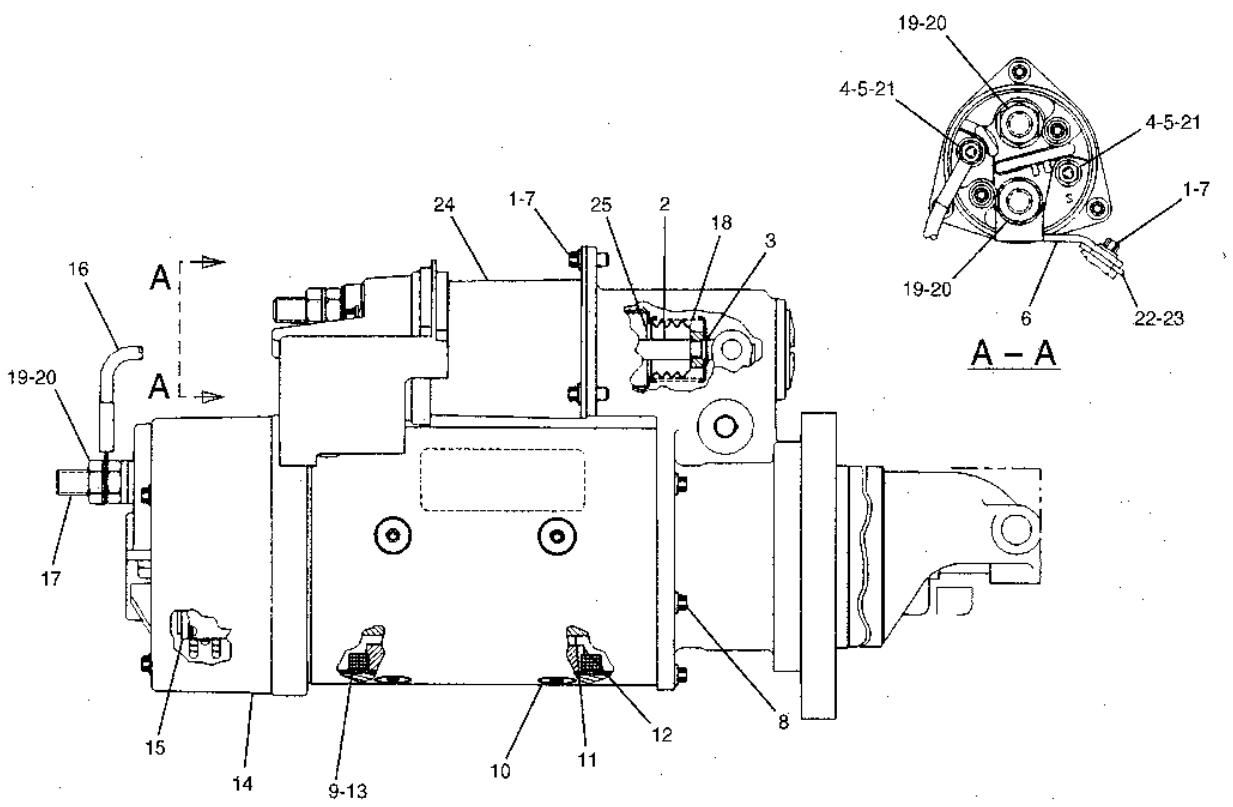


GRAPHIC #1

h84035e

# 6V5537 STARTING MOTOR GP-ELECTRIC-PART 2 OF 2

DELCO REMY
PART OF 6V5227-Page 150

**Key:**

**SMCS**

| NOTE | REF NO | GRAPHIC REF | PART NUMBER | QTY | PART NAME 1 2 3 4 5 6 (PRODUCT LEVEL) | PRICE USD |
|---|---|---|---|---|---|---|
| | 1 | | 9M-7609 | 1 | SPRING | |
| | 2 | | 4M-1828 | 1 | RETAINER | |
| | 3 | | 4M-1827 | 1 | RETAINER | |
| | 4 | | 4M-1831 | 1 | PLUG | |
| | 5 | | 3E-7775 | 1 | HOUSING AS | |
| | 6 | | 7T-3974 | 1 | HOUSING AS | |
| | 7 | | 7X-3373 | 6 | BOLT (L=22mm) | |
| | 8 | | 6N-3827 | 1 | DRIVE AS | |
| | 9 | | 3T-3434 | 6 | PLUG | |
| | 10 | | 7L-2894 | 1 | GASKET | |
| | 11 | | 4B-2049 | 1 | NUT | |
| | 12 | | 9X-4824 | 1 | COVER | |
| | 13 | | 8T-0328 | 1 | WASHER | |
| | | | 8C-3655 | 1 | BRUSH KIT (INCLUDES BRUSH, SPRING, SCREW, SEAL & | |
| | | | 7T-3267 | 1 | BUSHING KIT (INCLUDES SEAL, GASKET, BUSHING, SCREW | |
| | | | 7T-3268 | 1 | LEVER KIT (INCLUDES LEVER AS, SEAL, NUT, GASKET & | |
| | | | 8T-9884 | 1 | INSULATOR KIT (INCLUDES INSULATOR, & BUSHING) | |

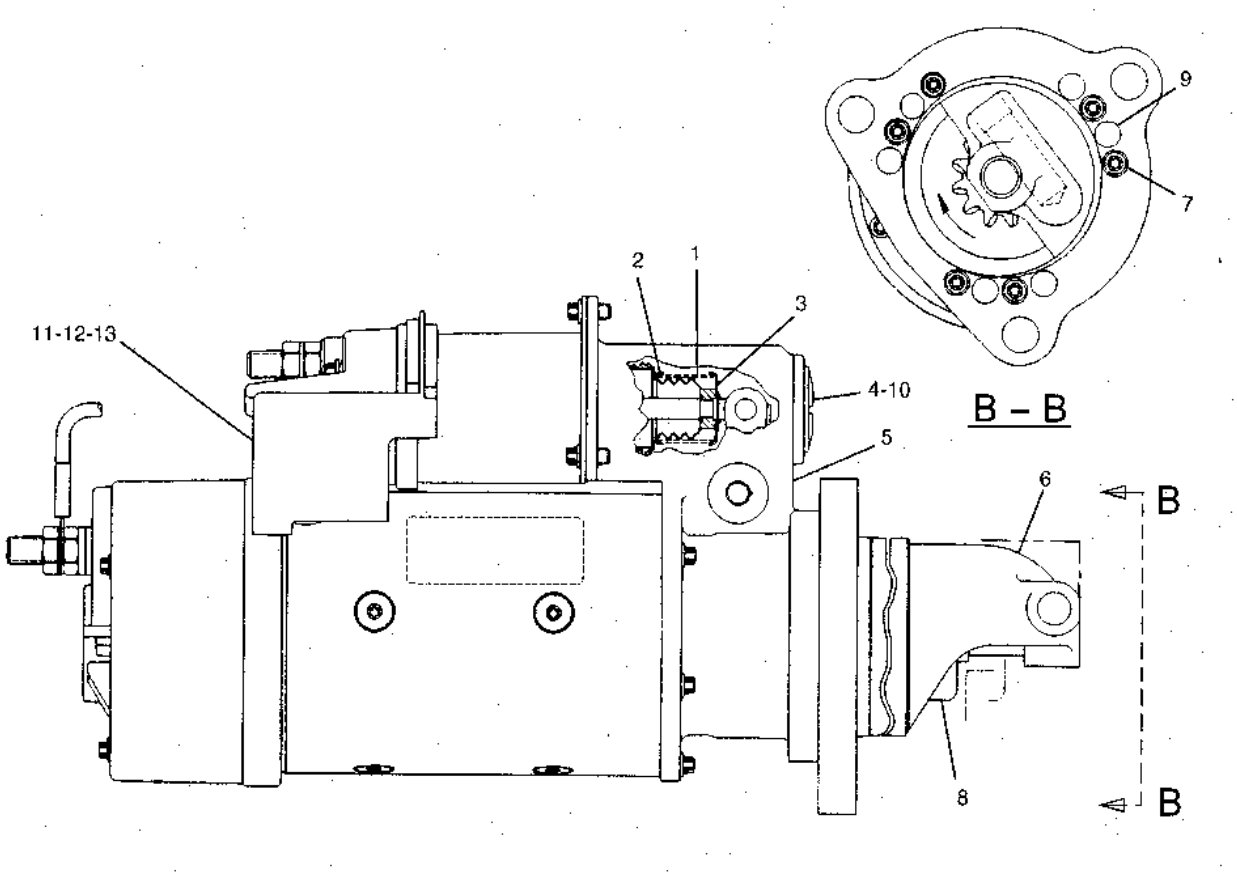


GRAPHIC #1

h84036e

# 6V5538 STARTING MOTOR GP-ELECTRIC

NIPPONDENSO
PART OF 6V5227-Page 150

**Key:**

**SMCS**

| NOTE | REF NO | GRAPHIC REF | PART NUMBER | QTY | PART NAME 1 2 3 4 5 6 (PRODUCT LEVEL) | PRICE USD |
|---|---|---|---|---|---|---|
| | 1 | | 6V-8188 | 3 | NUT | |
| | 2 | | 7X-0562 | 3 | WASHER | |
| | 3 | | 4B-2049 | 1 | NUT | |
| | 4 | | 8F-1434 | 1 | LOCKWASHER | |
| | 5 | | 8T-0328 | 1 | WASHER | |
| | 6 | | 8T-4133 | 1 | NUT | |
| | 7 | | 8T-4121 | 1 | WASHER | |
| | 8 | | 3E-0142 | 1 | HOUSING AS | |
| | 9 | | 3E-0141 | 1 | STOP | |
| | 10 | | 4N-7521 | 1 | RING | |
| | 11 | | 3E-0143 | 1 | DRIVE AS | |
| | 12 | | 3E-0144 | 1 | HOUSING AS | |
| | 13 | | 3E-0140 | 1 | LEVER AS | |
| | 14 | | 3E-0138 | 1 | ARMATURE AS | |
| | 15 | | 3E-0137 | 1 | HOLDER AS | |
| | 16 | | 3E-0135 | 1 | SOLENOID AS | |
| | 17 | | 3E-0125 | 1 | COVER AS | |
| | 18 | | 3E-0139 | 1 | HOUSING AS | |
| | 19 | | 3E-0136 | 1 | HOUSING AS | |
| | 20 | | 3E-0133 | 1 | WIRE AS | |
| | 21 | | 3E-0134 | 1 | COVER | |
| | 22 | | 3E-0132 | 1 | CONNECTOR | |
| | | | | | THE FOLLOWING REPAIR KITS ARE AVILABLE: | |
| | | | 3E-0127 | 1 | BEARING KIT | |
| | | | 3E-0128 | 1 | BRUSH KIT | |
| | | | 3E-0129 | 1 | HARDWARE KIT | |
| | | | 3E-0130 | 1 | STARTER SEAL KIT | |
| | | | 3E-0131 | 1 | WASHER KIT | |
| | | | 3E-0145 | 1 | STARTER PIN KIT | |

## 6V5538 STARTING MOTOR GP-ELECTRIC

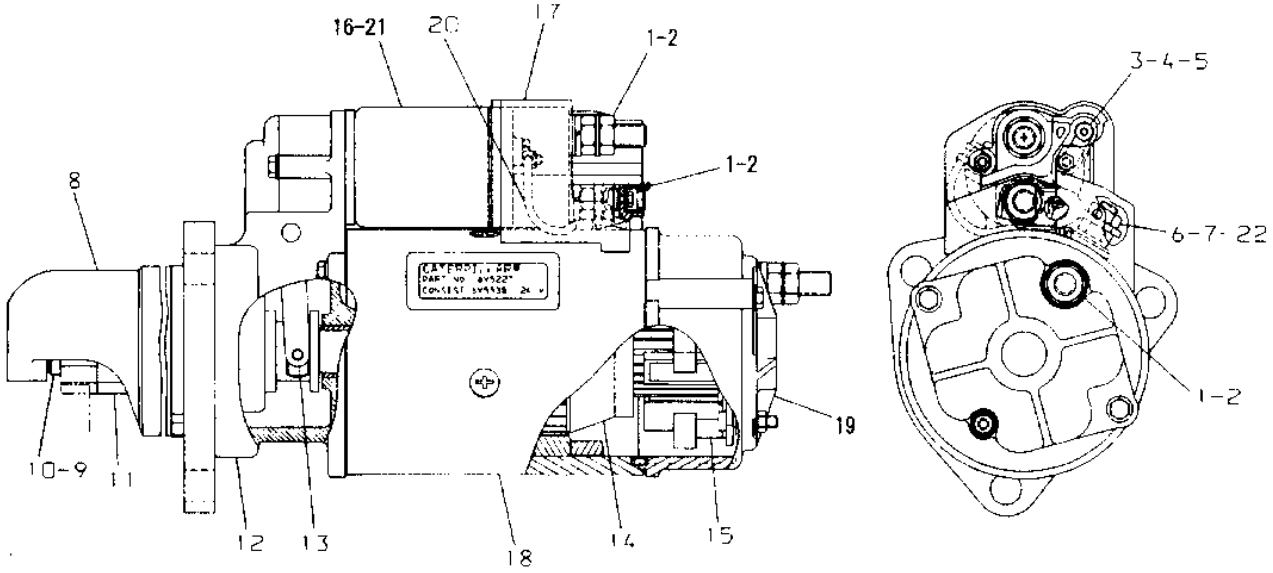


| NOTE | No. | PART No. | QTY | PART NAME |
|---|---|---|---|---|
| | 1 | 6V-8188 | 3 | NUT |
| | 2 | 7X-0562 | 3 | WASHER |
| | 3 | 4B-2049 | 1 | NUT |
| | 4 | 8F-1434 | 1 | LOCKWASHER |
| | 5 | 8T-0328 | 1 | WASHER |
| | 6 | 8T-4133 | 1 | NUT |
| | 7 | 8T-4121 | 1 | WASHER |
| | 8 | 3E-0142 | 1 | HOUSING AS |
| | 9 | 3E-0141 | 1 | STOP |
| | 10 | 4N-7521 | 1 | RING |
| | 11 | 3E-0143 | 1 | DRIVE AS |
| | 12 | 3E-0144 | 1 | HOUSING AS |
| | 13 | 3E-0140 | 1 | LEVER AS |
| | 14 | 3E-0138 | 1 | ARMATURE AS |
| | 15 | 3E-0137 | 1 | HOLDER AS |
| | 16 | 3E-0135 | 1 | SOLENOID AS |
| | 17 | 3E-0125 | 1 | COVER AS |
| | 18 | 3E-0139 | 1 | HOUSING AS |
| | 19 | 3E-0136 | 1 | HOUSING AS |
| | 20 | 3E-0133 | 1 | WIRE AS |
| | 21 | 3E-0134 | 1 | COVER |
| | 22 | 3E-0132 | 1 | CONNECTOR |
| | | | | THE FOLLOWING REPAIR KITS ARE AVILABLE: |
| | | 3E-0127 | 1 | BEARING KIT |
| | | 3E-0128 | 1 | BRUSH KIT |
| | | 3E-0129 | 1 | HARDWARE KIT |
| | | 3E-0130 | 1 | STARTER SEAL KIT |
| | | 3E-0131 | 1 | WASHER KIT |
| | | 3E-0145 | 1 | STARTER PIN KIT |

H51745E

GRAPHIC #1

h51745e

# 1275209 STARTING AR-COLD WEATHER

AN ATTACHMENT

**Key:** Y - Separate Illustration

**SMCS**

| NOTE | REF NO | GRAPHIC REF | PART NUMBER | QTY | PART NAME 1 2 3 4 5 6 (PRODUCT LEVEL) | PRICE USD |
|---|---|---|---|---|---|---|
| Y | | | 8S-3886 | 1 | STARTING MOTOR GP (ELECTRIC) | |
| Y | | | 111-4862 | 1 | BATTERY & WIRING GP (COLD WEATH) | |

# 8S3886 STARTING MOTOR GP-ELECTRIC

PART OF 1275209-Page 155
AN ATTACHMENT

**Key:**

**SMCS**

| NOTE | REF NO | GRAPHIC REF | PART NUMBER | QTY | PART NAME 1 2 3 4 5 6 (PRODUCT LEVEL) | PRICE USD |
|---|---|---|---|---|---|---|
| | 1 | | 7J-8902 | 3 | BOLT (L=38mm) | |
| | 2 | | 7X-0591 | 3 | WASHER-HARD | |
| | 3 | | 4H-7869 | 1 | GASKET | |
| R | 4 | | 6V-0512 | 1 | MOTOR GP | |
| | R | | 10R-1918 | 1 | MOTOR GP-ELEC -C | |
| | 5 | | 9F-4337 | 1 | WIRE AS | |
| | | | 2L-8052 | 1 | TERMINAL | |
| | | | 2L-8054 | 1 | TERMINAL | |

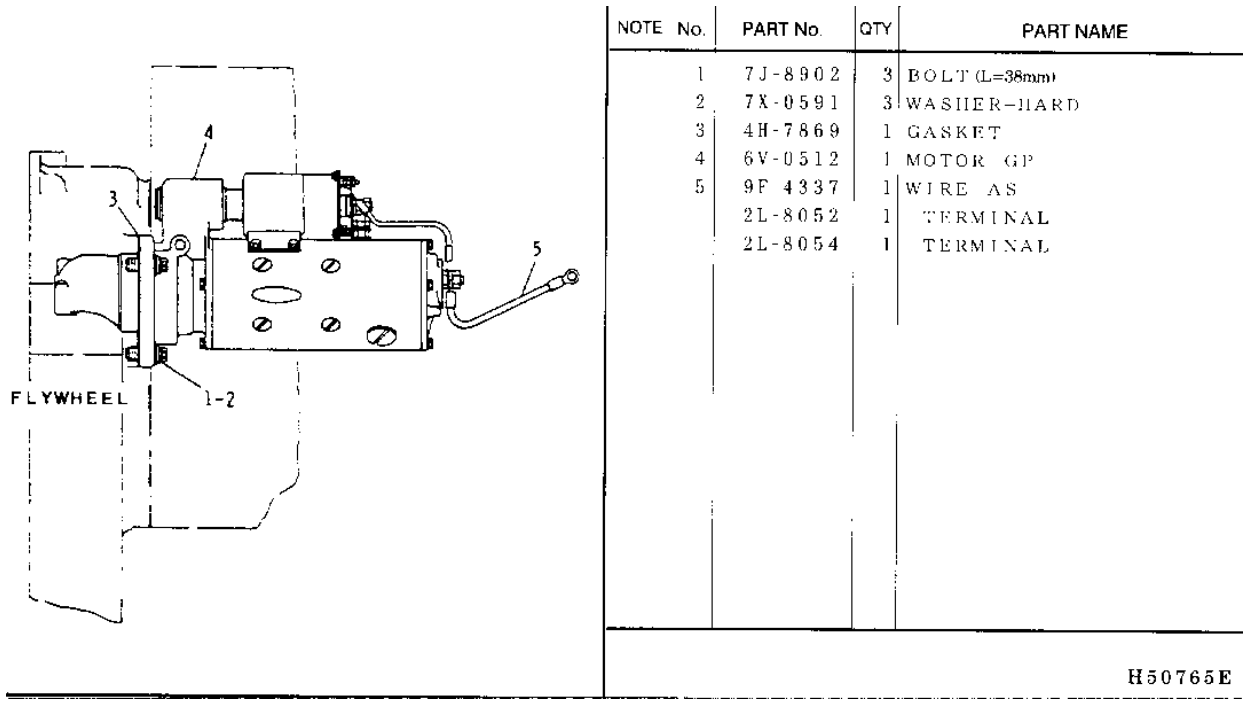


GRAPHIC #1 h50765e

# 7E9406 ALTERNATOR GP-CHARGING

PART OF 1229789-Page 121
1005047-Page 158

**Key:** R - REMFG PART MAY BE AVAILABLE, Y - SEPARATE ILLUSTRATION

**SMCS**

| NOTE | REF NO | GRAPHIC REF | PART NUMBER | QTY | PART NAME 1 2 3 4 5 6 (PRODUCT LEVEL) | PRICE USD |
|---|---|---|---|---|---|---|
| | 1 | | 4D-6565 | 1 | WIRE AS | |
| | | | 2L-8052 | 1 | TERMINAL | |
| | | | 2L-8050 | 1 | TERMINAL | |
| | 2 | | 8S-4183 | 1 | STRAP | |
| | 3 | | 0S-1585 | 2 | BOLT (L=38mm) | |
| | 4 | | 2S-6735 | 1 | SPACER | |
| | 5 | | 5P-1076 | 4 | WASHER | |
| | 6 | | 9S-6129 | 1 | PULLEY | |
| | 7 | | 9S-1240 | 1 | NUT AS | |
| | 8 | | 1F-0748 | 1 | NUT | |
| | 9 | | 0S-1571 | 1 | BOLT (L=44mm) | |
| | 10 | | 7S-6723 | 1 | BRACKET | |
| | 11 | | 0S-1619 | 1 | BOLT (L=76mm) | |
| | 12 | | 1D-4574 | 1 | BOLT (L=152mm) | |
| RY | 13 | | 100-5047 | 1 | ALTERNATOR GP | |
| | R | | 0R-3668 | 1 | ALTERNATOR GP -B | |
| | R | | 0R-3667 | 1 | ALTERNATOR GP | |

## 7E9406 ALTERNATOR GP-CHARGING

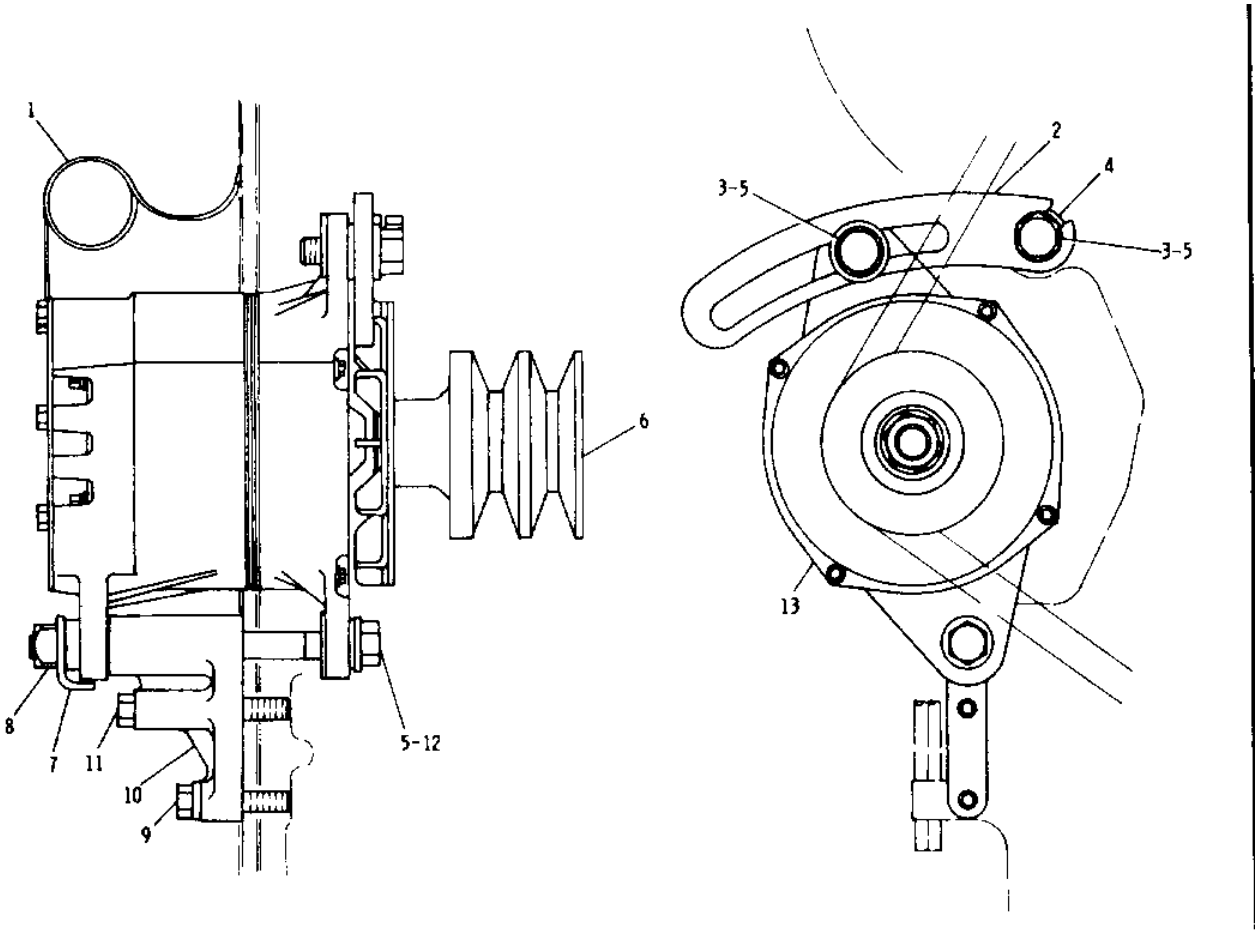


| NOTE | No. | PART No. | QTY | PART NAME | NOTE | No. | PART No. | QTY | PART NAME |
|---|---|---|---|---|---|---|---|---|---|
| | 1 | 4D-6565 | 1 | WIRE AS | | | | | |
| | | 2L-8052 | 1 | TERMINAL | | | | | |
| | | 2L-8050 | 1 | TERMINAL | | | | | |
| | 2 | 8S-4183 | 1 | STRAP | | | | | |
| | 3 | 0S-1585 | 2 | BOLT(L=38mm) | | | | | |
| | 4 | 2S-6735 | 1 | SPACER | | | | | |
| | 5 | 5P-1076 | 4 | WASHER | | | | | |
| | 6 | 9S-6129 | 1 | PULLEY | | | | | |
| | 7 | 9S-1240 | 1 | NUT AS | | | | | |
| | 8 | 1F-0748 | 1 | NUT | | | | | |
| | 9 | 0S-1571 | 1 | BOLT(L=44mm) | | | | | |
| | 10 | 7S-6723 | 1 | BRACKET | | | | | |
| | 11 | 0S-1619 | 1 | BOLT(L=76mm) | | | | | |
| | 12 | 1D-4574 | 1 | BOLT(L=152mm) | | | | | |
| Y | 13 | 100-5047 | 1 | ALTERNATOR GP | | | | | |

Y-SEE SEPARATE ILLUSTRATION

H51746E

GRAPHIC #1 h51746e

# 1005047 ALTERNATOR GP-CHARGING

PART OF 7E9406-Page 157

**Key:** Y - Separate Illustration

**SMCS**

| NOTE | REF NO | GRAPHIC REF | PART NUMBER | QTY | PART NAME 1 2 3 4 5 6 (PRODUCT LEVEL) | PRICE USD |
|---|---|---|---|---|---|---|
| Y | | | 100-5045 | 1 | ALTERNATOR GP (CHARGING) | |
| | | | | | -OR- | |
| Y | | | 100-5046 | 1 | ALTERNATOR GP (CHARGING) | |

# 1005045 ALTERNATOR GP-CHARGING

NIPPONDENSO
PART OF 1005047-Page 158

**Key:**

**SMCS**

| NOTE | REF NO | GRAPHIC REF | PART NUMBER | QTY | PART NAME 1 2 3 4 5 6 (PRODUCT LEVEL) | PRICE USD |
|---|---|---|---|---|---|---|
| | 1 | | 2K-4821 | 1 | LOCKNUT | |
| | | | 5P-8247 | 1 | WASHER | |
| | 2 | | 1B-8705 | 1 | KEY | |
| | 3 | | 7T-2793 | 1 | FAN AS | |
| | 4 | | 7T-2792 | 1 | FRAME AS | |
| | 5 | | 7T-6418 | 1 | STERTER AS | |
| | 6 | | 7T-2790 | 1 | ROTOR AS | |
| | 7 | | 7T-6417 | 1 | COIL AS | |
| | 8 | | 7T-2798 | 1 | REGULATOR AS | |
| | 9 | | 7T-2797 | 1 | COVER | |
| | 10 | | 7T-6416 | 1 | HOLDER AS | |
| | 11 | | 7T-2795 | 1 | FRAME AS | |
| | 12 | | 7T-2801 | 1 | CONDENSER AS | |
| | 13 | | 9L-6770 | 1 | CAP | |
| | 14 | | 7T-2802 | 1 | WIRE AS | |
| | 15 | | 7X-0447 | 1 | NUT | |
| | | | 2H-3920 | 1 | LOCKWASHER | |
| | 16 | | 6V-8185 | 1 | NUT | |
| | | | 1H-3244 | 1 | LOCKWASHER | |
| | | | | | THE FOLLOWING REPAIR KITS ARE AVAILABLE: | |
| | | | 7T-2799 | 1 | KIT (BEARING) (INCLUDES THREE BEARING) | |
| | | | 7T-2800 | 1 | KIT (TERMINAL LARGE) | |
| | | | 7T-2805 | 1 | KIT (TERMINAL SMALL) | |
| | | | 7T-2803 | 1 | KIT (HARDWEAR) (INCLUDES BOLTS, SCREW & WASHER) | |
| | | | 7T-2816 | 1 | KIT (HARDWEAR) (INCLUDES COLLARS, PLATES, RING & | |
| | | | 7T-2804 | 1 | KIT (TERMINAL) (INCLUDES WIRE AS, CAP, BUSHING & BOLT) | |

## 1005045 ALTERNATOR GP-CHARGING

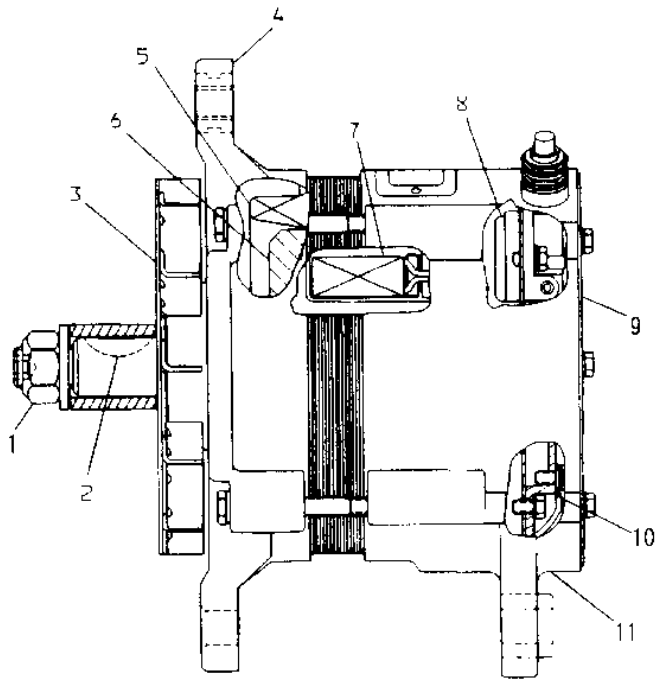


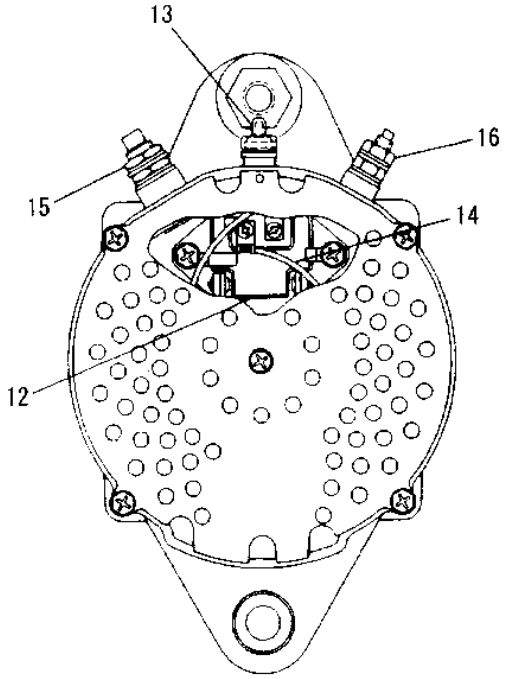


| NOTE | No. | PART No. | QTY | PART NAME |
|---|---|---|---|---|
| | 1 | 2K-4821 | 1 | LOCKNUT |
| | | 5P-8247 | 1 | WASHER |
| | 2 | 1B-8705 | 1 | KEY |
| | 3 | 7T-2793 | 1 | FAN AS |
| | 4 | 7T-2792 | 1 | FRAME AS |
| | 5 | 7T-6418 | 1 | STERTER AS |
| | 6 | 7T-2790 | 1 | ROTOR AS |
| | 7 | 7T-6417 | 1 | COIL AS |
| | 8 | 7T-2798 | 1 | REGULATOR AS |
| | 9 | 7T-2797 | 1 | COVER |
| | 10 | 7T-6416 | 1 | HOLDER AS |
| | 11 | 7T-2795 | 1 | FRAME AS |
| | 12 | 7T-2801 | 1 | CONDENSER AS |
| | 13 | 9L-6770 | 1 | CAP |
| | 14 | 7T-2802 | 1 | WIRE AS |
| | 15 | 7X-0447 | 1 | NUT |
| | | 2H 3920 | 1 | LOCKWASHER |
| | 16 | 6V-8185 | 1 | NUT |
| | | 1H-3244 | 1 | LOCKWASHER |

| NOTE | No. | PART No. | QTY | PART NAME |
|---|---|---|---|---|
| | | | | THE FOLLOWING REPAIR KITS ARE AVAILABLE: |
| | | 7T 2799 | 1 | KIT (BEARING) (INCLUDES THREE BEARING) |
| | | 7T-2800 | 1 | KIT (TERMINAL LARGE) |
| | | 7T-2805 | 1 | KIT (TERMINAL SMALL) |
| | | 7T-2803 | 1 | KIT (HARDWEAR) (INCLUDES BOLTS, SCREW & WASHER) |
| | | 7T-2816 | 1 | KIT (HARDWEAR) (INCLUDES COLLARS, PLATES, RING & BOLTS) |
| | | 7T-2804 | 1 | KIT (TERMINAL) (INCLUDES WIRE AS, CAP, BUSHING & BOLT) |

H51748E

GRAPHIC #1

h51748e

# 1005046 ALTERNATOR GP-CHARGING

ROBERT BOSCH
PART OF 1005047-Page 158

**Key:**

**SMCS**

| NOTE | REF NO | GRAPHIC REF | PART NUMBER | QTY | PART NAME 1 2 3 4 5 6 (PRODUCT LEVEL) | PRICE USD |
|---|---|---|---|---|---|---|
| | 1 | | 9G-7551 | 1 | BEARING | |
| | 2 | | 9G-7548 | 1 | RING | |
| | 3 | | 3T-1885 | 1 | COIL AS | |
| | 4 | | 9G-7560 | 1 | ROTOR AS | |
| | 5 | | 9G-7553 | 1 | RING | |
| | 6 | | 9G-7562 | 1 | COVER AS | |
| | 7 | | 9G-7567 | 1 | REGULATOR AS | |
| | 8 | | 9G-7552 | 1 | BEARING | |
| | 9 | | 9X-6001 | 4 | BOLT (L=150mm) | |
| | | | 8T-0328 | 4 | WASHER | |
| | 10 | | 9G-7568 | 1 | FRAME AS | |
| | 11 | | 3T-1887 | 1 | DIODE AS | |
| | 12 | | 3T-1866 | 1 | STATOR AS | |
| | 13 | | 9G-7566 | 1 | FRAME | |
| | 14 | | 9G-7564 | 1 | FAN | |
| | 15 | | 9G-7549 | 1 | SPACER | |
| | 16 | | 2K-4821 | 1 | LOCKNUT | |
| | 17 | | 5P-8247 | 1 | WASHER | |
| | 18 | | 7X-0447 | 1 | NUT | |
| | | | 8T-5360 | 1 | WASHER | |
| | 19 | | 9L-6770 | 1 | CAP | |
| | 20 | | 1B-8705 | 1 | KEY | |
| | 21 | | 5C-2874 | 1 | NUT | |
| | | | 7X-0620 | 1 | WASHER | |
| | | | | | THE FOLLOWING REPAIR KITS ARE AVAILABLE: | |
| | | | 9G-7554 | 1 | KIT (GROUND TERMINAL) | |
| | | | 9G-7555 | 1 | KIT (OUTPUT TERMINAL) | |
| | | | 9G-7556 | 1 | KIT (CAPACITOR) | |
| | | | 9G-7559 | 1 | KIT (RELAY TERMINAL) | |
| | | | 9G-7565 | 1 | KIT (REGULATOR TERMINAL) | |

## 1005046 ALTERNATOR GP-CHARGING

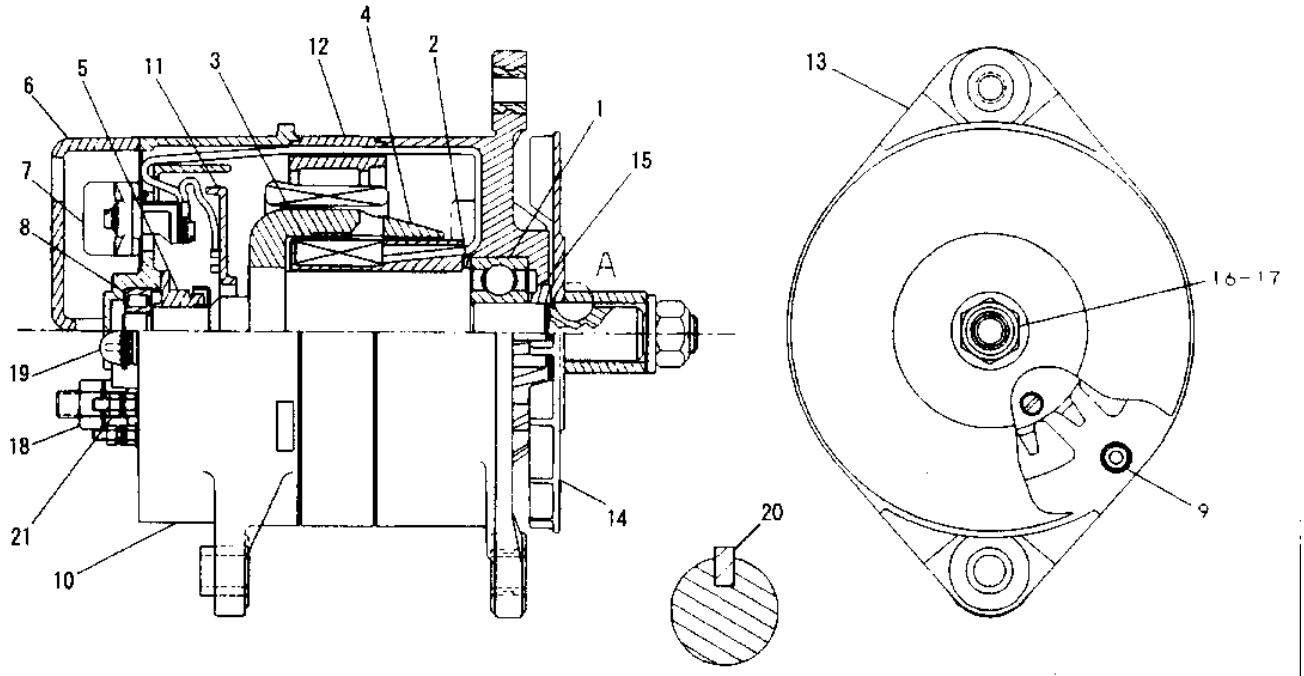


DETAIL OF A

| NOTE | No. | PART No. | QTY | PART NAME | NOTE | No. | PART No. | QTY | PART NAME |
|---|---|---|---|---|---|---|---|---|---|
| | 1 | 9G-7551 | 1 | BEARING | | 19 | 9L-6770 | 1 | CAP |
| | 2 | 9G-7548 | 1 | RING | | 20 | 1B-8705 | 1 | KEY |
| | 3 | 3T-1885 | 1 | COIL AS | | 21 | 5C-2874 | 1 | NUT |
| | 4 | 9G-7560 | 1 | ROTOR AS | | | 7X-0620 | 1 | WASHER |
| | 5 | 9G-7553 | 1 | RING | | | | | THE FOLLOWING REPAIR |
| | 6 | 9G-7562 | 1 | COVER AS | | | | | KITS ARE AVAILABLE: |
| | 7 | 9G-7567 | 1 | REGULATOR AS | | | 9G-7554 | 1 | KIT(GROUND TERMINAL) |
| | 8 | 9G-7552 | 1 | BEARING | | | 9G-7555 | 1 | KIT(OUTPUT TERMINAL) |
| | 9 | 9X-6001 | 4 | BOLT(L=150mm) | | | 9G-7556 | 1 | KIT(CAPACITOR) |
| | | 8T-0328 | 4 | WASHER | | | 9G-7559 | 1 | KIT(RELAY TERMINAL) |
| | 10 | 9G-7568 | 1 | FRAME AS | | | 9G-7565 | 1 | KIT |
| | 11 | 3T-1887 | 1 | DIODE AS | | | | | (REGULATOR TERMINAL) |
| | 12 | 3T-1866 | 1 | STATOR AS | | | | | |
| | 13 | 9G-7566 | 1 | FRAME | | | | | |
| | 14 | 9G-7564 | 1 | FAN | | | | | |
| | 15 | 9G-7549 | 1 | SPACER | | | | | |
| | 16 | 2K-4821 | 1 | LOCKNUT | | | | | |
| | 17 | 5P-8247 | 1 | WASHER | | | | | |
| | 18 | 7X-0447 | 1 | NUT | | | | | |
| | | 8T-5360 | 1 | WASHER | | | | | |

H51749E

# 1099413 STARTING AID GP-ETHER-PART 1 OF 2

AN ATTACHMENT

**Key:**

**SMCS**

| NOTE | REF NO | GRAPHIC REF | PART NUMBER | QTY | PART NAME 1 2 3 4 5 6 (PRODUCT LEVEL) | PRICE USD |
|---|---|---|---|---|---|---|
| | 1 | | 3E-6449 | 1 | SWITCH AS | |
| | | | 102-8802 | 1 | RECEPTACLE KIT | |
| | | | 3E-3365 | 1 | WEDGE | |
| | | | 8T-8729 | 2 | PIN | |
| | 2 | | 3K-0360 | 1 | SEAL-O-RING (ID=16.36mm) | |
| | 3 | | 2B-2404 | 2 | CLIP | |
| | 4 | | 3D-5102 | 2 | GROMMET | |
| | 5 | | 8T-4191 | 1 | BOLT (L=16mm) | |
| | 6 | | 8T-4121 | 3 | WASHER-HARD | |
| | 7 | | 5P-6312 | 2 | UNION-FLARELESS | |
| | 8 | | 5P-6313 | 4 | NUT | |
| | 9 | | 5P-6314 | 4 | SLEEVE | |
| | 10 | | 5P-2948 | 1 | CONNECTOR | |
| | 11 | | 8T-4136 | 1 | BOLT (L=25mm) | |
| | 12 | | 111-4784 | 1 | SWITCH AS (ROCKER) | |
| | | | 116-0173 | 1 | CONNECTOR | |
| | | | 116-0174 | 4 | TERMINAL | |
| | 13 | | 4I-7483 | 1 | ADAPTER | |
| | 14 | | 8T-4137 | 1 | BOLT (L=20mm) | |
| | 15 | | 4I-7487 | 1 | BRACKET AS | |
| | 16 | | 139-8866 | 1 | HOSE | |

## 1099413 STARTING AID GP-ETHER-PART 1 OF 2

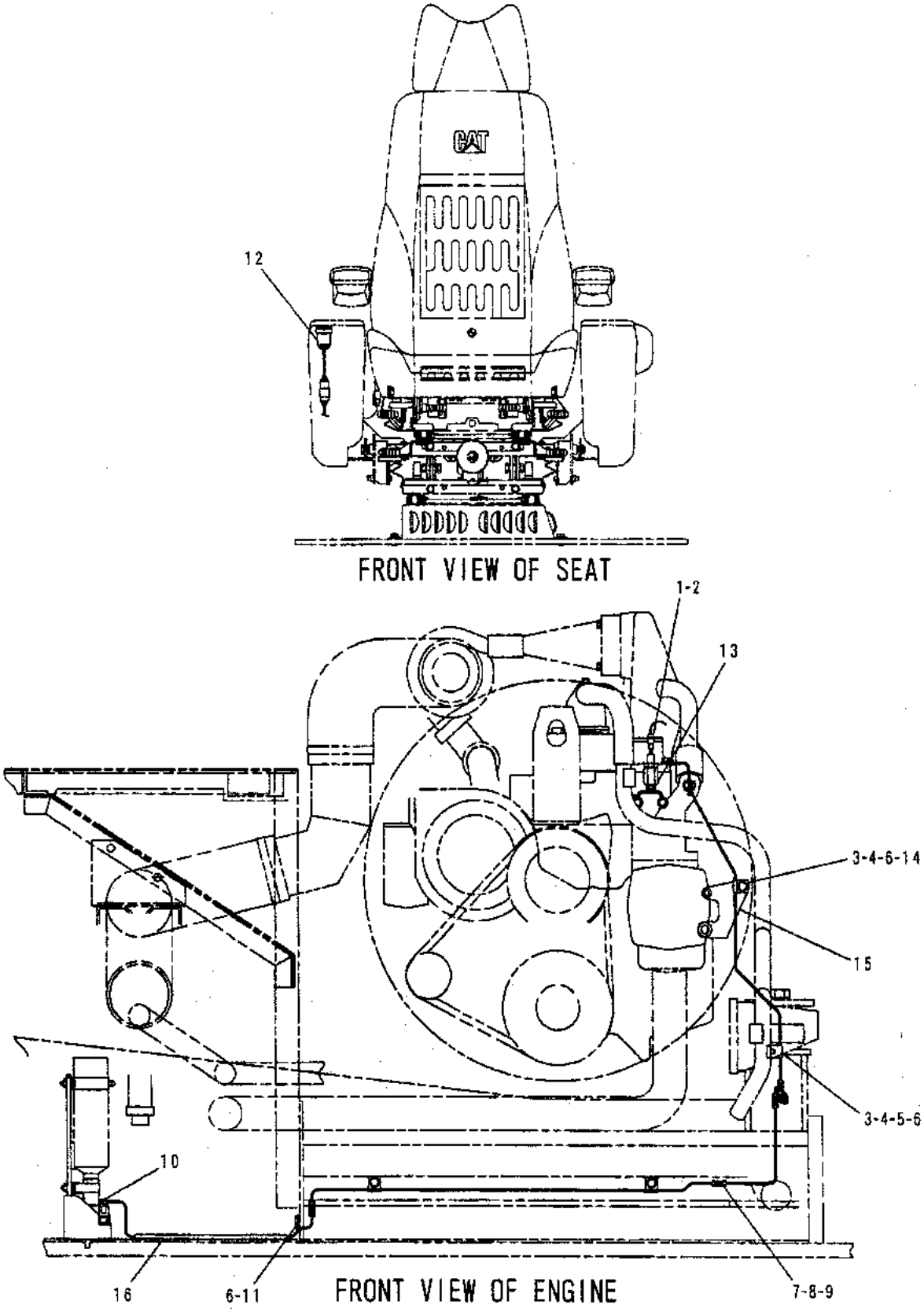


GRAPHIC #1

h58699e

# 1099413 STARTING AID GP-ETHER-PART 2 OF 2

AN ATTACHMENT

**Key:**

**SMCS**

| NOTE | REF NO | GRAPHIC REF | PART NUMBER | QTY | PART NAME 1 2 3 4 5 6 (PRODUCT LEVEL) | PRICE USD |
|---|---|---|---|---|---|---|
| | 1 | | 2B-2404 | 5 | CLIP | |
| | 2 | | 3D-5102 | 5 | GROMMET | |
| | 3 | | 8T-4191 | 3 | BOLT (L=16mm) | |
| | 4 | | 8T-4121 | 5 | WASHER | |
| | 5 | | 3E-6332 | 1 | VALVE AS | |
| | | | 3E-3365 | 1 | WEDGE | |
| | | | 7N-9801 | 1 | GASKET | |
| | | | 8T-8729 | 2 | PIN | |
| | | | 102-8802 | 1 | RECEPTACLE KIT | |
| | 6 | | 8T-4908 | 4 | BOLT (L=25mm) | |
| | 7 | | 8T-4224 | 4 | WASHER | |
| | 8 | | 109-9490 | 1 | SUPPORT AS | |
| | 9 | | 7N-2059 | 1 | CLAMP AS | |
| | 10 | | 7Y-1393 | 1 | TUBE | |
| | 11 | | 7N-0140 | 2 | TUBE AS | |
| | 12 | | 109-9489 | 1 | TUBE | |
| | 13 | | 109-9488 | 1 | TUBE | |
| | 14 | | 109-9487 | 1 | TUBE | |
| | 15 | | 8B-1931 | 1 | BUSHING | |
| | 16 | | 7X-6101 | 1 | ATOMIZER AS | |
| | 17 | | 4I-7450 | 1 | TUBE | |
| | 18 | | 8T-2501 | 1 | BOLT (L=51mm) | |
| | 19 | | 8T-4896 | 1 | WASHER | |
| | 20 | | 7X-0347 | 1 | BOLT (L=57mm) | |
| | 21 | | 8T-4122 | 1 | WASHER | |
| | 22 | | 8T-4195 | 2 | BOLT (L=30mm) | |

# 1160115 ALARM GP-TRAVEL

3E7738-Page 165
AN ATTACHMENT

**Key:** Y - SEPARATE ILLUSTRATION

**SMCS**

| NOTE | REF NO | GRAPHIC REF | PART NUMBER | QTY | PART NAME 1 2 3 4 5 6 (PRODUCT LEVEL) | PRICE USD |
|---|---|---|---|---|---|---|
| Y | 1 | | 3E-7738 | 1 | ALARM AS | |
| | 2 | | 7X-2538 | 2 | BOLT (L=100mm) | |
| | 3 | | 8T-4224 | 2 | WASHER-HARD | |
| | 4 | | 116-0118 | 1 | CLIP | |
| | 5 | | 2D-1290 | 1 | GROMMET | |
| | 6 | | 116-0116 | 1 | SHEET AS | |
| | 7 | | 8T-4137 | 2 | BOLT (L=20mm) | |
| | 8 | | 8T-4121 | 2 | WASHER-HARD | |

## 1160115 ALARM GP-TRAVEL

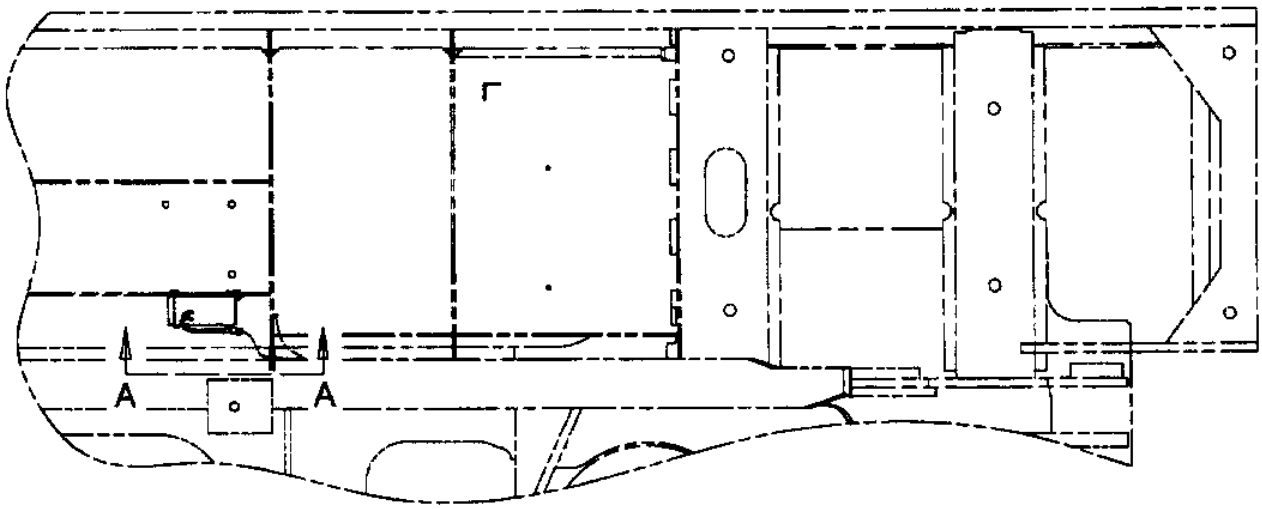


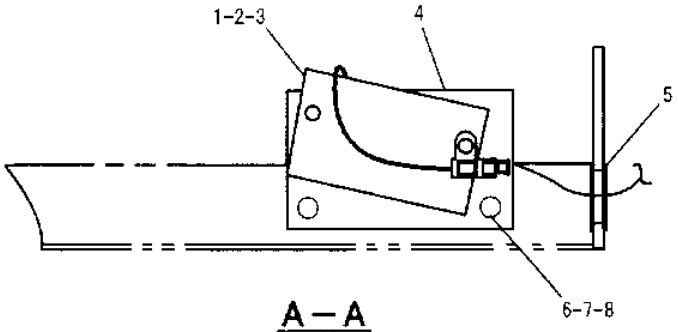


A—A

| NOTE | No. | PART No. | QTY | PART NAME | NOTE | No. | PART No. | QTY | PART NAME |
|---|---|---|---|---|---|---|---|---|---|
| Y | 1 | 3E-7738 | 1 | ALARM AS | | | | | |
| | 2 | 7X-2538 | 2 | BOLT(L=100mm) | | | | | |
| | 3 | 8T-4224 | 2 | WASHER-HARD | | | | | |
| | 4 | 116-0118 | 1 | CLIP | | | | | |
| | 5 | 2D-1290 | 1 | GROMMET | | | | | |
| | 6 | 116-0116 | 1 | SHEET AS | | | | | |
| | 7 | 8T-4137 | 2 | BOLT(L=20mm) | | | | | |
| | 8 | 8T-4121 | 2 | WASHER-HARD | | | | | |

Y-SEE SEPARATE ILLUSTRATION

H52052E

# 3E7738 ALARM AS-BACKUP

PART OF 1160015-Page 164
AN ATTACHMENT

**Key:**

**SMCS**

| NOTE | REF NO | GRAPHIC REF | PART NUMBER | QTY | PART NAME 1 2 3 4 5 6 (PRODUCT LEVEL) | PRICE USD |
|---|---|---|---|---|---|---|
| | 1 | | 3T-1815 | 1 | ALARM | |
| | 2 | | 3E-7739 | 1 | WIRE AS | |
| | | | 3E-3365 | 1 | WEDGE | |
| | | | 8T-8729 | 2 | PIN | |

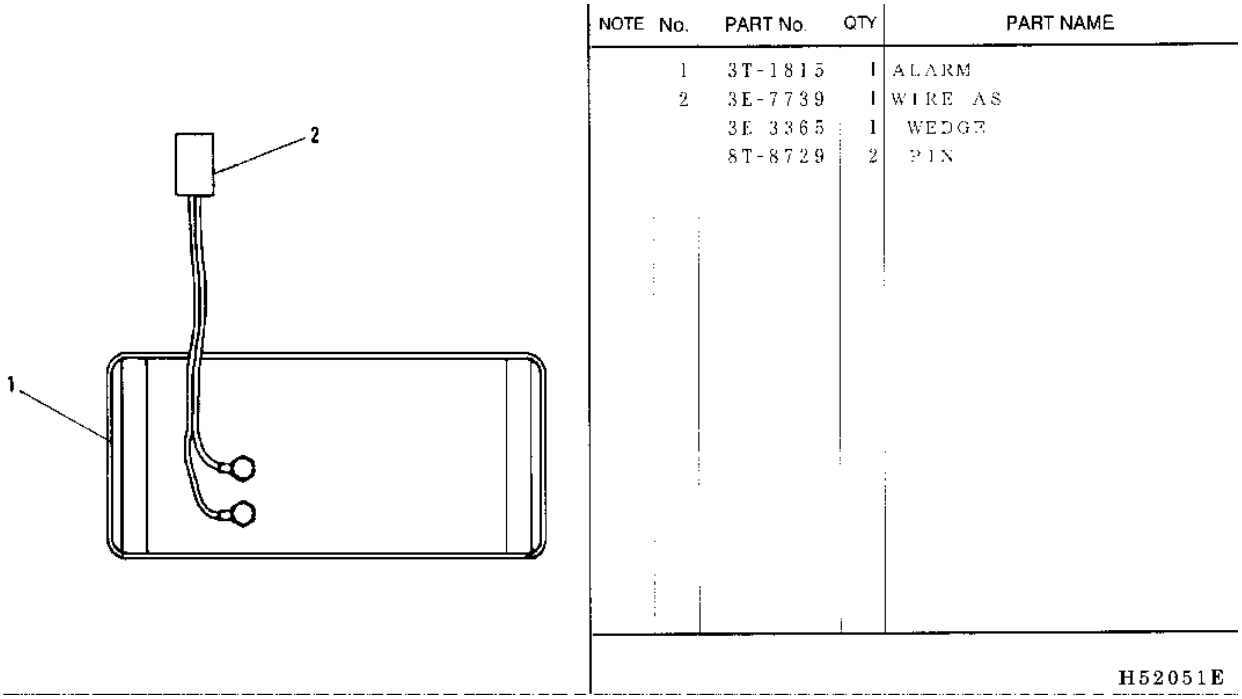


GRAPHIC #1 h52051e

# 4I5409 LIGHTING GP-CHASSIS

S/N 8SR 1-00447, 8TR 1-00509
5I8251-Page 172

**Key:** Y - SEE SEPARATE ILLUSTRATION

**SMCS**

| NOTE | REF NO | GRAPHIC REF | PART NUMBER | QTY | PART NAME 1 2 3 4 5 6 (PRODUCT LEVEL) | PRICE USD |
|---|---|---|---|---|---|---|
| Y | 1 | | 5I-8251 | 1 | LAMP GP | |

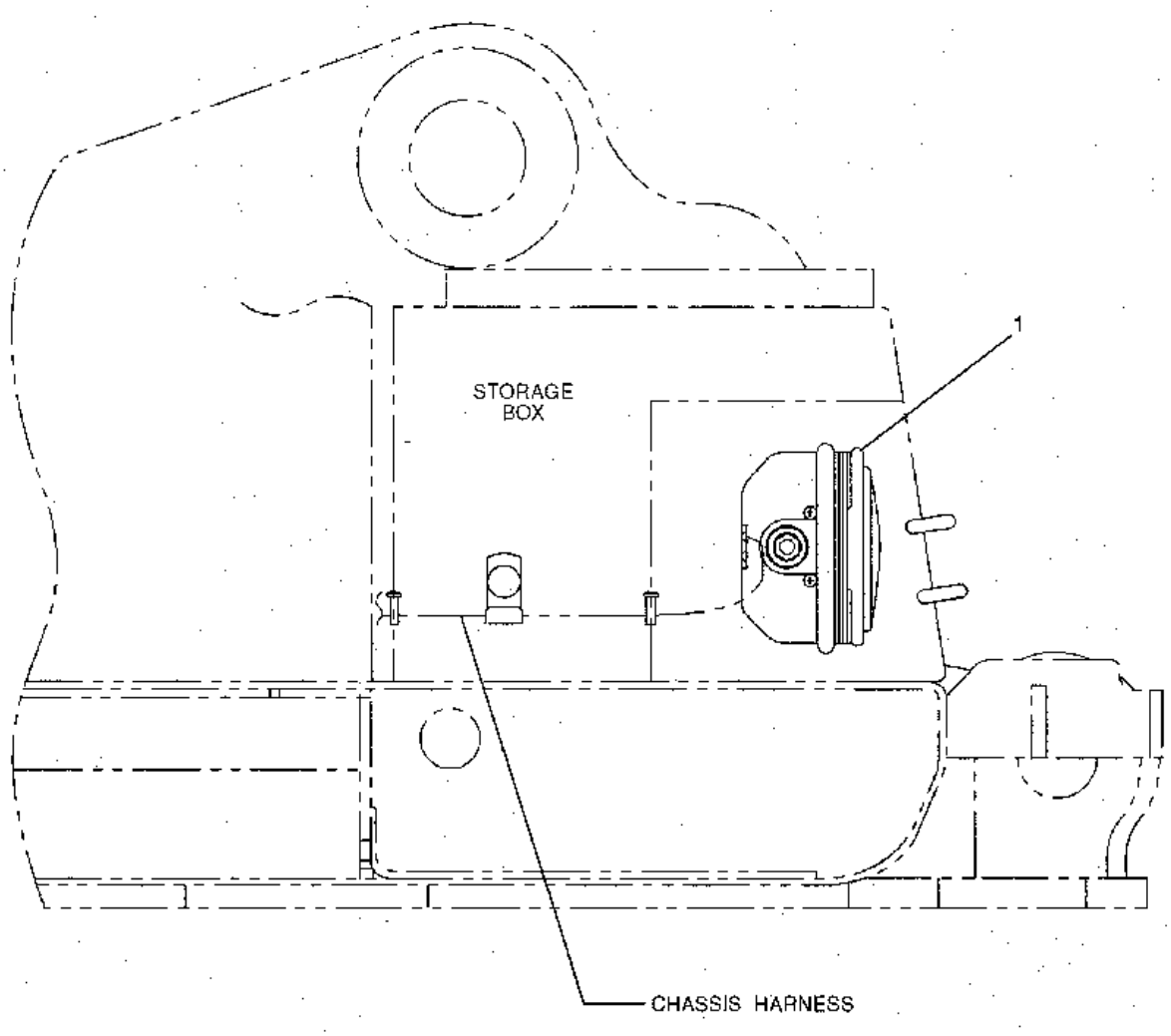


GRAPHIC #1

h61690e

# 4I5409 LIGHTING GP-CHASSIS

S/N 8SR 00448-UP, 8TR 00510-UP
1532523-Page 172A

**Key:** Y - SEE SEPARATE ILLUSTRATION

**SMCS**

| NOTE | REF NO | GRAPHIC REF | PART NUMBER | QTY | PART NAME 1 2 3 4 5 6 (PRODUCT LEVEL) | PRICE USD |
|---|---|---|---|---|---|---|
| Y | 1 | | 153-2523 | 1 | LAMP GP | |

## 4I5409 LIGHTING GP-CHASSIS

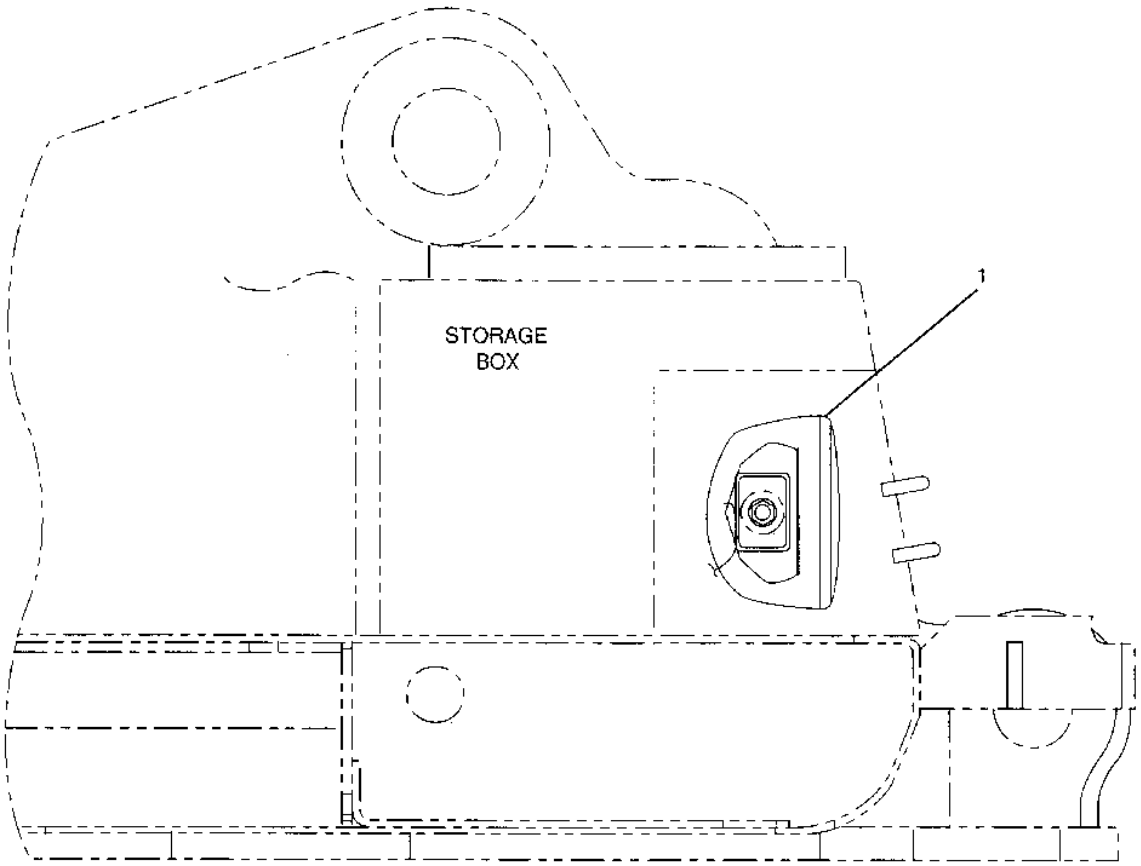


| NOTE | No. | PART No. | QTY | PART NAME |
|---|---|---|---|---|
| Y | 1 | 153-2523 | 1 | LAMP GP |

Y-SEE SEPARATE ILLUSTRATION

II62242E

GRAPHIC #1

h62242e

# 1254774 LIGHTING GP-CHASSIS

PART OF 1089846-Page 101, 1174159-Page 103
1532521-Page 172.03
AN ATTACHMENT

**Key:** Y - SEE SEPARATE ILLUSTRATION

**SMCS**

| NOTE | REF NO | GRAPHIC REF | PART NUMBER | QTY | PART NAME 1 2 3 4 5 6 (PRODUCT LEVEL) | PRICE USD |
|---|---|---|---|---|---|---|
| Y | 1 | | 153-2521 | 1 | LAMP GP | |
| | 2 | | 125-4775 | 1 | SUPPORT AS | |
| | 3 | | 8T-4137 | 2 | BOLT (L=20mm) | |
| | 4 | | 8T-4121 | 2 | WASHER | |

## 1254774 LIGHTING GP-CHASSIS

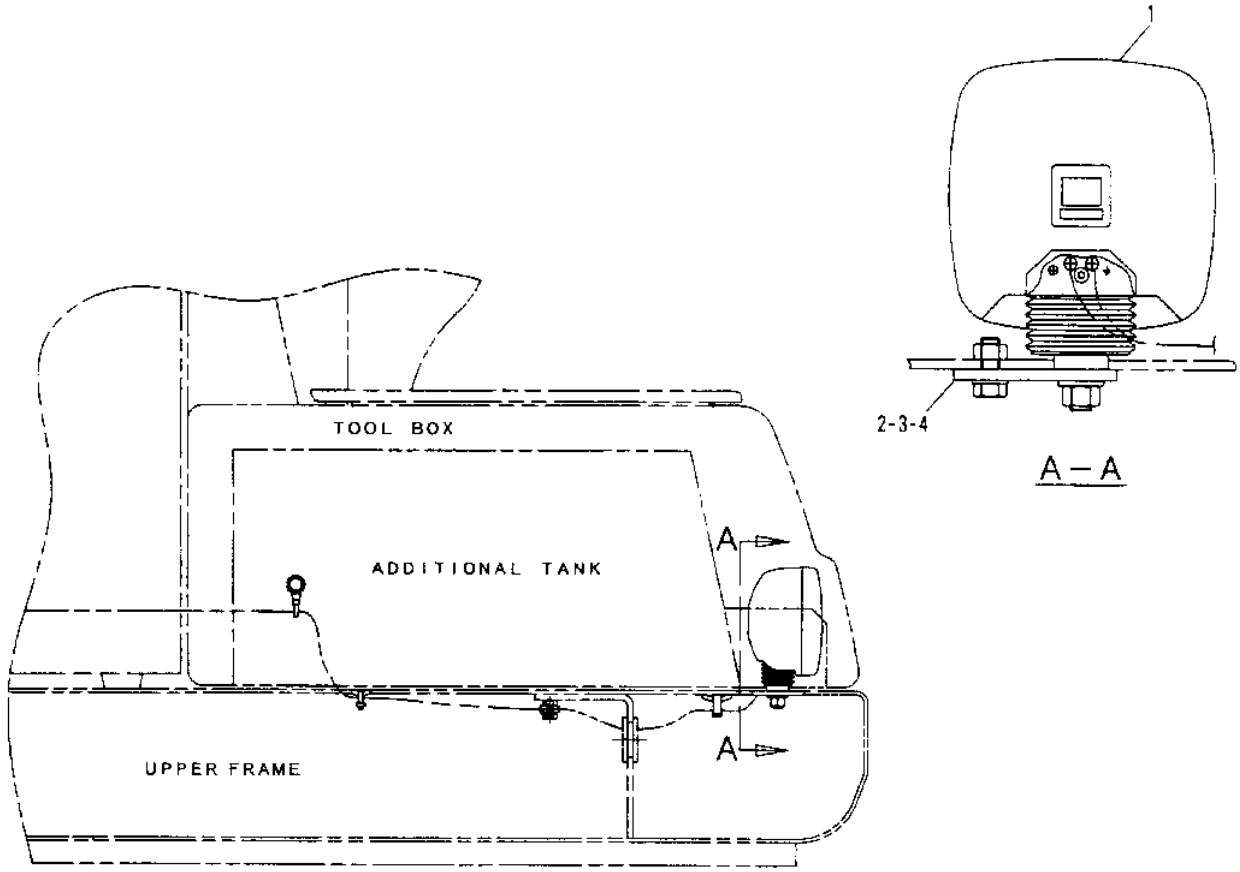


| NOTE | No. | PART No. | QTY | PART NAME |
|---|---|---|---|---|
| Y | 1 | 153-2521 | 1 | LAMP GP |
| | 2 | 125 4775 | 1 | SUPPORT AS |
| | 3 | 8T 4137 | 2 | BOLT (L=20mm) |
| | 4 | 8T-4121 | 2 | WASHER |

Y – SEE SEPARATE ILLUSTRATION

H63426E

# 1114694 LIGHTING GP-CAB

1160243-Page 170, 1114813-Page 173

**Key:** Y - SEPARATE ILLUSTRATION

**SMCS**

| NOTE | REF NO | GRAPHIC REF | PART NUMBER | QTY | PART NAME 1 2 3 4 5 6 (PRODUCT LEVEL) | PRICE USD |
|---|---|---|---|---|---|---|
| | 1 | | 125-4726 | 2 | CLIP | |
| | 2 | | 140-0853 | 1 | LAMP GP | |
| | 3 | | 8T-4137 | 4 | BOLT (L=20mm) | |
| | 4 | | 8T-4121 | 4 | WASHER-HARD | |
| | 5 | | 121-1077 | 2 | BRACKET AS | |
| Y | 6 | | 111-4813 | 1 | LAMP GP | |
| | 7 | | 3S-2093 | 2 | STRAP | |
| Y | 8 | | 116-0243 | 2 | HARNESS AS | |

## 1114694 LIGHTING GP-CAB

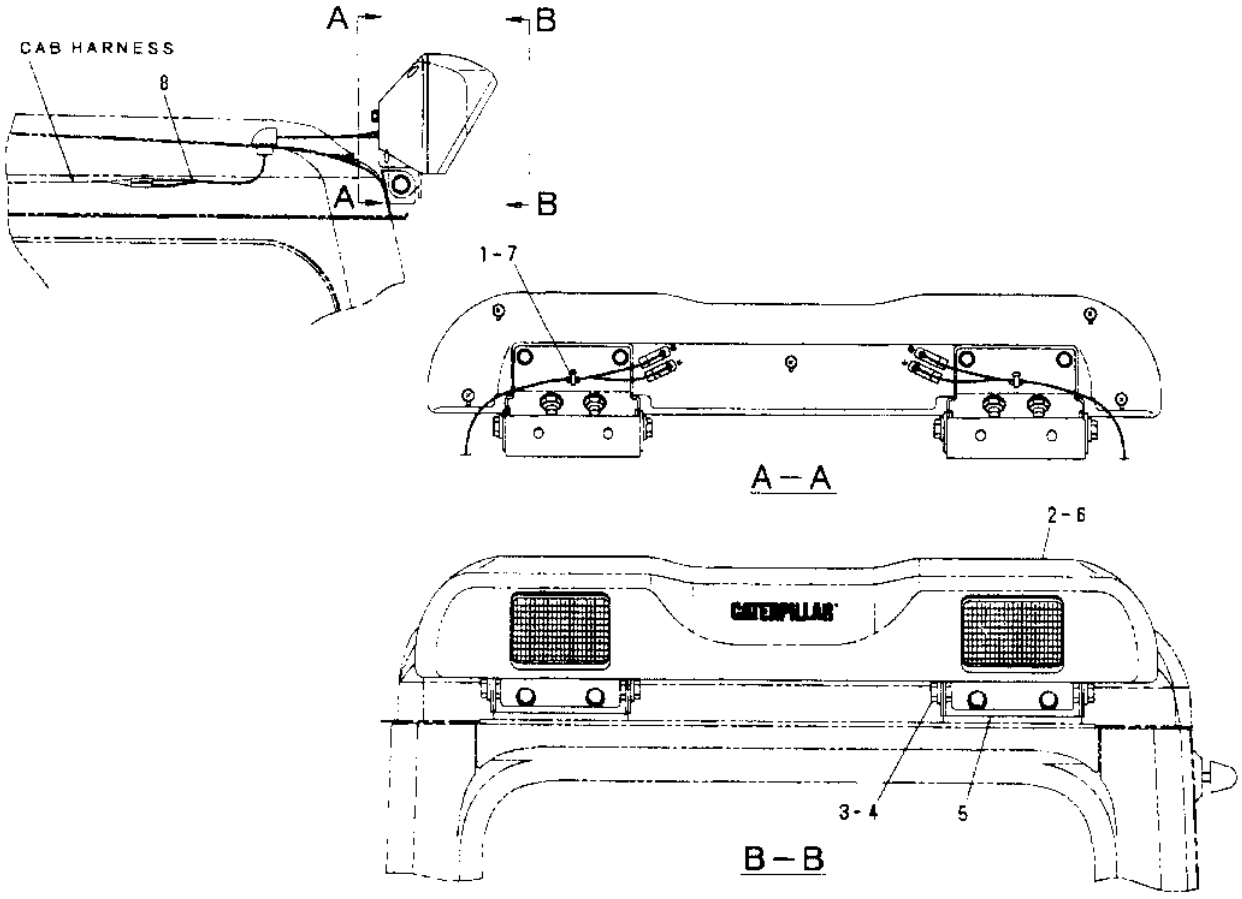


| NOTE | No. | PART No. | QTY | PART NAME |
|---|---|---|---|---|
| | 1 | 125-4726 | 2 | CLIP |
| | 2 | 140-0853 | 1 | LAMP GP |
| | 3 | 8T-4137 | 4 | BOLT (L=20mm) |
| | 4 | 8T-4121 | 4 | WASHER-HARD |
| | 5 | 121-1077 | 2 | BRACKET AS |
| Y | 6 | 111-4813 | 1 | LAMP GP |
| | 7 | 3S-2093 | 2 | STRAP |
| Y | 8 | 116-0243 | 2 | HARNESS AS |

| NOTE | No. | PART No. | QTY | PART NAME |
|---|---|---|---|---|

Y-SEE SEPARATE ILLUSTRATION

H53606E

GRAPHIC #1

h53606e

# 1114860 LIGHTING GP-BOOM

S/N 8SR 1-00447, 8TR 1-00509
PART OF 1205003-Page 484, 1317671, 1317673-Page 485.01, 1370946-Page 485.02
1160146-Page 171, 5I8250-Page 172.01
AN ATTACHMENT

**Key:** Y - SEPARATE ILLUSTRATION

**SMCS**

| NOTE | REF NO | GRAPHIC REF | PART NUMBER | QTY | PART NAME 1 2 3 4 5 6 (PRODUCT LEVEL) | PRICE USD |
|---|---|---|---|---|---|---|
| Y | 1 | | 116-0146 | 1 | HARNESS AS | |
| | | | 102-8802 | 1 | RECEPTACLE KIT | |
| | | | 3E-3365 | 1 | WEDGE | |
| | 2 | | 111-4836 | 11 | CLIP | |
| | 3 | | 8T-4121 | 10 | WASHER-HARD | |
| | 4 | | 8T-4133 | 10 | NUT | |
| Y | 5 | | 5I-8250 | 2 | LAMP GP | |
| | 6 | | 8T-4190 | 2 | BOLT (L=25mm) | |
| | 7 | | 9X-8257 | 2 | WASHER | |
| | 8 | | 5I-8273 | 2 | BRACKET | |
| | 9 | | 111-4837 | 1 | CLIP | |
| | 10 | | 116-0118 | 1 | CLIP | |

## 1114860 LIGHTING GP-BOOM

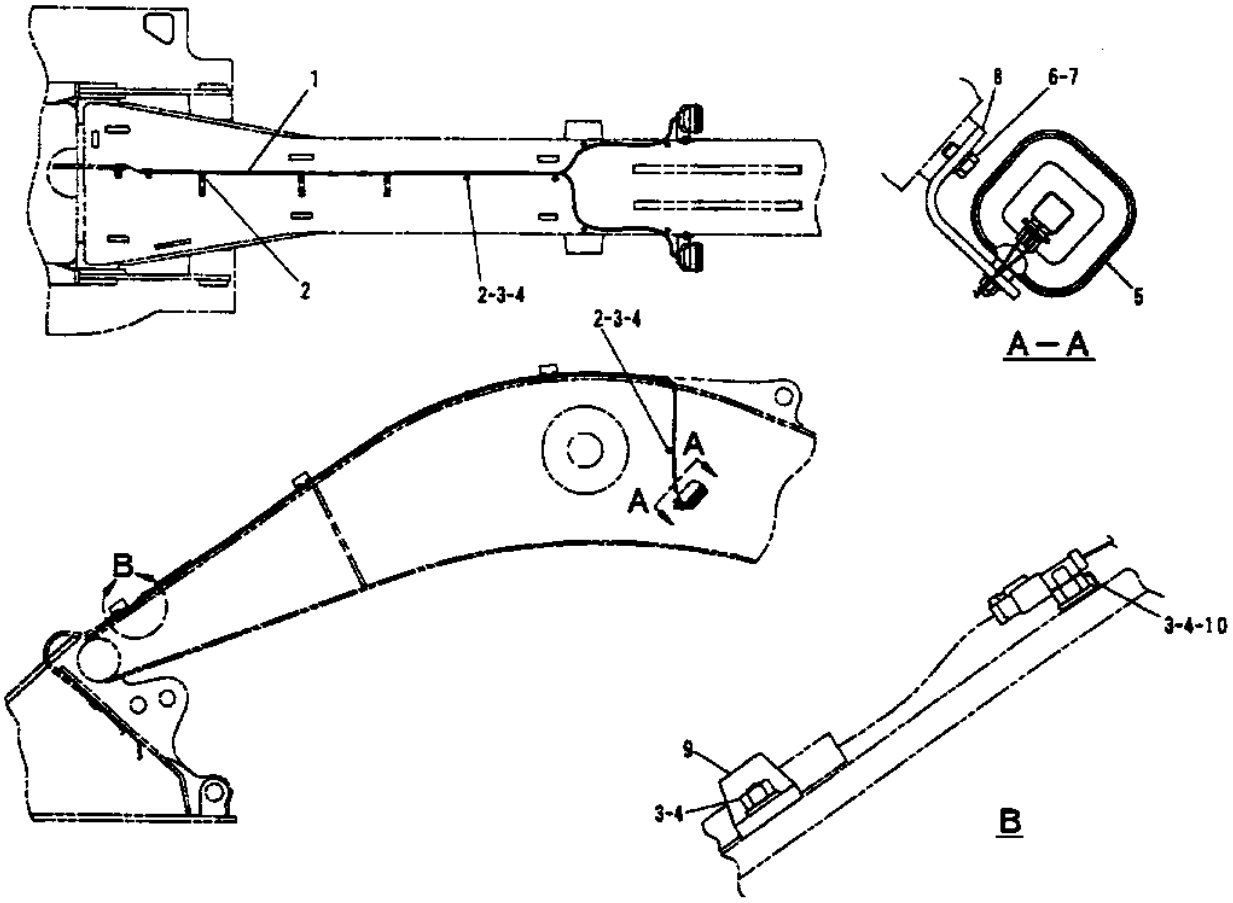


| NOTE | No. | PART No. | QTY | PART NAME | NOTE | No. | PART No. | QTY | PART NAME |
|---|---|---|---|---|---|---|---|---|---|
| | 1 | 116-0146 | 1 | HARNESS AS | | | | | |
| | | 102-8802 | 1 | RECEPTACLE KIT | | | | | |
| | | 3E-3365 | 1 | WEDGE | | | | | |
| | 2 | 111-4836 | 11 | CLIP | | | | | |
| | 3 | 8T-4121 | 10 | WASHER-HARD | | | | | |
| | 4 | 8T-4133 | 10 | NUT | | | | | |
| Y | 5 | 5I-8250 | 2 | LAMP GP | | | | | |
| | 6 | 8T-4190 | 2 | BOLT (L=25mm) | | | | | |
| | 7 | 9X-8257 | 2 | WASHER | | | | | |
| | 8 | 5I-8273 | 2 | BRACKET | | | | | |
| | 9 | 111-4837 | 1 | CLIP | | | | | |
| | 10 | 116-0118 | 1 | CLIP | | | | | |

Y-SEE SEPARATE ILLUSTRATION

H50769E

GRAPHIC #1

h50769e

# 1114860 LIGHTING GP-BOOM

S/N 8SR 00448-UP, 8TR 00510-UP
PART OF 1205003-Page 484, 1317671, 1317673-Page 485.01, 1370946-Page 485.02
1160146-Page 171, 1532521-Page 172.03
AN ATTACHMENT

**Key:** Y - SEE SEPARATE ILLUSTRATION

**SMCS**

| NOTE | REF NO | GRAPHIC REF | PART NUMBER | QTY | PART NAME 1 2 3 4 5 6 (PRODUCT LEVEL) | PRICE USD |
|---|---|---|---|---|---|---|
| Y | 1 | | 116-0146 | 1 | HARNESS AS | |
| | 2 | | 111-4836 | 11 | CLIP | |
| | 3 | | 8T-4121 | 10 | WASHER-HARD | |
| | 4 | | 8T-4133 | 10 | NUT | |
| Y | 5 | | 153-2521 | 2 | LAMP GP | |
| | 6 | | 8T-4190 | 2 | BOLT (L=25mm) | |
| | 7 | | 9X-8257 | 2 | WASHER | |
| | 8 | | 5I-8273 | 2 | BRACKET | |
| | 9 | | 111-4837 | 1 | CLIP | |
| | 10 | | 116-0118 | 1 | CLIP | |

## 1114860 LIGHTING GP-BOOM

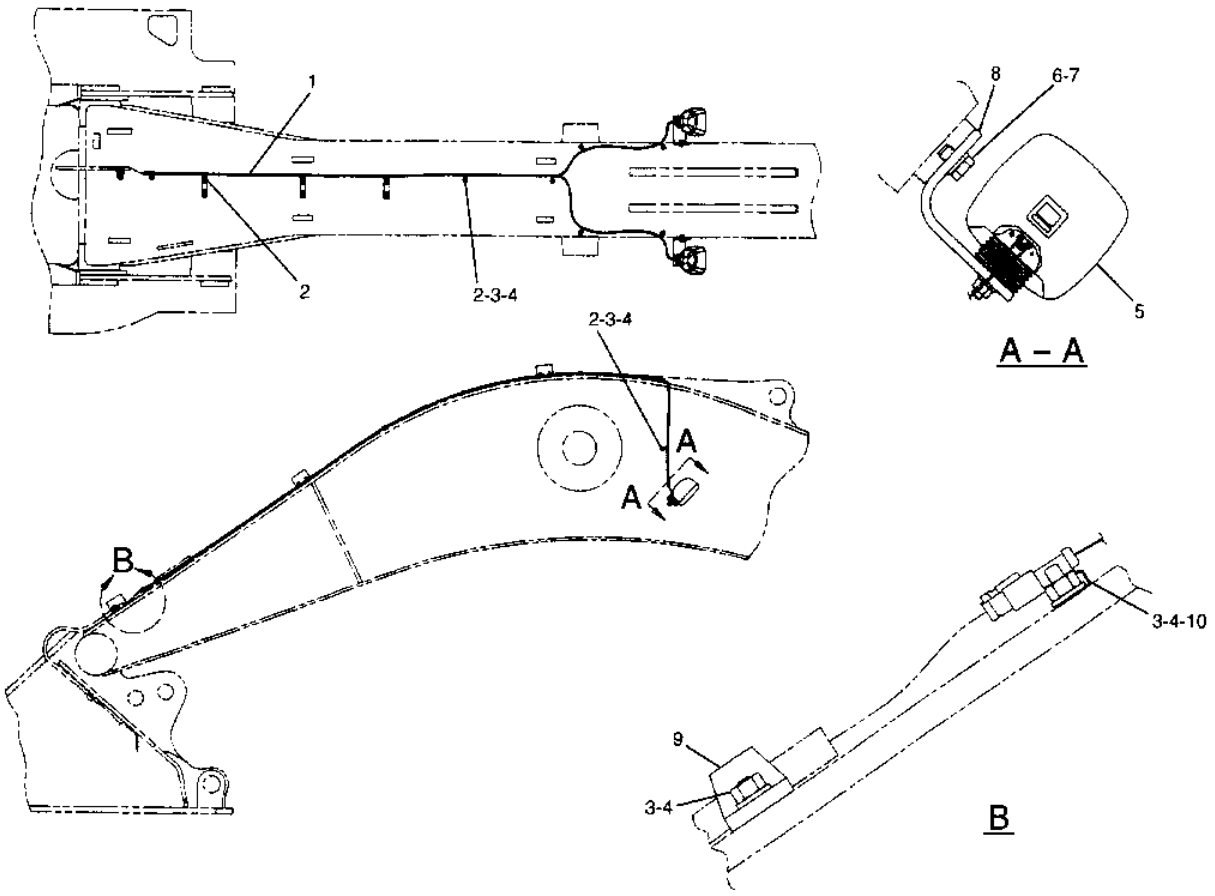


| NOTE | No. | PART No. | QTY | PART NAME | NOTE | No. | PART No. | QTY | PART NAME |
|---|---|---|---|---|---|---|---|---|---|
| Y | 1 | 116-0146 | 1 | HARNESS AS | | | | | |
| | 2 | 111-4836 | 11 | CLIP | | | | | |
| | 3 | 8T-4121 | 10 | WASHER-HARD | | | | | |
| | 4 | 8T-4133 | 10 | NUT | | | | | |
| Y | 5 | 153-2521 | 2 | LAMP GP | | | | | |
| | 6 | 8T-4190 | 2 | BOLT(L=25mm) | | | | | |
| | 7 | 9X-8257 | 2 | WASHER | | | | | |
| | 8 | 5I-8273 | 2 | BRACKET | | | | | |
| | 9 | 111-4837 | 1 | CLIP | | | | | |
| | 10 | 116-0118 | 1 | CLIP | | | | | |

Y-SEE SEPARATE ILLUSTRATION

H63998E

GRAPHIC #1

h63998e

# 1160243 HARNESS AS

PART OF 1114694-Page 168

**Key:** D - ORDER BY THE METER

**SMCS**

| NOTE | REF NO | GRAPHIC REF | PART NUMBER | QTY | PART NAME 1 2 3 4 5 6 (PRODUCT LEVEL) | PRICE USD |
|---|---|---|---|---|---|---|
| D | 1 | | 5P-5995 | | TUBE (0.24m) | |
| | 2 | | 2L-8075 | 2 | TERMINAL | |
| | 3 | | 7Y-3962 | 1 | TERMINAL | |
| | | | 7Y-3964 | 1 | TUBE | |
| | 4 | | 7Y-3963 | 1 | TERMINAL | |
| | | | 7Y-3965 | 1 | TUBE | |

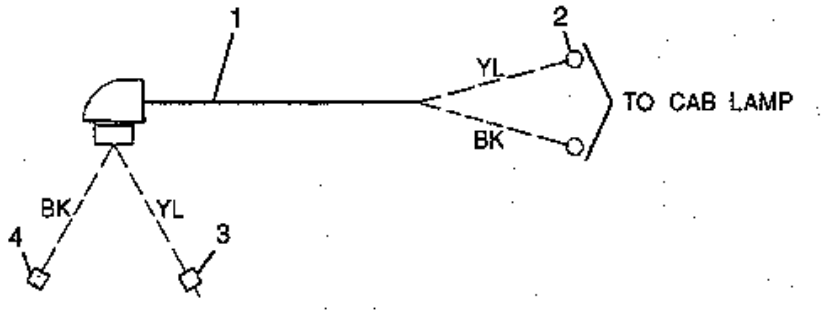


GRAPHIC #1 h53613e

# 1160146 HARNESS AS

PART OF 1114860-Page 169
AN ATTACHMENT

**Key:**

**SMCS**

| NOTE | REF NO | GRAPHIC REF | PART NUMBER | QTY | PART NAME 1 2 3 4 5 6 (PRODUCT LEVEL) | PRICE USD |
|---|---|---|---|---|---|---|
| | 1 | | 9W-0852 | 2 | PIN | |
| | 2 | | 102-8802 | 1 | RECEPTACLE KIT | |
| | 3 | | 3E-3365 | 1 | WEDGE | |
| | 4 | | 2L-8075 | 4 | TERMINAL | |

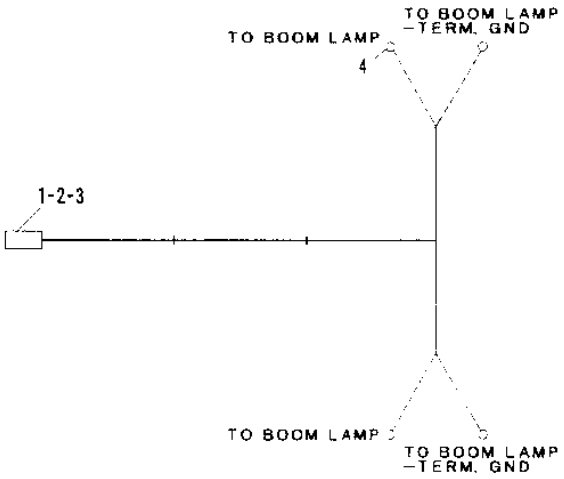


| NOTE | No. | PART No. | QTY | PART NAME |
|---|---|---|---|---|
| | 1 | 9W-0852 | 2 | PIN |
| | 2 | 102-8802 | 1 | RECEPTACLE KIT |
| | 3 | 3E-3365 | 1 | WEDGE |
| | 4 | 2L-8075 | 4 | TERMINAL |

H50772E

GRAPHIC #1

h50772e

# 5I8251 LAMP GP-FLOOD

S/N 8SR 1-00447, 8TR 1-00509
PART OF 4I5409-Page 167

**Key:**

**SMCS**

| NOTE | REF NO | GRAPHIC REF | PART NUMBER | QTY | PART NAME 1 2 3 4 5 6 (PRODUCT LEVEL) | PRICE USD |
|---|---|---|---|---|---|---|
| | 1 | | 9X-3463 | 1 | BULB | |
| | 2 | | 6V-5210 | 2 | SCREW | |
| | 3 | | 3B-4501 | 2 | LOCKWASHER | |
| | 4 | | 8T-4223 | 1 | WASHER | |
| | 5 | | 9X-8488 | 1 | NUT | |
| | 6 | | 106-0001 | 1 | LENS AS | |
| | 7 | | 106-0002 | 1 | BAND | |
| | 8 | | 106-0003 | 1 | RING | |
| | 9 | | 106-0004 | 1 | RING | |
| | 10 | | 106-0005 | 1 | SEAT | |
| | 11 | | 7Y-5286 | 1 | BOLT | |
| | 12 | | 7Y-5288 | 2 | SCREW | |

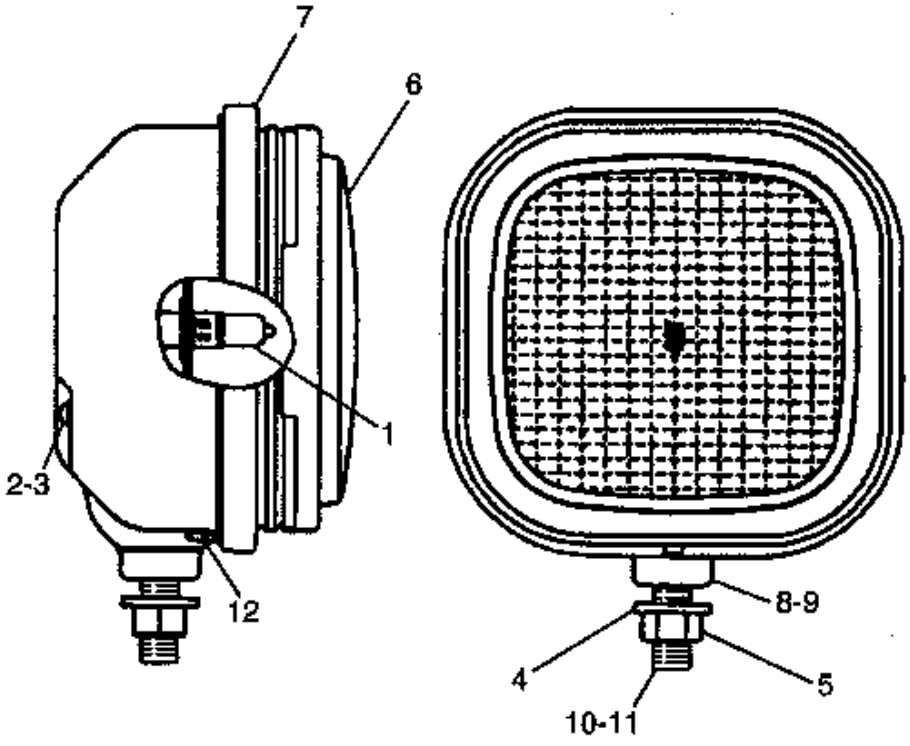


GRAPHIC #1

h81133e

# 1532523 LAMP GP-FLOOD

S/N 8SR 00448-UP, 8TR 00510-UP
PART OF 4I5409-Page 167A

**Key:**

**SMCS**

| NOTE | REF NO | GRAPHIC REF | PART NUMBER | QTY | PART NAME 1 2 3 4 5 6 (PRODUCT LEVEL) | PRICE USD |
|---|---|---|---|---|---|---|
| | 1 | | 6V-5210 | 2 | SCREW-MACHINE | |
| | 2 | | 3B-4501 | 2 | LOCKWASHER | |
| | 3 | | 9X-3463 | 1 | BULB | |
| | 4 | | 8T-4223 | 1 | WASHER-HARD | |
| | 5 | | 8T-4244 | 1 | NUT | |
| | 6 | | 174-7791 | 1 | SCREW | |
| | 7 | | 5C-2889 | 1 | LOCKWASHER | |
| | 8 | | 170-6993 | 1 | COVER | |
| | 9 | | 170-9417 | 1 | LENS AS | |
| | 10 | | 180-3861 | 4 | SCREW | |
| | 11 | | 170-9418 | 1 | BAND | |

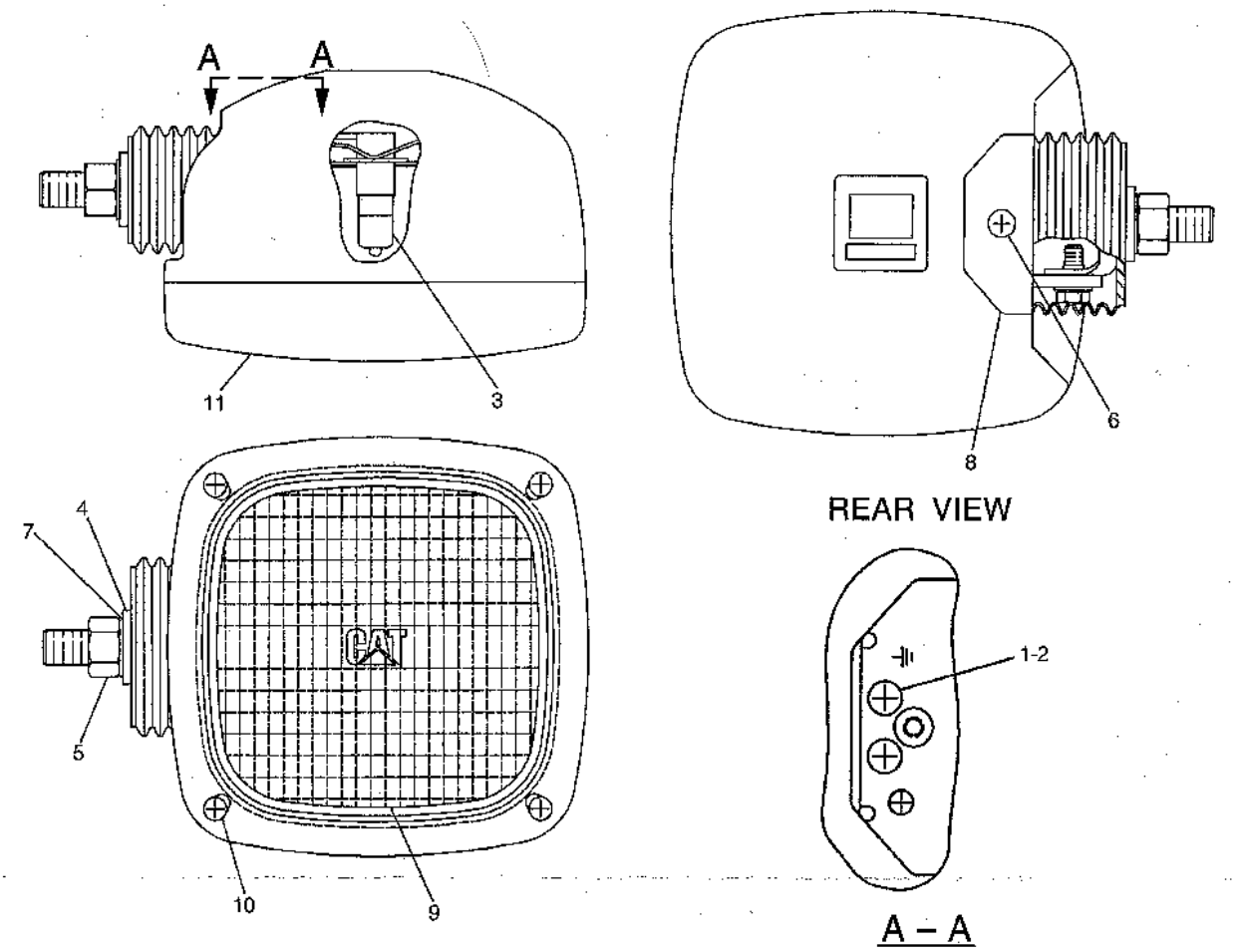


GRAPHIC #1

h66567e

# 5I8250 LAMP GP-FLOOD

S/N 8SR 1-00447, 8TR 1-00509
PART OF 1114860-Page 169
AN ATTACHMENT

**Key:** Y - Separate Illustration

**SMCS**

| NOTE | REF NO | GRAPHIC REF | PART NUMBER | QTY | PART NAME 1 2 3 4 5 6 (PRODUCT LEVEL) | PRICE USD |
|---|---|---|---|---|---|---|
| Y | | | 150-6978 | 1 | LAMP GP (FLOOD) | |
| | | | | | -OR- | |
| Y | | | 153-2452 | 1 | LAMP GP (FLOOD) | |

# 1506978 LAMP GP-FLOOD

S/N 8SR 1-00447, 8TR 1-00509
PART OF 5I8250-Page 172.01
AN ATTACHMENT

**Key:**

**SMCS**

| NOTE | REF NO | GRAPHIC REF | PART NUMBER | QTY | PART NAME 1 2 3 4 5 6 (PRODUCT LEVEL) | PRICE USD |
|---|---|---|---|---|---|---|
| | 1 | | 8T-0337 | 2 | SCREW (MACHINE) | |
| | 2 | | 9X-3463 | 1 | BULB | |
| | 3 | | 8T-4223 | 1 | WASHER (HARD) | |
| | 4 | | 8T-4244 | 1 | NUT | |

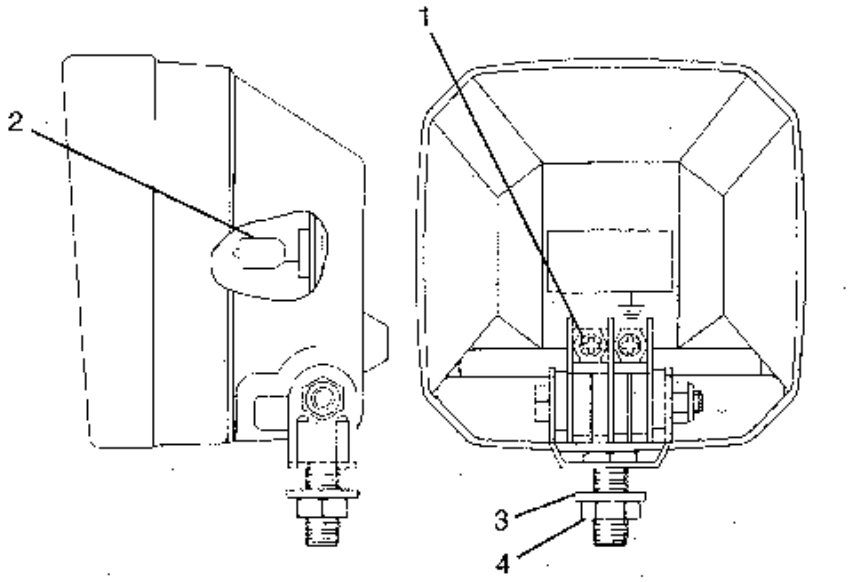


GRAPHIC #1 h61430e

# 1532452 LAMP GP-FLOOD

S/N 8SR 1-00447, 8TR 1-00509
PART OF 5I8250-Page 172.01
AN ATTACHMENT

**Key:**

**SMCS**

| NOTE | REF NO | GRAPHIC REF | PART NUMBER | QTY | PART NAME 1 2 3 4 5 6 (PRODUCT LEVEL) | PRICE USD |
|---|---|---|---|---|---|---|
| | 1 | | 9X-8488 | 1 | NUT | |
| | 2 | | 8T-4223 | 1 | WASHER | |
| | 3 | | 9X-3463 | 1 | BULB | |
| | 4 | | 6V-5210 | 2 | SCREW | |
| | 5 | | 3B-4501 | 2 | LOCKWASHER | |
| | 6 | | 106-0001 | 1 | LENS AS | |
| | 7 | | 106-0002 | 1 | BAND | |
| | 8 | | 106-0003 | 1 | RING | |
| | 9 | | 106-0004 | 1 | RING | |
| | 10 | | 106-0005 | 1 | SEAT | |
| | 11 | | 145-0556 | 1 | BOLT | |
| | 12 | | 7Y-5288 | 2 | SCREW | |

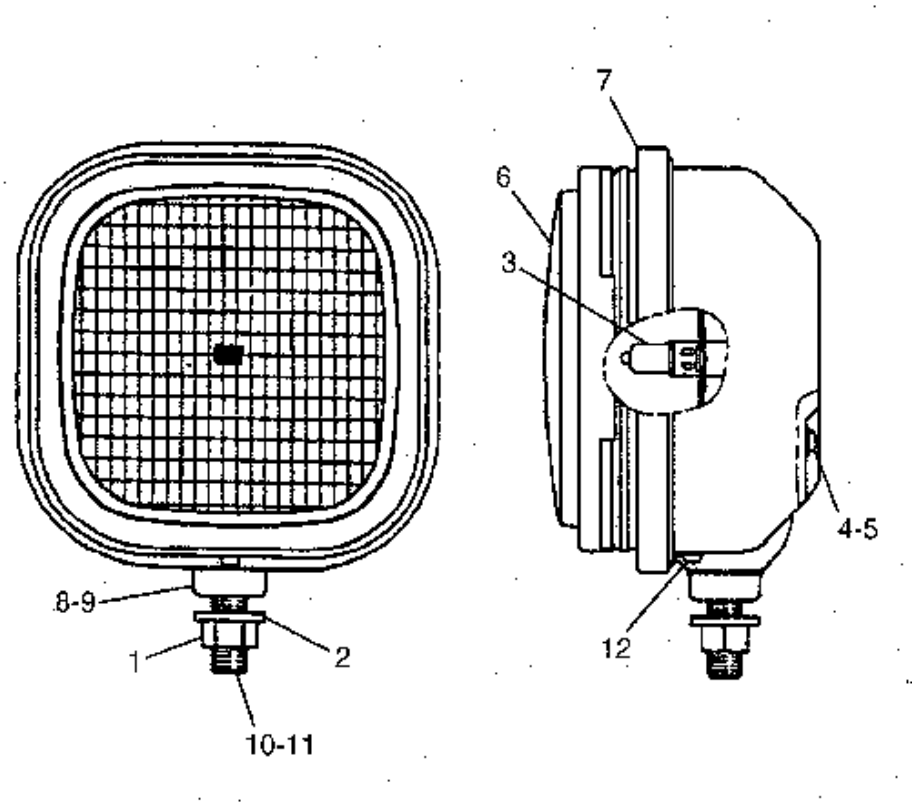


GRAPHIC #1

h61433e

# 1532521 LAMP GP-FLOOD

PART OF 1254774-Page 167.01, 1114860-Page 169.01
AN ATTACHMENT

**Key:**

**SMCS**

| NOTE | REF NO | GRAPHIC REF | PART NUMBER | QTY | PART NAME 1 2 3 4 5 6 (PRODUCT LEVEL) | PRICE USD |
|---|---|---|---|---|---|---|
| | 1 | | 6V-5210 | 2 | SCREW-MACHINE | |
| | 2 | | 3B-4501 | 2 | LOCKWASHER | |
| | 3 | | 9X-3463 | 1 | BULB | |
| | 4 | | 8T-4223 | 1 | WASHER-HARD | |
| | 5 | | 8T-4244 | 1 | NUT | |
| | 6 | | 174-7791 | 1 | SCREW | |
| | 7 | | 5C-2889 | 1 | LOCKWASHER | |
| | 8 | | 170-6993 | 1 | COVER | |
| | 9 | | 180-3861 | 4 | SCREW | |
| | 10 | | 170-9417 | 1 | LENS AS | |
| | 11 | | 170-9418 | 1 | BAND | |

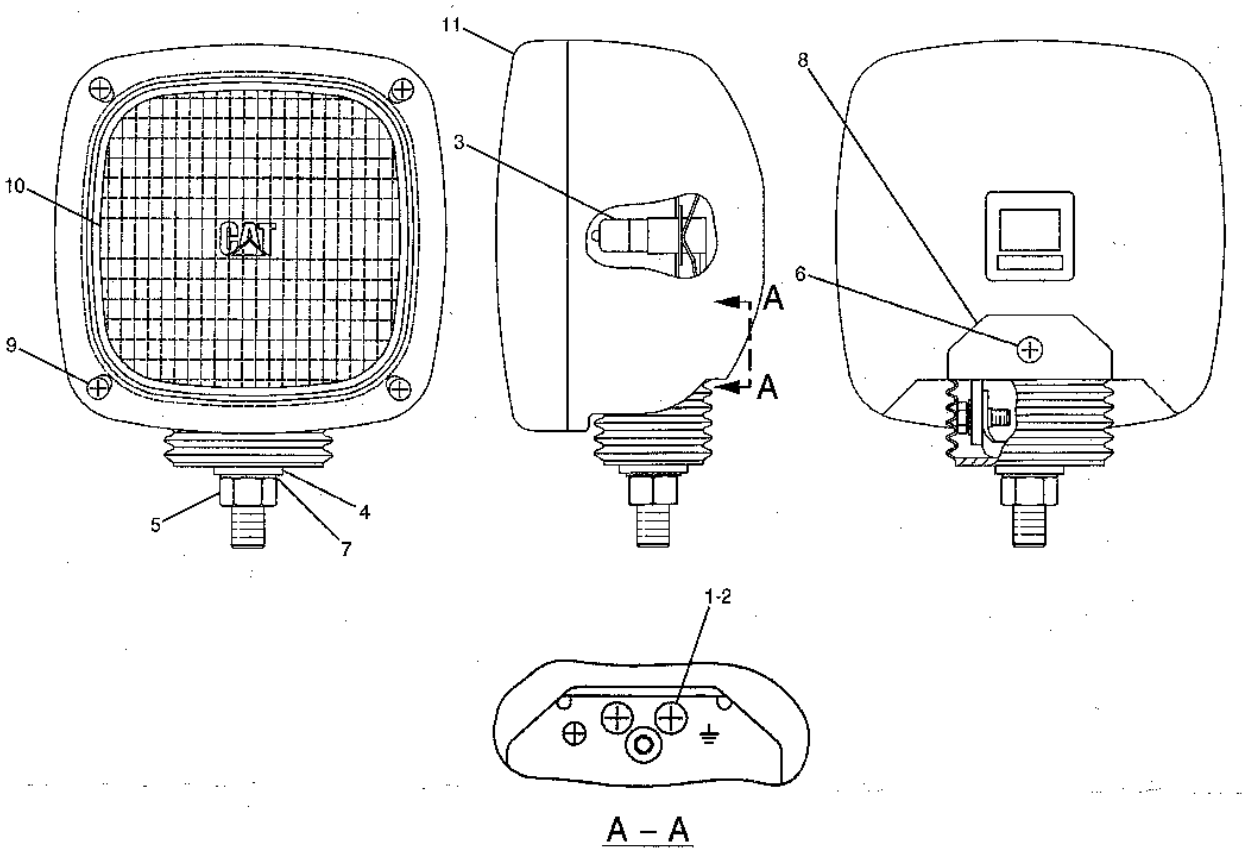


GRAPHIC #1

h66565e

# 1114813 LAMP GP-FLOOD

PART OF 1114694-Page 168

**Key:**

**SMCS**

| NOTE | REF NO | GRAPHIC REF | PART NUMBER | QTY | PART NAME 1 2 3 4 5 6 (PRODUCT LEVEL) | PRICE USD |
|---|---|---|---|---|---|---|
| | 1 | | 121-1069 | 1 | LAMP GP | |
| | | | 9X-3463 | 1 | BULB | |
| | 2 | | 8T-4189 | 4 | BOLT (L=20mm) | |
| | 3 | | 8T-4224 | 4 | WASHER | |
| | 4 | | 121-1072 | 2 | BRACKET | |
| | 5 | | 8T-4223 | 4 | WASHER | |
| | 6 | | 4I-0755 | 4 | NUT | |

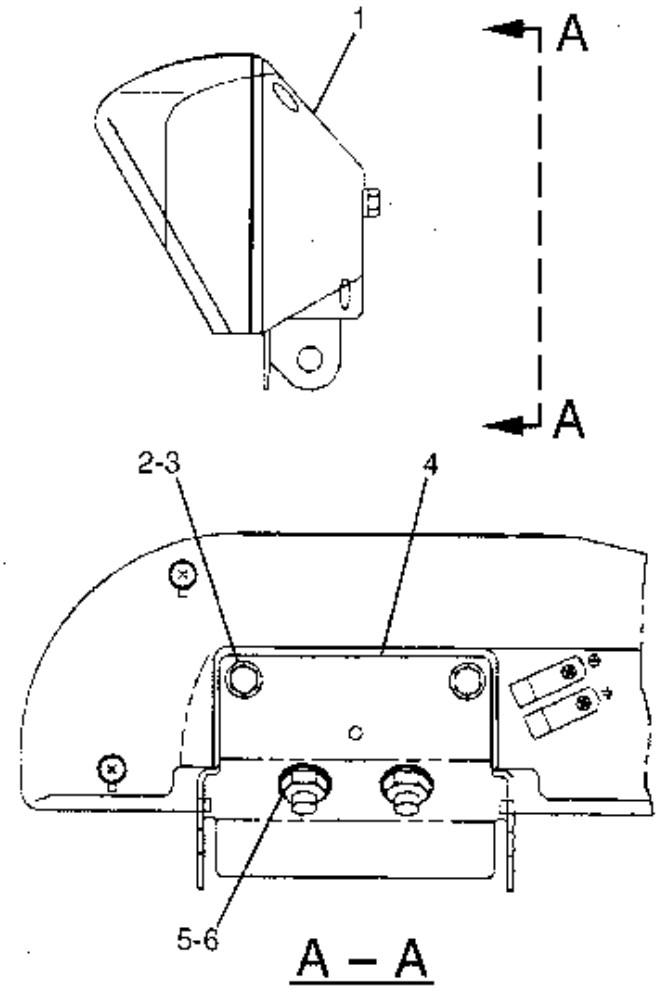


GRAPHIC #1

h50068e

# 1161317 FASTENER GP-SWING & FINAL DR

**Key:** E - ORDER BY THE CENTIMETER

**SMCS**

| NOTE | REF NO | GRAPHIC REF | PART NUMBER | QTY | PART NAME 1 2 3 4 5 6 (PRODUCT LEVEL) | PRICE USD |
|---|---|---|---|---|---|---|
| | 1 | | 8T-5878 | 40 | BOLT (L=80mm) | |
| | 2 | | 8T-4167 | 60 | WASHER-HARD | |
| | 3 | | 7X-2576 | 20 | BOLT (L=70mm) | |
| | 4 | | 8T-4137 | 1 | BOLT (L=20mm) | |
| | 5 | | 8T-4121 | 1 | WASHER-HARD | |
| | 6 | | 2B-7561 | 2 | CORK | |
| | 7 | | 7Y-1095 | 1 | DOWEL | |
| | 8 | | 5D-1026 | 1 | CLAMP | |
| E | 9 | | 5P-0767 | | HOSE (90cm) | |
| | 10 | | 114-1374 | 1 | SUPPORT | |

## 1161317 FASTENER GP-SWING & FINAL DR

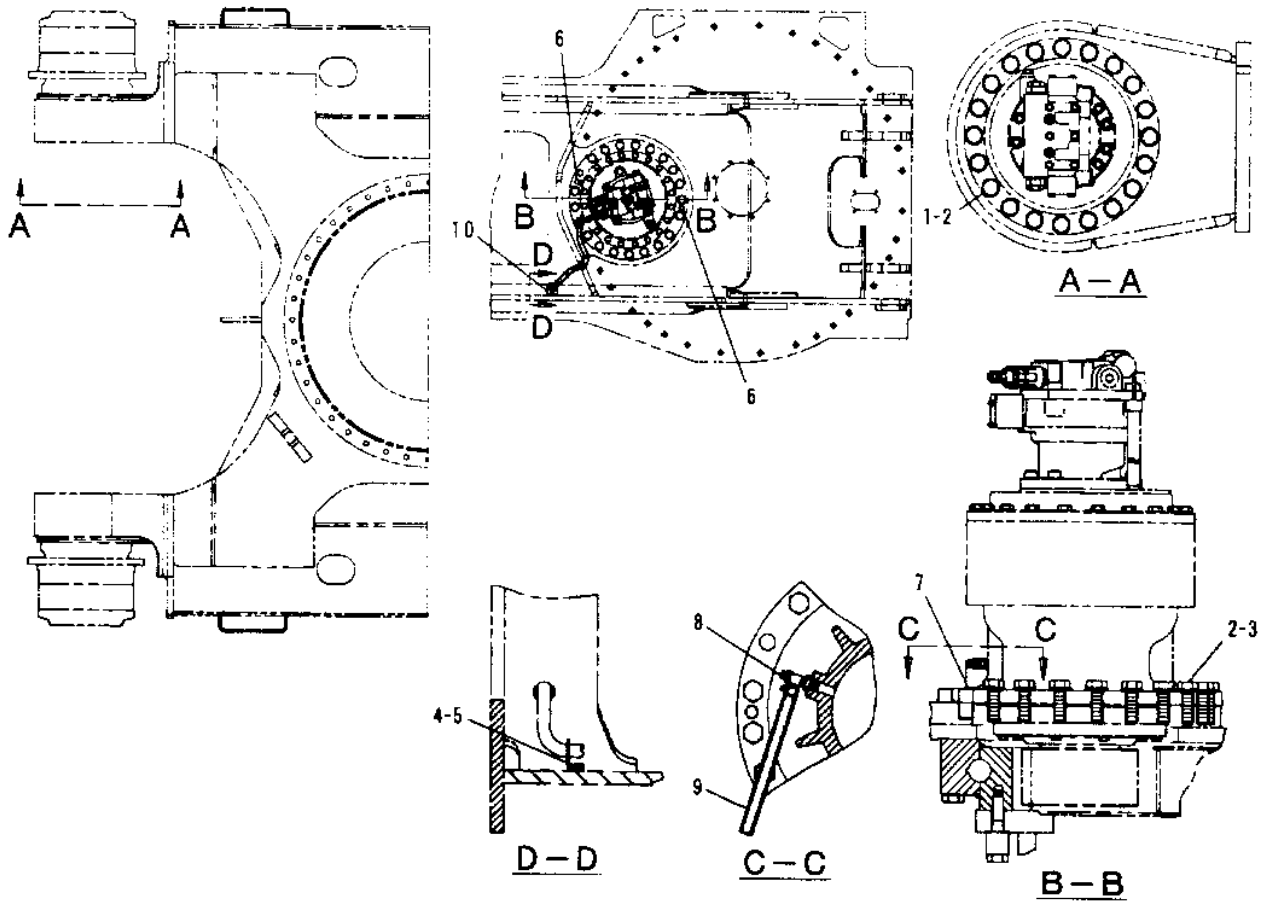


| NOTE | No. | PART No. | QTY | PART NAME | NOTE | No. | PART No. | QTY | PART NAME |
|---|---|---|---|---|---|---|---|---|---|
| | 1 | 8T-5878 | 40 | BOLT (L=80mm) | | | | | |
| | 2 | 8T-4167 | 60 | WASHER-HARD | | | | | |
| | 3 | 7X-2576 | 20 | BOLT (L=70mm) | | | | | |
| | 4 | 8T-4137 | 1 | BOLT (L=20mm) | | | | | |
| | 5 | 8T-4121 | 1 | WASHER-HARD | | | | | |
| | 6 | 2B-7561 | 2 | CORK | | | | | |
| | 7 | 7Y-1095 | 1 | DOWEL | | | | | |
| | 8 | 5D-1026 | 1 | CLAMP | | | | | |
| E | 9 | 5P-0767 | | HOSE ···(90cm) | | | | | |
| | 10 | 114-1374 | 1 | SUPPORT | | | | | |

E-ORDER BY THE CENTIMETER

H50784E

## 7Y0763 SPROCKET GP-NONSEGMENTED

2 REQUIRED

**Key:**

**SMCS**

| NOTE | REF NO | GRAPHIC REF | PART NUMBER | QTY | PART NAME 1 2 3 4 5 6 (PRODUCT LEVEL) | PRICE USD |
|---|---|---|---|---|---|---|
| | 1 | | 6Y-5685 | 1 | SPROCKET | |
| | 2 | | 7X-2575 | 16 | BOLT (L=60mm) | |

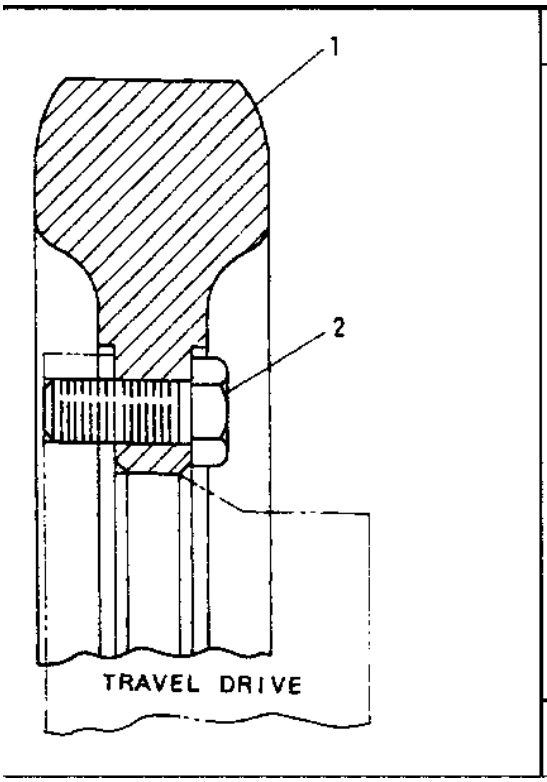


| NOTE | No. | PART No. | QTY | PART NAME |
|---|---|---|---|---|
| | 1 | 6Y-5685 | 1 | SPROCKET |
| | 2 | 7X-2575 | 16 | BOLT (L=60mm) |

H50780E

GRAPHIC #1 h50780e

# 1141477 FINAL DRIVE GP

2 REQUIRED
S/N 8SR 1-00386, 8TR 1-00402
1141478-Page 178, 1077028-Page 335

**Key:** Y - SEPARATE ILLUSTRATION

**SMCS**

| NOTE | REF NO | GRAPHIC REF | PART NUMBER | QTY | PART NAME 1 2 3 4 5 6 (PRODUCT LEVEL) | PRICE USD |
|---|---|---|---|---|---|---|
| Y | 1 | | 114-1478 | 1 | DRIVE GP | |
| Y | 2 | | 107-7028 | 1 | MOTOR GP | |

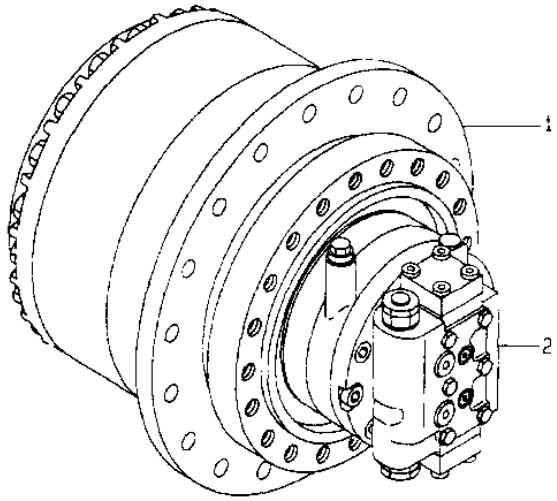


| NOTE | No. | PART No. | QTY | PART NAME |
|---|---|---|---|---|
| Y | 1 | 114-1478 | 1 | DRIVE GP |
| Y | 2 | 107-7028 | 1 | MOTOR GP |

Y–SEE SEPARATE ILLUSTRATION

H50785E

GRAPHIC #1 h50785e

# 1145541 FINAL DRIVE GP

2 REQUIRED
S/N 8SR 00387-00645, 8TR 00403-00943
1141478-Page 179.01, 1347130-Page 335.01

**Key:** Y - SEE SEPARATE ILLUSTRATION

**SMCS**

| NOTE | REF NO | GRAPHIC REF | PART NUMBER | QTY | PART NAME 1 2 3 4 5 6 (PRODUCT LEVEL) | PRICE USD |
|---|---|---|---|---|---|---|
| Y | 1 | | 114-1478 | 1 | DRIVE GP | |
| Y | 2 | | 134-7130 | 1 | MOTOR GP | |

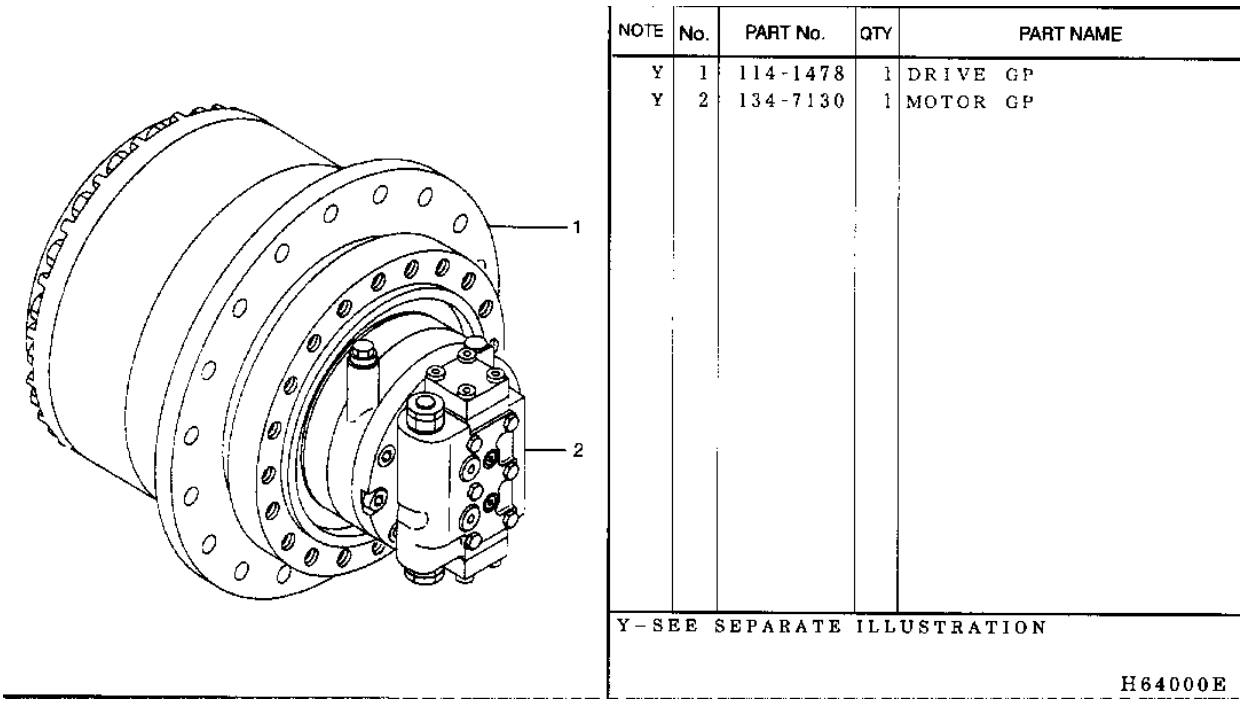


GRAPHIC #1 h64000e

# 1425541 FINAL DRIVE GP

2 REQUIRED
S/N 8SR 00646-UP, 8TR 00944-UP
1913241-Page 179.03, 1347130-Page 335.01

**Key:** Y - SEE SEPARATE ILLUSTRATION

**SMCS**

| NOTE | REF NO | GRAPHIC REF | PART NUMBER | QTY | PART NAME 1 2 3 4 5 6 (PRODUCT LEVEL) | PRICE USD |
|---|---|---|---|---|---|---|
| Y | 1 | | 191-3241 | 1 | DRIVE GP | |
| Y | 2 | | 134-7130 | 1 | MOTOR GP | |

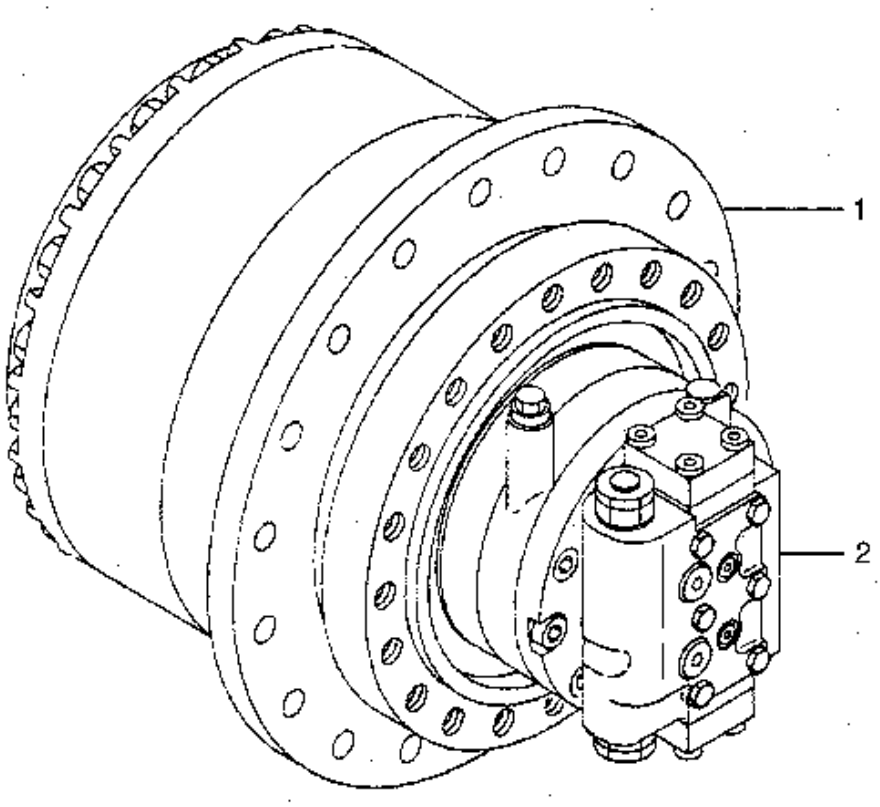


GRAPHIC #1 h79265e

# 1141478 FINAL DRIVE GP-PART 1 OF 2

S/N 8SR 1-00241, 8TR 1-00244
PART OF 1141477-Page 177

**Key:** B - USE AS REQUIRED

**SMCS**

| NOTE | REF NO | GRAPHIC REF | PART NUMBER | QTY | PART NAME 1 2 3 4 5 6 (PRODUCT LEVEL) | PRICE USD |
|---|---|---|---|---|---|---|
| | 1 | | 7Y-0646 | 1 | COVER | |
| | 2 | | 8T-4167 | 20 | WASHER-HARD | |
| B | 3 | | 1U-8846 | | GASKET MAKER (6ml) | |
| | 4 | | 114-1479 | 1 | HOUSING | |
| | 5 | | 114-1480 | 1 | HOUSING | |
| | 6 | | 132-6141 | 1 | SEAL GP | |
| | 7 | | 110-7226 | 2 | BEARING | |
| | 8 | | 6V-8133 | 10 | BOLT (L=80mm) | |
| | 9 | | 114-1541 | 6 | DOWEL | |
| B | 10 | | 110-7234 | 1 | SHIM (T=0.15mm) | |
| B | | | 110-7235 | 1 | SHIM (T=0.3mm) | |
| B | | | 110-7236 | 1 | SHIM (T=0.4m) | |
| B | | | 110-7237 | 1 | SHIM (T=0.5mm) | |
| B | | | 110-7238 | 1 | SHIM (T=0.6mm) | |
| B | | | 110-7239 | 1 | SHIM (T=0.7mm) | |
| B | | | 110-7240 | 1 | SHIM (T=0.8mm) | |
| B | | | 110-7241 | 1 | SHIM (T=1.0mm) | |
| B | | | 110-7242 | 1 | SHIM (T=1.6mm) | |
| | 11 | | 110-7227 | 1 | GEAR (Z=66) | |
| | 12 | | 2P-3628 | 1 | SEAL-O-RING (ID=412.34mm) | |
| | 13 | | 7Y-0642 | 1 | GEAR (Z=63) | |
| | 14 | | 110-7229 | 1 | GEAR (Z=73) | |
| | 15 | | 7M-8485 | 2 | SEAL-O-RING (ID=29.74mm) | |
| | 16 | | 3E-2338 | 2 | PLUG | |
| B | 17 | | 094-0577 | 1 | PLATE | |
| | 18 | | 9X-6032 | 12 | BOLT (L=30mm) | |
| | 19 | | 7Y-5235 | 20 | BOLT (L=190mm) | |

## 1141478 FINAL DRIVE GP-PART 1 OF 2

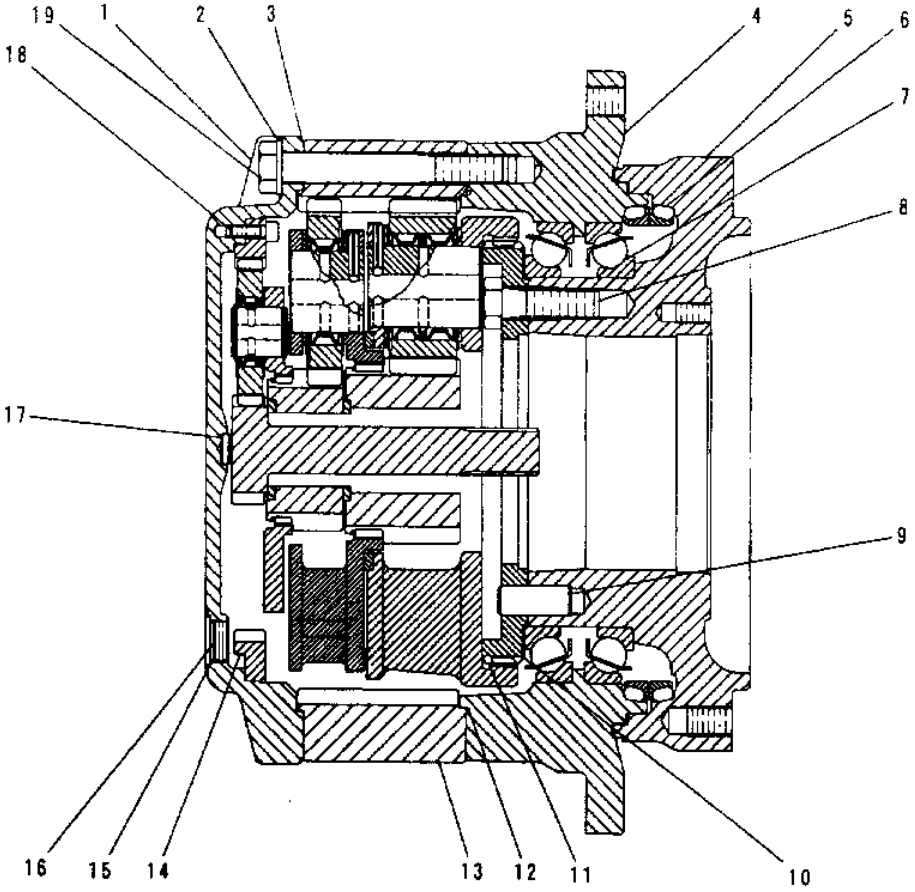


| NOTE | No. | PART No. | QTY | PART NAME |
|---|---|---|---|---|
| | 1 | 7Y-0646 | 1 | COVER |
| | 2 | 8T-4167 | 20 | WASHER-HARD |
| B | 3 | 1U-8846 | | GASKET MAKER · · · (6ml) |
| | 4 | 114-1479 | 1 | HOUSING |
| | 5 | 114-1480 | 1 | HOUSING |
| | 6 | 132-6141 | 1 | SEAL GP |
| | 7 | 110-7226 | 2 | BEARING |
| | 8 | 6V-8133 | 10 | BOLT(L=80mm) |
| | 9 | 114-1541 | 6 | DOWEL |
| B | 10 | 110-7234 | 1 | SHIM(T=0.15mm) |
| B | | 110-7235 | 1 | SHIM(T=0.3mm) |
| B | | 110-7236 | 1 | SHIM(T=0.4m) |
| B | | 110-7237 | 1 | SHIM(T=0.5mm) |
| B | | 110-7238 | 1 | SHIM(T=0.6mm) |
| B | | 110-7239 | 1 | SHIM(T=0.7mm) |
| B | | 110-7240 | 1 | SHIM(T=0.8mm) |
| B | | 110-7241 | 1 | SHIM(T=1.0mm) |
| B | | 110-7242 | 1 | SHIM(T=1.6mm) |
| | 11 | 110-7227 | 1 | GEAR(Z=66) |
| | 12 | 2P-3628 | 1 | SEAL-O-RING(ID=412.34mm) |
| | 13 | 7Y-0642 | 1 | GEAR(Z=63) |
| | 14 | 110-7229 | 1 | GEAR(Z=73) |
| | 15 | 7M-8485 | 2 | SEAL-O-RING(ID=29.74mm) |
| | 16 | 3E-2338 | 2 | PLUG |
| B | 17 | 094-0577 | 1 | PLATE |
| | 18 | 9X-6032 | 12 | BOLT(L=30mm) |
| | 19 | 7Y-5235 | 20 | BOLT(L=190mm) |

B-USE AS REQUIRED

H58606E

GRAPHIC #1 h58606e

# 1141478 FINAL DRIVE GP-PART 2 OF 2

S/N 8SR 1-00241, 8TR 1-00244
PART OF 1141477-Page 177

**Key:**

**SMCS**

| NOTE | REF NO | GRAPHIC REF | PART NUMBER | QTY | PART NAME 1 2 3 4 5 6 (PRODUCT LEVEL) | PRICE USD |
|---|---|---|---|---|---|---|
| | 1 | | 7Y-0664 | 9 | BEARING | |
| | 2 | | 7Y-0661 | 3 | SHAFT | |
| | 3 | | 7Y-0659 | 3 | GEAR (Z=22) | |
| | 4 | | 7Y-1094 | 12 | WASHER | |
| | 5 | | 095-0891 | 6 | PIN-SPRING | |
| | 6 | | 7Y-0663 | 3 | GEAR (Z=20) | |
| | 7 | | 7Y-0662 | 3 | SHAFT | |
| | 8 | | 8T-4240 | 3 | RING-RETAINING | |
| | 9 | | 110-7228 | 1 | CARRIER | |
| | 10 | | 7Y-0639 | 1 | GEAR (Z=21) | |
| | 11 | | 7Y-0644 | 1 | SPACER | |
| | 12 | | 7Y-0645 | 1 | CARRIER | |
| | 13 | | 110-7243 | 1 | CARRIER AS | |
| | 14 | | 7Y-0656 | 3 | SHAFT | |
| | 15 | | 096-3216 | 2 | SETSCREW | |
| | 16 | | 7Y-0667 | 1 | RING-RETAINING | |
| | 17 | | 093-1731 | 1 | RING-RETAINING | |
| | 18 | | 110-7231 | 1 | GEAR (Z=18) | |
| | 19 | | 7Y-0595 | 2 | SPACER | |
| | 20 | | 110-7232 | 1 | GEAR (Z=13) | |
| | 21 | | 110-7233 | 3 | GEAR (Z=24) | |
| | 22 | | 094-0584 | 6 | WASHER | |
| | 23 | | 094-1516 | 3 | BEARING | |

## 1141478 FINAL DRIVE GP-PART 2 OF 2

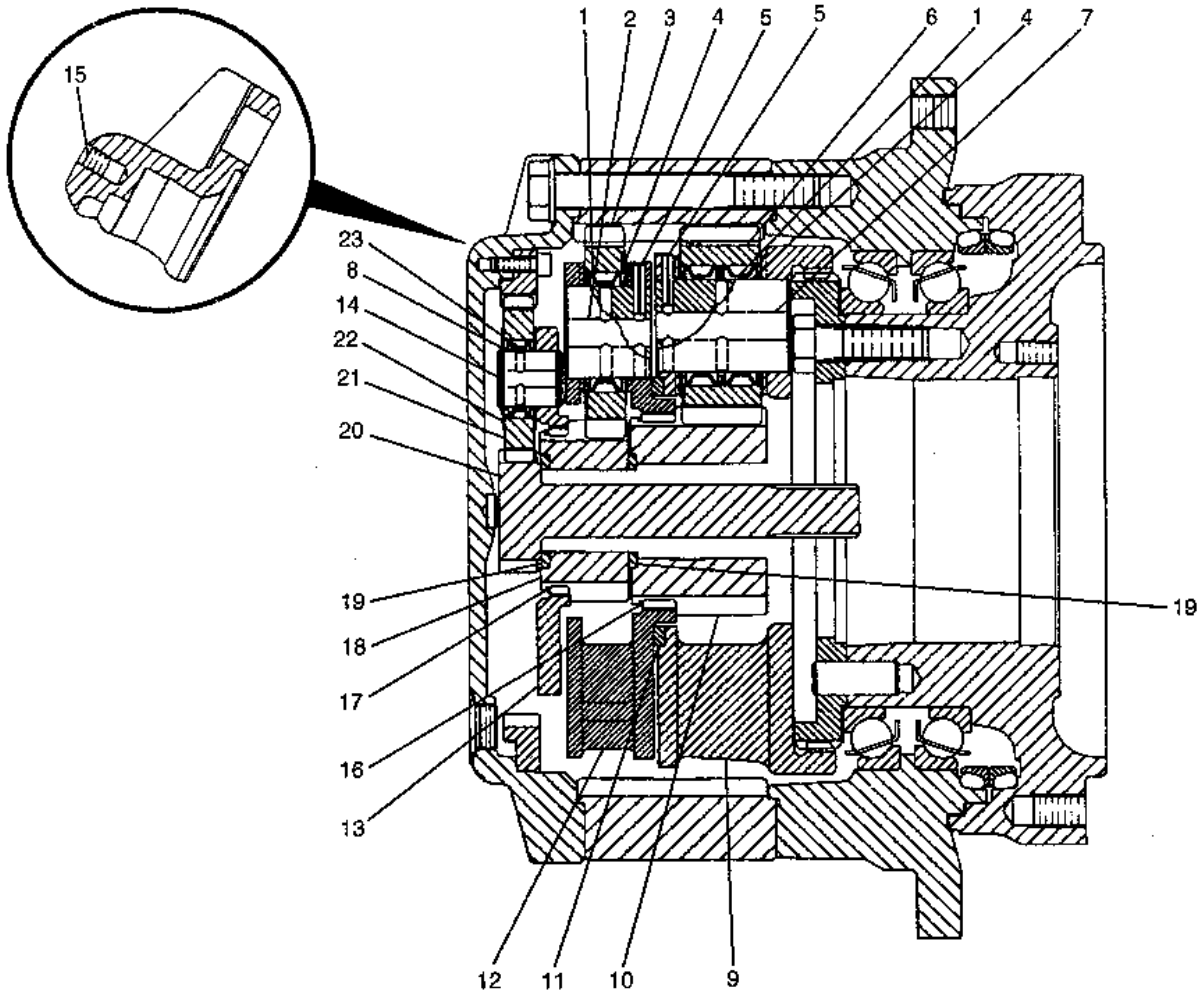


GRAPHIC #1

h58607e

# 1141478 FINAL DRIVE GP-PART 1 OF 2

S/N 8SR 00242-00645, 8TR 00245-00943
PART OF 1141477, 1425541-Page 177

**Key:** B - USE AS REQUIRED

**SMCS**

| NOTE | REF NO | GRAPHIC REF | PART NUMBER | QTY | PART NAME 1 2 3 4 5 6 (PRODUCT LEVEL) | PRICE USD |
|---|---|---|---|---|---|---|
| | 1 | | 7Y-0646 | 1 | COVER | |
| | 2 | | 8T-4167 | 20 | WASHER | |
| B | 3 | | 1U-8846 | | GASKET MAKER (6ml) | |
| | 4 | | 114-1479 | 1 | HOUSING | |
| | 5 | | 114-1480 | 1 | HOUSING | |
| | 6 | | 132-6141 | 1 | SEAL GP | |
| | 7 | | 168-8453 | 2 | BEARING | |
| | 8 | | 6V-8133 | 10 | BOLT (L=80mm) | |
| | 9 | | 114-1541 | 6 | PIN | |
| B | 10 | | 110-7234 | 1 | SHIM (T=0.15mm) | |
| B | | | 110-7235 | 1 | SHIM (T=0.30mm) | |
| B | | | 110-7236 | 1 | SHIM (T=0.40mm) | |
| B | | | 110-7237 | 1 | SHIM (T=0.50mm) | |
| B | | | 110-7238 | 1 | SHIM (T=0.60mm) | |
| B | | | 110-7239 | 1 | SHIM (T=0.70mm) | |
| B | | | 110-7240 | 1 | SHIM (T=0.80mm) | |
| B | | | 110-7241 | 1 | SHIM (T=1.00mm) | |
| B | | | 110-7242 | 1 | SHIM (T=1.60mm) | |
| | 11 | | 110-7227 | 1 | GEAR (Z=66) | |
| | 12 | | 2P-3628 | 1 | SEAL-O-RING (ID=412.34mm) | |
| | 13 | | 7Y-0642 | 1 | GEAR (Z=63) | |
| | 14 | | 110-7229 | 1 | GEAR (Z=72) | |
| | 15 | | 7M-8485 | 2 | SEAL-O-RING (ID=29.74mm) | |
| | 16 | | 3E-2338 | 2 | PLUG | |
| B | 17 | | 094-5477 | 1 | PLATE (T=7.00mm) | |
| B | | | 094-0578 | 1 | PLATE (T=8.00mm) | |
| B | | | 094-0579 | 1 | PLATE (T=9.00mm) | |
| B | | | 094-0580 | 1 | PLATE (T=10.00mm) | |
| | 18 | | 9X-6032 | 12 | BOLT (L=30mm) | |
| | 19 | | 7Y-5235 | 20 | BOLT (L=190mm) | |

## 1141478 FINAL DRIVE GP-PART 1 OF 2

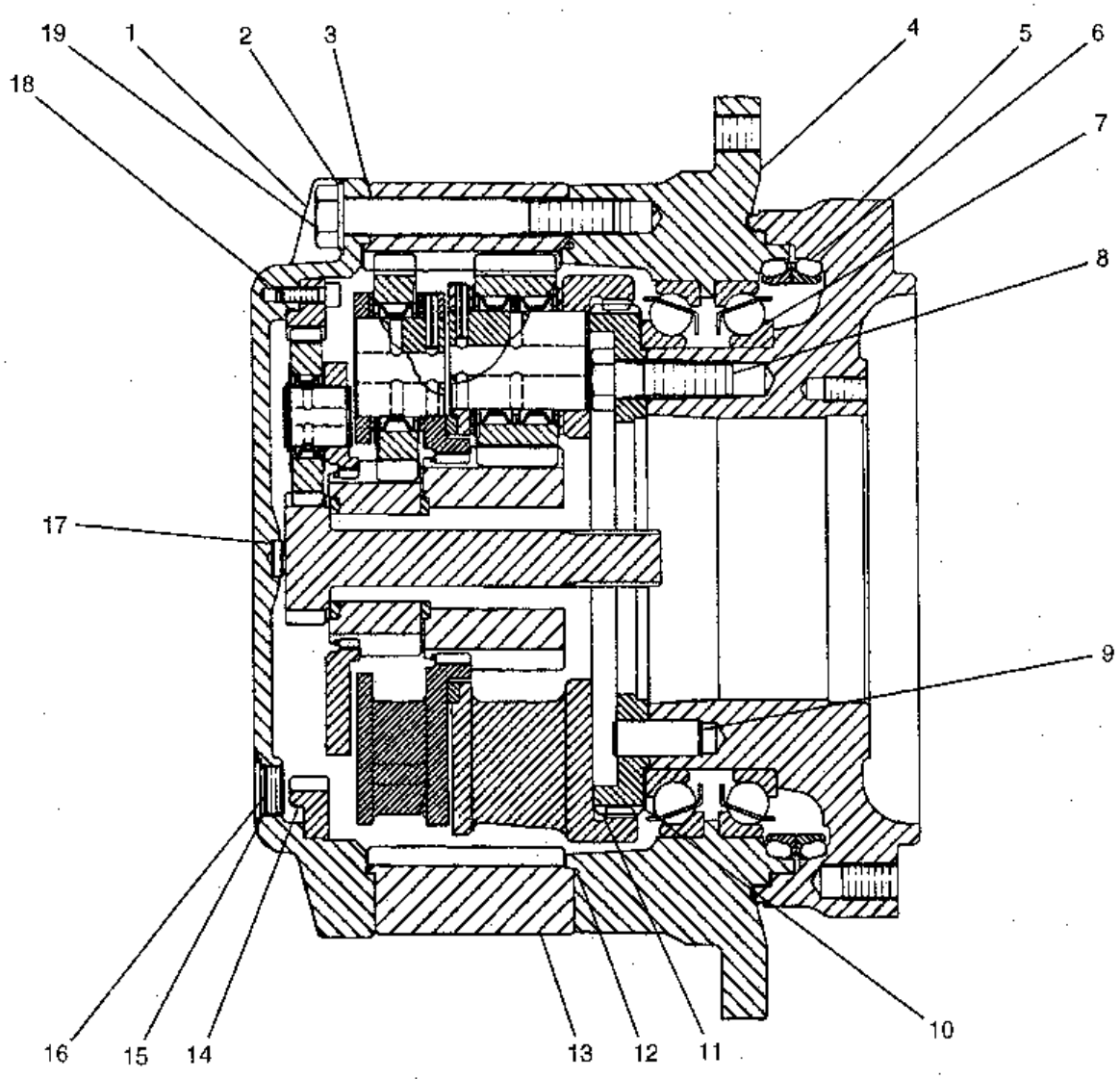


GRAPHIC #1

h79266e

# 1141478 FINAL DRIVE GP-PART 2 OF 2

S/N 8SR 00242-00645, 8TR 00245-00943
PART OF 1141477, 1425541-Page 177

**Key:**

**SMCS**

| NOTE | REF NO | GRAPHIC REF | PART NUMBER | QTY | PART NAME 1 2 3 4 5 6 (PRODUCT LEVEL) | PRICE USD |
|---|---|---|---|---|---|---|
| | 1 | | 7Y-0664 | 9 | BEARING | |
| | 2 | | 7Y-0661 | 3 | SHAFT | |
| | 3 | | 7Y-0659 | 3 | GEAR (Z=22) | |
| | 4 | | 7Y-1094 | 12 | WASHER | |
| | 5 | | 095-0891 | 6 | PIN | |
| | 6 | | 7Y-0663 | 3 | GEAR (Z=20) | |
| | 7 | | 7Y-0662 | 3 | SHAFT | |
| | 8 | | 8T-4240 | 3 | RING | |
| | 9 | | 110-7228 | 1 | CARRIER | |
| | 10 | | 7Y-0639 | 1 | GEAR (Z=21) | |
| | 11 | | 8Y-0644 | 1 | SPACER | |
| | 12 | | 7Y-0645 | 1 | CARRIER | |
| | 13 | | 110-7243 | 1 | CARRIER AS | |
| | 14 | | 7Y-0656 | 3 | SHAFT | |
| | 15 | | 096-3216 | 2 | SETSCREW | |
| | 16 | | 7Y-0667 | 1 | RING | |
| | 17 | | 093-1731 | 1 | RING | |
| | 18 | | 110-7231 | 1 | GEAR (Z=18) | |
| | 19 | | 7Y-0595 | 2 | SPACER | |
| | 20 | | 110-7232 | 1 | GEAR (Z=18) | |
| | 21 | | 110-7233 | 3 | GEAR (Z=26) | |
| | 22 | | 094-0584 | 6 | WASHER | |
| | 23 | | 094-1516 | 3 | BEARING | |

## 1141478 FINAL DRIVE GP-PART 2 OF 2

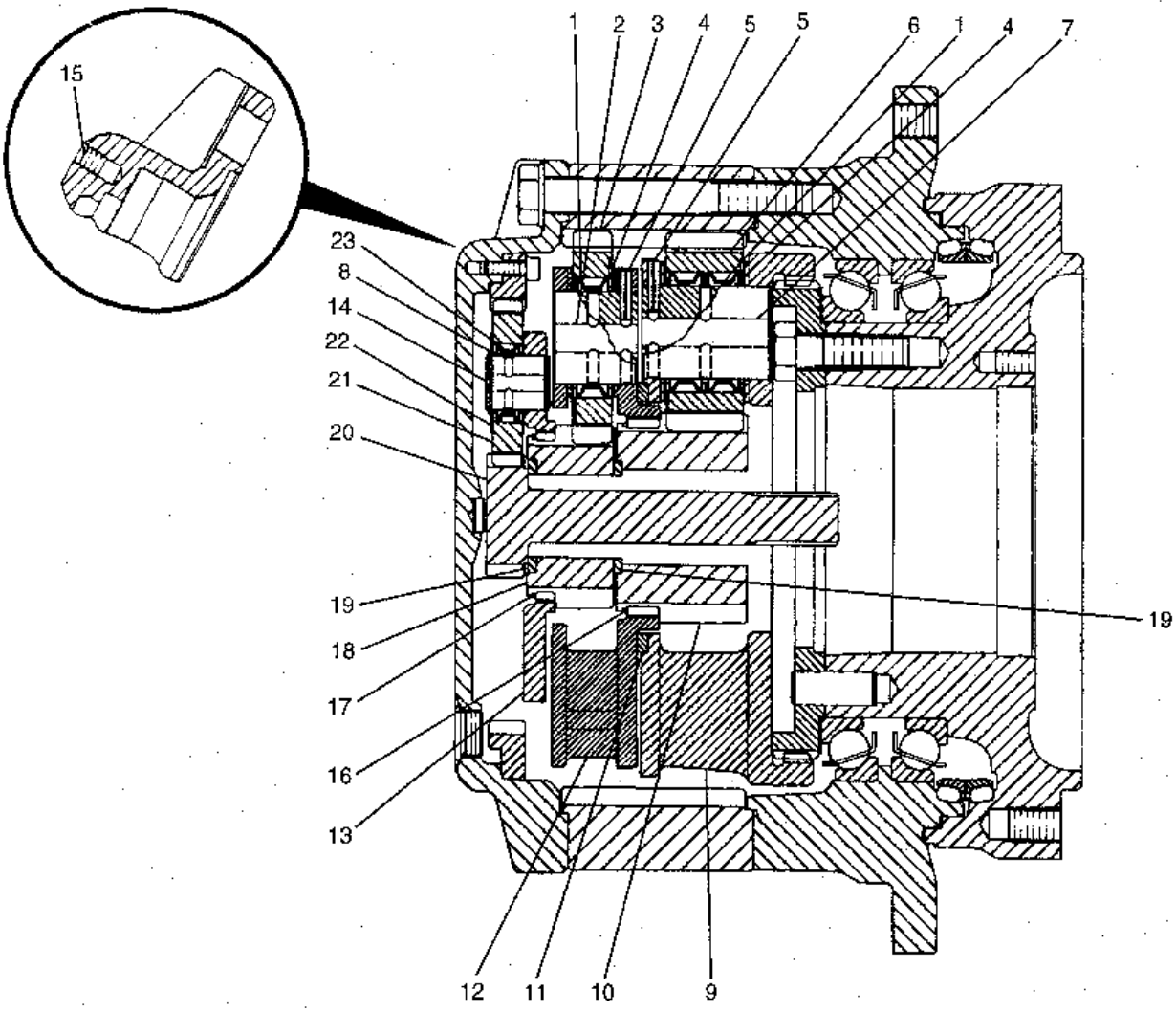


GRAPHIC #1

h79267e

# 1913241 FINAL DRIVE GP-PART 1 OF 2

S/N 8SR 00646-UP, 8TR 00944-UP
PART OF 1425541-Page 177.01

**Key:** B - USE AS REQUIRED

**SMCS**

| NOTE | REF NO | GRAPHIC REF | PART NUMBER | QTY | PART NAME 1 2 3 4 5 6 (PRODUCT LEVEL) | PRICE USD |
|---|---|---|---|---|---|---|
| | 1 | | 7Y-0646 | 1 | COVER | |
| | 2 | | 8T-4167 | 20 | WASHER | |
| B | 3 | | 1U-8846 | | GASKET MAKER (6ml) | |
| | 4 | | 191-3242 | 1 | HOUSING | |
| | 5 | | 191-3243 | 1 | HOUSING | |
| | 6 | | 132-6141 | 1 | SEAL GP | |
| | 7 | | 168-8453 | 2 | BEARING | |
| | 8 | | 6V-8133 | 10 | BOLT (L=80mm) | |
| | 9 | | 114-1541 | 6 | PIN | |
| B | 10 | | 110-7234 | 1 | SHIM (T=0.15mm) | |
| B | | | 110-7235 | 1 | SHIM (T=0.30mm) | |
| B | | | 110-7236 | 1 | SHIM (T=0.40mm) | |
| B | | | 110-7237 | 1 | SHIM (T=0.50mm) | |
| B | | | 110-7238 | 1 | SHIM (T=0.60mm) | |
| B | | | 110-7239 | 1 | SHIM (T=0.70mm) | |
| B | | | 110-7240 | 1 | SHIM (T=0.80mm) | |
| B | | | 110-7241 | 1 | SHIM (T=1.00mm) | |
| B | | | 110-7242 | 1 | SHIM (T=1.60mm) | |
| | 11 | | 110-7227 | 1 | GEAR (Z=66) | |
| | 12 | | 2P-3628 | 1 | SEAL-O-RING (ID=412.34mm) | |
| | 13 | | 7Y-0642 | 1 | GEAR (Z=63) | |
| | 14 | | 110-7229 | 1 | GEAR (Z=72) | |
| | 15 | | 7M-8485 | 2 | SEAL-O-RING (ID=29.74mm) | |
| | 16 | | 3E-2338 | 2 | PLUG | |
| B | 17 | | 094-5477 | 1 | PLATE (T=7.00mm) | |
| B | | | 094-0578 | 1 | PLATE (T=8.00mm) | |
| B | | | 094-0579 | 1 | PLATE (T=9.00mm) | |
| B | | | 094-0580 | 1 | PLATE (T=10.00mm) | |
| | 18 | | 9X-6032 | 12 | BOLT (L=30mm) | |
| | 19 | | 7Y-5235 | 20 | BOLT (L=190mm) | |

## 1913241 FINAL DRIVE GP-PART 1 OF 2

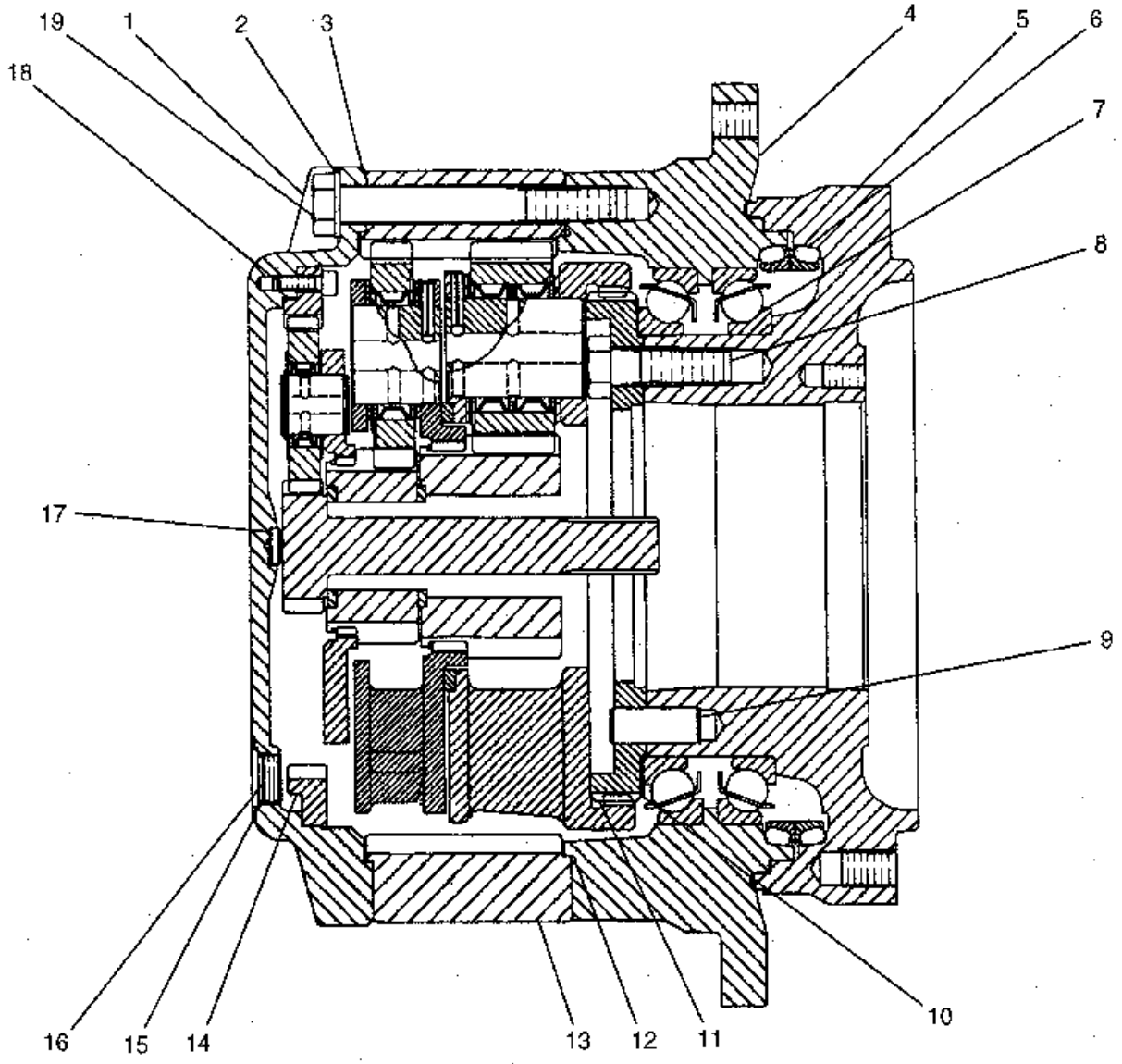


GRAPHIC #1

h79268e

# 1913241 FINAL DRIVE GP-PART 2 OF 2

S/N 8SR 00646-UP, 8TR 00944-UP
PART OF 1425541-Page 177.01

**Key:**

**SMCS**

| NOTE | REF NO | GRAPHIC REF | PART NUMBER | QTY | PART NAME 1 2 3 4 5 6 (PRODUCT LEVEL) | PRICE USD |
|---|---|---|---|---|---|---|
| | 1 | | 7Y-0664 | 9 | BEARING | |
| | 2 | | 7Y-0661 | 3 | SHAFT | |
| | 3 | | 7Y-0659 | 3 | GEAR (Z=22) | |
| | 4 | | 8Y-1094 | 12 | WASHER | |
| | 5 | | 095-0891 | 6 | PIN | |
| | 6 | | 7Y-0663 | 3 | GEAR (Z=20) | |
| | 7 | | 7Y-0662 | 3 | SHAFT | |
| | 8 | | 8T-4240 | 3 | RING | |
| | 9 | | 110-7228 | 1 | CARRIER | |
| | 10 | | 7Y-0639 | 1 | GEAR (Z=21) | |
| | 11 | | 8Y-0644 | 1 | SPACER | |
| | 12 | | 7Y-0645 | 1 | CARRIER | |
| | 13 | | 110-7243 | 1 | CARRIER AS | |
| | 14 | | 7Y-0656 | 3 | SHAFT | |
| | 15 | | 096-3216 | 2 | SETSCREW | |
| | 16 | | 7Y-0667 | 1 | RING | |
| | 17 | | 093-1731 | 1 | RING | |
| | 18 | | 110-7231 | 1 | GEAR (Z=18) | |
| | 19 | | 7Y-0595 | 2 | SPACER | |
| | 20 | | 110-7232 | 1 | GEAR (Z=18) | |
| | 21 | | 110-7233 | 3 | GEAR (Z=26) | |
| | 22 | | 094-0584 | 6 | WASHER | |
| | 23 | | 094-1516 | 3 | BEARING | |

## 1913241 FINAL DRIVE GP-PART 2 OF 2

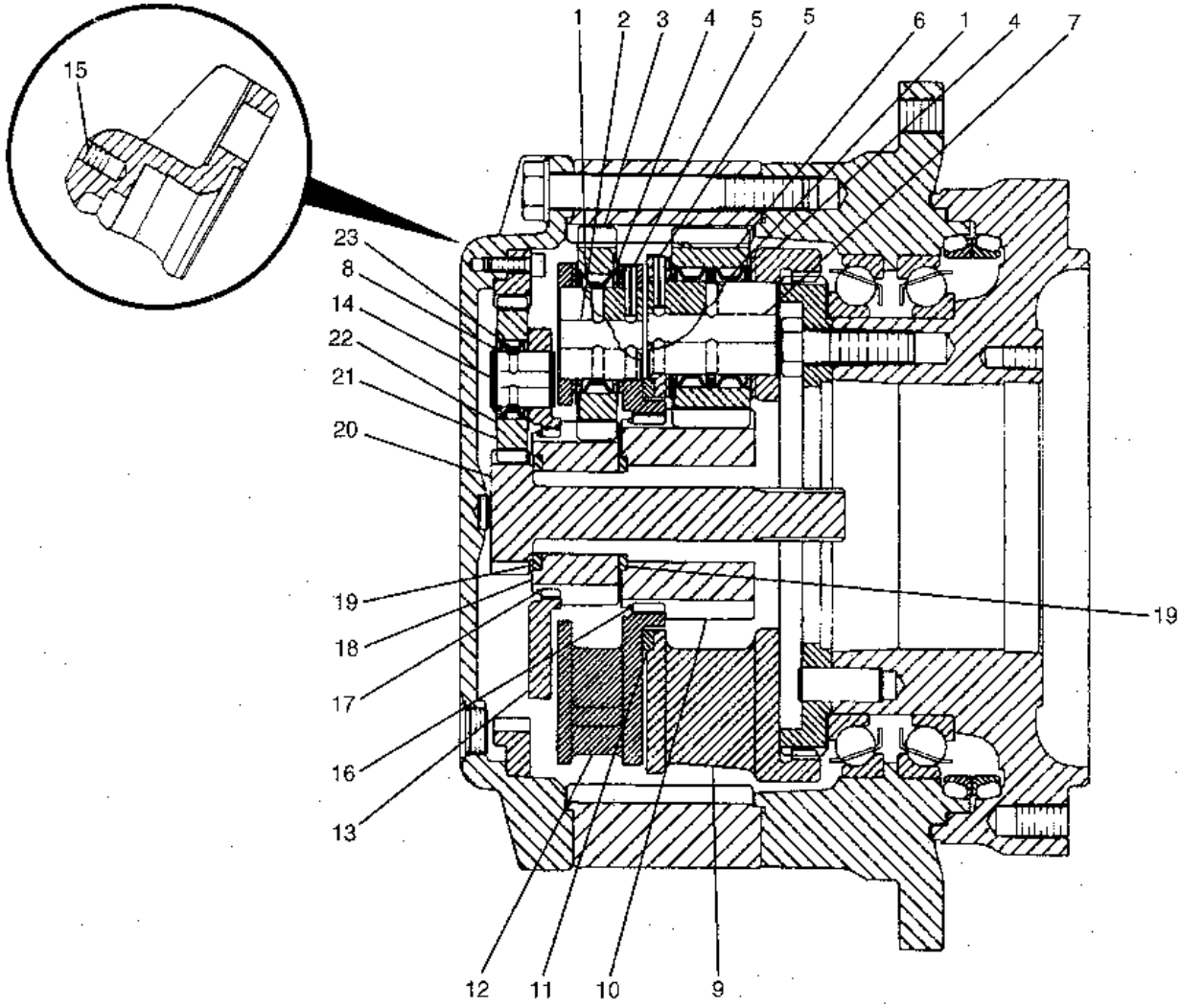


GRAPHIC #1

h79269e

# 1161634 HOOD & GUARD GP-PART 1 OF 3

S/N 8SR 1-00117, 8TR 1-00151
1161808-Page 188

**Key:** Y - SEE SEPARATE ILLUSTRATION

**SMCS**

| NOTE | REF NO | GRAPHIC REF | PART NUMBER | QTY | PART NAME 1 2 3 4 5 6 (PRODUCT LEVEL) | PRICE USD |
|---|---|---|---|---|---|---|
| Y | 1 | | 116-1808 | 1 | HOOD GP | |
| | 2 | | 8T-4192 | 28 | BOLT (L=25mm) | |
| | 3 | | 5P-1076 | 35 | WASHER | |
| | 4 | | 116-1734 | 1 | SUPPORT AS | |
| | 5 | | 116-1732 | 1 | COVER AS | |
| | 6 | | 116-1725 | 1 | COVER AS | |
| | 7 | | 116-1731 | 1 | SHEET | |
| | 8 | | 116-1728 | 1 | SHEET | |
| | 9 | | 116-1727 | 1 | SHEET | |
| | 10 | | 099-1426 | 2 | SPACER | |
| | 11 | | 114-6285 | 2 | BAR | |
| | 12 | | 8T-4183 | 6 | BOLT (L=40mm) | |
| | 13 | | 8T-4200 | 8 | BOLT (L=16mm) | |
| | 14 | | 116-1794 | 1 | SPRING | |
| | 15 | | 116-1795 | 1 | SPRING | |
| | 16 | | 8T-4224 | 8 | WASHER | |
| | 17 | | 4I-0118 | 2 | HOOK | |
| | 18 | | 4I-0117 | 1 | FASTENER | |
| | 19 | | 1R-9958 | 1 | FASTENER | |
| | 20 | | 8T-4223 | 2 | WASHER | |
| | 21 | | 7J-5925 | 1 | COTTER | |
| | 22 | | 116-1628 | 1 | SUPPORT AS | |
| | 23 | | 122-4124 | 1 | SHEET | |
| | 24 | | 8T-4139 | 2 | BOLT (L=30mm) | |

## 1161634 HOOD & GUARD GP-PART 1 OF 3

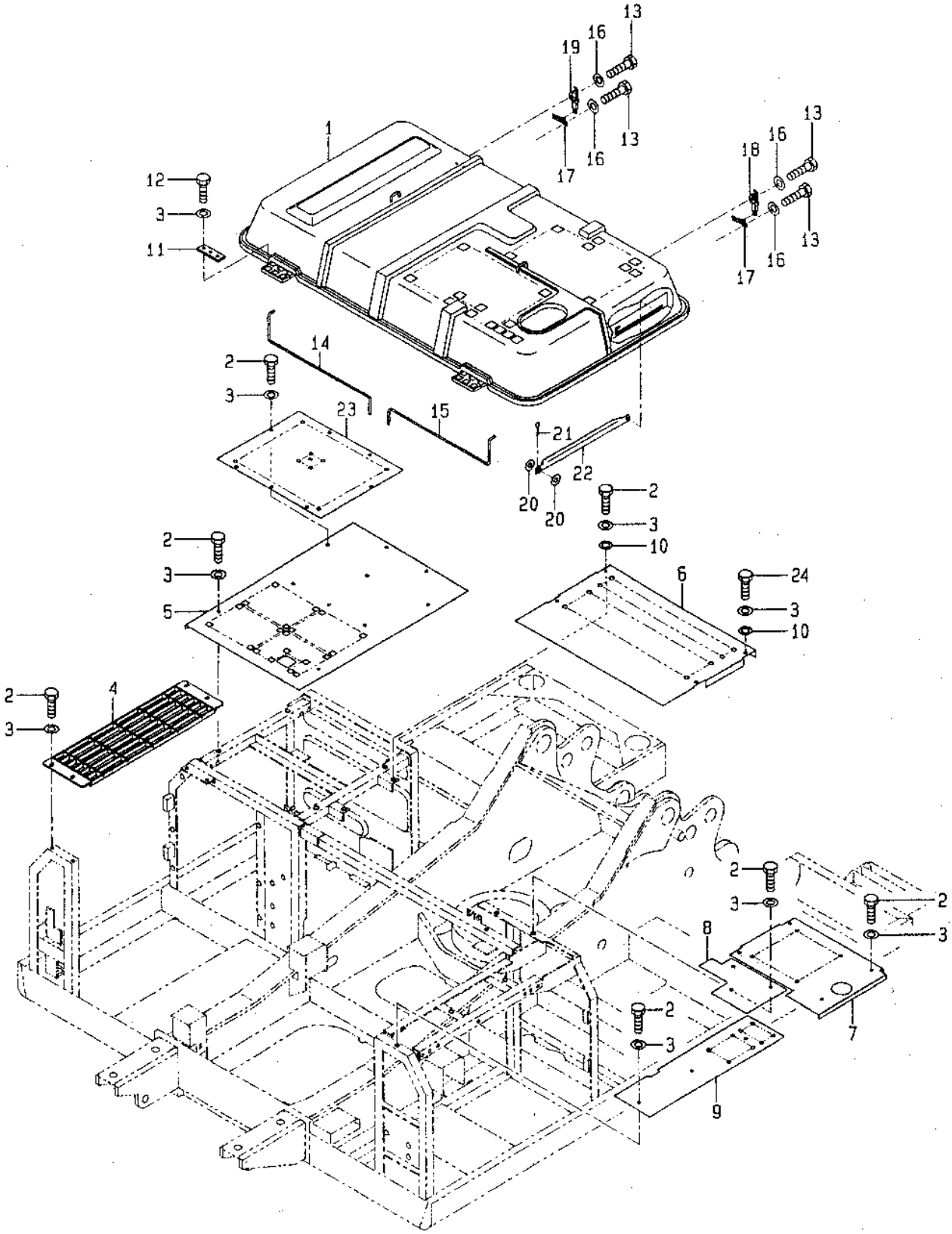


GRAPHIC #1

h58704e

# 1161634 HOOD & GUARD GP-PART 2 OF 3

S/N 8SR 1-00117, 8TR 1-00151
1161786-Page 189, 1161780-Page 190, 1161783-Page 191

**Key:** B - USE AS REQUIRED, D - ORDER BY THE METER, Y - SEE SEPARATE ILLUSTRATION

**SMCS**

| NOTE | REF NO | GRAPHIC REF | PART NUMBER | QTY | PART NAME 1 2 3 4 5 6 (PRODUCT LEVEL) | PRICE USD |
|---|---|---|---|---|---|---|
| | 1 | | 8T-4192 | 68 | BOLT (L=25mm) | |
| | 2 | | 5P-1076 | 71 | WASHER | |
| | 3 | | 116-1766 | 1 | SHEET AS | |
| | 4 | | 7Y-2680 | 1 | LINER | |
| | 5 | | 6P-2216 | 5 | CAP | |
| D | 6 | | 5P-5671 | | SEAL (0.752m) | |
| | 7 | | 129-3379 | 1 | COVER AS | |
| | 8 | | 129-3381 | 1 | LINER | |
| | 9 | | 129-3382 | 1 | LINER | |
| | 10 | | 116-1729 | 1 | SHEET | |
| | 11 | | 117-4390 | 1 | SHEET AS | |
| | 12 | | 7X-2548 | 2 | BOLT (L=16mm) | |
| Y | 13 | | 116-1786 | 1 | DOOR GP | |
| Y | 14 | | 116-1783 | 1 | DOOR GP | |
| | 15 | | 116-1745 | 1 | DOOR AS | |
| Y | 16 | | 116-1780 | 1 | DOOR GP | |
| | 17 | | 122-4120 | 3 | ROD | |
| | 18 | | 8T-4138 | 10 | BOLT (L=20mm) | |
| | 19 | | 5P-4115 | 16 | WASHER | |
| | 20 | | 4I-0232 | 2 | STRIKER | |
| | 21 | | 7I-1418 | 3 | SUPPORT AS | |
| | 22 | | 8T-0269 | 6 | BOLT (L=20mm) | |
| | 23 | | 9X-8256 | 8 | WASHER | |
| | 24 | | 4I-8019 | 3 | SUPPORT | |
| | 25 | | 6C-9553 | 2 | BOLT (L=16mm) | |
| | 26 | | 6I-6033 | 3 | STOPPER | |
| B | 27 | | 087-3908 | 4 | SHIM (T=1.00mm) | |
| B | | | 087-3909 | 4 | SHIM (T=2.00mm) | |
| | 28 | | 129-3388 | 3 | FILTER | |
| | 29 | | 116-1761 | 1 | COVER AS | |
| | 30 | | 117-4239 | 1 | SHEET AS | |
| | 31 | | 116-1818 | 1 | LINER | |
| | 32 | | 117-4240 | 1 | SHEET AS | |
| | 33 | | 116-1818 | 1 | LINER | |
| | 34 | | 116-1755 | 1 | SHEET AS | |
| | 35 | | 116-1756 | 1 | LINER | |
| | 36 | | 129-3378 | 1 | LINER | |
| | 37 | | 134-6201 | 1 | ROD | |
| | 38 | | 122-3979 | 1 | BAND | |
| | 39 | | 122-4093 | 1 | SHEET | |
| | 40 | | 122-3944 | 1 | SHEET AS | |
| | 41 | | 7Y-2854 | 2 | SPACER | |
| | 42 | | 7Y-2853 | 2 | SPACER | |
| | 43 | | 3B-4618 | 3 | COTTER | |
| | 44 | | 8T-4121 | 3 | WASHER | |
| D | 45 | | 5P-9205 | | SEAL (0.12m) | |
| D | 46 | | 5P-8309 | | SEAL (0.205m) | |
| | 47 | | 131-7450 | 1 | SHEET AS | |

## 1161634 HOOD & GUARD GP-PART 2 OF 3

| | | | |
|---|---|---|---|
| 48 | 131-7451 | 1 | LINER |
| 49 | 6P-2216 | 3 | CAP |
| 50 | 131-7452 | 1 | SHEET AS |
| 51 | 131-7455 | 1 | LINER |
| 52 | 131-7454 | 1 | LINER |
| 53 | 131-7453 | 1 | LINER |
| 54 | 6P-2216 | 9 | CAP |
| 55 | 4I-7294 | 9 | WASHER |
| 56 | 8T-4171 | 6 | BOLT (L=12mm) |

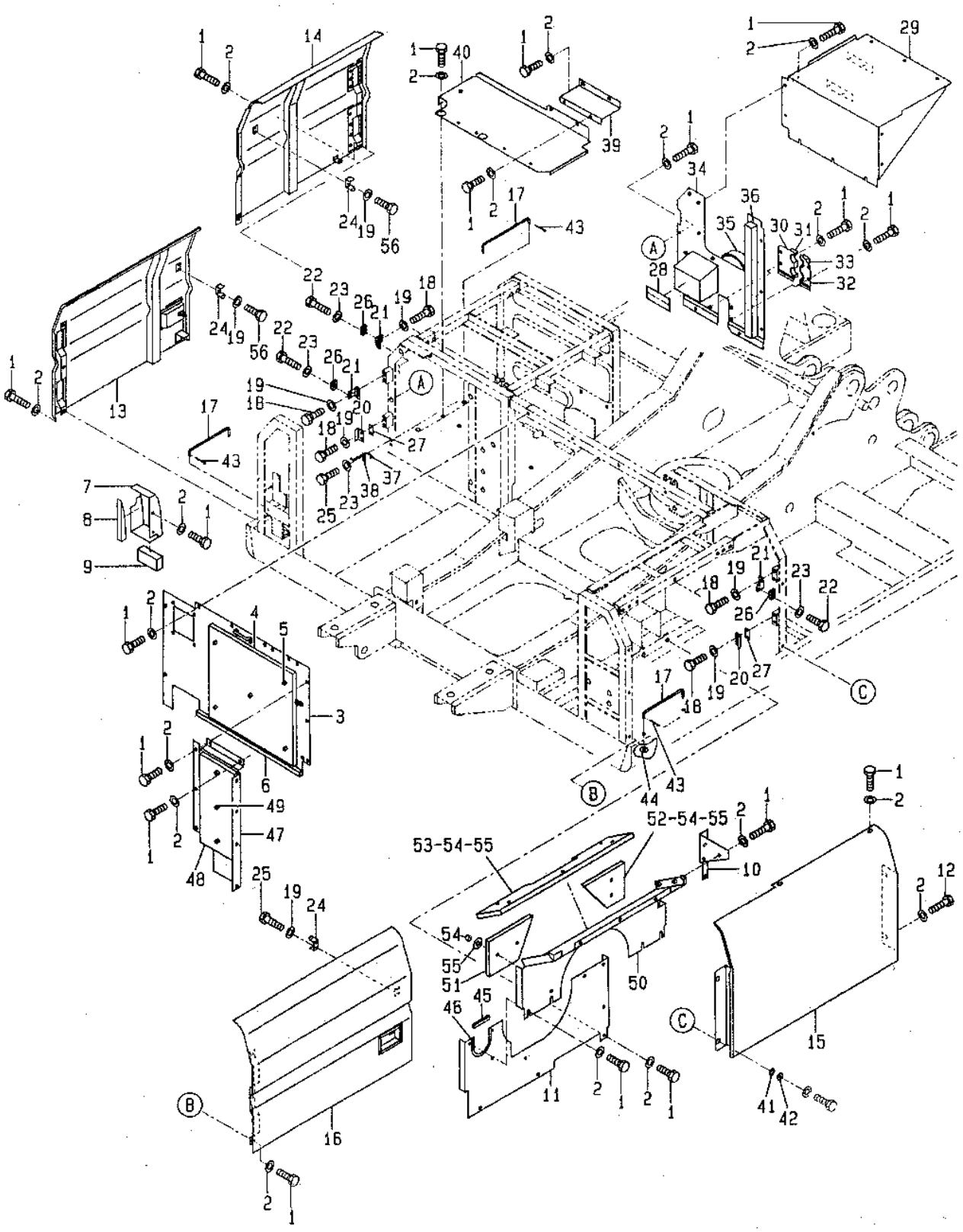

## 1161634 HOOD & GUARD GP-PART 2 OF 3

GRAPHIC #1 h58706e

# 1161634 HOOD & GUARD GP-PART 3 OF 3

S/N 8SR 1-00117, 8TR 1-00151

**Key:**

**SMCS**

| NOTE | REF NO | GRAPHIC REF | PART NUMBER | QTY | PART NAME 1 2 3 4 5 6 (PRODUCT LEVEL) | PRICE USD |
|---|---|---|---|---|---|---|
| | 1 | | 8T-4192 | 34 | BOLT (L=25mm) | |
| | 2 | | 5P-1076 | 53 | WASHER | |
| | 3 | | 116-1738 | 1 | SUPPORT AS | |
| | 4 | | 8T-4139 | 18 | BOLT (L=30mm) | |
| | 5 | | 117-4382 | 1 | SUPPORT AS | |
| | 6 | | 116-1748 | 1 | SUPPORT AS | |
| | 7 | | 116-1741 | 1 | SUPPORT AS | |
| | 8 | | 8T-4244 | 1 | NUT | |
| | 9 | | 116-1751 | 1 | SUPPORT AS | |
| | 10 | | 116-1658 | 1 | SUPPORT AS | |
| | 11 | | 116-1778 | 1 | SUPPORT AS | |
| | 12 | | 116-1743 | 1 | SUPPORT AS | |
| | 13 | | 122-3958 | 1 | SUPPORT AS | |
| | 14 | | 122-3948 | 1 | SUPPORT AS | |
| | 15 | | 122-3951 | 1 | SUPPORT AS | |
| | 16 | | 135-7510 | 1 | SUPPORT AS | |
| | 17 | | 131-0582 | 1 | SUPPORT AS | |

## 1161634 HOOD & GUARD GP-PART 3 OF 3

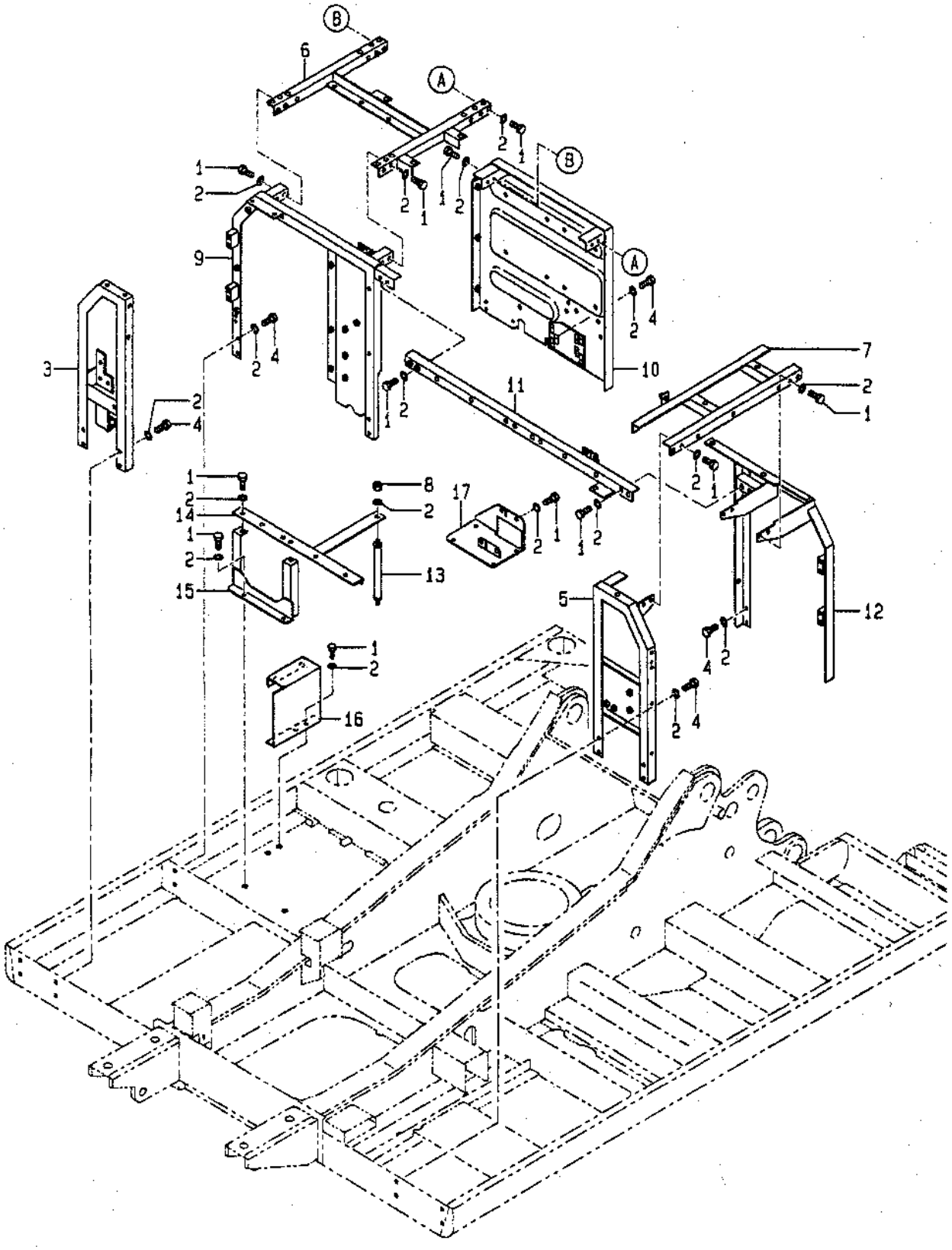


GRAPHIC #1

h58708e

# 1161634 HOOD & GUARD GP-PART 1 OF 3

S/N 8SR 00118-00417, 8TR 00152-00485
1161808-Page 188

**Key:** Y - SEE SEPARATE ILLUSTRATION

**SMCS**

| NOTE | REF NO | GRAPHIC REF | PART NUMBER | QTY | PART NAME 1 2 3 4 5 6 (PRODUCT LEVEL) | PRICE USD |
|---|---|---|---|---|---|---|
| Y | 1 | | 116-1808 | 1 | HOOD GP | |
| | 2 | | 8T-4192 | 26 | BOLT (L=25mm) | |
| | 3 | | 5P-1076 | 33 | WASHER | |
| | 4 | | 116-1734 | 1 | SUPPORT AS | |
| | 5 | | 116-1732 | 1 | COVER AS | |
| | 6 | | 116-1725 | 1 | COVER AS | |
| | 7 | | 116-1731 | 1 | SHEET | |
| | 8 | | 116-1728 | 1 | SHEET | |
| | 9 | | 116-1727 | 1 | SHEET | |
| | 10 | | 099-1426 | 2 | SPACER | |
| | 11 | | 114-6285 | 2 | BAR | |
| | 12 | | 8T-4183 | 6 | BOLT (L=40mm) | |
| | 13 | | 8T-4200 | 8 | BOLT (L=16mm) | |
| | 14 | | 116-1794 | 1 | SPRING | |
| | 15 | | 116-1795 | 1 | SPRING | |
| | 16 | | 8T-4224 | 8 | WASHER | |
| | 17 | | 4I-0118 | 2 | HOOK | |
| | 18 | | 4I-0117 | 1 | FASTENER | |
| | 19 | | 1R-9958 | 1 | FASTENER | |
| | 20 | | 8T-4223 | 2 | WASHER | |
| | 21 | | 7J-5925 | 1 | COTTER | |
| | 22 | | 116-1628 | 1 | SUPPORT AS | |
| | 23 | | 122-4124 | 1 | SHEET | |
| | 24 | | 8T-4139 | 2 | BOLT (L=30mm) | |
| | 25 | | 8T-4179 | 2 | BOLT (L=20mm) | |
| | 26 | | 7X-0618 | 2 | WASHER | |
| | 27 | | 7Y-2854 | 2 | SPACER | |

## 1161634 HOOD & GUARD GP-PART 1 OF 3

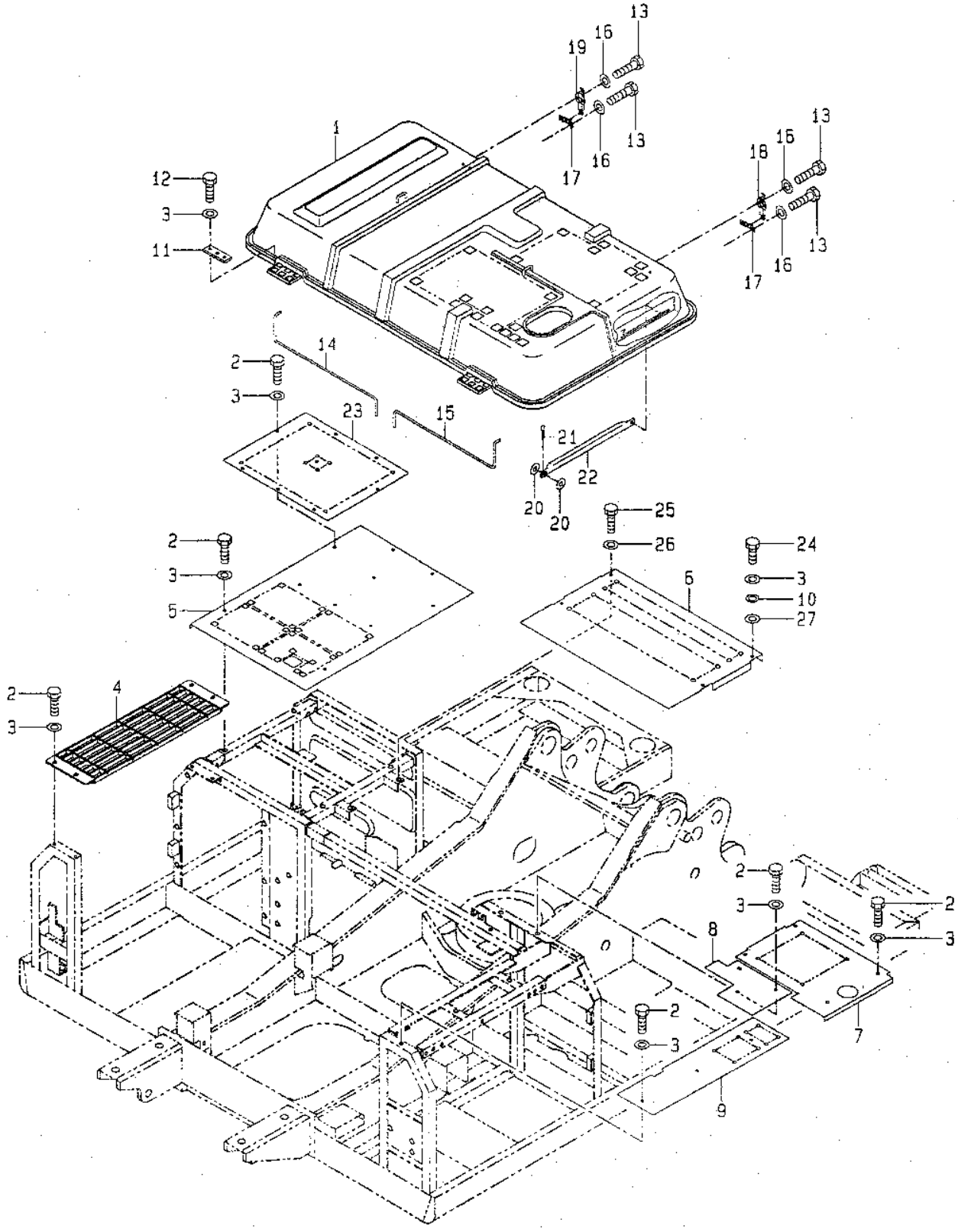


GRAPHIC #1

h64002e

# 1161634 HOOD & GUARD GP-PART 2 OF 3

S/N 8SR 00118-00417, 8TR 00152-00485
1161786-Page 189, 1161780-Page 190, 1161783-Page 191

**Key:** B - USE AS REQUIRED, D - ORDER BY THE METER, Y - SEE SEPARATE ILLUSTRATION

**SMCS**

| NOTE | REF NO | GRAPHIC REF | PART NUMBER | QTY | PART NAME 1 2 3 4 5 6 (PRODUCT LEVEL) | PRICE USD |
|---|---|---|---|---|---|---|
| | 1 | | 8T-4192 | 68 | BOLT (L=25mm) | |
| | 2 | | 5P-1076 | 71 | WASHER | |
| | 3 | | 116-1766 | 1 | SHEET AS | |
| | 4 | | 7Y-2680 | 1 | LINER | |
| | 5 | | 6P-2216 | 5 | CAP | |
| D | 6 | | 5P-5671 | | SEAL (0.752m) | |
| | 7 | | 129-3379 | 1 | COVER AS | |
| | 8 | | 129-3381 | 1 | LINER | |
| | 9 | | 129-3382 | 1 | LINER | |
| | 10 | | 116-1729 | 1 | SHEET | |
| | 11 | | 117-4390 | 1 | SHEET AS | |
| | 12 | | 7X-2548 | 2 | BOLT (L=16mm) | |
| Y | 13 | | 116-1786 | 1 | DOOR GP | |
| Y | 14 | | 116-1783 | 1 | DOOR GP | |
| | 15 | | 116-1745 | 1 | DOOR AS | |
| Y | 16 | | 116-1780 | 1 | DOOR GP | |
| | 17 | | 122-4120 | 1 | ROD | |
| | 18 | | 8T-4138 | 10 | BOLT (L=20mm) | |
| | 19 | | 5P-4115 | 16 | WASHER | |
| | 20 | | 4I-0232 | 2 | STRIKER | |
| | 21 | | 7I-1418 | 3 | SUPPORT AS | |
| | 22 | | 8T-0269 | 6 | BOLT (L=20mm) | |
| | 23 | | 9X-8256 | 8 | WASHER | |
| | 24 | | 4I-8019 | 3 | SUPPORT | |
| | 25 | | 5C-9553 | 2 | BOLT (L=16mm) | |
| | 26 | | 6I-6033 | 3 | STOPPER | |
| B | 27 | | 087-3908 | 4 | SHIM (T=1.00mm) | |
| B | | | 087-3909 | 4 | SHIM (T=2.00mm) | |
| | 28 | | 137-2241 | 1 | COVER | |
| | 29 | | 137-2246 | 1 | COVER AS | |
| | 30 | | 117-4239 | 1 | SHEET AS | |
| | 31 | | 116-1818 | 1 | LINER | |
| | 32 | | 117-4240 | 1 | SHEET AS | |
| | 33 | | 116-1818 | 1 | LINER | |
| | 34 | | 137-2222 | 1 | SHEET AS | |
| | 35 | | 116-1756 | 1 | LINER | |
| | 36 | | 129-3378 | 1 | LINER | |
| | 37 | | 134-6201 | 1 | ROD | |
| | 38 | | 122-3979 | 1 | BAND | |
| | 39 | | 122-4093 | 1 | SHEET | |
| | 40 | | 122-3944 | 1 | SHEET AS | |
| | 41 | | 7Y-2854 | 2 | SPACER | |
| | 42 | | 3B-4618 | 3 | COTTER | |
| | 43 | | 3B-4618 | 3 | COTTER | |
| | 44 | | 8T-4121 | 5 | WASHER | |
| D | 45 | | 5P-8309 | | SEAL (0.12m) | |
| D | 46 | | 5P-8309 | | SEAL (0.185m) | |
| | 47 | | 131-7450 | 1 | SHEET AS | |

## 1161634 HOOD & GUARD GP-PART 2 OF 3

| | | | |
|---|---|---|---|
| 48 | 131-7451 | 1 | LINER |
| 49 | 6P-2216 | 3 | CAP |
| 50 | 131-7452 | 1 | SHEET AS |
| 51 | 131-7455 | 1 | LINER |
| 52 | 131-7454 | 1 | LINER |
| 53 | 131-7453 | 1 | LINER |
| 54 | 6P-2216 | 9 | CAP |
| 55 | 4I-7924 | 9 | WASHER |
| 56 | 8T-4137 | 2 | BOLT (L=20mm) |
| 57 | 8T-4171 | 6 | BOLT (L=12mm) |

## 1161634 HOOD & GUARD GP-PART 2 OF 3

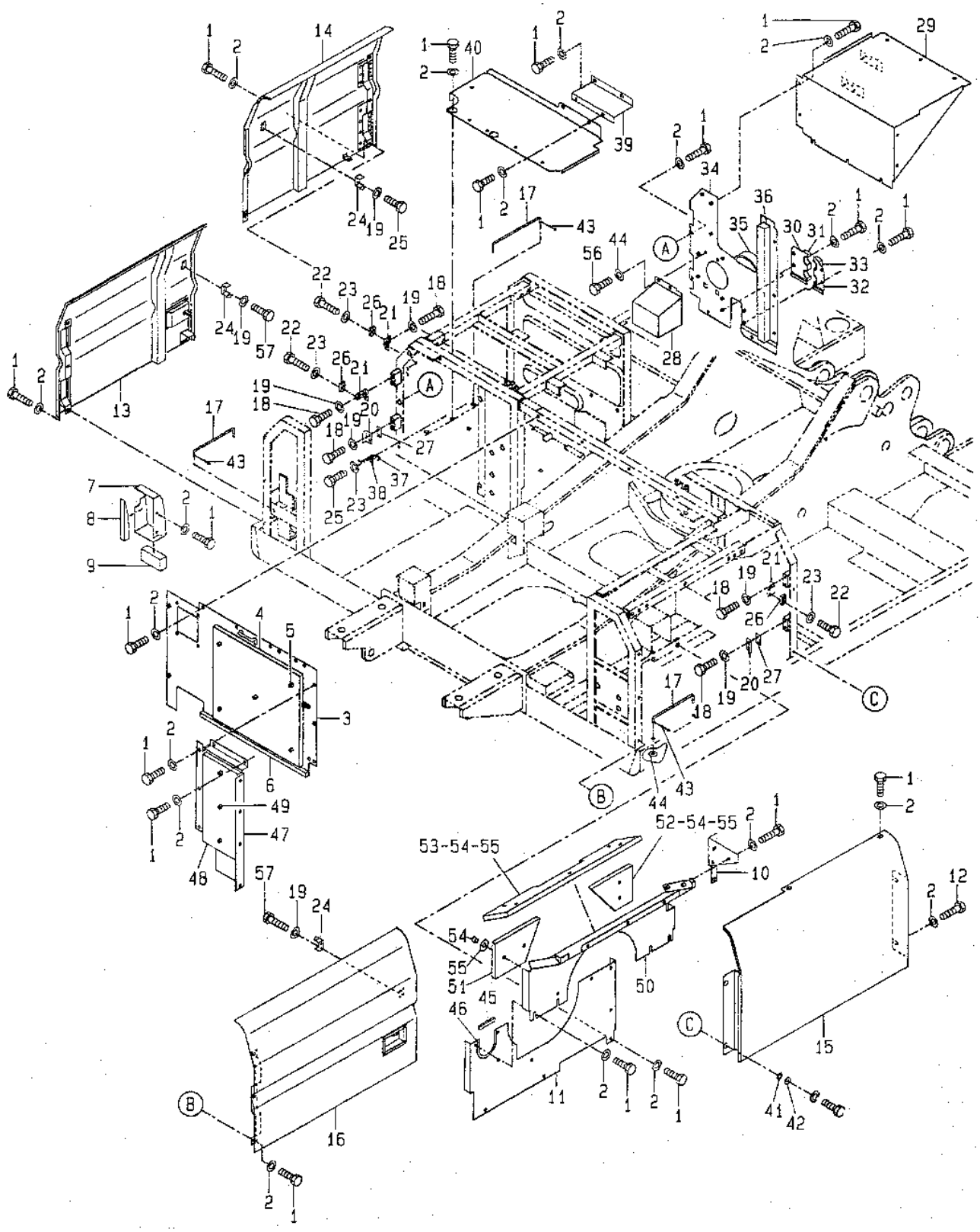

GRAPHIC #1

h64004e

# 1161634 HOOD & GUARD GP-PART 3 OF 3

S/N 8SR 00118-00417, 8TR 00152-00485

**Key:**

**SMCS**

| NOTE | REF NO | GRAPHIC REF | PART NUMBER | QTY | PART NAME 1 2 3 4 5 6 (PRODUCT LEVEL) | PRICE USD |
|---|---|---|---|---|---|---|
| | 1 | | 8T-4192 | 34 | BOLT (L=25mm) | |
| | 2 | | 5P-1076 | 53 | WASHER | |
| | 3 | | 116-1738 | 1 | SUPPORT AS | |
| | 4 | | 8T-4139 | 18 | BOLT (L=30mm) | |
| | 5 | | 117-4382 | 1 | SUPPORT AS | |
| | 6 | | 116-1748 | 1 | SUPPORT AS | |
| | 7 | | 116-1741 | 1 | SUPPORT AS | |
| | 8 | | 8T-4244 | 1 | NUT | |
| | 9 | | 116-1751 | 1 | SUPPORT AS | |
| | 10 | | 116-1658 | 1 | SUPPORT AS | |
| | 11 | | 116-1778 | 1 | SUPPORT AS | |
| | 12 | | 116-1743 | 1 | SUPPORT AS | |
| | 13 | | 122-3958 | 1 | SUPPORT AS | |
| | 14 | | 122-3948 | 1 | SUPPORT AS | |
| | 15 | | 122-3951 | 1 | SUPPORT AS | |
| | 16 | | 135-7510 | 1 | SUPPORT AS | |
| | 17 | | 131-0582 | 1 | SUPPORT AS | |

## 1161634 HOOD & GUARD GP-PART 3 OF 3

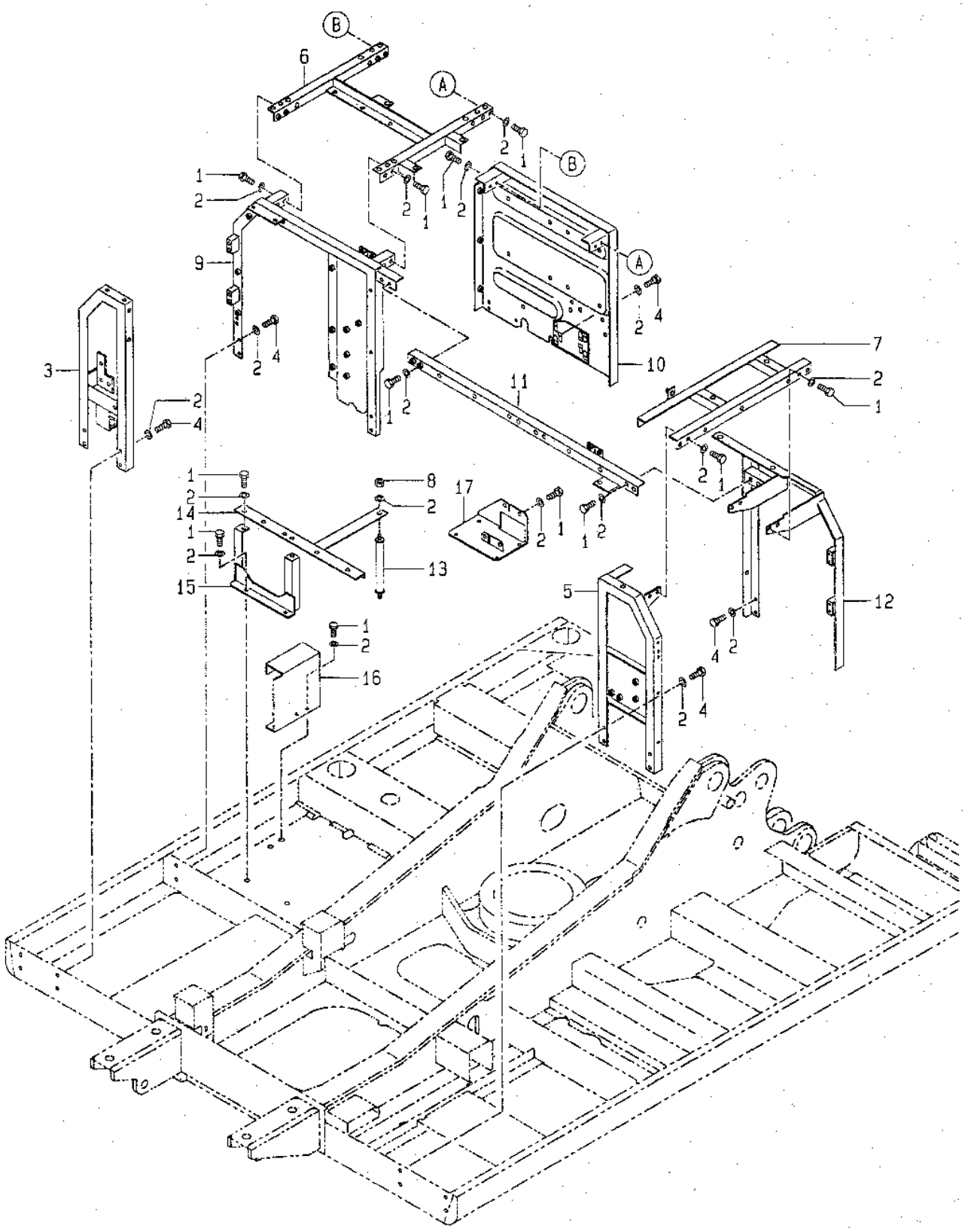


GRAPHIC #1

h64006e

# 1161634 HOOD & GUARD GP-PART 1 OF 3

S/N 8SR 00418-UP, 8TR 00486-UP
1161808-Page 188

**Key:** Y - SEE SEPARATE ILLUSTRATION

**SMCS**

| NOTE | REF NO | GRAPHIC REF | PART NUMBER | QTY | PART NAME 1 2 3 4 5 6 (PRODUCT LEVEL) | PRICE USD |
|---|---|---|---|---|---|---|
| Y | 1 | | 116-1808 | 1 | HOOD GP | |
| | 2 | | 8T-4192 | 26 | BOLT (L=25mm) | |
| | 3 | | 5P-1076 | 33 | WASHER | |
| | 4 | | 116-1734 | 1 | SUPPORT AS | |
| | 5 | | 116-1732 | 1 | COVER AS | |
| | 6 | | 116-1725 | 1 | COVER AS | |
| | 7 | | 116-1731 | 1 | SHEET | |
| | 8 | | 116-1728 | 1 | SHEET | |
| | 9 | | 116-1727 | 1 | SHEET | |
| | 10 | | 099-1426 | 2 | SPACER | |
| | 11 | | 114-6285 | 2 | BAR | |
| | 12 | | 8T-4183 | 6 | BOLT (L=40mm) | |
| | 13 | | 8T-4200 | 8 | BOLT (L=16mm) | |
| | 14 | | 116-1794 | 1 | SPRING | |
| | 15 | | 116-1795 | 1 | SPRING | |
| | 16 | | 8T-4224 | 8 | WASHER | |
| | 17 | | 4I-0118 | 2 | HOOK | |
| | 18 | | 4I-0117 | 1 | FASTENER | |
| | 19 | | 1R-9958 | 1 | FASTENER | |
| | 20 | | 8T-4223 | 2 | WASHER | |
| | 21 | | 7J-5925 | 1 | COTTER | |
| | 22 | | 116-1628 | 1 | SUPPORT AS | |
| | 23 | | 122-4124 | 1 | SHEET | |
| | 24 | | 8T-4139 | 2 | BOLT (L=30mm) | |
| | 25 | | 8T-4179 | 2 | BOLT (L=20mm) | |
| | 26 | | 7X-0618 | 2 | WASHER | |
| | 27 | | 7Y-2854 | 2 | SPACER | |

## 1161634 HOOD & GUARD GP-PART 1 OF 3

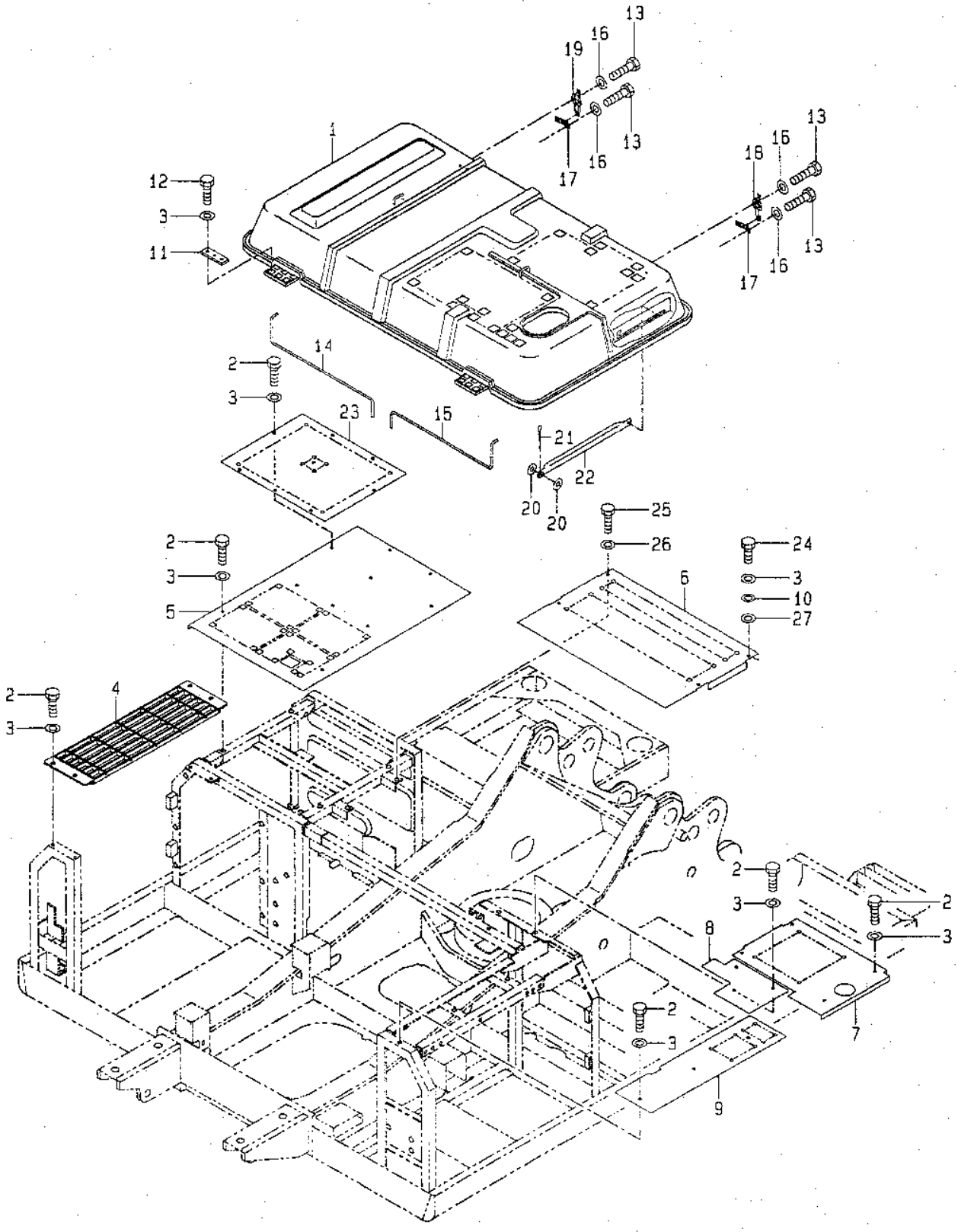


GRAPHIC #1

h79271e

# 1161634 HOOD & GUARD GP-PART 2 OF 3

S/N 8SR 00418-UP, 8TR 00486-UP
1161786-Page 189.01, 1161780-Page 190.01, 1161783-Page 191.01

**Key:** B - USE AS REQUIRED, D - ORDER BY THE METER, Y - SEE SEPARATE ILLUSTRATION

**SMCS**

| NOTE | REF NO | GRAPHIC REF | PART NUMBER | QTY | PART NAME 1 2 3 4 5 6 (PRODUCT LEVEL) | PRICE USD |
|---|---|---|---|---|---|---|
| | 1 | | 8T-4192 | 68 | BOLT (L=25mm) | |
| | 2 | | 5P-1076 | 71 | WASHER | |
| | 3 | | 116-1766 | 1 | SHEET AS | |
| | 4 | | 7Y-2680 | 1 | LINER | |
| | 5 | | 6P-2216 | 5 | CAP | |
| D | 6 | | 5P-5671 | | SEAL (0.752m) | |
| | 7 | | 129-3379 | 1 | COVER AS | |
| | 8 | | 129-3381 | 1 | LINER | |
| | 9 | | 129-3382 | 1 | LINER | |
| | 10 | | 116-1729 | 1 | SHEET | |
| | 11 | | 117-4390 | 1 | SHEET AS | |
| | 12 | | 7X-2548 | 2 | BOLT (L=16mm) | |
| Y | 13 | | 116-1786 | 1 | DOOR GP | |
| Y | 14 | | 116-1783 | 1 | DOOR GP | |
| | 15 | | 116-1745 | 1 | DOOR AS | |
| Y | 16 | | 116-1780 | 1 | DOOR GP | |
| | 17 | | 122-4120 | 1 | ROD | |
| | 18 | | 8T-4138 | 10 | BOLT (L=20mm) | |
| | 19 | | 5P-4115 | 16 | WASHER | |
| | 20 | | 4I-0232 | 2 | STRIKER | |
| | 21 | | 7I-1418 | 3 | SUPPORT AS | |
| | 22 | | 105-3487 | 6 | BOLT (L=20mm) | |
| | 23 | | 9X-8256 | 8 | WASHER | |
| | 24 | | 4I-8019 | 3 | SUPPORT | |
| | 25 | | 5C-9553 | 2 | BOLT (L=16mm) | |
| | 26 | | 6I-6033 | 3 | STOPPER | |
| B | 27 | | 087-3908 | 4 | SHIM (T=1.00mm) | |
| B | | | 087-3909 | 4 | SHIM (T=2.00mm) | |
| | 28 | | 137-2241 | 1 | COVER | |
| | 29 | | 137-2246 | 1 | COVER AS | |
| | 30 | | 117-4239 | 1 | SHEET AS | |
| | 31 | | 116-1818 | 1 | LINER | |
| | 32 | | 117-4240 | 1 | SHEET AS | |
| | 33 | | 116-1818 | 1 | LINER | |
| | 34 | | 137-2222 | 1 | SHEET AS | |
| | 35 | | 116-1756 | 1 | LINER | |
| | 36 | | 129-3378 | 1 | LINER | |
| | 37 | | 134-6201 | 1 | ROD | |
| | 38 | | 123-9790 | 1 | BAND | |
| | 39 | | 122-4093 | 1 | SHEET | |
| | 40 | | 122-3944 | 1 | SHEET AS | |
| | 41 | | 7Y-2854 | 2 | SPACER | |
| | 42 | | 3B-2853 | 3 | COTTER | |
| | 43 | | 3B-4618 | 3 | COTTER | |
| | 44 | | 8T-4121 | 5 | WASHER | |
| D | 45 | | 5P-8309 | | SEAL (0.12m) | |
| D | 46 | | 5P-8309 | | SEAL (0.185m) | |
| | 47 | | 131-7450 | 1 | SHEET AS | |

## 1161634 HOOD & GUARD GP-PART 2 OF 3

| | | | |
|---|---|---|---|
| 48 | 131-7451 | 1 | LINER |
| 49 | 6P-2216 | 3 | CAP |
| 50 | 131-7452 | 1 | SHEET AS |
| 51 | 131-7455 | 1 | LINER |
| 52 | 131-7454 | 1 | LINER |
| 53 | 131-7453 | 1 | LINER |
| 54 | 6P-2216 | 9 | CAP |
| 55 | 4I-7924 | 9 | WASHER |
| 56 | 8T-4137 | 2 | BOLT (L=20mm) |
| 57 | 8T-4171 | 6 | BOLT (L=12mm) |

## 1161634 HOOD & GUARD GP-PART 2 OF 3

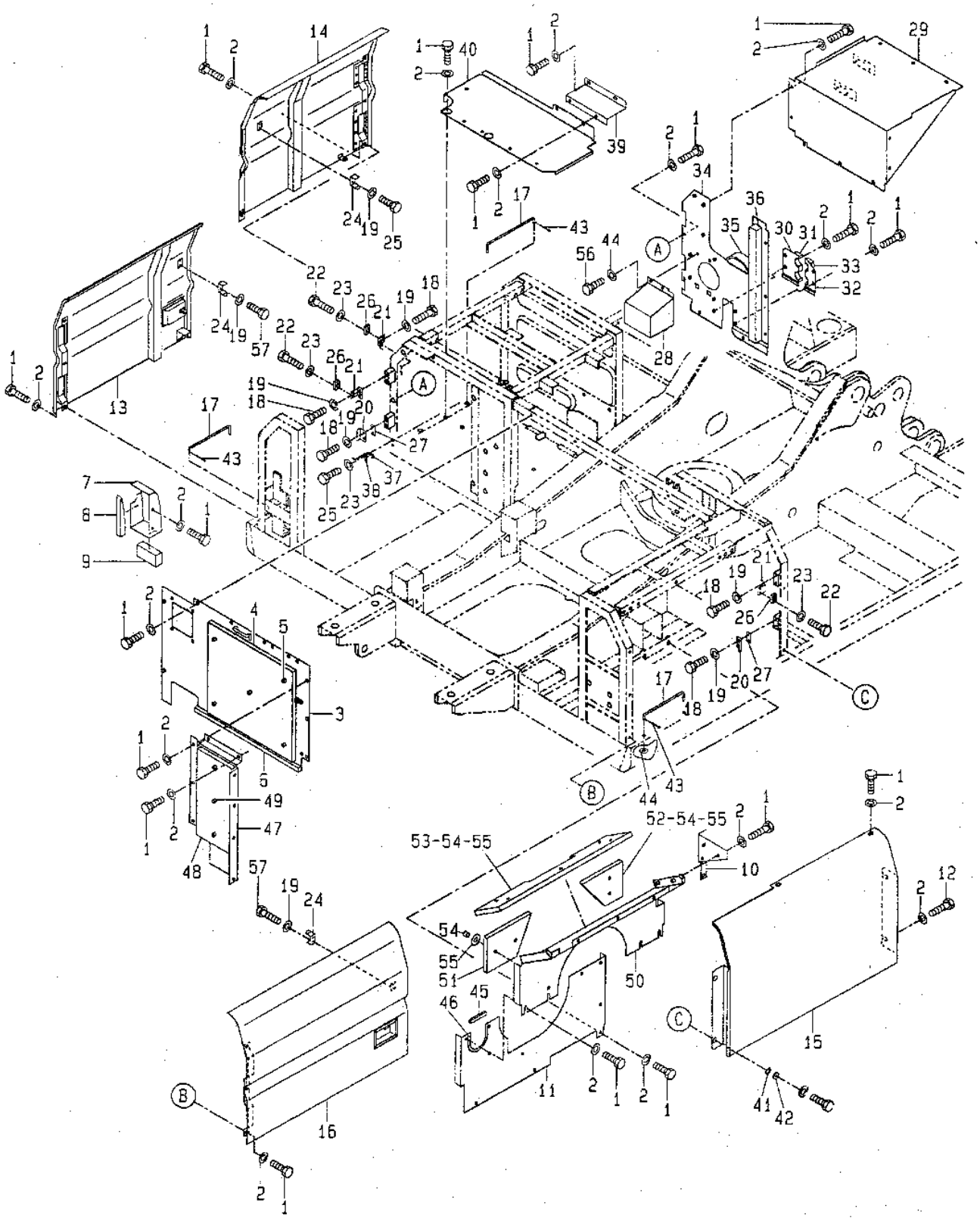

GRAPHIC #1

h79273e

# 1161634 HOOD & GUARD GP-PART 3 OF 3

S/N 8SR 00418-UP, 8TR 00486-UP

**Key:**

**SMCS**

| NOTE | REF NO | GRAPHIC REF | PART NUMBER | QTY | PART NAME 1 2 3 4 5 6 (PRODUCT LEVEL) | PRICE USD |
|---|---|---|---|---|---|---|
| | 1 | | 8T-4192 | 34 | BOLT (L=25mm) | |
| | 2 | | 5P-1076 | 53 | WASHER | |
| | 3 | | 116-1738 | 1 | SUPPORT AS | |
| | 4 | | 8T-4139 | 18 | BOLT (L=30mm) | |
| | 5 | | 117-4382 | 1 | SUPPORT AS | |
| | 6 | | 116-1748 | 1 | SUPPORT AS | |
| | 7 | | 116-1741 | 1 | SUPPORT AS | |
| | 8 | | 8T-4244 | 1 | NUT | |
| | 9 | | 116-1751 | 1 | SUPPORT AS | |
| | 10 | | 116-1658 | 1 | SUPPORT AS | |
| | 11 | | 116-1778 | 1 | SUPPORT AS | |
| | 12 | | 116-1743 | 1 | SUPPORT AS | |
| | 13 | | 122-3958 | 1 | SUPPORT AS | |
| | 14 | | 122-3948 | 1 | SUPPORT AS | |
| | 15 | | 122-3951 | 1 | SUPPORT AS | |
| | 16 | | 135-7510 | 1 | SUPPORT AS | |
| | 17 | | 131-0582 | 1 | SUPPORT AS | |

## 1161634 HOOD & GUARD GP-PART 3 OF 3

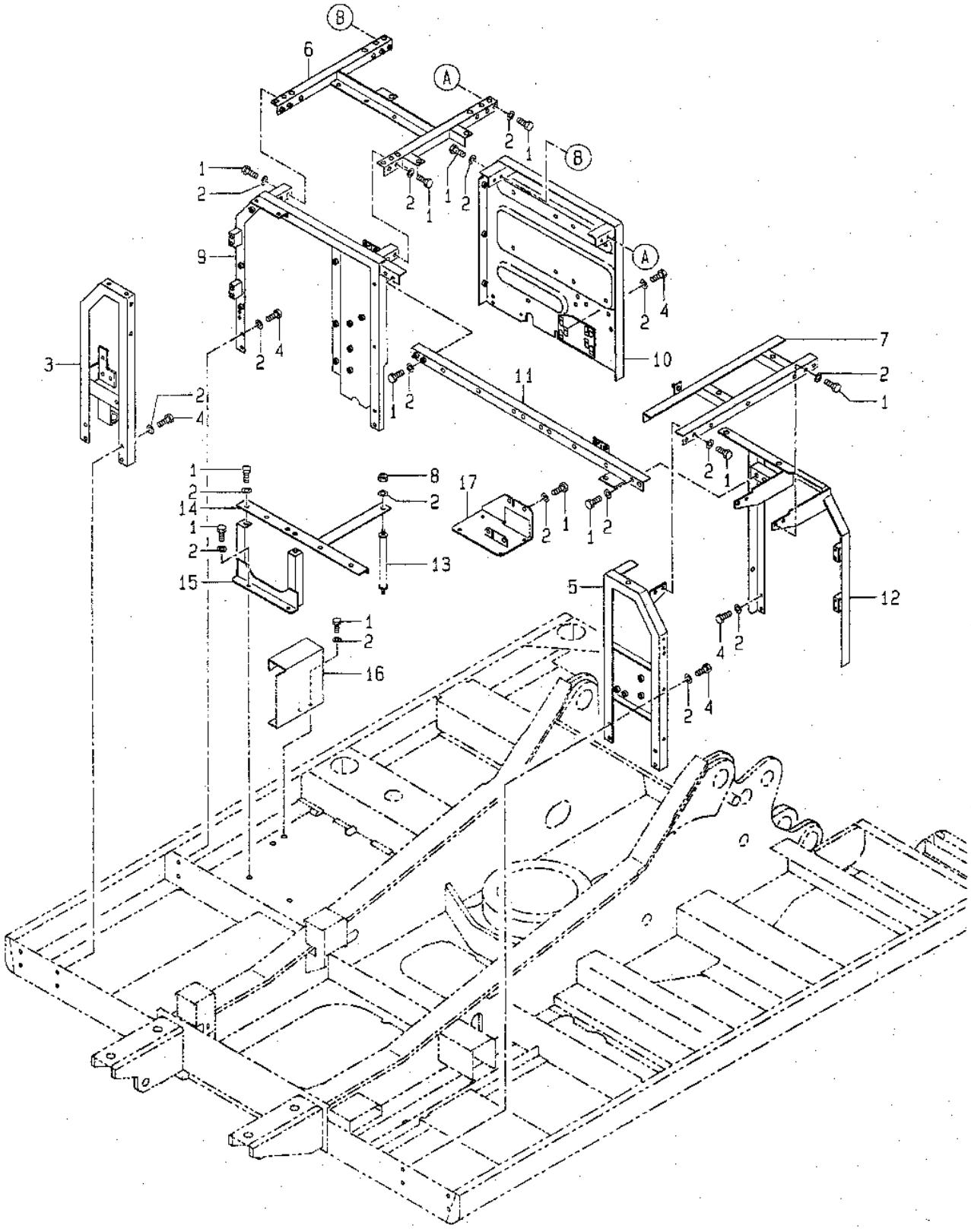


GRAPHIC #1

h79275e

# 1161808 HOOD GP-ENGINE

PART OF 1161634-Page 183

**Key:** H - ORDER BY THE DECIMETER

**SMCS**

| NOTE | REF NO | GRAPHIC REF | PART NUMBER | QTY | PART NAME 1 2 3 4 5 6 (PRODUCT LEVEL) | PRICE USD |
|---|---|---|---|---|---|---|
| H | 1 | | 102-5672 | | SEAL (67.3dm) | |
| | 2 | | 114-6289 | 2 | HINGE | |
| | 3 | | 129-3401 | 1 | LINER | |
| | 4 | | 129-3402 | 1 | LINER | |
| | 5 | | 129-3403 | 1 | LINER | |
| | 6 | | 8T-6693 | 4 | SCREW-MACHINE | |
| | 7 | | 8T-0328 | 4 | WASHER-HARD | |
| | 8 | | 096-4129 | 2 | CUSHION | |
| | 9 | | 131-7457 | 1 | LINER | |
| | 10 | | 131-7458 | 1 | LINER | |
| | 11 | | 131-7459 | 1 | LINER | |
| | 12 | | 131-7460 | 1 | LINER | |
| | 13 | | 131-7461 | 1 | LINER | |
| | 14 | | 131-7456 | 1 | LINER | |
| | 15 | | 4I-7924 | 19 | WASHER | |
| | 16 | | 6P-2216 | 19 | CAP | |

## 1161808 HOOD GP-ENGINE

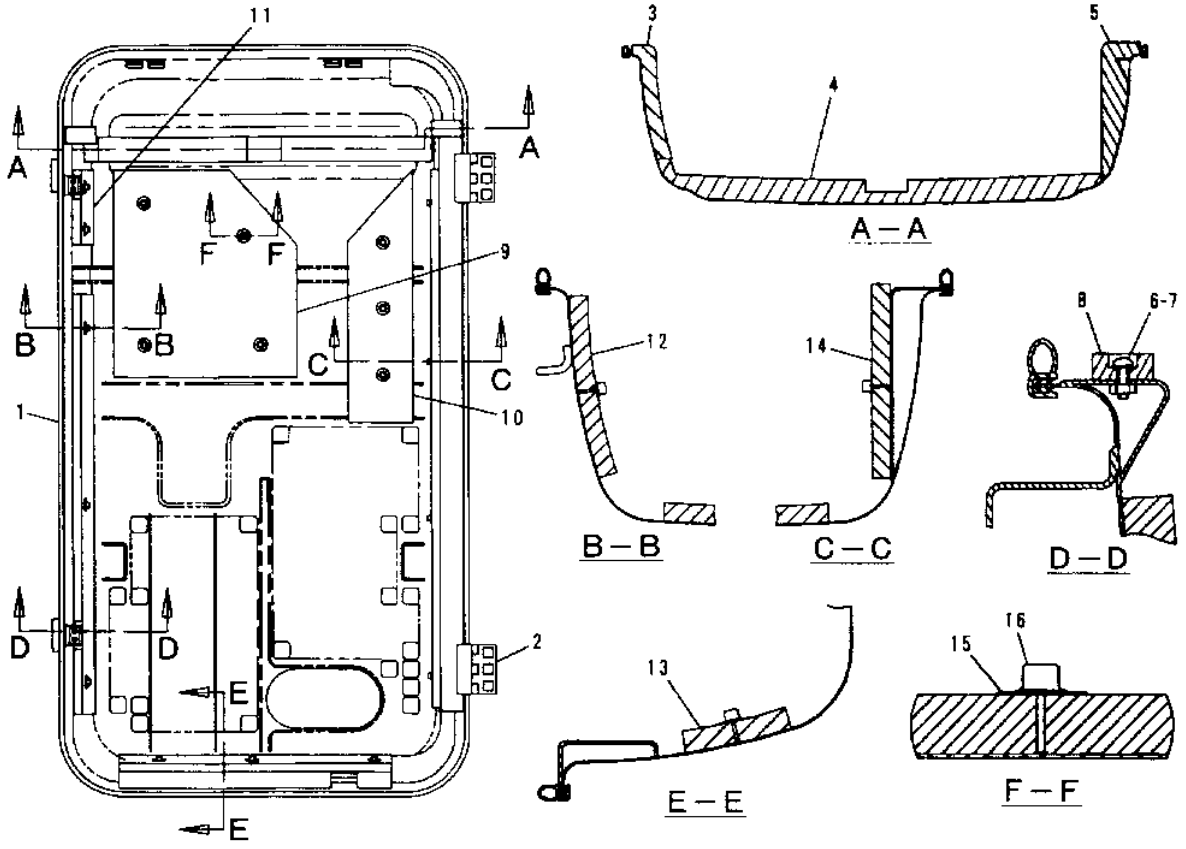


| NOTE | No. | PART No. | QTY | PART NAME | NOTE | No. | PART No. | QTY | PART NAME |
|---|---|---|---|---|---|---|---|---|---|
| ▲ | 1 | 102-5672 | | SEAL ···(67.3dm) | | | | | |
| | 2 | 114-6289 | 2 | HINGE | | | | | |
| | 3 | 129-3401 | 1 | LINER | | | | | |
| | 4 | 129-3402 | 1 | LINER | | | | | |
| | 5 | 129-3403 | 1 | LINER | | | | | |
| | 6 | 8T-6693 | 4 | SCREW-MACHINE | | | | | |
| | 7 | 8T-0328 | 4 | WASHER-HARD | | | | | |
| | 8 | 096-4129 | 2 | CUSHION | | | | | |
| | 9 | 131-7457 | 1 | LINER | | | | | |
| | 10 | 131-7458 | 1 | LINER | | | | | |
| | 11 | 131-7459 | 1 | LINER | | | | | |
| | 12 | 131-7460 | 1 | LINER | | | | | |
| | 13 | 131-7461 | 1 | LINER | | | | | |
| | 14 | 131-7456 | 1 | LINER | | | | | |
| | 15 | 4I-7924 | 19 | WASHER | | | | | |
| | 16 | 6P-2216 | 19 | CAP | | | | | |

▲ – ORDER BY THE DECIMETER

H50807E

# 1161786 DOOR GP-HOOD

S/N 8SR 1-00196, 8TR 1-00206
PART OF 1161634-Page 185

**Key:**

**SMCS**

| NOTE | REF NO | GRAPHIC REF | PART NUMBER | QTY | PART NAME 1 2 3 4 5 6 (PRODUCT LEVEL) | PRICE USD |
|---|---|---|---|---|---|---|
| | 1 | | 116-1627 | 2 | HINGE | |
| | 2 | | 7I-6328 | 1 | LINER | |
| | 3 | | 7I-6330 | 1 | LINER | |
| | 4 | | 117-4343 | 1 | LINER | |
| | 5 | | 4I-8436 | 1 | LOCK AS | |
| | | | 099-6415 | 1 | LOCK AS | |
| | 6 | | 4I-8438 | 4 | SCREW-MACHINE | |
| | 7 | | 099-6418 | 4 | NUT | |
| | 8 | | 122-4101 | 1 | RUBBER | |

## 1161786 DOOR GP-HOOD

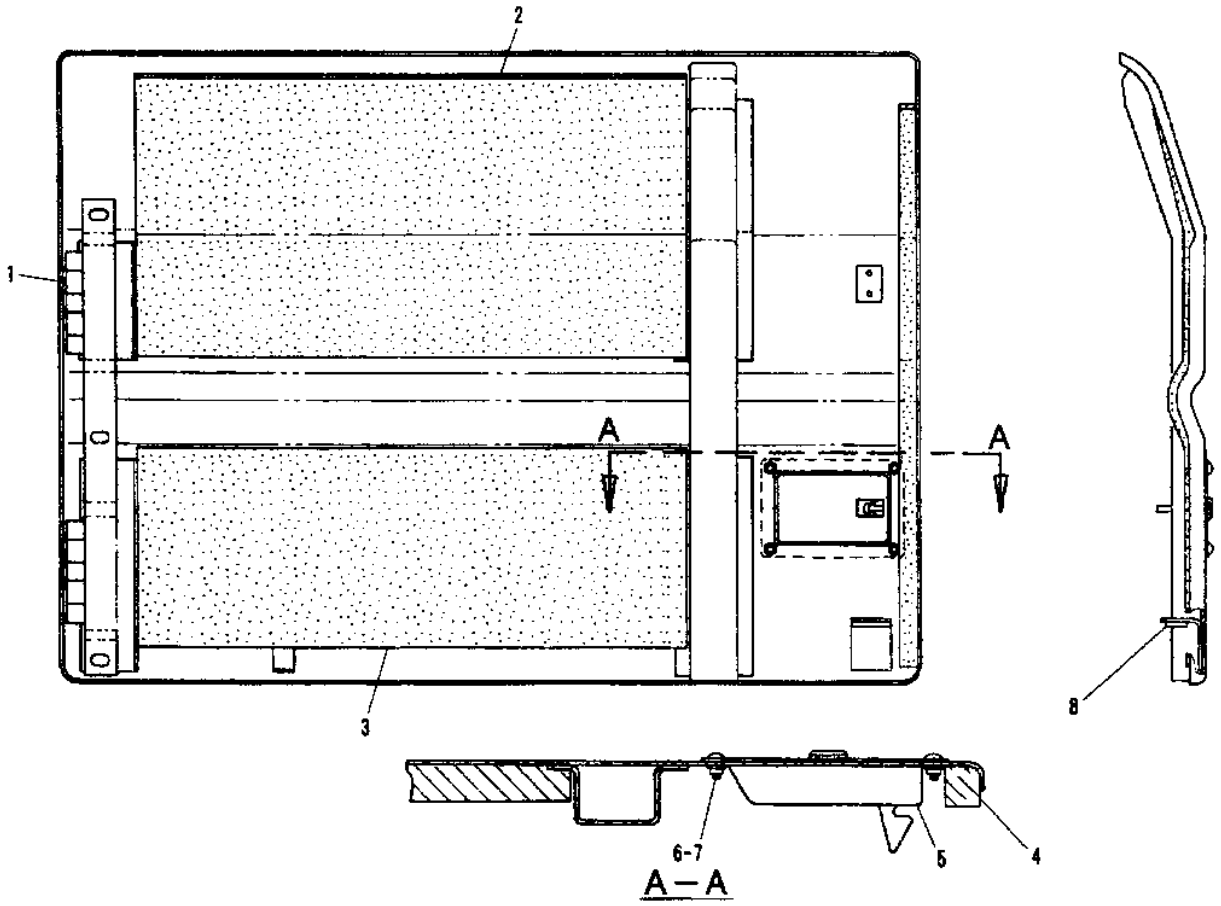


| NOTE | No. | PART No. | QTY | PART NAME |
|---|---|---|---|---|
| | 1 | 116-1627 | 2 | HINGE |
| | 2 | 7I-6328 | 1 | LINER |
| | 3 | 7I-6330 | 1 | LINER |
| | 4 | 117-4343 | 1 | LINER |
| | 5 | 4I-8436 | 1 | LOCK AS |
| | | 099-6415 | 1 | LOCK AS |
| | 6 | 4I-8438 | 4 | SCREW-MACHINE |
| | 7 | 099-6418 | 4 | NUT |
| | 8 | 122-4101 | 1 | RUBBER |

H58709E

# 1161786 DOOR GP-HOOD

S/N 8SR 00197-UP, 8TR 00207-UP
PART OF 1161634-Page 187.04

**Key:**

**SMCS**

| NOTE | REF NO | GRAPHIC REF | PART NUMBER | QTY | PART NAME 1 2 3 4 5 6 (PRODUCT LEVEL) | PRICE USD |
|---|---|---|---|---|---|---|
| | 1 | | 116-1627 | 2 | HINGE | |
| | 2 | | 140-0527 | 1 | INSULATION | |
| | 3 | | 140-0528 | 1 | INSULATION | |
| | 4 | | 117-4343 | 1 | LINER | |
| | 5 | | 142-5542 | 1 | LOCK AS | |
| | 6 | | 122-4101 | 1 | RUBBER | |
| | 7 | | 099-6418 | 4 | NUT | |

## 1161786 DOOR GP-HOOD

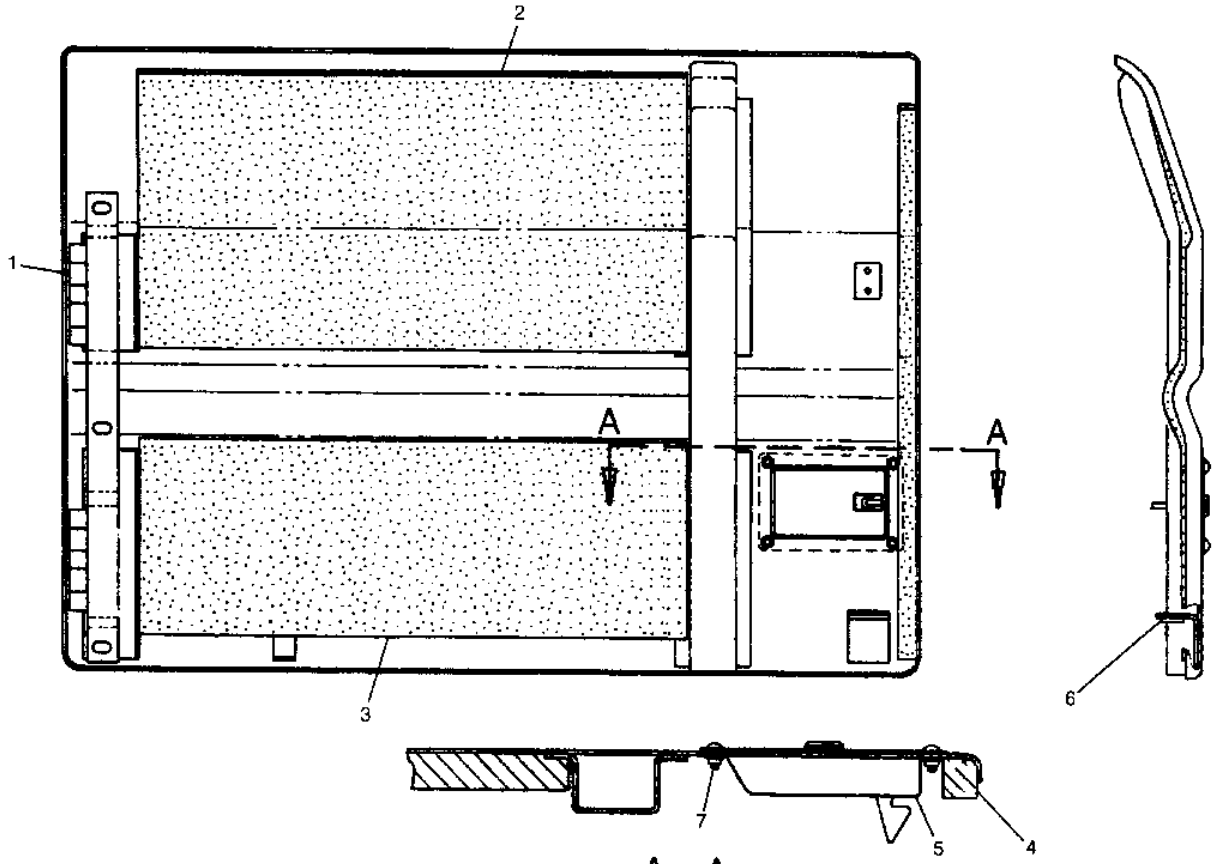


A – A

| NOTE | No. | PART No. | QTY | PART NAME | NOTE | No. | PART No. | QTY | PART NAME |
|---|---|---|---|---|---|---|---|---|---|
| | 1 | 116-1627 | 2 | HINGE | | | | | |
| | 2 | 140-0527 | 1 | INSULATION | | | | | |
| | 3 | 140-0528 | 1 | INSULATION | | | | | |
| | 4 | 117-4343 | 1 | LINER | | | | | |
| | 5 | 142-5542 | 1 | LOCK AS | | | | | |
| | 6 | 122-4101 | 1 | RUBBER | | | | | |
| | 7 | 099-6418 | 4 | NUT | | | | | |

H64013E

# 1161780 DOOR GP-HOOD

S/N 8SR 1-00196, 8TR 1-00206
PART OF 1161634-Page 185

**Key:**

**SMCS**

| NOTE | REF NO | GRAPHIC REF | PART NUMBER | QTY | PART NAME 1 2 3 4 5 6 (PRODUCT LEVEL) | PRICE USD |
|---|---|---|---|---|---|---|
| | 1 | | 129-3358 | 1 | LINER | |
| | 2 | | 116-1627 | 2 | HINGE | |
| | 3 | | 122-4043 | 1 | LINER | |
| | 4 | | 122-4044 | 1 | LINER | |
| | 5 | | 4I-8436 | 1 | LOCK AS | |
| | | | 099-6415 | 1 | LOCK AS | |
| | 6 | | 4I-8438 | 4 | SCREW-MACHINE | |
| | 7 | | 099-6418 | 4 | NUT | |

## 1161780 DOOR GP-HOOD

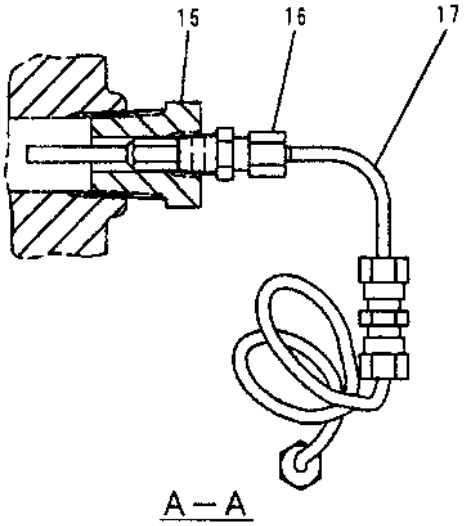


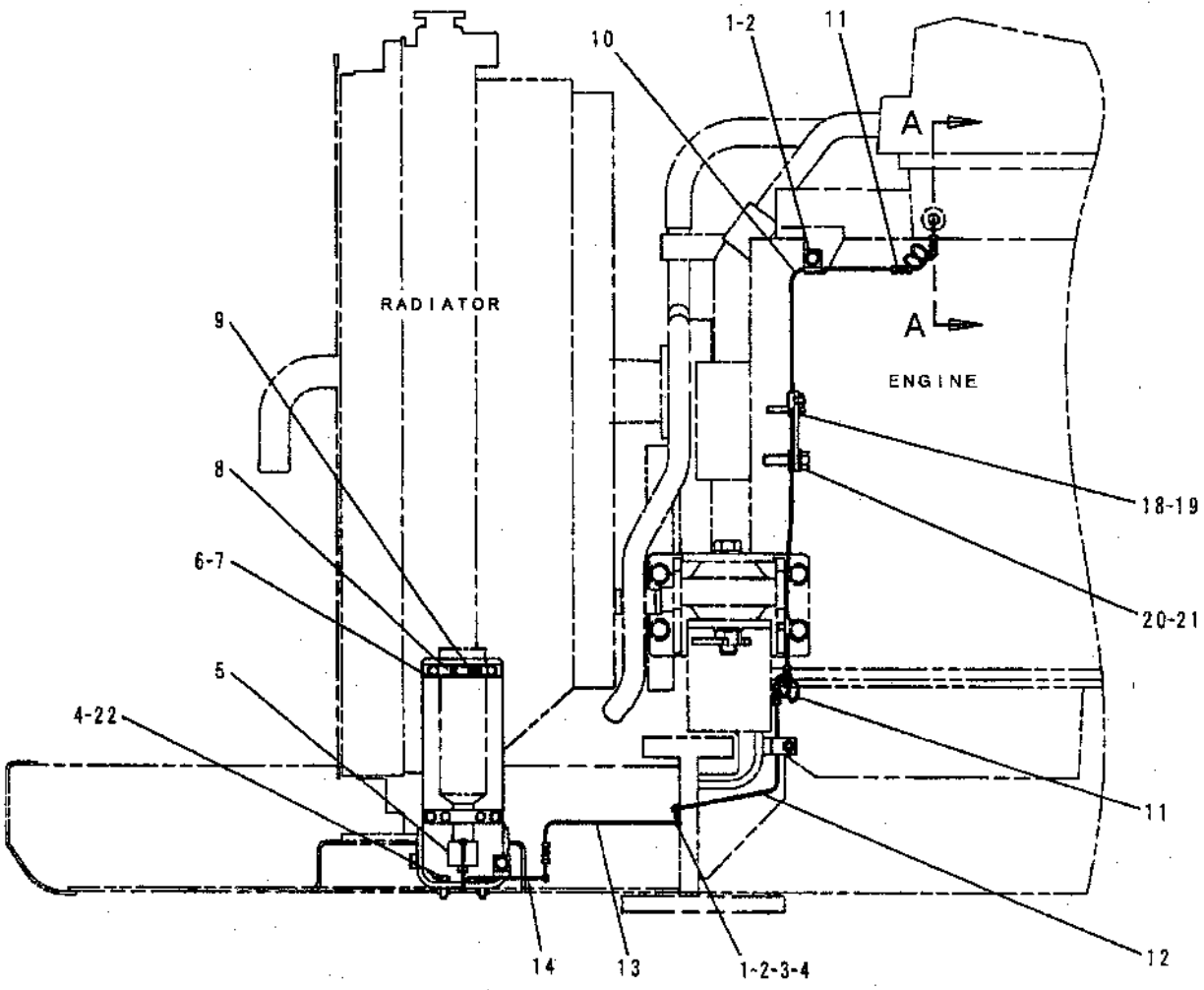


LEFT SIDE OF ENGINE

GRAPHIC #1

h58710e

# 1161780 DOOR GP-HOOD

S/N 8SR 00197-UP, 8TR 00207-UP
PART OF 1161634-Page 187.04

**Key:**

**SMCS**

| NOTE | REF NO | GRAPHIC REF | PART NUMBER | QTY | PART NAME 1 2 3 4 5 6 (PRODUCT LEVEL) | PRICE USD |
|---|---|---|---|---|---|---|
| | 1 | | 129-3358 | 1 | LINER | |
| | 2 | | 116-1627 | 2 | HINGE | |
| | 3 | | 140-0529 | 1 | INSULATION | |
| | 4 | | 140-0530 | 1 | INSULATION | |
| | 5 | | 142-5542 | 1 | LOCK AS | |
| | 6 | | 099-6418 | 4 | NUT | |

## 1161780 DOOR GP-HOOD

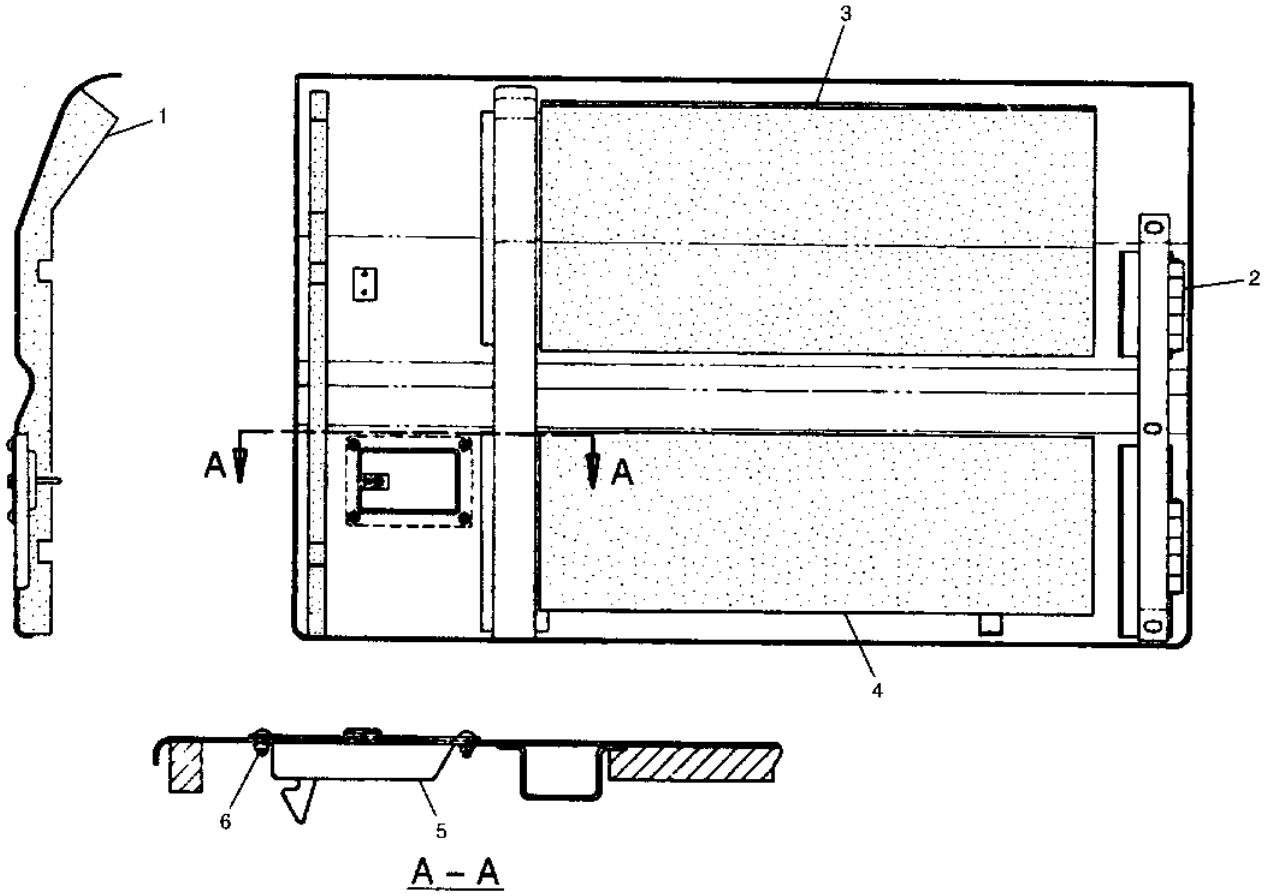


A – A

| NOTE | No. | PART No. | QTY | PART NAME | NOTE | No. | PART No. | QTY | PART NAME |
|---|---|---|---|---|---|---|---|---|---|
| | 1 | 129-3358 | 1 | LINER | | | | | |
| | 2 | 116-1627 | 2 | HINGE | | | | | |
| | 3 | 140-0529 | 1 | INSULATION | | | | | |
| | 4 | 140-0530 | 1 | INSULATION | | | | | |
| | 5 | 142-5542 | 1 | LOCK AS | | | | | |
| | 6 | 099-6418 | 4 | NUT | | | | | |

H64014E

# 1161783 DOOR GP-HOOD

S/N 8SR 1-00196, 8TR 1-00206
PART OF 1161634-Page 185

**Key:**

**SMCS**

| NOTE | REF NO | GRAPHIC REF | PART NUMBER | QTY | PART NAME 1 2 3 4 5 6 (PRODUCT LEVEL) | PRICE USD |
|---|---|---|---|---|---|---|
| | 1 | | 114-6264 | 1 | LINER | |
| | 2 | | 116-1627 | 2 | HINGE | |
| | 3 | | 7I-6328 | 1 | LINER | |
| | 4 | | 7I-6330 | 1 | LINER | |

## 1161783 DOOR GP-HOOD

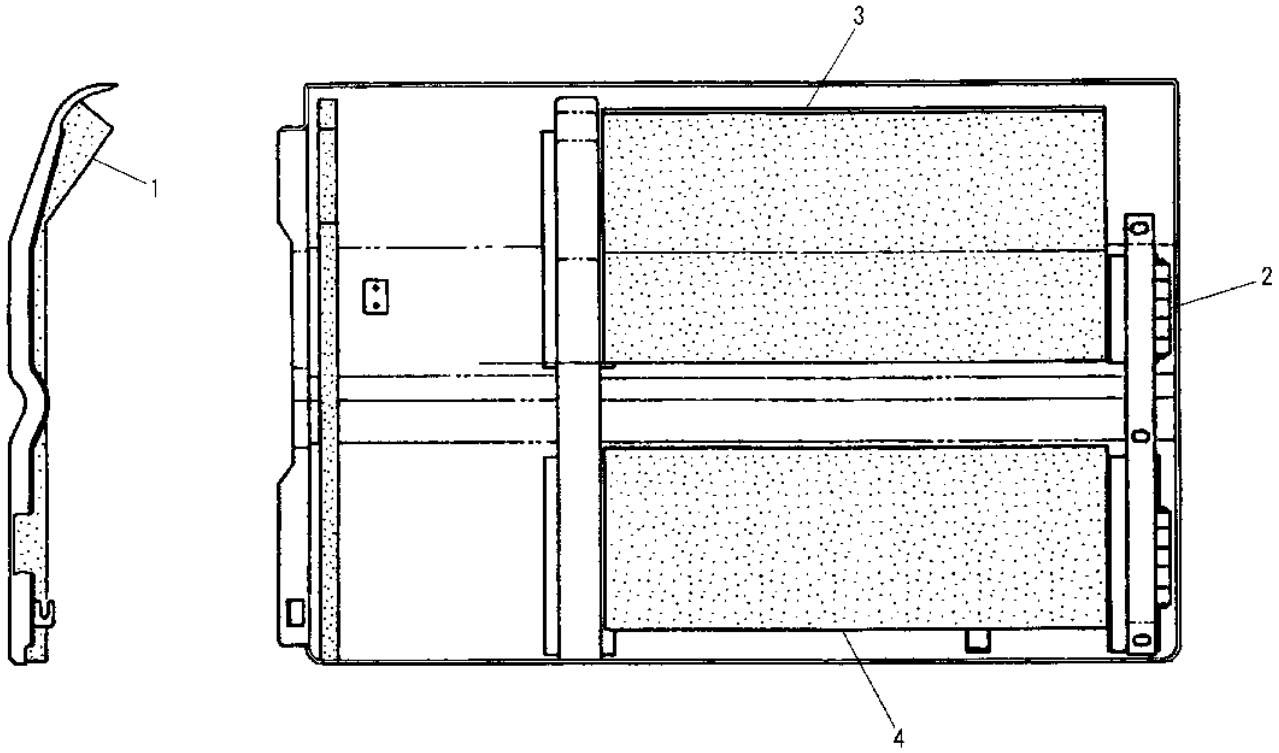


| NOTE | No. | PART No. | QTY | PART NAME |
|---|---|---|---|---|
| | 1 | 114-6264 | 1 | LINER |
| | 2 | 116-1627 | 2 | HINGE |
| | 3 | 71-6328 | 1 | LINER |
| | 4 | 71-6330 | 1 | LINER |

| NOTE | No. | PART No. | QTY | PART NAME |
|---|---|---|---|---|

H58711E

GRAPHIC #1

h58711e

# 1161783 DOOR GP-HOOD

S/N 8SR 00197-UP, 8TR 00207-UP
PART OF 1161634-Page 187.04

**Key:**

**SMCS**

| NOTE | REF NO | GRAPHIC REF | PART NUMBER | QTY | PART NAME 1 2 3 4 5 6 (PRODUCT LEVEL) | PRICE USD |
|---|---|---|---|---|---|---|
| | 1 | | 114-6264 | 1 | LINER | |
| | 2 | | 116-1627 | 2 | HINGE | |
| | 3 | | 140-0527 | 1 | INSULATION | |
| | 4 | | 140-0528 | 1 | INSULATION | |

## 1161783 DOOR GP-HOOD

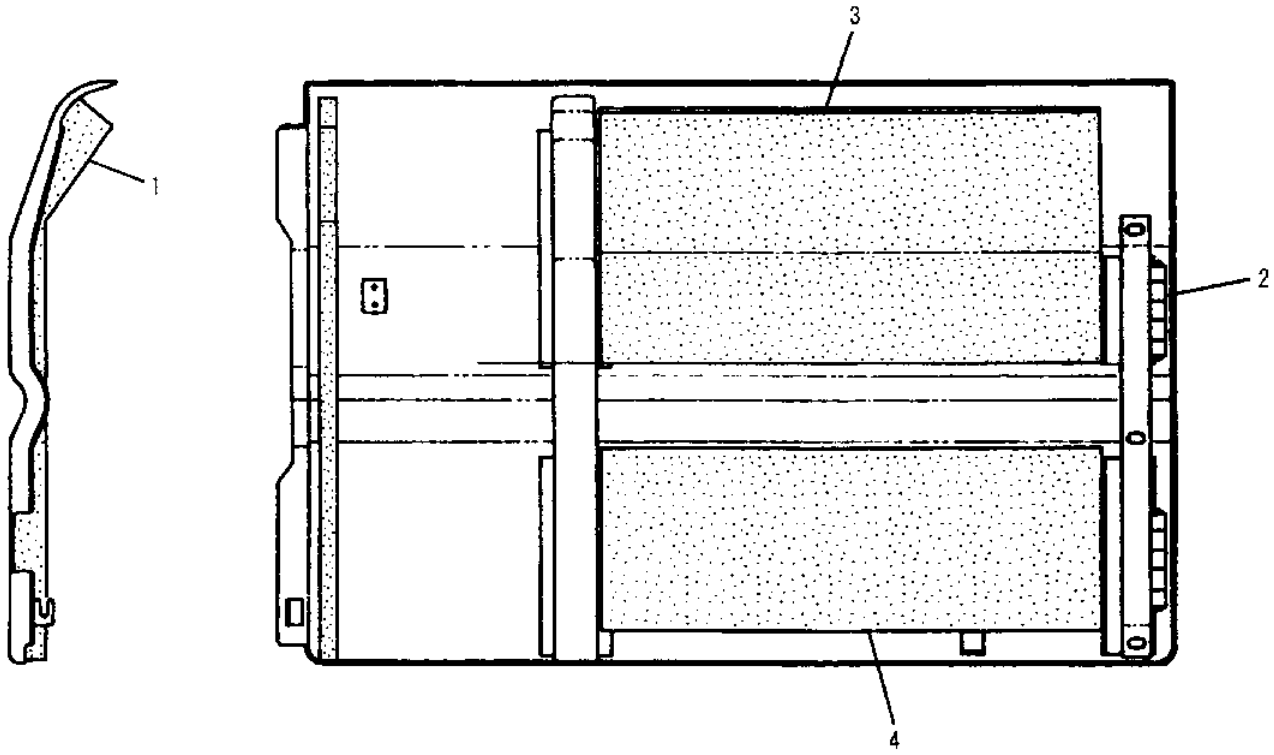


| NOTE | No. | PART No. | QTY | PART NAME | NOTE | No. | PART No. | QTY | PART NAME |
|---|---|---|---|---|---|---|---|---|---|
| | 1 | 114-6264 | 1 | LINER | | | | | |
| | 2 | 116-1627 | 2 | HINGE | | | | | |
| | 3 | 140-0527 | 1 | INSULATION | | | | | |
| | 4 | 140-0528 | 1 | INSULATION | | | | | |

H56344E

GRAPHIC #1

h56344e

# 1224096 DOOR GP-HOOD

PART OF 1224067-Page 196
AN ATTACHMENT

**Key:**

**SMCS**

| NOTE | REF NO | GRAPHIC REF | PART NUMBER | QTY | PART NAME 1 2 3 4 5 6 (PRODUCT LEVEL) | PRICE USD |
|---|---|---|---|---|---|---|
| | 1 | | 114-6264 | 1 | LINER | |
| | 2 | | 7Y-2881 | 1 | HINGE | |
| | 3 | | 102-5001 | 1 | LINER | |
| | 4 | | 103-0469 | 1 | LINER | |

## 1224096 DOOR GP-HOOD

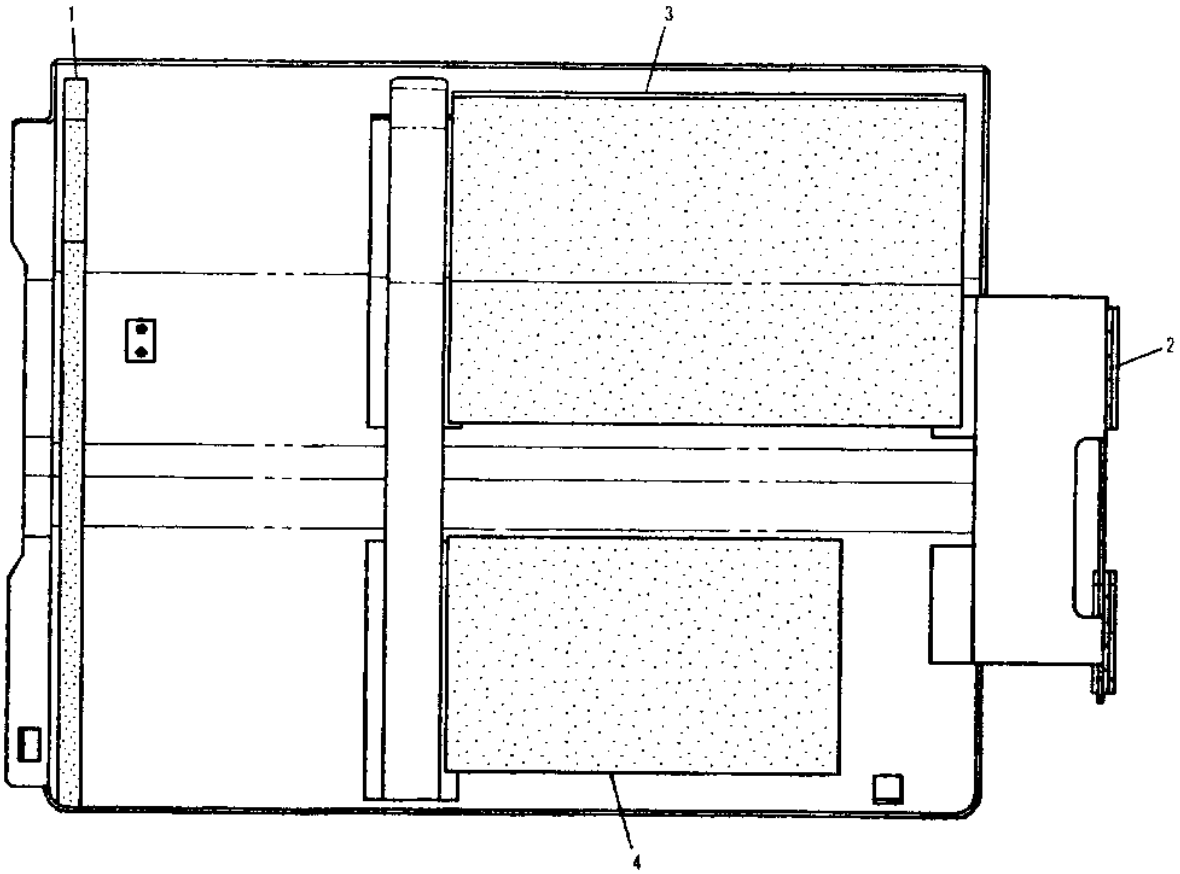


| NOTE | No. | PART No. | QTY | PART NAME |
|---|---|---|---|---|
| | 1 | 114-6264 | 1 | LINER |
| | 2 | 7Y-2881 | 1 | HINGE |
| | 3 | 102-5001 | 1 | LINER |
| | 4 | 103-0469 | 1 | LINER |

H59005E

GRAPHIC #1

h59005e

# 1357522 DOOR GP-HOOD

PART OF 1357516-Page 194
AN ATTACHMENT

**Key:**

**SMCS**

| NOTE | REF NO | GRAPHIC REF | PART NUMBER | QTY | PART NAME 1 2 3 4 5 6 (PRODUCT LEVEL) | PRICE USD |
|---|---|---|---|---|---|---|
| | 1 | | 116-1627 | 2 | HINGE | |
| | 2 | | 7I-6330 | 1 | LINER | |
| | 3 | | 117-4343 | 1 | LINER | |
| | 4 | | 142-5542 | 1 | LOCK AS | |
| | 5 | | 122-4101 | 1 | RUBBER | |
| | 6 | | 099-6418 | 4 | NUT | |

## 1357522 DOOR GP-HOOD

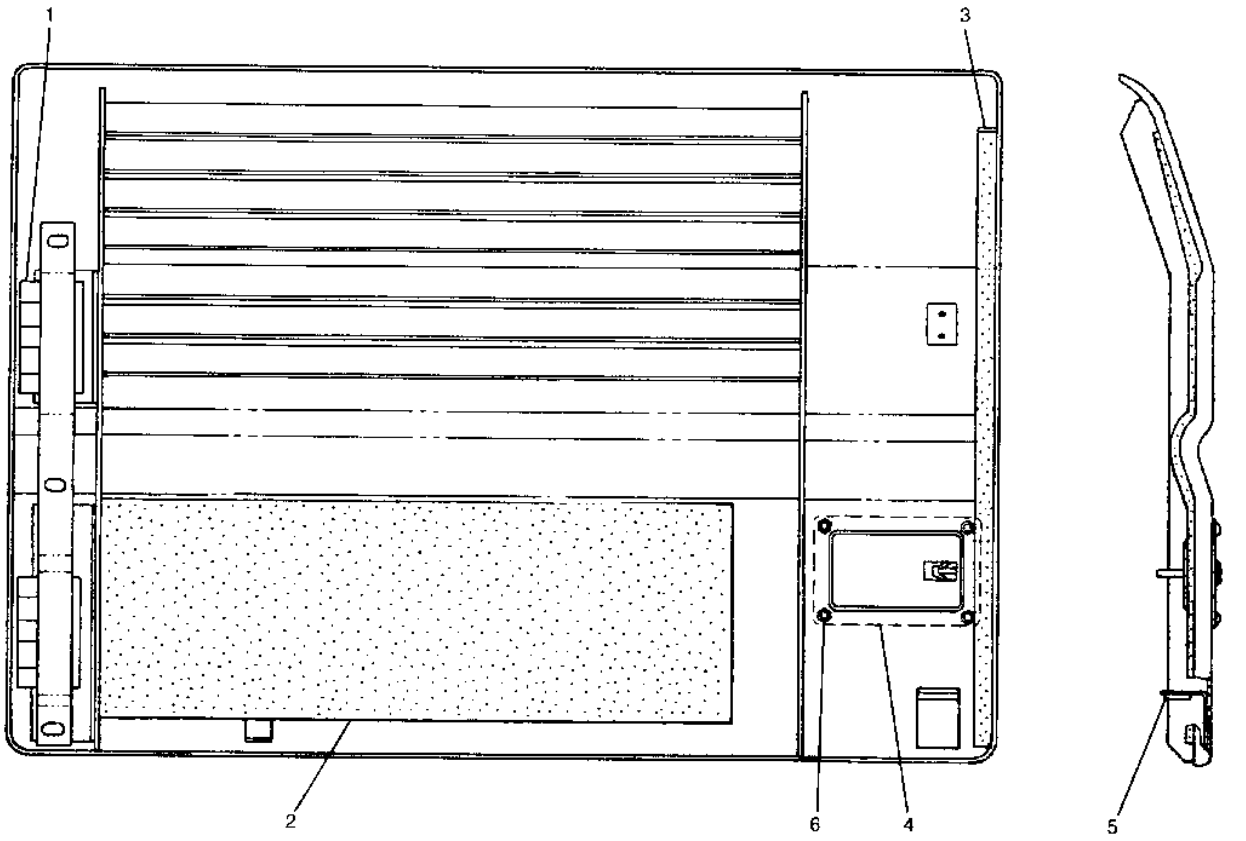


| NOTE | No. | PART No. | QTY | PART NAME |
|---|---|---|---|---|
| | 1 | 116-1627 | 2 | HINGE |
| | 2 | 7I-6330 | 1 | LINER |
| | 3 | 117-4343 | 1 | LINER |
| | 4 | 142-5542 | 1 | LOCK AS |
| | 5 | 122-4101 | 1 | RUBBER |
| | 6 | 099-6418 | 4 | NUT |

| NOTE | No. | PART No. | QTY | PART NAME |
|---|---|---|---|---|

H64015E

GRAPHIC #1

h64015e

# 1357516 HOOD GP-PERFORATED

HIGH AMBIENT
PART OF 1205025-Page 51
1357522-Page 193
AN ATTACHMENT

**Key:** Y - SEPARATE ILLUSTRATION

**SMCS**

| NOTE | REF NO | GRAPHIC REF | PART NUMBER | QTY | PART NAME 1 2 3 4 5 6 (PRODUCT LEVEL) | PRICE USD |
|---|---|---|---|---|---|---|
| Y | 1 | | 135-7522 | 1 | DOOR GP | |

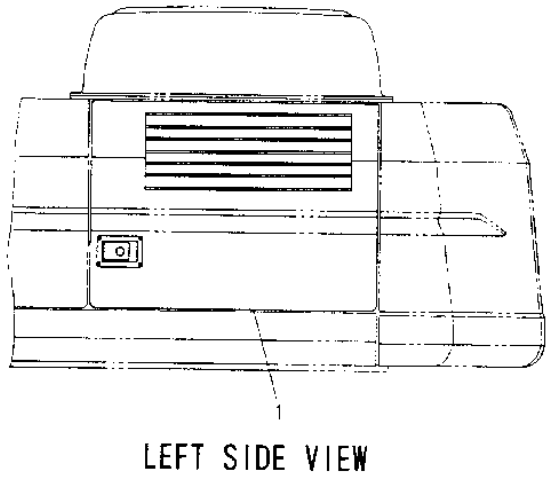


| NOTE | No. | PART No. | QTY | PART NAME |
|---|---|---|---|---|
| Y | 1 | 135-7522 | 1 | DOOR GP |

Y-SEE SEPARATE ILLUSTRATION

H58851E

GRAPHIC #1 h58851e

# 1317640 GUARD AR-BOTTOM

HEAVY DUTY
AN ATTACHMENT

**Key:** Y - Separate Illustration

**SMCS**

| NOTE | REF NO | GRAPHIC REF | PART NUMBER | QTY | PART NAME 1 2 3 4 5 6 (PRODUCT LEVEL) | PRICE USD |
|---|---|---|---|---|---|---|
| Y | | | 116-1638 | 1 | GUARD GP (BOTTOM) | |
| Y | | | 127-1423 | 1 | GUARD GP (TRAVEL MOTOR) | |
| | | | 124-8856 | 1 | GUARD GP (SWIVEL) | |

# 1224067 HOOD & GUARD GP

FOGS
PART OF 1263798-Page 445
1224096-Page 192
AN ATTACHMENT

**Key:** Y - SEE SEPARATE ILLUSTRATION

**SMCS**

| NOTE | REF NO | GRAPHIC REF | PART NUMBER | QTY | PART NAME 1 2 3 4 5 6 (PRODUCT LEVEL) | PRICE USD |
|---|---|---|---|---|---|---|
| | 1 | | 176-4989 | 1 | SHEET | |
| | 2 | | 8T-4136 | 4 | BOLT (L=25mm) | |
| | 3 | | 8T-4121 | 4 | WASHER | |
| | 4 | | 122-4098 | 1 | COVER AS | |
| Y | 5 | | 122-4096 | 1 | DOOR GP | |
| | 6 | | 121-4906 | 1 | SUPPORT AS | |
| | 7 | | 8T-4192 | 6 | BOLT (L=25mm) | |
| | 8 | | 5P-1076 | 6 | WASHER | |

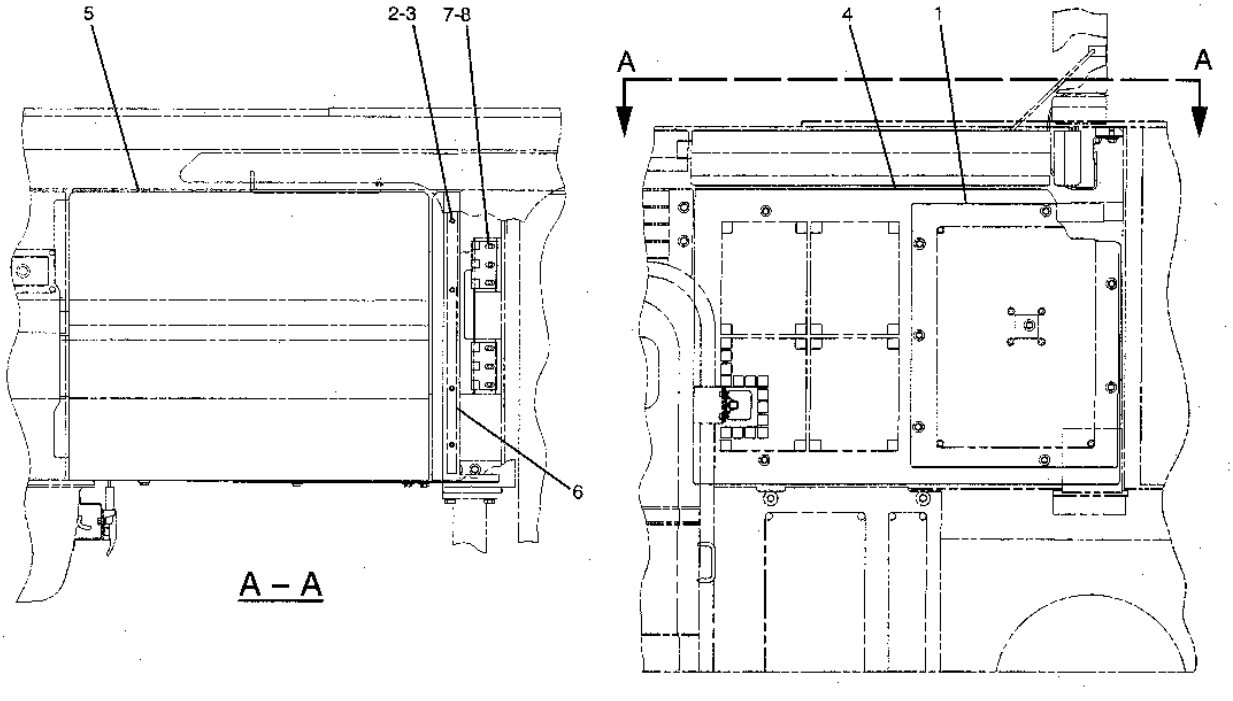


GRAPHIC #1

h79276e

# 1460517 HOOD GP

PRECLEANER
PART OF 1460516-Page 64.01
AN ATTACHMENT

**Key:**

**SMCS**

| NOTE | REF NO | GRAPHIC REF | PART NUMBER | QTY | PART NAME 1 2 3 4 5 6 (PRODUCT LEVEL) | PRICE USD |
|---|---|---|---|---|---|---|
| | 1 | | 146-0518 | 1 | COVER AS | |
| | 2 | | 146-0524 | 1 | COVER AS | |
| | 3 | | 146-0533 | 1 | SUPPORT | |
| | 4 | | 184-4006 | 1 | COVER | |
| | 5 | | 8T-4137 | 2 | BOLT (L=20mm) | |
| | 6 | | 8T-4121 | 2 | WASHER | |

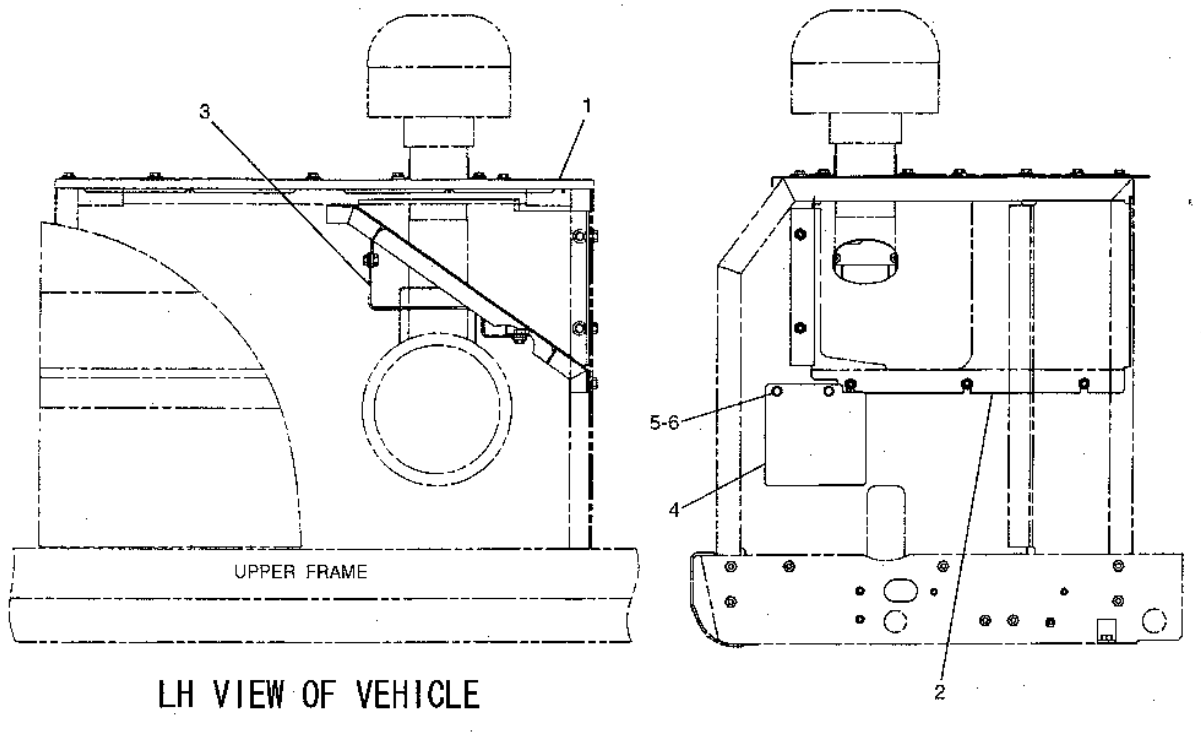


LH VIEW OF VEHICLE

GRAPHIC #1 h79277e

# 1161633 GUARD GP-BOTTOM

S/N 8SR 1-00169, 8TR 1-00212

**Key:**

**SMCS**

| NOTE | REF NO | GRAPHIC REF | PART NUMBER | QTY | PART NAME 1 2 3 4 5 6 (PRODUCT LEVEL) | PRICE USD |
|---|---|---|---|---|---|---|
| | 1 | | 116-1712 | 1 | SHEET | |
| | 2 | | 116-1713 | 1 | SHEET | |
| | 3 | | 116-1714 | 1 | SHEET | |
| | 4 | | 116-1715 | 1 | SHEET | |
| | 5 | | 116-1715 | 1 | SHEET | |
| | 6 | | 116-1717 | 1 | SHEET | |
| | 7 | | 116-1718 | 2 | SHEET | |
| | 8 | | 116-1721 | 1 | SHEET AS | |
| | 9 | | 116-1720 | 1 | SHEET AS | |
| | 10 | | 099-4691 | 44 | BOLT (L=25mm) | |
| | 11 | | 5P-1076 | 44 | WASHER-HARD | |

## 1161633 GUARD GP-BOTTOM

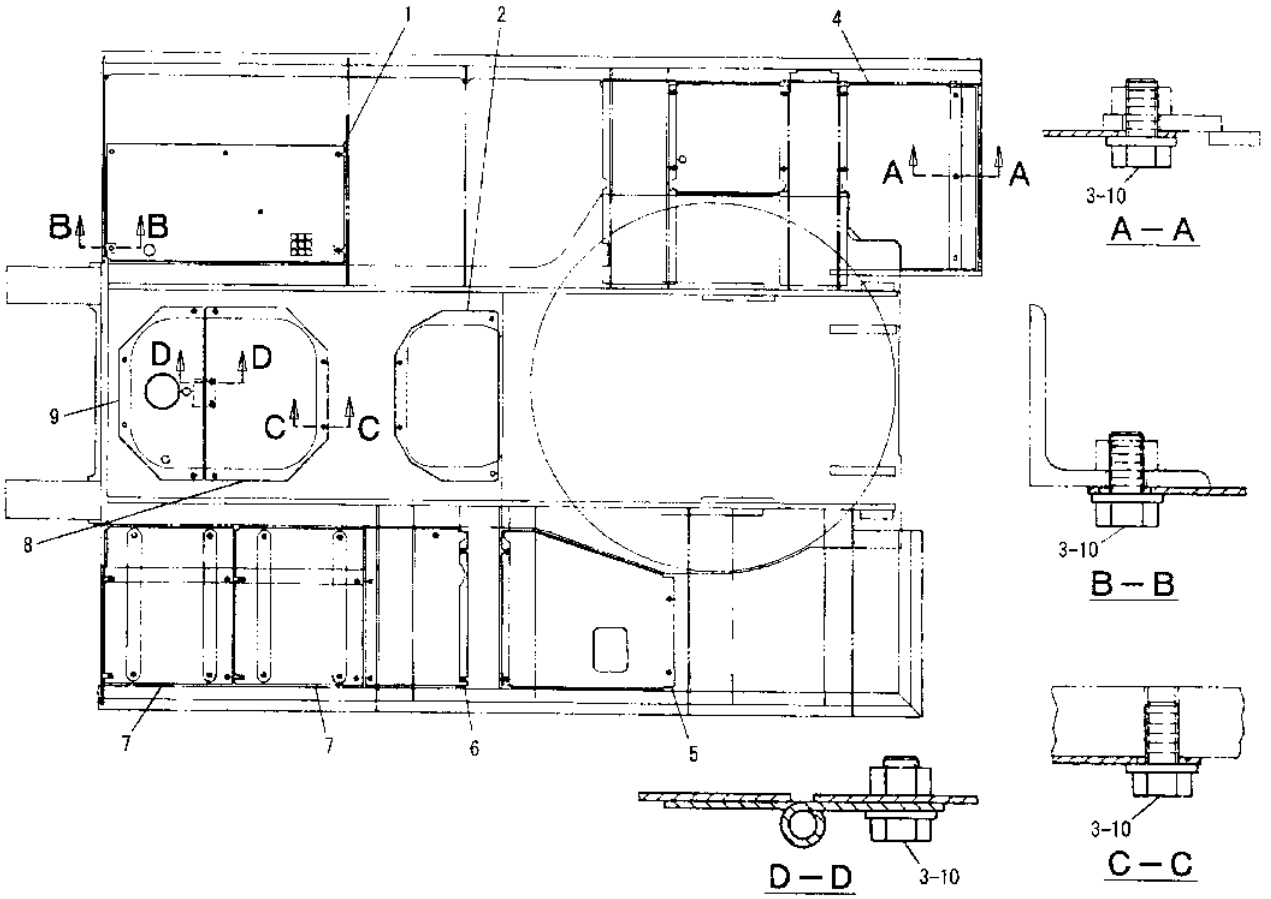


| NOTE | No. | PART No. | QTY | PART NAME |
|---|---|---|---|---|
| | 1 | 116-1712 | 1 | SHEET |
| | 2 | 116-1713 | 1 | SHEET |
| | 3 | 5P-1076 | 44 | WASHER-HARD |
| | 4 | 116-1715 | 1 | SHEET |
| | 5 | 116-1716 | 1 | SHEET |
| | 6 | 116-1717 | 1 | SHEET |
| | 7 | 116-1718 | 2 | SHEET |
| | 8 | 116-1721 | 1 | SHEET AS |
| | 9 | 116-1720 | 1 | SHEET AS |
| | 10 | 099-4691 | 44 | BOLT(L=25mm) |

| NOTE | No. | PART No. | QTY | PART NAME |
|---|---|---|---|---|

H50811E

# 1161633 GUARD GP-BOTTOM

S/N 8SR 00170-00417, 8TR 00231-00485

**Key:**

**SMCS**

| NOTE | REF NO | GRAPHIC REF | PART NUMBER | QTY | PART NAME 1 2 3 4 5 6 (PRODUCT LEVEL) | PRICE USD |
|---|---|---|---|---|---|---|
| | 1 | | 116-1712 | 1 | SHEET | |
| | 2 | | 116-1713 | 1 | SHEET | |
| | 3 | | 5P-1076 | 45 | WASHER-HARD | |
| | 4 | | 140-0613 | 1 | SHEET | |
| | 5 | | 116-1716 | 1 | SHEET | |
| | 6 | | 116-1717 | 1 | SHEET | |
| | 7 | | 116-1718 | 2 | SHEET | |
| | 8 | | 116-1721 | 1 | SHEET AS | |
| | 9 | | 116-1720 | 1 | SHEET AS | |
| | 10 | | 099-4691 | 45 | BOLT (L=25mm) | |
| | 11 | | 142-3745 | 1 | SHEET AS | |

## 1161633 GUARD GP-BOTTOM

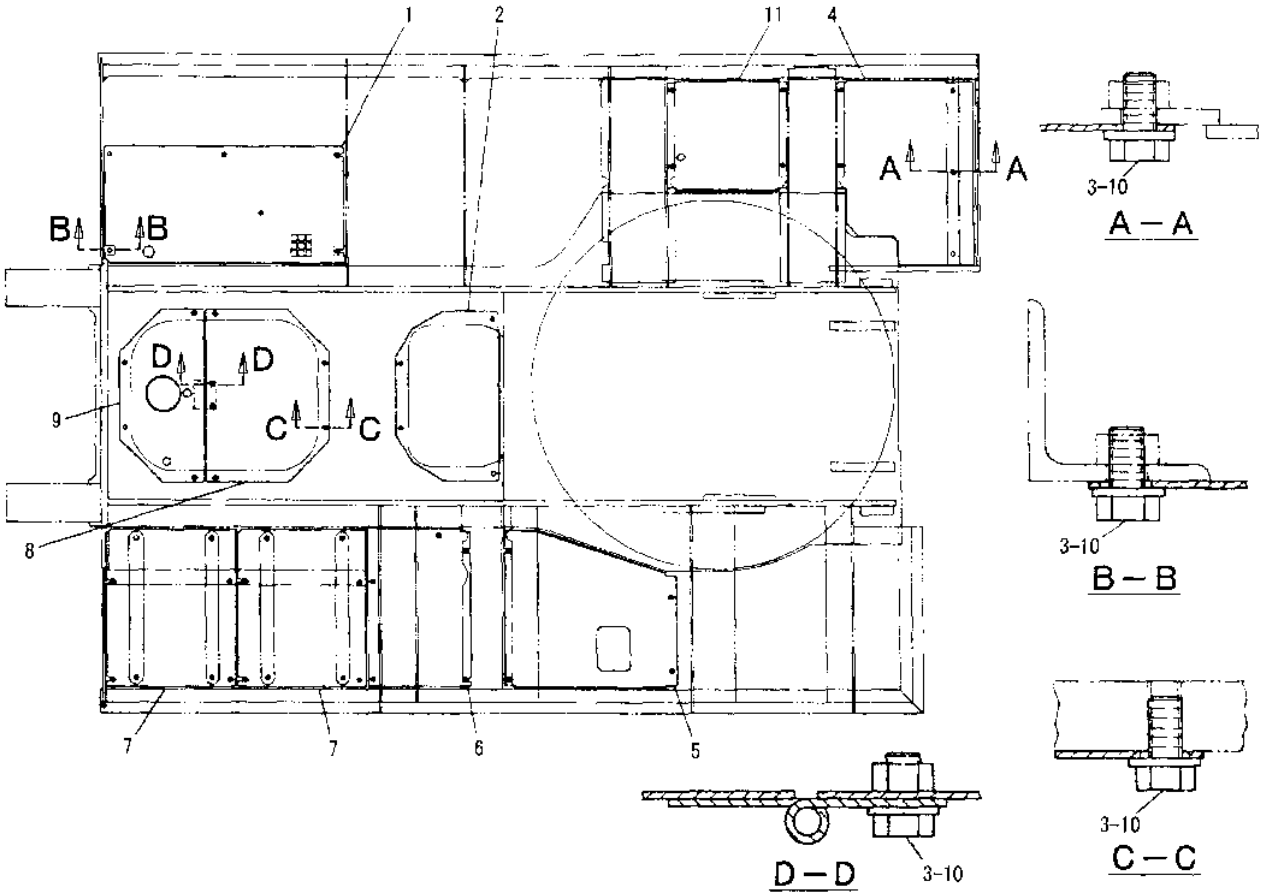


| NOTE | No. | PART No. | QTY | PART NAME |
|---|---|---|---|---|
| | 1 | 116-1712 | 1 | SHEET |
| | 2 | 116-1713 | 1 | SHEET |
| | 3 | 5P-1076 | 45 | WASHER-HARD |
| | 4 | 140-0613 | 1 | SHEET |
| | 5 | 116-1716 | 1 | SHEET |
| | 6 | 116-1717 | 1 | SHEET |
| | 7 | 116-1718 | 2 | SHEET |
| | 8 | 116-1721 | 1 | SHEET AS |
| | 9 | 116-1720 | 1 | SHEET AS |
| | 10 | 099-4691 | 45 | BOLT (L=25mm) |
| | 11 | 142-3745 | 1 | SHEET AS |

H56335E

GRAPHIC #1

h56335e

# 1161633 GUARD GP-BOTTOM

S/N 8SR 00418-UP, 8TR 00486-UP

**Key:** D - ORDER BY THE METER

**SMCS**

| NOTE | REF NO | GRAPHIC REF | PART NUMBER | QTY | PART NAME 1 2 3 4 5 6 (PRODUCT LEVEL) | PRICE USD |
|---|---|---|---|---|---|---|
| | 1 | | 116-1712 | 1 | SHEET | |
| | 2 | | 116-1713 | 1 | SHEET | |
| | 3 | | 5P-1076 | 45 | WASHER-HARD | |
| | 4 | | 140-0613 | 1 | SHEET | |
| | 5 | | 116-1716 | 1 | SHEET | |
| | 6 | | 116-1717 | 1 | SHEET | |
| | 7 | | 116-1718 | 2 | SHEET | |
| | 8 | | 116-1721 | 1 | SHEET AS | |
| | 9 | | 116-1720 | 1 | SHEET AS | |
| | | | 099-7857 | 1 | HINGE | |
| | 10 | | 099-4691 | 45 | BOLT (L=25mm) | |
| | 11 | | 154-0407 | 1 | SHEET AS | |
| D | | | 5P-9205 | | SEAL (0.5m) | |

## 1161633 GUARD GP-BOTTOM

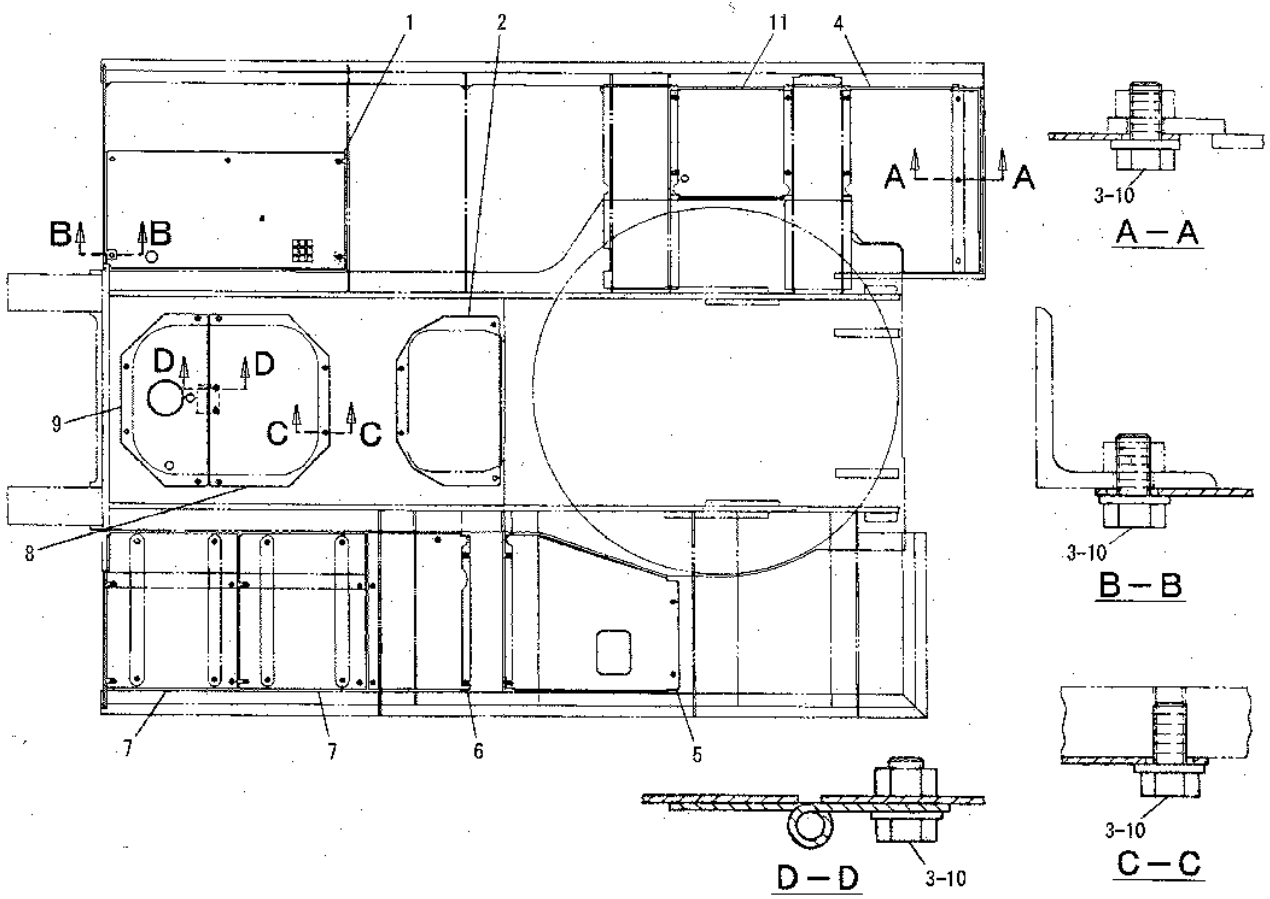


| NOTE | No. | PART No. | QTY | PART NAME | NOTE | No. | PART No. | QTY | PART NAME |
|---|---|---|---|---|---|---|---|---|---|
| | 1 | 116-1712 | 1 | SHEET | | | | | |
| | 2 | 116-1713 | 1 | SHEET | | | | | |
| | 3 | 5P-1076 | 45 | WASHER-HARD | | | | | |
| | 4 | 140-0613 | 1 | SHEET | | | | | |
| | 5 | 116-1716 | 1 | SHEET | | | | | |
| | 6 | 116-1717 | 1 | SHEET | | | | | |
| | 7 | 116-1718 | 2 | SHEET | | | | | |
| | 8 | 116-1721 | 1 | SHEET AS | | | | | |
| | 9 | 116-1720 | 1 | SHEET AS | | | | | |
| | | 099-7857 | 1 | HINGE | | | | | |
| | 10 | 099-4691 | 45 | BOLT(L=25mm) | | | | | |
| | 11 | 154-0407 | 1 | SHEET AS | | | | | |
| D | | 5P-9205 | | SEAL…(0.5m) | | | | | |

D-ORDER BY THE METER

H60556E

# 1161638 GUARD GP-BOTTOM

HEAVY DUTY
S/N 8SR 1-00417, 8TR 1-00485
PART OF 1317640-Page 195
AN ATTACHMENT

**Key:**

**SMCS**

| NOTE | REF NO | GRAPHIC REF | PART NUMBER | QTY | PART NAME 1 2 3 4 5 6 (PRODUCT LEVEL) | PRICE USD |
|---|---|---|---|---|---|---|
| | 1 | | 117-4216 | 1 | PLATE AS | |
| | 2 | | 117-4234 | 1 | PLATE AS | |
| | 3 | | 117-4218 | 1 | PLATE AS | |
| | 4 | | 117-4220 | 1 | PLATE AS | |
| | 5 | | 114-6229 | 1 | PLATE AS | |
| | 6 | | 117-4224 | 1 | PLATE AS | |
| | 7 | | 117-4226 | 1 | PLATE AS | |
| | 8 | | 117-4228 | 2 | PLATE AS | |
| | 9 | | 117-4232 | 1 | PLATE AS | |
| | 10 | | 117-4230 | 1 | PLATE AS | |
| | 11 | | 8C-8992 | 49 | BOLT (L=30mm) | |
| | 12 | | 5P-1076 | 49 | WASHER-HARD | |

## 1161638 GUARD GP-BOTTOM

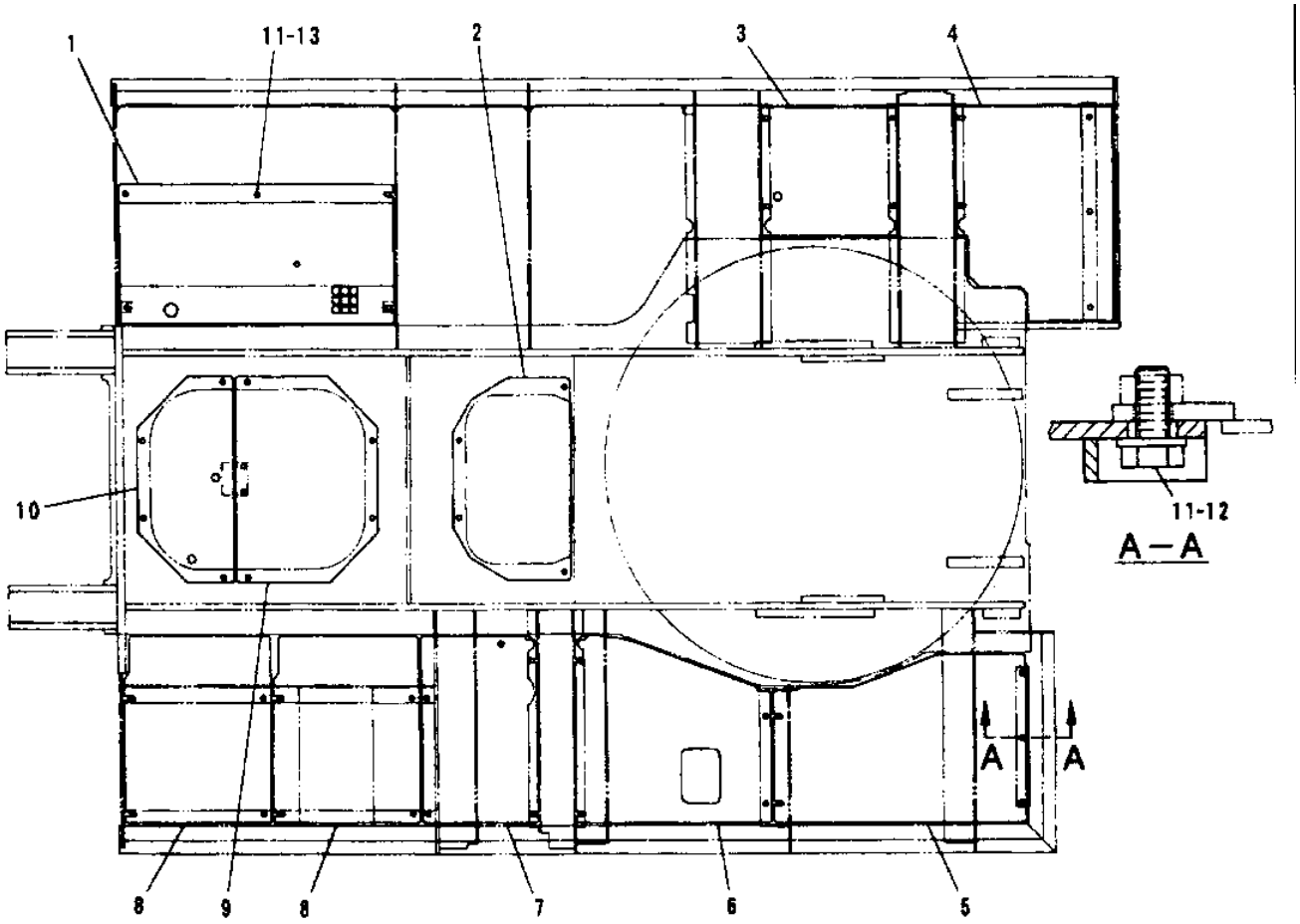


| NOTE | No. | PART No. | QTY | PART NAME | NOTE | No. | PART No. | QTY | PART NAME |
|---|---|---|---|---|---|---|---|---|---|
| | 1 | 117-4216 | 1 | PLATE AS | | | | | |
| | 2 | 117-4234 | 1 | PLATE AS | | | | | |
| | 3 | 117-4218 | 1 | PLATE AS | | | | | |
| | 4 | 117-4220 | 1 | PLATE AS | | | | | |
| | 5 | 114-6229 | 1 | PLATE AS | | | | | |
| | 6 | 117-4224 | 1 | PLATE AS | | | | | |
| | 7 | 117-4226 | 1 | PLATE AS | | | | | |
| | 8 | 117-4228 | 2 | PLATE AS | | | | | |
| | 9 | 117-4232 | 1 | PLATE AS | | | | | |
| | 10 | 117-4230 | 1 | PLATE AS | | | | | |
| | 11 | 8C-8992 | 49 | BOLT(L=30mm) | | | | | |
| | 12 | 5P-1076 | 49 | WASHER-HARD | | | | | |

H56342E

# 1161638 GUARD GP-BOTTOM

HEAVY DUTY
S/N 8SR 00418-UP, 8TR 00486-UP
PART OF 1317640-Page 195
AN ATTACHMENT

**Key:**

**SMCS**

| NOTE | REF NO | GRAPHIC REF | PART NUMBER | QTY | PART NAME 1 2 3 4 5 6 (PRODUCT LEVEL) | PRICE USD |
|---|---|---|---|---|---|---|
| | 1 | | 117-4216 | 1 | PLATE AS | |
| | 2 | | 117-4234 | 1 | PLATE AS | |
| | 3 | | 154-0464 | 1 | PLATE AS | |
| | 4 | | 117-4220 | 1 | PLATE AS | |
| | 5 | | 114-6229 | 1 | PLATE AS | |
| | 6 | | 117-4224 | 1 | PLATE AS | |
| | 7 | | 117-4226 | 1 | PLATE AS | |
| | 8 | | 117-4228 | 2 | PLATE AS | |
| | 9 | | 117-4232 | 1 | PLATE AS | |
| | 10 | | 117-4230 | 1 | PLATE AS | |
| | | | 099-7857 | 1 | HINGE | |
| | 11 | | 8C-8992 | 49 | BOLT (L=30mm) | |
| | 12 | | 5P-1076 | 49 | WASHER-HARD | |

## 1161638 GUARD GP-BOTTOM

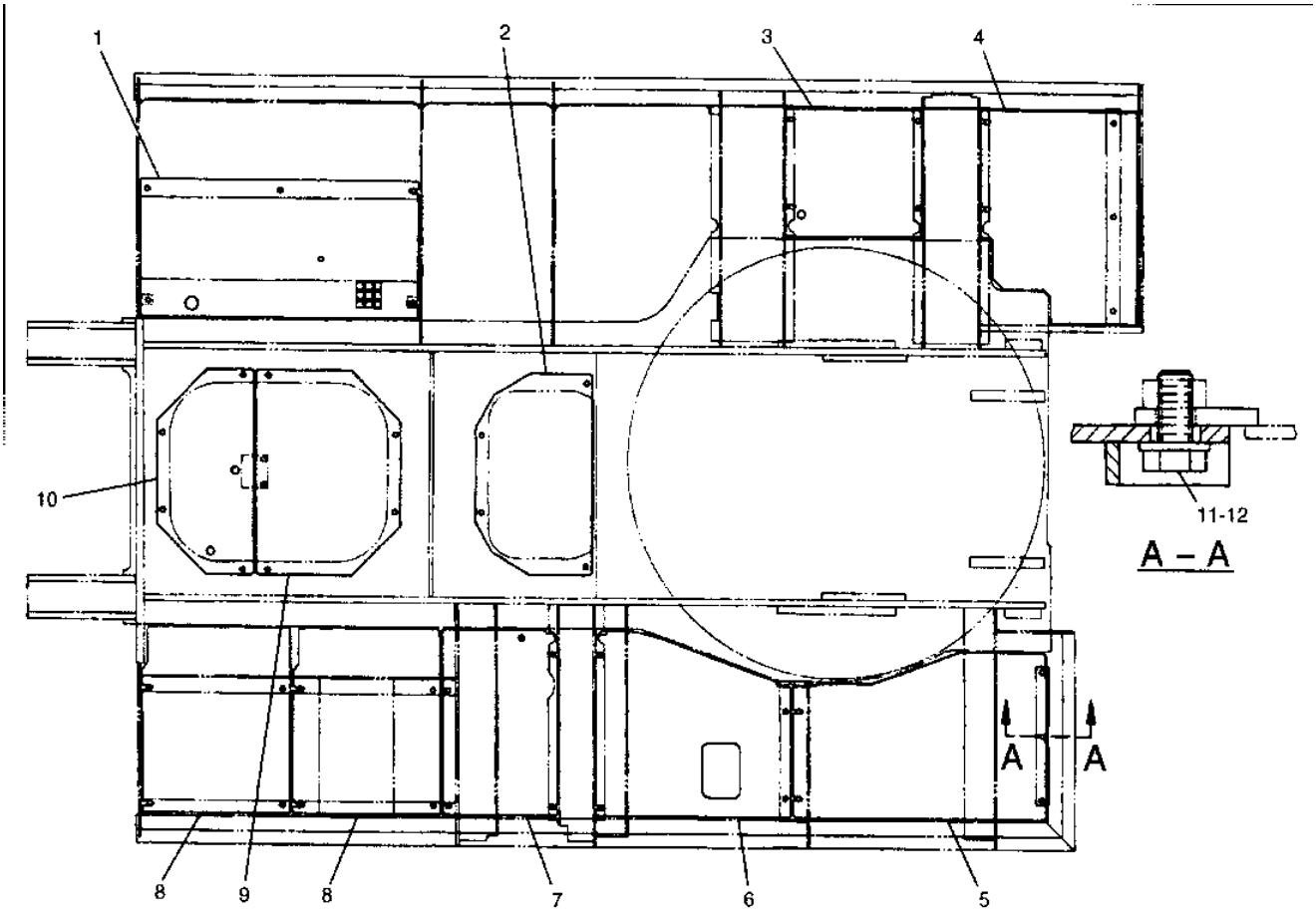


| NOTE | No. | PART No. | QTY | PART NAME |
|---|---|---|---|---|
| | 1 | 117-4216 | 1 | PLATE AS |
| | 2 | 117-4234 | 1 | PLATE AS |
| | 3 | 154-0464 | 1 | PLATE AS |
| | 4 | 117-4220 | 1 | PLATE AS |
| | 5 | 114-6229 | 1 | PLATE AS |
| | 6 | 117-4224 | 1 | PLATE AS |
| | 7 | 117-4226 | 1 | PLATE AS |
| | 8 | 117-4228 | 2 | PLATE AS |
| | 9 | 117-4232 | 1 | PLATE AS |
| | 10 | 117-4230 | 1 | PLATE AS |
| | | 099-7857 | 1 | HINGE |
| | 11 | 8C-8992 | 49 | BOLT(L=30mm) |
| | 12 | 5P-1076 | 49 | WASHER-HARD |

H64017E

# 1224027 GUARD GP-BOTTOM

ADDITIONAL TANK
PART OF 1089846-Page 101
AN ATTACHMENT

**Key:**

**SMCS**

| NOTE | REF NO | GRAPHIC REF | PART NUMBER | QTY | PART NAME 1 2 3 4 5 6 (PRODUCT LEVEL) | PRICE USD |
|---|---|---|---|---|---|---|
| | 1 | | 122-3969 | 1 | SHEET AS | |
| | 2 | | 099-4691 | 5 | BOLT (L=25mm) | |
| | 3 | | 5P-1076 | 5 | WASHER-HARD | |

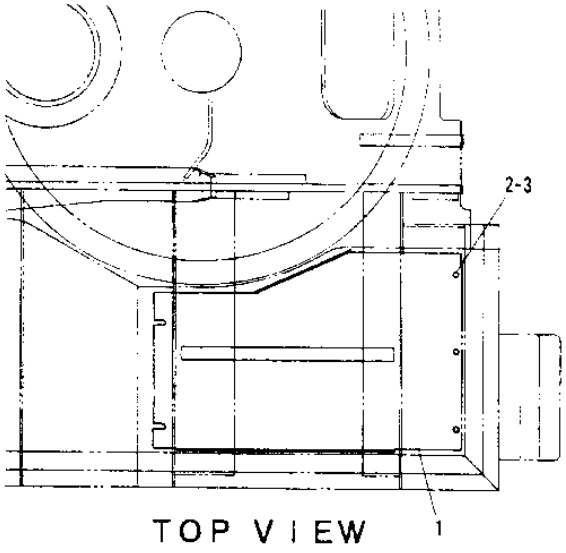


| NOTE | No. | PART No. | QTY | PART NAME |
|---|---|---|---|---|
| | 1 | 122-3969 | 1 | SHEET AS |
| | 2 | 099-4691 | 5 | BOLT (L=25mm) |
| | 3 | 5P 1076 | 5 | WASHER-HARD |

H50111E

GRAPHIC #1 h50111e

# 1764978 GUARD GP-BOTTOM

FOGS
PART OF 1263798-Page 445
AN ATTACHMENT

**Key:**

**SMCS**

| NOTE | REF NO | GRAPHIC REF | PART NUMBER | QTY | PART NAME 1 2 3 4 5 6 (PRODUCT LEVEL) | PRICE USD |
|---|---|---|---|---|---|---|
| | 1 | | 176-4977 | 1 | SHEET | |
| | 2 | | 099-4691 | 6 | BOLT | |
| | 3 | | 5P-1076 | 6 | WASHER | |

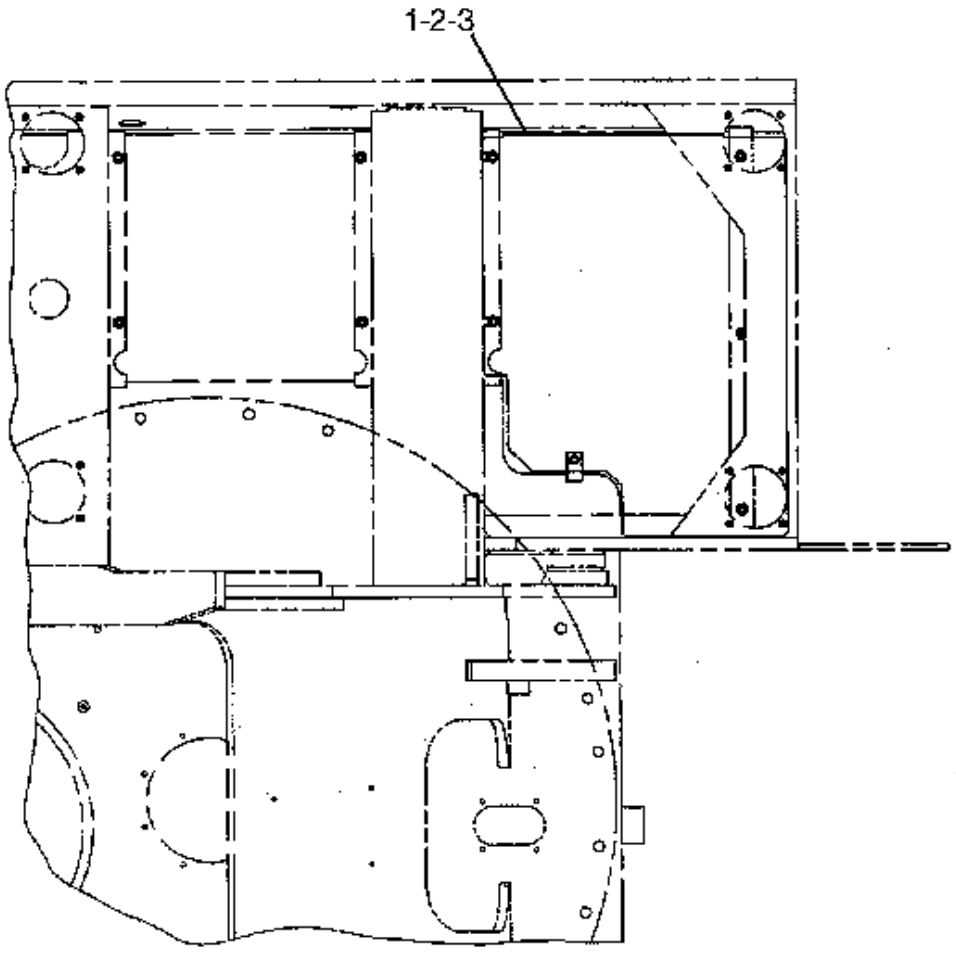


TOP VIEW

GRAPHIC #1

h79278e

# 1348856 GUARD GP-SWIVEL

PART OF 1317640-Page 195
AN ATTACHMENT

**Key:**

**SMCS**

| NOTE | REF NO | GRAPHIC REF | PART NUMBER | QTY | PART NAME 1 2 3 4 5 6 (PRODUCT LEVEL) | PRICE USD |
|---|---|---|---|---|---|---|
| | 1 | | 134-8857 | 1 | PLATE AS | |
| | 2 | | 130-4276 | 4 | PLATE | |
| | 3 | | 8T-4140 | 8 | BOLT (L=60mm) | |
| | 4 | | 3E-9411 | 8 | WASHER-HARD | |

## 1348856 GUARD GP-SWIVEL

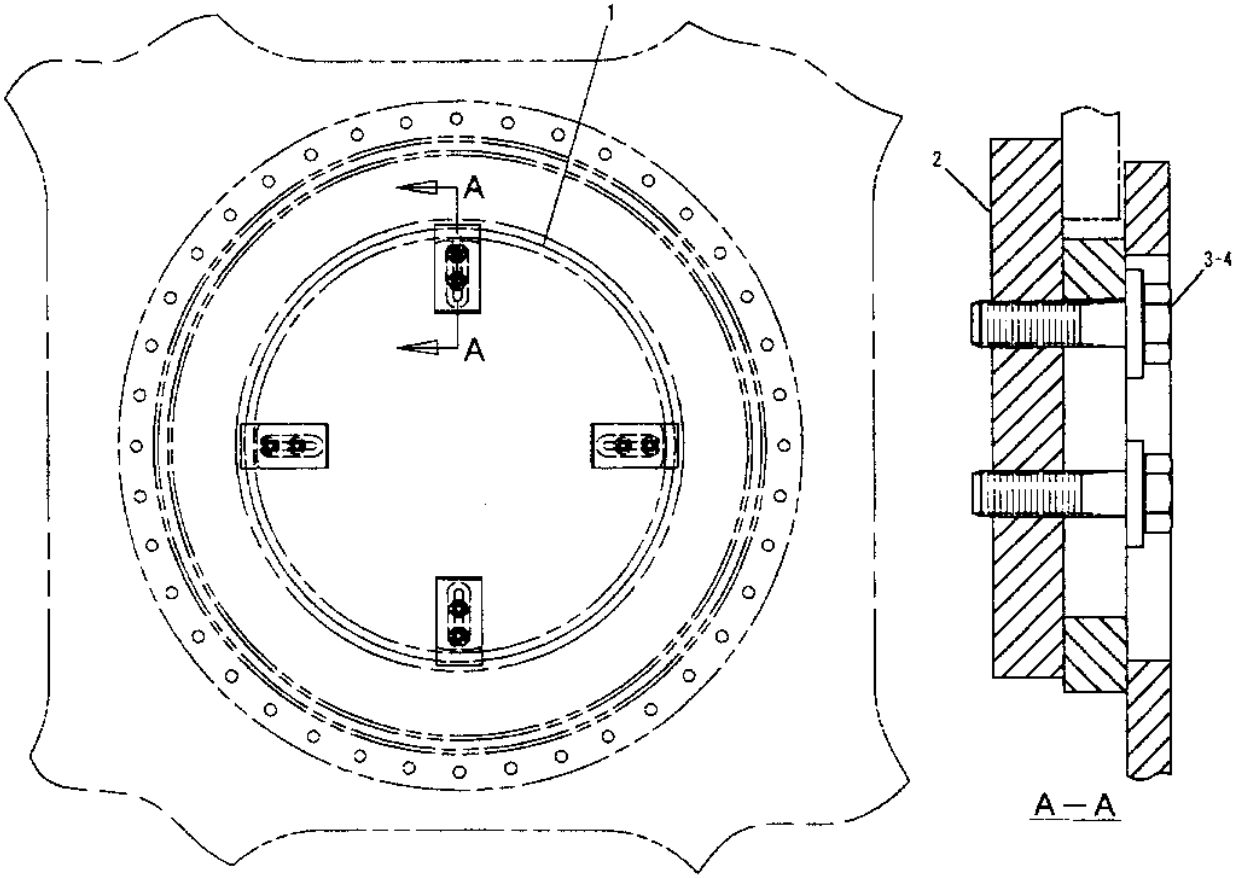


| NOTE | No. | PART No. | QTY | PART NAME | NOTE | No. | PART No. | QTY | PART NAME |
|---|---|---|---|---|---|---|---|---|---|
| | 1 | 134-8857 | 1 | PLATE AS | | | | | |
| | 2 | 130-4276 | 4 | PLATE | | | | | |
| | 3 | 8T-4140 | 8 | BOLT (L=60mm) | | | | | |
| | 4 | 3E-9411 | 8 | WASHER-HARD | | | | | |

H51774E

# 1089835 HANDHOLD GP

S/N 8SR 1-00417, 8TR 1-00485
1372290-Page 202.02

**Key:** Y - SEE SEPARATE ILLUSTRATION

**SMCS**

| NOTE | REF NO | GRAPHIC REF | PART NUMBER | QTY | PART NAME 1 2 3 4 5 6 (PRODUCT LEVEL) | PRICE USD |
|---|---|---|---|---|---|---|
| Y | 1 | | 137-2290 | 1 | HANDHOLD GP | |
| | 2 | | 8C-8992 | 4 | BOLT | |
| | 3 | | 5P-1076 | 4 | WASHER (HARD) | |

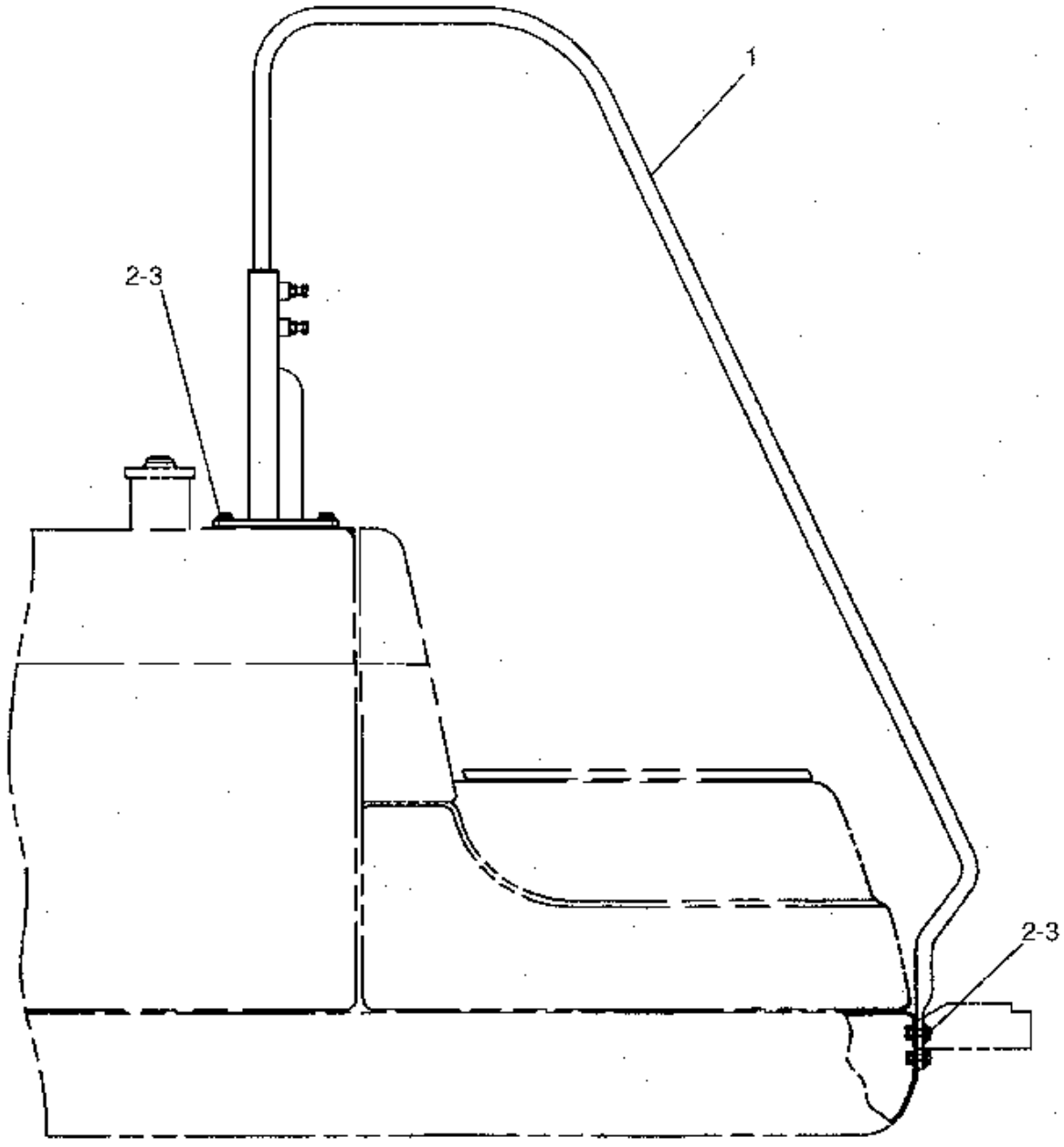


GRAPHIC #1

h54485e

# 1089835 HANDHOLD GP

S/N 8SR 00418-UP, 8TR 00486-UP
1372290-Page 202.02

**Key:** Y - SEE SEPARATE ILLUSTRATION

**SMCS**

| NOTE | REF NO | GRAPHIC REF | PART NUMBER | QTY | PART NAME 1 2 3 4 5 6 (PRODUCT LEVEL) | PRICE USD |
|---|---|---|---|---|---|---|
| Y | 1 | | 137-2290 | 1 | HANDRAIL GP | |
| | 2 | | 8C-8992 | 2 | BOLT (L=30mm) | |
| | 3 | | 5P-1076 | 2 | WASHER-HARD | |

## 1089835 HANDHOLD GP

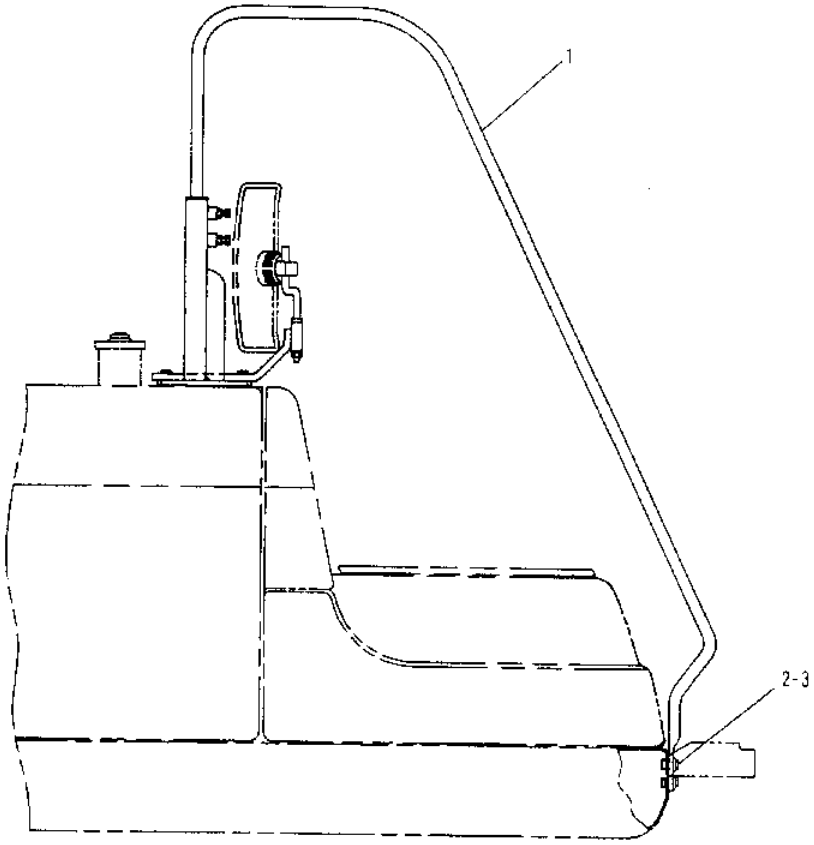


| NOTE | No. | PART No. | QTY | PART NAME | NOTE | No. | PART No. | QTY | PART NAME |
|---|---|---|---|---|---|---|---|---|---|
| Y | 1 | 137-2290 | 1 | HANDRAIL GP | | | | | |
| | 2 | 8C-8992 | 2 | BOLT (L=30mm) | | | | | |
| | 3 | 5P-1076 | 2 | WASHER-HARD | | | | | |

Y-SEE SEPARATE ILLUSTRATION

H60367E

# 1372290 HANDHOLD GP

PART OF 1089835-Page 202

**Key:**

**SMCS**

| NOTE | REF NO | GRAPHIC REF | PART NUMBER | QTY | PART NAME 1 2 3 4 5 6 (PRODUCT LEVEL) | PRICE USD |
|---|---|---|---|---|---|---|
| | 1 | | 129-3348 | 1 | PIPE AS | |
| | 2 | | 137-2295 | 1 | PIPE AS | |
| | 3 | | 137-2292 | 1 | SLEEVE (HARD) | |
| | 4 | | 137-2294 | 3 | BOLT | |
| | 5 | | 8T-4244 | 2 | NUT | |

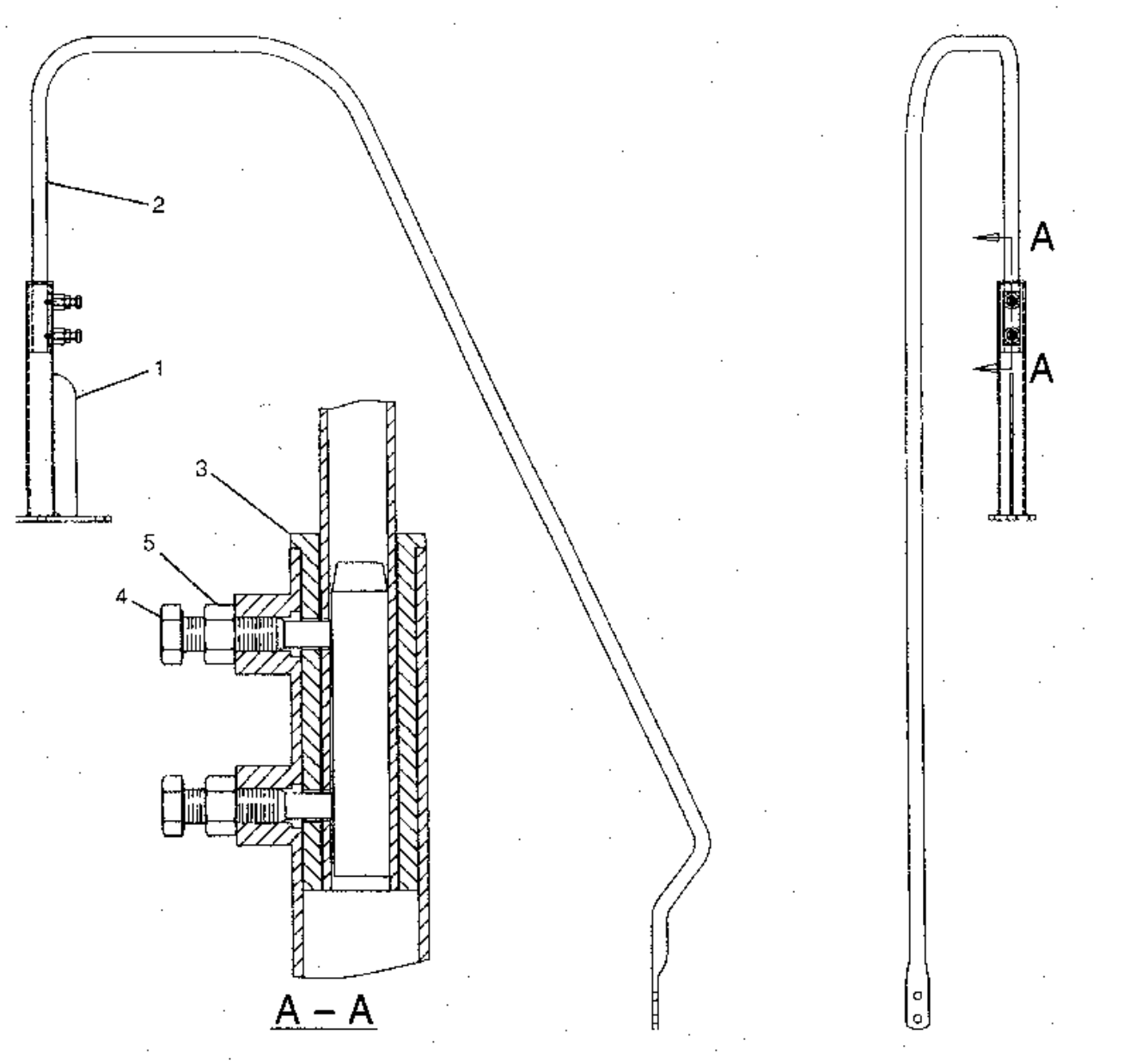


GRAPHIC #1

h54520e

# 1089839 BOX & MTG GP-STORAGE

S/N 8SR 1-00417, 8TR 1-00485
1089840-Page 205.01

**Key:** Y - SEE SEPARATE ILLUSTRATION

**SMCS**

| NOTE | REF NO | GRAPHIC REF | PART NUMBER | QTY | PART NAME 1 2 3 4 5 6 (PRODUCT LEVEL) | PRICE USD |
|---|---|---|---|---|---|---|
| Y | 1 | | 108-9840 | 1 | BOX GP | |
| | 2 | | 6V-8150 | 4 | BOLT (L=60mm) | |
| | 3 | | 122-4026 | 4 | SPACER | |

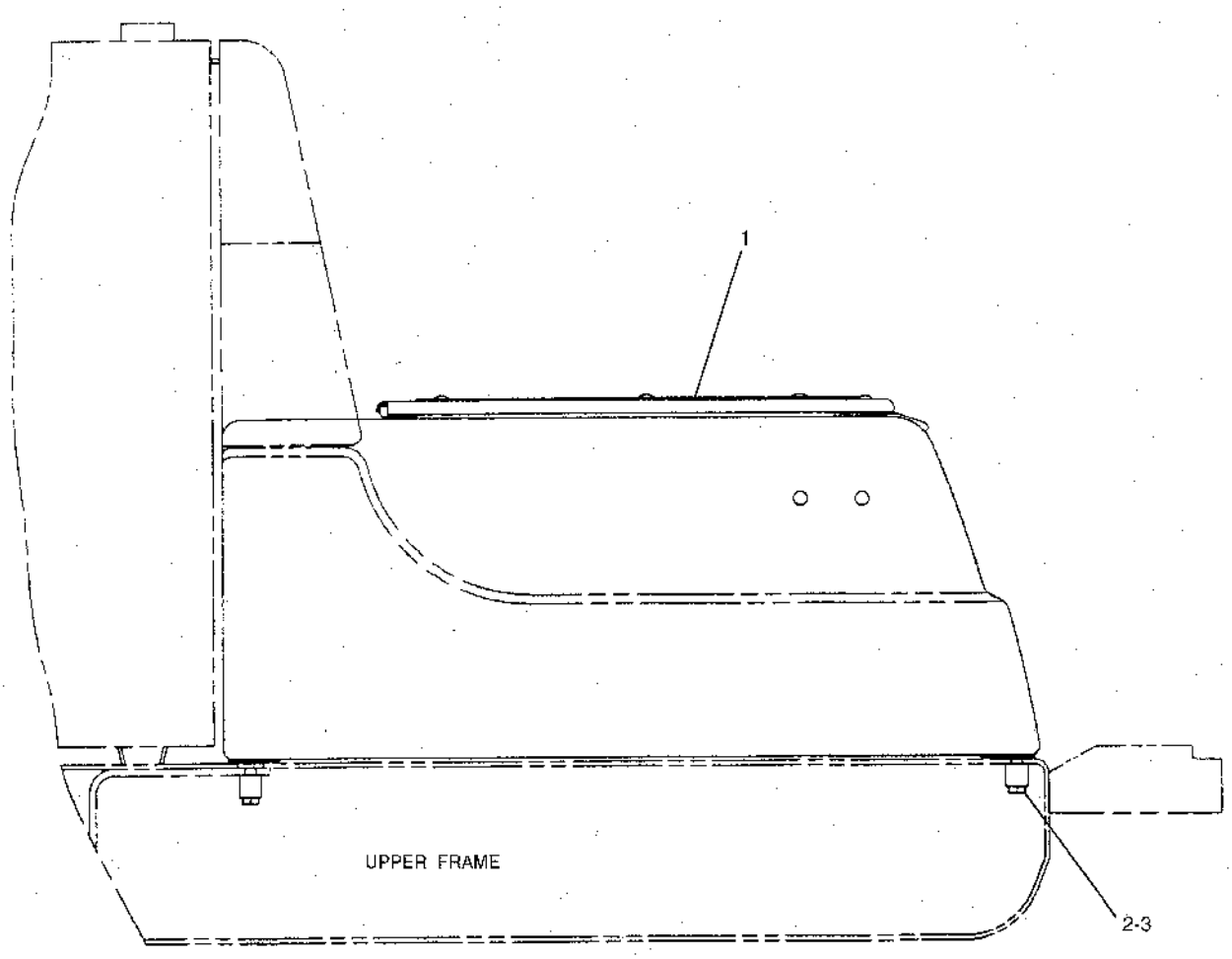


GRAPHIC #1 h52989e

# 1089839 BOX & MTG GP-STORAGE

S/N 8SR 00418-UP, 8TR 00486-UP
1540566-Page 206.05

**Key:** Y - SEE SEPARATE ILLUSTRATION

**SMCS**

| NOTE | REF NO | GRAPHIC REF | PART NUMBER | QTY | PART NAME 1 2 3 4 5 6 (PRODUCT LEVEL) | PRICE USD |
|---|---|---|---|---|---|---|
| Y | 1 | | 154-0566 | 1 | BOX GP | |
| | 2 | | 162-8284 | 4 | BOLT (L=60mm) | |
| | 3 | | 122-4026 | 4 | SPACER | |

## 1089839 BOX & MTG GP-STORAGE

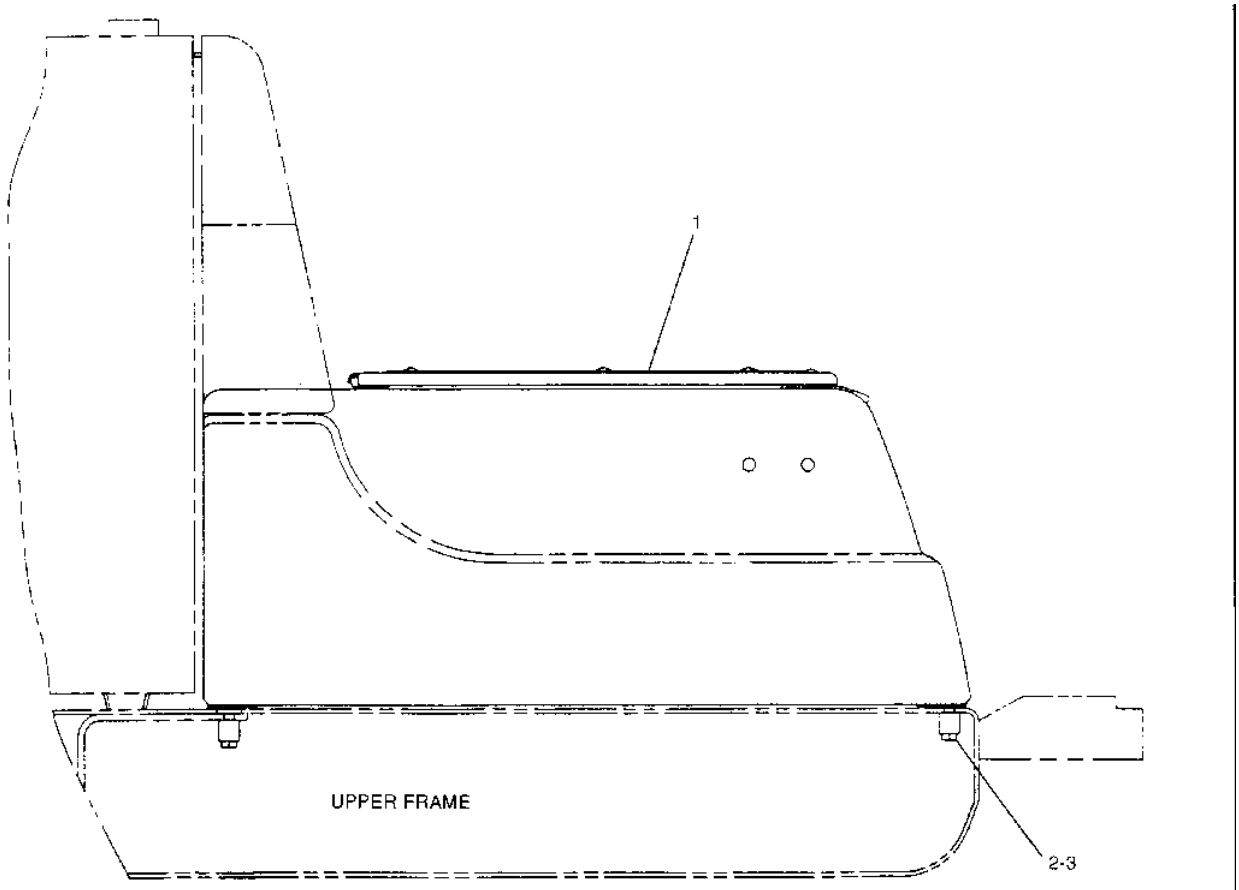


| NOTE | No. | PART No. | QTY | PART NAME |
|---|---|---|---|---|
| Y | 1 | 154-0566 | 1 | BOX GP |
| | 2 | 162-8284 | 4 | BOLT (L=60mm) |
| | 3 | 122-4026 | 4 | SPACER |

Y-SEE SEPARATE ILLUSTRATION

H63432E

# 1224022 BOX & MTG GP-STORAGE

S/N 8SR 1-00417, 8TR 1-00485
PART OF 1089846-Page 101, 1174159-Page 103
1224023-Page 206
AN ATTACHMENT

**Key:** Y - SEPARATE ILLUSTRATION

**SMCS**

| NOTE | REF NO | GRAPHIC REF | PART NUMBER | QTY | PART NAME 1 2 3 4 5 6 (PRODUCT LEVEL) | PRICE USD |
|---|---|---|---|---|---|---|
| Y | 1 | | 122-4023 | 1 | BOX GP | |
| | 2 | | 6V-8150 | 4 | BOLT (L=60mm) | |
| | 3 | | 122-4026 | 4 | SPACER | |

## 1224022 BOX & MTG GP-STORAGE

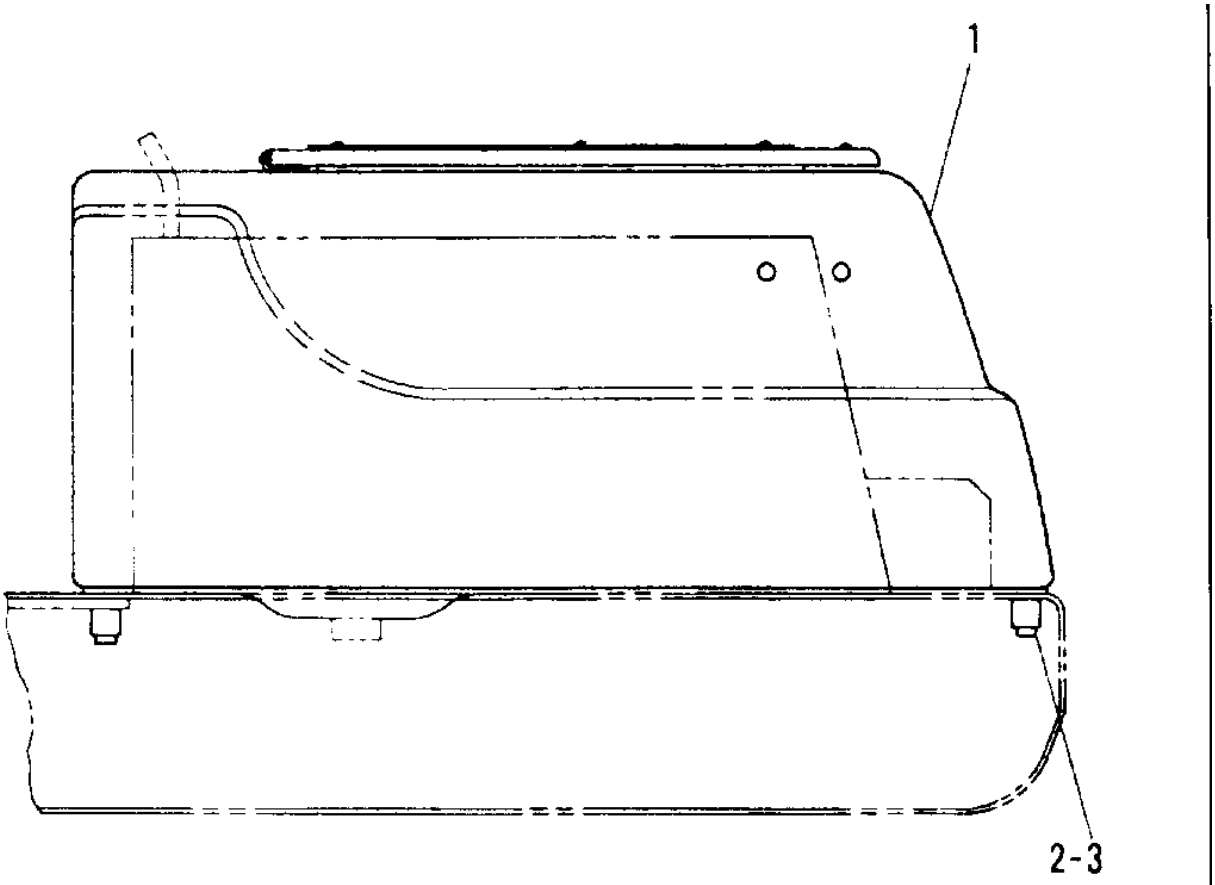


| NOTE | No. | PART No. | QTY | PART NAME |
|---|---|---|---|---|
| Y | 1 | 122-4023 | 1 | BOX GP |
| | 2 | 6V-8150 | 4 | BOLT L=60mm |
| | 3 | 122-4026 | 4 | SPACER |

| NOTE | No. | PART No. | QTY | PART NAME |
|---|---|---|---|---|

Y-SEE SEPARATE ILLUSTRATION

H52993E

GRAPHIC #1 h52993e

# 1224022 BOX & MTG GP-STORAGE

S/N 8SR 00418-UP, 8TR 00486-UP
PART OF 1089846-Page 101, 1174159-Page 103
1540654-Page 206.04
AN ATTACHMENT

**Key:** Y - SEE SEPARATE ILLUSTRATION

**SMCS**

| NOTE | REF NO | GRAPHIC REF | PART NUMBER | QTY | PART NAME 1 2 3 4 5 6 (PRODUCT LEVEL) | PRICE USD |
|---|---|---|---|---|---|---|
| Y | 1 | | 154-0654 | 1 | BOX GP | |
| | 2 | | 162-8284 | 4 | BOLT (L=60mm) | |
| | 3 | | 122-4026 | 4 | SPACER | |

## 1224022 BOX & MTG GP-STORAGE

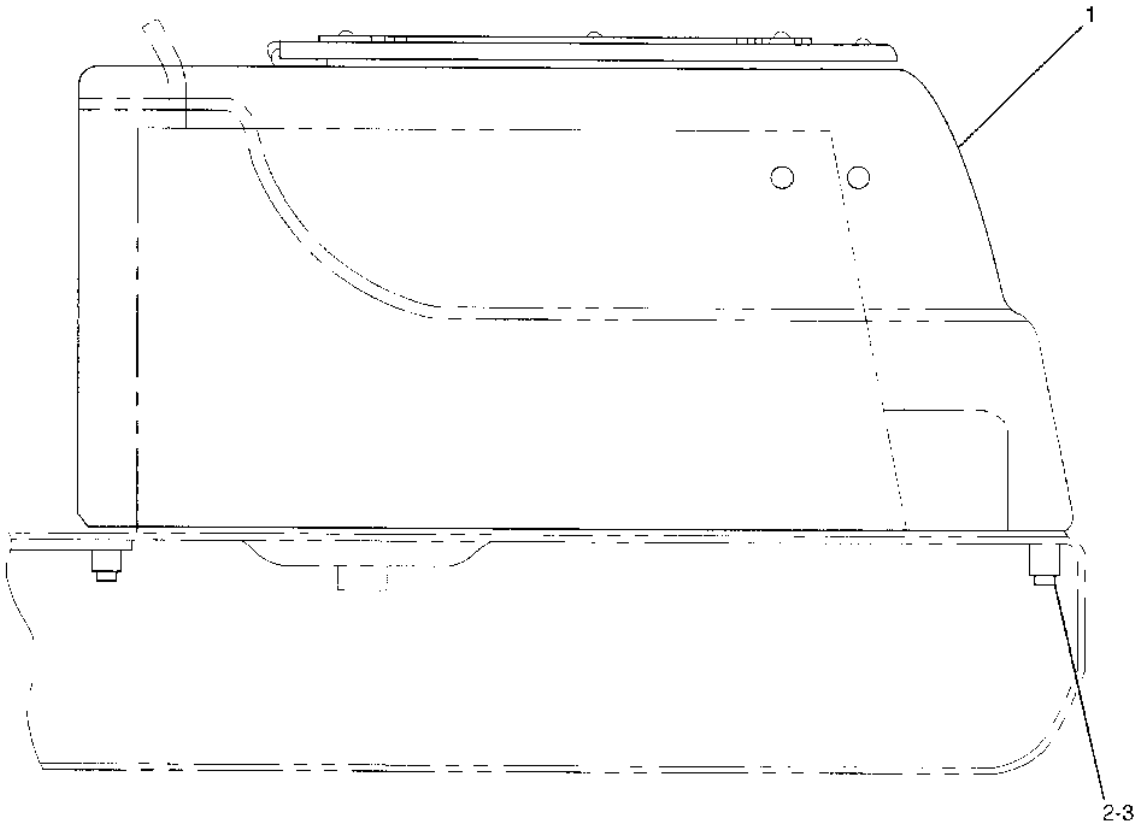


| NOTE | No. | PART No. | QTY | PART NAME |
|---|---|---|---|---|
| Y | 1 | 154-0654 | 1 | BOX GP |
| | 2 | 162-8284 | 4 | BOLT(L=60mm) |
| | 3 | 122-4026 | 4 | SPACER |

Y-SEE SEPARATE ILLUSTRATION

H63435E

# 1089844 BOX & MOUNTING GP

VANDALISM GUARD
PART OF 1204955-Page 444, 1024740-Page 445
AN ATTACHMENT

**Key:**

**SMCS**

| NOTE | REF NO | GRAPHIC REF | PART NUMBER | QTY | PART NAME 1 2 3 4 5 6 (PRODUCT LEVEL) | PRICE USD |
|---|---|---|---|---|---|---|
| | 1 | | 122-3946 | 1 | SHEET | |
| | 2 | | 102-5713 | 1 | BOLT AS | |

## 1089844 BOX & MOUNTING GP

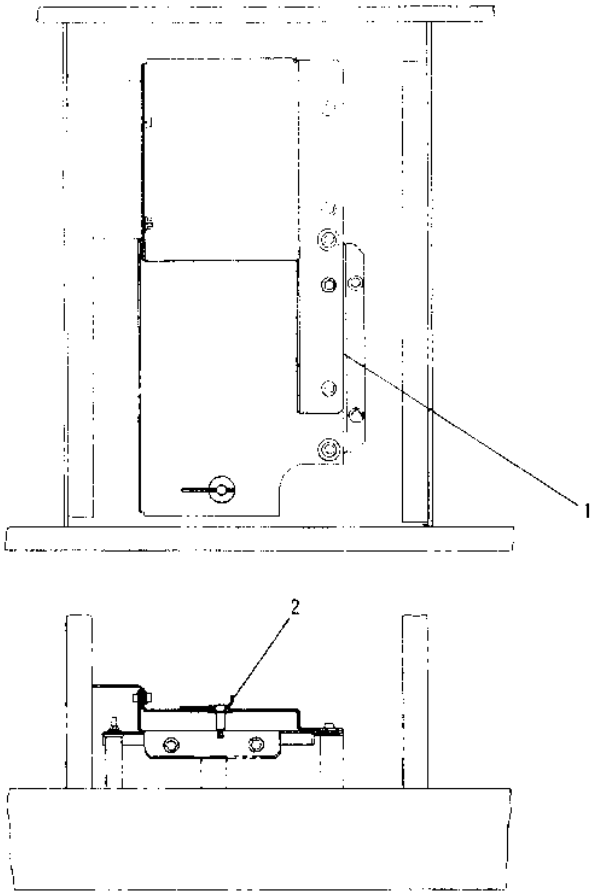


| NOTE | No. | PART No. | QTY | PART NAME | NOTE | No. | PART No. | QTY | PART NAME |
|---|---|---|---|---|---|---|---|---|---|
| | 1 | 122-3946 | 1 | SHEET | | | | | |
| | 2 | 102-5713 | 1 | BOLT AS | | | | | |

H53625E

GRAPHIC #1 h53625e

# 1089840 BOX GP-STORAGE

S/N 8SR 1-00397, 8TR 1-00449
PART OF 1089839-Page 203
1223877-Page 207

**Key:** Y - SEE SEPARATE ILLUSTRATION, H - ORDER BY THE DECIMETER

**SMCS**

| NOTE | REF NO | GRAPHIC REF | PART NUMBER | QTY | PART NAME 1 2 3 4 5 6 (PRODUCT LEVEL) | PRICE USD |
|---|---|---|---|---|---|---|
| | 1 | | 108-9888 | 1 | BODY AS | |
| | 2 | | 114-6223 | 1 | SEAL (22dm) | |
| H | | | 7Y-9352 | | SEAL (22dm) | |
| | | | 3D-9143 | 2 | HINGE | |
| | | | 8T-5413 | 4 | STUD | |
| | 3 | | 114-6111 | 1 | SHEET AS | |
| | 4 | | 6V-7357 | 2 | BOLT (L=25mm) | |
| | 5 | | 114-6109 | 1 | SHEET | |
| | 6 | | 137-2255 | 7 | BOLT | |
| | 7 | | 5C-7261 | 7 | NUT | |
| | 8 | | 5P-4116 | 8 | WASHER | |
| | 9 | | 4I-2187 | 1 | SUPPORT AS | |
| | 10 | | 096-3780 | 1 | PIN | |
| | 11 | | 095-0843 | 1 | COTTER | |
| | 12 | | 8T-4133 | 4 | NUT | |
| | 13 | | 5P-1075 | 4 | WASHER | |
| Y | 14 | | 122-3877 | 1 | HANDLE GP | |
| | 15 | | 122-4037 | 2 | GROMMET | |
| | 16 | | 7Y-3281 | 1 | GROMMET | |
| | 17 | | 137-2218 | 1 | CHANNEL | |
| | 18 | | 8T-5360 | 7 | WASHER | |

## 1089840 BOX GP-STORAGE

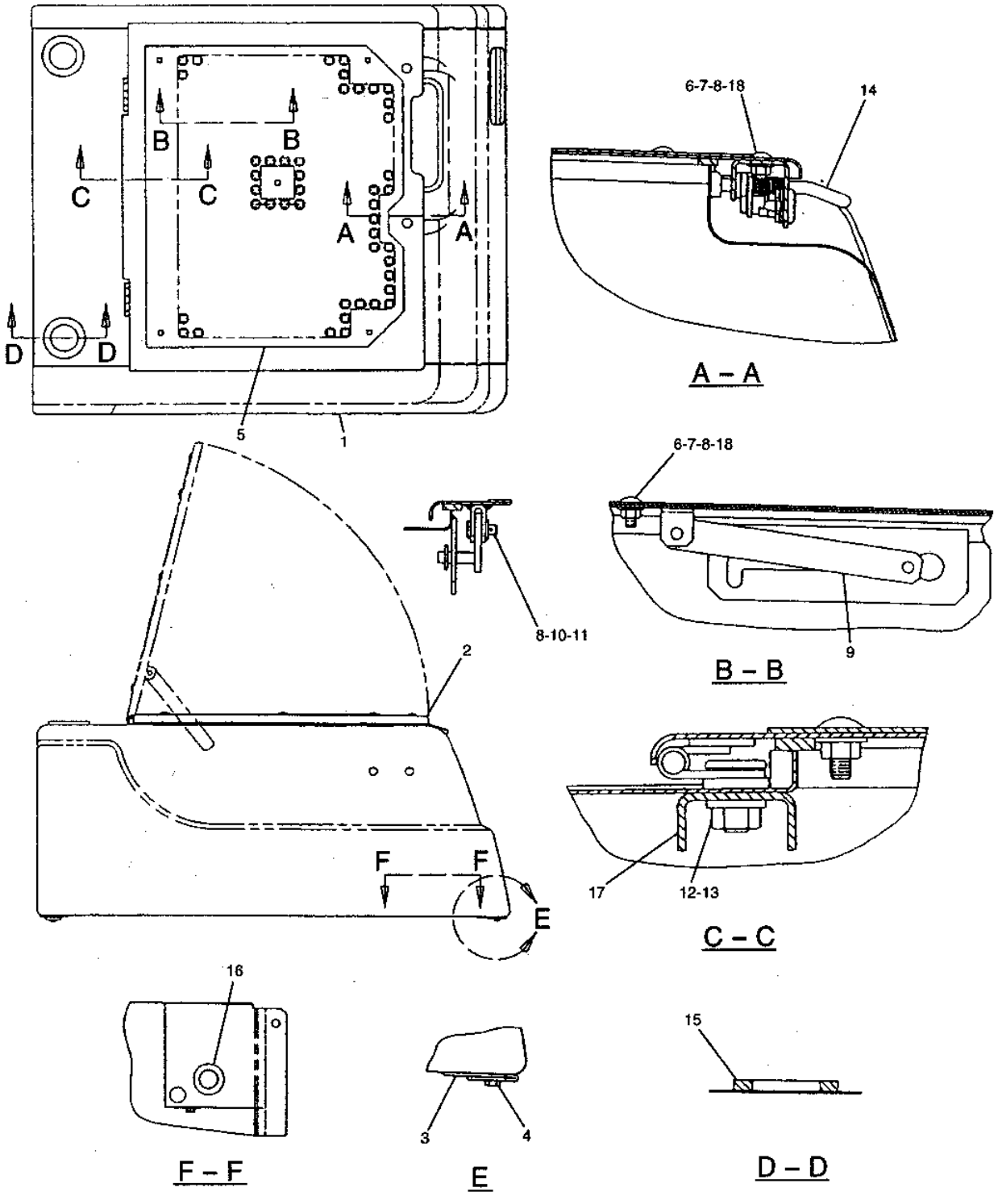


GRAPHIC #1

h81637e

# 1089840 BOX GP-STORAGE

S/N 8SR 00398-00417, 8TR 00450-00485
PART OF 1089839-Page 203
1223877-Page 207

**Key:** D - ORDER BY THE METER, Y - SEE SEPARATE ILLUSTRATION

**SMCS**

| NOTE | REF NO | GRAPHIC REF | PART NUMBER | QTY | PART NAME 1 2 3 4 5 6 (PRODUCT LEVEL) | PRICE USD |
|---|---|---|---|---|---|---|
| | 1 | | 108-9888 | 1 | BODY AS | |
| | 2 | | 114-6223 | 1 | COVER AS | |
| D | | | 3E-6573 | | SEAL (0.63m) | |
| | | | 3D-9143 | 2 | HINGE | |
| | | | 8T-5413 | 4 | STUD-WELD | |
| | 3 | | 114-6111 | 1 | SHEET AS | |
| | 4 | | 6V-7357 | 2 | BOLT (L=25mm) | |
| | 5 | | 154-0567 | 1 | SHEET | |
| | 6 | | 137-2255 | 7 | BOLT (L=20mm) | |
| | 7 | | 5C-7261 | 7 | NUT | |
| | 8 | | 5P-4116 | 8 | WASHER | |
| | 9 | | 4I-2187 | 1 | SUPPORT AS | |
| | 10 | | 096-3780 | 1 | PIN | |
| | 11 | | 095-0843 | 1 | COTTER | |
| | 12 | | 8T-4133 | 4 | NUT | |
| | 13 | | 5P-1075 | 4 | WASHER | |
| Y | 14 | | 122-3877 | 1 | HANDLE GP | |
| | 15 | | 122-4037 | 2 | GROMMET | |
| | 16 | | 7Y-3281 | 1 | GROMMET | |
| | 17 | | 137-2218 | 1 | CHANNEL | |
| | 18 | | 8T-5360 | 7 | WASHER | |

## 1089840 BOX GP-STORAGE

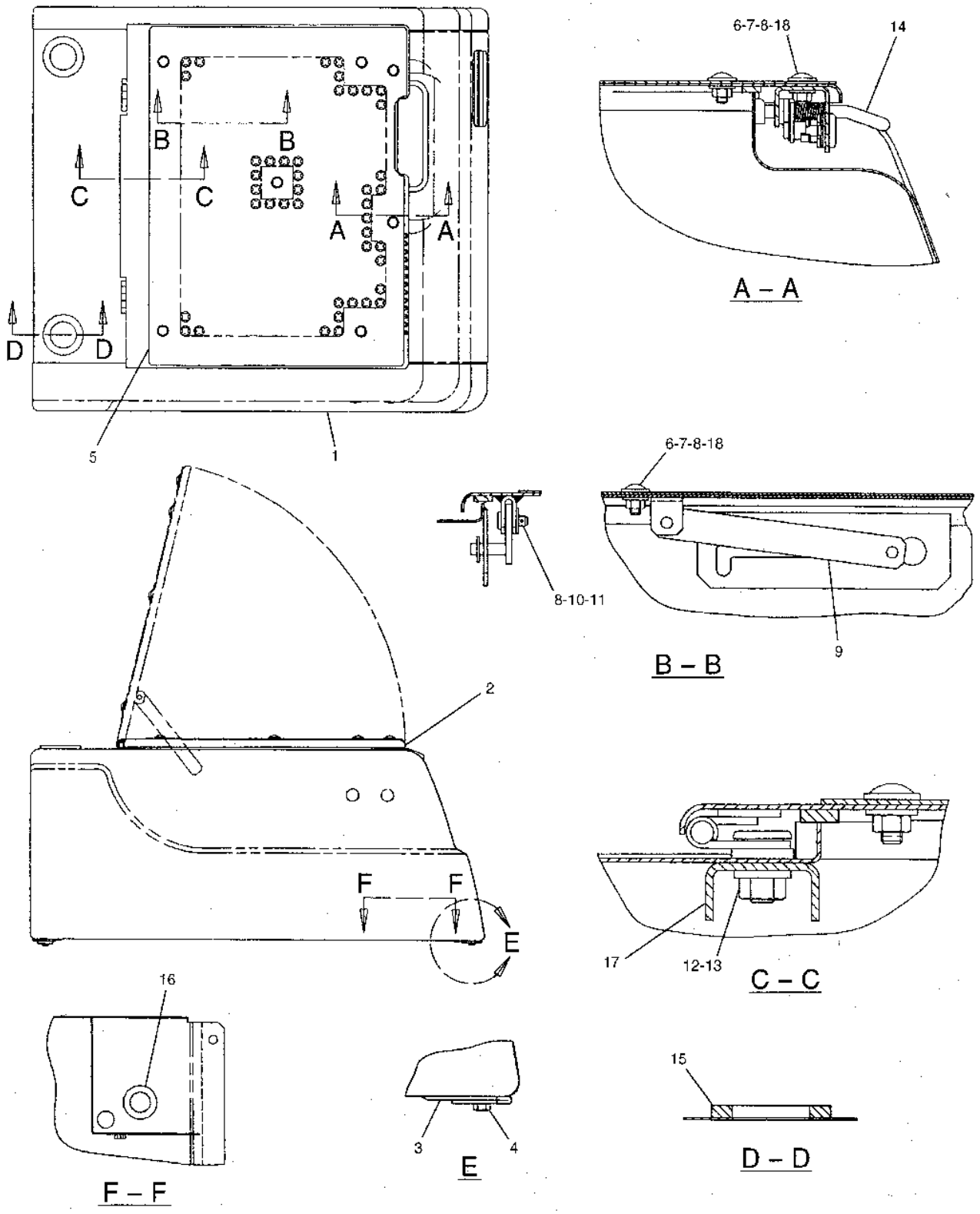


GRAPHIC #1

h63434e

# 1540566 BOX GP-STORAGE

S/N 8SR 00418-UP, 8TR 00486-UP
PART OF 1089839-Page 203.01
1223877-Page 207

**Key:** H - ORDER BY THE DECIMETER, Y - SEE SEPARATE ILLUSTRATION

**SMCS**

| NOTE | REF NO | GRAPHIC REF | PART NUMBER | QTY | PART NAME 1 2 3 4 5 6 (PRODUCT LEVEL) | PRICE USD |
|---|---|---|---|---|---|---|
| | 1 | | 108-9888 | 1 | BODY AS | |
| | 2 | | 146-4963 | 1 | COVER AS | |
| H | | | 7Y-9352 | | SEAL (22dm) | |
| | | | 3D-9143 | 2 | HINGE | |
| | | | 8T-5413 | 4 | STUD | |
| | 3 | | 114-6111 | 1 | SHEET AS | |
| | 4 | | 6V-7357 | 2 | BOLT (L=25mm) | |
| | 5 | | 154-0567 | 1 | SHEET | |
| | 6 | | 137-2255 | 7 | BOLT | |
| | 7 | | 5C-7261 | 7 | NUT | |
| | 8 | | 5P-4116 | 8 | WASHER | |
| | 9 | | 4I-2187 | 1 | SUPPORT AS | |
| | 10 | | 096-3780 | 1 | PIN | |
| | 11 | | 095-0843 | 1 | COTTER | |
| | 12 | | 8T-4133 | 4 | NUT | |
| | 13 | | 5P-1075 | 4 | WASHER | |
| Y | 14 | | 122-3877 | 1 | HANDLE GP | |
| | 15 | | 122-4037 | 2 | GROMMET | |
| | 16 | | 7Y-3281 | 1 | GROMMET | |
| | 17 | | 137-2218 | 1 | CHANNEL | |
| | 18 | | 8T-5360 | 7 | WASHER | |
| | 19 | | 4I-5034 | 2 | CLIP | |

## 1540566 BOX GP-STORAGE

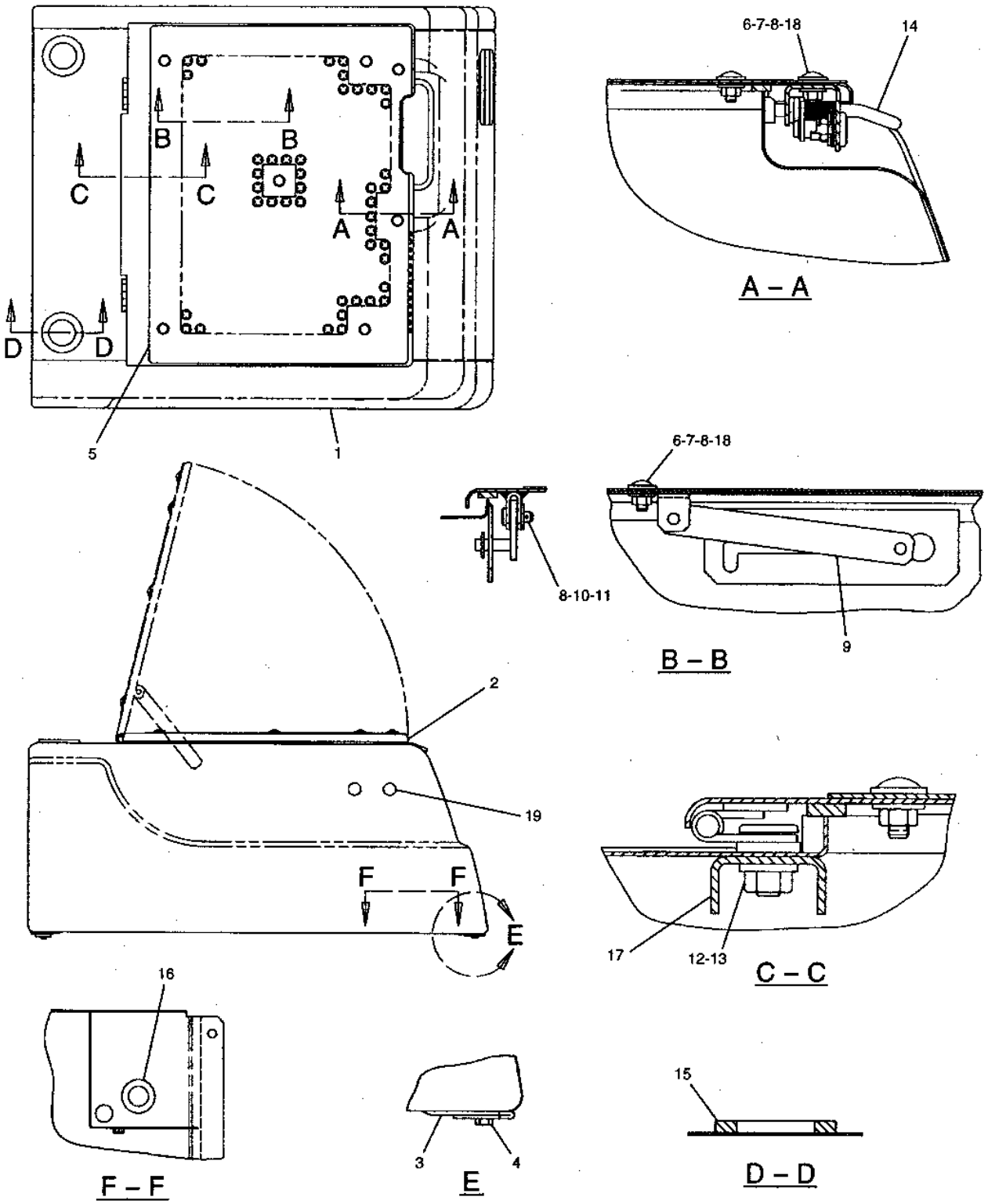


GRAPHIC #1

h81633e

# 1224023 BOX GP-STORAGE

S/N 8SR 1-00397, 8TR 1-00449
PART OF 1224022-Page 204
1223877-Page 207
AN ATTACHMENT

**Key:** E - ORDER BY THE CENTIMETER, Y - SEE SEPARATE ILLUSTRATION

**SMCS**

| NOTE | REF NO | GRAPHIC REF | PART NUMBER | QTY | PART NAME 1 2 3 4 5 6 (PRODUCT LEVEL) | PRICE USD |
|---|---|---|---|---|---|---|
| | 1 | | 122-4024 | 1 | BODY AS | |
| | 2 | | 114-6223 | 1 | COVER AS | |
| E | | | 7Y-9352 | | SEAL (220m) | |
| | | | 3D-9143 | 2 | HINGE | |
| | | | 8T-5413 | 4 | STUD-WELD | |
| | 3 | | 114-6109 | 1 | SHEET AS | |
| | 4 | | 137-2255 | 7 | BOLT (L=20mm) | |
| | 5 | | 5C-7261 | 7 | NUT | |
| | 6 | | 4I-2187 | 1 | SUPPORT AS | |
| | 7 | | 5P-4116 | 8 | WASHER-HARD | |
| | 8 | | 096-3780 | 1 | PIN | |
| | 9 | | 095-0843 | 1 | COTTER | |
| | 10 | | 8T-4133 | 4 | NUT | |
| | 11 | | 5P-1075 | 4 | WASHER-HARD | |
| Y | 12 | | 122-3877 | 1 | HANDLE GP | |
| | 13 | | 122-4037 | 2 | GROMMET | |
| | 14 | | 137-2218 | 1 | CHANNEL | |
| | 15 | | 8T-5360 | 7 | WASHER-HARD | |

## 1224023 BOX GP-STORAGE

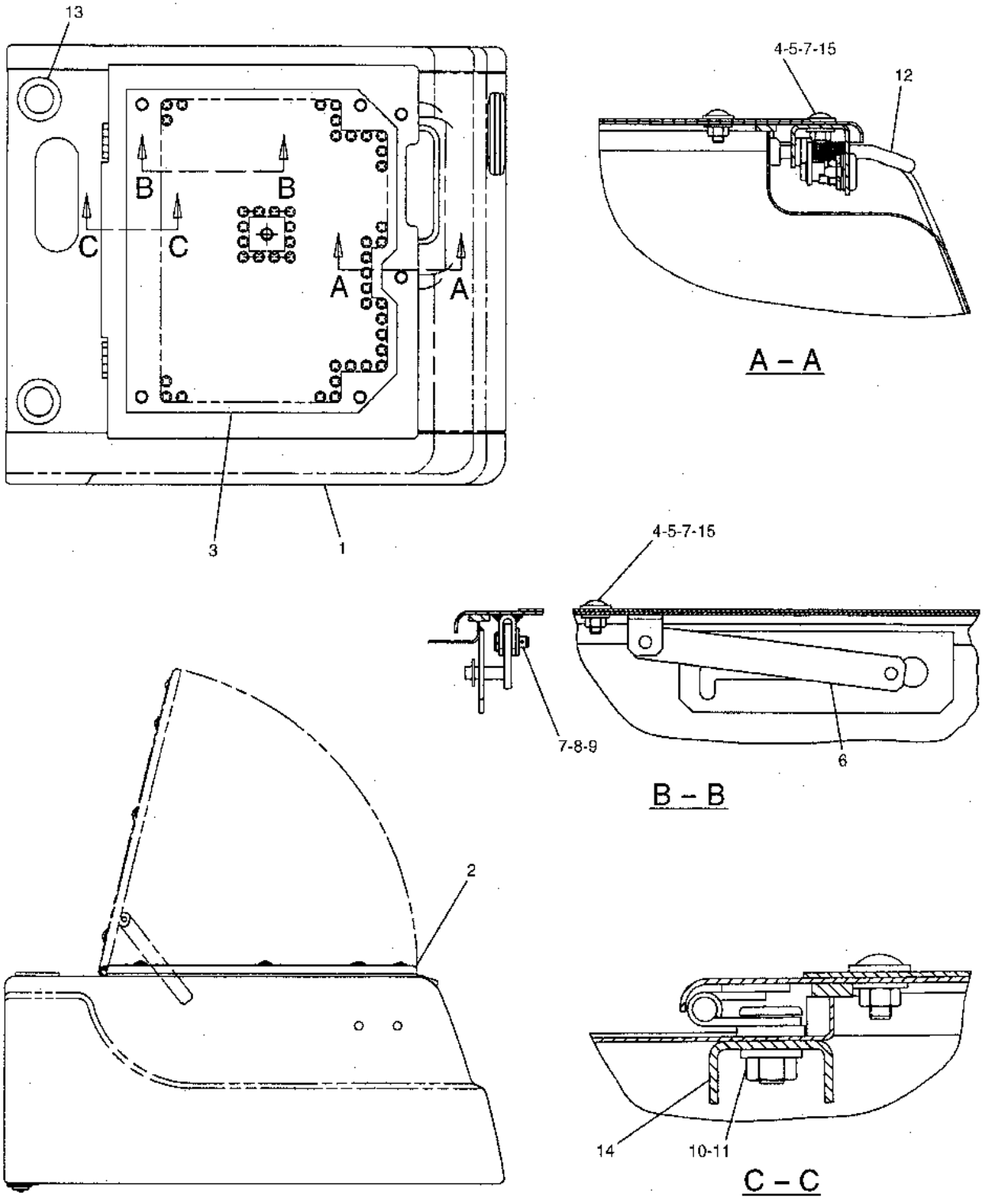


GRAPHIC #1

h53623e

# 1224023 BOX GP-STORAGE

S/N 8SR 00398-00417, 8TR 00450-00485
PART OF 1224022-Page 204
1223877-Page 207
AN ATTACHMENT

**Key:** E - ORDER BY THE CENTIMETER, Y - SEE SEPARATE ILLUSTRATION

**SMCS**

| NOTE | REF NO | GRAPHIC REF | PART NUMBER | QTY | PART NAME 1 2 3 4 5 6 (PRODUCT LEVEL) | PRICE USD |
|---|---|---|---|---|---|---|
| | 1 | | 122-4024 | 1 | BODY AS | |
| | 2 | | 114-6223 | 1 | COVER AS | |
| E | | | 3E-6573 | | SEAL (220cm) | |
| | | | 3D-9143 | 2 | HINGE | |
| | | | 8T-5413 | 4 | STUD-WELD | |
| | 3 | | 154-0567 | 1 | SHEET | |
| | 4 | | 137-2255 | 7 | BOLT (L=20mm) | |
| | 5 | | 5C-7261 | 7 | NUT | |
| | 6 | | 4I-2187 | 1 | SUPPORT AS | |
| | 7 | | 5P-4116 | 8 | WASHER-HARD | |
| | 8 | | 096-3780 | 1 | PIN | |
| | 9 | | 095-0843 | 1 | COTTER | |
| | 10 | | 8T-4133 | 4 | NUT | |
| | 11 | | 5P-1075 | 4 | WASHER-HARD | |
| Y | 12 | | 122-3877 | 1 | HANDLE GP | |
| | 13 | | 122-4037 | 2 | GROMMET | |
| | 14 | | 137-2218 | 1 | CHANNEL | |
| | 15 | | 8T-5360 | 7 | WASHER-HARD | |

## 1224023 BOX GP-STORAGE

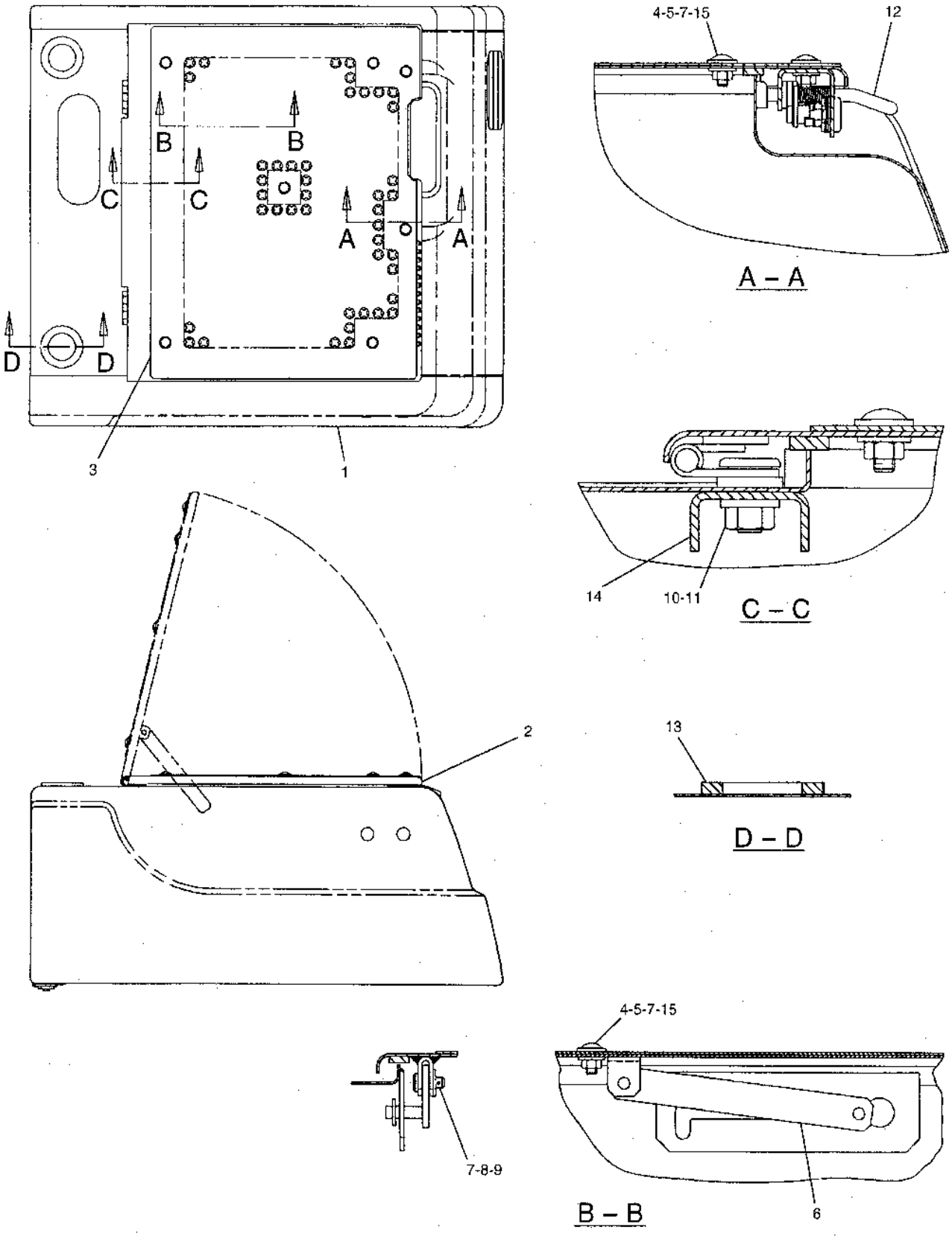


GRAPHIC #1

h63437e

# 1540654 BOX GP-STORAGE

S/N 8SR 00418-UP, 8TR 00486-UP
PART OF 1224022-Page 204.01
1223877-Page 207
AN ATTACHMENT

**Key:** H - ORDER BY THE DECIMETER, Y - SEE SEPARATE ILLUSTRATION

**SMCS**

| NOTE | REF NO | GRAPHIC REF | PART NUMBER | QTY | PART NAME 1 2 3 4 5 6 (PRODUCT LEVEL) | PRICE USD |
|---|---|---|---|---|---|---|
| | 1 | | 122-4024 | 1 | BODY AS | |
| | 2 | | 146-4963 | 1 | COVER AS | |
| H | | | 7Y-9352 | | SEAL (22dm) | |
| | | | 3D-9143 | 2 | HINGE | |
| | | | 8T-5413 | 4 | STUD | |
| | 3 | | 154-0567 | 1 | SHEET | |
| | 4 | | 137-2255 | 7 | BOLT | |
| | 5 | | 5C-7261 | 7 | NUT | |
| | 6 | | 4I-2187 | 1 | SUPPORT AS | |
| | 7 | | 5P-4116 | 8 | WASHER | |
| | 8 | | 096-3780 | 1 | PIN | |
| | 9 | | 095-0843 | 1 | COTTER | |
| | 10 | | 8T-4133 | 4 | NUT | |
| | 11 | | 5P-1075 | 4 | WASHER | |
| Y | 12 | | 122-3877 | 1 | HANDLE GP | |
| | 13 | | 122-4037 | 2 | GROMMET | |
| | 14 | | 137-2218 | 1 | CHANNEL | |
| | 15 | | 8T-5360 | 7 | WASHER | |
| | 16 | | 4I-5034 | 2 | CLIP | |

## 1540654 BOX GP-STORAGE

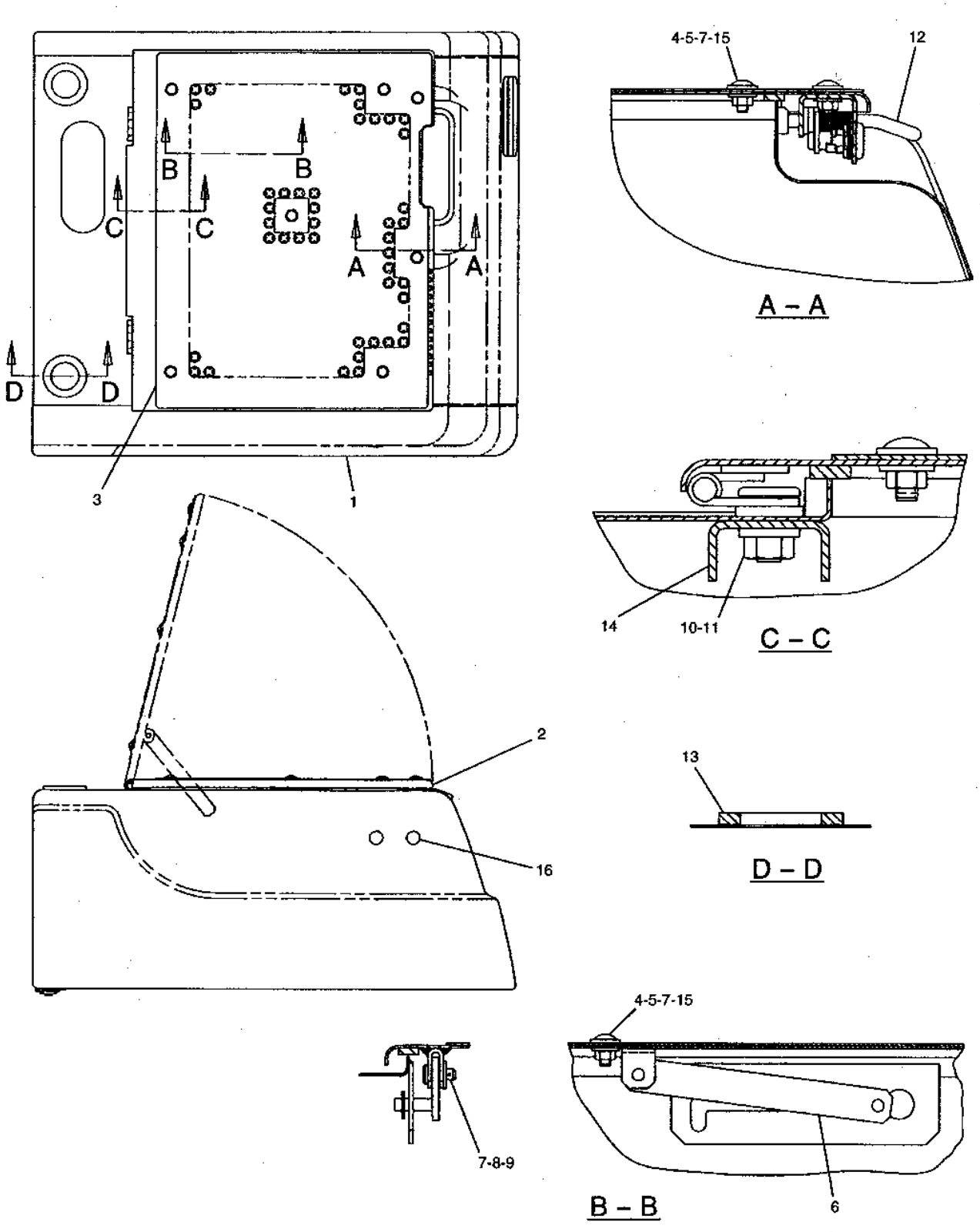


GRAPHIC #1

h81640e

# 1223877 HANDLE GP-STORAGE DOOR

PART OF 1089840-Page 205.02, 1540566-Page 205.06, 1224023-Page 206.01, 1540654-Page 206.05

**Key:**

**SMCS**

| NOTE | REF NO | GRAPHIC REF | PART NUMBER | QTY | PART NAME 1 2 3 4 5 6 (PRODUCT LEVEL) | PRICE USD |
|---|---|---|---|---|---|---|
| | 1 | | 9G-5582 | 1 | LOCK AS | |
| | | | 7F-9223 | 1 | LOCKWASHER | |
| | | | 8T-5004 | 1 | SCREW | |
| | 2 | | 122-3879 | 1 | HANDLE | |
| | 3 | | 122-3878 | 1 | BRACKET | |
| | 4 | | 122-3880 | 1 | BOSS | |
| | 5 | | 095-1272 | 2 | SETSCREW | |
| | 6 | | 122-3882 | 2 | SPRING | |
| | 7 | | 135-7559 | 1 | BOSS AS | |

## 1223877 HANDLE GP-STORAGE DOOR

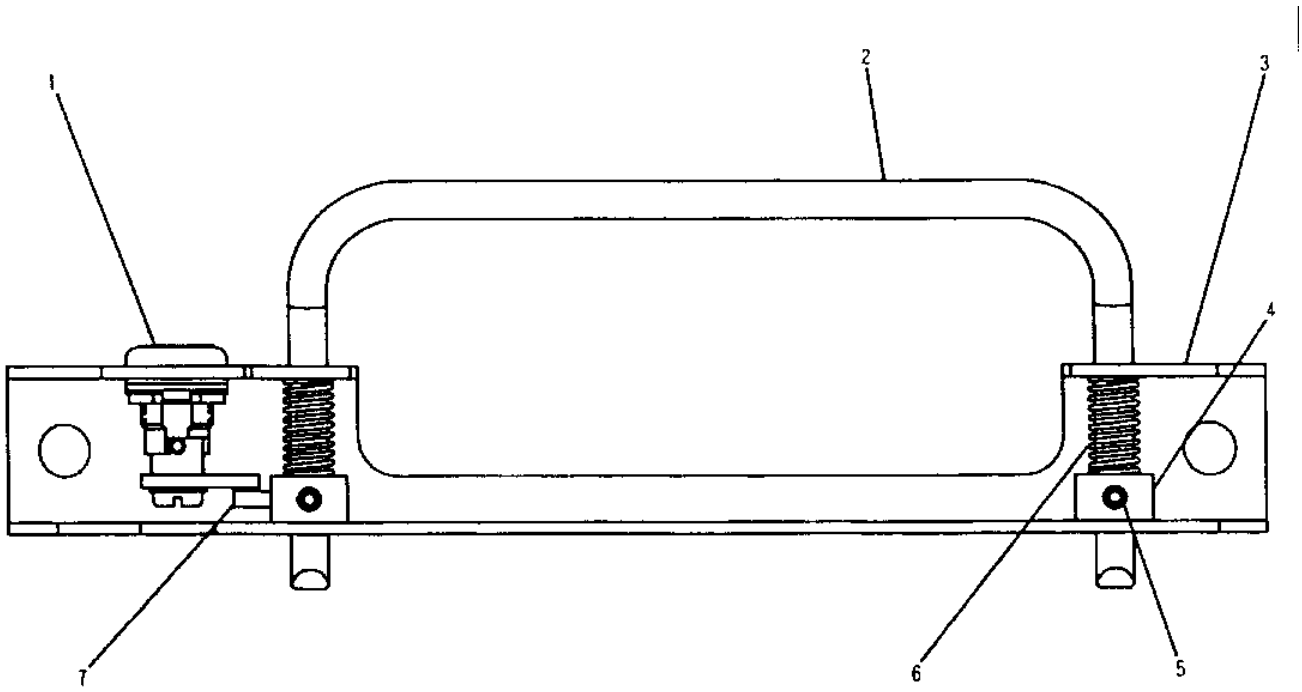


| NOTE | No. | PART No. | QTY | PART NAME |
|---|---|---|---|---|
| | 1 | 9G-5582 | 1 | LOCK AS |
| | | 7P-9223 | 1 | LOCKWASHER |
| | | 8T-5004 | 1 | SCREW |
| | 2 | 122-3879 | 1 | HANDLE |
| | 3 | 122-3878 | 1 | BRACKET |
| | 4 | 122 3880 | 1 | BOSS |
| | 5 | 095 1272 | 2 | SETSCREW |
| | 6 | 122-3882 | 2 | SPRING |
| | 7 | 135 7559 | 1 | BOSS AS |

| NOTE | No. | PART No. | QTY | PART NAME |
|---|---|---|---|---|

H52997E

GRAPHIC #1 h52997e

# 1146300 FENDER & COVER GP

S/N 8SR 1-00417, 8TR 1-00485

**Key:**

**SMCS**

| NOTE | REF NO | GRAPHIC REF | PART NUMBER | QTY | PART NAME 1 2 3 4 5 6 (PRODUCT LEVEL) | PRICE USD |
|---|---|---|---|---|---|---|
| | 1 | | 114-6302 | 1 | COVER | |
| | 2 | | 8T-0722 | 2 | BOLT (L=30mm) | |
| | 3 | | 116-1724 | 2 | WASHER | |
| | 4 | | 114-6195 | 2 | SPACER | |

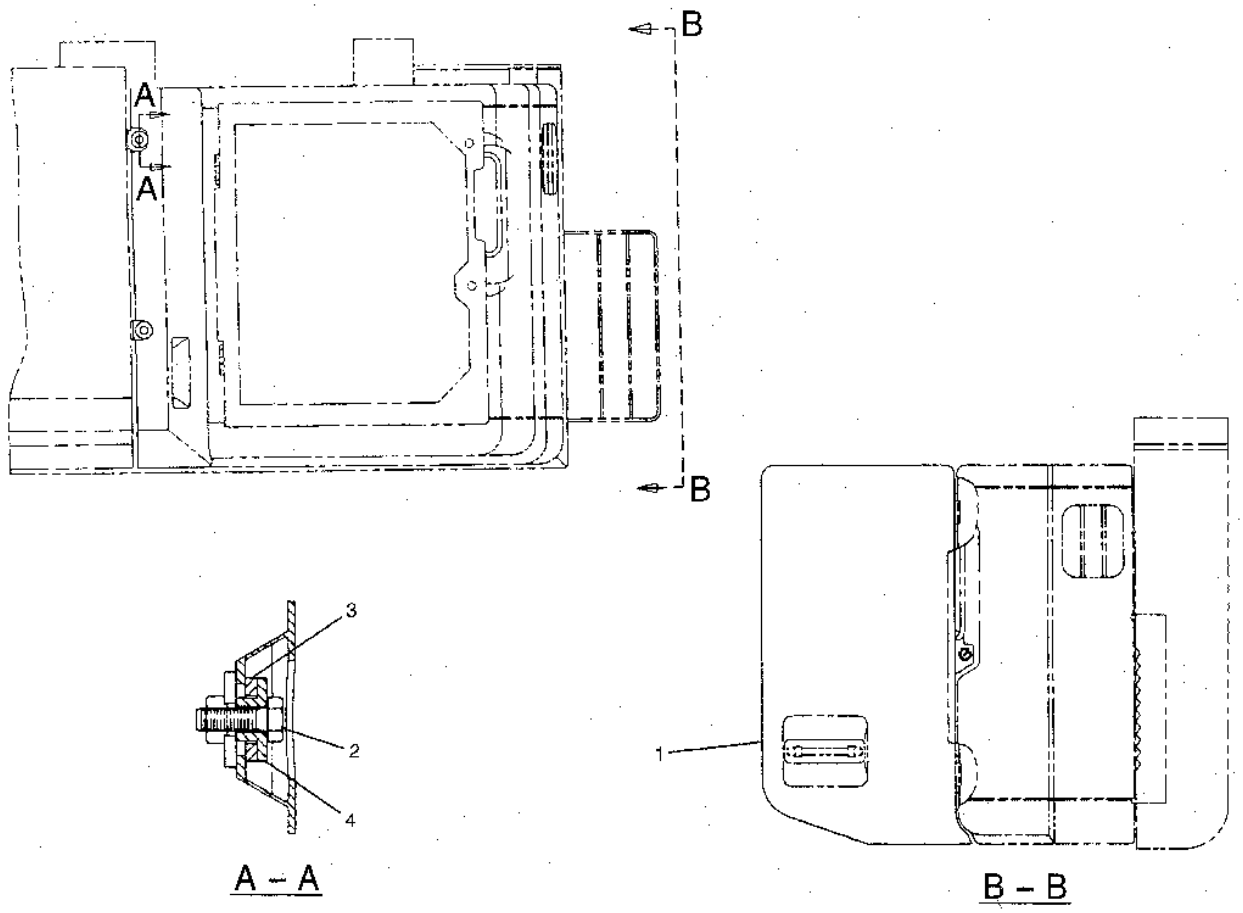


GRAPHIC #1

h52998e

# 1464966 FENDER & COVER GP

S/N 8SR 00418-UP, 8TR 00486-UP

**Key:**

**SMCS**

| NOTE | REF NO | GRAPHIC REF | PART NUMBER | QTY | PART NAME 1 2 3 4 5 6 (PRODUCT LEVEL) | PRICE USD |
|---|---|---|---|---|---|---|
| | 1 | | 114-6302 | 1 | COVER | |
| | 2 | | 146-4967 | 1 | SHEET AS | |
| | 3 | | 161-7632 | 2 | BOLT (L=40mm) | |
| | 4 | | 8T-4121 | 2 | WASHER-HARD | |
| | 5 | | 116-1724 | 2 | WASHER | |

## 1464966 FENDER & COVER GP

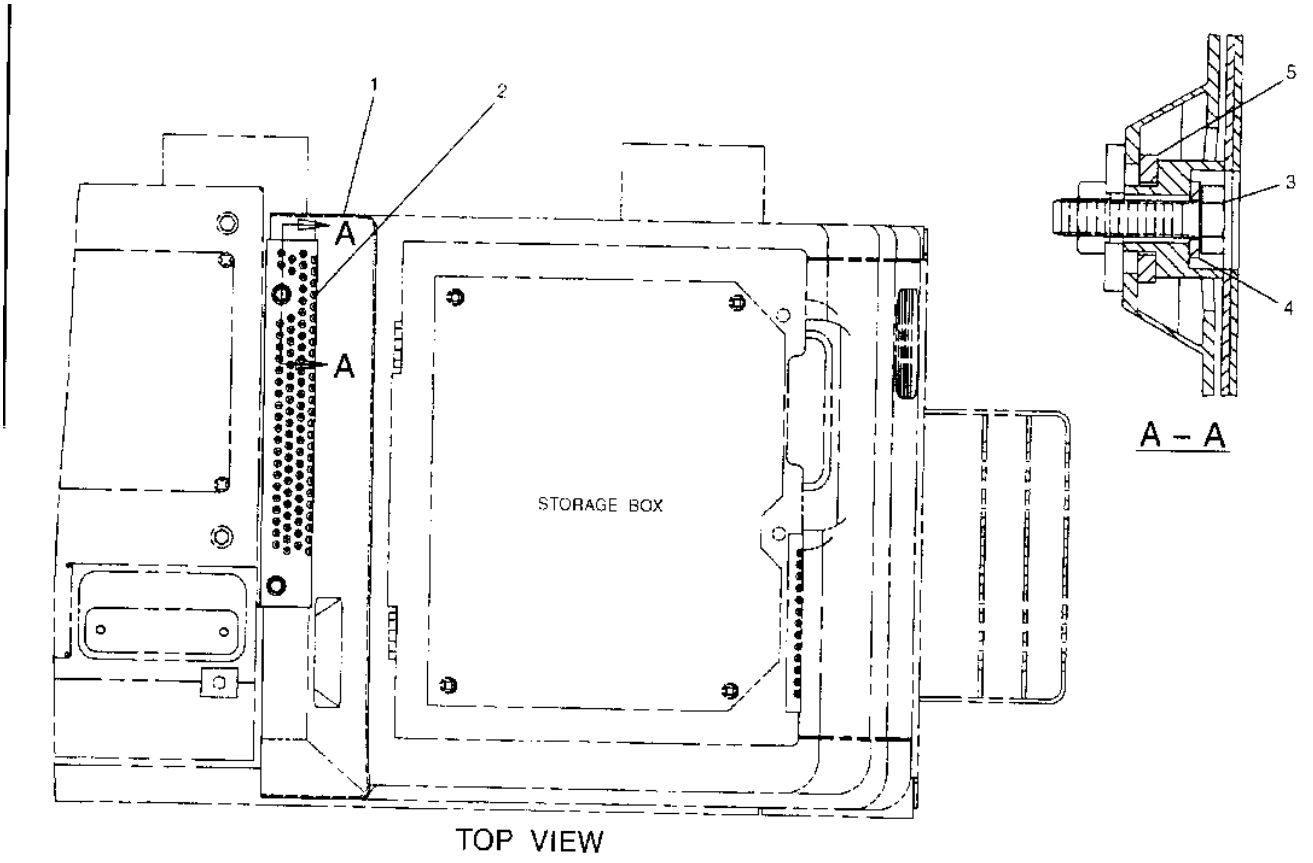


TOP VIEW

| NOTE | No. | PART No. | QTY | PART NAME |
|---|---|---|---|---|
| | 1 | 114-6302 | 1 | COVER |
| | 2 | 146-4967 | 1 | SHEET AS |
| | 3 | 161-7632 | 2 | BOLT(L=40mm. |
| | 4 | 8T-4121 | 2 | WASHER-HARD |
| | 5 | 116-1724 | 2 | WASHER |

| NOTE | No. | PART No. | QTY | PART NAME |
|---|---|---|---|---|

H65283E

GRAPHIC #1

h65283e

# 1161699 COUNTERWEIGHT GP

1161700-Page 210

**Key:** Y - SEPARATE ILLUSTRATION

**SMCS**

| NOTE | REF NO | GRAPHIC REF | PART NUMBER | QTY | PART NAME 1 2 3 4 5 6 (PRODUCT LEVEL) | PRICE USD |
|---|---|---|---|---|---|---|
| Y | 1 | | 116-1700 | 1 | COUNTERWEIGHT GP | |
| | 2 | | 6I-6646 | 4 | SPACER | |
| | 3 | | 4I-0191 | 4 | BOLT (T=181mm) | |

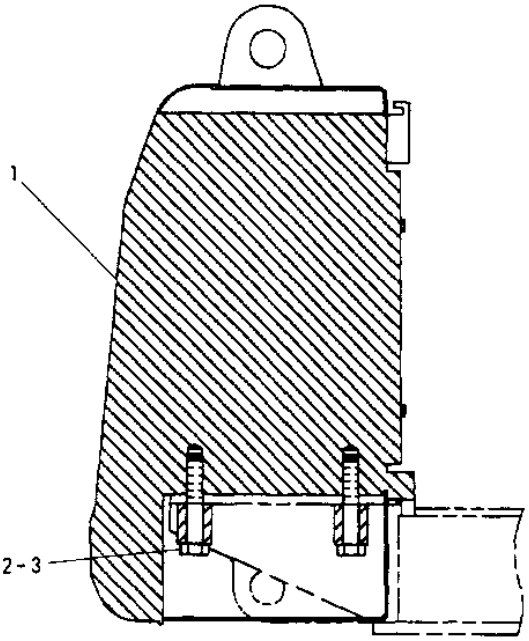


| NOTE | No. | PART No. | QTY | PART NAME |
|---|---|---|---|---|
| Y | 1 | 116-1700 | 1 | COUNTERWEIGHT GP |
| | 2 | 6I-6646 | 4 | SPACER |
| | 3 | 4I-0191 | 4 | BOLT (T=181mm) |

Y-SEE SEPARATE ILLUSTRATION

H50804E

GRAPHIC #1 h50804e

# 1174247 COUNTERWEIGHT GP

EXTRA
1174248-Page 211
AN ATTACHMENT

**Key:** Y - SEPARATE ILLUSTRATION

**SMCS**

| NOTE | REF NO | GRAPHIC REF | PART NUMBER | QTY | PART NAME 1 2 3 4 5 6 (PRODUCT LEVEL) | PRICE USD |
|---|---|---|---|---|---|---|
| Y | 1 | | 117-4248 | 1 | COUNTERWEIGHT GP | |
| | 2 | | 6I-6645 | 4 | SPACER | |
| | 3 | | 4I-0191 | 4 | BOLT (L=181mm) | |

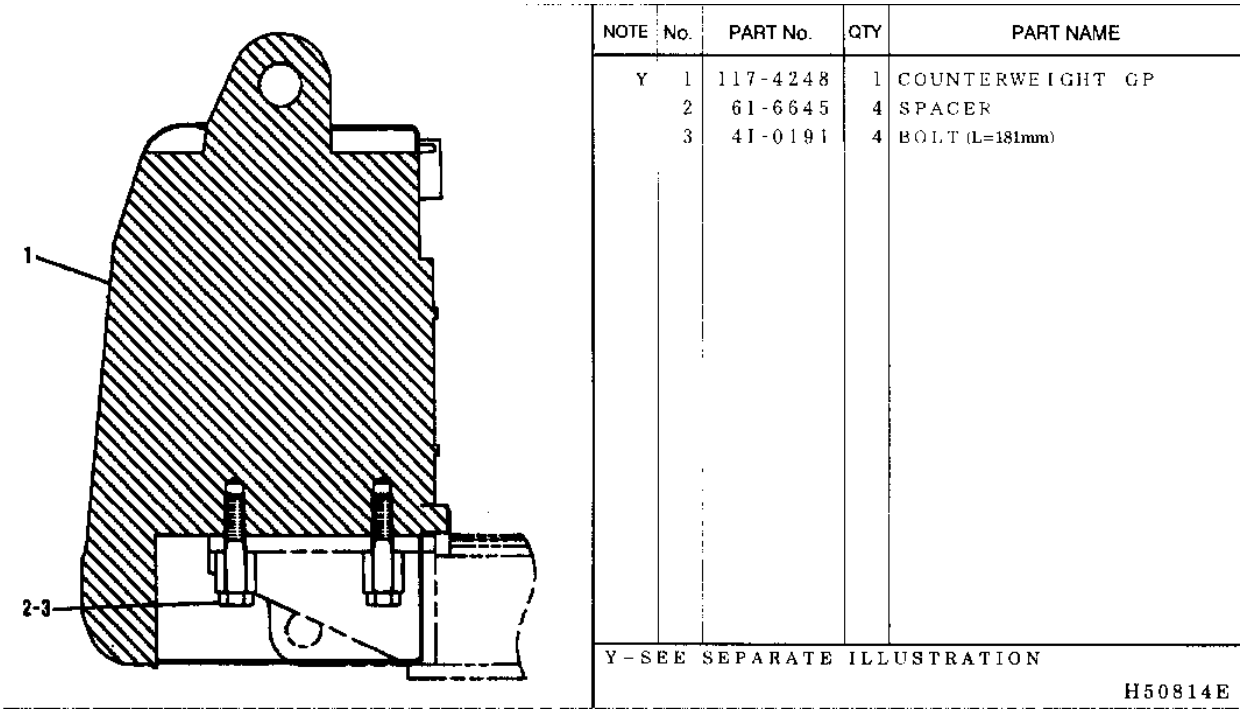


GRAPHIC #1 h50814e

# 1161700 COUNTERWEIGHT GP

1161699-Page 208

**Key:**

**SMCS**

| NOTE | REF NO | GRAPHIC REF | PART NUMBER | QTY | PART NAME 1 2 3 4 5 6 (PRODUCT LEVEL) | PRICE USD |
|---|---|---|---|---|---|---|
| | 1 | | 7I-0773 | 1 | LINER | |
| | 2 | | 116-1802 | 1 | INSULATION | |
| | 3 | | 7I-0717 | 1 | LINER | |
| | 4 | | 116-1804 | 1 | LINER | |
| | 5 | | 117-4377 | 1 | LINER | |
| | 6 | | 8T-4223 | 6 | WASHER-HARD (OD=25.5mm) | |
| | 7 | | 7Y-2292 | 6 | WASHER (OD=50.0mm) | |
| | 8 | | 8T-4179 | 6 | BOLT (L=20mm) | |
| | 9 | | 117-4256 | 1 | COUNTERWEIGHT AS | |
| | 10 | | 131-0574 | 1 | LINER | |

## 1161700 COUNTERWEIGHT GP

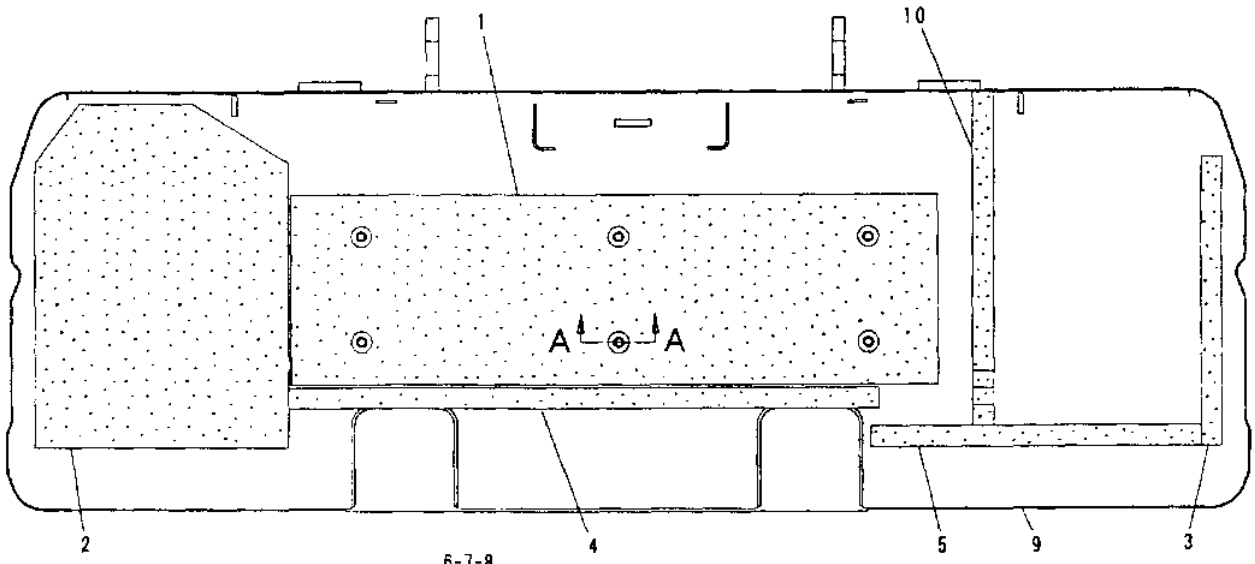


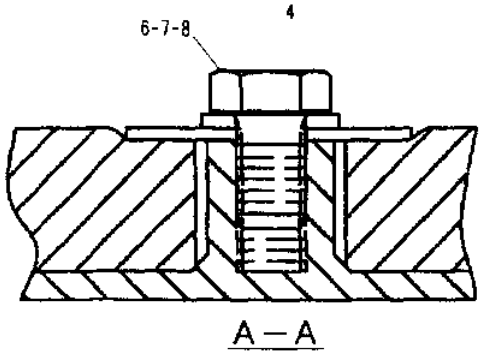


A—A

| NOTE | No. | PART No. | QTY | PART NAME |
|---|---|---|---|---|
| | 1 | 7I-0773 | 1 | LINER |
| | 2 | 116-1802 | 1 | INSULATION |
| | 3 | 7I-0717 | 1 | LINER |
| | 4 | 116-1804 | 1 | LINER |
| | 5 | 117-4377 | 1 | LINER |
| | 6 | 8T 4223 | 6 | WASHER-HARD (OD=25.5mm) |
| | 7 | 7Y-2292 | 6 | WASHER (OD=50.0mm) |
| | 8 | 8T-4179 | 6 | BOLT (L=20mm) |
| | 9 | 117-4256 | 1 | COUNTERWEIGHT AS |
| | 10 | 131-0574 | 1 | LINER |

H50798E

# 1174248 COUNTERWEIGHT GP

PART OF 1174247-Page 209
AN ATTACHMENT

**Key:**

**SMCS**

| NOTE | REF NO | GRAPHIC REF | PART NUMBER | QTY | PART NAME 1 2 3 4 5 6 (PRODUCT LEVEL) | PRICE USD |
|---|---|---|---|---|---|---|
| | 1 | | 7I-0773 | 1 | LINER | |
| | 2 | | 116-1802 | 1 | INSULATION | |
| | 3 | | 7I-0717 | 1 | LINER | |
| | 4 | | 116-1804 | 1 | LINER | |
| | 5 | | 117-4377 | 1 | LINER | |
| | 6 | | 8T-4223 | 6 | WASHER-HARD (OD=25.5mm) | |
| | 7 | | 7Y-2292 | 6 | WASHER (OD=50.0mm) | |
| | 8 | | 8T-4179 | 6 | BOLT (L=20mm) | |
| | 9 | | 117-4249 | 1 | COUNTERWEIGHT AS | |
| | 10 | | 131-0574 | 1 | LINER | |

## 1174248 COUNTERWEIGHT GP

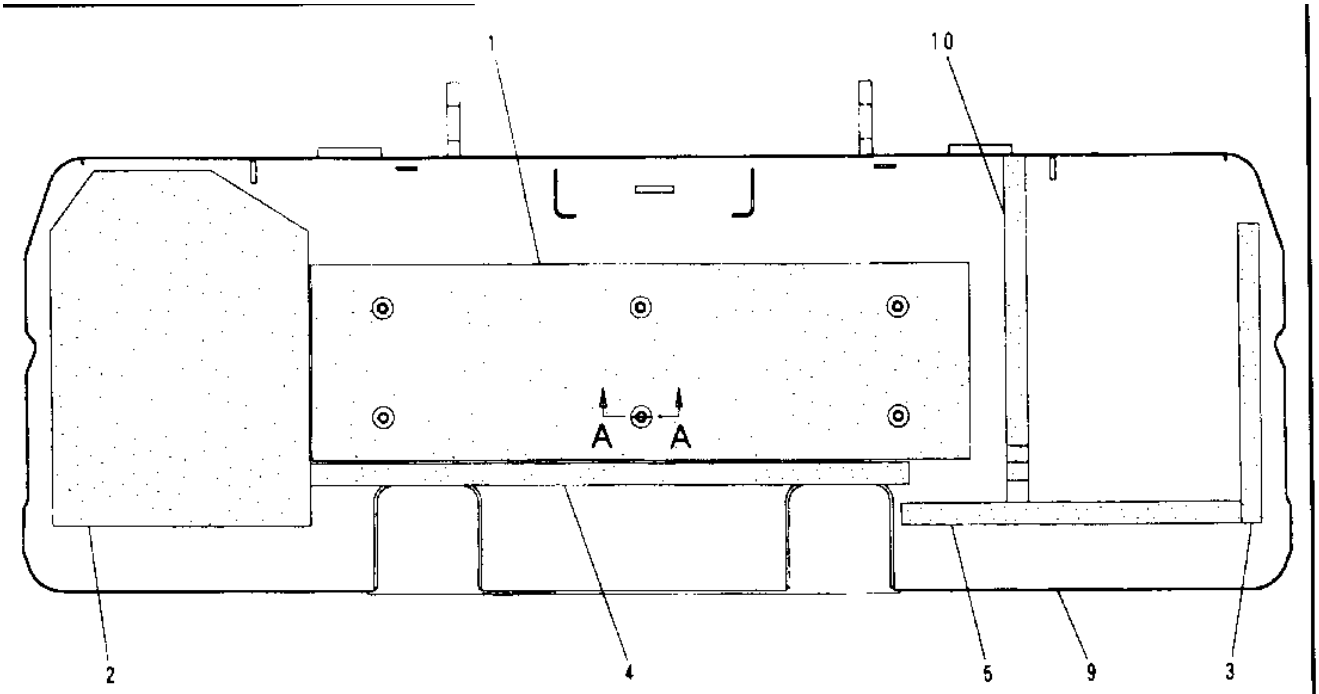


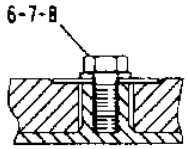


A – A

| NOTE | No. | PART No. | QTY | PART NAME |
|---|---|---|---|---|
| | 1 | 7I-0773 | 1 | LINER |
| | 2 | 116-1802 | 1 | INSULATION |
| | 3 | 7I-0717 | 1 | LINER |
| | 4 | 116-1804 | 1 | LINER |
| | 5 | 117-4377 | 1 | LINER |
| | 6 | 8T-4223 | 6 | WASHER (HARD) (OD=25.5mm) |
| | 7 | 7Y-2292 | 6 | WASHER (OD=50.0mm) |
| | 8 | 8T-4179 | 6 | BOLT (L=20mm) |
| | 9 | 117-4249 | 1 | COUNTERWEIGHT AS |
| | 10 | 131-0574 | 1 | LINER |

| NOTE | No. | PART No. | QTY | PART NAME |
|---|---|---|---|---|

H50813E

GRAPHIC #1

h50813e

# 1141315 GEAR & BEARING GP-PART 1 OF 2

**Key:**

**SMCS**

| NOTE | REF NO | GRAPHIC REF | PART NUMBER | QTY | PART NAME 1 2 3 4 5 6 (PRODUCT LEVEL) | PRICE USD |
|---|---|---|---|---|---|---|
| | 1 | | 5K-9243 | 4 | ELBOW | |
| | 2 | | 7Y-1095 | 1 | DOWEL | |
| | 3 | | 114-1379 | 1 | TUBE AS (RH) | |
| | 4 | | 3B-8489 | 2 | FITTING | |
| | 5 | | 8T-4199 | 4 | BOLT (L=12mm) | |
| | 6 | | 4N-9170 | 4 | CLIP | |
| | 7 | | 114-1380 | 1 | TUBE AS (LH) | |

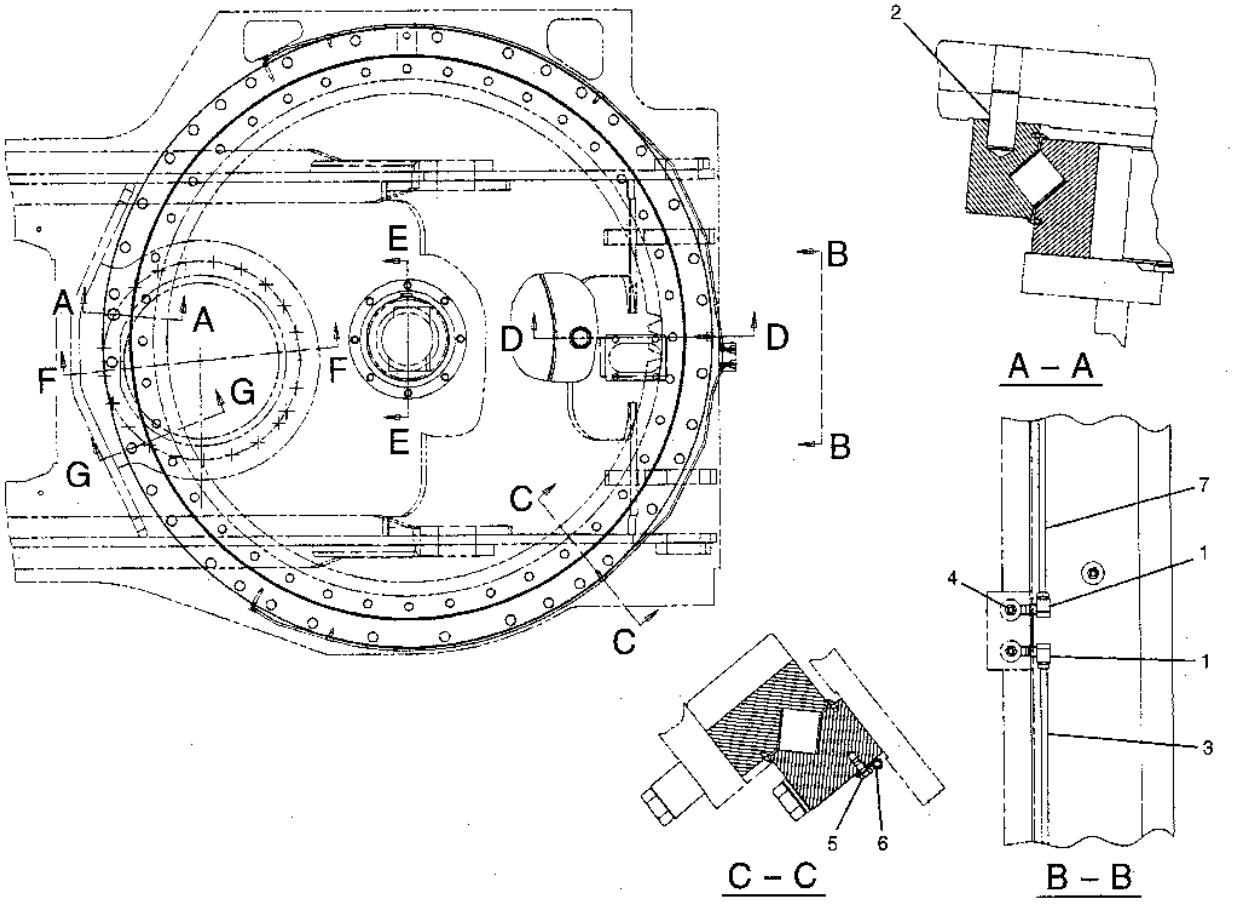


GRAPHIC #1

h79279e

# 1141315 GEAR & BEARING GP-PART 2 OF 2

1912557-Page 213.01

**Key:** B - USE AS REQUIRED, Y - SEE SEPARATE ILLUSTRATION

**SMCS**

| NOTE | REF NO | GRAPHIC REF | PART NUMBER | QTY | PART NAME 1 2 3 4 5 6 (PRODUCT LEVEL) | PRICE USD |
|---|---|---|---|---|---|---|
| | 1 | | 8T-4136 | 12 | BOLT (L=25mm) | |
| | 2 | | 8T-4121 | 12 | WASHER | |
| | 3 | | 7Y-1649 | 1 | BOOT | |
| | 4 | | 7Y-1650 | 1 | CLAMP | |
| | 5 | | 093-0543 | 1 | RETAINER | |
| | 6 | | 096-6095 | 1 | PLUG | |
| | 7 | | 095-1608 | 1 | SEAL-O-RING (ID=44.70mm) | |
| | 8 | | 7Y-1648 | 1 | STRIP | |
| | 9 | | 7Y-1647 | 1 | GASKET | |
| B | 10 | | 1U-8846 | | GASKET MAKER (380ml) | |
| Y | 11 | | 191-2557 | 1 | GEAR GP | |
| | 12 | | 6V-8132 | 40 | BOLT (L=120mm) | |
| | 13 | | 2B-7561 | 2 | CORK | |
| | 14 | | 8T-0670 | 36 | BOLT (L=140mm) | |
| | 15 | | 7Y-1507 | 40 | SPACER | |
| | 16 | | 096-0020 | 36 | SPACER | |

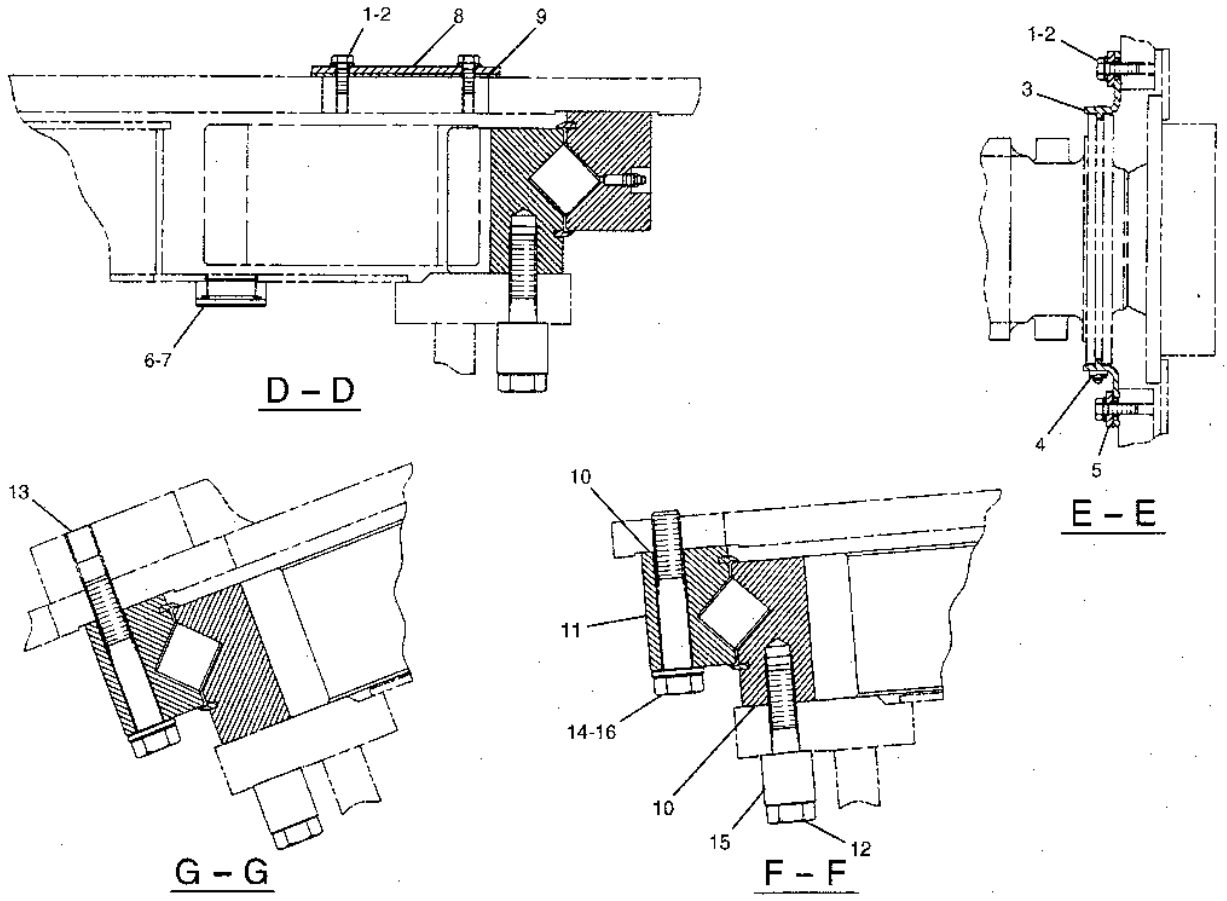


GRAPHIC #1

h79280e

# 1912557 GEAR & BEARING GP

PART OF 1141315-Page 213

**Key:** Y - Separate Illustration

**SMCS**

| NOTE | REF NO | GRAPHIC REF | PART NUMBER | QTY | PART NAME 1 2 3 4 5 6 (PRODUCT LEVEL) | PRICE USD |
|---|---|---|---|---|---|---|
| Y | | | 114-1435 | 1 | GEAR & BEARING GP | |
| | | | | | -OR- | |
| Y | | | 191-2558 | 213. | GEAR & BEARING GP | |

# 1912558 GEAR & BEARING GP

PART OF 1912557-Page 213.01

**Key:** E - ORDER BY THE CENTIMETER

**SMCS**

| NOTE | REF NO | GRAPHIC REF | PART NUMBER | QTY | PART NAME 1 2 3 4 5 6 (PRODUCT LEVEL) | PRICE USD |
|---|---|---|---|---|---|---|
| | 1 | | 3B-8489 | 1 | FITTING | |
| E | 2 | | 149-4685 | | SEAL (476cm) | |
| E | 3 | | 148-4685 | | SEAL (477cm) | |

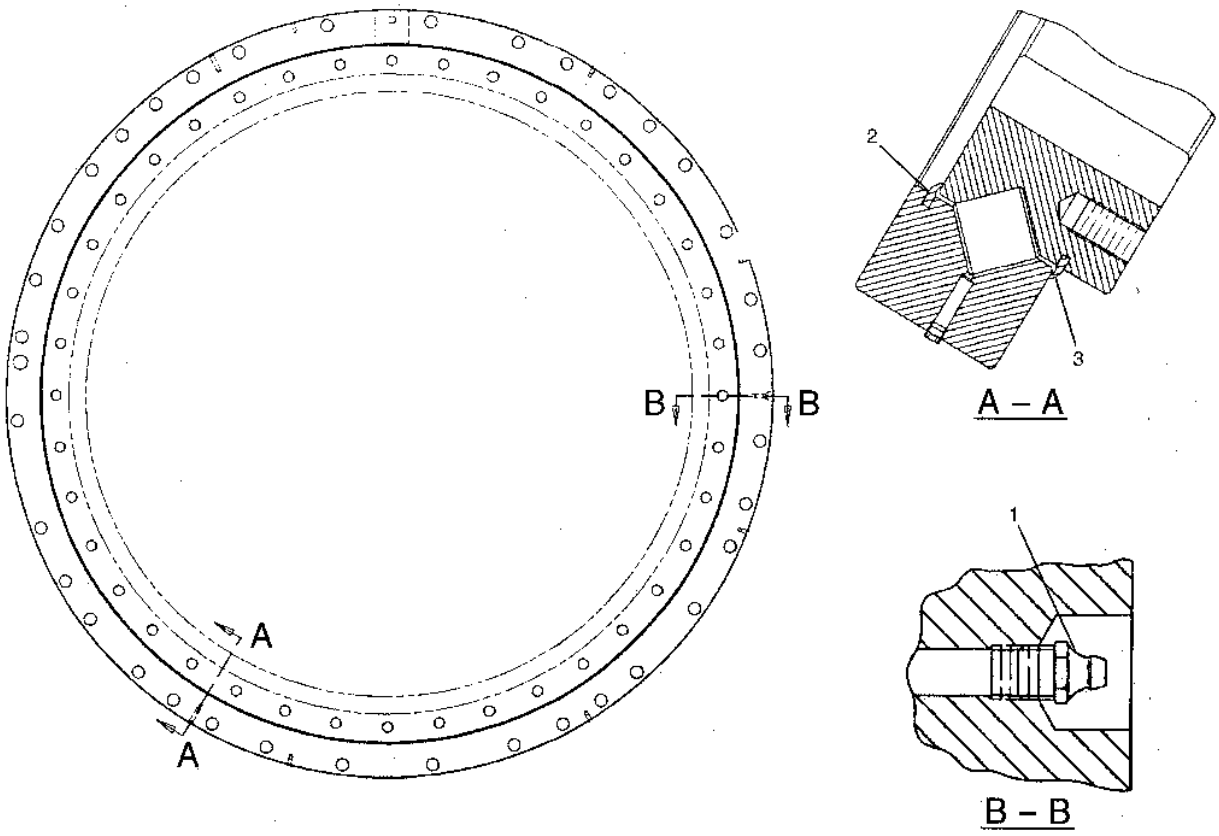


GRAPHIC #1

h79282e

# 1141435 GEAR & BEARING GP

PART OF 1912557-Page 213.01

**Key:** E - ORDER BY THE CENTIMETER

**SMCS**

| NOTE | REF NO | GRAPHIC REF | PART NUMBER | QTY | PART NAME 1 2 3 4 5 6 (PRODUCT LEVEL) | PRICE USD |
|---|---|---|---|---|---|---|
| | 1 | | 3B-8489 | 1 | FITTING | |
| E | 2 | | 110-7183 | | SEAL (476cm) | |
| E | 3 | | 110-7183 | | SEAL (477cm) | |

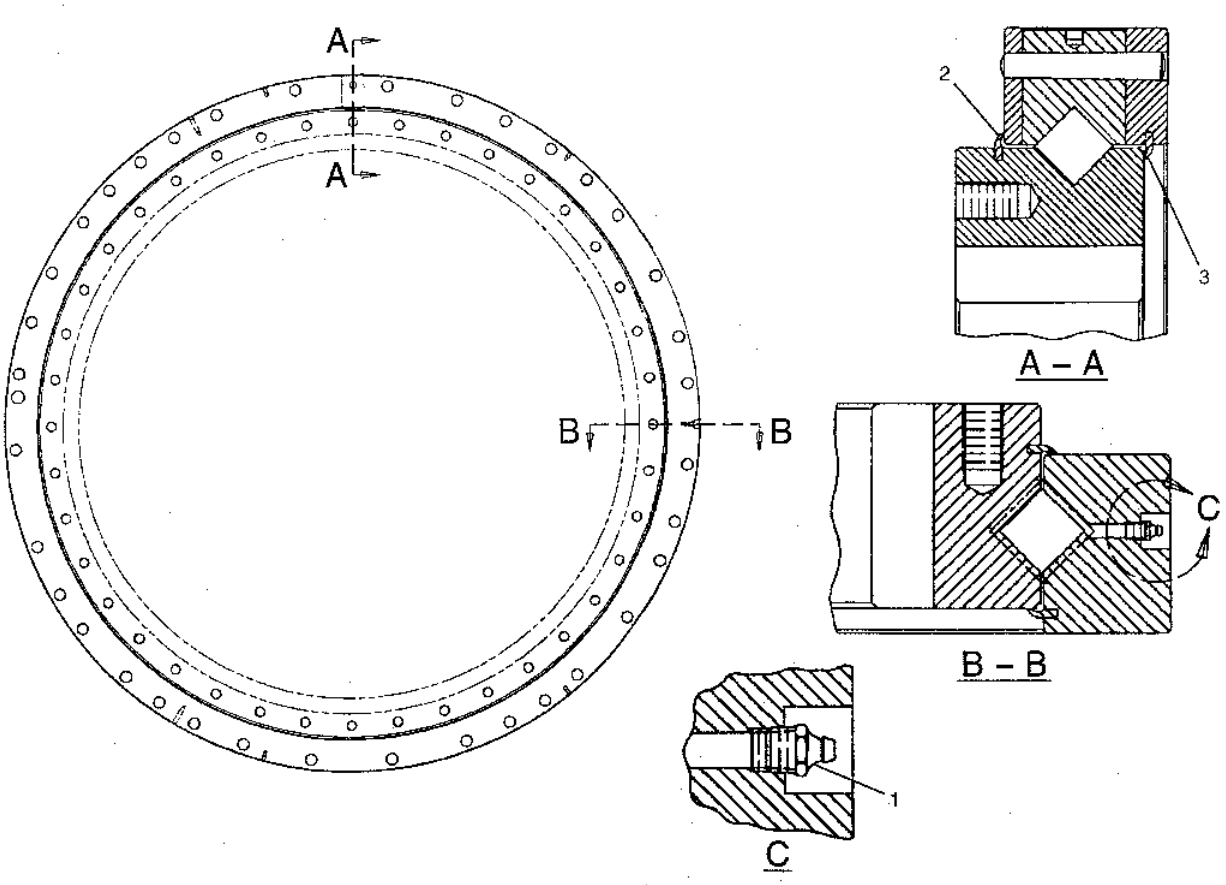


GRAPHIC #1

h58885e

# 1552661 FRAME GP-UPPER

S/N 8SR 1-00147, 8TR 1-00162

**Key:** B - USE AS REQUIRED

**SMCS**

| NOTE | REF NO | GRAPHIC REF | PART NUMBER | QTY | PART NAME 1 2 3 4 5 6 (PRODUCT LEVEL) | PRICE USD |
|---|---|---|---|---|---|---|
| | 1 | | 115-2662 | 1 | FRAME AS | |
| | 2 | | 7Y-1113 | 1 | BOSS | |
| | 3 | | 7Y-2318 | 2 | BOSS | |
| | 4 | | 113-2204 | 1 | PLATE AS | |
| | 5 | | 4I-3183 | 1 | WASHER | |
| B | 6 | | 4I-0575 | 2 | SHIM (T=1.00mm) | |
| B | | | 4I-0576 | 1 | SHIM (T=1.60mm) | |
| B | | | 4I-0577 | 1 | SHIM (T=2.00mm) | |
| | 7 | | 117-5435 | 2 | PIN AS | |
| | 8 | | 5I-8913 | 1 | BUMPER | |
| | 9 | | 8T-4780 | 2 | BOLT (L=30mm) | |
| | 10 | | 096-6467 | 2 | WASHER | |
| | 11 | | 093-0364 | 2 | SPACER | |
| B | 12 | | 093-0090 | 4 | SHIM (T=1.00mm) | |
| B | | | 7Y-3355 | 2 | SHIM (T=1.60mm) | |
| B | | | 093-0122 | 2 | SHIM (T=2.00mm) | |
| | 13 | | 8T-4167 | 1 | WASHER | |
| | 14 | | 8T-4123 | 2 | WASHER | |
| | 15 | | 8T-4137 | 4 | BOLT (L=20mm) | |
| | 16 | | 8T-4121 | 4 | WASHER | |
| | 17 | | 6I-5079 | 1 | PIN AS | |
| | 18 | | 7X-2572 | 1 | BOLT (L=35mm) | |
| | | | | | THE FOLLOWING REPAIR KIT IS AVAILABLE: | |
| | | | 7I-6881 | 1 | PLATE (L=1100mm) | |

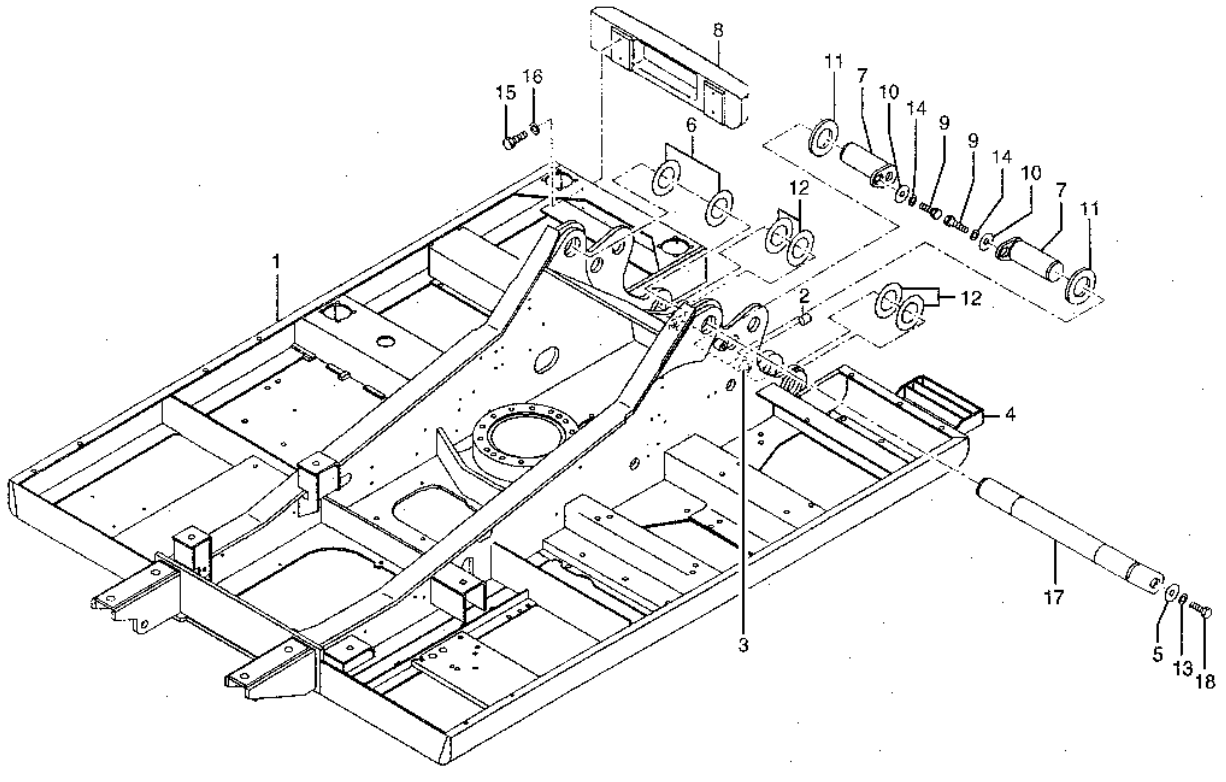


GRAPHIC #1

h58717e

# 1552661 FRAME GP-UPPER

S/N 8SR 00148-00417, 8TR 00163-00485

**Key:** B - USE AS REQUIRED

**SMCS**

| NOTE | REF NO | GRAPHIC REF | PART NUMBER | QTY | PART NAME 1 2 3 4 5 6 (PRODUCT LEVEL) | PRICE USD |
|---|---|---|---|---|---|---|
| | 1 | | 115-2662 | 1 | FRAME AS | |
| | 2 | | 7Y-1113 | 1 | BOSS | |
| | 3 | | 7Y-2318 | 2 | BOSS | |
| | 4 | | 113-2204 | 1 | PLATE AS | |
| | 5 | | 4I-3183 | 1 | WASHER | |
| B | 6 | | 4I-0575 | 2 | SHIM (T=1.00mm) | |
| B | | | 133-2428 | 1 | SHIM (T=0.50mm) | |
| B | | | 4I-0577 | 1 | SHIM (T=2.00mm) | |
| | 7 | | 117-5435 | 2 | PIN AS | |
| | 8 | | 5I-8913 | 1 | BUMPER | |
| | 9 | | 8T-4780 | 2 | BOLT (L=30mm) | |
| | 10 | | 096-6467 | 2 | WASHER | |
| | 11 | | 093-0364 | 2 | SPACER | |
| B | 12 | | 093-0090 | 4 | SHIM (T=1.00mm) | |
| B | | | 133-2427 | 2 | SHIM (T=0.50mm) | |
| B | | | 093-0122 | 2 | SHIM (T=2.00mm) | |
| | 13 | | 8T-4167 | 1 | WASHER | |
| | 14 | | 8T-4123 | 2 | WASHER | |
| | 15 | | 8T-4137 | 4 | BOLT (L=20mm) | |
| | 16 | | 8T-4121 | 4 | WASHER | |
| | 17 | | 6I-5079 | 1 | PIN AS | |
| | 18 | | 7X-2572 | 1 | BOLT (L=35mm) | |
| | | | | | THE FOLLOWING REPAIR KIT IS AVAILABLE: | |
| | | | 7I-6881 | 1 | PLATE (L=1100mm) | |

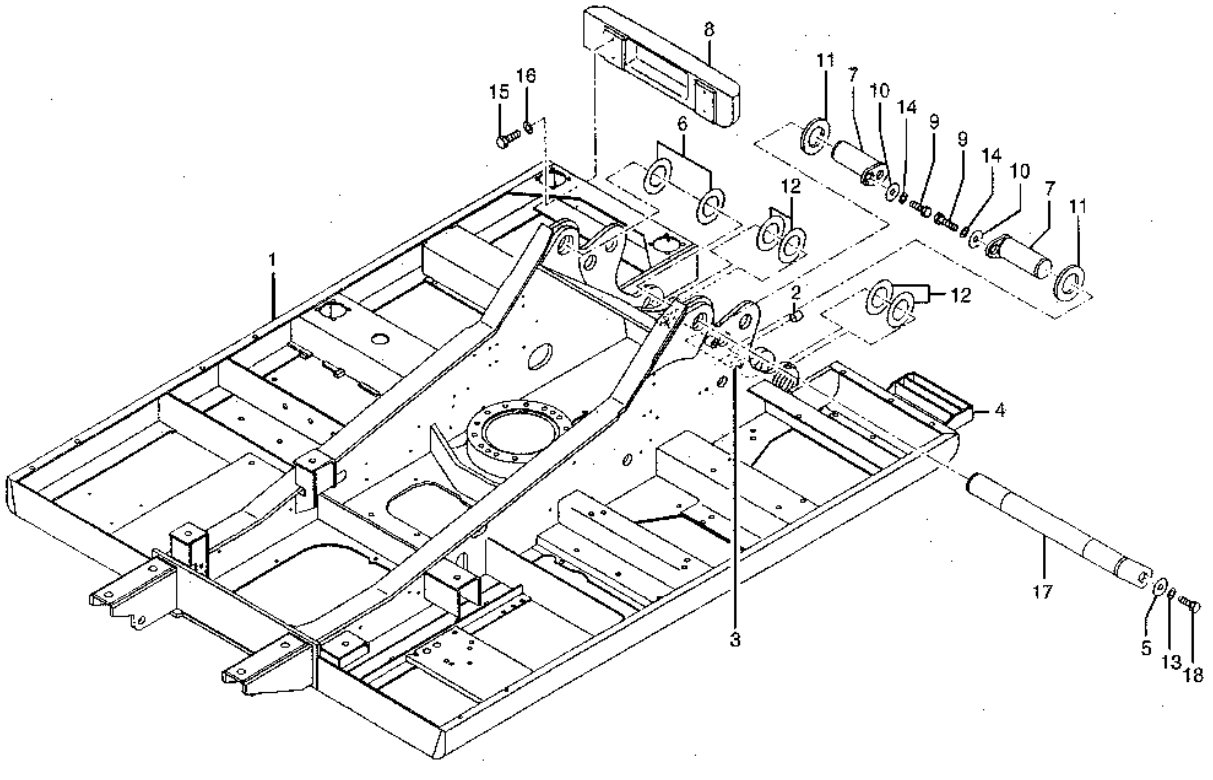

## 1552661 FRAME GP-UPPER

GRAPHIC #1 h58719e

# 1152661 FRAME GP-UPPER

S/N 8SR 00418-UP, 8TR 00486-UP

**Key:** B - USE AS REQUIRED

**SMCS**

| NOTE | REF NO | GRAPHIC REF | PART NUMBER | QTY | PART NAME 1 2 3 4 5 6 (PRODUCT LEVEL) | PRICE USD |
|---|---|---|---|---|---|---|
| | 1 | | 115-2662 | 1 | FRAME AS | |
| | 2 | | 7Y-1113 | 1 | BOSS | |
| | 3 | | 7Y-2318 | 2 | BOSS | |
| | 4 | | 113-2204 | 1 | PLATE AS | |
| | 5 | | 7Y-8763 | 1 | BOSS | |
| | 6 | | 9R-3924 | 1 | BOSS | |
| | 7 | | 117-5435 | 2 | PIN AS | |
| | 8 | | 154-0551 | 1 | BUMPER AS | |
| | 9 | | 8T-4780 | 2 | BOLT (L=30mm) | |
| | 10 | | 096-6467 | 2 | WASHER | |
| | 11 | | 093-0364 | 2 | SPACER | |
| B | 12 | | 093-0090 | 4 | SHIM (T=1.00mm) | |
| B | | | 133-2427 | 2 | SHIM (T=0.50mm) | |
| B | | | 093-0122 | 2 | SHIM (T=2.00mm) | |
| | 13 | | 8T-4167 | 1 | WASHER | |
| | 14 | | 8T-4123 | 2 | WASHER | |
| | 15 | | 8T-4195 | 4 | BOLT (L=30mm) | |
| | 16 | | 8T-4121 | 4 | WASHER | |
| | 17 | | 6I-5079 | 1 | PIN AS | |
| | 18 | | 7X-2572 | 1 | BOLT (L=35mm) | |
| | 19 | | 4I-3183 | 1 | WASHER | |
| B | 20 | | 4I-0575 | 2 | SHIM (T=1.00mm) | |
| B | | | 133-2428 | 1 | SHIM (T=0.50mm) | |
| B | | | 4I-0577 | 1 | SHIM (T=2.00mm) | |
| | | | | | THE FOLLOWING REPAIR KIT IS AVAILABLE: | |
| | | | 7I-6881 | 1 | PLATE (L=1100mm) | |

## 1152661 FRAME GP-UPPER

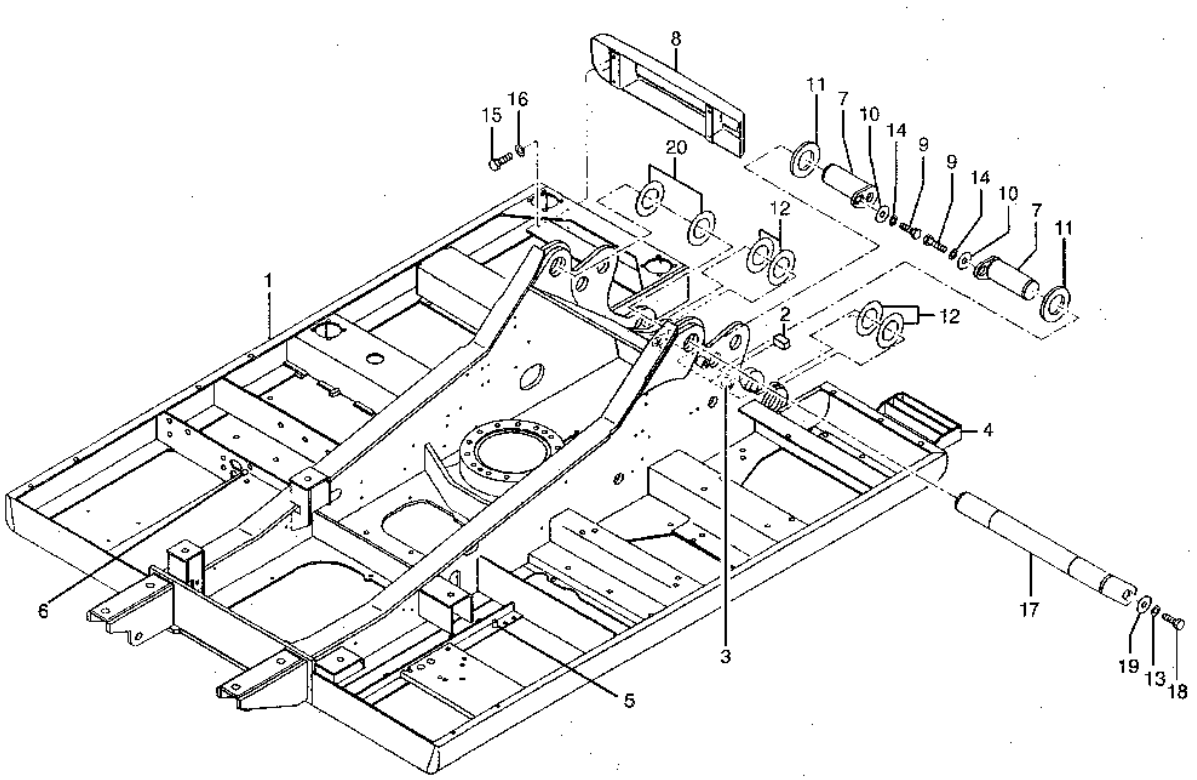


GRAPHIC #1

h60559e

# 1152657 FRAME AS-UNDERCARRIAGE

S/N 8SR 1-UP

**Key:**

**SMCS**

| NOTE | REF NO | GRAPHIC REF | PART NUMBER | QTY | PART NAME 1 2 3 4 5 6 (PRODUCT LEVEL) | PRICE USD |
|---|---|---|---|---|---|---|
| | 1 | | 120-7215 | 4 | STEP | |
| | 2 | | 117-5372 | 4 | BRACKET | |

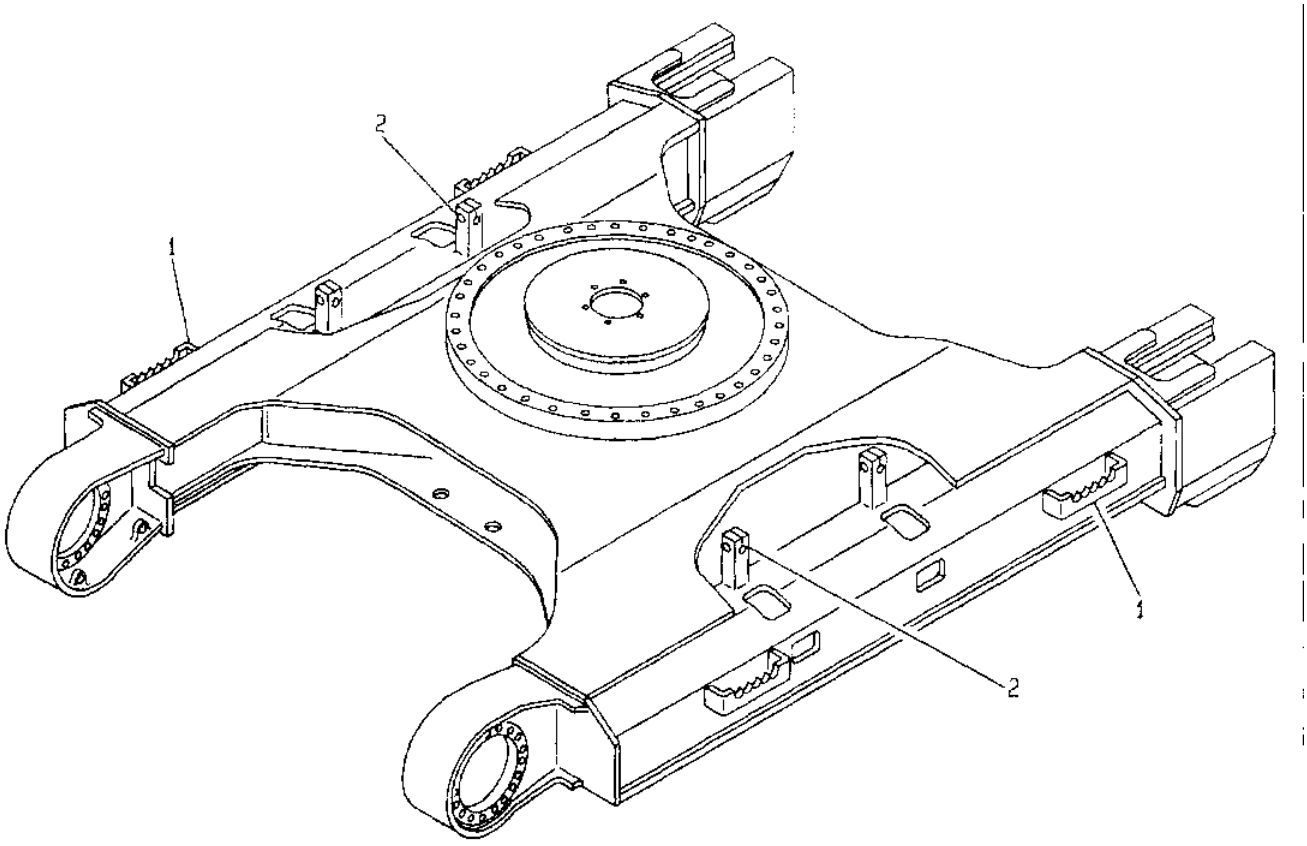


| NOTE | No. | PART No. | QTY | PART NAME | NOTE | No. | PART No. | QTY | PART NAME |
|---|---|---|---|---|---|---|---|---|---|
| | 1 | 120-7215 | 4 | STEP | | | | | |
| | 2 | 117-5372 | 4 | BRACKET | | | | | |

H58721E

## 1152657 FRAME AS-UNDERCARRIAGE

GRAPHIC #1

h58721e

# 1152658 FRAME AS-UNDERCARRIAGE

S/N 8SR 1-UP

**Key:**

**SMCS**

| NOTE | REF NO | GRAPHIC REF | PART NUMBER | QTY | PART NAME 1 2 3 4 5 6 (PRODUCT LEVEL) | PRICE USD |
|---|---|---|---|---|---|---|
| | 1 | | 120-7215 | 4 | STEP | |
| | 2 | | 117-5372 | 4 | BRACKET | |

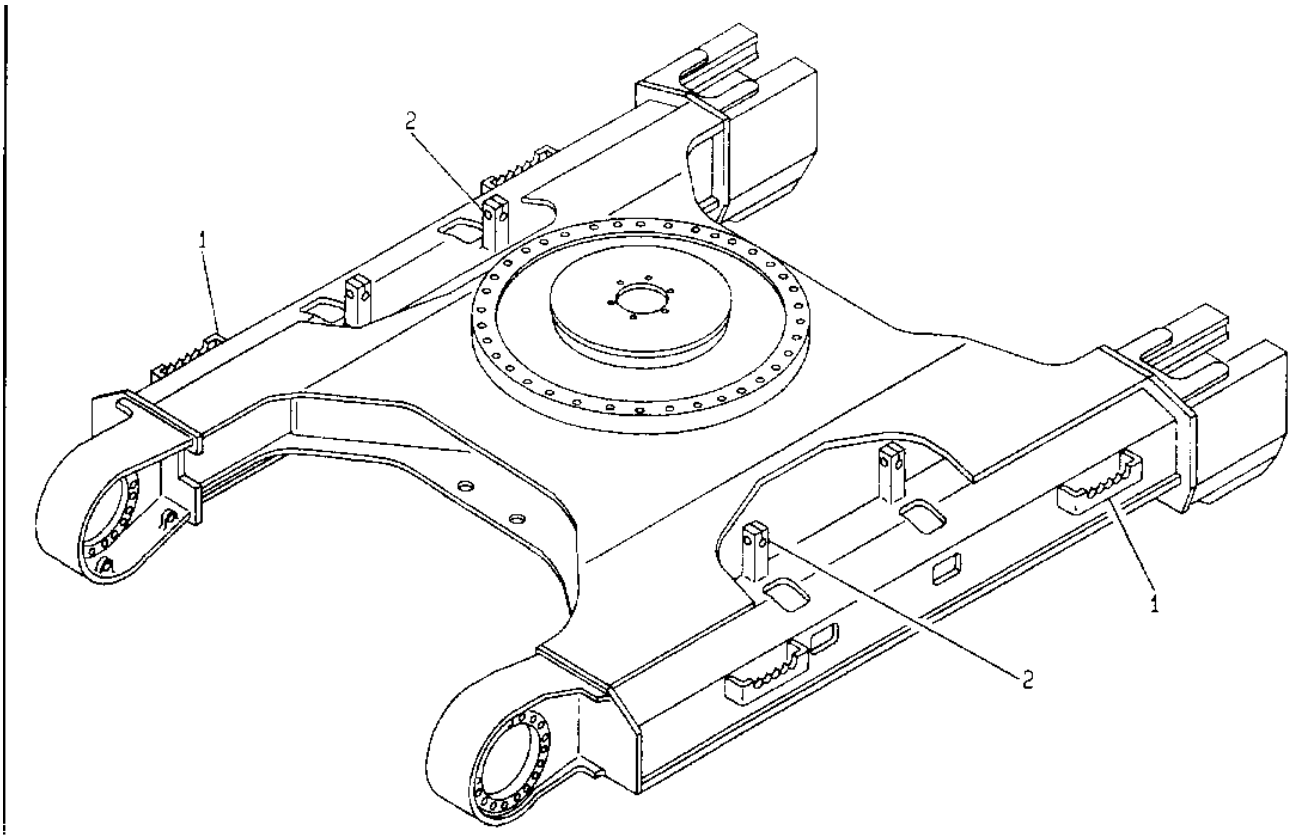


| NOTE | No. | PART No. | QTY | PART NAME | NOTE | No. | PART No. | QTY | PART NAME |
|---|---|---|---|---|---|---|---|---|---|
| | 1 | 120-7215 | 4 | STEP | | | | | |
| | 2 | 117-5372 | 4 | BRACKET | | | | | |

H58720E

## 1152658 FRAME AS-UNDERCARRIAGE

GRAPHIC #1

h58720e

# 1156343 IDLER GP-FRONT

1156344-Page 219, 7Y1457-Page 222

**Key:** Y - SEPARATE ILLUSTRATION

**SMCS**

| NOTE | REF NO | GRAPHIC REF | PART NUMBER | QTY | PART NAME 1 2 3 4 5 6 (PRODUCT LEVEL) | PRICE USD |
|---|---|---|---|---|---|---|
| | 1 | | 7X-2563 | 4 | BOLT (L=60mm) | |
| Y | 2 | | 7Y-1457 | 2 | ADJUSTMENT GP | |
| Y | 3 | | 115-6344 | 2 | IDLER GP | |

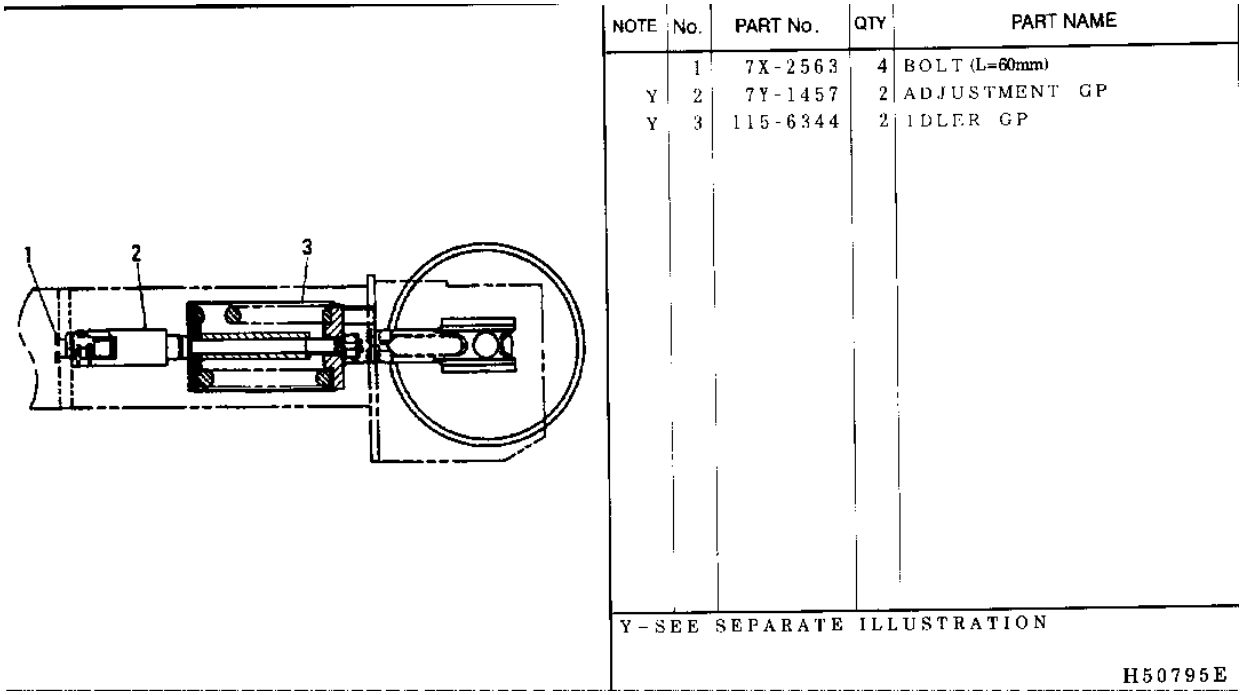


GRAPHIC #1 h50795e

# 1156344 IDLER GP-FRONT

PART OF 1156343-Page 219

**Key:** Y - SEE SEPARATE ILLUSTRATION

**SMCS**

| NOTE | REF NO | GRAPHIC REF | PART NUMBER | QTY | PART NAME 1 2 3 4 5 6 (PRODUCT LEVEL) | PRICE USD |
|---|---|---|---|---|---|---|
| Y | 1 | | 7Y-0773 | 1 | SPRING GP | |
| | 2 | | 8T-6430 | 4 | BOLT (M20) | |
| Y | 3 | | 136-2422 | 1 | IDLER GP | |

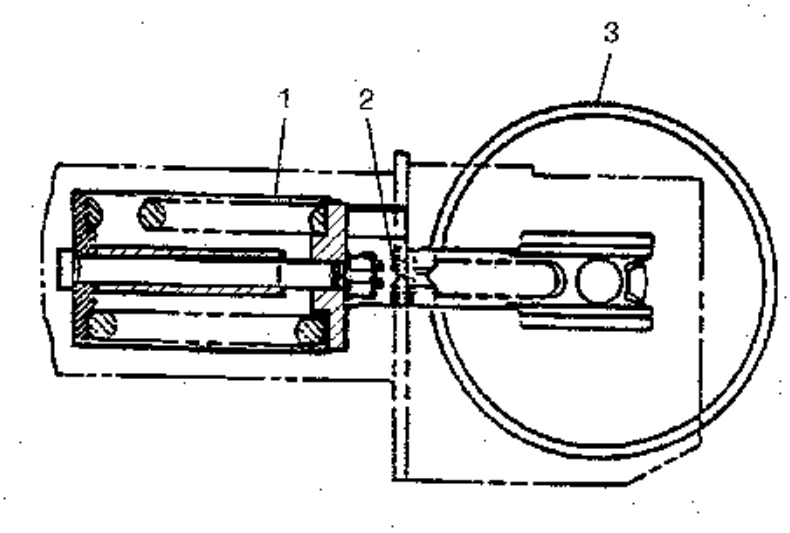


GRAPHIC #1 h79283e

# 1362422 IDLER GP-FRONT

PART OF 1156344-Page 219
1156344-Page 219

**Key:**

**SMCS**

| NOTE | REF NO | GRAPHIC REF | PART NUMBER | QTY | PART NAME 1 2 3 4 5 6 (PRODUCT LEVEL) | PRICE USD |
|---|---|---|---|---|---|---|
| | 1 | | 136-3847 | 1 | IDLER AS | |
| | 2 | | 6Y-8023 | 2 | BEARING | |
| | 3 | | 109-0881 | 2 | SEAL GP | |
| | 4 | | 1H-7339 | 2 | SEAL-O-RING (ID=75.79mm) | |
| | 5 | | 6Y-8029 | 2 | PIN | |
| | 6 | | 6Y-8028 | 1 | SHAFT | |
| | 7 | | 115-3699 | 2 | BEARING | |
| | 8 | | 7H-3171 | 1 | PLUG | |

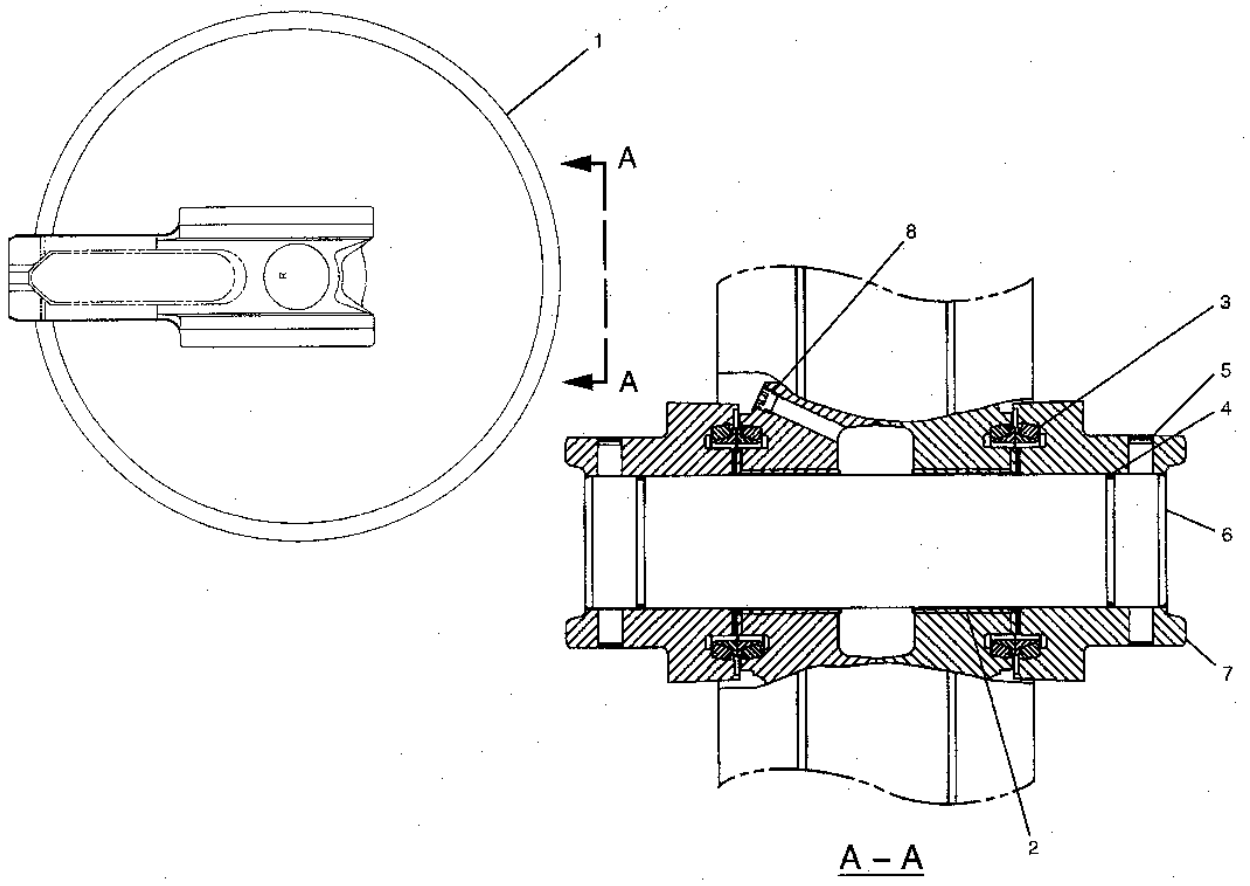


GRAPHIC #1

h79284e

# 7Y0073 IDLER GP-FRONT

PART OF 1156344-Page 219

**Key:**

**SMCS**

| NOTE | REF NO | GRAPHIC REF | PART NUMBER | QTY | PART NAME 1 2 3 4 5 6 (PRODUCT LEVEL) | PRICE USD |
|---|---|---|---|---|---|---|
| | 1 | | 4I-7397 | 1 | SUPPORT AS | |
| | 2 | | 4I-7401 | 1 | SPRING | |
| | 3 | | 7Y-1737 | 1 | ROD | |
| | 4 | | 7Y-0725 | 1 | WASHER-HARD | |
| | 5 | | 8C-7328 | 1 | NUT | |
| | 6 | | 7Y-1738 | 1 | SUPPORT | |
| | 7 | | 7Y-0735 | 1 | STRIP | |
| | 8 | | 8T-9080 | 2 | BOLT (L=20mm) | |

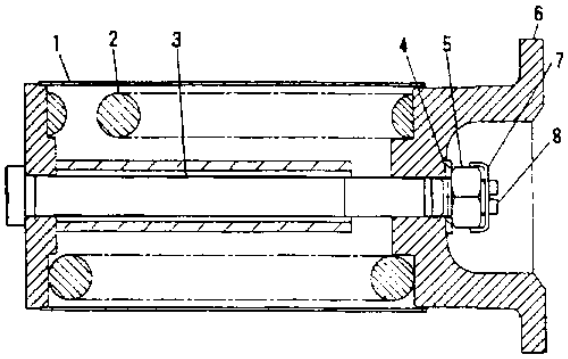


| NOTE | No. | PART No. | QTY | PART NAME |
|---|---|---|---|---|
| | 1 | 4I-7397 | 1 | SUPPORT AS |
| | 2 | 4I-7401 | 1 | SPRING |
| | 3 | 7Y-1737 | 1 | ROD |
| | 4 | 7Y-0725 | 1 | WASHER-HARD |
| | 5 | 8C-7328 | 1 | NUT |
| | 6 | 7Y-1738 | 1 | SUPPORT |
| | 7 | 7Y-0735 | 1 | STRIP |
| | 8 | 8T-9080 | 2 | BOLT (L=20mm) |

H50786E

GRAPHIC #1

h50786e

# 7Y1457 ADJUSTMENT GP-HYDRAULIC TRACK

PART OF 1156343-Page 219

**Key:**

**SMCS**

| NOTE | REF NO | GRAPHIC REF | PART NUMBER | QTY | PART NAME 1 2 3 4 5 6 (PRODUCT LEVEL) | PRICE USD |
|---|---|---|---|---|---|---|
| | 1 | | 8T-4191 | 2 | BOLT (L=16mm) | |
| | 2 | | 113-2824 | 1 | PLATE AS | |
| | 3 | | 5P-9891 | 1 | PLATE (WARNING) | |
| | 4 | | 4B-4158 | 4 | SCREW | |
| R | 5 | | 7Y-0207 | 1 | CYLINDER | |
| | R | | 0R-7395 | 1 | CYLINDER AS | |
| | 6 | | 099-0121 | 1 | SEAL | |
| | 7 | | 7Y-1258 | 1 | PISTON | |
| | 8 | | 7Y-1257 | 2 | RING | |
| | 9 | | 093-1514 | 2 | RING | |
| | 10 | | 095-1622 | 2 | SEAL-O-RING (ID=69.60mm) | |
| | 11 | | 095-2927 | 1 | VALVE (FILL) | |
| | 12 | | 2S-5926 | 1 | VALVE (RELIEF) | |

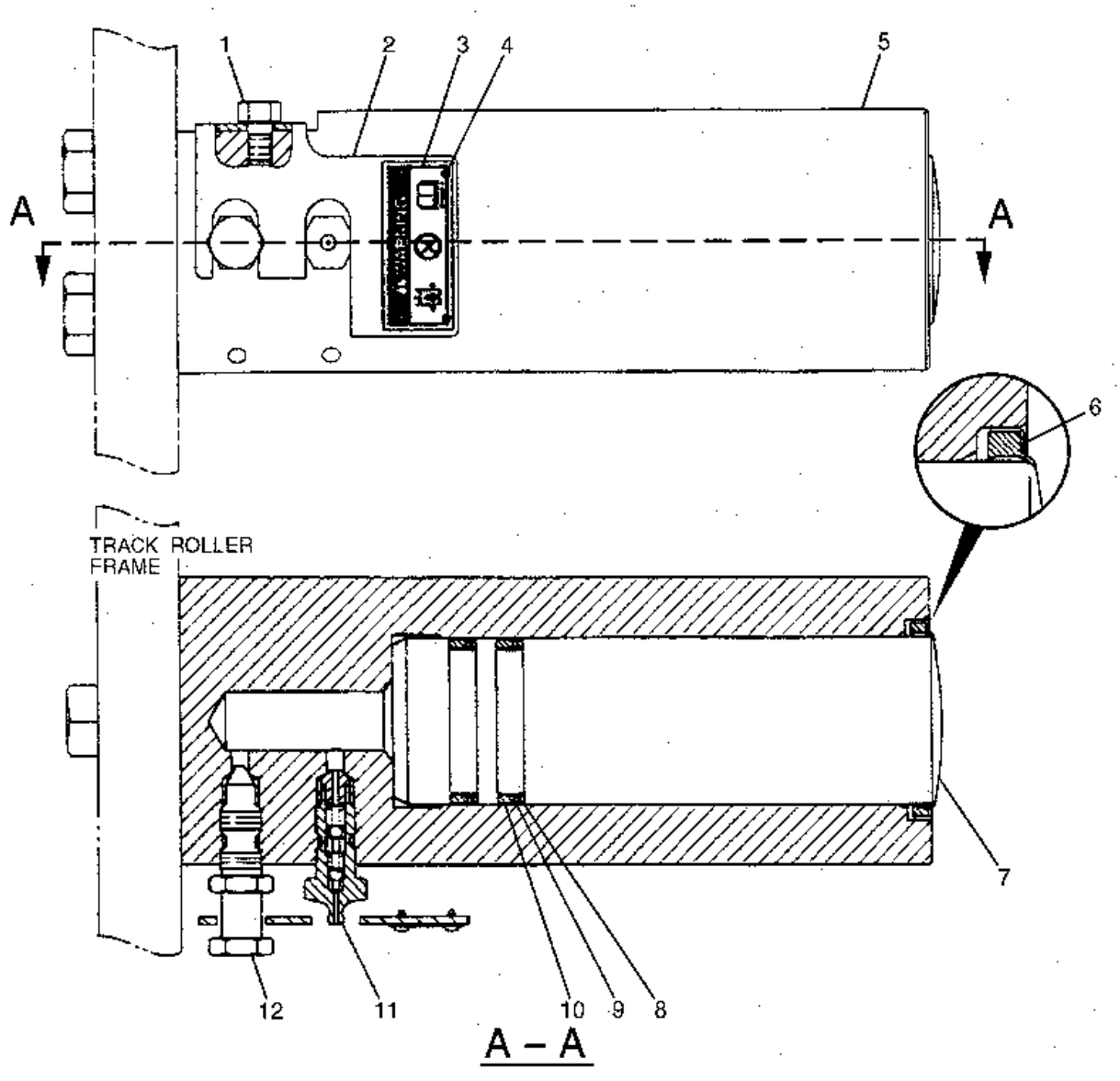


GRAPHIC #1

h79285e

# 1235442 GUARD GP-TRACK GUIDE

SPROCKET
S/N 8SR 1-UP
AN ATTACHMENT

**Key:**

**SMCS**

| NOTE | REF NO | GRAPHIC REF | PART NUMBER | QTY | PART NAME 1 2 3 4 5 6 (PRODUCT LEVEL) | PRICE USD |
|---|---|---|---|---|---|---|
| | 1 | | 127-1189 | 2 | GUARD AS (RH) | |
| | 2 | | 127-1190 | 2 | GUARD AS (LH) | |
| | 3 | | 8T-5379 | 12 | BOLT (L=50mm) | |
| | 4 | | 8T-4167 | 12 | WASHER-HARD | |
| | 5 | | 4I-6994 | 6 | BOLT (L=330mm) | |
| | 6 | | 8T-4131 | 6 | NUT | |
| | 7 | | 8T-4123 | 12 | WASHER-HARD | |
| | 8 | | 4I-5068 | 6 | PIPE | |

## 1235442 GUARD GP-TRACK GUIDE

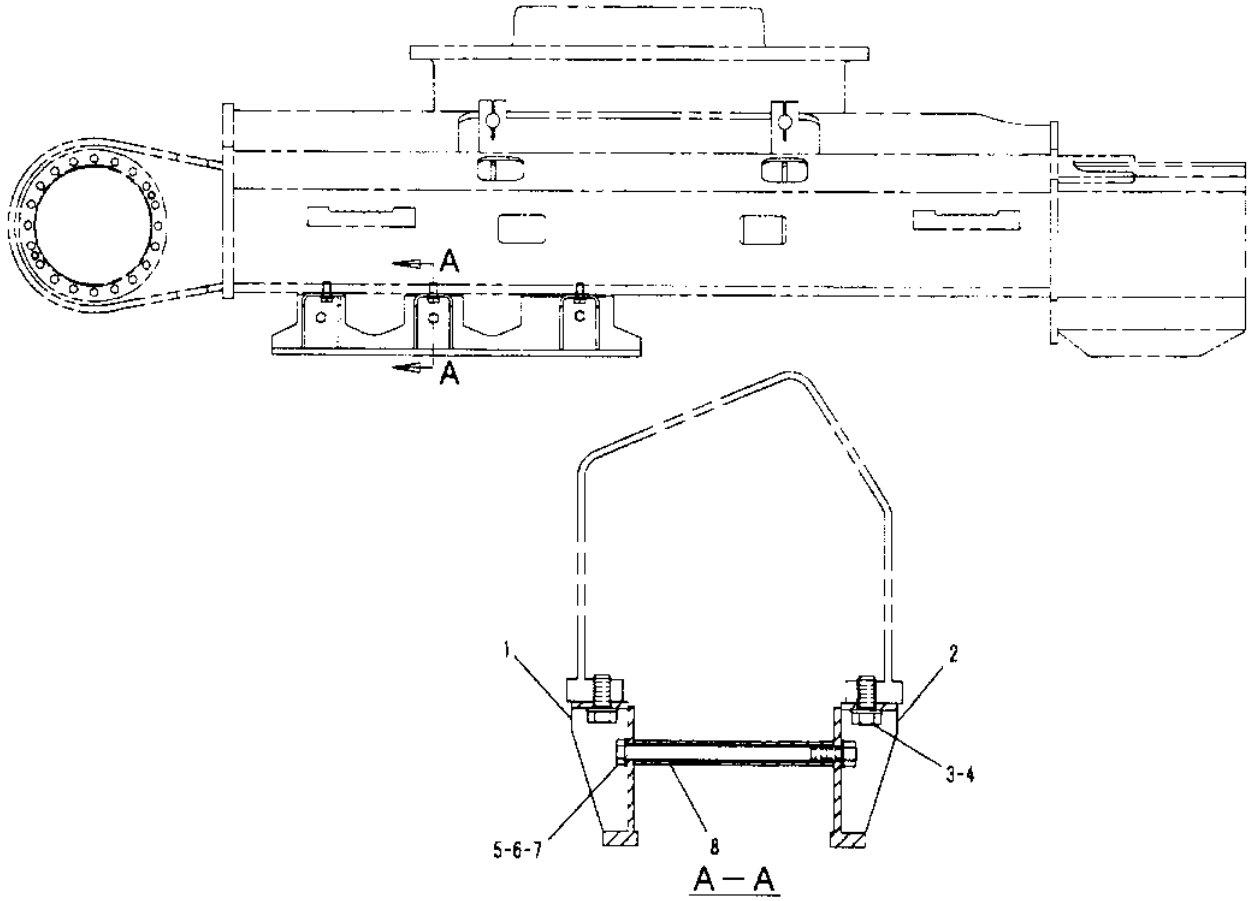


| NOTE | No. | PART No. | QTY | PART NAME |
|---|---|---|---|---|
| | 1 | 127-1189 | 2 | GUARD AS (RH) |
| | 2 | 127-1190 | 2 | GUARD AS (LH) |
| | 3 | 8T-5379 | 12 | BOLT (L=50mm) |
| | 4 | 8T-4167 | 12 | WASHER-HARD |
| | 5 | 4I-6994 | 6 | BOLT (L=330mm) |
| | 6 | 8T-4131 | 6 | NUT |
| | 7 | 8T-4123 | 12 | WASHER-HARD |
| | 8 | 4I-5068 | 6 | PIPE |

H50825E

GRAPHIC #1

h50825e

# 1235443 GUARD GP-TRACK GUIDE

SPROCKET
S/N 8TR 1-UP
AN ATTACHMENT

**Key:**

**SMCS**

| NOTE | REF NO | GRAPHIC REF | PART NUMBER | QTY | PART NAME 1 2 3 4 5 6 (PRODUCT LEVEL) | PRICE USD |
|---|---|---|---|---|---|---|
| | 1 | | 127-1203 | 2 | GUARD AS (RH) | |
| | 2 | | 127-1204 | 2 | GUARD AS (LH) | |
| | 3 | | 8T-5379 | 16 | BOLT (L=50mm) | |
| | 4 | | 8T-4167 | 16 | WASHER-HARD | |
| | 5 | | 4I-6994 | 8 | BOLT (L=330mm) | |
| | 6 | | 8T-4123 | 16 | WASHER-HARD | |
| | 7 | | 8T-4131 | 8 | NUT | |
| | 8 | | 4I-5068 | 8 | PIPE | |

## 1235443 GUARD GP-TRACK GUIDE

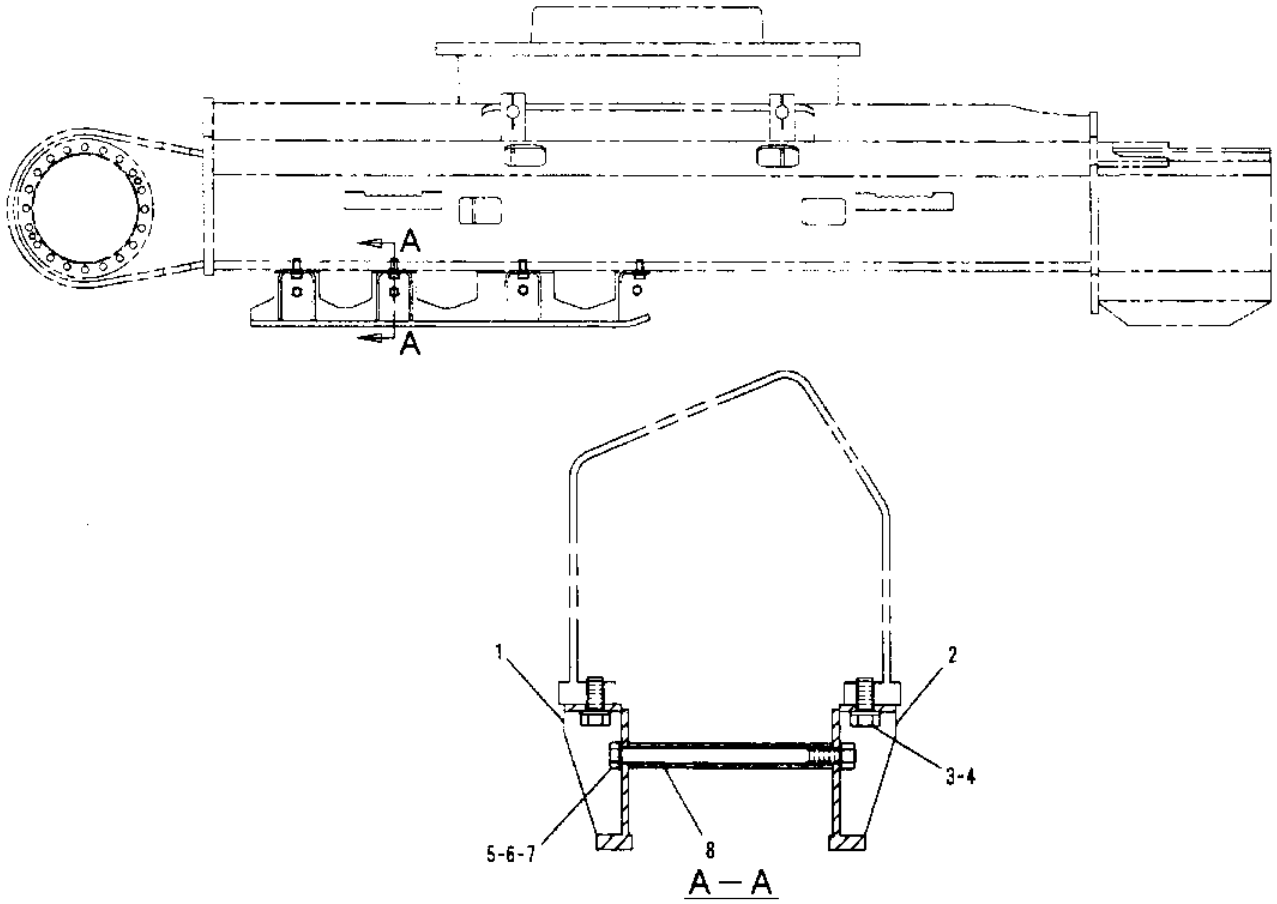


| NOTE | No. | PART No. | QTY | PART NAME |
|---|---|---|---|---|
| | 1 | 127-1203 | 2 | GUARD AS (RH) |
| | 2 | 127-1204 | 2 | GUARD AS (LH) |
| | 3 | 8T-5379 | 16 | BOLT (L=50mm) |
| | 4 | 8T-4167 | 16 | WASHER-HARD |
| | 5 | 4I-6994 | 8 | BOLT (L=330mm) |
| | 6 | 8T-4123 | 16 | WASHER-HARD |
| | 7 | 8T-4131 | 8 | NUT |
| | 8 | 4I-5068 | 8 | PIPE |

H50822E

GRAPHIC #1

h50822e

# 1235444 GUARD GP-TRACK GUIDE

FULL LENGTH
S/N 8SR 1-UP
AN ATTACHMENT

**Key:**

**SMCS**

| NOTE | REF NO | GRAPHIC REF | PART NUMBER | QTY | PART NAME 1 2 3 4 5 6 (PRODUCT LEVEL) | PRICE USD |
|---|---|---|---|---|---|---|
| | 1 | | 127-1190 | 4 | GUARD AS (RH) | |
| | 2 | | 127-1189 | 4 | GUARD AS (LH) | |
| | 3 | | 8T-5379 | 24 | BOLT (L=50mm) | |
| | 4 | | 8T-4167 | 24 | WASHER-HARD | |
| | 5 | | 4I-6994 | 12 | BOLT (L=330mm) | |
| | 6 | | 8T-4131 | 12 | NUT | |
| | 7 | | 8T-4123 | 24 | WASHER-HARD | |
| | 8 | | 4I-5068 | 12 | PIPE | |

## 1235444 GUARD GP-TRACK GUIDE

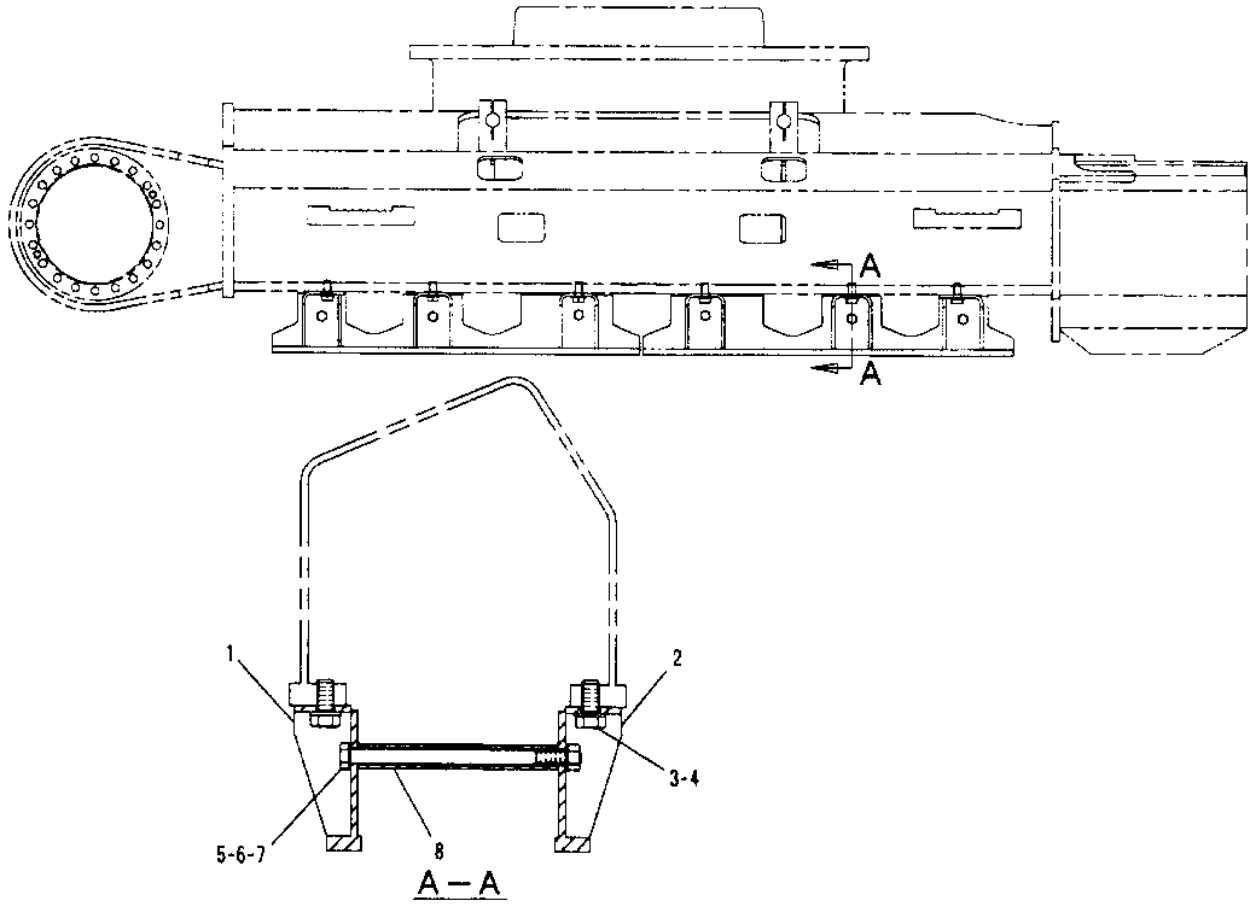


| NOTE | No. | PART No. | QTY | PART NAME | NOTE | No. | PART No. | QTY | PART NAME |
|---|---|---|---|---|---|---|---|---|---|
| | 1 | 127-1190 | 4 | GUARD AS (RH) | | | | | |
| | 2 | 127-1189 | 4 | GUARD AS (LH) | | | | | |
| | 3 | 8T-5379 | 24 | BOLT (L=50mm) | | | | | |
| | 4 | 8T-4167 | 24 | WASHER-HARD | | | | | |
| | 5 | 4I-6994 | 12 | BOLT (L=330mm) | | | | | |
| | 6 | 8T-4131 | 12 | NUT | | | | | |
| | 7 | 8T-4123 | 24 | WASHER-HARD | | | | | |
| | 8 | 4I-5068 | 12 | PIPE | | | | | |

H50826E

GRAPHIC #1

h50826e

# 1235445 GUARD GP-TRACK GUIDE

FULL LENGTH
S/N 8TR 1-UP
AN ATTACHMENT

**Key:**

**SMCS**

| NOTE | REF NO | GRAPHIC REF | PART NUMBER | QTY | PART NAME 1 2 3 4 5 6 (PRODUCT LEVEL) | PRICE USD |
|---|---|---|---|---|---|---|
| | 1 | | 127-1204 | 4 | GUARD AS (RH) | |
| | 2 | | 127-1203 | 4 | GUARD AS (LH) | |
| | 3 | | 8T-5379 | 32 | BOLT (L=50mm) | |
| | 4 | | 8T-4167 | 32 | WASHER-HARD | |
| | 5 | | 4I-6994 | 16 | BOLT (L=330mm) | |
| | 6 | | 8T-4123 | 32 | WASHER-HARD | |
| | 7 | | 8T-4131 | 16 | NUT | |
| | 8 | | 4I-5068 | 16 | PIPE | |

## 1235445 GUARD GP-TRACK GUIDE

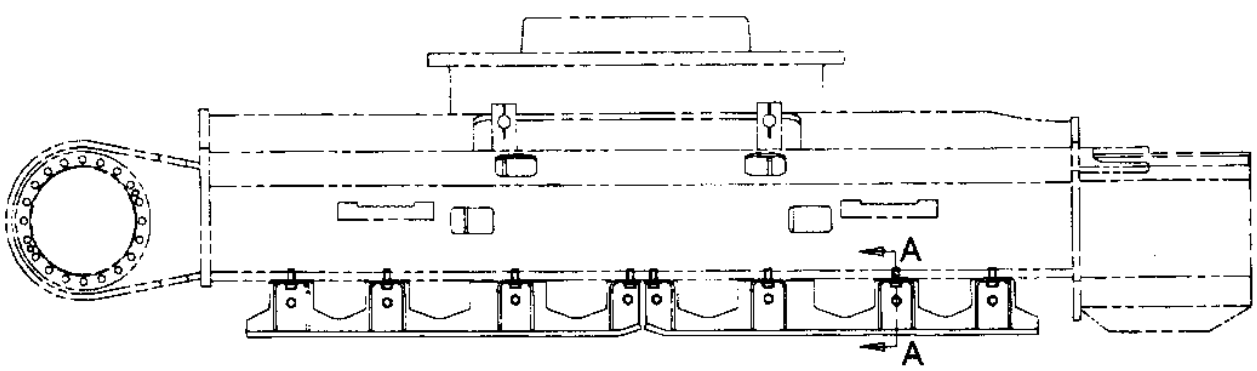


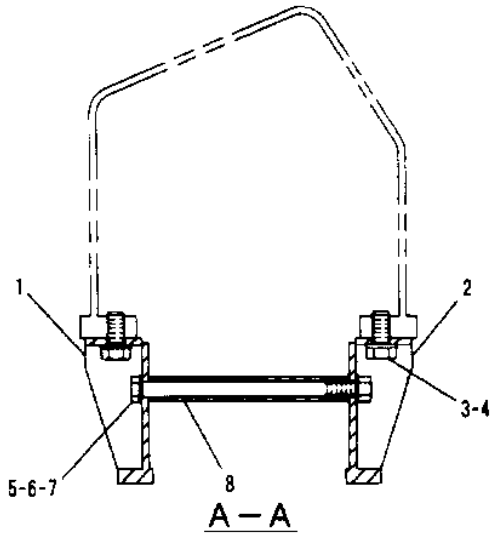


A — A

| NOTE | No. | PART No. | QTY | PART NAME |
|---|---|---|---|---|
| | 1 | 127-1204 | 4 | GUARD AS (RH) |
| | 2 | 127-1203 | 4 | GUARD AS (LH) |
| | 3 | 8T-5379 | 32 | BOLT (L=50mm) |
| | 4 | 8T-4167 | 32 | WASHER-HARD |
| | 5 | 4I-6994 | 16 | BOLT (L=330mm) |
| | 6 | 8T-4123 | 32 | WASHER-HART |
| | 7 | 8T-4131 | 16 | NUT |
| | 8 | 41-5068 | 16 | PIPE |

| NOTE | No. | PART No. | QTY | PART NAME |
|---|---|---|---|---|

H50823E

# 1156347 ROLLER AR-TRACK & CARRIER

S/N 8SR 1-UP
6Y5323-Page 228, 1791486-Page 228.01

**Key:** Y - SEE SEPARATE ILLUSTRATION

**SMCS**

| NOTE | REF NO | GRAPHIC REF | PART NUMBER | QTY | PART NAME 1 2 3 4 5 6 (PRODUCT LEVEL) | PRICE USD |
|---|---|---|---|---|---|---|
| | 1 | | 7X-2577 | 4 | BOLT (L=90mm) | |
| Y | 2 | | 6Y-5323 | 4 | ROLLER GP | |
| Y | 3 | | 179-1486 | 14 | ROLLER GP | |
| | 4 | | 7X-2454 | 56 | BOLT (L=110mm) | |
| | 5 | | 8T-4167 | 56 | WASHER | |

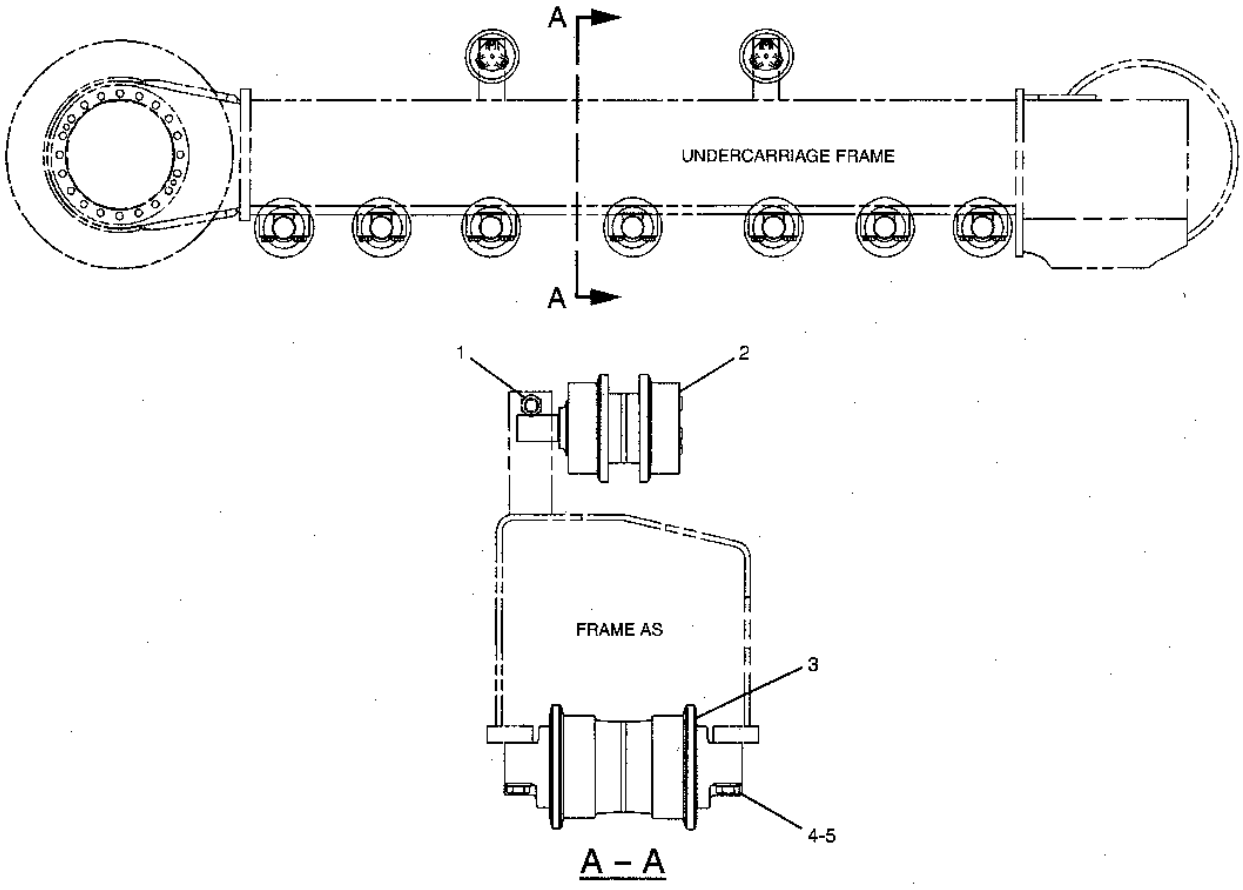


GRAPHIC #1

h75808e

# 1156348 ROLLER AR-TRACK & CARRIER

S/N 8TR 1-UP
6Y5323-Page 228, 1791486-Page 228.01

**Key:** Y - SEE SEPARATE ILLUSTRATION

**SMCS**

| NOTE | REF NO | GRAPHIC REF | PART NUMBER | QTY | PART NAME 1 2 3 4 5 6 (PRODUCT LEVEL) | PRICE USD |
|---|---|---|---|---|---|---|
| | 1 | | 7X-2577 | 4 | BOLT (L=90mm) | |
| Y | 2 | | 6Y-5323 | 4 | ROLLER GP | |
| Y | 3 | | 179-1486 | 16 | ROLLER GP | |
| | 4 | | 8T-4167 | 64 | WASHER | |
| | 5 | | 7X-2454 | 64 | BOLT (L=110mm) | |

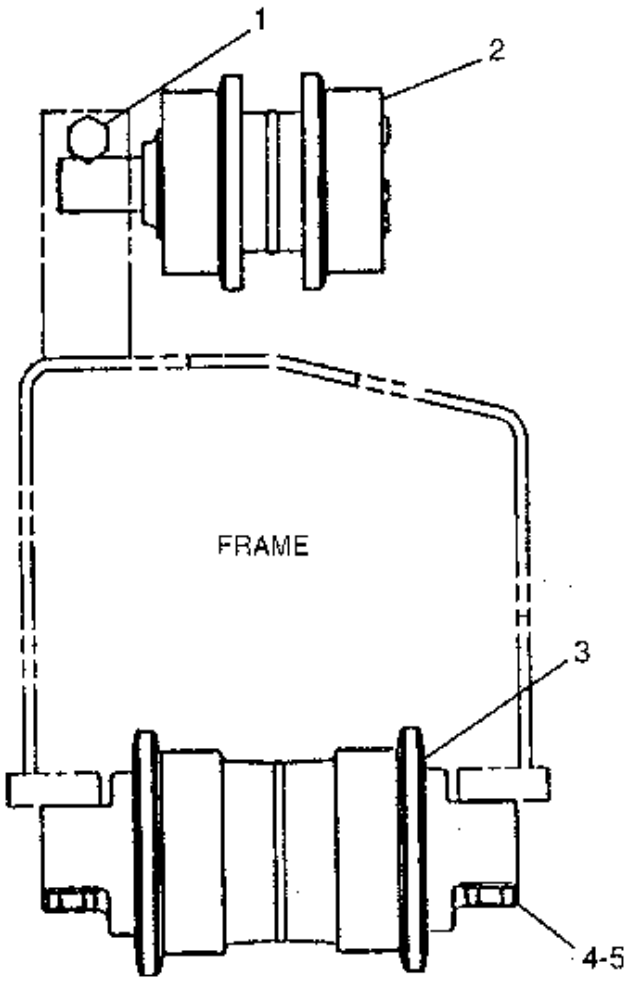


GRAPHIC #1

h79286e

# 6Y5323 ROLLER AR-TRACK & CARRIER

PART OF 1156347-Page 227, 1156348-Page 228

**Key:** R - REMFG PART MAY BE AVAILABLE

**SMCS**

| NOTE | REF NO | GRAPHIC REF | PART NUMBER | QTY | PART NAME 1 2 3 4 5 6 (PRODUCT LEVEL) | PRICE USD |
|---|---|---|---|---|---|---|
| | 1 | | 6Y-9858 | 1 | SHAFT AS | |
| | 2 | | 7H-3171 | 1 | PLUG | |
| | 3 | | 6Y-8077 | 1 | COVER | |
| R | 4 | | 9W-7216 | 1 | SEAL GP | |
| | 5 | | 6Y-9859 | 1 | ROLLER AS | |
| | 6 | | 6Y-9856 | 1 | BEARING | |
| | 7 | | 6Y-9855 | 1 | BEARING | |
| | 8 | | 6Y-8075 | 1 | RETAINER | |
| | 9 | | 6Y-8076 | 1 | WASHER-THRUST | |
| | 10 | | 5H-8848 | 1 | SEAL-O-RING (ID=69.44mm) | |
| | 11 | | 8T-1159 | 5 | BOLT (L=25mm) | |

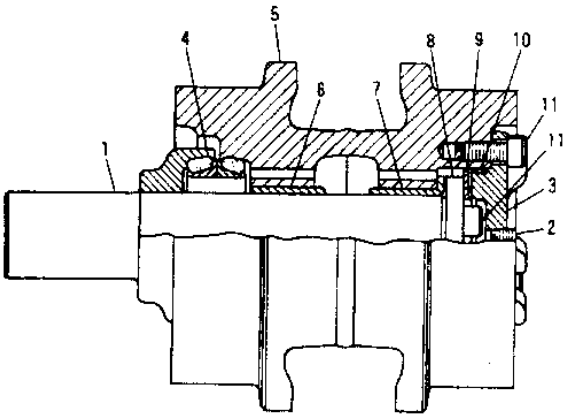


| NOTE | No. | PART No. | QTY | PART NAME |
|---|---|---|---|---|
| | 1 | 6Y-9858 | 1 | SHAFT AS |
| | 2 | 7H-3171 | 1 | PLUG |
| | 3 | 6Y-8077 | 1 | COVER |
| | 4 | 9W-7216 | 1 | SEAL GP |
| | 5 | 6Y-9859 | 1 | ROLLER AS |
| | 6 | 6Y-9856 | 1 | BEARING |
| | 7 | 6Y-9855 | 1 | BEARING |
| | 8 | 6Y-8075 | 1 | RETAINER |
| | 9 | 6Y-8076 | 1 | WASHER THRUST |
| | 10 | 5H-8848 | 1 | SEAL O RING (ID=69.44mm) |
| | 11 | 8T-1159 | 5 | BOLT (L=25mm) |

H50124E

GRAPHIC #1 h50124e

# 1791486 ROLLER GP-TRACK-SINGLE FLANGE

PART OF 1156347-Page 227, 1156348-Page 228

**Key:**

**SMCS**

| NOTE | REF NO | GRAPHIC REF | PART NUMBER | QTY | PART NAME 1 2 3 4 5 6 (PRODUCT LEVEL) | PRICE USD |
|---|---|---|---|---|---|---|
| | 1 | | 9W-2146 | 1 | PLUG | |
| | 2 | | 8F-8882 | 2 | SEAL-O-RING (ID=66.27mm) | |
| | 3 | | 179-1488 | 1 | ROLLER AS | |
| | 4 | | 6Y-2792 | 2 | BEARING | |
| | 5 | | 179-1497 | 2 | COLLAR | |
| | 6 | | 179-1498 | 1 | SHAFT | |
| | 7 | | 179-1499 | 2 | DOWEL | |
| | 8 | | 148-3533 | 2 | SEAL GP | |
| | 9 | | 160-6631 | 2 | RING | |

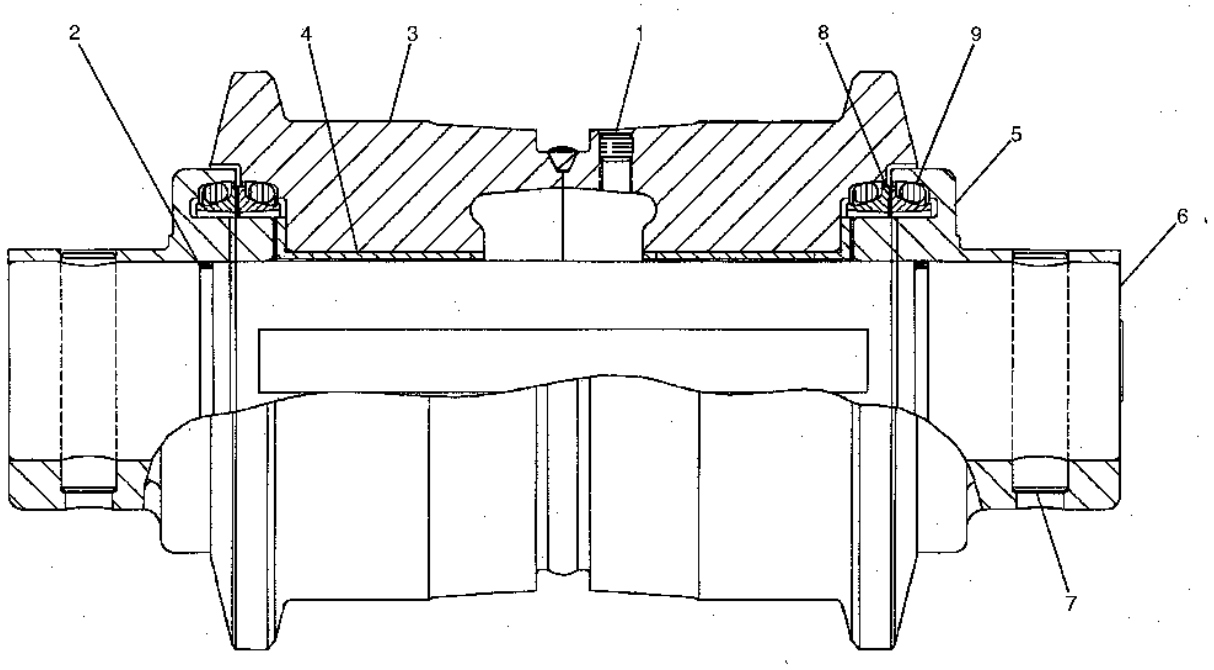


GRAPHIC #1 h83240e

# 1235441 GUARD GP-TRACK GUIDE

**Key:**

**SMCS**

| NOTE | REF NO | GRAPHIC REF | PART NUMBER | QTY | PART NAME 1 2 3 4 5 6 (PRODUCT LEVEL) | PRICE USD |
|---|---|---|---|---|---|---|
| | 1 | | 133-2504 | 2 | GUARD AS | |
| | 2 | | 8T-5379 | 8 | BOLT (L=50mm) | |
| | 3 | | 8T-4167 | 8 | WASHER | |

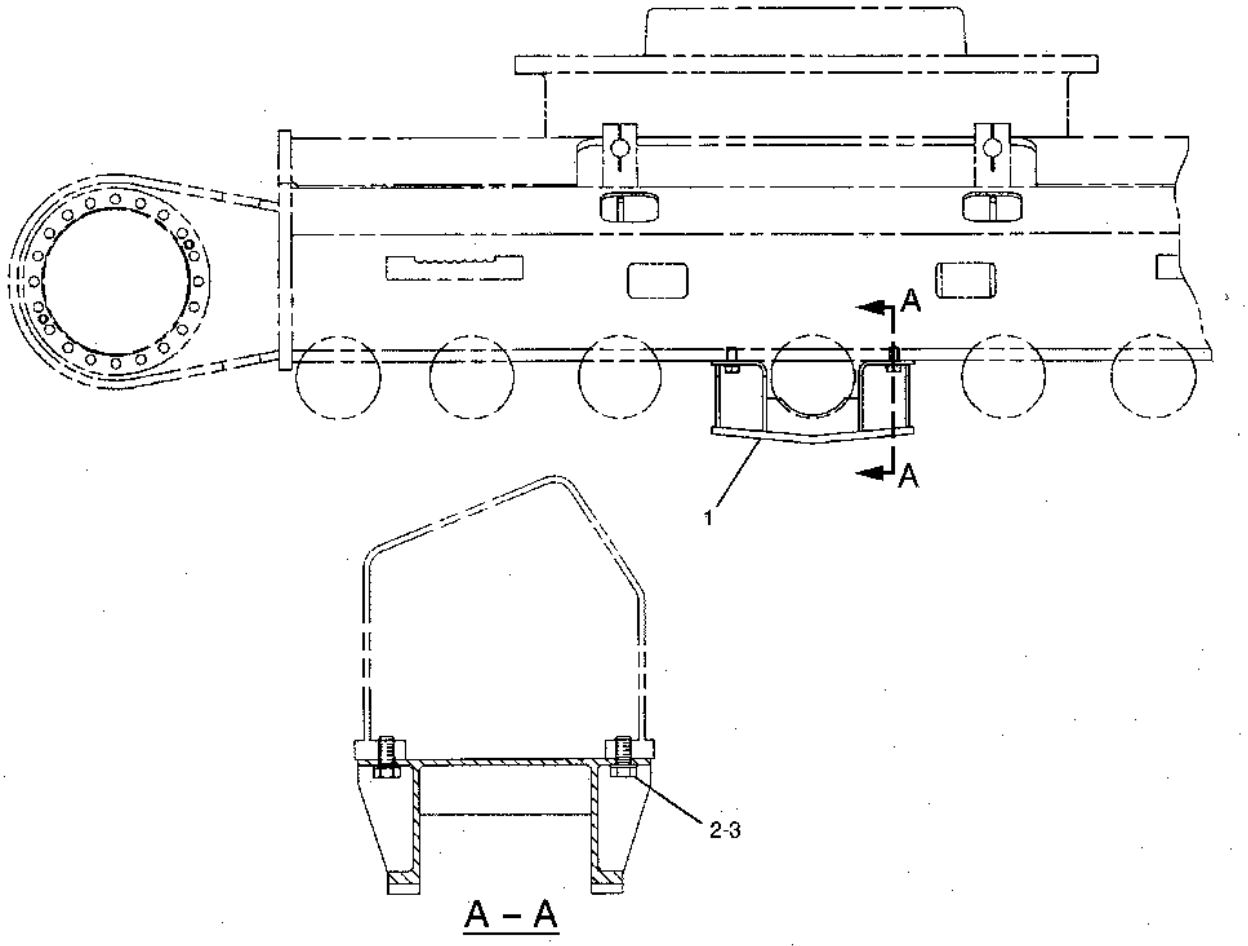


GRAPHIC #1

h79287e

# 1152660 GUARD GP-TRAVEL MOTOR

**Key:**

**SMCS**

| NOTE | REF NO | GRAPHIC REF | PART NUMBER | QTY | PART NAME 1 2 3 4 5 6 (PRODUCT LEVEL) | PRICE USD |
|---|---|---|---|---|---|---|
| | 1 | | 8C-8992 | 10 | BOLT (L=30mm) | |
| | 2 | | 5P-1076 | 10 | WASHER-HARD | |
| | 3 | | 117-5521 | 2 | PLATE | |

## 1152660 GUARD GP-TRAVEL MOTOR

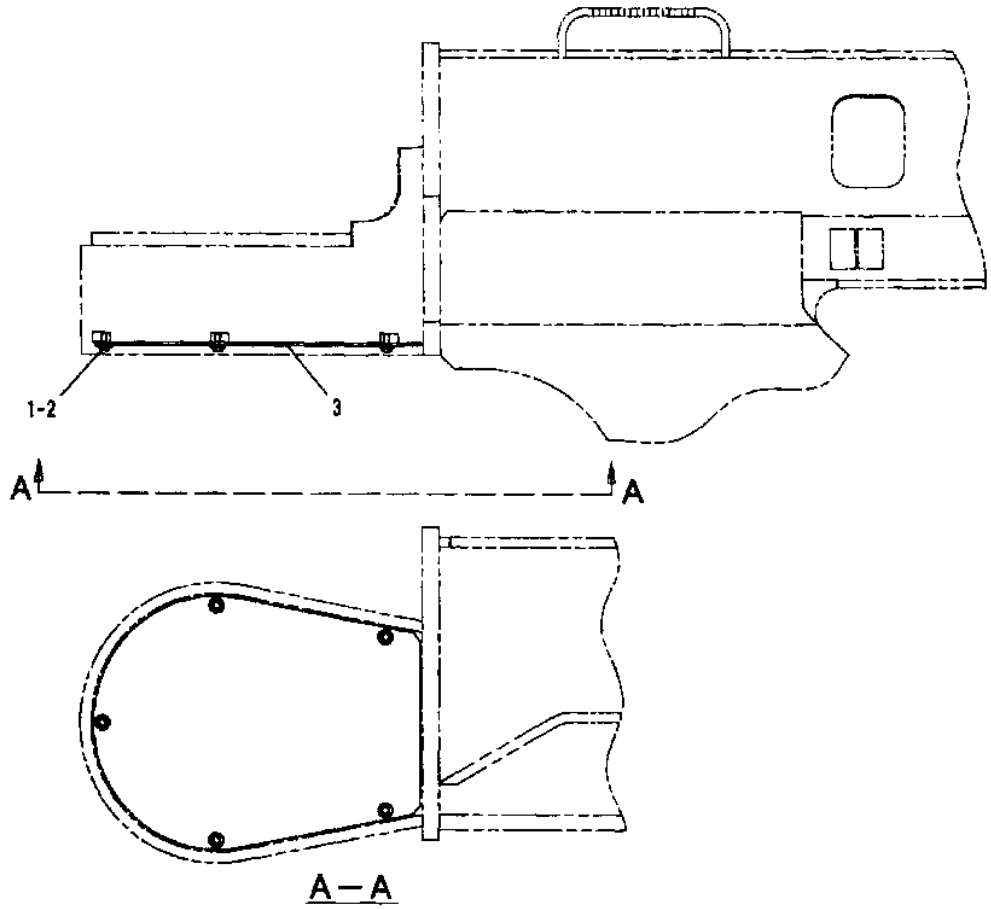


| NOTE | No. | PART No. | QTY | PART NAME |
|---|---|---|---|---|
| | 1 | 8C-8992 | 10 | BOLT (L=30mm) |
| | 2 | 5P-1076 | 10 | WASHER-HARD |
| | 3 | 117-5521 | 2 | PLATE |

H50793E

GRAPHIC #1

h50793e

# 1271423 GUARD GP-TRAVEL MOTOR

HEAVY DUTY
PART OF 1317640-Page 195
AN ATTACHMENT

**Key:**

**SMCS**

| NOTE | REF NO | GRAPHIC REF | PART NUMBER | QTY | PART NAME 1 2 3 4 5 6 (PRODUCT LEVEL) | PRICE USD |
|---|---|---|---|---|---|---|
| | 1 | | 7X-7478 | 10 | BOLT (L=35mm) | |
| | 2 | | 5P-1076 | 10 | WASHER-HARD | |
| | 3 | | 127-1424 | 1 | COVER AS | |
| | 4 | | 127-1432 | 1 | COVER AS | |

## 1271423 GUARD GP-TRAVEL MOTOR

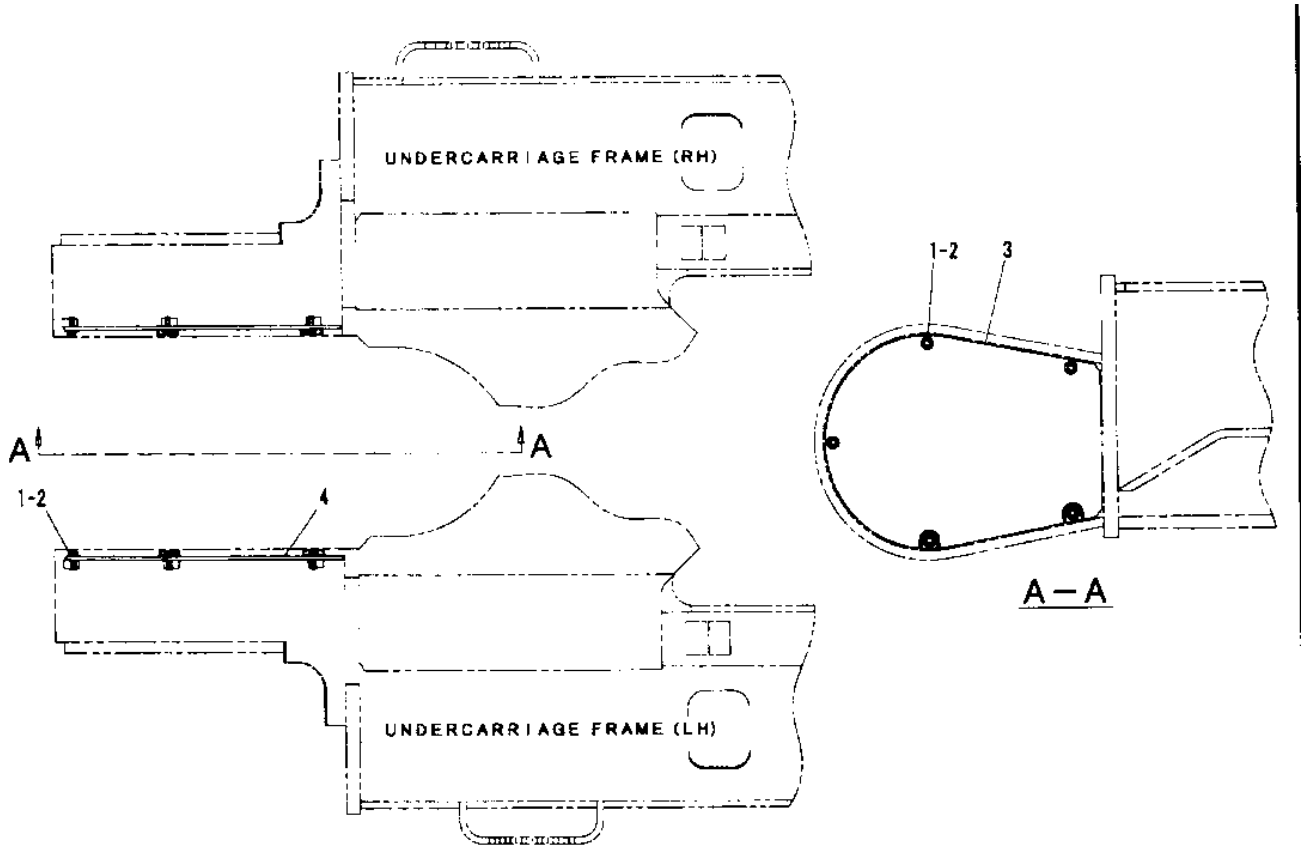


| NOTE | No. | PART No. | QTY | PART NAME |
|---|---|---|---|---|
| | 1 | 7X-7478 | 10 | BOLT (L=35.0mm) |
| | 2 | 5P-1076 | 10 | WASHER-HARD |
| | 3 | 127-1424 | 1 | COVER AS |
| | 4 | 127-1432 | 1 | COVER AS |

H50828E

GRAPHIC #1

h50828e

# 1944687 TRACK GP

600MM TRIPLE GROUSER SHOE-2 REQUIRED
S/N 8SR 1-UP

**Key:** Y - Separate Illustration

**SMCS**

| NOTE | REF NO | GRAPHIC REF | PART NUMBER | QTY | PART NAME 1 2 3 4 5 6 (PRODUCT LEVEL) | PRICE USD |
|---|---|---|---|---|---|---|
| Y | | | 201-9118 | 1 | LINK AS (TRACK) | |
| | | | 126-5066 | 45 | SHOE | |
| | | | 6Y-9024 | 180 | BOLT | |
| | | | 9W-4381 | 180 | NUT | |

# 1161260 TRACK GP

750MM TRIPLE GROUSER SHOE-2 REQUIRED
S/N 8SR 1-UP
AN ATTACHMENT

**Key:**

**SMCS**

| NOTE | REF NO | GRAPHIC REF | PART NUMBER | QTY | PART NAME 1 2 3 4 5 6 (PRODUCT LEVEL) | PRICE USD |
|---|---|---|---|---|---|---|
| | | | 180-7300 | 1 | LINK AS (TRACK) | |
| | | | 126-5067 | 45 | SHOE | |
| | | | 6Y-9024 | 180 | BOLT | |
| | | | 9W-4381 | 180 | NUT | |

# 1161261 TRACK GP

850MM TRIPLE GROUSER SHOE-2 REQUIRED
S/N 8SR 1-UP
AN ATTACHMENT

**Key:**

**SMCS**

| NOTE | REF NO | GRAPHIC REF | PART NUMBER | QTY | PART NAME 1 2 3 4 5 6 (PRODUCT LEVEL) | PRICE USD |
|---|---|---|---|---|---|---|
| | | | 180-7300 | 1 | LINK AS (TRACK) | |
| | | | 6Y-8180 | 45 | SHOE | |
| | | | 6Y-9024 | 180 | BOLT | |
| | | | 9W-4381 | 180 | NUT | |

# 1164686 TRACK GP

750MM TRIPLE GROUSER SHOE-2 REQUIRED
S/N 8TR 1-UP

**Key:**

**SMCS**

| NOTE | REF NO | GRAPHIC REF | PART NUMBER | QTY | PART NAME 1 2 3 4 5 6 (PRODUCT LEVEL) | PRICE USD |
|---|---|---|---|---|---|---|
| | | | 209-9119 | 1 | LINK AS (TRACK) | |
| | | | 126-5067 | 49 | SHOE | |
| | | | 6Y-9024 | 196 | BOLT | |
| | | | 9W-4381 | 196 | NUT | |

# 1161262 TRACK GP

600MM TRIPLE GROUSER SHOE-2 REQUIRED
S/N 8TR 1-UP
AN ATTACHMENT

**Key:** Y - Separate Illustration

**SMCS**

| NOTE | REF NO | GRAPHIC REF | PART NUMBER | QTY | PART NAME 1 2 3 4 5 6 (PRODUCT LEVEL) | PRICE USD |
|---|---|---|---|---|---|---|
| Y | | | 118-7301 | 1 | LINK AS (TRACK) | |
| | | | 126-5066 | 49 | SHOE | |
| | | | 6Y-9024 | 196 | BOLT | |
| | | | 9W-4381 | 196 | NUT | |

# 1161265 TRACK GP

850MM TRIPLE GROUSER SHOE-2 REQUIRED
S/N 8TR 1-UP
AN ATTACHMENT

**Key:** Y - Separate Illustration

**SMCS**

| NOTE | REF NO | GRAPHIC REF | PART NUMBER | QTY | PART NAME 1 2 3 4 5 6 (PRODUCT LEVEL) | PRICE USD |
|---|---|---|---|---|---|---|
| Y | | | 118-7301 | 1 | LINK AS (TRACK) | |
| | | | 6Y-8180 | 49 | SHOE | |
| | | | 6Y-9024 | 196 | BOLT | |
| | | | 9W-4381 | 196 | NUT | |

# 1187300 LINK AS-TRACK

S/N 8SR 1-UP
PART OF 1161260-Page 232, 1161261-Page 233
AN ATTACHMENT

**Key:**

**SMCS**

| NOTE | REF NO | GRAPHIC REF | PART NUMBER | QTY | PART NAME 1 2 3 4 5 6 (PRODUCT LEVEL) | PRICE USD |
|---|---|---|---|---|---|---|
| | 1 | | 6Y-2590 | 44 | LINK (LH) | |
| | 2 | | 095-7944 | 1 | COTTER | |
| | 3 | | 118-7303 | 1 | LINK (LH) | |
| | 4 | | 123-0026 | 1 | BUSHING | |
| | 5 | | 118-7302 | 1 | LINK (RH) | |
| | 6 | | 188-3066 | 1 | PIN | |
| | 7 | | 6Y-2749 | 2 | SPACER | |
| | 8 | | 6Y-2589 | 44 | LINK (RH) | |
| | 9 | | 6Y-2751 | 44 | PIN | |
| | 10 | | 6Y-2750 | 180 | WASHER | |
| | 11 | | 123-0025 | 44 | BUSHING | |

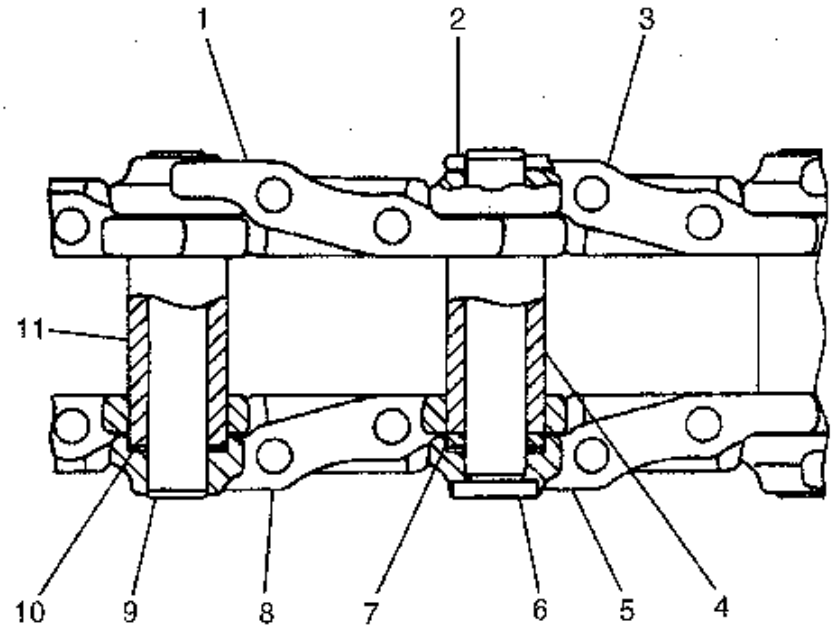


GRAPHIC #1

h79290e

# 1187301 LINK AS-TRACK

S/N 8TR 1-UP
PART OF 1161262-Page 234, 1161265-Page 235
AN ATTACHMENT

**Key:**

**SMCS**

| NOTE | REF NO | GRAPHIC REF | PART NUMBER | QTY | PART NAME 1 2 3 4 5 6 (PRODUCT LEVEL) | PRICE USD |
|---|---|---|---|---|---|---|
| | 1 | | 6Y-2590 | 48 | LINK (LH) | |
| | 2 | | 095-7944 | 1 | COTTER | |
| | 3 | | 118-7303 | 1 | LINK (LH) | |
| | 4 | | 123-0026 | 1 | BUSHING | |
| | 5 | | 118-7302 | 1 | LINK (RH) | |
| | 6 | | 188-3066 | 1 | PIN | |
| | 7 | | 6Y-2749 | 2 | SPACER | |
| | 8 | | 6Y-2589 | 48 | LINK (RH) | |
| | 9 | | 6Y-2751 | 48 | PIN | |
| | 10 | | 6Y-2750 | 196 | WASHER | |
| | 11 | | 123-0025 | 48 | BUSHING | |

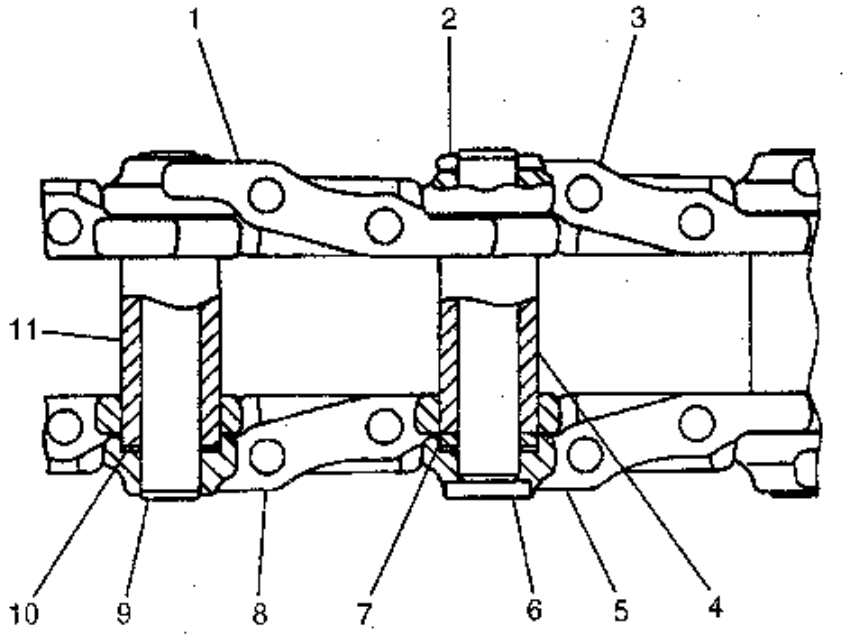


GRAPHIC #1

h79291e

# 2019118 LINK AS-TRACK

S/N 8SR 1-UP
PART OF 1944687-Page 232

**Key:**

**SMCS**

| NOTE | REF NO | GRAPHIC REF | PART NUMBER | QTY | PART NAME 1 2 3 4 5 6 (PRODUCT LEVEL) | PRICE USD |
|---|---|---|---|---|---|---|
| | 1 | | 6Y-2590 | 44 | LINK (LH) | |
| | 2 | | 095-7944 | 1 | COTTER | |
| | 3 | | 118-7303 | 1 | LINK (LH) | |
| | | | 6Y-2590 | 1 | LINK (LH) | |
| | 4 | | 201-0828 | 1 | BUSHING | |
| | 5 | | 118-7302 | 1 | LINK (RH) | |
| | | | 6Y-2589 | 1 | LINK (RH) | |
| | 6 | | 188-3066 | 1 | PIN | |
| | 7 | | 179-3428 | 2 | SEAL | |
| | 8 | | 6Y-2589 | 44 | LINK (RH) | |
| | 9 | | 6Y-2751 | 44 | PIN | |
| | 10 | | 179-3426 | 88 | SEAL | |
| | 11 | | 201-0827 | 44 | BUSHING | |

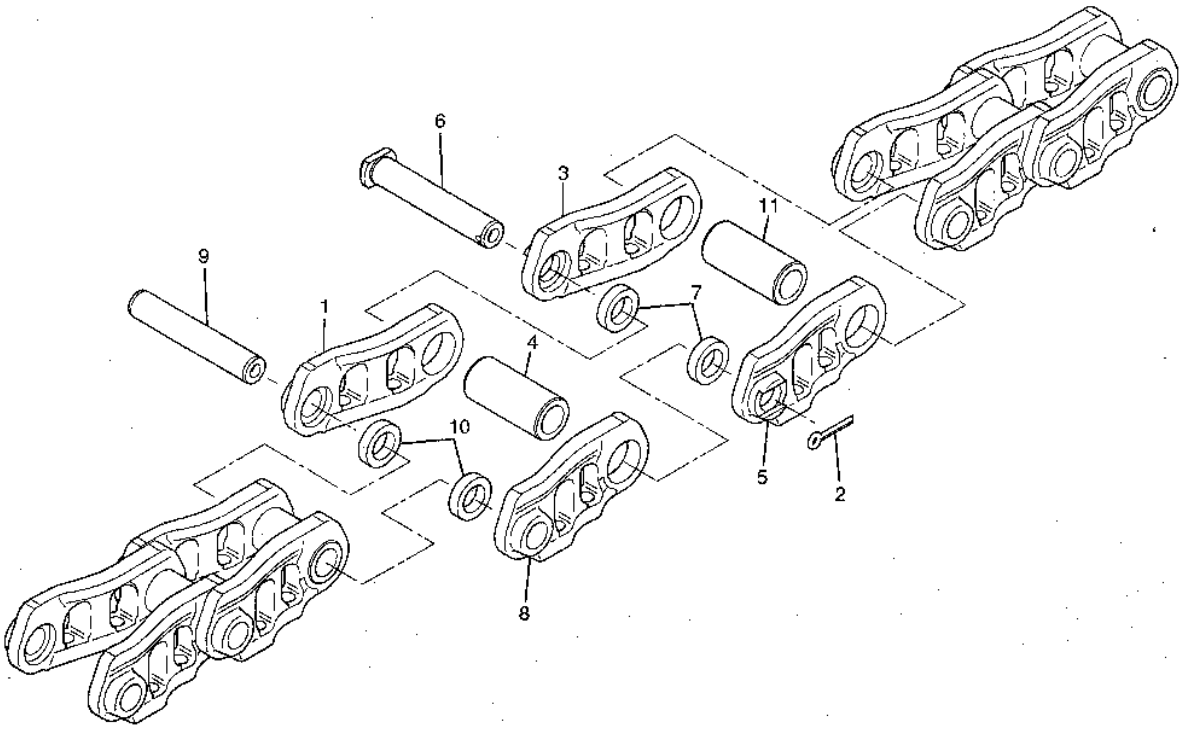


GRAPHIC #1

h83251e

# 2019119 LINK AS-TRACK

S/N 8TR 1-UP
PART OF 1944686-Page 234

**Key:**

**SMCS**

| NOTE | REF NO | GRAPHIC REF | PART NUMBER | QTY | PART NAME 1 2 3 4 5 6 (PRODUCT LEVEL) | PRICE USD |
|---|---|---|---|---|---|---|
| | 1 | | 6Y-2590 | 48 | LINK (LH) | |
| | 2 | | 095-7944 | 1 | COTTER | |
| | 3 | | 118-7303 | 1 | LINK (LH) | |
| | | | 6Y-2590 | 1 | LINK (LH) | |
| | 4 | | 201-0828 | 1 | BUSHING | |
| | 5 | | 118-7302 | 1 | LINK (RH) | |
| | | | 6Y-2589 | 1 | LINK (RH) | |
| | 6 | | 188-3066 | 1 | PIN | |
| | 7 | | 179-3428 | 2 | SEAL | |
| | 8 | | 6Y-2589 | 48 | LINK (RH) | |
| | 9 | | 6Y-2751 | 48 | PIN | |
| | 10 | | 179-3426 | 96 | SEAL | |
| | 11 | | 201-0827 | 48 | BUSHING | |

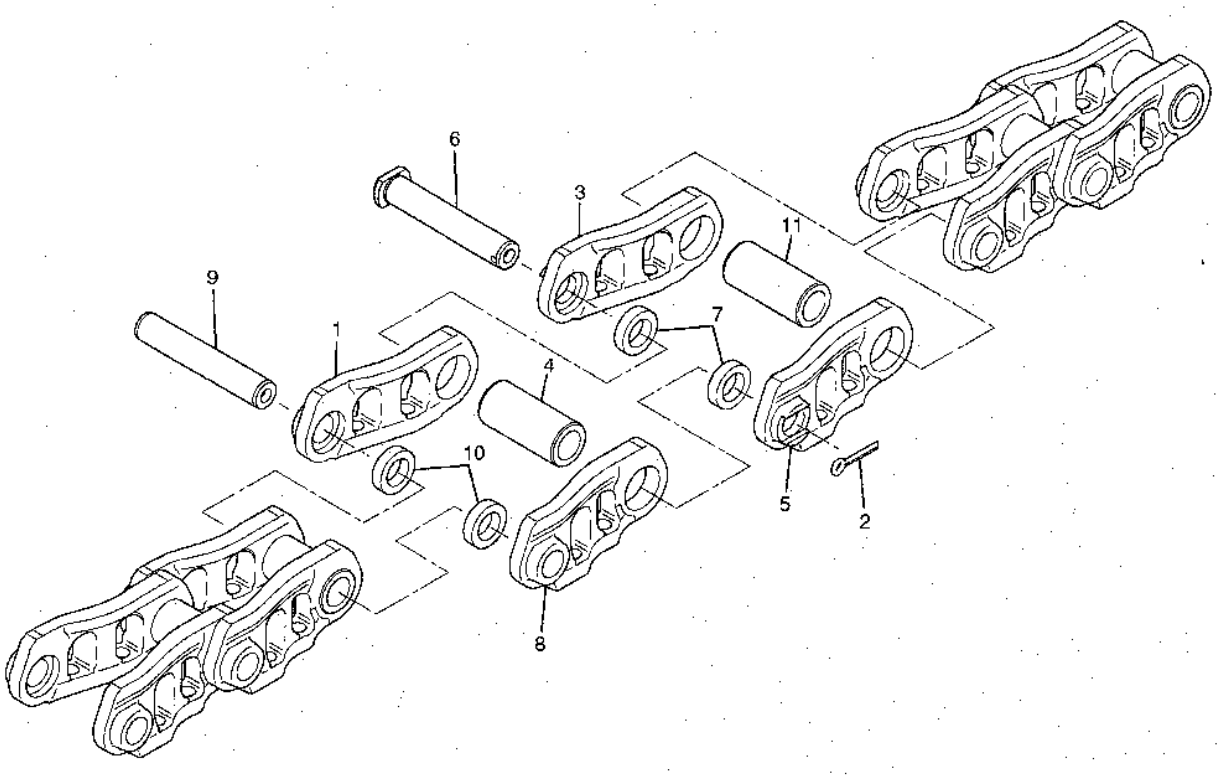


GRAPHIC #1

h83252e

# 1120067 TANK & MTG GP-HYDRAULIC

1232160-Page 238

**Key:** Y - SEPARATE ILLUSTRATION

**SMCS**

| NOTE | REF NO | GRAPHIC REF | PART NUMBER | QTY | PART NAME 1 2 3 4 5 6 (PRODUCT LEVEL) | PRICE USD |
|---|---|---|---|---|---|---|
| Y | 1 | | 123-2160 | 1 | TANK GP | |
| | 2 | | 7X-2553 | 6 | BOLT (L=40mm) | |
| | 3 | | 9X-8257 | 6 | WASHER | |

## 1120067 TANK & MTG GP-HYDRAULIC

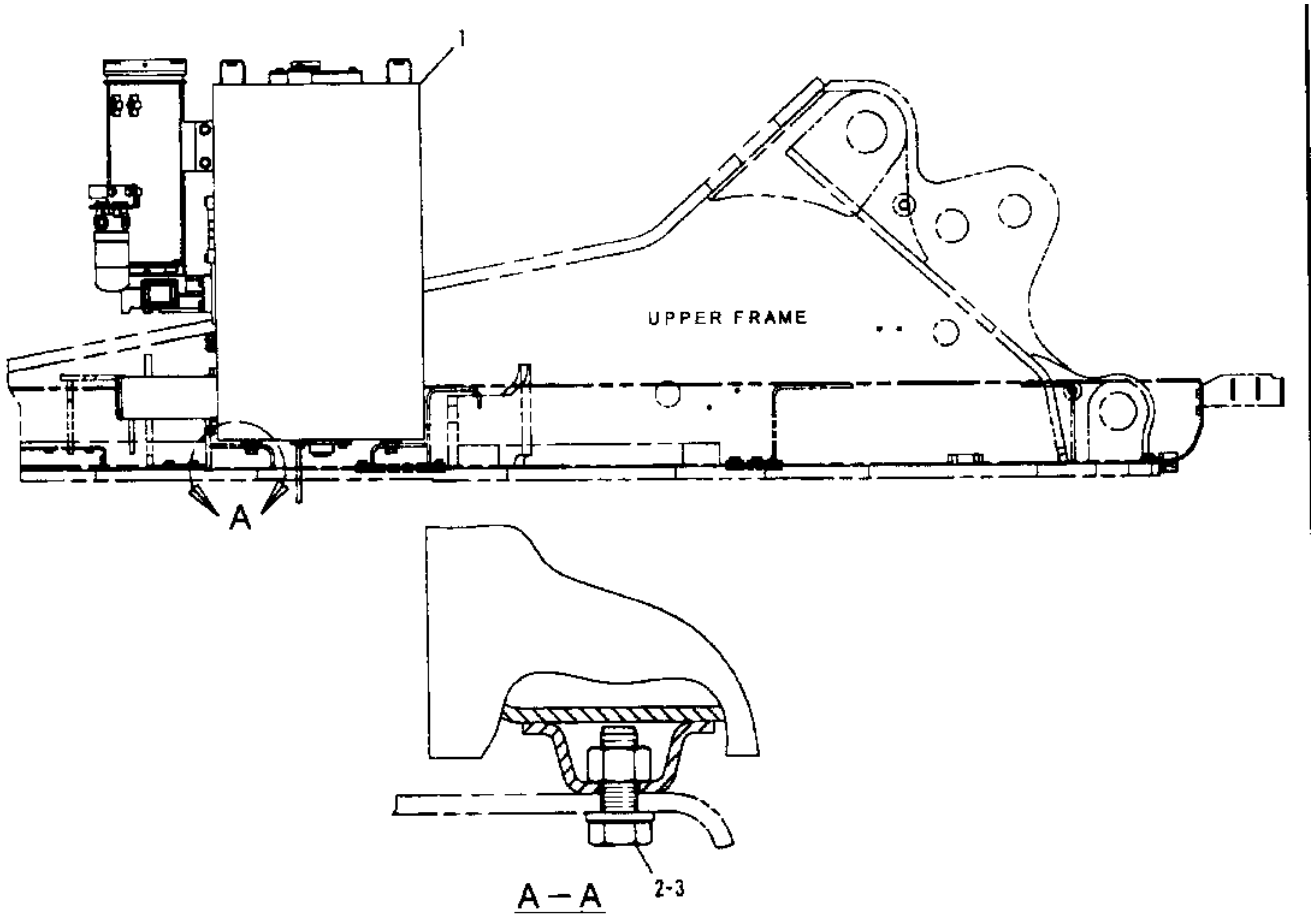


| NOTE | No. | PART No. | QTY | PART NAME | NOTE | No. | PART No. | QTY | PART NAME |
|---|---|---|---|---|---|---|---|---|---|
| Y | 1 | 123-2160 | 1 | TANK GP | | | | | |
| | 2 | 7X-2553 | 6 | BOLT (L=40mm) | | | | | |
| | 3 | 9X-8257 | 6 | WASHER | | | | | |

Y – SEE SEPARATE ILLUSTRATION

H50837E

GRAPHIC #1 h50837e

# 1232160 TANK & FILTER GP-HYDRAULIC (PART 1 OF 2)

CAPACITY 300 LITERS
PART OF 1120067-Page 237
1076996-Page 240, 1843930-Page 257, 1076995-Page 258

**Key:** Y - SEE SEPARATE ILLUSTRATION

**SMCS**

| NOTE | REF NO | GRAPHIC REF | PART NUMBER | QTY | PART NAME 1 2 3 4 5 6 (PRODUCT LEVEL) | PRICE USD |
|---|---|---|---|---|---|---|
| | 1 | | 8T-4121 | 12 | WASHER | |
| | 2 | | 8T-4137 | 8 | BOLT (L=20mm) | |
| | 3 | | 119-5162 | 1 | COVER | |
| | 4 | | 6V-6707 | 1 | SEAL-O-RING (ID=82.14mm) | |
| | 5 | | 115-8646 | 1 | GUARD | |
| | 6 | | 1P-4278 | 1 | CLAMP | |
| Y | 7 | | 107-6995 | 1 | FILTER GP | |
| | 8 | | 8T-4223 | 10 | WASHER | |
| | 9 | | 123-1982 | 1 | PIPE | |
| | 10 | | 6J-2680 | 2 | SEAL-O-RING (ID=69.44mm) | |
| | 11 | | 126-2079 | 1 | HOSE | |
| Y | 12 | | 107-6996 | 1 | SCREEN GP | |
| | 13 | | 111-4760 | 1 | SWITCH AS | |
| | | | 102-8802 | 1 | RECEPTACLE KIT | |
| | | | 3E-3365 | 1 | WEDGE | |
| | | | 8T-8729 | 2 | PIN | |
| | 14 | | 3D-2824 | 1 | SEAL-O-RING (ID=23.47mm) | |
| | 15 | | 8T-4133 | 2 | NUT | |
| | 16 | | 5P-9299 | 2 | CLIP | |
| | 17 | | 4I-5394 | 1 | SENDER | |
| | | | 4I-5490 | 2 | SCREW | |
| | | | 095-0826 | 2 | LOCKWASHER | |
| | 18 | | 3K-0360 | 1 | SEAL-O-RING (ID=16.36mm) | |
| | 19 | | 8T-4200 | 4 | BOLT (L=16mm) | |
| | 20 | | 8T-4224 | 4 | WASHER | |
| Y | 21 | | 184-3930 | 1 | FILTER GP | |
| | 22 | | 094-3245 | 1 | GAUGE AS | |
| | 23 | | 095-1514 | 4 | SEAL-O-RING (ID=9.80mm) | |
| | 24 | | 095-1517 | 4 | SEAL-O-RING (ID=13.80mm) | |
| | 25 | | 096-4754 | 1 | PIPE | |
| | 26 | | 7Y-4754 | 2 | BLOCK | |
| | 27 | | 094-3247 | 2 | BOLT (L=36mm) | |
| | 28 | | 8T-4195 | 2 | BOLT (L=30mm) | |
| | 29 | | 8T-4956 | 8 | BOLT (L=35mm) | |
| | 30 | | 8T-4139 | 2 | BOLT (L=30mm) | |

## 1232160 TANK & FILTER GP-HYDRAULIC (PART 1 OF 2)

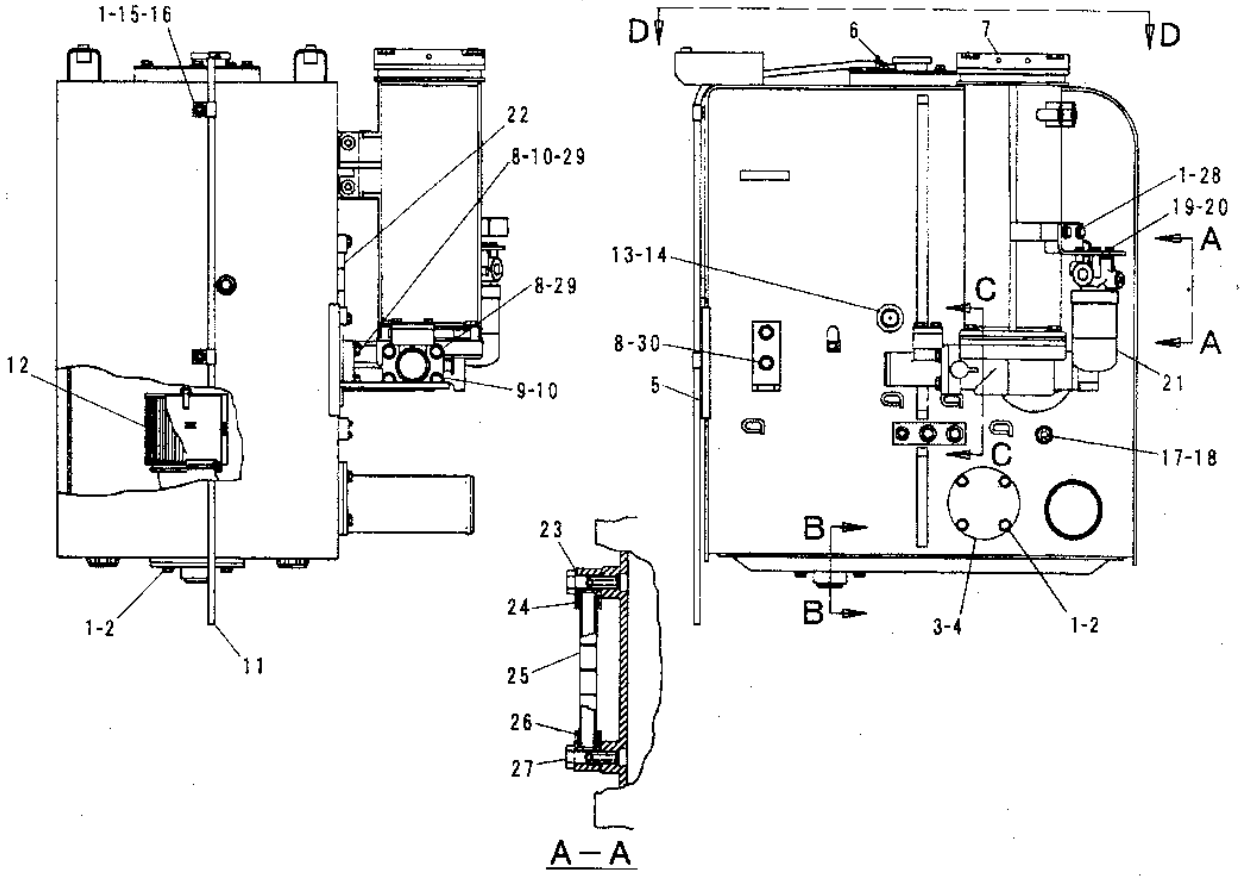


GRAPHIC #1

h79294e

# 1232160 TANK & FILTER GP-HYDRAULIC (PART 2 OF 2)

CAPACITY 300 LITERS
PART OF 1120067-Page 237

**Key:**

**SMCS**

| NOTE | REF NO | GRAPHIC REF | PART NUMBER | QTY | PART NAME 1 2 3 4 5 6 (PRODUCT LEVEL) | PRICE USD |
|---|---|---|---|---|---|---|
| | 1 | | 8T-4136 | 4 | BOLT (L=25mm) | |
| | 2 | | 8T-4121 | 10 | WASHER | |
| | 3 | | 8T-4137 | 6 | BOLT (L=20mm) | |
| | 4 | | 8T-4183 | 2 | BOLT (L=40mm) | |
| | 5 | | 2M-0849 | 2 | WASHER | |
| | 6 | | 112-0065 | 1 | BRACKET | |
| | 7 | | 121-1513 | 1 | SUPPORT AS | |
| | 8 | | 114-0741 | 1 | COVER | |
| | 9 | | 4J-0522 | 1 | SEAL-O-RING (ID=37.69mm) | |
| | 10 | | 169-7946 | 1 | COVER AS | |
| | 11 | | 4I-3743 | 1 | FILLER AS | |
| | 12 | | 4I-3745 | 1 | CAP | |
| | 13 | | 095-1730 | 1 | SEAL-O-RING (ID=179.30) | |
| | 14 | | 105-2652 | 1 | PLUG | |
| | 15 | | 6C-8496 | 1 | WASHER | |
| | 16 | | 095-1608 | 1 | SEAL-O-RING (ID=44.70mm) | |
| | 17 | | 112-0058 | 1 | COVER AS | |
| | 18 | | 8J-8783 | 1 | VALVE | |
| | 19 | | 1U-2827 | 1 | GUIDE | |
| | 20 | | 5M-2057 | 1 | SEAL-O-RING (ID=34.59mm) | |
| | 21 | | 9J-7031 | 1 | PLUG | |
| | 22 | | 4M-0189 | 1 | SEAL-O-RING (ID=104.37mm) | |
| | 23 | | 3J-7354 | 1 | SEAL-O-RING (ID=8.92mm) | |
| | 24 | | 9S-4182 | 1 | PLUG | |
| | 25 | | 133-5812 | 1 | SUPPORT | |

## 1232160 TANK & FILTER GP-HYDRAULIC (PART 2 OF 2)

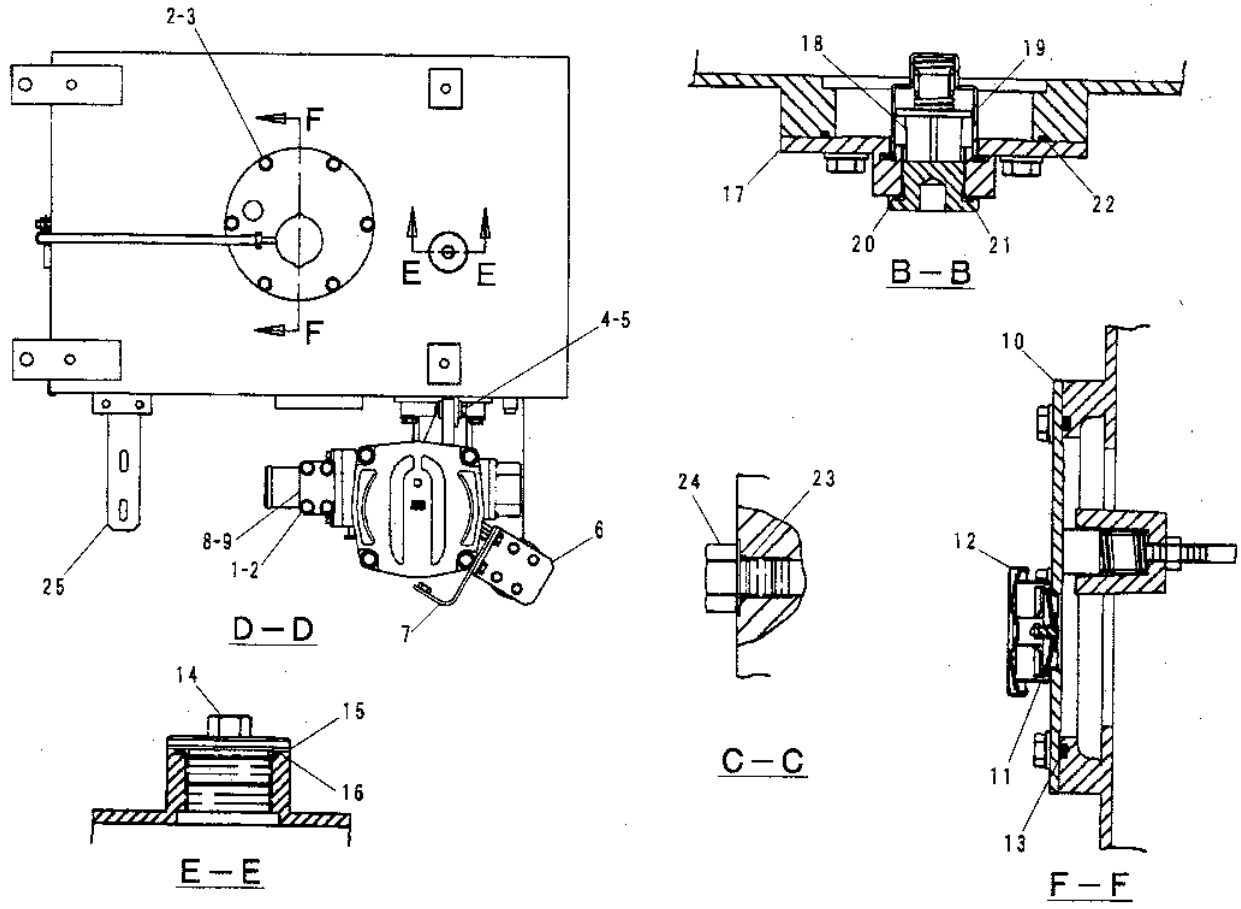


GRAPHIC #1

h79295e

# 1076996 SCREEN GP

PART OF 1232160-Page 238

**Key:**

**SMCS**

| NOTE | REF NO | GRAPHIC REF | PART NUMBER | QTY | PART NAME 1 2 3 4 5 6 (PRODUCT LEVEL) | PRICE USD |
|---|---|---|---|---|---|---|
| | 1 | | 095-6641 | 1 | GUIDE | |
| | 2 | | 095-6639 | 1 | SPRING | |
| | 3 | | 096-2915 | 1 | ROD | |
| | 4 | | 8T-4133 | 2 | NUT | |
| | 5 | | 087-5297 | 1 | SCREEN AS | |
| | 6 | | 5H-5672 | 1 | SEAL-O-RING (ID=113.67mm) | |

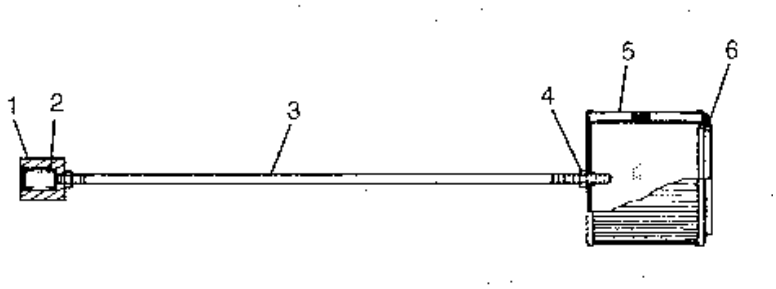


GRAPHIC #1 h50142e

# 1140665 DRIVE GP-PUMP

FOR CAT TYPE PUMP
5I4081-Page 244
AN ATTACHMENT

**Key:** Y - SEE SEPARATE ILLUSTRATION

**SMCS**

| NOTE | REF NO | GRAPHIC REF | PART NUMBER | QTY | PART NAME 1 2 3 4 5 6 (PRODUCT LEVEL) | PRICE USD |
|---|---|---|---|---|---|---|
| Y | 1 | | 5I-4081 | 1 | DRIVE GP | |
| | 2 | | 8T-4179 | 2 | BOLT (L=20mm) | |
| | 3 | | 4I-7716 | 1 | PLATE | |
| | 4 | | 119-5163 | 1 | SCREEN AS | |
| | 5 | | 8T-4136 | 4 | BOLT (L=25mm) | |
| | 6 | | 126-1913 | 1 | PLATE | |
| | 7 | | 6V-6707 | 1 | SEAL-O-RING (ID=82.14mm) | |
| | 8 | | 8T-4956 | 4 | BOLT (L=35mm) | |
| | 9 | | 8T-4223 | 4 | WASHER | |
| | 10 | | 1P-4582 | 2 | FLANGE | |
| | 11 | | 2J-5608 | 1 | COVER | |
| | 12 | | 4J-0527 | 1 | SEAL-O-RING (ID=56.74mm) | |

## 1140665 DRIVE GP-PUMP

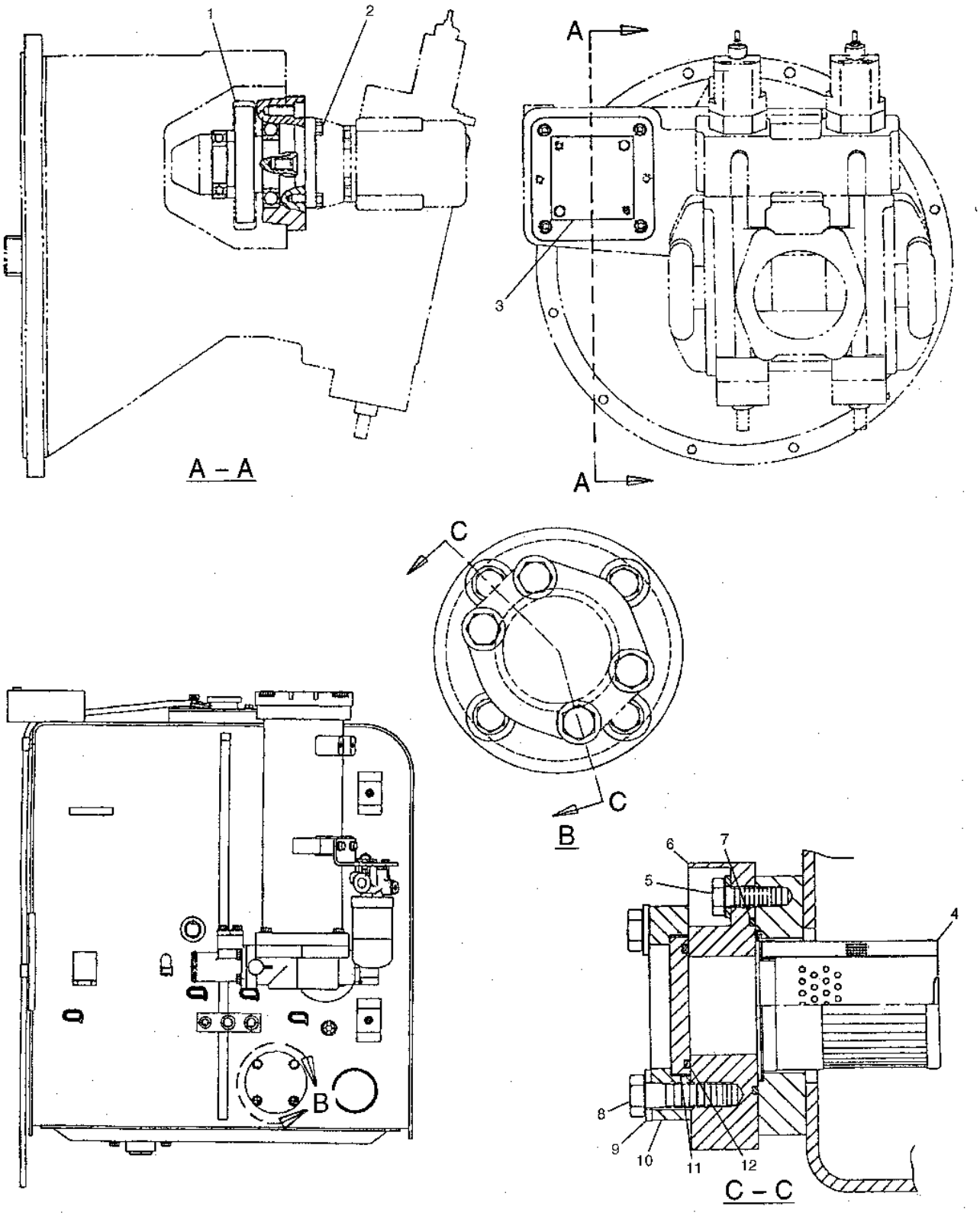


GRAPHIC #1

h51776e

# 1297998 DRIVE GP-PUMP

FOR SAE TYPE PUMP
1297999-Page 244.01
AN ATTACHMENT

**Key:** Y - SEE SEPARATE ILLUSTRATION

**SMCS**

| NOTE | REF NO | GRAPHIC REF | PART NUMBER | QTY | PART NAME 1 2 3 4 5 6 (PRODUCT LEVEL) | PRICE USD |
|---|---|---|---|---|---|---|
| Y | 1 | | 129-7999 | 1 | DRIVE GP | |
| | 2 | | 8T-4179 | 2 | BOLT (L=20mm) | |
| | 3 | | 4I-7716 | 1 | PLATE | |
| | 4 | | 131-9750 | 1 | SCREEN AS | |
| | 5 | | 8T-4136 | 4 | BOLT (L=25mm) | |
| | 6 | | 126-1913 | 1 | PLATE | |
| | 7 | | 6V-6707 | 1 | SEAL-O-RING (ID=82.14mm) | |
| | 8 | | 8T-4956 | 4 | BOLT (L=35mm) | |
| | 9 | | 8T-4223 | 4 | WASHER | |
| | 10 | | 1P-4582 | 2 | FLANGE | |
| | 11 | | 2J-5608 | 1 | COVER | |
| | 12 | | 4J-0527 | 1 | SEAL-O-RING (ID=56.74mm) | |

## 1297998 DRIVE GP-PUMP

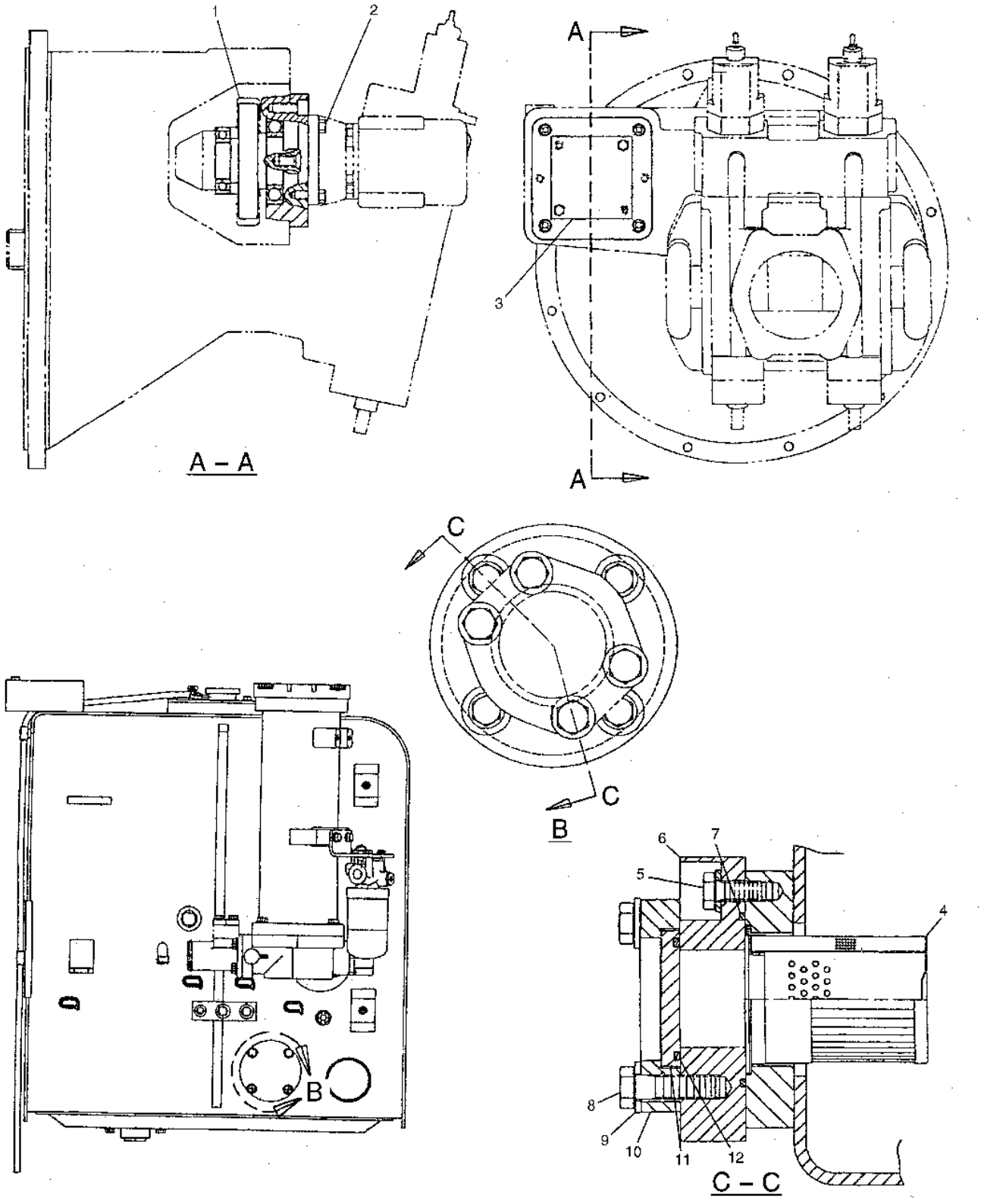


H59021E 03

GRAPHIC #1

h59021e

# 5I4081 DRIVE GP-ACCESSORY

PART OF 1140665-Page 243
AN ATTACHMENT

**Key:**

**SMCS**

| NOTE | REF NO | GRAPHIC REF | PART NUMBER | QTY | PART NAME 1 2 3 4 5 6 (PRODUCT LEVEL) | PRICE USD |
|---|---|---|---|---|---|---|
| | 1 | | 5I-8450 | 1 | FLANGE | |
| | 2 | | 8T-5049 | 1 | SEAL-O-RING (ID=101.27mm) | |
| | 3 | | 5I-8449 | 1 | SHAFT | |
| | 4 | | 095-0977 | 1 | BEARING | |
| | 5 | | 095-0979 | 1 | BEARING | |
| | 6 | | 2D-8009 | 1 | SEAL-O-RING (ID=142.47mm) | |

## 5I4081 DRIVE GP-ACCESSORY

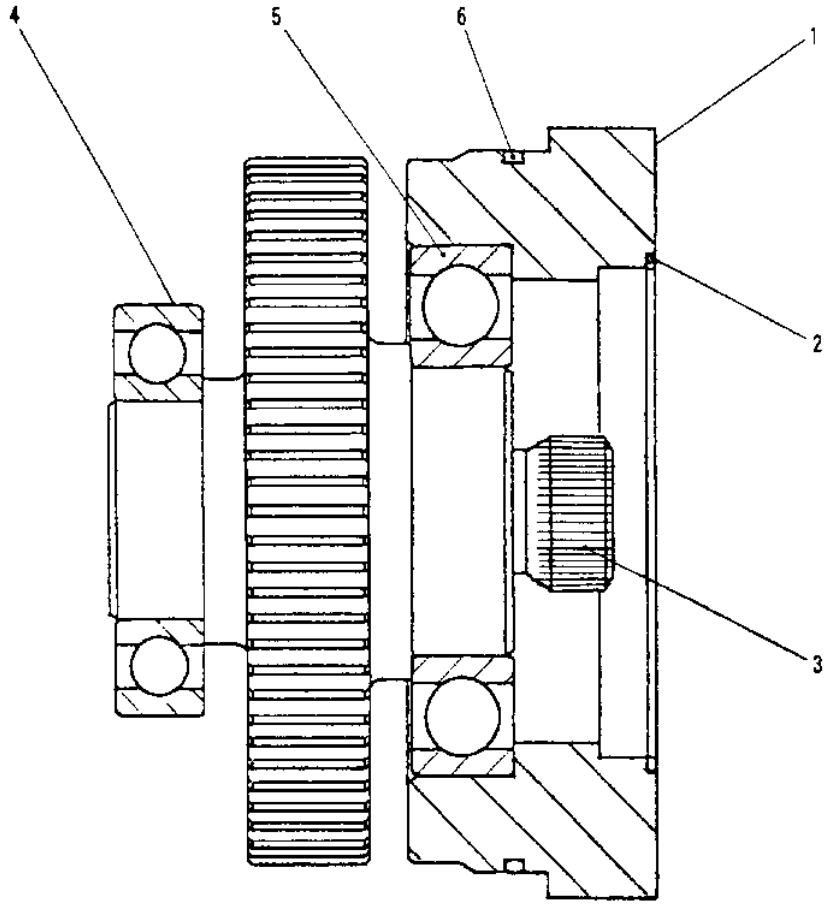


| NOTE | No. | PART No. | QTY | PART NAME | NOTE | No. | PART No. | QTY | PART NAME |
|---|---|---|---|---|---|---|---|---|---|
| | 1 | 5I-8450 | 1 | FLANGE | | | | | |
| | 2 | 8T-5049 | 1 | SEAL-O-RING (ID=101.27mm) | | | | | |
| | 3 | 5I-8449 | 1 | SHAFT | | | | | |
| | 4 | 095-0977 | 1 | BEARING | | | | | |
| | 5 | 095-0979 | 1 | BEARING | | | | | |
| | 6 | 2D-8009 | 1 | SEAL-O-RING (ID=142.47mm) | | | | | |

H53952E

GRAPHIC #1

h53952e

# 1297999 DRIVE GP-ACCESSORY

PART OF 1297998-Page 243.02
AN ATTACHMENT

**Key:**

**SMCS**

| NOTE | REF NO | GRAPHIC REF | PART NUMBER | QTY | PART NAME 1 2 3 4 5 6 (PRODUCT LEVEL) | PRICE USD |
|---|---|---|---|---|---|---|
| | 1 | | 137-3699 | 1 | FLANGE | |
| | 2 | | 8T-5049 | 1 | SEAL-O-RING (ID=101.27mm) | |
| | 3 | | 129-8001 | 1 | GEAR | |
| | 4 | | 095-0977 | 1 | BEARING | |
| | 5 | | 095-0979 | 1 | BEARING | |
| | 6 | | 2D-8009 | 1 | SEAL-O-RING (ID=142.47mm) | |

## 1297999 DRIVE GP-ACCESSORY

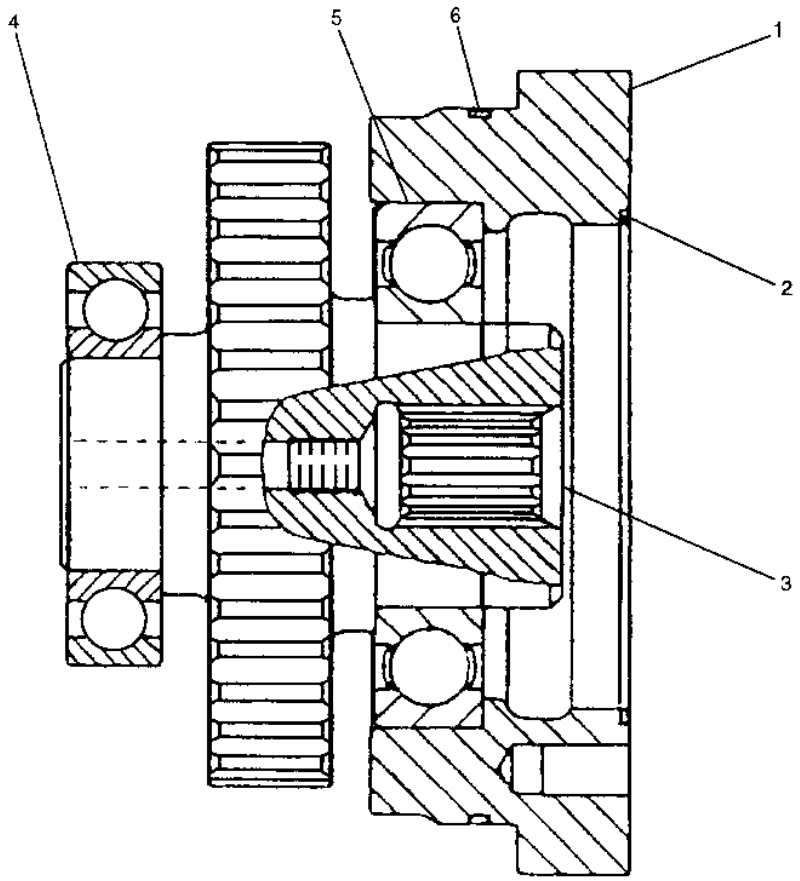


| NOTE | No. | PART No. | QTY | PART NAME |
|---|---|---|---|---|
| | 1 | 137-3699 | 1 | FLANGE |
| | 2 | 8T-5049 | 1 | SEAL-O-RING (ID=101.27mm) |
| | 3 | 129-8001 | 1 | GEAR |
| | 4 | 095-0977 | 1 | BEARING |
| | 5 | 095-0979 | 1 | BEARING |
| | 6 | 2D-8009 | 1 | SEAL-O-RING (ID=142.47mm) |

H59006E

GRAPHIC #1

h59006e

# 1099411 PUMP & MOUNTING GP

7Y0872-Page 246, 1232235-Page 247

**Key:** Y - SEPARATE ILLUSTRATION

**SMCS**

| NOTE | REF NO | GRAPHIC REF | PART NUMBER | QTY | PART NAME 1 2 3 4 5 6 (PRODUCT LEVEL) | PRICE USD |
|---|---|---|---|---|---|---|
| Y | 1 | | 123-2235 | 1 | PUMP GP | |
| Y | 2 | | 7Y-0872 | 1 | COUPLING GP | |
| | 3 | | 8T-8916 | 12 | BOLT (L=38mm) | |
| | 4 | | 8T-5360 | 12 | WASHER-HARD | |

## 1099411 PUMP & MOUNTING GP

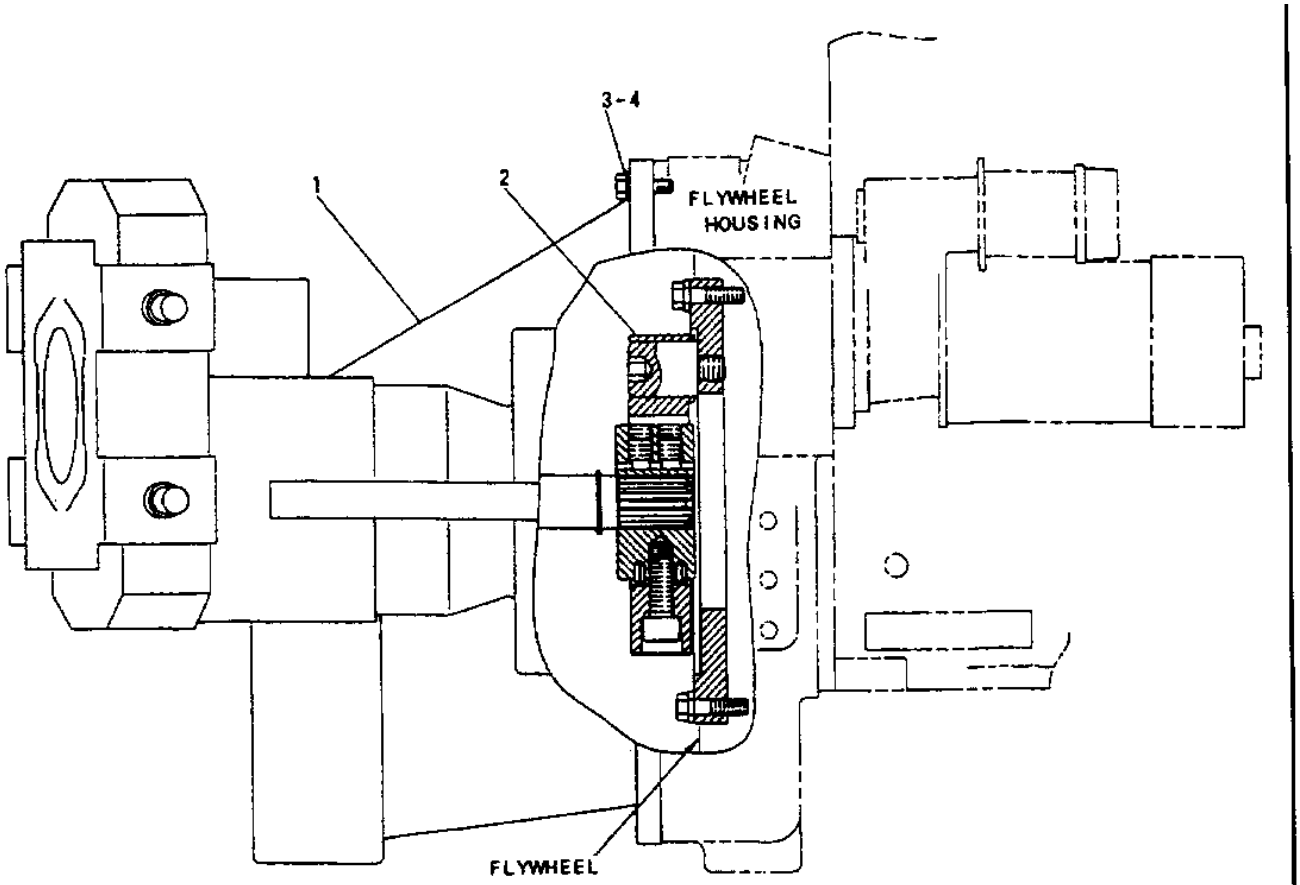


| NOTE | No. | PART No. | QTY | PART NAME | NOTE | No. | PART No. | QTY | PART NAME |
|---|---|---|---|---|---|---|---|---|---|
| Y | 1 | 123-2235 | 1 | PUMP GP | | | | | |
| Y | 2 | 7Y-0872 | 1 | COUPLING GP | | | | | |
| | 3 | 8T-8916 | 12 | BOLT (L=38mm) | | | | | |
| | 4 | 8T-5360 | 12 | WASHER-HARD | | | | | |

Y-SEE SEPARATE ILLUSTRATION

H50836E

GRAPHIC #1 h50836e

# 7Y0872 COUPLING GP-PUMP

PART OF 1099411-Page 245

**Key:**

**SMCS**

| NOTE | REF NO | GRAPHIC REF | PART NUMBER | QTY | PART NAME 1 2 3 4 5 6 (PRODUCT LEVEL) | PRICE USD |
|---|---|---|---|---|---|---|
| | 1 | | 099-5663 | 4 | BOLT (L=23mm) | |
| | 2 | | 7Y-1348 | 1 | COUPLING AS | |
| | 3 | | 085-7572 | 1 | ELEMENT AS | |
| | 4 | | 099-8110 | 4 | BOLT (L=50mm) | |
| | 5 | | 099-8109 | 4 | INSERT | |
| | 6 | | 099-8111 | 8 | PIN-SPRING | |
| | 7 | | 7Y-1350 | 1 | HUB | |
| | 8 | | 099-8112 | 2 | SETSCREW | |
| | 9 | | 1A-1460 | 8 | BOLT (L=51mm) | |
| | 10 | | 2M-0849 | 8 | WASHER-HARD | |
| | 11 | | 099-5664 | 1 | SPACER | |

## 7Y0872 COUPLING GP-PUMP

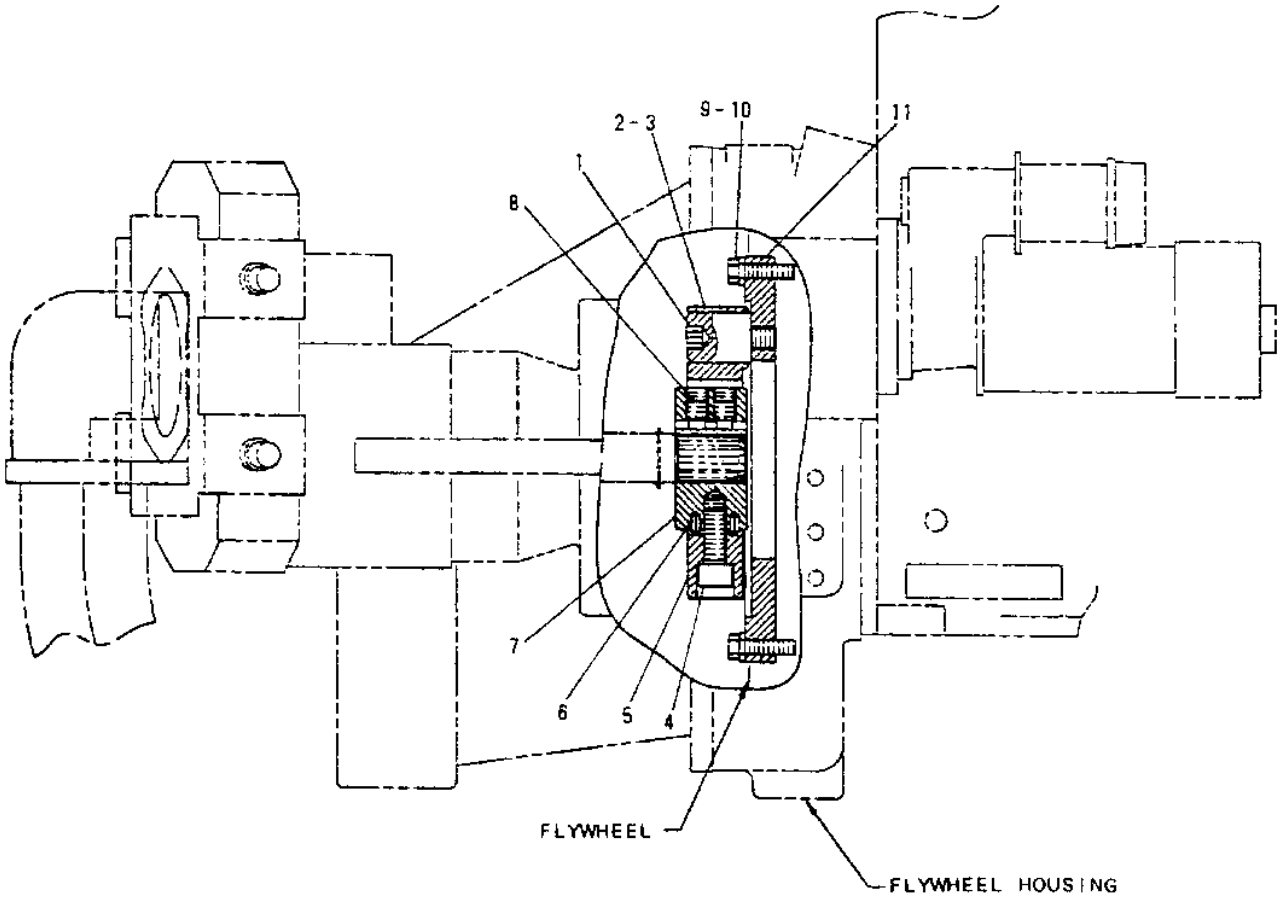


| NOTE | No. | PART No. | QTY | PART NAME | NOTE | No. | PART No. | QTY | PART NAME |
|---|---|---|---|---|---|---|---|---|---|
| | 1 | 099-5663 | 4 | BOLT (L=23mm) | | | | | |
| | 2 | 7Y-1348 | 1 | COUPLING AS | | | | | |
| | 3 | 085-7572 | 1 | ELEMENT AS | | | | | |
| | 4 | 099-8110 | 4 | BOLT (L=50mm) | | | | | |
| | 5 | 099-8109 | 4 | INSERT | | | | | |
| | 6 | 099-8111 | 8 | PIN-SPRING | | | | | |
| | 7 | 7Y-1350 | 1 | HUB | | | | | |
| | 8 | 099-8112 | 2 | SETSCREW | | | | | |
| | 9 | 1A-1460 | 8 | BOLT (L=51mm) | | | | | |
| | 10 | 2M-0849 | 8 | WASHER-HARD | | | | | |
| | 11 | 099-5664 | 1 | SPACER | | | | | |

H50835E

GRAPHIC #1

h50835e

# 1232235 PUMP GP-DOUBLE PISTON

PART OF 1099411-Page 245
1843955-Page 248, 1211374-Page 253

**Key:** Y - SEE SEPARATE ILLUSTRATION

**SMCS**

| NOTE | REF NO | GRAPHIC REF | PART NUMBER | QTY | PART NAME 1 2 3 4 5 6 (PRODUCT LEVEL) | PRICE USD |
|---|---|---|---|---|---|---|
| Y | 1 | | 184-3955 | 1 | PUMP GP | |
| Y | 2 | | 121-1374 | 1 | HEAD GP | |
| | 3 | | 5I-4410 | 1 | PLATE AS | |
| | | | 5I-8455 | 1 | PLATE | |
| J | 4 | | 2D-8009 | 1 | SEAL-O-RING (ID=142.47mm) | |
| | 5 | | 8T-8441 | 4 | BOLT (L=25mm) | |
| | | | 133-6901 | 1 | SEAL KIT (INCLUDES PARTS MARKED J) | |

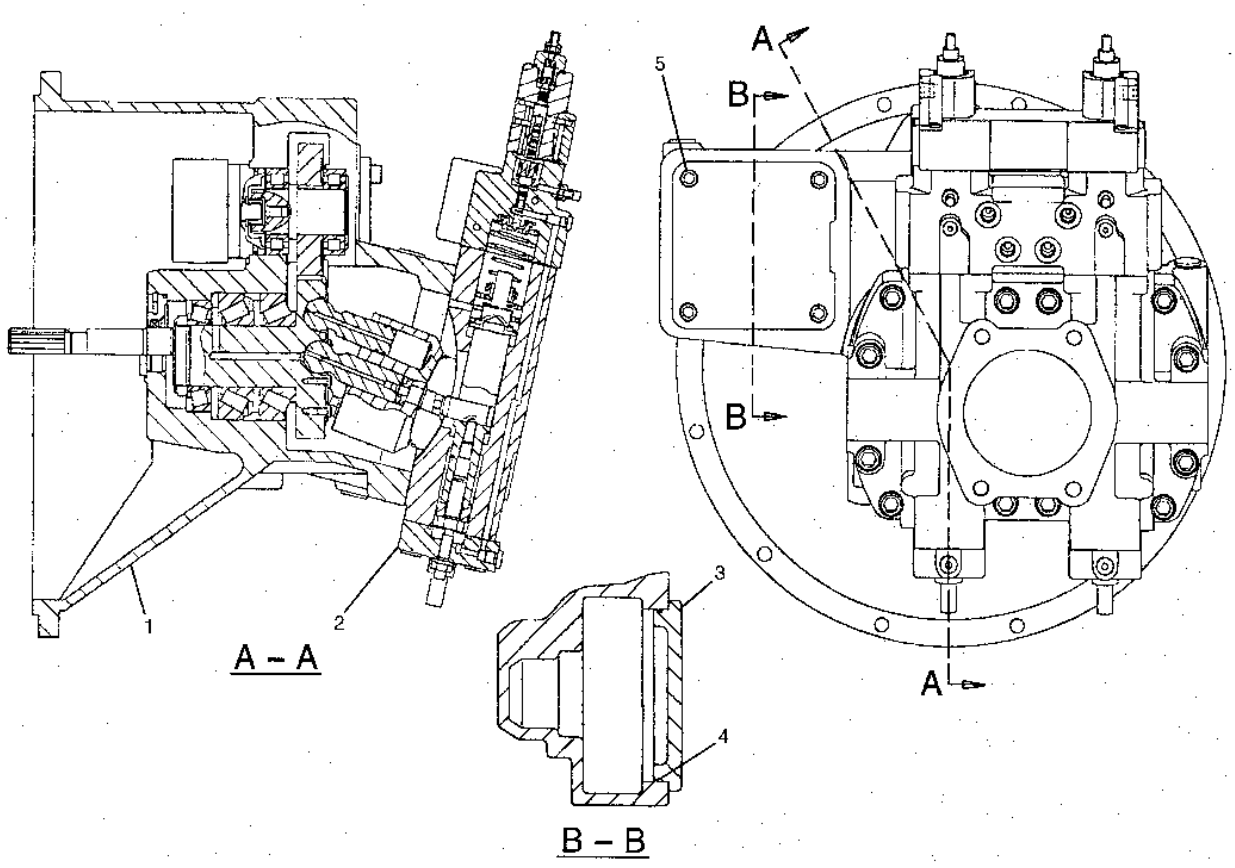


GRAPHIC #1

h79296e

# 1843955 PUMP GP-HYDRAULIC

PART OF 1232235-Page 247
1336912-Page 248.01, 1843956-Page 250, 1843957-Page 251

**Key:** Y - SEE SEPARATE ILLUSTRATION

**SMCS**

| NOTE | REF NO | GRAPHIC REF | PART NUMBER | QTY | PART NAME 1 2 3 4 5 6 (PRODUCT LEVEL) | PRICE USD |
|---|---|---|---|---|---|---|
| Y | 1 | | 184-3957 | 1 | ROTATING GP | |
| | 2 | | 5I-4471 | 1 | PLUG | |
| Y | 3 | | 184-3956 | 1 | ROTATING GP | |
| | 4 | | 6E-1572 | 1 | SEAL | |
| | 5 | | 5I-4468 | 1 | COVER | |
| | 6 | | 9X-6574 | 1 | RING | |
| | 7 | | 5H-6734 | 1 | SEAL-O-RING (ID=113.89mm) | |
| | 8 | | 126-2148 | 1 | HOUSING | |
| Y | 9 | | 133-6912 | 1 | PUMP GP | |
| | 10 | | 5I-4470 | 2 | SHAFT | |
| | 11 | | 5I-4472 | 2 | BEARING AS | |
| | 12 | | 7Y-5270 | 1 | KEY | |
| | 13 | | 5I-4469 | 1 | GEAR | |
| | 14 | | 081-3801 | 3 | PLUG | |

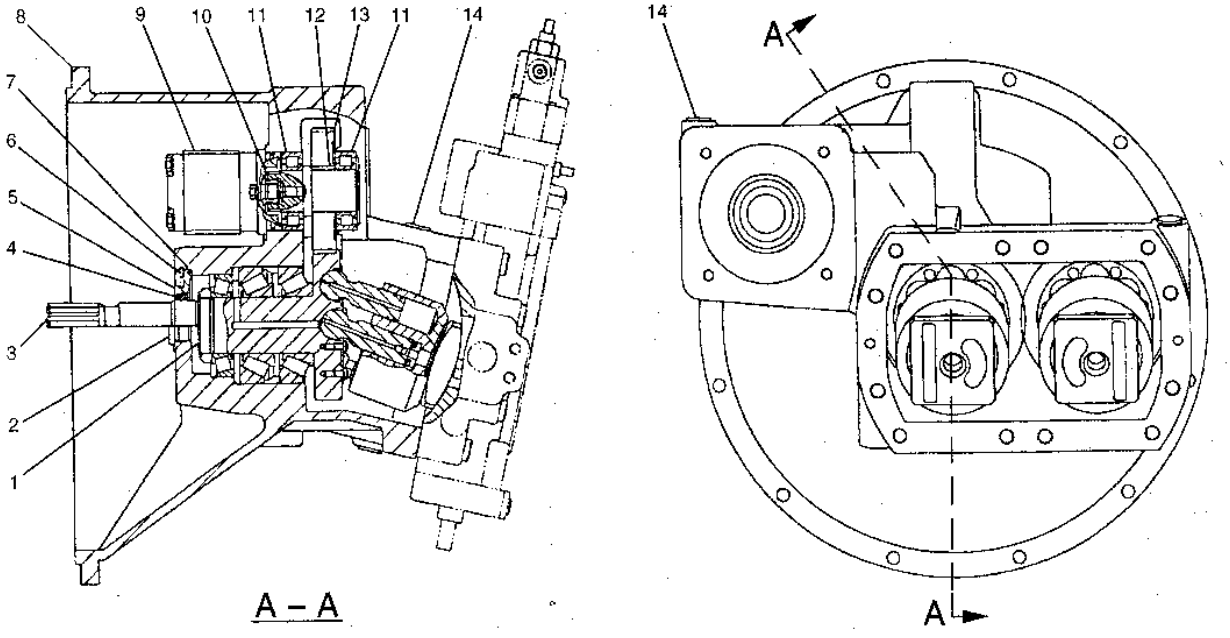


GRAPHIC #1

h74868e

# 1336912 PUMP GP-GEAR

1 SECTION
PART OF 1843955-Page 248

**Key:** Y - Separate Illustration

**SMCS**

| NOTE | REF NO | GRAPHIC REF | PART NUMBER | QTY | PART NAME 1 2 3 4 5 6 (PRODUCT LEVEL) | PRICE USD |
|---|---|---|---|---|---|---|
| Y | | | 126-2147 | 1 | PUMP GP (GEAR) | |
| | | | | | -OR- | |
| | | | 133-6896 | 1 | PUMP GP (GEAR) | |

# 1336898 PUMP GP-GEAR

1 SECTION
PART OF 1336912-Page 248.01
1336907-Page 249

**Key:** Y - SEPARATE ILLUSTRATION

**SMCS**

| NOTE | REF NO | GRAPHIC REF | PART NUMBER | QTY | PART NAME 1 2 3 4 5 6 (PRODUCT LEVEL) | PRICE USD |
|---|---|---|---|---|---|---|
| Y | 1 | | 133-6907 | 1 | PUMP GP | |
| | 2 | | 9X-6032 | 1 | BOLT (L=30mm) | |
| | 3 | | 2H-6184 | 1 | SEAL-O-RING (ID=78.97mm) | |
| | 4 | | 8T-0342 | 1 | BOLT (L=80mm) | |
| | 5 | | 7J-9933 | 1 | SEAL-O-RING (ID=21.89mm) | |
| | 6 | | 7J-9108 | 1 | SEAL-O-RING (ID=15.72mm) | |

## 1336898 PUMP GP-GEAR

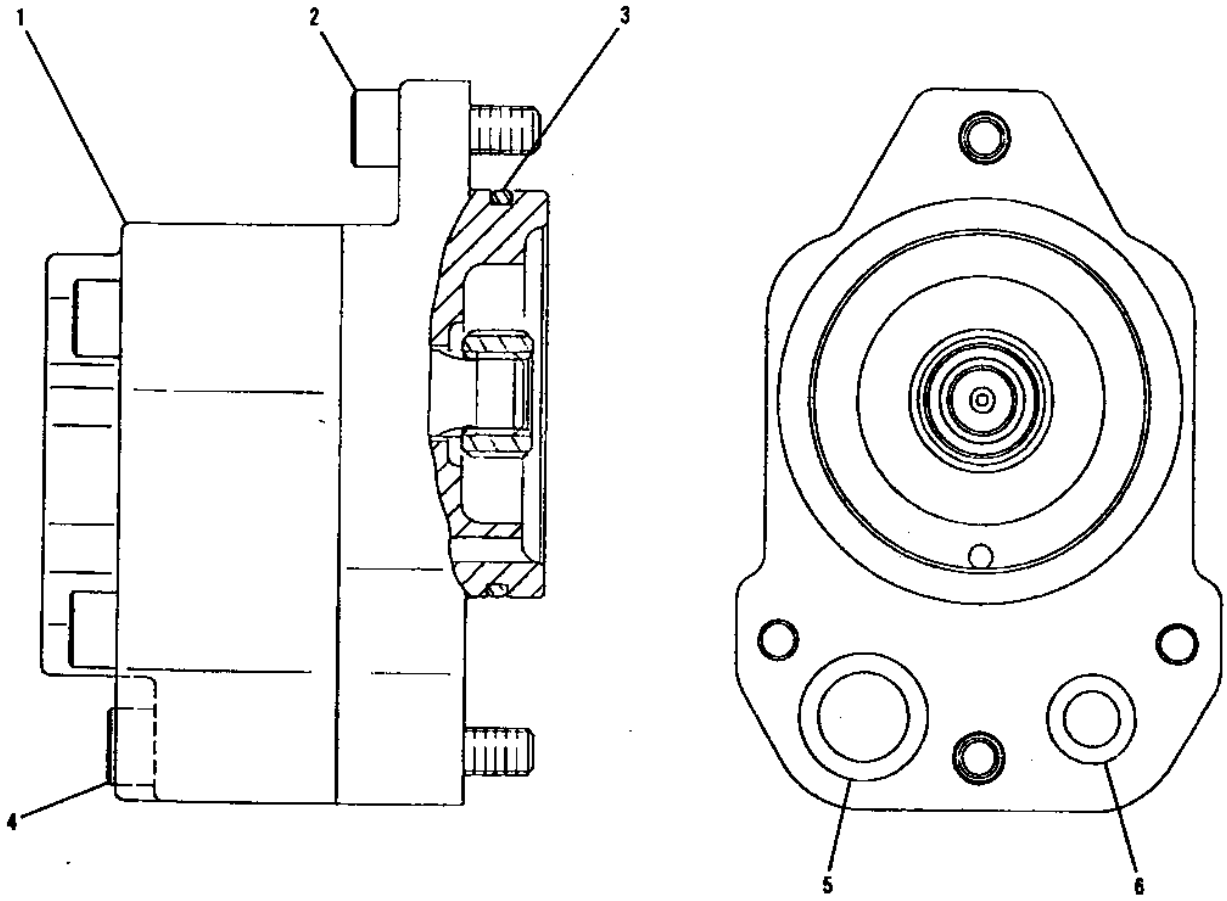


| NOTE | No. | PART No. | QTY | PART NAME | NOTE | No. | PART No. | QTY | PART NAME |
|---|---|---|---|---|---|---|---|---|---|
| Y | 1 | 133-6907 | 1 | PUMP GP | | | | | |
| | 2 | 9X-6032 | 1 | BOLT (L=30mm) | | | | | |
| | 3 | 2H-6184 | 1 | SEAL-O-RING (ID=78.97mm) | | | | | |
| | 4 | 8T-0342 | 1 | BOLT (L=80mm) | | | | | |
| | 5 | 7J-9933 | 1 | SEAL-O-RING (ID=21.89mm) | | | | | |
| | 6 | 7J-9108 | 1 | SEAL-O-RING (ID=15.72mm) | | | | | |

Y-SEE SEPARATE ILLUSTRATION

H56362E

GRAPHIC #1 h56362e

# 1262147 PUMP GP-GEAR

1 SECTION
PART OF 1336912-Page 248.01

**Key:**

**SMCS**

| NOTE | REF NO | GRAPHIC REF | PART NUMBER | QTY | PART NAME 1 2 3 4 5 6 (PRODUCT LEVEL) | PRICE USD |
|---|---|---|---|---|---|---|
| | 1 | | 2H-6184 | 1 | SEAL-O-RING (ID=78.97mm) | |
| | 2 | | 8T-4136 | 2 | BOLT (L=25mm) | |
| | 3 | | 6V-3922 | 1 | SEAL-O-RING (ID=18.72mm) | |
| | 4 | | 7J-9933 | 1 | SEAL-O-RING (ID=21.89mm) | |

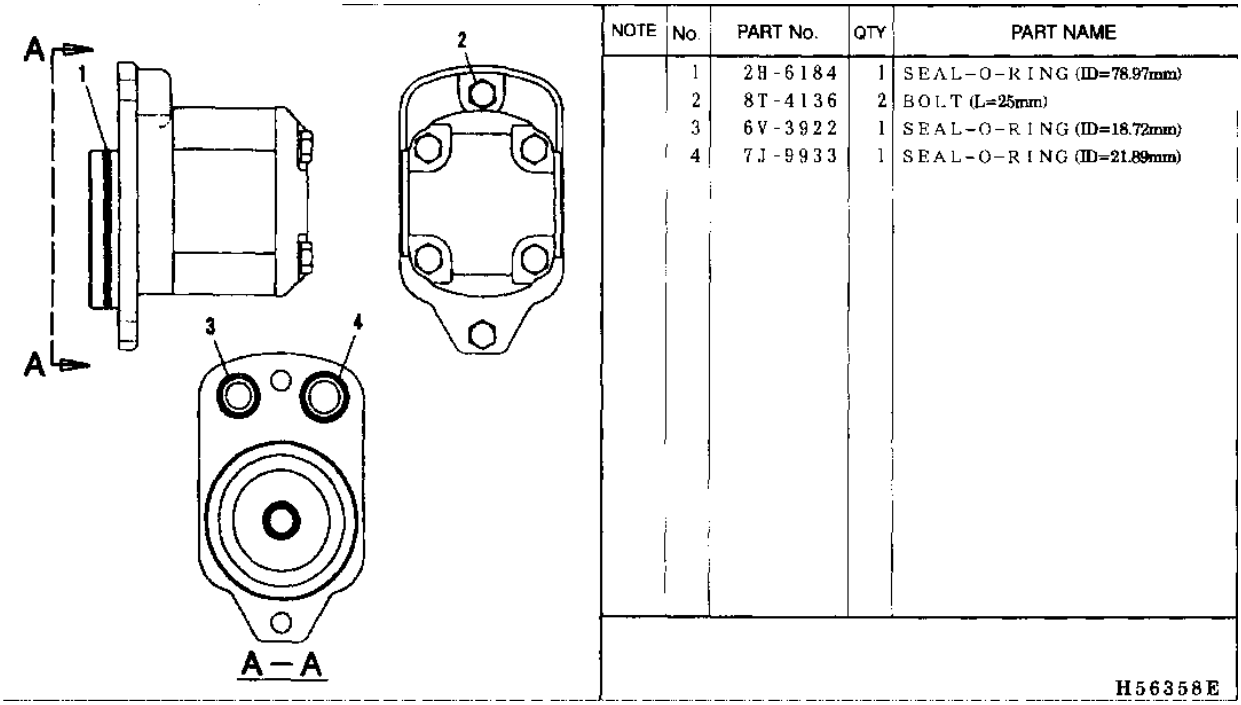


GRAPHIC #1 h56358e

# 1336907 PUMP GP-GEAR

1 SECTION
PART OF 1336898-Page 248.02

**Key:**

**SMCS**

| NOTE | REF NO | GRAPHIC REF | PART NUMBER | QTY | PART NAME 1 2 3 4 5 6 (PRODUCT LEVEL) | PRICE USD |
|---|---|---|---|---|---|---|
| | 1 | | 8T-6466 | 4 | BOLT (L=60mm) | |
| | 2 | | 130-7114 | 1 | SEAL | |

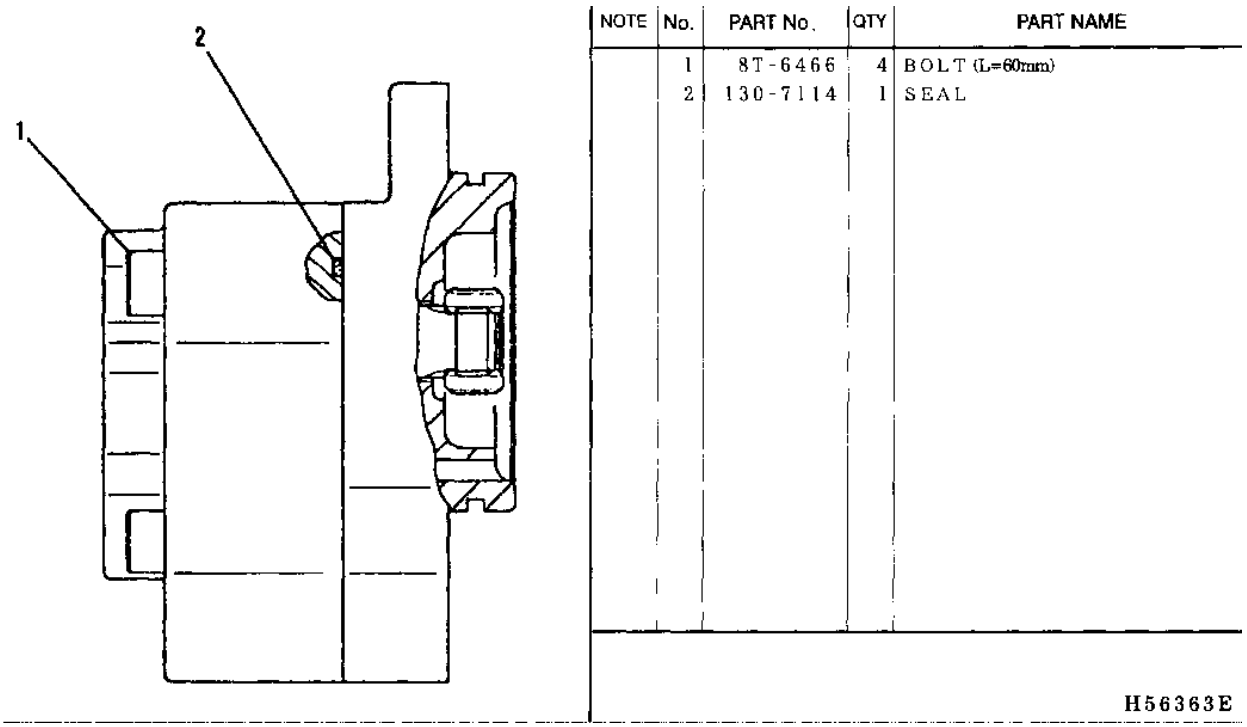


GRAPHIC #1 h56363e

# 1843956 ROTATING GP-PUMP

PART OF 1843955-Page 248
1425520-Page 252

**Key:** B - USE AS REQUIRED, Y - SEE SEPARATE ILLUSTRATION

**SMCS**

| NOTE | REF NO | GRAPHIC REF | PART NUMBER | QTY | PART NAME 1 2 3 4 5 6 (PRODUCT LEVEL) | PRICE USD |
|---|---|---|---|---|---|---|
| | 1 | | 176-5068 | 1 | NUT | |
| | 2 | | 5I-4478 | 1 | BEARING AS | |
| B | 3 | | 5I-4480 | 1 | SHIM (T=6.20mm) | |
| B | | | 5I-4481 | 1 | SHIM (T=6.30mm) | |
| B | | | 5I-4482 | 1 | SHIM (T=6.40mm) | |
| B | | | 5I-4483 | 1 | SHIM (T=6.50mm) | |
| B | | | 5I-4484 | 1 | SHIM (T=6.60mm) | |
| | 4 | | 188-4103 | 1 | BEARING AS | |
| | 5 | | 184-3958 | 1 | SHAFT | |
| Y | 6 | | 142-5520 | 1 | ROTATING GP | |
| | 7 | | 5I-4486 | 1 | PLATE | |

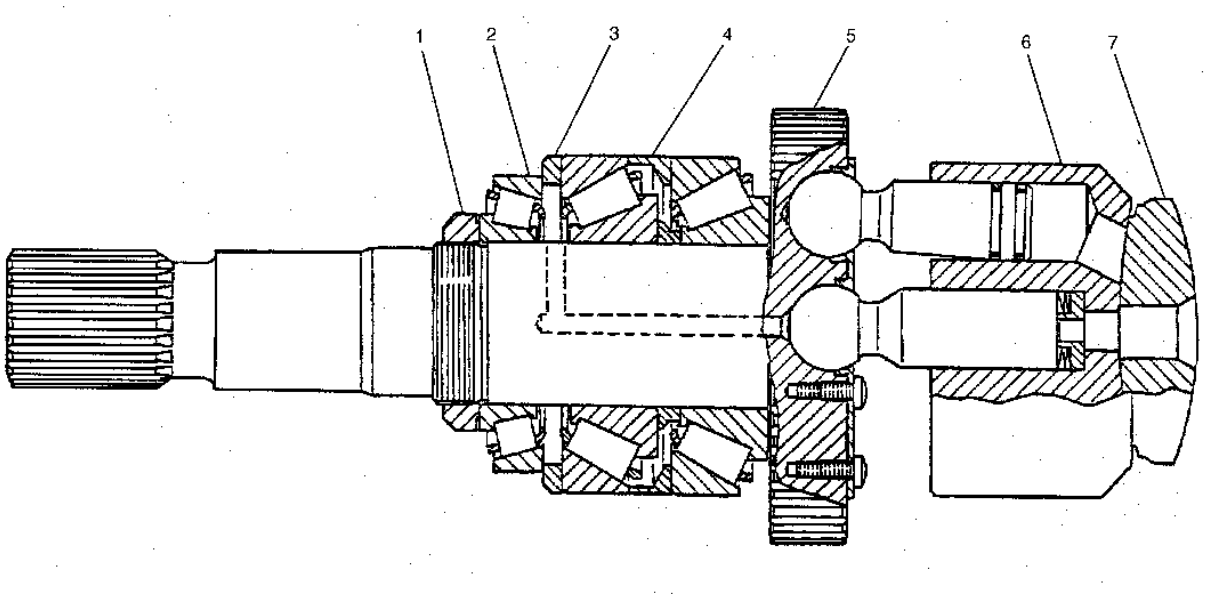


GRAPHIC #1 h74870e

# 1843957 ROTATING GP-PUMP

PART OF 1843955-Page 248
1425520-Page 252

**Key:** B - USE AS REQUIRED, Y - SEE SEPARATE ILLUSTRATION

**SMCS**

| NOTE | REF NO | GRAPHIC REF | PART NUMBER | QTY | PART NAME 1 2 3 4 5 6 (PRODUCT LEVEL) | PRICE USD |
|---|---|---|---|---|---|---|
| | 1 | | 176-5068 | 1 | NUT | |
| | 2 | | 5I-4478 | 1 | BEARING AS | |
| B | 3 | | 5I-4480 | 1 | SHIM (T=6.20mm) | |
| B | | | 5I-4481 | 1 | SHIM (T=6.30mm) | |
| B | | | 5I-4482 | 1 | SHIM (T=6.40mm) | |
| B | | | 5I-4483 | 1 | SHIM (T=6.50mm) | |
| B | | | 5I-4484 | 1 | SHIM (T=6.60mm) | |
| | 4 | | 188-4103 | 1 | BEARING AS | |
| | 5 | | 184-3959 | 1 | SHAFT | |
| Y | 6 | | 142-5520 | 1 | ROTATING GP | |
| | 7 | | 5I-4476 | 1 | PLATE | |

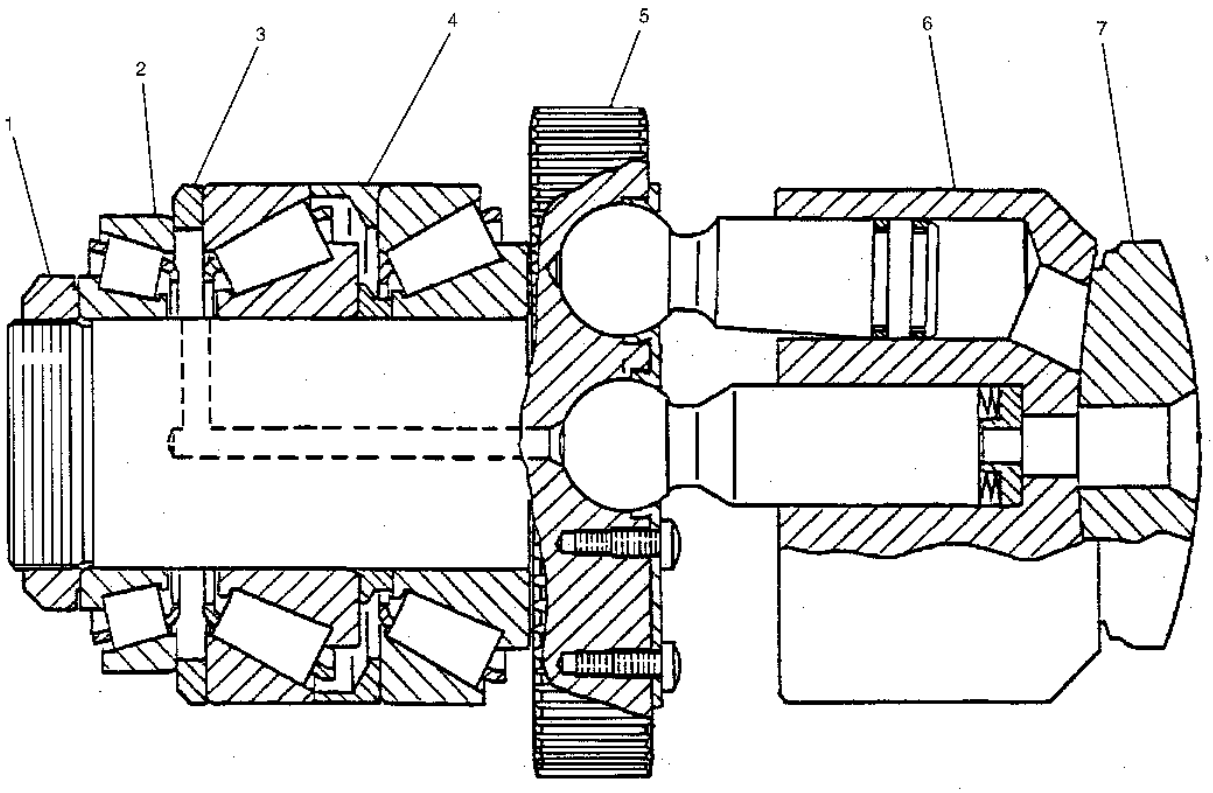


GRAPHIC #1 h74869e

# 1425520 ROTATING GP-PUMP

PART OF 1843956-Page 250, 1843957-Page 251

**Key:** B - USE AS REQUIRED

**SMCS**

| NOTE | REF NO | GRAPHIC REF | PART NUMBER | QTY | PART NAME 1 2 3 4 5 6 (PRODUCT LEVEL) | PRICE USD |
|---|---|---|---|---|---|---|
| B | 1 | | 5I-8405 | 1 | SPACER (T=9.75mm) | |
| B | | | 5I-8406 | 1 | SPACER (T=9.85mm) | |
| B | | | 5I-8407 | 1 | SPACER (T=9.95mm) | |
| B | | | 5I-8408 | 1 | SPACER (T=10.05mm) | |
| B | | | 5I-8409 | 1 | SPACER (T=10.15mm) | |
| B | | | 5I-8410 | 1 | SPACER (T=10.25mm) | |
| B | | | 5I-8411 | 1 | SPACER (T=10.35mm) | |
| B | | | 5I-8412 | 1 | SPACER (T=10.45mm) | |
| | 2 | | 5I-8402 | 14 | RING | |
| | 3 | | 5I-8403 | 4 | SPRING | |
| | 4 | | 5I-4311 | 1 | CYLINDER | |
| | 5 | | 5I-8404 | 1 | PLATE-RETAINING | |
| | 6 | | 113-4420 | 14 | SCREW | |
| | 7 | | 5I-4403 | 1 | PIN (CENTER) | |
| | 8 | | 5I-8401 | 7 | PISTON | |

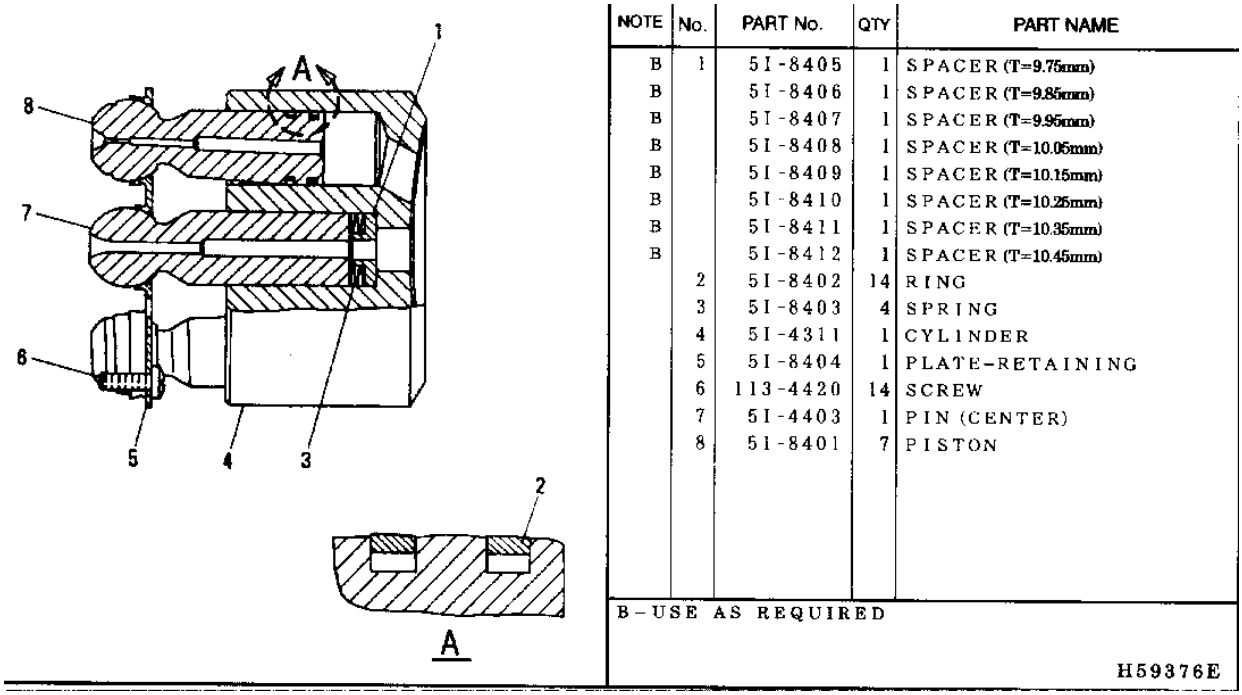


| NOTE | No. | PART No. | QTY | PART NAME |
|---|---|---|---|---|
| B | 1 | 5I-8405 | 1 | SPACER (T=9.75mm) |
| B | | 5I-8406 | 1 | SPACER (T=9.85mm) |
| B | | 5I-8407 | 1 | SPACER (T=9.95mm) |
| B | | 5I-8408 | 1 | SPACER (T=10.05mm) |
| B | | 5I-8409 | 1 | SPACER (T=10.15mm) |
| B | | 5I-8410 | 1 | SPACER (T=10.25mm) |
| B | | 5I-8411 | 1 | SPACER (T=10.35mm) |
| B | | 5I-8412 | 1 | SPACER (T=10.45mm) |
| | 2 | 5I-8402 | 14 | RING |
| | 3 | 5I-8403 | 4 | SPRING |
| | 4 | 5I-4311 | 1 | CYLINDER |
| | 5 | 5I-8404 | 1 | PLATE-RETAINING |
| | 6 | 113-4420 | 14 | SCREW |
| | 7 | 5I-4403 | 1 | PIN (CENTER) |
| | 8 | 5I-8401 | 7 | PISTON |

B-USE AS REQUIRED

H59376E

GRAPHIC #1 h59376e

# 1211374 HEAD GP-PUMP CONTROL

PART OF 1232235-Page 247
1211377-Page 254, 1211376-Page 256

**Key:** Y - SEE SEPARATE ILLUSTRATION

**SMCS**

| NOTE | REF NO | GRAPHIC REF | PART NUMBER | QTY | PART NAME 1 2 3 4 5 6 (PRODUCT LEVEL) | PRICE USD |
|---|---|---|---|---|---|---|
| Y | 1 | | 121-1376 | 2 | COVER GP | |
| | 2 | | 5I-8438 | 4 | RING | |
| | 3 | | 121-1467 | 2 | PISTON | |
| | 4 | | 5I-8430 | 2 | ROD | |
| | 5 | | 159-7666 | 2 | DOWEL | |
| | 6 | | 115-3688 | 1 | GASKET | |
| | 7 | | 121-1449 | 2 | PISTON | |
| | 8 | | 121-1450 | 2 | SPACER | |
| | 9 | | 5I-8432 | 2 | SPRING | |
| Y | 10 | | 121-1377 | 1 | HEAD GP | |
| | 11 | | 124-9884 | 2 | PIN | |
| | 12 | | 7X-2553 | 2 | BOLT (L=40mm) | |
| | 13 | | 3E-8008 | 4 | BOLT (L=90mm) | |
| | 14 | | 121-1378 | 1 | HOUSING | |
| | 15 | | 8T-2393 | 8 | BOLT (L=60mm) | |
| | 16 | | 123-2017 | 1 | PLUG | |
| | 17 | | 120-4394 | 1 | PLUG | |

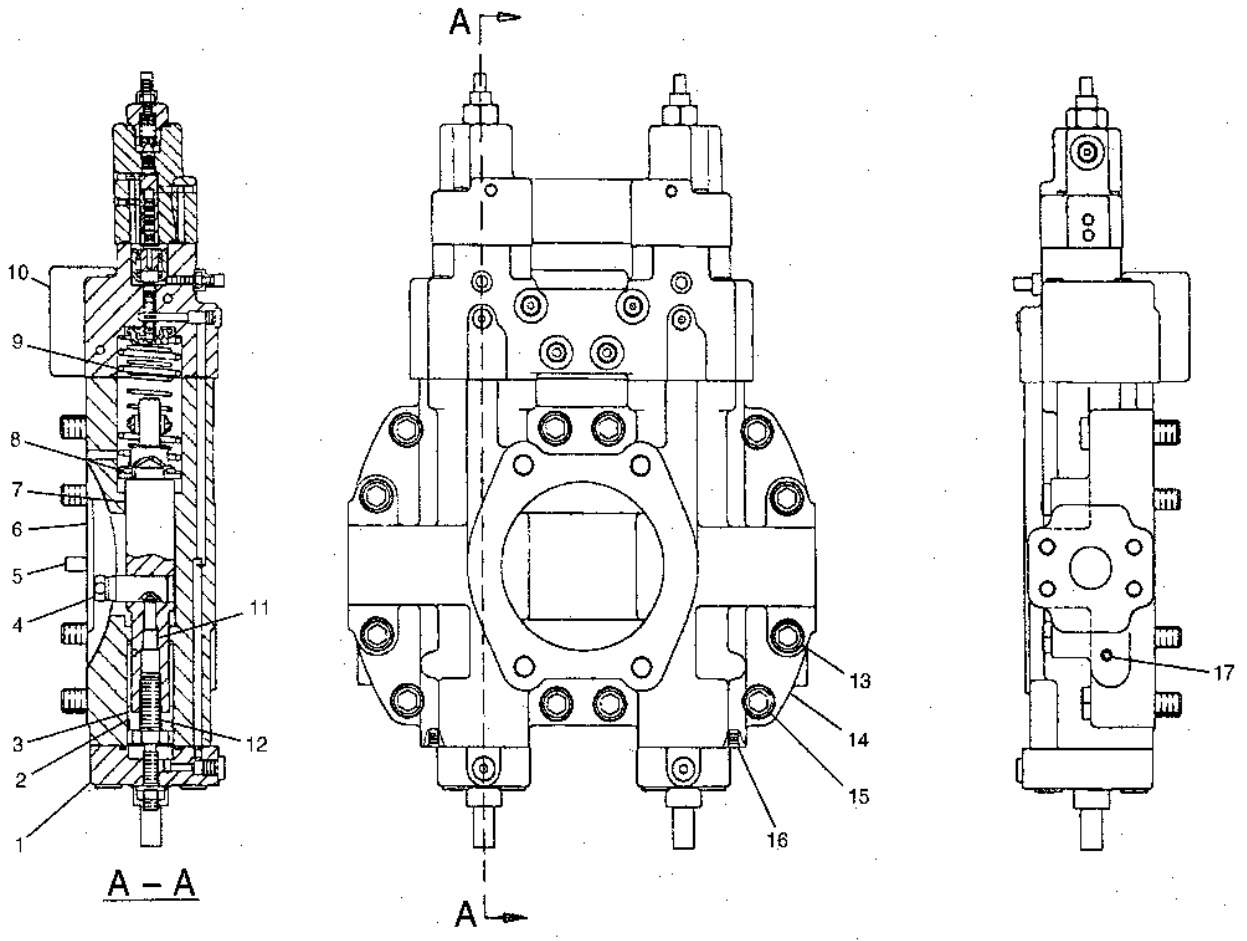


GRAPHIC #1

h79297e

# 1211377 HEAD GP-PUMP CONTROL

PART OF 1211374-Page 253
1211486-Page 255

**Key:** Y - SEE SEPARATE ILLUSTRATION

**SMCS**

| NOTE | REF NO | GRAPHIC REF | PART NUMBER | QTY | PART NAME 1 2 3 4 5 6 (PRODUCT LEVEL) | PRICE USD |
|---|---|---|---|---|---|---|
| | 1 | | 123-2017 | 8 | PLUG | |
| | 2 | | 3G-0785 | 1 | BALL | |
| | 3 | | 123-2020 | 1 | BUSH | |
| | 4 | | 123-2021 | 1 | SEAT | |
| | 5 | | 033-6039 | 4 | SEAL-O-RING (ID=9.25mm) | |
| | 6 | | 6V-5196 | 6 | BOLT (L=80mm) | |
| | 7 | | 121-1487 | 1 | COVER | |
| | 8 | | 081-3959 | 1 | PLUG | |
| | 9 | | 7Y-5269 | 2 | SEAL-O-RING (ID=56.82mm) | |
| | 10 | | 121-1488 | 2 | SPACER | |
| | 11 | | 162-0922 | 2 | PISTON | |
| | 12 | | 123-1981 | 2 | SEAT | |
| Y | 13 | | 121-1486 | 1 | HEAD GP | |
| | 14 | | 123-1980 | 2 | SPRING | |
| | 15 | | 087-4759 | 2 | SETSCREW | |
| | 16 | | 9T-4367 | 2 | CAP AS | |
| | 17 | | 9T-3853 | 2 | LOCKNUT | |
| | 18 | | 9T-3928 | 2 | PLUG | |
| | 19 | | 121-1493 | 2 | SPRING | |
| | 20 | | 171-3315 | 2 | SPACER | |
| | 21 | | 121-1494 | 2 | SPRING | |

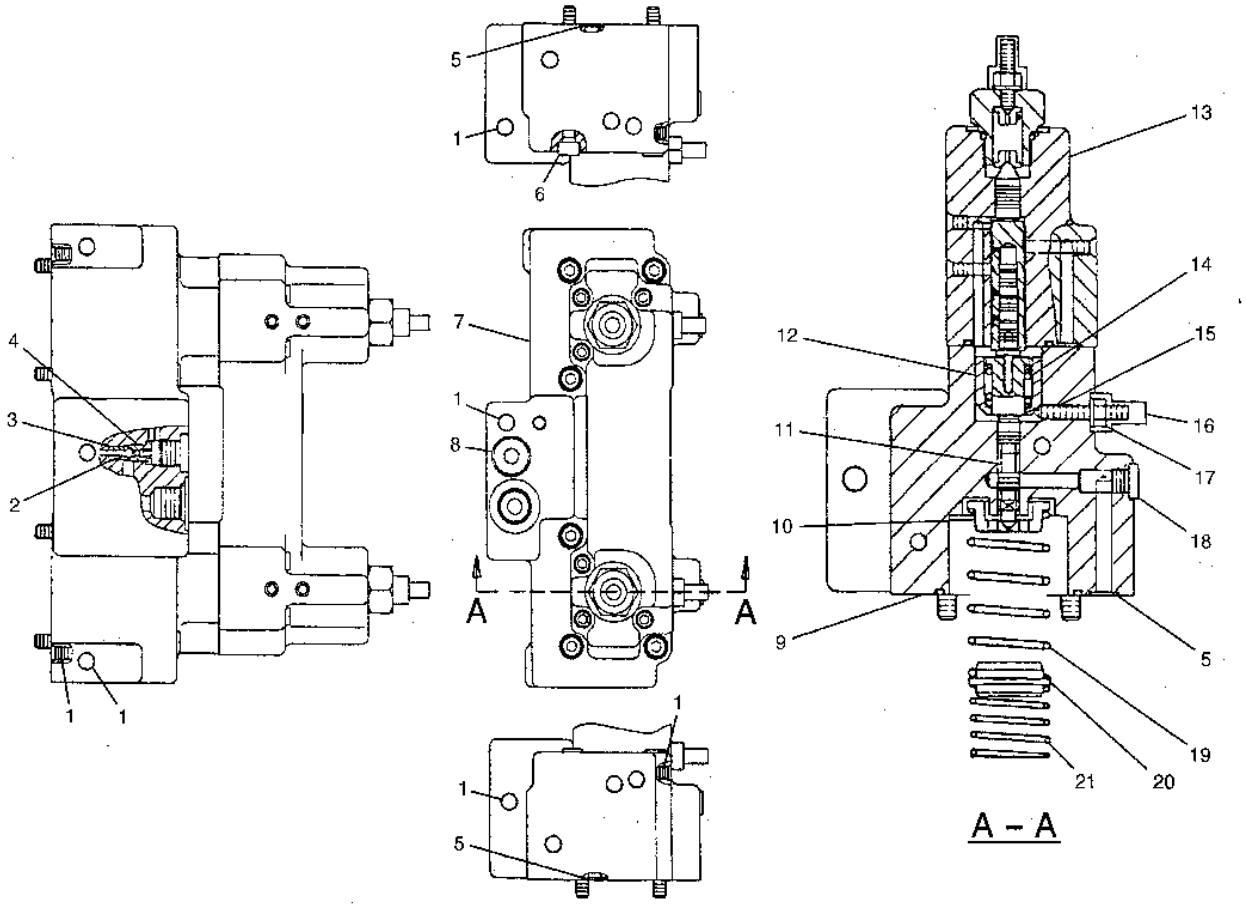

## 1211377 HEAD GP-PUMP CONTROL

GRAPHIC #1

h79298e

# 1211486 HEAD GP-PUMP CONTROL

PART OF 1211377-Page 254

**Key:**

**SMCS**

| NOTE | REF NO | GRAPHIC REF | PART NUMBER | QTY | PART NAME 1 2 3 4 5 6 (PRODUCT LEVEL) | PRICE USD |
|---|---|---|---|---|---|---|
| | 1 | | 120-4394 | 4 | PLUG | |
| | 2 | | 121-1496 | 2 | PISTON | |
| | 3 | | 121-1497 | 2 | PISTON | |
| | 4 | | 121-1498 | 2 | PISTON | |
| | 5 | | 099-5735 | 4 | SEAT | |
| | 6 | | 4I-5851 | 2 | COVER | |
| | 7 | | 123-2025 | 2 | SPRING | |
| | 8 | | 4J-5351 | 2 | COVER | |
| | 9 | | 123-2017 | 1 | PLUG | |
| | 10 | | 9T-4367 | 2 | CAP AS | |
| | 11 | | 099-5742 | 2 | SETSCREW | |
| | 12 | | 9T-3853 | 2 | CAP AS | |
| | 13 | | 4J-5477 | 4 | SEAL-O-RING (OD=11.23mm) | |
| | 14 | | 6V-8218 | 2 | SEAL-O-RING (ID=32.99mm) | |
| | 15 | | 8C-6965 | 6 | BOLT (L=45mm) | |
| | 16 | | 099-3094 | 2 | DOWEL | |
| | 17 | | 191-3107 | 2 | PIN | |
| | 18 | | 126-2072 | 1 | PLUG | |

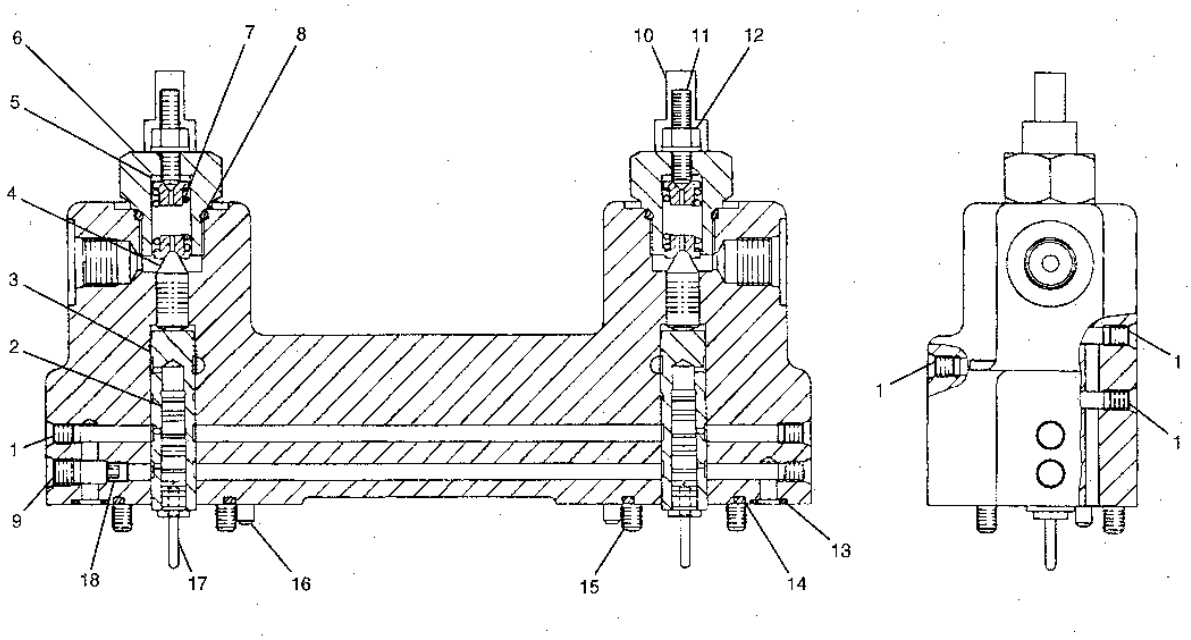


GRAPHIC #1

h79299e

# 1231376 COVER GP-PUMP CONTROL

PART OF 1211374-Page 253

**Key:**

**SMCS**

| NOTE | REF NO | GRAPHIC REF | PART NUMBER | QTY | PART NAME 1 2 3 4 5 6 (PRODUCT LEVEL) | PRICE USD |
|---|---|---|---|---|---|---|
| | 1 | | 6E-3283 | 1 | LOCKNUT | |
| | 2 | | 9T-3929 | 1 | PLUG AS | |
| | | | 6E-5479 | 1 | SEAL | |
| | 3 | | 033-6039 | 1 | SEAL-O-RING (ID=9.25MM) | |
| | 4 | | 4J-5573 | 1 | SEAL-O-RING (ID=40.87MM) | |
| | 5 | | 121-1585 | 1 | COVER | |
| | 6 | | 8T-2503 | 4 | BOLT (ID=35MM) | |
| | 7 | | 126-1497 | 1 | SETSCREW | |
| | 8 | | 128-8981 | 1 | CAP | |

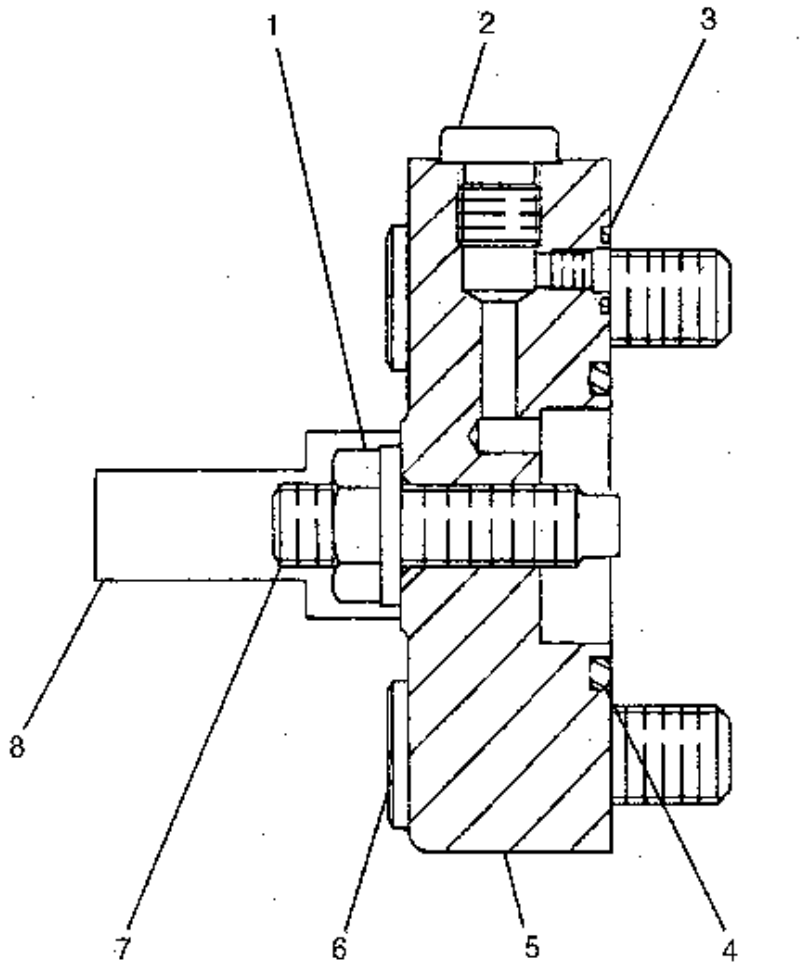


GRAPHIC #1

h84055e

# 1843930 FILTER GP-HYDRAULIC

PART OF 1232160-Page 238

**Key:**

**SMCS**

| NOTE | REF NO | GRAPHIC REF | PART NUMBER | QTY | PART NAME 1 2 3 4 5 6 (PRODUCT LEVEL) | PRICE USD |
|---|---|---|---|---|---|---|
| | 1 | | 184-3931 | 1 | FILTER AS | |
| | 2 | | 103-8236 | 1 | RING | |

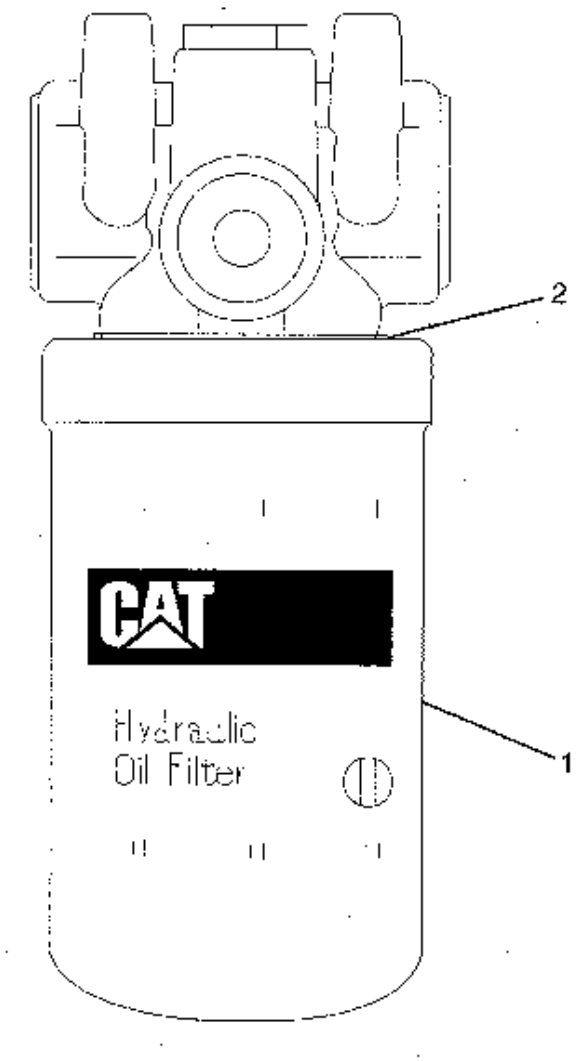


GRAPHIC #1

h69569e

# 1262075 FILTER GP-HYDRAULIC

PART OF 1136736-Page 305

**Key:**

**SMCS**

| NOTE | REF NO | GRAPHIC REF | PART NUMBER | QTY | PART NAME 1 2 3 4 5 6 (PRODUCT LEVEL) | PRICE USD |
|---|---|---|---|---|---|---|
| | 1 | | 093-7521 | 1 | FILTER | |
| | 2 | | 126-2076 | 1 | HEAD AS | |

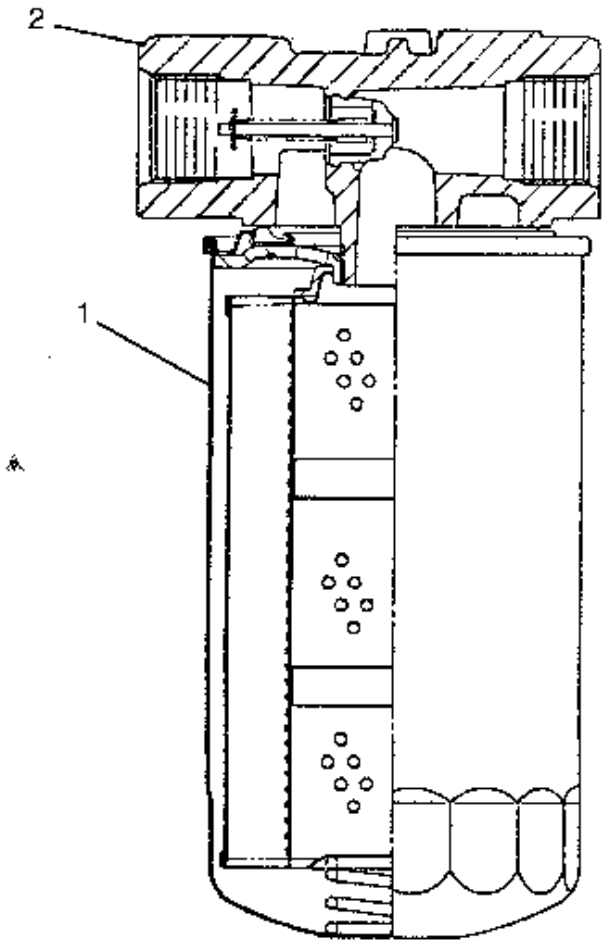


GRAPHIC #1

h66631e

# 1076995 FILTER GP-HYDRAULIC

PART OF 1232160-Page 238
1733503-Page 258.01, 1262080-Page 258.02, 1843997-Page 258.03

**Key:** Y - SEE SEPARATE ILLUSTRATION

**SMCS**

| NOTE | REF NO | GRAPHIC REF | PART NUMBER | QTY | PART NAME 1 2 3 4 5 6 (PRODUCT LEVEL) | PRICE USD |
|---|---|---|---|---|---|---|
| Y | 1 | | 173-3503 | 1 | BLOCK GP | |
| Y | 2 | | 184-3997 | 1 | HOUSING GP | |
| | 3 | | 116-3654 | 1 | COVER | |
| | 4 | | 123-2003 | 2 | SEAL-O-RING (ID=185mm) | |
| Y | 5 | | 126-2080 | 1 | FILTER GP | |
| | 6 | | 8T-4184 | 8 | BOLT (L=45mm) | |
| | 7 | | 8T-4223 | 8 | WASHER-HARD | |
| | 8 | | 8T-0289 | 4 | BOLT (L=20mm) | |
| | 9 | | 129-8034 | 1 | VALVE AS | |
| | 10 | | 143-7966 | 1 | INDICATOR AS | |
| | | | 8T-4127 | 4 | SCREW-MACHINE | |
| | | | 137-3695 | 1 | FILM | |
| | 11 | | 159-7784 | 1 | SEAL-O-RING | |
| | 12 | | 8T-0328 | 4 | WASHER-HARD | |

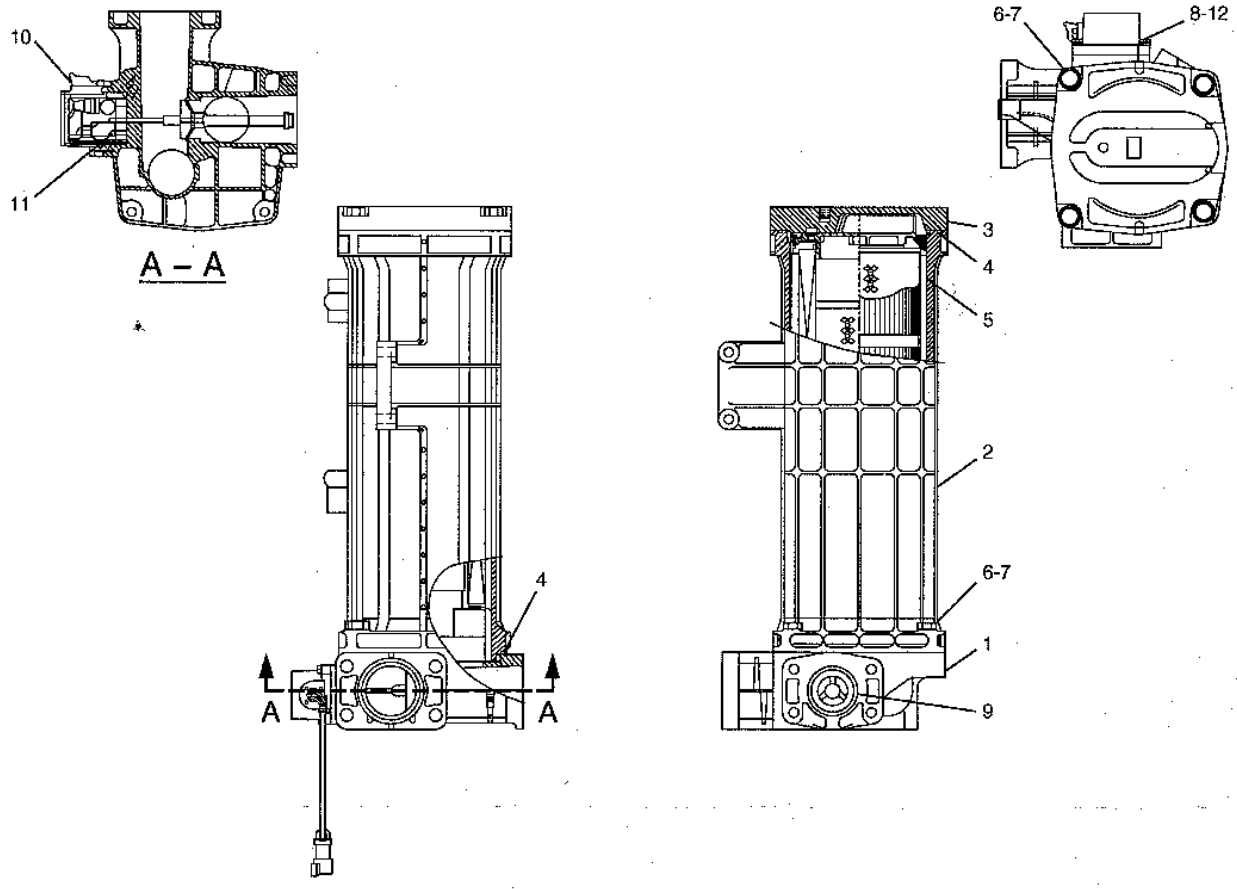


GRAPHIC #1

h72294e

# 1733503 BLOCK GP-HYDRAULIC

PART OF 1076995-Page 258

**Key:**

**SMCS**

| NOTE | REF NO | GRAPHIC REF | PART NUMBER | QTY | PART NAME 1 2 3 4 5 6 (PRODUCT LEVEL) | PRICE USD |
|---|---|---|---|---|---|---|
| | 1 | | 137-3628 | 1 | SHIM (T=0.1mm) | |
| | 2 | | 5L-4758 | 1 | SEAL-O-RING (ID=14.00mm) | |
| | 3 | | 6V-7658 | 2 | SEAL-O-RING (ID=59.40mm) | |
| | 4 | | 173-3505 | 1 | PLATE | |
| | 5 | | 137-3631 | 1 | PACKING | |
| | 6 | | 137-3626 | 1 | BOLT | |
| | 7 | | 173-3506 | 1 | PLUG AS | |
| | 8 | | 3J-1907 | 1 | SEAL-O-RING (ID=11.89mm) | |
| | 9 | | 7Y-5272 | 2 | PIN-SPRING | |

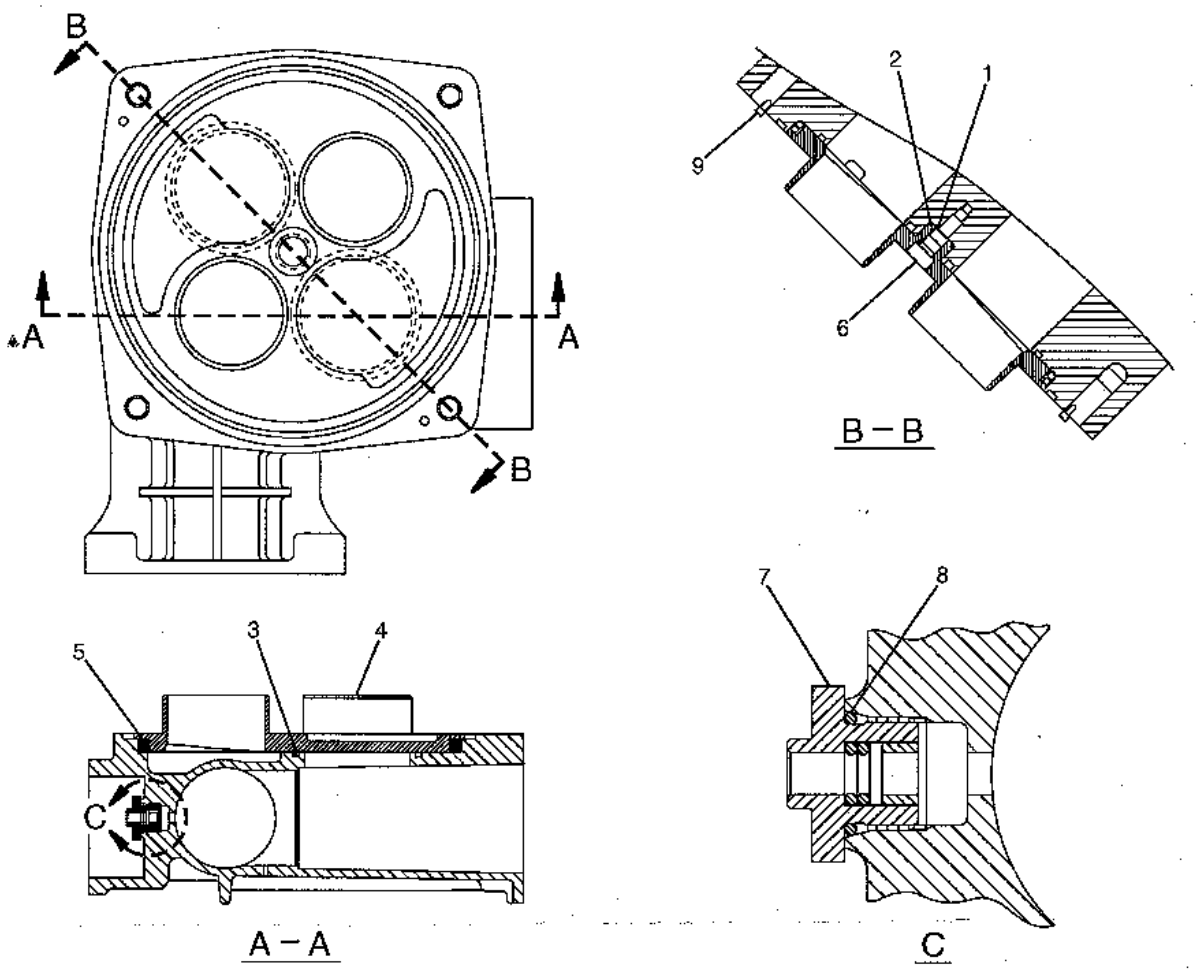


GRAPHIC #1

h67224e

# 1262080 FILTER GP-HYDRAULIC

PART OF 1076995-Page 258

**Key:**

**SMCS**

| NOTE | REF NO | GRAPHIC REF | PART NUMBER | QTY | PART NAME 1 2 3 4 5 6 (PRODUCT LEVEL) | PRICE USD |
|---|---|---|---|---|---|---|
| | 1 | | 137-3814 | 2 | PIN | |
| | 2 | | 126-2081 | 1 | ELEMENT | |
| J | 3 | | 095-1681 | 1 | SEAL-O-RING (ID=144.40mm) | |
| | 4 | | 169-8154 | 1 | RING | |
| J | 5 | | 4J-7533 | 1 | SEAL-O-RING (ID=6.07mm) | |
| J | 6 | | 9S-4180 | 1 | PLUG | |
| | 7 | | 137-3621 | 1 | HANDLE | |
| J | 8 | | 137-3628 | 1 | SHIM (T=0.10mm) | |
| | 9 | | 137-3626 | 1 | BOLT | |
| J | 10 | | 6V-7658 | 2 | SEAL-O-RING (ID=59.40mm) | |
| J | 11 | | 137-3623 | 4 | SEAL-O-RING (ID=55.60mm) | |
| J | 12 | | 137-3624 | 8 | SCREW | |
| J | 13 | | 137-3625 | 2 | PAD | |
| | 14 | | 137-3810 | 1 | FILM (INSTRUCTION) | |
| | 15 | | 137-3627 | 1 | PLATE | |
| | 16 | | 137-3818 | 1 | BASE | |
| J | 17 | | 3E-4297 | 1 | SEAL-O-RING (ID=10.00mm) | |
| J | 18 | | 137-3813 | 6 | BOLT (L=15mm) | |
| J | 19 | | 095-1510 | 6 | SEAL-O-RING (ID=4.80mm) | |
| | | | | | THE FOLLOWING REPAIR KIT IS AVAILABLE: | |
| | | | 137-3635 | 1 | SERVICE KIT (INCLUDES PARTS MARKED J) | |

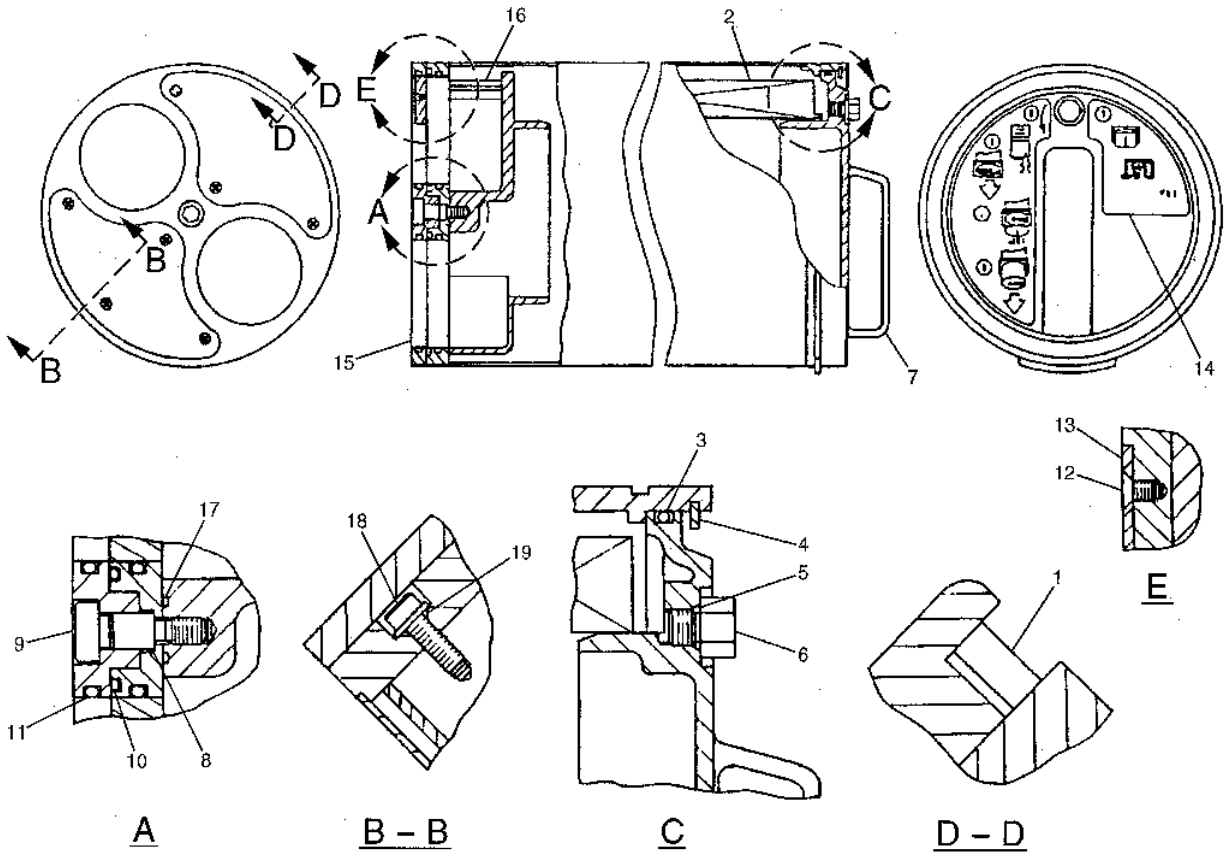


GRAPHIC #1

h69085e

# 1843997 HOUSING GP-FILTER

PART OF 1076995-Page 258

**Key:**

**SMCS**

| NOTE | REF NO | GRAPHIC REF | PART NUMBER | QTY | PART NAME 1 2 3 4 5 6 (PRODUCT LEVEL) | PRICE USD |
|---|---|---|---|---|---|---|
| | 1 | | 137-3634 | 1 | RING | |
| | 2 | | 143-7968 | 8 | SCREW-MACHINE | |

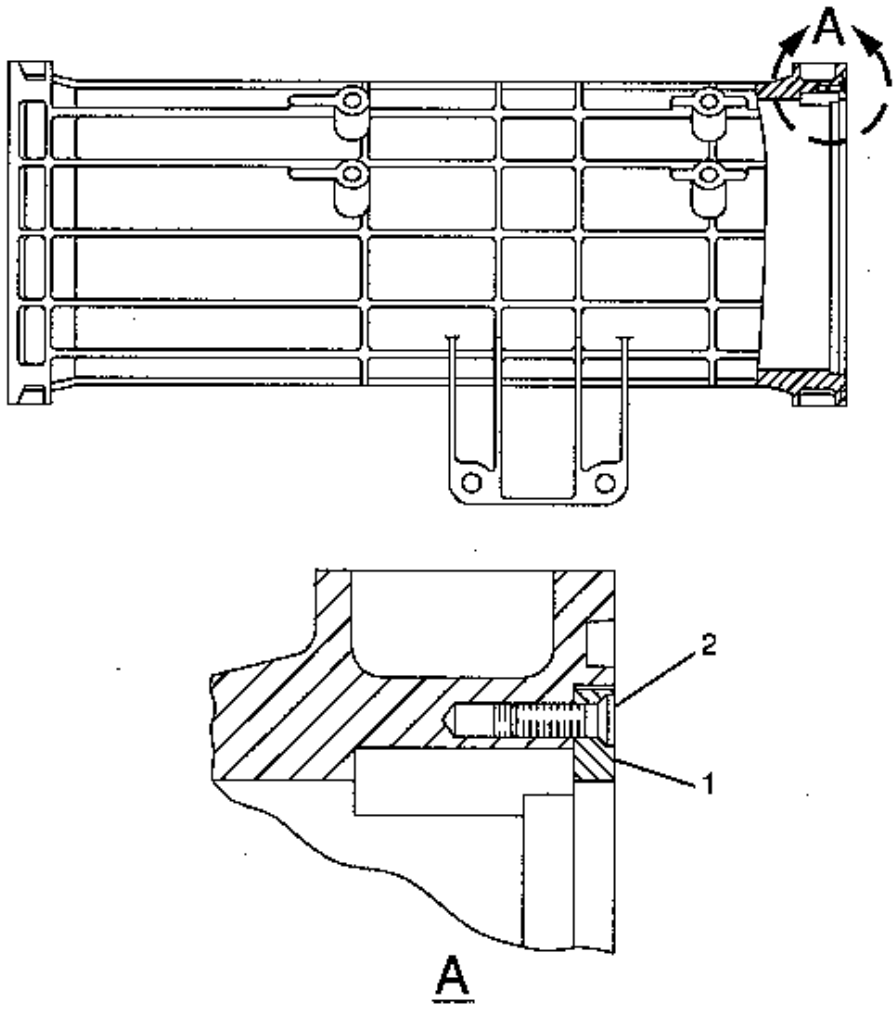


GRAPHIC #1

h72295e

# 1843995 FILTER AR

AN ATTACHMENT

**Key:**

**SMCS**

| NOTE | REF NO | GRAPHIC REF | PART NUMBER | QTY | PART NAME 1 2 3 4 5 6 (PRODUCT LEVEL) | PRICE USD |
|---|---|---|---|---|---|---|
| | | | 188-4142 | 1 | FILTER GP (HYDRAULIC) | |

# 1884148 FILTER GP-HYDRAULIC

PART OF 1843995-Page 258.03A
AN ATTACHMENT

**Key:**

**SMCS**

| NOTE | REF NO | GRAPHIC REF | PART NUMBER | QTY | PART NAME 1 2 3 4 5 6 (PRODUCT LEVEL) | PRICE USD |
|---|---|---|---|---|---|---|
| | 1 | | 137-3814 | 2 | PIN | |
| | 2 | | 179-9806 | 1 | ELEMENT | |
| J | 3 | | 095-1681 | 1 | SEAL-O-RING (ID=144.40mm) | |
| | 4 | | 169-8154 | 1 | RING (RETAINING) | |
| J | 5 | | 4J-7533 | 1 | SEAL-O-RING (ID=6.07mm) | |
| J | 6 | | 9S-4180 | 1 | PLUG | |
| | 7 | | 137-3621 | 1 | HANDLE | |
| J | 8 | | 137-3628 | 1 | SHIM (T=0.1mm) | |
| | 9 | | 137-3626 | 1 | BOLT | |
| J | 10 | | 6V-7658 | 2 | SEAL-O-RING (ID=59.40mm) | |
| J | 11 | | 137-3623 | 4 | SEAL-O-RING (ID=55.60mm) | |
| J | 12 | | 137-3624 | 8 | SCREW | |
| J | 13 | | 137-3625 | 2 | RAD (BLOTTING) | |
| | 14 | | 188-4149 | 1 | FILM (INSTRUCTION) | |
| | 15 | | 137-3627 | 1 | PLATE | |
| | 16 | | 137-3818 | 1 | BASE | |
| J | 17 | | 3E-4297 | 1 | SEAL-O-RING (ID=10.0mm) | |
| J | 18 | | 137-3813 | 6 | BOLT (L=15mm) | |
| J | 19 | | 095-1510 | 6 | SEAL-O-RING (ID=4.8mm) | |
| | | | | | THE FOLLOWING REPAIR KIT IS AVAILABLE: | |
| | | | 137-3635 | 1 | SERVICE KIT (INCLUDES PARTS MARKED J) | |

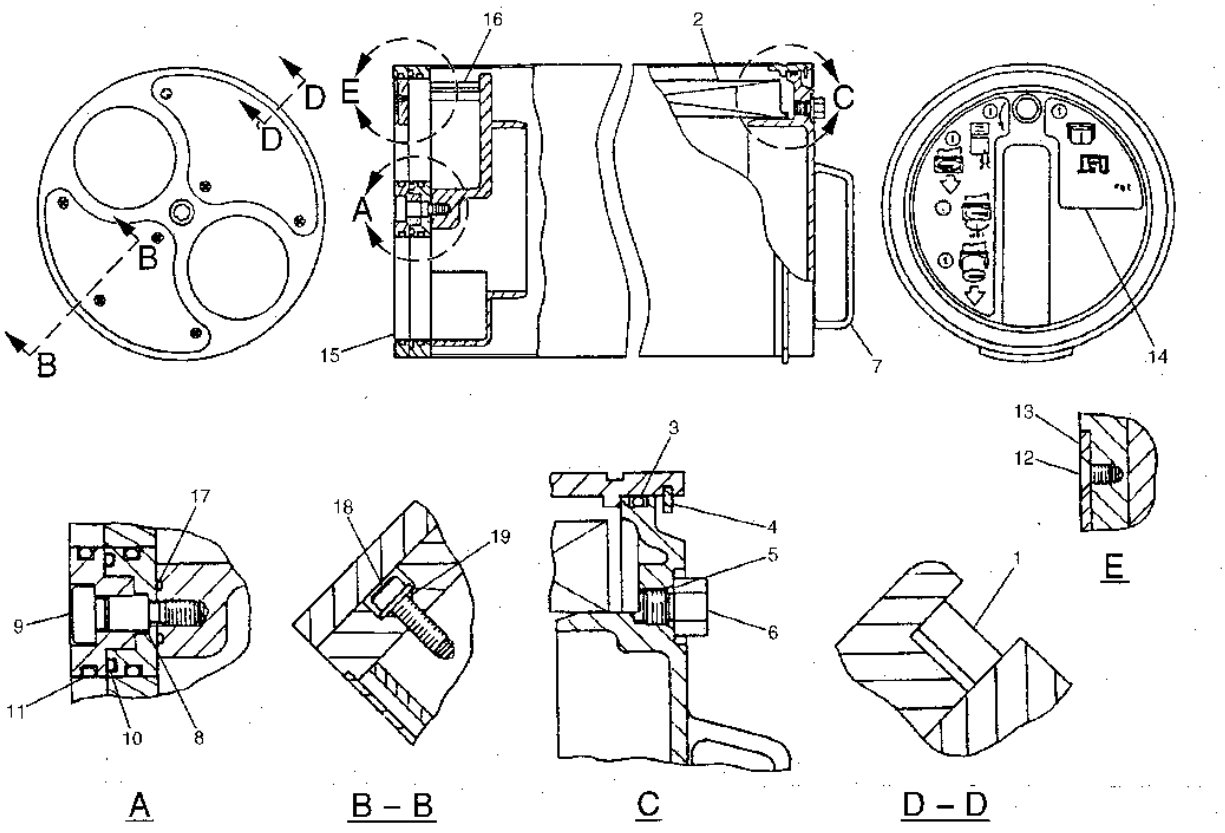


GRAPHIC #1

h69572e

# 0874456 ACCUMULATOR GP

PART OF 1136736-Page 305

**Key:** Y - Separate Illustration

**SMCS**

| NOTE | REF NO | GRAPHIC REF | PART NUMBER | QTY | PART NAME 1 2 3 4 5 6 (PRODUCT LEVEL) | PRICE USD |
|---|---|---|---|---|---|---|
| Y | | | 4I-1536 | 1 | ACCUMULATOR GP | |
| | | | | | -OR- | |
| Y | | | 5I-8416 | 1 | ACCUMULATOR GP | |
| | | | | | -OR- | |
| | | | 7Y-4444 | 1 | ACCUMULATOR GP | |

# 4I1536 ACCUMULATOR GP

PART OF 0874456-Page 258.04

**Key:**

**SMCS**

| NOTE | REF NO | GRAPHIC REF | PART NUMBER | QTY | PART NAME 1 2 3 4 5 6 (PRODUCT LEVEL) | PRICE USD |
|---|---|---|---|---|---|---|
| | 1 | | 4I-5862 | 1 | CAP | |
| | 2 | | 4I-1539 | 1 | CORE | |
| | 3 | | 5P-3779 | 1 | TAG (CYLINDER) | |

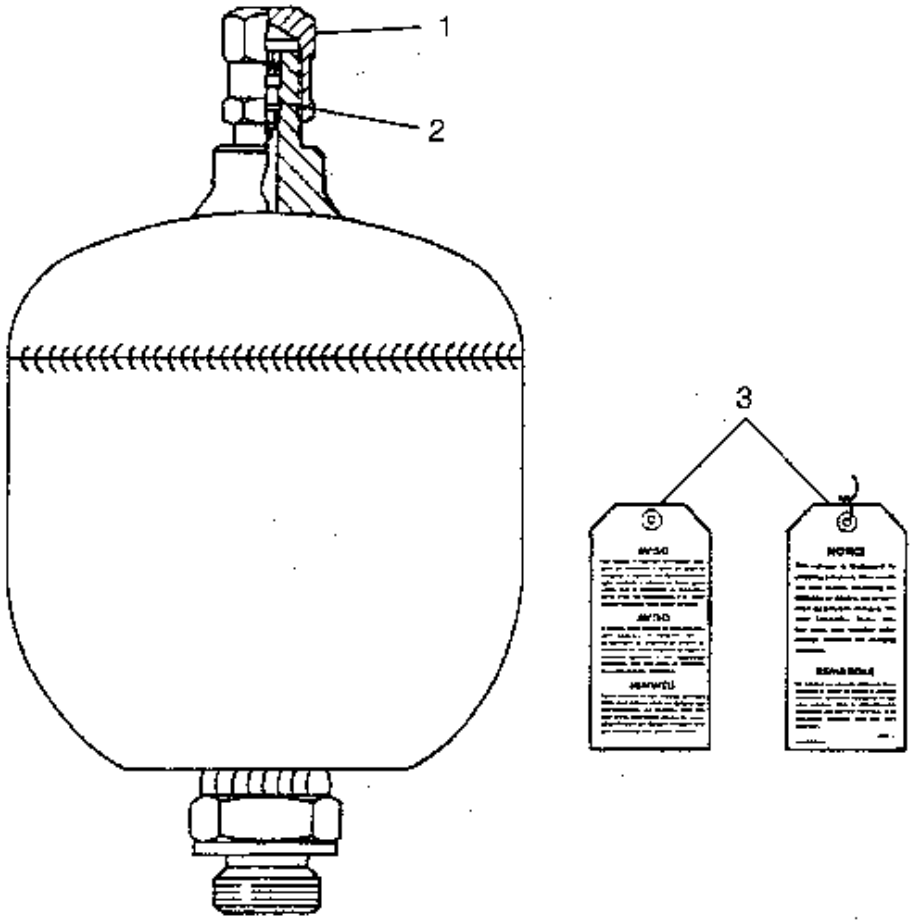


GRAPHIC #1 h50607e

# 5I8416 ACCUMULATOR GP

PART OF 0874456-Page 258.04
0874454-Page 258.06

**Key:** Y - SEE SEPARATE ILLUSTRATION

**SMCS**

| NOTE | REF NO | GRAPHIC REF | PART NUMBER | QTY | PART NAME 1 2 3 4 5 6 (PRODUCT LEVEL) | PRICE USD |
|---|---|---|---|---|---|---|
| | 1 | | 4I-8267 | 1 | CAP | |
| Y | 2 | | 087-4454 | 1 | ACCUMULATOR GP | |

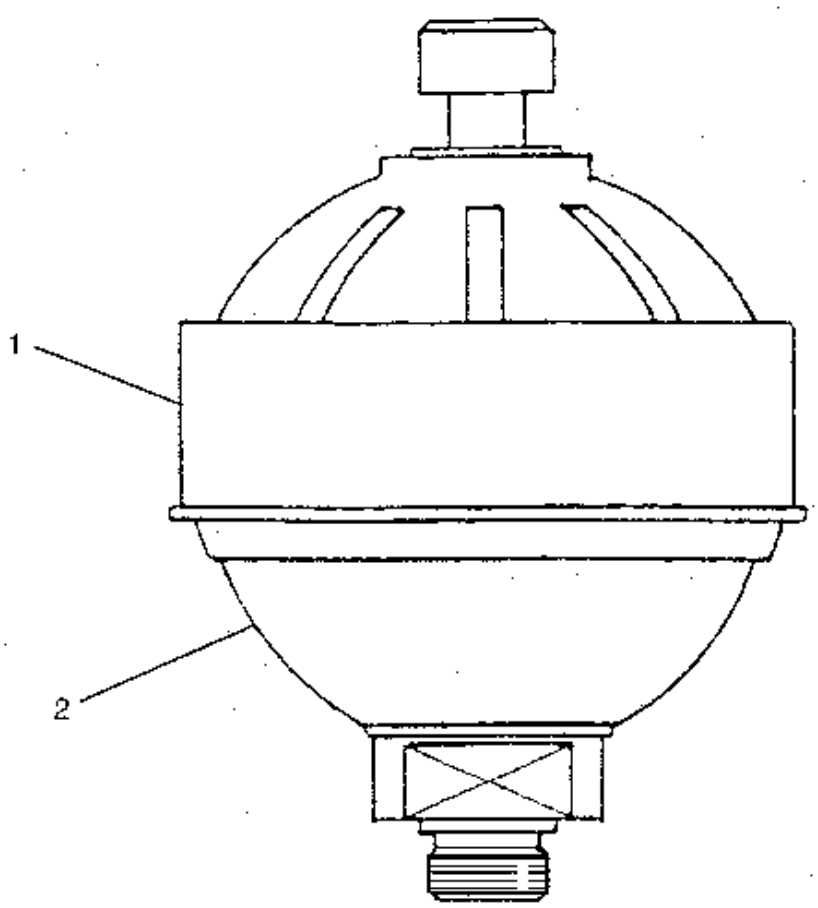


GRAPHIC #1 h50608e

# 0874454 ACCUMULATOR GP

PART OF 5I8416-Page 258.06

**Key:**

**SMCS**

| NOTE | REF NO | GRAPHIC REF | PART NUMBER | QTY | PART NAME 1 2 3 4 5 6 (PRODUCT LEVEL) | PRICE USD |
|---|---|---|---|---|---|---|
| | 1 | | 087-4577 | 1 | SEAL | |
| | 2 | | 087-4576 | 1 | CAP | |
| | 3 | | 087-4575 | 1 | CORE | |
| | 4 | | 5P-3779 | 1 | TAG (CYLINDER) | |

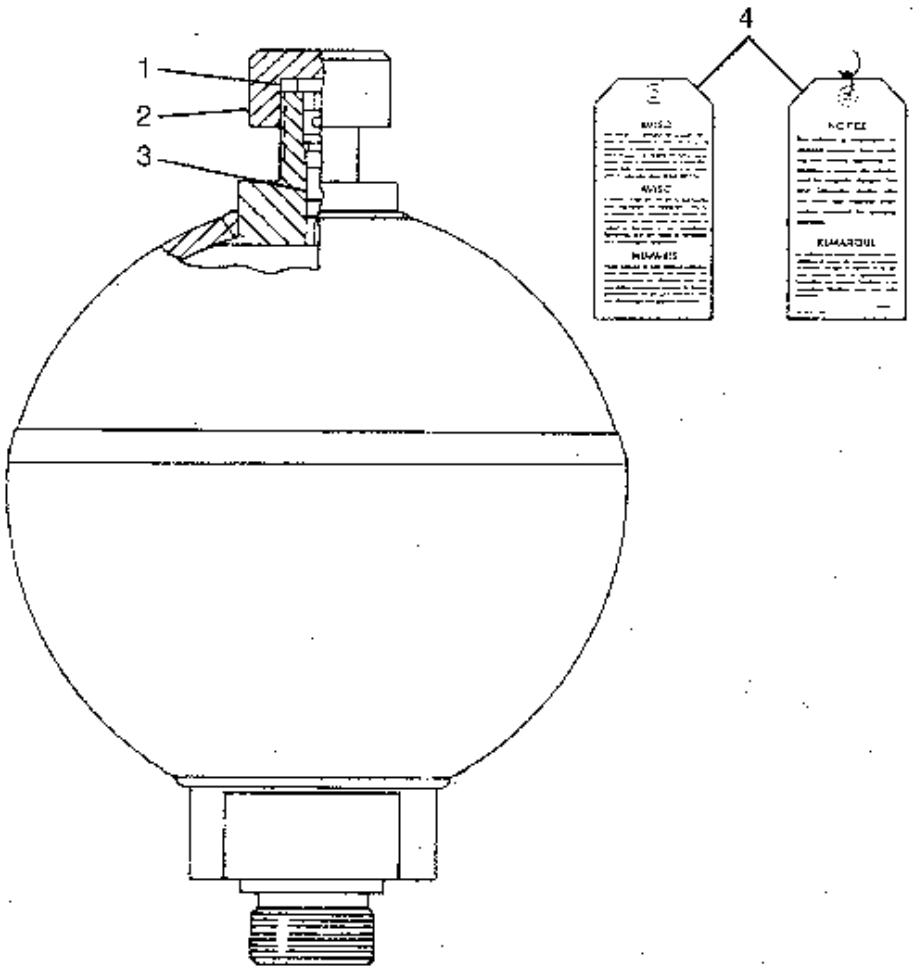


GRAPHIC #1

h50159e

# 1163432 CYLINDER & LINES GP-BOOM

LEFT HAND
PART OF 1205003-Page 484
AN ATTACHMENT

**Key:** Y - Separate Illustration

**SMCS**

| NOTE | REF NO | GRAPHIC REF | PART NUMBER | QTY | PART NAME 1 2 3 4 5 6 (PRODUCT LEVEL) | PRICE USD |
|---|---|---|---|---|---|---|
| Y | | | 115-8690 | 1 | LINES GP (BOOM CYLINDER) | |
| Y | | | 116-3577 | 1 | CYLINDER & SEAL GP (BOOM) | |

# 1163433 CYLINDER & LINES GP-BOOM

RIGHT HAND
PART OF 1205003-Page 484
AN ATTACHMENT

**Key:** Y - Separate Illustration

**SMCS**

| NOTE | REF NO | GRAPHIC REF | PART NUMBER | QTY | PART NAME 1 2 3 4 5 6 (PRODUCT LEVEL) | PRICE USD |
|---|---|---|---|---|---|---|
| Y | | | 115-8691 | 1 | LINES GP (BOOM CYLINDER) | |
| Y | | | 116-3577 | 1 | CYLINDER & SEAL GP (BOOM) | |

# 1336798 CYLINDER & LINES GP-BOOM

LEFT HAND, HIGH TEMP
PART OF 1317670-Page 484, 1317672-Page 485, 1370946-Page 485.02
AN ATTACHMENT

**Key:** Y - Separate Illustration

**SMCS**

| NOTE | REF NO | GRAPHIC REF | PART NUMBER | QTY | PART NAME 1 2 3 4 5 6 (PRODUCT LEVEL) | PRICE USD |
|---|---|---|---|---|---|---|
| Y | | | 115-8690 | 1 | LINES GP (BOOM CYLINDER) | |
| Y | | | 133-6803 | 1 | CYLINDER & SEAL GP (BOOM) | |

# 1336799 CYLINDER & LINES GP-BOOM

RIGHT HAND, HIGH TEMP
PART OF 1317670-Page 484, 1317672-Page 485, 1370946-Page 485.02
AN ATTACHMENT

**Key:** Y - Separate Illustration

**SMCS**

| NOTE | REF NO | GRAPHIC REF | PART NUMBER | QTY | PART NAME 1 2 3 4 5 6 (PRODUCT LEVEL) | PRICE USD |
|---|---|---|---|---|---|---|
| Y | | | 115-8691 | 1 | LINES GP (BOOM CYLINDER) | |
| Y | | | 133-6803 | 1 | CYLINDER & SEAL GP (BOOM) | |

# 1163434 CYLINDER & LINES GP-STICK

PART OF 1205003-Page 484
AN ATTACHMENT

**Key:** Y - Separate Illustration

**SMCS**

| NOTE | REF NO | GRAPHIC REF | PART NUMBER | QTY | PART NAME 1 2 3 4 5 6 (PRODUCT LEVEL) | PRICE USD |
|---|---|---|---|---|---|---|
| Y | | | 115-8692 | 1 | LINES GP (STICK CYLINDER) | |
| Y | | | 116-3637 | 1 | CYLINDER & SEAL GP (STICK) | |

# 1336800 CYLINDER & LINES GP-STICK

HIGH TEMP
PART OF 1317670-Page 484, 1317672-Page 485, 1370946-Page 485.02
AN ATTACHMENT

**Key:** Y - Separate Illustration

**SMCS**

| NOTE | REF NO | GRAPHIC REF | PART NUMBER | QTY | PART NAME 1 2 3 4 5 6 (PRODUCT LEVEL) | PRICE USD |
|---|---|---|---|---|---|---|
| Y | | | 115-8692 | 1 | LINES GP (STICK CYLINDER) | |
| Y | | | 133-6804 | 1 | CYLINDER & SEAL GP (STICK) | |

# 1163435 CYLINDER & LINES GP-BUCKET

D FAMILY
PART OF 1205022-Page 489
AN ATTACHMENT

**Key:** Y - Separate Illustration

**SMCS**

| NOTE | REF NO | GRAPHIC REF | PART NUMBER | QTY | PART NAME 1 2 3 4 5 6 (PRODUCT LEVEL) | PRICE USD |
|---|---|---|---|---|---|---|
| Y | | | 118-3920 | 1 | CYLINDER & SEAL GP (BUCKET) | |
| Y | | | 115-8693 | 1 | LINES GP (BUCKET CYLINDER) | |

# 1336801 CYLINDER & LINES GP-BUCKET

E FAMILY, HIGH TEMP
PART OF 1370918-Page 489
AN ATTACHMENT

**Key:** Y - Separate Illustration

**SMCS**

| NOTE | REF NO | GRAPHIC REF | PART NUMBER | QTY | PART NAME 1 2 3 4 5 6 (PRODUCT LEVEL) | PRICE USD |
|---|---|---|---|---|---|---|
| Y | | | 115-8694 | 1 | LINES GP (BUCKET CYLINDER) | |
| Y | | | 133-6806 | 1 | CYLINDER & SEAL GP (BUCKET) | |

# 1336801 CYLINDER & LINES GP-BUCKET

D FAMILY, HIGH TEMP
PART OF 1370917-Page 489.01
AN ATTACHMENT

**Key:** Y - Separate Illustration

**SMCS**

| NOTE | REF NO | GRAPHIC REF | PART NUMBER | QTY | PART NAME 1 2 3 4 5 6 (PRODUCT LEVEL) | PRICE USD |
|---|---|---|---|---|---|---|
| Y | | | 133-6805 | 1 | CYLINDER & SEAL GP (BUCKET) | |
| Y | | | 115-8693 | 1 | LINES GP (BUCKET CYLINDER) | |

# 1163577 CYLINDER & SEAL GP BOOM

PART OF 1163432, 1163433-Page 259
1163578-Page 264
AN ATTACHMENT

**Key:** Y - SEPARATE ILLUSTRATION

**SMCS**

| NOTE | REF NO | GRAPHIC REF | PART NUMBER | QTY | PART NAME 1 2 3 4 5 6 (PRODUCT LEVEL) | PRICE USD |
|---|---|---|---|---|---|---|
| Y | 1 | | 116-3578 | 1 | CYLINDER GP | |
| | 2 | | 9X-4597 | 4 | SEAL | |
| | 3 | | 3B-8489 | 1 | FITTING | |

## 1163577 CYLINDER & SEAL GP BOOM

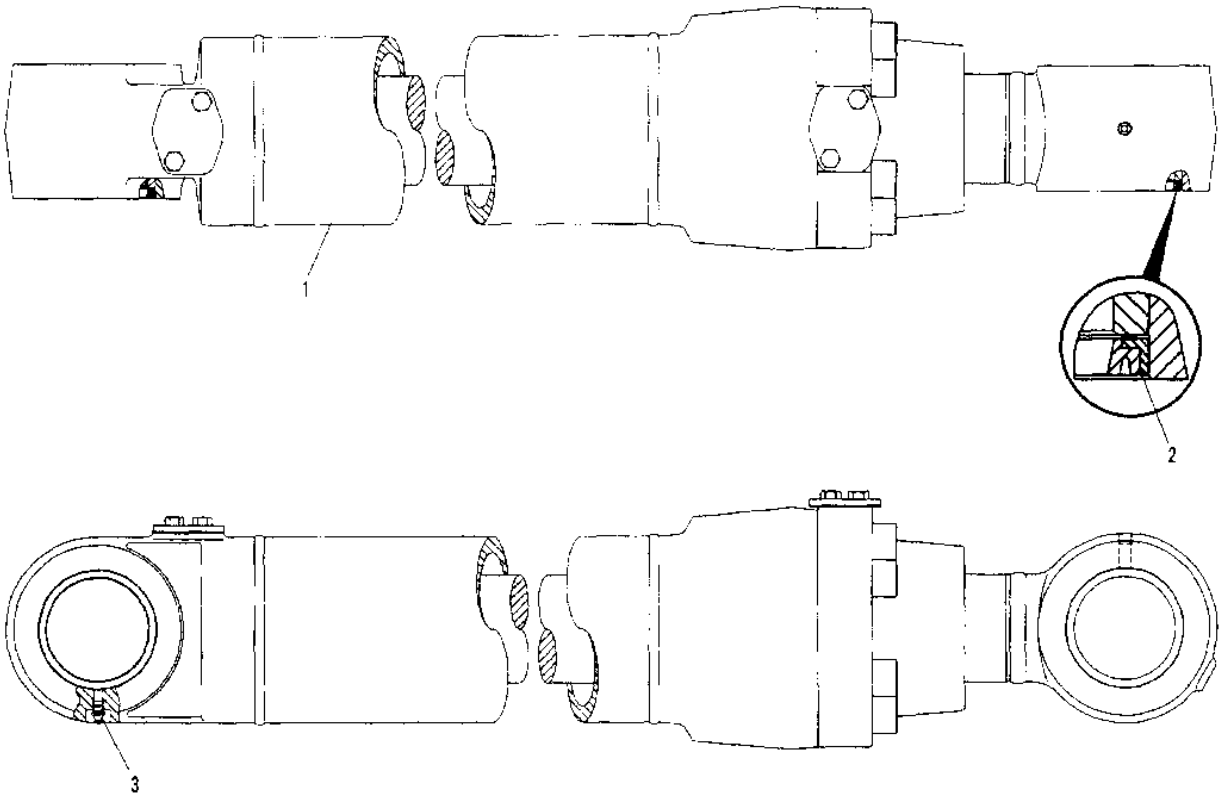


| NOTE | No. | PART No. | QTY | PART NAME |
|---|---|---|---|---|
| Y | 1 | 116-3578 | 1 | CYLINDER GP |
| | 2 | 9X-4597 | 4 | SEAL |
| | 3 | 3B-8489 | 1 | FITTING |

Y-SEE SEPARATE ILLUSTRATION

| NOTE | No. | PART No. | QTY | PART NAME |
|---|---|---|---|---|

H58727E

GRAPHIC #1

h58727e

# 1163637 CYLINDER & SEAL GP-STICK

PART OF 1163434-Page 260
1913118-Page 265
AN ATTACHMENT

**Key:** Y - SEE SEPARATE ILLUSTRATION

**SMCS**

| NOTE | REF NO | GRAPHIC REF | PART NUMBER | QTY | PART NAME 1 2 3 4 5 6 (PRODUCT LEVEL) | PRICE USD |
|---|---|---|---|---|---|---|
| Y | 1 | | 191-3118 | 1 | CYLINDER GP | |
| | 2 | | 7X-4803 | 4 | SEAL | |
| | 3 | | 3B-8489 | 1 | FITTING | |

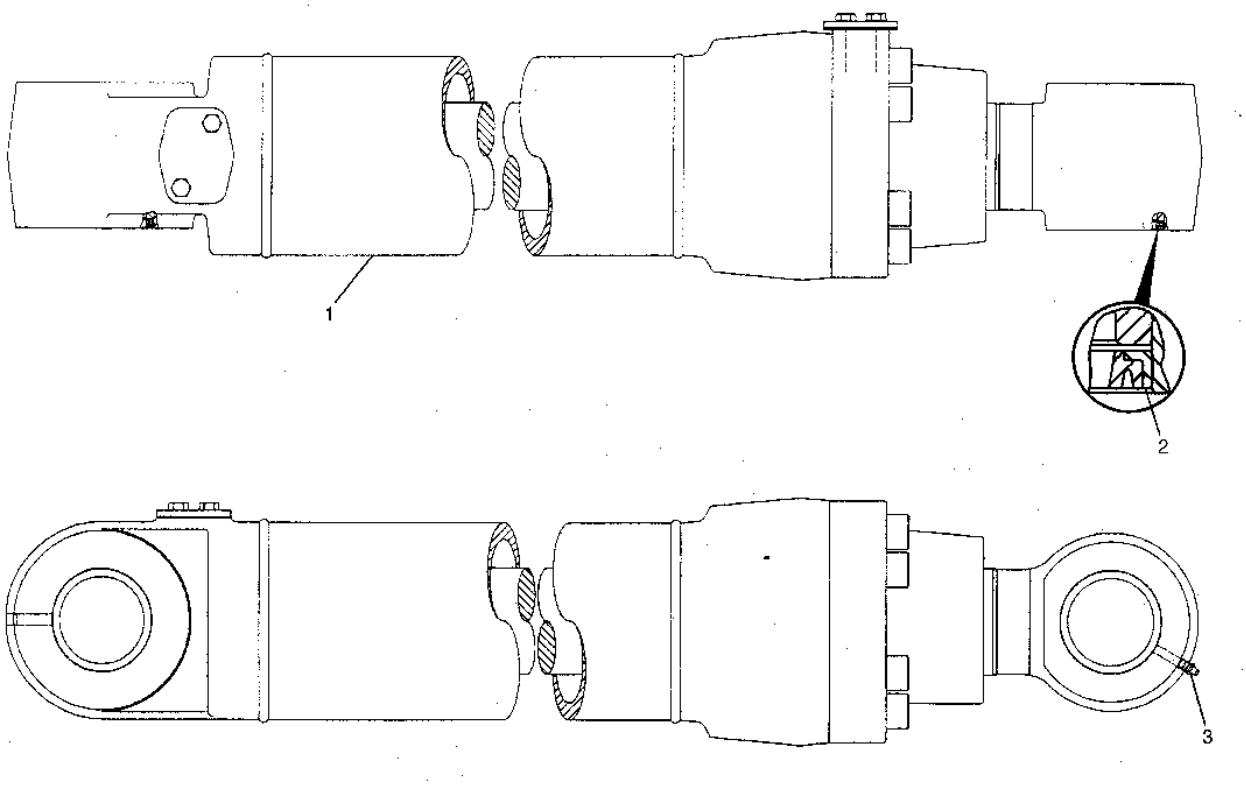


GRAPHIC #1 h79300e

# 1336803 CYLINDER & SEAL GP-BOOM

HIGH TEMP
PART OF 1336798, 1336799-Page 259.01
1336808-Page 264.01
AN ATTACHMENT

**Key:** Y - SEPARATE ILLUSTRATION

**SMCS**

| NOTE | REF NO | GRAPHIC REF | PART NUMBER | QTY | PART NAME 1 2 3 4 5 6 (PRODUCT LEVEL) | PRICE USD |
|---|---|---|---|---|---|---|
| Y | 1 | | 133-6808 | 1 | CYLINDER GP | |
| | 2 | | 9X-4597 | 4 | SEAL | |
| | 3 | | 3B-8489 | 1 | FITTING | |

## 1336803 CYLINDER & SEAL GP-BOOM

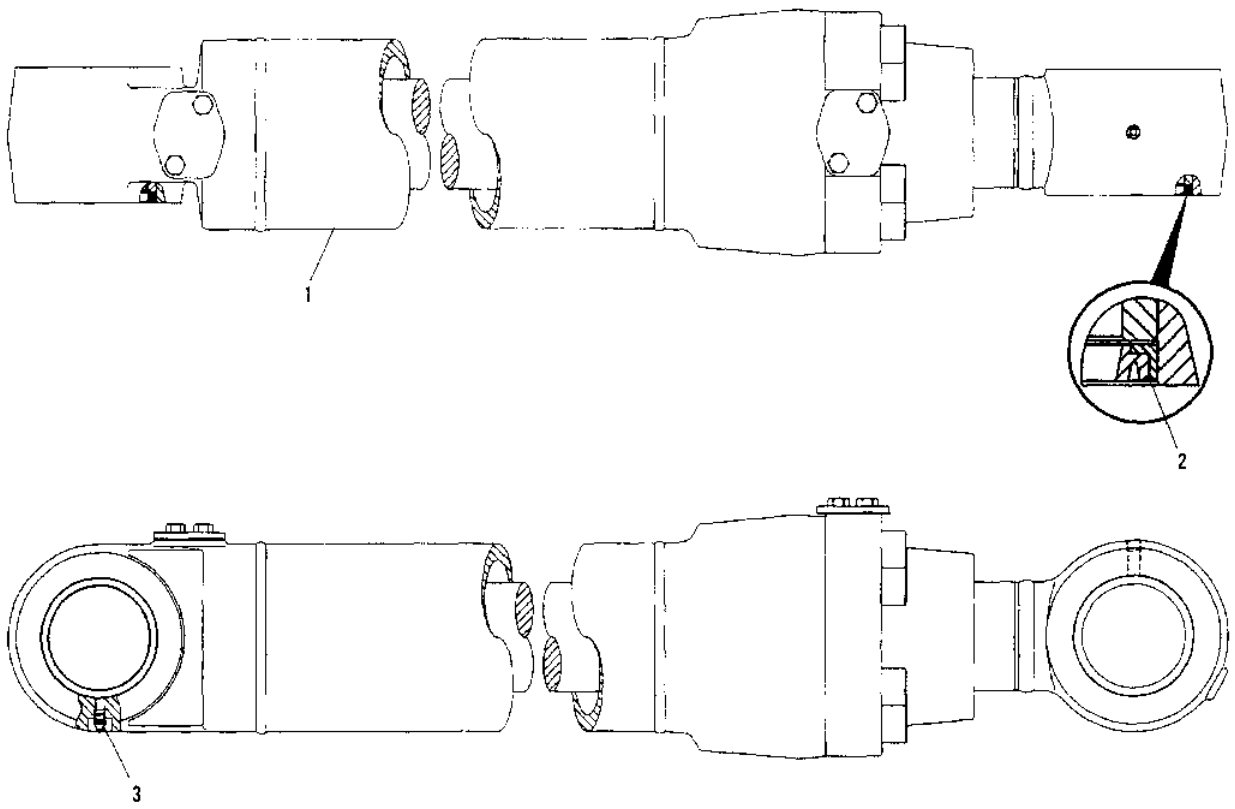


| NOTE | No. | PART No. | QTY | PART NAME |
|---|---|---|---|---|
| Y | 1 | 133-6808 | 1 | CYLINDER GP |
| | 2 | 9X-4597 | 4 | SEAL |
| | 3 | 3B-8489 | 1 | FITTING |

| NOTE | No. | PART No. | QTY | PART NAME |
|---|---|---|---|---|

Y-SEE SEPARATE ILLUSTRATION

H58729E

GRAPHIC #1

h58729e

# 1336804 CYLINDER & SEAL GP-STICK

HIGH TEMP
PART OF 1336800-Page 260
1913127-Page 265.01
AN ATTACHMENT

**Key:** Y - Separate Illustration

**SMCS**

| NOTE | REF NO | GRAPHIC REF | PART NUMBER | QTY | PART NAME 1 2 3 4 5 6 (PRODUCT LEVEL) | PRICE USD |
|---|---|---|---|---|---|---|
| Y | 1 | | 191-3127 | 1 | CYLINDER GP | |
| | 2 | | 7X-4803 | 4 | SEAL | |
| | 3 | | 3B-8489 | 1 | FITTING | |

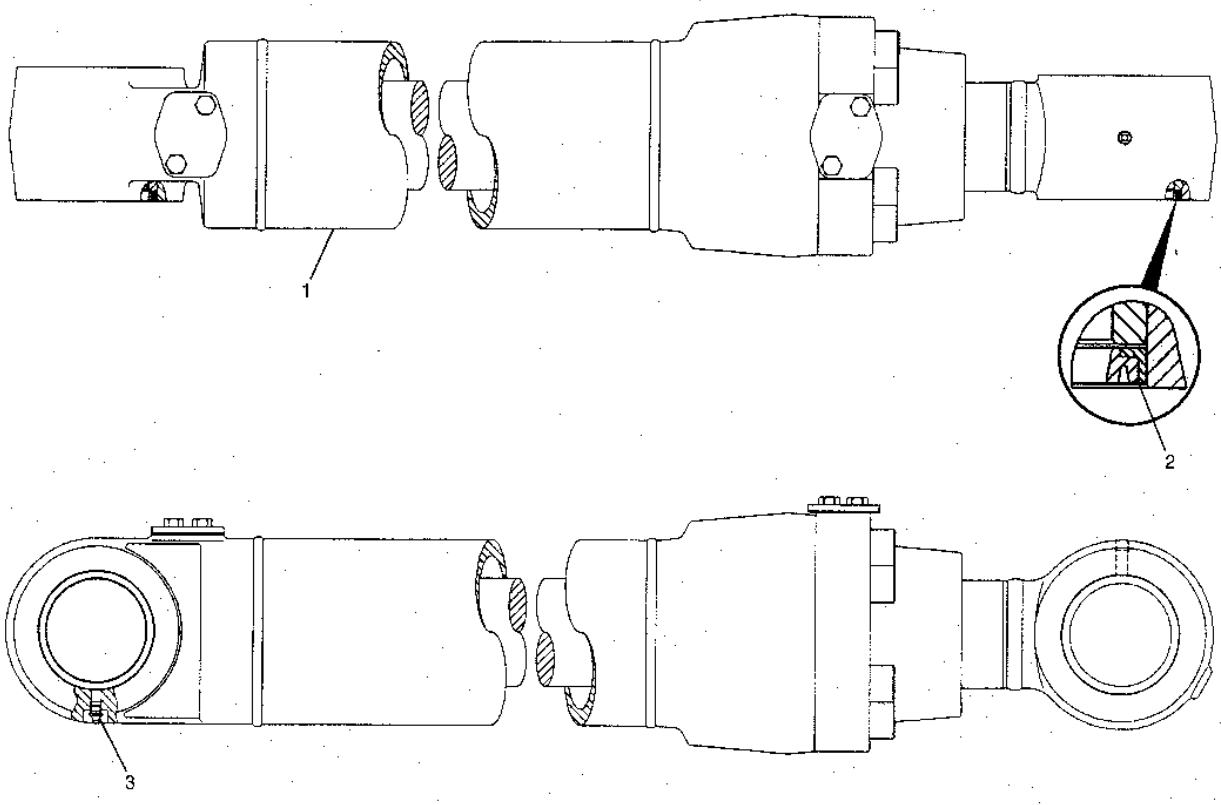


GRAPHIC #1 h79301e

# 1183920 CYLINDER & SEAL GP-BUCKET

D FAMILY
PART OF 1163435-Page 261
1183921-Page 266
AN ATTACHMENT

**Key:** Y - SEPARATE ILLUSTRATION

**SMCS**

| NOTE | REF NO | GRAPHIC REF | PART NUMBER | QTY | PART NAME 1 2 3 4 5 6 (PRODUCT LEVEL) | PRICE USD |
|---|---|---|---|---|---|---|
| | 1 | | 3B-8489 | 2 | FITTING | |
| Y | 2 | | 118-3921 | 1 | CYLINDER GP | |
| | 3 | | 7X-4803 | 2 | SEAL | |
| | 4 | | 096-0854 | 2 | SEAL | |

## 1183920 CYLINDER & SEAL GP-BUCKET

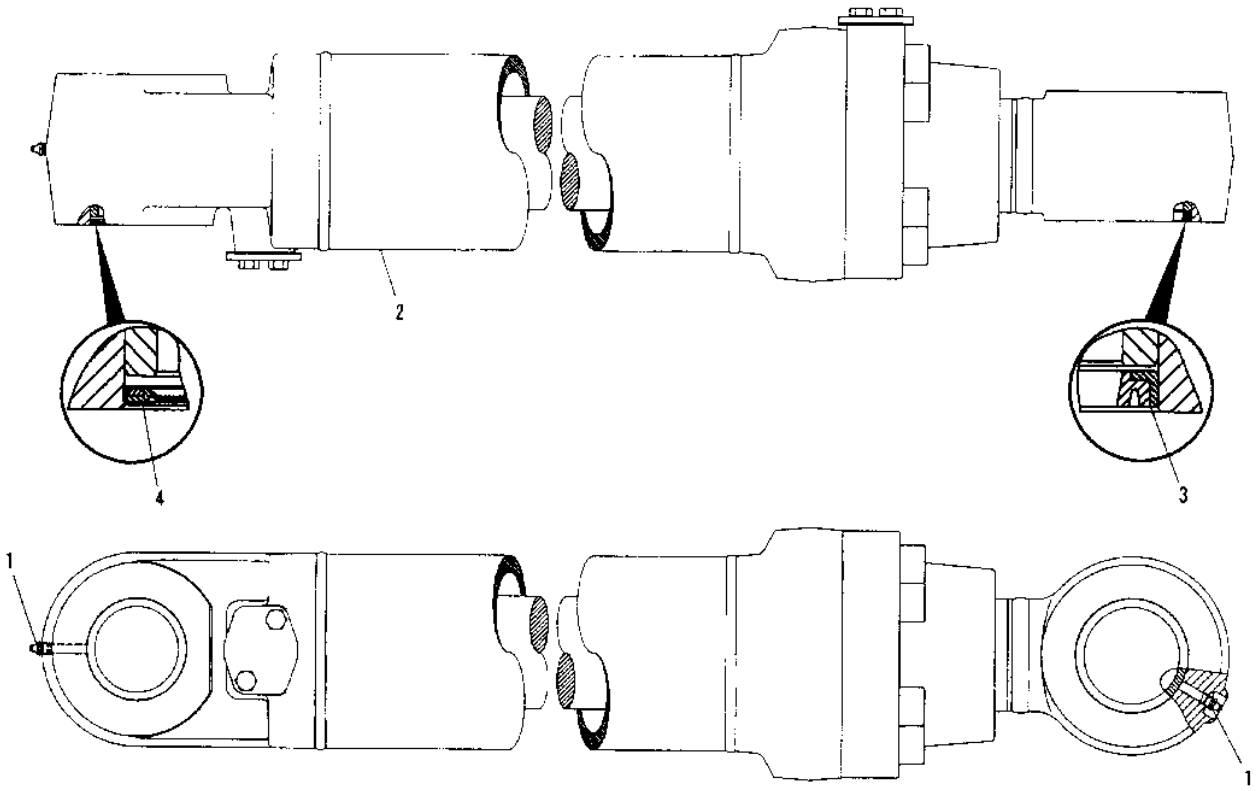


| NOTE | No. | PART No. | QTY | PART NAME |
|---|---|---|---|---|
| | 1 | 3B-8489 | 2 | FITTING |
| Y | 2 | 118-3921 | 1 | CYLINDER GP |
| | 3 | 7X-4803 | 2 | SEAL |
| | 4 | 096-0854 | 2 | SEAL |

| NOTE | No. | PART No. | QTY | PART NAME |
|---|---|---|---|---|

Y-SEE SEPARATE ILLUSTRATION

H58731E

GRAPHIC #1

h58731e

# 1336806 CYLINDER & SEAL GP-BUCKET

E FAMILY, HIGH TEMP
PART OF 1336802-Page 261
1336811-Page 267
AN ATTACHMENT

**Key:** Y - SEPARATE ILLUSTRATION

**SMCS**

| NOTE | REF NO | GRAPHIC REF | PART NUMBER | QTY | PART NAME 1 2 3 4 5 6 (PRODUCT LEVEL) | PRICE USD |
|---|---|---|---|---|---|---|
| | 1 | | 7X-4803 | 2 | SEAL | |
| Y | 2 | | 133-6811 | 1 | CYLINDER GP | |
| | 3 | | 9X-4597 | 2 | SEAL | |
| | 4 | | 3B-8489 | 2 | FITTING | |

## 1336806 CYLINDER & SEAL GP-BUCKET

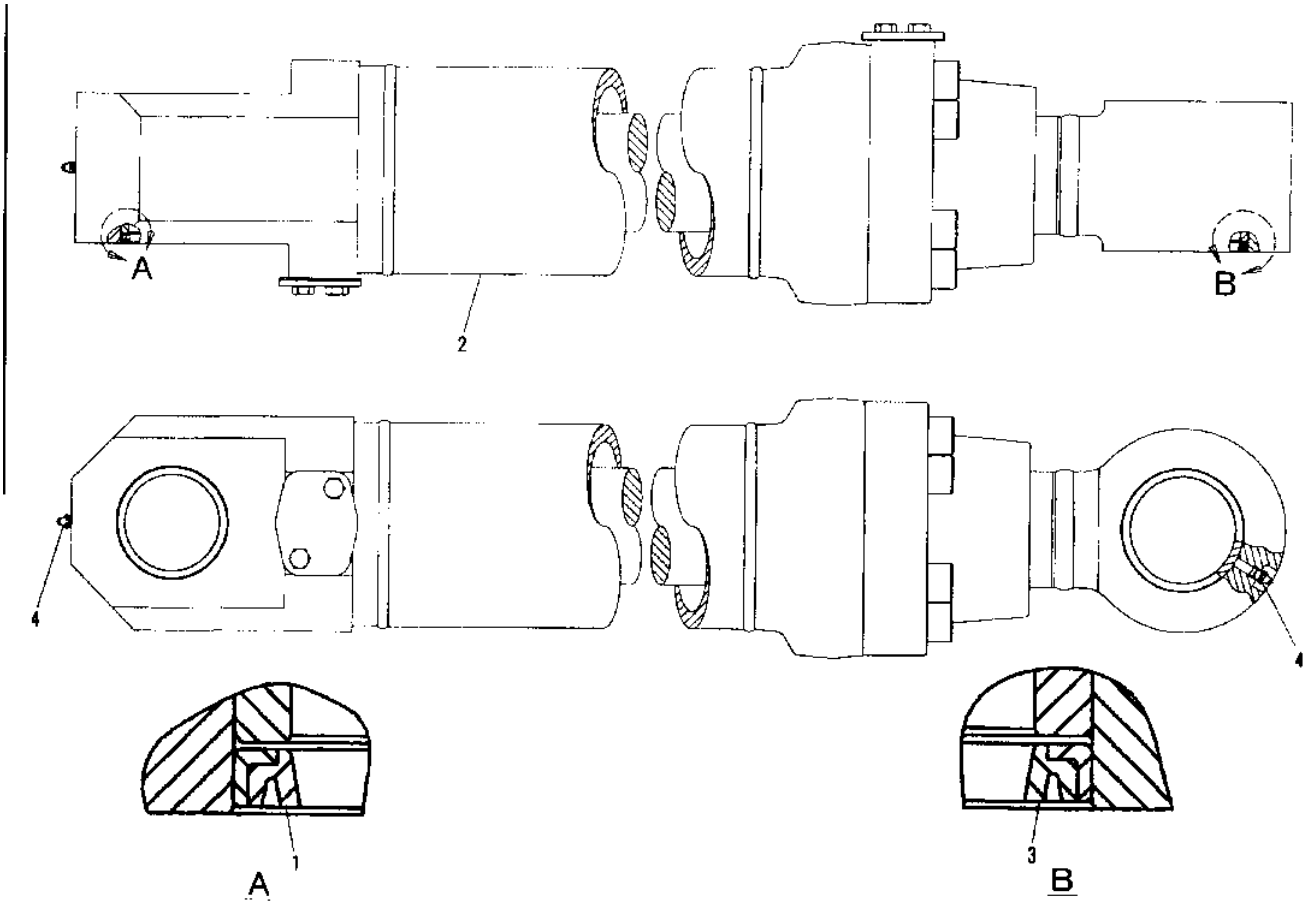


| NOTE | No. | PART No. | QTY | PART NAME |
|---|---|---|---|---|
| | 1 | 7X-4803 | 2 | SEAL |
| Y | 2 | 133-6811 | 1 | CYLINDER GP |
| | 3 | 9X-4597 | 2 | SEAL |
| | 4 | 3B-8489 | 2 | FITTING |

| NOTE | No. | PART No. | QTY | PART NAME |
|---|---|---|---|---|

Y-SEE SEPARATE ILLUSTRATION

H58732E

# 1336805 CYLINDER & SEAL GP-BUCKET

D FAMILY, HIGH TEMP
PART OF 1336801-Page 261.01
1336810-Page 266.01
AN ATTACHMENT

**Key:** Y - Separate Illustration

**SMCS**

| NOTE | REF NO | GRAPHIC REF | PART NUMBER | QTY | PART NAME 1 2 3 4 5 6 (PRODUCT LEVEL) | PRICE USD |
|---|---|---|---|---|---|---|
| | 1 | | 3B-8489 | 2 | FITTING | |
| Y | 2 | | 133-6810 | 1 | CYLINDER GP | |
| | 3 | | 7X-4803 | 2 | SEAL | |
| | 4 | | 096-0854 | 2 | SEAL | |

## 1336805 CYLINDER & SEAL GP-BUCKET

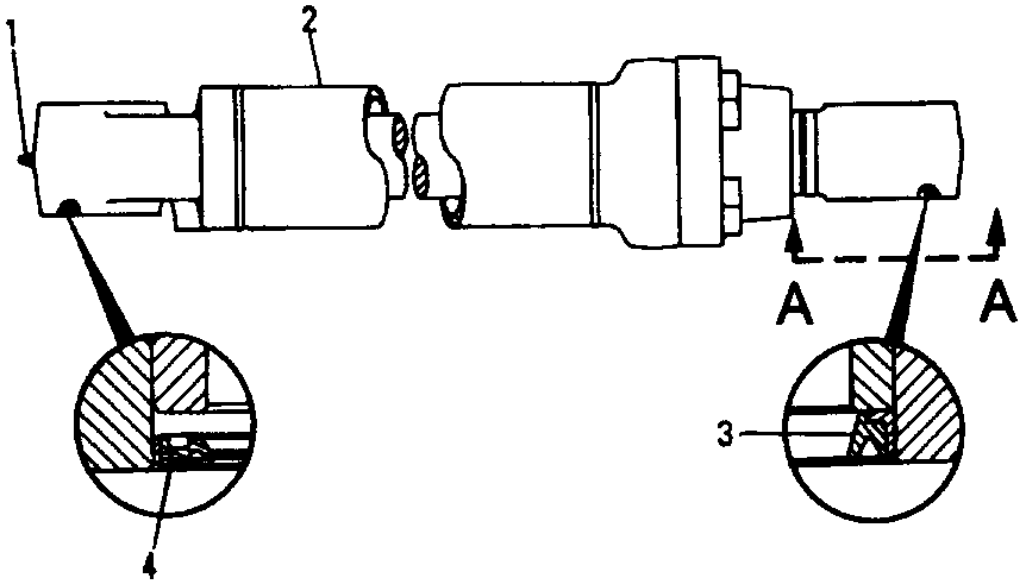


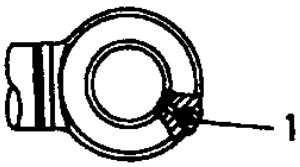


A – A

| NOTE | No. | PART No. | QTY | PART NAME | NOTE | No. | PART No. | QTY | PART NAME |
|---|---|---|---|---|---|---|---|---|---|
| | 1 | 38-8489 | 2 | FITTING | | | | | |
| | 2 | 133-6810 | 1 | CYLINDER GP | | | | | |
| | 3 | 7X-4803 | 2 | SEAL | | | | | |
| | 4 | 096-0854 | 2 | SEAL | | | | | |

H55951E

GRAPHIC #1

h55951e

# 1163578 CYLINDER GP-BOOM

PART OF 1163577-Page 262
AN ATTACHMENT

**Key:**

**SMCS**

| NOTE | REF NO | GRAPHIC REF | PART NUMBER | QTY | PART NAME 1 2 3 4 5 6 (PRODUCT LEVEL) | PRICE USD |
|---|---|---|---|---|---|---|
| | 1 | | 116-3579 | 1 | CYLINDER AS | |
| | 2 | | 137-2818 | 1 | BEARING | |
| J | 3 | | 116-3589 | 1 | RING | |
| J | 4 | | 9X-3601 | 1 | SEAL AS | |
| J | 5 | | 096-1581 | 1 | RING | |
| | 6 | | 7I-7180 | 1 | PISTON | |
| J | 7 | | 5I-8516 | 1 | RING | |
| | 8 | | 6I-6798 | 1 | STOP | |
| J | 9 | | 095-1633 | 1 | SEAL-O-RING (ID=139.60mm) | |
| J | 10 | | 7Y-4673 | 1 | RING | |
| | 11 | | 7Y-4672 | 1 | RING | |
| | 12 | | 7Y-5215 | 8 | BOLT (L=90mm) | |
| | 12 | | 114-0760 | 1 | HEAD | |
| | 13 | | 114-0760 | 1 | BEARING | |
| J | 14 | | 128-9265 | 1 | SEAL | |
| | 15 | | 7Y-4660 | 1 | HEAD | |
| J | 16 | | 7Y-4670 | 1 | SEAL | |
| J | 17 | | 7Y-4669 | 1 | RING | |
| J | 18 | | 165-9290 | 1 | SEAL | |
| R | 19 | | 7Y-4914 | 1 | ROD AS | |
| | R | | 0R-4866 | 1 | ROD AS-HYD | |
| | 20 | | 7Y-2397 | 1 | BEARING | |
| | 21 | | 7Y-4695 | 1 | LOCKNUT | |
| | | | | | THE FOLLOWING REPAIR KIT IS AVAILABLE: | |
| | | | 199-7416 | 1 | SEAL KIT (INCLUDES PARTS MARKED J) | |

## 1163578 CYLINDER GP-BOOM

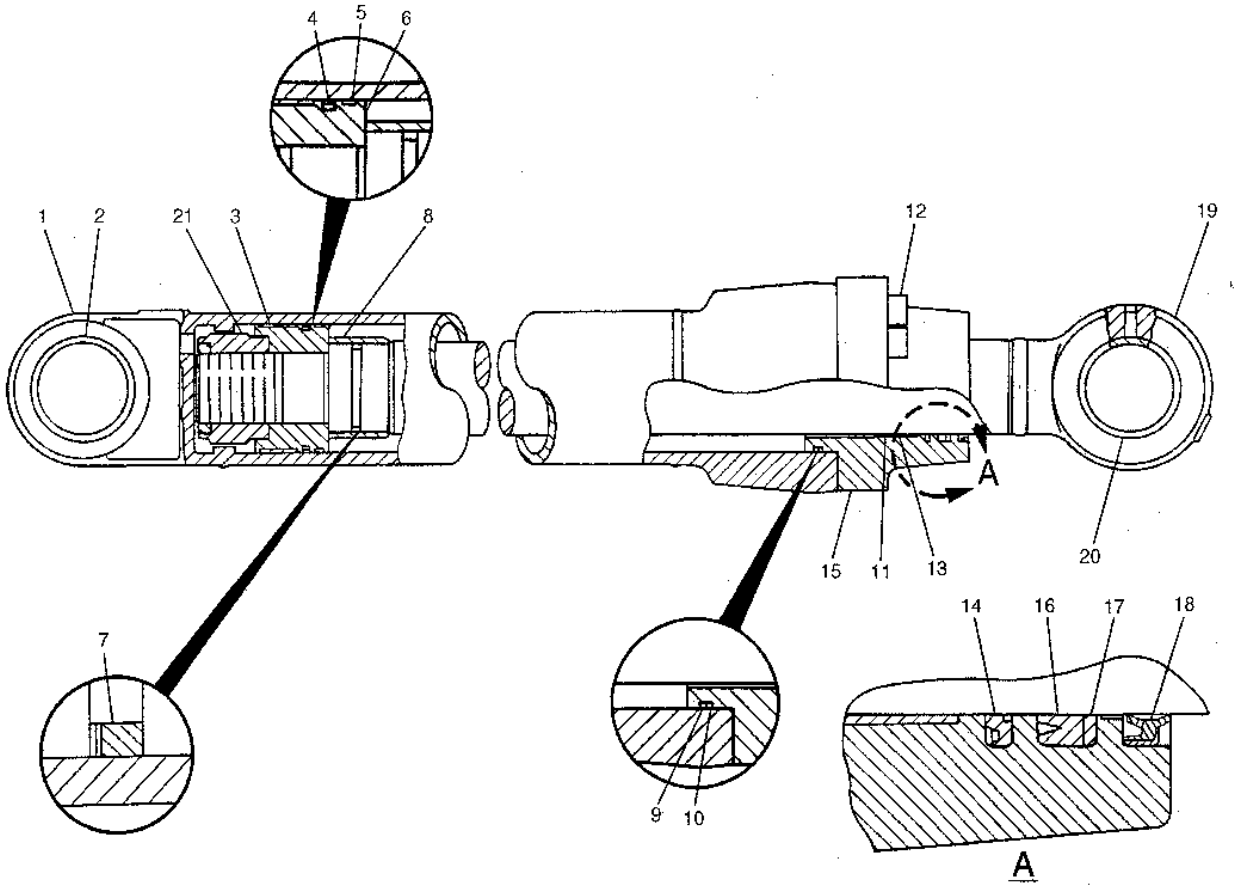


GRAPHIC #1

h79302e

# 1336808 CYLINDER GP-BOOM

HIGH TEMP
PART OF 1336803-Page 262.02
AN ATTACHMENT

**Key:**

**SMCS**

| NOTE | REF NO | GRAPHIC REF | PART NUMBER | QTY | PART NAME 1 2 3 4 5 6 (PRODUCT LEVEL) | PRICE USD |
|---|---|---|---|---|---|---|
| | 1 | | 116-3579 | 1 | CYLINDER AS | |
| | | | 137-2818 | 1 | BEARING | |
| | 2 | | 7Y-4695 | 1 | LOCKNUT | |
| J | 3 | | 116-3589 | 1 | RING | |
| J | 4 | | 9X-3601 | 1 | SEAL AS | |
| J | 5 | | 096-1581 | 1 | RING | |
| | 6 | | 7I-7180 | 1 | PISTON | |
| J | 7 | | 5I-8516 | 1 | RING-SEALING | |
| | 8 | | 6I-6798 | 1 | STOP | |
| J | 9 | | 095-1633 | 1 | SEAL-O-RING (ID=139.60mm) | |
| J | 10 | | 7Y-4673 | 1 | RING-BACK UP | |
| | 11 | | 7Y-4672 | 1 | RING-RETAINING | |
| | 12 | | 7Y-5215 | 8 | BOLT (L=90mm) | |
| | 13 | | 114-0760 | 1 | BEARING | |
| | 14 | | 128-9265 | 1 | SEAL | |
| | 15 | | 7Y-4660 | 1 | HEAD | |
| J | 16 | | 128-9269 | 1 | SEAL | |
| J | 17 | | 7Y-4669 | 1 | RING-BACK UP | |
| J | 18 | | 133-6813 | 1 | SEAL | |
| R | 19 | | 7Y-4914 | 1 | ROD AS | |
| | R | | 0R-4866 | 1 | ROD AS-HYD | |
| | | | 7Y-2397 | 1 | BEARING | |
| | | | | | THE FOLLOWING REPAIR KIT IS AVAILABLE: | |
| | | | 128-9277 | 1 | SEAL KIT | |
| | | | | | (INCLUDES PARTS MARKED J) | |

## 1336808 CYLINDER GP-BOOM

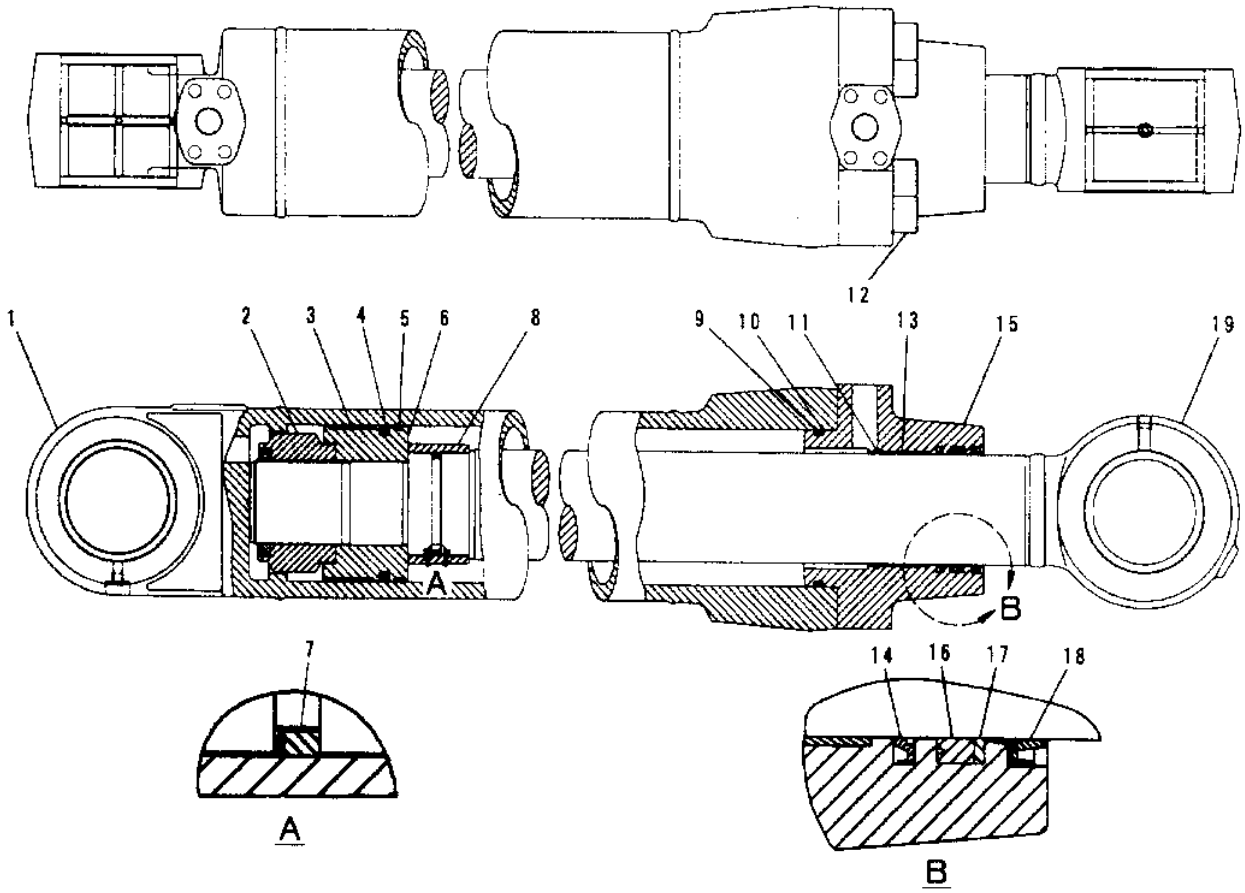


| NOTE | No. | PART No. | QTY | PART NAME | NOTE | No. | PART No. | QTY | PART NAME |
|---|---|---|---|---|---|---|---|---|---|
| | 1 | 116-3579 | 1 | CYLINDER AS | | 19 | 7Y-4914 | 1 | ROD AS |
| | | 137-2818 | 1 | BEARING | | | 7Y-2397 | 1 | BEARING |
| | 2 | 7Y-4695 | 1 | LOCKNUT | | | | | THE FOLLOWING |
| J | 3 | 116-3589 | 1 | RING | | | | | REPAIR KIT IS |
| J | 4 | 9X-3601 | 1 | SEAL AS | | | | | AVAILABLE : |
| J | 5 | 096-1581 | 1 | RING | | | 128-9277 | 1 | SEAL KIT |
| | 6 | 7I-7180 | 1 | PISTON | | | | | (INCLUDES PARTS |
| J | 7 | 5I-8516 | 1 | RING-SEALING | | | | | MARKED J) |
| | 8 | 6I-6798 | 1 | STOP | | | | | |
| J | 9 | 095-1633 | 1 | SEAL-O-RING (ID=139.60mm) | | | | | |
| J | 10 | 7Y-4673 | 1 | RING-BACK UP | | | | | |
| | 11 | 7Y-4672 | 1 | RING-RETAINING | | | | | |
| | 12 | 7Y-5215 | 8 | BOLT (L=90mm) | | | | | |
| | 13 | 114-0760 | 1 | BEARING | | | | | |
| | 14 | 128-9265 | 1 | SEAL | | | | | |
| | 15 | 7Y-4660 | 1 | HEAD | | | | | |
| J | 16 | 128-9269 | 1 | SEAL | | | | | |
| J | 17 | 7Y-4669 | 1 | RING-BACK UP | | | | | |
| J | 18 | 133-6813 | 1 | SEAL | | | | | |

H56359E

# 1913118 CYLINDER GP-STICK

PART OF 11636372-Page 262.02
AN ATTACHMENT

**Key:**

**SMCS**

| NOTE | REF NO | GRAPHIC REF | PART NUMBER | QTY | PART NAME 1 2 3 4 5 6 (PRODUCT LEVEL) | PRICE USD |
|---|---|---|---|---|---|---|
| | 1 | | 116-3639 | 1 | CYLINDER AS | |
| | | | 7Y-4939 | 1 | BEARING | |
| | 2 | | 103-8345 | 1 | RING | |
| | 3 | | 107-6579 | 1 | RING | |
| | 4 | | 107-6933 | 1 | STOP | |
| | 5 | | 7Y-4956 | 1 | LOCKNUT | |
| J | 6 | | 105-7262 | 1 | RING | |
| J | 7 | | 9X-3607 | 1 | SEAL AS | |
| J | 8 | | 096-5609 | 1 | RING | |
| | 9 | | 7I-7181 | 1 | PISTON | |
| J | 10 | | 191-3128 | 1 | RING | |
| | 11 | | 7Y-4936 | 1 | STOP | |
| J | 12 | | 095-1726 | 1 | SEAL-O-RING (ID=159.30mm) | |
| J | 13 | | 7Y-4945 | 1 | RING | |
| | 14 | | 7Y-4944 | 1 | RING | |
| | 15 | | 114-0761 | 1 | BEARING | |
| J | 16 | | 128-9266 | 1 | SEAL | |
| | 17 | | 7Y-4932 | 1 | HEAD | |
| J | 18 | | 7Y-4942 | 1 | SEAL | |
| J | 19 | | 7Y-4941 | 1 | RING | |
| J | 20 | | 165-9291 | 1 | SEAL | |
| R | 21 | | 191-3119 | 1 | ROD AS | |
| | R | | 0R-4867 | 1 | ROD AS-HYD | |
| | | | 7Y-4939 | 1 | BEARING | |
| | 22 | | 7Y-5239 | 8 | BOLT (L=100mm) | |
| | 23 | | 095-0930 | 2 | RING | |
| | | | | | THE FOLLOWING REPAIR KIT IS AVAILABLE: | |
| | | | 199-7417 | 1 | SEAL KIT (INCLUDES PARTS MARKED J) | |

## 1913118 CYLINDER GP-STICK

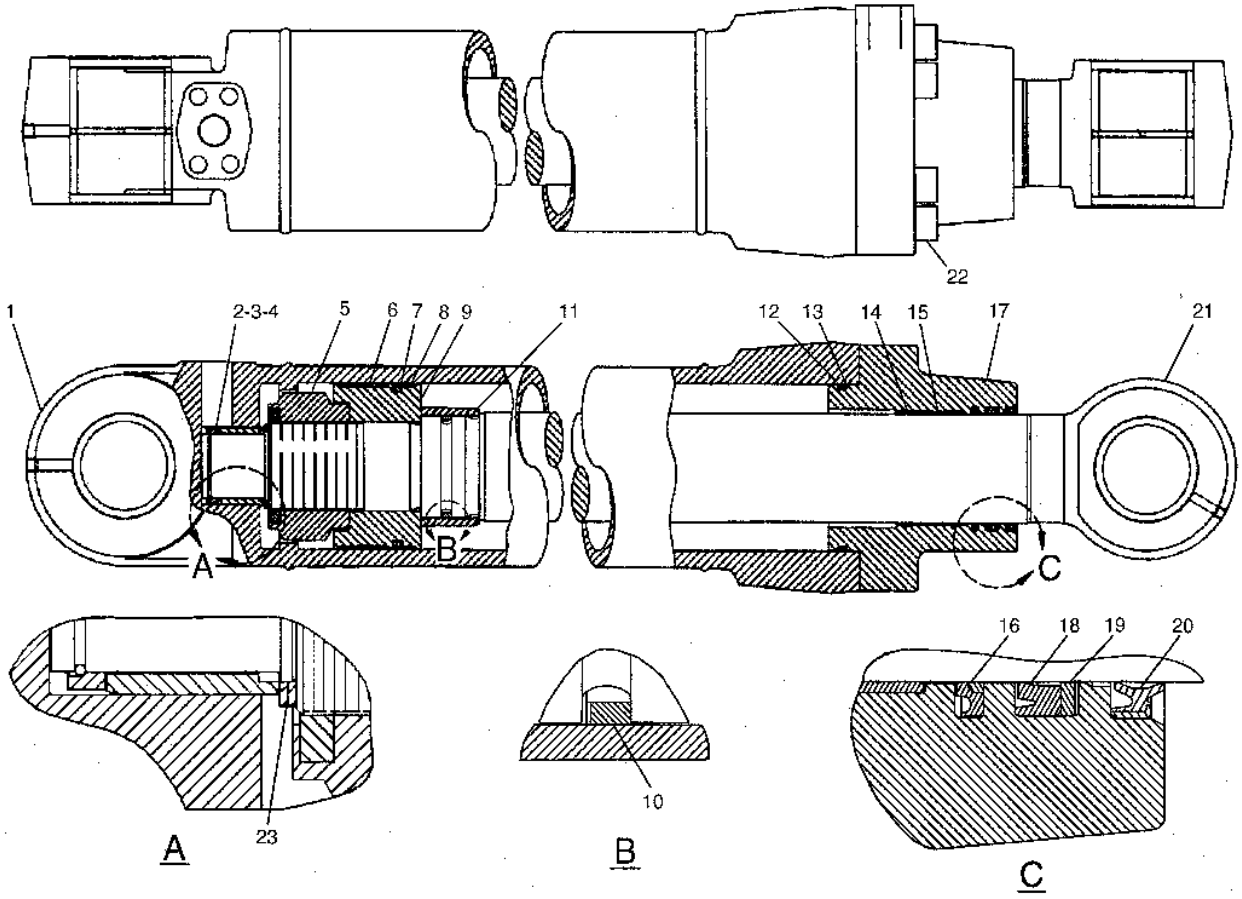


GRAPHIC #1

h79303e

# 1913127 CYLINDER GP-STICK

HIGH TEMP
PART OF 1336804-Page 262.03
AN ATTACHMENT

**Key:**

**SMCS**

| NOTE | REF NO | GRAPHIC REF | PART NUMBER | QTY | PART NAME 1 2 3 4 5 6 (PRODUCT LEVEL) | PRICE USD |
|---|---|---|---|---|---|---|
| | 1 | | 116-3639 | 1 | CYLINDER AS | |
| | 2 | | 7Y-4939 | 1 | BEARING | |
| | 3 | | 107-6579 | 1 | RING | |
| | 4 | | 107-6933 | 1 | STOP | |
| | 5 | | 7Y-4956 | 1 | LOCKNUT | |
| J | 6 | | 105-7262 | 1 | RING | |
| J | 7 | | 9X-3607 | 1 | SEAL AS | |
| J | 8 | | 096-5609 | 1 | RING | |
| | 9 | | 7I-7181 | 1 | PISTON | |
| J | 10 | | 191-3128 | 1 | RING | |
| | 11 | | 7Y-4936 | 1 | STOP | |
| J | 12 | | 095-1726 | 1 | SEAL-O-RING (ID=159.30mm) | |
| J | 13 | | 7Y-4945 | 1 | RING | |
| | 14 | | 7Y-4944 | 1 | RING | |
| | 15 | | 114-0761 | 1 | BEARING | |
| J | 16 | | 128-9266 | 1 | SEAL | |
| | 17 | | 7Y-4932 | 1 | HEAD | |
| J | 18 | | 128-9270 | 1 | SEAL | |
| J | 19 | | 7Y-4941 | 1 | RING | |
| J | 20 | | 133-6814 | 1 | SEAL | |
| R | 21 | | 191-3119 | 1 | ROD AS | |
| | R | | 0R-4867 | 1 | ROD AS-HYD | |
| | 22 | | 7Y-4939 | 1 | BEARING | |
| | 23 | | 095-0930 | 2 | RING | |
| | 24 | | 7Y-5239 | 8 | BOLT (L=100mm) | |
| | 25 | | 103-8345 | 1 | RING | |
| | | | | | THE FOLLOWING REPAIR KIT IS AVAILABLE: | |
| | | | 191-3170 | 1 | SEAL KIT (INCLUDES PARTS MARKED J) | |

## 1913127 CYLINDER GP-STICK

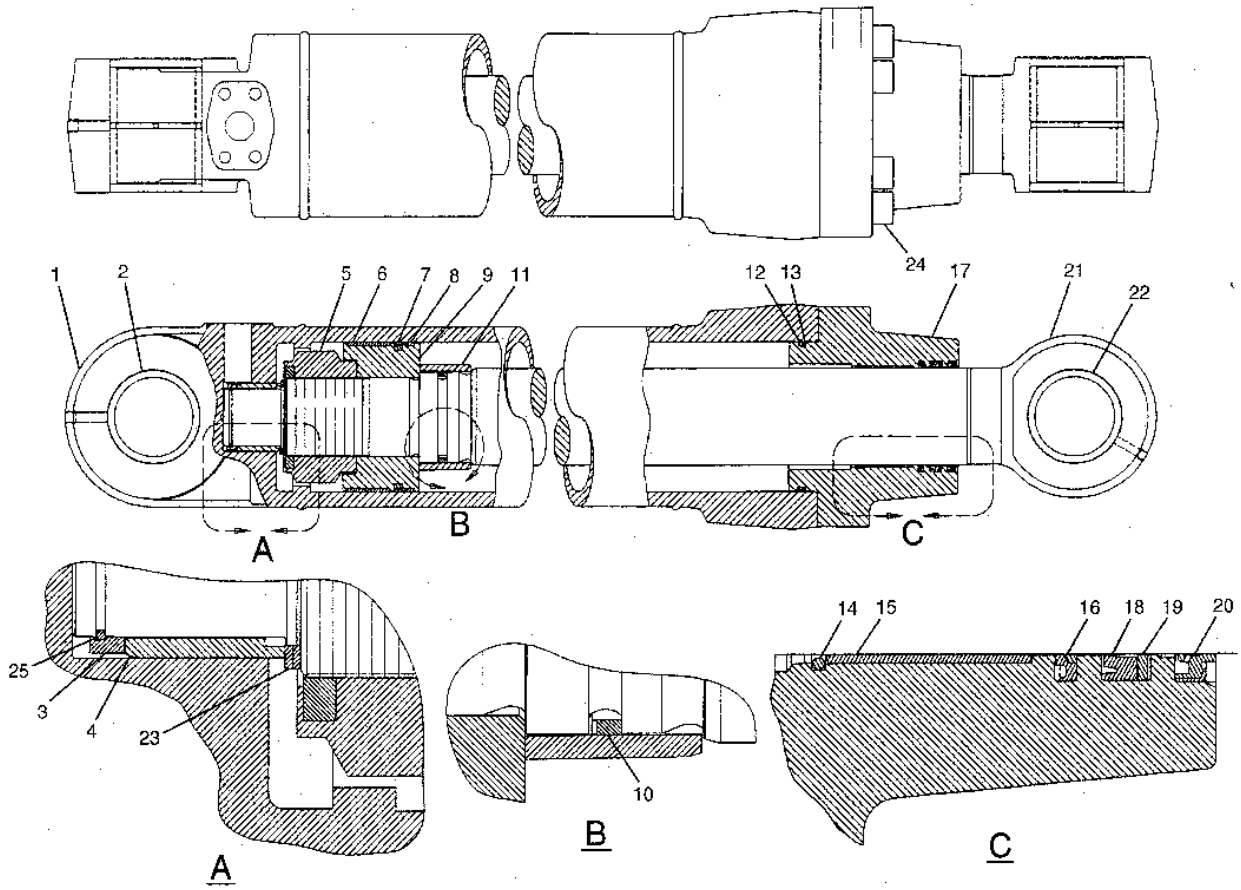


GRAPHIC #1

h79304e

# 1183921 CYLINDER GP-BUCKET

D FAMILY
PART OF 1183920-Page 263
AN ATTACHMENT

**Key:**

**SMCS**

| NOTE | REF NO | GRAPHIC REF | PART NUMBER | QTY | PART NAME 1 2 3 4 5 6 (PRODUCT LEVEL) | PRICE USD |
|---|---|---|---|---|---|---|
| | 1 | | 118-3922 | 1 | CYLINDER AS | |
| | | | 7Y-4666 | 1 | BEARING | |
| | 2 | | 7Y-4695 | 1 | LOCKNUT | |
| J | 3 | | 116-3589 | 1 | RING | |
| J | 4 | | 9X-3601 | 1 | SEAL AS | |
| J | 5 | | 096-1581 | 1 | RING | |
| | 6 | | 7I-7180 | 1 | PISTON | |
| | 7 | | 7Y-5215 | 8 | BOLT (L=90mm) | |
| R | 8 | | 7Y-5157 | 1 | ROD AS | |
| | R | | 0R-3607 | 1 | ROD AS | |
| | | | 7Y-5102 | 1 | BEARING | |
| | 9 | | 7Y-4660 | 1 | HEAD | |
| | 10 | | 114-0760 | 1 | BEARING | |
| | 11 | | 7Y-4672 | 1 | RING | |
| J | 12 | | 7Y-4673 | 1 | RING | |
| J | 13 | | 095-1633 | 1 | SEAL-O-RING (ID=139.60mm) | |
| J | 14 | | 165-9290 | 1 | SEAL | |
| J | 15 | | 7Y-4669 | 1 | RING | |
| J | 16 | | 7Y-4670 | 1 | SEAL | |
| J | 17 | | 128-9265 | 1 | SEAL | |
| | | | | | THE FOLLOWING REPAIR KIT IS AVAILABLE: | |
| | | | 199-7416 | 1 | SEAL KIT (INCLUDES PARTS MARKED J) | |

## 1183921 CYLINDER GP-BUCKET

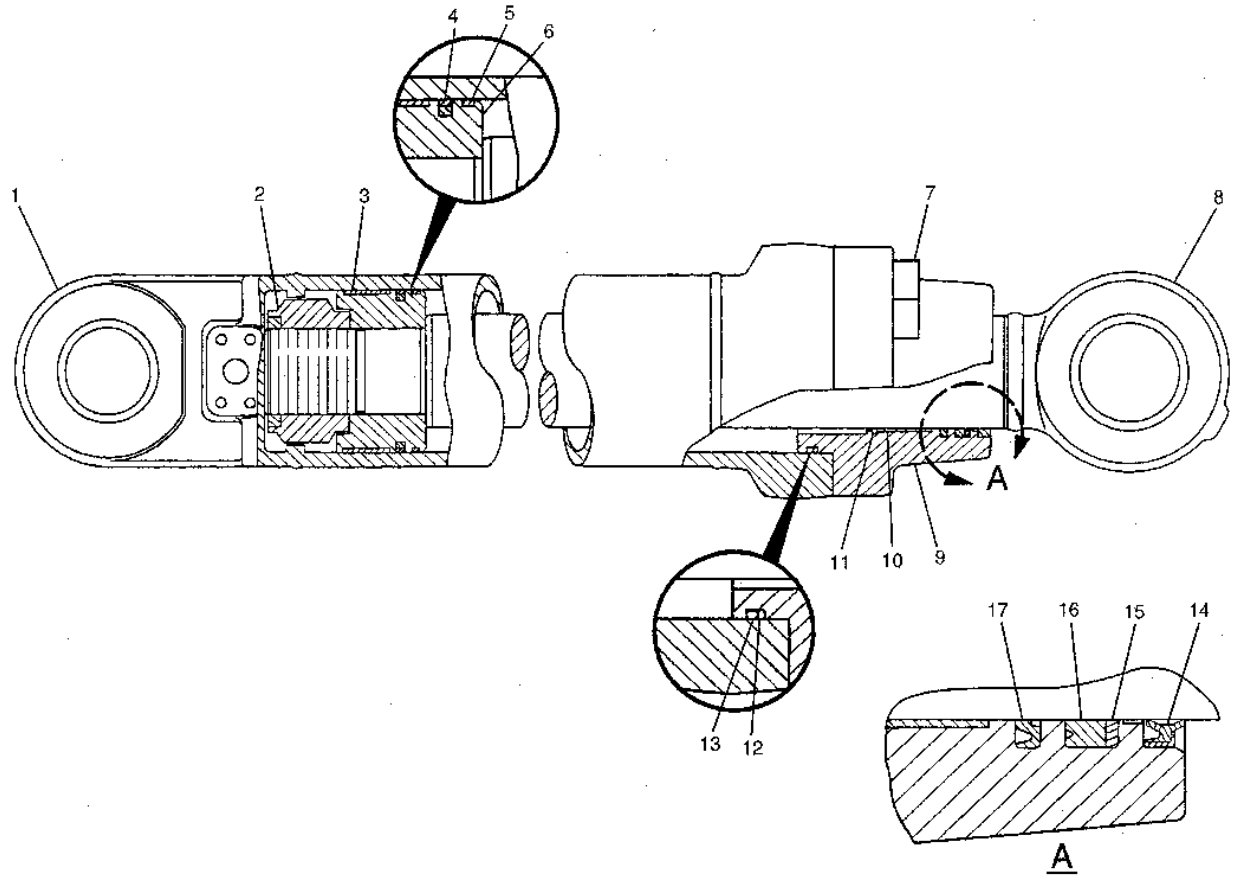


GRAPHIC #1

h79305e

# 1336810 CYLINDER GP-BUCKET

D FAMILY, HIGH TEMP
PART OF 1336805-Page 263.02
AN ATTACHMENT

**Key:** R - REMFG PART MAY BE AVAILABLE

**SMCS**

| NOTE | REF NO | GRAPHIC REF | PART NUMBER | QTY | PART NAME 1 2 3 4 5 6 (PRODUCT LEVEL) | PRICE USD |
|---|---|---|---|---|---|---|
| | 1 | | 118-3922 | 1 | CYLINDER AS | |
| | | | 7Y-4666 | 1 | BEARING | |
| | 2 | | 7Y-4695 | 1 | LOCKNUT | |
| J | 3 | | 116-3589 | 1 | RING | |
| J | 4 | | 9X-3601 | 1 | SEAL AS | |
| J | 5 | | 096-1581 | 1 | RING | |
| | 6 | | 7I-7180 | 1 | PISTON | |
| | 7 | | 7Y-5215 | 8 | BOLT (L=90mm) | |
| R | 8 | | 7Y-5157 | 1 | ROD AS | |
| | R | | 0R-3607 | 1 | ROD AS | |
| | | | 7Y-5102 | 1 | BEARING | |
| | 9 | | 7Y-4660 | 1 | HEAD | |
| | 10 | | 114-0760 | 1 | BEARING | |
| | 11 | | 7Y-4672 | 1 | RING | |
| J | 12 | | 7Y-4673 | 1 | RING | |
| J | 13 | | 095-1633 | 1 | SEAL-O-RING (ID=139.60mm) | |
| J | 14 | | 133-6813 | 1 | SEAL | |
| J | 15 | | 7Y-4669 | 1 | RING | |
| J | 16 | | 128-9269 | 1 | SEAL | |
| J | 17 | | 128-9265 | 1 | SEAL | |
| | | | | | THE FOLLOWING REPAIR KIT IS AVAILABLE: | |
| | | | 128-9277 | 1 | KIT-SEAL | |
| | | | | | (INCLUDES PARTS MARKED J) | |

## 1336810 CYLINDER GP-BUCKET

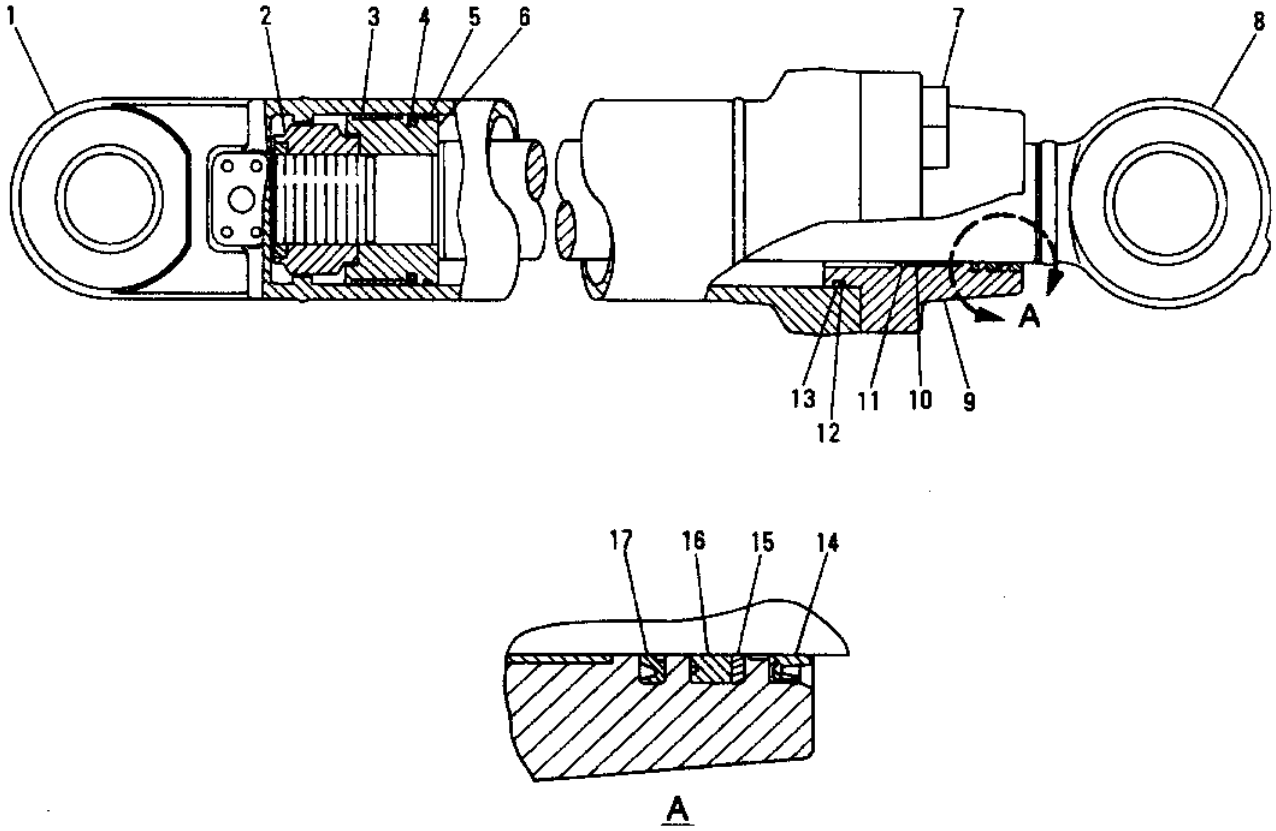


| NOTE | No. | PART No. | QTY | PART NAME | NOTE | No. | PART No. | QTY | PART NAME |
|---|---|---|---|---|---|---|---|---|---|
| | 1 | 118-3922 | 1 | CYLINDER AS | | | | | THE FOLLOWING |
| | | 7Y-4666 | 1 | BEARING | | | | | REPAIR KIT IS |
| | 2 | 7Y-4695 | 1 | LOCKNUT | | | | | AVAILABLE : |
| J | 3 | 116-3589 | 1 | RING | | | 128-9277 | 1 | KIT SEAL |
| J | 4 | 9X-3601 | 1 | SEAL AS | | | | | (INCLUDES PARTS |
| J | 5 | 096-1581 | 1 | RING | | | | | MARKED J) |
| | 6 | 7I-7180 | 1 | PISTON | | | | | |
| | 7 | 7Y-5215 | 8 | BOLT (L=90mm) | | | | | |
| | 8 | 7Y-5157 | 1 | ROD AS | | | | | |
| | | 7Y-5102 | 1 | BEARING | | | | | |
| | 9 | 7Y-4660 | 1 | HEAD | | | | | |
| | 10 | 114-0760 | 1 | BEARING | | | | | |
| | 11 | 7Y-4672 | 1 | RING | | | | | |
| J | 12 | 7Y-4673 | 1 | RING | | | | | |
| J | 13 | 095-1633 | 1 | SEAL-O-RING (ID=139.60mm) | | | | | |
| J | 14 | 133-6813 | 1 | SEAL | | | | | |
| J | 15 | 7Y-4669 | 1 | RING | | | | | |
| J | 16 | 128-9269 | 1 | SEAL | | | | | |
| J | 17 | 128-9265 | 1 | SEAL | | | | | |

H56361E

# 1336811 CYLINDER GP-BUCKET

E FAMILY, HIGH TEMP
PART OF 1336806-Page 263.01
AN ATTACHMENT

**Key:**

**SMCS**

| NOTE | REF NO | GRAPHIC REF | PART NUMBER | QTY | PART NAME 1 2 3 4 5 6 (PRODUCT LEVEL) | PRICE USD |
|---|---|---|---|---|---|---|
| R | 1 | | 118-3936 | 1 | CYLINDER AS | |
| | R | | 0R-9070 | 1 | CYL AS-HYD | |
| | 2 | | 087-5533 | 1 | BEARING | |
| J | 3 | | 118-3944 | 1 | RING | |
| J | 4 | | 9X-3604 | 1 | SEAL AS | |
| J | 5 | | 096-3201 | 1 | RING | |
| | 6 | | 123-2111 | 1 | PISTON | |
| J | 7 | | 095-1635 | 1 | SEAL-O-RING (ID=149.60mm) | |
| J | 8 | | 087-5550 | 1 | RING-BACK UP | |
| | 9 | | 7Y-4944 | 1 | RING-RETAINING | |
| | 10 | | 114-0762 | 1 | BEARING | |
| J | 11 | | 128-9266 | 1 | SEAL | |
| | 12 | | 087-5551 | 1 | HEAD | |
| | 13 | | 7Y-5239 | 8 | BOLT | |
| J | 14 | | 128-9270 | 1 | SEAL | |
| J | 15 | | 7Y-4941 | 1 | RING-BACK UP | |
| J | 16 | | 133-6814 | 1 | SEAL | |
| | 17 | | 123-2105 | 1 | ROD AS | |
| | 18 | | 087-5548 | 1 | BEARING | |
| | 19 | | 123-2112 | 1 | LOCKNUT | |
| | | | | | THE FOLLOWING REPAIR KIT IS AVAILABLE: | |
| | | | 128-9280 | 1 | SEAL KIT | |
| | | | | | (INCLUDES PARTS MARKED J) | |

## 1336811 CYLINDER GP-BUCKET

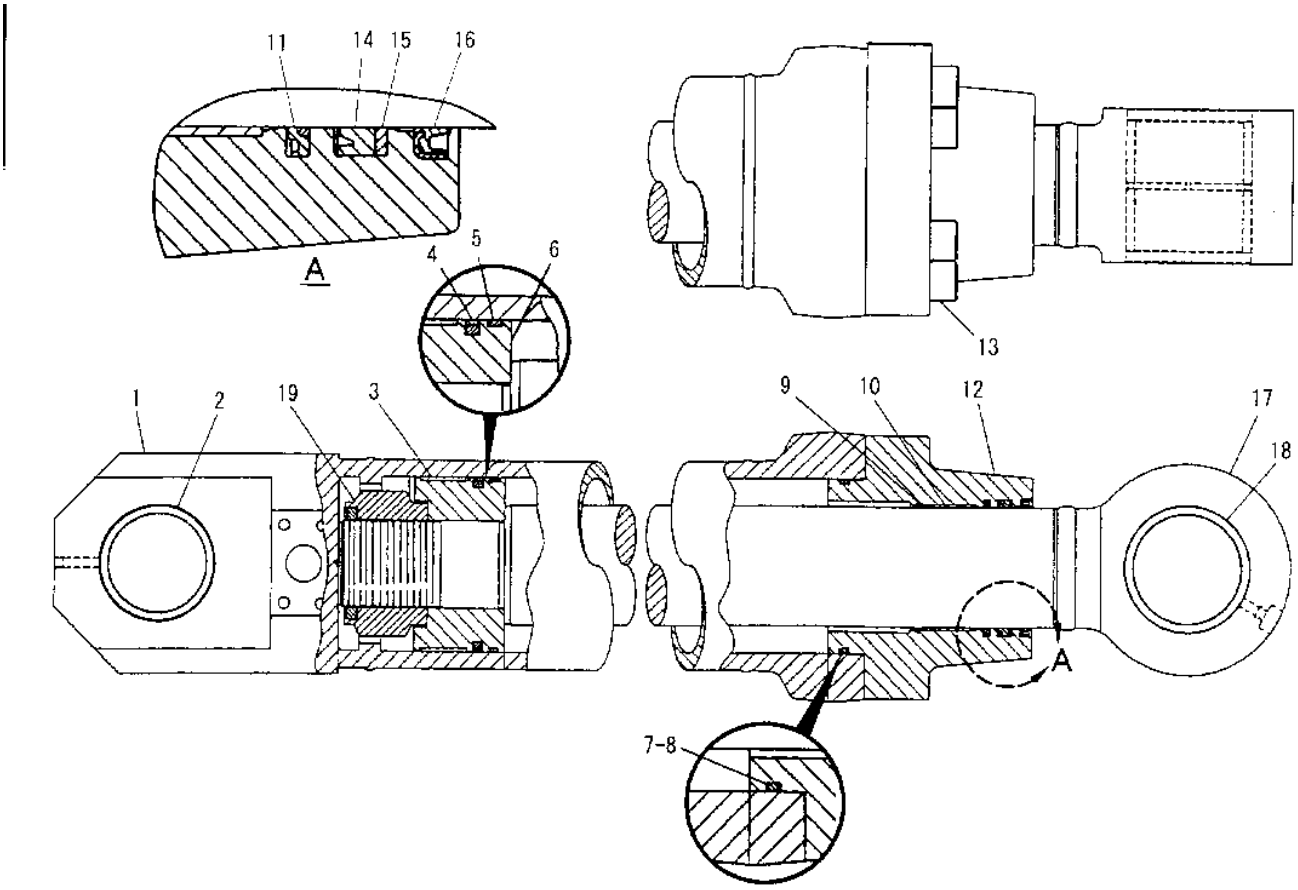


| NOTE | No. | PART No. | QTY | PART NAME |
|---|---|---|---|---|
| | 1 | 118 3936 | 1 | CYLINDER AS |
| | 2 | 087-5533 | 1 | BEARING |
| J | 3 | 118-3944 | 1 | RING |
| J | 4 | 9X-3604 | 1 | SEAL AS |
| J | 5 | 096-3201 | 1 | RING |
| | 6 | 123-2111 | 1 | PISTON |
| J | 7 | 095-1635 | 1 | SEAL-O-RING (ID=149.60mm) |
| J | 8 | 087-5550 | 1 | RING-BACK UP |
| | 9 | 7Y-4944 | 1 | RING-RETAINING |
| | 10 | 114-0762 | 1 | BEARING |
| J | 11 | 128-9266 | 1 | SEAL |
| | 12 | 087-5551 | 1 | HEAD |
| | 13 | 7Y-5239 | 8 | BOLT |
| J | 14 | 128-9270 | 1 | SEAL |
| J | 15 | 7Y-4941 | 1 | RING-BACK UP |
| J | 16 | 133-6814 | 1 | SEAL |
| | 17 | 123-2105 | 1 | ROD AS |
| | 18 | 087-5548 | 1 | BEARING |
| | 19 | 123 2112 | 1 | LOCKNUT |

| NOTE | No. | PART No. | QTY | PART NAME |
|---|---|---|---|---|
| | | | | THE FOLLOWING REPAIR KIT IS AVAILABLE: |
| | | 128-9280 | 1 | SEAL KIT (INCLUDES PARTS MARKED J) |

H58734E

GRAPHIC #1

h58734e

# 1158690 LINES GP-BOOM CYLINDER

LEFT HAND
PART OF 1163432-Page 259, 1336798-Page 259.01
AN ATTACHMENT

**Key:**

**SMCS**

| NOTE | REF NO | GRAPHIC REF | PART NUMBER | QTY | PART NAME 1 2 3 4 5 6 (PRODUCT LEVEL) | PRICE USD |
|---|---|---|---|---|---|---|
| | 1 | | 1P-3703 | 2 | SEAL | |
| | 2 | | 8T-4910 | 8 | BOLT (L=60mm) | |
| | 3 | | 131-9751 | 1 | TUBE AS | |
| | 4 | | 131-9747 | 1 | TUBE AS | |
| | 5 | | 8T-4223 | 2 | WASHER | |
| | 6 | | 8T-4139 | 2 | BOLT (L=30mm) | |
| | 7 | | 124-0887 | 1 | SUPPORT AS | |
| | 8 | | 108-7550 | 2 | CLIP | |
| | 9 | | 155-8856 | 1 | SUPPPORT AS | |
| | 10 | | 8T-4121 | 4 | WASHER | |
| | 11 | | 8T-4196 | 4 | BOLT (L=35mm) | |
| | 12 | | 5K-9090 | 2 | SEAL-O-RING (OD=27.22mm) | |

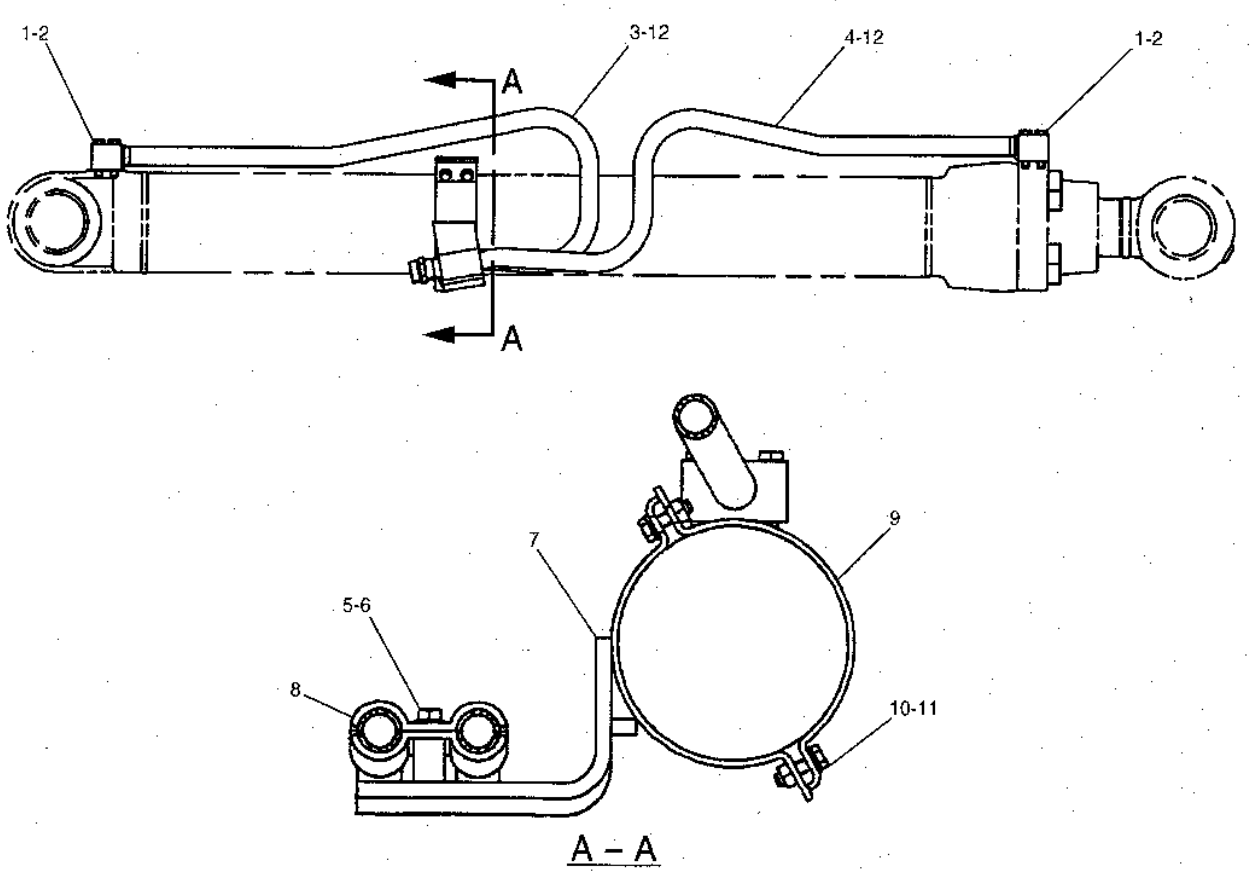


GRAPHIC #1

h79306e

# 1158691 LINES GP-BOOM CYLINDER

RIGHT HAND
PART OF 1163433-Page 259, 1336799-Page 259.01
AN ATTACHMENT

**Key:**

**SMCS**

| NOTE | REF NO | GRAPHIC REF | PART NUMBER | QTY | PART NAME 1 2 3 4 5 6 (PRODUCT LEVEL) | PRICE USD |
|---|---|---|---|---|---|---|
| | 1 | | 1P-3703 | 2 | SEAL | |
| | 2 | | 8T-4910 | 8 | BOLT (L=60mm) | |
| | 3 | | 131-9752 | 1 | TUBE AS | |
| | 4 | | 131-9745 | 1 | TUBE AS | |
| | 5 | | 115-8856 | 1 | SUPPORT AS | |
| | 6 | | 124-0891 | 1 | SUPPORT AS | |
| | 7 | | 8T-4223 | 2 | WASHER | |
| | 8 | | 8T-4139 | 2 | BOLT (L=30mm) | |
| | 9 | | 108-7550 | 2 | CLIP | |
| | 10 | | 8T-4121 | 4 | WASHER | |
| | 11 | | 8T-4196 | 4 | BOLT (L=35mm) | |
| | 12 | | 5K-9090 | 2 | SEAL-O-RING (OD=27.22mm) | |

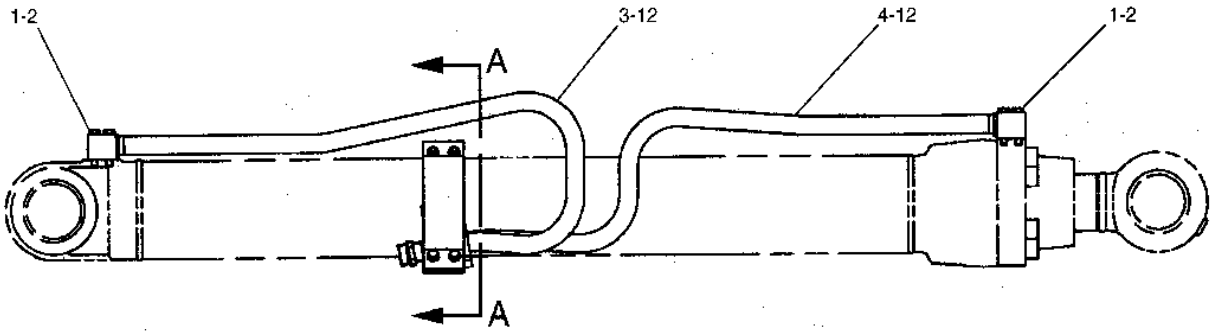


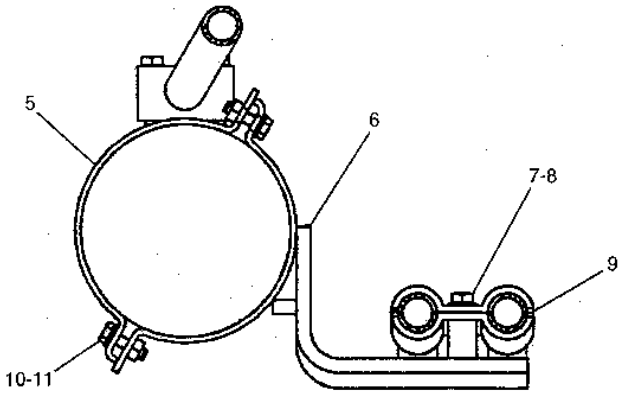


A – A

GRAPHIC #1

h79307e

# 1158692 LINES GP-STICK CYLINDER

PART OF 1163434, 1336800-Page 260
AN ATTACHMENT

**Key:**

**SMCS**

| NOTE | REF NO | GRAPHIC REF | PART NUMBER | QTY | PART NAME 1 2 3 4 5 6 (PRODUCT LEVEL) | PRICE USD |
|---|---|---|---|---|---|---|
| | 1 | | 087-5667 | 1 | TUBE AS | |
| | 2 | | 1P-3704 | 1 | SEAL (OD=45.0mm) | |
| | 3 | | 8T-4648 | 4 | BOLT (L=70mm) | |
| | 4 | | 124-0901 | 1 | SUPPORT AS | |
| | 5 | | 124-0909 | 2 | CLIP | |
| | 6 | | 9X-8257 | 2 | WASHER | |
| | 7 | | 7X-2553 | 2 | BOLT (L=40mm) | |
| | 8 | | 8T-4121 | 4 | WASHER-HARD | |
| | 9 | | 8T-4196 | 4 | BOLT (L=35mm) | |
| | 10 | | 124-0903 | 1 | SUPPORT AS | |

## 1158692 LINES GP-STICK CYLINDER

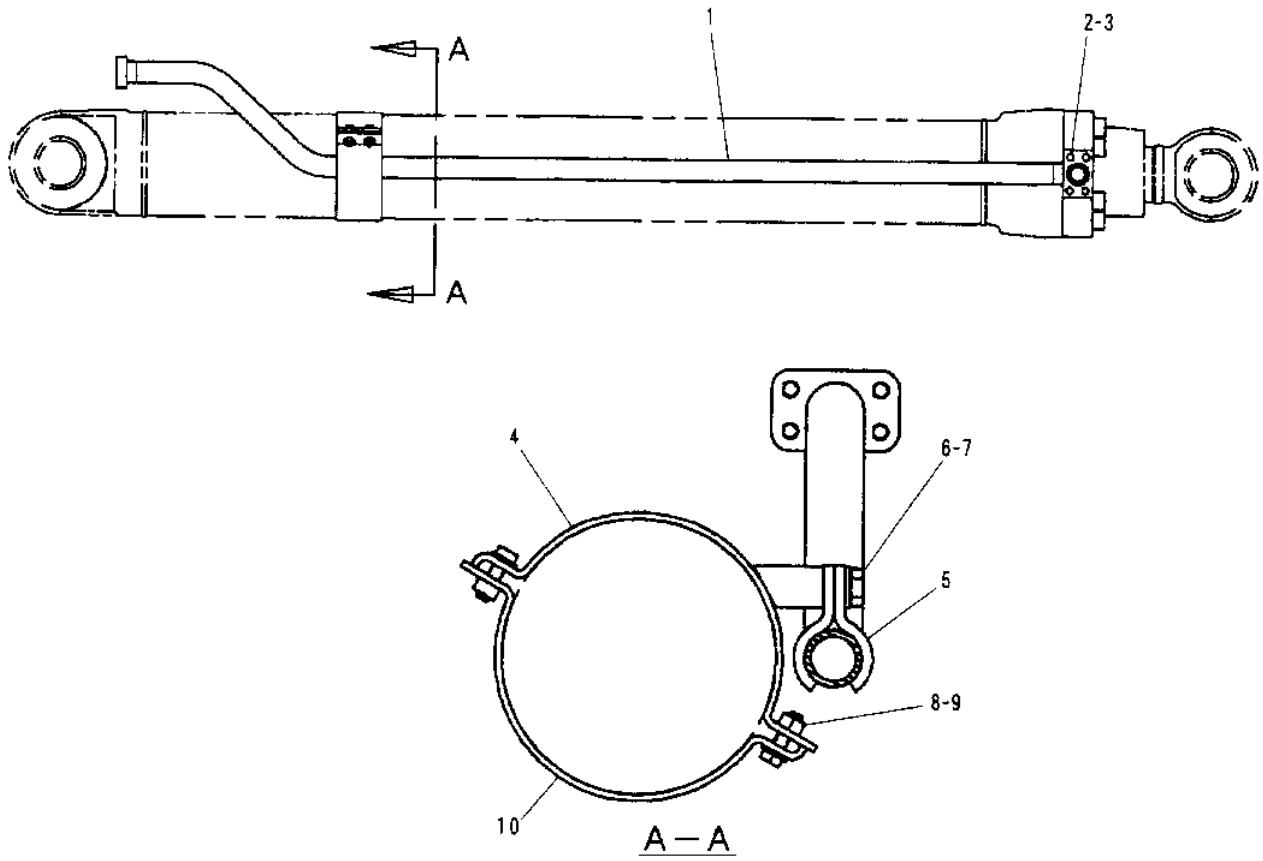


| NOTE | No. | PART No. | QTY | PART NAME |
|---|---|---|---|---|
| | 1 | 087-5667 | 1 | TUBE AS |
| | 2 | 1P-3704 | 1 | SEAL (OD=45.0mm) |
| | 3 | 8T-4648 | 4 | BOLT (L=70mm) |
| | 4 | 124-0901 | 1 | SUPPORT AS |
| | 5 | 124-0909 | 2 | CLIP |
| | 6 | 9X-8257 | 2 | WASHER |
| | 7 | 7X-2553 | 2 | BOLT (L=40mm) |
| | 8 | 8T-4121 | 4 | WASHER-HARD |
| | 9 | 8T-4196 | 4 | BOLT (L=35mm) |
| | 10 | 124-0903 | 1 | SUPPORT AS |

| NOTE | No. | PART No. | QTY | PART NAME |
|---|---|---|---|---|

H58737E

# 1158693 LINES GP-BUCKET CYLINDER

D FAMILY
PART OF 1163435-Page 261, 1336801-Page 261.01
AN ATTACHMENT

**Key:**

**SMCS**

| NOTE | REF NO | GRAPHIC REF | PART NUMBER | QTY | PART NAME 1 2 3 4 5 6 (PRODUCT LEVEL) | PRICE USD |
|---|---|---|---|---|---|---|
| | 1 | | 115-8960 | 1 | TUBE AS | |
| | 2 | | 1P-3703 | 1 | SEAL (OD=38.66mm) | |
| | 3 | | 8T-4910 | 4 | BOLT (L=60mm) | |
| | 4 | | 119-2379 | 1 | SUPPORT AS | |
| | 5 | | 8T-4121 | 4 | WASHER-HARD | |
| | 6 | | 8T-4196 | 4 | BOLT (L=35mm) | |
| | 7 | | 119-2378 | 1 | SUPPORT AS | |
| | 8 | | 7Y-3732 | 2 | CLIP | |
| | 9 | | 8T-4139 | 2 | BOLT (L=30mm) | |
| | 10 | | 8T-4223 | 2 | WASHER-HARD | |

## 1158693 LINES GP-BUCKET CYLINDER

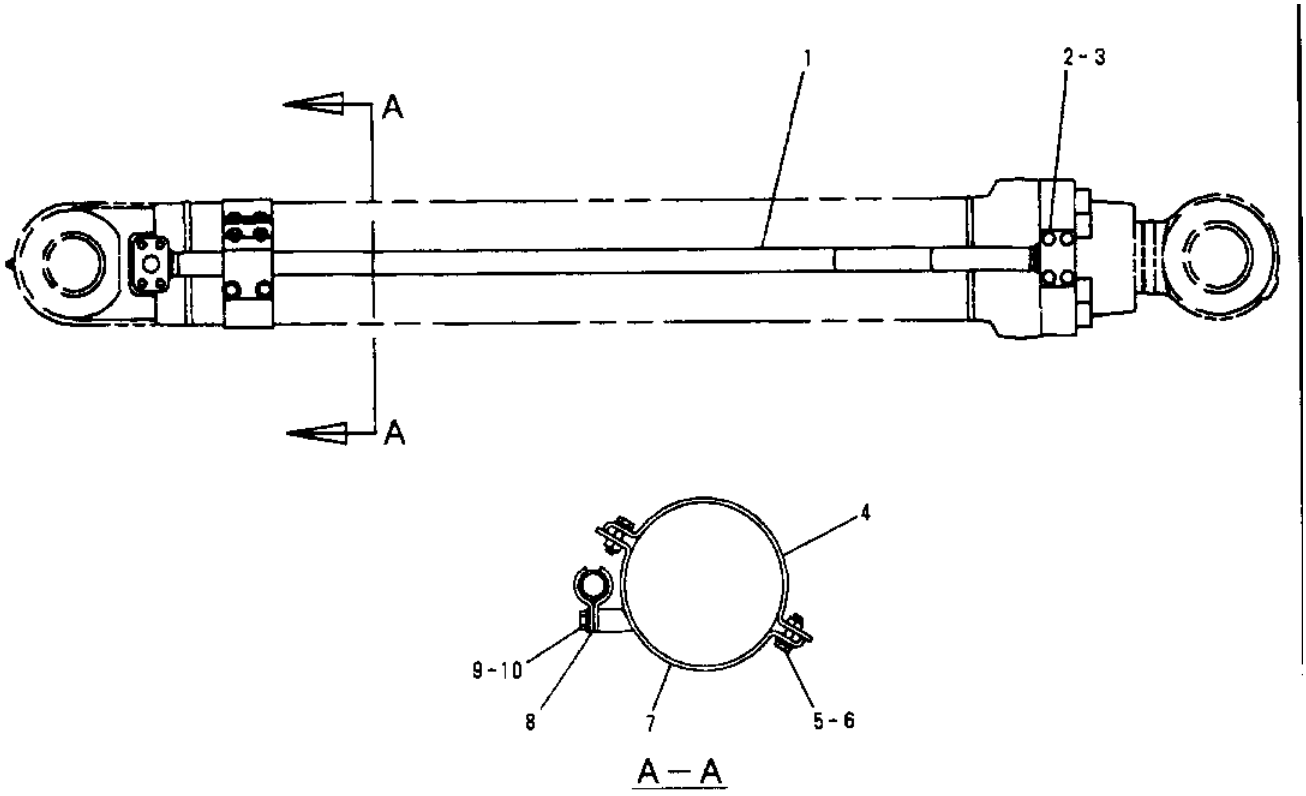


| NOTE | No. | PART No. | QTY | PART NAME | NOTE | No. | PART No. | QTY | PART NAME |
|---|---|---|---|---|---|---|---|---|---|
| | 1 | 115-8960 | 1 | TUBE AS | | | | | |
| | 2 | 1P-3703 | 1 | SEAL (OD=38.66mm) | | | | | |
| | 3 | 8T-4910 | 4 | BOLT (L=60mm) | | | | | |
| | 4 | 119-2379 | 1 | SUPPORT AS | | | | | |
| | 5 | 8T-4121 | 4 | WASHER-HARD | | | | | |
| | 6 | 8T-4196 | 4 | BOLT (L=35mm) | | | | | |
| | 7 | 119-2378 | 1 | SUPPORT AS | | | | | |
| | 8 | 7Y-3732 | 2 | CLIP | | | | | |
| | 9 | 8T-4139 | 2 | BOLT (L=30mm) | | | | | |
| | 10 | 8T-4223 | 2 | WASHER-HARD | | | | | |

H51881E

# 1158694 LINES GP-BUCKET CYLINDER

E FAMILY
PART OF 1336802-Page 261
AN ATTACHMENT

**Key:**

**SMCS**

| NOTE | REF NO | GRAPHIC REF | PART NUMBER | QTY | PART NAME 1 2 3 4 5 6 (PRODUCT LEVEL) | PRICE USD |
|---|---|---|---|---|---|---|
| | 1 | | 115-8961 | 1 | TUBE AS | |
| | 2 | | 1P-3704 | 1 | SEAL | |
| | 3 | | 8T-4910 | 4 | BOLT (L=60mm) | |
| | 4 | | 8T-4139 | 4 | BOLT (L=30mm) | |
| | 5 | | 8T-4223 | 4 | WASHER | |
| | 6 | | 7Y-3732 | 4 | CLIP | |
| | 7 | | 124-0910 | 2 | SUPPORT AS | |
| | 8 | | 8T-4121 | 8 | WASHER | |
| | 9 | | 8T-4196 | 8 | BOLT (L=35mm) | |
| | 10 | | 124-0911 | 2 | SUPPORT AS | |

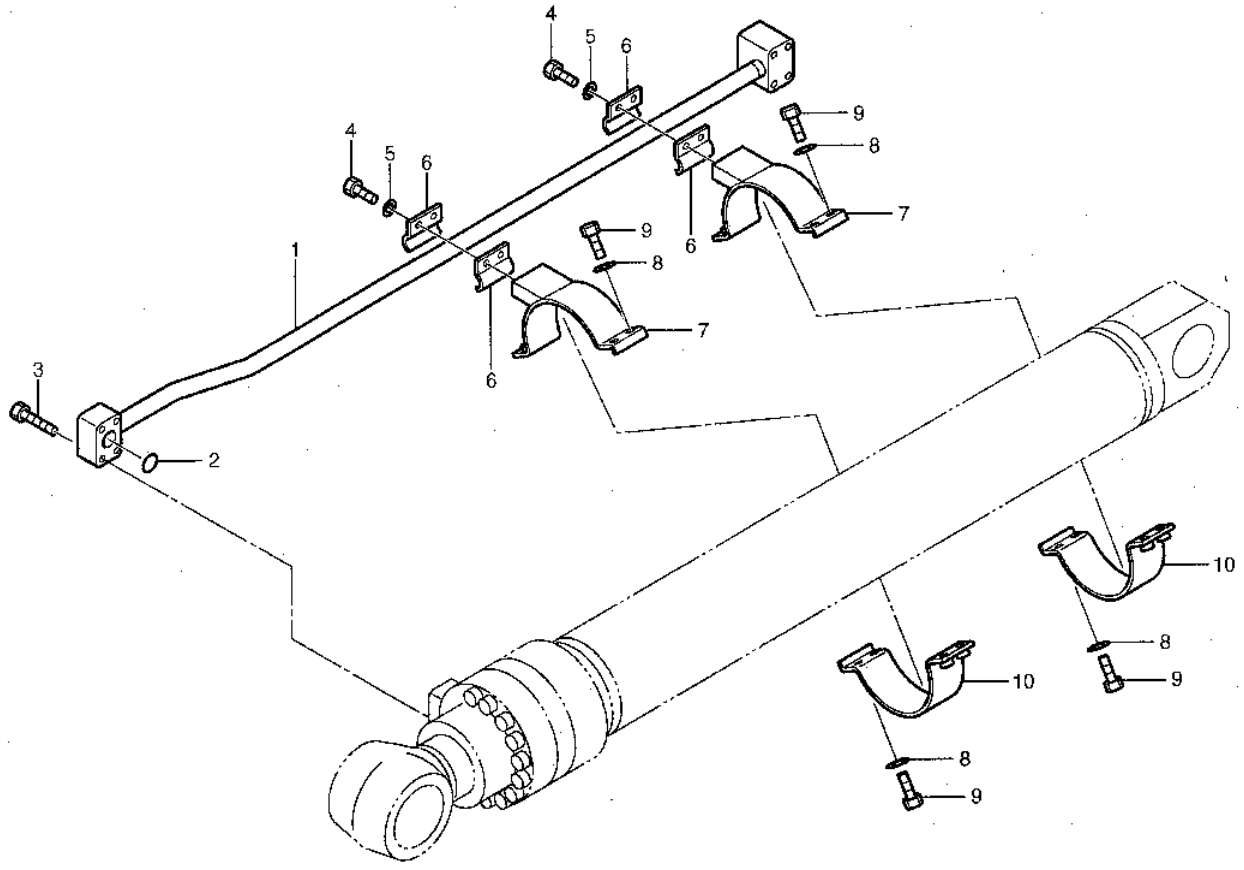


GRAPHIC #1

h66630e

# 1136865 LINES GP-BOOM CYLINDER

BOOM LOWERING CONTROL
PART OF 1153096-Page 301.02
1460562-Page 276
AN ATTACHMENT

**Key:** Y - SEE SEPARATE ILLUSTRATION

**SMCS**

| NOTE | REF NO | GRAPHIC REF | PART NUMBER | QTY | PART NAME 1 2 3 4 5 6 (PRODUCT LEVEL) | PRICE USD |
|---|---|---|---|---|---|---|
| | 1 | | 115-8856 | 2 | SUPPORT AS | |
| | 2 | | 8T-4910 | 8 | BOLT (L=60mm) | |
| | 3 | | 8T-4136 | 4 | BOLT (L=25mm) | |
| | 4 | | 8T-4121 | 20 | WASHER | |
| | 5 | | 6V-9182 | 2 | ELBOW | |
| | 6 | | 7M-8485 | 2 | SEAL-O-RING (ID=29.74mm) | |
| | 7 | | 6V-9746 | 4 | SEAL-O-RING (OD=22.50mm) | |
| Y | 8 | | 146-0562 | 2 | VALVE GP | |
| | 9 | | 8T-4139 | 8 | BOLT (L=30mm) | |
| | 10 | | 146-0568 | 2 | PLATE | |
| | 11 | | 108-7550 | 4 | CLIP | |
| | 12 | | 8T-4223 | 8 | WASHER | |
| | 13 | | 133-5738 | 1 | TUBE AS | |
| | 14 | | 146-0566 | 1 | TUBE AS | |
| | 15 | | 5K-9090 | 2 | SEAL-O-RING (OD=27.22mm) | |
| | 16 | | 8T-4195 | 8 | BOLT (L=30mm) | |
| | 17 | | 146-0567 | 1 | TUBE AS | |
| | 18 | | 1P-3703 | 4 | SEAL | |
| | 19 | | 133-5736 | 1 | TUBE AS | |
| | 20 | | 7Y-4868 | 4 | CLIP | |
| | 21 | | 137-0840 | 1 | SUPPORT AS | |
| | 22 | | 8T-4196 | 12 | BOLT (L=35mm) | |
| | 23 | | 137-0839 | 1 | SUPPORT AS | |

# 1460562 VALVE GP-CHECK & RELIEF

PART OF 1136865-Page 275
1460563-Page 277, 1315691-Page 278
AN ATTACHMENT

**Key:** Y - SEE SEPARATE ILLUSTRATION

**SMCS**

| NOTE | REF NO | GRAPHIC REF | PART NUMBER | QTY | PART NAME 1 2 3 4 5 6 (PRODUCT LEVEL) | PRICE USD |
|---|---|---|---|---|---|---|
| Y | 1 | | 131-5691 | 1 | VALVE GP | |
| | 2 | | 4J-0520 | 1 | SEAL-O-RING (ID=32.92mm) | |
| | 3 | | 095-0673 | 4 | BOLT (L=60mm) | |
| Y | 4 | | 146-0563 | 1 | VALVE GP | |

## 1460562 VALVE GP-CHECK & RELIEF

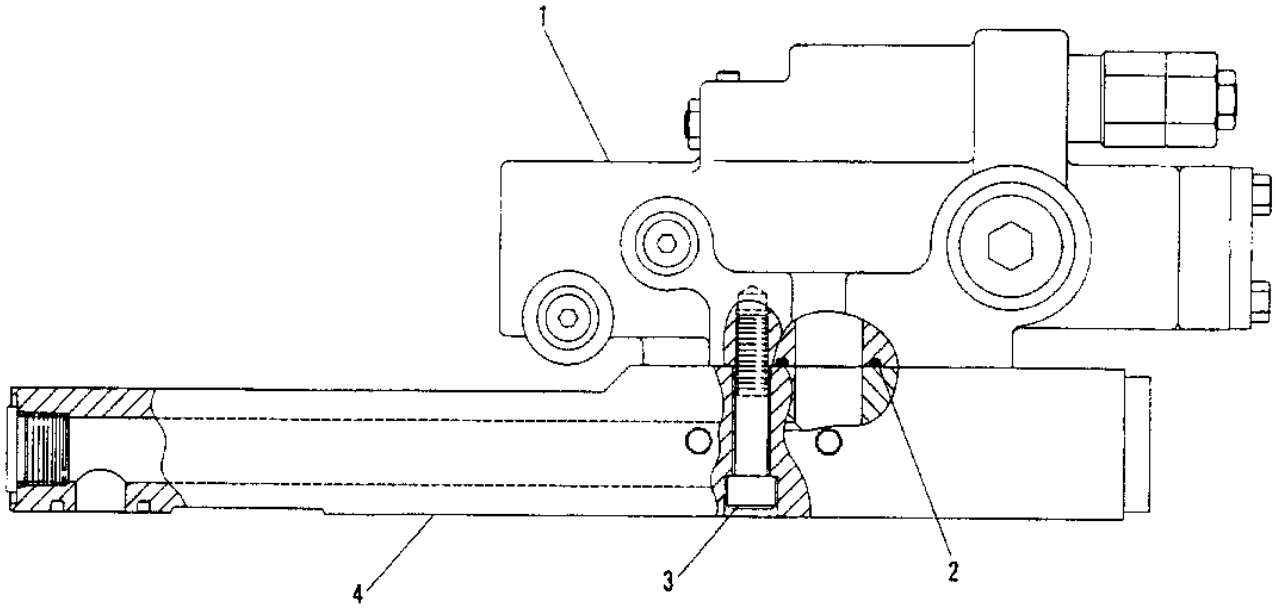


| NOTE | No. | PART No. | QTY | PART NAME |
|---|---|---|---|---|
| Y | 1 | 131-5691 | 1 | VALVE GP |
| | 2 | 4J-0520 | 1 | SEAL-O-RING (ID=32.92mm) |
| | 3 | 095-0673 | 4 | BOLT (L=60mm) |
| Y | 4 | 146-0563 | 1 | VALVE GP |

| NOTE | No. | PART No. | QTY | PART NAME |
|---|---|---|---|---|

Y-SEE SEPARATE ILLUSTRATION

H64036E

GRAPHIC #1

h64036e

# 1460563 VALVE GP-CHECK

PART OF 1460562-Page 276
AN ATTACHMENT

**Key:**

**SMCS**

| NOTE | REF NO | GRAPHIC REF | PART NUMBER | QTY | PART NAME 1 2 3 4 5 6 (PRODUCT LEVEL) | PRICE USD |
|---|---|---|---|---|---|---|
| | 1 | | 095-0728 | 2 | SCREW-MACHINE | |
| | 2 | | 146-0565 | 1 | ADAPTER | |
| | 3 | | 095-1598 | 1 | SEAL-O-RING (ID=30.70mm) | |
| | 4 | | 095-1792 | 1 | RING-BACK UP | |
| | 5 | | 123-2535 | 1 | VALVE | |
| | 6 | | 123-2537 | 1 | SPRING | |
| | 7 | | 9S-8008 | 1 | PLUG | |
| | 8 | | 3D-2824 | 1 | SEAL-O-RING (ID=23.47mm) | |

## 1460563 VALVE GP-CHECK

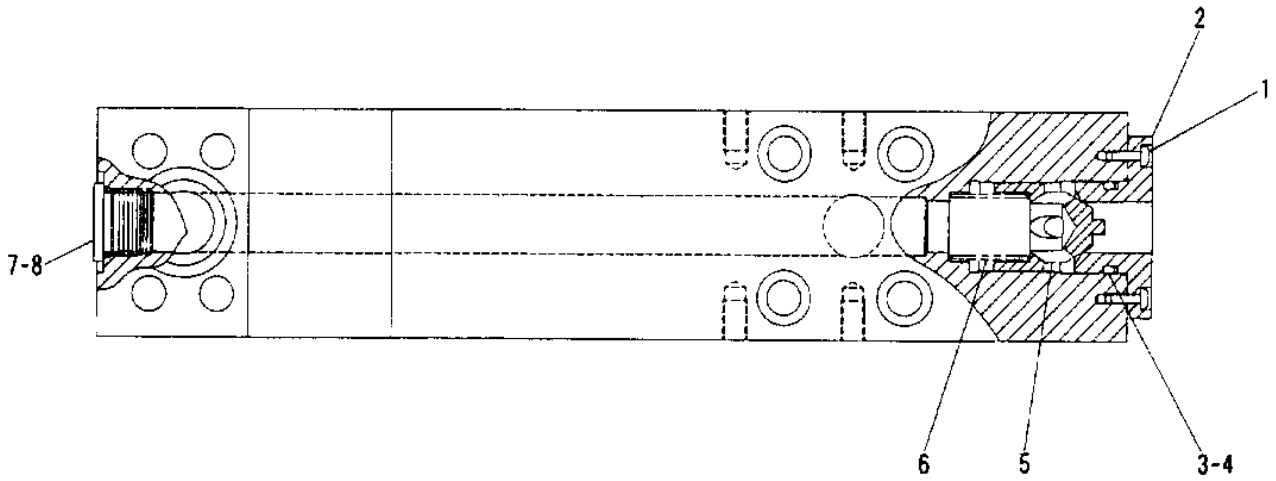


| NOTE | No. | PART No. | QTY | PART NAME |
|---|---|---|---|---|
| | 1 | 095-0728 | 2 | SCREW-MACHINE |
| | 2 | 146-0565 | 1 | ADAPTER |
| | 3 | 095-1598 | 1 | SEAL-O-RING (ID=30.70mm) |
| | 4 | 095-1792 | 1 | RING-BACK UP |
| | 5 | 123-2535 | 1 | VALVE |
| | 6 | 123-2537 | 1 | SPRING |
| | 7 | 9S-8008 | 1 | PLUG |
| | 8 | 3D-2824 | 1 | SEAL-O-RING (ID=23.47mm) |

H64037E

GRAPHIC #1

h64037e

# 1315691 VALVE GP-LOAD CONTROL

PART OF 1460562-Page 276
1163600-Page 355
AN ATTACHMENT

**Key:** Y - Separate Illustration

**SMCS**

| NOTE | REF NO | GRAPHIC REF | PART NUMBER | QTY | PART NAME 1 2 3 4 5 6 (PRODUCT LEVEL) | PRICE USD |
|---|---|---|---|---|---|---|
| | 1 | | 131-5677 | 1 | VALVE GP | |
| | 2 | | 9S-8004 | 2 | PLUG | |
| | 3 | | 3J-1907 | 2 | SEAL-O-RING (ID=11.89mm) | |
| | 4 | | 9S-9334 | 2 | PLUG | |
| | 5 | | 7M-8485 | 2 | SEAL-O-RING (ID=29.74mm) | |
| | 6 | | 8T-6759 | 4 | PLUG | |
| | 7 | | 123-2593 | 1 | WASHER | |
| | 8 | | 123-2594 | 1 | SPRING | |
| | 9 | | 123-2595 | 1 | SPRING | |
| | 10 | | 123-2601 | 1 | COVER | |
| | 11 | | 123-2603 | 1 | GUIDE | |
| | 12 | | 8T-4189 | 4 | BOLT (L=20mm) | |
| | 13 | | 5K-0216 | 1 | SEAL-O-RING (ID=47.35mm) | |
| | 14 | | 131-5688 | 1 | SETSCREW | |
| | 15 | | 131-5916 | 1 | WASHER | |
| | 16 | | 102-0884 | 1 | BOLT | |
| | 17 | | 4B-9880 | 1 | BALL | |
| | 18 | | 8T-4133 | 1 | NUT | |
| Y | 19 | | 116-3600 | 1 | VALVE GP | |
| | 20 | | 131-5766 | 1 | SEAT | |
| | 21 | | 8T-6757 | 2 | PLUG | |
| | 22 | | 131-5917 | 1 | WASHER | |

## 1315691 VALVE GP-LOAD CONTROL

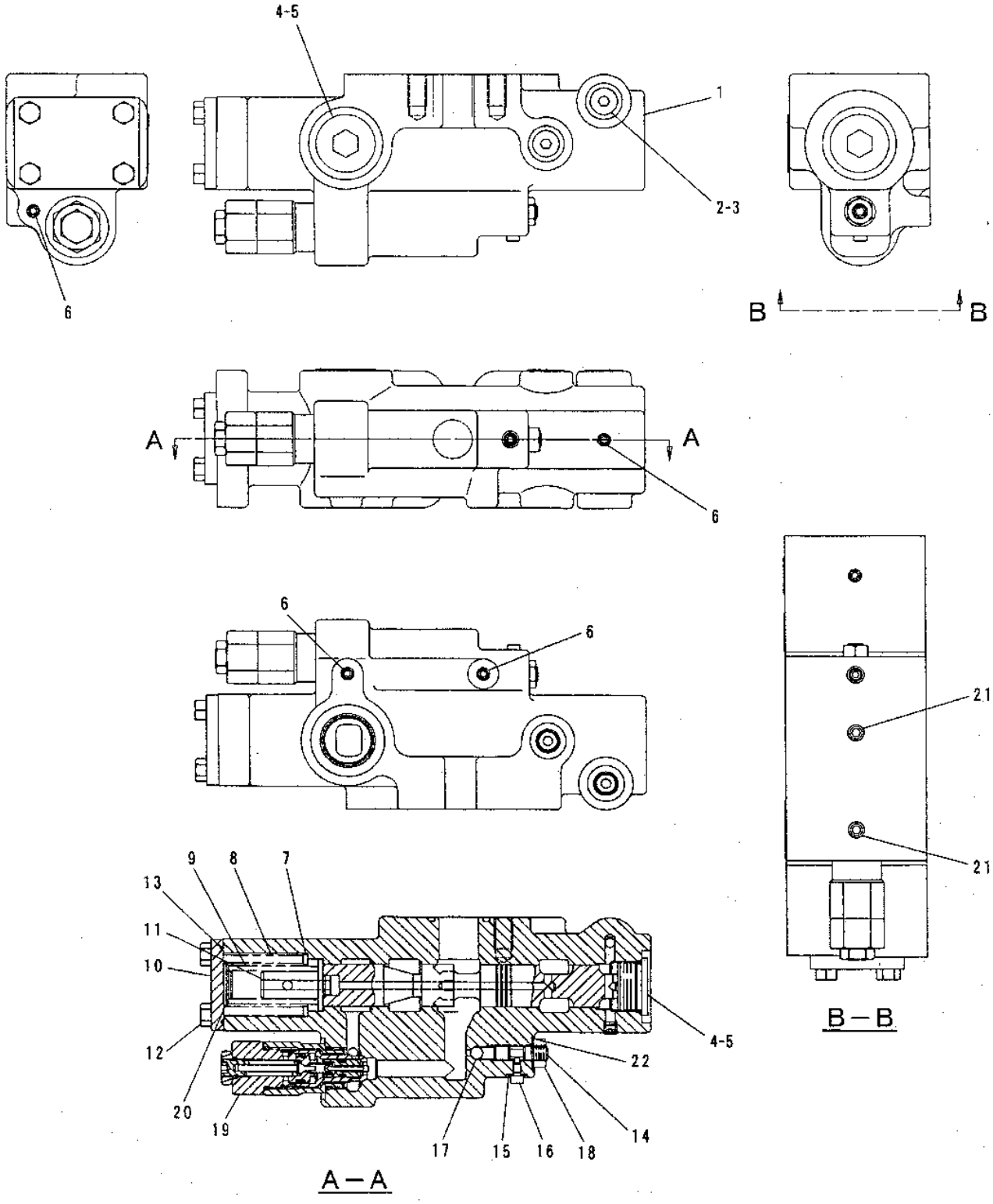


GRAPHIC #1

h64039e

# 1136846 LINES GP-BOOM

R-BOOM
PART OF 1205003-Page 484, 1317671-Page 485.01, 1370946-Page 485.02
AN ATTACHMENT

**Key:** E - ORDER BY THE CENTIMETER

**SMCS**

| NOTE | REF NO | GRAPHIC REF | PART NUMBER | QTY | PART NAME 1 2 3 4 5 6 (PRODUCT LEVEL) | PRICE USD |
|---|---|---|---|---|---|---|
| | 1 | | 124-1130 | 2 | TUBE AS | |
| | 2 | | 124-1131 | 1 | TUBE AS | |
| | 3 | | 133-5692 | 1 | TUBE AS | |
| | 4 | | 1P-3704 | 7 | SEAL (OD=45.0mm) | |
| | 5 | | 1P-5767 | 8 | FLANGE | |
| | 6 | | 8T-4223 | 40 | WASHER-HARD | |
| | 7 | | 8T-4184 | 16 | BOLT (L=45mm) | |
| | 8 | | 087-6649 | 1 | HOSE AS | |
| | | | 2P-6733 | 2 | STEM AS (STRAIGHT) | |
| E | | | 5P-0202 | | HOSE (115cm) | |
| | | | 5P-0477 | 2 | SLEEVE | |
| | 9 | | 087-6646 | 1 | HOSE AS | |
| | | | 2P-6732 | 1 | STEM AS (90 degrees) | |
| | | | 2P-6733 | 1 | STEM AS (STRAIGHT) | |
| E | | | 5P-0202 | | HOSE (115cm) | |
| | | | 5P-0477 | 2 | SLEEVE | |
| | 10 | | 124-1133 | 1 | TUBE AS | |
| | 11 | | 8T-4956 | 22 | BOLT (L=35mm) | |
| | 12 | | 124-1134 | 1 | TUBE AS | |
| | 13 | | 132-5874 | 1 | TUBE AS | |
| | 14 | | 124-1106 | 6 | CLIP | |
| | 15 | | 9X-8257 | 6 | WASHER | |
| | 16 | | 7X-2553 | 6 | BOLT (L=40mm) | |
| | 17 | | 124-1109 | 6 | CLIP | |
| | 18 | | 8T-4139 | 4 | BOLT (L=30mm) | |
| | 19 | | 124-1108 | 8 | CLIP | |
| | 20 | | 124-1107 | 6 | GROMMET | |
| | 21 | | 129-5874 | 10 | GROMMET | |

## 1136846 LINES GP-BOOM

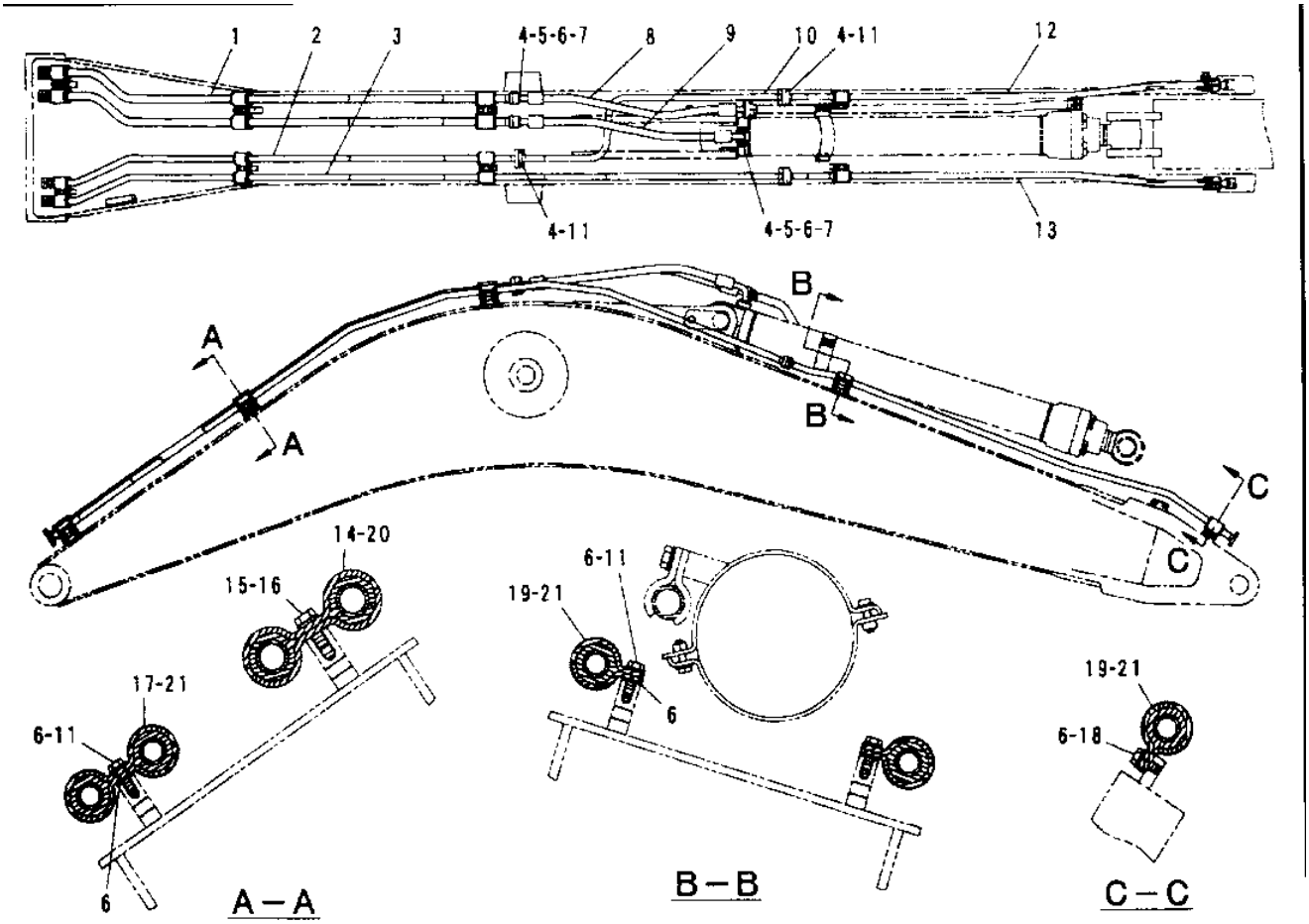


| NOTE | No. | PART No. | QTY | PART NAME |
|---|---|---|---|---|
| | 1 | 124-1130 | 2 | TUBE AS |
| | 2 | 124-1131 | 1 | TUBE AS |
| | 3 | 133-5692 | 1 | TUBE AS |
| | 4 | 1P-3704 | 7 | SEAL (OD=45.0mm) |
| | 5 | 1P-5767 | 8 | FLANGE |
| | 6 | 8T-4223 | 40 | WASHER-HARD |
| | 7 | 8T-4184 | 16 | BOLT (L=45mm) |
| | 8 | 087-6649 | 1 | HOSE AS |
| | | 2P-6733 | 2 | STEM AS (STRAIGHT) |
| E | | 5P-0202 | | HOSE ···(115cm) |
| | | 5P-0477 | 2 | SLEEVE |
| | 9 | 087-6646 | 1 | HOSE AS |
| | | 2P-6732 | 1 | STEM AS (90°) |
| | | 2P-6733 | 1 | STEM AS (STRAIGHT) |
| E | | 5P-0202 | | HOSE ···(115cm) |
| | | 5P-0477 | 2 | SLEEVE |
| | 10 | 124-1133 | 1 | TUBE AS |
| | 11 | 8T-4956 | 22 | BOLT (L=35mm) |
| | 12 | 124-1134 | 1 | TUBE AS |
| | 13 | 132-5874 | 1 | TUBE AS |
| | 14 | 124-1106 | 6 | CLIP |
| | 15 | 9X-8257 | 6 | WASHER |
| | 16 | 7X-2553 | 6 | BOLT (L=40mm) |
| | 17 | 124-1109 | 6 | CLIP |
| | 18 | 8T-4139 | 4 | BOLT (L=30mm) |
| | 19 | 124-1108 | 8 | CLIP |
| | 20 | 124-1107 | 6 | GROMMET |
| | 21 | 129-5874 | 10 | GROMMET |

E-ORDER BY THE CENTIMETER

H55699E

# 1136849 LINES GP-BOOM

M-BOOM
PART OF 1317673-Page 485.01
AN ATTACHMENT

**Key:** E - ORDER BY THE CENTIMETER

**SMCS**

| NOTE | REF NO | GRAPHIC REF | PART NUMBER | QTY | PART NAME 1 2 3 4 5 6 (PRODUCT LEVEL) | PRICE USD |
|---|---|---|---|---|---|---|
| | 1 | | 124-0975 | 2 | TUBE AS | |
| | 2 | | 124-1219 | 1 | TUBE AS | |
| | 3 | | 132-5108 | 1 | TUBE AS | |
| | 4 | | 1P-3704 | 7 | SEAL | |
| | 5 | | 1P-5767 | 8 | SEAL | |
| | 6 | | 8T-4223 | 40 | WASHER | |
| | 7 | | 8T-4194 | 16 | BOLT (L=50mm) | |
| | 8 | | 087-6649 | 1 | HOSE AS | |
| | | | 2P-6733 | 2 | STEM AS (STRAIGHT) | |
| E | | | 5P-0202 | | HOSE (115cm) | |
| | | | 5P-0477 | 2 | SLEEVE | |
| | 9 | | 087-6646 | 1 | HOSE AS | |
| | | | 2P-6732 | 1 | STEM AS (90°) | |
| | | | 2P-6733 | 1 | STEM AS (STRAIGHT) | |
| E | | | 5P-0202 | | HOSE (115cm) | |
| | | | 5P-0477 | 2 | SLEEVE | |
| | 10 | | 124-1221 | 1 | TUBE AS | |
| | 11 | | 8T-4956 | 22 | BOLT (L=35mm) | |
| | 12 | | 124-1210 | 1 | TUBE AS | |
| | 13 | | 132-5109 | 1 | TUBE AS | |
| | 14 | | 124-1106 | 6 | CLIP | |
| | 15 | | 9X-8257 | 6 | WASHER | |
| | 16 | | 7X-2553 | 6 | BOLT (L=40mm) | |
| | 17 | | 124-1109 | 6 | CLIP | |
| | 18 | | 8T-4139 | 4 | BOLT (L=30mm) | |
| | 19 | | 124-1108 | 8 | CLIP | |
| | 20 | | 124-1107 | 6 | GROMMET | |
| | 21 | | 129-5874 | 10 | GROMMET | |

## 1136849 LINES GP-BOOM

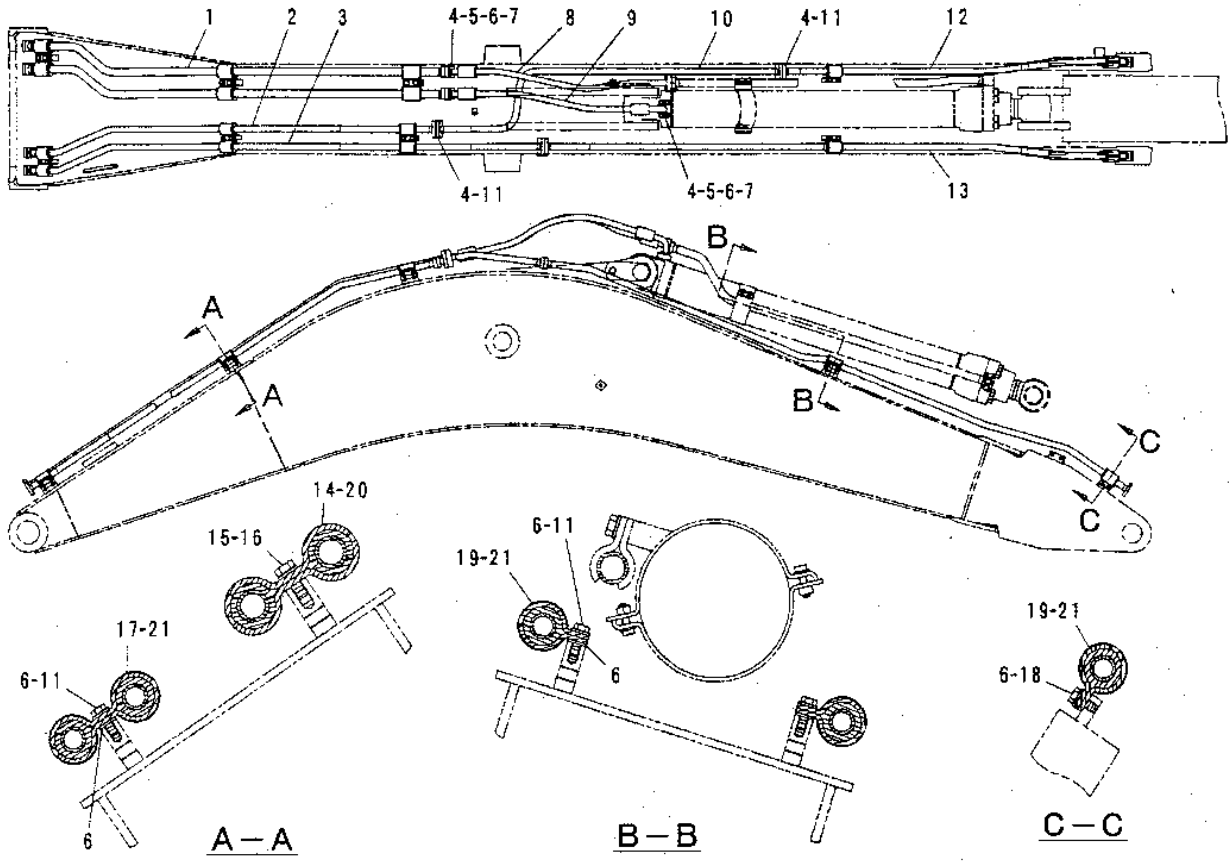


GRAPHIC #1

h79308e

# 1211927 LINES GP-AUXILIARY HYDRAULIC

R-BOOM
AN ATTACHMENT

**Key:**

**SMCS**

| NOTE | REF NO | GRAPHIC REF | PART NUMBER | QTY | PART NAME 1 2 3 4 5 6 (PRODUCT LEVEL) | PRICE USD |
|---|---|---|---|---|---|---|
| | 1 | | 121-1764 | 1 | TUBE AS | |
| | 2 | | 121-1765 | 1 | TUBE AS | |
| | 3 | | 121-1766 | 1 | TUBE AS | |
| | 4 | | 121-1767 | 1 | TUBE AS | |
| | 5 | | 124-0909 | 16 | CLIP | |
| | 6 | | 121-1948 | 3 | PLATE | |
| | 7 | | 121-1946 | 6 | PLATE | |
| | 8 | | 121-1947 | 3 | PLATE | |
| | 9 | | 1P-3705 | 2 | SEAL | |
| | 10 | | 8T-4174 | 6 | BOLT (L=120mm) | |
| | 11 | | 8T-7338 | 8 | BOLT (L=45mm) | |
| | 12 | | 8T-4173 | 6 | BOLT (L=110mm) | |
| | 13 | | 121-1676 | 1 | PLATE | |
| | 14 | | 9X-8257 | 32 | WASHER | |
| | 15 | | 7X-2554 | 12 | BOLT (L=70mm) | |
| | 16 | | 8T-4183 | 8 | BOLT (L=40mm) | |
| | 17 | | 127-6816 | 1 | PLATE | |
| | 18 | | 1P-3704 | 2 | SEAL (OD=45.0mm) | |
| | 19 | | 8T-4223 | 8 | WASHER | |
| | 20 | | 1P-5767 | 4 | FLANGE | |
| | 21 | | 8T-4194 | 8 | BOLT (L=50mm) | |

## 1211927 LINES GP-AUXILIARY HYDRAULIC

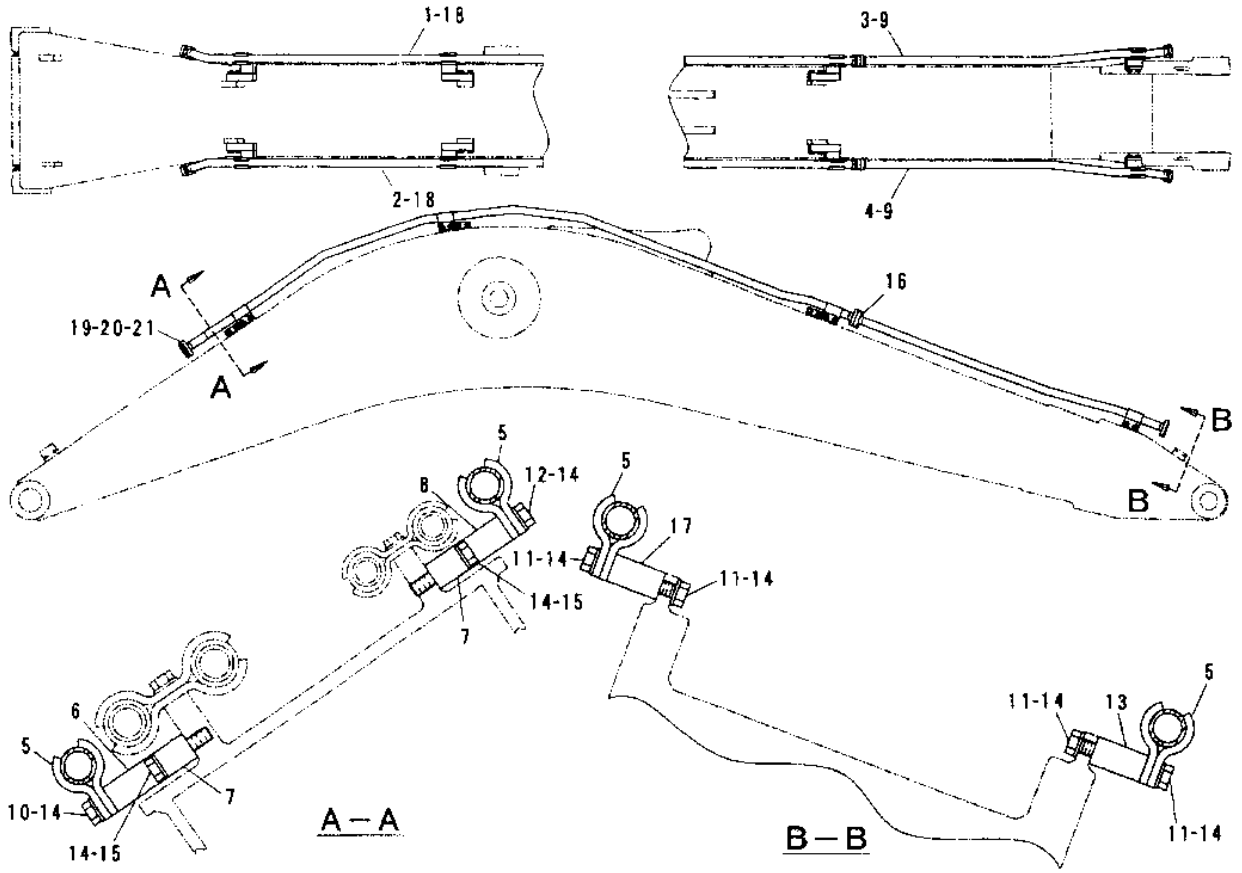


| NOTE | No. | PART No. | QTY | PART NAME | NOTE | No. | PART No. | QTY | PART NAME |
|---|---|---|---|---|---|---|---|---|---|
| | 1 | 121-1764 | 1 | TUBE AS | | 21 | 8T-4194 | 8 | BOLT (L=50mm) |
| | 2 | 121-1765 | 1 | TUBE AS | | | | | |
| | 3 | 121-1766 | 1 | TUBE AS | | | | | |
| | 4 | 121-1767 | 1 | TUBE AS | | | | | |
| | 5 | 124-0909 | 16 | CLIP | | | | | |
| | 6 | 121-1948 | 3 | PLATE | | | | | |
| | 7 | 121-1946 | 6 | PLATE | | | | | |
| | 8 | 121-1947 | 3 | PLATE | | | | | |
| | 9 | 1P-3705 | 2 | SEAL | | | | | |
| | 10 | 8T-4174 | 6 | BOLT (L=120mm) | | | | | |
| | 11 | 8T-7338 | 8 | BOLT (L=45mm) | | | | | |
| | 12 | 8T-4173 | 6 | BOLT (L=110mm) | | | | | |
| | 13 | 121-1676 | 1 | PLATE | | | | | |
| | 14 | 9X-8257 | 32 | WASHER | | | | | |
| | 15 | 7X-2554 | 12 | BOLT (L=70mm) | | | | | |
| | 16 | 8T-4183 | 8 | BOLT (L=40mm) | | | | | |
| | 17 | 127-6816 | 1 | PLATE | | | | | |
| | 18 | 1P-3704 | 2 | SEAL (OD=45.0mm) | | | | | |
| | 19 | 8T-4223 | 8 | WASHER | | | | | |
| | 20 | 1P-5767 | 4 | FLANGE | | | | | |

H64040E

# 1136851 LINES GP-STICK

R3.9D STICK
PART OF 1161480-Page 486
AN ATTACHMENT

**Key:** E - ORDER BY THE cm

**SMCS**

| NOTE | REF NO | GRAPHIC REF | PART NUMBER | QTY | PART NAME 1 2 3 4 5 6 (PRODUCT LEVEL) | PRICE USD |
|---|---|---|---|---|---|---|
| | 1 | | 8T-4223 | 16 | WASHER | |
| | 2 | | 4I-3695 | 2 | HOSE AS | |
| E | | | 5P-0201 | | HOSE (215cm) | |
| | | | 5P-1010 | 2 | SLEEVE | |
| | | | 5P-1125 | 1 | STEM AS (STRAIGHT) | |
| | | | 5P-1130 | 1 | STEM AS (90°) | |
| E | | | 6V-0746 | | GUARD (322cm) | |
| | 3 | | 087-5661 | 1 | BLOCK | |
| | 4 | | 6V-0400 | 8 | FLANGE | |
| | 5 | | 8T-5001 | 4 | BOLT (L=130mm) | |
| | 6 | | 1P-3703 | 5 | SEAL | |
| | 7 | | 8T-4184 | 12 | BOLT (L=45mm) | |

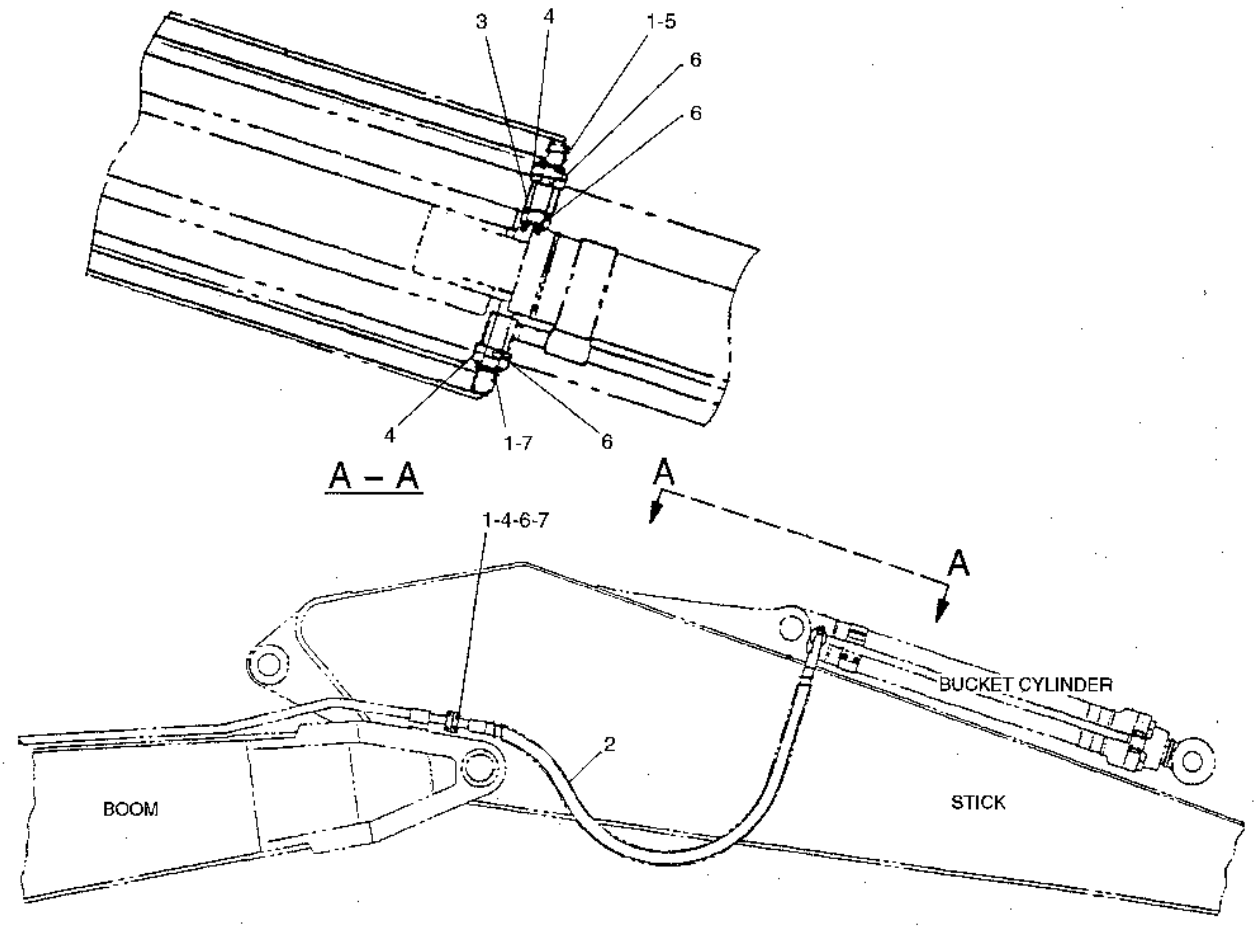


GRAPHIC #1

h83273e

# 1136853 LINES GP-STICK

R3.3D STICK
PART OF 1161482, 1205006-Page 487
AN ATTACHMENT

**Key:** E - ORDER BY THE CENTIMETER

**SMCS**

| NOTE | REF NO | GRAPHIC REF | PART NUMBER | QTY | PART NAME 1 2 3 4 5 6 (PRODUCT LEVEL) | PRICE USD |
|---|---|---|---|---|---|---|
| | 1 | | 8T-4223 | 16 | WASHER-HARD | |
| | 2 | | 087-6643 | 2 | HOSE AS | |
| E | | | 5P-0201 | | HOSE (195cm) | |
| | | | 5P-1010 | 2 | SLEEVE | |
| | | | 5P-1125 | 1 | STEM AS | |
| | | | 5P-1130 | 1 | STEM AS (90 degrees) | |
| E | | | 6V-0746 | | GUARD (272cm) | |
| | 3 | | 087-5661 | 1 | BLOCK | |
| | 4 | | 1P-3703 | 5 | SEAL (OD=38.66mm) | |
| | 5 | | 6V-0400 | 8 | FLANGE | |
| | 6 | | 8T-5001 | 4 | BOLT (L=130mm) | |
| | 7 | | 8T-4184 | 12 | BOLT (L=45mm) | |

## 1136853 LINES GP-STICK

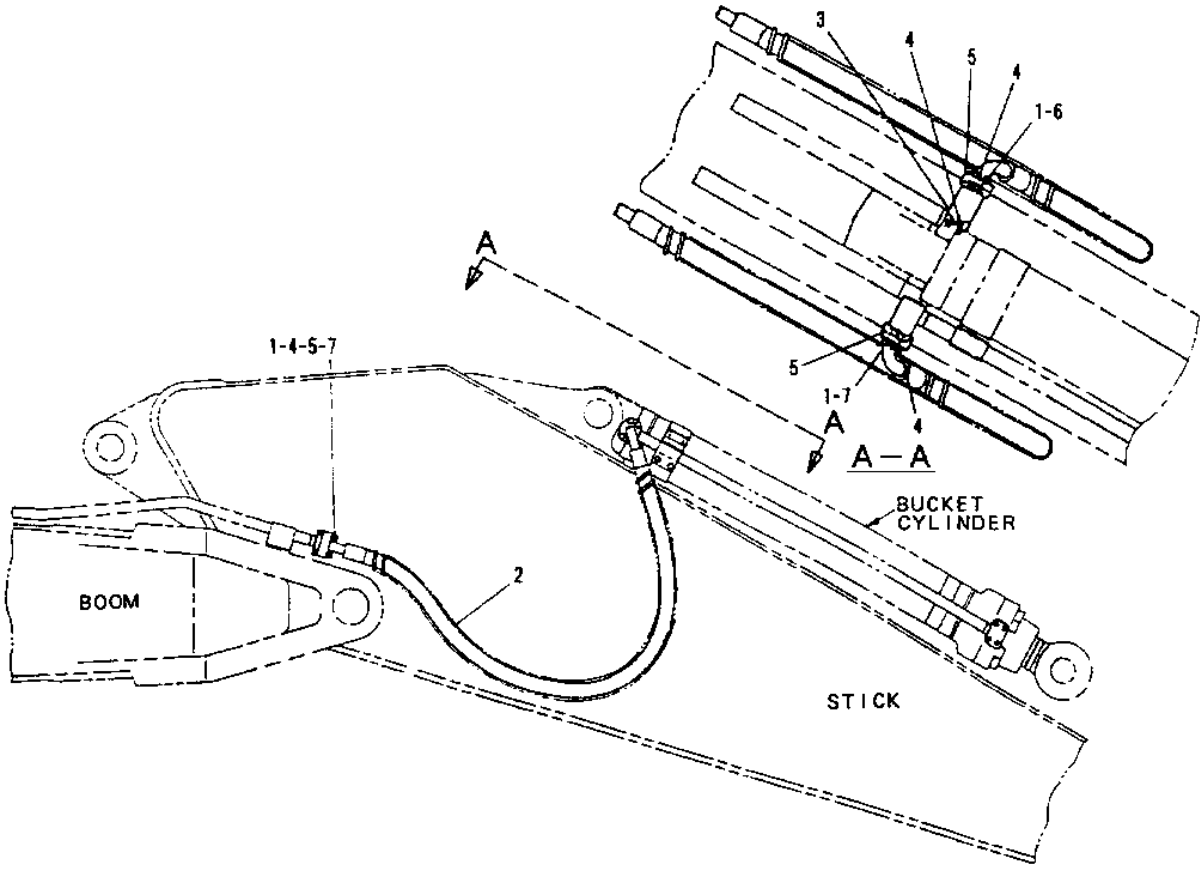


| NOTE | No. | PART No. | QTY | PART NAME | NOTE | No. | PART No. | QTY | PART NAME |
|---|---|---|---|---|---|---|---|---|---|
| | 1 | 8T-4223 | 16 | WASHER-HARD | | | | | |
| | 2 | 087-6643 | 2 | HOSE AS | | | | | |
| E | | 5P-0201 | | HOSE ···(195cm) | | | | | |
| | | 5P-1010 | 2 | SLEEVE | | | | | |
| | | 5P-1125 | 1 | STEM AS (STRAIGHT) | | | | | |
| | | 5P-1130 | 1 | STEM AS (90°) | | | | | |
| E | | 6V-0746 | | GUARD ···(272cm) | | | | | |
| | 3 | 087-5661 | 1 | BLOCK | | | | | |
| | 4 | 1P-3703 | 5 | SEAL (OD=38.66mm) | | | | | |
| | 5 | 6V-0400 | 8 | FLANGE | | | | | |
| | 6 | 8T-5001 | 4 | BOLT (L=130mm) | | | | | |
| | 7 | 8T-4184 | 12 | BOLT (L=45mm) | | | | | |

E-ORDER BY THE CENTIMETER

H50861E

# 1136855 LINES GP-STICK

R2.8D STICK
PART OF 1161484-Page 488
AN ATTACHMENT

**Key:** E - ORDER BY THE CENTIMETER

**SMCS**

| NOTE | REF NO | GRAPHIC REF | PART NUMBER | QTY | PART NAME 1 2 3 4 5 6 (PRODUCT LEVEL) | PRICE USD |
|---|---|---|---|---|---|---|
| | 1 | | 1P-3703 | 5 | SEAL | |
| | 2 | | 8T-5001 | 4 | BOLT (L=130mm) | |
| | 3 | | 8T-4223 | 16 | WASHER-HARD | |
| | 4 | | 6V-0400 | 8 | FLANGE | |
| | 5 | | 087-5661 | 1 | BLOCK | |
| | 6 | | 8T-4184 | 12 | BOLT (L=45mm) | |
| | 7 | | 087-6643 | 2 | HOSE AS | |
| E | | | 5P-0201 | | HOSE (195cm) | |
| | | | 5P-1010 | 2 | SLEEVE | |
| | | | 5P-1125 | 1 | STEM AS (STRAIGHT) | |
| | | | 5P-1130 | 1 | STEM AS (90 degrees) | |
| E | | | 6V-0746 | | GUARD (272cm) | |

## 1136855 LINES GP-STICK

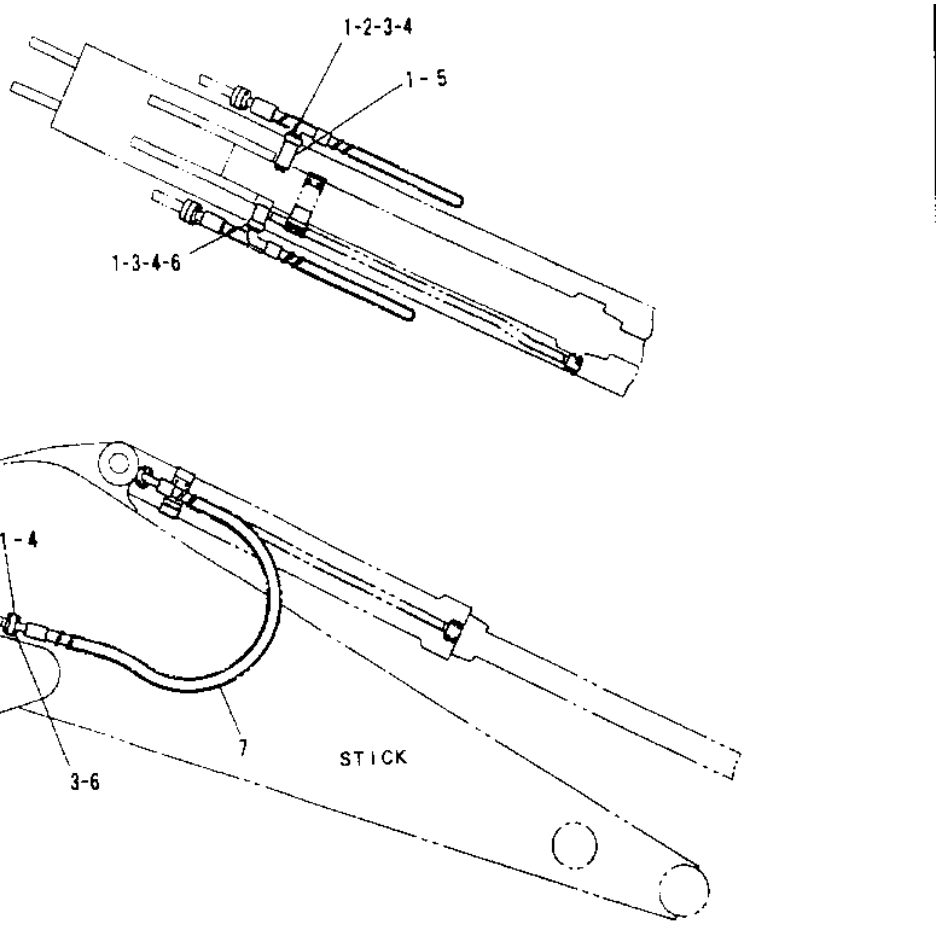


| NOTE | No. | PART No. | QTY | PART NAME |
|---|---|---|---|---|
| | 1 | 1P-3703 | 5 | SEAL |
| | 2 | 8T-5001 | 4 | BOLT (L=130mm) |
| | 3 | 8T-4223 | 16 | WASHER-HARD |
| | 4 | 6V-0400 | 8 | FLANGE |
| | 5 | 087-5661 | 1 | BLOCK |
| | 6 | 8T-4184 | 12 | BOLT (L=45mm) |
| | 7 | 087-6643 | 2 | HOSE AS |
| E | | 5P-0201 | | HOSE ···(195cm) |
| | | 5P-1010 | 2 | SLEEVE |
| | | 5P-1125 | 1 | STEM AS (STRAIGHT) |
| | | 5P-1130 | 1 | STEM AS (90°) |
| E | | 6V-0746 | | GUARD ···(272cm) |

| NOTE | No. | PART No. | QTY | PART NAME |
|---|---|---|---|---|

E-ORDER BY THE CENTIMETER

H53962E

# 1136859 LINES GP-STICK

M2.55E STICK
PART OF 1161488-Page 488
AN ATTACHMENT

**Key:** E - ORDER BY THE CENTIMETER

**SMCS**

| NOTE | REF NO | GRAPHIC REF | PART NUMBER | QTY | PART NAME 1 2 3 4 5 6 (PRODUCT LEVEL) | PRICE USD |
|---|---|---|---|---|---|---|
| | 1 | | 1P-3704 | 3 | SEAL (OD=45.0mm) | |
| | 2 | | 4I-6046 | 1 | BLOCK | |
| | 3 | | 1P-5767 | 4 | FLANGE | |
| | 4 | | 8T-5041 | 4 | BOLT (L=120mm) | |
| | 5 | | 8T-4223 | 16 | WASHER-HARD | |
| | 6 | | 8T-4184 | 12 | BOLT (L=45mm) | |
| | 7 | | 5I-3088 | 2 | HOSE AS | |
| E | | | 5P-0201 | | HOSE (155cm) | |
| | | | 5P-1010 | 2 | SLEEVE | |
| | | | 5P-1125 | 1 | STEM AS (STRAIGHT) | |
| | | | 5P-1136 | 1 | STEM AS (90 degrees) | |
| E | | | 6V-0746 | | GUARD (212cm) | |
| | 8 | | 1P-3703 | 2 | SEAL (OD=38.66mm) | |
| | 9 | | 6V-0400 | 4 | FLANGE | |

## 1136859 LINES GP-STICK

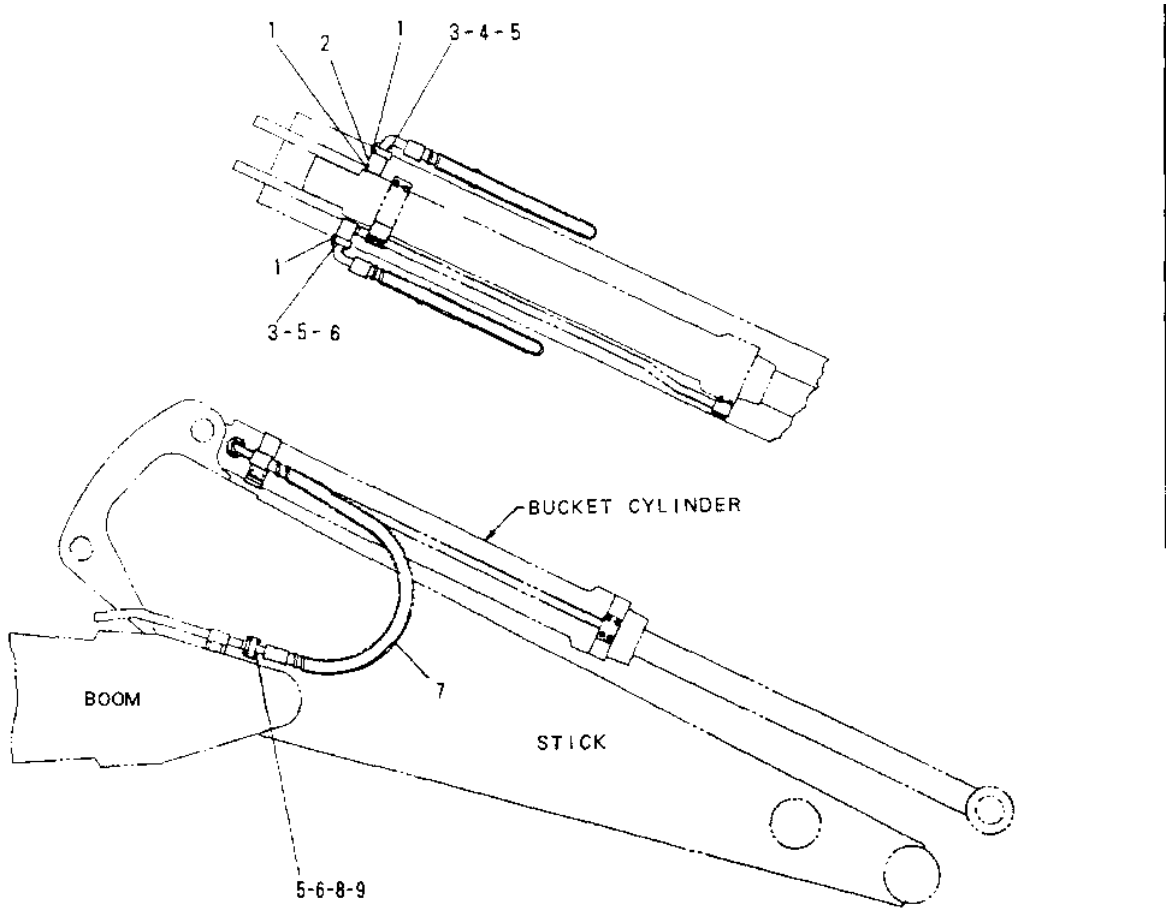


| NOTE | No. | PART No. | QTY | PART NAME | NOTE | No. | PART No. | QTY | PART NAME |
|---|---|---|---|---|---|---|---|---|---|
| | 1 | 1P-3704 | 3 | SEAL (OD=45.0mm) | | | | | |
| | 2 | 4I-6046 | 1 | BLOCK | | | | | |
| | 3 | 1P-5767 | 4 | FLANGE | | | | | |
| | 4 | 8T-5041 | 4 | BOLT (L=120mm) | | | | | |
| | 5 | 8T-4223 | 16 | WASHER-HARD | | | | | |
| | 6 | 8T-4184 | 12 | BOLT (L=45mm) | | | | | |
| | 7 | 5I-3088 | 2 | HOSE AS | | | | | |
| E | | 5P 0201 | | HOSE ···(155cm) | | | | | |
| | | 5P-1010 | 2 | SLEEVE | | | | | |
| | | 5P-1125 | 1 | STEM AS (STRAIGHT) | | | | | |
| | | 5P-1136 | 1 | STEM AS (90°) | | | | | |
| E | | 6V-0746 | | GUARD ···(212cm) | | | | | |
| | 8 | 1P-3703 | 2 | SEAL (OD=38.66mm) | | | | | |
| | 9 | 6V-0400 | 4 | FLANGE | | | | | |

E–ORDER BY THE CENTIMETER

H50862E

# 1211931 LINES AR-AUXILIARY HYDRAULIC

R3.3D STICK
S/N 8SR 1-(D97.05), 8TR 1-(D97.05)
AN ATTACHMENT

**Key:** Y - Separate Illustration

**SMCS**

| NOTE | REF NO | GRAPHIC REF | PART NUMBER | QTY | PART NAME 1 2 3 4 5 6 (PRODUCT LEVEL) | PRICE USD |
|---|---|---|---|---|---|---|
| Y | | | 121-1933 | 1 | STICK GP | |
| Y | | | 121-1932 | 1 | LINES GP (AUXILIARY HYDRAULIC) | |

# 1211931 LINES AR-AUXILIARY HYDRAULIC

R3.3D STICK
S/N 8SR (D97.06)-UP, 8TR (D97.06)-UP
AN ATTACHMENT

**Key:** Y - Separate Illustration

**SMCS**

| NOTE | REF NO | GRAPHIC REF | PART NUMBER | QTY | PART NAME 1 2 3 4 5 6 (PRODUCT LEVEL) | PRICE USD |
|---|---|---|---|---|---|---|
| Y | | | 121-1933 | 1 | STICK GP | |
| Y | | | 142-6672 | 1 | LINES GP (AUXILIARY HYDRAULIC) | |

# 1211937 LINES AR-AUXILIARY HYDRAULIC

R2.8D STICK
S/N 8SR 1-(D97.05), 8TR 1-(D97.05)
AN ATTACHMENT

**Key:** Y - Separate Illustration

**SMCS**

| NOTE | REF NO | GRAPHIC REF | PART NUMBER | QTY | PART NAME 1 2 3 4 5 6 (PRODUCT LEVEL) | PRICE USD |
|---|---|---|---|---|---|---|
| Y | | | 121-1938 | 1 | STICK GP | |
| Y | | | 116-9001 | 1 | LINES GP (AUXILIARY HYDRAULIC) | |

# 1211937 LINES AR-AUXILIARY HYDRAULIC

R2.8D STICK
S/N 8SR (D97.06)-UP, 8TR (D97.06)-UP
AN ATTACHMENT

**Key:** Y - Separate Illustration

**SMCS**

| NOTE | REF NO | GRAPHIC REF | PART NUMBER | QTY | PART NAME 1 2 3 4 5 6 (PRODUCT LEVEL) | PRICE USD |
|---|---|---|---|---|---|---|
| Y | | | 121-1938 | 1 | STICK GP | |
| Y | | | 142-6673 | 1 | LINES GP (AUXILIARY HYDRAULIC) | |

# 1211932 LINES GP-AUXILIARY HYDRAULIC

R3.3D STICK
S/N 8SR 1-(D97.05), 8TR 1-(D97.05)
PART OF 1211931-Page 288
AN ATTACHMENT

**Key:** E - ORDER BY THE CENTIMETER

**SMCS**

| NOTE | REF NO | GRAPHIC REF | PART NUMBER | QTY | PART NAME 1 2 3 4 5 6 (PRODUCT LEVEL) | PRICE USD |
|---|---|---|---|---|---|---|
| | 1 | | 121-1904 | 1 | TUBE AS | |
| | 2 | | 127-6673 | 2 | HOSE AS | |
| | | | 2P-6732 | 1 | STEM AS (90°) | |
| | | | 2P-6733 | 1 | STEM AS (STRAIGHT) | |
| | | | 3E-4062 | 2 | CLIP | |
| E | | | 5P-0202 | | HOSE (199cm) | |
| | | | 5P-0477 | 2 | SLEEVE | |
| | 3 | | 121-1803 | 2 | VALVE AS | |
| | 4 | | 124-0909 | 8 | CLIP | |
| | 5 | | 1P-5767 | 8 | FLANGE | |
| | 6 | | 8T-4183 | 8 | BOLT (L=40mm) | |
| | 7 | | 8T-4194 | 16 | BOLT (L=50mm) | |
| | 8 | | 8T-6685 | 4 | BOLT (L=110mm) | |
| | 9 | | 8T-7338 | 8 | BOLT (L=45mm) | |
| | 10 | | 8T-4121 | 4 | WASHER | |
| | 11 | | 8T-4223 | 16 | WASHER | |
| | 12 | | 9X-8257 | 8 | WASHER | |
| | 13 | | 1P-3704 | 4 | SEAL | |
| | 14 | | 1P-3705 | 2 | SEAL | |
| | 15 | | 1P-3704 | 2 | SEAL | |
| | 16 | | 5P-0048 | 2 | COVER | |
| | 17 | | 1P-5767 | 4 | FLANGE | |
| | 18 | | 8T-4223 | 8 | WASHER | |
| | 19 | | 8T-4184 | 8 | BOLT (L=45mm) | |

# 1426672 LINES GP-AUXILIARY HYDRAULIC

R3.3D STICK
S/N 8SR (D97.06)-UP, 8TR (D97.06)-UP
PART OF 1211931-Page 288
1371594-Page 291.07
AN ATTACHMENT

**Key:** E - ORDER BY THE CENTIMETER, Y - SEE SEPARATE ILLUSTRATION

**SMCS**

| NOTE | REF NO | GRAPHIC REF | PART NUMBER | QTY | PART NAME 1 2 3 4 5 6 (PRODUCT LEVEL) | PRICE USD |
|---|---|---|---|---|---|---|
| | 1 | | 142-6583 | 2 | TUBE AS | |
| | 2 | | 127-6673 | 2 | HOSE AS | |
| | | | 2P-6732 | 2 | STEM AS (90°) | |
| | | | 2P-6733 | 1 | STEM AS (STRAIGHT) | |
| | | | 3E-4062 | 2 | CLIP | |
| E | | | 5P-0202 | | HOSE (199cm) | |
| | | | 5P-0477 | 2 | SLEEVE | |
| Y | 3 | | 137-1594 | 2 | VALVE AS | |
| | 4 | | 124-0909 | 8 | CLIP | |
| | 5 | | 1P-5767 | 8 | FLANGE | |
| | 6 | | 8T-4183 | 8 | BOLT (L=40mm) | |
| | 7 | | 8T-4194 | 16 | BOLT (L=50mm) | |
| | 8 | | 8T-6685 | 4 | BOLT (L=110mm) | |
| | 9 | | 8T-7338 | 8 | BOLT (L=45mm) | |
| | 10 | | 8T-4121 | 4 | WASHER | |
| | 11 | | 8T-4223 | 16 | WASHER | |
| | 12 | | 9X-8257 | 8 | WASHER | |
| | 13 | | 1P-3704 | 8 | SEAL | |
| | 14 | | 135-4063 | 2 | FLANGE | |
| | 15 | | 8T-4956 | 8 | BOLT (L=35mm) | |
| | 16 | | 096-1421 | 2 | CAP AS | |

# 1169001 LINES GP-AUXILIARY HYDRAULIC

R2.8D STICK
S/N 8SR 1-(D97.05), 8TR 1-(D97.05)
PART OF 1211937-Page 289
AN ATTACHMENT

**Key:** E - ORDER BY THE CENTIMETER

**SMCS**

| NOTE | REF NO | GRAPHIC REF | PART NUMBER | QTY | PART NAME 1 2 3 4 5 6 (PRODUCT LEVEL) | PRICE USD |
|---|---|---|---|---|---|---|
| | 1 | | 121-1951 | 2 | TUBE AS | |
| | 2 | | 127-6677 | 2 | HOSE AS | |
| | | | 2P-6732 | 1 | STEM AS (90°) | |
| | | | 2P-6733 | 1 | STEM AS (STRAIGHT) | |
| | | | 3E-4062 | 2 | CLIP | |
| E | | | 5P-0202 | | HOSE (195cm) | |
| | | | 5P-0477 | 2 | SLEEVE | |
| | 3 | | 121-1803 | 2 | VALVE AS | |
| | 4 | | 124-0909 | 8 | CLIP | |
| | 5 | | 1P-5767 | 8 | FLANGE | |
| | 6 | | 8T-4183 | 8 | BOLT (L=40mm) | |
| | 7 | | 8T-4194 | 16 | BOLT (L=50mm) | |
| | 8 | | 8T-6685 | 4 | BOLT (L=110mm) | |
| | 9 | | 8T-7338 | 8 | BOLT (L=45mm) | |
| | 10 | | 8T-4121 | 4 | WASHER | |
| | 11 | | 8T-4223 | 16 | WASHER | |
| | 12 | | 9X-8257 | 8 | WASHER | |
| | 13 | | 1P-3704 | 4 | SEAL | |
| | 14 | | 1P-3705 | 2 | SEAL | |
| | 15 | | 1P-3704 | 2 | SEAL | |
| | 16 | | 5P-0048 | 2 | COVER | |
| | 17 | | 1P-5767 | 4 | FLANGE | |
| | 18 | | 8T-4223 | 8 | WASHER | |
| | 19 | | 8T-4184 | 8 | BOLT (L=45mm) | |

## 1169001 LINES GP-AUXILIARY HYDRAULIC

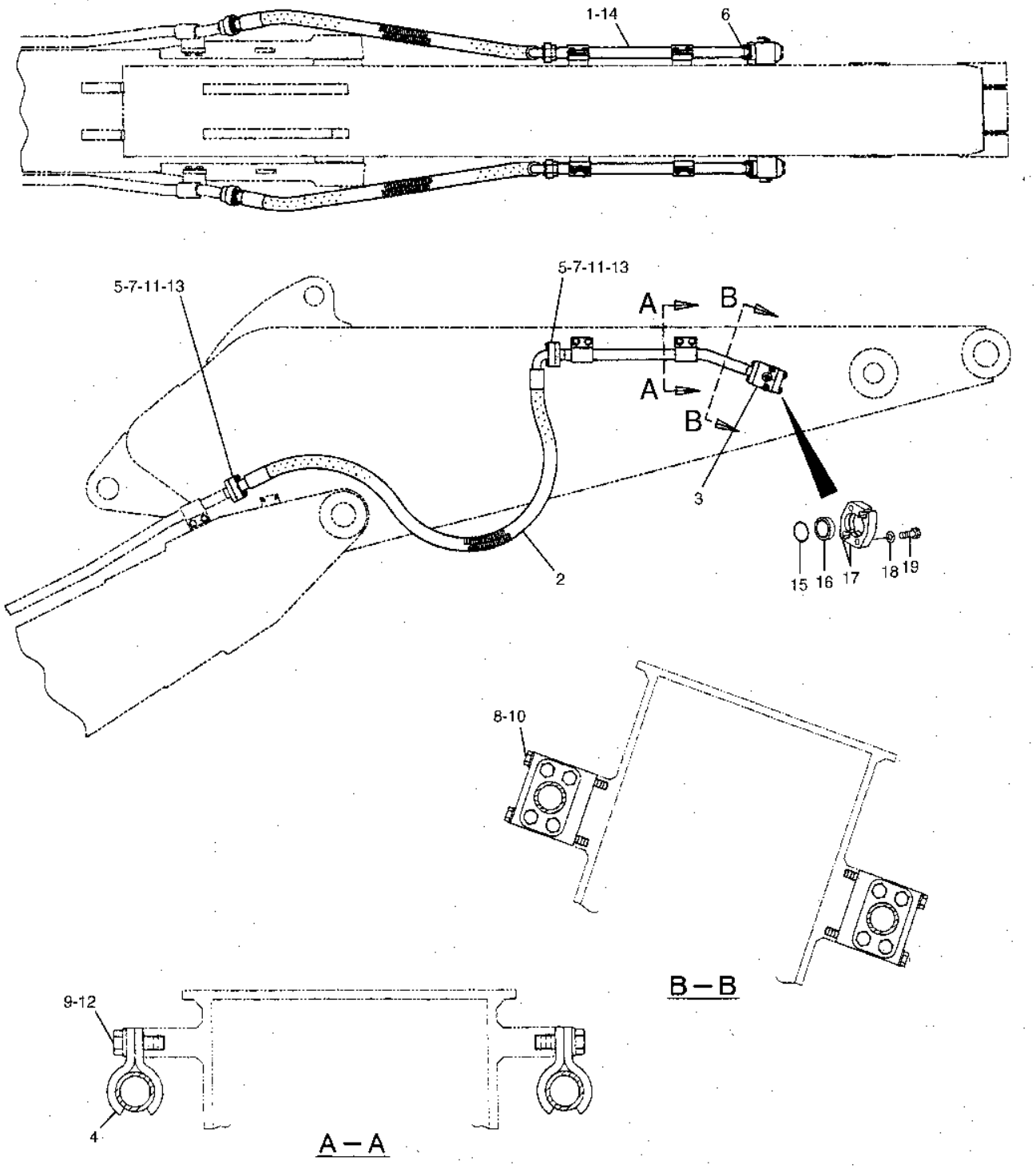


GRAPHIC #1

h81173e

# 1426673 LINES GP-AUXILIARY HYDRAULIC

R2.8D STICK
S/N 8SR (D97.06)-UP, 8TR (D97.06)-UP
PART OF 1211937-Page 289
1371594-Page 291.07
AN ATTACHMENT

**Key:** Y - Separate Illustration

**SMCS**

| NOTE | REF NO | GRAPHIC REF | PART NUMBER | QTY | PART NAME 1 2 3 4 5 6 (PRODUCT LEVEL) | PRICE USD |
|---|---|---|---|---|---|---|
| | 1 | | 142-6584 | 2 | TUBE AS | |
| | 2 | | 127-6677 | 2 | HOSE AS | |
| | | | 2P-6732 | 1 | STEM AS (90°) | |
| | | | 2P-6733 | 1 | STEM AS (STRAIGHT) | |
| | | | 3E-4062 | 2 | CLIP | |
| E | | | 5P-0202 | | HOSE (195cm) | |
| | | | 5P-0477 | 2 | SLEEVE | |
| Y | 3 | | 137-1594 | 2 | VALVE AS | |
| | 4 | | 124-0909 | 8 | CLIP | |
| | 5 | | 1P-5767 | 8 | FLANGE | |
| | 6 | | 8T-4183 | 8 | BOLT (L=40mm) | |
| | 7 | | 8T-4194 | 16 | BOLT (L=50mm) | |
| | 8 | | 8T-6685 | 4 | BOLT (L=110mm) | |
| | 9 | | 8T-7338 | 8 | BOLT (L=45mm) | |
| | 10 | | 8T-4121 | 4 | WASHER | |
| | 11 | | 8T-4223 | 16 | WASHER | |
| | 12 | | 9X-8257 | 8 | WASHER | |
| | 13 | | 1P-3704 | 8 | SEAL | |
| | 14 | | 135-4063 | 2 | FLANGE (MKB) | |
| | 15 | | 8T-4956 | 8 | BOLT (L=35mm) | |
| | 16 | | 096-1421 | 2 | CAP AS (MKB) | |

## 1426673 LINES GP-AUXILIARY HYDRAULIC

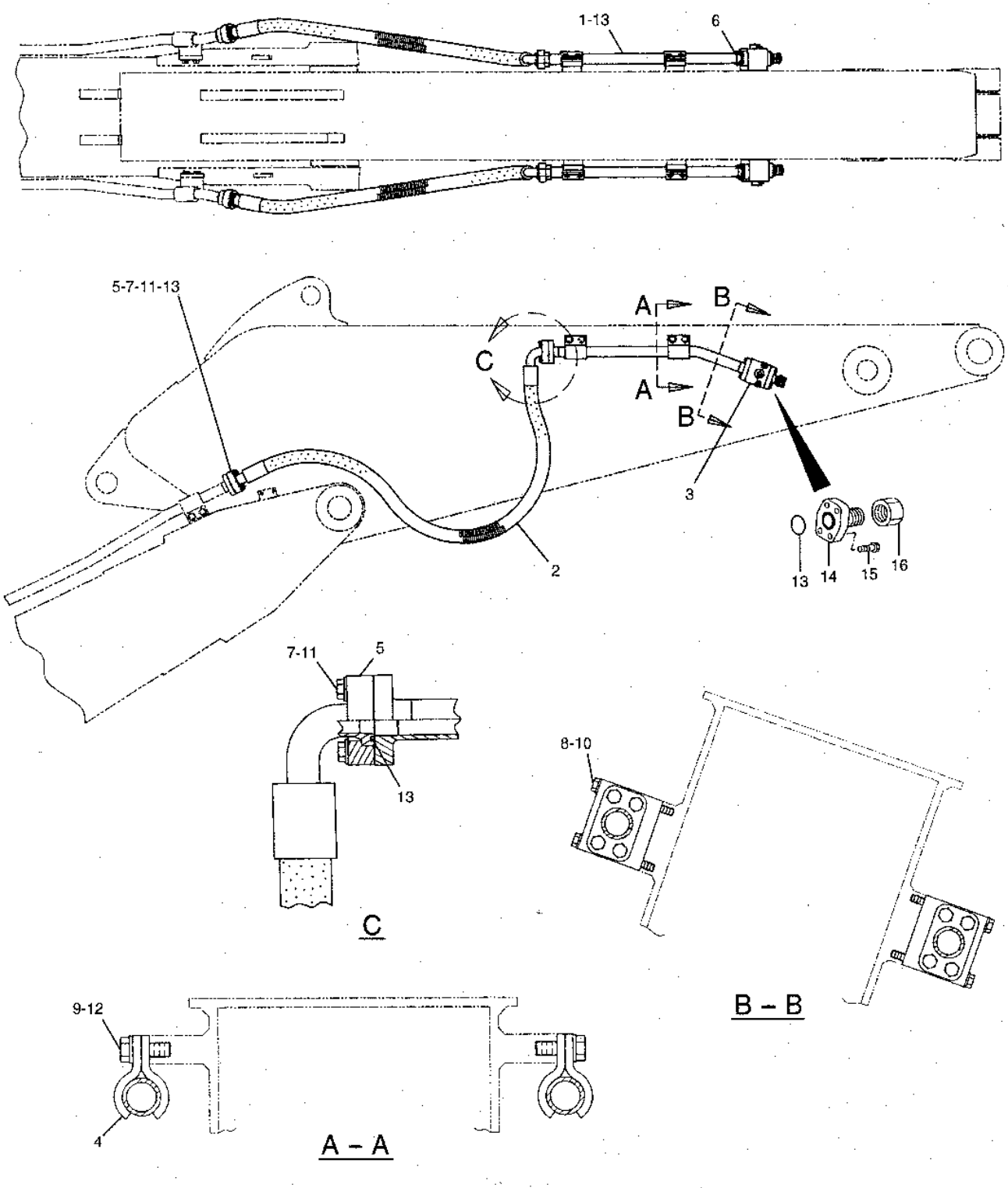


GRAPHIC #1

h81199e

# 1371594 VALVE AS-BALL

S/N 8SR (97.06)-UP, 8TR (D97.06)-UP
PART OF 1426672-Page 291.02, 1426673-Page 291.06
AN ATTACHMENT

**Key:** Y - Separate Illustration

**SMCS**

| NOTE | REF NO | GRAPHIC REF | PART NUMBER | QTY | PART NAME 1 2 3 4 5 6 (PRODUCT LEVEL) | PRICE USD |
|---|---|---|---|---|---|---|
| Y | | | 138-4243 | 1 | VALVE AS (BALL) | |
| | | | | | -OR- | |
| Y | | | 138-4244 | 1 | VALVE AS | |

# 1384243 VALVE AS-BALL

S/N 8SR (D97.06)-UP, 8TR (D97.06)-UP
PART OF 1371594-Page 291.07
AN ATTACHMENT

**Key:**

**SMCS**

| NOTE | REF NO | GRAPHIC REF | PART NUMBER | QTY | PART NAME 1 2 3 4 5 6 (PRODUCT LEVEL) | PRICE USD |
|---|---|---|---|---|---|---|
| | 1 | | 119-9447 | 1 | HANDLE | |
| | 2 | | 099-5845 | 1 | PLUG | |
| | 3 | | 3J-1907 | 1 | SEAL-O-RING (ID=11.89mm) | |
| | 4 | | 153-8644 | 1 | STOPPER | |
| | 5 | | 153-8645 | 1 | PLUNGER | |
| | 6 | | 153-8748 | 2 | SEAL | |

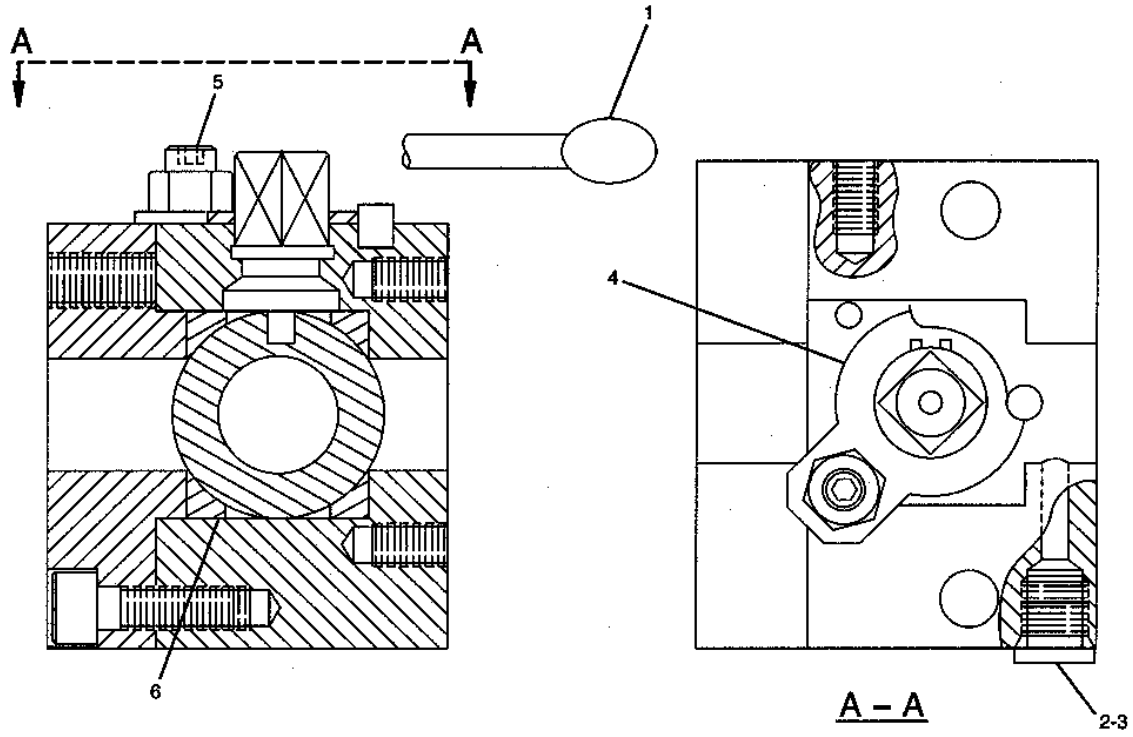


GRAPHIC #1 h63680e

# 1384244 VALVE AS

S/N 8SR (D97.06)-UP, 8TR (D97.06)-UP
PART OF 1371594-Page 291.07
AN ATTACHMENT

**Key:**

**SMCS**

| NOTE | REF NO | GRAPHIC REF | PART NUMBER | QTY | PART NAME 1 2 3 4 5 6 (PRODUCT LEVEL) | PRICE USD |
|---|---|---|---|---|---|---|
| | 1 | | 9S-4191 | 1 | PLUG | |
| | 2 | | 3J-1907 | 1 | SEAL-O-RING (ID=11.89mm) | |
| | 3 | | 119-1353 | 1 | HANDLE | |

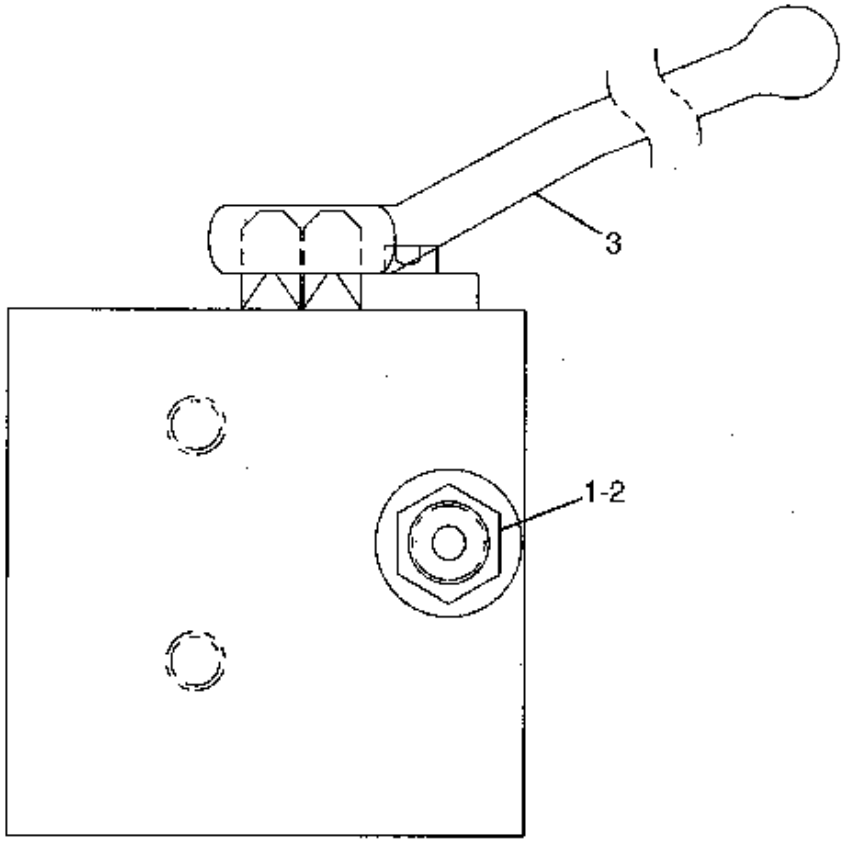


GRAPHIC #1

h62381e

# 1136822 LINES GP-TRAVEL MOTOR

S/N 8SR 1-UP
1597841-Page 339

**Key:** B - USE AS REQUIRED, E - ORDER BY THE CENTIMETER, Y - SEE SEPARATE ILLUSTRATION

**SMCS**

| NOTE | REF NO | GRAPHIC REF | PART NUMBER | QTY | PART NAME 1 2 3 4 5 6 (PRODUCT LEVEL) | PRICE USD |
|---|---|---|---|---|---|---|
| Y | 1 | | 159-7841 | 1 | SWIVEL GP | |
| | 2 | | 8T-4136 | 6 | BOLT (L=25mm) | |
| | 3 | | 8T-4121 | 6 | WASHER | |
| B | 4 | | 1U-8846 | | GASKET MAKER (2ml) | |
| | 5 | | 5K-9090 | 4 | SEAL-O-RING (OD=27.22cm) | |
| | 6 | | 9X-6032 | 16 | BOLT (L=30mm) | |
| | 7 | | 4J-5267 | 4 | SEAL-O-RING (ID=24.99mm) | |
| | 8 | | 7Y-3730 | 2 | FLANGE | |
| | 9 | | 113-6479 | 2 | FLANGE | |
| | 10 | | 087-5061 | 1 | HOSE AS | |
| E | | | 5P-0201 | | HOSE (126cm) | |
| | | | 5P-1010 | 2 | SLEEVE | |
| | | | 5P-1128 | 1 | STEM AS (45°) | |
| | | | 7X-4814 | 1 | STEM AS (45°) | |
| | 11 | | 087-5058 | 1 | HOSE AS | |
| E | | | 5P-0201 | | HOSE (123cm) | |
| | | | 5P-1010 | 2 | SLEEVE | |
| | | | 5P-1128 | 1 | STEM AS (45°) | |
| | | | 7X-4814 | 1 | STEM AS (45°) | |
| | 12 | | 8T-4184 | 48 | BOLT (L=45mm) | |
| | 13 | | 8T-4223 | 48 | WASHER | |
| | 14 | | 6V-0400 | 24 | FLANGE | |
| | 15 | | 1P-3703 | 12 | SEAL | |
| | 16 | | 4I-5546 | 1 | SUPPORT | |
| | 17 | | 8T-4648 | 2 | BOLT (L=70mm) | |
| | 18 | | 5P-1076 | 2 | WASHER | |
| | 19 | | 6V-8398 | 5 | SEAL-O-RING (OD=16.03mm) | |
| | 20 | | 4I-7745 | 1 | CONNECTOR | |
| | 21 | | 3D-2824 | 1 | SEAL-O-RING (ID=23.47mm) | |
| | 22 | | 6V-9844 | 1 | TEE | |
| | 23 | | 3K-0360 | 2 | SEAL-O-RING (ID=16.36mm) | |
| | 24 | | 6V-8639 | 2 | CONNECTOR | |
| | 25 | | 6V-8397 | 4 | SEAL-O-RING (OD=12.83mm) | |
| | 26 | | 3J-1907 | 3 | SEAL-O-RING (ID=11.89cm) | |
| | 27 | | 6V-8636 | 2 | CONNECTOR | |
| | 28 | | 115-8728 | 4 | GROMMET | |
| | 29 | | 4I-0809 | 1 | HOSE AS | |
| | 30 | | 4I-0830 | 1 | HOSE AS | |
| | 31 | | 6V-8774 | 1 | TEE | |
| | 32 | | 4I-0842 | 1 | HOSE AS | |
| | 33 | | 4I-0827 | 1 | HOSE AS | |
| | 34 | | 6K-0806 | 6 | STRAP | |
| | 35 | | 115-8749 | 4 | HOSE AS | |
| E | | | 5P-0201 | | HOSE (242cm) | |
| | | | 5P-1010 | 2 | SLEEVE | |
| | | | 5P-1125 | 1 | STEM AS (STRAIGHT) | |
| | 36 | | 138-5065 | 1 | HOSE AS | |
| E | | | 5P-0201 | | HOSE (126cm) | |

## 1136822 LINES GP-TRAVEL MOTOR

| | | | | |
|---|---|---|---|---|
| | | 5P-1010 | 2 | SLEEVE |
| | | 5P-1128 | 1 | STEM AS (45°) |
| | | 7X-4814 | 1 | STEM AS (45°) |
| E | | 7Y-5074 | | GUARD (66cm) |
| | 37 | 159-7678 | 1 | HOSE AS |
| E | | 5P-0201 | | HOSE (123cm) |
| | | 5P-1010 | 2 | SLEEVE |
| | | 5P-1128 | 1 | STEM AS (45°) |
| | | 7X-4814 | 1 | STEM AS (45°) |
| E | | 7Y-5074 | | GUARD (125cm) |

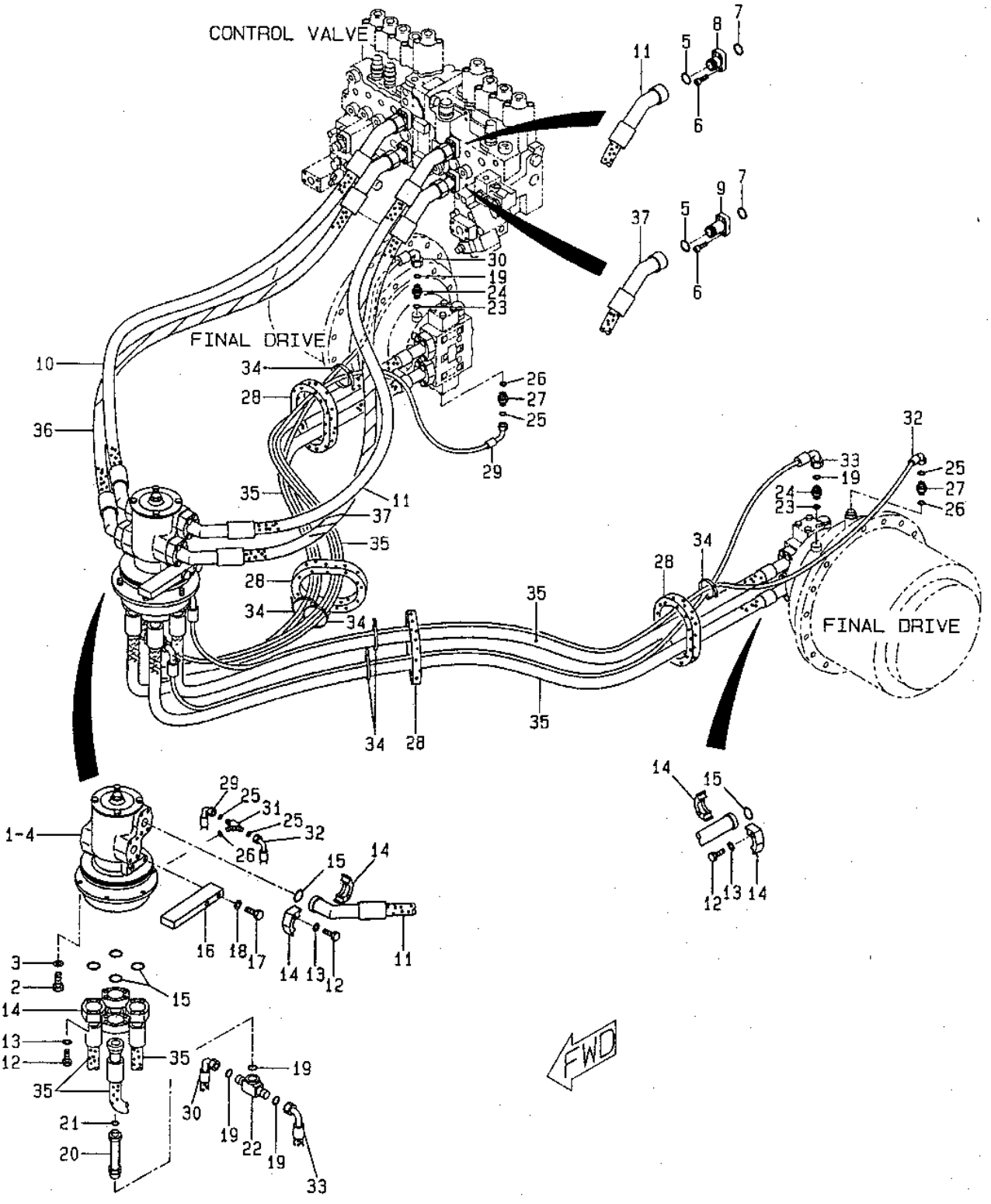

## 1136822 LINES GP-TRAVEL MOTOR

GRAPHIC #1

h79310e

# 1136823 LINES GP-TRAVEL MOTOR

S/N 8TR 1-UP
1597841-Page 339

**Key:** Y - Separate Illustration

**SMCS**

| NOTE | REF NO | GRAPHIC REF | PART NUMBER | QTY | PART NAME 1 2 3 4 5 6 (PRODUCT LEVEL) | PRICE USD |
|---|---|---|---|---|---|---|
| Y | 1 | | 159-7841 | 1 | SWIVEL GP | |
| | 2 | | 8T-4136 | 6 | BOLT (L=25mm) | |
| | 3 | | 8T-4121 | 6 | WASHER | |
| B | 4 | | 1U-8846 | | GASKET MAKER (2ml) | |
| | 5 | | 5K-9090 | 4 | SEAL-O-RING (OD=27.22mm) | |
| | 6 | | 9X-6032 | 16 | BOLT (L=30mm) | |
| | 7 | | 4J-5267 | 4 | SEAL-O-RING (ID=24.99mm) | |
| | 8 | | 7Y-3730 | 2 | FLANGE | |
| | 9 | | 113-6479 | 2 | FLANGE | |
| | 10 | | 087-5061 | 1 | HOSE AS | |
| E | | | 5P-0201 | | HOSE (126cm) | |
| | | | 5P-1010 | 2 | SLEEVE | |
| | | | 5P-1128 | 1 | STEM AS (45°) | |
| | | | 7X-4814 | 1 | STEM AS (45°) | |
| | 11 | | 087-5058 | 1 | HOSE AS | |
| E | | | 5P-0201 | | HOSE (123cm) | |
| | | | 5P-1010 | 2 | SLEEVE | |
| | | | 5P-1128 | 1 | STEM AS (45°) | |
| | | | 7X-4814 | 1 | STEM AS (45°) | |
| | 12 | | 8T-4184 | 48 | BOLT (L=45mm) | |
| | 13 | | 8T-4223 | 48 | WASHER | |
| | 14 | | 6V-0400 | 24 | FLANGE | |
| | 15 | | 1P-3703 | 12 | SEAL | |
| | 16 | | 4I-5546 | 1 | SUPPORT | |
| | 17 | | 8T-4648 | 2 | BOLT (L=70mm) | |
| | 18 | | 5P-1076 | 2 | WASHER | |
| | 19 | | 6V-8398 | 5 | SEAL-O-RING (OD=16.03mm) | |
| | 20 | | 4I-7745 | 1 | CONNECTOR | |
| | 21 | | 3D-2824 | 1 | SEAL-O-RING (ID=23.47mm) | |
| | 22 | | 6V-9844 | 1 | TEE | |
| | 23 | | 3K-0360 | 2 | SEAL-O-RING (ID=16.36mm) | |
| | 24 | | 6V-8639 | 2 | CONNECTOR | |
| | 25 | | 6V-8397 | 4 | SEAL-O-RING (OD=12.83mm) | |
| | 26 | | 3J-1907 | 3 | SEAL-O-RING (ID=11.89mm) | |
| | 27 | | 6V-8636 | 2 | CONNECTOR | |
| | 28 | | 115-8728 | 4 | GROMMET | |
| | 29 | | 087-6554 | 1 | HOSE AS | |
| | 30 | | 087-6548 | 1 | HOSE AS | |
| | 31 | | 6V-8774 | 1 | TEE | |
| | 32 | | 087-6557 | 1 | HOSE AS | |
| | 33 | | 087-6551 | 1 | HOSE AS | |
| | 34 | | 6K-0806 | 6 | STRAP | |
| | 35 | | 115-8753 | 4 | HOSE AS | |
| E | | | 5P-0201 | | HOSE (262cm) | |
| | | | 5P-1010 | 2 | SLEEVE | |
| | | | 5P-1125 | 2 | STEM AS (STRAIGHT) | |
| | 36 | | 138-5065 | 1 | HOSE AS | |
| E | | | 5P-0201 | | HOSE (126cm) | |

## 1136823 LINES GP-TRAVEL MOTOR

| | | | | |
|---|---|---|---|---|
| | | 5P-1010 | 2 | SLEEVE |
| | | 5P-1128 | 1 | STEM AS (45°) |
| | | 7X-4814 | 1 | STEM AS (45°) |
| E | | 7X-5074 | | GUARD (66cm) |
| | 37 | 159-7678 | 1 | HOSE AS |
| E | | 5P-0201 | | HOSE (123cm) |
| | | 5P-1010 | 2 | SLEEVE |
| | | 5P-1128 | 1 | STEM AS (45°) |
| | | 7X-4814 | 1 | STEM AS (45°) |
| E | | 7X-5074 | | GUARD (125cm) |

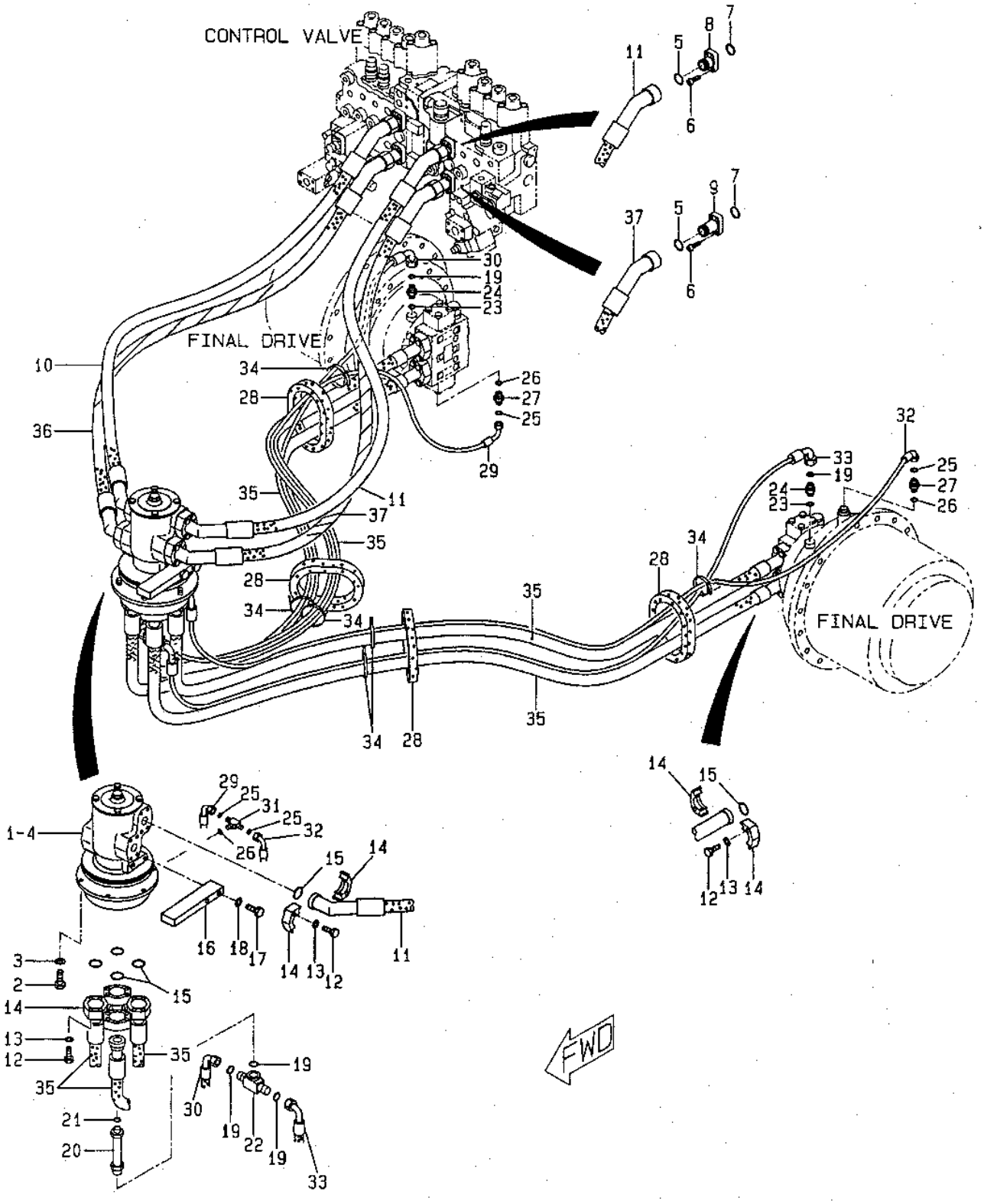

## 1136823 LINES GP-TRAVEL MOTOR

GRAPHIC #1 h64050e

# 1136839 LINES GP-PUMP-PART 1 OF 2

**Key:**

**SMCS**

| NOTE | REF NO | GRAPHIC REF | PART NUMBER | QTY | PART NAME 1 2 3 4 5 6 (PRODUCT LEVEL) | PRICE USD |
|---|---|---|---|---|---|---|
| | 1 | | 115-8671 | 1 | PIPE GP | |
| | | | 7M-8485 | 1 | SEAL-O-RING (ID=29.74mm) | |
| | | | 9S-4181 | 1 | PLUG | |
| | 2 | | 6V-0400 | 4 | FLANGE | |
| | 3 | | 5P-1979 | 1 | SEAL-O-RING (ID=132.72mm) | |
| | 4 | | 1P-3703 | 2 | SEAL | |
| | 5 | | 7G-5984 | 1 | CLIP | |
| | 6 | | 7G-5985 | 1 | CLIP | |
| | 7 | | 7G-5986 | 1 | GROMMET | |
| | 8 | | 119-2357 | 1 | SUPPORT AS | |
| | 9 | | 8T-7338 | 4 | BOLT (L=45mm) | |
| | 10 | | 8T-4184 | 8 | BOLT (L=45mm) | |
| | 11 | | 8T-4183 | 2 | BOLT (L=40mm) | |
| | 12 | | 9X-8257 | 4 | WASHER | |
| | 13 | | 8T-4223 | 16 | WASHER | |
| | 14 | | 8T-4192 | 2 | BOLT (L=25mm) | |
| | 15 | | 8T-4956 | 2 | BOLT (L=35mm) | |
| | 16 | | 8T-4139 | 2 | BOLT (L=30mm) | |

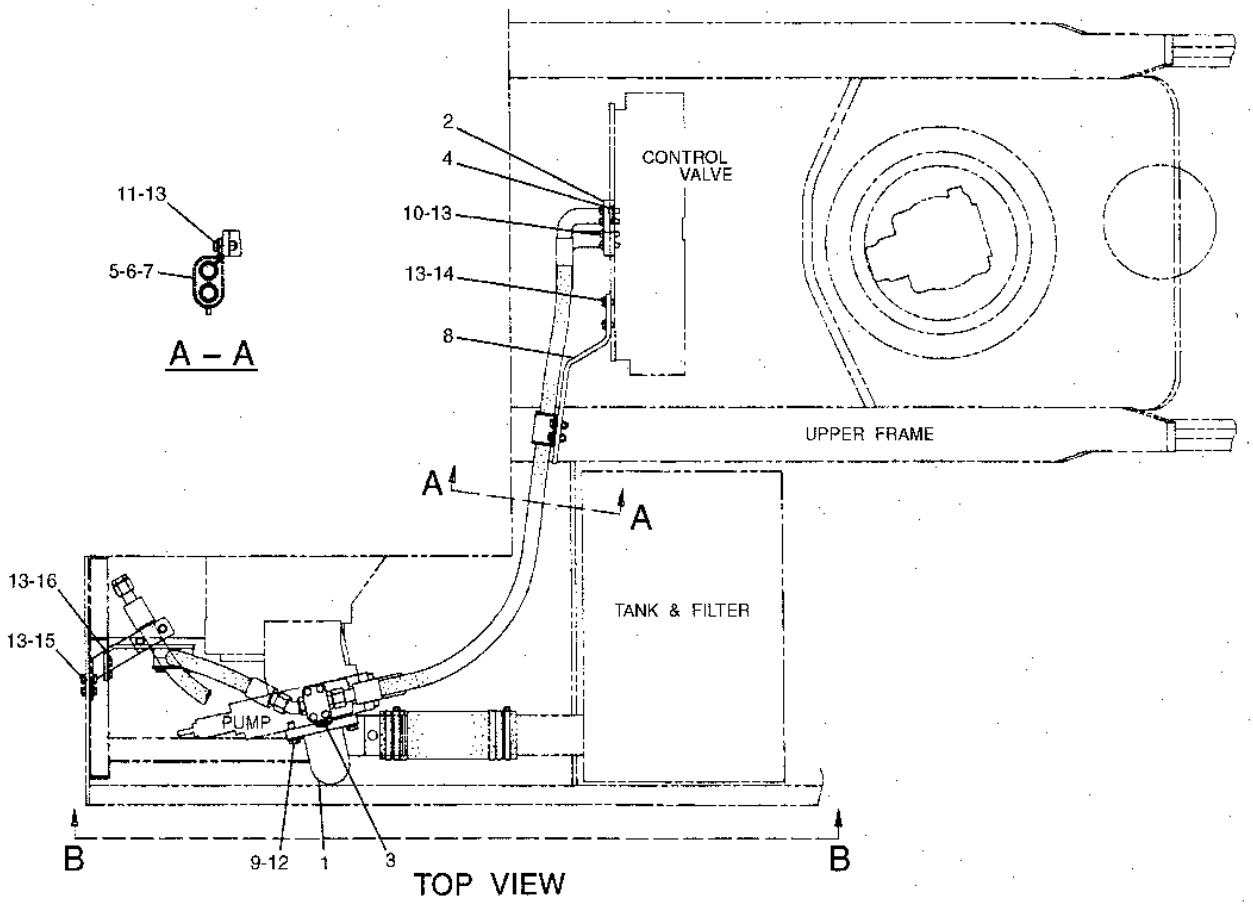


GRAPHIC #1

h79311e

# 1136839 LINES GP-PUMP-PART 2 OF 2

**Key:** E - ORDER BY THE CENTIMETER

**SMCS**

| NOTE | REF NO | GRAPHIC REF | PART NUMBER | QTY | PART NAME 1 2 3 4 5 6 (PRODUCT LEVEL) | PRICE USD |
|---|---|---|---|---|---|---|
| | 1 | | 124-0937 | 1 | HOSE AS | |
| | | | 3E-6820 | 1 | STEM AS (90°) | |
| E | | | 5P-0201 | | HOSE (146cm) | |
| | | | 5P-1010 | 2 | SLEEVE | |
| | | | 7X-1452 | 1 | STEM AS (STRAIGHT) | |
| | 2 | | 131-9609 | 1 | HOSE AS | |
| | | | 3E-6820 | 1 | STEM AS (90°) | |
| E | | | 5P-0201 | | HOSE (135cm) | |
| | | | 5P-1010 | 2 | SLEEVE | |
| | | | 7X-1452 | 1 | STEM AS (STRAIGHT) | |
| | 3 | | 8T-4121 | 4 | WASHER | |
| | 4 | | 115-8678 | 1 | HOSE | |
| | 5 | | 5P-1717 | 4 | CLAMP | |
| | 6 | | 1P-3704 | 2 | SEAL | |
| | 7 | | 9S-4182 | 1 | PLUG | |
| | 8 | | 3J-7354 | 1 | SEAL-O-RING (ID=8.92mm) | |
| | 9 | | 124-1037 | | HOSE AS | |
| E | | | 5P-0201 | | HOSE (68cm) | |
| | | | 5P-1010 | 2 | SLEEVE | |
| | | | 7X-1452 | 2 | STEM AS (STRAIGHT) | |
| | 10 | | 6V-8635 | 2 | CONNECTOR | |
| | 11 | | 199-1905 | 6 | SEAL-O-RING (ID=23.66mm) | |
| | 12 | | 7M-8485 | 4 | SEAL-O-RING (ID=29.74mm) | |
| | 13 | | 124-0929 | 1 | BLOCK | |
| | 14 | | 124-0930 | 1 | BLOCK | |
| | 15 | | 8T-4648 | 4 | BOLT | |
| | 16 | | 6V-9005 | 2 | ELBOW | |
| | 17 | | 129-5932 | 1 | CLAMP AS | |
| | 18 | | 8T-6868 | 4 | BOLT (L=80mm) | |
| | 19 | | 8T-4136 | 4 | BOLT (L=25mm) | |
| | 20 | | 129-5931 | 1 | CLAMP AS | |
| | 21 | | 6V-9512 | 2 | PLUG | |
| | 22 | | 124-1253 | 4 | RUBBER | |
| | 23 | | 124-1067 | 2 | PLATE | |

## 1136839 LINES GP-PUMP-PART 2 OF 2

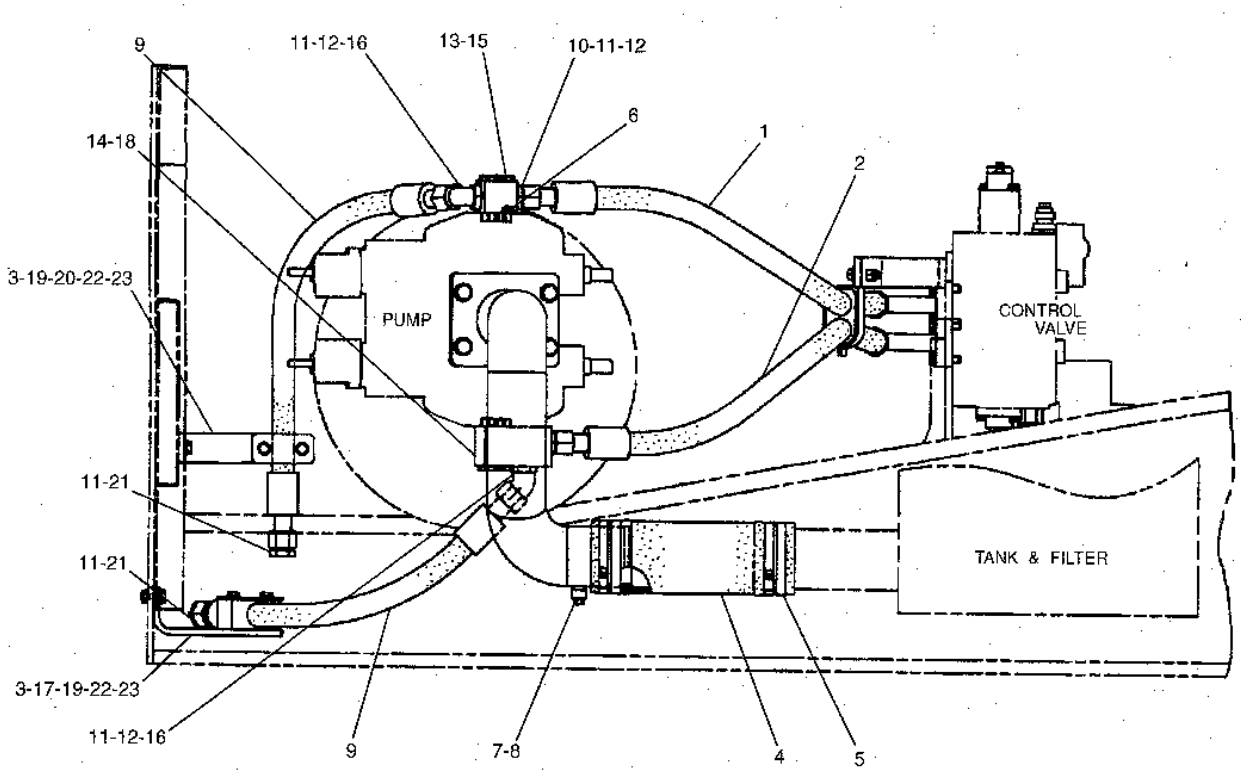


B – B

GRAPHIC #1

h79312e

# 1232571 INSTALLATION AR-AUXILIARY

2 PUMPS FLOW
AN ATTACHMENT

**Key:** Y - Separate Illustration

**SMCS**

| NOTE | REF NO | GRAPHIC REF | PART NUMBER | QTY | PART NAME 1 2 3 4 5 6 (PRODUCT LEVEL) | PRICE USD |
|---|---|---|---|---|---|---|
| Y | | | 128-7491 | 1 | LINES GP (FRONT) | |
| Y | | | 128-7492 | 1 | LINES GP (PILOT) | |

# 1178433 CONTROL AR-FLOW

COMBINED FUNCTION
AN ATTACHMENT

**Key:** Y - Separate Illustration

**SMCS**

| NOTE | REF NO | GRAPHIC REF | PART NUMBER | QTY | PART NAME 1 2 3 4 5 6 (PRODUCT LEVEL) | PRICE USD |
|---|---|---|---|---|---|---|
| Y | | | 116-0206 | 1 | WIRING GP | |
| Y | | | 119-2521 | 1 | LINES GP (PILOT) | |

# 1178432 CONTROL AR-FLOW

SINGLE FUNCTION
AN ATTACHMENT

**Key:** Y - Separate Illustration

**SMCS**

| NOTE | REF NO | GRAPHIC REF | PART NUMBER | QTY | PART NAME 1 2 3 4 5 6 (PRODUCT LEVEL) | PRICE USD |
|---|---|---|---|---|---|---|
| Y | | | 116-0206 | 1 | WIRING GP | |
| Y | | | 119-2520 | 1 | LINES GP (PILOT) | |

# 1211925 CONTROL AR-AUXILIARY

SINGLE FUNCTION/WITH THIRD PEDAL
AN ATTACHMENT

**Key:** Y - Separate Illustration

**SMCS**

| NOTE | REF NO | GRAPHIC REF | PART NUMBER | QTY | PART NAME 1 2 3 4 5 6 (PRODUCT LEVEL) | PRICE USD |
|---|---|---|---|---|---|---|
| Y | | | 109-6031 | 1 | CONTROL GP (HYDRAULIC) | |
| Y | | | 138-5073 | 1 | LINES GP (FRONT) | |
| Y | | | 113-6828 | 1 | LINES GP (PILOT) | |
| Y | | | 120-5094 | 1 | FILM GP | |

# 1211926 CONTROL AR-AUXILIARY

COMBINED FUNCTION/WITH THIRD PEDAL
AN ATTACHMENT

**Key:** Y - Separate Illustration

**SMCS**

| NOTE | REF NO | GRAPHIC REF | PART NUMBER | QTY | PART NAME 1 2 3 4 5 6 (PRODUCT LEVEL) | PRICE USD |
|---|---|---|---|---|---|---|
| Y | | | 109-6031 | 1 | CONTROL GP (HYDRAULIC) | |
| Y | | | 138-5072 | 1 | LINES GP (FRONT) | |
| Y | | | 113-6832 | 1 | LINES GP (PILOT) | |
| Y | | | 113-6833 | 1 | LINES GP (PILOT) | |
| Y | | | 120-5094 | 1 | FILM GP | |

# 1096190 CONTROL AR-AUXILIARY

SINGLE FUNCTION/WITHOUT THIRD PEDAL
AN ATTACHMENT

**Key:** Y - Separate Illustration

**SMCS**

| NOTE | REF NO | GRAPHIC REF | PART NUMBER | QTY | PART NAME 1 2 3 4 5 6 (PRODUCT LEVEL) | PRICE USD |
|---|---|---|---|---|---|---|
| Y | | | 120-5095 | 1 | FILM GP | |
| Y | | | 111-6428 | 1 | CONTROL GP (HYDRAULIC) | |
| Y | | | 138-5073 | 1 | LINES GP (FRONT) | |
| Y | | | 113-6828 | 1 | LINES GP (PILOT) | |

# 1096192 CONTROL AR-AUXILIARY

COMBINED FUNCTION/WITHOUT THIRD PEDAL
AN ATTACHMENT

**Key:** Y - Separate Illustration

**SMCS**

| NOTE | REF NO | GRAPHIC REF | PART NUMBER | QTY | PART NAME 1 2 3 4 5 6 (PRODUCT LEVEL) | PRICE USD |
|---|---|---|---|---|---|---|
| Y | | | 111-6428 | 1 | CONTROL GP (HYDRAULIC) | |
| Y | | | 138-5072 | 1 | LINES GP (FRONT) | |
| Y | | | 113-6832 | 1 | LINES GP (PILOT) | |
| Y | | | 113-6833 | 1 | LINES GP (PILOT) | |
| Y | | | 120-5095 | 1 | FILM GP | |

# 1153096 VALVE AR-CHECK & RELIEF

BOOM LOWERING CONTROL
AN ATTACHMENT

**Key:** Y - Separate Illustration

**SMCS**

| NOTE | REF NO | GRAPHIC REF | PART NUMBER | QTY | PART NAME 1 2 3 4 5 6 (PRODUCT LEVEL) | PRICE USD |
|---|---|---|---|---|---|---|
| Y | | | 113-6865 | 1 | LINES GP (BOOM CYLINDER) | |
| Y | | | 113-6866 | 1 | LINES GP (RETURN & FILTER) | |
| Y | | | 113-6867 | 1 | LINES GP (PILOT) | |

# 1136735 LINES GP-PILOT

S/N 8SR 1-00208, 8TR 1-00224
1232146, 1232147-Page 342, 1077058-Page 377, 1232148-Page 385, 1232510-Page 391

**Key:** Y - SEE SEPARATE ILLUSTRATION

**SMCS**

| NOTE | REF NO | GRAPHIC REF | PART NUMBER | QTY | PART NAME 1 2 3 4 5 6 (PRODUCT LEVEL) | PRICE USD |
|---|---|---|---|---|---|---|
| Y | 1 | | 123-2146 | 1 | VALVE GP (WORKING CONTROL) | |
| Y | 2 | | 123-2147 | 1 | VALVE GP (WORKING CONTROL) | |
| | 3 | | 6V-7357 | 6 | BOLT (L=25mm) | |
| | 4 | | 9X-8256 | 6 | WASHER | |
| | 5 | | 6V-8636 | 28 | CONNECTOR | |
| | 6 | | 3J-1907 | 49 | SEAL-O-RING (ID=11.89mm) | |
| | 7 | | 6V-8397 | 69 | SEAL-O-RING (OD=12.83mm) | |
| | 8 | | 6V-9836 | 1 | TEE | |
| | 9 | | 7K-1181 | 17 | STRAP | |
| | 18 | | 106-0180 | 1 | SWITCH AS (PRESSURE) | |
| | | | 102-8802 | 1 | RECEPTACLE KIT | |
| | | | 3E-3365 | 1 | WEDGE | |
| | | | 9W-0852 | 2 | PIN | |
| | 11 | | 4I-9521 | 10 | BAND (L1, RED) | |
| | 12 | | 4I-9522 | 8 | BAND (L2, YELLOW) | |
| | 13 | | 124-0986 | 1 | GROMMET | |
| | 14 | | 4I-0815 | 3 | HOSE AS (NOM 06, L=1300mm) | |
| Y | 15 | | 123-2510 | 1 | VALVE GP (SHOCKLESS) | |
| | 16 | | 8T-4198 | 4 | BOLT (L=100mm) | |
| | 17 | | 4I-9523 | 4 | BAND (L3, BLUE) | |
| | 18 | | 106-0179 | 2 | SWITCH AS (PRESSURE) | |
| | | | 155-2270 | 1 | PLUG KIT | |
| | | | 3E-3362 | 1 | WEDGE | |
| | | | 9W-0844 | 2 | SOCKET | |
| | 19 | | 115-8929 | 1 | GUARD | |
| | 20 | | 115-8929 | 1 | GUARD | |
| Y | 21 | | 107-7058 | 1 | VALVE GP (SAFETY LOCK) | |
| | 22 | | 8T-5005 | 2 | BOLT (L=70mm) | |
| | 23 | | 8T-4121 | 8 | WASHER | |
| | 24 | | 4I-3511 | 1 | HOSE AS (NOM 06, L=3350mm) | |
| | 25 | | 8T-4136 | 4 | BOLT (L=25mm) | |
| | 26 | | 087-5764 | 1 | HOSE AS (NOM 06, L=1550mm) | |
| | 27 | | 087-6584 | 3 | HOSE AS (NOM 06, L=3200mm) | |
| | 28 | | 108-7203 | 2 | HOSE AS (NOM 06, L=2600mm) | |
| | 29 | | 113-6700 | 1 | FITTING | |
| | 30 | | 7Y-4387 | 1 | HOSE AS (NOM 06, L=2600mm) | |
| | 31 | | 113-6701 | 1 | SUPPORT | |
| | 32 | | 104-8950 | 1 | HOSE AS (NOM 06, L=1200mm) | |
| | 33 | | 6V-9168 | 8 | NUT | |
| | 34 | | 099-7241 | 8 | WASHER | |
| | 35 | | 6V-8994 | 8 | UNION | |
| | 36 | | 107-6631 | 3 | CONNECTOR | |
| | 37 | | 6V-8781 | 3 | TEE | |
| | 38 | | 6V-8724 | 11 | ELBOW | |
| | 39 | | 5I-4371 | 1 | STOPPER | |
| | 40 | | 4I-3941 | 2 | FITTING AS | |
| | 41 | | 9S-4191 | 2 | PLUG | |
| | 42 | | 4I-0836 | 1 | HOSE AS (NOM 06, L=1200mm) | |

## 1136735 LINES GP-PILOT

| | | | | |
|---|---|---|---|---|
| | 43 | 4I-0769 | 2 | HOSE AS (NOM 06, L=2850mm) |
| | 44 | 108-7572 | 1 | HOSE AS (NOM 06, L=1650mm) |
| | 45 | 133-5813 | 4 | BAND (P, GRAY) |
| | 46 | 4I-1760 | 1 | HOSE AS (NOM 06, L=500mm) |
| | 47 | 113-6885 | 1 | HOSE AS (L=1700mm) |
| | 48 | 124-1104 | 2 | HOSE AS (NOM 06, L=1900mm) |
| | 49 | 113-6887 | 1 | HOSE AS (NOM 06, L=1950mm) |
| | 50 | 5I-4396 | 1 | HOSE AS (NOM 06, L=400mm) |
| Y | 51 | 123-2148 | 1 | VALVE GP (TRAVEL CONTROL) |
| | 52 | 8T-4137 | 2 | BOLT (L=20mm) |
| | 53 | 4I-9524 | 4 | BAND (L4, BROWN) |
| | 54 | 4I-9525 | 10 | BAND (R1, ORANGE) |
| | 55 | 4I-9526 | 8 | BAND (R2, WHITE) |
| | 56 | 113-6884 | 4 | HOSE AS (NOM 06, L=1400mm) |
| | 57 | 113-6882 | 4 | HOSE AS (NOM 06, L=1400mm) |
| | 58 | 4I-9527 | 6 | BAND (R3, GREEN) |
| | 59 | 4I-9528 | 4 | BAND (R4, PURPLE) |
| | 60 | 115-8645 | 1 | GUARD |

## 1136735 LINES GP-PILOT

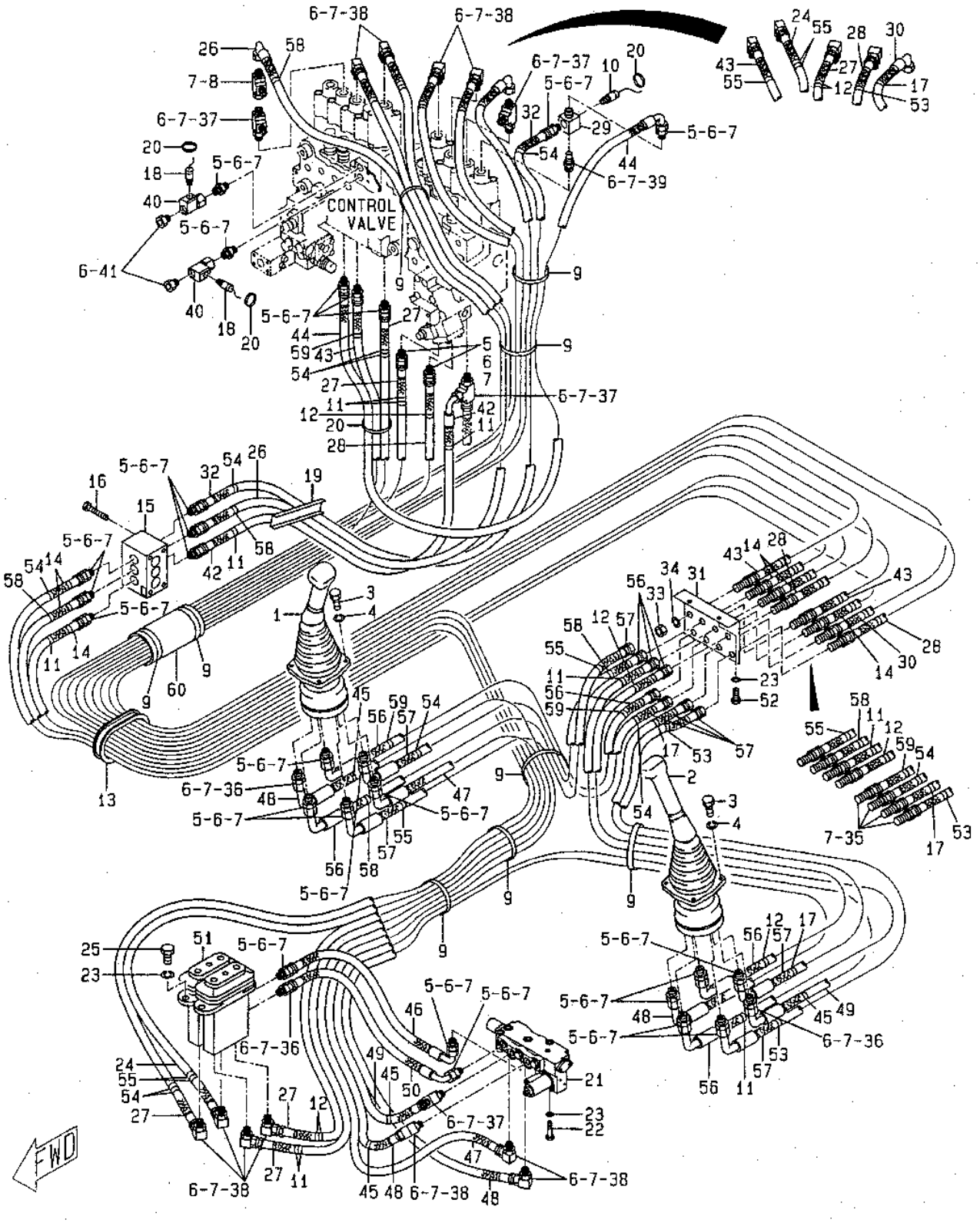


GRAPHIC #1

h58750e

# 1136735 LINES GP-PILOT

S/N 8SR 00209-00396, 8TR 00225-00434
1232146, 1232147-Page 342, 1077058-Page 377, 1232148-Page 385, 1232510-Page 391

**Key:** Y - SEE SEPARATE ILLUSTRATION

**SMCS**

| NOTE | REF NO | GRAPHIC REF | PART NUMBER | QTY | PART NAME 1 2 3 4 5 6 (PRODUCT LEVEL) | PRICE USD |
|---|---|---|---|---|---|---|
| Y | 1 | | 123-2146 | 1 | VALVE GP (WORKING CONTROL) | |
| Y | 2 | | 123-2147 | 1 | VALVE GP (WORKING CONTROL) | |
| | 3 | | 6V-7357 | 6 | BOLT (L=25mm) | |
| | 4 | | 9X-8256 | 6 | WASHER | |
| | 5 | | 6V-8636 | 28 | CONNECTOR | |
| | 6 | | 3J-1907 | 49 | SEAL-O-RING (ID=11.89mm) | |
| | 7 | | 6V-8397 | 69 | SEAL-O-RING (OD=12.83mm) | |
| | 8 | | 6V-9836 | 1 | TEE | |
| | 9 | | 7K-1181 | 19 | STRAP | |
| | 18 | | 106-0180 | 1 | SWITCH AS (PRESSURE) | |
| | | | 102-8802 | 1 | RECEPTACLE KIT | |
| | | | 3E-3365 | 1 | WEDGE | |
| | | | 9W-0852 | 2 | PIN | |
| | 11 | | 4I-9521 | 10 | BAND (L1, RED) | |
| | 12 | | 4I-9522 | 8 | BAND (L2, YELLOW) | |
| | 13 | | 124-0986 | 1 | GROMMET | |
| | 14 | | 4I-0815 | 3 | HOSE AS (NOM 06, L=1300mm) | |
| Y | 15 | | 123-2510 | 1 | VALVE GP (SHOCKLESS) | |
| | 16 | | 8T-4198 | 4 | BOLT (L=100mm) | |
| | 17 | | 4I-9523 | 4 | BAND (L3, BLUE) | |
| | 18 | | 106-0179 | 2 | SWITCH AS (PRESSURE) | |
| | | | 155-2270 | 1 | PLUG KIT | |
| | | | 3E-3362 | 1 | WEDGE | |
| | | | 9W-0844 | 2 | SOCKET | |
| | 19 | | 115-8929 | 1 | GUARD | |
| | 20 | | 115-8929 | 1 | GUARD | |
| Y | 21 | | 107-7058 | 1 | VALVE GP (SAFETY LOCK) | |
| | 22 | | 8T-5005 | 2 | BOLT (L=70mm) | |
| | 23 | | 8T-4121 | 8 | WASHER | |
| | 24 | | 115-8645 | 1 | GUARD | |
| | 25 | | 8T-4136 | 4 | BOLT (L=25mm) | |
| | 26 | | 087-5764 | 1 | HOSE AS (NOM 06, L=1550mm) | |
| | 27 | | 102-7685 | 3 | HOSE AS (NOM 06, L=3000mm) | |
| | 28 | | 108-7203 | 2 | HOSE AS (NOM 06, L=2600mm) | |
| | 29 | | 113-6700 | 1 | FITTING | |
| | 30 | | 7Y-4387 | 1 | HOSE AS (NOM 06, L=2600mm) | |
| | 31 | | 113-6701 | 1 | SUPPORT | |
| | 32 | | 104-8950 | 1 | HOSE AS (NOM 06, L=1200mm) | |
| | 33 | | 6V-9168 | 8 | NUT | |
| | 34 | | 099-7241 | 8 | WASHER | |
| | 35 | | 6V-8894 | 8 | UNION | |
| | 36 | | 107-6631 | 3 | CONNECTOR | |
| | 37 | | 6V-8781 | 3 | TEE | |
| | 38 | | 6V-8724 | 11 | ELBOW | |
| | 39 | | 5I-4371 | 1 | STOPPER | |
| | 40 | | 4I-3941 | 2 | FITTING AS | |
| | 41 | | 9S-4191 | 2 | PLUG | |
| | 42 | | 4I-0836 | 1 | HOSE AS (NOM 06, L=1200mm) | |

## 1136735 LINES GP-PILOT

| | | | | |
|---|---|---|---|---|
| | 43 | 4I-0769 | 2 | HOSE AS (NOM 06, L=2850mm) |
| | 44 | 108-7572 | 1 | HOSE AS (NOM 06, L=1650mm) |
| | 45 | 133-5813 | 4 | BAND (P, GRAY) |
| | 46 | 4I-1760 | 1 | HOSE AS (NOM 06, L=500mm) |
| | 47 | 113-6885 | 1 | HOSE AS (L=1700mm) |
| | 48 | 124-1104 | 2 | HOSE AS (NOM 06, L=1900mm) |
| | 49 | 113-6887 | 1 | HOSE AS (NOM 06, L=1950mm) |
| | 50 | 5I-4396 | 1 | HOSE AS (NOM 06, L=400mm) |
| Y | 51 | 123-2148 | 1 | VALVE GP (TRAVEL CONTROL) |
| | 52 | 8T-4137 | 2 | BOLT (L=20mm) |
| | 53 | 4I-9524 | 4 | BAND (L4, BROWN) |
| | 54 | 4I-9525 | 10 | BAND (R1, ORANGE) |
| | 55 | 4I-9526 | 8 | BAND (R2, WHITE) |
| | 56 | 113-6884 | 4 | HOSE AS (NOM 06, L=1400mm) |
| | 57 | 113-6882 | 4 | HOSE AS (NOM 06, L=1400mm) |
| | 58 | 4I-9527 | 6 | BAND (R3, GREEN) |
| | 59 | 4I-9528 | 4 | BAND (R4, PURPLE) |

## 1136735 LINES GP-PILOT

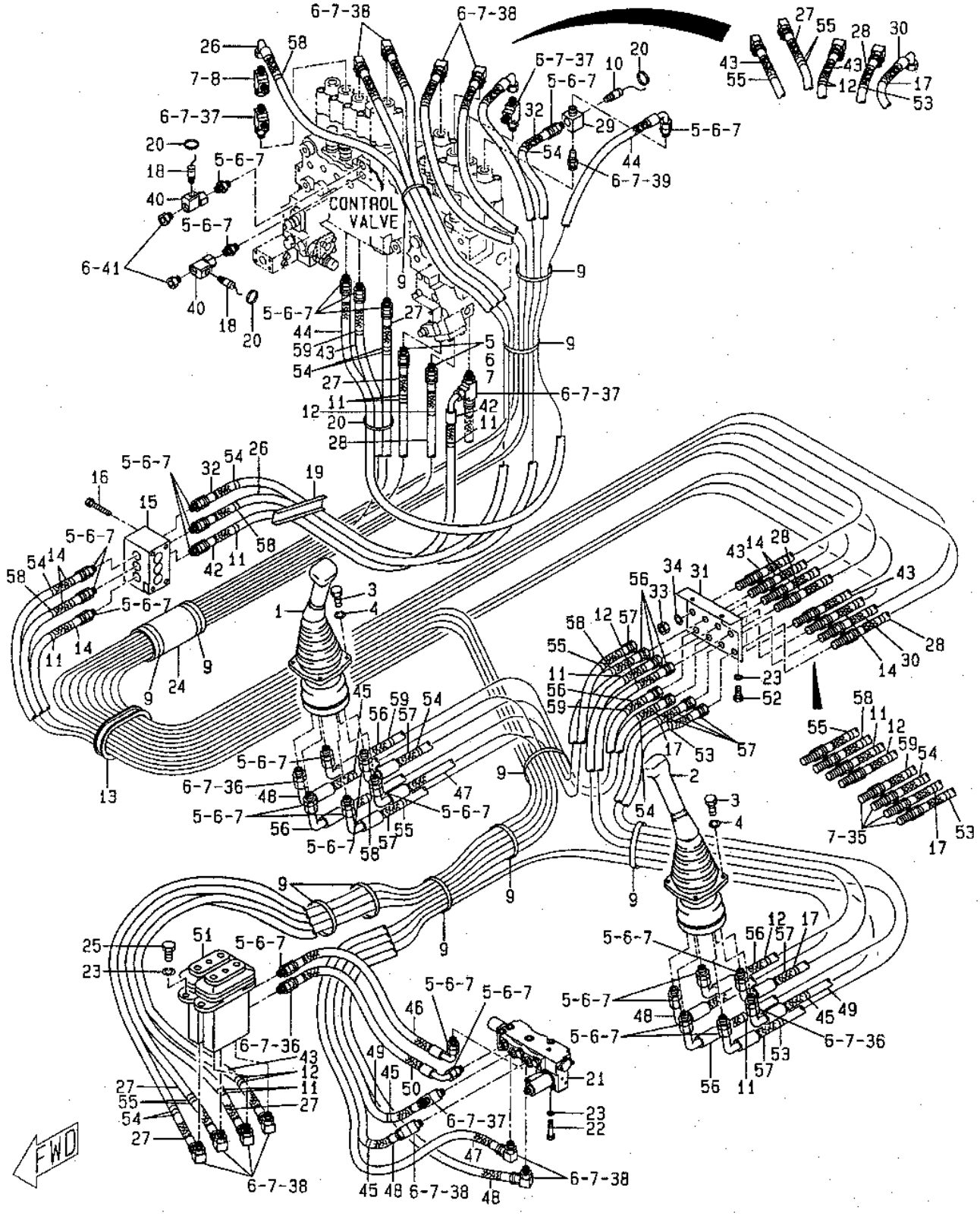


GRAPHIC #1

h56373e

# 1136735 LINES GP-PILOT

S/N 8SR 00397-00409, 8TR 00435-00462
1232146, 1232147-Page 342, 1077058-Page 377, 1232148-Page 385, 5I8706-Page 391.01

**Key:** Y - SEE SEPARATE ILLUSTRATION

**SMCS**

| NOTE | REF NO | GRAPHIC REF | PART NUMBER | QTY | PART NAME 1 2 3 4 5 6 (PRODUCT LEVEL) | PRICE USD |
|---|---|---|---|---|---|---|
| Y | 1 | | 123-2146 | 1 | VALVE GP (WORKING CONTROL) | |
| Y | 2 | | 123-2147 | 1 | VALVE GP (WORKING CONTROL) | |
| | 3 | | 6V-7357 | 6 | BOLT (L=25mm) | |
| | 4 | | 9X-8256 | 6 | WASHER | |
| | 5 | | 6V-8636 | 22 | CONNECTOR | |
| | 6 | | 3J-1907 | 44 | SEAL-O-RING (ID=11.89mm) | |
| | 7 | | 6V-8397 | 62 | SEAL-O-RING (OD=12.83mm) | |
| | 8 | | 6V-9836 | 1 | TEE | |
| | 9 | | 7K-1181 | 17 | STRAP | |
| | 18 | | 106-0180 | 1 | SWITCH AS (PRESSURE) | |
| | | | 102-8802 | 1 | RECEPTACLE KIT | |
| | | | 3E-3365 | 1 | WEDGE | |
| | | | 9W-0852 | 2 | PIN | |
| | 11 | | 4I-9521 | 10 | BAND (L1, RED) | |
| | 12 | | 4I-9522 | 8 | BAND (L2, YELLOW) | |
| | 13 | | 124-0986 | 1 | GROMMET | |
| | 14 | | 4I-1694 | 1 | CONNECTOR | |
| Y | 15 | | 5I-8706 | 1 | VALVE GP (SHOCKLESS) | |
| | 16 | | 4I-9528 | 4 | BAND (R4, PURPLE) | |
| | 17 | | 4I-9523 | 4 | BAND (L3, BLUE) | |
| | 18 | | 106-0179 | 2 | SWITCH AS (PRESSURE) | |
| | | | 155-2270 | 1 | PLUG KIT | |
| | | | 3E-3362 | 1 | WEDGE | |
| | | | 9W-0844 | 2 | SOCKET | |
| | 19 | | 115-8929 | 1 | GUARD | |
| | 20 | | 096-0061 | 4 | STRAP | |
| Y | 21 | | 107-7058 | 1 | VALVE GP (SAFETY LOCK) | |
| | 22 | | 8T-5005 | 2 | BOLT (L=70mm) | |
| | 23 | | 8T-4121 | 8 | WASHER | |
| | 24 | | 4I-9527 | 4 | BAND (R3, GREEN) | |
| | 25 | | 8T-4136 | 4 | BOLT (L=25mm) | |
| | 26 | | 4I-0716 | 1 | HOSE AS (NOM 06, L=3000mm) | |
| | 27 | | 102-7685 | 3 | HOSE AS (NOM 06, L=3000mm) | |
| | 28 | | 108-7203 | 2 | HOSE AS (NOM 06, L=2600mm) | |
| | 29 | | 113-6700 | 1 | FITTING | |
| | 30 | | 7Y-4387 | 1 | HOSE AS (NOM 06, L=2600mm) | |
| | 31 | | 113-6701 | 1 | SUPPORT | |
| | 32 | | 113-6882 | 1 | HOSE AS (NOM 06, L=1400mm) | |
| | 33 | | 6V-9168 | 8 | NUT | |
| | 34 | | 099-7241 | 8 | WASHER | |
| | 35 | | 6V-8994 | 8 | UNION | |
| | 36 | | 107-6631 | 3 | CONNECTOR | |
| | 37 | | 6V-8781 | 3 | TEE | |
| | 38 | | 6V-8724 | 11 | ELBOW | |
| | 39 | | 5I-4371 | 1 | STOPPER | |
| | 40 | | 4I-3941 | 2 | FITTING AS | |
| | 41 | | 9S-4191 | 2 | PLUG | |
| | 42 | | 7Y-4193 | 1 | HOSE AS (NOM 06, L=2500mm) | |

## 1136735 LINES GP-PILOT

| | | | | |
|---|---|---|---|---|
| | 43 | 4I-0769 | 2 | HOSE AS (NOM 06, L=2850mm) |
| | 44 | 108-7572 | 1 | HOSE AS (NOM 06, L=1650mm) |
| | 45 | 133-5813 | 4 | BAND (P, GRAY) |
| | 46 | 4I-1760 | 1 | HOSE AS (NOM 06, L=500mm) |
| | 47 | 113-6885 | 1 | HOSE AS (L=1700mm) |
| | 48 | 124-1104 | 2 | HOSE AS (NOM 06, L=1900mm) |
| | 49 | 113-6887 | 1 | HOSE AS (NOM 06, L=1950mm) |
| | 50 | 5I-4396 | 1 | HOSE AS (NOM 06, L=400mm) |
| Y | 51 | 123-2148 | 1 | VALVE GP (TRAVEL CONTROL) |
| | 52 | 8T-4137 | 2 | BOLT (L=20mm) |
| | 53 | 4I-9524 | 4 | BAND (L4, BROWN) |
| | 54 | 4I-9525 | 10 | BAND (R1, ORANGE) |
| | 55 | 4I-9526 | 8 | BAND (R2, WHITE) |
| | 56 | 113-6884 | 4 | HOSE AS (NOM 06, L=1400mm) |

## 1136735 LINES GP-PILOT

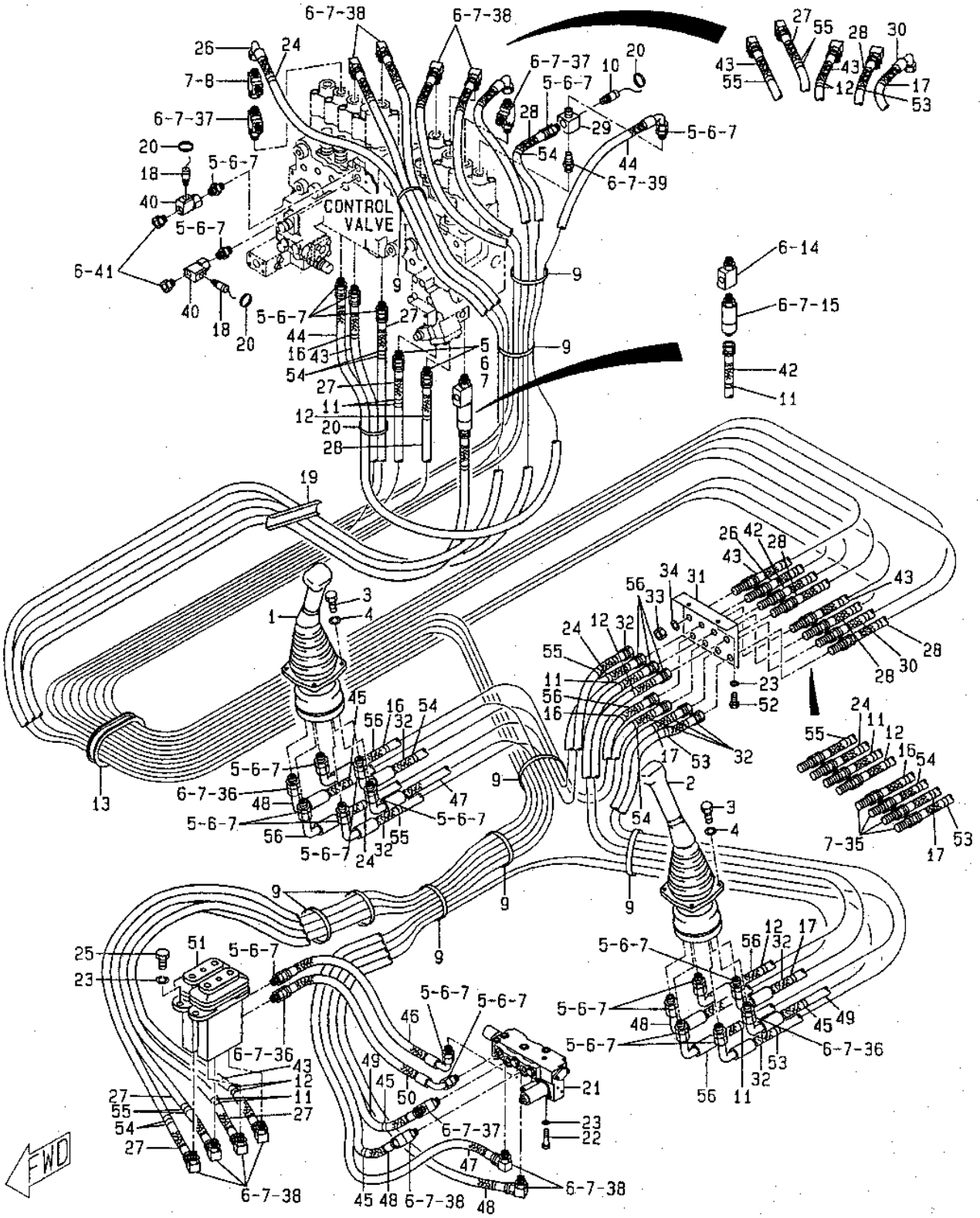


GRAPHIC #1

h64052e

# 1136735 LINES GP-PILOT

S/N 8SR 00410-00540, 8TR 00463-00682
1232146, 1232147-Page 342, 1077058-Page 377, 1232148-Page 385, 5I8706-Page 391.01

**Key:** Y - SEE SEPARATE ILLUSTRATION

**SMCS**

| NOTE | REF NO | GRAPHIC REF | PART NUMBER | QTY | PART NAME 1 2 3 4 5 6 (PRODUCT LEVEL) | PRICE USD |
|---|---|---|---|---|---|---|
| Y | 1 | | 123-2146 | 1 | VALVE GP (WORKING CONTROL) | |
| Y | 2 | | 123-2147 | 1 | VALVE GP (WORKING CONTROL) | |
| | 3 | | 6V-7357 | 6 | BOLT (L=25mm) | |
| | 4 | | 9X-8256 | 6 | WASHER | |
| | 5 | | 6V-8636 | 22 | CONNECTOR | |
| | 6 | | 3J-1907 | 44 | SEAL-O-RING (ID=11.89mm) | |
| | 7 | | 6V-8397 | 62 | SEAL-O-RING (OD=12.83mm) | |
| | 8 | | 6V-9836 | 1 | TEE | |
| | 9 | | 7K-1181 | 17 | STRAP | |
| | 10 | | 106-0180 | 1 | SWITCH AS (PRESSURE) | |
| | | | 102-8802 | 1 | RECEPTACLE KIT | |
| | | | 3E-3365 | 1 | WEDGE | |
| | | | 9W-0852 | 2 | PIN | |
| | 11 | | 4I-9521 | 10 | BAND (L1, RED) | |
| | 12 | | 4I-9522 | 8 | BAND (L2, YELLOW) | |
| | 13 | | 124-0986 | 1 | GROMMET | |
| | 14 | | 4I-1694 | 1 | CONNECTOR | |
| Y | 15 | | 5I-8706 | 1 | VALVE GP (SHOCKLESS) | |
| | 16 | | 4I-9528 | 4 | BAND (R4, PURPLE) | |
| | 17 | | 4I-9523 | 4 | BAND (L3, BLUE) | |
| | 18 | | 106-0179 | 2 | SWITCH AS (PRESSURE) | |
| | | | 155-2270 | 1 | PLUG KIT | |
| | | | 3E-3362 | 1 | WEDGE | |
| | | | 9W-0844 | 2 | SOCKET | |
| | 19 | | 115-8929 | 1 | GUARD | |
| | 20 | | 115-8929 | 1 | GUARD | |
| Y | 21 | | 107-7058 | 1 | VALVE GP (SAFETY LOCK) | |
| | 22 | | 8T-5005 | 2 | BOLT (L=70mm) | |
| | 23 | | 8T-4121 | 8 | WASHER | |
| | 24 | | 4I-9527 | 1 | BAND (R3, GREEN) | |
| | 25 | | 8T-4136 | 4 | BOLT (L=25mm) | |
| | 26 | | 4I-0716 | 1 | HOSE AS (NOM 06, L=3000mm) | |
| | 27 | | 102-7685 | 3 | HOSE AS (NOM 06, L=3000mm) | |
| | 28 | | 108-7203 | 2 | HOSE AS (NOM 06, L=2600mm) | |
| | 29 | | 113-6700 | 1 | FITTING | |
| | 30 | | 7Y-4387 | 1 | HOSE AS (NOM 06, L=2600mm) | |
| | 31 | | 113-6701 | 1 | SUPPORT | |
| | 32 | | 113-6882 | 1 | HOSE AS (NOM 06, L=1400mm) | |
| | 33 | | 6V-9168 | 8 | NUT | |
| | 34 | | 099-7241 | 8 | WASHER | |
| | 35 | | 6V-8994 | 8 | UNION | |
| | 36 | | 107-6631 | 3 | CONNECTOR | |
| | 37 | | 6V-8781 | 3 | TEE | |
| | 38 | | 6V-8724 | 11 | ELBOW | |
| | 39 | | 5I-4371 | 1 | STOPPER | |
| | 40 | | 4I-3941 | 2 | FITTING AS | |
| | 41 | | 9S-4191 | 2 | PLUG | |
| | 42 | | 7Y-4193 | 1 | HOSE AS (NOM 06, L=2500mm) | |

## 1136735 LINES GP-PILOT

| | | | | |
|---|---|---|---|---|
| | 43 | 4I-0769 | 2 | HOSE AS (NOM 06, L=2850mm) |
| | 44 | 108-7572 | 1 | HOSE AS (NOM 06, L=1650mm) |
| | 45 | 133-5813 | 4 | BAND (P, GRAY) |
| | 46 | 4I-1760 | 1 | HOSE AS (NOM 06, L=500mm) |
| | 47 | 113-6885 | 1 | HOSE AS (L=1700mm) |
| | 48 | 124-1104 | 2 | HOSE AS (NOM 06, L=1900mm) |
| | 49 | 113-6887 | 1 | HOSE AS (NOM 06, L=1950mm) |
| | 50 | 5I-4396 | 1 | HOSE AS (NOM 06, L=400mm) |
| Y | 51 | 123-2148 | 1 | VALVE GP (TRAVEL CONTROL) |
| | 52 | 8T-4137 | 2 | BOLT (L=20mm) |
| | 53 | 4I-9524 | 4 | BAND (L4, BROWN) |
| | 54 | 4I-9525 | 10 | BAND (R1, ORANGE) |
| | 55 | 4I-9526 | 8 | BAND (R2, WHITE) |
| | 56 | 113-6884 | 4 | HOSE AS (NOM 06, L=1400mm) |

## 1136735 LINES GP-PILOT

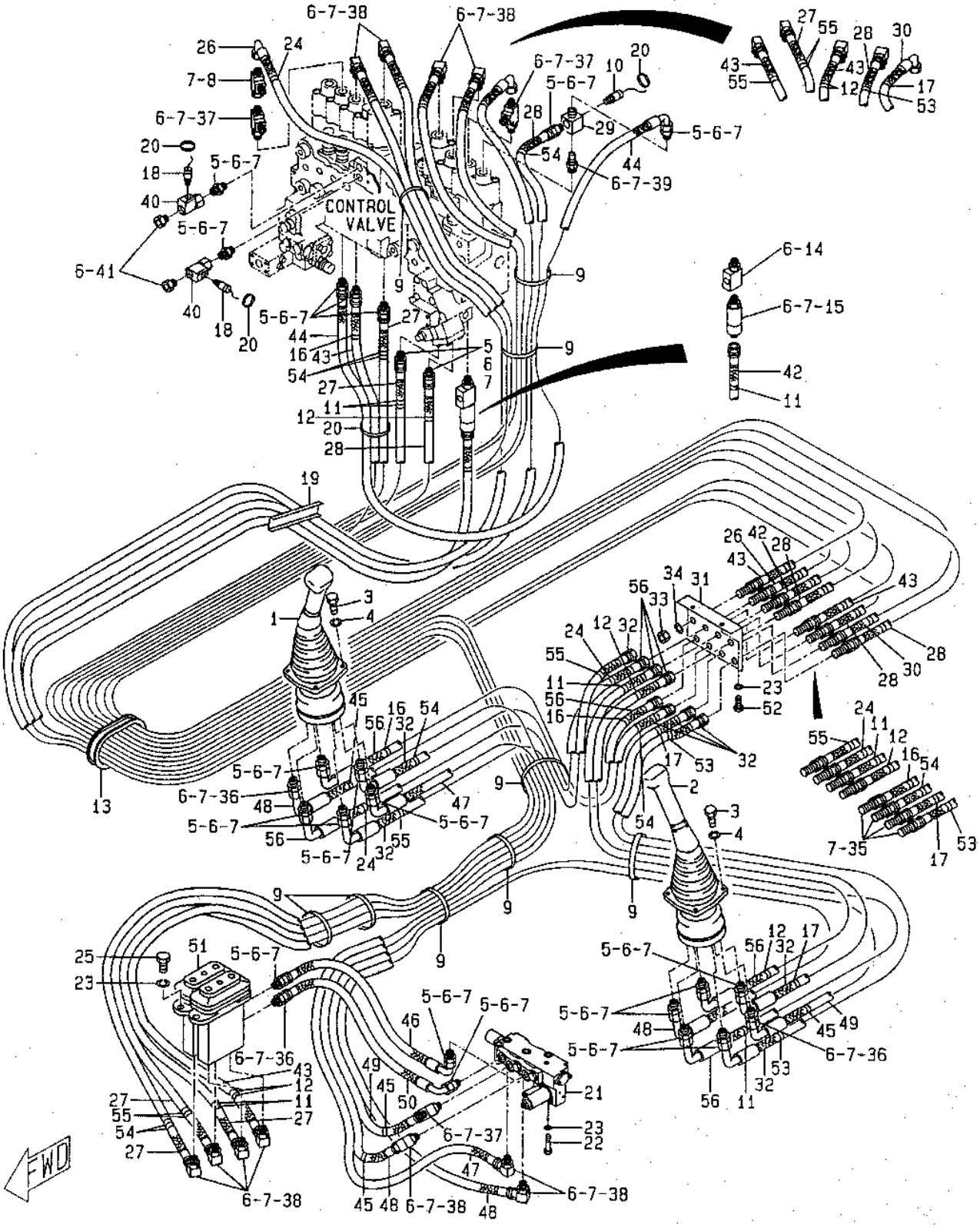


GRAPHIC #1

h79314e

# 1136735 LINES GP-PILOT

S/N 8SR 00541-UP, 8TR 00683-UP
1764985, 1764986-Page 342.01, 1077058-Page 377, 1232148-Page 385, 5I8706-Page 391.01

**Key:** Y - SEE SEPARATE ILLUSTRATION

**SMCS**

| NOTE | REF NO | GRAPHIC REF | PART NUMBER | QTY | PART NAME 1 2 3 4 5 6 (PRODUCT LEVEL) | PRICE USD |
|---|---|---|---|---|---|---|
| Y | 1 | | 176-4985 | 1 | VALVE GP (WORKING CONTROL) | |
| Y | 2 | | 176-4986 | 1 | VALVE GP (WORKING CONTROL) | |
| | 3 | | 6V-7357 | 6 | BOLT (L=25mm) | |
| | 4 | | 9X-8256 | 6 | WASHER | |
| | 5 | | 6V-8636 | 22 | CONNECTOR | |
| | 6 | | 3J-1907 | 44 | SEAL-O-RING (ID=11.89mm) | |
| | 7 | | 199-1901 | 62 | SEAL-O-RING (OD=12.83mm) | |
| | 8 | | 6V-9836 | 1 | TEE | |
| | 9 | | 7K-1181 | 17 | STRAP | |
| | 10 | | 106-0180 | 1 | SWITCH AS (PRESSURE) | |
| | | | 102-8802 | 1 | RECEPTACLE KIT | |
| | | | 3E-3365 | 1 | WEDGE | |
| | | | 9W-0852 | 2 | PIN | |
| | 11 | | 4I-9521 | 10 | BAND (L1, RED) | |
| | 12 | | 4I-9522 | 8 | BAND (L2, YELLOW) | |
| | 13 | | 142-5535 | 1 | GROMMET | |
| | 14 | | 4I-1694 | 1 | CONNECTOR | |
| Y | 15 | | 5I-8706 | 1 | VALVE GP (SHOCKLESS) | |
| | 16 | | 4I-9528 | 4 | BAND (R4, PURPLE) | |
| | 17 | | 4I-9523 | 4 | BAND (L3, BLUE) | |
| | 18 | | 106-0179 | 2 | SWITCH AS (PRESSURE) | |
| | | | 155-2270 | 1 | PLUG KIT | |
| | | | 3E-3362 | 1 | WEDGE | |
| | | | 9W-0844 | 2 | SOCKET | |
| | 19 | | 115-8929 | 1 | GUARD | |
| | 20 | | 096-0061 | 1 | GUARD | |
| Y | 21 | | 107-7058 | 1 | VALVE GP (SAFETY LOCK) | |
| | 22 | | 8T-5005 | 2 | BOLT (L=70mm) | |
| | 23 | | 8T-4121 | 8 | WASHER | |
| | 24 | | 4I-9527 | 1 | BAND (R3, GREEN) | |
| | 25 | | 8T-4136 | 4 | BOLT (L=25mm) | |
| | 26 | | 4I-0716 | 1 | HOSE AS (NOM 06, L=3000mm) | |
| | 27 | | 102-7685 | 3 | HOSE AS (NOM 06, L=3000mm) | |
| | 28 | | 108-7203 | 2 | HOSE AS (NOM 06, L=2600mm) | |
| | 29 | | 113-6700 | 1 | FITTING | |
| | 30 | | 7Y-4387 | 1 | HOSE AS (NOM 06, L=2600mm) | |
| | 31 | | 113-6701 | 1 | SUPPORT | |
| | 32 | | 113-6882 | 4 | HOSE AS (NOM 06, L=1400mm) | |
| | 33 | | 6V-9168 | 8 | NUT | |
| | 34 | | 099-7241 | 8 | WASHER | |
| | 35 | | 6V-8894 | 8 | UNION | |
| | 36 | | 107-6631 | 3 | CONNECTOR | |
| | 37 | | 6V-8781 | 3 | TEE | |
| | 38 | | 6V-8724 | 11 | ELBOW | |
| | 39 | | 5I-4371 | 1 | STOPPER | |
| | 40 | | 4I-3941 | 2 | FITTING AS | |
| | 41 | | 9S-4191 | 2 | PLUG | |
| | 42 | | 7Y-4193 | 1 | HOSE AS (NOM 06, L=2500mm) | |

## 1136735 LINES GP-PILOT

| | | | | |
|---|---|---|---|---|
| | 43 | 4I-0769 | 2 | HOSE AS (NOM 06, L=2850mm) |
| | 44 | 108-7572 | 1 | HOSE AS (NOM 06, L=1650mm) |
| | 45 | 133-5813 | 4 | BAND (P, GRAY) |
| | 46 | 4I-1760 | 1 | HOSE AS (NOM 06, L=500mm) |
| | 47 | 113-6885 | 1 | HOSE AS (L=1700mm) |
| | 48 | 124-1104 | 2 | HOSE AS (NOM 06, L=1900mm) |
| | 49 | 113-6887 | 1 | HOSE AS (NOM 06, L=1950mm) |
| | 50 | 5I-4396 | 1 | HOSE AS (NOM 06, L=400mm) |
| Y | 51 | 123-2148 | 1 | VALVE GP (TRAVEL CONTROL) |
| | 52 | 8T-4137 | 2 | BOLT (L=20mm) |
| | 53 | 4I-9524 | 4 | BAND (L4, BROWN) |
| | 54 | 4I-9525 | 8 | BAND (R1, ORANGE) |
| | 55 | 4I-9526 | 8 | BAND (R2, WHITE) |
| | 56 | 113-6884 | 4 | HOSE AS (NOM 06, L=1400mm) |

## 1136735 LINES GP-PILOT

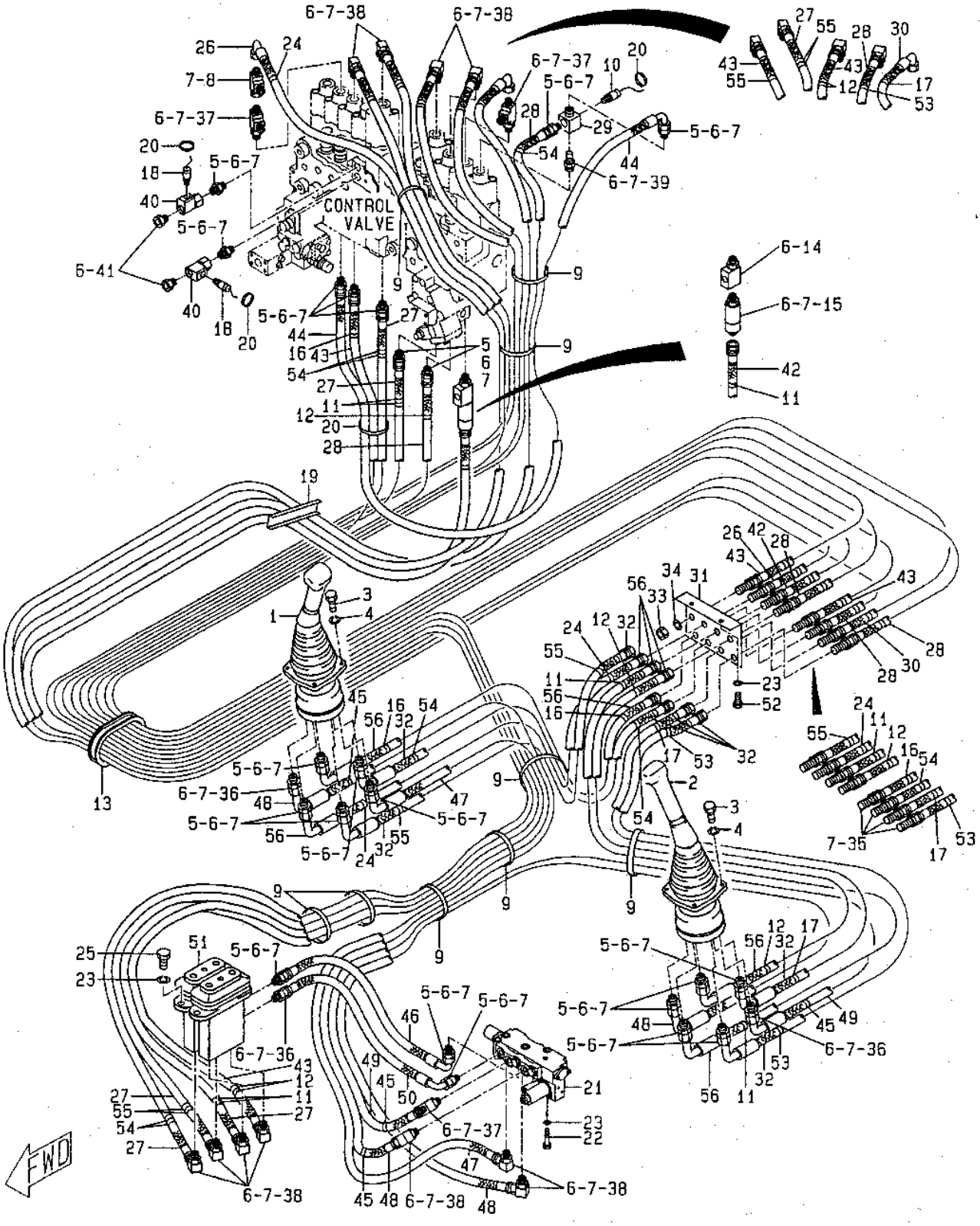


GRAPHIC #1

h79316e

# 1136736 LINES GP-PILOT

S/N 8SR 1-00176, 8TR 1-00181
1262075-Page 257, 0874456-Page 258.04, 1119950-Page 383, 1232549-Page 393

**Key:** Y - Separate Illustration

**SMCS**

| NOTE | REF NO | GRAPHIC REF | PART NUMBER | QTY | PART NAME 1 2 3 4 5 6 (PRODUCT LEVEL) | PRICE USD |
|---|---|---|---|---|---|---|
| | 1 | | 6V-8721 | 1 | ELBOW | |
| | 2 | | 6V-8625 | 3 | ELBOW | |
| | 3 | | 3K-0360 | 10 | SEAL-O-RING (ID=16.36mm) | |
| | 4 | | 6V-8398 | 16 | SEAL-O-RING (OD=16.03mm) | |
| | 5 | | 102-1163 | 1 | HOSE AS (NOM 08, L=4150mm) | |
| | 6 | | 110-5493 | 1 | HOSE AS (NOM 08, L=880mm) | |
| | 7 | | 115-8634 | 1 | TEE | |
| | 8 | | 2M-9780 | 3 | SEAL-O-RING (ID=19.18mm) | |
| | 9 | | 115-3780 | 1 | HOSE AS (NOM 08, L=1600mm) | |
| | 10 | | 111-0988 | 1 | HOSE AS (NOM 06, L=1950mm) | |
| | 11 | | 8T-0075 | 2 | CONNECTOR | |
| | 12 | | 3J-1907 | 40 | SEAL-O-RING (ID=11.89mm) | |
| | 13 | | 6V-8397 | 42 | SEAL-O-RING (OD=12.83mm) | |
| | 14 | | 4I-1631 | 1 | HOSE AS (NOM 06, L=2850mm) | |
| | 15 | | 104-8774 | 1 | HOSE AS (NOM 06, L=2200mm) | |
| | 16 | | 6V-8781 | 3 | TEE | |
| | 17 | | 4I-9527 | 6 | BAND (R3, GREEN) | |
| | 18 | | 6V-3965 | 4 | NIPPLE AS | |
| | 19 | | 6V-0852 | 4 | CAP | |
| | 20 | | 4I-6121 | 1 | HOSE AS (NOM 06, L=1150mm) | |
| | 21 | | 6V-8624 | 1 | ELBOW | |
| | 22 | | 129-6104 | 1 | HOSE AS (NOM 06, L=1150mm) | |
| | 23 | | 6V-8639 | 2 | CONNECTOR | |
| | 24 | | 6V-8636 | 8 | CONNECTOR | |
| | 25 | | 106-0178 | 1 | SENSOR AS | |
| | | | 3K-0360 | 1 | SEAL-O-RING (ID=16.36mm) | |
| | 26 | | 6V-8633 | 3 | CONNECTOR | |
| | 27 | | 3D-2824 | 3 | SEAL-O-RING (ID=23.47mm) | |
| | 28 | | 6V-8724 | 11 | ELBOW | |
| | 29 | | 6D-1641 | 4 | WASHER | |
| | 30 | | 8T-4137 | 6 | BOLT (L=20mm) | |
| | 31 | | 8T-4121 | 4 | WASHER | |
| | 32 | | 108-7508 | 1 | GUARD | |
| | 33 | | 087-4587 | 1 | GROMMET | |
| | 34 | | 115-8874 | 1 | GROMMET | |
| | 35 | | 096-0061 | 2 | STRAP | |
| | 36 | | 8C-0597 | 2 | CONNECTOR | |
| | 37 | | 108-7482 | 1 | HOSE AS (NOM 06, L=2500mm) | |
| | 38 | | 7Y-4190 | 1 | HOSE AS (NOM 06, L=2500mm) | |
| Y | 39 | | 123-2549 | 2 | VALVE GP | |
| | 40 | | 104-8771 | 1 | HOSE AS (NOM 06, L=2430mm) | |
| | 41 | | 6V-9836 | 2 | TEE | |
| | 42 | | 8C-6868 | 1 | CONNECTOR | |
| | 43 | | 087-5303 | 2 | HOSE AS (NOM 06, L=2300mm) | |
| | 44 | | 087-5765 | 1 | HOSE AS (NOM 06, L=570mm) | |
| | 45 | | 087-5764 | 1 | HOSE AS (NOM 06, L=1550mm) | |
| | 46 | | 104-8777 | 1 | HOSE AS (NOM 06, L=2030mm) | |
| | 47 | | 124-1027 | 1 | PLATE | |

## 1136736 LINES GP-PILOT

| | | | | |
|---|---|---|---|---|
| | 48 | 4I-0836 | 1 | HOSE AS (NOM 06, L=1200mm) |
| | 49 | 4I-0806 | 1 | HOSE AS NOM 06, L=1700mm) |
| | 50 | 087-5772 | 1 | HOSE AS (NOM 06, L=1000mm) |
| | 51 | 121-6385 | 1 | HOSE AS (NOM 06, L=2790mm) |
| | 52 | 107-6631 | 1 | CONNECTOR |
| | 53 | 4I-9528 | 4 | BAND (R4, PURPLE) |
| | 54 | 4I-5900 | 1 | HOSE AS (NOM 06, L=900mm) |
| | 55 | 087-4532 | 1 | HOSE AS (NOM 06, L=900mm) |
| | 56 | 5I-8825 | 1 | HOSE AS (NOM 06, L=750mm) |
| | 57 | 087-4480 | 1 | HOSE AS (NOM 08, L=1200mm) |
| | 58 | 113-6699 | 1 | ELBOW |
| | 59 | 7J-9933 | 1 | SEAL-O-RING (ID=21.89mm) |
| | 60 | 8T-4196 | 2 | BOLT (L=35mm) |
| | 61 | 6V-8632 | 2 | CONNECTOR |
| | 62 | 7J-9108 | 2 | SEAL-O-RING (OD=19.28mm) |
| | 63 | 102-1127 | 1 | HOSE AS (NOM 10, L=520mm) |
| Y | 64 | 087-4456 | 1 | ACCUMULATOR GP |
| | 65 | 6V-9873 | 3 | BOLT |
| | 66 | 099-4691 | 3 | PLUG |
| | 67 | 5P-1076 | 3 | WASHER |
| | 68 | 9S-4191 | 5 | PLUG |
| Y | 69 | 111-9950 | 1 | VALVE GP (PILOT MANIFOLD) |
| | 70 | 6V-9001 | 3 | ELBOW |
| | 71 | 108-7372 | 1 | HOSE AS (NOM 06, L=2950mm) |
| | 72 | 4I-9521 | 6 | BAND (L1, RED) |
| | 73 | 4I-9522 | 4 | BAND (L2, YELLOW) |
| | 74 | 4I-9523 | 6 | BAND (L3, BLUE) |
| | 75 | 4I-9524 | 4 | BAND (L4, BROWN) |
| | 76 | 4I-9525 | 4 | BAND (R1, ORANGE) |
| | 77 | 4I-9526 | 4 | BAND (R2, WHITE) |
| | 78 | 115-8645 | 1 | GUARD |
| | 79 | 115-8647 | 1 | GUARD |
| Y | 80 | 126-2075 | 1 | FILTER GP |
| | 81 | 087-5778 | 1 | HOSE AS (NOM 06, L=1780mm) |
| | 82 | 121-6391 | 1 | HOSE AS (NOM 06, L=1300mm) |
| | 83 | 8T-1686 | 1 | ELBOW |
| | 84 | 4I-0794 | 1 | HOSE AS (NOM 08, L=500mm) |
| | 85 | 124-0988 | 1 | ELBOW |
| | 86 | 7K-1181 | 28 | STRAP |

## 1136736 LINES GP-PILOT

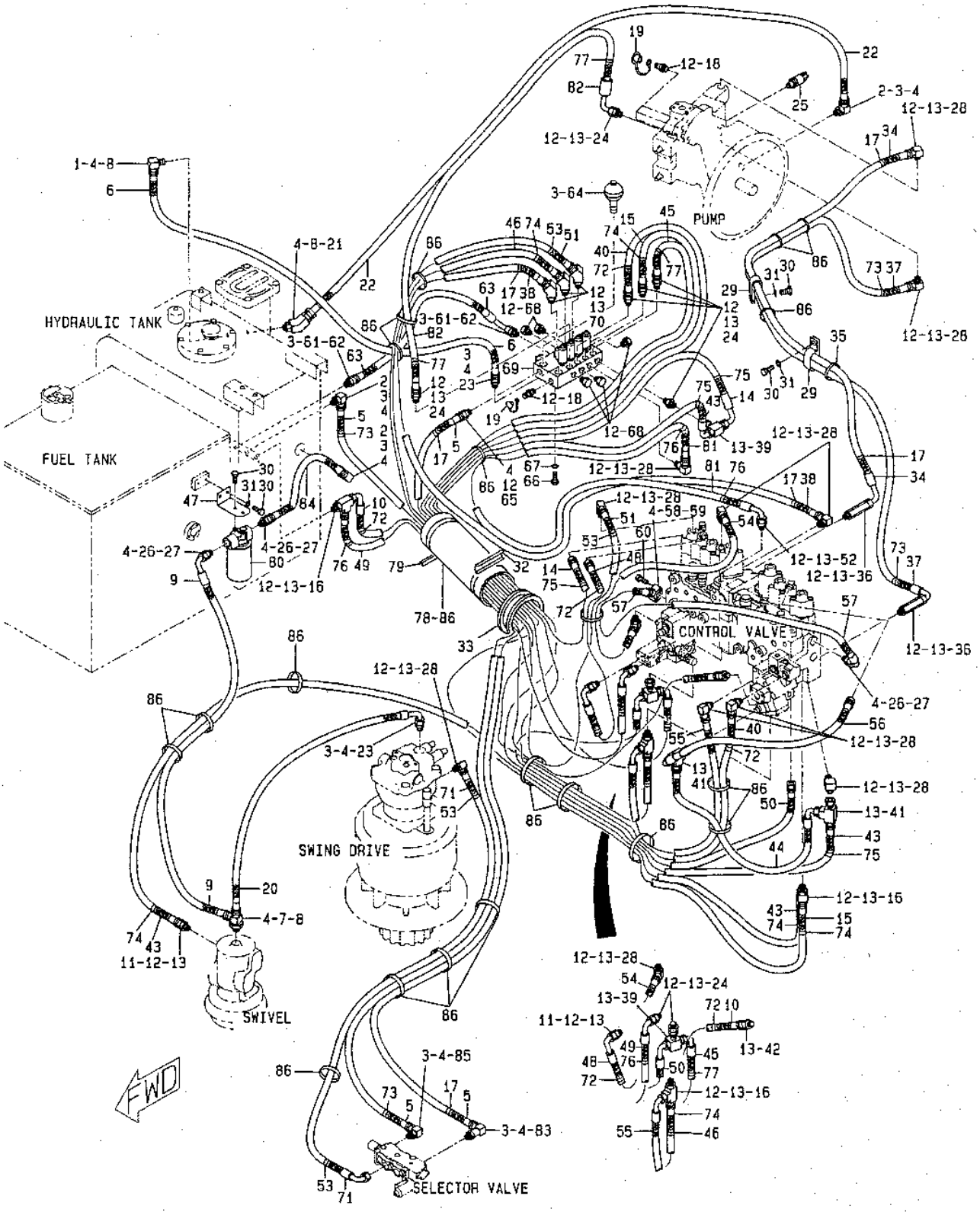


GRAPHIC #1

h58752e

# 1136736 LINES GP-PILOT

S/N 8SR 00177-00400, 8TR 00182-00460
1262075-Page 257, 0874456-Page 258.04, 1119950-Page 383, 1232549-Page 393

**Key:** Y - Separate Illustration

**SMCS**

| NOTE | REF NO | GRAPHIC REF | PART NUMBER | QTY | PART NAME 1 2 3 4 5 6 (PRODUCT LEVEL) | PRICE USD |
|---|---|---|---|---|---|---|
| | 1 | | 6V-8721 | 1 | ELBOW | |
| | 2 | | 6V-8625 | 3 | ELBOW | |
| | 3 | | 3K-0360 | 10 | SEAL-O-RING (ID=16.36mm) | |
| | 4 | | 6V-8398 | 16 | SEAL-O-RING (OD=16.03mm) | |
| | 5 | | 102-1163 | 1 | HOSE AS (NOM 08, L=4150mm) | |
| | 6 | | 124-1297 | 1 | HOSE AS (NOM 08, L=800mm) | |
| | 7 | | 115-8634 | 1 | TEE | |
| | 8 | | 2M-9780 | 3 | SEAL-O-RING (ID=19.18mm) | |
| | 9 | | 102-1157 | 1 | HOSE AS (NOM 08, L=1250mm) | |
| | 10 | | 111-0988 | 1 | HOSE AS (NOM 06, L=1950mm) | |
| | 11 | | 8T-0075 | 2 | CONNECTOR | |
| | 12 | | 3J-1907 | 42 | SEAL-O-RING (ID=11.89mm) | |
| | 13 | | 6V-8397 | 43 | SEAL-O-RING (OD=12.83mm) | |
| | 14 | | 4I-1631 | 1 | HOSE AS (NOM 06, L=2850mm) | |
| | 15 | | 104-8774 | 1 | HOSE AS (NOM 06, L=2200mm) | |
| | 16 | | 6V-8781 | 3 | TEE | |
| | 17 | | 4I-9527 | 6 | BAND (R3, GREEN) | |
| | 18 | | 6V-3965 | 4 | NIPPLE AS | |
| | 19 | | 6V-0852 | 4 | CAP | |
| | 20 | | 4I-6121 | 1 | HOSE AS (NOM 06, L=1000mm) | |
| | 21 | | 6V-8624 | 1 | ELBOW | |
| | 22 | | 135-8994 | 1 | HOSE AS (NOM 08, L=1100mm) | |
| | 23 | | 6V-8639 | 2 | CONNECTOR | |
| | 24 | | 6V-8636 | 8 | CONNECTOR | |
| | 25 | | 106-0178 | 1 | SENSOR AS | |
| | | | 3K-0360 | 1 | SEAL-O-RING (ID=16.36mm) | |
| | 26 | | 6V-8633 | 3 | CONNECTOR | |
| | 27 | | 3D-2824 | 3 | SEAL-O-RING (ID=23.47mm) | |
| | 28 | | 6V-8724 | 11 | ELBOW | |
| | 29 | | 6D-1641 | 4 | WASHER | |
| | 30 | | 8T-4137 | 6 | BOLT (L=20mm) | |
| | 31 | | 8T-4121 | 4 | WASHER | |
| | 32 | | 108-7508 | 1 | GUARD | |
| | 33 | | 087-4587 | 1 | GROMMET | |
| | 34 | | 135-8997 | 1 | HOSE AS (NOM 06, L=1750mm) | |
| | 35 | | 096-0061 | 2 | STRAP | |
| | 36 | | 8C-0597 | 2 | CONNECTOR | |
| | 37 | | 135-9000 | 1 | HOSE AS (NOM 06, L=2500mm) | |
| | 38 | | 7Y-4190 | 1 | HOSE AS (NOM 06, L=1650mm) | |
| Y | 39 | | 123-2549 | 2 | VALVE GP | |
| | 40 | | 104-8771 | 1 | HOSE AS (NOM 06, L=2430mm) | |
| | 41 | | 6V-9836 | 2 | TEE | |
| | 42 | | 8C-6868 | 1 | CONNECTOR | |
| | 43 | | 087-5303 | 2 | HOSE AS (NOM 06, L=2300mm) | |
| | 44 | | 087-5765 | 1 | HOSE AS (NOM 06, L=570mm) | |
| | 45 | | 087-5764 | 1 | HOSE AS (NOM 06, L=1550mm) | |
| | 46 | | 104-8777 | 1 | HOSE AS (NOM 06, L=2030mm) | |
| | 47 | | 124-1027 | 1 | PLATE | |

## 1136736 LINES GP-PILOT

| | | | | |
|---|---|---|---|---|
| | 48 | 4I-0836 | 1 | HOSE AS (NOM 06, L=1200mm) |
| | 49 | 4I-0806 | 1 | HOSE AS NOM 06, L=1700mm) |
| | 50 | 087-5772 | 1 | HOSE AS (NOM 06, L=1000mm) |
| | 51 | 121-6385 | 1 | HOSE AS (NOM 06, L=2790mm) |
| | 52 | 107-6631 | 1 | CONNECTOR |
| | 53 | 4I-9528 | 4 | BAND (R4, PURPLE) |
| | 54 | 4I-5900 | 1 | HOSE AS (NOM 06, L=900mm) |
| | 55 | 087-4532 | 1 | HOSE AS (NOM 06, L=900mm) |
| | 56 | 5I-8825 | 1 | HOSE AS (NOM 06, L=750mm) |
| | 57 | 087-4480 | 1 | HOSE AS (NOM 08, L=1200mm) |
| | 58 | 113-6699 | 1 | ELBOW |
| | 59 | 7J-9933 | 1 | SEAL-O-RING (ID=21.89mm) |
| | 60 | 8T-4196 | 2 | BOLT (L=35mm) |
| | 61 | 6V-8632 | 2 | CONNECTOR |
| | 62 | 7J-9108 | 2 | SEAL-O-RING (OD=19.28mm) |
| | 63 | 102-1127 | 1 | HOSE AS (NOM 10, L=520mm) |
| Y | 64 | 087-4456 | 1 | ACCUMULATOR GP |
| | 65 | 6V-9873 | 3 | BOLT |
| | 66 | 099-4691 | 5 | PLUG |
| | 67 | 5P-1076 | 3 | WASHER |
| | 68 | 9S-4191 | 5 | PLUG |
| Y | 69 | 111-9950 | 1 | VALVE GP (PILOT MANIFOLD) |
| | 70 | 6V-9001 | 3 | ELBOW |
| | 71 | 108-7372 | 1 | HOSE AS (NOM 06, L=2950mm) |
| | 72 | 4I-9521 | 6 | BAND (L1, RED) |
| | 73 | 4I-9522 | 4 | BAND (L2, YELLOW) |
| | 74 | 4I-9523 | 6 | BAND (L3, BLUE) |
| | 75 | 4I-9524 | 4 | BAND (L4, BROWN) |
| | 76 | 4I-9525 | 4 | BAND (R1, ORANGE) |
| | 77 | 4I-9526 | 4 | BAND (R2, WHITE) |
| | 78 | 115-8645 | 1 | GUARD |
| | 79 | 115-8647 | 1 | GUARD |
| Y | 80 | 126-2075 | 1 | FILTER GP |
| | 81 | 5I-8853 | 1 | HOSE AS (NOM 06, L=2750mm) |
| | 82 | 135-9003 | 1 | HOSE AS (NOM 06, L=1300mm) |
| | 83 | 8T-1686 | 1 | ELBOW |
| | 84 | 4I-0794 | 1 | HOSE AS (NOM 08, L=500mm) |
| | 85 | 124-0988 | 1 | ELBOW |
| | 86 | 7K-1181 | 24 | STRAP |
| | 87 | 8C-3451 | 1 | CAP |
| | 88 | 3J-7354 | 1 | SEAL-O-RING (ID=8.92mm) |
| | 89 | 7X-0871 | 1 | TEE |
| | 90 | 5P-9617 | 1 | ADAPTER |
| | 91 | 8C-3446 | 1 | VALVE |
| | 92 | 136-0207 | 3 | STRAP |

## 1136736 LINES GP-PILOT

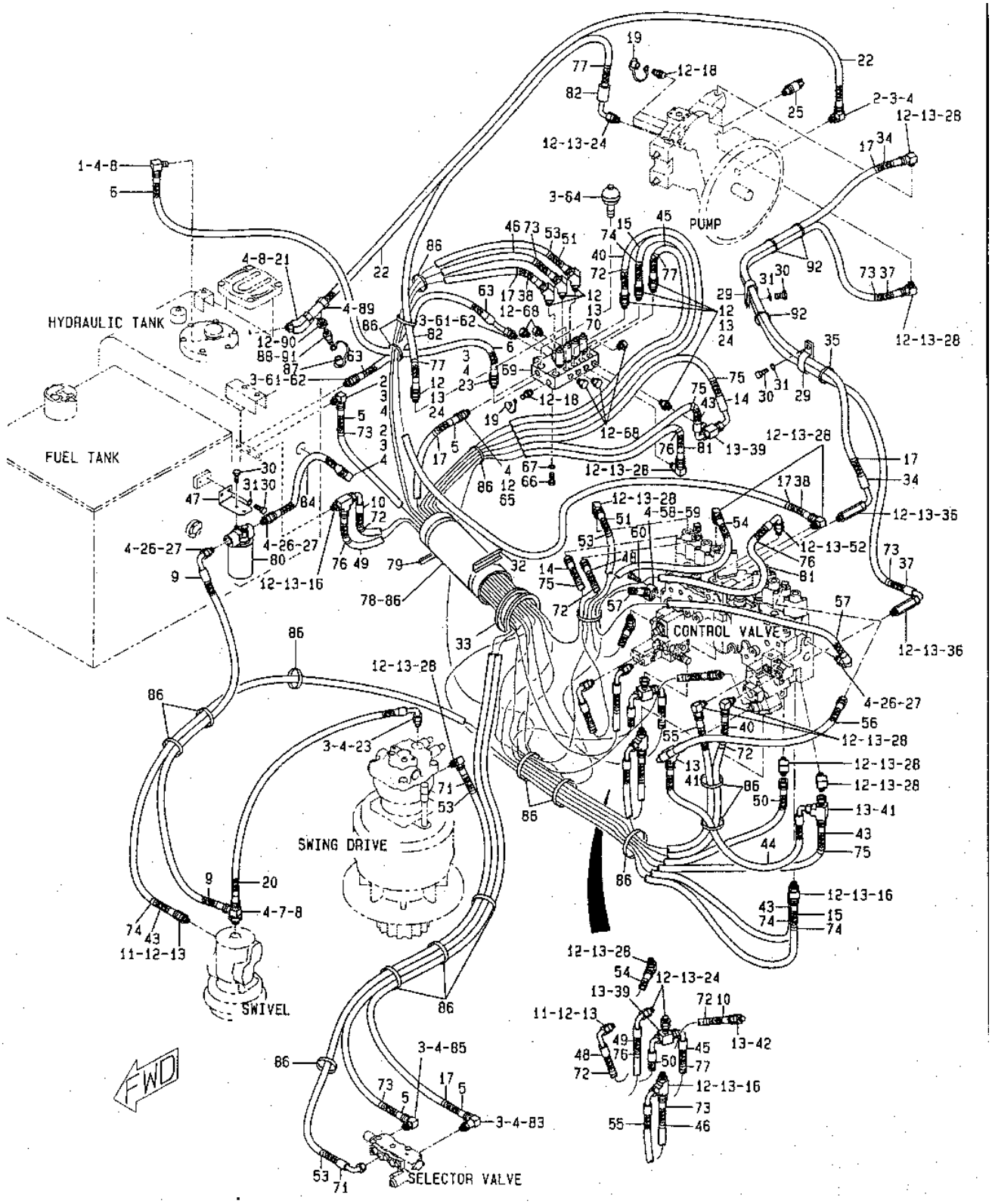


GRAPHIC #1

h64054e

# 1136736 LINES GP-PILOT

S/N 8SR 00401-UP, 8TR 00461-UP
1262075-Page 257, 0874456-Page 258.04, 1119950-Page 383, 1232549-Page 393

**Key:** Y - Separate Illustration

**SMCS**

| NOTE | REF NO | GRAPHIC REF | PART NUMBER | QTY | PART NAME 1 2 3 4 5 6 (PRODUCT LEVEL) | PRICE USD |
|---|---|---|---|---|---|---|
| | 1 | | 6V-8721 | 1 | ELBOW | |
| | 2 | | 6V-8625 | 3 | ELBOW | |
| | 3 | | 3K-0360 | 10 | SEAL-O-RING (ID=16.36mm) | |
| | 4 | | 6V-8398 | 17 | SEAL-O-RING (OD=16.03mm) | |
| | 5 | | 102-1163 | 2 | HOSE AS (NOM 08, L=4150mm) | |
| | 6 | | 124-1297 | 1 | HOSE AS (NOM 08, L=800mm) | |
| | 7 | | 115-8634 | 1 | TEE | |
| | 8 | | 2M-9780 | 3 | SEAL-O-RING (ID=19.18mm) | |
| | 9 | | 102-1157 | 1 | HOSE AS (NOM 08, L=1250mm) | |
| | 10 | | 7Y-8478 | 1 | HOSE AS (NOM 06, L=2100mm) | |
| | 11 | | 8T-0075 | 2 | CONNECTOR | |
| | 12 | | 3J-1907 | 44 | SEAL-O-RING (ID=11.89mm) | |
| | 13 | | 6V-8397 | 46 | SEAL-O-RING (OD=12.83mm) | |
| | 14 | | 4I-1631 | 1 | HOSE AS (NOM 06, L=2850mm) | |
| | 15 | | 104-8774 | 1 | HOSE AS (NOM 06, L=2200mm) | |
| | 16 | | 6V-8781 | 3 | TEE | |
| | 17 | | 4I-9527 | 6 | BAND (R3, GREEN) | |
| | 18 | | 6V-3965 | 4 | NIPPLE AS | |
| | 19 | | 6V-0852 | 4 | CAP | |
| | 20 | | 4I-6121 | 1 | HOSE AS (NOM 08, L=1000mm) | |
| | 21 | | 6V-8624 | 1 | ELBOW | |
| | 22 | | 135-8994 | 1 | HOSE AS (NOM 06, L=1100mm) | |
| | 23 | | 6V-8639 | 2 | CONNECTOR | |
| | 24 | | 6V-8636 | 8 | CONNECTOR | |
| | 25 | | 106-0178 | 1 | SENSOR AS | |
| | | | 3K-0360 | 1 | SEAL-O-RING (ID=16.36mm) | |
| | 26 | | 6V-8633 | 3 | CONNECTOR | |
| | 27 | | 3D-2824 | 3 | SEAL-O-RING (ID=23.47mm) | |
| | 28 | | 6V-8724 | 11 | ELBOW | |
| | 29 | | 6D-1641 | 4 | WASHER | |
| | 30 | | 8T-4137 | 6 | BOLT (L=20mm) | |
| | 31 | | 8T-4121 | 4 | WASHER | |
| | 32 | | 108-7508 | 1 | GUARD | |
| | 33 | | 087-4587 | 1 | GROMMET | |
| | 34 | | 135-8997 | 1 | GROMMET (NOM 06, L=1750mm) | |
| | 35 | | 096-0061 | 2 | STRAP | |
| | 36 | | 8C-0597 | 2 | CONNECTOR | |
| | 37 | | 135-9000 | 1 | HOSE AS (NOM 06, L=2500mm) | |
| | 38 | | 7Y-4190 | 1 | HOSE AS (NOM 06, L=1650mm) | |
| Y | 39 | | 123-2549 | 2 | VALVE GP | |
| | 40 | | 104-8771 | 1 | HOSE AS (NOM 06, L=2430mm) | |
| | 41 | | 6V-9836 | 2 | TEE | |
| | 42 | | 6V-9850 | 2 | ELBOW | |
| | 43 | | 087-5303 | 2 | HOSE AS (NOM 06, L=2300mm) | |
| | 44 | | 087-4531 | 1 | HOSE AS (NOM 06, L=600mm) | |
| | 45 | | 087-5764 | 1 | HOSE AS (NOM 06, L=1550mm) | |
| | 46 | | 104-8777 | 1 | HOSE AS (NOM 06, L=2030mm) | |
| | 47 | | 124-1027 | 1 | PLATE | |

## 1136736 LINES GP-PILOT

| | | | | |
|---|---|---|---|---|
| | 48 | 4I-0836 | 1 | HOSE AS (NOM 06, L=1200mm) |
| | 49 | 4I-0806 | 1 | HOSE AS NOM 06, L=1700mm) |
| | 50 | 087-5772 | 1 | HOSE AS (NOM 06, L=1000mm) |
| | 51 | 121-6385 | 1 | HOSE AS (NOM 06, L=2790mm) |
| | 52 | 107-6631 | 1 | CONNECTOR |
| | 53 | 4I-9528 | 4 | BAND (R4, PURPLE) |
| | 54 | 4I-5900 | 1 | HOSE AS (NOM 06, L=900mm) |
| | 55 | 087-4532 | 1 | HOSE AS (NOM 06, L=900mm) |
| | 56 | 5I-4387 | 1 | HOSE AS (NOM 06, L=700mm) |
| | 57 | 087-4480 | 1 | HOSE AS (NOM 08, L=1200mm) |
| | 58 | 113-6699 | 1 | ELBOW |
| | 59 | 7J-9933 | 1 | SEAL-O-RING (ID=21.89mm) |
| | 60 | 8T-4196 | 2 | BOLT (L=35mm) |
| | 61 | 6V-8632 | 2 | CONNECTOR |
| | 62 | 7J-9108 | 2 | SEAL-O-RING (OD=19.28mm) |
| | 63 | 102-1127 | 1 | HOSE AS (NOM 10, L=520mm) |
| Y | 64 | 087-4456 | 1 | ACCUMULATOR GP |
| | 65 | 6V-9873 | 1 | CONNECTOR |
| | 66 | 099-4691 | 3 | BOLT |
| | 67 | 5P-1076 | 3 | WASHER |
| | 68 | 9S-4191 | 5 | PLUG |
| Y | 69 | 111-9950 | 1 | VALVE GP (PILOT MANIFOLD) |
| | 70 | 6V-9001 | 3 | ELBOW |
| | 71 | 108-7372 | 1 | HOSE AS (NOM 06, L=2950mm) |
| | 72 | 4I-9521 | 6 | BAND (L1, RED) |
| | 73 | 4I-9522 | 4 | BAND (L2, YELLOW) |
| | 74 | 4I-9523 | 4 | BAND (L3, BLUE) |
| | 75 | 4I-9524 | 4 | BAND (L4, BROWN) |
| | 76 | 4I-9525 | 4 | BAND (R1, ORANGE) |
| | 77 | 4I-9526 | 4 | BAND (R2, WHITE) |
| | 78 | 115-8645 | 1 | GUARD |
| | 79 | 115-8647 | 1 | GUARD |
| Y | 80 | 126-2075 | 1 | FILTER GP |
| | 81 | 5I-8853 | 1 | HOSE AS (NOM 06, L=2750mm) |
| | 82 | 135-9003 | 1 | HOSE AS (NOM 06, L=1300mm) |
| | 83 | 8T-1686 | 1 | ELBOW |
| | 84 | 4I-0794 | 1 | HOSE AS (NOM 08, L=500mm) |
| | 85 | 124-0988 | 1 | ELBOW |
| | 86 | 7K-1181 | 25 | STRAP |
| | 87 | 8C-3451 | 1 | CAP |
| | 88 | 3J-7354 | 1 | SEAL-O-RING (ID=8.92mm) |
| | 89 | 7X-0871 | 1 | TEE |
| | 90 | 5P-9617 | 1 | ADAPTER |
| | 91 | 8C-3446 | 1 | VALVE |
| | 92 | 136-0207 | 3 | STRAP |
| | 93 | 8T-1905 | 1 | ELBOW |

## 1136736 LINES GP-PILOT

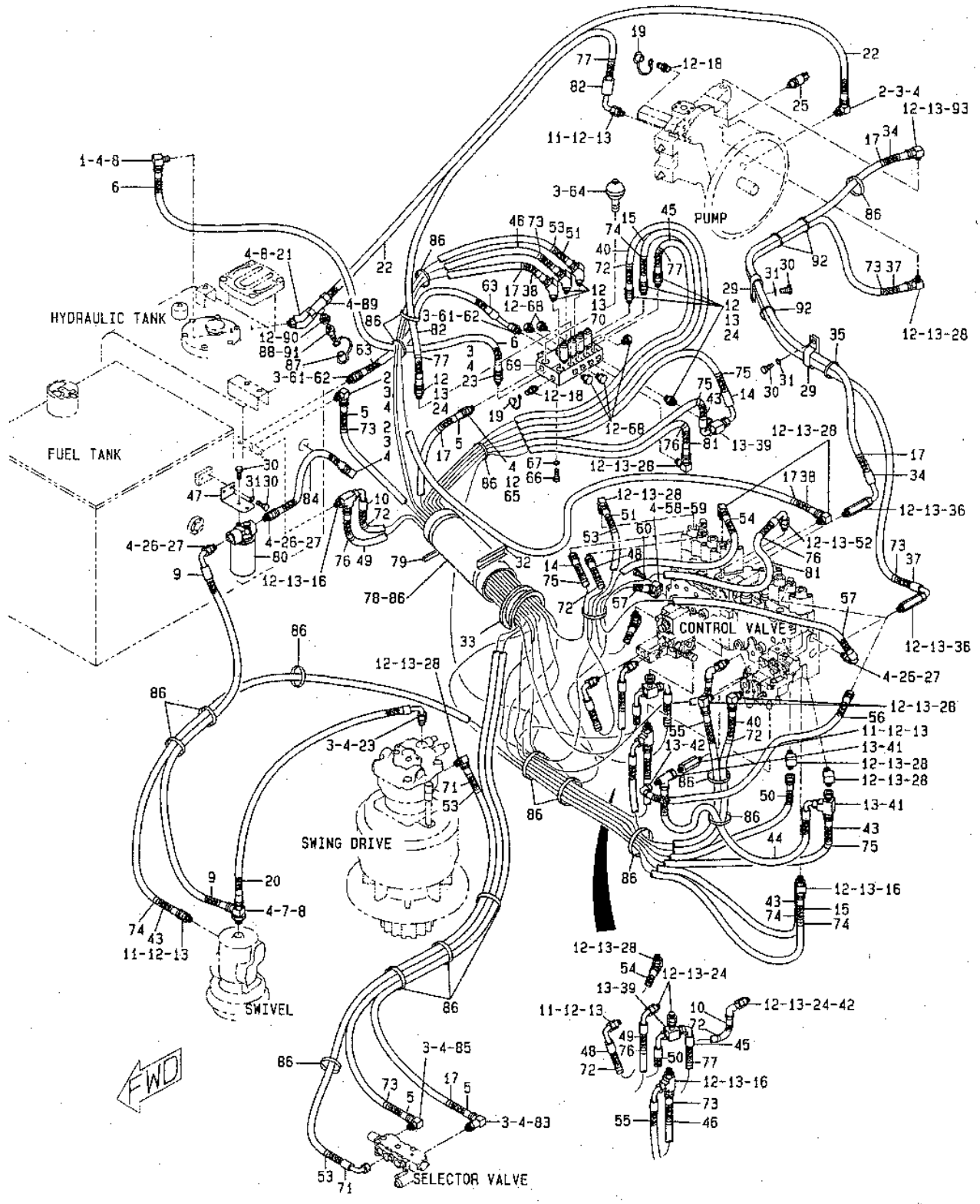


GRAPHIC #1

h79318e

# 1136737 LINES GP-PILOT

THIRD PEDAL
PART OF 1133422-Page 370
1120083-Page 392
AN ATTACHMENT

**Key:** Y - SEE SEPARATE ILLUSTRATION

**SMCS**

| NOTE | REF NO | GRAPHIC REF | PART NUMBER | QTY | PART NAME 1 2 3 4 5 6 (PRODUCT LEVEL) | PRICE USD |
|---|---|---|---|---|---|---|
| | 1 | | 5I-8825 | 3 | HOSE AS (NOM 06, L=750mm) | |
| | 2 | | 6V-8636 | 7 | CONNECTOR | |
| | 3 | | 3J-1907 | 16 | SEAL-O-RING (ID=11.89mm) | |
| | 4 | | 199-1901 | 16 | SEAL-O-RING (OD=12.83mm) | |
| | 5 | | 8T-0075 | 1 | CONNECTOR | |
| | 6 | | 113-6869 | 1 | HOSE AS (NOM 06, L=650mm) | |
| | 7 | | 4I-0821 | 2 | HOSE AS (NOM 06, L=650mm) | |
| | 8 | | 087-6585 | 2 | HOSE AS (NOM 06, L=350mm) | |
| | 9 | | 4I-1025 | 2 | HOSE AS (NOM 06, L=300mm) | |
| | 10 | | 8T-1905 | 2 | ELBOW | |
| | 11 | | 6V-8724 | 5 | ELBOW | |
| | 12 | | 4I-0769 | 1 | HOSE AS (NOM 06, L=2850mm) | |
| | 13 | | 4I-9522 | 4 | BAND (L2,YELLOW) | |
| | 14 | | 096-0061 | 2 | STRAP | |
| | 15 | | 4I-9525 | 4 | BAND (R1,ORANGE) | |
| | 16 | | 4I-9526 | 4 | BAND (R2,WHITE) | |
| | 17 | | 107-6631 | 1 | CONNECTOR | |
| | 18 | | 7K-1181 | 9 | STRAP | |
| | 19 | | 8T-4185 | 2 | BOLT (L=50mm) | |
| Y | 20 | | 112-0083 | 1 | VALVE GP | |
| | 21 | | 104-8771 | 1 | HOSE AS (NOM 06, L=2430mm) | |
| | 22 | | 108-7203 | 2 | HOSE AS (NOM 06, L=2600mm) | |
| | 23 | | 4I-9521 | 4 | BAND (L1,RED) | |

## 1136737 LINES GP-PILOT

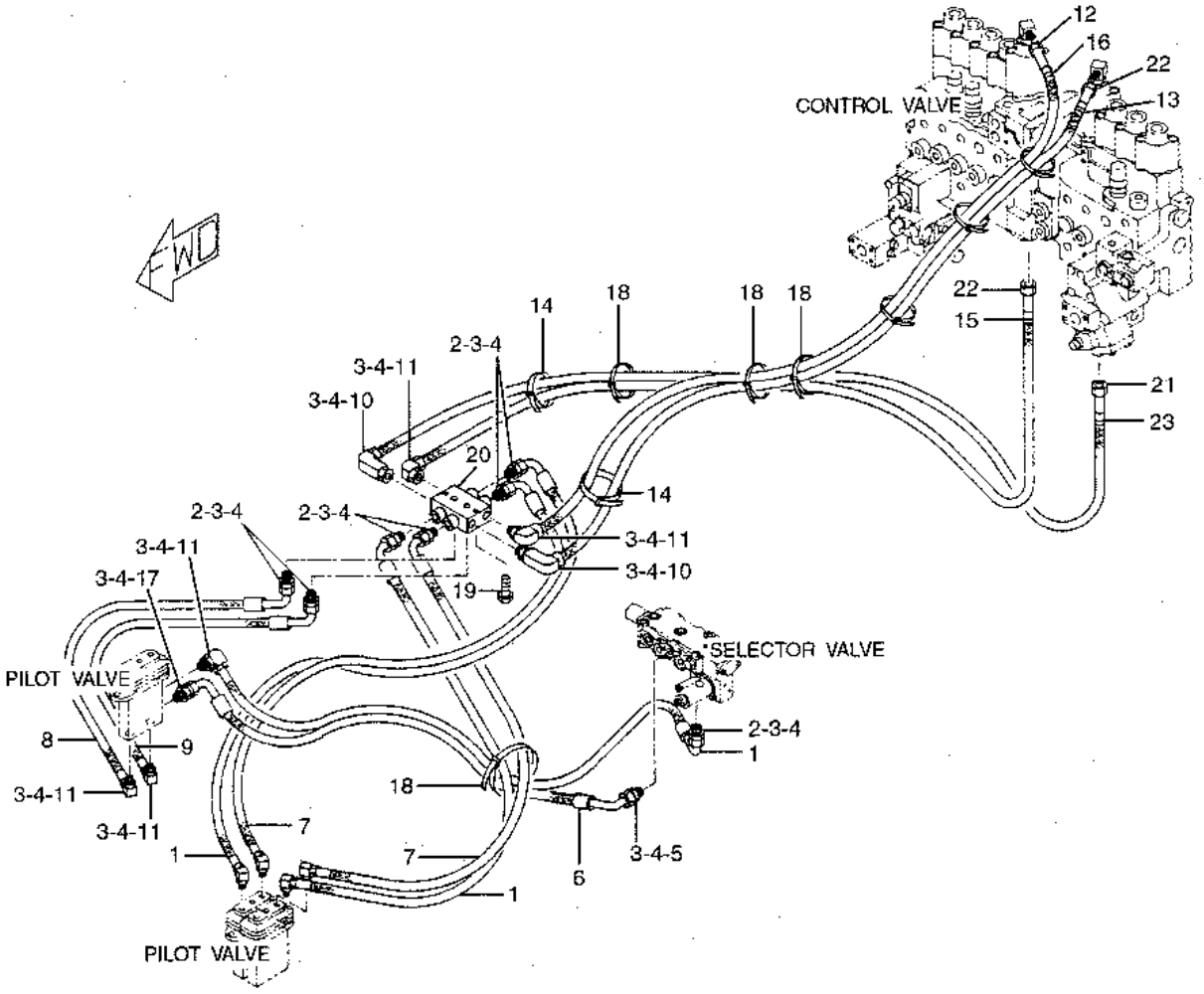


GRAPHIC #1

h79319e

# 1136828 LINES GP-PILOT

SINGLE FUNCTION
PART OF 1211925-Page 301, 1096190-Page 301.01
AN ATTACHMENT

**Key:**

**SMCS**

| NOTE | REF NO | GRAPHIC REF | PART NUMBER | QTY | PART NAME 1 2 3 4 5 6 (PRODUCT LEVEL) | PRICE USD |
|---|---|---|---|---|---|---|
| | 1 | | 6V-8636 | 3 | CONNECTOR | |
| | 2 | | 3J-1907 | 10 | SEAL-O-RING (ID=11.89mm) | |
| | 3 | | 6V-8397 | 10 | SEAL-O-RING (OD=12.83mm) | |
| | 4 | | 8T-0075 | 1 | CONNECTOR | |
| | 5 | | 4I-0818 | 2 | HOSE AS (NOM 06, L=820mm) | |
| | 6 | | 113-6869 | 1 | HOSE AS (NOM 06, L=650mm) | |
| | 7 | | 4I-0772 | 1 | HOSE AS (NOM 06, L=3550mm) | |
| | 8 | | 096-0061 | 7 | STRAP | |
| | 9 | | 6V-8724 | 2 | ELBOW | |
| | 10 | | 9S-4191 | 1 | PLUG | |
| | 11 | | 108-7507 | 1 | CONNECTOR | |
| | 12 | | 107-6631 | 1 | CONNECTOR | |
| | 13 | | 6V-8781 | 1 | TEE | |
| | 14 | | 106-0181 | 1 | SWITCH AS (PRESSURE) | |
| | | | 3E-3365 | 1 | WEDGE | |
| | | | 102-8802 | 1 | RECEPTACLE KIT | |
| | | | 9W-0852 | 2 | PIN | |
| | 15 | | 4I-3941 | 1 | FITTING AS | |

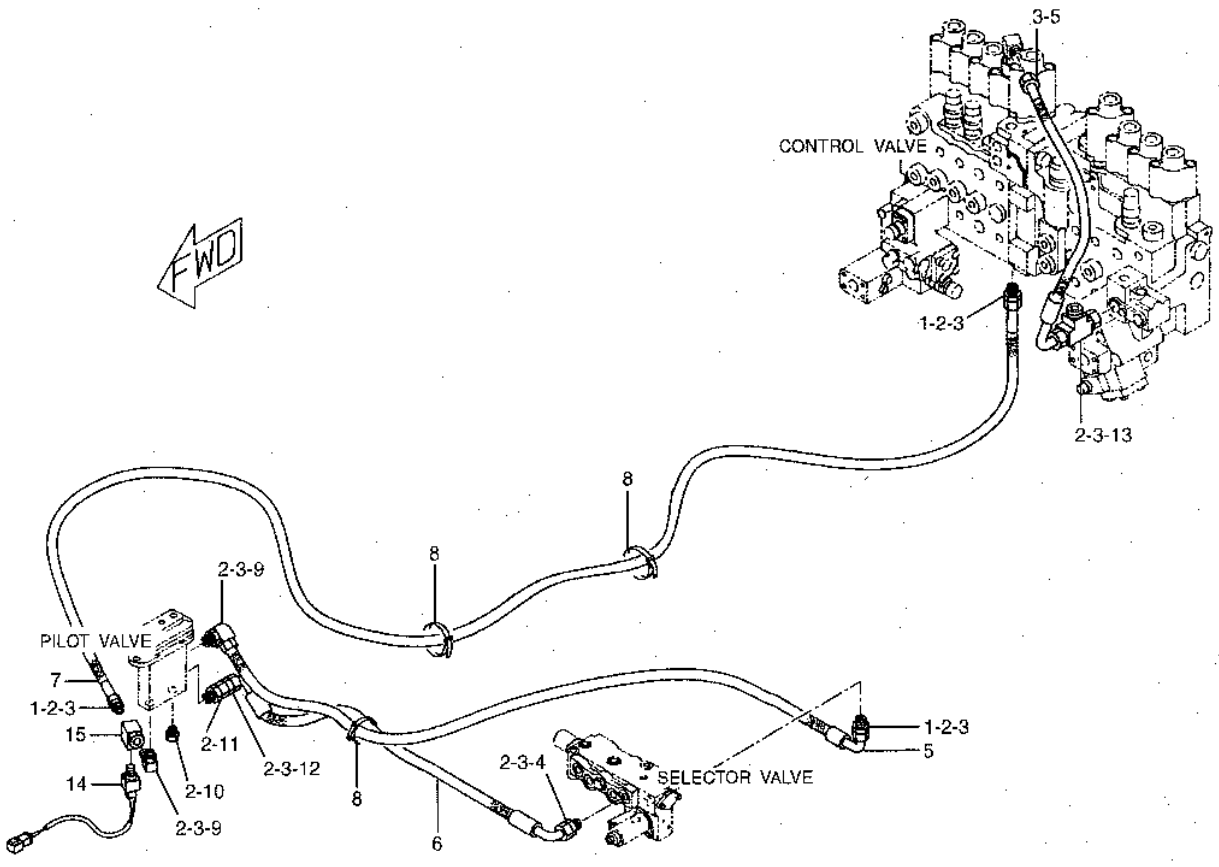


GRAPHIC #1

h50890e

# 1136832 LINES GP-PILOT

COMBINED FUNCTION
PART OF 1211926-Page 301, 1096192-Page 301.01
4I6363-Page 394.06
AN ATTACHMENT

**Key:** Y - SEE SEPARATE ILLUSTRATION

**SMCS**

| NOTE | REF NO | GRAPHIC REF | PART NUMBER | QTY | PART NAME 1 2 3 4 5 6 (PRODUCT LEVEL) | PRICE USD |
|---|---|---|---|---|---|---|
| | 1 | | 6V-8636 | 4 | CONNECTOR | |
| | 2 | | 3J-1907 | 12 | SEAL-O-RING (ID=11.89mm) | |
| | 3 | | 6V-8397 | 12 | SEAL-O-RING (ID=9.25mm) | |
| | 4 | | 8T-0075 | 1 | CONNECTOR | |
| | 5 | | 113-6869 | 1 | HOSE AS (NOM 15, L=650mm) | |
| | 6 | | 4I-0818 | 1 | HOSE AS (NOM 06, L=820mm) | |
| | 7 | | 108-7387 | 1 | HOSE AS (NOM 06, L=2500mm) | |
| | 8 | | 096-0061 | 10 | STRAP | |
| | 9 | | 4I-0772 | 1 | HOSE AS (NOM 06, L=3550mm) | |
| | 10 | | 087-4535 | 1 | HOSE AS (NOM 06, L=4150mm) | |
| | 11 | | 6V-8724 | 5 | ELBOW | |
| | 12 | | 124-0927 | 1 | SUPPORT | |
| | 13 | | 108-7507 | 1 | CONNECTOR | |
| | 14 | | 107-6631 | 1 | CONNECTOR | |
| | 15 | | 087-6582 | 1 | HOSE AS (NOM 06, L=400mm) | |
| | 16 | | 4I-3941 | 1 | FITTING AS | |
| | 17 | | 124-0928 | 1 | SPACER | |
| Y | 18 | | 4I-6363 | 1 | VALVE AS (BALL) | |
| | 19 | | 8T-4138 | 2 | BOLT (L=20mm) | |
| | 20 | | 8T-4172 | 2 | BOLT (L=80mm) | |
| | 21 | | 8T-4133 | 2 | NUT | |
| | 22 | | 8T-4121 | 2 | WASHER-HARD | |
| | 23 | | 106-0181 | 1 | SWITCH AS (PRESSURE) | |
| | | | 3E-3365 | 1 | WEDGE | |
| | | | 102-8802 | 1 | RECEPTACLE KIT | |
| | | | 9W-0852 | 2 | PIN | |

## 1136832 LINES GP-PILOT

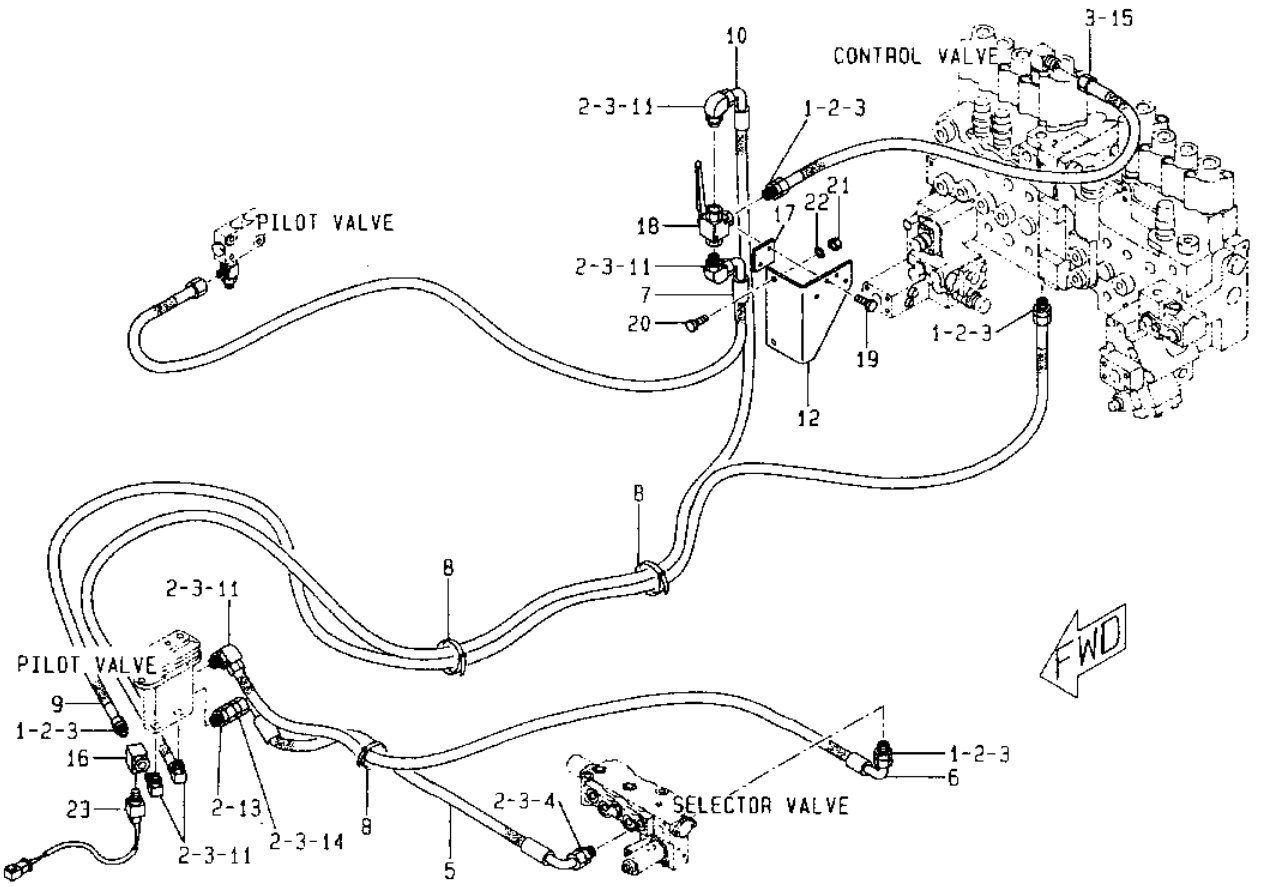


| NOTE | No. | PART No. | QTY | PART NAME |
|---|---|---|---|---|
| | 1 | 6V-8636 | 4 | CONNECTOR |
| | 2 | 3J-1907 | 12 | SEAL-O-RING (ID=11.89mm) |
| | 3 | 6V-8397 | 12 | SEAL-O-RING (ID=9.25mm) |
| | 4 | 8T-0075 | 1 | CONNECTOR |
| | 5 | 113-6869 | 1 | HOSE AS (NOM 15, L=650mm) |
| | 6 | 4I-0818 | 1 | HOSE AS (NOM 06, L=820mm) |
| | 7 | 108-7387 | 1 | HOSE AS (NOM 06, L=2500mm) |
| | 8 | 096-0061 | 10 | STRAP |
| | 9 | 4I-0772 | 1 | HOSE AS (NOM 06, L=3550mm) |
| | 10 | 087-4535 | 1 | HOSE AS (NOM 06, L=4150mm) |
| | 11 | 6V-8724 | 5 | ELBOW |
| | 12 | 124-0927 | 1 | SUPPORT |
| | 13 | 108-7507 | 1 | CONNECTOR |
| | 14 | 107-6631 | 1 | CONNECTOR |
| | 15 | 087-6582 | 1 | HOSE AS (NOM 06, L=400mm) |
| | 16 | 4I-3941 | 1 | FITTING AS |
| | 17 | 124-0928 | 1 | SPACER |
| Y | 18 | 4I-6363 | 1 | VALVE AS (BALL) |
| | 19 | 8T-4138 | 2 | BOLT (L=20mm) |
| | 20 | 8T-4172 | 2 | BOLT (L=80mm) |
| | 21 | 8T-4133 | 2 | NUT |
| | 22 | 8T-4121 | 2 | WASHER-HARD |
| | 23 | 106-0181 | 1 | SWITCH AS (PRESSURE) |
| | | 3E-3365 | 1 | WEDGE |
| | | 102-8802 | 1 | RECEPTACLE KIT |
| | | 9W-0852 | 2 | PIN |

Y-SEE SEPARATE ILLUSTRATION

H64057E

GRAPHIC #1

h64057e

# 1192520 LINES GP-PILOT

FLOW CONTROL/SINGLE FUNCTION
PART OF 1178432-Page 300
1216303-Page 376, 1224459-Page 378
AN ATTACHMENT

**Key:** Y - SEE SEPARATE ILLUSTRATION

**SMCS**

| NOTE | REF NO | GRAPHIC REF | PART NUMBER | QTY | PART NAME 1 2 3 4 5 6 (PRODUCT LEVEL) | PRICE USD |
|---|---|---|---|---|---|---|
| | 1 | | 7K-1181 | 10 | STRAP | |
| | 2 | | 5I-8853 | 1 | HOSE AS (NOM 06, L=2750mm) | |
| | 3 | | 6V-8636 | 11 | CONNECTOR | |
| | 4 | | 3J-1907 | 23 | SEAL-O-RING (ID=11.89mm) | |
| | 5 | | 6V-8397 | 24 | SEAL-O-RING (ID=9.25mm) | |
| | 6 | | 6V-8781 | 1 | TEE | |
| | 7 | | 6V-8724 | 4 | ELBOW | |
| | 8 | | 108-7387 | 1 | HOSE AS (NOM 06, L=2500mm) | |
| | 9 | | 8J-6875 | 2 | VALVE AS (SHUTTLE) | |
| | 10 | | 4I-6287 | 1 | COUPLING AS | |
| | 11 | | 121-6415 | 1 | SUPPORT AS | |
| | 12 | | 8T-4195 | 2 | BOLT (L=30mm) | |
| | 13 | | 8T-4121 | 2 | WASHER-HARD | |
| Y | 14 | | 121-6303 | 1 | VALVE GP | |
| | 15 | | 8T-4971 | 2 | BOLT (L=30mm) | |
| | 16 | | 9X-8256 | 2 | WASHER | |
| | 17 | | 6V-9001 | 2 | ELBOW | |
| Y | 18 | | 122-4459 | 1 | VALVE GP | |
| | 19 | | 8T-3647 | 2 | BOLT (L=80mm) | |
| | 20 | | 5C-7261 | 2 | NUT | |
| | 21 | | 8T-4224 | 4 | WASHER-HARD | |
| | 22 | | 8T-0075 | 1 | CONNECTOR | |
| | 23 | | 129-5926 | 1 | PLATE | |
| | 24 | | 124-1035 | 1 | FITTING | |
| | 25 | | 4I-0797 | 2 | HOSE AS (NOM 06, L=1350mm) | |
| | 26 | | 087-5765 | 1 | HOSE AS (NOM 06, L=570mm) | |
| | 27 | | 6V-9836 | 1 | TEE | |
| | 28 | | 9S-4191 | 1 | PLUG | |
| | 29 | | 4I-0806 | 1 | HOSE AS (NOM 06, L=1700mm) | |
| | 30 | | 087-4411 | 1 | HOSE AS (NOM 06, L=450mm) | |
| | 31 | | 6V-8774 | 1 | TEE | |
| | 32 | | 8T-0788 | 1 | ELBOW | |

## 1192520 LINES GP-PILOT

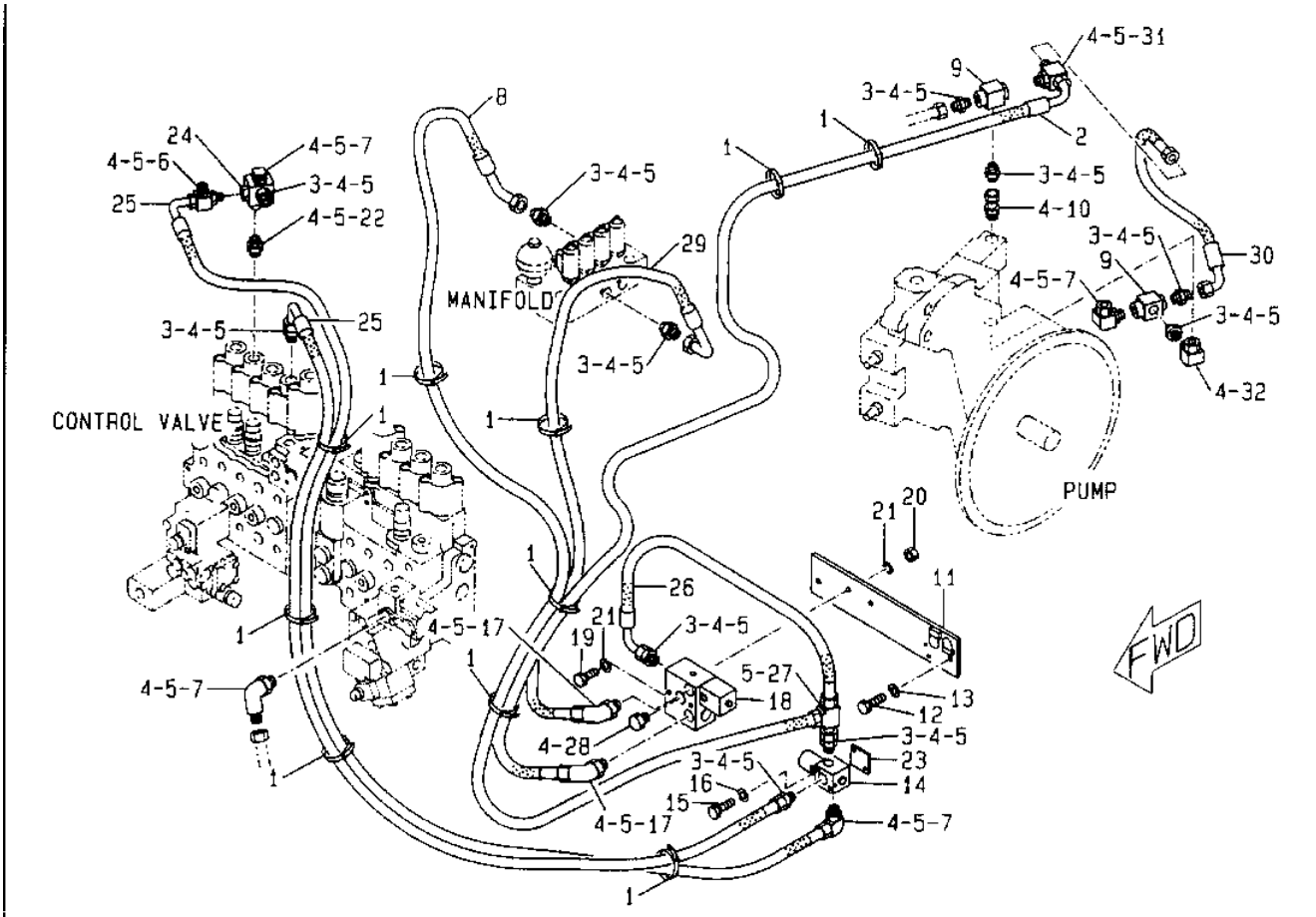


| NOTE | No. | PART No. | QTY | PART NAME |
|---|---|---|---|---|
| | 1 | 7K-1181 | 10 | STRAP |
| | 2 | 5I-8853 | 1 | HOSE AS (NOM 06, L=2750mm) |
| | 3 | 6V-8636 | 11 | CONNECTOR |
| | 4 | 3J-1907 | 23 | SEAL-O-RING (ID=11.89mm) |
| | 5 | 6V-8397 | 24 | SEAL-O-RING (ID=9.25mm) |
| | 6 | 6V-8781 | 1 | TEE |
| | 7 | 6V-8724 | 4 | ELBOW |
| | 8 | 108-7387 | 1 | HOSE AS (NOM 06, L=2500mm) |
| | 9 | 8J-6875 | 2 | VALVE AS (SHUTTLE) |
| | 10 | 4I-6287 | 1 | COUPLING AS |
| | 11 | 121-6415 | 1 | SUPPORT AS |
| | 12 | 8T-4195 | 2 | BOLT (L=30mm) |
| | 13 | 8T-4121 | 2 | WASHER-HARD |
| Y | 14 | 121-6303 | 1 | VALVE GP |
| | 15 | 8T-4971 | 2 | BOLT (L=30mm) |
| | 16 | 9X-8256 | 2 | WASHER |
| | 17 | 6V-9001 | 2 | ELBOW |
| Y | 18 | 122-4459 | 1 | VALVE GP |
| | 19 | 8T-3647 | 2 | BOLT (L=80mm) |
| | 20 | 5C-7261 | 2 | NUT |
| | 21 | 8T-4224 | 4 | WASHER-HARD |
| | 22 | 8T-0075 | 1 | CONNECTOR |
| | 23 | 129-5926 | 1 | PLATE |
| | 24 | 124-1035 | 1 | FITTING |
| | 25 | 4I-0797 | 2 | HOSE AS (NOM 06, L=1350mm) |
| | 26 | 087-5765 | 1 | HOSE AS (NOM 06, L=570mm) |
| | 27 | 6V-9836 | 1 | TEE |
| | 28 | 9S-4191 | 1 | PLUG |
| | 29 | 4I-0806 | 1 | HOSE AS (NOM 06, L=1700mm) |
| | 30 | 087-4411 | 1 | HOSE AS (NOM 06, L=450mm) |
| | 31 | 6V-8774 | 1 | TEE |
| | 32 | 8T-0788 | 1 | ELBOW |

Y-SEE SEPARATE ILLUSTRATION

H64058E

# 1136836 LINES GP-PILOT

4 WAY VALVE
S/N 8SR 1-00396, 8TR 1-00434
PART OF 1140652-Page 369
0856455-Page 384
AN ATTACHMENT

**Key:** Y - SEE SEPARATE ILLUSTRATION

**SMCS**

| NOTE | REF NO | GRAPHIC REF | PART NUMBER | QTY | PART NAME 1 2 3 4 5 6 (PRODUCT LEVEL) | PRICE USD |
|---|---|---|---|---|---|---|
| | 1 | | 7Y-4199 | 3 | HOSE AS (NOM 06, L=1800mm) | |
| | 2 | | 4I-3991 | 3 | HOSE AS (NOM 06, L=2100mm) | |
| | 3 | | 4I-0833 | 3 | HOSE AS (NOM 06, L=1850mm) | |
| | 4 | | 6V-8724 | 3 | ELBOW | |
| | 5 | | 3J-1907 | 18 | SEAL-O-RING (ID=11.89mm) | |
| | 6 | | 6V-8397 | 28 | SEAL-O-RING (OD=12.83mm) | |
| | 7 | | 104-8835 | 1 | HOSE AS (NOM 06, L=540mm) | |
| | 8 | | 4I-1760 | 2 | HOSE AS (NOM 06, L=500mm) | |
| | 9 | | 6V-9001 | 14 | ELBOW | |
| | 10 | | 8T-1905 | 1 | ELBOW | |
| | 11 | | 096-0061 | 8 | STRAP | |
| | 12 | | 4I-5933 | 1 | HOSE AS (NOM 06, L=1600mm) | |
| | 13 | | 4I-5811 | 1 | HOSE AS (NOM 06, L=2000mm) | |
| | 14 | | 8T-4956 | 4 | BOLT (L=35mm) | |
| | 15 | | 131-9632 | 1 | SUPPORT AS | |
| | 16 | | 4I-6003 | 3 | HOSE AS (NOM 06, L=2650mm) | |
| | 17 | | 4I-9521 | 4 | BAND (L1,RED) | |
| | 18 | | 4I-9522 | 2 | BAND (L2,YELLOW) | |
| | 19 | | 4I-9523 | 4 | BAND (L3,BLUE) | |
| | 20 | | 4I-9524 | 2 | BAND (L4,BROWN) | |
| | 21 | | 4I-9525 | 4 | BAND (R1,ORANGE) | |
| | 22 | | 4I-9526 | 2 | BAND (R2,WHITE) | |
| | 23 | | 4I-9527 | 4 | BAND (R3,GREEN) | |
| | 24 | | 4I-9528 | 2 | BAND (R4,PURPLE) | |
| Y | 25 | | 085-6455 | 1 | VALVE GP | |
| | 26 | | 108-7203 | 1 | HOSE AS (NOM 06, L=2600mm) | |
| | 27 | | 8T-4184 | 2 | BOLT (L=45mm) | |
| | 28 | | 8T-4223 | 6 | WASHER | |
| | 29 | | 115-8929 | 1 | GUARD | |

## 1136836 LINES GP-PILOT

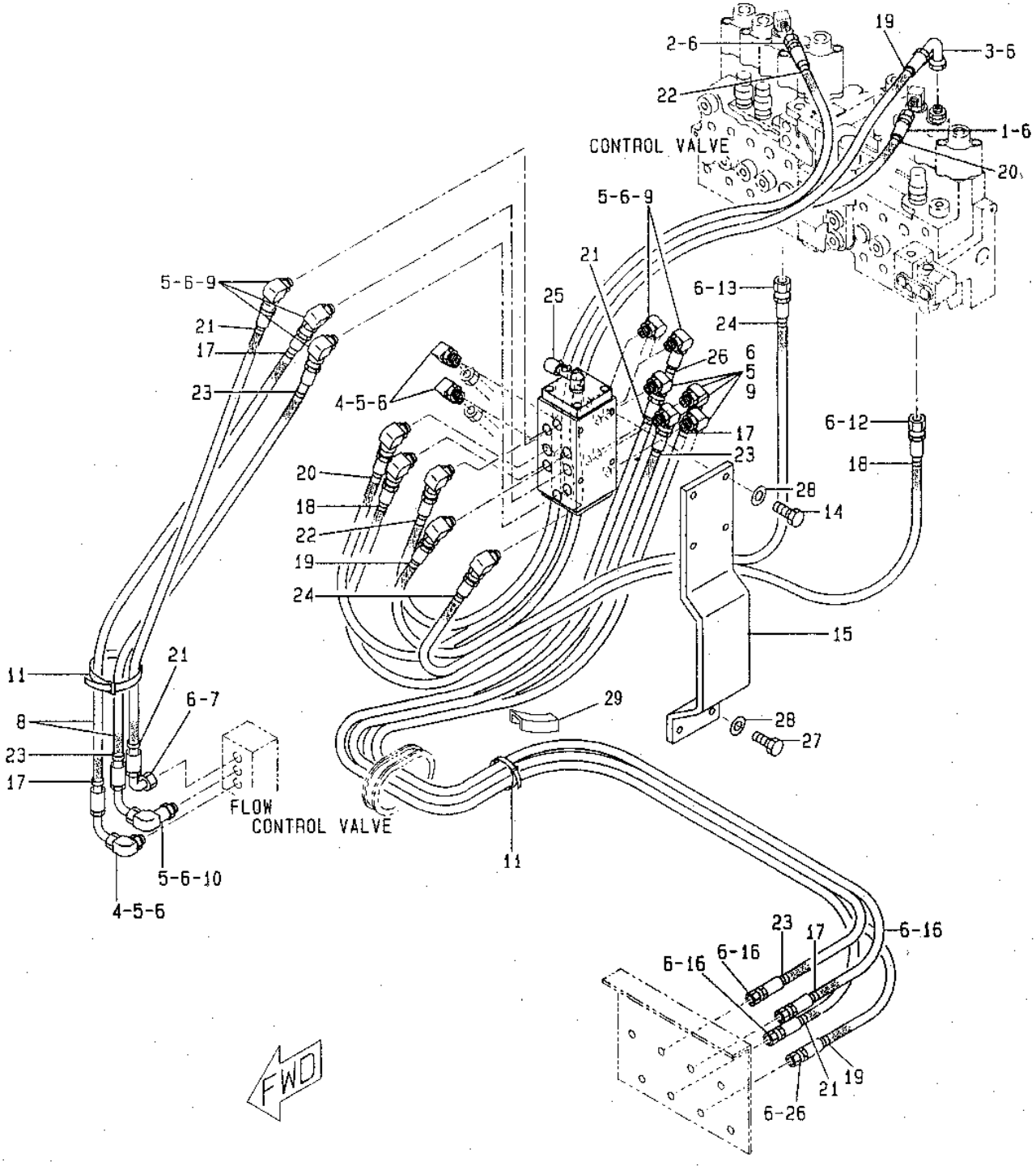


GRAPHIC #1

h58919e

# 1136836 LINES GP-PILOT

4 WAY VALVE
S/N 8SR 00397-UP, 8TR 00435-UP
PART OF 1140652-Page 369
0856455-Page 384
AN ATTACHMENT

**Key:** Y - SEE SEPARATE ILLUSTRATION

**SMCS**

| NOTE | REF NO | GRAPHIC REF | PART NUMBER | QTY | PART NAME 1 2 3 4 5 6 (PRODUCT LEVEL) | PRICE USD |
|---|---|---|---|---|---|---|
| | 1 | | 7Y-4199 | 1 | HOSE AS (NOM 06, L=1800mm) | |
| | 2 | | 4I-3991 | 3 | HOSE AS (NOM 06, L=2100mm) | |
| | 3 | | 4I-0833 | 3 | HOSE AS (NOM 06, L=1850mm) | |
| | 4 | | 6V-8724 | 2 | ELBOW | |
| | 5 | | 3J-1907 | 16 | SEAL-O-RING (ID=11.89mm) | |
| | 6 | | 6V-8397 | 28 | SEAL-O-RING (OD=12.83mm) | |
| | 7 | | 104-8973 | 1 | HOSE AS (NOM 06, L=1700mm) | |
| | 8 | | 4I-0995 | 1 | HOSE AS (NOM 06, L=2000mm) | |
| | 9 | | 6V-9001 | 14 | ELBOW | |
| | 10 | | 115-8929 | 1 | GUARD | |
| | 11 | | 096-0061 | 7 | STRAP | |
| | 12 | | 4I-5933 | 1 | HOSE AS (NOM 06, L=1600mm) | |
| | 13 | | 4I-5811 | 1 | HOSE AS (NOM 06, L=2000mm) | |
| | 14 | | 8T-4956 | 4 | BOLT (L=35mm) | |
| | 15 | | 131-9632 | 1 | SUPPORT AS | |
| | 16 | | 4I-6003 | 3 | HOSE AS (NOM 06, L=2650mm) | |
| | 17 | | 4I-9521 | 4 | BAND (L1,RED) | |
| | 18 | | 4I-9522 | 2 | BAND (L2,YELLOW) | |
| | 19 | | 4I-9523 | 4 | BAND (L3,BLUE) | |
| | 20 | | 4I-9524 | 2 | BAND (L4,BROWN) | |
| | 21 | | 4I-9525 | 4 | BAND (R1,ORANGE) | |
| | 22 | | 4I-9526 | 2 | BAND (R2,WHITE) | |
| | 23 | | 4I-9527 | 4 | BAND (R3,GREEN) | |
| | 24 | | 4I-9528 | 2 | BAND (R4,PURPLE) | |
| Y | 25 | | 085-6455 | 1 | VALVE GP | |
| | 26 | | 108-7203 | 1 | HOSE AS (NOM 06, L=2600mm) | |
| | 27 | | 8T-4184 | 2 | BOLT (L=45mm) | |
| | 28 | | 8T-4223 | 10 | WASHER | |

## 1136836 LINES GP-PILOT

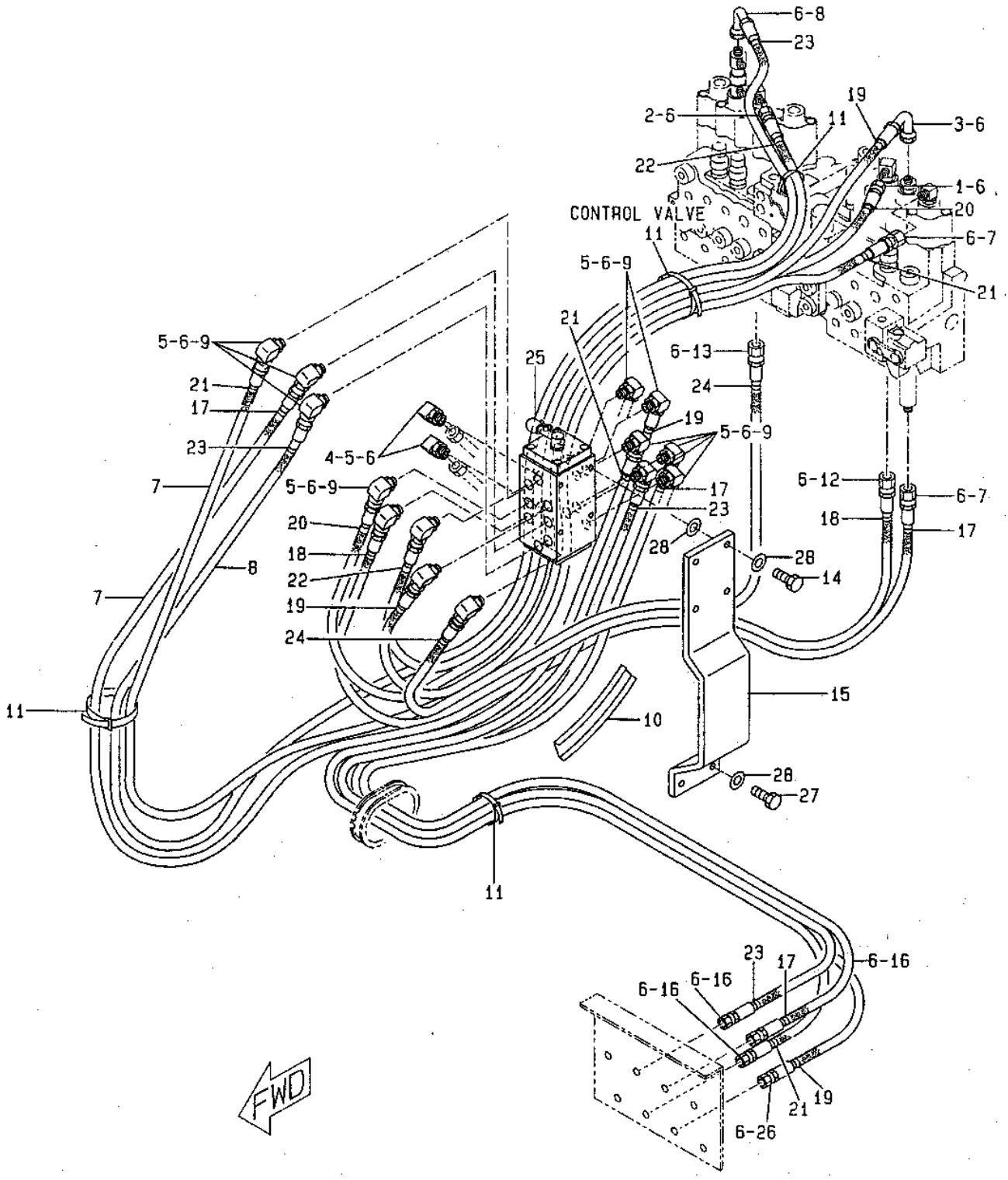


GRAPHIC #1

h64060e

# 1136833 LINES GP-PILOT

COMBINED FUNCTION
PART OF 1211926-Page 301, 1096192-Page 301.01
1195219-Page 388, 4I7836-Page 390.05, 4I6363-Page 394.06
AN ATTACHMENT

**Key:** Y - SEE SEPARATE ILLUSTRATION

**SMCS**

| NOTE | REF NO | GRAPHIC REF | PART NUMBER | QTY | PART NAME 1 2 3 4 5 6 (PRODUCT LEVEL) | PRICE USD |
|---|---|---|---|---|---|---|
| | 1 | | 7Y-4387 | 1 | HOSE AS (NOM 06, L=2600mm) | |
| | 2 | | 199-1901 | 21 | SEAL-O-RING (OD=12.83mm) | |
| | 3 | | 6V-8781 | 2 | TEE | |
| | 4 | | 3J-1907 | 14 | SEAL-O-RING (ID=11.89mm) | |
| | 5 | | 096-0061 | 12 | STRAP | |
| | 6 | | 5I-4387 | 1 | HOSE AS (NOM 06, L=700mm) | |
| | 7 | | 6V-8724 | 4 | ELBOW | |
| | 8 | | 4I-0833 | 3 | HOSE AS (NOM 06, L=1850mm) | |
| | 9 | | 6V-9850 | 2 | ELBOW | |
| | 10 | | 6V-8636 | 3 | CONNECTOR | |
| Y | 11 | | 119-5219 | 1 | VALVE GP | |
| | 12 | | 8T-4186 | 2 | BOLT (L=40mm) | |
| | 13 | | 4I-0797 | 1 | HOSE AS (NOM 06, L=1350mm) | |
| | 14 | | 4I-0803 | 2 | HOSE AS (NOM 06, L=2000mm) | |
| Y | 15 | | 4I-7836 | 1 | VALVE GP | |
| | 16 | | 8T-4171 | 2 | BOLT (L=12mm) | |
| | 17 | | 6V-9836 | 1 | TEE | |
| Y | 18 | | 4I-6363 | 1 | VALVE AS | |
| | 19 | | 4I-6327 | 1 | TEE | |
| | 20 | | 8T-0075 | 2 | CONNECTOR | |
| | 21 | | 085-7356 | 1 | FITTING | |
| | 22 | | 102-1323 | 1 | HOSE AS (NOM 06, L=1450mm) | |

## 1136833 LINES GP-PILOT

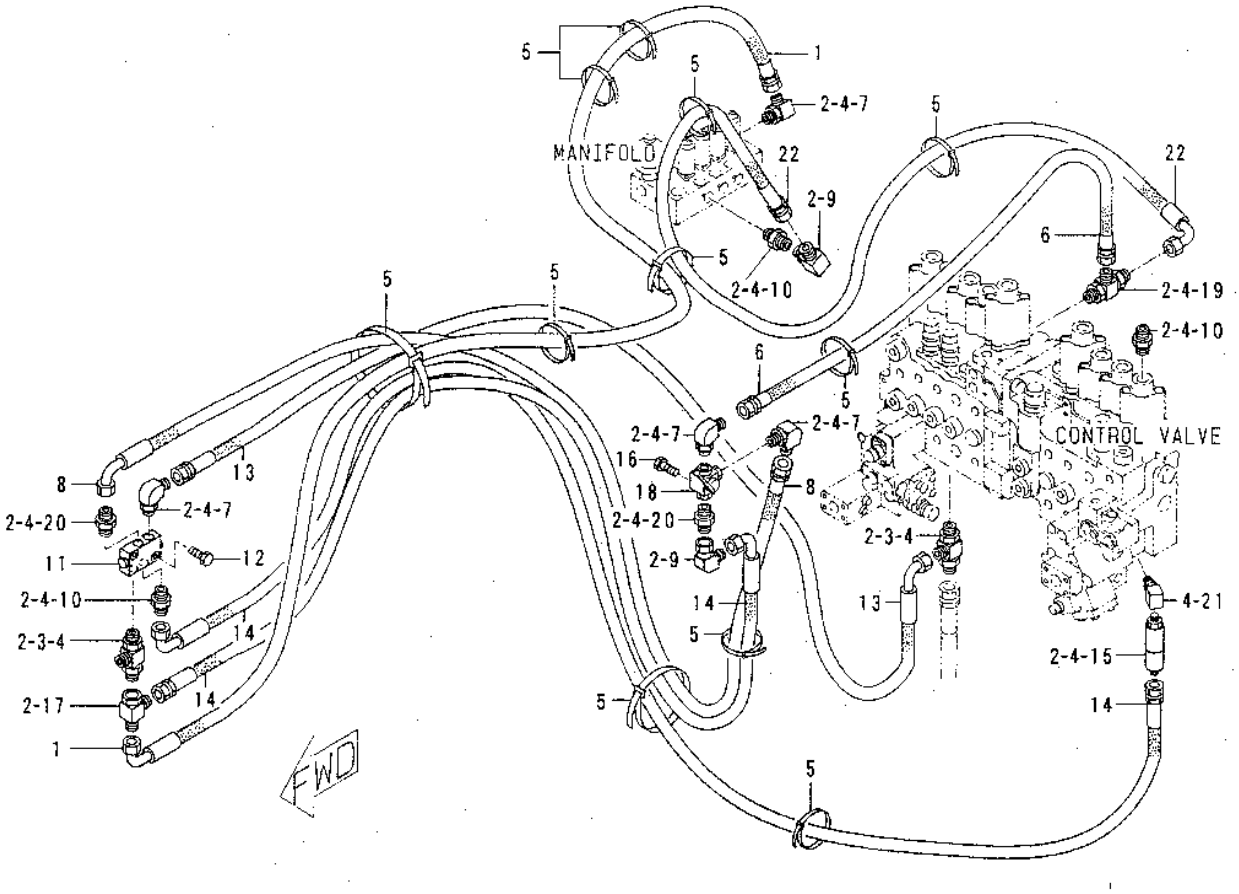


GRAPHIC #1

h79321e

# 1192521 LINES GP-PILOT

FLOW CONTROL/COMBINED FUNCTION
PART OF 1178433-Page 299
1216303-Page 376, 1224459-Page 378, 4I6363-Page 394.06
AN ATTACHMENT

**Key:** Y - SEE SEPARATE ILLUSTRATION

**SMCS**

| NOTE | REF NO | GRAPHIC REF | PART NUMBER | QTY | PART NAME 1 2 3 4 5 6 (PRODUCT LEVEL) | PRICE USD |
|---|---|---|---|---|---|---|
| | 1 | | 7K-1181 | 11 | STRAP | |
| | 2 | | 108-7360 | 1 | HOSE AS (NOM 06, L=2750mm) | |
| | 3 | | 6V-8636 | 10 | CONNECTOR | |
| | 4 | | 3J-1907 | 28 | SEAL-O-RING (ID=11.89mm) | |
| | 5 | | 6V-8397 | 29 | SEAL-O-RING (ID=9.25mm) | |
| | 6 | | 6V-8781 | 2 | TEE | |
| | 7 | | 6V-8724 | 6 | ELBOW | |
| | 8 | | 108-7387 | 1 | HOSE AS (NOM 06, L=2500mm) | |
| | 9 | | 8J-6875 | 3 | VALVE AS (SHUTTLE) | |
| | 10 | | 4I-6287 | 3 | COUPLING AS | |
| | 11 | | 121-6415 | 1 | SUPPORT AS | |
| | 12 | | 8T-4195 | 2 | BOLT (L=30mm) | |
| | 13 | | 8T-4121 | 2 | WASHER-HARD | |
| Y | 14 | | 121-6303 | 1 | VALVE GP | |
| | 15 | | 8T-4971 | 2 | BOLT (L=30mm) | |
| | 16 | | 9X-8256 | 2 | WASHER | |
| | 17 | | 6V-9001 | 3 | ELBOW | |
| | 18 | | 9S-4191 | 1 | PLUG | |
| Y | 19 | | 122-4459 | 1 | VALVE GP | |
| | 20 | | 8T-3647 | 2 | BOLT (L=80mm) | |
| | 21 | | 5C-7261 | 2 | NUT | |
| | 22 | | 8T-4224 | 4 | WASHER-HARD | |
| | 23 | | 8T-0075 | 1 | CONNECTOR | |
| | 24 | | 4I-0797 | 2 | HOSE AS (NOM 06, L=1350mm) | |
| | 25 | | 124-1035 | 1 | FITTING | |
| | 26 | | 087-5765 | 1 | HOSE AS (NOM 06, L=570mm) | |
| | 27 | | 6V-9836 | 2 | TEE | |
| | 28 | | 087-4411 | 1 | HOSE AS (NOM 06, L=450mm) | |
| | 29 | | 6V-8774 | 1 | TEE | |
| | 30 | | 087-5773 | 1 | HOSE AS (NOM 06, L=1050mm) | |
| Y | 31 | | 4I-6363 | 1 | VALVE AS (BALL) | |
| | 32 | | 4I-0806 | 1 | HOSE AS (NOM 06, L=1700mm) | |
| | 33 | | 8T-0788 | 1 | ELBOW | |
| | 34 | | 129-5926 | 1 | PLATE | |

## 1192521 LINES GP-PILOT

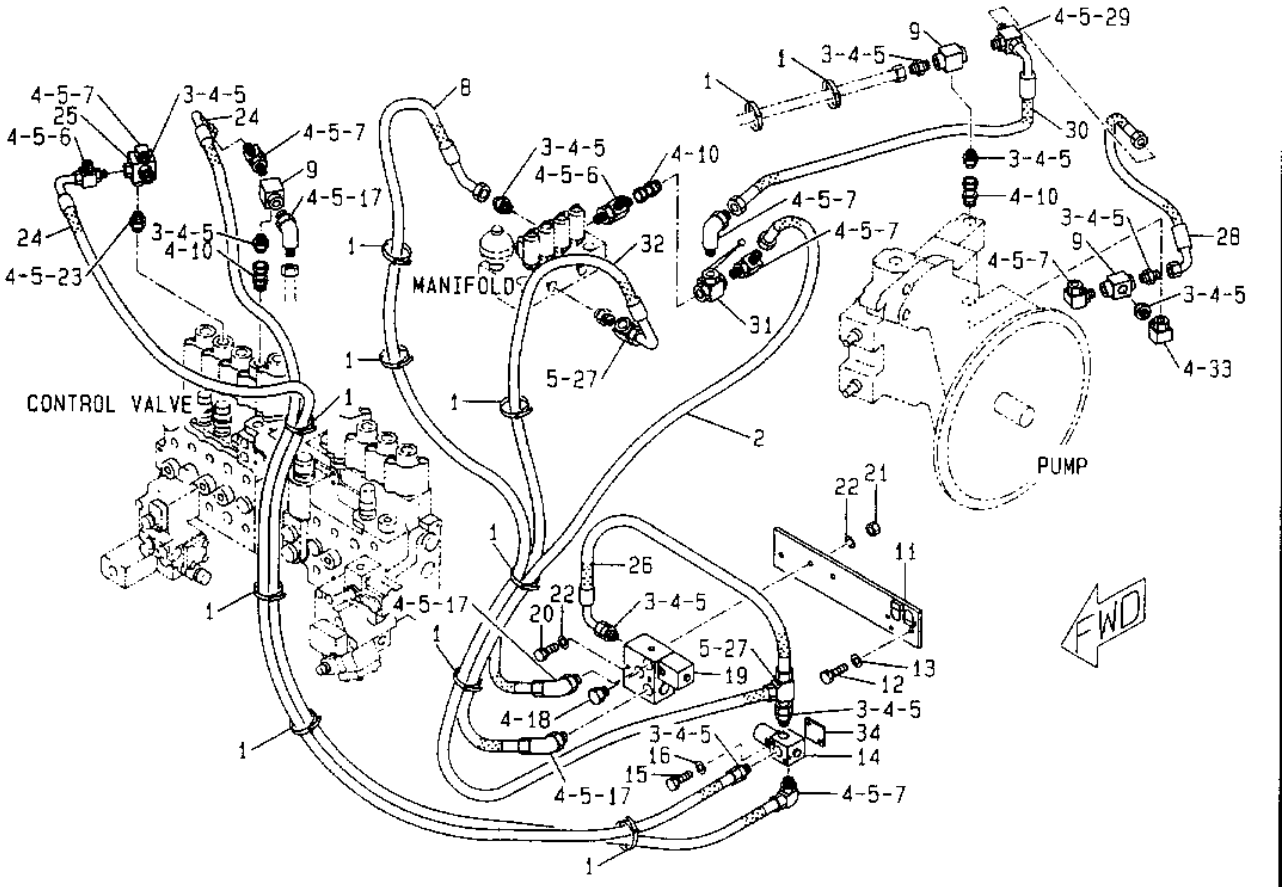


| NOTE | No. | PART No. | QTY | PART NAME |
|---|---|---|---|---|
| | 1 | 7K-1181 | 11 | STRAP |
| | 2 | 108-7360 | 1 | HOSE AS (NOM 06, L=2750mm) |
| | 3 | 6V-8636 | 10 | CONNECTOR |
| | 4 | 3J-1907 | 28 | SEAL-O-RING (ID=11.89mm) |
| | 5 | 6V-8397 | 29 | SEAL-O-RING (ID=9.25mm) |
| | 6 | 6V-8781 | 2 | TEE |
| | 7 | 6V-8724 | 6 | ELBOW |
| | 8 | 108-7387 | 1 | HOSE AS (NOM 06, L=2500mm) |
| | 9 | 8J-6875 | 3 | VALVE AS (SHUTTLE) |
| | 10 | 4I-6287 | 3 | COUPLING AS |
| | 11 | 121-6415 | 1 | SUPPORT AS |
| | 12 | 8T-4195 | 2 | BOLT (L=30mm) |
| | 13 | 8T-4121 | 2 | WASHER-HARD |
| Y | 14 | 121-6303 | 1 | VALVE GP |
| | 15 | 8T-4971 | 2 | BOLT (L=30mm) |
| | 16 | 9X-8256 | 2 | WASHER |
| | 17 | 6V-9001 | 3 | ELBOW |
| | 18 | 9S-4191 | 1 | PLUG |
| Y | 19 | 122-4459 | 1 | VALVE GP |
| | 20 | 8T-3647 | 2 | BOLT (L=80mm) |
| | 21 | 5C-7261 | 2 | NUT |
| | 22 | 8T-4224 | 4 | WASHER-HARD |
| | 23 | 8T-0075 | 1 | CONNECTOR |
| | 24 | 4I-0797 | 2 | HOSE AS (NOM 06, L=1350mm) |
| | 25 | 124-1035 | 1 | FITTING |
| | 26 | 087-5765 | 1 | HOSE AS (NOM 06, L=570mm) |
| | 27 | 6V-9836 | 2 | TEE |
| | 28 | 087-4411 | 1 | HOSE AS (NOM 06, L=450mm) |
| | 29 | 6V-8774 | 1 | TEE |
| | 30 | 087-5773 | 1 | HOSE AS (NOM 06, L=1050mm) |
| Y | 31 | 4I-6363 | 1 | VALVE AS (BALL) |
| | 32 | 4I-0806 | 1 | HOSE AS (NOM 06, L=1700mm) |
| | 33 | 8T-0788 | 1 | ELBOW |
| | 34 | 129-5926 | 1 | PLATE |

Y-SEE SEPARATE ILLUSTRATION

H64063E

GRAPHIC #1 h64063e

# 1287492 LINES GP-PILOT

2 PUMPS FLOW
PART OF 1232571-Page 298
1195219-Page 388, 4I7836-Page 390.05
AN ATTACHMENT

**Key:** Y - SEPARATE ILLUSTRATION

**SMCS**

| NOTE | REF NO | GRAPHIC REF | PART NUMBER | QTY | PART NAME 1 2 3 4 5 6 (PRODUCT LEVEL) | PRICE USD |
|---|---|---|---|---|---|---|
| | 1 | | 7Y-4387 | 1 | HOSE AS | |
| | 2 | | 4I-6327 | 1 | TEE | |
| | 3 | | 3J-1907 | 11 | SEAL-O-RING (ID=11.89mm) | |
| | 4 | | 6V-8397 | 14 | SEAL-O-RING (ID=9.25mm) | |
| | 5 | | 6V-8724 | 3 | ELBOW | |
| | 6 | | 085-7356 | 1 | FITTING | |
| | 7 | | 8T-0075 | 2 | CONNECTOR | |
| Y | 8 | | 4I-7836 | 1 | VALVE GP | |
| | 9 | | 6V-8781 | 1 | TEE | |
| | 10 | | 6V-9850 | 1 | ELBOW | |
| | 11 | | 6V-8636 | 2 | CONNECTOR | |
| Y | 12 | | 119-5219 | 1 | VALVE GP | |
| | 13 | | 8T-4186 | 2 | BOLT (L=40mm) | |
| | 14 | | 7K-1181 | 13 | STRAP | |
| | 15 | | 4I-0797 | 2 | HOSE AS | |
| | 16 | | 087-5303 | 1 | HOSE AS | |
| | 17 | | 4I-5811 | 1 | HOSE AS | |

## 1287492 LINES GP-PILOT

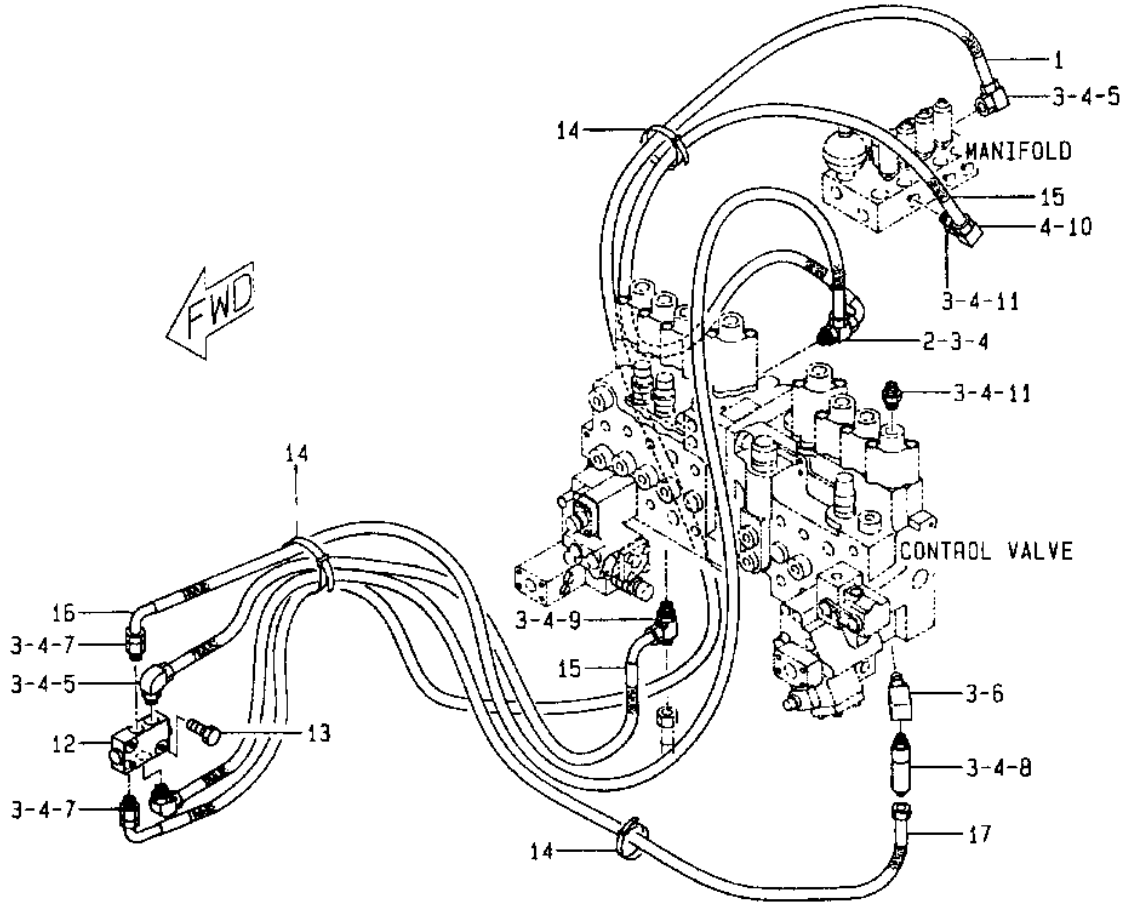


| NOTE | No. | PART No. | QTY | PART NAME |
|---|---|---|---|---|
| | 1 | 7Y-4387 | 1 | HOSE AS (NOM 06, L=2600mm) |
| | 2 | 4I-6327 | 1 | TEE |
| | 3 | 3J-1907 | 11 | SEAL-O-RING (ID=11.89mm) |
| | 4 | 6V-8397 | 14 | SEAL-O-RING (ID=9.25mm) |
| | 5 | 6V-8724 | 3 | ELBOW |
| | 6 | 085-7356 | 1 | FITTING |
| | 7 | 8T-0075 | 2 | CONNECTOR |
| Y | 8 | 4I-7836 | 1 | VALVE GP |
| | 9 | 6V-8781 | 1 | TEE |
| | 10 | 6V-9850 | 1 | ELBOW |
| | 11 | 6V-8636 | 2 | CONNECTOR |
| Y | 12 | 119-5219 | 1 | VALVE GP |
| | 13 | 8T-4186 | 2 | BOLT (L=40mm) |
| | 14 | 7K-1181 | 13 | STRAP |
| | 15 | 4I-0797 | 2 | HOSE AS (NOM 06, L=1350mm) |
| | 16 | 087-5303 | 1 | HOSE AS (NOM 06, L=2300mm) |
| | 17 | 4I-5811 | 1 | HOSE AS (NOM 09, L=2000mm) |

| NOTE | No. | PART No. | QTY | PART NAME |
|---|---|---|---|---|

Y-SEE SEPARATE ILLUSTRATION

H50895E

# 1136835 LINES GP-PILOT

2 WAY VALVE
PART OF 1140651-Page 369
1185984-Page 390.04
AN ATTACHMENT

**Key:** Y - SEE SEPARATE ILLUSTRATION

**SMCS**

| NOTE | REF NO | GRAPHIC REF | PART NUMBER | QTY | PART NAME 1 2 3 4 5 6 (PRODUCT LEVEL) | PRICE USD |
|---|---|---|---|---|---|---|
| | 1 | | 4I-0806 | 1 | HOSE AS (NOM 06, L=1700mm) | |
| | 2 | | 7Y-4190 | 2 | HOSE AS (NOM 06, L=1650mm) | |
| | 3 | | 111-0988 | 1 | HOSE AS (NOM 06, L=1950mm) | |
| | 4 | | 6V-9001 | 8 | ELBOW | |
| | 5 | | 3J-1907 | 8 | SEAL-O-RING (ID=11.89mm) | |
| | 6 | | 6V-8397 | 16 | SEAL-O-RING (OD=12.83mm) | |
| | 7 | | 8T-4223 | 10 | WASHER | |
| | 8 | | 8T-4184 | 2 | BOLT (L=45mm) | |
| | 9 | | 8T-4956 | 4 | BOLT (L=35mm) | |
| | 10 | | 131-9632 | 1 | SUPPORT AS | |
| | 11 | | 4I-3994 | 4 | HOSE AS (NOM 06, L=2300mm) | |
| | 12 | | 4I-9521 | 4 | BAND (L1,RED) | |
| | 13 | | 4I-9523 | 4 | BAND (L3,BLUE) | |
| | 14 | | 4I-9525 | 4 | BAND (R1,ORANGE) | |
| | 15 | | 4I-9527 | 4 | BAND (R3,GREEN) | |
| | 16 | | 096-0061 | 6 | STRAP | |
| Y | 17 | | 118-5984 | 1 | VALVE GP | |

## 1136835 LINES GP-PILOT

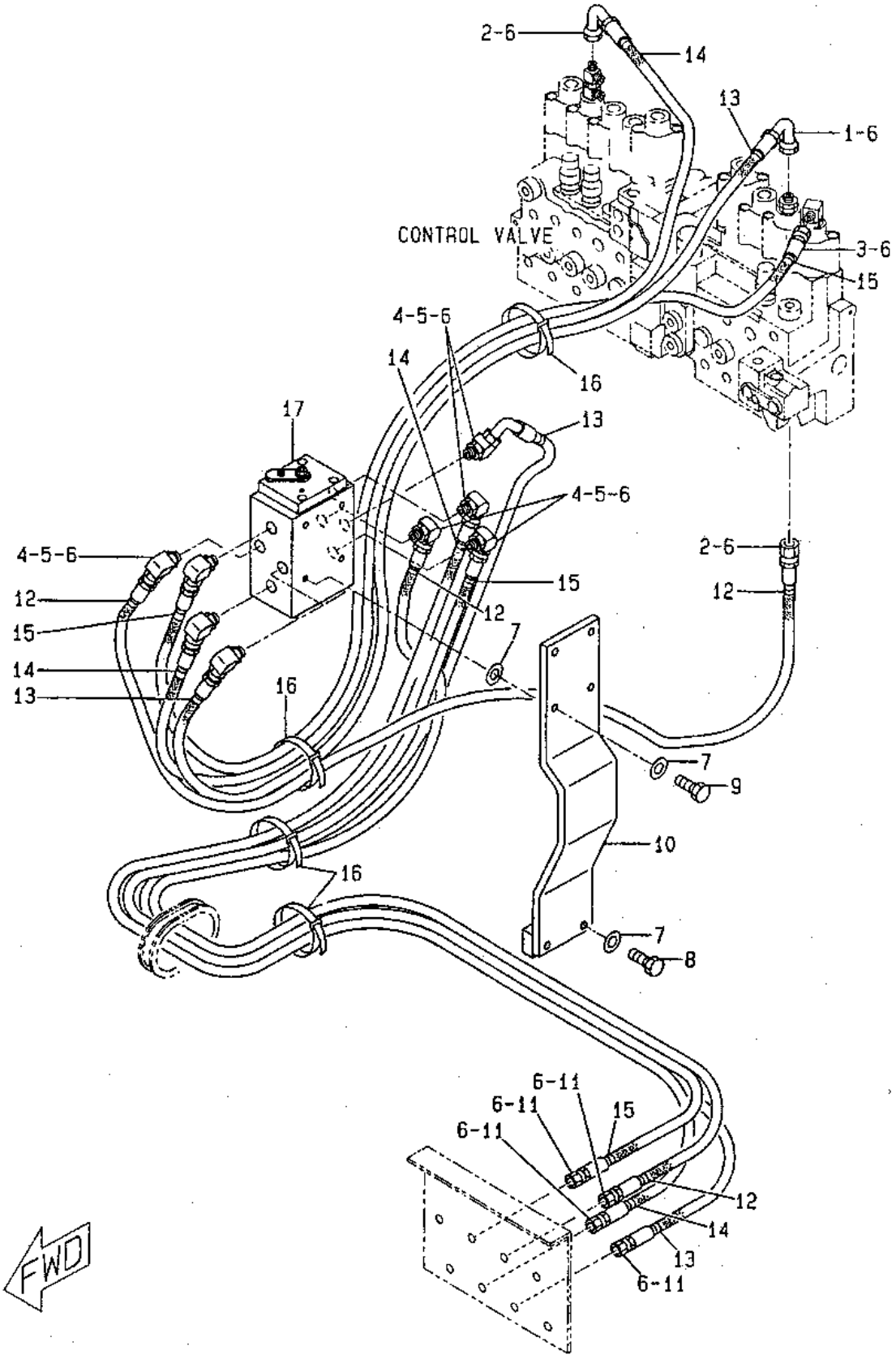


GRAPHIC #1

h64065e

# 1136867 LINES GP-PILOT

BOOM LOWERING CONTROL
PART OF 1153096-Page 301.02
AN ATTACHMENT

**Key:** E - ORDER BY THE CENTIMETER

**SMCS**

| NOTE | REF NO | GRAPHIC REF | PART NUMBER | QTY | PART NAME 1 2 3 4 5 6 (PRODUCT LEVEL) | PRICE USD |
|---|---|---|---|---|---|---|
| | 1 | | 6V-8788 | 2 | TEE | |
| | 2 | | 6V-8397 | 12 | SEAL-O-RING (ID=9.25mm) | |
| | 3 | | 113-6550 | 2 | HOSE AS (NOM 09, L=1150mm) | |
| E | | | 7I-7439 | | GUARD (105cm) | |
| | 4 | | 7K-1181 | 21 | STRAP | |
| | 5 | | 7Y-4193 | 2 | HOSE AS (NOM 06, L=2500mm) | |
| | 6 | | 6V-8724 | 4 | ELBOW | |
| | 7 | | 3J-1907 | 4 | SEAL-O-RING (ID=11.89mm) | |
| | 8 | | 129-5966 | 2 | HOSE AS (NOM 09, L=2700mm) | |
| E | | | 7I-7439 | | GUARD (315cm) | |

## 1136867 LINES GP-PILOT

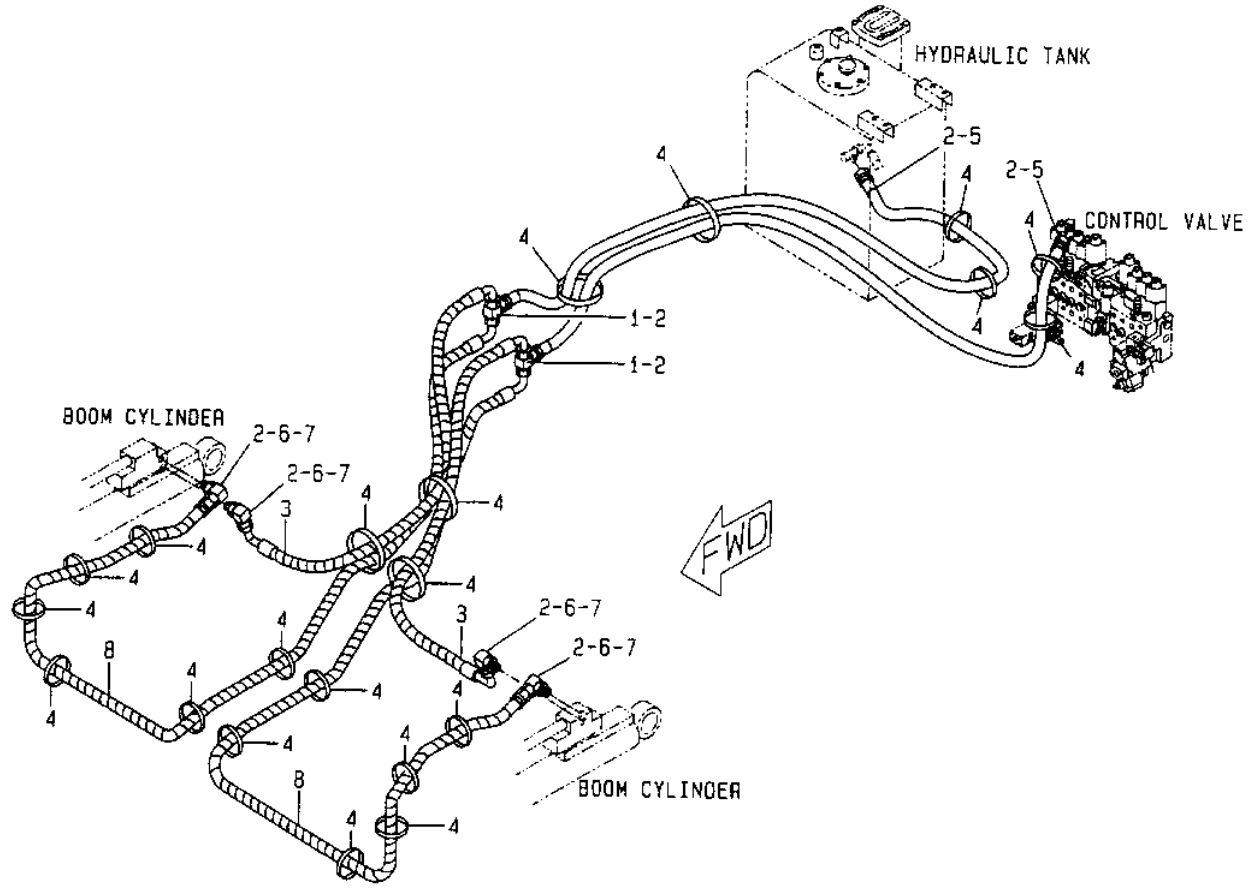


| NOTE | No. | PART No. | QTY | PART NAME | NOTE | No. | PART No. | QTY | PART NAME |
|---|---|---|---|---|---|---|---|---|---|
| | 1 | 6V-8788 | 2 | TEE | | | | | |
| | 2 | 6V-8397 | 12 | SEAL-O-RING (ID=9.25mm) | | | | | |
| | 3 | 113-6550 | 2 | HOSE AS (NOM 09, L=1150mm) | | | | | |
| E | | 7I-7439 | | GUARD ···(105cm) | | | | | |
| | 4 | 7K-1181 | 21 | STRAP | | | | | |
| | 5 | 7Y-4193 | 2 | HOSE AS (NOM 06, L=2500mm) | | | | | |
| | 6 | 6V-8724 | 4 | ELBOW | | | | | |
| | 7 | 3J-1907 | 4 | SEAL-O-RING (ID=11.89mm) | | | | | |
| | 8 | 129-5966 | 2 | HOSE AS (NOM 09, L=2700mm) | | | | | |
| E | | 7I-7439 | | GUARD ···(315cm) | | | | | |

E-ORDER BY THE CENTIMETER

H52211E

# 1136826 LINES GP-FRONT-PART 1 OF 2

S/N 8SR 1-00402, 8TR 1-00453
1232419-Page 389, 1183917-Page 390

**Key:** E - ORDER BY THE CENTIMETER, Y - SEE SEPARATE ILLUSTRATION

**SMCS**

| NOTE | REF NO | GRAPHIC REF | PART NUMBER | QTY | PART NAME 1 2 3 4 5 6 (PRODUCT LEVEL) | PRICE USD |
|---|---|---|---|---|---|---|
| | 1 | | 124-0844 | 1 | HOSE AS | |
| | | | 2P-6733 | 2 | STEM AS (STRAIGHT) | |
| E | | | 5P-0202 | | HOSE (128cm) | |
| | | | 5P-0477 | 2 | SLEEVE | |
| | 2 | | 8T-4223 | 34 | WASHER | |
| | 3 | | 1P-5767 | 6 | FLANGE | |
| | 4 | | 1P-3704 | 3 | SEAL | |
| | 5 | | 8T-4194 | 28 | BOLT (L=50mm) | |
| | 6 | | 115-8731 | 1 | HOSE AS | |
| E | | | 5P-0201 | | HOSE (142cm) | |
| | | | 5P-1010 | 2 | SLEEVE | |
| | | | 5P-1131 | 1 | STEM AS (STRAIGHT) | |
| | | | 7X-1452 | 1 | STEM AS (STRAIGHT) | |
| | 7 | | 121-6418 | 1 | TUBE AS | |
| | 8 | | 5K-9090 | 9 | SEAL-O-RING (OD=27.22mm) | |
| | 9 | | 115-8739 | 4 | HOSE AS | |
| E | | | 5P-0201 | | HOSE (82cm) | |
| | | | 5P-1010 | 2 | SLEEVE | |
| | | | 7X-1452 | 2 | STEM AS (STRAIGHT) | |
| | 10 | | 9X-6032 | 36 | BOLT (L=30mm) | |
| | 11 | | 1P-3703 | 8 | SEAL | |
| | 12 | | 6V-0400 | 8 | FLANGE | |
| | 13 | | 4I-8829 | 1 | HOSE AS | |
| E | | | 5P-0201 | | HOSE (127cm) | |
| | | | 5P-1010 | 2 | SLEEVE | |
| | | | 5P-1125 | 2 | STEM AS (STRAIGHT) | |
| | 14 | | 087-4935 | 1 | HOSE AS | |
| E | | | 5P-0201 | | HOSE (121cm) | |
| | | | 5P-1010 | 2 | SLEEVE | |
| | | | 5P-1125 | 2 | STEM AS (STRAIGHT) | |
| | 15 | | 131-9622 | 1 | TUBE AS | |
| | 16 | | 113-6477 | 1 | TUBE AS | |
| | 17 | | 4J-5267 | 5 | SEAL-O-RING (ID=24.99mm) | |
| | 18 | | 8T-9515 | 4 | BOLT (L=40mm) | |
| | 19 | | 086-2369 | 4 | BOLT (L=130mm) | |
| | 20 | | 6V-9746 | 1 | SEAL-O-RING (OD=22.50mm) | |
| | 21 | | 7Y-3730 | 1 | FLANGE | |
| | 22 | | 4J-0520 | 2 | SEAL-O-RING (ID=32.92mm) | |
| | 23 | | 8T-4139 | 4 | BOLT (L=30mm) | |
| | 24 | | 8T-4910 | 2 | BOLT (L=60mm) | |
| | 25 | | 6V-5556 | 2 | SEAL-O-RING (ID=25.07mm) | |
| | 26 | | 8T-4121 | 4 | WASHER | |
| | 27 | | 8T-0272 | 2 | BOLT (L=110mm) | |
| Y | 28 | | 123-2419 | 1 | VALVE GP (BOOM DRIFT REDUCTION) | |
| | 29 | | 7Y-3731 | 1 | FLANGE | |
| | 30 | | 096-1331 | 5 | BOLT (L=120mm) | |
| Y | 31 | | 118-3917 | 1 | VALVE GP (STICK DRIFT REDUCTION) | |
| | 32 | | 124-1116 | 1 | TUBE AS | |

## 1136826 LINES GP-FRONT-PART 1 OF 2

| | | | |
|---|---|---|---|
| 33 | 133-5828 | 1 | SUPPORT AS |
| 34 | 108-7550 | 3 | CLIP |
| 35 | 8T-4182 | 4 | BOLT (L=45mm) |
| 36 | 7Y-8099 | 2 | COVER |

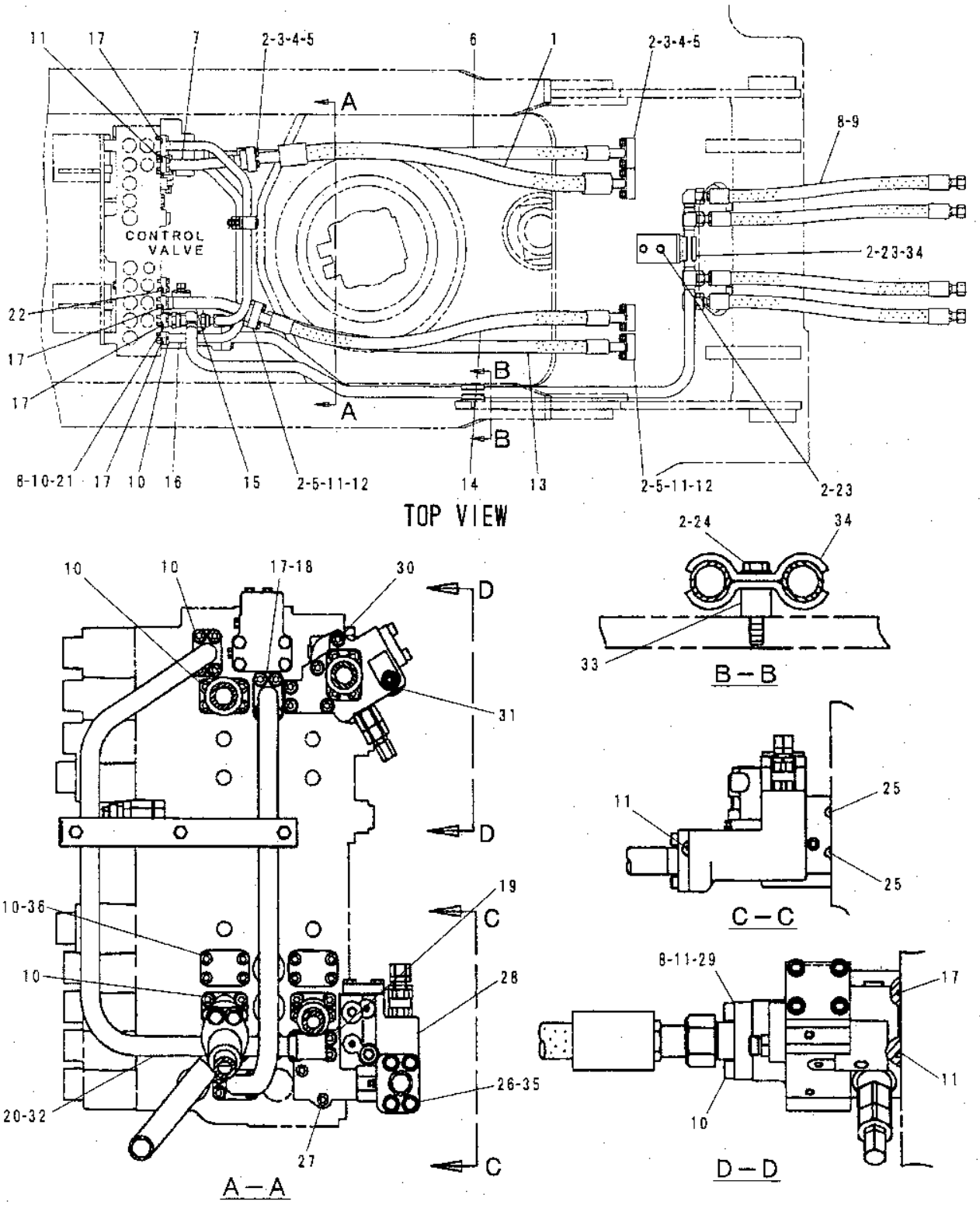


GRAPHIC #1

h58754e

# 1136826 LINES GP-FRONT-PART 2 OF 2

S/N 8SR 1-00402, 8TR 1-00453

**Key:**

**SMCS**

| NOTE | REF NO | GRAPHIC REF | PART NUMBER | QTY | PART NAME 1 2 3 4 5 6 (PRODUCT LEVEL) | PRICE USD |
|---|---|---|---|---|---|---|
| | 1 | | 124-1223 | 1 | TUBE AS | |
| | 2 | | 131-9630 | 1 | TUBE AS | |
| | 3 | | 123-2809 | 1 | SUPPORT AS | |
| | 4 | | 8T-5005 | 3 | BOLT (L=70mm) | |
| | 5 | | 8T-4133 | 3 | NUT | |
| | 6 | | 8T-4121 | 3 | WASHER | |
| | 7 | | 113-6511 | 1 | SUPPORT | |
| | 8 | | 113-6512 | 1 | PLATE | |
| | 9 | | 113-6513 | 2 | CLAMP | |
| | 10 | | 124-1245 | 1 | TUBE AS | |
| | 11 | | 9F-2167 | 1 | SCREW | |

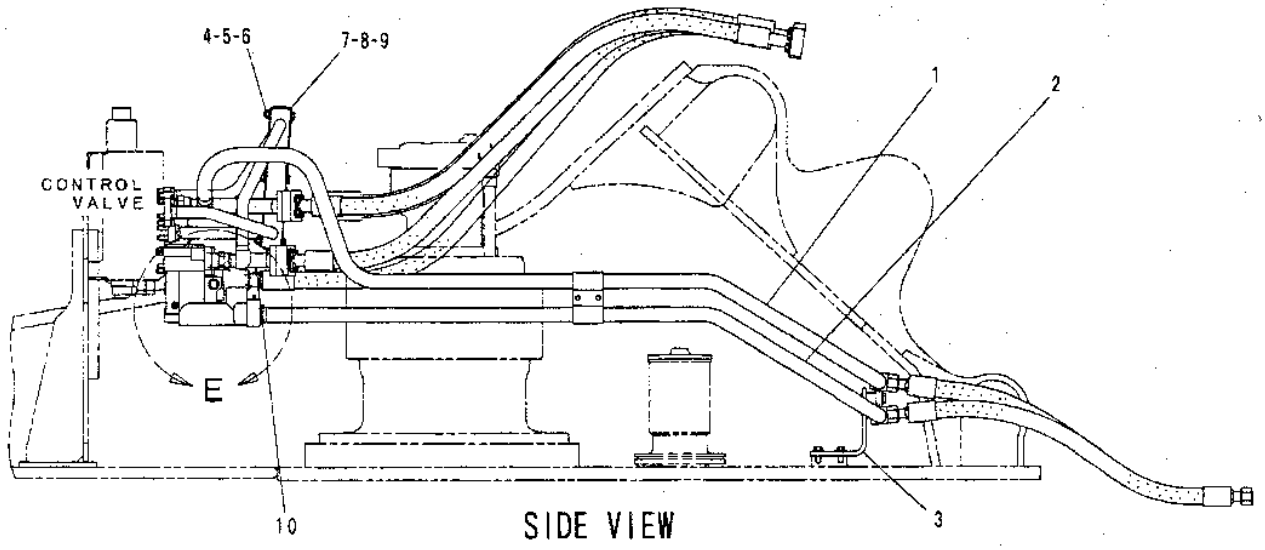


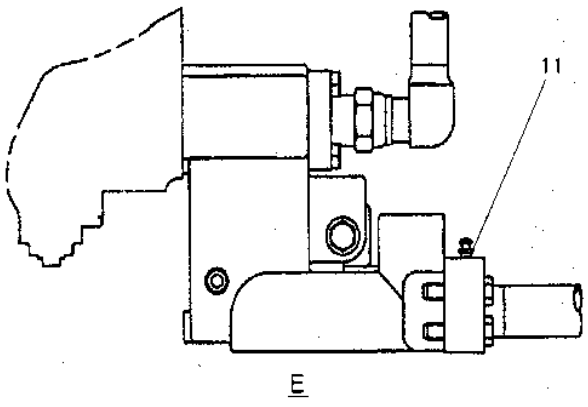


GRAPHIC #1

h58756e

# 1136826 LINES GP-FRONT-PART 1 OF 2

S/N 8SR 00403-UP, 8TR 00454-UP
1232419-Page 389, 1556996-Page 390.02

**Key:** E - ORDER BY THE CENTIMETER, Y - SEE SEPARATE ILLUSTRATION

**SMCS**

| NOTE | REF NO | GRAPHIC REF | PART NUMBER | QTY | PART NAME 1 2 3 4 5 6 (PRODUCT LEVEL) | PRICE USD |
|---|---|---|---|---|---|---|
| | 1 | | 142-7938 | 1 | HOSE AS | |
| | | | 2P-6733 | 2 | STEM AS (STRAIGHT) | |
| E | | | 5P-0202 | | HOSE (125cm) | |
| | | | 5P-0477 | 2 | SLEEVE | |
| | 2 | | 8T-4223 | 32 | WASHER | |
| | 3 | | 1P-5767 | 6 | FLANGE | |
| | 4 | | 1P-3704 | 3 | SEAL | |
| | 5 | | 8T-4194 | 28 | BOLT (L=50mm) | |
| | 6 | | 115-8731 | 1 | HOSE AS | |
| E | | | 5P-0201 | | HOSE (142cm) | |
| | | | 5P-1010 | 2 | SLEEVE | |
| | | | 5P-1131 | 1 | STEM AS (STRAIGHT) | |
| | | | 7X-1452 | 1 | STEM AS (STRAIGHT) | |
| | 7 | | 142-7935 | 1 | TUBE AS | |
| | 8 | | 199-1905 | 10 | SEAL-O-RING (OD=23.66mm) | |
| | 9 | | 115-8739 | 4 | HOSE AS | |
| E | | | 5P-0201 | | HOSE (82cm) | |
| | | | 5P-1010 | 2 | SLEEVE | |
| | | | 7X-1452 | 2 | STEM AS (STRAIGHT) | |
| | 10 | | 9X-6032 | 32 | BOLT (L=30mm) | |
| | 11 | | 1P-3703 | 8 | SEAL | |
| | 12 | | 6V-0400 | 8 | FLANGE | |
| | 13 | | 4I-8829 | 1 | HOSE AS | |
| E | | | 5P-0201 | | HOSE (127cm) | |
| | | | 5P-1010 | 2 | SLEEVE | |
| | | | 5P-1125 | 2 | STEM AS (STRAIGHT) | |
| | 14 | | 087-4935 | 1 | HOSE AS | |
| E | | | 5P-0201 | | HOSE (121cm) | |
| | | | 5P-1010 | 2 | SLEEVE | |
| | | | 5P-1125 | 2 | STEM AS (STRAIGHT) | |
| | 15 | | 113-6477 | 1 | TUBE AS | |
| | 16 | | 4J-5267 | 8 | SEAL-O-RING (ID=24.99mm) | |
| | 17 | | 8T-9515 | 4 | BOLT (L=40mm) | |
| | 18 | | 086-2369 | 4 | BOLT (L=130mm) | |
| | 19 | | 199-1904 | 2 | SEAL-O-RING (ID=18.94mm) | |
| | 20 | | 7Y-3730 | 1 | FLANGE | |
| | 21 | | 4J-0520 | 2 | SEAL-O-RING (ID=32.92mm) | |
| | 22 | | 8T-4139 | 2 | BOLT (L=30mm) | |
| | 23 | | 8T-4910 | 2 | BOLT (L=60mm) | |
| | 24 | | 6V-5556 | 2 | SEAL-O-RING (ID=25.07mm) | |
| | 25 | | 8T-4121 | 4 | WASHER | |
| | 26 | | 8T-0272 | 2 | BOLT (L=110mm) | |
| Y | 27 | | 123-2419 | 1 | VALVE GP (BOOM DRIFT REDUCTION) | |
| | 28 | | 142-7937 | 1 | FLANGE | |
| | 29 | | 9X-2158 | 4 | BOLT (L=90mm) | |
| Y | 30 | | 155-6996 | 1 | VALVE GP (STICK DRIFT REDUCTION) | |
| | 31 | | 124-1116 | 1 | TUBE AS | |
| | 32 | | 133-5828 | 1 | SUPPORT AS | |

## 1136826 LINES GP-FRONT-PART 1 OF 2

| | | | |
|---|---|---|---|
| 33 | 108-7550 | 3 | CLIP |
| 34 | 8T-4182 | 4 | BOLT (L=45mm) |
| 35 | 8T-0271 | 4 | BOLT (L=35mm) |
| 36 | 095-0658 | 1 | BOLT (L=70mm) |
| 37 | 5I-3071 | 1 | ELBOW |
| 38 | 134-7053 | 1 | HOSE AS |
| 39 | 8T-0078 | 1 | CONNECTOR |
| 40 | 8T-1160 | 4 | BOLT (L=50mm) |
| 41 | 4I-8889 | 1 | SEAL |
| 42 | 3D-2824 | 1 | SEAL-O-RING (ID=23.47mm) |
| 43 | 7Y-8099 | 2 | COVER |

## 1136826 LINES GP-FRONT-PART 1 OF 2

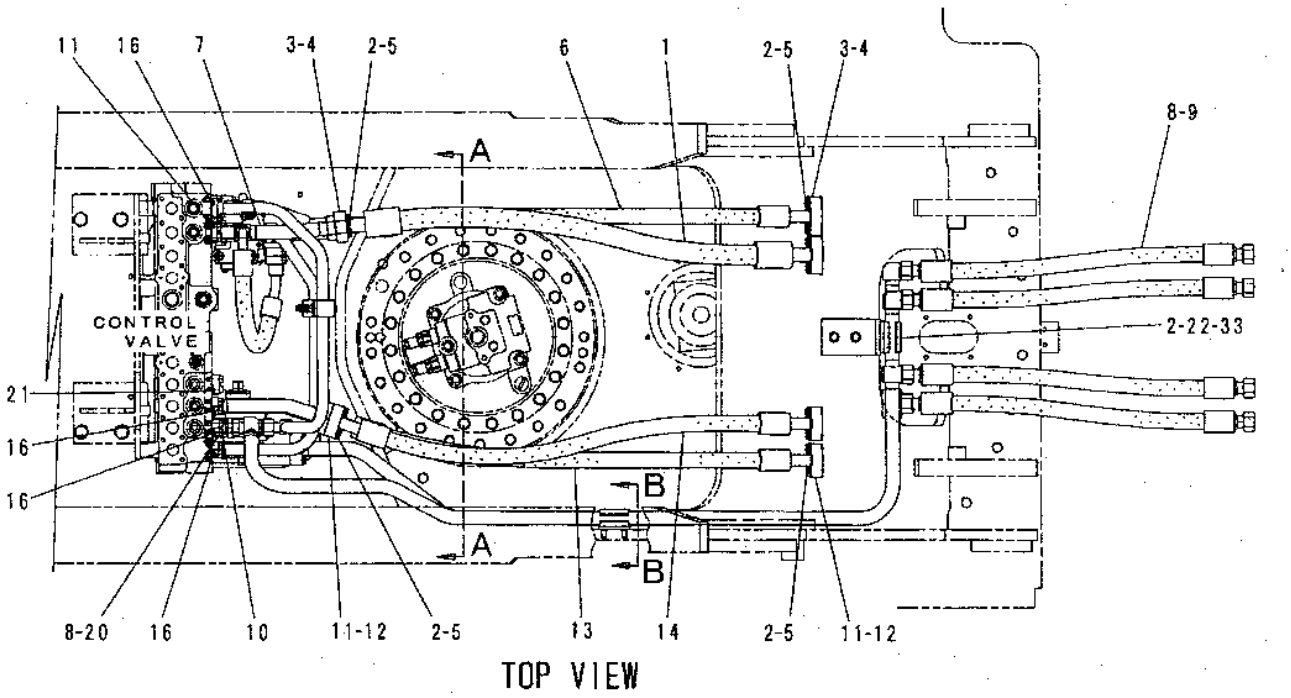


TOP VIEW

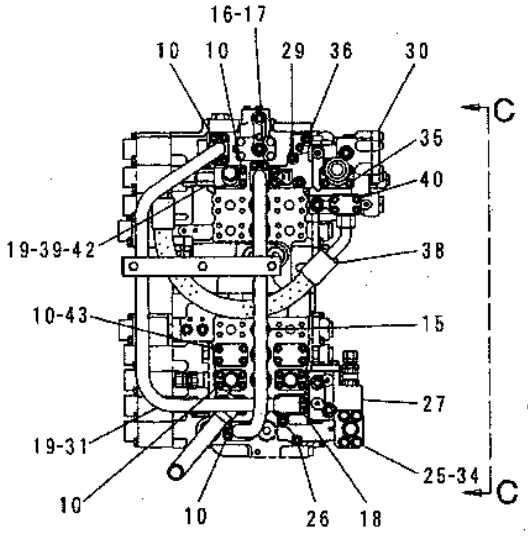


A—A

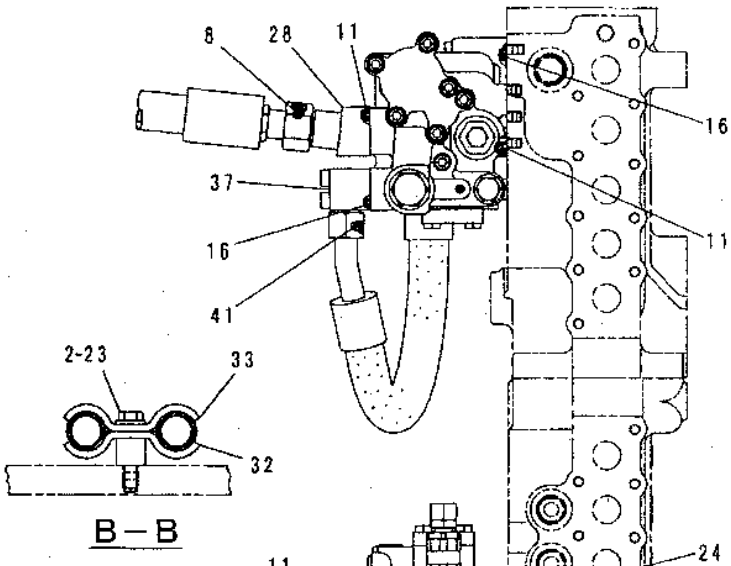


B—B

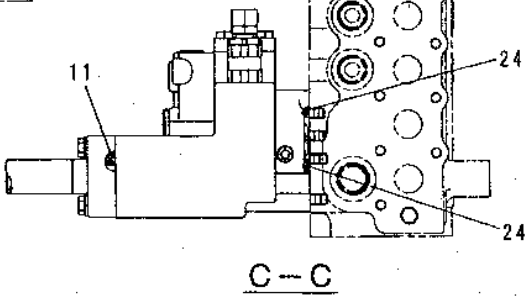


C—C

GRAPHIC #1

h79323e

# 1136826 LINES GP-FRONT-PART 2 OF 2

S/N 8SR 00403-UP, 8TR 00454-UP

**Key:**

**SMCS**

| NOTE | REF NO | GRAPHIC REF | PART NUMBER | QTY | PART NAME 1 2 3 4 5 6 (PRODUCT LEVEL) | PRICE USD |
|---|---|---|---|---|---|---|
| | 1 | | 8T-4223 | 2 | WASHER | |
| | 2 | | 131-9622 | 1 | TUBE AS | |
| | 3 | | 124-1223 | 1 | TUBE AS | |
| | 4 | | 131-9630 | 1 | TUBE AS | |
| | 5 | | 8T-4139 | 2 | BOLT (L=30mm) | |
| | 6 | | 123-2809 | 1 | SUPPORT AS | |
| | 7 | | 8T-5005 | 3 | BOLT (L=70mm) | |
| | 8 | | 8T-4133 | 3 | NUT | |
| | 9 | | 8T-4121 | 3 | WASHER | |
| | 10 | | 113-6511 | 1 | SUPPORT | |
| | 11 | | 113-6512 | 1 | PLATE | |
| | 12 | | 113-6513 | 2 | CLAMP | |
| | 13 | | 124-1245 | 1 | TUBE AS | |
| | 14 | | 9F-2167 | 1 | SCREW | |

## 1136826 LINES GP-FRONT-PART 2 OF 2

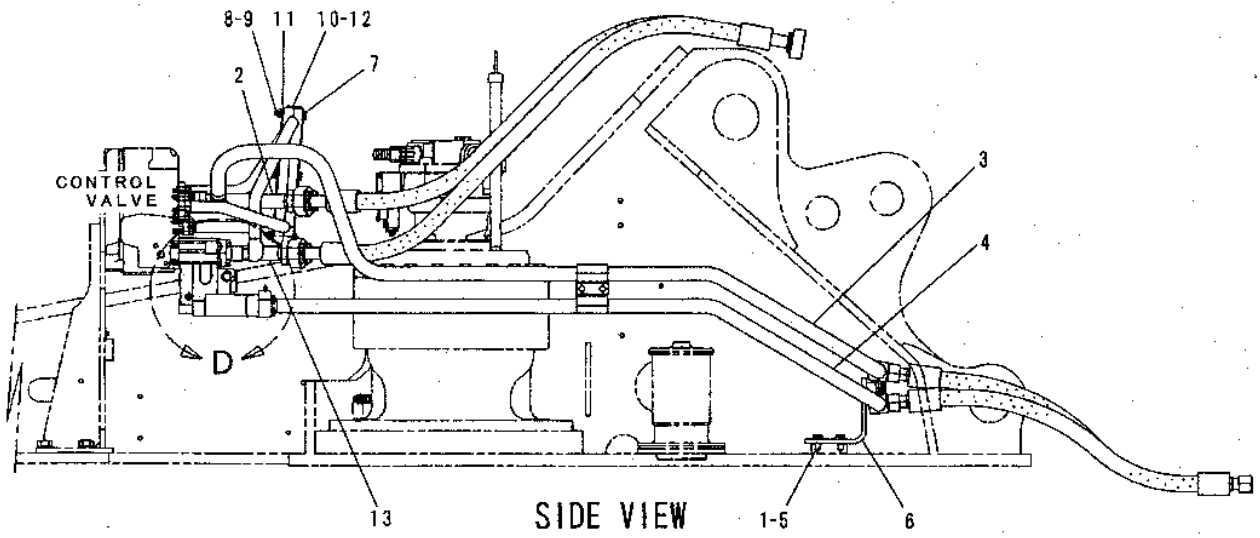


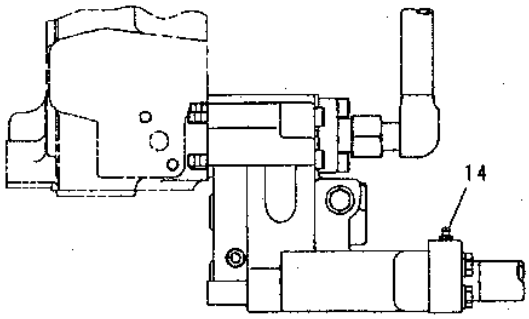


D

GRAPHIC #1

h79325e

# 1385073 LINES GP-FRONT-PART 1 OF 2

SINGLE FUNCTION
S/N 8SR 1-(D99.04), 8TR 1-(D99.04)
PART OF 1211925-Page 301, 1096190-Page 301.01
6C6746-Page 394
AN ATTACHMENT

**Key:** E - ORDER BY THE CENTIMETER, Y - SEPARATE ILLUSTRATION

**SMCS**

| NOTE | REF NO | GRAPHIC REF | PART NUMBER | QTY | PART NAME 1 2 3 4 5 6 (PRODUCT LEVEL) | PRICE USD |
|---|---|---|---|---|---|---|
| | 1 | | 5P-5148 | 4 | STRAP | |
| | 2 | | 1P-3704 | 1 | SEAL | |
| | 3 | | 4P-7582 | 1 | CLIP | |
| | 4 | | 8T-4223 | 4 | WASHER-HARD | |
| | 5 | | 8T-0198 | 1 | CONNECTOR | |
| | 6 | | 5K-9090 | 3 | SEAL-O-RING (ID=23.66mm) | |
| Y | 7 | | 6C-6746 | 1 | VALVE GP | |
| | 8 | | 6C-6699 | 1 | BLOCK | |
| | 9 | | 124-0876 | 1 | BLOCK | |
| | 10 | | 121-1772 | 1 | HOSE AS | |
| | | | 3E-4069 | 2 | CLIP | |
| E | | | 5P-0201 | | HOSE (142cm) | |
| | | | 5P-1010 | 2 | SLEEVE | |
| | | | 5P-1131 | 1 | STEM AS (STRAIGHT) | |
| E | | | 6V-0746 | | GUARD (213cm) | |
| | | | 7X-1452 | 1 | STEM AS (STRAIGHT) | |
| | 11 | | 121-1769 | 1 | HOSE AS | |
| | | | 2P-6733 | 1 | STEM AS (STRAIGHT) | |
| | | | 3E-4062 | 2 | CLIP | |
| E | | | 5P-0202 | | HOSE (143cm) | |
| | | | 5P-0477 | 2 | SLEEVE | |
| | 12 | | 8T-4184 | 4 | BOLT (L=45mm) | |
| | 13 | | 133-5698 | 1 | TUBE AS | |
| | 14 | | 7M-8485 | 3 | SEAL-O-RING (ID=29.74mm) | |
| | 15 | | 124-0956 | 1 | HOSE AS | |
| E | | | 5P-0201 | | HOSE (95cm) | |
| | | | 5P-1010 | 2 | SLEEVE | |
| | | | 7X-4815 | 2 | STEM AS (90 degrees) | |
| | 16 | | 1P-5767 | 2 | FLANGE | |
| | 17 | | 1P-3705 | 1 | SEAL | |
| | 18 | | 6V-8635 | 2 | CONNECTOR | |

## 1385073 LINES GP-FRONT-PART 1 OF 2

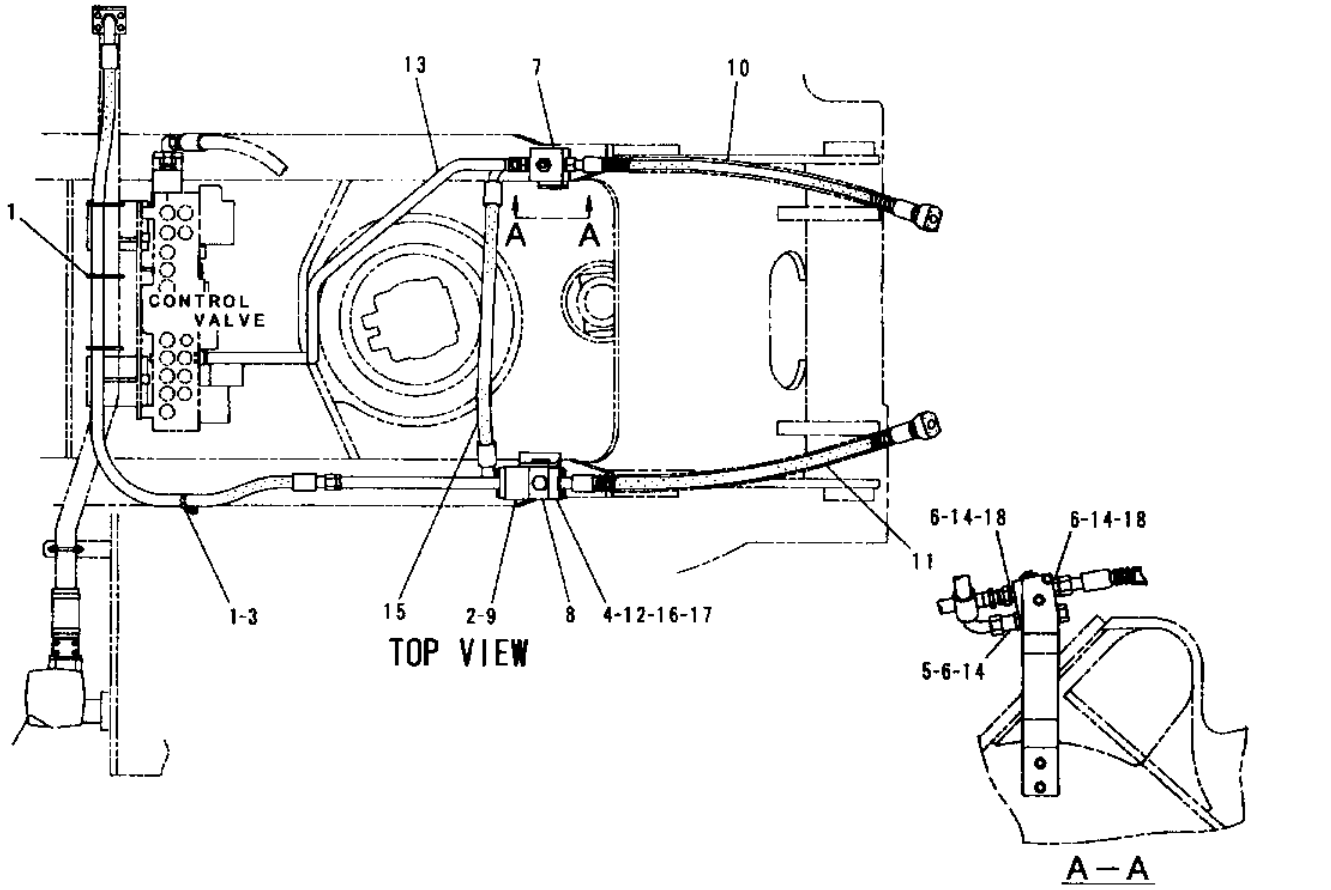


| NOTE | No. | PART No. | QTY | PART NAME | NOTE | No. | PART No. | QTY | PART NAME |
|---|---|---|---|---|---|---|---|---|---|
| | 1 | 5P-5148 | 4 | STRAP | | 11 | 121-1769 | 1 | HOSE AS |
| | 2 | 1P-3704 | 1 | SEAL | | | 2P-6733 | 1 | STEM AS (STRAIGHT) |
| | 3 | 4P-7582 | 1 | CLIP | | | 3E-4062 | 2 | CLIP |
| | 4 | 8T-4223 | 4 | WASHER-HARD | E | | 5P-0202 | | HOSE ···(143cm) |
| | 5 | 8T-0198 | 1 | CONNECTOR | | | 5P-0477 | 2 | SLEEVE |
| | 6 | 5K-9090 | 3 | SEAL-O-RING (ID=23.66mm) | | 12 | 8T-4184 | 4 | BOLT (L=45mm) |
| Y | 7 | 6C-6746 | 1 | VALVE GP | | 13 | 133-5698 | 1 | TUBE AS |
| | 8 | 6C-6699 | 1 | BLOCK | | 14 | 7M-8485 | 3 | SEAL-O-RING (ID=29.74mm) |
| | 9 | 124-0876 | 1 | BLOCK | | 15 | 124-0956 | 1 | HOSE AS |
| | 10 | 121-1772 | 1 | HOSE AS | E | | 5P-0201 | | HOSE ···(95cm) |
| | | 3E-4069 | 2 | CLIP | | | 5P-1010 | 2 | SLEEVE |
| E | | 5P-0201 | | HOSE ···(142cm) | | | 7X-4815 | 2 | STEM AS (90°) |
| | | 5P-1010 | 2 | SLEEVE | | 16 | 1P-5767 | 2 | FLANGE |
| | | 5P-1131 | 1 | STEM AS (STRAIGHT) | | 17 | 1P-3705 | 1 | SEAL |
| E | | 6V-0746 | | GUARD ···(213cm) | | 18 | 6V-8635 | 2 | CONNECTOR |
| | | 7X-1452 | 1 | STEM AS (STRAIGHT) | | | | | |

E-ORDER BY THE CENTIMETER
Y-SEE SEPARATE ILLUSTRATION

H56380E

# 1385073 LINES GP-FRONT-PART 2 OF 2

SINGLE FUNCTION
S/N 8SR 1-(D99.04), 8TR 1-(D99.04)
PART OF 1211925-Page 301, 1096190-Page 301.01
AN ATTACHMENT

**Key:**

**SMCS**

| NOTE | REF NO | GRAPHIC REF | PART NUMBER | QTY | PART NAME 1 2 3 4 5 6 (PRODUCT LEVEL) | PRICE USD |
|---|---|---|---|---|---|---|
| | 1 | | 7X-2550 | 4 | BOLT (L=110mm) | |
| | 2 | | 8T-4133 | 1 | NUT | |
| | 3 | | 138-5082 | 1 | PIPE AS | |
| | 4 | | 8T-4223 | 12 | WASHER-HARD | |
| | 5 | | 4J-0522 | 1 | SEAL-O-RING (ID=37.69mm) | |
| | 6 | | 5K-9090 | 3 | SEAL-O-RING (ID=23.66mm) | |
| | 7 | | 6V-9008 | 1 | ELBOW | |
| | 8 | | 8T-4956 | 4 | BOLT (L=35mm) | |
| | 9 | | 141-1310 | 1 | HOSE AS | |
| | 10 | | 8T-4183 | 4 | BOLT (L=40mm) | |
| | 11 | | 7X-7729 | 1 | WASHER | |
| | 12 | | 9S-4181 | 1 | PLUG | |
| | 13 | | 6V-8635 | 1 | CONNECTOR | |
| | 14 | | 7M-8485 | 3 | SEAL-O-RING (ID=29.74mm) | |
| | 15 | | 138-5017 | 1 | SUPPORT | |
| | 16 | | 133-5701 | 1 | SUPPORT | |
| | 17 | | 1P-3703 | 1 | SEAL | |
| | 18 | | 9X-6032 | 4 | BOLT (L=30mm) | |

## 1385073 LINES GP-FRONT-PART 2 OF 2

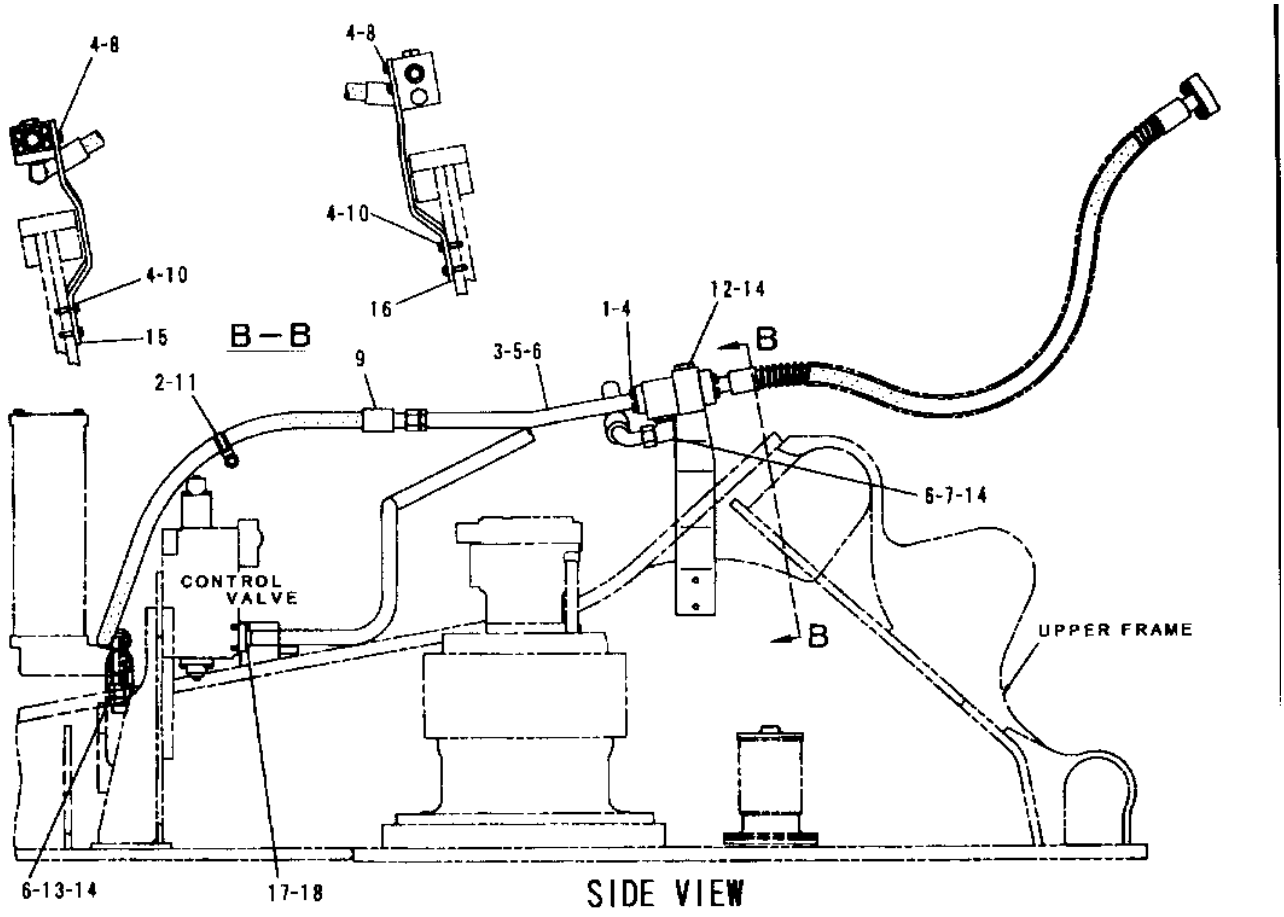


| NOTE | No. | PART No. | QTY | PART NAME |
|---|---|---|---|---|
| | 1 | 7X-2550 | 4 | BOLT (L=110mm) |
| | 2 | 8T-4133 | 1 | NUT |
| | 3 | 138-5082 | 1 | PIPE AS |
| | 4 | 8T-4223 | 12 | WASHER-HARD |
| | 5 | 4J-0522 | 1 | SEAL-O-RING (ID=37.69mm) |
| | 6 | 5K-9090 | 3 | SEAL-O-RING (ID=23.66mm) |
| | 7 | 6V-9008 | 1 | ELBOW |
| | 8 | 8T-4956 | 4 | BOLT (L=35mm) |
| | 9 | 141-1310 | 1 | HOSE AS |
| | 10 | 8T-4183 | 4 | BOLT (L=40mm) |
| | 11 | 7X-7729 | 1 | WASHER |
| | 12 | 9S-4181 | 1 | PLUG |
| | 13 | 6V-8635 | 1 | CONNECTOR |
| | 14 | 7M-8485 | 3 | SEAL-O-RING (ID=29.74mm) |
| | 15 | 138-5017 | 1 | SUPPORT |
| | 16 | 133-5701 | 1 | SUPPORT |
| | 17 | 1P-3703 | 1 | SEAL |
| | 18 | 9X-6032 | 4 | BOLT (L=30mm) |

| NOTE | No. | PART No. | QTY | PART NAME |
|---|---|---|---|---|

H56381E

# 1385073 LINES GP-FRONT-PART 1 OF 2

SINGLE FUNCTION
S/N 8SR (D99.05)-(T00.10), 8TR (D99.05)-(T00.10)
PART OF 1211925-Page 301, 1096190-Page 301.01
6C6746-Page 394
AN ATTACHMENT

**Key:** Y - Separate Illustration

**SMCS**

| NOTE | REF NO | GRAPHIC REF | PART NUMBER | QTY | PART NAME 1 2 3 4 5 6 (PRODUCT LEVEL) | PRICE USD |
|---|---|---|---|---|---|---|
| | 1 | | 176-5000 | 1 | TUBE AS | |
| | 2 | | 1P-3704 | 1 | SEAL | |
| | 3 | | 7Y-3732 | 2 | CLIP | |
| | 4 | | 8T-4223 | 8 | WASHER | |
| | 5 | | 8T-0198 | 1 | CONNECTOR | |
| | 6 | | 5K-9090 | 3 | SEAL-O-RING (OD=27.22mm) | |
| Y | 7 | | 6C-6746 | 1 | VALVE GP | |
| | 8 | | 6C-6699 | 1 | BLOCK | |
| | 9 | | 124-0876 | 1 | BLOCK | |
| | 10 | | 121-1772 | 1 | HOSE AS | |
| | | | 3E-4069 | 2 | CLIP | |
| E | | | 5P-0201 | | HOSE (142cm) | |
| | | | 5P-1010 | 2 | SLEEVE | |
| E | | | 6V-0746 | | GUARD (213cm) | |
| | | | 7X-1452 | 1 | STEM AS (STRAIGHT) | |
| | 11 | | 121-1769 | 1 | HOSE AS | |
| | | | 2P-6733 | 1 | STEM AS (STRAIGHT) | |
| | | | 3E-4062 | 2 | CLIP | |
| E | | | 5P-0202 | | HOSE (143cm) | |
| | | | 5P-0477 | 2 | SLEEVE | |
| | 12 | | 8T-4184 | 4 | BOLT (L=45mm) | |
| | 13 | | 133-5698 | 1 | TUBE AS | |
| | 14 | | 7M-8485 | 3 | SEAL-O-RING (ID=29.74mm) | |
| | 15 | | 124-0956 | 1 | HOSE AS | |
| | | | 5P-1010 | 2 | SLEEVE | |
| | | | 7X-4815 | 2 | STEM AS (90°) | |
| | 16 | | 1P-5767 | 2 | FLANGE | |
| | 17 | | 1P-3705 | 1 | SEAL | |
| | 18 | | 6V-8635 | 2 | CONNECTOR | |
| | 19 | | 8T-4956 | 4 | BOLT (L=35mm) | |
| | 20 | | 176-5001 | 1 | SUPPORT AS | |

## 1385073 LINES GP-FRONT-PART 1 OF 2

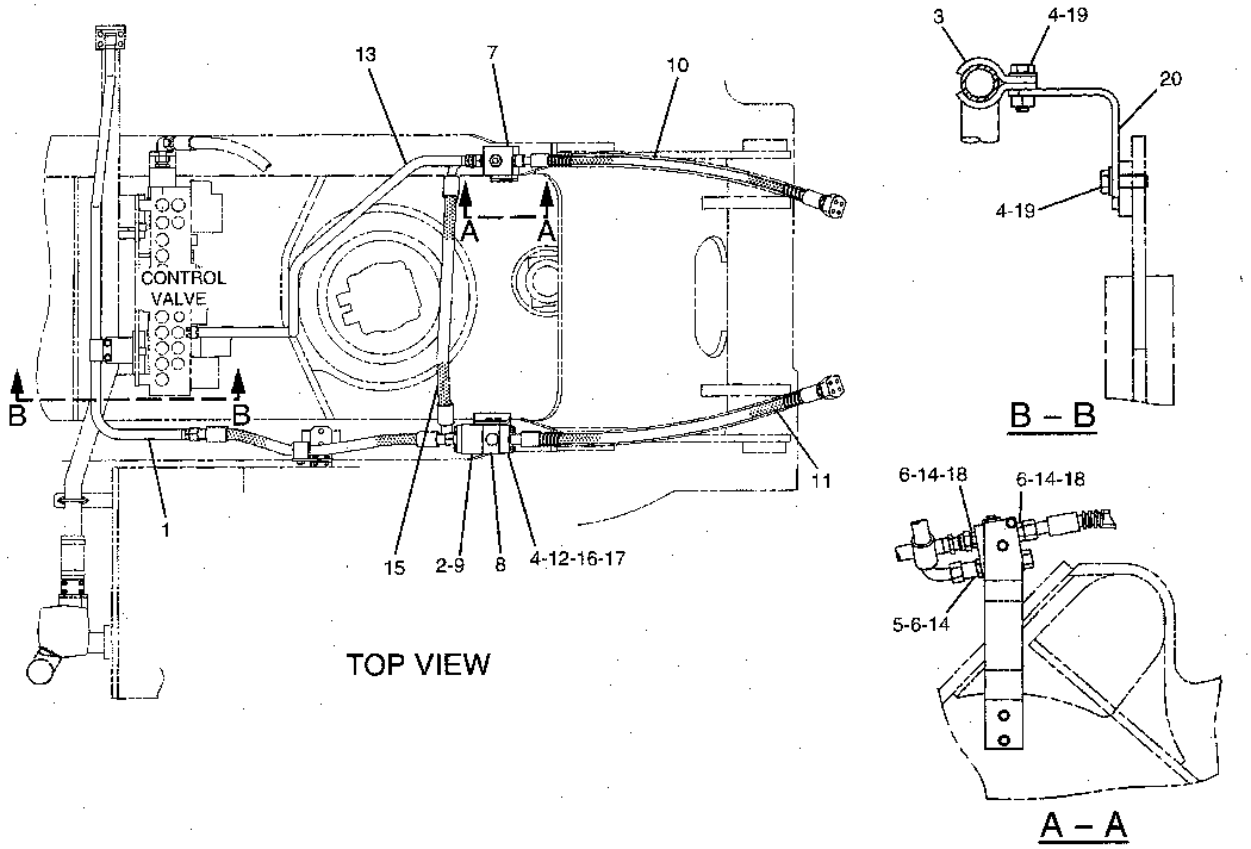


GRAPHIC #1

h79326e

# 1385073 LINES GP-FRONT-PART 2 OF 2

SINGLE FUNCTION
S/N 8SR (D99.05)-(T00.10), 8TR (D99.05)-(T00.10)
PART OF 1211925-Page 301, 1096190-Page 301.01
AN ATTACHMENT

**Key:**

**SMCS**

| NOTE | REF NO | GRAPHIC REF | PART NUMBER | QTY | PART NAME 1 2 3 4 5 6 (PRODUCT LEVEL) | PRICE USD |
|---|---|---|---|---|---|---|
| | 1 | | 7X-2550 | 4 | BOLT (L=110mm) | |
| | 2 | | 8T-4136 | 2 | BOLT (L=25mm) | |
| | 3 | | 5I-8679 | 1 | HOSE AS | |
| | 4 | | 8T-4223 | 13 | WASHER | |
| | 5 | | 1P-3705 | 1 | SEAL | |
| | 6 | | 5K-9090 | 3 | SEAL-O-RING (OD=27.22mm) | |
| | 7 | | 6V-9008 | 1 | ELBOW | |
| | 8 | | 8T-4956 | 1 | BOLT (L=35mm) | |
| | 9 | | 138-5044 | 1 | FLANGE | |
| | 10 | | 8T-4183 | 4 | BOLT (L=40mm) | |
| | 11 | | 8T-4121 | 2 | WASHER | |
| | 12 | | 9S-4181 | 1 | PLUG | |
| | 13 | | 4I-6141 | 1 | COUPLING AS | |
| | 14 | | 7M-8485 | 3 | SEAL-O-RING (ID=29.74mm) | |
| | 15 | | 138-5017 | 1 | SUPPORT | |
| | 16 | | 133-5701 | 1 | SUPPORT | |
| | 17 | | 1P-3703 | 1 | SEAL | |
| | 18 | | 9X-6032 | 4 | BOLT (L=30mm) | |
| | 19 | | 5P-7468 | 1 | CLIP | |
| | 20 | | 5P-7469 | 1 | CLIP | |
| | 21 | | 5P-8444 | 1 | GROMMET | |
| | 22 | | 8T-4139 | 1 | BOLT (L=30mm) | |
| | 23 | | 168-0810 | 1 | SUPPORT AS | |

## 1385073 LINES GP-FRONT-PART 2 OF 2

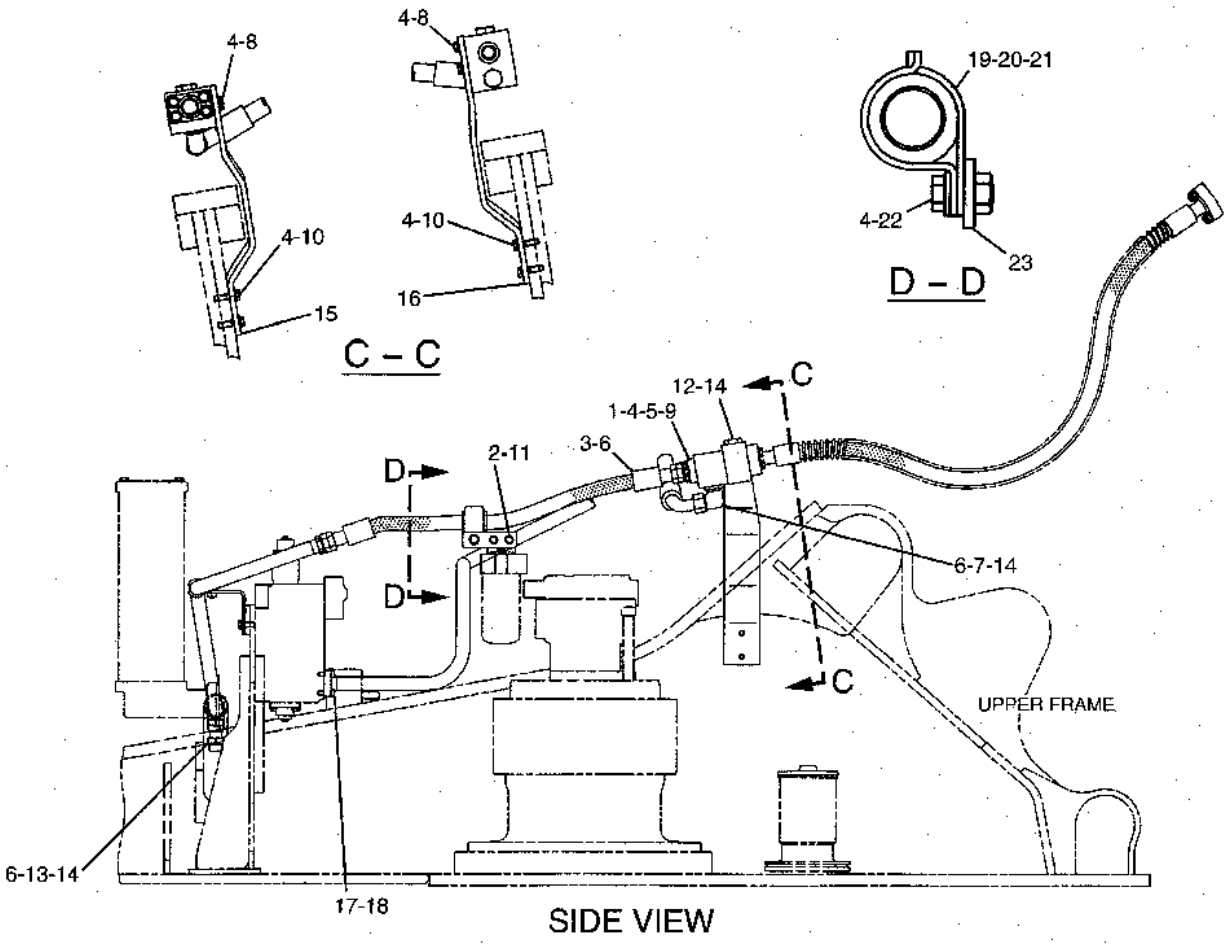


GRAPHIC #1

h79327e

# 1385073 LINES GP-FRONT-PART 1 OF 2

SINGLE FUNCTION
S/N 8SR (T00.11)-UP, 8TR (T00.11)-UP
PART OF 1211925-Page 301, 1096190-Page 301.01
6C6746-Page 394
AN ATTACHMENT

**Key:** E - ORDER BY THE CENTIMETER, Y - SEE SEPARATE ILLUSTRATION

**SMCS**

| NOTE | REF NO | GRAPHIC REF | PART NUMBER | QTY | PART NAME 1 2 3 4 5 6 (PRODUCT LEVEL) | PRICE USD |
|---|---|---|---|---|---|---|
| | 1 | | 1P-3704 | 1 | SEAL | |
| | 2 | | 8T-4223 | 10 | WASHER | |
| | 3 | | 184-4014 | 1 | SUPPORT AS | |
| | 4 | | 199-1905 | 4 | SEAL-O-RING (ID=23.66MM) | |
| Y | 5 | | 6C-6746 | 1 | VALVE GP | |
| | 6 | | 8T-4956 | 6 | BOLT (L=35MM) | |
| | 7 | | 176-5000 | 1 | TUBE AS | |
| | 8 | | 121-1772 | 1 | HOSE AS | |
| | | | 3E-4068 | 2 | CLIP | |
| E | | | 5P-0201 | 1 | HOSE (142CM) | |
| | | | 5P-1010 | 2 | SLEEVE | |
| | | | 5P-1131 | 1 | STEM AS (STRAIGHT) | |
| E | | | 6V-0746 | | GUARD (213CM) | |
| | | | 7X-1452 | 1 | STEM AS (STRAIGHT) | |
| | 9 | | 121-1769 | 1 | HOSE AS | |
| | | | 2P-6733 | 1 | STEM AS (STRAIGHT) | |
| | | | 3E-4062 | 2 | CLIP | |
| E | | | 5P-0202 | | HOSE (143CM) | |
| | | | 5P-0477 | 2 | SLEEVE | |
| | 10 | | 8T-4184 | 4 | BOLT (L=45MM) | |
| | 11 | | 8T-5005 | 3 | BOLT (L=70MM) | |
| | 12 | | 7M-8485 | 3 | SEAL-O-RING (ID=29.74MM) | |
| | 13 | | 1P-3703 | 1 | SEAL | |
| | 14 | | 9X-6032 | 4 | BOLT (L=30MM) | |
| | 15 | | 6V-8635 | 1 | CONNECTOR | |
| | 16 | | 1P-3705 | 1 | SEAL | |
| | 17 | | 1P-5767 | 2 | FLANGE | |
| | 18 | | 113-6511 | 1 | SUPPORT | |
| | 19 | | 124-0956 | 1 | HOSE AS | |
| E | | | 5P-0201 | 4 | HOSE (95CM) | |
| | | | 5P-1010 | 2 | SLEEVE | |
| | | | 7X-4815 | 2 | STEM AS (90B°) | |
| | 20 | | 124-0876 | 1 | BLOCK | |
| | 21 | | 6C-6699 | 1 | BLOCK | |
| | 22 | | 113-6513 | 2 | CLAMP | |
| | 23 | | 113-6512 | 1 | PLATE | |
| | 24 | | 8T-0198 | 1 | CONNECTOR | |
| | 25 | | 8T-4133 | 3 | NUT | |
| | 26 | | 184-4013 | 1 | HOSE AS | |
| E | | | 5P-0201 | 1 | HOSE (69CM) | |
| | | | 5P-1010 | 2 | SLEEVE | |
| | | | 7X-4814 | 1 | STEM AS (45B°) | |
| | | | 7X-4815 | 1 | STEM AS (90B°) | |
| | 27 | | 8T-8898 | 1 | CONNECTOR | |
| | 28 | | 184-4012 | 1 | TUBE AS | |
| | 29 | | 7Y-3732 | 4 | CLIP | |

## 1385073 LINES GP-FRONT-PART 1 OF 2

| | | | |
|---|---|---|---|
| 30 | 176-5001 | 1 | SUPPORT AS |
| 31 | 8T-4121 | 3 | WASHER |

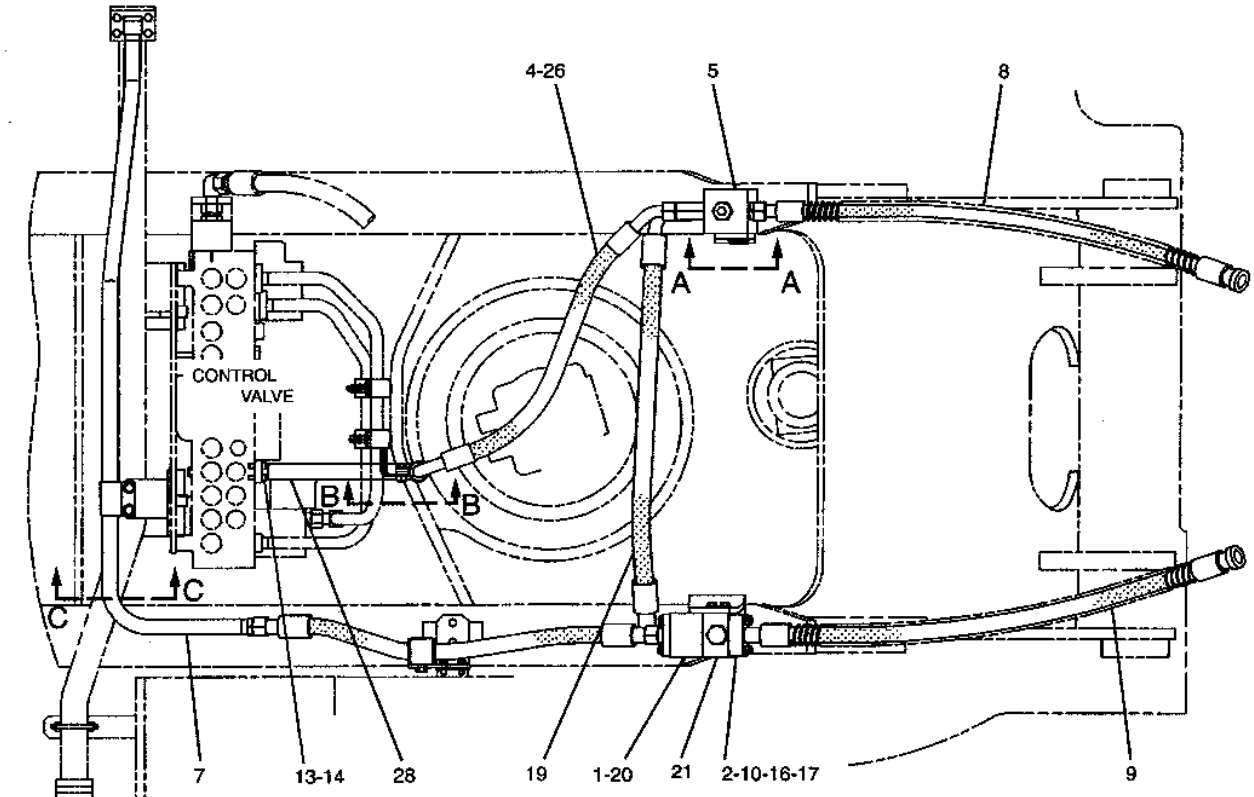


TOP VIEW

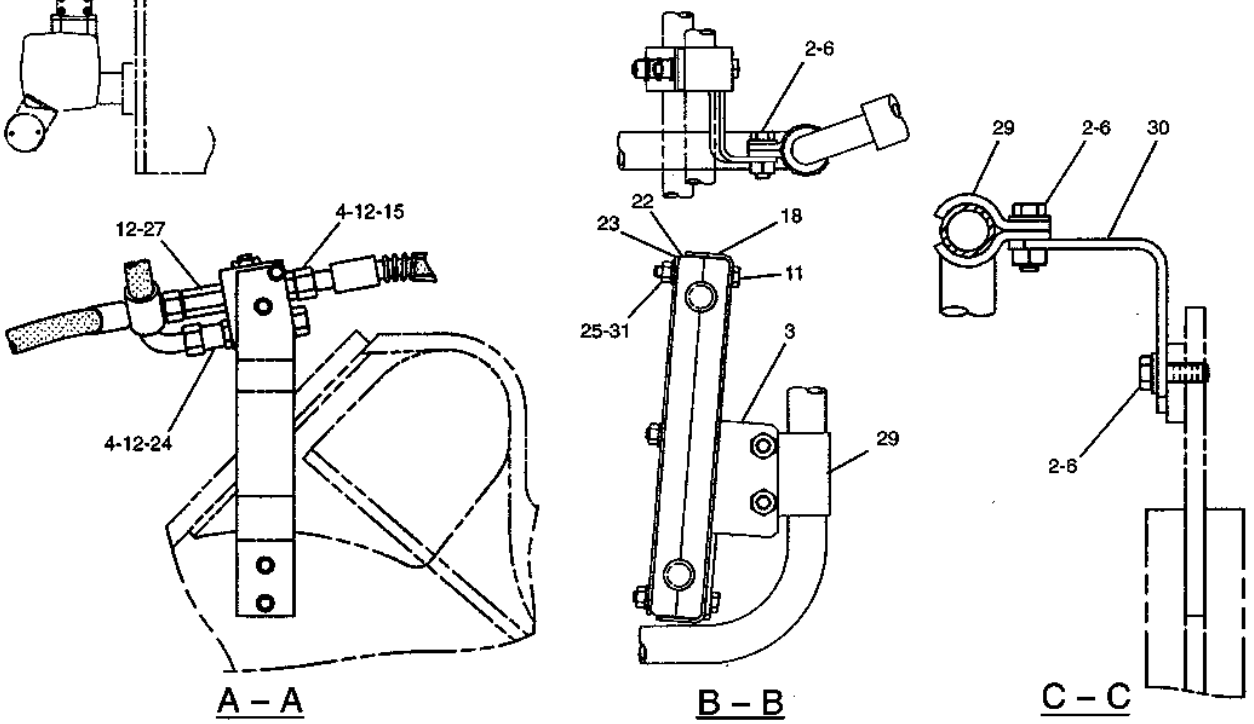


A – A B – B C – C

H84579E 06

GRAPHIC #1

h84579e

# 1385073 LINES GP-FRONT-PART 2 OF 2

SINGLE FUNCTION
S/N 8SR (T00.11)-UP, 8TR (T00.11)-UP
PART OF 1211925-Page 301, 1096190-Page 301.01
AN ATTACHMENT

**Key:**

**SMCS**

| NOTE | REF NO | GRAPHIC REF | PART NUMBER | QTY | PART NAME 1 2 3 4 5 6 (PRODUCT LEVEL) | PRICE USD |
|---|---|---|---|---|---|---|
| | 1 | | 7X-2550 | 4 | BOLT (L=110MM) | |
| | 2 | | 5I-8679 | 1 | HOSE AS | |
| | 3 | | 8T-4223 | 13 | WASHER | |
| | 4 | | 199-1905 | 4 | SEAL-O-RING (ID=23.66MM) | |
| | 5 | | 8T-4956 | 4 | BOLT (L=35MM) | |
| | 6 | | 7M-8485 | 3 | SEAL-O-RING (ID=29.74) | |
| | 7 | | 138-5017 | 1 | SUPPORT | |
| | 8 | | 133-5701 | 1 | SUPPORT | |
| | 9 | | 9S-4181 | 1 | PLUG | |
| | 10 | | 1P-3705 | 1 | SEAL | |
| | 1 | | 8T-4183 | 4 | BOLT (L=40MM) | |
| | 12 | | 6V-9008 | 1 | ELBOW | |
| | 13 | | 138-5044 | 1 | FLANGE | |
| | 14 | | 4I-6141 | 1 | COUPLING AS | |
| | 15 | | 8T-4136 | 2 | BOLT (L=25MM) | |
| | 16 | | 8T-4121 | 2 | WASHER | |
| | 17 | | 5P-7468 | 1 | CLIP | |
| | 18 | | 5P-7469 | 1 | CLIP | |
| | 19 | | 5P-8444 | 1 | GROMMET | |
| | 20 | | 8T-4139 | 4 | BOLT (L=30MM) | |
| | 21 | | 168-0810 | 1 | SUPPORT AS | |
| | | | 168-0811 | 1 | BAR | |

## 1385073 LINES GP-FRONT-PART 2 OF 2

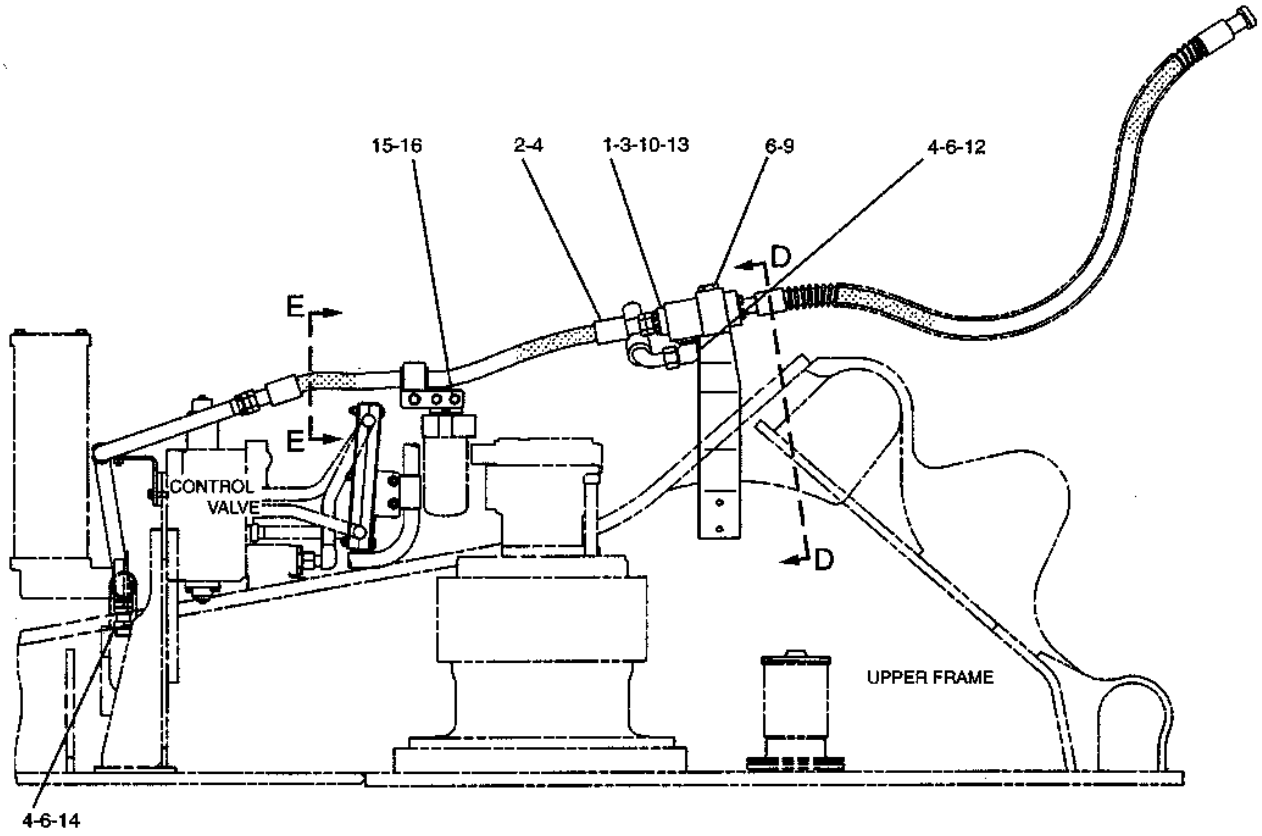


SIDE VIEW

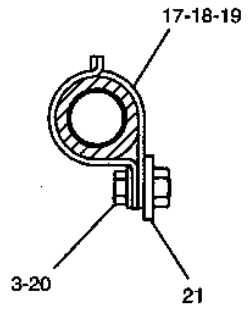


E – E

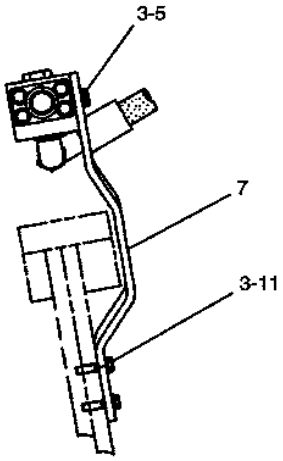


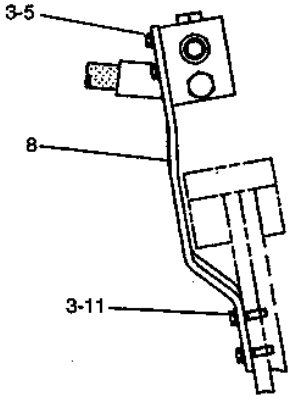


D – D

H84580E 06

GRAPHIC #1

h84580e

# 1385072 LINES GP-FRONT-PART 1 OF 2

COMBINED FUNCTION
S/N 8SR 1-(T00.10), 8TR 1-(T00.10)
PART OF 1211926-Page 301, 1096192-Page 301.01
AN ATTACHMENT

**Key:** E - ORDER BY THE CENTIMETER

**SMCS**

| NOTE | REF NO | GRAPHIC REF | PART NUMBER | QTY | PART NAME 1 2 3 4 5 6 (PRODUCT LEVEL) | PRICE USD |
|---|---|---|---|---|---|---|
| | 1 | | 142-7613 | 1 | HOSE AS | |
| | 2 | | 121-1772 | 1 | HOSE AS | |
| | | | 3E-4069 | 2 | CLIP | |
| E | | | 5P-0201 | | HOSE (142cm) | |
| | | | 5P-1010 | 2 | SLEEVE | |
| | | | 5P-1131 | 1 | STEM AS (STRAIGHT) | |
| E | | | 6V-0746 | | GUARD (213cm) | |
| | | | 7X-1452 | 1 | STEM AS (STRAIGHT) | |
| | 3 | | 122-8705 | 1 | U-BOLT | |
| | 4 | | 096-4883 | 2 | NUT | |
| | 5 | | 140-0648 | 1 | BLOCK | |
| | 6 | | 133-5698 | 1 | TUBE AS | |
| | 7 | | 121-6356 | 1 | HOSE AS | |
| E | | | 5P-0200 | | HOSE (33cm) | |
| | | | 5P-1027 | 2 | SLEEVE | |
| | | | 7X-1451 | 1 | STEM AS (STRAIGHT) | |
| | | | 7X-1467 | 1 | STEM AS (45°) | |
| | 8 | | 138-5111 | 1 | HOSE AS | |
| E | | | 5P-0201 | | HOSE (72cm) | |
| | | | 5P-1010 | 2 | SLEEVE | |
| | | | 7X-1452 | 1 | STEM AS (STRAIGHT) | |
| | | | 7X-4815 | 1 | STEM AS (90°) | |
| | 9 | | 8T-4121 | 2 | WASHER | |
| | 10 | | 1P-3704 | 1 | SEAL | |
| | 11 | | 141-1278 | 1 | HOSE AS | |
| | | | 3E-4069 | 2 | CLIP | |
| E | | | 5P-0201 | | HOSE (147cm) | |
| | | | 5P-1010 | 2 | SLEEVE | |
| | | | 5P-1131 | 1 | STEM AS (STRAIGHT) | |
| E | | | 6V-0746 | 1 | GUARD (205cm) | |
| | | | 7X-1452 | 1 | STEM AS (STRAIGHT) | |
| | 12 | | 131-9613 | 1 | HOSE AS | |
| E | | | 5P-0201 | | HOSE (134cm) | |
| | | | 5P-1010 | 2 | SLEEVE | |
| | | | 7X-1452 | 1 | STEM AS (STRAIGHT) | |
| | 13 | | 5K-9090 | 7 | SEAL-O-RING (OD=27.22mm) | |
| | 14 | | 6V-9746 | 2 | SEAL-O-RING (OD=22.50mm) | |
| | 15 | | 6V-9008 | 1 | ELBOW | |
| | 16 | | 7M-8485 | 7 | SEAL-O-RING (ID=29.74mm) | |
| | 17 | | 121-6270 | 1 | TUBE AS | |
| | 18 | | 6V-8635 | 4 | CONNECTOR | |
| | 19 | | 095-0673 | 4 | BOLT (L=60mm) | |
| | 20 | | 8T-0198 | 1 | CONNECTOR | |
| | 21 | | 4P-7582 | 1 | CLIP | |
| | 22 | | 5P-5148 | 4 | STRAP | |
| | 23 | | 138-5109 | 1 | TUBE AS | |
| | 24 | | 8J-0426 | 1 | PLUG | |

## 1385072 LINES GP-FRONT-PART 1 OF 2

| | | | |
|---|---|---|---|
| 25 | 9S-4191 | 1 | PLUG |
| 26 | 3J-1907 | 1 | SEAL-O-RING (ID=11.89mm) |

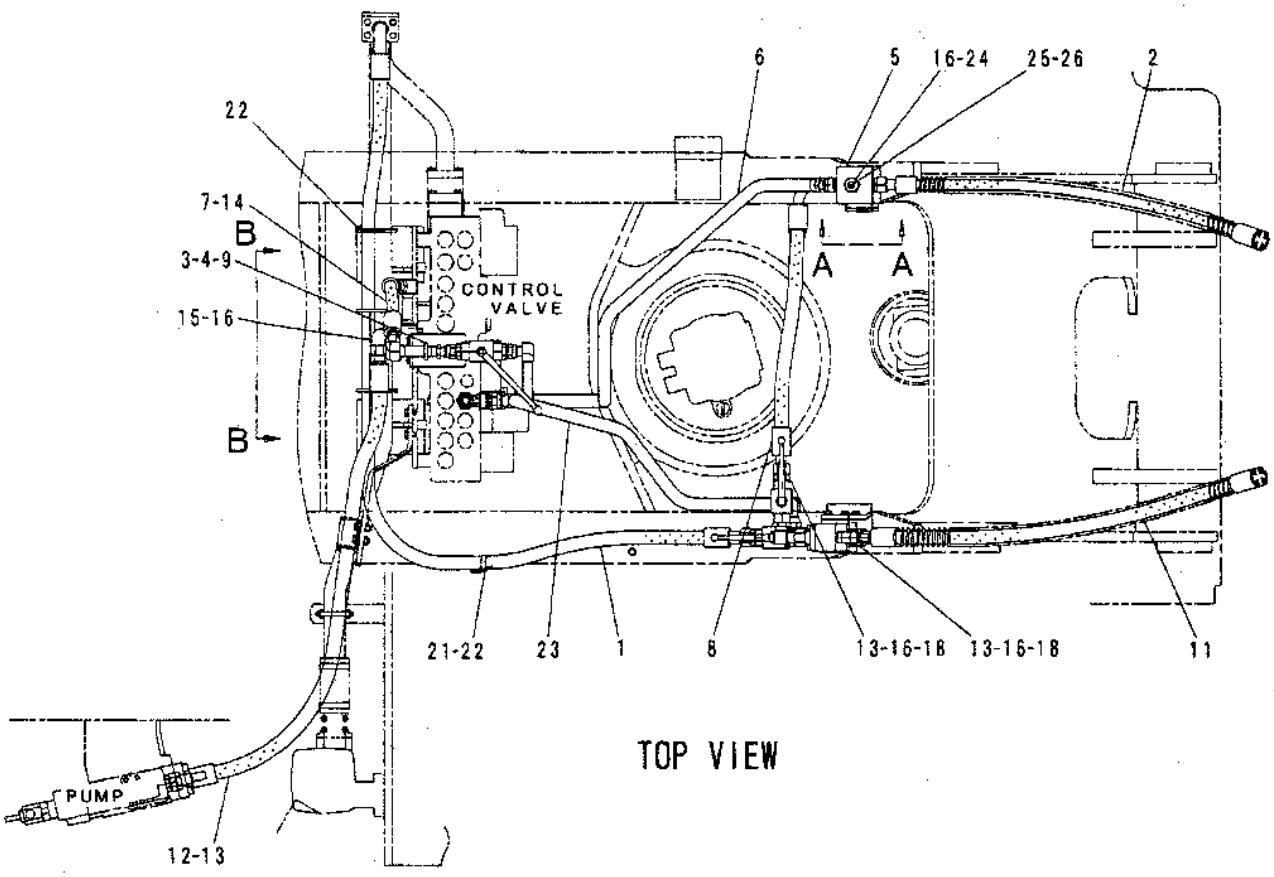


TOP VIEW

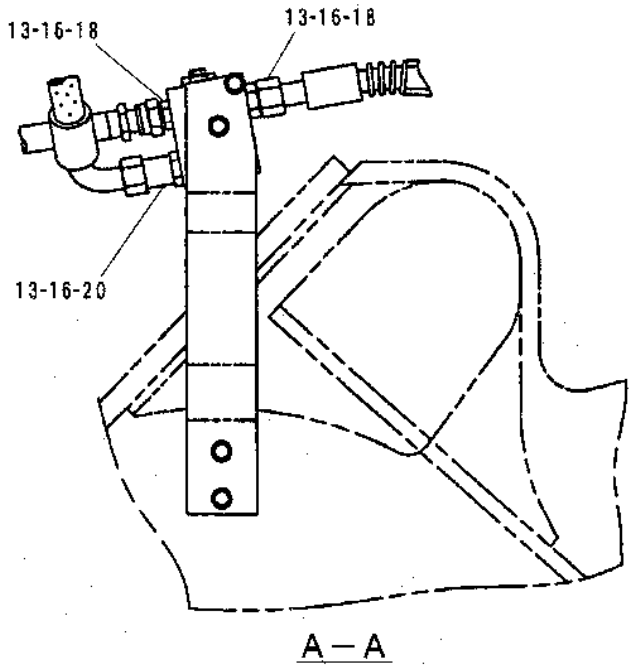


A—A

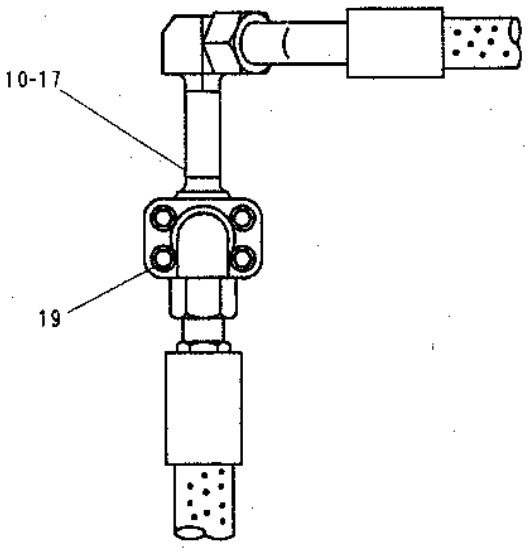


B—B

GRAPHIC #1

h58862e

# 1385072 LINES GP-FRONT-PART 2 OF 2

COMBINED FUNCTION
S/N 8SR 1-(T00.10), 8TR 1-(T00.10)
PART OF 1211926-Page 301, 1096192-Page 301.01
1163600-Page 355, 4I0890-Page 382, 4I6301-Page 382.01, 1913149-Page 395
AN ATTACHMENT

**Key:** Y - SEE SEPARATE ILLUSTRATION

**SMCS**

| NOTE | REF NO | GRAPHIC REF | PART NUMBER | QTY | PART NAME 1 2 3 4 5 6 (PRODUCT LEVEL) | PRICE USD |
|---|---|---|---|---|---|---|
| | 1 | | 6V-8716 | 2 | CONNECTOR | |
| | 2 | | 121-6461 | 1 | SUPPORT AS | |
| | 3 | | 8T-4223 | 8 | WASHER | |
| | 4 | | 8T-4121 | 2 | WASHER | |
| | 5 | | 113-6814 | 1 | TUBE AS | |
| | 6 | | 138-5110 | 1 | SUPPORT | |
| | 7 | | 133-5701 | 1 | SUPPORT | |
| | 8 | | 8T-4183 | 4 | BOLT (L=40mm) | |
| | 9 | | 113-6813 | 1 | TUBE AS | |
| | 10 | | 9X-6032 | 16 | BOLT (L=30mm) | |
| | 11 | | 7Y-3731 | 3 | FLANGE | |
| | 12 | | 1P-3703 | 4 | SEAL | |
| | 13 | | 5K-9090 | 7 | SEAL-O-RING (OD=27.22mm) | |
| | 14 | | 4K-1388 | 1 | SEAL-O-RING (ID=26.59mm) | |
| Y | 15 | | 4I-0890 | 1 | VALVE GP | |
| | 16 | | 6V-9746 | 3 | SEAL-O-RING (OD=22.50mm) | |
| | 17 | | 7M-8485 | 7 | SEAL-O-RING (ID=29.74mm) | |
| | 18 | | 8T-4956 | 4 | BOLT (L=35mm) | |
| | 19 | | 6V-8635 | 3 | CONNECTOR | |
| Y | 20 | | 116-3600 | 2 | VALVE GP | |
| Y | 21 | | 191-3149 | 3 | VALVE AS | |
| | 22 | | 8T-4136 | 2 | BOLT (L=25mm) | |
| | 23 | | 8T-4133 | 1 | NUT | |
| | 24 | | 7X-7729 | 1 | WASHER | |
| | 25 | | 6I-6793 | 1 | BLOCK | |
| | 26 | | 8T-6408 | 4 | BOLT (L=160mm) | |
| | 27 | | 6V-9854 | 1 | ELBOW | |
| Y | 28 | | 4I-6301 | 1 | VALVE GP | |
| | 29 | | 5I-3183 | 1 | ELBOW | |
| | 30 | | 4J-0520 | 1 | SEAL-O-RING (ID=32.92mm) | |
| | 31 | | 4I-6141 | 1 | COUPLING AS | |

## 1385072 LINES GP-FRONT-PART 2 OF 2

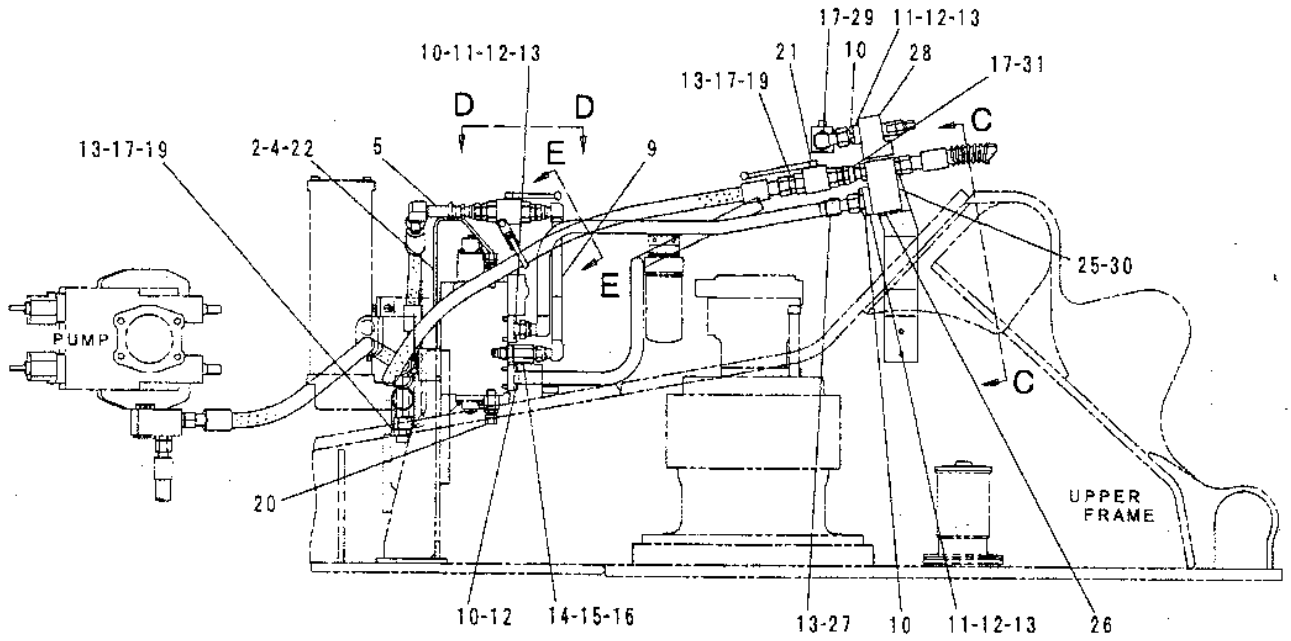


SIDE VIEW

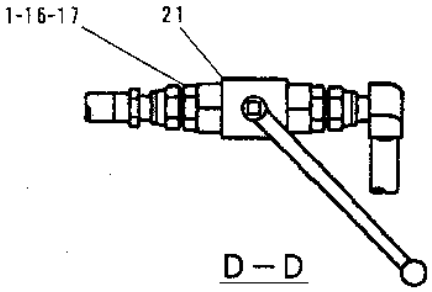


D – D

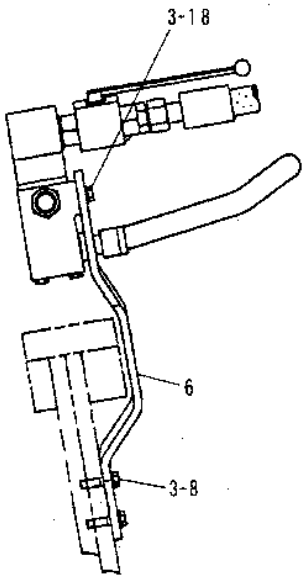


C – C

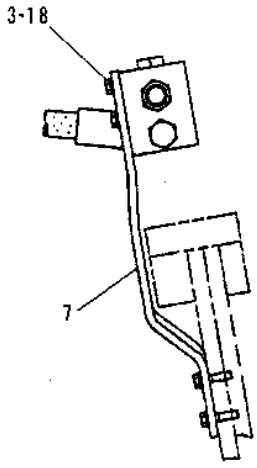


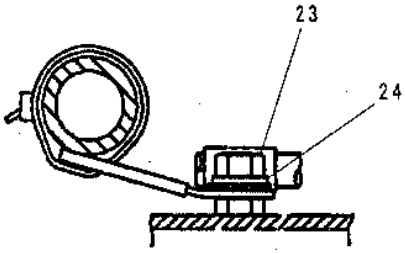


E – E

GRAPHIC #1

h58864e

# 1385072 LINES GP-FRONT-PART 1 OF 2

COMBINED FUNCTION
S/N 8SR (T00.11)-UP, 8TR (T00.11)-UP
PART OF 1211926-Page 301, 1096192-Page 301.01
AN ATTACHMENT

**Key:** E - ORDER BY THE CENTIMETER

**SMCS**

| NOTE | REF NO | GRAPHIC REF | PART NUMBER | QTY | PART NAME 1 2 3 4 5 6 (PRODUCT LEVEL) | PRICE USD |
|---|---|---|---|---|---|---|
| | 1 | | 134-6949 | 1 | HOSE AS | |
| | 2 | | 121-1772 | 1 | HOSE AS | |
| | | | 3E-4069 | 2 | CLIP | |
| E | | | 5P-0201 | | HOSE (142cm) | |
| | | | 5P-1010 | 2 | SLEEVE | |
| | | | 5P-1131 | 1 | STEM AS (STRAIGHT) | |
| E | | | 6V-0746 | | GUARD (213cm) | |
| | | | 7X-1452 | 1 | STEM AS (STRAIGHT) | |
| | 3 | | 122-8705 | 1 | U-BOLT | |
| | 4 | | 096-4883 | 2 | NUT | |
| | 5 | | 140-0648 | 1 | BLOCK | |
| | 6 | | 184-4013 | 1 | HOSE AS | |
| E | | | 5P-0201 | | HOSE (69cm) | |
| | | | 5P-1010 | 2 | SLEEVE | |
| | | | 7X-4814 | 1 | STEM AS (45°) | |
| | | | 7X-4815 | 1 | STEM AS (90°) | |
| | 7 | | 121-6356 | 1 | HOSE AS | |
| E | | | 5P-0200 | | HOSE (33cm) | |
| | | | 5P-1027 | 2 | SLEEVE | |
| | | | 7X-1451 | 1 | STEM AS (STRAIGHT) | |
| | | | 7X-1467 | 1 | STEM AS (90°) | |
| | 8 | | 138-5111 | 1 | HOSE AS | |
| E | | | 5P-0201 | | HOSE (72cm) | |
| | | | 5P-1010 | 2 | SLEEVE | |
| | | | 7X-1452 | 1 | STEM AS (STRAIGHT) | |
| | | | 7X-4815 | 1 | STEM AS (45°) | |
| | 9 | | 8T-4121 | 5 | WASHER | |
| | 10 | | 1P-3704 | 1 | SEAL | |
| | 11 | | 141-1278 | 1 | HOSE AS | |
| | | | 3E-4069 | 2 | CLIP | |
| E | | | 5P-0201 | | HOSE (147cm) | |
| | | | 5P-1010 | 2 | SLEEVE | |
| | | | 5P-1131 | 1 | STEM AS (STRAIGHT) | |
| E | | | 6V-0746 | 1 | GUARD (205cm) | |
| | | | 7X-1452 | 1 | STEM AS (STRAIGHT) | |
| | 12 | | 131-9613 | 1 | HOSE AS | |
| E | | | 5P-0201 | | HOSE (134cm) | |
| | | | 5P-1010 | 2 | SLEEVE | |
| | | | 7X-1452 | 1 | STEM AS (STRAIGHT) | |
| | 13 | | 5K-9090 | 10 | SEAL-O-RING (OD=27.22mm) | |
| | 14 | | 6V-9746 | 2 | SEAL-O-RING (OD=22.50mm) | |
| | 15 | | 6V-9008 | 1 | ELBOW | |
| | 16 | | 7M-8485 | 7 | SEAL-O-RING (ID=29.74mm) | |
| | 17 | | 121-6270 | 1 | TUBE AS | |
| | 18 | | 6V-8635 | 3 | CONNECTOR | |
| | 19 | | 095-0673 | 4 | BOLT (L=60mm) | |
| | 20 | | 8T-0198 | 1 | CONNECTOR | |

## 1385072 LINES GP-FRONT-PART 1 OF 2

| | | | |
|---|---|---|---|
| 21 | 8T-4223 | 7 | WASHER |
| 22 | 8T-8898 | 1 | CONNECTOR |
| 23 | 138-5109 | 1 | TUBE AS |
| 24 | 8J-0426 | 1 | PLUG |
| 25 | 9S-4191 | 1 | PLUG |
| 26 | 3J-1907 | 1 | SEAL-O-RING (ID=11.89mm) |
| 27 | 8T-4956 | 6 | BOLT (L=35mm) |
| 28 | 7Y-3732 | 4 | CLIP |
| 29 | 194-4014 | 1 | SUPPORT AS |
| 30 | 8T-5005 | 3 | BOLT (L=70mm) |
| 31 | 8T-4133 | 3 | NUT |
| 32 | 176-5000 | 1 | TUBE AS |
| 33 | 113-6511 | 1 | SUPPORT |
| 34 | 5P-7468 | 1 | CLIP |
| 35 | 5P-7469 | 1 | CLIP |
| 36 | 113-6513 | 2 | CLAMP |
| 37 | 113-6512 | 1 | PLATE |
| 38 | 5P-8444 | 1 | GROMMET |
| 39 | 8T-4139 | 1 | BOLT (L=30mm) |
| 40 | 168-0810 | 1 | SUPPORT AS |
| 41 | 176-5001 | 1 | SUPPORT AS |

## 1385072 LINES GP-FRONT-PART 1 OF 2

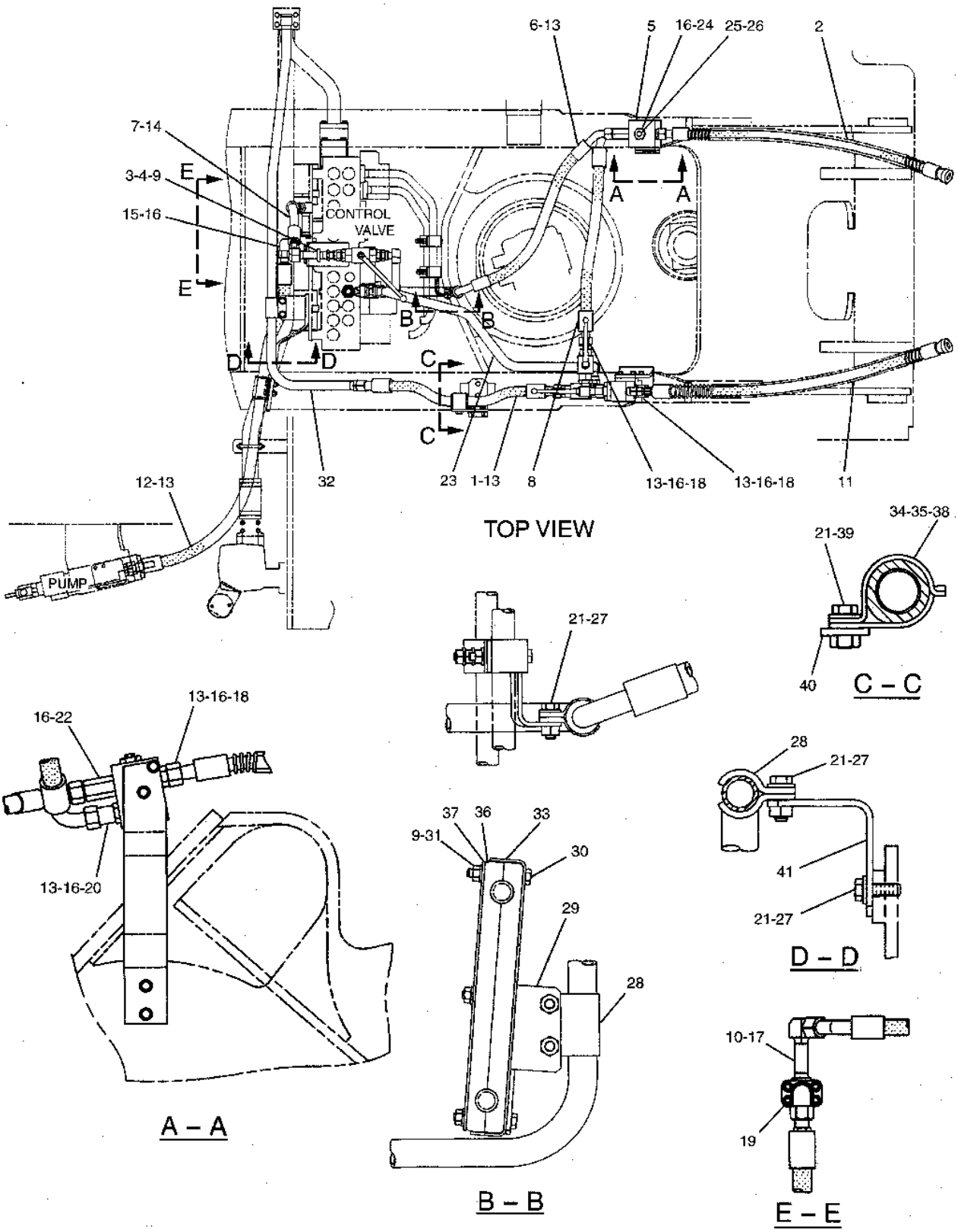


GRAPHIC #1

h79333e

# 1385072 LINES GP-FRONT-PART 2 OF 2

COMBINED FUNCTION
S/N 8SR (T00.11)-UP, 8TR (T00.11)-UP
PART OF 1211926-Page 301, 1096192-Page 301.01
1163600-Page 355, 4I0890-Page 382, 4I6301-Page 382.01, 1913149-Page 395
AN ATTACHMENT

**Key:** Y - SEE SEPARATE ILLUSTRATION

**SMCS**

| NOTE | REF NO | GRAPHIC REF | PART NUMBER | QTY | PART NAME 1 2 3 4 5 6 (PRODUCT LEVEL) | PRICE USD |
|---|---|---|---|---|---|---|
| | 1 | | 6V-8716 | 2 | CONNECTOR | |
| | 2 | | 121-6461 | 1 | SUPPORT AS | |
| | 3 | | 8T-4223 | 8 | WASHER | |
| | 4 | | 8T-4121 | 4 | WASHER | |
| | 5 | | 113-6814 | 1 | TUBE AS | |
| | 6 | | 138-5110 | 1 | SUPPORT | |
| | 7 | | 133-5701 | 1 | SUPPORT | |
| | 8 | | 8T-4183 | 4 | BOLT (L=40mm) | |
| | 9 | | 113-6813 | 1 | TUBE AS | |
| | 10 | | 9X-6032 | 16 | BOLT (L=30mm) | |
| | 11 | | 7Y-3731 | 3 | FLANGE | |
| | 12 | | 1P-3703 | 4 | SEAL | |
| | 13 | | 5K-9090 | 7 | SEAL-O-RING (OD=27.22mm) | |
| | 14 | | 4K-1388 | 1 | SEAL-O-RING (ID=26.59mm) | |
| Y | 15 | | 4I-0890 | 1 | VALVE GP | |
| | 16 | | 6V-9746 | 3 | SEAL-O-RING (OD=22.50mm) | |
| | 17 | | 7M-8485 | 7 | SEAL-O-RING (ID=29.74mm) | |
| | 18 | | 8T-4956 | 4 | BOLT (L=35mm) | |
| | 19 | | 6V-8635 | 3 | CONNECTOR | |
| Y | 20 | | 116-3600 | 2 | VALVE GP | |
| Y | 21 | | 191-3149 | 3 | VALVE AS | |
| | 22 | | 8T-4136 | 2 | BOLT (L=25mm) | |
| | 23 | | 4I-6141 | 2 | COUPLING AS | |
| | 24 | | 184-4012 | 1 | TUBE AS | |
| | 25 | | 6I-6793 | 1 | BLOCK | |
| | 26 | | 8T-6408 | 4 | BOLT (L=160mm) | |
| | 27 | | 6V-9854 | 1 | ELBOW | |
| Y | 28 | | 4I-6301 | 1 | VALVE GP | |
| | 29 | | 5I-3183 | 1 | ELBOW | |
| | 30 | | 4J-0520 | 1 | SEAL-O-RING (ID=32.92mm) | |

## 1385072 LINES GP-FRONT-PART 2 OF 2

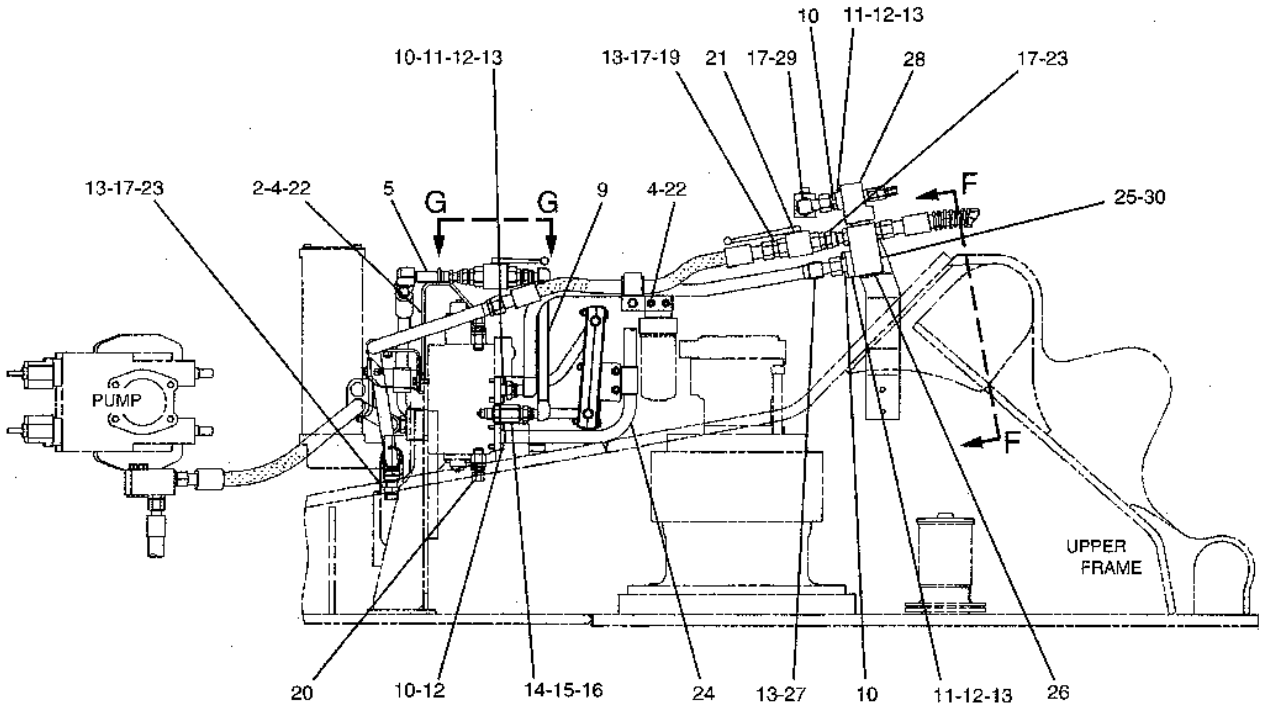


SIDE VIEW

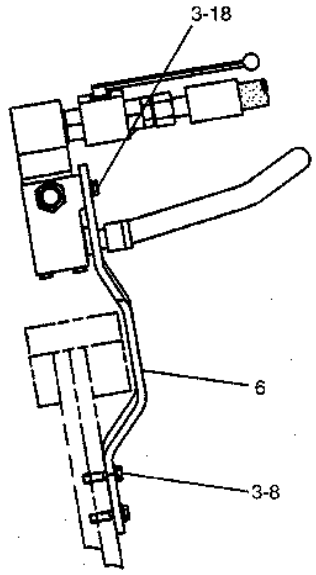


F – F

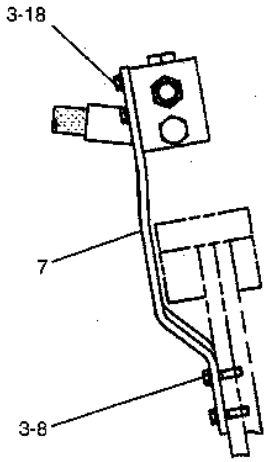


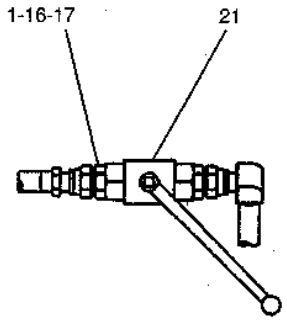


G – G

GRAPHIC #1

h79335e

# 1287491 LINES GP-FRONT

2 PUMPS FLOW
PART OF 1232571-Page 298
4I0890-Page 382
AN ATTACHMENT

**Key:** E - ORDER BY THE CENTIMETER, Y - SEE SEPARATE ILLUSTRATION

**SMCS**

| NOTE | REF NO | GRAPHIC REF | PART NUMBER | QTY | PART NAME 1 2 3 4 5 6 (PRODUCT LEVEL) | PRICE USD |
|---|---|---|---|---|---|---|
| | 1 | | 129-5865 | 1 | TUBE AS | |
| | 2 | | 121-6356 | 1 | HOSE AS | |
| E | | | 5P-0200 | | HOSE (33cm) | |
| | | | 5P-1027 | 2 | SLEEVE | |
| | | | 7X-1451 | 1 | STEM AS (STRAIGHT) | |
| | | | 7X-1467 | 1 | STEM AS (45°) | |
| | 3 | | 131-9613 | 1 | HOSE AS | |
| E | | | 5P-0201 | | HOSE (134cm) | |
| | | | 5P-1010 | 2 | SLEEVE | |
| | | | 7X-1452 | 2 | STEM AS (STRAIGHT) | |
| | 4 | | 121-6270 | 1 | TUBE AS | |
| | 5 | | 1P-3704 | 1 | SEAL | |
| | 6 | | 5K-9090 | 1 | SEAL-O-RING (OD=27.22mm) | |
| | 7 | | 8T-4136 | 2 | BOLT (L=25mm) | |
| | 8 | | 122-8705 | 1 | U-BOLT | |
| | 9 | | 096-4883 | 2 | NUT | |
| | 10 | | 8T-4121 | 4 | WASHER | |
| | 11 | | 121-6461 | 1 | SUPPORT AS | |
| Y | 12 | | 4I-0890 | 1 | VALVE GP | |
| | 13 | | 6V-9746 | 3 | SEAL-O-RING (OD=22.50mm) | |
| | 14 | | 4K-1388 | 1 | SEAL-O-RING (ID=26.59mm) | |
| | 15 | | 6V-9008 | 1 | ELBOW | |
| | 16 | | 7M-8485 | 1 | SEAL-O-RING (ID=29.74mm) | |
| | 17 | | 095-0673 | 4 | BOLT (L=60mm) | |

## 1287491 LINES GP-FRONT

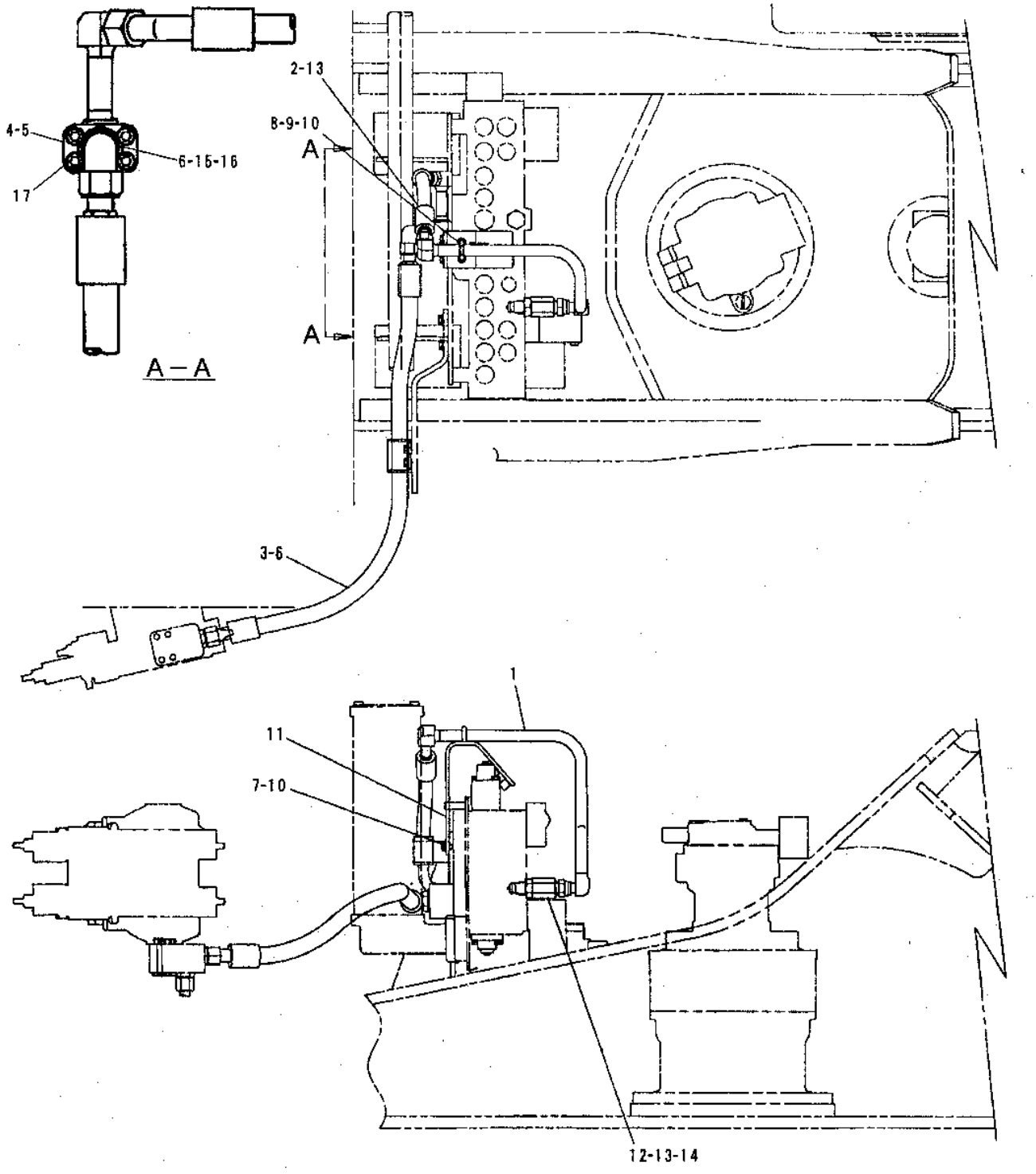


GRAPHIC #1

h51764e

# 1136840 LINES GP-RETURN & FILTER-PART 1 OF 2

S/N 8SR 1-00176, 8TR 1-00181
1425516-Page 381.02

**Key:** Y - SEPARATE ILLUSTRATION

**SMCS**

| NOTE | REF NO | GRAPHIC REF | PART NUMBER | QTY | PART NAME 1 2 3 4 5 6 (PRODUCT LEVEL) | PRICE USD |
|---|---|---|---|---|---|---|
| | 1 | | 115-8662 | 1 | PIPE AS | |
| | 2 | | 123-2700 | 1 | HOSE | |
| | 3 | | 5P-4868 | 2 | CLAMP | |
| | 4 | | 115-8665 | 1 | PIPE AS | |
| | 5 | | 129-5860 | 1 | PIPE AS | |
| | 6 | | 129-5859 | 1 | PIPE AS | |
| | 7 | | 113-6568 | 1 | HOSE AS | |
| | 8 | | 6V-9854 | 1 | ELBOW | |
| | 9 | | 8T-4121 | 6 | WASHER-HARD | |
| | 10 | | 6V-8635 | 1 | CONNECTOR | |
| | 11 | | 4J-0524 | 3 | SEAL-O-RING (ID=47.22mm) | |
| | 12 | | 4J-0526 | 1 | SEAL-O-RING (ID=53.57mm) | |
| | 13 | | 4J-0527 | 1 | SEAL-O-RING (ID=56.74mm) | |
| | 14 | | 5K-9090 | 2 | SEAL-O-RING (ID=23.66mm) | |
| | 15 | | 7M-8485 | 1 | SEAL-O-RING (ID=29.74mm) | |
| | 16 | | 094-6526 | 1 | VALVE AS | |
| Y | 17 | | 113-6721 | 1 | VALVE GP | |
| | 18 | | 7Y-5247 | 1 | U-BOLT | |
| | 19 | | 8T-4223 | 10 | WASHER-HARD | |
| | 20 | | 8T-4956 | 8 | BOLT (L=35mm) | |
| | 21 | | 8T-4139 | 2 | BOLT (L=30mm) | |
| | 22 | | 8T-4172 | 8 | BOLT (L=80mm) | |
| | 23 | | 096-4883 | 2 | NUT | |

## 1136840 LINES GP-RETURN & FILTER-PART 1 OF 2

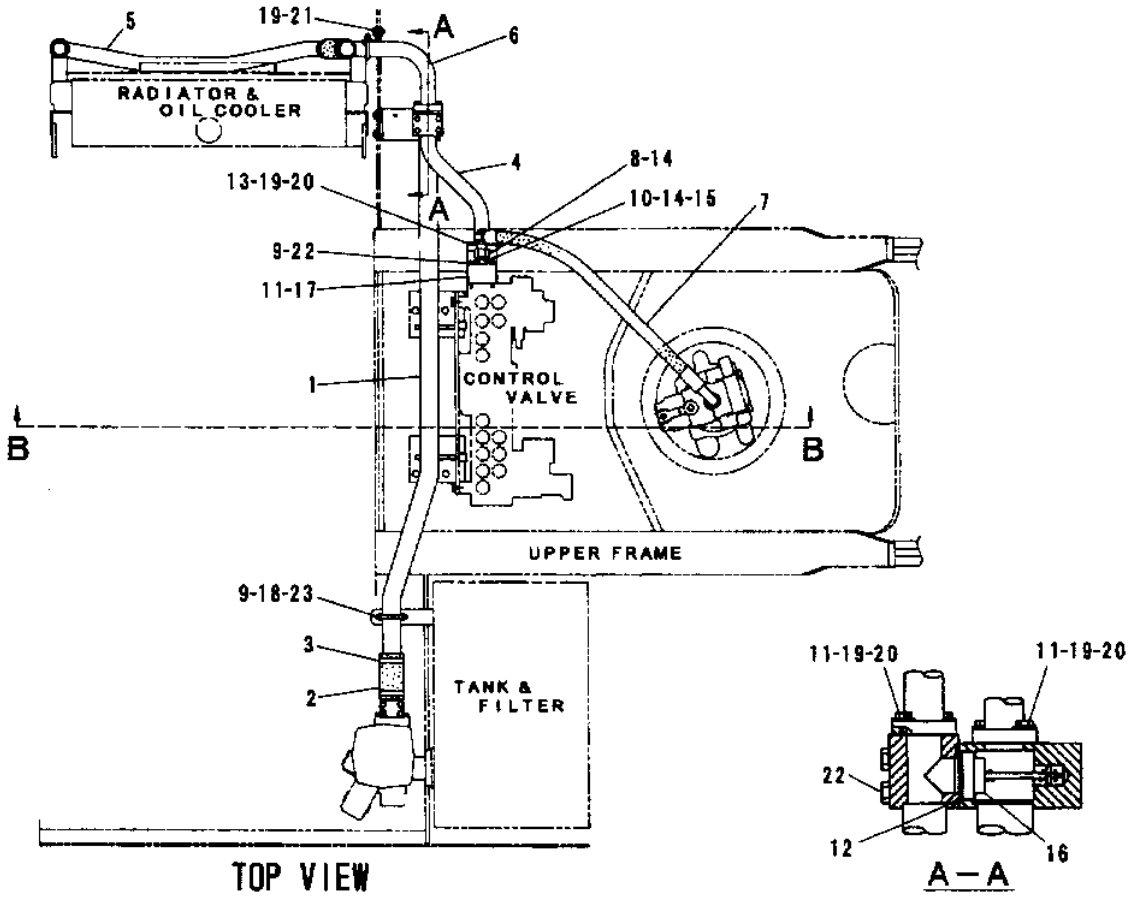


| NOTE | No. | PART No. | QTY | PART NAME |
|---|---|---|---|---|
| | 1 | 115-8662 | 1 | PIPE AS |
| | 2 | 123-2700 | 1 | HOSE |
| | 3 | 5P-4868 | 2 | CLAMP |
| | 4 | 115-8665 | 1 | PIPE AS |
| | 5 | 129-5860 | 1 | PIPE AS |
| | 6 | 129-5859 | 1 | PIPE AS |
| | 7 | 113-6568 | 1 | HOSE AS |
| | 8 | 6V-9854 | 1 | ELBOW |
| | 9 | 8T-4121 | 6 | WASHER-HARD |
| | 10 | 6V-8635 | 1 | CONNECTOR |
| | 11 | 4J-0524 | 3 | SEAL-O-RING (ID=47.22mm) |
| | 12 | 4J-0526 | 1 | SEAL-O-RING (ID=53.57mm) |
| | 13 | 4J-0527 | 1 | SEAL-O-RING (ID=56.74mm) |
| | 14 | 5K-9090 | 2 | SEAL-O-RING (ID=23.66mm) |
| | 15 | 7M-8485 | 1 | SEAL-O-RING (ID=29.74mm) |
| | 16 | 094-6526 | 1 | VALVE AS |
| Y | 17 | 113-6721 | 1 | VALVE GP |
| | 18 | 7Y-5247 | 1 | U-BOLT |
| | 19 | 8T-4223 | 10 | WASHER-HARD |
| | 20 | 8T-4956 | 8 | BOLT (L=35mm) |
| | 21 | 8T-4139 | 2 | BOLT (L=30mm) |
| | 22 | 8T-4172 | 8 | BOLT (L=80mm) |
| | 23 | 096-4883 | 2 | NUT |

Y-SEE SEPARATE ILLUSTRATION

H51603E

# 1136840 LINES GP-RETURN & FILTER-PART 2 OF 2

S/N 8SR 1-00176, 8TR 1-00181

**Key:**

**SMCS**

| NOTE | REF NO | GRAPHIC REF | PART NUMBER | QTY | PART NAME 1 2 3 4 5 6 (PRODUCT LEVEL) | PRICE USD |
|---|---|---|---|---|---|---|
| | 1 | | 115-8782 | 2 | HOSE | |
| | 2 | | 5P-0597 | 4 | CLAMP | |
| | 3 | | 8T-4121 | 4 | WASHER-HARD | |
| | 4 | | 6V-8635 | 1 | CONNECTOR | |
| | 5 | | 5K-9090 | 1 | SEAL-O-RING (ID=23.66mm) | |
| | 6 | | 7M-8485 | 1 | SEAL-O-RING (ID=29.74mm) | |
| | 7 | | 115-8679 | 1 | SUPPORT | |
| | 8 | | 115-8777 | 1 | SUPPORT | |
| | 9 | | 7Y-5238 | 2 | U-BOLT | |
| | 10 | | 8T-4223 | 4 | WASHER-HARD | |
| | 11 | | 8T-4956 | 2 | BOLT (L=35mm) | |
| | 12 | | 8T-4139 | 2 | BOLT (L=30mm) | |
| | 13 | | 096-4883 | 4 | NUT | |

## 1136840 LINES GP-RETURN & FILTER-PART 2 OF 2

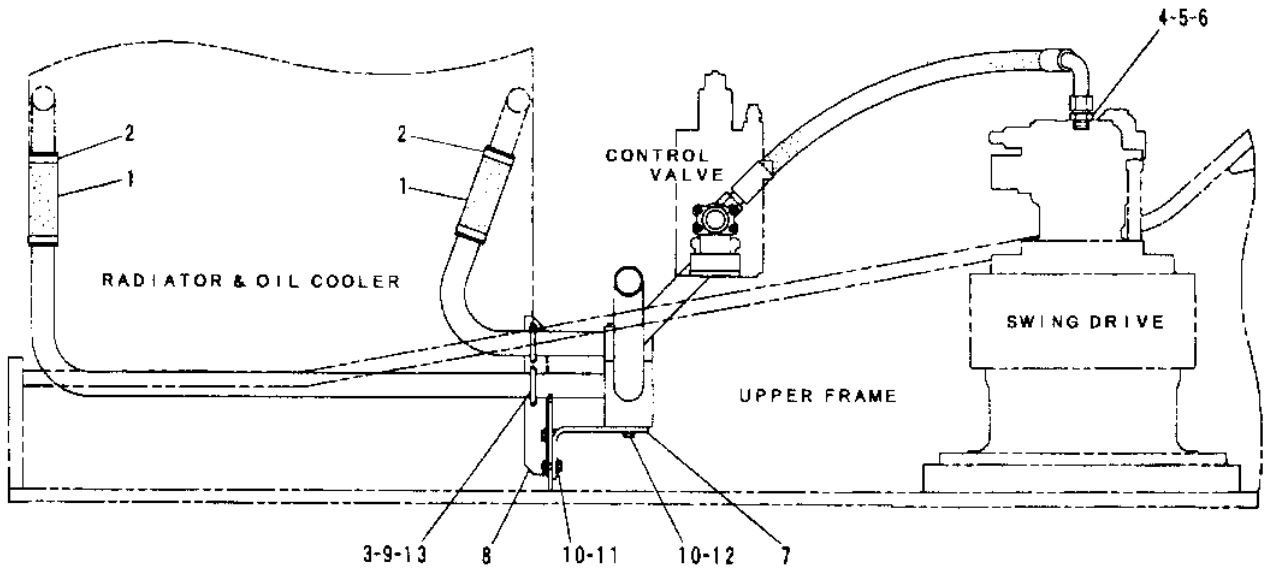


B－B

| NOTE | No. | PART No. | QTY | PART NAME | NOTE | No. | PART No. | QTY | PART NAME |
|---|---|---|---|---|---|---|---|---|---|
| | 1 | 115-8782 | 2 | HOSE | | | | | |
| | 2 | 5P-0597 | 4 | CLAMP | | | | | |
| | 3 | 8T-4121 | 4 | WASHER-HARD | | | | | |
| | 4 | 6V-8635 | 1 | CONNECTOR | | | | | |
| | 5 | 5K-9090 | 1 | SEAL-O-RING (ID=23.66mm) | | | | | |
| | 6 | 7M-8485 | 1 | SEAL-O-RING (ID=29.74mm) | | | | | |
| | 7 | 115-8679 | 1 | SUPPORT | | | | | |
| | 8 | 115 8777 | 1 | SUPPORT | | | | | |
| | 9 | 7Y-5238 | 2 | U-BOLT | | | | | |
| | 10 | 8T-4223 | 4 | WASHER-HARD | | | | | |
| | 11 | 8T-4956 | 2 | BOLT (L=35mm) | | | | | |
| | 12 | 8T-4139 | 2 | BOLT (L=30mm) | | | | | |
| | 13 | 096-4883 | 4 | NUT | | | | | |

H51604E

# 1136840 LINES GP-RETURN & FILTER-PART 1 OF 2

S/N 8SR 00177-00567, 8TR 00182-00757
1425516-Page 382.02

**Key:** Y - SEE SEPARATE ILLUSTRATION

**SMCS**

| NOTE | REF NO | GRAPHIC REF | PART NUMBER | QTY | PART NAME 1 2 3 4 5 6 (PRODUCT LEVEL) | PRICE USD |
|---|---|---|---|---|---|---|
| | 1 | | 115-8662 | 1 | PIPE AS | |
| | 2 | | 123-2700 | 1 | HOSE | |
| | 3 | | 5P-4868 | 2 | CLAMP | |
| | 4 | | 131-2570 | 1 | PIPE AS | |
| | 5 | | 129-5860 | 1 | PIPE AS | |
| | 6 | | 129-5859 | 1 | PIPE AS | |
| | 7 | | 7I-7595 | 1 | HOSE AS | |
| | 8 | | 6V-9854 | 1 | ELBOW | |
| | 9 | | 8T-4121 | 8 | WASHER-HARD | |
| | 10 | | 6V-8635 | 1 | CONNECTOR | |
| | 11 | | 4J-0524 | 3 | SEAL-O-RING (ID=47.22mm) | |
| | 12 | | 4J-0526 | 1 | SEAL-O-RING (ID=53.57mm) | |
| | 13 | | 4J-0527 | 1 | SEAL-O-RING (ID=56.74mm) | |
| | 14 | | 5K-9090 | 2 | SEAL-O-RING (ID=23.66mm) | |
| | 15 | | 7M-8485 | 2 | SEAL-O-RING (ID=29.74mm) | |
| | 16 | | 094-6526 | 1 | VALVE AS | |
| Y | 17 | | 142-5516 | 1 | VALVE GP | |
| | 18 | | 7Y-5247 | 1 | U-BOLT | |
| | 19 | | 8T-4223 | 12 | WASHER-HARD | |
| | 20 | | 8T-4956 | 8 | BOLT (L=35mm) | |
| | 21 | | 8T-4139 | 2 | BOLT (L=30mm) | |
| | 22 | | 8T-4172 | 4 | BOLT (L=80mm) | |
| | 23 | | 096-4883 | 4 | NUT | |
| | 24 | | 8T-4178 | 4 | BOLT (L=90mm) | |
| | 25 | | 9S-4181 | 1 | PLUG | |
| | 26 | | 7Y-5238 | 1 | U-BOLT | |
| | 27 | | 142-5481 | 1 | STRIP | |
| | 28 | | 8T-4192 | 2 | BOLT (L=25mm) | |

## 1136840 LINES GP-RETURN & FILTER-PART 1 OF 2

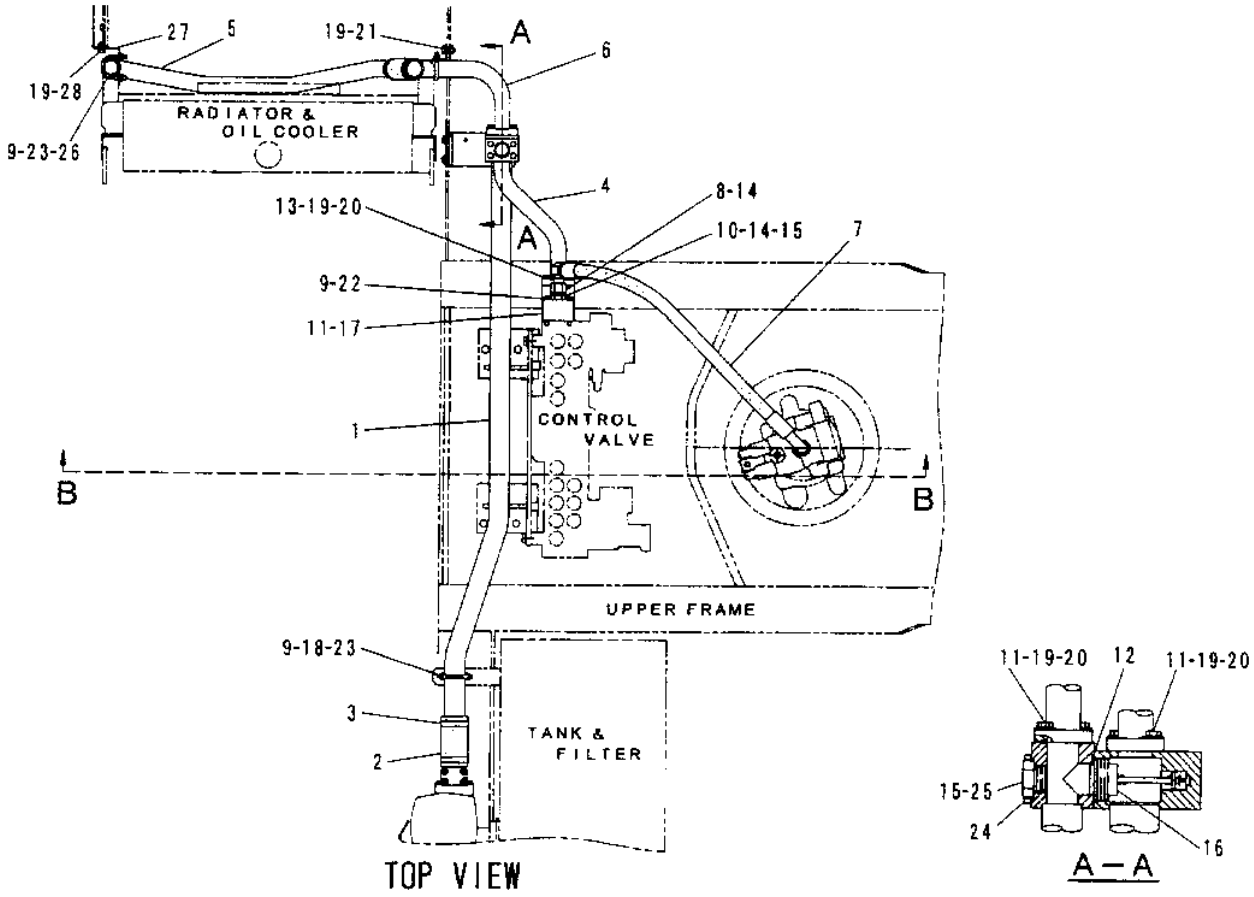


| NOTE | No. | PART No. | QTY | PART NAME |
|---|---|---|---|---|
| | 1 | 115-8662 | 1 | PIPE AS |
| | 2 | 123-2700 | 1 | HOSE |
| | 3 | 5P-4868 | 2 | CLAMP |
| | 4 | 131-2570 | 1 | PIPE AS |
| | 5 | 129-5860 | 1 | PIPE AS |
| | 6 | 129-5859 | 1 | PIPE AS |
| | 7 | 7I-7595 | 1 | HOSE AS |
| | 8 | 6V-9854 | 1 | ELBOW |
| | 9 | 8T-4121 | 8 | WASHER-HARD |
| | 10 | 6V-8635 | 1 | CONNECTOR |
| | 11 | 4J-0524 | 3 | SEAL-O-RING (ID=47.22mm) |
| | 12 | 4J-0526 | 1 | SEAL-O-RING (ID=53.57mm) |
| | 13 | 4J-0527 | 1 | SEAL-O-RING (ID=56.74mm) |
| | 14 | 5K-9090 | 2 | SEAL-O-RING (ID=23.66mm) |
| | 15 | 7M-8485 | 2 | SEAL-O-RING (ID=29.74mm) |
| | 16 | 094-6526 | 1 | VALVE AS |
| Y | 17 | 142-5516 | 1 | VALVE GP |
| | 18 | 7Y-5247 | 1 | U-BOLT |
| | 19 | 8T-4223 | 12 | WASHER-HARD |
| | 20 | 8T-4956 | 8 | BOLT (L=35mm) |
| | 21 | 8T-4139 | 2 | BOLT (L=30mm) |
| | 22 | 8T-4172 | 4 | BOLT (L=80mm) |
| | 23 | 096-4883 | 4 | NUT |
| | 24 | 8T-4178 | 4 | BOLT (L=90mm) |
| | 25 | 9S-4181 | 1 | PLUG |
| | 26 | 7Y-5238 | 1 | U-BOLT |
| | 27 | 142-5481 | 1 | STRIP |
| | 28 | 8T-4192 | 2 | BOLT (L=25mm) |

Y-SEE SEPARATE ILLUSTRATION

H64071E

# 1136840 LINES GP-RETURN & FILTER-PART 2 OF 2

S/N 8SR 00177-00567, 8TR 00182-00757

**Key:**

**SMCS**

| NOTE | REF NO | GRAPHIC REF | PART NUMBER | QTY | PART NAME 1 2 3 4 5 6 (PRODUCT LEVEL) | PRICE USD |
|---|---|---|---|---|---|---|
| | 1 | | 115-8782 | 2 | HOSE | |
| | 2 | | 5P-0597 | 4 | CLAMP | |
| | 3 | | 8T-4121 | 4 | WASHER-HARD | |
| | 4 | | 6V-8635 | 1 | CONNECTOR | |
| | 5 | | 5K-9090 | 1 | SEAL-O-RING (ID=23.66mm) | |
| | 6 | | 7M-8485 | 1 | SEAL-O-RING (ID=29.74mm) | |
| | 7 | | 115-8679 | 1 | SUPPORT | |
| | 8 | | 115-8777 | 1 | SUPPORT | |
| | 9 | | 7Y-5238 | 2 | U-BOLT | |
| | 10 | | 8T-4223 | 4 | WASHER-HARD | |
| | 11 | | 8T-4956 | 2 | BOLT (L=35mm) | |
| | 12 | | 8T-4139 | 2 | BOLT (L=30mm) | |
| | 13 | | 096-4883 | 4 | NUT | |

## 1136840 LINES GP-RETURN & FILTER-PART 2 OF 2

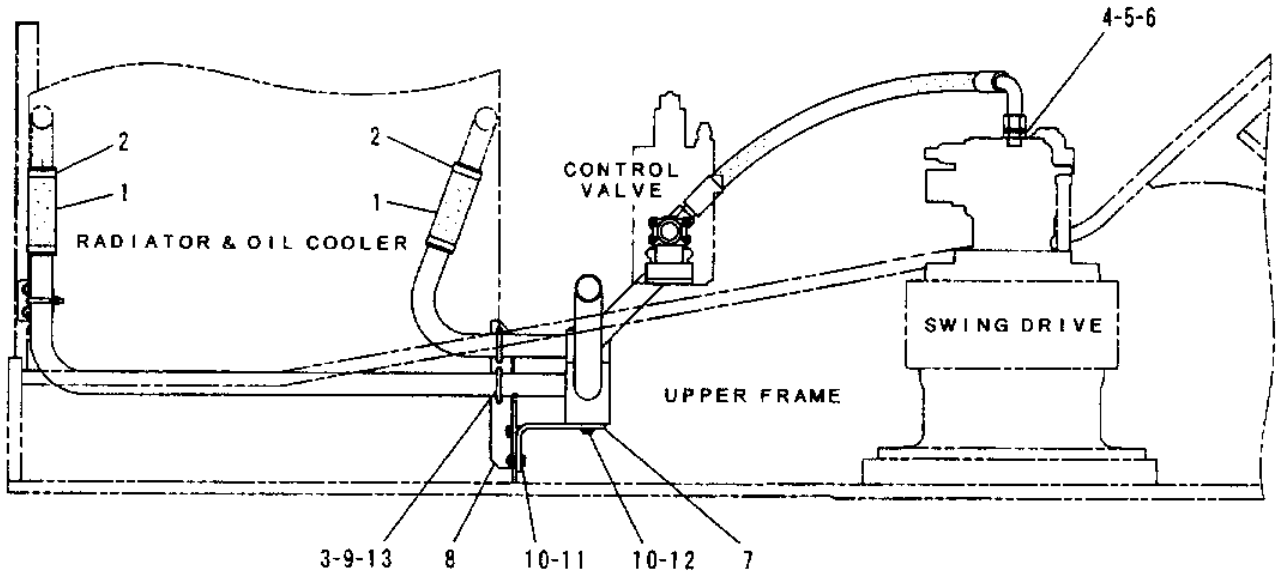


B—B

| NOTE | No. | PART No. | QTY | PART NAME |
|---|---|---|---|---|
| | 1 | 115-8782 | 2 | HOSE |
| | 2 | 5P-0597 | 4 | CLAMP |
| | 3 | 8T-4121 | 4 | WASHER-HARD |
| | 4 | 6V-8635 | 1 | CONNECTOR |
| | 5 | 5K-9090 | 1 | SEAL-O-RING (ID=23.66mm) |
| | 6 | 7M-8485 | 1 | SEAL-O-RING (ID=29.74mm) |
| | 7 | 115-8679 | 1 | SUPPORT |
| | 8 | 115-8777 | 1 | SUPPORT |
| | 9 | 7Y-5238 | 2 | U-BOLT |
| | 10 | 8T-4223 | 4 | WASHER-HARD |
| | 11 | 8T-4956 | 2 | BOLT (L=35mm) |
| | 12 | 8T-4139 | 2 | BOLT (L=30mm) |
| | 13 | 096-4883 | 4 | NUT |

H64072E

# 1136840 LINES GP-RETURN & FILTER-PART 1 OF 2

S/N 8SR 00568-UP, 8TR 00758-UP
1843831-Page 381.03

**Key:** Y - Separate Illustration

**SMCS**

| NOTE | REF NO | GRAPHIC REF | PART NUMBER | QTY | PART NAME 1 2 3 4 5 6 (PRODUCT LEVEL) | PRICE USD |
|---|---|---|---|---|---|---|
| | 1 | | 115-8662 | 1 | PIPE AS | |
| | 2 | | 123-2700 | 1 | HOSE | |
| | 3 | | 5P-4868 | 2 | CLAMP | |
| | 4 | | 131-2570 | 1 | PIPE AS | |
| | 5 | | 129-5860 | 1 | PIPE AS | |
| | 6 | | 129-5859 | 1 | PIPE AS | |
| | 7 | | 7I-7595 | 1 | HOSE AS | |
| | 8 | | 6V-9854 | 1 | ELBOW | |
| | 9 | | 8T-4121 | 8 | WASHER | |
| | 10 | | 6V-8635 | 1 | CONNECTOR | |
| | 11 | | 4J-0524 | 3 | SEAL-O-RING (ID=47.22mm) | |
| | 12 | | 4J-0526 | 1 | SEAL-O-RING (ID=53.57mm) | |
| | 13 | | 4J-0527 | 1 | SEAL-O-RING (ID=56.74mm) | |
| | 14 | | 5K-9090 | 2 | SEAL-O-RING (OD=27.22mm) | |
| | 15 | | 7M-8485 | 2 | SEAL-O-RING (ID=29.74mm) | |
| | 16 | | 094-6526 | 1 | VALVE AS | |
| Y | 17 | | 184-3831 | 1 | VALVE GP | |
| | 18 | | 7Y-5247 | 1 | U-BOLT | |
| | 19 | | 8T-4223 | 12 | WASHER | |
| | 20 | | 8T-4956 | 8 | BOLT (L=35mm) | |
| | 21 | | 8T-4139 | 2 | BOLT (L=30mm) | |
| | 22 | | 8T-4172 | 4 | BOLT (L=80mm) | |
| | 23 | | 096-4883 | 4 | NUT | |
| | 24 | | 8T-4178 | 4 | BOLT (L=90mm) | |
| | 25 | | 9S-4181 | 1 | PLUG | |
| | 26 | | 7Y-5238 | 1 | U-BOLT | |
| | 27 | | 142-5481 | 1 | STRIP | |
| | 28 | | 8T-4192 | 2 | BOLT (L=25mm) | |

## 1136840 LINES GP-RETURN & FILTER-PART 1 OF 2

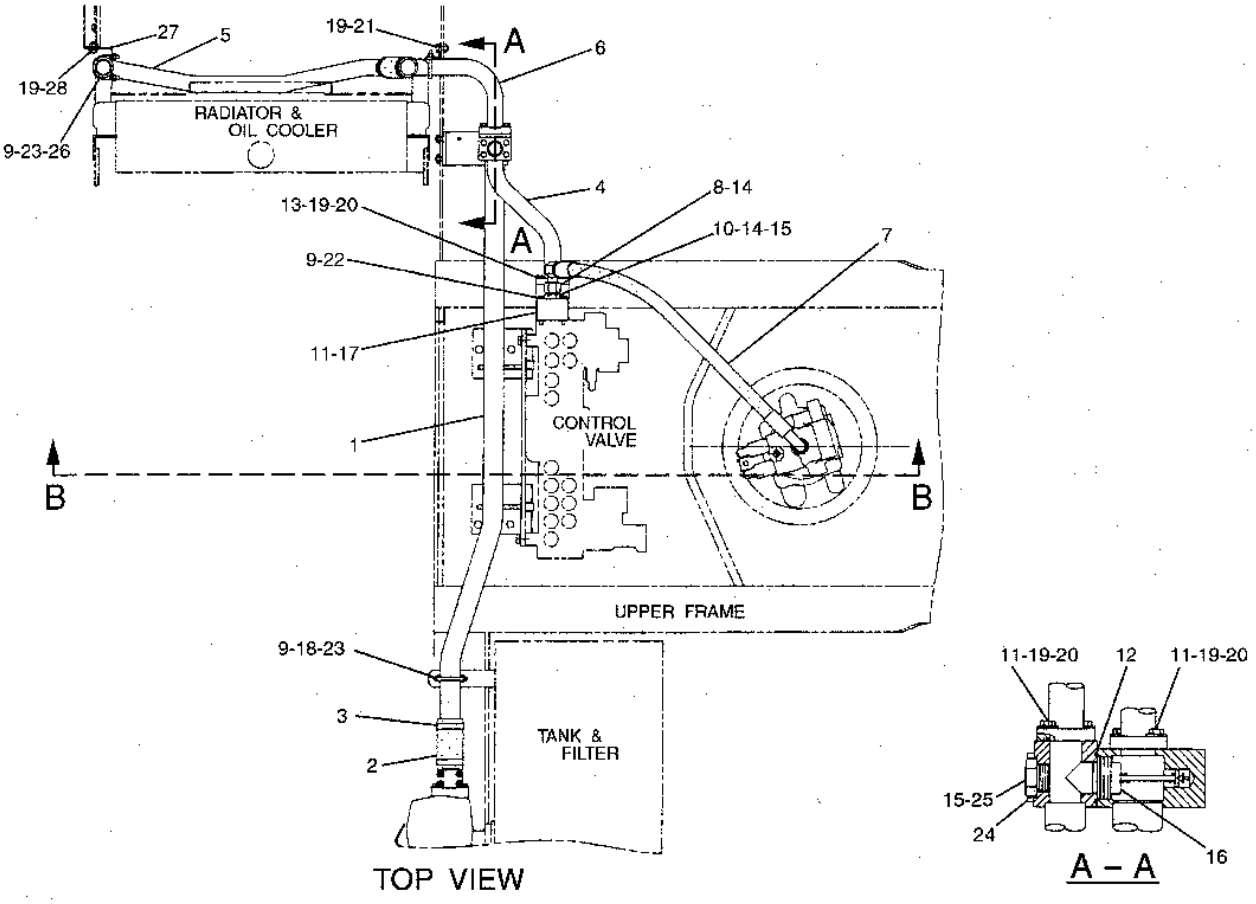


GRAPHIC #1

h79336e

# 1136840 LINES GP-RETURN & FILTER-PART 2 OF 2

S/N 8SR 00568-UP, 8TR 00758-UP

**Key:**

**SMCS**

| NOTE | REF NO | GRAPHIC REF | PART NUMBER | QTY | PART NAME 1 2 3 4 5 6 (PRODUCT LEVEL) | PRICE USD |
|---|---|---|---|---|---|---|
| | 1 | | 115-8782 | 2 | HOSE | |
| | 2 | | 5P-0597 | 4 | CLAMP | |
| | 3 | | 8T-4121 | 4 | WASHER | |
| | 4 | | 6V-8635 | 1 | CONNECTOR | |
| | 5 | | 5K-9090 | 1 | SEAL-O-RING (OD=27.22mm) | |
| | 6 | | 7M-8485 | 1 | SEAL-O-RING (ID=29.74mm) | |
| | 7 | | 115-8679 | 1 | SUPPORT | |
| | 8 | | 115-8777 | 1 | SUPPORT | |
| | 9 | | 7Y-5238 | 2 | U-BOLT | |
| | 10 | | 8T-4223 | 4 | WASHER | |
| | 11 | | 8T-4956 | 2 | BOLT (L=35mm) | |
| | 12 | | 8T-4139 | 2 | BOLT (L=30mm) | |
| | 13 | | 096-4883 | 4 | NUT | |

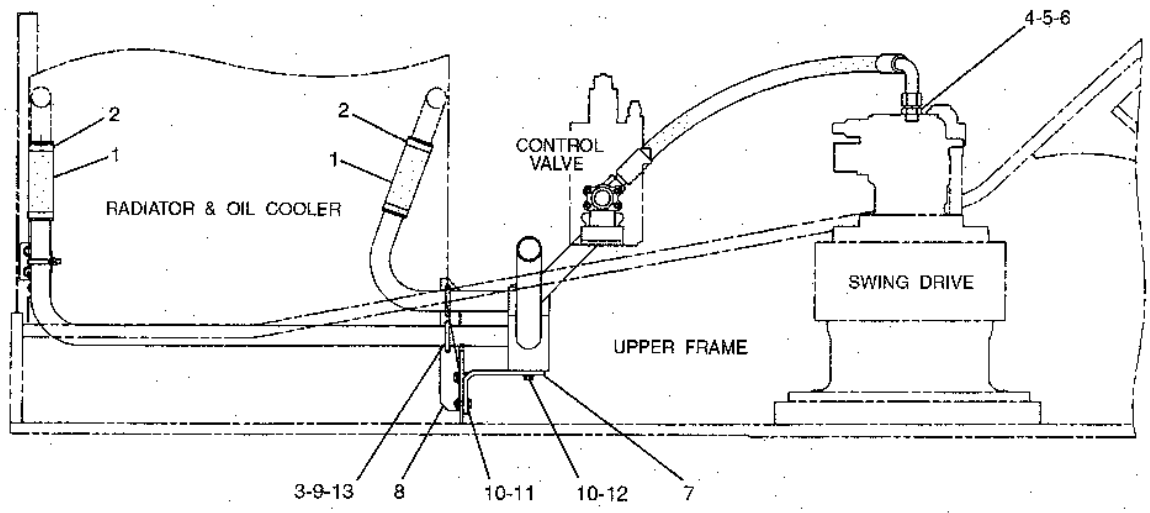


B – B

GRAPHIC #1

h79337e

# 1136866 LINES GP-RETURN & FILTER

BOOM LOWERING CONTROL
PART OF 1153096-Page 301.02
4I5525-Page 367, 1232433-Page 367.01,
AN ATTACHMENT

**Key:** Y - SEE SEPARATE ILLUSTRATION

**SMCS**

| NOTE | REF NO | GRAPHIC REF | PART NUMBER | QTY | PART NAME 1 2 3 4 5 6 (PRODUCT LEVEL) | PRICE USD |
|---|---|---|---|---|---|---|
| | 1 | | 124-1252 | 1 | TUBE AS | |
| | 2 | | 124-0943 | 1 | TUBE AS | |
| | 3 | | 4I-5760 | 2 | HOSE AS | |
| | 4 | | 124-0941 | 1 | PIPE AS | |
| | 5 | | 131-9666 | 1 | HOSE AS | |
| | 6 | | 8T-4196 | 8 | BOLT (L=35mm) | |
| | 7 | | 8T-4121 | 8 | WASHER | |
| | 8 | | 1P-4577 | 4 | FLANGE | |
| | 9 | | 4J-0520 | 2 | SEAL-O-RING (ID=32.92mm) | |
| | 10 | | 7Y-4171 | 1 | PLATE | |
| | 11 | | 7M-8485 | 1 | SEAL-O-RING (ID=29.74mm) | |
| | 12 | | 5K-9090 | 3 | SEAL-O-RING (OD=27.22mm) | |
| | 13 | | 113-6776 | 1 | HOSE AS | |
| | 14 | | 8Y-4956 | 4 | BOLT (L=35mm) | |
| Y | 15 | | 4I-5525 | 1 | VALVE GP | |
| | 16 | | 7Y-3732 | 4 | CLIP | |
| | 17 | | 8T-4223 | 4 | WASHER | |
| | 18 | | 8T-4139 | 8 | BOLT (L=30mm) | |
| | 19 | | 1P-3703 | 3 | SEAL | |
| | 20 | | 9X-6032 | 4 | BOLT (L=30mm) | |
| | 21 | | 4J-5267 | 1 | SEAL-O-RING (ID=24.99mm) | |
| | 22 | | 6V-8785 | 1 | TEE | |
| | 23 | | 6V-8637 | 2 | CONNECTOR | |
| | 24 | | 3D-2824 | 2 | SEAL-O-RING (ID=23.47mm) | |
| | 25 | | 6V-9746 | 2 | SEAL-O-RING (OD=22.50mm) | |
| Y | 26 | | 123-2433 | 1 | VALVE GP | |
| | 27 | | 6V-5556 | 2 | SEAL-O-RING (ID=25.07mm) | |
| | 28 | | 7Y-2522 | 1 | PLATE | |

## 1136866 LINES GP-RETURN & FILTER

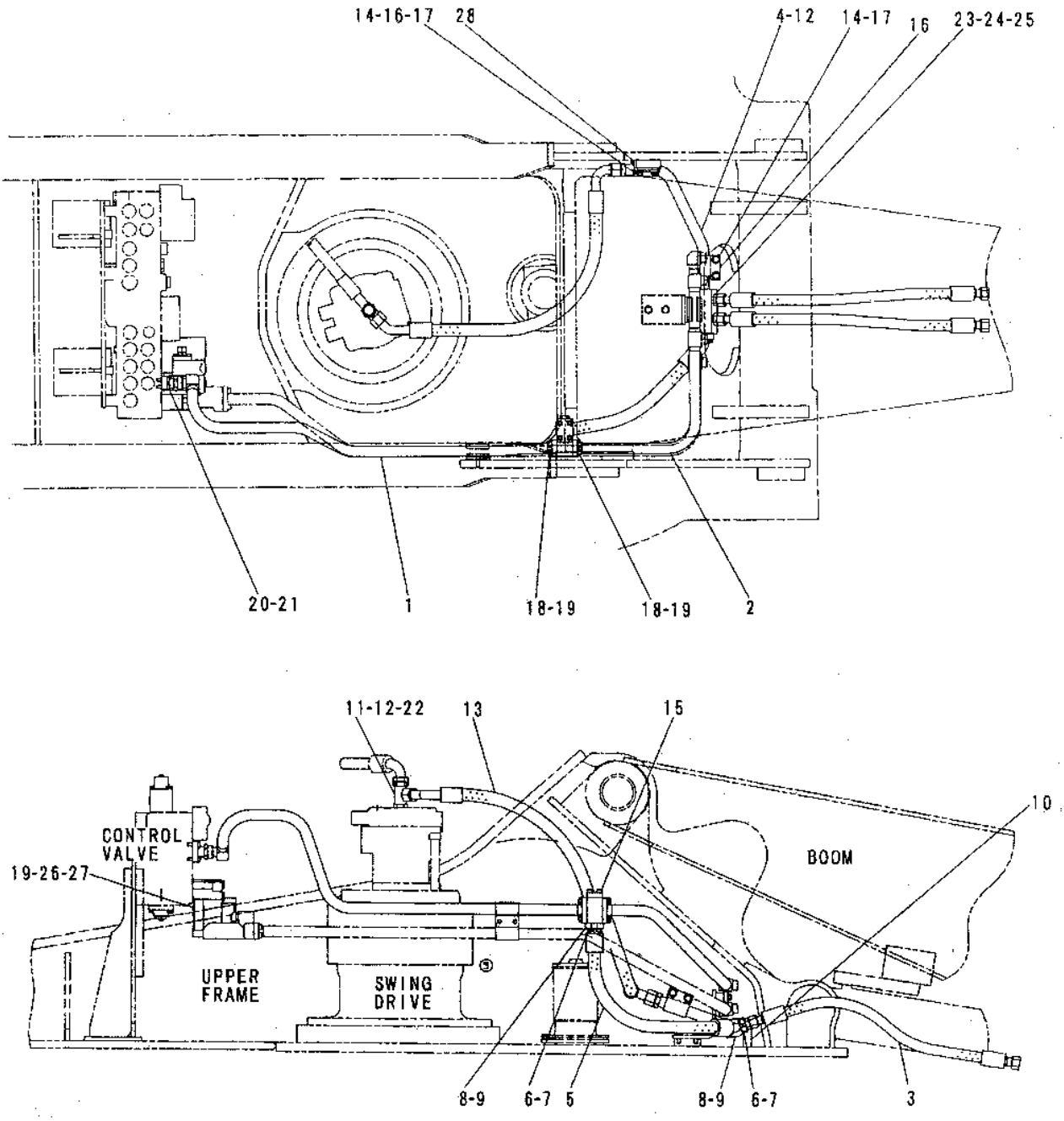


GRAPHIC #1

h64074e

# 1335832 LINES GP-SWING MOTOR

1077056-Page 373

**Key:** Y - Separate Illustration

**SMCS**

| NOTE | REF NO | GRAPHIC REF | PART NUMBER | QTY | PART NAME 1 2 3 4 5 6 (PRODUCT LEVEL) | PRICE USD |
|---|---|---|---|---|---|---|
| | 1 | | 8T-9403 | 4 | FLANGE | |
| | 2 | | 8T-4182 | 8 | BOLT (L=45mm) | |
| | 3 | | 8T-4121 | 8 | WASHER | |
| | 4 | | 1P-3702 | 2 | SEAL (ID=32.23mm) | |
| | 5 | | 3D-2824 | 2 | SEAL (ID=23.47mm) | |
| | 6 | | 6V-8637 | 2 | CONNECTOR | |
| | 7 | | 6V-9746 | 2 | SEAL (ID=18.94mm) | |
| | 8 | | 087-5732 | 1 | HOSE AS | |
| | 9 | | 087-4941 | 1 | HOSE AS | |
| Y | 10 | | 107-7056 | 1 | VALVE GP | |
| | 11 | | 8T-4178 | 6 | BOLT (L=90mm) | |

## 1335832 LINES GP-SWING MOTOR

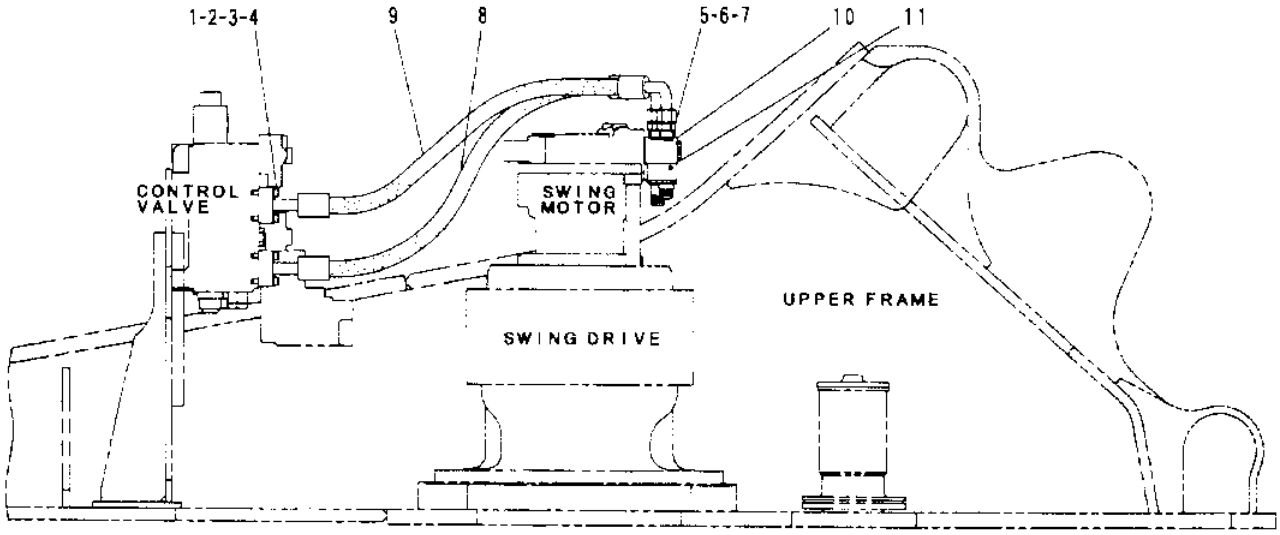


| NOTE | No. | PART No. | QTY | PART NAME | NOTE | No. | PART No. | QTY | PART NAME |
|---|---|---|---|---|---|---|---|---|---|
| | 1 | 8T-9403 | 4 | FLANGE | | | | | |
| | 2 | 8T-4182 | 8 | BOLT (L=45mm) | | | | | |
| | 3 | 8T 4121 | 8 | WASHER | | | | | |
| | 4 | 1P-3702 | 2 | SEAL (ID=32.23mm) | | | | | |
| | 5 | 3D-2824 | 2 | SEAL (ID=23.47mm) | | | | | |
| | 6 | 6V-8637 | 2 | CONNECTOR | | | | | |
| | 7 | 6V-9746 | 2 | SEAL (ID=18.94mm) | | | | | |
| | 8 | 087-5732 | 1 | HOSE AS | | | | | |
| | 9 | 087-4941 | 1 | HOSE AS | | | | | |
| Y | 10 | 107-7056 | 1 | VALVE GP | | | | | |
| | 11 | 8T-4178 | 6 | BOLT (L=90mm) | | | | | |

Y-SEE SEPARATE ILLUSTRATION

H51657E

GRAPHIC #1

h51657e

# 1141306 DRIVE GP-SWING

1141305-Page329.01, 1140661-Page 330

**Key:** Y - SEPARATE ILLUSTRATION

**SMCS**

| NOTE | REF NO | GRAPHIC REF | PART NUMBER | QTY | PART NAME 1 2 3 4 5 6 (PRODUCT LEVEL) | PRICE USD |
|---|---|---|---|---|---|---|
| Y | 1 | | 114-0661 | 1 | MOTOR GP | |
| Y | 2 | | 114-1305 | 1 | DRIVE GP | |

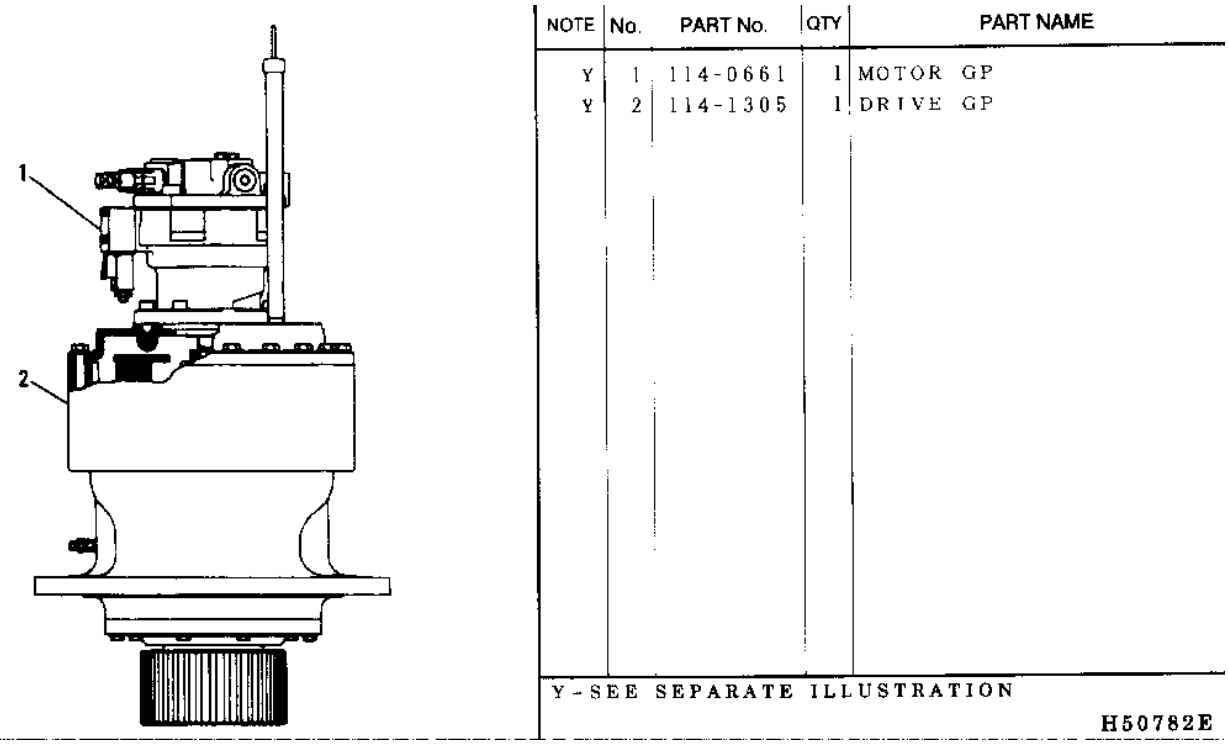


GRAPHIC #1 h50782e

# 1141305 DRIVE GP-SWING

1141306-Page329

**Key:** B - USE AS REQUIRED

**SMCS**

| NOTE | REF NO | GRAPHIC REF | PART NUMBER | QTY | PART NAME 1 2 3 4 5 6 (PRODUCT LEVEL) | PRICE USD |
|---|---|---|---|---|---|---|
| | 1 | | 114-1287 | 3 | GEAR (Z=28) | |
| | 2 | | 094-1528 | 6 | WASHER | |
| | 3 | | 7Y-0916 | 3 | SHAFT | |
| | 4 | | 114-1284 | 1 | COVER | |
| | 5 | | 114-1290 | 1 | CARRIER | |
| | 6 | | 7I-7623 | 1 | SPACER | |
| | 7 | | 114-1285 | 1 | GEAR (Z=17) | |
| | 8 | | 094-0574 | 1 | RING | |
| | 9 | | 114-1322 | 2 | RING | |
| | 10 | | 114-1286 | 1 | GEAR (Z=23) | |
| | 11 | | 114-1398 | 1 | GAUGE | |
| | 12 | | 114-1399 | 1 | PIPE | |
| | 13 | | 114-1291 | 1 | CARRIER | |
| B | 14 | | 1U-8846 | | GASKET MAKER (13ml) | |
| | 15 | | 4I-7527 | 1 | BREATHER AS | |
| | | | 093-5150 | 1 | COUPLING | |
| | | | 114-8234 | 1 | BREATHER | |
| | | | 159-7665 | 1 | NIPPLE | |
| | 16 | | 114-1289 | 1 | GEAR (Z=76) | |
| | 17 | | 7I-7684 | 1 | SPACER | |
| | 18 | | 110-7149 | 1 | RING | |
| | 19 | | 9U-8693 | 1 | BEARING | |
| | 20 | | 7Y-0907 | 1 | SPACER | |
| | 21 | | 7Y-1100 | 1 | BEARING | |
| | 22 | | 8T-4184 | 10 | BOLT (L=45mm) | |
| | 23 | | 8T-4223 | 10 | WASHER | |
| | 24 | | 128-9170 | 2 | SEAL | |
| | 25 | | 114-1294 | 1 | SHAFT | |
| | 26 | | 114-1293 | 1 | CAGE | |
| | 27 | | 095-1694 | 1 | SEAL-O-RING (ID=279.30mm) | |
| | 28 | | 114-1292 | 1 | HOUSING | |
| | 29 | | 6V-7238 | 1 | VALVE | |
| | 30 | | 3K-0360 | 1 | SEAL-O-RING (ID=16.36mm) | |
| | 31 | | 099-5194 | 3 | PIN | |
| | 32 | | 7Y-1094 | 6 | WASHER | |
| | 33 | | 7Y-0912 | 6 | BEARING | |
| | 34 | | 110-7144 | 3 | SHAFT | |
| | 35 | | 114-1288 | 3 | GEAR (Z=25) | |
| | 36 | | 095-0891 | 3 | PIN | |
| | 37 | | 7Y-0339 | 3 | BEARING | |
| | 38 | | 7Y-5227 | 20 | BOLT (L=190mm) | |
| | 39 | | 9X-8257 | 20 | WASHER | |

## 1141305 DRIVE GP-SWING

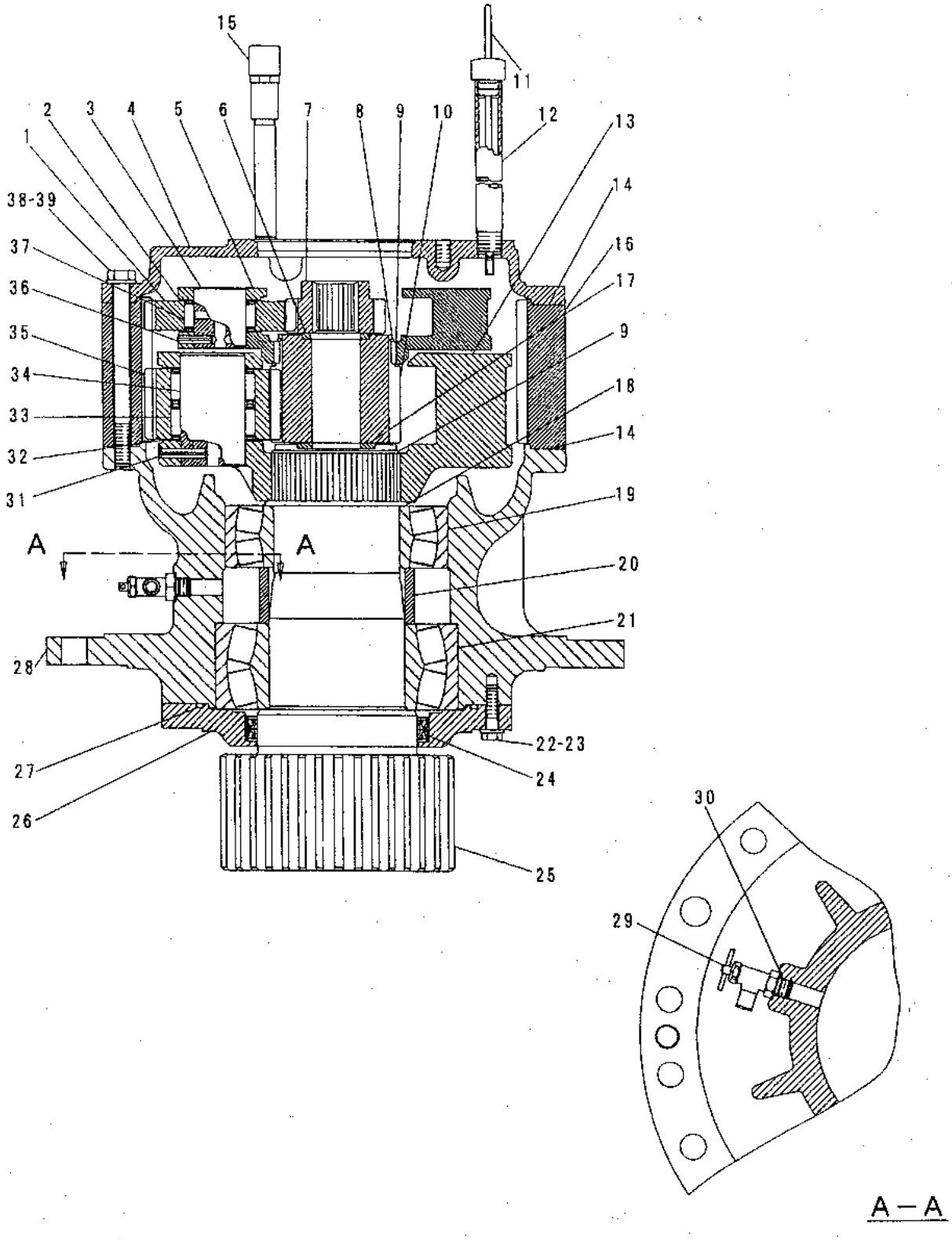


GRAPHIC #1

h79339e

# 1140661 MOTOR & MTG GP-SWING

S/N 8SR 1-(T00.11), 8TR 1-(T00.11)
PART OF 1141306-Page 329
1077054-Page 330.02

**Key:** Y - SEPARATE ILLUSTRATION

**SMCS**

| NOTE | REF NO | GRAPHIC REF | PART NUMBER | QTY | PART NAME 1 2 3 4 5 6 (PRODUCT LEVEL) | PRICE USD |
|---|---|---|---|---|---|---|
| Y | 1 | | 107-7054 | 1 | MOTOR GP | |
| | 2 | | 6V-5204 | 1 | RING-RETAINING | |
| | 3 | | 9X-8257 | 4 | WASHER | |
| | 4 | | 8T-4944 | 4 | BOLT (L=40mm) | |
| | 5 | | 8T-6404 | 1 | SEAL-O-RING (ID=158.42mm) | |

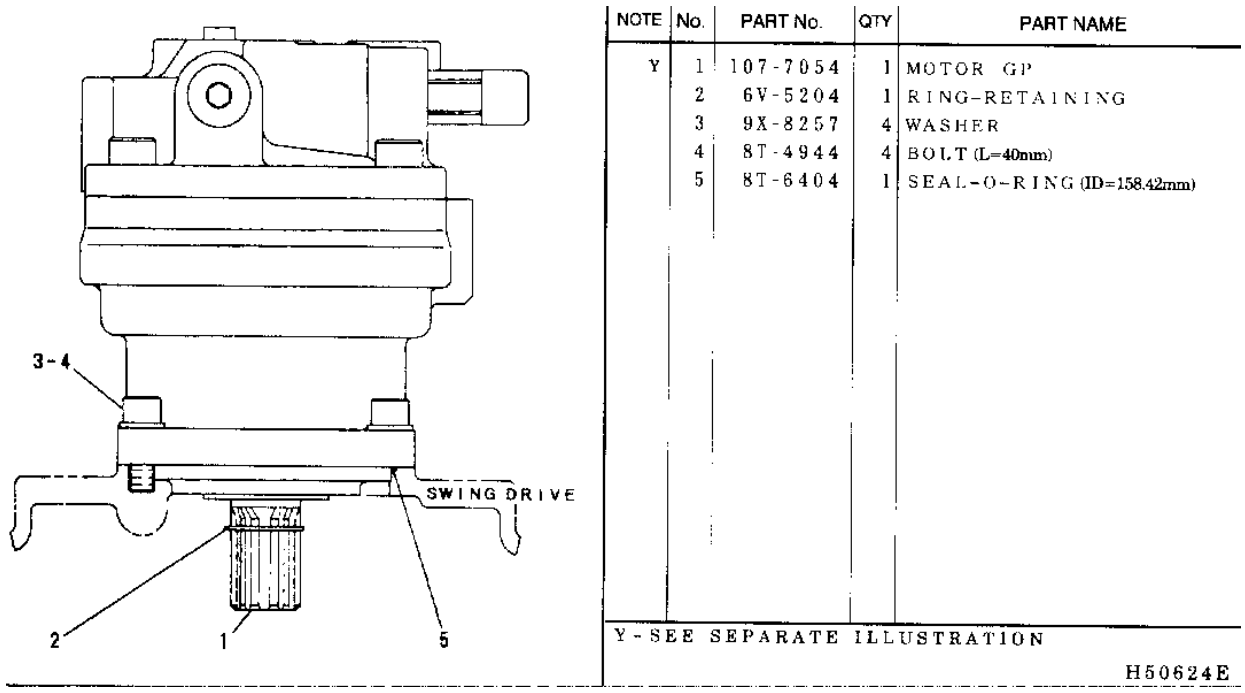


GRAPHIC #1 h50624e

# 1140661 MOTOR & MTG GP-SWING

S/N 8SR (T00.12)-UP, 8TR (T00.12)-UP
PART OF 1141306-Page 329
1843829-Page 331.02

**Key:** M - METRIC PART, R - REMFG PART MAY BE AVAILABLE, Y - SEPARATE ILLUSTRATION

**SMCS**

| NOTE | REF NO | GRAPHIC REF | PART NUMBER | QTY | PART NAME 1 2 3 4 5 6 (PRODUCT LEVEL) | PRICE USD |
|---|---|---|---|---|---|---|
| YR | 1 | | 184-3829 | 1 | MOTOR GP-PISTON | |
| | R | | 0R-8640 | 1 | MOTOR GP-PS-F | |
| | 2 | | 148-8353 | 1 | ELBOW AS | |
| | | | 3J-1907 | 1 | SEAL-O-RING | |
| | | | 6V-8397 | 1 | SEAL-O-RING | |
| | | | 6V-9001 | 1 | ELBOW | |
| | 3 | | 148-8340 | 1 | CONNECTOR AS | |
| | | | 3K-0360 | 1 | SEAL-O-RING | |
| | | | 6V-8398 | 1 | SEAL-O-RING | |
| | | | 6V-8639 | 1 | CONNECTOR | |
| | 4 | | 148-8335 | 1 | CONNECTOR AS | |
| | | | 5K-9090 | 1 | SEAL-O-RING | |
| | | | 6V-8635 | 1 | CONNECTOR | |
| | | | 7M-8485 | 1 | SEAL-O-RING | |
| | 5 | | 148-8327 | 2 | CONNECTOR AS | |
| | | | | | (EACH INCLUDES) | |
| | | | 3D-2824 | 1 | SEAL-O-RING | |
| | | | 6V-8637 | 1 | CONNECTOR | |
| | | | 6V-9746 | 1 | SEAL-O-RING | |
| | 6 | | 7Y-8109 | 1 | BRACKET AS | |
| M | 7 | | 8T-4178 | 6 | BOLT (M10X1.5X90-MM) | |
| M | 8 | | 8T-4137 | 1 | BOLT (M10X1.5X20-MM) | |
| | 9 | | 8T-4121 | 1 | WASHER-HARD (11X21X2.5-MM THK) | |
| Y | 10 | | 107-7056 | 1 | VALVE GP-SWING CUSHION | |

## 1140661 MOTOR & MTG GP-SWING

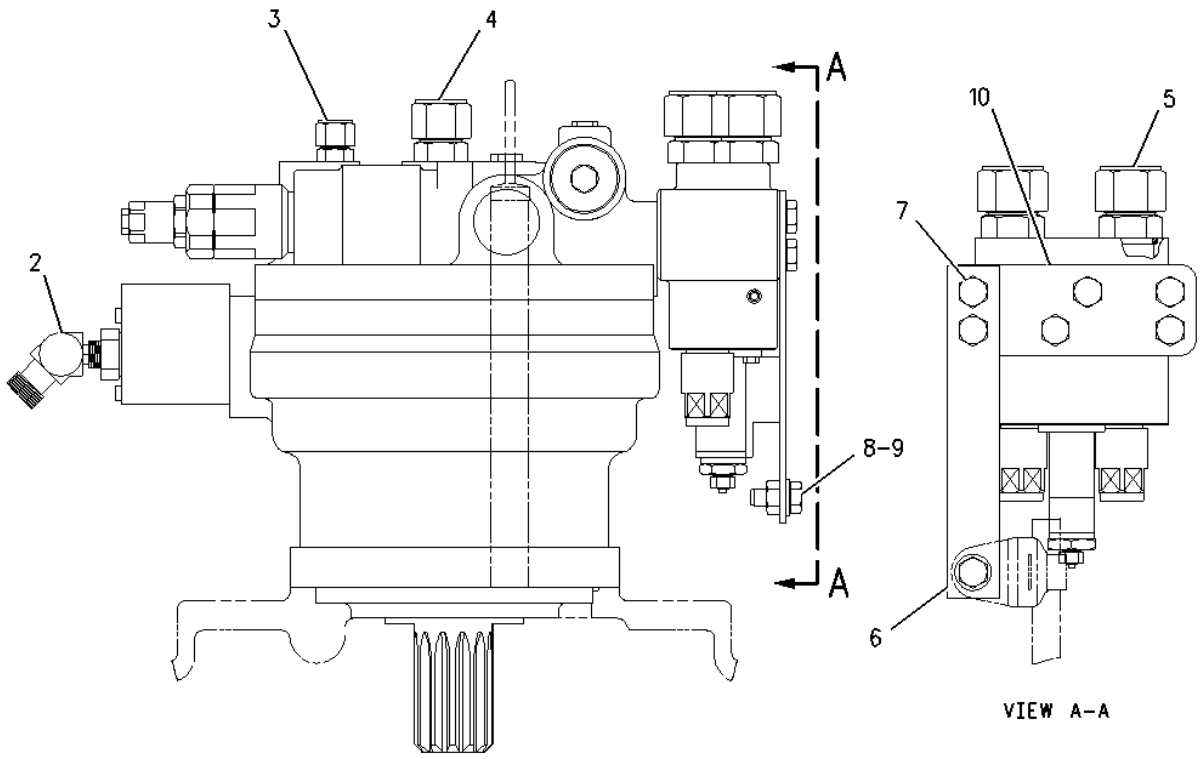


GRAPHIC #1

h79340e

# 1077054 MOTOR GP-SWING

S/N 8SR 1-00183, 8TR 1-00187
PART OF 1140661-Page 330
1211564-Page 332, 4I7788-Page 334, 1211565-Page 375

**Key:** Y - SEPARATE ILLUSTRATION

**SMCS**

| NOTE | REF NO | GRAPHIC REF | PART NUMBER | QTY | PART NAME 1 2 3 4 5 6 (PRODUCT LEVEL) | PRICE USD |
|---|---|---|---|---|---|---|
| Y | 1 | | 121-1564 | 1 | MOTOR GP | |
| Y | 2 | | 121-1565 | 1 | VALVE GP | |
| | 3 | | 8T-6974 | 3 | BOLT (L=80mm) | |
| | 4 | | 095-1573 | 2 | SEAL-O-RING (ID=5.80mm) | |
| Y | 5 | | 4I-7788 | 2 | VALVE GP | |
| | 6 | | 9X-8256 | 6 | WASHER | |
| | 7 | | 5B-9304 | 2 | SCREW | |

## 1077054 MOTOR GP-SWING

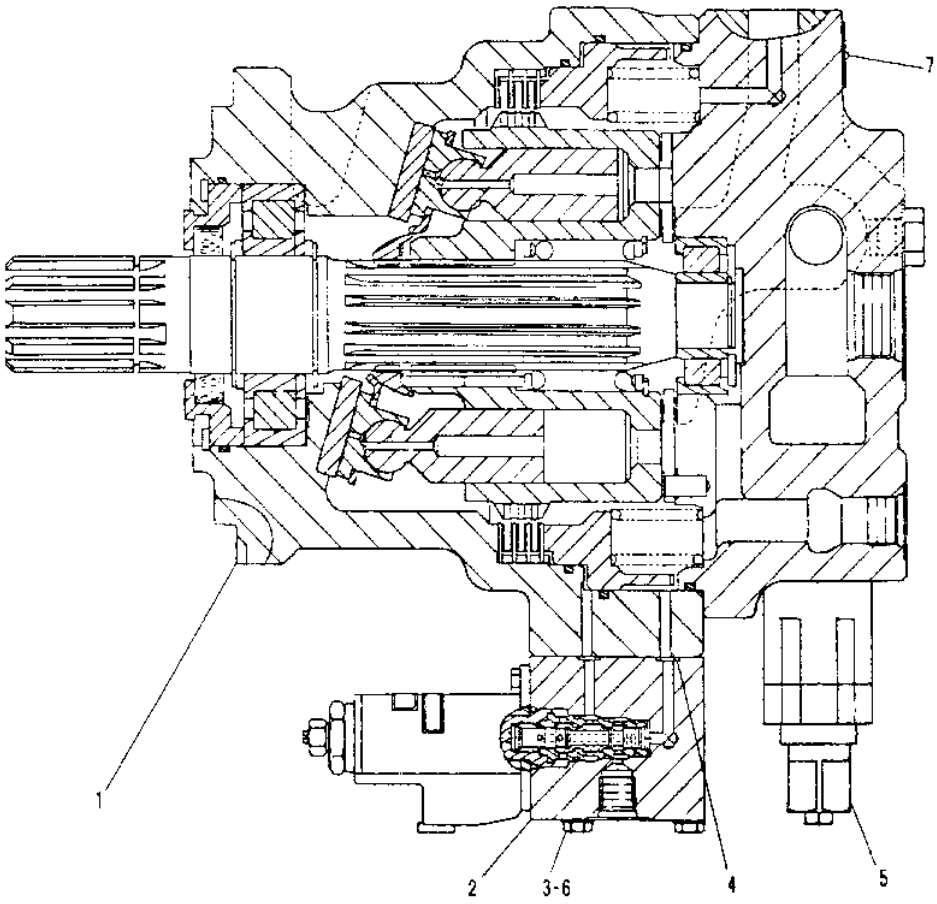


| NOTE | No. | PART No. | QTY | PART NAME |
|---|---|---|---|---|
| Y | 1 | 121-1564 | 1 | MOTOR GP |
| Y | 2 | 121-1565 | 1 | VALVE GP |
| | 3 | 8T-6974 | 3 | BOLT(L=80mm) |
| | 4 | 095-1573 | 2 | SEAL-O-RING(ID=5.80mm) |
| Y | 5 | 4I-7788 | 2 | VALVE GP |
| | 6 | 9X-8256 | 6 | WASHER |
| | 7 | 5B 9304 | 2 | SCREW |

| NOTE | No. | PART No. | QTY | PART NAME |
|---|---|---|---|---|

Y-SEE SEPARATE ILLUSTRATION

H51019E

GRAPHIC #1 h51019e

# 1077054 MOTOR GP-SWING

S/N 8SR 00184-00411, 8TR 00188-00467
PART OF 1140661-Page 330
1211564-Page 332, 4I7788-Page 334, 1373637-Page 375

**Key:** Y - SEPARATE ILLUSTRATION

**SMCS**

| NOTE | REF NO | GRAPHIC REF | PART NUMBER | QTY | PART NAME 1 2 3 4 5 6 (PRODUCT LEVEL) | PRICE USD |
|---|---|---|---|---|---|---|
| Y | 1 | | 121-1564 | 1 | MOTOR GP | |
| Y | 2 | | 137-3637 | 1 | VALVE GP | |
| | 3 | | 8T-6974 | 3 | BOLT (L=80mm) | |
| | 4 | | 095-1574 | 2 | SEAL-O-RING (ID=6.8mm) | |
| Y | 5 | | 4I-7788 | 2 | VALVE GP | |
| | 6 | | 9X-8256 | 6 | WASHER | |
| | 7 | | 5B-9304 | 2 | SCREW | |

## 1077054 MOTOR GP-SWING

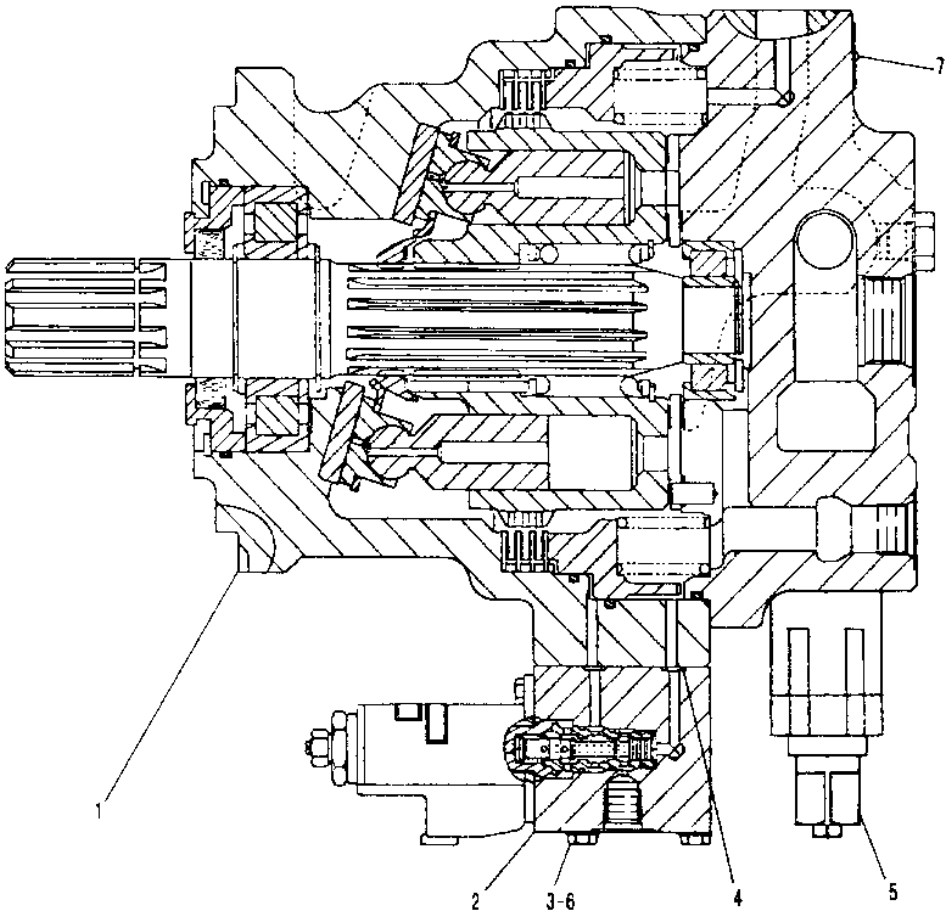


| NOTE | No. | PART No. | QTY | PART NAME | NOTE | No. | PART No. | QTY | PART NAME |
|---|---|---|---|---|---|---|---|---|---|
| Y | 1 | 121-1564 | 1 | MOTOR GP | | | | | |
| Y | 2 | 137-3637 | 1 | VALVE GP | | | | | |
| | 3 | 8T-6974 | 3 | BOLT (L=80mm) | | | | | |
| | 4 | 095-1574 | 2 | SEAL-O-RING (ID=6.8mm) | | | | | |
| Y | 5 | 4I-7788 | 2 | VALVE GP | | | | | |
| | 6 | 9X-8256 | 6 | WASHER | | | | | |
| | 7 | 5B-9304 | 2 | SCREW | | | | | |

Y-SEE SEPARATE ILLUSTRATION

H56391E

GRAPHIC #1

h56391e

# 1077054 MOTOR GP-SWING

S/N 8SR 00412-(T00.11), 8TR 00468-(T00.11)
PART OF 1140661-Page 330
1211564-Page 332, 1540403-Page 334.01, 1373637-Page 375

**Key:** Y - SEE SEPARATE ILLUSTRATION

**SMCS**

| NOTE | REF NO | GRAPHIC REF | PART NUMBER | QTY | PART NAME 1 2 3 4 5 6 (PRODUCT LEVEL) | PRICE USD |
|---|---|---|---|---|---|---|
| Y | 1 | | 121-1564 | 1 | MOTOR GP | |
| Y | 2 | | 137-3637 | 1 | VALVE GP | |
| | 3 | | 8T-6974 | 3 | BOLT (L=80mm) | |
| | 4 | | 095-1574 | 2 | SEAL-O-RING (ID=6.8mm) | |
| Y | 5 | | 154-0403 | 2 | VALVE GP | |
| | 6 | | 9X-8256 | 6 | WASHER | |
| | 7 | | 5B-9304 | 2 | SCREW | |

## 1077054 MOTOR GP-SWING

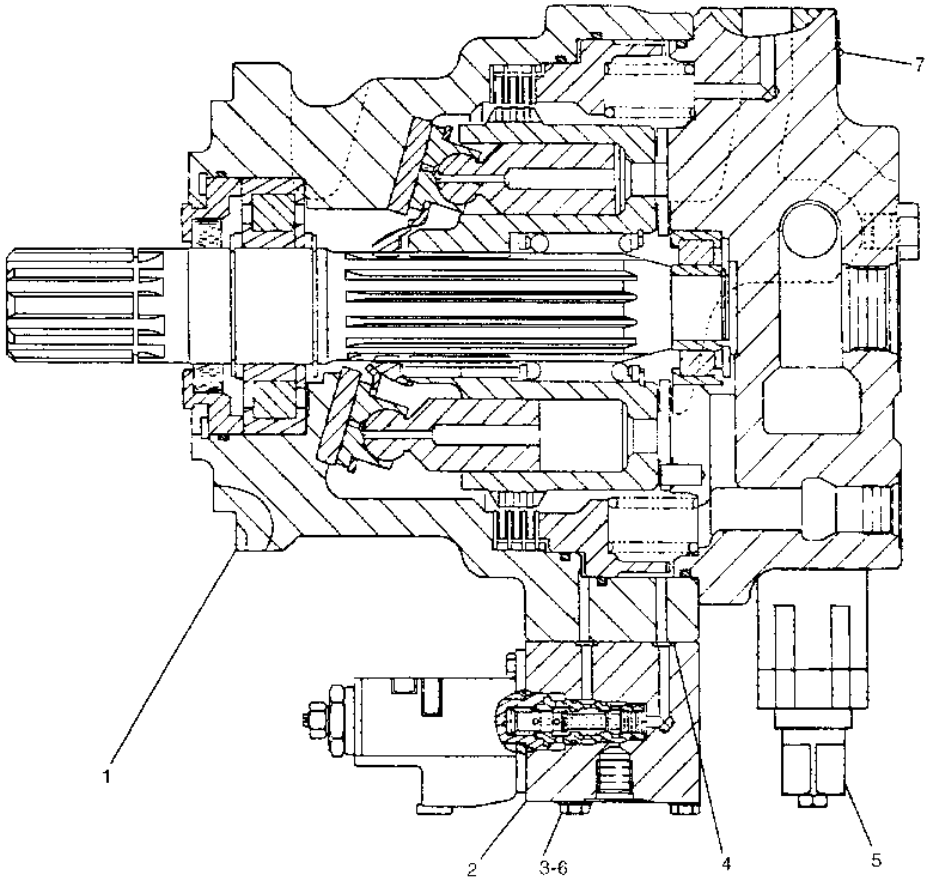


| NOTE | No. | PART No. | QTY | PART NAME |
|---|---|---|---|---|
| Y | 1 | 121-1564 | 1 | MOTOR GP |
| Y | 2 | 137-3637 | 1 | VALVE GP |
| | 3 | 8T-6974 | 3 | BOLT (L=80mm) |
| | 4 | 095 1574 | 2 | SEAL-O-RING (ID=6.8mm) |
| Y | 5 | 154 0403 | 2 | VALVE GP |
| | 6 | 9X-8256 | 6 | WASHER |
| | 7 | 5B-9304 | 2 | SCREW |

| NOTE | No. | PART No. | QTY | PART NAME |
|---|---|---|---|---|

Y-SEE SEPARATE ILLUSTRATION

H63465E

GRAPHIC #1

h63465e

# 1843829 MOTOR GP-SWING

S/N 8SR (T00.12)-UP, 8TR (T00.12)-UP
PART OF 1140661-Page 330
1843834-Page 333.01, 1843830-Page 334.02, 1373637-Page 375

**Key:** Y - SEE SEPARATE ILLUSTRATION

**SMCS**

| NOTE | REF NO | GRAPHIC REF | PART NUMBER | QTY | PART NAME 1 2 3 4 5 6 (PRODUCT LEVEL) | PRICE USD |
|---|---|---|---|---|---|---|
| RY | 1 | | 184-3834 | 1 | MOTOR GP | |
| | R | | 10R-1968 | 1 | MOTOR GP-PSTN | |
| Y | 2 | | 137-3637 | 1 | VALVE GP | |
| | 3 | | 8T-6974 | 3 | BOLT (L=80mm) | |
| | 4 | | 095-1574 | 2 | SEAL-O-RING (ID=6.8mm) | |
| Y | 5 | | 184-3830 | 2 | VALVE GP | |
| | 6 | | 9X-8256 | 6 | WASHER | |
| | 7 | | 5B-9304 | 2 | SCREW | |

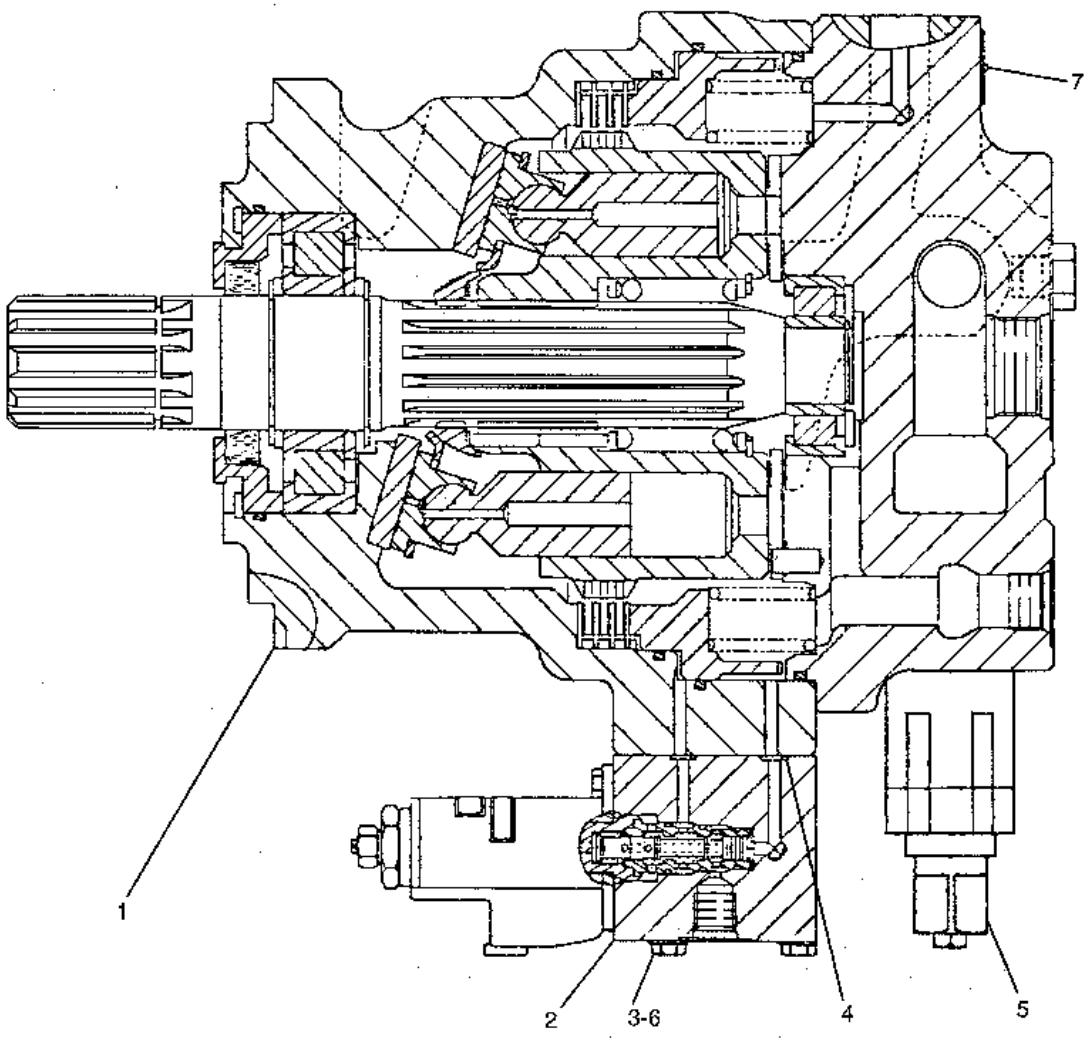


GRAPHIC #1 h79341e

# 1211564 MOTOR GP-SWING-PART 1 OF 2

S/N 8SR 1-(T00.11), 8TR 1-(T00.11)
PART OF 1077054-Page 330.02

**Key:**

**SMCS**

| NOTE | REF NO | GRAPHIC REF | PART NUMBER | QTY | PART NAME 1 2 3 4 5 6 (PRODUCT LEVEL) | PRICE USD |
|---|---|---|---|---|---|---|
| | 1 | | 7Y-4292 | 3 | PLATE-FRICTION | |
| | 2 | | 7Y-4293 | 4 | PLATE | |
| | 3 | | 111-1116 | 1 | BARREL | |
| J | 4 | | 5J-2383 | 1 | SEAL-O-RING (ID=190.09mm) | |
| J | 5 | | 7Y-4294 | 1 | SEAL-O-RING (ID=209.14mm) | |
| | 6 | | 7Y-4290 | 1 | PISTON-BRAKE | |
| | 7 | | 123-2139 | 18 | SPRING | |
| J | 8 | | 4I-5849 | 1 | SEAL-O-RING (ID=199.86mm) | |
| | 9 | | 121-1567 | 1 | HEAD GP | |
| | 10 | | 099-8111 | 2 | PIN | |
| | 11 | | 4I-7787 | 1 | PLATE | |
| | 12 | | 110-5525 | 2 | PLUG | |
| J | 13 | | 3J-1907 | 2 | SEAL-O-RING (ID=11.89mm) | |
| | 14 | | 095-0939 | 1 | RING-RETAINING | |
| | 15 | | 4I-5850 | 1 | RING | |
| | 16 | | 7Y-4269 | 1 | BEARING | |
| | 17 | | 7Y-4252 | 3 | SPACER | |
| | 18 | | 7Y-4255 | 1 | SPRING | |
| | 19 | | 7Y-4258 | 1 | SPACER | |
| | 20 | | 7Y-4256 | 12 | PIN | |
| | 21 | | 7Y-4257 | 1 | SPACER | |
| | 22 | | 7Y-4254 | 1 | BUSHING | |
| | 23 | | 6V-5204 | 2 | RING-RETAINING | |
| | 24 | | 7Y-4270 | 1 | BEARING | |
| J | 25 | | 095-1714 | 1 | SEAL-O-RING (ID=99.40mm) | |
| J | 26 | | 096-1533 | 1 | SEAL | |
| | 27 | | 7Y-4251 | 1 | SHAFT | |
| | 28 | | 7Y-4266 | 1 | RETAINER | |
| | 29 | | 6V-5203 | 1 | RING-RETAINING | |
| | 30 | | 7Y-4261 | 1 | PLATE | |
| | 31 | | 7Y-4262 | 1 | PLATE | |
| | 32 | | 111-1115 | 1 | BODY | |
| | 33 | | 4I-6448 | 1 | PISTON AS | |
| | | | 7Y-4259 | 9 | PISTON AS | |

## 1211564 MOTOR GP-SWING-PART 1 OF 2

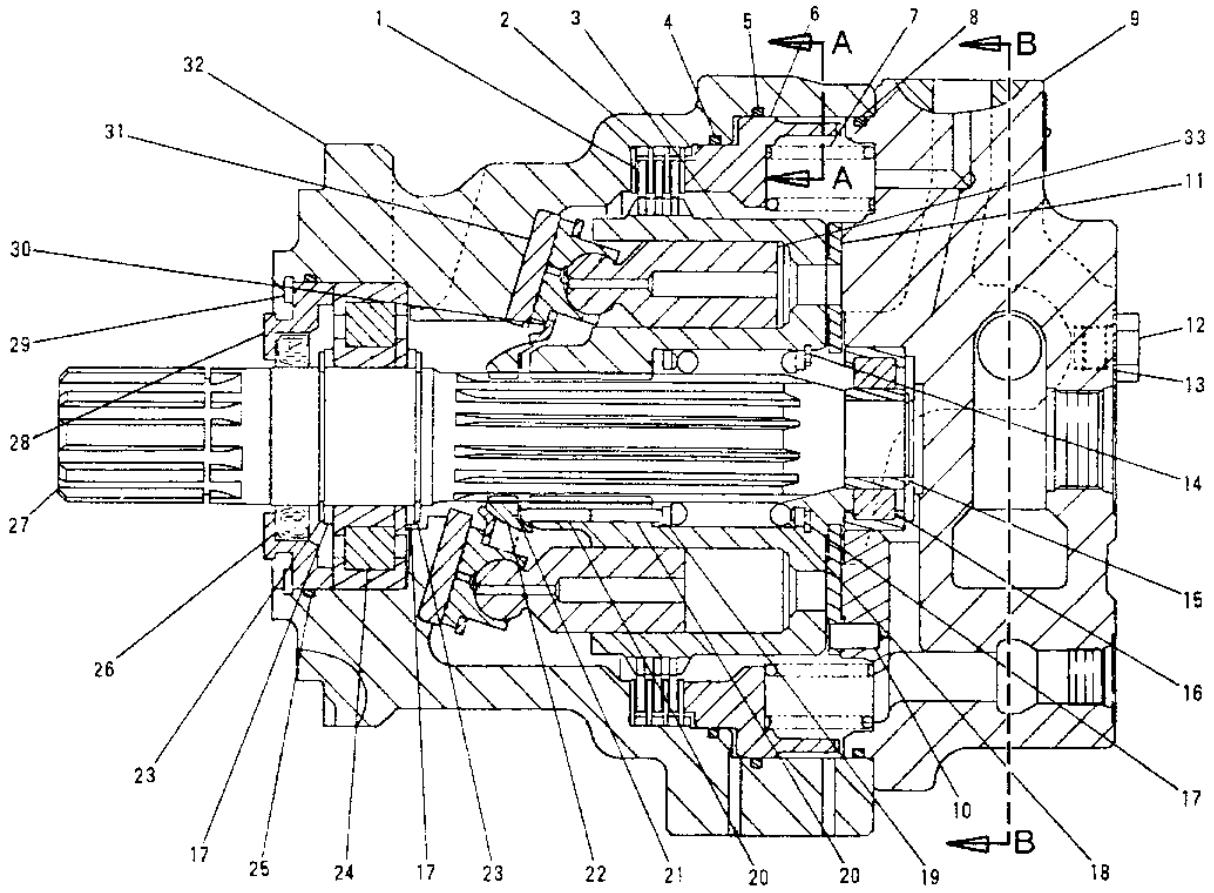


GRAPHIC #1

h55995e

# 1211564 MOTOR GP-SWING-PART 2 OF 2

S/N 8SR 1-(T00.11), 8TR 1-(T00.11)
PART OF 1077054-Page 330.02

**Key:**

**SMCS**

| NOTE | REF NO | GRAPHIC REF | PART NUMBER | QTY | PART NAME 1 2 3 4 5 6 (PRODUCT LEVEL) | PRICE USD |
|---|---|---|---|---|---|---|
| | 1 | | 7Y-4267 | 2 | VALVE | |
| | 2 | | 7Y-4268 | 2 | SPRING | |
| J | 3 | | 095-1595 | 2 | SEAL-O-RING (ID=27.70mm) | |
| | 4 | | 094-1900 | 2 | PLUG | |
| | 5 | | 7Y-5221 | 4 | BOLT | |
| J | 6 | | 095-1579 | 1 | SEAL-O-RING (ID=10.80mm) | |
| | 7 | | 7Y-4274 | 1 | PLUG | |
| | | | | | THE FOLLOWING REPAIR KIT IS AVAILABLE: | |
| | | | 121-1577 | 1 | SEAL KIT | |
| | | | | | (INCLUDES PARTS MARKED J) | |

## 1211564 MOTOR GP-SWING-PART 2 OF 2

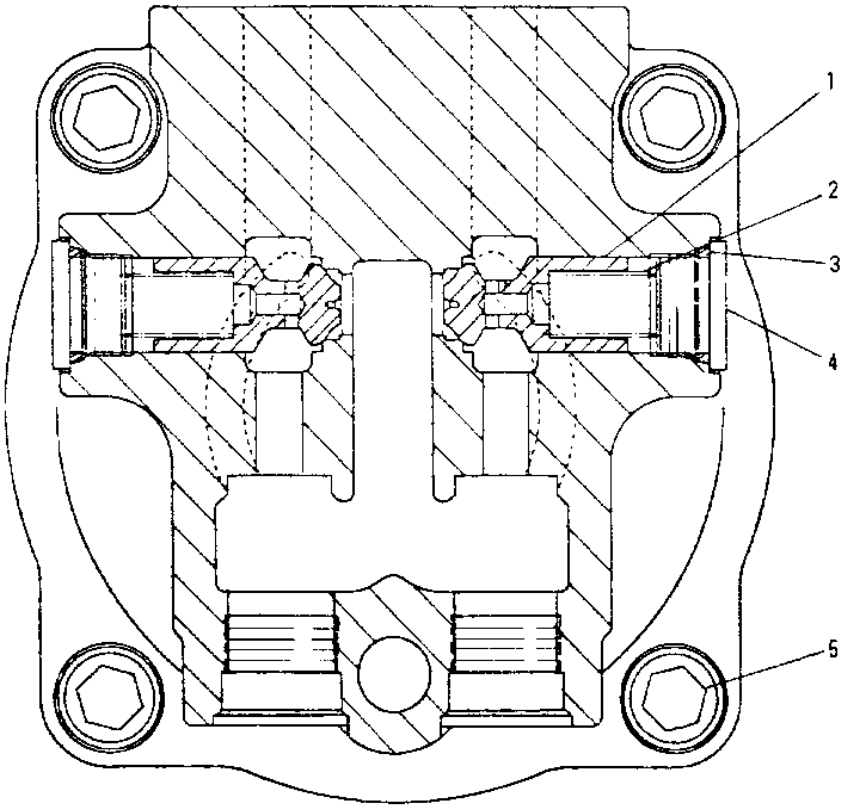


B – B

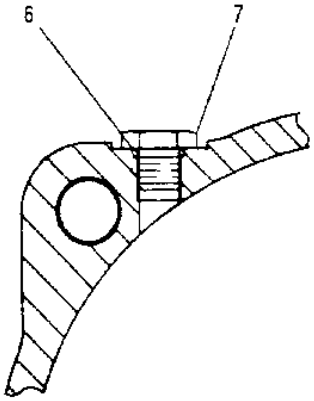


A – A

| NOTE | No. | PART No. | QTY | PART NAME |
|---|---|---|---|---|
| | 1 | 7Y-4267 | 2 | VALVE |
| | 2 | 7Y-4268 | 2 | SPRING |
| J | 3 | 095-1595 | 2 | SEAL-O-RING (ID=27.70mm) |
| | 4 | 094-1900 | 2 | PLUG |
| | 5 | 7Y-5221 | 4 | BOLT |
| J | 6 | 095-1579 | 1 | SEAL-O-RING (ID=10.80mm) |
| | 7 | 7Y-4274 | 1 | PLUG |
| | | | | THE FOLLOWING REPAIR KIT IS AVAILABLE: |
| | | 121-1577 | 1 | SEAL KIT (INCLUDES PARTS MARKED J) |

H55996E

# 1843834 MOTOR GP-SWING-PART 1 OF 2

S/N 8SR (T00.12)-UP, 8TR (T00.12)-UP
PART OF 1843829-Page 331.02

**Key:**

**SMCS**

| NOTE | REF NO | GRAPHIC REF | PART NUMBER | QTY | PART NAME 1 2 3 4 5 6 (PRODUCT LEVEL) | PRICE USD |
|---|---|---|---|---|---|---|
| | 1 | | 7Y-4292 | 3 | PLATE-FRICTION | |
| | 2 | | 7Y-4293 | 4 | PLATE | |
| | 3 | | 111-1116 | 1 | BARREL | |
| J | 4 | | 5J-2383 | 1 | SEAL-O-RING (ID=190.09mm) | |
| J | 5 | | 7Y-4294 | 1 | SEAL-O-RING (ID=209.14mm) | |
| | 6 | | 184-3835 | 1 | PISTON-BRAKE | |
| | 7 | | 123-2139 | 18 | SPRING | |
| J | 8 | | 4I-5849 | 1 | SEAL-O-RING (ID=199.86mm) | |
| | 9 | | 121-1567 | 1 | HEAD GP | |
| | 10 | | 099-8111 | 2 | PIN | |
| | 11 | | 4I-7787 | 1 | PLATE | |
| | 12 | | 110-5525 | 2 | PLUG | |
| J | 13 | | 3J-1907 | 2 | SEAL-O-RING (ID=11.89mm) | |
| | 14 | | 095-0939 | 1 | RING-RETAINING | |
| | 15 | | 4I-5850 | 1 | RING | |
| | 16 | | 7Y-4269 | 1 | BEARING | |
| | 17 | | 7Y-4252 | 3 | SPACER | |
| | 18 | | 7Y-4255 | 1 | SPRING | |
| | 19 | | 7Y-4258 | 1 | SPACER | |
| | 20 | | 7Y-4256 | 12 | PIN | |
| | 21 | | 7Y-4257 | 1 | SPACER | |
| | 22 | | 7Y-4254 | 1 | BUSHING | |
| | 23 | | 6V-5204 | 2 | RING-RETAINING | |
| | 24 | | 7Y-4270 | 1 | BEARING | |
| J | 25 | | 095-1714 | 1 | SEAL-O-RING (ID=99.40mm) | |
| J | 26 | | 096-1533 | 1 | SEAL | |
| | 27 | | 7Y-4251 | 1 | SHAFT | |
| | 28 | | 7Y-4266 | 1 | RETAINER | |
| | 29 | | 6V-5203 | 1 | RING-RETAINING | |
| | 30 | | 7Y-4261 | 1 | PLATE | |
| | 31 | | 7Y-4262 | 1 | PLATE | |
| | 32 | | 111-1115 | 1 | BODY | |
| | 33 | | 4I-6448 | 1 | PISTON AS | |
| | | | 7Y-4259 | 9 | PISTON AS | |

## 1843834 MOTOR GP-SWING-PART 1 OF 2

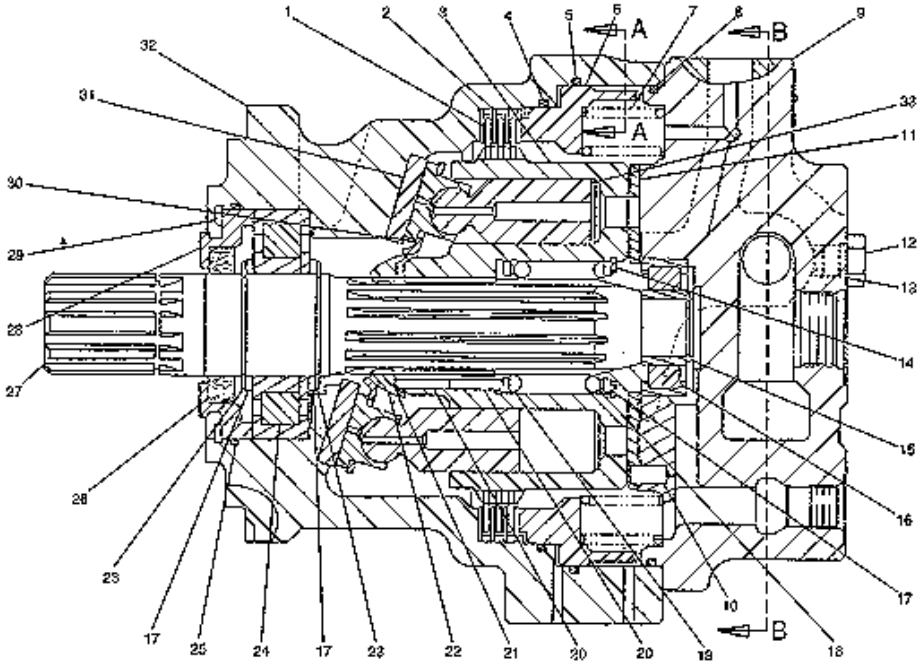


GRAPHIC #1 h78558e

# 1843834 MOTOR GP-SWING-PART 2 OF 2

S/N 8SR (T00.12)-UP, 8TR (T00.12)-UP
PART OF 1843829-Page 331.02

**Key:**

**SMCS**

| NOTE | REF NO | GRAPHIC REF | PART NUMBER | QTY | PART NAME 1 2 3 4 5 6 (PRODUCT LEVEL) | PRICE USD |
|---|---|---|---|---|---|---|
| | 1 | | 7Y-4267 | 2 | VALVE | |
| | 2 | | 7Y-4268 | 2 | SPRING | |
| J | 3 | | 095-1595 | 2 | SEAL-O-RING (ID=27.70mm) | |
| | 4 | | 094-1900 | 2 | PLUG | |
| | 5 | | 7Y-5221 | 4 | BOLT (L=45mm) | |
| J | 6 | | 095-1579 | 1 | SEAL-O-RING (ID=10.80mm) | |
| | 7 | | 7Y-4274 | 1 | PLUG | |
| | | | | | THE FOLLOWING REPAIR KIT IS AVAILABLE: | |
| | | | 121-1577 | 1 | SEAL KIT | |
| | | | | | (INCLUDES PARTS MARKED J) | |

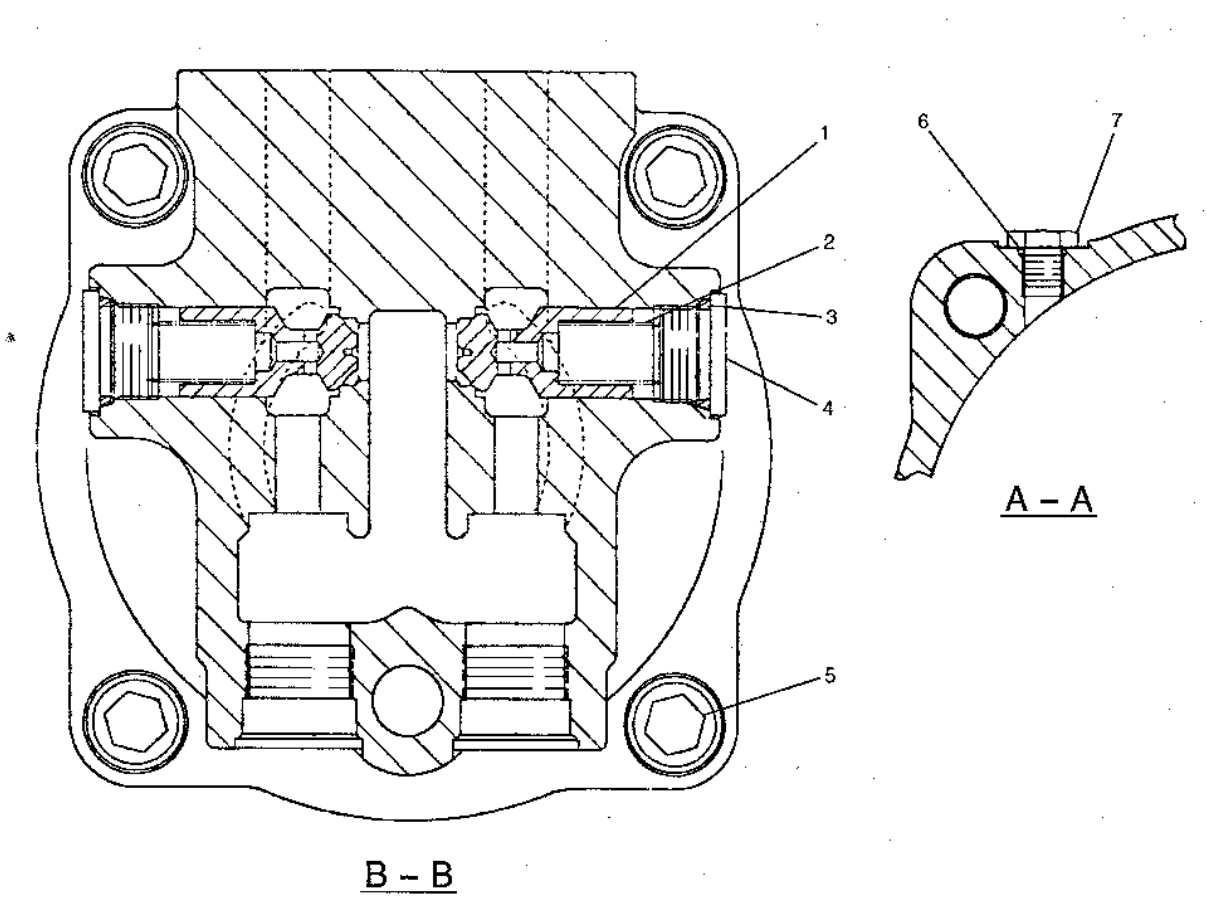


GRAPHIC #1

h78559e

# 4I7788 VALVE GP-RELIEF

S/N 8SR 1-00411, 8TR 1-00467
PART OF 1077054-Page 330.02

**Key:**

**SMCS**

| NOTE | REF NO | GRAPHIC REF | PART NUMBER | QTY | PART NAME 1 2 3 4 5 6 (PRODUCT LEVEL) | PRICE USD |
|---|---|---|---|---|---|---|
| | 1 | | 7I-7970 | 1 | PLUG | |
| | 2 | | 4I-7792 | 1 | SPRING | |
| | 3 | | 4I-7793 | 1 | LOCKNUT | |
| | 4 | | 4I-7837 | 1 | BALL | |
| | 5 | | 4I-7795 | 1 | BODY AS | |
| | 6 | | 4I-7790 | 1 | SPRING | |
| | 7 | | 095-1698 | 1 | SEAL-O-RING (ID=29.40mm) | |
| | 8 | | 7Y-4278 | 1 | RING | |
| | 9 | | 4I-7794 | 1 | RETAINER | |
| | 10 | | 095-1593 | 1 | SEAL-O-RING (ID=24.70mm) | |
| | 11 | | 096-3064 | 1 | RING | |
| | 12 | | 095-1586 | 1 | SEAL-O-RING (ID=19.80mm) | |
| | 13 | | 095-1785 | 1 | RING | |
| | 14 | | 7I-7971 | 1 | PLUG | |
| | 15 | | 7Y-5280 | 1 | SEAL-O-RING (ID=3.80mm) | |

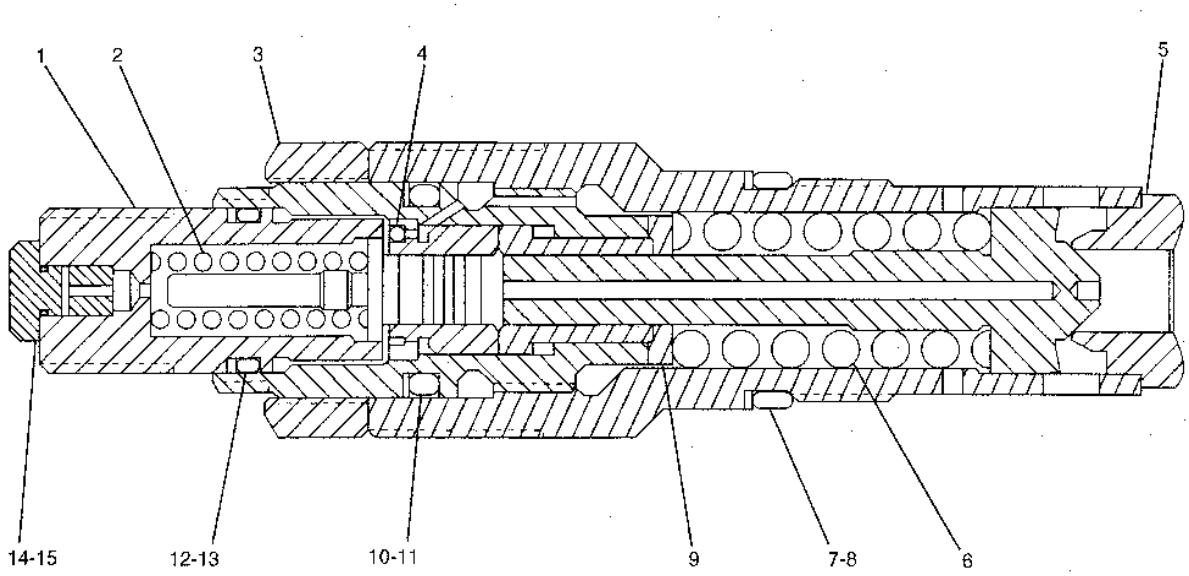


GRAPHIC #1

h50283e

# 1540403 VALVE GP-RELIEF

S/N 8SR 00412-(T00.11), 8TR 00468-(T00.11)
PART OF 1077054-Page 331.01

**Key:**

**SMCS**

| NOTE | REF NO | GRAPHIC REF | PART NUMBER | QTY | PART NAME 1 2 3 4 5 6 (PRODUCT LEVEL) | PRICE USD |
|---|---|---|---|---|---|---|
| | 1 | | 7I-7970 | 1 | PLUG | |
| | 2 | | 4I-7792 | 1 | SPRING | |
| | 3 | | 4I-7793 | 1 | LOCKNUT | |
| | 4 | | 4I-7837 | 1 | BALL | |
| | 5 | | 155-7168 | 1 | BODY AS | |
| | 6 | | 4I-7790 | 1 | SPRING | |
| | 7 | | 095-1698 | 1 | SEAL-O-RING (ID=29.40mm) | |
| | 8 | | 7Y-4278 | 1 | RING-BACK UP | |
| | 9 | | 4I-7794 | 1 | RETAINER | |
| | 10 | | 095-1593 | 1 | SEAL-O-RING (ID=24.70mm) | |
| | 11 | | 096-3064 | 1 | RING-BACK UP | |
| | 12 | | 095-1586 | 1 | SEAL-O-RING (ID=19.80mm) | |
| | 13 | | 095-1785 | 1 | RING-BACK UP | |
| | 14 | | 7I-7971 | 1 | PLUG | |
| | 15 | | 7Y-5280 | 1 | SEAL-O-RING (ID=3.80mm) | |

## 1540403 VALVE GP-RELIEF

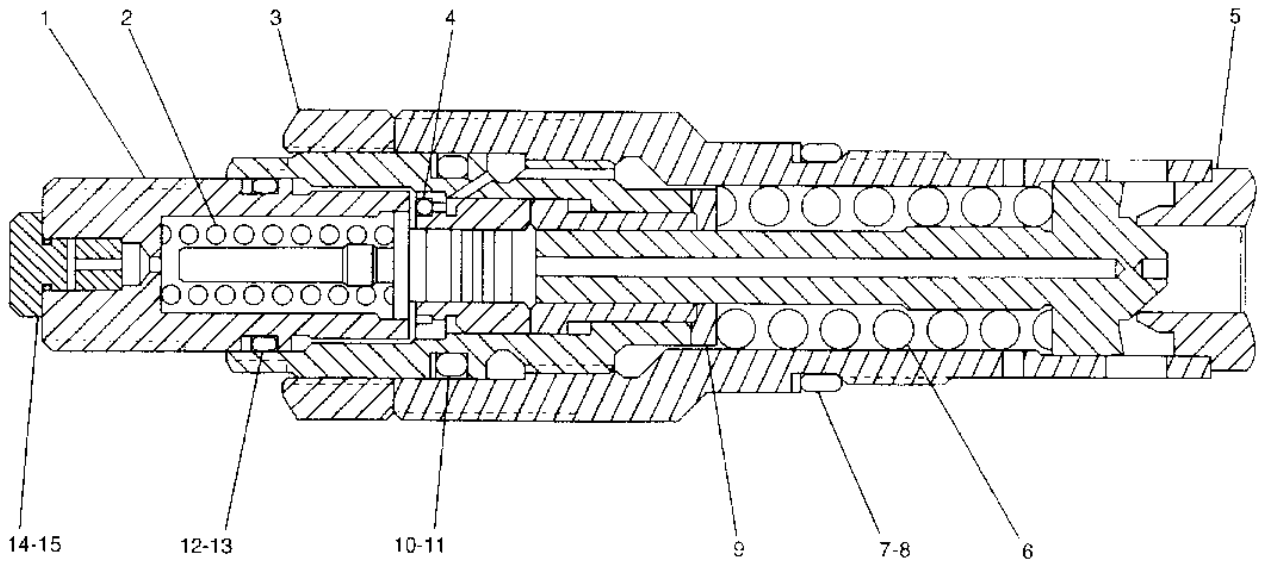


| NOTE | No. | PART No. | QTY | PART NAME |
|---|---|---|---|---|
| | 1 | 7I-7970 | 1 | PLUG |
| | 2 | 4I-7792 | 1 | SPRING |
| | 3 | 4I-7793 | 1 | LOCKNUT |
| | 4 | 4I-7837 | 1 | BALL |
| | 5 | 155-7168 | 1 | BODY AS |
| | 6 | 4I-7790 | 1 | SPRING |
| | 7 | 095-1698 | 1 | SEAL-O-RING (ID=29.40mm) |
| | 8 | 7Y-4278 | 1 | RING-BACK UP |
| | 9 | 4I-7794 | 1 | RETAINER |
| | 10 | 095-1593 | 1 | SEAL-O-RING (ID=24.70mm) |
| | 11 | 096-3064 | 1 | RING-BACK UP |
| | 12 | 095-1586 | 1 | SEAL-O-RING (ID=19.80mm) |
| | 13 | 095 1785 | 1 | RING-BACK UP |
| | 14 | 7I-7971 | 1 | PLUG |
| | 15 | 7Y-5280 | 1 | SEAL-O-RING (ID=3.80mm) |

| NOTE | No. | PART No. | QTY | PART NAME |
|---|---|---|---|---|

H63466E

GRAPHIC #1

h63466e

# 1843830 VALVE GP-RELIEF

S/N 8SR (T00.12)-UP, 8TR (T00.12)-UP
PART OF 1843829-Page 331.02

**Key:**

**SMCS**

| NOTE | REF NO | GRAPHIC REF | PART NUMBER | QTY | PART NAME 1 2 3 4 5 6 (PRODUCT LEVEL) | PRICE USD |
|---|---|---|---|---|---|---|
| | 1 | | 191-3201 | 1 | SPRING | |
| | 2 | | 168-0713 | 1 | BODY AS | |
| | 3 | | 095-1698 | 1 | SEAL-O-RING (ID=29.40mm) | |
| | 4 | | 168-0763 | 1 | RETAINER | |
| | 5 | | 6V-5556 | 1 | SEAL-O-RING (ID=25.07mm) | |
| | 6 | | 7I-0966 | 1 | RING-BACK UP | |
| | 7 | | 168-0764 | 1 | LOCKNUT | |
| | 8 | | 7J-9933 | 1 | SEAL-O-RING (ID=21.89mm) | |
| | 9 | | 168-0765 | 1 | RING-BACK UP | |
| | 10 | | 168-0766 | 1 | PLUG | |

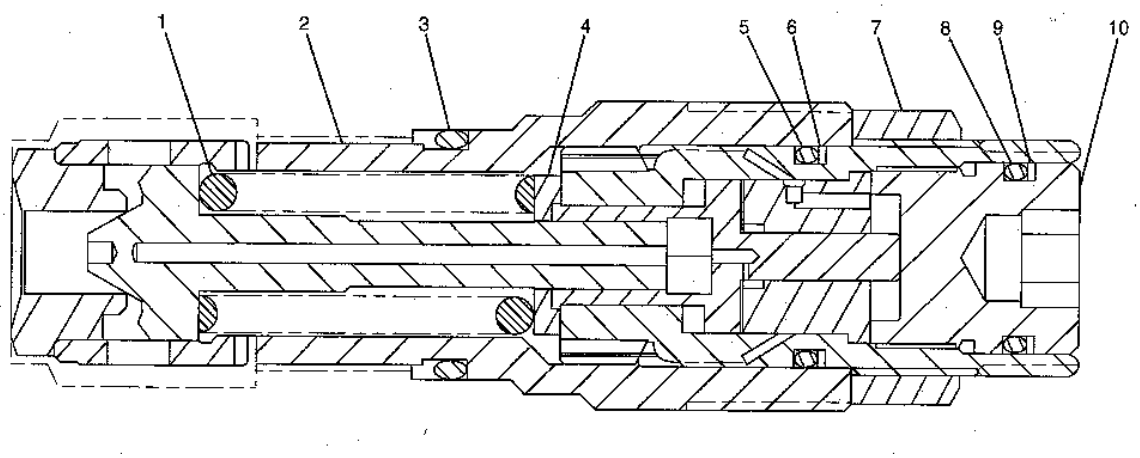


GRAPHIC #1 h84995e

# 1077028 MOTOR & MTG GP-TRAVEL

S/N 8SR 1-00386, 8TR 1-00402
PART OF 1141477-Page 177
1077029-Page 336, 1373718-Page 338

**Key:** Y - SEE SEPARATE ILLUSTRATION

**SMCS**

| NOTE | REF NO | GRAPHIC REF | PART NUMBER | QTY | PART NAME 1 2 3 4 5 6 (PRODUCT LEVEL) | PRICE USD |
|---|---|---|---|---|---|---|
| Y | 1 | | 107-7029 | 1 | MOTOR GP | |
| Y | 2 | | 137-3718 | 1 | VALVE GP | |
| | 3 | | 095-0707 | 3 | BOLT (L=120mm) | |
| | 4 | | 8T-4176 | 6 | BOLT (L=90mm) | |

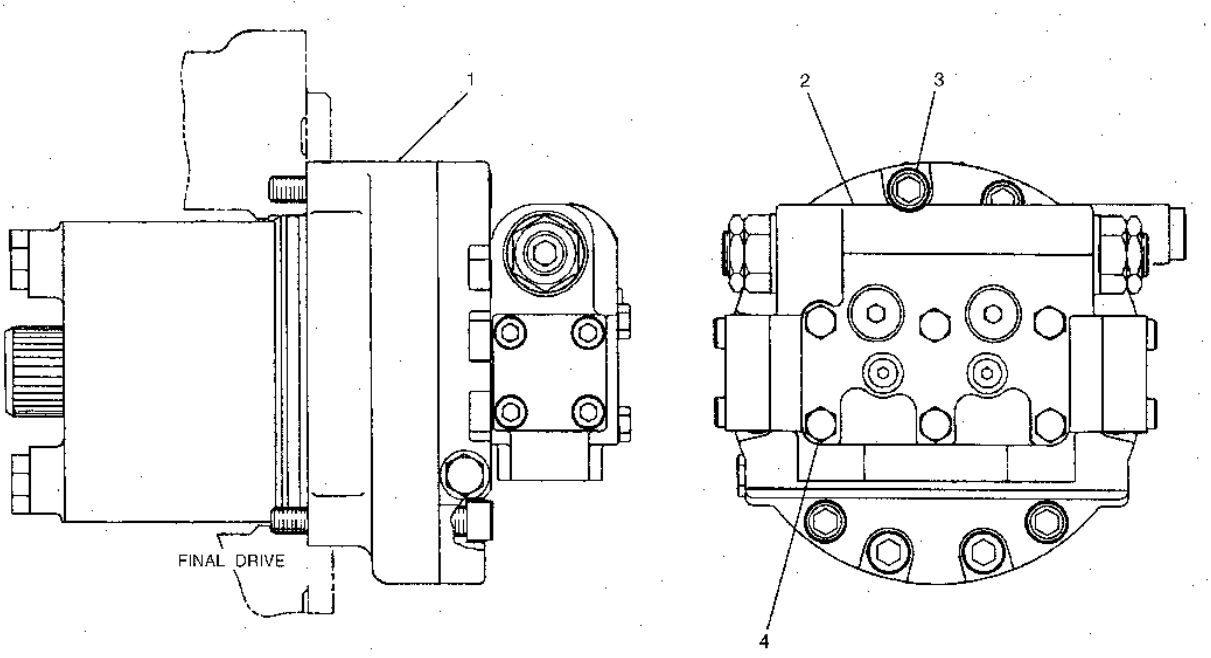


GRAPHIC #1 h53712e

# 1347130 MOTOR & MTG GP-TRAVEL

8SR 00387-UP, 8TR 00403-UP
PART OF 1425541-Page 177
1347131-Page 337.01, 1373718-Page 338

**Key:** Y - SEE SEPARATE ILLUSTRATION

**SMCS**

| NOTE | REF NO | GRAPHIC REF | PART NUMBER | QTY | PART NAME 1 2 3 4 5 6 (PRODUCT LEVEL) | PRICE USD |
|---|---|---|---|---|---|---|
| Y | 1 | | 134-7131 | 1 | MOTOR GP | |
| Y | 2 | | 137-3718 | 1 | VALVE GP | |
| | 3 | | 095-0707 | 3 | BOLT (L=120mm) | |
| | 4 | | 8T-4176 | 6 | BOLT (L=90mm) | |

## 1347130 MOTOR & MTG GP-TRAVEL

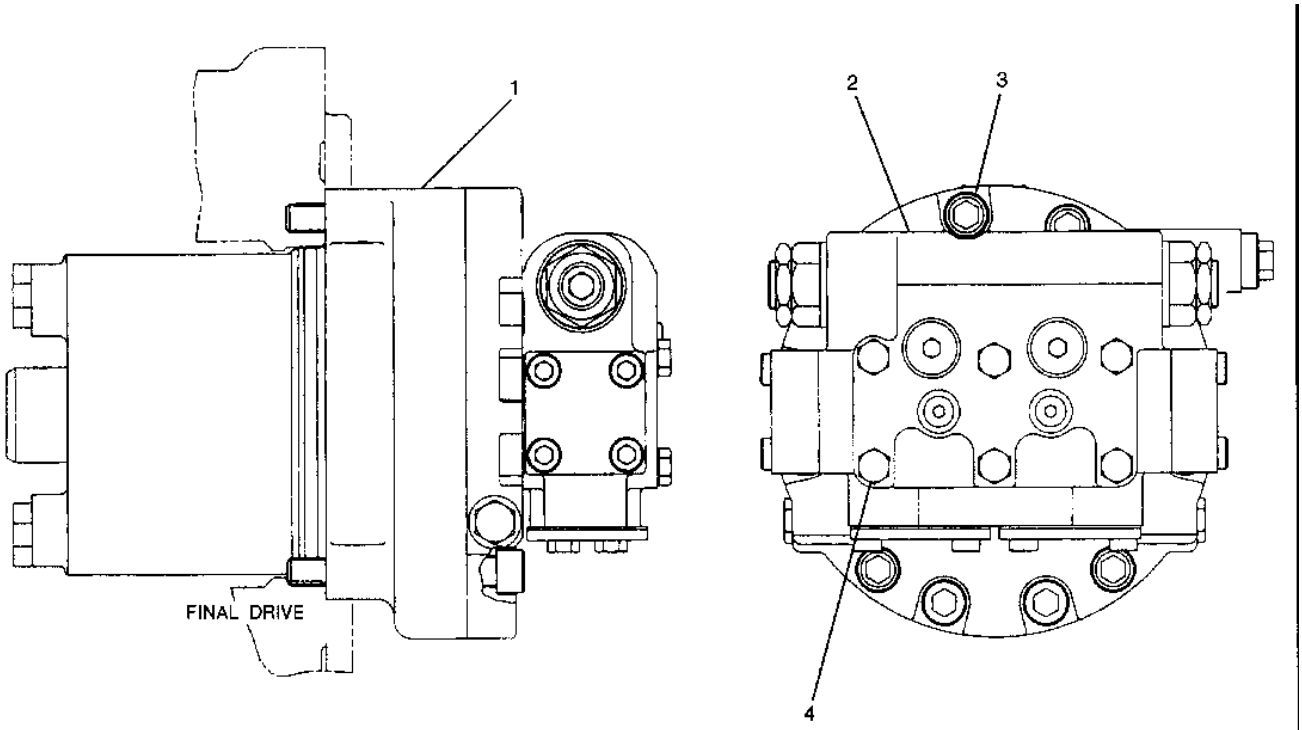


| NOTE | No. | PART No. | QTY | PART NAME |
|---|---|---|---|---|
| Y | 1 | 134-7131 | 1 | MOTOR GP |
| Y | 2 | 137-3718 | 1 | VALVE GP |
| | 3 | 095-0707 | 3 | BOLT (L=120mm) |
| | 4 | 8T-4176 | 6 | BOLT (L=90mm) |

Y-SEE SEPARATE ILLUSTRATION

H64077E

GRAPHIC #1 h64077e

# 1077029 MOTOR GP-TRAVEL

8SR 1-00386, 8TR 1-00402
PART OF 1077028-Page 335

**Key:** B - USE AS REQUIRED

**SMCS**

| NOTE | REF NO | GRAPHIC REF | PART NUMBER | QTY | PART NAME 1 2 3 4 5 6 (PRODUCT LEVEL) | PRICE USD |
|---|---|---|---|---|---|---|
| | 1 | | 087-4629 | 1 | SHAFT | |
| | 2 | | 087-4743 | 2 | STOPPER | |
| | 3 | | 094-1399 | 2 | RING | |
| | 4 | | 7Y-4212 | 1 | BEARING | |
| | 5 | | 087-4757 | 2 | PISTON | |
| | 6 | | 107-6969 | 1 | BODY | |
| | 7 | | 122-5114 | 1 | GUIDE | |
| | 8 | | 087-4628 | 1 | PLATE | |
| | 9 | | 147-5860 | 1 | PISTON AS | |
| | 10 | | 133-6777 | 1 | BARREL AS | |
| | 11 | | 107-6954 | 4 | PLATE | |
| | 12 | | 107-6955 | 5 | PLATE | |
| | 13 | | 096-1523 | 1 | GUIDE | |
| | 14 | | 7Y-4213 | 1 | PISTON | |
| | 15 | | 7Y-4202 | 1 | HEAD | |
| | 16 | | 8T-4944 | 10 | BOLT (L=40mm) | |
| B | 17 | | 096-1521 | 1 | SHIM (T=1.00mm) | |
| B | | | 096-3785 | 1 | SHIM (T=1.20mm) | |
| B | | | 096-3786 | 1 | SHIM (T=1.40mm) | |
| B | | | 096-3787 | 1 | SHIM (T=1.60mm) | |
| B | | | 096-3788 | 1 | SHIM (T=1.80mm) | |
| B | | | 096-1522 | 1 | SHIM (T=2.00mm) | |
| | 18 | | 096-3978 | 1 | SPRING | |
| | 19 | | 7Y-4216 | 1 | SPOOL | |
| J | 20 | | 2M-9780 | 1 | SEAL-O-RING (ID=19.18mm) | |
| | 21 | | 087-4786 | 1 | ADAPTER | |
| | 22 | | 121-1558 | 2 | PIN | |
| | 23 | | 096-5916 | 2 | SEAT | |
| | 24 | | 2D-6642 | 2 | BALL | |
| J | 25 | | 095-1572 | 2 | SEAL-O-RING (ID=4.80mm) | |
| J | 26 | | 096-5919 | 2 | RING | |
| | 27 | | 096-5915 | 2 | RETAINER | |
| | 28 | | 096-4003 | 1 | BEARING SET | |
| J | 29 | | 095-1585 | 1 | SEAL-O-RING (ID=17.80mm) | |
| | 30 | | 087-4742 | 1 | VALVE | |
| | 31 | | 096-1519 | 1 | SEAT | |
| | 32 | | 095-7380 | 1 | SPRING | |
| | 33 | | 095-7382 | 1 | RETAINER | |
| | 34 | | 094-1875 | 1 | DOWEL | |
| | 35 | | 095-7378 | 1 | WASHER SET | |
| | 36 | | 094-1882 | 11 | PLUG | |
| J | 37 | | 095-1575 | 3 | SEAL-O-RING (ID=7.80mm) | |
| J | 38 | | 096-4378 | 1 | RING | |
| J | 39 | | 096-4377 | 2 | SEAL-O-RING (ID=190.00mm) | |
| J | 40 | | 095-1700 | 2 | SEAL-O-RING (ID=34.40mm) | |
| J | 41 | | 095-7384 | 1 | SEAL-O-RING (ID=160.00mm) | |
| J | 42 | | 095-7383 | 1 | SEAL-O-RING (ID=174.00mm) | |
| J | 43 | | 095-7386 | 1 | RING | |

## 1077029 MOTOR GP-TRAVEL

| | | | | |
|---|---|---|---|---|
| J | 44 | 095-7387 | 1 | RING |
| J | 45 | 095-1685 | 1 | SEAL-O-RING (ID=179.30mm) |
| | 46 | 118-4057 | 9 | SPRING |
| | 47 | 7Y-4215 | 1 | SPACER |
| J | 48 | 095-1586 | 2 | SEAL-O-RING (ID=19.80mm) |
| J | 49 | 7Y-4217 | 2 | RING |
| J | 50 | 096-4376 | 1 | SEAL |
| | 51 | 123-2008 | 2 | KEY |
| | 52 | 095-7419 | 4 | SCREW |
| | 53 | 7Y-4224 | 2 | ORIFICE |
| J | 54 | 3K-0360 | 1 | SEAL-O-RING (ID=16.36mm) |
| | 55 | 9S-4185 | 1 | PLUG |
| | | | | THE FOLLOWING REPAIR KIT IS AVAILABLE: |
| | | 7Y-4222 | 1 | SEAL KIT (INCLUDES PARTS MARKED J) |
| | | | | THE FOLLOWING SERVICE REPAIR IS AVAILABLE: |
| | | 142-5515 | 2 | RING |

## 1077029 MOTOR GP-TRAVEL

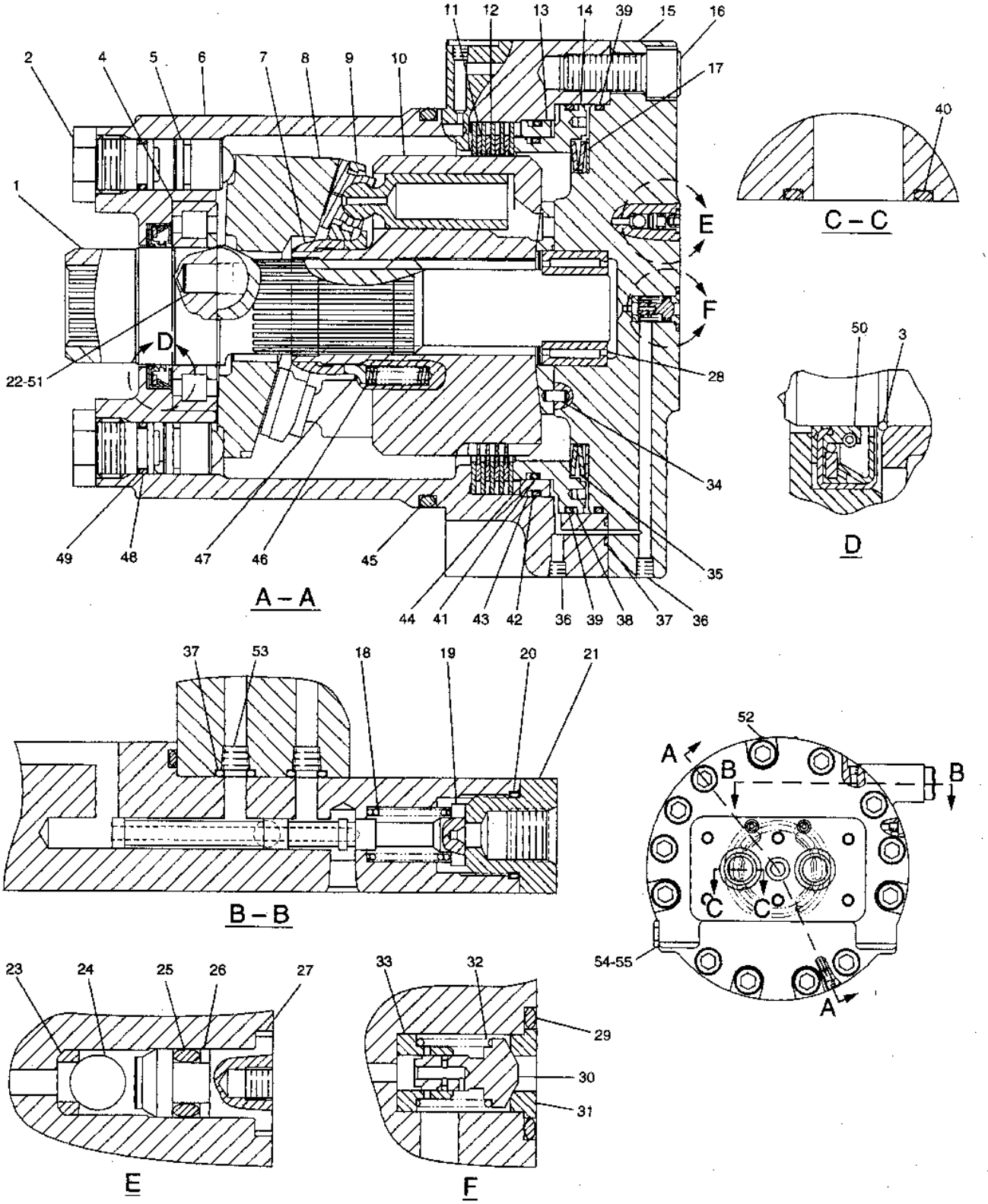


GRAPHIC #1

h85439e

# 1347131 MOTOR GP-TRAVEL

8SR 00387-UP, 8TR 00403-UP
PART OF 1347130-Page 335.01

**Key:** B - USE AS REQUIRED

**SMCS**

| NOTE | REF NO | GRAPHIC REF | PART NUMBER | QTY | PART NAME 1 2 3 4 5 6 (PRODUCT LEVEL) | PRICE USD |
|---|---|---|---|---|---|---|
| | 1 | | 087-4629 | 1 | SHAFT | |
| | 2 | | 087-4743 | 2 | STOPPER | |
| | 3 | | 094-1399 | 2 | RING | |
| | 4 | | 7Y-4212 | 1 | BEARING | |
| | 5 | | 087-4757 | 2 | PISTON | |
| | 6 | | 107-6969 | 1 | BODY | |
| | 7 | | 122-5114 | 1 | GUIDE | |
| | 8 | | 087-4628 | 1 | PLATE | |
| | 9 | | 147-5860 | 1 | PISTON AS | |
| | 10 | | 134-7134 | 1 | BARREL AS | |
| | 11 | | 107-6954 | 4 | PLATE | |
| | 12 | | 107-6955 | 5 | PLATE | |
| | 13 | | 096-1523 | 1 | GUIDE | |
| | 14 | | 7Y-4213 | 1 | PISTON | |
| | 15 | | 7Y-4202 | 1 | HEAD | |
| | 16 | | 8T-4944 | 10 | BOLT (L=40mm) | |
| B | 17 | | 096-1521 | 1 | SHIM (T=1.00mm) | |
| B | | | 096-3785 | 1 | SHIM (T=1.20mm) | |
| B | | | 096-3786 | 1 | SHIM (T=1.40mm) | |
| B | | | 096-3787 | 1 | SHIM (T=1.60mm) | |
| B | | | 096-1522 | 1 | SHIM (T=2.00mm) | |
| B | | | 096-3788 | 1 | SHIM (T=1.80mm) | |
| | 18 | | 096-3978 | 1 | SPRING | |
| | 19 | | 7Y-4216 | 1 | SPOOL | |
| J | 20 | | 2M-9780 | 1 | SEAL-O-RING (ID=19.18mm) | |
| | 21 | | 087-4786 | 1 | ADAPTER | |
| | 22 | | 121-1558 | 2 | PIN | |
| | 23 | | 096-5916 | 2 | SEAT | |
| | 24 | | 2D-6642 | 2 | BALL | |
| J | 25 | | 095-1572 | 2 | SEAL-O-RING (ID=4.80mm) | |
| J | 26 | | 096-5919 | 2 | RING | |
| | 27 | | 096-5915 | 2 | RETAINER | |
| | 28 | | 096-4003 | 1 | BEARING SET | |
| J | 29 | | 095-1585 | 1 | SEAL-O-RING (ID=17.80mm) | |
| | 30 | | 087-4742 | 1 | VALVE | |
| | 31 | | 096-1519 | 1 | SEAT | |
| | 32 | | 095-7380 | 1 | SPRING | |
| | 33 | | 095-7382 | 1 | RETAINER | |
| | 34 | | 094-1875 | 1 | DOWEL | |
| | 35 | | 095-7378 | 1 | WASHER SET | |
| | 36 | | 084-1882 | 11 | PLUG | |
| J | 37 | | 095-1575 | 3 | SEAL-O-RING (ID=7.80mm) | |
| J | 38 | | 096-4378 | 1 | RING | |
| J | 39 | | 096-4377 | 2 | SEAL-O-RING (ID=190.00mm) | |
| J | 40 | | 095-1700 | 2 | SEAL-O-RING (ID=34.40mm) | |
| J | 41 | | 095-7384 | 1 | SEAL-O-RING (ID=160.00mm) | |
| J | 42 | | 095-7383 | 1 | SEAL-O-RING (ID=174.00mm) | |
| J | 43 | | 095-7386 | 1 | RING | |

## 1347131 MOTOR GP-TRAVEL

| | | | | |
|---|---|---|---|---|
| J | 44 | 195-7387 | 1 | RING |
| J | 45 | 095-1685 | 1 | SEAL-O-RING (ID=179.30mm) |
| | 46 | 118-4057 | 9 | SPRING |
| | 47 | 7Y-4215 | 1 | SPACER |
| J | 48 | 095-1586 | 2 | SEAL-O-RING (ID=19.80mm) |
| J | 49 | 7Y-4217 | 2 | RING |
| J | 50 | 096-4376 | 1 | SEAL |
| | 51 | 123-2008 | 2 | KEY |
| | 52 | 095-7419 | 4 | SCREW |
| | 53 | 7Y-4224 | 2 | ORIFICE |
| J | 54 | 2K-0360 | 1 | SEAL-O-RING (ID=16.36mm) |
| | 55 | 9S-4185 | 1 | PLUG |
| | | | | THE FOLLOWING REPAIR KIT IS AVAILABLE |
| | | 7Y-4222 | 1 | SEAL KIT (INCLUDES PARTS MARKED J) |

## 1347131 MOTOR GP-TRAVEL

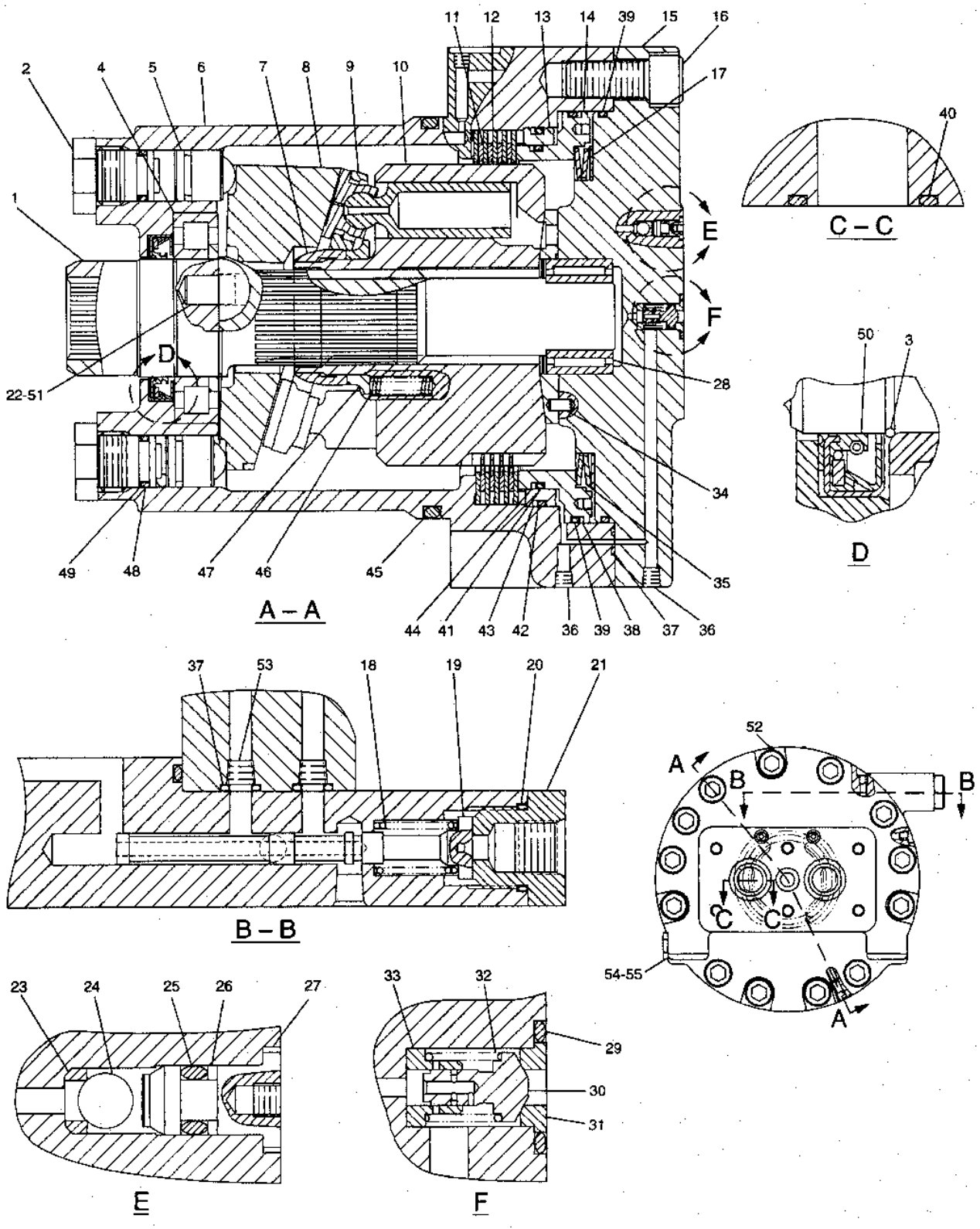


GRAPHIC #1

h74539e

# 1373718 VALVE GP-TRACTION CONTROL

PART OF 1077028-Page 335, 1347130-Page 335.01
1298030-Page 366

**Key:** Y - SEPARATE ILLUSTRATION

**SMCS**

| NOTE | REF NO | GRAPHIC REF | PART NUMBER | QTY | PART NAME 1 2 3 4 5 6 (PRODUCT LEVEL) | PRICE USD |
|---|---|---|---|---|---|---|
| | 1 | | 5B-9304 | 2 | SCREW | |
| | 2 | | 6V-8200 | 8 | BOLT (L=35mm) | |
| | 3 | | 9S-8004 | 2 | PLUG | |
| | 4 | | 3J-1907 | 2 | SEAL-O-RING (ID=11.89mm) | |
| | 5 | | 129-7932 | 2 | GUIDE | |
| | 6 | | 129-7931 | 2 | SPRING | |
| | 7 | | 095-1701 | 2 | SEAL-O-RING (ID=39.40mm) | |
| | 8 | | 119-5360 | 2 | COVER | |
| Y | 9 | | 129-8030 | 2 | VALVE GP | |
| | 10 | | 2M-9780 | 2 | SEAL-O-RING (ID=19.18mm) | |
| | 11 | | 119-5364 | 2 | PLUG | |
| | 12 | | 119-5362 | 2 | SPRING | |
| | 13 | | 119-5365 | 2 | VALVE | |

## 1373718 VALVE GP-TRACTION CONTROL

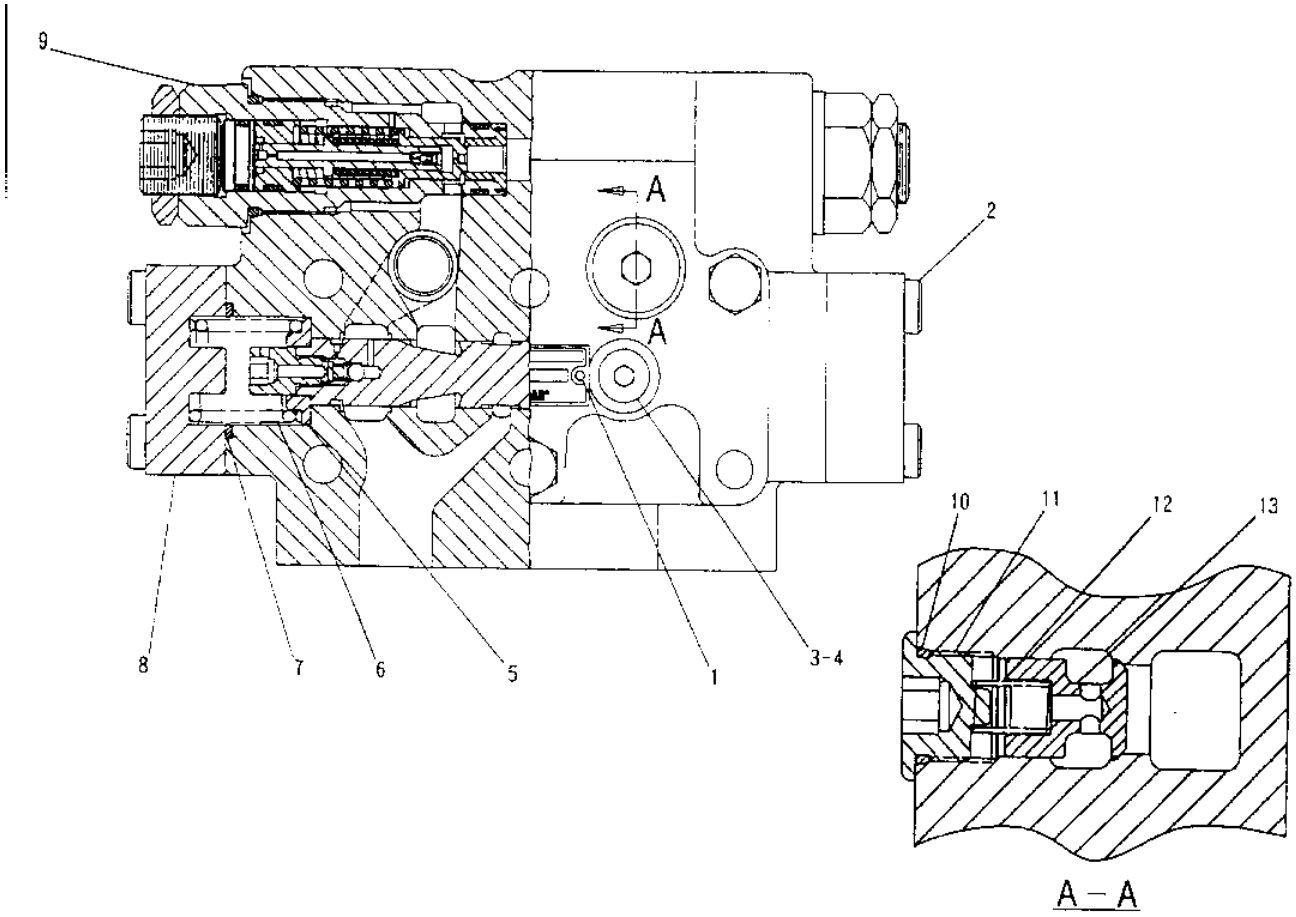


| NOTE | No. | PART No. | QTY | PART NAME |
|---|---|---|---|---|
| | 1 | 5B-9304 | 2 | SCREW |
| | 2 | 6V-8200 | 8 | BOLT (L=35mm) |
| | 3 | 9S-8004 | 2 | PLUG |
| | 4 | 3J 1907 | 2 | SEAL-O-RING (ID=11.89mm) |
| | 5 | 129-7932 | 2 | GUIDE |
| | 6 | 129-7931 | 2 | SPRING |
| | 7 | 095-1701 | 2 | SEAL-O-RING (ID=39.40mm) |
| | 8 | 119-5360 | 2 | COVER |
| Y | 9 | 129-8030 | 2 | VALVE GP |
| | 10 | 2M-9780 | 2 | SEAL-O-RING (ID=19.18mm) |
| | 11 | 119-5364 | 2 | PLUG |
| | 12 | 119-5362 | 2 | SPRING |
| | 13 | 119-5365 | 2 | VALVE |

| NOTE | No. | PART No. | QTY | PART NAME |
|---|---|---|---|---|

Y-SEE SEPARATE ILLUSTRATION

H53744E

# 1597841 SWIVEL GP

PART OF 1136822-Page 293, 1136823-Page 295
4I6263-Page 340

**Key:** Y - SEE SEPARATE ILLUSTRATION

**SMCS**

| NOTE | REF NO | GRAPHIC REF | PART NUMBER | QTY | PART NAME 1 2 3 4 5 6 (PRODUCT LEVEL) | PRICE USD |
|---|---|---|---|---|---|---|
| | 1 | | 8T-4136 | 6 | BOLT (L=25mm) | |
| | 2 | | 8T-4121 | 2 | WASHER-HARD | |
| | 3 | | 7Y-4817 | 1 | COVER | |
| | 4 | | 095-1716 | 1 | SEAL-O-RING (ID=109.40mm) | |
| | 5 | | 7I-7131 | 1 | RETAINER | |
| | 6 | | 7Y-4801 | 1 | HOUSING | |
| | 7 | | 159-7782 | 5 | SEAL | |
| | 8 | | 095-1625 | 3 | SEAL-O-RING (ID=89.60mm) | |
| | 9 | | 4I-6262 | 1 | ROTOR | |
| Y | | | 4I-6263 | 1 | ROTOR GP | |
| | 10 | | 8T-6759 | 1 | PLUG | |

## 1597841 SWIVEL GP

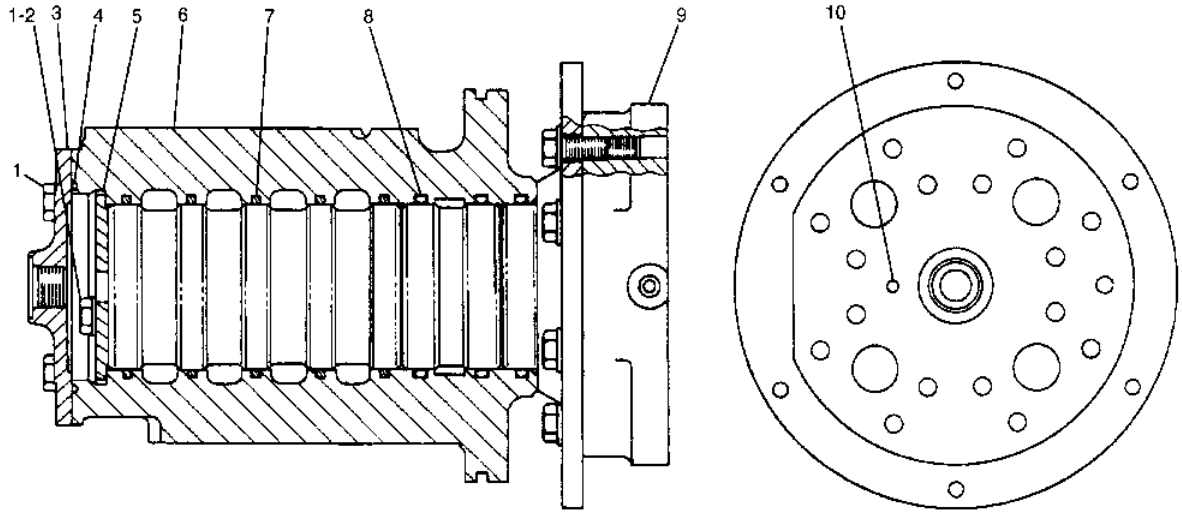


| NOTE | No. | PART No. | QTY | PART NAME | NOTE | No. | PART No. | QTY | PART NAME |
|---|---|---|---|---|---|---|---|---|---|
| | 1 | 8T-4136 | 6 | BOLT (L=25mm) | | | | | |
| | 2 | 8T-4121 | 2 | WASHER-HARD | | | | | |
| | 3 | 7Y-4817 | 1 | COVER | | | | | |
| | 4 | 095-1716 | 1 | SEAL-O-RING (ID=109.40mm) | | | | | |
| | 5 | 7I-7131 | 1 | RETAINER | | | | | |
| | 6 | 7Y-4801 | 1 | HOUSING | | | | | |
| | 7 | 159-7782 | 5 | SEAL | | | | | |
| | 8 | 095-1625 | 3 | SEAL-O-RING (ID=89.60mm) | | | | | |
| | 9 | 4I-6262 | 1 | ROTOR | | | | | |
| Y | | 4I-6263 | 1 | ROTOR GP | | | | | |
| | 10 | 8T-6759 | 1 | PLUG | | | | | |

Y-SEE SEPARATE ILLUSTRATION

H66981E

GRAPHIC #1

h66981e

# 4I6263 ROTOR GP-SWIVEL

PART OF 1597841-Page 339

**Key:** B - USE AS REQUIRED

**SMCS**

| NOTE | REF NO | GRAPHIC REF | PART NUMBER | QTY | PART NAME 1 2 3 4 5 6 (PRODUCT LEVEL) | PRICE USD |
|---|---|---|---|---|---|---|
| | 1 | | 8T-4139 | 5 | BOLT (L=30mm) | |
| | 2 | | 8T-4223 | 5 | WASHER | |
| | 3 | | 7Y-4804 | 1 | PLATE | |
| B | 4 | | 1U-8846 | | GASKET MAKER (2ml) | |
| | 5 | | 7Y-4803 | 1 | ROTOR | |

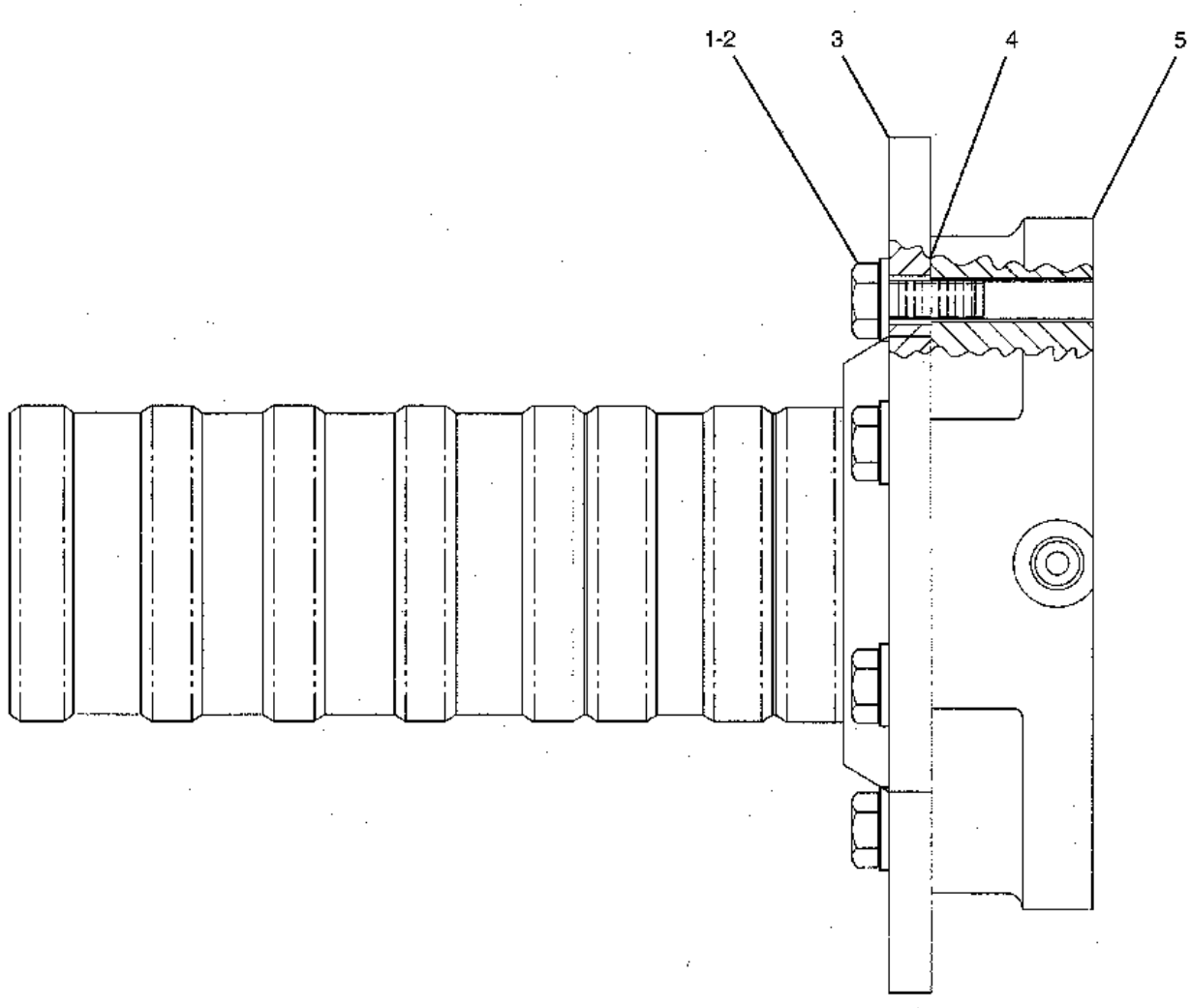


GRAPHIC #1

h67277e

# 1232146 VALVE GP-PILOT

RIGHT UNIT
S/N 8SR 1-00540, 8TR 1-00682
PART OF 1136735-Page 303
1337900-Page 343, 1315914-Page 386

**Key:** Y - SEE SEPARATE ILLUSTRATION

**SMCS**

| NOTE | REF NO | GRAPHIC REF | PART NUMBER | QTY | PART NAME 1 2 3 4 5 6 (PRODUCT LEVEL) | PRICE USD |
|---|---|---|---|---|---|---|
| Y | 1 | | 133-7900 | 1 | CONTROL GP | |
| | 2 | | 7Y-8463 | 1 | NUT | |
| Y | 3 | | 131-5914 | 1 | VALVE GP | |

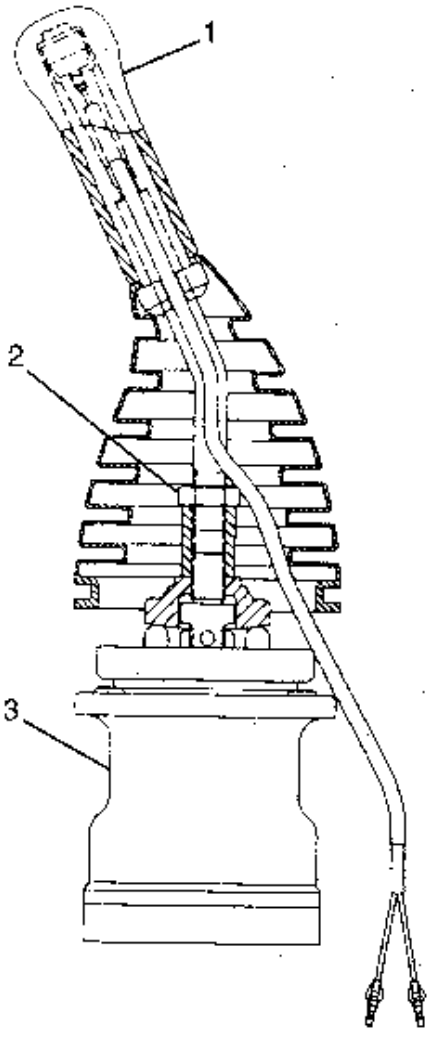


GRAPHIC #1 h52412e

# 1232147 VALVE GP-PILOT

LEFT UNIT
S/N 8SR 1-00540, 8TR 1-00682
PART OF 1136735-Page 303
1337899-Page 343, 1315914-Page 386

**Key:** Y - SEE SEPARATE ILLUSTRATION

**SMCS**

| NOTE | REF NO | GRAPHIC REF | PART NUMBER | QTY | PART NAME 1 2 3 4 5 6 (PRODUCT LEVEL) | PRICE USD |
|---|---|---|---|---|---|---|
| Y | 1 | | 133-7899 | 1 | CONTROL GP | |
| | 2 | | 7Y-8463 | 1 | NUT | |
| Y | 3 | | 131-5914 | 1 | VALVE GP | |

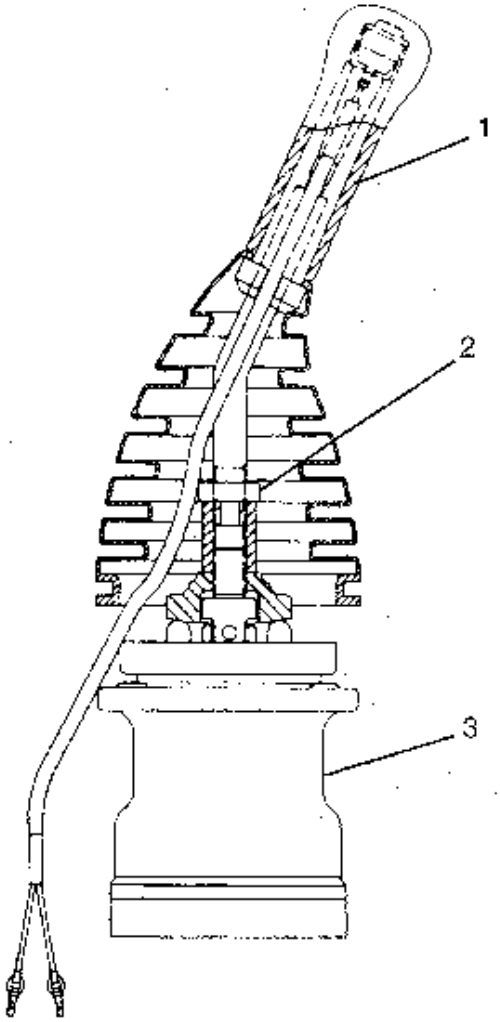


GRAPHIC #1

h52413e

# 1764985 VALVE GP-PILOT

RIGHT UNIT
S/N 8SR 00541-UP, 8TR 00683-UP
PART OF 1136735-Page 303.08
1337900-Page 343, 1764984-Page 386.01, 1643899-Page 386.02, 1843900-Page 386.03

**Key:** Y - SEE SEPARATE ILLUSTRATION

**SMCS**

| NOTE | REF NO | GRAPHIC REF | PART NUMBER | QTY | PART NAME 1 2 3 4 5 6 (PRODUCT LEVEL) | PRICE USD |
|---|---|---|---|---|---|---|
| Y | 1 | | 133-7900 | 1 | CONTROL GP | |
| | 2 | | 7Y-8463 | 1 | NUT | |
| Y | 3 | | 176-4984 | 1 | VALVE GP | |
| | | | | | THE FOLLOWING SERVICE REPAIRE ARE AVAILABLE: | |
| Y | | | 184-3899 | 1 | VALVE GP | |
| Y | | | 184-3900 | 1 | VALVE GP | |

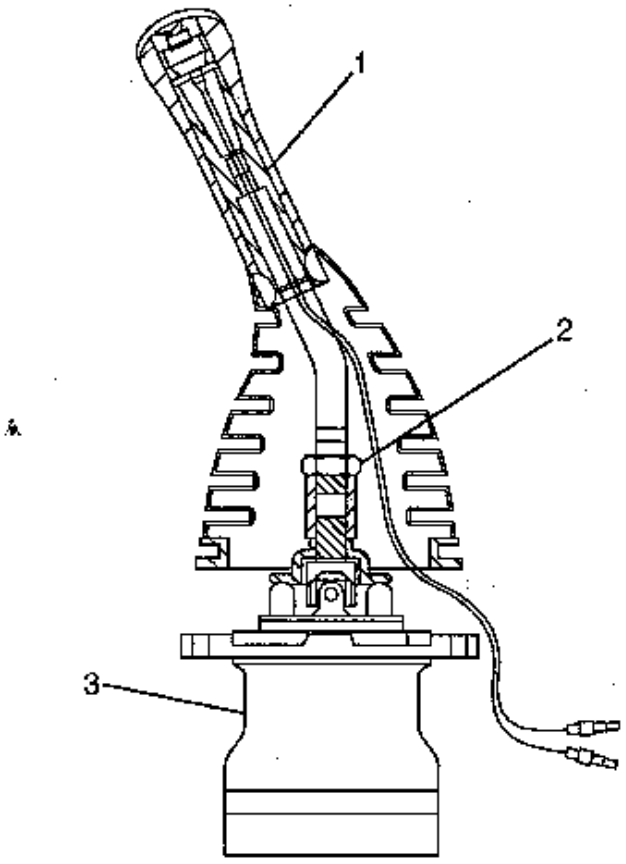


GRAPHIC #1

h69139e

# 1764986 VALVE GP-PILOT

LEFT UNIT
S/N 8SR 00541-UP, 8TR 00683-UP
PART OF 1136735-Page 303.08
1337899-Page 343, 1764984-Page 386.01, 1643899-Page 386.02, 1843900-Page 386.03

**Key:** Y - SEE SEPARA5TE ILLUSTRATION

**SMCS**

| NOTE | REF NO | GRAPHIC REF | PART NUMBER | QTY | PART NAME 1 2 3 4 5 6 (PRODUCT LEVEL) | PRICE USD |
|---|---|---|---|---|---|---|
| Y | 1 | | 133-7899 | 1 | CONTROL GP | |
| | 2 | | 7Y-8463 | 1 | NUT | |
| Y | 3 | | 176-4984 | 1 | VALVE GP | |
| | | | | | THE FOLLOWING SERVICE REPAIR IS AVAILABLE: | |
| Y | | | 184-3899 | 1 | VALVE GP | |
| Y | | | 184-3900 | 1 | VALVE GP | |

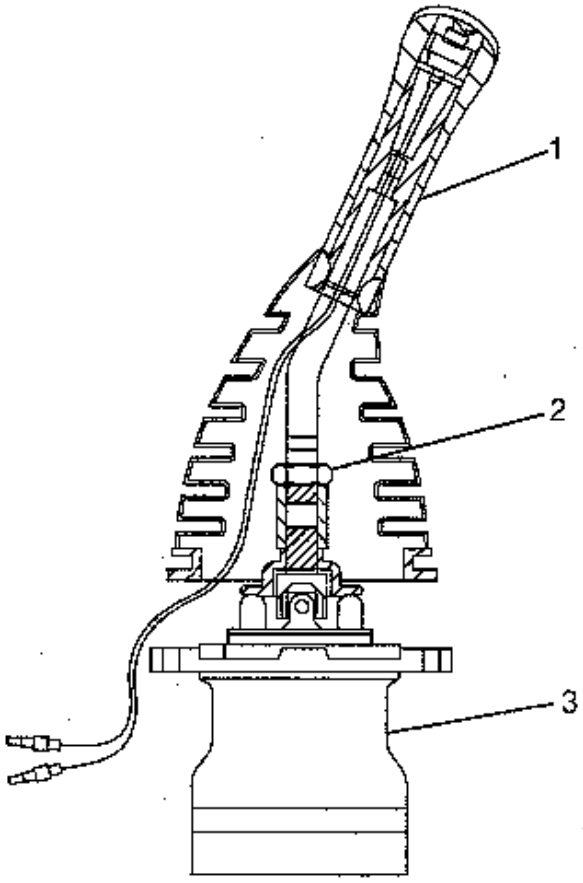


GRAPHIC #1 h69140e

# 1337899 CONTROL GP-PILOT OPERATED HYD

PART OF 1232147-Page 342, 1764986-Page 342.01
1282133-Page 344

**Key:** Y - SEE SEPARATE ILLUSTRATION

**SMCS**

| NOTE | REF NO | GRAPHIC REF | PART NUMBER | QTY | PART NAME 1 2 3 4 5 6 (PRODUCT LEVEL) | PRICE USD |
|---|---|---|---|---|---|---|
| Y | 1 | | 128-2133 | 1 | KNOB AS | |
| | 2 | | 124-4010 | 1 | LEVER | |
| | 3 | | 096-2617 | 2 | SCREW (MACHINE) | |
| | 4 | | 130-0379 | 1 | BOOT | |

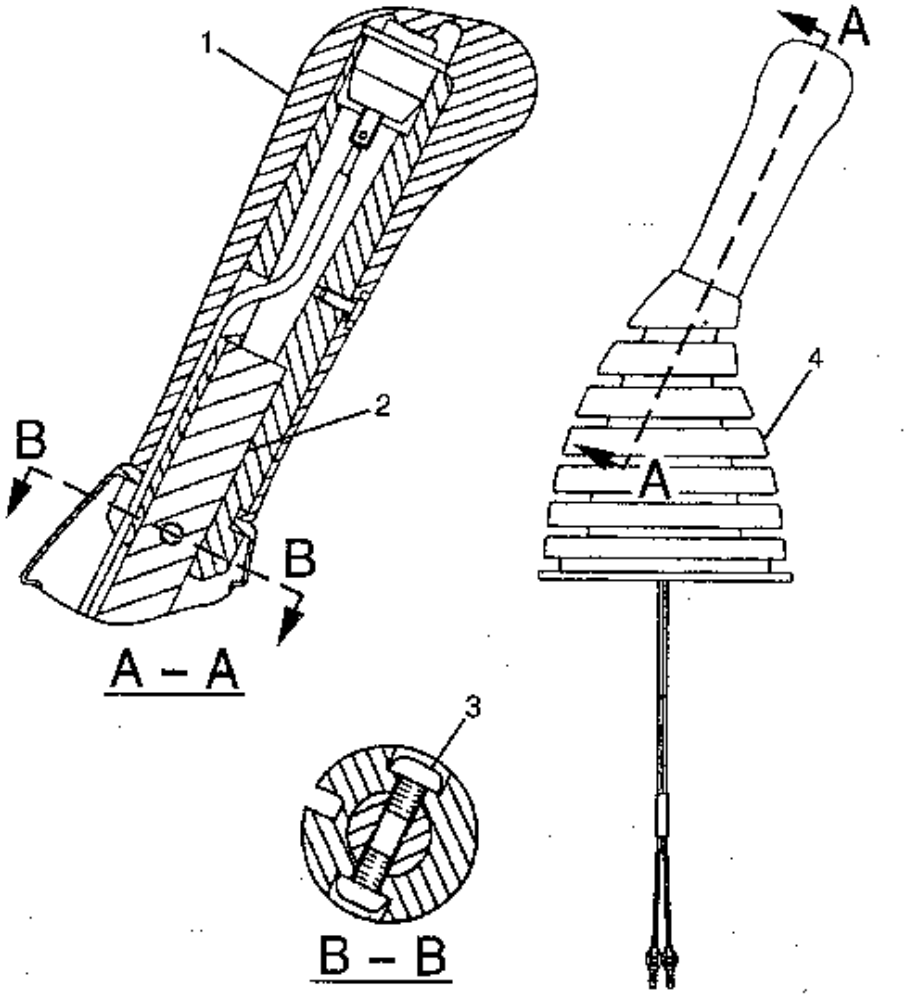


GRAPHIC #1

h50646e

# 1337900 CONTROL GP-PILOT OPERATED HYD

PART OF 1232146-Page 342, 1764985-Page 342.01
1282132-Page 344

**Key:** Y - SEE SEPARATE ILLUSTRATION

**SMCS**

| NOTE | REF NO | GRAPHIC REF | PART NUMBER | QTY | PART NAME 1 2 3 4 5 6 (PRODUCT LEVEL) | PRICE USD |
|---|---|---|---|---|---|---|
| Y | 1 | | 128-2132 | 1 | KNOB AS | |
| | 2 | | 124-4010 | 1 | LEVER | |
| | 3 | | 096-2617 | 2 | SCREW (MACHINE) | |
| | 4 | | 130-0379 | 1 | BOOT | |

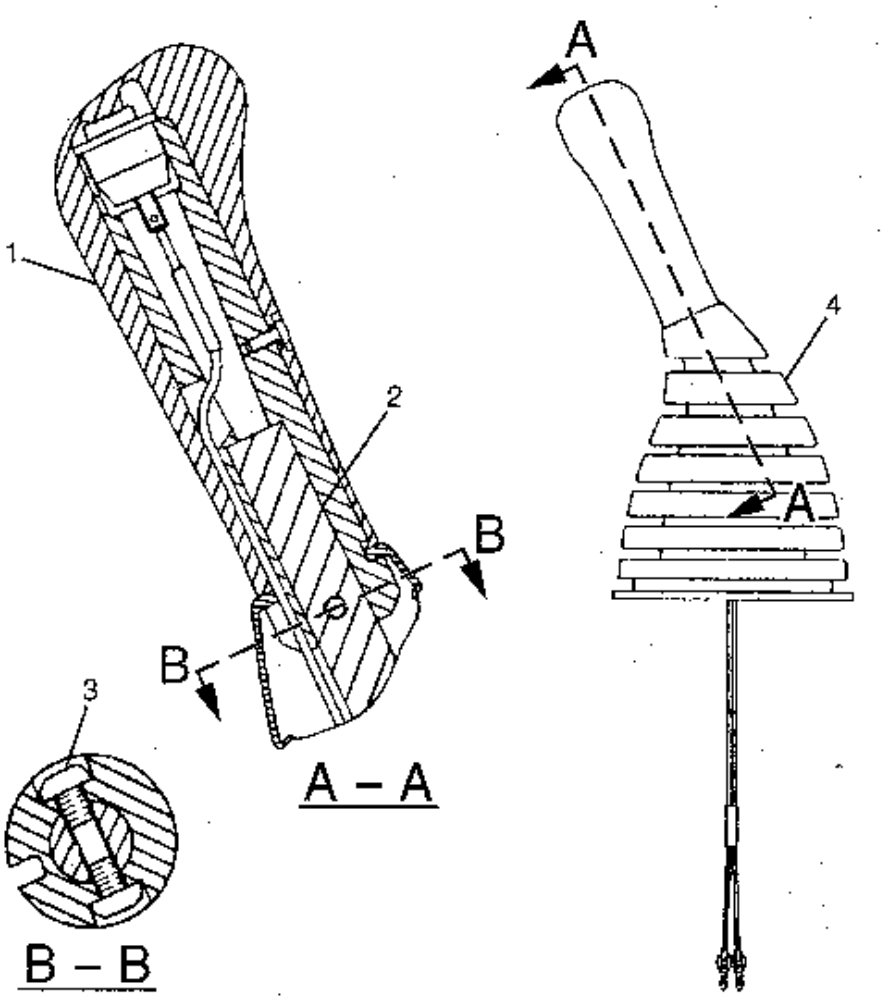


GRAPHIC #1

h50647e

# 1282132 KNOB AS

PART OF 1337900-Page 343

**Key:**

**SMCS**

| NOTE | REF NO | GRAPHIC REF | PART NUMBER | QTY | PART NAME 1 2 3 4 5 6 (PRODUCT LEVEL) | PRICE USD |
|---|---|---|---|---|---|---|
| | 1 | | 124-4008 | 1 | KNOB | |
| | 2 | | 124-4009 | 1 | SHAFT | |
| | 3 | | 6K-0613 | 2 | TERMINAL | |
| | 4 | | 087-4970 | 2 | SLEEVE | |
| | 5 | | 128-2134 | 1 | SWITCH AS | |
| | 6 | | 6I-5298 | 1 | SCREW | |

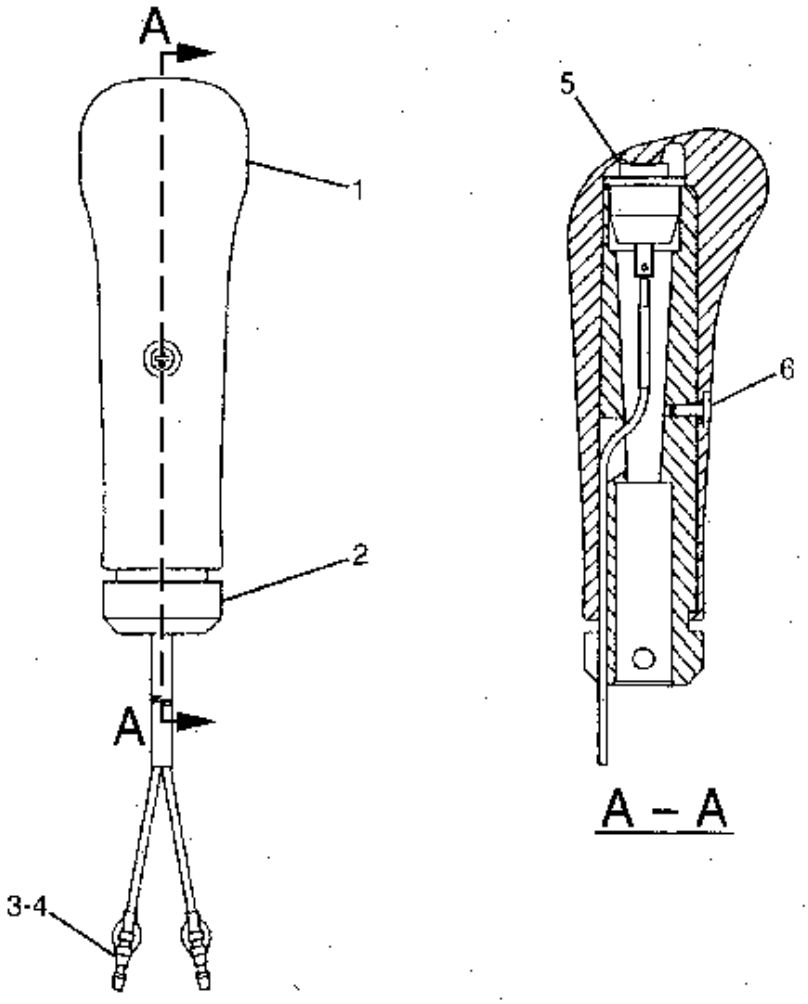


GRAPHIC #1

h51040e

# 1282133 KNOB AS

PART OF 1337899-Page 343

**Key:**

**SMCS**

| NOTE | REF NO | GRAPHIC REF | PART NUMBER | QTY | PART NAME 1 2 3 4 5 6 (PRODUCT LEVEL) | PRICE USD |
|---|---|---|---|---|---|---|
| | 1 | | 128-2131 | 1 | KNOB | |
| | 2 | | 124-4009 | 1 | SHAFT | |
| | 3 | | 6K-0613 | 2 | TERMINAL | |
| | 4 | | 087-4970 | 2 | SLEEVE | |
| | 5 | | 128-2134 | 1 | SWITCH AS | |
| | 6 | | 6I-5298 | 1 | SCREW | |

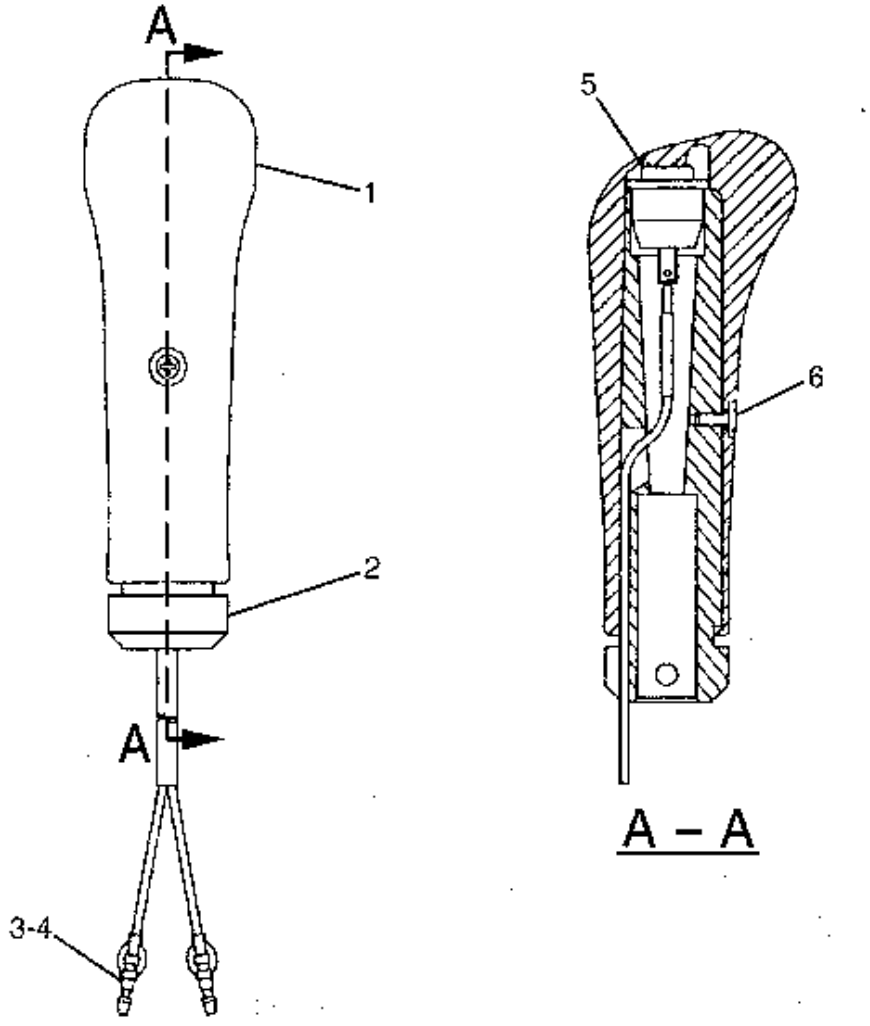


GRAPHIC #1

h51041e

# 1116284 CONTROL GP-PILOT OPERATED HYD

S/N 8SR 1-00417, 8TR 1-00485

**Key:**

**SMCS**

| NOTE | REF NO | GRAPHIC REF | PART NUMBER | QTY | PART NAME 1 2 3 4 5 6 (PRODUCT LEVEL) | PRICE USD |
|---|---|---|---|---|---|---|
| | 1 | | 096-6333 | 1 | KNOB | |
| | 2 | | 117-6350 | 1 | PEDAL AS (RH) | |
| | 3 | | 117-6349 | 1 | PEDAL AS (LH) | |
| | 4 | | 096-6332 | 1 | KNOB | |
| | 5 | | 117-6356 | 2 | STEP AS | |
| | 6 | | 124-4021 | 1 | LEVER AS (LH) | |
| | 7 | | 124-4025 | 1 | LEVER AS (RH) | |
| | 8 | | 8T-4191 | 8 | BOLT (L=16mm) | |
| | 9 | | 8T-4121 | 12 | WASHER (HARD) | |
| | 10 | | 122-9609 | 1 | PEDAL | |
| | 11 | | 096-6331 | 2 | NUT | |
| | 12 | | 8T-4136 | 4 | BOLT (L=25mm) | |
| | 13 | | 122-9608 | 1 | PEDAL | |
| | 14 | | 122-9610 | 2 | STEP | |

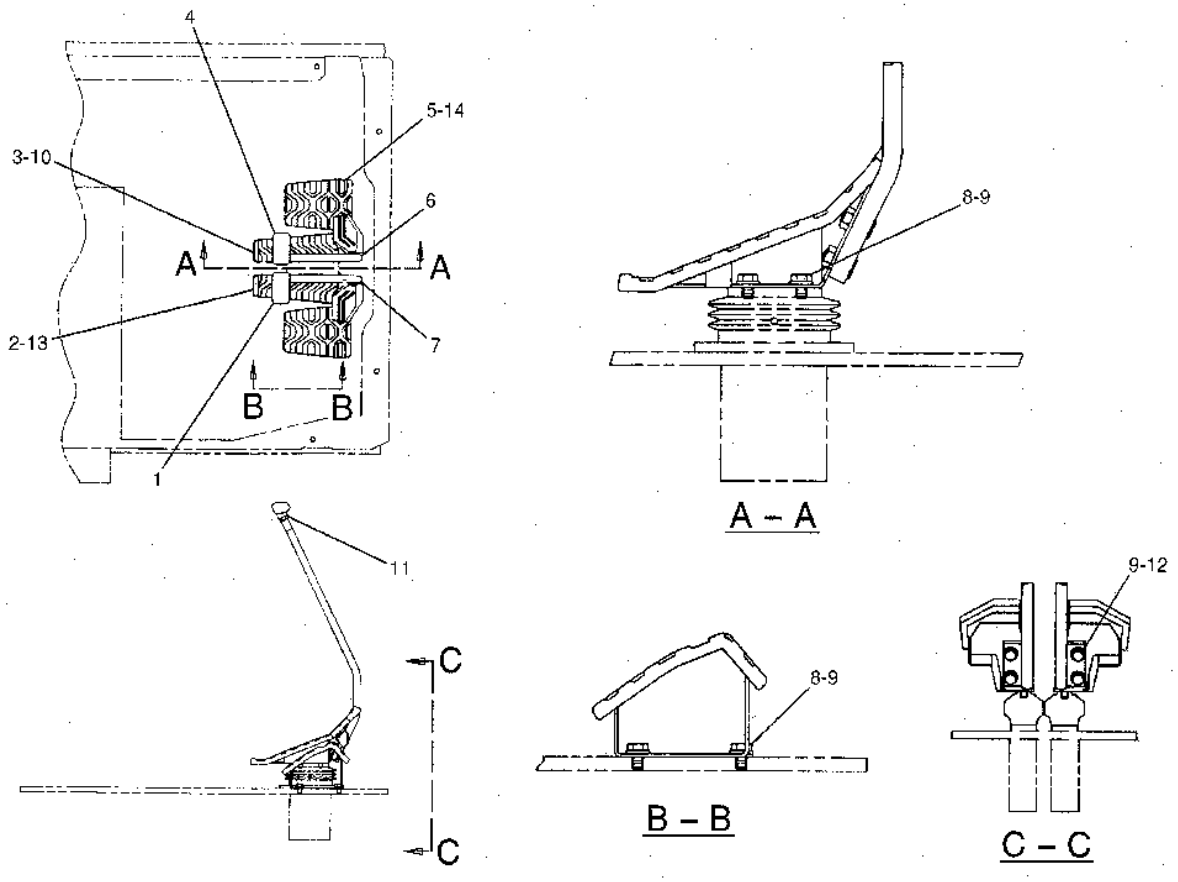


GRAPHIC #1

h50264e

# 1116284 CONTROL GP-PILOT OPERATED HYD

S/N 8SR 00418-UP, 8TR 00486-UP

**Key:** Y - Separate Illustration

**SMCS**

| NOTE | REF NO | GRAPHIC REF | PART NUMBER | QTY | PART NAME 1 2 3 4 5 6 (PRODUCT LEVEL) | PRICE USD |
|---|---|---|---|---|---|---|
| | | | 154-0568 | 1 | CONTROL GP (PILOT OPERATED HYD) | |
| | | | | | -OR- | |
| Y | | | 154-0569 | 1 | CONTROL GP (PILOT OPERATED HYD) | |

# 1540569 CONTROL GP-PILOT OPERATED HYD

S/N 8SR 00418-UP, 8TR 00486-UP
PART OF 1116284-Page 345.01

**Key:**

**SMCS**

| NOTE | REF NO | GRAPHIC REF | PART NUMBER | QTY | PART NAME 1 2 3 4 5 6 (PRODUCT LEVEL) | PRICE USD |
|---|---|---|---|---|---|---|
| | 1 | | 142-5546 | 2 | KNOB | |
| | 2 | | 117-6350 | 1 | PEDAL AS (RH) | |
| | 3 | | 117-6349 | 1 | PEDAL AS (LH) | |
| | 4 | | 095-0728 | 2 | SCREW | |
| | 5 | | 117-6356 | 2 | STEP AS | |
| | 6 | | 142-5544 | 1 | LEVER AS (LH) | |
| | 7 | | 142-5543 | 1 | LEVER AS (RH) | |
| | 8 | | 8T-4191 | 8 | BOLT (L=16mm) | |
| | 9 | | 8T-4121 | 12 | WASHER-HARD | |
| | 10 | | 122-9609 | 1 | PEDAL | |
| | 11 | | 096-6166 | 2 | WASHER | |
| | 12 | | 8T-4136 | 4 | BOLT (L=25mm) | |
| | 13 | | 122-9608 | 1 | PEDAL | |
| | 14 | | 122-9610 | 2 | STEP | |

## 1540569 CONTROL GP-PILOT OPERATED HYD

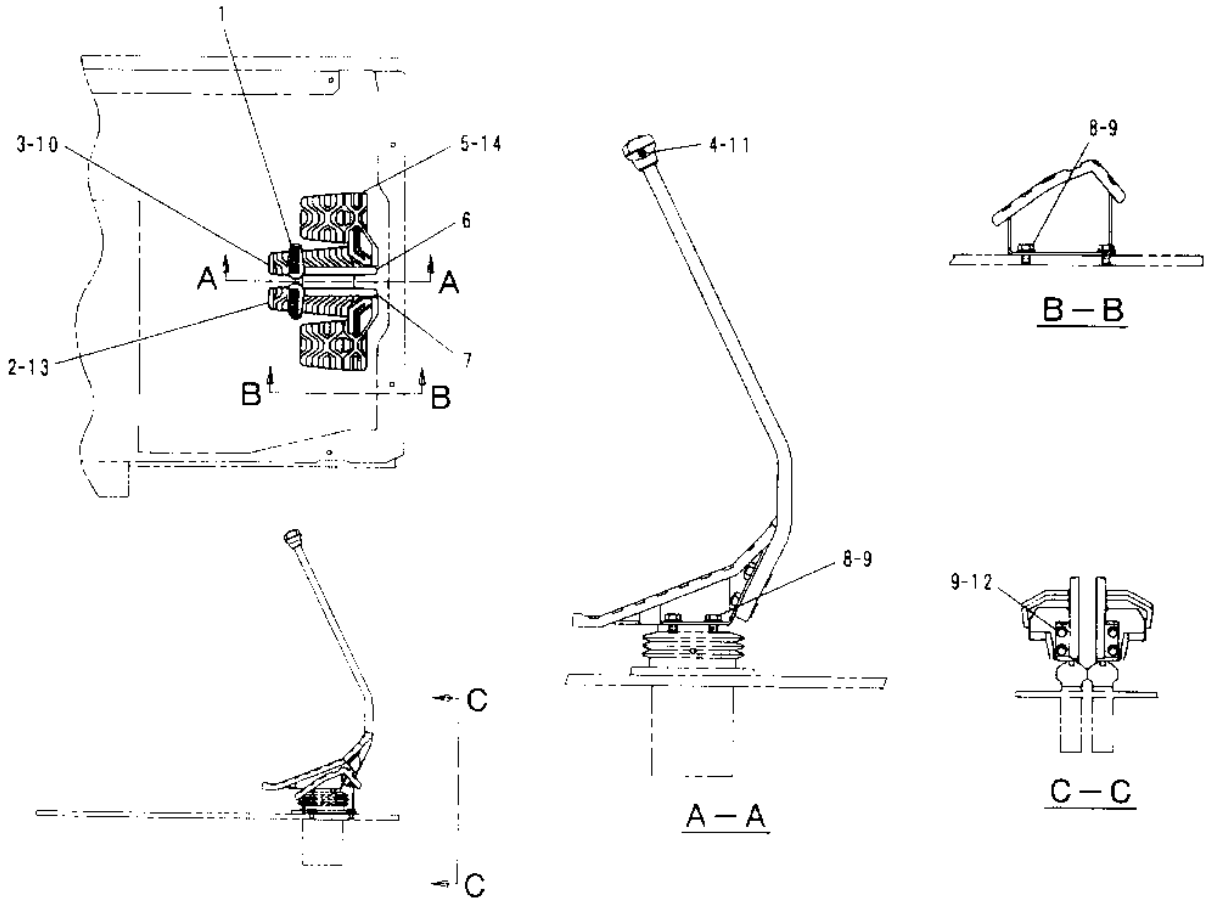


| NOTE | No. | PART No. | QTY | PART NAME |
|---|---|---|---|---|
| | 1 | 142-5546 | 2 | KNOB |
| | 2 | 117-6350 | 1 | PEDAL AS (RH) |
| | 3 | 117-6349 | 1 | PEDAL AS (LH) |
| | 4 | 095-0728 | 2 | SCREW |
| | 5 | 117-6356 | 2 | STEP AS |
| | 6 | 142-5544 | 1 | LEVER AS (LH) |
| | 7 | 142 5543 | 1 | LEVER AS (RH) |
| | 8 | 8T-4191 | 8 | BOLT(L=16mm) |
| | 9 | 8T-4121 | 12 | WASHER-HARD |
| | 10 | 122 9609 | 1 | PEDAL |
| | 11 | 096-6166 | 2 | WASHER |
| | 12 | 8T-4136 | 4 | BOLT(L=25mm) |
| | 13 | 122-9608 | 1 | PEDAL |
| | 14 | 122-9610 | 2 | STEP |

| NOTE | No. | PART No. | QTY | PART NAME |
|---|---|---|---|---|

H60197E

GRAPHIC #1

h60197e

# 1096031 CONTROL GP-HYDRAULIC

SINGLE AND COMBINED FUNCTION/WITH THIRD PEDAL
PART OF 1211925, 1211926-Page 301
1232604-Page 387
AN ATTACHMENT

**Key:** Y - SEE SEPARATE ILLUSTRATION

**SMCS**

| NOTE | REF NO | GRAPHIC REF | PART NUMBER | QTY | PART NAME 1 2 3 4 5 6 (PRODUCT LEVEL) | PRICE USD |
|---|---|---|---|---|---|---|
| | 1 | | 127-6793 | 1 | PEDAL AS | |
| | 2 | | 8T-0114 | 1 | PIN-SPRING | |
| Y | 3 | | 123-2604 | 1 | VALVE GP | |
| | 4 | | 121-1865 | 1 | PEDAL | |
| | 5 | | 8T-4121 | 5 | WASHER-HARD | |
| | 6 | | 5I-7090 | 1 | CHAIN AS | |
| | 7 | | 095-0735 | 2 | SCREW-MACHINE | |
| | 8 | | 8T-4136 | 2 | BOLT (L=25mm) | |
| | 9 | | 8T-4191 | 3 | BOLT (L=16mm) | |
| | 10 | | 154-0670 | 1 | FLOORMAT | |
| | 11 | | 128-2173 | 1 | PIN | |
| | 12 | | 127-6794 | 1 | SUPPORT AS | |

## 1096031 CONTROL GP-HYDRAULIC

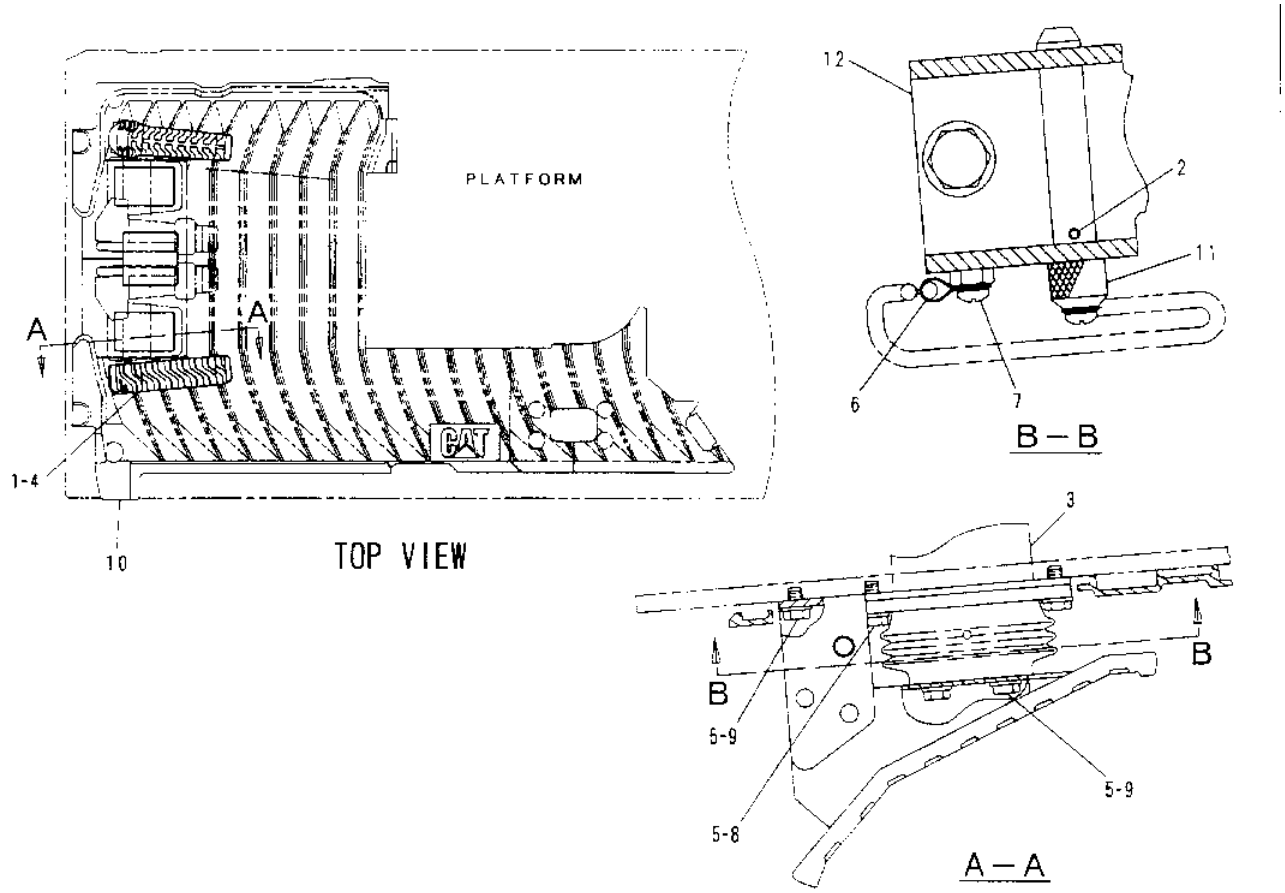


| NOTE | No. | PART No. | QTY | PART NAME |
|---|---|---|---|---|
| | 1 | 127-6793 | 1 | PEDAL AS |
| | 2 | 8T-0114 | 1 | PIN-SPRING |
| Y | 3 | 123-2604 | 1 | VALVE GP |
| | 4 | 121 1865 | 1 | PEDAL |
| | 5 | 8T-4121 | 5 | WASHER-HARD |
| | 6 | 5I-7090 | 1 | CHAIN AS |
| | 7 | 095-0735 | 2 | SCREW-MACHINE |
| | 8 | 8T-4136 | 2 | BOLT (L=25mm) |
| | 9 | 8T-4191 | 3 | BOLT (L=16mm) |
| | 10 | 154-0670 | 1 | FLOORMAT |
| | 11 | 128-2173 | 1 | PIN |
| | 12 | 127 6794 | 1 | SUPPORT AS |

| NOTE | No. | PART No. | QTY | PART NAME |
|---|---|---|---|---|

Y-SEE SEPARATE ILLUSTRATION

H63586E

GRAPHIC #1

h63586e

# 1116428 CONTROL GP-HYDRAULIC

SINGLE AND COMBINED FUNCTION/WITHOUT THIRD PEDAL
PART OF 1096090, 1096192-Page 301.01, 1133422-Page 370
1232604-Page 387
AN ATTACHMENT

**Key:** Y - SEE SEPARATE ILLUSTRATION

**SMCS**

| NOTE | REF NO | GRAPHIC REF | PART NUMBER | QTY | PART NAME 1 2 3 4 5 6 (PRODUCT LEVEL) | PRICE USD |
|---|---|---|---|---|---|---|
| | 1 | | 128-2170 | 1 | PEDAL AS | |
| | 2 | | 8T-0114 | 1 | PIN (SPRING) | |
| Y | 3 | | 123-2604 | 1 | VALVE GP | |
| | 4 | | 122-9611 | 1 | PEDAL | |
| | 5 | | 8T-4121 | 5 | WASHER (HARD) | |
| | 6 | | 5I-7090 | 1 | CHAIN AS | |
| | 7 | | 095-0735 | 2 | SCREW (MACHINE) | |
| | 8 | | 8T-4136 | 2 | BOLT (L=25mm) | |
| | 9 | | 8T-4191 | 3 | BOLT (L=16mm) | |
| | 10 | | 154-0666 | 1 | FLOORMAT | |
| | 11 | | 128-2173 | 1 | PIN | |
| | 12 | | 128-2172 | 1 | SUPPORT AS | |

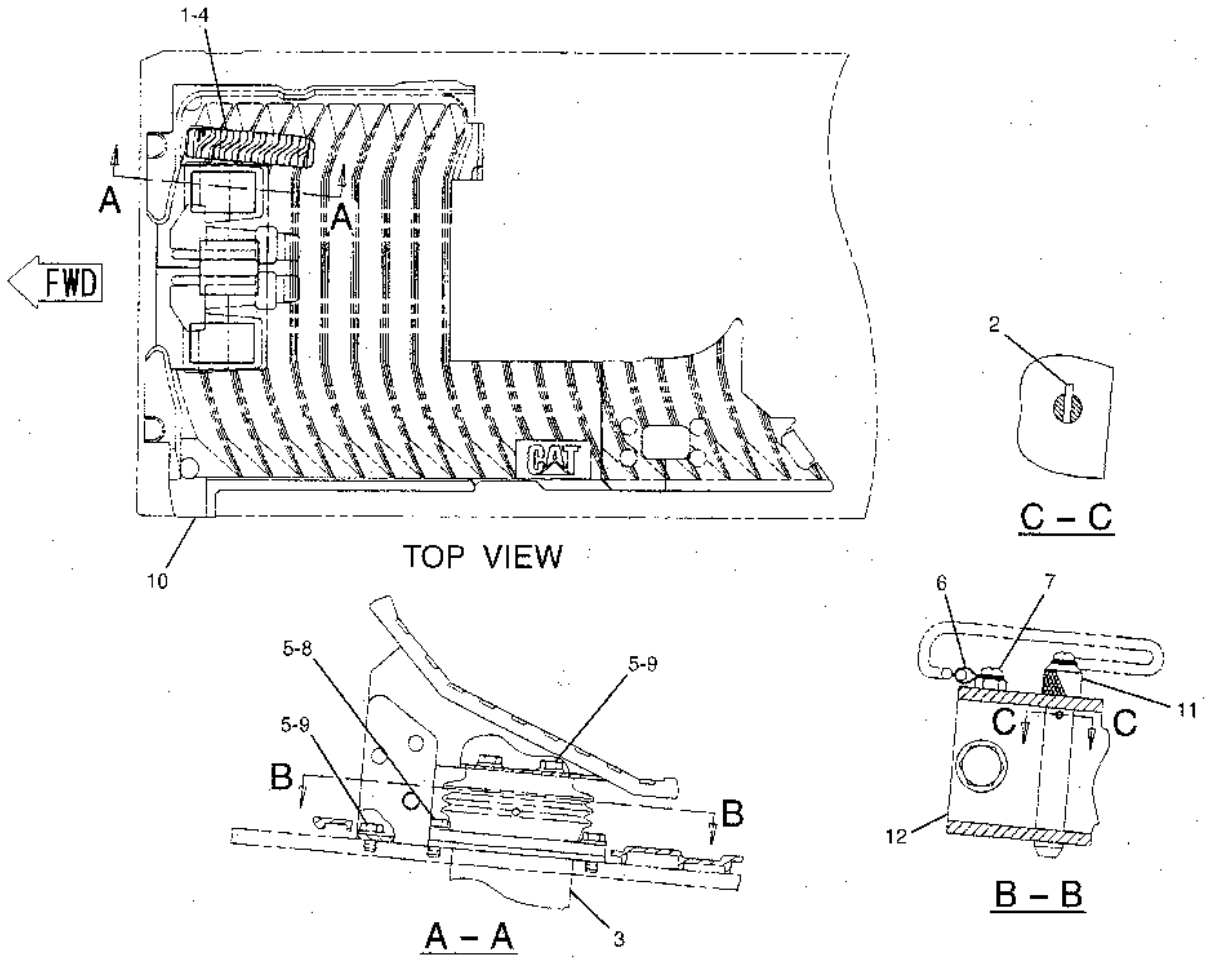


GRAPHIC #1

h60198e

# 1352272 CONTROL GP-HYDRAULIC

THIRD PEDAL
S/N 8SR (D96.11)-UP, 8TR (D96.11)-UP
PART OF 1133422-Page 370
1232604-Page 387
AN ATTACHMENT

**Key:** Y - SEE SEPARATE ILLUSTRATION

**SMCS**

| NOTE | REF NO | GRAPHIC REF | PART NUMBER | QTY | PART NAME 1 2 3 4 5 6 (PRODUCT LEVEL) | PRICE USD |
|---|---|---|---|---|---|---|
| | 1 | | 135-2274 | 1 | PEDAL | |
| | 2 | | 135-2273 | 1 | PEDAL AS | |
| | 3 | | 154-0666 | 1 | FLOORMAT | |
| | 4 | | 8T-4191 | 3 | BOLT (L=16mm) | |
| | 5 | | 8T-4121 | 5 | WASHER-HARD | |
| | 6 | | 8T-4136 | 2 | BOLT (L=25mm) | |
| Y | 7 | | 123-2604 | 1 | VALVE GP | |
| | 8 | | 8T-0114 | 1 | PIN-SPRING | |
| | 9 | | 5I-7090 | 1 | CHAIN AS | |
| | 10 | | 095-0735 | 2 | SCREW-MACHINE | |
| | 11 | | 128-2173 | 1 | PIN | |
| | 12 | | 135-2275 | 1 | SUPPORT AS | |

## 1352272 CONTROL GP-HYDRAULIC

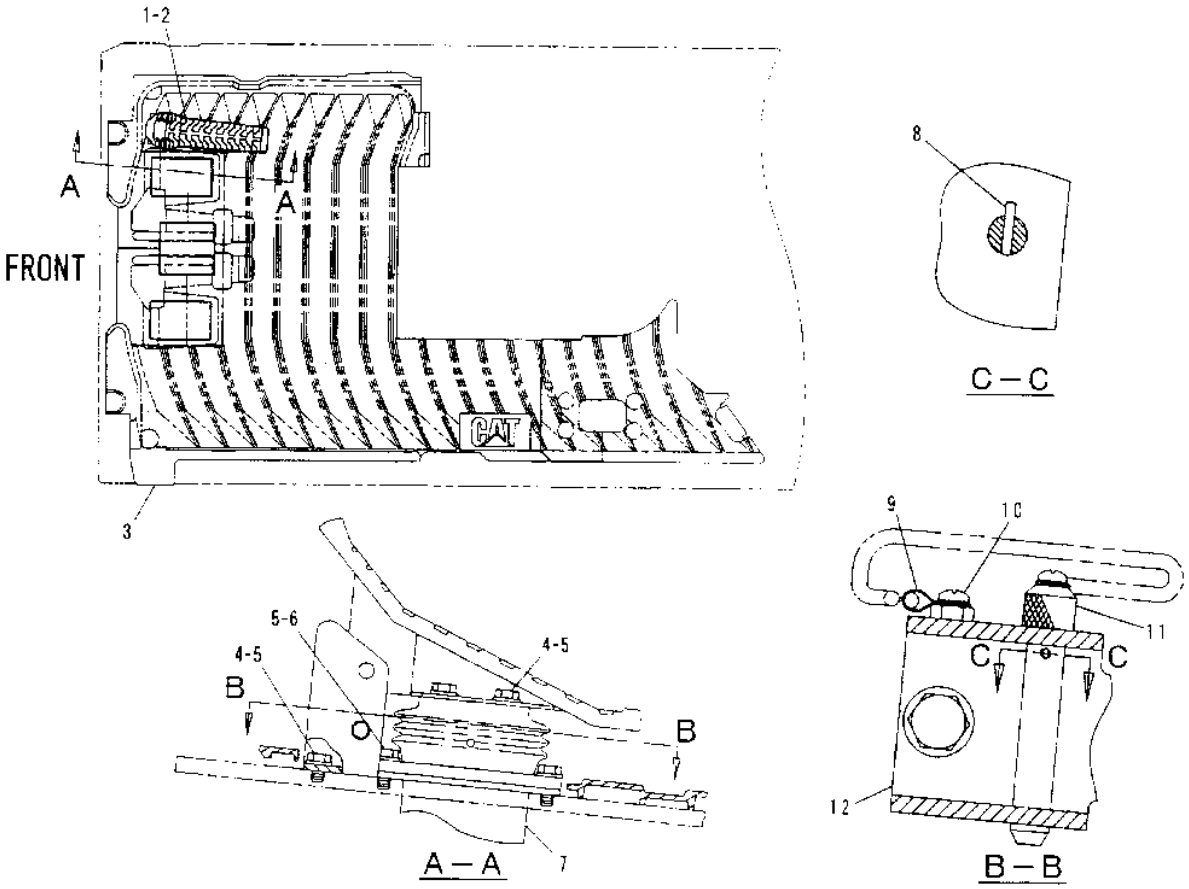


| NOTE | No. | PART No. | QTY | PART NAME | NOTE | No. | PART No. | QTY | PART NAME |
|---|---|---|---|---|---|---|---|---|---|
| | 1 | 135-2274 | 1 | PEDAL | | | | | |
| | 2 | 135-2273 | 1 | PEDAL AS | | | | | |
| | 3 | 154-0666 | 1 | FLOORMAT | | | | | |
| | 4 | 8T 4191 | 3 | BOLT (L=16mm) | | | | | |
| | 5 | 8T-4121 | 5 | WASHER-HARD | | | | | |
| | 6 | 8T-4136 | 2 | BOLT (L=25mm) | | | | | |
| Y | 7 | 123-2604 | 1 | VALVE GP | | | | | |
| | 8 | 8T-0114 | 1 | PIN-SPRING | | | | | |
| | 9 | 51 7090 | 1 | CHAIN AS | | | | | |
| | 10 | 095-0735 | 2 | SCREW-MACHINE | | | | | |
| | 11 | 128-2173 | 1 | PIN | | | | | |
| | 12 | 135 2275 | 1 | SUPPORT AS | | | | | |

Y-SEE SEPARATE ILLUSTRATION

H63587E

# 1077037 MOUNTING GP-VALVE

**Key:**

**SMCS**

| NOTE | REF NO | GRAPHIC REF | PART NUMBER | QTY | PART NAME 1 2 3 4 5 6 (PRODUCT LEVEL) | PRICE USD |
|---|---|---|---|---|---|---|
| | 1 | | 114-0624 | 1 | BRACKET AS | |
| | 2 | | 100-3866 | 4 | BOLT (L=40mm) | |
| | 3 | | 9X-8257 | 4 | WASHER | |
| | 4 | | 8T-5460 | 4 | BOLT (L=40mm) | |
| | 5 | | 8T-4123 | 4 | WASHER (HARD) | |

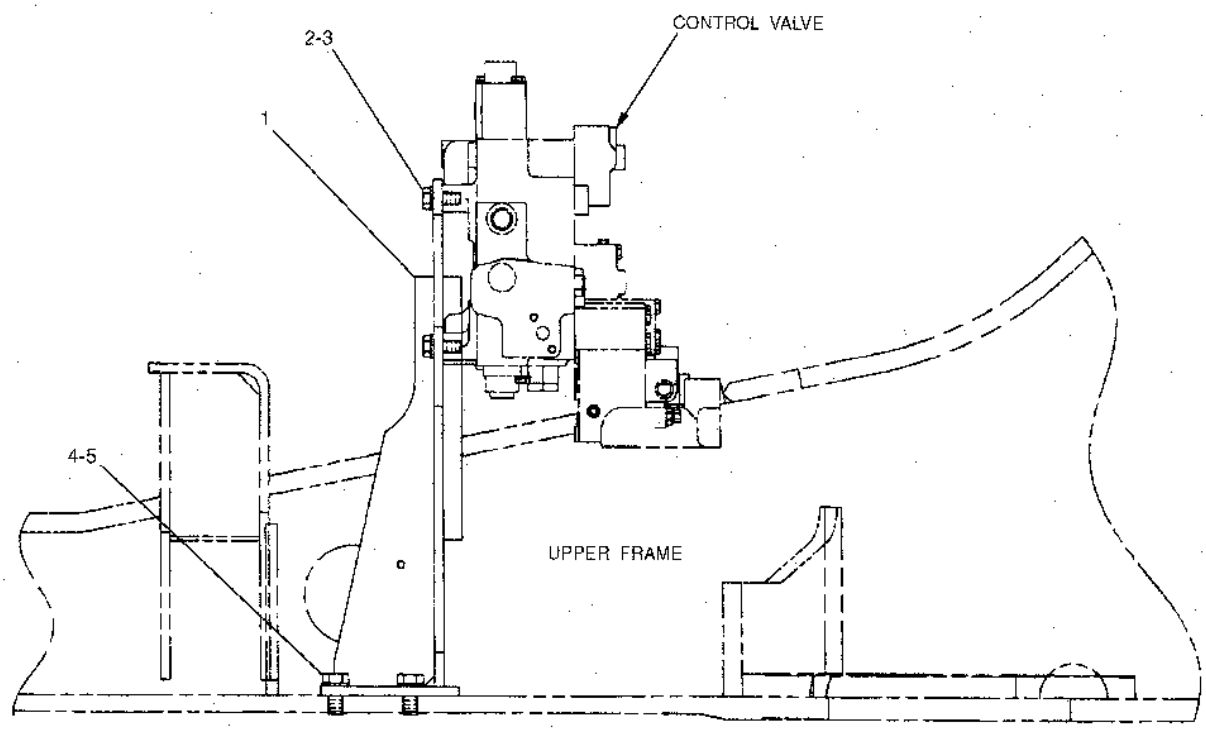


GRAPHIC #1 h51022e

# 1077010 VALVE GP-MAIN CONTROL

S/N 8SR 1-00400, 8TR 1-00460
1077011-Page 350, 1077014-Page 358, 6E4281-Page 368

**Key:** Y - SEPARATE ILLUSTRATION

**SMCS**

| NOTE | REF NO | GRAPHIC REF | PART NUMBER | QTY | PART NAME 1 2 3 4 5 6 (PRODUCT LEVEL) | PRICE USD |
|---|---|---|---|---|---|---|
| Y | 1 | | 107-7011 | 1 | VALVE GP | |
| Y | 2 | | 107-7014 | 1 | VALVE GP | |
| | 3 | | 8T-4193 | 4 | BOLT (L=50mm) | |
| | 4 | | 9X-8257 | 4 | WASHER-HARD | |
| Y | 5 | | 6E-4281 | 1 | VALVE GP | |
| | 6 | | 4J-9535 | 1 | SEAL-O-RING (ID=10.77mm) | |
| | 7 | | 4J-5309 | 6 | SEAL-O-RING (ID=9.19mm) | |
| | 8 | | 1P-3702 | 2 | SEAL | |
| | 9 | | 6V-0357 | 2 | SEAL-O-RING (ID=29.74mm) | |
| | 10 | | 4J-0519 | 1 | SEAL-O-RING (ID=31.34mm) | |
| | 11 | | 6E-2157 | 1 | SPRING | |
| | 12 | | 8T-5005 | 4 | BOLT (L=70mm) | |
| | 13 | | 4B-4158 | 2 | SCREW | |

## 1077010 VALVE GP-MAIN CONTROL

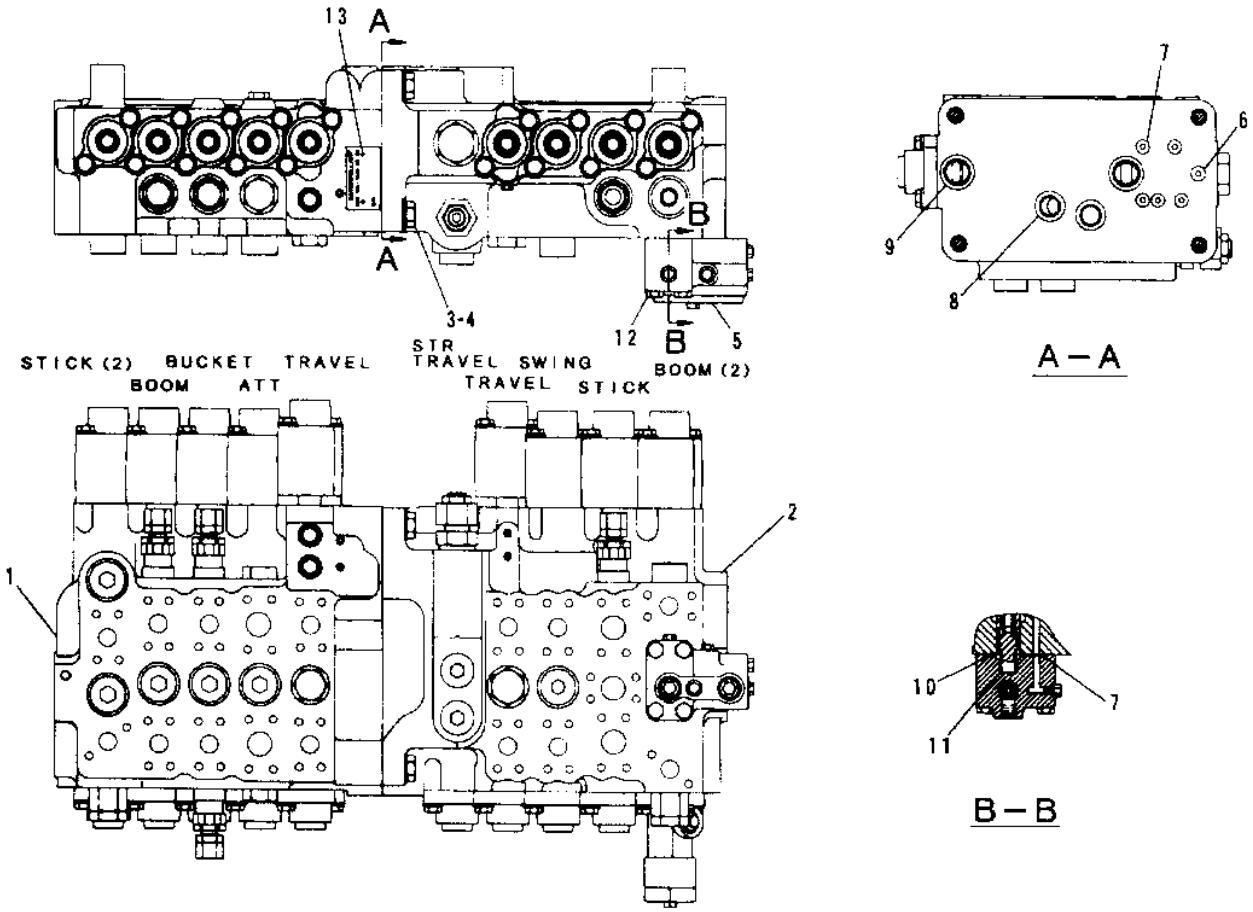


| NOTE | No. | PART No. | QTY | PART NAME |
|---|---|---|---|---|
| Y | 1 | 107-7011 | 1 | VALVE GP |
| Y | 2 | 107-7014 | 1 | VALVE GP |
| | 3 | 8T-4193 | 4 | BOLT (L=50mm) |
| | 4 | 9X-8257 | 4 | WASHER-HARD |
| Y | 5 | 6E-4281 | 1 | VALVE GP |
| | 6 | 4J-9535 | 1 | SEAL-O-RING (ID=10.77mm) |
| | 7 | 4J-5309 | 6 | SEAL-O-RING (ID=9.19mm) |
| | 8 | 1P-3702 | 2 | SEAL |
| | 9 | 6V-0357 | 2 | SEAL-O-RING (ID=29.74mm) |
| | 10 | 4J-0519 | 1 | SEAL-O-RING (ID=31.34mm) |
| | 11 | 6E-2157 | 1 | SPRING |
| | 12 | 8T-5005 | 4 | BOLT (L=70mm) |
| | 13 | 4B-4158 | 2 | SCREW |

| NOTE | No. | PART No. | QTY | PART NAME |
|---|---|---|---|---|

Y-SEE SEPARATE ILLUSTRATION

H56382E

# 1425521 VALVE GP-MAIN CONTROL

S/N 8SR 00401-UP, 8TR 00461-UP
1077011-Page 351.03, 1425522-Page 361.05, 6E4281-Page 368

**Key:** Y - SEE SEPARATE ILLUSTRATION

**SMCS**

| NOTE | REF NO | GRAPHIC REF | PART NUMBER | QTY | PART NAME 1 2 3 4 5 6 (PRODUCT LEVEL) | PRICE USD |
|---|---|---|---|---|---|---|
| Y | 1 | | 107-7011 | 1 | VALVE GP | |
| Y | 2 | | 142-5522 | 1 | VALVE GP | |
| | 3 | | 8T-4193 | 4 | BOLT (L=50mm) | |
| | 4 | | 9X-8257 | 4 | WASHER | |
| Y | 5 | | 6E-4281 | 1 | VALVE GP | |
| | 6 | | 4J-9535 | 1 | SEAL-O-RING (ID=10.77mm) | |
| | 7 | | 4J-5309 | 6 | SEAL-O-RING (ID=9.19mm) | |
| | 8 | | 1P-3702 | 2 | SEAL | |
| | 9 | | 6V-0357 | 2 | SEAL-O-RING (ID=29.74mm) | |
| | 10 | | 4J-0519 | 1 | SEAL-O-RING (ID=31.34mm) | |
| | 11 | | 6E-2157 | 1 | SPRING | |
| | 12 | | 8T-5005 | 4 | BOLT (L=70mm) | |
| | 13 | | 4B-4158 | 2 | SCREW | |

## 1425521 VALVE GP-MAIN CONTROL

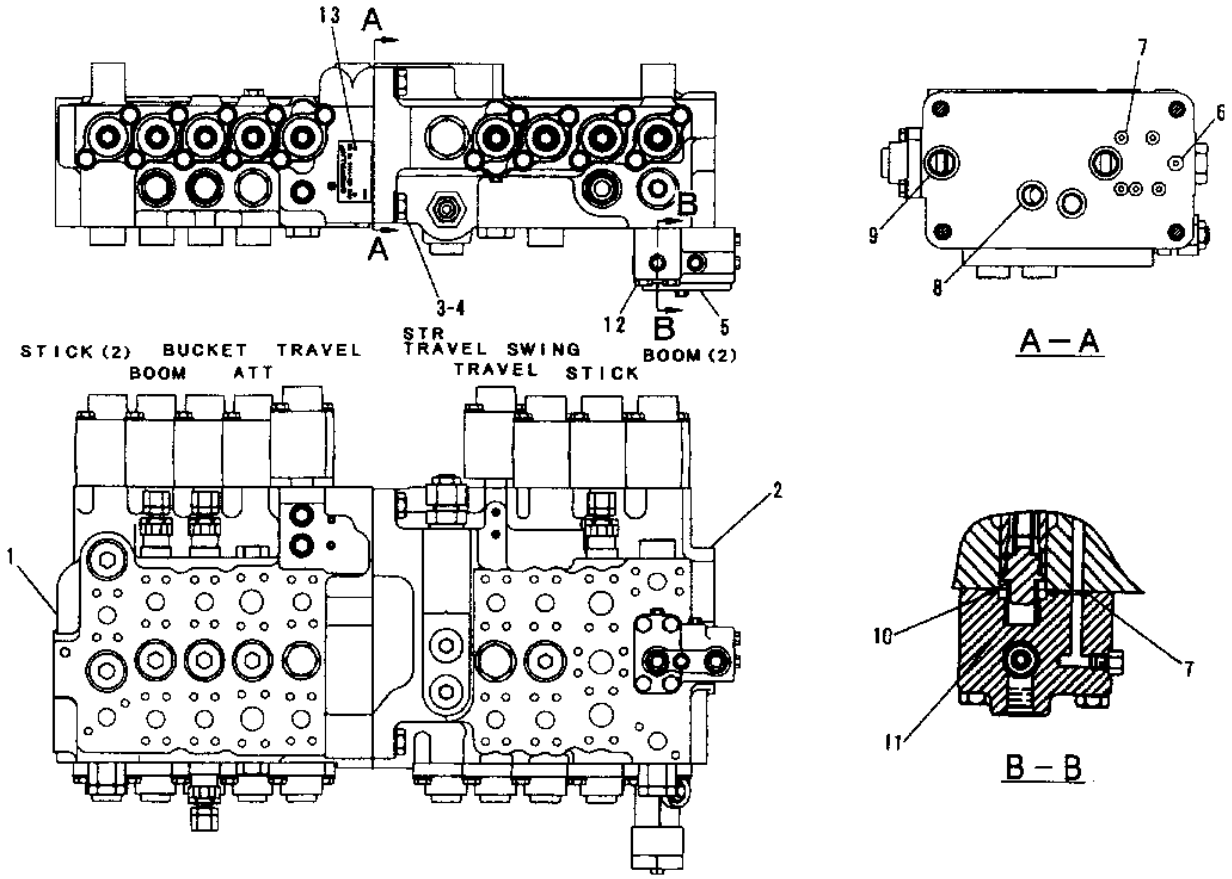


| NOTE | No. | PART No. | QTY | PART NAME | NOTE | No. | PART No. | QTY | PART NAME |
|---|---|---|---|---|---|---|---|---|---|
| Y | 1 | 107-7011 | 1 | VALVE GP | | | | | |
| Y | 2 | 142-5522 | 1 | VALVE GP | | | | | |
| | 3 | 8T-4193 | 4 | BOLT (L=50mm) | | | | | |
| | 4 | 9X-8257 | 4 | WASHER | | | | | |
| Y | 5 | 6E-4281 | 1 | VALVE GP | | | | | |
| | 6 | 4J-9535 | 1 | SEAL-O-RING (ID=10.77mm) | | | | | |
| | 7 | 4J-5309 | 6 | SEAL-O-RING (ID=9.19mm) | | | | | |
| | 8 | 1P-3702 | 2 | SEAL | | | | | |
| | 9 | 6V-0357 | 2 | SEAL-O-RING (ID=29.74mm) | | | | | |
| | 10 | 4J-0519 | 1 | SEAL-O-RING (ID=31.34mm) | | | | | |
| | 11 | 6E-2157 | 1 | SPRING | | | | | |
| | 12 | 8T-5005 | 4 | BOLT (L=70mm) | | | | | |
| | 13 | 4B-4158 | 2 | SCREW | | | | | |

Y – SEE SEPARATE ILLUSTRATION

H60566E

# 1077011 VALVE GP-CONTROL-PART 1 OF 2

S/N 8SR 1-00340, 8TR 1-00325
PART OF 1077010-Page 349
1077012-Page 352, 6E4816-Page 355

**Key:** Y - SEE SEPARATE ILLUSTRATION

**SMCS**

| NOTE | REF NO | GRAPHIC REF | PART NUMBER | QTY | PART NAME 1 2 3 4 5 6 (PRODUCT LEVEL) | PRICE USD |
|---|---|---|---|---|---|---|
| Y | 1 | | 107-7012 | 1 | VALVE GP | |
| | 2 | | 6V-5597 | 4 | SEAL-O-RING (ID=40.94mm) | |
| | 3 | | 6E-2274 | 2 | COVER | |
| | 4 | | 8T-4195 | 10 | BOLT (L=30mm) | |
| | 5 | | 8T-4121 | 20 | WASHER | |
| | 6 | | 9S-4183 | 1 | PLUG | |
| | 7 | | 3D-2824 | 1 | SEAL-O-RING (ID=23.47mm) | |
| | 8 | | 1T-0936 | 2 | PLUG | |
| | 9 | | 096-3044 | 1 | SEAL-O-RING (ID=31.72mm) | |
| | 10 | | 3J-1907 | 1 | SEAL-O-RING (ID=11.89mm) | |
| | 11 | | 8T-4198 | 2 | BOLT (L=100mm) | |
| | 12 | | 6E-2273 | 2 | HOUSING | |
| | 13 | | 6E-2151 | 1 | ADAPTER | |
| | 14 | | 4J-5309 | 1 | SEAL-O-RING (ID=9.19mm) | |
| | 15 | | 8T-6759 | 6 | PLUG | |
| Y | 16 | | 6E-4816 | 2 | PLUG GP | |
| | 17 | | 6E-5731 | 1 | VALVE GP | |
| | 18 | | 4K-1388 | 1 | SEAL-O-RING (ID=26.59mm) | |
| | 19 | | 7I-2148 | 1 | SPRING | |
| | 20 | | 8T-4178 | 8 | BOLT (L=90mm) | |
| | 21 | | 9S-4191 | 1 | PLUG | |
| | 22 | | 6E-5730 | 1 | PLUG | |

## 1077011 VALVE GP-CONTROL-PART 1 OF 2

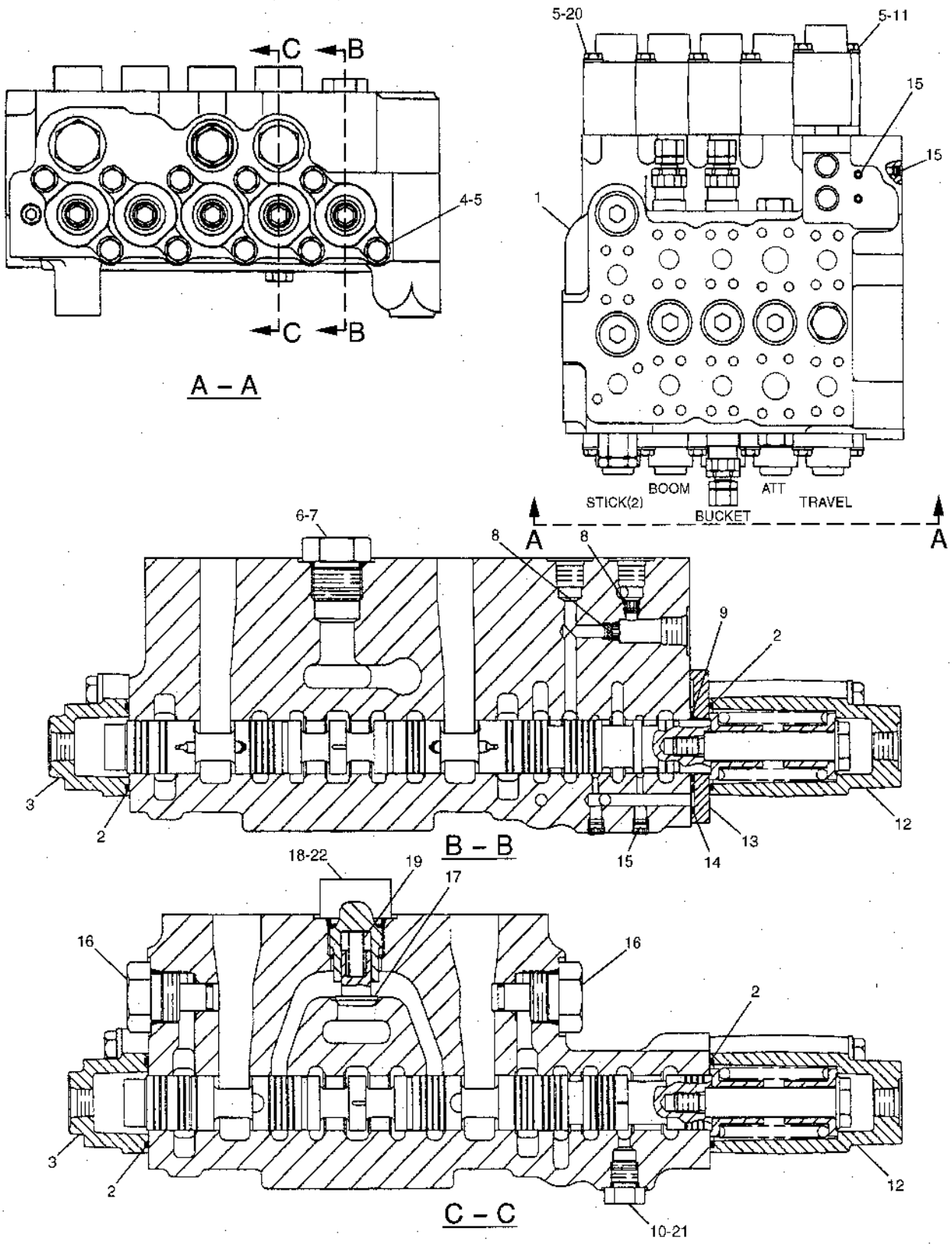


GRAPHIC #1

h58773e

# 1077011 VALVE GP-CONTROL-PART 2 OF 2

S/N 8SR 1-003407, 8TR 1-00325
PART OF 1077010-Page 349
1163600-Page 355, 1095152-Page 357

**Key:** Y - SEE SEPARATE ILLUSTRATION

**SMCS**

| NOTE | REF NO | GRAPHIC REF | PART NUMBER | QTY | PART NAME 1 2 3 4 5 6 (PRODUCT LEVEL) | PRICE USD |
|---|---|---|---|---|---|---|
| | 1 | | 6V-5597 | 6 | SEAL-O-RING (ID=40.94mm) | |
| | 2 | | 6E-2274 | 3 | COVER | |
| | 3 | | 6E-2273 | 3 | HOUSING | |
| | 4 | | 6E-5731 | 2 | VALVE | |
| | 5 | | 4K-1388 | 4 | SEAL-O-RING (ID=26.59mm) | |
| | 6 | | 7I-1248 | 2 | SPRING | |
| Y | 7 | | 109-5152 | 1 | VALVE GP | |
| Y | 8 | | 116-3600 | 3 | VALVE GP | |
| | 9 | | 6E-5643 | 2 | VALVE | |
| | 10 | | 6E-5644 | 2 | PLUG | |
| | 11 | | 4T-3148 | 2 | SPRING | |
| | 12 | | 6E-5730 | 2 | PLUG | |

## 1077011 VALVE GP-CONTROL-PART 2 OF 2

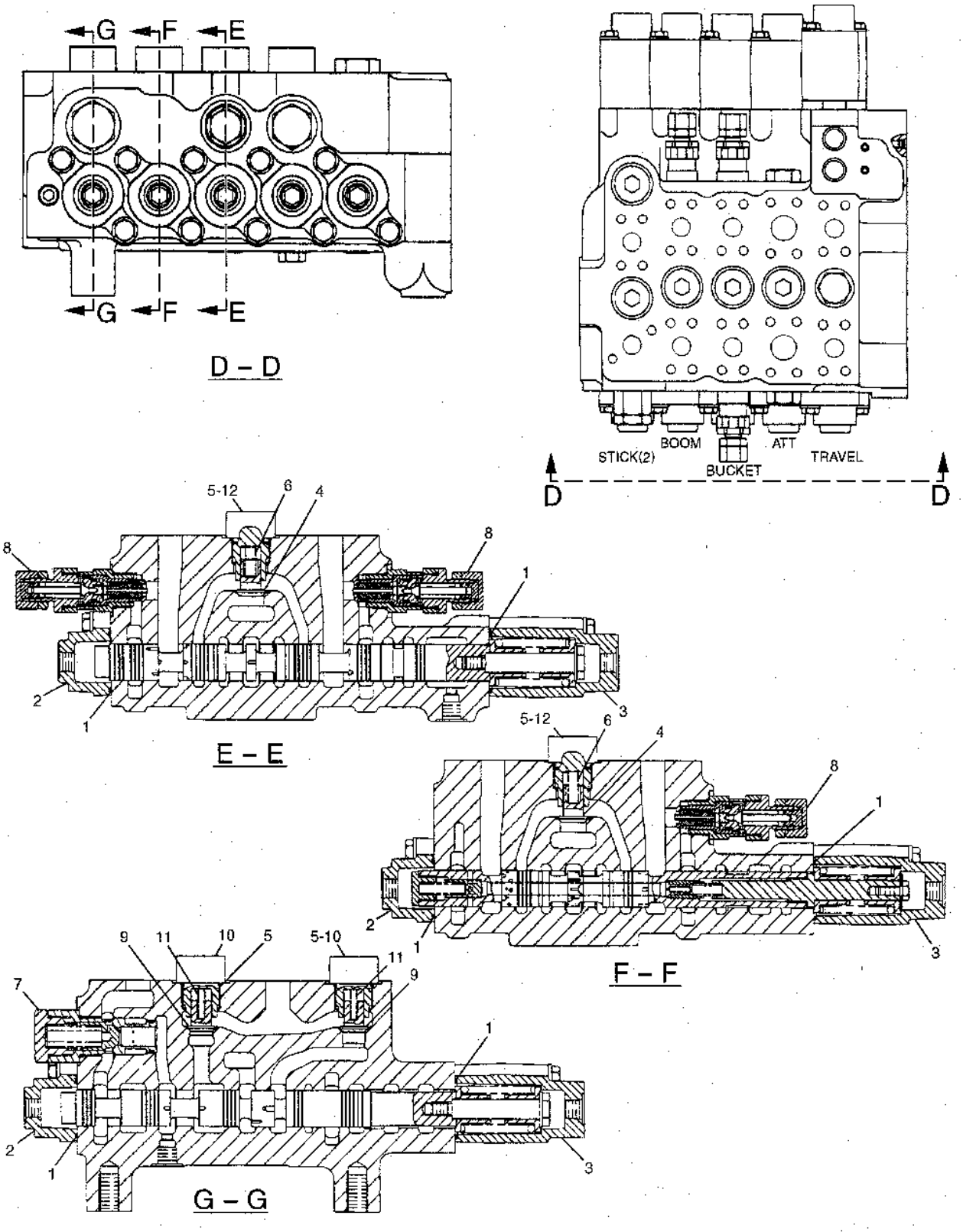


GRAPHIC #1

h58775e

# 1077011 VALVE GP-CONTROL-PART 1 OF 2

S/N 8SR 00341-UP, 8TR 00326-UP
PART OF 1077010-Page 349, 1425521-Page 349.01
1077012-Page 352, 6E4816-Page 355

**Key:** Y - SEE SEPARATE ILLUSTRATION

**SMCS**

| NOTE | REF NO | GRAPHIC REF | PART NUMBER | QTY | PART NAME 1 2 3 4 5 6 (PRODUCT LEVEL) | PRICE USD |
|---|---|---|---|---|---|---|
| Y | 1 | | 107-7012 | 1 | VALVE GP | |
| | 2 | | 6V-5597 | 4 | SEAL-O-RING (ID=40.94mm) | |
| | 3 | | 6E-2274 | 2 | COVER | |
| | 4 | | 8T-4195 | 10 | BOLT (L=30mm) | |
| | 5 | | 8T-4121 | 20 | WASHER | |
| | 6 | | 9S-4183 | 1 | PLUG | |
| | 7 | | 3D-2824 | 1 | SEAL-O-RING (ID=23.47mm) | |
| | 8 | | 1T-0936 | 2 | PLUG | |
| | 9 | | 096-3044 | 1 | SEAL-O-RING (ID=31.72mm) | |
| | 10 | | 3J-1907 | 1 | SEAL-O-RING (ID=11.89mm) | |
| | 11 | | 8T-4198 | 2 | BOLT (L=100mm) | |
| | 12 | | 6E-2273 | 2 | HOUSING | |
| | 13 | | 6E-2151 | 1 | ADAPTER | |
| | 14 | | 4J-5309 | 1 | SEAL-O-RING (ID=9.19mm) | |
| | 15 | | 8T-6759 | 6 | PLUG | |
| Y | 16 | | 6E-4816 | 2 | PLUG GP | |
| | 17 | | 6E-5731 | 1 | VALVE GP | |
| | 18 | | 4K-1388 | 1 | SEAL-O-RING (ID=26.59mm) | |
| | 19 | | 7I-2148 | 1 | SPRING | |
| | 20 | | 8T-4178 | 8 | BOLT (L=90mm) | |
| | 21 | | 9S-4191 | 1 | PLUG | |
| | 22 | | 6E-5730 | 1 | PLUG | |

## 1077011 VALVE GP-CONTROL-PART 1 OF 2

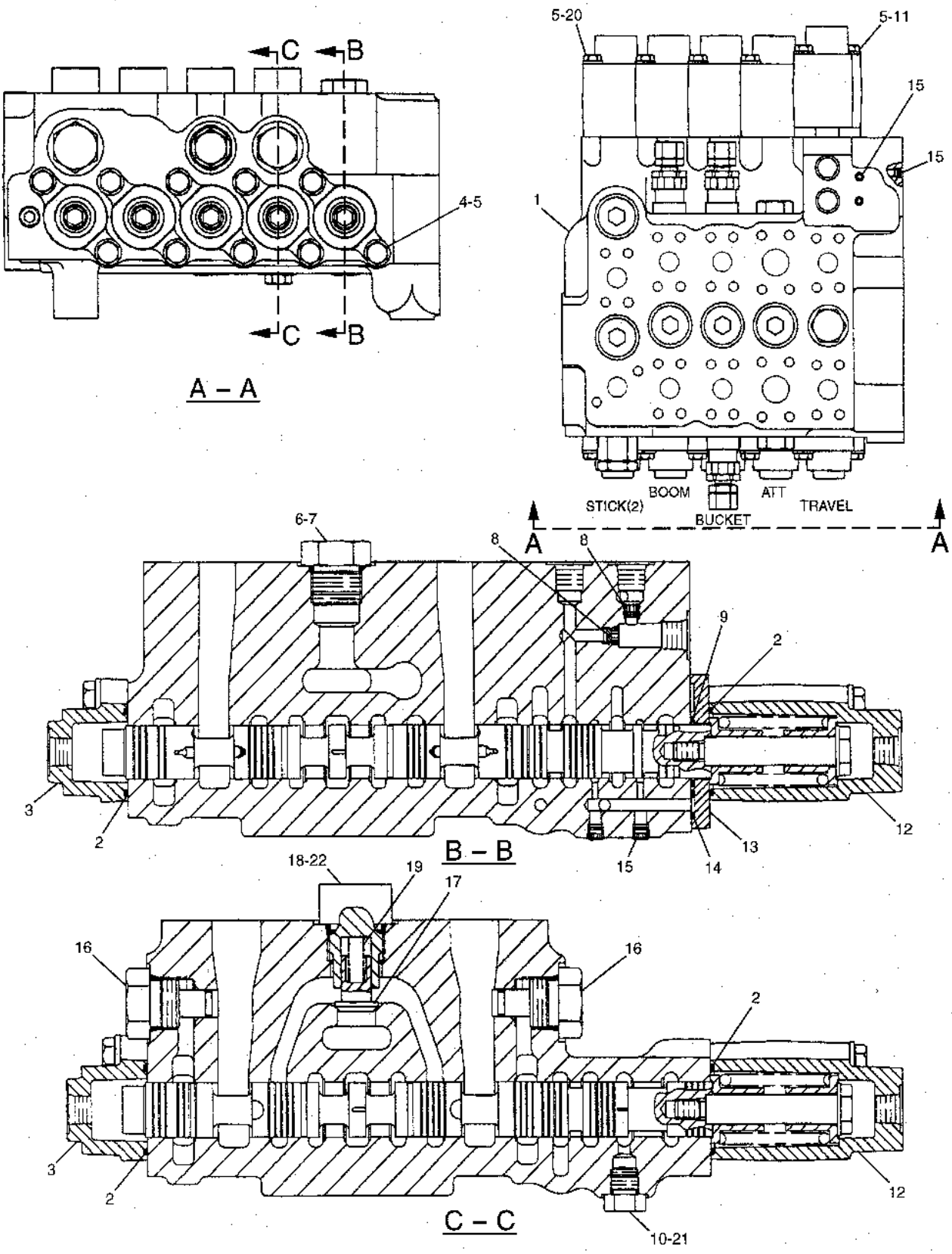


GRAPHIC #1

h79343e

# 1077011 VALVE GP-CONTROL-PART 2 OF 2

S/N 8SR 00341-UP, 8TR 00326-UP
PART OF 1077010-Page 349, 1425521-Page 349.01
1163600-Page 355, 1474163-Page 357

**Key:** Y - SEE SEPARATE ILLUSTRATION

**SMCS**

| NOTE | REF NO | GRAPHIC REF | PART NUMBER | QTY | PART NAME 1 2 3 4 5 6 (PRODUCT LEVEL) | PRICE USD |
|---|---|---|---|---|---|---|
| | 1 | | 6V-5597 | 6 | SEAL-O-RING (ID=40.94mm) | |
| | 2 | | 6E-2274 | 3 | COVER | |
| | 3 | | 6E-2273 | 3 | HOUSING | |
| | 4 | | 6E-5731 | 2 | VALVE | |
| | 5 | | 4K-1388 | 4 | SEAL-O-RING (ID=26.59mm) | |
| | 6 | | 7I-1248 | 2 | SPRING | |
| Y | 7 | | 147-4163 | 1 | VALVE GP | |
| Y | 8 | | 116-3600 | 3 | VALVE GP | |
| | 9 | | 6E-5643 | 2 | VALVE | |
| | 10 | | 6E-5644 | 2 | PLUG | |
| | 11 | | 4T-3148 | 2 | SPRING | |
| | 12 | | 6E-5730 | 2 | PLUG | |
| | | | | | THE FOLLOWING SERVICE REPAIR ARE AVAILABLE: | |
| | | | 9S-8001 | 6 | PLUG | |
| | | | 4J-7533 | 6 | SEAL-O-RING (ID=6.07mm) | |

## 1077011 VALVE GP-CONTROL-PART 2 OF 2

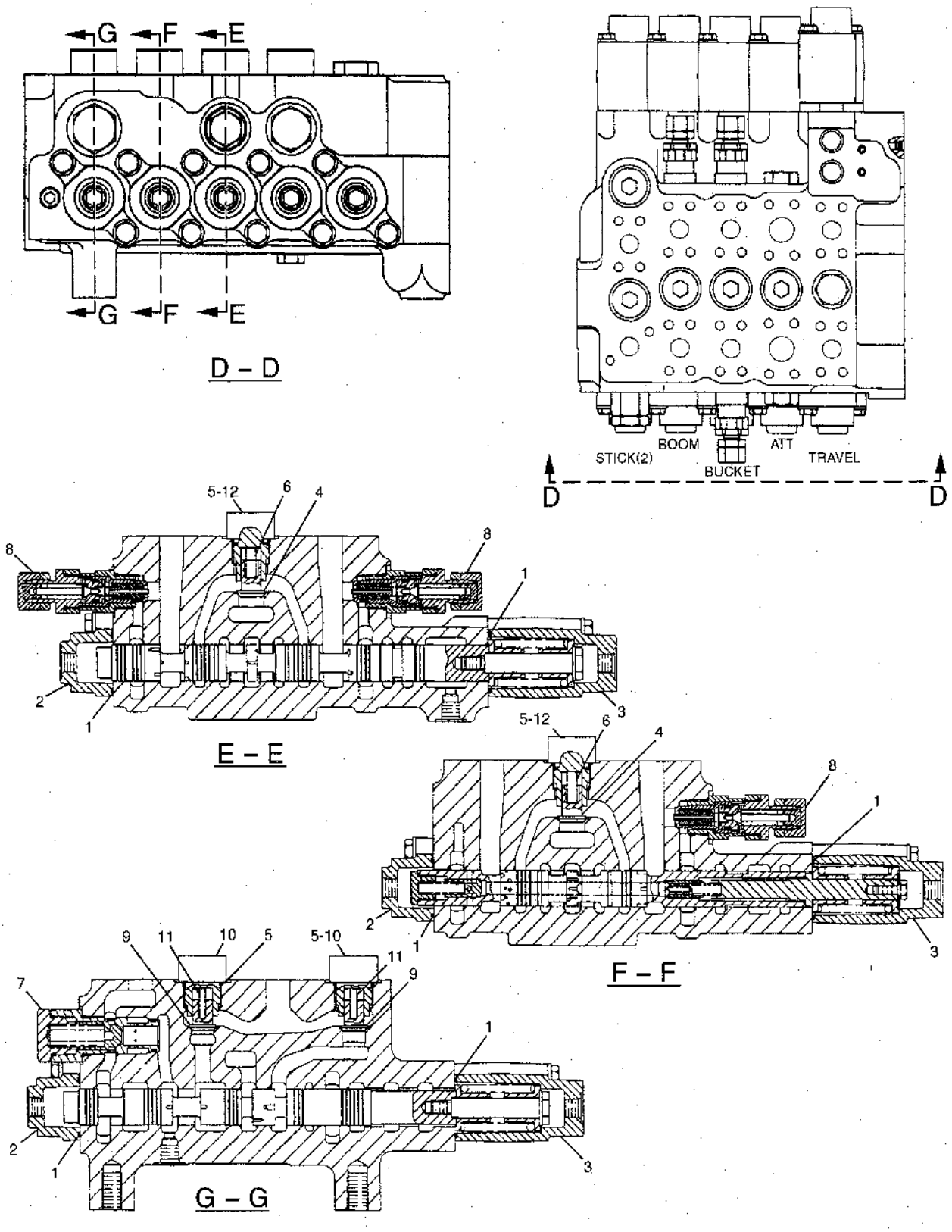


GRAPHIC #1

h79345e

# 1077012 VALVE GP-CONTROL

PART OF 1077011-Page 351

**Key:** Y - Separate Illustration

**SMCS**

| NOTE | REF NO | GRAPHIC REF | PART NUMBER | QTY | PART NAME 1 2 3 4 5 6 (PRODUCT LEVEL) | PRICE USD |
|---|---|---|---|---|---|---|
| Y | | | 107-7013 | 1 | VALVE GP (CONTROL) | |
| | | | | | -OR- | |
| Y | | | 112-0039 | 1 | VALVE GP (CONTROL) | |

# 1077013 VALVE GP-CONTROL

S/N 8SR 1-00335, 8TR 1-00313
PART OF 1077012-Page 352

**Key:**

**SMCS**

| NOTE | REF NO | GRAPHIC REF | PART NUMBER | QTY | PART NAME 1 2 3 4 5 6 (PRODUCT LEVEL) | PRICE USD |
|---|---|---|---|---|---|---|
| | 1 | | 104-7293 | 3 | SPRING | |
| | 2 | | 104-7296 | 1 | SPRING | |
| | 3 | | 6E-2271 | 10 | RETAINER | |
| | 4 | | 6E-5122 | 4 | BOLT | |
| | 5 | | 111-9959 | 1 | PLUG | |
| | 6 | | 3K-0360 | 2 | SEAL-O-RING (ID=16.36mm) | |
| | 7 | | 8T-4189 | 1 | BOLT (L=20mm) | |
| | 8 | | 9N-0869 | 1 | WASHER-HARD | |
| | 9 | | 107-6948 | 1 | SPRING | |
| | 10 | | 107-6949 | 1 | PLUG | |
| | 11 | | 107-6947 | 1 | VALVE | |
| | 12 | | 6E-5045 | 1 | SPRING | |
| | 13 | | 116-3451 | 1 | SPRING | |
| | 14 | | 107-6950 | 1 | GUIDE | |
| | 15 | | 104-7294 | 1 | SPRING | |
| | 16 | | 5D-1247 | 2 | WASHER | |
| | | | | | THE FOLLOWING REPAIR KITS ARE AVAILABLE: | |
| | | | 155-7151 | 1 | REPAIR KIT-STEM (BOOM 1) | |
| | | | 155-7154 | 1 | REPAIR KIT-STEM (STICK 2) | |
| | | | 159-7753 | 1 | REPAIR KIT-STEM (TRAVEL) | |

## 1077013 VALVE GP-CONTROL

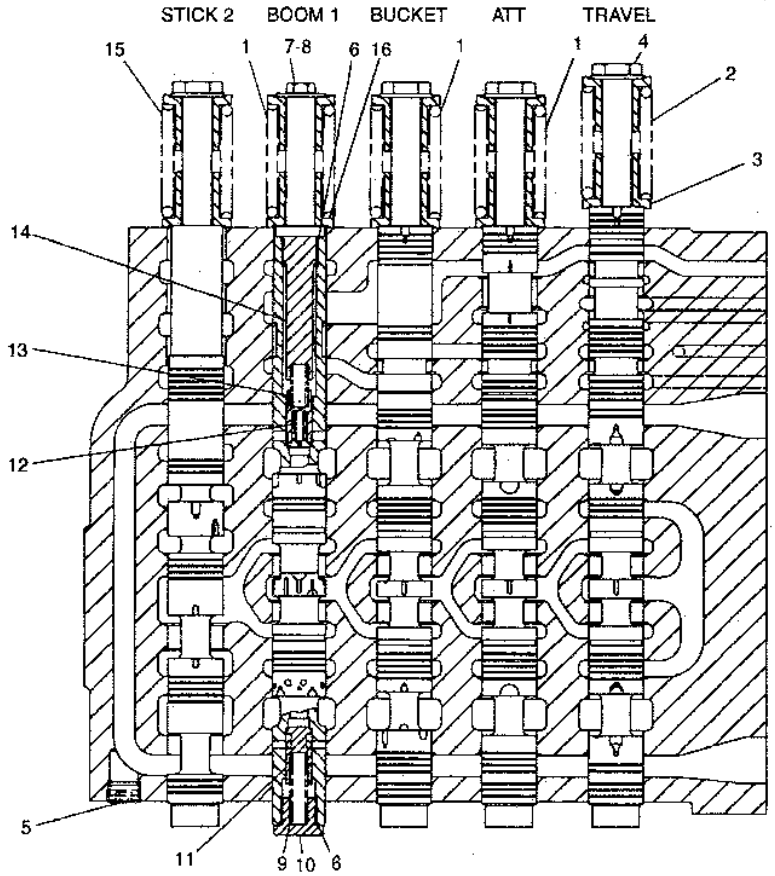


| NOTE | No. | PART No. | QTY | PART NAME | NOTE | No. | PART No. | QTY | PART NAME |
|---|---|---|---|---|---|---|---|---|---|
| | 1 | 104-7293 | 3 | SPRING | | | | | THE FOLLOWING |
| | 2 | 104-7296 | 1 | SPRING | | | | | REPAIR KITS ARE |
| | 3 | 6E-2271 | 10 | RETAINER | | | | | AVAILABLE: |
| | 4 | 6E-5122 | 4 | BOLT | | | 151-7151 | 1 | REPAIR KIT-STEM (BOOM1) |
| | 5 | 111-9959 | 1 | PLUG | | | 155-7154 | 1 | REPAIR KIT-STEM (STICK2) |
| | 6 | 3K-0360 | 2 | SEAL-O-RING (ID=16.36mm) | | | 159-7753 | 1 | REPAIR KIT-STEM (TRAVEL) |
| | 7 | 8T-4189 | 1 | BOLT (L=20mm) | | | | | |
| | 8 | 9N-0869 | 1 | WASHER-HARD | | | | | |
| | 9 | 107-6948 | 1 | SPRING | | | | | |
| | 10 | 107-6949 | 1 | PLUG | | | | | |
| | 11 | 107-6947 | 1 | VALVE | | | | | |
| | 12 | 6E-5045 | 1 | SPRING | | | | | |
| | 13 | 116-3451 | 1 | SPRING | | | | | |
| | 14 | 107-6950 | 1 | GUIDE | | | | | |
| | 15 | 104-7294 | 1 | SPRING | | | | | |
| | 16 | 5D-1247 | 2 | WASHER | | | | | |

H58776E

# 1077013 VALVE GP-CONTROL

S/N 8SR 00336-UP, 8TR 00314-UP
PART OF 1077012-Page 352

**Key:**

**SMCS**

| NOTE | REF NO | GRAPHIC REF | PART NUMBER | QTY | PART NAME 1 2 3 4 5 6 (PRODUCT LEVEL) | PRICE USD |
|---|---|---|---|---|---|---|
| | 1 | | 104-7293 | 3 | SPRING | |
| | 2 | | 104-7296 | 1 | SPRING | |
| | 3 | | 6E-2271 | 10 | RETAINER | |
| | 4 | | 6E-5122 | 4 | BOLT | |
| | 5 | | 111-9959 | 1 | PLUG | |
| | 6 | | 3K-0360 | 2 | SEAL-O-RING (ID=16.36mm) | |
| | 7 | | 8T-4189 | 1 | BOLT (L=20mm) | |
| | 8 | | 9N-0869 | 1 | WASHER | |
| | 9 | | 107-6948 | 1 | SPRING | |
| | 10 | | 107-6949 | 1 | PLUG | |
| | 11 | | 107-6947 | 1 | VALVE | |
| | 12 | | 6E-5045 | 1 | SPRING | |
| | 13 | | 116-3451 | 1 | SPRING | |
| | 14 | | 107-6950 | 1 | GUIDE | |
| | 15 | | 104-7294 | 1 | SPRING | |
| | | | | | THE FOLLOWING REPAIR KITS ARE AVAILABLE: | |
| | | | 155-7151 | 1 | REPAIR KIT (BOOM 1) | |
| | | | 155-7154 | 1 | REPAIR KIT (STICK 2) | |
| | | | 159-7769 | 1 | REPAIR KIT (BUCKET) | |
| | | | 159-7753 | 1 | REPAIR KIT (TRAVEL) | |
| | | | | | THE FOLLOWING SERVICE REPAIR ARE AVAILABLE: | |
| | | | 9S-8004 | 1 | PLUG | |
| | | | 3J-1907 | 1 | SEAL-O-RING (ID=11.89mm) | |

## 1077013 VALVE GP-CONTROL

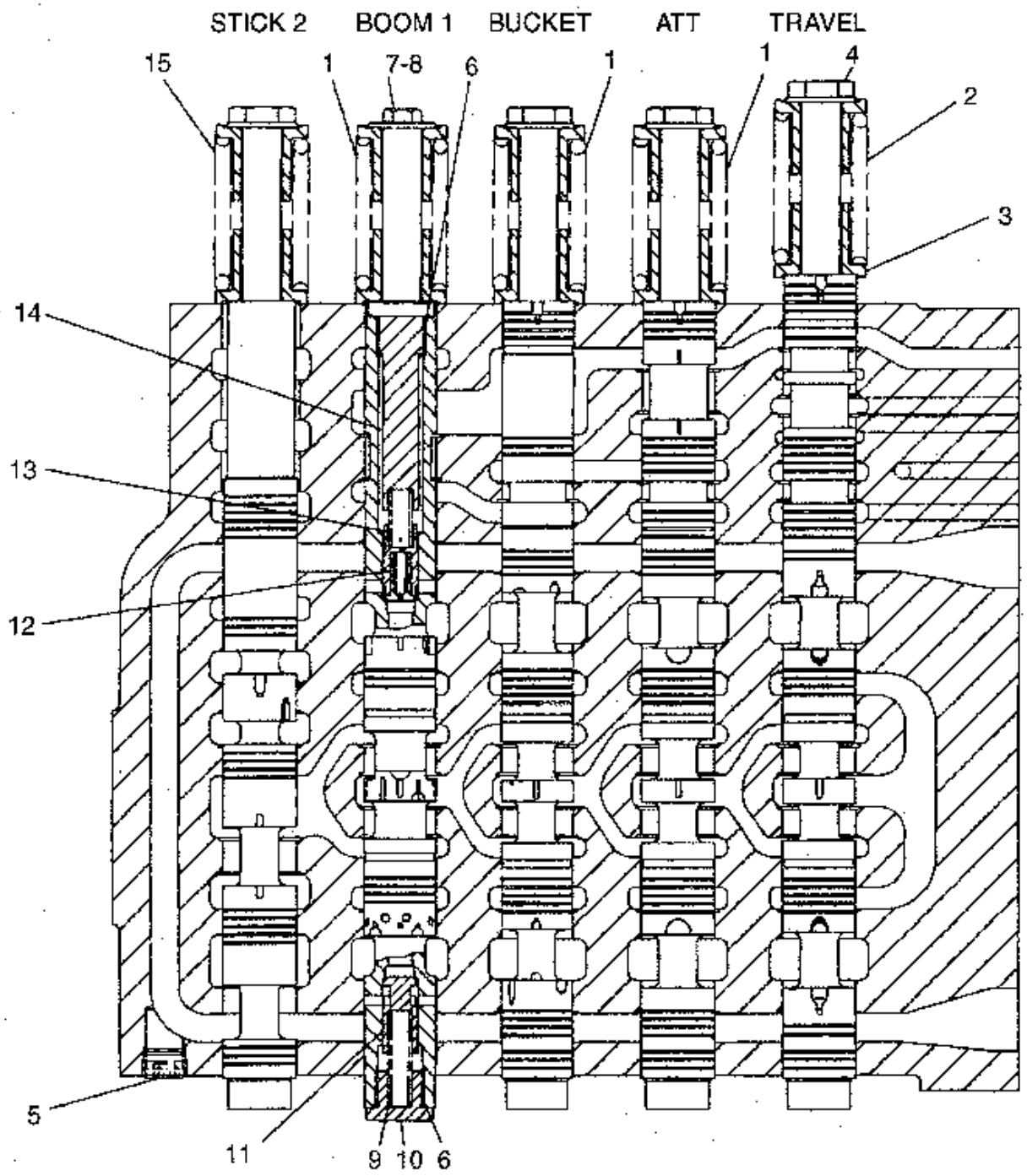


GRAPHIC #1

h79346e

# 1120039 VALVE GP-CONTROL

S/N 8SR 1-00335, 8TR 1-00313
PART OF 1077012-Page 352

**Key:**

**SMCS**

| NOTE | REF NO | GRAPHIC REF | PART NUMBER | QTY | PART NAME 1 2 3 4 5 6 (PRODUCT LEVEL) | PRICE USD |
|---|---|---|---|---|---|---|
| | 1 | | 104-7293 | 3 | SPRING | |
| | 2 | | 9N-0869 | 5 | WASHER-HARD | |
| | 3 | | 8T-4189 | 5 | BOLT (L=20mm) | |
| | 4 | | 104-7296 | 1 | SPRING | |
| | 5 | | 6E-2271 | 10 | RETAINER | |
| | 6 | | 111-9959 | 1 | PLUG | |
| | 7 | | 3K-0360 | 2 | SEAL-O-RING (ID=16.36mm) | |
| | 8 | | 107-6949 | 1 | PLUG | |
| | 9 | | 107-6948 | 1 | SPRING | |
| | 10 | | 107-6947 | 1 | VALVE | |
| | 11 | | 6E-5045 | 1 | SPRING | |
| | 12 | | 116-3451 | 1 | SPRING | |
| | 13 | | 107-6950 | 1 | GUIDE | |
| | 14 | | 104-7294 | 1 | SPRING | |
| | 15 | | 5D-1247 | 2 | WASHER | |

## 1120039 VALVE GP-CONTROL

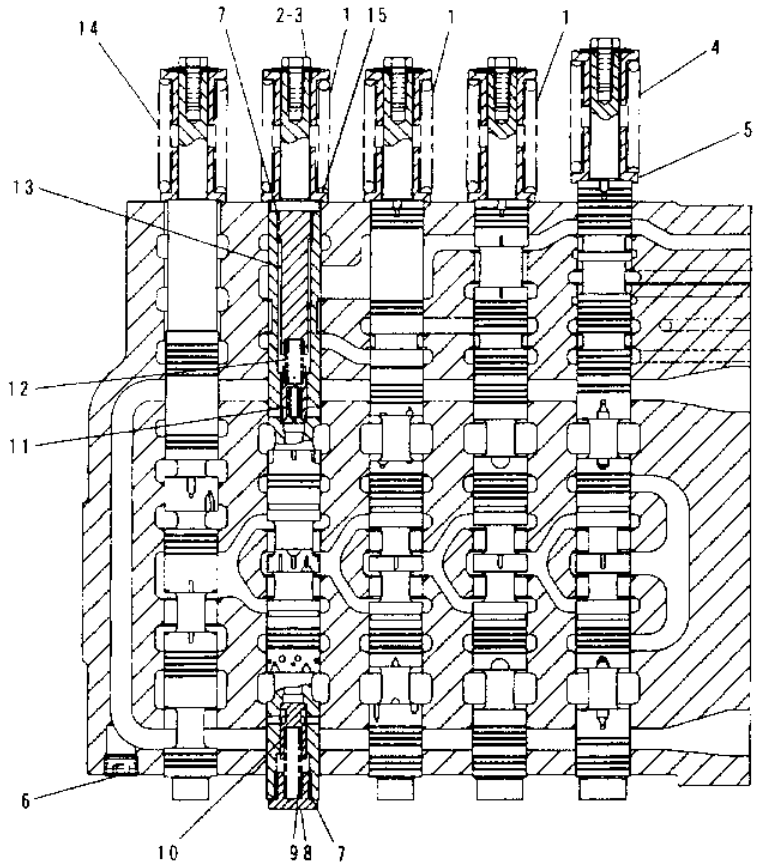


| NOTE | No. | PART No. | QTY | PART NAME | NOTE | No. | PART No. | QTY | PART NAME |
|---|---|---|---|---|---|---|---|---|---|
| | 1 | 104-7293 | 3 | SPRING | | | | | |
| | 2 | 9N-0869 | 5 | WASHER-HARD | | | | | |
| | 3 | 8T-4189 | 5 | BOLT(L=20mm) | | | | | |
| | 4 | 104-7296 | 1 | SPRING | | | | | |
| | 5 | 6E-2271 | 10 | RETAINER | | | | | |
| | 6 | 111-9959 | 1 | PLUG | | | | | |
| | 7 | 3K-0360 | 2 | SEAL-O-RING(ID=16.36mm) | | | | | |
| | 8 | 107-6949 | 1 | PLUG | | | | | |
| | 9 | 107-6948 | 1 | SPRING | | | | | |
| | 10 | 107-6947 | 1 | VALVE | | | | | |
| | 11 | 6E-5045 | 1 | SPRING | | | | | |
| | 12 | 116-3451 | 1 | SPRING | | | | | |
| | 13 | 107-6950 | 1 | GUIDE | | | | | |
| | 14 | 104-7294 | 1 | SPRING | | | | | |
| | 15 | 5D-1247 | 2 | WASHER | | | | | |

H58778E

GRAPHIC #1

h58778e

# 1120039 VALVE GP-CONTROL

S/N 8SR 00336-UP, 8TR 00314-UP
PART OF 1077012-Page 352

**Key:**

**SMCS**

| NOTE | REF NO | GRAPHIC REF | PART NUMBER | QTY | PART NAME 1 2 3 4 5 6 (PRODUCT LEVEL) | PRICE USD |
|---|---|---|---|---|---|---|
| | 1 | | 104-7293 | 3 | SPRING | |
| | 2 | | 9N-0869 | 5 | WASHER | |
| | 3 | | 8T-4189 | 5 | BOLT (L=20mm) | |
| | 4 | | 104-7296 | 1 | SPRING | |
| | 5 | | 6E-2271 | 10 | RETAINER | |
| | 6 | | 111-9959 | 1 | PLUG | |
| | 7 | | 3K-0360 | 2 | SEAL-O-RING (ID=16.36mm) | |
| | 8 | | 107-6949 | 1 | PLUG | |
| | 9 | | 107-6948 | 1 | SPRING | |
| | 10 | | 107-6947 | 1 | VALVE | |
| | 11 | | 6E-5045 | 1 | SPRING | |
| | 12 | | 116-3451 | 1 | SPRING | |
| | 13 | | 107-6950 | 1 | GUIDE | |
| | 14 | | 104-7294 | 1 | SPRING | |
| | | | | | THE FOLLOWING SERVICE REPAIR ARE AVAILABLE: | |
| | | | 9S-8004 | 1 | PLUG | |
| | | | 3J-1907 | 1 | SEAL-O-RING (ID=11.89mm) | |

## 1120039 VALVE GP-CONTROL

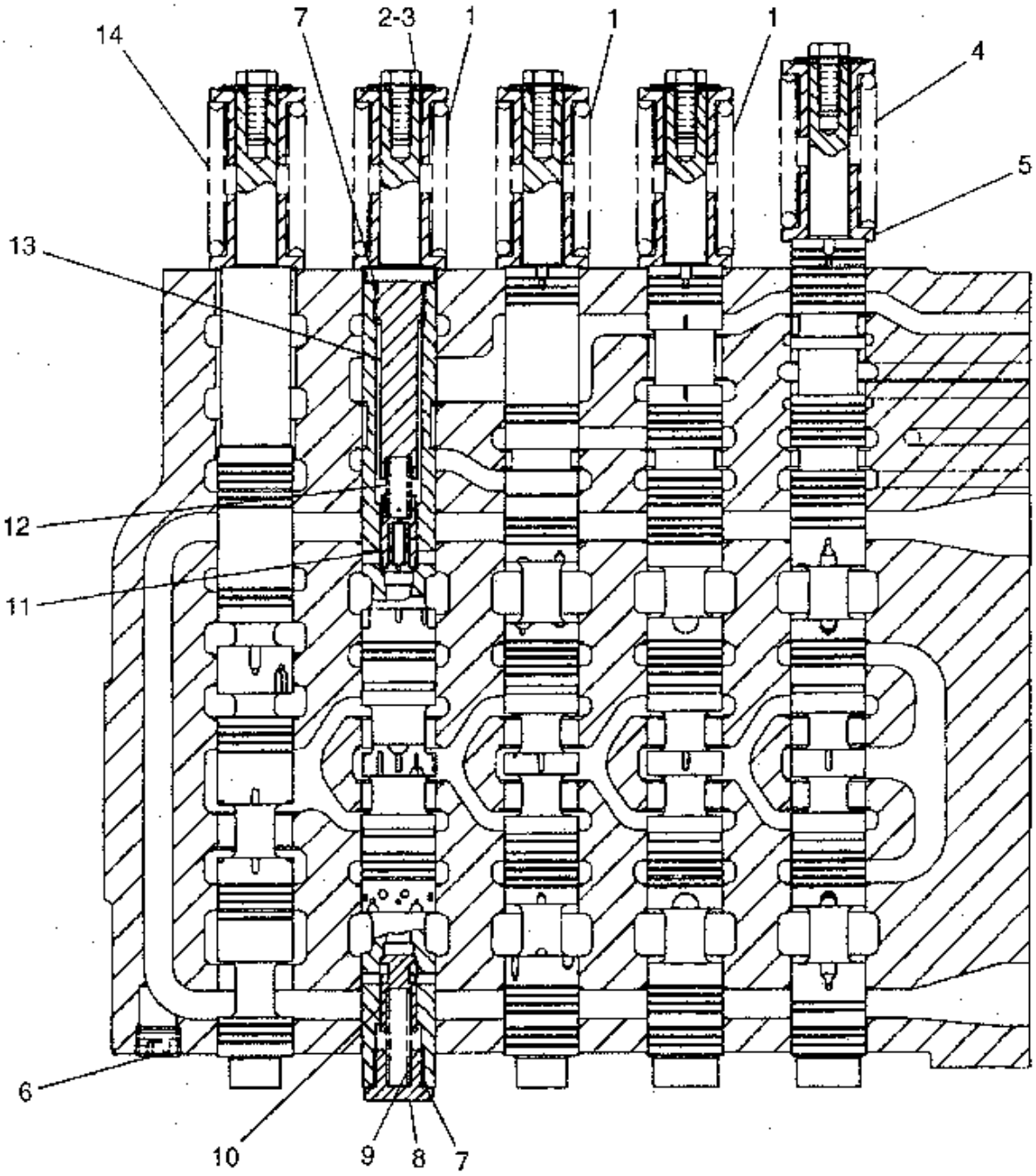


GRAPHIC #1

h79347e

# 6E4816 PLUG GP

PART OF 1077011-Page 351

**Key:** Y - Separate Illustration

**SMCS**

| NOTE | REF NO | GRAPHIC REF | PART NUMBER | QTY | PART NAME 1 2 3 4 5 6 (PRODUCT LEVEL) | PRICE USD |
|---|---|---|---|---|---|---|
| Y | | | 6E-4793 | 1 | PLUG GP | |
| | | | | | -OR- | |
| Y | | | 6E-2746 | 1 | PLUG GP | |

# 1163600 VALVE GP-RELIEF

l385072-Page 321.02, 1077011-Page 351.02, 1077014-Page 359, 1425522-Page 361.06, 1713266-Page 363.04, 1232433-Pa
1183917-Page 390, 1556996-Page 390.03

**Key:** Y - Separate Illustration

**SMCS**

| NOTE | REF NO | GRAPHIC REF | PART NUMBER | QTY | PART NAME 1 2 3 4 5 6 (PRODUCT LEVEL) | PRICE USD |
|---|---|---|---|---|---|---|
| Y | | | 118-5410 | 1 | VALVE GP (RELIEF) | |
| | | | | | -OR- | |
| Y | | | 116-3601 | 1 | VALVE GP (PILOT RELIEF) | |

# 6E4793 PLUG GP

PART OF 6E4816-Page 355

**Key:**

**SMCS**

| NOTE | REF NO | GRAPHIC REF | PART NUMBER | QTY | PART NAME 1 2 3 4 5 6 (PRODUCT LEVEL) | PRICE USD |
|---|---|---|---|---|---|---|
| | 1 | | 6M-5062 | 1 | SEAL-O-RING (ID=10.82mm) | |
| | 2 | | 3D-2824 | 1 | SEAL-O-RING (ID=23.47mm) | |
| | 3 | | 9J-0705 | 1 | RING (BACK UP) | |

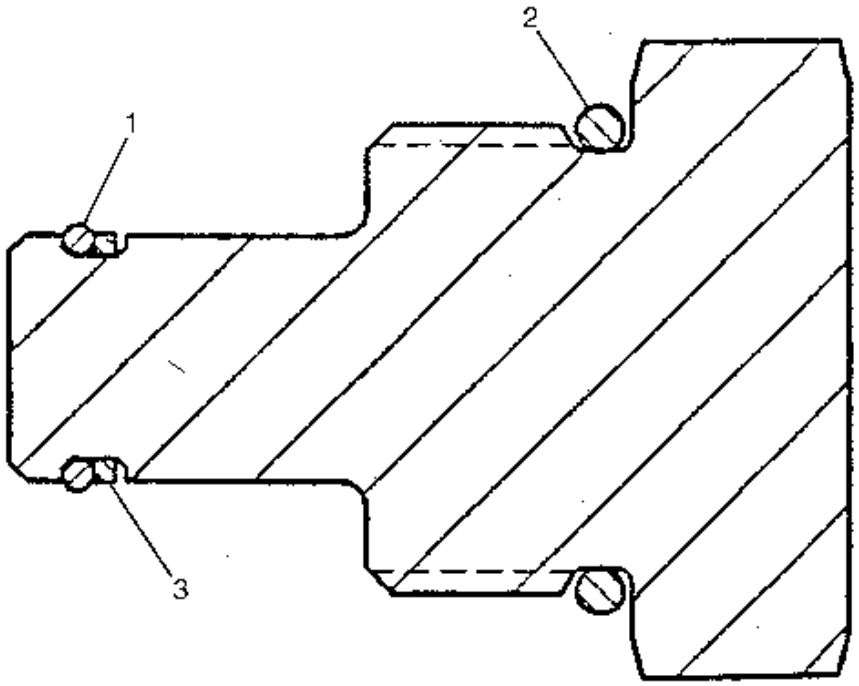


GRAPHIC #1 h50289e

# 6E2746 PLUG GP

PART OF 6E4816-Page 355

**Key:**

**SMCS**

| NOTE | REF NO | GRAPHIC REF | PART NUMBER | QTY | PART NAME 1 2 3 4 5 6 (PRODUCT LEVEL) | PRICE USD |
|---|---|---|---|---|---|---|
| | 1 | | 6E-2745 | 1 | SEAL | |
| | 2 | | 9T-4506 | 1 | PLUG | |

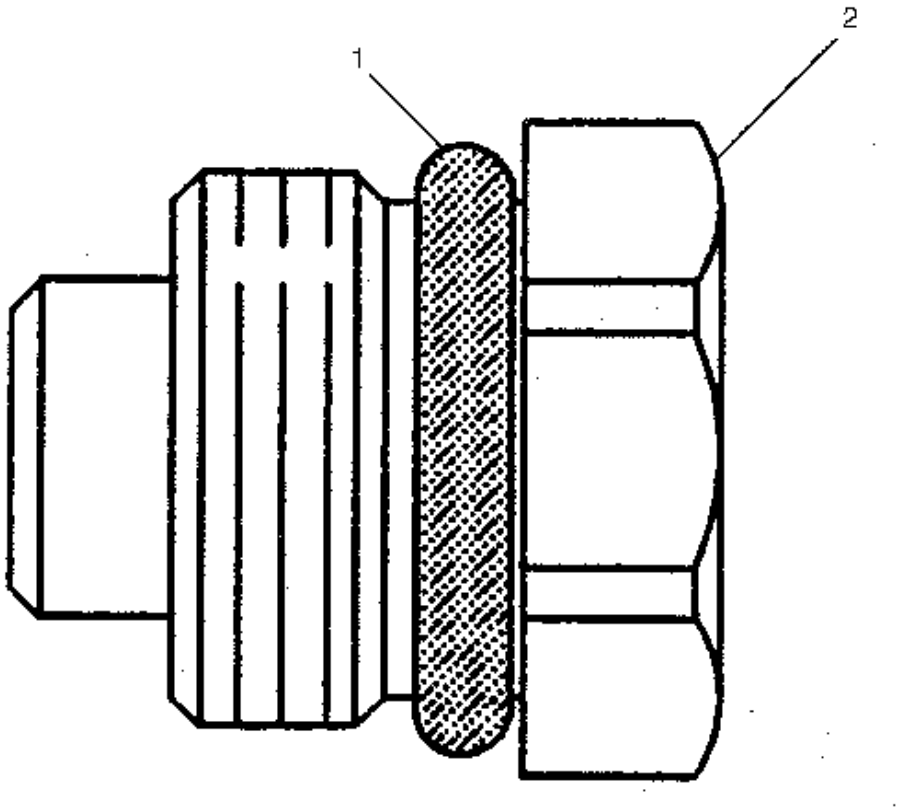


GRAPHIC #1 h58173e

# 1095152 VALVE GP-RELIEF

S/N 8SR 1-00340, 8TR 1-00325
PART OF 1077011-Page 351.02

**Key:** B - USE AS REQUIRED

**SMCS**

| NOTE | REF NO | GRAPHIC REF | PART NUMBER | QTY | PART NAME 1 2 3 4 5 6 (PRODUCT LEVEL) | PRICE USD |
|---|---|---|---|---|---|---|
| | 1 | | 5I-4111 | 1 | PLUG | |
| | 2 | | 5P-3108 | 1 | SEAL-O-RING (ID=20.30mm) | |
| | 3 | | 107-6370 | 1 | SPRING | |
| | 4 | | 107-6371 | 1 | VALVE | |
| | 5 | | 4K-1388 | 2 | SEAL-O-RING (ID=26.59mm) | |
| B | 6 | | 4J-7385 | 1 | SHIM (T=1.219mm) | |
| B | 7 | | 4J-7386 | 1 | SHIM (T=0.254mm) | |

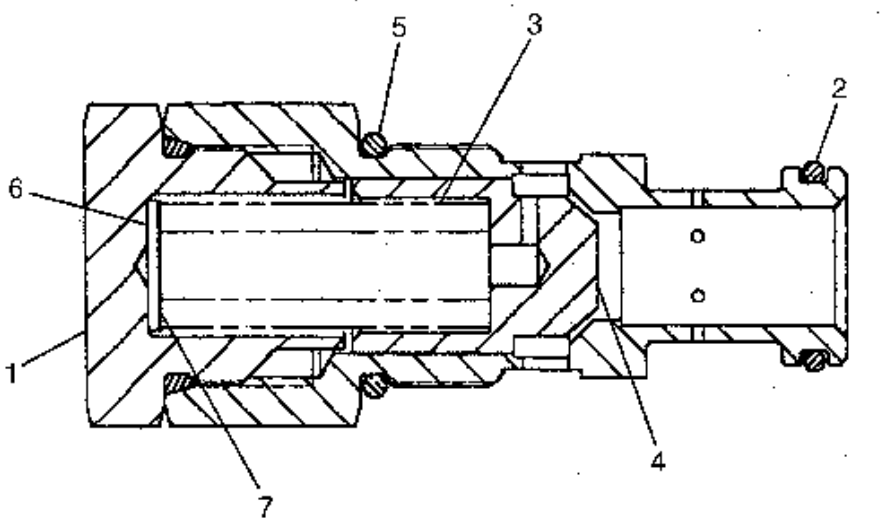


GRAPHIC #1 h51025e

# 1474163 VALVE GP-RELIEF

S/N 8SR 00341-UP, 8TR 00326-UP
PART OF 1077011-Page 351.06

**Key:** B - USE AS REQUIRED

**SMCS**

| NOTE | REF NO | GRAPHIC REF | PART NUMBER | QTY | PART NAME 1 2 3 4 5 6 (PRODUCT LEVEL) | PRICE USD |
|---|---|---|---|---|---|---|
| | 1 | | 5I-4111 | 1 | PLUG | |
| | 2 | | 5P-3108 | 1 | SEAL-O-RING (ID=20.30mm) | |
| | 3 | | 107-6370 | 1 | SPRING | |
| | 4 | | 107-6371 | 1 | VALVE | |
| | 5 | | 4K-1388 | 2 | SEAL-O-RING (ID=26.59mm) | |
| B | 6 | | 4J-7385 | 1 | SHIM (T=1.219mm) | |
| B | 7 | | 4J-7386 | 1 | SHIM (T=0.254mm) | |

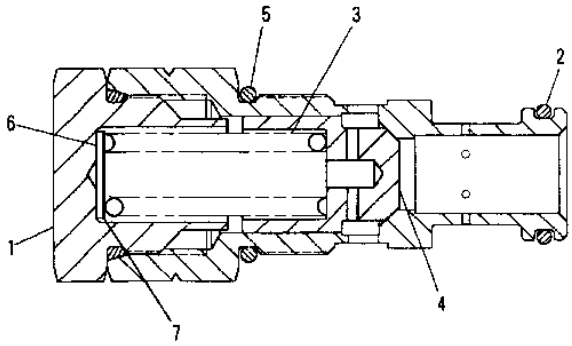


| NOTE | No. | PART No. | QTY | PART NAME |
|---|---|---|---|---|
| | 1 | 5I-4111 | 1 | PLUG |
| | 2 | 5P-3108 | 1 | SEAL-O-RING (ID=20.30mm) |
| | 3 | 107-6370 | 1 | SPRING |
| | 4 | 107-6371 | 1 | VALVE |
| | 5 | 4K-1388 | 2 | SEAL-O-RING (ID=26.59mm) |
| B | 6 | 4J-7385 | 1 | SHIM (T=1.219mm) |
| B | 7 | 4J-7386 | 1 | SHIM (T=0.254mm) |

B-USE AS REQUIRED

H58780E

GRAPHIC #1 h58780e

# 1077014 VALVE GP-CONTROL-PART 1 OF 2

S/N 8SR 1-00340, 8TR 1-00325
PART OF 1077010-Page 349
1163600-Page 355, 1077015-Page 362, 1092667-Page 365, 7I8136-Page 367

**Key:** Y - SEE SEPARATE ILLUSTRATION

**SMCS**

| NOTE | REF NO | GRAPHIC REF | PART NUMBER | QTY | PART NAME 1 2 3 4 5 6 (PRODUCT LEVEL) | PRICE USD |
|---|---|---|---|---|---|---|
| Y | 1 | | 107-7015 | 1 | VALVE GP | |
| | 2 | | 8T-6759 | 1 | PLUG | |
| | 3 | | 6V-5597 | 4 | SEAL-O-RING (ID=40.94mm) | |
| | 4 | | 123-2446 | 1 | VALVE GP | |
| | 5 | | 6E-2274 | 1 | COVER | |
| | 6 | | 8T-4195 | 10 | BOLT (L=30mm) | |
| | 7 | | 8T-4121 | 18 | WASHER | |
| Y | 8 | | 109-2667 | 1 | VALVE GP | |
| Y | 9 | | 7I-8136 | 1 | VALVE GP | |
| | 10 | | 4T-3148 | 1 | SPRING | |
| | 11 | | 6E-5644 | 1 | PLUG | |
| | 12 | | 4K-1388 | 1 | SEAL-O-RING (ID=26.59mm) | |
| | 13 | | 8T-4178 | 6 | BOLT (L=90mm) | |
| | 14 | | 6E-2273 | 2 | HOUSING | |
| Y | 15 | | 116-3600 | 1 | VALVE GP | |
| | 16 | | 116-3445 | 1 | SLEEVE | |
| | 17 | | 6E-3539 | 1 | VALVE | |
| | 18 | | 6E-5168 | 1 | SPRING | |
| | 19 | | 6E-3541 | 1 | PILOT | |
| | 20 | | 6V-0357 | 1 | SEAL-O-RING (ID=29.74mm) | |
| | 21 | | 6E-5643 | 1 | VALVE | |
| | 22 | | 8T-4198 | 2 | BOLT (L=100mm) | |
| | 23 | | 6E-5643 | 1 | VALVE | |
| | 24 | | 123-2151 | 1 | PLUG | |
| | 25 | | 2S-4078 | 1 | SEAL-O-RING (ID=37.47mm) | |
| | 26 | | 123-2444 | 1 | SPACER | |
| | 27 | | 123-2445 | 1 | SPRING | |

# 1077014 VALVE GP-CONTROL-PART 1 OF 2

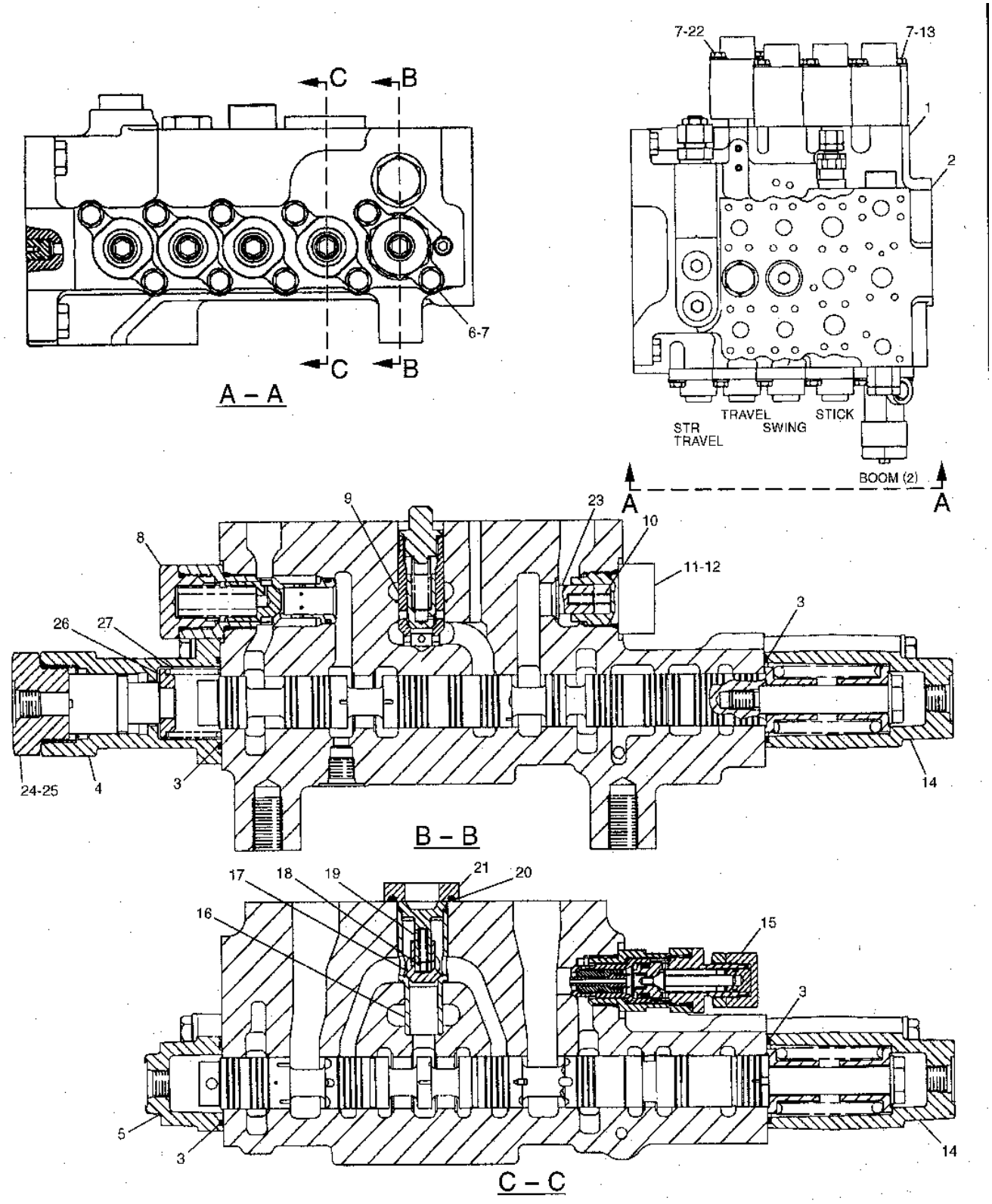


GRAPHIC #1

h56387e

# 1077014 VALVE GP-CONTROL-PART 2 OF 2

S/N 8SR 1-00340, 8TR 1-00325
PART OF 1077010-Page 349
1710030-Page 380

**Key:** Y - SEE SEPARATE ILLUSTRATION

**SMCS**

| NOTE | REF NO | GRAPHIC REF | PART NUMBER | QTY | PART NAME 1 2 3 4 5 6 (PRODUCT LEVEL) | PRICE USD |
|---|---|---|---|---|---|---|
| | 1 | | 8T-6759 | 2 | PLUG | |
| | 2 | | 6V-5597 | 5 | SEAL-O-RING (ID=40.94mm) | |
| | 3 | | 3E-2274 | 3 | COVER | |
| | 4 | | 4T-3148 | 2 | SPRING | |
| | 5 | | 4K-1388 | 2 | SEAL-O-RING (ID=26.59mm) | |
| | 6 | | 6E-2273 | 2 | HOUSING | |
| | 7 | | 4I-6397 | 2 | RING | |
| | 8 | | 096-3044 | 1 | SEAL-O-RING (ID=31.72mm) | |
| | 9 | | 6E-5731 | 1 | VALVE | |
| | 10 | | 6E-5730 | 1 | PLUG | |
| | 11 | | 6E-2156 | 1 | SLEEVE | |
| | 12 | | 9S-4188 | 1 | PLUG | |
| | 13 | | 4J-5309 | 2 | SEAL-O-RING (ID=9.19mm) | |
| | 14 | | 6E-2151 | 1 | ADAPTER | |
| | 15 | | 6E-5643 | 2 | VALVE | |
| | 16 | | 6E-2161 | 1 | PISTON | |
| | 17 | | 8J-4645 | 1 | PLUG | |
| | 18 | | 7M-8485 | 1 | SEAL-O-RING (ID=29.74mm) | |
| | 19 | | 6E-5638 | 2 | PLUG | |
| | 20 | | 6V-3922 | 2 | SEAL-O-RING (ID=18.72mm) | |
| | 21 | | 6E-5169 | 1 | SPRING | |
| | 22 | | 7I-1248 | 1 | SPRING | |
| Y | 23 | | 171-0030 | 1 | VALVE GP | |

## 1077014 VALVE GP-CONTROL-PART 2 OF 2

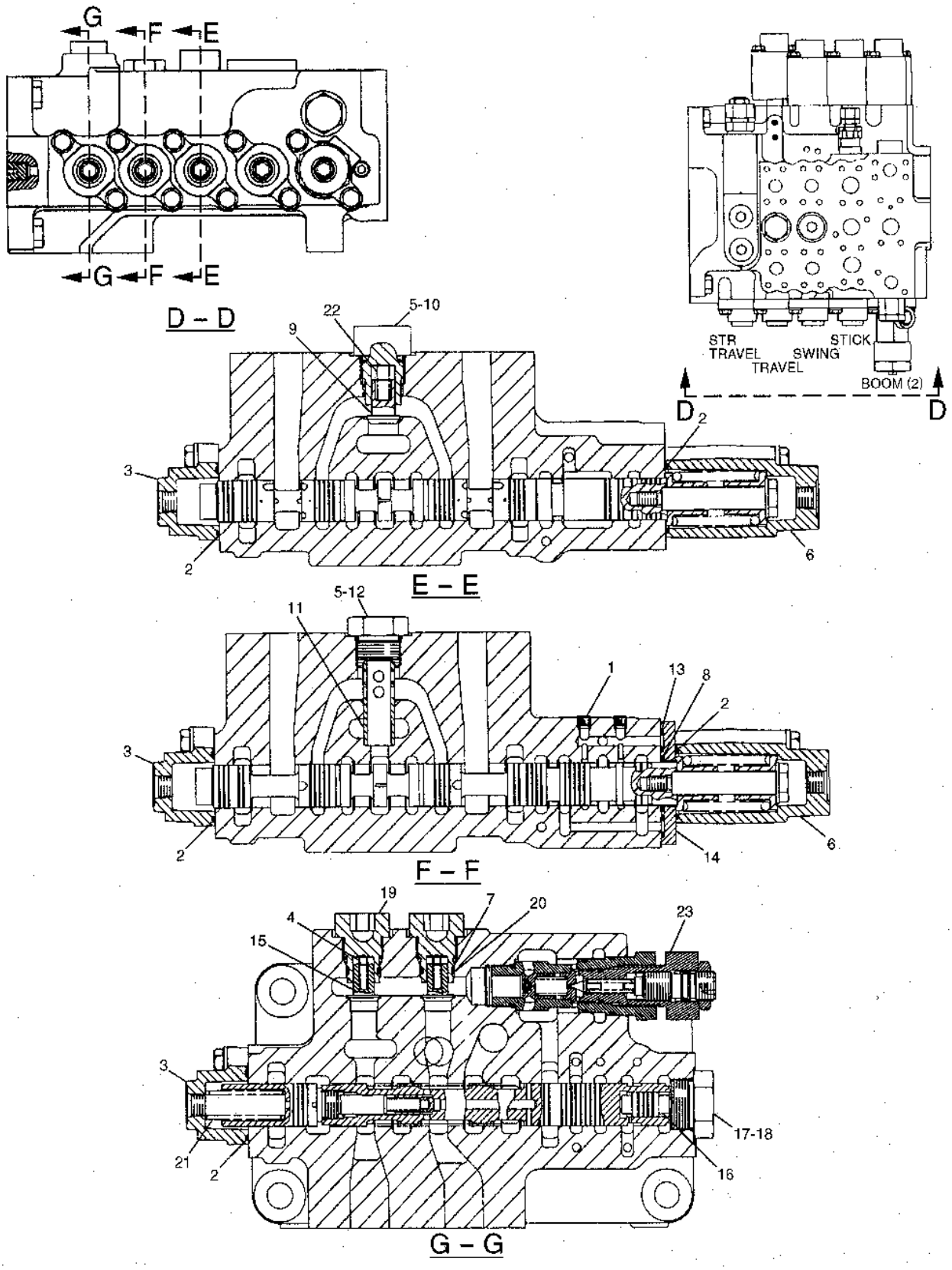


GRAPHIC #1

h56389e

# 1077014 VALVE GP-CONTROL-PART 1 OF 2

S/N 8SR 00341-00400, 8TR 00326-00460
PART OF 1077010-Page 349
1163600-Page 355, 1077015-Page 362, 1474161-Page 365, 7I8136-Page 367

**Key:** Y - SEE SEPARATE ILLUSTRATION

**SMCS**

| NOTE | REF NO | GRAPHIC REF | PART NUMBER | QTY | PART NAME 1 2 3 4 5 6 (PRODUCT LEVEL) | PRICE USD |
|---|---|---|---|---|---|---|
| Y | 1 | | 107-7015 | 1 | VALVE GP | |
| | 2 | | 8T-6759 | 1 | PLUG | |
| | 3 | | 6V-5597 | 4 | SEAL-O-RING (ID=40.94mm) | |
| | 4 | | 123-2446 | 1 | VALVE GP | |
| | 5 | | 6E-2274 | 1 | COVER | |
| | 6 | | 8T-4195 | 10 | BOLT (L=30mm) | |
| | 7 | | 8T-4121 | 18 | WASHER | |
| Y | 8 | | 109-2667 | 1 | VALVE GP | |
| Y | 9 | | 7I-8136 | 1 | VALVE GP | |
| | 10 | | 4T-3148 | 1 | SPRING | |
| | 11 | | 6E-5644 | 1 | PLUG | |
| | 12 | | 4K-1388 | 1 | SEAL-O-RING (ID=26.59mm) | |
| | 13 | | 8T-4178 | 6 | BOLT (L=90mm) | |
| | 14 | | 6E-2273 | 2 | HOUSING | |
| Y | 15 | | 116-3600 | 1 | VALVE GP | |
| | 16 | | 116-3445 | 1 | SLEEVE | |
| | 17 | | 6E-3539 | 1 | VALVE | |
| | 18 | | 6E-5168 | 1 | SPRING | |
| | 19 | | 6E-3541 | 1 | PILOT | |
| | 20 | | 6V-0357 | 1 | SEAL-O-RING (ID=29.74mm) | |
| | 21 | | 6E-2158 | 1 | VALVE | |
| | 22 | | 8T-4198 | 2 | BOLT (L=100mm) | |
| | 23 | | 6E-5643 | 1 | VALVE | |
| | 24 | | 123-2151 | 1 | PLUG | |
| | 25 | | 2S-4078 | 1 | SEAL-O-RING (ID=37.47mm) | |
| | 26 | | 123-2444 | 1 | SPACER | |
| | 27 | | 123-2445 | 1 | SPRING | |

## 1077014 VALVE GP-CONTROL-PART 1 OF 2

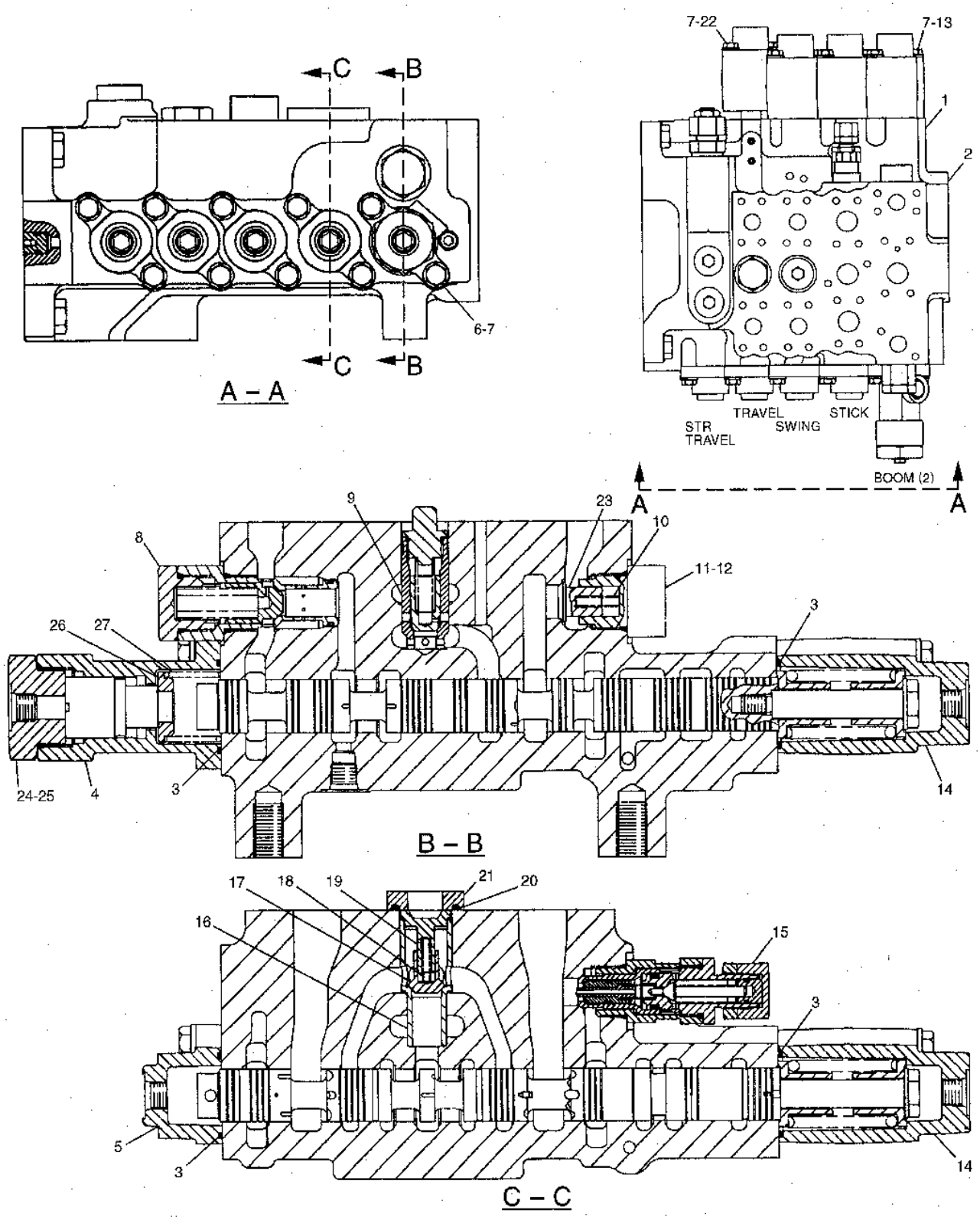


GRAPHIC #1

h63377e

# 1077014 VALVE GP-CONTROL-PART 2 OF 2

S/N 8SR 00341-00400, 8TR 00326-00460
PART OF 1077010-Page 349
1710030-Page 380

**Key:** Y - SEE SEPARATE ILLUSTRATION

**SMCS**

| NOTE | REF NO | GRAPHIC REF | PART NUMBER | QTY | PART NAME 1 2 3 4 5 6 (PRODUCT LEVEL) | PRICE USD |
|---|---|---|---|---|---|---|
| | 1 | | 8T-6759 | 2 | PLUG | |
| | 2 | | 6V-5597 | 5 | SEAL-O-RING (ID=40.94mm) | |
| | 3 | | 3E-2274 | 3 | COVER | |
| | 4 | | 4T-3148 | 2 | SPRING | |
| | 5 | | 4K-1388 | 2 | SEAL-O-RING (ID=26.59mm) | |
| | 6 | | 6E-2273 | 2 | HOUSING | |
| | 7 | | 4I-6397 | 2 | RING | |
| | 8 | | 096-3044 | 1 | SEAL-O-RING (ID=31.72mm) | |
| | 9 | | 6E-5731 | 1 | VALVE | |
| | 10 | | 6E-5730 | 1 | PLUG | |
| | 11 | | 6E-2156 | 1 | SLEEVE | |
| | 12 | | 9S-4188 | 1 | PLUG | |
| | 13 | | 4J-5309 | 2 | SEAL-O-RING (ID=9.19mm) | |
| | 14 | | 6E-2151 | 1 | ADAPTER | |
| | 15 | | 6E-5643 | 2 | VALVE | |
| | 16 | | 6E-2161 | 1 | PISTON | |
| | 17 | | 8J-4645 | 1 | PLUG | |
| | 18 | | 7M-8485 | 1 | SEAL-O-RING (ID=29.74mm) | |
| | 19 | | 6E-3922 | 2 | PLUG | |
| | 20 | | 6V-3922 | 2 | SEAL-O-RING (ID=18.72mm) | |
| | 21 | | 6E-5169 | 1 | SPRING | |
| | 22 | | 7I-1248 | 1 | SPRING | |
| Y | 23 | | 171-0030 | 1 | VALVE GP | |

## 1077014 VALVE GP-CONTROL-PART 2 OF 2

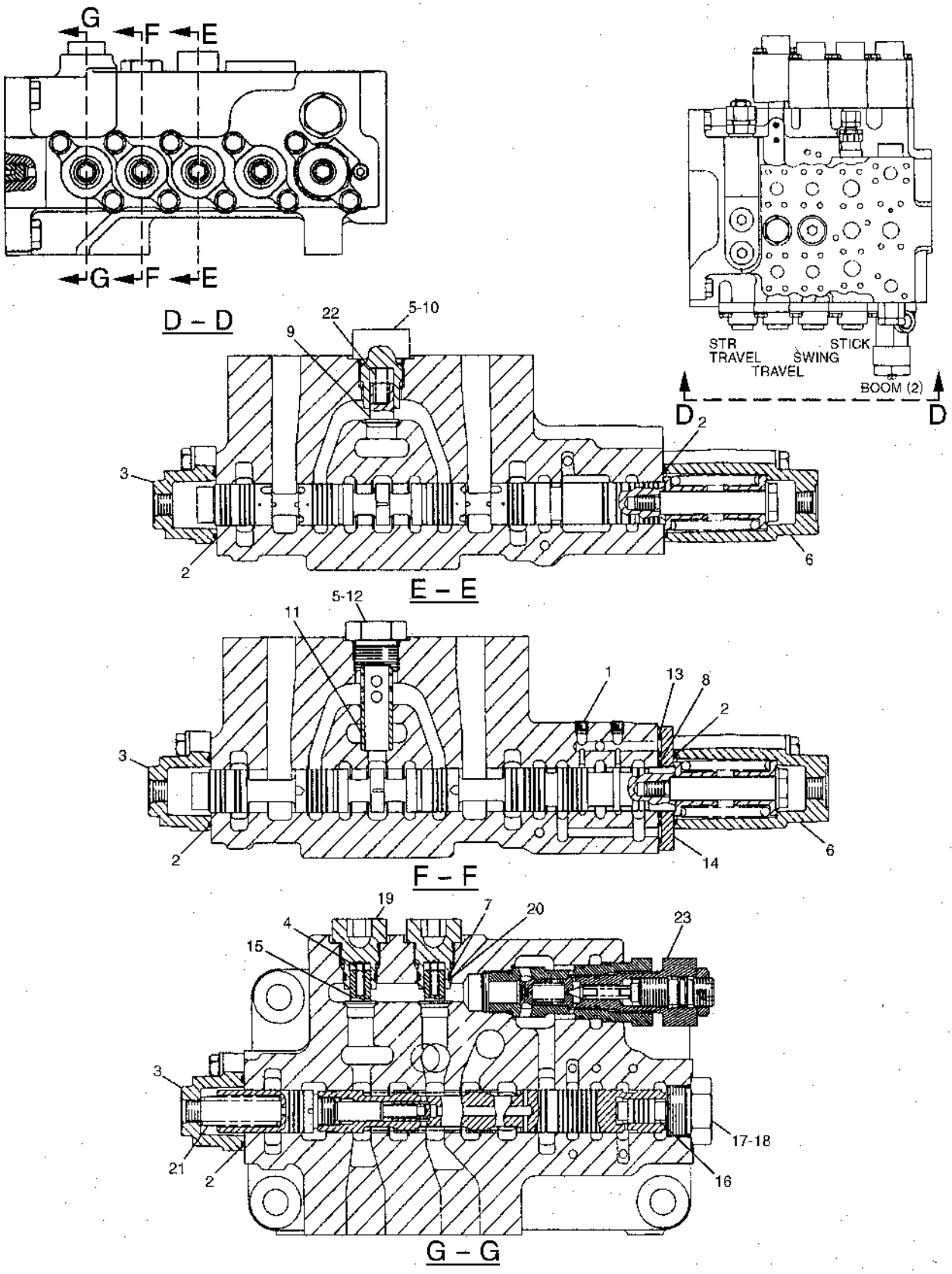


GRAPHIC #1

h63379e

# 1425522 VALVE GP-CONTROL-PART 1 OF 2

S/N 8SR 00401-UP, 8TR 00461-UP
PART OF 1425521-Page 349.01
1163600-Page 355, 1425523-Page 362, 1474161-Page 365, 7I8136-Page 367

**Key:** Y - SEE SEPARATE ILLUSTRATION

**SMCS**

| NOTE | REF NO | GRAPHIC REF | PART NUMBER | QTY | PART NAME 1 2 3 4 5 6 (PRODUCT LEVEL) | PRICE USD |
|---|---|---|---|---|---|---|
| Y | 1 | | 142-5523 | 1 | VALVE GP | |
| | 2 | | 8T-6759 | 1 | PLUG | |
| | 3 | | 6V-5597 | 4 | SEAL-O-RING (ID=40.94mm) | |
| | 4 | | 123-2446 | 1 | VALVE GP | |
| | 5 | | 6E-2274 | 1 | COVER | |
| | 6 | | 8T-4195 | 10 | BOLT (L=30mm) | |
| | 7 | | 8T-4121 | 18 | WASHER | |
| Y | 8 | | 147-4161 | 1 | VALVE GP | |
| Y | 9 | | 7I-8136 | 1 | VALVE GP | |
| | 10 | | 4T-3148 | 1 | SPRING | |
| | 11 | | 6E-5644 | 1 | PLUG | |
| | 12 | | 4K-1388 | 1 | SEAL-O-RING (ID=26.59mm) | |
| | 13 | | 8T-4178 | 6 | BOLT (L=90mm) | |
| | 14 | | 6E-2273 | 2 | HOUSING | |
| Y | 15 | | 116-3600 | 1 | VALVE GP | |
| | 16 | | 116-3445 | 1 | SLEEVE | |
| | 17 | | 6E-3539 | 1 | VALVE | |
| | 18 | | 6E-5168 | 1 | SPRING | |
| | 19 | | 6E-3541 | 1 | PILOT | |
| | 20 | | 6V-0357 | 1 | SEAL-O-RING (ID=29.74mm) | |
| | 21 | | 6E-2158 | 1 | FLANGE | |
| | 22 | | 8T-4198 | 2 | BOLT (L=100mm) | |
| | 23 | | 6E-5643 | 1 | VALVE | |
| | 24 | | 123-2151 | 1 | PLUG | |
| | 25 | | 2S-4078 | 1 | SEAL-O-RING (ID=37.47mm) | |
| | 26 | | 123-2444 | 1 | SPACER | |
| | 27 | | 123-2445 | 1 | SPRING | |

## 1425522 VALVE GP-CONTROL-PART 1 OF 2

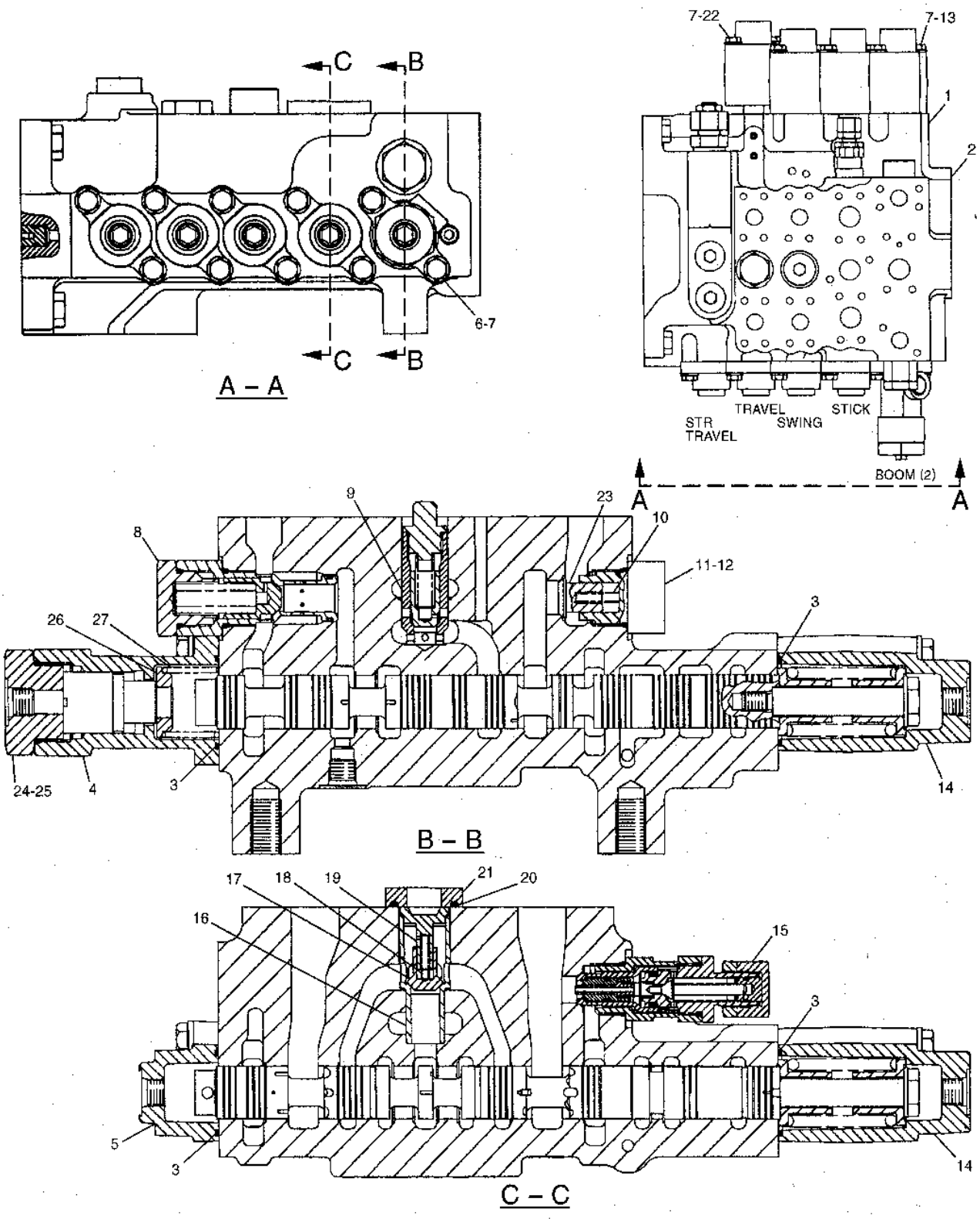


GRAPHIC #1

h79349e

# 1425522 VALVE GP-CONTROL-PART 2 OF 2

S/N 8SR 00401-UP, 8TR 00461-UP
PART OF 1425521-Page 349.01
1710030-Page 380

**Key:** Y - SEE SEPARATE ILLUSTRATION

**SMCS**

| NOTE | REF NO | GRAPHIC REF | PART NUMBER | QTY | PART NAME 1 2 3 4 5 6 (PRODUCT LEVEL) | PRICE USD |
|---|---|---|---|---|---|---|
| | 1 | | 8T-6759 | 2 | PLUG | |
| | 2 | | 6V-5597 | 5 | SEAL-O-RING (ID=40.94mm) | |
| | 3 | | 6E-2274 | 3 | COVER | |
| | 4 | | 4T-3148 | 2 | SPRING | |
| | 5 | | 4K-1388 | 2 | SEAL-O-RING (ID=26.59mm) | |
| | 6 | | 6E-2273 | 2 | HOUSING | |
| | 7 | | 4I-6397 | 2 | RING | |
| | 8 | | 096-3044 | 1 | SEAL-O-RING (ID=31.72mm) | |
| | 9 | | 6E-5731 | 1 | VALVE | |
| | 10 | | 6E-5730 | 1 | PLUG | |
| | 11 | | 6E-2156 | 1 | SLEEVE | |
| | 12 | | 9S-4188 | 1 | PLUG | |
| | 13 | | 4J-5309 | 2 | SEAL-O-RING (ID=9.19mm) | |
| | 14 | | 6E-2151 | 1 | ADAPTER | |
| | 15 | | 6E-5643 | 2 | VALVE | |
| | 16 | | 6E-2161 | 1 | PISTON | |
| | 17 | | 8J-4645 | 1 | PLUG | |
| | 18 | | 7M-8485 | 1 | SEAL-O-RING (ID=29.74mm) | |
| | 19 | | 6E-5638 | 2 | PLUG | |
| | 20 | | 6V-3922 | 2 | SEAL-O-RING (ID=18.72mm) | |
| | 21 | | 6E-5169 | 1 | SPRING | |
| | 22 | | 7I-1248 | 1 | SPRING | |
| Y | 23 | | 171-0030 | 1 | VALVE GP | |

## 1425522 VALVE GP-CONTROL-PART 2 OF 2

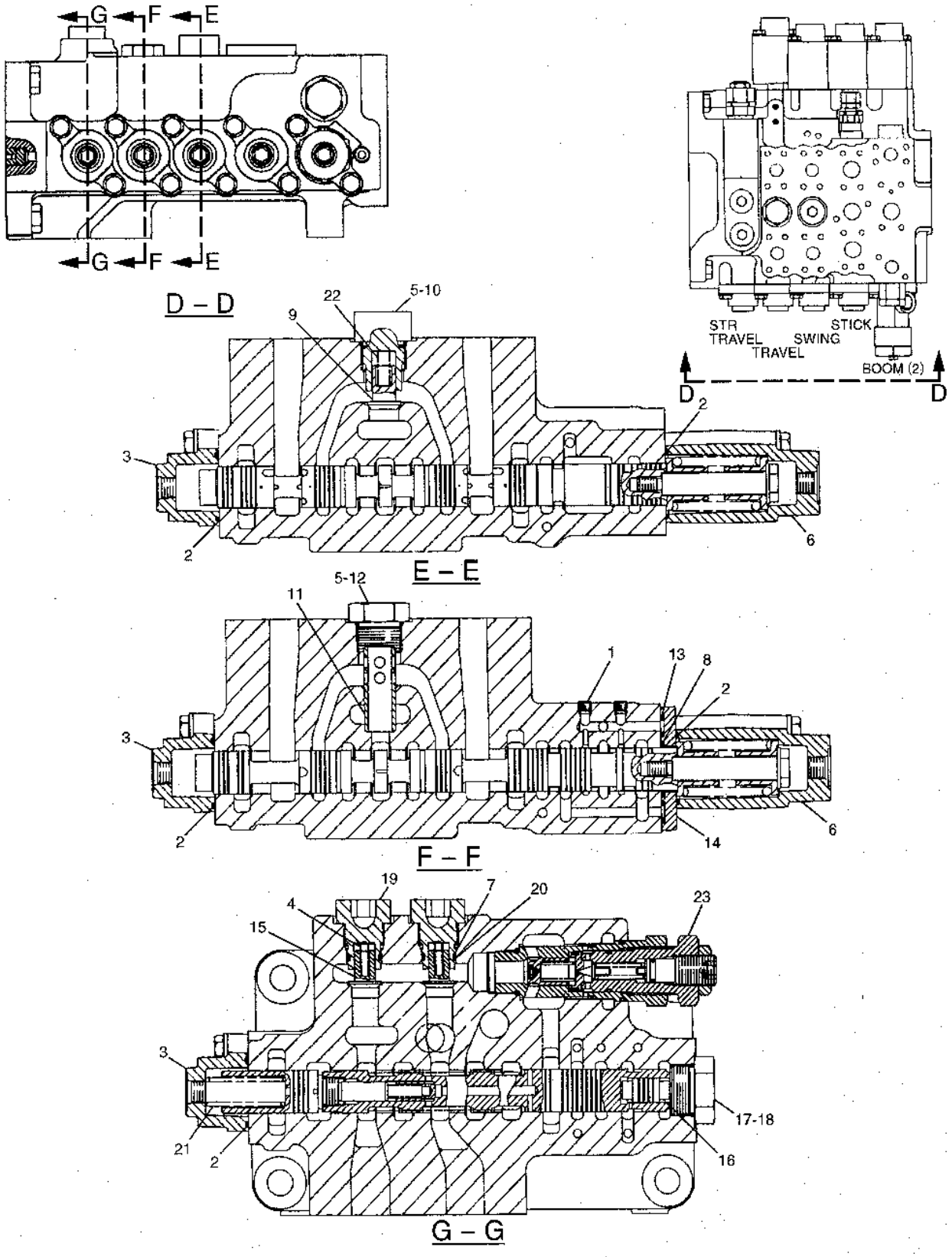


GRAPHIC #1

h79351e

# 1077015 VALVE GP-CONTROL

S/N 8SR 1-00400, 8TR 1-00460
PART OF 1077014-Page 359

**Key:** Y - Separate Illustration

**SMCS**

| NOTE | REF NO | GRAPHIC REF | PART NUMBER | QTY | PART NAME 1 2 3 4 5 6 (PRODUCT LEVEL) | PRICE USD |
|---|---|---|---|---|---|---|
| Y | | | 107-7016 | 1 | VALVE GP (CONTROL) | |
| | | | | | -OR- | |
| Y | | | 112-0040 | 1 | VALVE GP (CONTROL) | |

# 1425523 VALVE GP-CONTROL

S/N 8SR 00401-UP, 8TR 00461-UP
PART OF 1425522-Page 361.06

**Key:** Y - Separate Illustration

**SMCS**

| NOTE | REF NO | GRAPHIC REF | PART NUMBER | QTY | PART NAME 1 2 3 4 5 6 (PRODUCT LEVEL) | PRICE USD |
|---|---|---|---|---|---|---|
| Y | | | 142-5524 | 1 | VALVE GP (CONTROL) | |
| | | | | | -OR- | |
| Y | | | 154-0527 | 1 | VALVE GP (CONTROL) | |

# 1077016 VALVE GP-CONTROL

S/N 8SR 1-00335, 8TR 1-00313
PART OF 1077015-Page 362

**Key:**

**SMCS**

| NOTE | REF NO | GRAPHIC REF | PART NUMBER | QTY | PART NAME 1 2 3 4 5 6 (PRODUCT LEVEL) | PRICE USD |
|---|---|---|---|---|---|---|
| | 1 | | 104-7296 | 1 | SPRING | |
| | 2 | | 6E-5122 | 4 | BOLT | |
| | 3 | | 104-7293 | 2 | SPRING | |
| | 4 | | 3K-0360 | 1 | SEAL-O-RING (ID=16.36mm) | |
| | 5 | | 6E-2271 | 8 | RETAINER | |
| | 6 | | 104-7295 | 1 | SPRING | |
| | 7 | | 111-9959 | 1 | PLUG | |
| | 8 | | 9S-8005 | 1 | PLUG | |
| | 9 | | 5M-7937 | 1 | DOWEL | |
| | 10 | | 2S-2596 | 1 | SPRING | |
| | 11 | | 6E-2163 | 1 | VALVE | |
| | 12 | | 7Y-5219 | 1 | SEAL-O-RING (ID=12.37mm) | |
| | 13 | | 6E-3653 | 1 | PLUG | |
| | 14 | | 4I-3569 | 1 | RING-BACK UP | |
| | 15 | | 5D-1247 | 3 | WASHER | |

## 1077016 VALVE GP-CONTROL

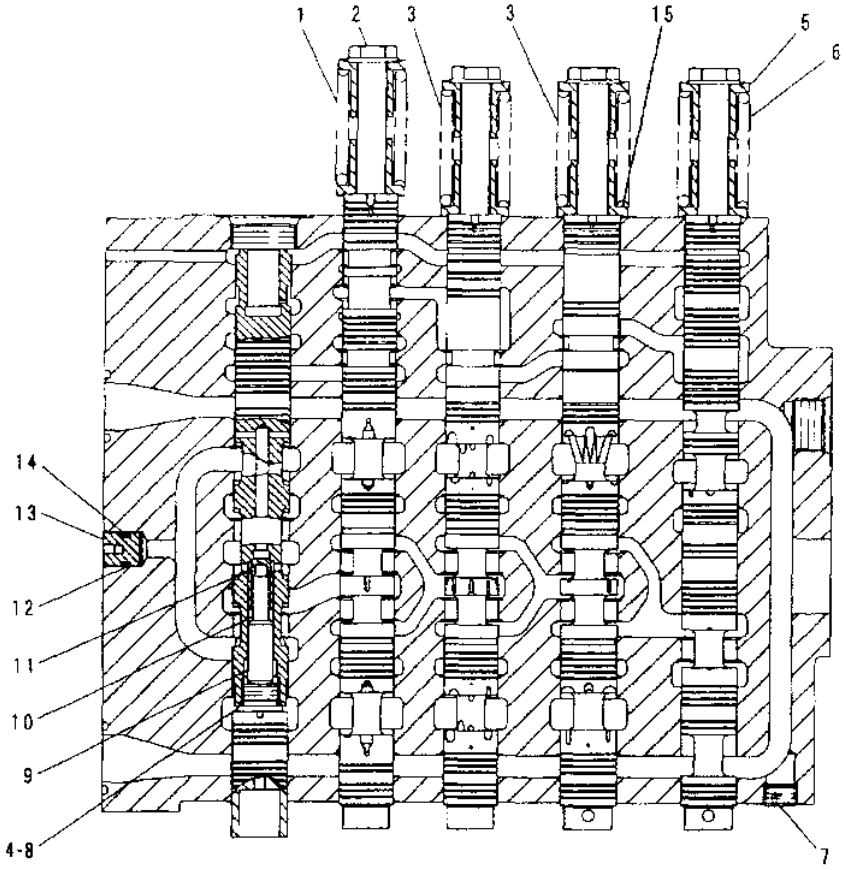


| NOTE | No. | PART No. | QTY | PART NAME | NOTE | No. | PART No. | QTY | PART NAME |
|---|---|---|---|---|---|---|---|---|---|
| | 1 | 104-7296 | 1 | SPRING | | | | | |
| | 2 | 6E-5122 | 4 | BOLT | | | | | |
| | 3 | 104-7293 | 2 | SPRING | | | | | |
| | 4 | 3K-0360 | 1 | SEAL-O-RING (ID=16.36mm) | | | | | |
| | 5 | 6E-2271 | 8 | RETAINER | | | | | |
| | 6 | 104-7295 | 1 | SPRING | | | | | |
| | 7 | 111-9959 | 1 | PLUG | | | | | |
| | 8 | 9S-8005 | 1 | PLUG | | | | | |
| | 9 | 5M-7937 | 1 | DOWEL | | | | | |
| | 10 | 2S-2596 | 1 | SPRING | | | | | |
| | 11 | 6E-2163 | 1 | VALVE | | | | | |
| | 12 | 7Y-5219 | 1 | SEAL-O-RING (ID=12.37mm) | | | | | |
| | 13 | 6E-3653 | 1 | PLUG | | | | | |
| | 14 | 4I-3569 | 1 | RING-BACK UP | | | | | |
| | 15 | 5D-1247 | 3 | WASHER | | | | | |

H58785E

GRAPHIC #1 h58785e

# 1077016 VALVE GP-CONTROL

S/N 8SR 00336-00400, 8TR 00314-00460
PART OF 1077015-Page 362

**Key:**

**SMCS**

| NOTE | REF NO | GRAPHIC REF | PART NUMBER | QTY | PART NAME 1 2 3 4 5 6 (PRODUCT LEVEL) | PRICE USD |
|---|---|---|---|---|---|---|
| | 1 | | 104-7296 | 1 | SPRING | |
| | 2 | | 6E-5122 | 4 | BOLT | |
| | 3 | | 104-7293 | 2 | SPRING | |
| | 4 | | 3K-0360 | 1 | SEAL-O-RING (ID=16.36mm) | |
| | 5 | | 6E-2271 | 8 | RETAINER | |
| | 6 | | 104-7294 | 1 | SPRING | |
| | 7 | | 111-9959 | 1 | PLUG | |
| | 8 | | 9S-8005 | 1 | PLUG | |
| | 9 | | 5M-7937 | 1 | DOWEL | |
| | 10 | | 2S-2596 | 1 | SPRING | |
| | 11 | | 6E-2163 | 1 | VALVE | |
| | 12 | | 7Y-5219 | 1 | SEAL-O-RING (ID=12.37mm) | |
| | 13 | | 6E-3653 | 1 | PLUG | |
| | 14 | | 4I-3569 | 1 | RING-BACK UP | |

## 1077016 VALVE GP-CONTROL

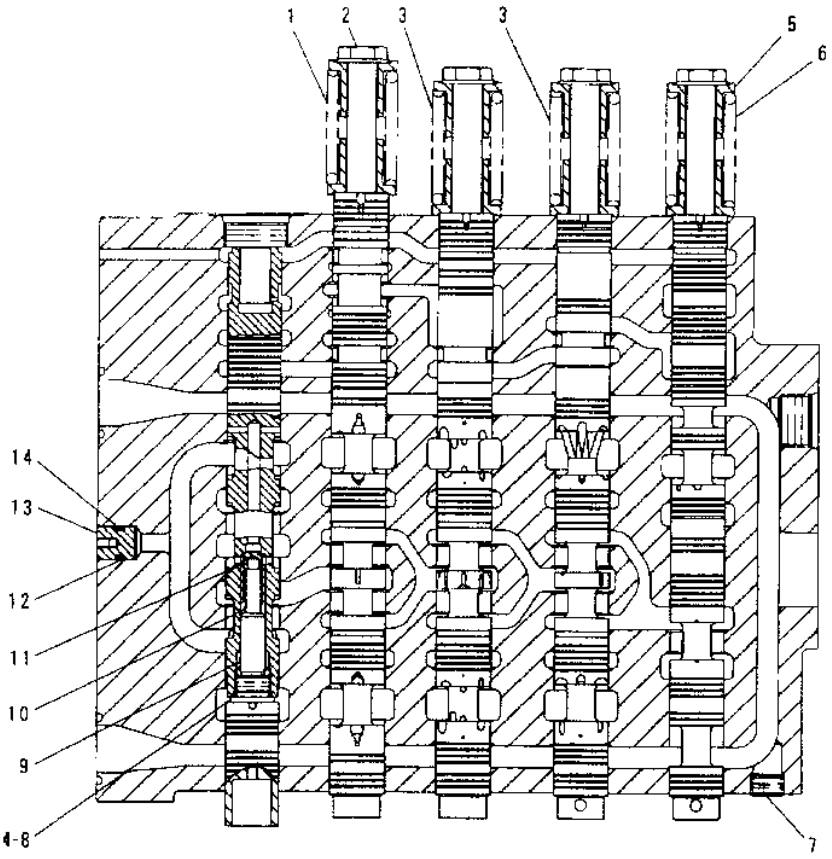


| NOTE | No. | PART No. | QTY | PART NAME |
|---|---|---|---|---|
| | 1 | 104-7296 | 1 | SPRING |
| | 2 | 6E-5122 | 4 | BOLT |
| | 3 | 104-7293 | 2 | SPRING |
| | 4 | 3K-0360 | 1 | SEAL-O-RING (ID=16.36mm) |
| | 5 | 6E-2271 | 8 | RETAINER |
| | 6 | 104-7294 | 1 | SPRING |
| | 7 | 111-9959 | 1 | PLUG |
| | 8 | 9S-8005 | 1 | PLUG |
| | 9 | 5M-7937 | 1 | DOWEL |
| | 10 | 2S-2596 | 1 | SPRING |
| | 11 | 6E-2163 | 1 | VALVE |
| | 12 | 7Y-5219 | 1 | SEAL-O-RING (ID=12.37mm) |
| | 13 | 6E-3653 | 1 | PLUG |
| | 14 | 4I-3569 | 1 | RING-BACK UP |

H58786E

# 1425524 VALVE GP-CONTROL

S/N 8SR 00401-UP, 8TR 00461-UP
PART OF 1425523-Page 362
1713266-Page 363.03

**Key:** B - USE AS REQUIRED, Y - SEE SEPARATE ILLUSTRATION

**SMCS**

| NOTE | REF NO | GRAPHIC REF | PART NUMBER | QTY | PART NAME 1 2 3 4 5 6 (PRODUCT LEVEL) | PRICE USD |
|---|---|---|---|---|---|---|
| | 1 | | 104-7296 | 1 | SPRING | |
| | 2 | | 6E-5122 | 4 | BOLT | |
| | 3 | | 104-7293 | 2 | SPRING | |
| | 4 | | 3K-0360 | 1 | SEAL-O-RING (ID=16.36mm) | |
| | 5 | | 6E-2271 | 8 | RETAINER | |
| | 6 | | 104-7294 | 1 | SPRING | |
| | 7 | | 111-9959 | 1 | PLUG | |
| | 8 | | 9S-8005 | 1 | PLUG | |
| | 9 | | 5M-7937 | 1 | DOWEL | |
| | 10 | | 2S-2596 | 1 | SPRING | |
| | 11 | | 6E-2163 | 1 | VALVE | |
| | 12 | | 7Y-5219 | 1 | SEAL-O-RING (ID=12.37mm) | |
| | 13 | | 6E-3653 | 1 | PLUG | |
| | 14 | | 4I-3569 | 1 | RING | |
| | | | | | THE FOLLOWING REPAIR KITS ARE AVAILABLE: | |
| | | | 159-7753 | 1 | REPAIR KIT (TRAVEL) | |
| | | | 159-7771 | 1 | REPAIR KIT (SWING) | |
| R | | | 159-7156 | 1 | REPAIR KIT (STICK 1) | |
| | R | | 0R-4611 | 1 | MOTOR GP-HYD | |
| | | | 155-7147 | 1 | REPAIR KIT (BOOM 2) | |
| B | | | 171-3268 | 1 | REPAIR KIT (STICK 1) | |
| BY | | | 171-3266 | 1 | VALVE GP | |

## 1425524 VALVE GP-CONTROL

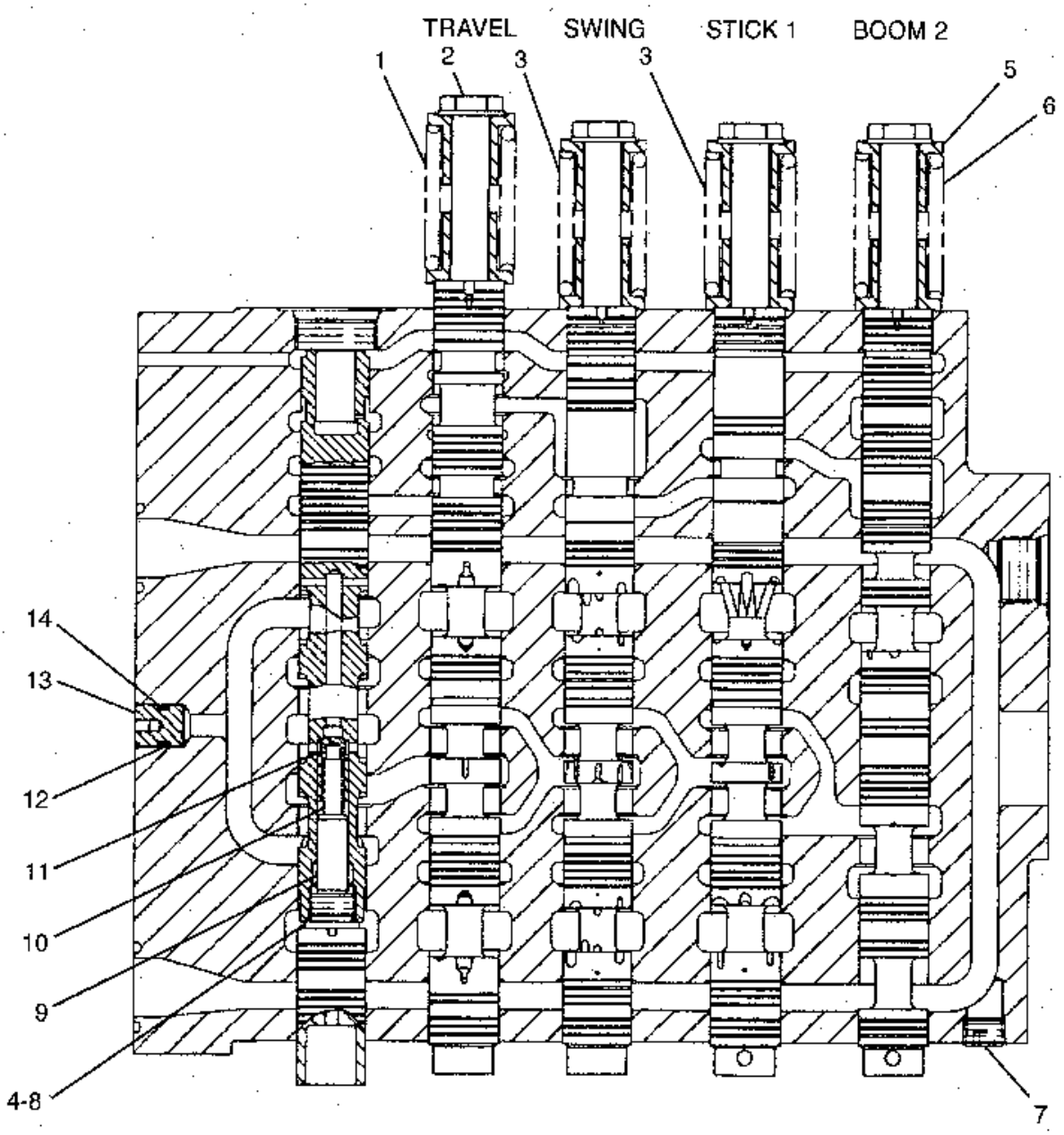


GRAPHIC #1 h84056e

# 1713266 VALVE GP-PILOT

S/N 8SR 00401-UP, 8TR 00461-UP
PART OF 1425524-Page 363.02
1163600-Page 355

**Key:** B - USE AS REQUIRED, Y - SEE SEPARATE ILLUSTRATION

**SMCS**

| NOTE | REF NO | GRAPHIC REF | PART NUMBER | QTY | PART NAME 1 2 3 4 5 6 (PRODUCT LEVEL) | PRICE USD |
|---|---|---|---|---|---|---|
| | 1 | | 095-1574 | 1 | SEAL-O-RING (ID=6.80mm) | |
| | 2 | | 8T-6757 | 5 | PLUG | |
| | 3 | | 8T-6759 | 8 | PLUG | |
| | 4 | | 147-4184 | 2 | PLUG | |
| | 5 | | 123-2481 | 1 | COVER | |
| | 6 | | 9X-6032 | 6 | BOLT (L=30mm) | |
| | 7 | | 8T-2637 | 1 | PIN | |
| | 8 | | 4B-4158 | 2 | SCREW | |
| | 9 | | 9X-8005 | 2 | PLUG | |
| | 10 | | 3K-0360 | 3 | SEAL-O-RING (ID=16.36mm) | |
| B | 11 | | 140-0649 | 3 | SHIM (T=1.00mm) | |
| B | | | 140-0650 | 1 | SHIM (T=0.50mm) | |
| B | | | 140-0651 | 1 | SHIM (T=0.25mm) | |
| | 12 | | 147-4138 | 1 | ADJUSTER | |
| | 13 | | 8T-4132 | 1 | NUT | |
| | 14 | | 123-2479 | 1 | SPRING | |
| | 15 | | 095-1579 | 1 | SEAL-O-RING (ID=10.80mm) | |
| | 16 | | 095-1780 | 1 | RING | |
| | 17 | | 123-2482 | 1 | VALVE GP | |
| | 18 | | 095-6104 | 1 | SEAL-O-RING (ID=39.70mm) | |
| | 19 | | 147-4137 | 1 | PLUG | |
| | 20 | | 3D-2824 | 1 | SEAL-O-RING (ID=23.47mm) | |
| | 21 | | 123-2486 | 1 | GUIDE | |
| | 22 | | 123-2492 | 1 | SPRING | |
| | 23 | | 132-2488 | 1 | VALVE | |
| | 24 | | 123-2489 | 1 | SPRING | |
| | 25 | | 095-1586 | 1 | SEAL-O-RING (19.80mm) | |
| | 26 | | 8T-4136 | 4 | BOLT | |
| | 327 | | 118-4044 | 1 | COVER | |
| | 28 | | 095-1594 | 1 | SEAL-O-RING (ID=25.70mm) | |
| | 29 | | 095-1594 | 1 | SEAL-O-RING (ID=25.70mm) | |
| | 30 | | 087-5166 | 1 | SPRING | |
| Y | 31 | | 116-3600 | 1 | VALVE GP | |
| | 32 | | 9S-4185 | 1 | PLUG | |
| | 33 | | 5I-8511 | 1 | SPRING | |
| | 34 | | 4I-8965 | 1 | GUIDE | |
| | 35 | | 3J-1907 | 1 | SEAL-O-RING (ID=11.89mm) | |
| | 36 | | 132-2485 | 1 | PLUG | |

## 1713266 VALVE GP-PILOT

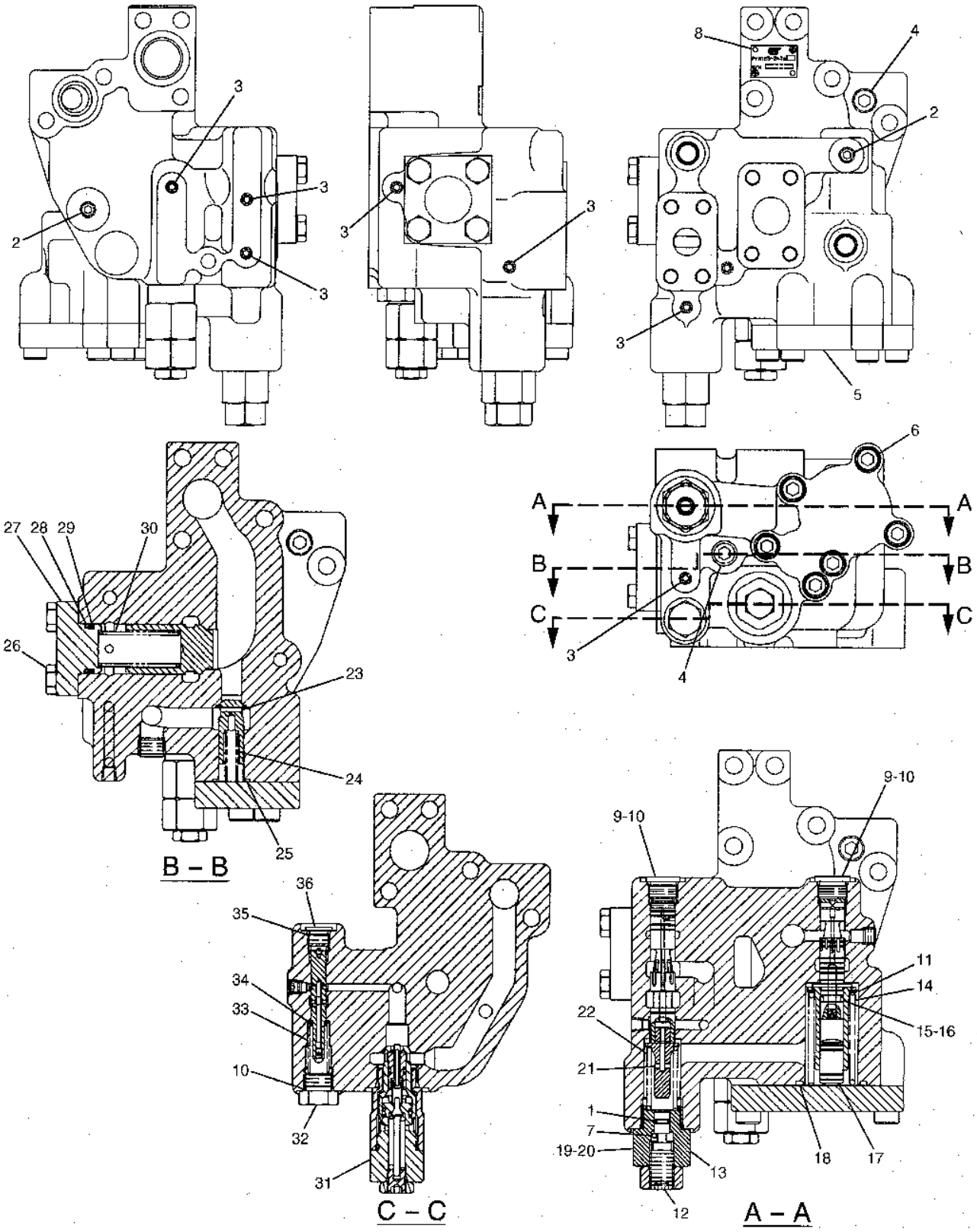


GRAPHIC #1

h79354e

# 1120040 VALVE GP-CONTROL

S/N 8SR 1-00335, 8TR 1-00313
PART OF 1077015-Page 362

**Key:**

**SMCS**

| NOTE | REF NO | GRAPHIC REF | PART NUMBER | QTY | PART NAME 1 2 3 4 5 6 (PRODUCT LEVEL) | PRICE USD |
|---|---|---|---|---|---|---|
| | 1 | | 104-7296 | 1 | SPRING | |
| | 2 | | 8T-4189 | 4 | BOLT (L=20mm) | |
| | 3 | | 9N-0869 | 4 | WASHER-HARD | |
| | 4 | | 104-7293 | 2 | SPRING | |
| | 5 | | 3K-0360 | 1 | SEAL-O-RING (ID=16.36mm) | |
| | 6 | | 6E-2271 | 8 | RETAINER | |
| | 7 | | 104-7295 | 1 | SPRING | |
| | 8 | | 111-9959 | 1 | PLUG | |
| | 9 | | 9S-8005 | 1 | PLUG | |
| | 10 | | 5M-7937 | 1 | DOWEL | |
| | 11 | | 2S-2596 | 1 | SPRING | |
| | 12 | | 6E-3653 | 1 | PLUG | |
| | 13 | | 7Y-5219 | 1 | SEAL-O-RING (ID=12.37mm) | |
| | 14 | | 4I-3569 | 1 | RING-BACK UP | |
| | 15 | | 6E-2163 | 1 | VALVE | |
| | 16 | | 7Y-5219 | 1 | SEAL (ID=12.37mm) | |
| | 17 | | 6E-3653 | 1 | PLUG | |
| | 18 | | 4I-3569 | 1 | RING | |
| | 19 | | 5D-1247 | 3 | WASHER | |

## 1120040 VALVE GP-CONTROL

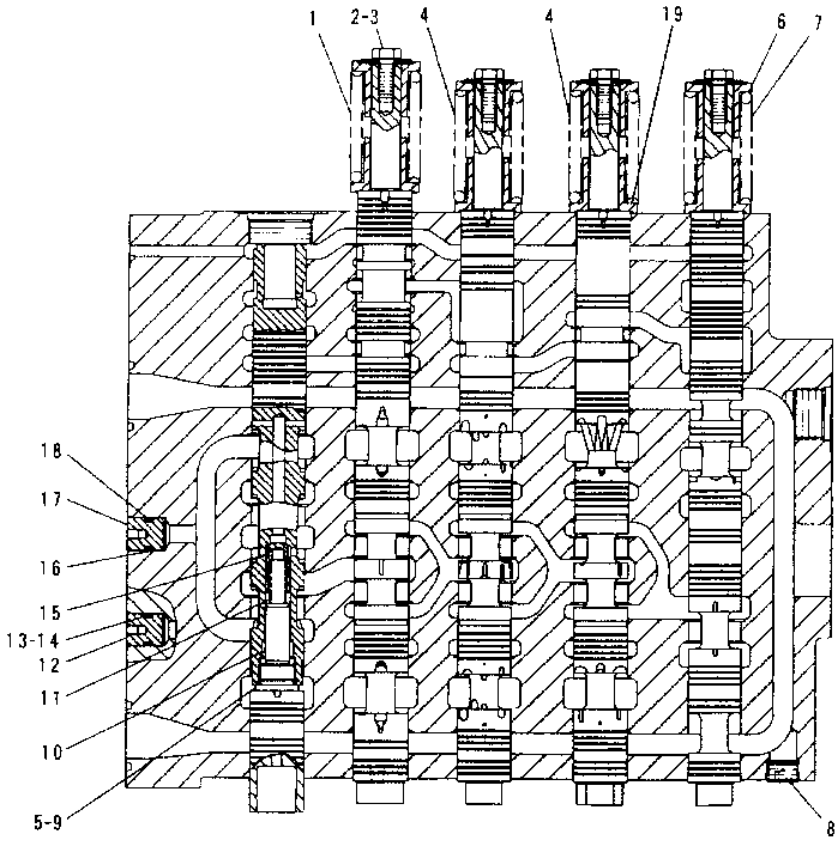


| NOTE | No. | PART No. | QTY | PART NAME |
|---|---|---|---|---|
| | 1 | 104-7296 | 1 | SPRING |
| | 2 | 8T-4189 | 4 | BOLT (L=20mm) |
| | 3 | 9N-0869 | 4 | WASHER-HARD |
| | 4 | 104-7293 | 2 | SPRING |
| | 5 | 3K-0360 | 1 | SEAL-O-RING (ID=16.36mm) |
| | 6 | 6E-2271 | 8 | RETAINER |
| | 7 | 104-7295 | 1 | SPRING |
| | 8 | 111-9959 | 1 | PLUG |
| | 9 | 9S-8005 | 1 | PLUG |
| | 10 | 5M-7937 | 1 | DOWEL |
| | 11 | 2S-2596 | 1 | SPRING |
| | 12 | 6E-3653 | 1 | PLUG |
| | 13 | 7Y-5219 | 1 | SEAL-O-RING (ID=12.37mm) |
| | 14 | 4I-3569 | 1 | RING-BACK UP |
| | 15 | 6E-2163 | 1 | VALVE |
| | 16 | 7Y-5219 | 1 | SEAL (ID=12.37mm) |
| | 17 | 6E-3653 | 1 | PLUG |
| | 18 | 4I-3569 | 1 | RING |
| | 19 | 5D-1247 | 3 | WASHER |

| NOTE | No. | PART No. | QTY | PART NAME |
|---|---|---|---|---|

H58787E

GRAPHIC #1

h58787e

# 1120040 VALVE GP-CONTROL

S/N 8SR 00336-00400, 8TR 00314-00460
PART OF 1077015-Page 362

**Key:**

**SMCS**

| NOTE | REF NO | GRAPHIC REF | PART NUMBER | QTY | PART NAME 1 2 3 4 5 6 (PRODUCT LEVEL) | PRICE USD |
|---|---|---|---|---|---|---|
| | 1 | | 104-7296 | 1 | SPRING | |
| | 2 | | 8T-4189 | 4 | BOLT (L=20mm) | |
| | 3 | | 9N-0869 | 4 | WASHER-HARD | |
| | 4 | | 104-7293 | 2 | SPRING | |
| | 5 | | 3K-0360 | 1 | SEAL-O-RING (ID=16.36mm) | |
| | 6 | | 6E-2271 | 8 | RETAINER | |
| | 7 | | 104-7295 | 1 | SPRING | |
| | 8 | | 111-9959 | 1 | PLUG | |
| | 9 | | 9S-8005 | 1 | PLUG | |
| | 10 | | 5M-7937 | 1 | DOWEL | |
| | 11 | | 2S-2596 | 1 | SPRING | |
| | 12 | | 6E-3653 | 1 | PLUG | |
| | 13 | | 7Y-5219 | 1 | SEAL-O-RING (ID=12.37mm) | |
| | 14 | | 4I-3569 | 1 | RING-BACK UP | |
| | 15 | | 6E-2163 | 1 | VALVE | |
| | 16 | | 7Y-5219 | 1 | SEAL (ID=12.37mm) | |
| | 17 | | 6E-3653 | 1 | PLUG | |
| | 18 | | 4I-3569 | 1 | RING | |

## 1120040 VALVE GP-CONTROL

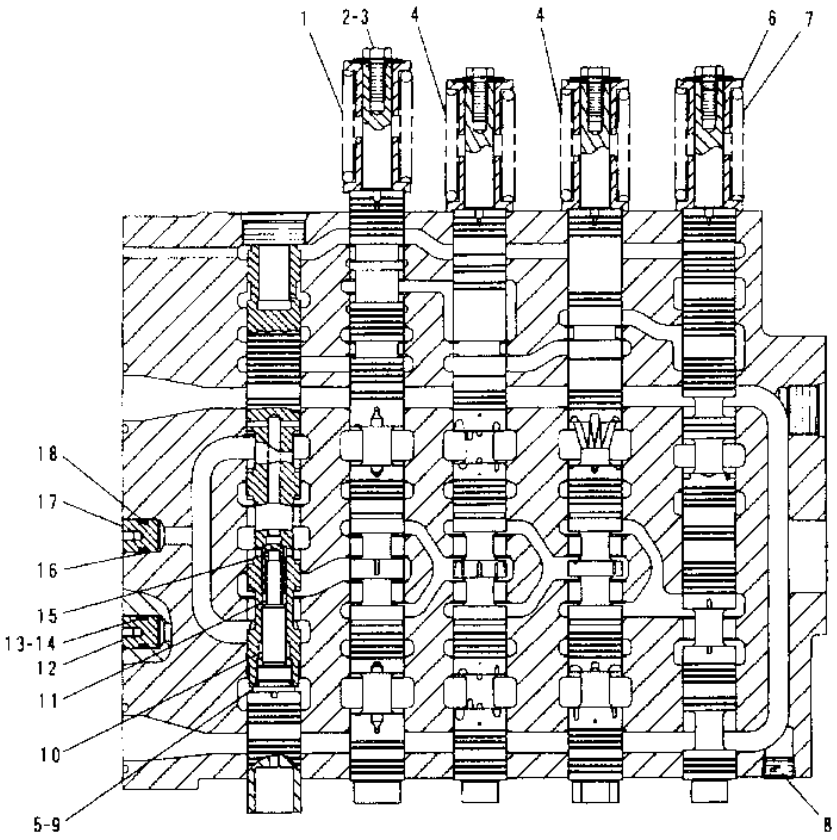


| NOTE | No. | PART No. | QTY | PART NAME |
|---|---|---|---|---|
| | 1 | 104-7296 | 1 | SPRING |
| | 2 | 8T-4189 | 4 | BOLT(L=20mm) |
| | 3 | 9N-0869 | 4 | WASHER-HARD |
| | 4 | 104-7293 | 2 | SPRING |
| | 5 | 3K-0360 | 1 | SEAL-O-RING(ID=16.36mm) |
| | 6 | 6E-2271 | 8 | RETAINER |
| | 7 | 104-7295 | 1 | SPRING |
| | 8 | 111 9959 | 1 | PLUG |
| | 9 | 9S 8005 | 1 | PLUG |
| | 10 | 5M-7937 | 1 | DOWEL |
| | 11 | 2S-2596 | 1 | SPRING |
| | 12 | 6E-3653 | 1 | PLUG |
| | 13 | 7Y-5219 | 1 | SEAL-O-RING(ID=12.37mm) |
| | 14 | 4I-3569 | 1 | RING-BACK UP |
| | 15 | 6E-2163 | 1 | VALVE |
| | 16 | 7Y-5219 | 1 | SEAL(ID=12.37mm) |
| | 17 | 6E-3653 | 1 | PLUG |
| | 18 | 4I-3569 | 1 | RING |

| NOTE | No. | PART No. | QTY | PART NAME |
|---|---|---|---|---|

H58788E

GRAPHIC #1

h58788e

# 1540527 VALVE GP-CONTROL

S/N 8SR 00401-UP, 8TR 00461-UP
PART OF 1425523-Page 362

**Key:**

**SMCS**

| NOTE | REF NO | GRAPHIC REF | PART NUMBER | QTY | PART NAME 1 2 3 4 5 6 (PRODUCT LEVEL) | PRICE USD |
|---|---|---|---|---|---|---|
| | 1 | | 104-7296 | 1 | SPRING | |
| | 2 | | 8T-4189 | 4 | BOLT (L=20mm) | |
| | 3 | | 9N-0869 | 4 | WASHER | |
| | 4 | | 104-7293 | 2 | SPRING | |
| | 5 | | 3K-0360 | 1 | SEAL-O-RING (ID=16.36mm) | |
| | 6 | | 6E-2271 | 8 | RETAINER | |
| | 7 | | 104-7294 | 1 | SPRING | |
| | 8 | | 111-9959 | 1 | PLUG | |
| | 9 | | 9S-8005 | 1 | PLUG | |
| | 10 | | 5M-7937 | 1 | DOWEL | |
| | 11 | | 2S-2596 | 1 | SPRING | |
| | 12 | | 6E-3653 | 1 | PLUG | |
| | 13 | | 7Y-5219 | 1 | SEAL-O-RING (ID=12.37mm) | |
| | 14 | | 4I-3569 | 1 | RING | |
| | 15 | | 6E-2163 | 1 | VALVE | |
| | 16 | | 7Y-5219 | 1 | SEAL-O-RING (ID=12.37mm) | |
| | 17 | | 6E-3653 | 1 | PLUG | |
| | 18 | | 4I-3569 | 1 | RING | |

## 1540527 VALVE GP-CONTROL

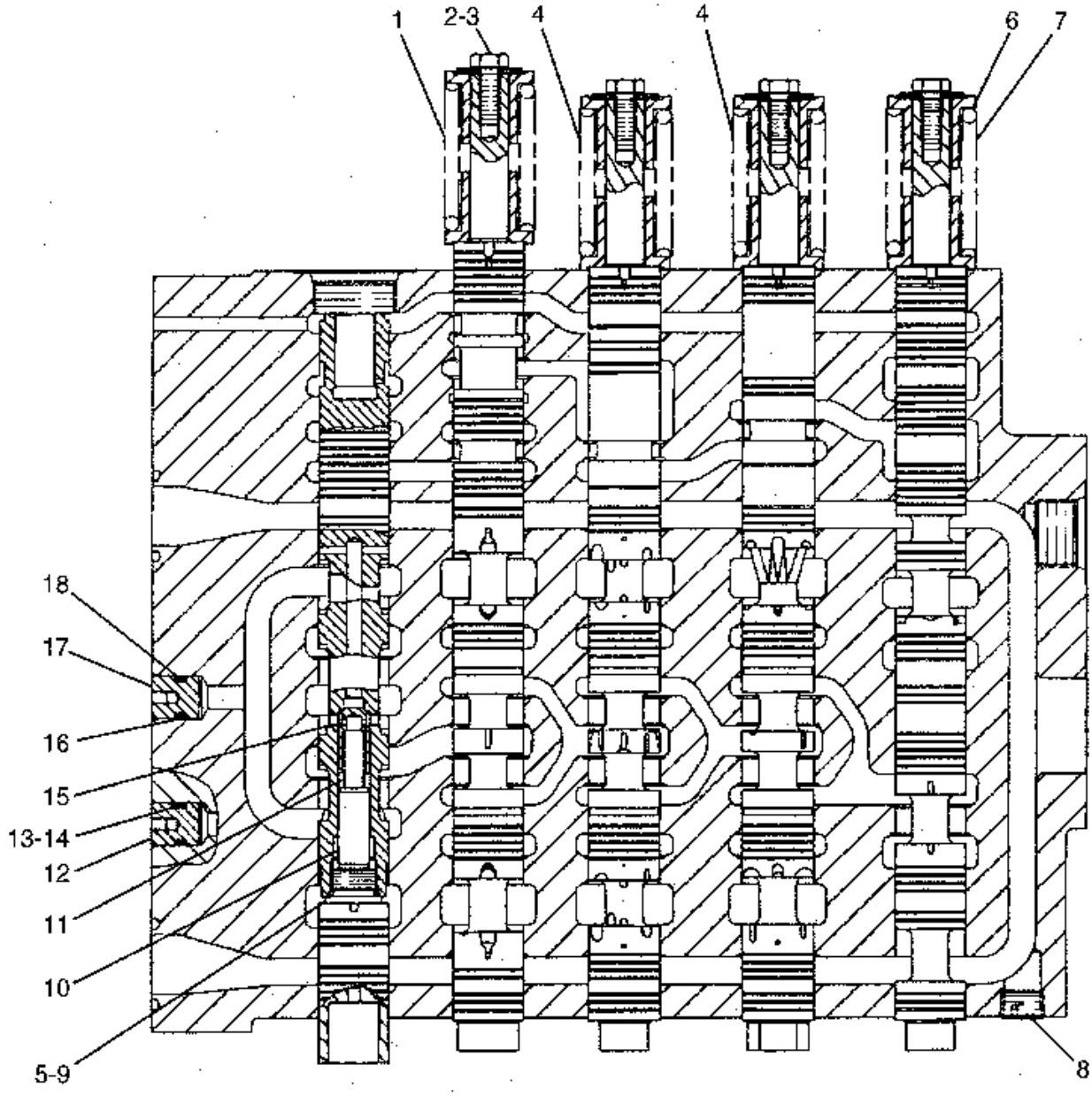


GRAPHIC #1 h79355e

# 1092667 VALVE GP-RELIEF

S/N 8SR 1-00340, 8TR 1-00325
PART OF 1077014-Page 359

**Key:** B - USE AS REQUIRED

**SMCS**

| NOTE | REF NO | GRAPHIC REF | PART NUMBER | QTY | PART NAME 1 2 3 4 5 6 (PRODUCT LEVEL) | PRICE USD |
|---|---|---|---|---|---|---|
| | 1 | | 107-6370 | 1 | SPRING | |
| | 2 | | 5P-3108 | 1 | SEAL-O-RING (ID=20.30mm) | |
| | 3 | | 5I-4111 | 1 | PLUG | |
| B | 4 | | 4J-7386 | 5 | SHIM (T=0.254mm) | |
| | 5 | | 4K-1388 | 2 | SEAL-O-RING (ID=26.59mm) | |
| B | 6 | | 4J-7385 | 1 | SHIM (T=1.219mm) | |
| | 7 | | 107-6371 | 1 | VALVE | |

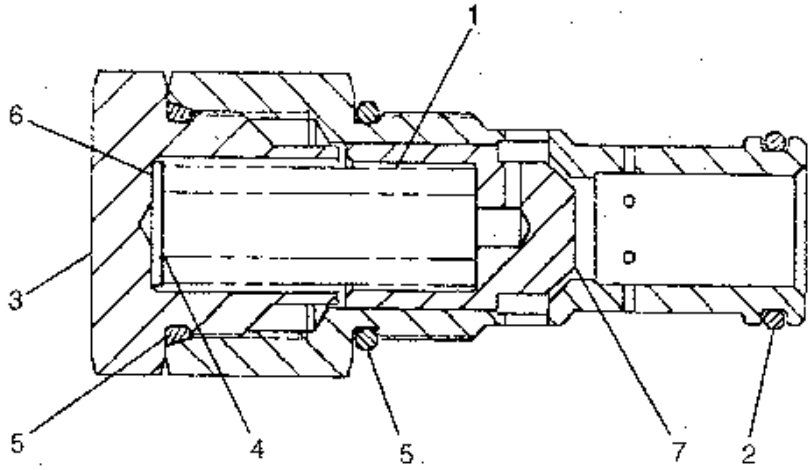


GRAPHIC #1 h51026e

# 1474161 VALVE GP-RELIEF

S/N 8SR 00341-UP, 8TR 00326-UP
PART OF 1077014-Page 361.02, 1425522-Page 361.06

**Key:** B - USE AS REQUIRED

**SMCS**

| NOTE | REF NO | GRAPHIC REF | PART NUMBER | QTY | PART NAME 1 2 3 4 5 6 (PRODUCT LEVEL) | PRICE USD |
|---|---|---|---|---|---|---|
| | 1 | | 107-6370 | 1 | SPRING | |
| | 2 | | 5P-3108 | 1 | SEAL-O-RING (ID=20.30mm) | |
| | 3 | | 5I-4111 | 1 | PLUG | |
| B | 4 | | 4J-7386 | 1 | SHIM (T=0.254mm) | |
| | 5 | | 4K-1388 | 2 | SEAL-O-RING (ID=26.59mm) | |
| B | 6 | | 4J-7385 | 1 | SHIM (T=1.219mm) | |
| | 7 | | 107-6371 | 1 | VALVE | |

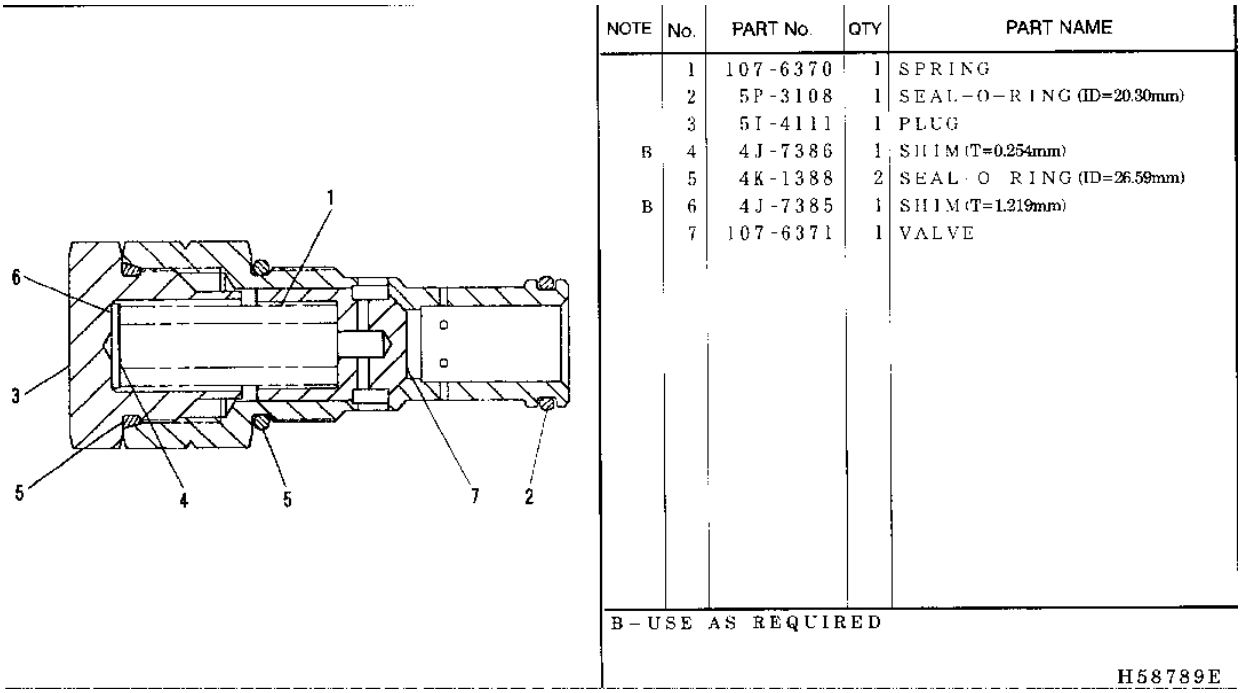


| NOTE | No. | PART No. | QTY | PART NAME |
|---|---|---|---|---|
| | 1 | 107-6370 | 1 | SPRING |
| | 2 | 5P-3108 | 1 | SEAL-O-RING (ID=20.30mm) |
| | 3 | 5I-4111 | 1 | PLUG |
| B | 4 | 4J-7386 | 1 | SHIM (T=0.254mm) |
| | 5 | 4K-1388 | 2 | SEAL-O-RING (ID=26.59mm) |
| B | 6 | 4J-7385 | 1 | SHIM (T=1.219mm) |
| | 7 | 107-6371 | 1 | VALVE |

B-USE AS REQUIRED

H58789E

GRAPHIC #1 h58789e

# 1298030 VALVE GP-RELIEF

PART OF 1373718-Page 338

**Key:**

**SMCS**

| NOTE | REF NO | GRAPHIC REF | PART NUMBER | QTY | PART NAME 1 2 3 4 5 6 (PRODUCT LEVEL) | PRICE USD |
|---|---|---|---|---|---|---|
| | 1 | | 114-0515 | 1 | SEAT | |
| | 2 | | 095-1785 | 3 | RING-BACK UP | |
| | 3 | | 095-1586 | 3 | SEAL-O-RING (ID=19.80mm) | |
| | 4 | | 114-0516 | 1 | SPRING | |
| | 5 | | 114-0519 | 1 | STOPPER | |
| | 6 | | 7Y-8436 | 1 | SCREW | |
| | 7 | | 7Y-8437 | 1 | NUT | |
| | 8 | | 114-0518 | 1 | BODY | |
| | 9 | | 095-1601 | 1 | SEAL-O-RING (ID=34.70mm) | |
| | 10 | | 121-1459 | 2 | RING-BACK UP | |
| | 11 | | 114-0517 | 1 | PISTON | |
| | 12 | | 114-0514 | 1 | SPRING | |
| | 13 | | 129-8031 | 1 | VALVE GP | |

## 1298030 VALVE GP-RELIEF

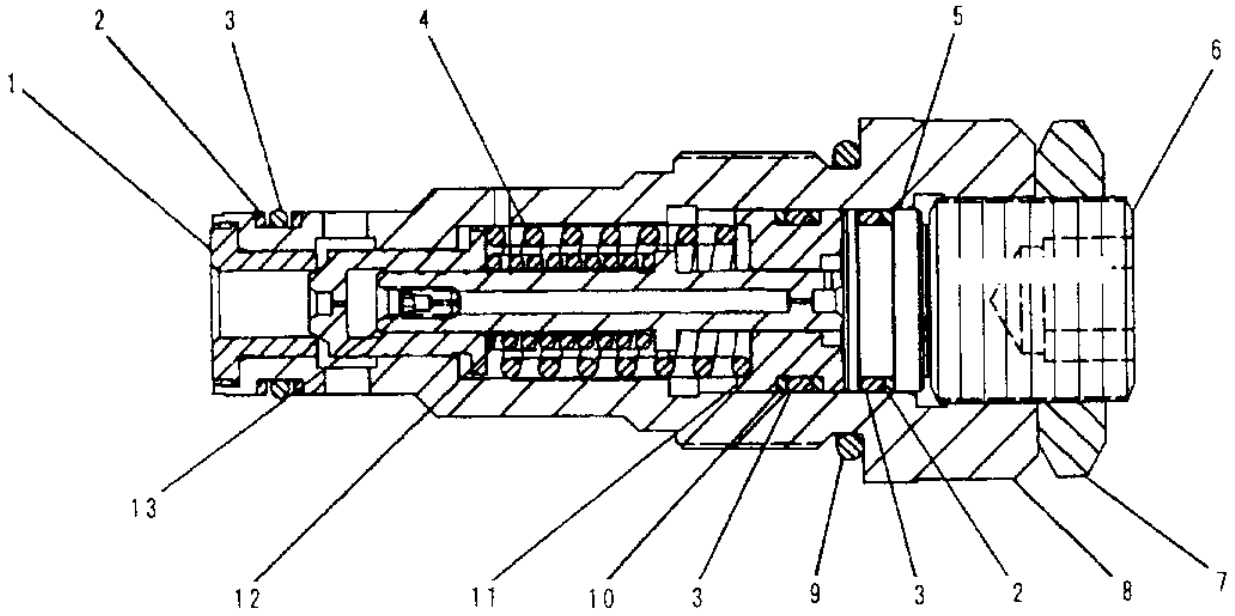


| NOTE | No. | PART No. | QTY | PART NAME | NOTE | No. | PART No. | QTY | PART NAME |
|---|---|---|---|---|---|---|---|---|---|
| | 1 | 114-0515 | 1 | SEAT | | | | | |
| | 2 | 095-1785 | 3 | RING-BACK UP | | | | | |
| | 3 | 095 1586 | 3 | SEAL-O-RING (ID=19.80mm) | | | | | |
| | 4 | 114 0516 | 1 | SPRING | | | | | |
| | 5 | 114 0519 | 1 | STOPPER | | | | | |
| | 6 | 7Y-8436 | 1 | SCREW | | | | | |
| | 7 | 7Y-8437 | 1 | NUT | | | | | |
| | 8 | 114-0518 | 1 | BODY | | | | | |
| | 9 | 095-1601 | 1 | SEAL-O-RING (ID=34.70mm) | | | | | |
| | 10 | 121-1459 | 2 | RING-BACK UP | | | | | |
| | 11 | 114-0517 | 1 | PISTON | | | | | |
| | 12 | 114-0514 | 1 | SPRING | | | | | |
| | 13 | 129-8031 | 1 | VALVE GP | | | | | |

H50318E

GRAPHIC #1 h50318e

# 7I8136 VALVE GP-CHECK

PART OF 1077014-Page 359, 1425522-Page 361.06

**Key:**

**SMCS**

| NOTE | REF NO | GRAPHIC REF | PART NUMBER | QTY | PART NAME 1 2 3 4 5 6 (PRODUCT LEVEL) | PRICE USD |
|---|---|---|---|---|---|---|
| | 1 | | 5I-3082 | 1 | PLUG | |
| | 2 | | 3K-0360 | 1 | SEAL-O-RING (ID=16.36mm) | |
| | 3 | | 3N-3252 | 1 | SPRING | |

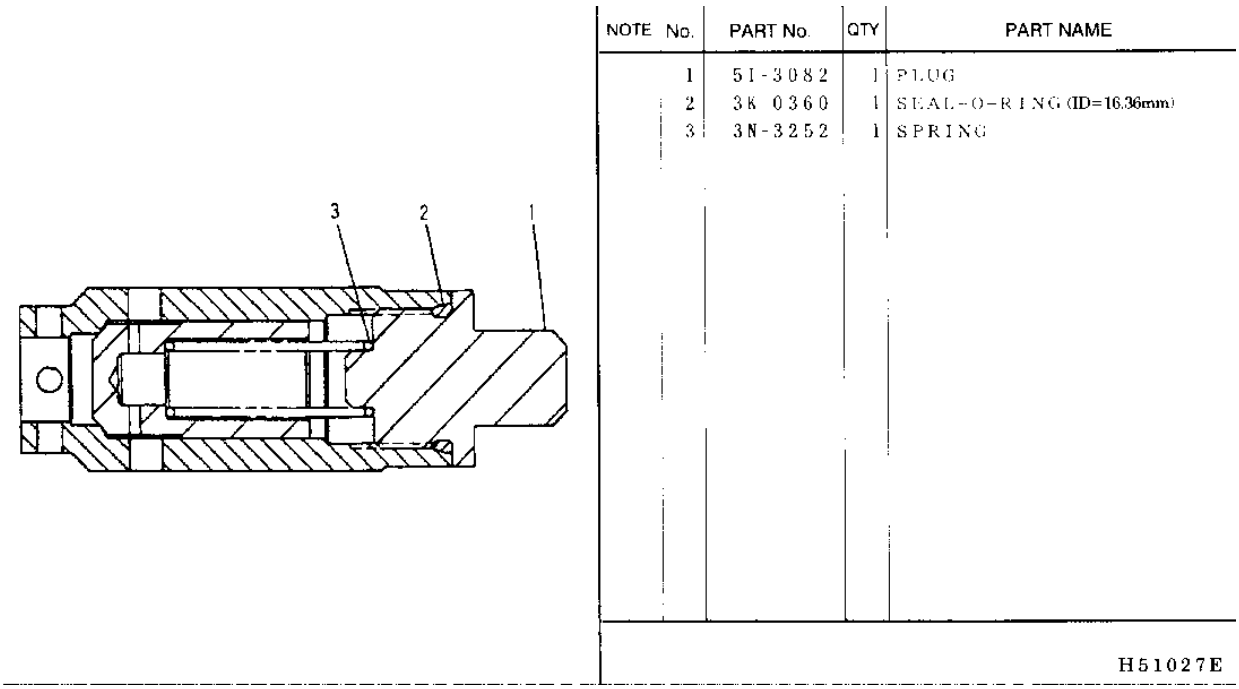


GRAPHIC #1 h51027e

# 4I5525 VALVE GP-CHECK

PART OF 1136866-Page 327
AN ATTACHMENT

**Key:**

**SMCS**

| NOTE | REF NO | GRAPHIC REF | PART NUMBER | QTY | PART NAME 1 2 3 4 5 6 (PRODUCT LEVEL) | PRICE USD |
|---|---|---|---|---|---|---|
| | 1 | | 8T-1159 | 4 | BOLT (L=25mm) | |
| | 2 | | 6V-8978 | 1 | SEAL-O-RING (ID=29.82mm) | |
| | 3 | | 4I-5523 | 1 | COVER | |
| | 4 | | 4I-5521 | 1 | BODY | |
| | 5 | | 4I-5520 | 1 | VALVE | |
| | 6 | | 2M-9780 | 1 | SEAL-O-RING (ID=19.18mm) | |
| | 7 | | 9S-4190 | 1 | PLUG | |
| | 8 | | 4I-5522 | 1 | SPRING | |

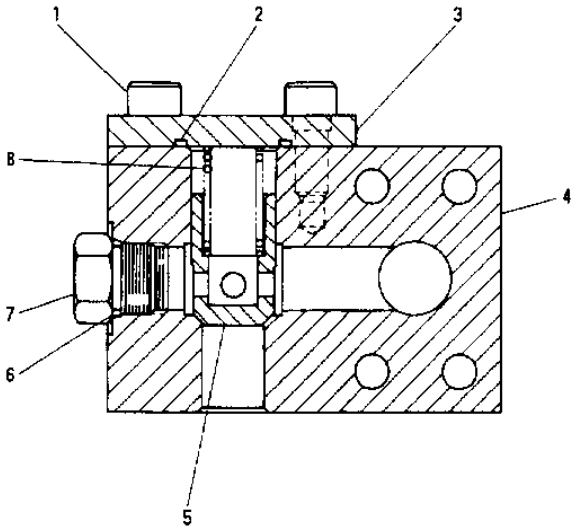


| NOTE | No. | PART No. | QTY | PART NAME |
|---|---|---|---|---|
| | 1 | 8T-1159 | 4 | BOLT (L=25mm) |
| | 2 | 6V-8978 | 1 | SEAL-O-RING (ID=29.82mm) |
| | 3 | 4I-5523 | 1 | COVER |
| | 4 | 4I-5521 | 1 | BODY |
| | 5 | 4I-5520 | 1 | VALVE |
| | 6 | 2M-9780 | 1 | SEAL-O-RING (ID=19.18mm) |
| | 7 | 9S-4190 | 1 | PLUG |
| | 8 | 4I-5522 | 1 | SPRING |

H53707E

GRAPHIC #1 h53707e

# 1232433 VALVE GP-RELIEF

PART OF 1136866-Page 327
1163600-Page 355
AN ATTACHMENT

**Key:** Y - SEPARATE ILLUSTRATION

**SMCS**

| NOTE | REF NO | GRAPHIC REF | PART NUMBER | QTY | PART NAME 1 2 3 4 5 6 (PRODUCT LEVEL) | PRICE USD |
|---|---|---|---|---|---|---|
| | 1 | | 096-3773 | 2 | SCREW-MACHINE | |
| | 2 | | 095-1594 | 1 | SEAL-O-RING (ID=25.70mm) | |
| | 3 | | 095-1789 | 1 | RING-BACK UP | |
| | 4 | | 118-4044 | 1 | COVER | |
| | 5 | | 8T-4136 | 4 | BOLT (L=25mm) | |
| Y | 6 | | 116-3600 | 1 | VALVE GP | |
| | 7 | | 111-9959 | 4 | PLUG | |
| | 8 | | 123-2423 | 1 | FLANGE | |
| | 9 | | 1P-3702 | 1 | SEAL (ID=32.23mm) | |

## 1232433 VALVE GP-RELIEF

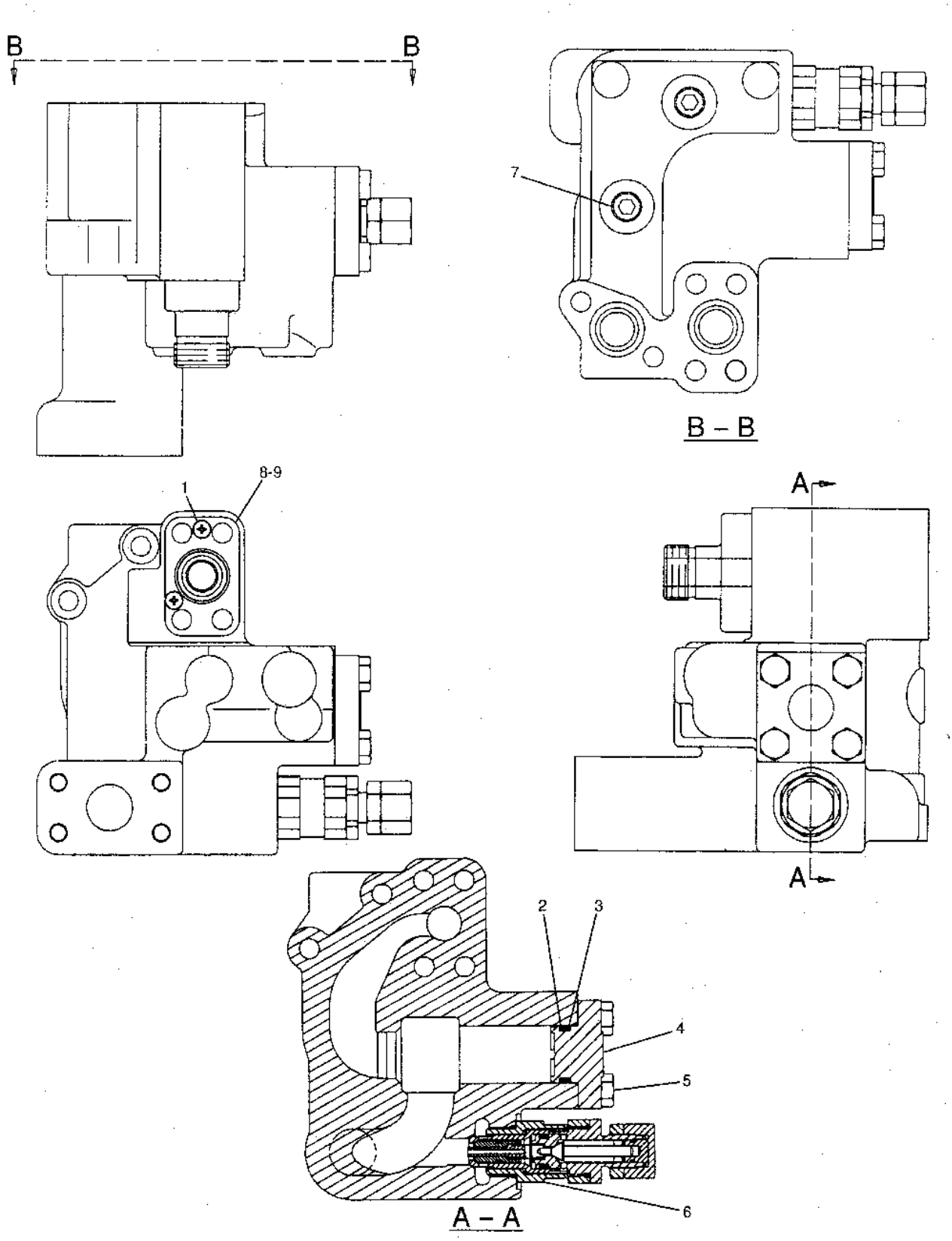


GRAPHIC #1

h53737e

# 6E4281 VALVE GP-PRESSURE CONTROL

PART OF 1077010-Page 349, 1425521-Page 349.01

**Key:**

**SMCS**

| NOTE | REF NO | GRAPHIC REF | PART NUMBER | QTY | PART NAME 1 2 3 4 5 6 (PRODUCT LEVEL) | PRICE USD |
|---|---|---|---|---|---|---|
| | 1 | | 9S-8006 | 2 | PLUG | |
| | 2 | | 2M-9780 | 2 | SEAL-O-RING (ID=19.18mm) | |
| | 3 | | 4J-7533 | 5 | SEAL-O-RING (ID=6.07mm) | |
| | 4 | | 6E-2790 | 1 | SPRING | |
| | 5 | | 6E-4280 | 1 | VALVE GP | |
| | 6 | | 9S-4180 | 5 | PLUG | |

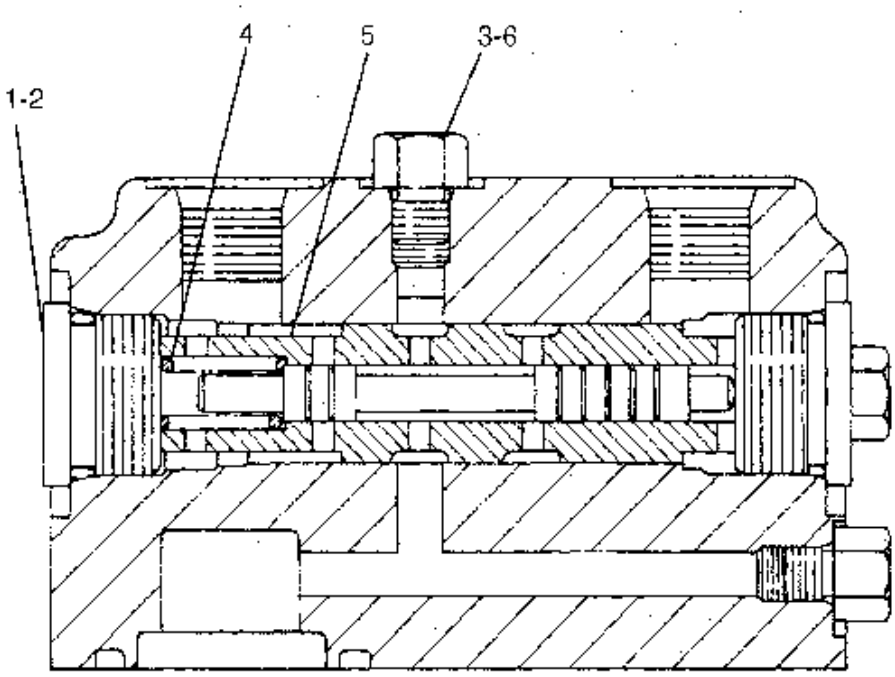


GRAPHIC #1

h50630e

# 1140652 VALVE AR-4 WAY

AN ATTACHMENT

**Key:** Y - Separate Illustration

**SMCS**

| NOTE | REF NO | GRAPHIC REF | PART NUMBER | QTY | PART NAME 1 2 3 4 5 6 (PRODUCT LEVEL) | PRICE USD |
|---|---|---|---|---|---|---|
| Y | | | 113-6836 | 1 | LINES GP (PILOT) | |
| Y | | | 120-5101 | 1 | FILM GP | |

# 1140651 VALVE AR-2 WAY

AN ATTACHMENT

**Key:** Y - Separate Illustration

**SMCS**

| NOTE | REF NO | GRAPHIC REF | PART NUMBER | QTY | PART NAME 1 2 3 4 5 6 (PRODUCT LEVEL) | PRICE USD |
|---|---|---|---|---|---|---|
| Y | | | 113-6835 | 1 | LINES GP (PILOT) | |
| Y | | | 120-5100 | 1 | FILM GP | |

# 1133422 PEDAL AR-THIRD

S/N 8SR 1-(D96.10), 8TR 1-(D96.10)
AN ATTACHMENT

**Key:** Y - Separate Illustration

**SMCS**

| NOTE | REF NO | GRAPHIC REF | PART NUMBER | QTY | PART NAME 1 2 3 4 5 6 (PRODUCT LEVEL) | PRICE USD |
|---|---|---|---|---|---|---|
| Y | | | 111-6428 | 1 | CONTROL GP (HYDRAULIC) | |
| Y | | | 113-6737 | 1 | LINES GP (PILOT) | |
| | | | 127-5250 | 1 | FILM (INSTRUCTION) | |

# 1133422 PEDAL AR-THIRD

S/N 8SR (D96.11)-UP, 8TR (D96.11)-UP
AN ATTACHMENT

**Key:** Y - Separate Illustration

**SMCS**

| NOTE | REF NO | GRAPHIC REF | PART NUMBER | QTY | PART NAME 1 2 3 4 5 6 (PRODUCT LEVEL) | PRICE USD |
|---|---|---|---|---|---|---|
| Y | | | 135-2272 | 1 | CONTROL GP (HYDRAULIC) | |
| Y | | | 113-6737 | 1 | LINES GP (PILOT) | |
| | | | 127-5250 | 1 | FILM (INSTRUCTION) | |

# 1119916 VALVE GP-PRESS REDUCING SOL

PART OF 1119950-Page 383

**Key:**

**SMCS**

| NOTE | REF NO | GRAPHIC REF | PART NUMBER | QTY | PART NAME 1 2 3 4 5 6 (PRODUCT LEVEL) | PRICE USD |
|---|---|---|---|---|---|---|
| | 1 | | 6M-5062 | 1 | SEAL-O-RING (ID=10.82mm) | |
| | 2 | | 4K-2039 | 1 | SEAL-O-RING (ID=12.42mm) | |
| | 3 | | 5L-4758 | 1 | SEAL-O-RING (ID=14.00mm) | |
| | 4 | | 095-1586 | 1 | SEAL-O-RING (ID=19.80mm) | |
| | 5 | | 114-0623 | 1 | NUT AS | |

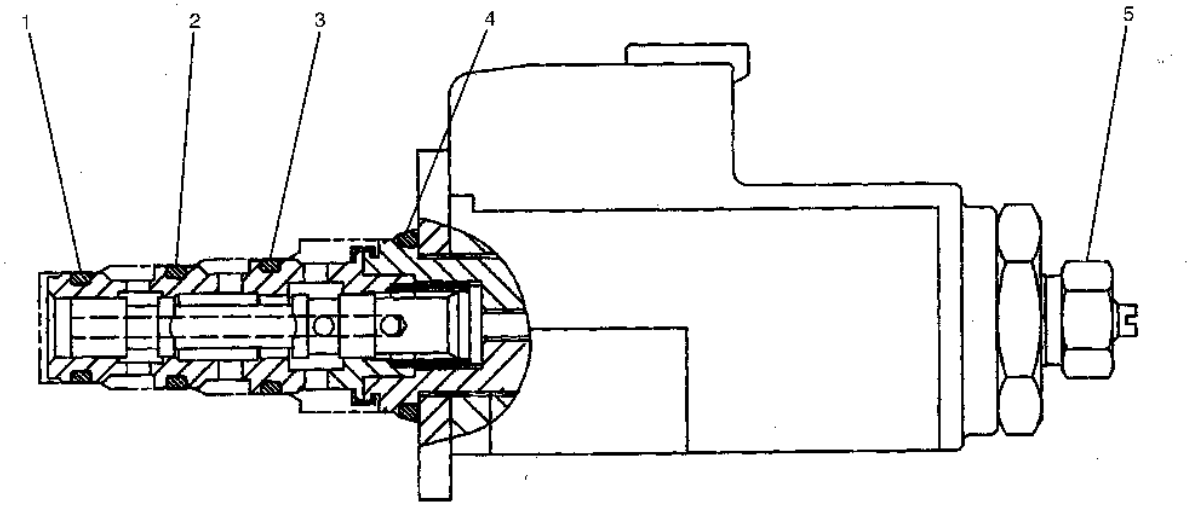


GRAPHIC #1 h67281e

# 1077056 VALVE GP-SOLENOID

PART OF 1335832-Page 328
1163526-Page 376.01

**Key:** Y - SEPARATE ILLUSTRATION

**SMCS**

| NOTE | REF NO | GRAPHIC REF | PART NUMBER | QTY | PART NAME 1 2 3 4 5 6 (PRODUCT LEVEL) | PRICE USD |
|---|---|---|---|---|---|---|
| | 1 | | 5B-9304 | 2 | SCREW | |
| Y | 2 | | 116-3526 | 1 | VALVE GP | |
| | 3 | | 8T-0288 | 2 | BOLT | |
| | 4 | | 8T-6759 | 6 | PLUG | |
| | 5 | | 116-3525 | 2 | ORIFICE | |
| | 6 | | 095-1576 | 1 | SEAL-O-RING | |
| | 7 | | 114-0550 | 2 | VALVE GP | |
| | 8 | | 094-1902 | 2 | RING | |
| | 9 | | 095-1586 | 2 | SEAL-O-RING (ID=19.80mm) | |
| | 10 | | 095-1785 | 2 | RING-BACK UP | |
| | 11 | | 095-1698 | 2 | SEAL-O-RING (ID=29.40mm) | |

## 1077056 VALVE GP-SOLENOID

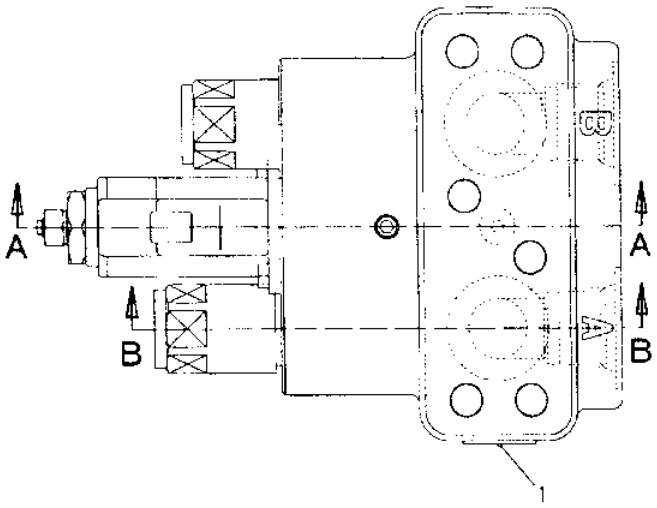


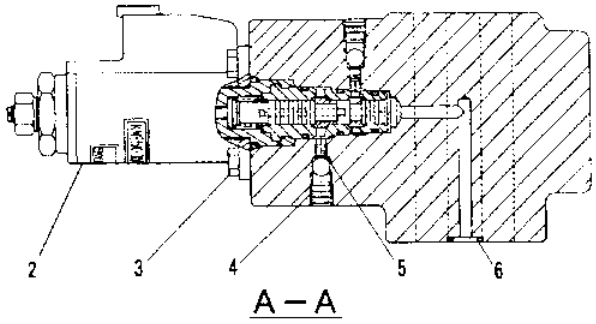


A – A

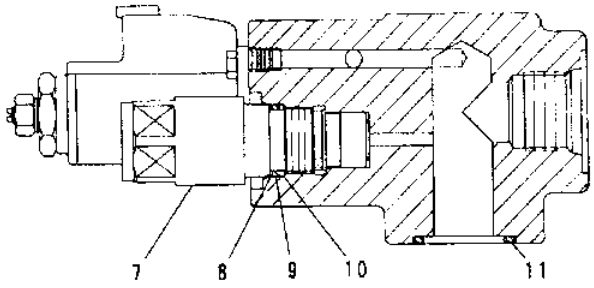


B – B

| NOTE | No. | PART No. | QTY | PART NAME |
|---|---|---|---|---|
| | 1 | 5B-9304 | 2 | SCREW |
| Y | 2 | 116-3526 | 1 | VALVE GP |
| | 3 | 8T-0288 | 2 | BOLT (L=12mm) |
| | 4 | 8T-6759 | 6 | PLUG |
| | 5 | 116-3525 | 2 | ORIFICE |
| | 6 | 095-1576 | 1 | SEAL-O-RING |
| | 7 | 114-0550 | 2 | VALVE GP |
| | 8 | 094-1902 | 2 | RING |
| | 9 | 095-1586 | 2 | SEAL-O-RING (ID=19.80mm) |
| | 10 | 095-1785 | 2 | RING-BACK UP |
| | 11 | 095-1698 | 2 | SEAL-O-RING (ID=29.40mm) |

| NOTE | No. | PART No. | QTY | PART NAME |
|---|---|---|---|---|

Y – SEE SEPARATE ILLUSTRATION

H50322E

GRAPHIC #1

h50322e

# 1211490 VALVE GP-SOLENOID

PART OF 1119950-Page 383

**Key:**

**SMCS**

| NOTE | REF NO | GRAPHIC REF | PART NUMBER | QTY | PART NAME 1 2 3 4 5 6 (PRODUCT LEVEL) | PRICE USD |
|---|---|---|---|---|---|---|
| | 1 | | 095-1750 | 1 | SEAL-O-RING (ID=10.82mm) | |
| | 2 | | 6V-8398 | 1 | SEAL-O-RING (ID=12.42mm) | |
| | 3 | | 095-1751 | 1 | SEAL-O-RING (ID=14.00mm) | |
| | 4 | | 095-1586 | 1 | SEAL-O-RING (ID=19.80mm) | |
| | 5 | | 114-0623 | 1 | NUT AS | |

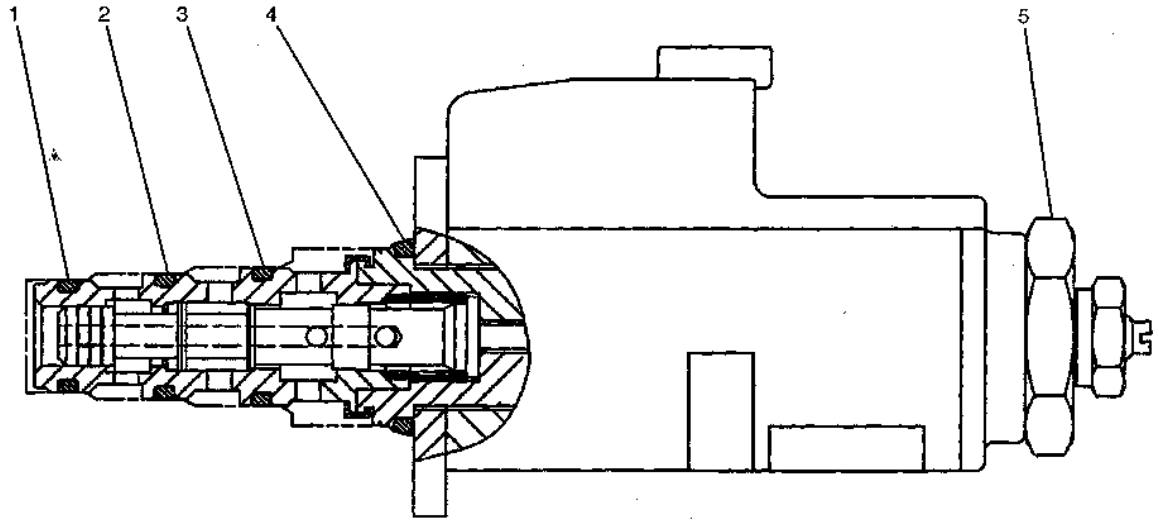


GRAPHIC #1 h74211e

# 1211491 VALVE GP-SOLENOID

PART OF 1211565, 1373637-Page 375, 1077058-Page 377, 1119950-Page 383

**Key:**

**SMCS**

| NOTE | REF NO | GRAPHIC REF | PART NUMBER | QTY | PART NAME 1 2 3 4 5 6 (PRODUCT LEVEL) | PRICE USD |
|---|---|---|---|---|---|---|
| | 1 | | 095-1750 | 1 | SEAL-O-RING (ID=10.82mm) | |
| | 2 | | 199-1902 | 1 | SEAL-O-RING (ID=12.47mm) | |
| | 3 | | 095-1751 | 1 | SEAL-O-RING (ID=14.00mm) | |
| | 4 | | 095-1586 | 1 | SEAL-O-RING (ID=19.80mm) | |
| | 5 | | 114-0623 | 1 | NUT AS | |

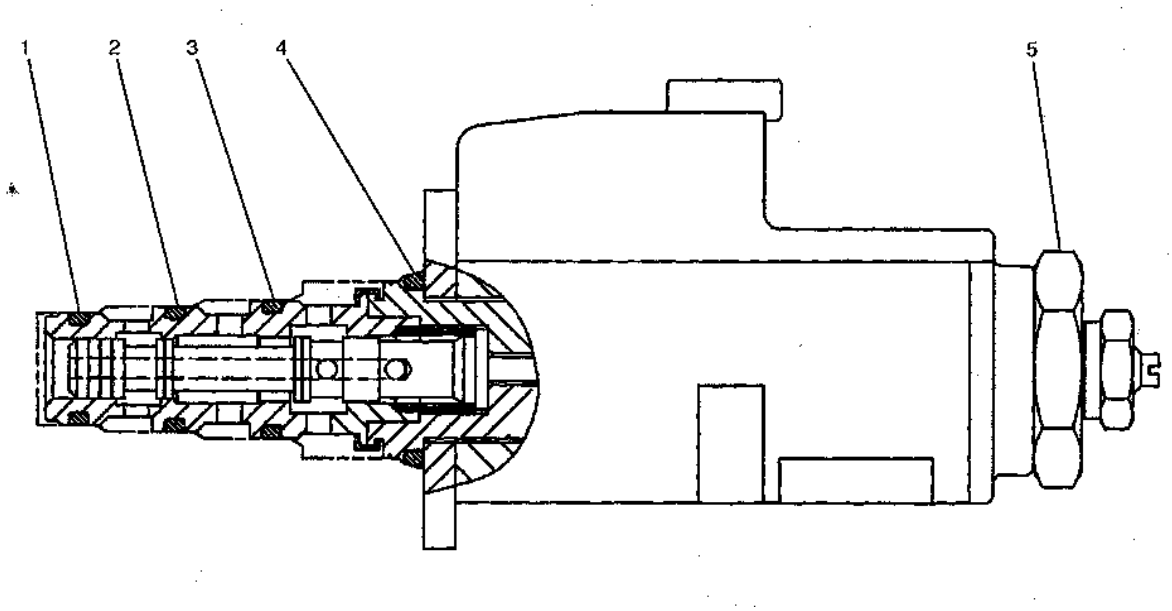


GRAPHIC #1 h74210e

# 1211565 VALVE GP-SOLENOID

S/N 8SR 1-00183, 8TR 1-00187
PART OF 1077054-Page 330.02
1211491-Page 374.01

**Key:** Y - SEE SEPARATE ILLUSTRATION

**SMCS**

| NOTE | REF NO | GRAPHIC REF | PART NUMBER | QTY | PART NAME 1 2 3 4 5 6 (PRODUCT LEVEL) | PRICE USD |
|---|---|---|---|---|---|---|
| Y | 1 | | 121-1491 | 1 | VALVE GP | |
| | 2 | | 8T-0288 | 2 | BOLT (L=12mm) | |
| | 3 | | 121-1570 | 1 | BODY | |

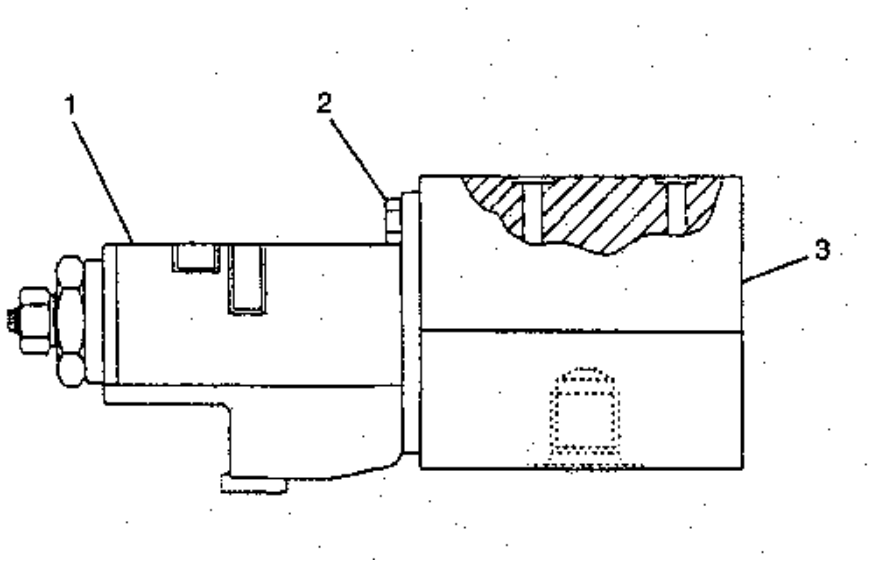


GRAPHIC #1 h51373e

# 1373637 VALVE GP-SOLENOID

S/N 8SR 00184-UP, 8TR 00188-UP
PART OF 1077054-Page 331, 1843829-Page 331.02
1211491-Page 374.01

**Key:** Y - SEE SEPARATE ILLUSTRATION

**SMCS**

| NOTE | REF NO | GRAPHIC REF | PART NUMBER | QTY | PART NAME 1 2 3 4 5 6 (PRODUCT LEVEL) | PRICE USD |
|---|---|---|---|---|---|---|
| Y | 1 | | 121-1491 | 1 | VALVE GP | |
| | 2 | | 8T-0288 | 2 | BOLT (L=12mm) | |
| | 3 | | 137-3639 | 1 | ORIFICE | |
| | 4 | | 137-3638 | 1 | BODY | |
| | 5 | | 5B-9304 | 2 | SCREW | |

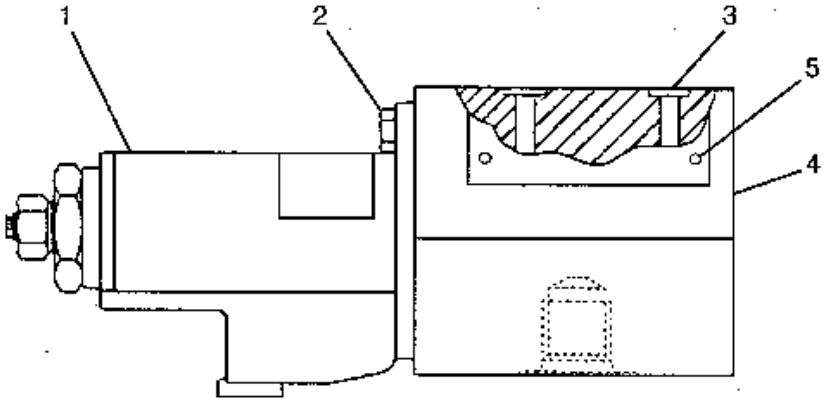


GRAPHIC #1 h56127e

# 1216303 VALVE GP-SOLENOID

PART OF 1192520-Page 309, 1192521-Page 314
AN ATTACHMENT

**Key:**

**SMCS**

| NOTE | REF NO | GRAPHIC REF | PART NUMBER | QTY | PART NAME 1 2 3 4 5 6 (PRODUCT LEVEL) | PRICE USD |
|---|---|---|---|---|---|---|
| | 1 | | 7I-8102 | 1 | VALVE AS | |
| | 2 | | 121-6304 | 1 | COIL GP | |
| | 3 | | 099-0822 | 2 | BOLT (L=10mm) | |
| | 4 | | 095-1519 | 1 | SEAL-O-RING (ID=15.80mm) | |
| | 5 | | 7I-0986 | 1 | PLUG | |
| | 6 | | 7I-7403 | 1 | SPRING | |
| | 7 | | 095-1578 | 1 | SEAL-O-RING (ID=9.80mm) | |

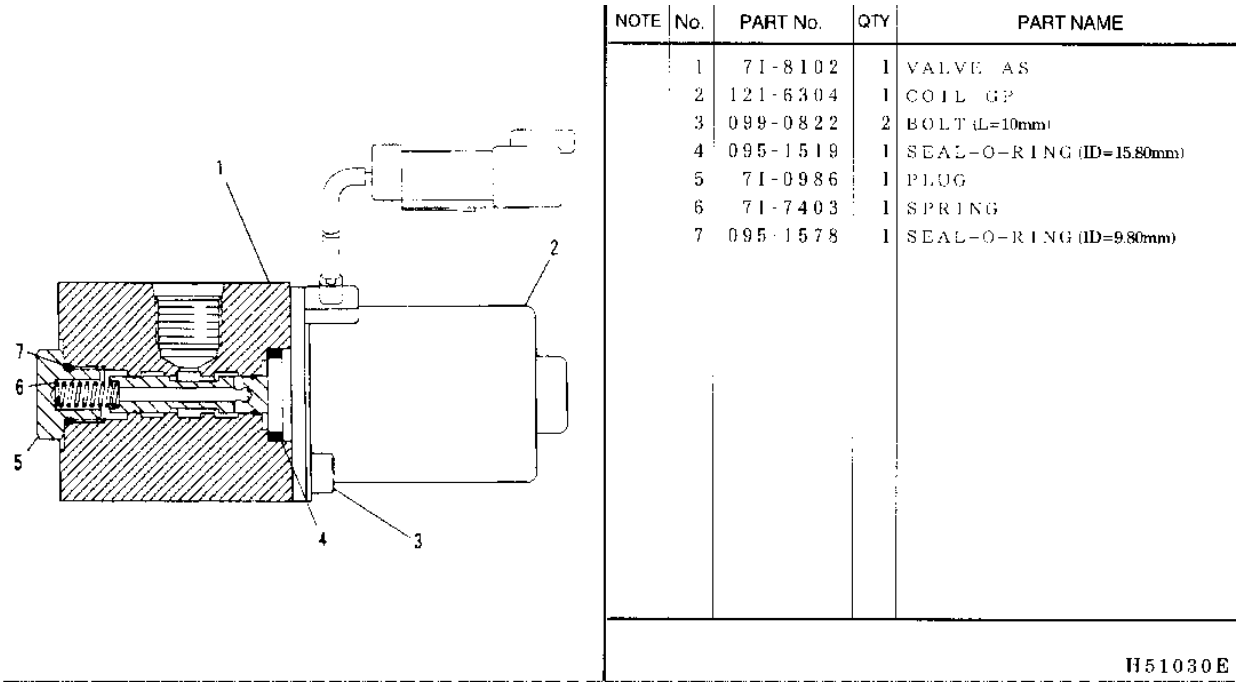


| NOTE | No. | PART No. | QTY | PART NAME |
|---|---|---|---|---|
| | 1 | 7I-8102 | 1 | VALVE AS |
| | 2 | 121-6304 | 1 | COIL GP |
| | 3 | 099-0822 | 2 | BOLT (L=10mm) |
| | 4 | 095-1519 | 1 | SEAL-O-RING (ID=15.80mm) |
| | 5 | 7I-0986 | 1 | PLUG |
| | 6 | 7I-7403 | 1 | SPRING |
| | 7 | 095-1578 | 1 | SEAL-O-RING (ID=9.80mm) |

H51030E

GRAPHIC #1 h51030e

# 1528340 VALVE GP-SOLENOID

PART OF 1224459-Page 378
AN ATTACHMENT

**Key:**

**SMCS**

| NOTE | REF NO | GRAPHIC REF | PART NUMBER | QTY | PART NAME 1 2 3 4 5 6 (PRODUCT LEVEL) | PRICE USD |
|---|---|---|---|---|---|---|
| | 1 | | 141-6787 | 1 | COIL AS | |
| | | | 1S-9593 | 2 | STRAP | |
| | | | 102-8802 | 1 | RECEPTACLE KIT | |
| | | | 8T-8729 | 2 | PIN | |
| | 2 | | 152-8338 | 1 | CARTRIDGE AS | |
| | | | 8C-9987 | 1 | WASHER | |
| | | | 111-0343 | 1 | LOCKNUT | |
| | 3 | | 111-0343 | 1 | LOCKNUT | |
| | 4 | | 8C-9987 | 1 | WASHER | |
| | | | | | THE FOLLOWING REPAIR KIT IS AVAILABLE: | |
| | | | 197-7701 | 1 | SEAL KIT | |

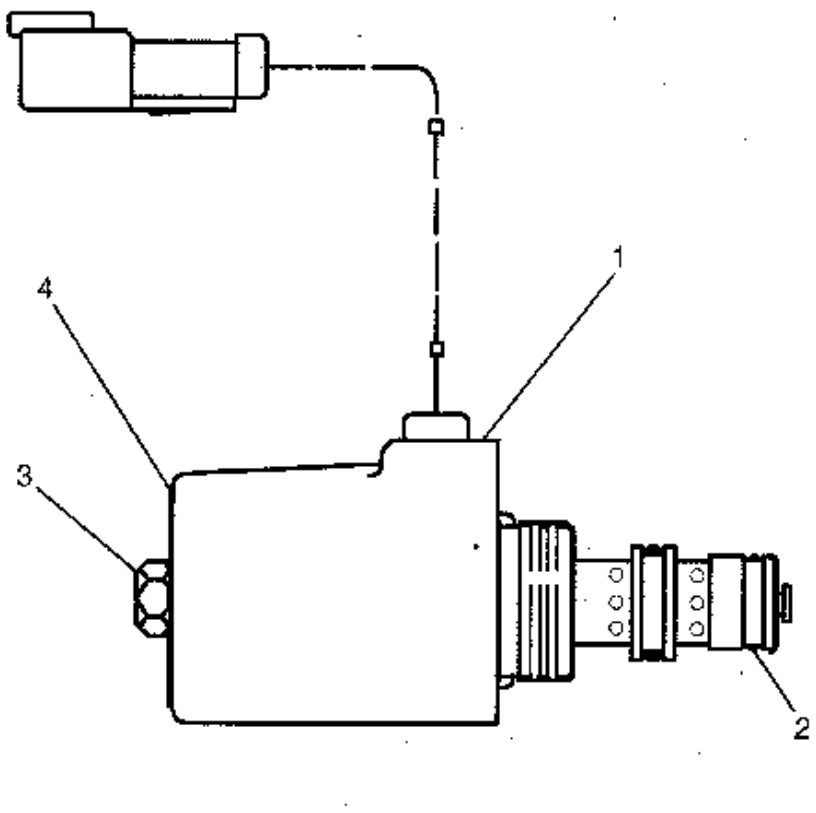


GRAPHIC #1

h74091e

# 1163526 VALVE GP-SOLENOID

PART OF 1077056-Page 373

**Key:**

**SMCS**

| NOTE | REF NO | GRAPHIC REF | PART NUMBER | QTY | PART NAME 1 2 3 4 5 6 (PRODUCT LEVEL) | PRICE USD |
|---|---|---|---|---|---|---|
| | 1 | | 126-6514 | 1 | SEAL-O-RING (ID=10.82mm) | |
| | 2 | | 126-6515 | 1 | SEAL-O-RING (ID=12.42mm) | |
| | 3 | | 126-6516 | 1 | SEAL-O-RING (ID=14.00mm) | |
| | 4 | | 095-1586 | 1 | SEAL-O-RING (ID=19.80mm) | |

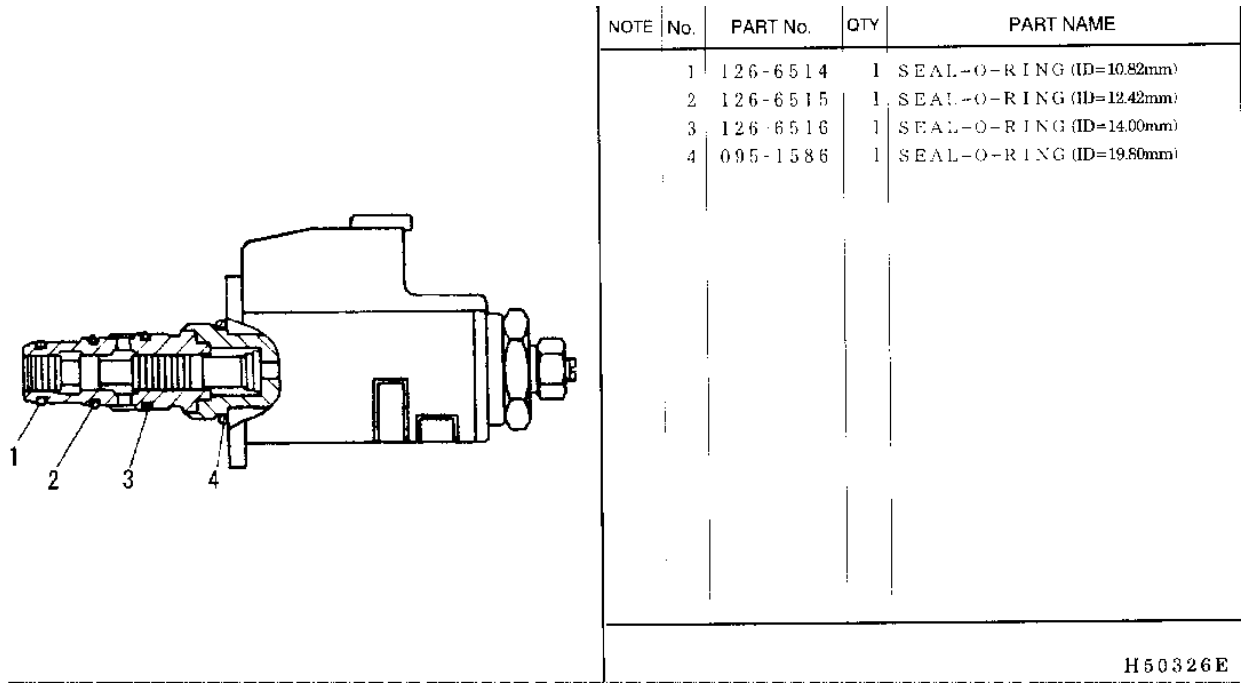


GRAPHIC #1 h50326e

# 1077058 VALVE GP-SELECTOR

PART OF 1136735-Page 303
1211491-Page 374.01

**Key:** Y - SEE SEPARATE ILLUSTRATION

**SMCS**

| NOTE | REF NO | GRAPHIC REF | PART NUMBER | QTY | PART NAME 1 2 3 4 5 6 (PRODUCT LEVEL) | PRICE USD |
|---|---|---|---|---|---|---|
| | 1 | | 7I-2272 | 2 | BOLT (L=12mm) | |
| | 2 | | 9S-4191 | 4 | PLUG | |
| | 3 | | 3J-1907 | 4 | SEAL-O-RING (ID=11.89mm) | |
| Y | 4 | | 121-1491 | 1 | VALVE GP | |
| | 5 | | 7I-2273 | 4 | BOLT (L=16mm) | |
| | 6 | | 107-7062 | 1 | COVER | |
| | 7 | | 8T-6759 | 4 | PLUG | |
| | 8 | | 107-7063 | 1 | COVER | |
| | 9 | | 107-7064 | 1 | SPRING | |
| | 10 | | 199-1905 | 2 | SEAL-O-RING (ID=23.66mm) | |

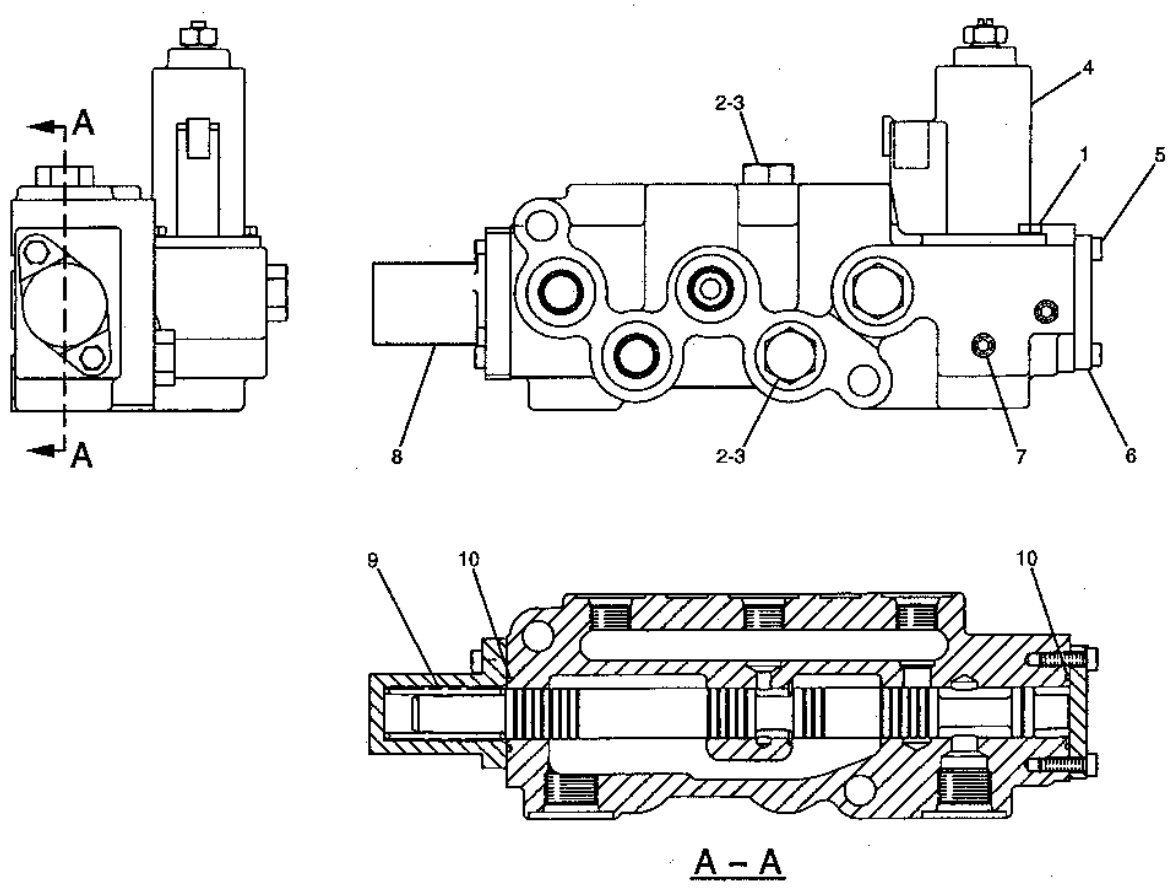


GRAPHIC #1

h75357e

# 1224459 VALVE GP-PRESSURE CONTROL

PART OF 1192520-Page 309, 1192521-Page 314
1528340-Page 376
AN ATTACHMENT

**Key:** Y - SEE SEPARATE ILLUSTRATION

**SMCS**

| NOTE | REF NO | GRAPHIC REF | PART NUMBER | QTY | PART NAME 1 2 3 4 5 6 (PRODUCT LEVEL) | PRICE USD |
|---|---|---|---|---|---|---|
| Y | 1 | | 152-8340 | 1 | VALVE GP | |
| | 2 | | 9S-8001 | 1 | PLUG | |
| | 3 | | 4J-7533 | 1 | SEAL-O-RING (ID=6.07mm) | |
| | 4 | | 144-2117 | 1 | BODY | |
| | 5 | | 9S-8006 | 1 | PLUG | |
| | 6 | | 2M-9780 | 1 | SEAL-O-RING (ID=19.18mm) | |
| | 7 | | 8J-0323 | 1 | SEAT | |
| | 8 | | 3J-1907 | 2 | SEAL-O-RING (ID=11.89mm) | |
| | 9 | | 1J-8497 | 1 | VALVE | |
| | 10 | | 9S-8004 | 1 | PLUG | |
| | 11 | | 3K-0360 | 1 | SEAL-O-RING (ID=16.36mm) | |
| | 12 | | 7I-7415 | 1 | SPRING | |
| | 13 | | 6E-5510 | 1 | RETAINER AS | |
| | 14 | | 9X-6395 | 1 | NUT (O-RING) | |

# 1224459 VALVE GP-PRESSURE CONTROL

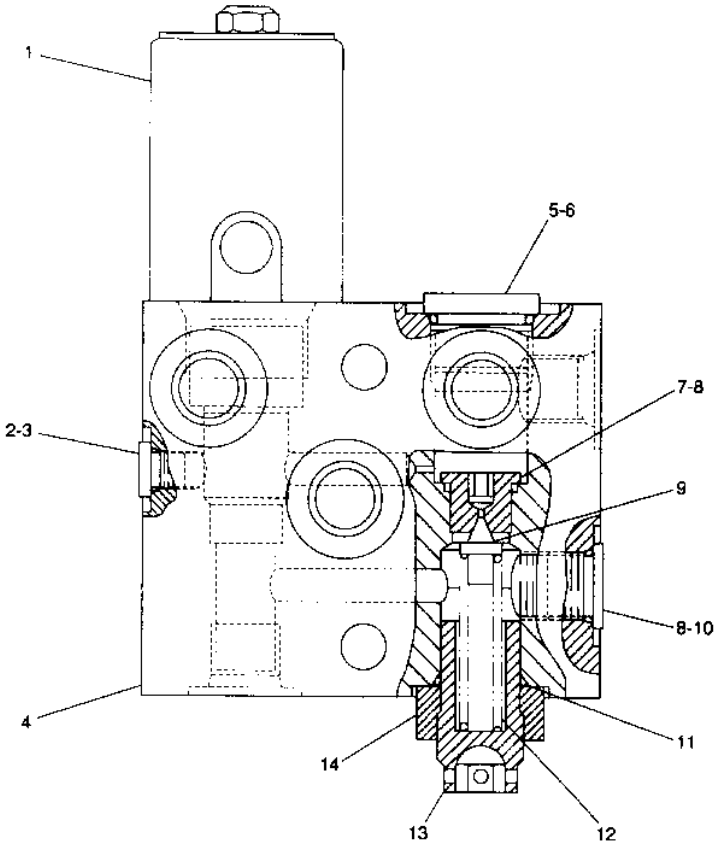


| NOTE | No. | PART No. | QTY | PART NAME | NOTE | No. | PART No. | QTY | PART NAME |
|---|---|---|---|---|---|---|---|---|---|
| Y | 1 | 152-8340 | 1 | VALVE GP | | | | | |
| | 2 | 9S-8001 | 1 | PLUG | | | | | |
| | 3 | 4J-7533 | 1 | SEAL-O-RING (ID=6.07mm) | | | | | |
| | 4 | 144-2117 | 1 | BODY | | | | | |
| | 5 | 9S-8006 | 1 | PLUG | | | | | |
| | 6 | 2M-9780 | 1 | SEAL-O-RING (ID=19.18mm) | | | | | |
| | 7 | 8J-0323 | 1 | SEAT | | | | | |
| | 8 | 3J-1907 | 2 | SEAL-O-RING (ID=11.89mm) | | | | | |
| | 9 | 1J-8497 | 1 | VALVE | | | | | |
| | 10 | 9S-8004 | 1 | PLUG | | | | | |
| | 11 | 3K-0360 | 1 | SEAL-O-RING (ID=16.36mm) | | | | | |
| | 12 | 7I-7415 | 1 | SPRING | | | | | |
| | 13 | 6E-5510 | 1 | RETAINER AS | | | | | |
| | 14 | 9X-6395 | 1 | NUT(O-RING) | | | | | |

Y-SEE SEPARATE ILLUSTRATION

H69477E

GRAPHIC #1

h69477e

# 1163601 VALVE GP-PILOT RELIEF

PART OF 1163600-Page 355

**Key:**

**SMCS**

| NOTE | REF NO | GRAPHIC REF | PART NUMBER | QTY | PART NAME 1 2 3 4 5 6 (PRODUCT LEVEL) | PRICE USD |
|---|---|---|---|---|---|---|
| | 1 | | 095-1578 | 1 | SEAL-O-RING (ID=9.80mm) | |
| | 2 | | 3D-2824 | 2 | SEAL-O-RING (ID=23.47mm) | |
| | 3 | | 103-8255 | 1 | SEAL-O-RING (ID=14.80mm) | |
| | 4 | | 103-8252 | 2 | RING | |
| | 5 | | 103-8254 | 1 | SEAL-O-RING (ID=7.80mm) | |
| | 6 | | 103-8253 | 2 | RING | |

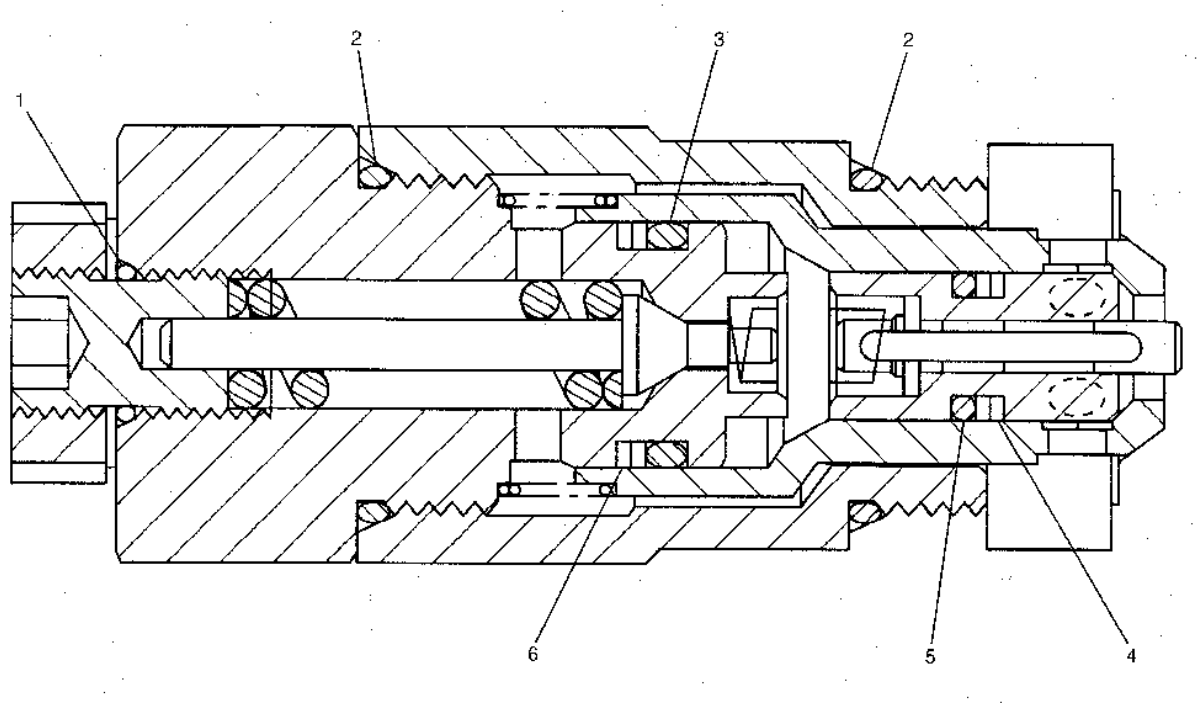


GRAPHIC #1 h53178e

# 1710030 VALVE GP-RELIEF

PART OF 1077014-Page 361, 1425522-Page 361.08

**Key:**

**SMCS**

| NOTE | REF NO | GRAPHIC REF | PART NUMBER | QTY | PART NAME 1 2 3 4 5 6 (PRODUCT LEVEL) | PRICE USD |
|---|---|---|---|---|---|---|
| | 1 | | 119-5398 | 1 | FILTER | |
| | 2 | | 6I-6795 | 1 | SPRING | |
| | 3 | | 171-0034 | 1 | SEAT | |
| | 4 | | 171-0037 | 1 | VALVE | |
| | 5 | | 4I-3510 | 1 | SPRING | |
| | 6 | | 171-0035 | 1 | HOLDER | |
| | 7 | | 4I-7714 | 1 | NUT | |
| | 8 | | 171-0036 | 1 | ADJUSTER | |
| | 9 | | 095-1579 | 1 | SEAL-O-RING (ID=10.80mm) | |
| | 10 | | 6V-8218 | 1 | SEAL-O-RING (ID=32.99mm) | |
| | 11 | | 095-1590 | 1 | SEAL-O-RING (ID=21.80mm) | |
| | 12 | | 6V-8978 | 1 | SEAL-O-RING (ID=29.82mm) | |
| | 13 | | 095-1786 | 1 | RING-BACK UP | |
| | 14 | | 095-1587 | 1 | SEAL-O-RING (ID=20.80mm) | |
| | 15 | | 3D-2824 | 1 | SEAL-O-RING (ID=23.47mm) | |
| | 16 | | 107-6541 | 1 | RING-RETAINING | |
| | 17 | | 107-6540 | 1 | COLLAR | |

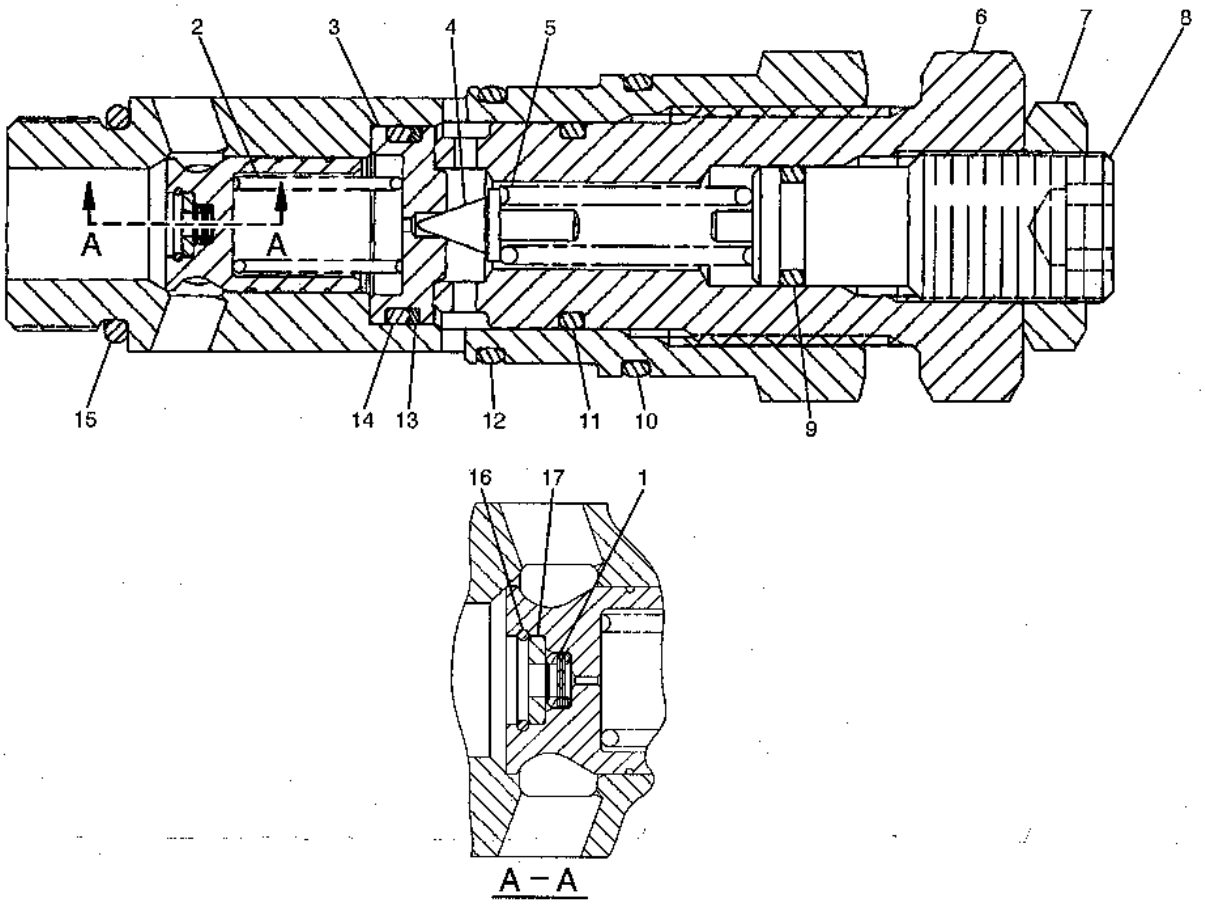


GRAPHIC #1

h67329e

# 1332848 VALVE GP-RELIEF

PART OF 6C6746-Page 394
AN ATTACHMENT

**Key:** B - USE AS REQUIRED

**SMCS**

| NOTE | REF NO | GRAPHIC REF | PART NUMBER | QTY | PART NAME 1 2 3 4 5 6 (PRODUCT LEVEL) | PRICE USD |
|---|---|---|---|---|---|---|
| | 1 | | 8J-0323 | 1 | SEAT | |
| | 2 | | 3J-1907 | 1 | SEAL-O-RING (ID=11.89mm) | |
| | 3 | | 8J-0331 | 1 | VALVE | |
| | 4 | | 8J-0322 | 1 | SPRING | |
| B | 5 | | 5J-6153 | 7 | SHIM (T=0.178mm) | |
| B | 6 | | 6J-8696 | 5 | SHIM (T=1.219mm) | |

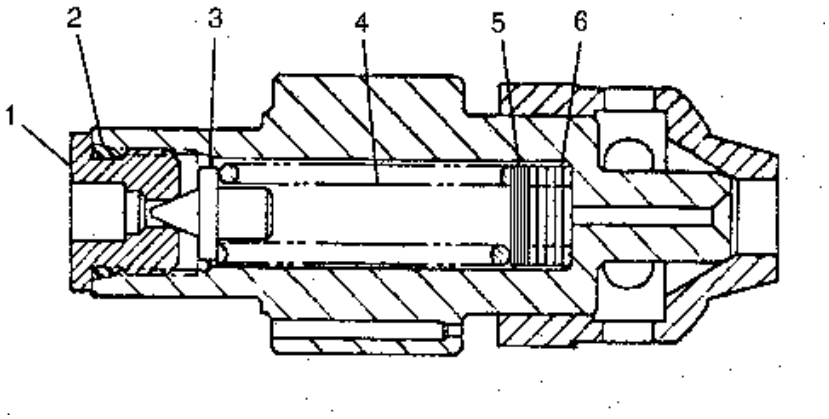


GRAPHIC #1 h79356e

# 1185410 VALVE GP-RELIEF

PART OF 1163600-Page 355

**Key:**

**SMCS**

| NOTE | REF NO | GRAPHIC REF | PART NUMBER | QTY | PART NAME 1 2 3 4 5 6 (PRODUCT LEVEL) | PRICE USD |
|---|---|---|---|---|---|---|
| | 1 | | 030-0167 | 1 | RING | |
| | 2 | | 8L-2779 | 2 | SEAL-O-RING (ID=9.25mm) | |
| | 3 | | 033-6036 | 2 | SEAL-O-RING (ID=23.47mm) | |
| | 4 | | 3P-0647 | 1 | SEAL-O-RING (ID=13.94mm) | |
| | 5 | | 9J-0707 | 2 | RING | |

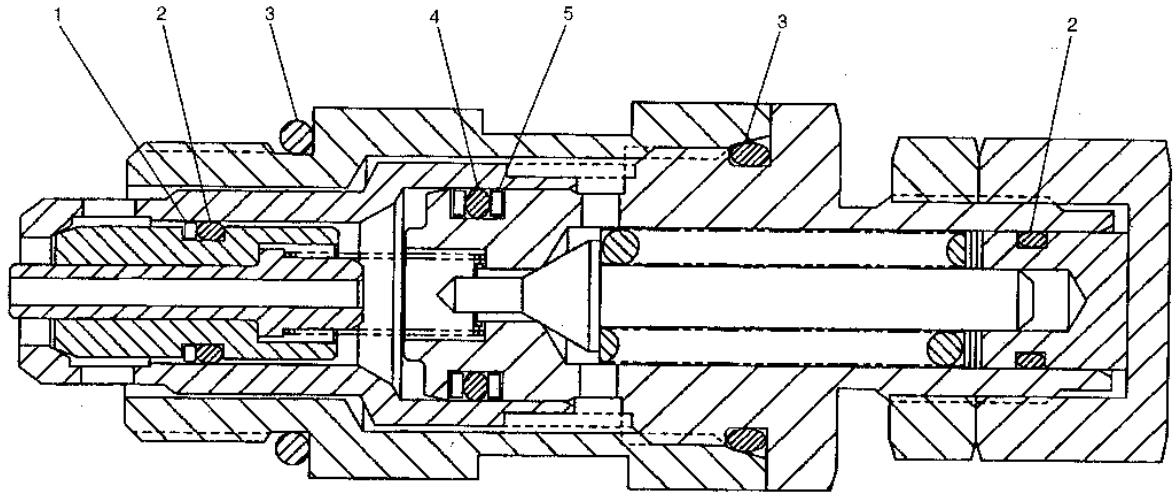


GRAPHIC #1 h53177e

# 1425516 VALVE GP-CHECK

S/N 8SR 1-00567, 8TR 1-00757
PART OF 1136840-Page 324

**Key:**

**SMCS**

| NOTE | REF NO | GRAPHIC REF | PART NUMBER | QTY | PART NAME 1 2 3 4 5 6 (PRODUCT LEVEL) | PRICE USD |
|---|---|---|---|---|---|---|
| | 1 | | 8T-4139 | 2 | BOLT (L=30mm) | |
| | 2 | | 142-5517 | 1 | VALVE AS | |
| | 3 | | 103-8259 | 1 | RING | |
| | 4 | | 095-1603 | 1 | SEAL-O-RING (ID=37.70mm) | |
| | 5 | | 114-0771 | 1 | COVER | |
| | 6 | | 8T-4123 | 2 | WASHER (HARD) | |

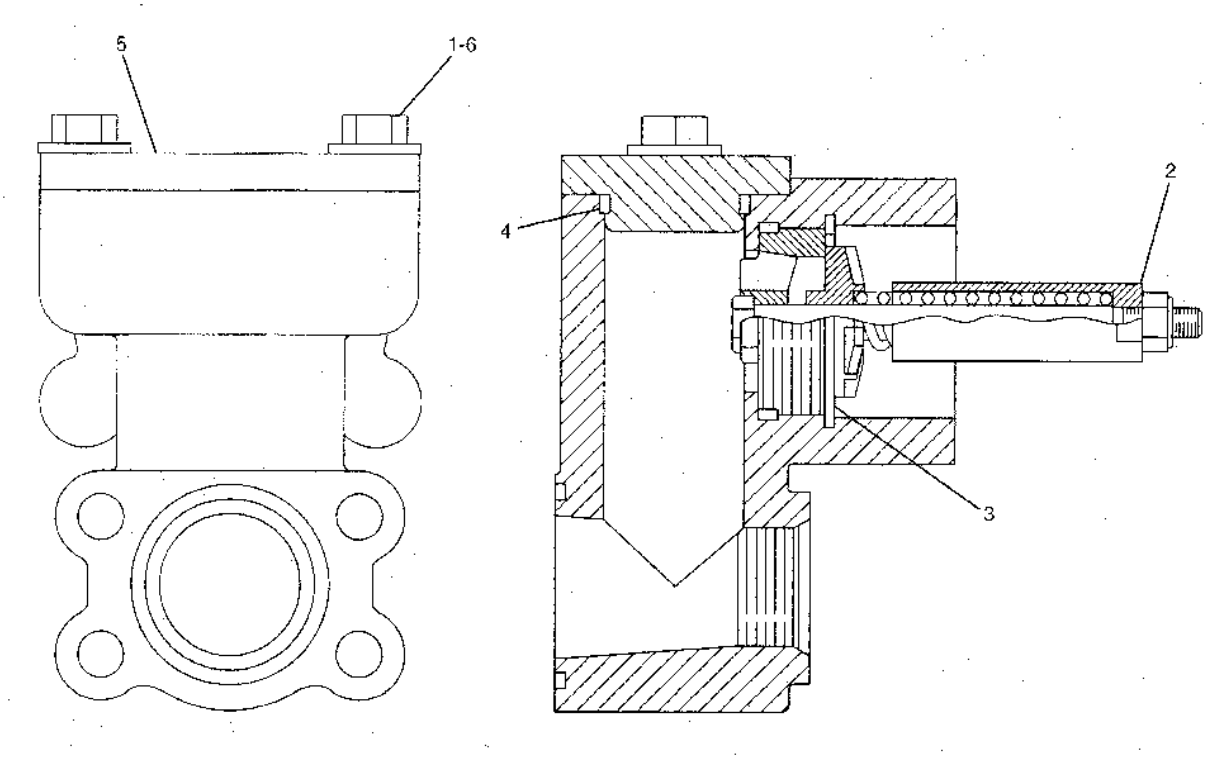


GRAPHIC #1 h58584e

# 1843831 VALVE GP-CHECK

S/N 8SR 00568-UP, 8TR 00758-UP
PART OF 1136840-Page 325.03

**Key:**

**SMCS**

| NOTE | REF NO | GRAPHIC REF | PART NUMBER | QTY | PART NAME 1 2 3 4 5 6 (PRODUCT LEVEL) | PRICE USD |
|---|---|---|---|---|---|---|
| | 1 | | 8T-4139 | 2 | BOLT (L=30mm) | |
| | 2 | | 184-3833 | 1 | VALVE AS | |
| | 3 | | 184-3841 | 1 | RING | |
| | 4 | | 095-1603 | 1 | SEAL-O-RING (ID=37.70mm) | |
| | 5 | | 114-0771 | 1 | COVER | |
| | 6 | | 8T-4123 | 2 | WASHER-HARD | |

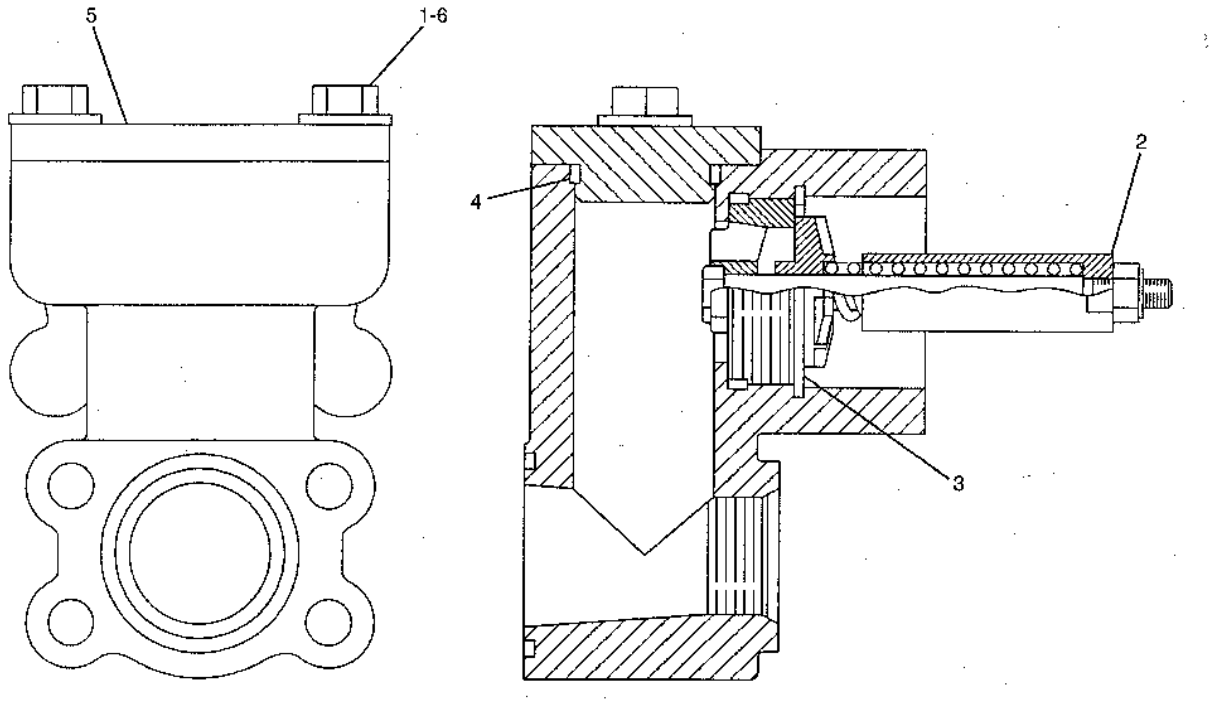


GRAPHIC #1 h67974e

# 4I0890 VALVE GP-CHECK

PART OF 1385072-Page 321.02, 1287491-Page 323
AN ATTACHMENT

**Key:**

**SMCS**

| NOTE | REF NO | GRAPHIC REF | PART NUMBER | QTY | PART NAME 1 2 3 4 5 6 (PRODUCT LEVEL) | PRICE USD |
|---|---|---|---|---|---|---|
| | 1 | | 4I-0891 | 1 | VALVE | |
| | 2 | | 4I-0892 | 1 | FITTING | |
| | 3 | | 085-4743 | 1 | SPRING | |
| | 4 | | 7M-8485 | 1 | SEAL-O-RING (ID=29.74mm) | |
| | 5 | | 099-6954 | 1 | SPRING | |
| | 6 | | 4I-0893 | 1 | BODY | |
| | 7 | | 099-6953 | 1 | VALVE | |

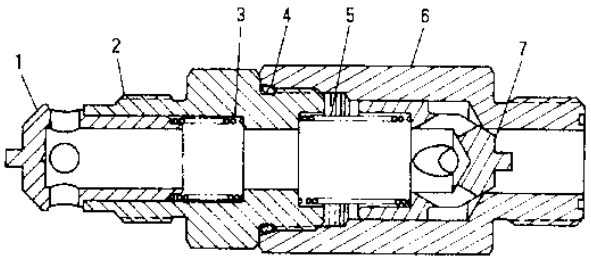


| NOTE | No. | PART No. | QTY | PART NAME |
|---|---|---|---|---|
| | 1 | 41-0891 | 1 | VALVE |
| | 2 | 41-0892 | 1 | FITTING |
| | 3 | 085-4743 | 1 | SPRING |
| | 4 | 7M-8485 | 1 | SEAL-O-RING (ID=29.74mm) |
| | 5 | 099-6954 | 1 | SPRING |
| | 6 | 4I-0893 | 1 | BODY |
| | 7 | 099-6953 | 1 | VALVE |

H51037E

GRAPHIC #1 h51037e

# 4I6301 VALVE GP-CHECK & RELIEF

PART OF 1385072-Page 321.02
6E5234-Page 382.02
AN ATTACHMENT

**Key:** Y - SEE SEPARATE ILLUSTRATION

**SMCS**

| NOTE | REF NO | GRAPHIC REF | PART NUMBER | QTY | PART NAME 1 2 3 4 5 6 (PRODUCT LEVEL) | PRICE USD |
|---|---|---|---|---|---|---|
| Y | 1 | | 6E-5234 | 1 | VALVE GP | |
| | 2 | | 4I-5520 | 1 | VALVE | |
| | 3 | | 095-1600 | 1 | SEAL-O-RING (ID=33.70mm) | |
| | 4 | | 085-4792 | 1 | RETAINER | |
| | 5 | | 095-0728 | 2 | SCREW | |
| | 6 | | 093-9473 | 1 | SPRING | |

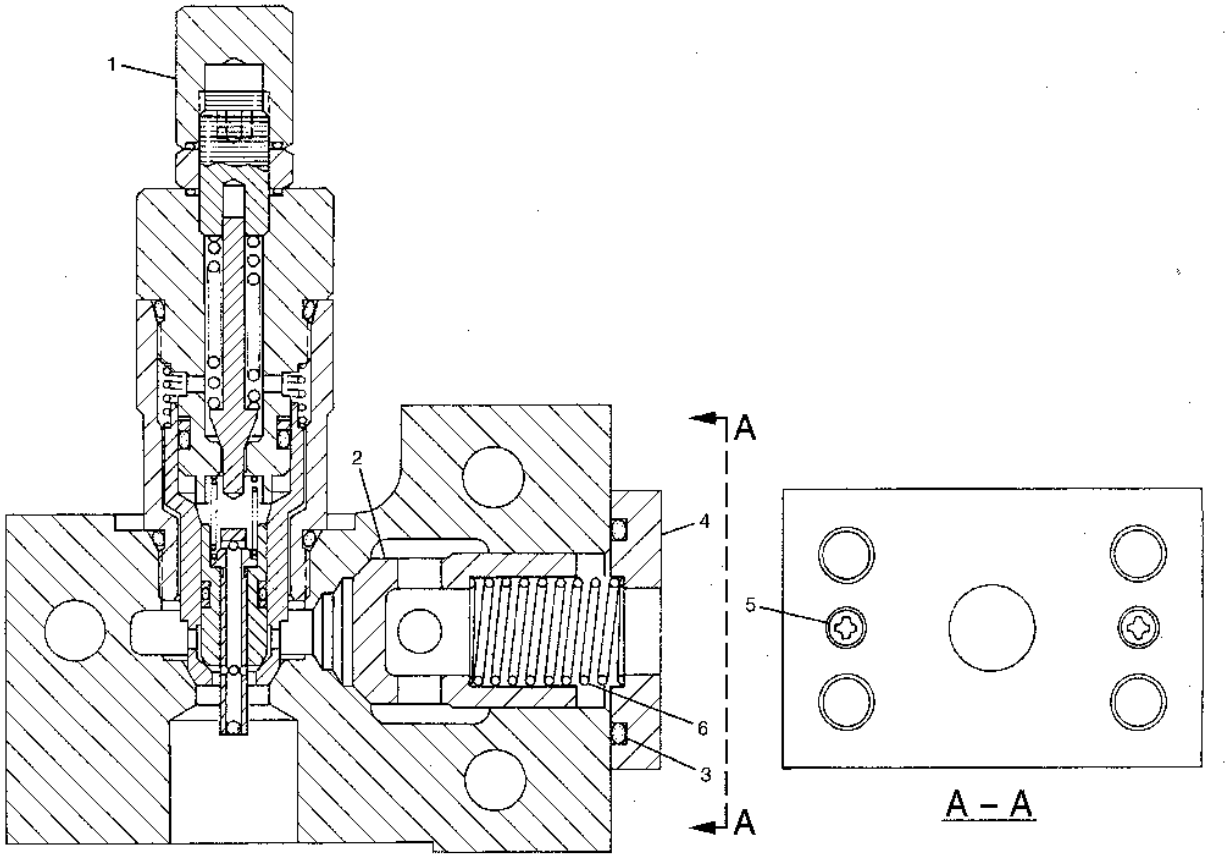


GRAPHIC #1

h54561e

# 6E5234 VALVE GP-RELIEF

PART OF 4I6301-Page 382.01
AN ATTACHMENT

**Key:**

**SMCS**

| NOTE | REF NO | GRAPHIC REF | PART NUMBER | QTY | PART NAME 1 2 3 4 5 6 (PRODUCT LEVEL) | PRICE USD |
|---|---|---|---|---|---|---|
| | 1 | | 030-0167 | 1 | RING | |
| | 2 | | 8L-2779 | 1 | SEAL-O-RING (ID=9.25mm) | |
| | 3 | | 033-6036 | 2 | SEAL-O-RING (ID=23.47mm) | |
| | 4 | | 3P-0647 | 1 | SEAL-0-RING (ID=13.94mm) | |
| | 5 | | 9J-0707 | 1 | RING | |
| | 6 | | 2P-2975 | 1 | SEAL-O-RING (ID=17.17mm) | |

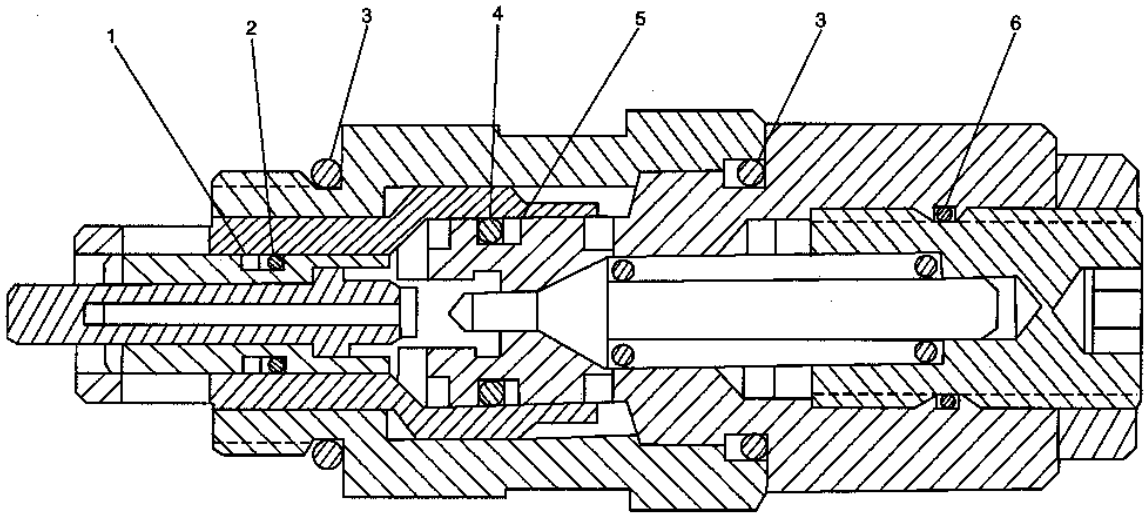


GRAPHIC #1 h69122e

# 1119950 VALVE GP-MANIFOLD & REDUCING

PART OF 1136736-Page 305
1119916-Page 371, 1211490-Page 374, 1211491-Page 374.01

**Key:** Y - SEPARATE ILLUSTRATION

**SMCS**

| NOTE | REF NO | GRAPHIC REF | PART NUMBER | QTY | PART NAME 1 2 3 4 5 6 (PRODUCT LEVEL) | PRICE USD |
|---|---|---|---|---|---|---|
| | 1 | | 123-2467 | 1 | VALVE GP | |
| Y | 2 | | 111-9916 | 1 | VALVE GP | |
| Y | 3 | | 121-1490 | 2 | VALVE GP | |
| Y | 4 | | 121-1491 | 1 | VALVE GP | |
| | 5 | | 7Y-5011 | 1 | VALVE | |
| | 6 | | 096-1598 | 1 | SPRING | |
| | 7 | | 3K-0360 | 1 | SEAL-O-RING (ID=16.36mm) | |
| | 8 | | 7Y-5010 | 1 | PLUG | |
| | 9 | | 096-1595 | 1 | SPRING | |
| | 10 | | 095-1592 | 1 | SEAL-O-RING (ID=23.70mm) | |
| | 11 | | 7Y-5009 | 1 | CARTRIDGE | |
| | 12 | | 2Y-5829 | 1 | NUT | |
| | 13 | | 4I-8915 | 1 | SETSCREW | |
| | 14 | | 095-1582 | 1 | SEAL-O-RING (ID=13.80mm) | |
| | 15 | | 4I-5657 | 1 | PLUG | |
| | 16 | | 8T-6759 | 12 | PLUG | |
| | 17 | | 7I-2272 | 8 | BOLT | |

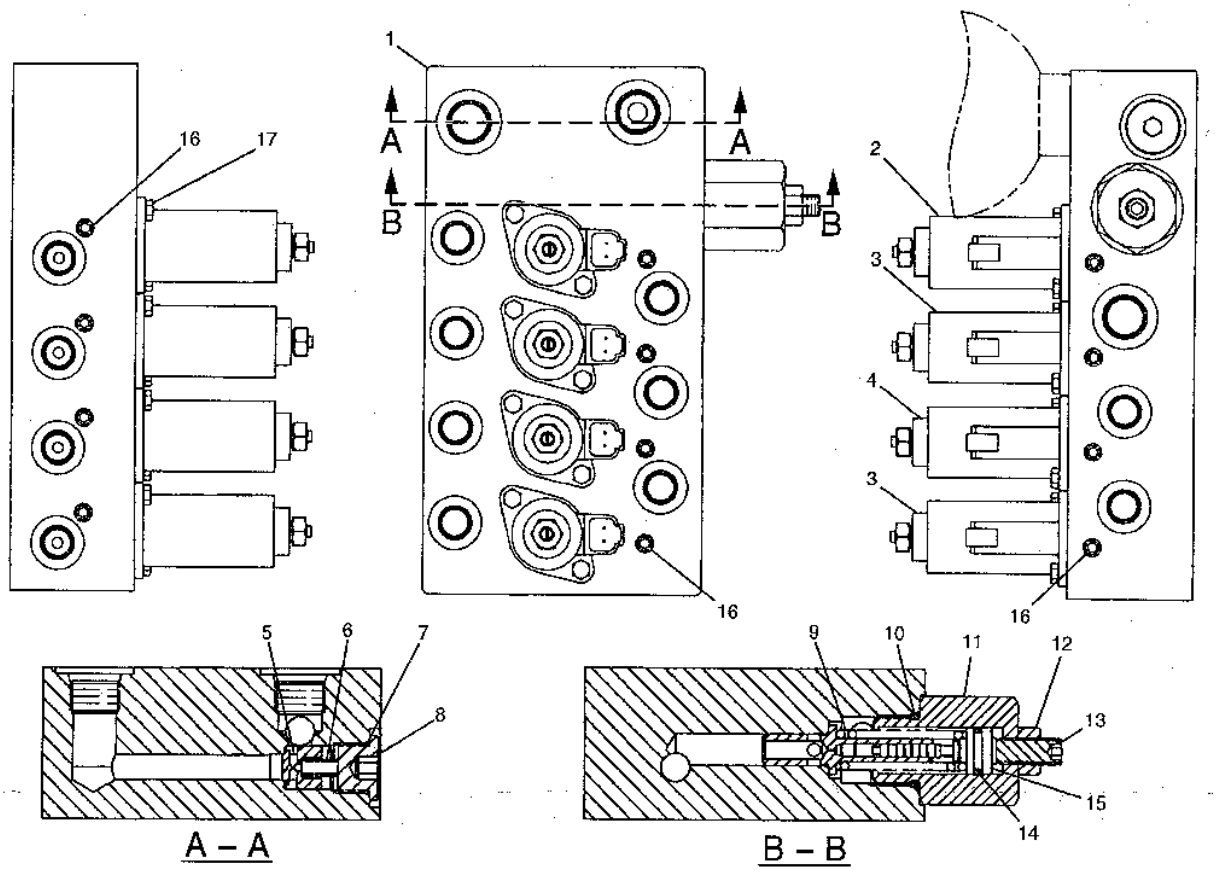


GRAPHIC #1

h67594e

# 0856455 VALVE GP-PILOT

PART OF 1136836-Page 311
AN ATTACHMENT

**Key:**

**SMCS**

| NOTE | REF NO | GRAPHIC REF | PART NUMBER | QTY | PART NAME 1 2 3 4 5 6 (PRODUCT LEVEL) | PRICE USD |
|---|---|---|---|---|---|---|
| | 1 | | 8T-1159 | 8 | BOLT (L=25mm) | |
| | 2 | | 085-7076 | 1 | COVER | |
| | 3 | | 085-7079 | 1 | GRIP | |
| | 4 | | 085-7080 | 1 | LEVER | |
| | 5 | | 085-7084 | 1 | BOLT-WING | |
| | 6 | | 095-1710 | 2 | SEAL-O-RING (ID=79.40mm) | |
| | 7 | | 085-7075 | 1 | COVER | |
| | 8 | | 095-1590 | 1 | SEAL-O-RING (ID=21.80mm) | |
| | 9 | | 095-1787 | 1 | RING-BACK UP | |
| | 10 | | 085-7083 | 1 | PIN-SPRING | |
| | 11 | | 6I-6923 | 1 | SEAL | |
| | 12 | | 085-7085 | 1 | BALL | |
| | 13 | | 095-1582 | 1 | SEAL-O-RING (ID=13.80mm) | |
| | 14 | | 085-7078 | 1 | SPRING | |
| | 15 | | 085-7077 | 1 | PLUG | |
| | 16 | | 085-7081 | 4 | NEEDLE | |
| | 17 | | 085-7082 | 14 | PLUG | |
| | 18 | | 096-4545 | 1 | PIN | |

## 0856455 VALVE GP-PILOT

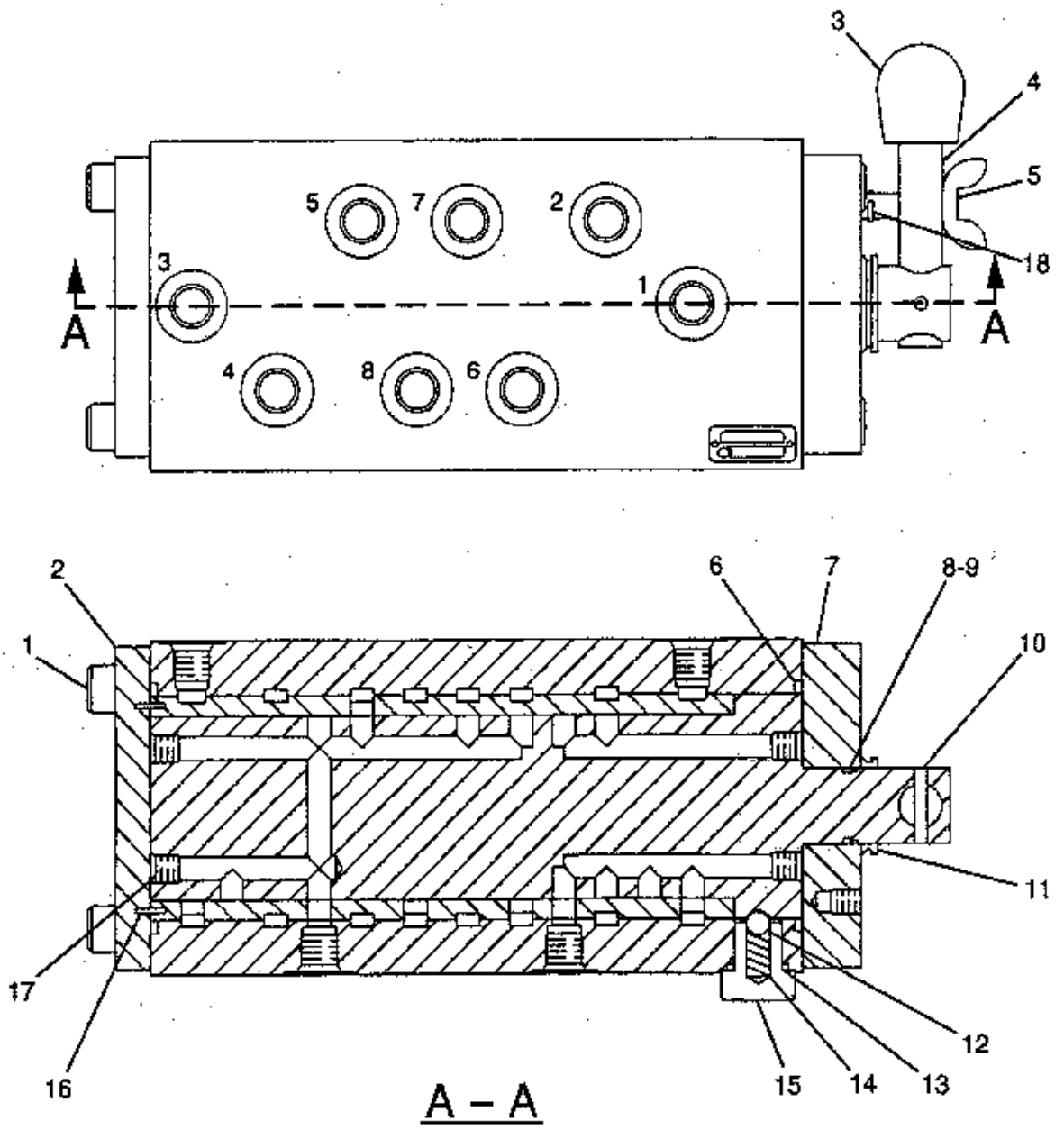


GRAPHIC #1

h74094e

# 1232148 VALVE GP-PILOT

PART OF 1136735-Page 303
AN ATTACHMENT

**Key:**

**SMCS**

| NOTE | REF NO | GRAPHIC REF | PART NUMBER | QTY | PART NAME 1 2 3 4 5 6 (PRODUCT LEVEL) | PRICE USD |
|---|---|---|---|---|---|---|
| | 1 | | 087-4707 | 4 | SPRING | |
| | 2 | | 131-5818 | 4 | SPRING | |
| | 3 | | 099-6136 | 8 | WASHER | |
| | 4 | | 095-0936 | 4 | RING (RETAINING) | |
| | 5 | | 126-1865 | 4 | SPRING | |
| | 6 | | 126-1866 | 4 | SPRING | |
| | 7 | | 119-5393 | 4 | PISTON | |
| | 8 | | 6V-8400 | 4 | SEAL-O-RING (ID=30.01mm) | |
| | 9 | | 119-5387 | 4 | PLUG | |
| | 10 | | 119-5389 | 4 | PACKING | |
| | 11 | | 119-5390 | 4 | PUSHROD | |
| | 12 | | 087-4710 | 4 | SETSCREW | |
| | 13 | | 8T-4133 | 4 | NUT | |
| | 14 | | 087-5709 | 2 | BELLOW | |
| | 15 | | 087-5708 | 2 | PEDAL | |
| | 16 | | 8T-0343 | 2 | BOLT (L=55mm) | |
| | 17 | | 119-5388 | 4 | CAP | |
| | 18 | | 119-5386 | 2 | COVER | |
| | 19 | | 119-5391 | 4 | SEAT | |
| | 20 | | 119-5392 | 4 | BUSHING | |
| | 21 | | 153-5223 | 12 | BALL | |
| | 22 | | 119-5395 | 4 | SEAT | |
| | 23 | | 099-6137 | 4 | WASHER | |
| | 24 | | 099-6141 | 4 | WASHER | |
| | 25 | | 119-5385 | 1 | HOUSING | |
| | 26 | | 099-6145 | 2 | CAMSHAFT | |
| | 27 | | 099-6144 | 4 | BUSHING | |
| | 28 | | 095-1260 | 2 | SETSCREW | |
| | 29 | | 8T-6759 | 2 | PLUG | |

## 1232148 VALVE GP-PILOT

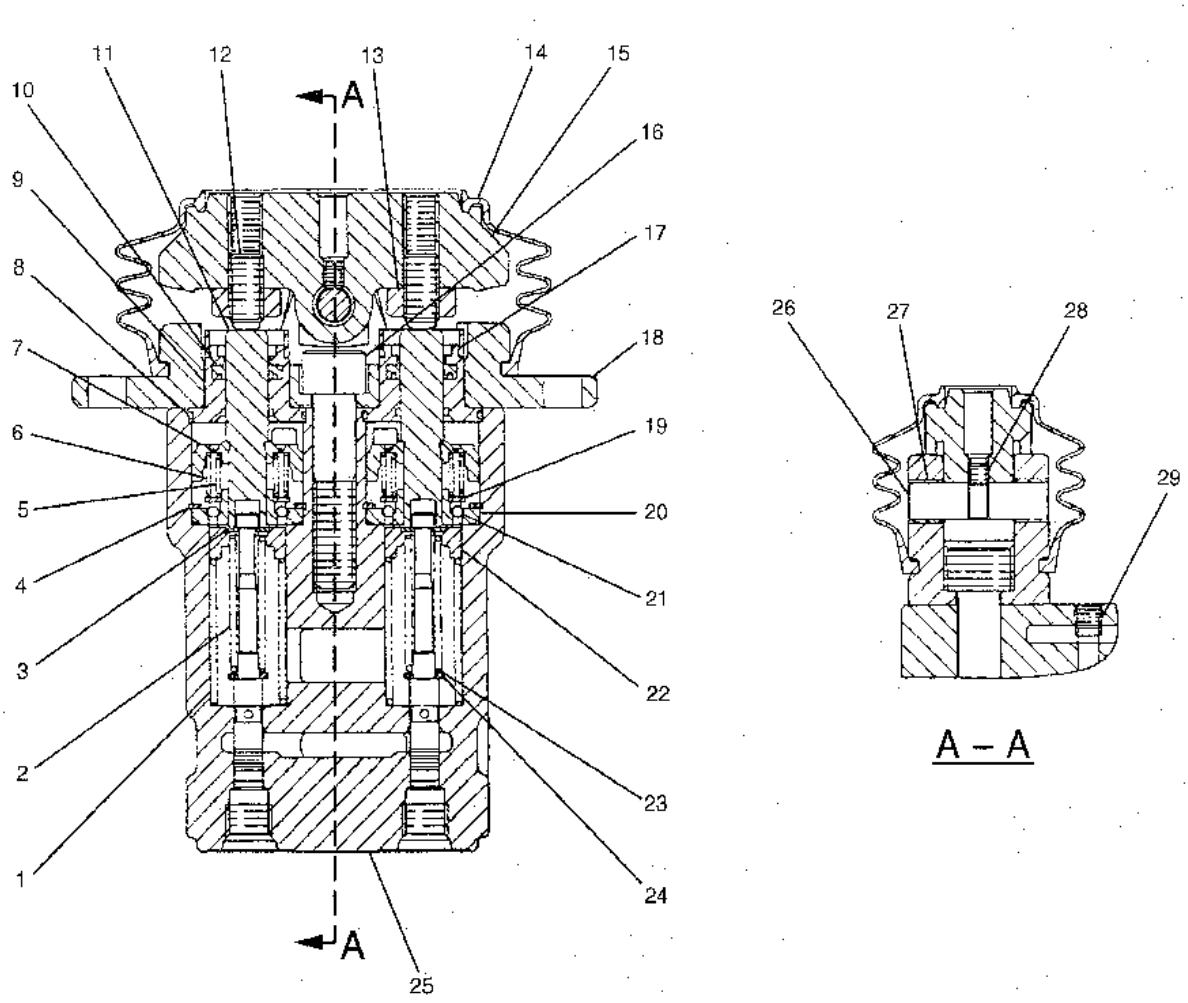


GRAPHIC #1

h60887e

# 1315914 VALVE GP-PILOT

S/N 8SR 1-00540, 8TR 1-00682
PART OF 1232146, 1232147-Page 342

**Key:** B - USE AS REQUIRED

**SMCS**

| NOTE | REF NO | GRAPHIC REF | PART NUMBER | QTY | PART NAME 1 2 3 4 5 6 (PRODUCT LEVEL) | PRICE USD |
|---|---|---|---|---|---|---|
| | 1 | | 096-1622 | 1 | BUSHING | |
| | 2 | | 131-5863 | 2 | SPRING | |
| | 3 | | 118-4083 | 2 | SEAT | |
| | 4 | | 095-1586 | 4 | SEAL-O-RING (ID=19.80mm) | |
| | 5 | | 118-4086 | 4 | ROD | |
| | 6 | | 131-5915 | 1 | NUT | |
| | 7 | | 4I-6365 | 1 | JOINT | |
| | 8 | | 4I-6366 | 1 | PLATE | |
| | 9 | | 118-4087 | 4 | SPRING | |
| | 10 | | 094-0872 | 1 | PLATE | |
| | 11 | | 099-6136 | 8 | WASHER | |
| | 12 | | 118-4085 | 2 | SEAT | |
| | 13 | | 131-5864 | 2 | SPRING | |
| B | 14 | | 099-6137 | 4 | WASHER (T=0.2mm) | |
| | 15 | | 118-4082 | 4 | SPRING | |
| | 16 | | 131-5862 | 1 | BODY AS | |
| | 17 | | 096-1621 | 1 | SEAL-O-RING (ID=89.5mm) | |
| | 18 | | 087-4969 | 1 | PLATE | |
| | 19 | | 7Y-0468 | 1 | PIN (SPRING) | |
| | 20 | | 096-4498 | 2 | WASHER (SEAL) | |
| | 21 | | 6V-5192 | 2 | BOLT (L=30mm) | |
| | 22 | | 096-1628 | 4 | PLUG | |
| | 23 | | 094-0876 | 4 | SEAL | |
| | 24 | | 121-1631 | 2 | SEAT | |
| | 25 | | 5B-9304 | 2 | SCREW | |
| | 26 | | 121-1563 | 2 | SEAT | |

## 1315914 VALVE GP-PILOT

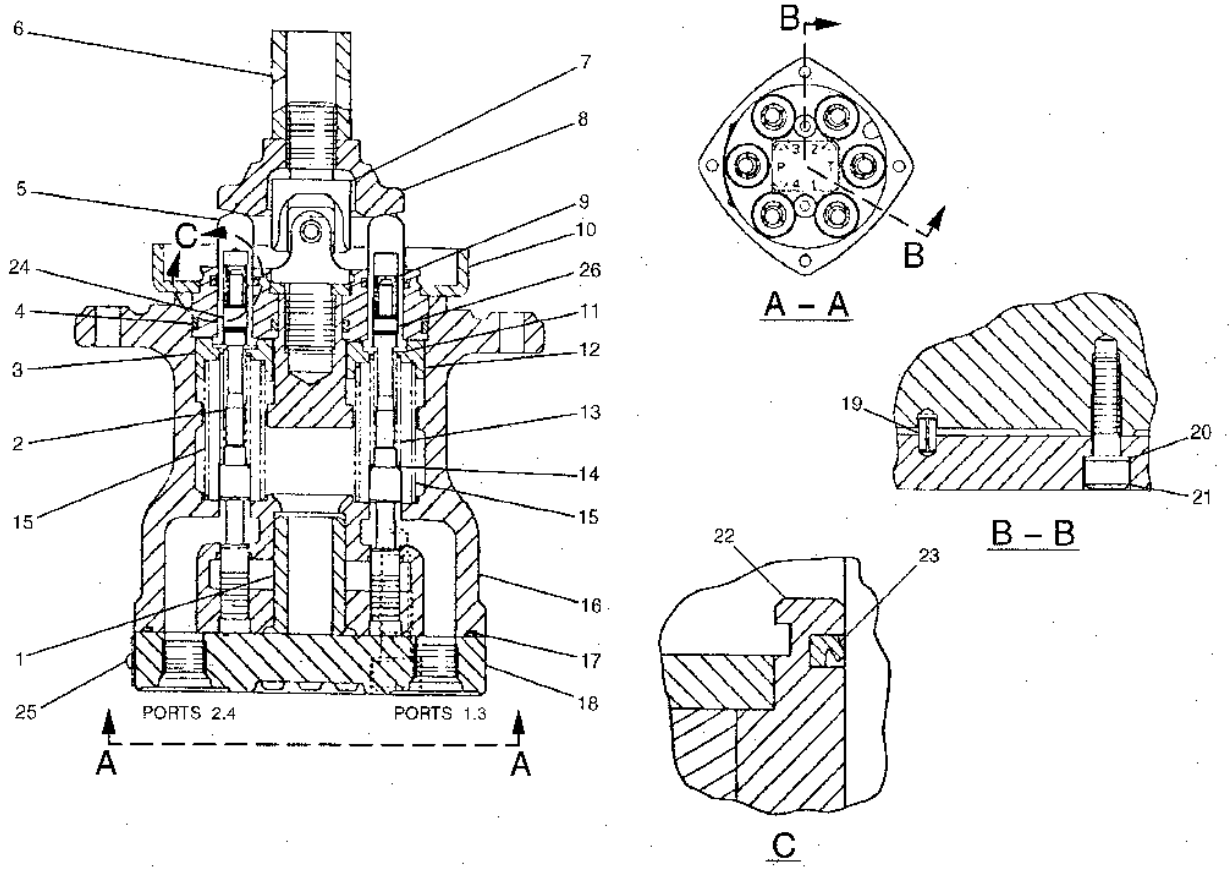


GRAPHIC #1

h56242e

# 1764984 VALVE GP-PILOT

S/N 8SR 00541-UP, 8TR 00683-UP
PART OF 1764985, 1764986-Page 342.01

**Key:** Y - SEE SEPARATE ILLUSTRATION

**SMCS**

| NOTE | REF NO | GRAPHIC REF | PART NUMBER | QTY | PART NAME 1 2 3 4 5 6 (PRODUCT LEVEL) | PRICE USD |
|---|---|---|---|---|---|---|
| | 1 | | 123-2467 | 1 | VALVE GP | |
| Y | 2 | | 111-9916 | 1 | VALVE GP | |
| Y | 3 | | 121-1490 | 2 | VALVE GP | |
| Y | 4 | | 121-1491 | 1 | VALVE GP | |
| | 5 | | 7Y-5011 | 1 | VALVE | |
| | 6 | | 096-1598 | 1 | SPRING | |
| | 7 | | 3K-0360 | 1 | SEAL-O-RING (ID=16.36mm) | |
| | 8 | | 7Y-5010 | 1 | PLUG | |
| | 9 | | 096-1595 | 1 | SPRING | |
| | 10 | | 095-1592 | 1 | SEAL-O-RING (ID=23.70mm) | |
| | 11 | | 7Y-5009 | 1 | CARTRIDGE | |
| | 12 | | 8T-4133 | 1 | NUT | |
| | 13 | | 4I-8915 | 1 | SETSCREW | |
| | 14 | | 095-1582 | 1 | SEAL-O-RING (ID=13.80mm) | |
| | 15 | | 4I-5657 | 1 | PLUG | |
| | 16 | | 8T-6759 | 12 | PLUG | |
| | 17 | | 7I-2272 | 8 | BOLT (L=12mm) | |

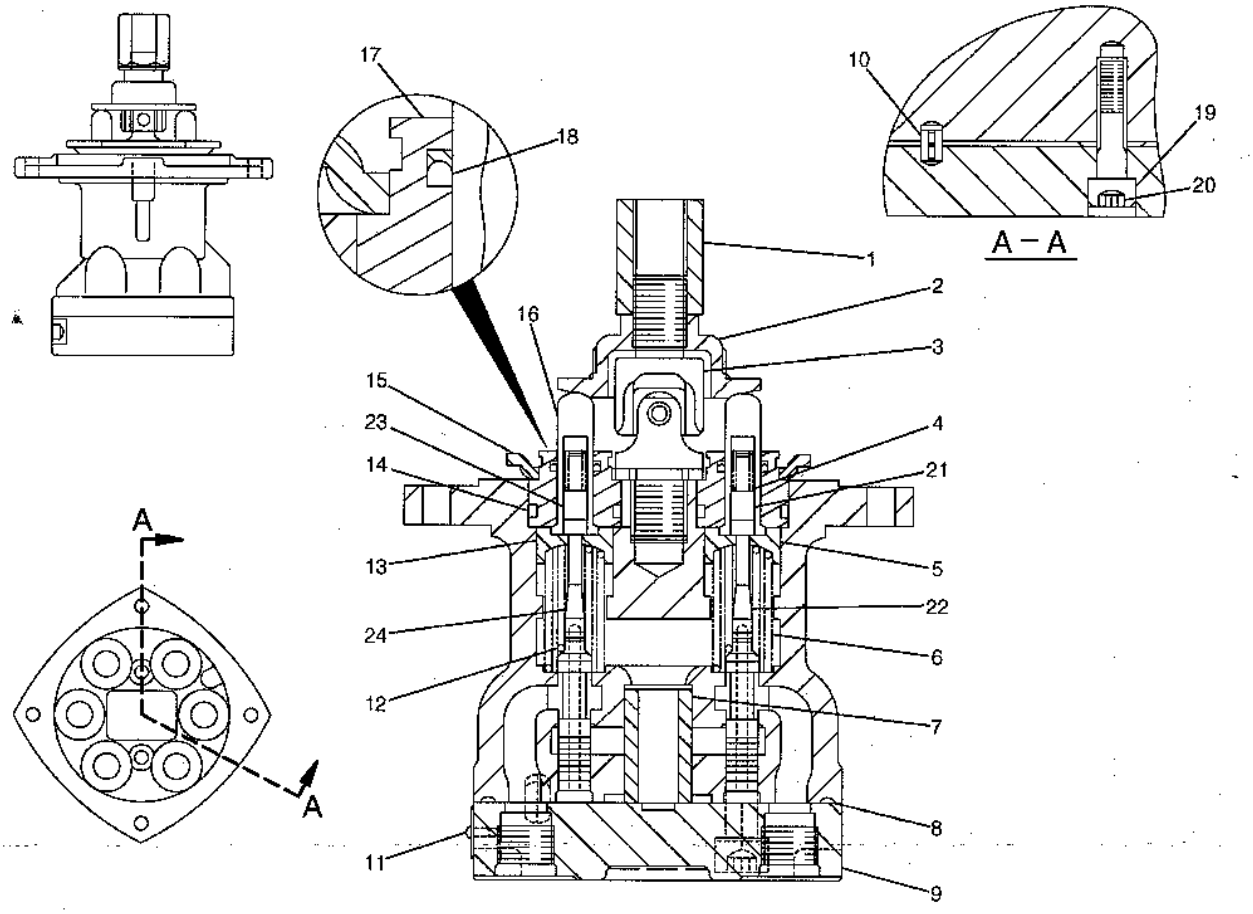


GRAPHIC #1

h74212e

# 1843899 VALVE GP-PILOT

S/N 8SR 00541-UP, 8TR 00683-UP
PART OF 1764985, 1764986-Page 342.01

**Key:** B - USE AS REQUIRED

**SMCS**

| NOTE | REF NO | GRAPHIC REF | PART NUMBER | QTY | PART NAME 1 2 3 4 5 6 (PRODUCT LEVEL) | PRICE USD |
|---|---|---|---|---|---|---|
| | 1 | | 131-5915 | 1 | NUT | |
| | 2 | | 165-9431 | 1 | PLATE | |
| | 3 | | 4I-6365 | 1 | JOINT | |
| | 4 | | 118-4087 | 4 | SPRING | |
| | 5 | | 165-9436 | 2 | SEAT | |
| | 6 | | 165-9461 | 4 | SPRING | |
| | 7 | | 165-9439 | 1 | BUSHING | |
| | 8 | | 165-9448 | 1 | SEAL-O-RING (ID=84.50mm) | |
| | 9 | | 168-0794 | 1 | PLATE | |
| | 10 | | 7Y-0468 | 1 | PIN | |
| | 11 | | 5B-9304 | 2 | SCREW | |
| B | 12 | | 099-6137 | 4 | WASHER (T=0.2mm) | |
| | 13 | | 165-9435 | 2 | SEAT | |
| | 14 | | 095-1586 | 4 | SEAL-O-RING (ID=19.80mm) | |
| | 15 | | 165-9438 | 1 | PLATE | |
| | 16 | | 118-4086 | 4 | ROD | |
| | 17 | | 096-1628 | 4 | PLUG | |
| | 18 | | 094-0876 | 4 | SEAL | |
| | 19 | | 096-4498 | 2 | WASHER-SEAL | |
| | 20 | | 6V-8337 | 2 | BOLT (L=35mm) | |

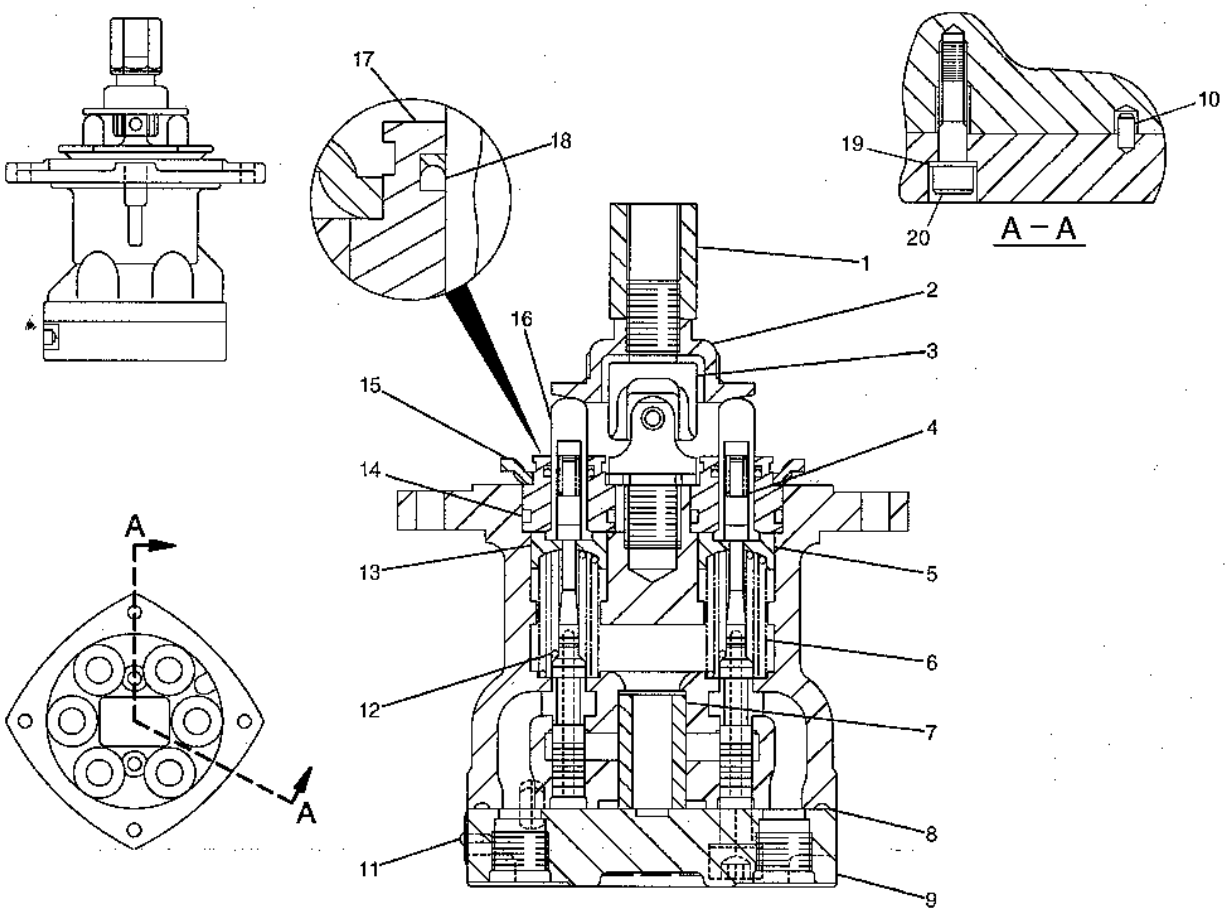

## 1843899 VALVE GP-PILOT

GRAPHIC #1

h69144e

# 1843900 VALVE GP-PILOT

S/N 8SR 00541-UP, 8TR 00683-UP
PART OF 1764985, 1764986-Page 342.01

**Key:** B - USE AS REQUIRED

**SMCS**

| NOTE | REF NO | GRAPHIC REF | PART NUMBER | QTY | PART NAME 1 2 3 4 5 6 (PRODUCT LEVEL) | PRICE USD |
|---|---|---|---|---|---|---|
| | 1 | | 131-5915 | 1 | NUT | |
| | 2 | | 165-9431 | 1 | PLATE | |
| | 3 | | 4I-6365 | 1 | JOINT | |
| | 4 | | 118-4087 | 4 | SPRING | |
| | 5 | | 165-9436 | 2 | SEAT | |
| | 6 | | 165-9461 | 4 | SPRING | |
| | 7 | | 165-9439 | 1 | BUSHING | |
| | 8 | | 165-9448 | 1 | SEAL-O-RING (ID=84.50mm) | |
| | 9 | | 168-0794 | 1 | PLATE | |
| | 10 | | 7Y-0468 | 1 | PIN | |
| | 11 | | 5B-9304 | 2 | SCREW | |
| B | 12 | | 099-6137 | 4 | WASHER (T=0.2mm) | |
| | 13 | | 165-9435 | 2 | SEAT | |
| | 14 | | 095-1586 | 4 | SEAL-O-RING (ID=19.80mm) | |
| | 15 | | 165-9438 | 1 | PLATE | |
| | 16 | | 118-4086 | 4 | ROD | |
| | 17 | | 096-1628 | 4 | PLUG | |
| | 18 | | 094-0876 | 4 | SEAL | |
| | 19 | | 096-4498 | 2 | WASHER-SEAL | |
| | 20 | | 6V-8337 | 2 | BOLT (L=35mm) | |

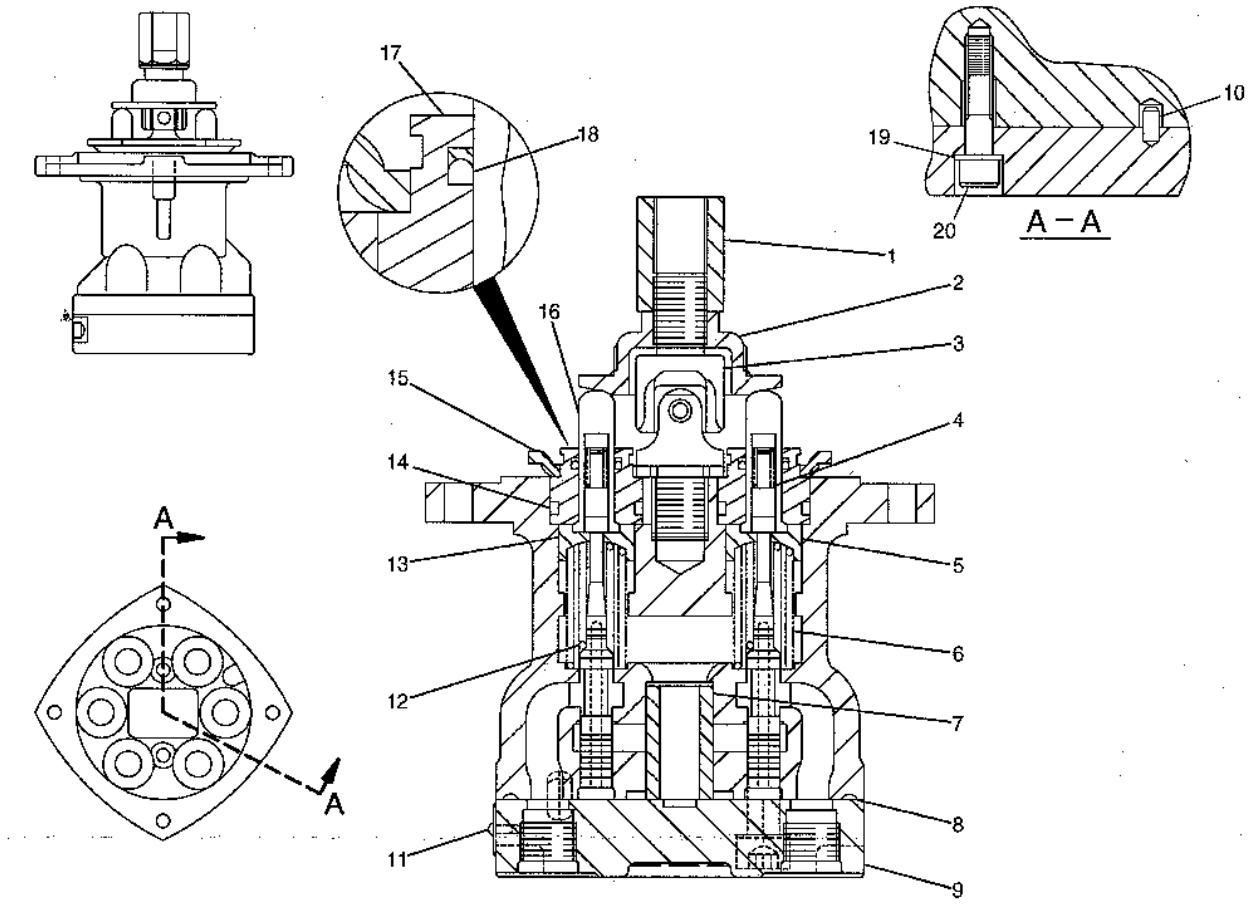

## 1843900 VALVE GP-PILOT

GRAPHIC #1

h69145e

# 1232604 VALVE GP-PILOT

PART OF 1096031-Page 346, 1116428-Page 347, 1352272-Page 347.01
AN ATTACHMENT

**Key:**

**SMCS**

| NOTE | REF NO | GRAPHIC REF | PART NUMBER | QTY | PART NAME 1 2 3 4 5 6 (PRODUCT LEVEL) | PRICE USD |
|---|---|---|---|---|---|---|
| | 1 | | 087-4710 | 2 | SETSCREW | |
| | 2 | | 087-5708 | 1 | PEDAL | |
| | 3 | | 095-1260 | 1 | SETSCREW | |
| | 4 | | 087-5709 | 1 | BELLOW | |
| | 5 | | 087-4704 | 2 | ROD | |
| | 6 | | 099-6135 | 2 | SCRAPER | |
| | 7 | | 094-0876 | 2 | SEAL | |
| | 8 | | 087-4703 | 2 | PLUG | |
| | 9 | | 095-1586 | 2 | SEAL-O-RING (ID=19.80mm) | |
| | 10 | | 099-6136 | 4 | WASHER | |
| | 11 | | 099-6140 | 2 | SEAT | |
| | 12 | | 099-6145 | 1 | CAMSHAFT | |
| | 13 | | 099-6141 | 2 | WASHER | |
| | 14 | | 099-6137 | 2 | WASHER | |
| | 15 | | 099-6142 | 2 | SPRING | |
| | 16 | | 123-2605 | 2 | SPRING | |
| | 17 | | 099-6132 | 1 | HOUSING | |
| | 18 | | 087-5707 | 1 | COVER | |
| | 19 | | 087-4448 | 2 | BOLT (L=30mm) | |
| | 20 | | 8T-4133 | 2 | NUT | |
| | 21 | | 099-6144 | 2 | BUSHING | |

## 1232604 VALVE GP-PILOT

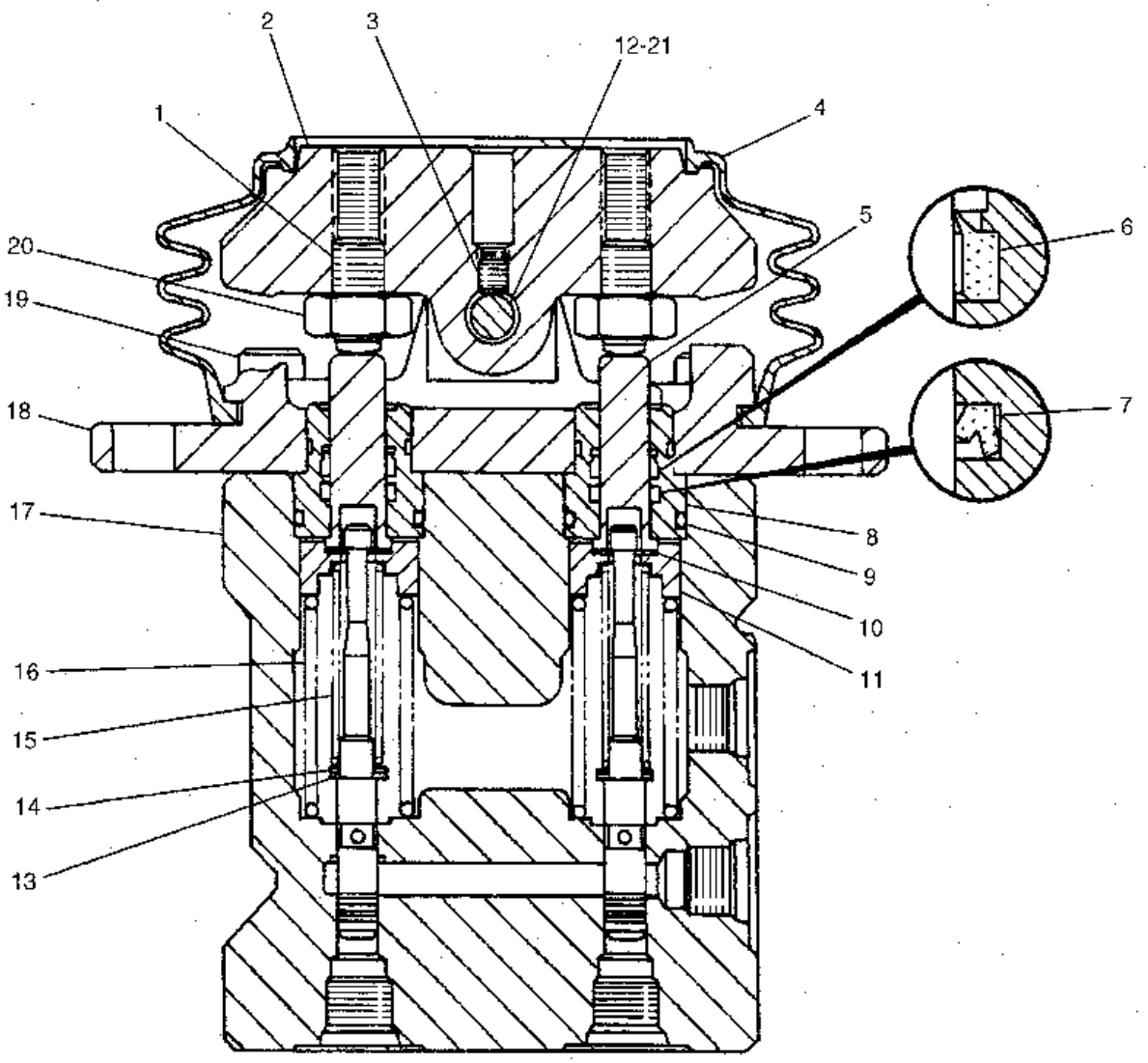


GRAPHIC #1

h50333e

# 1195219 VALVE GP-PILOT

PART OF 1136833-Page 313, 1287492-Page 315
AN ATTACHMENT

**Key:**

**SMCS**

| NOTE | REF NO | GRAPHIC REF | PART NUMBER | QTY | PART NAME 1 2 3 4 5 6 (PRODUCT LEVEL) | PRICE USD |
|---|---|---|---|---|---|---|
| | 1 | | 096-3375 | 1 | SPRING | |
| | 2 | | 096-3376 | 1 | GUIDE | |
| | 3 | | 3K-0360 | 2 | SEAL-O-RING (ID=16.36mm) | |
| | 4 | | 9S-4185 | 2 | PLUG | |

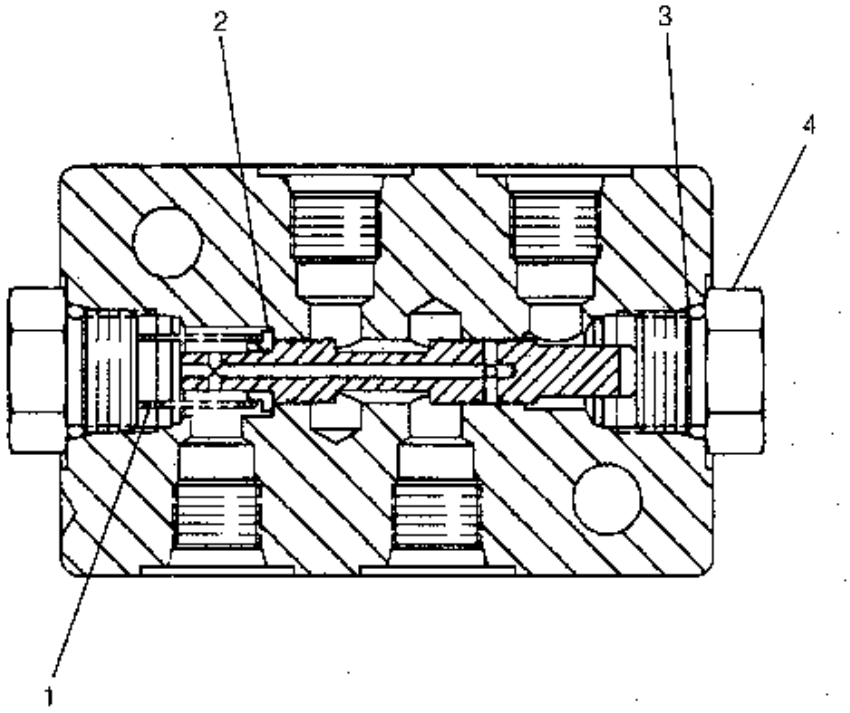


GRAPHIC #1 h51042e

# 1232419 VALVE GP-PILOT

PART OF 1136826-Page 317
1163600-Page 355

**Key:** Y - SEPARATE ILLUSTRATION

**SMCS**

| NOTE | REF NO | GRAPHIC REF | PART NUMBER | QTY | PART NAME 1 2 3 4 5 6 (PRODUCT LEVEL) | PRICE USD |
|---|---|---|---|---|---|---|
| | 1 | | 096-3773 | 2 | SCREW-MACHINE | |
| | 2 | | 087-5166 | 1 | SPRING | |
| | 3 | | 095-1594 | 1 | SEAL-O-RING (ID=25.70mm) | |
| | 4 | | 095-1789 | 1 | RING-BACK UP | |
| | 5 | | 118-4044 | 1 | COVER | |
| | 6 | | 8T-4136 | 4 | BOLT (L=25mm) | |
| Y | 7 | | 116-3600 | 1 | VALVE GP | |
| | 8 | | 111-9959 | 4 | PLUG | |
| | 9 | | 8T-6759 | 6 | PLUG | |
| | 10 | | 9S-8005 | 1 | PLUG | |
| | 11 | | 3K-0360 | 1 | SEAL-O-RING (ID=16.36mm) | |
| | 12 | | 107-6944 | 1 | PLUG | |
| | 13 | | 3J-1907 | 1 | SEAL-O-RING (ID=11.89mm) | |
| | 14 | | 096-4899 | 1 | SETSCREW | |
| | 15 | | 4I-8965 | 1 | GUIDE | |
| | 16 | | 5I-8511 | 1 | SPRING | |
| | 17 | | 4B-9880 | 1 | BALL | |
| | 18 | | 8T-4133 | 1 | NUT | |
| | 19 | | 9S-4182 | 1 | PLUG | |
| | 20 | | 3J-7354 | 1 | SEAL (ID=8.92mm) | |
| | 21 | | 123-2423 | 1 | FLANGE | |
| | 22 | | 1P-3702 | 1 | SEAL | |

## 1232419 VALVE GP-PILOT

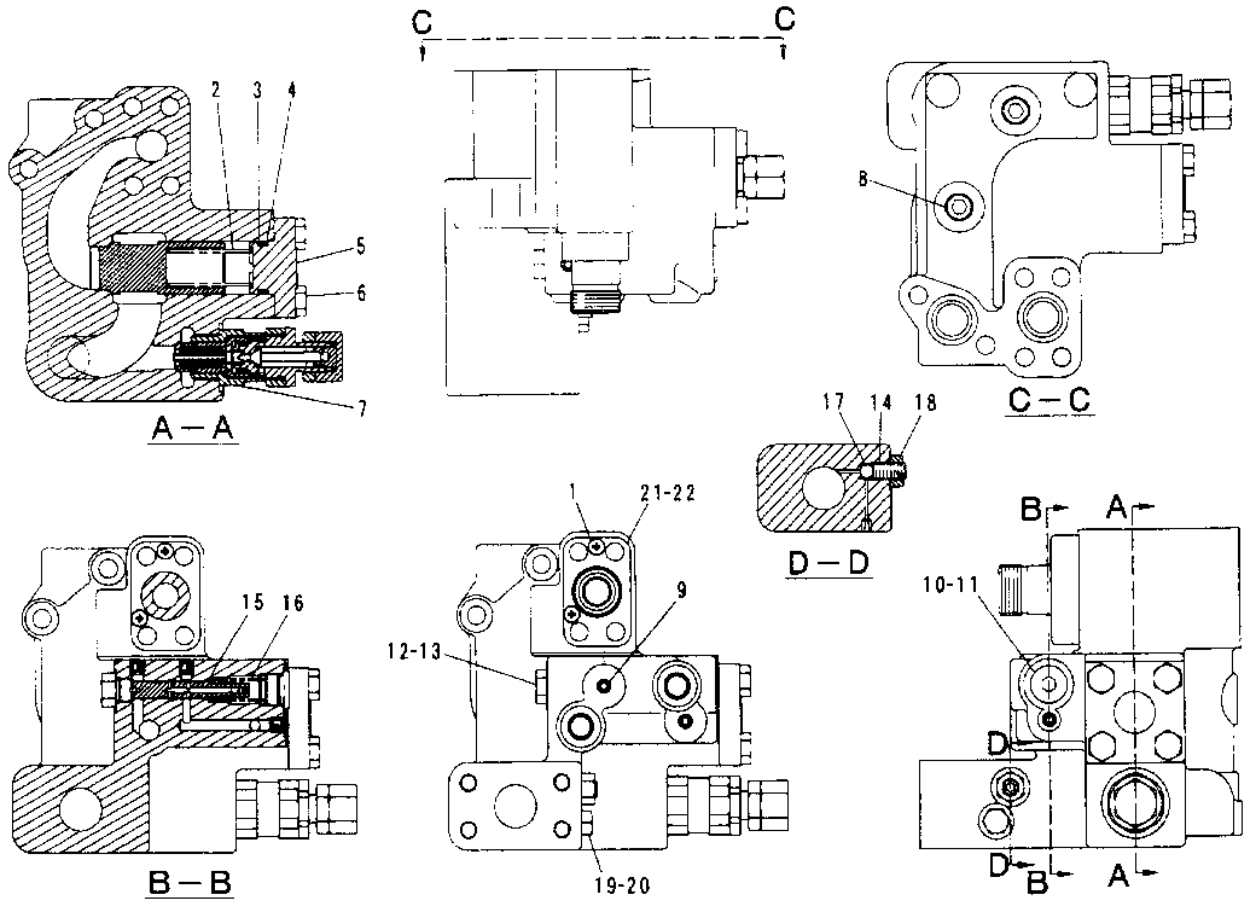


| NOTE | No. | PART No. | QTY | PART NAME |
|---|---|---|---|---|
| | 1 | 096-3773 | 2 | SCREW-MACHINE |
| | 2 | 087-5166 | 1 | SPRING |
| | 3 | 095-1594 | 1 | SEAL-O-RING (ID=25.70mm) |
| | 4 | 095-1789 | 1 | RING-BACK UP |
| | 5 | 118-4044 | 1 | COVER |
| | 6 | 8T-4136 | 4 | BOLT (L=25mm) |
| Y | 7 | 116-3600 | 1 | VALVE GP |
| | 8 | 111-9959 | 4 | PLUG |
| | 9 | 8T-6759 | 6 | PLUG |
| | 10 | 9S-8005 | 1 | PLUG |
| | 11 | 3K-0360 | 1 | SEAL-O-RING (ID=16.36mm) |
| | 12 | 107-6944 | 1 | PLUG |
| | 13 | 3J-1907 | 1 | SEAL-O-RING (ID=11.89mm) |
| | 14 | 096-4899 | 1 | SETSCREW |
| | 15 | 4I-8965 | 1 | GUIDE |
| | 16 | 5I-8511 | 1 | SPRING |
| | 17 | 4B-9880 | 1 | BALL |
| | 18 | 8T-4133 | 1 | NUT |
| | 19 | 9S-4182 | 1 | PLUG |
| | 20 | 3J-7354 | 1 | SEAL (ID=8.92mm) |
| | 21 | 123-2423 | 1 | FLANGE |
| | 22 | 1P-3702 | 1 | SEAL |

Y – SEE SEPARATE ILLUSTRATION

H52814E

# 1183917 VALVE GP-PILOT

S/N 8SR 1-00402, 8TR 1-00453
PART OF 1136826-Page 317
1163600-Page 355

**Key:** Y - SEE SEPARATE ILLUSTRATION

**SMCS**

| NOTE | REF NO | GRAPHIC REF | PART NUMBER | QTY | PART NAME 1 2 3 4 5 6 (PRODUCT LEVEL) | PRICE USD |
|---|---|---|---|---|---|---|
| | 1 | | 9S-8005 | 1 | PLUG | |
| | 2 | | 111-9959 | 2 | PLUG | |
| Y | 3 | | 116-3600 | 1 | VALVE GP | |
| | 4 | | 087-5166 | 1 | SPRING | |
| | 5 | | 095-1594 | 1 | SEAL-O-RING (ID=25.70mm) | |
| | 6 | | 095-1789 | 1 | RING (BACK UP) | |
| | 7 | | 118-4044 | 1 | COVER | |
| | 8 | | 8T-4136 | 4 | BOLT (L=25mm) | |
| | 9 | | 8T-6759 | 3 | PLUG | |
| | 10 | | 6V-8636 | 1 | CONNECTOR | |
| | 11 | | 3J-1907 | 1 | SEAL-O-RING (ID=11.89mm) | |
| | 12 | | 4I-8965 | 1 | GUIDE | |
| | 13 | | 5I-8511 | 1 | SPRING | |
| | 14 | | 3K-0360 | 1 | SEAL-O-RING (ID=16.36mm) | |

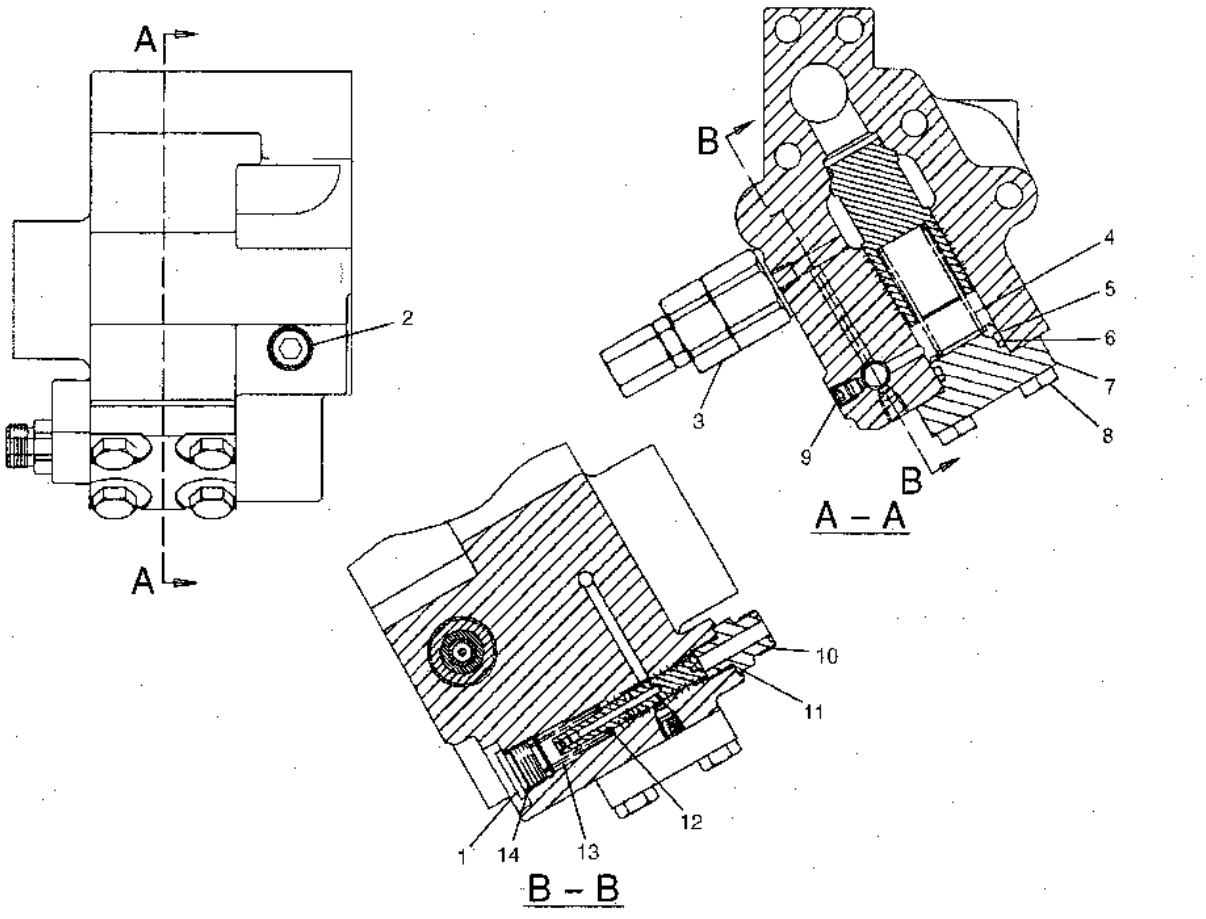


GRAPHIC #1

h50301e

# 1556996 VALVE GP-PILOT

S/N 8SR 00403-UP, 8TR 00454-UP
PART OF 1136826-Page 317.04
1163600-Page 355

**Key:** B - USE AS REQUIRED, Y - SEE SEPARATE ILLUSTRATION

**SMCS**

| NOTE | REF NO | GRAPHIC REF | PART NUMBER | QTY | PART NAME 1 2 3 4 5 6 (PRODUCT LEVEL) | PRICE USD |
|---|---|---|---|---|---|---|
| | 1 | | 095-1574 | 1 | SEAL-O-RING (ID=6.8mm) | |
| | 2 | | 8T-6757 | 6 | PLUG | |
| | 3 | | 8T-6759 | 8 | PLUG | |
| | 4 | | 147-4184 | 2 | PLUG | |
| | 5 | | 123-2481 | 1 | COVER | |
| | 6 | | 9X-6032 | 6 | BOLT (L=30mm) | |
| | 7 | | 8T-2637 | 1 | PIN-SPRING | |
| | 8 | | 4B-4158 | 2 | SCREW | |
| | 9 | | 9S-8005 | 2 | PLUG | |
| | 10 | | 3K-0360 | 3 | SEAL-O-RING (ID=16.36mm) | |
| B | 11 | | 140-0649 | 3 | SHIM (T=1.0mm) | |
| B | | | 140-0650 | 1 | SHIM (T=0.5mm) | |
| B | | | 140-0651 | 1 | SHIM (T=0.25mm) | |
| | 12 | | 147-4138 | 1 | ADJUSTER | |
| | 13 | | 8T-4132 | 1 | NUT | |
| | 14 | | 123-2479 | 1 | SPRING | |
| | 15 | | 095-1579 | 1 | SEAL-O-RING (ID=10.80mm) | |
| | 16 | | 095-1780 | 1 | RING-BACK UP | |
| | 17 | | 123-2482 | 1 | VALVE GP | |
| | 18 | | 095-1604 | 1 | SEAL-O-RING (ID=39.70mm) | |
| | 19 | | 147-4137 | 1 | PLUG | |
| | 20 | | 3D-2824 | 1 | SEAL-O-RING (ID=23.47mm) | |
| | 21 | | 123-2486 | 1 | GUIDE | |
| | 22 | | 123-2492 | 1 | SPRING | |
| | 23 | | 123-2488 | 1 | VALVE | |
| | 24 | | 123-2489 | 1 | SPRING | |
| | 25 | | 095-1586 | 1 | SEAL-O-RING (ID=19.80mm) | |
| | 26 | | 8T-4136 | 4 | BOLT (L=25mm) | |
| | 27 | | 118-4044 | 1 | COVER | |
| | 28 | | 095-1789 | 1 | RING-BACK UP | |
| | 29 | | 095-1594 | 1 | SEAL-O-RING (ID=25.70mm) | |
| | 30 | | 087-5166 | 1 | SPRING | |
| Y | 31 | | 116-3600 | 1 | VALVE GP | |
| | 32 | | 9S-4185 | 1 | PLUG | |
| | 33 | | 5I-8511 | 1 | SPRING | |
| | 34 | | 4I-8965 | 1 | GUIDE | |
| | 35 | | 3J-1907 | 1 | SEAL-O-RING (ID=11.89mm) | |
| | 36 | | 123-2485 | 1 | PLUG | |

## 1556996 VALVE GP-PILOT

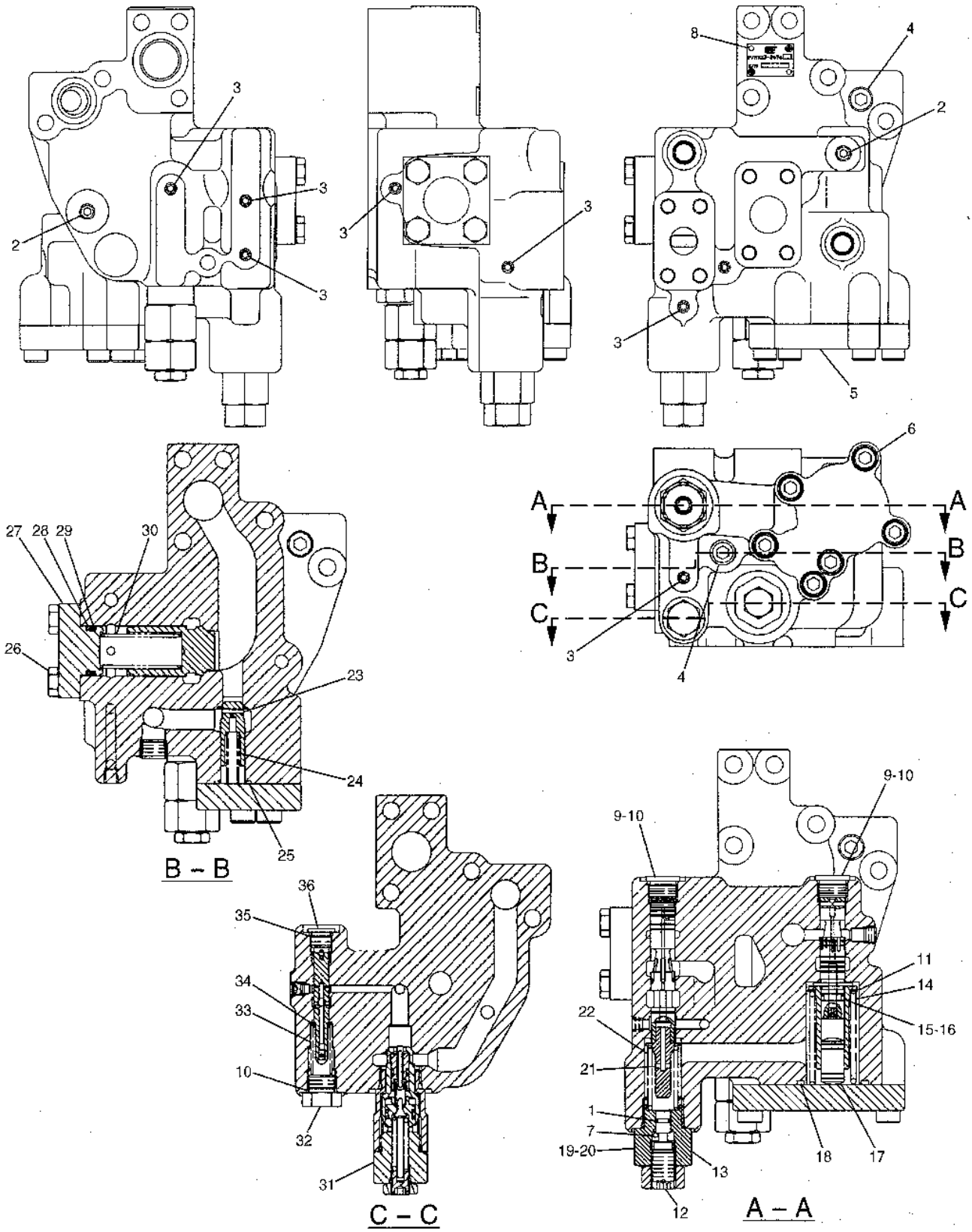


GRAPHIC #1

h64082e

# 1185984 VALVE GP-PILOT

PART OF 1136835-Page 315.02
AN ATTACHMENT

**Key:**

**SMCS**

| NOTE | REF NO | GRAPHIC REF | PART NUMBER | QTY | PART NAME 1 2 3 4 5 6 (PRODUCT LEVEL) | PRICE USD |
|---|---|---|---|---|---|---|
| | 1 | | 5I-4000 | 1 | HOUSING | |
| | 2 | | 7Y-5219 | 1 | SEAL-O-RING (ID=12.37mm) | |
| | 3 | | 5I-4001 | 1 | COVER | |
| | 4 | | 9S-8003 | 4 | PLUG | |
| | 5 | | 4J-0528 | 2 | SEAL-O-RING (ID=59.92mm) | |
| | 6 | | 8T-1159 | 4 | BOLT (L=25mm) | |
| | 7 | | 5I-4002 | 1 | COVER | |
| | 8 | | 6V-3938 | 4 | BOLT (L=25mm) | |
| | 9 | | 5I-4003 | 1 | LEVER | |
| | 10 | | 8T-4908 | 1 | BOLT (L=25mm) | |
| | 11 | | 8T-4133 | 1 | NUT | |
| | 12 | | 8T-4121 | 1 | WASHER-HARD | |
| | 13 | | 1J-9671 | 4 | SEAL-O-RING (ID=10.52mm) | |
| | 14 | | 6I-6758 | 1 | SPOOL AS | |
| | | | 7Y-5272 | 1 | PIN | |
| | 15 | | 118-5983 | 1 | SEAL | |

## 1185984 VALVE GP-PILOT

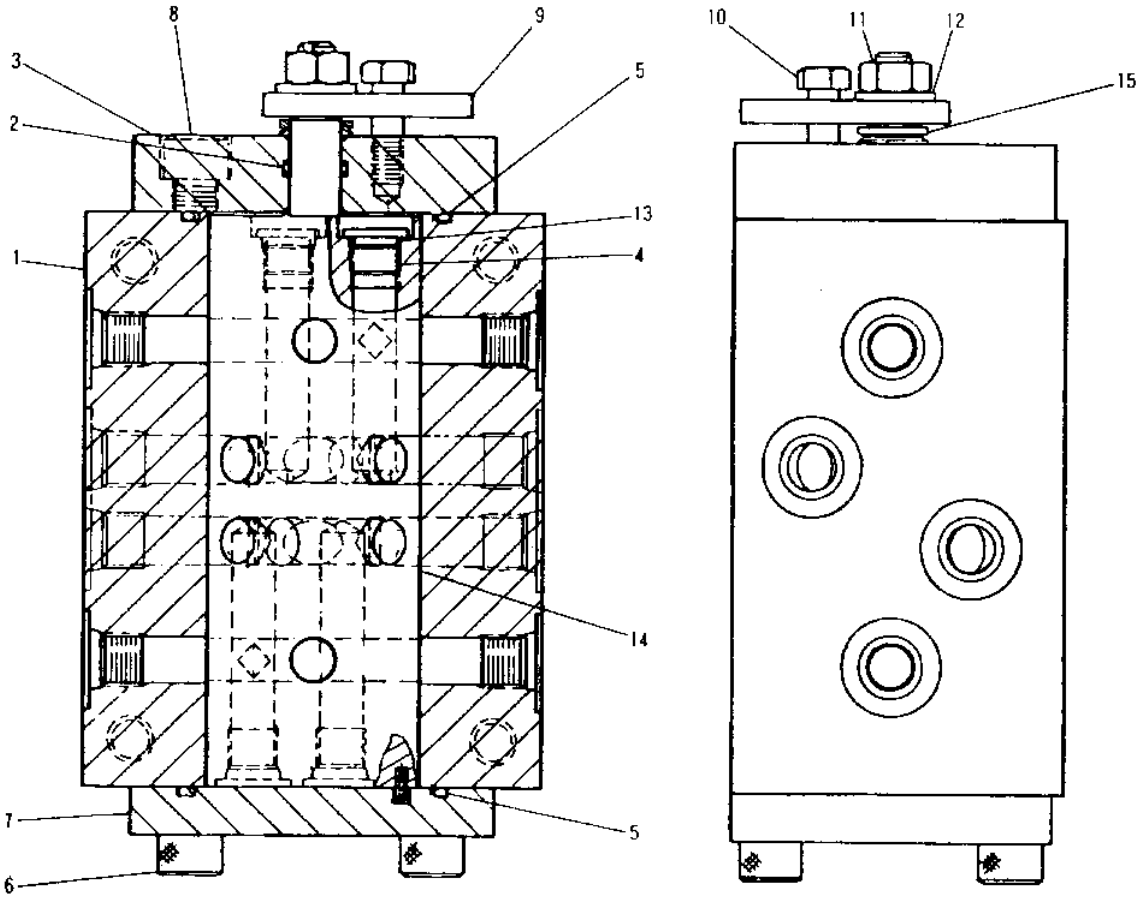


| NOTE | No. | PART No. | QTY | PART NAME | NOTE | No. | PART No. | QTY | PART NAME |
|---|---|---|---|---|---|---|---|---|---|
| | 1 | 5I-4000 | 1 | HOUSING | | | | | |
| | 2 | 7Y-5219 | 1 | SEAL-O-RING (ID=12.37mm) | | | | | |
| | 3 | 5I-4001 | 1 | COVER | | | | | |
| | 4 | 9S-8003 | 4 | PLUG | | | | | |
| | 5 | 4J-0528 | 2 | SEAL-O-RING (ID=59.92mm) | | | | | |
| | 6 | 8T-1159 | 4 | BOLT (L=25mm) | | | | | |
| | 7 | 5I-4002 | 1 | COVER | | | | | |
| | 8 | 6V-3938 | 4 | BOLT (L=20mm) | | | | | |
| | 9 | 5I-4003 | 1 | LEVER | | | | | |
| | 10 | 8T-4908 | 1 | BOLT (L=25mm) | | | | | |
| | 11 | 8T-4133 | 1 | NUT | | | | | |
| | 12 | 8T-4121 | 1 | WASHER-HARD | | | | | |
| | 13 | 1J-9671 | 4 | SEAL-O-RING (ID=10.52mm) | | | | | |
| | 14 | 6I-6758 | 1 | SPOOL AS | | | | | |
| | | 7Y-5272 | 1 | PIN | | | | | |
| | 15 | 118-5983 | 1 | SEAL | | | | | |

H52432E

GRAPHIC #1

h52432e

# 4I7836 VALVE GP-FLOW CONTROL

PART OF 1136833-Page 313, 1287492-Page 315
AN ATTACHMENT

**Key:**

**SMCS**

| NOTE | REF NO | GRAPHIC REF | PART NUMBER | QTY | PART NAME 1 2 3 4 5 6 (PRODUCT LEVEL) | PRICE USD |
|---|---|---|---|---|---|---|
| | 1 | | 6I-6904 | 1 | CONNECTOR | |
| | 2 | | 095-1582 | 1 | SEAL-O-RING | |
| | 3 | | 6I-6905 | 1 | BODY | |
| | 4 | | 099-0365 | 2 | SPRING | |
| | 5 | | 099-0367 | 1 | PLUNGER AS | |
| | 6 | | 6I-6907 | 1 | SLEEVE | |
| | 7 | | 095-1587 | 2 | SEAL-O-RING | |
| | 8 | | 6V-8754 | 1 | RING-RETAINING | |

## 4I7836 VALVE GP-FLOW CONTROL

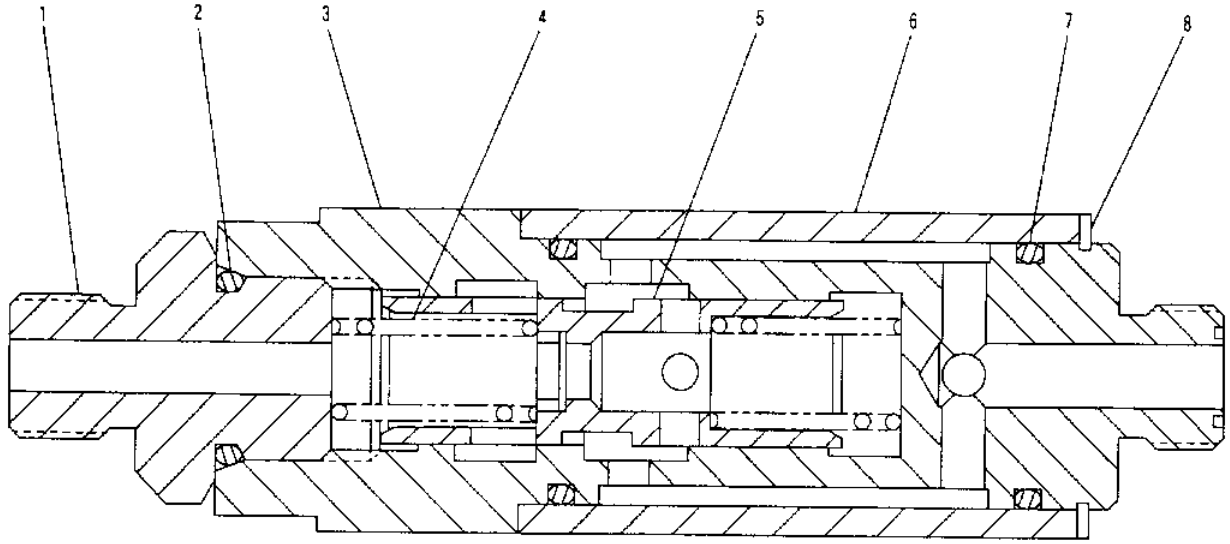


| NOTE | No. | PART No. | QTY | PART NAME |
|---|---|---|---|---|
| | 1 | 6I-6904 | 1 | CONNECTOR |
| | 2 | 095 1582 | 1 | SEAL-O-RING |
| | 3 | 6I-6905 | 1 | BODY |
| | 4 | 099-0365 | 2 | SPRING |
| | 5 | 099-0367 | 1 | PLUNGER AS |
| | 6 | 6I-6907 | 1 | SLEEVE |
| | 7 | 095-1587 | 2 | SEAL-O-RING |
| | 8 | 6V-8754 | 1 | RING-RETAINING |

| NOTE | No. | PART No. | QTY | PART NAME |
|---|---|---|---|---|

H59236E

GRAPHIC #1 h59236e

# 1232510 VALVE GP-FLOW CONTROL

S/N 8SR 1-00396, 8TR 1-00434
PART OF 1136735-Page 303

**Key:**

**SMCS**

| NOTE | REF NO | GRAPHIC REF | PART NUMBER | QTY | PART NAME 1 2 3 4 5 6 (PRODUCT LEVEL) | PRICE USD |
|---|---|---|---|---|---|---|
| | 1 | | 096-4514 | 3 | PLUG | |
| | 2 | | 095-1582 | 6 | SEAL-O-RING (ID=13.80mm) | |
| | 3 | | 099-0365 | 2 | SPRING | |
| | 4 | | 6I-6906 | 1 | PLUNGER AS | |
| | 5 | | 6I-6925 | 1 | BODY | |
| | 6 | | 099-0366 | 3 | PLUG | |

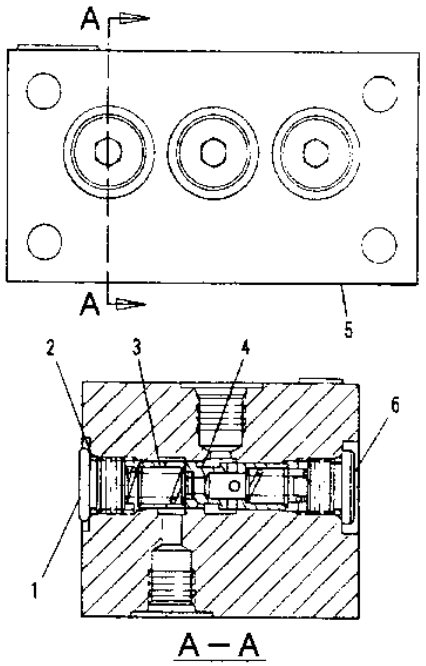


| NOTE | No. | PART No. | QTY | PART NAME |
|---|---|---|---|---|
| | 1 | 096 4514 | 3 | PLUG |
| | 2 | 095-1582 | 6 | SEAL-O-RING (ID=13.80mm) |
| | 3 | 099-0365 | 2 | SPRING |
| | 4 | 6I-6906 | 1 | PLUNGER AS |
| | 5 | 6I-6925 | 1 | BODY |
| | 6 | 099 0366 | 3 | PLUG |

H51043E

GRAPHIC #1

h51043e

# 5I8706 VALVE GP-FLOW CONTROL

S/N 8SR 00397-UP, 8TR 00435-UP
PART OF 1136735-Page 303.04

**Key:**

**SMCS**

| NOTE | REF NO | GRAPHIC REF | PART NUMBER | QTY | PART NAME 1 2 3 4 5 6 (PRODUCT LEVEL) | PRICE USD |
|---|---|---|---|---|---|---|
| | 1 | | 6I-6904 | 1 | CONNECTOR | |
| | 2 | | 095-1582 | 1 | SEAL-O-RING (ID=13.80mm) | |
| | 3 | | 6I-6905 | 1 | BODY | |
| | 4 | | 099-0365 | 2 | SPRING | |
| | 5 | | 6I-6906 | 1 | PLUNGER AS | |
| | 6 | | 6I-6907 | 1 | SLEEVE | |
| | 7 | | 095-1587 | 2 | SEAL-O-RING (ID=20.80mm) | |
| | 8 | | 6V-8754 | 1 | RING-RETAINING | |

## 5I8706 VALVE GP-FLOW CONTROL

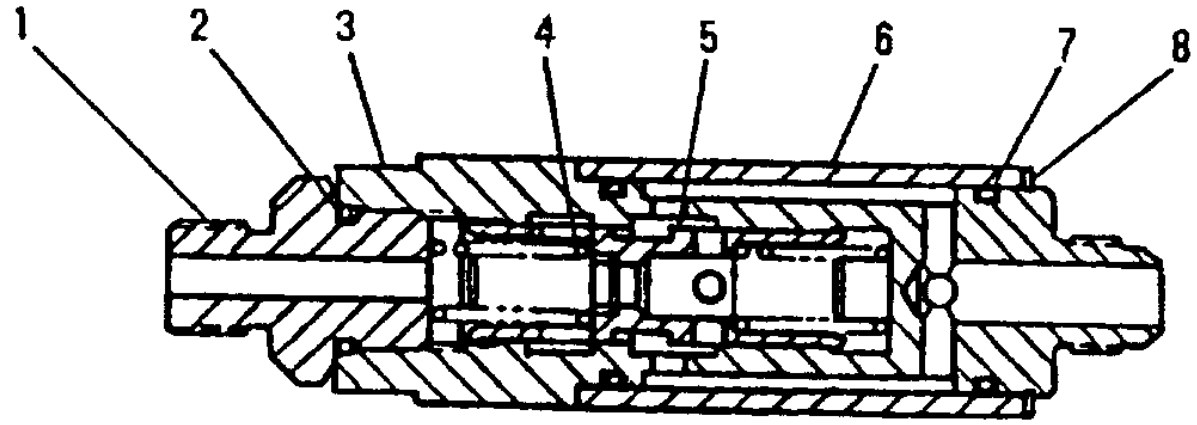


| NOTE | No. | PART No. | QTY | PART NAME |
|---|---|---|---|---|
| | 1 | 6I 6904 | 1 | CONNECTOR |
| | 2 | 095 1582 | 1 | SEAL-O-RING (ID=13.80mm) |
| | 3 | 6I 6905 | 1 | BODY |
| | 4 | 099-0365 | 2 | SPRING |
| | 5 | 6I 6906 | 1 | PLUNGER AS |
| | 6 | 6I 6907 | 1 | SLEEVE |
| | 7 | 095 1587 | 2 | SEAL-O-RING (ID=20.80mm) |
| | 8 | 6V 8754 | 1 | RING-RETAINING |

H53709E

GRAPHIC #1 h53709e

# 1120083 VALVE GP-SHUTTLE

PART OF 1136737-Page 306
AN ATTACHMENT

**Key:**

**SMCS**

| NOTE | REF NO | GRAPHIC REF | PART NUMBER | QTY | PART NAME 1 2 3 4 5 6 (PRODUCT LEVEL) | PRICE USD |
|---|---|---|---|---|---|---|
| | 1 | | 112-0085 | 4 | PLUG | |
| | 2 | | 3J-1907 | 4 | SEAL-O-RING (ID=11.89mm) | |
| | 3 | | 2D-6642 | 4 | BALL | |

## 1120083 VALVE GP-SHUTTLE

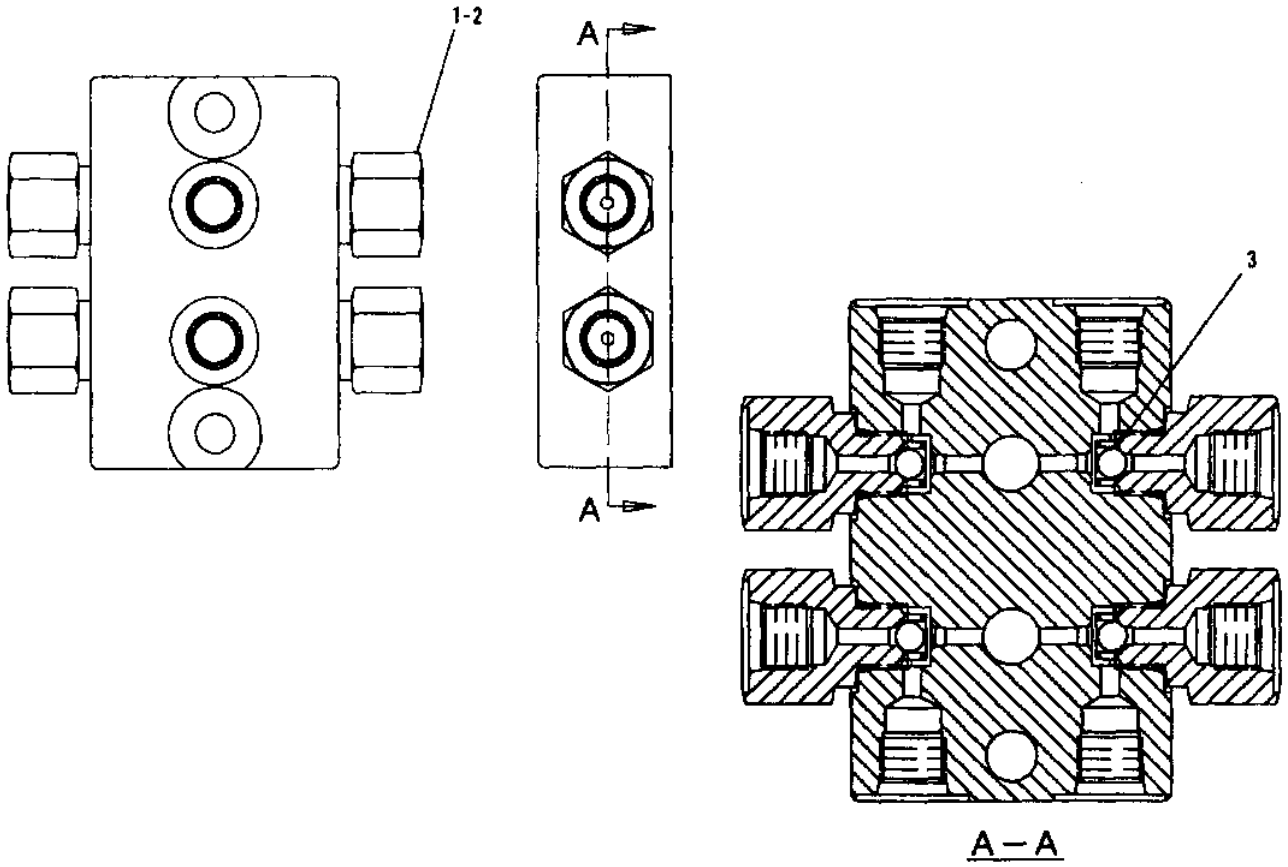


| NOTE | No. | PART No. | QTY | PART NAME | NOTE | No. | PART No. | QTY | PART NAME |
|---|---|---|---|---|---|---|---|---|---|
| | 1 | 112-0085 | 4 | PLUG | | | | | |
| | 2 | 3J-1907 | 4 | SEAL-O-RING (ID=11.89mm) | | | | | |
| | 3 | 2D-6642 | 4 | BALL | | | | | |

H51517E

GRAPHIC #1

# 1232549 VALVE GP-SHUTTLE

PART OF 1136736-Page 305

**Key:**

**SMCS**

| NOTE | REF NO | GRAPHIC REF | PART NUMBER | QTY | PART NAME 1 2 3 4 5 6 (PRODUCT LEVEL) | PRICE USD |
|---|---|---|---|---|---|---|
| | 1 | | 4B-9783 | 1 | BALL | |
| | 2 | | 123-2552 | 2 | CONNECTOR | |
| | 3 | | 3J-1907 | 2 | SEAL-O-RING (ID=11.89mm) | |

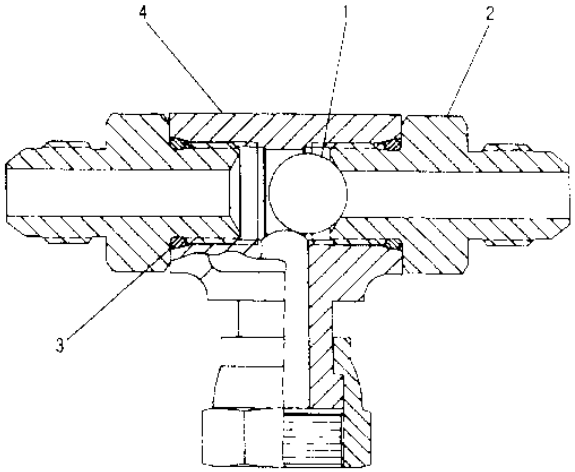


| NOTE No. | PART No. | QTY | PART NAME |
|---|---|---|---|
| 1 | 4B 9783 | 1 | BALL |
| 2 | 123-2552 | 2 | CONNECTOR |
| 3 | 3J-1907 | 2 | SEAL-O-RING (ID=11.89mm) |
| 4 | 123-2511 | 1 | TEE |

H50290E

GRAPHIC #1 h50290e

# 6C6746 VALVE GP

PART OF 1385073-Page 318
1332848-Page 381
AN ATTACHMENT

**Key:** Y - SEE SEPARATE ILLUSTRATION

**SMCS**

| NOTE | REF NO | GRAPHIC REF | PART NUMBER | QTY | PART NAME 1 2 3 4 5 6 (PRODUCT LEVEL) | PRICE USD |
|---|---|---|---|---|---|---|
| | 1 | | 6C-6628 | 1 | BLOCK | |
| | 2 | | 8J-0426 | 1 | PLUG | |
| | 3 | | 7M-8485 | 3 | SEAL-O-RING (ID=29.74mm) | |
| | 4 | | 9S-4191 | 1 | PLUG | |
| | 5 | | 3J-1907 | 1 | SEAL-O-RING (ID=11.89mm) | |
| | 6 | | 9S-4181 | 1 | PLUG | |
| | 7 | | 8J-0324 | 1 | PLUG | |
| | 8 | | 5F-8535 | 1 | SPRING | |
| Y | 9 | | 133-2848 | 1 | VALVE GP | |

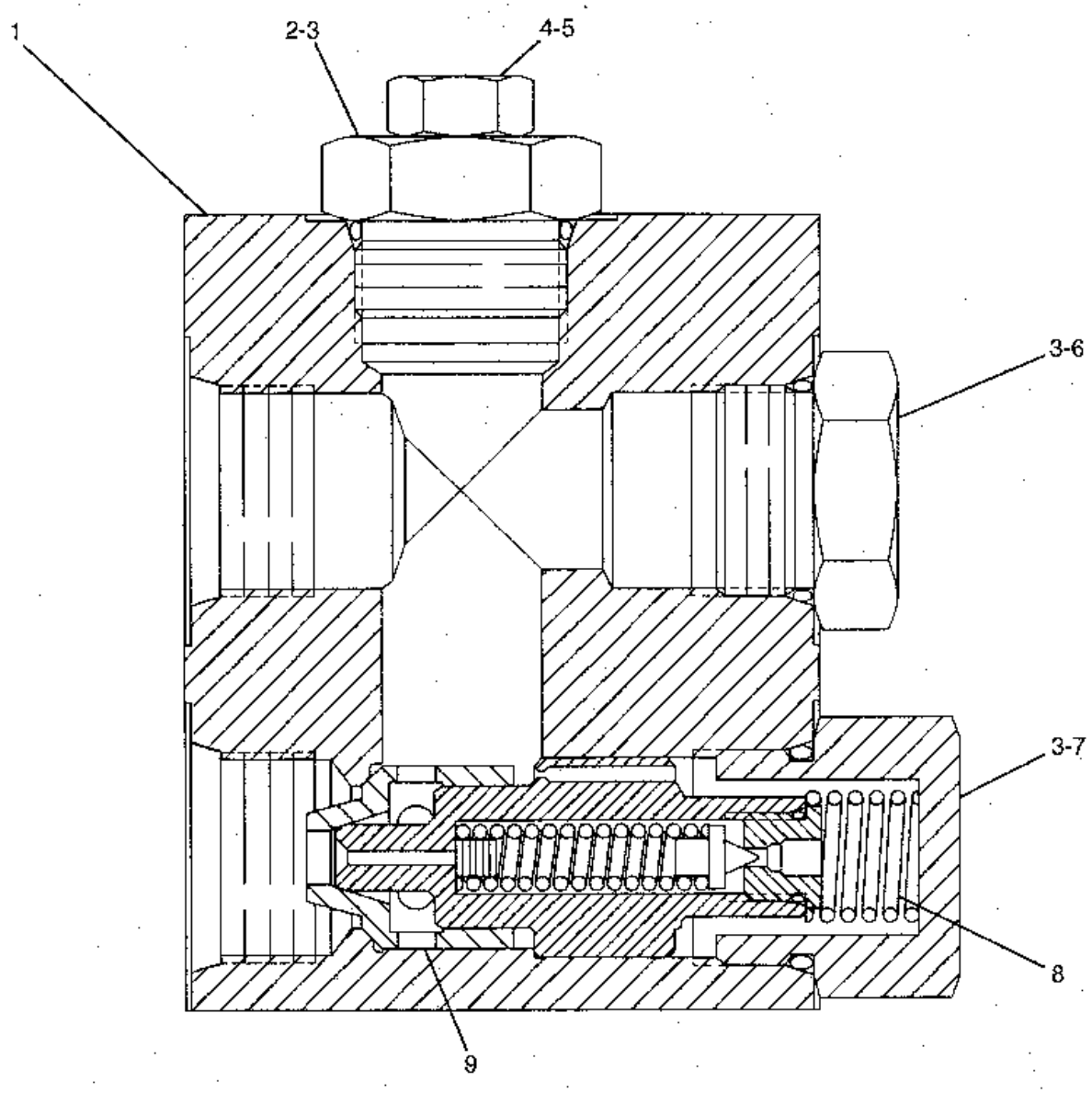


GRAPHIC #1

h79357e

# 1271322 VALVE AS

BOOM
S/N 8SR 1-(D97.01), 8TR 1-(D97.01)
PART OF 1218675-Page 498.01
AN ATTACHMENT

**Key:**

**SMCS**

| NOTE | REF NO | GRAPHIC REF | PART NUMBER | QTY | PART NAME 1 2 3 4 5 6 (PRODUCT LEVEL) | PRICE USD |
|---|---|---|---|---|---|---|
| | 1 | | 123-5580 | 1 | VALVE | |
| | 2 | | 123-5596 | 1 | BLOCK | |
| | 3 | | 118-6058 | 9 | CONNECTOR | |
| | 4 | | 127-1212 | 3 | CONNECTOR | |
| | 5 | | 123-5594 | 1 | CONNECTOR | |
| | 6 | | 123-5595 | 1 | NIPPLE AS | |
| | 7 | | 118-6049 | 1 | PLUG | |
| | 8 | | 118-6050 | 1 | WASHER | |
| | 9 | | 127-1324 | 2 | TUBE AS | |
| | 10 | | 118-6051 | 1 | NUT | |
| | 11 | | 118-6052 | 1 | SLEEVE | |
| | 12 | | 123-5588 | 1 | NUT | |
| | 13 | | 123-5589 | 1 | SLEEVE | |
| | 14 | | 118-6057 | 9 | SLEEVE | |

## 1271322 VALVE AS

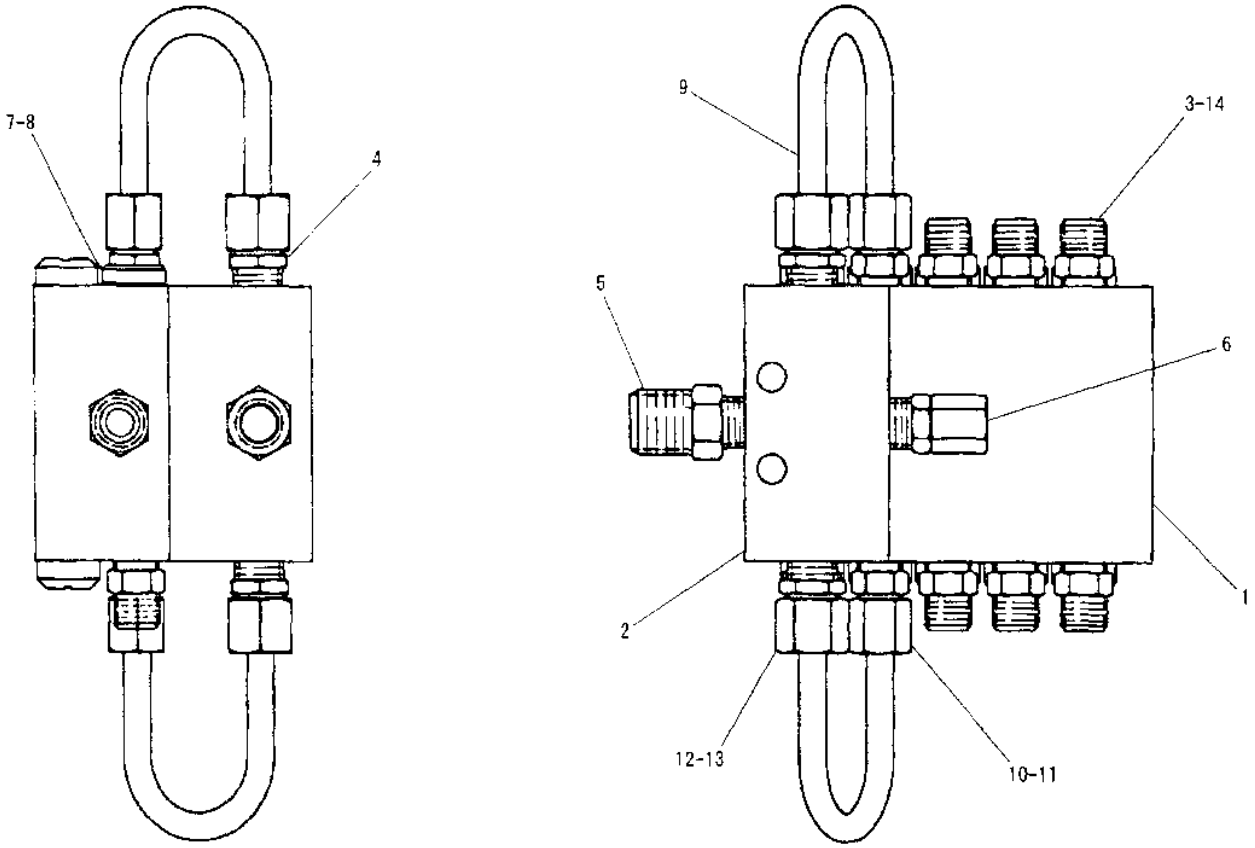


| NOTE | No. | PART No. | QTY | PART NAME |
|---|---|---|---|---|
| | 1 | 123-5580 | 1 | VALVE |
| | 2 | 123-5596 | 1 | BLOCK |
| | 3 | 118-6058 | 9 | CONNECTOR |
| | 4 | 127-1212 | 3 | CONNECTOR |
| | 5 | 123-5594 | 1 | CONNECTOR |
| | 6 | 123-5595 | 1 | NIPPLE AS |
| | 7 | 118-6049 | 1 | PLUG |
| | 8 | 118-6050 | 1 | WASHER |
| | 9 | 127-1324 | 2 | TUBE AS |
| | 10 | 118-6051 | 1 | NUT |
| | 11 | 118-6052 | 1 | SLEEVE |
| | 12 | 123-5588 | 1 | NUT |
| | 13 | 123-5589 | 1 | SLEEVE |
| | 14 | 118-6057 | 9 | SLEEVE |

H50611E

GRAPHIC #1 h50611e

# 1373066 VALVE AS

BOOM
S/N 8SR (D97.02)-UP, 8TR (D97.02)-UP
PART OF 1218675-Page 498.04
1349153-Page 394.04, 1349304-Page 394.05
AN ATTACHMENT

**Key:** Y - SEPARATE ILLUSTRATION

**SMCS**

| NOTE | REF NO | GRAPHIC REF | PART NUMBER | QTY | PART NAME 1 2 3 4 5 6 (PRODUCT LEVEL) | PRICE USD |
|---|---|---|---|---|---|---|
| Y | 1 | | 134-9153 | 1 | VALVE AS | |
| Y | 2 | | 134-9304 | 1 | BLOCK AS | |
| | 3 | | 134-9242 | 3 | TUBE AS | |
| | | | 118-6051 | 2 | NUT | |
| | | | 118-6052 | 2 | SLEEVE | |
| | 4 | | 134-9138 | 1 | CLAMP | |

## 1373066 VALVE AS

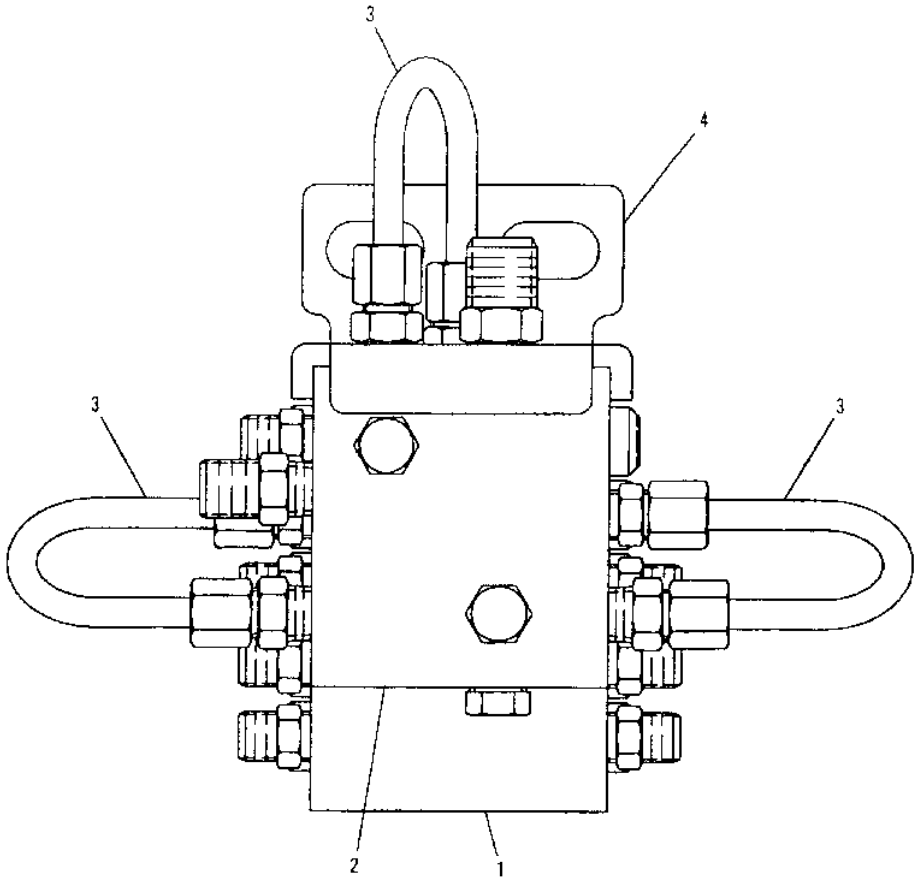


| NOTE | No. | PART No. | QTY | PART NAME |
|---|---|---|---|---|
| Y | 1 | 134-9153 | 1 | VALVE AS |
| Y | 2 | 134-9304 | 1 | BLOCK AS |
| | 3 | 134-9242 | 3 | TUBE AS |
| | | 118-6051 | 2 | NUT |
| | | 118-6052 | 2 | SLEEVE |
| | 4 | 134-9138 | 1 | CLAMP |

| NOTE | No. | PART No. | QTY | PART NAME |
|---|---|---|---|---|

Y-SEE SEPARATE ILLUSTRATION

H58792E

GRAPHIC #1 h58792e

# 1271323 VALVE AS

STICK
PART OF 1218693-Page 498.07
AN ATTACHMENT

**Key:**

**SMCS**

| NOTE | REF NO | GRAPHIC REF | PART NUMBER | QTY | PART NAME 1 2 3 4 5 6 (PRODUCT LEVEL) | PRICE USD |
|---|---|---|---|---|---|---|
| | 1 | | 123-5578 | 1 | VALVE | |
| | 2 | | 156-0760 | 4 | CONNECTOR AS | |
| | 3 | | 118-6049 | 2 | PLUG | |
| | 4 | | 118-6050 | 1 | WASHER | |
| | 5 | | 154-0689 | 1 | CONNECTOR | |

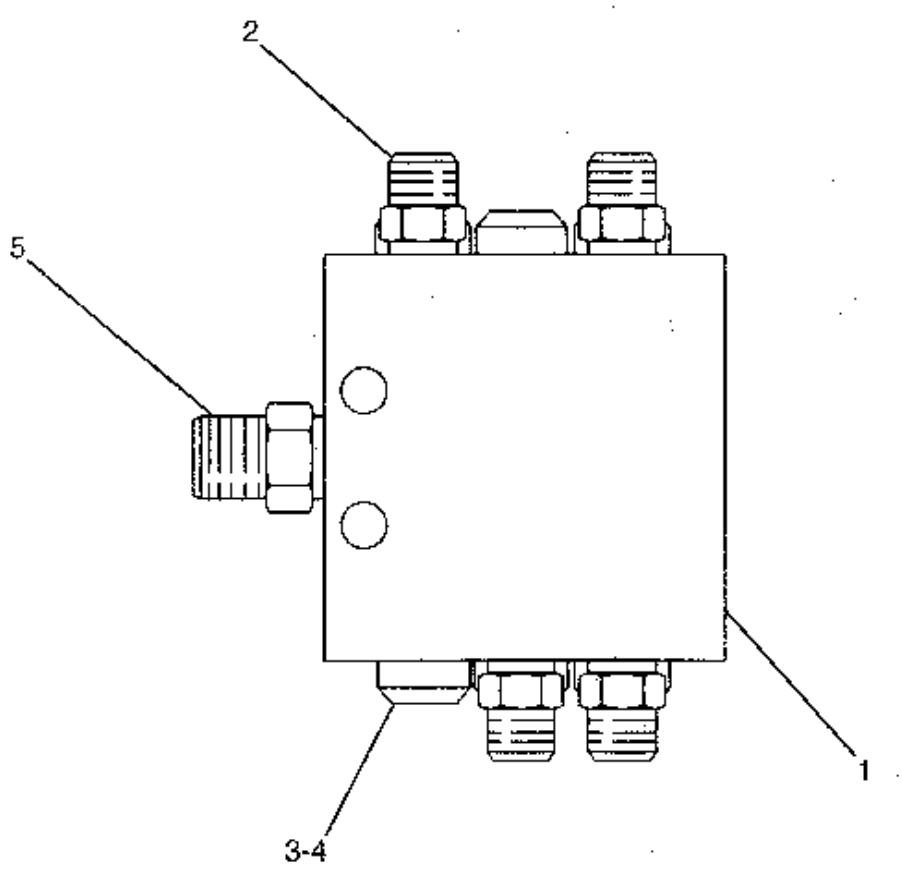


GRAPHIC #1

h74097e

# 1349153 VALVE AS

S/N 8SR (D97.02)-UP, 8TR (D97.02)-UP
PART OF 1373066-Page 394.02
AN ATTACHMENT

**Key:**

**SMCS**

| NOTE | REF NO | GRAPHIC REF | PART NUMBER | QTY | PART NAME 1 2 3 4 5 6 (PRODUCT LEVEL) | PRICE USD |
|---|---|---|---|---|---|---|
| | 1 | | 123-5580 | 1 | VALVE | |
| | 2 | | 134-9247 | 1 | CONNECTOR | |
| | 3 | | 156-0760 | 9 | CONNECTOR AS | |
| | 4 | | 118-6050 | 2 | WASHER | |
| | 5 | | 118-6049 | 1 | PLUG | |

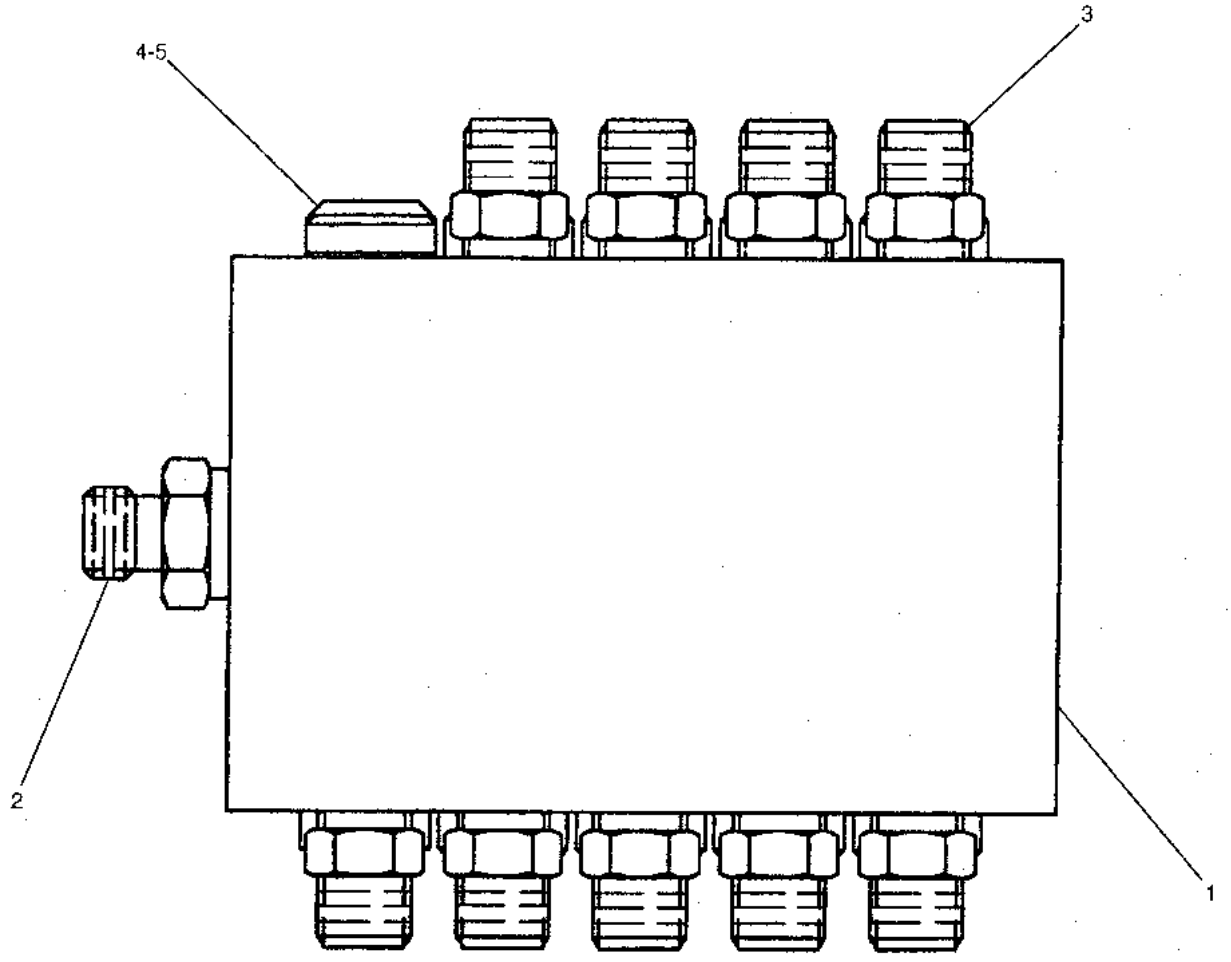


GRAPHIC #1 h74098e

# 1349304 BLOCK AS

S/N 8SR (D97.02)-UP, 8TR (D97.02)-UP
PART OF 1373066-Page 394.02
AN ATTACHMENT

**Key:**

**SMCS**

| NOTE | REF NO | GRAPHIC REF | PART NUMBER | QTY | PART NAME 1 2 3 4 5 6 (PRODUCT LEVEL) | PRICE USD |
|---|---|---|---|---|---|---|
| | 1 | | 134-9152 | 1 | BLOCK | |
| | 2 | | 134-9244 | 3 | CONNECTOR | |
| | 3 | | 127-1212 | 1 | CONNECTOR | |
| | 4 | | 123-5594 | 1 | CONNECTOR | |
| | 5 | | 123-5595 | 2 | NIPPLE AS | |
| | 6 | | 8T-6764 | 1 | PLUG | |

## 1349304 BLOCK AS

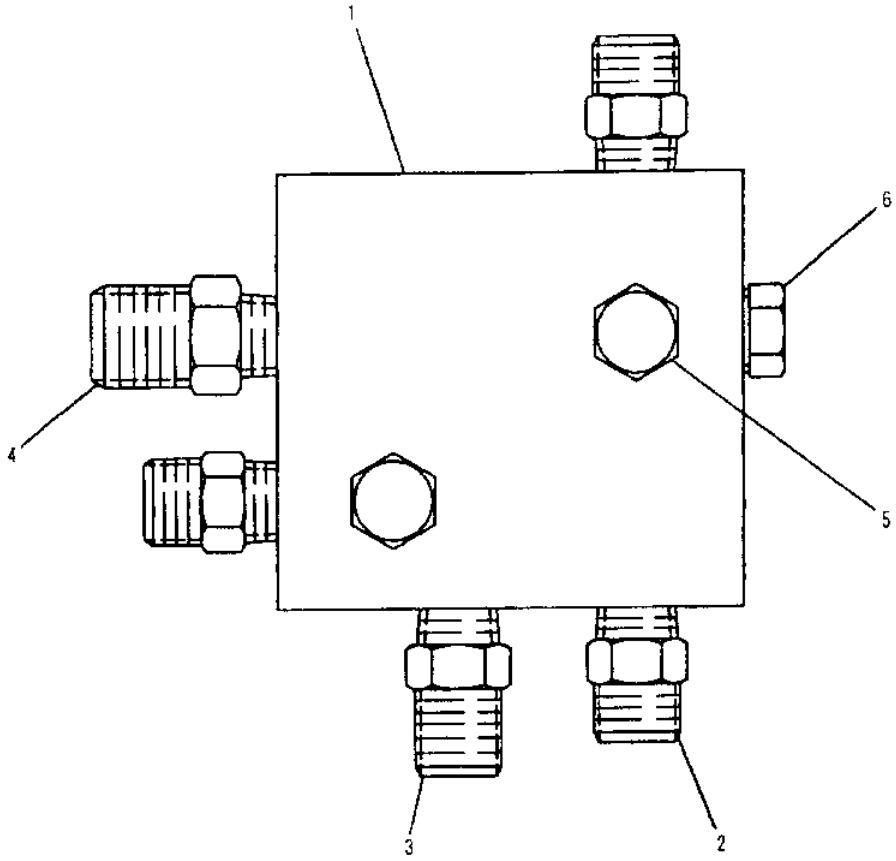


| NOTE | No. | PART No. | QTY | PART NAME |
|---|---|---|---|---|
| | 1 | 134-9152 | 1 | BLOCK |
| | 2 | 134-9244 | 3 | CONNECTOR |
| | 3 | 127-1212 | 1 | CONNECTOR |
| | 4 | 123-5594 | 1 | CONNECTOR |
| | 5 | 123-5595 | 2 | NIPPLE AS |
| | 6 | 8T-6764 | 1 | PLUG |

| NOTE | No. | PART No. | QTY | PART NAME |
|---|---|---|---|---|

H58794E

GRAPHIC #1

h58794e

# 4I6363 VALVE AS-BALL

PART OF 1136832-Page 308, 1136833-Page 313, 1192521-Page 314
AN ATTACHMENT

**Key:**

**SMCS**

| NOTE | REF NO | GRAPHIC REF | PART NUMBER | QTY | PART NAME 1 2 3 4 5 6 (PRODUCT LEVEL) | PRICE USD |
|---|---|---|---|---|---|---|
| | 1 | | 134-7113 | 1 | HANDLE | |
| | 2 | | 134-7111 | 1 | PLATE | |
| | 3 | | 134-7114 | 1 | BOLT | |

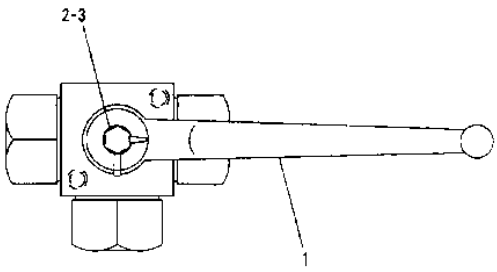


| NOTE | No. | PART No. | QTY | PART NAME |
|---|---|---|---|---|
| | 1 | 134-7113 | 1 | HANDLE |
| | 2 | 134-7111 | 1 | PLATE |
| | 3 | 134 7114 | 1 | BOLT |

H59693E

GRAPHIC #1

h59693e

# 1913149 VALVE AS-BALL

PART OF 1385072-Page 321.02
AN ATTACHMENT

**Key:**

**SMCS**

| NOTE | REF NO | GRAPHIC REF | PART NUMBER | QTY | PART NAME 1 2 3 4 5 6 (PRODUCT LEVEL) | PRICE USD |
|---|---|---|---|---|---|---|
| | 1 | | 6I-6916 | 1 | HANDLE | |
| | 2 | | 191-3200 | 1 | PLATE | |
| | 3 | | 096-6837 | 1 | RING | |
| | 4 | | 153-8748 | 2 | SEAL | |
| | 5 | | 8T-4202 | 2 | SEAL-O-RING (ID=39.40mm) | |
| | 6 | | 191-3199 | 1 | STOPPER | |
| | 7 | | 095-1584 | 1 | SEAL-O-RING (ID=15.80mm) | |
| | 8 | | 095-1783 | 1 | RING | |

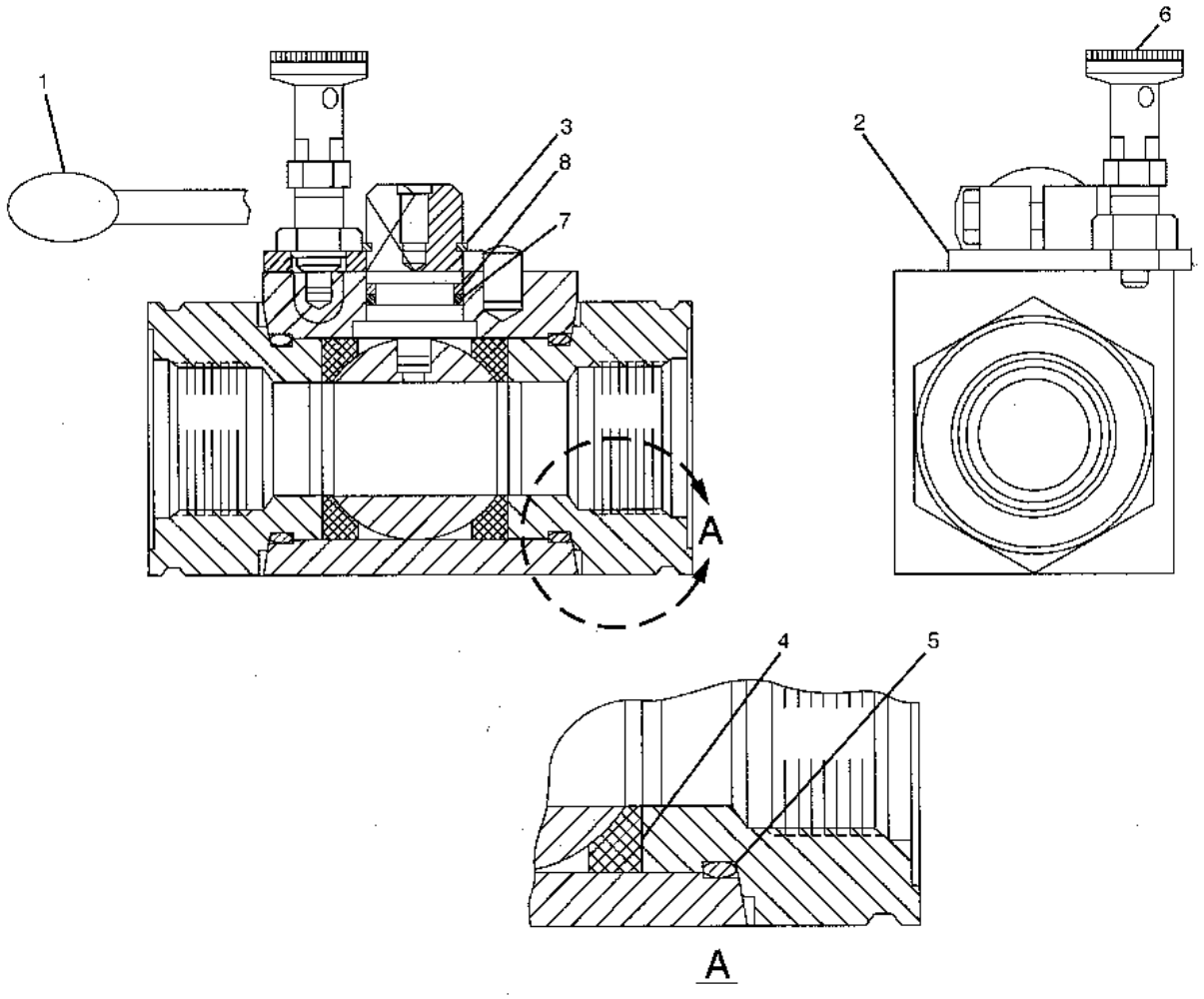


GRAPHIC #1

h75362e

# 1263783 LUBRICATION AR-AUTOMATIC

R BOOM, R3.3D STICK
AN ATTACHMENT

**Key:** Y - Separate Illustration

**SMCS**

| NOTE | REF NO | GRAPHIC REF | PART NUMBER | QTY | PART NAME 1 2 3 4 5 6 (PRODUCT LEVEL) | PRICE USD |
|---|---|---|---|---|---|---|
| Y | | | 120-5003 | 1 | BOOM AR | |
| Y | | | 120-5006 | 1 | STICK AR (HOE) | |
| Y | | | 120-5022 | 1 | LINKAGE AR (BUCKET) | |
| Y | | | 120-5113 | 1 | PUMP GP (LUBRICATION) (AUTO) | |

# 1317670 BOOM AR-1 PIECE LONG

R-BOOM, HIGH TEMP
AN ATTACHMENT

**Key:** Y - Separate Illustration

**SMCS**

| NOTE | REF NO | GRAPHIC REF | PART NUMBER | QTY | PART NAME 1 2 3 4 5 6 (PRODUCT LEVEL) | PRICE USD |
|---|---|---|---|---|---|---|
| Y | | | 131-7671 | 1 | BOOM AR (1 PIECE) | |
| Y | | | 133-6798 | 1 | CYLINDER & LINES GP (BOOM) | |
| Y | | | 133-6799 | 1 | CYLINDER & LINES GP (BOOM) | |
| Y | | | 133-6800 | 1 | CYLINDER & LINES GP (STICK) | |

# 1205003 BOOM AR

R-BOOM, AUTOMATIC LUBRICATION
PART OF 1263783-Page 483.01
AN ATTACHMENT

**Key:** Y - Separate Illustration

**SMCS**

| NOTE | REF NO | GRAPHIC REF | PART NUMBER | QTY | PART NAME 1 2 3 4 5 6 (PRODUCT LEVEL) | PRICE USD |
|---|---|---|---|---|---|---|
| Y | | | 116-3432 | 1 | CYLINDER & LINES GP (BOOM) | |
| Y | | | 116-3433 | 1 | CYLINDER & LINES GP (BOOM) | |
| Y | | | 116-3434 | 1 | CYLINDER & LINES GP (STICK) | |
| Y | | | 121-8674 | 1 | BOOM GP | |
| Y | | | 121-8675 | 1 | LINES GP (GREASE) | |
| Y | | | 113-6846 | 1 | LINES GP (BOOM) | |
| Y | | | 111-4860 | 1 | LIGHTING GP (BOOM) | |

# 1317672 BOOM AR-1 PIECE

M-BOOM, HIGH TEMP
AN ATTACHMENT

**Key:** Y - Separate Illustration

**SMCS**

| NOTE | REF NO | GRAPHIC REF | PART NUMBER | QTY | PART NAME 1 2 3 4 5 6 (PRODUCT LEVEL) | PRICE USD |
|---|---|---|---|---|---|---|
| Y | | | 133-6798 | 1 | CYLINDER & LINES GP (BOOM) | |
| Y | | | 133-6799 | 1 | CYLINDER & LINES GP (BOOM) | |
| Y | | | 133-6800 | 1 | CYLINDER & LINES GP (STICK) | |
| Y | | | 131-7673 | 1 | BOOM AR (1 PIECE) | |
| Y | | | 127-5310 | 1 | FILM SET | |

# 1317671 BOOM AR-1 PIECE

R-BOOM, HIGH TEMP
PART OF 1317670-Page 484
AN ATTACHMENT

**Key:** Y - Separate Illustration

**SMCS**

| NOTE | REF NO | GRAPHIC REF | PART NUMBER | QTY | PART NAME 1 2 3 4 5 6 (PRODUCT LEVEL) | PRICE USD |
|---|---|---|---|---|---|---|
| Y | | | 111-4860 | 1 | LIGHTING GP (BOOM) | |
| Y | | | 113-6846 | 1 | LINES GP (BOOM) | |
| Y | | | 115-2646 | 1 | BOOM GP | |
| Y | | | 115-2649 | 1 | LINES GP (GREASE) | |

# 1317673 BOOM AR-1 PIECE

M-BOOM, HIGH TEMP
PART OF 1317672-Page 485
AN ATTACHMENT

**Key:** Y - Separate Illustration

**SMCS**

| NOTE | REF NO | GRAPHIC REF | PART NUMBER | QTY | PART NAME 1 2 3 4 5 6 (PRODUCT LEVEL) | PRICE USD |
|---|---|---|---|---|---|---|
| Y | | | 111-4860 | 1 | LIGHTING GP (BOOM) | |
| Y | | | 113-6849 | 1 | LINES GP (BOOM) | |
| Y | | | 115-2648 | 1 | BOOM GP | |
| Y | | | 115-2650 | 1 | LINES GP (GREASE) | |

# 1370945 LUBRICATION AR-AUTOMATIC

R-BOOM, R3.3D STICK, HIGH TEMP
AN ATTACHMENT

**Key:** Y - Separate Illustration

**SMCS**

| NOTE | REF NO | GRAPHIC REF | PART NUMBER | QTY | PART NAME 1 2 3 4 5 6 (PRODUCT LEVEL) | PRICE USD |
|---|---|---|---|---|---|---|
| Y | | | 137-0946 | 1 | BOOM AR (1 PIECE LONG) | |
| Y | | | 120-5006 | 1 | STICK AR (HOE) | |
| Y | | | 137-0917 | 1 | LINKAGE AR (BUCKET) | |
| Y | | | 120-5113 | 1 | PUMP GP (LUBRICATION) (AUTO) | |

# 1370946 BOOM AR-1 PIECE LONG

R-BOOM, AUTOMATIC LUBRICATION, HIGH TEMP
PART OF 1370945-Page 485.02
AN ATTACHMENT

**Key:** Y - Separate Illustration

**SMCS**

| NOTE | REF NO | GRAPHIC REF | PART NUMBER | QTY | PART NAME 1 2 3 4 5 6 (PRODUCT LEVEL) | PRICE USD |
|---|---|---|---|---|---|---|
| Y | | | 133-6798 | 1 | CYLINDER & LINES GP (BOOM) | |
| Y | | | 133-6799 | 1 | CYLINDER & LINES GP (BOOM) | |
| Y | | | 133-6800 | 1 | CYLINDER & LINES GP (STICK) | |
| Y | | | 121-8674 | 1 | BOOM GP | |
| Y | | | 121-8675 | 1 | LINES GP (GREASE) | |
| Y | | | 113-6846 | 1 | LINES GP (BOOM) | |
| Y | | | 111-4860 | 1 | LIGHTING GP (BOOM) | |

# 1161480 STICK AR-HOE

R3.9D STICK
AN ATTACHMENT

**Key:** Y - Separate Illustration

**SMCS**

| NOTE | REF NO | GRAPHIC REF | PART NUMBER | QTY | PART NAME 1 2 3 4 5 6 (PRODUCT LEVEL) | PRICE USD |
|---|---|---|---|---|---|---|
| Y | | | 115-2651 | 1 | STICK GP (HOE) | |
| Y | | | 113-6851 | 1 | LINES GP (STICK) | |

# 1161482 STICK AR-HOE

R3.3D STICK
AN ATTACHMENT

**Key:** Y - Separate Illustration

**SMCS**

| NOTE | REF NO | GRAPHIC REF | PART NUMBER | QTY | PART NAME 1 2 3 4 5 6 (PRODUCT LEVEL) | PRICE USD |
|---|---|---|---|---|---|---|
| Y | | | 115-2652 | 1 | STICK GP (HOE) | |
| Y | | | 113-6853 | 1 | LINES GP (STICK) | |

# 1205006 STICK AR-HOE

R3.3D STICK, AUTOMATIC LUBRICATION
PART OF 1263783-Page 483.01, 1370945-Page 485.02
AN ATTACHMENT

**Key:** Y - Separate Illustration

**SMCS**

| NOTE | REF NO | GRAPHIC REF | PART NUMBER | QTY | PART NAME 1 2 3 4 5 6 (PRODUCT LEVEL) | PRICE USD |
|---|---|---|---|---|---|---|
| Y | | | 121-8692 | 1 | STICK GP (HOE) | |
| Y | | | 113-6853 | 1 | LINES GP (STICK) | |
| Y | | | 121-8693 | 1 | LINES GP (GREASE) | |

# 1161488 STICK AR-HOE

M2.55E STICK
AN ATTACHMENT

**Key:** Y - Separate Illustration

**SMCS**

| NOTE | REF NO | GRAPHIC REF | PART NUMBER | QTY | PART NAME 1 2 3 4 5 6 (PRODUCT LEVEL) | PRICE USD |
|---|---|---|---|---|---|---|
| Y | | | 115-2655 | 1 | STICK GP (HOE) | |
| Y | | | 113-6859 | 1 | LINES GP (STICK) | |

# 1161484 STICK AR-HOE

R2.8D STICK
AN ATTACHMENT

**Key:** Y - Separate Illustration

**SMCS**

| NOTE | REF NO | GRAPHIC REF | PART NUMBER | QTY | PART NAME 1 2 3 4 5 6 (PRODUCT LEVEL) | PRICE USD |
|---|---|---|---|---|---|---|
| Y | | | 115-2653 | 1 | STICK GP (HOE) | |
| Y | | | 113-6855 | 1 | LINES GP (STICK) | |

# 1205022 LINKAGE AR-BUCKET

D FAMILY, AUTOMATIC LUBRICATION
PART OF 1263783-Page 483.01
AN ATTACHMENT

**Key:** Y - Separate Illustration

**SMCS**

| NOTE | REF NO | GRAPHIC REF | PART NUMBER | QTY | PART NAME 1 2 3 4 5 6 (PRODUCT LEVEL) | PRICE USD |
|---|---|---|---|---|---|---|
| Y | | | 116-3435 | 1 | CYLINDER & LINES GP (BUCKET) | |
| Y | | | 133-2435 | 1 | LINKAGE GP (BUCKET) | |

# 1370918 LINKAGE AR-BUCKET

E FAMILY, HIGH TEMP
AN ATTACHMENT

**Key:** Y - Separate Illustration

**SMCS**

| NOTE | REF NO | GRAPHIC REF | PART NUMBER | QTY | PART NAME 1 2 3 4 5 6 (PRODUCT LEVEL) | PRICE USD |
|---|---|---|---|---|---|---|
| Y | | | 133-2442 | 1 | LINKAGE GP (BUCKET) | |
| Y | | | 133-6802 | 1 | CYLINDER & LINES GP (BUCKET) | |

# 1370917 LINKAGE AR-BUCKET

D FAMILY, AUTOMATIC LUBRICATION, HIGH TEMP
PART OF 1370945-Page 485.02
AN ATTACHMENT

**Key:** Y - Separate Illustration

**SMCS**

| NOTE | REF NO | GRAPHIC REF | PART NUMBER | QTY | PART NAME 1 2 3 4 5 6 (PRODUCT LEVEL) | PRICE USD |
|---|---|---|---|---|---|---|
| Y | | | 133-2435 | 1 | LINKAGE GP (BUCKET) | |
| Y | | | 133-6801 | 1 | CYLINDER & LINES GP (BUCKET) | |

# 1152646 BOOM GP

R-BOOM (6.5M)
PART OF 1317671-Page 485.01
AN ATTACHMENT

**Key:** B - USE AS REQUIRED

**SMCS**

| NOTE | REF NO | GRAPHIC REF | PART NUMBER | QTY | PART NAME 1 2 3 4 5 6 (PRODUCT LEVEL) | PRICE USD |
|---|---|---|---|---|---|---|
| | 1 | | 117-5470 | 1 | BOOM AS | |
| | 2 | | 137-2821 | 2 | BEARING | |
| | 3 | | 4I-3723 | 2 | PLATE | |
| | 4 | | 7Y-2579 | 2 | BAR | |
| | 5 | | 087-5841 | 5 | PLATE | |
| | 6 | | 113-2276 | 1 | MANIFOLD | |
| | 7 | | 093-0364 | 2 | SPACER | |
| B | 8 | | 093-0084 | 2 | SHIM (T=1.0mm) | |
| B | | | 093-0116 | 1 | SHIM (T=2.0mm) | |
| B | | | 133-2426 | 1 | SHIM (T=0.5mm) | |
| | 9 | | 8T-4780 | 2 | BOLT (L=30mm) | |
| | 10 | | 093-0349 | 2 | WASHER (OD=60mm) | |
| | 11 | | 8T-4123 | 2 | WASHER-HARD (OD=35mm) | |
| | 12 | | 113-2963 | 1 | PIN AS | |
| | 13 | | 093-0366 | 1 | SPACER | |
| B | 14 | | 093-0090 | 2 | SHIM (T=1.0mm) | |
| B | | | 093-0122 | 1 | SHIM (T=2.0mm) | |
| B | | | 133-2427 | 1 | SHIM (T=0.5mm) | |
| | 15 | | 113-2966 | 1 | PIN AS | |
| | 16 | | 9X-4598 | 2 | SEAL | |
| | 17 | | 3B-8489 | 1 | FITTING | |
| | 18 | | 8T-6764 | 1 | PLUG | |
| | 19 | | 087-6372 | 1 | PIN | |
| | 20 | | 077-6444 | 2 | PLATE | |
| | 21 | | 8T-7338 | 6 | BOLT (L=45mm) | |
| | 22 | | 9X-8257 | 6 | WASHER | |

## 1152646 BOOM GP

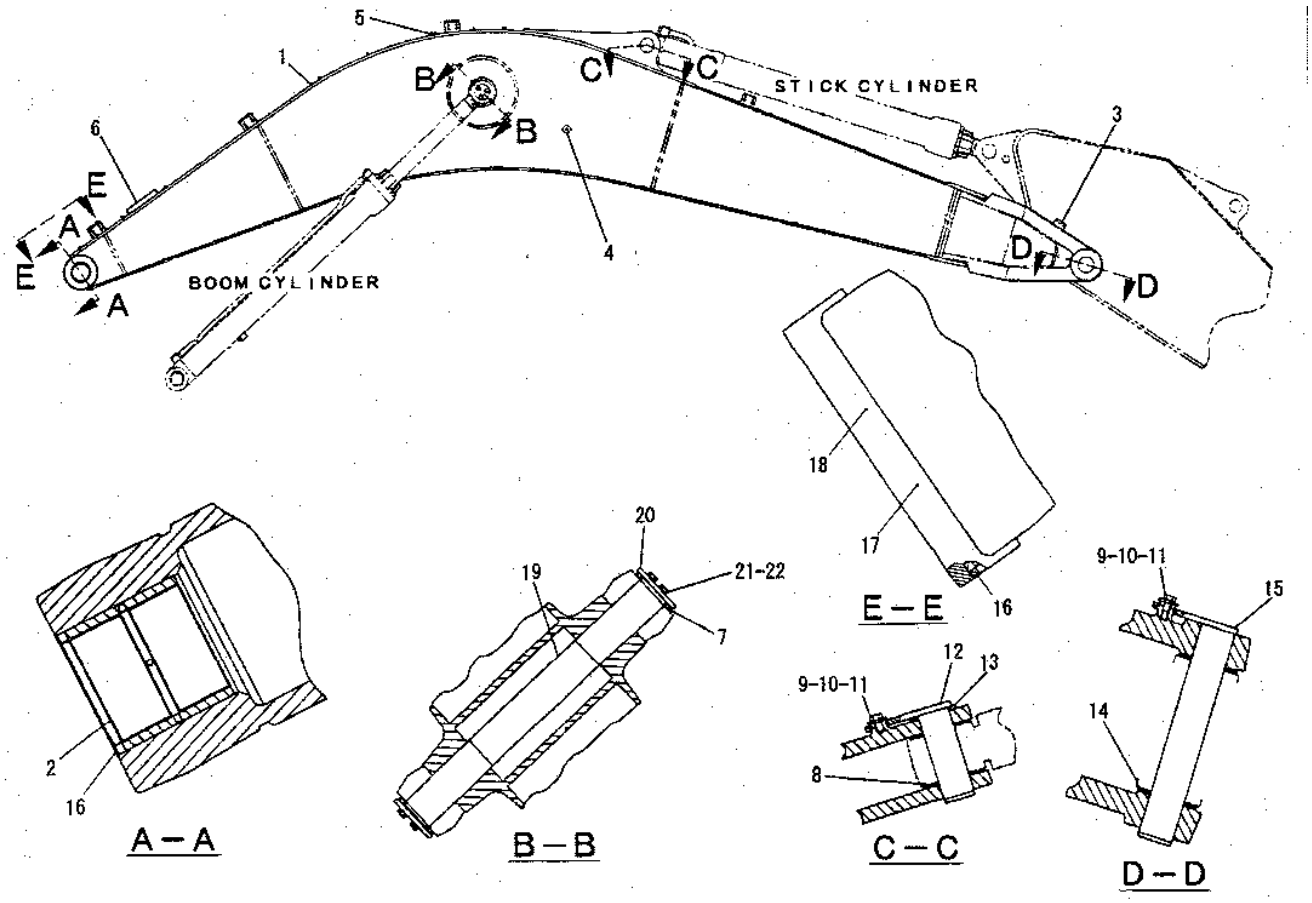


| NOTE | No. | PART No. | QTY | PART NAME | NOTE | No. | PART No. | QTY | PART NAME |
|---|---|---|---|---|---|---|---|---|---|
| | 1 | 117-5470 | 1 | BOOM AS | | 17 | 3B-8489 | 1 | FITTING |
| | 2 | 137-2821 | 2 | BEARING | | 18 | 8T-6764 | 1 | PLUG |
| | 3 | 4I-3723 | 2 | PLATE | | 19 | 087-6372 | 1 | PIN |
| | 4 | 7Y-2579 | 2 | BAR | | 20 | 087-6444 | 2 | PLATE |
| | 5 | 087-5841 | 5 | PLATE | | 21 | 8T-7338 | 6 | BOLT (L=45mm) |
| | 6 | 113-2276 | 1 | MANIFOLD | | 22 | 9X-8257 | 6 | WASHER |
| | 7 | 093-0364 | 2 | SPACER | | | | | |
| B | 8 | 093-0084 | 2 | SHIM (T=1.0mm) | | | | | |
| B | | 093-0116 | 1 | SHIM (T=2.0mm) | | | | | |
| B | | 133-2426 | 1 | SHIM (T=0.5mm) | | | | | |
| | 9 | 8T-4780 | 2 | BOLT (L=30mm) | | | | | |
| | 10 | 093-0349 | 2 | WASHER (OD=60mm) | | | | | |
| | 11 | 8T-4123 | 2 | WASHER-HARD (OD=35mm) | | | | | |
| | 12 | 113-2963 | 1 | PIN AS | | | | | |
| | 13 | 093-0366 | 1 | SPACER | | | | | |
| B | 14 | 093-0090 | 2 | SHIM (T=1.0mm) | | | | | |
| B | | 093-0122 | 1 | SHIM (T=2.0mm) | | | | | |
| B | | 133-2427 | 1 | SHIM (T=0.5mm) | | | | | |
| | 15 | 113-2966 | 1 | PIN AS | | | | | |
| | 16 | 9X-4598 | 2 | SEAL | | | | | |

B-USE AS REQUIRED

H56401E

# 1218674 BOOM GP

R-BOOM (6.5M) AUTOMATIC LUBRICATION
PART OF 1205003-Page 484, 1370946-Page 458.02
AN ATTACHMENT

**Key:** B - USE AS REQUIRED

**SMCS**

| NOTE | REF NO | GRAPHIC REF | PART NUMBER | QTY | PART NAME 1 2 3 4 5 6 (PRODUCT LEVEL) | PRICE USD |
|---|---|---|---|---|---|---|
| | 1 | | 128-9993 | 1 | BOOM AS | |
| | 2 | | 128-9885 | 2 | BEARING | |
| | 3 | | 4I-3723 | 2 | PLATE | |
| | 4 | | 123-5577 | 1 | BLOCK | |
| | 5 | | 9R-3924 | 2 | BOSS | |
| | 6 | | 9R-2821 | 5 | BOSS | |
| | 7 | | 123-5575 | 1 | BLOCK | |
| | 8 | | 123-5581 | 1 | PLATE | |
| | 9 | | 8T-4780 | 2 | BOLT (L=30mm) | |
| | 10 | | 093-0349 | 2 | WASHER (OD=60mm) | |
| | 11 | | 8T-4123 | 2 | WASHER-HARD (OD=35mm) | |
| | 12 | | 113-2963 | 1 | PIN AS | |
| | 13 | | 093-0366 | 1 | SPACER | |
| B | 14 | | 093-0090 | 2 | SHIM (T=1.0mm) | |
| B | | | 133-2427 | 1 | SHIM (T=0.5mm) | |
| B | | | 093-0122 | 1 | SHIM (T=2.0mm) | |
| | 15 | | 113-2966 | 1 | PIN AS | |
| | 16 | | 9X-4598 | 2 | SEAL | |
| | 17 | | 3B-8489 | 1 | FITTING | |
| | 18 | | 8T-6764 | 1 | PLUG | |
| | 19 | | 087-6372 | 1 | PIN | |
| | 20 | | 087-6444 | 2 | PLATE | |
| | 21 | | 8T-7338 | 6 | BOLT (L=45mm) | |
| | 22 | | 9X-8257 | 6 | WASHER | |
| | 23 | | 093-0364 | 2 | SPACER | |
| B | 24 | | 093-0084 | 2 | SHIM (T=1.0mm) | |
| B | | | 113-2127 | 1 | SHIM (T=0.5mm) | |
| B | | | 093-0116 | 1 | SHIM (T=2.0mm) | |

## 1218674 BOOM GP

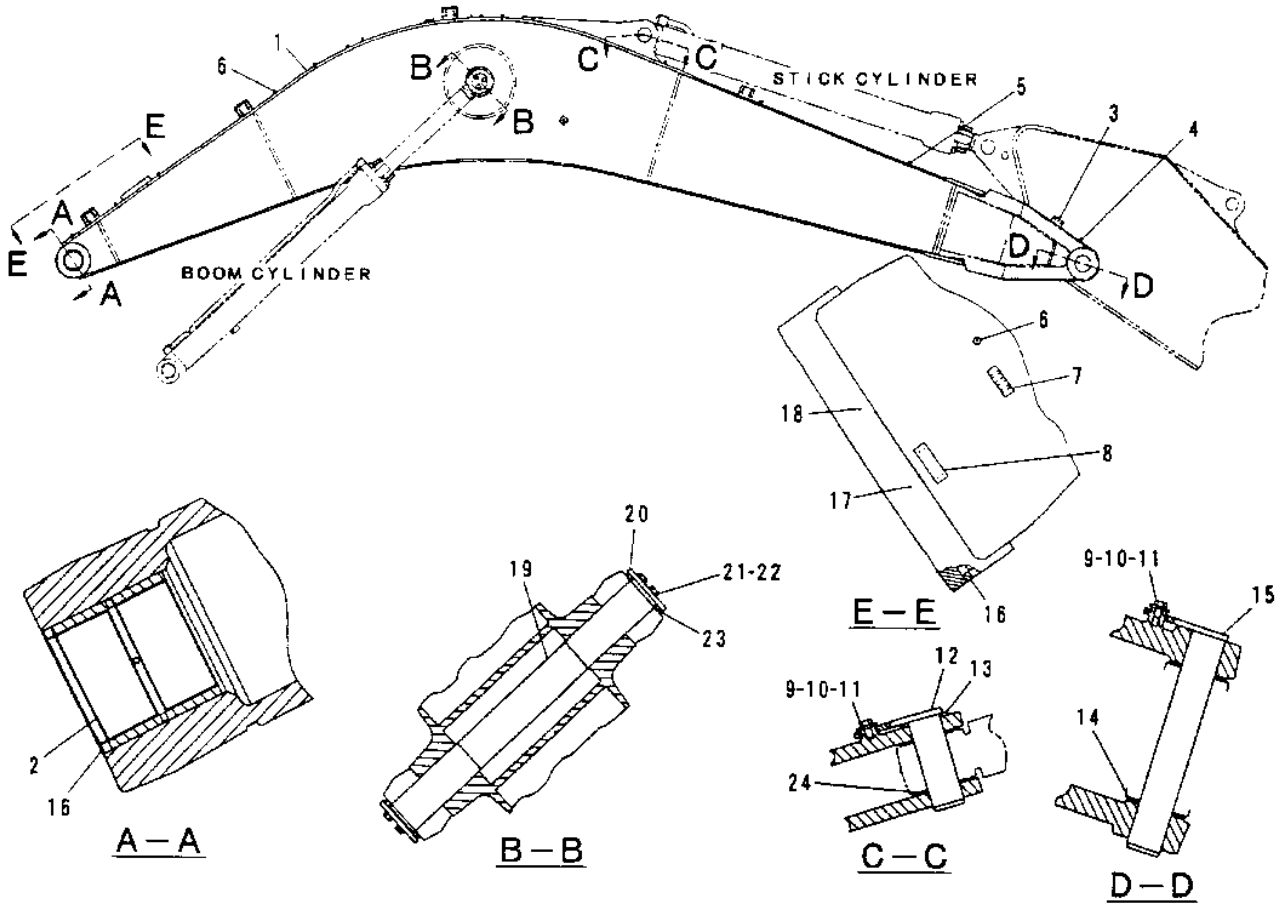


| NOTE | No. | PART No. | QTY | PART NAME |
|---|---|---|---|---|
| | 1 | 128-9993 | 1 | BOOM AS |
| | 2 | 128-9885 | 2 | BEARING |
| | 3 | 4I-3723 | 2 | PLATE |
| | 4 | 123-5577 | 1 | BLOCK |
| | 5 | 9R-3924 | 2 | BOSS |
| | 6 | 9R-2821 | 5 | BOSS |
| | 7 | 123-5575 | 1 | BLOCK |
| | 8 | 123-5581 | 1 | PLATE |
| | 9 | 8T-4780 | 2 | BOLT (L=30mm) |
| | 10 | 093-0349 | 2 | WASHER (OD=60mm) |
| | 11 | 8T-4123 | 2 | WASHER-HARD (OD=35mm) |
| | 12 | 113-2963 | 1 | PIN AS |
| | 13 | 093-0366 | 1 | SPACER |
| B | 14 | 093-0090 | 2 | SHIM (T=1.0mm) |
| B | | 133-2427 | 1 | SHIM (T=0.5mm) |
| B | | 093-0122 | 1 | SHIM (T=2.0mm) |
| | 15 | 113-2966 | 1 | PIN AS |
| | 16 | 9X-4598 | 2 | SEAL |
| | 17 | 3B-8489 | 1 | FITTING |
| | 18 | 8T-6764 | 1 | PLUG |
| | 19 | 087-6372 | 1 | PIN |
| | 20 | 087-6444 | 2 | PLATE |
| | 21 | 8T-7338 | 6 | BOLT (L=45mm) |
| | 22 | 9X-8257 | 6 | WASHER |
| | 23 | 093-0364 | 2 | SPACER |
| B | 24 | 093-0084 | 2 | SHIM (T=1.0mm) |
| B | | 113-2127 | 1 | SHIM (T=0.5mm) |
| B | | 093-0116 | 1 | SHIM (T=2.0mm) |

B-USE AS REQUIRED

H58880E

# 1152648 BOOM GP

M-BOOM (6.18M)
PART OF 1317673-Page 485.01
AN ATTACHMENT

**Key:** B - USE AS REQUIRED

**SMCS**

| NOTE | REF NO | GRAPHIC REF | PART NUMBER | QTY | PART NAME 1 2 3 4 5 6 (PRODUCT LEVEL) | PRICE USD |
|---|---|---|---|---|---|---|
| | 1 | | 117-5572 | 1 | BOOM AS | |
| | 2 | | 137-2821 | 2 | BEARING | |
| | 3 | | 4I-3723 | 2 | PLATE | |
| | 4 | | 7Y-2579 | 2 | BAR | |
| | 5 | | 087-5841 | 3 | PLATE | |
| | 6 | | 113-2276 | 1 | MANIFOLD | |
| | 7 | | 093-0364 | 2 | SPACER | |
| | 8 | | 7X-2573 | 1 | BOLT (L=40mm) | |
| | 9 | | 4I-3183 | 1 | WASHER | |
| | 10 | | 8T-4167 | 1 | WASHER | |
| | 11 | | 5I-3301 | 1 | PIN AS | |
| B | 12 | | 4I-0575 | 2 | SHIM (T=1.00mm) | |
| B | | | 4I-0577 | 1 | SHIM (T=2.00mm) | |
| B | | | 133-2428 | 1 | SHIM (T=0.50mm) | |
| | 13 | | 093-0366 | 1 | SPACER | |
| | 14 | | 113-2963 | 1 | PIN AS | |
| | 15 | | 8T-4780 | 1 | BOLT (L=30mm) | |
| | 16 | | 093-0349 | 1 | WASHER | |
| | 17 | | 8T-4123 | 1 | WASHER | |
| B | 18 | | 093-0084 | 2 | SHIM (T=1.00mm) | |
| B | | | 093-0116 | 1 | SHIM (T=2.00mm) | |
| B | | | 133-2426 | 1 | SHIM (T=0.50mm) | |
| | 19 | | 9X-4598 | 2 | SEAL | |
| | 20 | | 3B-8489 | 1 | FITTING | |
| | 21 | | 8T-6764 | 1 | PLUG | |
| | 22 | | 087-6372 | 1 | PIN | |
| | 23 | | 087-6444 | 2 | PLATE | |
| | 24 | | 8T-7338 | 6 | BOLT (L=45mm) | |
| | 25 | | 9X-8257 | 6 | WASHER | |

## 1152648 BOOM GP

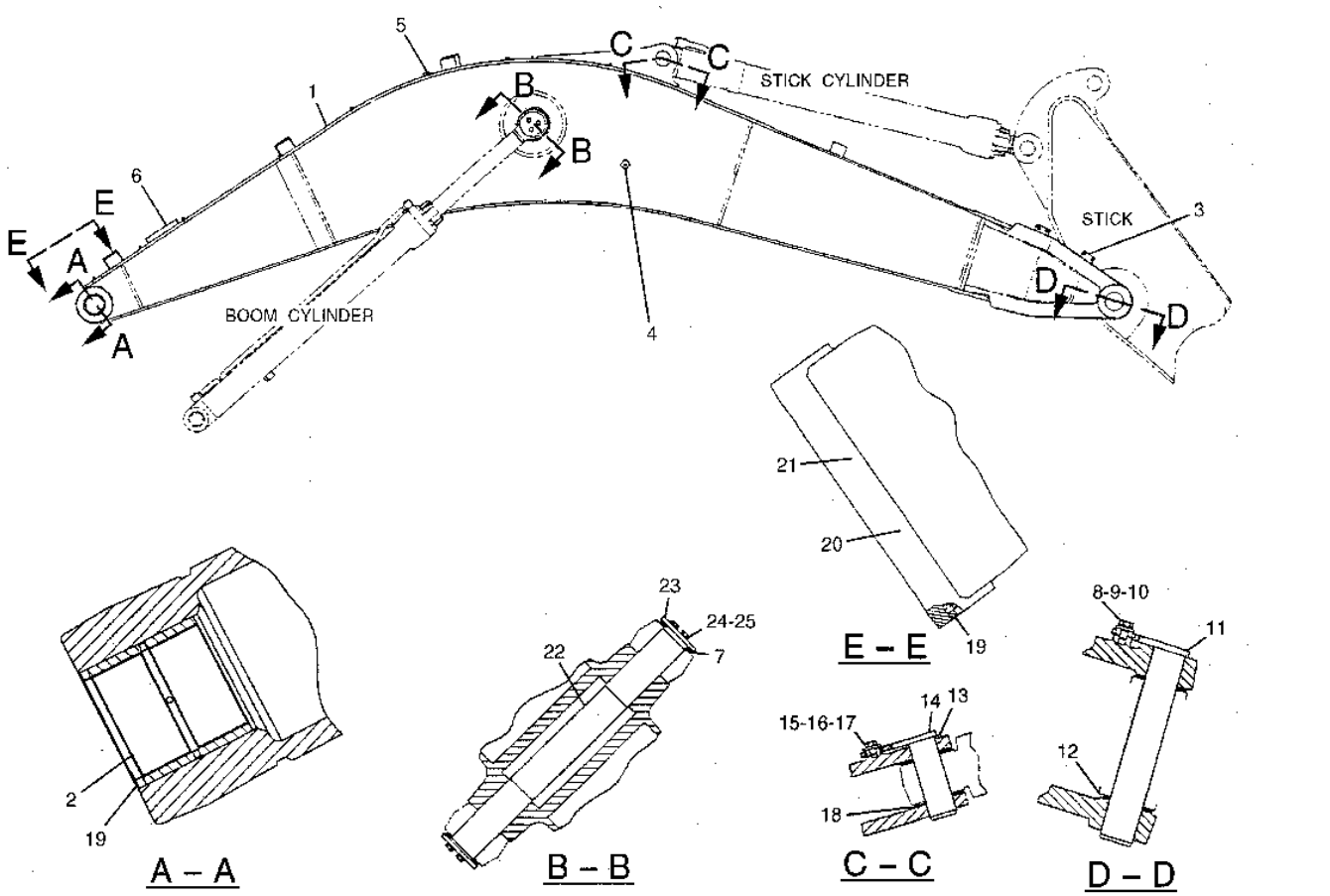


GRAPHIC #1

h79368e

# 1152651 STICK GP-HOE

R3.9D STICK
PART OF 1161480-Page 486
AN ATTACHMENT

**Key:** B - USE AS REQUIRED

**SMCS**

| NOTE | REF NO | GRAPHIC REF | PART NUMBER | QTY | PART NAME 1 2 3 4 5 6 (PRODUCT LEVEL) | PRICE USD |
|---|---|---|---|---|---|---|
| | 1 | | 8T-4780 | 2 | BOLT (L=30mm) | |
| | 2 | | 093-0349 | 2 | WASHER (OD=60mm) | |
| | 3 | | 8T-4123 | 2 | WASHER-HARD (OD=35mm) | |
| | 4 | | 5I-3299 | 1 | PIN AS | |
| | 5 | | 093-0363 | 1 | SPACER | |
| B | 6 | | 093-0083 | 2 | SHIM (T=1.0mm) | |
| B | | | 093-0115 | 1 | SHIM (T=2.0mm) | |
| B | | | 133-2425 | 1 | SHIM (T=0.5mm) | |
| | 7 | | 127-1197 | 1 | STICK AS | |
| | 8 | | 137-2819 | 2 | BEARING | |
| | 9 | | 7Y-3551 | 2 | BEARING | |
| | 10 | | 137-2817 | 2 | BEARING | |
| | 11 | | 3B-8489 | 3 | FITTING | |
| | 12 | | 7X-4803 | 2 | SEAL | |
| | 13 | | 093-1434 | 2 | SEAL | |
| | 14 | | 9X-4597 | 2 | SEAL | |
| | 15 | | 093-0366 | 1 | SPACER | |
| | 16 | | 113-2963 | 1 | PIN AS | |
| B | 17 | | 093-0084 | 2 | SHIM (T=1.0mm) | |
| B | | | 093-0116 | 1 | SHIM (T=2.0mm) | |
| B | | | 113-2127 | 1 | SHIM (T=0.5mm) | |

## 1152651 STICK GP-HOE

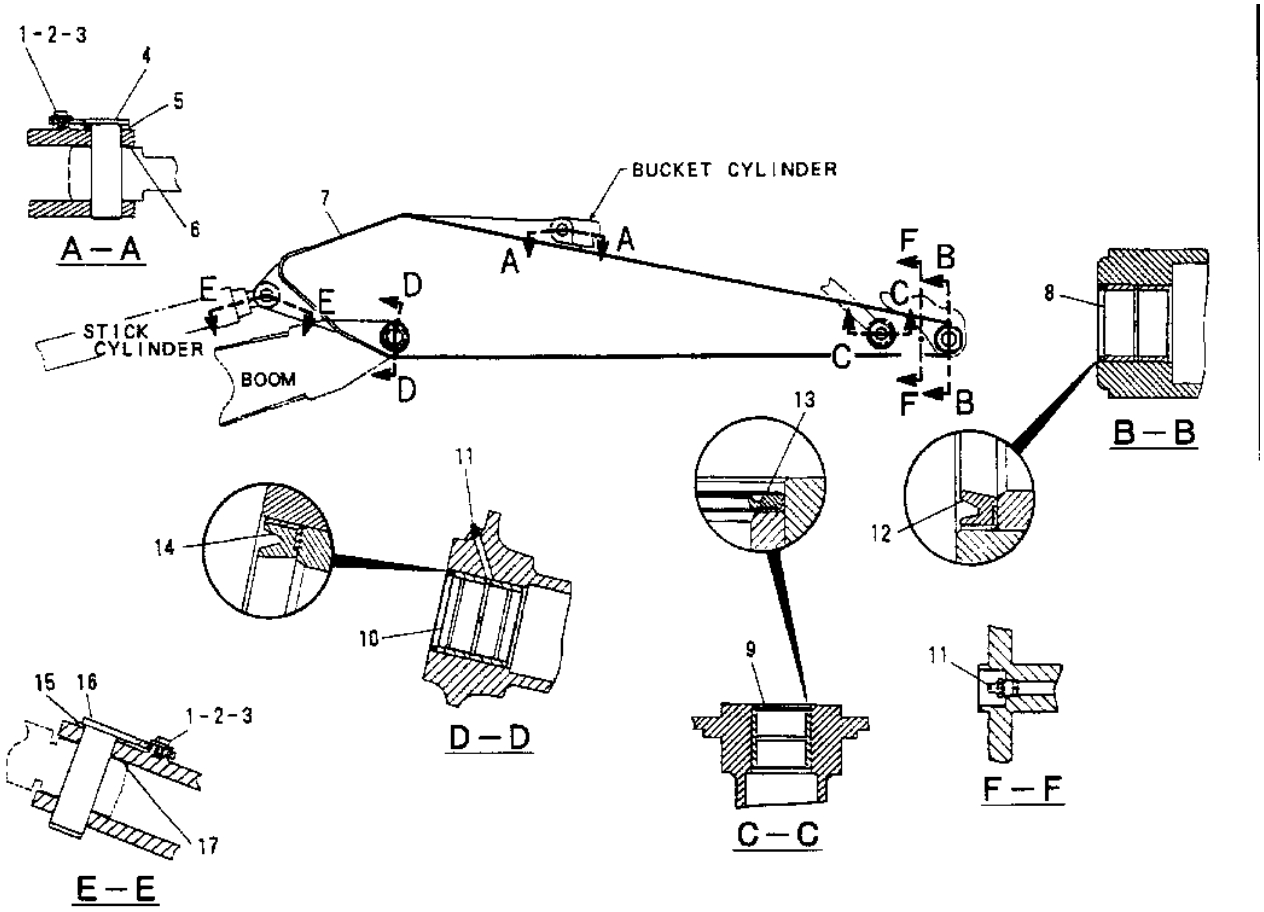


| NOTE | No. | PART No. | QTY | PART NAME |
|---|---|---|---|---|
| | 1 | 8T-4780 | 2 | BOLT (L=30mm) |
| | 2 | 093-0349 | 2 | WASHER (OD=60mm) |
| | 3 | 8T-4123 | 2 | WASHER-HARD (OD=35mm) |
| | 4 | 5I-3299 | 1 | PIN AS |
| | 5 | 093-0363 | 1 | SPACER |
| B | 6 | 093-0083 | 2 | SHIM (T=1.0mm) |
| B | | 093-0115 | 1 | SHIM (T=2.0mm) |
| B | | 133-2425 | 1 | SHIM (T=0.5mm) |
| | 7 | 127-1197 | 1 | STICK AS |
| | 8 | 137-2819 | 2 | BEARING |
| | 9 | 7Y-3551 | 2 | BEARING |
| | 10 | 137-2817 | 2 | BEARING |
| | 11 | 3B-8489 | 3 | FITTING |
| | 12 | 7X-4803 | 2 | SEAL |
| | 13 | 093-1434 | 2 | SEAL |
| | 14 | 9X-4597 | 2 | SEAL |
| | 15 | 093-0366 | 1 | SPACER |
| | 16 | 113-2963 | 1 | PIN AS |
| B | 17 | 093-0084 | 2 | SHIM (T=1.0mm) |
| B | | 093-0116 | 1 | SHIM (T=2.0mm) |
| B | | 113-2127 | 1 | SHIM (T=0.5mm) |

B—USE AS REQUIRED

H58807E

# 1152652 STICK GP-HOE

R3.3D STICK
PART OF 1161482-Page 487
AN ATTACHMENT

**Key:** B - USE AS REQUIRED

**SMCS**

| NOTE | REF NO | GRAPHIC REF | PART NUMBER | QTY | PART NAME 1 2 3 4 5 6 (PRODUCT LEVEL) | PRICE USD |
|---|---|---|---|---|---|---|
| | 1 | | 8T-4780 | 1 | BOLT (L=30mm) | |
| | 2 | | 8T-4123 | 2 | WASHER | |
| | 3 | | 093-0349 | 2 | WASHER | |
| | 4 | | 5I-3299 | 1 | PIN AS | |
| | 5 | | 093-0363 | 1 | SPACER | |
| B | 6 | | 093-0083 | 2 | SHIM (T=1.00mm) | |
| B | | | 133-2425 | 1 | SHIM (T=0.50mm) | |
| B | | | 093-0115 | 1 | SHIM (T=2.00mm) | |
| | 7 | | 117-5471 | 1 | STICK AS | |
| | 8 | | 137-2819 | 2 | BEARING | |
| | 9 | | 7Y-3551 | 2 | BEARING | |
| | 10 | | 137-2817 | 2 | BEARING | |
| | 11 | | 3B-8489 | 3 | FITTING | |
| | 12 | | 7X-4803 | 2 | SEAL | |
| | 13 | | 093-1434 | 2 | SEAL | |
| | 14 | | 9X-4597 | 2 | SEAL | |
| | 15 | | 093-0366 | 1 | SPACER | |
| | 16 | | 113-2963 | 1 | PIN AS | |
| B | 17 | | 093-0084 | 2 | SHIM (T=1.00mm) | |
| B | | | 093-0116 | 1 | SHIM (T=2.00mm) | |
| B | | | 113-2127 | 1 | SHIM (T=0.50mm) | |

## 1152652 STICK GP-HOE

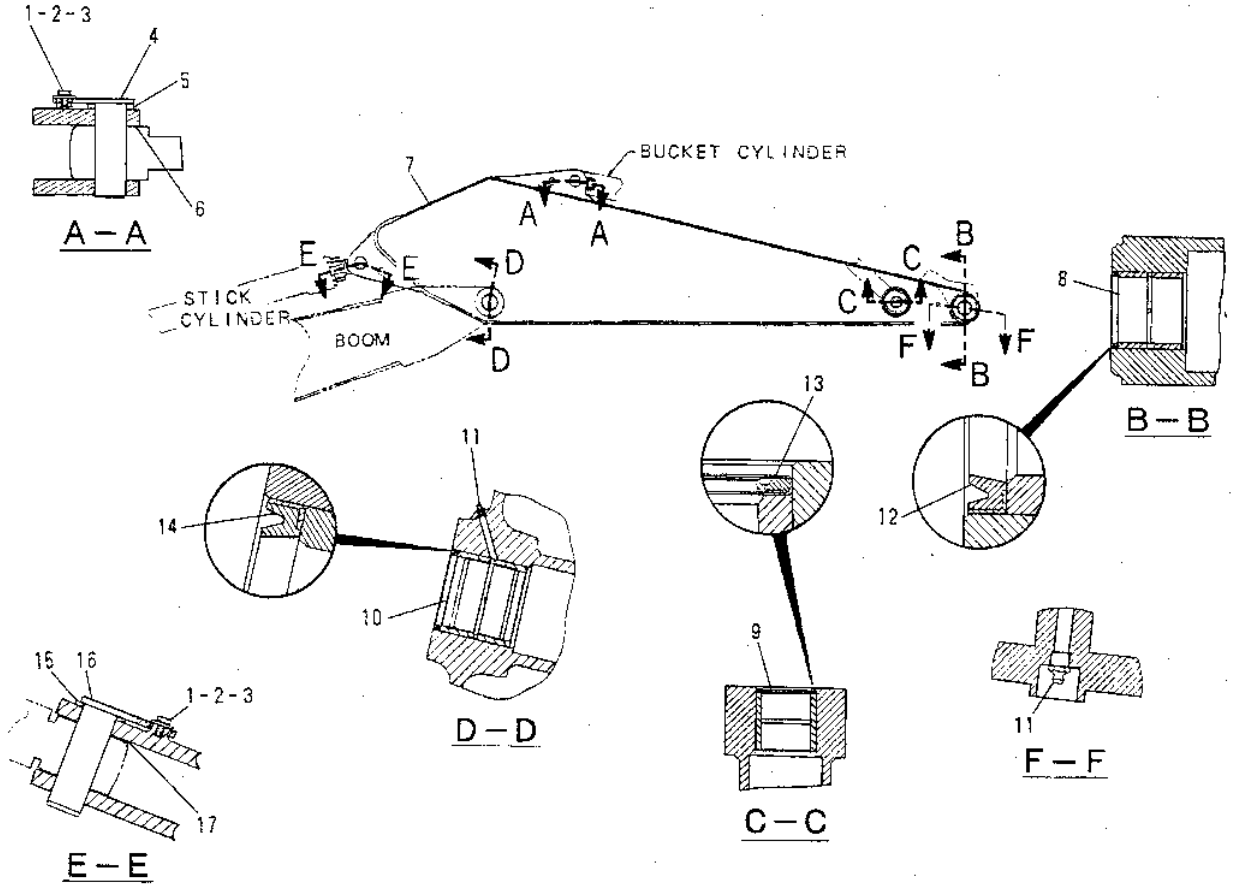


GRAPHIC #1 h84059e

# 1211933 STICK GP

R3.3D STICK, AUXILIARY
PART OF 1211931-Page 288
AN ATTACHMENT

**Key:** B - USE AS REQUIRED

**SMCS**

| NOTE | REF NO | GRAPHIC REF | PART NUMBER | QTY | PART NAME 1 2 3 4 5 6 (PRODUCT LEVEL) | PRICE USD |
|---|---|---|---|---|---|---|
| | 1 | | 8T-4780 | 2 | BOLT (L=30mm) | |
| | 2 | | 093-0349 | 1 | WASHER | |
| | 3 | | 8T-4123 | 2 | WASHER | |
| | 4 | | 5I-3299 | 1 | PIN AS | |
| | 5 | | 093-0363 | 1 | SPACER | |
| B | 6 | | 093-0083 | 2 | SHIM (T=1.00mm) | |
| B | | | 7Y-2498 | 1 | SHIM (T=1.60mm) | |
| B | | | 093-0115 | 1 | SHIM (T=2.00mm) | |
| | 7 | | 146-1400 | 1 | STICK AS | |
| | 8 | | 7Y-3553 | 2 | BEARING | |
| | 9 | | 7Y-3551 | 2 | BEARING | |
| | 10 | | 103-5348 | 2 | BEARING | |
| | 11 | | 121-1759 | 4 | PLATE | |
| | 12 | | 121-1760 | 2 | PLATE | |
| B | 13 | | 093-0084 | 2 | SHIM (T=1.00mm) | |
| B | | | 7Y-2497 | 1 | SHIM (T=1.60mm) | |
| B | | | 093-0116 | 1 | SHIM (T=2.00mm) | |
| | 14 | | 113-2963 | 1 | PIN AS | |
| | 15 | | 093-0366 | 2 | SPACER | |
| | 16 | | 3B-8489 | 3 | FITTING | |
| | 17 | | 7X-4803 | 2 | SEAL | |
| | 18 | | 093-1434 | 2 | SEAL | |
| | 19 | | 9X-4597 | 2 | SEAL | |

## 1211933 STICK GP

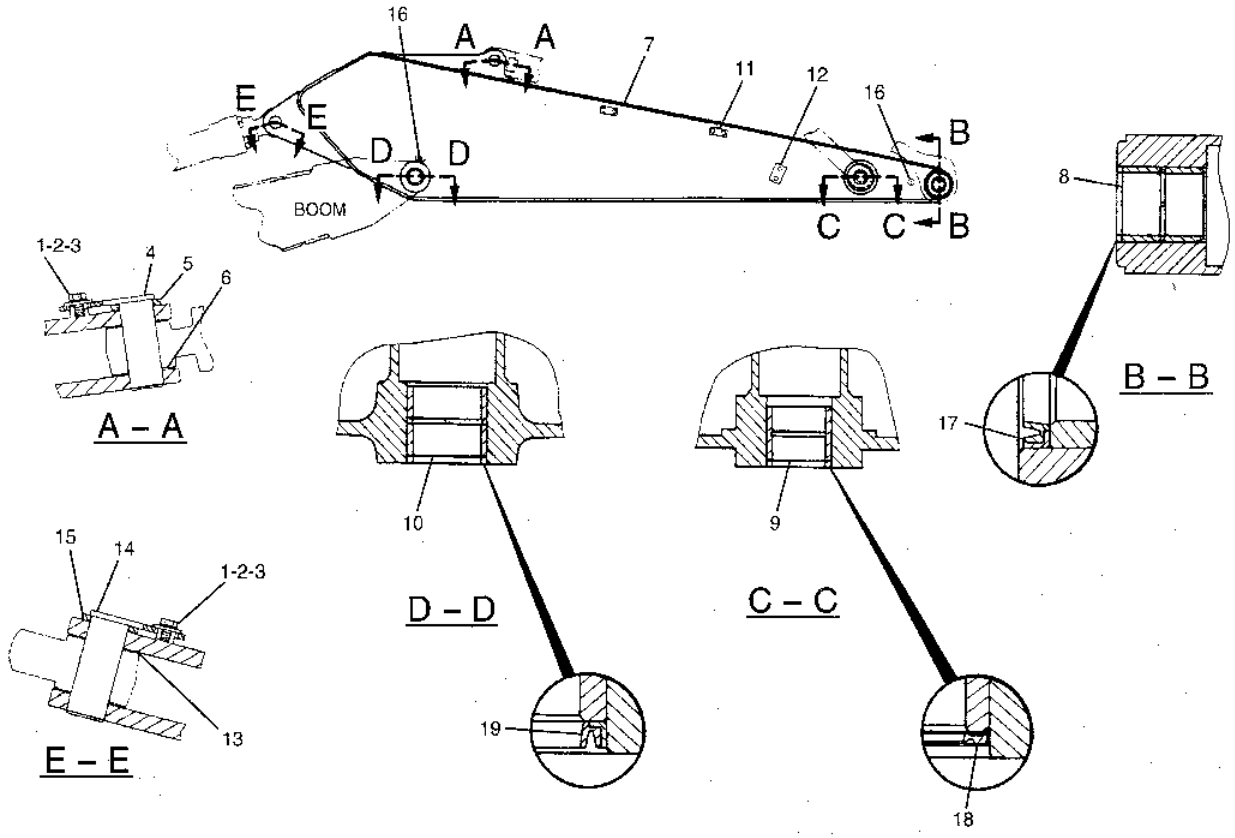


GRAPHIC #1

h84037e

# 1218692 STICK GP-HOE

R3.3D STICK, AUTOMATIC LUBRICATION
PART OF 1205006-Page 487
AN ATTACHMENT

**Key:** B - USE AS REQUIRED

**SMCS**

| NOTE | REF NO | GRAPHIC REF | PART NUMBER | QTY | PART NAME 1 2 3 4 5 6 (PRODUCT LEVEL) | PRICE USD |
|---|---|---|---|---|---|---|
| | 1 | | 8T-4780 | 2 | BOLT (L=30mm) | |
| | 2 | | 8T-4123 | 2 | WASHER-HARD (OD=35mm) | |
| | 3 | | 093-0349 | 2 | WASHER (OD=60mm) | |
| | 4 | | 5I-3299 | 1 | PIN AS | |
| | 5 | | 093-0363 | 1 | SPACER | |
| B | 6 | | 093-0083 | 2 | SHIM (T=1.0mm) | |
| B | | | 133-2425 | 1 | SHIM (T=0.5mm) | |
| B | | | 093-0115 | 1 | SHIM (T=2.0mm) | |
| | 7 | | 128-9995 | 1 | STICK AS | |
| | 8 | | 128-9882 | 2 | BEARING | |
| | 9 | | 7Y-3551 | 2 | BEARING | |
| | 10 | | 128-9886 | 2 | BEARING | |
| | 11 | | 123-5576 | 2 | BLOCK | |
| | 12 | | 7Y-8763 | 1 | BOSS | |
| | 13 | | 123-5579 | 1 | PLATE | |
| | 14 | | 9X-4597 | 2 | SEAL | |
| | 15 | | 093-0366 | 1 | SPACER | |
| | 16 | | 113-2963 | 1 | PIN AS | |
| B | 17 | | 093-0084 | 2 | SHIM (T=1.0mm) | |
| B | | | 113-2127 | 1 | SHIM (T=0.5mm) | |
| B | | | 093-0116 | 1 | SHIM (T=2.0mm) | |
| | 18 | | 3B-8489 | 3 | FITTING | |
| | 19 | | 7X-4803 | 2 | SEAL | |
| | 20 | | 093-1434 | 2 | SEAL | |

## 1218692 STICK GP-HOE

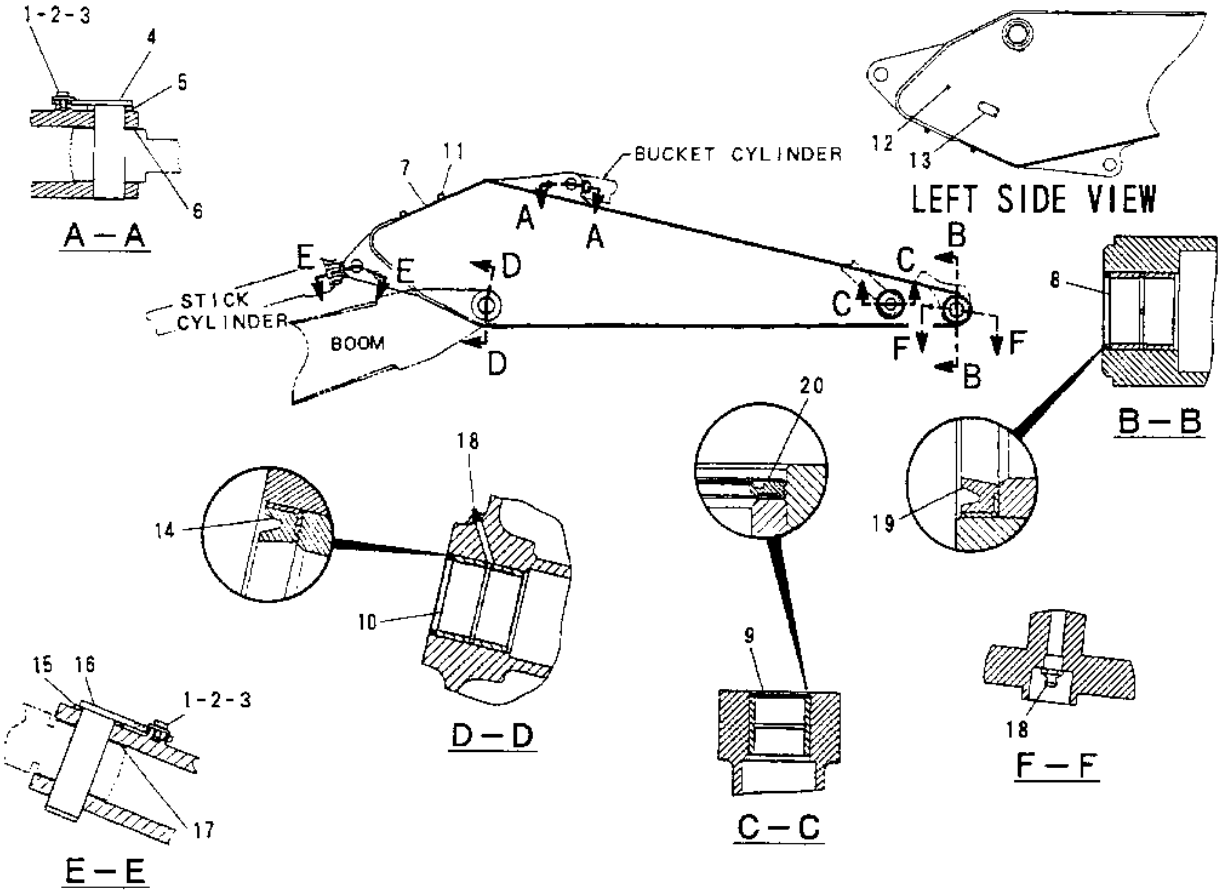


| NOTE | No. | PART No. | QTY | PART NAME | NOTE | No. | PART No. | QTY | PART NAME |
|---|---|---|---|---|---|---|---|---|---|
| | 1 | 8T-4780 | 2 | BOLT(L=30mm) | B | 17 | 093-0084 | 2 | SHIM(T=1.0mm) |
| | 2 | 8T-4123 | 2 | WASHER-HARD(OD=35mm) | B | | 113-2127 | 1 | SHIM(T=0.5mm) |
| | 3 | 093-0349 | 2 | WASHER(OD=60mm) | B | | 093-0116 | 1 | SHIM(T=2.0mm) |
| | 4 | 5I-3299 | 1 | PIN AS | | 18 | 3B-8489 | 3 | FITTING |
| | 5 | 093-0363 | 1 | SPACER | | 19 | 7X-4803 | 2 | SEAL |
| B | 6 | 093-0083 | 2 | SHIM(T=1.0mm) | | 20 | 093-1434 | 2 | SEAL |
| B | | 133-2425 | 1 | SHIM(T=0.5mm) | | | | | |
| B | | 093-0115 | 1 | SHIM(T=2.0mm) | | | | | |
| | 7 | 128-9995 | 1 | STICK AS | | | | | |
| | 8 | 128-9882 | 2 | BEARING | | | | | |
| | 9 | 7Y-3551 | 2 | BEARING | | | | | |
| | 10 | 128-9886 | 2 | BEARING | | | | | |
| | 11 | 123-5576 | 2 | BLOCK | | | | | |
| | 12 | 7Y-8763 | 1 | BOSS | | | | | |
| | 13 | 123-5579 | 1 | PLATE | | | | | |
| | 14 | 9X-4597 | 2 | SEAL | | | | | |
| | 15 | 093-0366 | 1 | SPACER | | | | | |
| | 16 | 113-2963 | 1 | PIN AS | | | | | |

B-USE AS REQUIRED

H58809E

GRAPHIC #1

h58809e

# 1211938 STICK GP

R2.8D STICK, AUXILIARY
PART OF 1211937-Page 289
AN ATTACHMENT

**Key:** B - USE AS REQUIRED

**SMCS**

| NOTE | REF NO | GRAPHIC REF | PART NUMBER | QTY | PART NAME 1 2 3 4 5 6 (PRODUCT LEVEL) | PRICE USD |
|---|---|---|---|---|---|---|
| | 1 | | 8T-4780 | 2 | BOLT (L=30mm) | |
| | 2 | | 093-0349 | 2 | WASHER | |
| | 3 | | 8T-4123 | 2 | WASHER | |
| | 4 | | 5I-3299 | 1 | PIN AS | |
| | 5 | | 093-0363 | 1 | SPACER | |
| B | 6 | | 093-0083 | 2 | SHIM (T=1.00mm) | |
| B | | | 7Y-2498 | 1 | SHIM (T=1.60mm) | |
| B | | | 093-0115 | 1 | SHIM (T=2.00mm) | |
| | 7 | | 146-1403 | 1 | STICK AS | |
| | 8 | | 137-2819 | 2 | BEARING | |
| | 9 | | 7Y-3551 | 2 | BEARING | |
| | 10 | | 137-2817 | 2 | BEARING | |
| | 11 | | 121-1759 | 4 | PLATE | |
| | 12 | | 121-1760 | 2 | PLATE | |
| B | 13 | | 093-0084 | 2 | SHIM (T=1.00mm) | |
| B | | | 7Y-2497 | 1 | SHIM (T=1.60mm) | |
| B | | | 093-0116 | 1 | SHIM (T=2.00mm) | |
| | 14 | | 113-2963 | 1 | PIN AS | |
| | 15 | | 093-0366 | 1 | SPACER | |
| | 16 | | 3B-8489 | 3 | FITTING | |
| | 17 | | 7X-4803 | 2 | SEAL | |
| | 18 | | 093-1434 | 2 | SEAL | |
| | 19 | | 9X-4597 | 2 | SEAL | |

## 1211938 STICK GP

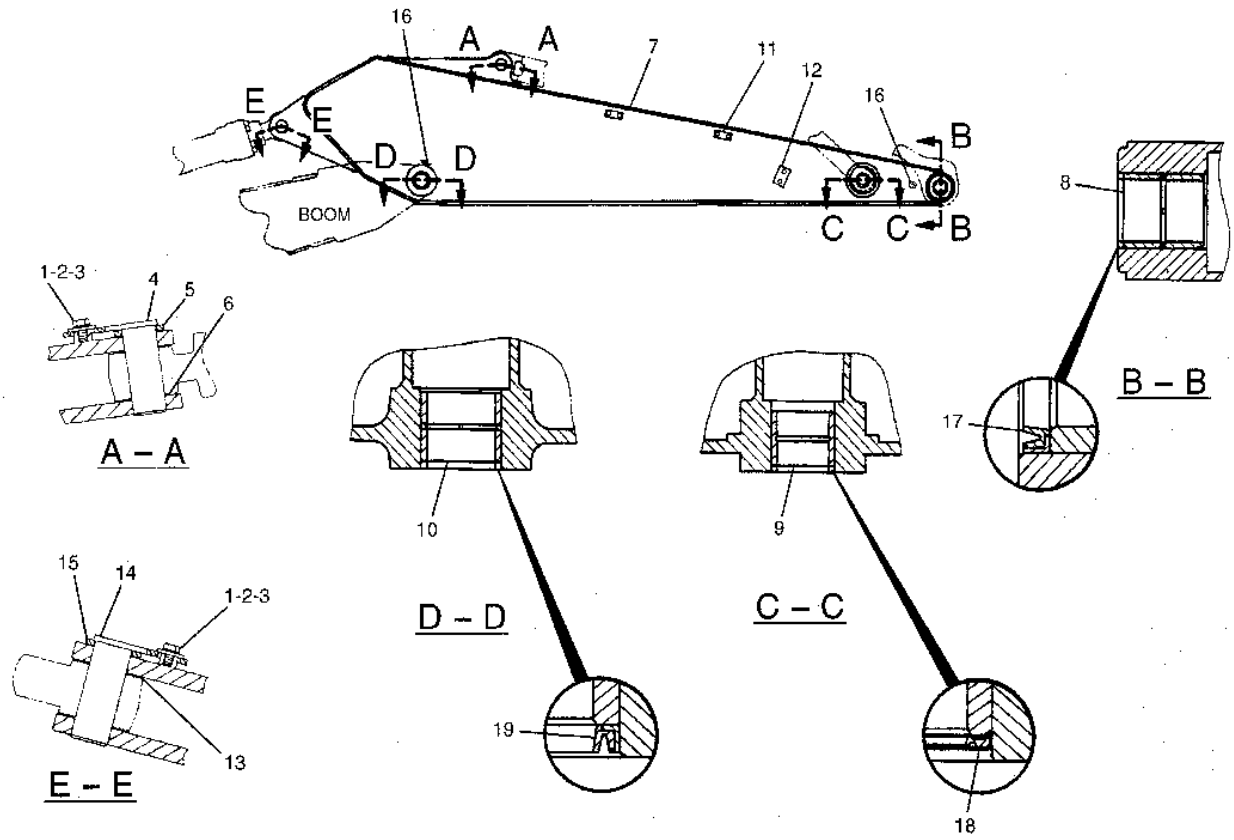


GRAPHIC #1 h84038e

# 1152653 STICK GP-HOE

R2.8D STICK
PART OF 1161484-Page 488
AN ATTACHMENT

**Key:** B - USE AS REQUIRED

**SMCS**

| NOTE | REF NO | GRAPHIC REF | PART NUMBER | QTY | PART NAME 1 2 3 4 5 6 (PRODUCT LEVEL) | PRICE USD |
|---|---|---|---|---|---|---|
| | 1 | | 8T-4780 | 2 | BOLT (L=30mm) | |
| | 2 | | 8T-4123 | 2 | WASHER-HARD | |
| | 3 | | 093-0349 | 2 | WASHER | |
| | 4 | | 5I-3299 | 1 | PIN AS | |
| | 5 | | 093-0363 | 1 | SPACER | |
| B | 6 | | 093-0083 | 2 | SHIM (T=1.0mm) | |
| B | | | 133-2425 | 1 | SHIM (T=0.5mm) | |
| B | | | 093-0115 | 1 | SHIM (T=2.0mm) | |
| | 7 | | 127-1199 | 1 | STICK AS | |
| | 8 | | 137-2819 | 2 | BEARING | |
| | 9 | | 7Y-3551 | 2 | BEARING | |
| | 10 | | 137-2817 | 2 | BEARING | |
| | 11 | | 3B-8489 | 3 | FITTING | |
| | 12 | | 7X-4803 | 2 | SEAL | |
| | 13 | | 093-1434 | 2 | SEAL | |
| | 14 | | 9X-4597 | 2 | SEAL | |
| B | 15 | | 093-0084 | 2 | SHIM (T=1.0mm) | |
| B | | | 113-2127 | 1 | SHIM (T=0.5mm) | |
| B | | | 093-0116 | 1 | SHIM (T=2.0mm) | |
| | 16 | | 113-2963 | 1 | PIN AS | |
| | 17 | | 093-0366 | 1 | SPACER | |

## 1152653 STICK GP-HOE

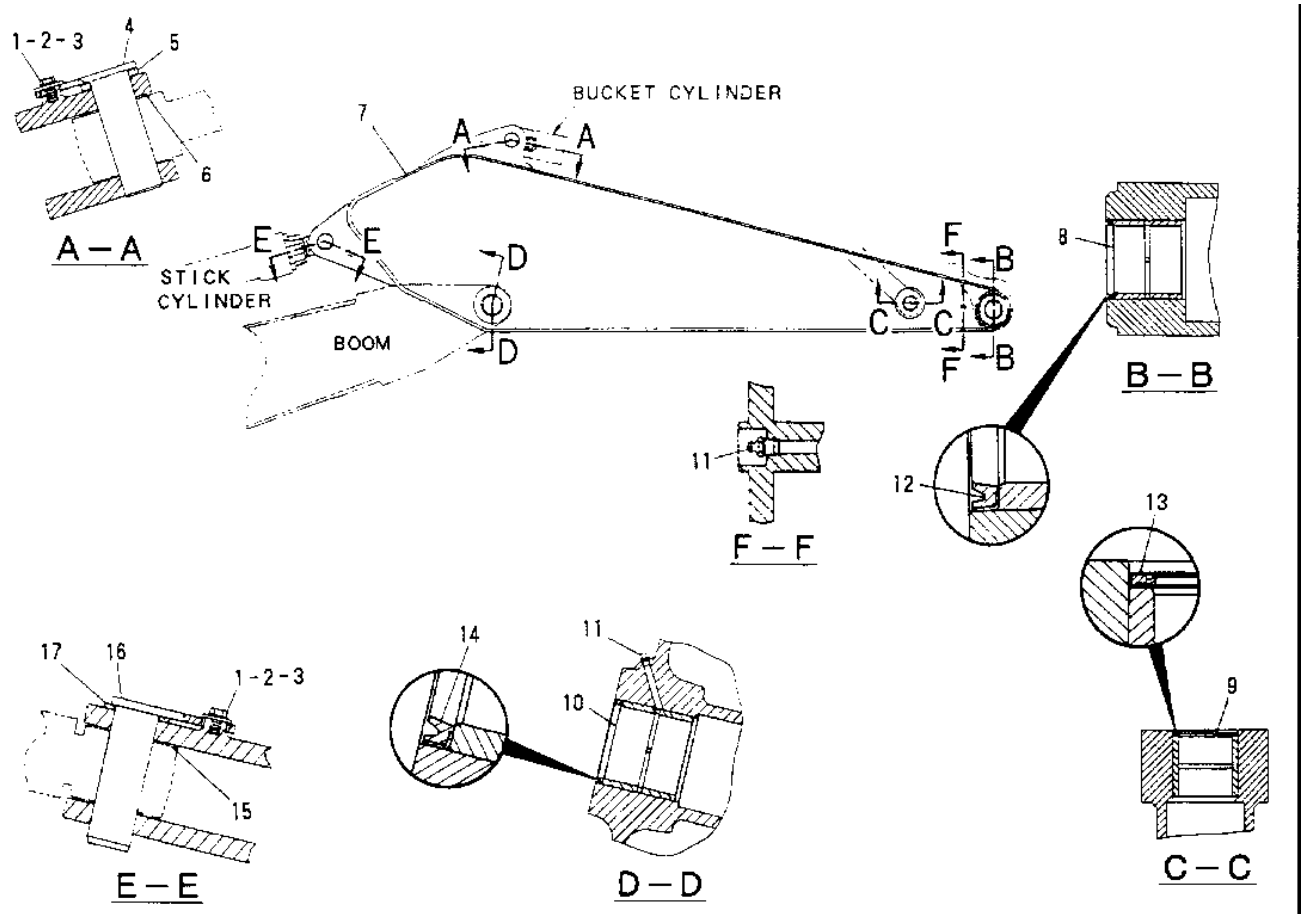


| NOTE | No. | PART No. | QTY | PART NAME |
|---|---|---|---|---|
| | 1 | 8T-4780 | 2 | BOLT(L=30mm) |
| | 2 | 8T-4123 | 2 | WASHER-HARD |
| | 3 | 093-0349 | 2 | WASHER |
| | 4 | 5I-3299 | 1 | PIN AS |
| | 5 | 093-0363 | 1 | SPACER |
| B | 6 | 093-0083 | 2 | SHIM(T=1.0mm) |
| B | | 133-2425 | 1 | SHIM(T=0.5mm) |
| B | | 093 0115 | 1 | SHIM(T=2.0mm) |
| | 7 | 127 1199 | 1 | STICK AS |
| | 8 | 137-2819 | 2 | BEARING |
| | 9 | 7Y-3551 | 2 | BEARING |
| | 10 | 137-2817 | 2 | BEARING |
| | 11 | 3B-8489 | 3 | FITTING |
| | 12 | 7X-4803 | 2 | SEAL |
| | 13 | 093 1434 | 2 | SEAL |
| | 14 | 9X-4597 | 2 | SEAL |
| B | 15 | 093-0084 | 2 | SHIM(T=1.0mm) |
| B | | 113-2127 | 1 | SHIM(T=0.5mm) |
| B | | 093-0116 | 1 | SHIM(T=2.0mm) |
| | 16 | 113-2963 | 1 | PIN AS |
| | 17 | 093-0366 | 1 | SPACER |

B-USE AS REQUIRED

H58810E

# 1152655 STICK GP-HOE

M2.55E STICK
S/N 8SR 1-(T00.10), 8TR 1-(T00.10)
PART OF 1161488-Page 488
AN ATTACHMENT

**Key:** B - USE AS REQUIRED

**SMCS**

| NOTE | REF NO | GRAPHIC REF | PART NUMBER | QTY | PART NAME 1 2 3 4 5 6 (PRODUCT LEVEL) | PRICE USD |
|---|---|---|---|---|---|---|
| | 1 | | 8T-4780 | 2 | BOLT (L=30mm) | |
| | 2 | | 093-0349 | 2 | WASHER (OD=60mm) | |
| | 3 | | 8T-4123 | 2 | WASHER-HARD (OD=35mm) | |
| | 4 | | 113-2963 | 2 | PIN AS | |
| | 5 | | 093-0366 | 2 | SPACER | |
| B | 6 | | 093-0084 | 4 | SHIM (T=1.0mm) | |
| B | | | 113-2127 | 2 | SHIM (T=0.5mm) | |
| B | | | 093-0116 | 2 | SHIM (T=2.0mm) | |
| | 7 | | 4I-4473 | 2 | SPACER | |
| | 8 | | 117-5576 | 1 | STICK AS | |
| | 9 | | 137-2817 | 2 | BEARING | |
| | 10 | | 4I-4666 | 2 | BEARING | |
| | 11 | | 137-2822 | 2 | BEARING | |
| | 12 | | 3B-8489 | 3 | FITTING | |
| | 13 | | 9X-4597 | 2 | SEAL | |
| | 14 | | 096-0854 | 2 | SEAL | |
| | 15 | | 9X-4598 | 2 | SEAL | |

## 1152655 STICK GP-HOE

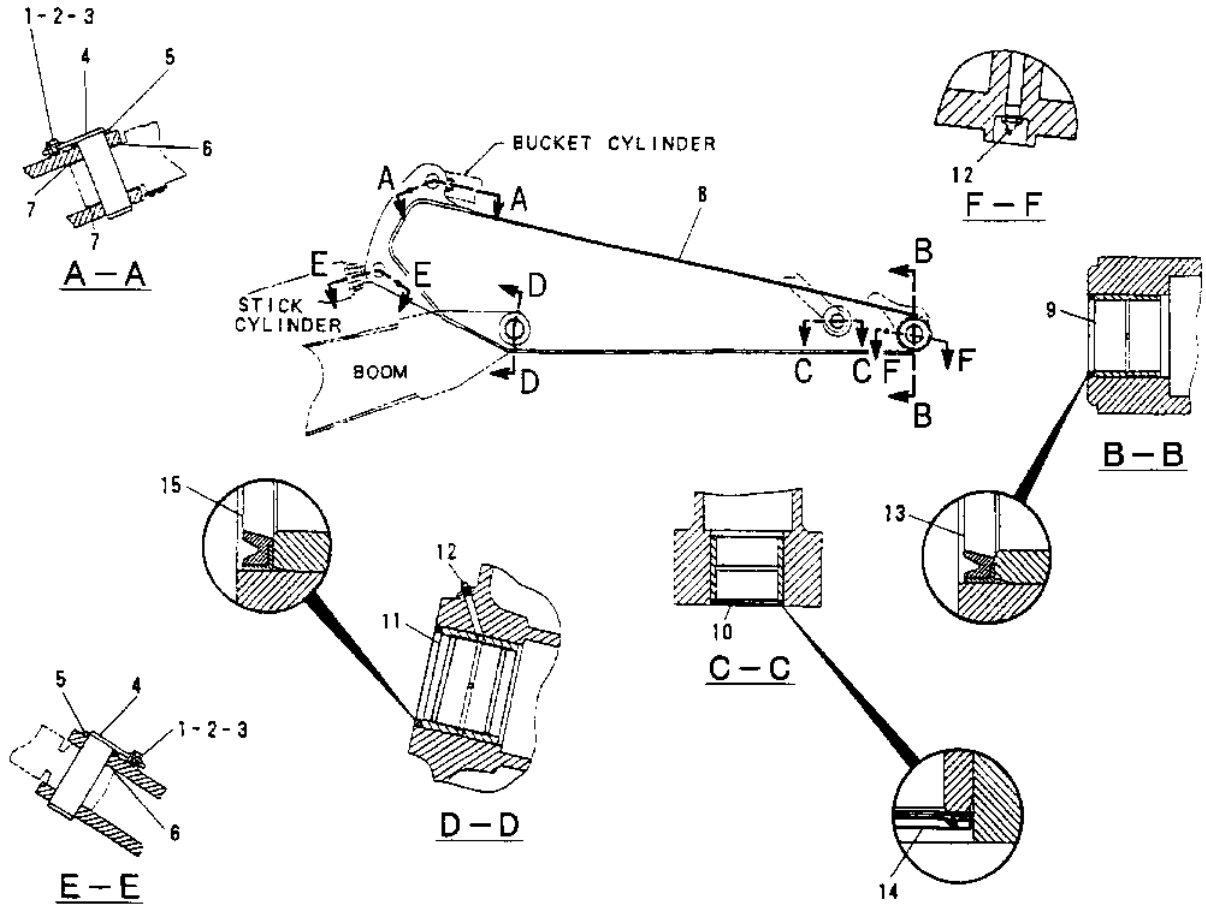


| NOTE | No. | PART No. | QTY | PART NAME |
|---|---|---|---|---|
| | 1 | 8T-4780 | 2 | BOLT (L=30mm) |
| | 2 | 093-0349 | 2 | WASHER (OD=60mm) |
| | 3 | 8T-4123 | 2 | WASHER-HARD (OD=35mm) |
| | 4 | 113-2963 | 2 | PIN AS |
| | 5 | 093 0366 | 2 | SPACER |
| B | 6 | 093-0084 | 4 | SHIM (T=1.0mm) |
| B | | 113-2127 | 2 | SHIM (T=0.5mm) |
| B | | 093-0116 | 2 | SHIM (T=2.0mm) |
| | 7 | 4I-4473 | 2 | SPACER |
| | 8 | 117-5576 | 1 | STICK AS |
| | 9 | 137-2817 | 2 | BEARING |
| | 10 | 4I-4666 | 2 | BEARING |
| | 11 | 137 2822 | 2 | BEARING |
| | 12 | 3B-8489 | 3 | FITTING |
| | 13 | 9X-4597 | 2 | SEAL |
| | 14 | 096-0854 | 2 | SEAL |
| | 15 | 9X-4598 | 2 | SEAL |

B-USE AS REQUIRED

H58811E

# 1152655 STICK GP-HOE

M2.55E STICK
S/N 8SR (T00.11)-UP, 8TR (T00.11)-UP
PART OF 1161488-Page 488
AN ATTACHMENT

**Key:** B - USE AS REQUIRED

**SMCS**

| NOTE | REF NO | GRAPHIC REF | PART NUMBER | QTY | PART NAME 1 2 3 4 5 6 (PRODUCT LEVEL) | PRICE USD |
|---|---|---|---|---|---|---|
| | 1 | | 8T-4780 | 2 | BOLT (L=30mm) | |
| | 2 | | 093-0349 | 2 | WASHER | |
| | 3 | | 8T-4123 | 2 | WASHER | |
| | 4 | | 191-3180 | 2 | PIN AS | |
| | 5 | | 093-0366 | 2 | SPACER | |
| B | 6 | | 093-0084 | 4 | SHIM (T=1.00mm) | |
| B | | | 113-2127 | 2 | SHIM (T=0.50mm) | |
| B | | | 093-0116 | 2 | SHIM (T=2.00mm) | |
| | 7 | | 4I-4473 | 2 | SPACER | |
| | 8 | | 191-3194 | 1 | STICK AS | |
| | 9 | | 137-2817 | 2 | BEARING | |
| | 10 | | 4I-4666 | 2 | BEARING | |
| | 11 | | 137-2822 | 2 | BEARING | |
| | 12 | | 3B-8489 | 3 | FITTING | |
| | 13 | | 9X-4597 | 2 | SEAL | |
| | 14 | | 096-0854 | 2 | SEAL | |
| | 15 | | 9X-4598 | 2 | SEAL | |

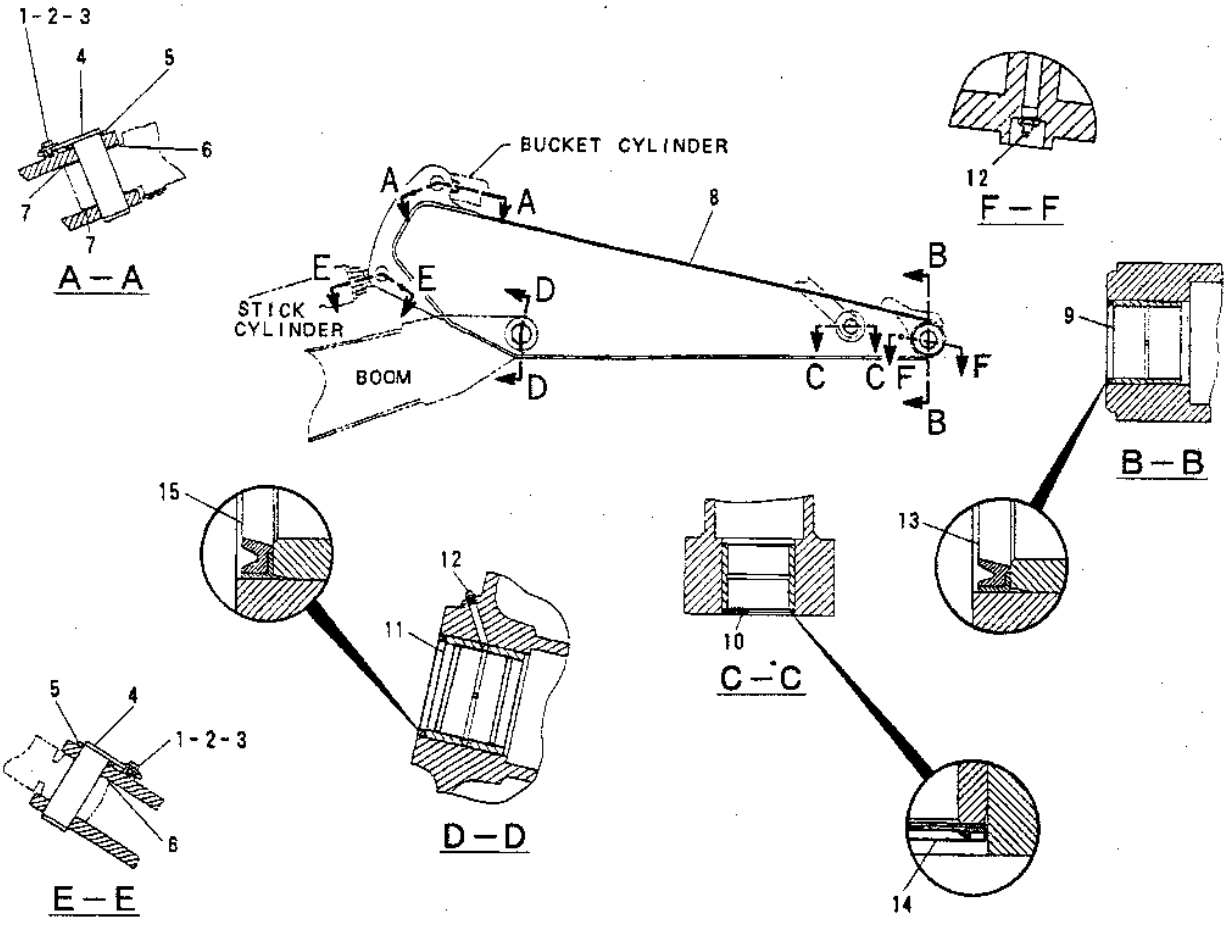


GRAPHIC #1

h79369e

# 1218675 LINES GP-GREASE

R-BOOM, AUTOMATIC LUBRICATION
S/N 8SR 1-(D97.01), 8TR 1-(D97.01)
PART OF 1205003-Page 484, 1370946-Page 485.02
1271322-Page 394.01
AN ATTACHMENT

**Key:** Y - SEE SEPARATE ILLUSTRATION

**SMCS**

| NOTE | REF NO | GRAPHIC REF | PART NUMBER | QTY | PART NAME 1 2 3 4 5 6 (PRODUCT LEVEL) | PRICE USD |
|---|---|---|---|---|---|---|
| | 1 | | 128-9976 | 1 | TUBE AS | |
| | 2 | | 128-9977 | 1 | TUBE AS | |
| | 3 | | 128-9978 | 1 | TUBE AS | |
| | 4 | | 128-9979 | 1 | TUBE AS | |
| | 5 | | 128-9980 | 1 | TUBE AS | |
| | 6 | | 128-9985 | 1 | TUBE AS | |
| | 7 | | 118-6051 | 1 | NUT | |
| | 8 | | 118-6052 | 1 | SLEEVE | |
| | 9 | | 123-5588 | 1 | NUT | |
| | 10 | | 123-5589 | 1 | SLEEVE | |
| | 11 | | 128-9974 | 2 | HOSE AS | |
| Y | 12 | | 127-1322 | 1 | VALVE AS | |
| | 13 | | 109-8708 | 2 | CLAMP | |
| | 14 | | 110-9851 | 2 | BOLT | |
| | 15 | | 123-5597 | 4 | CONNECTOR | |
| | 16 | | 8T-4121 | 16 | WASHER | |
| | 17 | | 8T-4137 | 2 | BOLT (L=20mm) | |
| | 18 | | 5P-9085 | 7 | CLIP | |
| | 19 | | 8T-4191 | 8 | BOLT (L=16mm) | |
| | 20 | | 127-1212 | 3 | CONNECTOR | |
| | 21 | | 127-1213 | 2 | ELBOW | |
| | 22 | | 118-6051 | 2 | NUT | |
| | 23 | | 118-6052 | 2 | SLEEVE | |
| | 24 | | 8T-3844 | 2 | BOLT (L=70mm) | |
| | 25 | | 4I-3171 | 1 | HOSE AS | |
| | 26 | | 105-6431 | 1 | CONNECTOR | |
| | 27 | | 130-4064 | 2 | CONNECTOR | |
| | 28 | | 123-5586 | 2 | ELBOW | |
| | 29 | | 123-5588 | 3 | NUT | |
| | 30 | | 123-5589 | 3 | SLEEVE | |
| | 31 | | 7K-1181 | 4 | STRAP | |
| | 32 | | 123-5594 | 1 | CONNECTOR | |
| | 33 | | 8T-4133 | 6 | NUT | |
| | 34 | | 087-5840 | 3 | PLATE | |
| | 35 | | 033-8248 | 3 | CLIP | |
| | 36 | | 4I-3170 | 1 | HOSE AS | |
| | 37 | | 105-6431 | 1 | CONNECTOR | |
| | 38 | | 107-9729 | 1 | HOSE AS | |
| | 39 | | 105-6431 | 1 | CONNECTOR | |
| | 40 | | 128-9982 | 1 | TUBE AS | |
| | 41 | | 118-6051 | 1 | NUT | |
| | 42 | | 118-6052 | 1 | SLEEVE | |
| | 43 | | 123-5588 | 1 | NUT | |
| | 44 | | 123-5589 | 1 | SLEEVE | |
| | 45 | | 128-9984 | 1 | TUBE AS | |
| | 46 | | 118-6051 | 1 | NUT | |

## 1218675 LINES GP-GREASE

| | | | | |
|---|---|---|---|---|
| 47 | | 118-6052 | 1 | SLEEVE |
| 48 | | 123-5588 | 1 | NUT |
| 49 | | 123-5589 | 1 | SLEEVE |
| 50 | | 128-9981 | 1 | TUBE AS |
| 51 | | 118-6051 | 1 | NUT |
| 52 | | 118-6052 | 1 | SLEEVE |
| 53 | | 123-5588 | 1 | NUT |
| 54 | | 123-5589 | 1 | SLEEVE |
| 55 | | 128-9983 | 1 | TUBE AS |
| 56 | | 118-6051 | 1 | NUT |
| 57 | | 118-6052 | 1 | SLEEVE |
| 58 | | 123-5588 | 1 | NUT |
| 59 | | 123-5589 | 1 | SLEEVE |
| 60 | | 128-9990 | 1 | TUBE AS |
| 61 | | 118-6051 | 1 | NUT |
| 62 | | 118-6052 | 1 | SLEEVE |
| 63 | | 123-5588 | 1 | NUT |
| 64 | | 123-5589 | 1 | SLEEVE |
| 65 | | 128-9991 | 1 | TUBE AS |
| 66 | | 118-6051 | 1 | NUT |
| 67 | | 118-6052 | 1 | SLEEVE |
| 68 | | 123-5588 | 1 | NUT |
| 69 | | 123-5589 | 1 | SLEEVE |

# 1218675 LINES GP-GREASE

R-BOOM, AUTOMATIC LUBRICATION
S/N 8SR (D97.02)-(T00.11), 8TR (D97.02)-(T00.11)
PART OF 1205003-Page 484, 1370946-Page 485.02
1373066-Page 394.01
AN ATTACHMENT

**Key:** Y - SEE SEPARATE ILLUSTRATION

**SMCS**

| NOTE | REF NO | GRAPHIC REF | PART NUMBER | QTY | PART NAME 1 2 3 4 5 6 (PRODUCT LEVEL) | PRICE USD |
|---|---|---|---|---|---|---|
| | 1 | | 128-9976 | 1 | TUBE AS | |
| | 2 | | 128-9977 | 1 | TUBE AS | |
| | 3 | | 128-9978 | 1 | TUBE AS | |
| | 4 | | 128-9979 | 1 | TUBE AS | |
| | 5 | | 141-3540 | 1 | TUBE AS | |
| | 6 | | 134-9232 | 1 | TUBE AS | |
| | | | 118-6051 | 2 | NUT | |
| | | | 118-6052 | 2 | SLEEVE | |
| | 7 | | 134-9233 | 1 | TUBE AS | |
| | | | 118-6051 | 2 | NUT | |
| | | | 118-6052 | 2 | SLEEVE | |
| | 8 | | 134-9234 | 1 | TUBE AS | |
| | | | 118-6051 | 2 | NUT | |
| | | | 118-6052 | 2 | SLEEVE | |
| | 9 | | 134-9235 | 1 | TUBE AS | |
| | | | 118-6051 | 2 | NUT | |
| | | | 118-6052 | 2 | SLEEVE | |
| | 10 | | 134-9236 | 1 | TUBE AS | |
| | | | 118-6051 | 2 | NUT | |
| | | | 118-6052 | 2 | SLEEVE | |
| | 11 | | 137-2865 | 2 | HOSE AS | |
| Y | 12 | | 137-3066 | 1 | VALVE AS | |
| | 13 | | 109-8708 | 1 | CLAMP | |
| | 14 | | 110-9851 | 4 | BOLT | |
| | 15 | | 123-5597 | 4 | CONNECTOR | |
| | 16 | | 8T-4121 | 19 | WASHER | |
| | 17 | | 8T-4137 | 2 | BOLT (L=16mm) | |
| | 18 | | 5P-9085 | 11 | CLIP | |
| | 19 | | 8T-4191 | 11 | BOLT (L=16mm) | |
| | 20 | | 134-9244 | 3 | CONNECTOR | |
| | 21 | | 134-9245 | 2 | ELBOW | |
| | 22 | | 118-6051 | 4 | NUT | |
| | 23 | | 118-6052 | 4 | SLEEVE | |
| | 24 | | 117-5550 | 2 | HOSE AS | |
| | | | 105-6431 | 1 | CONNECTOR | |
| | 25 | | 123-5588 | 1 | NUT | |
| | 26 | | 123-5589 | 3 | SLEEVE | |
| | 27 | | 117-5551 | 2 | HOSE AS | |
| | | | 105-6431 | 1 | CONNECTOR | |
| | 28 | | 123-5586 | 2 | ELBOW | |
| | 29 | | 8T-4133 | 6 | NUT | |
| | 30 | | 087-5840 | 3 | PLATE | |
| | 31 | | 033-8248 | 3 | CLIP | |
| | 32 | | 123-5594 | 1 | CONNECTOR | |

## 1218675 LINES GP-GREASE

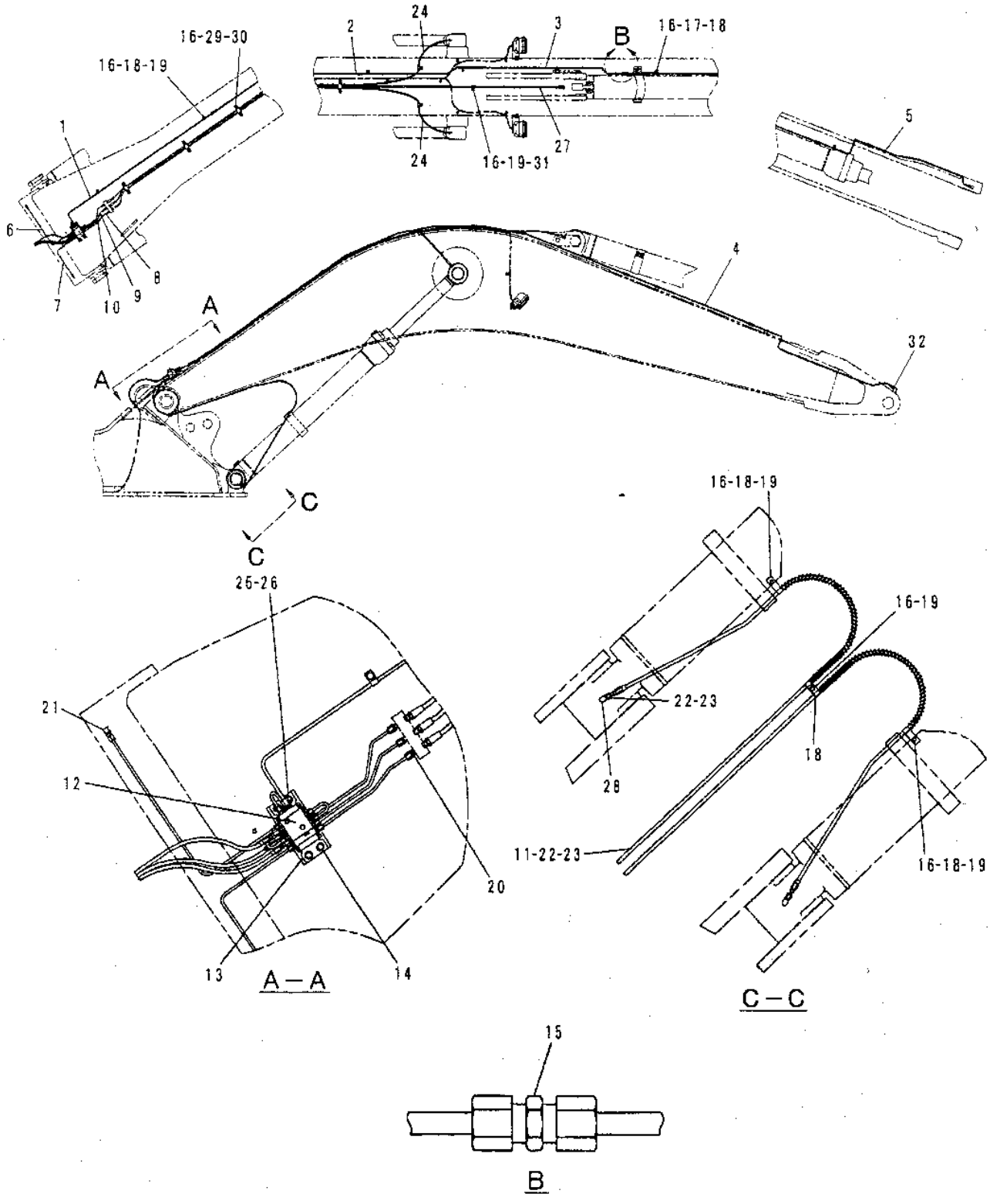


GRAPHIC #1

h58813e

# 1218675 LINES GP-GREASE

R-BOOM, AUTOMATIC LUBRICATION
S/N 8SR (T00.12)-UP, 8TR (T00.12)-UP
PART OF 1205003-Page 484, 1370946-Page 485.02
1373066-Page 394.02
AN ATTACHMENT

**Key:** Y - SEE SEPARATE ILLUSTRATION

**SMCS**

| NOTE | REF NO | GRAPHIC REF | PART NUMBER | QTY | PART NAME 1 2 3 4 5 6 (PRODUCT LEVEL) | PRICE USD |
|---|---|---|---|---|---|---|
| | 1 | | 128-9976 | 1 | TUBE AS | |
| | 2 | | 128-9977 | 1 | TUBE AS | |
| | 3 | | 128-9978 | 1 | TUBE AS | |
| | 4 | | 128-9979 | 1 | TUBE AS | |
| | 5 | | 141-3540 | 1 | TUBE AS | |
| | 6 | | 134-9232 | 1 | TUBE AS | |
| | | | 118-6051 | 2 | NUT | |
| | | | 118-6052 | 2 | SLEEVE | |
| | 7 | | 134-9233 | 1 | TUBE AS | |
| | | | 118-6051 | 2 | NUT | |
| | | | 118-6052 | 2 | SLEEVE | |
| | 8 | | 134-9234 | 1 | TUBE AS | |
| | | | 118-6051 | 2 | NUT | |
| | | | 118-6052 | 2 | SLEEVE | |
| | 9 | | 134-9235 | 1 | TUBE AS | |
| | | | 118-6051 | 2 | NUT | |
| | | | 118-6052 | 2 | SLEEVE | |
| | 10 | | 134-9236 | 1 | TUBE AS | |
| | | | 118-6051 | 2 | NUT | |
| | | | 118-6052 | 2 | SLEEVE | |
| | 11 | | 147-3941 | 2 | HOSE AS | |
| Y | 12 | | 137-3066 | 1 | VALVE AS | |
| | 13 | | 109-8708 | 2 | CLAMP | |
| | 14 | | 110-9851 | 4 | BOLT | |
| | 15 | | 123-5597 | 4 | CONNECTOR | |
| | 16 | | 8T-4121 | 19 | WASHER | |
| | 17 | | 8T-4137 | 2 | BOLT (L=16mm) | |
| | 18 | | 5P-9085 | 9 | CLIP | |
| | 19 | | 8T-4191 | 8 | BOLT (L=16mm) | |
| | 20 | | 134-9244 | 3 | CONNECTOR | |
| | 21 | | 134-9245 | 2 | ELBOW | |
| | 22 | | 118-6051 | 4 | NUT | |
| | 23 | | 118-6052 | 4 | SLEEVE | |
| | 24 | | 117-5550 | 2 | HOSE AS | |
| | | | 105-6431 | 1 | CONNECTOR | |
| | 25 | | 123-5588 | 1 | NUT | |
| | 26 | | 123-5589 | 1 | SLEEVE | |
| | 27 | | 117-5551 | 1 | HOSE AS | |
| | | | 105-6431 | 1 | CONNECTOR | |
| | 28 | | 123-5586 | 2 | ELBOW | |
| | 29 | | 8T-4133 | 6 | NUT | |
| | 30 | | 087-5840 | 3 | PLATE | |
| | 31 | | 033-8248 | 3 | CLIP | |
| | 32 | | 123-5594 | 1 | CONNECTOR | |
| | 33 | | 8T-4136 | 3 | BOLT (L=25mm) | |
| | 34 | | 9X-8582 | 1 | CLIP | |

## 1218675 LINES GP-GREASE

| | | | | |
|---|---|---|---|---|
| 35 | 7K-1181 | 4 | STRAP | |

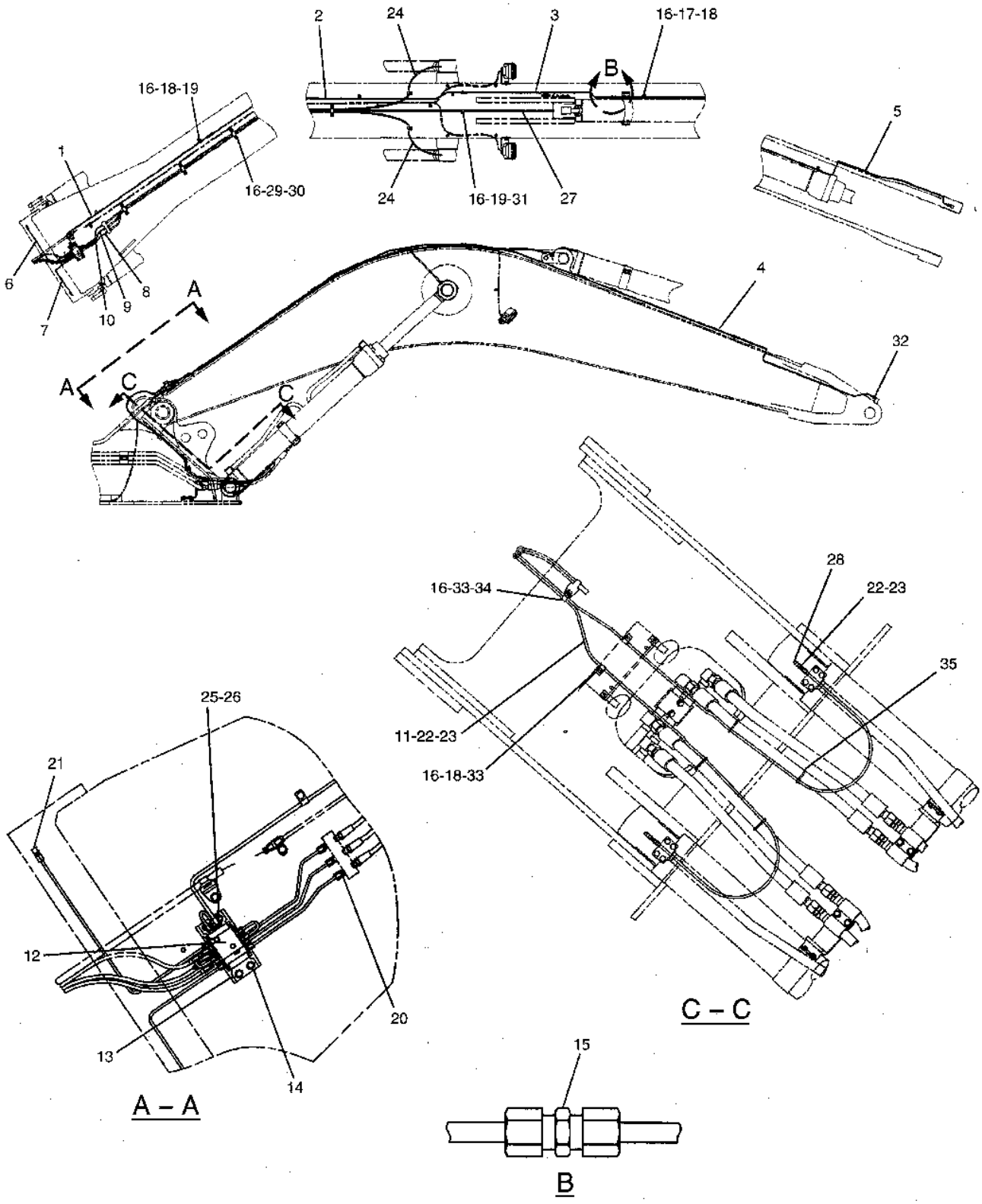


GRAPHIC #1

h79371e

# 1152649 LINES GP-GREASE

R-BOOM
PART OF 1317671-Page 485.01
AN ATTACHMENT

**Key:**

**SMCS**

| NOTE | REF NO | GRAPHIC REF | PART NUMBER | QTY | PART NAME 1 2 3 4 5 6 (PRODUCT LEVEL) | PRICE USD |
|---|---|---|---|---|---|---|
| | 1 | | 8T-4133 | 8 | NUT | |
| | 2 | | 8T-4121 | 11 | WASHER | |
| | 3 | | 087-5840 | 3 | PLATE | |
| | 4 | | 8W-2772 | 2 | CLIP | |
| | 5 | | 4I-3168 | 1 | TUBE AS | |
| | 6 | | 4I-3169 | 1 | TUBE AS | |
| | 7 | | 5K-9243 | 2 | ELBOW | |
| | 8 | | 6L-3616 | 2 | CONNECTOR | |
| | 9 | | 3B-8489 | 5 | FITTING | |
| | 10 | | 117-5550 | 1 | HOSE AS | |
| | | | 105-6431 | 1 | CONNECTOR | |
| | 11 | | 033-8248 | 3 | CLIP | |
| | 12 | | 8T-4191 | 3 | BOLT (L=16mm) | |
| | 13 | | 117-5551 | 1 | HOSE AS | |
| | | | 105-6431 | 1 | CONNECTOR | |
| | 14 | | 120-7226 | 1 | HOSE AS | |
| | | | 105-6431 | 1 | CONNECTOR | |

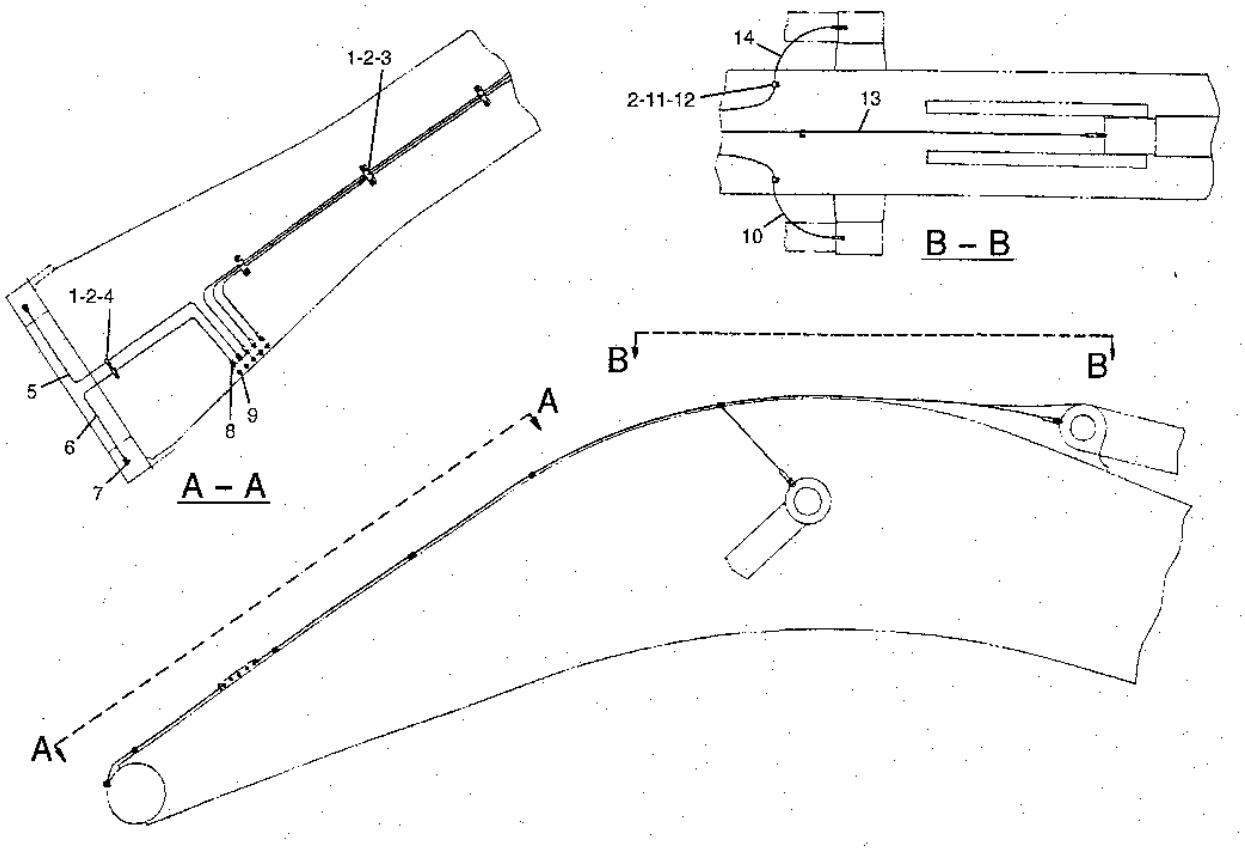


GRAPHIC #1

h79372e

# 1152650 LINES GP-GREASE

M-BOOM
PART OF 1317673-Page 485.01
AN ATTACHMENT

**Key:**

**SMCS**

| NOTE | REF NO | GRAPHIC REF | PART NUMBER | QTY | PART NAME 1 2 3 4 5 6 (PRODUCT LEVEL) | PRICE USD |
|---|---|---|---|---|---|---|
| | 1 | | 5K-9243 | 2 | ELBOW | |
| | 2 | | 4I-3169 | 1 | TUBE AS | |
| | 3 | | 4I-3168 | 1 | TUBE AS | |
| | 4 | | 8M-2772 | 2 | CLIP | |
| | 5 | | 8T-4133 | 8 | NUT | |
| | 6 | | 8T-4121 | 11 | WASHER-HARD | |
| | 7 | | 087-5840 | 3 | PLATE | |
| | 8 | | 3B-8489 | 5 | FITTING | |
| | 9 | | 6L-3616 | 2 | CONNECTOR | |
| | 10 | | 117-5550 | 2 | HOSE AS | |
| | 11 | | 033-8248 | 3 | CLIP | |
| | 12 | | 8T-4191 | 3 | BOLT (L=16mm) | |
| | 13 | | 120-7227 | 1 | HOSE AS | |

## 1152650 LINES GP-GREASE

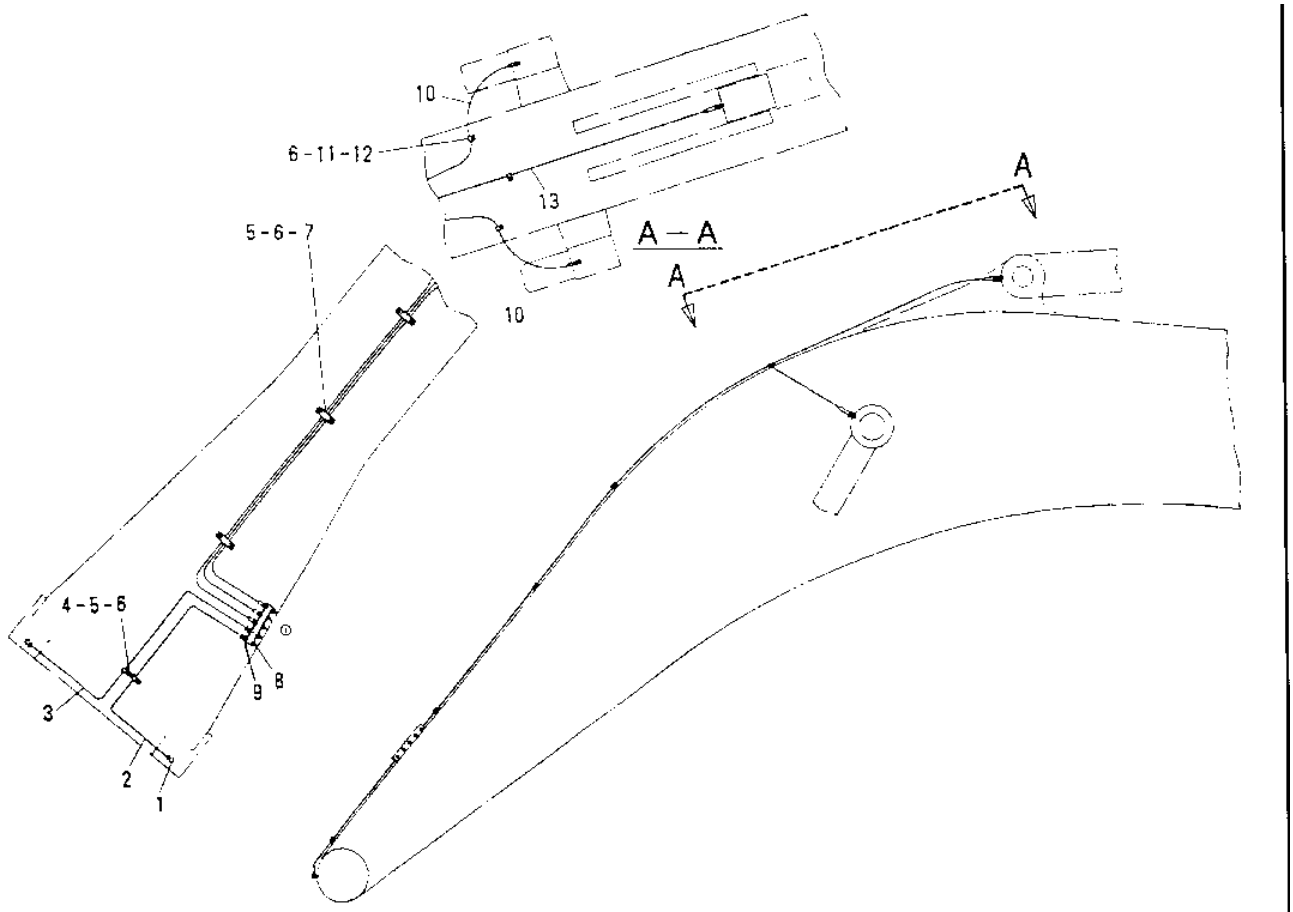


| NOTE | No. | PART No. | QTY | PART NAME |
|---|---|---|---|---|
| | 1 | 5K-9243 | 2 | ELBOW |
| | 2 | 4I-3169 | 1 | TUBE AS |
| | 3 | 4I-3168 | 1 | TUBE AS |
| | 4 | 8M-2772 | 2 | CLIP |
| | 5 | 8T-4133 | 8 | NUT |
| | 6 | 8T-4121 | 11 | WASHER-HARD |
| | 7 | 087-5840 | 3 | PLATE |
| | 8 | 3B-8489 | 5 | FITTING |
| | 9 | 6L-3616 | 2 | CONNECTOR |
| | 10 | 117-5550 | 2 | HOSE AS |
| | | 105-6431 | 1 | CONNECTOR |
| | 11 | 033-8248 | 3 | CLIP |
| | 12 | 8T-4191 | 3 | BOLT(L=16mm) |
| | 13 | 120-7227 | 1 | HOSE AS |
| | | 105-6431 | 1 | CONNECTOR |

| NOTE | No. | PART No. | QTY | PART NAME |
|---|---|---|---|---|

H50866E

GRAPHIC #1

h50866e

# 1218693 LINES GP-GREASE

R3.3D STICK, AUTOMATIC LUBRICATION
S/N 8SR 1-(D96.10), 8TR 1-(D96.10)
PART OF 1205006-Page 487
1271323-Page 394.03
AN ATTACHMENT

**Key:** Y - SEPARATE ILLUSTRATION

**SMCS**

| NOTE | REF NO | GRAPHIC REF | PART NUMBER | QTY | PART NAME 1 2 3 4 5 6 (PRODUCT LEVEL) | PRICE USD |
|---|---|---|---|---|---|---|
| | 1 | | 134-9237 | 1 | TUBE AS | |
| | | | 118-6051 | 2 | NUT | |
| | | | 118-6052 | 2 | SLEEVE | |
| | 2 | | 134-9238 | 1 | TUBE AS | |
| | | | 118-6051 | 2 | NUT | |
| | | | 118-6052 | 2 | SLEEVE | |
| | 3 | | 134-9239 | 1 | TUBE AS | |
| | | | 118-6051 | 2 | NUT | |
| | | | 118-6052 | 2 | SLEEVE | |
| | 4 | | 134-9240 | 1 | TUBE AS | |
| | | | 118-6051 | 2 | NUT | |
| | | | 118-6052 | 2 | SLEEVE | |
| | 5 | | 123-5587 | 1 | HOSE AS | |
| | 6 | | 123-5592 | 1 | HOSE AS | |
| | 7 | | 123-5593 | 1 | HOSE AS | |
| Y | 8 | | 127-1323 | 1 | VALVE AS | |
| | 9 | | 109-8708 | 2 | CLAMP | |
| | 10 | | 110-9851 | 4 | BOLT | |
| | 11 | | 5P-9085 | 2 | CLIP | |
| | 12 | | 8T-4121 | 2 | WASHER-HARD | |
| | 13 | | 8T-4133 | 1 | NUT | |
| | 14 | | 127-1212 | 4 | CONNECTOR | |
| | 15 | | 127-1213 | 1 | ELBOW | |
| | 16 | | 123-5588 | 6 | NUT | |
| | 17 | | 123-5589 | 6 | SLEEVE | |
| | 18 | | 8T-4137 | 1 | BOLT (L=20mm) | |
| | 19 | | 134-9244 | 4 | CONNECTOR | |

## 1218693 LINES GP-GREASE

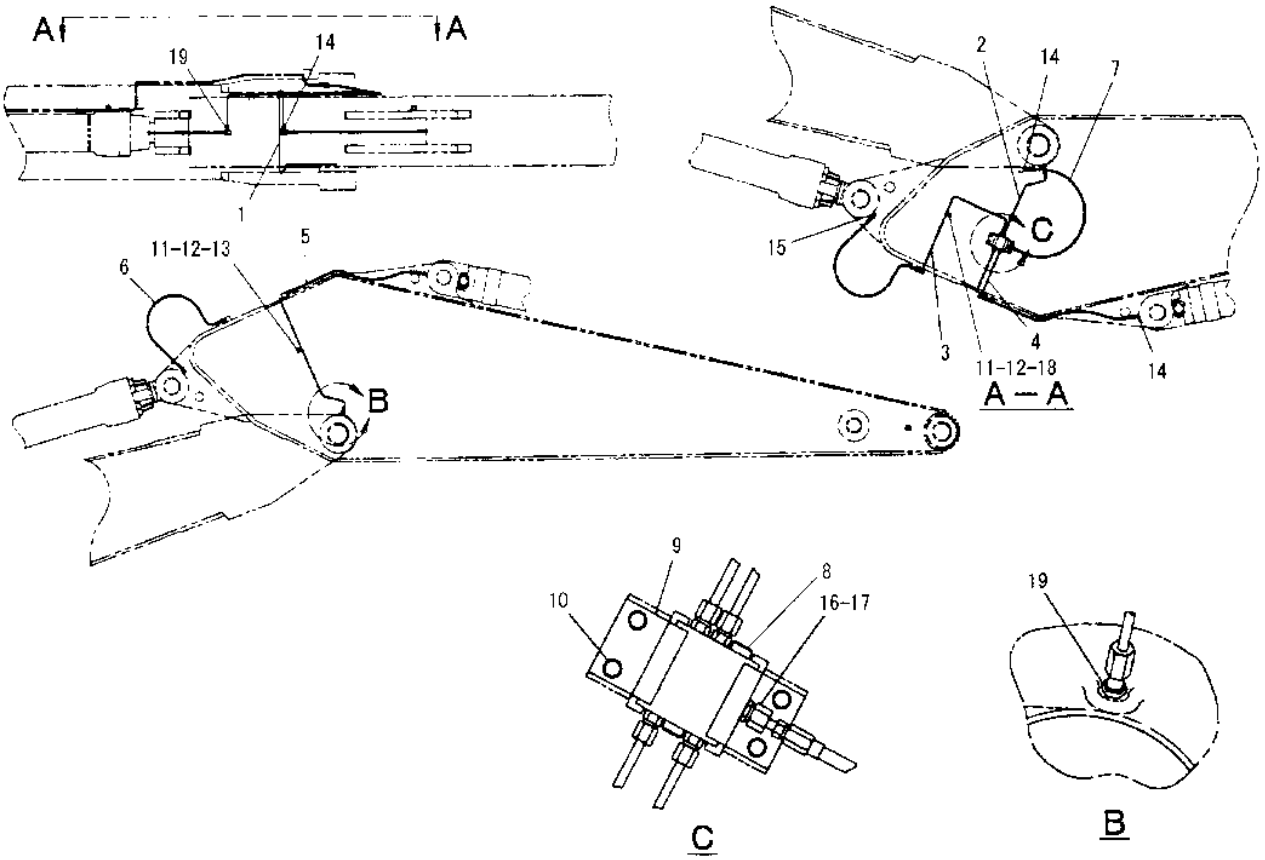


| NOTE | No. | PART No. | QTY | PART NAME |
|---|---|---|---|---|
| | 1 | 134-9237 | 1 | TUBE AS |
| | | 118-6051 | 2 | NUT |
| | | 118-6052 | 2 | SLEEVE |
| | 2 | 134-9238 | 1 | TUBE AS |
| | | 118-6051 | 2 | NUT |
| | | 118-6052 | 2 | SLEEVE |
| | 3 | 134-9239 | 1 | TUBE AS |
| | | 118-6051 | 2 | NUT |
| | | 118-6052 | 2 | SLEEVE |
| | 4 | 134-9240 | 1 | TUBE AS |
| | | 118-6051 | 2 | NUT |
| | | 118-6052 | 2 | SLEEVE |
| | 5 | 123-5587 | 1 | HOSE AS |
| | 6 | 123-5592 | 1 | HOSE AS |
| | 7 | 123-5593 | 1 | HOSE AS |
| Y | 8 | 127-1323 | 1 | VALVE AS |
| | 9 | 109-8708 | 2 | CLAMP |
| | 10 | 110-9851 | 4 | BOLT |
| | 11 | 5P-9085 | 2 | CLIP |
| | 12 | 8T-4121 | 2 | WASHER-HARD |
| | 13 | 8T-4133 | 1 | NUT |
| | 14 | 127-1212 | 4 | CONNECTOR |
| | 15 | 127-1213 | 1 | ELBOW |
| | 16 | 123-5588 | 6 | NUT |
| | 17 | 123-5589 | 6 | SLEEVE |
| | 18 | 8T-4137 | 1 | BOLT (L=20mm) |
| | 19 | 134-9244 | 4 | CONNECTOR |

Y—SEE SEPARATE ILLUSTRATION

H58814E

GRAPHIC #1

h58814e

# 1218693 LINES GP-GREASE

R3.3D STICK, AUTOMATIC LUBRICATION
S/N 8SR (D96.11)-UP, 8TR (D96.11)-UP
PART OF 1205006-Page 487
1271323-Page 394.03
AN ATTACHMENT

**Key:** Y - SEPARATE ILLUSTRATION

**SMCS**

| NOTE | REF NO | GRAPHIC REF | PART NUMBER | QTY | PART NAME 1 2 3 4 5 6 (PRODUCT LEVEL) | PRICE USD |
|---|---|---|---|---|---|---|
| | 1 | | 137-2961 | 1 | TUBE AS | |
| | | | 118-6051 | 2 | NUT | |
| | | | 118-6052 | 2 | SLEEVE | |
| | 2 | | 137-2961 | 1 | TUBE AS | |
| | | | 118-6051 | 2 | NUT | |
| | | | 118-6052 | 2 | SLEEVE | |
| | 3 | | 134-9237 | 1 | TUBE AS | |
| | | | 118-6051 | 2 | NUT | |
| | | | 118-6052 | 2 | SLEEVE | |
| | 4 | | 134-9239 | 1 | TUBE AS | |
| | | | 118-6051 | 2 | NUT | |
| | | | 118-6052 | 2 | SLEEVE | |
| | 5 | | 123-5587 | 1 | HOSE AS | |
| | 6 | | 123-5592 | 1 | HOSE AS | |
| | 7 | | 123-5593 | 1 | HOSE AS | |
| Y | 8 | | 127-1323 | 1 | VALVE AS | |
| | 9 | | 109-8708 | 2 | CLAMP | |
| | 10 | | 110-9851 | 4 | BOLT | |
| | 11 | | 5P-9085 | 2 | CLIP | |
| | 12 | | 8T-4121 | 2 | WASHER-HARD | |
| | 13 | | 8T-4133 | 1 | NUT | |
| | 14 | | 127-1212 | 3 | CONNECTOR | |
| | 15 | | 127-1213 | 2 | ELBOW | |
| | 16 | | 123-5588 | 6 | NUT | |
| | 17 | | 123-5589 | 6 | SLEEVE | |
| | 18 | | 8T-4137 | 1 | BOLT (L=20mm) | |
| | 19 | | 134-9244 | 4 | CONNECTOR | |
| | 20 | | 134-9245 | 2 | ELBOW | |
| | 21 | | 4K-3026 | 2 | EXTENSION | |

## 1218693 LINES GP-GREASE

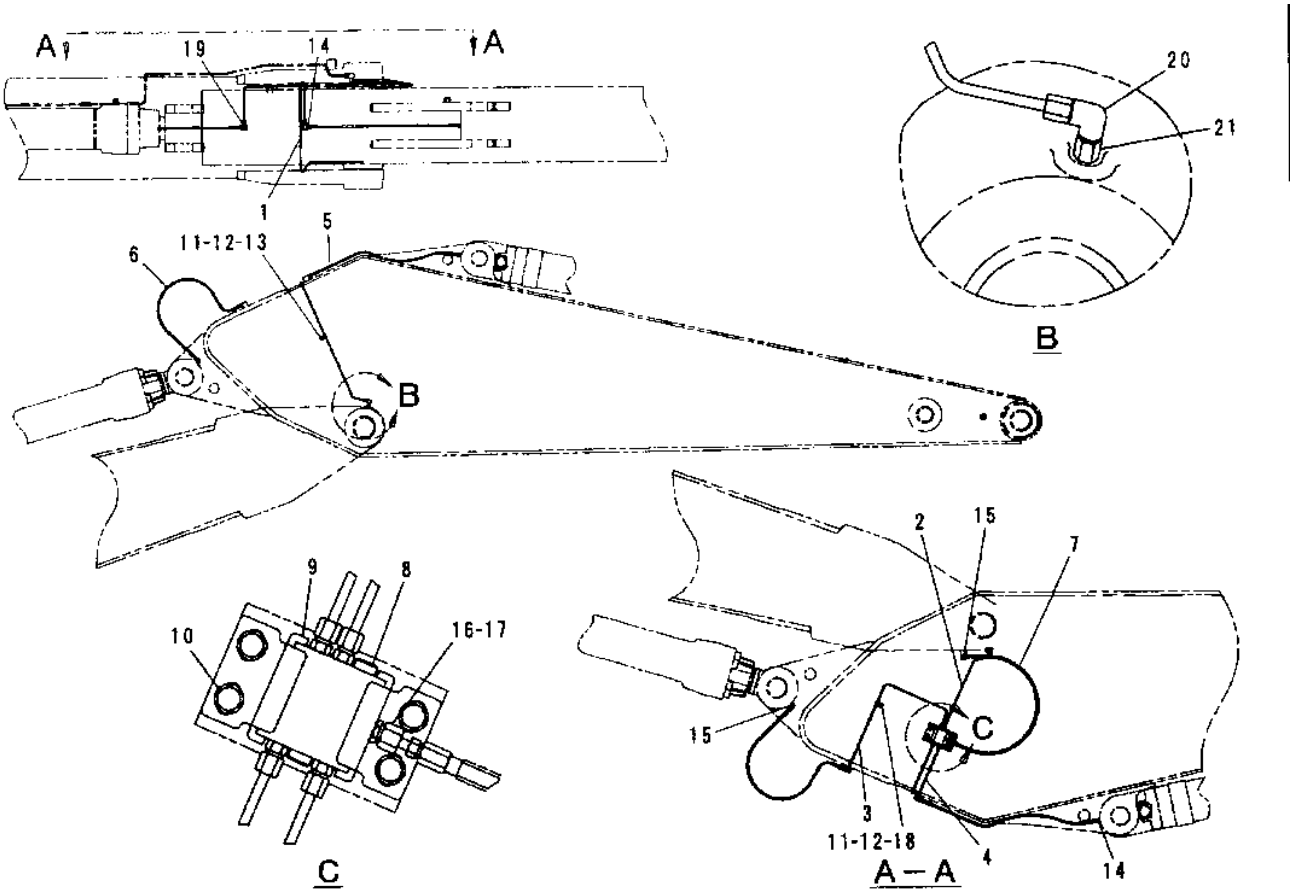


| NOTE | No. | PART No. | QTY | PART NAME |
|---|---|---|---|---|
| | 1 | 137-2961 | 1 | TUBE AS |
| | | 118-6051 | 2 | NUT |
| | | 118-6052 | 2 | SLEEVE |
| | 2 | 137-2961 | 1 | TUBE AS |
| | | 118-6051 | 2 | NUT |
| | | 118-6052 | 2 | SLEEVE |
| | 3 | 134-9237 | 1 | TUBE AS |
| | | 118-6051 | 2 | NUT |
| | | 118-6052 | 2 | SLEEVE |
| | 4 | 134-9239 | 1 | TUBE AS |
| | | 118-6051 | 2 | NUT |
| | | 118-6052 | 2 | SLEEVE |
| | 5 | 123-5587 | 1 | HOSE AS |
| | 6 | 123-5592 | 1 | HOSE AS |
| | 7 | 123-5593 | 1 | HOSE AS |
| Y | 8 | 127-1323 | 1 | VALVE AS |
| | 9 | 109-8708 | 2 | CLAMP |
| | 10 | 110-9851 | 4 | BOLT |
| | 11 | 5P-9085 | 2 | CLIP |
| | 12 | 8T-4121 | 2 | WASHER-HARD |
| | 13 | 8T-4133 | 1 | NUT |
| | 14 | 127-1212 | 3 | CONNECTOR |
| | 15 | 127-1213 | 2 | ELBOW |
| | 16 | 123-5588 | 6 | NUT |
| | 17 | 123-5589 | 6 | SLEEVE |
| | 18 | 8T-4137 | 1 | BOLT (L=20mm) |
| | 19 | 134-9244 | 4 | CONNECTOR |
| | 20 | 134-9245 | 2 | ELBOW |
| | 21 | 4K-3026 | 2 | EXTENSION |

Y—SEE SEPARATE ILLUSTRATION

H58815E

GRAPHIC #1

h58815e

# 1205113 PUMP GP-LUBRICATION-AUTO

PART OF 1263783-Page 483.01, 1370945-Page 485.02
1275264-Page 498.01
AN ATTACHMENT

**Key:** Y - Separate Illustration

**SMCS**

| NOTE | REF NO | GRAPHIC REF | PART NUMBER | QTY | PART NAME 1 2 3 4 5 6 (PRODUCT LEVEL) | PRICE USD |
|---|---|---|---|---|---|---|
| Y | 1 | | 127-5264 | 1 | PUMP AS | |
| | | | 137-1003 | 1 | VALVE AS | |
| | | | 137-1004 | 1 | ELEMENT AS | |
| | | | 137-1005 | 1 | CAP AS | |
| | 2 | | 117-4345 | 1 | SUPPORT AS | |
| | 3 | | 127-5268 | 1 | HOSE AS | |
| | | | 108-6703 | 2 | COUPLING | |
| | | | 108-6705 | 2 | CONNECTOR | |
| | 4 | | 096-0061 | 5 | STRAP | |
| | 5 | | 127-5266 | 1 | GREASE GUN AS | |
| | 6 | | 8T-7547 | 2 | BOLT (L=30mm) | |
| | 7 | | 5C-7261 | 2 | NUT | |
| | 8 | | 8T-4224 | 2 | WASHER-HARD | |
| | 9 | | 8T-4139 | 3 | BOLT (L=30mm) | |
| | 10 | | 5P-1076 | 3 | WASHER-HARD | |

## 1205113 PUMP GP-LUBRICATION-AUTO

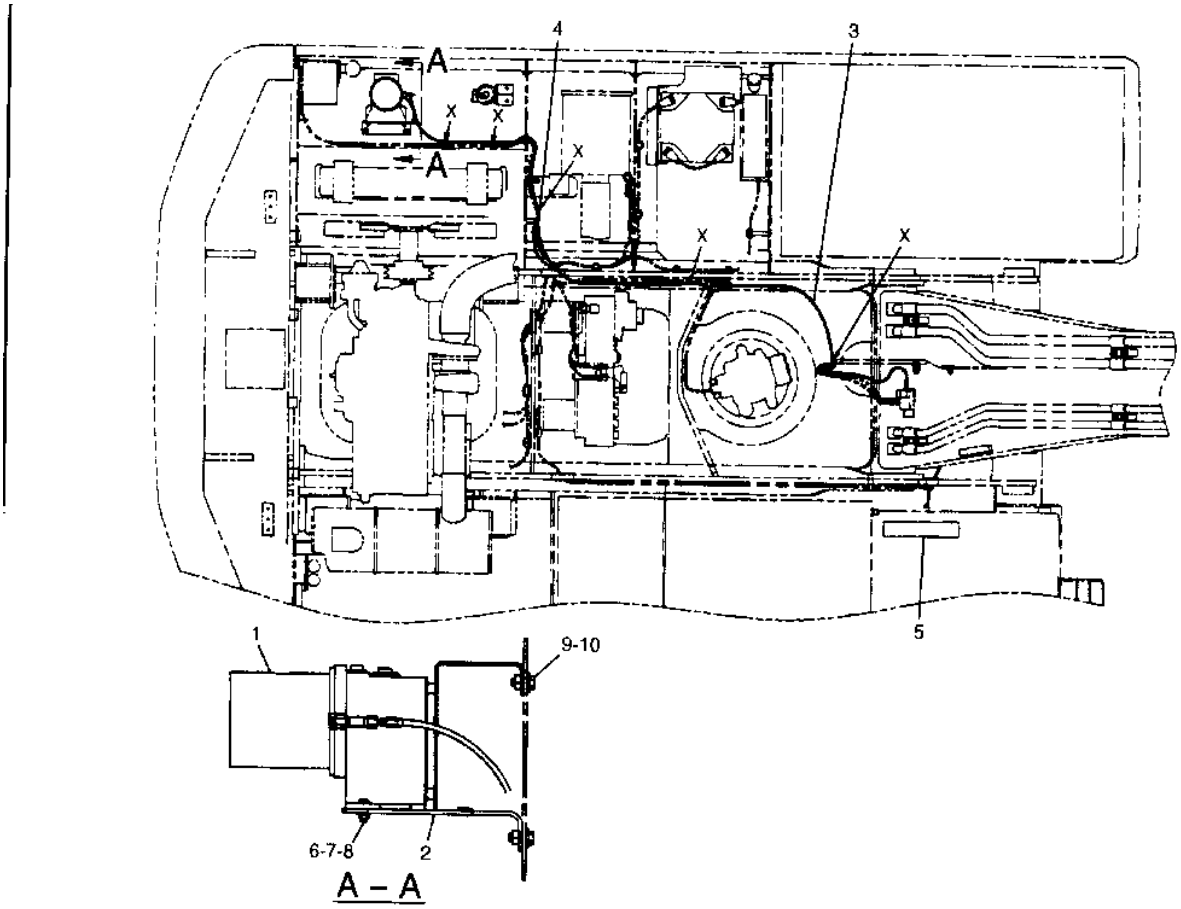


| NOTE | No. | PART No. | QTY | PART NAME | NOTE | No. | PART No. | QTY | PART NAME |
|---|---|---|---|---|---|---|---|---|---|
| | 1 | 127-5264 | 1 | PUMP AS | | | | | |
| | - | 137-1003 | 1 | VALVE AS | | | | | |
| | | 137-1004 | 1 | ELEMENT AS | | | | | |
| | | 137-1005 | 1 | CAP AS | | | | | |
| | 2 | 117-4345 | 1 | SUPPORT AS | | | | | |
| | 3 | 127-5268 | 1 | HOSE AS | | | | | |
| | | 108-6703 | 2 | COUPLING | | | | | |
| | | 108-6705 | 2 | CONNECTOR | | | | | |
| | 4 | 096-0061 | 5 | STRAP | | | | | |
| | 5 | 127-5266 | 1 | GREASE GUN AS | | | | | |
| | 6 | 8T-7547 | 2 | BOLT (L=30mm) | | | | | |
| | 7 | 5C-7261 | 2 | NUT | | | | | |
| | 8 | 8T-4224 | 2 | WASHER-HARD | | | | | |
| | 9 | 8T-4139 | 3 | BOLT (L=30mm) | | | | | |
| | 10 | 5P-1076 | 3 | WASHER-HARD | | | | | |

H64104E

GRAPHIC #1

h64104e

# 1275264 PUMP AS

PART OF 1205113-Page 498.09
AN ATTACHMENT

**Key:**

**SMCS**

| NOTE | REF NO | GRAPHIC REF | PART NUMBER | QTY | PART NAME 1 2 3 4 5 6 (PRODUCT LEVEL) | PRICE USD |
|---|---|---|---|---|---|---|

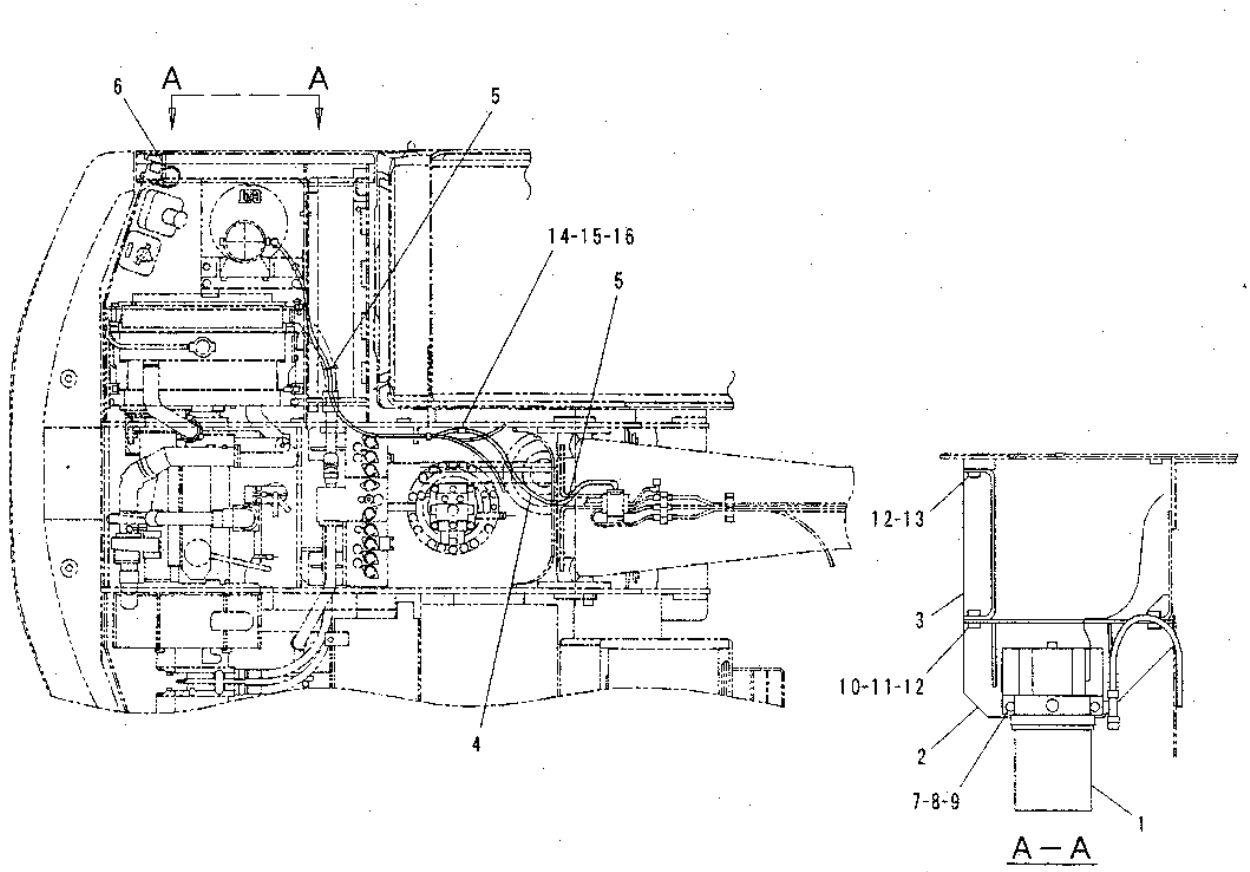


GRAPHIC #1

h65575e

# 1332435 LINKAGE GP-BUCKET

D FAMILY
PART OF 1205022-Page 489, 1370917-Page 489.01
AN ATTACHMENT

**Key:** B - USE AS REQUIRED

**SMCS**

| NOTE | REF NO | GRAPHIC REF | PART NUMBER | QTY | PART NAME 1 2 3 4 5 6 (PRODUCT LEVEL) | PRICE USD |
|---|---|---|---|---|---|---|
| | 1 | | 3B-8489 | 5 | FITTING | |
| | 2 | | 7Y-3547 | 1 | PIN | |
| | 3 | | 133-2441 | 1 | LINK | |
| | 4 | | 7Y-3556 | 1 | LINK AS | |
| | 5 | | 7Y-3552 | 2 | BEARING | |
| | 6 | | 7Y-3428 | 2 | BEARING | |
| | 7 | | 7Y-3528 | 1 | LINK AS | |
| | | | 7Y-3529 | 1 | TUBE | |
| | 8 | | 7X-2559 | 1 | BOLT (L=160mm) | |
| | 9 | | 8T-4132 | 8 | NUT | |
| | 10 | | 7X-4803 | 4 | SEAL (ID=90.00mm) | |
| | 11 | | 096-0854 | 2 | SEAL (ID=79.85mm) | |
| | 12 | | 7Y-3557 | 1 | BOLT (L=210mm) | |
| | 13 | | 7Y-3550 | 1 | PIN | |
| | 14 | | 093-1344 | 2 | SEAL-O-RING (ID=140.00mm) | |
| | 15 | | 7Y-3549 | 1 | PIN | |
| | 16 | | 093-1345 | 2 | SEAL-O-RING (ID=155.00mm) | |
| | 17 | | 7Y-5227 | 1 | BOLT (L=190mm) | |
| | 18 | | 7Y-3548 | 1 | PIN | |
| | 19 | | 7X-2558 | 1 | BOLT (L=150mm) | |
| | 20 | | 8T-4192 | 1 | BOLT (L=25mm) | |
| | 21 | | 5P-1076 | 1 | WASHER-HARD | |
| B | 22 | | 133-2430 | 1 | SHIM (T=0.5mm) | |
| B | | | 133-2438 | 2 | SHIM (T=1.0mm) | |
| B | | | 133-2443 | 1 | SHIM (T=1.6mm) | |
| B | | | 133-2477 | 1 | SHIM (T=2.0mm) | |
| | 23 | | 093-0116 | 1 | SHIM (T=2.0mm) | |

# 1332435 LINKAGE GP-BUCKET

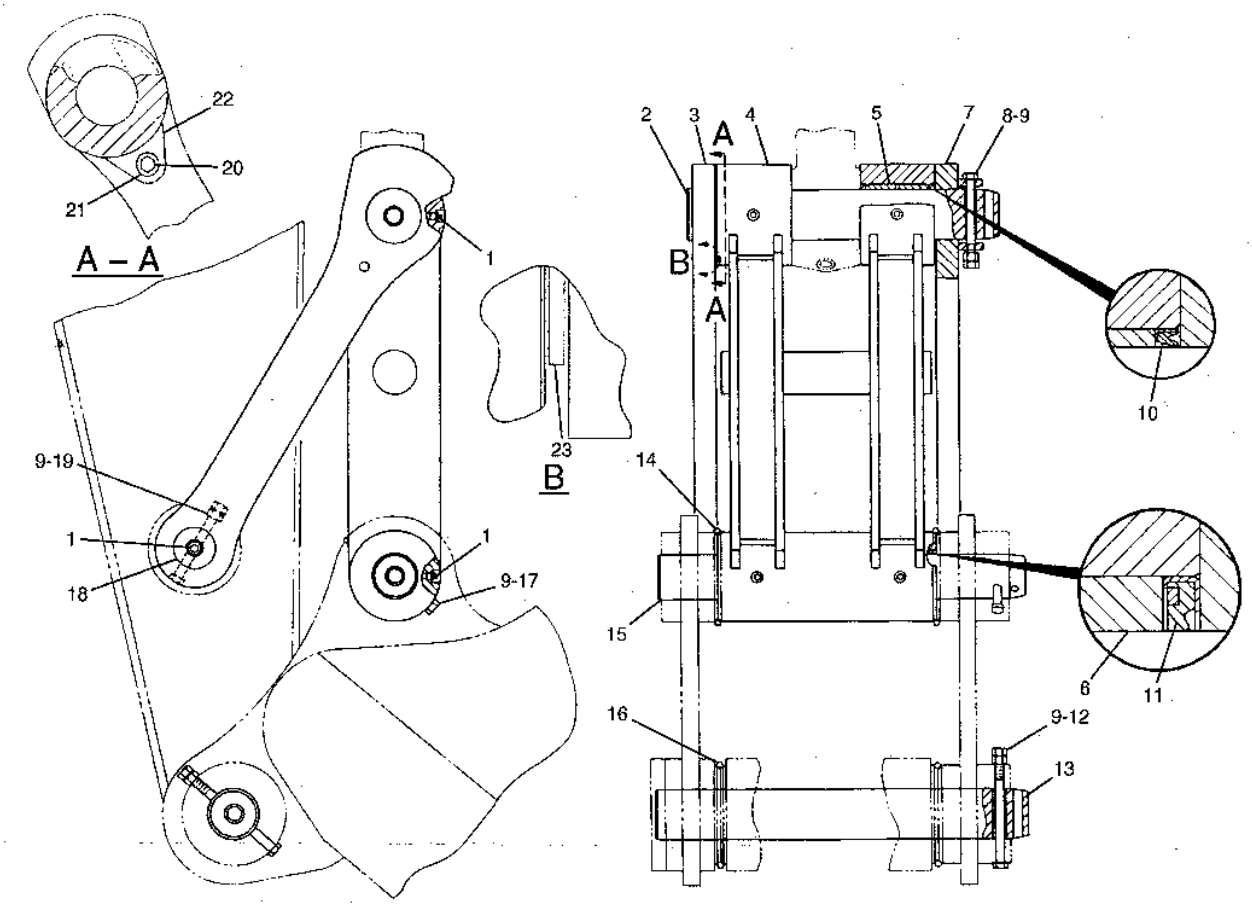


GRAPHIC #1

h79373e

# 1332442 LINKAGE GP-BUCKET

E FAMILY
PART OF 1370918-Page 489
AN ATTACHMENT

**Key:** B - USE AS REQUIRED

**SMCS**

| NOTE | REF NO | GRAPHIC REF | PART NUMBER | QTY | PART NAME 1 2 3 4 5 6 (PRODUCT LEVEL) | PRICE USD |
|---|---|---|---|---|---|---|
| | 1 | | 4I-4804 | 1 | PIN | |
| | 2 | | 133-2444 | 1 | LINK | |
| | 3 | | 4I-4717 | 1 | LINK AS | |
| | 4 | | 087-5548 | 2 | BEARING | |
| | 5 | | 7Y-3428 | 2 | BEARING | |
| | 6 | | 7Y-5261 | 1 | BOLT (L=190mm) | |
| | 7 | | 8T-4131 | 8 | NUT | |
| | 8 | | 9X-4597 | 4 | SEAL | |
| | 9 | | 096-0854 | 2 | SEAL | |
| | 10 | | 7X-2571 | 1 | BOLT (L=240mm) | |
| | 11 | | 4I-4805 | 1 | PIN | |
| | 12 | | 093-1349 | 2 | SEAL-O-RING (ID=175.00mm) | |
| | 13 | | 4I-4806 | 1 | PIN | |
| | 14 | | 093-1344 | 2 | SEAL-O-RING (ID=140.00mm) | |
| | 15 | | 7X-2569 | 1 | BOLT (L=200mm) | |
| | 16 | | 3B-8489 | 5 | FITTING | |
| | 17 | | 7Y-5260 | 1 | BOLT (L=170mm) | |
| | 18 | | 4I-4807 | 1 | PIN | |
| | 19 | | 8T-4192 | 1 | BOLT (L=25mm) | |
| | 20 | | 5P-1076 | 1 | WASHER | |
| B | 21 | | 133-2431 | 1 | SHIM (T=0.50mm) | |
| B | | | 133-2440 | 2 | SHIM (T=1.00mm) | |
| B | | | 133-2475 | 1 | SHIM (T=1.60mm) | |
| B | | | 133-2478 | 1 | SHIM (T=2.00mm) | |
| | 22 | | 093-0122 | 1 | SHIM (T=2.00mm) | |
| | 23 | | 4I-4724 | 1 | LINK AS | |

# 1332442 LINKAGE GP-BUCKET

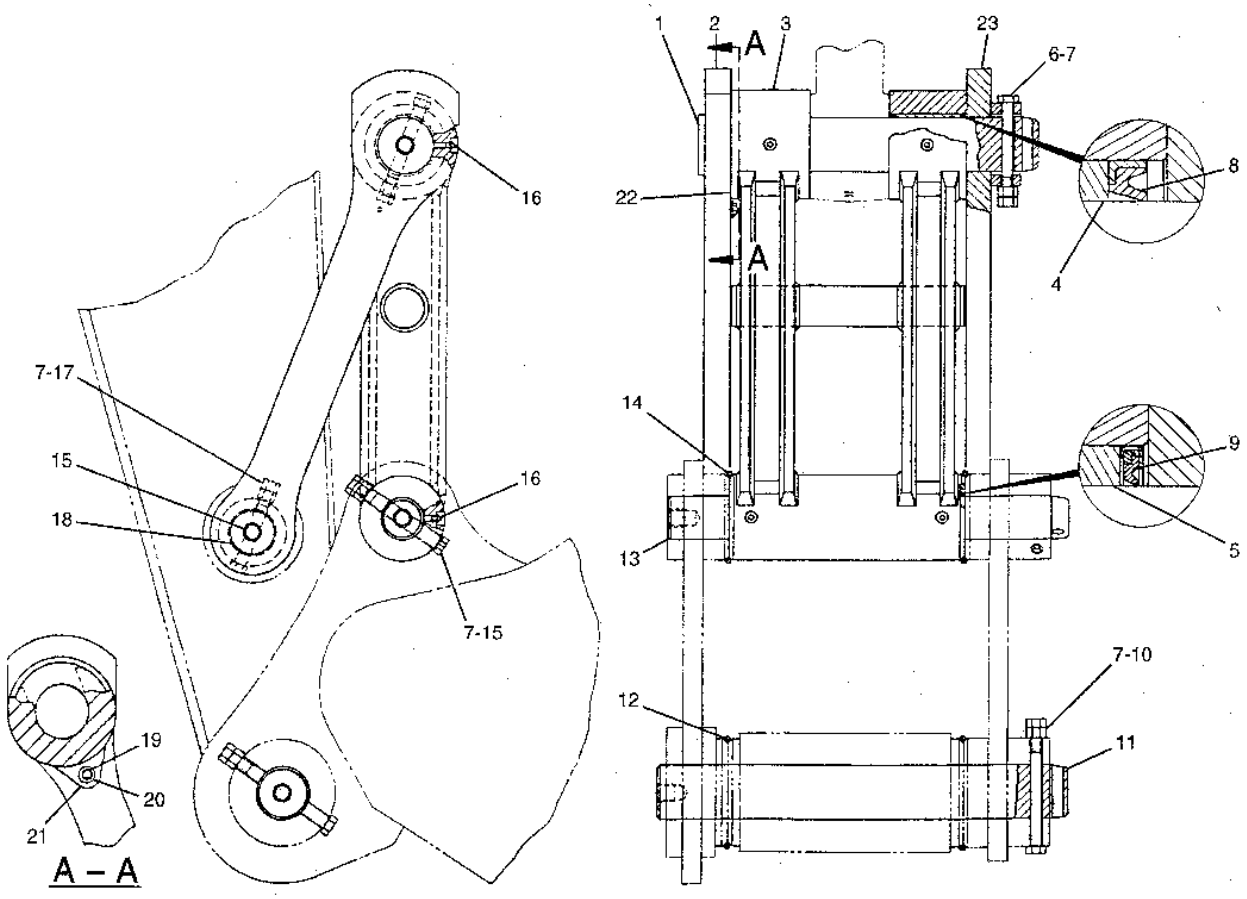


GRAPHIC #1

h79374e

# 6I5024 BUCKET & ADJUSTER GP

D FAMILY-TRENCHING
AN ATTACHMENT

**Key:** Y - Separate Illustration

**SMCS**

| NOTE | REF NO | GRAPHIC REF | PART NUMBER | QTY | PART NAME 1 2 3 4 5 6 (PRODUCT LEVEL) | PRICE USD |
|---|---|---|---|---|---|---|
| Y | | | 7Y-7569 | 1 | BUCKET AS (TRENCHING) | |
| Y | | | 7Y-3476 | 1 | ADJUSTER GP (BUCKET) | |

# 6I5026 BUCKET & ADJUSTER GP

D FAMILY-EXCAVATION
AN ATTACHMENT

**Key:** Y - Separate Illustration

**SMCS**

| NOTE | REF NO | GRAPHIC REF | PART NUMBER | QTY | PART NAME 1 2 3 4 5 6 (PRODUCT LEVEL) | PRICE USD |
|---|---|---|---|---|---|---|
| Y | | | 5I-3483 | 1 | BUCKET AS (EXCAVATION) | |
| Y | | | 7Y-3476 | 1 | ADJUSTER GP (BUCKET) | |

# 6I5069 BUCKET & ADJUSTER GP

D FAMILY-EXCAVATION
AN ATTACHMENT

**Key:** Y - Separate Illustration

**SMCS**

| NOTE | REF NO | GRAPHIC REF | PART NUMBER | QTY | PART NAME 1 2 3 4 5 6 (PRODUCT LEVEL) | PRICE USD |
|---|---|---|---|---|---|---|
| Y | | | 103-5121 | 1 | BUCKET AS (EXCAVATION) | |
| Y | | | 7Y-3476 | 1 | ADJUSTER GP (BUCKET) | |

# 6I5027 BUCKET & ADJUSTER GP

D FAMILY-MASS EXCAVATION
AN ATTACHMENT

**Key:** Y - Separate Illustration

**SMCS**

| NOTE | REF NO | GRAPHIC REF | PART NUMBER | QTY | PART NAME 1 2 3 4 5 6 (PRODUCT LEVEL) | PRICE USD |
|---|---|---|---|---|---|---|
| Y | | | 7Y-7470 | 1 | BUCKET AS (MASS EXCAVATION) | |
| Y | | | 7Y-3476 | 1 | ADJUSTER GP (BUCKET) | |

# 1110061 BUCKET & ADJUSTER GP

D 1700 MX-1.9
AN ATTACHMENT

**Key:** Y - Separate Illustration

**SMCS**

| NOTE | REF NO | GRAPHIC REF | PART NUMBER | QTY | PART NAME 1 2 3 4 5 6 (PRODUCT LEVEL) | PRICE USD |
|---|---|---|---|---|---|---|
| Y | | | 123-5385 | 1 | BUCKET AS (MASS EXCAVATION) | |
| Y | | | 7Y-3476 | 1 | ADJUSTER GP (BUCKET) | |

# 1233545 BUCKET & ADJUSTER GP

D 1225 ES-1.4
AN ATTACHMENT

**Key:** Y - Separate Illustration

**SMCS**

| NOTE | REF NO | GRAPHIC REF | PART NUMBER | QTY | PART NAME 1 2 3 4 5 6 (PRODUCT LEVEL) | PRICE USD |
|---|---|---|---|---|---|---|
| Y | | | 7Y-3476 | 1 | ADJUSTER GP (BUCKET) | |
| Y | | | 123-3217 | 1 | BUCKET AS | |

# 1178966 BUCKET & ADJUSTER GP

D 1400 ES-1.6
AN ATTACHMENT

**Key:** Y - Separate Illustration

**SMCS**

| NOTE | REF NO | GRAPHIC REF | PART NUMBER | QTY | PART NAME 1 2 3 4 5 6 (PRODUCT LEVEL) | PRICE USD |
|---|---|---|---|---|---|---|
| Y | | | 7Y-3476 | 1 | ADJUSTER GP (BUCKET) | |
| | | | 117-8967 | 1 | BUCKET AS | |

# 1285355 BUCKET & ADJUSTER GP

D 1540 ES-1.8
AN ATTACHMENT

**Key:** Y - Separate Illustration

**SMCS**

| NOTE | REF NO | GRAPHIC REF | PART NUMBER | QTY | PART NAME 1 2 3 4 5 6 (PRODUCT LEVEL) | PRICE USD |
|---|---|---|---|---|---|---|
| Y | | | 7Y-3476 | 1 | ADJUSTER GP (BUCKET) | |
| Y | | | 128-5358 | 1 | BUCKET AS | |

# 1285356 BUCKET & ADJUSTER GP

D 1695 ES-2.0
AN ATTACHMENT

**Key:** Y - Separate Illustration

**SMCS**

| NOTE | REF NO | GRAPHIC REF | PART NUMBER | QTY | PART NAME 1 2 3 4 5 6 (PRODUCT LEVEL) | PRICE USD |
|---|---|---|---|---|---|---|
| Y | | | 7Y-3476 | 1 | ADJUSTER GP (BUCKET) | |
| Y | | | 128-5371 | 1 | BUCKET AS | |

# 6I5034 BUCKET & ADJUSTER GP

E FAMILY-EXCAVATION
AN ATTACHMENT

**Key:** Y - Separate Illustration

**SMCS**

| NOTE | REF NO | GRAPHIC REF | PART NUMBER | QTY | PART NAME 1 2 3 4 5 6 (PRODUCT LEVEL) | PRICE USD |
|---|---|---|---|---|---|---|
| Y | | | 7Y-9140 | 1 | BUCKET AS (EXCAVATION) | |
| Y | | | 087-5960 | 1 | ADJUSTER GP (BUCKET) | |

# 6I5035 BUCKET & ADJUSTER GP

E FAMILY-EXCAVATION
AN ATTACHMENT

**Key:** Y - Separate Illustration

**SMCS**

| NOTE | REF NO | GRAPHIC REF | PART NUMBER | QTY | PART NAME 1 2 3 4 5 6 (PRODUCT LEVEL) | PRICE USD |
|---|---|---|---|---|---|---|
| Y | | | 7Y-9141 | 1 | BUCKET AS (EXCAVATION) | |
| Y | | | 087-5960 | 1 | ADJUSTER GP (BUCKET) | |

# 6I5036 BUCKET & ADJUSTER GP

E FAMILY-MASS EXCAVATION
AN ATTACHMENT

**Key:** Y - Separate Illustration

**SMCS**

| NOTE | REF NO | GRAPHIC REF | PART NUMBER | QTY | PART NAME 1 2 3 4 5 6 (PRODUCT LEVEL) | PRICE USD |
|---|---|---|---|---|---|---|
| Y | | | 7Y-9143 | 1 | BUCKET AS (MASS EXCAVATION) | |
| Y | | | 087-5960 | 1 | ADJUSTER GP (BUCKET) | |

# 7Y7569 BUCKET AS-TRENCHING

D FAMILY
1200MM WIDE-1.3Cu.M.-ADAPTER SIZE J400
PART OF 6I5024-Page 501
AN ATTACHMENT

**Key:**

**SMCS**

| NOTE | REF NO | GRAPHIC REF | PART NUMBER | QTY | PART NAME 1 2 3 4 5 6 (PRODUCT LEVEL) | PRICE USD |
|---|---|---|---|---|---|---|
| | 1 | | 109-8554 | 1 | EDGE AS | |
| | 2 | | 6I-6406 | 1 | ADAPTER (LH) | |
| | 3 | | 6I-6404 | 3 | ADAPTER | |
| | 4 | | 6I-6405 | 1 | ADAPTER (RH) | |
| | 5 | | 4B-4158 | 4 | SCREW | |
| | 6 | | 6I-5219 | 1 | PLATE | |
| | 7 | | 128-9200 | 1 | PLATE | |
| | 8 | | 7Y-7558 | 2 | PLATE | |
| | 9 | | 6I-5217 | 1 | PLATE | |

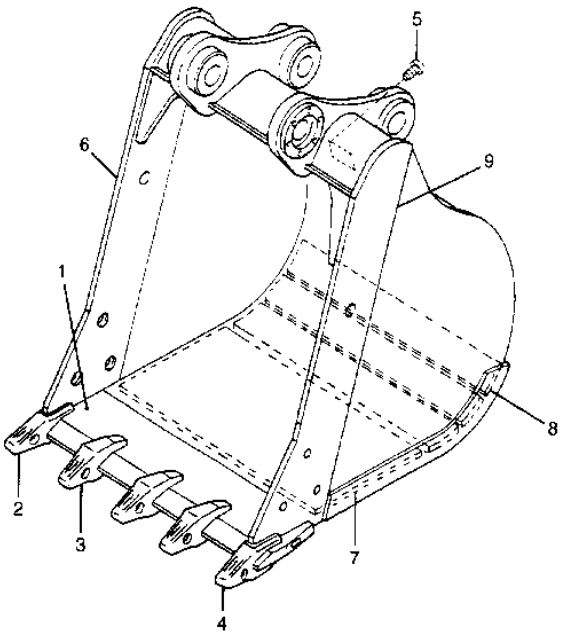


| NOTE | No. | PART No. | QTY | PART NAME |
|---|---|---|---|---|
| | 1 | 109-8554 | 1 | EDGE AS |
| | 2 | 6I-6406 | 1 | ADAPTER (LH) |
| | 3 | 6I-6404 | 3 | ADAPTER |
| | 4 | 6I-6405 | 1 | ADAPTER (RH) |
| | 5 | 4B-4158 | 4 | SCREW |
| | 6 | 6I-5219 | 1 | PLATE |
| | 7 | 128-9200 | 1 | PLATE |
| | 8 | 7Y-7558 | 2 | PLATE |
| | 9 | 6I-5217 | 1 | PLATE |

H64105E

GRAPHIC #1

h64105e

# 5I3483 BUCKET AS-EXCAVATION

D FAMILY
1500MM WIDE-1.5Cu.M.-ADAPTER SIZE J400
PART OF 6I5026-Page 501
AN ATTACHMENT

**Key:** B - USE AS REQUIRED

**SMCS**

| NOTE | REF NO | GRAPHIC REF | PART NUMBER | QTY | PART NAME 1 2 3 4 5 6 (PRODUCT LEVEL) | PRICE USD |
|---|---|---|---|---|---|---|
| | 1 | | 109-8556 | 1 | EDGE AS | |
| | 2 | | 6I-6405 | 1 | ADAPTER (RH) | |
| | 3 | | 6I-6406 | 1 | ADAPTER (LH) | |
| | 4 | | 6I-6404 | 3 | ADAPTER | |
| | 5 | | 6I-5215 | 1 | PLATE | |
| | 6 | | 128-9207 | 1 | PLATE | |
| | 7 | | 5I-3492 | 3 | PLATE | |
| | 8 | | 6I-5213 | 1 | PLATE | |
| | 9 | | 5I-3485 | 2 | PLATE | |
| B | 10 | | 4B-4158 | 4 | SCREW | |

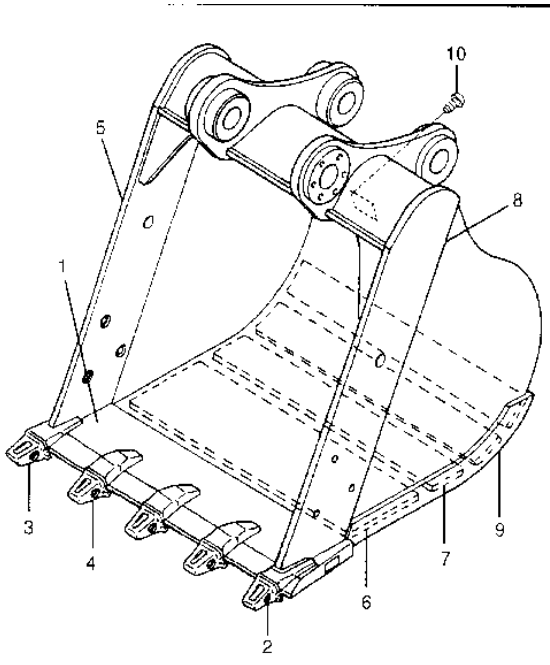


| NOTE | No. | PART No. | QTY | PART NAME |
|---|---|---|---|---|
| | 1 | 109-8556 | 1 | EDGE AS |
| | 2 | 6I-6405 | 1 | ADAPTER (RH) |
| | 3 | 6I-6406 | 1 | ADAPTER (LH) |
| | 4 | 6I-6404 | 3 | ADAPTER |
| | 5 | 6I-5215 | 1 | PLATE |
| | 6 | 128-9207 | 1 | PLATE |
| | 7 | 5I-3492 | 3 | PLATE |
| | 8 | 6I-5213 | 1 | PLATE |
| | 9 | 5I-3485 | 2 | PLATE |
| B | 10 | 4B-4158 | 4 | SCREW |

B–USE AS REQUIRED

H63489E

GRAPHIC #1 h63489e

# 1035121 BUCKET AS-EXCAVATION

D FAMILY
1345MM WIDE-1.3Cu.M.-ADAPTER SIZE J400
PART OF 6I5069-Page 501.01
AN ATTACHMENT

**Key:** B - USE AS REQUIRED

**SMCS**

| NOTE | REF NO | GRAPHIC REF | PART NUMBER | QTY | PART NAME 1 2 3 4 5 6 (PRODUCT LEVEL) | PRICE USD |
|---|---|---|---|---|---|---|
| | 1 | | 103-5207 | 1 | EDGE AS | |
| | 2 | | 6I-6405 | 1 | ADAPTER | |
| | 3 | | 6I-6406 | 1 | ADAPTER | |
| | 4 | | 6I-6404 | 3 | ADAPTER | |
| | 5 | | 6I-5215 | 1 | PLATE | |
| | 6 | | 128-9209 | 1 | PLATE | |
| | 7 | | 7Y-7566 | 3 | PLATE | |
| | 8 | | 6I-5213 | 1 | PLATE | |
| | 9 | | 5I-3485 | 2 | PLATE | |
| B | 10 | | 4B-4158 | 4 | SCREW | |

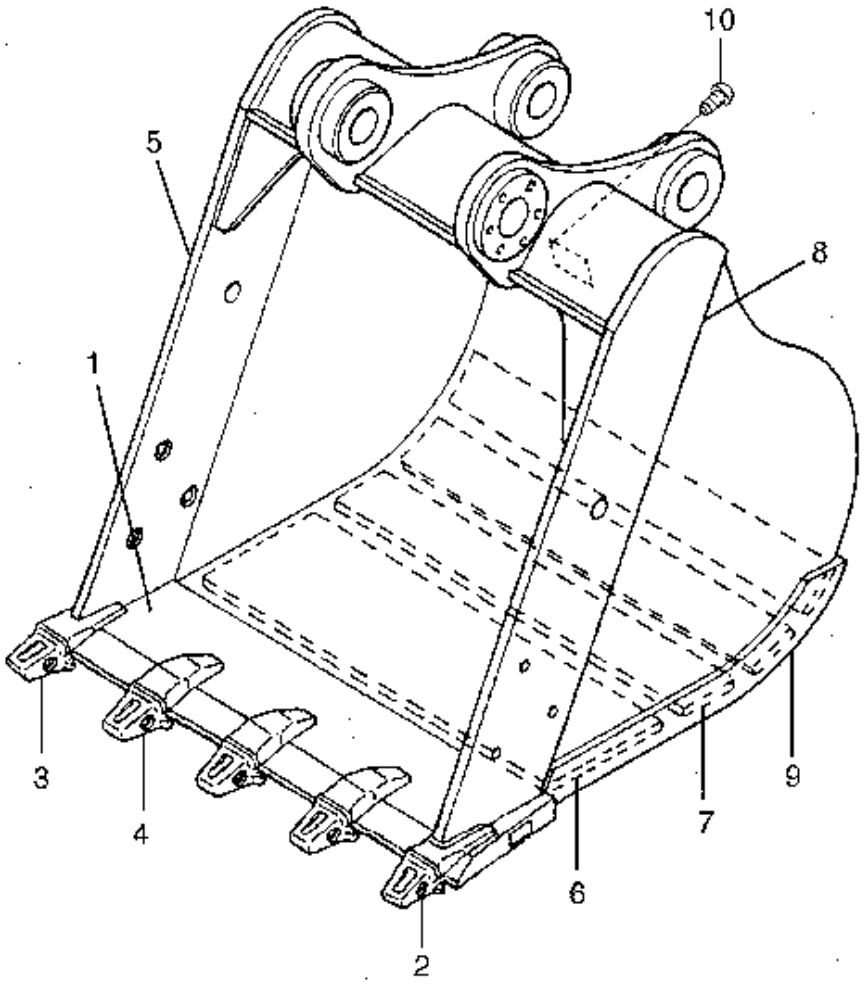


GRAPHIC #1

h84039e

# 7Y7470 BUCKET AS-MASS EXCAVATION

D FAMILY
1520MM WIDE-1.6Cu.M.-ADAPTER SIZE J400
PART OF 6I5027-Page 502
AN ATTACHMENT

**Key:** B - USE AS REQUIRED

**SMCS**

| NOTE | REF NO | GRAPHIC REF | PART NUMBER | QTY | PART NAME 1 2 3 4 5 6 (PRODUCT LEVEL) | PRICE USD |
|---|---|---|---|---|---|---|
| | 1 | | 109-8557 | 1 | EDGE AS | |
| | 2 | | 6I-6406 | 1 | ADAPTER (LH) | |
| | 3 | | 6I-6404 | 4 | ADAPTER | |
| | 4 | | 6I-6405 | 1 | ADAPTER (RH) | |
| | 5 | | 6I-5215 | 1 | PLATE | |
| | 6 | | 7Y-7480 | 2 | PLATE | |
| | 7 | | 128-9198 | 1 | PLATE | |
| | 8 | | 7Y-7483 | 2 | PLATE | |
| | 9 | | 6I-5213 | 1 | PLATE | |
| | 10 | | 7Y-7482 | 1 | PLATE | |
| B | 11 | | 4B-4158 | 4 | SCREW | |

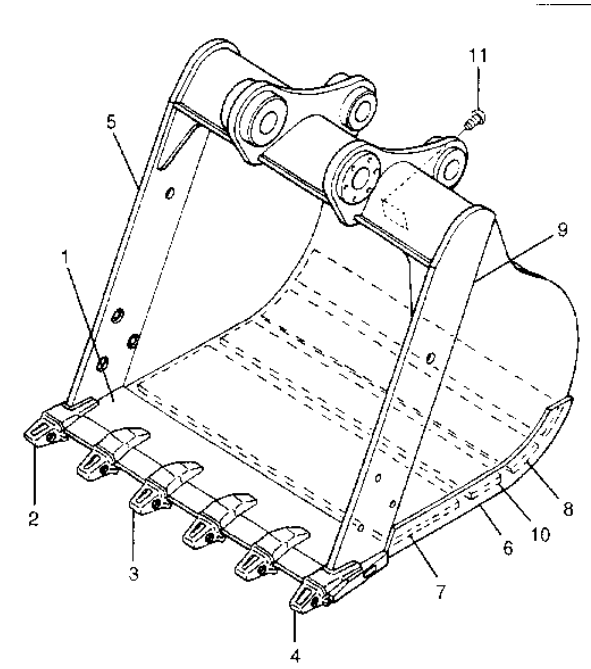


| NOTE | No. | PART No. | QTY | PART NAME |
|---|---|---|---|---|
| | 1 | 109 8557 | 1 | EDGE AS |
| | 2 | 6I-6406 | 1 | ADAPTER (LH) |
| | 3 | 6I-6404 | 4 | ADAPTER |
| | 4 | 6I 6405 | 1 | ADAPTER (RH) |
| | 5 | 6I 5215 | 1 | PLATE |
| | 6 | 7Y-7480 | 2 | PLATE |
| | 7 | 128-9198 | 1 | PLATE |
| | 8 | 7Y-7483 | 2 | PLATE |
| | 9 | 6I 5213 | 1 | PLATE |
| | 10 | 7Y-7482 | 1 | PLATE |
| B | 11 | 4B-4158 | 4 | SCREW |

B-USE AS REQUIRED

H63490E

GRAPHIC #1

h63490e

# 1235385 BUCKET AS-MASS EXCAVATION

D FAMILY
1700MM WIDE-1.9Cu.M.-ADAPTER SIZE J400
PART OF 1110061-Page 502
AN ATTACHMENT

**Key:** B - USE AS REQUIRED

**SMCS**

| NOTE | REF NO | GRAPHIC REF | PART NUMBER | QTY | PART NAME 1 2 3 4 5 6 (PRODUCT LEVEL) | PRICE USD |
|---|---|---|---|---|---|---|
| | 1 | | 123-5392 | 1 | EDGE AS | |
| | 2 | | 6I-6406 | 1 | ADAPTER (LH) | |
| | 3 | | 6I-6404 | 4 | ADAPTER | |
| | 4 | | 6I-6405 | 1 | ADAPTER (RH) | |
| | 5 | | 6I-5215 | 1 | PLATE | |
| | 6 | | 123-5395 | 4 | PLATE | |
| | 7 | | 6I-5213 | 1 | PLATE | |
| | 8 | | 123-5396 | 1 | PLATE | |
| B | 9 | | 4B-4158 | 4 | SCREW | |

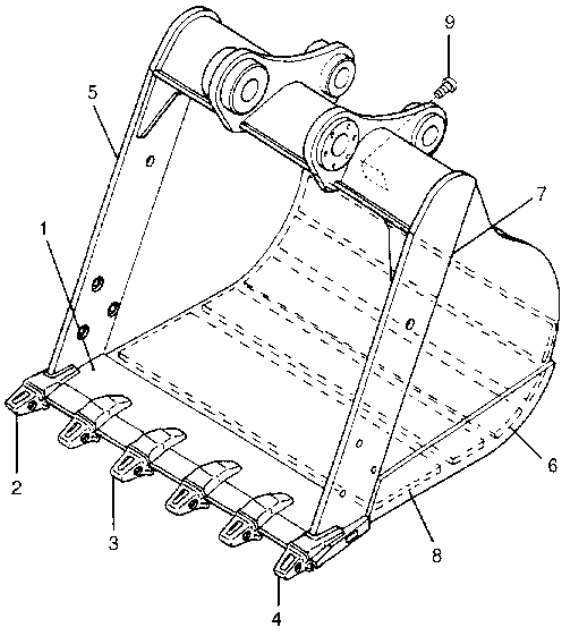


| NOTE | No. | PART No. | QTY | PART NAME |
|---|---|---|---|---|
| | 1 | 123-5392 | 1 | EDGE AS |
| | 2 | 6I-6406 | 1 | ADAPTER (LH) |
| | 3 | 6I-6404 | 4 | ADAPTER |
| | 4 | 6I-6405 | 1 | ADAPTER (RH) |
| | 5 | 6I-5215 | 1 | PLATE |
| | 6 | 123-5395 | 4 | PLATE |
| | 7 | 6I-5213 | 1 | PLATE |
| | 8 | 123-5396 | 1 | PLATE |
| B | 9 | 4B-4158 | 4 | SCREW |

B - USE AS REQUIRED

H63603E

GRAPHIC #1 h63603e

# 1233217 BUCKET AS

D FAMILY-HEAVY DUTY
1225MM WIDE-1.4Cu.M.-ADAPTER SIZE J460
PART OF 1233545-Page 502.01
AN ATTACHMENT

**Key:** B - USE AS REQUIRED

**SMCS**

| NOTE | REF NO | GRAPHIC REF | PART NUMBER | QTY | PART NAME 1 2 3 4 5 6 (PRODUCT LEVEL) | PRICE USD |
|---|---|---|---|---|---|---|
| | 1 | | 123-3220 | 1 | EDGE AS | |
| | 2 | | 159-0464 | 3 | ADAPTER | |
| | 3 | | 159-0465 | 3 | ADAPTER | |
| | 4 | | 159-0466 | 1 | ADAPTER | |
| | 5 | | 123-3219 | 3 | PLATE | |
| | 6 | | 128-2677 | 1 | PLATE | |
| | 7 | | 119-0030 | 1 | PLATE | |
| | 8 | | 119-0032 | 1 | PLATE | |
| B | 9 | | 4B-4158 | 4 | SCREW | |

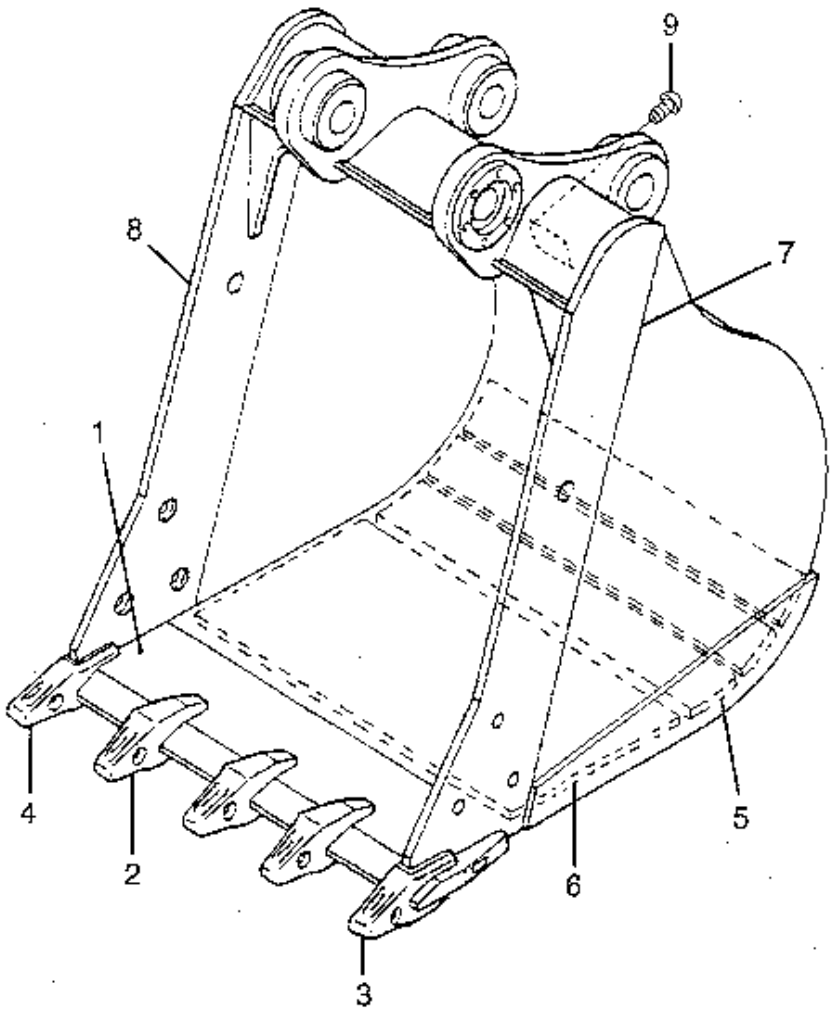


GRAPHIC #1

h84057e

# 1285358 BUCKET AS

D FAMILY-HEAVY DUTY
1540MM WIDE-1.8Cu.M.-ADAPTER SIZE J460
PART OF 1285355-Page 502.02
AN ATTACHMENT

**Key:**

**SMCS**

| NOTE | REF NO | GRAPHIC REF | PART NUMBER | QTY | PART NAME 1 2 3 4 5 6 (PRODUCT LEVEL) | PRICE USD |
|---|---|---|---|---|---|---|
| | 1 | | 128-5366 | 1 | EDGE AS | |
| | 2 | | 6I-6464 | 4 | ADAPTER | |
| | 3 | | 6I-6465 | 1 | ADAPTER (RH) | |
| | 4 | | 6I-6466 | 1 | ADAPTER (LH) | |
| | 5 | | 128-5364 | 1 | PLATE | |
| | 6 | | 119-0030 | 1 | PLATE | |
| | 7 | | 119-0032 | 1 | PLATE | |
| | 8 | | 128-5365 | 3 | PLATE | |
| | 9 | | 4B-4158 | 4 | SCREW | |

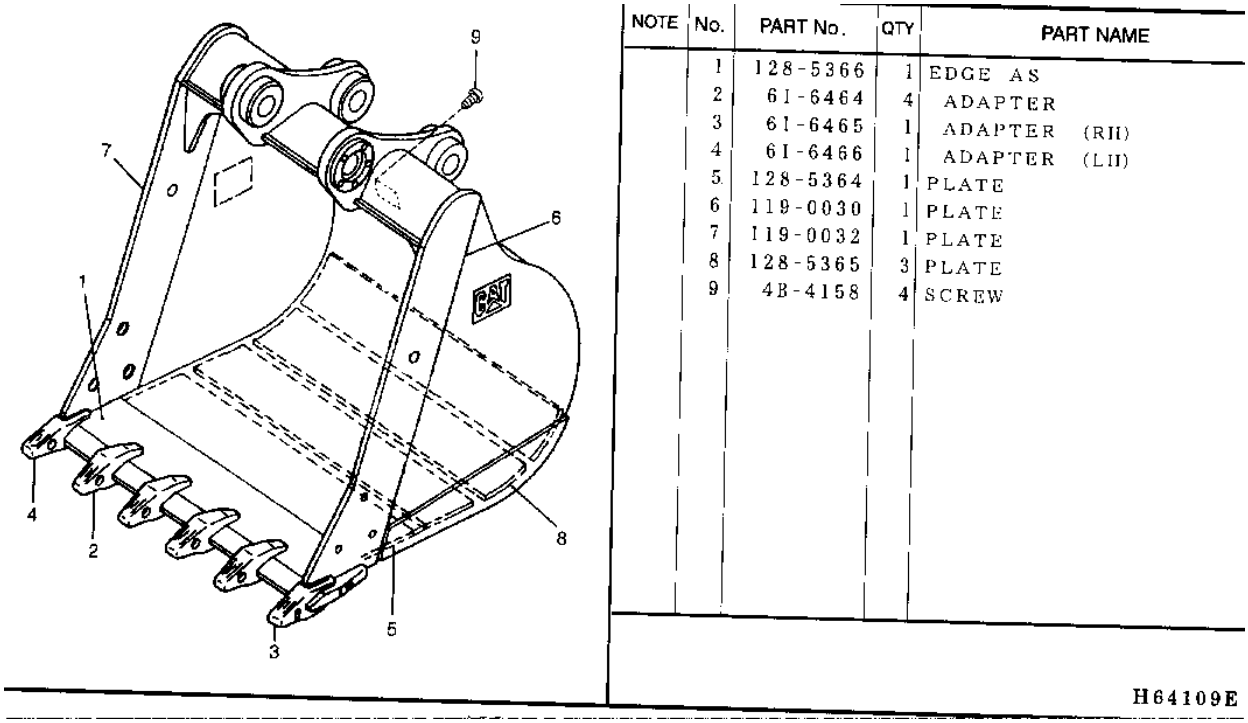


| NOTE | No. | PART No. | QTY | PART NAME |
|---|---|---|---|---|
| | 1 | 128-5366 | 1 | EDGE AS |
| | 2 | 6I-6464 | 4 | ADAPTER |
| | 3 | 6I-6465 | 1 | ADAPTER (RH) |
| | 4 | 6I-6466 | 1 | ADAPTER (LH) |
| | 5 | 128-5364 | 1 | PLATE |
| | 6 | 119-0030 | 1 | PLATE |
| | 7 | 119-0032 | 1 | PLATE |
| | 8 | 128-5365 | 3 | PLATE |
| | 9 | 4B-4158 | 4 | SCREW |

GRAPHIC #1 h64109e

# 1285371 BUCKET AS

D FAMILY-HEAVY DUTY
1695MM WIDE-2.0Cu.M.-ADAPTER SIZE J460
PART OF 1285356-Page 502.02
AN ATTACHMENT

**Key:**

**SMCS**

| NOTE | REF NO | GRAPHIC REF | PART NUMBER | QTY | PART NAME 1 2 3 4 5 6 (PRODUCT LEVEL) | PRICE USD |
|---|---|---|---|---|---|---|
| | 1 | | 128-5379 | 1 | EDGE AS | |
| | 2 | | 6I-6464 | 4 | ADAPTER | |
| | 3 | | 6I-6465 | 1 | ADAPTER (RH) | |
| | 4 | | 6I-6466 | 1 | ADAPTER (LH) | |
| | 5 | | 128-5377 | 1 | PLATE | |
| | 6 | | 119-0030 | 1 | PLATE | |
| | 7 | | 119-0032 | 1 | PLATE | |
| | 8 | | 128-5378 | 3 | PLATE | |
| | 9 | | 4B-4158 | 4 | SCREW | |

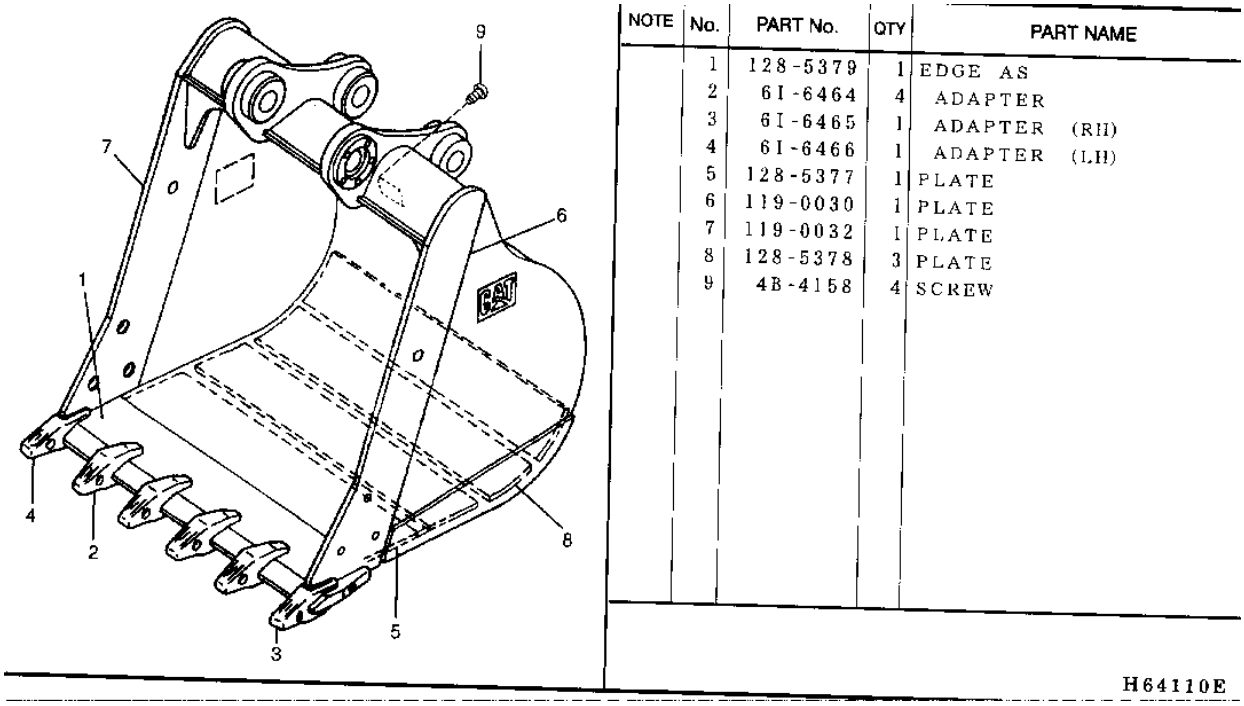


| NOTE | No. | PART No. | QTY | PART NAME |
|---|---|---|---|---|
| | 1 | 128-5379 | 1 | EDGE AS |
| | 2 | 6I-6464 | 4 | ADAPTER |
| | 3 | 6I-6465 | 1 | ADAPTER (RH) |
| | 4 | 6I-6466 | 1 | ADAPTER (LH) |
| | 5 | 128-5377 | 1 | PLATE |
| | 6 | 119-0030 | 1 | PLATE |
| | 7 | 119-0032 | 1 | PLATE |
| | 8 | 128-5378 | 3 | PLATE |
| | 9 | 4B-4158 | 4 | SCREW |

H64110E

GRAPHIC #1 h64110e

# 7Y9140 BUCKET AS-EXCAVATION

E FAMILY
1470MM WIDE-1.7Cu.M.-ADAPTER SIZE J460
PART OF 6I5034-Page 503
AN ATTACHMENT

**Key:**

**SMCS**

| NOTE | REF NO | GRAPHIC REF | PART NUMBER | QTY | PART NAME 1 2 3 4 5 6 (PRODUCT LEVEL) | PRICE USD |
|---|---|---|---|---|---|---|
| | 1 | | 6I-5239 | 1 | EDGE AS | |
| | 2 | | 6I-6466 | 1 | ADAPTER (LH) | |
| | 3 | | 6I-6464 | 3 | ADAPTER | |
| | 4 | | 6I-6465 | 1 | ADAPTER (RH) | |
| | 5 | | 6I-5236 | 1 | PLATE | |
| | 6 | | 6I-5238 | 1 | PLATE | |
| | 7 | | 128-9210 | 1 | PLATE | |
| | 8 | | 4B-4158 | 4 | SCREW | |
| | 9 | | 4I-4062 | 2 | PLATE | |

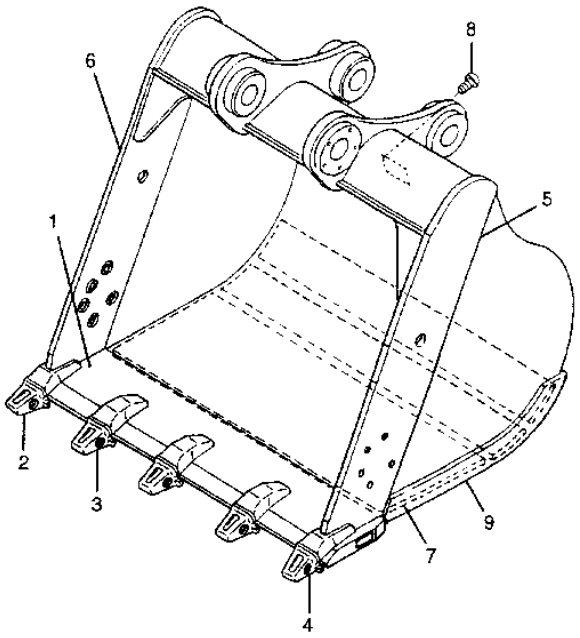


| NOTE | No. | PART No. | QTY | PART NAME |
|---|---|---|---|---|
| | 1 | 6I-5239 | 1 | EDGE AS |
| | 2 | 6I-6466 | 1 | ADAPTER (LH) |
| | 3 | 6I-6464 | 3 | ADAPTER |
| | 4 | 6I-6465 | 1 | ADAPTER (RH) |
| | 5 | 6I-5236 | 1 | PLATE |
| | 6 | 6I-5238 | 1 | PLATE |
| | 7 | 128-9210 | 1 | PLATE |
| | 8 | 4B-4158 | 4 | SCREW |
| | 9 | 4I-4062 | 2 | PLATE |

H64111E

GRAPHIC #1

h64111e

# 7Y9141 BUCKET AS-EXCAVATION

E FAMILY
1600MM WIDE-1.9Cu.M.-ADAPTER SIZE J460
PART OF 6I5035-Page 503
AN ATTACHMENT

**Key:**

**SMCS**

| NOTE | REF NO | GRAPHIC REF | PART NUMBER | QTY | PART NAME 1 2 3 4 5 6 (PRODUCT LEVEL) | PRICE USD |
|---|---|---|---|---|---|---|
| | 1 | | 6I-5240 | 1 | EDGE AS | |
| | 2 | | 159-0466 | 1 | ADAPTER (LH) | |
| | 3 | | 159-0464 | 3 | ADAPTER | |
| | 4 | | 159-0465 | 1 | ADAPTER (RH) | |
| | 5 | | 6I-5236 | 1 | PLATE | |
| | 6 | | 6I-5238 | 1 | PLATE | |
| | 7 | | 128-9210 | 1 | PLATE | |
| | 8 | | 4B-4158 | 4 | SCREW | |
| | 9 | | 4I-4062 | 2 | PLATE | |

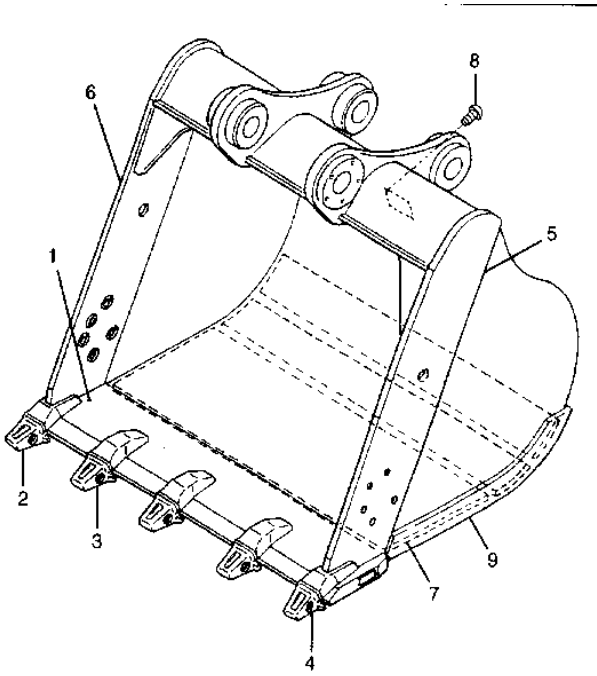


| NOTE | No. | PART No. | QTY | PART NAME |
|---|---|---|---|---|
| | 1 | 6I-5240 | 1 | EDGE AS |
| | 2 | 6I-6466 | 1 | ADAPTER (LH) |
| | 3 | 6I-6464 | 3 | ADAPTER |
| | 4 | 6I-6465 | 1 | ADAPTER (RH) |
| | 5 | 6I-5236 | 1 | PLATE |
| | 6 | 6I-5238 | 1 | PLATE |
| | 7 | 128-9210 | 1 | PLATE |
| | 8 | 4B-4158 | 4 | SCREW |
| | 9 | 4I-4062 | 2 | PLATE |

H64112E

GRAPHIC #1 h64112e

# 7Y9143 BUCKET AS-MASS EXCAVATION

E FAMILY
1735MM WIDE-2.1Cu.M.-ADAPTER SIZE J460
PART OF 6I5036-Page 504
AN ATTACHMENT

**Key:**

**SMCS**

| NOTE | REF NO | GRAPHIC REF | PART NUMBER | QTY | PART NAME 1 2 3 4 5 6 (PRODUCT LEVEL) | PRICE USD |
|---|---|---|---|---|---|---|
| | 1 | | 6I-5241 | 1 | EDGE AS | |
| | 2 | | 6I-6465 | 1 | ADAPTER (RH) | |
| | 3 | | 6I-6466 | 1 | ADAPTER (LH) | |
| | 4 | | 6I-6464 | 4 | ADAPTER | |
| | 5 | | 6I-5236 | 1 | PLATE | |
| | 6 | | 6I-5238 | 1 | PLATE | |
| | 7 | | 128-9212 | 1 | PLATE | |
| | 8 | | 4I-4067 | 2 | PLATE | |
| | 9 | | 4I-4062 | 2 | PLATE | |
| | 10 | | 4B-4158 | 4 | SCREW | |

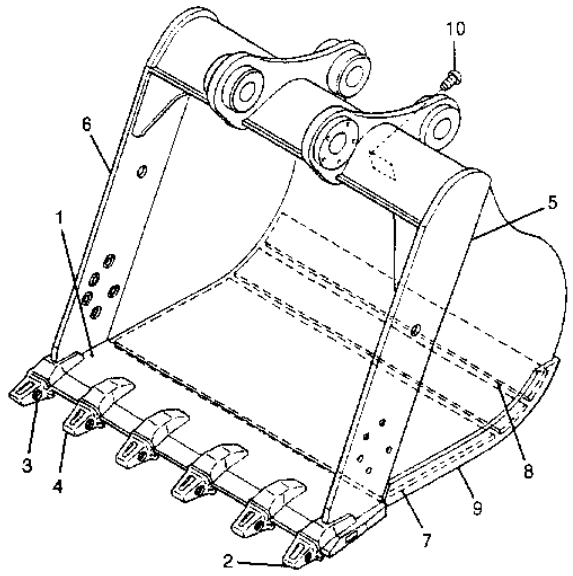


| NOTE | No. | PART No. | QTY | PART NAME |
|---|---|---|---|---|
| | 1 | 6I-5241 | 1 | EDGE AS |
| | 2 | 6I-6465 | 1 | ADAPTER (RH) |
| | 3 | 6I-6466 | 1 | ADAPTER (LH) |
| | 4 | 6I-6464 | 4 | ADAPTER |
| | 5 | 6I-5236 | 1 | PLATE |
| | 6 | 6I-5238 | 1 | PLATE |
| | 7 | 128-9212 | 1 | PLATE |
| | 8 | 4I-4067 | 2 | PLATE |
| | 9 | 4I-4062 | 2 | PLATE |
| | 10 | 4B-4158 | 4 | SCREW |

H64113E

GRAPHIC #1 h64113e

# 7Y3476 ADJUSTER GP-BUCKET

D FAMILY
PART OF 6I5024, 6I5026-Page 501, 6I5069-Page 501.01, 6I5027, 1110061-Page 502, 1178966, 1233545-Page 502.01
1285355, 1285356-Page 502.02
AN ATTACHMENT

**Key:** B - USE AS REQUIRED

**SMCS**

| NOTE | REF NO | GRAPHIC REF | PART NUMBER | QTY | PART NAME 1 2 3 4 5 6 (PRODUCT LEVEL) | PRICE USD |
|---|---|---|---|---|---|---|
| B | 1 | | 087-5976 | 6 | SHIM (T=1.0mm) | |
| B | | | 087-5975 | 4 | SHIM (T=0.5mm) | |
| | 2 | | 087-5974 | 1 | PIN | |
| | 3 | | 134-8950 | 1 | PLATE | |
| | 4 | | 8T-4193 | 6 | BOLT (L=50mm) | |
| | 5 | | 9X-8257 | 6 | WASHER | |
| | 6 | | 087-5978 | 1 | FLANGE | |

## 7Y3476 ADJUSTER GP-BUCKET

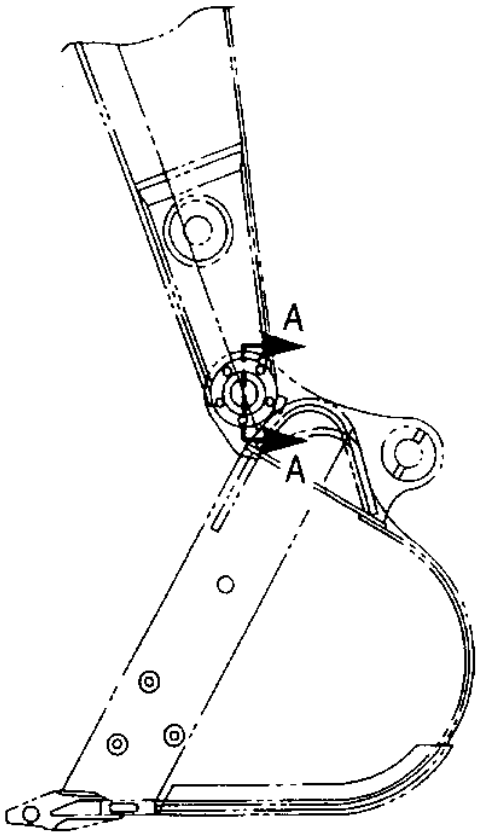


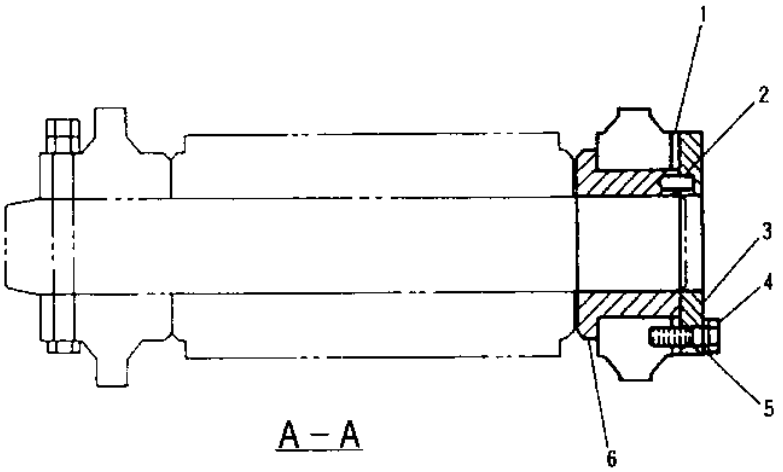


A – A

| NOTE | No. | PART No. | QTY | PART NAME | NOTE | No. | PART No. | QTY | PART NAME |
|---|---|---|---|---|---|---|---|---|---|
| B | 1 | 087-5976 | 6 | SHIM (T=1.0mm) | | | | | |
| B | | 087-5975 | 4 | SHIM (T=0.5mm) | | | | | |
| | 2 | 087-5974 | 1 | PIN | | | | | |
| | 3 | 134-8950 | 1 | PLATE | | | | | |
| | 4 | 8T-4193 | 6 | BOLT (L=50mm) | | | | | |
| | 5 | 9X-8257 | 6 | WASHER | | | | | |
| | 6 | 087-5978 | 1 | FLANGE | | | | | |

B – USE AS REQUIRED

H56399E

GRAPHIC #1 h56399e

# 0875960 ADJUSTER GP-BUCKET

E FAMILY
PART OF 6I5034, 6I5035-Page 503, 6I5036-Page 504
AN ATTACHMENT

**Key:** B - USE AS REQUIRED

**SMCS**

| NOTE | REF NO | GRAPHIC REF | PART NUMBER | QTY | PART NAME 1 2 3 4 5 6 (PRODUCT LEVEL) | PRICE USD |
|---|---|---|---|---|---|---|
| B | 1 | | 4I-6605 | 6 | SHIM (T=1.0mm) | |
| B | | | 4I-6604 | 4 | SHIM (T=0.5mm) | |
| | 2 | | 4I-6626 | 1 | PIN | |
| | 3 | | 134-8951 | 1 | PLATE | |
| | 4 | | 7X-2563 | 5 | BOLT (L=60mm) | |
| | 5 | | 8T-4123 | 5 | WASHER-HARD | |
| | 6 | | 163-3492 | 1 | FLANGE | |

## 0875960 ADJUSTER GP-BUCKET

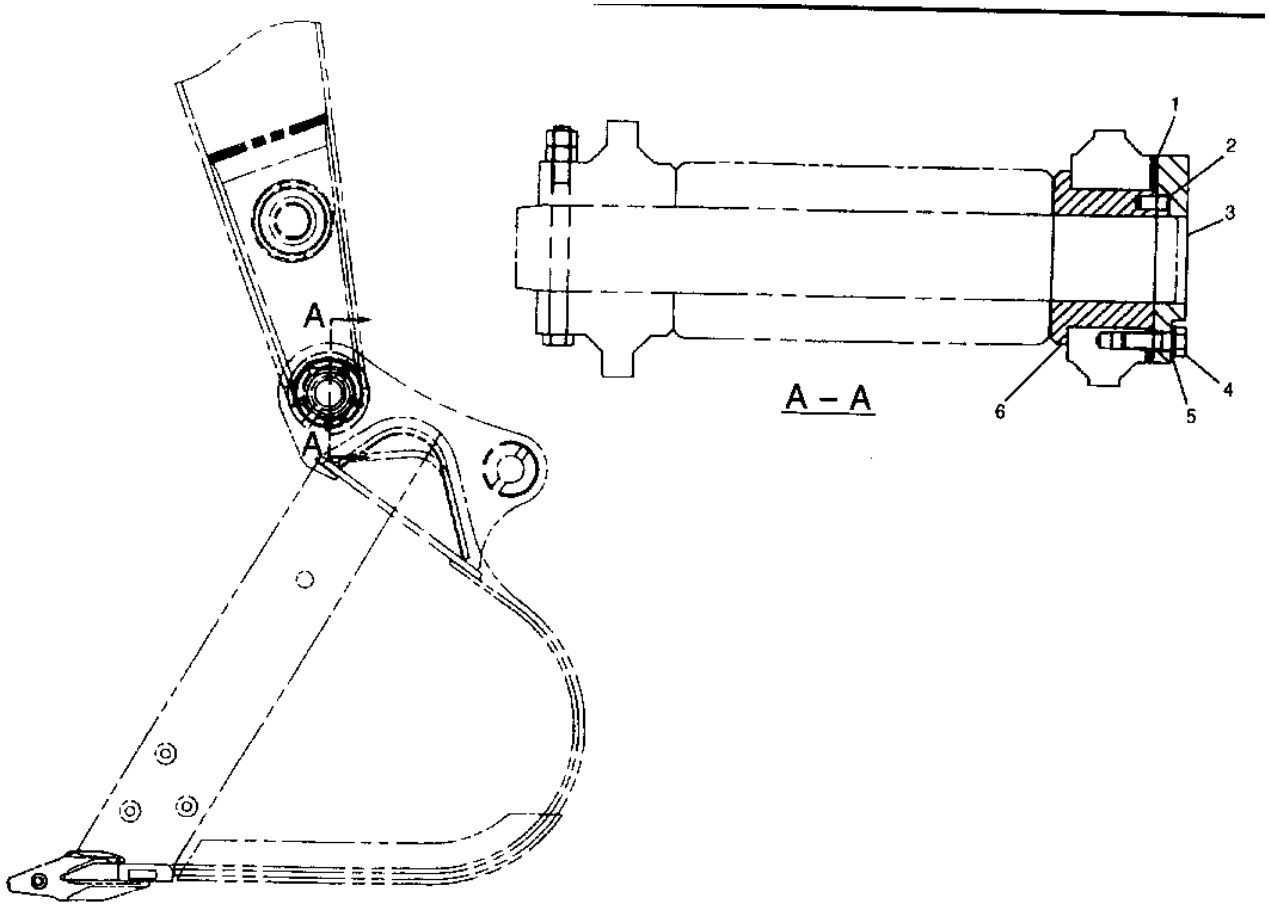


| NOTE | No. | PART No. | QTY | PART NAME |
|---|---|---|---|---|
| B | 1 | 4I-6605 | 6 | SHIM (T=1.0mm) |
| B | | 4I-6604 | 4 | SHIM (T=0.5mm) |
| | 2 | 4I-6626 | 1 | PIN |
| | 3 | 134-8951 | 1 | PLATE |
| | 4 | 7X-2563 | 5 | BOLT (L=60mm) |
| | 5 | 8T-4123 | 5 | WASHER-HARD |
| | 6 | 163-3492 | 1 | FLANGE |

| NOTE | No. | PART No. | QTY | PART NAME |
|---|---|---|---|---|

B-USE AS REQUIRED

H64114E

GRAPHIC #1 h64114e

# 7Y0366 SIDECUTTER GP

D FAMILY
AN ATTACHMENT

**Key:**

**SMCS**

| NOTE | REF NO | GRAPHIC REF | PART NUMBER | QTY | PART NAME 1 2 3 4 5 6 (PRODUCT LEVEL) | PRICE USD |
|---|---|---|---|---|---|---|
| | 1 | | 7Y-0358 | 1 | SIDECUTTER (LH) | |
| | | | 7Y-0357 | 1 | SIDECUTTER (RH) | |
| | 2 | | 6I-6371 | 6 | BOLT (L=64mm) | |
| | 3 | | 2J-3507 | 6 | NUT | |

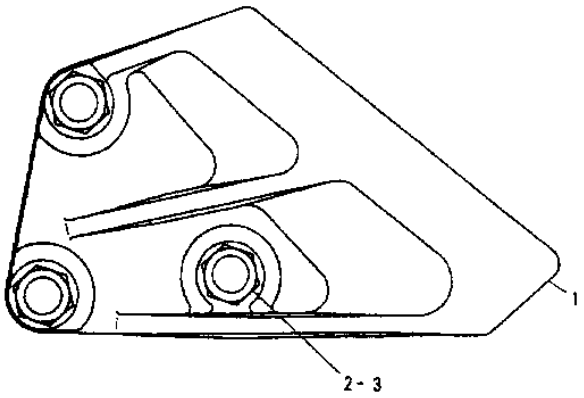


| NOTE | No. | PART No. | QTY | PART NAME |
|---|---|---|---|---|
| | 1 | 7Y-0358 | 1 | SIDECUTTER (LH) |
| | | 7Y-0357 | 1 | SIDECUTTER (RH) |
| | 2 | 6I 6371 | 6 | BOLT (L=64mm) |
| | 3 | 2J 3507 | 6 | NUT |

H50450E

GRAPHIC #1

h50450e

# 7Y2148 SIDECUTTER GP

E FAMILY
AN ATTACHMENT

**Key:**

**SMCS**

| NOTE | REF NO | GRAPHIC REF | PART NUMBER | QTY | PART NAME 1 2 3 4 5 6 (PRODUCT LEVEL) | PRICE USD |
|---|---|---|---|---|---|---|
| | 1 | | 8J-9825 | 1 | SIDECUTTER | |
| | | | 8J-9826 | 1 | SIDECUTTER | |
| | 2 | | 7Y-2146 | 10 | BOLT (L=70mm) | |
| | 3 | | 3K-5234 | 10 | WASHER-HARD | |
| | 4 | | 2J-3507 | 10 | NUT | |

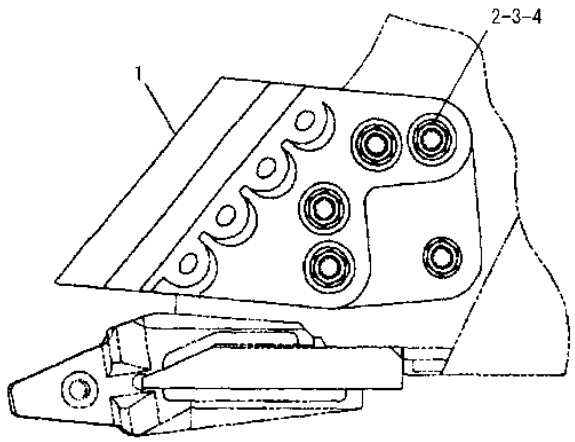


| NOTE | No. | PART No. | QTY | PART NAME |
|---|---|---|---|---|
| | 1 | 8J-9825 | 1 | SIDECUTTER |
| | | 8J-9826 | 1 | SIDECUTTER |
| | 2 | 7Y-2146 | 10 | BOLT (L=70mm) |
| | 3 | 3K-5234 | 10 | WASHER-HARD |
| | 4 | 2J-3507 | 10 | NUT |

H50928E

GRAPHIC #1 h50928e

# 1270716 TIP GP-LONG

ADAPTER SIZE J400
AN ATTACHMENT

**Key:**

**SMCS**

| NOTE | REF NO | GRAPHIC REF | PART NUMBER | QTY | PART NAME 1 2 3 4 5 6 (PRODUCT LEVEL) | PRICE USD |
|---|---|---|---|---|---|---|
| | 1 | | 116-7408 | 1 | PIN | |
| | 2 | | 116-7409 | 1 | RETAINER AS | |
| | 3 | | 7T-3402 | 1 | TIP | |

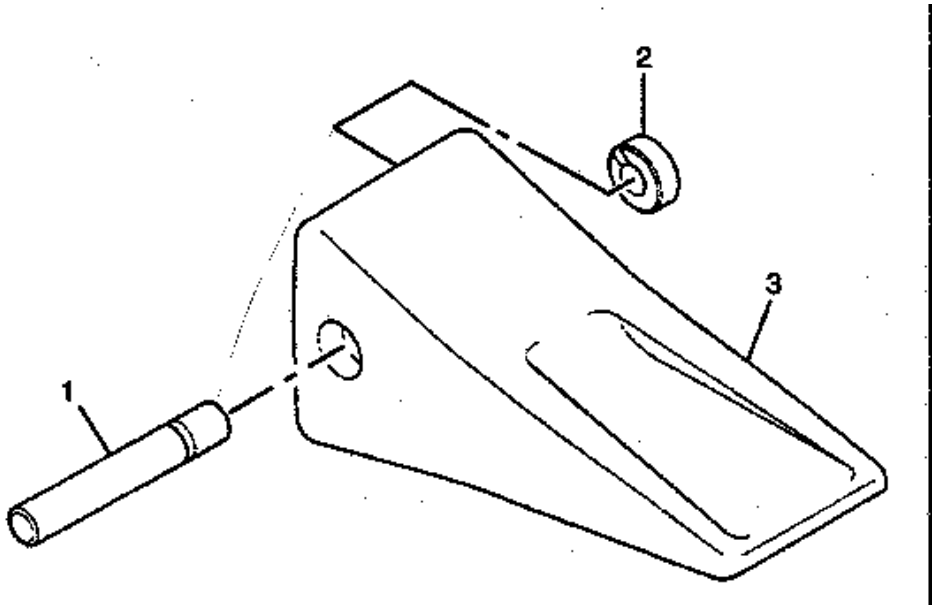


GRAPHIC #1 h65611e

# 6Y5472 TIP GP-LONG

HEAVY DUTY
ADAPTER SIZE J400
AN ATTACHMENT

**Key:**

**SMCS**

| NOTE | REF NO | GRAPHIC REF | PART NUMBER | QTY | PART NAME 1 2 3 4 5 6 (PRODUCT LEVEL) | PRICE USD |
|---|---|---|---|---|---|---|
| | 1 | | 116-7408 | 1 | PIN | |
| | 2 | | 116-7409 | 1 | RETAINER AS | |
| | 3 | | 8E-4402 | 1 | TIP | |

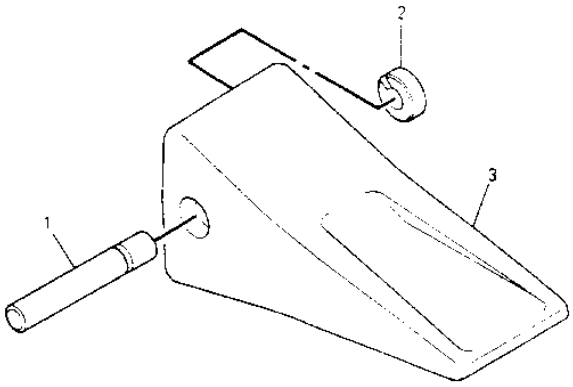


| NOTE | No. | PART No. | QTY | PART NAME |
|---|---|---|---|---|
| | 1 | 116 7408 | 1 | PIN |
| | 2 | 116-7409 | 1 | RETAINER AS |
| | 3 | 8E 4402 | 1 | TIP |

H53774E

GRAPHIC #1 h53774e

# 1270715 TIP GP-SHORT

ADAPTER SIZE J400
AN ATTACHMENT

**Key:**

**SMCS**

| NOTE | REF NO | GRAPHIC REF | PART NUMBER | QTY | PART NAME 1 2 3 4 5 6 (PRODUCT LEVEL) | PRICE USD |
|---|---|---|---|---|---|---|
| | 1 | | 116-7408 | 1 | PIN | |
| | 2 | | 116-7409 | 1 | RETAINER AS | |
| | 3 | | 7T-3401 | 1 | TIP | |

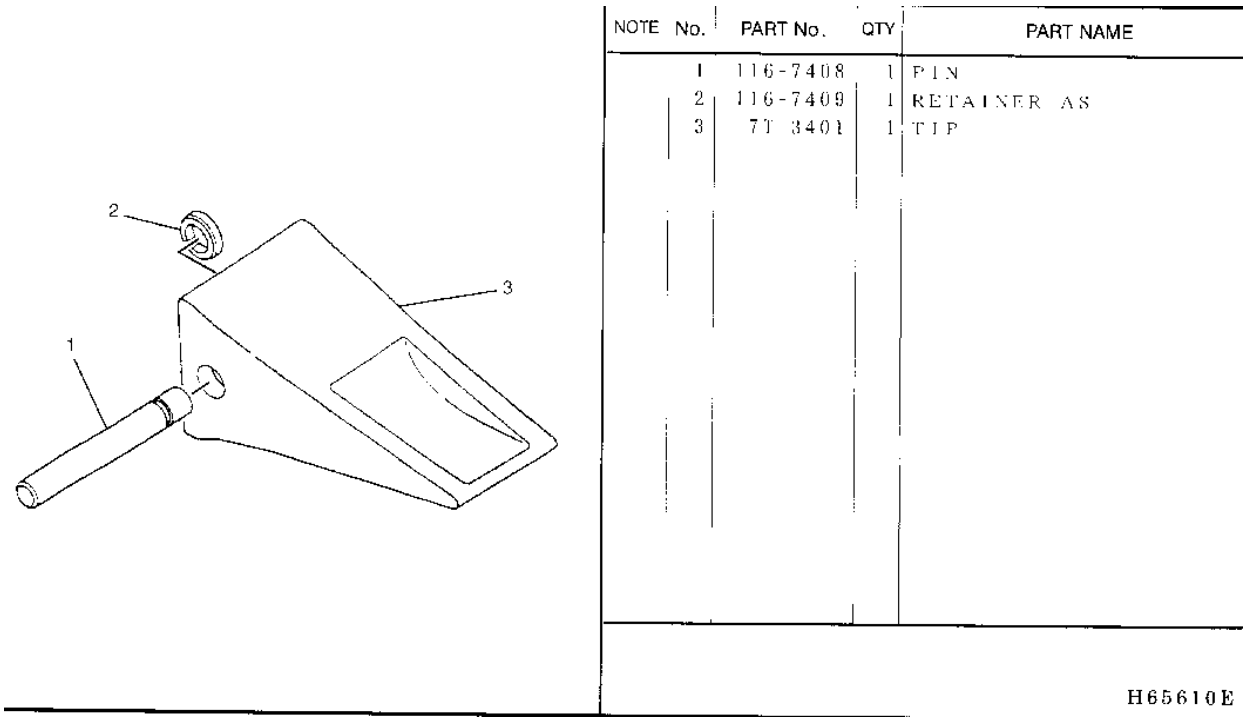


GRAPHIC #1 h65610e

# 8E0837 TIP GP-ABRASION

HEAVY DUTY
ADAPTER SIZE J400
AN ATTACHMENT

**Key:**

**SMCS**

| NOTE | REF NO | GRAPHIC REF | PART NUMBER | QTY | PART NAME 1 2 3 4 5 6 (PRODUCT LEVEL) | PRICE USD |
|---|---|---|---|---|---|---|
| | 1 | | 116-7408 | 1 | PIN | |
| | 2 | | 116-7409 | 1 | RETAINER AS | |
| | 3 | | 7T-3403 | 1 | TIP | |

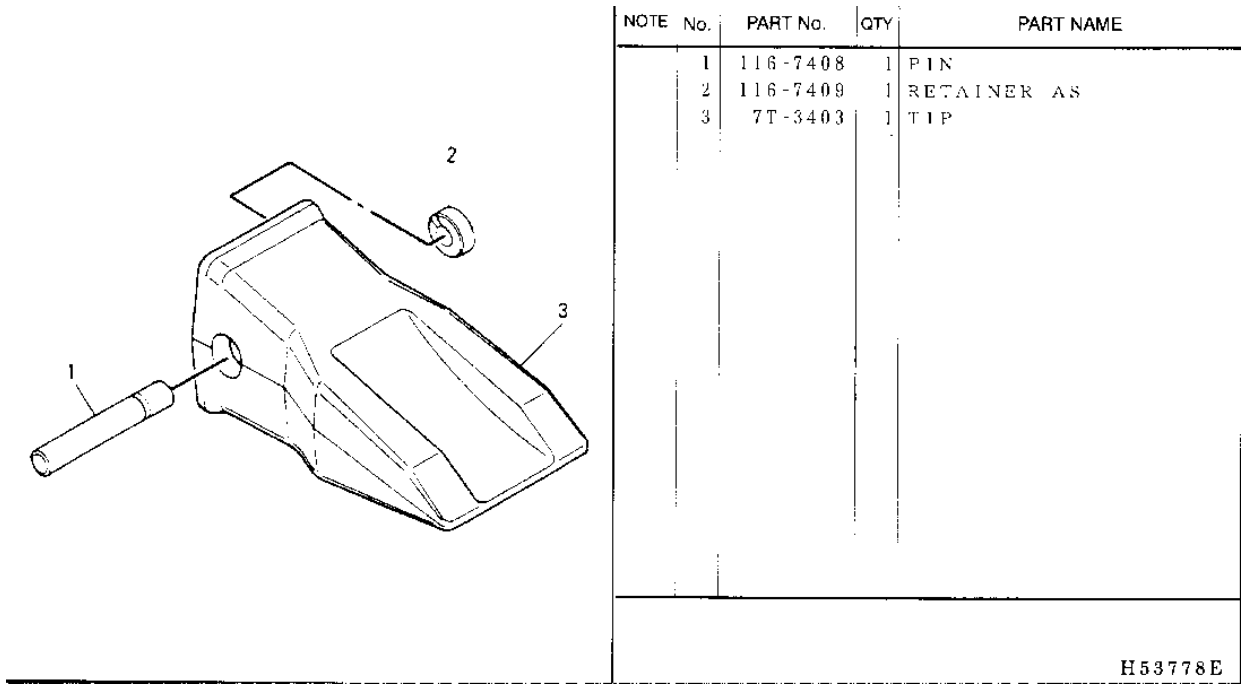


GRAPHIC #1 h53778e

# 8E0838 TIP GP-PENETRATION

ADAPTER SIZE J400
AN ATTACHMENT

**Key:**

**SMCS**

| NOTE | REF NO | GRAPHIC REF | PART NUMBER | QTY | PART NAME 1 2 3 4 5 6 (PRODUCT LEVEL) | PRICE USD |
|---|---|---|---|---|---|---|
| | 1 | | 116-7408 | 1 | PIN | |
| | 2 | | 6Y-7409 | 1 | TIP | |
| | 3 | | 116-7409 | 1 | RETAINER AS | |

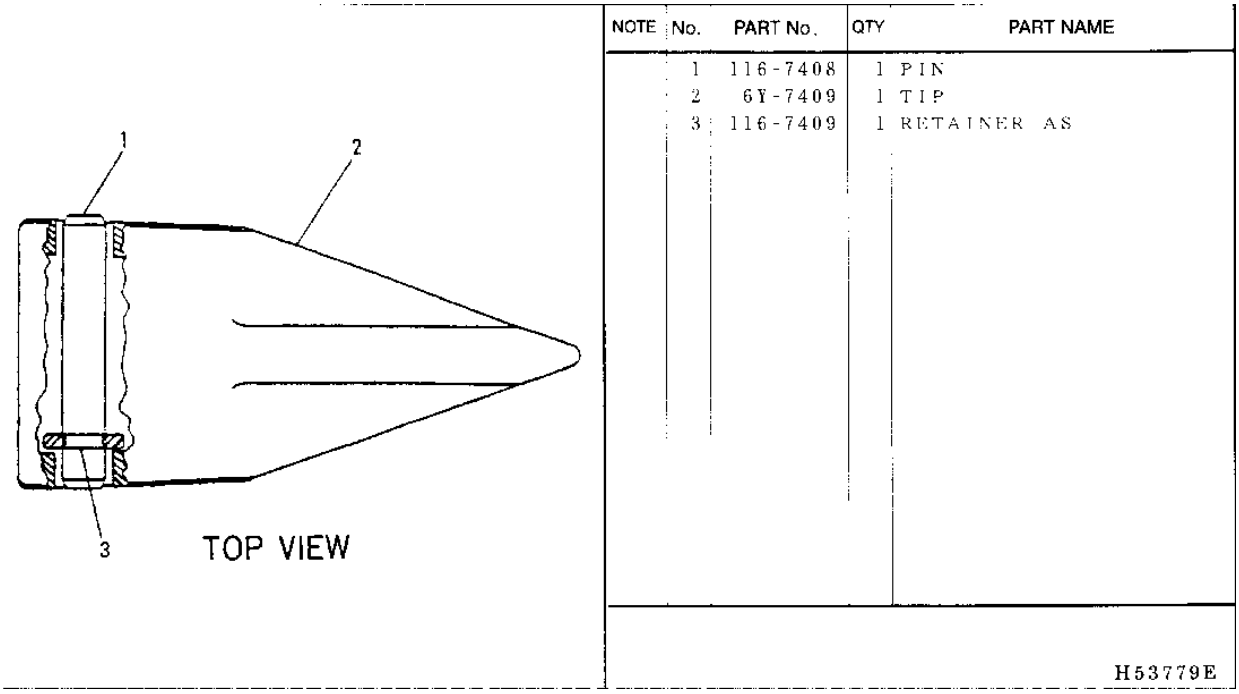


GRAPHIC #1 h53779e

# 8E0840 TIP GP

SHARP CENTER
ADAPTER SIZE J400
AN ATTACHMENT

**Key:**

**SMCS**

| NOTE | REF NO | GRAPHIC REF | PART NUMBER | QTY | PART NAME 1 2 3 4 5 6 (PRODUCT LEVEL) | PRICE USD |
|---|---|---|---|---|---|---|
| | 1 | | 116-7408 | 1 | PIN | |
| | 2 | | 6Y-5409 | 1 | TIP | |
| | 3 | | 116-7409 | 1 | RETAINER AS | |

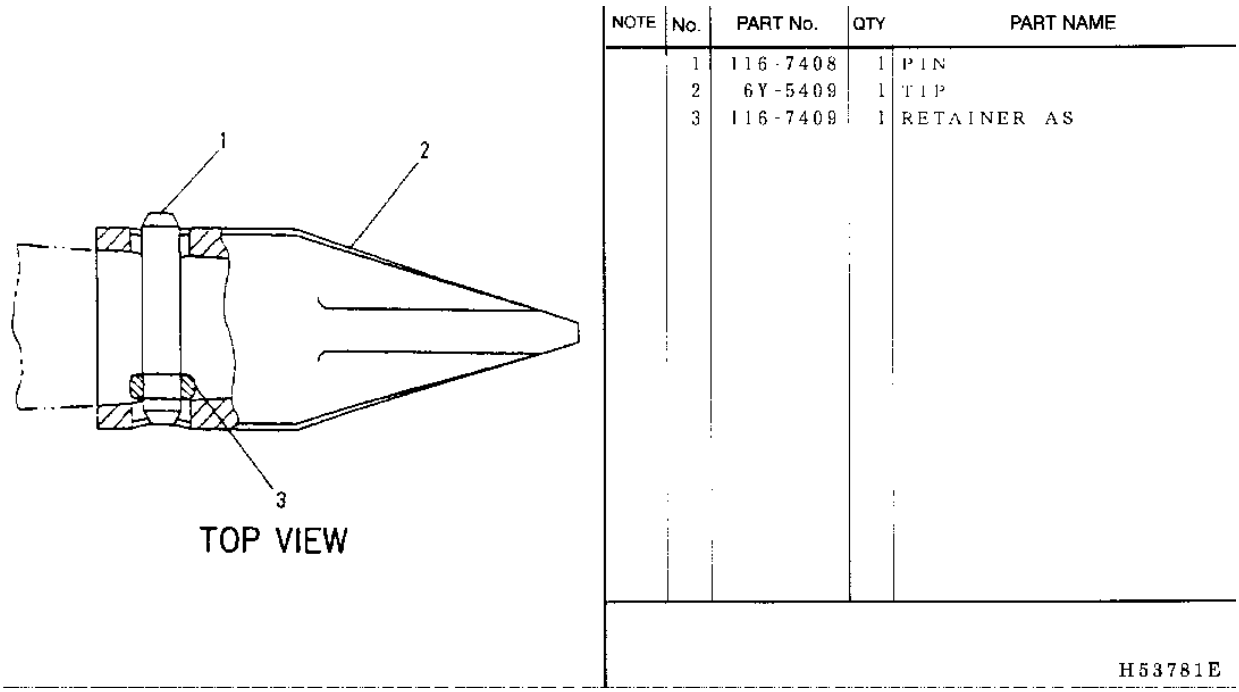


GRAPHIC #1 h53781e

# 8E0839 TIP GP

SHARP CORNER
ADAPTER SIZE J400
AN ATTACHMENT

**Key:**

**SMCS**

| NOTE | REF NO | GRAPHIC REF | PART NUMBER | QTY | PART NAME 1 2 3 4 5 6 (PRODUCT LEVEL) | PRICE USD |
|---|---|---|---|---|---|---|
| | 1 | | 116-7408 | 1 | PIN | |
| | 2 | | 6Y-5408 | 1 | TIP | |
| | 3 | | 116-7409 | 1 | RETAINER AS | |

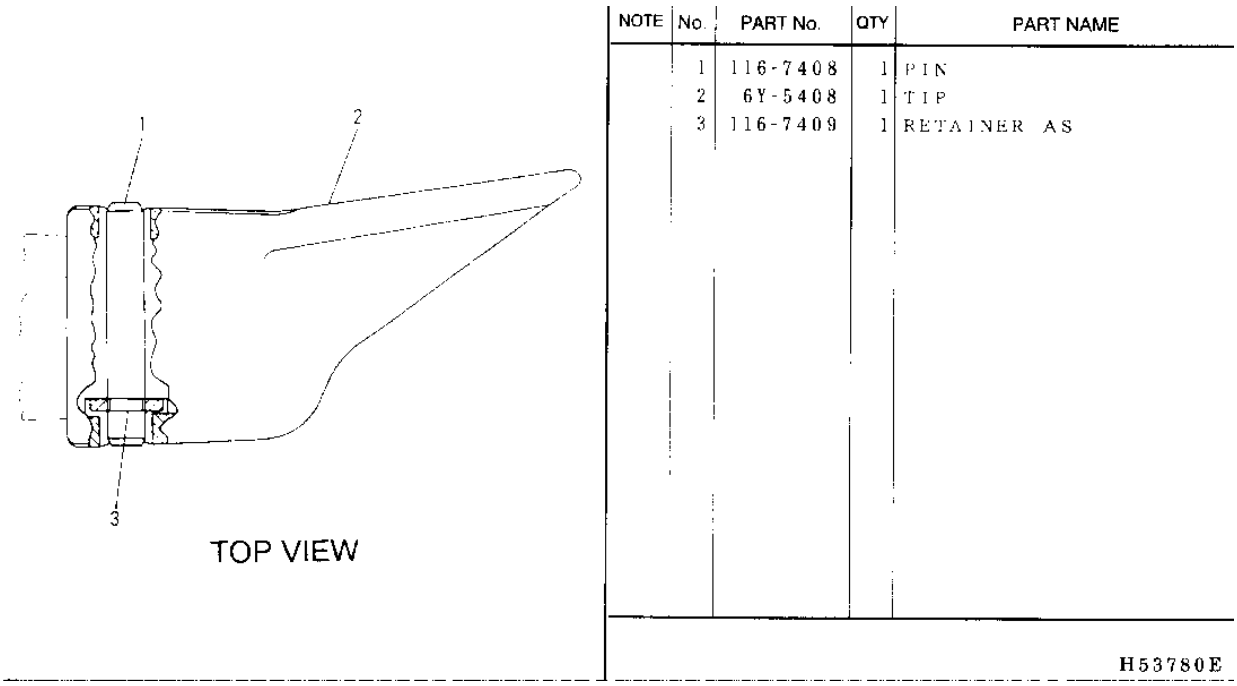


GRAPHIC #1 h53780e

# 8E0836 TIP GP-WIDE

ADAPTER SIZE J400
AN ATTACHMENT

**Key:**

**SMCS**

| NOTE | REF NO | GRAPHIC REF | PART NUMBER | QTY | PART NAME 1 2 3 4 5 6 (PRODUCT LEVEL) | PRICE USD |
|---|---|---|---|---|---|---|
| | 1 | | 116-7409 | 1 | RETAINER AS | |
| | 2 | | 116-7408 | 1 | PIN | |
| | 3 | | 107-3400 | 1 | TIP | |

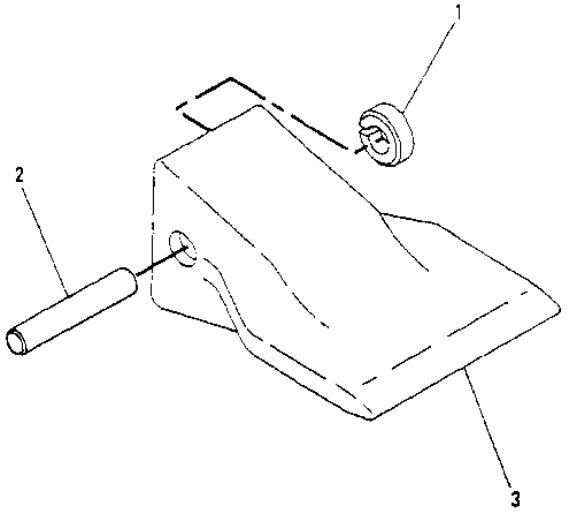


| NOTE | No. | PART No. | QTY | PART NAME |
|---|---|---|---|---|
| | 1 | 116-7409 | 1 | RETAINER AS |
| | 2 | 116-7408 | 1 | PIN |
| | 3 | 107-3400 | 1 | TIP |

H58870E

GRAPHIC #1 h58870e

# 9N4562 TIP GP-LONG

ADAPTER SIZE J460
AN ATTACHMENT

**Key:**

**SMCS**

| NOTE | REF NO | GRAPHIC REF | PART NUMBER | QTY | PART NAME 1 2 3 4 5 6 (PRODUCT LEVEL) | PRICE USD |
|---|---|---|---|---|---|---|
| | 1 | | 114-0468 | 1 | PIN | |
| | 2 | | 107-3469 | 1 | RETAINER AS | |
| | 3 | | 9W-8452 | 1 | TIP | |

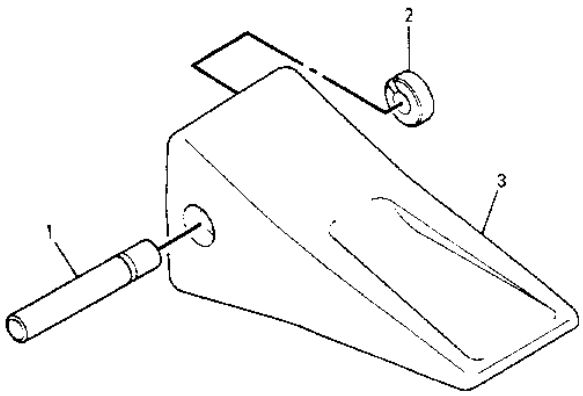


| NOTE | No. | PART No. | QTY | PART NAME |
|---|---|---|---|---|
| | 1 | 114-0468 | 1 | PIN |
| | 2 | 107-3469 | 1 | RETAINER AS |
| | 3 | 9W-8452 | 1 | TIP |

H56400E

GRAPHIC #1

h56400e

# 9N4563 TIP GP-LONG

HEAVY DUTY
ADAPTER SIZE J460
AN ATTACHMENT

**Key:**

**SMCS**

| NOTE | REF NO | GRAPHIC REF | PART NUMBER | QTY | PART NAME 1 2 3 4 5 6 (PRODUCT LEVEL) | PRICE USD |
|---|---|---|---|---|---|---|
| | 1 | | 114-0468 | 1 | PIN | |
| | 2 | | 107-3469 | 1 | RETAINER AS | |
| | 3 | | 9N-4452 | 1 | TIP | |

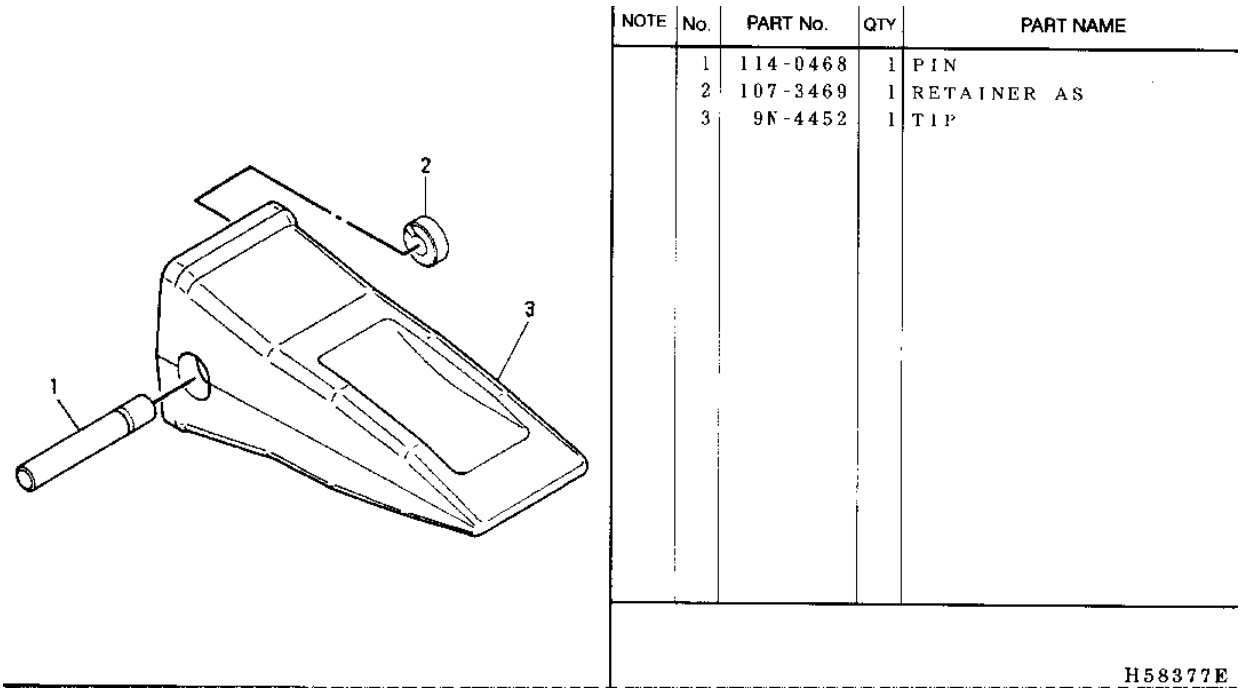


GRAPHIC #1 h58377e

# 9N4561 TIP GP-SHORT

ADAPTER SIZE J460
AN ATTACHMENT

**Key:**

**SMCS**

| NOTE | REF NO | GRAPHIC REF | PART NUMBER | QTY | PART NAME 1 2 3 4 5 6 (PRODUCT LEVEL) | PRICE USD |
|---|---|---|---|---|---|---|
| | 1 | | 114-0468 | 1 | PIN | |
| | 2 | | 107-3469 | 1 | RETAINER AS | |
| | 3 | | 9W-8451 | 1 | TIP | |

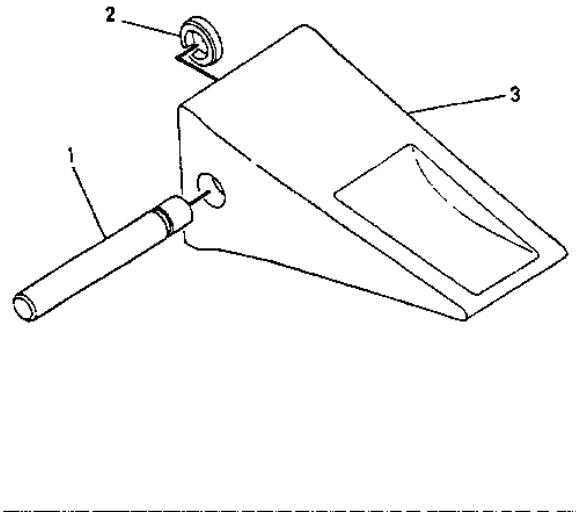


| NOTE | No. | PART No. | QTY | PART NAME |
|---|---|---|---|---|
| | 1 | 114-0468 | 1 | PIN |
| | 2 | 107-3469 | 1 | RETAINER AS |
| | 3 | 9W-8451 | 1 | TIP |

H58378E

GRAPHIC #1

h58378e

# 8E3758 TIP GP-ABRASION

HEAVY DUTY
ADAPTER SIZE J460
AN ATTACHMENT

**Key:**

**SMCS**

| NOTE | REF NO | GRAPHIC REF | PART NUMBER | QTY | PART NAME 1 2 3 4 5 6 (PRODUCT LEVEL) | PRICE USD |
|---|---|---|---|---|---|---|
| | 1 | | 114-0468 | 1 | PIN | |
| | 2 | | 107-3469 | 1 | RETAINER AS | |
| | 3 | | 9N-4453 | 1 | TIP | |

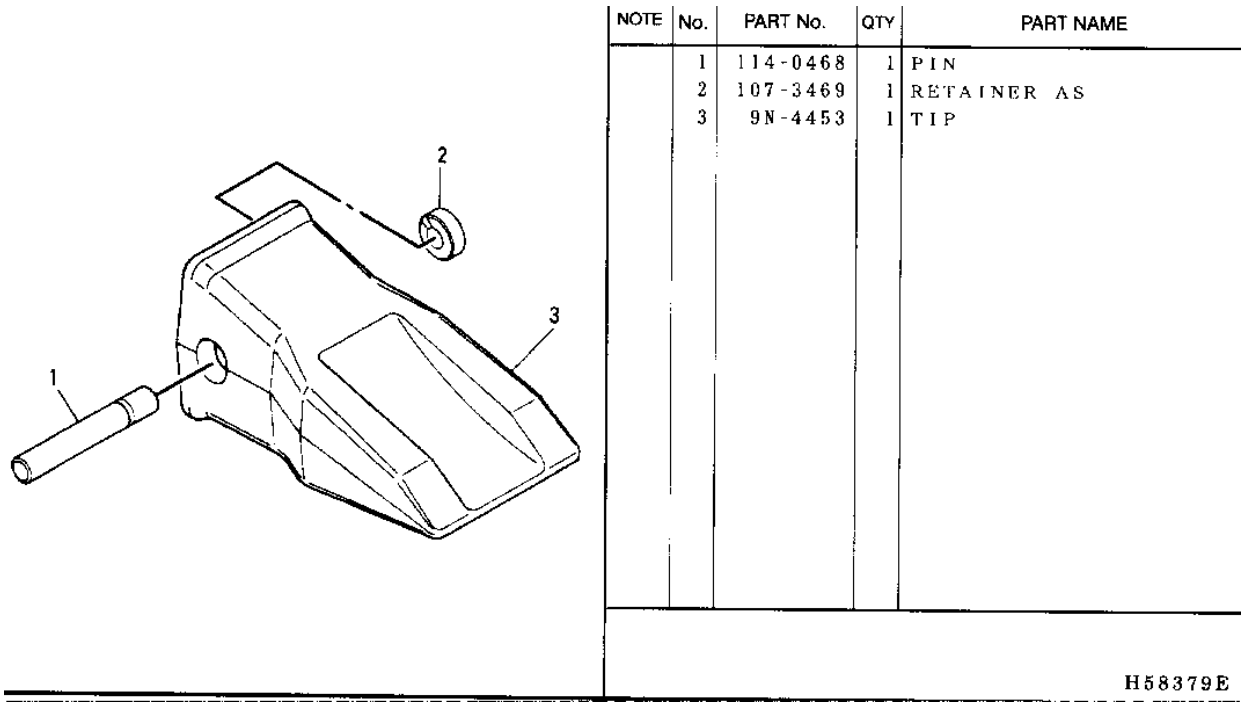


GRAPHIC #1 h58379e

# 9N4564 TIP GP-PENETRATION

ADAPTER SIZE J460
AN ATTACHMENT

**Key:**

**SMCS**

| NOTE | REF NO | GRAPHIC REF | PART NUMBER | QTY | PART NAME 1 2 3 4 5 6 (PRODUCT LEVEL) | PRICE USD |
|---|---|---|---|---|---|---|
| | 1 | | 114-0468 | 1 | PIN | |
| | 2 | | 9W-8459 | 1 | TIP | |
| | 3 | | 107-3469 | 1 | RETAINER | |

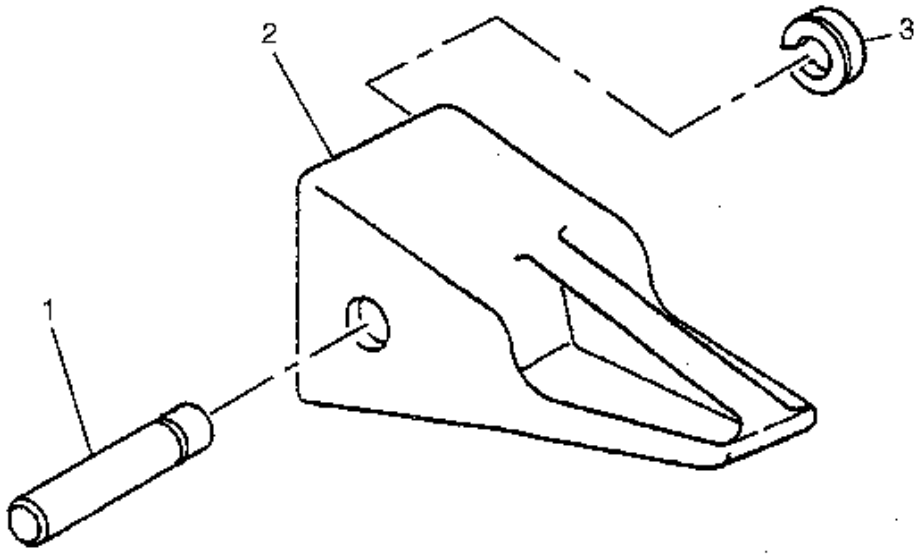


GRAPHIC #1 h84031e

# 9N4566 TIP GP

SHARP CENTER
ADAPTER SIZE J460
AN ATTACHMENT

**Key:**

**SMCS**

| NOTE | REF NO | GRAPHIC REF | PART NUMBER | QTY | PART NAME 1 2 3 4 5 6 (PRODUCT LEVEL) | PRICE USD |
|---|---|---|---|---|---|---|
| | 1 | | 114-0468 | 1 | PIN | |
| | 2 | | 7T-8459 | 1 | TIP | |
| | 3 | | 107-3469 | 1 | RETAINER AS | |

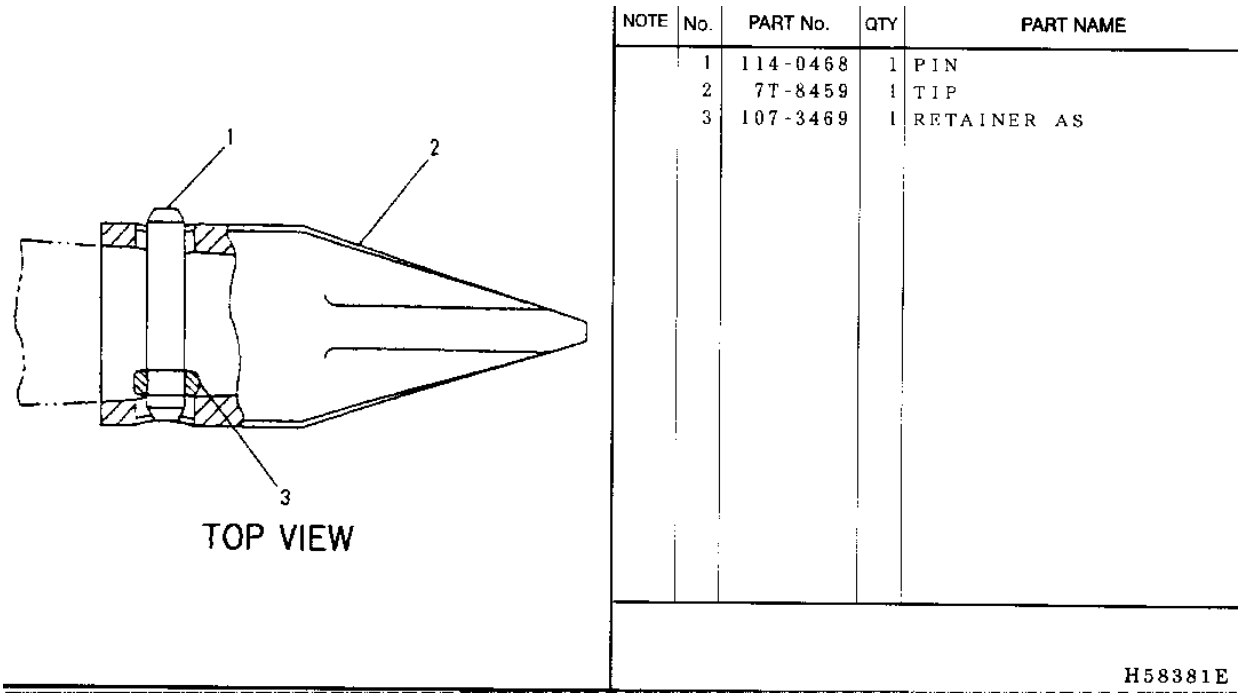


GRAPHIC #1 h58381e

# 9N4565 TIP GP

SHARP CORNER
ADAPTER SIZE J460
AN ATTACHMENT

**Key:**

**SMCS**

| NOTE | REF NO | GRAPHIC REF | PART NUMBER | QTY | PART NAME 1 2 3 4 5 6 (PRODUCT LEVEL) | PRICE USD |
|---|---|---|---|---|---|---|
| | 1 | | 114-0468 | 1 | PIN | |
| | 2 | | 6I-8458 | 1 | TIP | |
| | 3 | | 107-3469 | 1 | RETAINER AS | |

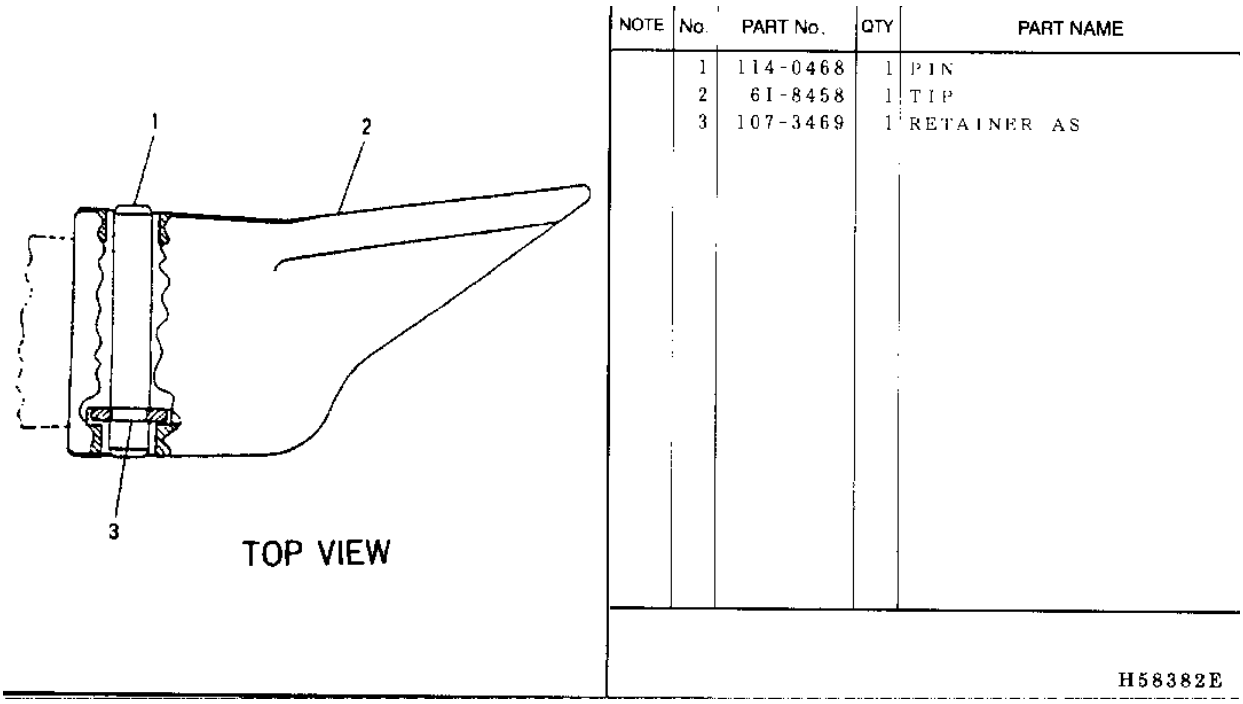


GRAPHIC #1 h58382e

# 9N4560 TIP GP-WIDE

ADAPTER SIZE J460
AN ATTACHMENT

**Key:**

**SMCS**

| NOTE | REF NO | GRAPHIC REF | PART NUMBER | QTY | PART NAME 1 2 3 4 5 6 (PRODUCT LEVEL) | PRICE USD |
|---|---|---|---|---|---|---|
| | 1 | | 107-3469 | 1 | RETAINER AS | |
| | 2 | | 114-0468 | 1 | PIN | |
| | 3 | | 107-3450 | 1 | TIP | |

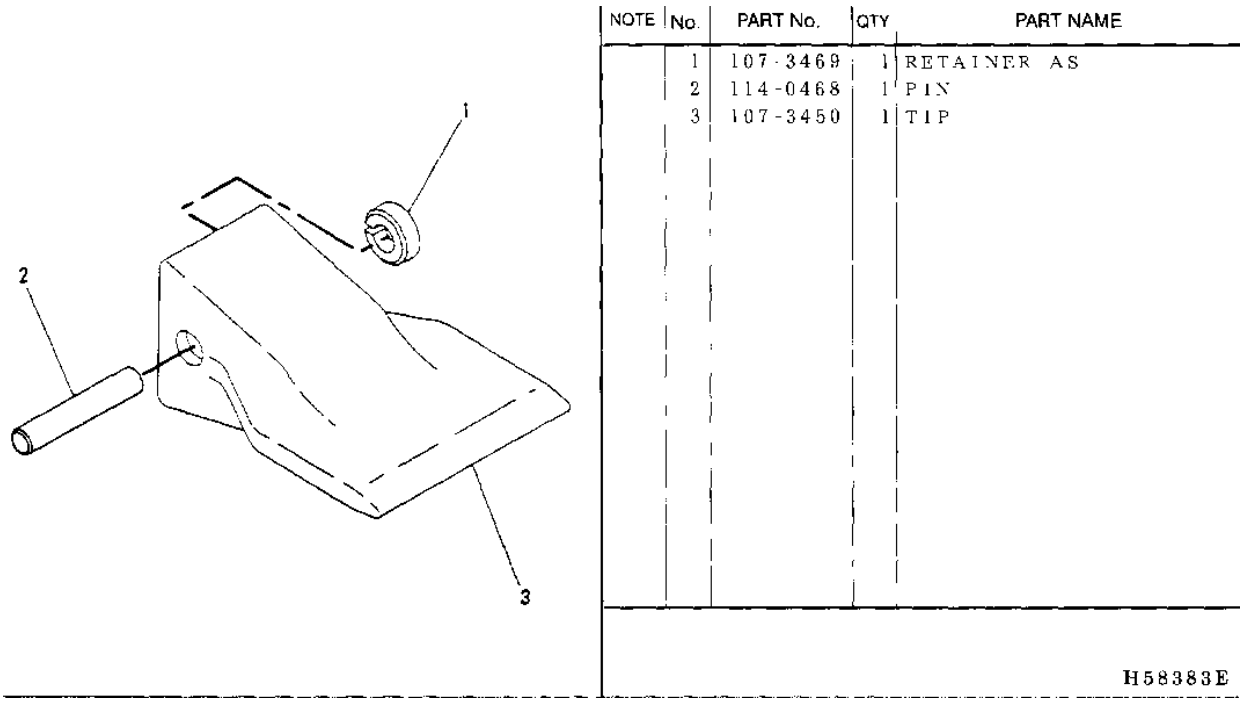


GRAPHIC #1 h58383e

# 1116270 CAB GP

S/N 8SR 1-(D98.01), 8TR 1-(D98.01)
1116271-Page 398, 1116277-Page 430

**Key:** Y - SEPARATE ILLUSTRATION

**SMCS**

| NOTE | REF NO | GRAPHIC REF | PART NUMBER | QTY | PART NAME 1 2 3 4 5 6 (PRODUCT LEVEL) | PRICE USD |
|---|---|---|---|---|---|---|
| Y | 1 | | 111-6271 | 1 | CAB GP | |
| Y | 2 | | 111-6277 | 1 | COVER GP | |
| | 3 | | 111-6276 | 1 | COVER AS | |
| | | | 6I-5368 | 1 | RUBBER | |
| | 4 | | 9X-2041 | 4 | SCREW | |
| | 5 | | 9X-2044 | 4 | SCREW | |
| | 6 | | 8T-4223 | 9 | WASHER-HARD | |
| | 7 | | 8T-4139 | 1 | BOLT (L=30mm) | |
| | 8 | | 7X-2549 | 4 | BOLT (L=100mm) | |
| | 9 | | 8T-6868 | 4 | BOLT (L=80mm) | |
| | 10 | | 8T-4191 | 2 | BOLT (L=16mm) | |
| | 11 | | 124-7346 | 2 | LOCKWASHER | |

## 1116270 CAB GP

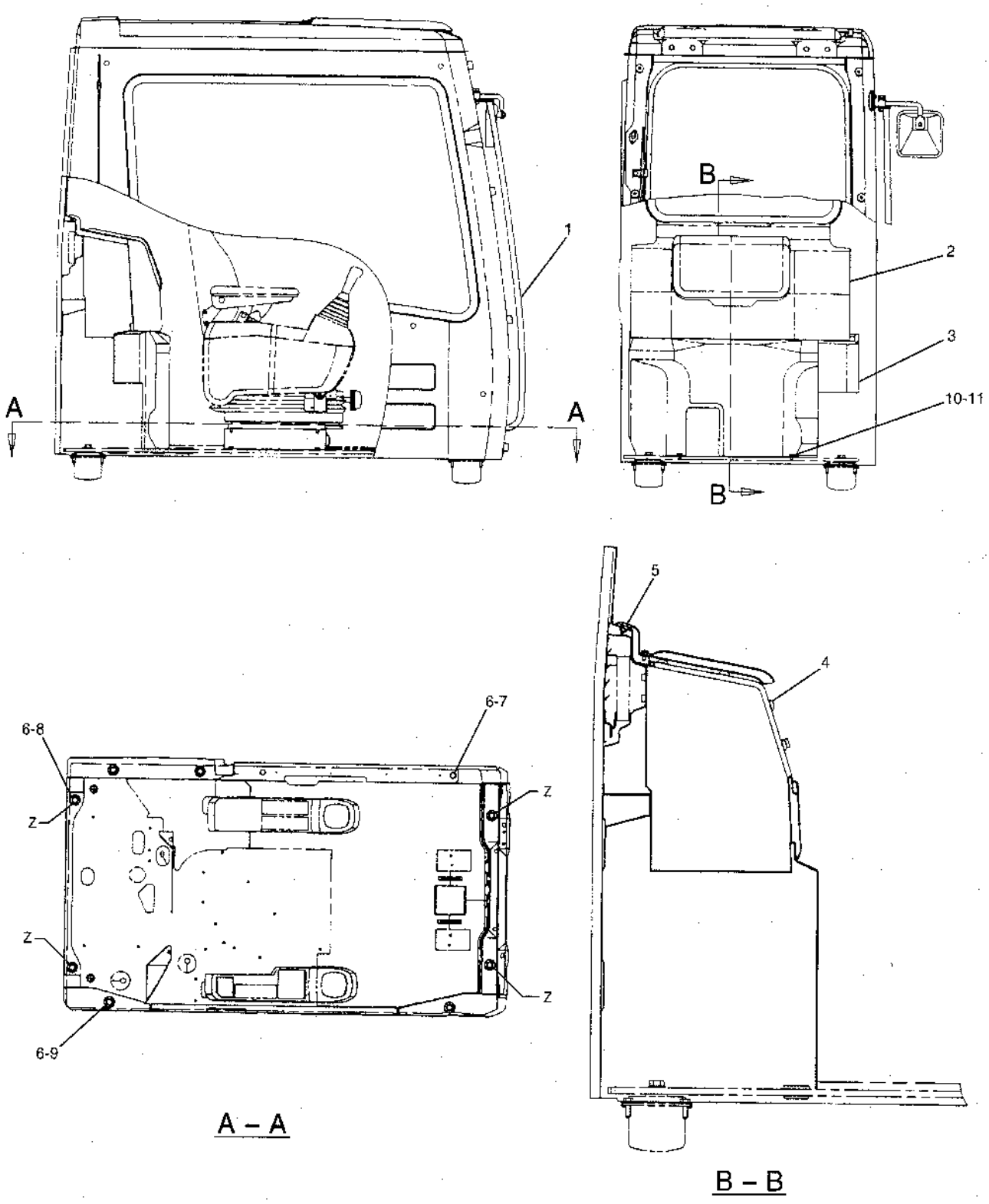


GRAPHIC #1

h53202e

# 1116293 CAB GP

WITH POLYCARBONATE WINDOW
S/N 8SR 1-00417, 8TR 1-00485
1116294-Page 402, 1116277-Page 430
AN ATTACHMENT

**Key:** Y - SEE SEPARATE ILLUSTRATION

**SMCS**

| NOTE | REF NO | GRAPHIC REF | PART NUMBER | QTY | PART NAME 1 2 3 4 5 6 (PRODUCT LEVEL) | PRICE USD |
|---|---|---|---|---|---|---|
| Y | 1 | | 111-6294 | 1 | CAB GP | |
| Y | 2 | | 111-6277 | 1 | COVER GP | |
| | 3 | | 111-6276 | 1 | COVER AS | |
| | | | 6I-5368 | 1 | RUBBER | |
| | 4 | | 9X-2041 | 4 | SCREW | |
| | 5 | | 9X-2044 | 4 | SCREW | |
| | 6 | | 8T-4223 | 9 | WASHER-HARD | |
| | 7 | | 8T-4139 | 1 | BOLT (L=30mm) | |
| | 8 | | 7X-2549 | 4 | BOLT (L=100mm) | |
| | 9 | | 8T-6868 | 4 | BOLT (L=80mm) | |
| | 10 | | 8T-4191 | 2 | BOLT (L=16mm) | |
| | 11 | | 124-7346 | 2 | LOCKWASHER | |

## 1116293 CAB GP

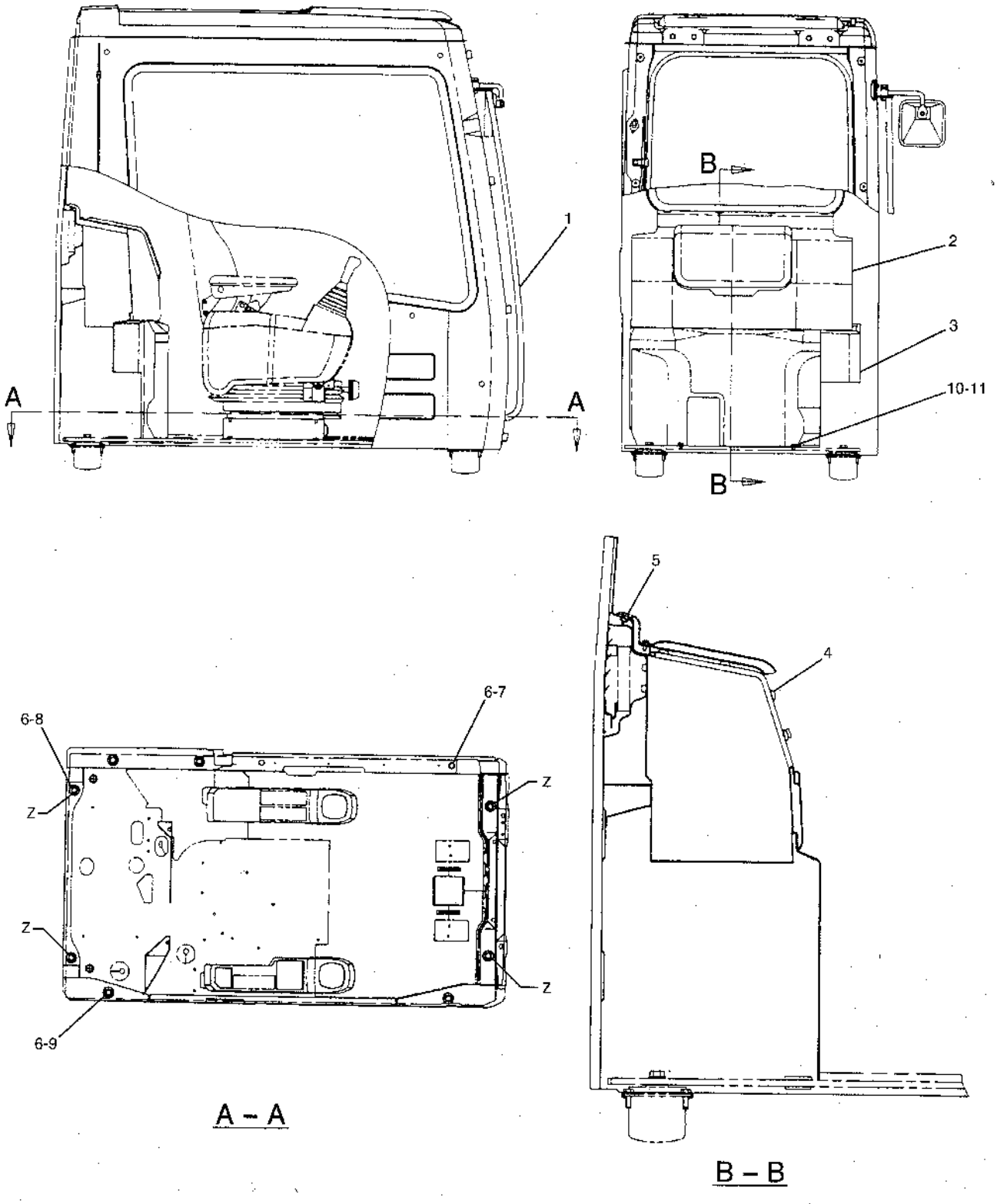


GRAPHIC #1

h63589e

# 1540674 CAB GP

WITH POLYCARBONATE WINDOW
S/N 8SR 00418-UP, 8TR 00486-UP
1557019-Page 405.01, 1557027-Page 430.01
AN ATTACHMENT

**Key:** Y - SEE SEPARATE ILLUSTRATION

**SMCS**

| NOTE | REF NO | GRAPHIC REF | PART NUMBER | QTY | PART NAME 1 2 3 4 5 6 (PRODUCT LEVEL) | PRICE USD |
|---|---|---|---|---|---|---|
| Y | 1 | | 155-7019 | 1 | CAB GP | |
| Y | 2 | | 155-7027 | 1 | COVER GP | |
| | 3 | | 139-7246 | 1 | COVER AS | |
| | | | 6I-5368 | 1 | RUBBER | |
| | 4 | | 9X-2041 | 4 | SCREW | |
| | 5 | | 9X-2044 | 9 | SCREW | |
| | 6 | | 8T-4223 | 9 | WASHER-HARD | |
| | 7 | | 8T-4139 | 1 | BOLT (L=30mm) | |
| | 8 | | 7X-2549 | 4 | BOLT (L=100mm) | |
| | 9 | | 8T-6868 | 4 | BOLT (L=80mm) | |
| | 10 | | 8T-4191 | 2 | BOLT (L=16mm) | |
| | 11 | | 124-7346 | 2 | LOCKWASHER | |
| | 12 | | 148-1609 | 1 | CASE AS | |
| | | | 159-7747 | 1 | COVER | |
| | | | 159-7748 | 1 | BODY | |

## 1540674 CAB GP

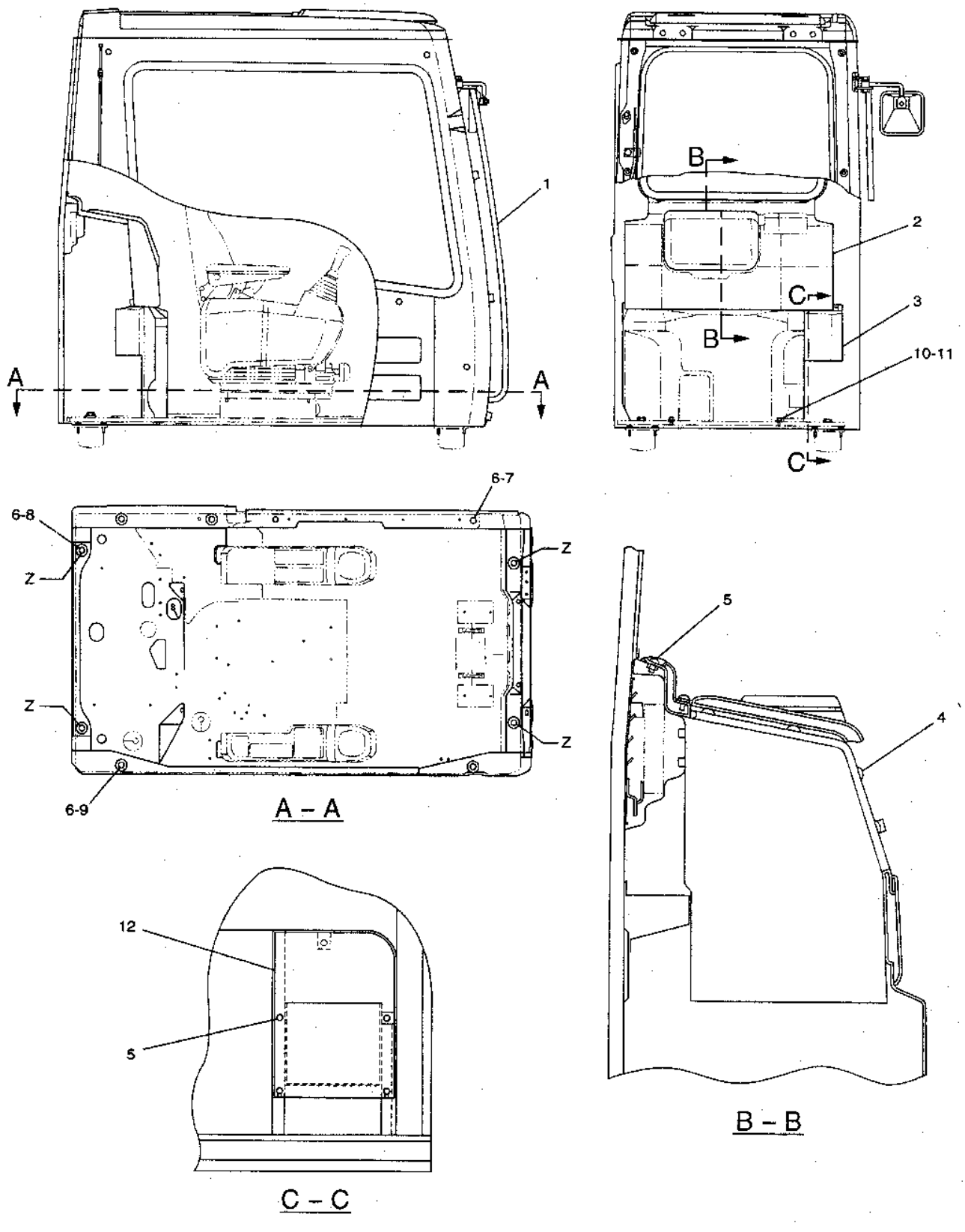


H63591E 00

GRAPHIC #1

h63591e

# 1244012 CAB GP

WITH RADIO MOUNTING & VANDAL BOSS
S/N 8SR 1-00417, 8TR 1-00485
1244013-Page 406, 1116277-Page 430

**Key:** Y - SEE SEPARATE ILLUSTRATION

**SMCS**

| NOTE | REF NO | GRAPHIC REF | PART NUMBER | QTY | PART NAME 1 2 3 4 5 6 (PRODUCT LEVEL) | PRICE USD |
|---|---|---|---|---|---|---|
| Y | 1 | | 124-4013 | 1 | CAB GP | |
| Y | 2 | | 111-6277 | 1 | COVER GP | |
| | 3 | | 111-6276 | 1 | COVER AS | |
| | | | 6I-5368 | 1 | RUBBER | |
| | 4 | | 9X-2041 | 4 | SCREW | |
| | 5 | | 9X-2044 | 4 | SCREW | |
| | 6 | | 8T-4223 | 9 | WASHER (HARD) | |
| | 7 | | 8T-4139 | 1 | BOLT (L=30mm) | |
| | 8 | | 7X-2549 | 4 | BOLT (L=100mm) | |
| | 9 | | 8T-6868 | 4 | BOLT (L=80mm) | |
| | 10 | | 8T-4191 | 2 | BOLT(L=16mm) | |
| | 11 | | 124-7346 | 2 | LOCKWASHER | |

## 1244012 CAB GP

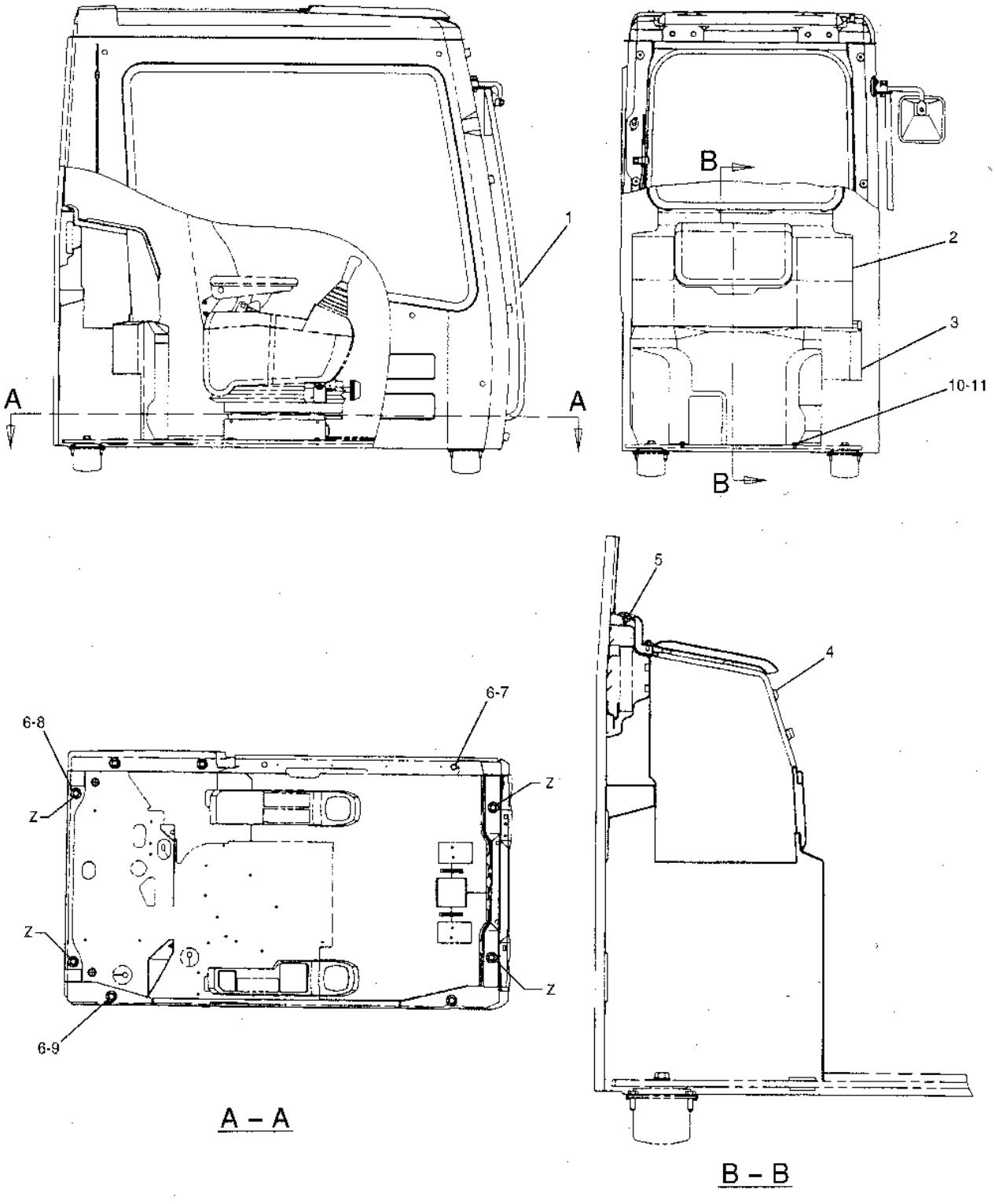


GRAPHIC #1

h63558e

# 1556995 CAB GP

WITH RADIO MOUNTING & VANDAL BOSS
S/N 8SR 00418-UP, 8TR 00486-UP
1557020-Page 409.01, 1557027-Page 430.01

**Key:** Y - SEE SEPARATE ILLUSTRATION

**SMCS**

| NOTE | REF NO | GRAPHIC REF | PART NUMBER | QTY | PART NAME 1 2 3 4 5 6 (PRODUCT LEVEL) | PRICE USD |
|---|---|---|---|---|---|---|
| Y | 1 | | 155-7020 | 1 | CAB GP | |
| Y | 2 | | 155-7027 | 1 | COVER GP | |
| | 3 | | 139-7246 | 1 | COVER AS | |
| | | | 6I-5368 | 1 | RUBBER | |
| | 4 | | 9X-2041 | 4 | SCREW | |
| | 5 | | 9X-2044 | 9 | SCREW | |
| | 6 | | 8T-4223 | 9 | WASHER-HARD | |
| | 7 | | 8T-4139 | 1 | BOLT (L=30mm) | |
| | 8 | | 7X-2549 | 4 | BOLT (L=100mm) | |
| | 9 | | 8T-6868 | 4 | BOLT (L=80mm) | |
| | 10 | | 8T-4191 | 2 | BOLT (L=16mm) | |
| | 11 | | 124-7346 | 2 | LOCKWASHER | |
| | 12 | | 148-1609 | 1 | CASE AS | |
| | | | 159-7747 | 1 | COVER | |
| | | | 159-7748 | 1 | BODY | |

# 1116271 CAB GP (BASIC)-PART 1 OF 2

S/N 8SR 1-(D98.01), 8TR 1-(D98.01)
PART OF 1116270-Page 395.02
4I6973-Page 410, 4I1273-Page 413

**Key:** E - ORDER BY THE CENTIMETER, Y - SEE SEPARATE ILLUSTRATION

**SMCS**

| NOTE | REF NO | GRAPHIC REF | PART NUMBER | QTY | PART NAME 1 2 3 4 5 6 (PRODUCT LEVEL) | PRICE USD |
|---|---|---|---|---|---|---|
| | 1 | | 4I-4353 | 1 | SEAL | |
| | 2 | | 087-8484 | 2 | GROMMET | |
| | 3 | | 8T-6411 | 6 | SCREW-MACHINE | |
| | 4 | | 9X-8256 | 6 | WASHER | |
| | 5 | | 124-3943 | 1 | VISOR AS | |
| | | | 124-3940 | 2 | HANDLE | |
| | 6 | | 124-3938 | 2 | RAIL | |
| | 7 | | 122-9636 | 1 | LINER | |
| | 8 | | 4I-3089 | 9 | CLIP | |
| | 9 | | 9X-2041 | 4 | SCREW | |
| | 10 | | 133-8016 | 1 | PACKING | |
| | 11 | | 9X-2044 | 8 | SCREW | |
| | 12 | | 6V-8928 | 1 | HOOK | |
| | 13 | | 8T-4121 | 9 | WASHER-HARD | |
| Y | 14 | | 4I-1273 | 1 | HATCH GP | |
| | 15 | | 096-0721 | 1 | LIGHT | |
| | 16 | | 099-0864 | 1 | BODY | |
| | 17 | | 099-0865 | 1 | LIGHT | |
| | 18 | | 099-0866 | 1 | COVER | |
| | 19 | | 4I-3043 | 2 | SCREW | |
| | 20 | | 4I-1186 | 1 | GLASS | |
| | 21 | | 4I-6829 | 1 | SEAL | |
| | 22 | | 4I-4273 | 1 | COVER | |
| | 23 | | 4I-4392 | 3 | CLIP | |
| | 24 | | 4I-3045 | 1 | SPACER | |
| | 25 | | 4I-3087 | 2 | CLIP | |
| | 26 | | 4I-3053 | 1 | LINER | |
| | 27 | | 122-9637 | 1 | HANDLE AS | |
| | 28 | | 4I-3090 | 3 | SEAL | |
| | 29 | | 4I-3144 | 2 | WASHER-HARD | |
| | 30 | | 4I-3066 | 1 | STRIKER-LOCK | |
| | 31 | | 127-0580 | 2 | SCREW | |
| | 32 | | 124-3978 | 1 | HANDLE AS | |
| E | 33 | | 3E-6647 | | SEAL (375cm) | |
| Y | 34 | | 4I-6973 | 1 | DOOR GP | |
| | 35 | | 4I-3096 | 1 | GROMMET | |
| | 36 | | 8T-4133 | 9 | NUT | |
| | 37 | | 6V-7636 | 2 | PIN AS | |
| | 38 | | 4I-4251 | 1 | ROD | |
| | 39 | | 9X-2046 | 4 | SCREW | |
| | 40 | | 8Y-5728 | 1 | LATCH AS | |
| | 41 | | 4I-4228 | 1 | BRACKET AS | |
| | 42 | | 4I-1206 | 2 | GUIDE | |
| | 43 | | 128-2192 | 1 | LEVER AS | |
| | 44 | | 9X-2045 | 2 | SCREW | |
| | 45 | | 4I-3063 | 1 | SPRING | |
| | 46 | | 133-8015 | 1 | BRACKET AS | |

## 1116271 CAB GP (BASIC)-PART 1 OF 2

| | | | |
|---|---|---|---|
| 47 | 4I-4330 | 2 | SEAL |
| 48 | 099-0823 | 3 | SCREW-MACHINE |
| 49 | 147-4870 | 1 | GUARD |
| 50 | 122-9627 | 1 | COVER |
| 51 | 127-3735 | 1 | SEAL |
| 52 | 4I-4241 | 1 | PLATE |
| 53 | 4I-5034 | 2 | CLIP |
| 54 | 1R-5998 | 2 | LOCKWASHER |
| 55 | 099-3603 | 1 | CATCH |
| 56 | 096-3772 | 2 | SCREW-MACHINE |
| 57 | 8T-4137 | 2 | BOLT (L=20mm) |

## 1116271 CAB GP (BASIC)-PART 1 OF 2

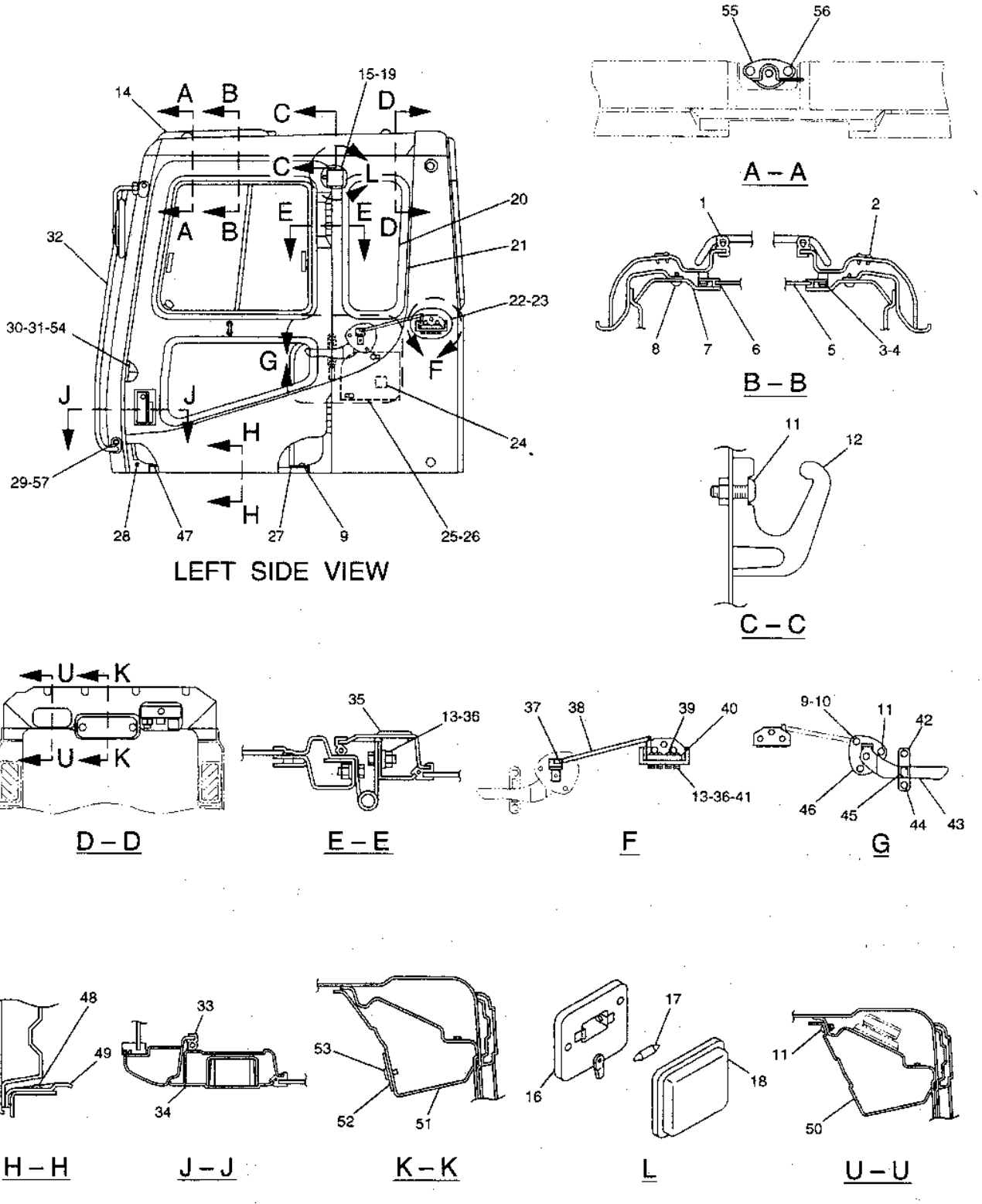


GRAPHIC #1

h63468e

# 1116271 CAB GP (BASIC)-PART 2 OF 2

S/N 8SR 1-(D98.01), 8TR 1-(D98.01)
PART OF 1116270-Page 395.02
1060054-Page 122.01, 6I5444-Page 415, 1116273-Page 422, 1116272-Page 427

**Key:** E - ORDER BY THE CENTIMETER, Y - SEE SEPARATE ILLUSTRATION

**SMCS**

| NOTE | REF NO | GRAPHIC REF | PART NUMBER | QTY | PART NAME 1 2 3 4 5 6 (PRODUCT LEVEL) | PRICE USD |
|---|---|---|---|---|---|---|
| | 1 | | 9X-2041 | 4 | SCREW | |
| | 2 | | 095-0735 | 2 | SCREW-MACHINE | |
| | 3 | | 9X-2044 | 8 | SCREW | |
| | 4 | | 8T-4121 | 4 | WASHER-HARD | |
| | 5 | | 8T-4137 | 4 | BOLT (L=20mm) | |
| | 6 | | 8T-4193 | 1 | BOLT (L=50mm) | |
| | 7 | | 9X-8257 | 1 | WASHER | |
| | 8 | | 3B-4510 | 1 | LOCKWASHER | |
| | 9 | | 122-9612 | 1 | SUPPORT AS | |
| | 10 | | 113-3426 | 1 | MIRROR | |
| | 11 | | 4I-4287 | 1 | SEAL | |
| | 12 | | 5C-9553 | 2 | BOLT (L=16mm) | |
| | | | 8H-3481 | 2 | LOCKWASHER | |
| | | | 9X-8256 | 2 | WASHER | |
| Y | 13 | | 111-6272 | 1 | WIPER GP | |
| Y | 14 | | 111-6273 | 1 | WINDOW GP | |
| | 15 | | 4I-3087 | 6 | CLIP | |
| | 16 | | 4I-3090 | 6 | SEAL | |
| | 17 | | 127-0580 | 4 | SCREW | |
| E | 18 | | 3E-6647 | | SEAL (247cm) | |
| | 19 | | 8T-4133 | 2 | NUT | |
| | 20 | | 9X-2045 | 4 | SCREW | |
| | 21 | | 3E-8020 | 2 | SCREW | |
| | 22 | | 4I-4243 | 1 | PLATE AS | |
| | 23 | | 4I-4253 | 1 | HOLDER (GLASS) | |
| | 24 | | 6I-5440 | 1 | BRACKET | |
| | 25 | | 7Y-7364 | 1 | GROMMET | |
| | 26 | | 124-4027 | 1 | RETAINER | |
| | 27 | | 124-4028 | 1 | PACKING | |
| | 28 | | 8T-4224 | 2 | WASHER | |
| | | | 8T-7547 | 2 | BOLT (L=30mm) | |
| E | 29 | | 6I-5470 | | SEAL (150cm) | |
| | 30 | | 105-9539 | 1 | COVER AS | |
| Y | 31 | | 6I-5444 | 1 | BOX GP | |
| | 32 | | 8T-4160 | 1 | HANDLE AS | |
| | 33 | | 6V-6885 | 1 | STRIKER-WINDOW | |
| | 34 | | 135-2213 | 1 | SHIM (T=1.4mm) | |
| | 35 | | 122-9631 | 1 | LINER | |
| | 36 | | 5I-3707 | 1 | LOUVER | |
| | 37 | | 124-4018 | 1 | CAP | |
| | 38 | | 124-4017 | 1 | BRACKET | |
| | 39 | | 124-4036 | 1 | HOLDER (BEVERAGE) | |
| | 40 | | 096-4883 | 3 | NUT | |
| | 41 | | 124-4014 | 1 | COVER | |
| | 42 | | 124-4015 | 1 | COVER | |
| | 43 | | 124-4016 | 1 | DUCT | |
| | 44 | | 4I-4330 | 2 | SEAL | |

## 1116271 CAB GP (BASIC)-PART 2 OF 2

| | | | | |
|---|---|---|---|---|
| | 45 | 124-3981 | 2 | STOPPER |
| | 46 | 095-0728 | 2 | SCREW |
| | | 096-6166 | 2 | WASHER |
| | 47 | 105-9525 | 1 | NOZZLE AS |
| | | 085-8037 | 1 | NOZZLE |
| | | 099-0862 | 1 | HOSE |
| | | 105-9526 | 1 | ADAPTER |
| | | 105-9527 | 1 | PACKING |
| | 48 | 4I-5043 | 1 | GLASS |
| | 49 | 1R-5998 | 4 | LOCKWASHER |
| | 50 | 122-9640 | 2 | HOLDER AS |
| | 51 | 122-9629 | 1 | HOLDER (GLASS) |
| | 52 | 122-9630 | 1 | HOLDER (GLASS) |
| | 53 | 8T-4200 | 4 | BOLT (L=16mm) |
| | | 8T-4224 | 4 | WASHER |
| | 54 | 122-9632 | 1 | GLASS |
| | 55 | 122-9634 | 1 | SEAL AS |
| E | | 3E-6647 | | SEAL (82cm) |
| | 56 | 4I-4282 | 2 | STOPPER |
| | 57 | 7X-0578 | 2 | WASHER-HARD |
| | 58 | 7Y-8561 | 1 | BUMPER |
| | 59 | 135-2331 | 1 | SPACER |
| | 60 | 124-4026 | 1 | GLASS |
| | 61 | 4I-1205 | 1 | BUMPER |
| | 62 | 8C-7581 | 2 | SCREW |
| Y | 63 | 106-0054 | 1 | WIRING GP |
| | 64 | 119-5026 | 3 | SCREW |
| | 65 | 096-6561 | 1 | ASHTRAY AS |
| | 66 | 128-2135 | 6 | SCREW |
| | 67 | 128-2136 | 2 | SCREW |
| | 68 | 4I-4334 | 1 | SCREW-TAPPING |
| | 69 | 7Y-5293 | 1 | NUT |
| E | 70 | 3E-8083 | | SEAL (400cm) |
| | 71 | 4I-4403 | 1 | COVER AS |
| | 72 | 4I-4315 | 4 | CLIP |
| | 73 | 6I-5409 | 1 | COVER (RH) |
| | 74 | 6I-5410 | 1 | COVER (LH) |
| | 75 | 139-7173 | 1 | SEAL |
| | 76 | 139-7119 | 2 | PLUG |
| | 77 | 127-3735 | 1 | SEAL |

## 1116271 CAB GP (BASIC)-PART 2 OF 2

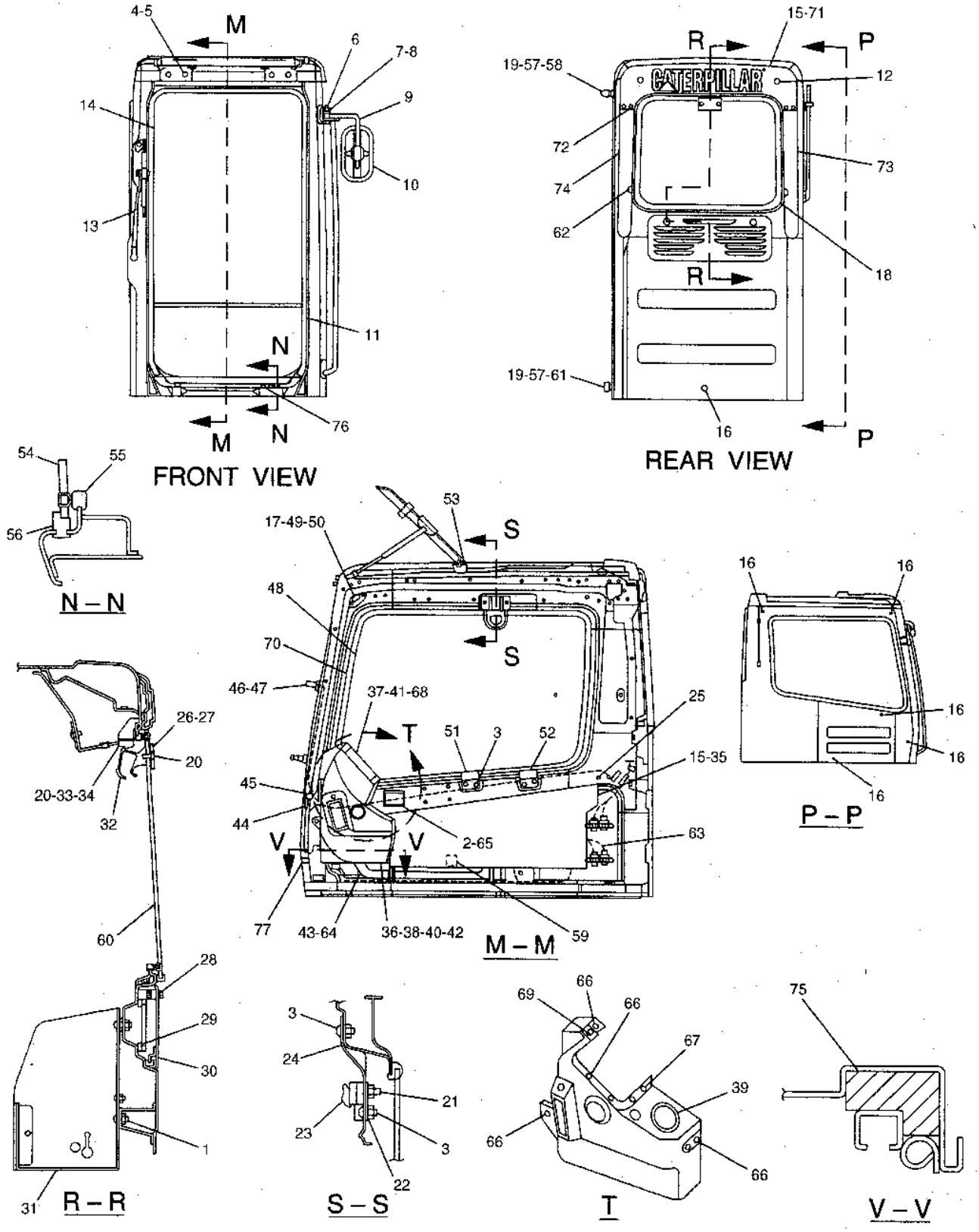


GRAPHIC #1

h63470e

# 1116294 CAB GP (BASIC)-PART 1 OF 2

WITH POLYCARBONATE WINDOW
S/N 8SR 1-00417, 8TR 1-00485
PART OF 1116293-Page 397
4I6974-Page 411.01, 4I1273-Page 413
AN ATTACHMENT

**Key:** E - ORDER BY THE CENTIMETER, Y - SEE SEPARATE ILLUSTRATION

**SMCS**

| NOTE | REF NO | GRAPHIC REF | PART NUMBER | QTY | PART NAME 1 2 3 4 5 6 (PRODUCT LEVEL) | PRICE USD |
|---|---|---|---|---|---|---|
| | 1 | | 4I-4353 | 1 | SEAL | |
| | 2 | | 087-8484 | 2 | GROMMET | |
| | 3 | | 8T-6411 | 6 | SCREW-MACHINE | |
| | 4 | | 9X-8256 | 6 | WASHER | |
| | 5 | | 124-3943 | 1 | VISOR AS | |
| | | | 124-3940 | 2 | HANDLE | |
| | 6 | | 124-3938 | 2 | RAIL | |
| | 7 | | 122-9636 | 1 | LINER | |
| | 8 | | 4I-3089 | 9 | CLIP | |
| | 9 | | 9X-2041 | 4 | SCREW | |
| | 10 | | 133-8016 | 1 | PACKING | |
| | 11 | | 9X-2044 | 8 | SCREW | |
| | 12 | | 6V-8928 | 1 | HOOK | |
| | 13 | | 8T-4121 | 9 | WASHER-HARD | |
| Y | 14 | | 4I-1273 | 1 | HATCH GP | |
| | 15 | | 096-0721 | 1 | LIGHT | |
| | 16 | | 099-0864 | 1 | BODY | |
| | 17 | | 099-0865 | 1 | LIGHT | |
| | 18 | | 099-0866 | 1 | COVER | |
| | 19 | | 4I-3043 | 2 | SCREW | |
| | 20 | | 4I-1193 | 1 | GLASS | |
| | 21 | | 4I-6829 | 1 | SEAL | |
| | 22 | | 4I-4273 | 1 | COVER | |
| | 23 | | 4I-4392 | 3 | CLIP | |
| | 24 | | 4I-3045 | 1 | SPACER | |
| | 25 | | 4I-3087 | 2 | CLIP | |
| | 26 | | 4I-3053 | 1 | LINER | |
| | 27 | | 122-9637 | 1 | HANDLE AS | |
| | 28 | | 4I-3090 | 3 | SEAL | |
| | 29 | | 4I-3144 | 2 | WASHER-HARD | |
| | 30 | | 4I-3066 | 1 | STRIKER-LOCK | |
| | 31 | | 127-0580 | 2 | SCREW | |
| | 32 | | 124-3978 | 1 | HANDLE AS | |
| E | 33 | | 3E-6647 | | SEAL (375cm) | |
| Y | 34 | | 4I-6974 | 1 | DOOR GP | |
| | 35 | | 4I-3096 | 1 | GROMMET | |
| | 36 | | 8T-4133 | 9 | NUT | |
| | 37 | | 6V-7636 | 2 | PIN AS | |
| | 38 | | 4I-4251 | 1 | ROD | |
| | 39 | | 9X-2046 | 4 | SCREW | |
| | 40 | | 8Y-5728 | 1 | LATCH AS | |
| | 41 | | 4I-4228 | 1 | BRACKET AS | |
| | 42 | | 4I-1206 | 2 | GUIDE | |
| | 43 | | 128-2192 | 1 | LEVER AS | |
| | 44 | | 9X-2045 | 2 | SCREW | |
| | 45 | | 4I-3063 | 1 | SPRING | |

## 1116294 CAB GP (BASIC)-PART 1 OF 2

| | | | |
|---|---|---|---|
| 46 | 133-8015 | 1 | BRACKET AS |
| 47 | 4I-4330 | 2 | SEAL |
| 48 | 099-0823 | 3 | SCREW-MACHINE |
| 49 | 147-4870 | 1 | GUARD |
| 50 | 122-9627 | 1 | COVER |
| 51 | 127-3735 | 1 | SEAL |
| 52 | 4I-4241 | 1 | PLATE |
| 53 | 4I-5034 | 2 | CLIP |
| 54 | 1R-5998 | 2 | LOCKWASHER |
| 55 | 099-3603 | 1 | CATCH |
| 56 | 096-3772 | 2 | SCREW-MACHINE |
| 57 | 4I-3123 | 2 | BOLT (L=20mm) |
| 58 | 4I-6602 | 8 | BOSS |

## 1116294 CAB GP (BASIC)-PART 1 OF 2

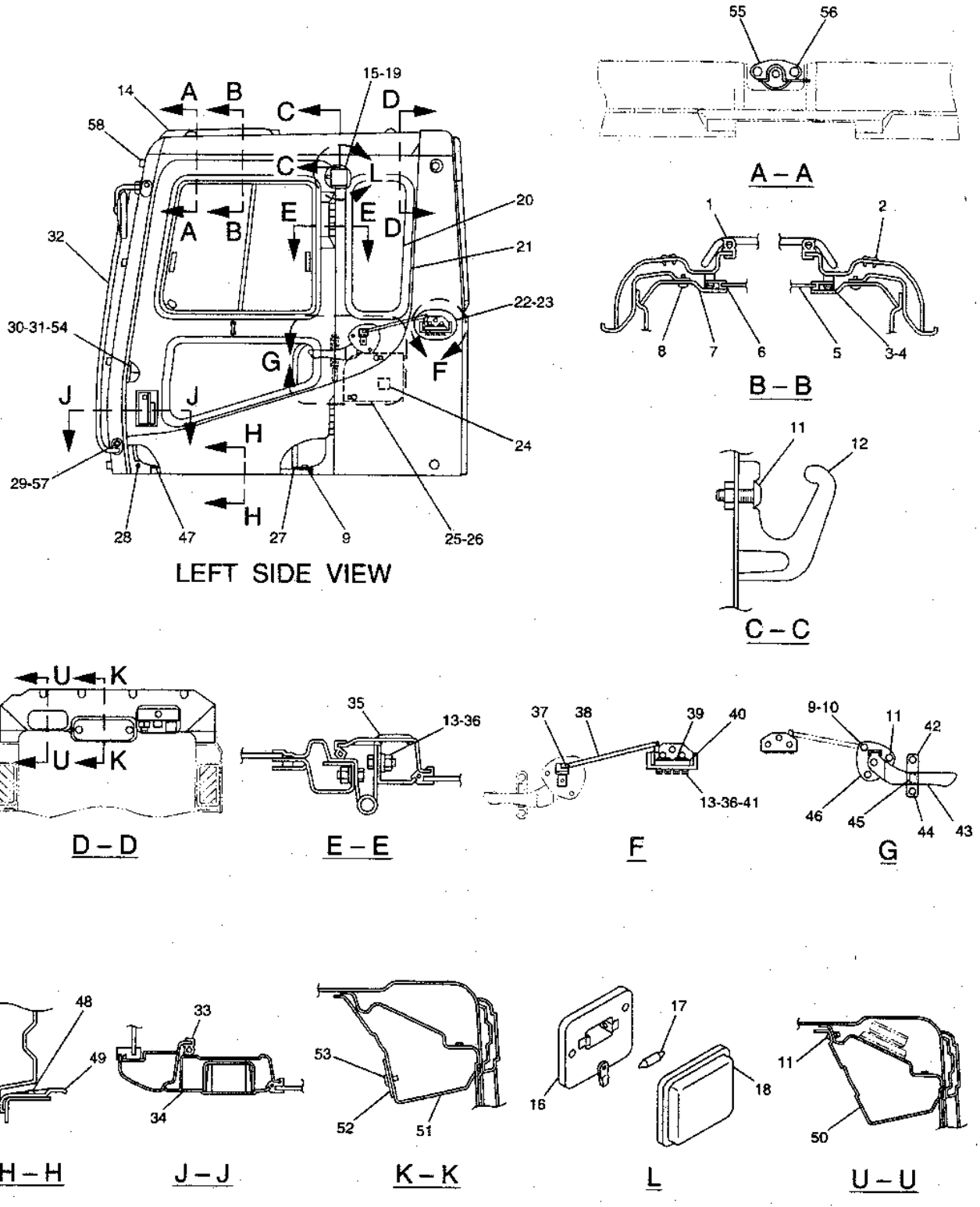


GRAPHIC #1

h63593e

# 1116294 CAB GP (BASIC)-PART 2 OF 2

WITH POLYCARBONATE WINDOW
S/N 8SR 1-00417, 8TR 1-00485
PART OF 1116293-Page 397
1060054-Page 122.02, 1160094-Page 122.06, 6I5444-Page 415, 1116273-Page 422, 1116272-Page 427
AN ATTACHMENT

**Key:** E - ORDER BY THE CENTIMETER, Y - SEE SEPARATE ILLUSTRATION

**SMCS**

| NOTE | REF NO | GRAPHIC REF | PART NUMBER | QTY | PART NAME 1 2 3 4 5 6 (PRODUCT LEVEL) | PRICE USD |
|---|---|---|---|---|---|---|
| | 1 | | 9X-2041 | 4 | SCREW | |
| | 2 | | 095-0735 | 2 | SCREW-MACHINE | |
| | 3 | | 9X-2044 | 8 | SCREW | |
| | 4 | | 8T-4121 | 4 | WASHER-HARD | |
| | 5 | | 8T-4137 | 4 | BOLT (L=20mm) | |
| | 6 | | 8T-4193 | 1 | BOLT (L=50mm) | |
| | 7 | | 9X-8257 | 1 | WASHER | |
| | 8 | | 3B-4510 | 1 | LOCKWASHER | |
| | 9 | | 4I-5042 | 1 | SUPPORT AS | |
| | 10 | | 5P-6872 | 1 | MIRROR | |
| | 11 | | 4I-4287 | 1 | SEAL | |
| | 12 | | 5C-9553 | 2 | BOLT (L=16mm) | |
| | | | 8H-3481 | 2 | LOCKWASHER | |
| | | | 9X-8256 | 2 | WASHER | |
| Y | 13 | | 111-6272 | 1 | WIPER GP | |
| Y | 14 | | 111-6273 | 1 | WINDSHIELD GP | |
| | 15 | | 4I-3087 | 6 | CLIP | |
| | 16 | | 4I-3090 | 6 | SEAL | |
| | 17 | | 127-0580 | 4 | SCREW | |
| E | 18 | | 3E-6647 | | SEAL (247cm) | |
| | 19 | | 8T-4133 | 2 | NUT | |
| | 20 | | 9X-2045 | 4 | SCREW | |
| | 21 | | 3E-8020 | 2 | SCREW | |
| | 22 | | 4I-4243 | 1 | PLATE AS | |
| | 23 | | 4I-4253 | 1 | HOLDER (GLASS) | |
| | 24 | | 6I-5440 | 1 | BRACKET | |
| | 25 | | 7Y-7364 | 1 | GROMMET | |
| | 26 | | 124-4027 | 1 | RETAINER | |
| | 27 | | 124-4028 | 1 | PACKING | |
| | 28 | | 8T-7547 | 2 | BOLT (L=30mm) | |
| | | | 8T-4224 | 2 | WASHER | |
| E | 29 | | 6I-5470 | | SEAL (150cm) | |
| | 30 | | 105-9539 | 1 | COVER AS | |
| Y | 31 | | 6I-5444 | 1 | BOX GP | |
| | 32 | | 8T-4160 | 1 | HANDLE AS | |
| | 33 | | 6V-6885 | 1 | STRIKER-WINDOW | |
| | 34 | | 135-2213 | 1 | SHIM (T=1.4mm) | |
| | 35 | | 122-9631 | 1 | LINER | |
| | 36 | | 5I-3707 | 1 | LOUVER | |
| | 37 | | 124-4018 | 1 | CAP | |
| | 38 | | 124-4017 | 1 | BRACKET | |
| | 39 | | 124-4036 | 1 | HOLDER (BEVERAGE) | |
| | 40 | | 096-4883 | 3 | NUT | |
| | 41 | | 124-4014 | 1 | COVER | |
| | 42 | | 124-4015 | 1 | COVER | |
| | 43 | | 124-4016 | 1 | DUCT | |

## 1116294 CAB GP (BASIC)-PART 2 OF 2

| | | | | |
|---|---|---|---|---|
| | 44 | 4I-4330 | 2 | SEAL |
| | 45 | 124-3981 | 2 | STOPPER |
| | 46 | 095-0728 | 2 | SCREW |
| | | 096-6166 | 2 | WASHER |
| | 47 | 105-9525 | 1 | NOZZLE AS |
| | | 085-8037 | 1 | NOZZLE |
| | | 099-0862 | 1 | HOSE |
| | | 105-9526 | 1 | ADAPTER |
| | | 105-9527 | 1 | PACKING |
| | 48 | 4I-5044 | 1 | GLASS |
| | 49 | 1R-5998 | 4 | LOCKWASHER |
| | 50 | 122-9640 | 2 | HOLDER AS |
| | 51 | 122-9629 | 1 | HOLDER (GLASS) |
| | 52 | 122-9630 | 1 | HOLDER (GLASS) |
| | 53 | 8T-4200 | 4 | BOLT (L=16mm) |
| | | 8T-4224 | 4 | WASHER |
| | 54 | 122-9632 | 1 | GLASS |
| | 55 | 122-9634 | 1 | SEAL AS |
| E | | 3E-6647 | | SEAL (82cm) |
| | 56 | 4I-4282 | 2 | STOPPER |
| | 57 | 7X-0578 | 2 | WASHER-HARD |
| | 58 | 7Y-8561 | 1 | BUMPER |
| | 59 | 135-2331 | 1 | SPACER |
| | 60 | 133-8018 | 1 | GLASS |
| | 61 | 4I-1205 | 1 | BUMPER |
| | 62 | 8C-7581 | 2 | SCREW |
| Y | 63 | 106-0054 | 1 | WIRING GP |
| | 64 | 119-5026 | 3 | SCREW |
| | 65 | 096-6561 | 1 | ASHTRAY AS |
| | 66 | 128-2135 | 6 | SCREW |
| | 67 | 128-2136 | 2 | SCREW |
| | 68 | 4I-4334 | 1 | SCREW-TAPPING |
| | 69 | 7Y-5293 | 1 | NUT |
| E | 70 | 6I-5415 | | SEAL (400cm) |
| | 71 | 4I-4403 | 1 | COVER AS |
| | 72 | 4I-4315 | 4 | CLIP |
| | 73 | 6I-5409 | 1 | COVER (RH) |
| | 74 | 6I-5410 | 1 | COVER (LH) |
| Y | 75 | 116-0094 | 1 | WIRING GP |
| | 76 | 139-7119 | 2 | PLUG |
| | 77 | 139-7173 | 1 | SEAL |
| | 78 | 127-3735 | 1 | SEAL |

## 1116294 CAB GP (BASIC)-PART 2 OF 2

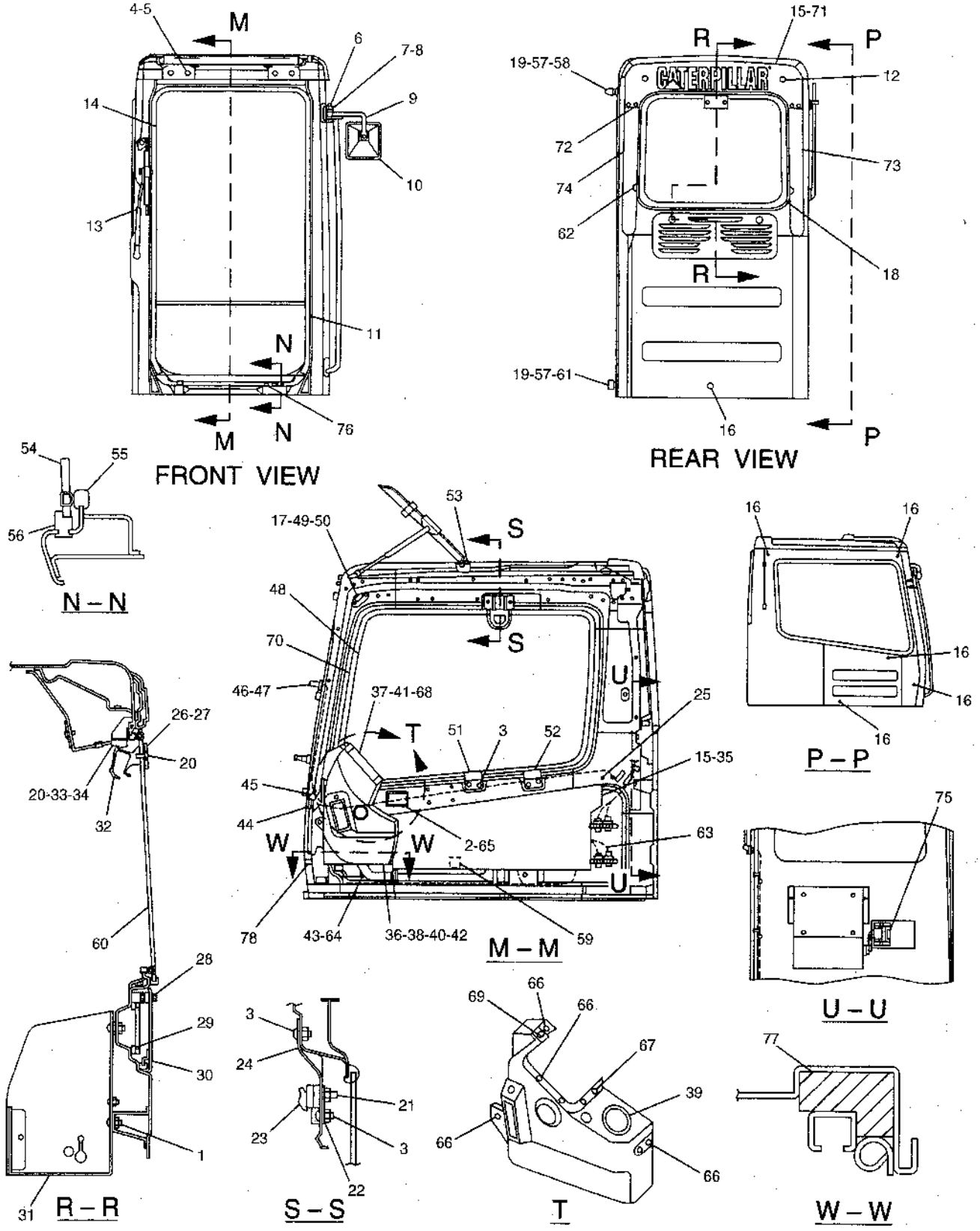


GRAPHIC #1

h63595e

# 1557019 CAB GP (BASIC)-PART 1 OF 2

WITH POLYCARBONATE WINDOW
S/N 8SR 00418-UP, 8TR 00486-UP
PART OF 1540674-Page 397B
1157054-Page 411.03, 4I1273-Page 413
AN ATTACHMENT

**Key:** E - ORDER BY THE CENTIMETER, Y - SEE SEPARATE ILLUSTRATION

**SMCS**

| NOTE | REF NO | GRAPHIC REF | PART NUMBER | QTY | PART NAME 1 2 3 4 5 6 (PRODUCT LEVEL) | PRICE USD |
|---|---|---|---|---|---|---|
| | 1 | | 4I-4353 | 1 | SEAL | |
| | 2 | | 087-8484 | 2 | GROMMET | |
| | 3 | | 8T-6411 | 6 | SCREW | |
| | 4 | | 9X-8256 | 6 | WASHER | |
| | 5 | | 124-3943 | 1 | VISOR AS | |
| | | | 124-3940 | 2 | HANDLE | |
| | 6 | | 124-3938 | 2 | RAIL | |
| | 7 | | 122-9636 | 1 | LINER | |
| | 8 | | 4I-3089 | 9 | CLIP | |
| | 9 | | 9X-2041 | 4 | SCREW | |
| | 10 | | 133-8016 | 1 | PACKING | |
| | 11 | | 9X-2044 | 9 | SCREW | |
| | 12 | | 6V-8928 | 1 | HOOK | |
| | 13 | | 8T-4121 | 9 | WASHER-HARD | |
| Y | 14 | | 4I-1273 | 1 | HATCH GP | |
| | 15 | | 096-0721 | 1 | LIGHT | |
| | 16 | | 099-0864 | 1 | BODY | |
| | 17 | | 099-0865 | 1 | LIGHT | |
| | 18 | | 096-0866 | 1 | COVER | |
| | 19 | | 4I-3043 | 2 | SCREW | |
| | 20 | | 155-7032 | 1 | GLASS | |
| | 21 | | 4I-6829 | 1 | SEAL | |
| | 22 | | 4I-4273 | 1 | COVER | |
| | 23 | | 4I-4392 | 3 | CLIP | |
| | 24 | | 4I-3123 | 2 | BOLT (L=20mm) | |
| | 25 | | 099-3603 | 1 | CATCH | |
| | 26 | | 096-3772 | 2 | SCREW-MACHINE | |
| | 27 | | 122-9637 | 1 | HANDLE AS | |
| | 28 | | 4I-3090 | 3 | SEAL | |
| | 29 | | 4I-3144 | 2 | WASHER-HARD | |
| | 30 | | 4I-3066 | 1 | STRIKER-LOCK | |
| | 31 | | 127-0580 | 2 | SCREW | |
| | 32 | | 124-3978 | 1 | HANDLE AS | |
| | 33 | | 4I-6602 | 8 | BOSS | |
| E | 34 | | 3E-6647 | | SEAL (375cm) | |
| Y | 35 | | 155-7054 | 1 | DOOR GP | |
| | 36 | | 4I-3096 | 1 | GROMMET | |
| | 37 | | 8T-4133 | 9 | NUT | |
| | 38 | | 6V-7636 | 2 | PIN AS | |
| | 39 | | 171-3278 | 1 | ROD | |
| | 40 | | 9X-2046 | 4 | SCREW | |
| | 41 | | 8Y-5728 | 1 | LATCH AS | |
| | 42 | | 4I-4228 | 1 | BRACKET AS | |
| | 43 | | 4I-1206 | 2 | GUIDE | |
| | 44 | | 128-2192 | 1 | LEVER AS | |
| | 45 | | 9X-2045 | 2 | SCREW | |

## 1557019 CAB GP (BASIC)-PART 1 OF 2

| | | | |
|---|---|---|---|
| 46 | 4I-3063 | 1 | SPRING |
| 47 | 133-8015 | 2 | BRACKET AS |
| 48 | 4I-4330 | 2 | SEAL |
| 49 | 099-0823 | 3 | SCREW-MACHINE |
| 50 | 147-4870 | 1 | GUARD |
| 51 | 122-9627 | 1 | COVER |
| 52 | 127-3735 | 1 | SEAL |
| 53 | 4I-4241 | 1 | PLATE |
| 54 | 4I-5034 | 2 | CLIP |
| 55 | 1R-5998 | 2 | LOCKWASHER |

## 1557019 CAB GP (BASIC)-PART 1 OF 2

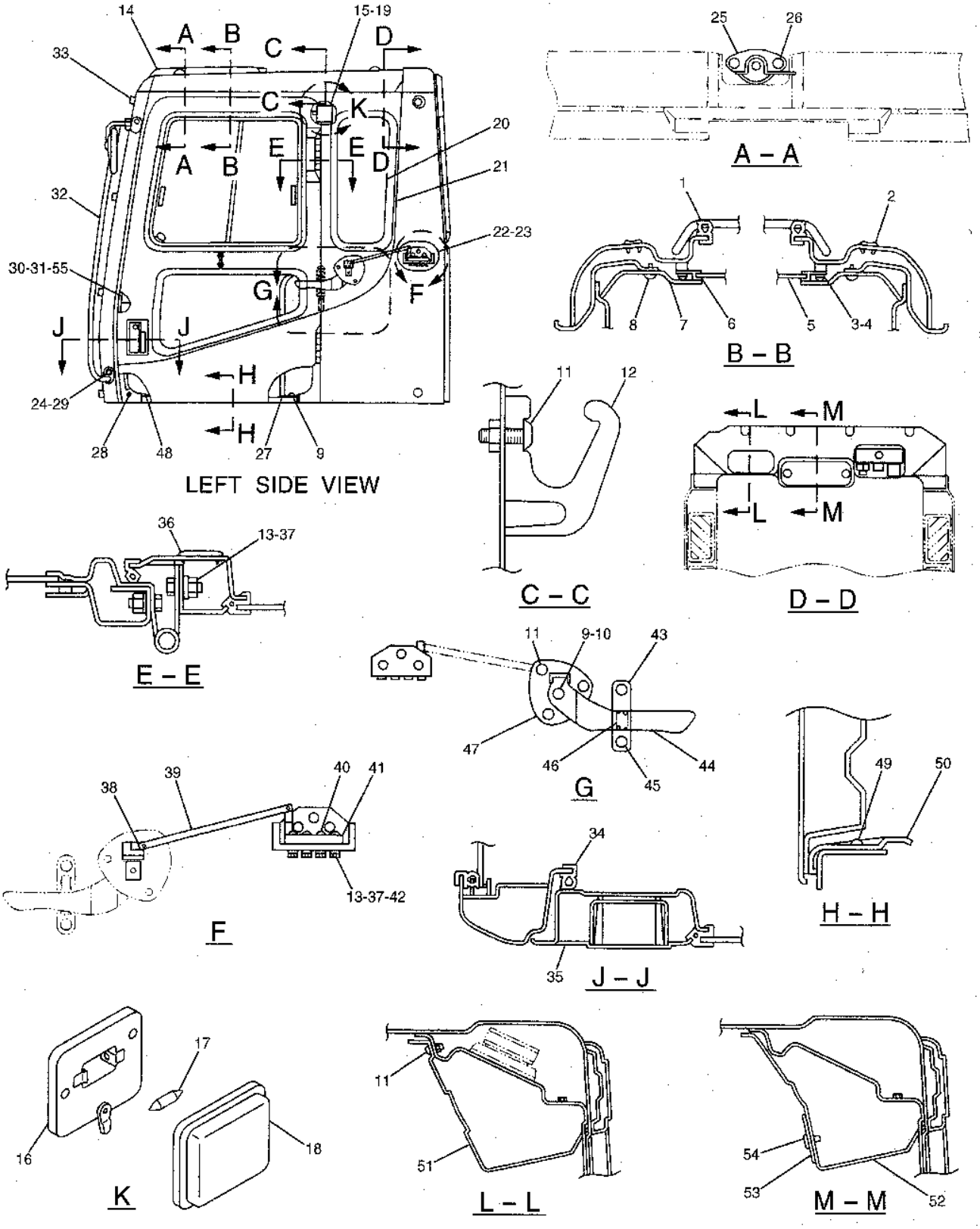


GRAPHIC #1

h73377e

# 1557019 CAB GP (BASIC)-PART 2 OF 2

WITH POLYCARBONATE WINDOW
S/N 8SR 00418-UP, 8TR 00486-UP
PART OF 1540674-Page 397B
)054-Page 122.03C, 1507025-Page 122.06A, 6I5444-Page 415, 1557043-Page 424, 1557041-Page 427.01, 1557039-Page 42
AN ATTACHMENT

**Key:** E - ORDER BY THE CENTIMETER, Y - SEE SEPARATE ILLUSTRATION

**SMCS**

| NOTE | REF NO | GRAPHIC REF | PART NUMBER | QTY | PART NAME 1 2 3 4 5 6 (PRODUCT LEVEL) | PRICE USD |
|---|---|---|---|---|---|---|
| | 1 | | 9X-2041 | 4 | SCREW | |
| | 2 | | 095-0735 | 2 | SCREW-MACHINE | |
| | 3 | | 9X-2044 | 7 | SCREW | |
| | 4 | | 8T-4121 | 7 | WASHER-HARD | |
| | 5 | | 8T-4137 | 4 | BOLT (L=20mm) | |
| | 6 | | 8T-4193 | 1 | BOLT (L=50mm) | |
| | 7 | | 9X-8257 | 1 | WASHER | |
| | 8 | | 3B-4510 | 1 | LOCKWASHER | |
| | 9 | | 4I-5042 | 1 | SUPPORT AS | |
| | 10 | | 5P-6872 | 1 | MIRROR | |
| | 11 | | 4I-4287 | 1 | SEAL | |
| | 12 | | 5C-9553 | 2 | BOLT (L=16mm) | |
| | | | 8H-3481 | 2 | LOCKWASHER | |
| | | | 9X-8256 | 2 | WASHER | |
| Y | 13 | | 155-7041 | 1 | WIPER GP | |
| Y | 14 | | 155-7043 | 1 | WINDOW GP | |
| | 15 | | 4I-3087 | 6 | CLIP | |
| | 16 | | 4I-3090 | 6 | SEAL | |
| | 17 | | 127-0580 | 4 | SCREW | |
| | 18 | | 166-3215 | 1 | SEAL | |
| | 19 | | 8T-4133 | 5 | NUT | |
| | 20 | | 9X-2045 | 4 | SCREW | |
| | 21 | | 3E-8020 | 2 | SCREW | |
| | 22 | | 4I-4243 | 1 | PLATE AS | |
| | 23 | | 4I-4253 | 1 | HOLDER (GLASS) | |
| | 24 | | 6I-5440 | 1 | BRACKET | |
| | 25 | | 7Y-7364 | 1 | GROMMET | |
| | 26 | | 124-4027 | 1 | RETAINER | |
| | 27 | | 124-4028 | 1 | PACKING | |
| | 28 | | 8T-7547 | 2 | BOLT (L=30mm) | |
| | | | 8T-4224 | 2 | WASHER | |
| E | 29 | | 6I-5470 | | SEAL (150cm) | |
| | 30 | | 105-9539 | 1 | COVER AS | |
| Y | 31 | | 6I-5444 | 1 | BOX GP | |
| | 32 | | 134-5555 | 1 | LATCH AS | |
| | 33 | | 6V-6885 | 1 | STRIKER-WINDOW | |
| | 34 | | 135-2213 | 1 | SHIM (T=1.4mm) | |
| | 35 | | 122-9631 | 1 | LINER | |
| | 36 | | 5I-3707 | 1 | LOUVER | |
| | 37 | | 124-4018 | 1 | CAP | |
| | 38 | | 124-4017 | 1 | BRACKET | |
| | 39 | | 124-4036 | 1 | HOLDER (BEVERAGE) | |
| | 40 | | 6I-5415 | | SEAL (400cm) | |
| | 41 | | 124-4014 | 1 | COVER | |
| Y | 42 | | 155-7039 | 1 | COVER GP | |
| | 43 | | 124-4016 | 1 | DUCT | |

## 1557019 CAB GP (BASIC)-PART 2 OF 2

| | | | | |
|---|---|---|---|---|
| | 44 | 4I-4330 | 2 | SEAL |
| | 45 | 124-3981 | 2 | STOPPER |
| | 46 | 095-0728 | 2 | SCREW |
| | | 096-6166 | 2 | WASHER-HARD |
| | 47 | 105-9525 | 1 | NOZZLE AS |
| | | 085-8037 | 1 | NOZZLE |
| | | 099-0862 | 1 | HOSE |
| | | 105-9526 | 1 | ADAPTER |
| | | 105-9527 | 1 | PACKING |
| | 48 | 155-7034 | 1 | GLASS |
| | 49 | 1R-5998 | 4 | LOCKWASHER |
| | 50 | 122-9640 | 2 | HOLDER AS |
| | 51 | 122-9629 | 1 | HOLDER (GLASS) |
| | 52 | 122-9630 | 1 | HOLDER (GLASS) |
| | 53 | 8T-4200 | 4 | BOLT (L=16mm) |
| | | 8T-4224 | 4 | WASHER-HARD |
| | 54 | 155-7035 | 1 | GLASS |
| | 55 | 122-9634 | 1 | SEAL AS |
| E | | 3E-6647 | | SEAL (82cm) |
| | 56 | 4I-4282 | 2 | STOPPER |
| | 57 | 7X-0578 | 2 | WASHER-HARD |
| | 58 | 7Y-8561 | 1 | BUMPER |
| | 59 | 4I-4403 | 1 | COVER AS |
| | | 4I-4315 | 4 | CLIP |
| | | 6I-5409 | 1 | COVER (RH) |
| | | 6I-5410 | 1 | COVER (LH) |
| | 60 | 155-7037 | 1 | GLASS AS |
| | 61 | 4I-1205 | 1 | BUMPER |
| | 62 | 8C-7581 | 2 | SCREW |
| Y | 63 | 106-0054 | 1 | WIRING GP |
| Y | 64 | 150-7025 | 1 | WIRING GP |
| | 65 | 119-5026 | 3 | SCREW |
| | 66 | 096-6561 | 1 | ASHTRAY AS |
| | 67 | 128-2135 | 6 | SCREW |
| | 68 | 128-2136 | 2 | SCREW |
| | 69 | 4I-4334 | 1 | SCREW-TAPPING |
| | 70 | 7Y-5293 | 1 | NUT |
| | 71 | 135-2331 | 1 | SPACER |
| | 72 | 139-7119 | 2 | PLUG |
| | 73 | 139-7173 | 1 | SEAL |
| | 74 | 127-3735 | 1 | SEAL |

## 1557019 CAB GP (BASIC)-PART 2 OF 2

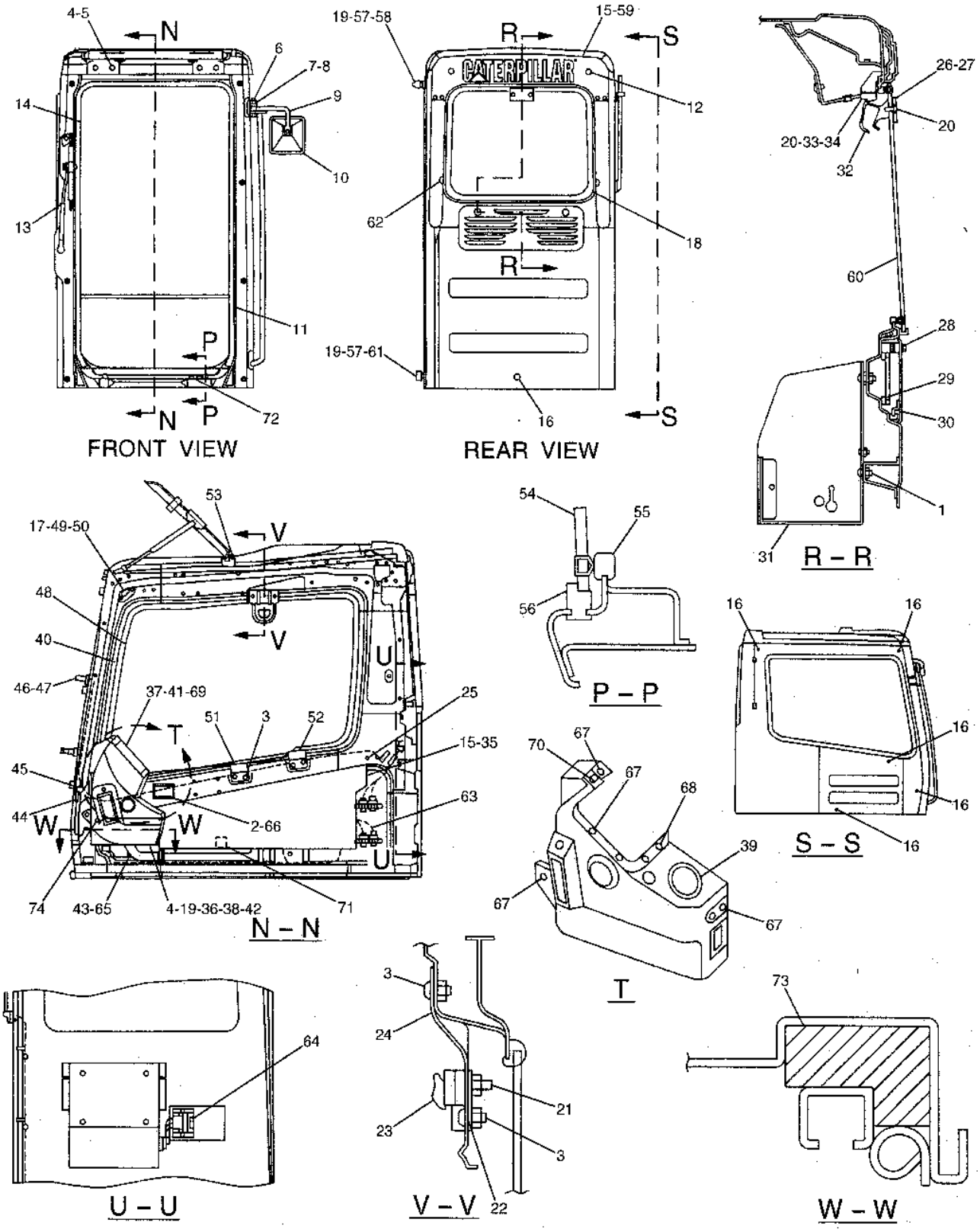


GRAPHIC #1

h73379e

# 1244013 CAB GP (BASIC)-PART 1 OF 2

WITH RADIO MOUNTING & VANDAL BOSS
S/N 8SR 1-00417, 8TR 1-00485
PART OF 1244012-Page 397.02
4I6973-Page 410, 4I1273-Page 413

**Key:** E - ORDER BY THE CENTIMETER, Y - SEE SEPARATE ILLUSTRATION

**SMCS**

| NOTE | REF NO | GRAPHIC REF | PART NUMBER | QTY | PART NAME 1 2 3 4 5 6 (PRODUCT LEVEL) | PRICE USD |
|---|---|---|---|---|---|---|
| | 1 | | 4I-4353 | 1 | SEAL | |
| | 2 | | 087-8484 | 2 | GROMMET | |
| | 3 | | 8T-6411 | 6 | SCREW (MACHINE) | |
| | 4 | | 9X-8256 | 6 | WASHER | |
| | 5 | | 124-3943 | 1 | VISOR AS | |
| | | | 124-3940 | 2 | HANDLE | |
| | 6 | | 124-3938 | 2 | RAIL | |
| | 7 | | 122-9636 | 1 | LINER | |
| | 8 | | 4I-3089 | 9 | CLIP | |
| | 9 | | 9X-2041 | 4 | SCREW | |
| | 10 | | 133-8016 | 1 | PACKING | |
| | 11 | | 9X-2044 | 8 | SCREW | |
| | 12 | | 6V-8928 | 1 | HOOK | |
| | 13 | | 8T-4121 | 9 | WASHER (HARD) | |
| Y | 14 | | 4I-1273 | 1 | HATCH GP | |
| | 15 | | 096-0721 | 1 | LIGHT | |
| | 16 | | 099-0864 | 1 | BODY | |
| | 17 | | 099-0865 | 1 | LIGHT | |
| | 18 | | 099-0866 | 1 | COVER | |
| | 19 | | 4I-3043 | 2 | SCREW | |
| | 20 | | 4I-1186 | 1 | GLASS | |
| | 21 | | 4I-6829 | 1 | SEAL | |
| | 22 | | 4I-4273 | 1 | COVER | |
| | 23 | | 4I-4392 | 3 | CLIP | |
| | 24 | | 4I-3045 | 1 | SPACER | |
| | 25 | | 4I-3087 | 2 | CLIP | |
| | 26 | | 4I-3053 | 1 | LINER | |
| | 27 | | 122-9637 | 1 | HANDLE AS | |
| | 28 | | 4I-3090 | 3 | SEAL | |
| | 29 | | 4I-3144 | 2 | WASHER (HARD) | |
| | 30 | | 4I-3066 | 1 | STRIKER (LOCK) | |
| | 31 | | 127-0580 | 2 | SCREW | |
| | 32 | | 124-3978 | 1 | HANDLE AS | |
| E | 33 | | 3E-6647 | | SEAL (375cm) | |
| Y | 34 | | 4I-6973 | 1 | DOOR GP | |
| | 35 | | 4I-3096 | 1 | GROMMET | |
| | 36 | | 8T-4133 | 9 | NUT | |
| | 37 | | 6V-7636 | 2 | PIN AS | |
| | 38 | | 4I-4251 | 1 | ROD | |
| | 39 | | 9X-2046 | 4 | SCREW | |
| | 40 | | 8Y-5728 | 1 | LATCH AS | |
| | 41 | | 4I-4228 | 1 | BRACKET AS | |
| | 42 | | 4I-1206 | 2 | GUIDE | |
| | 43 | | 128-2192 | 1 | LEVER AS | |
| | 44 | | 9X-2045 | 2 | SCREW | |
| | 45 | | 4I-3063 | 1 | SPRING | |
| | 46 | | 133-8015 | 1 | BRACKET AS | |

## 1244013 CAB GP (BASIC)-PART 1 OF 2

| | | | |
|---|---|---|---|
| 47 | 4I-4330 | 2 | SEAL |
| 48 | 099-0823 | 3 | SCREW (MACHINE) |
| 49 | 147-4870 | 1 | GUARD |
| 50 | 122-9627 | 1 | COVER |
| 51 | 127-3735 | 1 | SEAL |
| 52 | 4I-4241 | 1 | PLATE |
| 53 | 4I-5034 | 2 | CLIP |
| 54 | 1R-5998 | 2 | LOCKWASHER |
| 55 | 099-3603 | 1 | CATCH |
| 56 | 096-3772 | 2 | SCREW (MACHINE) |
| 57 | 4I-3123 | 2 | BOLT (L=20mm) |
| 58 | 4I-6602 | 8 | BOSS |

## 1244013 CAB GP (BASIC)-PART 1 OF 2

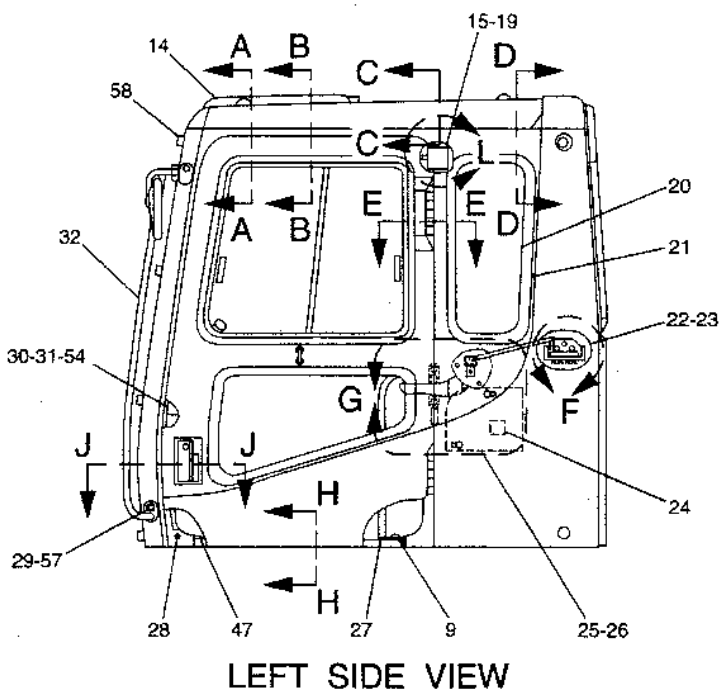


LEFT SIDE VIEW

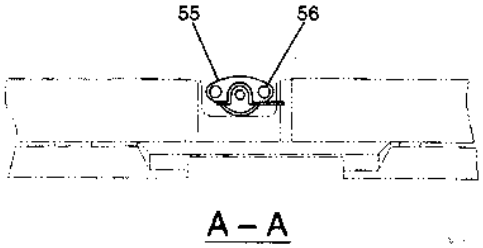


A – A

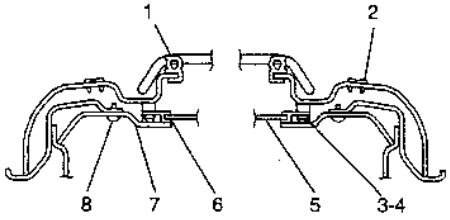


B – B

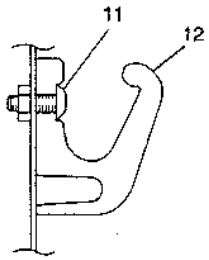


C – C

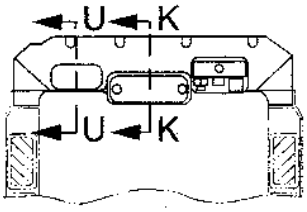


D – D

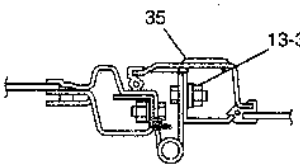


E – E

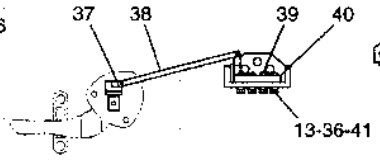


F

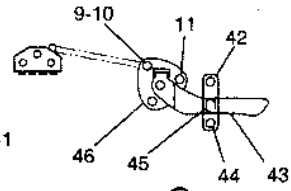


G

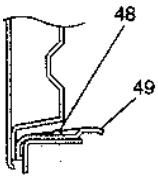


H – H

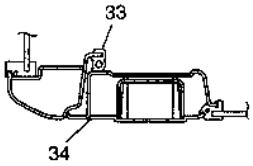


J – J

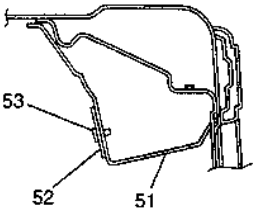


K – K

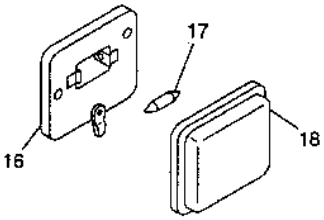


L

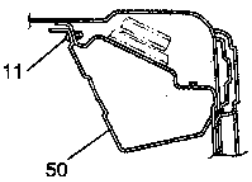


U – U

GRAPHIC #1

h63560e

# 1244013 CAB GP (BASIC)-PART 2 OF 2

WITH RADIO MOUNTING & VANDAL BOSS
S/N 8SR 1-00417, 8TR 1-00485
PART OF 1244012-Page 397.02
1060054-Page 122.02, 1160094-Page 122.06, 6I5444-Page 415, 1116273-Page 422, 1116272-Page 427

**Key:** E - ORDER BY THE CENTIMETER, Y - SEE SEPARATE ILLUSTRATION

**SMCS**

| NOTE | REF NO | GRAPHIC REF | PART NUMBER | QTY | PART NAME 1 2 3 4 5 6 (PRODUCT LEVEL) | PRICE USD |
|---|---|---|---|---|---|---|
| | 1 | | 9X-2041 | 4 | SCREW | |
| | 2 | | 095-0735 | 2 | SCREW (MACHINE) | |
| | 3 | | 9X-2044 | 8 | SCREW | |
| | 4 | | 8T-4121 | 4 | WASHER (HARD) | |
| | 5 | | 8T-4137 | 4 | BOLT (L=20mm) | |
| | 6 | | 8T-4193 | 1 | BOLT (L=50mm) | |
| | 7 | | 9X-8257 | 1 | WASHER | |
| | 8 | | 3B-4510 | 1 | LOCKWASHER | |
| | 9 | | 4I-5042 | 1 | SUPPORT AS | |
| | 10 | | 5P-6872 | 1 | MIRROR | |
| | 11 | | 4I-4287 | 1 | SEAL | |
| | 12 | | 5C-9553 | 2 | BOLT (L=16mm) | |
| | | | 8Y-3481 | 2 | LOCKWASHER | |
| | | | 9X-8256 | 2 | WASHER | |
| Y | 13 | | 111-6272 | 1 | WIPER GP | |
| Y | 14 | | 111-6273 | 1 | WINDOW GP | |
| | 15 | | 4I-3087 | 6 | CLIP | |
| | 16 | | 4I-3090 | 6 | SEAL | |
| | 17 | | 127-0580 | 4 | SCREW | |
| E | 18 | | 3E-6647 | | SEAL (247cm) | |
| | 19 | | 8T-4133 | 2 | NUT | |
| | 20 | | 9X-2045 | 4 | SCREW | |
| | 21 | | 3E-8020 | 2 | SCREW | |
| | 22 | | 4I-4243 | 1 | PLATE AS | |
| | 23 | | 4I-4253 | 1 | HOLDER (GLASS) | |
| | 24 | | 6I-5440 | 1 | BRACKET | |
| | 25 | | 7Y-7364 | 1 | GROMMET | |
| | 26 | | 124-4027 | 1 | RETAINER | |
| | 27 | | 124-4028 | 1 | PACKING | |
| | 28 | | 8T-7547 | 2 | BOLT (L=30mm) | |
| | | | 8T-4224 | 2 | WASHER | |
| E | 29 | | 6I-5470 | | SEAL (150cm) | |
| | 30 | | 105-9539 | 1 | COVER AS | |
| Y | 31 | | 6I-5444 | 1 | BOX GP | |
| | 32 | | 8T-4160 | 1 | HANDLE AS | |
| | 33 | | 6V-6885 | 1 | STRIKER (WINDOW) | |
| | 34 | | 135-2213 | 1 | SHIM (T=1.4mm) | |
| | 35 | | 122-9631 | 1 | LINER | |
| | 36 | | 5I-3707 | 1 | LOUVER | |
| | 37 | | 124-4018 | 1 | CAP | |
| | 38 | | 124-4017 | 1 | BRACKET | |
| | 39 | | 124-4036 | 1 | HOLDER (BEVERAGE) | |
| | 40 | | 096-4883 | 3 | NUT | |
| | 41 | | 124-4014 | 1 | COVER | |
| | 42 | | 124-4015 | 1 | COVER | |
| | 43 | | 124-4016 | 1 | DUCT | |
| | 44 | | 4I-4330 | 2 | SEAL | |

## 1244013 CAB GP (BASIC)-PART 2 OF 2

| | | | | |
|---|---|---|---|---|
| | 45 | 124-3981 | 2 | STOPPER |
| | 46 | 095-0728 | 2 | SCREW |
| | | 096-6166 | 2 | WASHER |
| | 47 | 105-9525 | 1 | NOZZLE AS |
| | | 085-8037 | 1 | NOZZLE |
| | | 099-0862 | 1 | HOSE |
| | | 105-9526 | 1 | ADAPTER |
| | | 105-9527 | 1 | PACKING |
| | 48 | 4I-5043 | 1 | GLASS |
| | 49 | 1R-5998 | 4 | LOCKWASHER |
| | 50 | 122-9640 | 2 | HOLDER AS |
| | 51 | 122-9629 | 1 | HOLDER (GLASS) |
| | 52 | 122-9630 | 1 | HOLDER (GLASS) |
| | 53 | 8T-4200 | 4 | BOLT (L=16mm) |
| | | 8T-4224 | 4 | WASHER |
| | 54 | 122-9632 | 1 | GLASS |
| | 55 | 122-9634 | 1 | SEAL AS |
| E | | 3E-6647 | | SEAL (82cm) |
| | 56 | 4I-4282 | 2 | STOPPER |
| | 57 | 7X-0578 | 2 | WASHER (HARD) |
| | 58 | 7Y-8561 | 1 | BUMPER |
| | 59 | 135-2331 | 1 | SPACER |
| | 60 | 124-4026 | 1 | GLASS |
| | 61 | 4I-1205 | 1 | BUMPER |
| | 62 | 8C-7581 | 2 | SCREW |
| Y | 63 | 106-0054 | 1 | WIRING GP |
| Y | 64 | 116-0094 | 1 | WIRING GP |
| | 65 | 119-5026 | 3 | SCREW |
| | 66 | 096-6561 | 1 | ASHTRAY AS |
| | 67 | 128-2135 | 6 | SCREW |
| | 68 | 128-2136 | 2 | SCREW |
| | 69 | 4I-4334 | 1 | SCREW (TAPPING) |
| | 70 | 7Y-5293 | 1 | NUT |
| | 71 | 4I-4403 | 1 | COVER AS |
| | 72 | 4I-4315 | 4 | CLIP |
| | 73 | 6I-5409 | 1 | COVER (RH) |
| | 74 | 6I-5410 | 1 | COVER (LH) |
| E | 75 | 3E-8083 | | SEAL (400cm) |
| | 76 | 139-7119 | 2 | PLUG |
| | 77 | 139-7173 | 1 | SEAL |
| | 78 | 127-3735 | 1 | SEAL |

## 1244013 CAB GP (BASIC)-PART 2 OF 2

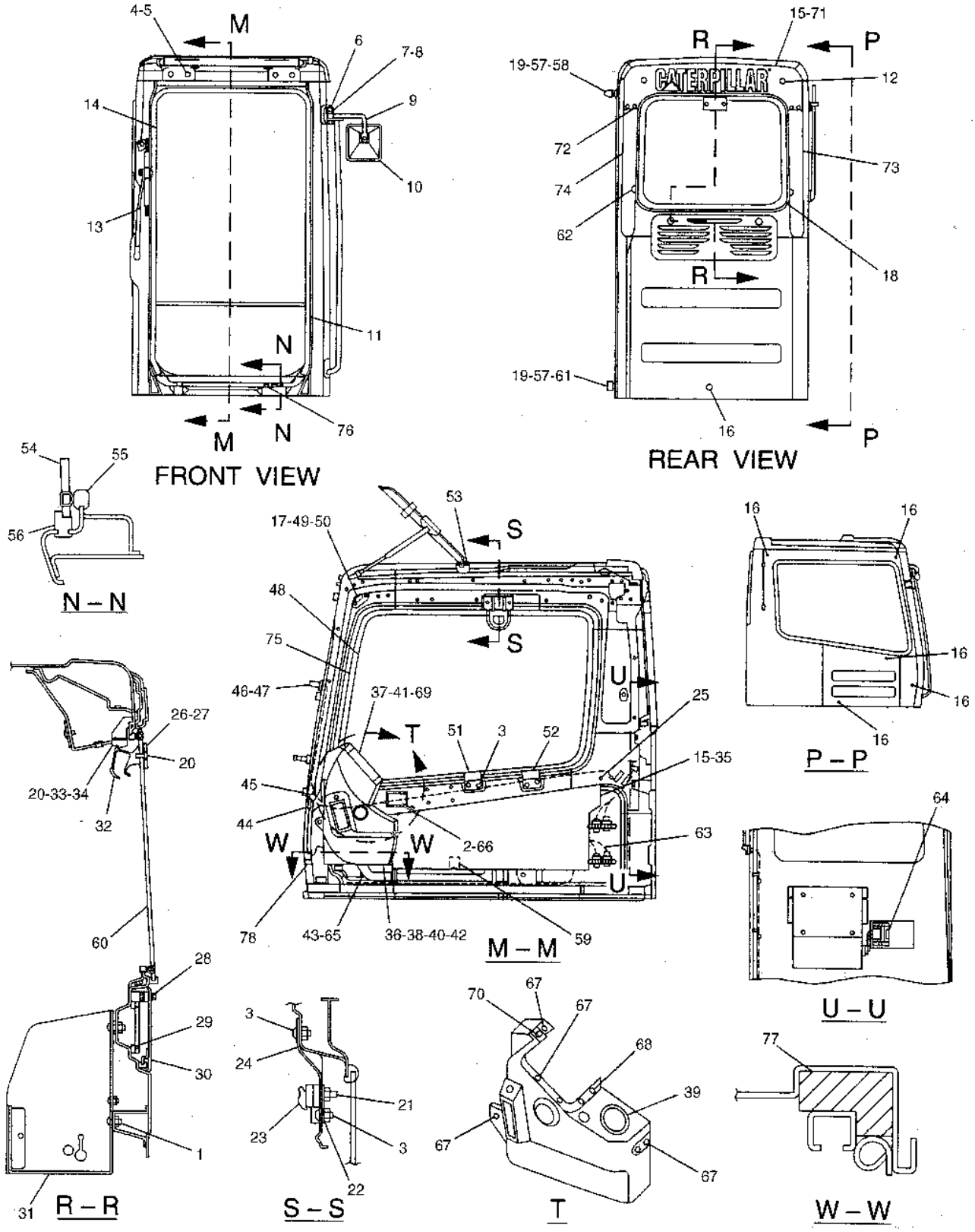


GRAPHIC #1

h63562e

# 1557020 CAB GP (BASIC)-PART 1 OF 2

WITH RADIO MOUNTING & VANDAL BOSS
S/N 8SR 00418-UP, 8TR 00486-UP
PART OF 1556995-Page 397.04
1557053-Page 411A, 4I1273-Page 413

**Key:** E - ORDER BY THE CENTIMETER, Y - SEE SEPARATE ILLUSTRATION

**SMCS**

| NOTE | REF NO | GRAPHIC REF | PART NUMBER | QTY | PART NAME 1 2 3 4 5 6 (PRODUCT LEVEL) | PRICE USD |
|---|---|---|---|---|---|---|
| | 1 | | 4I-4353 | 1 | SEAL | |
| | 2 | | 087-8484 | 2 | GROMMET | |
| | 3 | | 8T-6411 | 6 | SCREW | |
| | 4 | | 9X-8256 | 6 | WASHER | |
| | 5 | | 124-3943 | 1 | VISOR AS | |
| | | | 124-3940 | 2 | HANDLE | |
| | 6 | | 124-3938 | 2 | RAIL | |
| | 7 | | 122-9636 | 1 | LINER | |
| | 8 | | 4I-3089 | 9 | CLIP | |
| | 9 | | 9X-2041 | 4 | SCREW | |
| | 10 | | 133-8016 | 1 | PACKING | |
| | 11 | | 9X-2044 | 9 | SCREW | |
| | 12 | | 6V-8928 | 1 | HOOK | |
| | 13 | | 8T-4121 | 9 | WASHER-HARD | |
| Y | 14 | | 4I-1273 | 1 | HATCH GP | |
| | 15 | | 096-0721 | 1 | LIGHT | |
| | 16 | | 099-0864 | 1 | BODY | |
| | 17 | | 099-0865 | 1 | LIGHT | |
| | 18 | | 099-0866 | 1 | COVER | |
| | 19 | | 4I-4273 | 1 | COVER | |
| | 20 | | 4I-4392 | 3 | CLIP | |
| | 21 | | 4I-6602 | 8 | BOSS | |
| Y | 22 | | 155-7053 | 1 | DOOR GP | |
| | 23 | | 122-9637 | 1 | HANDLE AS | |
| | 24 | | 4I-3090 | 3 | SEAL | |
| | 25 | | 8T-4137 | 2 | BOLT (L=20mm) | |
| | 26 | | 4I-3144 | 2 | WASHER-HARD | |
| | 27 | | 4I-3066 | 1 | STRIKER-LOCK | |
| | 28 | | 127-0580 | 2 | SCREW | |
| | 29 | | 124-3978 | 1 | HANDLE AS | |
| E | 30 | | 3E-6647 | | SEAL (375cm) | |
| | 31 | | 4I-3096 | 1 | GROMMET | |
| | 32 | | 8T-4133 | 9 | NUT | |
| | 33 | | 6V-7636 | 2 | PIN AS | |
| | 34 | | 171-3278 | 1 | ROD | |
| | 35 | | 9X-2046 | 4 | SCREW | |
| | 36 | | 8Y-5728 | 1 | LATCH AS | |
| | 37 | | 4I-4228 | 1 | BRACKET AS | |
| | 38 | | 4I-1206 | 2 | GUIDE | |
| | 39 | | 128-2192 | 1 | LEVER AS | |
| | 40 | | 9X-2045 | 2 | SCREW | |
| | 41 | | 4I-3063 | 1 | SPRING | |
| | 42 | | 133-8015 | 1 | BRACKET AS | |
| | 43 | | 4I-4330 | 2 | SEAL | |
| | 44 | | 099-0823 | 3 | SCREW-MACHINE | |
| | 45 | | 147-4870 | 1 | GUARD | |
| | 46 | | 122-9627 | 1 | COVER | |

## 1557020 CAB GP (BASIC)-PART 1 OF 2

| | | | |
|---|---|---|---|
| 47 | 127-3735 | 1 | SEAL |
| 48 | 4I-4241 | 1 | PLATE |
| 49 | 4I-5034 | 2 | CLIP |
| 50 | 1R-5998 | 2 | LOCKWASHER |
| 51 | 096-3772 | 2 | SCREW-MACHINE |
| 52 | 099-3603 | 1 | CATCH |
| 53 | 4I-3043 | 2 | SCREW |
| 54 | 155-7031 | 1 | GLASS |
| 55 | 4I-6829 | 1 | SEAL |

## 1557020 CAB GP (BASIC)-PART 1 OF 2

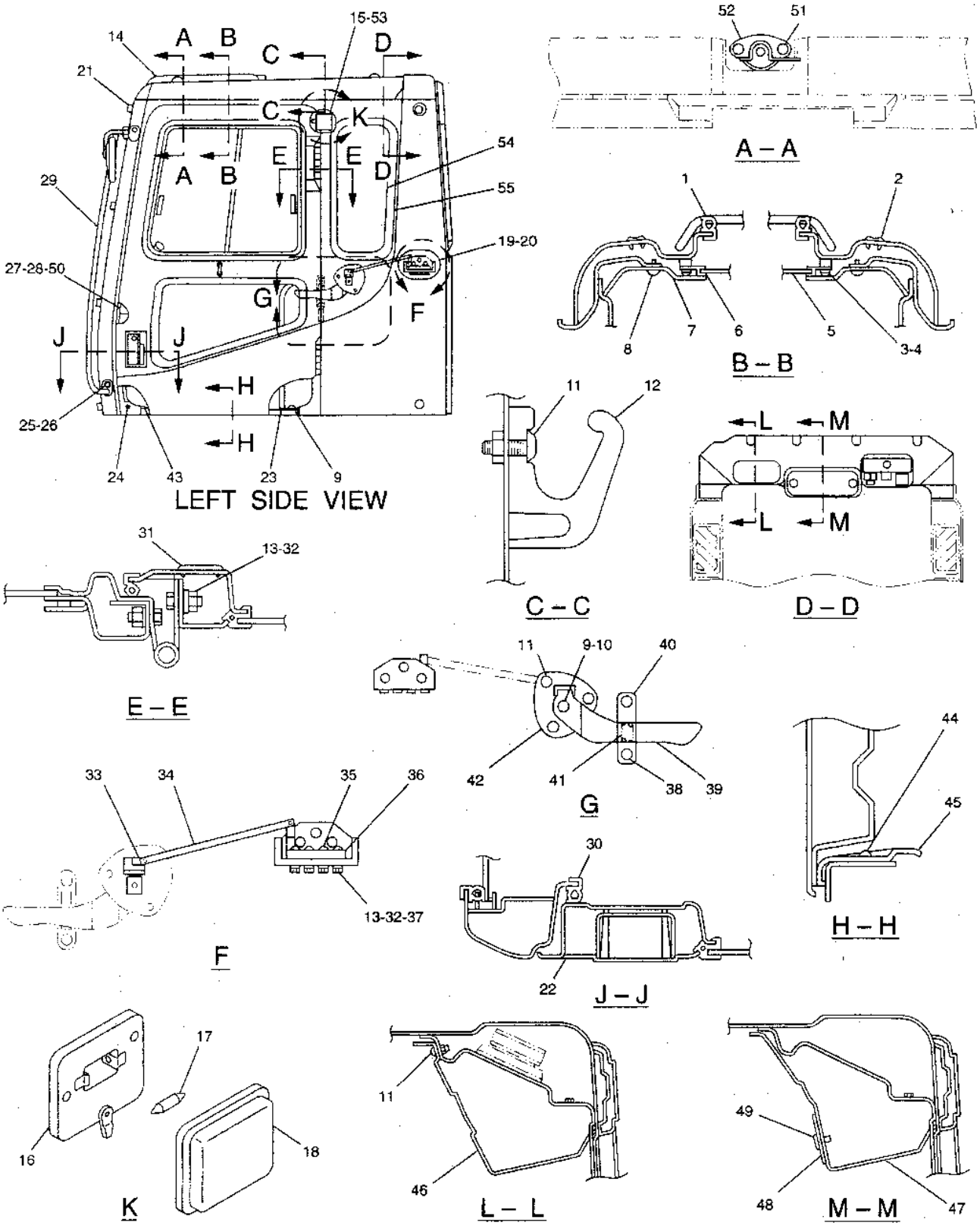


GRAPHIC #1

h73373e

# 1557020 CAB GP (BASIC)-PART 2 OF 2

WITH RADIO MOUNTING & VANDAL BOSS
S/N 8SR 00418-UP, 8TR 00486-UP
PART OF 1556995-Page 397.04
)054-Page 122.03C, 1507025-Page 122.06A, 6I5444-Page 415, 1557043-Page 424, 1557041-Page 427.01, 1557039-Page 42

**Key:** E - ORDER BY THE CENTIMETER, Y - SEE SEPARATE ILLUSTRATION

**SMCS**

| NOTE | REF NO | GRAPHIC REF | PART NUMBER | QTY | PART NAME 1 2 3 4 5 6 (PRODUCT LEVEL) | PRICE USD |
|---|---|---|---|---|---|---|
| | 1 | | 9X-2041 | 4 | SCREW | |
| | 2 | | 095-0735 | 2 | SCREW-MACHINE | |
| | 3 | | 9X-2044 | 7 | SCREW | |
| | 4 | | 8T-4121 | 4 | WASHER-HARD | |
| | 5 | | 8T-4137 | 4 | BOLT (L=20mm) | |
| | 6 | | 8T-4193 | 1 | BOLT (L=50mm) | |
| | 7 | | 9X-8257 | 1 | WASHER | |
| | 8 | | 3B-4510 | 1 | LOCKWASHER | |
| | 9 | | 4I-5042 | 1 | SUPPORT AS | |
| | 10 | | 5P-6872 | 1 | MIRROR | |
| | 11 | | 4I-4287 | 1 | SEAL | |
| | 12 | | 5C-9553 | 2 | BOLT (L=16mm) | |
| | | | 8H-3481 | 2 | LOCKWASHER | |
| | | | 9X-8256 | 2 | WASHER | |
| Y | 13 | | 155-7041 | 1 | WIPER GP | |
| Y | 14 | | 155-7043 | 1 | WINDOW GP | |
| | 15 | | 4I-3087 | 6 | CLIP | |
| | 16 | | 4I-3090 | 6 | SEAL | |
| | 17 | | 127-0580 | 4 | SCREW | |
| Y | 18 | | 155-7039 | 1 | COVER GP | |
| | 19 | | 4I-4334 | 1 | SCREW-TAPPING | |
| | 20 | | 7Y-5293 | 1 | NUT | |
| | 21 | | 166-3215 | 1 | SEAL | |
| | 22 | | 155-7033 | 1 | GLASS | |
| | 23 | | 8T-4133 | 5 | NUT | |
| | 24 | | 135-2331 | 1 | SPACER | |
| | 25 | | 139-7119 | 2 | PLUG | |
| | 26 | | 9X-2045 | 4 | SCREW | |
| | 27 | | 3E-8020 | 2 | SCREW | |
| | 28 | | 4I-4243 | 1 | PLATE AS | |
| | 29 | | 4I-4253 | 1 | HOLDER (GLASS) | |
| | 30 | | 6I-5440 | 1 | BRACKET | |
| | 31 | | 7Y-7364 | 1 | GROMMET | |
| | 32 | | 124-4027 | 1 | RETAINER | |
| | 33 | | 124-4028 | 1 | PACKING | |
| | 34 | | 8T-7547 | 2 | BOLT (L=30mm) | |
| | | | 8T-4224 | 2 | WASHER-HARD | |
| E | 35 | | 6I-5470 | | SEAL (150cm) | |
| | 36 | | 105-9539 | 1 | COVER AS | |
| Y | 37 | | 6I-5444 | 1 | BOX GP | |
| | 38 | | 134-5555 | 1 | LATCH AS | |
| | 39 | | 6V-6885 | 1 | STRIKER-WINDOW | |
| | 40 | | 135-2213 | 1 | SHIM (T=1.4mm) | |
| | 41 | | 122-9631 | 1 | LINER | |
| | 42 | | 5I-3707 | 1 | LOUVER | |
| | 43 | | 124-4018 | 1 | CAP | |
| | 44 | | 124-4017 | 1 | BRACKET | |

## 1557020 CAB GP (BASIC)-PART 2 OF 2

| | | | | |
|---|---|---|---|---|
| | 45 | 124-4036 | 3 | HOLDER (BEVERAGE) |
| | 46 | 4I-4330 | 2 | SEAL |
| | 47 | 124-4014 | 1 | COVER |
| | 48 | 139-7173 | 1 | SEAL |
| | 49 | 124-4016 | 1 | DUCT |
| | 50 | 124-3981 | 2 | STOPPER |
| | 51 | 095-0728 | 2 | SCREW |
| | | 096-6166 | 2 | WASHER-HARD |
| | 52 | 105-9525 | 1 | NOZZLE AS |
| | | 085-8037 | 1 | NOZZLE |
| | | 099-0862 | 1 | HOSE |
| | | 105-9526 | 1 | ADAPTER |
| | | 105-9527 | 1 | PACKING |
| | 53 | 155-7036 | 1 | GLASS |
| | 54 | 1R-5998 | 4 | LOCKWASHER |
| | 55 | 122-9640 | 2 | HOLDER AS |
| | 56 | 122-9629 | 1 | HOLDER (GLASS) |
| | 57 | 122-9630 | 1 | HOLDER (GLASS) |
| | 58 | 8T-4200 | 4 | BOLT (L=16mm) |
| | | 8T-4224 | 4 | WASHER-HARD |
| | 59 | 155-7035 | 1 | GLASS |
| | 60 | 122-9634 | 1 | SEAL AS |
| E | | 3E-6647 | | SEAL (82cm) |
| | 61 | 4I-4282 | 2 | STOPPER |
| | 62 | 7X-0578 | 2 | WASHER-HARD |
| | 63 | 7Y-8561 | 1 | BUMPER |
| | 64 | 4I-4403 | 1 | COVER AS |
| | 65 | 4I-4315 | 4 | CLIP |
| | 66 | 6I-5409 | 1 | COVER (RH) |
| | 67 | 6I-5410 | 1 | COVER (LH) |
| | 68 | 4I-1205 | 1 | BUMPER |
| | 69 | 8C-7581 | 2 | SCREW |
| Y | 70 | 106-0054 | 1 | WIRING GP |
| Y | 71 | 150-7025 | 1 | WIRING GP |
| | 72 | 119-5026 | 3 | SCREW |
| | 73 | 096-6561 | 1 | ASHTRAY AS |
| | 74 | 128-2135 | 6 | SCREW |
| | 75 | 128-2136 | 2 | SCREW |
| | 76 | 127-3735 | 2 | SEAL |
| E | 77 | 3E-8083 | | SEAL (400cm) |

## 1557020 CAB GP (BASIC)-PART 2 OF 2

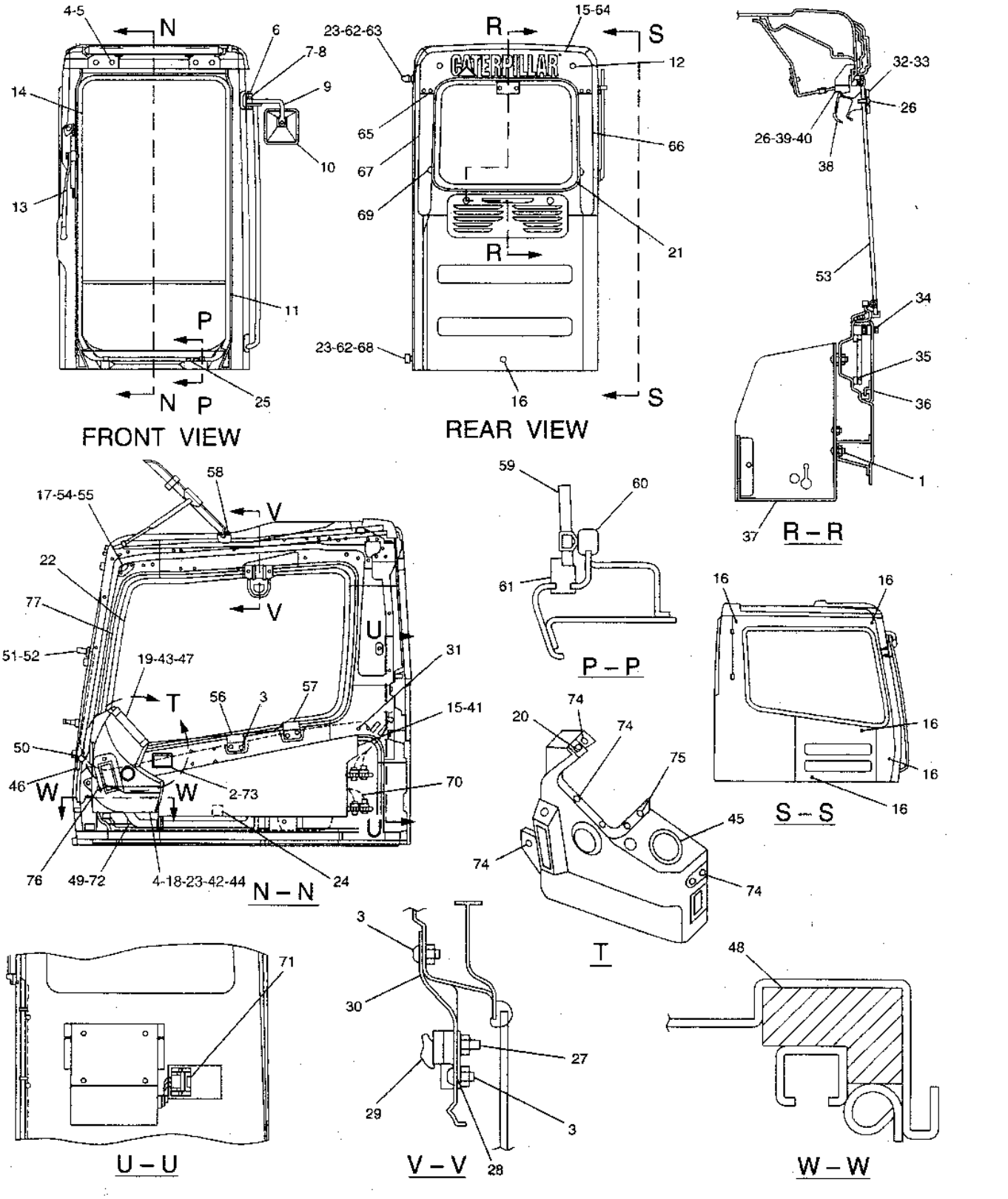


GRAPHIC #1

h73375e

# 4I6973 DOOR GP-CAB

S/N 8SR 1-00417, 8TR 1-00485
PART OF 1116271-Page 399, 1244013-Page 407
4I6966-Page 412

**Key:** E - ORDER BY THE CENTIMETER, Y - SEE SEPARATE ILLUSTRATION

**SMCS**

| NOTE | REF NO | GRAPHIC REF | PART NUMBER | QTY | PART NAME 1 2 3 4 5 6 (PRODUCT LEVEL) | PRICE USD |
|---|---|---|---|---|---|---|
| | 1 | | 4I-4286 | 1 | KNOB | |
| | 2 | | 096-2622 | 2 | SCREW (MACHINE) | |
| | 3 | | 4I-6832 | 1 | SEAL | |
| | 4 | | 095-0742 | 8 | SCREW AS | |
| | 5 | | 9X-2044 | 3 | SCREW | |
| | 6 | | 4I-4255 | 1 | LOCK AS | |
| | | | 122-5312 | 1 | SNAP | |
| Y | 7 | | 4I-6966 | 1 | WINDOW AS (DOOR) | |
| | 8 | | 4I-4254 | 1 | HANDLE AS | |
| | 9 | | 095-0827 | 8 | LOCKWASHER | |
| | 10 | | 4I-4332 | 1 | COVER | |
| | 11 | | 4I-6833 | 4 | BOLT (L=16mm) | |
| | 12 | | 4I-4334 | 2 | SCREW (TAPPING) | |
| | 13 | | 4I-4357 | 2 | GROMMET | |
| | 14 | | 4I-4250 | 1 | ROD AS | |
| | 15 | | 4I-4244 | 1 | HOOK | |
| | 16 | | 8T-4224 | 2 | WASHER (HARD) | |
| | 17 | | 4I-1185 | 1 | GLASS | |
| E | 18 | | 4I-5030 | | SEAL (70cm) | |
| E | 19 | | 3E-8297 | | SEAL (280cm) | |
| | 20 | | 4I-3097 | 1 | GROMMET | |
| | 21 | | 096-3884 | 2 | NUT | |
| | 22 | | 122-5233 | 1 | SEAL | |
| | 23 | | 4I-3124 | 1 | BOLT (L=10mm) | |
| | 24 | | 4I-3072 | 4 | CAP | |
| | 25 | | 4I-3071 | 2 | HANDLE | |
| | 26 | | 8Y-4820 | 1 | HANDLE AS | |
| | | | 8Y-4501 | 1 | SPRING | |
| | 27 | | 4I-4213 | 1 | COVER | |
| | 28 | | 8T-4136 | 6 | BOLT (L=25mm) | |
| | 29 | | 8T-4121 | 6 | WASHER (HARD) | |
| | 30 | | 4I-1268 | 2 | HINGE AS | |

## 4I6973 DOOR GP-CAB

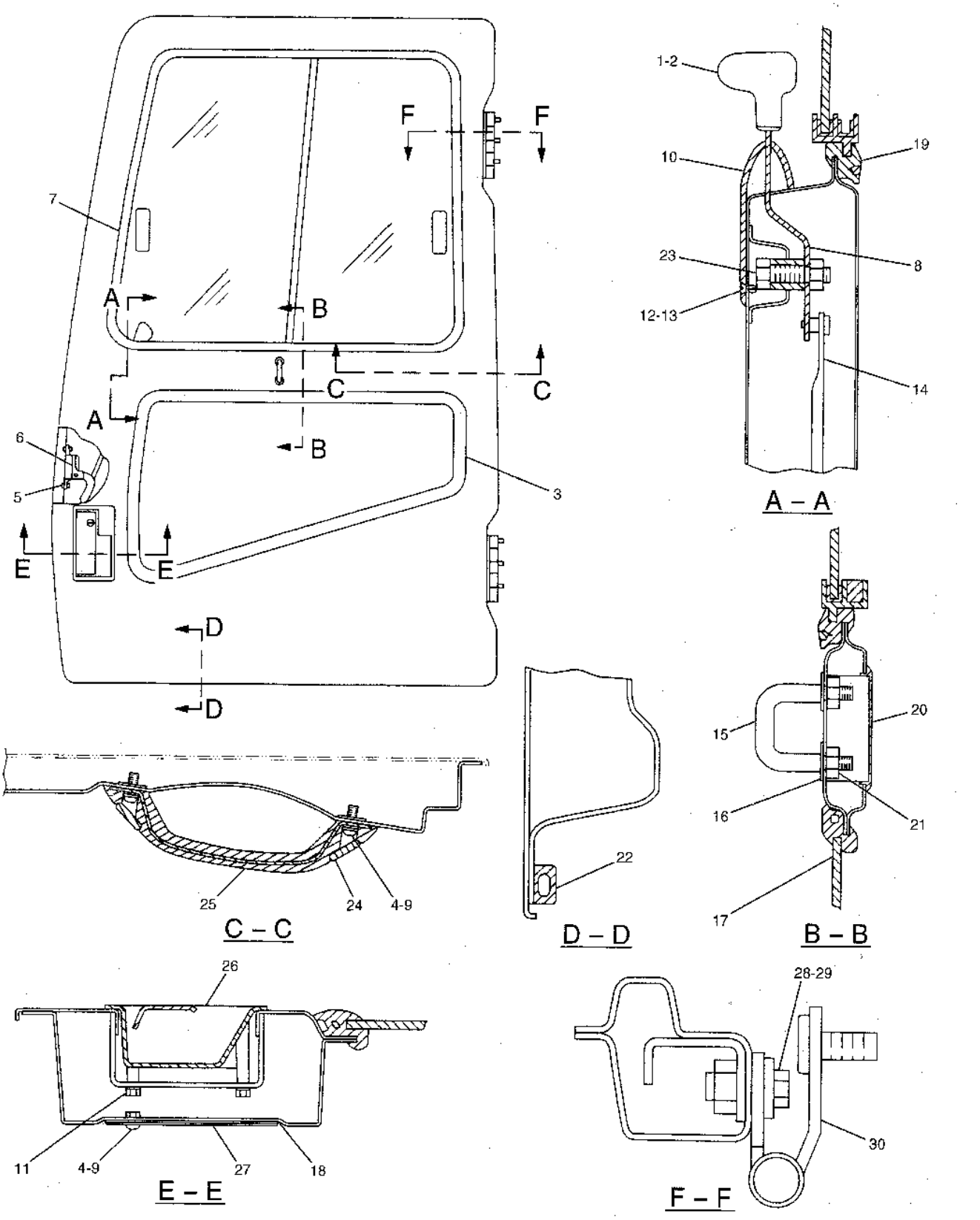


GRAPHIC #1

h53220e

# 1557053 DOOR GP-CAB

S/N 8SR 00418-UP, 8TR 00486-UP
PART OF 1557020-Page 409.02
1557058-Page 412.01

**Key:** E - ORDER BY THE CENTIMETER, Y - SEE SEPARATE ILLUSTRATION

**SMCS**

| NOTE | REF NO | GRAPHIC REF | PART NUMBER | QTY | PART NAME 1 2 3 4 5 6 (PRODUCT LEVEL) | PRICE USD |
|---|---|---|---|---|---|---|
| | 1 | | 4I-4286 | 1 | KNOB | |
| | 2 | | 096-2622 | 2 | SCREW (MACHINE) | |
| | 3 | | 4I-6832 | 1 | SEAL | |
| | 4 | | 095-0742 | 8 | SCREW AS | |
| | 5 | | 9X-2044 | 3 | SCREW | |
| | 6 | | 4I-4255 | 1 | LOCK AS | |
| | | | 122-5312 | 1 | SNAP | |
| Y | 7 | | 155-7058 | 1 | WINDOW AS | |
| | 8 | | 4I-4254 | 1 | HANDLE AS | |
| | 9 | | 095-0827 | 8 | LOCKWASHER | |
| | 10 | | 4I-4332 | 1 | COVER | |
| | 11 | | 4I-6833 | 4 | BOLT (L=16mm) | |
| | 12 | | 4I-4334 | 2 | SCREW (TAPPING) | |
| | 13 | | 4I-4357 | 2 | GROMMET | |
| | 14 | | 4I-4250 | 1 | ROD AS | |
| | 15 | | 4I-4244 | 1 | HOOK | |
| | 16 | | 8T-4224 | 2 | WASHER (HARD) | |
| | 17 | | 155-7056 | 1 | GLASS | |
| E | 18 | | 4I-5030 | | SEAL (70cm) | |
| E | 19 | | 3E-8297 | | SEAL (280cm) | |
| | 20 | | 4I-3097 | 1 | GROMMET | |
| | 21 | | 096-3884 | 2 | NUT | |
| | 22 | | 122-5233 | 1 | SEAL | |
| | 23 | | 4I-3124 | 1 | BOLT (L=10mm) | |
| | 24 | | 151-6704 | 4 | CAP | |
| | 25 | | 151-6703 | 2 | HANDLE | |
| | 26 | | 8Y-4820 | 1 | HANDLE AS | |
| | | | 8Y-4501 | 1 | SPRING | |
| | 27 | | 4I-4213 | 1 | COVER | |
| | 28 | | 8T-4136 | 6 | BOLT (L=25mm) | |
| | 29 | | 8T-4121 | 6 | WASHER (HARD) | |
| | 30 | | 4I-1268 | 2 | HINGE AS | |

## 1557053 DOOR GP-CAB

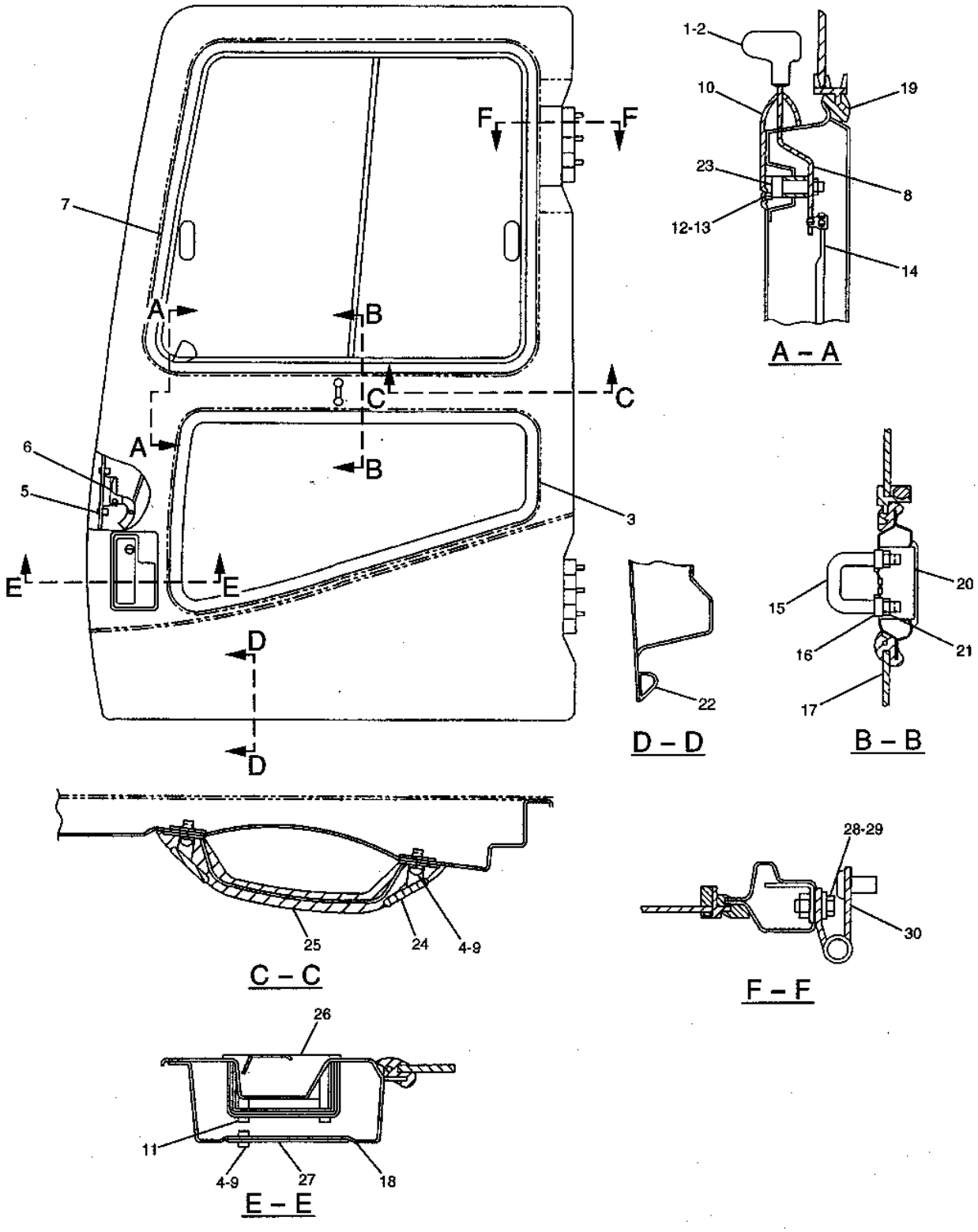


GRAPHIC #1

h65163e

# 4I6974 DOOR GP-CAB

S/N 8SR 1-00417, 8TR 1-00485
PART OF 1116294-Page 403
4I6966-Page 412
AN ATTACHMENT

**Key:** E - ORDER BY THE CENTIMETER, Y - SEPARATE ILLUSTRATION

**SMCS**

| NOTE | REF NO | GRAPHIC REF | PART NUMBER | QTY | PART NAME 1 2 3 4 5 6 (PRODUCT LEVEL) | PRICE USD |
|---|---|---|---|---|---|---|
| | 1 | | 4I-4286 | 1 | KNOB | |
| | 2 | | 096-2622 | 2 | SCREW-MACHINE | |
| | 3 | | 4I-6832 | 1 | SEAL | |
| | 4 | | 095-0742 | 8 | SCREW-MACHINE | |
| | 5 | | 9X-2044 | 3 | SCREW | |
| | 6 | | 4I-4255 | 1 | LOCK AS | |
| | | | 122-5312 | 1 | SNAP | |
| Y | 7 | | 4I-6966 | 1 | WINDOW AS-DOOR | |
| | 8 | | 4I-4254 | 1 | HANDLE AS | |
| | 9 | | 095-0827 | 8 | LOCKWASHER | |
| | 10 | | 4I-4332 | 1 | COVER | |
| | 11 | | 4I-6833 | 4 | BOLT | |
| | 12 | | 4I-4334 | 2 | SCREW-TAPPING | |
| | 13 | | 4I-4357 | 2 | GROMMET | |
| | 14 | | 4I-4250 | 1 | ROD AS | |
| | 15 | | 4I-4244 | 1 | HOOK | |
| | 16 | | 8T-4224 | 2 | WASHER-HARD | |
| | 17 | | 4I-1190 | 1 | GLASS | |
| E | 18 | | 4I-5030 | | SEAL (70cm) | |
| E | 19 | | 3E-8297 | | SEAL (280cm) | |
| | 20 | | 4I-3097 | 1 | GROMMET | |
| | 21 | | 096-3884 | 2 | NUT | |
| | 22 | | 122-5233 | 1 | SEAL | |
| | 23 | | 4I-3124 | 1 | BOLT | |
| | 24 | | 4I-3072 | 4 | CAP | |
| | 25 | | 4I-3071 | 2 | HANDLE | |
| | 26 | | 8Y-4820 | 1 | HANDLE AS | |
| | | | 8Y-4501 | 1 | SPRING | |
| | 27 | | 4I-4213 | 1 | COVER | |
| | 28 | | 8T-4136 | 6 | BOLT (L=25mm) | |
| | 29 | | 8T-4121 | 6 | WASHER-HARD | |
| | 30 | | 4I-1268 | 2 | HINGE AS | |

## 4I6974 DOOR GP-CAB

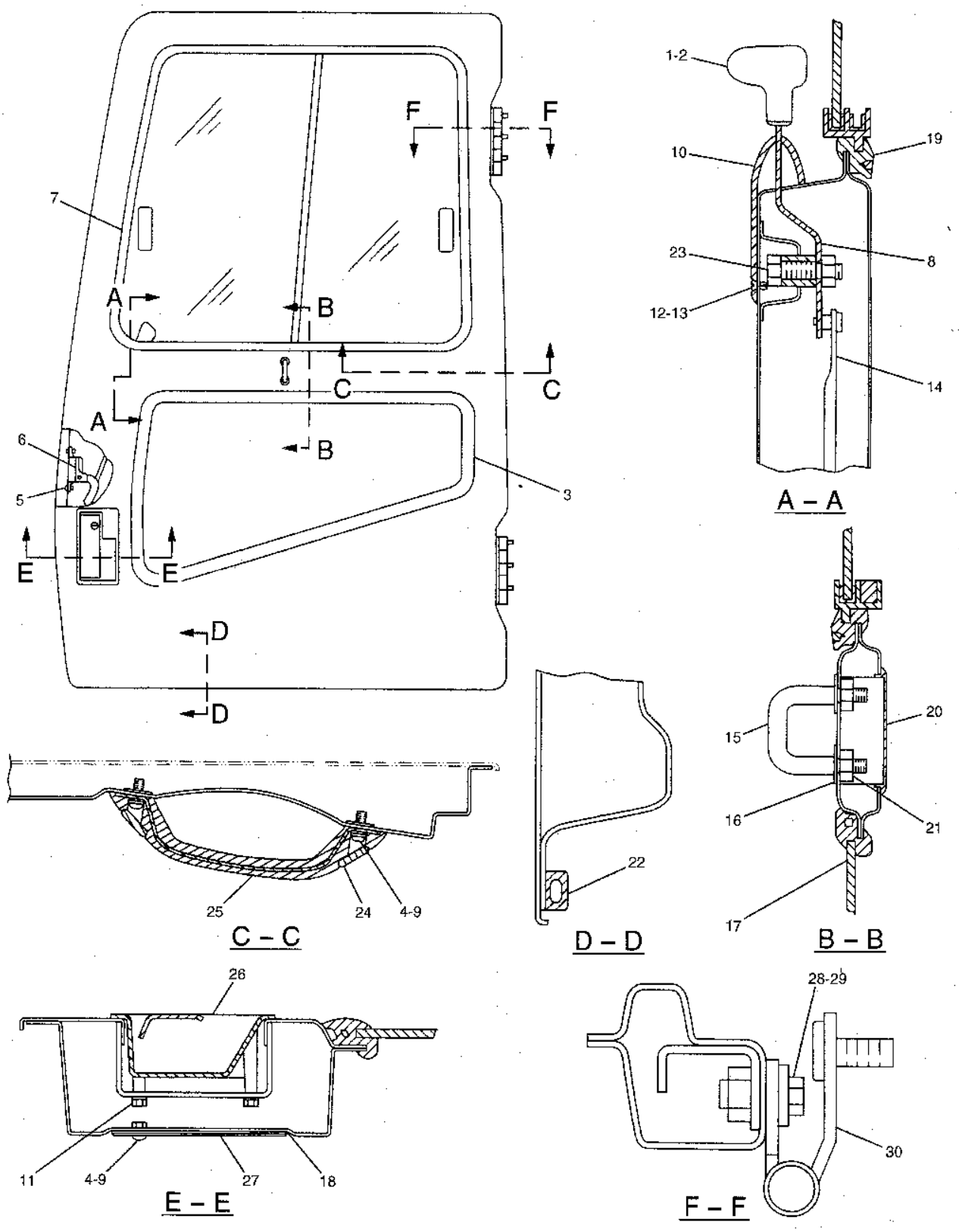


GRAPHIC #1

h53222e

# 1557054 DOOR GP-CAB

S/N 8SR 00418-UP, 8TR 00486-UP
PART OF 1557019-Page 405.02
1557058-Page 412.01
AN ATTACHMENT

**Key:** E - ORDER BY THE CENTIMETER, Y - SEPARATE ILLUSTRATION

**SMCS**

| NOTE | REF NO | GRAPHIC REF | PART NUMBER | QTY | PART NAME 1 2 3 4 5 6 (PRODUCT LEVEL) | PRICE USD |
|---|---|---|---|---|---|---|
| | 1 | | 4I-4286 | 1 | KNOB | |
| | 2 | | 096-2622 | 2 | SCREW | |
| | 3 | | 4I-6832 | 1 | SEAL | |
| | 4 | | 095-0742 | 8 | SCREW | |
| | 5 | | 9X-2044 | 3 | SCREW | |
| | 6 | | 4I-4255 | 1 | LOCK AS | |
| | | | 122-5312 | 1 | SNAP | |
| Y | 7 | | 155-7058 | 1 | WINDOW AS | |
| | 8 | | 4I-4254 | 1 | HANDLE AS | |
| | 9 | | 095-0827 | 8 | LOCKWASHER | |
| | 10 | | 4I-4332 | 1 | COVER | |
| | 11 | | 4I-6833 | 4 | BOLT (L=16MM) | |
| | 12 | | 4I-4334 | 2 | SCREW | |
| | 13 | | 4I-4357 | 2 | GROMMET | |
| | 14 | | 4I-4250 | 1 | ROD AS | |
| | 15 | | 4I-4244 | 1 | HOOK | |
| | 16 | | 8T-4224 | 2 | WASHER | |
| | 17 | | 4I-1190 | 1 | GLASS | |
| E | 18 | | 4I-5030 | | SEAL (70CM) | |
| E | 19 | | 3E-8297 | | SEAL (280CM) | |
| | 20 | | 4I-3097 | 1 | GROMMET | |
| | 21 | | 096-3884 | 2 | NUT | |
| | 22 | | 122-5233 | 1 | SEAL | |
| | 23 | | 4I-3124 | 1 | BOLT | |
| | 24 | | 151-6704 | 4 | CAP | |
| | 25 | | 151-6703 | 2 | HANDLE | |
| | 26 | | 8Y-4820 | 1 | HANDLE AS | |
| | | | 8Y-4501 | 1 | SPRING | |
| | 27 | | 4I-4213 | 1 | COVER | |
| | 28 | | 8T-4136 | 6 | BOLT (L=25MM) | |
| | 29 | | 8T-4121 | 6 | WASHER | |
| | 30 | | 4I-1268 | 2 | HINGE AS | |

## 1557054 DOOR GP-CAB

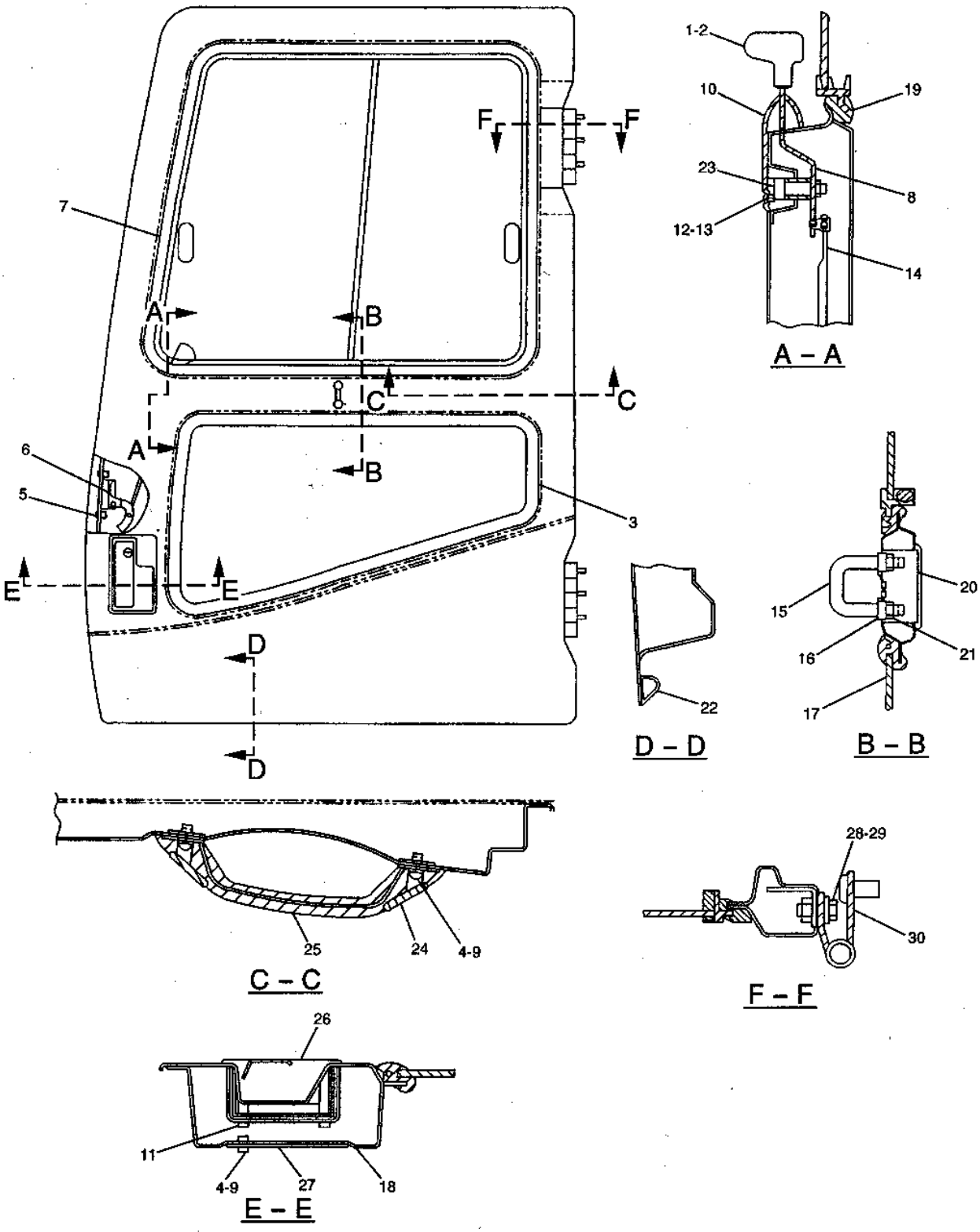


GRAPHIC #1

h65165e

# 4I6966 WINDOW AS-DOOR

S/N 8SR 1-00417, 8TR 1-00485
PART OF 4I6973-Page 411, 4I6974-Page 411.02

**Key:** E - ORDER BY THE CENTIMETER

**SMCS**

| NOTE | REF NO | GRAPHIC REF | PART NUMBER | QTY | PART NAME 1 2 3 4 5 6 (PRODUCT LEVEL) | PRICE USD |
|---|---|---|---|---|---|---|
| | 1 | | 4I-6967 | 1 | FRAME AS | |
| | 2 | | 4I-4300 | 1 | CATCH | |
| | | | 099-0139 | 3 | RIVET | |
| | 3 | | 4I-6968 | 1 | GLASS | |
| | 4 | | 4I-6856 | 1 | SEAL | |
| | 5 | | 4I-6969 | 1 | GLASS | |
| | 6 | | 4I-6972 | 1 | SEAL | |
| | 7 | | 085-6444 | 2 | LOCK AS | |
| | | | 085-6445 | 1 | LOCK | |
| | 8 | | 085-6447 | 1 | RETAINER | |
| | 9 | | 085-6449 | 1 | PACKING | |
| | 10 | | 085-6446 | 1 | LOCK | |
| | 11 | | 085-6448 | 2 | SCREW | |
| | 12 | | 4I-6970 | 1 | CHANNEL | |
| | 13 | | 4I-6971 | 1 | SEAL | |
| E | 14 | | 8C-7585 | | BUMPER (30cm) | |
| E | 15 | | 8C-7585 | | BUMPER (20cm) | |

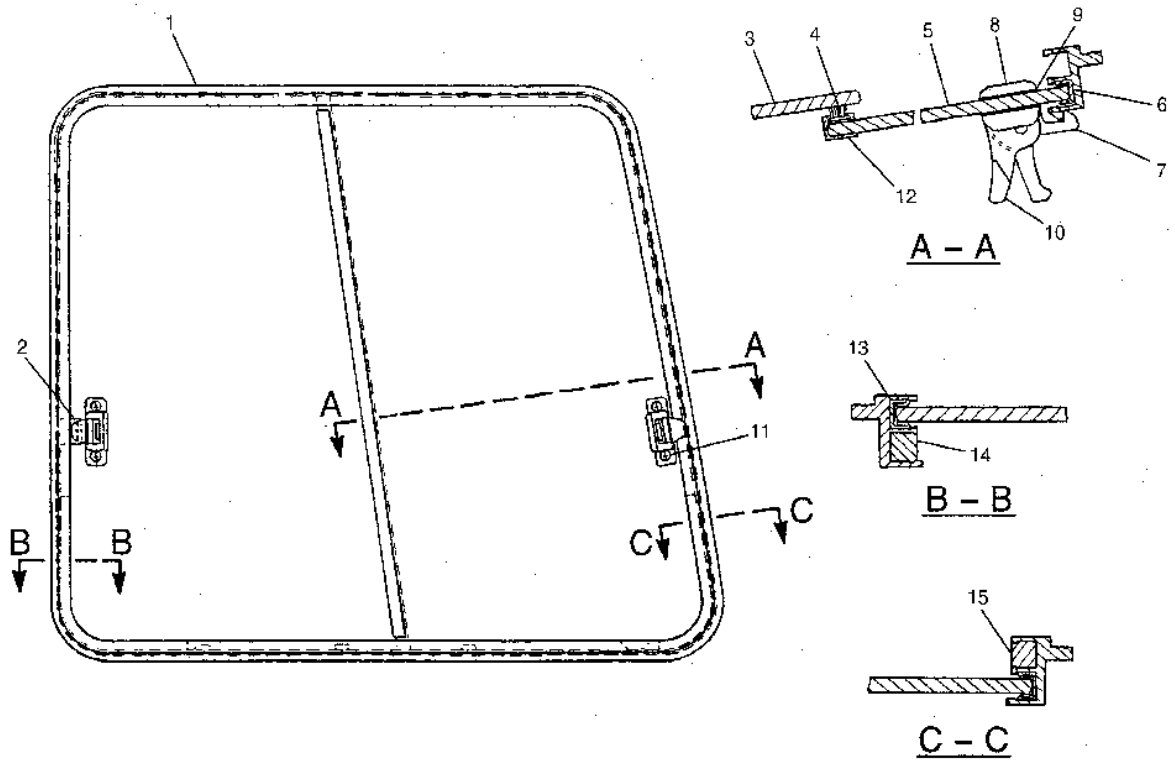


GRAPHIC #1

h50345e

# 1557058 WINDOW AS-DOOR

S/N 8SR 00418-UP, 8SR 00486-UP
PART OF 1557053-Page 411B, 1557054-Page 411.04

**Key:** E - ORDER BY THE CENTIMETER

**SMCS**

| NOTE | REF NO | GRAPHIC REF | PART NUMBER | QTY | PART NAME 1 2 3 4 5 6 (PRODUCT LEVEL) | PRICE USD |
|---|---|---|---|---|---|---|
| | 1 | | 4I-6967 | 1 | FRAME AS | |
| | 2 | | 4I-4300 | 1 | CATCH | |
| | | | 099-0139 | 3 | RIVET | |
| | 3 | | 4I-6971 | 1 | SEAL | |
| | 4 | | 155-7059 | 1 | GLASS | |
| | 5 | | 4I-6856 | 1 | SEAL | |
| | 6 | | 155-7060 | 1 | GLASS | |
| | 7 | | 4I-6970 | 1 | CHANNEL | |
| | 8 | | 4I-6972 | 1 | SEAL | |
| | 9 | | 085-6444 | 2 | LOCK AS | |
| | 10 | | 085-6445 | 1 | LOCK | |
| | 11 | | 085-6446 | 1 | LOCK | |
| | 12 | | 085-6447 | 1 | RETAINER | |
| | 13 | | 085-6448 | 2 | SCREW | |
| | 14 | | 085-6449 | 1 | PACKING | |
| E | 15 | | 8C-7585 | | BUMPER (30CM) | |
| E | 16 | | 8C-7585 | | BUMPER (20CM) | |

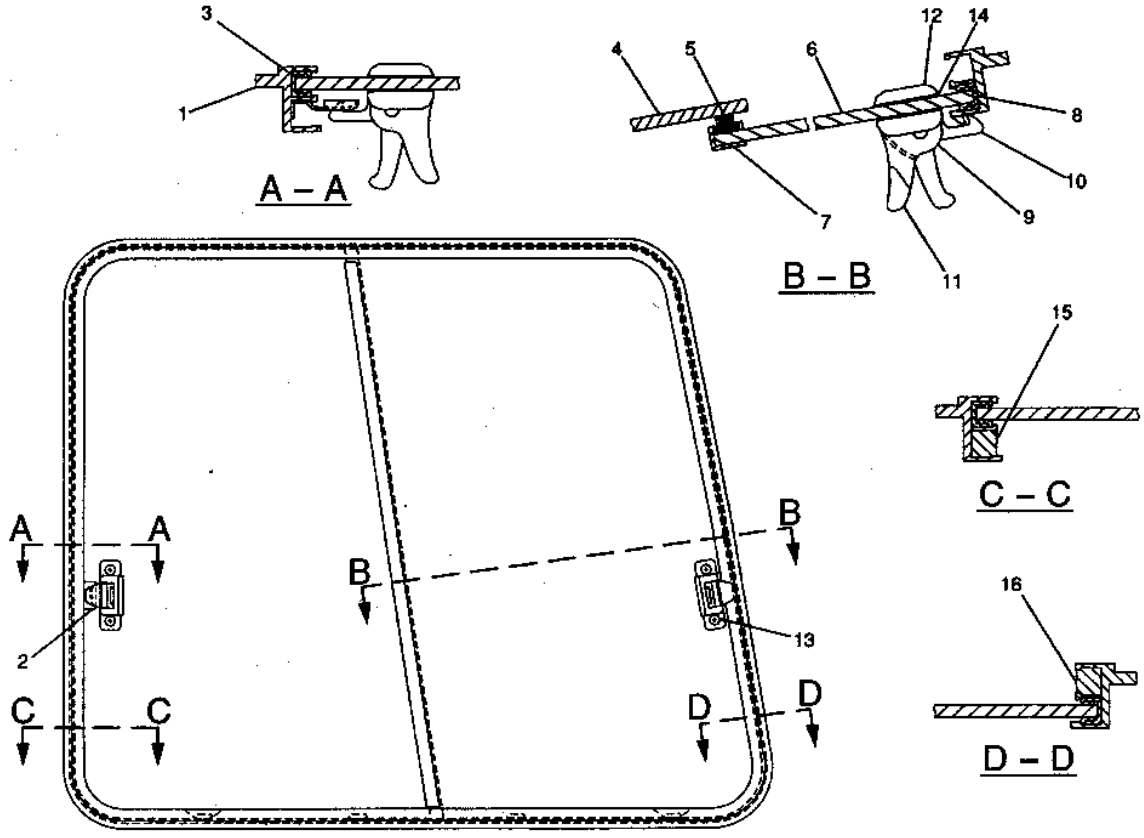


GRAPHIC #1

h60095e

# 4I1273 HATCH GP

PART OF 1116271-Page 399, 1116294-Page 403, 1557019-Page 405.02, 1244013-Page 407, 1557020-Page 409.02
4I4204-Page 414

**Key:** Y - SEE SEPARATE ILLUSTRATION

**SMCS**

| NOTE | REF NO | GRAPHIC REF | PART NUMBER | QTY | PART NAME 1 2 3 4 5 6 (PRODUCT LEVEL) | PRICE USD |
|---|---|---|---|---|---|---|
| Y | 1 | | 4I-4204 | 1 | HATCH GP | |
| | 2 | | 099-3506 | 2 | SPRING AS | |
| | 3 | | 5D-4822 | 4 | RING | |
| | 4 | | 4I-1260 | 2 | PACKING | |
| | 5 | | 6I-5338 | 2 | HINGE AS | |
| | 6 | | 6I-5342 | 4 | NUT | |

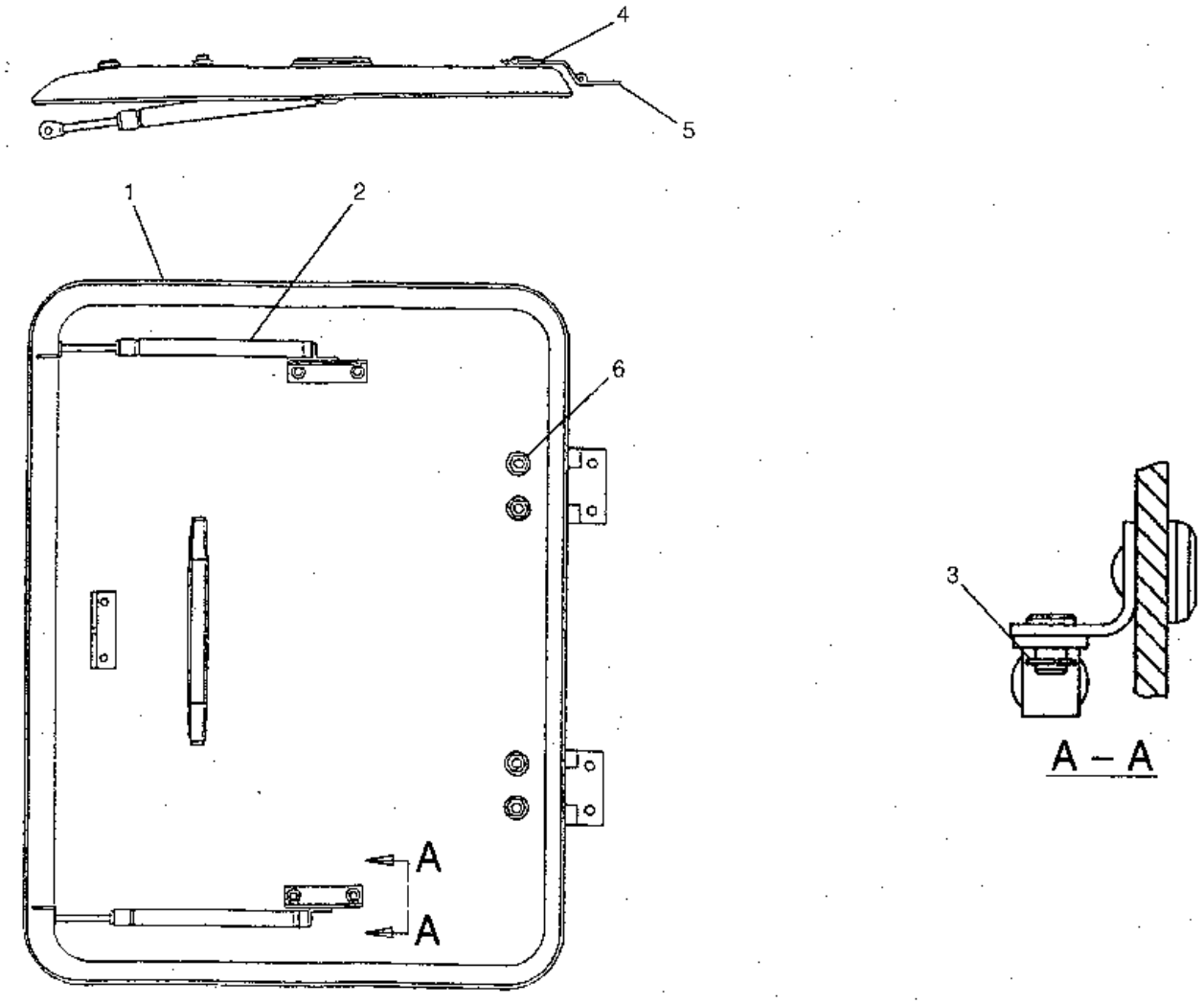


GRAPHIC #1

h51050e

# 4I4204 HATCH GP

PART OF 4I1273-Page 413

**Key:**

**SMCS**

| NOTE | REF NO | GRAPHIC REF | PART NUMBER | QTY | PART NAME 1 2 3 4 5 6 (PRODUCT LEVEL) | PRICE USD |
|---|---|---|---|---|---|---|
| | 1 | | 4I-4205 | 1 | COVER | |
| | 2 | | 4I-4242 | 2 | BRACKET | |
| | 3 | | 6I-5432 | 1 | CATCH | |
| | 4 | | 4I-3071 | 1 | HANDLE | |
| | 5 | | 4I-3072 | 2 | CAP | |
| | 6 | | 4I-4361 | 3 | RETAINER | |
| | 7 | | 085-6449 | 3 | PACKING | |
| | 8 | | 095-0736 | 6 | SCREW (MACHINE) | |
| | 9 | | 5C-2890 | 2 | NUT | |
| | 10 | | 8T-6412 | 2 | SCREW | |
| | 11 | | 9X-8256 | 2 | WASHER | |
| | 12 | | 4I-3054 | 2 | PACKING | |
| | 13 | | 095-0827 | 2 | LOCKWASHER | |

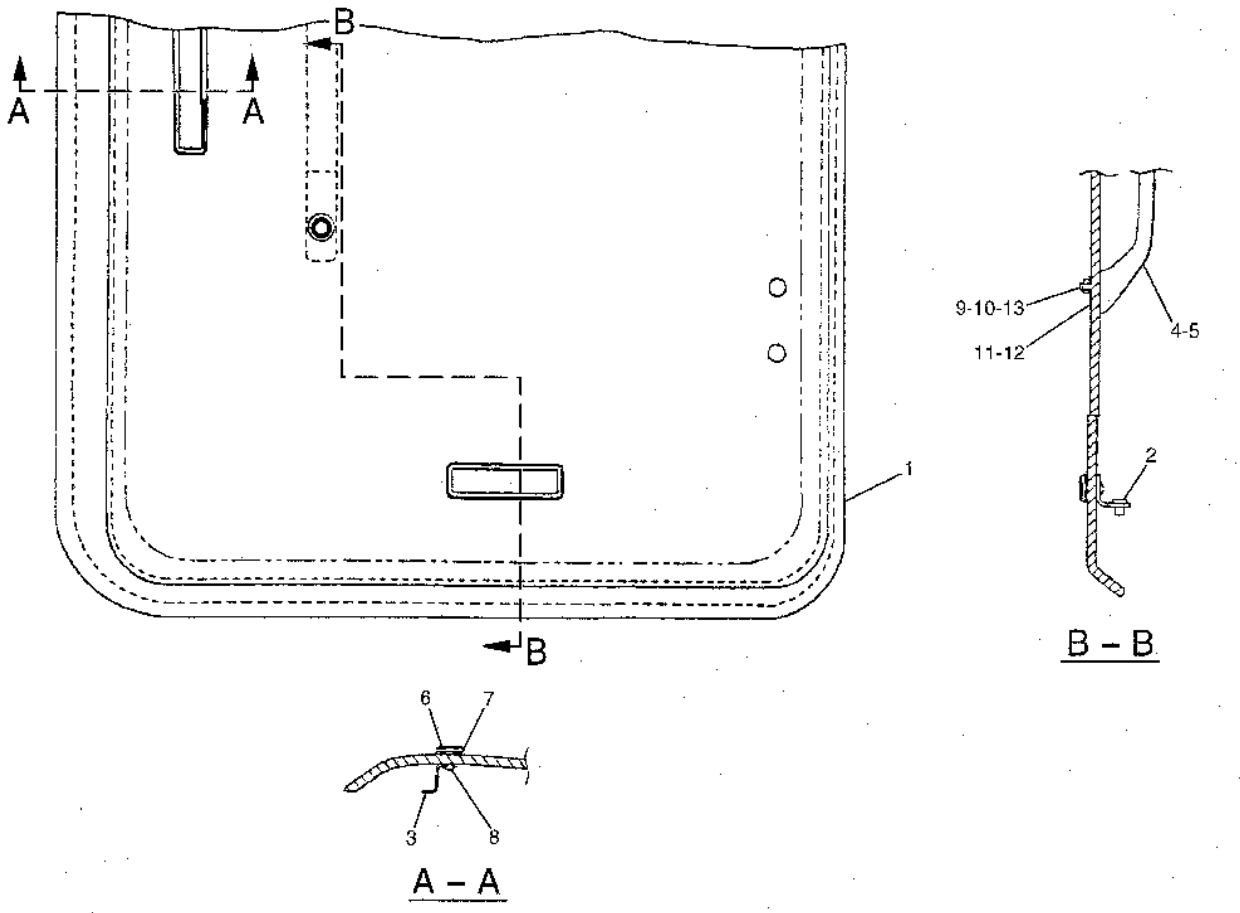


GRAPHIC #1

h50354e

# 6I5444 BOX GP-STORAGE

PART OF 1116271-Page 401, 1116294-Page 405, 1557019-Page 405.04, 1244013-Page 409, 1557020-Page 409.04

**Key:**

**SMCS**

| NOTE | REF NO | GRAPHIC REF | PART NUMBER | QTY | PART NAME 1 2 3 4 5 6 (PRODUCT LEVEL) | PRICE USD |
|---|---|---|---|---|---|---|
| | 1 | | 6I-5445 | 1 | PANEL AS | |
| | 2 | | 6I-5443 | 1 | PANEL | |
| | 3 | | 6I-5446 | 1 | PANEL AS | |
| | 4 | | 095-0744 | 4 | SCREW | |
| | 5 | | 4I-3081 | 1 | CAP | |

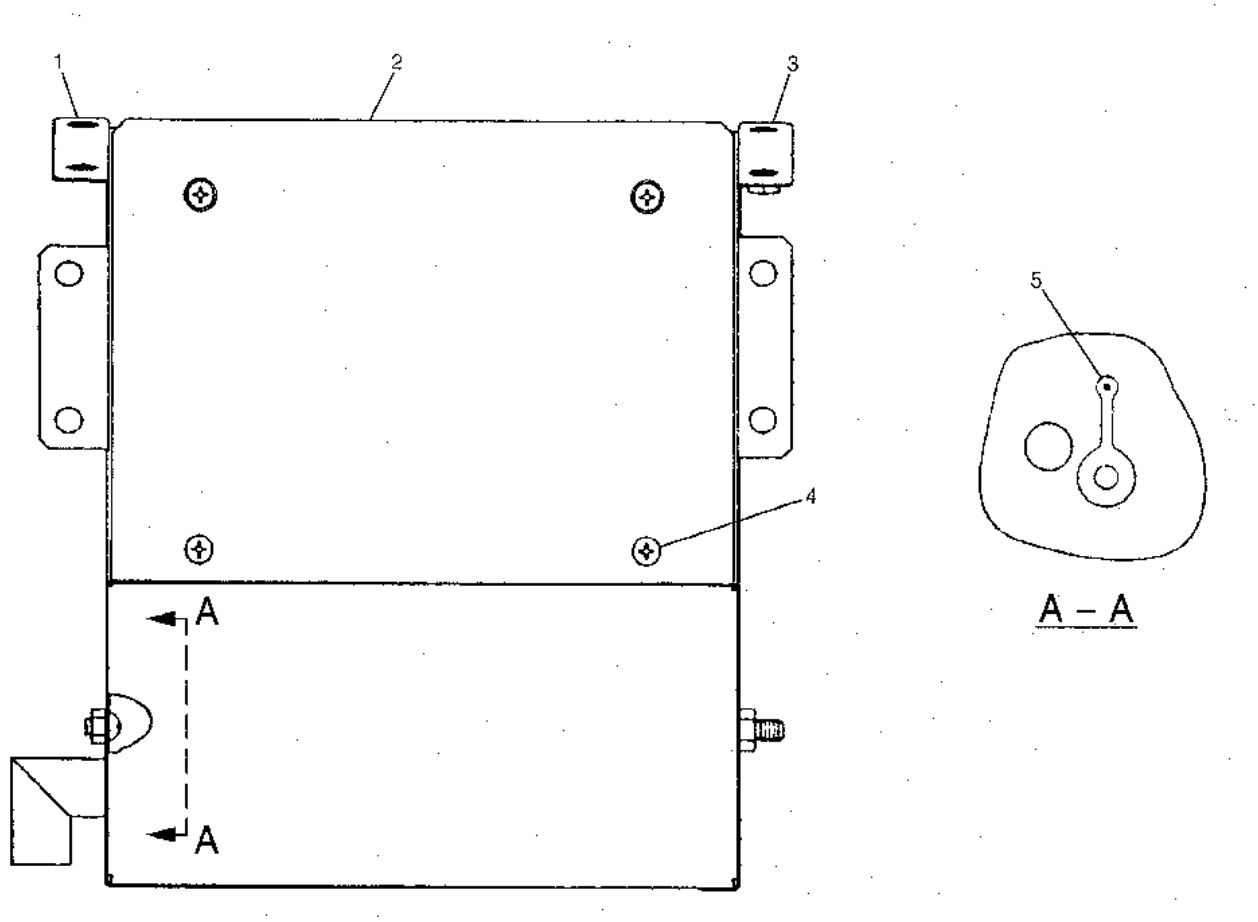


GRAPHIC #1

h51051e

# 1116273 WINDOW GP

S/N 8SR 1-00417, 8TR 1-00485
PART OF 1116271-Page 401, 1116294-Page 405, 1244013-Page 409
1243963-Page 426

**Key:** Y - SEE SEPARATE ILLUSTRATION

**SMCS**

| NOTE | REF NO | GRAPHIC REF | PART NUMBER | QTY | PART NAME 1 2 3 4 5 6 (PRODUCT LEVEL) | PRICE USD |
|---|---|---|---|---|---|---|
| Y | 1 | | 124-3963 | 1 | WINDOW GP | |
| | 2 | | 9X-2044 | 7 | SCREW | |
| | 3 | | 124-3966 | 1 | STOPPER | |
| | 4 | | 124-3974 | 1 | SWITCH | |
| | 5 | | 8C-7581 | 1 | SCREW | |
| | 6 | | 124-3965 | 1 | BRACKET | |
| | 7 | | 9X-2042 | 1 | SCREW | |
| | 8 | | 124-3964 | 1 | BRACKET AS | |
| | 9 | | 124-3959 | 1 | RAIL (RH) | |
| | 10 | | 6V-5683 | 5 | BOLT (L=16mm) | |
| | 11 | | 8Y-5745 | 1 | LATCH AS | |
| | 12 | | 4I-1271 | 1 | STOPPER | |
| | 13 | | 4I-3078 | 1 | BRACKET | |
| | 14 | | 4I-4224 | 1 | BRACKET AS | |
| | 15 | | 8T-4137 | 7 | BOLT (L=20mm) | |
| | 16 | | 8T-4121 | 7 | WASHER | |
| | 17 | | 122-9639 | 1 | BRACKET | |
| | 18 | | 4I-4280 | 1 | COVER | |
| | 19 | | 9X-2045 | 6 | SCREW | |
| | 20 | | 102-7688 | 1 | KNOB | |
| | 21 | | 7I-1660 | 1 | FILM (INSTRUCTION) | |
| | 22 | | 124-3957 | 1 | CABLE AS | |
| | 23 | | 124-3956 | 1 | SPRING AS | |
| | 24 | | 122-9635 | 1 | LINER | |
| | 25 | | 4I-3089 | 4 | CLIP | |
| | 26 | | 124-3961 | 2 | CLAMP | |
| | 27 | | 100-2881 | 2 | SCREW | |
| | 28 | | 124-4054 | 1 | GUIDE | |
| | 29 | | 124-3960 | 2 | BLOCK | |

## 1116273 WINDOW GP

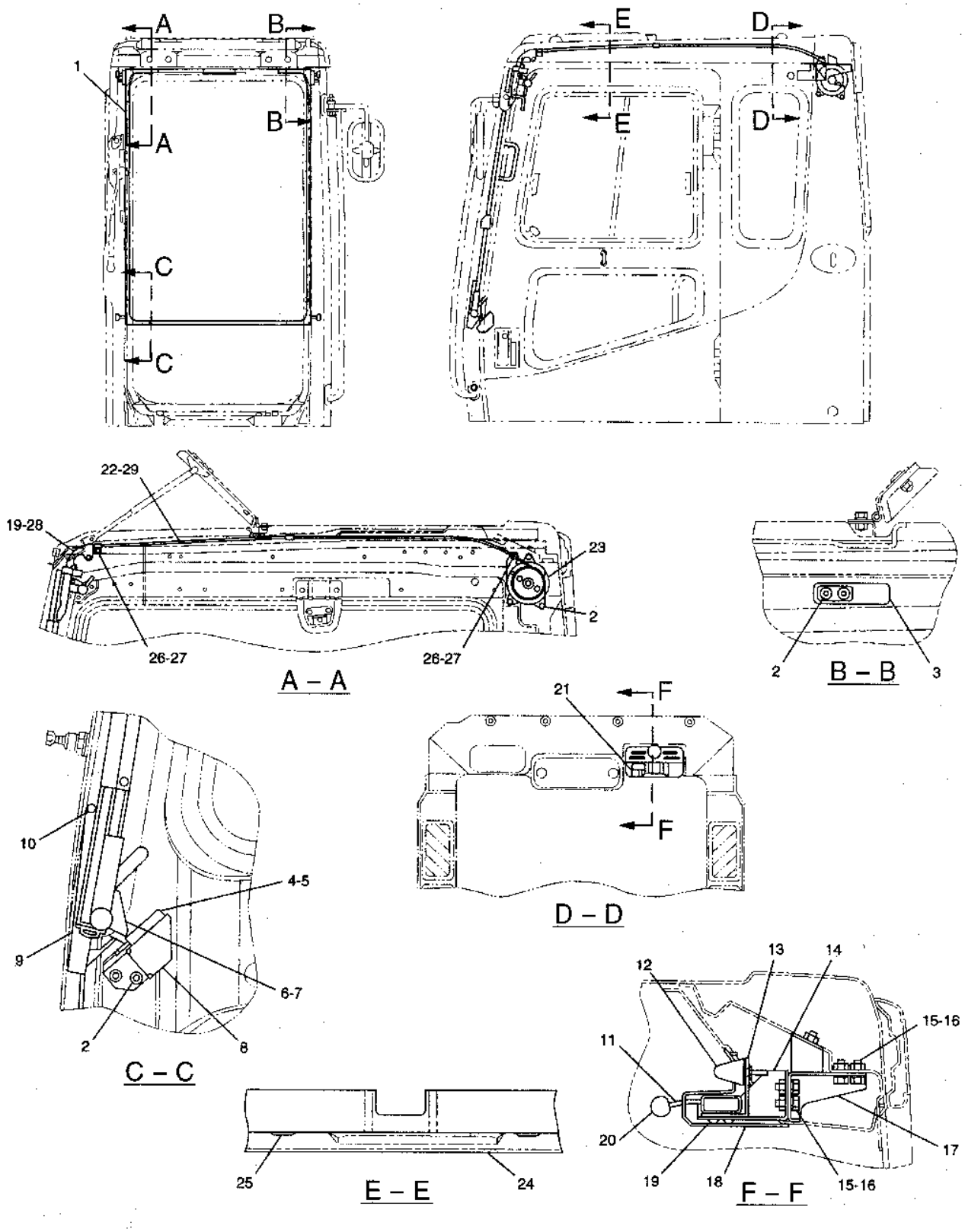


GRAPHIC #1

h53227e

# 1557043 WINDOW GP

S/N 8SR 00418-UP, 8SR 00486-UP
PART OF 1557019-Page 405.04, 1557020-Page 409.04
1557045-Page 426.01

**Key:** Y - SEE SEPARATE ILLUSTRATION

**SMCS**

| NOTE | REF NO | GRAPHIC REF | PART NUMBER | QTY | PART NAME 1 2 3 4 5 6 (PRODUCT LEVEL) | PRICE USD |
|---|---|---|---|---|---|---|
| Y | 1 | | 155-7045 | 1 | WINDOW GP | |
| | 2 | | 9X-2044 | 7 | SCREW | |
| | 3 | | 124-3966 | 1 | STOPPER | |
| | 4 | | 124-3974 | 1 | SWITCH | |
| | 5 | | 3E-9873 | 1 | SCREW | |
| | 6 | | 124-3965 | 1 | BRACKET | |
| | 7 | | 9X-2042 | 1 | SCREW | |
| | 8 | | 124-3964 | 1 | BRACKET AS | |
| | 9 | | 124-3959 | 1 | RAIL (RH) | |
| | 10 | | 6V-5683 | 5 | BOLT (L=16mm) | |
| | 11 | | 8Y-5745 | 1 | LATCH AS | |
| | 12 | | 4I-1271 | 1 | STOPPER | |
| | 13 | | 4I-3078 | 1 | BRACKET | |
| | 14 | | 4I-4224 | 1 | BRACKET AS | |
| | 15 | | 8T-4137 | 7 | BOLT (L=20mm) | |
| | 16 | | 8T-4121 | 7 | WASHER (HARD) | |
| | 17 | | 122-9639 | 1 | BRACKET | |
| | 18 | | 4I-4280 | 1 | COVER | |
| | 19 | | 9X-2045 | 6 | SCREW | |
| | 20 | | 102-7688 | 1 | KNOB | |
| | 21 | | 7I-1660 | 1 | FILM (INSTRUCTION) | |
| | 22 | | 124-3957 | 1 | CABLE AS | |
| | 23 | | 124-3956 | 1 | SPRING AS | |
| | 24 | | 122-9635 | 1 | LINER | |
| | 25 | | 4I-3089 | 4 | CLIP | |
| | 26 | | 124-3961 | 2 | CLAMP | |
| | 27 | | 100-2881 | 2 | SCREW | |
| | 28 | | 124-4054 | 1 | GUIDE | |
| | 29 | | 124-3960 | 2 | BLOCK | |

## 1557043 WINDOW GP

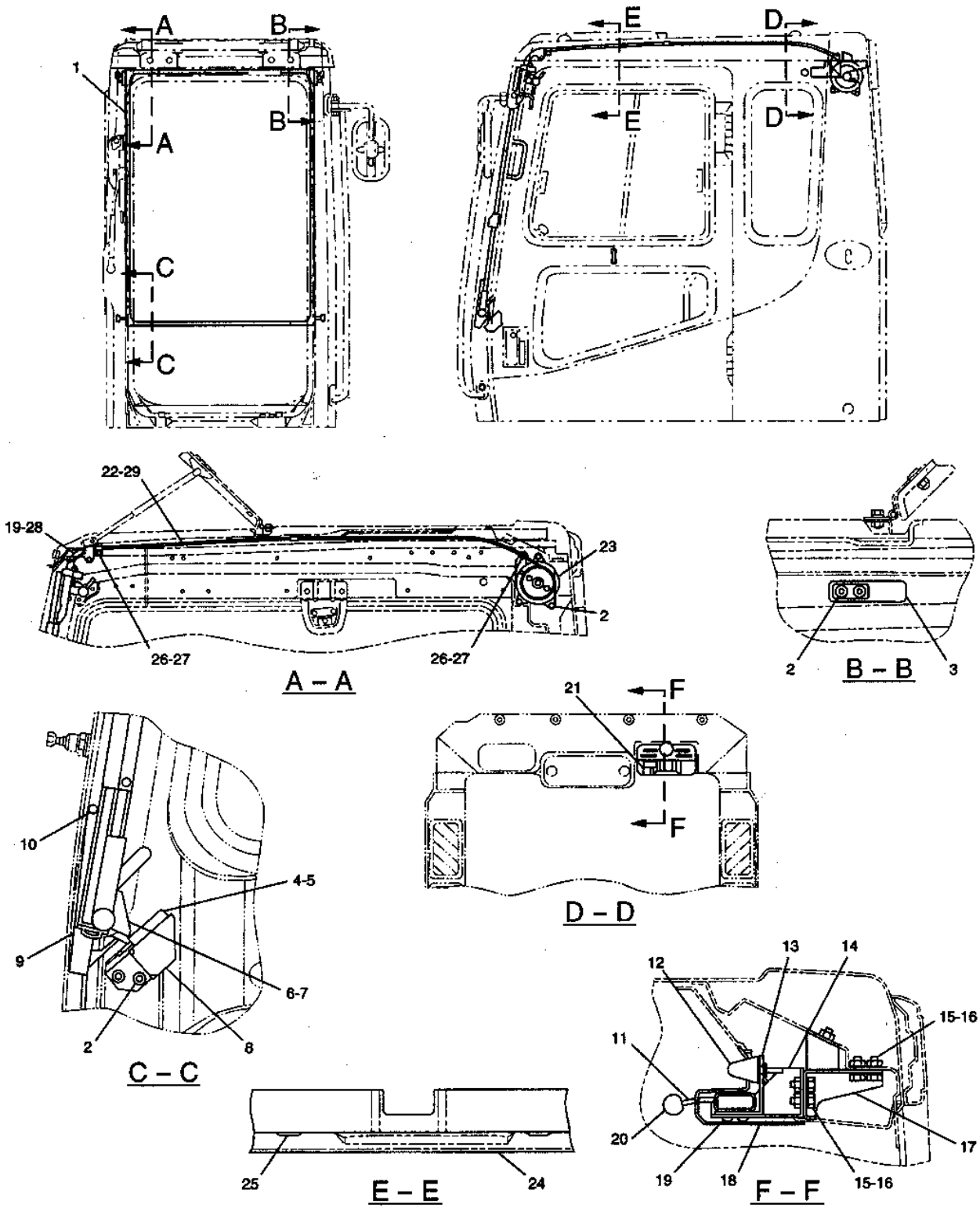


GRAPHIC #1

h60214e

# 1246963 WINDOW GP

S/N 8SR 1-00417, 8TR 1-00485
PART OF 1116273-Page 423

**Key:**

**SMCS**

| NOTE | REF NO | GRAPHIC REF | PART NUMBER | QTY | PART NAME 1 2 3 4 5 6 (PRODUCT LEVEL) | PRICE USD |
|---|---|---|---|---|---|---|
| | 1 | | 124-3975 | 1 | LATCH AS (LH) | |
| | 2 | | 9X-2044 | 8 | SCREW | |
| | 3 | | 099-0822 | 17 | BOLT (L=10mm) | |
| | 4 | | 124-3969 | 2 | HOLDER | |
| | 5 | | 124-3971 | 1 | SEAL | |
| | 6 | | 124-3970 | 1 | HOLDER AS | |
| | 7 | | 124-3967 | 1 | GLASS (UPPER) | |
| | 8 | | 124-3972 | 1 | SEAL | |
| | 9 | | 124-3968 | 4 | HOLDER | |
| | 10 | | 124-3976 | 1 | LATCH AS (RH) | |
| | 11 | | 124-3973 | 4 | ROLLER | |
| | 12 | | 096-4085 | 2 | RUBBER (CAP) | |

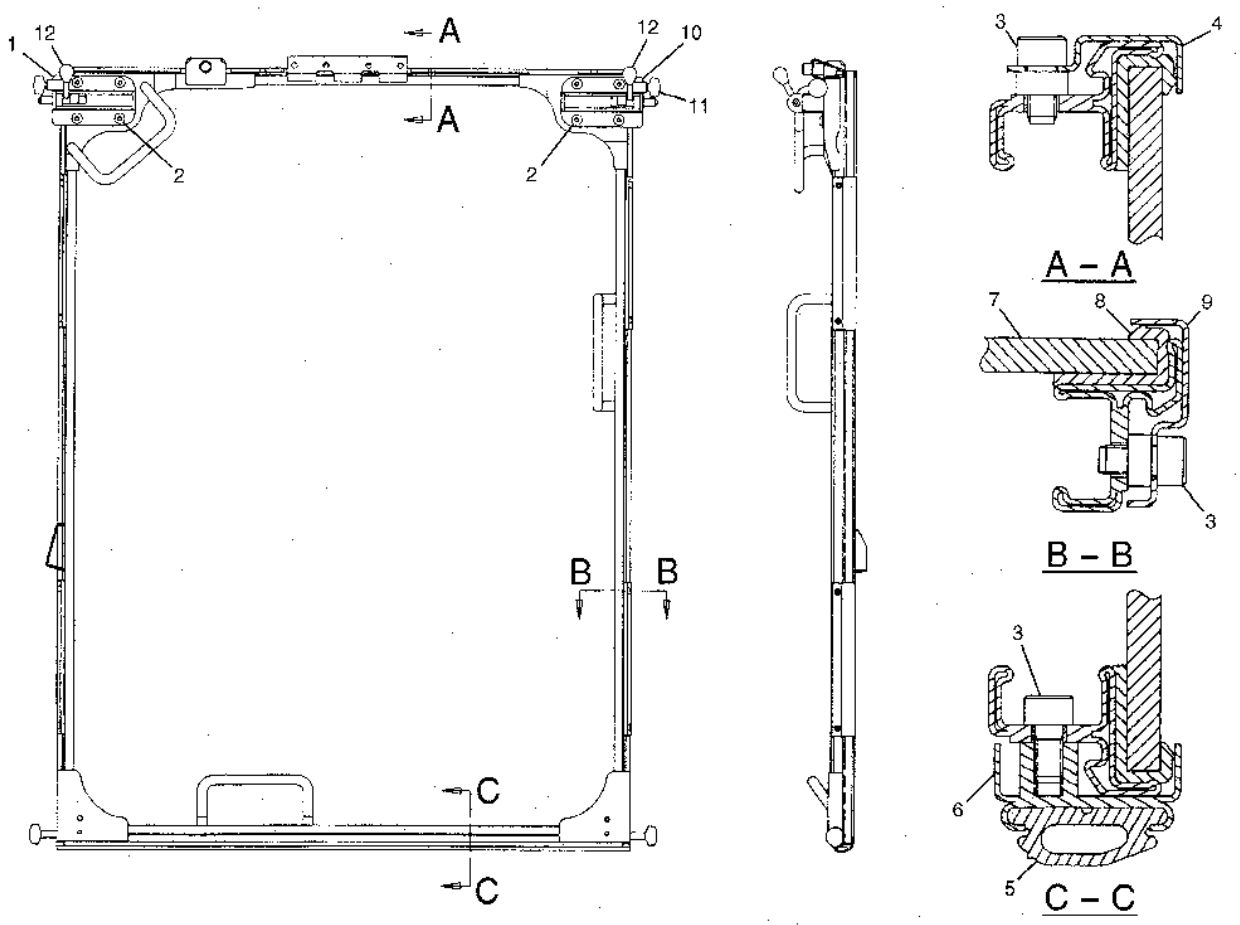


GRAPHIC #1

h53762e

# 1557045 WINDOW GP

S/N 8SR 00418-UP, 8SR 00486-UP
PART OF 1557043-Page 425

**Key:**

**SMCS**

| NOTE | REF NO | GRAPHIC REF | PART NUMBER | QTY | PART NAME 1 2 3 4 5 6 (PRODUCT LEVEL) | PRICE USD |
|---|---|---|---|---|---|---|
| | 1 | | 124-3975 | 1 | LATCH AS (LH) | |
| | 2 | | 9X-2044 | 8 | SCREW | |
| | 3 | | 099-0822 | 17 | BOLT (L=10mm) | |
| | 4 | | 124-3969 | 2 | HOLDER | |
| | 5 | | 124-3971 | 1 | SEAL | |
| | 6 | | 124-3970 | 1 | HOLDER AS | |
| | 7 | | 155-7046 | 1 | GLASS (UPPER) | |
| | 8 | | 124-3972 | 1 | SEAL | |
| | 9 | | 124-3968 | 4 | HOLDER | |
| | 10 | | 124-3976 | 1 | LATCH AS (RH) | |
| | 11 | | 124-3973 | 4 | ROLLER | |
| | 12 | | 096-4085 | 2 | RUBBER (CAP) | |

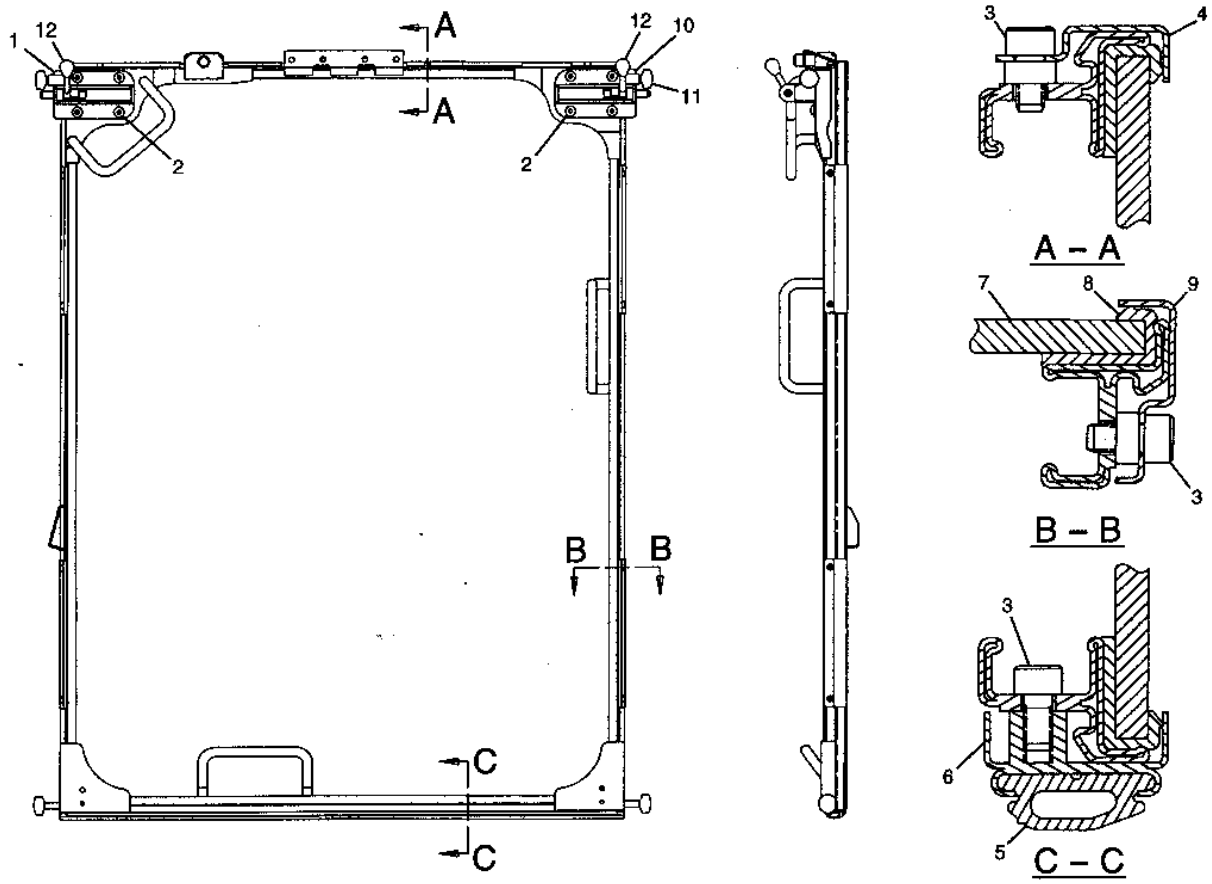


GRAPHIC #1

h60216e

# 1116272 WIPER GP-WINDOW

S/N 8SR 1-00417, 8TR 1-00485
PART OF 1116271-Page 401, 1116294-Page 405, 1244013-Page 409
1229602-Page 428, 1229603-Page 428.01

**Key:** Y - SEE SEPARATE ILLUSTRATION

**SMCS**

| NOTE | REF NO | GRAPHIC REF | PART NUMBER | QTY | PART NAME 1 2 3 4 5 6 (PRODUCT LEVEL) | PRICE USD |
|---|---|---|---|---|---|---|
| Y | 1 | | 122-9602 | 1 | ARM AS | |
| | 2 | | 9X-2045 | 1 | SCREW | |
| | 3 | | 124-3955 | 1 | HOLDER | |
| | 4 | | 9X-2044 | 2 | SCREW | |
| | 5 | | 5C-2890 | 6 | NUT | |
| | 6 | | 122-9604 | 1 | RELAY AS | |
| Y | 7 | | 122-9603 | 1 | MOTOR AS | |

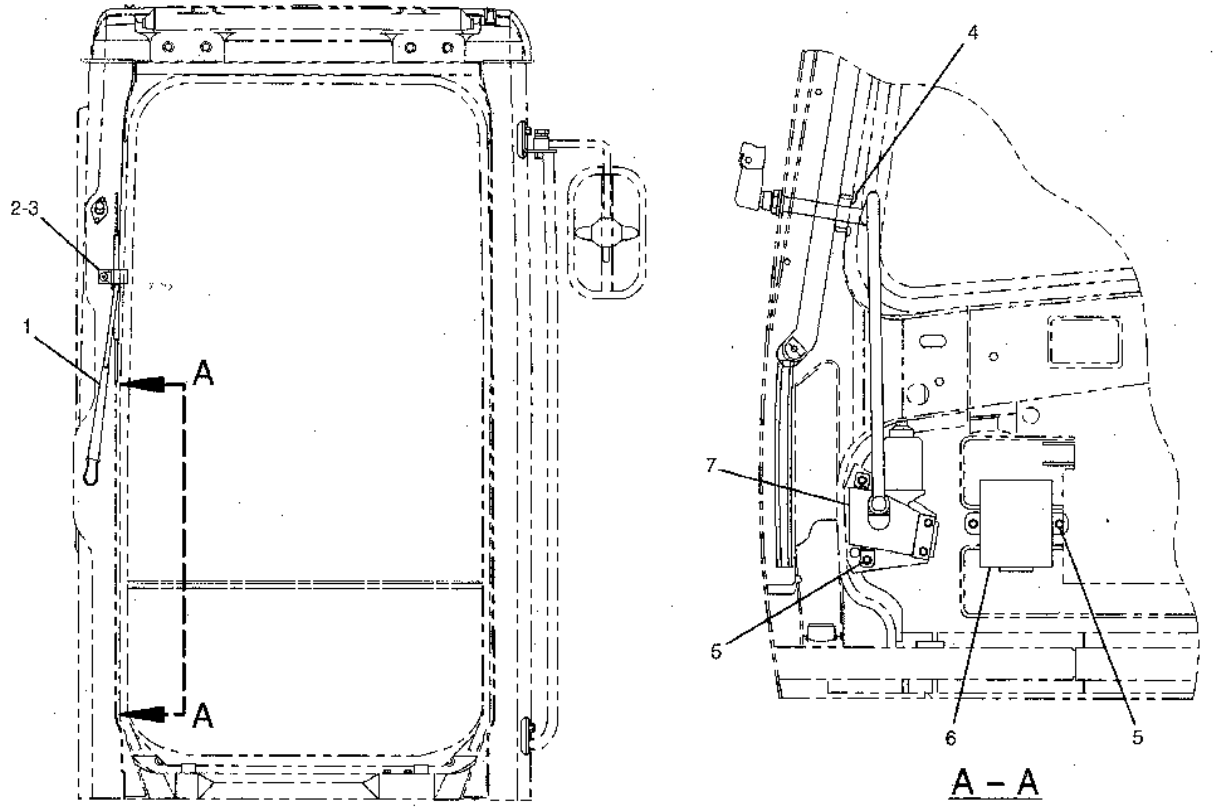


GRAPHIC #1

h50368e

# 1557041 WIPER GP-WINDOW

S/N 8SR 00418-UP, 8SR 00486-UP
PART OF 1557019-Page 405.04, 1557020-Page 409.04
1229602-Page 428, 1229603-Page 428.01

**Key:** Y - SEE SEPARATE ILLUSTRATION

**SMCS**

| NOTE | REF NO | GRAPHIC REF | PART NUMBER | QTY | PART NAME 1 2 3 4 5 6 (PRODUCT LEVEL) | PRICE USD |
|---|---|---|---|---|---|---|
| Y | 1 | | 122-9602 | 1 | ARM AS | |
| | 2 | | 9X-2045 | 1 | SCREW | |
| | 3 | | 124-3955 | 1 | HOLDER | |
| | 4 | | 9X-2044 | 2 | SCREW | |
| | 5 | | 5C-2890 | 6 | NUT | |
| | 6 | | 155-7042 | 1 | RELAY AS | |
| Y | 7 | | 122-9603 | 1 | MOTOR AS | |

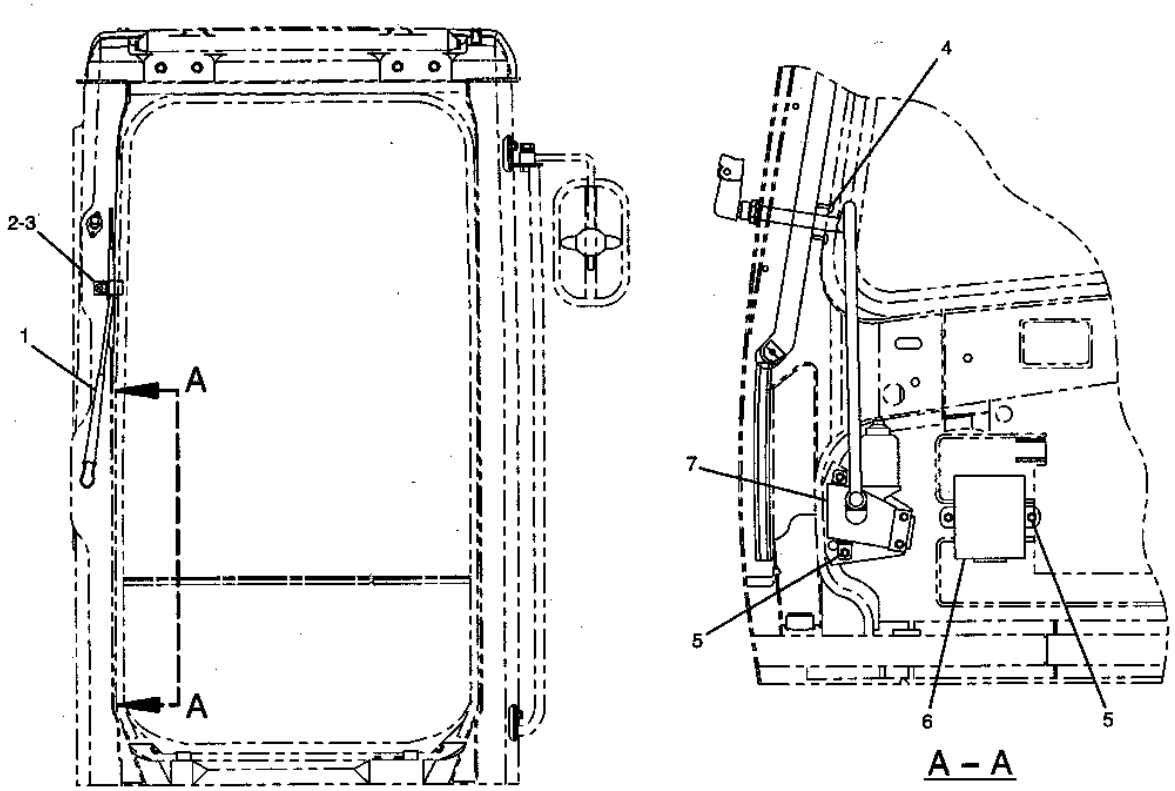


GRAPHIC #1

h60230e

# 1229602 ARM AS-WIPER

PART OF 1116272-Page 427, 1557041-Page 427.01

**Key:**

**SMCS**

| NOTE | REF NO | GRAPHIC REF | PART NUMBER | QTY | PART NAME 1 2 3 4 5 6 (PRODUCT LEVEL) | PRICE USD |
|---|---|---|---|---|---|---|
| | 1 | | 124-3922 | 1 | GUIDE | |
| | 2 | | 124-3921 | 1 | BLADE AS | |
| | 3 | | 124-3920 | 1 | ARM AS | |
| | 4 | | 124-3996 | 1 | COVER | |
| | 5 | | 147-4954 | 1 | SCREW KIT | |

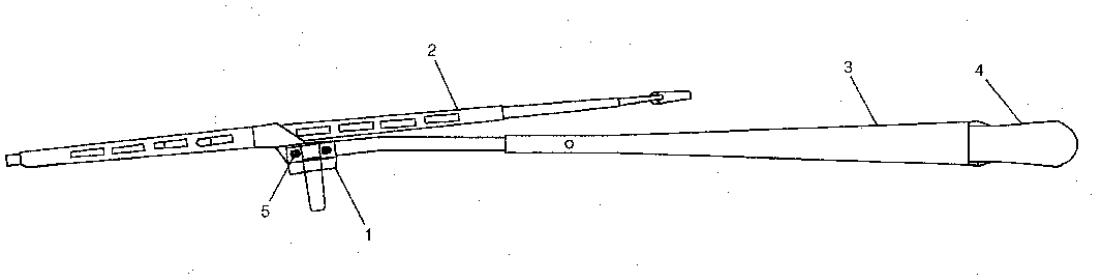


GRAPHIC #1 h59425e

# 1229603 MOTOR AS-WINDOW WIPER

PART OF 1116272-Page 427, 1557041-Page 427.01

**Key:**

**SMCS**

| NOTE | REF NO | GRAPHIC REF | PART NUMBER | QTY | PART NAME 1 2 3 4 5 6 (PRODUCT LEVEL) | PRICE USD |
|---|---|---|---|---|---|---|
| | 1 | | 6V-8231 | 1 | NUT | |
| | 2 | | 7Y-3472 | 1 | CAP | |
| | 3 | | 7Y-3470 | 1 | NUT | |
| | 4 | | 124-3953 | 1 | WASHER | |
| | 5 | | 124-3952 | 1 | PACKING | |

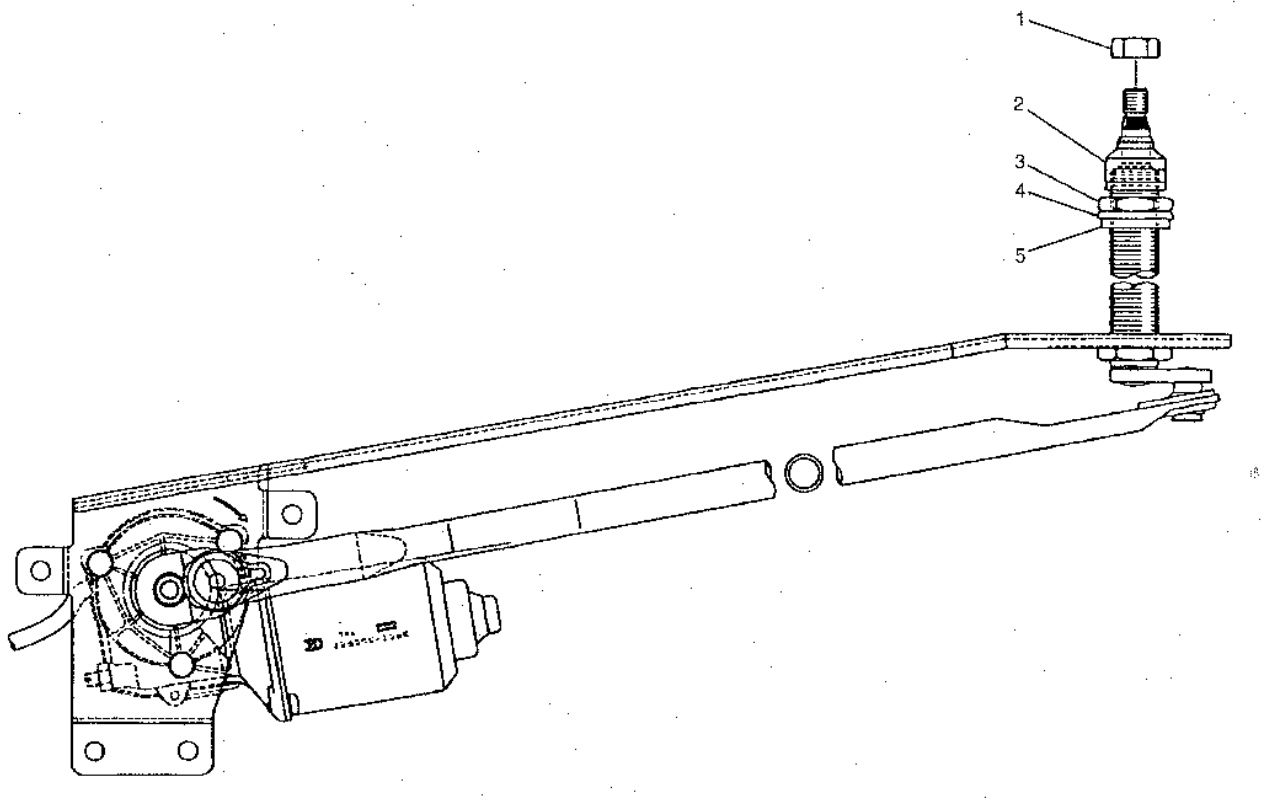


GRAPHIC #1 h53230e

# 1557039 COVER GP

S/N 8SR 00418-UP, 8TR 00486-UP
PART OF 1557019-Page 405.04, 1557020-Page 409.04

**Key:**

**SMCS**

| NOTE | REF NO | GRAPHIC REF | PART NUMBER | QTY | PART NAME 1 2 3 4 5 6 (PRODUCT LEVEL) | PRICE USD |
|---|---|---|---|---|---|---|
| | 1 | | 155-7040 | 1 | COVER | |
| | 2 | | 155-7049 | 1 | HOLDER | |
| | 3 | | 119-5026 | 2 | SCREW | |

## 1557039 COVER GP

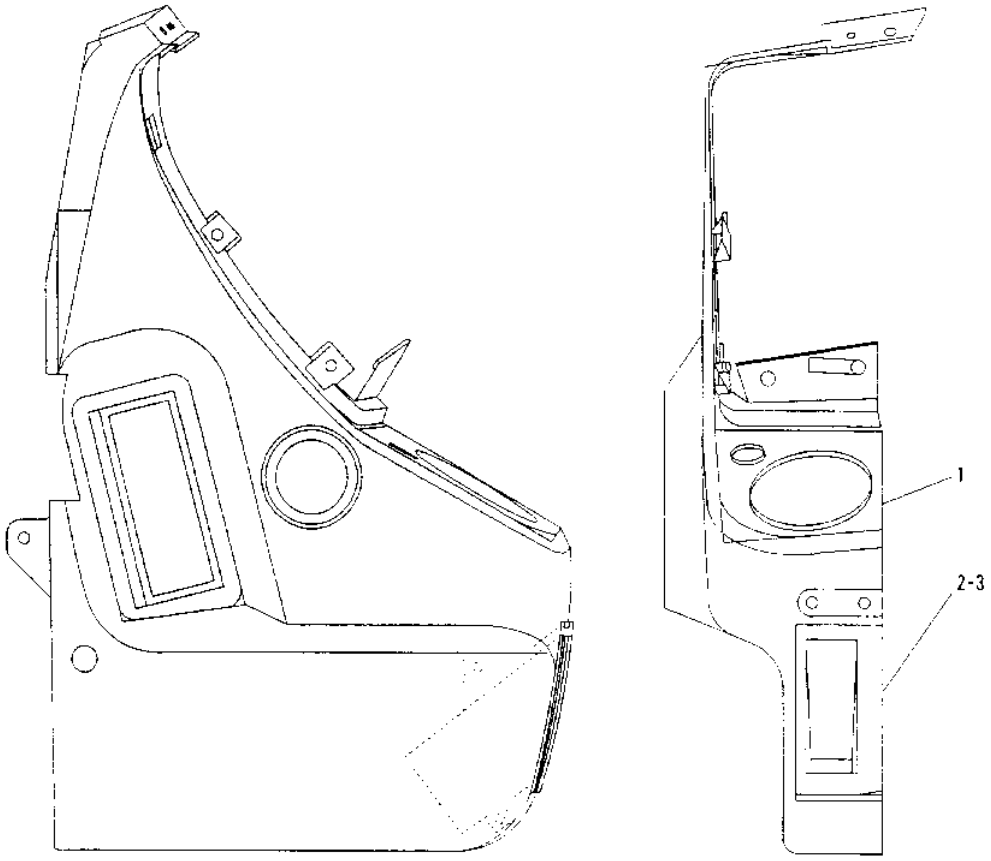


| NOTE | No. | PART No. | QTY | PART NAME |
|---|---|---|---|---|
| | 1 | 155-7040 | 1 | COVER |
| | 2 | 155-7049 | 1 | HOLDER |
| | 3 | 119 5026 | 2 | SCREW |

| NOTE | No. | PART No. | QTY | PART NAME |
|---|---|---|---|---|

H60228E

GRAPHIC #1

h60228e

# 1133452 MOTOR AS-WINDOW WIPER

PART OF 1116315-Page 443.02
AN ATTACHMENT

**Key:**

**SMCS**

| NOTE | REF NO | GRAPHIC REF | PART NUMBER | QTY | PART NAME 1 2 3 4 5 6 (PRODUCT LEVEL) | PRICE USD |
|---|---|---|---|---|---|---|
| | 1 | | 8T-8729 | 4 | PIN | |
| | 2 | | 102-8804 | 1 | RECEPTACLE KIT | |
| | 3 | | 3E-3377 | 1 | WEDGE | |
| | 4 | | 6I-5497 | 1 | NUT | |
| | 5 | | 6I-5496 | 1 | WASHER-SPRING | |
| | 6 | | 6I-5495 | 1 | NUT | |

## 1133452 MOTOR AS-WINDOW WIPER

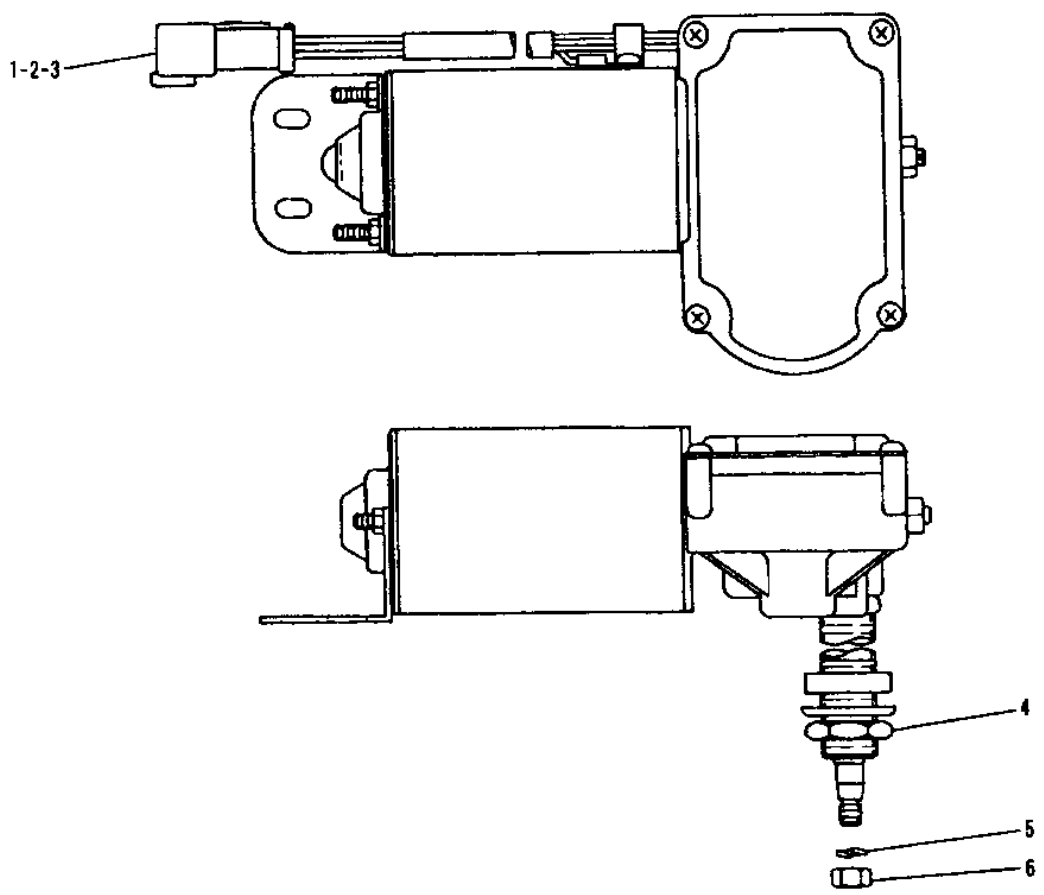


| NOTE | No. | PART No. | QTY | PART NAME | NOTE | No. | PART No. | QTY | PART NAME |
|---|---|---|---|---|---|---|---|---|---|
| | 1 | 8T-8729 | 4 | PIN | | | | | |
| | 2 | 102-8804 | 1 | RECEPTACLE KIT | | | | | |
| | 3 | 3E-3377 | 1 | WEDGE | | | | | |
| | 4 | 6I-5497 | 1 | NUT | | | | | |
| | 5 | 6I-5496 | 1 | WASHER-SPRING | | | | | |
| | 6 | 6I-5495 | 1 | NUT | | | | | |

H50917E

GRAPHIC #1 h50917e

# 1116277 COVER GP-STORAGE

S/N 8SR 1-00417, 8TR 1-00485
PART OF 1116270-Page 395.02, 1116293-Page 397, 1244012-Page 397.02

**Key:**

**SMCS**

| NOTE | REF NO | GRAPHIC REF | PART NUMBER | QTY | PART NAME 1 2 3 4 5 6 (PRODUCT LEVEL) | PRICE USD |
|---|---|---|---|---|---|---|
| | 1 | | 130-0275 | 1 | COVER AS | |
| | 2 | | 130-0278 | 1 | COVER AS | |
| | 3 | | 9X-2044 | 3 | SCREW | |
| | 4 | | 100-7689 | 3 | NUT AS | |
| | 5 | | 122-9597 | 1 | CAP | |

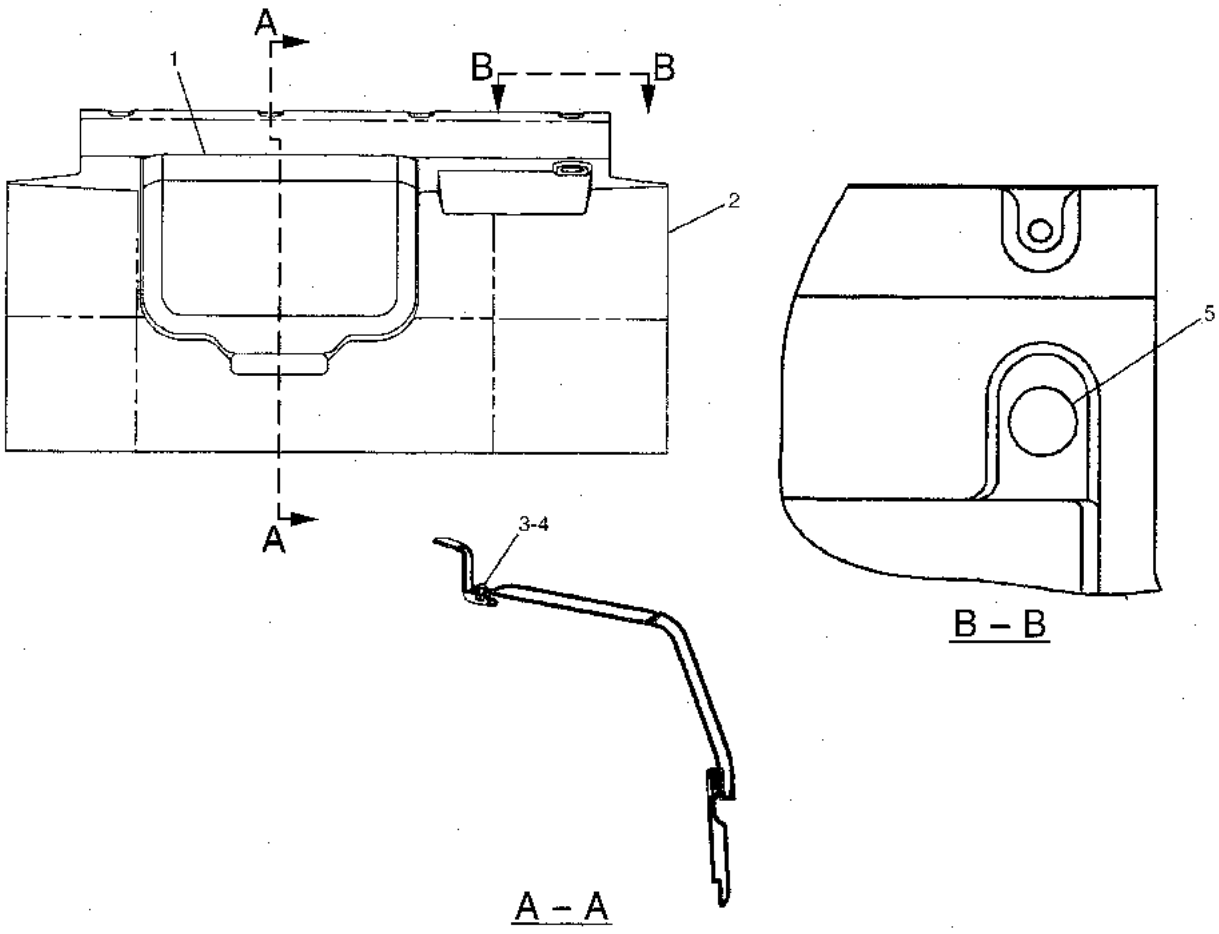


GRAPHIC #1

h51645e

# 1557027 COVER GP-STORAGE

S/N 8SR 00418-UP, 8SR 00486-UP
PART OF 1540674-Page 397B, 1556995-Page 397.04
1116277-Page 430.02

**Key:** Y - SEE SEPARATE ILLUSTRATION

**SMCS**

| NOTE | REF NO | GRAPHIC REF | PART NUMBER | QTY | PART NAME 1 2 3 4 5 6 (PRODUCT LEVEL) | PRICE USD |
|---|---|---|---|---|---|---|
| Y | 1 | | 111-6277 | 1 | COVER GP | |
| | 2 | | 155-7028 | 1 | BOX AS | |
| | | | 159-7745 | 1 | CASE | |
| | | | 159-7746 | 1 | COVER | |
| | 3 | | 095-0759 | 4 | SCREW | |

## 1557027 COVER GP-STORAGE

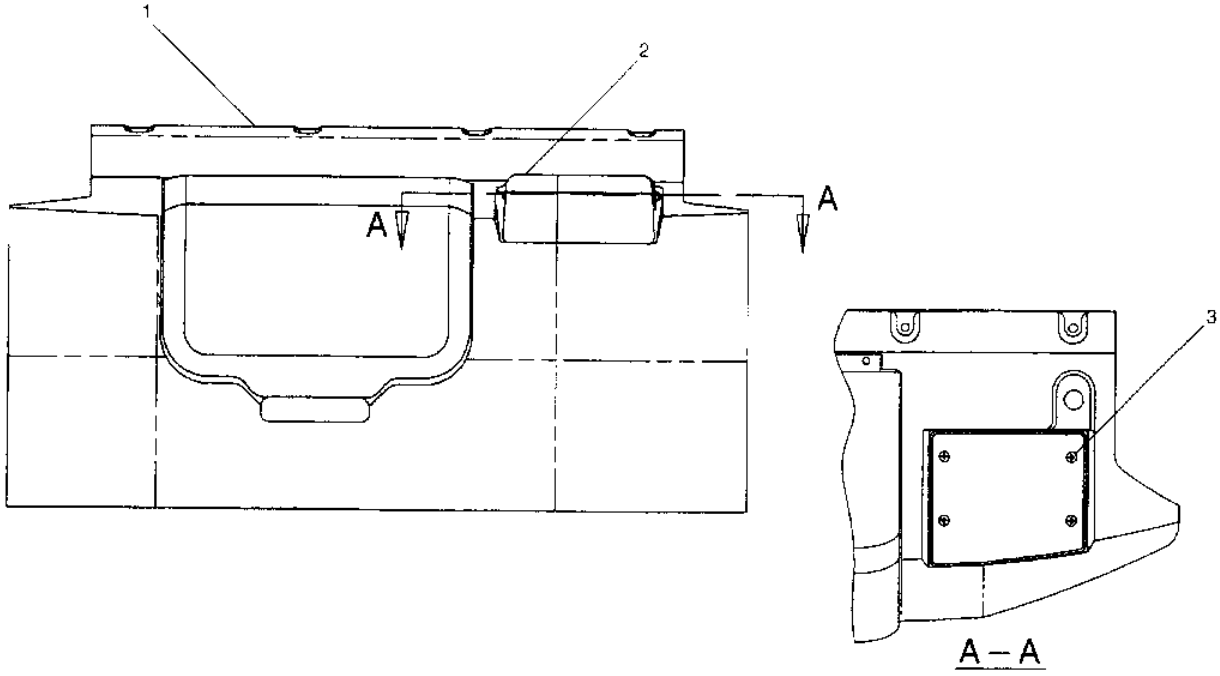


| NOTE | No. | PART No. | QTY | PART NAME | NOTE | No. | PART No. | QTY | PART NAME |
|---|---|---|---|---|---|---|---|---|---|
| Y | 1 | 111-6277 | 1 | COVER GP | | | | | |
| | 2 | 155-7028 | 1 | BOX AS | | | | | |
| | | 159-7745 | 1 | CASE | | | | | |
| | | 159-7746 | 1 | COVER | | | | | |
| | 3 | 095-0759 | 4 | SCREW | | | | | |

Y–SEE SEPARATE ILLUSTRATION

H61807E

GRAPHIC #1

h61807e

# 1116277 COVER GP-STORAGE

S/N 8SR 00418-UP, 8TR 00486-UP
PART OF 1557027-Page 430.01

**Key:**

**SMCS**

| NOTE | REF NO | GRAPHIC REF | PART NUMBER | QTY | PART NAME 1 2 3 4 5 6 (PRODUCT LEVEL) | PRICE USD |
|---|---|---|---|---|---|---|
| | 1 | | 130-0275 | 1 | COVER AS | |
| | 2 | | 155-7111 | 1 | COVER AS | |
| | 3 | | 9X-2044 | 3 | SCREW | |
| | 4 | | 100-7689 | 3 | NUT AS | |
| | 5 | | 122-9597 | 1 | CAP | |

## 1116277 COVER GP-STORAGE

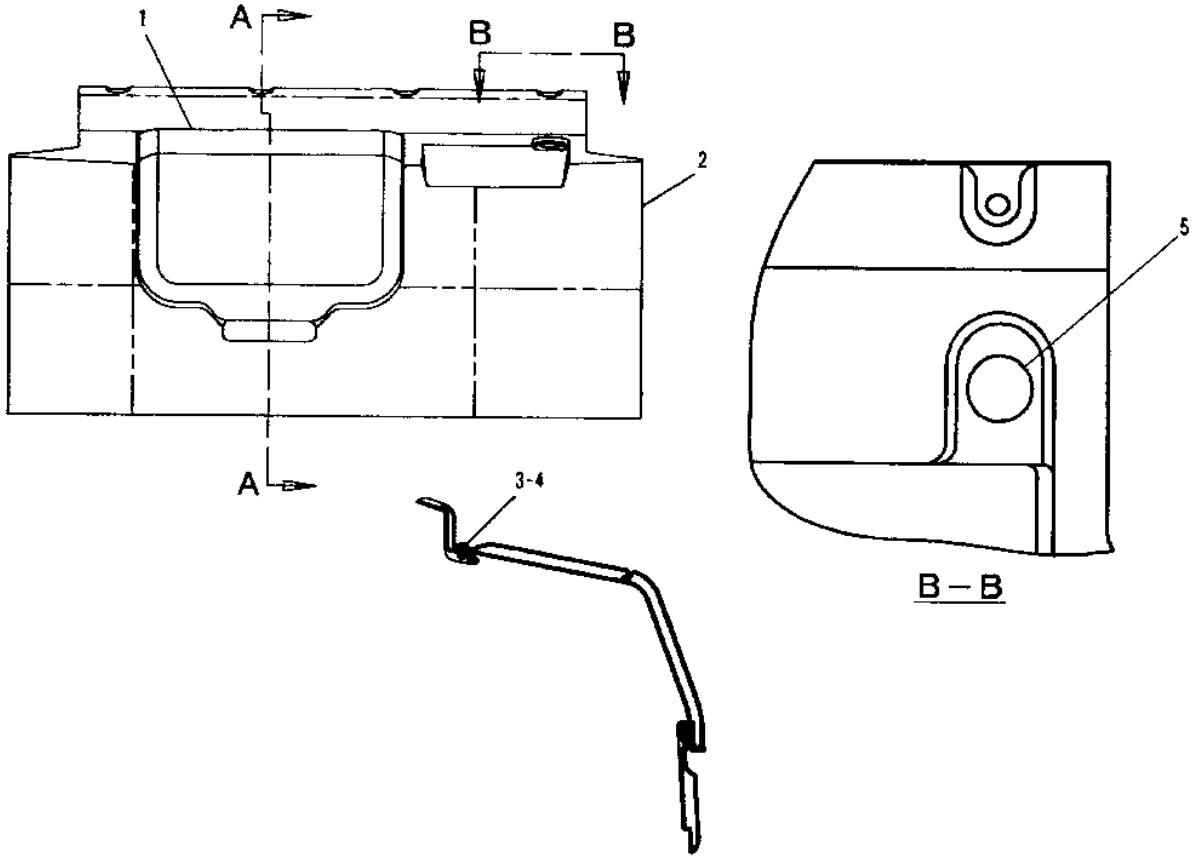


| NOTE | No. | PART No. | QTY | PART NAME | NOTE | No. | PART No. | QTY | PART NAME |
|---|---|---|---|---|---|---|---|---|---|
| | 1 | 130-0275 | 1 | COVER AS | | | | | |
| | 2 | 155-7111 | 1 | COVER AS | | | | | |
| | 3 | 9X-2044 | 3 | SCREW | | | | | |
| | 4 | 100-7689 | 3 | NUT AS | | | | | |
| | 5 | 122-9597 | 1 | CAP | | | | | |

H59424E

# 1060176 MONITOR GP-OPERATOR

**Key:**

**SMCS**

| NOTE | REF NO | GRAPHIC REF | PART NUMBER | QTY | PART NAME 1 2 3 4 5 6 (PRODUCT LEVEL) | PRICE USD |
|---|---|---|---|---|---|---|
| | 1 | | 151-9385 | 1 | MONITOR GP | |
| | | | 157-3122 | 1 | ALARM KIT | |
| | | | 171-2655 | 1 | COVER | |
| | 2 | | 9X-2044 | 4 | SCREW | |
| | 3 | | 9W-1494 | 1 | METER KIT | |

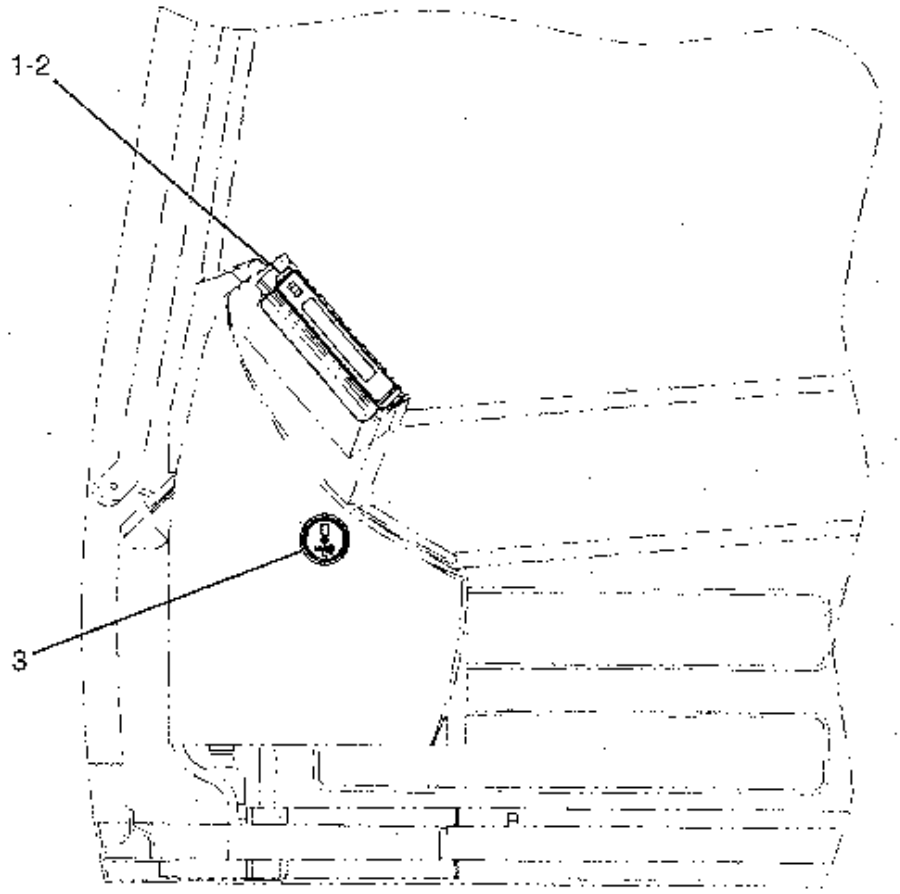


GRAPHIC #1

h60227e

# 1116310 WINDSHIELD AR-AUTO

S/N 8SR 1-00417, 8TR 1-00485
AN ATTACHMENT

**Key:** Y - Separate Illustration

**SMCS**

| NOTE | REF NO | GRAPHIC REF | PART NUMBER | QTY | PART NAME 1 2 3 4 5 6 (PRODUCT LEVEL) | PRICE USD |
|---|---|---|---|---|---|---|
| Y | | | 117-6262 | 1 | WINDOW GP | |
| Y | | | 117-6263 | 1 | DRIVE GP (WINDSHIELD) (AUTO) | |
| Y | | | 117-6264 | 1 | CONTROL & MTG GP (WINDSHIELD) | |
| Y | | | 121-1099 | 1 | WIRING GP | |
| | | | 128-2122 | 1 | HANDLE | |

# 1557061 WINDSHIELD AR-AUTO

S/N 8SR 00418-UP, 8TR 00486-UP
AN ATTACHMENT

**Key:** Y - Separate Illustration

**SMCS**

| NOTE | REF NO | GRAPHIC REF | PART NUMBER | QTY | PART NAME 1 2 3 4 5 6 (PRODUCT LEVEL) | PRICE USD |
|---|---|---|---|---|---|---|
| Y | | | 155-7062 | 1 | WINDOW GP | |
| Y | | | 155-7063 | 1 | DRIVE GP (WINDSHIELD) (AUTO) | |
| Y | | | 117-6264 | 1 | CONTROL & MTG GP (WINDSHIELD) | |
| Y | | | 121-1099 | 1 | WIRING GP | |
| | | | 128-2122 | 1 | HANDLE | |

# 1176262 WINDOW GP

S/N 8SR 1-00417, 8TR 1-00485
PART OF 1116310-Page 432
AN ATTACHMENT

**Key:**

**SMCS**

| NOTE | REF NO | GRAPHIC REF | PART NUMBER | QTY | PART NAME 1 2 3 4 5 6 (PRODUCT LEVEL) | PRICE USD |
|---|---|---|---|---|---|---|
| | 1 | | 128-2106 | 1 | BRACKET AS | |
| | 2 | | 9X-2042 | 12 | SCREW | |
| | 3 | | 128-2108 | 1 | BRACKET AS | |
| | 4 | | 128-2104 | 1 | BRACKET AS | |
| | 5 | | 124-3973 | 4 | ROLLER | |
| | 6 | | 128-2102 | 1 | BRACKET AS | |
| | 7 | | 099-0822 | 17 | BOLT (L=10mm) | |
| | 8 | | 124-3969 | 2 | HOLDER | |
| | 9 | | 124-3967 | 1 | GLASS (UPPER) | |
| | 10 | | 124-3972 | 1 | SEAL | |
| | 11 | | 124-3968 | 4 | HOLDER | |
| | 12 | | 128-2155 | 1 | CAP | |
| | 13 | | 124-3971 | 1 | SEAL | |
| | 14 | | 124-3970 | 1 | HOLDER AS | |
| | 15 | | 8T-4133 | 1 | NUT | |
| | 16 | | 4I-5153 | 1 | BUMPER | |
| | 17 | | 128-2112 | 1 | BRACKET AS | |
| | 18 | | 8T-4200 | 2 | BOLT (L=16mm) | |
| | 19 | | 8T-4224 | 2 | WASHER-HARD | |

## 1176262 WINDOW GP

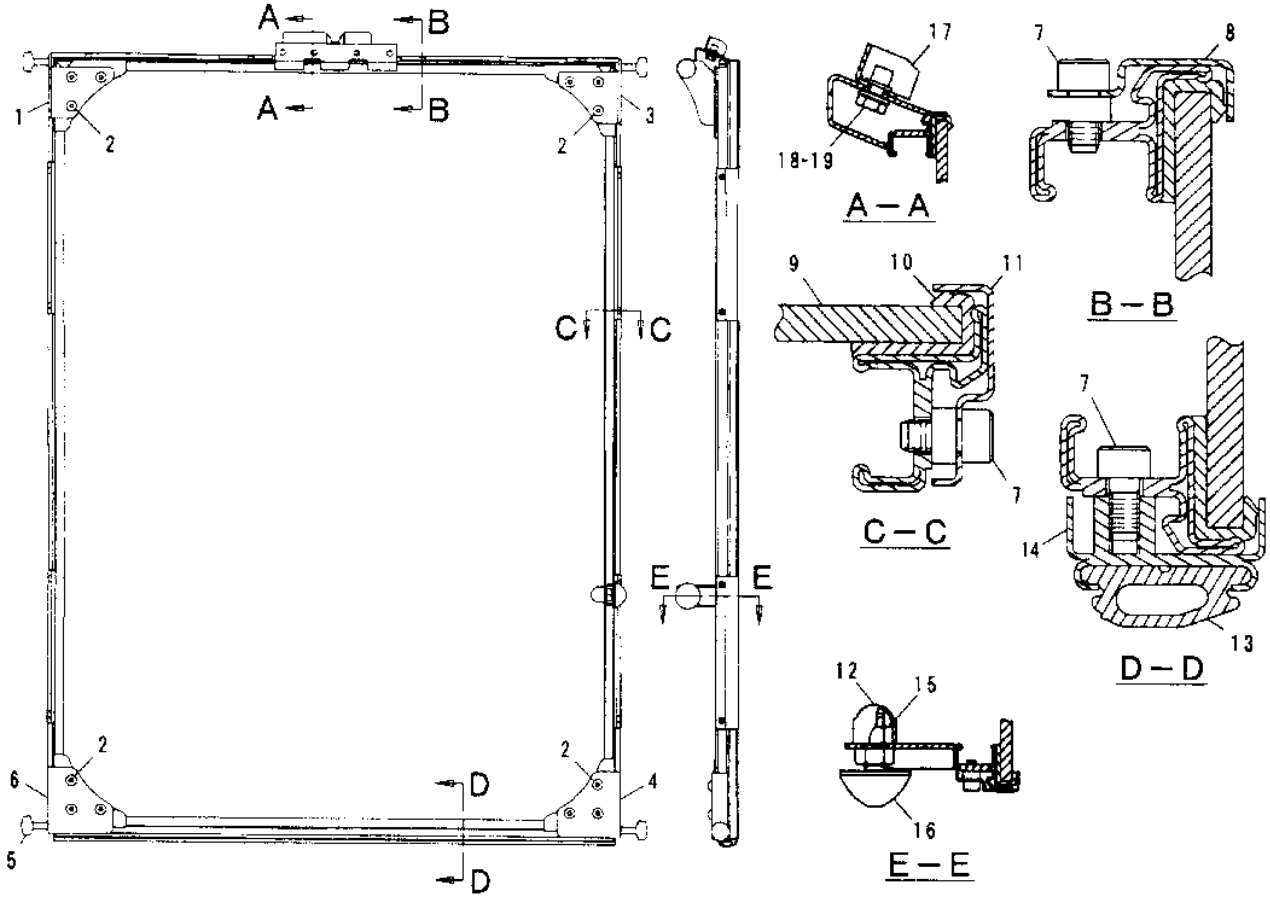


| NOTE | No. | PART No. | QTY | PART NAME |
|---|---|---|---|---|
| | 1 | 128-2106 | 1 | BRACKET AS |
| | 2 | 9X-2042 | 12 | SCREW |
| | 3 | 128-2108 | 1 | BRACKET AS |
| | 4 | 128-2104 | 1 | BRACKET AS |
| | 5 | 124-3973 | 4 | ROLLER |
| | 6 | 128-2102 | 1 | BRACKET AS |
| | 7 | 099-0822 | 17 | BOLT (L=10mm) |
| | 8 | 124-3969 | 2 | HOLDER |
| | 9 | 124-3967 | 1 | GLASS (UPPER) |
| | 10 | 124-3972 | 1 | SEAL |
| | 11 | 124-3968 | 4 | HOLDER |
| | 12 | 128-2155 | 1 | CAP |
| | 13 | 124-3971 | 1 | SEAL |
| | 14 | 124-3970 | 1 | HOLDER AS |
| | 15 | 8T-4133 | 1 | NUT |
| | 16 | 4I-5153 | 1 | BUMPER |
| | 17 | 128-2112 | 1 | BRACKET AS |
| | 18 | 8T-4200 | 2 | BOLT (L=16mm) |
| | 19 | 8T-4224 | 2 | WASHER-HARD |

H50399E

# 1557062 WINDOW GP

S/N 8SR 00418-UP, 8TR 00486-UP
PART OF 1557061-Page 432
AN ATTACHMENT

**Key:**

**SMCS**

| NOTE | REF NO | GRAPHIC REF | PART NUMBER | QTY | PART NAME 1 2 3 4 5 6 (PRODUCT LEVEL) | PRICE USD |
|---|---|---|---|---|---|---|
| | 1 | | 128-2106 | 1 | BRACKET AS (LH) | |
| | 2 | | 9X-2042 | 12 | SCREW | |
| | 3 | | 128-2108 | 1 | BRACKET AS (RH) | |
| | 4 | | 128-2104 | 1 | BRACKET AS (RH) | |
| | 5 | | 124-3973 | 4 | ROLLER | |
| | 6 | | 128-2102 | 1 | BRACKET AS (LH) | |
| | 7 | | 099-0822 | 17 | BOLT (L=10mm) | |
| | 8 | | 124-3969 | 2 | HOLDER | |
| | 9 | | 155-7046 | 1 | GLASS (UPPER) | |
| | 10 | | 124-3972 | 1 | SEAL | |
| | 11 | | 124-3968 | 4 | HOLDER | |
| | 12 | | 128-2155 | 1 | CAP | |
| | 13 | | 124-3971 | 1 | SEAL | |
| | 14 | | 124-3970 | 1 | HOLDER AS | |
| | 15 | | 8T-4133 | 1 | NUT | |
| | 16 | | 4I-5153 | 1 | BUMPER | |
| | 17 | | 128-2112 | 1 | BRACKET AS | |
| | 18 | | 8T-4200 | 2 | BOLT (L=16mm) | |
| | 19 | | 8T-4224 | 2 | WASHER-HARD | |

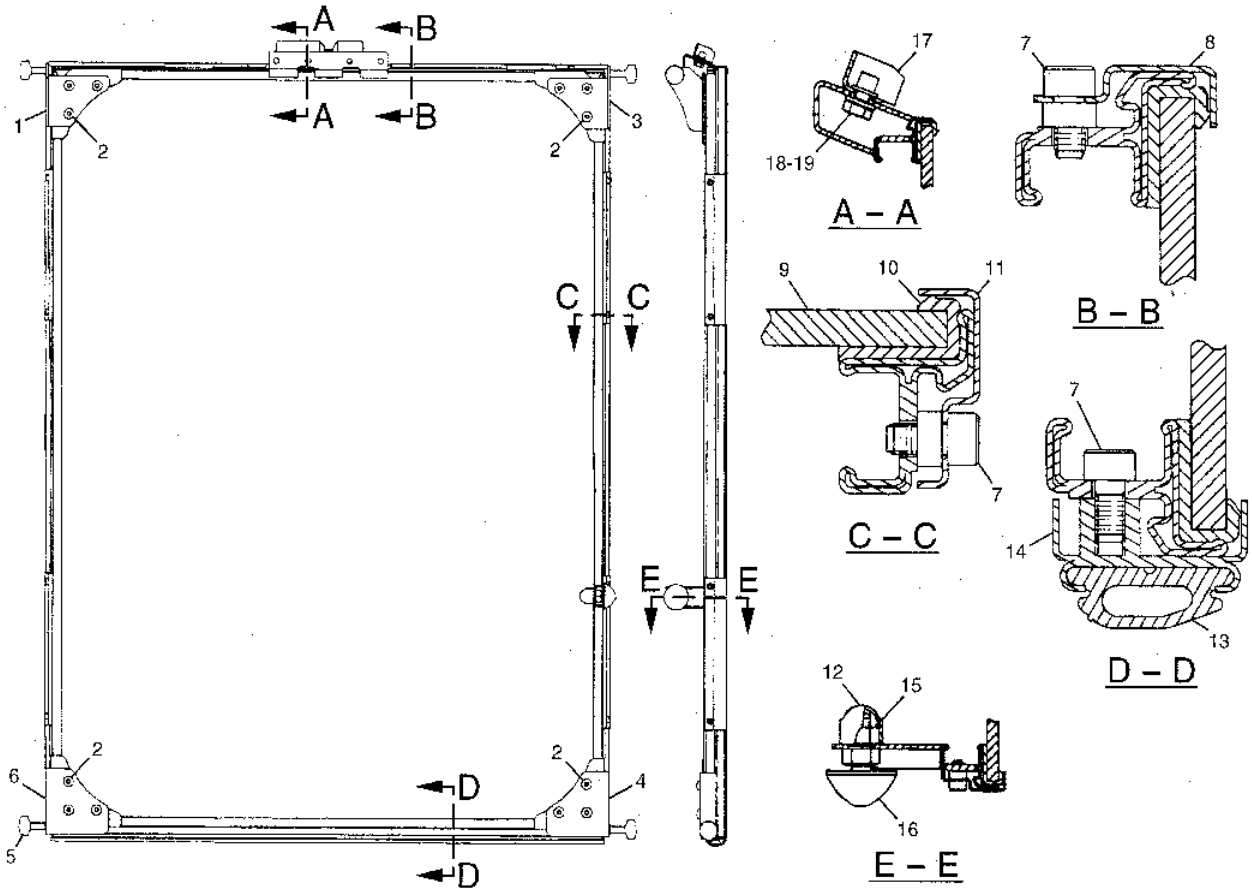


GRAPHIC #1

h60218e

# 1557064 COVER GP

S/N 8SR 00418-UP, 8TR 00486-UP
PART OF 1557063-Page 434.03
AN ATTACHMENT

**Key:**

**SMCS**

| NOTE | REF NO | GRAPHIC REF | PART NUMBER | QTY | PART NAME 1 2 3 4 5 6 (PRODUCT LEVEL) | PRICE USD |
|---|---|---|---|---|---|---|
| | 1 | | 155-7065 | 1 | COVER | |
| | 2 | | 155-7049 | 1 | HOLDER | |
| | 3 | | 119-5026 | 2 | SCREW | |

## 1557064 COVER GP

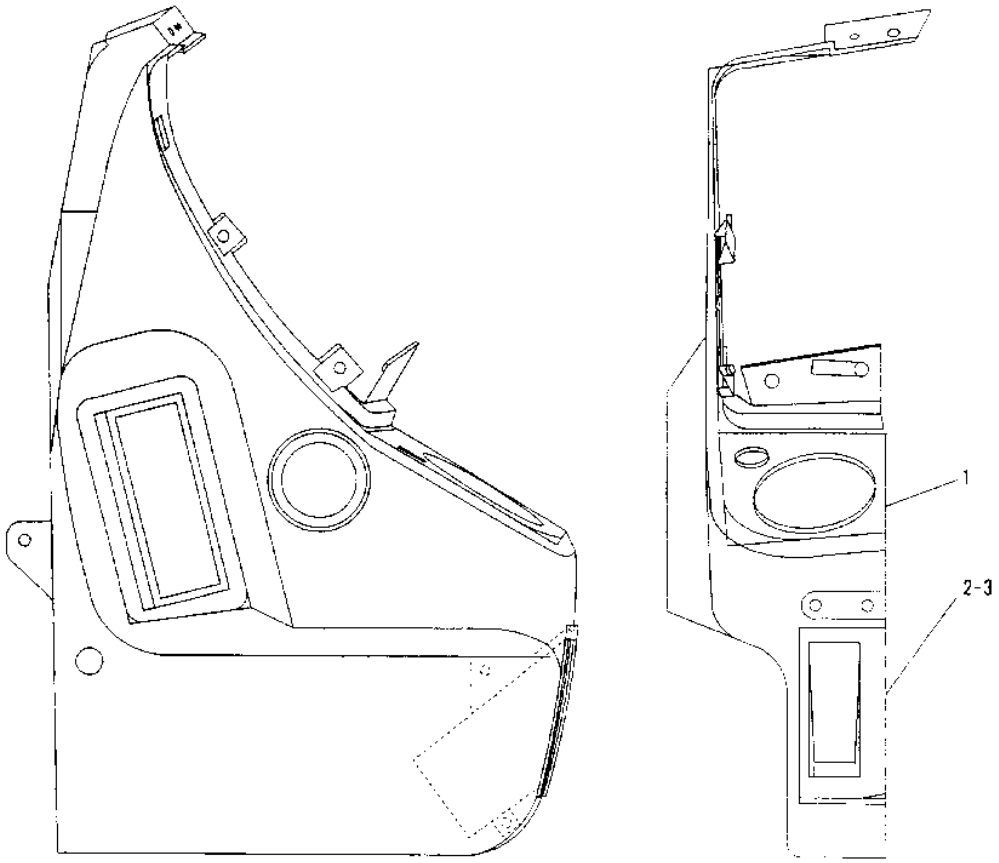


| NOTE | No. | PART No. | QTY | PART NAME | NOTE | No. | PART No. | QTY | PART NAME |
|---|---|---|---|---|---|---|---|---|---|
| | 1 | 155-7065 | 1 | COVER | | | | | |
| | 2 | 155-7049 | 1 | HOLDER | | | | | |
| | 3 | 119-5026 | 2 | SCREW | | | | | |

H60219E

# 1176263 DRIVE GP-WINDSHIELD-AUTO

S/N 8SR 1-00417, 8TR 1-00485
PART OF 1116310-Page 432
1229646-Page 435
AN ATTACHMENT

**Key:** B - USE AS REQUIRED, Y - SEPARATE ILLUSTRATION

**SMCS**

| NOTE | REF NO | GRAPHIC REF | PART NUMBER | QTY | PART NAME 1 2 3 4 5 6 (PRODUCT LEVEL) | PRICE USD |
|---|---|---|---|---|---|---|
| | 1 | | 4I-3089 | 4 | CLIP | |
| | 2 | | 128-2111 | 1 | LINER | |
| | 3 | | 8C-7581 | 4 | SCREW | |
| | 4 | | 8T-4200 | 2 | BOLT (L=16mm) | |
| | 5 | | 8T-4224 | 2 | WASHER-HARD | |
| | 6 | | 128-2113 | 1 | STOPPER | |
| | 7 | | 117-6306 | 2 | SWITCH | |
| | 8 | | 8T-4137 | 2 | BOLT (L=20mm) | |
| | 9 | | 8T-4121 | 2 | WASHER-HARD | |
| | 10 | | 113-4033 | 1 | COVER | |
| | 11 | | 5C-8312 | 1 | NUT | |
| | 12 | | 099-5307 | 1 | GROMMET | |
| | 13 | | 9X-2044 | 12 | SCREW | |
| | 14 | | 128-2116 | 1 | BRACKET AS | |
| B | 15 | | 128-2118 | 2 | SHIM (T=1.0mm) | |
| B | 16 | | 128-2119 | 2 | SHIM (T=2.0mm) | |
| B | 17 | | 128-2120 | 2 | SHIM (T=3.0mm0 | |
| | 18 | | 6V-5683 | 22 | BOLT (L=16mm) | |
| | 19 | | 128-2099 | 1 | COVER | |
| | 20 | | 128-2117 | 2 | STOPPER | |
| Y | 21 | | 122-9646 | 1 | DRIVE AS | |
| | 22 | | 128-2115 | 1 | BRACKET | |
| | 23 | | 128-2154 | 2 | PLATE | |

## 1176263 DRIVE GP-WINDSHIELD-AUTO

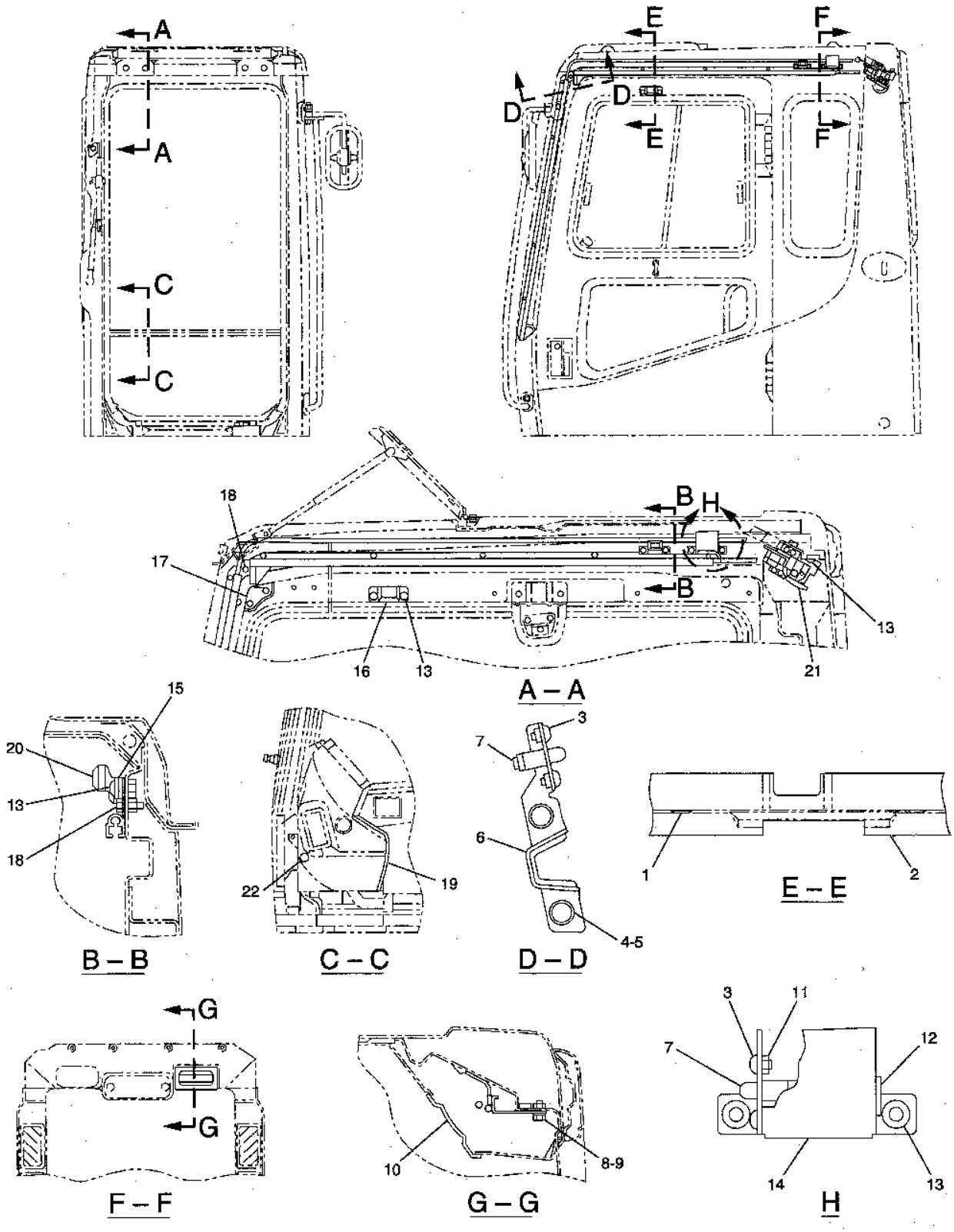


GRAPHIC #1

h59701e

# 1557063 DRIVE GP-WINDSHIELD-AUTO

S/N 8SR 00418-UP, 8TR 00486-UP
PART OF 1557061-Page 432
1557064-Page 433.02, 1229646-Page 435
AN ATTACHMENT

**Key:** B - USE AS REQUIRED, Y - SEE SEPARATE ILLUSTRATION

**SMCS**

| NOTE | REF NO | GRAPHIC REF | PART NUMBER | QTY | PART NAME 1 2 3 4 5 6 (PRODUCT LEVEL) | PRICE USD |
|---|---|---|---|---|---|---|
| | 1 | | 4I-3089 | 4 | CLIP | |
| | 2 | | 128-2111 | 1 | LINER | |
| | 3 | | 8C-7581 | 4 | SCREW | |
| | 4 | | 8T-4200 | 2 | BOLT (L=16mm) | |
| | 5 | | 8T-4224 | 2 | WASHER-HARD | |
| | 6 | | 128-2113 | 1 | STOPPER | |
| | 7 | | 117-6306 | 2 | SWITCH | |
| | 8 | | 8T-4137 | 2 | BOLT (L=20mm) | |
| | 9 | | 8T-4121 | 2 | WASHER-HARD | |
| | 10 | | 113-4033 | 1 | COVER | |
| | 11 | | 5C-8312 | 1 | NUT | |
| | 12 | | 099-5307 | 1 | GROMMET | |
| | 13 | | 9X-2044 | 12 | SCREW | |
| | 14 | | 128-2116 | 1 | BRACKET AS | |
| B | 15 | | 128-2118 | 2 | SHIM (T=1.0mm) | |
| B | | | 128-2119 | 2 | SHIM (T=2.0mm) | |
| B | | | 128-2120 | 2 | SHIM (T=3.0mm) | |
| | 16 | | 128-2115 | 1 | BRACKET | |
| | 17 | | 128-2154 | 2 | PLATE | |
| | 18 | | 6V-5683 | 22 | BOLT (L=16mm) | |
| Y | 19 | | 155-7064 | 1 | COVER GP | |
| | 20 | | 128-2117 | 2 | STOPPER | |
| Y | 21 | | 122-9646 | 1 | DRIVE AS | |

## 1557063 DRIVE GP-WINDSHIELD-AUTO

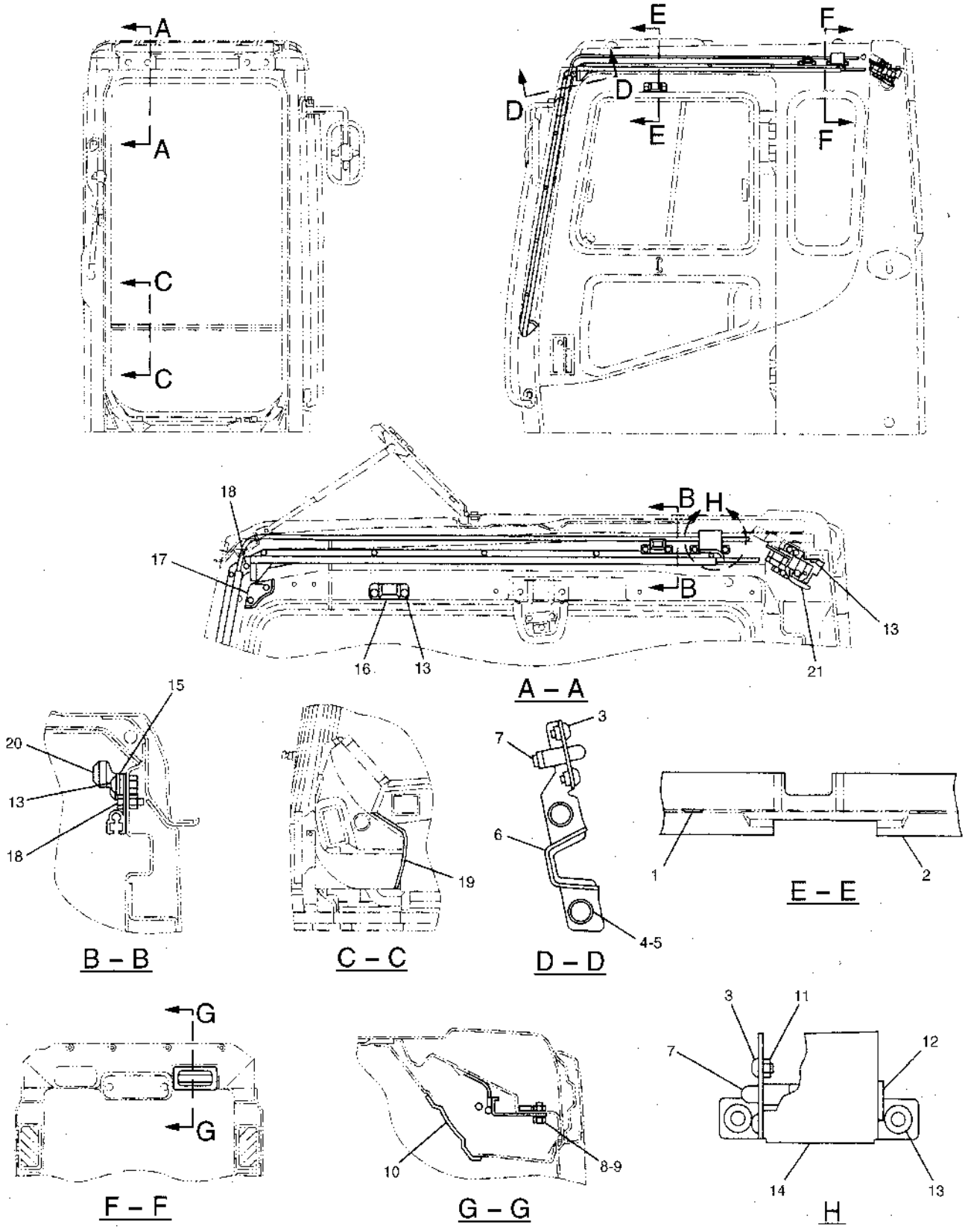


GRAPHIC #1

h60224e

# 1229646 DRIVE AS-WINDSHIELD-AUTO

PART OF 1176263-Page 434.01, 1557063-Page 434.03
1282123-Page 436
AN ATTACHMENT

**Key:** A - NOT PART OF THIS GROUP, Y - SEPARATE ILLUSTRATION

**SMCS**

| NOTE | REF NO | GRAPHIC REF | PART NUMBER | QTY | PART NAME 1 2 3 4 5 6 (PRODUCT LEVEL) | PRICE USD |
|---|---|---|---|---|---|---|
| | 1 | | 128-2121 | 2 | STOPPER | |
| Y | 2 | | 128-2123 | 1 | DRIVE AS | |
| A | 3 | | 128-2122 | 1 | HANDLE | |

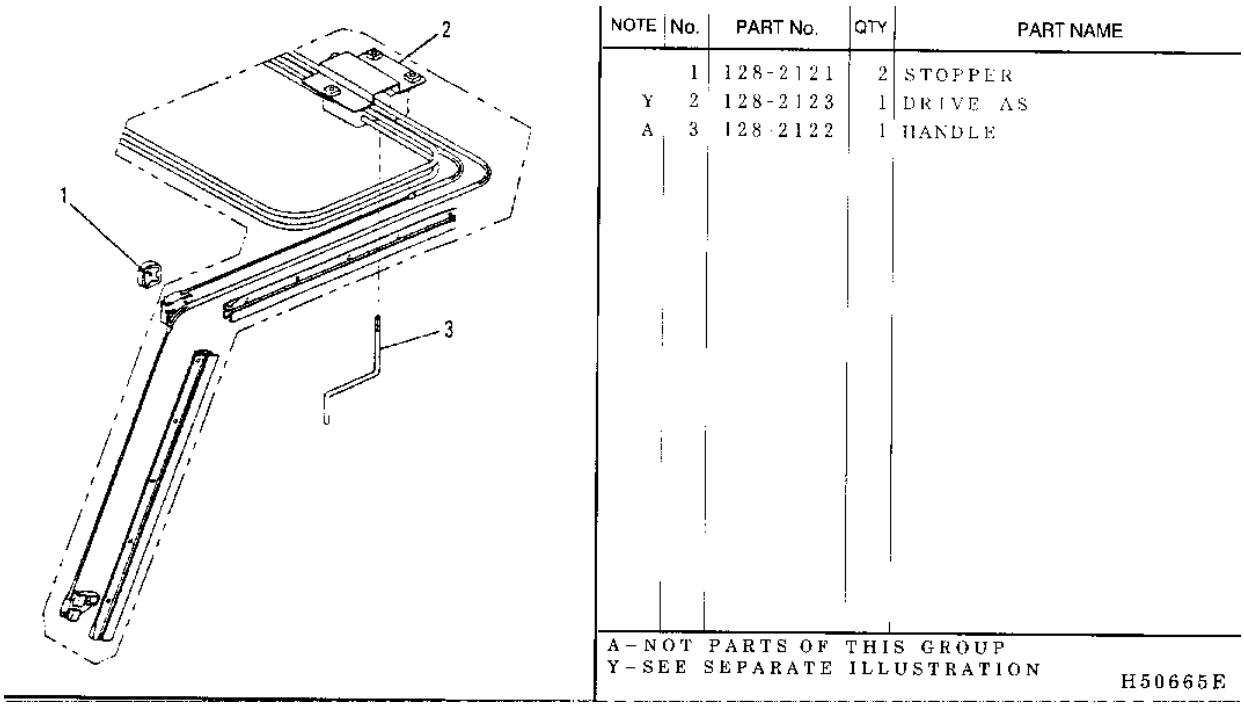


GRAPHIC #1 h50665e

# 1282123 DRIVE AS-WINDSHIELD-AUTO

PART OF 1229646-Page 435
AN ATTACHMENT

**Key:**

**SMCS**

| NOTE | REF NO | GRAPHIC REF | PART NUMBER | QTY | PART NAME 1 2 3 4 5 6 (PRODUCT LEVEL) | PRICE USD |
|---|---|---|---|---|---|---|
| | 1 | | 124-3959 | 1 | RAIL (RH) | |
| | 2 | | 128-2124 | 1 | RAIL (LH) | |
| | 3 | | 128-2125 | 1 | RAIL (RH) | |
| | 4 | | 128-2126 | 1 | RAIL (LH) | |
| | 5 | | 128-2127 | 1 | CABLE AS | |
| | 6 | | 128-2128 | 1 | CABLE AS | |
| | 7 | | 128-2129 | 1 | GEAR AS | |
| | 8 | | 128-2130 | 1 | BRACKET | |
| | 9 | | 124-3960 | 8 | BLOCK | |

## 1282123 DRIVE AS-WINDSHIELD-AUTO

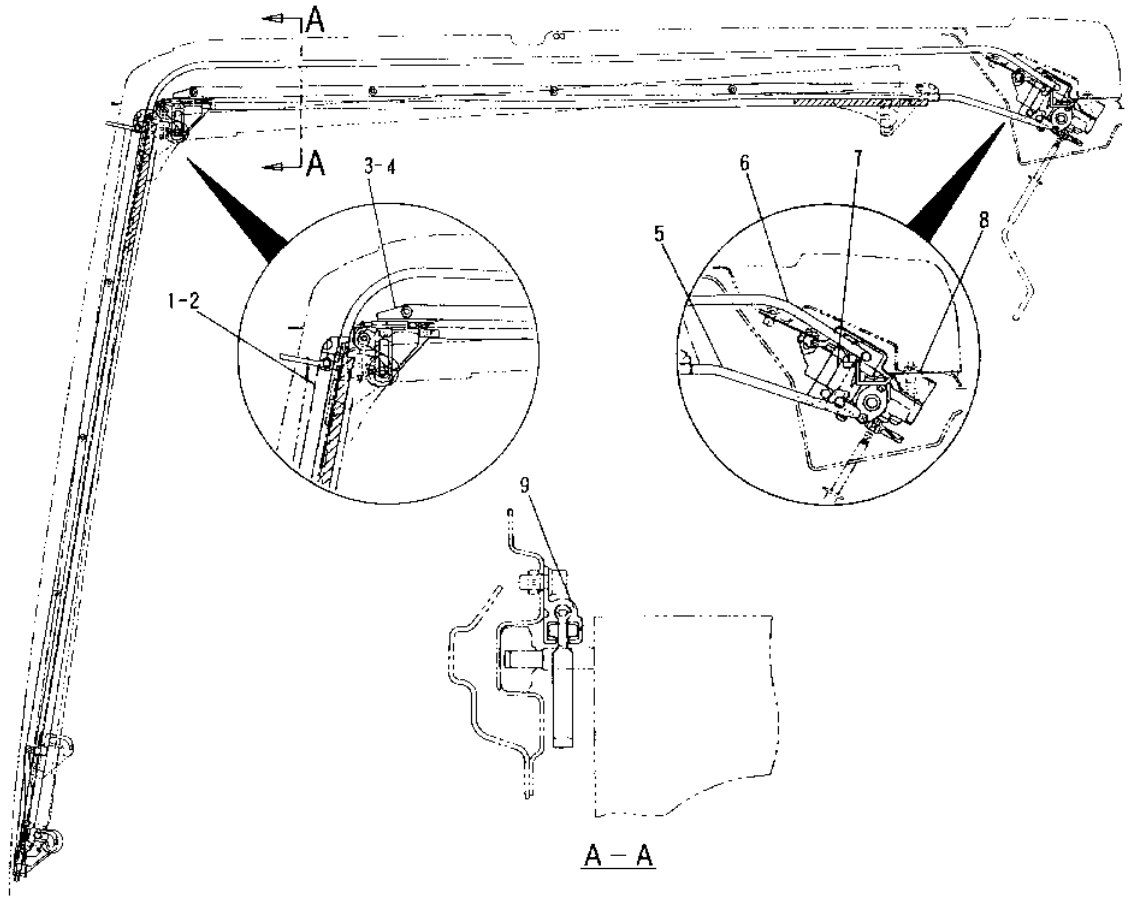


| NOTE | No. | PART No. | QTY | PART NAME | NOTE | No. | PART No. | QTY | PART NAME |
|---|---|---|---|---|---|---|---|---|---|
| | 1 | 124-3959 | 1 | RAIL (RH) | | | | | |
| | 2 | 128-2124 | 1 | RAIL (LH) | | | | | |
| | 3 | 128-2125 | 1 | RAIL (RH) | | | | | |
| | 4 | 128-2126 | 1 | RAIL (LH) | | | | | |
| | 5 | 128 2127 | 1 | CABLE AS | | | | | |
| | 6 | 128-2128 | 1 | CABLE AS | | | | | |
| | 7 | 128-2129 | 1 | GEAR AS | | | | | |
| | 8 | 128-2130 | 1 | BRACKET | | | | | |
| | 9 | 124-3960 | 8 | BLOCK | | | | | |

H50666E

# 1116267 WASHER GP-WINDOW

4I0559-Page 438

**Key:** D - ORDER BY THE METER, Y - SEE SEPARATE ILLUSTRATION

**SMCS**

| NOTE | REF NO | GRAPHIC REF | PART NUMBER | QTY | PART NAME 1 2 3 4 5 6 (PRODUCT LEVEL) | PRICE USD |
|---|---|---|---|---|---|---|
| | 1 | | 121-7102 | 1 | SUPPORT AS | |
| | 2 | | 9X-8256 | 2 | WASHER | |
| | 3 | | 8T-4970 | 2 | BOLT (L=14mm) | |
| | 4 | | 2D-1290 | 1 | GROMMET | |
| | 5 | | 6V-3265 | 3 | CLIP | |
| | 6 | | 8T-4121 | 3 | WASHER (HARD) | |
| | 7 | | 8T-4195 | 2 | BOLT (L=30mm) | |
| | 8 | | 6V-2679 | 1 | FILM (INSTRUCTION) | |
| Y | 9 | | 4I-0559 | 1 | TANK AS | |
| | 10 | | 7Y-3474 | 1 | VALVE AS | |
| | 11 | | 8T-4191 | 1 | BOLT (L=16mm) | |
| D | 12 | | 5P-5992 | | HOSE (2.7m) | |

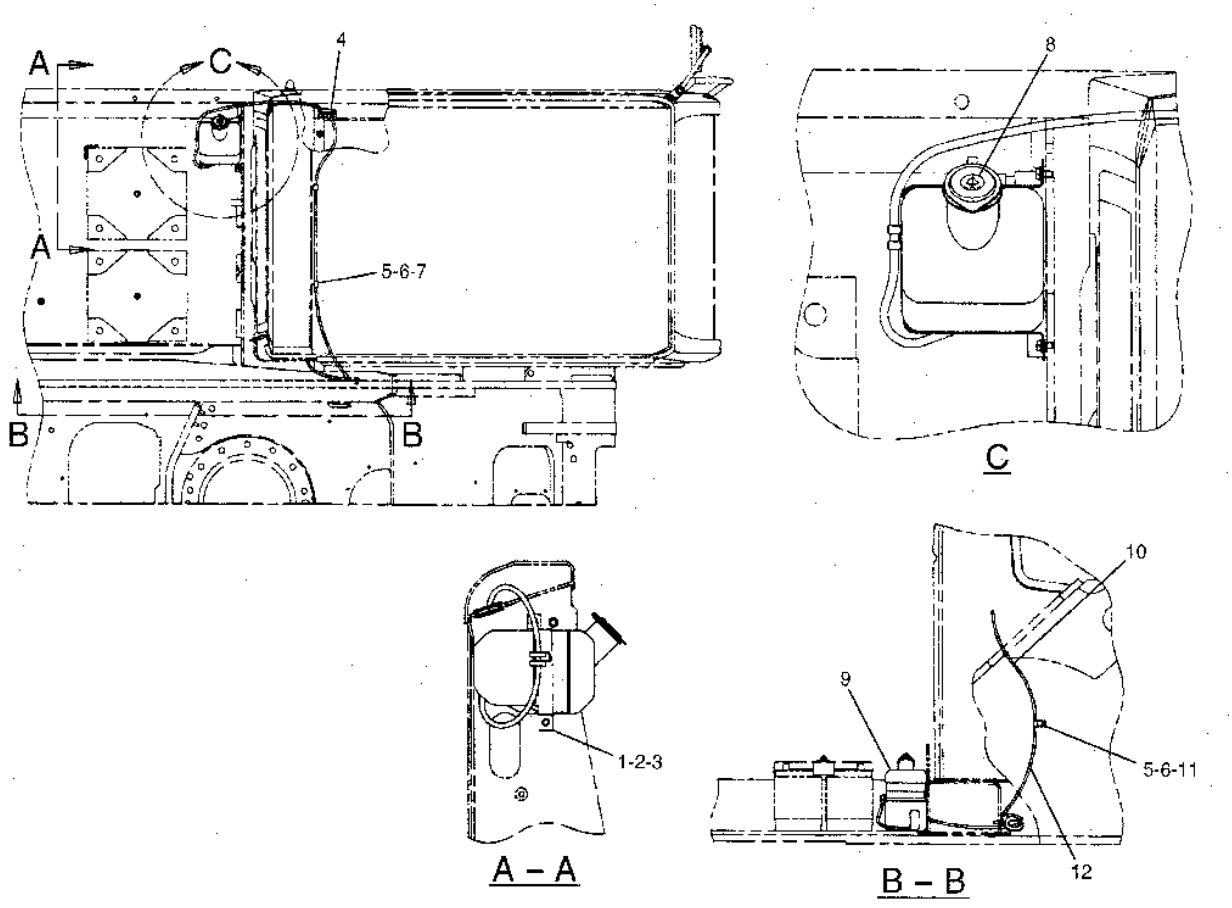


GRAPHIC #1

h50667e

# 4I0559 TANK AS-WINDOW WASHER

PART OF 1116267-Page 437

**Key:**

**SMCS**

| NOTE | REF NO | GRAPHIC REF | PART NUMBER | QTY | PART NAME 1 2 3 4 5 6 (PRODUCT LEVEL) | PRICE USD |
|---|---|---|---|---|---|---|
| | 1 | | 7T-8890 | 1 | PUMP AS | |
| | 2 | | 8T-5914 | 1 | GROMMET | |
| | 3 | | 3W-6398 | 1 | CAP | |
| | 4 | | 3W-6399 | 1 | PACKING | |

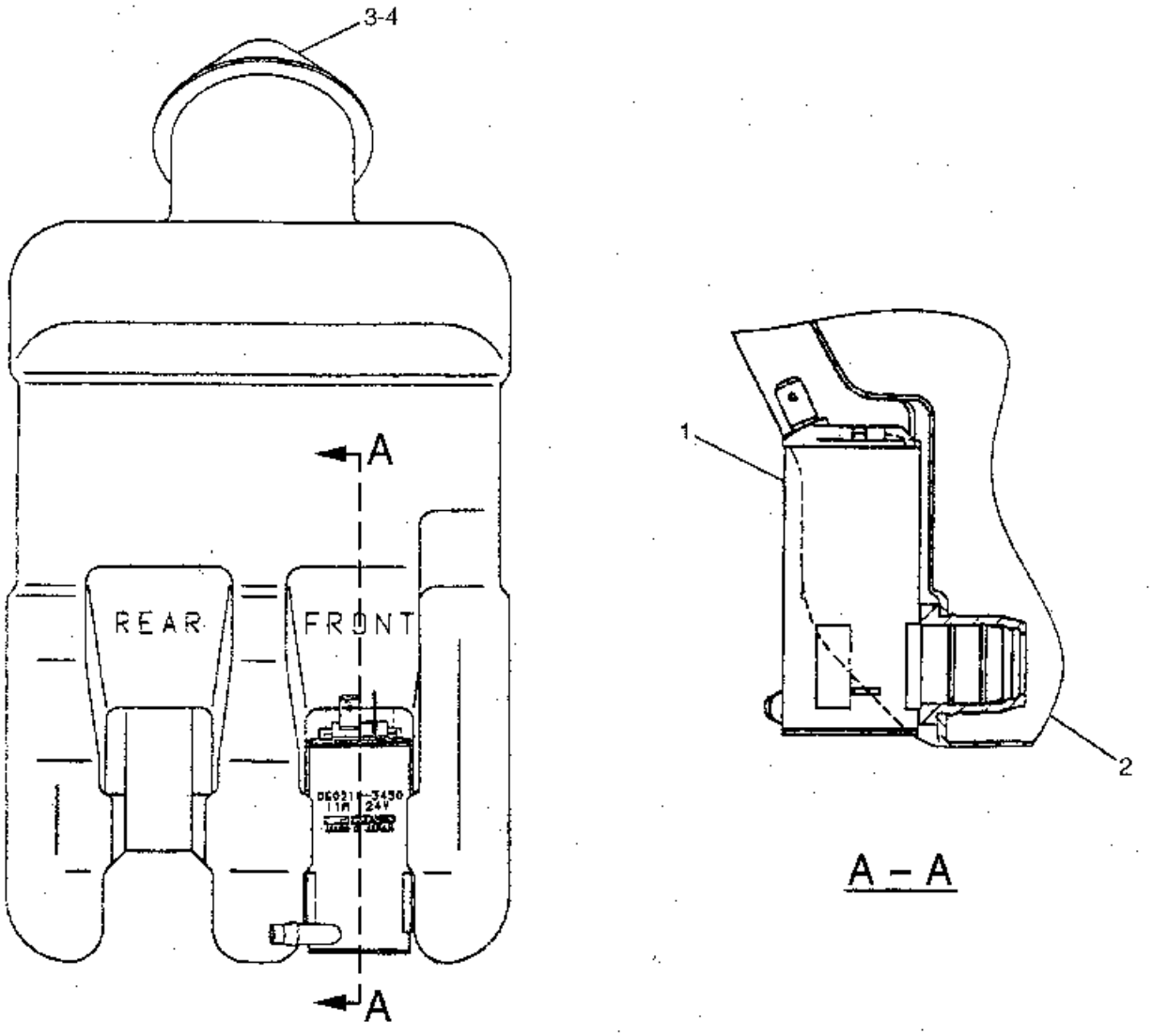


GRAPHIC #1

h50668e

# 1116314 WIPER AR-LOWER

AN ATTACHMENT

**Key:** Y - Separate Illustration

**SMCS**

| NOTE | REF NO | GRAPHIC REF | PART NUMBER | QTY | PART NAME 1 2 3 4 5 6 (PRODUCT LEVEL) | PRICE USD |
|---|---|---|---|---|---|---|
| Y | | | 111-4695 | 1 | WIRING GP-LOWER WIPER | |
| Y | | | 111-6315 | 1 | WIPER & WASHER GP (WINDOW) | |
| Y | | | 111-6316 | 1 | WASHER GP (WINDOW) | |

# 1116316 WASHER GP-WINDOW

LOWER
PART OF 1116314-Page 439
8R1774-Page 442
AN ATTACHMENT

**Key:** D - ORDER BY THE METER, Y - SEPARATE ILLUSTRATION

**SMCS**

| NOTE | REF NO | GRAPHIC REF | PART NUMBER | QTY | PART NAME 1 2 3 4 5 6 (PRODUCT LEVEL) | PRICE USD |
|---|---|---|---|---|---|---|
| | 1 | | 109-4429 | 1 | NOZZLE AS | |
| | 2 | | 096-0061 | 4 | STRAP | |
| D | 3 | | 5P-5992 | | HOSE (0.3m) | |
| | 4 | | 7Y-3474 | 1 | VALVE AS | |
| | 5 | | 7S-4244 | 2 | CLIP | |
| | 6 | | 6V-2679 | 1 | FILM (INSTRUCTION) | |
| Y | 7 | | 8R-1774 | 1 | BOTTLE GP | |
| D | 8 | | 5P-5992 | | HOSE (3.0m) | |

## 1116316 WASHER GP-WINDOW

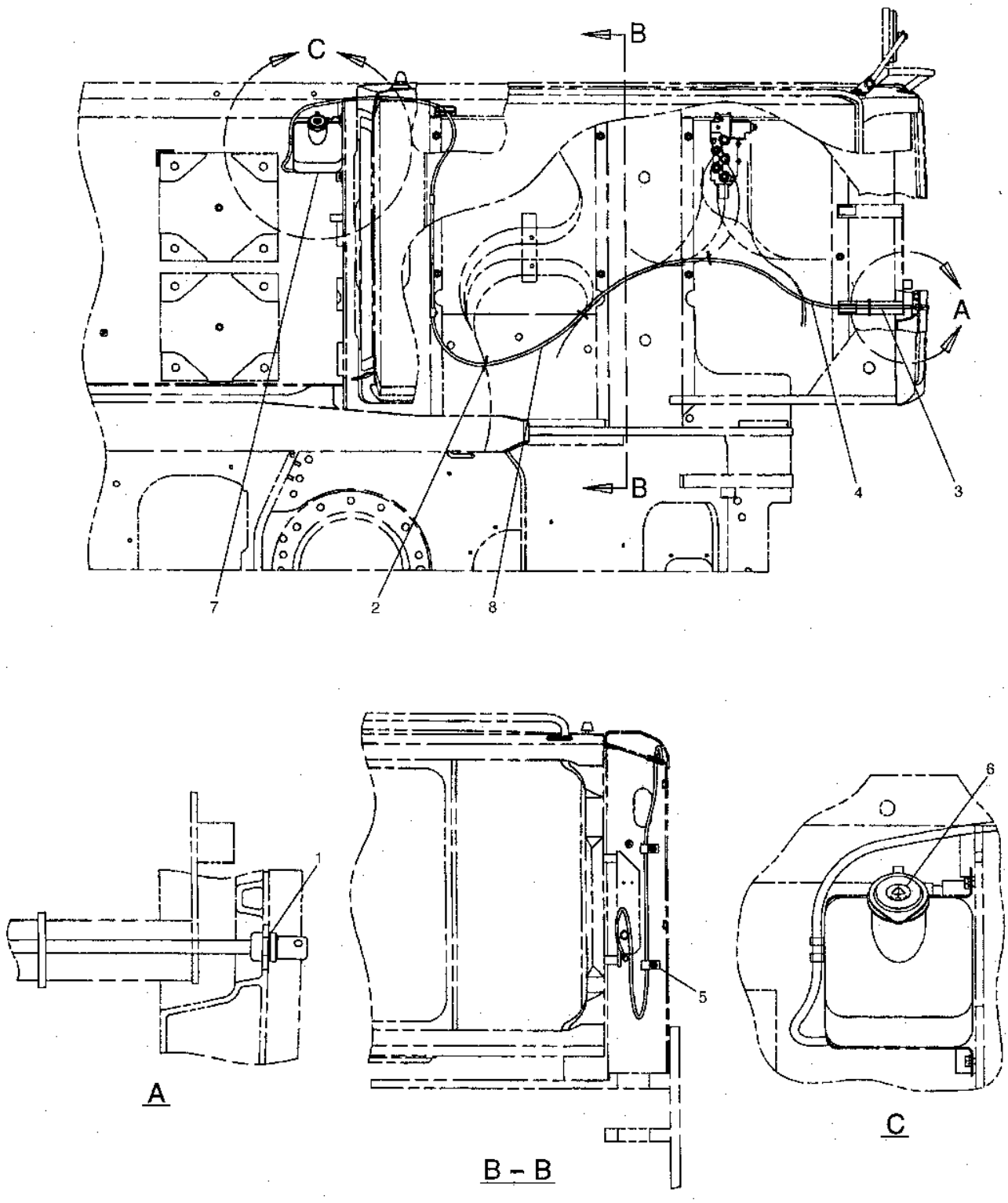


GRAPHIC #1

h51772e

# 8R1774 BOTTLE GP-WINDOW WASHER

PART OF 1116316-Page 441
AN ATTACHMENT

**Key:**

**SMCS**

| NOTE | REF NO | GRAPHIC REF | PART NUMBER | QTY | PART NAME 1 2 3 4 5 6 (PRODUCT LEVEL) | PRICE USD |
|---|---|---|---|---|---|---|
| | 1 | | 3W-6398 | 1 | CAP | |
| | | | 3W-6399 | 1 | PACKING | |
| | 2 | | 8T-5914 | 2 | GROMMET | |
| | 3 | | 8T-5913 | 2 | FILTER | |
| | 4 | | 7T-8890 | 2 | PUMP AS | |

## 8R1774 BOTTLE GP-WINDOW WASHER

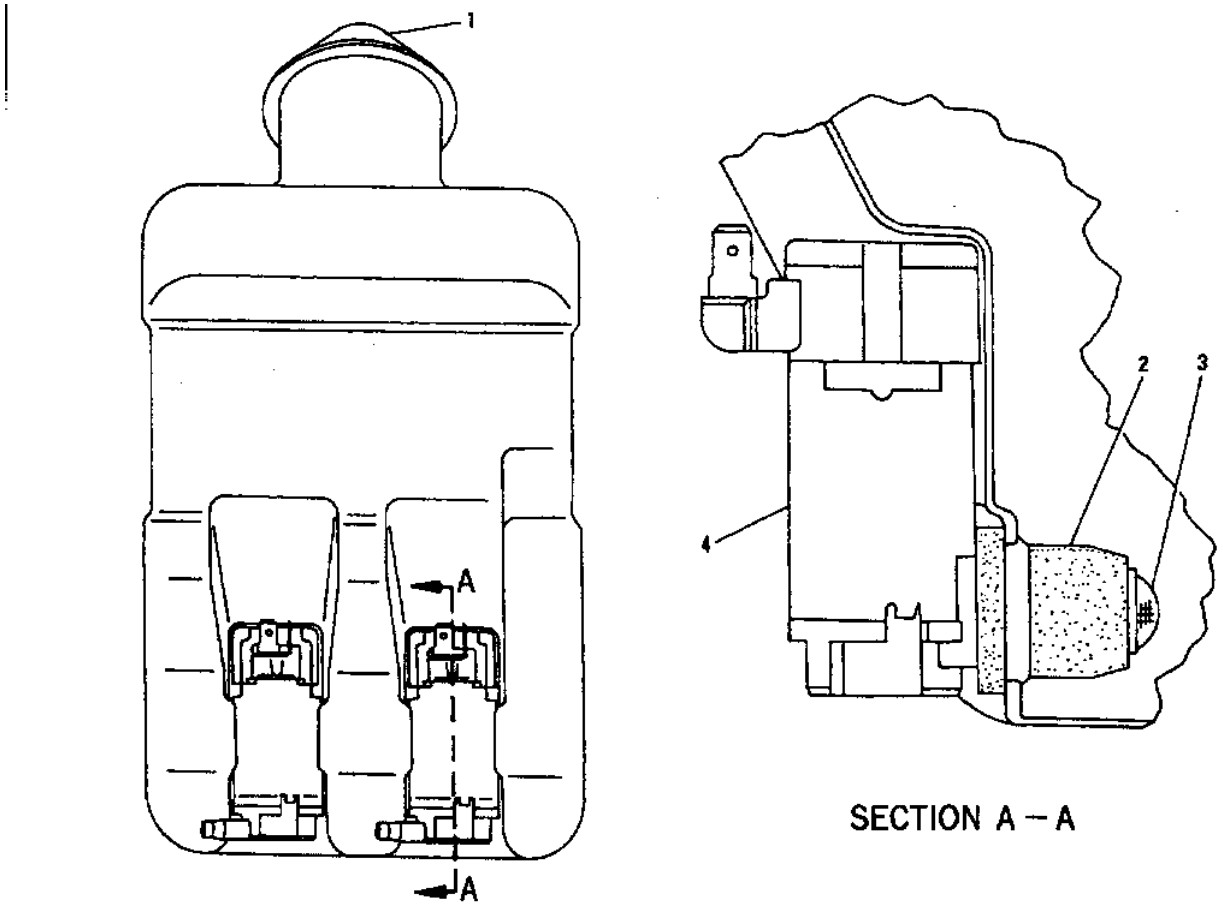


SECTION A – A

| NOTE | No. | PART No. | QTY | PART NAME | NOTE | No. | PART No. | QTY | PART NAME |
|---|---|---|---|---|---|---|---|---|---|
| | 1 | 3W-6398 | 1 | CAP | | | | | |
| | | 3W-6399 | 1 | PACKING | | | | | |
| | 2 | 8T-5914 | 2 | GROMMET | | | | | |
| | 3 | 8T-5913 | 2 | FILTER | | | | | |
| | 4 | 7T-8890 | 2 | PUMP AS | | | | | |

H50389E

GRAPHIC #1

h50389e

# 1116315 WIPER & WASHER GP-WINDOW

LOWER
PART OF 1116314-Page 439
1133452-Page 429
AN ATTACHMENT

**Key:** Y - SEE SEPARATE ILLUSTRATION

**SMCS**

| NOTE | REF NO | GRAPHIC REF | PART NUMBER | QTY | PART NAME 1 2 3 4 5 6 (PRODUCT LEVEL) | PRICE USD |
|---|---|---|---|---|---|---|
| | 1 | | 4I-1163 | 1 | BRACKET | |
| | 2 | | 4I-5021 | 1 | BLADE AS | |
| | 3 | | 154-0650 | 1 | BUMPER | |
| Y | 4 | | 113-3452 | 1 | MOTOR AS | |
| | 5 | | 8T-4121 | 4 | WASHER-HARD | |
| | 6 | | 8T-4191 | 4 | BOLT (L=16mm) | |
| | 7 | | 096-0061 | 2 | STRAP | |
| | 8 | | 113-3439 | 1 | BRACKET AS | |
| | 9 | | 6V-9672 | 2 | SCREW-MACHINE | |
| | 10 | | 5C-8312 | 2 | NUT | |
| | 11 | | 096-6166 | 4 | WASHER-HARD | |
| | 12 | | 9X-8257 | 1 | WASHER | |
| | 13 | | 4I-5020 | 1 | ARM AS | |
| | 14 | | 5C-9553 | 2 | BOLT (L=16mm) | |
| | 15 | | 8H-3481 | 2 | LOCKWASHER | |
| | 16 | | 9X-8256 | 2 | WASHER | |

## 1116315 WIPER & WASHER GP-WINDOW

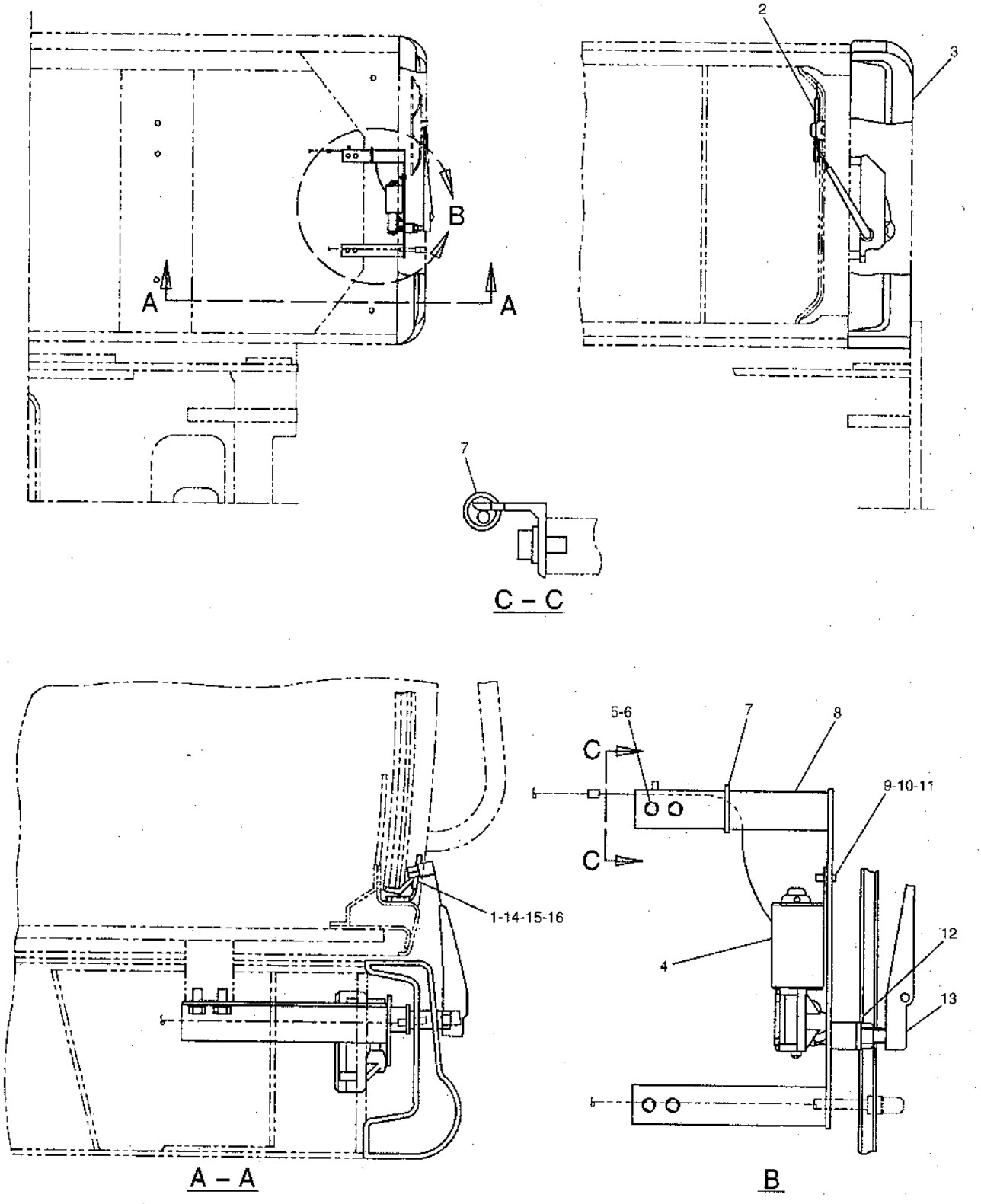


GRAPHIC #1

h60403e

# 1204955 GUARD AR-VANDALISM

AN ATTACHMENT

**Key:** Y - Separate Illustration

**SMCS**

| NOTE | REF NO | GRAPHIC REF | PART NUMBER | QTY | PART NAME 1 2 3 4 5 6 (PRODUCT LEVEL) | PRICE USD |
|---|---|---|---|---|---|---|
| Y | | | 108-9844 | 1 | BOX & MOUNTING GP | |
| Y | | | 124-4007 | 1 | GUARD GP (VANDALISM) | |

# 1263798 GUARD AR-OVERHEAD

FOGS
AN ATTACHMENT

**Key:** Y - Separate Illustration

**SMCS**

| NOTE | REF NO | GRAPHIC REF | PART NUMBER | QTY | PART NAME 1 2 3 4 5 6 (PRODUCT LEVEL) | PRICE USD |
|---|---|---|---|---|---|---|
| Y | | | 121-8658 | 1 | GUARD GP (OVERHEAD) | |
| Y | | | 122-4067 | 1 | HOOD & GUARD GP | |
| Y | | | 176-4978 | 1 | GUARD GP (BOTTOM) | |

# 1024740 GUARD AR-VANDALISM

AN ATTACHMENT

**Key:** Y - Separate Illustration

**SMCS**

| NOTE | REF NO | GRAPHIC REF | PART NUMBER | QTY | PART NAME 1 2 3 4 5 6 (PRODUCT LEVEL) | PRICE USD |
|---|---|---|---|---|---|---|
| Y | | | 111-6321 | 1 | GUARD GP (VANDALISM) | |
| Y | | | 108-9844 | 1 | BOX & MOUNTING GP | |

# 1244007 GUARD GP-VANDALISM

PART OF 1204955-Page 444
AN ATTACHMENT

**Key:**

**SMCS**

| NOTE | REF NO | GRAPHIC REF | PART NUMBER | QTY | PART NAME 1 2 3 4 5 6 (PRODUCT LEVEL) | PRICE USD |
|---|---|---|---|---|---|---|
| | 1 | | 5I-3245 | 1 | GUARD AS | |
| | | | 8H-2282 | 2 | HINGE | |
| | 2 | | 5I-3248 | 1 | GUARD AS | |
| | | | 8H-2282 | 2 | HINGE | |
| | 3 | | 5I-3242 | 1 | GUARD AS | |
| | | | 8H-2282 | 2 | HINGE | |
| | 4 | | 4I-3232 | 1 | GUARD AS | |
| | | | 8H-2282 | 1 | HINGE | |
| | 5 | | 4I-3235 | 1 | SHEET | |
| | 6 | | 8T-4199 | 2 | BOLT (L=12mm) | |
| | 7 | | 8T-4224 | 2 | WASHER-HARD | |
| | 8 | | 122-9595 | 6 | PIN | |
| | 9 | | 122-9596 | 1 | PIN | |
| | 10 | | 124-4011 | 1 | PIN | |

## 1244007 GUARD GP-VANDALISM

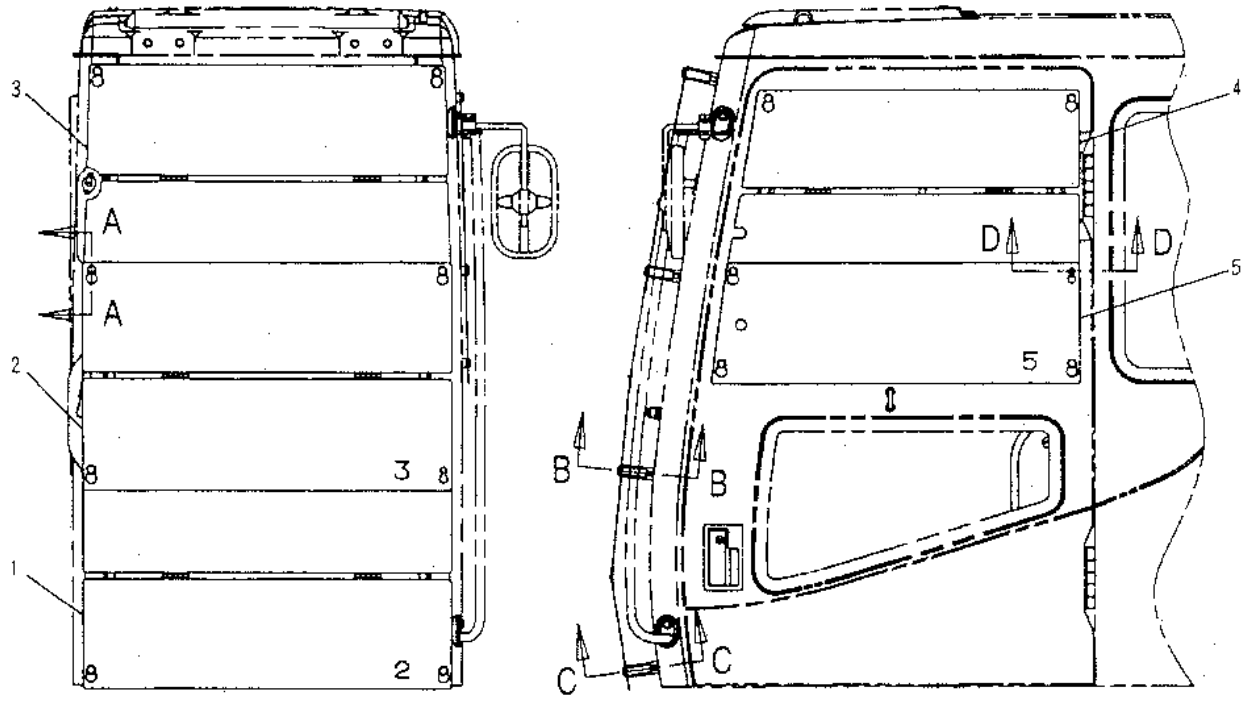


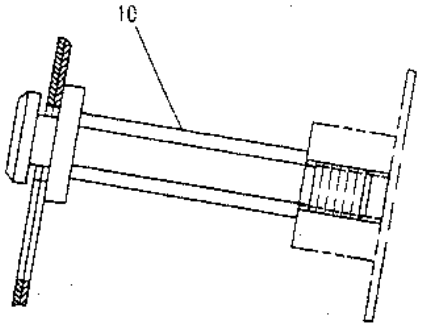


A – A

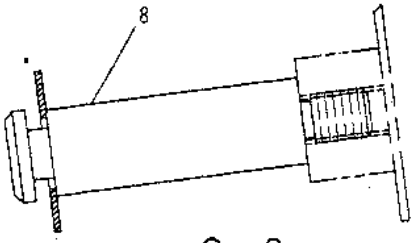


C – C

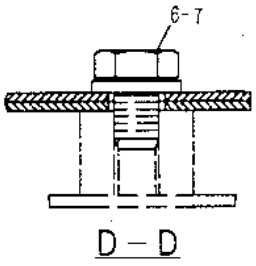


D – D

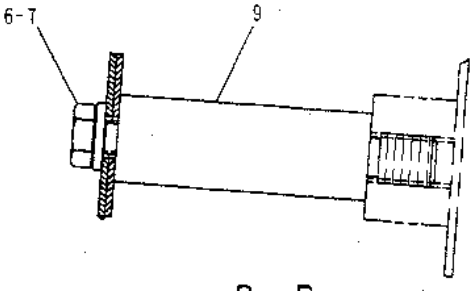


B – B

GRAPHIC #1

h52467e

# 1218658 GUARD GP-OVERHEAD

FOGS
PART OF 1263798-Page 445
AN ATTACHMENT

**Key:** B - USE AS REQUIRED

**SMCS**

| NOTE | REF NO | GRAPHIC REF | PART NUMBER | QTY | PART NAME 1 2 3 4 5 6 (PRODUCT LEVEL) | PRICE USD |
|---|---|---|---|---|---|---|
| | 1 | | 127-1406 | 1 | FRAME AS | |
| | 2 | | 7Y-3430 | 1 | PLATE | |
| | 3 | | 7Y-1113 | 1 | BOSS | |
| | 4 | | 7Y-2318 | 1 | BOSS | |
| | 5 | | 113-2204 | 1 | PLATE AS | |
| | 6 | | 7Y-8763 | 1 | BOSS | |
| | 7 | | 9R-3924 | 1 | BOSS | |
| | 8 | | 7X-2553 | 28 | BOLT (L=40mm) | |
| | 9 | | 8T-4193 | 12 | BOLT (L=50mm) | |
| | 10 | | 8T-4140 | 4 | BOLT (L=60mm) | |
| | 11 | | 8T-4175 | 4 | BOLT (L=90mm) | |
| | 12 | | 8T-4132 | 4 | NUT | |
| | 13 | | 9X-8257 | 52 | WASHER | |
| | 14 | | 8T-4139 | 2 | BOLT (L=30mm) | |
| | 15 | | 8T-4223 | 6 | WASHER | |
| B | 16 | | 093-0331 | 32 | SHIM (T=2.00mm) | |
| B | | | 093-0332 | 32 | SHIM (T=1.00mm) | |
| B | | | 093-0333 | 32 | SHIM (T=0.70mm) | |
| B | | | 093-0334 | 32 | SHIM (T=0.40mm) | |
| | 17 | | 8T-4183 | 4 | BOLT (L=40mm) | |
| | 18 | | 7I-0323 | 1 | GUARD AS | |
| | 19 | | 116-1517 | 1 | PLATE (WARNING) | |
| | 20 | | 4B-4158 | 4 | SCREW | |
| | 21 | | 171-3375 | 1 | HOOK | |
| | 22 | | 121-8742 | 1 | PLATE | |
| | 23 | | 134-7106 | 1 | SUPPORT AS | |
| | 24 | | 121-8732 | 1 | SUPPORT AS | |
| | 25 | | 121-8743 | 1 | PLATE | |
| | 26 | | 101-2260 | 1 | PLATE | |
| | | | | | THE FOLLOWING SERVICE REPAIR IS AVAILABLE: | |
| | | | 7I-6881 | 1 | PLATE (L=1100mm) | |

## 1218658 GUARD GP-OVERHEAD

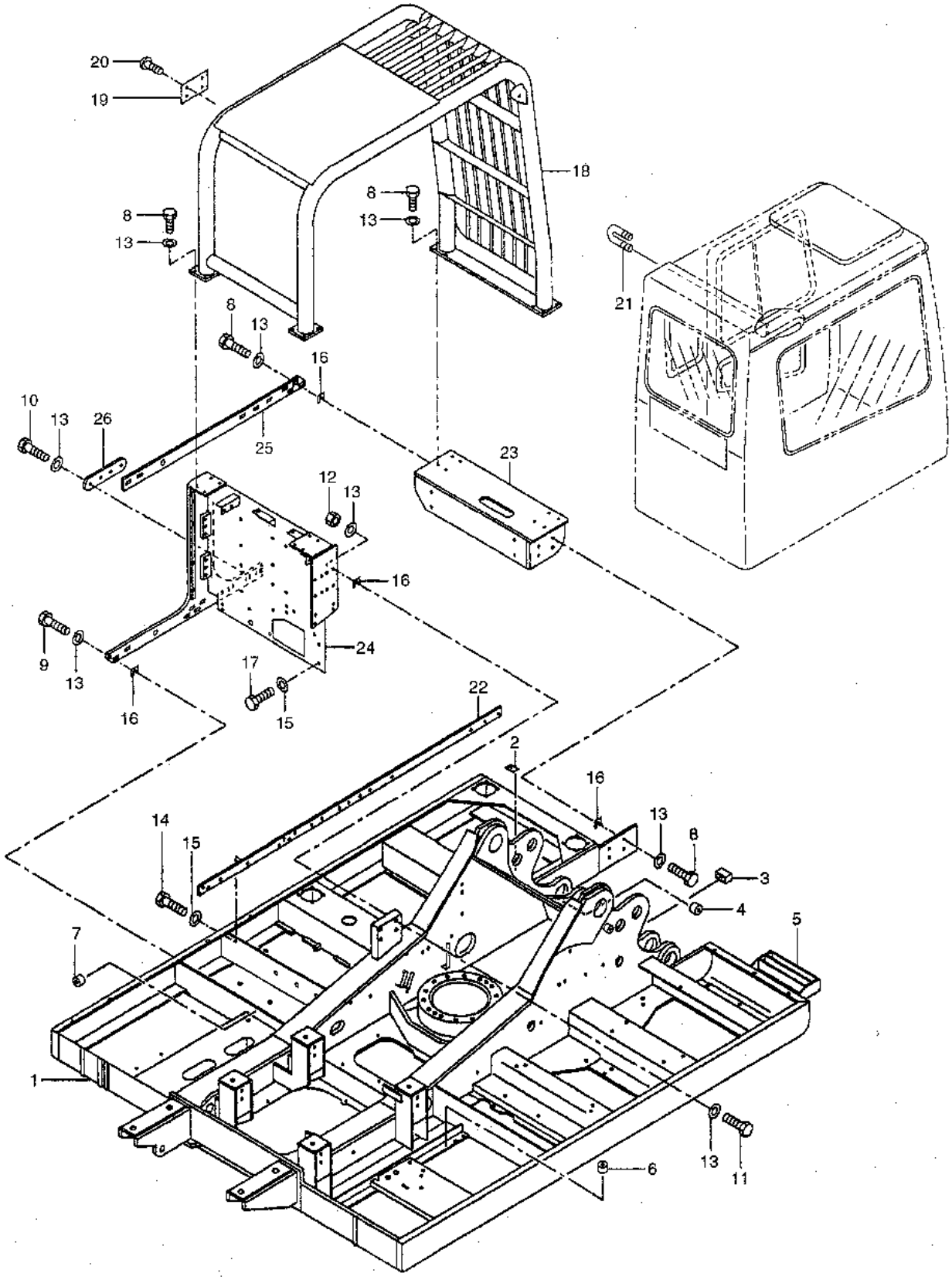


GRAPHIC #1

h84033e

# 1116321 GUARD GP-VANDALISM

PART OF 1024740-Page 445
AN ATTACHMENT

**Key:**

**SMCS**

| NOTE | REF NO | GRAPHIC REF | PART NUMBER | QTY | PART NAME 1 2 3 4 5 6 (PRODUCT LEVEL) | PRICE USD |
|---|---|---|---|---|---|---|
| | 1 | | 5I-3245 | 1 | GUARD AS | |
| | | | 8H-2282 | 1 | HINGE | |
| | 2 | | 5I-3248 | 1 | GUARD AS | |
| | | | 8H-2282 | 1 | HINGE | |
| | 3 | | 6I-5393 | 1 | GUARD AS | |
| | | | 8H-2232 | 1 | HINGE | |
| | 4 | | 4I-3232 | 1 | GUARD AS | |
| | | | 8H-2232 | 1 | HINGE | |
| | 5 | | 4I-3235 | 1 | SHEET | |
| | 6 | | 8T-4138 | 4 | BOLT (L=20mm) | |
| | 7 | | 6I-5356 | 1 | BRACKET AS | |
| | 8 | | 8T-4199 | 2 | BOLT (L=12mm) | |
| | 9 | | 8T-4224 | 2 | WASHER-HARD | |
| | 10 | | 122-9595 | 4 | PIN | |
| | 11 | | 122-9596 | 1 | PIN | |
| | 12 | | 124-4011 | 1 | PIN | |

## 1116321 GUARD GP-VANDALISM

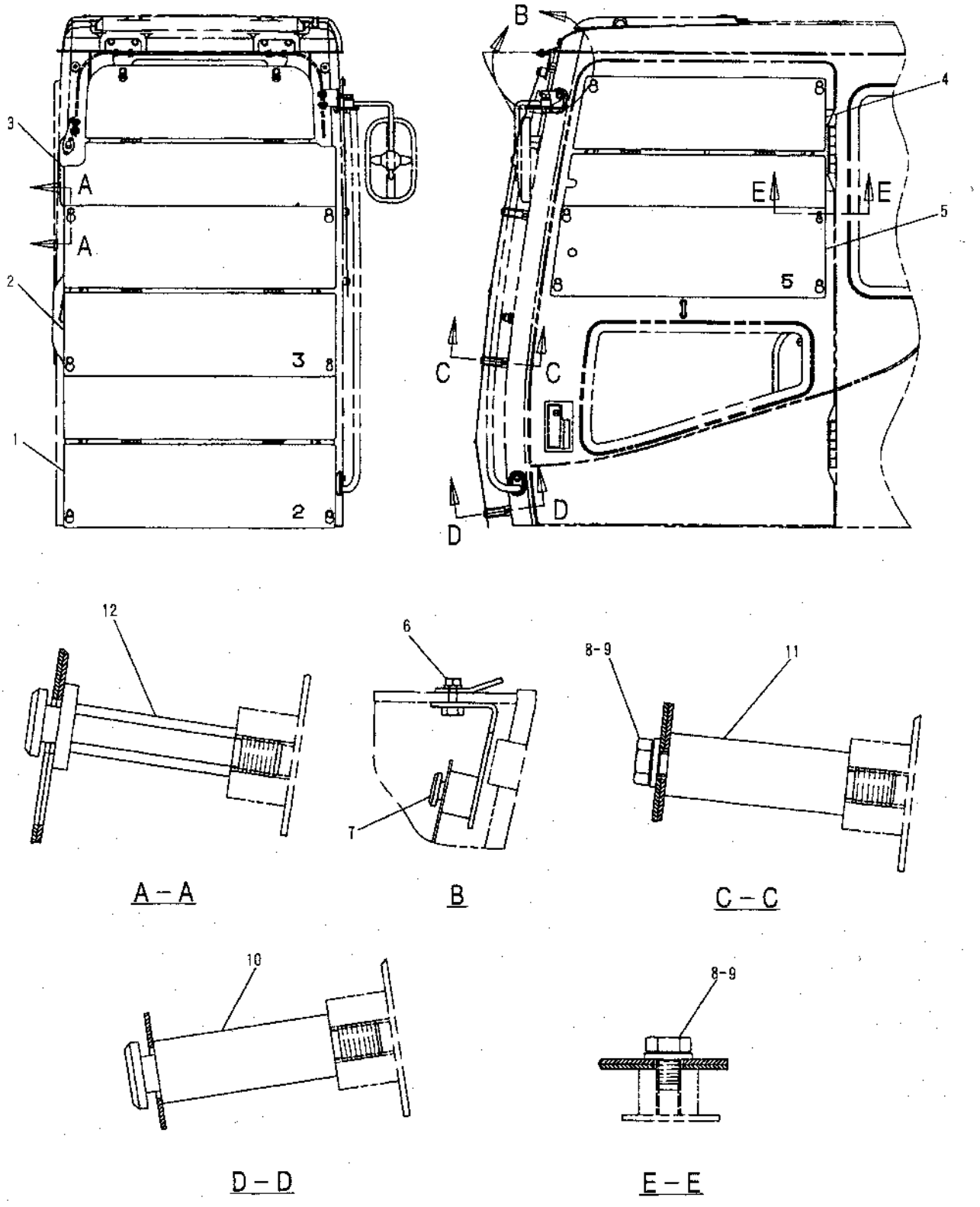


GRAPHIC #1

h52184e

# 1116313 VISOR GP-SUN

AN ATTACHMENT

**Key:**

**SMCS**

| NOTE | REF NO | GRAPHIC REF | PART NUMBER | QTY | PART NAME 1 2 3 4 5 6 (PRODUCT LEVEL) | PRICE USD |
|---|---|---|---|---|---|---|
| | 1 | | 128-2160 | 1 | SUPPORT AS | |
| | 2 | | 6I-5123 | 1 | PLATE | |
| | 3 | | 128-2152 | 1 | VISOR | |
| | 4 | | 9X-2044 | 11 | SCREW | |
| | 5 | | 6I-5121 | 1 | PLATE AS | |
| | 6 | | 6I-5126 | 2 | STRIP | |
| | 7 | | 4I-7032 | 1 | PLATE AS | |

## 1116313 VISOR GP-SUN

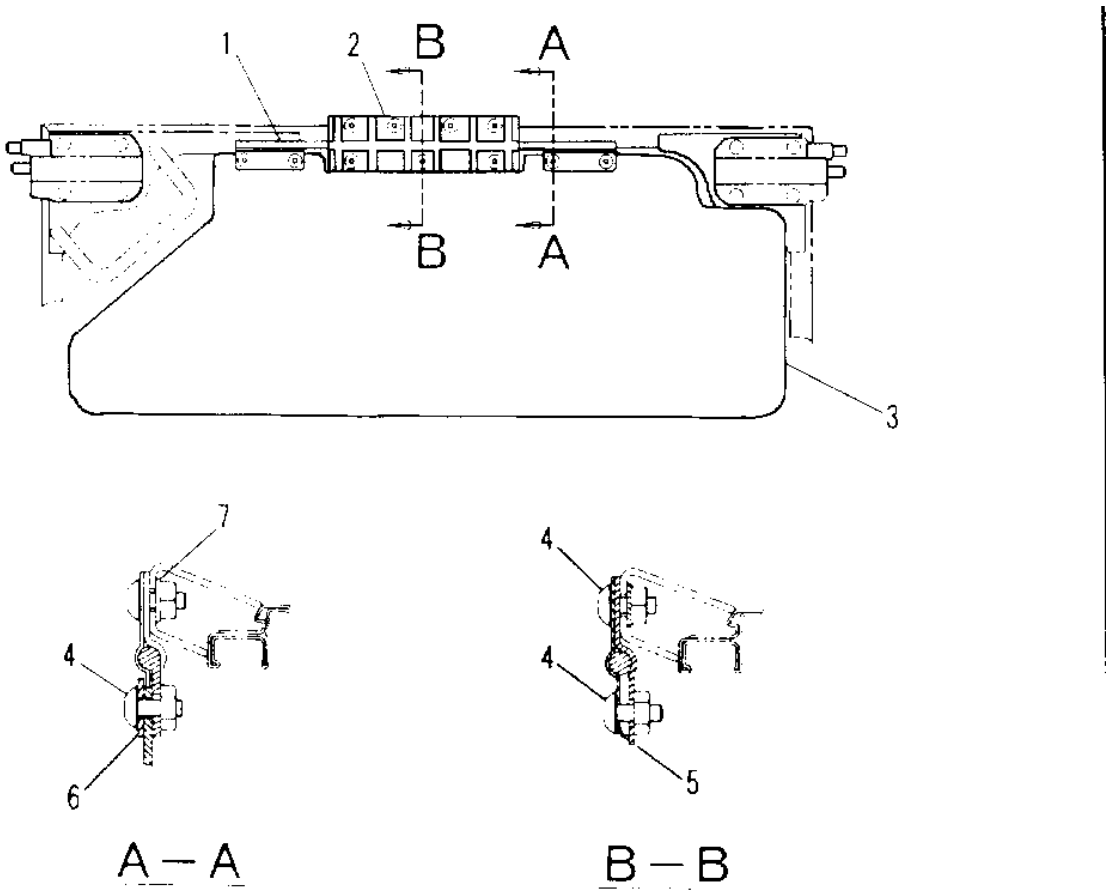


| NOTE | No. | PART No. | QTY | PART NAME |
|---|---|---|---|---|
| | 1 | 128-2160 | 1 | SUPPORT AS |
| | 2 | 6I-5123 | 1 | PLATE |
| | 3 | 128-2152 | 1 | VISOR |
| | 4 | 9X-2044 | 11 | SCREW |
| | 5 | 6I-5121 | 1 | PLATE AS |
| | 6 | 6I-5126 | 2 | STRIP |
| | 7 | 4I-7032 | 1 | PLATE AS |

| NOTE | No. | PART No. | QTY | PART NAME |
|---|---|---|---|---|

H53233E

# 6I5387 VISOR GP-PROTECTION-RAIN

AN ATTACHMENT

**Key:** E - ORDER BY THE CENTIMETER

**SMCS**

| NOTE | REF NO | GRAPHIC REF | PART NUMBER | QTY | PART NAME 1 2 3 4 5 6 (PRODUCT LEVEL) | PRICE USD |
|---|---|---|---|---|---|---|
| E | 1 | | 3E-8268 | | TRIM-BULK (131cm) | |
| | 2 | | 4I-5039 | 2 | BRACKET | |
| | 3 | | 8T-4137 | 4 | BOLT (L=20mm) | |
| | 4 | | 8T-4121 | 4 | WASHER-HARD | |
| | 5 | | 6I-5388 | 1 | VISOR | |
| | 6 | | 4I-5041 | 1 | BRACKET | |
| | 7 | | 4I-5040 | 1 | BRACKET | |
| | 8 | | 6V-7357 | 8 | BOLT (L=25mm) | |
| | 9 | | 9X-8256 | 8 | WASHER | |
| | 10 | | 4I-5049 | 8 | NUT | |

## 6I5387 VISOR GP-PROTECTION-RAIN

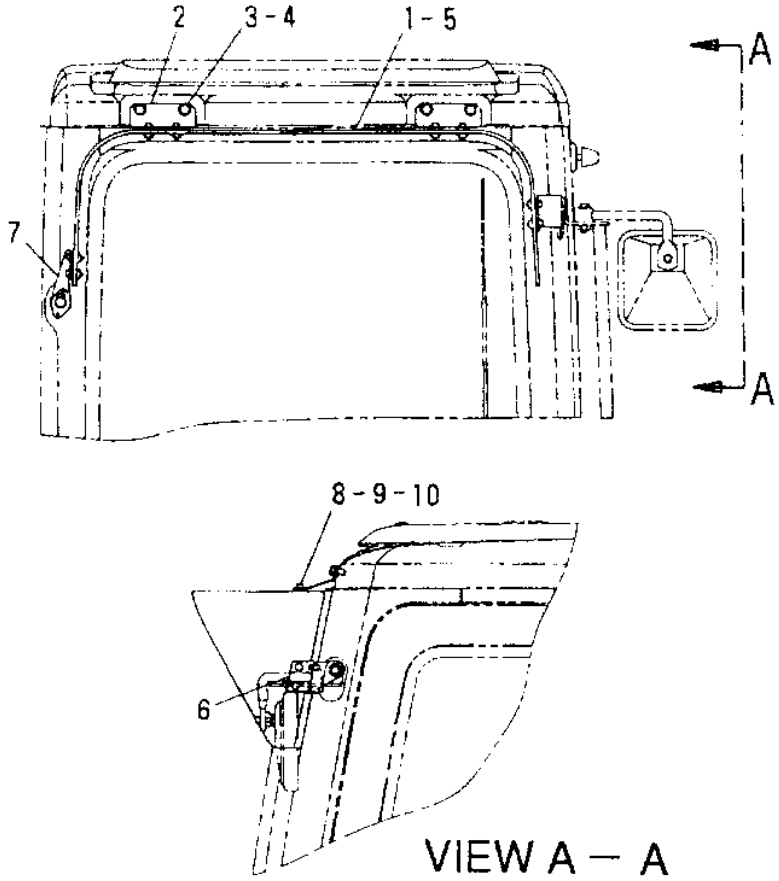


| NOTE | No. | PART No. | QTY | PART NAME |
|---|---|---|---|---|
| E | 1 | 3E-8268 | | TRIM-BULK ···(131cm) |
| | 2 | 4I-5039 | 2 | BRACKET |
| | 3 | 8T-4137 | 4 | BOLT(L=20mm) |
| | 4 | 8T-4121 | 4 | WASHER-HARD |
| | 5 | 6I-5388 | 1 | VISOR |
| | 6 | 4I-5041 | 1 | BRACKET |
| | 7 | 4I-5040 | 1 | BRACKET |
| | 8 | 6V-7357 | 8 | BOLT(L=25mm) |
| | 9 | 9X-8256 | 8 | WASHER |
| | 10 | 4I-5049 | 8 | NUT |

| NOTE | No. | PART No. | QTY | PART NAME |
|---|---|---|---|---|

E-ORDER BY THE CENTIMETER

H53234E

# 1089836 MIRROR GP-REAR VIEW

S/N 8SR 1-00417, 8TR 1-00485

**Key:**

**SMCS**

| NOTE | REF NO | GRAPHIC REF | PART NUMBER | QTY | PART NAME 1 2 3 4 5 6 (PRODUCT LEVEL) | PRICE USD |
|---|---|---|---|---|---|---|
| | 1 | | 137-2270 | 1 | MIRROR | |
| | 2 | | 114-6294 | 1 | BAR AS | |
| | 3 | | 114-6291 | 1 | SUPPORT AS | |
| | 4 | | 099-4691 | 2 | BOLT (L=25mm) | |
| | 5 | | 8T-4223 | 3 | WASHER | |
| | 6 | | 8T-4244 | 1 | NUT | |

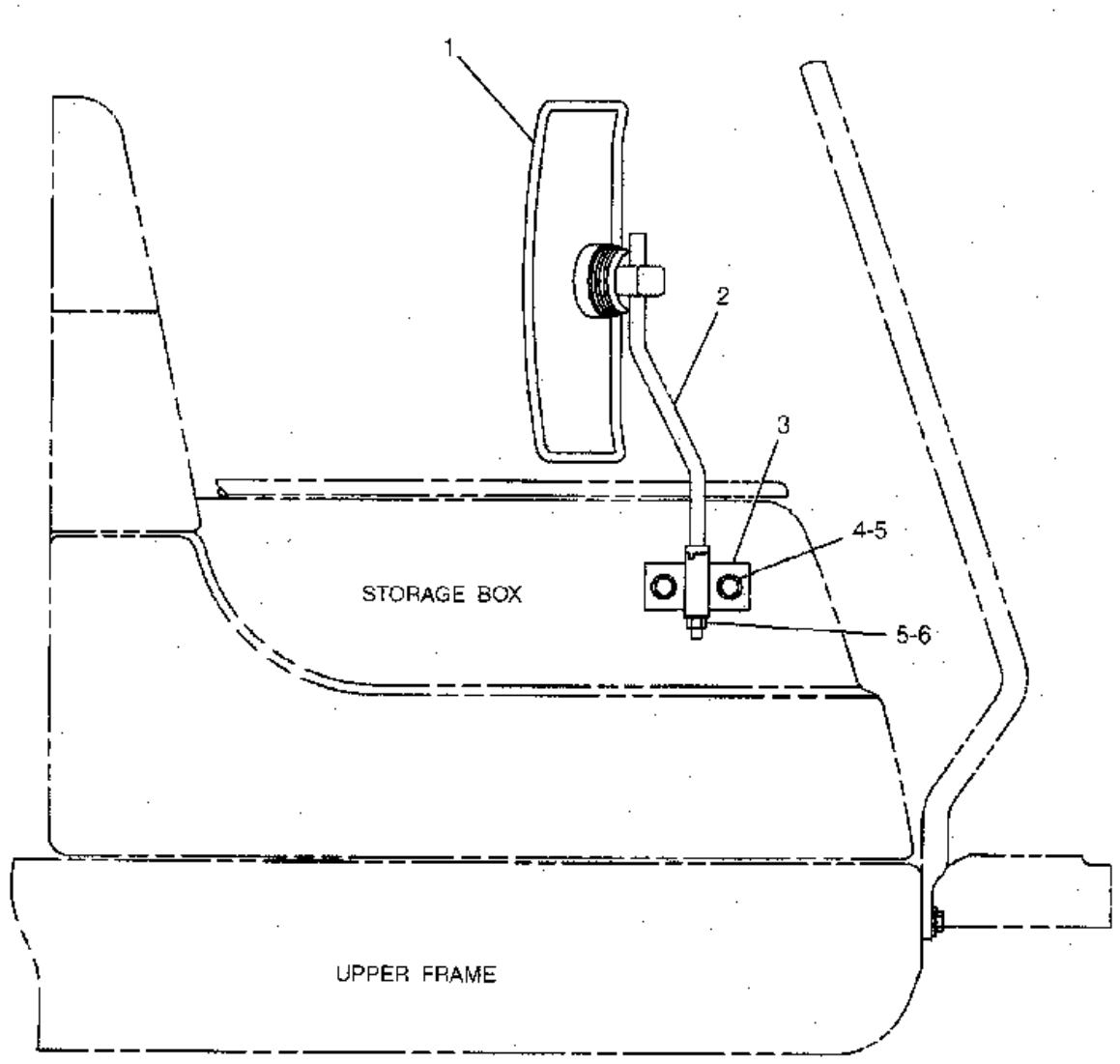


GRAPHIC #1

h53748e

# 1557001 MIRROR GP-REAR VIEW

S/N 8SR 00418-UP, 8TR 00486-UP

**Key:**

**SMCS**

| NOTE | REF NO | GRAPHIC REF | PART NUMBER | QTY | PART NAME 1 2 3 4 5 6 (PRODUCT LEVEL) | PRICE USD |
|---|---|---|---|---|---|---|
| | 1 | | 137-2270 | 1 | MIRROR | |
| | 2 | | 159-7842 | 1 | BAR AS | |
| | 3 | | 155-7004 | 1 | SUPPORT AS | |
| | 4 | | 6V-7611 | 2 | BOLT (L=40mm) | |
| | 5 | | 5P-1076 | 3 | WASHER | |
| | 6 | | 8T-4244 | 1 | NUT | |

## 1557001 MIRROR GP-REAR VIEW

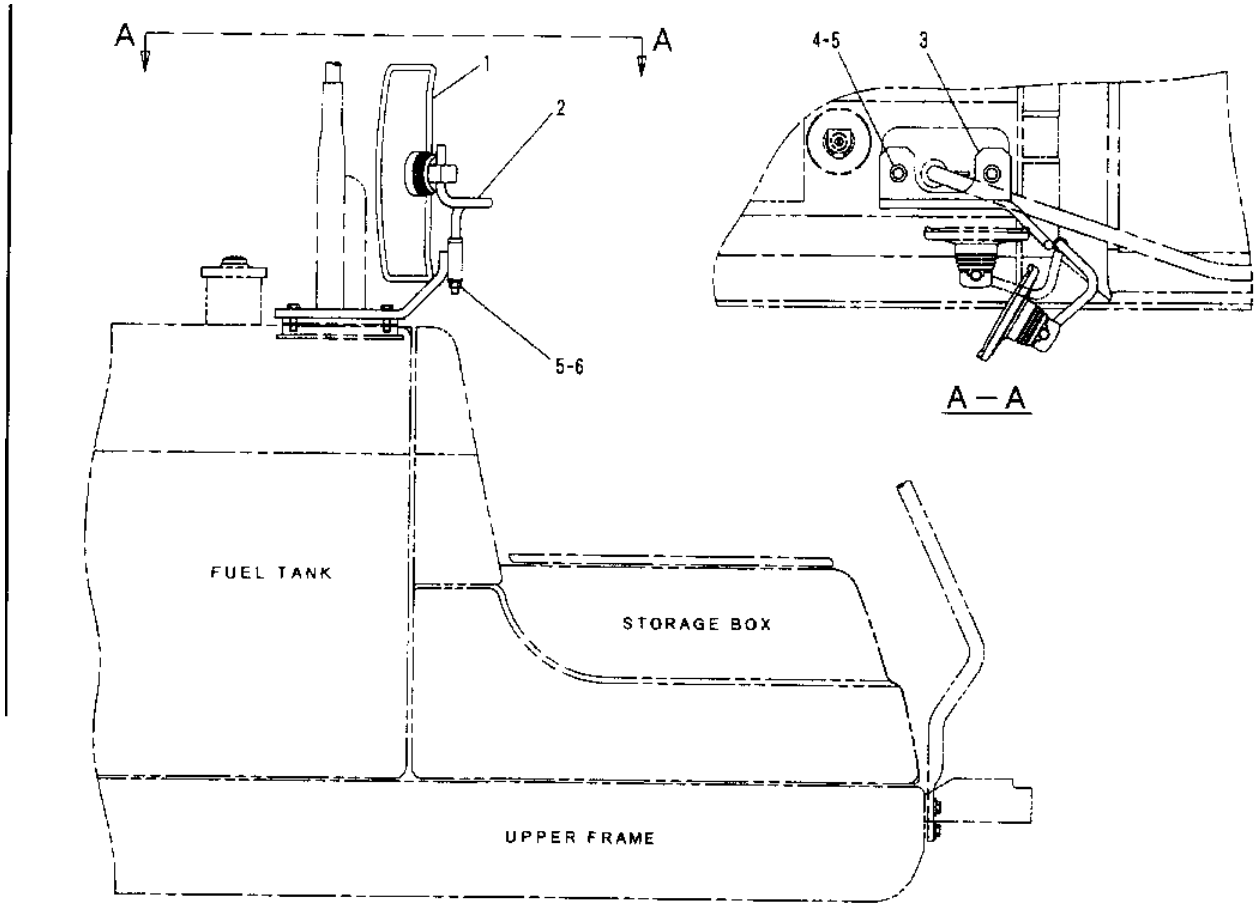


| NOTE | No. | PART No. | QTY | PART NAME |
|---|---|---|---|---|
| | 1 | 137-2270 | 1 | MIRROR |
| | 2 | 159-7842 | 1 | BAR AS |
| | 3 | 155-7004 | 1 | SUPPORT AS |
| | 4 | 6V-7611 | 2 | BOLT (L=40mm) |
| | 5 | 5P-1076 | 3 | WASHER |
| | 6 | 8T-4244 | 1 | NUT |

H64087E

# 7Y3813 HORN GP-ELECTRIC

**Key:**

**SMCS**

| NOTE | REF NO | GRAPHIC REF | PART NUMBER | QTY | PART NAME 1 2 3 4 5 6 (PRODUCT LEVEL) | PRICE USD |
|---|---|---|---|---|---|---|
| | 1 | | 7Y-3919 | 1 | HORN AS | |
| | | | 095-0826 | 2 | LOCKWASHER | |
| | | | 095-7930 | 2 | SCREW | |
| | 2 | | 7Y-3920 | 1 | HORN AS | |
| | | | 095-0826 | 2 | LOCKWASHER | |
| | | | 095-7930 | 2 | SCREW | |
| | 3 | | 8T-4191 | 2 | BOLT (L=16mm) | |
| | 4 | | 8T-4121 | 2 | WASHER (HARD) | |

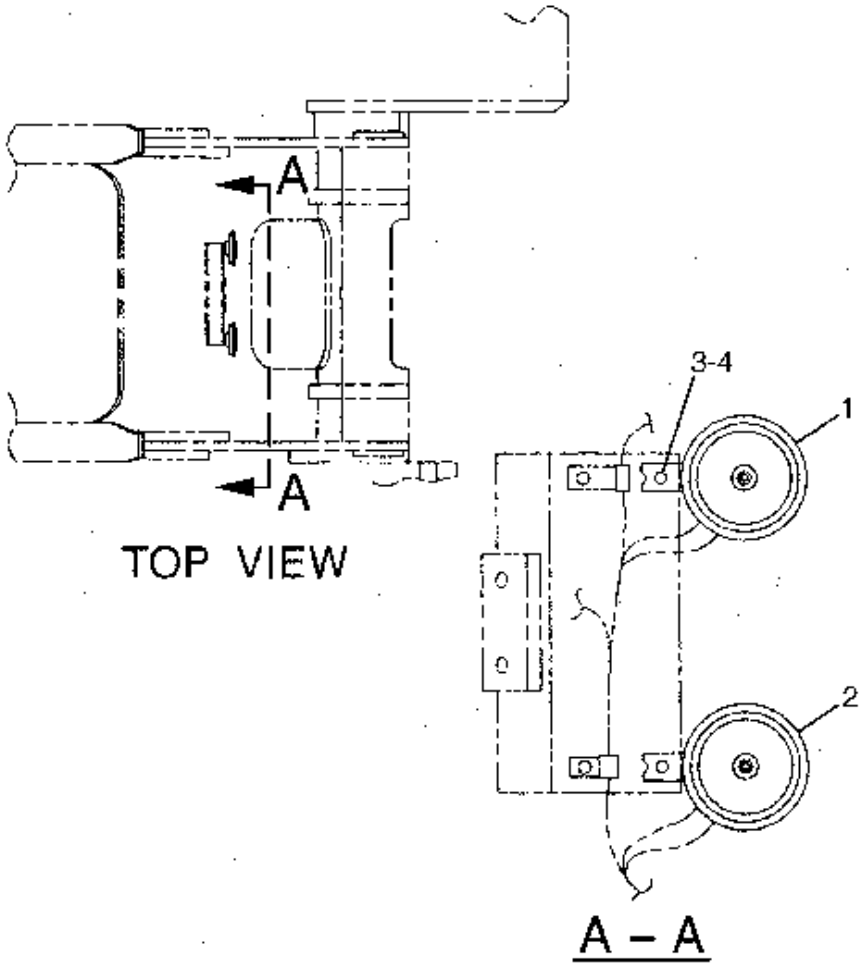


GRAPHIC #1

h50062e

# 1116285 PLATFORM GP-OPERATOR

S/N 8SR 1-00417, 8TR 1-00485

**Key:**

**SMCS**

| NOTE | REF NO | GRAPHIC REF | PART NUMBER | QTY | PART NAME 1 2 3 4 5 6 (PRODUCT LEVEL) | PRICE USD |
|---|---|---|---|---|---|---|
| | 1 | | 122-9599 | 1 | PLATFORM AS | |
| | 2 | | 122-9663 | 1 | FLOORMAT | |
| | 3 | | 121-7059 | 2 | GROMMET | |
| | 4 | | 117-6307 | 1 | GROMMET | |
| | 5 | | 7X-2553 | 4 | BOLT (L=40mm) | |
| | 6 | | 8T-4122 | 4 | WASHER | |
| | 7 | | 122-9626 | 4 | MOUNT AS | |
| | 8 | | 8T-4195 | 16 | BOLT (L=30mm) | |
| | 9 | | 8T-4191 | 4 | BOLT (L=16mm) | |
| | 10 | | 8T-4121 | 20 | WASHER | |
| | 11 | | 4I-3266 | 2 | STRIP | |

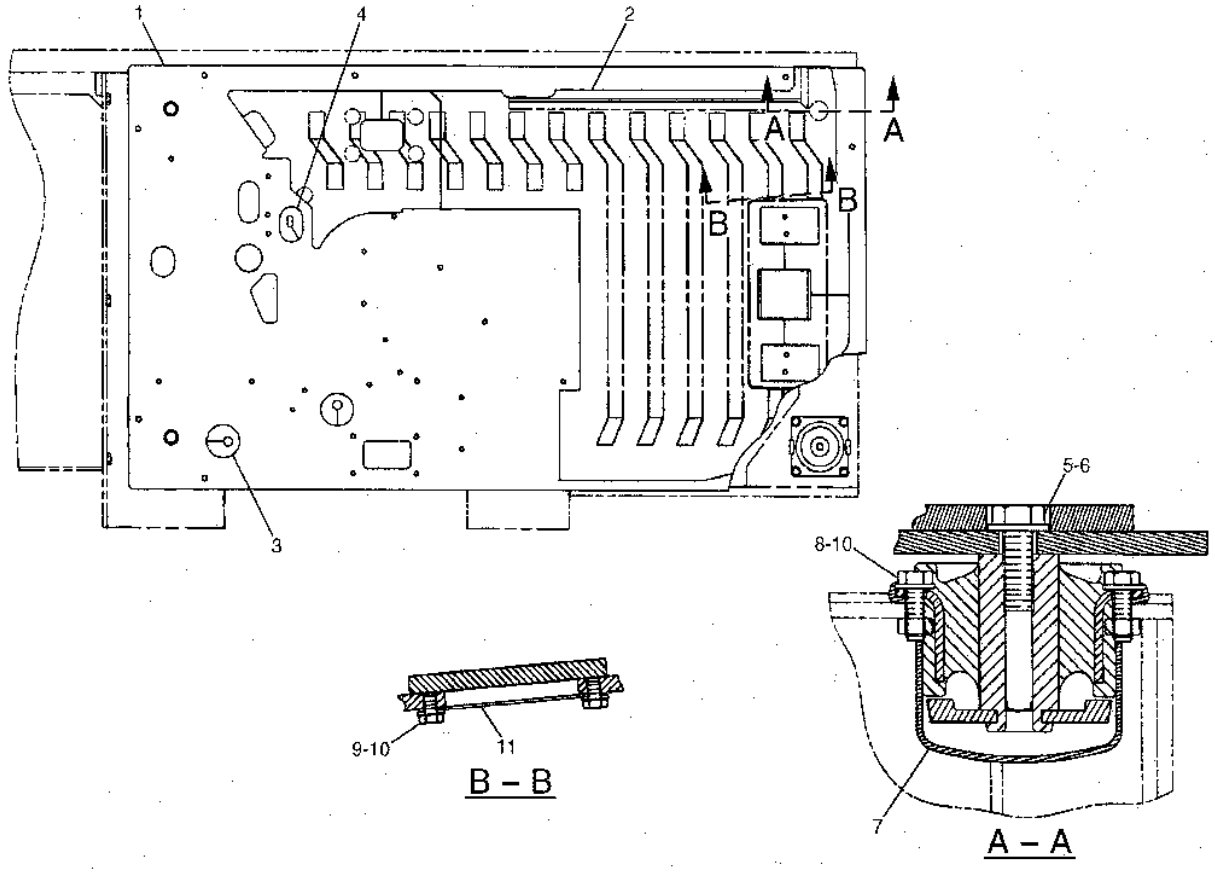


GRAPHIC #1

h50079e

# 1540591 PLATFORM GP-OPERATOR

S/N 8SR 00418-UP, 8TR 00486-UP

**Key:**

**SMCS**

| NOTE | REF NO | GRAPHIC REF | PART NUMBER | QTY | PART NAME 1 2 3 4 5 6 (PRODUCT LEVEL) | PRICE USD |
|---|---|---|---|---|---|---|
| | 1 | | 154-0485 | 1 | PLATFORM AS | |
| | 2 | | 154-0581 | 1 | FLOORMAT | |
| | 3 | | 121-7059 | 2 | GROMMET | |
| | 4 | | 117-6307 | 1 | GROMMET | |
| | 5 | | 7X-2553 | 4 | BOLT (L=40mm) | |
| | 6 | | 8T-4122 | 4 | WASHER | |
| | 7 | | 122-9626 | 4 | MOUNT AS | |
| | 8 | | 8T-4195 | 16 | BOLT (L=30mm) | |
| | 9 | | 8T-4191 | 4 | BOLT (L=16mm) | |
| | 10 | | 8T-4121 | 20 | WASHER | |
| | 11 | | 4I-3266 | 2 | STRIP | |

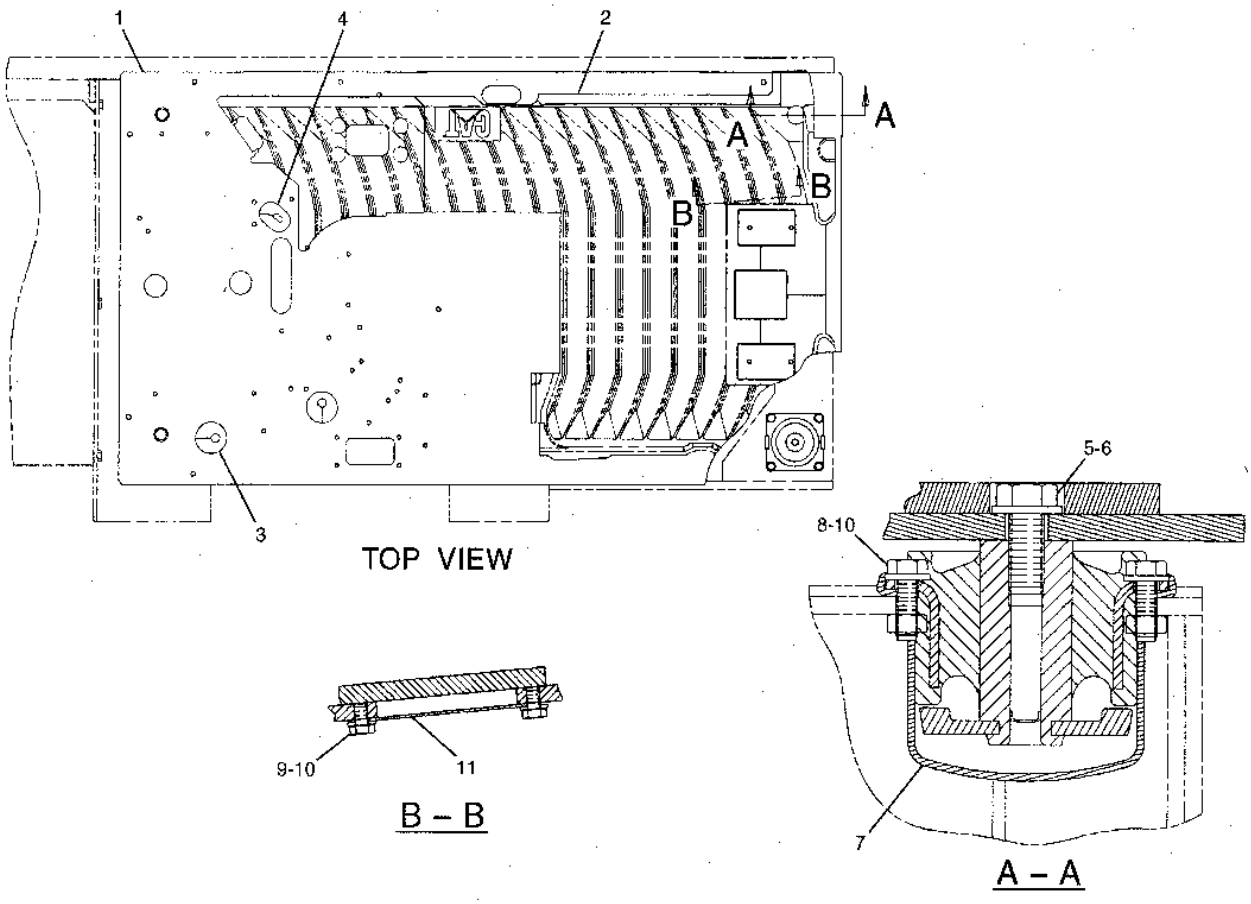


GRAPHIC #1

h60470e

# 1116278 CONSOLE GP-OPERATOR

S/N 8SR 1-00417, 8TR 1-00485
1116280-Page 449, 1116279-Page 450

**Key:** Y - SEPARATE ILLUSTRATION

**SMCS**

| NOTE | REF NO | GRAPHIC REF | PART NUMBER | QTY | PART NAME 1 2 3 4 5 6 (PRODUCT LEVEL) | PRICE USD |
|---|---|---|---|---|---|---|
| Y | 1 | | 111-6279 | 1 | CONSOLE GP | |
| Y | 2 | | 111-6280 | 1 | CONSOLE GP | |
| | 3 | | 9X-2044 | 8 | SCREW | |
| | 4 | | 122-9622 | 2 | SUPPORT | |
| | 5 | | 122-9618 | 2 | GUARD | |
| | 6 | | 122-9617 | 2 | GUARD | |
| | 7 | | 122-9655 | 4 | SUPPORT | |
| | 8 | | 7K-1181 | 8 | STRAP | |
| | 9 | | 8T-4137 | 8 | BOLT (L=20mm) | |
| | 10 | | 8T-4121 | 8 | WASHER-HARD | |
| | 11 | | 9X-2043 | 8 | SCREW | |

## 1116278 CONSOLE GP-OPERATOR

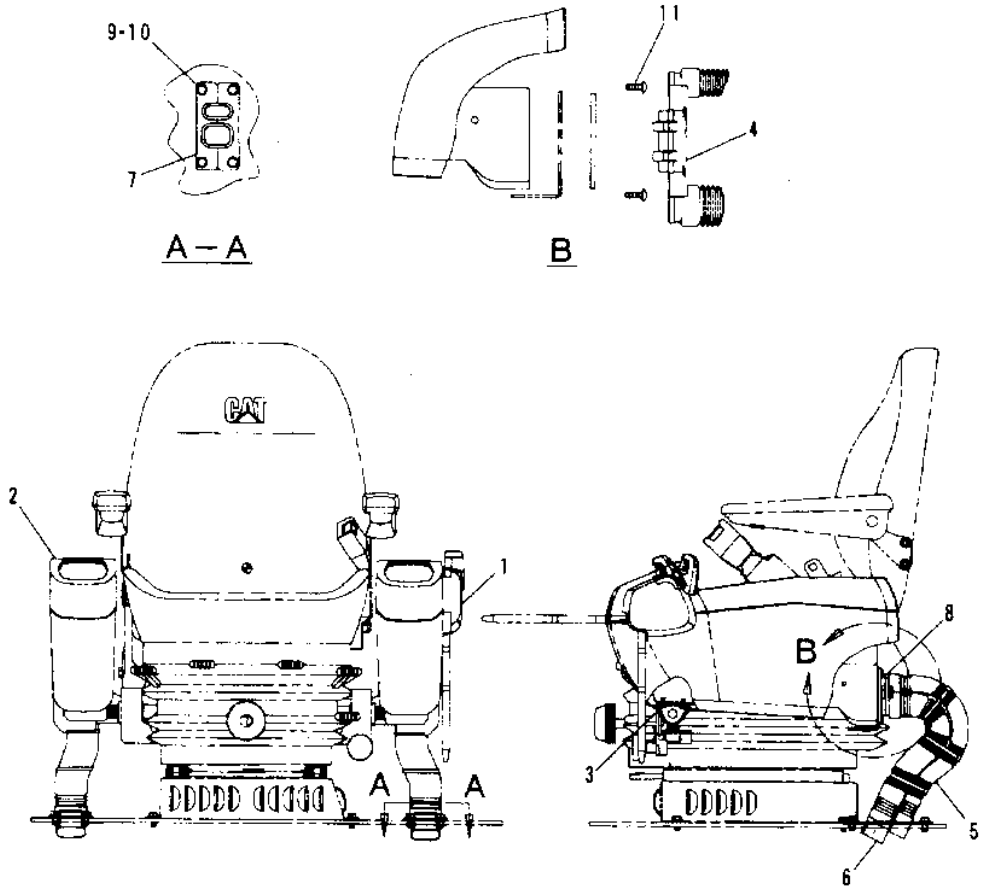


| NOTE | No. | PART No. | QTY | PART NAME | NOTE | No. | PART No. | QTY | PART NAME |
|---|---|---|---|---|---|---|---|---|---|
| Y | 1 | 111-6279 | 1 | CONSOLE GP | | | | | |
| Y | 2 | 111-6280 | 1 | CONSOLE GP | | | | | |
| | 3 | 9X-2044 | 8 | SCREW | | | | | |
| | 4 | 122-9622 | 2 | SUPPORT | | | | | |
| | 5 | 122-9618 | 2 | GUARD | | | | | |
| | 6 | 122-9617 | 2 | GUARD | | | | | |
| | 7 | 122-9655 | 4 | SUPPORT | | | | | |
| | 8 | 7K-1181 | 8 | STRAP | | | | | |
| | 9 | 8T-4137 | 8 | BOLT (L=20mm) | | | | | |
| | 10 | 8T-4121 | 8 | WASHER-HARD | | | | | |
| | 11 | 9X-2043 | 8 | SCREW | | | | | |

Y-SEE SEPARATE ILLUSTRATION

H50670E

# 1116278 CONSOLE GP-OPERATOR

S/N 8SR 00418-UP, 8TR 00486-UP
1557084-Page 449.01, 1557008-Page 450.01

**Key:** Y - SEE SEPARATE ILLUSTRATION

**SMCS**

| NOTE | REF NO | GRAPHIC REF | PART NUMBER | QTY | PART NAME 1 2 3 4 5 6 (PRODUCT LEVEL) | PRICE USD |
|---|---|---|---|---|---|---|
| Y | 1 | | 155-7008 | 1 | CONSOLE GP | |
| Y | 2 | | 155-7084 | 1 | CONSOLE GP | |
| | 3 | | 9X-2045 | 8 | SCREW | |
| | 4 | | 122-9622 | 2 | SUPPORT | |
| | 5 | | 122-9618 | 2 | GUARD | |
| | 6 | | 122-9617 | 2 | GUARD | |
| | 7 | | 122-9655 | 4 | SUPPORT | |
| | 8 | | 7K-1181 | 8 | STRAP | |
| | 9 | | 8T-4137 | 8 | BOLT (L=20mm) | |
| | 10 | | 8T-4121 | 8 | WASHER-HARD | |
| | 11 | | 9X-2043 | 8 | SCREW | |

## 1116278 CONSOLE GP-OPERATOR

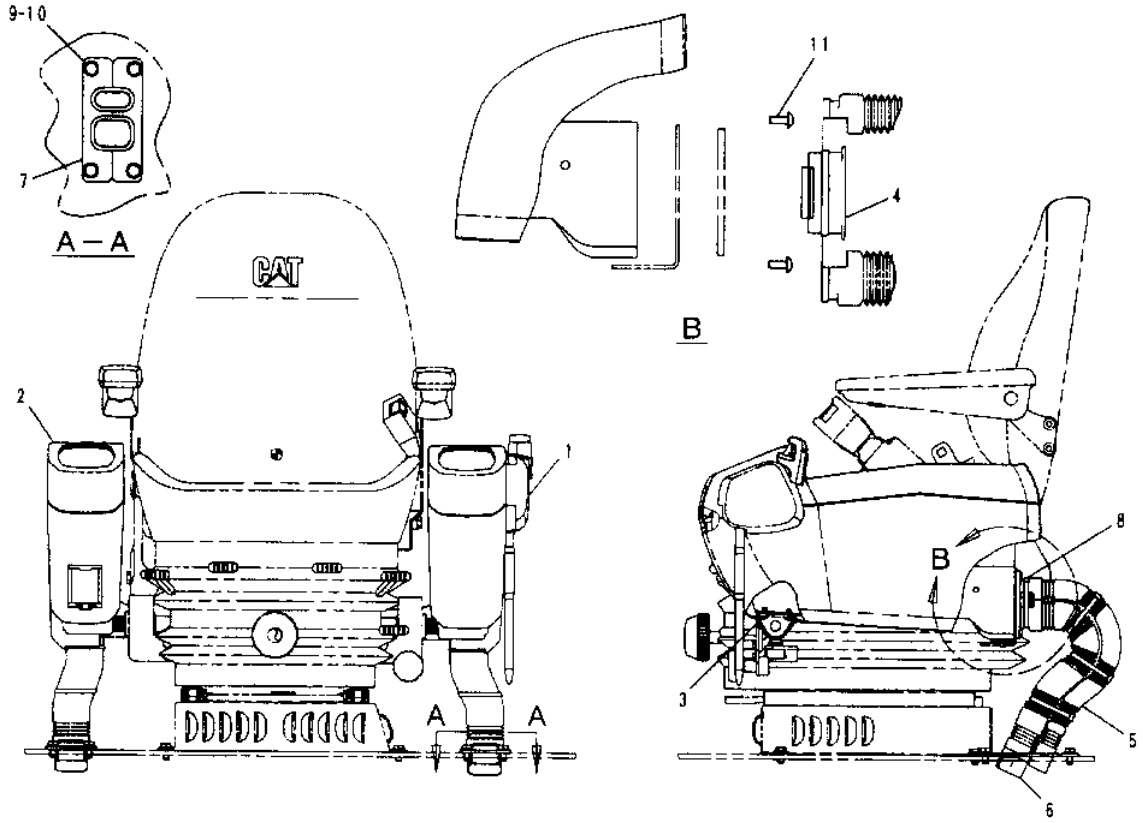


| NOTE | No. | PART No. | QTY | PART NAME |
|---|---|---|---|---|
| Y | 1 | 155-7008 | 1 | CONSOLE GP |
| Y | 2 | 155-7084 | 1 | CONSOLE GP |
| | 3 | 9X-2045 | 8 | SCREW |
| | 4 | 122-9622 | 2 | SUPPORT |
| | 5 | 122-9618 | 2 | GUARD |
| | 6 | 122-9617 | 2 | GUARD |
| | 7 | 122-9655 | 4 | SUPPORT |
| | 8 | 7K-1181 | 8 | STRAP |
| | 9 | 8T-4137 | 8 | BOLT (L=20mm) |
| | 10 | 8T-4121 | 8 | WASHER-HARD |
| | 11 | 9X-2043 | 8 | SCREW |

Y-SEE SEPARATE ILLUSTRATION

H60238E

# 1116280 CONSOLE GP

RIGHT HAND
S/N 8SR 1-00417, 8TR 1-00485
PART OF 1116278-Page 448

**Key:**

**SMCS**

| NOTE | REF NO | GRAPHIC REF | PART NUMBER | QTY | PART NAME 1 2 3 4 5 6 (PRODUCT LEVEL) | PRICE USD |
|---|---|---|---|---|---|---|
| | 1 | | 113-4014 | 1 | PANEL | |
| | 2 | | 113-4012 | 1 | SUPPORT | |
| | 3 | | 124-3932 | 2 | CAP | |
| | 4 | | 117-6256 | 1 | SUPPORT AS | |
| | 5 | | 117-6268 | 1 | COVER | |
| | 6 | | 117-6266 | 1 | COVER | |
| | 7 | | 117-6273 | 1 | COVER | |
| | 8 | | 119-5026 | 2 | SCREW | |
| | 9 | | 7Y-5295 | 1 | SCREW | |
| | 10 | | 7Y-5293 | 1 | NUT | |
| | 11 | | 9X-2042 | 6 | SCREW | |
| | 12 | | 5C-2890 | 2 | NUT | |
| | 13 | | 9X-2044 | 4 | SCREW | |

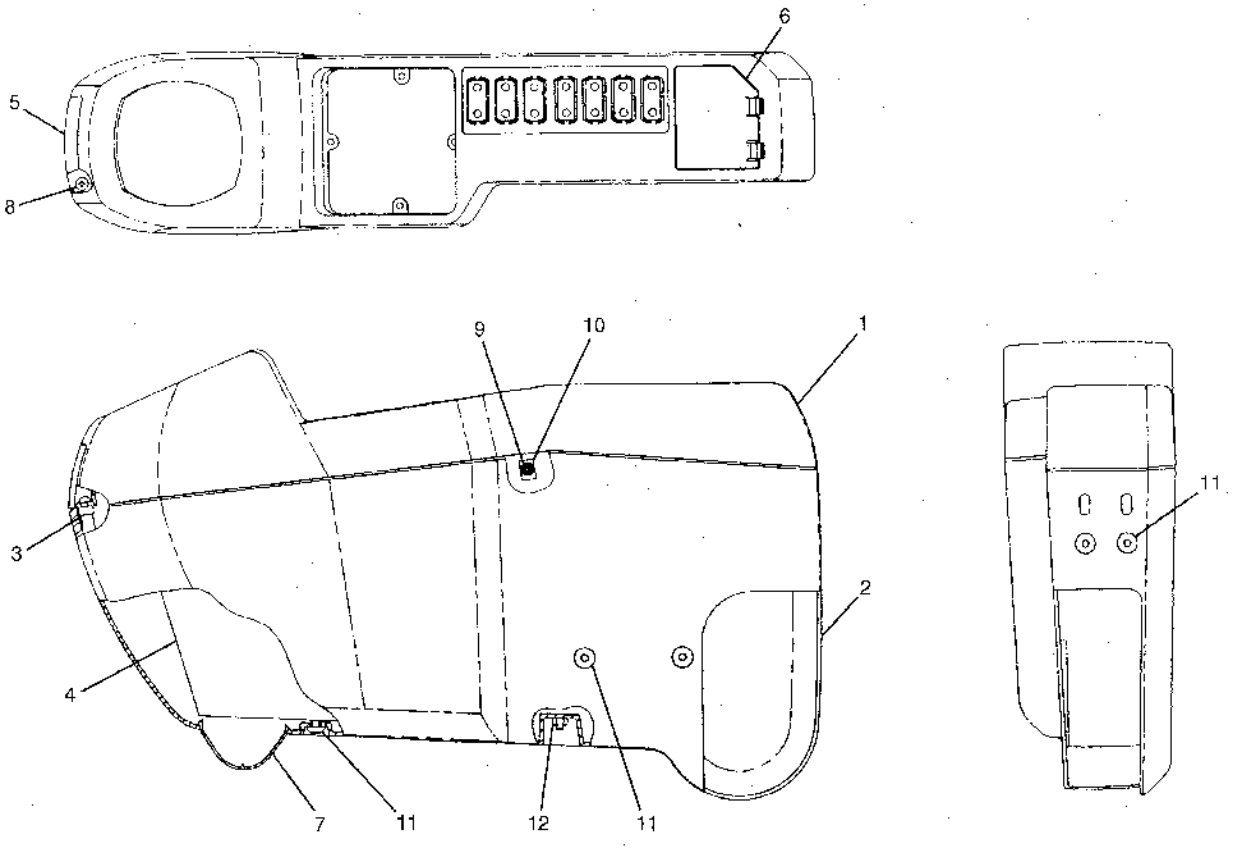


GRAPHIC #1

h52468e

# 1557084 CONSOLE GP

RIGHT HAND
S/N 8SR 00418-UP, 8TR 00486-UP
PART OF 1116278-Page 448.01

**Key:**

**SMCS**

| NOTE | REF NO | GRAPHIC REF | PART NUMBER | QTY | PART NAME 1 2 3 4 5 6 (PRODUCT LEVEL) | PRICE USD |
|---|---|---|---|---|---|---|
| | 1 | | 113-4014 | 1 | PANEL | |
| | 2 | | 155-7085 | 1 | HOLDER | |
| | 3 | | 155-7086 | 1 | SUPPORT | |
| | 4 | | 117-6256 | 1 | SUPPORT AS | |
| | 5 | | 117-6266 | 1 | COVER | |
| | 6 | | 117-6268 | 1 | COVER | |
| | 7 | | 117-6273 | 1 | COVER | |
| | 8 | | 124-3932 | 2 | CAP | |
| | 9 | | 7Y-5295 | 1 | SCREW | |
| | 10 | | 119-5026 | 2 | SCREW | |
| | 11 | | 9X-2042 | 6 | SCREW | |
| | 12 | | 7Y-5293 | 1 | NUT | |
| | 13 | | 155-7099 | 2 | NUT | |
| | 14 | | 5C-2890 | 2 | NUT | |

## 1557084 CONSOLE GP

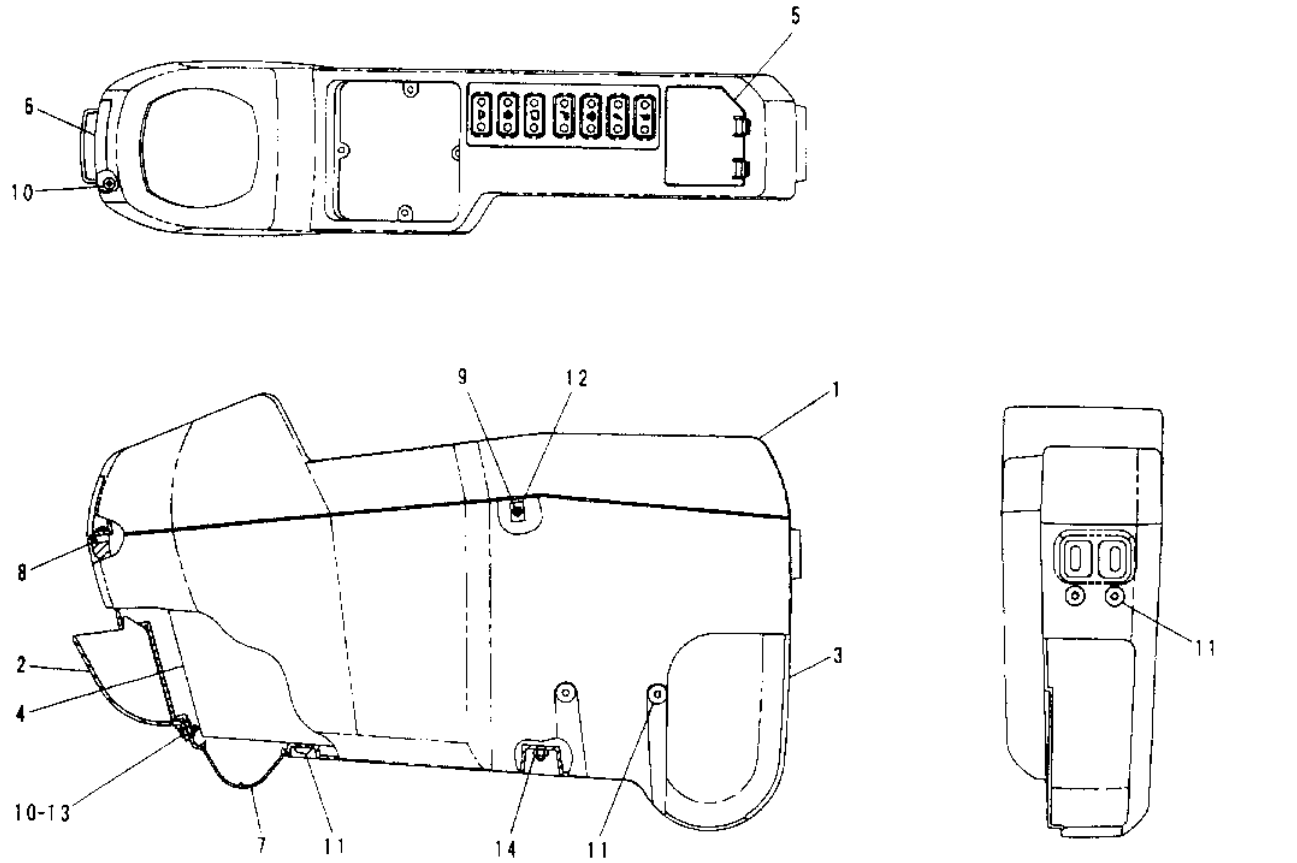


| NOTE | No. | PART No. | QTY | PART NAME | NOTE | No. | PART No. | QTY | PART NAME |
|---|---|---|---|---|---|---|---|---|---|
| | 1 | 113-4014 | 1 | PANEL | | | | | |
| | 2 | 155-7085 | 1 | HOLDER | | | | | |
| | 3 | 155-7086 | 1 | SUPPORT | | | | | |
| | 4 | 117-6256 | 1 | SUPPORT AS | | | | | |
| | 5 | 117-6266 | 1 | COVER | | | | | |
| | 6 | 117-6268 | 1 | COVER | | | | | |
| | 7 | 117-6273 | 1 | COVER | | | | | |
| | 8 | 124-3932 | 2 | CAP | | | | | |
| | 9 | 7Y-5295 | 1 | SCREW | | | | | |
| | 10 | 119-5026 | 2 | SCREW | | | | | |
| | 11 | 9X-2042 | 6 | SCREW | | | | | |
| | 12 | 7Y-5293 | 1 | NUT | | | | | |
| | 13 | 155-7099 | 2 | NUT | | | | | |
| | 14 | 5C-2890 | 2 | NUT | | | | | |

H60240E

# 1116279 CONSOLE GP

LEFT HAND
S/N 8SR 1-00417, 8TR 1-00485
PART OF 1116278-Page 448
1176265-Page 451

**Key:** Y - SEE SEPARATE ILLUSTRATION

**SMCS**

| NOTE | REF NO | GRAPHIC REF | PART NUMBER | QTY | PART NAME 1 2 3 4 5 6 (PRODUCT LEVEL) | PRICE USD |
|---|---|---|---|---|---|---|
| | 1 | | 113-4013 | 1 | SUPPORT | |
| | 2 | | 117-6257 | 1 | SUPPORT AS | |
| | 3 | | 113-4016 | 1 | COVER | |
| | 4 | | 117-6268 | 1 | COVER | |
| | 5 | | 117-6267 | 1 | COVER | |
| | 6 | | 117-6273 | 1 | COVER | |
| Y | 7 | | 117-6265 | 1 | LEVER AS | |
| | 8 | | 119-5026 | 4 | SCREW | |
| | 9 | | 124-3932 | 12 | CAP | |
| | 10 | | 135-2185 | 1 | PANEL | |
| | 11 | | 9X-2042 | 6 | SCREW | |
| | 12 | | 5C-2890 | 2 | NUT | |
| | 13 | | 135-2184 | 1 | COVER | |

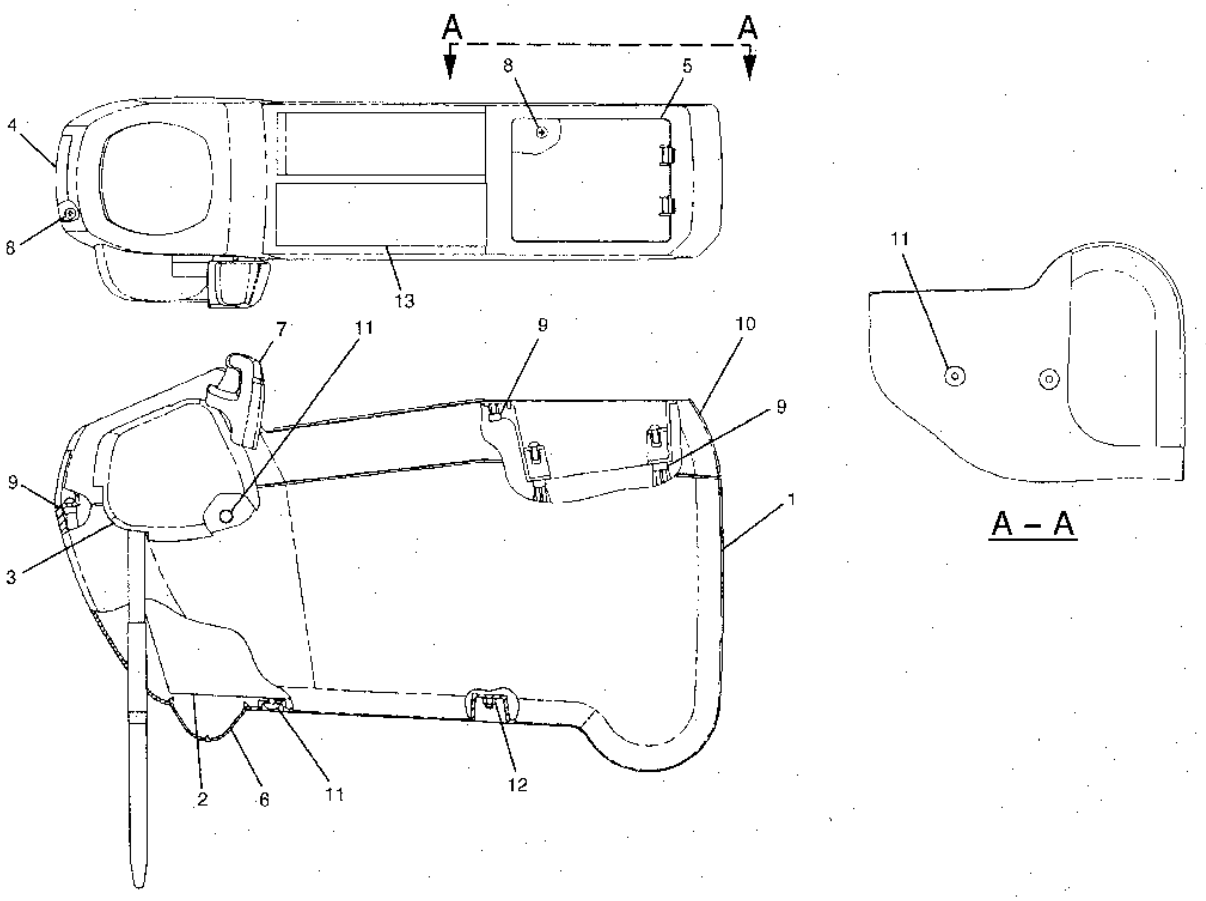


GRAPHIC #1

h52469e

# 1557008 CONSOLE GP

LEFT HAND
S/N 8SR 00418-UP, 8TR 00486-UP
PART OF 1116278-Page 448.01
1597774-Page 451

**Key:** Y - SEE SEPARATE ILLUSTRATION

**SMCS**

| NOTE | REF NO | GRAPHIC REF | PART NUMBER | QTY | PART NAME 1 2 3 4 5 6 (PRODUCT LEVEL) | PRICE USD |
|---|---|---|---|---|---|---|
| | 1 | | 184-3821 | 1 | SUPPORT | |
| | 2 | | 155-7007 | 1 | SUPPORT AS | |
| | 3 | | 113-4016 | 1 | COVER | |
| | 4 | | 117-6268 | 1 | COVER | |
| | 5 | | 117-6267 | 1 | COVER | |
| | 6 | | 117-6273 | 1 | COVER | |
| Y | 7 | | 159-7744 | 1 | LEVER AS | |
| | 8 | | 119-5026 | 4 | SCREW | |
| | 9 | | 124-3932 | 12 | CAP | |
| | 10 | | 135-2185 | 1 | PANEL | |
| | 11 | | 9X-2042 | 6 | SCREW | |
| | 12 | | 5C-2890 | 2 | NUT | |
| | 13 | | 135-2184 | 1 | COVER | |
| | 14 | | 184-3839 | 2 | NUT | |
| | 15 | | 161-3730 | 2 | SCREW-TAPPING | |
| | 16 | | 161-3729 | 1 | NUT | |

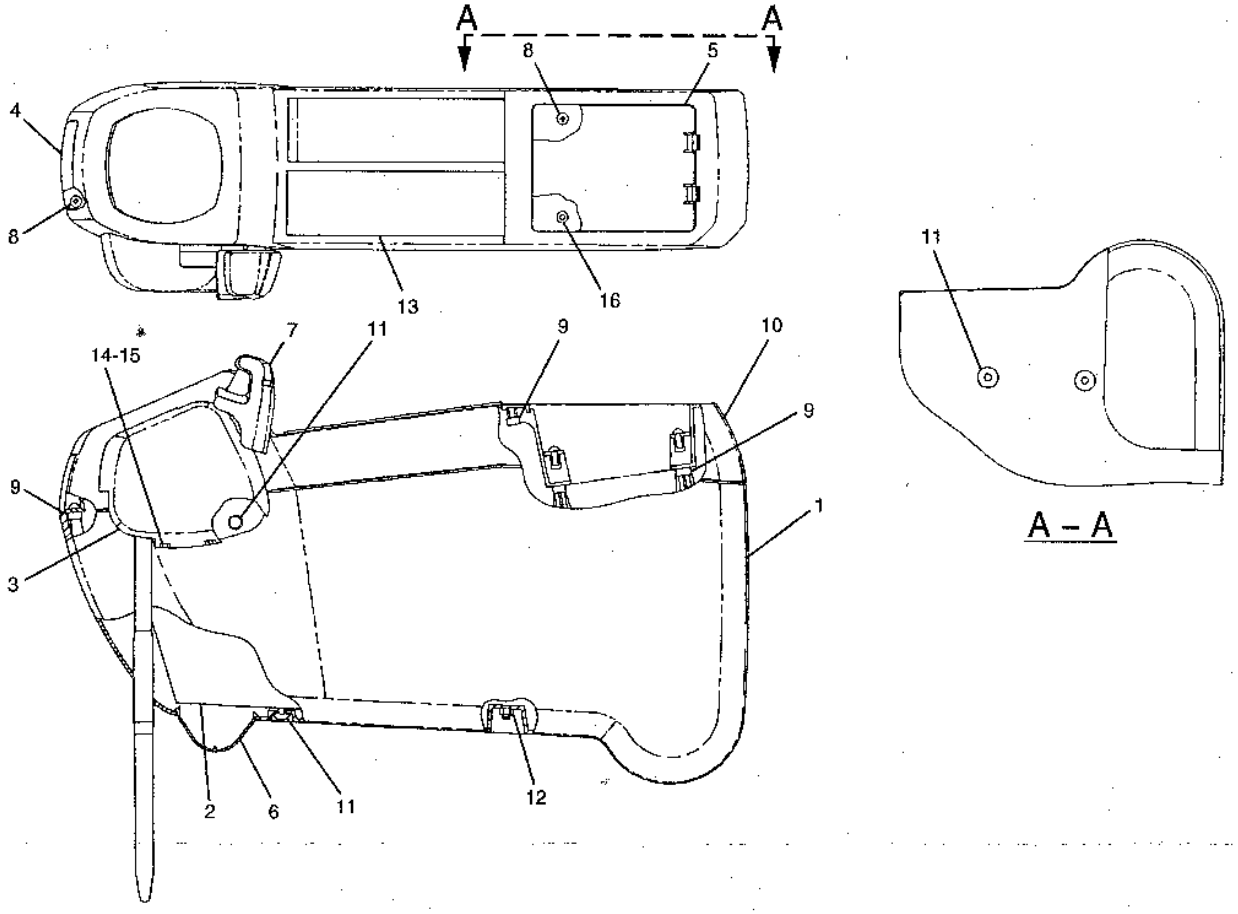


GRAPHIC #1

h72375e

# 1176265 LEVER AS

S/N 8SR 1-00417, 8TR 1-00485
PART OF 1116279-Page 450

**Key:**

**SMCS**

| NOTE | REF NO | GRAPHIC REF | PART NUMBER | QTY | PART NAME 1 2 3 4 5 6 (PRODUCT LEVEL) | PRICE USD |
|---|---|---|---|---|---|---|
| | 1 | | 095-7930 | 2 | SCREW (MACHINE) | |
| | 2 | | 121-7057 | 1 | KNOB | |
| | 3 | | 117-6269 | 1 | LEVER | |
| | 4 | | 117-6270 | 1 | SUPPORT AS | |
| | 5 | | 117-6272 | 1 | LEVER AS | |
| | 6 | | 100-7740 | 3 | RING (RETAINING) | |
| | 7 | | 117-6271 | 1 | SPRING | |
| | 8 | | 117-6274 | 1 | PIN | |
| | 9 | | 8T-4224 | 2 | WASHER (HARD) | |

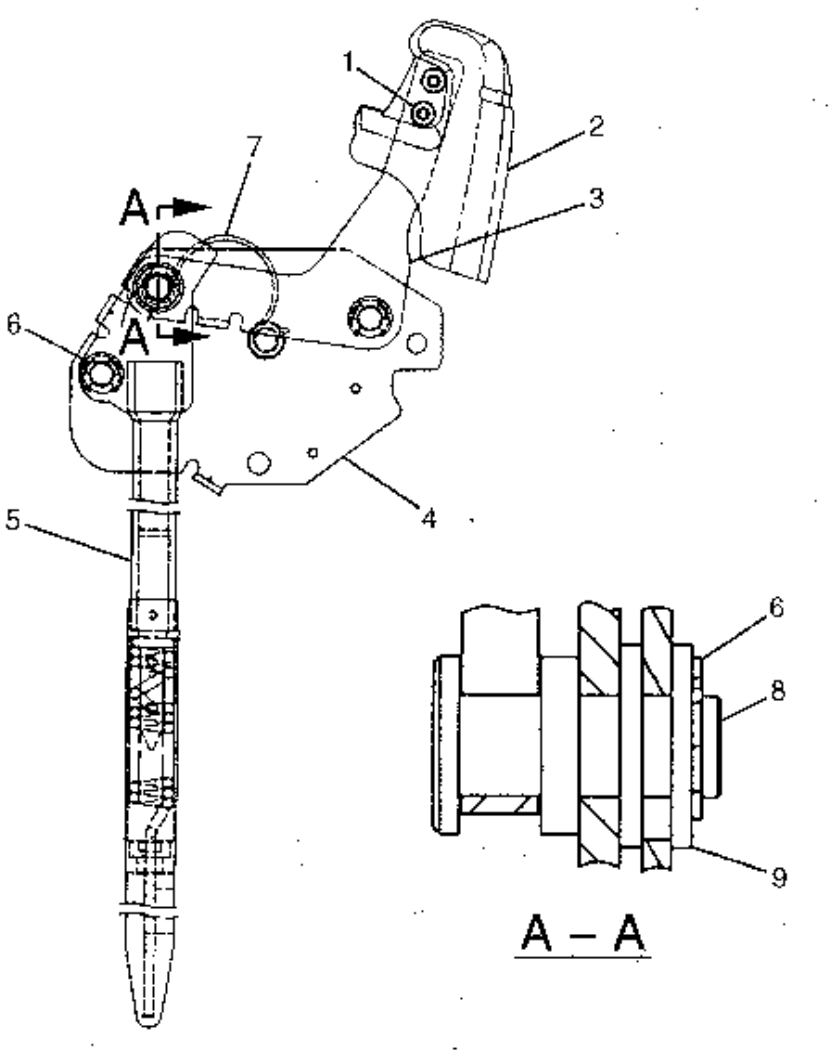


GRAPHIC #1

h50920e

# 1597744 LEVER AS

S/N 8SR 00418-UP, 8TR 00486-UP
PART OF 1557008-Page 450.01

**Key:**

**SMCS**

| NOTE | REF NO | GRAPHIC REF | PART NUMBER | QTY | PART NAME 1 2 3 4 5 6 (PRODUCT LEVEL) | PRICE USD |
|---|---|---|---|---|---|---|
| | 1 | | 095-7930 | 2 | SCREW-MACHINE | |
| | 2 | | 121-7057 | 1 | KNOB | |
| | 3 | | 117-6269 | 1 | LEVER | |
| | 4 | | 117-6270 | 1 | SUPPORT AS | |
| | 5 | | 117-6272 | 1 | LEVER AS | |
| | 6 | | 5D-4822 | 3 | RING-RETAINING | |
| | 7 | | 117-6271 | 1 | SPRING | |
| | 8 | | 117-6274 | 1 | PIN | |
| | 9 | | 8T-4224 | 2 | WASHER-HARD | |

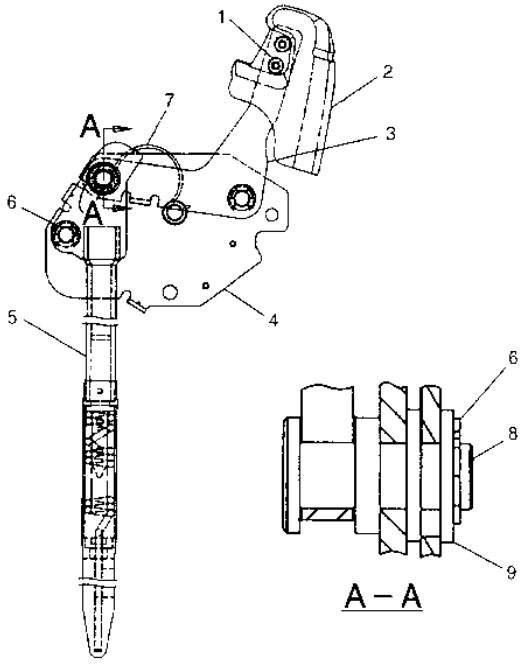


| NOTE | No. | PART No. | QTY | PART NAME |
|---|---|---|---|---|
| | 1 | 095-7930 | 2 | SCREW-MACHINE |
| | 2 | 121-7057 | 1 | KNOB |
| | 3 | 117-6269 | 1 | LEVER |
| | 4 | 117-6270 | 1 | SUPPORT AS |
| | 5 | 117-6272 | 1 | LEVER AS |
| | 6 | 5D-4822 | 3 | RING-RETAINING |
| | 7 | 117-6271 | 1 | SPRING |
| | 8 | 117-6274 | 1 | PIN |
| | 9 | 8T-4224 | 2 | WASHER-HARD |

H62408E

GRAPHIC #1

h62408e

# 1116281 SUPPORT GP-SEAT

**Key:**

**SMCS**

| NOTE | REF NO | GRAPHIC REF | PART NUMBER | QTY | PART NAME 1 2 3 4 5 6 (PRODUCT LEVEL) | PRICE USD |
|---|---|---|---|---|---|---|
| | 1 | | 139-7114 | 1 | SUPPORT AS | |
| | 2 | | 8T-4191 | 4 | BOLT (L=16mm) | |
| | 3 | | 8T-4121 | 4 | WASHER (HARD) | |

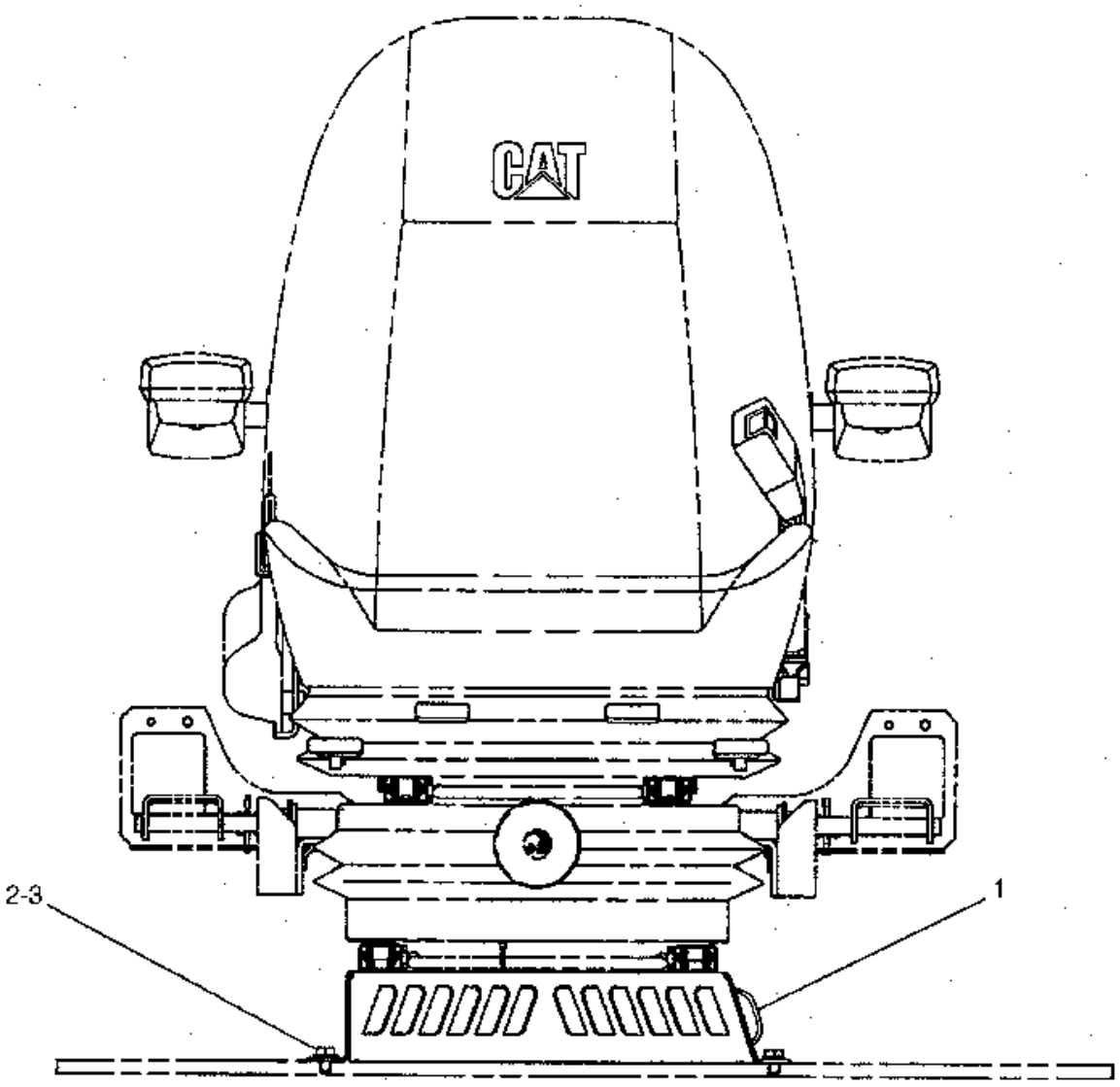


FRONT VIEW

GRAPHIC #1

h59136e

# 1116282 SEAT GP

1116283-Page 452.01, 1229625-Page 453

**Key:** Y - Separate Illustration

**SMCS**

| NOTE | REF NO | GRAPHIC REF | PART NUMBER | QTY | PART NAME 1 2 3 4 5 6 (PRODUCT LEVEL) | PRICE USD |
|---|---|---|---|---|---|---|
| Y | 1 | | 111-6283 | 1 | SEAT GP | |
| Y | 2 | | 122-9625 | 1 | BELT GP | |
| | 3 | | 6V-8202 | 4 | BOLT (L=16mm) | |

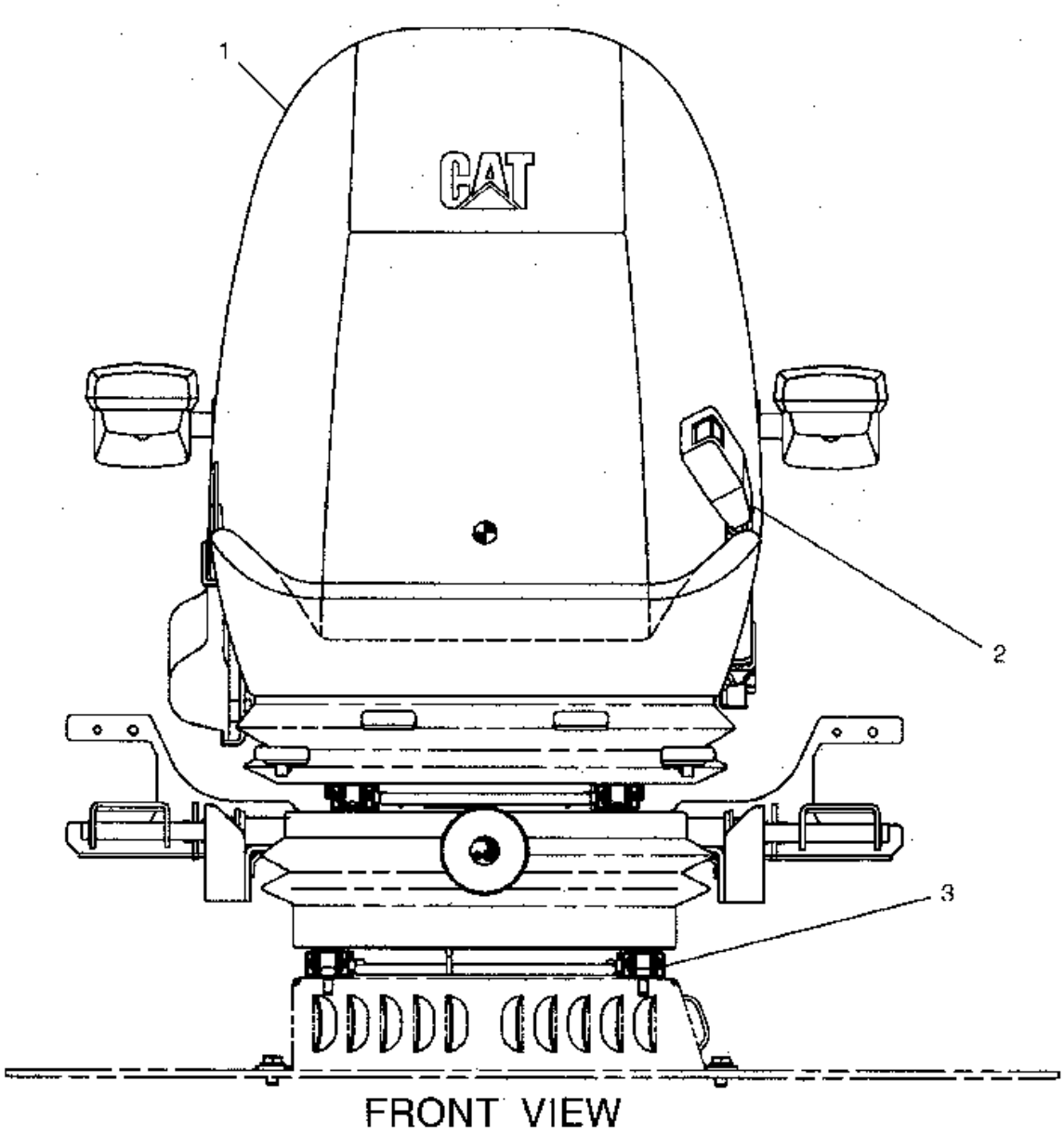


GRAPHIC #1

h53237e

# 1116283 SEAT GP

PART OF 1116282-Page 452
1519617-Page 454, 1116391-Page 460

**Key:** Y - SEE SEPARATE ILLUSTRATION

**SMCS**

| NOTE | REF NO | GRAPHIC REF | PART NUMBER | QTY | PART NAME 1 2 3 4 5 6 (PRODUCT LEVEL) | PRICE USD |
|---|---|---|---|---|---|---|
| Y | 1 | | 151-9617 | 1 | SEAT GP | |
| Y | 2 | | 111-6391 | 1 | SUSPENSION GP | |
| | 3 | | 8T-1158 | 4 | BOLT (L=20mm) | |
| | 4 | | 5C-9553 | 2 | BOLT (L=16mm) | |
| | 5 | | 095-0827 | 2 | LOCKWASHER | |
| | 6 | | 9X-8256 | 2 | WASHER | |

## 1116283 SEAT GP

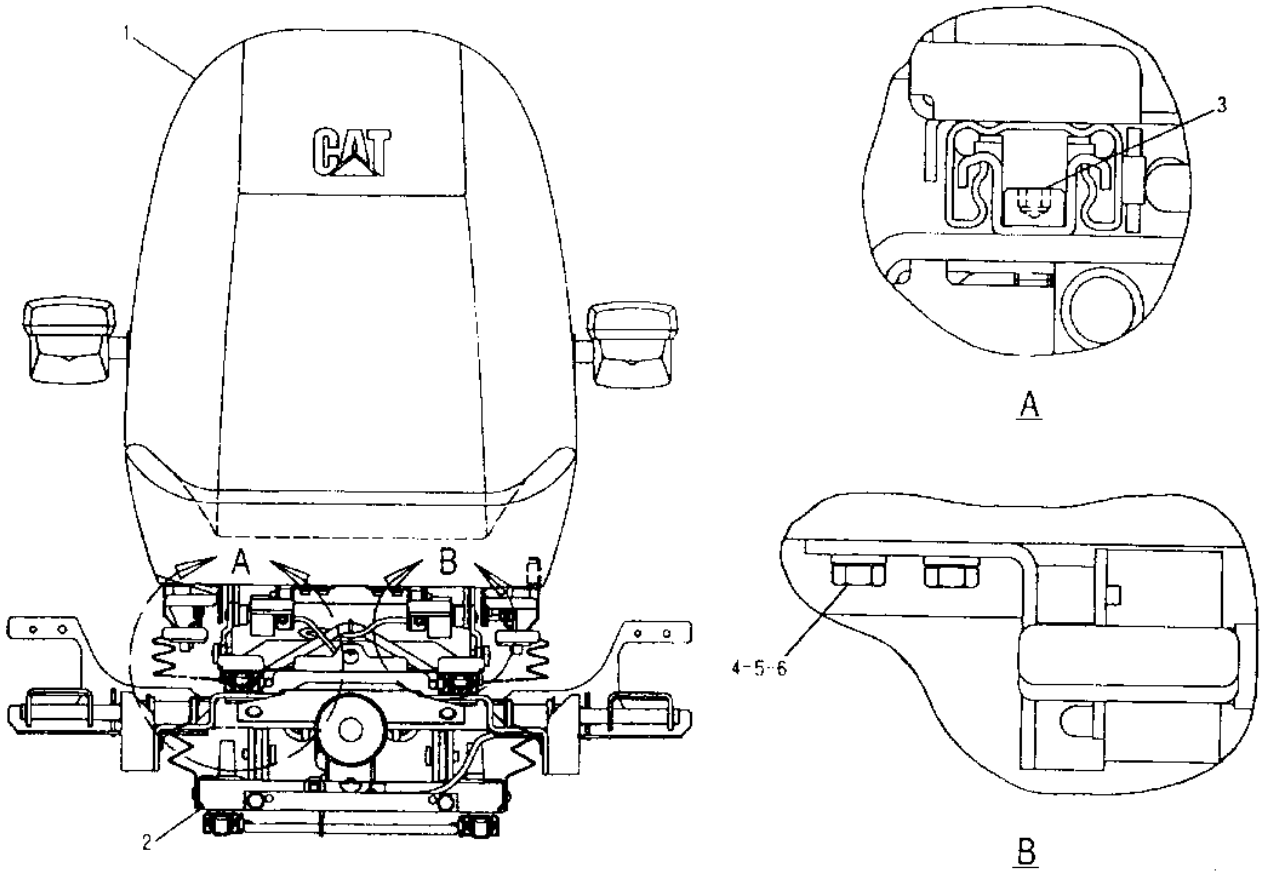


| NOTE | No. | PART No. | QTY | PART NAME | NOTE | No. | PART No. | QTY | PART NAME |
|---|---|---|---|---|---|---|---|---|---|
| Y | 1 | 151-9617 | 1 | SEAT GP | | | | | |
| Y | 2 | 111-6391 | 1 | SUSPENSION GP | | | | | |
| | 3 | 8T-1158 | 4 | BOLT(L=20mm) | | | | | |
| | 4 | 5C-9553 | 2 | BOLT(L=16mm) | | | | | |
| | 5 | 095 0827 | 2 | LOCKWASHER | | | | | |
| | 6 | 9X-8256 | 2 | WASHER | | | | | |

Y-SEE SEPARATE ILLUSTRATION

H60066E

GRAPHIC #1

h60066e

# 1229625 SEAT BELT GP

PART OF 1116282-Page 452

**Key:**

**SMCS**

| NOTE | REF NO | GRAPHIC REF | PART NUMBER | QTY | PART NAME 1 2 3 4 5 6 (PRODUCT LEVEL) | PRICE USD |
|---|---|---|---|---|---|---|
| | 1 | | 8S-4724 | 1 | BOLT (L=25.58mm) | |
| | 2 | | 9L-7816 | 1 | BOLT (L=15.88mm) | |
| | 3 | | 8S-0934 | 1 | LOCKNUT | |

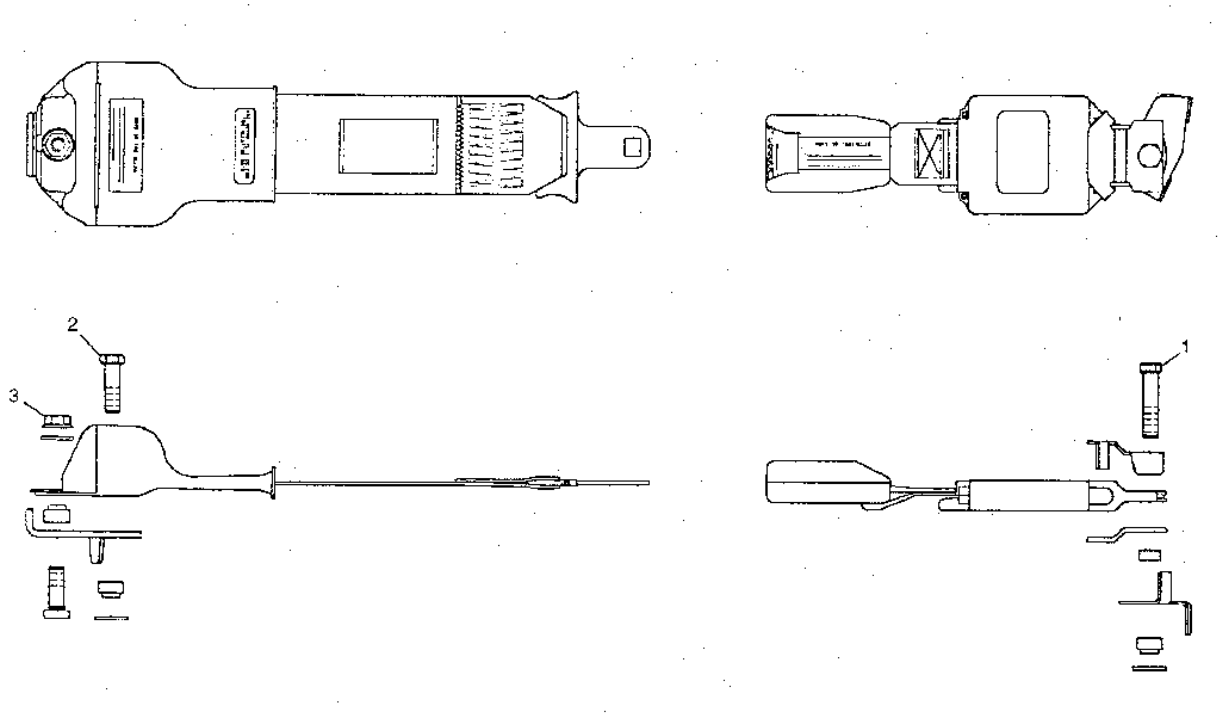


GRAPHIC #1

h51892e

# 1519617 SEAT GP

PART OF 1116283-Page 452.01
1597672-Page 456

**Key:** Y - SEE SEPARATE ILLUSTRATION

**SMCS**

| NOTE | REF NO | GRAPHIC REF | PART NUMBER | QTY | PART NAME 1 2 3 4 5 6 (PRODUCT LEVEL) | PRICE USD |
|---|---|---|---|---|---|---|
| | 1 | | 133-7882 | 1 | ARM CUSHION KIT | |
| Y | 2 | | 159-7672 | 1 | SEAT AS | |
| | 3 | | 133-7883 | 1 | ARM CUSHION KIT | |
| | 4 | | 130-0337 | 1 | COVER KIT | |
| | | | 130-0328 | 1 | CLIP KIT | |
| | 5 | | 130-0336 | 1 | RISER KIT(HEIGHT) | |
| | | | 130-0348 | 1 | SPRING KIT | |
| | | | 130-0350 | 1 | SUPPORT KIT | |
| | | | 133-7884 | 1 | HANDLE KIT | |
| | | | 133-7885 | 1 | HANDLE KIT | |
| | 6 | | 130-0338 | 1 | ADJUSTER KIT | |
| | | | 130-0351 | 1 | CABLE KIT | |
| | 7 | | 130-0335 | 1 | CONTROL KIT | |
| | | | 130-0351 | 1 | CABLE KIT | |
| | | | 133-7886 | 1 | HANDLE KIT | |
| | 8 | | 114-3350 | 4 | SCREW | |

## 1519617 SEAT GP

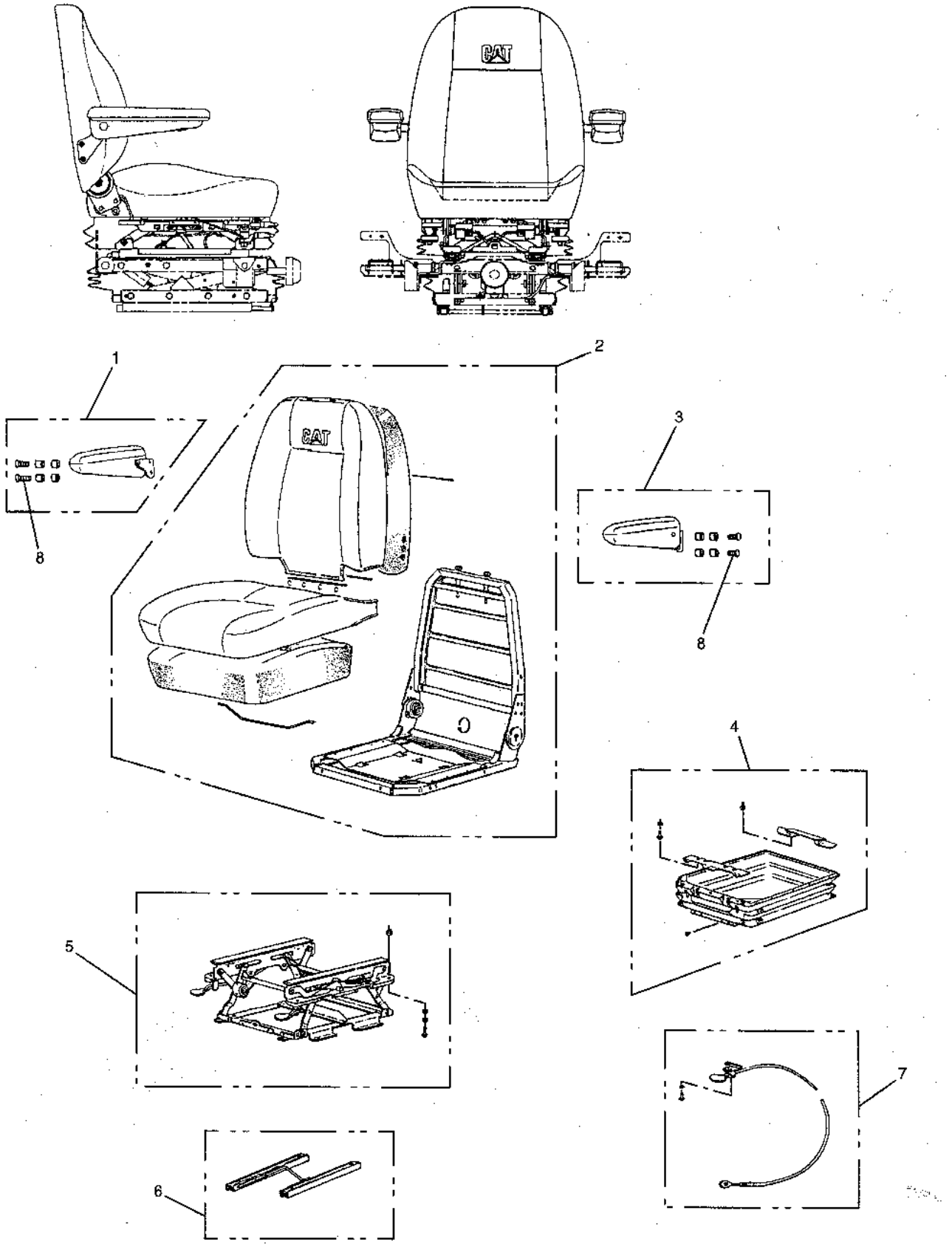


GRAPHIC #1

h62399e

# 1597672 SEAT AS

PART OF 1519617-Page 455

**Key:**

**SMCS**

| NOTE | REF NO | GRAPHIC REF | PART NUMBER | QTY | PART NAME 1 2 3 4 5 6 (PRODUCT LEVEL) | PRICE USD |
|---|---|---|---|---|---|---|
| | 1 | | 159-7673 | 1 | COVER KIT | |
| | 2 | | 110-5056 | 1 | FOAM KIT | |
| | 3 | | 130-0356 | 1 | FRAME KIT | |
| | | | 130-0347 | 1 | CABLE KIT | |
| | 4 | | 159-7674 | 1 | COVER KIT | |
| | 5 | | 110-5059 | 1 | FOAM KIT | |

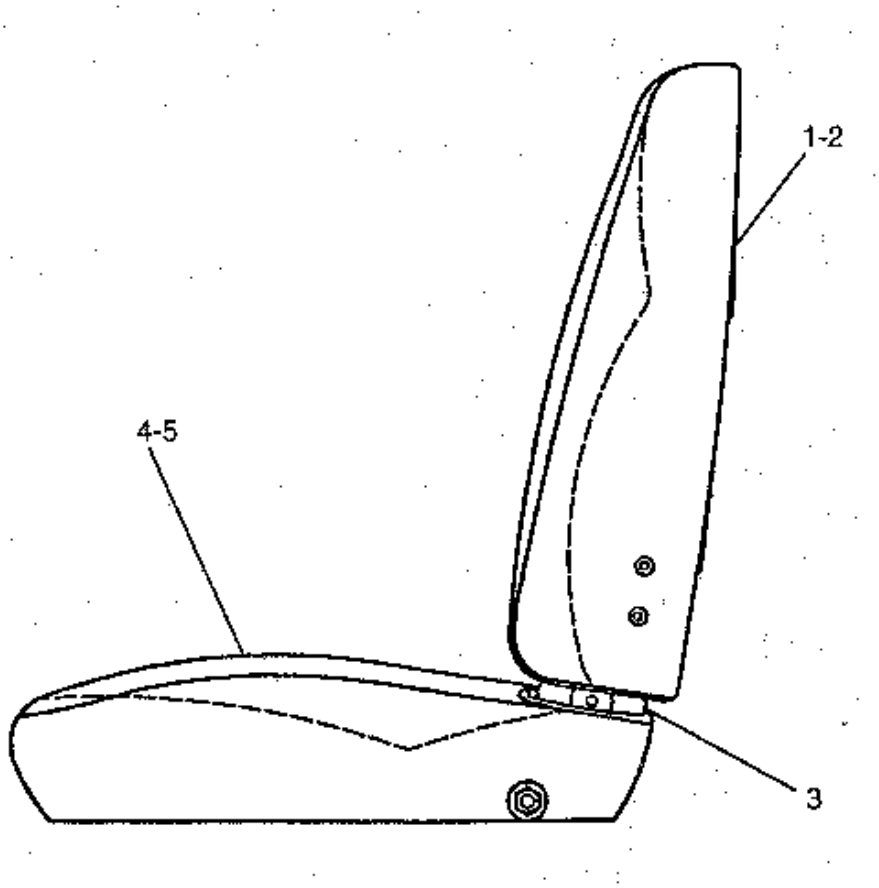


GRAPHIC #1 h62407e

# 1540775 SEAT AS

PART OF 1502200-Page 459
AN ATTACHMENT

**Key:**

**SMCS**

| NOTE | REF NO | GRAPHIC REF | PART NUMBER | QTY | PART NAME 1 2 3 4 5 6 (PRODUCT LEVEL) | PRICE USD |
|---|---|---|---|---|---|---|
| | 1 | | 154-0776 | 1 | COVER KIT | |
| | 2 | | 6I-5380 | 1 | FOAM KIT | |
| | 3 | | 184-3856 | 1 | SUPPORT KIT | |
| | | | 130-0324 | 1 | HANDLE KIT | |
| | 4 | | 130-0334 | 1 | FRAME KIT | |
| | | | 130-0347 | 1 | CABLE KIT | |
| | 5 | | 154-0777 | 1 | COVER KIT | |
| | 6 | | 8Y-6877 | 1 | SEAT CUSHION KIT | |

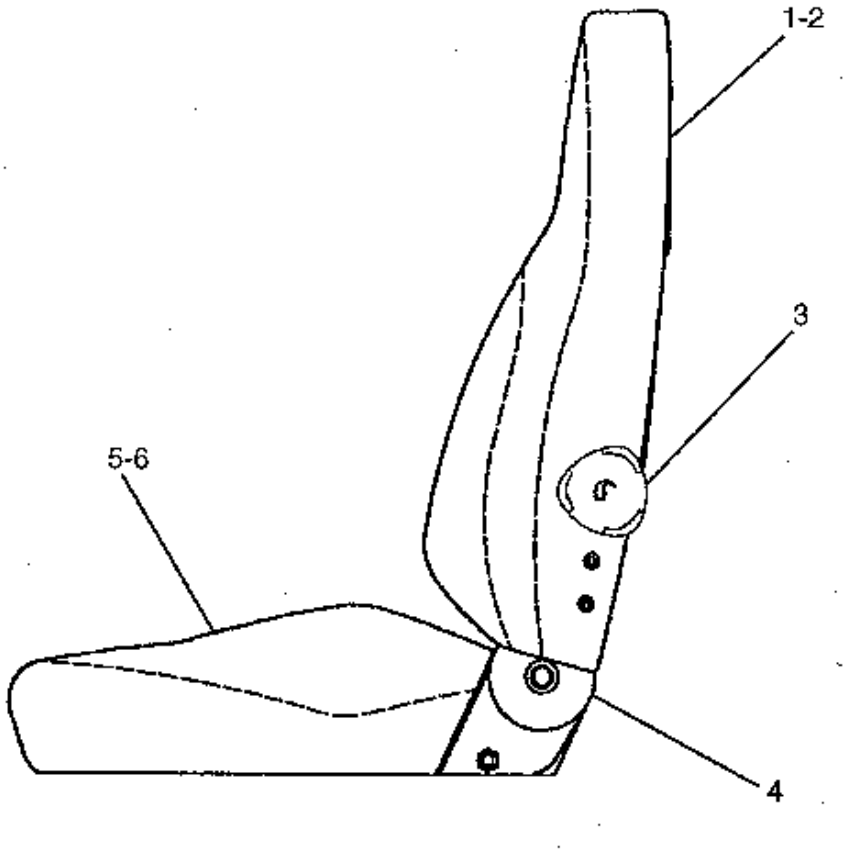


GRAPHIC #1

h67802e

# 1243925 SEAT GP

1502200-Page 458, 1243926-Page 462
AN ATTACHMENT

**Key:** Y - SEE SEPARATE ILLUSTRATION

**SMCS**

| NOTE | REF NO | GRAPHIC REF | PART NUMBER | QTY | PART NAME 1 2 3 4 5 6 (PRODUCT LEVEL) | PRICE USD |
|---|---|---|---|---|---|---|
| Y | 1 | | 150-2200 | 1 | SEAT GP | |
| Y | 2 | | 124-3926 | 1 | SUSPENSION GP | |
| | 3 | | 8T-1158 | 4 | BOLT (L=20mm) | |
| | 4 | | 5C-9553 | 2 | BOLT (L=16mm) | |
| | 5 | | 095-0827 | 2 | LOCKWASHER | |
| | 6 | | 9X-8256 | 2 | WASHER | |

## 1243925 SEAT GP

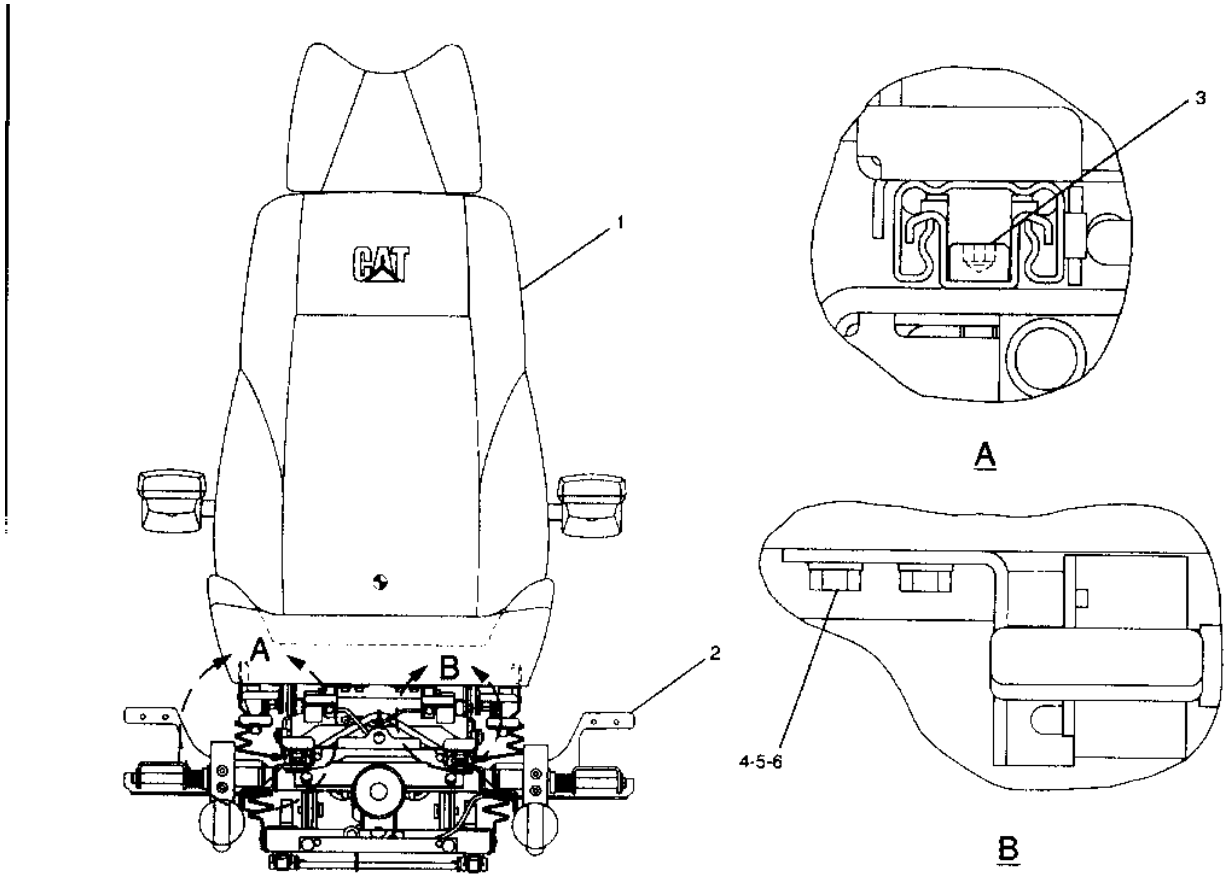


| NOTE | No. | PART No. | QTY | PART NAME | NOTE | No. | PART No. | QTY | PART NAME |
|---|---|---|---|---|---|---|---|---|---|
| Y | 1 | 150-2200 | 1 | SEAT GP | | | | | |
| Y | 2 | 124-3926 | 1 | SUSPENSION GP | | | | | |
| | 3 | 8T-1158 | 4 | BOLT (L=20mm) | | | | | |
| | 4 | 5C-9553 | 2 | BOLT (L=16mm) | | | | | |
| | 5 | 095-0827 | 2 | LOCKWASHER | | | | | |
| | 6 | 9X-8256 | 2 | WASHER | | | | | |

Y-SEE SEPARATE ILLUSTRATION

H61541E

# 1502200 SEAT GP

PART OF 1243925-Page 457
1540775-Page 456
AN ATTACHMENT

**Key:** Y - SEE SEPARATE ILLUSTRATION

**SMCS**

| NOTE | REF NO | GRAPHIC REF | PART NUMBER | QTY | PART NAME 1 2 3 4 5 6 (PRODUCT LEVEL) | PRICE USD |
|---|---|---|---|---|---|---|
| | 1 | | 133-7882 | 1 | ARM CUSHION KIT | |
| Y | 2 | | 154-0775 | 1 | SEAT AS | |
| | 3 | | 130-0333 | 1 | HEADREST KIT | |
| | 4 | | 133-7883 | 1 | ARM CUSHION KIT | |
| | 5 | | 130-0337 | 1 | COVER KIT | |
| | 6 | | 130-0336 | 1 | RISER KIT (HEIGHT) | |
| | | | 133-7884 | 1 | HANDLE KIT | |
| | | | 133-7885 | 1 | HANDLE KIT | |
| | | | 130-0350 | 1 | SUPPORT KIT | |
| | | | 130-0348 | 1 | SPRING KIT | |
| | 7 | | 130-0338 | 1 | ADJUSTER KIT | |
| | | | 130-0351 | 1 | CABLE KIT | |
| | 8 | | 130-0335 | 1 | CONTROL KIT | |
| | | | 130-0351 | 1 | CABLE KIT | |
| | | | 133-7886 | 1 | HANDLE KIT | |
| | 9 | | 114-3350 | 4 | SCREW | |

## 1502200 SEAT GP

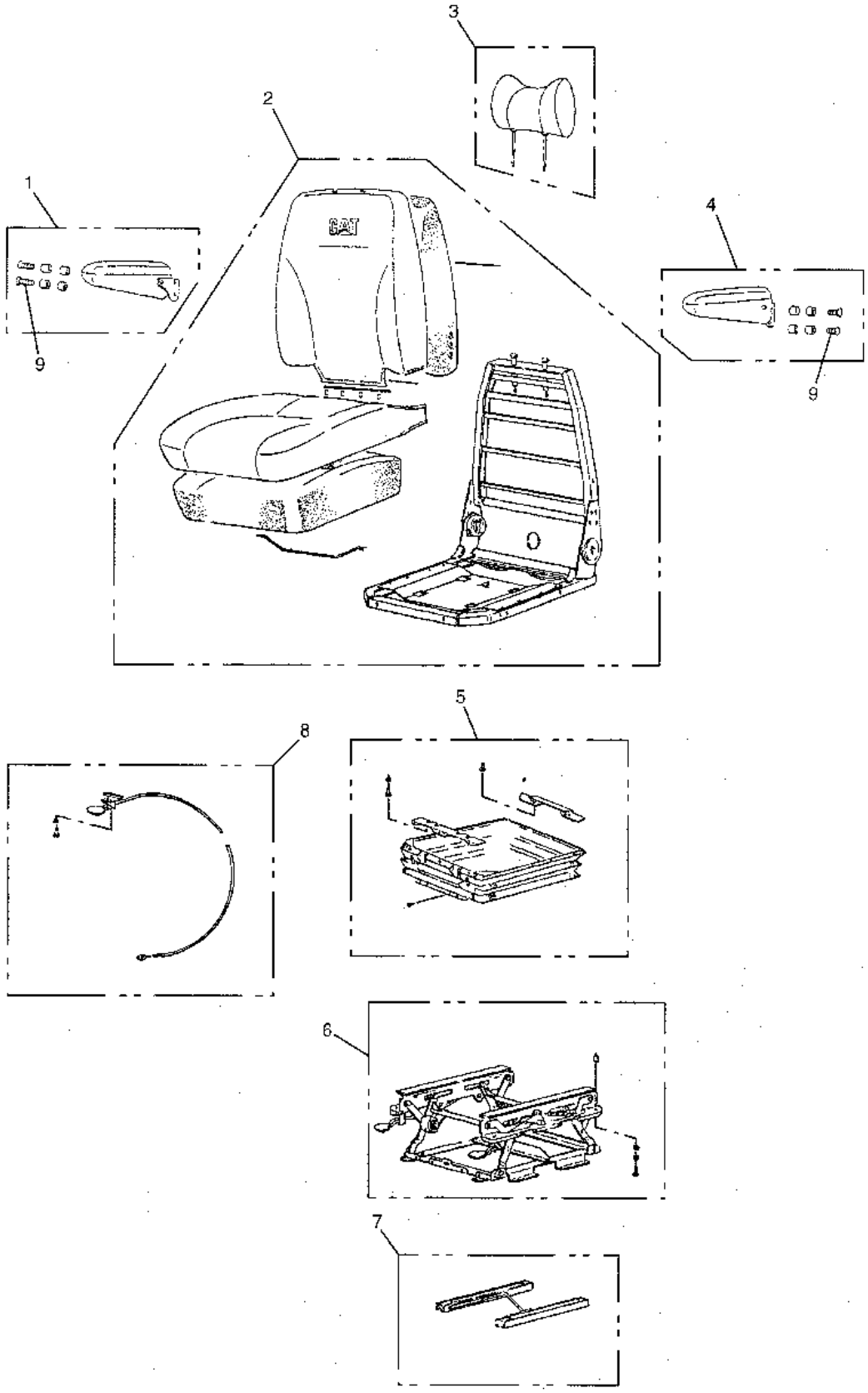


GRAPHIC #1

h67801e

# 1116391 SUSPENSION GP-SEAT

PART OF 1116283-Page 452.01
1300340-Page 464

**Key:** Y - SEE SEPARATE ILLUSTRATION

**SMCS**

| NOTE | REF NO | GRAPHIC REF | PART NUMBER | QTY | PART NAME 1 2 3 4 5 6 (PRODUCT LEVEL) | PRICE USD |
|---|---|---|---|---|---|---|
| | 1 | | 124-4004 | 2 | PLATE | |
| | 2 | | 147-4788 | 1 | COVER KIT | |
| | | | 130-0328 | 1 | CLIP KIT | |
| | 3 | | 133-7904 | 1 | SUPPORT KIT | |
| | | | 133-7955 | 1 | FASTENER KIT | |
| | 4 | | 130-0344 | 1 | SUPPORT KIT | |
| | 5 | | 147-4791 | 1 | CONTROL KIT | |
| | | | 147-4792 | 1 | CABLE KIT | |
| | | | 133-7887 | 1 | HANDLE KIT | |
| | 6 | | 130-0345 | 1 | SUPPORT KIT | |
| | 7 | | 133-7903 | 1 | SUPPORT KIT | |
| | | | 133-7955 | 1 | FASTENER KIT | |
| | 8 | | 147-4793 | 1 | ADJUSTER KIT | |
| | | | 147-4792 | 1 | CABLE KIT | |
| Y | 9 | | 130-0340 | 1 | SUSPENSION AS | |

## 1116391 SUSPENSION GP-SEAT

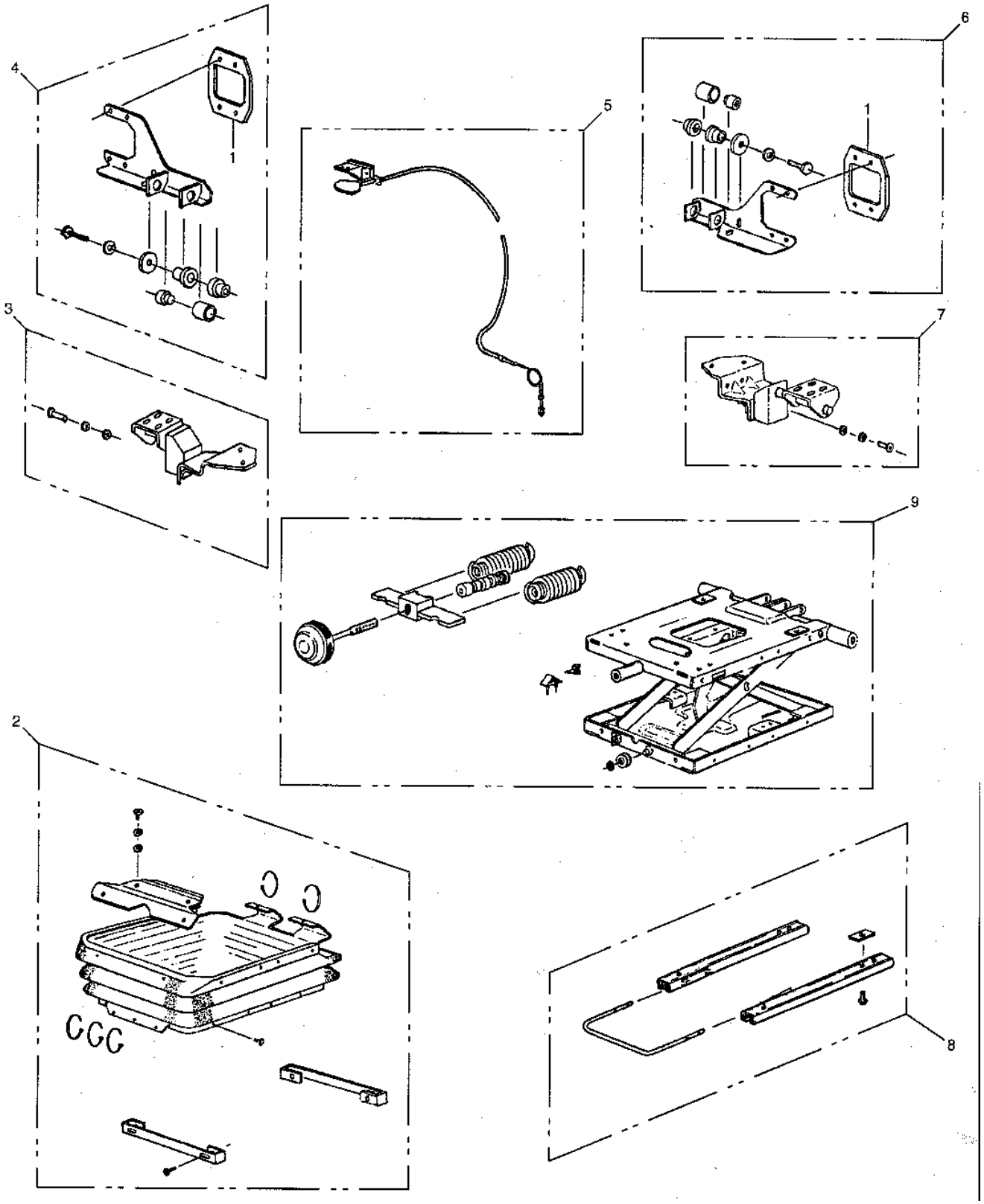


GRAPHIC #1

h56833e

# 1243926 SUSPENSION GP-SEAT

PART OF 1243925-Page 457
1300340-Page 464
AN ATTACHMENT

**Key:** Y - SEE SEPARATE ILLUSTRATION

**SMCS**

| NOTE | REF NO | GRAPHIC REF | PART NUMBER | QTY | PART NAME 1 2 3 4 5 6 (PRODUCT LEVEL) | PRICE USD |
|---|---|---|---|---|---|---|
| | 1 | | 124-4004 | 2 | PLATE | |
| | 2 | | 130-0339 | 1 | SUSPENSION COVER KIT | |
| | | | 130-0328 | 1 | CLIP KIT | |
| | 3 | | 130-0342 | 1 | CONTROL KIT | |
| | | | 133-7955 | 1 | FASTENER KIT | |
| | 4 | | 147-4786 | 1 | SUPPORT KIT | |
| | 5 | | 147-4791 | 1 | CONTROL KIT | |
| | | | 147-4792 | 1 | CABLE KIT | |
| | | | 133-7887 | 1 | HANDLE KIT | |
| | 6 | | 147-4787 | 1 | SUPPORT KIT | |
| | 7 | | 130-0343 | 1 | CONTROL KIT | |
| | | | 133-7955 | 1 | FASTENER KIT | |
| | 8 | | 147-4793 | 1 | ADJUSTER KIT | |
| | | | 147-4792 | 1 | CABLE KIT | |
| Y | 9 | | 130-0340 | 1 | SUSPENSION AS | |
| | 10 | | 147-4869 | 1 | COVER | |

# 1300340 SUSPENSION AS-SEAT

PART OF 1116391-Page 461, 1243926-Page 463

**Key:**

**SMCS**

| NOTE | REF NO | GRAPHIC REF | PART NUMBER | QTY | PART NAME 1 2 3 4 5 6 (PRODUCT LEVEL) | PRICE USD |
|---|---|---|---|---|---|---|
| | 1 | | 130-0323 | 1 | LEVER KIT | |
| | 2 | | 130-0321 | 1 | DAMPER KIT | |
| | 3 | | 130-0325 | 1 | BEARING KIT | |
| | 4 | | 110-5066 | 1 | BUMPER KIT | |
| | 5 | | 130-0322 | 1 | ADJUSTER KIT | |

## 1300340 SUSPENSION AS-SEAT

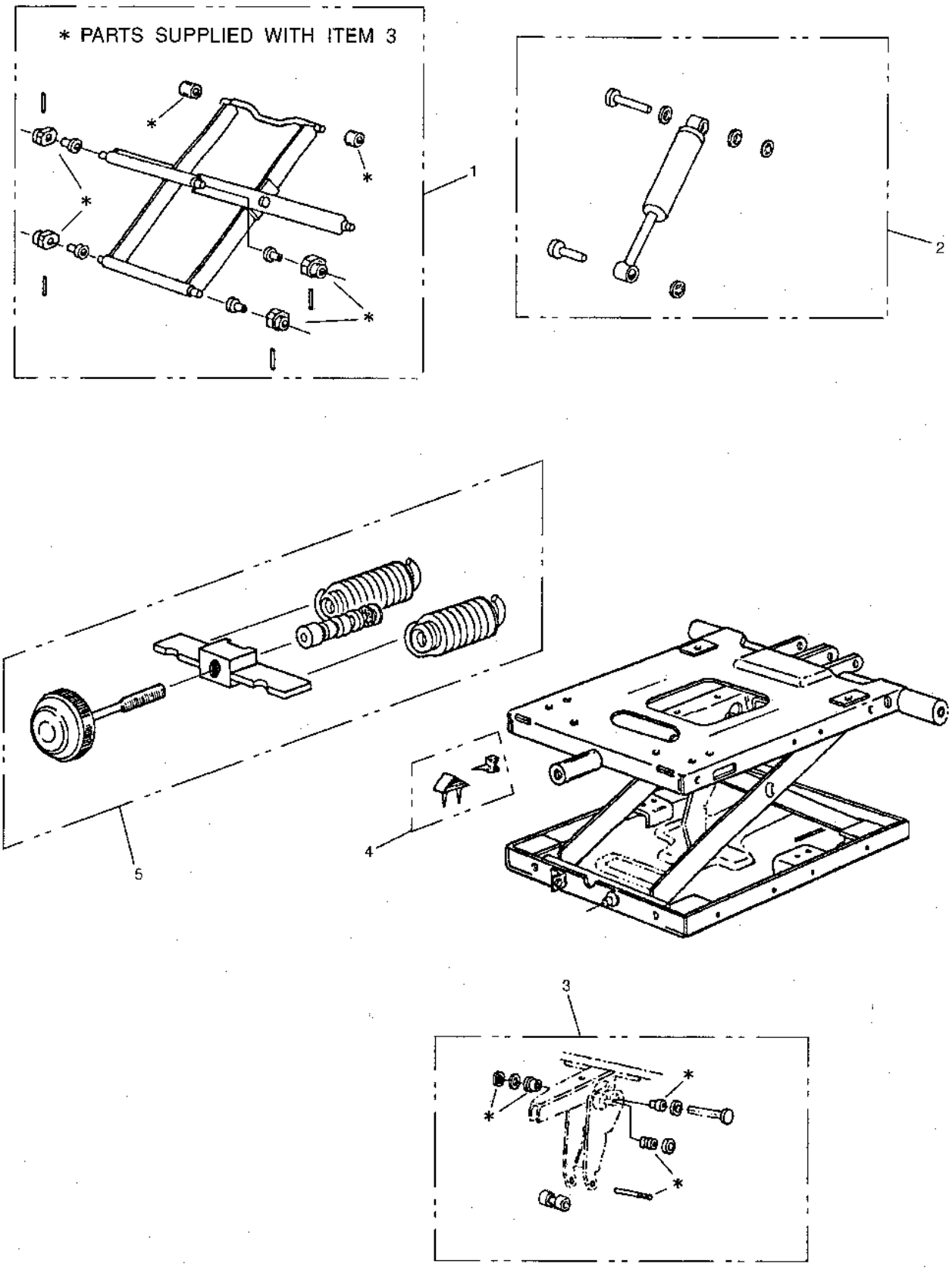


GRAPHIC #1

h51130e

# 1229648 HEADREST AS

SEAT
AN ATTACHMENT

**Key:**

**SMCS**

| NOTE | REF NO | GRAPHIC REF | PART NUMBER | QTY | PART NAME 1 2 3 4 5 6 (PRODUCT LEVEL) | PRICE USD |
|---|---|---|---|---|---|---|

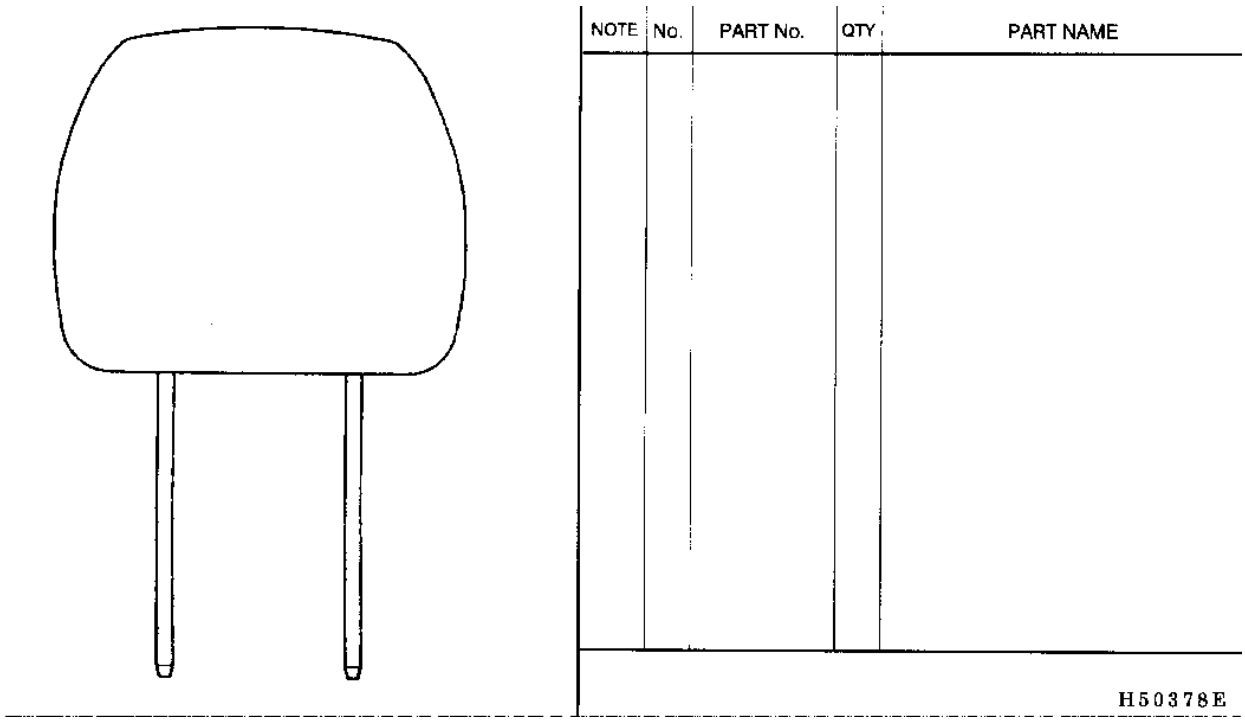


GRAPHIC #1 h50378e

# 7Y0059 LITERATURE GP

OWNER & OPERATOR

**Key:**

**SMCS**

| NOTE | REF NO | GRAPHIC REF | PART NUMBER | QTY | PART NAME 1 2 3 4 5 6 (PRODUCT LEVEL) | PRICE USD |
|---|---|---|---|---|---|---|
| | | | 5P-7958 | 2 | SLEEVE | |
| | | | 5P-8500 | 2 | KEY | |
| | | | 099-3645 | 1 | CABLE | |

# 1099462 COMPRESSOR GP-REFRIGERANT

S/N 8SR 1-00417, 8TR 1-00485

**Key:**

**SMCS**

| NOTE | REF NO | GRAPHIC REF | PART NUMBER | QTY | PART NAME 1 2 3 4 5 6 (PRODUCT LEVEL) | PRICE USD |
|---|---|---|---|---|---|---|
| | 1 | | 8T-2502 | 1 | BOLT (L=29mm) | |
| | 2 | | 8T-4896 | 11 | WASHER-HARD | |
| | 3 | | 030-3289 | 1 | V-BELT | |
| | 4 | | 5P-2566 | 1 | BOLT (L=38mm) | |
| | 5 | | 8T-4223 | 3 | WASHER-HARD | |
| | 6 | | 7C-2164 | 1 | BLOCK | |
| | 7 | | 7X-3374 | 2 | NUT | |
| | 8 | | 6L-5874 | 1 | ROD | |
| | 9 | | 7X-0288 | 4 | BOLT (L=41mm) | |
| | 10 | | 6V-8801 | 5 | NUT | |
| | 11 | | 7W-6421 | 2 | PLATE | |
| | 12 | | 6V-4432 | 1 | BOLT (L=102mm) | |
| | 13 | | 6V-8188 | 1 | NUT | |
| | 14 | | 136-1290 | 1 | BRACKET AS | |
| | 15 | | 6V-8918 | 1 | BOLT (L=32mm) | |
| | 16 | | 8T-4224 | 4 | WASHER-HARD | |
| | 17 | | 4M-6425 | 1 | BOLT (L=25mm) | |
| | 18 | | 109-9515 | 1 | PLATE AS | |
| | 19 | | 8T-9377 | 1 | BOLT (L=57mm) | |
| | 20 | | 3E-1906 | 1 | COMPRESSOR GP | |
| | | | 101-1759 | 1 | COMPRESSOR GP | |
| | | | 102-8802 | 1 | RECEPTACLE KIT | |
| | | | 9W-0852 | 2 | PIN | |
| | | | 3E-3365 | 1 | WEDGE | |
| | | | 100-4512 | 1 | COIL AS | |
| | 21 | | 7X-2537 | 1 | BOLT (L=35mm) | |
| | 22 | | 5C-7261 | 1 | NUT | |
| | 23 | | 0L-1143 | 1 | BOLT (L=64mm) | |
| | 24 | | 5M-2894 | 1 | WASHER | |
| | 25 | | 3S-2093 | 1 | STRAP | |

## 1099462 COMPRESSOR GP-REFRIGERANT

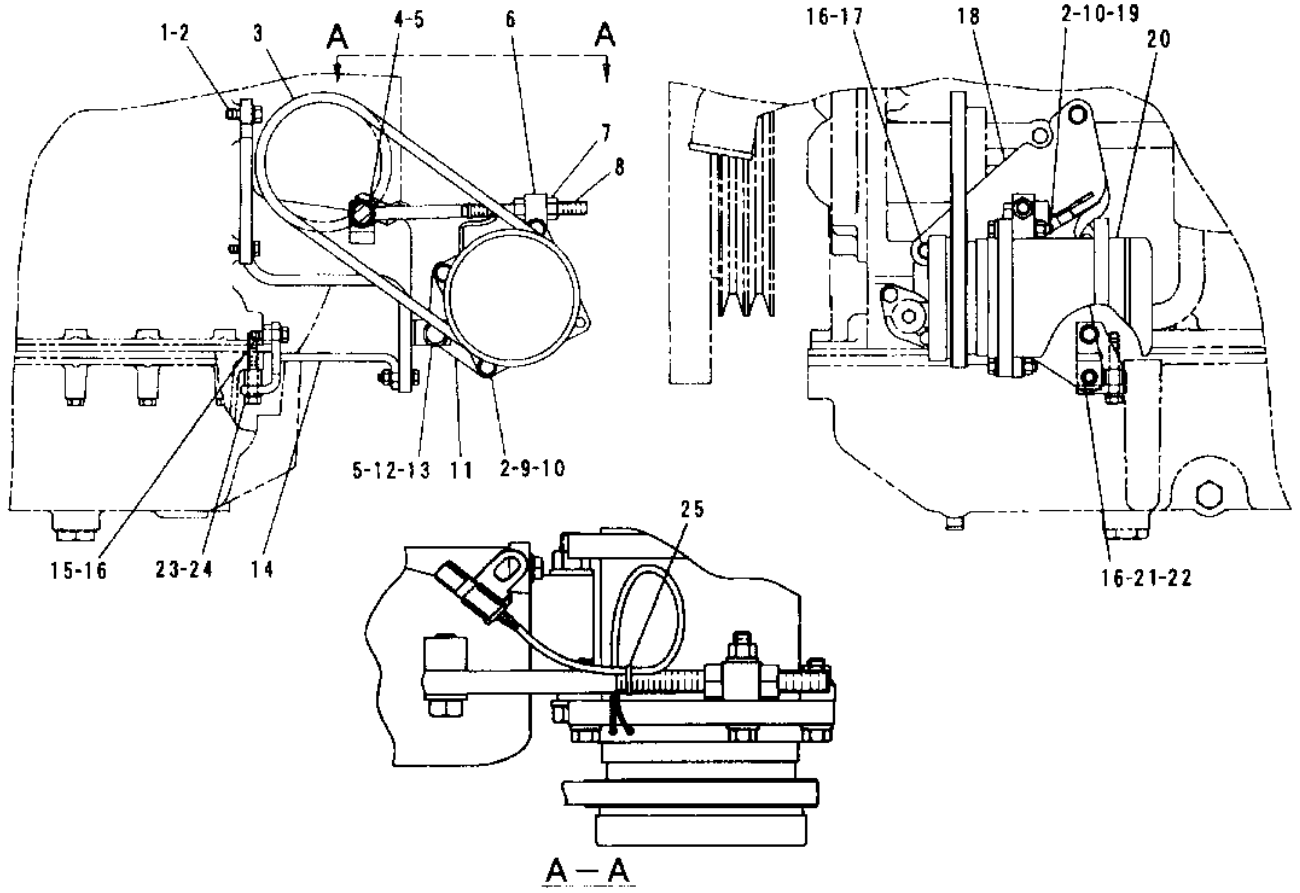


| NOTE | No. | PART No. | QTY | PART NAME | NOTE | No. | PART No. | QTY | PART NAME |
|---|---|---|---|---|---|---|---|---|---|
| | 1 | 8T-2502 | 1 | BOLT (L=29mm) | | 20 | 3E-1906 | 1 | COMPRESSOR GP |
| | 2 | 8T-4896 | 11 | WASHER-HARD | | | 101-1759 | 1 | COMPRESSOR GP |
| | 3 | 030-3289 | 1 | V-BELT | | | 102-8802 | 1 | RECEPTACLE KIT |
| | 4 | 5P-2566 | 1 | BOLT (L=38mm) | | | 9W-0852 | 2 | PIN |
| | 5 | 8T-4223 | 3 | WASHER-HARD | | | 3E-3365 | 1 | WEDGE |
| | 6 | 7C-2164 | 1 | BLOCK | | | 100-4512 | 1 | COIL AS |
| | 7 | 7X-3374 | 2 | NUT | | 21 | 7X-2537 | 1 | BOLT (L=35mm) |
| | 8 | 6L-5874 | 1 | ROD | | 22 | 5C-7261 | 1 | NUT |
| | 9 | 7X-0288 | 4 | BOLT (L=41mm) | | 23 | 0L-1143 | 1 | BOLT (L=64mm) |
| | 10 | 6V-8801 | 5 | NUT | | 24 | 5M-2894 | 1 | WASHER |
| | 11 | 7W-6421 | 2 | PLATE | | 25 | 3S-2093 | 1 | STRAP |
| | 12 | 6V-4432 | 1 | BOLT (L=102mm) | | | | | |
| | 13 | 6V-8188 | 1 | NUT | | | | | |
| | 14 | 136-1290 | 1 | BRACKET AS | | | | | |
| | 15 | 6V-8918 | 1 | BOLT (L=32mm) | | | | | |
| | 16 | 8T-4224 | 4 | WASHER-HARD | | | | | |
| | 17 | 4M-6425 | 1 | BOLT (L=25mm) | | | | | |
| | 18 | 109-9515 | 1 | PLATE AS | | | | | |
| | 19 | 8T-9377 | 1 | BOLT (L=57mm) | | | | | |

H56309E

# 1540418 COMPRESSOR GP-REFRIGERANT

S/N 8SR 00418-UP, 8TR 00486-UP

**Key:**

**SMCS**

| NOTE | REF NO | GRAPHIC REF | PART NUMBER | QTY | PART NAME 1 2 3 4 5 6 (PRODUCT LEVEL) | PRICE USD |
|---|---|---|---|---|---|---|
| | 1 | | 8T-2502 | 1 | BOLT (L=29mm) | |
| | 2 | | 8T-4896 | 1 | WASHER-HARD | |
| | 3 | | 1N-4635 | 1 | V-BELT | |
| | 4 | | 154-0419 | 1 | BRACKET AS | |
| | 5 | | 0L-1143 | 1 | BOLT (L=64mm) | |
| | 6 | | 5M-2894 | 1 | WASHER-HARD | |
| | 7 | | 6V-8918 | 1 | BOLT (L=32mm) | |
| | 8 | | 8T-4224 | 8 | WASHER-HARD | |
| | 9 | | 4M-6425 | 1 | BOLT (L=25mm) | |
| | 10 | | 154-0421 | 1 | PLATE AS | |
| | 11 | | 154-0490 | 1 | COMPRESSOR GP | |
| | 12 | | 7X-2537 | 1 | BOLT (L=35mm) | |
| | 13 | | 5C-7261 | 1 | NUT | |
| | 14 | | 154-0491 | 1 | PULLEY AS | |
| | 15 | | 085-7329 | 4 | SPACER | |
| | 16 | | 7X-2540 | 4 | BOLT (L=120mm) | |

## 1540418 COMPRESSOR GP-REFRIGERANT

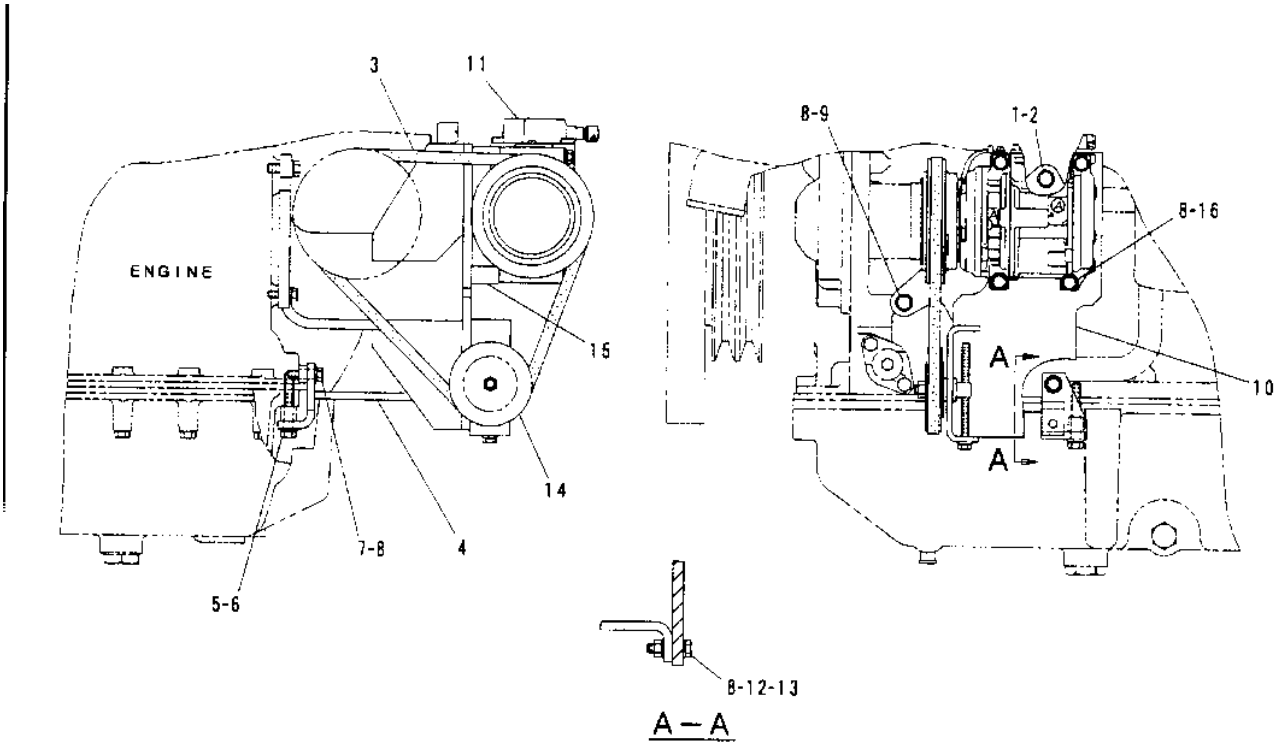


| NOTE | No. | PART No. | QTY | PART NAME |
|---|---|---|---|---|
| | 1 | 8T-2502 | 1 | BOLT(L=29mm) |
| | 2 | 8T-4896 | 1 | WASHER-HARD |
| | 3 | 1N-4635 | 1 | V-BELT |
| | 4 | 154-0419 | 1 | BRACKET AS |
| | 5 | 0L-1143 | 1 | BOLT(L=64mm) |
| | 6 | 5M-2894 | 1 | WASHER-HARD |
| | 7 | 6V-8918 | 1 | BOLT(L=32mm) |
| | 8 | 8T-4224 | 8 | WASHER-HARD |
| | 9 | 4M-6425 | 1 | BOLT(L=25mm) |
| | 10 | 154-0421 | 1 | PLATE AS |
| | 11 | 154-0490 | 1 | COMPRESSOR GP |
| | 12 | 7X-2537 | 1 | BOLT(L=35mm) |
| | 13 | 5C-7261 | 1 | NUT |
| | 14 | 154-0491 | 1 | PULLEY AS |
| | 15 | 085-7329 | 4 | SPACER |
| | 16 | 7X-2540 | 4 | BOLT(L=120mm) |

H64090E

# 1133421 CONDENSER & MTG GP-AIR COND

S/N 8SR 1-00417, 8TR 1-00485

**Key:**

**SMCS**

| NOTE | REF NO | GRAPHIC REF | PART NUMBER | QTY | PART NAME 1 2 3 4 5 6 (PRODUCT LEVEL) | PRICE USD |
|---|---|---|---|---|---|---|
| | 1 | | 128-2186 | 1 | BRACKET AS | |
| | 2 | | 7X-2534 | 8 | BOLT (L=50mm) | |
| | 3 | | 9X-8256 | 8 | WASHER | |
| | 4 | | 095-0827 | 8 | LOCKWASHER | |
| | 5 | | 128-2185 | 1 | BRACKET AS | |
| | 6 | | 105-9407 | 1 | CONDENSER AS | |
| | 7 | | 8T-4137 | 4 | BOLT (L=20mm) | |
| | 8 | | 8T-4121 | 4 | WASHER-HARD | |

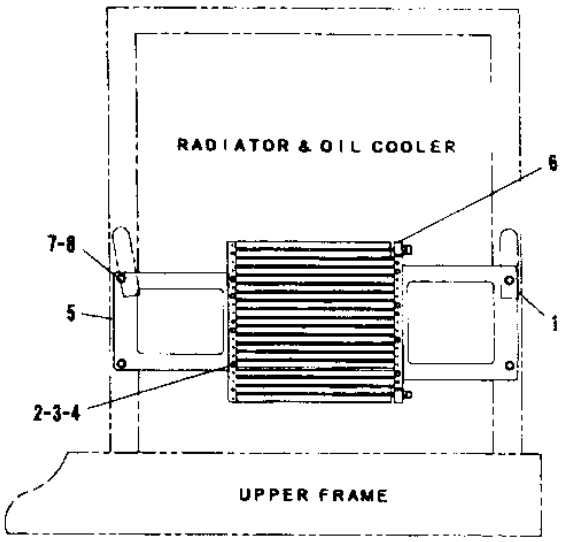


| NOTE | No. | PART No. | QTY | PART NAME |
|---|---|---|---|---|
| | 1 | 128-2186 | 1 | BRACKET AS |
| | 2 | 7X-2534 | 8 | BOLT (L=50mm) |
| | 3 | 9X-8256 | 8 | WASHER |
| | 4 | 095-0827 | 8 | LOCKWASHER |
| | 5 | 128-2185 | 1 | BRACKET AS |
| | 6 | 105-9407 | 1 | CONDENSER AS |
| | 7 | 8T-4137 | 4 | BOLT (L=20mm) |
| | 8 | 8T-4121 | 4 | WASHER-HARD |

H50733E

GRAPHIC #1 h50733e

# 1540415 CONDENSER & MTG GP-AIR COND

S/N 8SR 00418-UP, 8SR 00486-UP

**Key:**

**SMCS**

| NOTE | REF NO | GRAPHIC REF | PART NUMBER | QTY | PART NAME 1 2 3 4 5 6 (PRODUCT LEVEL) | PRICE USD |
|---|---|---|---|---|---|---|
| | 1 | | 8T-4137 | 4 | BOLT (L=20mm) | |
| | 2 | | 8T-4121 | 4 | WASHER-HARD | |
| | 3 | | 154-0416 | 2 | BRACKET AS | |
| | 4 | | 130-0253 | 1 | CONDENSER AS | |
| | 5 | | 8T-4189 | 4 | BOLT (L=20mm) | |
| | 6 | | 8T-4224 | 4 | WASHER-HARD | |

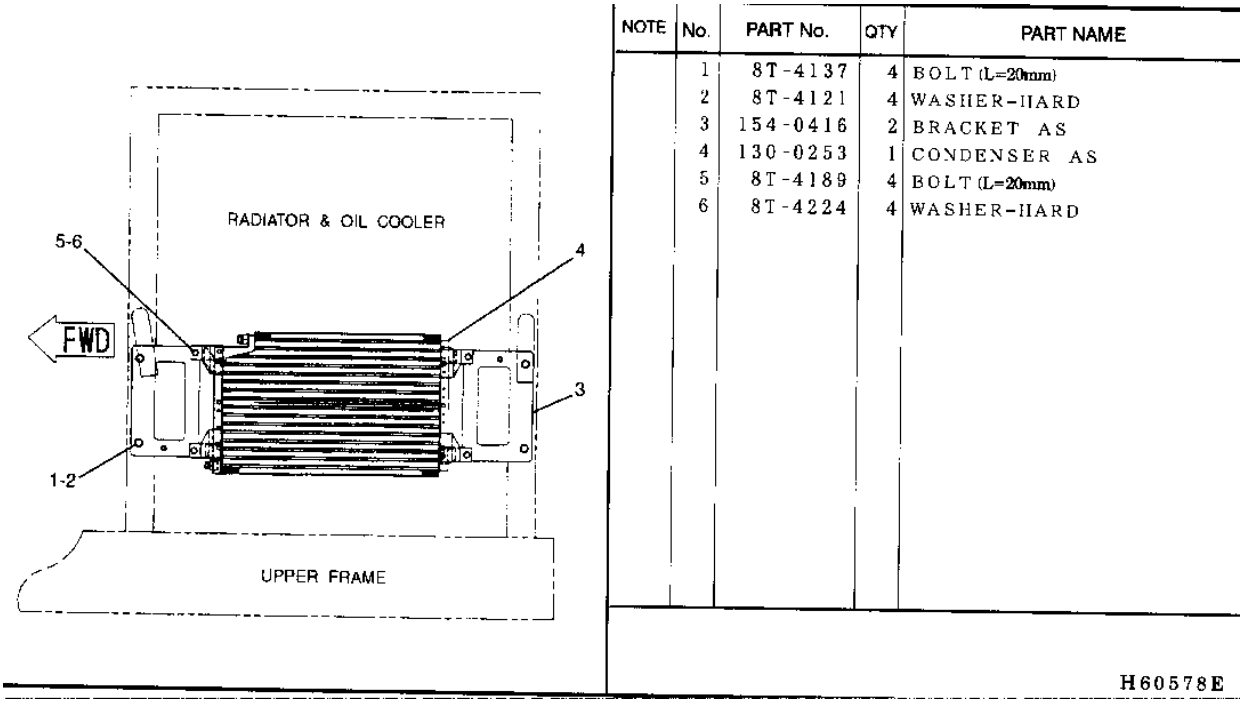


GRAPHIC #1 h60578e

# 1229681 AIR CONDITIONER GP

S/N 8SR 1-00417, 8TR 1-00485

**Key:** Y - Separate Illustration

**SMCS**

| NOTE | REF NO | GRAPHIC REF | PART NUMBER | QTY | PART NAME 1 2 3 4 5 6 (PRODUCT LEVEL) | PRICE USD |
|---|---|---|---|---|---|---|
| Y | | | 4I-1170 | 1 | DUCT GP (AIR) | |
| Y | | | 111-6289 | 1 | DUCT GP (DEFROST) | |
| Y | | | 111-6291 | 1 | DUCT GP (AIR) | |
| Y | | | 111-6305 | 1 | AIR CONDITIONER & MOUNTING GP | |
| Y | | | 124-3985 | 1 | DUCT GP (AIR) | |

# 1557021 AIR CONDITIONER GP

S/N 8SR 00418-UP, 8TR 00486-UP

**Key:** Y - Separate Illustration

**SMCS**

| NOTE | REF NO | GRAPHIC REF | PART NUMBER | QTY | PART NAME 1 2 3 4 5 6 (PRODUCT LEVEL) | PRICE USD |
|---|---|---|---|---|---|---|
| Y | | | 128-2149 | 1 | DUCT GP (AIR) | |
| Y | | | 128-2148 | 1 | DUCT GP (DEFROST) | |
| Y | | | 128-2150 | 1 | DUCT GP (AIR) | |
| Y | | | 155-7022 | 1 | AIR CONDITIONER & MOUNTING GP | |
| Y | | | 139-7150 | 1 | DUCT GP (AIR) | |

# 1352230 HEATER AR

S/N 8SR 1-00417, 8TR 1-00485
AN ATTACHMENT

**Key:** Y - Separate Illustration

**SMCS**

| NOTE | REF NO | GRAPHIC REF | PART NUMBER | QTY | PART NAME 1 2 3 4 5 6 (PRODUCT LEVEL) | PRICE USD |
|---|---|---|---|---|---|---|
| Y | | | 111-6287 | 1 | HEATER & MOUNTING GP | |
| Y | | | 135-2231 | 1 | LINES GP (HEATER) | |

# 1540684 HEATER AR

S/N 8SR 00418-UP, 8SR 00486-UP
AN ATTACHMENT

**Key:** Y - Separate Illustration

**SMCS**

| NOTE | REF NO | GRAPHIC REF | PART NUMBER | QTY | PART NAME 1 2 3 4 5 6 (PRODUCT LEVEL) | PRICE USD |
|---|---|---|---|---|---|---|
| Y | | | 154-0678 | 1 | HEATER & MOUNTING GP | |
| Y | | | 154-0685 | 1 | LINES GP (HEATER) | |

# 1116305 AIR CONDITIONER & MOUNTING GP

S/N 8SR 1-00417, 8TR 1-00485
PART OF 1229681-Page 468
1116413-Page 472

**Key:** Y - Separate Illustration

**SMCS**

| NOTE | REF NO | GRAPHIC REF | PART NUMBER | QTY | PART NAME 1 2 3 4 5 6 (PRODUCT LEVEL) | PRICE USD |
|---|---|---|---|---|---|---|
| Y | 1 | | 111-6413 | 1 | CONDITIONER GP | |
| | 2 | | 119-5026 | 4 | SCREW | |
| | 3 | | 130-0297 | 1 | PANEL | |
| | 4 | | 4I-0471 | 2 | HOSE | |
| | 5 | | 4I-6544 | 2 | CLAMP | |
| | 6 | | 8T-4137 | 7 | BOLT (L=20mm) | |
| | 7 | | 128-2163 | 1 | SENSOR | |
| | 8 | | 4I-6600 | 2 | CLAMP | |
| | 9 | | 128-2162 | 1 | SENSOR | |
| | 10 | | 8T-4121 | 7 | WASHER | |
| | 11 | | 8T-4200 | 1 | BOLT (L=16mm) | |
| | 12 | | 8T-4224 | 1 | WASHER | |
| | 13 | | 4I-3400 | 1 | HOSE | |
| | 14 | | 124-4058 | 1 | DUCT AS | |
| | | | 124-4051 | 1 | CLAMP | |
| | 15 | | 130-0298 | 1 | HARNESS AS | |
| | 16 | | 5I-3572 | 1 | FILTER | |
| | 17 | | 124-4053 | 1 | THERMISTOR | |
| | 18 | | 124-4050 | 1 | GROMMET | |

## 1116305 AIR CONDITIONER & MOUNTING GP

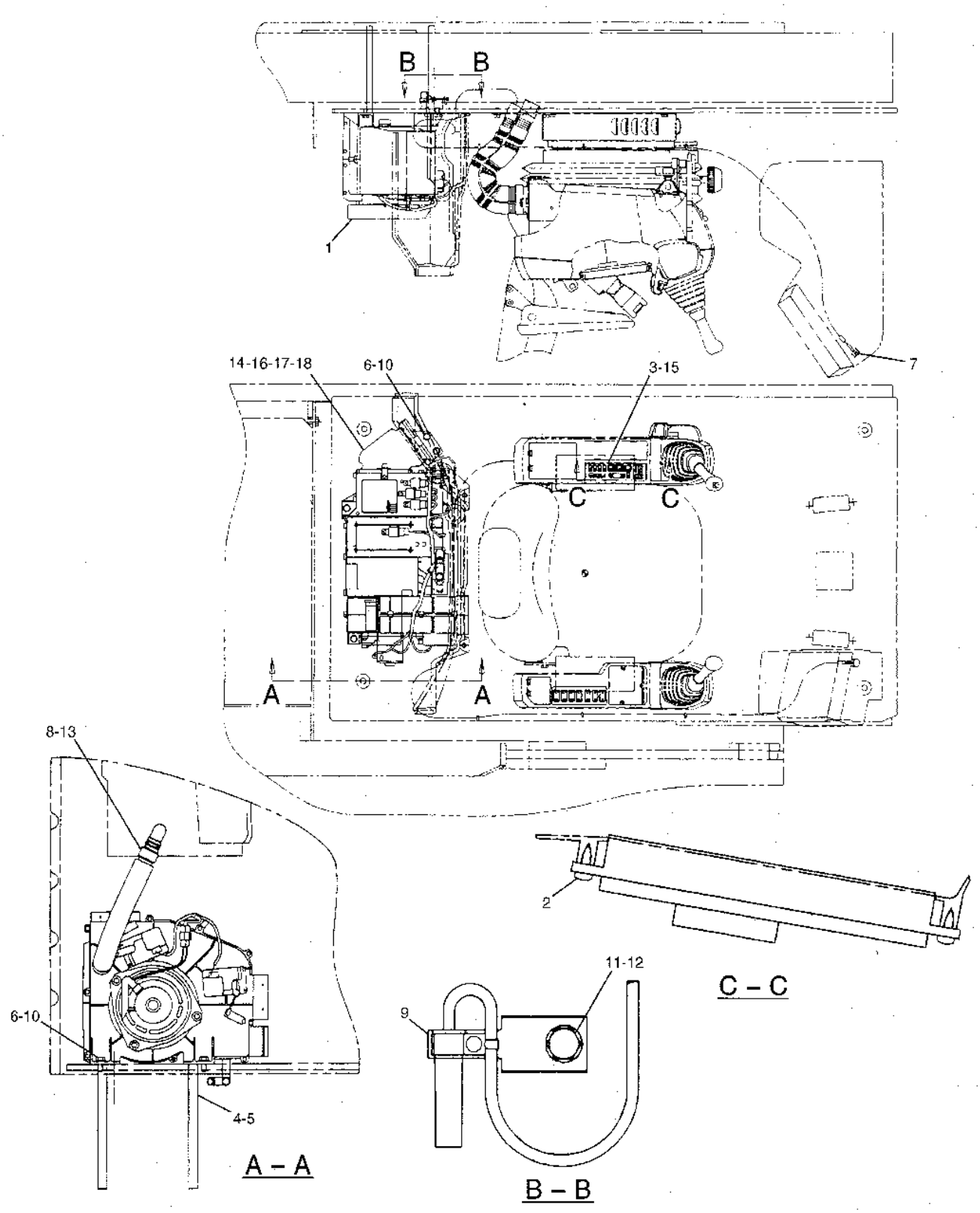


GRAPHIC #1

h83116e

# 1557022 AIR CONDITIONER & MOUNTING GP

S/N 8SR 00418-UP, 8TR 00486-UP
PART OF 1557021-Page 468
1597855-Page 473.01, 1680746-Page 477.03, 1352255-Page 477.05

**Key:** Y - SEE SEPARATE ILLUSTRATION

**SMCS**

| NOTE | REF NO | GRAPHIC REF | PART NUMBER | QTY | PART NAME 1 2 3 4 5 6 (PRODUCT LEVEL) | PRICE USD |
|---|---|---|---|---|---|---|
| | 1 | | 119-5026 | 4 | SCREW | |
| | 2 | | 128-2163 | 1 | SENSOR-TEMPERATURE | |
| | 3 | | 8T-4200 | 1 | BOLT (L=16mm) | |
| | 4 | | 8T-4224 | 1 | WASHER-HARD | |
| Y | 5 | | 159-7855 | 1 | CONDITIONER GP | |
| | 6 | | 128-2162 | 1 | SENSOR-SUN LOAD | |
| | 7 | | 139-7207 | 1 | PANEL | |
| | 8 | | 133-7950 | 1 | COVER AS | |
| | 9 | | 8T-4137 | 15 | BOLT (L=20mm) | |
| | 10 | | 8T-4121 | 15 | WASHER-HARD | |
| Y | 11 | | 168-0746 | 1 | DISTRIBUTOR AS | |
| | 12 | | 130-0252 | 2 | HOSE | |
| | 13 | | 122-9657 | 2 | CLAMP | |
| | 14 | | 122-9624 | 1 | HOSE | |
| | 15 | | 4I-6600 | 1 | CLAMP | |
| | 16 | | 8T-6693 | 1 | SCREW-MACHINE | |
| Y | 17 | | 135-2255 | 1 | DUCT AS | |
| | 18 | | 8T-0328 | 1 | WASHER-HARD | |
| | 19 | | 3X-2093 | 1 | STRAP | |
| | 20 | | 155-7023 | 1 | HARNESS AS | |

## 1557022 AIR CONDITIONER & MOUNTING GP

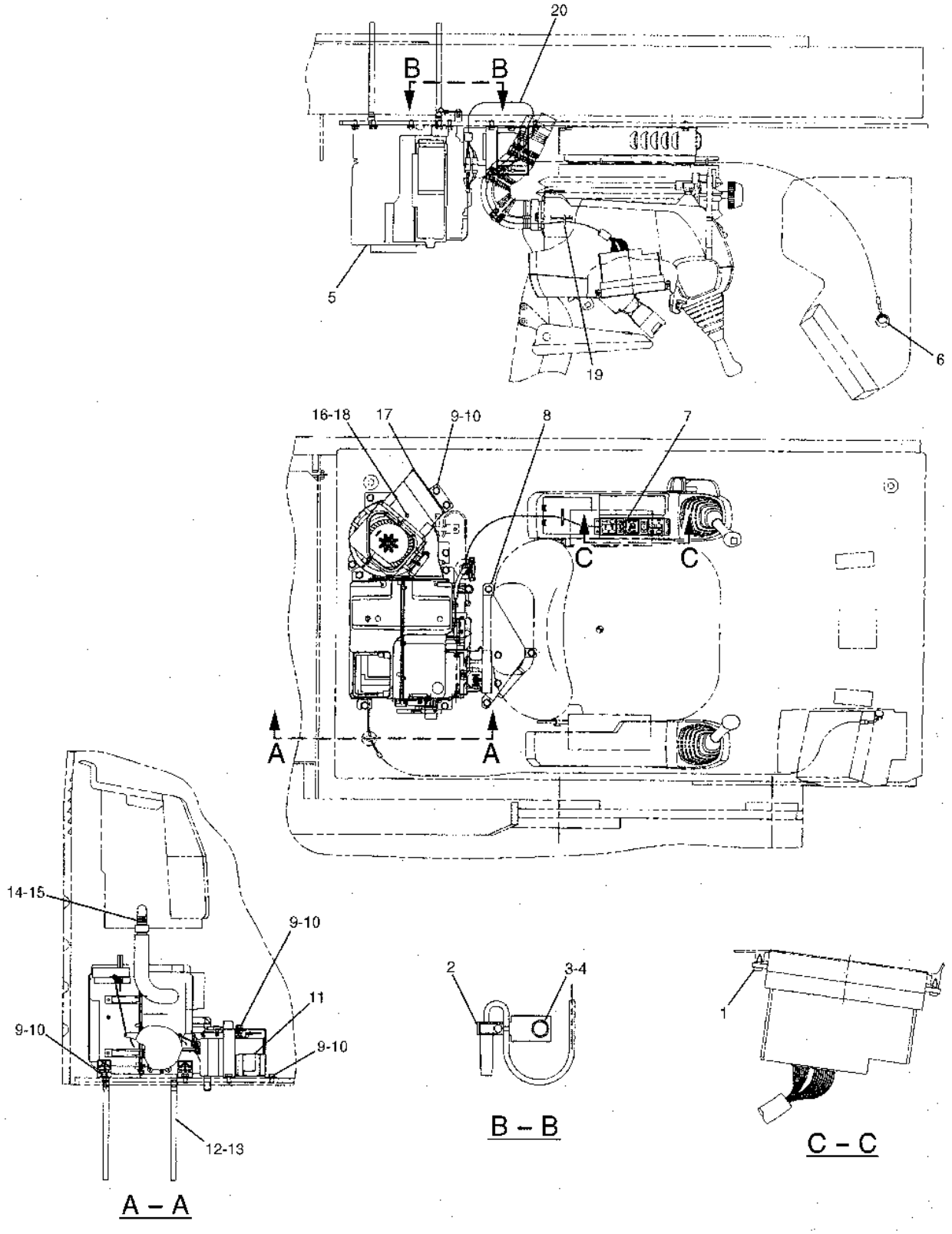


GRAPHIC #1

h66702e

# 1116413 AIR CONDITIONER GP

S/N 8SR 1-00417, 8TR 1-00485
PART OF 1116305-Page 471

**Key:**

**SMCS**

| NOTE | REF NO | GRAPHIC REF | PART NUMBER | QTY | PART NAME 1 2 3 4 5 6 (PRODUCT LEVEL) | PRICE USD |
|---|---|---|---|---|---|---|
| | 1 | | 105-9507 | 1 | CORE AS | |
| | 2 | | 5I-3556 | 1 | CORE AS | |
| | 3 | | 5I-3557 | 1 | CASE | |
| | 4 | | 5I-3558 | 1 | CASE | |
| | 5 | | 5I-3559 | 1 | CASE | |
| | 6 | | 124-3934 | 1 | CASE | |
| | 7 | | 124-3935 | 1 | CASE | |
| | 8 | | 5I-3562 | 1 | CASE | |
| | 9 | | 096-0783 | 3 | INSULATOR | |
| | 10 | | 5I-3591 | 1 | GROMMET | |
| | 11 | | 124-3936 | 1 | GROMMET | |
| | 12 | | 124-3937 | 1 | BRACKET | |
| | 13 | | 5I-3594 | 1 | GROMMET | |
| | 14 | | 5I-3595 | 1 | GROMMET | |
| | 15 | | 5I-3596 | 1 | GROMMET | |
| | 16 | | 5I-3597 | 1 | GROMMET | |
| | 17 | | 5I-3598 | 1 | GROMMET | |
| | 18 | | 124-4037 | 1 | SPRING | |
| | 19 | | 5I-3569 | 1 | BRACKET | |
| | 20 | | 5I-3571 | 1 | COVER | |
| | 21 | | 5I-3599 | 1 | BRACKET | |
| | 22 | | 124-4038 | 1 | BRACKET | |
| | 23 | | 124-4039 | 1 | BRACKET | |
| | 24 | | 105-9508 | 1 | PIPE | |
| | 25 | | 5I-3602 | 1 | HOSE | |
| | 26 | | 5I-3603 | 2 | CLAMP | |
| | 27 | | 5I-3584 | 1 | CLIP | |
| | 28 | | 5I-3585 | 1 | CLIP | |
| | 29 | | 5I-3586 | 1 | CLIP | |
| | 30 | | 5I-3566 | 1 | MOTOR AS | |
| | | | 115-3811 | 1 | FAN | |
| | 31 | | 5I-3563 | 1 | MOTOR AS | |
| | 32 | | 5I-3564 | 1 | MOTOR AS | |
| | 33 | | 5I-3565 | 2 | MOTOR AS | |
| | 34 | | 105-9509 | 1 | VALVE AS | |
| | 35 | | 5I-3568 | 1 | VALVE AS | |
| | 36 | | 099-6746 | 1 | THERMISTOR | |
| | 37 | | 124-4040 | 1 | RESISTOR | |
| | 38 | | 124-4041 | 1 | HARNESS AS | |
| | 39 | | 7I-0213 | 1 | COVER | |
| | 40 | | 5I-3575 | 1 | ROD AS | |
| | 41 | | 5I-3576 | 3 | ROD | |
| | 42 | | 5I-3587 | 1 | DAMPER AS | |
| | 43 | | 5I-3588 | 1 | DAMPER AS | |
| | 44 | | 5I-3589 | 1 | DAMPER AS | |
| | 45 | | 5I-3577 | 1 | ROD | |
| | 46 | | 5I-3578 | 1 | ROD | |
| | 47 | | 5I-3579 | 1 | ROD | |

## 1116413 AIR CONDITIONER GP

| | | | |
|---|---|---|---|
| 48 | 124-4042 | 5 | RELAY |
| 49 | 135-2205 | 1 | CONTROL AS |
| 50 | 5I-3605 | 11 | CLAMP |
| 51 | 5I-3580 | 3 | CLAMP |
| 52 | 5I-3581 | 5 | CLAMP |
| 53 | 5I-3582 | 1 | CLAMP |
| 54 | 5I-3606 | 1 | CLIP |
| 55 | 5I-3607 | 4 | CLAMP |
| 56 | 5I-3608 | 1 | SEAL |
| 57 | 7I-0253 | 1 | HOSE |
| 58 | 124-4044 | 1 | HARNESS AS |
| 59 | 124-4045 | 1 | CLAMP |
| 60 | 124-4046 | 1 | THERMISTOR |
| 61 | 124-4047 | 1 | THERMISTOR |
| 62 | 124-4048 | 1 | HOLDER |
| 63 | 124-4049 | 1 | INSULATOR |
| 64 | 124-4050 | 1 | GROMMET |
| 65 | 124-4051 | 1 | CLAMP |
| 66 | 124-4052 | 1 | COVER |
| 67 | 5I-3609 | 15 | BOLT |
| 68 | 5I-3610 | 6 | BOLT |
| 69 | 130-0299 | 1 | COVER |
| 70 | 5I-3611 | 3 | BOLT |
| 71 | 5I-3612 | 1 | RING |
| 72 | 5I-3613 | 12 | NUT |
| 73 | 5I-3614 | 3 | NUT |
| 74 | 5I-3615 | 16 | SCREW |
| 75 | 5I-3616 | 11 | SCREW |
| 76 | 5I-3638 | 2 | SCREW |
| 77 | 5I-3639 | 13 | SCREW |
| 78 | 5I-3640 | 6 | SCREW |
| 79 | 7I-0251 | 10 | SCREW |
| 80 | 7Y-5287 | 1 | SCREW |

## 1116413 AIR CONDITIONER GP

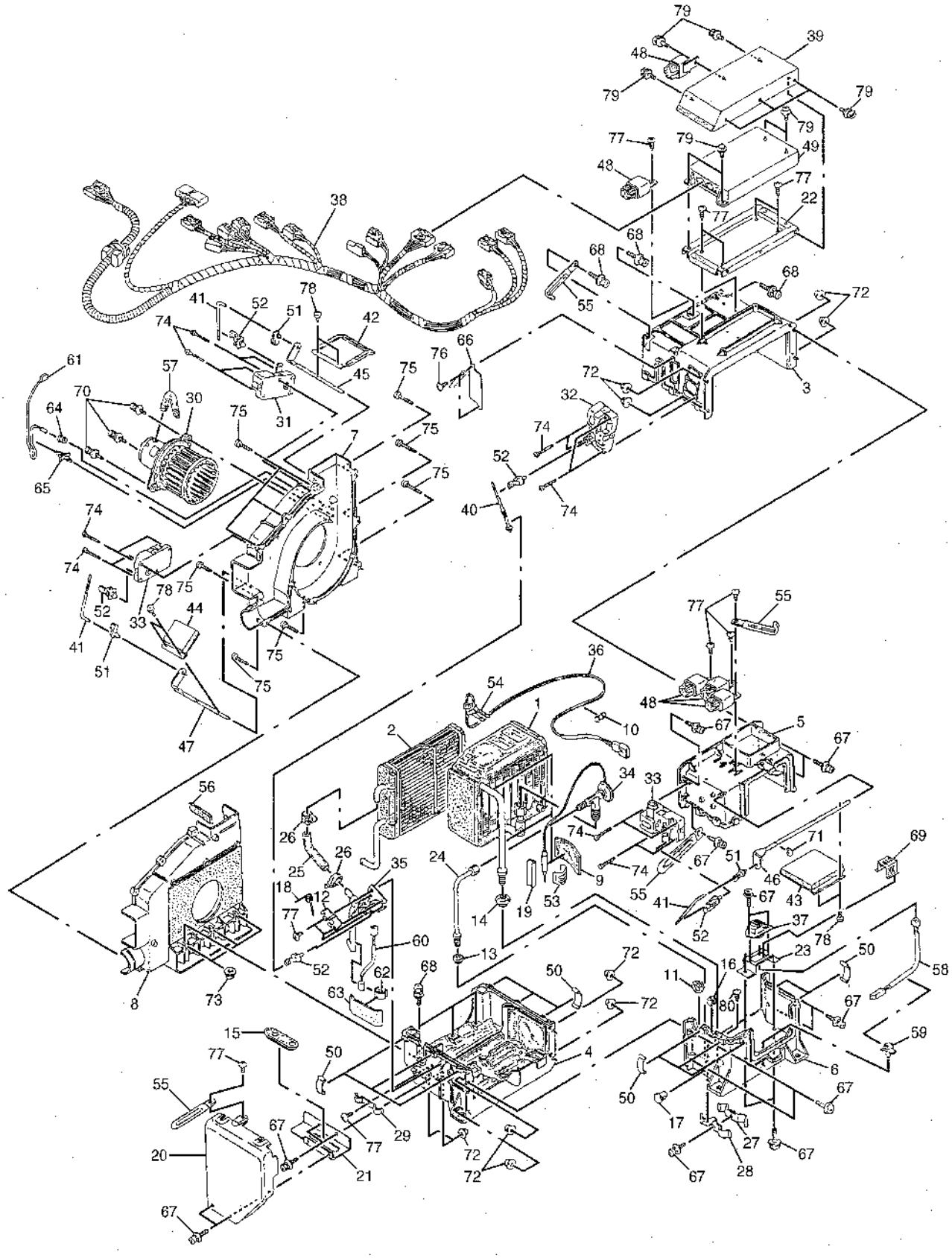

GRAPHIC #1

h52481e

# 1597855 AIR CONDITIONER GP

S/N 8SR 00418-UP, 8TR 00486-UP
PART OF 1557022-Page 471.02
1474833-Page 473.02, 1680808-Page 473.03

**Key:** Y - SEE SEPARATE ILLUSTRATION

**SMCS**

| NOTE | REF NO | GRAPHIC REF | PART NUMBER | QTY | PART NAME 1 2 3 4 5 6 (PRODUCT LEVEL) | PRICE USD |
|---|---|---|---|---|---|---|
| | 1 | | 159-7853 | 1 | HARNESS AS | |
| | 2 | | 147-4846 | 2 | PACKING | |
| | 3 | | 8T-0328 | 1 | WASHER-HARD | |
| | 4 | | 147-4843 | 2 | BRACKET | |
| | 5 | | 147-4845 | 1 | PACKING | |
| | 6 | | 147-4844 | 1 | CONNECTOR | |
| Y | 7 | | 168-0808 | 1 | CONDITIONER GP | |
| Y | 8 | | 147-4833 | 1 | BLOWER GP | |
| | 9 | | 135-2296 | 2 | RELAY | |
| | 10 | | 8T-4970 | 2 | BOLT (L=14mm) | |
| | 11 | | 095-0827 | 2 | LOCKWASHER | |
| | 12 | | 9X-8256 | 2 | WASHER | |
| | 13 | | 147-4832 | 1 | CLIP | |
| | 14 | | 6V-9674 | 1 | SCREW-MACHINE | |
| | 15 | | 096-0192 | 1 | LOCKWASHER | |

## 1597855 AIR CONDITIONER GP

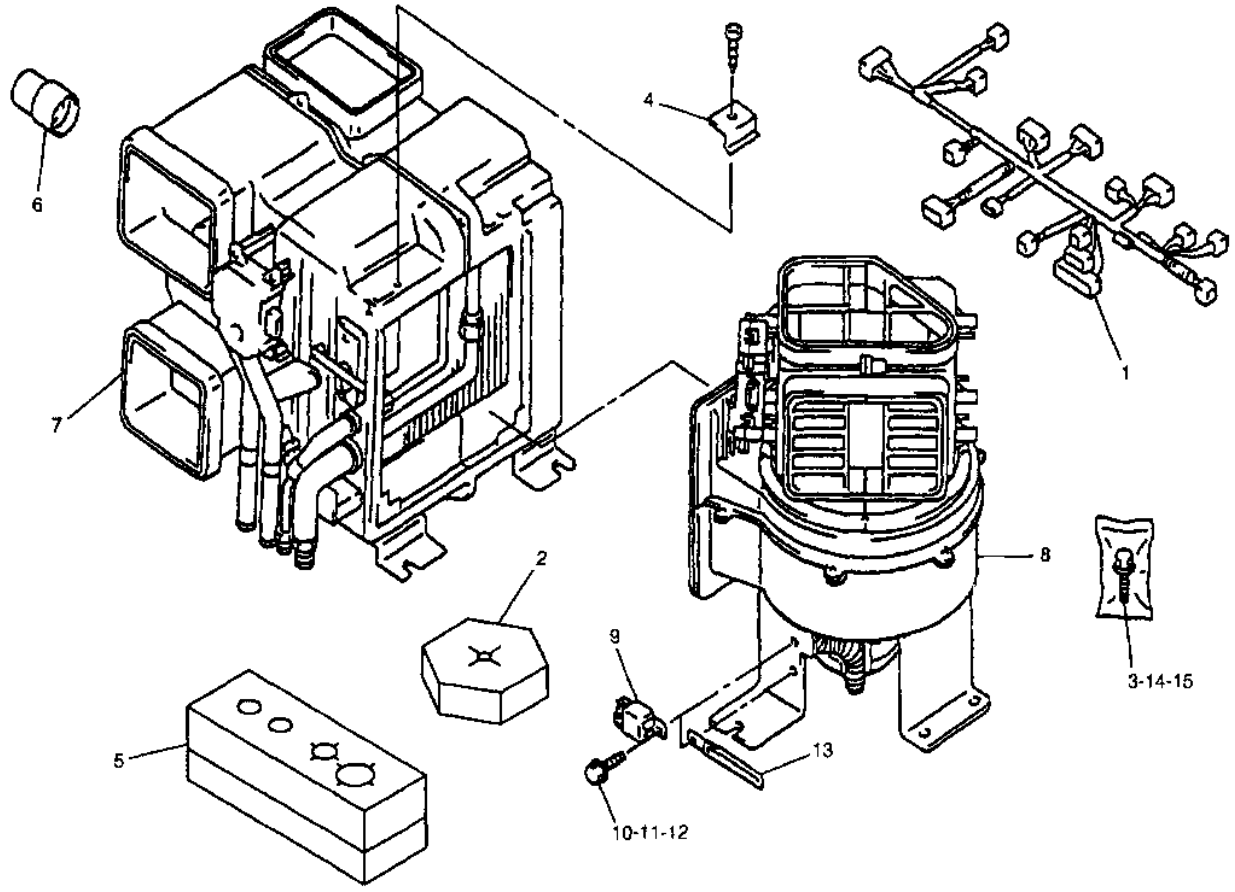


| NOTE | No. | PART No. | QTY | PART NAME |
|---|---|---|---|---|
| | 1 | 159-7853 | 1 | HARNESS AS |
| | 2 | 147-4846 | 2 | PACKING |
| | 3 | 8T-0328 | 1 | WASHER-HARD |
| | 4 | 147-4843 | 2 | BRACKET |
| | 5 | 147-4845 | 1 | PACKING |
| | 6 | 147-4844 | 1 | CONNECTOR |
| Y | 7 | 168-0808 | 1 | CONDITIONER GP |
| Y | 8 | 147-4833 | 1 | BLOWER GP |
| | 9 | 135-2296 | 2 | RELAY |
| | 10 | 8T-4970 | 2 | BOLT (L=14mm) |
| | 11 | 095-0827 | 2 | LOCKWASHER |
| | 12 | 9X-8256 | 2 | WASHER |
| | 13 | 147-4832 | 1 | CLIP |
| | 14 | 6V-9674 | 1 | SCREW-MACHINE |
| | 15 | 096-0192 | 1 | LOCKWASHER |

Y-SEE SEPARATE ILLUSTRATION

H66705E

GRAPHIC #1

h66705e

# 1474833 BLOWER GP

S/N 8SR 00418-UP, 8TR 00486-UP
PART OF 1597855-Page 473.01, 1597856-Page 481.03

**Key:**

**SMCS**

| NOTE | REF NO | GRAPHIC REF | PART NUMBER | QTY | PART NAME 1 2 3 4 5 6 (PRODUCT LEVEL) | PRICE USD |
|---|---|---|---|---|---|---|
| | 1 | | 147-4831 | 1 | CLAMP | |
| | 2 | | 147-4841 | 1 | INSULATOR | |
| | 3 | | 147-4840 | 1 | INSULATOR | |
| | 4 | | 147-4916 | 1 | CLIP AS | |
| | 5 | | 147-4837 | 1 | PIPE | |
| | 6 | | 147-4836 | 1 | BRACKET AS | |
| | 7 | | 147-4834 | 1 | MOTOR AS | |
| | 8 | | 8T-6693 | 3 | SCREW-MACHINE | |
| | 9 | | 8T-0328 | 3 | WASHER-HARD | |
| | 10 | | 096-0192 | 3 | LOCKWASHER | |
| | 11 | | 147-4838 | 1 | PACKING | |
| | 12 | | 147-4835 | 1 | MOTOR AS | |
| | 13 | | 147-4832 | 2 | CLIP | |
| | 14 | | 147-4839 | 1 | INSULATOR | |

## 1474833 BLOWER GP

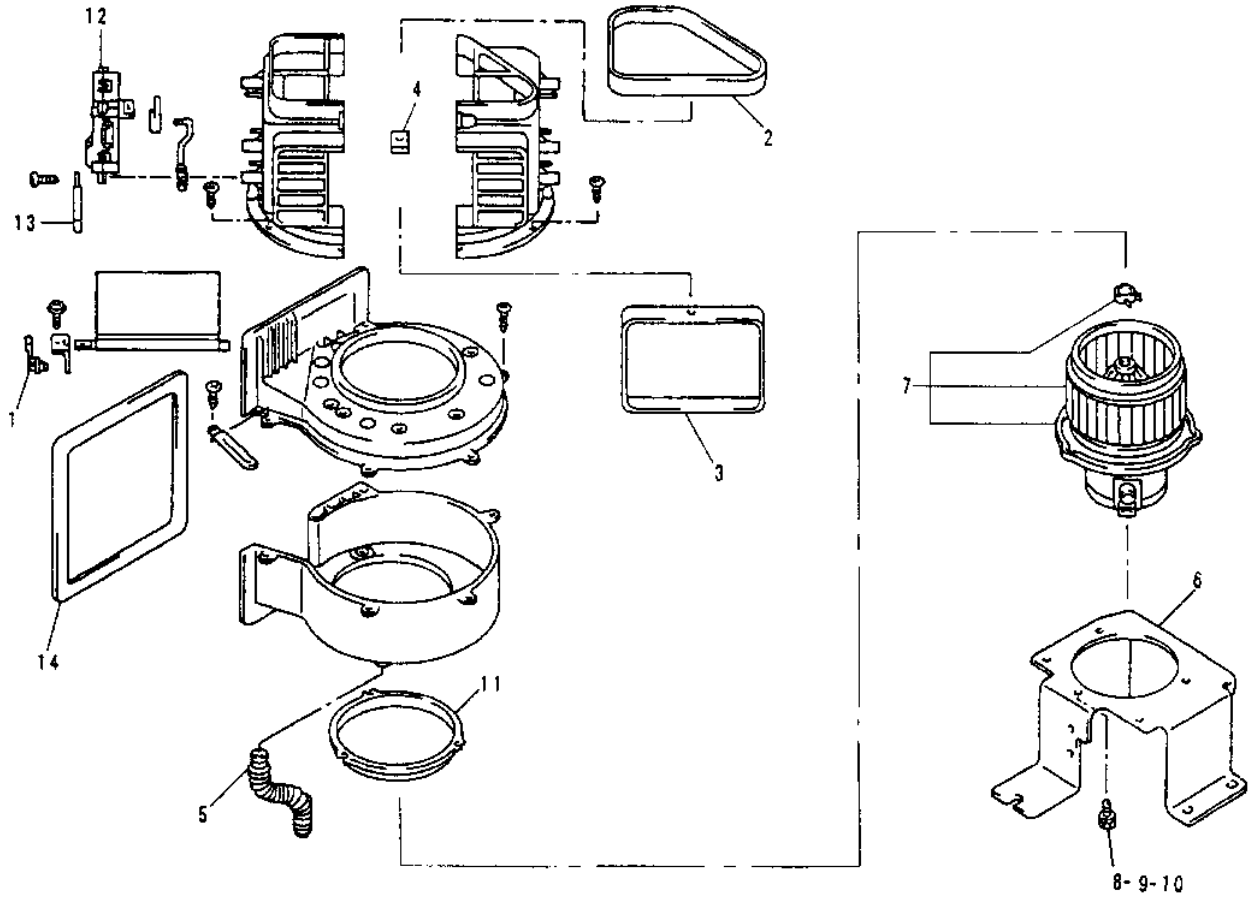


| NOTE | No. | PART No. | QTY | PART NAME | NOTE | No. | PART No. | QTY | PART NAME |
|---|---|---|---|---|---|---|---|---|---|
| | 1 | 147-4831 | 1 | CLAMP | | | | | |
| | 2 | 147-4841 | 1 | INSULATOR | | | | | |
| | 3 | 147-4840 | 1 | INSULATOR | | | | | |
| | 4 | 147-4916 | 1 | CLIP AS | | | | | |
| | 5 | 147-4837 | 1 | PIPE | | | | | |
| | 6 | 147-4836 | 1 | BRACKET AS | | | | | |
| | 7 | 147-4834 | 1 | MOTOR AS | | | | | |
| | 8 | 8T-6693 | 3 | SCREW-MACHINE | | | | | |
| | 9 | 8T-0328 | 3 | WASHER-HARD | | | | | |
| | 10 | 096-0192 | 3 | LOCKWASHER | | | | | |
| | 11 | 147-4838 | 1 | PACKING | | | | | |
| | 12 | 147-4835 | 1 | MOTOR AS | | | | | |
| | 13 | 147-4832 | 2 | CLIP | | | | | |
| | 14 | 147-4839 | 1 | INSULATOR | | | | | |

H58013E

GRAPHIC #1

h58013e

# 1680808 AIR CONDITIONER GP

S/N 8SR 00418-UP, 8TR 00486-UP
PART OF 1597855-Page 473.01

**Key:**

**SMCS**

| NOTE | REF NO | GRAPHIC REF | PART NUMBER | QTY | PART NAME 1 2 3 4 5 6 (PRODUCT LEVEL) | PRICE USD |
|---|---|---|---|---|---|---|
| | 1 | | 147-4828 | 1 | BRACKET | |
| | 2 | | 147-4815 | 1 | THERMISTOR | |
| | 3 | | 147-4830 | 1 | BRACKET | |
| | 4 | | 147-4829 | 1 | BRACKET | |
| | 5 | | 147-4827 | 1 | BRACKET | |
| | 6 | | 147-4823 | 1 | SENSOR AS | |
| | 7 | | 147-4814 | 1 | TUBE AS | |
| | 8 | | 121-7136 | 1 | SEAL-O-RING (ID=13.4mm) | |
| | 9 | | 121-7138 | 2 | SEAL-O-RING (ID=6.7mm) | |
| | 10 | | 130-0263 | 1 | VALVE AS | |
| | 11 | | 8T-9534 | 2 | BOLT (L=50mm) | |
| | 12 | | 147-4816 | 2 | CLIP | |
| | 13 | | 147-4813 | 1 | CORE AS | |
| | 14 | | 147-4831 | 2 | CLAMP | |
| | 15 | | 147-4822 | 1 | BRACKET | |
| | 16 | | 147-4825 | 1 | MOTOR AS | |
| | 17 | | 147-4832 | 4 | CLIP | |
| | 18 | | 147-4812 | 1 | CORE AS | |
| | 19 | | 147-4826 | 1 | MOTOR AS | |
| | 20 | | 159-7858 | 1 | CONTROLLER AS | |
| | 21 | | 147-4819 | 1 | GROMMET | |
| | 22 | | 130-0270 | 1 | SWITCH AS(PRESSURE) | |
| | 23 | | 159-7741 | 1 | TUBE AS | |
| | 24 | | 159-7742 | 1 | TUBE AS | |
| | 25 | | 121-7136 | 1 | SEAL-O-RING (ID=13.4mm) | |
| | 26 | | 147-4820 | 1 | CLIP | |
| | 27 | | 147-4821 | 1 | CLIP | |
| | 28 | | 159-7739 | 1 | DOOR AS | |
| | 29 | | 159-7740 | 1 | DOOR AS | |

# 4I1170 DUCT GP-AIR

S/N 8SR 1-00417, 8TR 1-00485
PART OF 1229681-Page 468

**Key:**

**SMCS**

| NOTE | REF NO | GRAPHIC REF | PART NUMBER | QTY | PART NAME 1 2 3 4 5 6 (PRODUCT LEVEL) | PRICE USD |
|---|---|---|---|---|---|---|
| | 1 | | 095-0742 | 4 | SCREW | |
| | 2 | | 095-0827 | 4 | LOCKWASHER | |
| | 3 | | 4I-1251 | 1 | DUCT | |
| | 4 | | 4I-1278 | 1 | FILTER | |

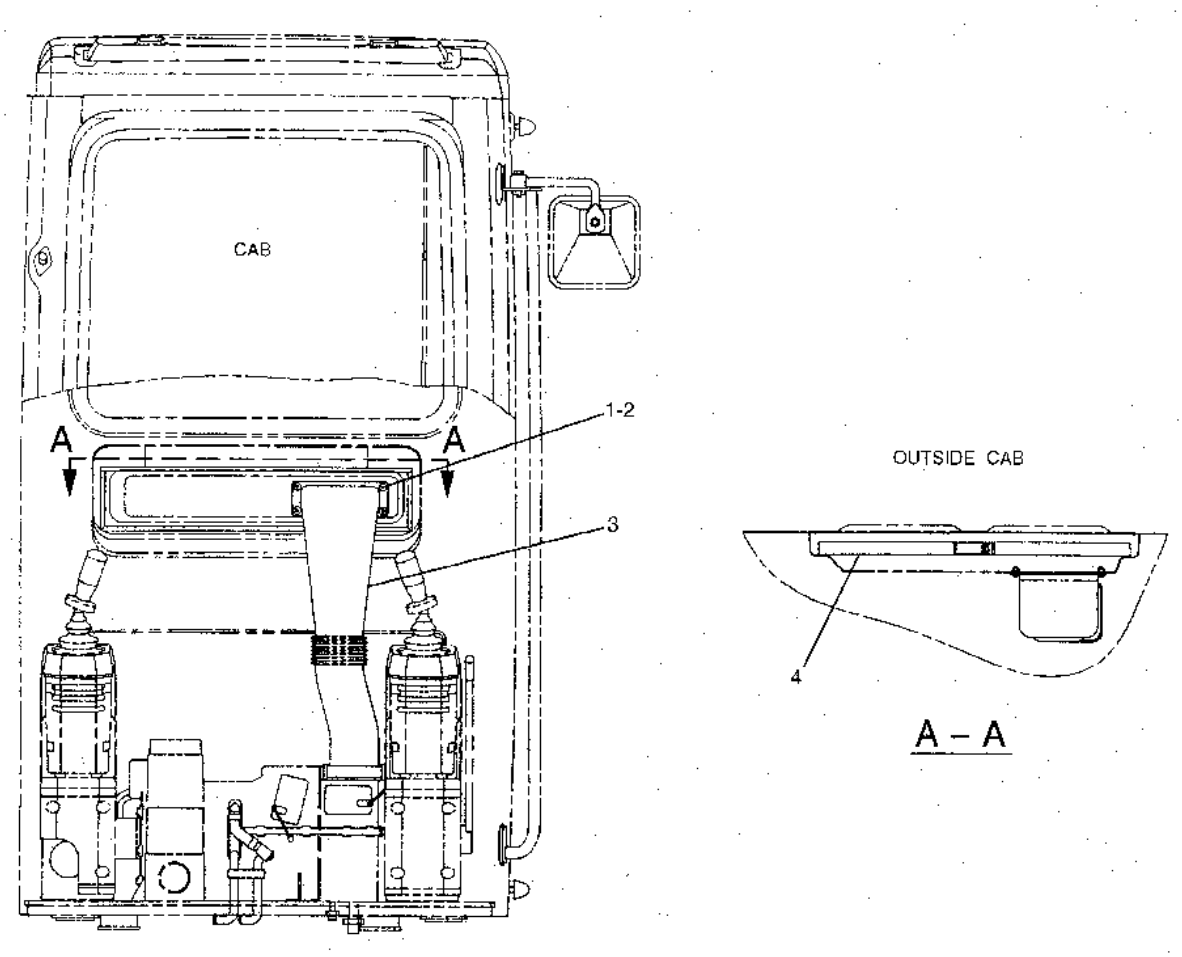


GRAPHIC #1

h53246e

# 1116289 DUCT GP-DEFROST

S/N 8SR 1-00417, 8TR 1-00485
PART OF 1229681-Page 468

**Key:**

**SMCS**

| NOTE | REF NO | GRAPHIC REF | PART NUMBER | QTY | PART NAME 1 2 3 4 5 6 (PRODUCT LEVEL) | PRICE USD |
|---|---|---|---|---|---|---|
| | 1 | | 119-6811 | 1 | DUCT | |
| | 2 | | 119-6812 | 1 | DUCT | |
| | 3 | | 9X-2044 | 3 | SCREW | |
| | 4 | | 124-3989 | 1 | COVER | |

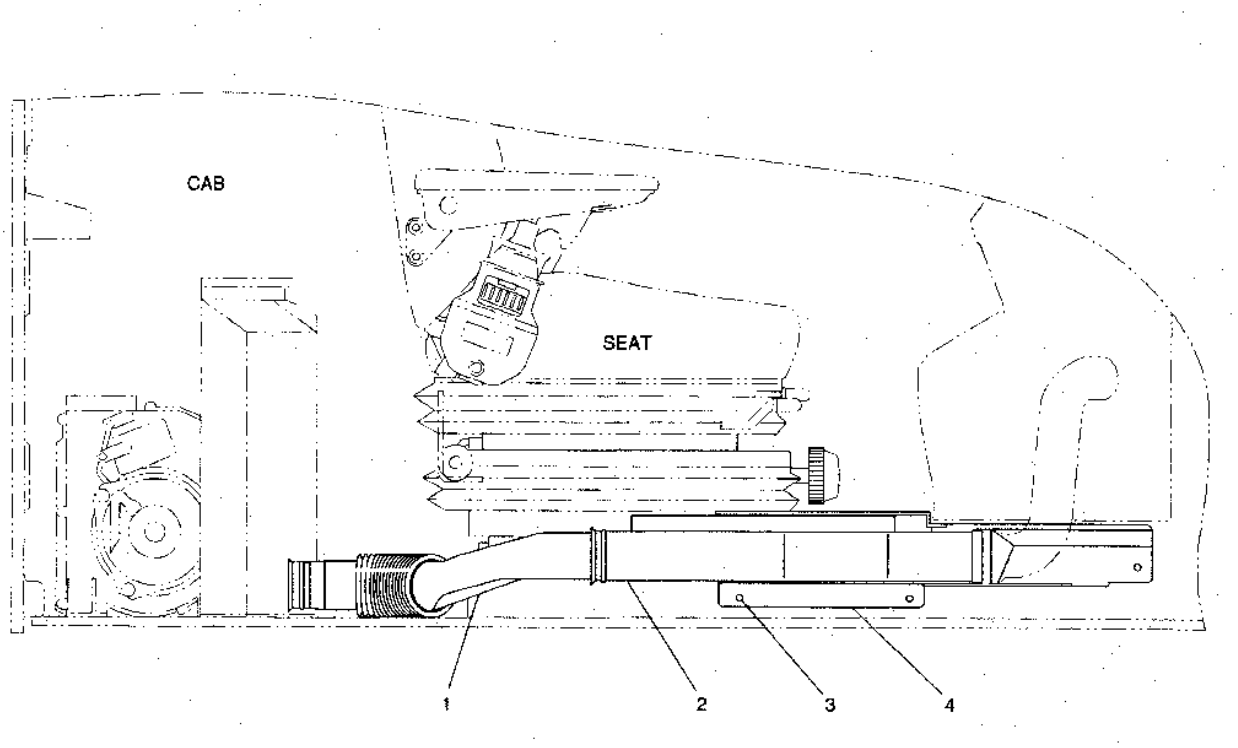


GRAPHIC #1

h53245e

# 1282148 DUCT GP-DEFROST

S/N 8SR 00418-UP, 8TR 00486-UP
PART OF 1557021-Page 468

**Key:**

**SMCS**

| NOTE | REF NO | GRAPHIC REF | PART NUMBER | QTY | PART NAME 1 2 3 4 5 6 (PRODUCT LEVEL) | PRICE USD |
|---|---|---|---|---|---|---|
| | 1 | | 6I-5331 | 4 | RIVET | |
| | 2 | | 139-7179 | 1 | DUCT | |
| | 3 | | 139-7180 | 1 | DUCT | |
| | 4 | | 119-6812 | 1 | DUCT | |
| | 5 | | 9X-2044 | 3 | SCREW | |
| | 6 | | 124-3989 | 1 | COVER | |

## 1282148 DUCT GP-DEFROST

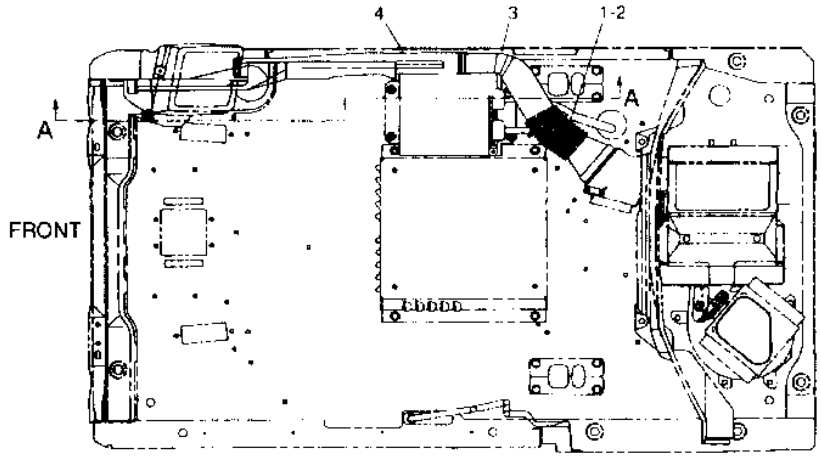


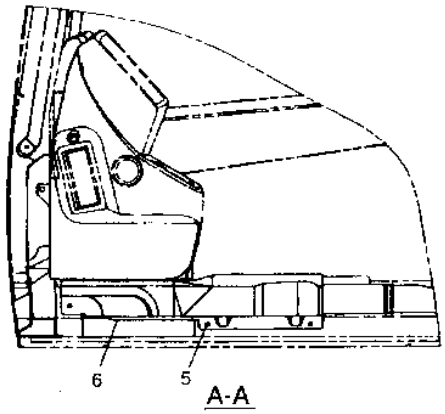


| NOTE | No. | PART No. | QTY | PART NAME | NOTE | No. | PART No. | QTY | PART NAME |
|---|---|---|---|---|---|---|---|---|---|
| | 1 | 6I-5331 | 4 | RIVET | | | | | |
| | 2 | 139-7179 | 1 | DUCT | | | | | |
| | 3 | 139-7180 | 1 | DUCT | | | | | |
| | 4 | 119-6812 | 1 | DUCT | | | | | |
| | 5 | 9X-2044 | 3 | SCREW | | | | | |
| | 6 | 124-3989 | 1 | COVER | | | | | |

H58000E

# 1116291 DUCT GP-AIR

HEATER
S/N 8SR 1-00417, 8TR 1-00485
PART OF 1229681-Page 468

**Key:**

**SMCS**

| NOTE | REF NO | GRAPHIC REF | PART NUMBER | QTY | PART NAME 1 2 3 4 5 6 (PRODUCT LEVEL) | PRICE USD |
|---|---|---|---|---|---|---|
| | 1 | | 111-6388 | 1 | DUCT | |
| | 2 | | 111-6389 | 1 | RUBBER (CUSHION) | |

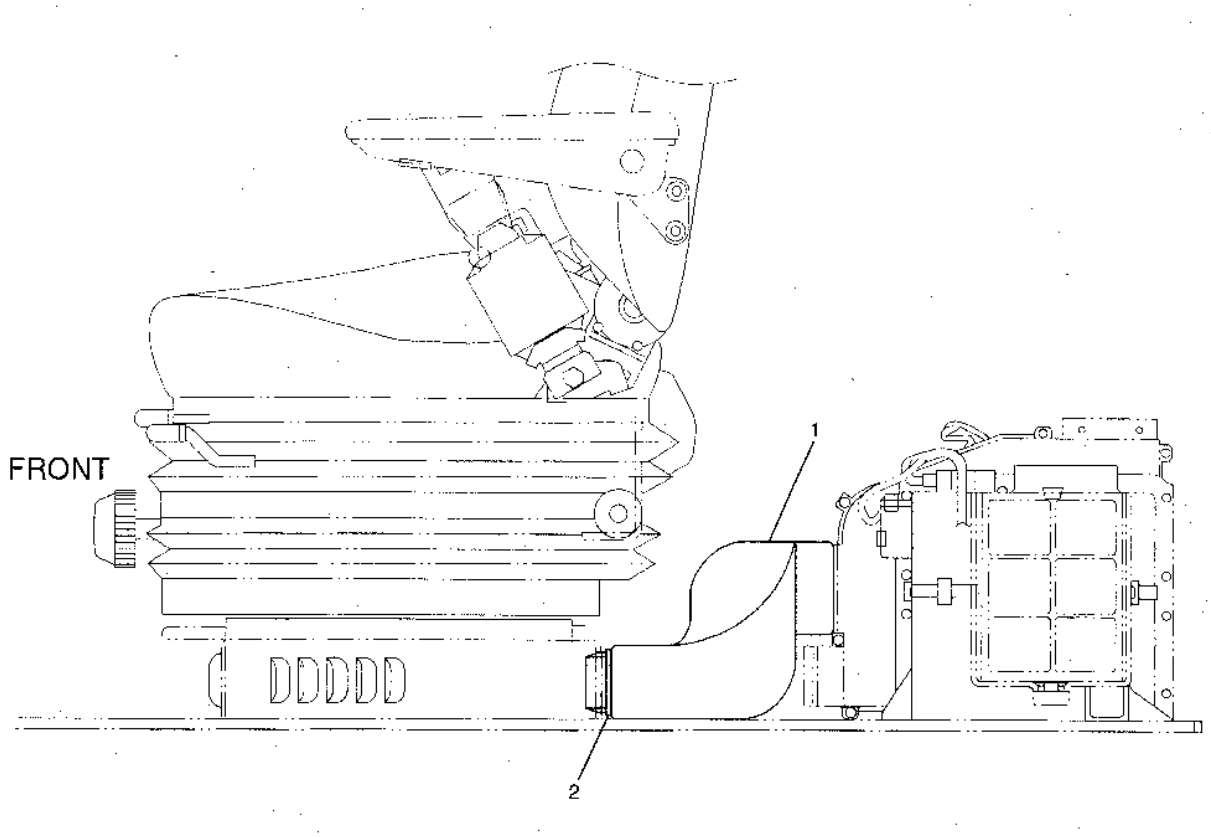


GRAPHIC #1 h53247e

# 1243982 DUCT AS

S/N 8SR 1-00417, 8TR 1-00485
PART OF 1243985-Page 477.01

**Key:**

**SMCS**

| NOTE | REF NO | GRAPHIC REF | PART NUMBER | QTY | PART NAME 1 2 3 4 5 6 (PRODUCT LEVEL) | PRICE USD |
|---|---|---|---|---|---|---|
| | 1 | | 124-3983 | 1 | INSULATOR | |
| | 2 | | 124-3984 | 1 | INSULATOR | |
| | 3 | | 124-3986 | 1 | INSULATOR | |
| | 4 | | 105-9533 | 2 | INSULATOR | |
| | 5 | | 105-9534 | 1 | INSULATOR | |

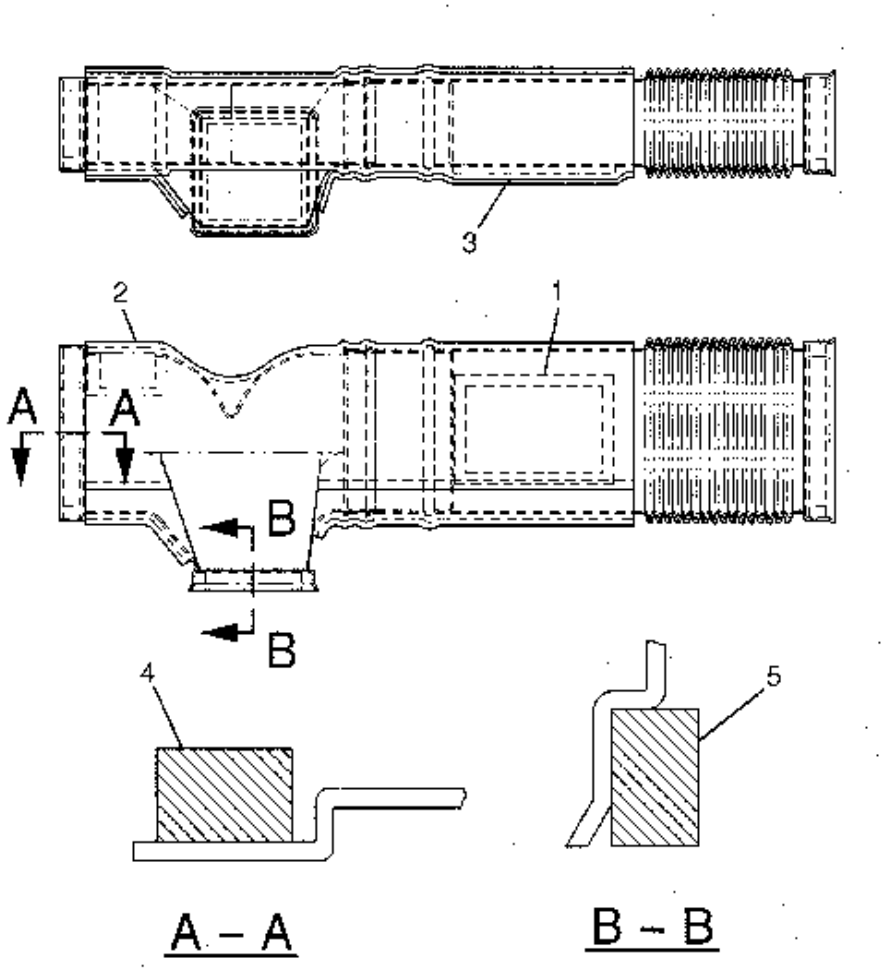


GRAPHIC #1

h50680e

# 1243985 DUCT GP-AIR

AIR CONDITIONER
S/N 8SR 1-00417, 8TR 1-00485
PART OF 1229681-Page 468
1243982-Page 477

**Key:** Y - SEE SEPARATE ILLUSTRATION

**SMCS**

| NOTE | REF NO | GRAPHIC REF | PART NUMBER | QTY | PART NAME 1 2 3 4 5 6 (PRODUCT LEVEL) | PRICE USD |
|---|---|---|---|---|---|---|
| | 1 | | 9X-2044 | 8 | SCREW | |
| | 2 | | 8Y-6967 | 6 | LOUVER AS | |
| | 3 | | 124-3918 | 1 | DUCT | |
| | 4 | | 124-3917 | 1 | DUCT | |
| Y | 5 | | 124-3982 | 1 | DUCT AS | |

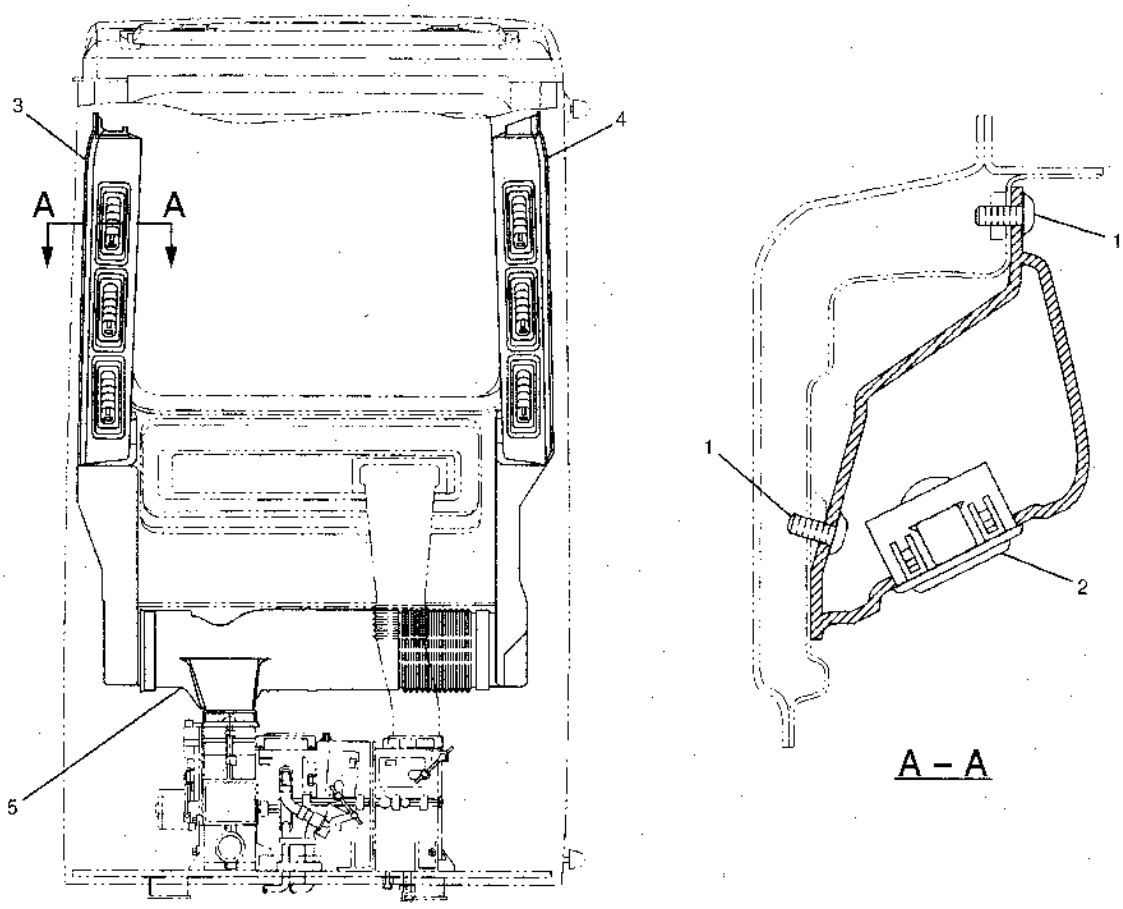


GRAPHIC #1 h53248e

# 1282149 DUCT GP-AIR

S/N 8SR 00418-UP, 8TR 00486-UP
PART OF 1557021-Page 468

**Key:**

**SMCS**

| NOTE | REF NO | GRAPHIC REF | PART NUMBER | QTY | PART NAME 1 2 3 4 5 6 (PRODUCT LEVEL) | PRICE USD |
|---|---|---|---|---|---|---|
| | 1 | | 4I-1278 | 1 | FILTER | |
| | 2 | | 095-0742 | 4 | SCREW | |
| | 3 | | 095-0827 | 4 | LOCKWASHER | |
| | 4 | | 147-4941 | 1 | DUCT AS | |
| | | | 147-4943 | 1 | INSULATOR | |

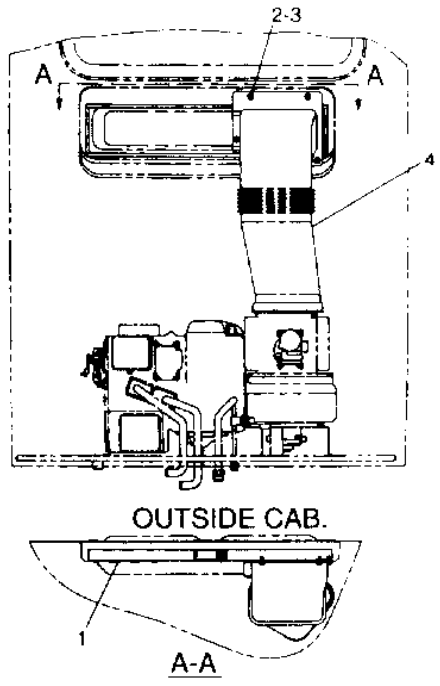


| NOTE No. | PART No. | QTY | PART NAME |
|---|---|---|---|
| 1 | 4I 1278 | 1 | FILTER |
| 2 | 095 0742 | 4 | SCREW |
| 3 | 095 0827 | 4 | LOCKWASHER |
| 4 | 147-4941 | 1 | DUCT AS |
| | 147 4943 | 1 | INSULATOR |

H58001E

GRAPHIC #1 h58001e

# 1282150 DUCT GP-AIR

HEATER
S/N 8SR 00418-UP, 8SR 00486-UP
PART OF 1557021-Page 468

**Key:**

**SMCS**

| NOTE | REF NO | GRAPHIC REF | PART NUMBER | QTY | PART NAME 1 2 3 4 5 6 (PRODUCT LEVEL) | PRICE USD |
|---|---|---|---|---|---|---|
| | 1 | | 130-0376 | 1 | DUCT | |
| | 2 | | 111-6389 | 1 | RUBBER-CUSHION | |

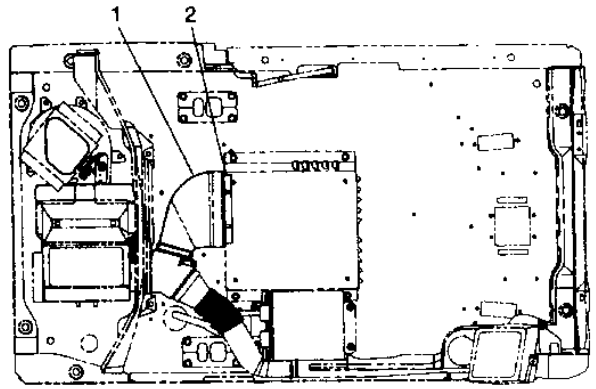


| NOTE | No. | PART No. | QTY | PART NAME |
|---|---|---|---|---|
| | 1 | 130-0376 | 1 | DUCT |
| | 2 | 111-6389 | 1 | RUBBER-CUSHION |

H58002E

GRAPHIC #1 h58002e

# 1680746 DISTRIBUTOR AS

S/N 8SR 00418-UP, 8TR 00486-UP
PART OF 1557022-Page 471.02

**Key:**

**SMCS**

| NOTE | REF NO | GRAPHIC REF | PART NUMBER | QTY | PART NAME 1 2 3 4 5 6 (PRODUCT LEVEL) | PRICE USD |
|---|---|---|---|---|---|---|
| | 1 | | 147-4849 | 1 | INSULATOR | |
| | 2 | | 147-4850 | 1 | INSULATOR | |
| | 3 | | 147-4848 | 1 | INSULATOR | |
| | 4 | | 147-4831 | 1 | CLAMP | |
| | 5 | | 147-4847 | 1 | MOTOR AS | |

## 1680746 DISTRIBUTOR AS

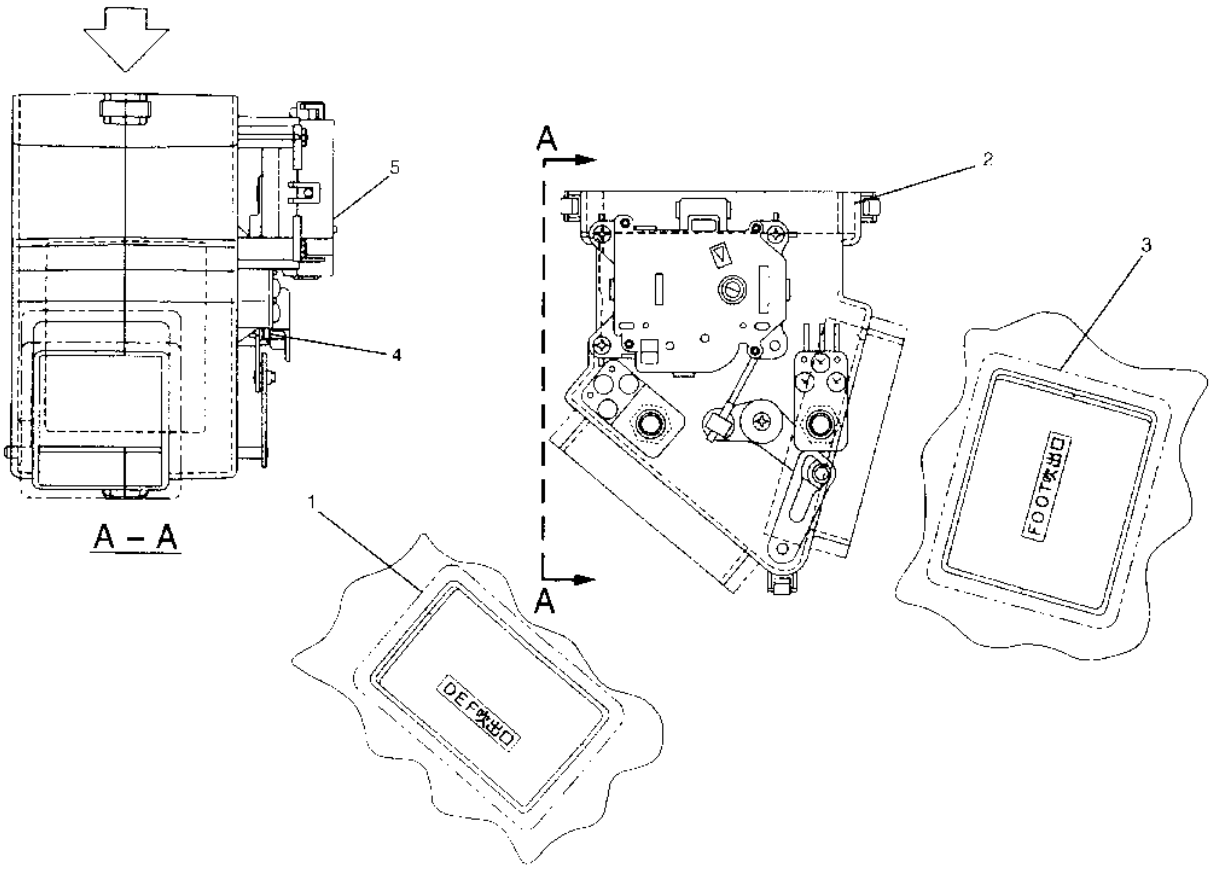


| NOTE | No. | PART No. | QTY | PART NAME |
|---|---|---|---|---|
| | 1 | 147-4849 | 1 | INSULATOR |
| | 2 | 147-4850 | 1 | INSULATOR |
| | 3 | 147-4848 | 1 | INSULATOR |
| | 4 | 147-4831 | 1 | CLAMP |
| | 5 | 147-4847 | 1 | MOTOR AS |

H65438E

GRAPHIC #1

h65438e

# 1397150 DUCT GP-AIR

AIR CONDITIONER
S/N 8SR 00418-UP, 8SR 00486-UP
PART OF 1557021-Page 468
1397151-Page 477.05

**Key:** Y - SEPARATE ILLUSTRATION

**SMCS**

| NOTE | REF NO | GRAPHIC REF | PART NUMBER | QTY | PART NAME 1 2 3 4 5 6 (PRODUCT LEVEL) | PRICE USD |
|---|---|---|---|---|---|---|
| | 1 | | 9X-2044 | 8 | SCREW | |
| | 2 | | 8Y-6967 | 6 | LOUVER AS | |
| | 3 | | 124-3918 | 1 | DUCT | |
| | 4 | | 124-3917 | 1 | DUCT | |
| Y | 5 | | 139-7151 | 1 | DUCT AS | |

## 1397150 DUCT GP-AIR

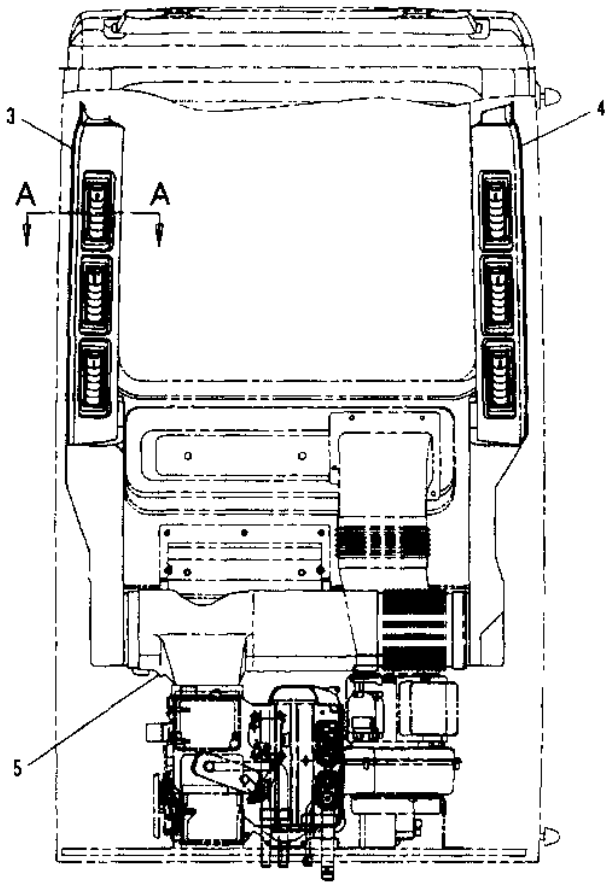


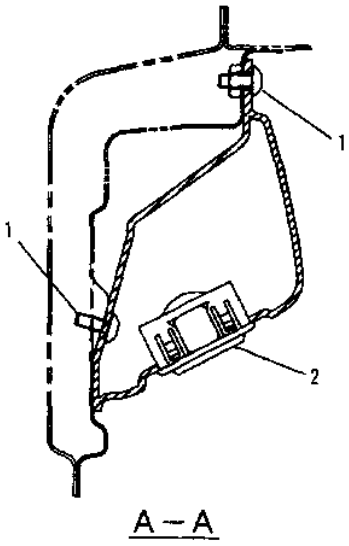


| NOTE | No. | PART No. | QTY | PART NAME | NOTE | No. | PART No. | QTY | PART NAME |
|---|---|---|---|---|---|---|---|---|---|
| | 1 | 9X-2044 | 8 | SCREW | | | | | |
| | 2 | 8Y-6967 | 6 | LOUVER AS | | | | | |
| | 3 | 124-3918 | 1 | DUCT | | | | | |
| | 4 | 124-3917 | 1 | DUCT | | | | | |
| Y | 5 | 139-7151 | 1 | DUCT AS | | | | | |

Y-SEE SEPARATE ILLUSTRATION

H59435E

GRAPHIC #1

h59435e

# 1397151 DUCT AS

S/N 8SR 00418-UP, 8SR 00486-UP
PART OF 1397150-Page 477.04

**Key:**

**SMCS**

| NOTE | REF NO | GRAPHIC REF | PART NUMBER | QTY | PART NAME 1 2 3 4 5 6 (PRODUCT LEVEL) | PRICE USD |
|---|---|---|---|---|---|---|
| | 1 | | 139-7255 | 1 | INSULATOR | |
| | 2 | | 124-3984 | 1 | INSULATOR | |
| | 3 | | 147-4871 | 1 | INSULATOR | |
| | 4 | | 105-9533 | 2 | INSULATOR | |
| | 5 | | 105-9534 | 1 | INSULATOR | |
| | 6 | | 124-3983 | 1 | INSULATOR | |

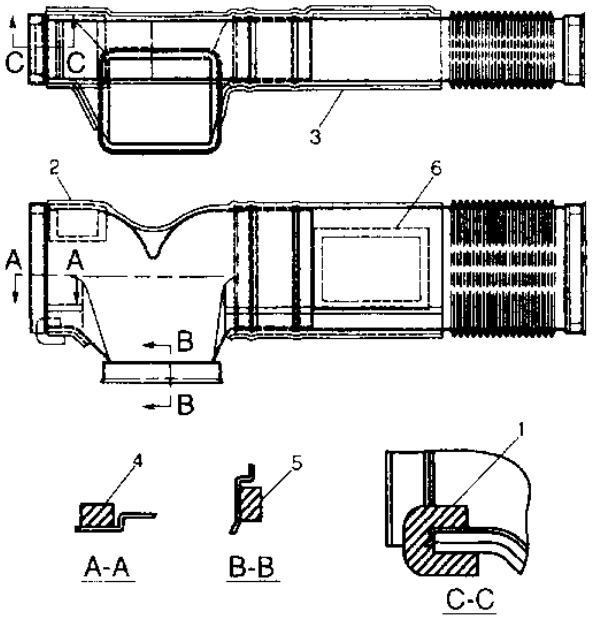


| NOTE | No. | PART No. | QTY | PART NAME |
|---|---|---|---|---|
| | 1 | 139-7255 | 1 | INSULATOR |
| | 2 | 124-3984 | 1 | INSULATOR |
| | 3 | 147-4871 | 1 | INSULATOR |
| | 4 | 105-9533 | 2 | INSULATOR |
| | 5 | 105-9534 | 1 | INSULATOR |
| | 6 | 124-3983 | 1 | INSULATOR |

H58009E

GRAPHIC #1

h58009e

# 1352255 DUCT AS

S/N 8SR 00418-UP, 8SR 00486-UP
PART OF 1557022-Page 471.02

**Key:**

**SMCS**

| NOTE | REF NO | GRAPHIC REF | PART NUMBER | QTY | PART NAME 1 2 3 4 5 6 (PRODUCT LEVEL) | PRICE USD |
|---|---|---|---|---|---|---|
| | 1 | | 159-7783 | 1 | GROMMET | |
| | 2 | | 147-4852 | 1 | THERMISTOR AS | |
| | 3 | | 147-4851 | 1 | FILTER | |

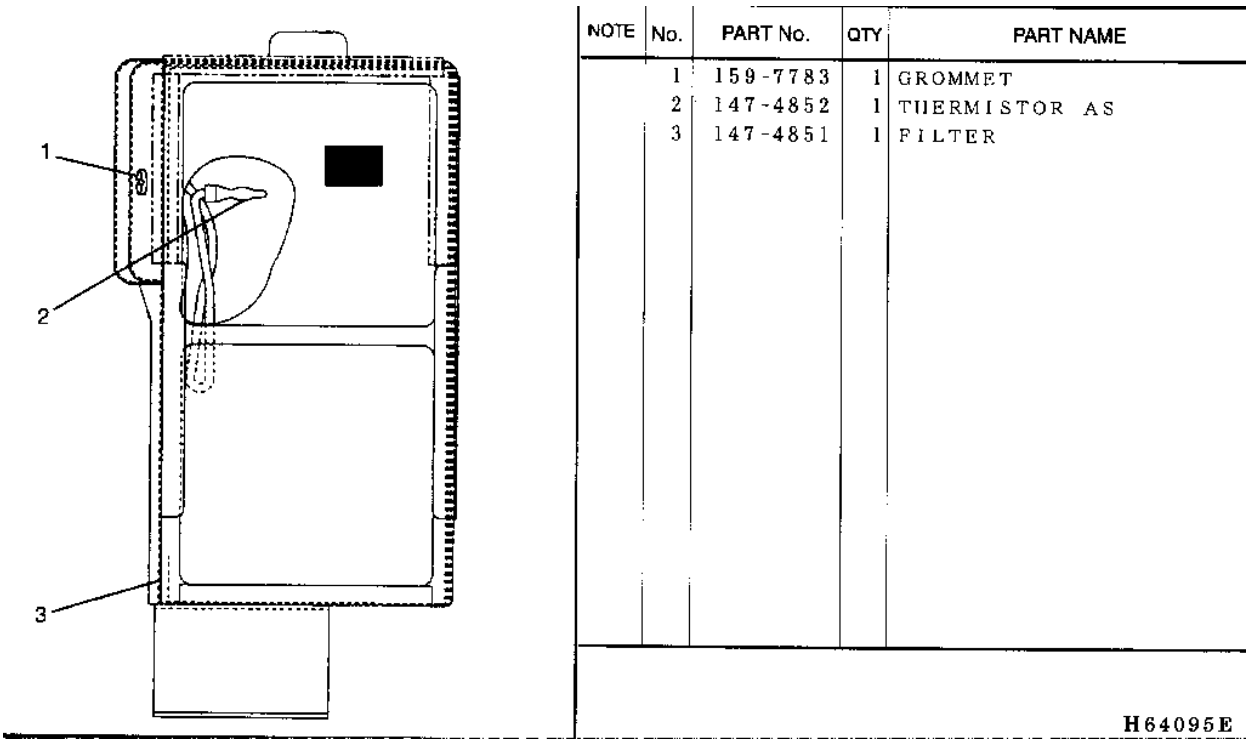


GRAPHIC #1 h64095e

# 1229684 LINES GP-AIR CONDITIONER-PART 1 OF 2

S/N 8SR 1-00417, 8TR 1-00485

**Key:** E - ORDER BY THE CENTIMETER

**SMCS**

| NOTE | REF NO | GRAPHIC REF | PART NUMBER | QTY | PART NAME 1 2 3 4 5 6 (PRODUCT LEVEL) | PRICE USD |
|---|---|---|---|---|---|---|
| | 1 | | 8T-4137 | 8 | BOLT (L=20mm) | |
| | 2 | | 8T-4121 | 10 | WASHER | |
| | 3 | | 6D-1641 | 9 | CLIP | |
| E | 4 | | 7I-7439 | | GUARD (55cm) | |
| E | 5 | | 7I-7439 | | GUARD (55cm) | |
| | 6 | | 5D-1026 | 2 | CLAMP | |
| | 7 | | 7X-2621 | 1 | BOLT (L=12mm) | |
| | 8 | | 093-2065 | 1 | GROMMET | |
| E | 9 | | 7I-7439 | | GUARD (38cm) | |
| | 10 | | 6V-7357 | 2 | BOLT (L=25mm) | |
| | 11 | | 9X-8256 | 4 | WASHER | |
| | 12 | | 5C-9553 | 2 | BOLT (L=16mm) | |
| | 13 | | 113-4008 | 1 | HOSE AS | |
| | | | 113-3466 | 1 | SEAL-O-RING (ID=6.80mm) | |
| | 14 | | 096-0061 | 1 | STRAP | |
| | 15 | | 8T-4189 | 2 | BOLT (L=20mm) | |
| | 16 | | 8T-4224 | 2 | WASHER | |
| | 17 | | 113-3444 | 1 | RECEIVER AS | |
| | | | 124-4055 | 1 | RECEIVER AS | |
| | | | 139-7111 | 1 | HARNESS AS | |
| | 18 | | 105-9412 | 1 | BRACKET AS | |
| E | 19 | | 7I-7439 | | GUARD (60cm) | |
| | 20 | | 105-9411 | 1 | SUPPORT | |
| | 21 | | 8T-4136 | 1 | BOLT (L=25mm) | |
| | 22 | | 7F-6998 | 1 | LOCKWASHER | |
| | 23 | | 113-4007 | 1 | HOSE AS | |
| | | | 113-3467 | 1 | SEAL-O-RING (ID=11.00mm) | |
| | 24 | | 6D-4246 | 1 | CLIP | |

## 1229684 LINES GP-AIR CONDITIONER-PART 1 OF 2

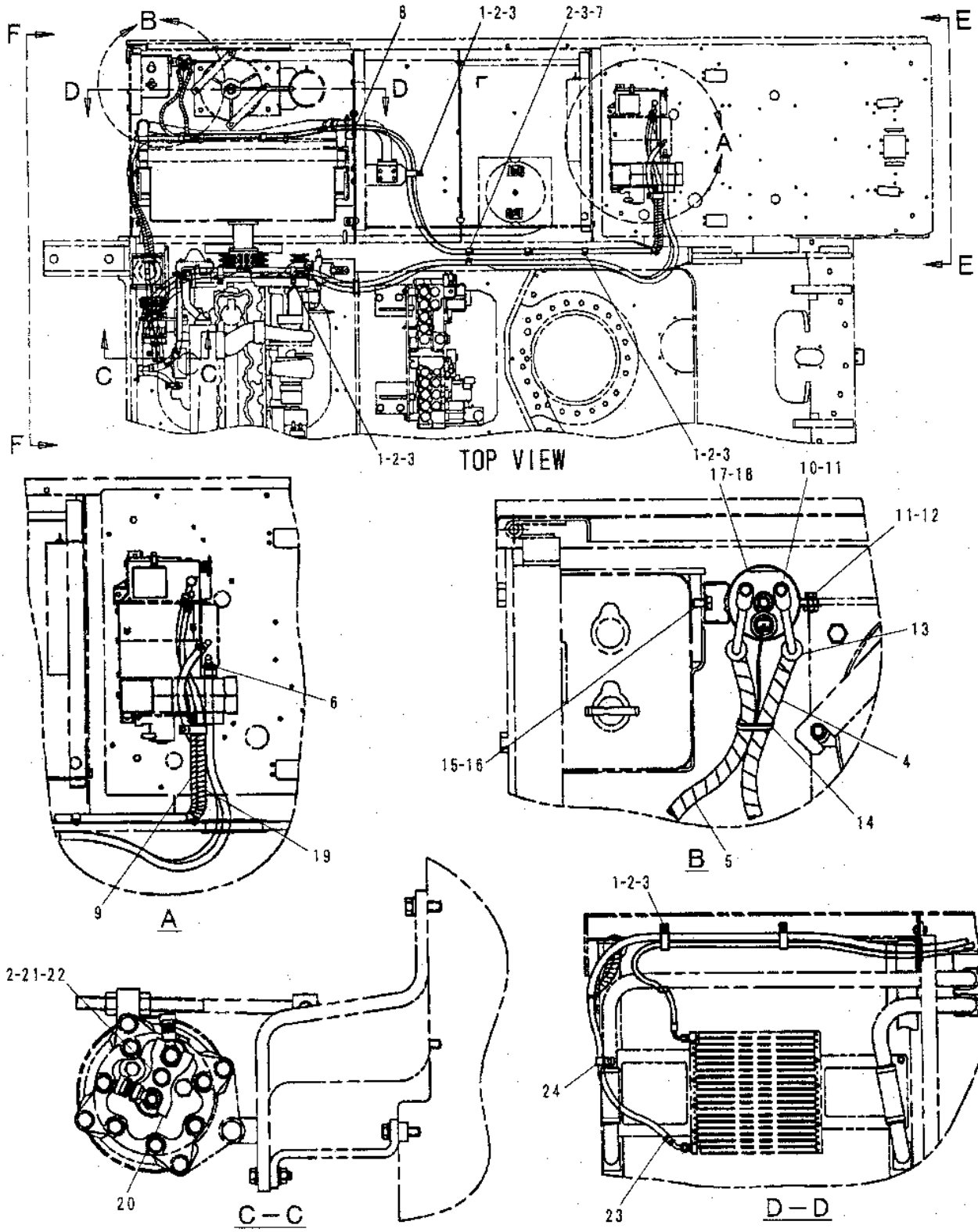


GRAPHIC #1

h79362e

# 1229684 LINES GP-AIR CONDITIONER-PART 2 OF 2

S/N 8SR 1-00417, 8TR 1-00485

**Key:** E - ORDER BY THE CENTIMETER

**SMCS**

| NOTE | REF NO | GRAPHIC REF | PART NUMBER | QTY | PART NAME 1 2 3 4 5 6 (PRODUCT LEVEL) | PRICE USD |
|---|---|---|---|---|---|---|
| | 1 | | 8T-4137 | 4 | BOLT (L=20mm) | |
| | 2 | | 8T-4121 | 5 | WASHER | |
| | 3 | | 6D-1641 | 6 | CLIP | |
| | 4 | | 8F-8151 | 2 | COCK | |
| | 5 | | 6B-4661 | 2 | BUSHING | |
| | 6 | | 5D-1026 | 4 | CLAMP | |
| | 7 | | 7X-2621 | 2 | BOLT (L=12mm) | |
| | 8 | | 113-4006 | 1 | HOSE AS | |
| | | | 133-3468 | 1 | SEAL-O-RING (ID=13.80mm) | |
| | 9 | | 113-4009 | 1 | HOSE AS | |
| | | | 113-3466 | 1 | SEAL-O-RING (ID=6.80mm) | |
| E | 10 | | 7I-7439 | | GUARD | |
| | 11 | | 096-0061 | 4 | STRAP | |
| E | 12 | | 5P-0767 | | HOSE (485cm) | |
| | 13 | | 096-5863 | 1 | GROMMET | |
| E | 14 | | 5P-0767 | | HOSE (470cm) | |
| | 15 | | 7I-0374 | 1 | INSULATOR | |
| | 16 | | 7Y-8167 | 1 | GROMMET | |

## 1229684 LINES GP-AIR CONDITIONER-PART 2 OF 2

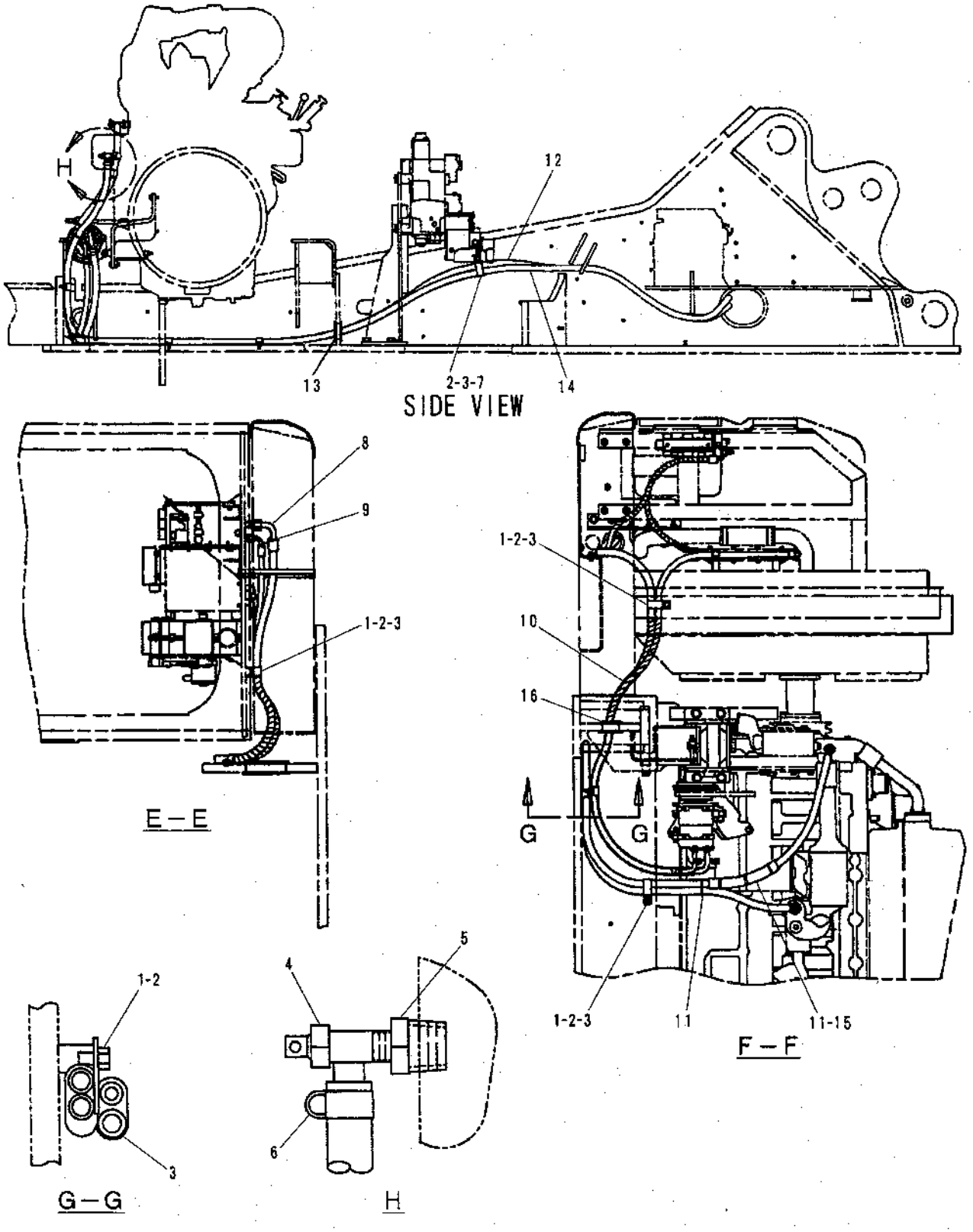


GRAPHIC #1

h79364e

# 1540471 LINES GP-AIR CONDITIONER-PART 1 OF 2

S/N 8SR 00418-UP, 8TR 00486-UP

**Key:** E - ORDER BY THE CENTIMETER

**SMCS**

| NOTE | REF NO | GRAPHIC REF | PART NUMBER | QTY | PART NAME 1 2 3 4 5 6 (PRODUCT LEVEL) | PRICE USD |
|---|---|---|---|---|---|---|
| | 1 | | 113-3497 | 1 | RECEIVER AS | |
| | 2 | | 121-7098 | 1 | BRACKET AS | |
| | | | 8T-4138 | 2 | BOLT (L=20mm) | |
| | | | 9X-8256 | 2 | WASHER | |
| | 3 | | 133-8011 | 1 | FITTING AS | |
| | | | 121-7138 | 1 | SEAL-O-RING (ID=6.70mm) | |
| | 4 | | 155-6990 | 1 | HOSE AS | |
| E | | | 7I-7439 | | GUARD (80cm) | |
| | | | 121-7136 | 2 | SEAL-O-RING (ID=13.40mm) | |
| | 5 | | 155-6992 | 1 | HOSE AS | |
| E | | | 7I-7439 | | GUARD (120cm) | |
| | | | 121-7137 | 2 | SEAL-O-RING (ID=10.80mm) | |
| | 6 | | 155-6991 | 1 | HOSE AS | |
| E | | | 7I-7439 | | GUARD (120cm) | |
| | | | 121-7137 | 2 | SEAL-O-RING | |
| | 7 | | 139-7235 | 2 | HOSE | |
| | 8 | | 122-9605 | 2 | JOINT | |
| | 9 | | 5D-1026 | 6 | CLAMP | |
| | 10 | | 6D-1641 | 7 | CLIP | |
| | 11 | | 5P-2369 | 2 | CLIP | |
| | 12 | | 6D-4246 | 1 | CLIP | |
| | 13 | | 093-2065 | 1 | GROMMET | |
| | 14 | | 8T-4138 | 1 | BOLT (L=20mm) | |
| | 15 | | 6V-7357 | 1 | BOLT (L=25mm) | |
| | 16 | | 8T-4971 | 2 | BOLT (L=30mm) | |
| | 17 | | 8T-4200 | 2 | BOLT (L=16mm) | |
| | 18 | | 7X-2621 | 1 | BOLT (L=12mm) | |
| | 19 | | 8T-4137 | 9 | BOLT (L=20mm) | |
| | 20 | | 9X-8256 | 4 | WASHER | |
| | 21 | | 8T-4224 | 2 | WASHER | |
| | 22 | | 8T-4121 | 10 | WASHER | |

## 1540471 LINES GP-AIR CONDITIONER-PART 1 OF 2

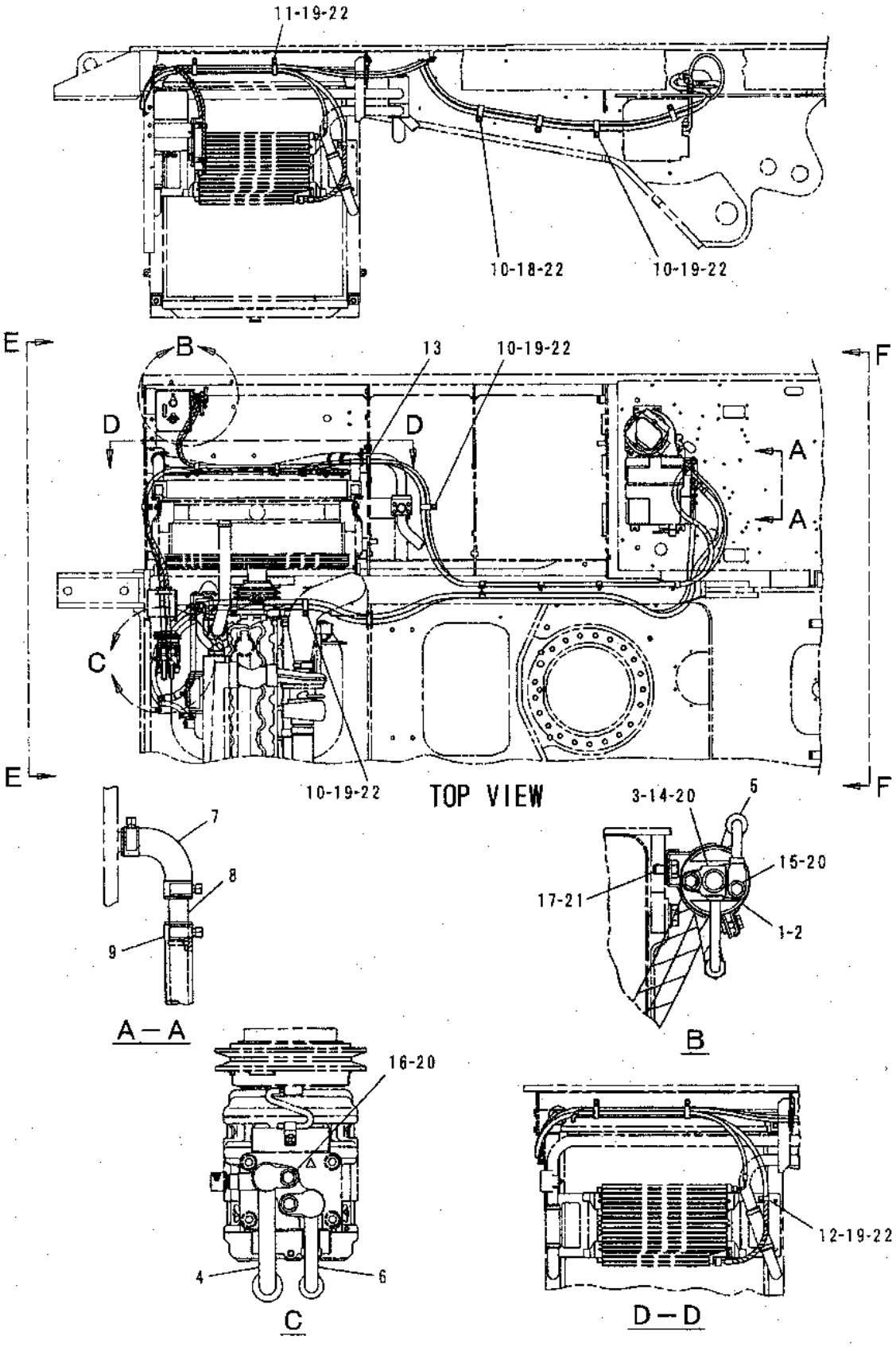


GRAPHIC #1

h60583e

# 1540471 LINES GP-AIR CONDITIONER-PART 2 OF 2

S/N 8SR 00418-UP, 8TR 00486-UP

**Key:** E - ORDER BY THE CENTIMETER

**SMCS**

| NOTE | REF NO | GRAPHIC REF | PART NUMBER | QTY | PART NAME 1 2 3 4 5 6 (PRODUCT LEVEL) | PRICE USD |
|---|---|---|---|---|---|---|
| | 1 | | 155-6993 | 1 | HOSE AS | |
| E | | | 7I-7439 | | GUARD (80cm) | |
| | | | 121-7138 | 2 | SEAL-O-RING (ID=6.70mm) | |
| E | 2 | | 5P-0767 | | HOSE (560cm) | |
| E | 3 | | 5P-0767 | | HOSE (460cm) | |
| | 4 | | 8F-8151 | 2 | COCK | |
| | 5 | | 6B-4661 | 2 | BUSHING | |
| | 6 | | 5D-1026 | 2 | CLAMP | |
| | 7 | | 6D-1641 | 5 | CLIP | |
| | 8 | | 7I-0374 | 1 | INSULATOR | |
| | 9 | | 096-0061 | 5 | STRAP | |
| | 10 | | 7Y-8167 | 1 | GROMMET | |
| | 11 | | 096-5863 | 1 | GROMMET | |
| | 12 | | 8X-2621 | 1 | BOLT (L=12mm) | |
| | 13 | | 8T-4137 | 3 | BOLT (L=20mm) | |
| | 14 | | 8T-4121 | 4 | WASHER | |

## 1540471 LINES GP-AIR CONDITIONER-PART 2 OF 2

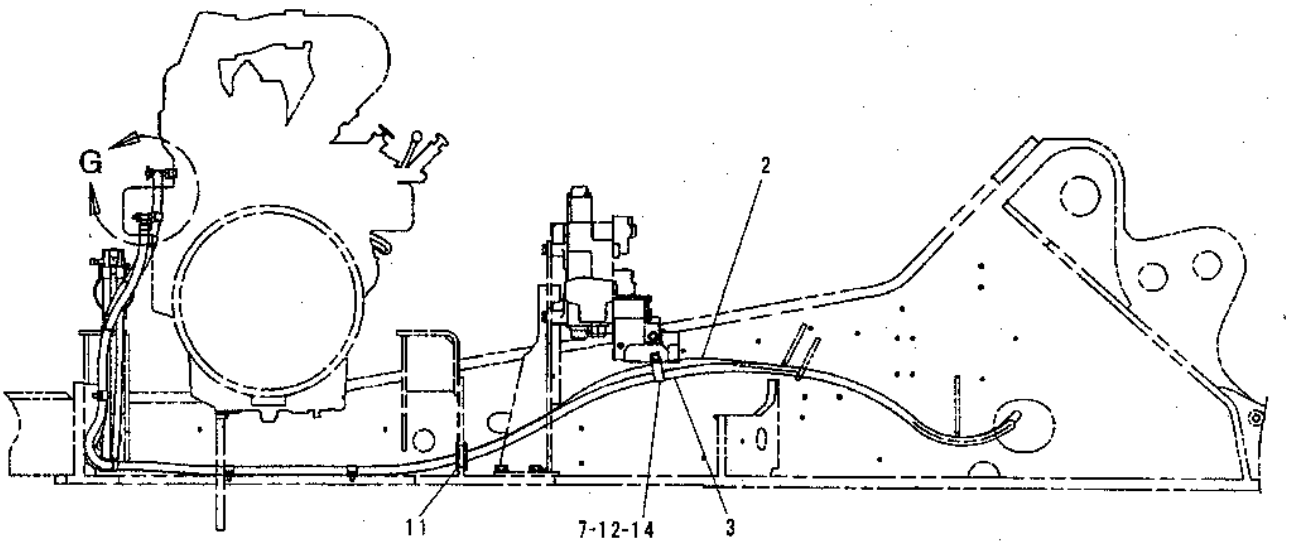


SIDE VIEW

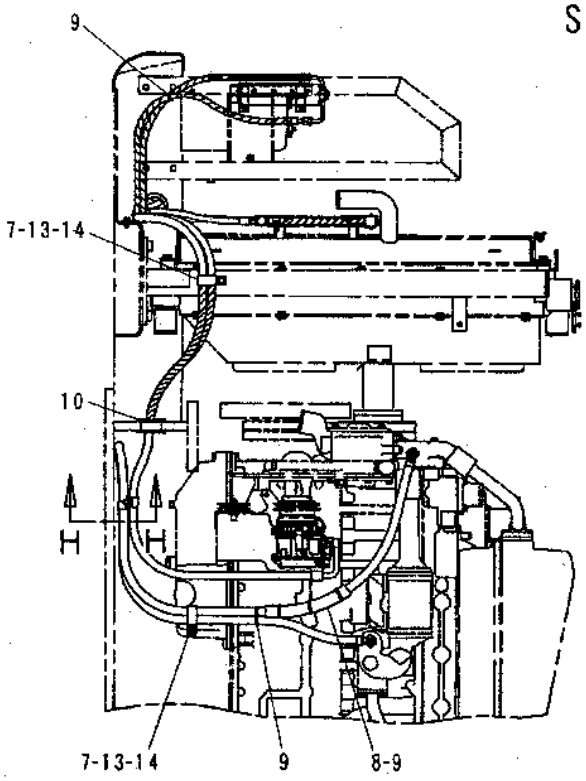


E—E

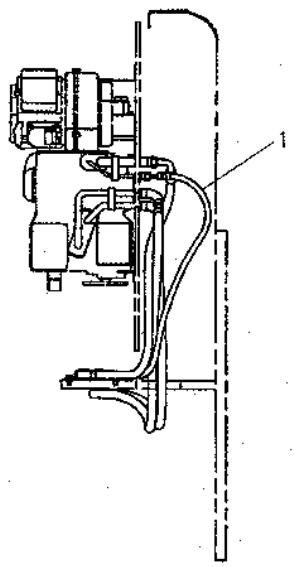


F—F

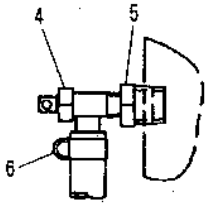


G

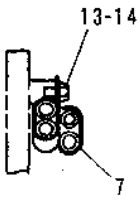


H—H

GRAPHIC #1

h60585e

# 1116287 HEATER & MOUNTING GP

S/N 8SR 1-00417, 8TR 1-00485
PART OF 1352230-Page 469
1116288-Page 481.01
AN ATTACHMENT

**Key:** Y - SEE SEPARATE ILLUSTRATION

**SMCS**

| NOTE | REF NO | GRAPHIC REF | PART NUMBER | QTY | PART NAME 1 2 3 4 5 6 (PRODUCT LEVEL) | PRICE USD |
|---|---|---|---|---|---|---|
| Y | 1 | | 111-6288 | 1 | HEATER GP | |
| | 2 | | 128-2158 | 1 | GROMMET | |
| | 3 | | 135-2251 | 1 | PANEL | |
| | 4 | | 121-7055 | 1 | DUCT AS | |
| | | | 5I-3572 | 1 | FILTER | |
| | | | 135-2250 | 1 | DUCT AS | |
| | 5 | | 130-0298 | 1 | HARNESS AS | |

## 1116287 HEATER & MOUNTING GP

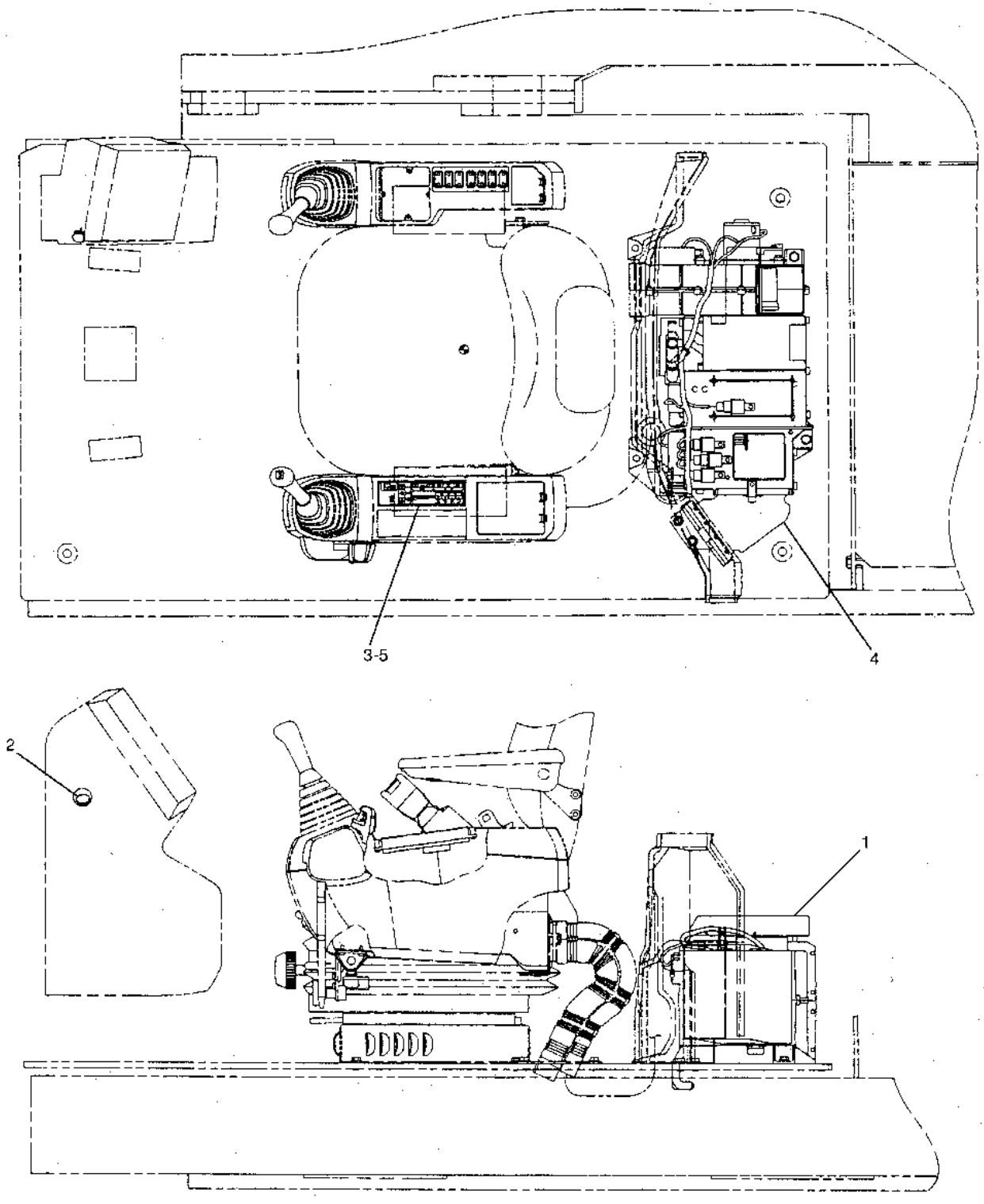


GRAPHIC #1

h83118e

# 1540678 HEATER & MOUNTING GP

S/N 8SR 00418-UP, 8SR 00486-UP
PART OF 1540684-Page 469
1597856-Page 481.03
AN ATTACHMENT

**Key:** Y - SEE SEPARATE ILLUSTRATION

**SMCS**

| NOTE | REF NO | GRAPHIC REF | PART NUMBER | QTY | PART NAME 1 2 3 4 5 6 (PRODUCT LEVEL) | PRICE USD |
|---|---|---|---|---|---|---|
| Y | 1 | | 159-7856 | 1 | HEATER GP | |
| | 2 | | 139-7261 | 1 | PANEL | |

## 1540678 HEATER & MOUNTING GP

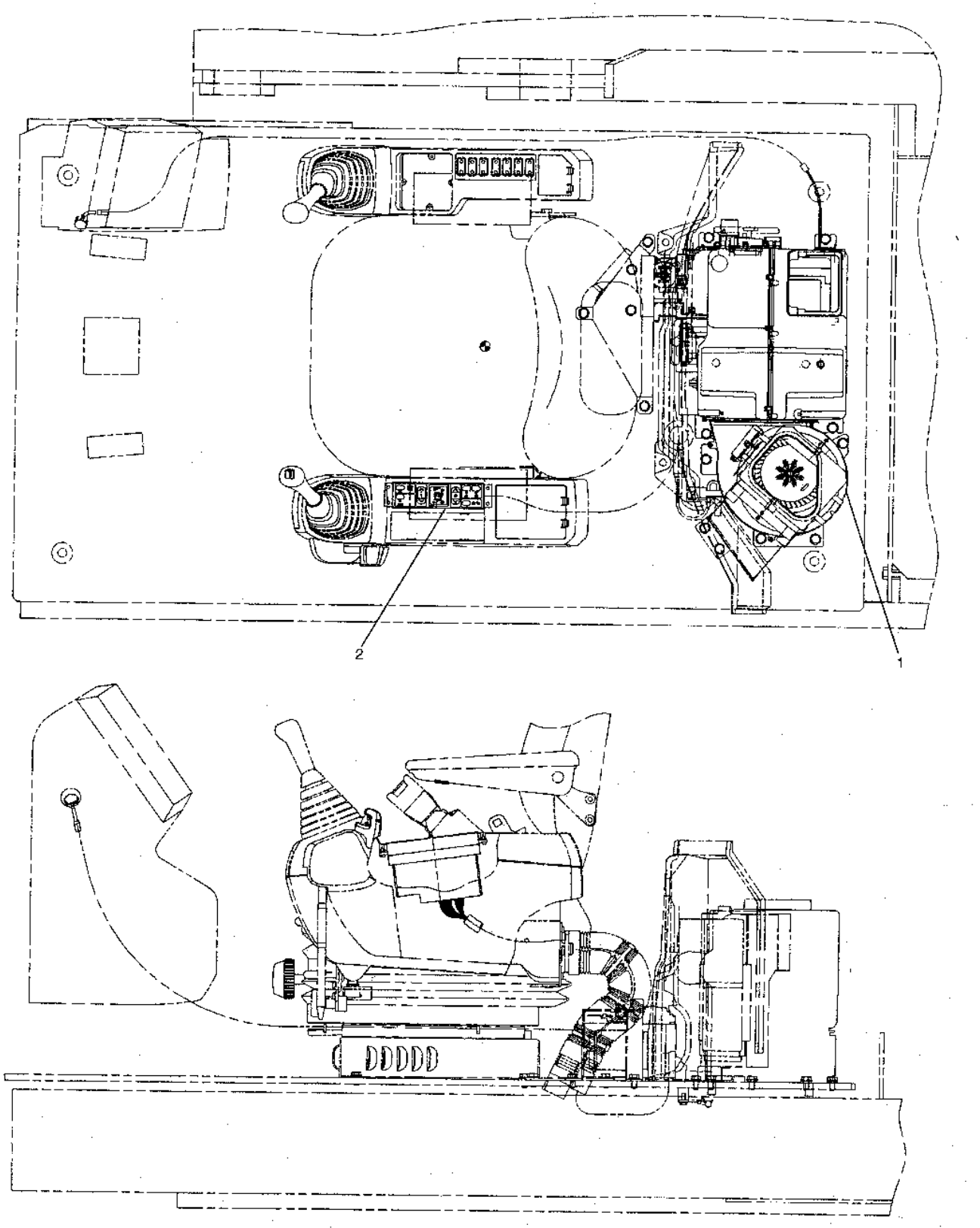


GRAPHIC #1

h69494e

# 1116288 HEATER GP

S/N 8SR 1-00417, 8TR 1-00485
PART OF 1116287-Page 481
AN ATTACHMENT

**Key:**

**SMCS**

| NOTE | REF NO | GRAPHIC REF | PART NUMBER | QTY | PART NAME 1 2 3 4 5 6 (PRODUCT LEVEL) | PRICE USD |
|---|---|---|---|---|---|---|
| | 1 | | 5I-3587 | 1 | DAMPER AS | |
| | 2 | | 5I-3608 | 1 | SEAL | |
| | 3 | | 5I-3610 | 6 | BOLT | |
| | 4 | | 5I-3639 | 11 | SCREW | |
| | 5 | | 124-4042 | 3 | RELAY | |
| | 6 | | 135-2190 | 1 | HARNESS AS | |
| | | | 7I-6621 | 2 | FUSE | |
| | 7 | | 5I-3571 | 1 | COVER | |
| | 8 | | 5I-3607 | 2 | CLAMP | |
| | 9 | | 5I-3609 | 16 | BOLT | |
| | 10 | | 5I-3596 | 1 | GROMMET | |
| | 11 | | 5I-3599 | 1 | BRACKET | |
| | 12 | | 5I-3562 | 1 | CASE | |
| | 13 | | 5I-3561 | 1 | CASE | |
| | 14 | | 7I-0253 | 1 | HOSE | |
| | 15 | | 7I-0251 | 10 | SCREW | |
| | 16 | | 7I-0213 | 1 | COVER | |
| | 17 | | 5I-3640 | 6 | SCREW | |
| | 18 | | 124-4038 | 1 | BRACKET | |
| | 19 | | 135-2189 | 1 | CONTROL AS | |
| | 20 | | 5I-3605 | 11 | CLAMP | |
| | 21 | | 5I-3613 | 10 | NUT | |
| | 22 | | 5I-3644 | 1 | GROMMET | |
| | 23 | | 5I-3588 | 1 | DAMPER AS | |
| | 24 | | 5I-3612 | 1 | RING | |
| | 25 | | 5I-3603 | 2 | CLAMP | |
| | 26 | | 124-4052 | 1 | COVER | |
| | 27 | | 5I-3602 | 1 | HOSE | |
| | 28 | | 5I-3638 | 2 | SCREW | |
| | 29 | | 5I-3557 | 1 | CASE | |
| | 30 | | 5I-3564 | 1 | MOTOR AS | |
| | 31 | | 5I-3565 | 2 | MOTOR AS | |
| | 32 | | 135-2253 | 1 | CLAMP | |
| | 33 | | 5I-3578 | 1 | ROD | |
| | 34 | | 5I-3559 | 1 | CASE | |
| | 35 | | 5I-3597 | 1 | GROMMET | |
| | 36 | | 124-3936 | 1 | GROMMET | |
| | 37 | | 5I-3575 | 1 | ROD AS | |
| | 38 | | 7Y-5287 | 1 | SCREW | |
| | 39 | | 124-3934 | 1 | CASE | |
| | 40 | | 5I-3598 | 1 | GROMMET | |
| | 41 | | 5I-3642 | 1 | CASE | |
| | 42 | | 5I-3586 | 1 | CLIP | |
| | 43 | | 5I-3614 | 3 | NUT | |
| | 44 | | 5I-3643 | 1 | GROMMET | |
| | 45 | | 135-2191 | 1 | MOTOR AS | |
| | | | 115-3811 | 1 | FAN | |

## 1116288 HEATER GP

| | | | |
|---|---|---|---|
| 46 | 5I-3581 | 5 | CLAMP |
| 47 | 5I-3576 | 3 | ROD |
| 48 | 5I-3580 | 3 | CLAMP |
| 49 | 5I-3577 | 1 | ROD |
| 50 | 5I-3563 | 1 | MOTOR AS |
| 51 | 5I-3616 | 9 | SCREW |
| 52 | 5I-3615 | 16 | SCREW |
| 53 | 5I-3579 | 1 | ROD |
| 54 | 5I-3611 | 3 | BOLT |
| 55 | 5I-3589 | 1 | DAMPER AS |
| 56 | 5I-3568 | 1 | VALVE |
| 57 | 5I-3556 | 1 | CORE AS |
| 58 | 124-4045 | 1 | CLAMP |
| 59 | 130-0299 | 1 | COVER |
| 60 | 124-4040 | 1 | RESISTOR |
| 61 | 135-2192 | 1 | BRACKET |
| 62 | 124-4044 | 1 | HARNESS AS |

## 1116288 HEATER GP

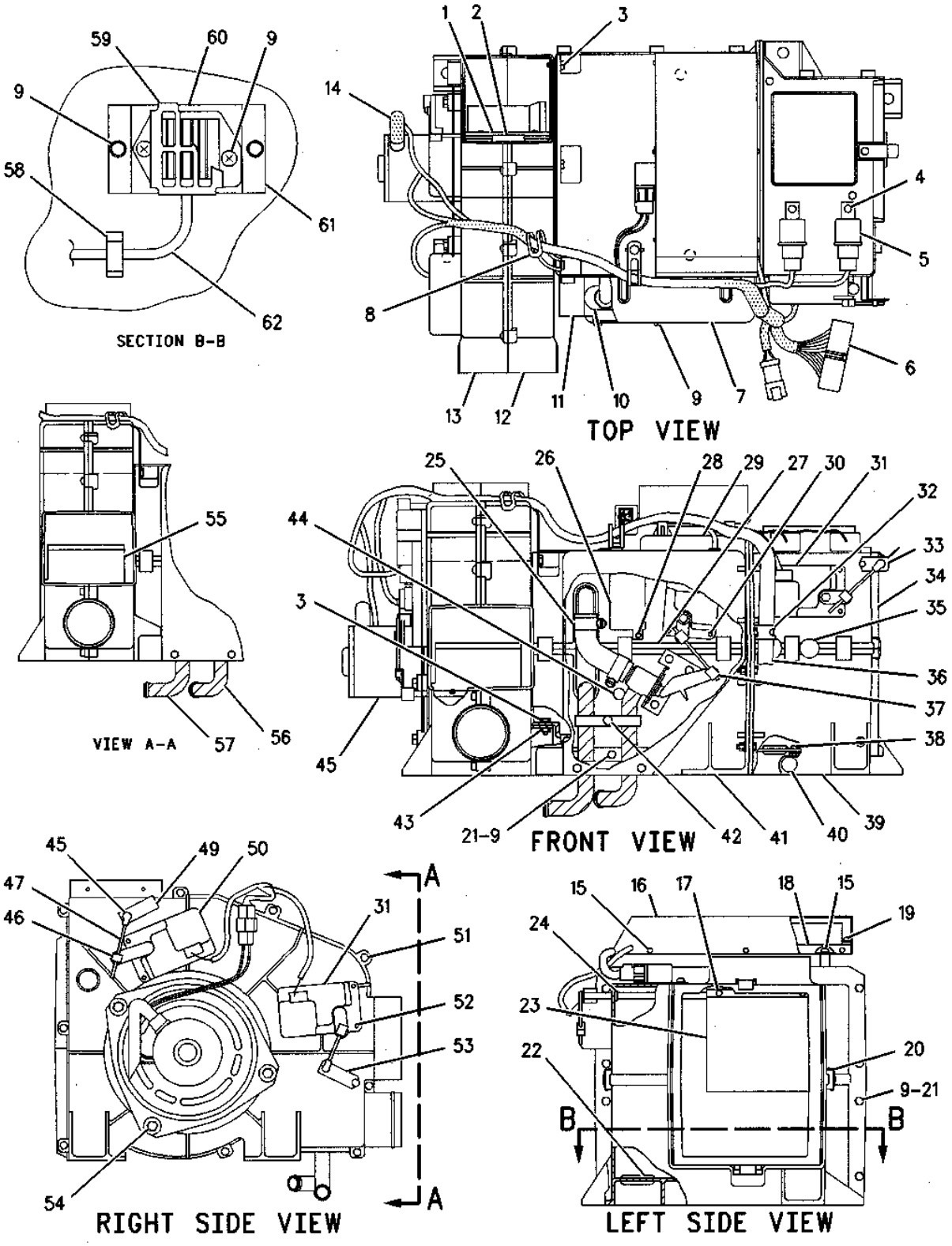


GRAPHIC #1

g00305315

GRAPHIC #1

h52490e

# 1597856 HEATER GP

S/N 8SR 00418-UP, 8SR 00486-UP
PART OF 1540678-Page 481B
1474833-Page 473.02, 1680809-Page 481.05
AN ATTACHMENT

**Key:** Y - SEE SEPARATE ILLUSTRATION

**SMCS**

| NOTE | REF NO | GRAPHIC REF | PART NUMBER | QTY | PART NAME 1 2 3 4 5 6 (PRODUCT LEVEL) | PRICE USD |
|---|---|---|---|---|---|---|
| | 1 | | 159-7854 | 1 | HARNESS AS | |
| | 2 | | 147-4846 | 2 | PACKING | |
| | 3 | | 8T-0328 | 1 | WASHER-HARD | |
| | 4 | | 147-4843 | 2 | BRACKET | |
| | 5 | | 147-4876 | 1 | PACKING | |
| | 6 | | 147-4844 | 1 | CONNECTOR | |
| Y | 7 | | 168-0809 | 1 | HEATER GP | |
| Y | 8 | | 147-4833 | 1 | BLOWER GP | |
| | 9 | | 135-2296 | 1 | RELAY | |
| | 10 | | 8T-4970 | 1 | BOLT (L=14mm) | |
| | 11 | | 095-0827 | 1 | LOCKWASHER | |
| | 12 | | 9X-8256 | 1 | WASHER | |
| | 13 | | 096-0192 | 1 | LOCKWASHER | |
| | 14 | | 6V-9674 | 1 | SCREW-MACHINE | |

## 1597856 HEATER GP

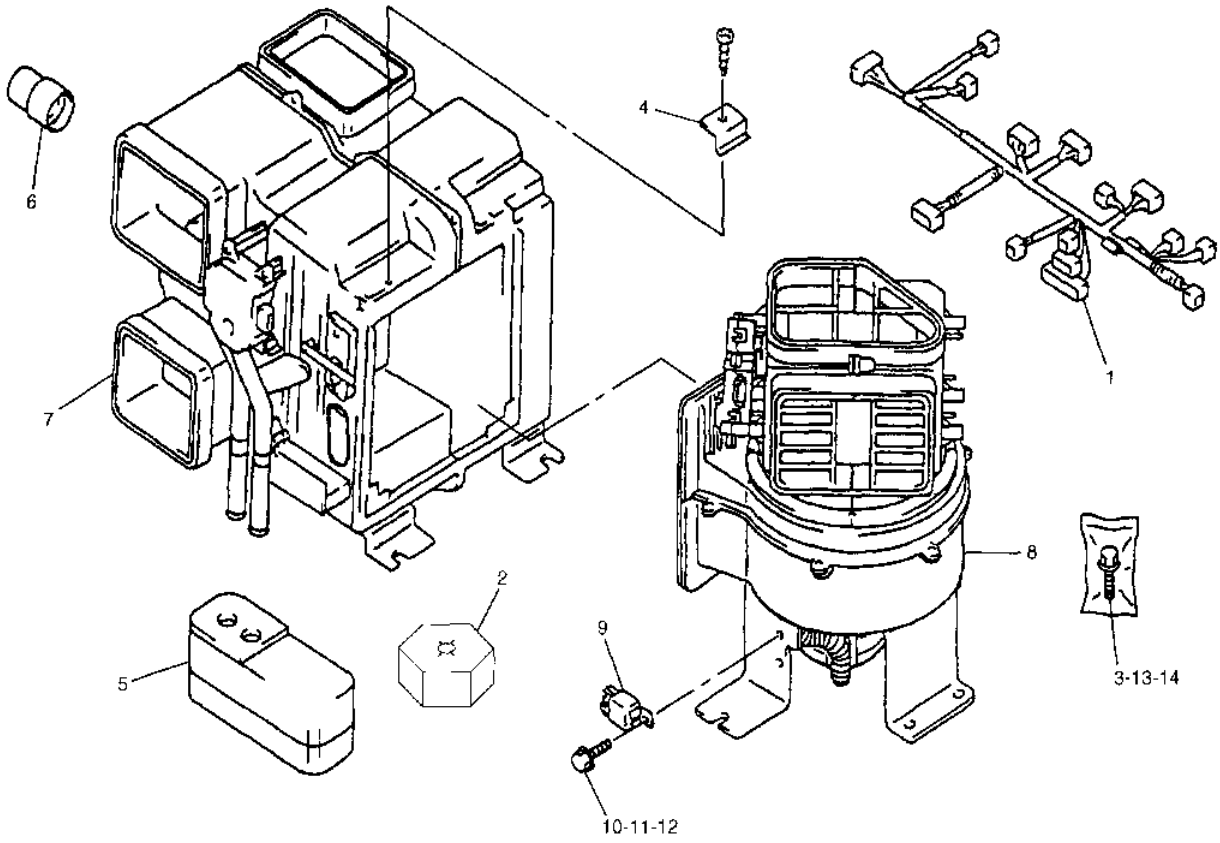


| NOTE | No. | PART No. | QTY | PART NAME |
|---|---|---|---|---|
| | 1 | 159-7854 | 1 | HARNESS AS |
| | 2 | 147-4846 | 2 | PACKING |
| | 3 | 8T-0328 | 1 | WASHER-HARD |
| | 4 | 147-4843 | 2 | BRACKET |
| | 5 | 147-4876 | 1 | PACKING |
| | 6 | 147-4844 | 1 | CONNECTOR |
| Y | 7 | 168-0809 | 1 | HEATER GP |
| Y | 8 | 147-4833 | 1 | BLOWER GP |
| | 9 | 135-2296 | 1 | RELAY |
| | 10 | 8T-4970 | 1 | BOLT (L=14mm) |
| | 11 | 095-0827 | 1 | LOCKWASHER |
| | 12 | 9X-8256 | 1 | WASHER |
| | 13 | 096-0192 | 1 | LOCKWASHER |
| | 14 | 6V-9674 | 1 | SCREW-MACHINE |

Y-SEE SEPARATE ILLUSTRATION

H69495E

GRAPHIC #1

h69495e

# 1680809 HEATER GP

S/N 8SR 00418-UP, 8SR 00486-UP
PART OF 1597856-Page 481.03
AN ATTACHMENT

**Key:**

**SMCS**

| NOTE | REF NO | GRAPHIC REF | PART NUMBER | QTY | PART NAME 1 2 3 4 5 6 (PRODUCT LEVEL) | PRICE USD |
|---|---|---|---|---|---|---|
| | 1 | | 147-4828 | 1 | BRACKET | |
| | 2 | | 147-4877 | 1 | PLUG | |
| | 3 | | 147-4830 | 1 | BRACKET | |
| | 4 | | 147-4829 | 1 | BRACKET | |
| | 5 | | 147-4827 | 1 | BRACKET | |
| | 6 | | 147-4823 | 1 | SENSOR AS | |
| | 7 | | 147-4856 | 2 | PLUG | |
| | 8 | | 147-4813 | 1 | CORE AS | |
| | 9 | | 147-4822 | 1 | BRACKET | |
| | 10 | | 147-4825 | 1 | MOTOR AS | |
| | 11 | | 159-7858 | 1 | CONTROLLER AS | |
| | 12 | | 147-4855 | 1 | GROMMET | |
| | 13 | | 147-4821 | 1 | CLIP | |
| | 14 | | 147-4826 | 1 | MOTOR AS | |
| | 15 | | 147-4831 | 2 | CLAMP | |
| | 16 | | 159-7740 | 1 | DOOR AS | |
| | 17 | | 159-7739 | 1 | DOOR AS | |

## 1680809 HEATER GP

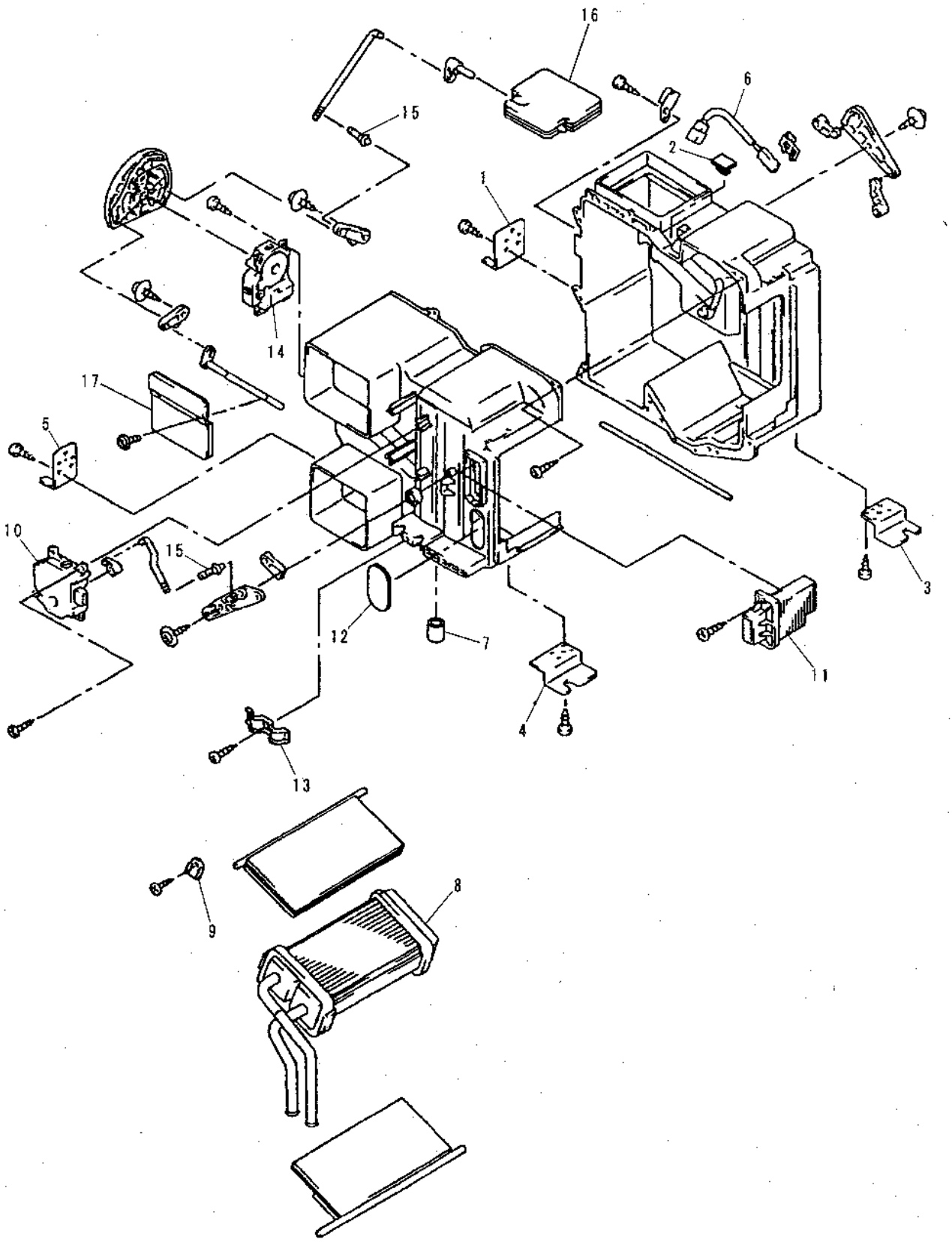


GRAPHIC #1

h69497e

# 1352231 LINES GP-HEATER

S/N 8SR 1-00417, 8TR 1-00485
PART OF 1352230-Page 469
AN ATTACHMENT

**Key:** E - ORDER BY THE CENTIMETER

**SMCS**

| NOTE | REF NO | GRAPHIC REF | PART NUMBER | QTY | PART NAME 1 2 3 4 5 6 (PRODUCT LEVEL) | PRICE USD |
|---|---|---|---|---|---|---|
| | 1 | | 8T-4137 | 4 | BOLT (L=20mm) | |
| | 2 | | 8T-4121 | 5 | WASHER | |
| | 3 | | 6D-1641 | 5 | CLIP | |
| | 4 | | 8F-8151 | 2 | COCK | |
| | 5 | | 6B-4661 | 2 | BUSHING | |
| | 6 | | 5D-1026 | 4 | CLAMP | |
| | 7 | | 7X-2621 | 1 | BOLT (L=12mm) | |
| | 8 | | 096-0061 | 4 | STRAP | |
| E | 9 | | 5P-0767 | | HOSE (485cm) | |
| | 10 | | 096-5863 | 1 | GROMMET | |
| | 11 | | 7I-0374 | 1 | INSULATOR | |
| E | 12 | | 5P-0767 | | GUARD (470cm) | |

## 1352231 LINES GP-HEATER

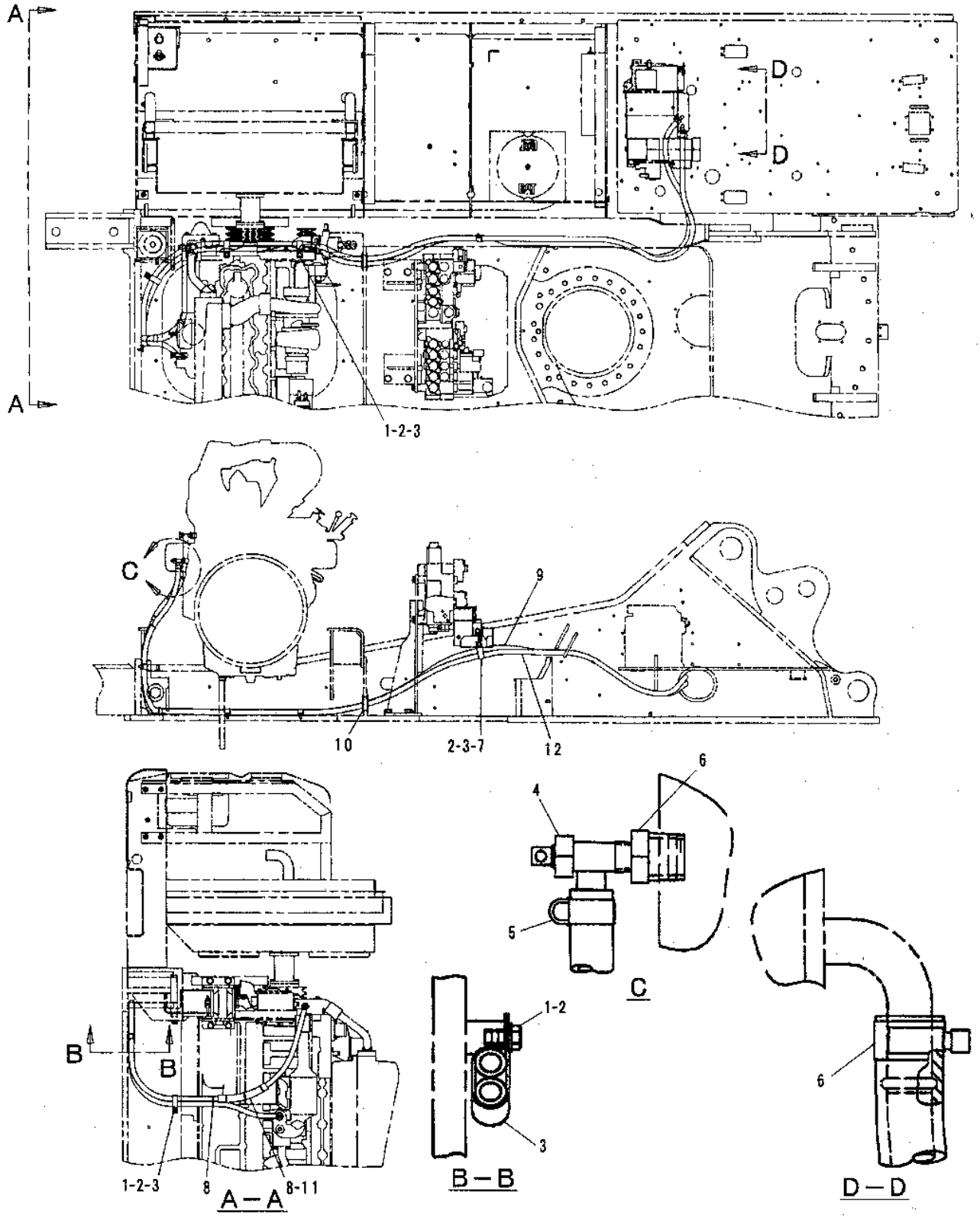


GRAPHIC #1

h79366e

# 1540685 LINES GP-HEATER

S/N 8SR 00418-UP, 8SR 00486-UP
PART OF 1540684-Page 469
AN ATTACHMENT

**Key:** E - ORDER BY THE CENTIMETER

**SMCS**

| NOTE | REF NO | GRAPHIC REF | PART NUMBER | QTY | PART NAME 1 2 3 4 5 6 (PRODUCT LEVEL) | PRICE USD |
|---|---|---|---|---|---|---|
| | 1 | | 8T-4137 | 4 | BOLT (L=20mm) | |
| | 2 | | 8T-4121 | 5 | WASHER | |
| | 3 | | 6D-1641 | 5 | CLIP | |
| | 4 | | 8F-8151 | 2 | COCK | |
| | 5 | | 6B-4661 | 2 | BUSHING | |
| | 6 | | 5D-1026 | 8 | CLAMP | |
| | 7 | | 7X-2621 | 1 | BOLT (L=12mm) | |
| | 8 | | 096-0061 | 4 | STRAP | |
| E | 9 | | 5P-0767 | | HOSE (485cm) | |
| | 10 | | 096-5863 | 1 | GROMMET | |
| | 11 | | 7I-0374 | 1 | INSULATOR | |
| | 12 | | 139-7235 | 2 | HOSE | |
| | 13 | | 122-9605 | 2 | JOINT | |
| E | 14 | | 5P-0767 | | HOSE (470cm) | |

## 1540685 LINES GP-HEATER

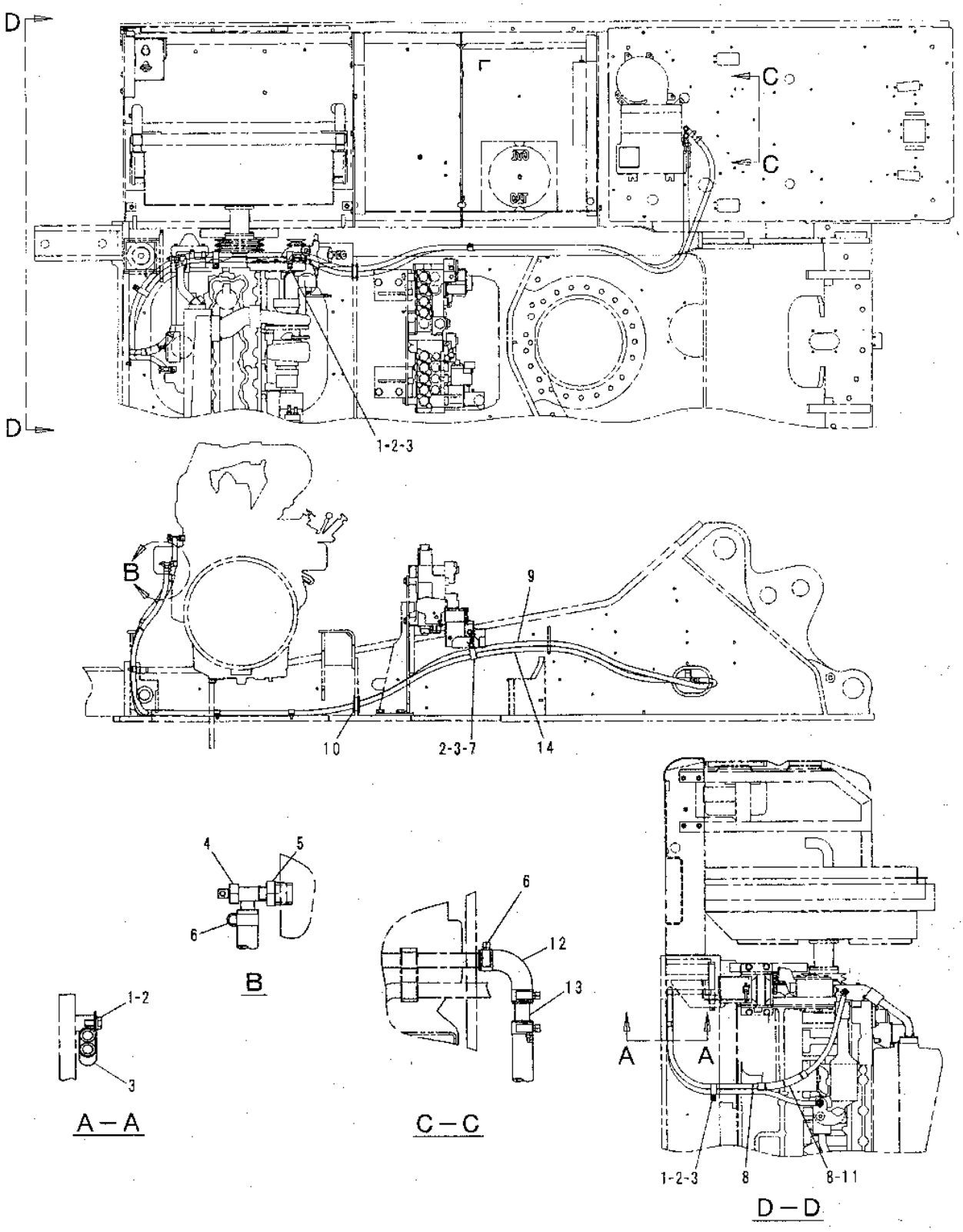


GRAPHIC #1

h60698e

# 1161513 PLATE & FILM GP-PART 1 OF 3

S/N 8SR 1-00417

**Key:**

**SMCS**

| NOTE | REF NO | GRAPHIC REF | PART NUMBER | QTY | PART NAME 1 2 3 4 5 6 (PRODUCT LEVEL) | PRICE USD |
|---|---|---|---|---|---|---|
| | 1 | | 7Y-0012 | 2 | FILM (WARNING) | |
| | 2 | | 7Y-0013 | 1 | FILM (WARNING) | |
| | 3 | | 120-5106 | 1 | FILM (WARNING) | |
| | 4 | | 120-5107 | 1 | FILM (INSTRUCTION) | |
| | 5 | | 7Y-0014 | 1 | FILM (INSTRUCTION) | |
| | 6 | | 117-8423 | 1 | FILM (NOTICE) | |
| | 7 | | 127-5286 | 1 | FILM (INSTRUCTION) | |
| | 8 | | 6V-4611 | 1 | FILM (WARNING) | |
| | 9 | | 127-5281 | 1 | FILM (CIRCUIT BREAKER) | |
| | 10 | | 4I-2927 | 1 | FILM (CIRCUIT BREAKER) | |
| | 11 | | 116-1552 | 1 | FILM (STRIPE) | |
| | 12 | | 7X-7644 | 2 | FILM (TIE DOWN) | |
| | 13 | | 4P-6464 | 1 | FILM (RADIAL SEAL AIR CLEANER) | |
| | 14 | | 134-7258 | 1 | FILM (ELC) | |

## 1161513 PLATE & FILM GP-PART 1 OF 3

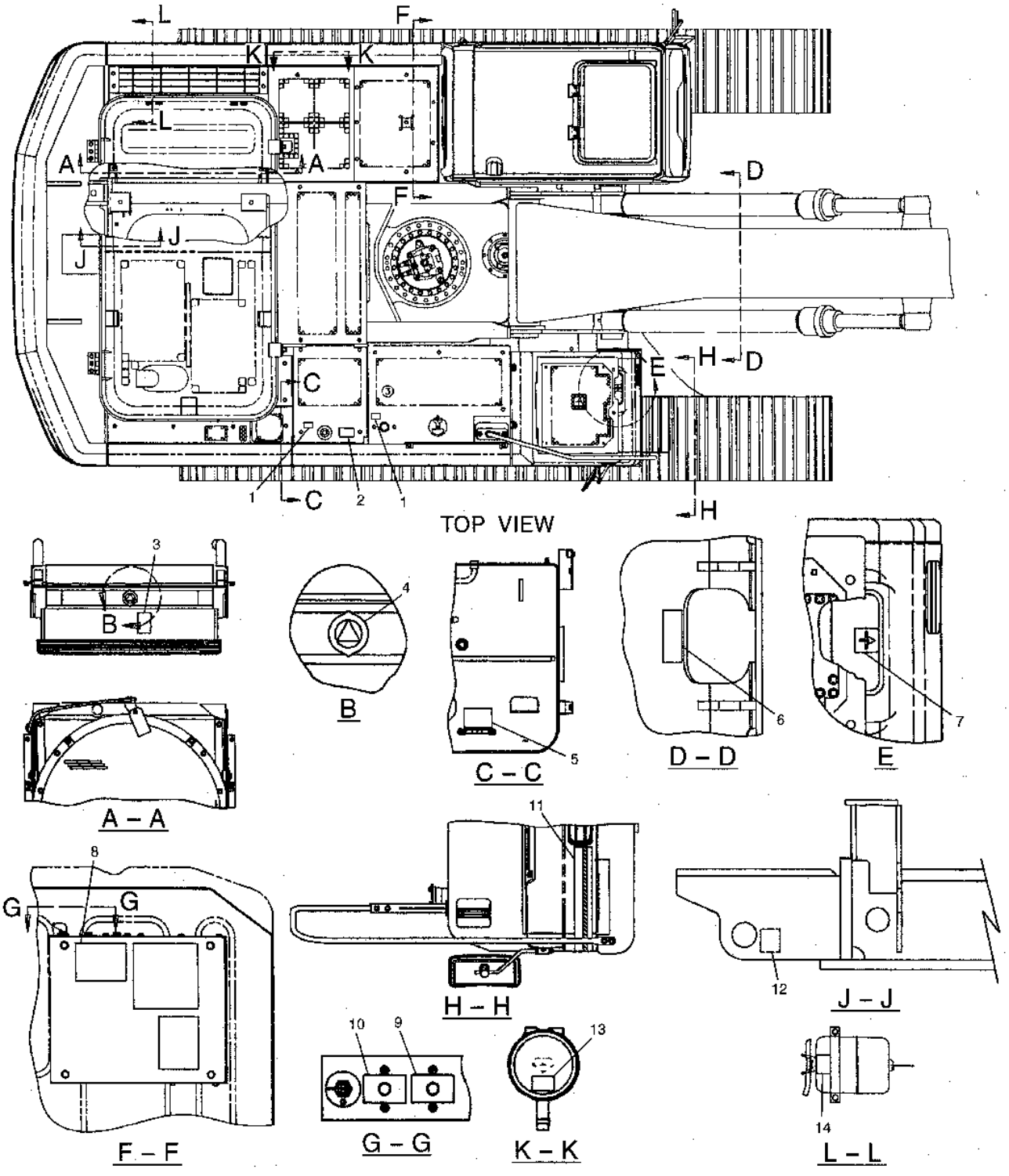


GRAPHIC #1

h64116e

# 1161513 PLATE & FILM GP-PART 2 OF 3

S/N 8SR 1-00417

**Key:** E - ORDER BY THE CENTIMETER, Z - NOT SERVICED

**SMCS**

| NOTE | REF NO | GRAPHIC REF | PART NUMBER | QTY | PART NAME 1 2 3 4 5 6 (PRODUCT LEVEL) | PRICE USD |
|---|---|---|---|---|---|---|
| | 1 | | 1P-2807 | 4 | FILM (LIFT) | |
| E | 2 | | 134-6146 | | FILM (STRIPE) (580cm) | |
| | 3 | | 105-7545 | 1 | FILM (CAT) | |
| | 4 | | 127-5282 | 2 | FILM (CAT) | |
| | 5 | | 116-1592 | 1 | FILM (STRIPE) | |
| | 6 | | 120-5069 | 1 | FILM (STRIPE) | |
| | 7 | | 116-1545 | 1 | FILM (CAT) | |
| | 8 | | 120-5070 | 1 | FILM (STRIPE) | |
| | 9 | | 117-8452 | 1 | FILM (STRIPE) | |
| | 10 | | 127-5284 | 1 | FILM (STRIPE) | |
| | 11 | | 127-5285 | 1 | FILM (CAT) | |
| | 12 | | 134-6137 | 2 | FILM (330B) | |
| | 13 | | 127-5283 | 1 | FILM (CAT) | |
| | 14 | | 120-5129 | 1 | FILM (WARNING) | |
| Z | 15 | | (NONE) | 1 | PLATE (PIN) | |
| | 16 | | 4B-4158 | 4 | SCREW | |
| | 17 | | 7X-7644 | 2 | FILM (TIE DOWN) | |

## 1161513 PLATE & FILM GP-PART 2 OF 3

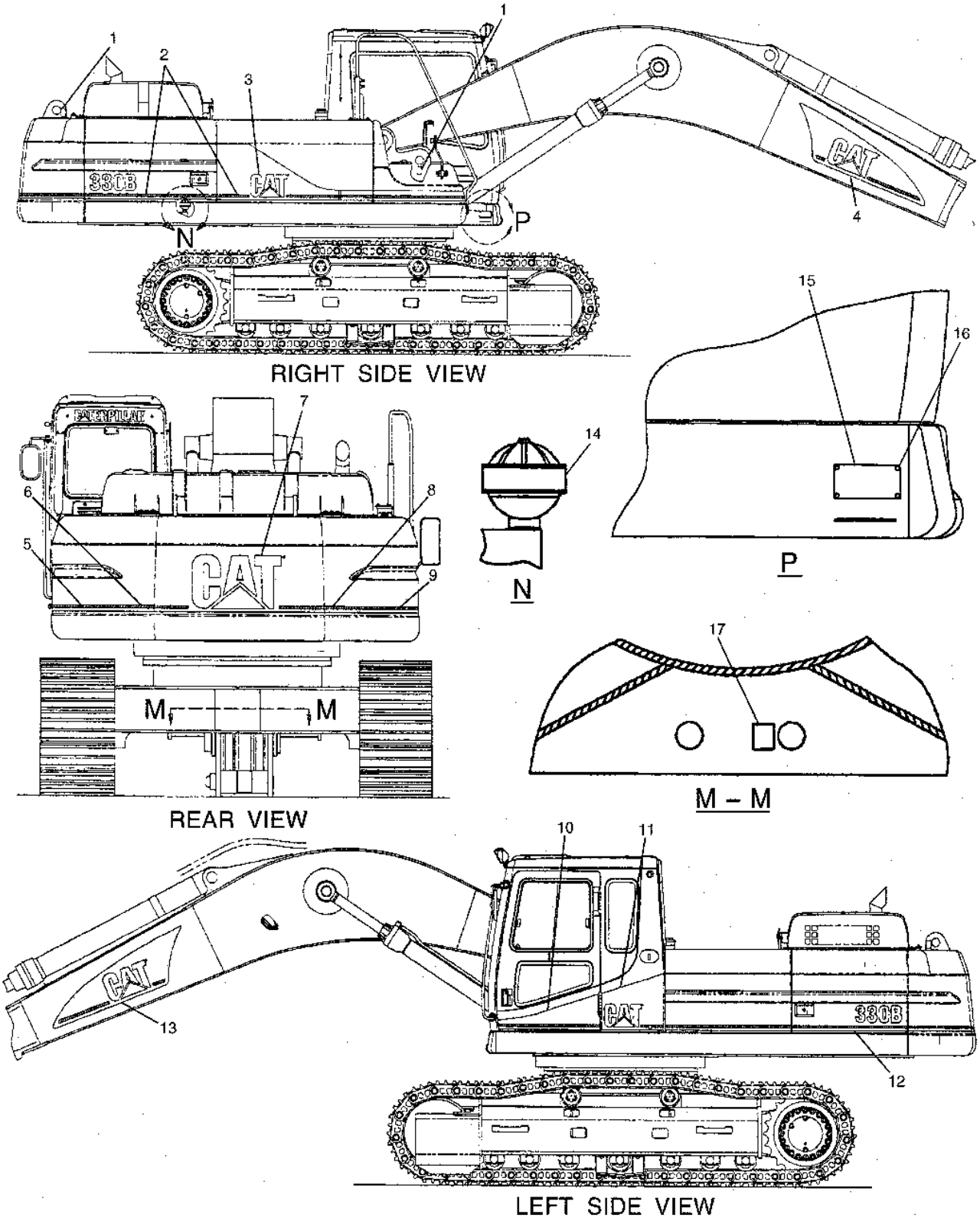


GRAPHIC #1

h64118e

# 1161513 PLATE & FILM GP-PART 3 OF 3

S/N 8SR 1-00417

**Key:** Z - NOT SERVICED

**SMCS**

| NOTE | REF NO | GRAPHIC REF | PART NUMBER | QTY | PART NAME 1 2 3 4 5 6 (PRODUCT LEVEL) | PRICE USD |
|---|---|---|---|---|---|---|
| | 1 | | 7Y-0005 | 1 | FILM (WARNING) | |
| | 2 | | 4I-8472 | 1 | FILM (INSTRUCTION) | |
| | 3 | | 7Y-0003 | 1 | FILM (WARNING) | |
| | 4 | | 7Y-0001 | 1 | PLATE (WARNING) | |
| | 5 | | 4B-4158 | 8 | SCREW | |
| Z | 6 | | (NONE) | 1 | PLATE (SIN) | |
| | 7 | | 4I-8088 | 1 | FILM (NOTICE) | |
| | 8 | | 1R-6245 | 1 | FILM (WARNING) | |
| | 9 | | 117-8420 | 1 | FILM (LIFTING CAP) | |
| | 10 | | 101-2842 | 1 | FILM (EMERGENCY EXIT) | |
| | 11 | | 8T-1915 | 1 | FILM (NOTICE) | |
| | 12 | | 116-1523 | 1 | FILM (INSTRUCTION) | |
| | 13 | | 134-6118 | 1 | FILM (INSTRUCTION) | |
| | 14 | | 134-6144 | 1 | FILM (WARNING) | |

## 1161513 PLATE & FILM GP-PART 3 OF 3

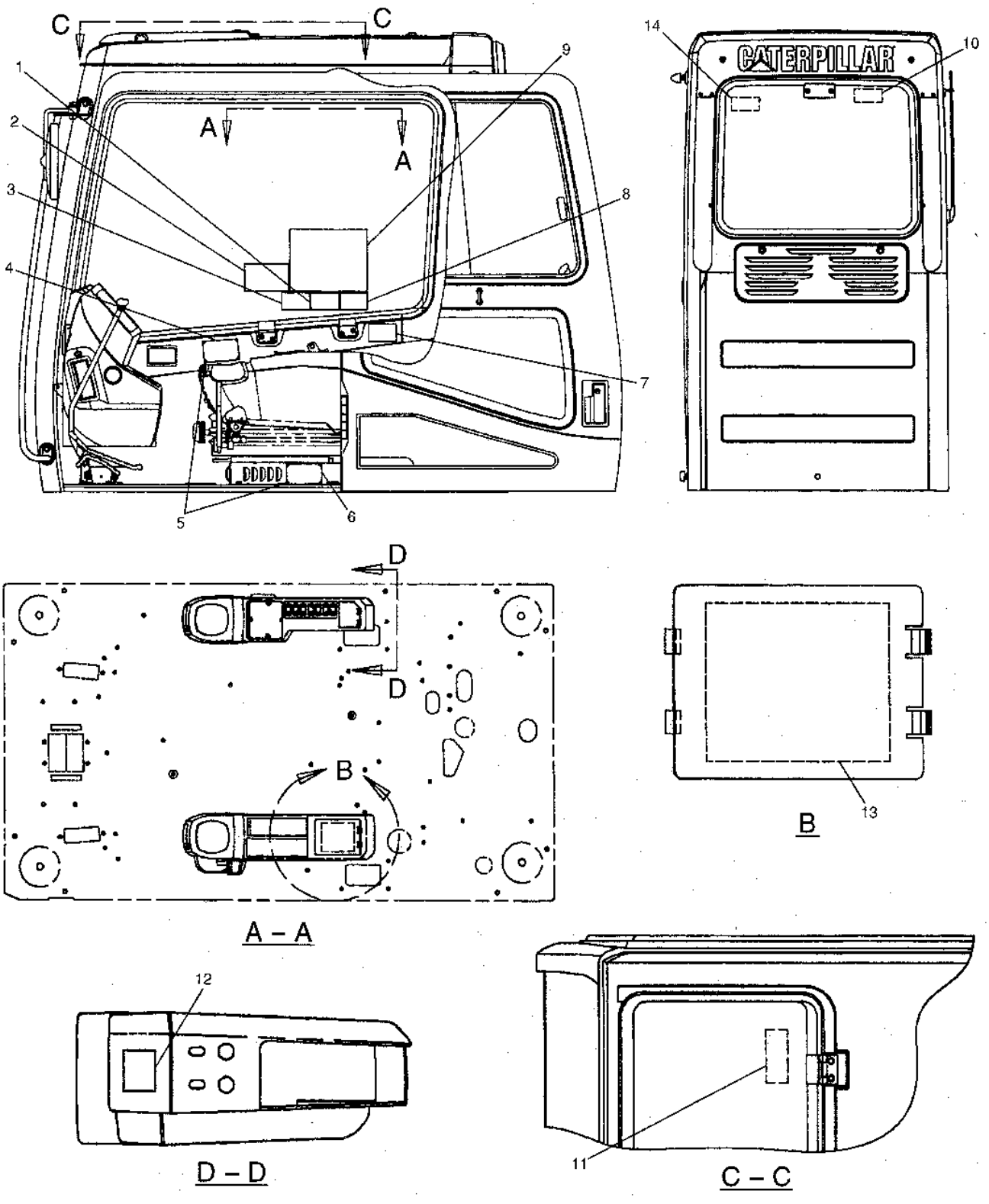


GRAPHIC #1

h64120e

# 1161513 PLATE & FILM GP-PART 1 OF 3

S/N 8SR 00418-00627

**Key:**

**SMCS**

| NOTE | REF NO | GRAPHIC REF | PART NUMBER | QTY | PART NAME 1 2 3 4 5 6 (PRODUCT LEVEL) | PRICE USD |
|---|---|---|---|---|---|---|
| | 1 | | 7Y-0012 | 2 | FILM (WARNING) | |
| | 2 | | 7Y-0013 | 1 | FILM (WARNING) | |
| | 3 | | 120-5106 | 1 | FILM (WARNING) | |
| | 4 | | 120-5107 | 1 | FILM (INSTRUCTION) | |
| | 5 | | 7Y-0014 | 1 | FILM (INSTRUCTION) | |
| | 6 | | 117-8423 | 1 | FILM (NOTICE) | |
| | 7 | | 127-5286 | 1 | FILM (INSTRUCTION) | |
| | 8 | | 6V-4611 | 1 | FILM (WARNING) | |
| | 9 | | 127-5281 | 1 | FILM (CIRCUIT BREAKER) | |
| | 10 | | 4I-2927 | 1 | FILM (CIRCUIT BREAKER) | |
| | 11 | | 116-1552 | 1 | FILM (STRIPE) | |
| | 12 | | 7X-7644 | 2 | FILM (TIE DOWN) | |
| | 13 | | 4P-6464 | 1 | FILM (RADIAL SEAL AIR CLEANER) | |
| | 14 | | 134-7258 | 1 | FILM (ELC) | |

## 1161513 PLATE & FILM GP-PART 1 OF 3

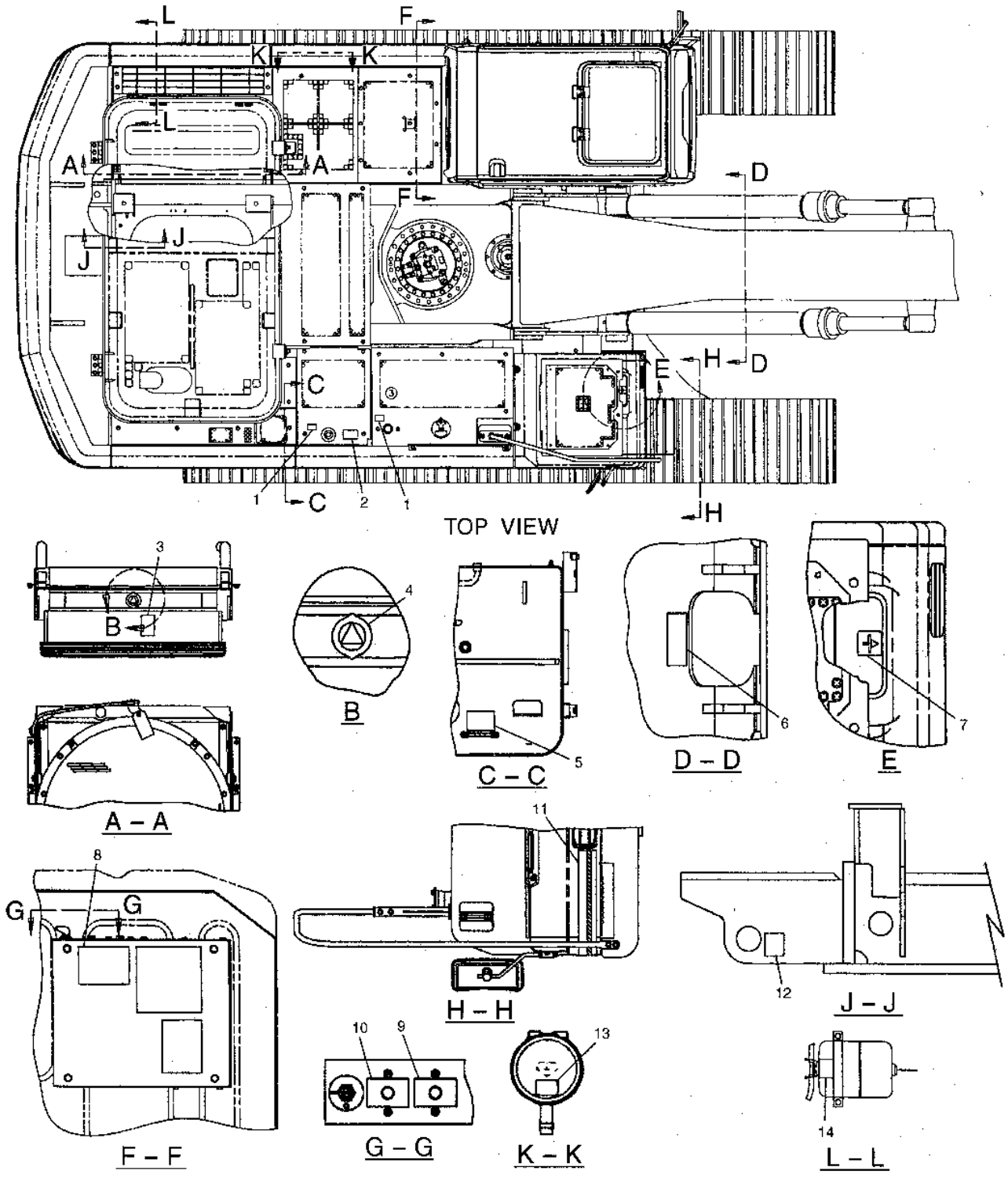


GRAPHIC #1

h79376e

# 1161513 PLATE & FILM GP-PART 2 OF 3

S/N 8SR 00418-00627

**Key:** E - ORDER BY THE CENTIMETER, Z - NOT SERVICED

**SMCS**

| NOTE | REF NO | GRAPHIC REF | PART NUMBER | QTY | PART NAME 1 2 3 4 5 6 (PRODUCT LEVEL) | PRICE USD |
|---|---|---|---|---|---|---|
| | 1 | | 1P-2807 | 4 | FILM (LIFT) | |
| E | 2 | | 134-6146 | | FILM (STRIPE) (580cm) | |
| | 3 | | 105-7545 | 1 | FILM (CAT) | |
| | 4 | | 127-5282 | 1 | FILM (CAT) | |
| | 5 | | 116-1592 | 1 | FILM (STRIPE) | |
| | 6 | | 120-5069 | 1 | FILM (STRIPE) | |
| | 7 | | 116-1545 | 1 | FILM (CAT) | |
| | 8 | | 120-5070 | 1 | FILM (STRIPE) | |
| | 9 | | 117-8452 | 1 | FILM (STRIPE) | |
| | 10 | | 127-5284 | 1 | FILM (STRIPE) | |
| | 11 | | 127-5285 | 1 | FILM (CAT) | |
| | 12 | | 134-6137 | 2 | FILM (330B) | |
| | 13 | | 127-5283 | 1 | FILM (CAT) | |
| | 14 | | 120-5129 | 1 | FILM (WARNING) | |
| Z | 15 | | (NONE) | 1 | PLATE (PIN) | |
| | 16 | | 4B-4158 | 4 | SCREW | |
| | 17 | | 7X-7644 | 2 | FILM (TIE DOWN) | |
| | 18 | | 188-7268 | 2 | FILM (WARNING) | |
| | 19 | | 190-5386 | 2 | FILM (SAFETY) | |

## 1161513 PLATE & FILM GP-PART 2 OF 3

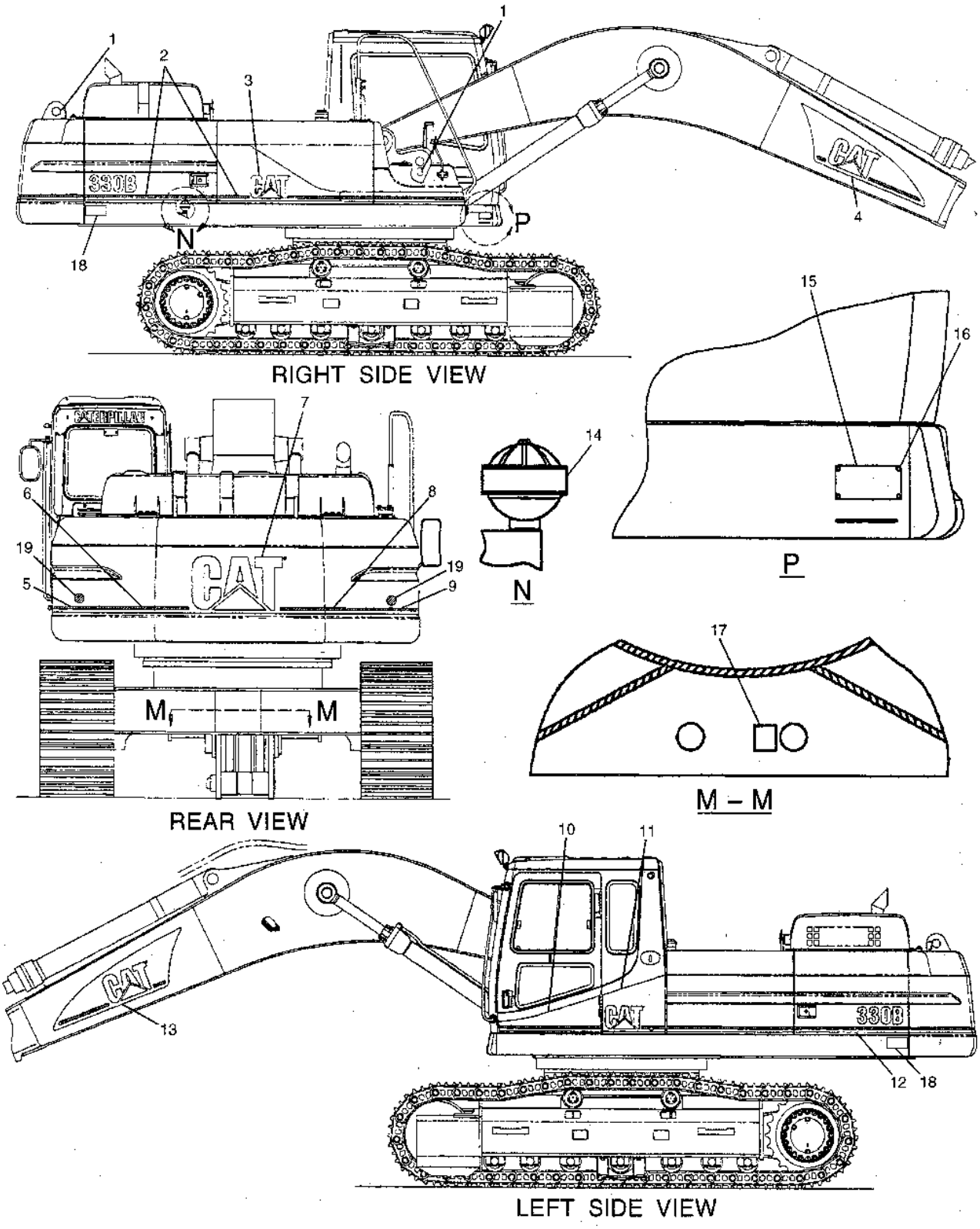


GRAPHIC #1

h79378e

# 1161513 PLATE & FILM GP-PART 3 OF 3

S/N 8SR 00418-00627

**Key:** Z - NOT SERVICED

**SMCS**

| NOTE | REF NO | GRAPHIC REF | PART NUMBER | QTY | PART NAME 1 2 3 4 5 6 (PRODUCT LEVEL) | PRICE USD |
|---|---|---|---|---|---|---|
| | 1 | | 7Y-0005 | 1 | FILM (WARNING) | |
| | 2 | | 4I-8472 | 1 | FILM (INSTRUCTION) | |
| | 3 | | 7Y-0003 | 1 | FILM (WARNING) | |
| | 4 | | 7Y-0001 | 1 | PLATE (WARNING) | |
| | 5 | | 4B-4158 | 8 | SCREW | |
| Z | 6 | | (NONE) | 1 | PLATE (SIN) | |
| | 7 | | 4I-8088 | 1 | FILM (NOTICE) | |
| | 8 | | 1R-6245 | 1 | FILM (WARNING) | |
| | 9 | | 117-8420 | 1 | FILM (LIFTING CAP) | |
| | 10 | | 101-2842 | 1 | FILM (EMERGENCY EXIT) | |
| | 11 | | 8T-1915 | 1 | FILM (NOTICE) | |
| | 12 | | 116-1523 | 1 | FILM (INSTRUCTION) | |
| | 13 | | 155-7110 | 1 | FILM (INSTRUCTION) | |
| | 14 | | 134-6144 | 1 | FILM (WARNING) | |

## 1161513 PLATE & FILM GP-PART 3 OF 3

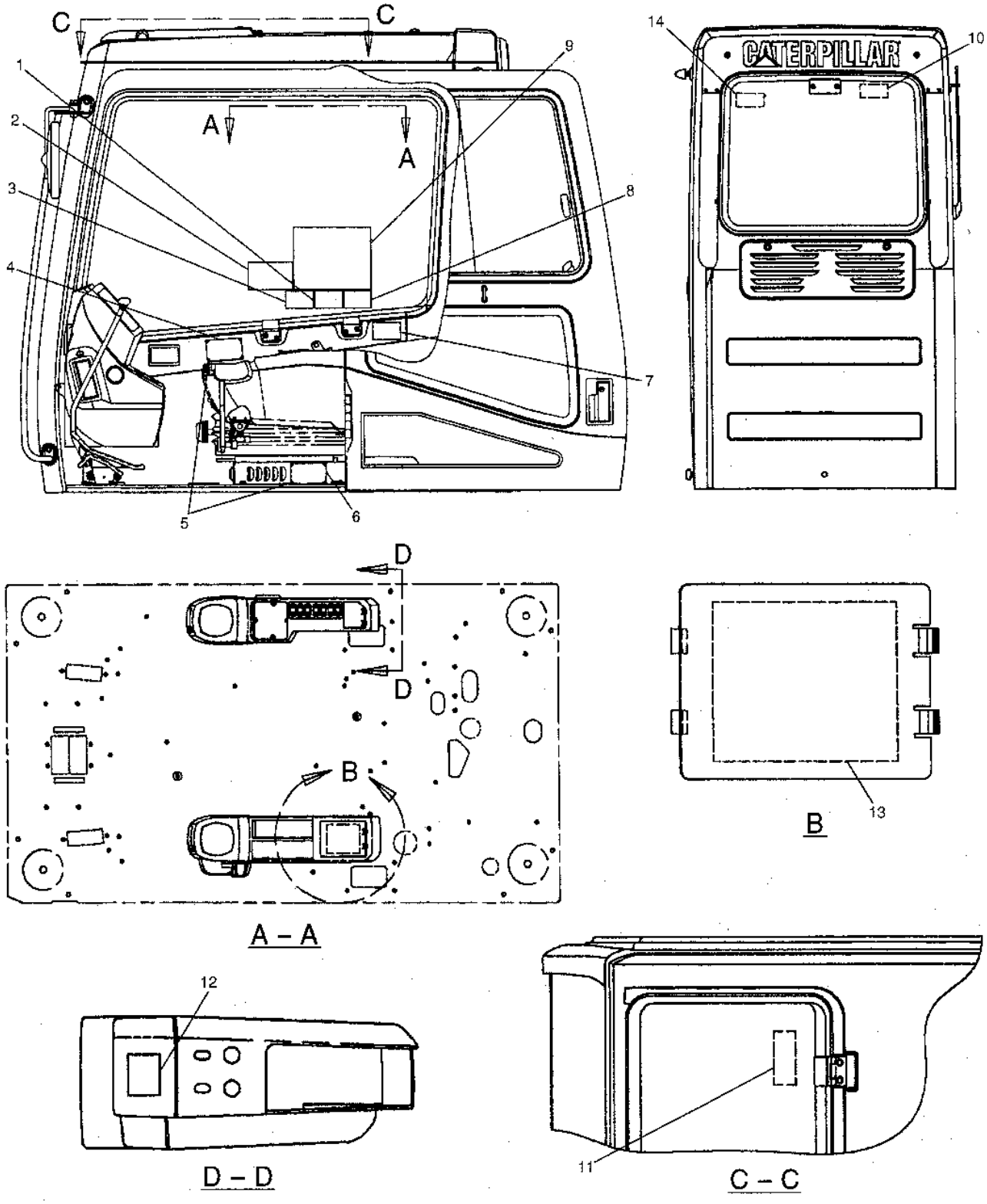


GRAPHIC #1

h79380e

# 1161513 PLATE & FILM GP-PART 1 OF 3

S/N 8SR 00628-UP

**Key:**

**SMCS**

| NOTE | REF NO | GRAPHIC REF | PART NUMBER | QTY | PART NAME 1 2 3 4 5 6 (PRODUCT LEVEL) | PRICE USD |
|---|---|---|---|---|---|---|
| | 1 | | 7Y-0012 | 2 | FILM (WARNING) | |
| | 2 | | 7Y-0013 | 1 | FILM (WARNING) | |
| | 3 | | 120-5106 | 1 | FILM (WARNING) | |
| | 4 | | 120-5107 | 1 | FILM (INSTRUCTION) | |
| | 5 | | 7Y-0014 | 1 | FILM (INSTRUCTION) | |
| | 6 | | 117-8423 | 1 | FILM (NOTICE) | |
| | 7 | | 127-5286 | 1 | FILM (INSTRUCTION) | |
| | 8 | | 6V-4611 | 1 | FILM (WARNING) | |
| | 9 | | 127-5281 | 1 | FILM (CIRCUIT BREAKER) | |
| | 10 | | 4I-2927 | 1 | FILM (CIRCUIT BREAKER) | |
| | 11 | | 116-1552 | 1 | FILM (STRIPE) | |
| | 12 | | 7X-7644 | 2 | FILM (TIE DOWN) | |
| | 13 | | 4P-6464 | 1 | FILM (RADIAL SEAL AIR CLEANER) | |
| | 14 | | 134-7258 | 1 | FILM (ELC) | |

## 1161513 PLATE & FILM GP-PART 1 OF 3

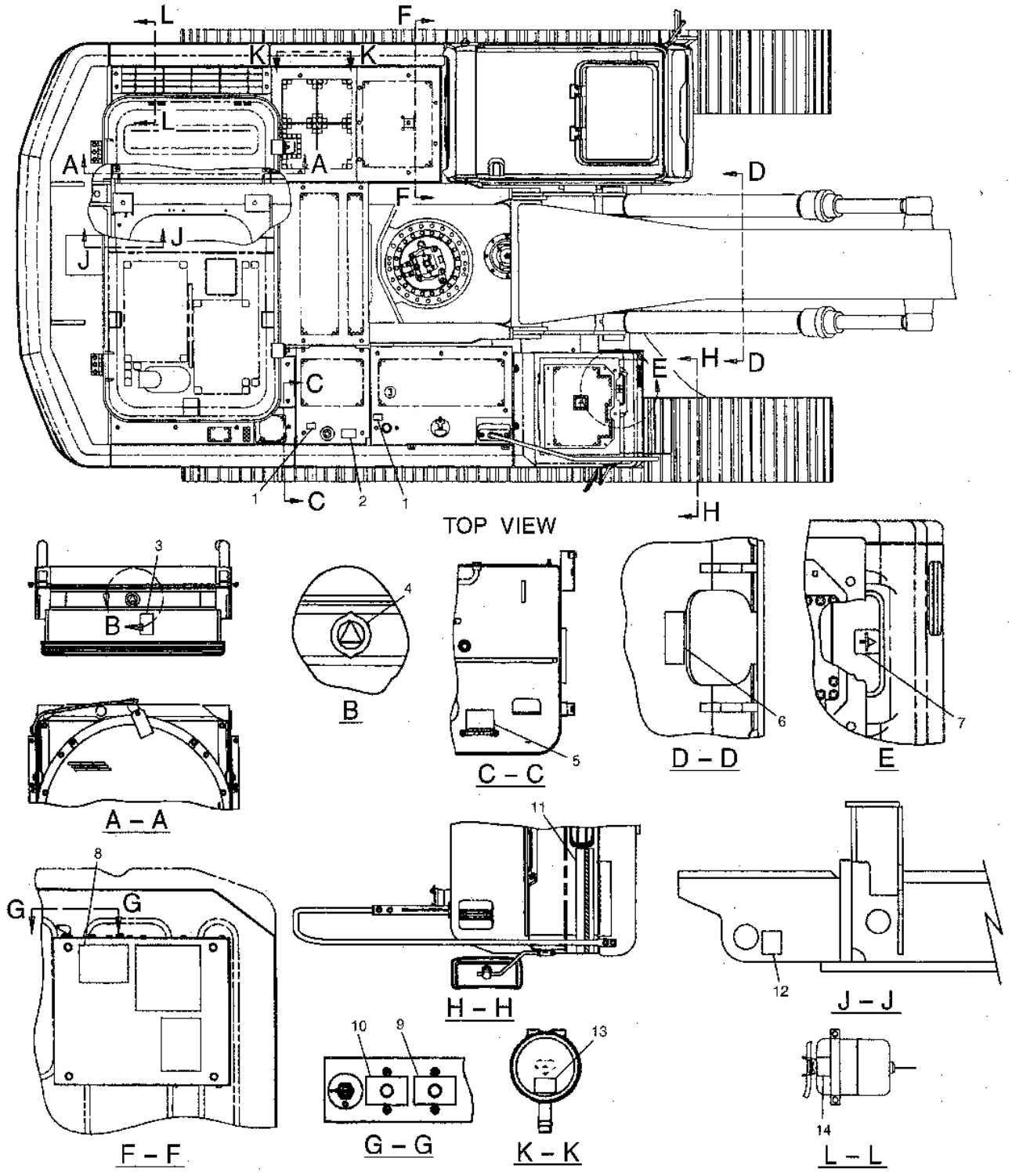


GRAPHIC #1

h79382e

# 1161513 PLATE & FILM GP-PART 2 OF 3

S/N 8SR 00628-UP

**Key:** E - ORDER BY THE CENTIMETER, Z - NOT SERVICED

**SMCS**

| NOTE | REF NO | GRAPHIC REF | PART NUMBER | QTY | PART NAME 1 2 3 4 5 6 (PRODUCT LEVEL) | PRICE USD |
|---|---|---|---|---|---|---|
| | 1 | | 1P-2807 | 4 | FILM (LIFT) | |
| E | 2 | | 134-6146 | | FILM (STRIPE) (580cm) | |
| | 3 | | 105-7545 | 1 | FILM (CAT) | |
| | 4 | | 127-5282 | 2 | FILM (CAT) | |
| | 5 | | 116-1592 | 1 | FILM (STRIPE) | |
| | 6 | | 120-5069 | 1 | FILM (STRIPE) | |
| | 7 | | 116-1545 | 1 | FILM (CAT) | |
| | 8 | | 120-5070 | 1 | FILM (STRIPE) | |
| | 9 | | 117-8452 | 1 | FILM (STRIPE) | |
| | 10 | | 127-5284 | 1 | FILM (STRIPE) | |
| | 11 | | 127-5285 | 1 | FILM (CAT) | |
| | 12 | | 134-6137 | 2 | FILM (330B) | |
| | 13 | | 127-5283 | 1 | FILM (CAT) | |
| | 14 | | 120-5129 | 1 | FILM (WARNING) | |
| Z | 15 | | (NONE) | 1 | PLATE (PIN) | |
| | 16 | | 4B-4158 | 4 | SCREW | |
| | 17 | | 7X-7644 | 2 | FILM (TIE DOWN) | |
| | 18 | | 188-7268 | 2 | FILM (WARNING) | |
| | 19 | | 190-5386 | 2 | FILM (SAFETY) | |

## 1161513 PLATE & FILM GP-PART 2 OF 3

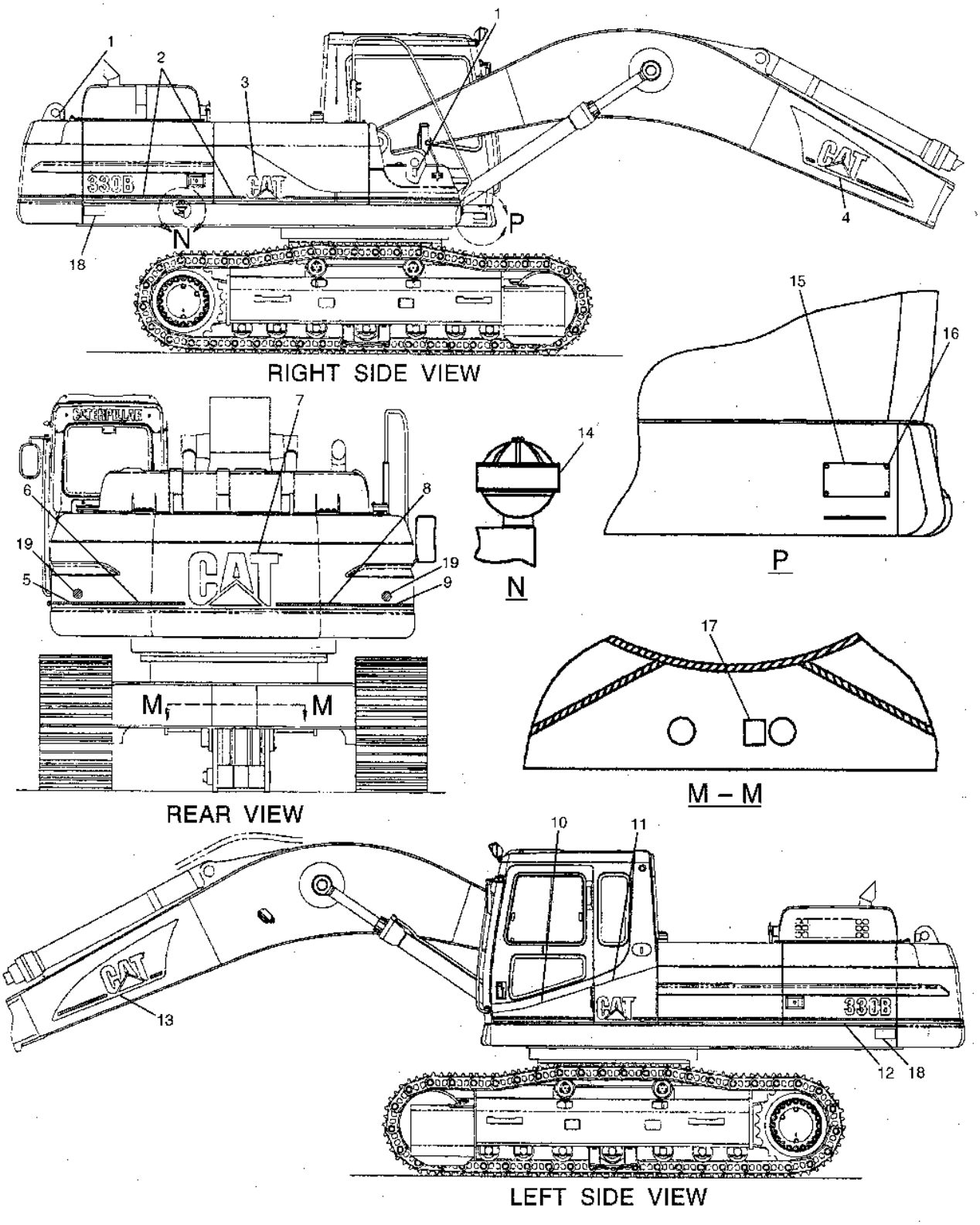


GRAPHIC #1

h79384e

# 1161513 PLATE & FILM GP-PART 3 OF 3

S/N 8SR 00628-UP

**Key:**

**SMCS**

| NOTE | REF NO | GRAPHIC REF | PART NUMBER | QTY | PART NAME 1 2 3 4 5 6 (PRODUCT LEVEL) | PRICE USD |
|---|---|---|---|---|---|---|
| | 1 | | 7Y-0005 | 1 | FILM (WARNING) | |
| | 2 | | 4I-8472 | 1 | FILM (INSTRUCTION) | |
| | 3 | | 7Y-0003 | 1 | FILM (WARNING) | |
| | 4 | | 7Y-0001 | 1 | PLATE (WARNING) | |
| | 5 | | 4B-4158 | 8 | SCREW | |
| | 6 | | 134-6144 | 1 | FILM (WARNING) | |
| | 7 | | 4I-8088 | 1 | FILM (NOTICE) | |
| | 8 | | 1R-6245 | 1 | FILM (WARNING) | |
| | 9 | | 117-8420 | 1 | FILM (LIFTING CAP) | |
| | 10 | | 101-2842 | 1 | FILM (EMERGENCY EXIT) | |
| | 11 | | 8T-1915 | 1 | FILM (NOTICE) | |
| | 12 | | 116-1523 | 1 | FILM (INSTRUCTION) | |
| | 13 | | 155-7110 | 1 | FILM (INSTRUCTION) | |

## 1161513 PLATE & FILM GP-PART 3 OF 3

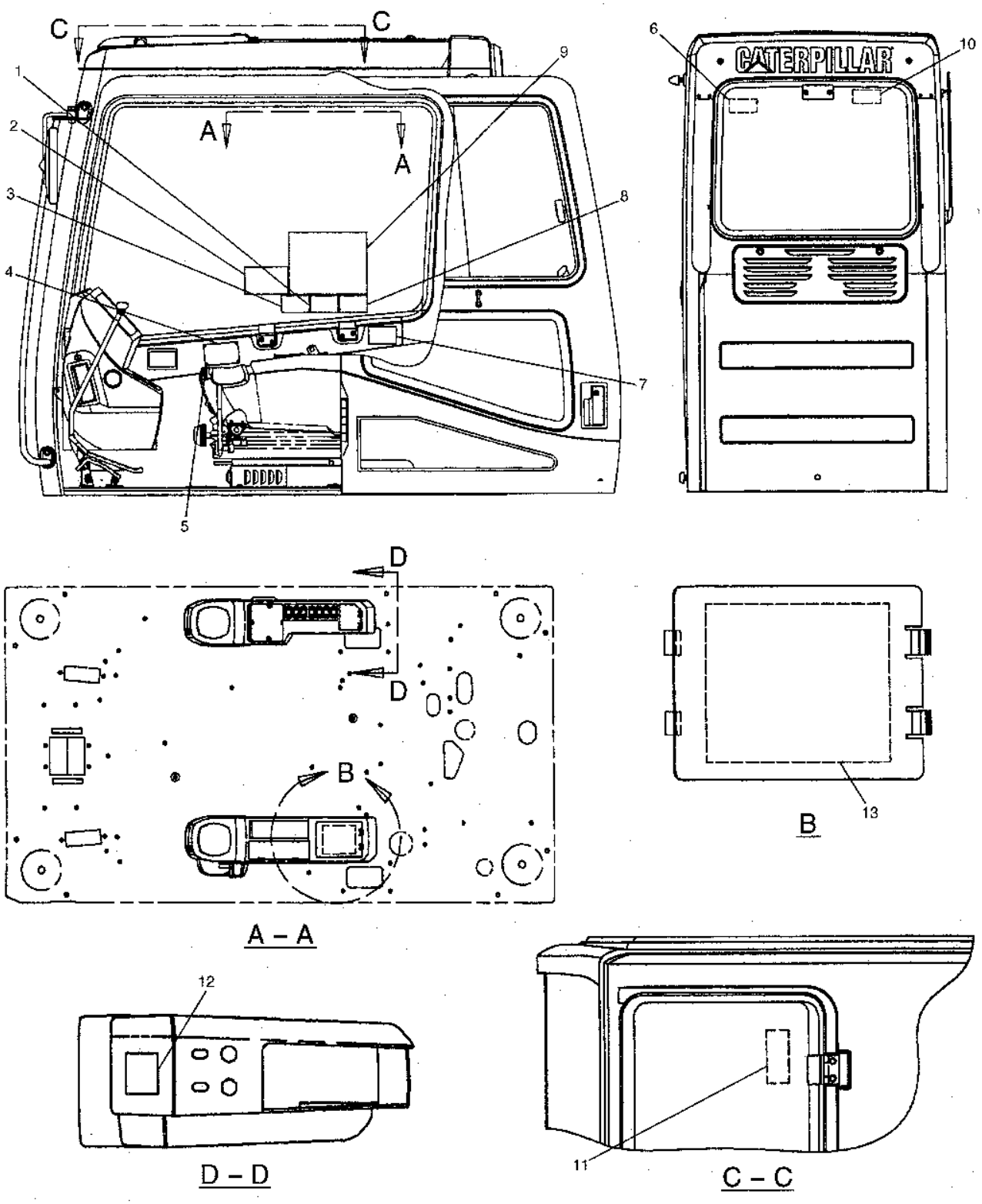


GRAPHIC #1

h79386e

# 1161514 PLATE & FILM GP-PART 1 OF 3

S/N 8TR 1-00485

**Key:**

**SMCS**

| NOTE | REF NO | GRAPHIC REF | PART NUMBER | QTY | PART NAME 1 2 3 4 5 6 (PRODUCT LEVEL) | PRICE USD |
|---|---|---|---|---|---|---|
| | 1 | | 7Y-0012 | 2 | FILM (WARNING) | |
| | 2 | | 7Y-0013 | 1 | FILM (WARNING) | |
| | 3 | | 120-5106 | 1 | FILM (WARNING) | |
| | 4 | | 120-5107 | 1 | FILM (INSTRUCTION) | |
| | 5 | | 7Y-0014 | 1 | FILM (INSTRUCTION) | |
| | 6 | | 117-8423 | 1 | FILM (NOTICE) | |
| | 7 | | 127-5286 | 1 | FILM (INSTRUCTION) | |
| | 8 | | 6V-4611 | 1 | FILM (WARNING) | |
| | 9 | | 127-5281 | 1 | FILM (CIRCUIT BREAKER) | |
| | 10 | | 4I-2927 | 1 | FILM (CIRCUIT BREAKER) | |
| | 11 | | 116-1552 | 1 | FILM (STRIPE) | |
| | 12 | | 7X-7644 | 2 | FILM (TIE DOWN) | |
| | 13 | | 4P-6464 | 1 | FILM (RADIAL SEAL AIR CLEANER) | |
| | 14 | | 134-7258 | 1 | FILM (ELC) | |

## 1161514 PLATE & FILM GP-PART 1 OF 3

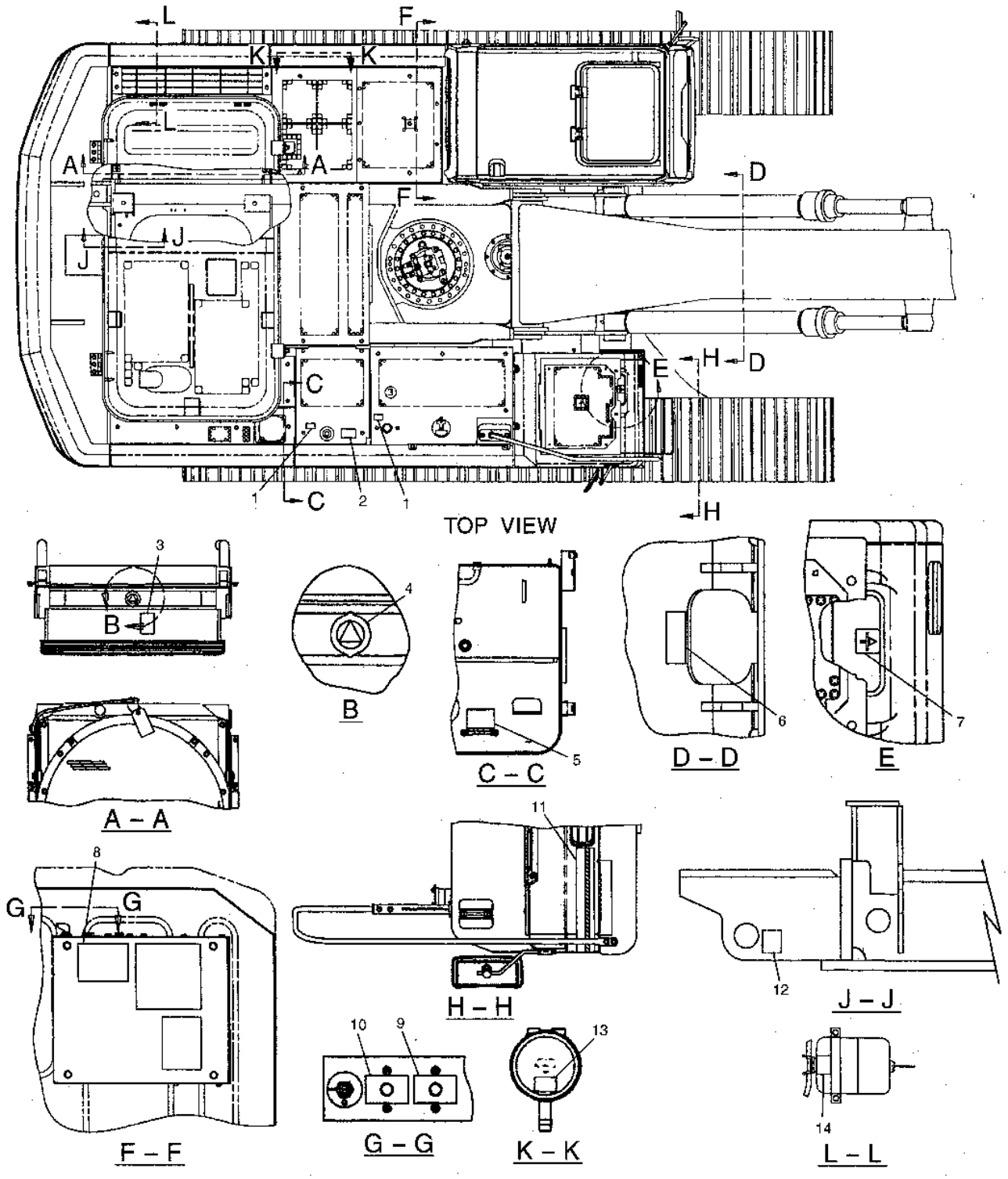


GRAPHIC #1

h64128e

# 1161514 PLATE & FILM GP-PART 2 OF 3

S/N 8TR 1-00485

**Key:** E - ORDER BY THE CENTIMETER, Z - NOT SERVICED

**SMCS**

| NOTE | REF NO | GRAPHIC REF | PART NUMBER | QTY | PART NAME 1 2 3 4 5 6 (PRODUCT LEVEL) | PRICE USD |
|---|---|---|---|---|---|---|
| | 1 | | 1P-2807 | 4 | FILM (LIFT) | |
| E | 2 | | 134-6146 | 1 | FILM (STRIPE) (580cm) | |
| | 3 | | 105-7545 | 1 | FILM (CAT) | |
| | 4 | | 127-5282 | 1 | FILM (CAT) | |
| | 5 | | 116-1592 | 1 | FILM (STRIPE) | |
| | 6 | | 120-5069 | 1 | FILM (STRIPE) | |
| | 7 | | 116-1545 | 1 | FILM (CAT) | |
| | 8 | | 120-5070 | 1 | FILM (STRIPE) | |
| | 9 | | 117-8452 | 1 | FILM (STRIPE) | |
| | 10 | | 127-5284 | 1 | FILM (STRIPE) | |
| | 11 | | 127-5285 | 1 | FILM (CAT) | |
| | 12 | | 134-6138 | 2 | FILM (330BL) | |
| | 13 | | 127-5283 | 1 | FILM (CAT) | |
| | 14 | | 120-5129 | 1 | FILM (WARNING) | |
| Z | 15 | | (NONE) | 1 | PLATE (PIN) | |
| | 16 | | 4B-4158 | 4 | SCREW | |
| | 17 | | 7X-7644 | 2 | FILM (TIE DOWN) | |

## 1161514 PLATE & FILM GP-PART 2 OF 3

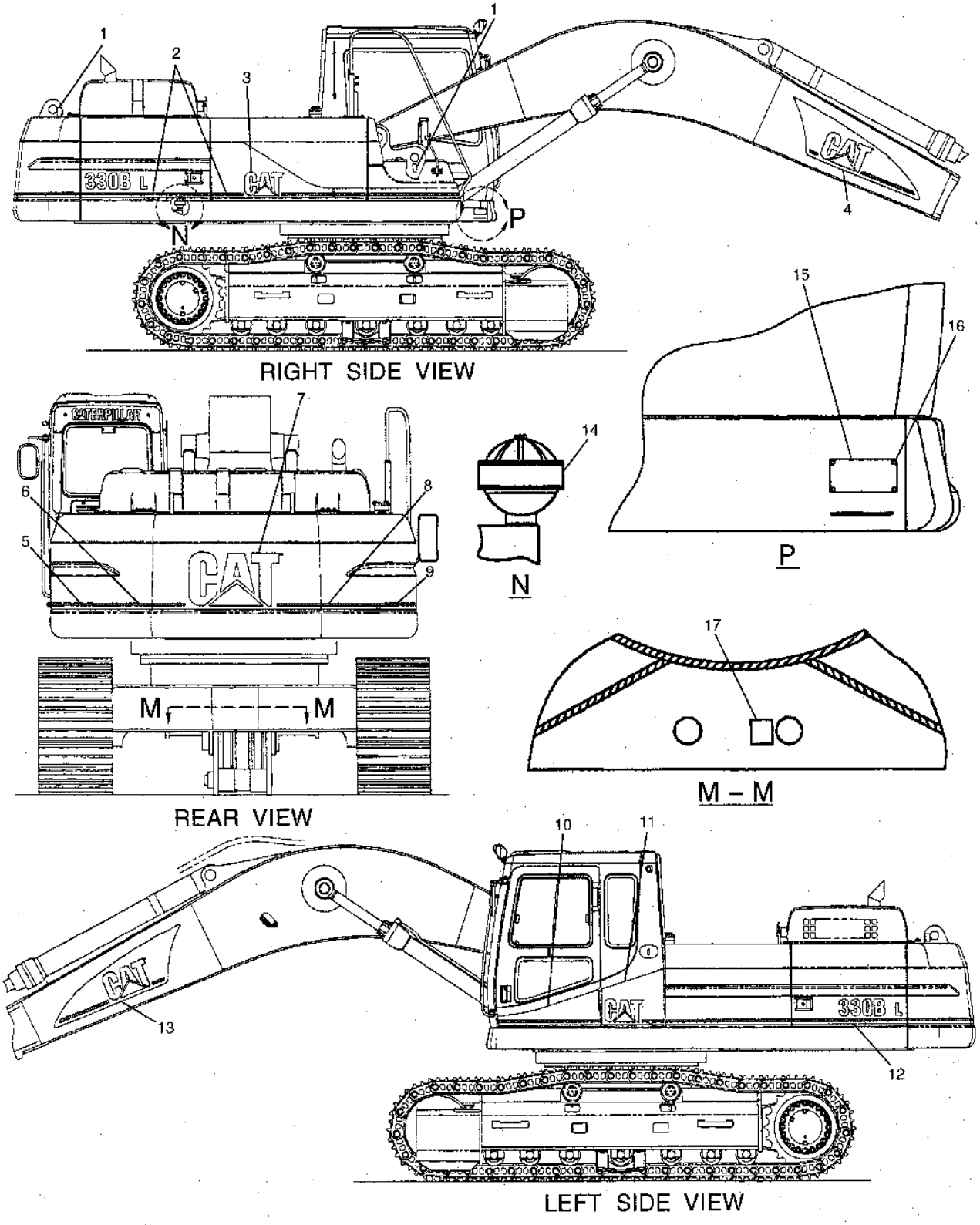


GRAPHIC #1

h64130e

# 1161514 PLATE & FILM GP-PART 3 OF 3

S/N 8TR 1-00485

**Key:** Z - NOT SERVICED

**SMCS**

| NOTE | REF NO | GRAPHIC REF | PART NUMBER | QTY | PART NAME 1 2 3 4 5 6 (PRODUCT LEVEL) | PRICE USD |
|---|---|---|---|---|---|---|
| | 1 | | 7Y-0005 | 1 | FILM (WARNING) | |
| | 2 | | 4I-8472 | 1 | FILM (INSTRUCTION) | |
| | 3 | | 7Y-0003 | 1 | FILM (WARNING) | |
| | 4 | | 7Y-0001 | 1 | PLATE (WARNING) | |
| | 5 | | 4B-4158 | 8 | SCREW | |
| Z | 6 | | (NONE) | 1 | PLATE (SIN) | |
| | 7 | | 4I-8088 | 1 | FILM (NOTICE) | |
| | 8 | | 1R-6245 | 1 | FILM (WARNING)) | |
| | 9 | | 117-8421 | 1 | FILM (LIFTING CAP) | |
| | 10 | | 101-2842 | 1 | FILM (EMERGENCY EXIT) | |
| | 11 | | 8T-1915 | 1 | FILM (NOTICE) | |
| | 12 | | 116-1523 | 1 | FILM (INSTRUCTION) | |
| | 13 | | 134-6118 | 1 | FILM (INSTRUCTION) | |
| | 14 | | 134-6144 | 1 | FILM (WARNING) | |

## 1161514 PLATE & FILM GP-PART 3 OF 3

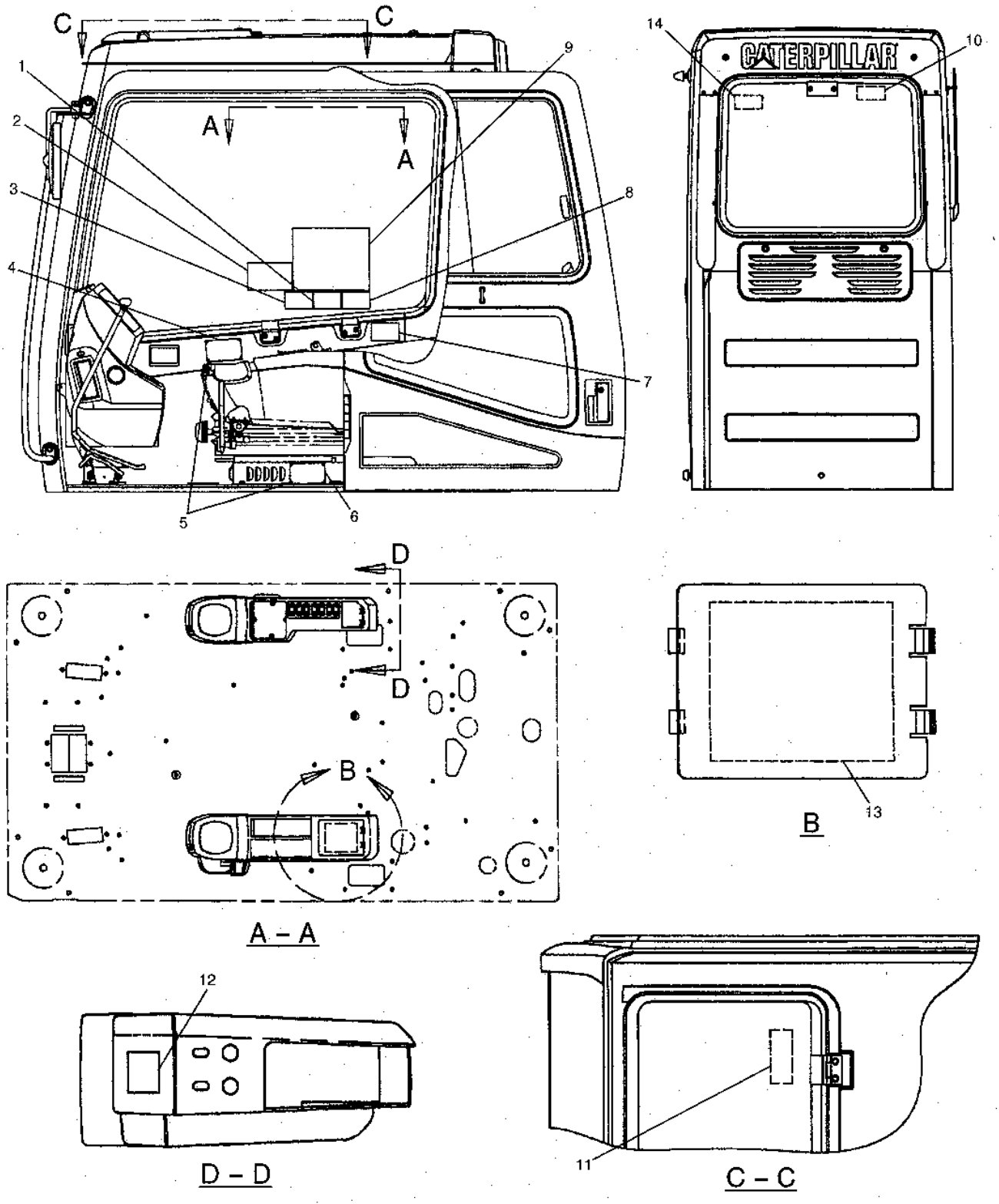


GRAPHIC #1

h64132e

# 1161514 PLATE & FILM GP-PART 1 OF 3

S/N 8TR 00486-00919

**Key:**

**SMCS**

| NOTE | REF NO | GRAPHIC REF | PART NUMBER | QTY | PART NAME 1 2 3 4 5 6 (PRODUCT LEVEL) | PRICE USD |
|---|---|---|---|---|---|---|
| | 1 | | 7Y-0012 | 2 | FILM (WARNING) | |
| | 2 | | 7Y-0013 | 1 | FILM (WARNING) | |
| | 3 | | 120-5106 | 1 | FILM (WARNING) | |
| | 4 | | 120-5107 | 1 | FILM (INSTRUCTION) | |
| | 5 | | 7Y-0014 | 1 | FILM (INSTRUCTION) | |
| | 6 | | 117-8423 | 1 | FILM (NOTICE) | |
| | 7 | | 127-5286 | 1 | FILM (INSTRUCTION) | |
| | 8 | | 6V-4611 | 1 | FILM (WARNING) | |
| | 9 | | 127-5281 | 1 | FILM (CIRCUIT BREAKER) | |
| | 10 | | 4I-2927 | 1 | FILM (CIRCUIT BREAKER) | |
| | 11 | | 116-1552 | 1 | FILM (STRIPE) | |
| | 12 | | 7X-7644 | 2 | FILM (TIE DOWN) | |
| | 13 | | 4P-6464 | 1 | FILM (RADIAL SEAL AIR CLEANER) | |
| | 14 | | 134-7258 | 1 | FILM (ELC) | |

## 1161514 PLATE & FILM GP-PART 1 OF 3

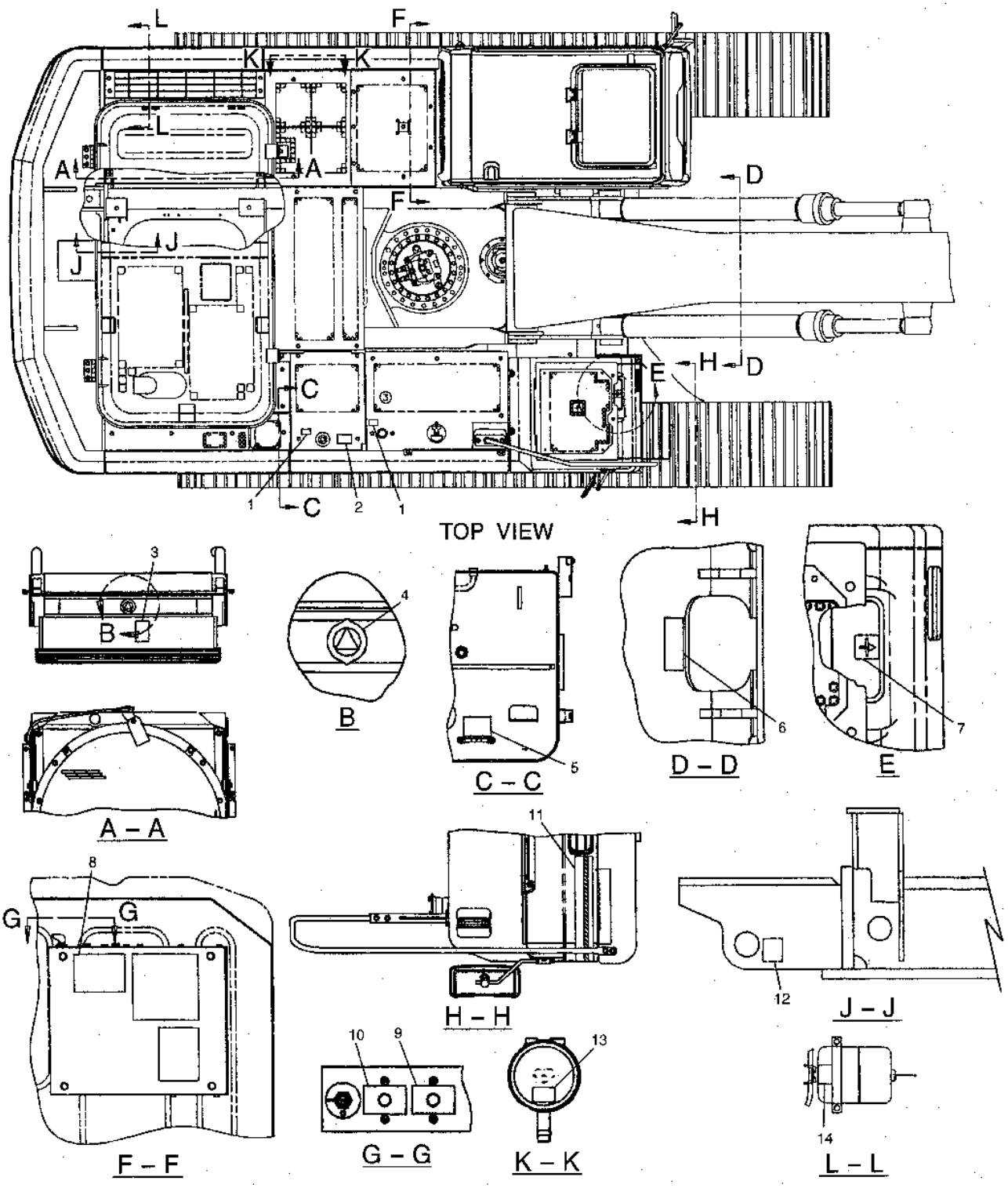


GRAPHIC #1

h79388e

# 1161514 PLATE & FILM GP-PART 2 OF 3

S/N 8TR 00486-00919

**Key:** E - ORDER BY THE CENTIMETER, Z - NOT SERVICED

**SMCS**

| NOTE | REF NO | GRAPHIC REF | PART NUMBER | QTY | PART NAME 1 2 3 4 5 6 (PRODUCT LEVEL) | PRICE USD |
|---|---|---|---|---|---|---|
| | 1 | | 1P-2807 | 4 | FILM (LIFT) | |
| E | 2 | | 134-6146 | 1 | FILM (STRIPE) (580cm) | |
| | 3 | | 105-7545 | 1 | FILM (CAT) | |
| | 4 | | 127-5282 | 1 | FILM (CAT) | |
| | 5 | | 116-1592 | 1 | FILM (STRIPE) | |
| | 6 | | 120-5069 | 1 | FILM (STRIPE) | |
| | 7 | | 116-1545 | 1 | FILM (CAT) | |
| | 8 | | 120-5070 | 1 | FILM (STRIPE) | |
| | 9 | | 117-8452 | 1 | FILM (STRIPE) | |
| | 10 | | 127-5284 | 1 | FILM (STRIPE) | |
| | 11 | | 127-5285 | 1 | FILM (CAT) | |
| | 12 | | 134-6138 | 2 | FILM (330BL) | |
| | 13 | | 127-5283 | 1 | FILM (CAT) | |
| | 14 | | 120-5129 | 1 | FILM (WARNING) | |
| Z | 15 | | (NONE) | 1 | PLATE (PIN) | |
| | 16 | | 4B-4158 | 4 | SCREW | |
| | 17 | | 7X-7644 | 2 | FILM (TIE DOWN) | |

## 1161514 PLATE & FILM GP-PART 2 OF 3

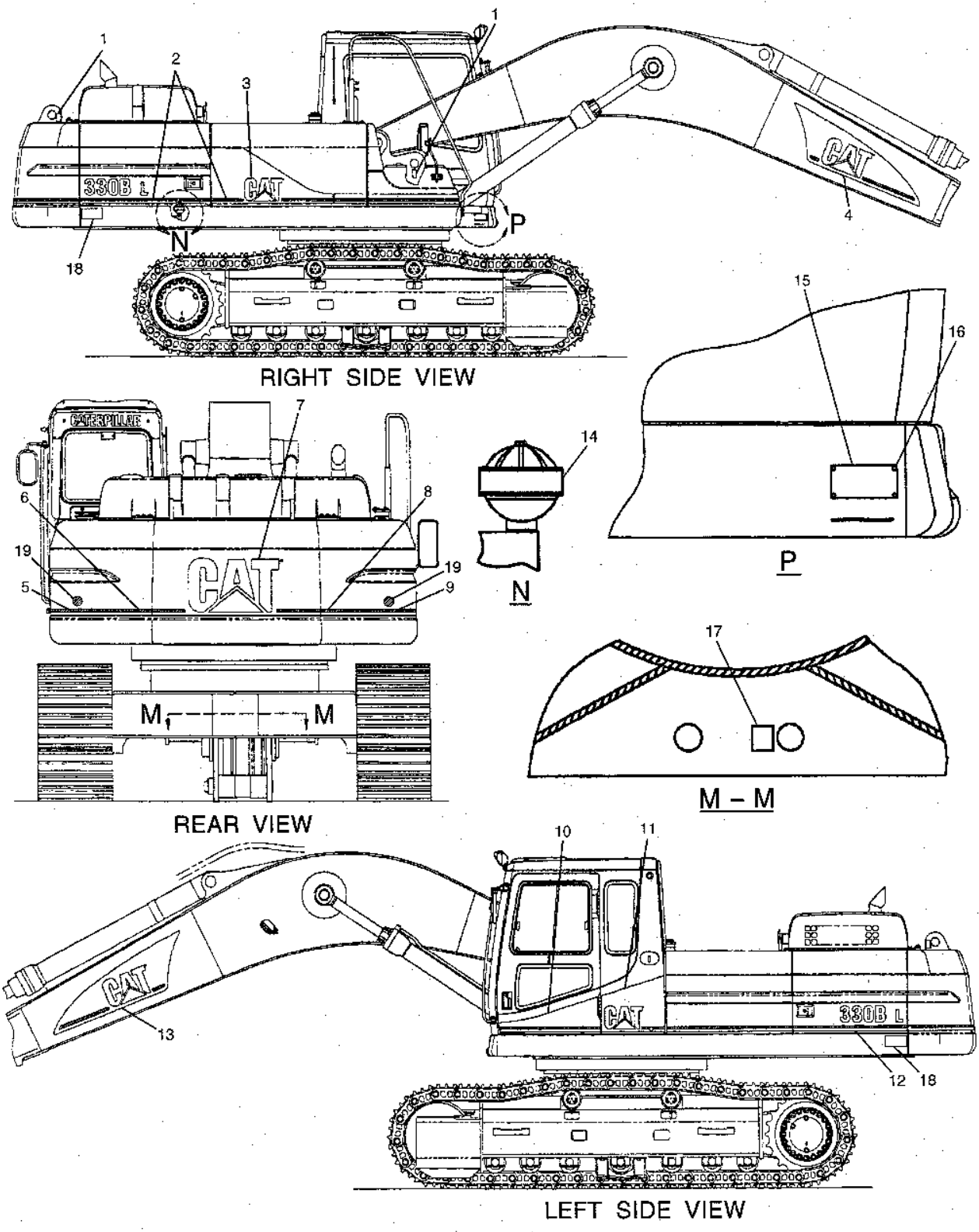


GRAPHIC #1

h79390e

# 1161514 PLATE & FILM GP-PART 3 OF 3

S/N 8TR 00486-00919

**Key:** Z - NOT SERVICED

**SMCS**

| NOTE | REF NO | GRAPHIC REF | PART NUMBER | QTY | PART NAME 1 2 3 4 5 6 (PRODUCT LEVEL) | PRICE USD |
|---|---|---|---|---|---|---|
| | 1 | | 7Y-0005 | 1 | FILM (WARNING) | |
| | 2 | | 4I-8472 | 1 | FILM (INSTRUCTION) | |
| | 3 | | 7Y-0003 | 1 | FILM (WARNING) | |
| | 4 | | 7Y-0001 | 1 | PLATE (WARNING) | |
| | 5 | | 4B-4158 | 8 | SCREW | |
| Z | 6 | | (NONE) | 1 | PLATE (SIN) | |
| | 7 | | 4I-8088 | 1 | FILM (NOTICE) | |
| | 8 | | 1R-6245 | 1 | FILM (WARNING)) | |
| | 9 | | 117-8421 | 1 | FILM (LIFTING CAP) | |
| | 10 | | 101-2842 | 1 | FILM (EMERGENCY EXIT) | |
| | 11 | | 8T-1915 | 1 | FILM (NOTICE) | |
| | 12 | | 116-1523 | 1 | FILM (INSTRUCTION) | |
| | 13 | | 155-7110 | 1 | FILM (INSTRUCTION) | |
| | 14 | | 134-6144 | 1 | FILM (WARNING) | |

## 1161514 PLATE & FILM GP-PART 3 OF 3

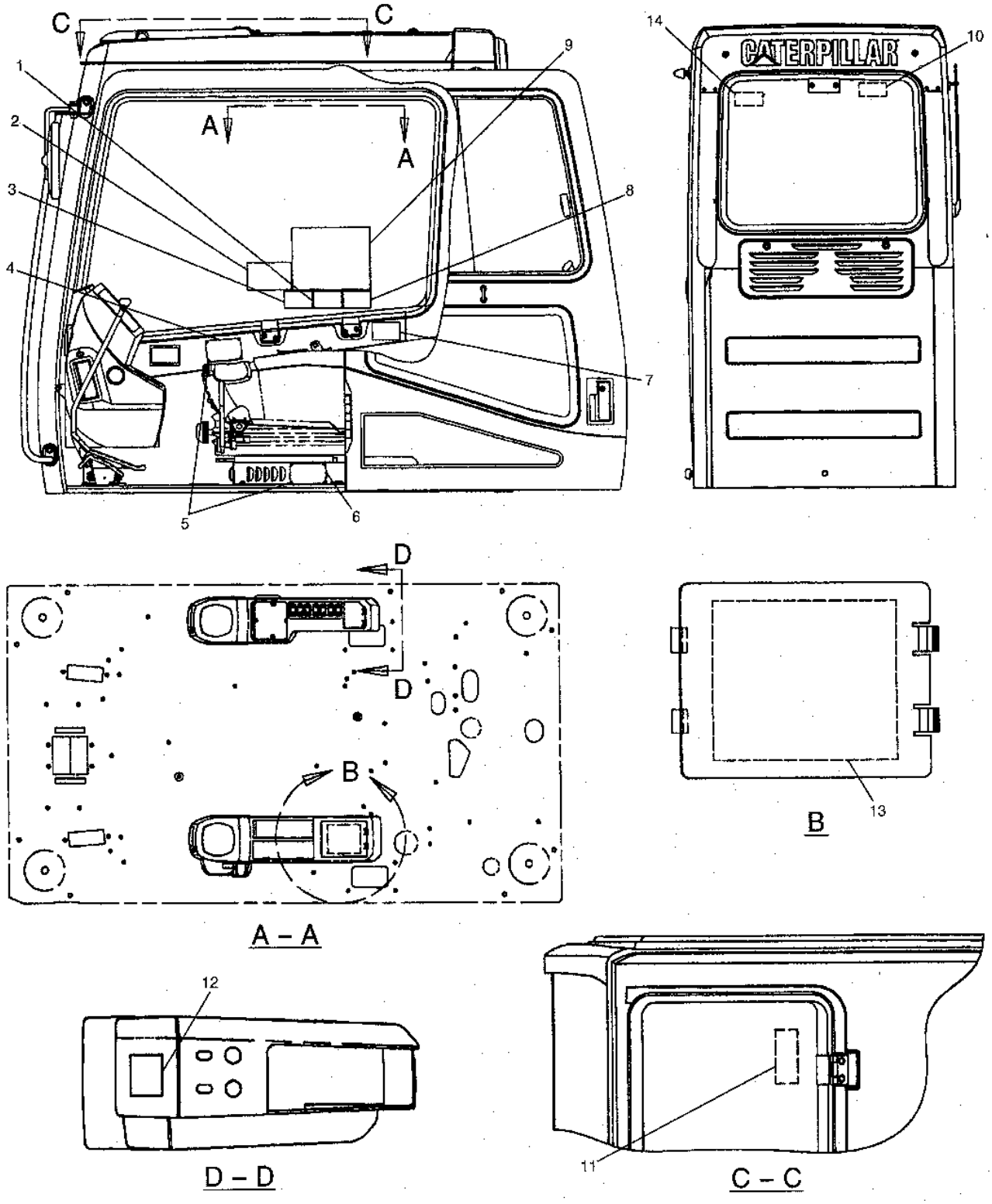


GRAPHIC #1

h79392e

# 1161514 PLATE & FILM GP-PART 1 OF 3

S/N 8TR 00920-UP

**Key:**

**SMCS**

| NOTE | REF NO | GRAPHIC REF | PART NUMBER | QTY | PART NAME 1 2 3 4 5 6 (PRODUCT LEVEL) | PRICE USD |
|---|---|---|---|---|---|---|
| | 1 | | 7Y-0012 | 2 | FILM (WARNING) | |
| | 2 | | 7Y-0013 | 1 | FILM (WARNING) | |
| | 3 | | 120-5106 | 1 | FILM (WARNING) | |
| | 4 | | 120-5107 | 1 | FILM (INSTRUCTION) | |
| | 5 | | 7Y-0014 | 1 | FILM (INSTRUCTION) | |
| | 6 | | 117-8423 | 1 | FILM (NOTICE) | |
| | 7 | | 127-5286 | 1 | FILM (INSTRUCTION) | |
| | 8 | | 6V-4611 | 1 | FILM (WARNING) | |
| | 9 | | 127-5281 | 1 | FILM (CIRCUIT BREAKER) | |
| | 10 | | 4I-2927 | 1 | FILM (CIRCUIT BREAKER) | |
| | 11 | | 116-1552 | 1 | FILM (STRIPE) | |
| | 12 | | 7X-7644 | 2 | FILM (TIE DOWN) | |
| | 13 | | 4P-6464 | 1 | FILM (RADIAL SEAL AIR CLEANER) | |
| | 14 | | 134-7258 | 1 | FILM (ELC) | |

## 1161514 PLATE & FILM GP-PART 1 OF 3

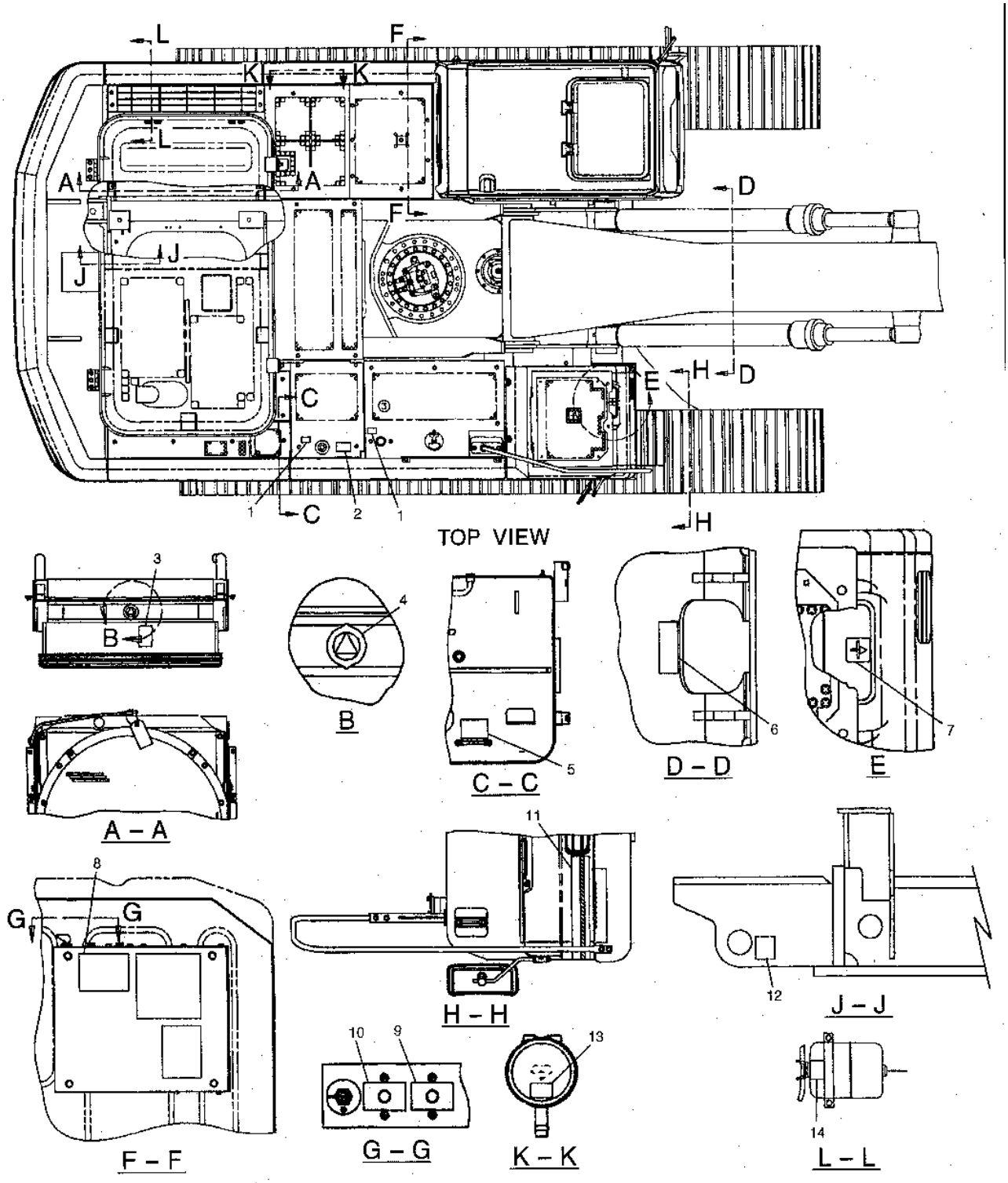


GRAPHIC #1

h79394e

# 1161514 PLATE & FILM GP-PART 2 OF 3

S/N 8TR 00920-UP

**Key:** E - ORDER BY THE CENTIMETER, Z - NOT SERVICED

**SMCS**

| NOTE | REF NO | GRAPHIC REF | PART NUMBER | QTY | PART NAME 1 2 3 4 5 6 (PRODUCT LEVEL) | PRICE USD |
|---|---|---|---|---|---|---|
| | 1 | | 1P-2807 | 4 | FILM (LIFT) | |
| E | 2 | | 134-6146 | 1 | FILM (STRIPE) (580cm) | |
| | 3 | | 105-7545 | 1 | FILM (CAT) | |
| | 4 | | 127-5282 | 1 | FILM (CAT) | |
| | 5 | | 116-1592 | 1 | FILM (STRIPE) | |
| | 6 | | 120-5069 | 1 | FILM (STRIPE) | |
| | 7 | | 116-1545 | 1 | FILM (CAT) | |
| | 8 | | 120-5070 | 1 | FILM (STRIPE) | |
| | 9 | | 117-8452 | 1 | FILM (STRIPE) | |
| | 10 | | 127-5284 | 1 | FILM (STRIPE) | |
| | 11 | | 127-5285 | 1 | FILM (CAT) | |
| | 12 | | 134-6138 | 2 | FILM (330BL) | |
| | 13 | | 127-5283 | 1 | FILM (CAT) | |
| | 14 | | 120-5129 | 1 | FILM (WARNING) | |
| Z | 15 | | (NONE) | 1 | PLATE (PIN) | |
| | 16 | | 4B-4158 | 4 | SCREW | |
| | 17 | | 7X-7644 | 2 | FILM (TIE DOWN) | |
| | 18 | | 188-7268 | 2 | FILM (WARNING) | |
| | 19 | | 190-5386 | 2 | FILM (SAFETY) | |

## 1161514 PLATE & FILM GP-PART 2 OF 3

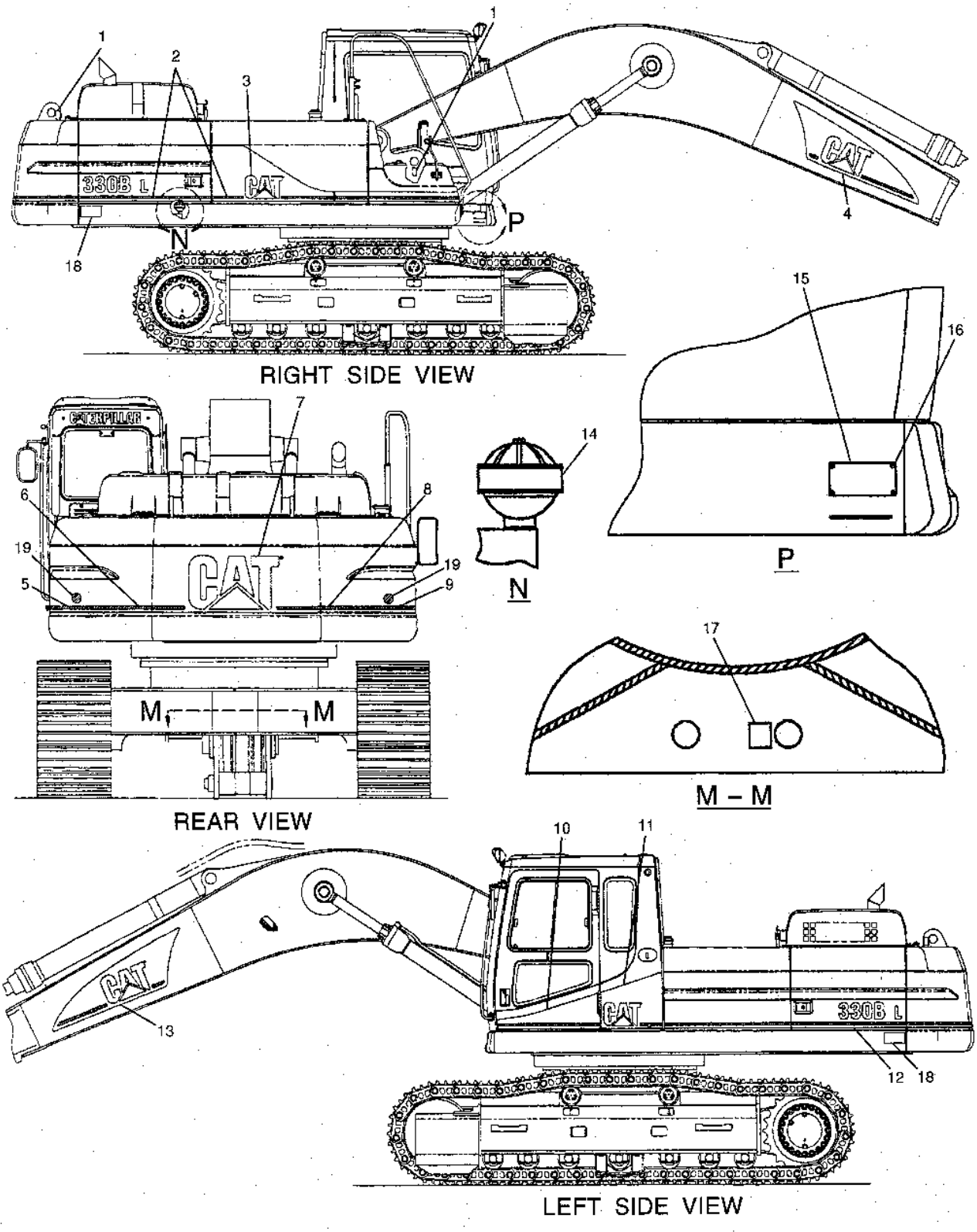


GRAPHIC #1

h79396e

# 1161514 PLATE & FILM GP-PART 3 OF 3

S/N 8TR 00920-UP

**Key:** Z - NOT SERVICED

**SMCS**

| NOTE | REF NO | GRAPHIC REF | PART NUMBER | QTY | PART NAME 1 2 3 4 5 6 (PRODUCT LEVEL) | PRICE USD |
|---|---|---|---|---|---|---|
| | 1 | | 7Y-0005 | 1 | FILM (WARNING) | |
| | 2 | | 4I-8472 | 1 | FILM (INSTRUCTION) | |
| | 3 | | 7Y-0003 | 1 | FILM (WARNING) | |
| | 4 | | 7Y-0001 | 1 | PLATE (WARNING) | |
| | 5 | | 4B-4158 | 8 | SCREW | |
| | 6 | | 134-6144 | 1 | FILM (WARNING) | |
| | 7 | | 4I-8088 | 1 | FILM (NOTICE) | |
| | 8 | | 1R-6245 | 1 | FILM (WARNING)) | |
| | 9 | | 117-8421 | 1 | FILM (LIFTING CAP) | |
| | 10 | | 101-2842 | 1 | FILM (EMERGENCY EXIT) | |
| | 11 | | 8T-1915 | 1 | FILM (NOTICE) | |
| | 12 | | 116-1523 | 1 | FILM (INSTRUCTION) | |
| | 13 | | 155-7110 | 1 | FILM (INSTRUCTION) | |

## 1161514 PLATE & FILM GP-PART 3 OF 3

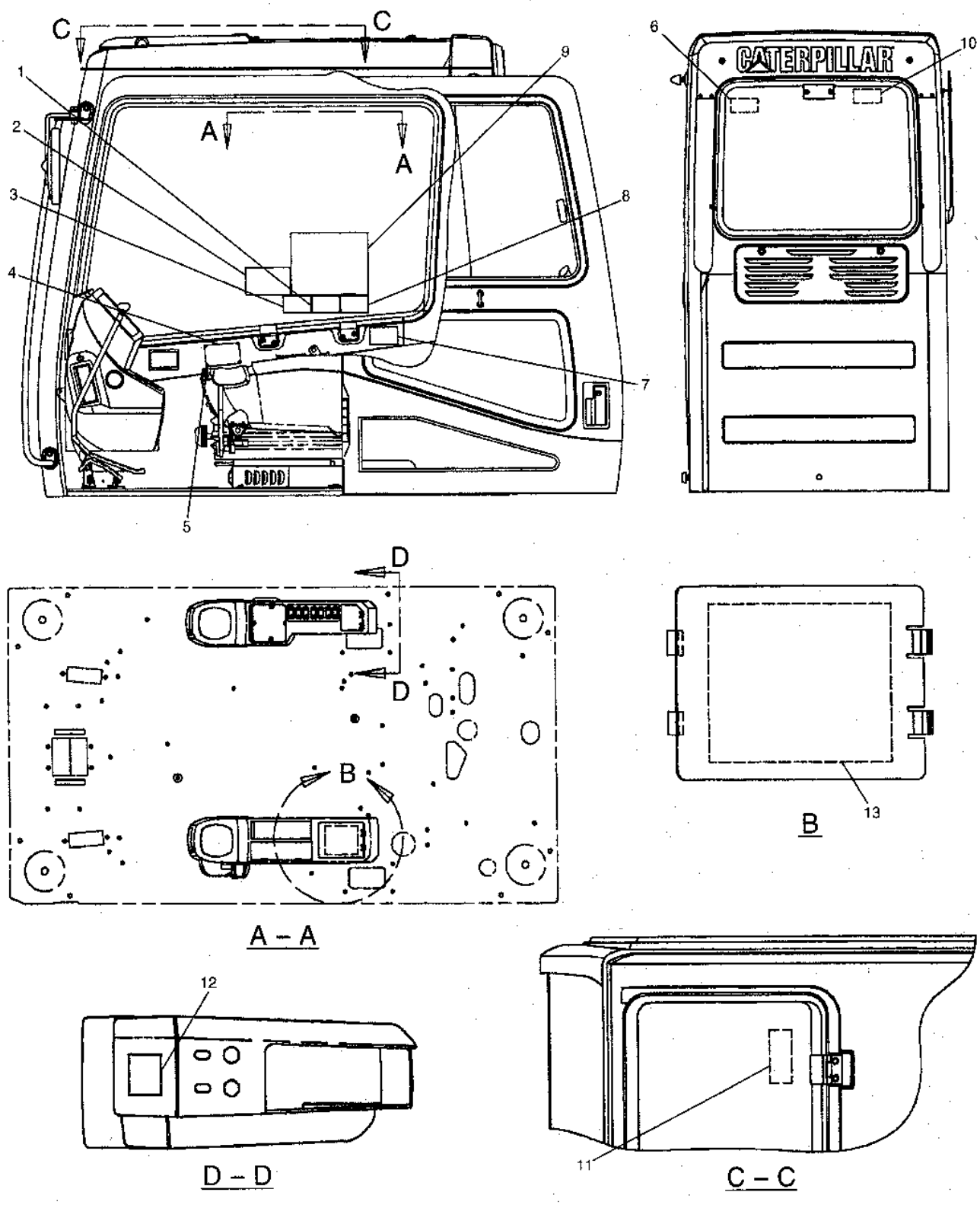


GRAPHIC #1

h79398e

# 1205094 FILM GP

SINGLE AND COMBINED FUNCTION/WITH THIRD PEDAL
PART OF 1211925, 1211926-Page 301
AN ATTACHMENT

**Key:**

**SMCS**

| NOTE | REF NO | GRAPHIC REF | PART NUMBER | QTY | PART NAME 1 2 3 4 5 6 (PRODUCT LEVEL) | PRICE USD |
|---|---|---|---|---|---|---|

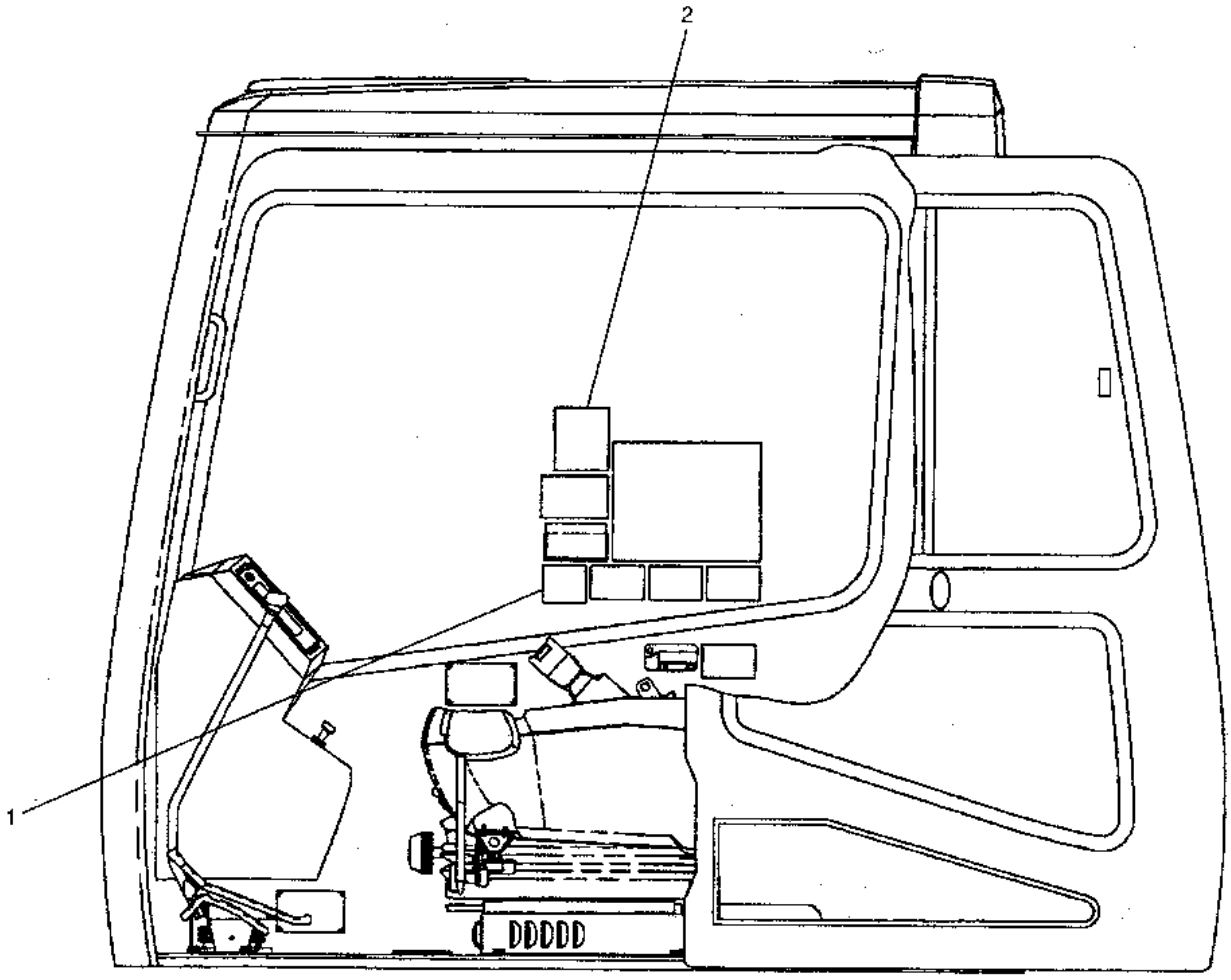


GRAPHIC #1 h83828e

# 1205101 FILM GP

4 WAY VALVE
PART OF 1140652-Page 369
AN ATTACHMENT

**Key:**

**SMCS**

| NOTE | REF NO | GRAPHIC REF | PART NUMBER | QTY | PART NAME 1 2 3 4 5 6 (PRODUCT LEVEL) | PRICE USD |
|---|---|---|---|---|---|---|
| | 1 | | 4I-2885 | 1 | CASE | |
| | 2 | | 102-4861 | 1 | PLATE | |
| | | | 102-4862 | 1 | PLATE (KOB, JIS/SCM) | |
| | 3 | | 7I-0455 | 1 | FILM (WARNING) | |
| | 4 | | 7I-1549 | 1 | FILM (WARNING) | |
| | 5 | | 109-1839 | 1 | FILM (INSTRUCTION) | |

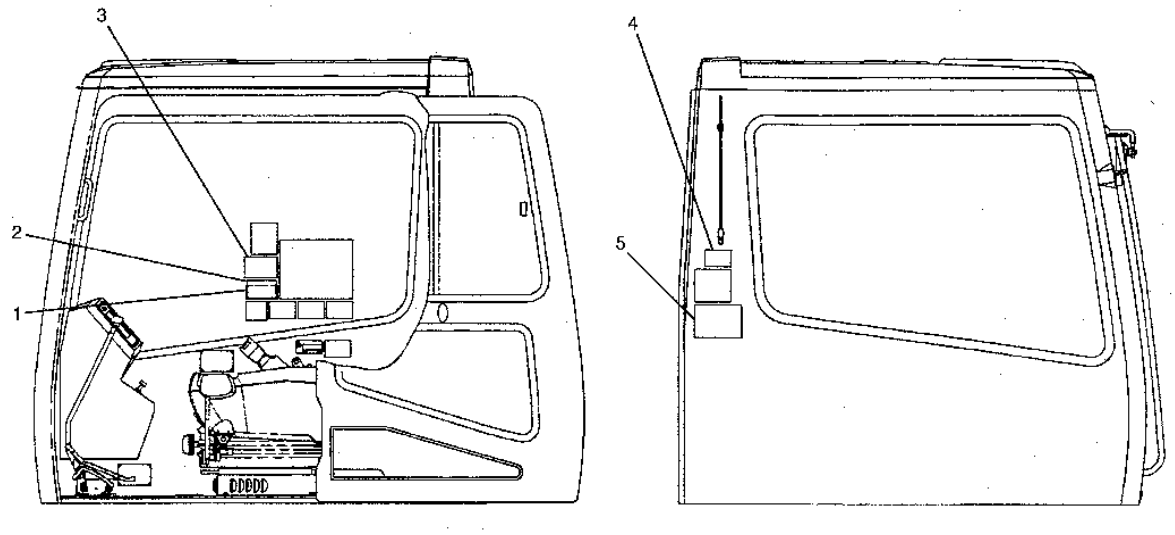


GRAPHIC #1 h83827e

# 1205095 FILM GP

SINGLE AND COMBINED FUNCTION/WITHOUT THIRD PEDAL
PART OF 1096190, 1096192-Page 301.01
AN ATTACHMENT

**Key:**

**SMCS**

| NOTE | REF NO | GRAPHIC REF | PART NUMBER | QTY | PART NAME 1 2 3 4 5 6 (PRODUCT LEVEL) | PRICE USD |
|---|---|---|---|---|---|---|
| | 1 | | 127-5251 | 1 | FILM (INSTRUCTION) | |
| | 2 | | 7I-1565 | 1 | FILM (NOTICE) | |

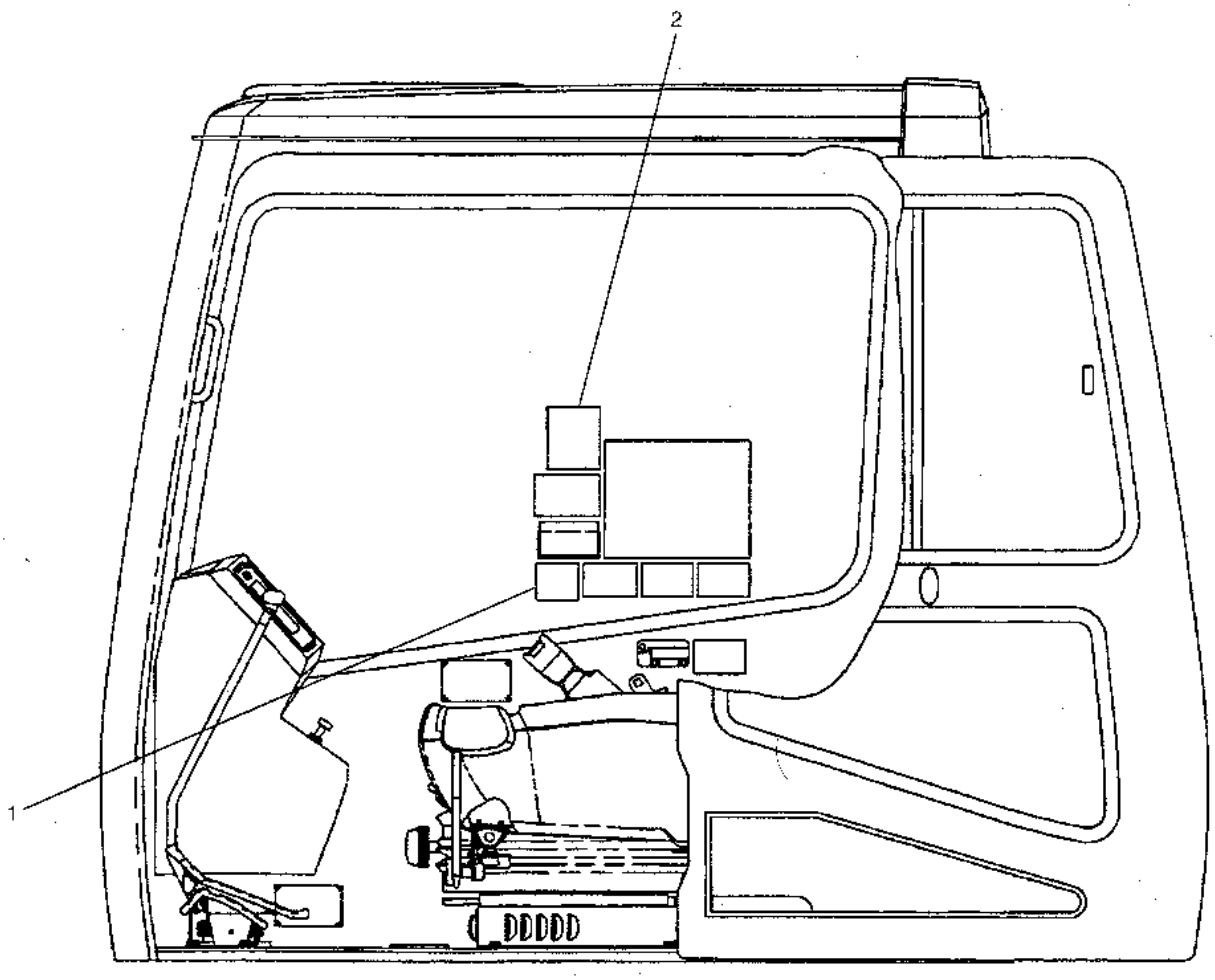


GRAPHIC #1 h83826e

# 1205100 FILM GP

2 WAY VALVE
PART OF 1140651-Page 369
AN ATTACHMENT

**Key:**

**SMCS**

| NOTE | REF NO | GRAPHIC REF | PART NUMBER | QTY | PART NAME 1 2 3 4 5 6 (PRODUCT LEVEL) | PRICE USD |
|---|---|---|---|---|---|---|
| | 1 | | 4I-2885 | 1 | CASE | |
| | 2 | | 7I-0455 | 1 | FILM (WARNING) | |
| | 3 | | 7I-0456 | 1 | FILM (INSTRUCTION) | |
| | 4 | | 7I-0719 | 1 | PLATE (INSTRUCTION) | |
| | 5 | | 7I-1549 | 1 | FILM (WARNING) | |

## 1205100 FILM GP

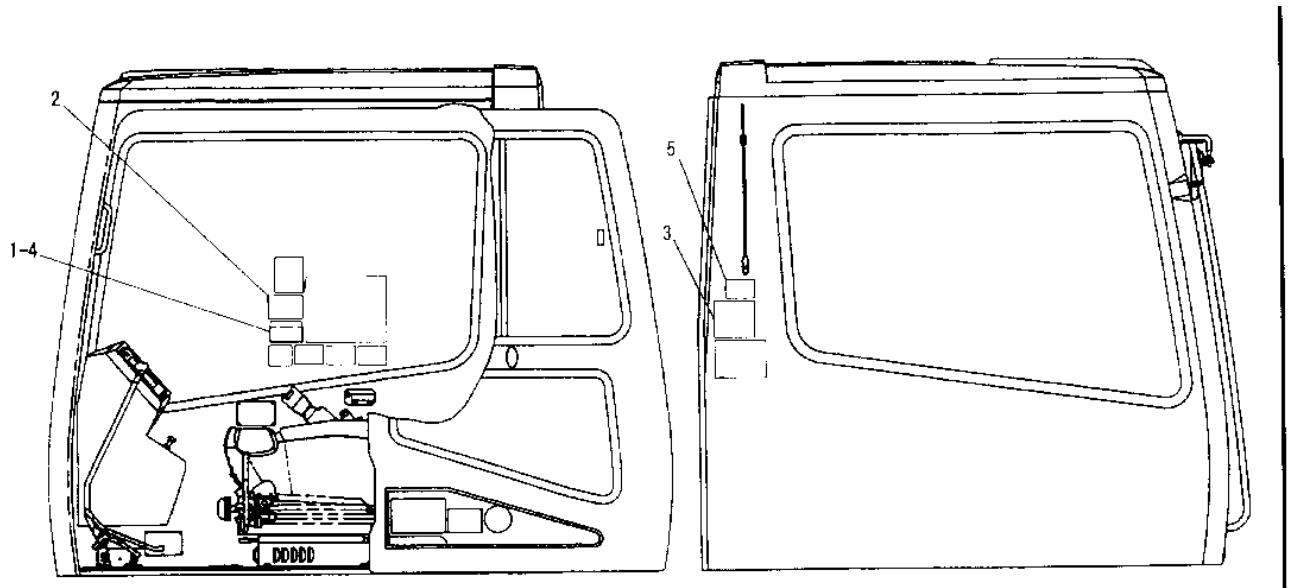


| NOTE | No. | PART No. | QTY | PART NAME |
|---|---|---|---|---|
| | 1 | 4I-2885 | 1 | CASE |
| | 2 | 7I 0455 | 1 | FILM (WARNING) |
| | 3 | 7I-0456 | 1 | FILM (INSTRUCTION) |
| | 4 | 7I-0719 | 1 | PLATE (INSTRUCTION) |
| | 5 | 7I 1549 | 1 | FILM (WARNING) |

| NOTE | No. | PART No. | QTY | PART NAME |
|---|---|---|---|---|

H60138E

GRAPHIC #1 h60138e

## 1275333 FILM GP

ME DECAL
S/N 8SR 1-UP
AN ATTACHMENT

**Key:**

**SMCS**

| NOTE | REF NO | GRAPHIC REF | PART NUMBER | QTY | PART NAME 1 2 3 4 5 6 (PRODUCT LEVEL) | PRICE USD |
|---|---|---|---|---|---|---|
| | 1 | | 134-6140 | 2 | FILM (330 BME) | |

## 1275333 FILM GP

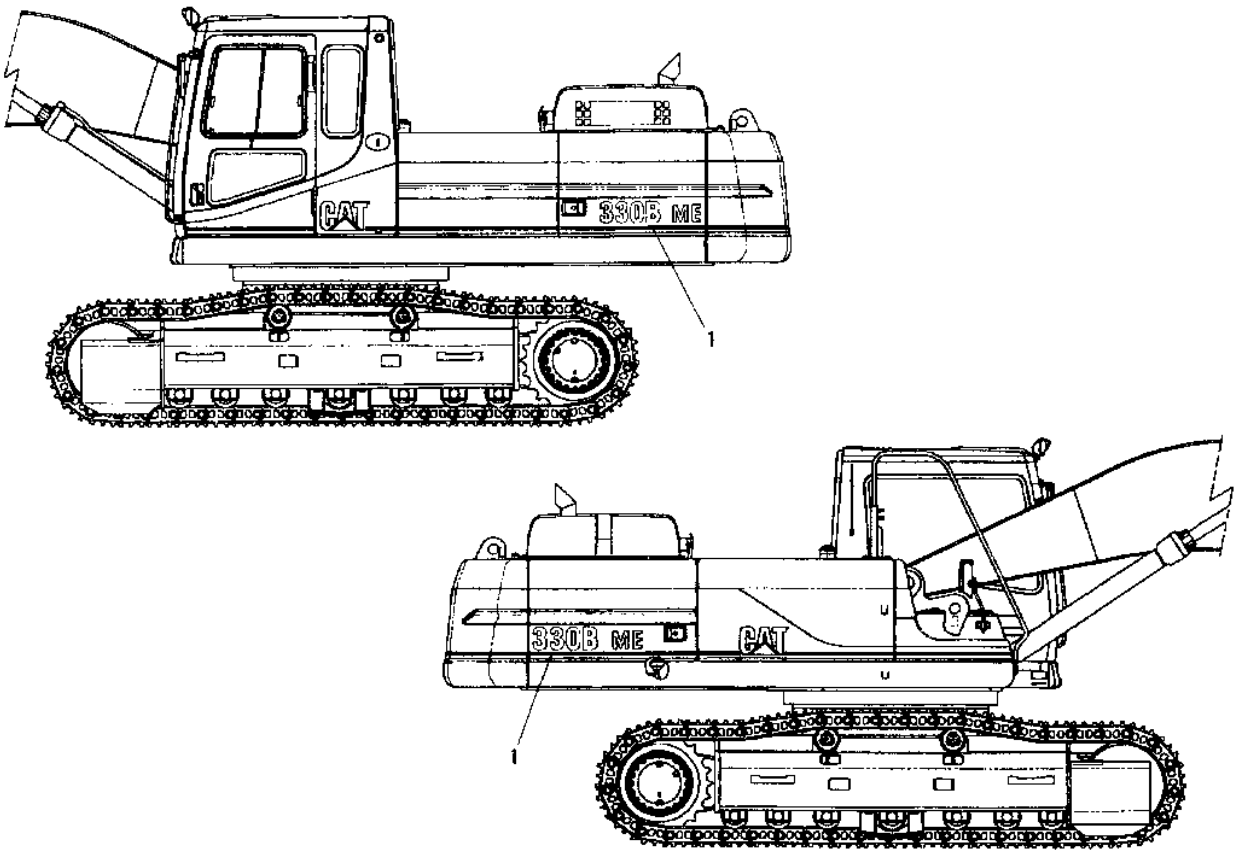


| NOTE | No. | PART No. | QTY | PART NAME | NOTE | No. | PART No. | QTY | PART NAME |
|---|---|---|---|---|---|---|---|---|---|
| | 1 | 134-6140 | 2 | FILM(330BME) | | | | | |

H58877E

GRAPHIC #1

h58877e

# 1275336 FILM GP

ME DECAL
S/N 8TR 1-UP
AN ATTACHMENT

**Key:**

**SMCS**

| NOTE | REF NO | GRAPHIC REF | PART NUMBER | QTY | PART NAME 1 2 3 4 5 6 (PRODUCT LEVEL) | PRICE USD |
|---|---|---|---|---|---|---|
| | 1 | | 134-6141 | 2 | FILM (330 BLME) | |

## 1275336 FILM GP

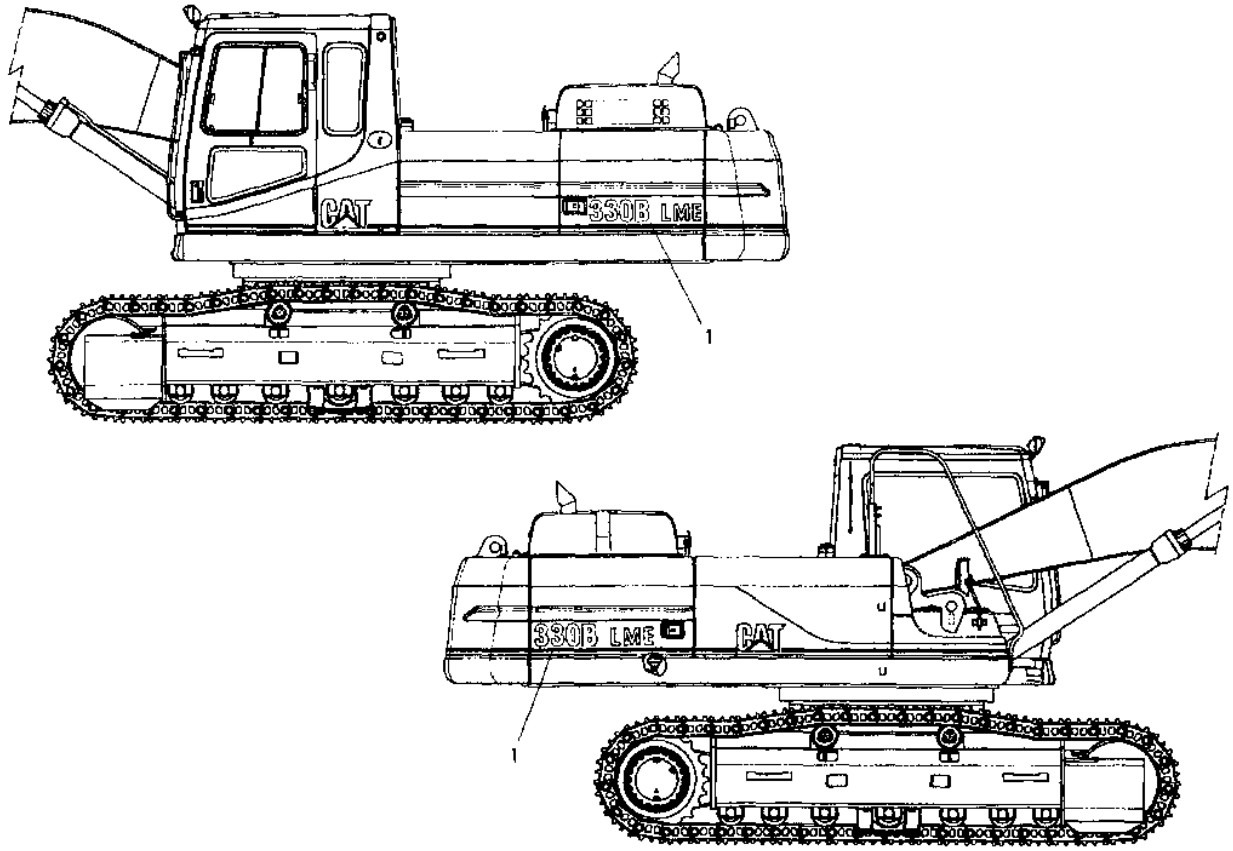


| NOTE | No. | PART No. | QTY | PART NAME | NOTE | No. | PART No. | QTY | PART NAME |
|---|---|---|---|---|---|---|---|---|---|
| | 1 | 134-6141 | 2 | FILM (330BLME) | | | | | |

H58878E

GRAPHIC #1

h58878e

# 1275310 FILM GP

M-BOOM
PART OF 1317672-Page 485
AN ATTACHMENT

**Key:**

**SMCS**

| NOTE | REF NO | GRAPHIC REF | PART NUMBER | QTY | PART NAME 1 2 3 4 5 6 (PRODUCT LEVEL) | PRICE USD |
|---|---|---|---|---|---|---|
| | 1 | | 132-4099 | 1 | FILM (CAT) | |

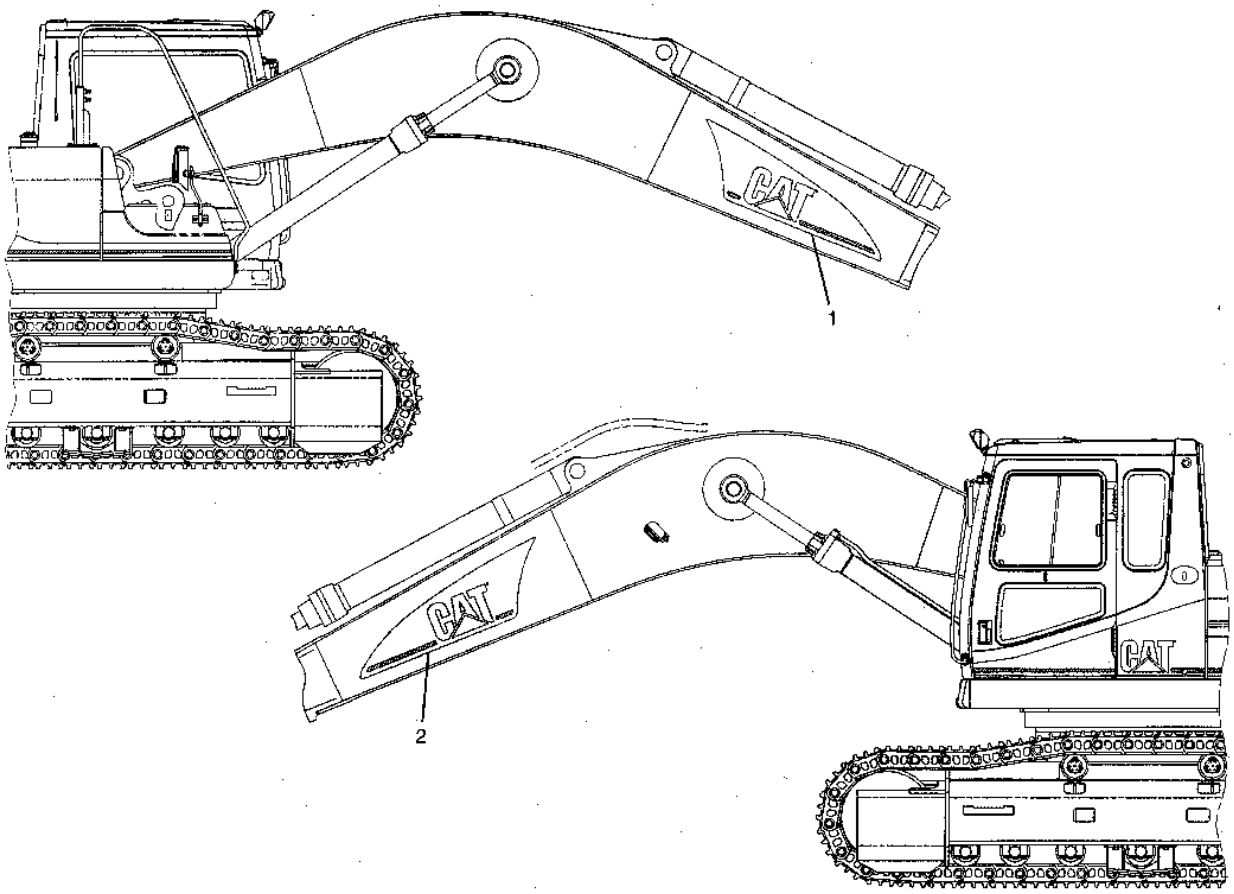


GRAPHIC #1

h79399e