CATERPILLAR®

SEBP4865-09
December 2009

VOLUME I
Pages 1-540

RUTHZIL TRATOR COMERCIAL DE PEÇAS LTDA 11 97083-6812 ROLANDO

Parts Manual

SIS

See “General Information” for New Parts Manual Features.

330D L Excavators

B6H1-Up (Machine)
JLP1-Up (Machine)
THX1-Up (Engine)

Powered By C9 Engine

Product and Dealer Information

Note: For product identification plate locations, see the section “Product Identification Information” in the Operation and Maintenance Manual.

Delivery Date: _____

Product Information

Model: _____

Product Identification Number: _____

Engine Serial Number: _____

Transmission Serial Number: _____

Generator Serial Number: _____

Attachment Serial Numbers: _____

Attachment Information: _____

Customer Equipment Number: _____

Dealer Equipment Number: _____

Dealer Information

Name: _____ Branch: _____

Address: _____

_____

_____

	Dealer Contact	Phone Number	Hours
Sales:	_____	_____	_____
Parts:	_____	_____	_____
Service:	_____	_____	_____

MEMORANDA

TABLE OF CONTENTS

Name	Page
GENERAL INFORMATION	A5
REPAIR ALTERNATIVES	A8
SUPPLEMENTAL COOLANT ADDITIVES	A9
MAINTENANCE PARTS	A10
INDEX	A14
MACHINE ARRANGEMENT	1
CHASSIS AR	1
COLD WEATHER AR	1
CONVERSION AR-MACHINE	2
GENERAL AR	2
ENGINE ARRANGEMENT	4
ENGINE AR	4
ENGINE AR-COMPLETE	9
ENGINE AR-CORE	13
INSTALLATION AR-ENGINE	17
BASIC ENGINE	19
BELT GP-SERPENTINE	19
CAMSHAFT GP	20
COVER GP-CYLINDER BLOCK	21
COVER GP-FLYWHEEL HOUSING	22
COVER GP-FRONT HOUSING	23
COVER GP-VALVE MECHANISM	25
CRANKSHAFT GP	29
CYLINDER BLOCK AS	30
CYLINDER BLOCK GP	32
CYLINDER HEAD AS	34
CYLINDER HEAD GP	40
DAMPER & PULLEY GP	50
DRIVE GP-ACCESSORY	51
DRIVE GP-FAN	55
FASTENER GP-CYLINDER HEAD	57
FASTENER GP-DAMPER & PULLEY	60
FASTENER GP-FRONT HOUSING	61
FASTENER GP-VALVE COVER	62
FASTENER GP-VALVE COVER BASE	64
FLYWHEEL GP	65
GEAR GP-FRONT	66
HOUSING GP-FLYWHEEL	67
HOUSING GP-FRONT	68
LIFTING GP-ENGINE	69
MOUNTING GP-ENGINE	70
PAN GP-OIL	72
PISTON & ROD GP	74
PLUG GP-ENGINE	76
ROCKER ARM GP	78
SEAL GP-CRANKSHAFT	80
VALVE MECHANISM GP	81
LUBRICATION SYSTEM	83
FILTER GP-ENGINE OIL	83
FUMES DISPOSAL GP	87
GAUGE GP-OIL LEVEL (DIPSTICK)	88
LINES GP-ENGINE OIL	92
LINES GP-ENGINE OIL DRAIN	93
LINES GP-TURBOCHARGER OIL	94
MOUNTING GP-ENGINE OIL FILTER	97
PUMP GP-ENGINE OIL	99
COOLING SYSTEM	101
COOLER GP-ENGINE OIL	101
FAN GP-SUCTION	102
HOUSING & REGULATOR GP	111
LINES GP-TURBOCHARGER WATER	112
LINES GP-WATER	113
MODULE GP-COOLING	114
PLUG GP-WATER LINES	117
PUMP GP-WATER	118
RADIATOR & HYD OIL COOLER GP	120
AIR INLET AND EXHAUST SYSTEM	126
AIR CLEANER & MOUNTING GP	126
AIR CLEANER AR	127
AIR CLEANER GP	128
ELBOW GP-AIR INLET	131
LINES GP-AIR	132
LINES GP-MUFFLER DRAIN	137
MANIFOLD GP-EXHAUST	139
MUFFLER GP	140
TURBOCHARGER GP	142
FUEL SYSTEM	144
FILTER GP-WATER SEP & FUEL	144
INJECTOR GP-FUEL	145
LINES GP-FUEL	149
PUMP & MOTOR GP-REFUELING	175
PUMP AR-FUEL TRANSFER	176
PUMP GP-FUEL INJECTION	177
PUMP GP-FUEL PRIMING	181
PUMP GP-FUEL PRM & PRIM FILTER	183
PUMP GP-FUEL PRM & WATER SEP	184
PUMP GP-REFUELING	185
PUMP GP-UNIT INJECTOR HYD	189
REGULATOR GP-FUEL PRESSURE	205
TANK & MTG GP-FUEL	207
TANK GP-FUEL	208
VALVE GP-FUEL BYPASS	217
VALVE GP-FUEL SHUTOFF	218
ELECTRICAL AND STARTING SYSTEM	219
ALARM GP	219
ALARM GP-TRAVEL	220
ALTERNATOR GP-CHARGING	221
BATTERY & WIRING GP	224

TABLE OF CONTENTS

Name	Page
BLOCK GP-JUNCTION	262
CONTROL & MTG GP-COMMUNICATION	263
CONTROL & MTG GP-ENGINE ELEK	268
CONTROL & MTG GP-MACHINE	269
CONTROL GP-UNPROGRAMMED	270
ELECTRONICS GP-COMMUNICATION	271
ELECTRONICS GP-MACHINE	271
ELECTRONICS GP-MONITOR	272
FASTENER GP-WIRING HARNESS	273
HEATER GP-JACKET WATER	278
INSTALLATION AR-COMMUNICATION	279
INSTALLATION GP-COMMUNICATION	280
LAMP GP-FLOOD	281
LIGHTING GP-CHASSIS	284
LIGHTING GP-FLOOD	285
PANEL & MTG GP-CIRCUIT BREAKER	289
PANEL GP-CIRCUIT BREAKER	290
PANEL GP-SWITCH	292
PLUG GP-CONNECTOR	294
SENSOR GP-ENGINE	295
SENSOR GP-LIQUID LEVEL	297
SENSOR GP-PRESSURE	299
SENSOR GP-SPEED	310
SENSOR GP-TEMPERATURE	313
STARTING AID GP	319
STARTING AID GP-ETHER	320
STARTING AR-COLD WEATHER	326
STARTING MOTOR GP-ELECTRIC	327
SWITCH GP-DISCONNECT	334
SWITCH GP-MAGNETIC	335
SWITCH GP-POSITION	337
SWITCH GP-PRESSURE	338
SWITCH GP-PUSH BUTTON	340
SWITCH GP-REFUELING	342
SWITCH GP-ROTARY	343
SWITCH GP-START	344
SWITCH GP-TOGGLE	345
SWITCH GP-WIPER	348
VALVE GP-ETHER STARTING	349
WIRING GP-AUX START RECEPTACLE	350
WIRING GP-AUXILIARY CONTROL	352
WIRING GP-CAB	357
WIRING GP-CHASSIS	366
WIRING GP-COMMUNICATION	369
WIRING GP-CONSOLE	373
WIRING GP-CONVERTER	377
WIRING GP-ELECTRONIC CONTROL	379
WIRING GP-FINE SWING	385
WIRING GP-FUEL SYSTEM	386
WIRING GP-HEATER	387
WIRING GP-MEDIUM PRESSURE	388
WIRING GP-PLATFORM	389
WIRING GP-QUICK COUPLER	391
WIRING GP-REFUELING PUMP	394
POWER TRAIN	398
FINAL DRIVE GP	398
DRIVE GP-FINAL	399
FINAL DRIVE GP	403
DRIVE GP-FINAL	404
FINAL DRIVE GP	407
DRIVE GP-FINAL	409
POWER TRAIN AR	412
SPROCKET GP	413
FRAME AND BODY	414
BOX & MTG GP-STORAGE	414
BOX GP-STORAGE	415
BUMPER GP	417
COUNTERWEIGHT & MOUNTING GP	418
COUNTERWEIGHT GP	422
COVER AS-SOUND SUPPRESSION	427
COVER GP-ACCESS	430
DOOR AS-ACCESS	432
DOOR GP-ACCESS	434
FENDER & COVER GP	438
FRAME GP-UPPER	440
GEAR & BEARING GP-SWING	442
GUARD AR-BOTTOM	448
GUARD GP-BOTTOM	449
GUARD GP-SWIVEL	453
HANDRAIL GP	455
HOOD & GUARD GP	456
HOOD GP	484
HOOD GP-ENGINE	490
SHEET AS-SOUND SUPPRESSION	495
STEP GP	507
STORAGE GP-VANDALISM GUARD	508
SUPPORT AS-ENCLOSURE	510
UNDERCARRIAGE	514
ADJUSTMENT GP-HYDRAULIC TRACK	514
FRAME AR-UNDERCARRIAGE	516
FRAME AS-UNDERCARRIAGE	517
GUARD GP-TRACK GUIDE	518
GUARD GP-TRAVEL MOTOR	521
IDLER GP-FRONT	523
LINK AS-TRACK	527
ROLLER AR-TRACK & CARRIER	528
ROLLER GP-TRACK CARRIER	529
ROLLER GP-TRACK-SINGLE FLANGE	530
SPRING GP-RECOIL	531
TRACK AR	532
TRACK GP	533

TABLE OF CONTENTS

Name	Page
HYDRAULIC SYSTEM	541
ACCUMULATOR GP-HYDRAULIC	541
ACTUATOR GP	548
BASE GP-OIL FILTER	549
CONTROL AR-AUXILIARY	550
CONTROL AR-COUPLER	553
COUPLING GP-PUMP	554
CYLINDER & LINES GP-BOOM	555
CYLINDER & LINES GP-BUCKET	556
CYLINDER & LINES GP-STICK	557
CYLINDER & SEAL GP-BOOM	558
CYLINDER & SEAL GP-BUCKET	560
CYLINDER & SEAL GP-STICK	564
CYLINDER GP-BOOM	566
CYLINDER GP-BUCKET	570
CYLINDER GP-COUPLER	578
CYLINDER GP-HYDRAULIC	579
CYLINDER GP-STICK	580
DRIVE GP-AUXILIARY PUMP	584
DRIVE GP-SWING	587
FASTENER GP-SWING & FINAL DR	592
FILTER & VALVE GP-PILOT	594
FILTER GP-OIL	595
GAUGE GP-SIGHT	601
HEAD GP-PUMP	602
HOSE GP-HYDRAULIC	609
HYDRAULIC AR	617
INSTALLATION AR-COUPLER	617
LINES GP-AUXILIARY HYDRAULIC	618
LINES GP-BOOM	650
LINES GP-BOOM CYLINDER	660
LINES GP-BUCKET CYLINDER	662
LINES GP-COUPLER	664
LINES GP-FRONT	685
LINES GP-HYDRAULIC OIL COOLER	740
LINES GP-PILOT	746
LINES GP-PUMP	827
LINES GP-RETURN	836
LINES GP-STICK	848
LINES GP-STICK CYLINDER	852
LINES GP-TRAVEL MOTOR	853
MANIFOLD GP-CONTROL	859
MOTOR & MTG GP-SWING	862
MOTOR & MTG GP-TRAVEL	863
MOTOR GP-PISTON	864
MOTOR GP-SWING	866
MOTOR GP-TRAVEL	872
MOUNTING GP-MAIN CONTROL VALVE	875
PLUG GP-CONTROL VALVE	876
PUMP & MTG GP-AUXILIARY	880
PUMP & MTG GP-MAIN HYDRAULIC	881
PUMP GP-GEAR	883
PUMP GP-MAIN HYDRAULIC	884
PUMP GP-PISTON	888
ROTATING GP-MOTOR	907
ROTATING GP-PUMP	908
SCREEN GP-HYDRAULIC	909
SWIVEL GP	910
TANK & FILTER GP-HYDRAULIC	912
TANK & MTG GP-HYDRAULIC	916
TANK GP-HYDRAULIC	917
VALVE & MTG GP-CONTROL	919
VALVE AR-ALT PATTERN CONTROL	920
VALVE GP-CHECK	921
VALVE GP-CONTROL	924
VALVE GP-LOAD CONTROL	950
VALVE GP-MAIN CONTROL	954
VALVE GP-MANUAL	958
VALVE GP-PILOT	962
VALVE GP-PRESSURE REDUCING	977
VALVE GP-PRIORITY	980
VALVE GP-PUMP CONTROL	981
VALVE GP-RELIEF	983
VALVE GP-SHUTTLE	1002
VALVE GP-SOLENOID	1007
VALVE GP-SOLENOID & MANIFOLD	1018
VALVE GP-SOLENOID & RELIEF	1020
VALVE GP-SWING CUSHION	1025
VALVE GP-TRAVEL COUNTERBALANCE	1028
IMPLEMENTS	1029
BOOM AR-1 PIECE LONG	1029
BOOM AR-1 PIECE SHORT	1031
BOOM GP-1 PIECE	1032
BOOM GP	1036
LINES GP-GREASE	1048
LINKAGE AR-BUCKET	1052
LINKAGE GP-BUCKET	1054
STICK AR	1060
STICK AR-HOE	1061
STICK GP-HOE	1063
WORK TOOLS	1079
ADJUSTER GP-BUCKET	1079
BUCKET & ADJUSTER GP	1081
BUCKET AS-EXCAVATION	1093
BUCKET AS-HEAVY DUTY	1094
BUCKET AS-HEAVY DUTY ROCK	1097
BUCKET GP-ROCK	1098
COUPLER AR-QUICK	1100
COUPLER GP-QUICK	1101
HOOK GP-LIFTING	1104
LOCK GP-QUICK COUPLER	1105
PIN GP-COUPLER	1106
PROTECTOR GP-SIDE BAR	1107
SIDECUTTER GP	1111
TIP GP-ABRASION	1114
TIP GP-DOUBLE SPIKE	1115

TABLE OF CONTENTS

Name	Page
TIP GP-GENERAL PURPOSE	1116
TIP GP-HEAVY ABRASION	1119
TIP GP-PENETRATION	1120
TIP GP-PENETRATION PLUS	1124
YOKE GP-LIFTING	1127
OPERATOR STATION	1128
ADJUSTER GP-SEAT	1128
AIR CONDITIONER & MOUNTING GP	1129
AIR CONDITIONER AR	1135
AIR CONDITIONER GP	1136
ANTENNA & MOUNTING GP	1143
ARMREST GP	1144
CAB GP	1148
COIL GP-EVAPORATOR	1161
COMPRESSOR GP-REFRIGERANT	1163
CONDENSER & MTG GP-REFRIGERANT	1165
CONDENSER GP-REFRIGERANT	1167
CONSOLE GP-OPERATOR	1169
CONTROL & MTG GP-JOYSTICK	1184
CONTROL & MTG GP-PEDAL	1189
CONTROL GP-FOOT	1191
CONTROL GP-HANDLE	1193
CONTROL GP-HYDRAULIC PEDAL	1199
CONTROL GP-JOYSTICK	1201
CONTROL GP-PEDAL	1209
CONTROL GP-PILOT OPERATED HYD	1211
COVER GP-CAB	1212
COVER GP-STORAGE	1213
DOOR GP-CAB	1214
DUCT GP-CAB AIR	1219
FLOOR MAT	1220
FLOOR MAT GP	1225
GUARD AR-VANDALISM	1226
GUARD GP-VANDALISM	1227
GUARD GP-WINDOW	1229
HATCH GP-ROOF	1233
HORN GP-ELECTRIC	1235
HOUSING GP-AIR CONDITIONER	1239
LINES GP-AIR CONDITIONER	1240
LITERATURE GP	1246
MIRROR GP-REAR VIEW	1247
MONITOR & MTG GP-OPERATOR	1248
MONITOR GP-OPERATOR	1252
MOUNTING GP-ANTENNA	1255
MOUNTING GP-PLATFORM	1258
OPERATOR AR	1260
PEDAL AR-AUXILIARY	1260
PLATFORM GP-OPERATOR	1261
RADIO GP	1262
RADIO GP-COMMUNICATION	1263
SCREEN GP-SUN	1264
SEAT & MOUNTING GP	1265
SEAT GP	1266
SEAT GP-SUSPENSION	1268
SERVICE GP-MONITOR	1269
SUPPORT GP-SEAT	1272
SUSPENSION GP-SEAT	1273
VISOR GP-CAB	1275
VISOR GP-PROTECTION	1276
WASHER GP-WINDOW	1277
WINDOW GP-CAB	1281
WINDOW GP-DOOR	1289
WIPER & WASHER GP-WINDOW	1291
WIPER AR-WINDOW	1295
WIPER GP-WINDOW	1296
SERVICE EQUIPMENT AND SUPPLIES	1298
FILM GP	1298
PLATE & FILM GP	1311
PART NUMBER INDEX	B1

GENERAL INFORMATION

1. MACHINE IDENTIFICATION

Caterpillar machines are identified by Product Identification Numbers (PIN). Some components included in a machine may be identified by Serial Numbers (S/N). Typical components that will be serialized include engines, transmissions, bulldozers, and rippers. The machine and engine are further identified by arrangement numbers and in some cases modification numbers. These numbers are shown on the product identification plate(s) and on the master plate in the operator's compartment.

Caterpillar dealers need all of these numbers to determine accurate parts identification.

SIS *New Feature*

Effective First Quarter 2001 the Caterpillar Product Identification Number (PIN) changed from 8 to 17 characters. In an effort to provide uniform equipment identification, Caterpillar and other construction equipment manufacturers are moving to comply with the latest version of the product identification numbering standard. Non-road machine PINs are defined by ISO 10261. The new PIN format will apply to all Caterpillar machines and generator sets. The PIN plates and frame marking will display the 17 character PIN. The new format will look like the following:

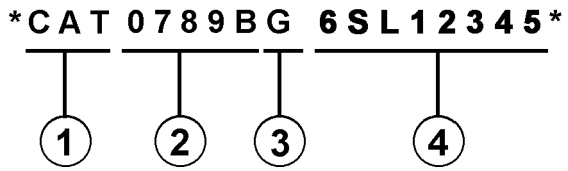

Where:

1. Caterpillar's World Manufacturing Code (characters 1-3)

2. Machine Descriptor (characters 4-8)

3. Check Character (character 9)

4. Machine Indicator Section (MIS) or Product Sequence Number (characters 10-17). These were previously referred to as the Serial Number.

Machines and generator sets produced before First Quarter 2001 will maintain their 8 character PIN format.

Components such as engines, transmissions, axles, etc. and work tools will continue to use an 8 character Serial Number (S/N).

2. ORDERING PARTS

⚠ WARNING

When replacement parts are required for this product Caterpillar recommends using Caterpillar replacement parts or parts with equivalent specifications including, but not limited to, physical dimensions, type, strength and material.

Failure to heed this warning can lead to premature failures, product damage, personal injury or death.

Quality Caterpillar replacement parts are available from Caterpillar dealers throughout the world. Their parts inventories are up to date and include all parts normally required to protect your investment in Caterpillar machines. Dealers may offer repair kits or remanufactured parts to allow selection of the most effective repair alternative for a particular situation. When ordering parts, your order should specify the quantity, part number, part name, and the serial number/product identification number of the machine for which the parts are needed.

3. PARTS MANUAL ORGANIZATION

Product information in this manual is presented as "information elements" that represent all of the components for the specific model. Engine Arrangement and Seat Group are examples of information elements. The information elements are organized alphabetically by part name and secondarily by part number within each major section of the manual.

4. TABLE OF CONTENTS

A table of contents (TOC) is found at the beginning of the manual. The TOC lists each section of the manual with a complete list of all information elements organized as they appear in the manual. Page numbers are provided for quick reference to detailed parts identification illustrations and serviceable consist lists.

5. MAINTENANCE PARTS INDEX

The Maintenance Parts Index, located near the beginning of the manual, references most frequently used maintenance part numbers, providing description, quantity, usage and page number. This information is organized alphabetically by part description.

6. INDEX

The index located near the front of the manual is an alphabetical listing of all information elements included in the manual. Page numbers are provided for quick reference to detailed parts identification illustrations and serviceable consist lists.

7. PART NUMBER INDEX

A numerical index listing all part numbers and the corresponding page number(s) appears at the back of the manual.

8. CAPTIONS

Captions located at the beginning of each information element identify the part number and part name along with additional descriptive information. PIN and S/N information found in each caption should be used to select correct information for a specific machine. Field replacement options, identification of optional attachment components, and where used ("part of") information is also provided.

The first line of a caption is shown in larger type font to indicate the beginning of an information element. Captions for additional pages that may be required to illustrate an information element will be shown in standard type font and will include the term *(contd.)* .

9. NON-SERVICED PARTS

In some instances it is necessary to display non-serviced parts that are a link to a lower level serviceable consist lists. These non-serviced part numbers are shown in *italic* type indicating that they are not available.

10. PARTS LIST REFERENCE NUMBERS

Numbers shown in the Ref No column correspond to numbers used in the associated graphic(s). An alphabetic suffix may be added to a reference number to identify lower level consist items. Numbers shown in the Graphic Ref column refer to the graphic number identifier displayed in the lower left corner of each illustration. The Graphic Ref number may be used in combination with the item Ref No to determine the correct part number. There may be intentional omission of a Ref No in a consist list as information is updated to reflect the latest serviceable part numbers.

11. INDENTED PART NAMES

When a part name is indented in a parts list, it is part of (included in) the group or assembly under which it is indented.

12. ILLUSTRATION REFERENCE LETTERS

When necessary, illustrations contain reference letters (A, B, C etc.) that are intended to track lines and harnesses from one point to another. They are also used to show where to reconnect illustrations that have been separated.

13. ABBREVIATIONS AND SYMBOLS

O.D. – Outside Diameter
I.D. – Inside Diameter
A – Not Part Of This Group
B – Use As Required
C – Change From Previous Type
D – Order By The Meter
E – Order By The Centimeter
F – Not Shown
G – Order By The Inch
I – Refer To Hydraulic Information System
M – Metric Part
R – Remfg Part May Be Available
Y – Separate Illustration
Z – Not Serviced Separately

SIS *New Feature*

14. DESCRIPTION OF TYPE CHANGES

Type - A type is defined as any configuration change that requires an additional Information Element for an Arrangement, Group, or Assembly. If serial number breaks for types are not available, a type # (Type 1, Type 2, etc.) will be displayed in the caption. These "type" changes are identified with a "C" note (change from previous type) in the Parts List. Only the "types" that apply to this Parts Manual will be included. Additional types may exist causing "C" notes to appear on an Information Element when no other types are shown.

15.<END>

This symbol indicates the end of an information element.

NOTE:

Continuing improvement and advancement of product design may cause changes to your machine which may not be included in this publication. Whenever a question arises regarding your Caterpillar product or this publication, please consult your Caterpillar dealer for the latest available information.

FRAME AND BODY

8E-3299 PLATFORM GP-CAB

PIN 3SK1-99999

SMCS-7253 — 100090751

NOTE	REF NO	GRAPHIC REF	PART NUMBER	QTY	PART NAME (1 2 3 4 5 6 PRODUCT LEVEL)	SEE PAGE
		1	3T-3863	1	PLATE AS	
	2	1	6E-2062	25	BOLT (3/8-16X.750IN)	
	3	1	6F-1076	41	WASHER-HARD (38MM THK)	
	4	1	9F-1644	2	SUPPORT AS-FOOT	
	5	1	7P-2229	18	BOLT (1/2-13X1IN)	
		1	6F-	18	WASHER-HARD (41MM THK)	
	6	1	6E-6136		COVER AS-LH	
		1	9F-2978	5	NUT-WELD (3/8-16 THD)	
		1	1P-0188	1	CLIP	
	7	1	7E-3411	4	COVER	
	8	1	9J-0488	18	SCREW-HEAD (3/8-16X.875IN)	
	9	1	-4474	1	COVER	
		1	6E-897		GASKET	
	10	1	6E-3249	1		
		1	6E-3250	1	GASKET	
	11	1	3T-3638	1	HANDHOLD	
	12	1	6E-9676	1	COVER AS	
		1	9F-2978	8	NUT-WELD (3/8-16 THD)	
		1	6E-9678	1	GASKET	
	13	1	7T-0131	1	FLOORPLATE AS	
		1	1F-0748	4	NUT-WELD (1/2-13 THD)	
	14	1	7V-8067	1	PLUG-BUTTON	
	15	1	7T-0136	1	PLATE AS	
		1	9F-2978	5	NUT-WELD (3/8-16 THD)	
	16	1	7T-8066	1	COVER	
		1	7T-9779	1	GASKET	
	17	1	3T-3861	1	PLATE AS	
	18	1	6T-8364	4	BOLT (1/4-20X.625IN)	
M		1	9T-4205	4	WASHER-HARD (20MM THK)	
	19	1	6L-8494	1	FLOOR MAT	
	20	1	6E-6846	1	MODULE AS-OPERATOR	
	21	1	3T-3834	1	HANDHOLD	
	22	1	9F-8671	2	PLUG	
	23	2	6T-8364	4	BOLT (1/4-20X.625IN)	
M		2	9T-4205	4	WASHER-HARD (20MM THK)	
	24	2	6E-3062	17	BOLT (3/8-16X.750IN)	
	26	2	6F-1076	21	WASHER-HARD (38MM THK)	
	26	2	7T-0135	1	SEAL	
	27	2	7X-0075	2	BOLT (3/4-10X5IN)	
		2	7X-0682	2	WASHER-HARD (64MM THK)	
	28	2	3T-3462	2	PLATE	
	29	2	3T-3290	1	PLATE AS	
		2	7E-6828	8	SPACER	
	30	2	3T-8281	1	SEAL	
	31	2	7E-8817	1	GASKET	
	32	2	7E-8616	1	COVER AS	
		2	2R-2276	2	WASHER	
		2	6F-8626	2	SCREW-KNURLED	
	33	2	9W-3429	1	COVER	
	34	2	6E-8697	1	COVER	
	35	2	6D-3931	8	SCREW-SOCKET HEAD	
	36	2	9W-3142	8	MOUNTING	
	37	2	9W-9027	2	PLATE	
	38	2	7X-0090	2	BOLT (7/8-9X5IN)	
		2	7X-0672	2	WASHER-HARD	
	39	2	4L-6454	4	BOLT (3/8-16X1.0IN)	
	40	2	3T-4788	1	COVER	

12 FRAME AND BODY — 1 of 4 — SELP4570-01

FRAME AND BODY

8E-3299 PLATFORM GP-CAB *(contd.)* — 100090751

NOTE	REF NO	GRAPHIC REF	PART NUMBER	QTY	PART NAME (1 2 3 4 5 6 PRODUCT LEVEL)	SEE PAGE
	41	2	6E-2616	1	COVER	
	42	2	7T-0134	1	PLATE	
	43	2	7T-0138	1	GASKET	
	44	2	7G-8724	1	GASKET	
	45	2	7G-8723	1	COVER	
	46	2	6V-1950	2	PLUG-BUTTON	

M-METRIC PART

SELP4570-01 — 2 of 4 — FRAME AND BODY 13

FRAME AND BODY

8E-3299 PLATFORM GP-CAB *(contd.)* — 100090751

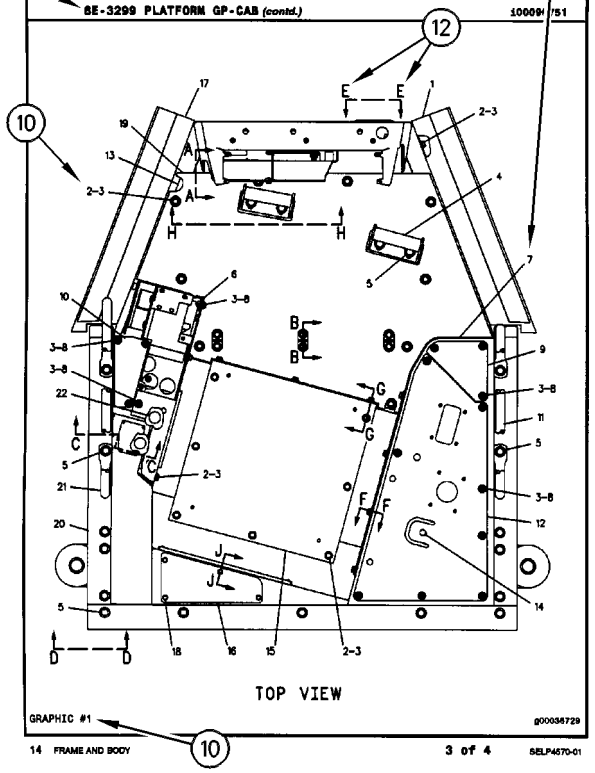

14 FRAME AND BODY — 3 of 4 — SELP4570-01

FRAME AND BODY

8E-3299 PLATFORM GP-CAB *(contd.)* — 100090751

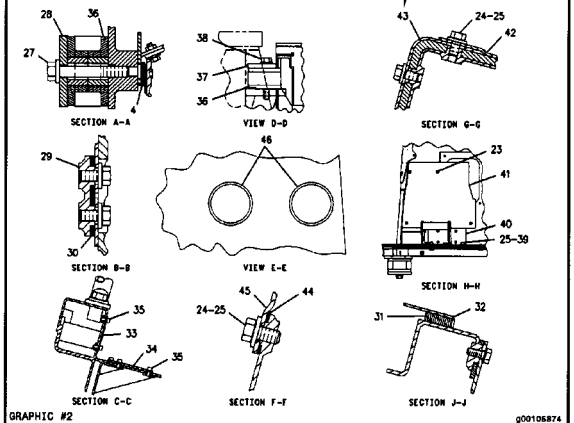

SELP4570-01 — 4 of 4 — FRAME AND BODY 16

REPAIR ALTERNATIVES

REMANUFACTURED COMPONENTS

As an option when making repairs consider Caterpillar Remanufactured Components. Components that are available through the Caterpillar Remanufactured Program are identified three ways in the parts book:

- with the letter R in the note field of the parts list
- with an R* at the beginning of the first line of the caption
- with an *R at the end of the first line of the caption

Typical components included in the Remanufacturing Program include:

ALTERNATORS
CONNECTING RODS
CRANKSHAFTS - UNDERSIZE
CRANKSHAFTS - UPGRADE TO NEW
CYLINDER HEADS
ELECTRONIC CONTROL MODULES (ECM)
ELECTRONIC SENSORS
FUEL INJECTORS
FUEL NOZZLES
FUEL PUMPS
GOVERNORS
OIL PUMPS
PISTONS
SHORT BLOCKS
STARTERS
TURBOCHARGERS - COMPLETE
TURBOCHARGER CARTRIDGES
WATER PUMPS

Caterpillar Remanufactured engines for many engine arrangements are also available.

SUPPLEMENTAL COOLANT ADDITIVES

CUSTOMER BENEFITS:

Protects against cavitation, foam, erosion, corrosion, and scale buildup in cooling systems.

- Provides measured coolant conditioner.

DESCRIPTION:

Additives deplete from the coolant with normal operation. For this reason, Supplemental Coolant Additives (SCA) must be added to all heavy duty coolants at regular intervals. In addition, when not using a fully formulated, pre-charged antifreeze, like Caterpillar's DEAC, an initial charge of SCA must be added to the cooling system. The amount of SCA added to the system is dependent on the capacity of the system.

The SCA for initial fill is provided as a liquid. SCA's for maintenance intervals are available in liquid form and as a spin-on element. (No Spin-on available for 3600 Family of Engines)

NOTE:

The amount of SCA added at initial fill is not the same as the amount added at maintenance intervals.

The coolant additive elements can be used with any ethylene or propylene glycol type antifreeze which meets ASTM D4985 or ASTM D5345 Specifications.

NOTE:

For use with standard heavy duty coolant only, not for use with Extended Life Coolant.

PARTS NEEDED:

Cooling System Capacity		Liquid SCA at Initial Fill	Liquid SCA at Maintenance*	Spin-on SCA Maintenance Element*
Liters	Gallons			
22-30	(6-8)	3P-2044 (1)	6V-3542 (1)	111-2370 (1)
30-38	(8-10)	3P-2044 (1) 6V-3542 (1)	111-2372 (1)	111-2369 (1)
38-49	(10-13)	3P-2044 (1) 8T-1589 (1)	111-2372 (1)	111-2369 (1)
49-64	(13-17)	3P-2044 (2)	8T-1589 (1)	9N-3368 (1)
64-83	(17-22)	3P-2044 (2) 8T-1589 (1)	111-2372 (1) 6V-3542 (1)	111-2371 (1)
83-114	(22-30)	3P-2044 (3) 8T-1589 (1)	3P-2044 (1)	9N-3718 (1)
114-163	(30-43)	3P-2044 (5)	3P-2044 (1) 6V-3542 (1)	111-2371 (2)
163-242	(43-64)	3P-2044 (8)	3P-2044 (2)	9N-3718 (2)

** Normal maintenance period is 250 hrs. See your Operation and Maintenance Manual for complete coolant maintenance instructions.*

( ) Indicates quantity required.

MAINTENANCE PARTS

DESCRIPTION	PART NUMBER	QTY	WHERE USED	PAGE
AIR INLET AND EXHAUST SYSTEM				
FILTER ELEMENT AS-AIR (PRIMARY)	142-1339	1	AIR CLEANER GP	129
		1	AIR CLEANER GP	130
FILTER ELEMENT AS-AIR (PRIMARY, ULTRA HIGH EFFICIENCY)	220-0453	1	AIR CLEANER GP	129
		1	AIR CLEANER GP	130
FILTER ELEMENT AS-AIR (SECONDARY)	142-1404	1	AIR CLEANER GP	129
		1	AIR CLEANER GP	130
BASIC ENGINE				
BELT-SERPENTINE	183-4494	1	BELT GP-SERPENTINE	19
		1	DRIVE GP-ACCESSORY	51
BREATHER AS (CRANKCASE)	240-0041	1	COVER GP-CYLINDER BLOCK	21
CAP AS-ENGINE OIL FILLER	227-4531	1	COVER GP-VALVE MECHANISM	25
		1	COVER GP-VALVE MECHANISM	26
		1	COVER GP-VALVE MECHANISM	27
		1	COVER GP-VALVE MECHANISM	28
SEAL-VALVE COVER	268-3490	1	COVER GP-VALVE MECHANISM	28
	285-4106		COVER GP-VALVE MECHANISM	26
SEAL-VALVE COVER (VALVE MECHANISM BASE)	268-3490	1	COVER GP-VALVE MECHANISM	25
		1	COVER GP-VALVE MECHANISM	26
		1	COVER GP-VALVE MECHANISM	27
COOLING SYSTEM				
CAP AS (COOLANT FILL)	204-0920	1	RADIATOR & HYD OIL COOLER GP	120
		1	RADIATOR & HYD OIL COOLER GP	123
CAP AS (COOLANT OVERFLOW)	171-3370	1	RADIATOR & HYD OIL COOLER GP	120
		1	RADIATOR & HYD OIL COOLER GP	123
CAP AS-RADIATOR	036-1865	1	MODULE GP-COOLING	114
GASKET (WATER REGULATOR HOUSING)	191-4457	1	HOUSING & REGULATOR GP	111
		1	LINES GP-WATER	113
HOSE-RADIATOR	230-2930	1	RADIATOR & HYD OIL COOLER GP	120
		1	RADIATOR & HYD OIL COOLER GP	123
	230-2931	1	RADIATOR & HYD OIL COOLER GP	120
		1	RADIATOR & HYD OIL COOLER GP	123
REGULATOR-TEMPERATURE (92-DEG C) (COOLANT)	248-5513	1	HOUSING & REGULATOR GP	111
REGULATOR-WATER TEMPERATURE (98-DEG C) (COOLANT)	247-7133	1	LINES GP-WATER	113

MAINTENANCE PARTS

DESCRIPTION	PART NUMBER	QTY	WHERE USED	PAGE
ELECTRICAL AND STARTING SYSTEM				
BATTERY (12-VOLT, MAINTENANCE FREE)	263-9574	2	BATTERY & WIRING GP	244
		2	BATTERY & WIRING GP	254
BATTERY (12-VOLT, MAINTENANCE FREE, WET)	3T-5760	2	BATTERY & WIRING GP	224
		2	BATTERY & WIRING GP	234
BATTERY GP (12-VOLT, MAINTENANCE FREE, WET)	115-2422	2	BATTERY & WIRING GP	246
CAP AS-FILLER (BATTERY)	123-1373	6	BATTERY & WIRING GP	224
		6	BATTERY & WIRING GP	234
		6	BATTERY & WIRING GP	244
		6	BATTERY & WIRING GP	246
		6	BATTERY & WIRING GP	254
CIRCUIT BREAKER AS (120-AMPERE) (HEATER)	216-4970	1	PANEL GP-CIRCUIT BREAKER	290
CIRCUIT BREAKER AS (80-AMPERE) (ALTERNATOR)	171-2210	1	PANEL GP-CIRCUIT BREAKER	290
CIRCUIT BREAKER AS (80-AMPERE) (MAIN)	171-2210	1	PANEL GP-CIRCUIT BREAKER	290
FUSE (10-AMPERE)	113-8490	22	WIRING GP-CAB	357
FUSE (15-AMPERE)	113-8491	5	WIRING GP-CAB	357
		1	WIRING GP-CAB	365
FUSE (25-AMPERE)	113-8493	3	WIRING GP-CAB	357
FUSE (30-AMPERE)	124-3548	2	WIRING GP-CAB	357
FUSE (5-AMPERE)	141-2759	8	WIRING GP-CAB	357
KEY (BATTERY DISCONNECT)	8H-5306	1	SWITCH GP-DISCONNECT	334
LAMP AS (24-VOLT, 3-WATT)	170-9324	1	PANEL GP-SWITCH	292
LAMP-HALOGEN (24-VOLT, 70-WATT)	9X-3463	1	LAMP GP-FLOOD	281
		1	LAMP GP-FLOOD	282
		1	LAMP GP-FLOOD	283
		1	LIGHTING GP-FLOOD	285

MAINTENANCE PARTS

DESCRIPTION	PART NUMBER	QTY	WHERE USED	PAGE
FUEL SYSTEM				
CAP AS-FILLER (FUEL TANK)	7X-7700	1	TANK GP-FUEL	209
		1	TANK GP-FUEL	211
		1	TANK GP-FUEL	213
		1	TANK GP-FUEL	215
FILTER AS-WATER SEP & FUEL (PRIMARY)	326-1644	1	FILTER GP-WATER SEP & FUEL	144
FILTER-FUEL (ADVANCED EFFICIENCY)	1R-0762	1	LINES GP-FUEL	151
		1	LINES GP-FUEL	154
		1	LINES GP-FUEL	157
		1	LINES GP-FUEL	161
		1	LINES GP-FUEL	164
		1	LINES GP-FUEL	168
		1	LINES GP-FUEL	172
GASKET	9Y-8389	1	LINES GP-FUEL	154
		1	LINES GP-FUEL	157
		1	LINES GP-FUEL	160
		1	LINES GP-FUEL	164
		1	LINES GP-FUEL	172
GASKET (FUEL PRIMING PUMP)	9Y-8389	1	LINES GP-FUEL	151
		1	LINES GP-FUEL	168
		1	PUMP GP-FUEL PRIMING	181
STRAINER AS-FUEL	229-1860	1	PUMP GP-REFUELING	185
		1	PUMP GP-REFUELING	187
STRAINER AS-FUEL (FLOAT GAUGE)	303-9933	1	TANK GP-FUEL	209
		1	TANK GP-FUEL	211
		1	TANK GP-FUEL	213
		1	TANK GP-FUEL	215
HYDRAULIC SYSTEM				
BREATHER (HYDRAULIC TANK)	227-0590	1	TANK GP-HYDRAULIC	917
BREATHER (SWING DRIVE)	114-8234	1	DRIVE GP-SWING	588
	4H-6112	1	DRIVE GP-SWING	590
FILTER ELEMENT AS-OIL (ULTRA HIGH EFFICIENCY) (HYDRAULIC RETURN)	179-9806	1	FILTER GP-OIL	598
FILTER-OIL (ADVANCED EFFICIENCY) (HYDRAULIC, CASE DRAIN)	093-7521	1	FILTER GP-OIL	595
		1	FILTER GP-OIL	600
FILTER-OIL (ADVANCED EFFICIENCY) (HYDRAULIC, PILOT)	5I-8670	1	FILTER & VALVE GP-PILOT	594
PLUG-OIL DRAIN (OIL PAN) (HYDRAULIC TANK)	6I-0723	1	TANK GP-HYDRAULIC	917
SCREEN AS (HYDRAULIC TANK)	131-9750	1	LINES GP-PUMP	831
	209-6000	1	SCREEN GP-HYDRAULIC	909
LUBRICATION SYSTEM				
FILTER-ENGINE OIL (ADVANCED EFFICIENCY)	1R-1808	1	FILTER GP-ENGINE OIL	83
		1	FILTER GP-ENGINE OIL	85

MAINTENANCE PARTS

DESCRIPTION	PART NUMBER	QTY	WHERE USED	PAGE
OPERATOR STATION				
BLADE AS-WIPER (275-MM) (LOWER)	4I-5021	1	WIPER & WASHER GP-WINDOW	1291
		1	WIPER & WASHER GP-WINDOW	1293
BLADE AS-WIPER (600-MM) (UPPER)	161-3670	1	WIPER GP-WINDOW	1296
CAP AS (WINDOW WASHER)	178-5431	1	WASHER GP-WINDOW	1277
		1	WASHER GP-WINDOW	1278
FILTER ELEMENT AS-CAB AIR	305-0329	1	DUCT GP-CAB AIR	1219
FILTER ELEMENT-CAB AIR	245-7823	1	AIR CONDITIONER GP	1136
		1	AIR CONDITIONER GP	1138
		1	AIR CONDITIONER GP	1141
	293-1184	1	CAB GP	1160
FILTER GP-AIR (AIR CONDITIONER)	293-1137	1	AIR CONDITIONER GP	1141
LAMP (24-VOLT, 10-WATT)	201-4417	1	CAB GP	1156
LAMP-HALOGEN (24-VOLT, 70-WATT)	9X-3463	1	GUARD GP-WINDOW	1229
		1	GUARD GP-WINDOW	1231
RECEIVER-REFRIGERANT DRYER	176-1902	1	LINES GP-AIR CONDITIONER	1240
		1	LINES GP-AIR CONDITIONER	1243
SEAT BELT GP (RETRACTABLE, 3-IN)	235-9020	1	SEAT GP	1267

INDEX

Name	Page
A	
ACCUMULATOR GP-HYDRAULIC–CHARGED	541, 542, 543, 544, 545, 546
ACCUMULATOR GP-HYDRAULIC–UNCHARGED	547
ACTUATOR GP–HYDRAULIC FAN PUMP	548
ADJUSTER GP-BUCKET–DB-FAMILY	1080
ADJUSTER GP-BUCKET–G/U/V/TB-FAMILY	1079
ADJUSTER GP-SEAT (UPPER SLIDE)	1273
ADJUSTER GP-SEAT–LOWER SLIDE	1128
ADJUSTMENT GP-HYDRAULIC TRACK	514, 515
AIR CLEANER & MOUNTING GP	126
AIR CLEANER AR–PRECLEANER	127
AIR CLEANER GP	129, 130
AIR CLEANER GP–WITH PRECLEANER	128
AIR CONDITIONER & MOUNTING GP	1129, 1131, 1133
AIR CONDITIONER AR	1135
AIR CONDITIONER GP	1136, 1138, 1141
ALARM GP–FAULT	219
ALARM GP-TRAVEL	220
ALTERNATOR GP-CHARGING	221, 222
ANTENNA & MOUNTING GP–PRODUCT LINK	1143
ARMREST GP–LH	1145, 1147
ARMREST GP–RH	1144, 1146
ATOMIZER GP-ETHER	320, 323
B	
BASE GP-OIL FILTER–HYDRAULIC	549
BASE GP-VALVE COVER	25, 26, 28
BATTERY & WIRING GP	224, 234, 246, 254
BATTERY & WIRING GP–COLD WEATHER	244
BATTERY (12-VOLT, MAINTENANCE FREE)	244, 254
BATTERY (12-VOLT, MAINTENANCE FREE, WET)	224, 234
BATTERY GP (12-VOLT, MAINTENANCE FREE, WET)	246
BELT GP-SERPENTINE	19
BELT-SERPENTINE	19, 51
BLADE AS-WIPER (275-MM) (LOWER)	1291, 1293
BLADE AS-WIPER (600-MM) (UPPER)	1296
BLOCK GP-JUNCTION (BATTERY)	262
BLOCK GP-JUNCTION–BATTERY	262
BOOM AR-1 PIECE LONG	1029, 1030
BOOM AR-1 PIECE LONG–ACCUGRADE	1030
BOOM AR-1 PIECE LONG–ACCUGRADE READY	1029, 1030
BOOM AR-1 PIECE SHORT	1031
BOOM GP	1038, 1040, 1042
BOOM GP–ACCUGRADE	1044, 1046
BOOM GP–ACCUGRADE READY	1036
BOOM GP-1 PIECE	1032, 1034
BOX & MTG GP-STORAGE	414
BOX GP-STORAGE	415
BRACKET GP-MOUNTING (SUSPENSION SEAT)	1273
BREATHER (HYDRAULIC TANK)	917
BREATHER (SWING DRIVE)	588, 590
BREATHER AS (CRANKCASE)	21
BUCKET & ADJUSTER GP–EXCAVATION, TB-FAMILY	1081
BUCKET & ADJUSTER GP–GENERAL PURPOSE, DB-FAMILY	1085, 1086
BUCKET & ADJUSTER GP–HEAVY-DUTY POWER, TB-FAMILY	1084, 1089, 1090, 1091
BUCKET & ADJUSTER GP–HEAVY-DUTY ROCK, TB-FAMILY	1092
BUCKET & ADJUSTER GP–HEAVY-DUTY, DB-FAMILY	1088
BUCKET & ADJUSTER GP–HEAVY-DUTY, TB-FAMILY	1082, 1083, 1087

INDEX

Name	Page
BUCKET AS-EXCAVATION–TB-FAMILY	1093
BUCKET AS-HEAVY DUTY ROCK–TB-FAMILY	1097
BUCKET AS-HEAVY DUTY–TB-FAMILY	1094
	1095
	1096
BUCKET GP-ROCK–QUICK COUPLER	1098
	1099
BUMPER GP	417
C	
CAB GP	1148
	1150
	1151
	1153
	1160
CAB GP–EXTERIOR	1156
CAB GP–INTERIOR	1154
CAB GP–POLYCARBONATE GLASS, NACD	1160
CAMSHAFT GP	20
CAP AS (COOLANT FILL)	120
	123
CAP AS (COOLANT OVERFLOW)	120
	123
CAP AS (WINDOW WASHER)	1277
	1278
CAP AS-ENGINE OIL FILLER	25
	26
	27
	28
CAP AS-FILLER (BATTERY)	224
	234
	244
	246
	254
CAP AS-FILLER (FUEL TANK)	209
	211
	213
	215
CAP AS-RADIATOR	114
CHASSIS AR	1
CIRCUIT BREAKER AS (120-AMPERE) (HEATER)	290
CIRCUIT BREAKER AS (80-AMPERE) (ALTERNATOR)	290
CIRCUIT BREAKER AS (80-AMPERE) (MAIN)	290
COIL GP-EVAPORATOR	1161
COLD WEATHER AR	1
COMPRESSOR GP-REFRIGERANT	1163
	1164
CONDENSER & MTG GP-REFRIGERANT	1165
CONDENSER GP-REFRIGERANT	1167
	1168
CONSOLE GP-OPERATOR	1169
	1171
	1173
CONSOLE GP-OPERATOR–LH	1175
	1181
	1183
CONSOLE GP-OPERATOR–RH	1177
	1179
	1183
CONTROL & MTG GP-COMMUNICATION–PRODUCT LINK 121SR	265
CONTROL & MTG GP-COMMUNICATION–PRODUCT LINK 300	263
	264
CONTROL & MTG GP-ENGINE ELEK	268
CONTROL & MTG GP-JOYSTICK	1187
	1188
CONTROL & MTG GP-JOYSTICK–3-BUTTON, TRIGGER SWITCH	1186
CONTROL & MTG GP-JOYSTICK–WITH SLIDE CONTROL	1184
	1185
CONTROL & MTG GP-MACHINE	269
CONTROL & MTG GP-PEDAL–LH	1189
	1190
CONTROL AR-AUXILIARY–HAMMER, FOOT SWITCH	550
CONTROL AR-AUXILIARY–JOYSTICK, 3-BUTTON, TRIGGER SWITCH	550
CONTROL AR-AUXILIARY–JOYSTICK, MODULATION SWITCH	550
CONTROL AR-AUXILIARY–SYSTEM 14, COMBINED FUNCTION	551
CONTROL AR-AUXILIARY–SYSTEM 3, 1-WAY, 2-PUMP	552
CONTROL AR-AUXILIARY–SYSTEM 5, 2-WAY, 1-PUMP	552
CONTROL AR-COUPLER	553
CONTROL GP-FOOT–WORK TOOL	1191
CONTROL GP-HANDLE–JOYSTICK, LH	1193
	1196
CONTROL GP-HANDLE–JOYSTICK, RH	1194
	1195
CONTROL GP-HANDLE–LH	1198
CONTROL GP-HANDLE–RH	1197
CONTROL GP-HYDRAULIC PEDAL–THIRD PEDAL, STRAIGHT TRAVEL	1199
CONTROL GP-JOYSTICK–LH	1201
	1204
	1206
	1207
CONTROL GP-JOYSTICK–RH	1202
	1203
	1205
	1208
CONTROL GP-PEDAL–ELECTRIC	1209

INDEX

Name	Page
	1210
CONTROL GP-PILOT OPERATED HYD–TRAVEL	1211
CONTROL GP-UNPROGRAMMED	269
CONTROL GP-UNPROGRAMMED (ENGINE)	268
CONTROL GP-UNPROGRAMMED (PRODUCT LINK 300)	270
CONTROL GP-UNPROGRAMMED–PRODUCT LINK 300	270
CONVERSION AR-MACHINE–ACCUGRADE READY	2
COOLER GP-ENGINE OIL	101
CORE AS-HEATER	1136
	1138
	1141
CORE AS-OIL COOLER (ENGINE)	101
CORE AS-OIL COOLER (HYDRAULIC)	114
CORE AS-RADIATOR	114
COUNTERWEIGHT & MOUNTING GP	418
	419
	420
	421
COUNTERWEIGHT GP	422
	423
	424
	425
COUPLER AR-QUICK–WITH HOOK	1100
COUPLER AR-QUICK–WITH YOKE	1100
COUPLER GP-QUICK	1101
COUPLER GP-QUICK–WITH HOOK	1102
COUPLER GP-QUICK–WITH YOKE	1103
COUPLING GP-PUMP	554
COVER AS-SOUND SUPPRESSION	427
	429
COVER AS-SOUND SUPPRESSION–PRECLEANER	428
COVER GP-ACCESS–FUEL, HYDRAULIC TANKS	430
	431
COVER GP-CAB–REAR	1212
COVER GP-CYLINDER BLOCK	21
COVER GP-FLYWHEEL HOUSING	22
COVER GP-FRONT HOUSING	23
	24
COVER GP-STORAGE	1213
COVER GP-VALVE MECHANISM	25
	26
	27
	28
CRANKSHAFT GP	29
CYLINDER & LINES GP-BOOM–LH	555
CYLINDER & LINES GP-BOOM–RH	555
CYLINDER & LINES GP-BUCKET	556
CYLINDER & LINES GP-STICK	557
CYLINDER & SEAL GP-BOOM	558
	559
CYLINDER & SEAL GP-BUCKET	560
	561
	562
	563
CYLINDER & SEAL GP-STICK	564
	565
CYLINDER BLOCK AS	30
CYLINDER BLOCK GP	32
	33
CYLINDER GP-BOOM	566
	568
CYLINDER GP-BUCKET	570
	572
	574
	576
CYLINDER GP-COUPLER	1105
CYLINDER GP-COUPLER–LOCK	578
CYLINDER GP-HYDRAULIC	579
CYLINDER GP-STICK	580
	582
CYLINDER HEAD AS	34
	36
	38
CYLINDER HEAD GP	40
	41
	43
	45
	47
	49

D

DAMPER & PULLEY GP	50
DOOR AS-ACCESS–AIR CLEANER, BATTERY	432
	433
DOOR GP-ACCESS–PUMP COMPARTMENT	434
	437
DOOR GP-ACCESS–RADIATOR	435
	436
DOOR GP-CAB	1214
	1216
DRIVE GP-ACCESSORY	51
	53
DRIVE GP-AUXILIARY PUMP–ACCESSORY DRIVE	584
	585
DRIVE GP-FAN	55
	56
DRIVE GP-FINAL–WITHOUT MOTOR	399
	404
	409
DRIVE GP-SWING–WITH MOTOR	587
DRIVE GP-SWING–WITHOUT MOTOR	588

INDEX

Name	Page
	590
DUCT GP-CAB AIR	1219

E

Name	Page
ELBOW GP-AIR INLET	131
ELECTRONICS GP-COMMUNICATION–PRODUCT LINK 300	271
ELECTRONICS GP-ENGINE RATINGS	15
ELECTRONICS GP-MACHINE	271
ELECTRONICS GP-MACHINE–HIGH POWER	272
ELECTRONICS GP-MONITOR	272
ENGINE AR	4 5 7 8
ENGINE AR-COMPLETE	9 10 11
ENGINE AR-CORE	13 14 15 16

F

Name	Page
FAN GP-SUCTION	102 107
FASTENER GP-CYLINDER HEAD	57 58 59
FASTENER GP-DAMPER & PULLEY	60
FASTENER GP-FRONT HOUSING	61
FASTENER GP-SWING & FINAL DR	592
FASTENER GP-VALVE COVER	62 63
FASTENER GP-VALVE COVER BASE	64
FASTENER GP-WIRING HARNESS–FOOT SWITCH	276
FASTENER GP-WIRING HARNESS–HEAVY LIFT	274
FASTENER GP-WIRING HARNESS–JOYSTICK	277
FASTENER GP-WIRING HARNESS–PEDAL CONTROL	275
FASTENER GP-WIRING HARNESS–STRAIGHT TRAVEL	273
FENDER & COVER GP	438
FILM GP–ALT PATTERN CONTROL, WARNING	1304
FILM GP–BOOM	1309
FILM GP–CONTROL PATTERN, QUICK CHANGE	1305
FILM GP–FUEL TRANSFER PUMP	1310
FILM GP–HAMMER CONTROL, FOOT SWITCH	1303
FILM GP–MASS EXCAVATOR	1298
FILM GP–OPERATOR CONTROLS, NOTICE	1299 1301 1302
FILM GP–QUICK COUPLER	1307 1308
FILM-IDENTIFICATION (CAT, LH)	1309
FILM-IDENTIFICATION (CAT, RH)	1309
FILM-IDENTIFICATION (FUEL)	386
FILM-INFORMATION (PRODUCT LINK, READ OMM)	265
FILM-INFORMATION (TIE-DOWN)	1318
FILM-INSTRUCTION (COUPLER OPERATION)	1308
FILM-INSTRUCTION (ENGINE SHUTOFF)	1318
FILM-INSTRUCTION (HYDRAULIC OIL RETURN FILTER)	598
FILM-INSTRUCTION (OPERATOR CONTROLS)	1318
FILM-INSTRUCTION (OPERATOR CONTROLS, READ OMM)	1260 1302
FILM-INSTRUCTION (REFUELING PUMP)	185 187
FILM-INSTRUCTION (TOP, AIR CLEANER COVER)	129 130
FILM-INSTRUCTION (WINDOW CLEANING, READ OMM)	1318
FILM-NOTICE (LIFT EYE LOCATION)	1102 1103
FILM-WARNING (CRUSH HAZARD, READ OMM, INTL)	1308
FILM-WARNING (CRUSH HAZARD, READ OMM, U.S.)	1308
FILM-WARNING (FRONT GUARD, READ OMM)	1231
FILM-WARNING (HIGH PRESSURE CYLINDER)	545
FILM-WARNING (HOT FLUID UNDER PRESSURE, U.S.)	1311 1323
FILM-WARNING (PRODUCT LINK RADIO, INTL)	265 280
FILM-WARNING (PRODUCT LINK RADIO, U.S.)	265 280
FILM-WARNING (READ OMM)	1102 1103
FILM-WARNING (SEAT BELT, U.S.)	1311 1323
FILM-WARNING (TOP GUARD, READ OMM)	1231

INDEX

Name	Page
FILTER & VALVE GP-PILOT–HYDRAULIC OIL	594
FILTER AS-WATER SEP & FUEL (PRIMARY)	144
FILTER ELEMENT AS-AIR (PRIMARY)	129, 130
FILTER ELEMENT AS-AIR (PRIMARY, ULTRA HIGH EFFICIENCY)	129, 130
FILTER ELEMENT AS-AIR (SECONDARY)	129, 130
FILTER ELEMENT AS-CAB AIR	1219
FILTER ELEMENT AS-OIL (ULTRA HIGH EFFICIENCY) (HYDRAULIC RETURN)	598
FILTER ELEMENT-CAB AIR	1136, 1138, 1141, 1160
FILTER GP-AIR (AIR CONDITIONER)	1136, 1138, 1141
FILTER GP-ENGINE OIL	83, 85
FILTER GP-OIL–HYDRAULIC RETURN	596, 598
FILTER GP-OIL–HYDRAULIC, CASE DRAIN	595, 600
FILTER GP-WATER SEP & FUEL	144
FILTER-ENGINE OIL (ADVANCED EFFICIENCY)	83, 85
FILTER-FUEL (ADVANCED EFFICIENCY)	151, 154, 157, 161, 164, 168, 172
FILTER-OIL (ADVANCED EFFICIENCY) (HYDRAULIC, CASE DRAIN)	595, 600
FILTER-OIL (ADVANCED EFFICIENCY) (HYDRAULIC, PILOT)	594
FINAL DRIVE GP	399, 404, 409
FINAL DRIVE GP–WITH MOTOR	398, 403, 407, 408
FLOOR MAT	1220, 1221, 1222, 1223, 1224, 1225
FLOOR MAT GP	1225
FLYWHEEL GP	65
FRAME AR-UNDERCARRIAGE	516
FRAME AS-UNDERCARRIAGE	517
FRAME GP-UPPER	440
FUMES DISPOSAL GP	87
FUSE (10-AMPERE)	357
FUSE (15-AMPERE)	357, 365
FUSE (25-AMPERE)	357
FUSE (30-AMPERE)	357
FUSE (5-AMPERE)	357

G

Name	Page
GASKET	154, 157, 160, 164, 172
GASKET (FUEL PRIMING PUMP)	151, 168, 181
GASKET (WATER REGULATOR HOUSING)	111, 113
GAUGE GP-OIL LEVEL (DIPSTICK)	88, 90
GAUGE GP-SIGHT–HYDRAULIC OIL LEVEL	601
GAUGE-OIL LEVEL (SWING DRIVE)	588, 590
GEAR & BEARING GP-SWING	442, 443, 444, 445
GEAR GP-FRONT	66
GENERAL AR	2, 3
GUARD AR-BOTTOM–HEAVY-DUTY	448
GUARD AR-VANDALISM	1226
GUARD AR-VANDALISM–WITH SUN VISOR	1226
GUARD GP-BOTTOM	449, 450
GUARD GP-BOTTOM–HEAVY-DUTY	451, 452
GUARD GP-SWIVEL	453, 454
GUARD GP-TRACK GUIDE	518, 519, 520
GUARD GP-TRAVEL MOTOR	521, 522
GUARD GP-VANDALISM	1228
GUARD GP-VANDALISM–CAB	1227
GUARD GP-WINDOW	1229, 1231

INDEX

Name	Page
H	
HANDLE GP-JOYSTICK (RH)	1195
HANDRAIL GP	455
HARNESS AS-CAB	357, 365
HARNESS AS-CAB (PRIMING PUMP)	361
HARNESS AS-CHASSIS	225, 235, 247, 255, 1237
HARNESS AS-CHASSIS (HORN)	1238
HARNESS AS-CONSOLE (LH)	373
HARNESS AS-CONSOLE (RH)	292, 375
HARNESS AS-CONTROL	352, 355, 388
HARNESS AS-CONTROL (BODY TILT SENSOR, GPS RECEIVER)	366
HARNESS AS-CONTROL (DISPLAY, GPS RADIO)	366
HARNESS AS-CONTROL (PRODUCT LINK)	369
HARNESS AS-CONTROL (PRODUCT LINK, ANTENNA)	369, 371
HARNESS AS-ENGINE	383
HARNESS AS-ENGINE (ELECTRONIC CONTROL MODULE)	379, 381
HARNESS AS-ENGINE (UNIT INJECTOR)	379, 381, 383
HARNESS AS-HEATER & AIR COND	1129, 1131, 1133, 1136, 1138, 1141
HARNESS AS-HEATER & AIR COND (CONTROL PANEL SWITCHES)	1129, 1131, 1133
HARNESS AS-LIGHTING	287, 288
HARNESS AS-LIGHTING (CAB FLOODLIGHT)	285
HARNESS AS-MOTOR (CONDENSER FAN)	1167, 1168
HARNESS AS-OPERATOR CONTROLS	1191
HARNESS AS-PLATFORM	389
HARNESS AS-PUMP (FUEL PRIMING)	386
HARNESS AS-PUMP (REFUELING)	394, 396
HARNESS AS-QUICK COUPLER	363, 392
HARNESS AS-SOLENOID (FINE SWING)	385
HARNESS AS-SOLENOID (QUICK COUPLER DISENGAGE)	391
HARNESS AS-SWITCH (REFUELING PUMP, START)	340
HARNESS AS-SWITCH (REFUELING PUMP, STOP)	341
HARNESS AS-SWITCH (SECONDARY SHUTDOWN)	389
HARNESS AS-WIRING	396
HARNESS AS-WIRING (CAB)	363
HARNESS AS-WIRING (QUICK COUPLER SWITCH)	346
HARNESS AS-WIRING (SERVICE CONNECTOR)	369, 371
HATCH GP-ROOF	1233, 1234
HEAD GP-MOTOR	867, 870
HEAD GP-PUMP	602, 605
HEATER GP-JACKET WATER	278
HOOD & GUARD GP	456, 466, 476
HOOD GP–ACCUGRADE READY	486, 487
HOOD GP–PRECLEANER	484, 485
HOOD GP–RADIATOR	488, 489
HOOD GP-ENGINE	491, 492, 493
HOOD GP-ENGINE–RADIATOR	490
HOOK GP-LIFTING	1104
HORN GP-ELECTRIC	1235, 1236, 1237, 1238
HOSE GP-HYDRAULIC–CONTROL VALVE, BOOM	614
HOSE GP-HYDRAULIC–CONTROL VALVE, STICK	609
HOSE GP-HYDRAULIC–FRONT	610, 611, 612, 613, 615, 616
HOSE-RADIATOR	120, 123

INDEX

Name	Page
HOUSING & REGULATOR GP–TEMPERATURE REGULATOR	111
HOUSING GP-AIR CONDITIONER–INLET AIR	1239
HOUSING GP-FLYWHEEL	67
HOUSING GP-FRONT	68
HYDRAULIC AR	617

I

IDLER GP-FRONT	523
	524
	525
	526
INDICATOR AS (HYDRAULIC RETURN FILTER)	596
INDICATOR AS-AIR FILTER CHANGE (AIR RESTRICTION)	136
INJECTOR GP-FUEL	145
	146
	147
	148
INSTALLATION AR-COMMUNICATION–PRODUCT LINK 121SR	279
INSTALLATION AR-COMMUNICATION–PRODUCT LINK 300	279
INSTALLATION AR-COMMUNICATION–PRODUCT LINK 321SR	279
INSTALLATION AR-COUPLER–DB-FAMILY LINKAGE, PIN GRABBER	617
INSTALLATION AR-ENGINE	17
	18
INSTALLATION GP-COMMUNICATION–PRODUCT LINK 121SR	280

K

KEY (BATTERY DISCONNECT)	334
KIT-RECEPTACLE (2-PIN)	379
	381
KIT-SEAL (BUCKET CYLINDER)	570
	572
KIT-SEAL (GEAR PUMP)	883

L

LAMP (24-VOLT, 10-WATT)	1156
LAMP AS (24-VOLT, 3-WATT)	292
LAMP GP-FLOOD (24-VOLT)	1229
LAMP GP-FLOOD (24-VOLT) (CANOPY)	1231
LAMP GP-FLOOD–24-VOLT	281
	282
	283
LAMP-HALOGEN (24-VOLT, 70-WATT)	281
	282
	283
	285
	1229
	1231
LIFTING GP-ENGINE	69
LIGHTING GP-CHASSIS	284
LIGHTING GP-FLOOD–BOOM	287
LIGHTING GP-FLOOD–CAB	285
LIGHTING GP-FLOOD–MASS BOOM	288
LINES GP-AIR–AFTERCOOLER TO TURBOCHARGER	132
	134
LINES GP-AIR–AIR CLEANER TO TURBOCHARGER	136
LINES GP-AIR CONDITIONER	1240
	1243
LINES GP-AUXILIARY HYDRAULIC–BOOM, HIGH PRESSURE	618
LINES GP-AUXILIARY HYDRAULIC–BOOM, MEDIUM PRESSURE	620
	622
	624
LINES GP-AUXILIARY HYDRAULIC–MASS BOOM, HIGH PRESSURE	626
LINES GP-AUXILIARY HYDRAULIC–MASS BOOM, MEDIUM PRESSURE	628
	630
	632
LINES GP-AUXILIARY HYDRAULIC–STICK, HIGH PRESSURE	634
	635
	638
	641
	643
	646
	647
LINES GP-AUXILIARY HYDRAULIC–STICK, MEDIUM PRESSURE	636
	639
	644
	648
LINES GP-BOOM	650
	652
	654
	657
LINES GP-BOOM CYLINDER–LH	660
LINES GP-BOOM CYLINDER–RH	661
LINES GP-BUCKET CYLINDER	662
	663
LINES GP-COUPLER–KIT, PIN GRABBER	681
LINES GP-COUPLER–MASS BOOM	671
	673
LINES GP-COUPLER–QUICK, HOOK	679
LINES GP-COUPLER–QUICK, PIN GRABBER	664
LINES GP-COUPLER–REACH BOOM	665
	667

INDEX

Name	Page
	669
LINES GP-COUPLER–STICK	675
	676
	677
	678
LINES GP-ENGINE OIL	92
LINES GP-ENGINE OIL DRAIN	93
LINES GP-FRONT–BOOM CYLINDER	730
	732
LINES GP-FRONT– IMPL, SWING, TRAVEL, WORK TOOL	724
	727
LINES GP-FRONT– MEDIUM PRESSURE CIRCUIT	705
	707
LINES GP-FRONT–QUICK COUPLER	709
	712
	715
	718
	721
	734
LINES GP-FRONT– SYSTEM 14, COMBINED FUNCTION	693
	697
	701
LINES GP-FRONT– SYSTEM 3, 1-WAY, 2-PUMP	685
LINES GP-FRONT– SYSTEM 5, 2-WAY, 1-PUMP	689
	691
LINES GP-FUEL	149
	151
	154
	157
	160
	164
	168
	172
LINES GP-GREASE–LONG BOOM	1048
LINES GP-GREASE–SHORT BOOM	1050
LINES GP-HYDRAULIC OIL COOLER	740
	743
LINES GP-MUFFLER DRAIN	137
LINES GP-PILOT– 1-PUMP/2-PUMP, 1-WAY FLOW	792
	795
	798
LINES GP-PILOT–4-WAY PATTERN	780
LINES GP-PILOT– ALT PATTERN CONTROL, 2-WAY	783
	786
	789
LINES GP-PILOT–CONTROL VALVE	750
	753
	759
	764
LINES GP-PILOT– CONTROL VALVE, TRAVEL VALVE	778
LINES GP-PILOT–HEAVY LIFT	772
LINES GP-PILOT–JOYSTICK, PEDALS	746
LINES GP-PILOT–MAIN HYDRAULIC	770
	823
	825
LINES GP-PILOT–MEDIUM PRESSURE	815
	817
	819
LINES GP-PILOT–ROTATOR	821
LINES GP-PILOT–SYSTEM 14, SYSTEM 17	801
	805
	809
LINES GP-PILOT– SYSTEM 5, 2-WAY, 1-PUMP	813
LINES GP-PILOT– THIRD PEDAL, PILOT VALVE	774
	776
LINES GP-PUMP–AUXILIARY	831
LINES GP-PUMP–MAIN HYDRAULIC	827
	829
	834
LINES GP-RETURN–FILTERS	839
	842
	845
LINES GP-RETURN–REAR	836
LINES GP-STICK–BUCKET CYLINDER	848
	849
	850
	851
LINES GP-STICK CYLINDER	852
LINES GP-TRAVEL MOTOR– LONG UNDERCARRIAGE	853
	855
	857
LINES GP-TURBOCHARGER OIL	94
	96
LINES GP-TURBOCHARGER WATER	112
LINES GP-WATER	113
LINK AS-TRACK	527
LINKAGE AR-BUCKET– DB-FAMILY, ACCUGRADE READY	1052
LINKAGE AR-BUCKET– DB-FAMILY, WITH LIFTING EYE	1052
	1053
LINKAGE AR-BUCKET– TB-FAMILY, WITH LIFTING EYE	1052
LINKAGE AR-BUCKET– TB1-FAMILY, WITH LIFTING EYE	1053
LINKAGE GP-BUCKET– DB-FAMILY, ACCUGRADE READY	1058
LINKAGE GP-BUCKET– DB-FAMILY, WITH LIFTING EYE	1054

INDEX

Name	Page
LINKAGE GP-BUCKET– TB-FAMILY, WITH LIFTING EYE	1056
LITERATURE GP	1246
LOCK GP-QUICK COUPLER–HYDRAULIC	1105

M

MANIFOLD GP-CONTROL– PILOT OIL SUPPLY	859 860 861
MANIFOLD GP-EXHAUST	139
MIRROR GP-REAR VIEW–FRONT, RH	1247
MODULE GP-COOLING	114
MONITOR & MTG GP-OPERATOR	1248 1249 1250 1251
MONITOR GP-OPERATOR	1248 1252 1253 1254 1271
MOTOR & MTG GP-SWING	862
MOTOR & MTG GP-TRAVEL	863
MOTOR AS (WIPER)	1296
MOTOR GP-PISTON–HYDRAULIC FAN	864
MOTOR GP-SWING	866 867 869 870
MOTOR GP-TRAVEL	872
MOUNTING GP-ANTENNA–ACCUGRADE	1255
MOUNTING GP-ANTENNA–PRODUCT LINK	1257
MOUNTING GP-ENGINE	70
MOUNTING GP-ENGINE OIL FILTER	97
MOUNTING GP-MAIN CONTROL VALVE	875
MOUNTING GP-PLATFORM	1258
MUFFLER GP	140

O

OPERATOR AR	1260

P

PADLOCK GP	207 456 466 476
PAN GP-OIL–ENGINE	72
PANEL & MTG GP-CIRCUIT BREAKER	289
PANEL GP-CIRCUIT BREAKER	290
PANEL GP-SWITCH–ENGINE SPEED, START	292
PEDAL AR-AUXILIARY–LH	1260
PEDAL AR-AUXILIARY– THIRD PEDAL, STRAIGHT TRAVEL	1260
PIN GP-COUPLER–DB-LINKAGE	1106
PISTON & ROD GP	74 75
PLATE & FILM GP	1313 1318
PLATE & FILM GP–U.S.	1311 1323
PLATE-CAUTION (OIL FILL)	872
PLATE-IDENTIFICATION (CAT)	1082 1083 1084 1085 1086 1087 1088 1093 1094 1095 1096 1097 1098 1099
PLATE-INSTRUCTION (BATTERY)	290
PLATE-SERIAL NUMBER	1102
PLATE-WARNING (HIGH PRESSURE CYLINDER)	514 515
PLATFORM GP-OPERATOR	1261
PLUG GP-CONNECTOR– ENGINE HARNESS, PROTECTIVE COVER	294
PLUG GP-CONTROL VALVE	876 877 878 879
PLUG GP-ENGINE	76 77
PLUG GP-WATER LINES	117
PLUG-OIL DRAIN (OIL PAN) (HYDRAULIC TANK)	917
PLUG-PIPE	117
POWER TRAIN AR	412
PROTECTOR GP-SIDE BAR	1107 1108 1109 1110
PUMP & MOTOR GP-REFUELING	175
PUMP & MTG GP-AUXILIARY	880
PUMP & MTG GP-MAIN HYDRAULIC	881 882
PUMP AR-FUEL TRANSFER	176
PUMP GP-ENGINE OIL	99 100
PUMP GP-FUEL INJECTION	177

INDEX

Name	Page
	178
	179
	180
PUMP GP-FUEL PRIMING	181
	182
PUMP GP-FUEL PRM & PRIM FILTER–WITH WATER SEPARATOR	183
PUMP GP-FUEL PRM & WATER SEP	184
PUMP GP-FUEL TRANSFER	189
	200
	201
	202
PUMP GP-GEAR	883
	891
	903
PUMP GP-GEROTOR	100
PUMP GP-MAIN HYDRAULIC	884
	885
	886
	887
PUMP GP-PISTON–HYDRAULIC FAN	888
PUMP GP-PISTON–WITH PILOT GEAR PUMP	890
	894
	899
	903
PUMP GP-REFUELING	185
	187
PUMP GP-UNIT INJECTOR HYD	189
	190
	192
	194
	196
	198
	200
	201
	202
	203
PUMP GP-WATER	118
	119

R

Name	Page
RADIATOR & HYD OIL COOLER GP	120
	123
RADIO GP–AM, FM	1262
RADIO GP-COMMUNICATION (PRODUCT LINK 121SR)	280
RADIO GP-COMMUNICATION–PRODUCT LINK 121SR	1263
RECEIVER-REFRIGERANT DRYER	1240
	1243
REGULATOR AS-VOLTAGE (24-VOLT) (ALTERNATOR)	222
REGULATOR GP-FUEL PRESSURE	205
	206
REGULATOR-PRESSURE (FUEL)	183
REGULATOR-TEMPERATURE (92-DEG C) (COOLANT)	111
REGULATOR-WATER TEMPERATURE (98-DEG C) (COOLANT)	113
RELAY (24-VOLT) (BOOM FLOODLIGHT)	357
RELAY (24-VOLT) (CAB FLOODLIGHT)	357
RELAY (24-VOLT) (CHASSIS LIGHT)	357
RELAY (24-VOLT) (ETHER)	357
RELAY (24-VOLT) (HORN)	357
RELAY (24-VOLT) (NEUTRAL START)	357
RELAY (24-VOLT) (PRIMING PUMP)	361
RELAY (24-VOLT) (QUICK COUPLER LOCK ON)	363
RELAY (24-VOLT) (QUICK COUPLER LOCK PRIORITY)	363
RELAY (24-VOLT) (QUICK COUPLER LOCK)	363
RELAY (24-VOLT) (REFUELING PUMP, START)	394
	396
RELAY (24-VOLT) (REFUELING PUMP, STOP)	394
	396
RELAY (24-VOLT) (TRAVEL ALARM)	357
RELAY (BLOWER)	1239
RELAY (COMPRESSOR CLUTCH)	1239
RELAY (CONDENSER)	1239
RELAY (CONDENSER, HIGH)	1239
RELAY AS (UPPER) (WIPER)	1296
ROCKER ARM GP–EXHAUST	78
ROCKER ARM GP–INLET	79
ROLLER AR-TRACK & CARRIER	528
ROLLER GP-TRACK CARRIER	529
ROLLER GP-TRACK-SINGLE FLANGE	530
ROTATING GP-MOTOR–HYDRAULIC FAN–AUTOMATIC REVERSING FAN	907
ROTATING GP-PUMP	908

S

Name	Page
SCREEN AS (HYDRAULIC TANK)	831
	909
SCREEN GP-HYDRAULIC–TANK	909
SCREEN GP-SUN	1264
SEAL GP-CRANKSHAFT	80
SEAL-CRANKSHAFT	80
SEAL-VALVE COVER	26
	28
SEAL-VALVE COVER (VALVE MECHANISM BASE)	25
	26
	27
SEAT & MOUNTING GP–HIGH BACK, TILT	1265
SEAT BELT GP (RETRACTABLE, 3-IN)	1267
SEAT GP–HIGH BACK, TILT	1266

INDEX

Name	Page
	1267
SEAT GP-SUSPENSION–HIGH BACK, TILT	1268
SENDER AS-TEMPERATURE (HYDRAULIC OIL)	917
SENSOR AS-LIQUID LEVEL (WATER SEPARATOR)	297
SENSOR AS-PRESSURE	301
SENSOR AS-PRESSURE (1-PUMP/2-PUMP, 1-WAY/2-WAY FLW)	693
SENSOR AS-PRESSURE (MAIN HYDRAULIC PUMP)	770
	823
	825
SENSOR AS-PRESSURE (WORK TOOL)	697
	701
SENSOR AS-TEMPERATURE	315
	316
SENSOR AS-TEMPERATURE (AIR)	1239
SENSOR AS-TEMPERATURE (AMBIENT AIR TEMP)	1136
	1138
SENSOR AS-TEMPERATURE (AMBIENT AIR)	1141
SENSOR AS-TEMPERATURE (COOLANT)	1136
	1138
	1141
SENSOR GP-ENGINE	5
	9
	10
	11
	295
	296
SENSOR GP-FUEL LEVEL	209
	211
	213
	215
SENSOR GP-LIQUID LEVEL	297
SENSOR GP-LIQUID LEVEL (WATER IN FUEL)	1
	298
SENSOR GP-LIQUID LEVEL–WATER IN FUEL	298
SENSOR GP-PRESSURE	299
	300
	301
	302
	303
	304
	305
	306
	307
	308
	309
SENSOR GP-PRESSURE (ATMOSPHERIC AIR)	295
SENSOR GP-PRESSURE (ATMOSPHERIC)	296
SENSOR GP-PRESSURE (ENGINE OIL)	295
	296
SENSOR GP-PRESSURE (FUEL)	151
	154
	157
	160
	164
	168
	172
SENSOR GP-PRESSURE (INJECTION ACTUATION)	295
	296
SENSOR GP-PRESSURE (OUTLET AIR)	296
SENSOR GP-PRESSURE (TURBOCHARGER OUTLET)	295
SENSOR GP-SPEED	5
	9
	10
	11
	310
	311
SENSOR GP-SPEED (ENGINE TIMING)	295
	296
SENSOR GP-SPEED–CRANKSHAFT	312
SENSOR GP-TEMPERATURE	172
	313
	314
	315
	316
	317
	318
SENSOR GP-TEMPERATURE (AIR)	314
SENSOR GP-TEMPERATURE (AMBIENT AIR)	246
	254
SENSOR GP-TEMPERATURE (COOLANT)	296
SENSOR GP-TEMPERATURE (FUEL)	151
	154
	157
	160
	164
	168
SENSOR GP-TEMPERATURE (INLET AIR)	224
	234
SENSOR GP-TEMPERATURE (INTAKE AIR TEMPERATURE)	296
SENSOR-PRESSURE	308
SENSOR-TEMPERATURE (AMBIENT AIR)	1129
	1131
	1133
SERVICE GP-COMMUNICATION (PRODUCT LINK 300)	271
SERVICE GP-MACHINE	272
SERVICE GP-MONITOR	1269
	1270

INDEX

Name	Page
	1271
SHEET AS-SOUND SUPPRESSION	495
	496
	497
	498
	499
	500
	501
	502
	503
	504
	505
	506
SIDECUTTER GP	1111
	1112
	1113
SOFTWARE GP-COMMUNICATION (PRODUCT LINK 121SR)	1263
SOFTWARE GP-COMMUNICATION (PRODUCT LINK 300)	271
SOFTWARE GP-MACHINE	272
SOFTWARE GP-MONITOR	272
	1269
	1270
	1271
SOLENOID AS-STARTING MOTOR (24-VOLT)	332
SPRING AS-GAS	1231
SPRING GP-RECOIL	531
SPROCKET GP	413
STARTING AID GP–AIR INLET HEATER	319
STARTING AID GP-ETHER	320
	323
STARTING AR-COLD WEATHER	326
STARTING MOTOR GP-ELECTRIC	327
	328
	329
	331
STEP GP	507
STICK AR–AUX HYD, QUICK COUPLER	1060
STICK AR–AUXILIARY HYD, QUICK COUPLER	1060
STICK AR-HOE	1062
STICK AR-HOE–ACCUGRADE READY	1061
STICK AR-HOE–AUX HYD, QUICK COUPLER	1061
STICK AR-HOE–REACH, ACCUGRADE READY	1062
STICK GP-HOE–ACCUGRADE	1071
	1073
	1078
STICK GP-HOE–ACCUGRADE READY	1077
STICK GP-HOE–AUXILIARY, COUPLER	1063
	1065
	1067
	1069
	1075
	1076
STORAGE GP-VANDALISM GUARD	508
	509
STRAINER AS-FUEL	185
	187
STRAINER AS-FUEL (FLOAT GAUGE)	209
	211
	213
	215
SUN VISOR	1275
SUPPORT AS-ENCLOSURE	510
	511
SUPPORT AS-ENCLOSURE–AIR CLEANER	512
	513
SUPPORT GP-SEAT	1272
SUSPENSION GP-SEAT	1274
SUSPENSION GP-SEAT–MECHANICAL	1273
SWITCH (LIQUID LEVEL) (FUEL)	342
SWITCH (WINDOW LOWER LIMIT)	1281
SWITCH AS-FOOT	1191
SWITCH AS-LIMIT (HYDRAULIC LOCKOUT)	337
SWITCH AS-LIQUID LEVEL (ENGINE OIL)	72
SWITCH AS-LIQUID LEVEL (FUEL TANK SHUTOFF)	187
SWITCH AS-LIQUID LEVEL (HYDRAULIC OIL)	917
SWITCH AS-MAGNETIC (24-VOLT) (MAIN RELAY)	357
SWITCH AS-MAGNETIC (24-VOLT) (REFUELING POWER RELAY)	394
	396
SWITCH AS-PRESSURE (IMPLEMENT, SWING)	746
SWITCH AS-PRESSURE (REFRIGERANT)	1240
	1243
SWITCH AS-PRESSURE (THIRD PEDAL, STRAIGHT TRAVEL)	774
	776
SWITCH AS-PRESSURE (TRAVEL, LH)	746
SWITCH AS-PRESSURE (TRAVEL, RH)	746
SWITCH AS-PUSH BUTTON (HORN)	1193
SWITCH AS-PUSH BUTTON (MANUAL LOW IDLE)	1194
SWITCH AS-ROCKER (FINE SWING)	357
SWITCH AS-ROCKER (LOWER WASHER)	348
SWITCH AS-ROCKER (WIPER, LOWER)	348
SWITCH AS-ROLLER (WIPER, LOWER)	1291
	1293
SWITCH AS-TOGGLE (AUTO/MANUAL ENG SPEED CONTROL)	375
SWITCH AS-TOGGLE (MANUAL ENGINE SPEED CONTROL)	375
SWITCH AS-TOGGLE (QUICK COUPLER)	346
	363

INDEX

Name	Page
SWITCH AS-TOGGLE (SECONDARY SHUTDOWN)	389
SWITCH GP-DISCONNECT (BATTERY)	290
SWITCH GP-DISCONNECT–BATTERY	334
SWITCH GP-MAGNETIC	336
SWITCH GP-MAGNETIC–START RELAY	335
SWITCH GP-PEDAL (WORK TOOL)	1191
SWITCH GP-POSITION–HYDRAULIC LOCKOUT	337
SWITCH GP-PRESSURE (FUEL FILTER)	151
	154
	157
	164
	168
SWITCH GP-PRESSURE (FUEL)	172
SWITCH GP-PRESSURE–FUEL FILTER	338
	339
SWITCH GP-PUSH BUTTON (REFUELING PUMP, STOP)	341
SWITCH GP-PUSH BUTTON–REFUELING PUMP, START	340
SWITCH GP-PUSH BUTTON–REFUELING PUMP, STOP	341
SWITCH GP-PUSHBUTTON (REFUELING PUMP, START)	340
SWITCH GP-REFUELING–FUEL TANK SHUTOFF	342
SWITCH GP-ROTARY–THROTTLE POSITION	343
SWITCH GP-START–ENGINE, KEY	344
SWITCH GP-TOGGLE (QUICK COUPLER)	363
SWITCH GP-TOGGLE–FUEL PRIMING PUMP	345
SWITCH GP-TOGGLE–QUICK COUPLER	346
SWITCH GP-TOGGLE–QUICK COUPLER LOCK	347
SWITCH GP-WIPER–LOWER	348
SWIVEL GP	910

T

TANK & FILTER GP-HYDRAULIC	912
	914
TANK & MTG GP-FUEL	207
TANK & MTG GP-HYDRAULIC	916
TANK GP-FUEL	208
	209
	211
	213
	215
TANK GP-HYDRAULIC	917
TIP GP-ABRASION–K-110	1114
TIP GP-DOUBLE SPIKE–K-130	1115
TIP GP-GENERAL PURPOSE–K-100	1117
TIP GP-GENERAL PURPOSE–K-110	1116
	1118
TIP GP-GENERAL PURPOSE–K-130	1117
TIP GP-HEAVY ABRASION–K-110	1119
TIP GP-PENETRATION–K-100	1122
TIP GP-PENETRATION–K-110	1120
	1121
	1123
TIP GP-PENETRATION PLUS–K-100	1124
TIP GP-PENETRATION PLUS–K-110	1126
TIP GP-PENETRATION PLUS–K-130, LIFTING EYE	1125
TRACK AR	532
TRACK GP–2-REQUIRED	533
	536
	537
	538
TRACK GP–2-REQUIRED, HEAVY-DUTY	534
	535
TRACK GP–HEAVY-DUTY	539
TURBOCHARGER GP	142
	143

V

VALVE & MTG GP-CONTROL–AUXILIARY	919
VALVE AR-ALT PATTERN CONTROL–2-WAY	920
VALVE AR-ALT PATTERN CONTROL–4-WAY	920
VALVE AS (FUEL SHUTOFF)	209
	211
	213
	215
VALVE GP-CHECK	579
	921
	922
VALVE GP-CHECK (OIL COOLER BYPASS)	836
VALVE GP-CONTROL–AUXILIARY	929
VALVE GP-CONTROL–LH	935
VALVE GP-CONTROL–MEDIUM PRESSURE	924
	925
	944
VALVE GP-CONTROL–QUICK COUPLER	927
VALVE GP-CONTROL–RH	931
	945
VALVE GP-CONTROL–WITHOUT COVERS, HOUSINGS	926
	940
	942
	949
VALVE GP-COUNTERBALANCE (TRAVEL)	1028
VALVE GP-ETHER STARTING	349
VALVE GP-FUEL BYPASS	217
VALVE GP-FUEL SHUTOFF	218
VALVE GP-LOAD CONTROL–BOOM DRIFT RED, LINE RELIEF	952
VALVE GP-LOAD CONTROL–STICK DRIFT RED, LINE RELIEF	950

INDEX

Name	Page
VALVE GP-MAIN CONTROL–HEAVY LIFT	954
VALVE GP-MAIN CONTROL–HEAVY LIFT–RH	956
VALVE GP-MANUAL (AUXILIARY, SHUTOFF)	643
	647
VALVE GP-MANUAL–AUXILIARY, SHUTOFF	958
	959
	960
	961
VALVE GP-PILOT	975
VALVE GP-PILOT (THIRD PEDAL, STRAIGHT TRAVEL)	1199
VALVE GP-PILOT–ALT PATTERN CONTROL, 2-WAY	963
	973
VALVE GP-PILOT–CONTROL PATTERN CHANGE	962
VALVE GP-PILOT–JOYSTICK	965
	970
VALVE GP-PILOT RELIEF (HYDRAULIC FILTER)	594
VALVE GP-PILOT–TRAVEL	968
VALVE GP-PRESSURE REDUCING (QUICK COUPLER)	927
VALVE GP-PRESSURE REDUCING–BOOM, SWING PRIORITY	977
	978
VALVE GP-PRIORITY–SWING	980
VALVE GP-PUMP CONTROL–HYDRAULIC FAN	981
VALVE GP-RELIEF	866
	984
	985
	988
	989
	991
	997
	998
	1001
VALVE GP-RELIEF (160-BAR (2321-PSI))	944
VALVE GP-RELIEF (160-BAR) (2321-PSI)	925
VALVE GP-RELIEF (80-BAR (1161-PSI))	944
VALVE GP-RELIEF (80-BAR) (1161-PSI)	925
VALVE GP-RELIEF (CROSSOVER)	1028
VALVE GP-RELIEF (LINE)	689
VALVE GP-RELIEF–LINE	994
	995
	996
VALVE GP-RELIEF–MAIN, HEAVY LIFT	992
	999
VALVE GP-RELIEF–NEGATIVE FLOW CONTROL	983
	990
VALVE GP-RELIEF–WITH BLOCK	986
	987
VALVE GP-SHUTTLE	1002
	1003
	1004
	1005
	1006
	1011
VALVE GP-SOLENOID	772
	1007
	1008
	1009
	1010
	1011
	1012
	1013
	1014
	1015
	1016
	1017
VALVE GP-SOLENOID & MANIFOLD	681
	1018
	1019
VALVE GP-SOLENOID & MANIFOLD (QUICK COUPLER)	709
	712
	715
	718
	721
VALVE GP-SOLENOID & RELIEF	1020
	1021
	1022
	1023
VALVE GP-SOLENOID & RELIEF (WITH BLOCK)	701
VALVE GP-SOLENOID (1-PUMP/2-PUMP, 1-WAY FLOW)	1016
VALVE GP-SOLENOID (HYDRAULIC LOCKOUT)	860
	861
VALVE GP-SOLENOID (NEG FLOW CONT, PROPN RED VALVE)	793
	796
	799
	802
	806
	810
VALVE GP-SOLENOID (PRESSURE REDUCING)	815
	817
	819
VALVE GP-SOLENOID (PRESSURE REDUCING) (1-PUMP, 2-WAY, JOYSTICK BUTTON)	813
VALVE GP-SOLENOID (PRESSURE REDUCING) (1-PUMP/2-PUMP, 1-WAY FLOW)	792
	795
	798

INDEX

Name	Page
VALVE GP-SOLENOID (PUMP CONTROL)	891, 895, 900, 904
VALVE GP-SOLENOID (QUICK COUPLER PIN)	1014
VALVE GP-SOLENOID (QUICK COUPLER)	927
VALVE GP-SOLENOID (STRAIGHT TRAVEL)	935
VALVE GP-SOLENOID (SWING BRAKE RELEASE)	860, 861
VALVE GP-SOLENOID (TRAVEL SPEED)	860, 861
VALVE GP-SOLENOID (WORK TOOL, 4-FUNCTION)	801, 805, 809, 1015
VALVE GP-SWING CUSHION (FINE SWING)	732
VALVE GP-SWING CUSHION–FINE SWING	1025, 1026
VALVE GP-TRAVEL COUNTERBALANCE	1028
VALVE GP-UNLOADING	935
VALVE MECHANISM GP	81, 82
VALVE-SHUTOFF (HEATER, LINES)	1240, 1243
VISOR GP-CAB–SUN	1275
VISOR GP-PROTECTION–RAIN	1276

W

Name	Page
WASHER GP-WINDOW	1277, 1278
WASHER GP-WINDOW–LOWER	1279
WATER SEP & FUEL PRM PUMP GP	184
WINDOW GP-CAB–FRONT, LOWER	1284, 1285
WINDOW GP-CAB–FRONT, UPPER	1281
WINDOW GP-CAB–SIDE, REAR	1287, 1288
WINDOW GP-DOOR	1289
WIPER & WASHER GP-WINDOW–LOWER	1291, 1293
WIPER AR-WINDOW–LOWER	1295
WIPER GP-WINDOW–FRONT, UPPER	1296
WIRING GP-AUX START RECEPTACLE–JUMP START	350
WIRING GP-AUXILIARY CONTROL	352
WIRING GP-AUXILIARY CONTROL–SOLENOID	355
WIRING GP-CAB	357
WIRING GP-CAB–ACCUGRADE READY	365
WIRING GP-CAB–COUPLER	363
WIRING GP-CAB–PRIMING PUMP	361
WIRING GP-CHASSIS–ACCUGRADE READY	366
WIRING GP-COMMUNICATION–PRODUCT LINK 121SR	371
WIRING GP-COMMUNICATION–PRODUCT LINK 321SR	369
WIRING GP-CONSOLE	374
WIRING GP-CONSOLE–LH	373
WIRING GP-CONSOLE–RH	375
WIRING GP-CONVERTER–12-VOLT, 7-AMPERE	377, 378
WIRING GP-ELECTRONIC CONTROL	379, 381, 383
WIRING GP-FINE SWING	385
WIRING GP-FUEL SYSTEM–PRIMING PUMP	386
WIRING GP-HEATER–AIR INLET MANIFOLD	387
WIRING GP-MEDIUM PRESSURE	388
WIRING GP-PLATFORM	389
WIRING GP-QUICK COUPLER	391, 392
WIRING GP-REFUELING PUMP–REFUELING	394, 396

Y

Name	Page
YOKE GP-LIFTING	1127

MACHINE ARRANGEMENT

247-7386 CHASSIS AR

S/N: B6H1-UP; JLP1-UP

PART OF 229-1873, 264-8594 GENERAL AR

SMCS-7000 **i03602181**

NOTE	PART NUMBER	QTY	PART NAME 1 2 3 4 5 6 (PRODUCT LEVEL)	SEE PAGE
Y	*251-0618*	1	BATTERY & WIRING GP	224
			S/N: B6H1-652; JLP1-737	
Y	*306-8527*	1	BATTERY & WIRING GP	246
			S/N: B6H653-UP; JLP738-UP	
Y	*223-3040*	1	BOX & MTG GP-STORAGE	414
Y	*237-8756*	1	COUNTERWEIGHT & MOUNTING GP	418
			S/N: B6H1-652; JLP1-737	
Y	*237-8759*	1	COUNTERWEIGHT & MOUNTING GP	419
			S/N: B6H653-UP; JLP738-UP	
Y	*262-2595*	1	FENDER & COVER GP	438
Y	*251-2755*	1	FRAME GP-UPPER	440
Y	*237-8753*	1	GUARD GP-BOTTOM	449
Y	*256-1644*	1	HANDRAIL GP	455
Y	*237-8768*	1	HOOD & GUARD GP	456
Y	*267-8071*	1	HORN GP-ELECTRIC	1235
Y	*4I-5409*	1	LIGHTING GP-CHASSIS (FRONT, RH)	284
Y	*235-9021*	1	LINES GP-AIR CONDITIONER	1240
Y	*237-8752*	1	LINES GP-FUEL	151
Y	*7Y-0059*	1	LITERATURE GP	1246
Y	*142-3836*	1	MIRROR GP-REAR VIEW (FRONT, RH)	1247
Y	*245-7811*	1	MOUNTING GP-PLATFORM	1258
Y	*229-9072*	1	OPERATOR AR	1260
Y	*229-1894*	1	PLATE & FILM GP	1313
Y	*233-1124*	1	SENSOR GP-LIQUID LEVEL (WATER IN FUEL)	298
Y	*237-8783*	1	TANK & MTG GP-FUEL	207
Y	*238-1568*	1	WIRING GP-FINE SWING	385

Y-SEPARATE ILLUSTRATION

<END>

267-8840 COLD WEATHER AR

S/N: B6H1-UP; JLP1-UP

AN ATTACHMENT

SMCS-7000 **i03161460**

NOTE	PART NUMBER	QTY	PART NAME 1 2 3 4 5 6 (PRODUCT LEVEL)	SEE PAGE
Y	*237-7621*	1	HEATER GP-JACKET WATER	278
Y	*275-3748*	1	STARTING AR-COLD WEATHER	326
			—OR—	
Y	*314-3587*	1	STARTING AR-COLD WEATHER	326
Y	*251-0621*	1	WIRING GP-AUX START RECEPTACLE (JUMP START)	350

Y-SEPARATE ILLUSTRATION

<END>

MACHINE ARRANGEMENT

290-1780 CONVERSION AR-MACHINE—ACCUGRADE READY

S/N: B6H1-UP; JLP1-UP

FOR USE WITH 275-3701—PAGE 1029, 275-3705—PAGE 1061, 275-3706—PAGE 1061, 275-3713—PAGE 1052, 278-3928—PAGE 420

AN ATTACHMENT

SMCS-7000 **i02819347**

NOTE	PART NUMBER	QTY	PART NAME 1 2 3 4 5 6 (PRODUCT LEVEL)	SEE PAGE
Y	*273-5358*	1	FLOOR MAT GP (ACCUGRADE)	1225
Y	*293-6867*	1	HOOD GP (ACCUGRADE READY)	486
Y	*270-5603*	1	MOUNTING GP-ANTENNA (ACCUGRADE)	1255
Y	*306-8349*	1	WIRING GP-CAB (ACCUGRADE READY)	365
Y	*275-7194*	1	WIRING GP-CHASSIS (ACCUGRADE READY)	366

Y-SEPARATE ILLUSTRATION

<END>

229-1873 GENERAL AR

S/N: B6H1-UP

SMCS-7000 **i03470901**

NOTE	PART NUMBER	QTY	PART NAME 1 2 3 4 5 6 (PRODUCT LEVEL)	SEE PAGE
Y	*247-7386*	1	CHASSIS AR	1
Y	*274-7465*	1	CONSOLE GP-OPERATOR (LH)	1183
Y	*274-7466*	1	CONSOLE GP-OPERATOR (RH)	1183
Y	*260-2053*	1	ELECTRONICS GP-MACHINE (HIGH POWER)	272
			S/N: B6H1-632	
Y	*297-4426*	1	ELECTRONICS GP-MACHINE (HIGH POWER)	272
			S/N: B6H633-UP	
Y	*221-8861*	1	ELECTRONICS GP-MONITOR	272
Y	*222-8297*	1	ENGINE AR	4
			S/N: B6H1-528	
Y	**262-1359**	1	ENGINE AR	7
			S/N: B6H529-UP	
Y	*229-1898*	1	FRAME AR-UNDERCARRIAGE	516
Y	*259-7766*	1	HYDRAULIC AR	617
Y	*239-6405*	1	INSTALLATION AR-ENGINE	17
			S/N: B6H1-528	
Y	*279-7825*	1	INSTALLATION AR-ENGINE	18
			S/N: B6H529-UP	
Y	*191-2576*	1	POWER TRAIN AR	412
	185-8284	1	COVER (CAB RADIO OPENING)	
			(USED TO COVER OPENING IN RH CAB CONSOLE WHEN CAB RADIO IS NOT INSTALLED)	

Y-SEPARATE ILLUSTRATION

<END>

MACHINE ARRANGEMENT

264-8594 GENERAL AR

S/N: JLP1-UP

SMCS-7000 **i03470900**

NOTE	PART NUMBER	QTY	PART NAME 1 2 3 4 5 6 (PRODUCT LEVEL)	SEE PAGE
Y	*247-7386*	1	CHASSIS AR	1
Y	*274-7465*	1	CONSOLE GP-OPERATOR (LH)	1183
Y	*274-7466*	1	CONSOLE GP-OPERATOR (RH)	1183
Y	*227-7683*	1	ELECTRONICS GP-MACHINE	271
			S/N: JLP1-218	
Y	*260-2053*	1	ELECTRONICS GP-MACHINE (HIGH POWER)	272
			S/N: JLP219-559	
Y	*297-4426*	1	ELECTRONICS GP-MACHINE (HIGH POWER)	272
			S/N: JLP560-UP	
Y	*221-8861*	1	ELECTRONICS GP-MONITOR	272
Y	*266-6263*	1	ENGINE AR	8
Y	*229-1898*	1	FRAME AR-UNDERCARRIAGE	516
Y	*259-7766*	1	HYDRAULIC AR	617
Y	*239-6405*	1	INSTALLATION AR-ENGINE	17
			S/N: JLP1-218	
Y	*279-7825*	1	INSTALLATION AR-ENGINE	18
			S/N: JLP219-UP	
Y	*191-2576*	1	POWER TRAIN AR	412
	185-8284	1	COVER (CAB RADIO OPENING)	
			(USED TO COVER OPENING IN RH CAB CONSOLE WHEN CAB RADIO IS NOT INSTALLED)	

Y-SEPARATE ILLUSTRATION

<END>

ENGINE ARRANGEMENT

222-8297 ENGINE AR

S/N: B6H1-528

PART OF 229-1873 GENERAL AR

SMCS-1000 **i02494626**

NOTE	PART NUMBER	QTY	PART NAME 1 2 3 4 5 6 (PRODUCT LEVEL)	SEE PAGE
Y	**224-9843**	1	ENGINE AR	5
Y	*222-8300*	1	MUFFLER GP	140

Y-SEPARATE ILLUSTRATION

ENGINE ARRANGEMENT

224-9843 ENGINE AR

S/N: THX1-UP

PART OF 222-8297 ENGINE AR

SMCS-1000 **i03791942**

NOTE	PART NUMBER	QTY	PART NAME 1 2 3 4 5 6 (PRODUCT LEVEL)	SEE PAGE
Y	*177-6972*	1	ALTERNATOR GP-CHARGING	221
Y	*183-8088*	1	COMPRESSOR GP-REFRIGERANT	1163
			S/N: THX1-1072	
Y	*276-3814*	1	COMPRESSOR GP-REFRIGERANT	1164
			S/N: THX1073-UP	
Y	*253-4522*	1	CONTROL & MTG GP-ENGINE ELEK	268
Y	*202-3301*	1	COVER GP-CYLINDER BLOCK (CRANKCASE BREATHER)	21
Y	*127-5728*	1	COVER GP-FLYWHEEL HOUSING	22
Y	*118-1727*	1	COVER GP-FRONT HOUSING (ACCESSORY DRIVE)	23
Y	*211-3285*	1	COVER GP-FRONT HOUSING	24
Y	*258-8724*	1	COVER GP-VALVE MECHANISM	27
			S/N: THX1-1072	
Y	*235-8174*	1	COVER GP-VALVE MECHANISM	25
			S/N: THX1073-UP	
Y	*165-4557*	1	DAMPER & PULLEY GP	50
Y	*242-1934*	1	ELBOW GP-AIR INLET	131
Y	*229-2665*	1	ENGINE AR-CORE	13
			S/N: THX1-22637	
Y	*348-2747*	1	ENGINE AR-CORE	16
			S/N: THX22638-UP	
Y	*218-0859*	1	FASTENER GP-DAMPER & PULLEY	60
Y	*116-4556*	1	FASTENER GP-FRONT HOUSING	61
Y	*236-7315*	1	FASTENER GP-VALVE COVER	62
Y	*258-8728*	1	FASTENER GP-VALVE COVER (BASE)	63
			S/N: THX1-1072	
Y	*233-0423*	1	FASTENER GP-VALVE COVER BASE	64
			S/N: THX1073-UP	
Y	*187-0474*	1	FILTER GP-ENGINE OIL	83
Y	*102-3596*	1	FLYWHEEL GP	65
Y	*196-1829*	1	FUMES DISPOSAL GP	87
Y	*242-1586*	1	GAUGE GP-OIL LEVEL (DIPSTICK) (ENGINE)	88
Y	*238-3215*	1	STARTING AID GP	319
Y	*229-3568*	1	HOUSING GP-FLYWHEEL	67
Y	*191-3063*	1	LIFTING GP-ENGINE	69
Y	*202-6603*	1	LINES GP-ENGINE OIL	92
Y	*231-3039*	1	LINES GP-FUEL	149
Y	*165-4465*	1	LINES GP-TURBOCHARGER OIL	94
Y	*244-0989*	1	LINES GP-TURBOCHARGER WATER	112
Y	*348-4301*	1	LINES GP-WATER	113
			S/N: THX22638-UP	
Y	*248-8835*	1	HOUSING & REGULATOR GP	111
			S/N: THX1-22637	
Y	*165-4444*	1	MANIFOLD GP-EXHAUST	139
Y	*187-0472*	1	PAN GP-OIL	72
Y	*235-8200*	1	PLUG GP-CONNECTOR (ENGINE HARNESS, PROT COVER)	294
Y	*169-3105*	1	PLUG GP-ENGINE	76
Y	*205-4013*	1	PLUG GP-WATER LINES	117
Y	*241-7605*	1	DRIVE GP-ACCESSORY	51
Y	*202-7674*	1	PUMP GP-WATER	118
Y	*178-3899*	1	SEAL GP-CRANKSHAFT	80
Y	*231-1978*	1	SENSOR GP-ENGINE	295
			S/N: THX1-22179	
Y	*330-6034*	1	SENSOR GP-ENGINE	296
			S/N: THX22180-UP	
Y	*242-9982*	1	SENSOR GP-SPEED	312

ENGINE ARRANGEMENT

224-9843 **ENGINE AR** ***(contd.)*** **i03791942**

NOTE	PART NUMBER	QTY	PART NAME 1 2 3 4 5 6 (PRODUCT LEVEL)	SEE PAGE
Y	*197-0986*	1	STARTING MOTOR GP-ELECTRIC	328
			S/N: THX1-14532	
Y	*180-2435*	1	STARTING MOTOR GP-ELECTRIC	327
			S/N: THX14533-UP	
Y	*236-6226*	1	WIRING GP-ELECTRONIC CONTROL (ENGINE)	379
			S/N: THX1-22179	
Y	*330-6018*	1	WIRING GP-ELECTRONIC CONTROL (ENGINE)	383
			S/N: THX22180-UP	
Y	*269-3410*	1	WIRING GP-HEATER	387
			PLEASE USE THE GASKET KIT LINK IN SIS OR CONTACT YOUR LOCAL DEALER FOR THE LATEST GASKET KIT INFORMATION	

Y-SEPARATE ILLUSTRATION

ENGINE ARRANGEMENT

262-1359 ENGINE AR

S/N: B6H529-UP

PART OF 229-1873 GENERAL AR

SMCS-1000 **i03600580**

NOTE	PART NUMBER	QTY	PART NAME 1 2 3 4 5 6 (PRODUCT LEVEL)	SEE PAGE
Y	*177-6972*	1	ALTERNATOR GP-CHARGING	221
Y	*281-9154*	1	BELT GP-SERPENTINE	19
Y	*276-3814*	1	COMPRESSOR GP-REFRIGERANT	1164
Y	**240-1861**	1	ENGINE AR-COMPLETE	9
Y	*222-8300*	1	MUFFLER GP	140
Y	*197-0986*	1	STARTING MOTOR GP-ELECTRIC	328
			S/N: B6H529-652	
Y	*180-2435*	1	STARTING MOTOR GP-ELECTRIC	327
			S/N: B6H653-UP	

Y-SEPARATE ILLUSTRATION

ENGINE ARRANGEMENT

266-6263 ENGINE AR

S/N: JLP1-UP

PART OF 264-8594 GENERAL AR

SMCS-1000 **i03602340**

NOTE	PART NUMBER	QTY	PART NAME 1 2 3 4 5 6 (PRODUCT LEVEL)	SEE PAGE
Y	**177-6972**	1	ALTERNATOR GP-CHARGING	221
			S/N: JLP220-UP	
Y	**281-9154**	1	BELT GP-SERPENTINE	19
			S/N: JLP220-UP	
Y	**276-3814**	1	COMPRESSOR GP-REFRIGERANT	1164
			S/N: JLP220-UP	
Y	**270-2771**	1	ENGINE AR-COMPLETE	10
			S/N: JLP1-219	
Y	**301-3082**	1	ENGINE AR-COMPLETE	11
			S/N: JLP220-UP	
Y	**222-8300**	1	MUFFLER GP	140
Y	**197-0986**	1	STARTING MOTOR GP-ELECTRIC	328
			S/N: JLP220-866	
Y	**180-2435**	1	STARTING MOTOR GP-ELECTRIC	327
			S/N: JLP867-UP	

Y-SEPARATE ILLUSTRATION

ENGINE ARRANGEMENT

240-1861 ENGINE AR-COMPLETE

S/N: THX1000-UP
227-BRAKE KW (285-BHP) AT 1800 RPM
PART OF 262-1359 ENGINE AR

SMCS-1000 **i03688583**

NOTE	PART NUMBER	QTY	PART NAME 1 2 3 4 5 6 (PRODUCT LEVEL)	SEE PAGE
Y	*253-4522*	1	CONTROL & MTG GP-ENGINE ELEK	268
Y	*202-3301*	1	COVER GP-CYLINDER BLOCK (CRANKCASE BREATHER)	21
Y	*127-5728*	1	COVER GP-FLYWHEEL HOUSING	22
Y	*118-1727*	1	COVER GP-FRONT HOUSING (ACCESSORY DRIVE)	23
Y	*211-3285*	1	COVER GP-FRONT HOUSING	24
Y	*235-8174*	1	COVER GP-VALVE MECHANISM	25
Y	*165-4557*	1	DAMPER & PULLEY GP	50
Y	*277-8279*	1	DRIVE GP-ACCESSORY	53
Y	*242-1934*	1	ELBOW GP-AIR INLET	131
Y	*229-2665*	1	ENGINE AR-CORE	13
			S/N: THX1000-22637	
Y	*348-2747*	1	ENGINE AR-CORE	16
			S/N: THX22638-UP	
Y	*218-0859*	1	FASTENER GP-DAMPER & PULLEY	60
Y	*116-4556*	1	FASTENER GP-FRONT HOUSING	61
Y	*236-7315*	1	FASTENER GP-VALVE COVER	62
Y	*233-0423*	1	FASTENER GP-VALVE COVER BASE	64
Y	*187-0474*	1	FILTER GP-ENGINE OIL	83
Y	*102-3596*	1	FLYWHEEL GP	65
Y	*196-1829*	1	FUMES DISPOSAL GP	87
Y	*242-1586*	1	GAUGE GP-OIL LEVEL (DIPSTICK)	88
Y	*238-3215*	1	STARTING AID GP	319
Y	*229-3568*	1	HOUSING GP-FLYWHEEL	67
Y	*191-3063*	1	LIFTING GP-ENGINE	69
Y	*202-6603*	1	LINES GP-ENGINE OIL	92
Y	*231-3039*	1	LINES GP-FUEL	149
Y	*165-4465*	1	LINES GP-TURBOCHARGER OIL	94
Y	*244-0989*	1	LINES GP-TURBOCHARGER WATER	112
Y	*248-8835*	1	HOUSING & REGULATOR GP	111
			S/N: THX1000-22637	
Y	*348-4301*	1	LINES GP-WATER	113
			S/N: THX22638-UP	
Y	*165-4444*	1	MANIFOLD GP-EXHAUST	139
Y	*187-0472*	1	PAN GP-OIL	72
Y	*235-8200*	1	PLUG GP-CONNECTOR (ENGINE HARNESS, PROT COVER)	294
Y	*169-3105*	1	PLUG GP-ENGINE	76
Y	*205-4013*	1	PLUG GP-WATER LINES	117
Y	*202-7674*	1	PUMP GP-WATER	118
Y	*178-3899*	1	SEAL GP-CRANKSHAFT	80
Y	*231-1978*	1	SENSOR GP-ENGINE	295
			S/N: THX1000-22179	
Y	*330-6034*	1	SENSOR GP-ENGINE	296
			S/N: THX22180-UP	
Y	*242-9982*	1	SENSOR GP-SPEED	312
Y	*236-6226*	1	WIRING GP-ELECTRONIC CONTROL (ENGINE)	379
			S/N: THX1000-22179	
Y	*330-6018*	1	WIRING GP-ELECTRONIC CONTROL	383
			S/N: THX22180-UP	
Y	*269-3410*	1	WIRING GP-HEATER	387
			PLEASE USE THE GASKET KIT LINK IN SIS OR CONTACT YOUR LOCAL DEALER FOR THE LATEST GASKET KIT INFORMATION	

Y-SEPARATE ILLUSTRATION

ENGINE ARRANGEMENT

270-2771 ENGINE AR-COMPLETE

S/N: THX300-UP

PART OF 266-6263 ENGINE AR

SMCS-1000 **i02635941**

NOTE	PART NUMBER	QTY	PART NAME 1 2 3 4 5 6 (PRODUCT LEVEL)	SEE PAGE
Y	*177-6972*	1	ALTERNATOR GP-CHARGING	221
Y	*276-3814*	1	COMPRESSOR GP-REFRIGERANT	1164
Y	*253-4522*	1	CONTROL & MTG GP-ENGINE ELEK	268
Y	*202-3301*	1	COVER GP-CYLINDER BLOCK (CRANKCASE BREATHER)	21
Y	*127-5728*	1	COVER GP-FLYWHEEL HOUSING	22
Y	*118-1727*	1	COVER GP-FRONT HOUSING (ACCESSORY DRIVE)	23
Y	*211-3285*	1	COVER GP-FRONT HOUSING	24
Y	*235-8174*	1	COVER GP-VALVE MECHANISM	25
Y	*165-4557*	1	DAMPER & PULLEY GP	50
Y	*242-1934*	1	ELBOW GP-AIR INLET	131
Y	*270-4216*	1	ENGINE AR-CORE	14
Y	*218-0859*	1	FASTENER GP-DAMPER & PULLEY	60
Y	*116-4556*	1	FASTENER GP-FRONT HOUSING	61
Y	*236-7315*	1	FASTENER GP-VALVE COVER	62
Y	*233-0423*	1	FASTENER GP-VALVE COVER BASE	64
Y	*187-0474*	1	FILTER GP-ENGINE OIL	83
Y	*102-3596*	1	FLYWHEEL GP	65
Y	*196-1829*	1	FUMES DISPOSAL GP	87
Y	*242-1586*	1	GAUGE GP-OIL LEVEL (DIPSTICK)	88
Y	*238-3215*	1	STARTING AID GP	319
Y	*229-3568*	1	HOUSING GP-FLYWHEEL	67
Y	*191-3063*	1	LIFTING GP-ENGINE	69
Y	*202-6603*	1	LINES GP-ENGINE OIL	92
Y	*231-3039*	1	LINES GP-FUEL	149
Y	*165-4465*	1	LINES GP-TURBOCHARGER OIL	94
Y	*244-0989*	1	LINES GP-TURBOCHARGER WATER	112
Y	*248-8835*	1	HOUSING & REGULATOR GP	111
Y	*165-4444*	1	MANIFOLD GP-EXHAUST	139
Y	*187-0472*	1	PAN GP-OIL	72
Y	*235-8200*	1	PLUG GP-CONNECTOR (ENGINE HARNESS, PROT COVER)	294
Y	*169-3105*	1	PLUG GP-ENGINE	76
Y	*205-4013*	1	PLUG GP-WATER LINES	117
Y	*241-7605*	1	DRIVE GP-ACCESSORY	51
Y	*202-7674*	1	PUMP GP-WATER	118
Y	*178-3899*	1	SEAL GP-CRANKSHAFT	80
Y	*231-1978*	1	SENSOR GP-ENGINE	295
Y	*242-9982*	1	SENSOR GP-SPEED	312
Y	*197-0986*	1	STARTING MOTOR GP-ELECTRIC	328
Y	*236-6226*	1	WIRING GP-ELECTRONIC CONTROL (ENGINE)	379
Y	*269-3410*	1	WIRING GP-HEATER	387
			PLEASE USE THE GASKET KIT LINK IN SIS OR CONTACT YOUR LOCAL DEALER FOR THE LATEST GASKET KIT INFORMATION	

Y-SEPARATE ILLUSTRATION

ENGINE ARRANGEMENT

301-3082 ENGINE AR-COMPLETE

S/N: THX1-UP
213 BRAKE KW (286 BHP) AT 1800 RPM
PART OF 266-6263 ENGINE AR

SMCS-1000 **i03663351**

NOTE	PART NUMBER	QTY	PART NAME 1 2 3 4 5 6 (PRODUCT LEVEL)	SEE PAGE
Y	*253-4522*	1	CONTROL & MTG GP-ENGINE ELEK	268
Y	*202-3301*	1	COVER GP-CYLINDER BLOCK (CRANKCASE BREATHER)	21
Y	*127-5728*	1	COVER GP-FLYWHEEL HOUSING	22
Y	*118-1727*	1	COVER GP-FRONT HOUSING (ACCESSORY DRIVE)	23
Y	*211-3285*	1	COVER GP-FRONT HOUSING	24
Y	*235-8174*	1	COVER GP-VALVE MECHANISM	25
Y	*165-4557*	1	DAMPER & PULLEY GP	50
Y	*242-1934*	1	ELBOW GP-AIR INLET	131
Y	*270-4216*	1	ENGINE AR-CORE	14
			S/N: THX1-22638	
Y	*348-2746*	1	ENGINE AR-CORE	15
			S/N: THX22639-UP	
Y	*218-0859*	1	FASTENER GP-DAMPER & PULLEY	60
Y	*116-4556*	1	FASTENER GP-FRONT HOUSING	61
Y	*236-7315*	1	FASTENER GP-VALVE COVER	62
Y	*233-0423*	1	FASTENER GP-VALVE COVER BASE	64
Y	*187-0474*	1	FILTER GP-ENGINE OIL	83
Y	*102-3596*	1	FLYWHEEL GP	65
Y	*196-1829*	1	FUMES DISPOSAL GP	87
Y	*242-1586*	1	GAUGE GP-OIL LEVEL (DIPSTICK) (ENGINE)	88
Y	*229-3568*	1	HOUSING GP-FLYWHEEL	67
Y	*191-3063*	1	LIFTING GP-ENGINE	69
Y	*202-6603*	1	LINES GP-ENGINE OIL	92
Y	*231-3039*	1	LINES GP-FUEL	149
Y	*165-4465*	1	LINES GP-TURBOCHARGER OIL	94
Y	*244-0989*	1	LINES GP-TURBOCHARGER WATER	112
Y	*248-8835*	1	HOUSING & REGULATOR GP	111
			S/N: THX1-22638	
Y	*348-4301*	1	LINES GP-WATER	113
			S/N: THX22639-UP	
Y	*165-4444*	1	MANIFOLD GP-EXHAUST	139
Y	*187-0472*	1	PAN GP-OIL	72
Y	*235-8200*	1	PLUG GP-CONNECTOR (ENGINE HARNESS, PROT COVER)	294
Y	*169-3105*	1	PLUG GP-ENGINE	76
Y	*205-4013*	1	PLUG GP-WATER LINES	117
Y	*241-7605*	1	DRIVE GP-ACCESSORY	51
			—OR—	
Y	*277-8279*	1	DRIVE GP-ACCESSORY	53
Y	*202-7674*	1	PUMP GP-WATER	118
Y	*178-3899*	1	SEAL GP-CRANKSHAFT	80
Y	*231-1978*	1	SENSOR GP-ENGINE	295
			S/N: THX1-22179	
Y	*330-6034*	1	SENSOR GP-ENGINE	296
			S/N: THX22180-UP	
Y	*242-9982*	1	SENSOR GP-SPEED	312
Y	*238-3215*	1	STARTING AID GP	319
Y	*236-6226*	1	WIRING GP-ELECTRONIC CONTROL (ENGINE)	379
			S/N: THX1-22179	
Y	*330-6018*	1	WIRING GP-ELECTRONIC CONTROL	383
			S/N: THX22180-UP	
Y	*269-3410*	1	WIRING GP-HEATER	387
			PLEASE USE THE GASKET KIT LINK IN SIS OR CONTACT YOUR LOCAL DEALER FOR THE LATEST GASKET KIT INFORMATION	

ENGINE ARRANGEMENT

301-3082 ENGINE AR-COMPLETE *(contd.)* **i03663351**

Y-SEPARATE ILLUSTRATION

ENGINE ARRANGEMENT

229-2665 ENGINE AR-CORE

S/N: THX1-22637

PART OF 224-9843 ENGINE AR, 240-1861 ENGINE AR-COMPLETE

SMCS-1000 **i02503744**

NOTE	PART NUMBER	QTY	PART NAME 1 2 3 4 5 6 (PRODUCT LEVEL)	SEE PAGE
Y	*242-0674*	1	CAMSHAFT GP	20
Y	*188-3826*	1	COOLER GP-ENGINE OIL	101
Y	*164-6148*	1	CRANKSHAFT GP	29
Y	*161-3406*	1	CYLINDER BLOCK GP	32
Y	*242-0672*	1	CYLINDER HEAD GP	40
Y	*213-4363*	1	FASTENER GP-CYLINDER HEAD	58
Y	*205-1321*	1	GEAR GP-FRONT	66
Y	*245-3260*	1	HOUSING GP-FRONT	68
Y	*265-1400*	6	PISTON & ROD GP	74
Y	*195-8098*	1	PUMP GP-ENGINE OIL	99
Y	*267-3362*	1	PUMP GP-FUEL INJECTION	180
Y	*258-8745*	1	PUMP GP-UNIT INJECTOR HYD	190
Y	*258-8337*	1	TURBOCHARGER GP	143
Y	*242-0447*	1	VALVE MECHANISM GP	82
	272-9625	1	ELECTRONICS GP-ENGINE RATINGS	

Y-SEPARATE ILLUSTRATION

ENGINE ARRANGEMENT

270-4216 ENGINE AR-CORE

S/N: THX1-UP

PART OF 270-2771, 301-3082 ENGINE AR-COMPLETE

SMCS-1000 **i02636004**

NOTE	PART NUMBER	QTY	PART NAME 1 2 3 4 5 6 (PRODUCT LEVEL)	SEE PAGE
Y	*242-0674*	1	CAMSHAFT GP	20
Y	*188-3826*	1	COOLER GP-ENGINE OIL	101
Y	*164-6148*	1	CRANKSHAFT GP	29
Y	*161-3406*	1	CYLINDER BLOCK GP	32
Y	*242-0672*	1	CYLINDER HEAD GP	40
Y	*213-4363*	1	FASTENER GP-CYLINDER HEAD	58
Y	*205-1321*	1	GEAR GP-FRONT	66
Y	*245-3260*	1	HOUSING GP-FRONT	68
Y	*265-1400*	6	PISTON & ROD GP	74
Y	*195-8098*	1	PUMP GP-ENGINE OIL	99
Y	*267-3362*	1	PUMP GP-FUEL INJECTION	180
Y	*258-8745*	1	PUMP GP-UNIT INJECTOR HYD	190
Y	*258-8337*	1	TURBOCHARGER GP	143
Y	*242-0447*	1	VALVE MECHANISM GP	82
	223-9020	1	ELECTRONICS GP-ENGINE RATINGS	

Y-SEPARATE ILLUSTRATION

ENGINE ARRANGEMENT

348-2746 ENGINE AR-CORE

S/N: THX22639-UP
213 BRAKE KW (286 GHP) AT 1800 RPM
PART OF 301-3082 ENGINE AR-COMPLETE

SMCS-1000 **i03714520**

NOTE	PART NUMBER	QTY	PART NAME 1 2 3 4 5 6 (PRODUCT LEVEL)	SEE PAGE
Y	*242-0674*	1	CAMSHAFT GP	20
Y	*188-3826*	1	COOLER GP-ENGINE OIL	101
Y	*164-6148*	1	CRANKSHAFT GP	29
Y	*161-3406*	1	CYLINDER BLOCK GP	32
Y	*345-8414*	1	CYLINDER HEAD GP	49
Y	*213-4363*	1	FASTENER GP-CYLINDER HEAD	58
Y	*205-1321*	1	GEAR GP-FRONT	66
Y	*245-3260*	1	HOUSING GP-FRONT	68
Y	*347-7908*	6	PISTON & ROD GP	75
Y	*195-8098*	1	PUMP GP-ENGINE OIL	99
Y	*267-3362*	1	PUMP GP-FUEL INJECTION	180
Y	*258-8745*	1	PUMP GP-UNIT INJECTOR HYD	190
Y	*258-8337*	1	TURBOCHARGER GP	143
Y	*242-0447*	1	VALVE MECHANISM GP	82
	223-9020	1	ELECTRONICS GP-ENGINE RATINGS	

Y-SEPARATE ILLUSTRATION

ENGINE ARRANGEMENT

348-2747 ENGINE AR-CORE

S/N: THX22638-UP

PART OF 224-9843 ENGINE AR, 240-1861 ENGINE AR-COMPLETE

SMCS-1000 **i03688582**

NOTE	PART NUMBER	QTY	PART NAME 1 2 3 4 5 6 (PRODUCT LEVEL)	SEE PAGE
Y	*242-0674*	1	CAMSHAFT GP	20
Y	*188-3826*	1	COOLER GP-ENGINE OIL	101
Y	*164-6148*	1	CRANKSHAFT GP	29
Y	*161-3406*	1	CYLINDER BLOCK GP	32
Y	*345-8414*	1	CYLINDER HEAD GP	49
Y	*213-4363*	1	FASTENER GP-CYLINDER HEAD	58
Y	*205-1321*	1	GEAR GP-FRONT	66
Y	*245-3260*	1	HOUSING GP-FRONT	68
Y	*347-7908*	6	PISTON & ROD GP	75
Y	*195-8098*	1	PUMP GP-ENGINE OIL	99
Y	*267-3362*	1	PUMP GP-FUEL INJECTION	180
Y	*258-8745*	1	PUMP GP-UNIT INJECTOR HYD	190
Y	*258-8337*	1	TURBOCHARGER GP	143
Y	*242-0447*	1	VALVE MECHANISM GP	82
	272-9625	1	ELECTRONICS GP-ENGINE RATINGS	

Y-SEPARATE ILLUSTRATION

ENGINE ARRANGEMENT

239-6405 INSTALLATION AR-ENGINE

S/N: B6H1-528; JLP1-218

PART OF 229-1873, 264-8594 GENERAL AR

SMCS-1000 **i03600680**

NOTE	PART NUMBER	QTY	PART NAME 1 2 3 4 5 6 (PRODUCT LEVEL)	SEE PAGE
Y	*239-6407*	1	AIR CLEANER & MOUNTING GP	126
Y	*245-7940*	1	CONDENSER & MTG GP-REFRIGERANT	1165
Y	*230-2899*	1	FAN GP-SUCTION	102
Y	*239-6406*	1	LINES GP-AIR (AIR CLEANER TO TURBOCHARGER)	136
Y	*230-2898*	1	LINES GP-AIR (AFTERCOOLER TO TURBOCHARGER)	132
Y	*239-6408*	1	LINES GP-ENGINE OIL DRAIN	93
Y	*255-2915*	1	LINES GP-MUFFLER DRAIN	137
Y	*239-6474*	1	MOUNTING GP-ENGINE	70
Y	*239-6409*	1	MOUNTING GP-ENGINE OIL FILTER	97
Y	*230-2896*	1	RADIATOR & HYD OIL COOLER GP	120

Y-SEPARATE ILLUSTRATION

ENGINE ARRANGEMENT

279-7825 INSTALLATION AR-ENGINE

S/N: B6H529-UP; JLP219-UP

PART OF 229-1873, 264-8594 GENERAL AR

SMCS-1000 **i03600682**

NOTE	PART NUMBER	QTY	PART NAME 1 2 3 4 5 6 (PRODUCT LEVEL)	SEE PAGE
Y	*239-6407*	1	AIR CLEANER & MOUNTING GP	126
Y	*245-7940*	1	CONDENSER & MTG GP-REFRIGERANT	1165
Y	*230-2899*	1	FAN GP-SUCTION	102
Y	*239-6406*	1	LINES GP-AIR (AIR CLEANER TO TURBOCHARGER)	136
Y	*230-2898*	1	LINES GP-AIR (AFTERCOOLER TO TURBOCHARGER)	132
Y	*239-6408*	1	LINES GP-ENGINE OIL DRAIN	93
Y	*239-6474*	1	MOUNTING GP-ENGINE	70
Y	*239-6409*	1	MOUNTING GP-ENGINE OIL FILTER	97
Y	*279-7820*	1	PLUG GP-ENGINE	77
Y	*230-2896*	1	RADIATOR & HYD OIL COOLER GP	120

Y-SEPARATE ILLUSTRATION

BASIC ENGINE

281-9154 BELT GP-SERPENTINE

S/N: B6H529-UP; JLP220-UP

PART OF 262-1359, 266-6263 ENGINE AR

SMCS-1397 **i02756622**

NOTE	REF NO	GRAPHIC REF	PART NUMBER	QTY	PART NAME 1 2 3 4 5 6 (PRODUCT LEVEL)	SEE PAGE
	1	1	**183-4494**	1	BELT-SERPENTINE	

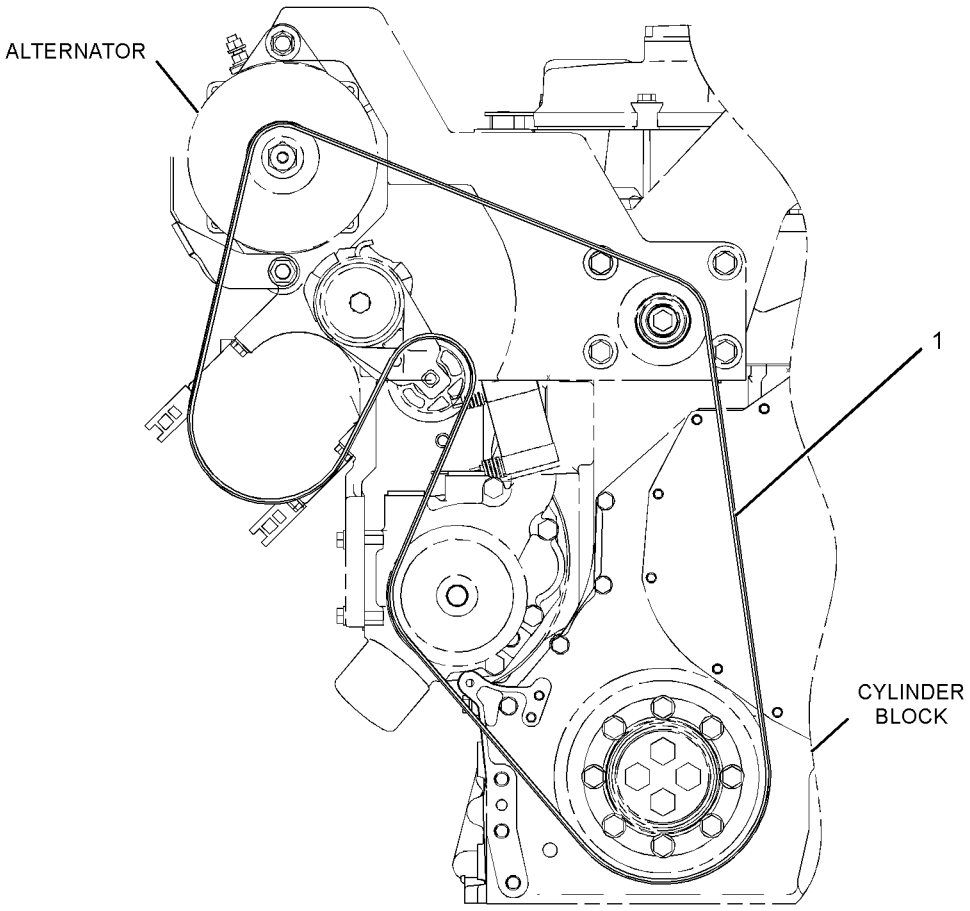

FRONT VIEW
(ENGINE)

GRAPHIC #1 **<END>** g01236782

BASIC ENGINE

242-0674 CAMSHAFT GP

S/N: THX1-UP

PART OF 229-2665, 270-4216, 348-2746, 348-2747 ENGINE AR-CORE

SMCS-1210 **i02433943**

NOTE	REF NO	GRAPHIC REF	PART NUMBER	QTY	PART NAME 1 2 3 4 5 6 (PRODUCT LEVEL)	SEE PAGE
	1	1	**107-7694**	1	PLATE-THRUST	
R	2	1	**242-0673**	1	CAMSHAFT AS	
	2A	1	**1B-8705**	1	KEY-WOODRUFF	
	2B	1	**224-3247**	1	GEAR (100-TEETH)	
M	3		**6V-3940**	2	BOLT (M8X1.25X25-MM)	

M-METRIC PART
R-REMFG PART MAY BE AVAILABLE

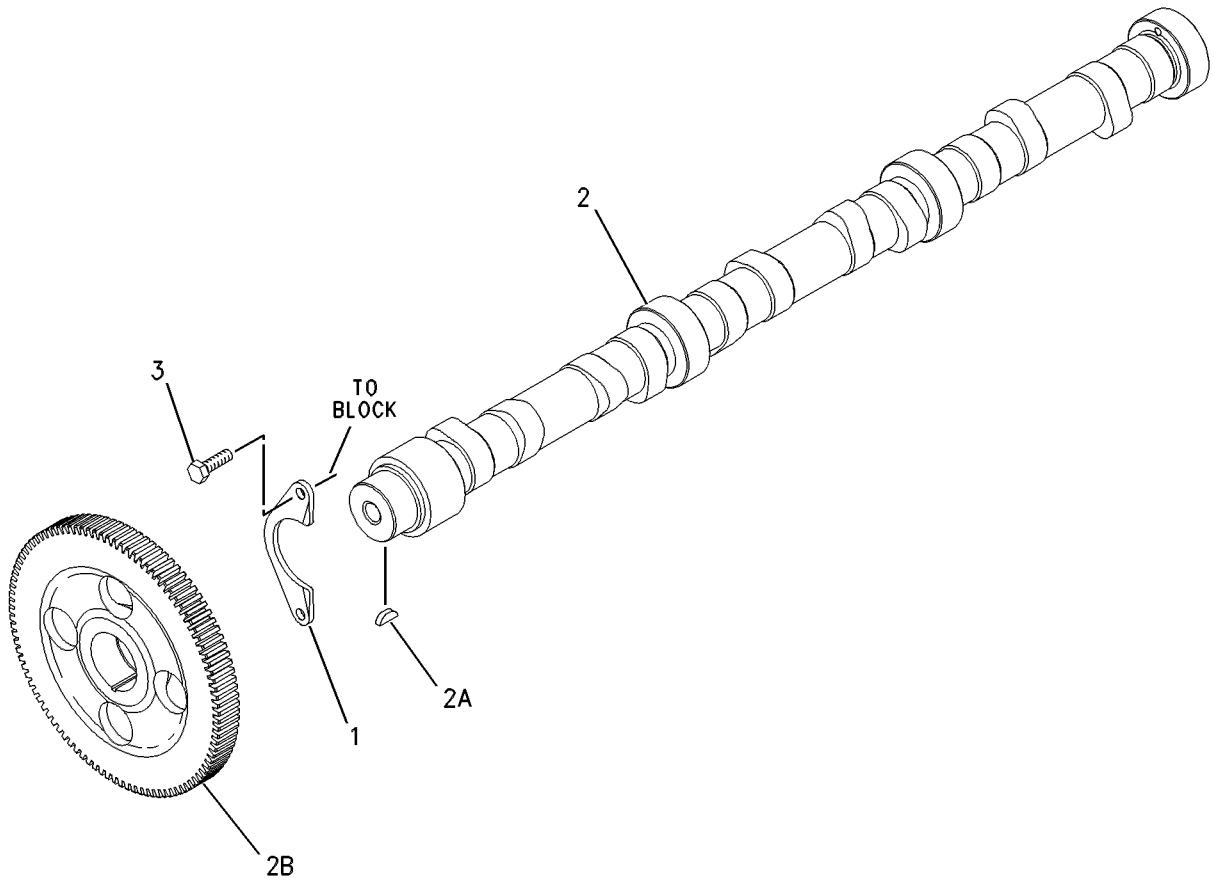

GRAPHIC #1 **<END>** g00626400

BASIC ENGINE

202-3301 COVER GP-CYLINDER BLOCK

S/N: THX1-UP

PART OF 224-9843 ENGINE AR, 240-1861, 270-2771, 301-3082 ENGINE AR-COMPLETE

SMCS-1201 **i02535211**

NOTE	REF NO	GRAPHIC REF	PART NUMBER	QTY	PART NAME 1 2 3 4 5 6 (PRODUCT LEVEL)	SEE PAGE
	1	1	**213-2411**	1	COVER	
	2	1	**213-2410**	1	GASKET	
	3	1	**240-0041**	1	BREATHER AS (CRANKCASE)	
M	4	1	**3E-8005**	1	BOLT (M8X1.25X160-MM)	
M	5	1	**6V-3918**	2	BOLT (M8X1.25X50-MM)	
M	6	1	**6V-3940**	9	BOLT (M8X1.25X25-MM)	
	7	1	**9F-4446**	1	SEAL-O-RING (CRANKCASE BREATHER)	
	8	1	**9M-1974**	11	WASHER-HARD (8.8X16X2-MM THK)	
	9	1	**5N-4185**	1	WASHER-SPECIAL	

M-METRIC PART

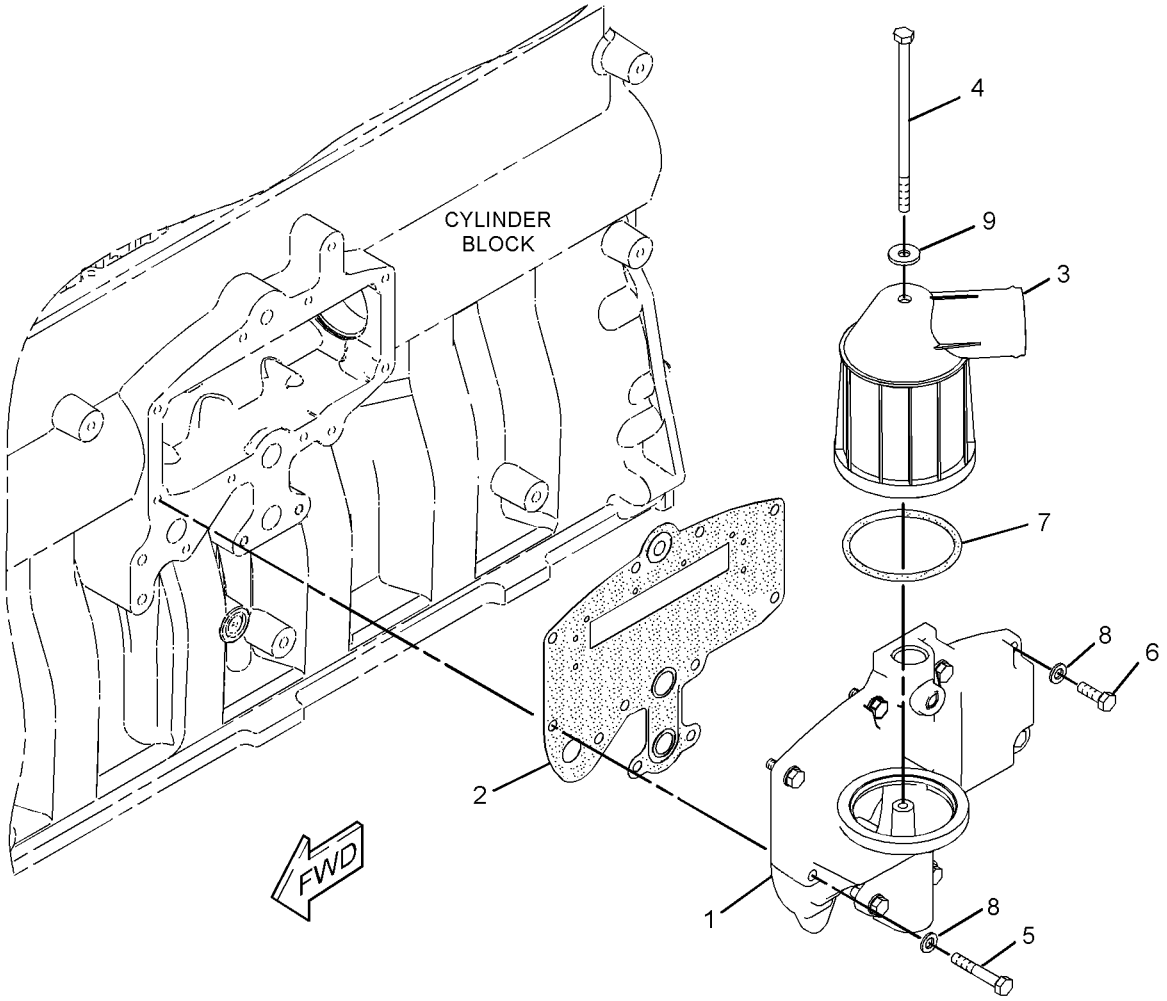

GRAPHIC #1 **<END>** g01216863

127-5728 COVER GP-FLYWHEEL HOUSING

S/N: THX1-UP

PART OF 224-9843 ENGINE AR, 240-1861, 270-2771, 301-3082 ENGINE AR-COMPLETE

SMCS-1157 **i01671192**

NOTE	REF NO	GRAPHIC REF	PART NUMBER	QTY	PART NAME 1 2 3 4 5 6 (PRODUCT LEVEL)	SEE PAGE
	1	1	**9Y-6089**	1	GASKET	
	2	1	**0S-1589**	3	BOLT (5/8-11X1.75-IN)	
	3	1	**4D-3704**	3	WASHER-HARD (17X30X5-MM THK)	
	4	1	**4N-1114**	1	COVER	

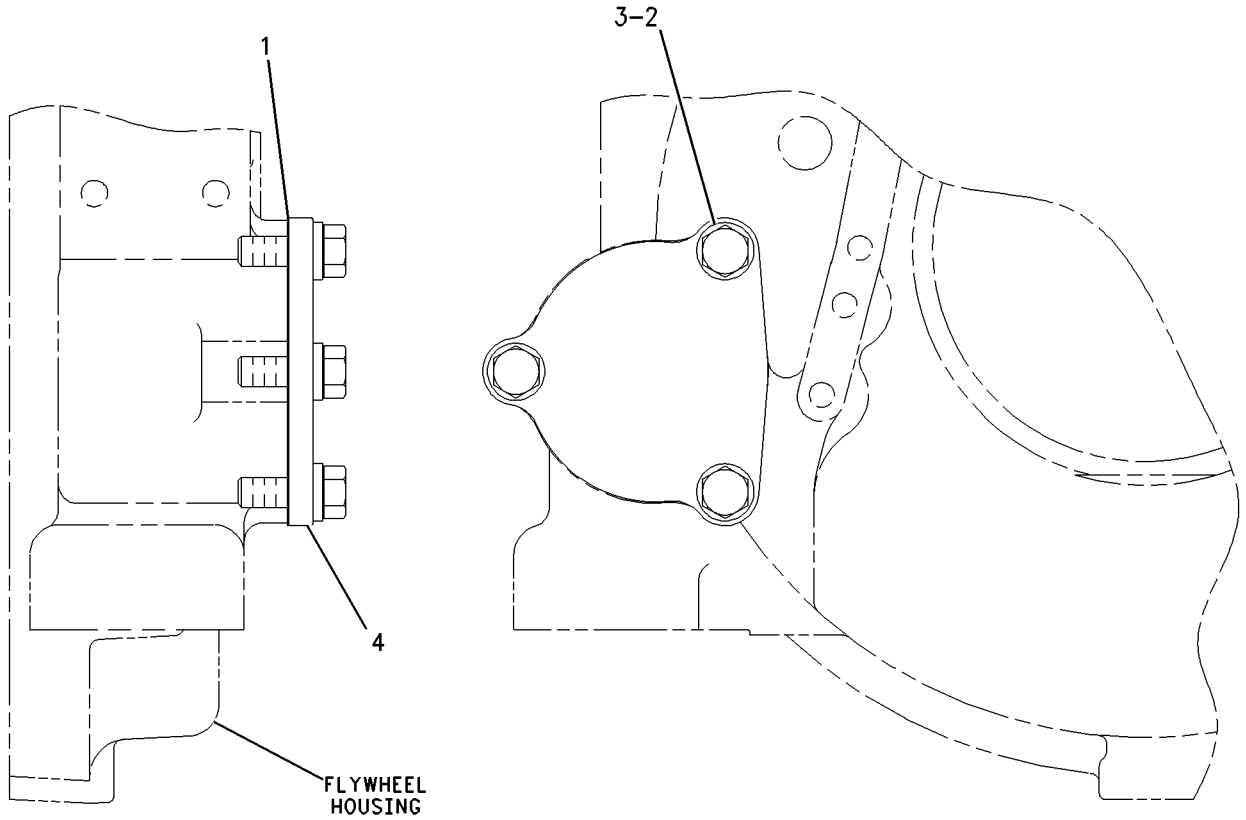

RIGHT SIDE VIEW FRONT VIEW

GRAPHIC #1 **<END>** g00783561

118-1727 COVER GP-FRONT HOUSING

S/N: THX1-UP

PART OF 224-9843 ENGINE AR, 240-1861, 270-2771, 301-3082 ENGINE AR-COMPLETE

SMCS-1150 **i01671188**

NOTE	REF NO	GRAPHIC REF	PART NUMBER	QTY	PART NAME 1 2 3 4 5 6 (PRODUCT LEVEL)	SEE PAGE
	1	1	**5P-8245**	4	WASHER-HARD (13.5X25.5X3-MM THK)	
M	2	1	**6V-5696**	2	BOLT (M12X1.75X80-MM)	
	3	1	**4W-2026**	1	COVER	
	4	1	**135-9819**	1	SEAL-INTEGRAL	
M	5	1	**6V-8149**	2	NUT (M12X1.75-THD)	

M-METRIC PART

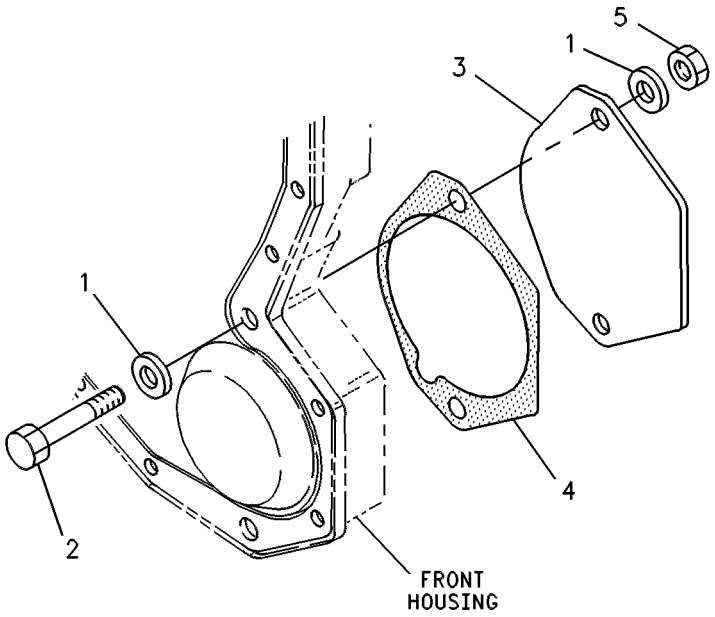

GRAPHIC #1 **<END>** g00245495

BASIC ENGINE

211-3285 COVER GP-FRONT HOUSING

S/N: THX1-UP

PART OF 224-9843 ENGINE AR, 240-1861, 270-2771, 301-3082 ENGINE AR-COMPLETE

SMCS-1150 **i01674489**

NOTE	REF NO	GRAPHIC REF	PART NUMBER	QTY	PART NAME 1 2 3 4 5 6 (PRODUCT LEVEL)	SEE PAGE
M	1	1	**9X-2099**	2	STUD (M8X1.25X52.75-MM)	
	2	1	**7C-1445**	1	COVER	
	3	1	**166-1776**	1	COVER AS-FRONT	
	3A	1	**126-1757**	2	WASHER (10.85X19.3X1.27-MM THK)	
	3B	1	**136-0822**	2	STUD	
	4	1	**166-1781**	1	GASKET	
	5	1	**061-9455**	1	SEAL-O-RING	
M	6	1	**5C-7261**	2	NUT (M8X1.25-THD)	
M	7	1	**6V-2317**	10	BOLT (M8X1.25X30-MM)	
M	8	1	**8T-0100**	2	BOLT (M8X1.25X60-MM)	
	9	1	**8T-4224**	2	WASHER-HARD (8.8X16X2-MM THK)	

M-METRIC PART

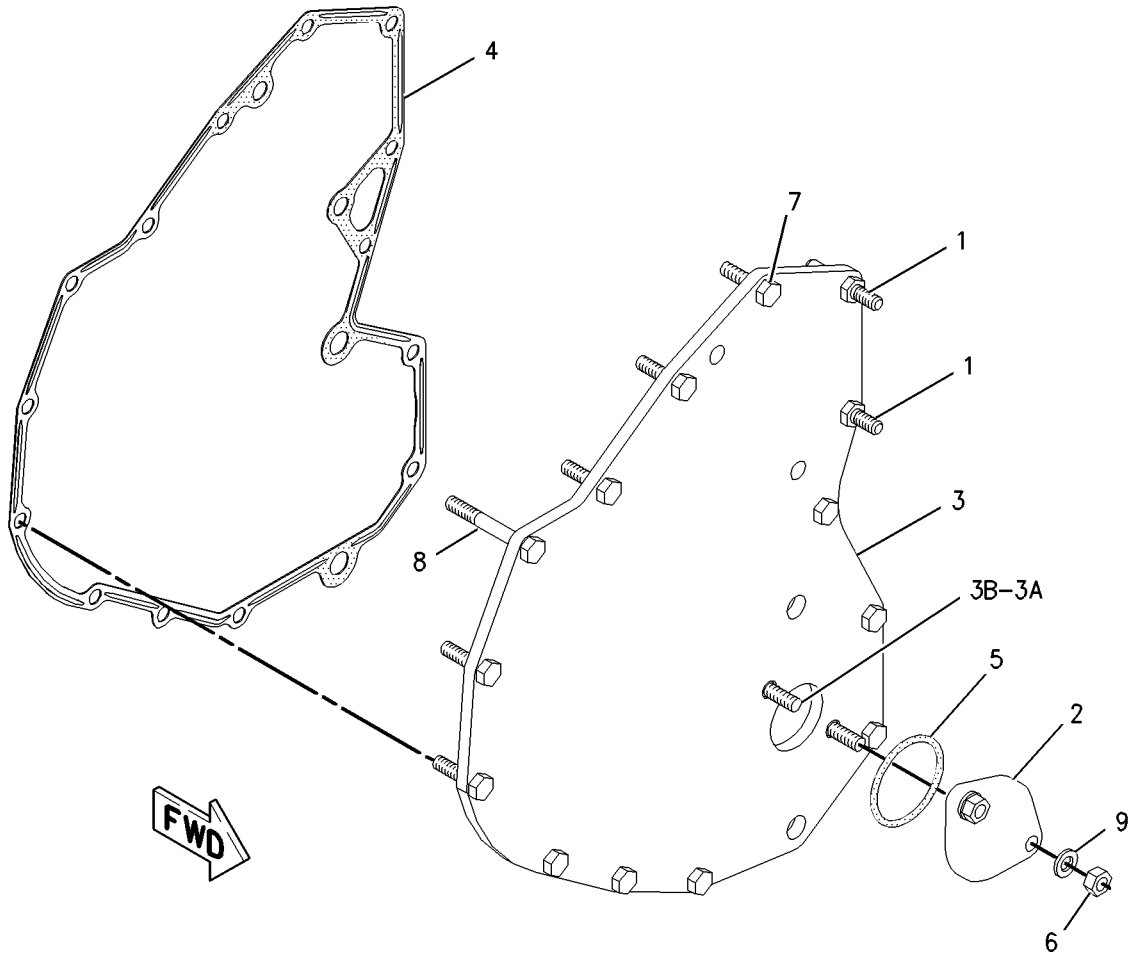

GRAPHIC #1 **<END>** g00827837

BASIC ENGINE

235-8174 COVER GP-VALVE MECHANISM

S/N: THX300-6128

PART OF 224-9843 ENGINE AR, 270-2771 ENGINE AR-COMPLETE

SMCS-1107 **i02637731**

NOTE	REF NO	GRAPHIC REF	PART NUMBER	QTY	PART NAME 1 2 3 4 5 6 (PRODUCT LEVEL)	SEE PAGE
	1	1	**227-4531**	1	CAP AS-ENGINE OIL FILLER	
	1A	1	**7F-8268**	1	SEAL-O-RING	
	2	1	**246-5083**	11	SLEEVE-SPACER	
	3	1	**263-7821**	1	COVER GP-VALVE MECHANISM	
L	3A	1	**217-5701**		SEAL-BULK (23-DM)(VALVE MECHANISM COVER)	
	4	1	**271-2418**	1	BASE GP-VALVE COVER	
L	4A	1	**268-3490**	1	SEAL-VALVE COVER (VALVE MECHANISM BASE)	
BF			**4C-9612**		SEALANT-SILICONE	

B-USE AS REQUIRED
F-NOT SHOWN
L-ORDER BY DECIMETER

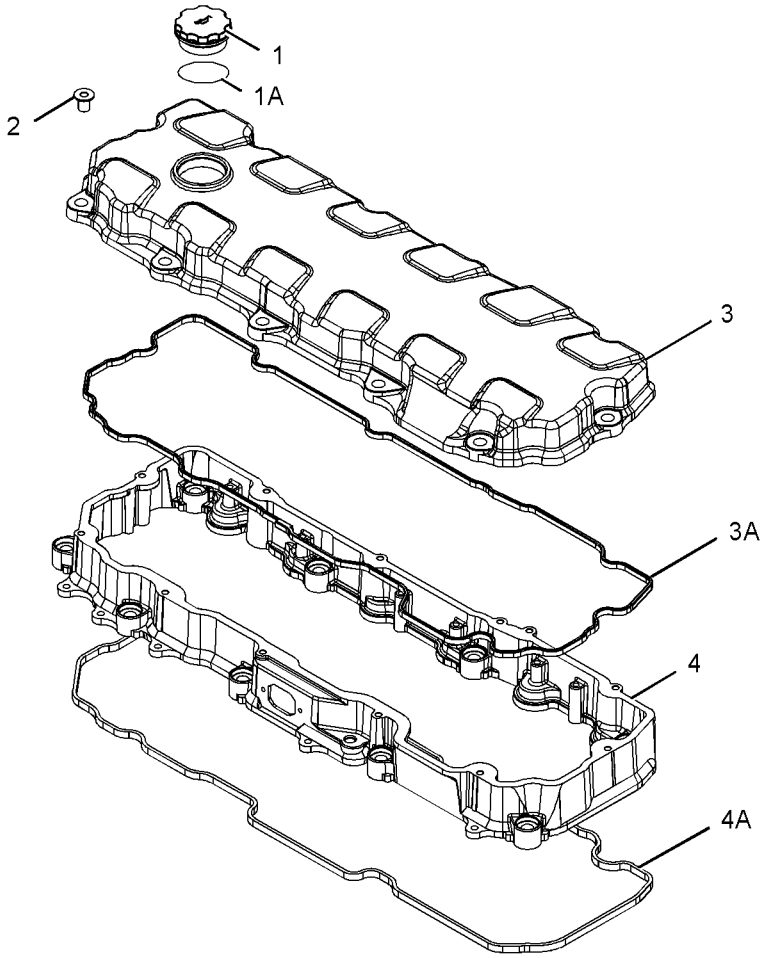

GRAPHIC #1 **<END>** g01277347

235-8174 COVER GP-VALVE MECHANISM

S/N: THX1-UP

PART OF 224-9843 ENGINE AR, 240-1861, 270-2771, 301-3082 ENGINE AR-COMPLETE

SMCS-1107 **i02672328**

NOTE	REF NO	GRAPHIC REF	PART NUMBER	QTY	PART NAME 1 2 3 4 5 6 (PRODUCT LEVEL)	SEE PAGE
	1	1	**227-4531**	1	CAP AS-ENGINE OIL FILLER	
	1A	1	**7F-8268**	1	SEAL-O-RING	
C	2	1	**273-2838**	11	SLEEVE-SPACER	
C	3	1	**263-7825**	1	COVER GP-VALVE MECHANISM	
	3A	1	**285-4106**		SEAL-VALVE COVER	
	4	1	**271-2418**	1	BASE GP-VALVE COVER	
	4A	1	**268-3490**	1	SEAL-VALVE COVER (VALVE MECHANISM BASE)	

C-CHANGE FROM PREVIOUS TYPE

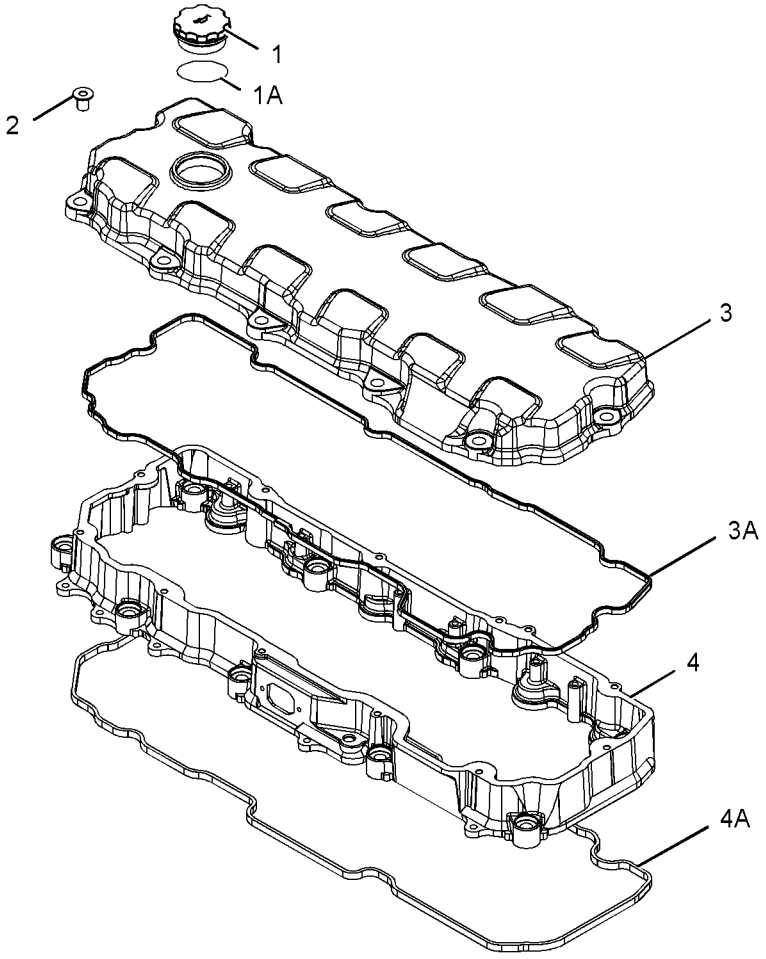

GRAPHIC #1 **<END>** g01277347

BASIC ENGINE

258-8724 COVER GP-VALVE MECHANISM

S/N: THX1-555

PART OF 224-9843 ENGINE AR

SMCS-1107 **i02698089**

NOTE	REF NO	GRAPHIC REF	PART NUMBER	QTY	PART NAME 1 2 3 4 5 6 (PRODUCT LEVEL)	SEE PAGE
	1	1	**213-5206**	1	COVER GP-VALVE MECHANISM	
J	1A	1	**217-5701**		SEAL-BULK (23-DM)	
	2	1	**227-4531**	1	CAP AS-ENGINE OIL FILLER	
	2A	1	**7F-8268**	1	SEAL-O-RING	
	3	1	**246-5083**	11	SLEEVE-SPACER	
	4	1	**259-2358**	1	COVER-BASE (VALVE MECHANISM)	
	5	1	**268-3490**	1	SEAL-VALVE COVER (VALVE MECHANISM BASE)	
	6	1	**280-0543**	9	WASHER-HARD (15.5X27X0.95-MM THK)	

J-ORDER BY THE DECIMETER

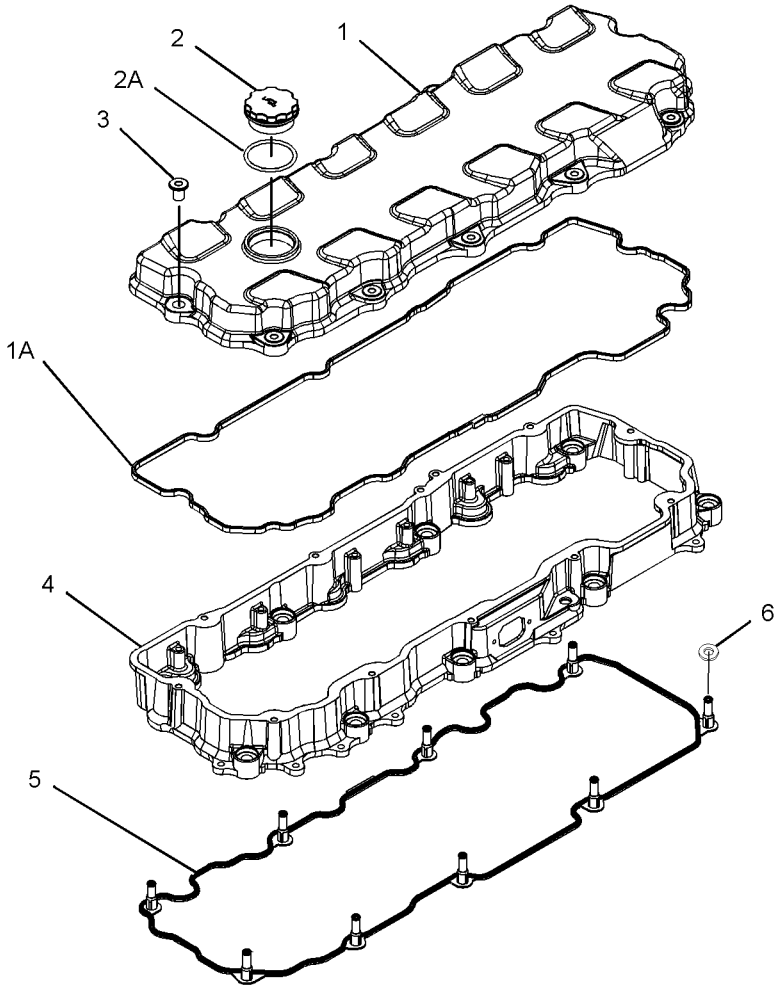

GRAPHIC #1 **<END>** g01353674

BASIC ENGINE

258-8724 COVER GP-VALVE MECHANISM

S/N: THX556-1072

PART OF 224-9843 ENGINE AR

SMCS-1107 **i02520247**

NOTE	REF NO	GRAPHIC REF	PART NUMBER	QTY	PART NAME 1 2 3 4 5 6 (PRODUCT LEVEL)	SEE PAGE
C	1	1	**263-7821**	1	COVER GP-VALVE MECHANISM	
J	1A	1	**217-5701**		SEAL-BULK (24-DM)	
	2	1	**227-4531**	1	CAP AS-ENGINE OIL FILLER	
	2A	1	**7F-8268**	1	SEAL-O-RING	
	3	1	**246-5083**	11	SLEEVE-SPACER	
C	4	1	**271-2418**	1	BASE GP-VALVE COVER	
	4A	1	**268-3490**	1	SEAL-VALVE COVER	

C-CHANGE FROM PREVIOUS TYPE
J-ORDER BY THE DECIMETER

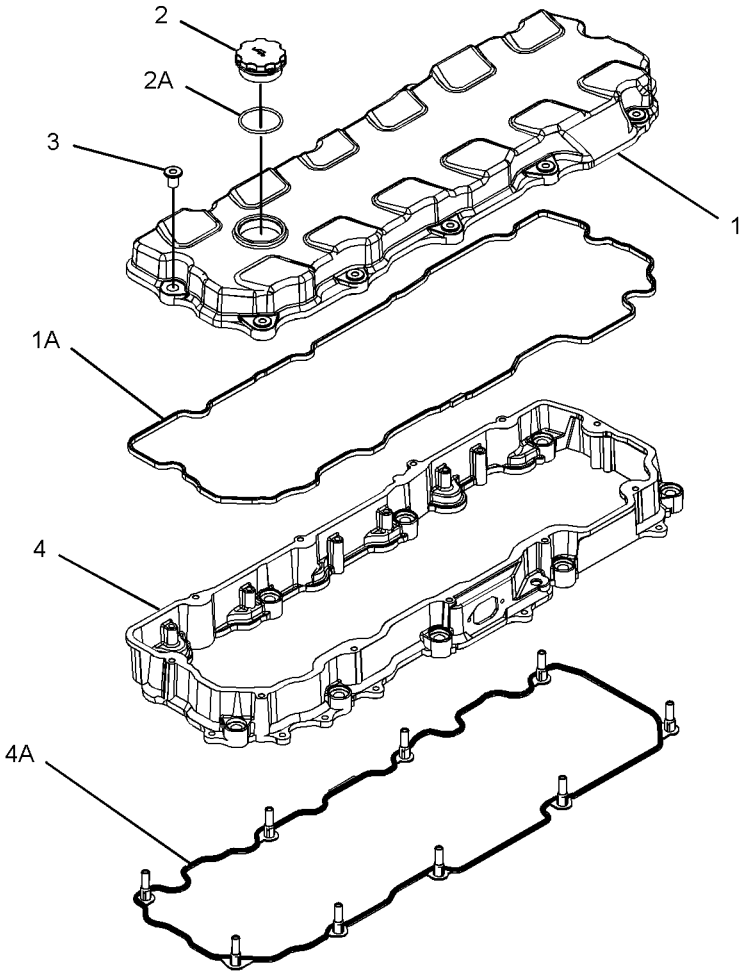

GRAPHIC #1 **<END>** g01277962

164-6148 CRANKSHAFT GP

S/N: THX1-UP

PART OF 229-2665, 270-4216, 348-2746, 348-2747 ENGINE AR-CORE

SMCS-1202 **i03592365**

NOTE	REF NO	GRAPHIC REF	PART NUMBER	QTY	PART NAME 1 2 3 4 5 6 (PRODUCT LEVEL)	SEE PAGE
J	1	1	**151-2939**	7	BEARING-MAIN (STANDARD)	
AB			**282-1771**	7	BEARING-MAIN (0.25-MM US)	
AB			**282-1772**	7	BEARING-MAIN (0.51-MM US)	
R	2	1	**261-1544**	1	CRANKSHAFT AS	
	2A	1	**1B-8705**	1	KEY-WOODRUFF	
	2B	1	**2W-8147**	1	GEAR (50-TEETH)	
	2C	1	**9Y-0810**	1	SLEEVE-WEAR	
J	3	1	**246-3150**	2	PLATE-THRUST	
					AVAILABLE REPAIR KIT(S):	
AJ			**243-6716**		BEARING GP-MAIN (STANDARD)	
					(INCLUDES A COMPLETE SET OF MAIN BEARINGS AND THRUST PLATES)	

A-NOT PART OF THIS GROUP
B-USE AS REQUIRED
J-KIT MARKED J INCLUDES PARTS MARKED J
R-REMFG PART MAY BE AVAILABLE

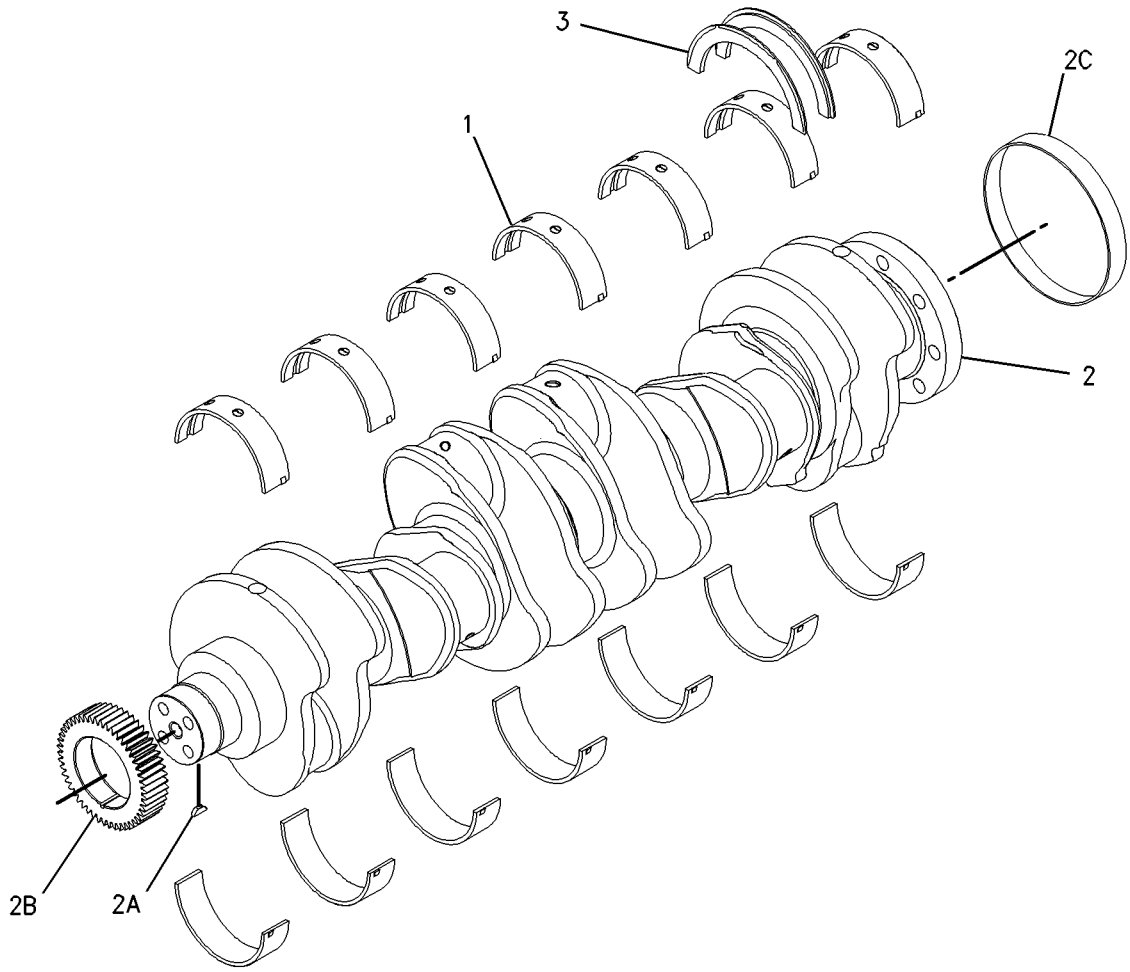

GRAPHIC #1 **<END>** g00789955

325-3915 CYLINDER BLOCK AS

S/N: THX1-UP

PART OF 220-1952 CYLINDER BLOCK GP

SMCS-1201 **i03235781**

NOTE	REF NO	GRAPHIC REF	PART NUMBER	QTY	PART NAME 1 2 3 4 5 6 (PRODUCT LEVEL)	SEE PAGE
	1	1	**0L-1026**	2	PLUG-CUP	
	2	1	**3B-0623**	2	PLUG-CUP	
	3	1	**4F-5695**	4	PLUG-CUP	
M	4	1	**175-0454**	14	BOLT (M16X2X160-MM)	
	5	1	**203-5805**	2	BEARING-SLEEVE	
	6	1	**203-6090**	1	BEARING-SLEEVE	
	7	1	**212-7002**	7	CAP-BEARING	
	8	1	**216-5586**	1	BEARING-SLEEVE (CAMSHAFT)	
	10	1	**9X-8268**	14	WASHER (17.5X30X3.5-MM THK)	

M-METRIC PART

325-3915 CYLINDER BLOCK AS *(contd.)* **i03235781**

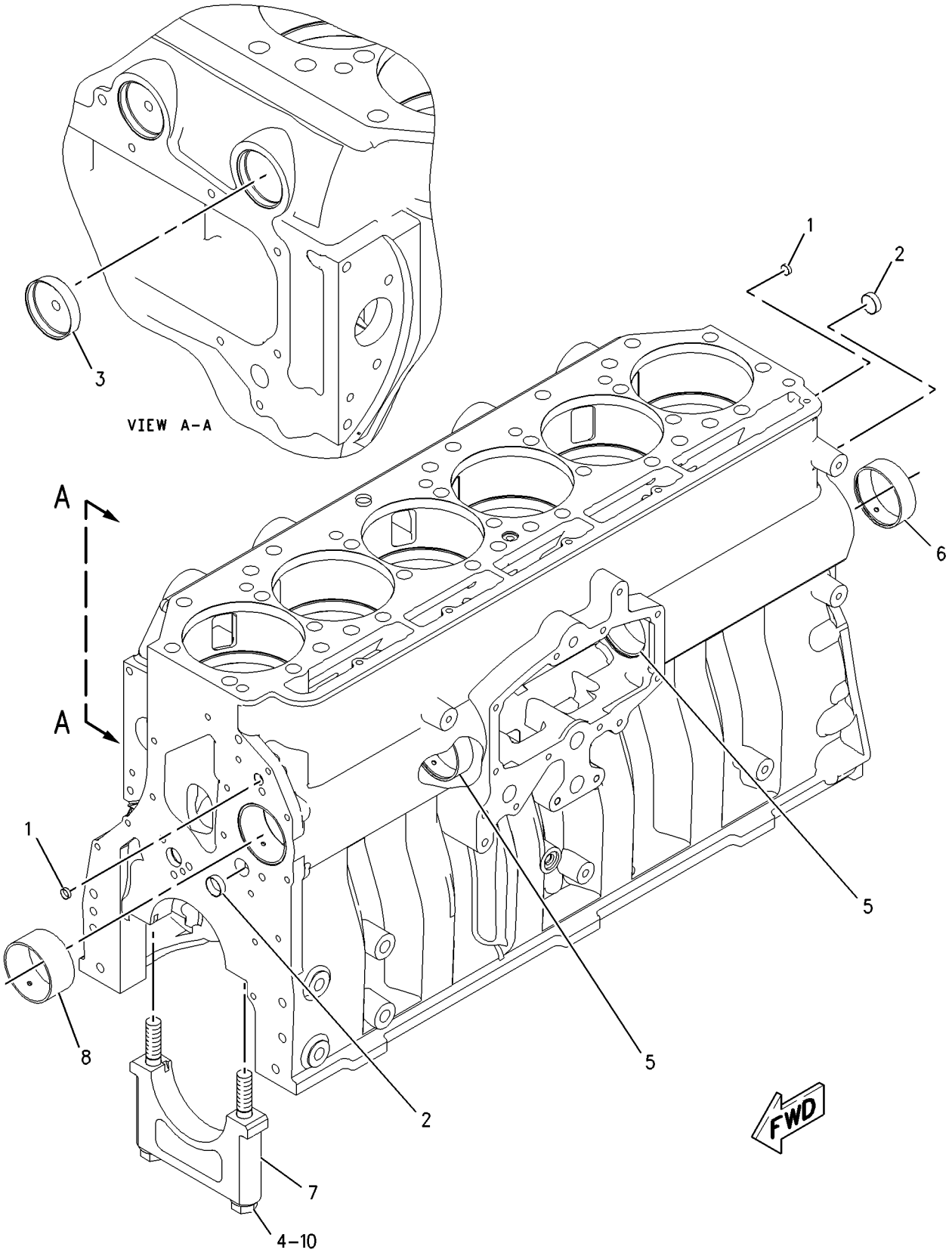

GRAPHIC #1 **<END>** g00920253

BASIC ENGINE

161-3406 CYLINDER BLOCK GP

S/N: THX1-UP

PART OF 229-2665, 270-4216, 348-2746, 348-2747 ENGINE AR-CORE

SMCS-1201 **i01833065**

NOTE	REF NO	GRAPHIC REF	PART NUMBER	QTY	PART NAME 1 2 3 4 5 6 (PRODUCT LEVEL)	SEE PAGE
	1	1	**0S-0519**	1	PLUG-CUP	
	2	1	**1W-8407**	2	SLEEVE	
	3	1	**4G-4972**	1	SEAL-O-RING	
CY	4	1	*220-1952*	1	CYLINDER BLOCK GP	33
	5	1	**6V-3538**	2	DOWEL	
	6	1	**7N-5683**	2	DOWEL	

C-CHANGE FROM PREVIOUS TYPE
Y-SEPARATE ILLUSTRATION

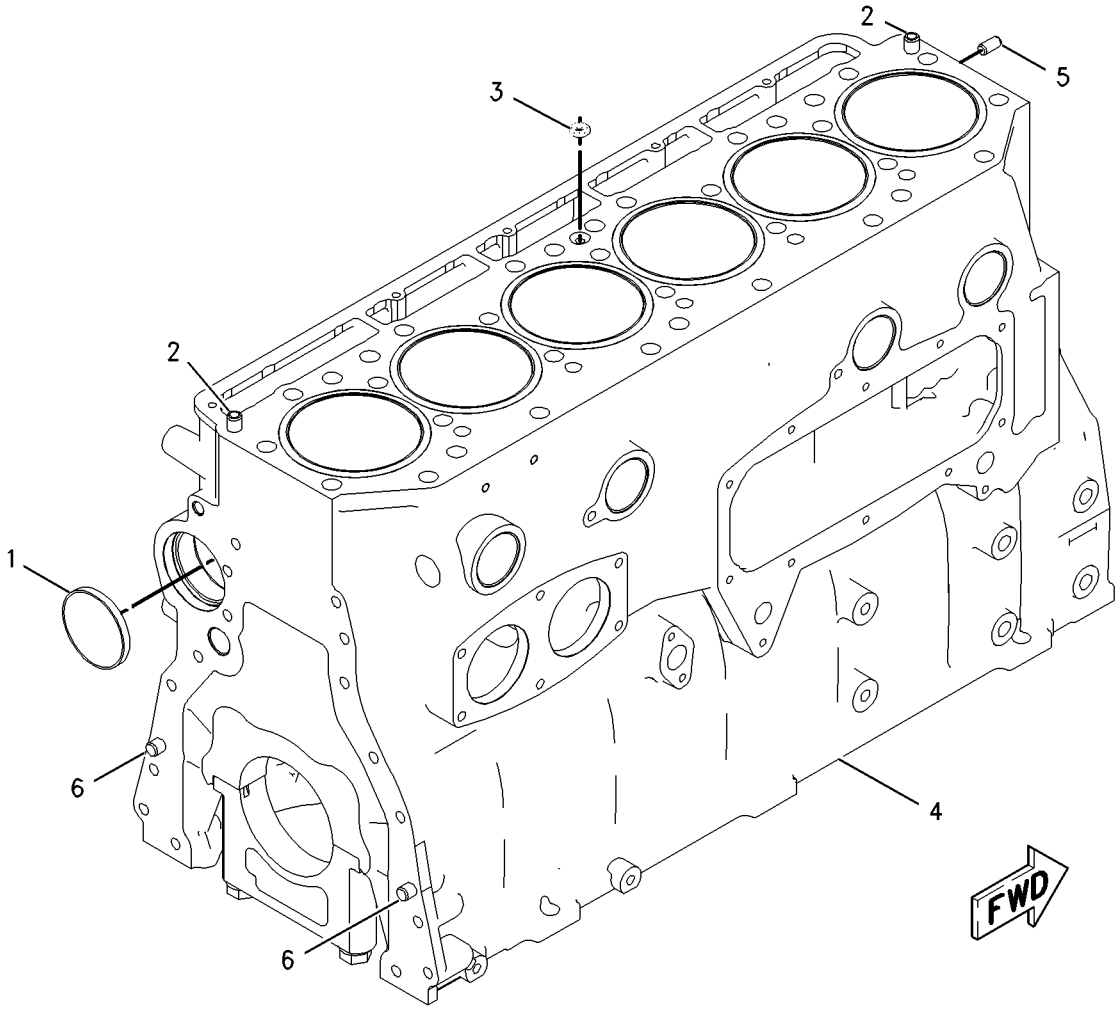

GRAPHIC #1 **<END>** g00838255

220-1952 CYLINDER BLOCK GP

S/N: THX1-UP

PART OF 161-3406 CYLINDER BLOCK GP

SMCS-1201 **i03235603**

NOTE	REF NO	GRAPHIC REF	PART NUMBER	QTY	PART NAME 1 2 3 4 5 6 (PRODUCT LEVEL)	SEE PAGE
	1	1	**167-0024**	6	SEAL-LINER	
	2	1	**190-3562**	6	LINER-CYLINDER	
Y	3	1	**325-3915**	1	CYLINDER BLOCK AS	30

Y-SEPARATE ILLUSTRATION

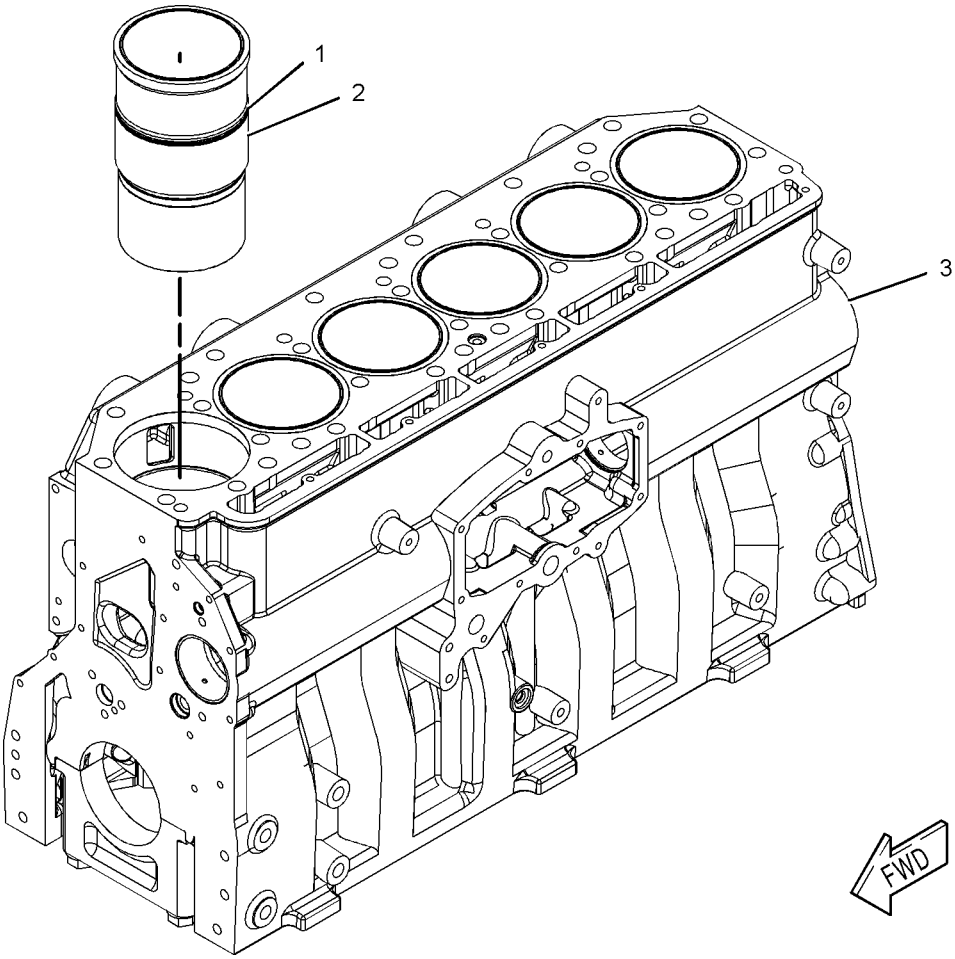

GRAPHIC #1 **<END>** g01032547

252-8438 CYLINDER HEAD AS

S/N: THX1-UP

PART OF 252-8439 CYLINDER HEAD GP

SMCS-1100 **i03792630**

NOTE	REF NO	GRAPHIC REF	PART NUMBER	QTY	PART NAME 1 2 3 4 5 6 (PRODUCT LEVEL)	SEE PAGE
	1	1	**6V-7604**	6	PLUG-CUP	
	2	1	**8M-5860**	18	PLUG-CUP	
	3	1	**212-8917**	12	INSERT-VALVE SEAT (EXHAUST)	
AB		1	**254-3947**	1	INSERT-VALVE SEAT (0.508-MM OS, EXHAUST)	
AB		1	**317-7210**	1	INSERT-VALVE SEAT (0.127-MM OS, EXHAUST)	
AB		1	**317-7211**	1	INSERT-VALVE SEAT (0.25-MM OS, EXHAUST)	
	4	1	**227-1200**	6	SLEEVE-INJECTOR	
	5	1	**241-8388**	12	INSERT-VALVE SEAT (INLET)	
AB		1	**254-3946**	1	INSERT-VALVE SEAT (0.508-MM OS, INLET)	
AB		1	**317-7212**	1	INSERT-VALVE SEAT (0.127-MM OS, INLET)	
AB		1	**317-7213**	1	INSERT-VALVE SEAT (0.25-MM OS, INLET)	
	7	1	**8C-0563**	12	SEAL-O-RING	

A-NOT PART OF THIS GROUP
B-USE AS REQUIRED

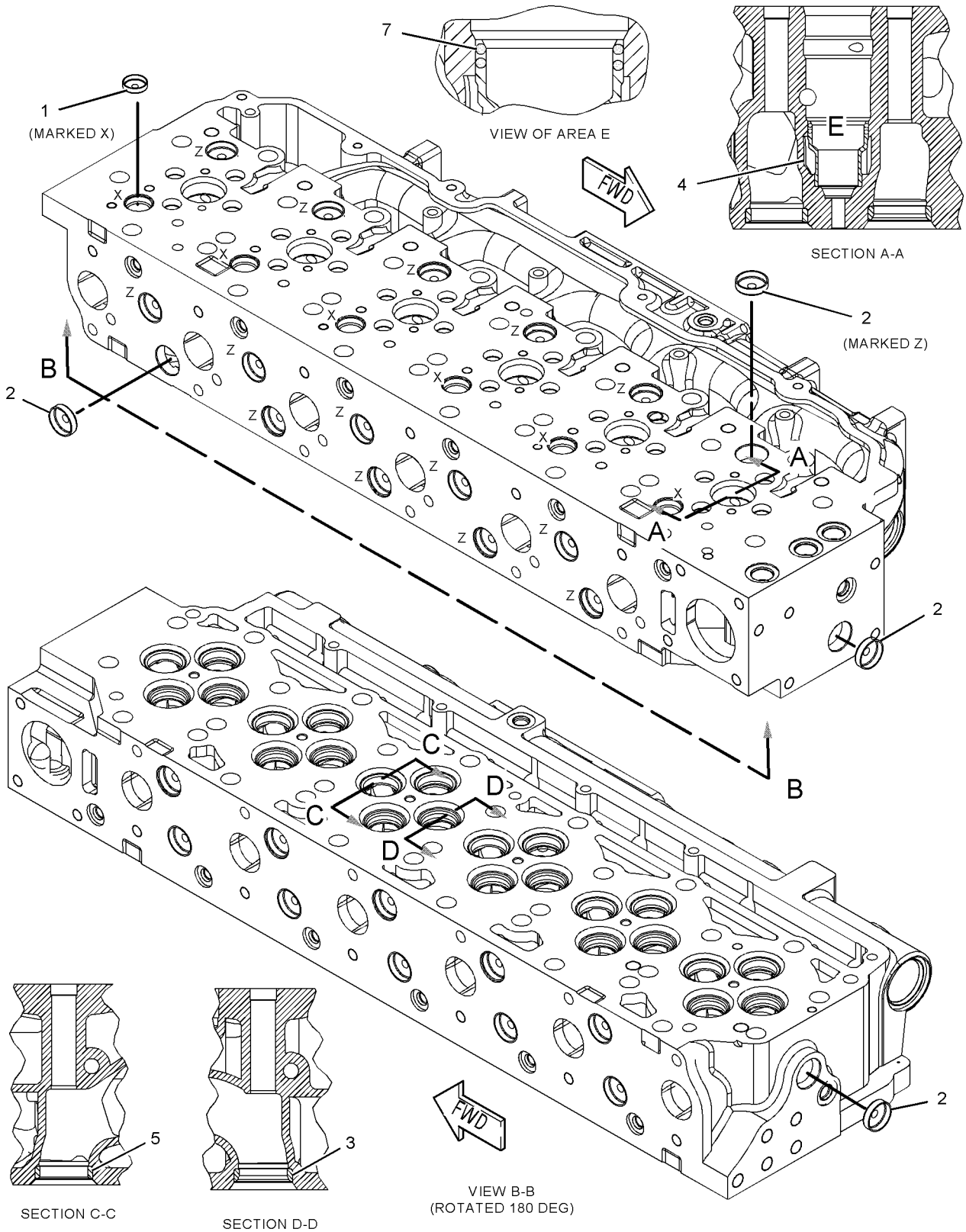

GRAPHIC #1

<END>

g01089169

311-7229 CYLINDER HEAD AS

S/N: THX1-UP

PART OF 252-8439, 344-2149 CYLINDER HEAD GP

SMCS-1100 **i03787151**

NOTE	REF NO	GRAPHIC REF	PART NUMBER	QTY	PART NAME 1 2 3 4 5 6 (PRODUCT LEVEL)	SEE PAGE
	1	1	**6V-7604**	6	PLUG-CUP	
	2	1	**8M-5860**	18	PLUG-CUP	
	3	1	**212-8917**	12	INSERT-VALVE SEAT (EXHAUST) (STANDARD)	
		1	**317-7210**		INSERT-VALVE SEAT (0.127-MM OS, EXHAUST)	
		1	**317-7211**		INSERT-VALVE SEAT (0.25-MM OS, EXHAUST)	
AB		1	**254-3947**		INSERT-VALVE SEAT (0.508-MM OS, EXHAUST)	
	4	1	**227-1200**	6	SLEEVE-INJECTOR	
	5	1	**241-8388**	12	INSERT-VALVE SEAT (INLET) (STANDARD)	
		1	**317-7212**		INSERT-VALVE SEAT (0.127-MM OS, INLET)	
		1	**317-7213**		INSERT-VALVE SEAT (0.25-MM OS, INLET)	
AB		1	**254-3946**		INSERT-VALVE SEAT (0.508-MM OS, INLET)	
	6	1	**310-7255**	6	SEAL-O-RING	
	7	1	**310-7257**	6	SEAL-O-RING	

A-NOT PART OF THIS GROUP
B-USE AS REQUIRED

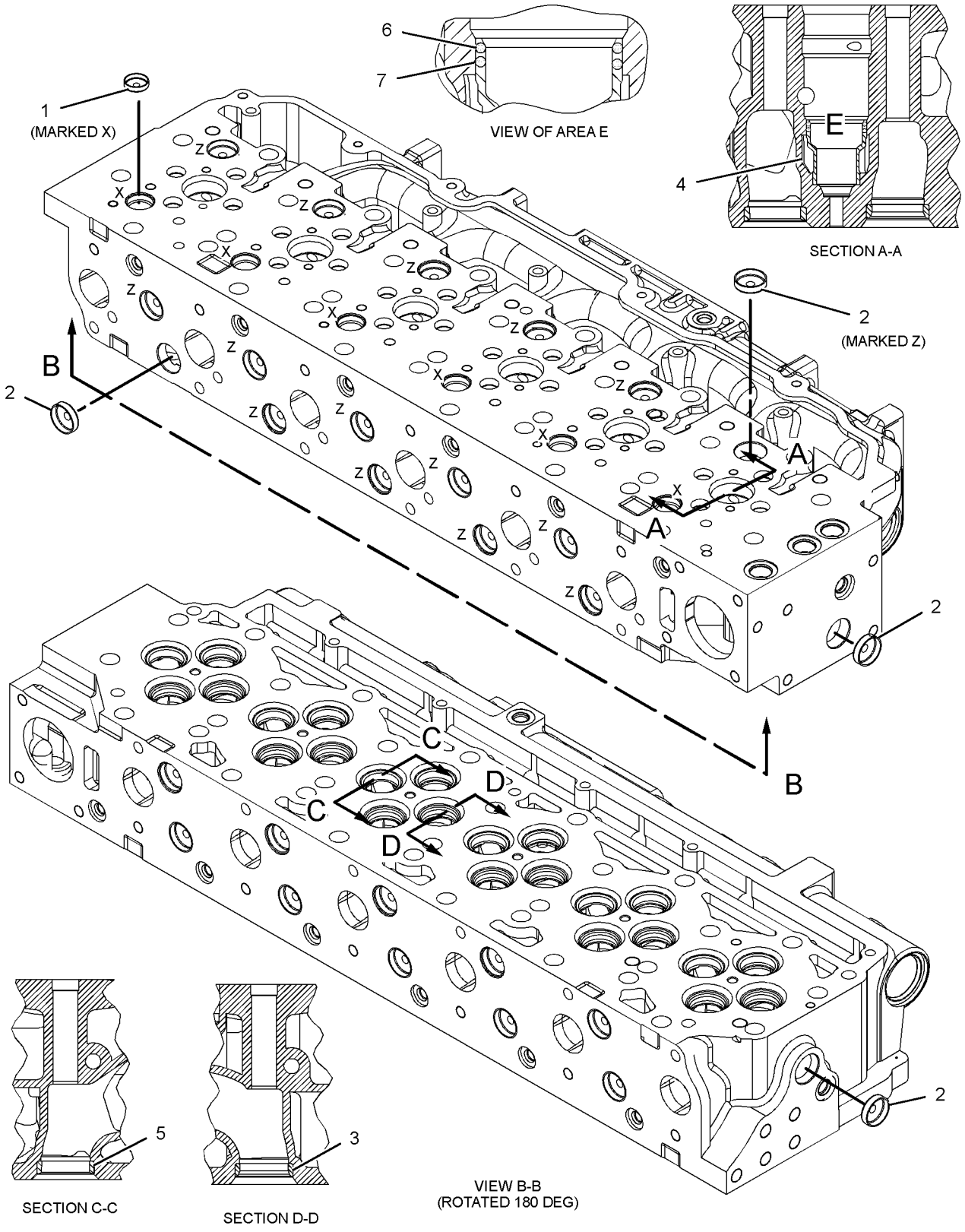

GRAPHIC #1 **<END>** g01414571

BASIC ENGINE

332-3619 CYLINDER HEAD AS

S/N: THX1-UP

PART OF 252-8439 CYLINDER HEAD GP

SMCS-1100 **i03246481**

NOTE	REF NO	GRAPHIC REF	PART NUMBER	QTY	PART NAME 1 2 3 4 5 6 (PRODUCT LEVEL)	SEE PAGE
	1	1	**6V-7604**	6	PLUG-CUP	
	2	1	**8M-5860**	18	PLUG-CUP	
	3	1	**212-8917**	12	INSERT-VALVE SEAT (EXHAUST) (STANDARD)	
AB		1	**317-7210**		INSERT-VALVE SEAT (0.127-MM OS OD, EXHAUST)	
AB		1	**317-7211**		INSERT-VALVE SEAT (0.254-MM OS OD, EXHAUST)	
AB		1	**254-3947**		INSERT-VALVE SEAT (0.508-MM OS OD, EXHAUST)	
	4	1	**227-1200**	6	SLEEVE-INJECTOR	
	5	1	**241-8388**	12	INSERT-VALVE SEAT (INLET) (STANDARD)	
AB		1	**317-7212**		INSERT-VALVE SEAT (0.127-MM OS OD, INLET)	
AB		1	**317-7213**		INSERT-VALVE SEAT (0.254-MM OS OD, INLET)	
AB		1	**254-3946**		INSERT-VALVE SEAT (0.508-MM OS OD, INLET)	
	6	1	**310-7255**	6	SEAL-O-RING	
	7	1	**310-7257**	6	SEAL-O-RING	

A-NOT PART OF THIS GROUP
B-USE AS REQUIRED

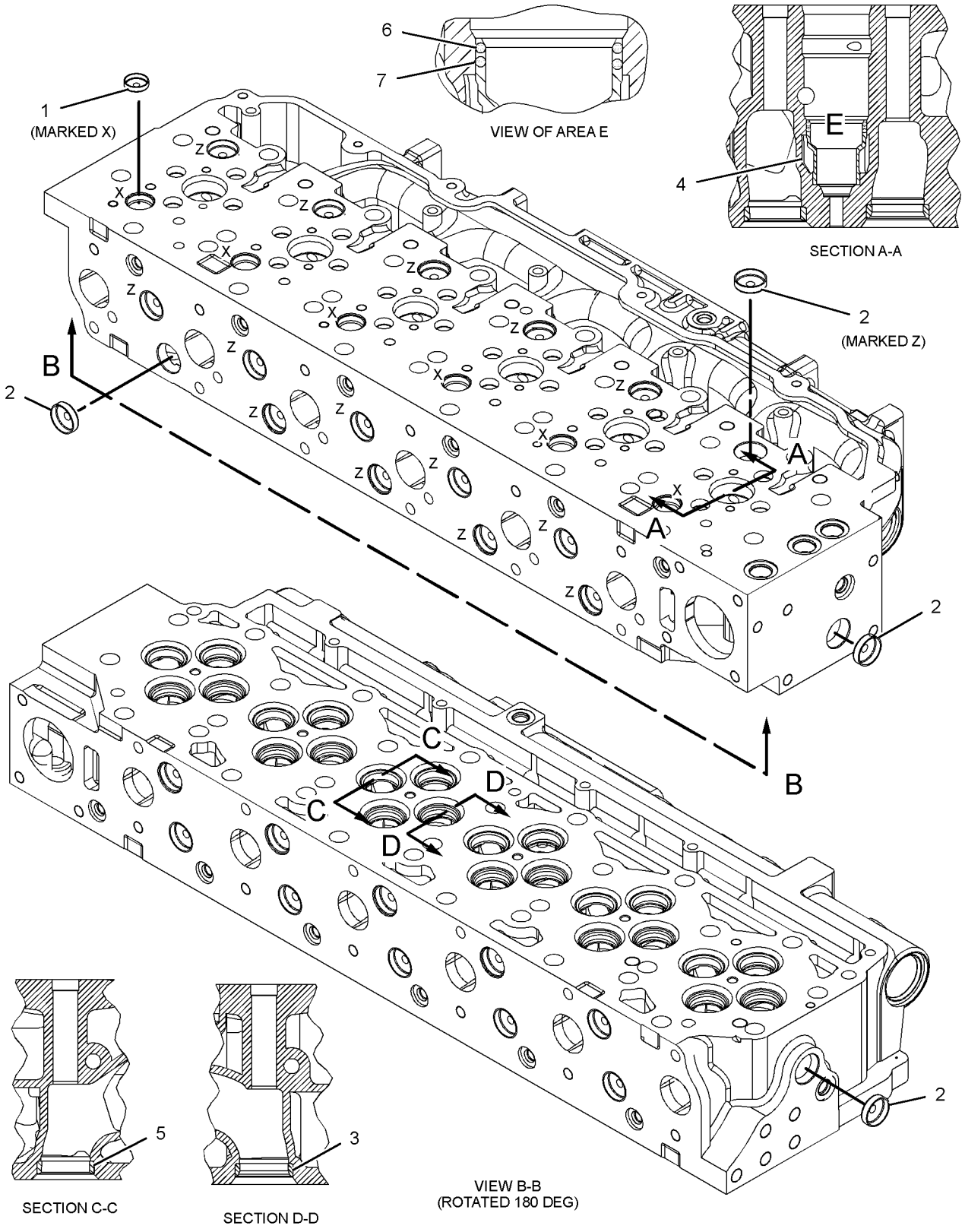

GRAPHIC #1 **<END>** g01414571

BASIC ENGINE

242-0672 CYLINDER HEAD GP

S/N: THX1-UP

PART OF 229-2665, 270-4216 ENGINE AR-CORE

SMCS-1100 **i02721753**

NOTE	REF NO	GRAPHIC REF	PART NUMBER	QTY	PART NAME 1 2 3 4 5 6 (PRODUCT LEVEL)	SEE PAGE
	1	1	**2A-3746**	1	PLUG-CUP	
	2	1	**187-1315**	1	GASKET AS	
Y	3	1	**252-8439**	1	CYLINDER HEAD GP	41

Y-SEPARATE ILLUSTRATION

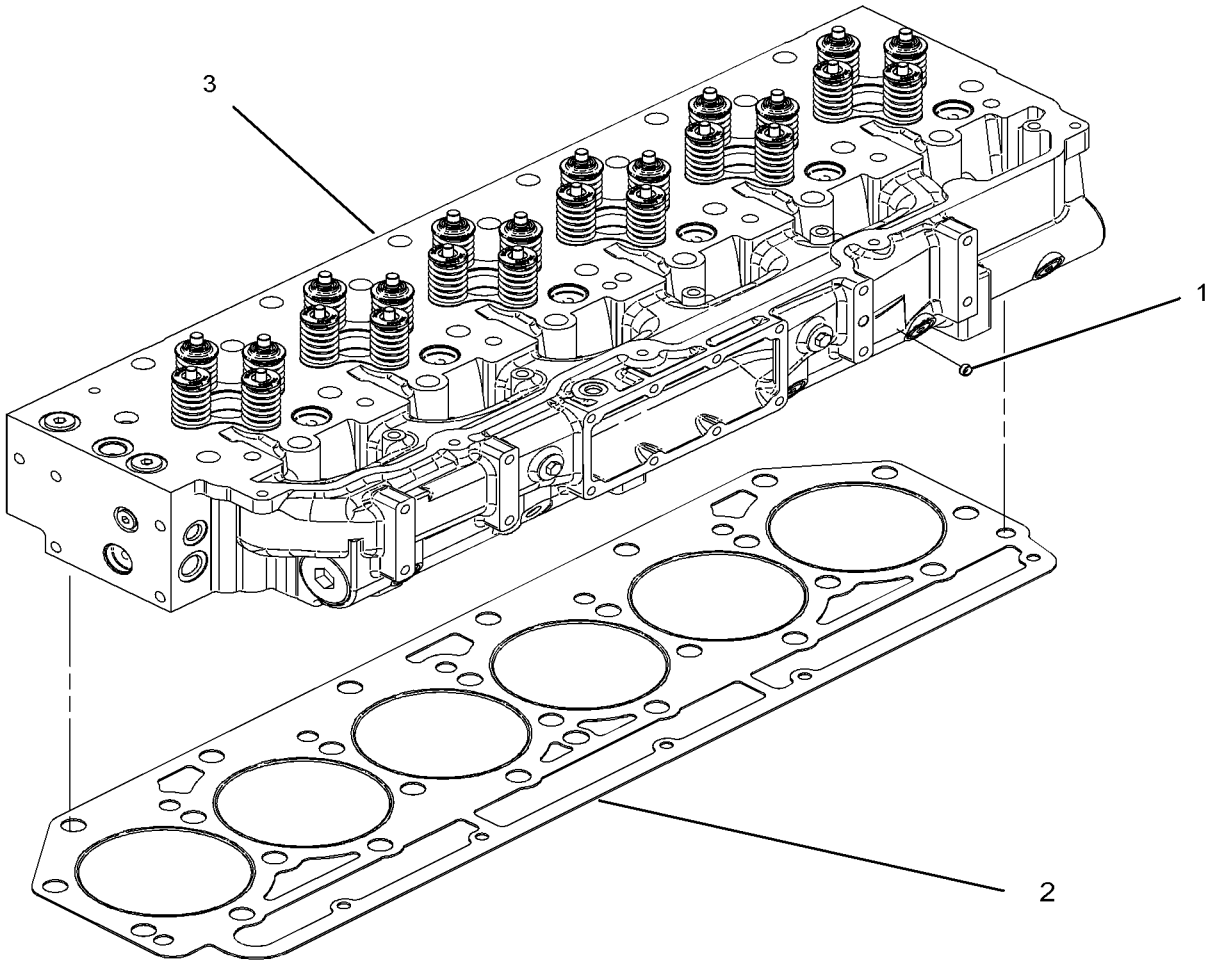

GRAPHIC #1 **<END>** g01305570

252-8439 CYLINDER HEAD GP*R

S/N: THX1-10289

PART OF 242-0672 CYLINDER HEAD GP

SMCS-1100 **i03770651**

NOTE	REF NO	GRAPHIC REF	PART NUMBER	QTY	PART NAME 1 2 3 4 5 6 (PRODUCT LEVEL)	SEE PAGE
	1	1	**1W-2715**	24	LOCK-RETAINER	
	2	1	**2A-4429**	24	LOCK-RETAINER	
	3	1	**260-4856**	12	GUIDE-VALVE	
AB		1	**203-3237**		GUIDE-VALVE (0.13-MM OS OD, EXHAUST)	
AB		1	**203-3238**		GUIDE-VALVE (0.5-MM OS OD, EXHAUST)	
	4	1	**163-2478**	12	SEAL-VALVE STEM	
	5	1	*183-3407*	6	PLUG AS (MARKED Y)	
					(EACH INCLUDES)	
		1	**9S-8004**	1	PLUG	
		1	**153-4906**	1	SEAL-O-RING	
	6	1	**271-7442**	2	PLUG (HEX HEAD)	
	7	1	**183-2317**	2	SEAL-O-RING	
	8	1	**190-6115**	12	SPRING-VALVE (INNER)	
	9	1	**190-6117**	12	SPRING-VALVE (OUTER)	
	10	1	**211-2134**	12	RETAINER (VALVE SPRING)	
	11	1	**217-0609**	6	SEAT-VALVE SPRING	
	12	1	**241-8382**	12	VALVE-INLET	
	13	1	**241-8383**	12	VALVE-EXHAUST	
	14	1	**241-8384**	12	RETAINER (VALVE SPRING)	
	15	1	**241-8385**	12	SPRING-VALVE (OUTER)	
	16	1	**241-8386**	12	SPRING-VALVE (INNER)	
	17	1	**241-8387**	6	SEAT	
	18	1	**259-5829**	12	GUIDE-VALVE	
AB		1	**254-3941**		GUIDE-VALVE (0.13-MM OS OD)	
AB		1	**254-3942**		GUIDE-VALVE (0.5-MM OS OD)	
	19	1	**241-8390**	12	SEAL-VALVE STEM	
Y	20	1	*252-8438*	1	CYLINDER HEAD AS	34
	21	1	*148-8395*	2	PLUG AS	
					(EACH INCLUDES)	
		1	**3K-0360**	1	SEAL-O-RING	
		1	**9S-8005**	1	PLUG-O-RING (HEX HEAD)	
	22	1	**8T-6764**	2	PLUG-PIPE (1/8-27-THD)	

A-NOT PART OF THIS GROUP
B-USE AS REQUIRED
Y-SEPARATE ILLUSTRATION

252-8439 CYLINDER HEAD GP *(contd.)* i03770651

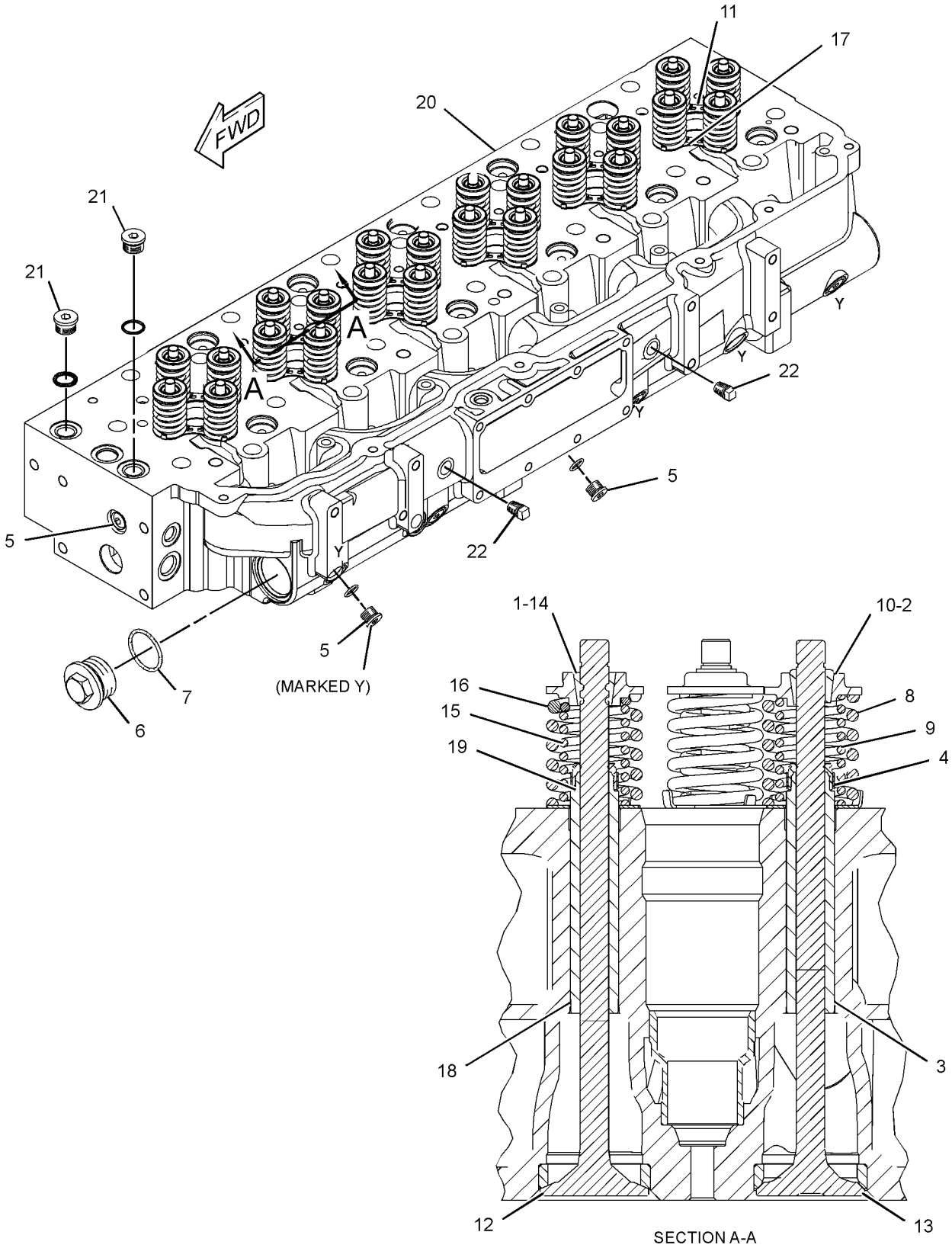

GRAPHIC #1 **<END>** g01989015

252-8439 CYLINDER HEAD GP*R

S/N: THX10290-UP

PART OF 242-0672 CYLINDER HEAD GP

TYPE 1

SMCS-1100 **i03787170**

NOTE	REF NO	GRAPHIC REF	PART NUMBER	QTY	PART NAME 1 2 3 4 5 6 (PRODUCT LEVEL)	SEE PAGE
	1	1	**1W-2715**	24	LOCK-RETAINER	
	2	1	**2A-4429**	24	LOCK-RETAINER	
	3	1	**260-4856**	12	GUIDE-VALVE (STANDARD, EXHAUST)	
AB		1	**203-3237**	12	GUIDE-VALVE (0.13-MM OS, EXHAUST)	
AB		1	**203-3238**	12	GUIDE-VALVE (0.5-MM OS, EXHAUST)	
	4	1	**163-2478**	12	SEAL-VALVE STEM	
	5	1	*321-8638*	6	PLUG AS (MARKED Y)	
					(EACH INCLUDES)	
		1	**214-7568**	1	SEAL-O-RING	
	6	1	*319-6237*	2	PLUG AS (HEX HEAD)	
					(EACH INCLUDES)	
		1	**271-7442**	1	PLUG	
	6A	1	**228-7096**	1	SEAL-O-RING	
	8	1	**190-6115**	12	SPRING-VALVE (INNER)	
	9	1	**190-6117**	12	SPRING-VALVE (OUTER)	
	10	1	**211-2134**	12	RETAINER (VALVE SPRING)	
	11	1	**217-0609**	6	SEAT-VALVE SPRING	
	12	1	**241-8382**	12	VALVE-INLET	
	13	1	**241-8383**	12	VALVE-EXHAUST	
	14	1	**241-8384**	12	RETAINER (VALVE SPRING)	
	15	1	**241-8385**	12	SPRING-VALVE (OUTER)	
	16	1	**241-8386**	12	SPRING-VALVE (INNER)	
	17	1	**241-8387**	6	SEAT	
	18	1	**259-5829**	12	GUIDE-VALVE (STANDARD, INTAKE)	
AB		1	**254-3941**		GUIDE-VALVE (0.13-MM OS)	
AB		1	**254-3942**		GUIDE-VALVE (0.5-MM OS)	
	19	1	**241-8390**	12	SEAL-VALVE STEM	
Y	20	1	*311-7229*	1	CYLINDER HEAD AS	36
	21	1	*148-8395*	2	PLUG AS	
					(EACH INCLUDES)	
		1	**3K-0360**	1	SEAL-O-RING	
		1	**9S-8005**	1	PLUG-O-RING (HEX HEAD)	
	22	1	**8T-6764**	2	PLUG-PIPE (1/8-27-THD)	

A-NOT PART OF THIS GROUP
B-USE AS REQUIRED
Y-SEPARATE ILLUSTRATION

252-8439 CYLINDER HEAD GP *(contd.)* i03787170

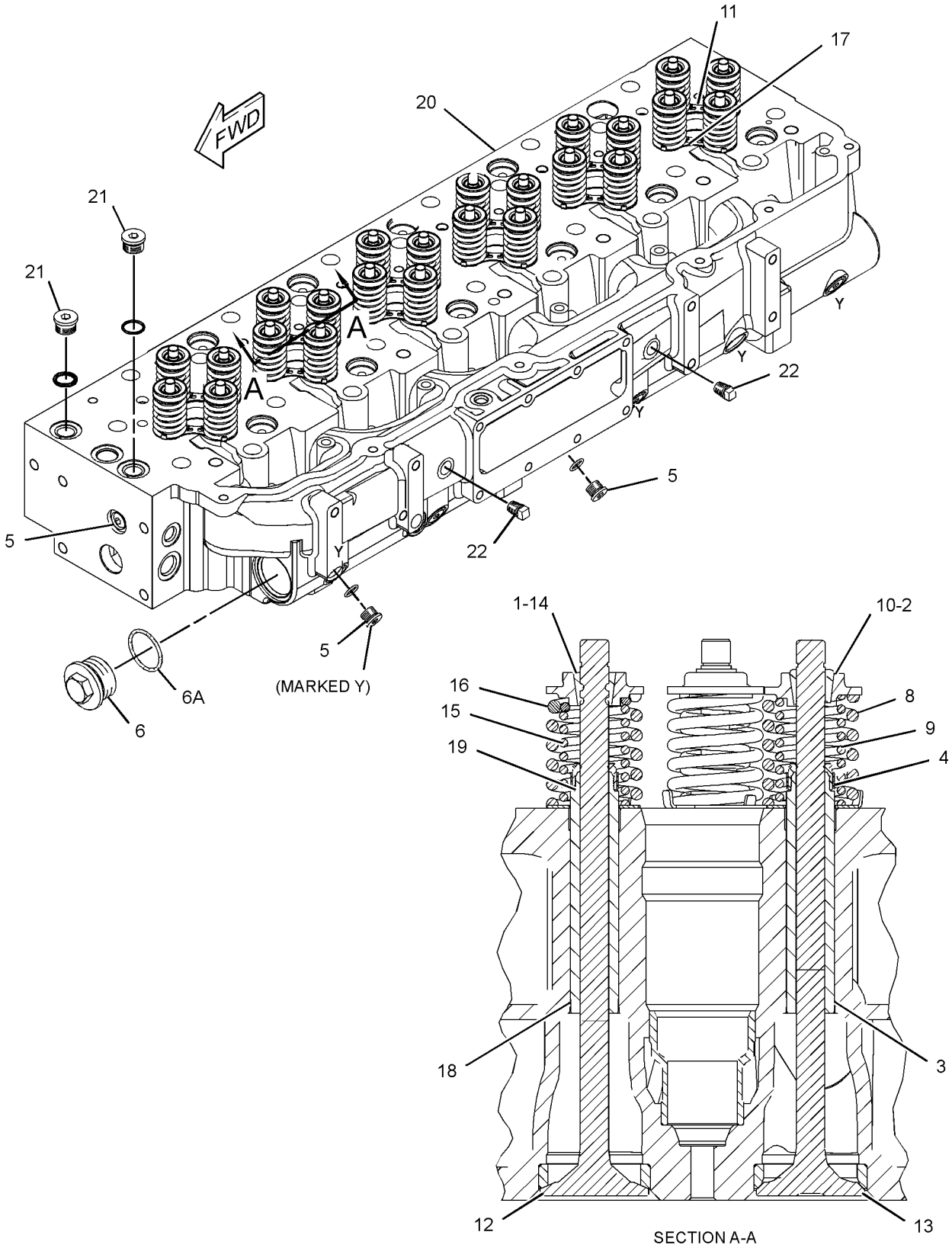

GRAPHIC #1 **<END>** g01988815

252-8439 CYLINDER HEAD GP*R

S/N: THX10290-UP

PART OF 242-0672 CYLINDER HEAD GP

TYPE 2

SMCS-1100 **i03770653**

NOTE	REF NO	GRAPHIC REF	PART NUMBER	QTY	PART NAME 1 2 3 4 5 6 (PRODUCT LEVEL)	SEE PAGE
	1	1	**1W-2715**	24	LOCK-RETAINER	
	2	1	**2A-4429**	24	LOCK-RETAINER	
	3	1	**260-4856**	12	GUIDE-VALVE (STANDARD, EXHAUST)	
AB		1	**203-3237**	12	GUIDE-VALVE (0.13-MM OS OD, EXHAUST)	
AB		1	**203-3238**	12	GUIDE-VALVE (0.5-MM OS OD, EXHAUST)	
	4	1	**163-2478**	12	SEAL-VALVE STEM	
	5	1	*321-8638*	6	PLUG AS (MARKED Y)	
					(EACH INCLUDES)	
		1	**214-7568**	1	SEAL-O-RING	
	6	1	*319-6237*	2	PLUG AS (HEX HEAD)	
					(EACH INCLUDES)	
		1	**271-7442**	1	PLUG	
	6A	1	**228-7096**	1	SEAL-O-RING	
	8	1	**190-6115**	12	SPRING-VALVE (INNER)	
	9	1	**190-6117**	12	SPRING-VALVE (OUTER)	
	10	1	**211-2134**	12	RETAINER (VALVE SPRING)	
	11	1	**217-0609**	6	SEAT-VALVE SPRING	
	12	1	**241-8382**	12	VALVE-INLET	
	13	1	**241-8383**	12	VALVE-EXHAUST	
	14	1	**241-8384**	12	RETAINER (VALVE SPRING)	
	15	1	**241-8385**	12	SPRING-VALVE (OUTER)	
	16	1	**241-8386**	12	SPRING-VALVE (INNER)	
	17	1	**241-8387**	6	SEAT	
	18	1	**259-5829**	12	GUIDE-VALVE (STANDARD, INTAKE)	
AB		1	**254-3941**		GUIDE-VALVE (0.13-MM OS OD)	
AB		1	**254-3942**		GUIDE-VALVE (0.5-MM OS OD)	
	19	1	**241-8390**	12	SEAL-VALVE STEM	
CY	20	1	*332-3619*	1	CYLINDER HEAD AS	38
	21	1	*148-8395*	2	PLUG AS	
					(EACH INCLUDES)	
		1	**3K-0360**	1	SEAL-O-RING	
		1	**9S-8005**	1	PLUG-O-RING (HEX HEAD)	
	22	1	**9F-2247**	2	PLUG-PIPE	

A-NOT PART OF THIS GROUP
B-USE AS REQUIRED
C-CHANGE FROM PREVIOUS TYPE
Y-SEPARATE ILLUSTRATION

252-8439 CYLINDER HEAD GP *(contd.)* i03770653

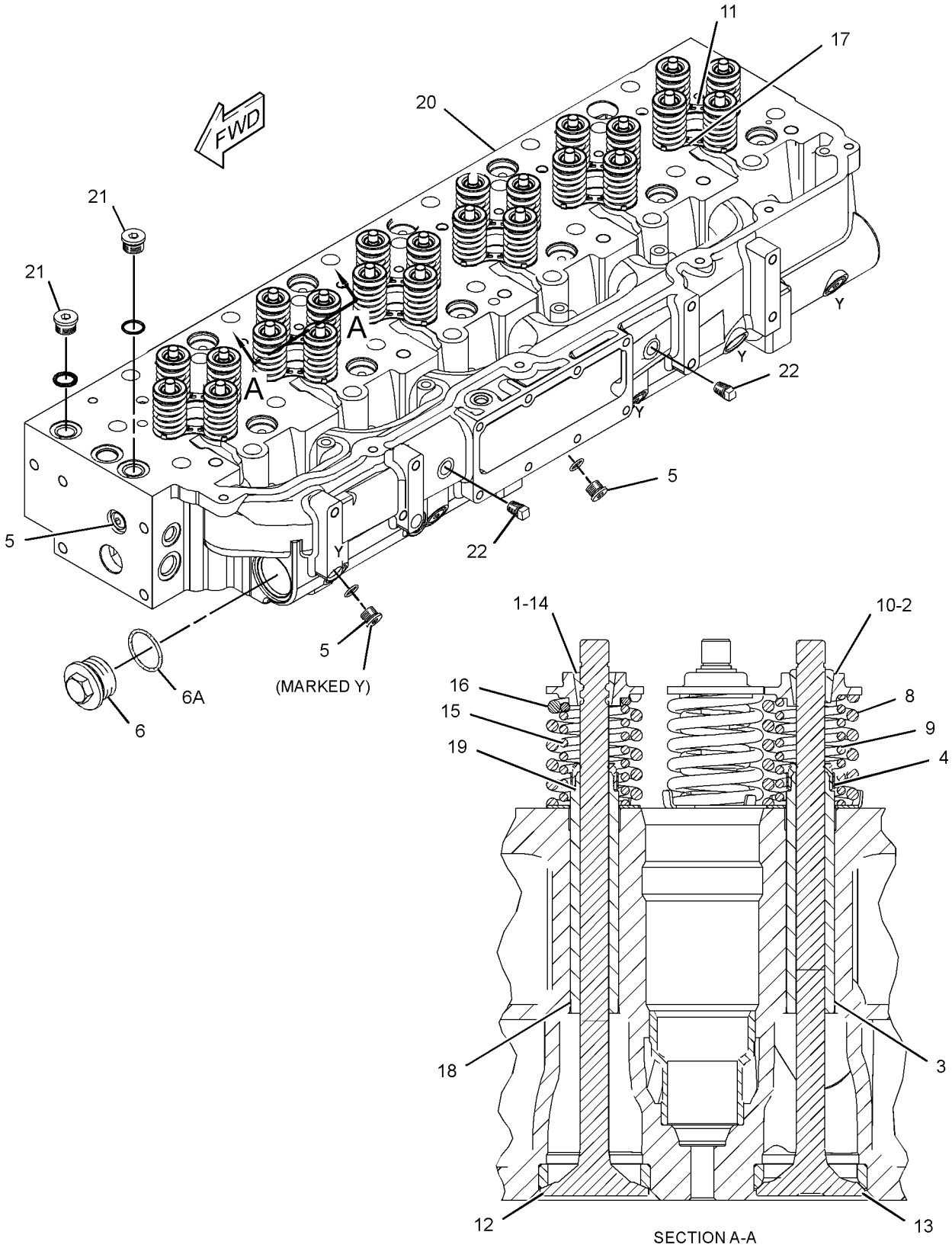

GRAPHIC #1 **<END>** g01988815

BASIC ENGINE

344-2149 CYLINDER HEAD GP

S/N: THX22638-UP

PART OF 345-8414 CYLINDER HEAD GP

SMCS-1100 **i03787189**

NOTE	REF NO	GRAPHIC REF	PART NUMBER	QTY	PART NAME 1 2 3 4 5 6 (PRODUCT LEVEL)	SEE PAGE
	1	1	**1W-2715**	24	LOCK-RETAINER (INLET)	
	2	1	**2A-4429**	24	LOCK-RETAINER (EXHAUST)	
	3	1	**163-2478**	12	SEAL-VALVE STEM (EXHAUST)	
	4	1	**190-6115**	12	SPRING-VALVE (INNER)	
	5	1	**190-6117**	12	SPRING-VALVE (OUTER)	
	6	1	**211-2134**	12	RETAINER (VALVE SPRING)	
	7	1	**217-0609**	6	SEAT-VALVE SPRING	
	8	1	**241-8383**	12	VALVE-EXHAUST	
	9	1	**241-8384**	12	RETAINER (VALVE SPRING)	
	10	1	**241-8385**	12	SPRING-VALVE (OUTER)	
	11	1	**241-8386**	12	SPRING-VALVE (INNER)	
	12	1	**241-8387**	6	SEAT	
	13	1	**241-8390**	12	SEAL-VALVE STEM	
	14	1	**252-7803**	12	VALVE-INLET	
	15	1	**259-5829**	12	GUIDE-VALVE (STANDARD, INTAKE)	
	16	1	**260-4856**	12	GUIDE-VALVE (STANDARD, EXHAUST)	
		1	**203-3237**		GUIDE-VALVE (0.13-MM OS, EXHAUST)	
		1	**203-3238**		GUIDE-VALVE (0.5-MM OS, EXHAUST)	
Y	17	1	*311-7229*	1	CYLINDER HEAD AS	36
	18	1	*319-6237*	2	PLUG AS	
					(EACH INCLUDES)	
		1	**228-7096**	1	SEAL-O-RING	
		1	**271-7442**	1	PLUG	
	19	1	*321-8638*	6	PLUG AS	
					(EACH INCLUDES)	
		1	**214-7568**	1	SEAL-O-RING	
		1	**321-8635**	1	PLUG	
	20	1	*307-2673*	2	PLUG AS	
					(EACH INCLUDES)	
		1	**9S-8005**	1	PLUG-O-RING	
		1	**238-5080**	1	SEAL-O-RING	
	21	1	**8T-6764**	2	PLUG-PIPE (1/8-27-THD) (CYLINDER HEAD)	

Y-SEPARATE ILLUSTRATION

344-2149 **CYLINDER HEAD GP** *(contd.)* **i03787189**

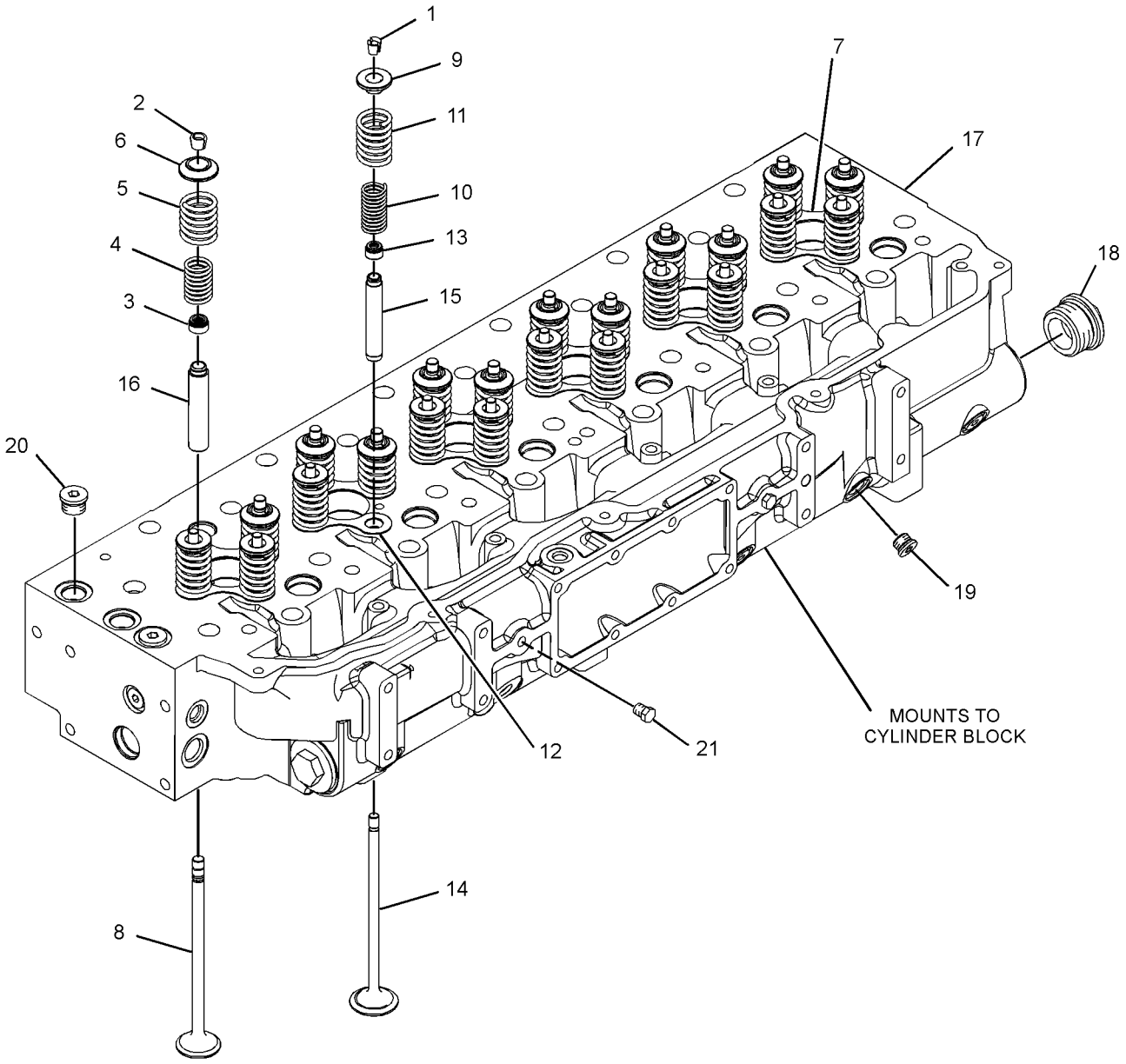

GRAPHIC #1 **<END>** g01979881

345-8414 CYLINDER HEAD GP

S/N: THX22638-UP

PART OF 348-2746, 348-2747 ENGINE AR-CORE

SMCS-1100 **i03688610**

NOTE	REF NO	GRAPHIC REF	PART NUMBER	QTY	PART NAME 1 2 3 4 5 6 (PRODUCT LEVEL)	SEE PAGE
	1	1	**2A-3746**	1	PLUG-CUP	
	2	1	**187-1315**	1	GASKET AS	
Y	3	1	**344-2149**	1	CYLINDER HEAD GP	47

Y-SEPARATE ILLUSTRATION

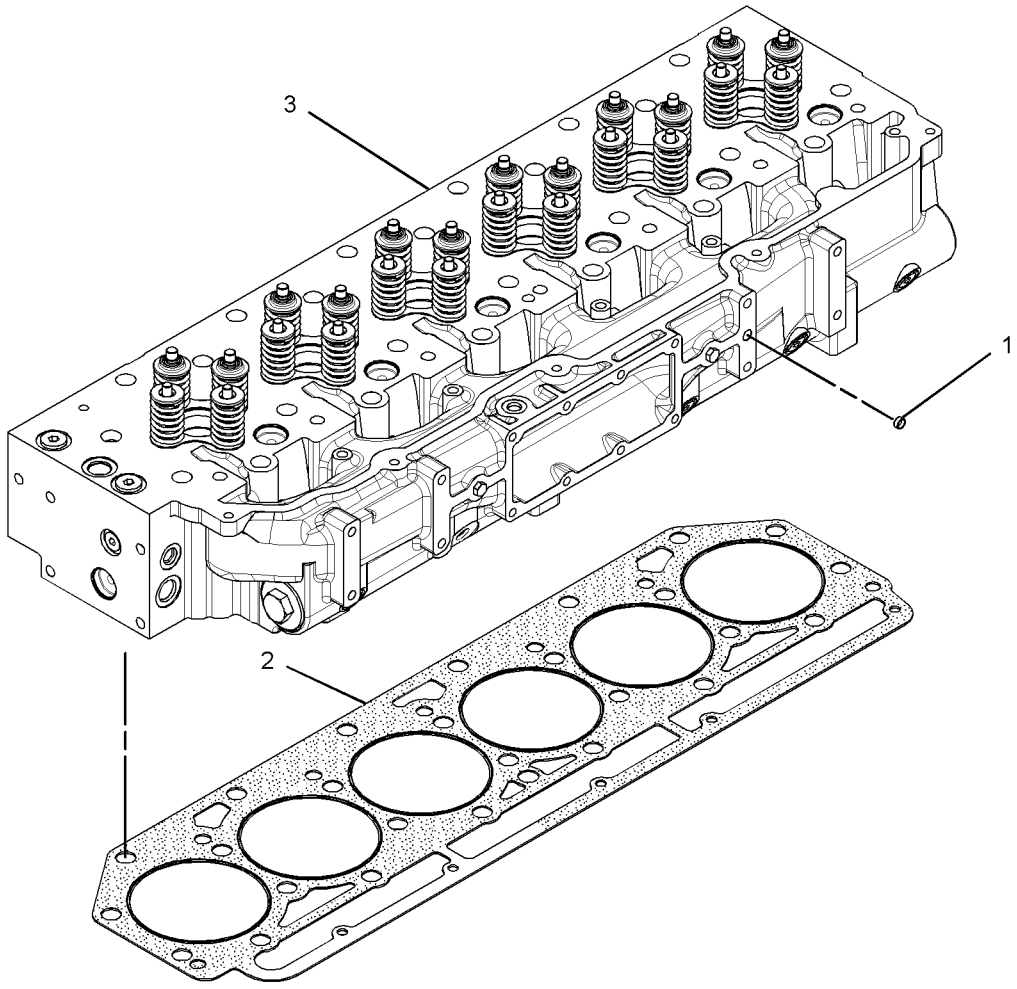

GRAPHIC #1 **<END>** g01979813

165-4557 DAMPER & PULLEY GP

S/N: THX1-UP

PART OF 224-9843 ENGINE AR, 240-1861, 270-2771, 301-3082 ENGINE AR-COMPLETE

SMCS-1205 **i01743128**

NOTE	REF NO	GRAPHIC REF	PART NUMBER	QTY	PART NAME 1 2 3 4 5 6 (PRODUCT LEVEL)	SEE PAGE
	1	1	**2W-7381**	1	PLATE-CLAMP	
	2	1	**167-8121**	1	DAMPER AS	
	3	1	**153-1036**	1	PULLEY-CRANKSHAFT (8 GROOVE)	
M	4	1	**8T-3666**	4	BOLT (M14X2X60-MM)	

M-METRIC PART

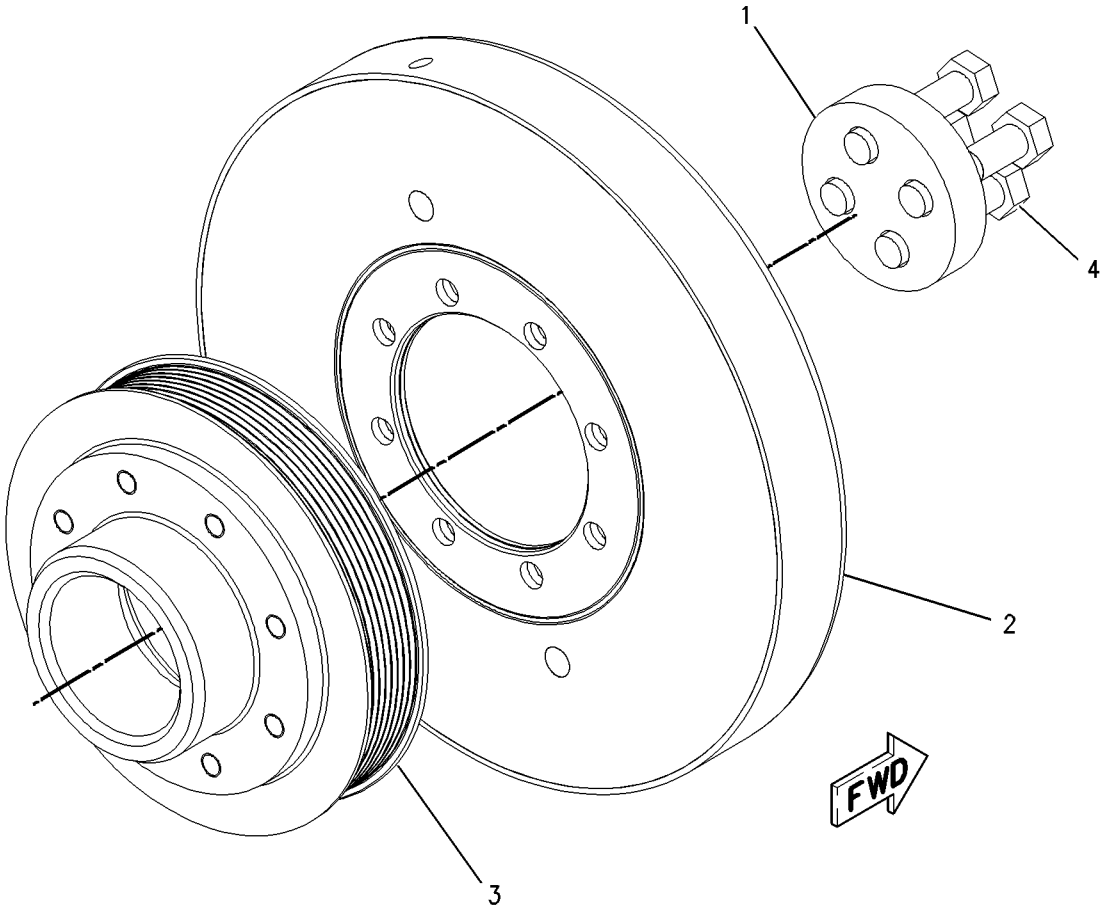

GRAPHIC #1 **<END>** g00836513

241-7605 DRIVE GP-ACCESSORY

S/N: THX1-UP

PART OF 224-9843 ENGINE AR, 270-2771, 301-3082 ENGINE AR-COMPLETE

SMCS-1207 **i03600722**

NOTE	REF NO	GRAPHIC REF	PART NUMBER	QTY	PART NAME 1 2 3 4 5 6 (PRODUCT LEVEL)	SEE PAGE
	1	1	**189-2449**	1	SUPPORT	
	2	1	**190-0643**	1	BELT TENSIONER	
	3	1	**197-9642**	1	PULLEY AS-IDLER (8-GROOVE)	
	4	1	**241-7604**	1	BRACKET	
	5	1	**183-4494**	1	BELT-SERPENTINE	
	6	1	**6E-5102**	1	PLATE	
M	7	1	**6V-5218**	4	BOLT (M8X1.25X35-MM)	
	8	1	**6V-5839**	7	WASHER (11X21X2.5-MM THK)	
M	9	1	**6V-5842**	6	BOLT (M10X1.5X40-MM)	
M	10	1	**8T-0643**	1	BOLT (M10X1.5X80-MM)	
	11	1	**9M-1974**	4	WASHER-HARD (8.8X16X2-MM THK)	

M-METRIC PART

241-7605 **DRIVE GP-ACCESSORY** *(contd.)* **i03600722**

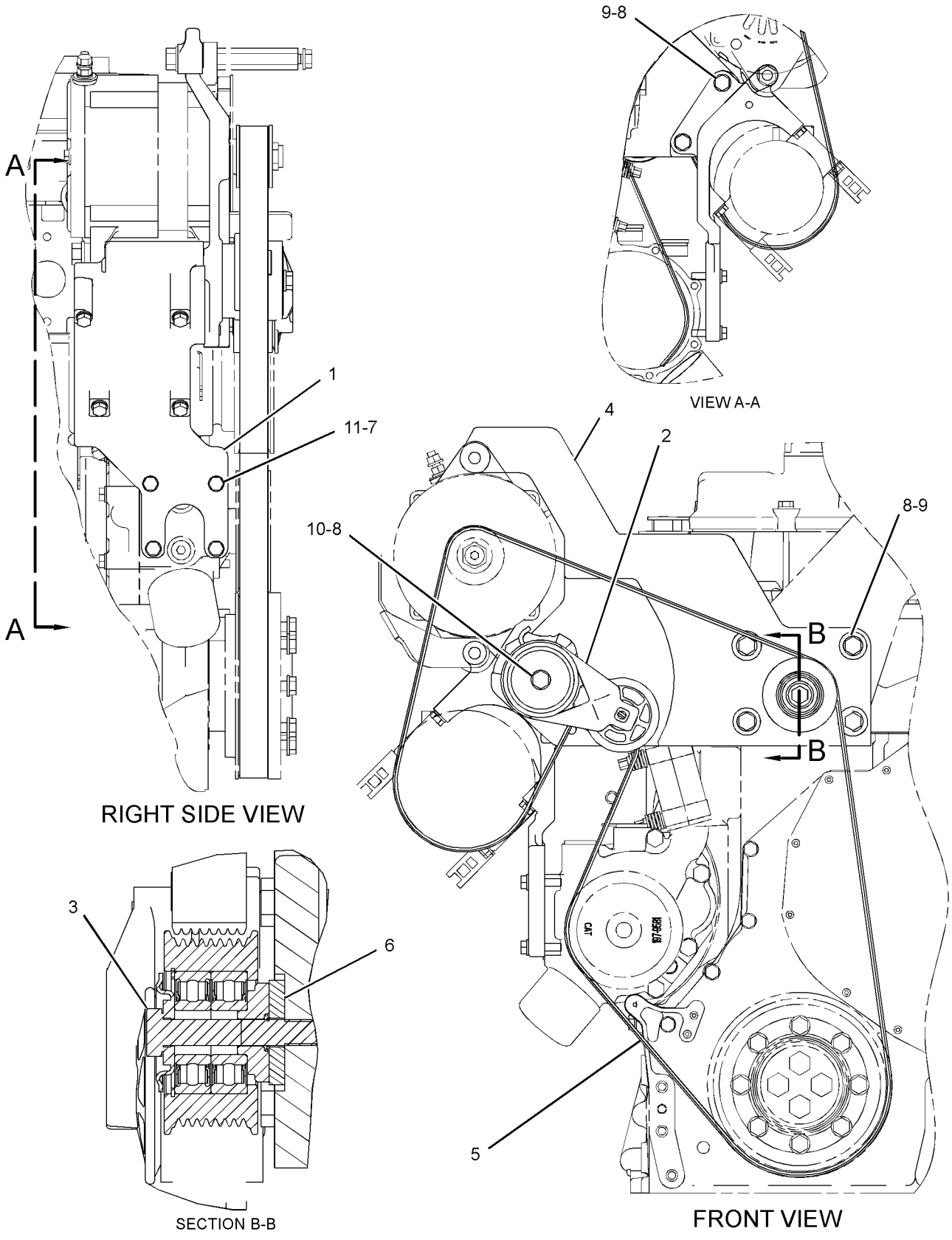

GRAPHIC #1 **<END>** g01186148

277-8279 DRIVE GP-ACCESSORY

S/N: THX1-UP

PART OF 240-1861, 301-3082 ENGINE AR-COMPLETE

SMCS-1207 **i02772288**

NOTE	REF NO	GRAPHIC REF	PART NUMBER	QTY	PART NAME 1 2 3 4 5 6 (PRODUCT LEVEL)	SEE PAGE
	1	1	**189-2449**	1	SUPPORT (COMPRESSOR)	
	2	1	**190-0643**	1	BELT TENSIONER	
	3	1	**197-9642**	1	PULLEY AS-IDLER (8-GROOVE)	
	4	1	**241-7604**	1	BRACKET	
	5	1	**6E-5102**	1	PLATE	
M	6	1	**6V-5218**	4	BOLT (M8X1.25X35-MM)	
	7	1	**6V-5839**	7	WASHER (11X21X2.5-MM THK)	
M	8	1	**6V-5842**	6	BOLT (M10X1.5X40-MM)	
M	9	1	**8T-0643**	1	BOLT (M10X1.5X80-MM)	
	10	1	**9M-1974**	4	WASHER-HARD (8.8X16X2-MM THK)	

M-METRIC PART

277-8279 **DRIVE GP-ACCESSORY** *(contd.)* **i02772288**

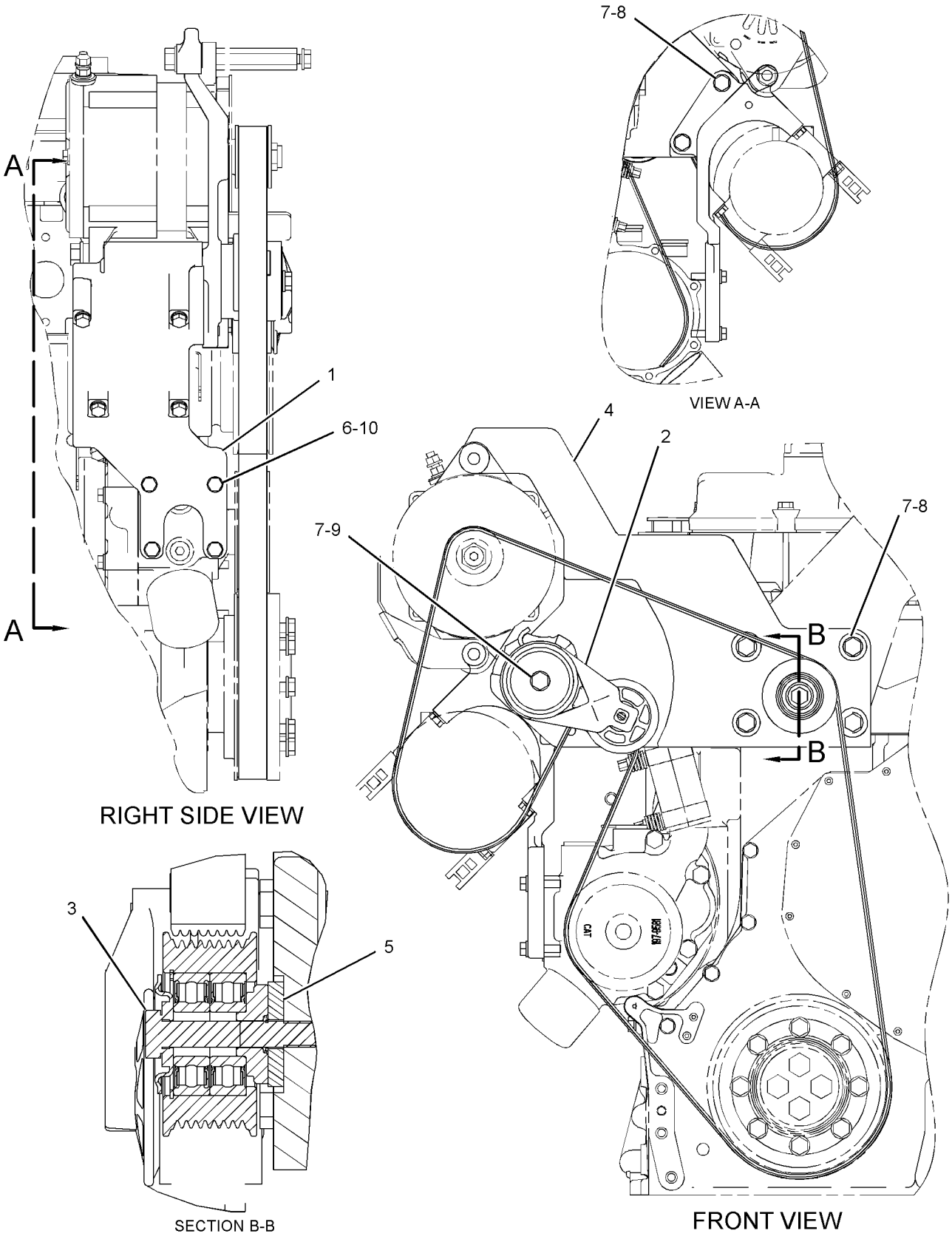

GRAPHIC #1 **<END>** g01217113

BASIC ENGINE

137-3750 DRIVE GP-FAN

S/N: B6H1-652; JLP1-944

PART OF 230-2899 FAN GP-SUCTION

SMCS-1359 **i02495097**

NOTE	REF NO	GRAPHIC REF	PART NUMBER	QTY	PART NAME 1 2 3 4 5 6 (PRODUCT LEVEL)	SEE PAGE
	1	1	**137-3746**	1	SHAFT	
	2	1	**137-3751**	1	SEAL-LIP TYPE	
C	3	1	**200-3311**	1	HOUSING	
	4	1	**4B-3665**	2	BALL BEARING	
	5	1	**137-3749**	2	SPACER (45X53X10-MM THK)	
	6	1	**6V-5590**	1	RING-RETAINING	
	8	1	**095-7424**	1	RING-RETAINING	

C-CHANGE FROM PREVIOUS TYPE

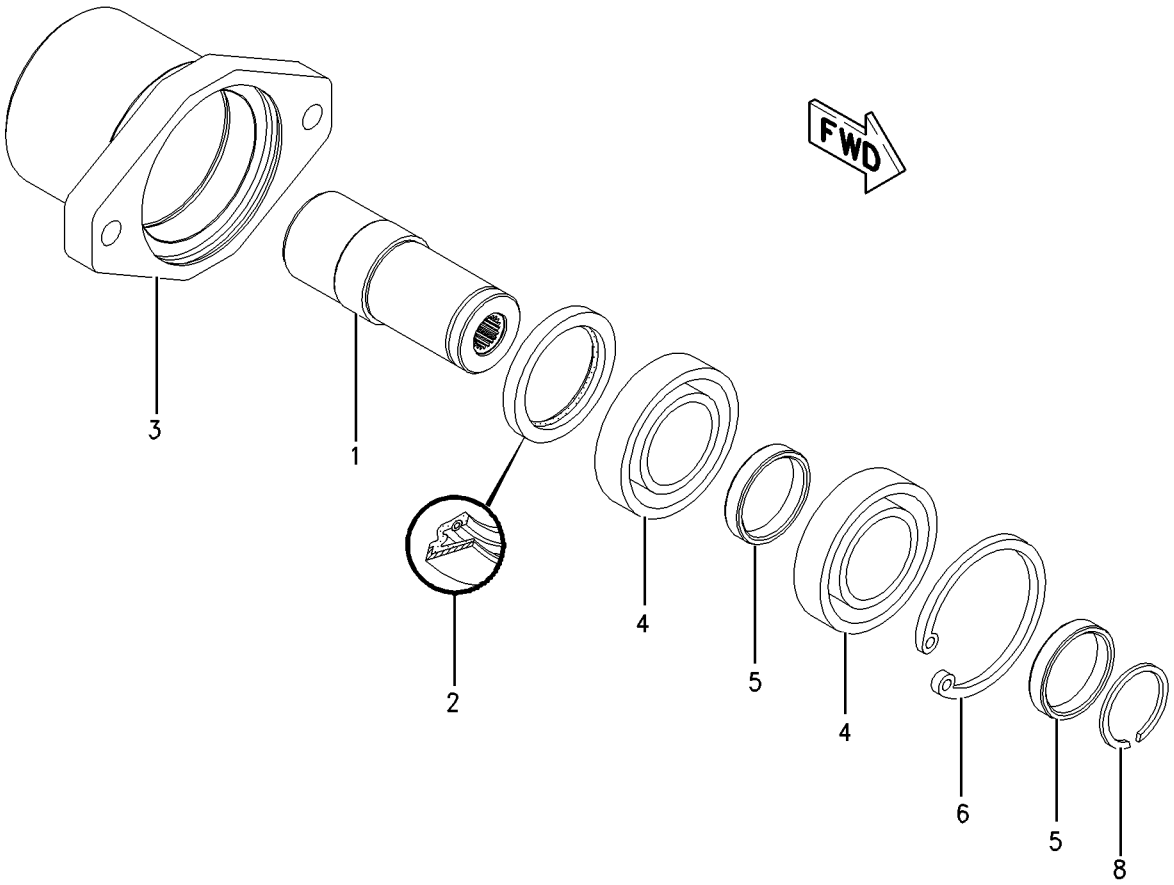

GRAPHIC #1 **<END>** g00856937

BASIC ENGINE

295-9439 DRIVE GP-FAN

S/N: B6H653-UP; JLP945-UP

PART OF 230-2899 FAN GP-SUCTION

SMCS-1359 **i03297835**

NOTE	REF NO	GRAPHIC REF	PART NUMBER	QTY	PART NAME 1 2 3 4 5 6 (PRODUCT LEVEL)	SEE PAGE
	1	1	**137-3746**	1	SHAFT	
	2	1	**129-7925**	1	SEAL-LIP TYPE	
	3	1	**200-3311**	1	HOUSING	
	4	1	**4B-3665**	2	BALL BEARING	
	5	1	**137-3749**	2	SPACER (45X53X10-MM THK)	
	6	1	**6V-5590**	1	RING-RETAINING	
	7	1	**095-7424**	1	RING-RETAINING	

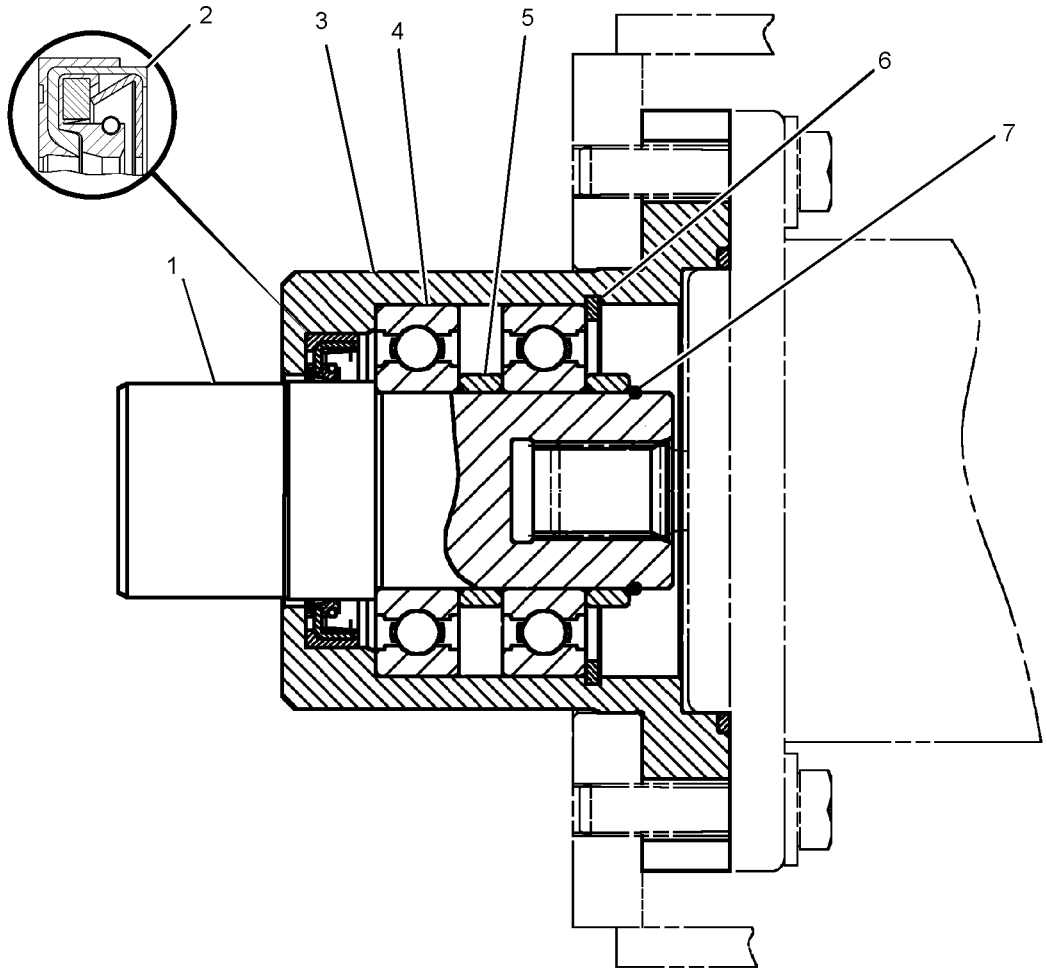

GRAPHIC #1 **<END>** g01538953

167-0171 FASTENER GP-CYLINDER HEAD

S/N: THX1-UP

PART OF 213-4363 FASTENER GP-CYLINDER HEAD

SMCS-1100 **i01682539**

NOTE	REF NO	GRAPHIC REF	PART NUMBER	QTY	PART NAME 1 2 3 4 5 6 (PRODUCT LEVEL)	SEE PAGE
M	1	1	**183-5163**	1	BOLT	
	2	1	**9X-8268**	1	WASHER (17.5X30X3.5MM THK)	

M-METRIC PART

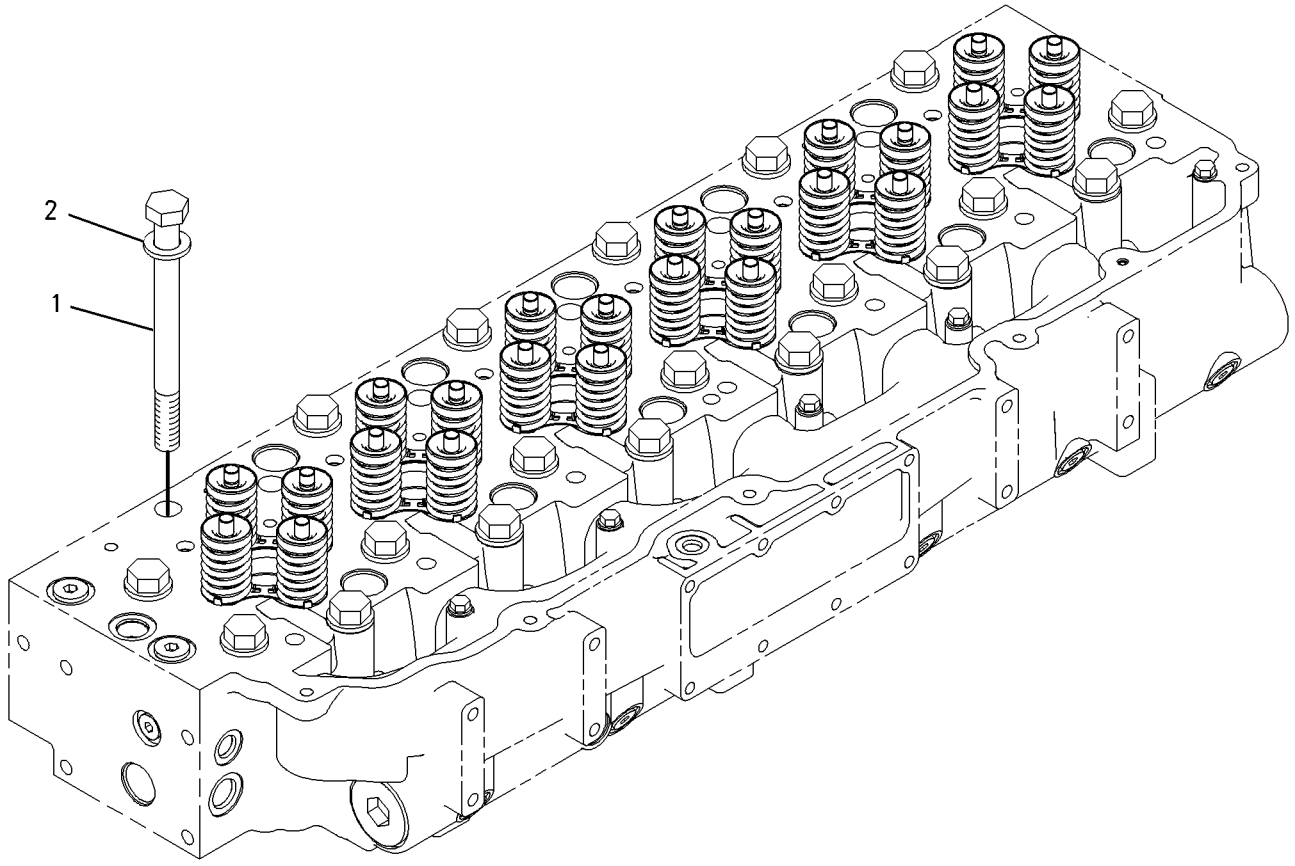

GRAPHIC #1 **<END>** g00792849

213-4363 FASTENER GP-CYLINDER HEAD

S/N: THX1-16676

PART OF 229-2665, 270-4216 ENGINE AR-CORE

SMCS-1100 **i02433678**

NOTE	REF NO	GRAPHIC REF	PART NUMBER	QTY	PART NAME 1 2 3 4 5 6 (PRODUCT LEVEL)	SEE PAGE
Y	1	1	*167-0171*	26	FASTENER GP-CYLINDER HEAD	57
M	2	1	**8C-4984**	5	BOLT (M8X1.25X150-MM)	
	3	1	**9M-1974**	5	WASHER-HARD (8.8X16X2-MM THK)	

M-METRIC PART
Y-SEPARATE ILLUSTRATION

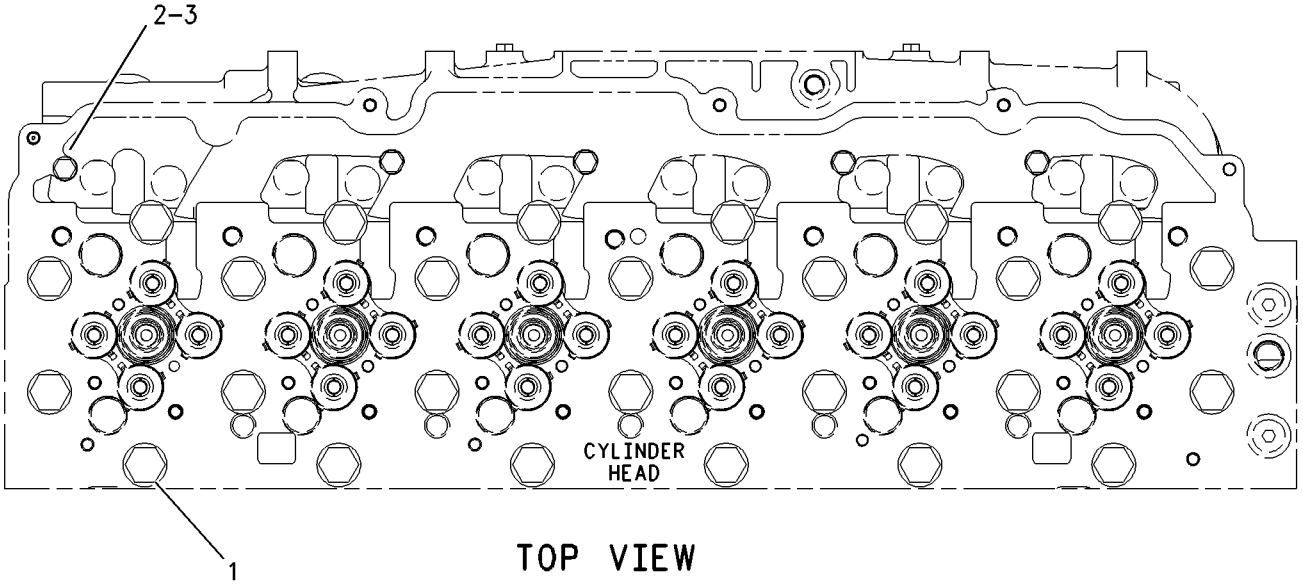

TOP VIEW

GRAPHIC #1 **<END>** g00919169

213-4363 FASTENER GP-CYLINDER HEAD

S/N: THX16677-UP

PART OF 229-2665, 270-4216, 348-2746, 348-2747 ENGINE AR-CORE

SMCS-1100 **i03787196**

NOTE	REF NO	GRAPHIC REF	PART NUMBER	QTY	PART NAME 1 2 3 4 5 6 (PRODUCT LEVEL)	SEE PAGE
C	1	1	*290-6884*	26	FASTENER GP-CYLINDER HEAD	
					(EACH INCLUDES)	
		1	**9X-8268**	1	WASHER (17.5X30X3.5-MM THK)	
M		1	**263-2915**	1	BOLT-12 POINT HEAD (M16X2X180-MM)	
M	2	1	**8C-4984**	5	BOLT (M8X1.25X150-MM)	
	3	1	**9M-1974**	5	WASHER-HARD (8.8X16X2-MM THK)	

C-CHANGE FROM PREVIOUS TYPE
M-METRIC PART

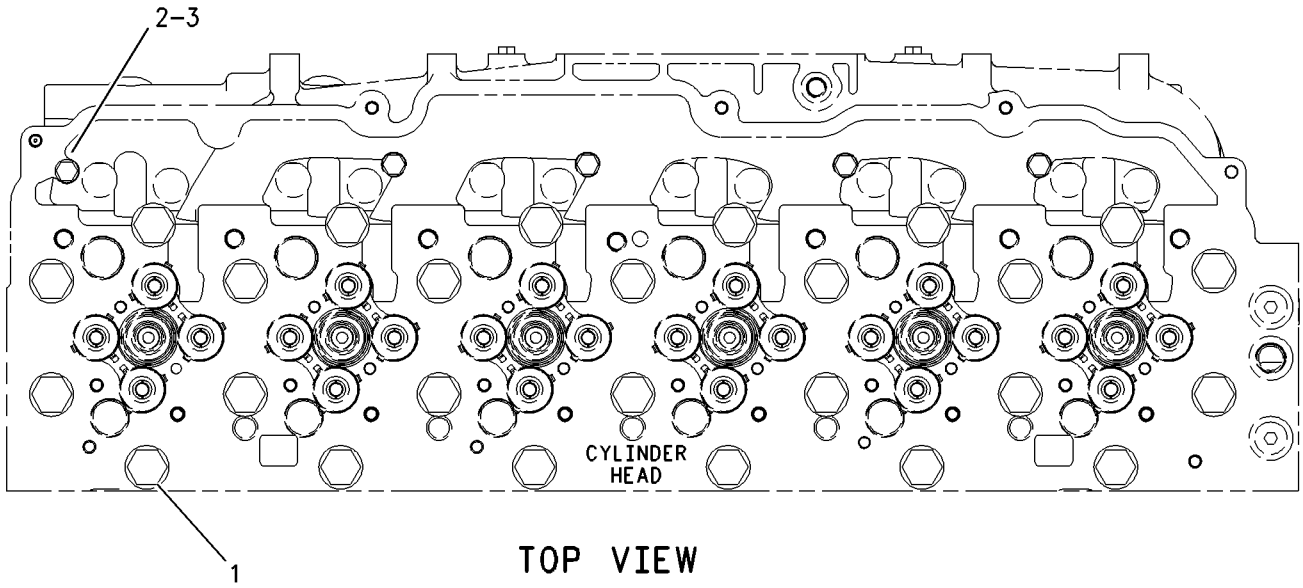

TOP VIEW

GRAPHIC #1 **<END>** g00919169

BASIC ENGINE

218-0859 FASTENER GP-DAMPER & PULLEY

S/N: THX1-UP

PART OF 224-9843 ENGINE AR, 240-1861, 270-2771, 301-3082 ENGINE AR-COMPLETE

SMCS-1205, 7553 **i02214637**

NOTE	REF NO	GRAPHIC REF	PART NUMBER	QTY	PART NAME 1 2 3 4 5 6 (PRODUCT LEVEL)	SEE PAGE
	1	1	**228-3621**	1	SPACER (101.5X167X8-MM THK)	
M	2	1	**6V-4249**	8	BOLT (M10X1.5X50-MM)	

M-METRIC PART

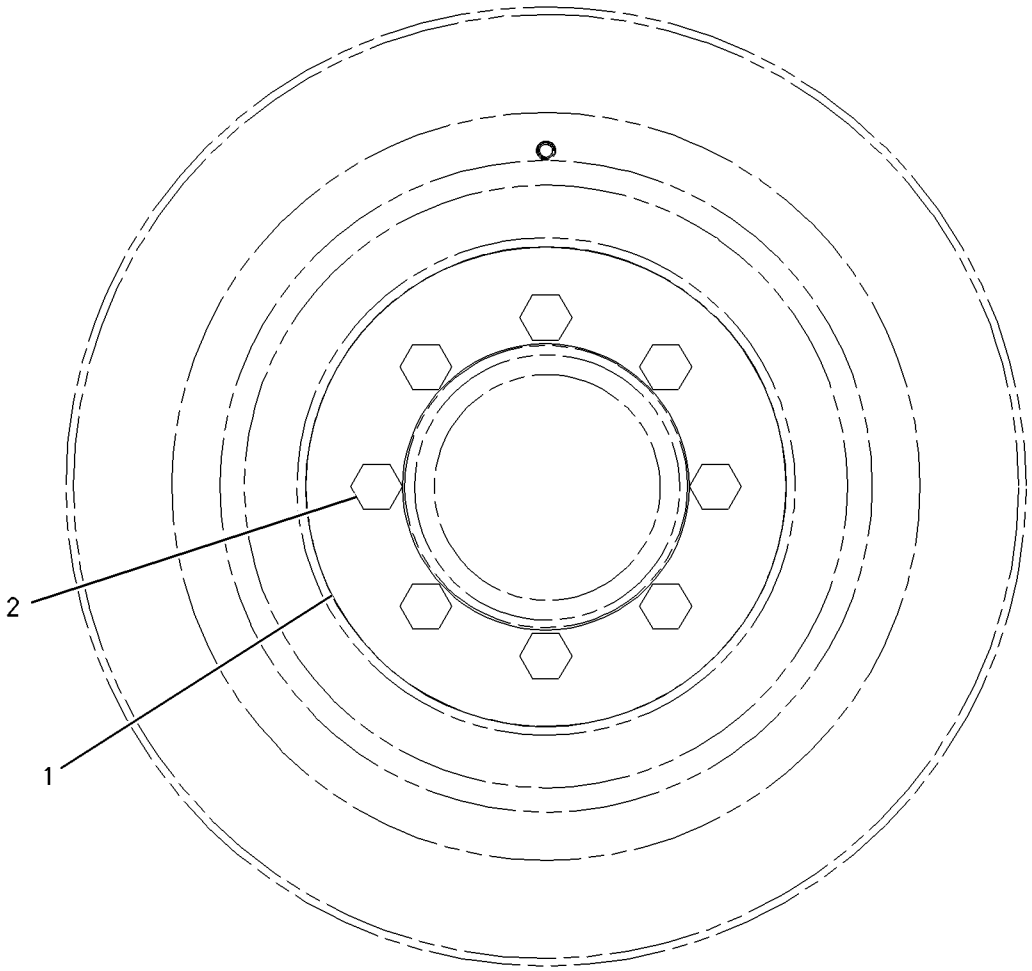

FRONT VIEW

GRAPHIC #1 **<END>** g00919524

116-4556 FASTENER GP-FRONT HOUSING

S/N: THX1-UP

PART OF 224-9843 ENGINE AR, 240-1861, 270-2771, 301-3082 ENGINE AR-COMPLETE

SMCS-1162 **i01487429**

NOTE	REF NO	GRAPHIC REF	PART NUMBER	QTY	PART NAME 1 2 3 4 5 6 (PRODUCT LEVEL)	SEE PAGE
M	1	1	**6V-8336**	6	BOLT (M12X1.75X70-MM)	
		1	**5P-8245**	6	WASHER-HARD (13.5X25.5X3-MM THK)	

M-METRIC PART

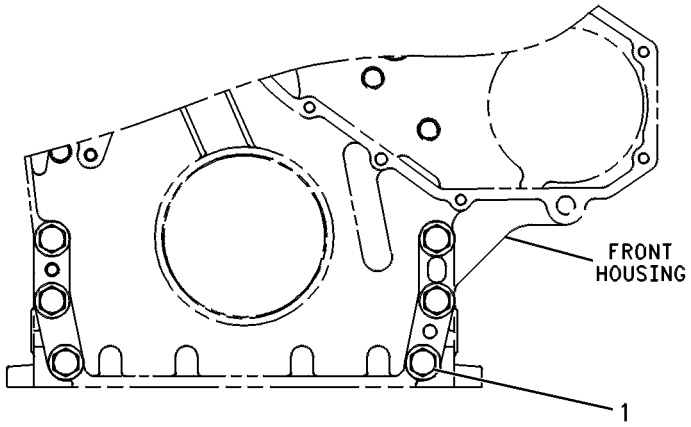

FRONT VIEW

GRAPHIC #1 **<END>** g00244671

236-7315 FASTENER GP-VALVE COVER

S/N: THX1-UP

PART OF 224-9843 ENGINE AR, 240-1861, 270-2771, 301-3082 ENGINE AR-COMPLETE

SMCS-1107 **i02431566**

NOTE	REF NO	GRAPHIC REF	PART NUMBER	QTY	PART NAME 1 2 3 4 5 6 (PRODUCT LEVEL)	SEE PAGE
M	1	1	**099-3649**	11	BOLT (M8X1.25X40-MM)	
	2	1	**8T-4224**	11	WASHER-HARD (8.8X16X2-MM THK)	

M-METRIC PART

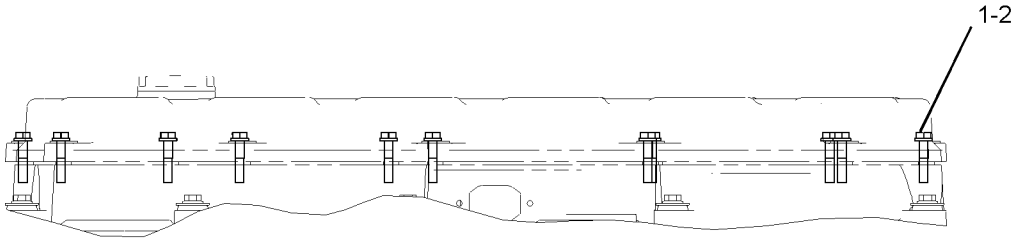

GRAPHIC #1 **<END>** g01013698

258-8728 FASTENER GP-VALVE COVER

S/N: THX1-1072

PART OF 224-9843 ENGINE AR

SMCS-1107 **i02431531**

NOTE	REF NO	GRAPHIC REF	PART NUMBER	QTY	PART NAME 1 2 3 4 5 6 (PRODUCT LEVEL)	SEE PAGE
	1	1	**244-4500**	9	SPRING	
M	2	1	**8T-0100**	9	BOLT (M8X1.25X60-MM)	
	3	1	**9N-0869**	9	WASHER-HARD (8.8X25.5X2-MM THK)	

M-METRIC PART

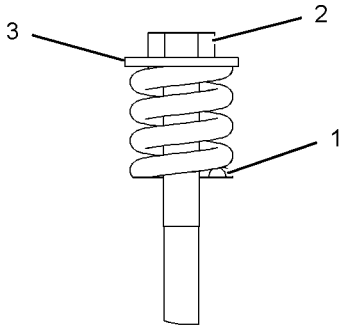

VIEW OF AREA A

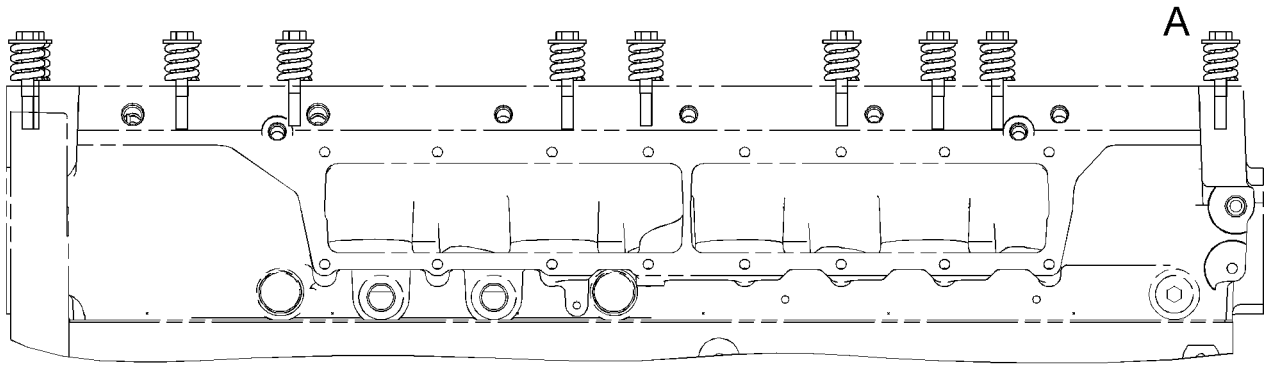

RIGHT SIDE VIEW

GRAPHIC #1 **<END>** g01146125

233-0423 FASTENER GP-VALVE COVER BASE

S/N: THX1-UP

PART OF 224-9843 ENGINE AR, 240-1861, 270-2771, 301-3082 ENGINE AR-COMPLETE

SMCS-1120 **i02637720**

NOTE	REF NO	GRAPHIC REF	PART NUMBER	QTY	PART NAME 1 2 3 4 5 6 (PRODUCT LEVEL)	SEE PAGE
	1	1	**244-4500**	9	SPRING	
M	2	1	**8T-0100**	9	BOLT (M8X1.25X60-MM)	
	3	1	**9N-0869**	9	WASHER-HARD (8.8X25.5X2-MM THK)	

M-METRIC PART

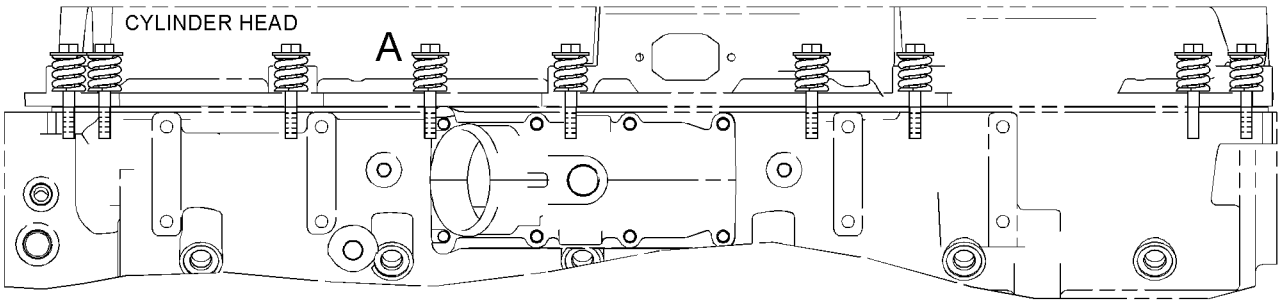

LEFT SIDE VIEW

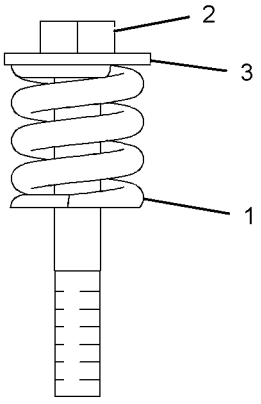

VIEW OF AREA A

GRAPHIC #1 **<END>** g01207018

102-3596 FLYWHEEL GP

S/N: THX1-UP

PART OF 224-9843 ENGINE AR, 240-1861, 270-2771, 301-3082 ENGINE AR-COMPLETE

SMCS-1156 **i02503973**

NOTE	REF NO	GRAPHIC REF	PART NUMBER	QTY	PART NAME 1 2 3 4 5 6 (PRODUCT LEVEL)	SEE PAGE
R	1	1	**163-0424**	1	FLYWHEEL AS	
	1A	1	**4N-2514**	1	GEAR (113-TEETH)	
M	2	1	**9X-2021**	8	BOLT-LOCKING (M16X2X45-MM)	
	3	1	**5P-8247**	8	WASHER-HARD (17X32X3.5-MM THK)	

M-METRIC PART
R-REMFG PART MAY BE AVAILABLE

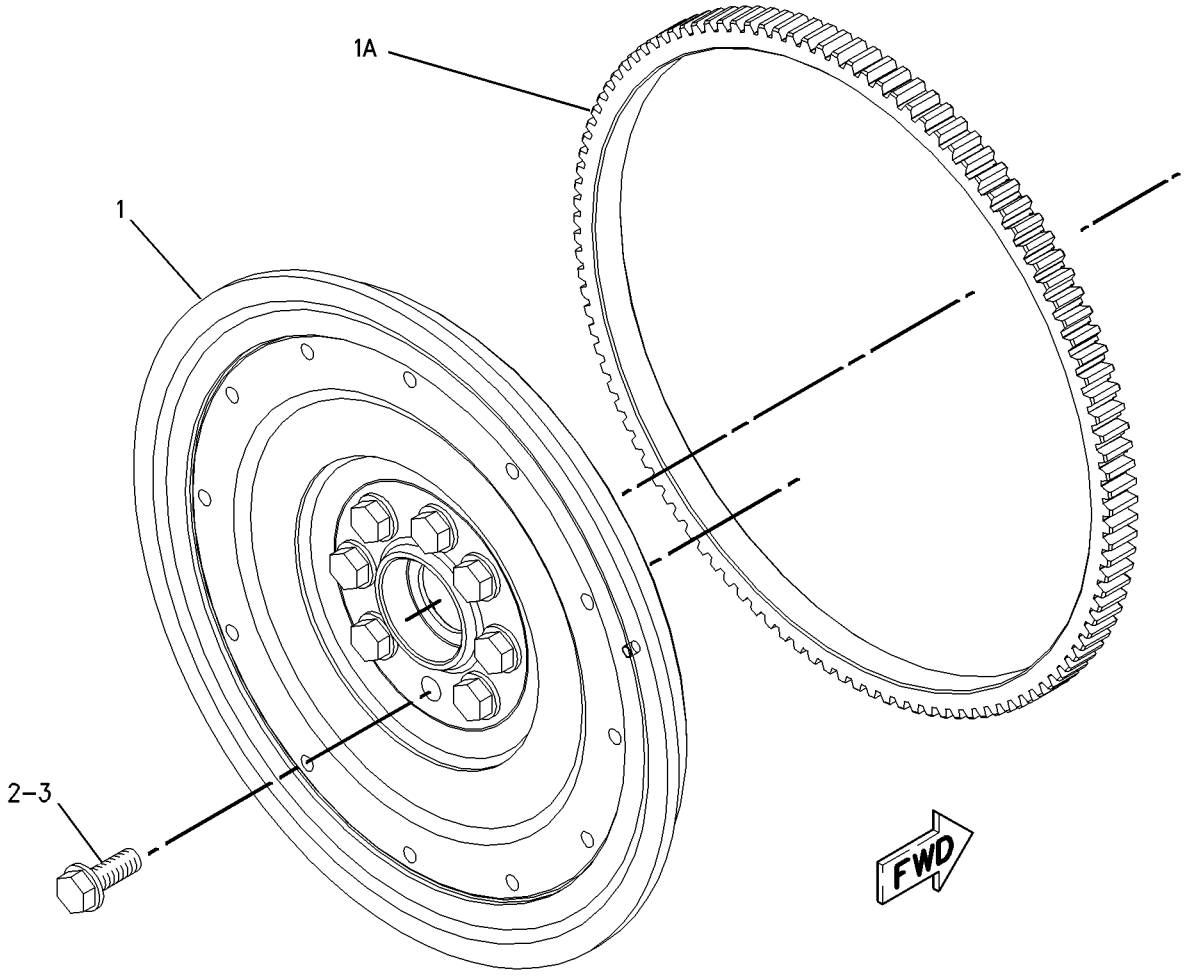

GRAPHIC #1 **<END>** g00779246

BASIC ENGINE

205-1321 GEAR GP-FRONT

S/N: THX1-UP

PART OF 229-2665, 270-4216, 348-2746, 348-2747 ENGINE AR-CORE

SMCS-1151, 1162, 1206 **i01696307**

NOTE	REF NO	GRAPHIC REF	PART NUMBER	QTY	PART NAME 1 2 3 4 5 6 (PRODUCT LEVEL)	SEE PAGE
	1	1	**113-6069**	1	PLATE-THRUST	
	2	1	**115-4219**	1	PLATE-RETAINING	
	3	1	**200-4495**	1	SHAFT-IDLER	
	4	1	**205-1320**	1	GEAR AS-IDLER (50 TEETH)	
	4A	1	**115-4072**	1	BEARING	
M	5	1	**136-4183**	1	BOLT-12 POINT HEAD (M10X1.5X30MM)	
M	6	1	**6V-5843**	2	BOLT (M10X1.50X45MM)	

M-METRIC PART

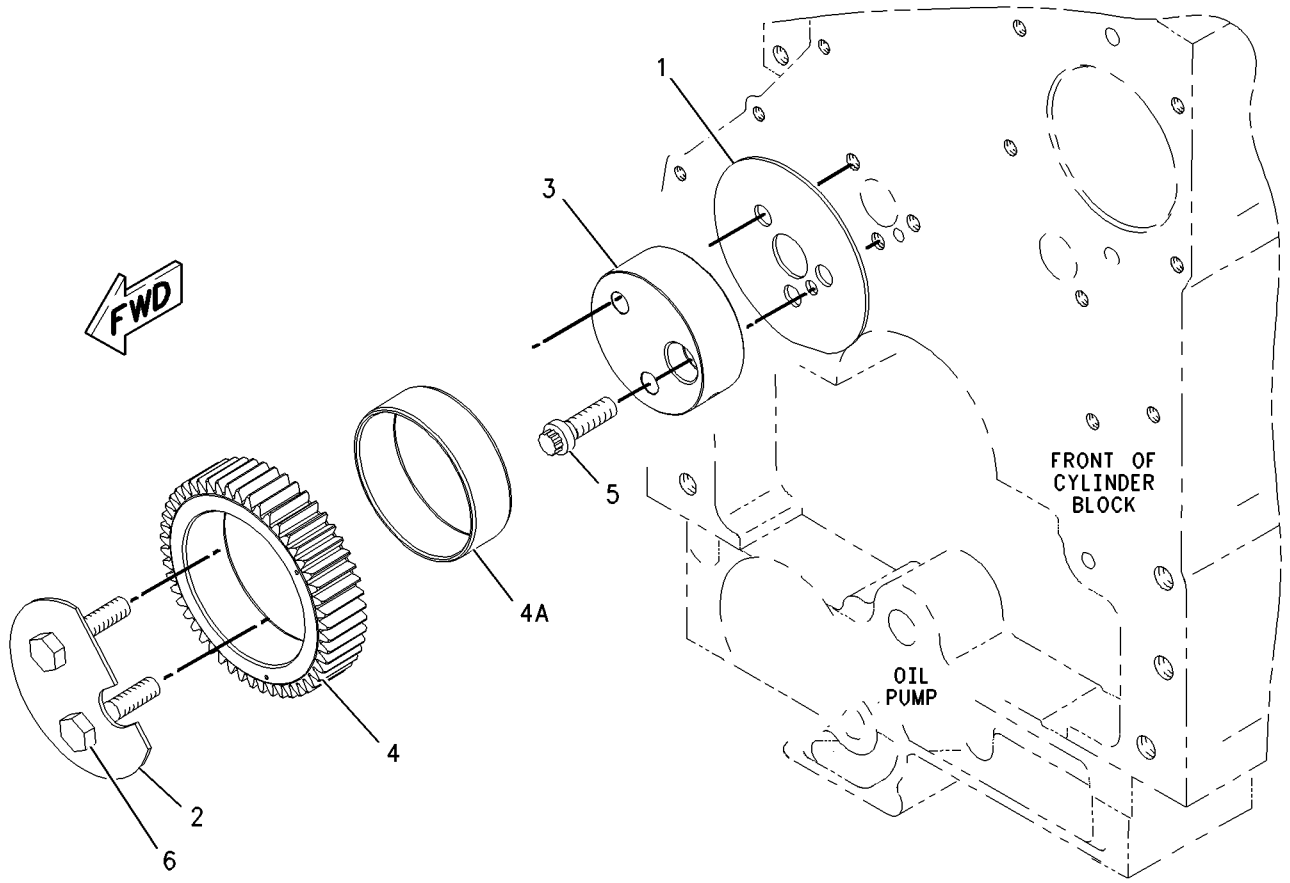

GRAPHIC #1 **<END>** g00873940

229-3568 HOUSING GP-FLYWHEEL

S/N: THX1-UP

PART OF 224-9843 ENGINE AR, 240-1861, 270-2771, 301-3082 ENGINE AR-COMPLETE

SMCS-1157 **i03171283**

NOTE	REF NO	GRAPHIC REF	PART NUMBER	QTY	PART NAME 1 2 3 4 5 6 (PRODUCT LEVEL)	SEE PAGE
	1	1	**7C-1445**	2	COVER	
	2	1	**229-3569**	1	HOUSING-FLYWHEEL	
	3	1	**061-9455**	1	SEAL-O-RING	
	4	1	**3K-8460**	1	PLUG	
	5	1	**5P-7701**	1	SEAL-O-RING	
	6	1	**5P-7814**	1	SEAL-O-RING	
	7	1	**5P-8245**	14	WASHER-HARD (13.5X25.5X3-MM THK)	
M	8	1	**6V-5219**	2	BOLT (M8X1.25X40-MM)	
M	9	1	**6V-8197**	14	BOLT (M12X1.75X40-MM)	
	10	1	**8L-2786**	2	SEAL-O-RING	
	11	1	**9M-1974**	2	WASHER-HARD (8.8X16X2-MM THK)	
	12	1	**9S-4185**	2	PLUG-O-RING (FLYWHEEL HOUSING DRAIN)	
	13	1	**9S-9334**	1	PLUG-O-RING	
BF			**1U-8846**		SEALANT-GASKET	

B-USE AS REQUIRED
F-NOT SHOWN
M-METRIC PART

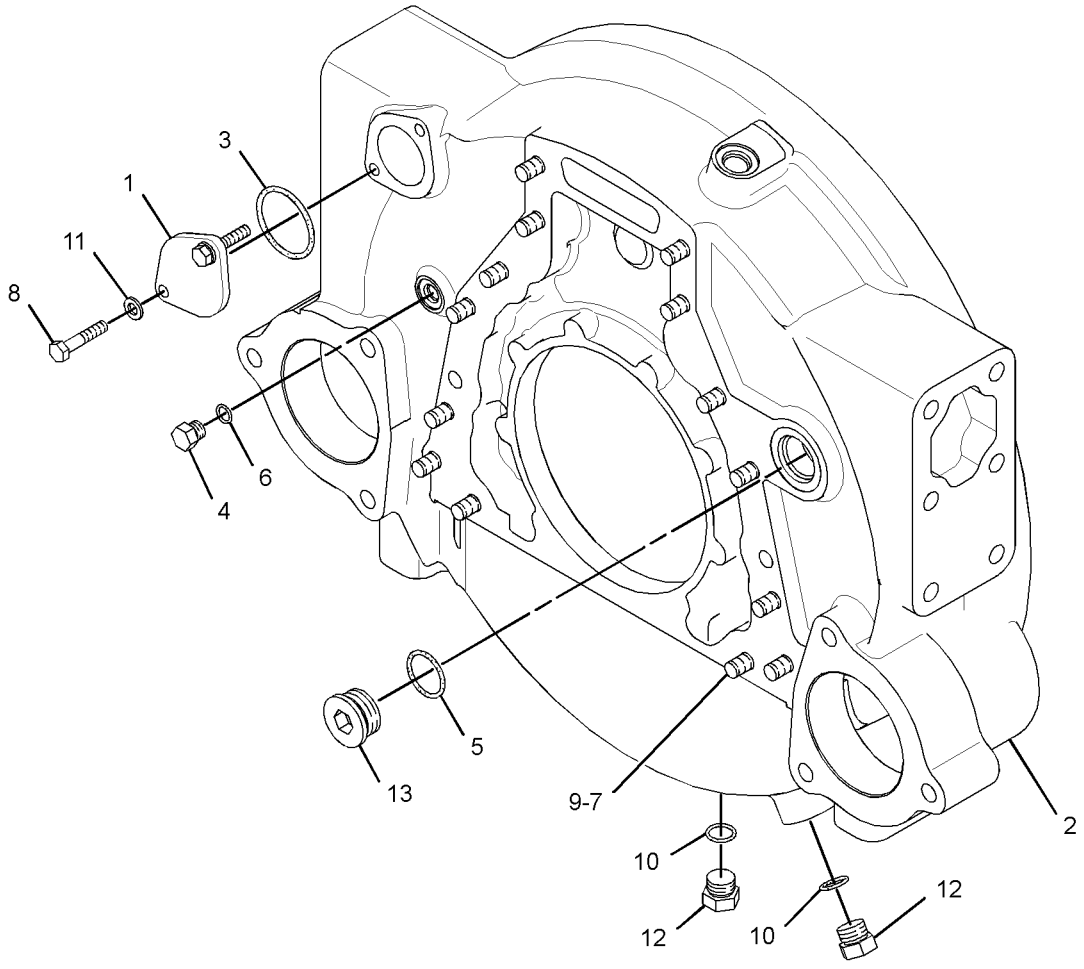

GRAPHIC #1 **<END>** g01623341

BASIC ENGINE

245-3260 HOUSING GP-FRONT

S/N: THX1-UP

PART OF 229-2665, 270-4216, 348-2746, 348-2747 ENGINE AR-CORE

SMCS-1151, 1162, 1206 **i02504053**

NOTE	REF NO	GRAPHIC REF	PART NUMBER	QTY	PART NAME 1 2 3 4 5 6 (PRODUCT LEVEL)	SEE PAGE
	1	1	**245-3259**	1	HOUSING-FRONT	
M	2	1	**6V-3918**	4	BOLT (M8X1.25X50-MM)	
M	3	1	**6V-5217**	8	BOLT (M8X1.25X20-MM)	
	4	1	**9M-1974**	12	WASHER-HARD (8.8X16X2-MM THK)	
B	5	1	**1U-8846**		SEALANT-GASKET	

B-USE AS REQUIRED
M-METRIC PART

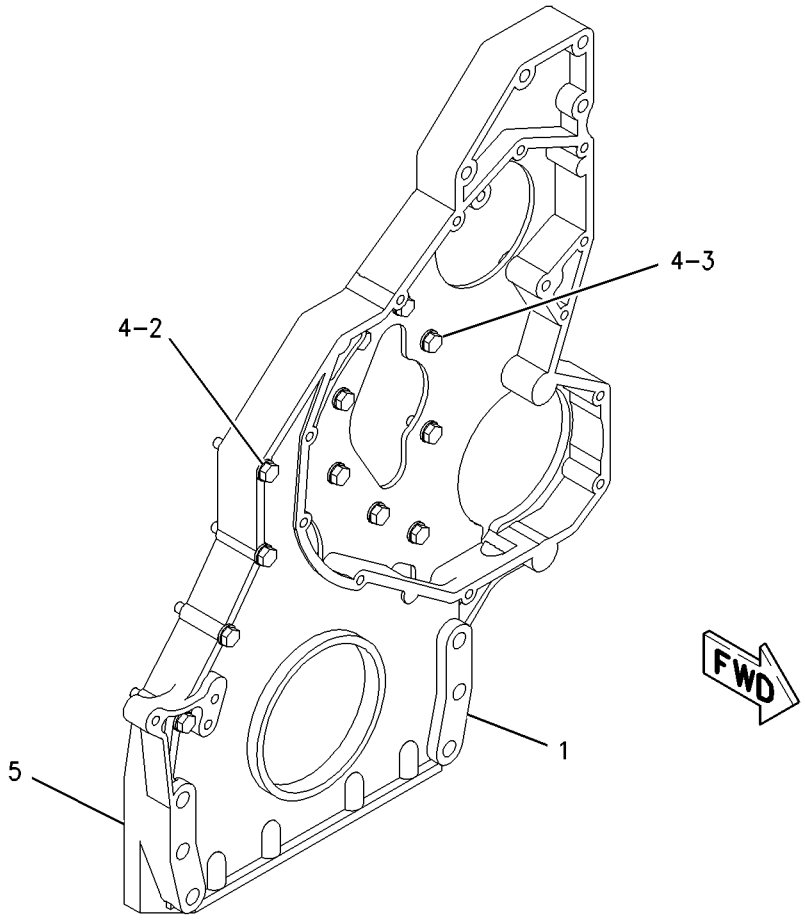

GRAPHIC #1 **<END>** g00713985

191-3063 LIFTING GP-ENGINE

S/N: THX1-UP

PART OF 224-9843 ENGINE AR, 240-1861, 270-2771, 301-3082 ENGINE AR-COMPLETE

SMCS-1122 **i02052452**

NOTE	REF NO	GRAPHIC REF	PART NUMBER	QTY	PART NAME 1 2 3 4 5 6 (PRODUCT LEVEL)	SEE PAGE
	1	1	**228-4766**	1	PLATE-LIFTING	
	2	1	**166-1785**	1	PLATE-LIFTING	
	3	1	**5P-8245**	3	WASHER-HARD (13.5X25.5X3-MM THK)	
M	4	1	**6V-8675**	3	BOLT (M12X1.75X35-MM)	

M-METRIC PART

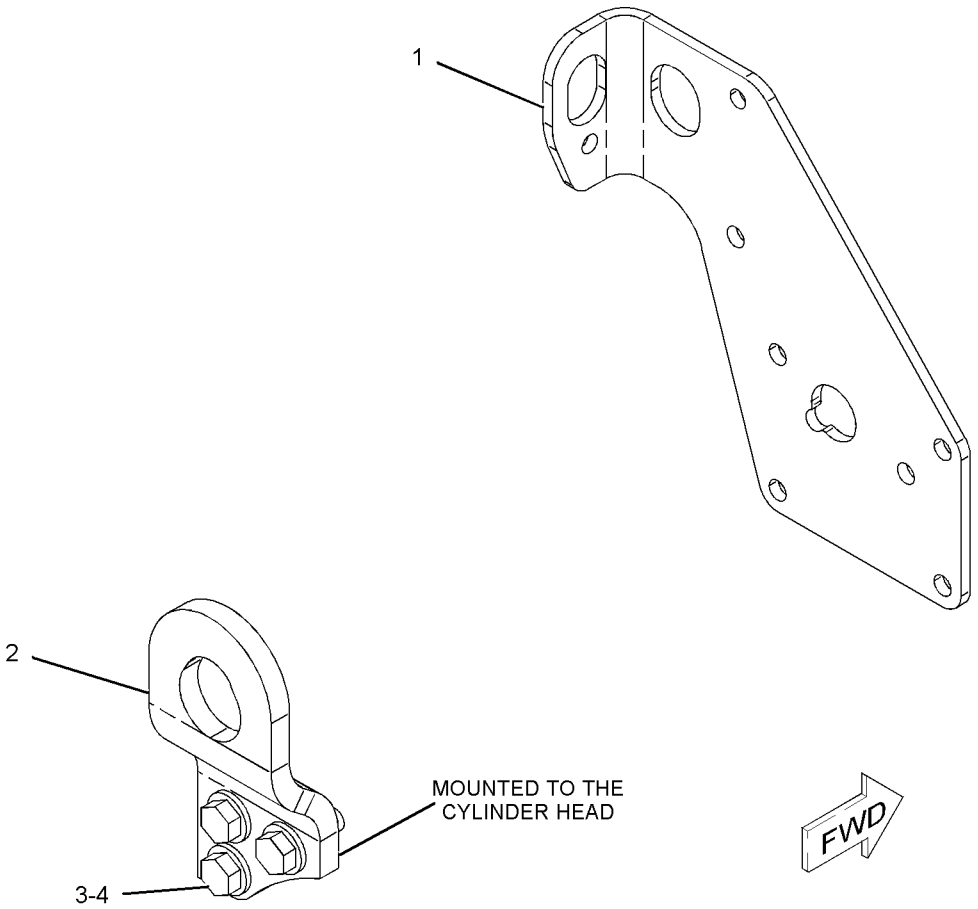

GRAPHIC #1 **<END>** g01057483

BASIC ENGINE

239-6474 MOUNTING GP-ENGINE

S/N: B6H1-UP; JLP1-UP

PART OF 239-6405, 279-7825 INSTALLATION AR-ENGINE

SMCS-1152 **i02746995**

NOTE	REF NO	GRAPHIC REF	PART NUMBER	QTY	PART NAME 1 2 3 4 5 6 (PRODUCT LEVEL)	SEE PAGE
	1	1	**109-9437**	4	WASHER (24.5X135X12-MM THK)	
	2	1	**139-8736**	2	MOUNT-FLEXIBLE	
	3	1	**139-8737**	2	MOUNT-FLEXIBLE	
M	4	1	**139-8873**	4	SUPPORT AS	
	5	1	**178-6473**	2	MOUNT-FLEXIBLE	
	6	1	**178-6474**	2	MOUNT-FLEXIBLE	
	7	1	**9X-8257**	16	WASHER (17.5X30X3.5-MM THK)	
	8	1	**239-6475**	2	BRACKET (FRONT, RH)	
	9	1	**287-0215**	1	BRACKET AS (REAR, RH)	
	10	1	**287-0216**	1	BRACKET AS (REAR, LH)	
M	11	1	**7X-2553**	4	BOLT (M16X2X40-MM)	
M	12	1	**7X-2554**	4	BOLT (M16X2X70-MM)	
M	13	1	**7X-2567**	4	BOLT (M24X3X160-MM)	
	14	1	**8T-1482**	4	WASHER-HARD (26X50X8-MM THK)	
	15	1	**8T-4167**	4	WASHER-HARD (26X44X4-MM THK)	
M	16	1	**8T-7338**	8	BOLT (M16X2X45-MM)	

M-METRIC PART

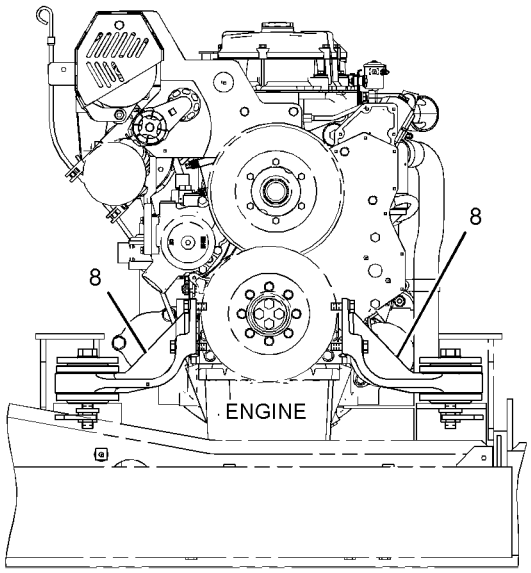

FRONT VIEW OF ENGINE

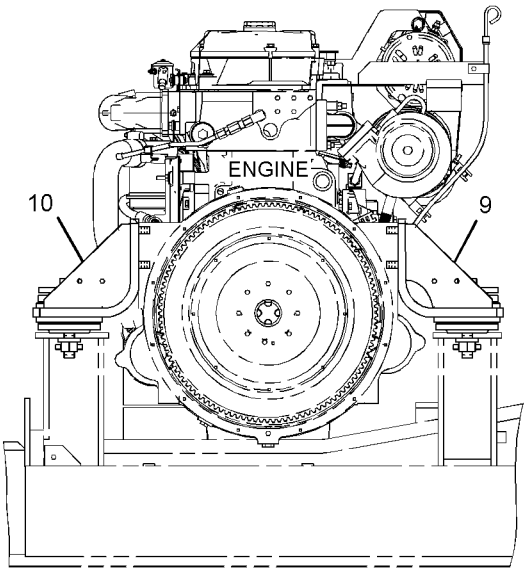

REAR VIEW OF ENGINE

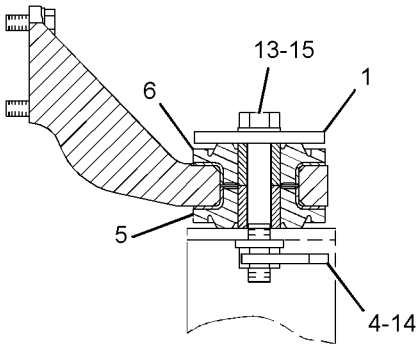

SECTION A-A

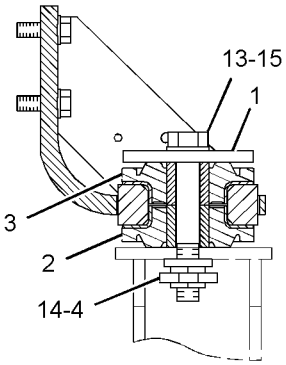

SECTION B-B

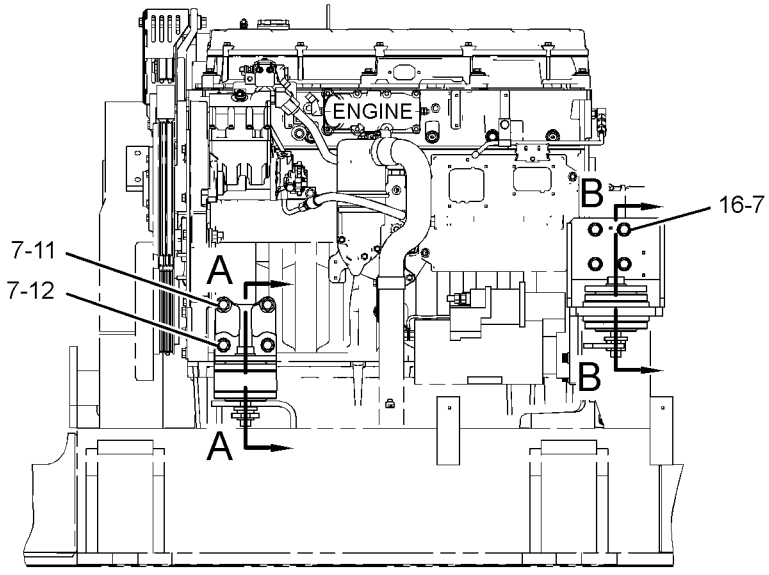

LEFT SIDE VIEW OF ENGINE

GRAPHIC #1

<END>

g01377974

BASIC ENGINE

187-0472 PAN GP-OIL—ENGINE

S/N: THX1-UP

PART OF 224-9843 ENGINE AR, 240-1861, 270-2771, 301-3082 ENGINE AR-COMPLETE

SMCS-1302 **i03171302**

NOTE	REF NO	GRAPHIC REF	PART NUMBER	QTY	PART NAME 1 2 3 4 5 6 (PRODUCT LEVEL)	SEE PAGE
	1	1	*148-8395*	1	PLUG AS	
		1	**3K-0360**	1	SEAL-O-RING	
		1	**9S-8005**	1	PLUG-O-RING	
	2	1	**6V-7238**	1	VALVE-SHUTOFF (ENGINE OIL PAN DRAIN)	
	3	1	**213-0677**	1	SWITCH AS-LIQUID LEVEL (ENGINE OIL)	
		1	**9X-3401**	2	PIN-CONNECTOR (16-GA TO 18-GA)	
					—OR—	
		1	**126-1767**	2	PIN-CONNECTOR (14-GA)	
	3A	1	**102-8802**	1	KIT-RECEPTACLE (2-PIN)	
					(INCLUDES RECEPTACLE AS & WEDGE)	
	4	1	**136-4303**	1	PLUG AS-CONNECTOR (2-PIN)	
		1	**8T-8737**	2	PLUG-SEAL	
		1	**155-2270**	1	KIT-CONNECTING PLUG (2-PIN)	
					(INCLUDES PLUG AS, WEDGE & INTERFACE SEAL)	
	5	1	**189-9377**	1	SEAL-O-RING	
	6	1	**190-6114**	1	GASKET-OIL PAN (ENGINE)	
	7	1	**221-9806**	1	PAN-OIL	
	8	1	**3K-0360**	1	SEAL-O-RING	
M	9	1	**6V-3918**	32	BOLT (M8X1.25X50-MM)	
	10	1	**9M-1974**	32	WASHER-HARD (8.8X16X2-MM THK)	
B	11	1	**4C-9612**		SEALANT-SILICONE	

B-USE AS REQUIRED
M-METRIC PART

187-0472 **PAN GP-OIL** *(contd.)* **i03171302**

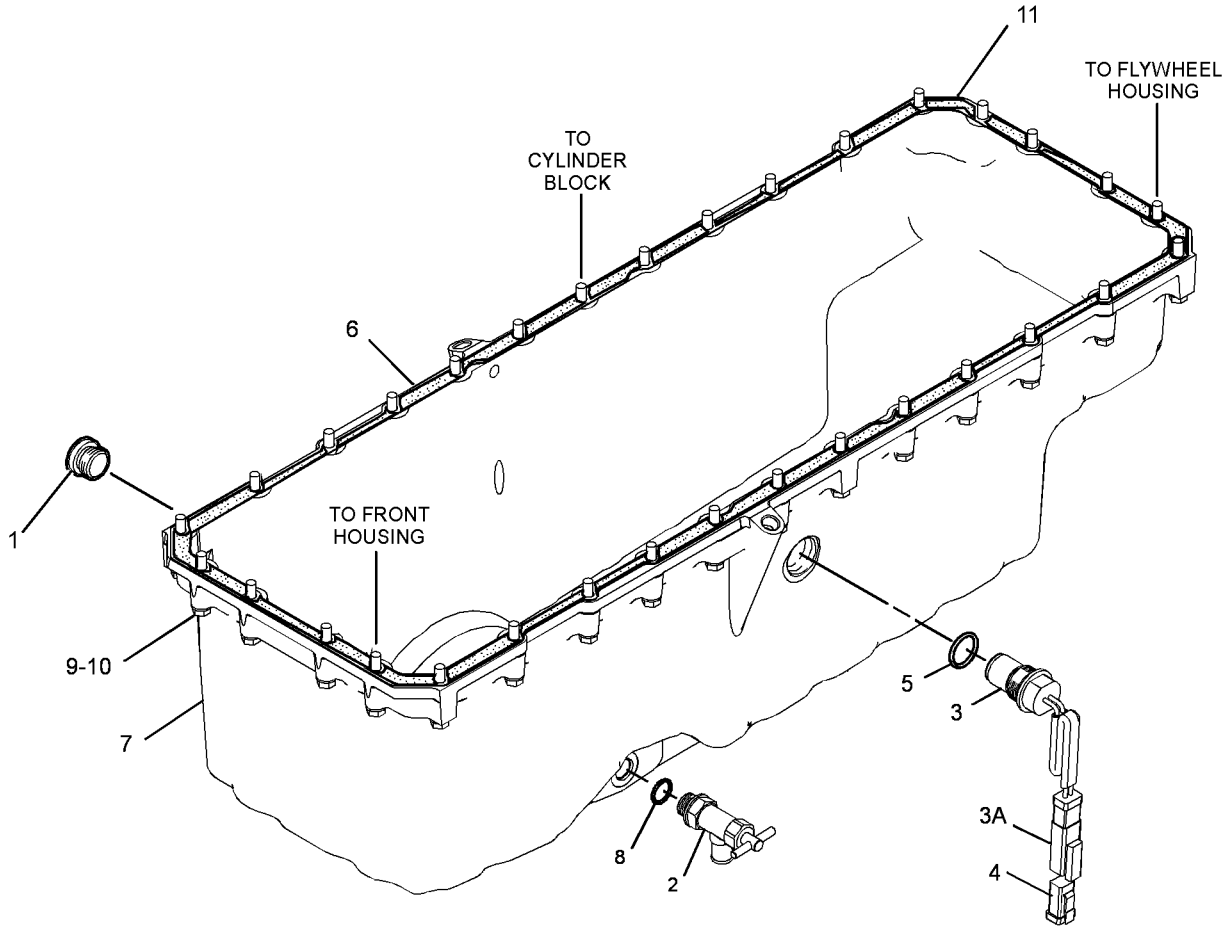

GRAPHIC #1 **<END>** g01430144

BASIC ENGINE

265-1400 PISTON & ROD GP

S/N: THX1-UP
16.1:1 COMPRESSION RATIO
PART OF 229-2665, 270-4216 ENGINE AR-CORE

SMCS-1225 **i03770654**

NOTE	REF NO	GRAPHIC REF	PART NUMBER	QTY	PART NAME 1 2 3 4 5 6 (PRODUCT LEVEL)	SEE PAGE
	1	1	**213-3190**	1	BEARING (STANDARD)	
AB		1	**282-2478**		BEARING-CONNECTING ROD (0.25-MM US)	
AB		1	**282-2479**		BEARING-CONNECTING ROD (0.51-MM US)	
R	2	1	**160-8199**	1	ROD AS	
	2A	1	**160-8194**	1	BEARING (CONNECTING ROD)	
M	2B	1	**160-8197**	2	BOLT	
	3	1	**166-3648**	1	PIN-PISTON	
	4	1	**168-7211**	1	RING-PISTON (OIL CONTROL)	
R	5	1	**265-1401**	1	CROWN AS-PISTON	
	6	1	**161-3424**	1	RING-PISTON (INTERMEDIATE)	
	7	1	**197-9367**	1	TUBE AS (PISTON COOLING JET)	
	8	1	**197-9392**	1	RING-PISTON (TOP)	
	9	1	**324-7380**	1	SKIRT-PISTON	
M	10	1	**6V-3940**	1	BOLT (M8X1.25X25-MM)	
	11	1	**7X-2908**	2	RING-RETAINING	

A-NOT PART OF THIS GROUP
B-USE AS REQUIRED
M-METRIC PART
R-REMFG PART MAY BE AVAILABLE

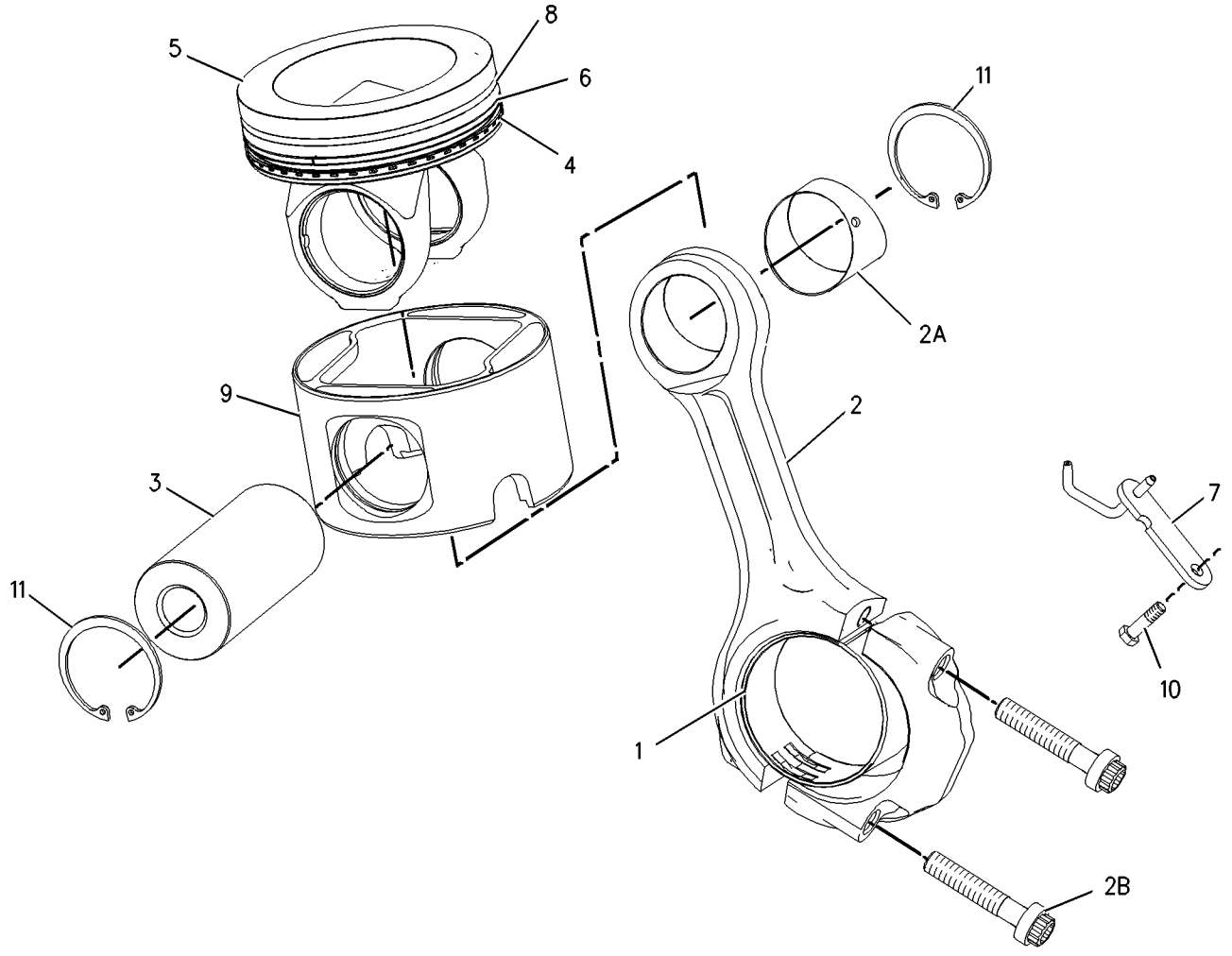

GRAPHIC #1 **<END>** g00922644

BASIC ENGINE

347-7908 PISTON & ROD GP

S/N: THX22638-UP

PART OF 348-2746, 348-2747 ENGINE AR-CORE

SMCS-1225 **i03770656**

NOTE	REF NO	GRAPHIC REF	PART NUMBER	QTY	PART NAME 1 2 3 4 5 6 (PRODUCT LEVEL)	SEE PAGE
	1	1	**213-3190**	1	BEARING (STANDARD)	
AB		1	**282-2478**		BEARING-CONNECTING ROD (0.25-MM US)	
AB		1	**282-2479**		BEARING-CONNECTING ROD (0.51-MM US)	
R	2	1	**160-8199**	1	ROD AS	
	2A	1	**160-8194**	1	BEARING	
M	2B	1	**160-8197**	2	BOLT	
	3	1	**166-3648**	1	PIN-PISTON	
	4	1	**347-2382**	1	RING-PISTON (OIL CONTROL)	
R	5	1	**265-1401**	1	CROWN AS-PISTON	
	6	1	**347-2381**	1	RING-PISTON (INTERMEDIATE)	
	7	1	**197-9367**	1	TUBE AS (PISTON COOLING JET)	
	8	1	**347-2380**	1	RING-PISTON-TOP	
	9	1	**324-7380**	1	SKIRT-PISTON	
M	10	1	**6V-3940**	1	BOLT (M8X1.25X25-MM)	
	11	1	**7X-2908**	2	RING-RETAINING	

A-NOT PART OF THIS GROUP
B-USE AS REQUIRED
M-METRIC PART
R-REMFG PART MAY BE AVAILABLE

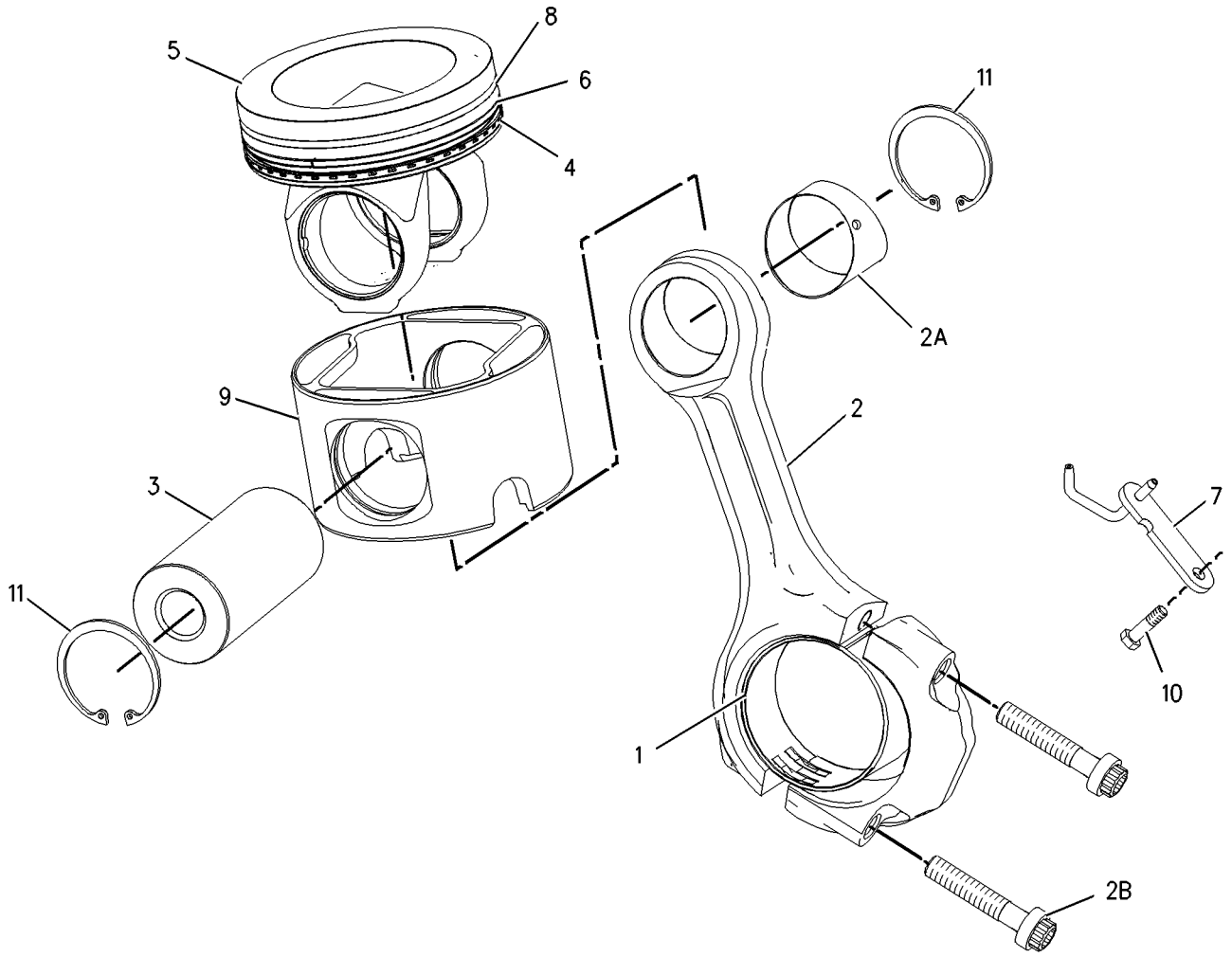

GRAPHIC #1 **<END>** g00922644

BASIC ENGINE

169-3105 PLUG GP-ENGINE

S/N: THX1-UP

PART OF 224-9843 ENGINE AR, 240-1861, 270-2771, 301-3082 ENGINE AR-COMPLETE

SMCS-1000 **i02795404**

NOTE	REF NO	GRAPHIC REF	PART NUMBER	QTY	PART NAME 1 2 3 4 5 6 (PRODUCT LEVEL)	SEE PAGE
	1	1	*183-3406*	2	PLUG AS	
					(EACH INCLUDES)	
		1	**9S-4191**	1	PLUG-O-RING	
	1A	1	**6V-5049**	1	SEAL-O-RING	
	2	1	*148-8408*	1	PLUG AS	
		1	**9S-4183**	1	PLUG-O-RING	
	2A	1	**3D-2824**	1	SEAL-O-RING	
	3	1	**8L-2786**	2	SEAL-O-RING	
	4	1	**9S-8005**	2	PLUG-O-RING	

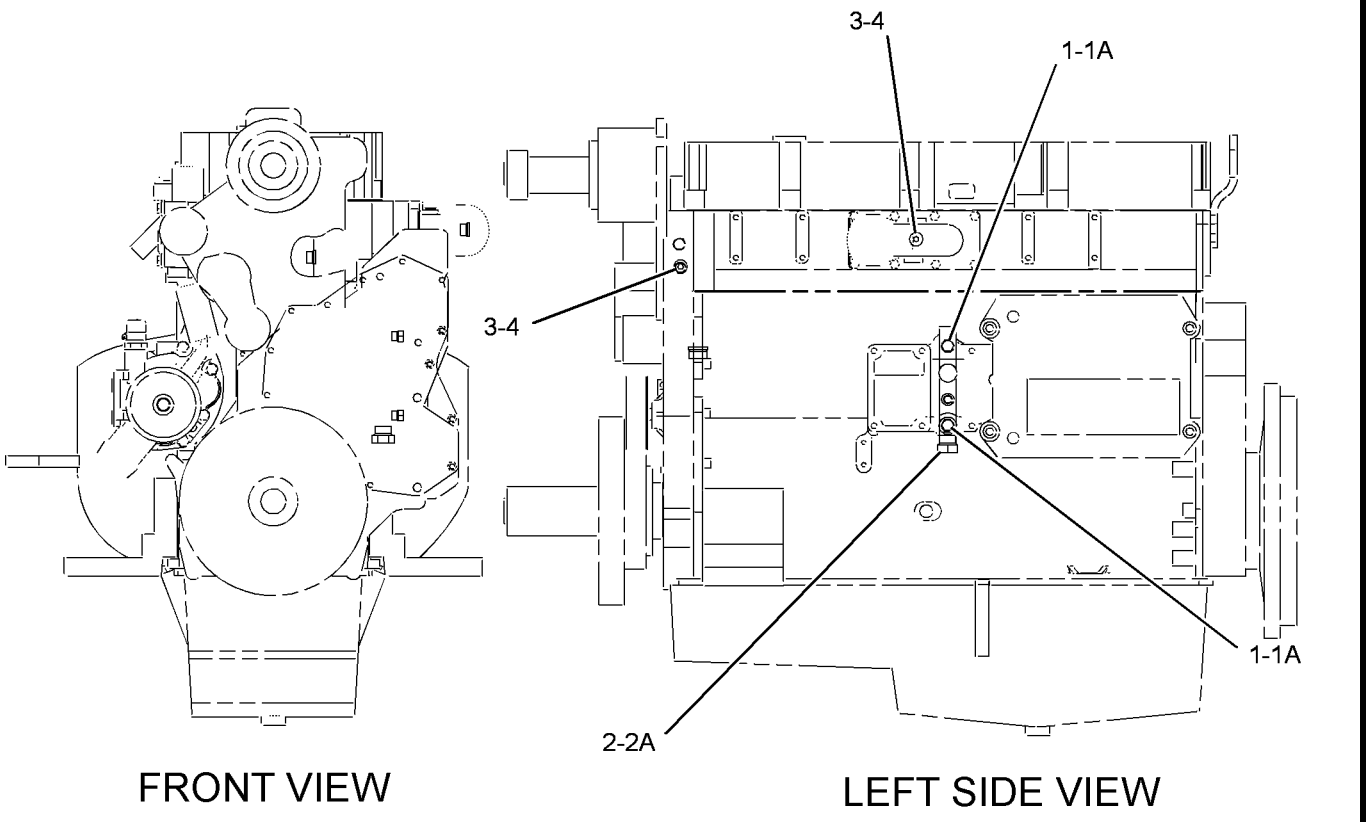

GRAPHIC #1 **<END>** g01395933

BASIC ENGINE

279-7820 PLUG GP-ENGINE

S/N: B6H529-UP; JLP219-UP

PART OF 279-7825 INSTALLATION AR-ENGINE

SMCS-1000 **i02756547**

NOTE	REF NO	GRAPHIC REF	PART NUMBER	QTY	PART NAME 1 2 3 4 5 6 (PRODUCT LEVEL)	SEE PAGE
	1	1	**3J-5390**	1	PLUG	

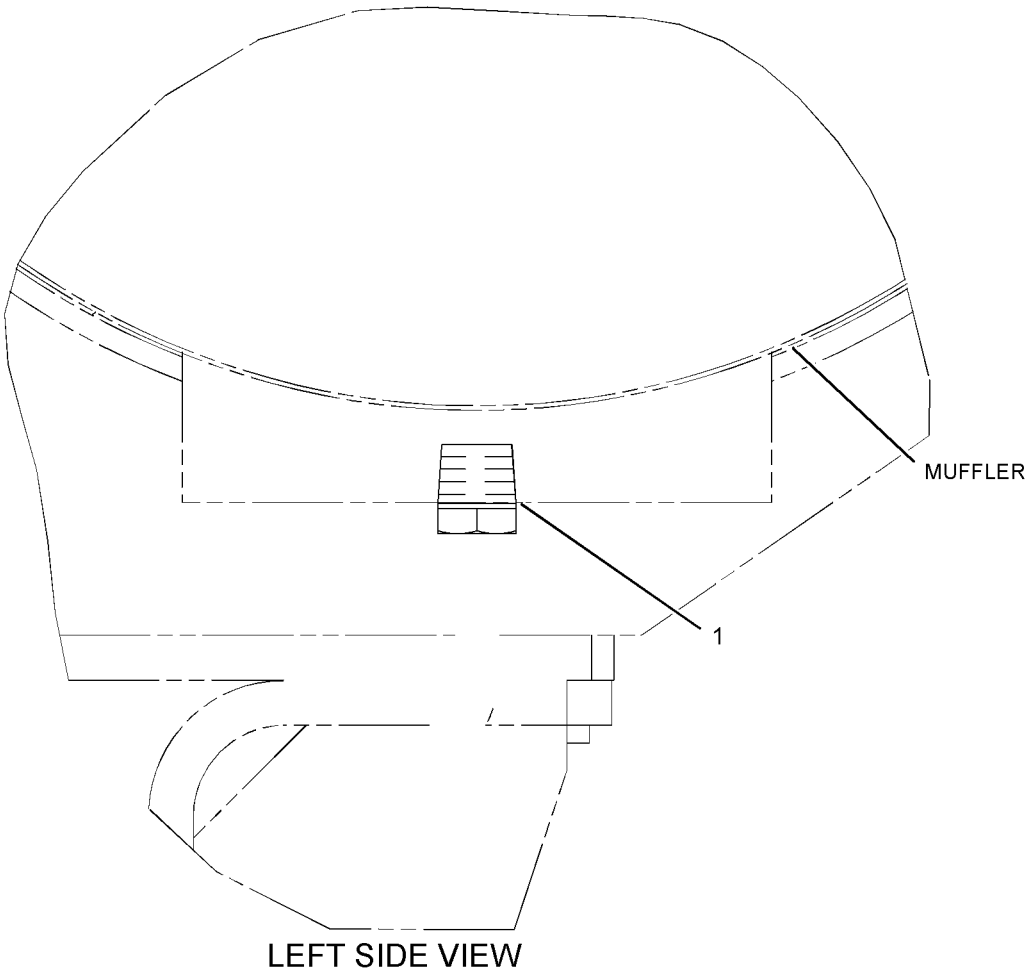

LEFT SIDE VIEW

GRAPHIC #1

<END>

g01239111

213-9320 ROCKER ARM GP–EXHAUST

S/N: THX1-UP

PART OF 212-8926 VALVE MECHANISM GP

SMCS-1123 **i02585214**

NOTE	REF NO	GRAPHIC REF	PART NUMBER	QTY	PART NAME 1 2 3 4 5 6 (PRODUCT LEVEL)	SEE PAGE
R	1	1	**163-2447**	1	ROCKER ARM AS	
M	2	1	**260-7524**	1	SCREW-VALVE ADJUSTMENT (M10X1.5-THD)	
M	3	1	**2Y-5829**	1	NUT (M10X1.5-THD)	

M-METRIC PART
R-REMFG PART MAY BE AVAILABLE

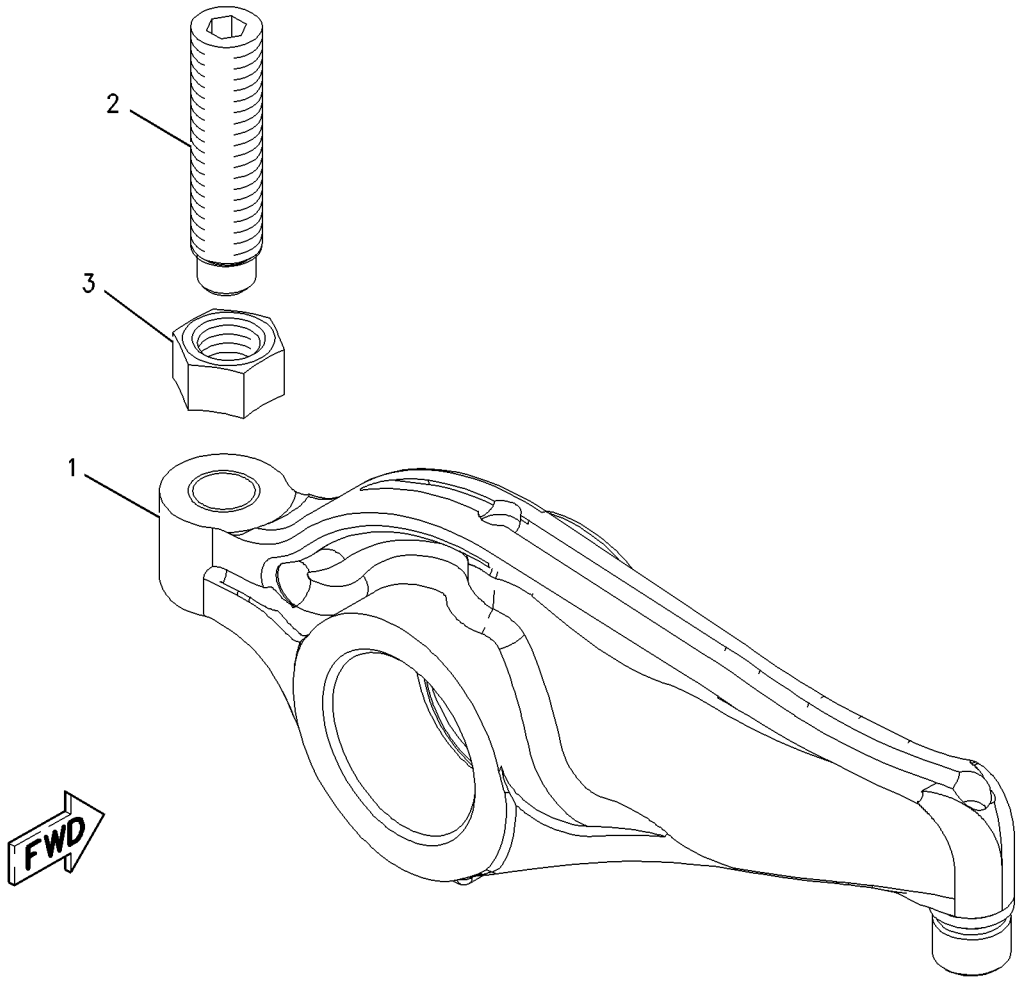

GRAPHIC #1 **<END>** g00979393

242-0329 ROCKER ARM GP–INLET

S/N: THX1-UP

PART OF 212-8926 VALVE MECHANISM GP

SMCS-1123 **i02585530**

NOTE	REF NO	GRAPHIC REF	PART NUMBER	QTY	PART NAME 1 2 3 4 5 6 (PRODUCT LEVEL)	SEE PAGE
M	1	1	**260-7524**	1	SCREW-VALVE ADJUSTMENT (M10X1.5-THD)	
R	2	1	**242-0328**	1	ROCKER ARM AS	
M	3	1	**2Y-5829**	1	NUT (M10X1.5-THD)	

M-METRIC PART
R-REMFG PART MAY BE AVAILABLE

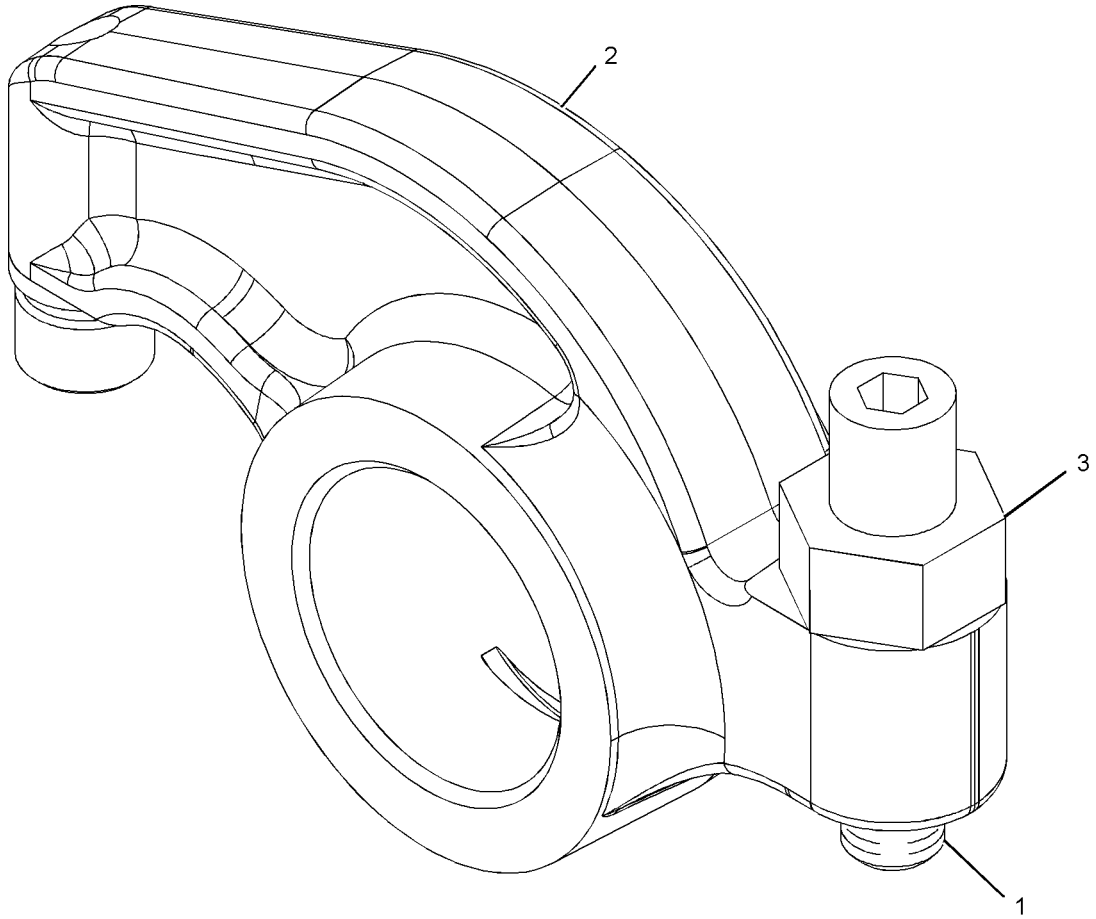

GRAPHIC #1 **<END>** g01056688

BASIC ENGINE

178-3899 SEAL GP-CRANKSHAFT

S/N: THX1-UP

PART OF 224-9843 ENGINE AR, 240-1861, 270-2771, 301-3082 ENGINE AR-COMPLETE

SMCS-1160, 1161 **i02893380**

NOTE	REF NO	GRAPHIC REF	PART NUMBER	QTY	PART NAME 1 2 3 4 5 6 (PRODUCT LEVEL)	SEE PAGE
	1	1	**4R-9999**	1	EXCLUDER-CRANKSHAFT SEAL	
M	2	1	**206-3719**	9	BOLT AS	
	3	1	**245-7339**	1	SEAL-CRANKSHAFT	
	4	1	**285-4073**	1	SEAL GP-CRANKSHAFT	

M-METRIC PART

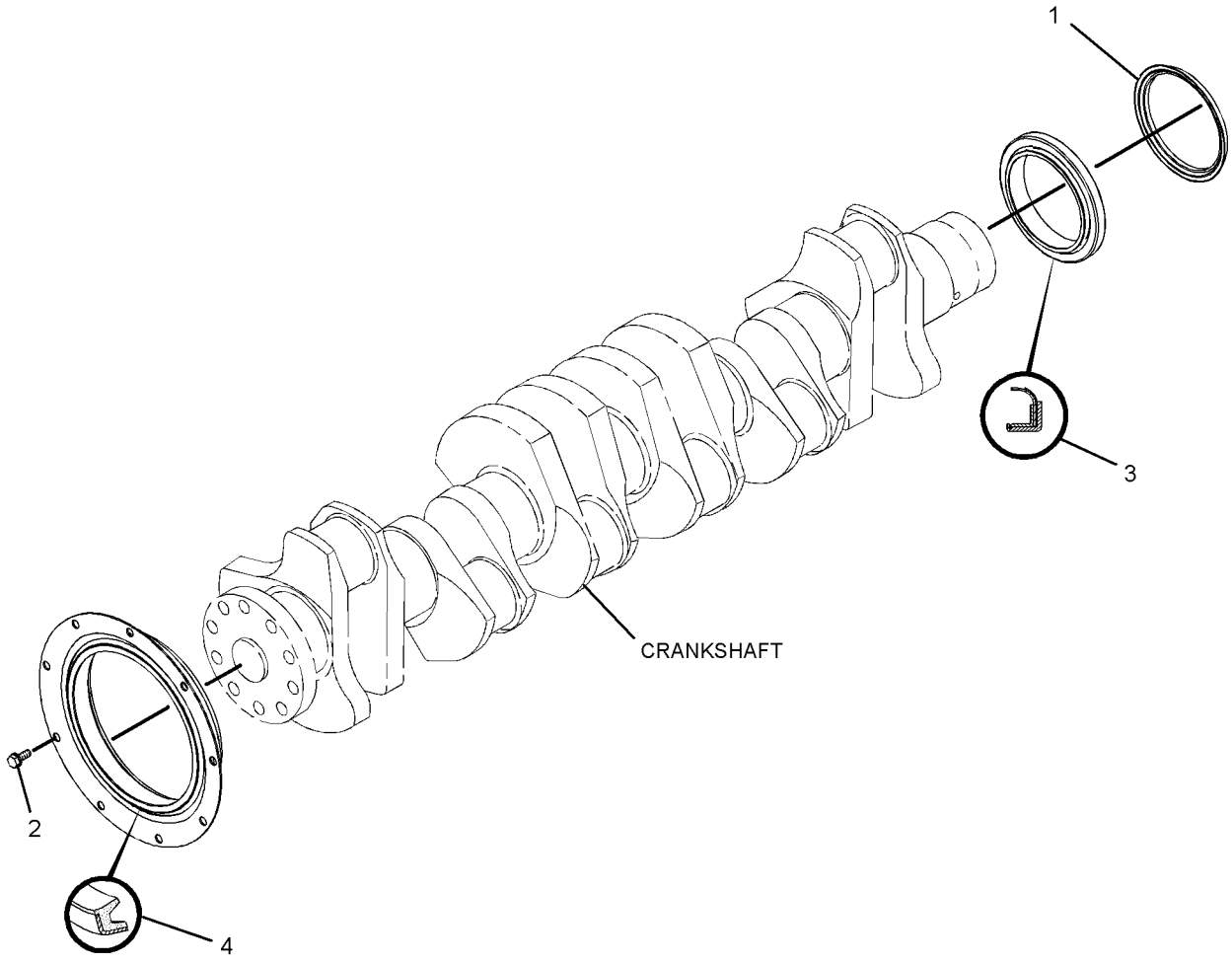

GRAPHIC #1 **<END>** g01439993

212-8926 VALVE MECHANISM GP

S/N: THX1-UP

PART OF 242-0447 VALVE MECHANISM GP

SMCS-1209 **i02433895**

NOTE	REF NO	GRAPHIC REF	PART NUMBER	QTY	PART NAME 1 2 3 4 5 6 (PRODUCT LEVEL)	SEE PAGE
	1	1	**163-2445**	1	SHAFT AS-ROCKER ARM	
		1	**8F-6575**	2	PLUG-CUP	
	2	1	**163-2459**	6	SPRING	
	3	1	**164-5669**	2	STAND (END)	
	4	1	**176-5913**	4	STAND (MIDDLE)	
	5	1	**176-5914**	1	STAND (OIL)	
Y	6	1	*213-9320*	6	ROCKER ARM GP (EXHAUST)	78
Y	7	1	*242-0329*	6	ROCKER ARM GP (INLET)	79
	8	1	**5P-8245**	7	WASHER-HARD (13.5X25.5X3-MM THK)	
M	9	1	**8T-0646**	7	BOLT (M12X1.75X110-MM)	

M-METRIC PART
Y-SEPARATE ILLUSTRATION

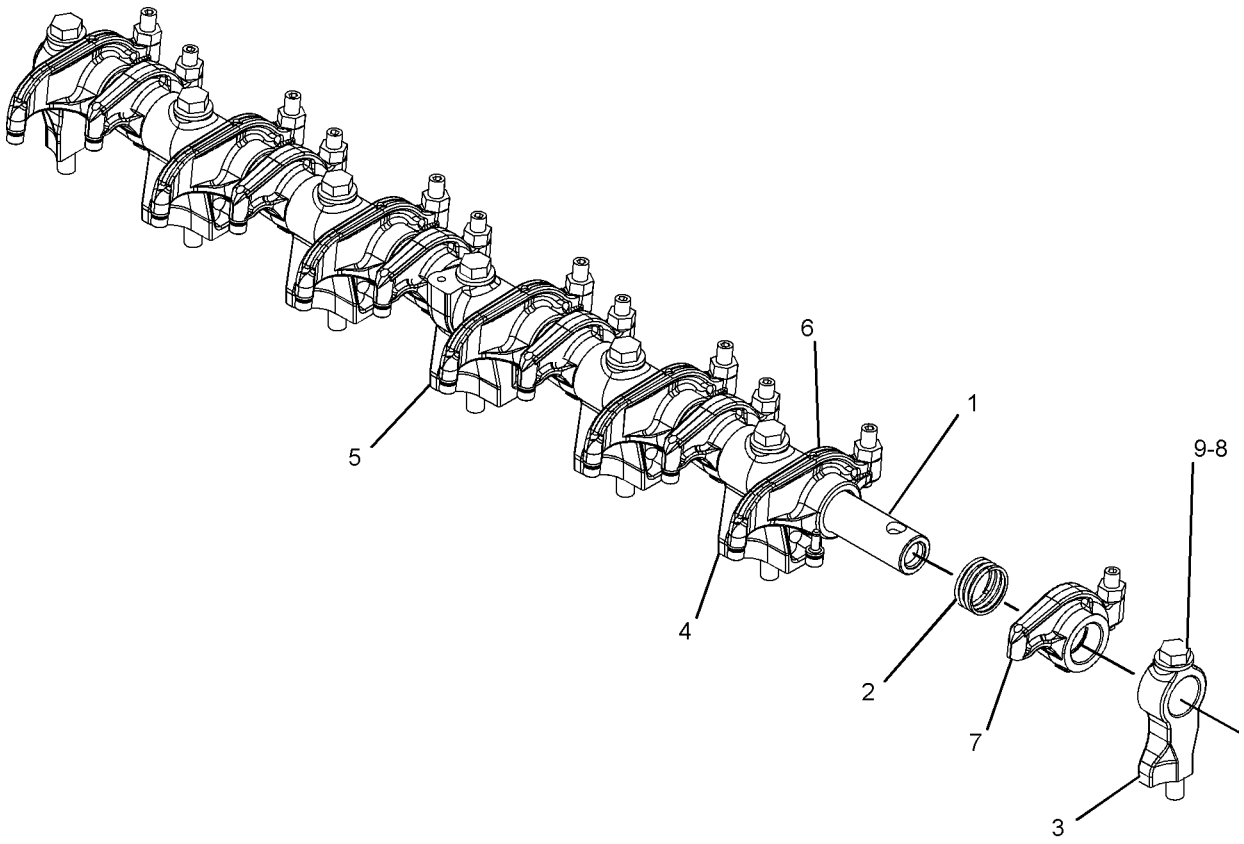

GRAPHIC #1 **<END>** g01069313

BASIC ENGINE

242-0447 VALVE MECHANISM GP

S/N: THX1-UP

PART OF 229-2665, 270-4216, 348-2746, 348-2747 ENGINE AR-CORE

SMCS-1209 **i02748257**

NOTE	REF NO	GRAPHIC REF	PART NUMBER	QTY	PART NAME 1 2 3 4 5 6 (PRODUCT LEVEL)	SEE PAGE
	1	1	**304-5260**	12	SPRING-GUIDE	
	2	1	**264-6156**	12	ROD-VALVE PUSH	
	3	1	**163-2437**	12	LIFTER AS-VALVE	
Y	4	1	*212-8926*	1	VALVE MECHANISM GP	81
	5	1	**244-5891**	6	BRIDGE-VALVE	
	6	1	**255-8674**	6	BRIDGE-VALVE	

Y-SEPARATE ILLUSTRATION

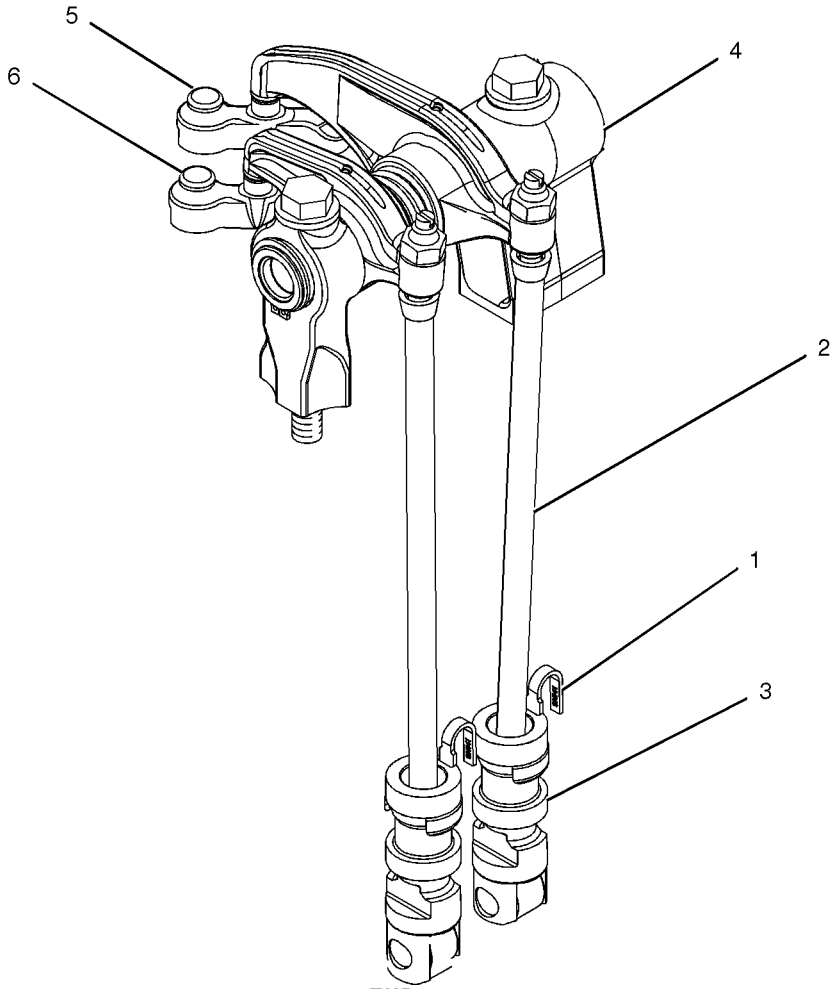

GRAPHIC #1 **<END>** g01043825

187-0474 FILTER GP-ENGINE OIL

S/N: THX1-9314

PART OF 224-9843 ENGINE AR, 240-1861, 270-2771, 301-3082 ENGINE AR-COMPLETE

SMCS-1308 **i03465082**

NOTE	REF NO	GRAPHIC REF	PART NUMBER	QTY	PART NAME 1 2 3 4 5 6 (PRODUCT LEVEL)	SEE PAGE
	1	1	**1R-1808**	1	FILTER-ENGINE OIL (ADVANCED EFFICIENCY)	
	2	1	**7C-1493**	2	VALVE AS-BYPASS (ENGINE OIL FILTER BASE)	
	3	1	**8C-3445**	1	CAP-DUST	
	4	1	**242-3864**	2	SPRING	
	5	1	**102-5828**	1	COVER	
	6	1	**102-5829**	1	ADAPTER	
	7	1	**144-6650**	1	ELBOW	
	8	1	**275-6631**	1	BASE AS-OIL FILTER (ENGINE)	
	8A	1	**2P-4304**	1	STUD-HOLLOW	
	9	1	**209-7291**	1	BASE AS-OIL FILTER (ENGINE)	
	9A	1	**2P-4304**	1	STUD-HOLLOW	
	10	1	**209-7290**	1	GASKET	
	11	1	**030-7935**	1	CONNECTOR	
	12	1	**033-5853**	1	SEAL-O-RING	
	13	1	**106-9586**	2	SEAL-O-RING	
I	14	1	**203-1022**	1	HOSE AS	
I	15	1	**203-1023**	1	HOSE AS	
	16	1	**2M-9780**	2	SEAL-O-RING	
	17	1	**3J-7354**	1	SEAL-O-RING	
	18	1	**5P-7701**	4	SEAL-O-RING	
M	19	1	**5P-8196**	2	PLUG	
	20	1	**6V-3908**	2	SEAL-O-RING	
M	21	1	**6V-5218**	12	BOLT (M8X1.25X35-MM)	
	22	1	**6V-8635**	2	CONNECTOR	
	23	1	**8C-3446**	1	VALVE-FLUID SAMPLING (ENGINE OIL)	
	24	1	**9M-1974**	12	WASHER-HARD (8.8X16X2-MM THK)	
	25	1	**9S-4181**	1	PLUG-O-RING	
	26	1	**9S-4182**	1	PLUG-O-RING	
	27	1	**9X-7712**	1	SEAL-O-RING	

I-REFER TO HYDRAULIC INFORMATION SYSTEM
M-METRIC PART

187-0474 **FILTER GP-ENGINE OIL** *(contd.)* **i03465082**

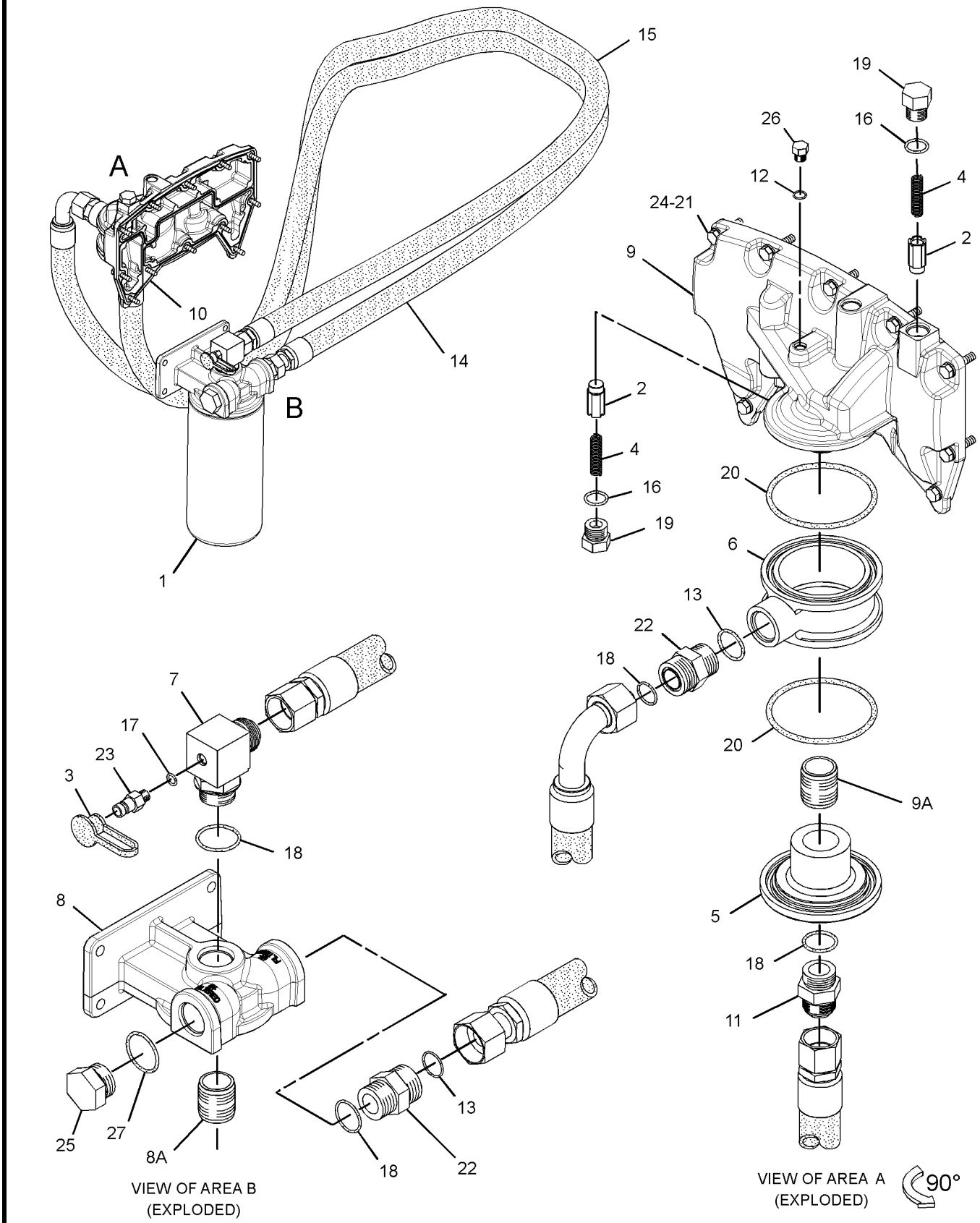

GRAPHIC #1 **<END>** g01413131

187-0474 FILTER GP-ENGINE OIL

S/N: THX9315-UP

PART OF 224-9843 ENGINE AR, 240-1861, 270-2771, 301-3082 ENGINE AR-COMPLETE

SMCS-1308 **i03743523**

NOTE	REF NO	GRAPHIC REF	PART NUMBER	QTY	PART NAME 1 2 3 4 5 6 (PRODUCT LEVEL)	SEE PAGE
	1	1	**1R-1808**	1	FILTER-ENGINE OIL (ADVANCED EFFICIENCY)	
	2	1	**7C-1493**	2	VALVE AS-BYPASS (ENGINE OIL FILTER BASE)	
	3	1	**8C-3445**	1	CAP-DUST	
	4	1	**242-3864**	2	SPRING	
	5	1	**102-5828**	1	COVER	
	6	1	**102-5829**	1	ADAPTER	
C	7	1	**297-7920**	1	TEE	
	8	1	**275-6631**	1	BASE AS-OIL FILTER (ENGINE)	
	8A	1	**2P-4304**	1	STUD-HOLLOW	
	9	1	**209-7291**	1	BASE AS-OIL FILTER (ENGINE)	
	9A	1	**2P-4304**	1	STUD-HOLLOW	
	10	1	**209-7290**	1	GASKET	
C	11	1	**8T-7927**	1	CONNECTOR	
	12	1	**033-5853**	1	SEAL-O-RING	
	13	1	**106-9586**	2	SEAL-O-RING	
CI	14	1	**307-6480**	1	HOSE AS	
CI	15	1	**307-6481**	1	HOSE AS	
	16	1	**2M-9780**	2	SEAL-O-RING	
	17	1	**3J-7354**	1	SEAL-O-RING	
	18	1	**5P-7701**	4	SEAL-O-RING	
M	19	1	**5P-8196**	2	PLUG	
	20	1	**6V-3908**	2	SEAL-O-RING	
M	21	1	**6V-5218**	11	BOLT (M8X1.25X35-MM)	
	22	1	**6V-8635**	2	CONNECTOR	
	23	1	**8C-3446**	1	VALVE-FLUID SAMPLING (ENGINE OIL)	
	24	1	**9M-1974**	12	WASHER-HARD (8.8X16X2-MM THK)	
	25	1	**9S-4181**	1	PLUG-O-RING	
	26	1	**9S-4182**	1	PLUG-O-RING	
	27	1	**9X-7712**	1	SEAL-O-RING	
C	28	1	**228-7094**	2	SEAL-O-RING	
M	29	1	**145-2264**	1	STUD (M8X1.25X35-MM)	

C-CHANGE FROM PREVIOUS TYPE
I-REFER TO HYDRAULIC INFORMATION SYSTEM
M-METRIC PART

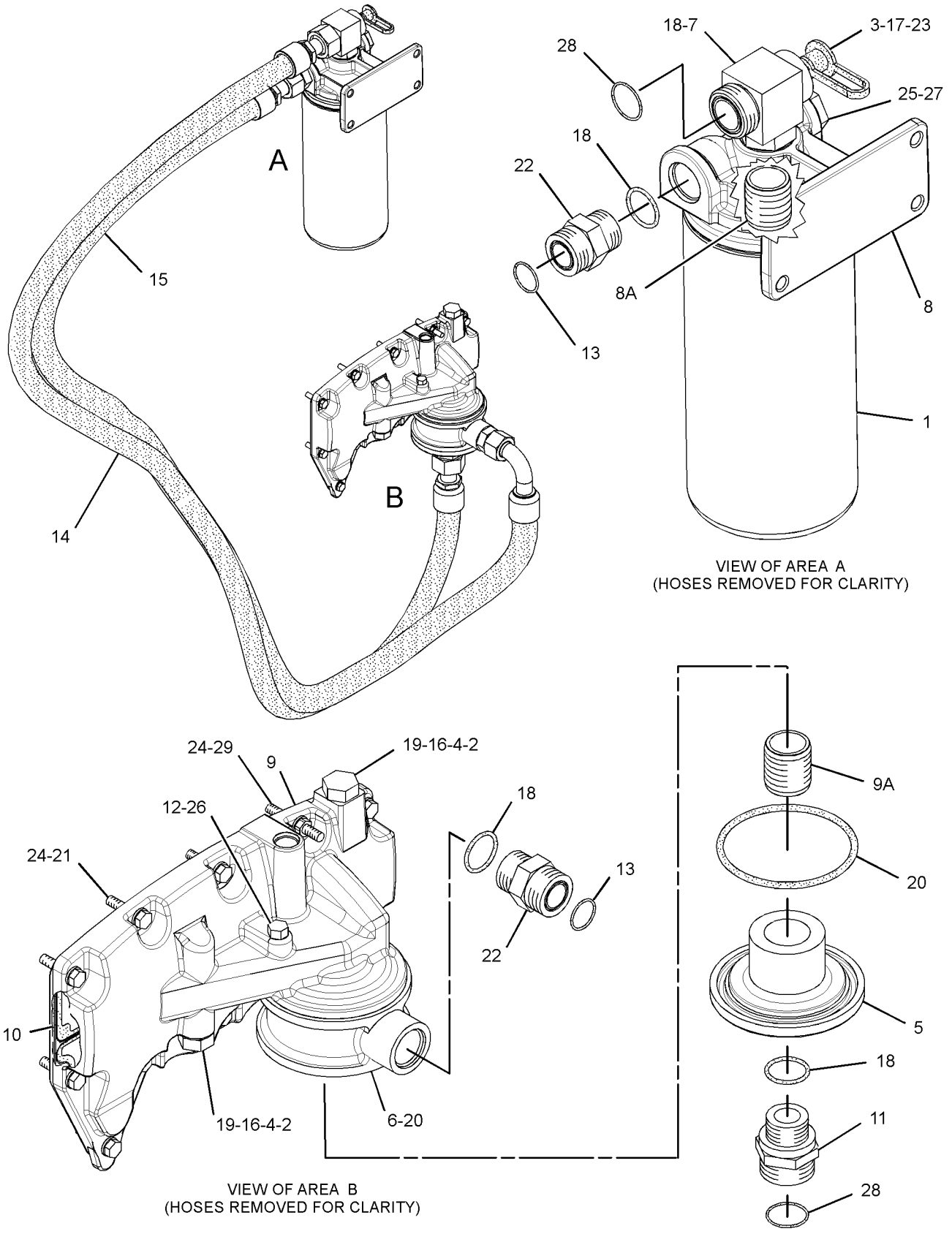

GRAPHIC #1 **<END>** g02022900

196-1829 FUMES DISPOSAL GP

S/N: THX1-UP

PART OF 224-9843 ENGINE AR, 240-1861, 270-2771, 301-3082 ENGINE AR-COMPLETE

SMCS-1317 **i02034219**

NOTE	REF NO	GRAPHIC REF	PART NUMBER	QTY	PART NAME 1 2 3 4 5 6 (PRODUCT LEVEL)	SEE PAGE
	1	1	**5P-0597**	1	CLAMP-HOSE	
	2	1	**196-1831**	1	HOSE-DISPOSAL (FUMES)	
	3	1	**220-1718**	1	BRACKET	
	4	1	**5P-4325**	1	CLIP	
M	5	1	**5P-7970**	1	NUT (M8X1.25-THD)	
M	6	1	**6V-5217**	1	BOLT (M8X1.25X20-MM)	
	7	1	**6V-5839**	1	WASHER (11X21X2.5-MM THK)	
M	8	1	**6V-6317**	1	BOLT (M10X1.5X20-MM)	
	9	1	**9M-1974**	2	WASHER-HARD (8.8X16X2-MM THK)	

M-METRIC PART

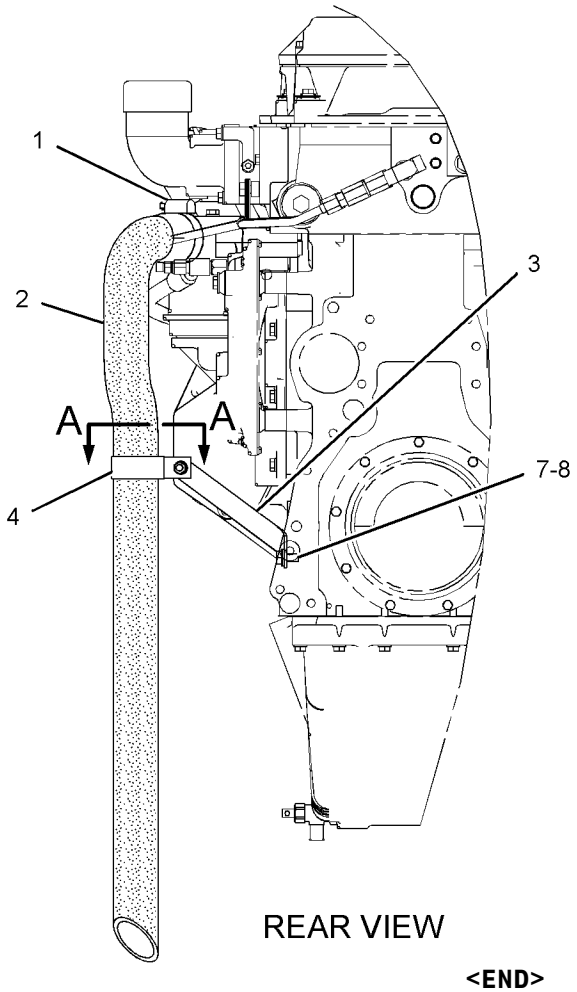

REAR VIEW

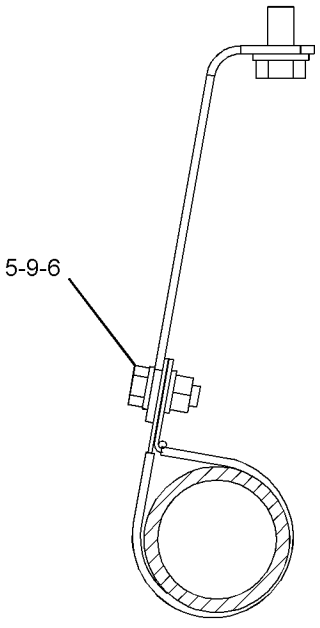

SECTION A-A

GRAPHIC #1 **<END>** g01058524

242-1586 GAUGE GP-OIL LEVEL (DIPSTICK)

S/N: THX1-UP

PART OF 224-9843 ENGINE AR, 240-1861, 301-3082 ENGINE AR-COMPLETE

TYPE 1

SMCS-1326 **i02503996**

NOTE	REF NO	GRAPHIC REF	PART NUMBER	QTY	PART NAME 1 2 3 4 5 6 (PRODUCT LEVEL)	SEE PAGE
	1	1	**242-1598**	1	BRACKET AS	
	2	1	**242-1599**	1	TUBE AS	
	3	1	**262-9965**	1	GAUGE-OIL LEVEL (DIPSTICK) (ENGINE)	
	4	1	**263-1193**	1	BRACKET AS	
	5	1	**5P-8245**	1	WASHER-HARD (13.5X25.5X3-MM THK)	
	6	1	**6V-3265**	2	CLIP	
	7	1	**6V-5839**	4	WASHER (11X21X2.5-MM THK)	
M	8	1	**6V-6317**	4	BOLT (M10X1.5X20-MM)	
M	9	1	**8T-0293**	1	BOLT (M12X1.75X20-MM)	

M-METRIC PART

242-1586 **GAUGE GP-OIL LEVEL (DIPSTICK)** *(contd.)* **i02503996**

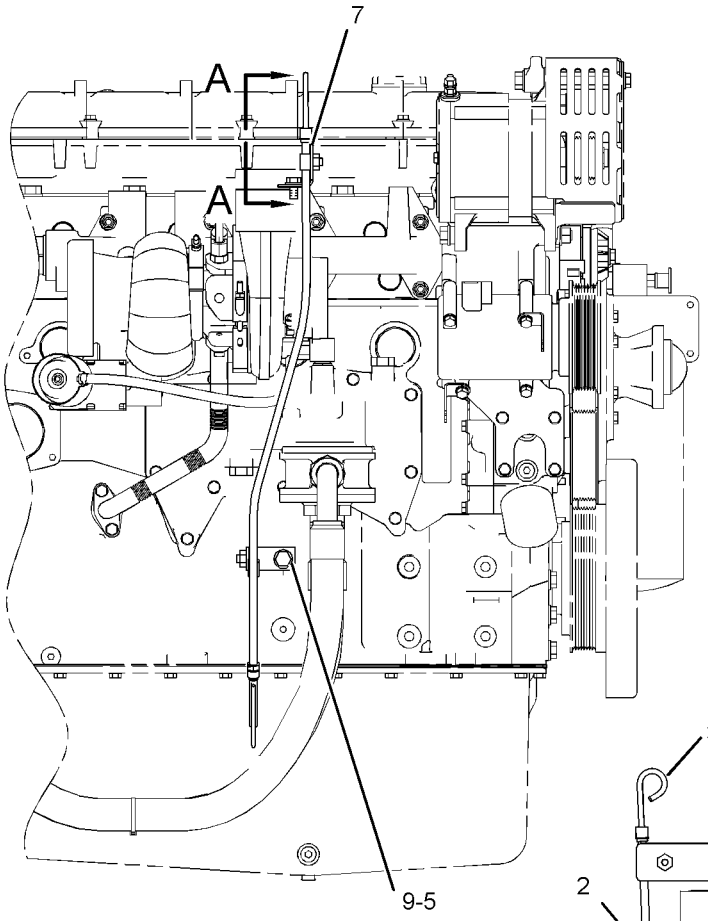

RIGHT SIDE VIEW

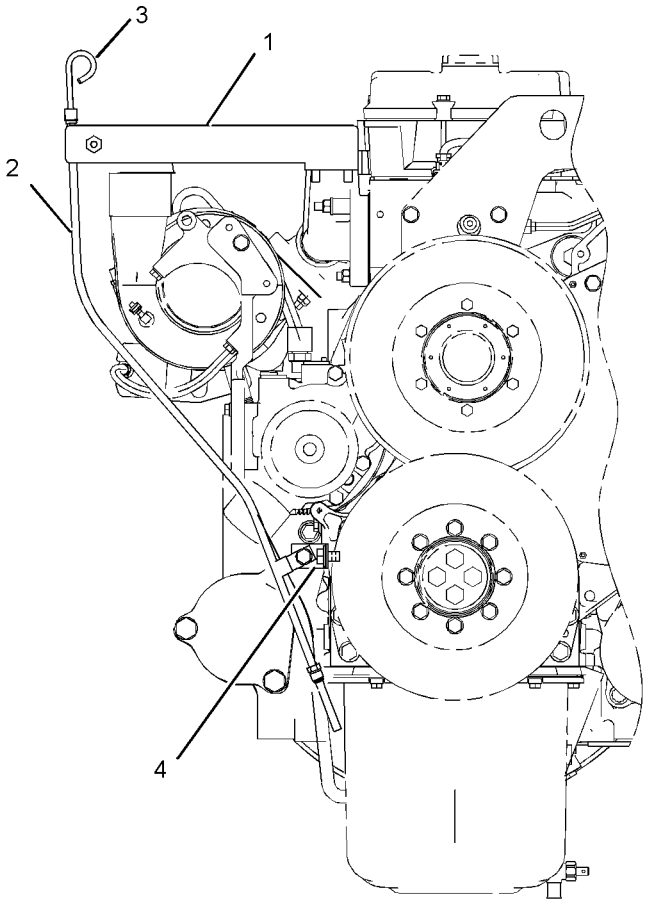

FRONT VIEW

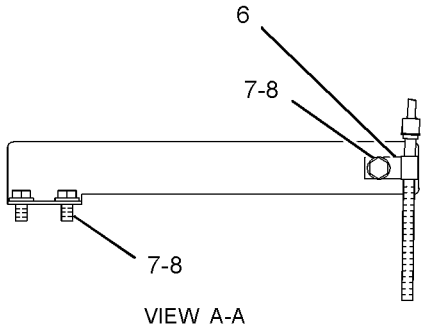

VIEW A-A

GRAPHIC #1 **<END>** g01188541

242-1586 GAUGE GP-OIL LEVEL (DIPSTICK)

S/N: THX1-UP

PART OF 224-9843 ENGINE AR, 270-2771 ENGINE AR-COMPLETE

TYPE 2

SMCS-1326 **i02514044**

NOTE	REF NO	GRAPHIC REF	PART NUMBER	QTY	PART NAME 1 2 3 4 5 6 (PRODUCT LEVEL)	SEE PAGE
	1	1	**242-1598**	1	BRACKET AS	
	2	1	**242-1599**	1	TUBE AS	
C	3	1	**208-7474**	1	GAUGE-OIL LEVEL (ENGINE)	
C	4	1	**194-3526**	1	BRACKET AS	
	5	1	**5P-8245**	1	WASHER-HARD (13.5X25.5X3-MM THK)	
	6	1	**6V-3265**	2	CLIP	
	7	1	**6V-5839**	4	WASHER (11X21X2.5-MM THK)	
M	8	1	**6V-6317**	4	BOLT (M10X1.5X20-MM)	
M	9	1	**8T-0293**	1	BOLT (M12X1.75X20-MM)	

C-CHANGE FROM PREVIOUS TYPE
M-METRIC PART

242-1586 **GAUGE GP-OIL LEVEL (DIPSTICK)** *(contd.)* **i02514044**

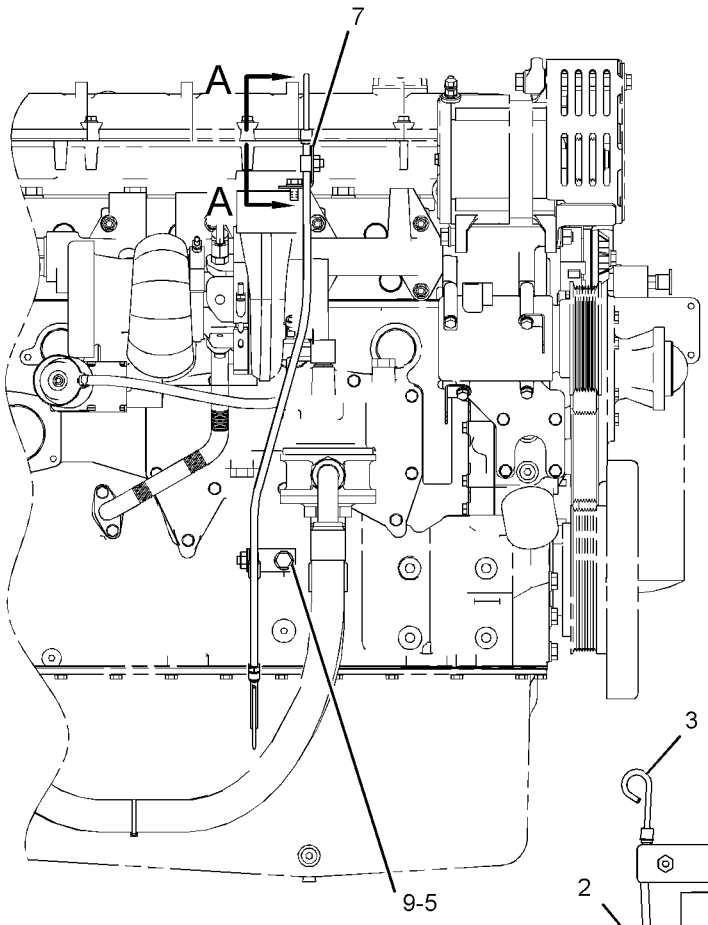

RIGHT SIDE VIEW

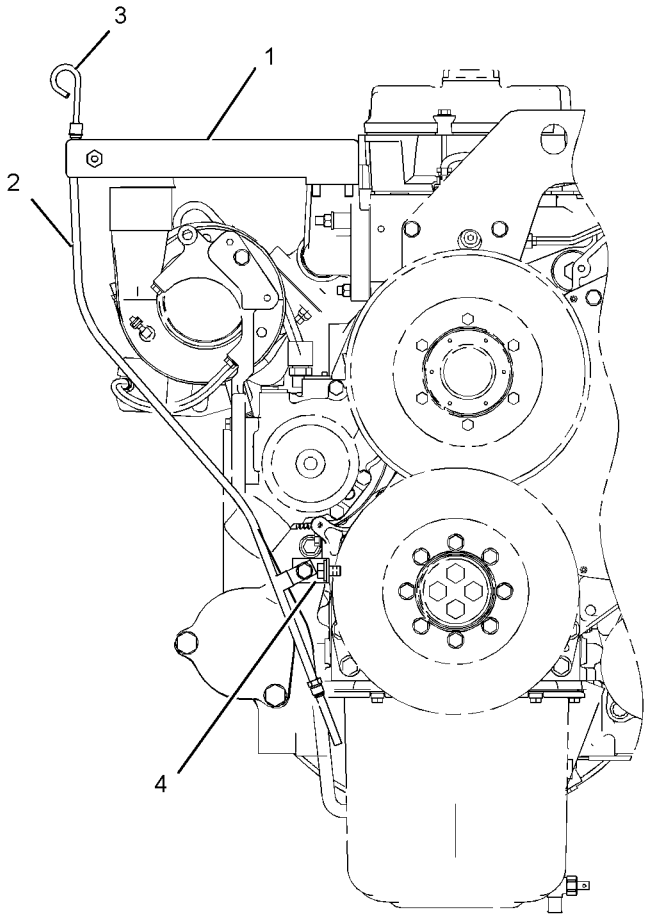

FRONT VIEW

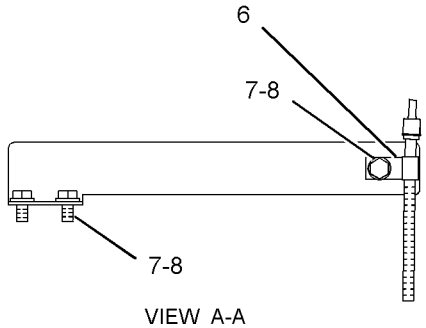

VIEW A-A

GRAPHIC #1 **<END>** g01257807

LUBRICATION SYSTEM

202-6603 LINES GP-ENGINE OIL

S/N: THX1-UP

PART OF 224-9843 ENGINE AR, 240-1861, 270-2771, 301-3082 ENGINE AR-COMPLETE

SMCS-1307 **i01964568**

NOTE	REF NO	GRAPHIC REF	PART NUMBER	QTY	PART NAME 1 2 3 4 5 6 (PRODUCT LEVEL)	SEE PAGE
	1	1	**195-0452**	1	GASKET	
	2	1	**234-0203**	1	ELBOW-OUTLET	
	3	1	**213-5213**	1	TUBE AS	
	4	1	**033-6034**	1	SEAL-O-RING	
M	5	1	**208-9282**	1	BOLT (M8X1.25X25-MM)	
	6	1	**5P-7530**	1	SEAL-O-RING	
M	7	1	**6V-3940**	2	BOLT (M8X1.25X25-MM)	
M	8	1	**8T-0292**	1	BOLT (M8X1.25X90-MM)	
	9	1	**9M-1974**	3	WASHER-HARD (8.8X16X2-MM THK)	

M-METRIC PART

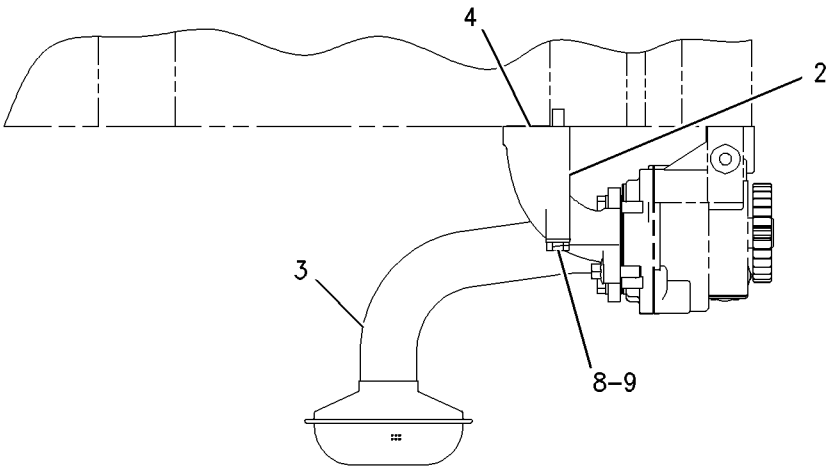

LEFT SIDE VIEW

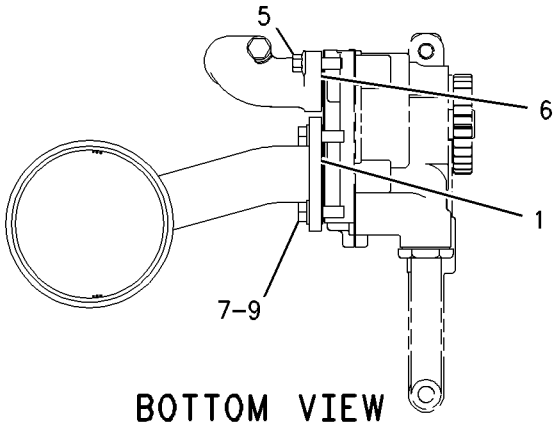

BOTTOM VIEW

GRAPHIC #1 **<END>** g00992152

239-6408 LINES GP-ENGINE OIL DRAIN

S/N: B6H1-UP; JLP1-UP

PART OF 239-6405, 279-7825 INSTALLATION AR-ENGINE

SMCS-1307 **i02495102**

NOTE	REF NO	GRAPHIC REF	PART NUMBER	QTY	PART NAME 1 2 3 4 5 6 (PRODUCT LEVEL)	SEE PAGE
	1	1	**095-1388**	1	CLAMP-HOSE	
E	2	1	**5P-0743**		HOSE (27-CM)	

E-ORDER BY THE CENTIMETER

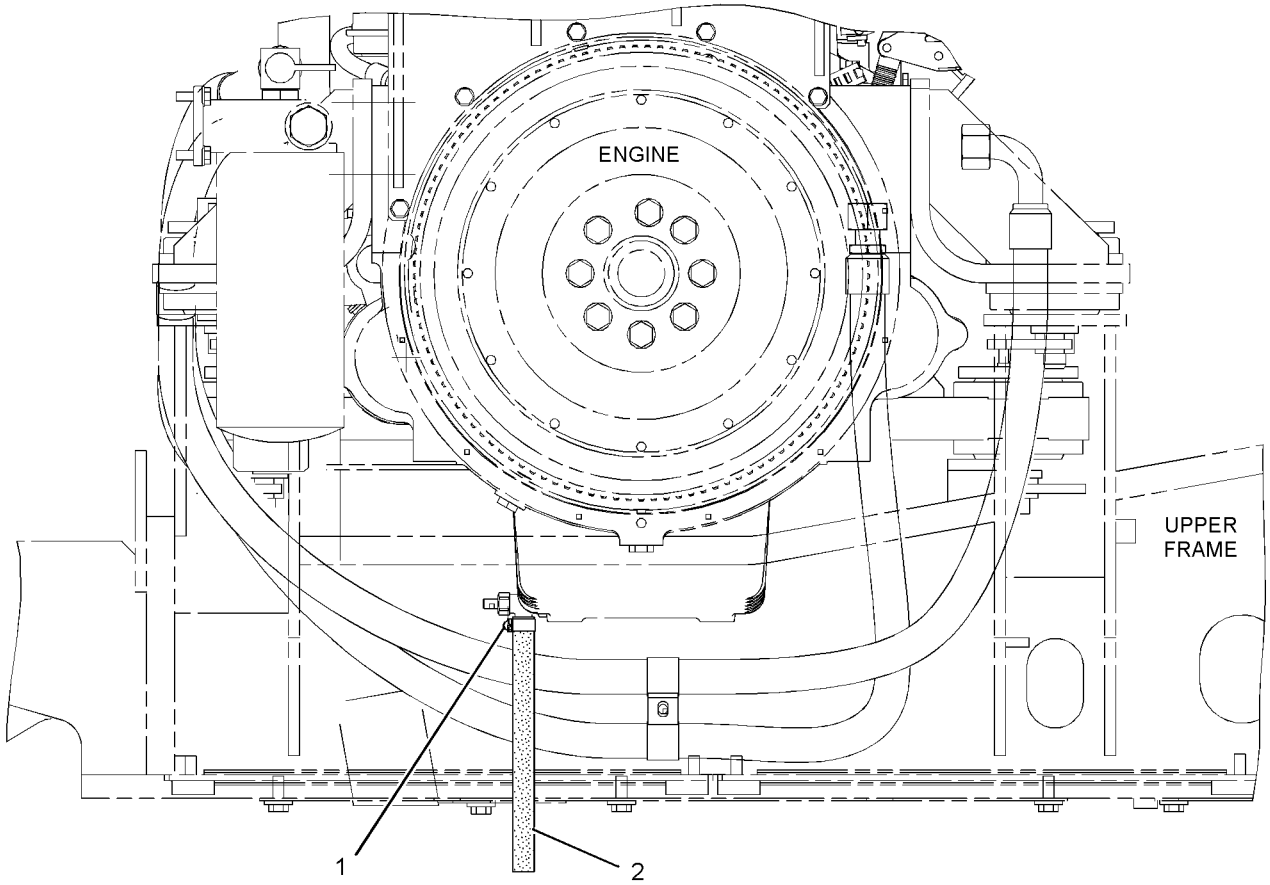

RIGHT SIDE VIEW

GRAPHIC #1

<END>

g01197323

LUBRICATION SYSTEM

165-4465 LINES GP-TURBOCHARGER OIL

S/N: THX1-320

PART OF 224-9843 ENGINE AR, 270-2771, 301-3082 ENGINE AR-COMPLETE

SMCS-1052 **i02177428**

NOTE	REF NO	GRAPHIC REF	PART NUMBER	QTY	PART NAME 1 2 3 4 5 6 (PRODUCT LEVEL)	SEE PAGE
	1	1	**249-9230**	1	HOSE AS (TURBOCHARGER OIL SUPPLY)	
	2	1	**167-0166**	1	TUBE AS (TURBOCHARGER) (FLEX)	
	3	1	**183-3398**	1	CONNECTOR AS	
		1	**6V-8636**	1	CONNECTOR	
	3A	1	**6V-5049**	1	SEAL-O-RING	
	3B	1	**8L-2779**	1	SEAL-O-RING	
	4	1	**183-3404**	1	ELBOW AS	
	4A	1	**8L-2779**	1	SEAL-O-RING	
	4B	1	**8L-2786**	1	SEAL-O-RING	
	5	1	**3P-1156**	2	SEAL-O-RING	
M	6	1	**6V-3940**	4	BOLT (M8X1.25X25-MM)	
	7	1	**9M-1974**	4	WASHER-HARD (8.8X16X2-MM THK)	

M-METRIC PART

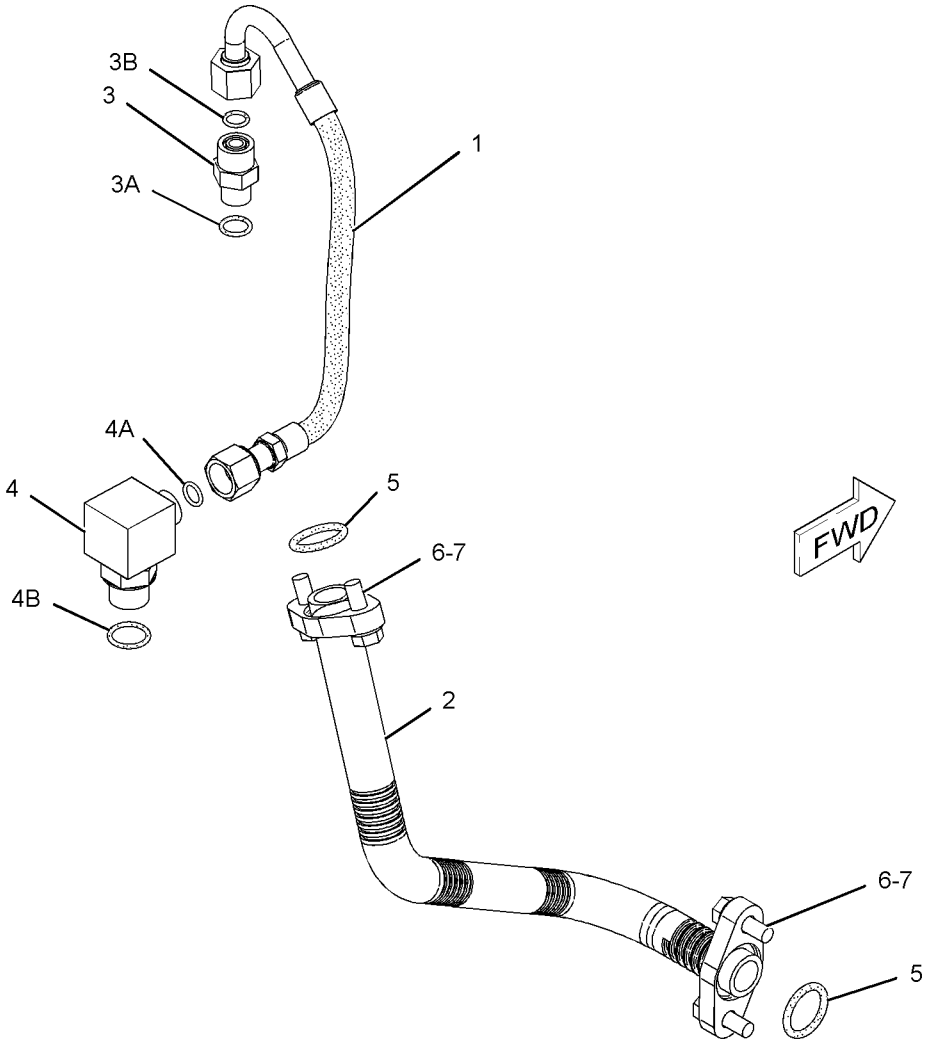

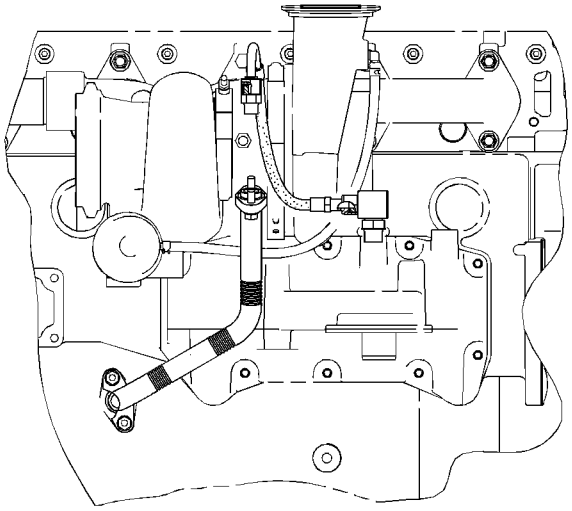

LEFT SIDE VIEW

GRAPHIC #1

<END>

g01067149

165-4465 LINES GP-TURBOCHARGER OIL

S/N: THX321-UP

PART OF 224-9843 ENGINE AR, 240-1861, 270-2771, 301-3082 ENGINE AR-COMPLETE

SMCS-1052 **i02772944**

NOTE	REF NO	GRAPHIC REF	PART NUMBER	QTY	PART NAME 1 2 3 4 5 6 (PRODUCT LEVEL)	SEE PAGE
C	1	1	*183-3399*	1	CONNECTOR AS	
		1	**6V-8636**	1	CONNECTOR	
	1A	1	**214-7568**	1	SEAL-O-RING	
	1B	1	**221-3494**	1	SEAL-O-RING	
	2	1	**183-3404**	1	ELBOW AS	
	2A	1	**8L-2779**	1	SEAL-O-RING	
	2B	1	**8L-2786**	1	SEAL-O-RING	
C	3	1	**197-8419**	1	GASKET	
C	4	1	**246-6036**	1	HOSE	
	5	1	**249-9230**	1	HOSE AS	
C	6	1	**259-2993**	1	TUBE AS-DRAIN	
C	7	1	**259-2994**	1	TUBE AS-DRAIN	
C	8	1	**269-8788**	2	CLAMP-BAND	
	9	1	**5P-7530**	1	SEAL-O-RING	
CM	10	1	**6V-3940**	2	BOLT (M8X1.25X25-MM)	
CM	11	1	**6V-5218**	2	BOLT (M8X1.25X35-MM)	
	12	1	**9M-1974**	4	WASHER-HARD (8.8X16X2-MM THK)	

C-CHANGE FROM PREVIOUS TYPE
M-METRIC PART

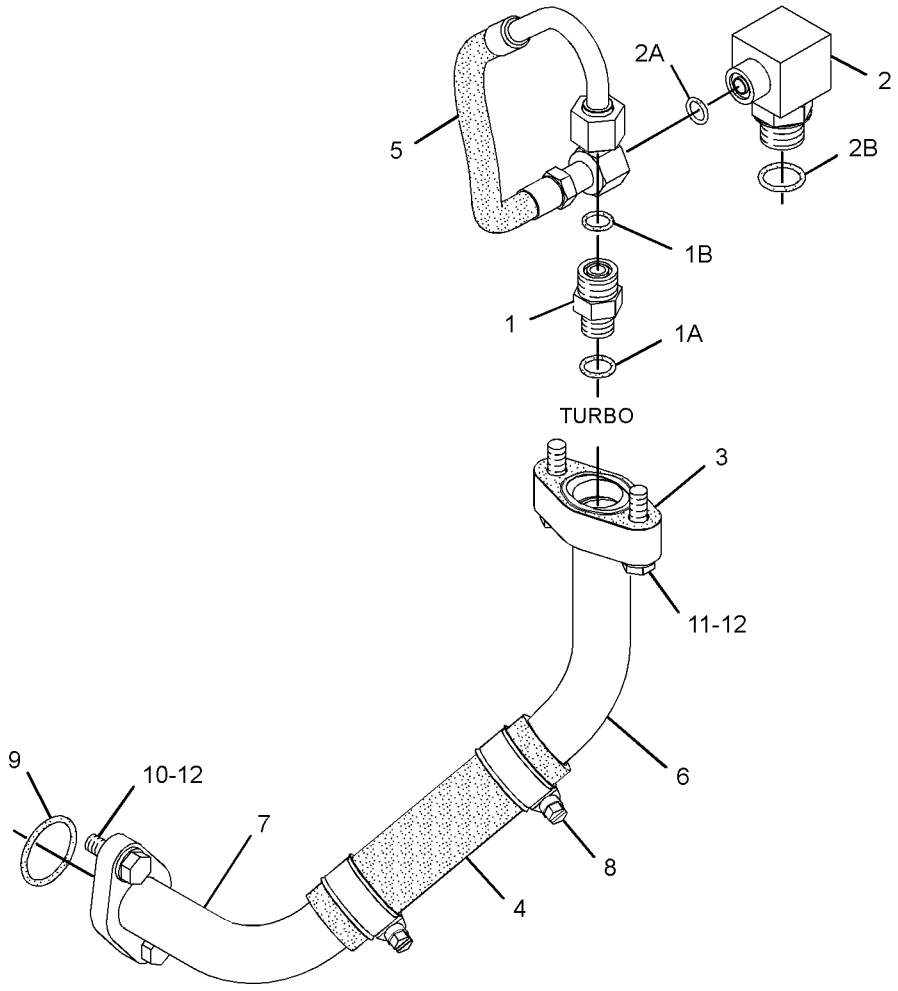

GRAPHIC #1 **<END>** g01387023

239-6409 MOUNTING GP-ENGINE OIL FILTER

S/N: B6H1-UP; JLP1-UP

PART OF 239-6405, 279-7825 INSTALLATION AR-ENGINE

SMCS-1308 **i02816122**

NOTE	REF NO	GRAPHIC REF	PART NUMBER	QTY	PART NAME 1 2 3 4 5 6 (PRODUCT LEVEL)	SEE PAGE
	1	1	**239-6500**	1	PLATE	
	2	1	**305-4903**	1	SUPPORT AS	
	3	1	**4D-7388**	6	CLIP	
	4	1	**7X-7729**	2	WASHER (11X25X3-MM THK)	
	5	1	**8T-4121**	10	WASHER-HARD (11X21X2.5-MM THK)	
M	6	1	**8T-4133**	1	NUT (M10X1.5-THD)	
M	7	1	**8T-4136**	3	BOLT (M10X1.5X25-MM)	
M	8	1	**8T-4186**	2	BOLT (M10X1.5X40-MM)	
M	9	1	**8T-4195**	5	BOLT (M10X1.5X30-MM)	
M	10	1	**8T-4196**	1	BOLT (M10X1.5X35-MM)	

M-METRIC PART

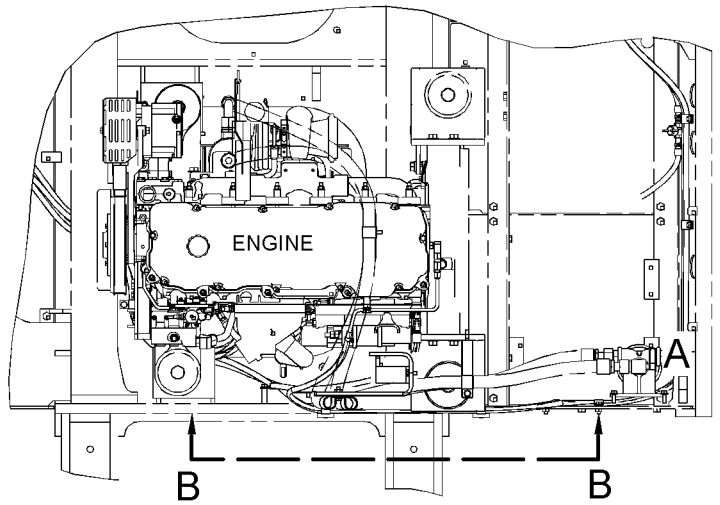

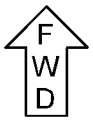

TOP VIEW

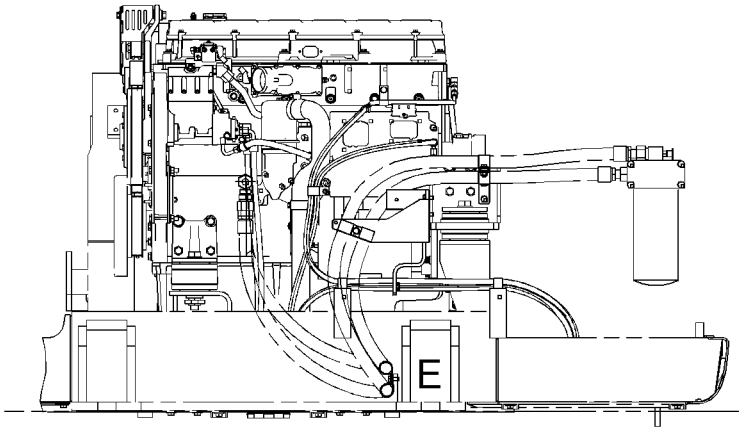

REAR VIEW

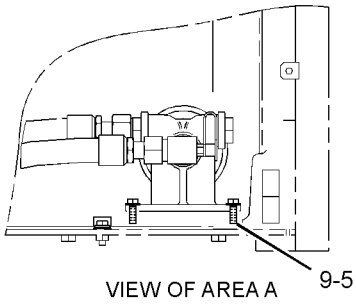

VIEW OF AREA A

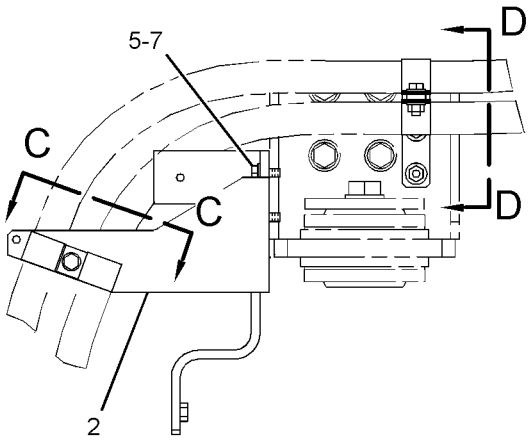

SECTION B-B

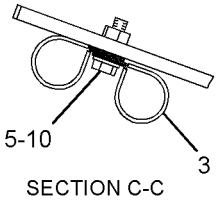

SECTION C-C

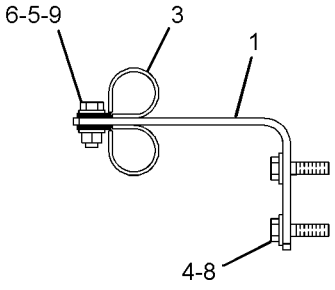

SECTION D-D

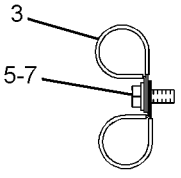

VIEW OF AREA E

GRAPHIC #1 **<END>** g01416217

195-8098 PUMP GP-ENGINE OIL

S/N: THX1-UP

PART OF 229-2665, 270-4216 ENGINE AR-CORE

TYPE 1

SMCS-1304, 1315 **i01836187**

NOTE	REF NO	GRAPHIC REF	PART NUMBER	QTY	PART NAME 1 2 3 4 5 6 (PRODUCT LEVEL)	SEE PAGE
	1	1	**211-0546**	1	PUMP GP-ENGINE OIL	
		1	**210-5522**	1	PUMP AS-ENGINE OIL	
	1A	1	**221-0144**	1	GEAR AS (60 TEETH)	
M	2	1	**6V-1819**	2	BOLT (M10X1.50X100MM)	
	3	1	**6V-5839**	2	WASHER (11X21X2.5MM THK)	

M-METRIC PART

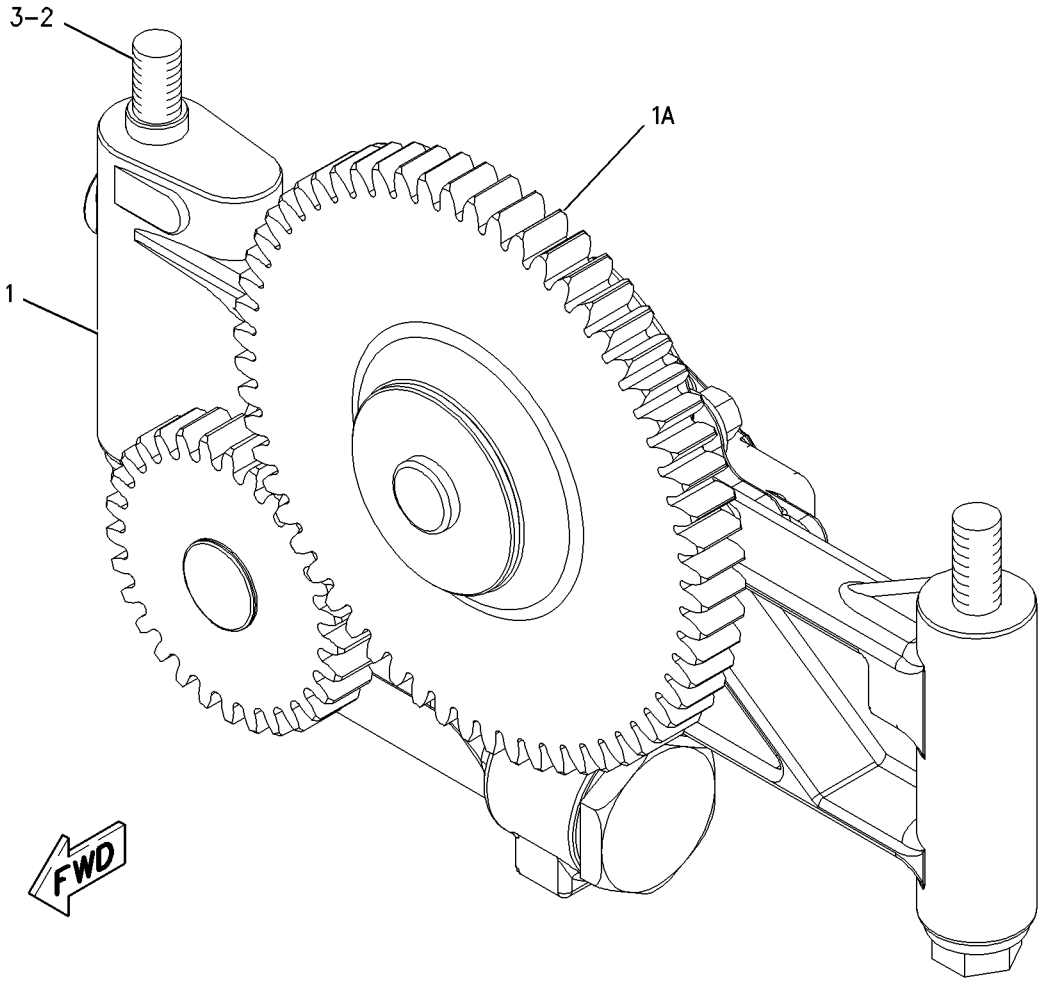

GRAPHIC #1 **<END>** g00909910

LUBRICATION SYSTEM

195-8098 PUMP GP-ENGINE OIL

S/N: THX1-UP

PART OF 229-2665, 270-4216, 348-2746, 348-2747 ENGINE AR-CORE

TYPE 2

SMCS-1304, 1315 **i03574923**

NOTE	REF NO	GRAPHIC REF	PART NUMBER	QTY	PART NAME 1 2 3 4 5 6 (PRODUCT LEVEL)	SEE PAGE
C	1	1	*331-8906*	1	PUMP GP-GEROTOR	
	1A	1	**221-0144**	1	GEAR AS (60-TEETH)	
		1	**331-8905**	1	PUMP AS-ENGINE OIL	
M	2	1	**6V-1819**	2	BOLT (M10X1.5X100-MM)	
	3	1	**6V-5839**	2	WASHER (11X21X2.5-MM THK)	

C-CHANGE FROM PREVIOUS TYPE
M-METRIC PART

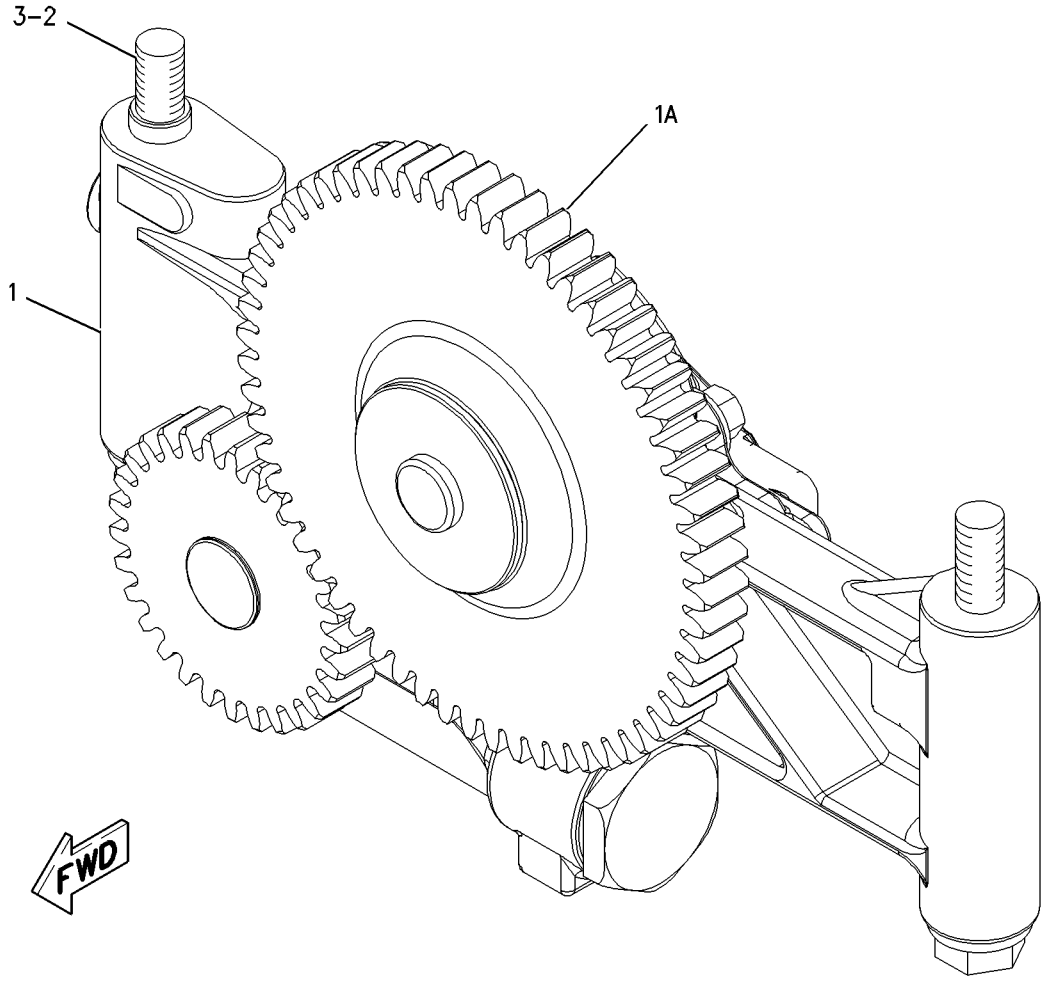

GRAPHIC #1 **<END>** g00909910

188-3826 COOLER GP-ENGINE OIL

S/N: THX1-UP

PART OF 229-2665, 270-4216, 348-2746, 348-2747 ENGINE AR-CORE

SMCS-1378 **i02946218**

NOTE	REF NO	GRAPHIC REF	PART NUMBER	QTY	PART NAME 1 2 3 4 5 6 (PRODUCT LEVEL)	SEE PAGE
	1	1	**209-7293**	1	GASKET	
	2	1	**293-9367**	1	CORE AS-OIL COOLER (ENGINE)	

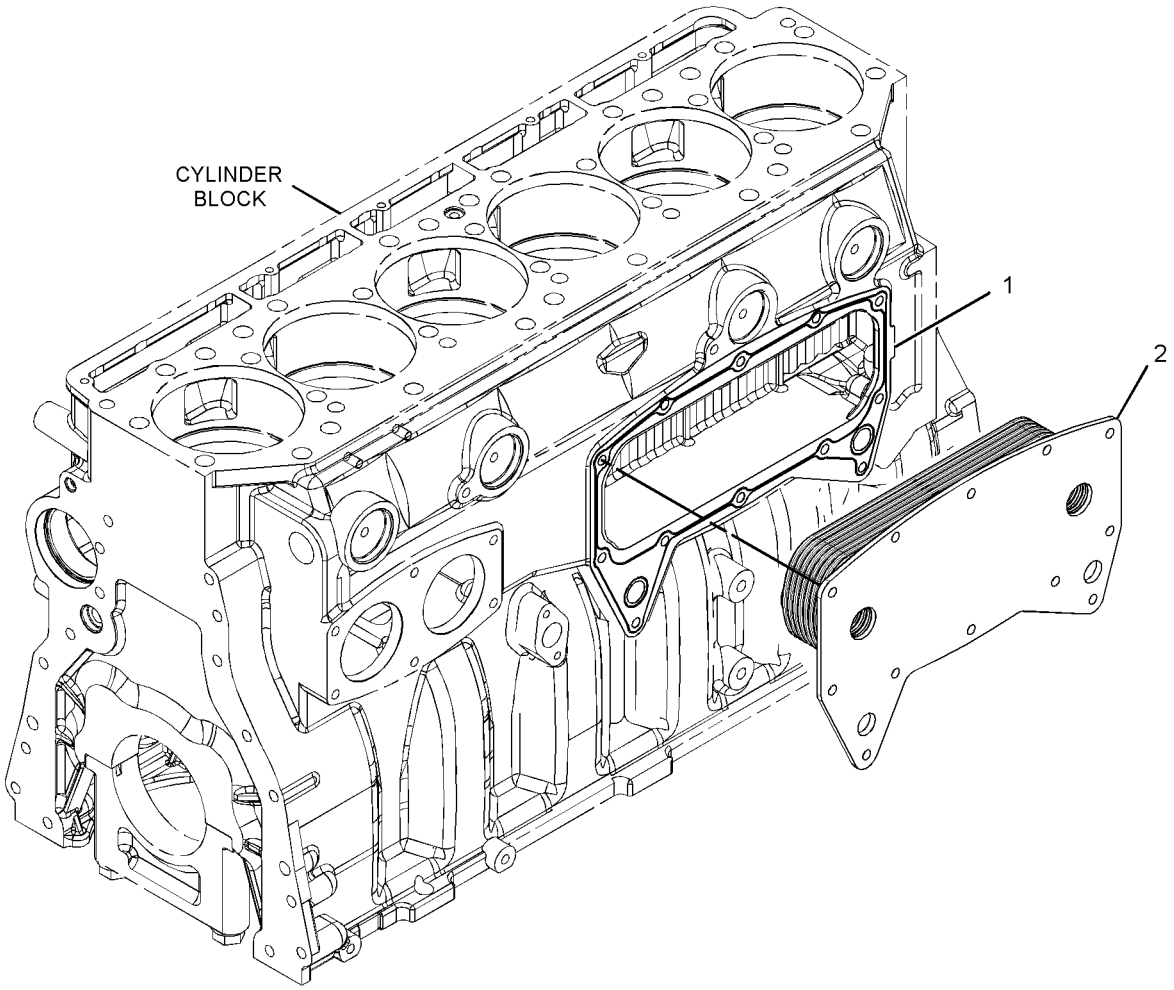

GRAPHIC #1 **<END>** g01419332

COOLING SYSTEM

230-2899 FAN GP-SUCTION

S/N: B6H1-652; JLP1-944

PART OF 239-6405, 279-7825 INSTALLATION AR-ENGINE

SMCS-1356 **i03600729**

NOTE	REF NO	GRAPHIC REF	PART NUMBER	QTY	PART NAME 1 2 3 4 5 6 (PRODUCT LEVEL)	SEE PAGE
Y	1	3	*137-3750*	1	DRIVE GP-FAN	55
M	2	4	**8T-4956**	8	BOLT (M12X1.75X35-MM)	
	3	3	**147-7170**	1	ADAPTER	
	4	1	**230-2946**	1	SUPPORT AS-FAN (LH)	
	5	1	**230-2953**	2	BRACE	
	6	1	**230-2956**	1	SUPPORT AS-FAN (RH)	
	7	4	**230-2960**	1	SUPPORT AS-FAN (RH, VERTICAL)	
YR	8	1	**234-4638**	1	MOTOR GP-PISTON (HYDRAULIC FAN)	864
	9	2	**245-9171**	1	SEAL	
	10	4	**245-9292**	1	SUPPORT AS-FAN (LH, VERTICAL)	
	11	3	**245-9293**	1	SPIDER AS (8-BLADE)	
	12	1	**245-9294**	2	GUARD AS-FAN	
	13	1	**281-3548**	1	SUPPORT AS-FAN (REAR)	
	14	2	**265-3552**	2	BRACE	
M	15	4	**136-4182**	2	BOLT (M16X2X100-MM)	
	16	3	**4M-0189**	1	SEAL-O-RING	
	17	3,4	**5P-1076**	18	WASHER-HARD (13.5X30X4-MM THK)	
	18	1,4	**7X-0515**	10	WASHER-HARD (17X35X5-MM THK)	
M	19	1,4	**7X-2553**	4	BOLT (M16X2X40-MM)	
	20	2	**7X-7729**	12	WASHER (11X25X3-MM THK)	
	21	3	**8T-4121**	8	WASHER-HARD (11X21X2.5-MM THK)	
M	22	4	**8T-4132**	2	NUT (M16X2-THD)	
M	23	2	**8T-4137**	12	BOLT (M10X1.5X20-MM)	
M	24	3	**8T-4139**	7	BOLT (M12X1.75X30-MM)	
M	25	4	**8T-4184**	4	BOLT (M12X1.75X45-MM)	
M	26	3	**8T-4194**	2	BOLT (M12X1.75X50-MM)	
M	27	3	**8T-4196**	8	BOLT (M10X1.5X35-MM)	
	28	3,4	**8T-4223**	9	WASHER-HARD (13.5X25.5X3-MM THK)	
M	29	4	**8T-4244**	6	NUT (M12X1.75-THD)	
M	30	1	**8T-4779**	6	BOLT (M16X2X35-MM)	

M-METRIC PART
R-REMFG PART MAY BE AVAILABLE
Y-SEPARATE ILLUSTRATION

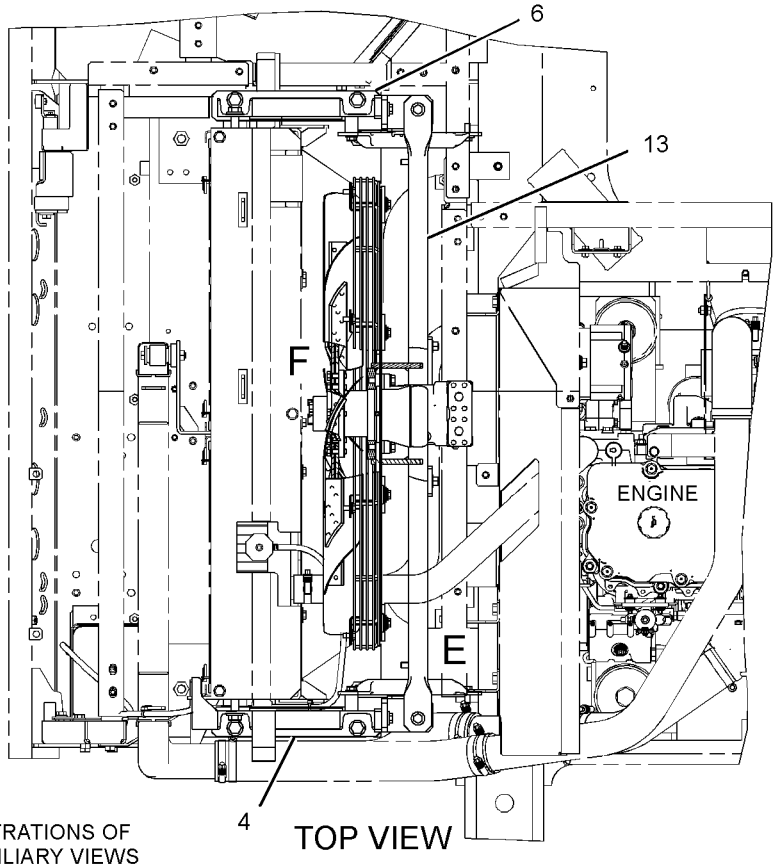

REFER TO ALL ILLUSTRATIONS OF THIS GROUP FOR AUXILIARY VIEWS

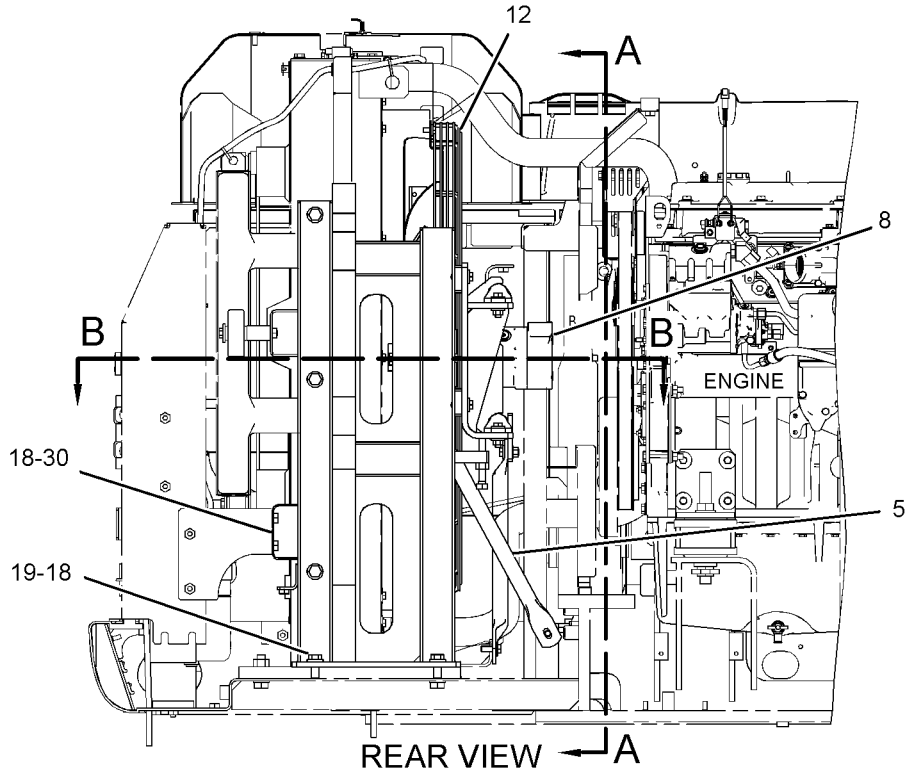

GRAPHIC #1 g01365574

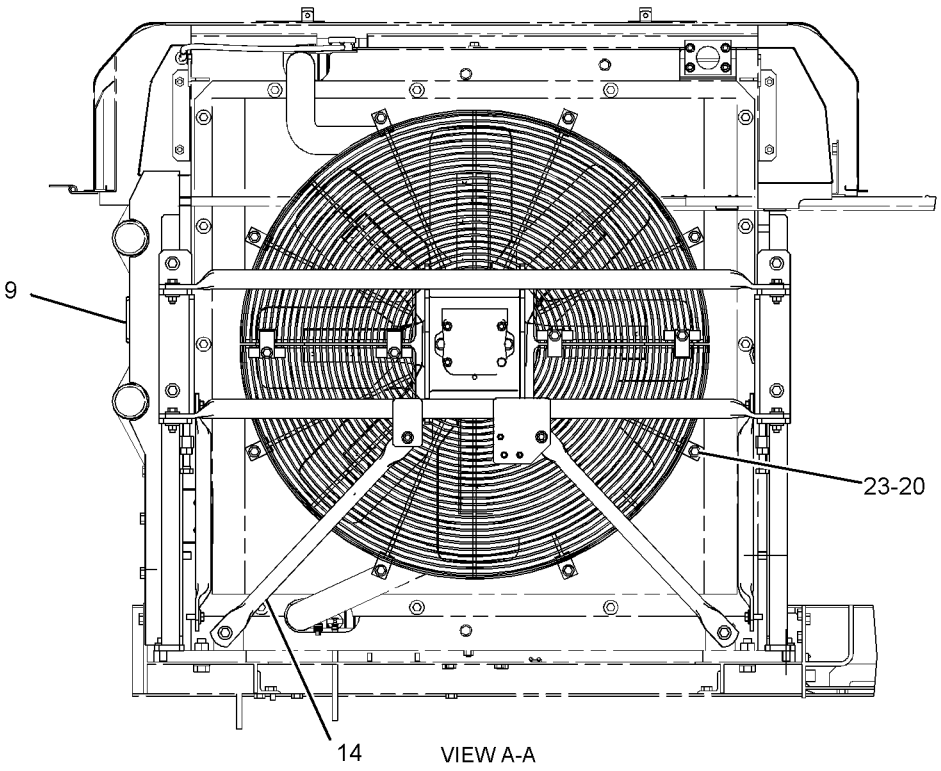

REFER TO ALL ILLUSTRATIONS OF THIS GROUP FOR AUXILIARY VIEWS

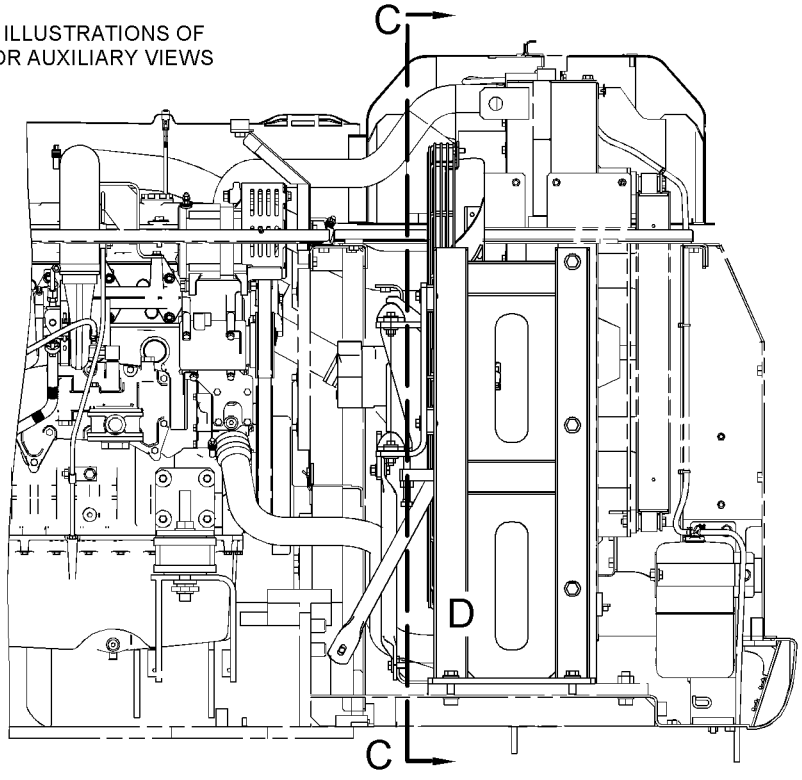

FRONT VIEW

GRAPHIC #2 g01365129

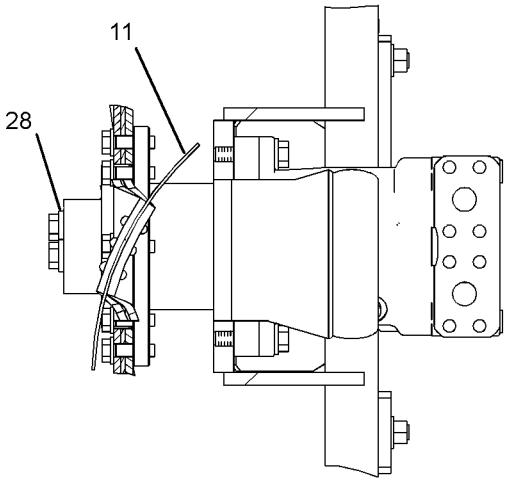

VIEW OF AREA F

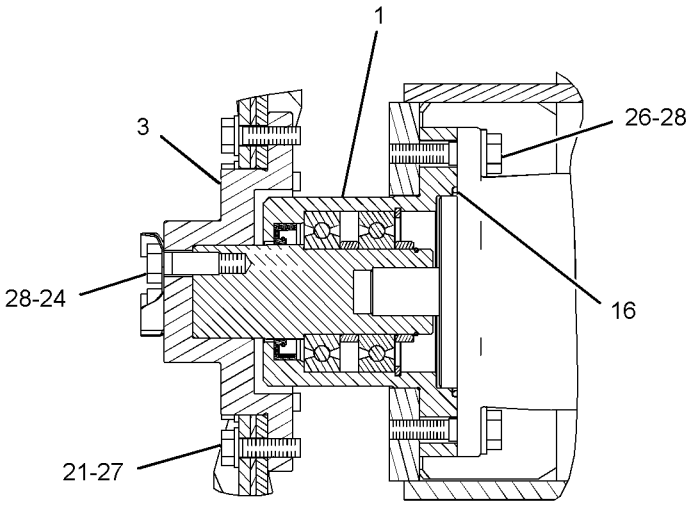

SECTION B-B

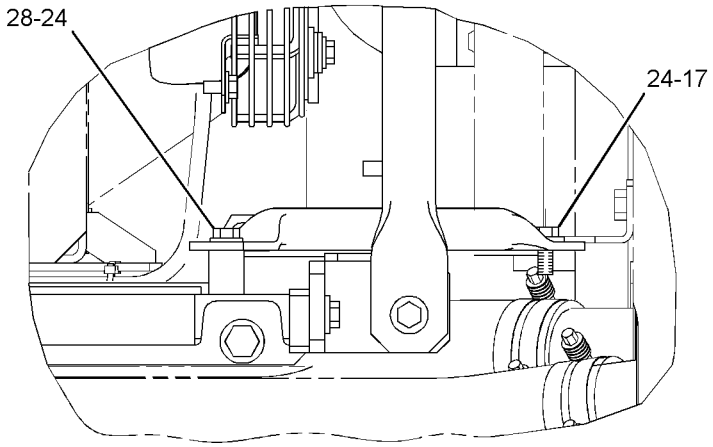

VIEW OF AREA E

GRAPHIC #3 g01365130

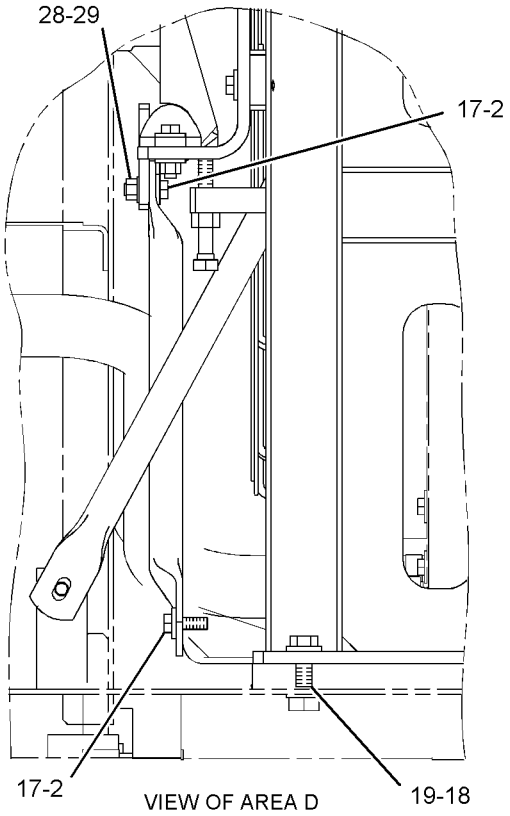

VIEW OF AREA D

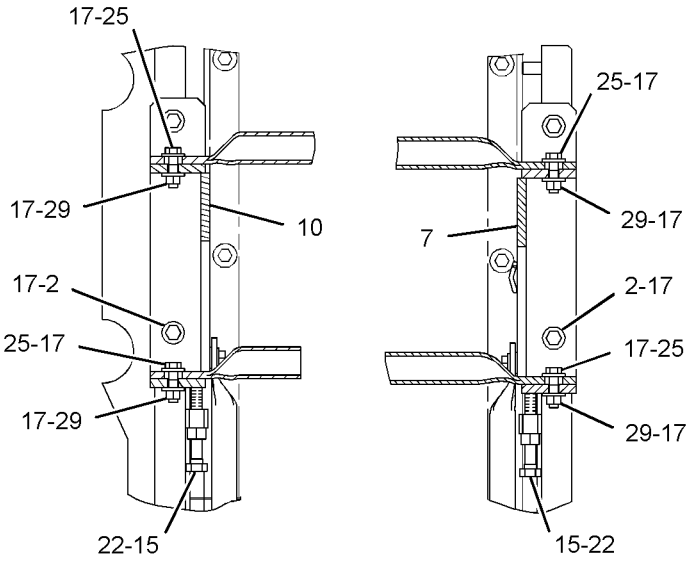

SECTION C-C

GRAPHIC #4 **<END>** g01365131

230-2899 FAN GP-SUCTION

S/N: B6H653-UP; JLP945-UP

PART OF 279-7825 INSTALLATION AR-ENGINE

SMCS-1356 **i03600726**

NOTE	REF NO	GRAPHIC REF	PART NUMBER	QTY	PART NAME 1 2 3 4 5 6 (PRODUCT LEVEL)	SEE PAGE
CY	1	3	*295-9439*	1	DRIVE GP-FAN	56
M	2	3	**8T-4956**	8	BOLT (M12X1.75X35-MM)	
	3	3	**147-7170**	1	ADAPTER	
	4	1	**230-2946**	1	SUPPORT AS-FAN (LH)	
	5	1	**230-2953**	2	BRACE	
	6	1	**230-2956**	1	SUPPORT AS-FAN (RH)	
	7	3	**230-2960**	1	SUPPORT AS-FAN (RH, VERTICAL)	
YR	8	1	**234-4638**	1	MOTOR GP-PISTON (HYDRAULIC FAN)	864
	9	2	**245-9171**	1	SEAL	
	10	3	**245-9292**	1	SUPPORT AS-FAN (LH, VERTICAL)	
	11	1	**245-9293**	1	SPIDER AS (8-BLADE)	
	12	1	**245-9294**	2	GUARD AS-FAN	
	13	1	**281-3548**	1	SUPPORT AS-FAN (REAR)	
	14	2	**265-3552**	2	BRACE	
M	15	3	**136-4182**	2	BOLT (M16X2X100-MM)	
	16	3	**4M-0189**	1	SEAL-O-RING	
	17	3	**5P-1076**	18	WASHER-HARD (13.5X30X4-MM THK)	
	18	1,3	**7X-0515**	10	WASHER-HARD (17X35X5-MM THK)	
M	19	1,3	**7X-2553**	4	BOLT (M16X2X40-MM)	
	20	2	**7X-7729**	12	WASHER (11X25X3-MM THK)	
	21	3	**8T-4121**	8	WASHER-HARD (11X21X2.5-MM THK)	
M	22	3	**8T-4132**	2	NUT (M16X2-THD)	
M	23	2	**8T-4137**	12	BOLT (M10X1.5X20-MM)	
M	24	3	**8T-4139**	7	BOLT (M12X1.75X30-MM)	
M	25	3	**8T-4184**	4	BOLT (M12X1.75X45-MM)	
M	26	3	**8T-4194**	2	BOLT (M12X1.75X50-MM)	
M	27	3	**8T-4196**	8	BOLT (M10X1.5X35-MM)	
	28	3	**8T-4223**	9	WASHER-HARD (13.5X25.5X3-MM THK)	
M	29	3	**8T-4244**	6	NUT (M12X1.75-THD)	
M	30	1	**8T-4779**	6	BOLT (M16X2X35-MM)	

C-CHANGE FROM PREVIOUS TYPE
M-METRIC PART
R-REMFG PART MAY BE AVAILABLE
Y-SEPARATE ILLUSTRATION

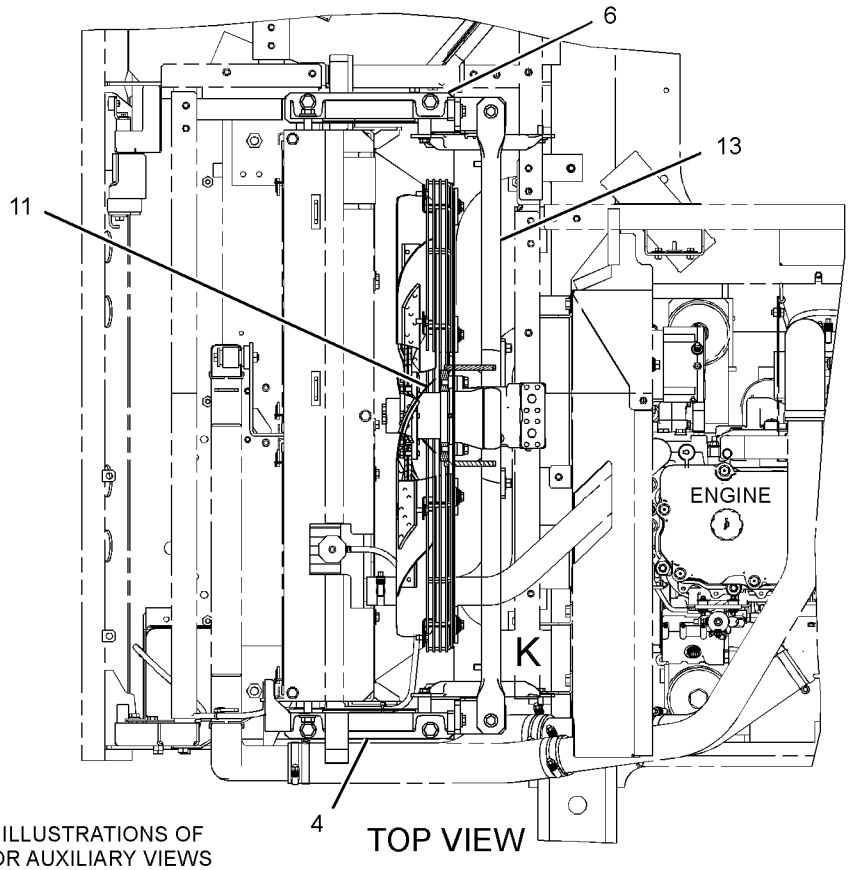

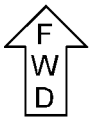

REFER TO ALL ILLUSTRATIONS OF THIS GROUP FOR AUXILIARY VIEWS

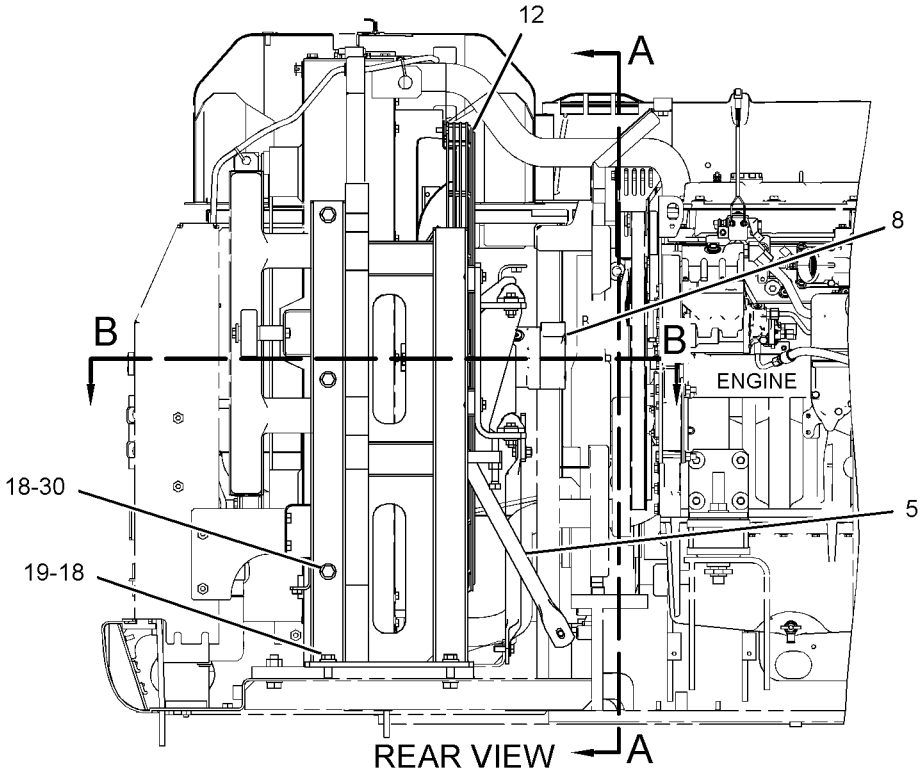

GRAPHIC #1

g01414961

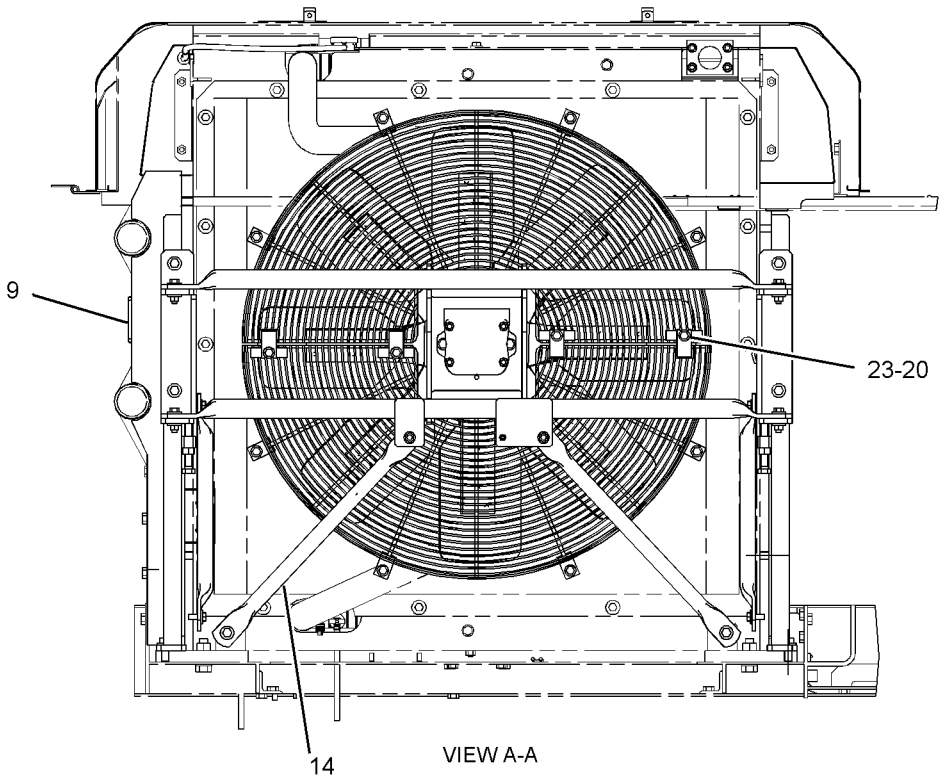

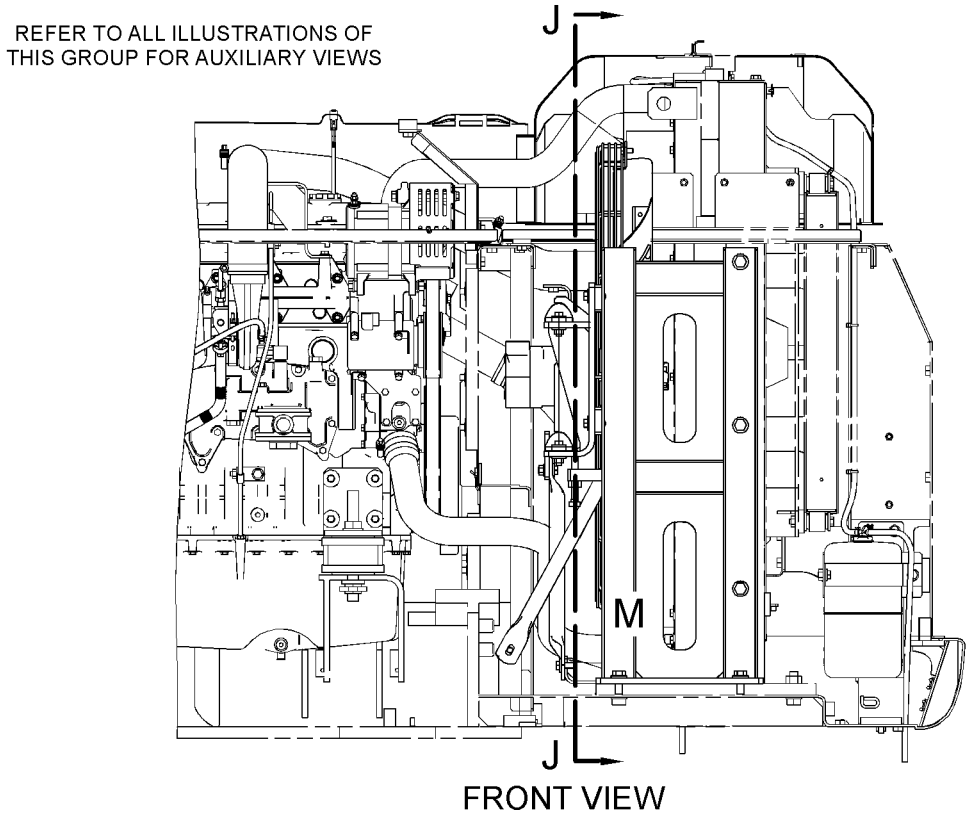

GRAPHIC #2 g01200694

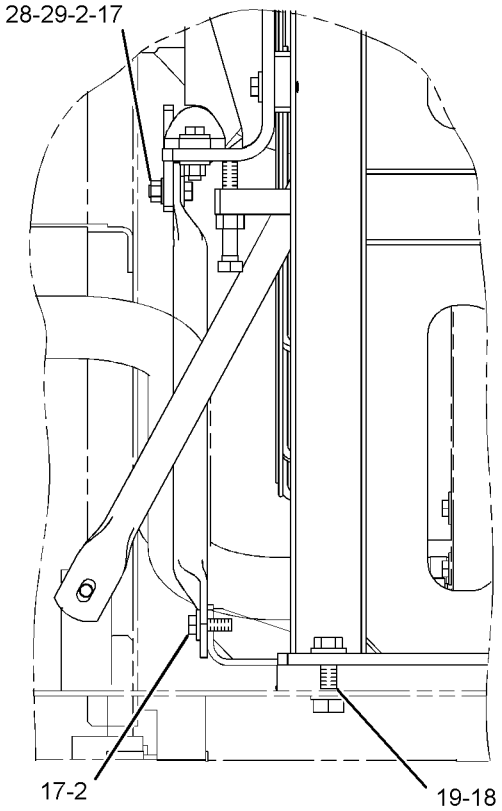

VIEW OF AREA M

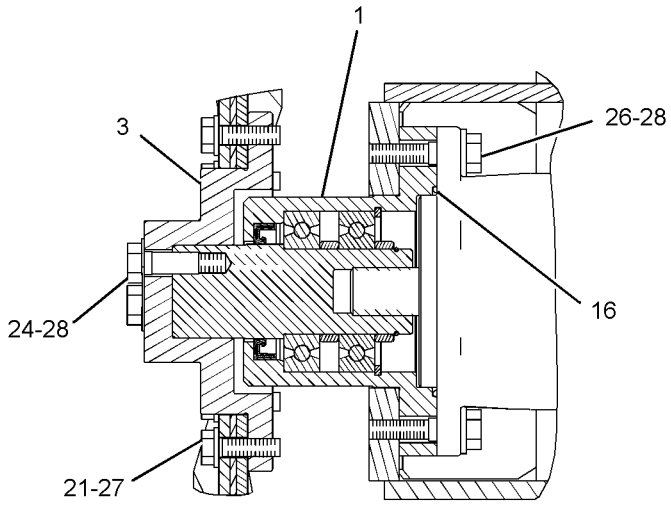

SECTION B-B

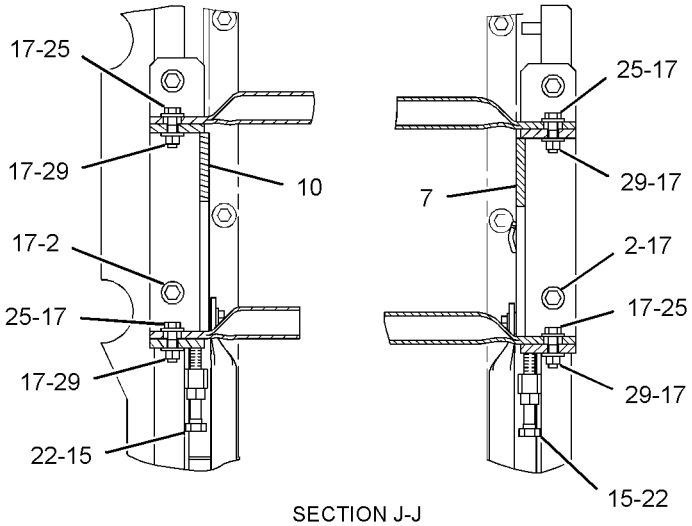

SECTION J-J

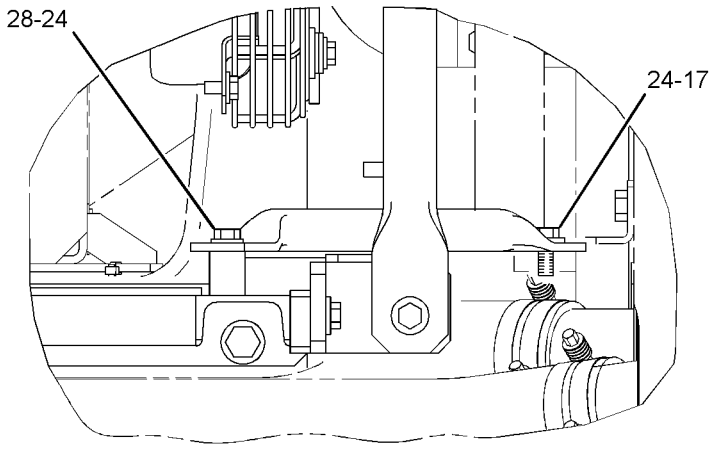

VIEW OF AREA K

GRAPHIC #3 **<END>** g01414963

248-8835 HOUSING & REGULATOR GP–TEMPERATURE REGULATOR

S/N: THX1-UP

PART OF 224-9843 ENGINE AR, 240-1861, 270-2771, 301-3082 ENGINE AR-COMPLETE

SMCS-1355, 1393 **i03734906**

NOTE	REF NO	GRAPHIC REF	PART NUMBER	QTY	PART NAME 1 2 3 4 5 6 (PRODUCT LEVEL)	SEE PAGE
	1	1	**248-5513**	1	REGULATOR-TEMPERATURE (92-DEG C) (COOLANT)	
	2	1	**157-0670**	1	CAP-DUST	
	3	1	**280-6794**	1	HOSE	
	4	1	**217-5200**	1	HOUSING AS	
	4A	1	**3S-9643**	1	SEAL-LIP TYPE (WATER TEMPERATURE REGULATOR)	
	5	1	**191-4457**	1	GASKET (WATER REGULATOR HOUSING)	
	6	1	**237-5176**	2	CLAMP-BAND	
	7	1	*341-0087*	1	PLUG AS	
		1	**9S-4185**	1	PLUG-O-RING	
	7A	1	**6V-6609**	1	SEAL-O-RING	
	8	1	**154-9025**	1	VALVE-FLUID SAMPLING (COOLANT)	
	9	1	**4S-9191**	4	WASHER (12X22.5X5-MM THK)	
	10	1	**6B-5072**	1	BUSHING-REDUCING	
M	11	1	**8T-0644**	4	BOLT (M10X1.5X90-MM)	

M-METRIC PART

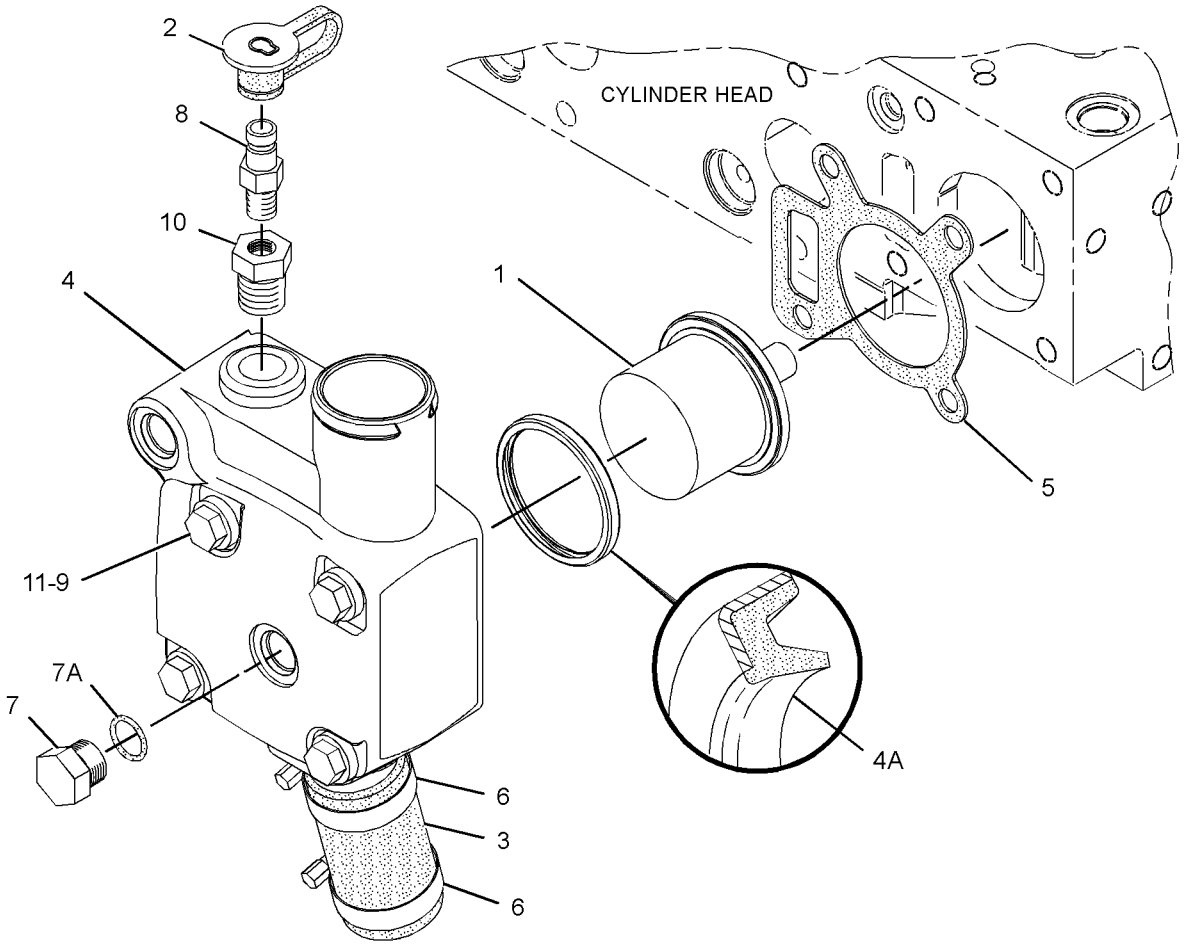

GRAPHIC #1 **<END>** g01256579

COOLING SYSTEM

244-0989 LINES GP-TURBOCHARGER WATER

S/N: THX1-UP

PART OF 224-9843 ENGINE AR, 240-1861, 270-2771, 301-3082 ENGINE AR-COMPLETE

SMCS-1052 **i03434560**

NOTE	REF NO	GRAPHIC REF	PART NUMBER	QTY	PART NAME 1 2 3 4 5 6 (PRODUCT LEVEL)	SEE PAGE
	1	1	**118-0911**	1	TEE-O-RING PORT	
	2	1	**120-9127**	1	TEE	
	3	1	**3K-0360**	3	SEAL-O-RING	
M	4	1	**5C-7261**	1	NUT (M8X1.25-THD)	
	5	1	**7B-7501**	1	CLIP	
	6	1	**6V-6609**	2	SEAL-O-RING	
	7	1	**8M-0505**	2	CONNECTOR	
	8	1	**8T-1715**	1	ADAPTER	
	9	1	*148-8411*	2	PLUG AS	
					(EACH INCLUDES)	
		1	**3K-0360**	1	SEAL-O-RING	
		1	**9S-4185**	1	PLUG-O-RING	
	10	1	**164-5603**	1	CONNECTOR AS	
		1	**3K-0360**	1	SEAL-O-RING	
		1	**8M-0505**	1	CONNECTOR	
	11	1	**9M-1974**	1	WASHER-HARD (8.8X16X2-MM THK)	
	12	1	**244-0988**	2	HOSE AS	

M-METRIC PART

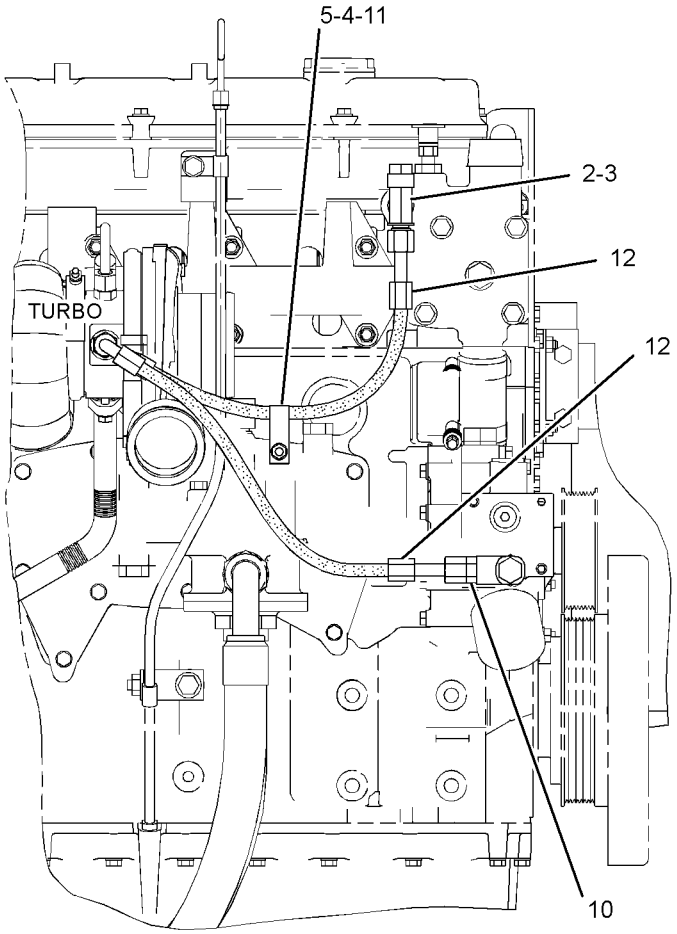

RIGHT SIDE VIEW OF ENGINE

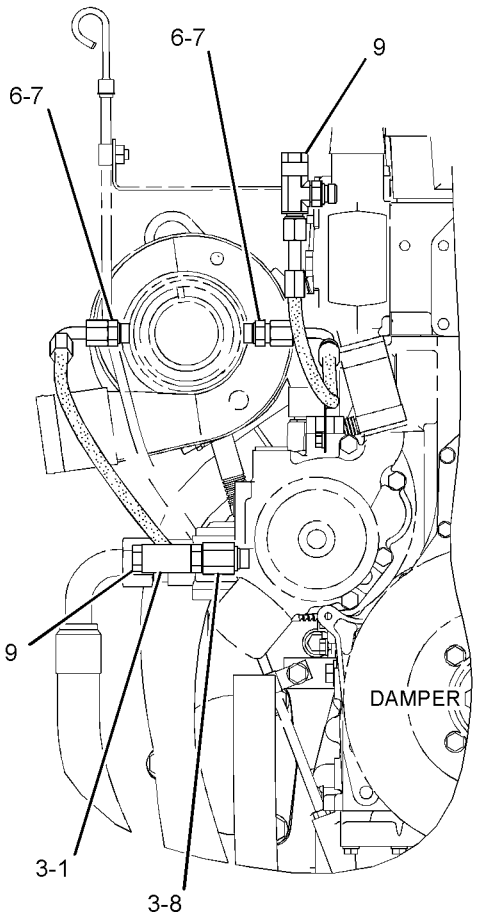

FRONT VIEW OF ENGINE

GRAPHIC #1 **<END>** g01716933

COOLING SYSTEM

348-4301 LINES GP-WATER

S/N: THX22638-UP

PART OF 224-9843 ENGINE AR, 240-1861, 301-3082 ENGINE AR-COMPLETE

SMCS-1355, 1380 **i03663203**

NOTE	REF NO	GRAPHIC REF	PART NUMBER	QTY	PART NAME 1 2 3 4 5 6 (PRODUCT LEVEL)	SEE PAGE
	1	1	**280-6794**	1	HOSE	
	2	1	**157-0670**	1	CAP-DUST	
	3	1	**191-4457**	1	GASKET (WATER REGULATOR HOUSING)	
	4	1	**217-5200**	1	HOUSING AS	
		1	**3S-9643**	1	SEAL-LIP TYPE	
		1	**217-5199**	1	HOUSING	
	5	1	**237-5176**	2	CLAMP-BAND	
	6	1	**247-7133**	1	REGULATOR-WATER TEMPERATURE (98-DEG C) (COOLANT)	
	7	1	*341-0087*	1	PLUG AS	
		1	**6V-6609**	1	SEAL-O-RING	
		1	**9S-4185**	1	PLUG-O-RING	
	8	1	**154-9025**	1	VALVE-FLUID SAMPLING (ENGINE COOLANT)	
	9	1	**4S-9191**	4	WASHER (12X22.5X5-MM THK)	
	10	1	**6B-5072**	1	BUSHING-REDUCING	
M	11	1	**8T-0644**	4	BOLT (M10X1.5X90-MM)	

M-METRIC PART

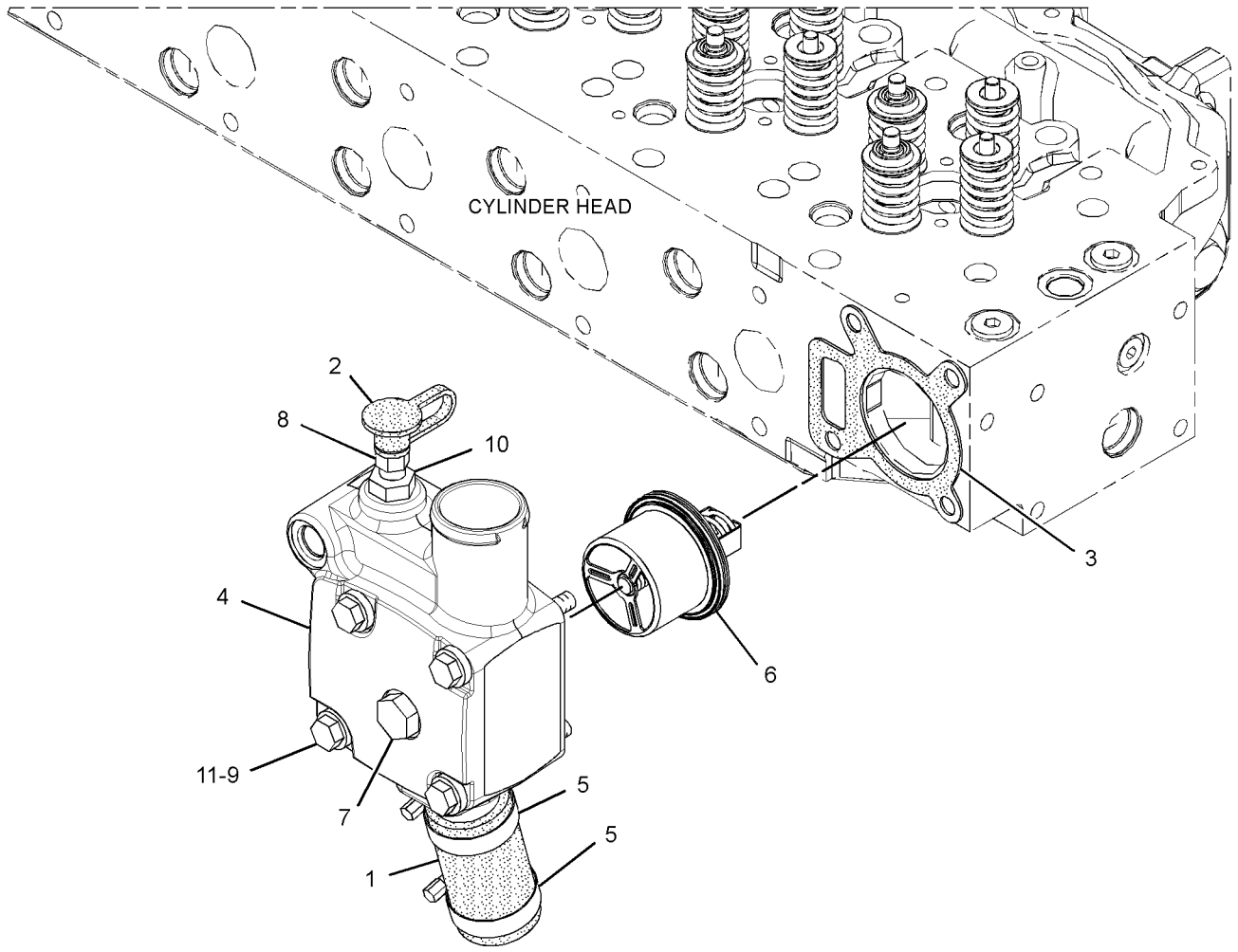

GRAPHIC #1 **<END>** g01966691

COOLING SYSTEM

265-3553 MODULE GP-COOLING

S/N: B6H1-UP; JLP1-UP

PART OF 230-2896 RADIATOR & HYD OIL COOLER GP

SMCS-1064, 1350, 1374, 1375, 1378, 137T, 1712, 1811, 4346 **i03600732**

NOTE	REF NO	GRAPHIC REF	PART NUMBER	QTY	PART NAME 1 2 3 4 5 6 (PRODUCT LEVEL)	SEE PAGE
	1	2	**1P-5411**	3	SLEEVE	
	2	2	**1P-5412**	6	BUSHING-TERMINAL	
	3	1	**8T-0376**	1	VALVE (DRAIN)	
	4	1	**036-1865**	1	CAP AS-RADIATOR	
	5	1	**096-4035**	3	CLIP	
	6	2	**245-9359**	1	CORE AS-RADIATOR	
	7	2	**245-9360**	1	CORE AS-OIL COOLER (HYDRAULIC)	
	8	2	**326-3898**	1	AFTERCOOLER AS	
	9	1	**265-3534**	1	FRAME AS	
	10	1	**265-3535**	1	BRACKET AS	
	11	2	**265-3536**	1	BRACKET AS	
	12	1	**265-3537**	1	PLATE AS	
	13	1	**265-3539**	4	ISOLATOR	
	14	1	**265-3540**	2	SEAL	
	15	2	**265-3542**	1	SEAL	
	16	2	**265-3543**	1	SEAL	
	17	2	**265-3544**	1	SHROUD AS-RADIATOR	
	18	2	**7X-0618**	5	WASHER-HARD (13.5X40X5-MM THK)	
	19	1	**7X-7729**	16	WASHER (11X25X3-MM THK)	
M	20	1	**8T-4137**	16	BOLT (M10X1.5X20-MM)	
M	21	1,2	**8T-4139**	5	BOLT (M12X1.75X30-MM)	
M	22	2	**8T-4176**	2	BOLT (M12X1.75X90-MM)	
M	23	1,2	**8T-4192**	7	BOLT (M12X1.75X25-MM)	
	24	1,2	**8T-4223**	14	WASHER-HARD (13.5X25.5X3-MM THK)	
M	25	2	**8T-4956**	2	BOLT (M12X1.75X35-MM)	
M	26	2	**8T-5041**	1	BOLT (M12X1.75X120-MM)	
E	27	1	**7Y-1976**		HOSE-WATER (176-CM)	
E	27A	1	**7Y-1976**		HOSE-WATER (21-CM)	

E-ORDER BY THE CENTIMETER
M-METRIC PART

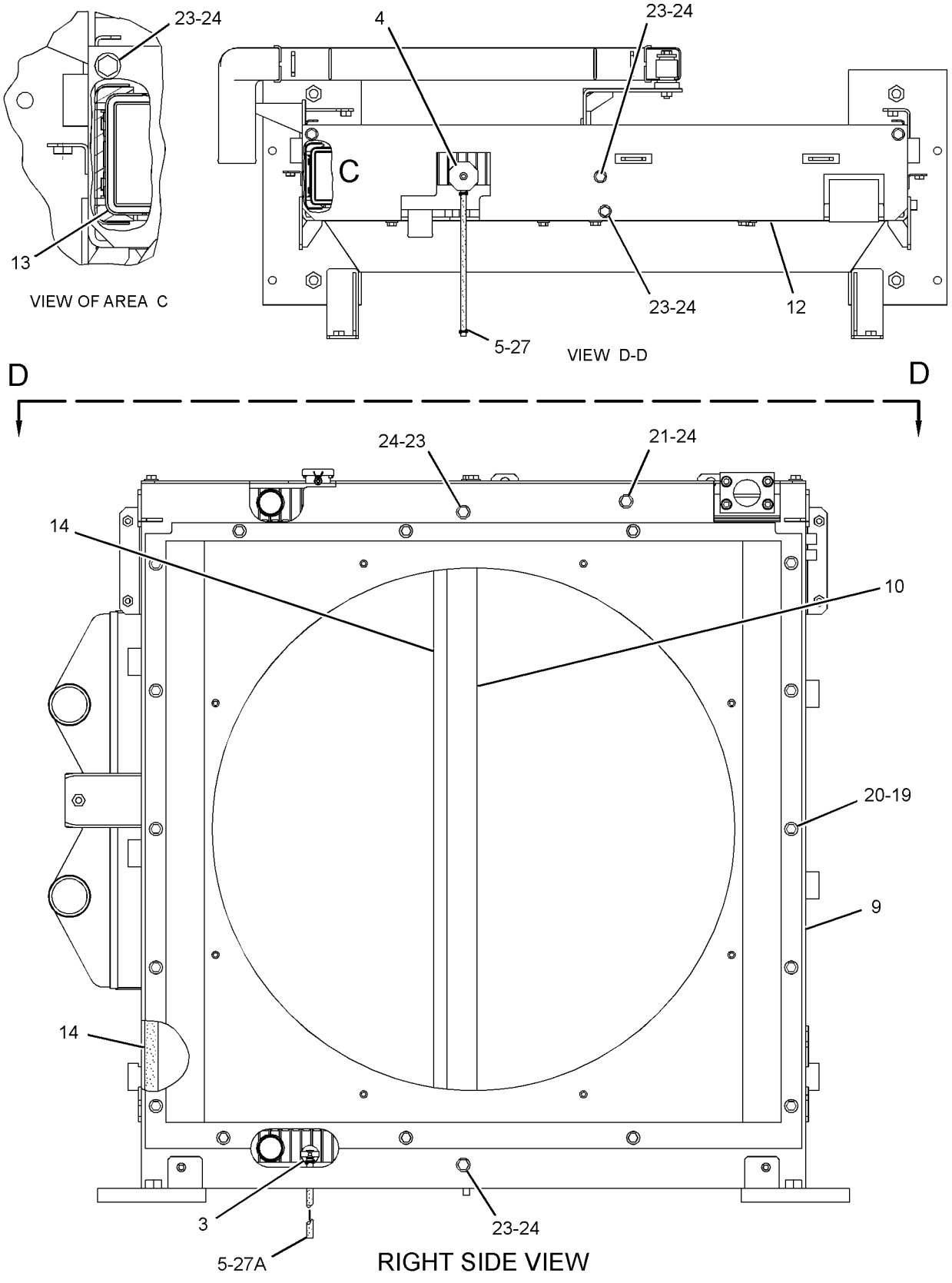

GRAPHIC #1 g01243551

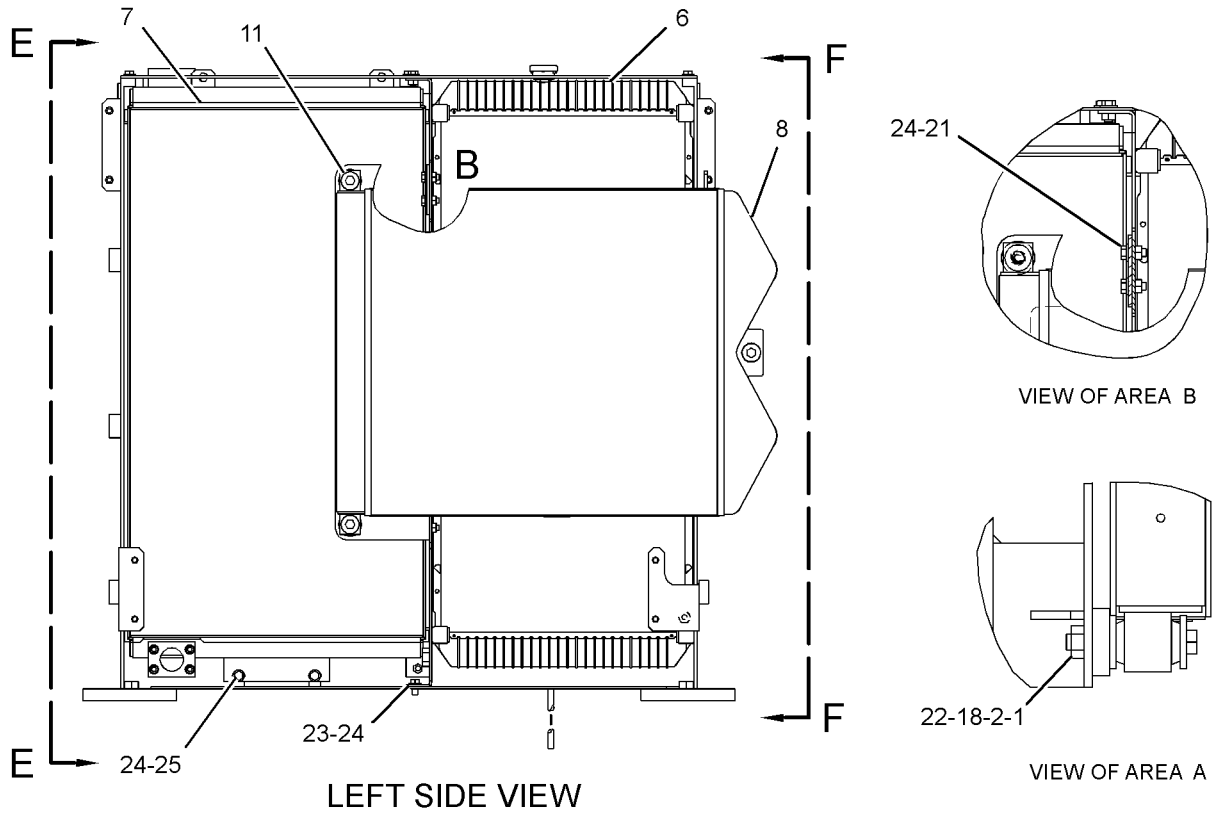

LEFT SIDE VIEW

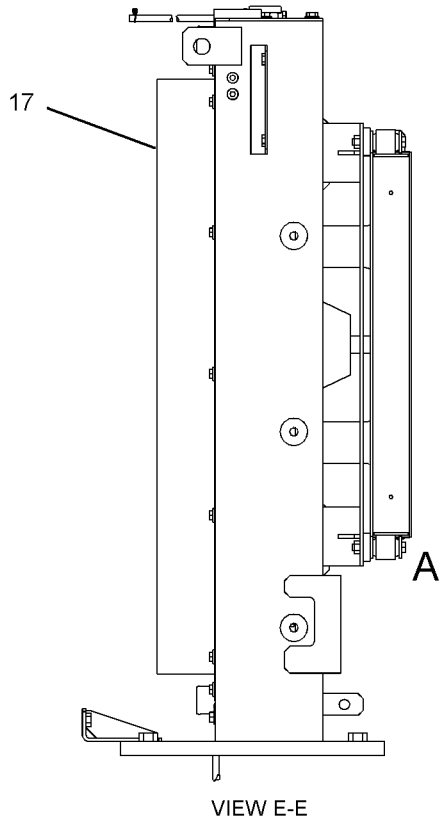

VIEW E-E

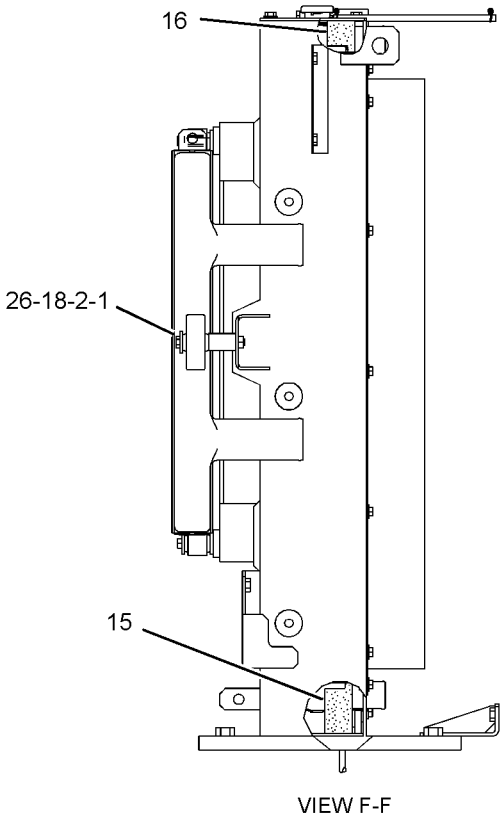

VIEW F-F

GRAPHIC #2 **<END>** g01243550

205-4013 PLUG GP-WATER LINES

S/N: THX1-UP

PART OF 224-9843 ENGINE AR, 240-1861, 270-2771, 301-3082 ENGINE AR-COMPLETE

SMCS-1393 **i01677922**

NOTE	REF NO	GRAPHIC REF	PART NUMBER	QTY	PART NAME 1 2 3 4 5 6 (PRODUCT LEVEL)	SEE PAGE
	1	1	**7L-7556**	2	PLUG-CUP (67.03MM DIA)	
					—OR—	
		1	**209-1434**	2	PLUG-CUP (73.38MM DIA)	
	2	1	**8T-6761**	1	PLUG-PIPE	

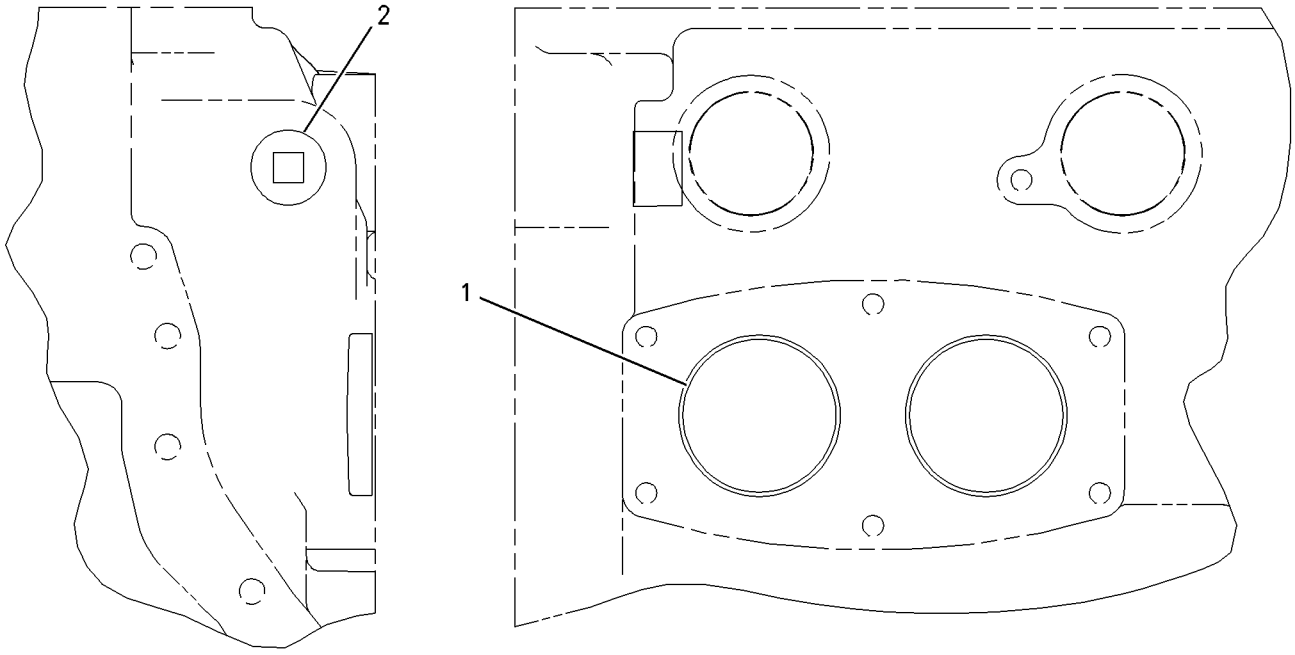

REAR VIEW RIGHT SIDE VIEW

GRAPHIC #1 **<END>** g00790624

202-7674 PUMP GP-WATER

S/N: THX1-UP

PART OF 224-9843 ENGINE AR, 240-1861, 270-2771, 301-3082 ENGINE AR-COMPLETE

SMCS-1361 **i02034905**

NOTE	REF NO	GRAPHIC REF	PART NUMBER	QTY	PART NAME 1 2 3 4 5 6 (PRODUCT LEVEL)	SEE PAGE
CY	1	1	**219-4452**	1	PUMP GP-WATER	119
	2	1	**2M-4453**	1	SEAL-O-RING	
	3	1	**4J-0525**	1	SEAL-O-RING	
M	5	1	**8T-0644**	4	BOLT (M10X1.5X90-MM)	

C-CHANGE FROM PREVIOUS TYPE
M-METRIC PART
Y-SEPARATE ILLUSTRATION

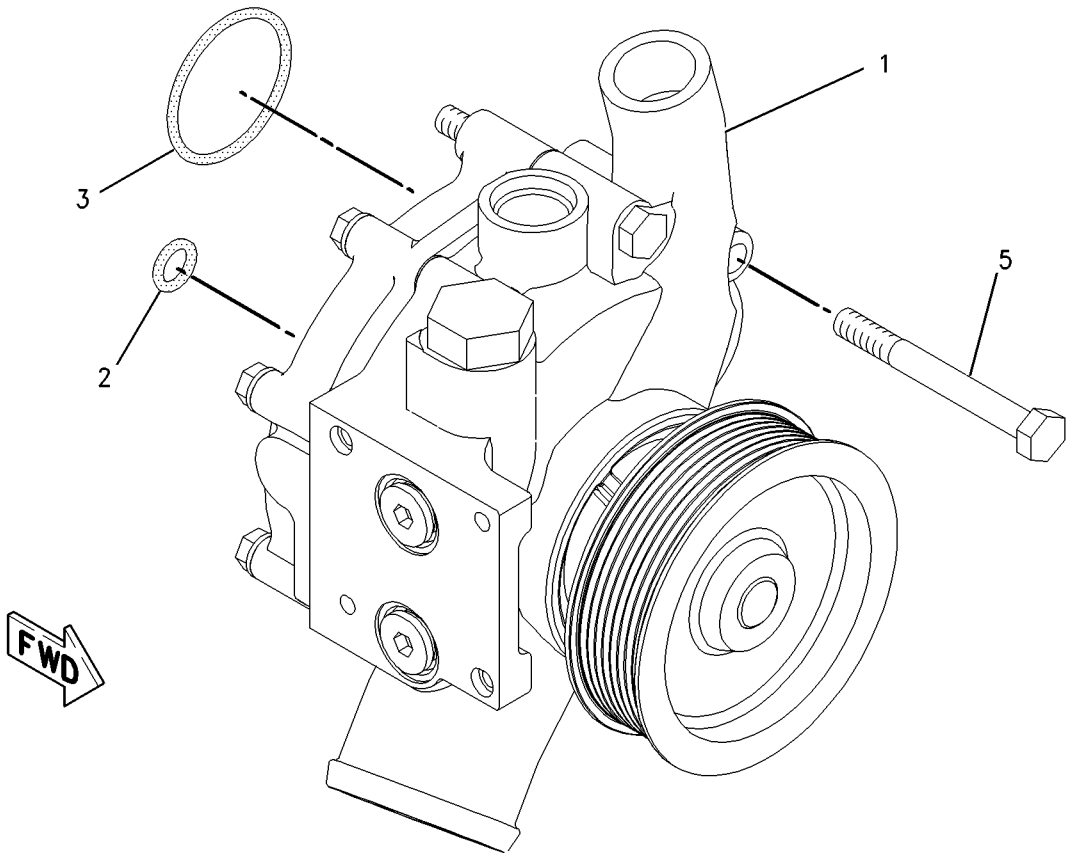

GRAPHIC #1 **<END>** g00787346

COOLING SYSTEM

219-4452 PUMP GP-WATER*R

S/N: THX1-UP

PART OF 202-7674 PUMP GP-WATER

SMCS-1361 **i01906203**

NOTE	REF NO	GRAPHIC REF	PART NUMBER	QTY	PART NAME 1 2 3 4 5 6 (PRODUCT LEVEL)	SEE PAGE
	1	1	**177-1044**	1	COVER	
M	2	1	**6V-3918**	4	BOLT (M8X1.25X50-MM)	
	2A	1	**9M-1974**	4	WASHER-HARD (8.8X16X2-MM THK)	
	3	1	**216-2942**	1	PUMP AS-WATER	
		1	**216-2941**	1	HOUSING-PUMP	
	3A	1	**177-1052**	1	SHAFT AS	
	3B	1	**177-1056**	1	IMPELLER-PUMP	
	3C	1	**197-9581**	1	PULLEY (8-GROOVE)	
	3D	1	**147-5088**	1	SEAL AS-WATER PUMP	
	4	1	**222-3901**	1	GASKET	
	5	1	**3K-0360**	2	SEAL-O-RING	
	6	1	**9S-8005**	2	PLUG-O-RING	

M-METRIC PART

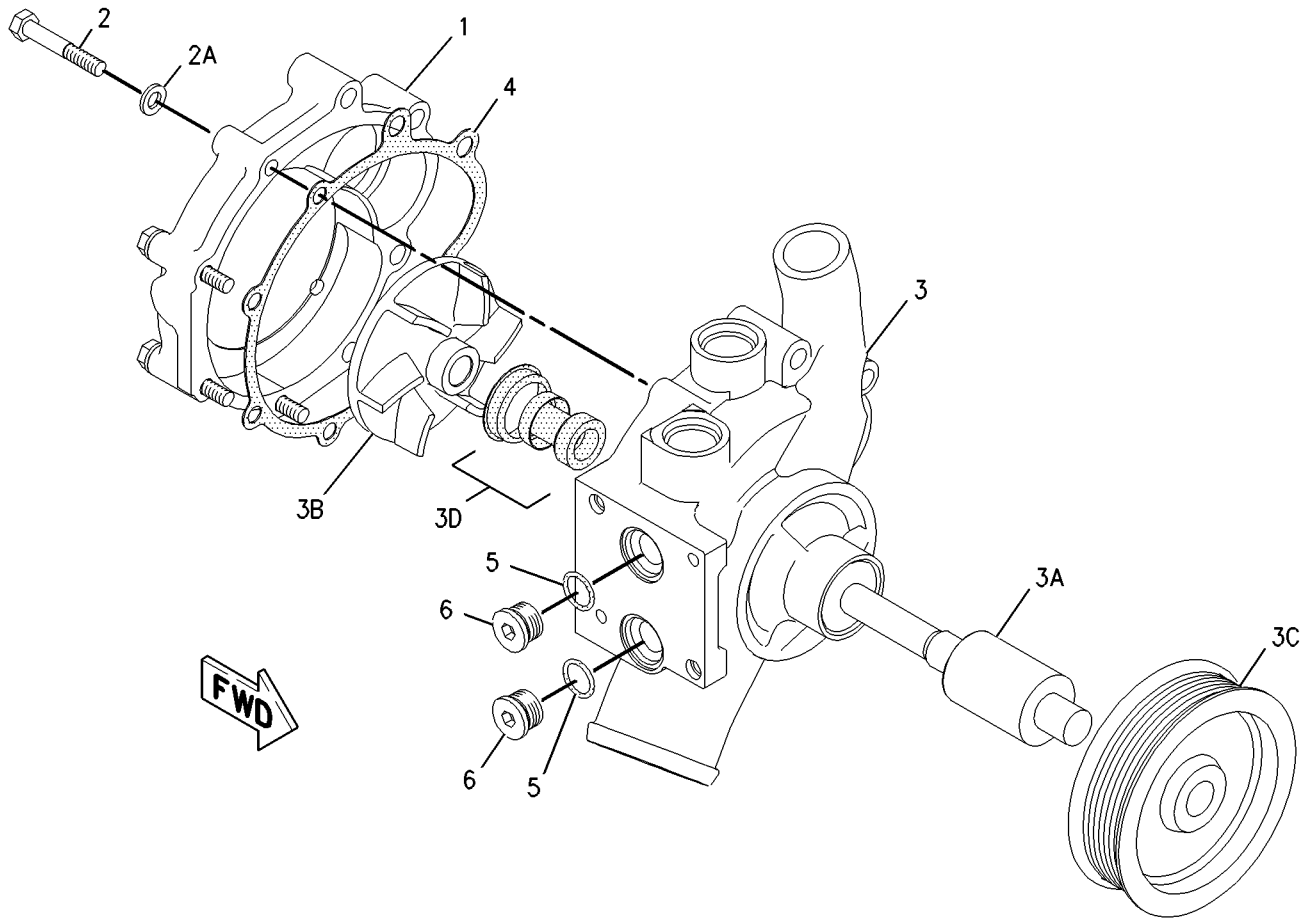

GRAPHIC #1 **<END>** g00941188

COOLING SYSTEM

230-2896 RADIATOR & HYD OIL COOLER GP

S/N: B6H1-528; JLP1-218

PART OF 239-6405 INSTALLATION AR-ENGINE

SMCS-1351 **i02494965**

NOTE	REF NO	GRAPHIC REF	PART NUMBER	QTY	PART NAME 1 2 3 4 5 6 (PRODUCT LEVEL)	SEE PAGE
	1	1	**7I-2673**	4	STRAP-CABLE	
	2	2	**8T-6703**	3	CLAMP-HOSE	
	3	2	**096-4035**	1	CLIP	
	4	2	**144-0367**	1	CLAMP-HOSE	
	5	2	**204-0909**	1	BAND	
Y	6	1	**265-3553**	1	MODULE GP-COOLING	114
	7	1	**230-2930**	1	HOSE-RADIATOR	
	8	1	**230-2931**	1	HOSE-RADIATOR	
	9	2	**265-3595**	1	SUPPORT AS	
	10	2	**245-9170**	1	SEAL	
	11	2	**245-9174**	1	SEAL	
	12	2	**245-9206**	1	TANK AS-EXPANSION (INCLUDES COOLANT LEVEL SWITCH)	
		2	**171-3370**	1	CAP AS (COOLANT OVERFLOW)	
		2	**204-0920**	1	CAP AS (COOLANT FILL)	
	13	2	**245-9287**	1	SEAL	
	14	2	**245-9288**	1	SEAL	
	15	2	**245-9289**	1	SEAL	
M	16	2	**7X-2563**	4	BOLT (M20X2.5X60-MM)	
	17	2	**8T-4123**	4	WASHER (22X35X3.5-MM THK)	
M	18	2	**8T-4192**	3	BOLT (M12X1.75X25-MM)	
	19	2	**8T-4223**	5	WASHER-HARD (13.5X25.5X3-MM THK)	
	20	2	**9D-3769**	1	GROMMET	
E	21	2	**7Y-1976**		HOSE-WATER (56-CM)	
M	22	2	**8T-4183**	2	BOLT (M12X1.75X40-MM)	
D	23	1	**5P-9909**		SEAL (0.1-M)	

D-ORDER BY THE METER
E-ORDER BY THE CENTIMETER
M-METRIC PART
Y-SEPARATE ILLUSTRATION

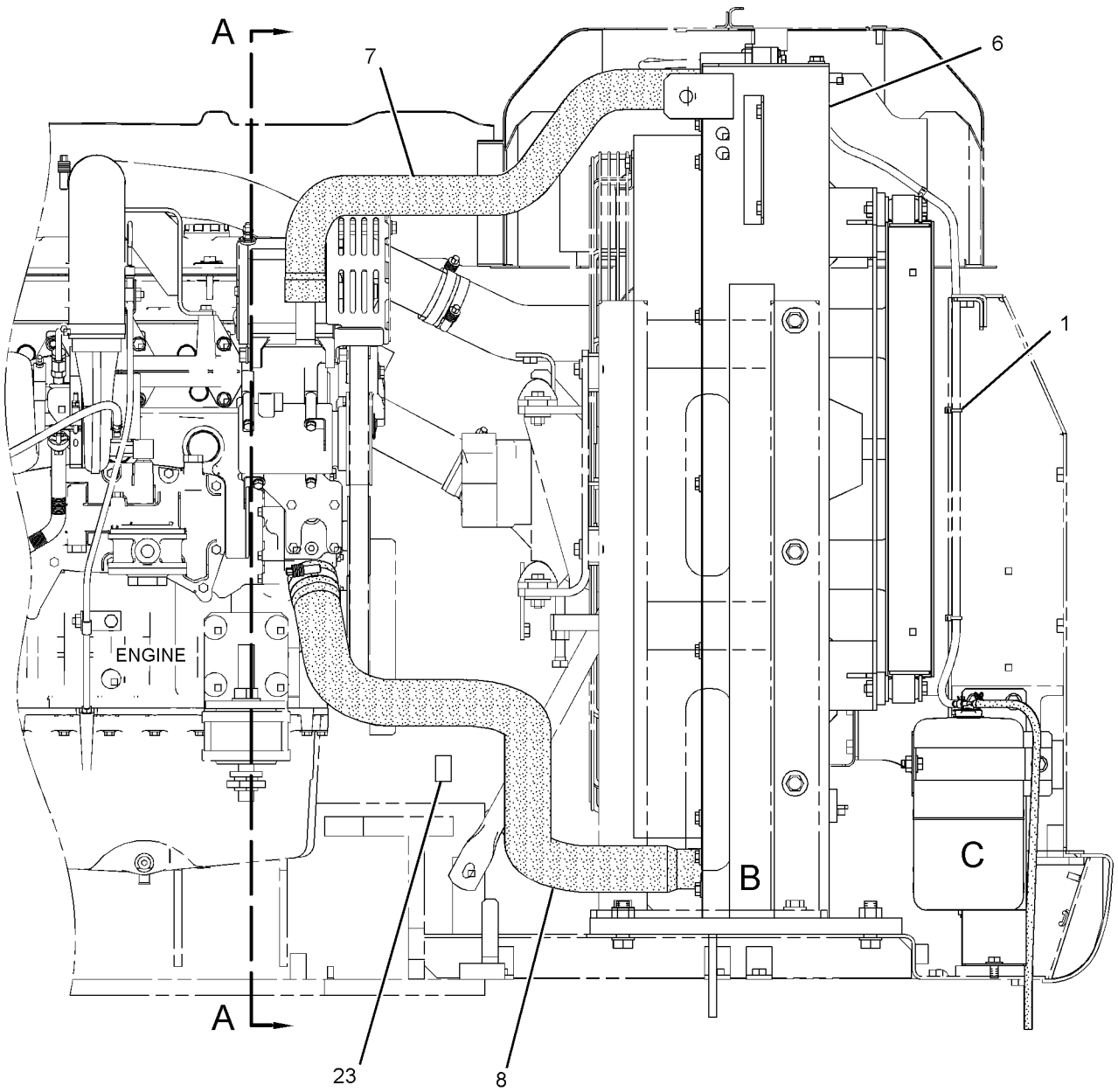

FRONT VIEW

GRAPHIC #1 g01207366

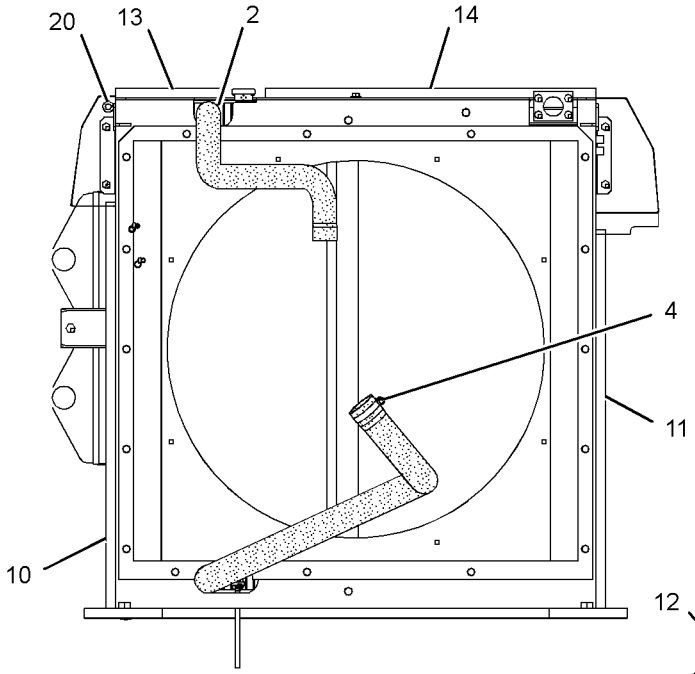

VIEW A-A

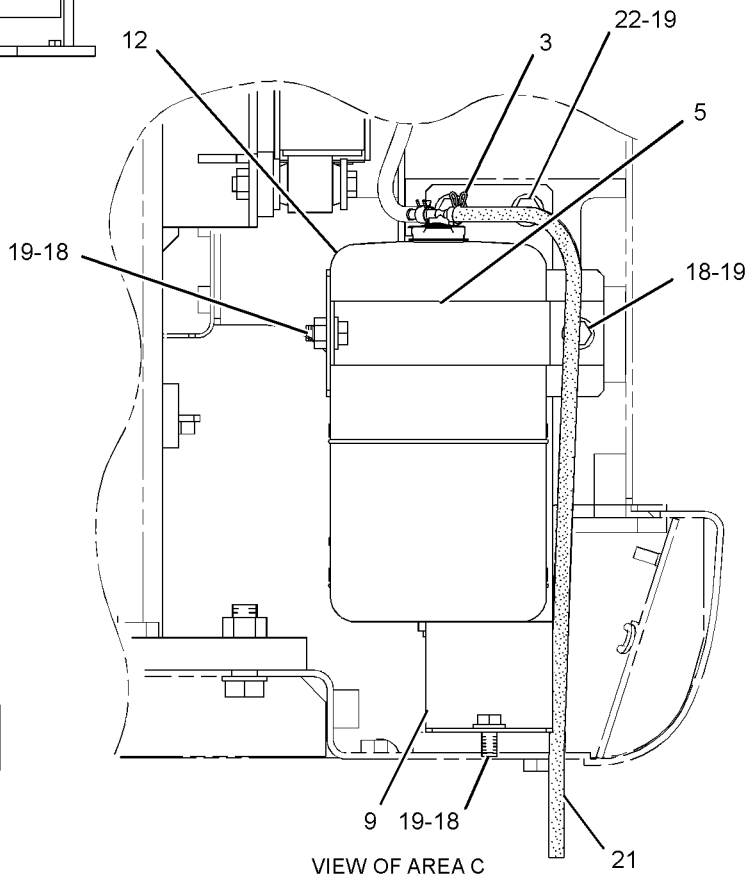

VIEW OF AREA C

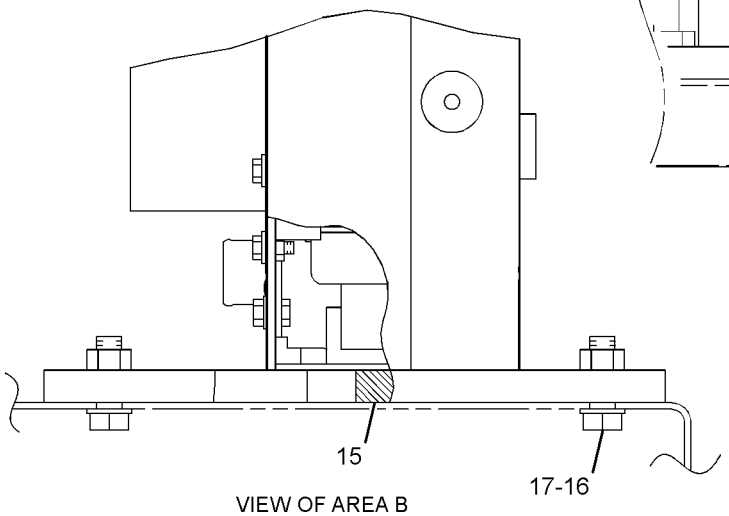

VIEW OF AREA B

GRAPHIC #2 **<END>** g01207367

COOLING SYSTEM

230-2896 RADIATOR & HYD OIL COOLER GP

S/N: B6H529-UP; JLP219-UP

PART OF 279-7825 INSTALLATION AR-ENGINE

SMCS-1351 **i02808509**

NOTE	REF NO	GRAPHIC REF	PART NUMBER	QTY	PART NAME 1 2 3 4 5 6 (PRODUCT LEVEL)	SEE PAGE
	1	1	**7I-2673**	4	STRAP-CABLE	
	2	1	**8T-6703**	3	CLAMP-HOSE	
	3	1	**096-4035**	1	CLIP	
	4	1	**144-0367**	1	CLAMP-HOSE	
	5	2	**204-0909**	1	BAND	
	6	1	**230-2930**	1	HOSE-RADIATOR	
	7	1	**230-2931**	1	HOSE-RADIATOR	
	8	1	**245-9170**	1	SEAL	
	9	1	**245-9174**	1	SEAL	
	10	2	**245-9206**	1	TANK AS-EXPANSION (INCLUDES COOLANT LEVEL SWITCH)	
		2	**171-3370**	1	CAP AS (COOLANT OVERFLOW)	
		2	**204-0920**	1	CAP AS (COOLANT FILL)	
	11	1	**245-9287**	1	SEAL	
	12	1	**245-9288**	1	SEAL	
	13	1	**245-9289**	1	SEAL	
Y	14	1	**265-3553**	1	MODULE GP-COOLING	114
	15	2	**265-3595**	1	SUPPORT AS	
C	16	2	**281-3546**	1	PLATE AS	
C	17	2	**184-5394**	1	CLIP	
M	18	1	**7X-2563**	4	BOLT (M20X2.5X60-MM)	
C	19	2	**8T-4121**	3	WASHER-HARD (11X21X2.5-MM THK)	
	20	1	**8T-4123**	4	WASHER (22X35X3.5-MM THK)	
CM	21	2	**8T-4136**	1	BOLT (M10X1.5X25-MM)	
M	22	2	**8T-4183**	2	BOLT (M12X1.75X40-MM)	
M	23	2	**8T-4192**	3	BOLT (M12X1.75X25-MM)	
CM	24	2	**8T-4195**	2	BOLT (M10X1.5X30-MM)	
	25	2	**8T-4223**	5	WASHER-HARD (13.5X25.5X3-MM THK)	
	26	2	**9D-3769**	1	GROMMET	
E	27	1	**7Y-1976**		HOSE-WATER (56-CM)	

C-CHANGE FROM PREVIOUS TYPE
E-ORDER BY THE CENTIMETER
M-METRIC PART
Y-SEPARATE ILLUSTRATION

REFER TO ALL ILLUSTRATIONS OF
THIS GROUP FOR AUXILIARY VIEWS

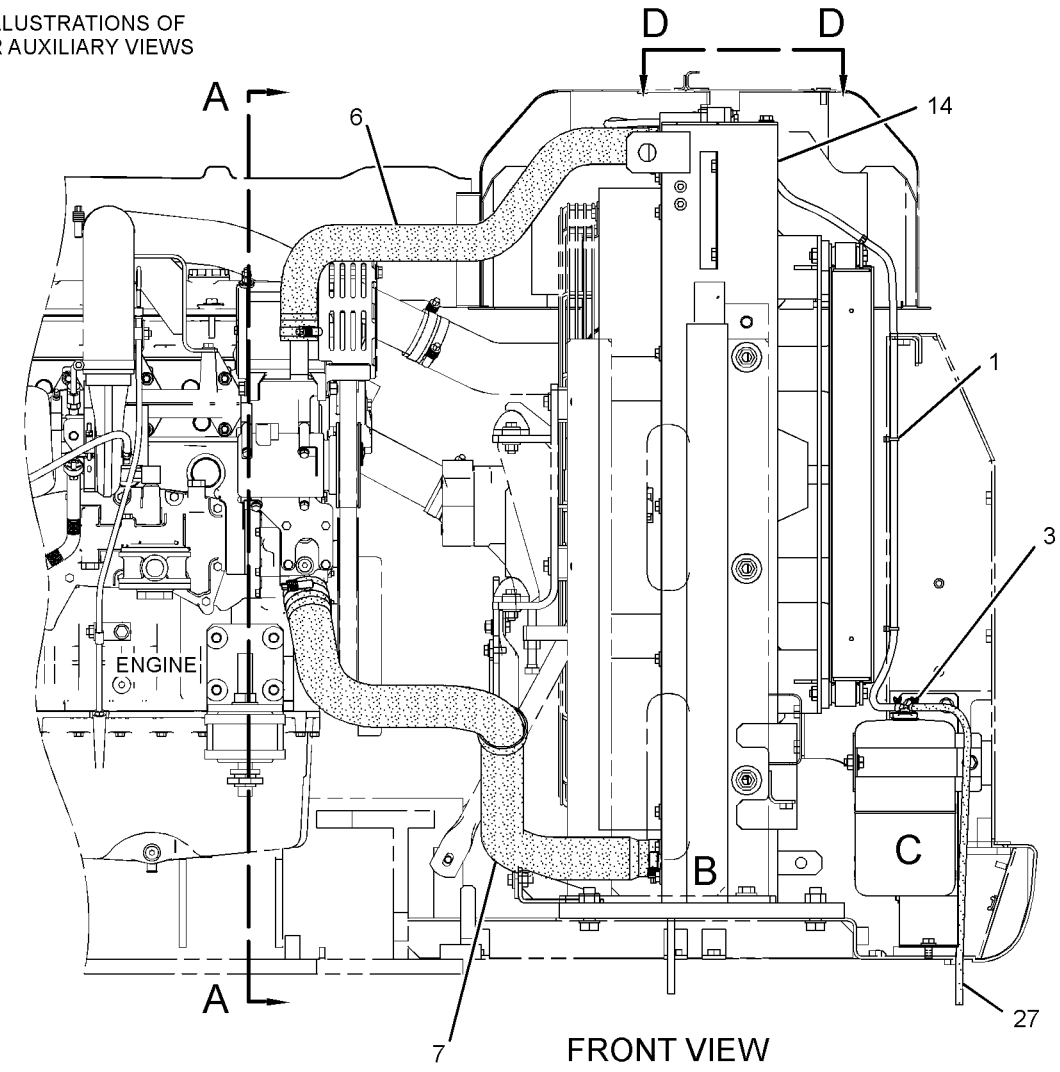

FRONT VIEW

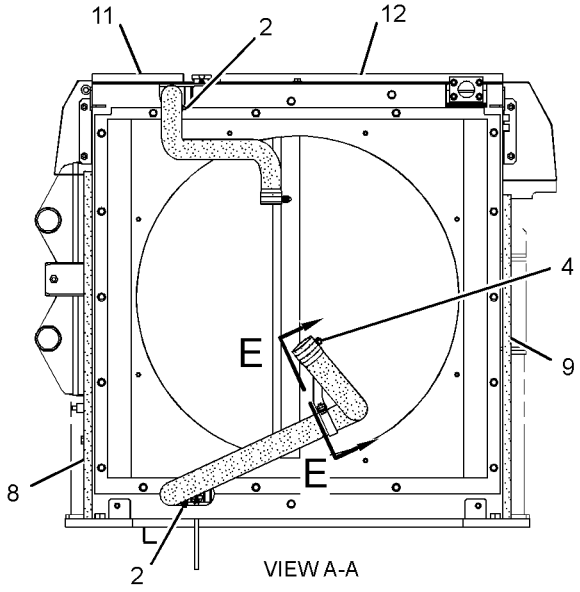

VIEW A-A

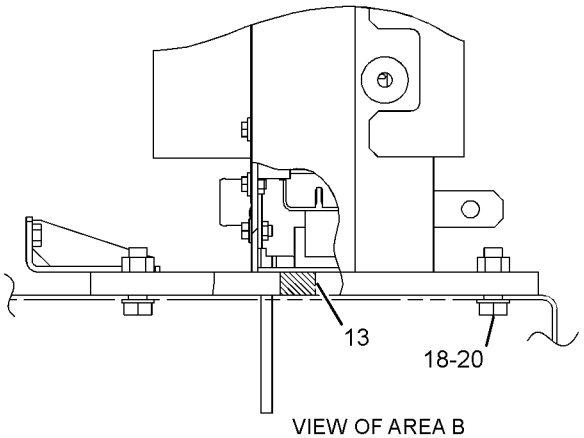

VIEW OF AREA B

GRAPHIC #1

g01302435

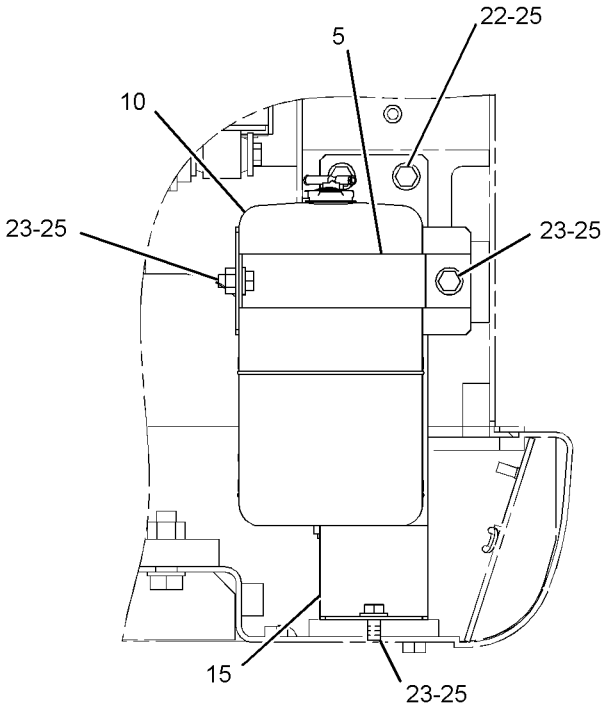

VIEW OF AREA C

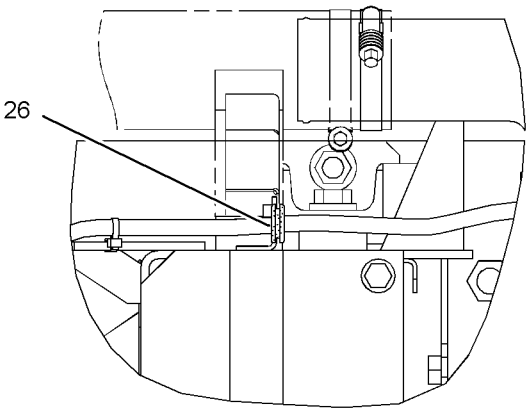

VIEW D-D

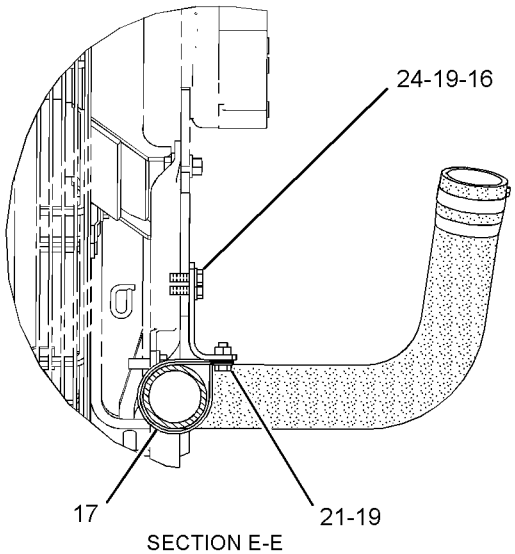

SECTION E-E

GRAPHIC #2 **<END>** g01302436

AIR INLET AND EXHAUST SYSTEM

239-6407 AIR CLEANER & MOUNTING GP

S/N: B6H1-UP; JLP1-UP

PART OF 239-6405, 279-7825 INSTALLATION AR-ENGINE

SMCS-1051, 1054, 7452 **i02619529**

NOTE	REF NO	GRAPHIC REF	PART NUMBER	QTY	PART NAME 1 2 3 4 5 6 (PRODUCT LEVEL)	SEE PAGE
Y	1	1	**255-2914**	1	AIR CLEANER GP	129
	2	1	**8T-4121**	4	WASHER-HARD (11X21X2.5-MM THK)	
M	3	1	**8T-4137**	4	BOLT (M10X1.5X20-MM)	

M-METRIC PART
Y-SEPARATE ILLUSTRATION

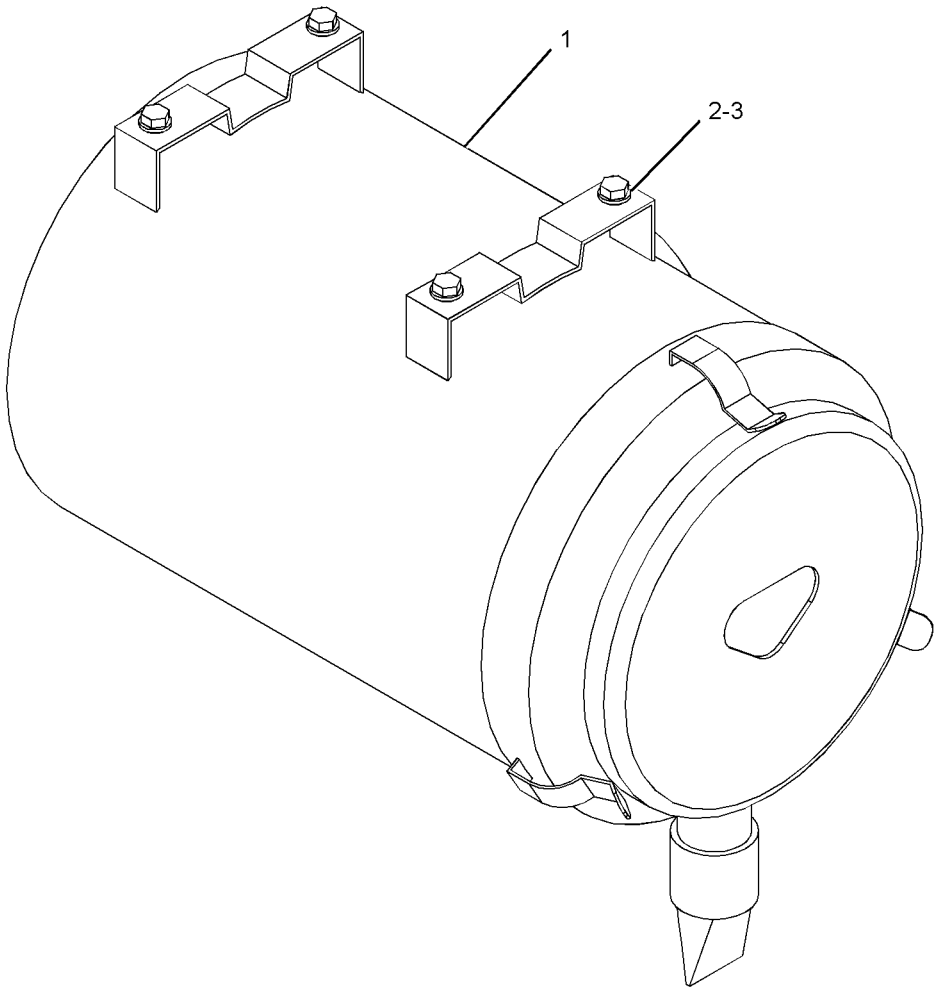

GRAPHIC #1 **<END>** g01199520

AIR INLET AND EXHAUST SYSTEM

240-3769 AIR CLEANER AR–PRECLEANER

S/N: B6H1-UP; JLP1-UP

AN ATTACHMENT

SMCS-1051 **i03171399**

NOTE	PART NUMBER	QTY	PART NAME 1 2 3 4 5 6 (PRODUCT LEVEL)	SEE PAGE
Y	*239-6411*	1	AIR CLEANER GP (WITH PRECLEANER)	128
Y	*237-8802*	1	HOOD GP (PRECLEANER)	484

Y-SEPARATE ILLUSTRATION

<END>

AIR INLET AND EXHAUST SYSTEM

239-6411 AIR CLEANER GP–WITH PRECLEANER

S/N: B6H1-UP; JLP1-UP
PART OF 240-3769 AIR CLEANER AR
AN ATTACHMENT

SMCS-1051, 1054 **i02502373**

NOTE	REF NO	GRAPHIC REF	PART NUMBER	QTY	PART NAME 1 2 3 4 5 6 (PRODUCT LEVEL)	SEE PAGE
	1	1	**8T-4987**	1	CLAMP-HOSE	
	2	1	**130-3280**	1	PRECLEANER AS	
		1	**174-5415**	1	CLAMP	
	3	1	**255-2929**	1	TUBE AS	
	4	1	**266-6189**	1	HOSE	
Y	5	1	**266-6190**	1	AIR CLEANER GP	130
	6	1	**5P-1076**	4	WASHER-HARD (13.5X30X4-MM THK)	
	7	1	**7Y-1838**	1	CLAMP	
M	8	1	**8T-4133**	1	NUT (M10X1.5-THD)	
M	9	1	**8T-4185**	5	BOLT (M10X1.5X50-MM)	
M	10	1	**8T-4192**	4	BOLT (M12X1.75X25-MM)	

M-METRIC PART
Y-SEPARATE ILLUSTRATION

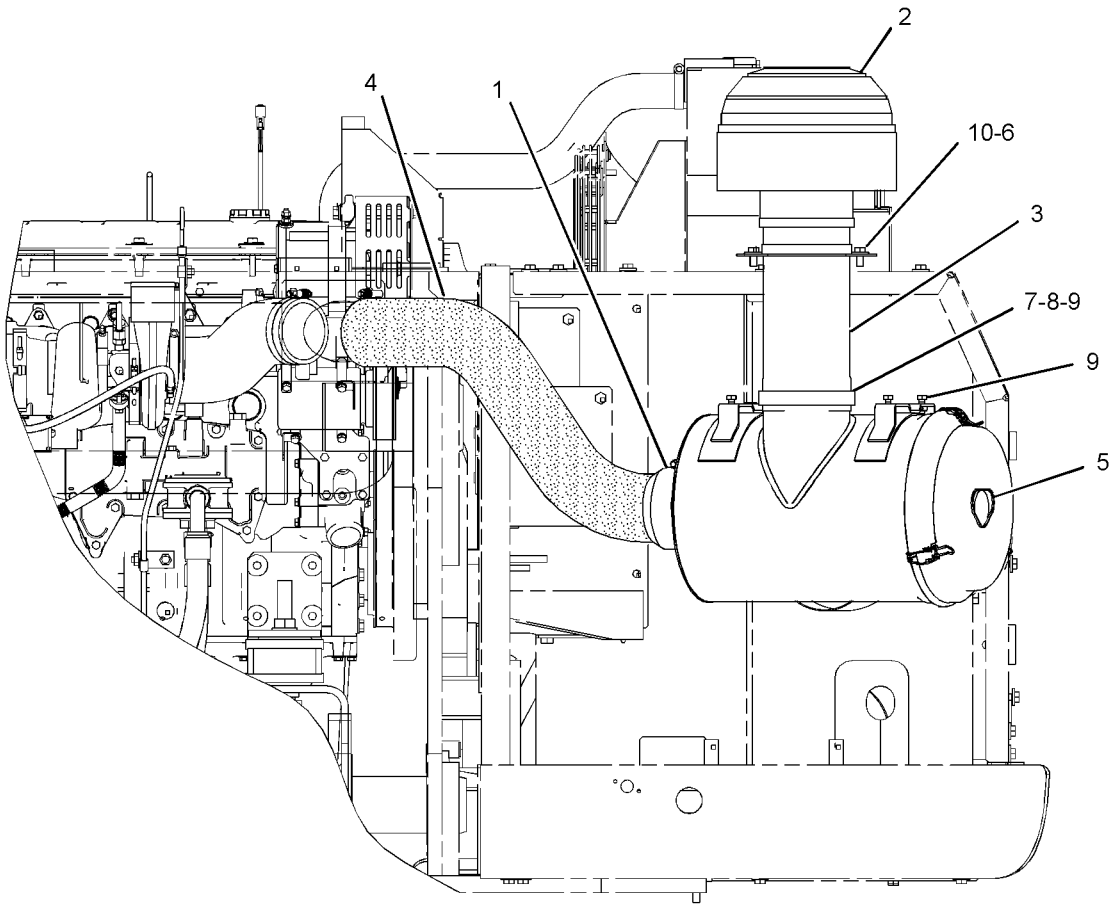

FRONT VIEW

GRAPHIC #1 **<END>** g01223611

255-2914 AIR CLEANER GP

S/N: B6H1-UP; JLP1-UP

PART OF 239-6407 AIR CLEANER & MOUNTING GP

SMCS-1051, 1054 **i03107144**

NOTE	REF NO	GRAPHIC REF	PART NUMBER	QTY	PART NAME 1 2 3 4 5 6 (PRODUCT LEVEL)	SEE PAGE
	1	1	**131-8826**	1	FILM-INSTRUCTION (TOP, AIR CLEANER COVER)	
	2	1	**131-8829**	1	VALVE-DUST (AIR CLEANER)	
	3	1	**142-1404**	1	FILTER ELEMENT AS-AIR (SECONDARY)	
	4	1	**142-1339**	1	FILTER ELEMENT AS-AIR (PRIMARY)	
					—OR—	
		1	**220-0453**	1	FILTER ELEMENT AS-AIR (PRIMARY, ULTRA HIGH EFFICIENCY)	
	5	1	**159-7667**	1	SEAL-O-RING	
	6	1	**131-8828**	1	COVER AS	
	6A	1	**139-8794**	3	LATCH	
	7	1	**5L-3233**	1	FITTING	
	8	1	**1R-9953**	1	CAP	

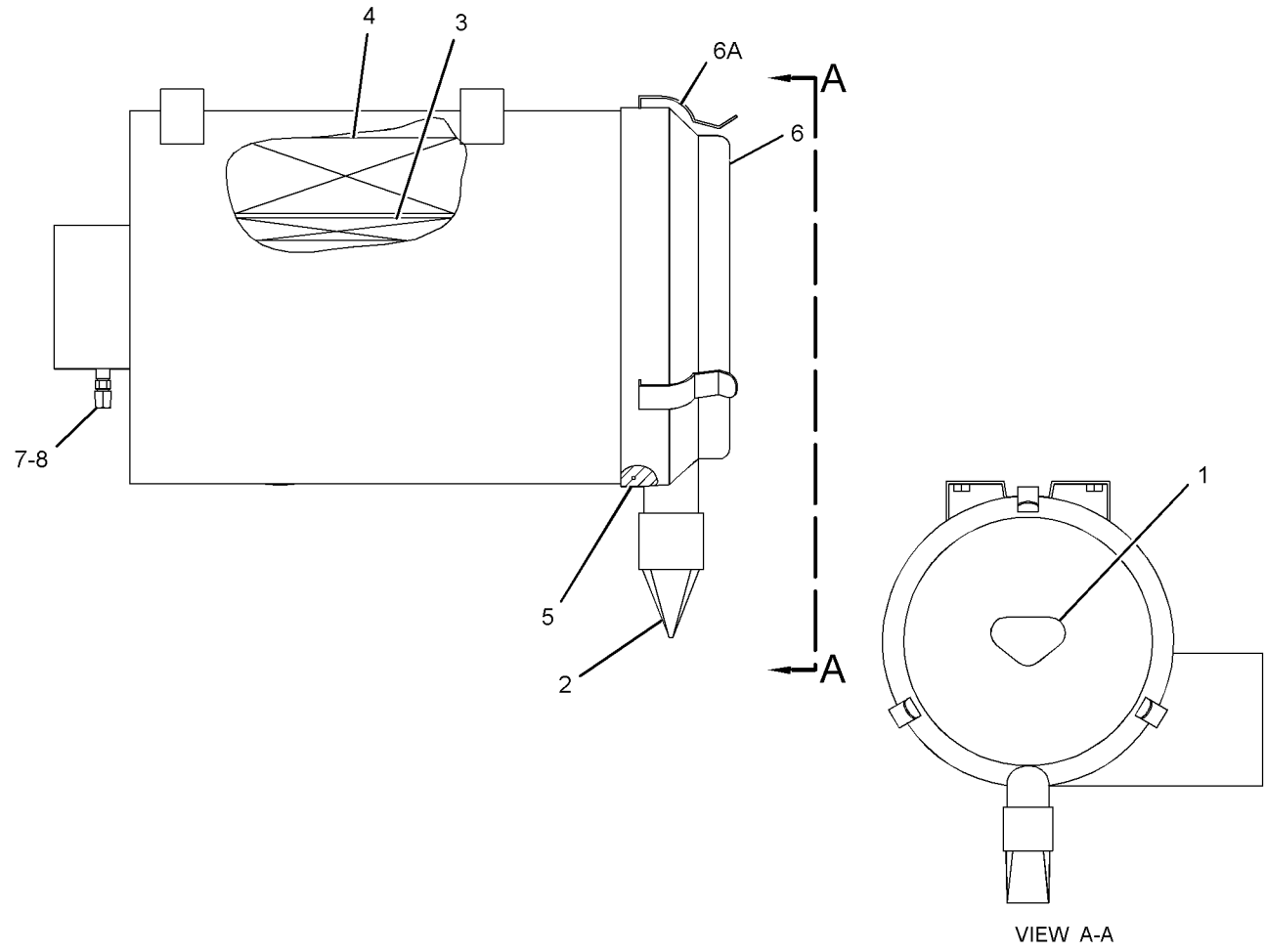

GRAPHIC #1 **<END>** g01590069

266-6190 AIR CLEANER GP

S/N: B6H1-UP; JLP1-UP
PART OF 239-6411 AIR CLEANER GP
AN ATTACHMENT

SMCS-1051, 1054 **i03171400**

NOTE	REF NO	GRAPHIC REF	PART NUMBER	QTY	PART NAME 1 2 3 4 5 6 (PRODUCT LEVEL)	SEE PAGE
	1	1	**142-1404**	1	FILTER ELEMENT AS-AIR (SECONDARY)	
	2	1	**142-1339**	1	FILTER ELEMENT AS-AIR (PRIMARY)	
					—OR—	
		1	**220-0453**	1	FILTER ELEMENT AS-AIR (PRIMARY, ULTRA HIGH EFFICIENCY)	
	3	1	**171-9892**	1	COVER AS	
	4	1	**1R-9953**	1	CAP	
	5	1	**5L-3233**	1	FITTING	
	6	1	**131-8826**	1	FILM-INSTRUCTION (TOP, AIR CLEANER COVER)	

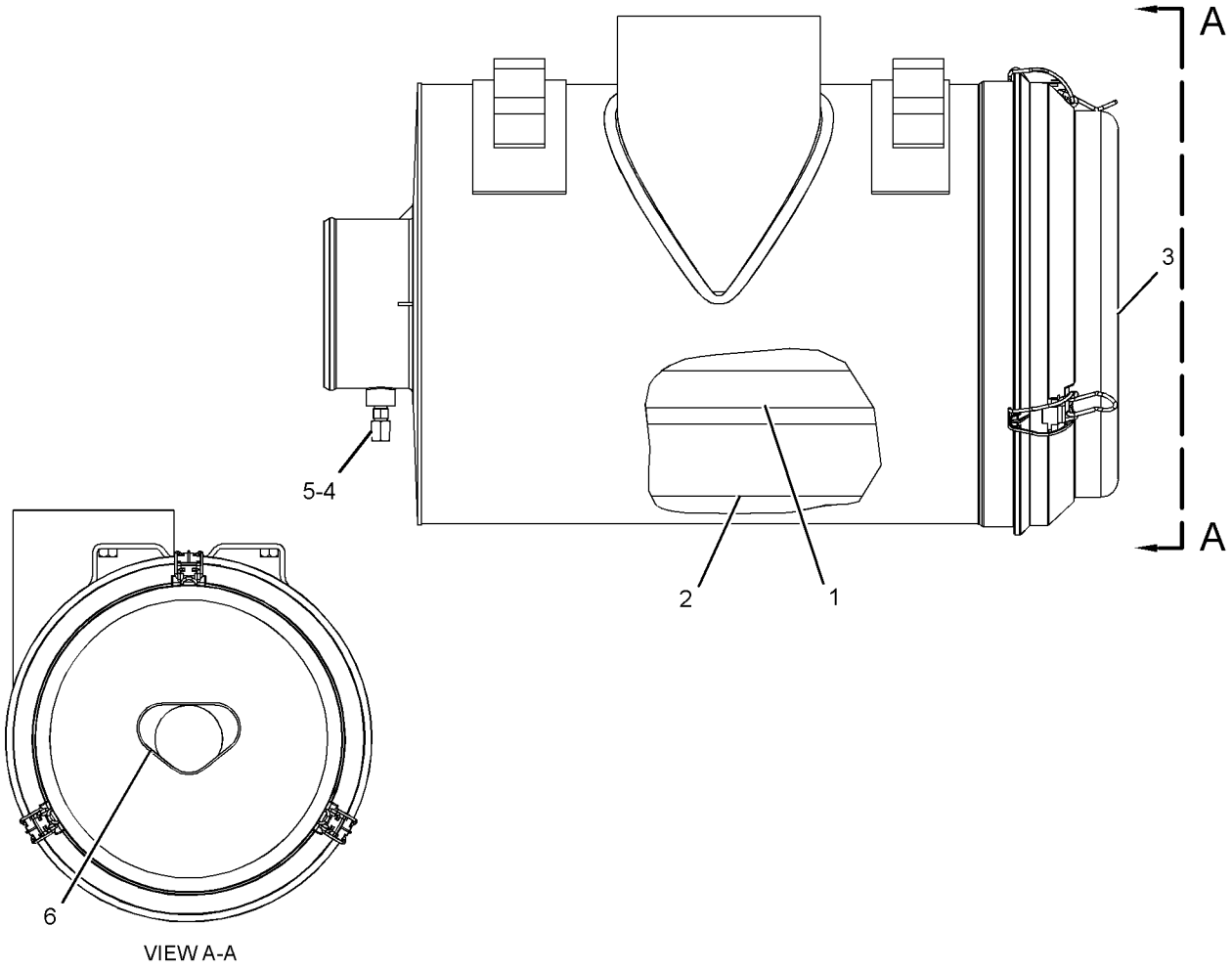

VIEW A-A

GRAPHIC #1 **<END>** g01199497

AIR INLET AND EXHAUST SYSTEM

242-1934 ELBOW GP-AIR INLET

S/N: THX1-UP

PART OF 224-9843 ENGINE AR, 240-1861, 270-2771, 301-3082 ENGINE AR-COMPLETE

SMCS-1058 **i03176081**

NOTE	REF NO	GRAPHIC REF	PART NUMBER	QTY	PART NAME 1 2 3 4 5 6 (PRODUCT LEVEL)	SEE PAGE
M	1	1	**131-0353**	2	STUD (M8X1.25X82.75-MM)	
	2	1	**221-6809**	1	ELBOW	
	3	1	**3E-4352**	2	WASHER-HARD (8.8X20.5X2.5-MM THK)	
M	4	1	**8C-5748**	5	BOLT (M8X1.25X55-MM)	
M	5	1	**8T-0100**	1	BOLT (M8X1.25X60-MM)	
	6	1	**9M-1974**	6	WASHER-HARD (8.8X16X2-MM THK)	
B	7	1	**1U-8846**		SEALANT-GASKET	

B-USE AS REQUIRED
M-METRIC PART

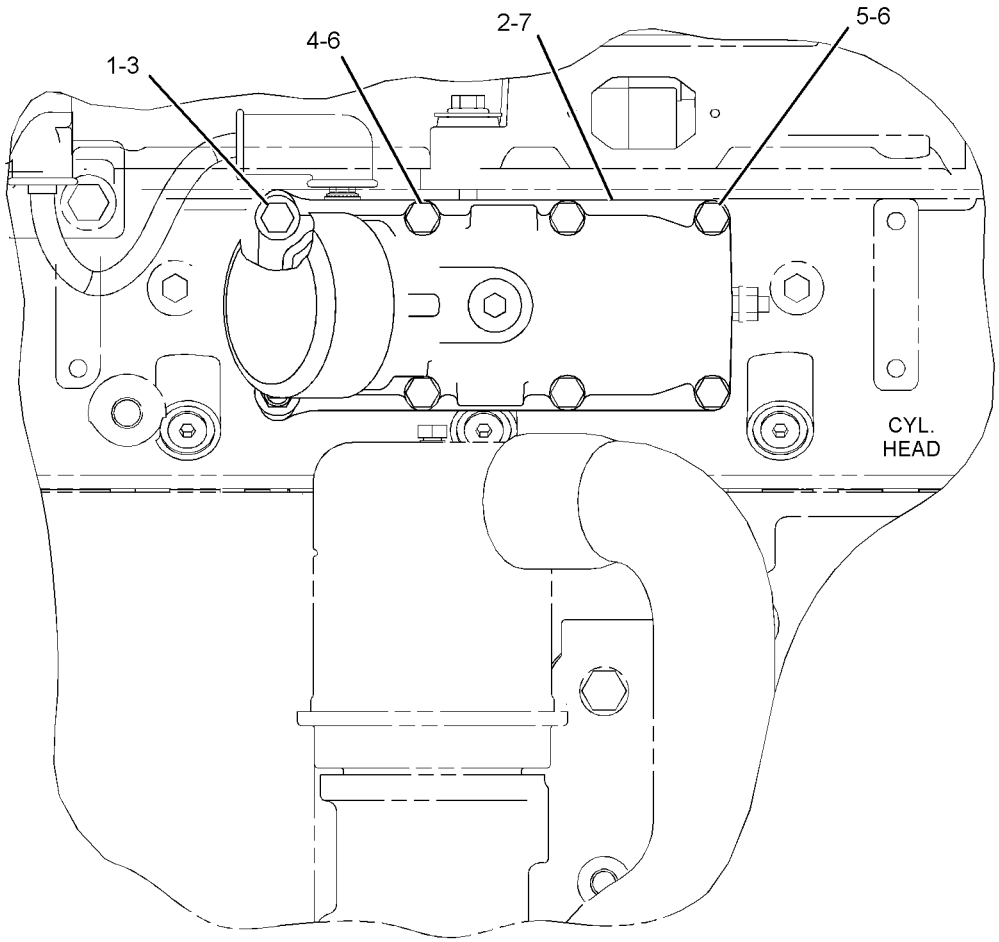

LEFT SIDE VIEW

GRAPHIC #1 **<END>** g01624587

AIR INLET AND EXHAUST SYSTEM

230-2898 LINES GP-AIR—AFTERCOOLER TO TURBOCHARGER

S/N: B6H1-528; JLP1-218

PART OF 239-6405 INSTALLATION AR-ENGINE

SMCS-1071 **i02495031**

NOTE	REF NO	GRAPHIC REF	PART NUMBER	QTY	PART NAME 1 2 3 4 5 6 (PRODUCT LEVEL)	SEE PAGE
	1	1	**144-0367**	12	CLAMP-HOSE	
	2	1	**230-2933**	1	HOSE	
	3	1	**230-2934**	1	HOSE	
	4	1	**230-2935**	1	TUBE AS	
	5	1	**230-2939**	1	BRACKET	
	6	1	**230-2940**	1	HOSE	
	7	1	**230-2941**	1	HOSE	
	8	1	**230-2942**	1	TUBE AS	
	9	1	**265-3561**	1	SEAL	
	10	1	**8T-4121**	7	WASHER-HARD (11X21X2.5-MM THK)	
M	11	1	**8T-4136**	7	BOLT (M10X1.5X25-MM)	

M-METRIC PART

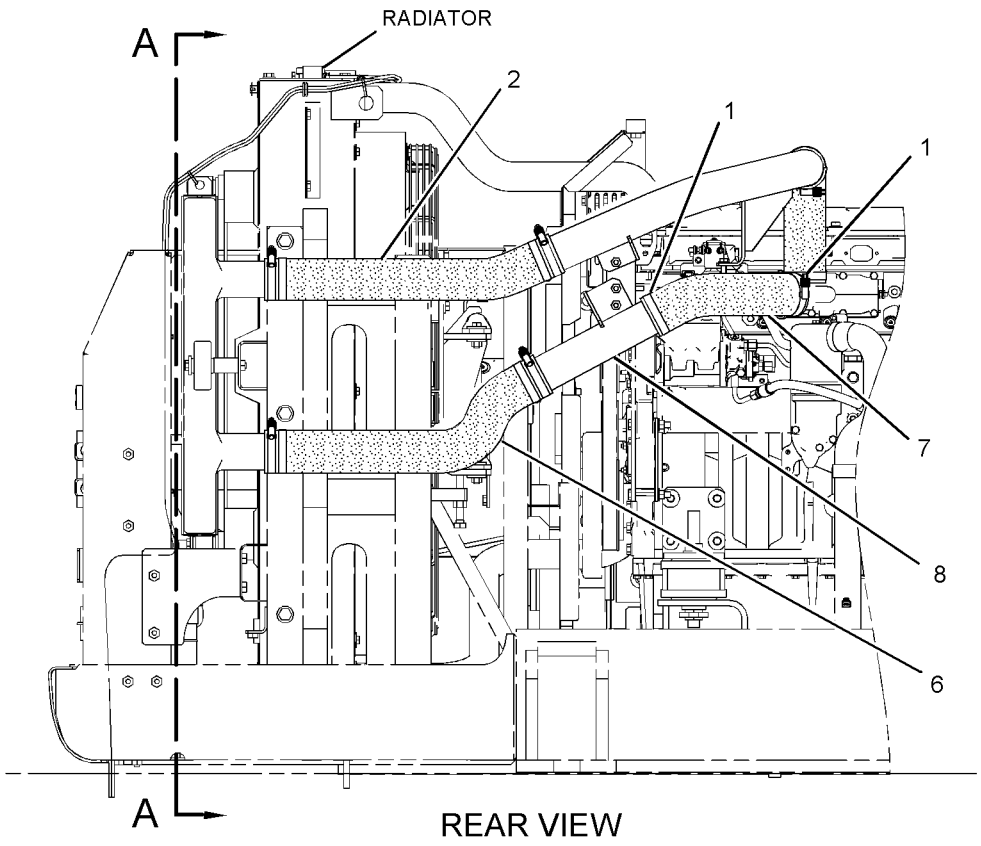

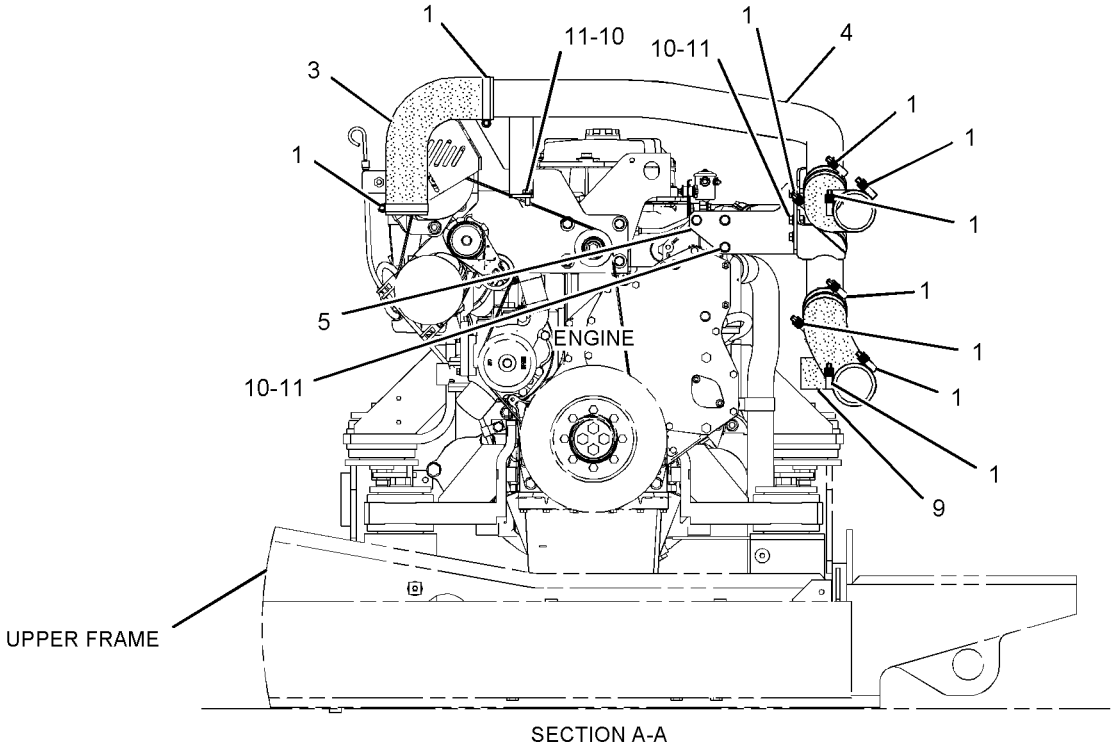

GRAPHIC #1 **<END>** g01236627

AIR INLET AND EXHAUST SYSTEM

230-2898 LINES GP-AIR—AFTERCOOLER TO TURBOCHARGER

S/N: B6H529-UP; JLP219-UP

PART OF 279-7825 INSTALLATION AR-ENGINE

SMCS-1071 **i03252524**

NOTE	REF NO	GRAPHIC REF	PART NUMBER	QTY	PART NAME 1 2 3 4 5 6 (PRODUCT LEVEL)	SEE PAGE
	1	1	**144-0367**	12	CLAMP-HOSE	
	2	1	**230-2933**	1	HOSE	
C	3	1	**230-2866**	1	HOSE	
C	4	1	**281-3510**	1	TUBE AS	
	5	1	**230-2939**	1	BRACKET	
	6	1	**230-2940**	1	HOSE	
C	7	1	**281-3515**	1	HOSE	
C	8	1	**281-3512**	1	TUBE AS	
	9	1	**265-3561**	1	SEAL	
	10	1	**8T-4121**	1	WASHER-HARD (11X21X2.5-MM THK)	
M	11	1	**8T-4136**	7	BOLT (M10X1.5X25-MM)	
	12	1	**7X-7729**	6	WASHER (11X25X3-MM THK)	

C-CHANGE FROM PREVIOUS TYPE
M-METRIC PART

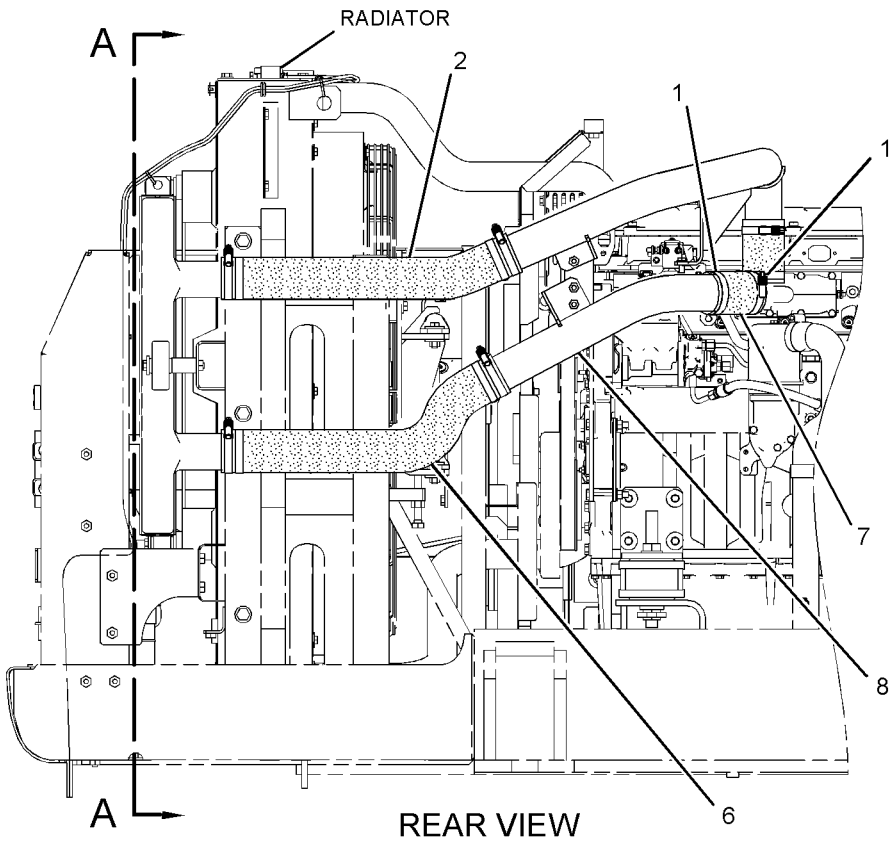

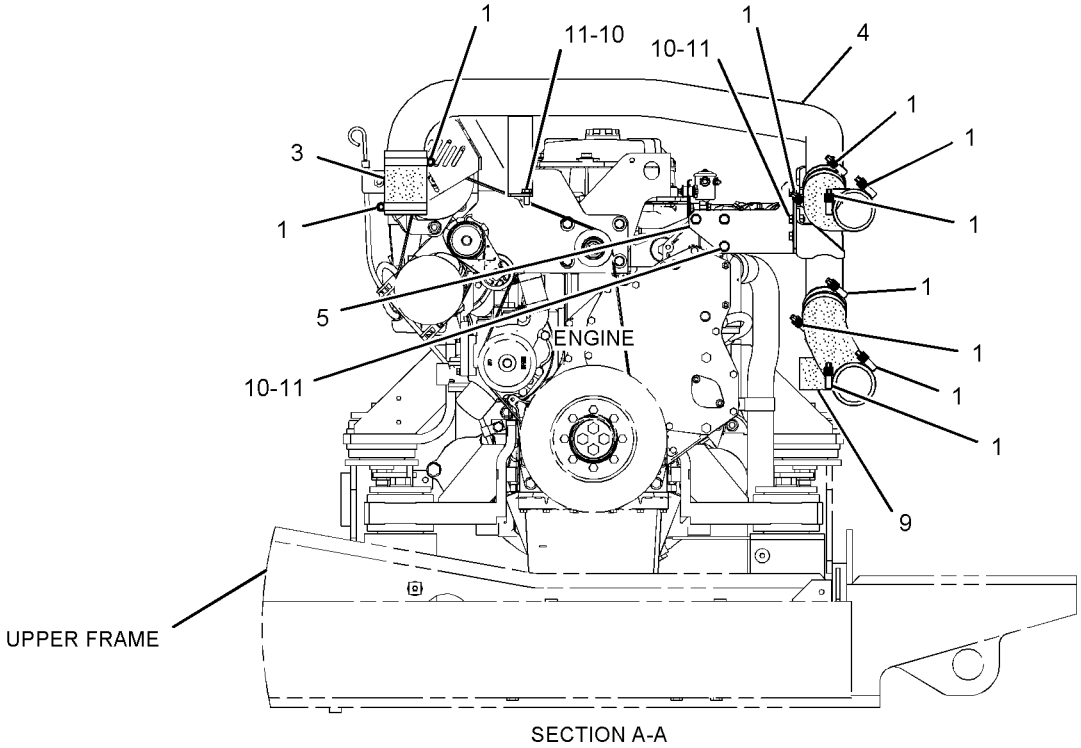

GRAPHIC #1 **<END>** g01335144

239-6406 LINES GP-AIR—AIR CLEANER TO TURBOCHARGER

S/N: B6H1-UP; JLP1-UP

PART OF 239-6405, 279-7825 INSTALLATION AR-ENGINE

SMCS-1071 **i03722583**

NOTE	REF NO	GRAPHIC REF	PART NUMBER	QTY	PART NAME 1 2 3 4 5 6 (PRODUCT LEVEL)	SEE PAGE
	1	1	**5L-3233**	1	FITTING	
	2	1	**8T-4986**	3	CLAMP-HOSE	
	3	1	**8T-4987**	1	CLAMP-HOSE	
	4	1	**255-2966**	1	INDICATOR AS-AIR FILTER CHANGE (AIR RESTRICTION)	
	5	1	**324-4169**	1	HOSE	
	6	1	**266-6217**	1	HOSE	

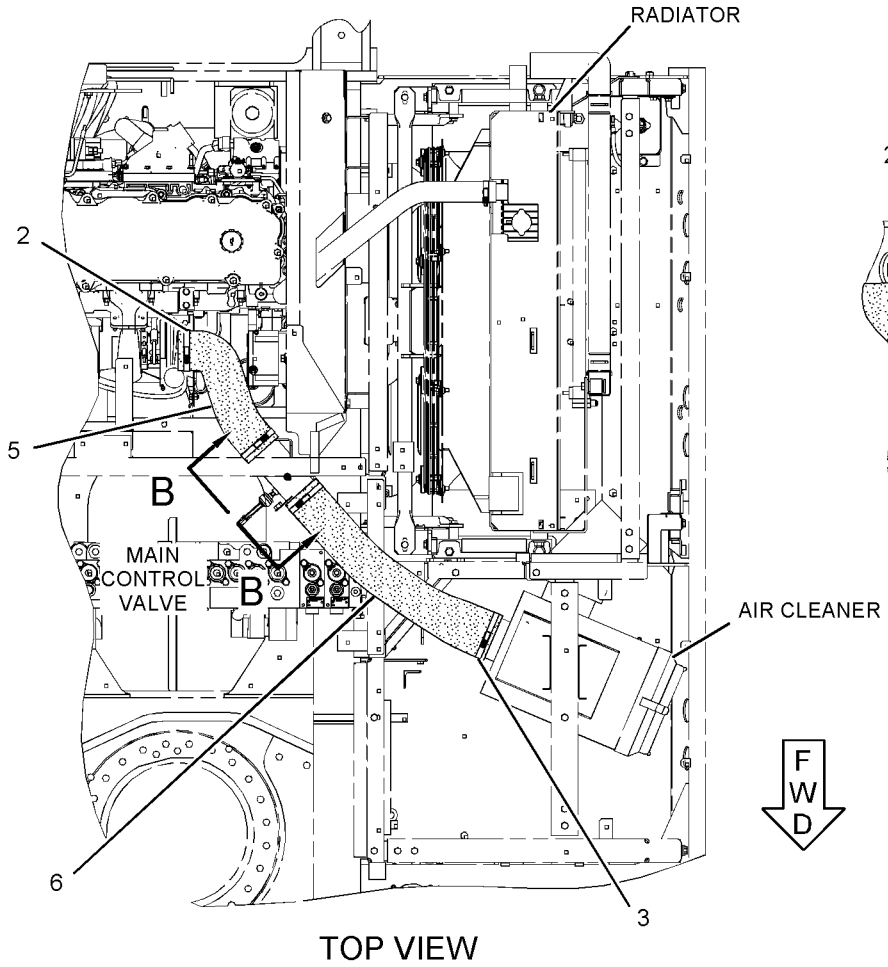

TOP VIEW

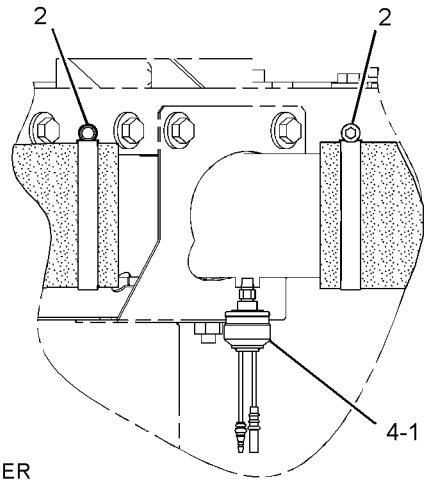

VIEW B-B

GRAPHIC #1 **<END>** g01199380

AIR INLET AND EXHAUST SYSTEM

255-2915 LINES GP-MUFFLER DRAIN

S/N: B6H1-528; JLP1-218

PART OF 239-6405 INSTALLATION AR-ENGINE

SMCS-1062 **i02495142**

NOTE	REF NO	GRAPHIC REF	PART NUMBER	QTY	PART NAME 1 2 3 4 5 6 (PRODUCT LEVEL)	SEE PAGE
	1	1	**5P-4961**	1	CLAMP-HOSE	
	2	1	**7K-1181**	3	STRAP-CABLE	
	3	1	**171-9073**	1	CLIP	
	4	1	**205-6781**	1	PIPE AS	
	5	1	**8T-4121**	1	WASHER-HARD (11X21X2.5-MM THK)	
M	6	1	**8T-4191**	1	BOLT (M10X1.5X16-MM)	
E	7	1	**5P-1442**		HOSE (113-CM)	

E-ORDER BY THE CENTIMETER
M-METRIC PART

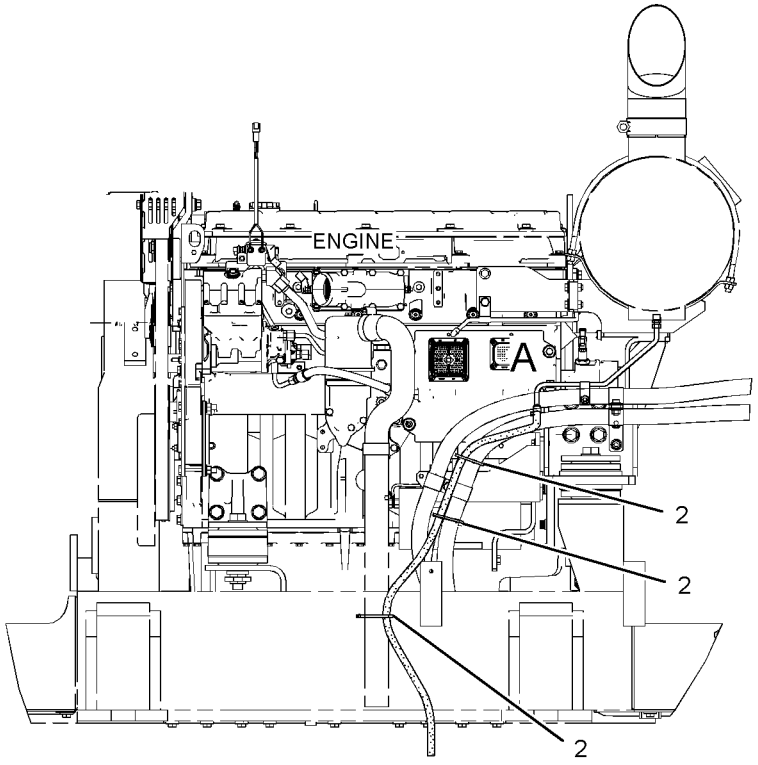

REAR VIEW

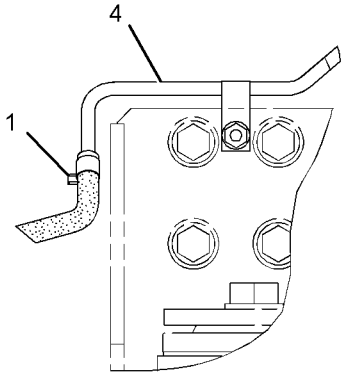

VIEW OF AREA A

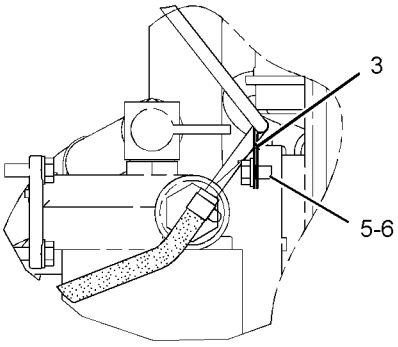

VIEW OF AREA B

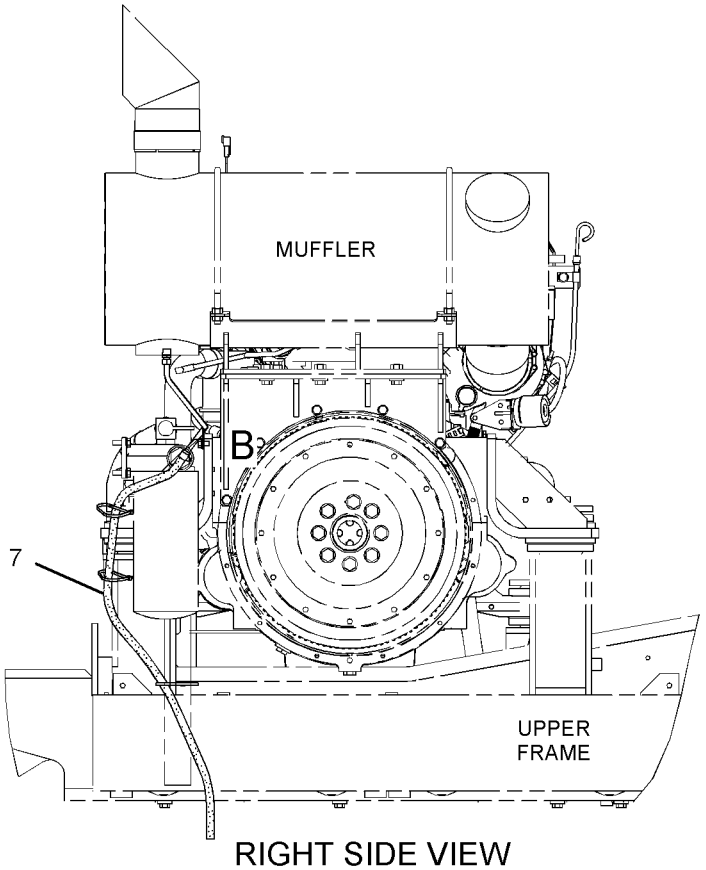

RIGHT SIDE VIEW

GRAPHIC #1 **<END>** g01201820

165-4444 MANIFOLD GP-EXHAUST

S/N: THX1-UP

45 DEGREE DRY EXHAUST MANIFOLD WITH REAR TURBOCHARGER EXHAUST

PART OF 224-9843 ENGINE AR, 240-1861, 270-2771, 301-3082 ENGINE AR-COMPLETE

FOR USE WITH 165-4465—PAGE 94

SMCS-1059 **i02153917**

NOTE	REF NO	GRAPHIC REF	PART NUMBER	QTY	PART NAME 1 2 3 4 5 6 (PRODUCT LEVEL)	SEE PAGE
M	1	1	**3E-8017**	12	LOCKNUT (M10X1.5-MM THD)	
	2	1	**161-3398**	1	MANIFOLD-EXHAUST (REAR)	
	3	1	**192-4697**	1	MANIFOLD-EXHAUST (CENTER)	
	4	1	**161-3411**	6	GASKET	
	5	1	**203-7775**	1	MANIFOLD-EXHAUST (FRONT)	
M	6	1	**116-3715**	12	STUD-TAPERLOCK (M10X1.5X85-MM)	
	7	1	**4P-4369**	6	SPACER (12X19X23.5-MM THK)	
	8	1	**6V-5839**	12	WASHER (11X21X2.5-MM THK)	
M	9	1	**8T-7044**	4	STUD-TAPERLOCK (M10X1.5X40-MM)	

M-METRIC PART

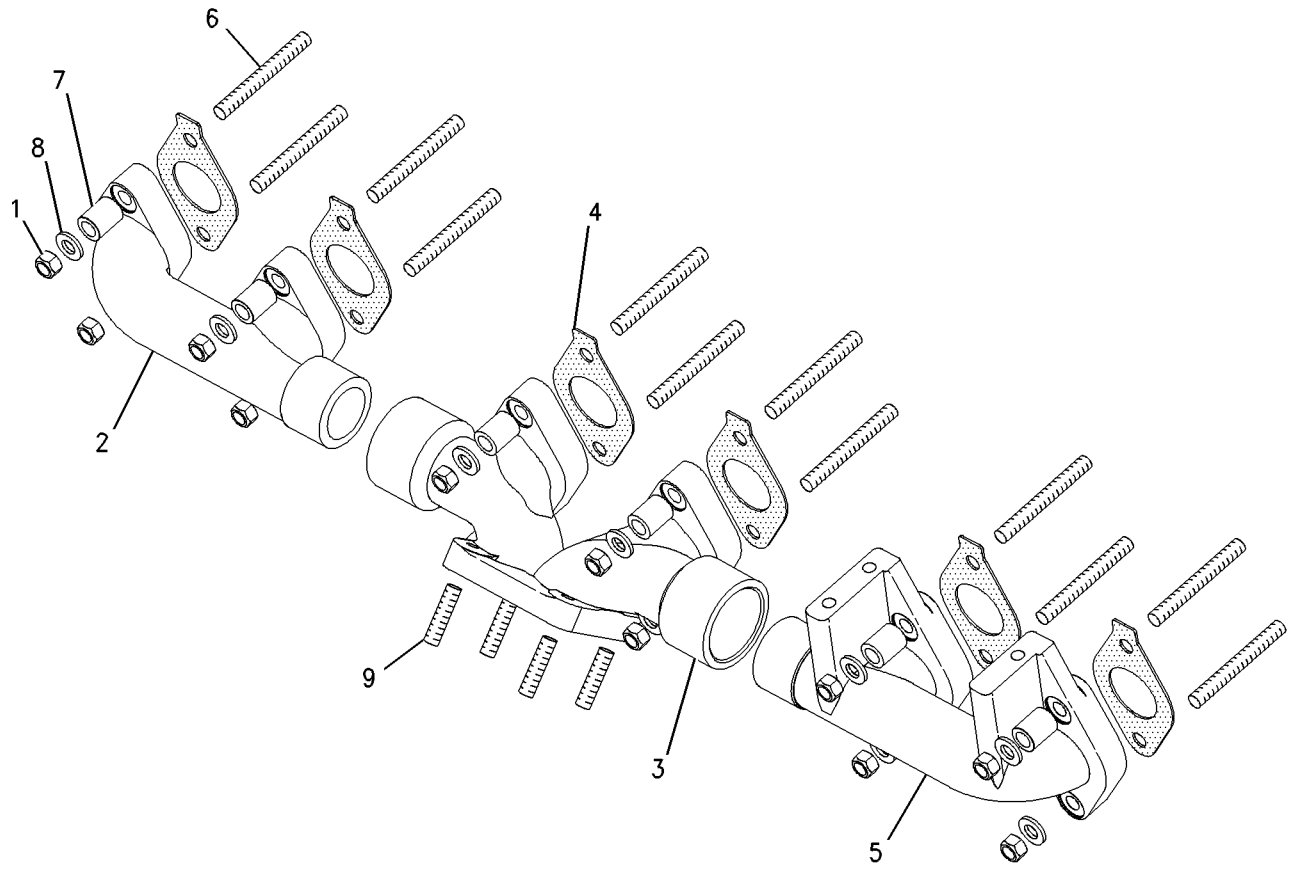

GRAPHIC #1 **<END>** g00713513

AIR INLET AND EXHAUST SYSTEM

222-8300 MUFFLER GP

S/N: B6H1-UP; JLP1-UP

PART OF 222-8297, 262-1359, 266-6263 ENGINE AR

SMCS-1062 **i03009510**

NOTE	REF NO	GRAPHIC REF	PART NUMBER	QTY	PART NAME 1 2 3 4 5 6 (PRODUCT LEVEL)	SEE PAGE
	1	1	**119-5708**	1	CLIP	
	2	1	**193-2839**	1	PIPE AS	
	3	1	**193-2844**	1	PLATE	
	4	1	**310-9725**	1	PLATE	
	5	1	**205-6642**	1	MUFFLER AS	
	6	1	**239-6494**	1	SUPPORT AS	
	7	1	**310-9771**	1	BRACKET AS	
	8	1	**131-8847**	2	U-BOLT	
	9	1	**241-9265**	1	CLAMP-MUFFLER	
M	11	1	**8T-4137**	1	BOLT (M10X1.5X20-MM)	
	12	1	**5P-1076**	3	WASHER-HARD (13.5X30X4-MM THK)	
	13	1	**7X-7729**	5	WASHER (11X25X3-MM THK)	
	15	1	**8T-4121**	5	WASHER-HARD (11X21X2.5-MM THK)	
M	16	1	**8T-4136**	2	BOLT (M10X1.5X25-MM)	
M	17	1	**8T-4184**	3	BOLT (M12X1.75X45-MM)	
M	18	1	**8T-4185**	5	BOLT (M10X1.5X50-MM)	
M	19	1	**8T-4196**	2	BOLT (M10X1.5X35-MM)	
	20	1	**8T-4223**	3	WASHER-HARD (13.5X25.5X3-MM THK)	
M	21	1	**8T-4244**	8	NUT (M12X1.75-THD)	
M	22	1	**8T-4956**	3	BOLT (M12X1.75X35-MM)	
	23	1	**9N-1941**	1	CLAMP-V-BAND	
	24	1	**255-2900**	1	PIPE AS-EXHAUST	
	25	1	**7E-6455**	1	CLAMP	

M-METRIC PART

222-8300 **MUFFLER GP** *(contd.)* **i03009510**

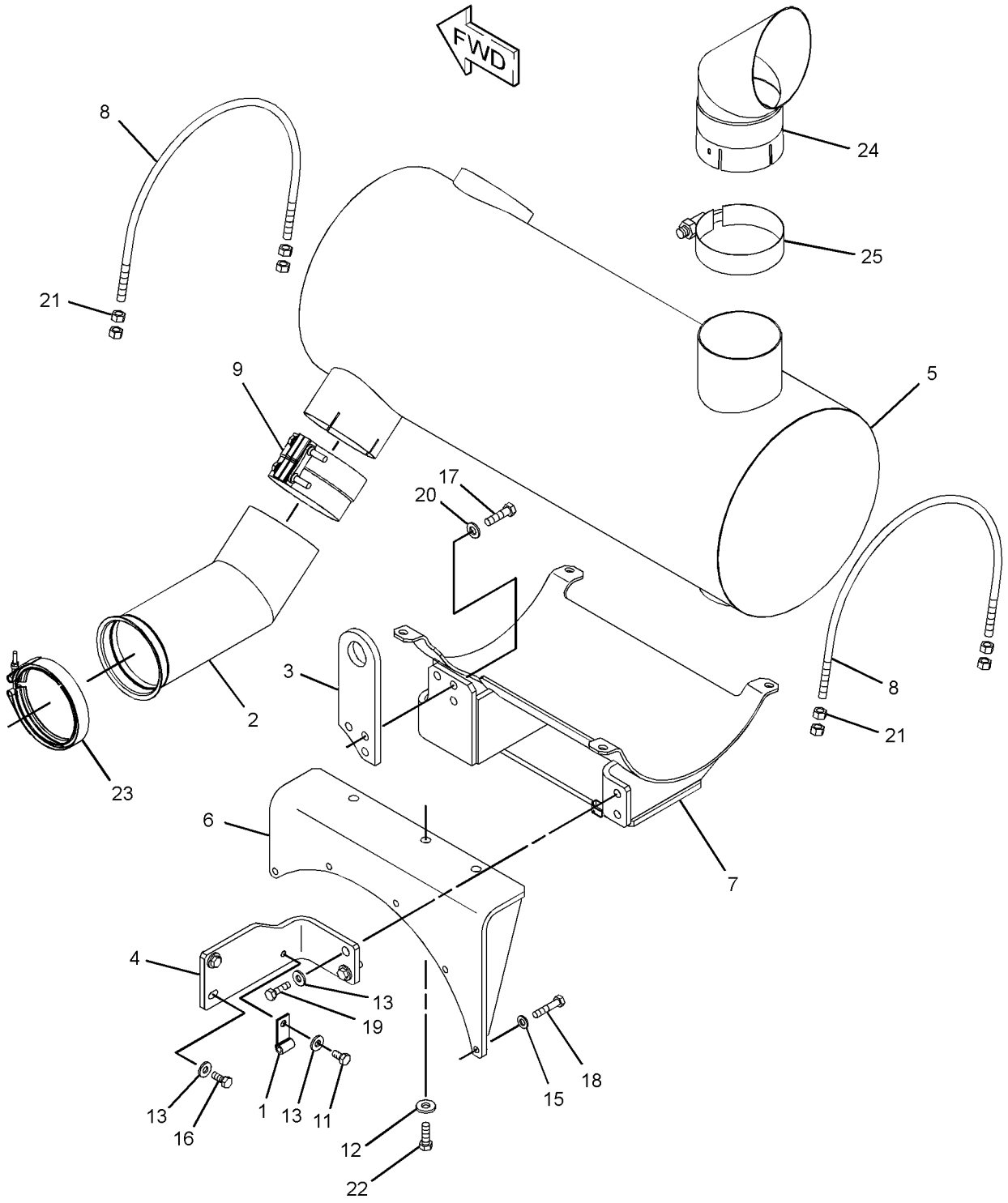

GRAPHIC #1 **<END>** g01518557

AIR INLET AND EXHAUST SYSTEM

250-7700 TURBOCHARGER GP

S/N: THX1-UP

PART OF 258-8337 TURBOCHARGER GP

SMCS-1052, 1053 **i02713175**

NOTE	REF NO	GRAPHIC REF	PART NUMBER	QTY	PART NAME 1 2 3 4 5 6 (PRODUCT LEVEL)	SEE PAGE
	1	1	**248-5576**	1	CLAMP AS-V-BAND	
	2	1	**5P-4536**	1	ELBOW	
	3	1	**137-1602**	1	CLAMP AS (TURBINE)	
	4	1	**161-6963**	2	CLAMP	
	6	1	**235-5507**	1	CARTRIDGE GP-TURBOCHARGER	
E	7	1	**242-3360**		HOSE (23-CM)	

E-ORDER BY THE CENTIMETER

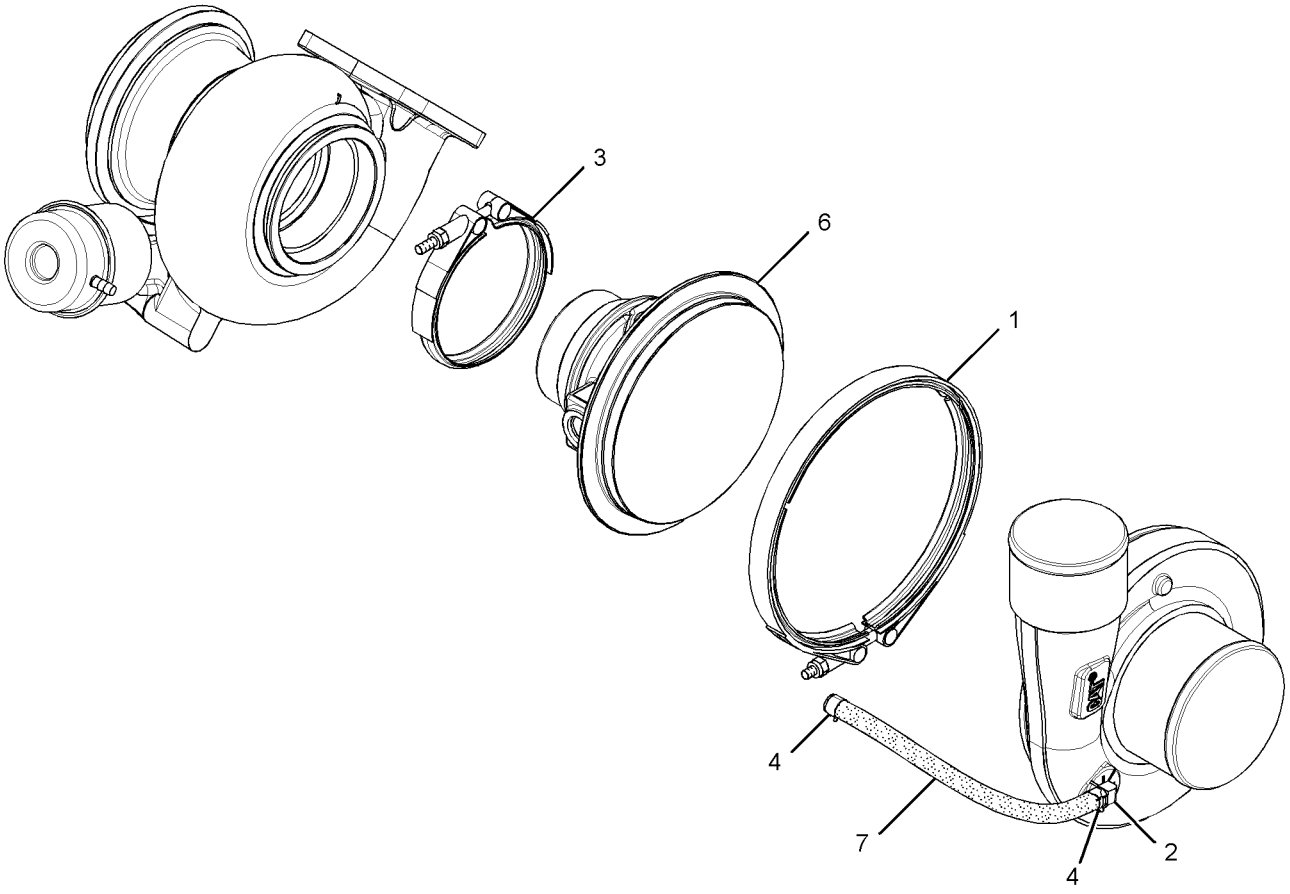

GRAPHIC #1 **<END>** g01375897

AIR INLET AND EXHAUST SYSTEM

258-8337 TURBOCHARGER GP

S/N: THX1-UP

PART OF 229-2665, 270-4216, 348-2746, 348-2747 ENGINE AR-CORE

SMCS-1052, 1053 **i02504042**

NOTE	REF NO	GRAPHIC REF	PART NUMBER	QTY	PART NAME 1 2 3 4 5 6 (PRODUCT LEVEL)	SEE PAGE
	1	1	**1P-0451**	1	GASKET	
M	2	1	**3E-8017**	4	LOCKNUT (M10X1.5-MM-THD)	
Y	3	1	**250-7700**	1	TURBOCHARGER GP	142

M-METRIC PART
Y-SEPARATE ILLUSTRATION

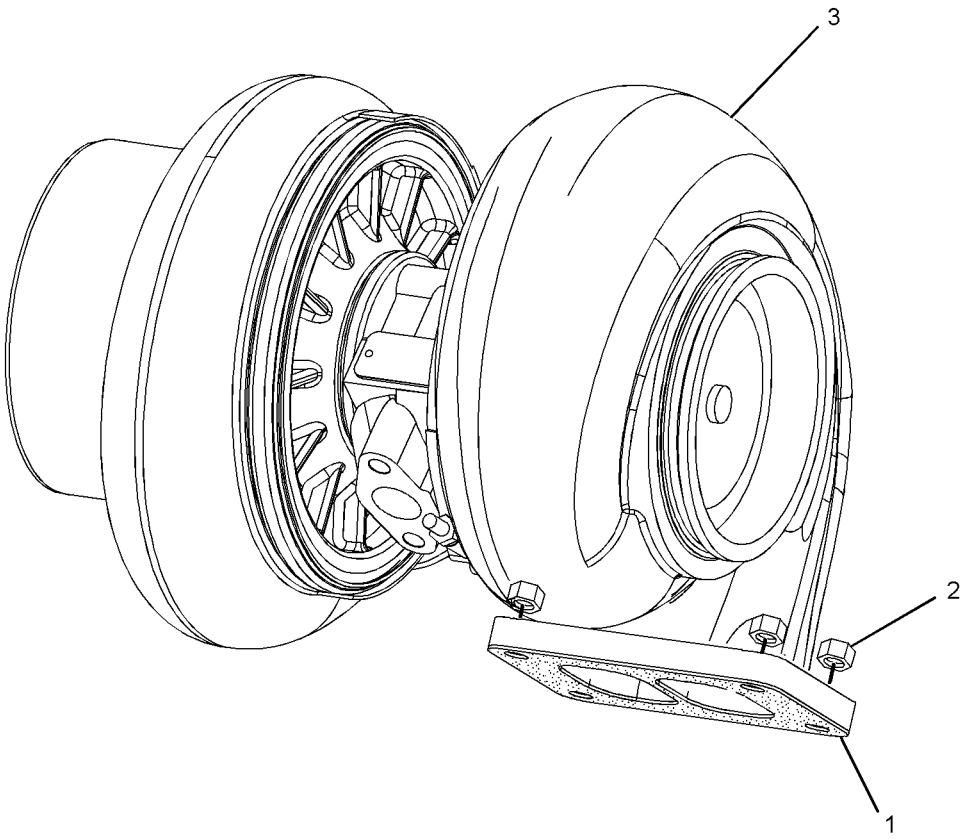

GRAPHIC #1 **<END>** g01187210

174-9570 FILTER GP-WATER SEP & FUEL

S/N: B6H1-UP; JLP1-UP
PART OF 237-8752 LINES GP-FUEL, 190-8977 PUMP GP-FUEL PRM & WATER SEP
ALSO AN ATTACHMENT

SMCS-1261, 1263 **i03671369**

NOTE	REF NO	GRAPHIC REF	PART NUMBER	QTY	PART NAME 1 2 3 4 5 6 (PRODUCT LEVEL)	SEE PAGE
	1	1	**326-1644**	1	FILTER AS-WATER SEP & FUEL (PRIMARY)	
	1A	1	**220-8678**	1	SEAL-RING (FUEL, WATER SEPARATOR)	
	2	1	**343-5527**	1	BOWL AS (FUEL, WATER SEPARATOR)	
		1	**3J-1907**	1	SEAL-O-RING	
		1	**5F-9144**	1	SEAL-O-RING	
		1	**8F-7219**	1	SEAL-O-RING	
		1	**9S-8004**	1	PLUG	

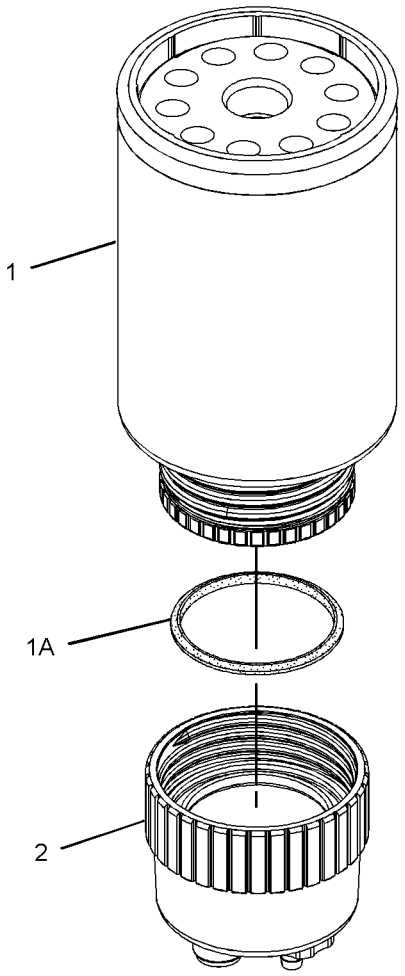

GRAPHIC #1 **<END>** g01179858

267-3360 INJECTOR GP-FUEL

S/N: THX1-UP

PART OF 267-3361 PUMP GP-FUEL INJECTION

SMCS-1251, 1254, 1290, 1713 **i02504058**

NOTE	REF NO	GRAPHIC REF	PART NUMBER	QTY	PART NAME 1 2 3 4 5 6 (PRODUCT LEVEL)	SEE PAGE
	1	1	**149-5240**	1	RING-BACKUP	
	2	1	**169-3104**	1	RING-BACKUP	
	3	1	**169-8598**	1	SEAL-O-RING	
	5	1	**109-3207**	1	SEAL-O-RING	
	6	1	**148-2903**	1	SEAL-O-RING	
	7	1	**169-8586**	1	RING-BACKUP	

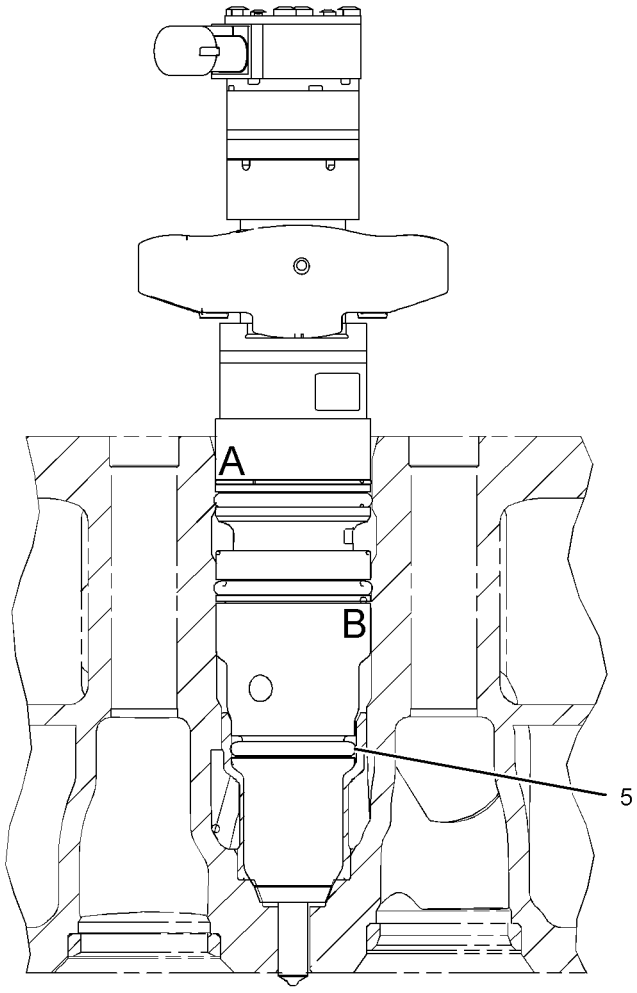

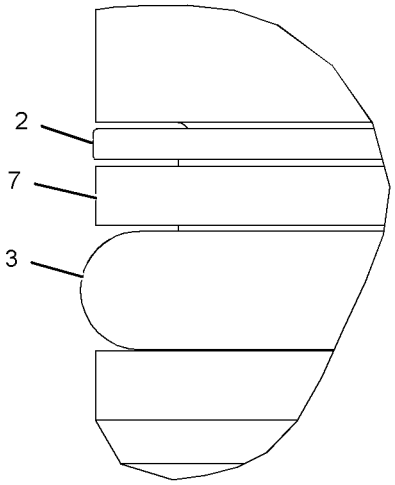

VIEW OF AREA A

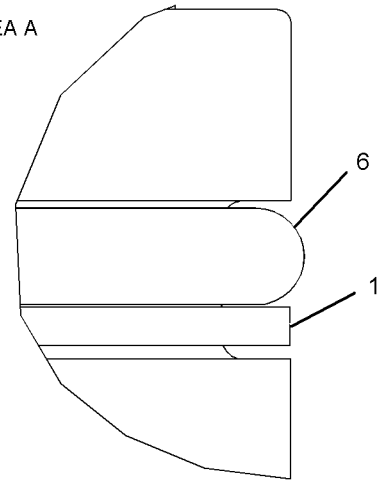

VIEW OF AREA B

GRAPHIC #1 **<END>** g01147349

293-4066 INJECTOR GP-FUEL*R

S/N: B6H1-UP

FIELD INSTALLATION

SMCS-1251, 1254, 1290, 1713 **i02576806**

NOTE	REF NO	GRAPHIC REF	PART NUMBER	QTY	PART NAME 1 2 3 4 5 6 (PRODUCT LEVEL)	SEE PAGE
	1	1	**149-5240**	1	RING-BACKUP	
	2	1	**293-0730**	1	RING-BACKUP	
	3	1	**109-3207**	1	SEAL-O-RING	
	4	1	**148-2903**	2	SEAL-O-RING	

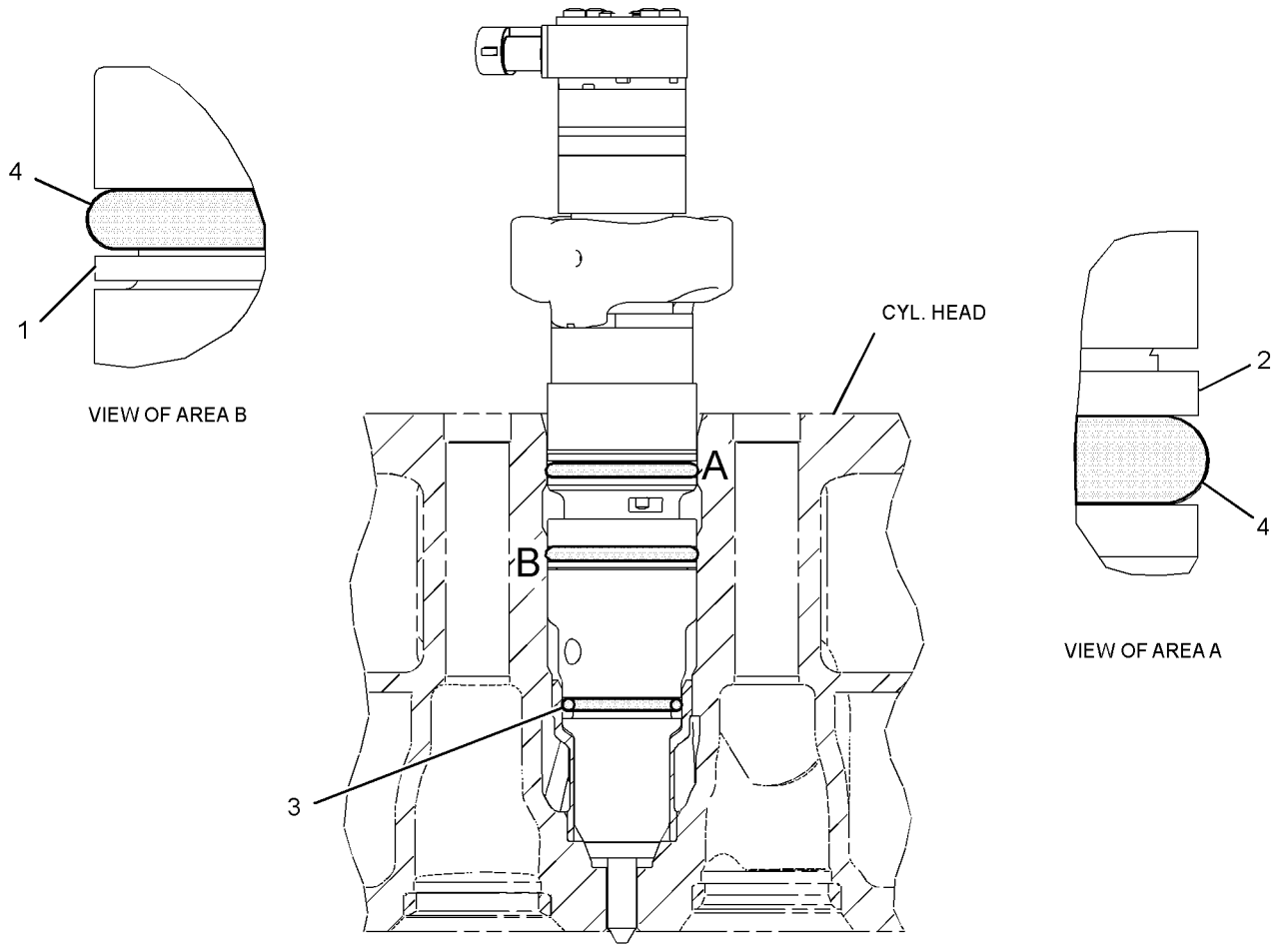

GRAPHIC #1

<END>

g01291147

293-4072 INJECTOR GP-FUEL

S/N: THX1-17738

PART OF 267-3361 PUMP GP-FUEL INJECTION

SMCS-1251, 1254, 1290, 1713 **i02572072**

NOTE	REF NO	GRAPHIC REF	PART NUMBER	QTY	PART NAME 1 2 3 4 5 6 (PRODUCT LEVEL)	SEE PAGE
	1	1	**149-5240**	1	RING-BACKUP	
	2	1	**293-0730**	1	RING-BACKUP	
	3	1	**109-3207**	1	SEAL-O-RING	
	4	1	**148-2903**	2	SEAL-O-RING	

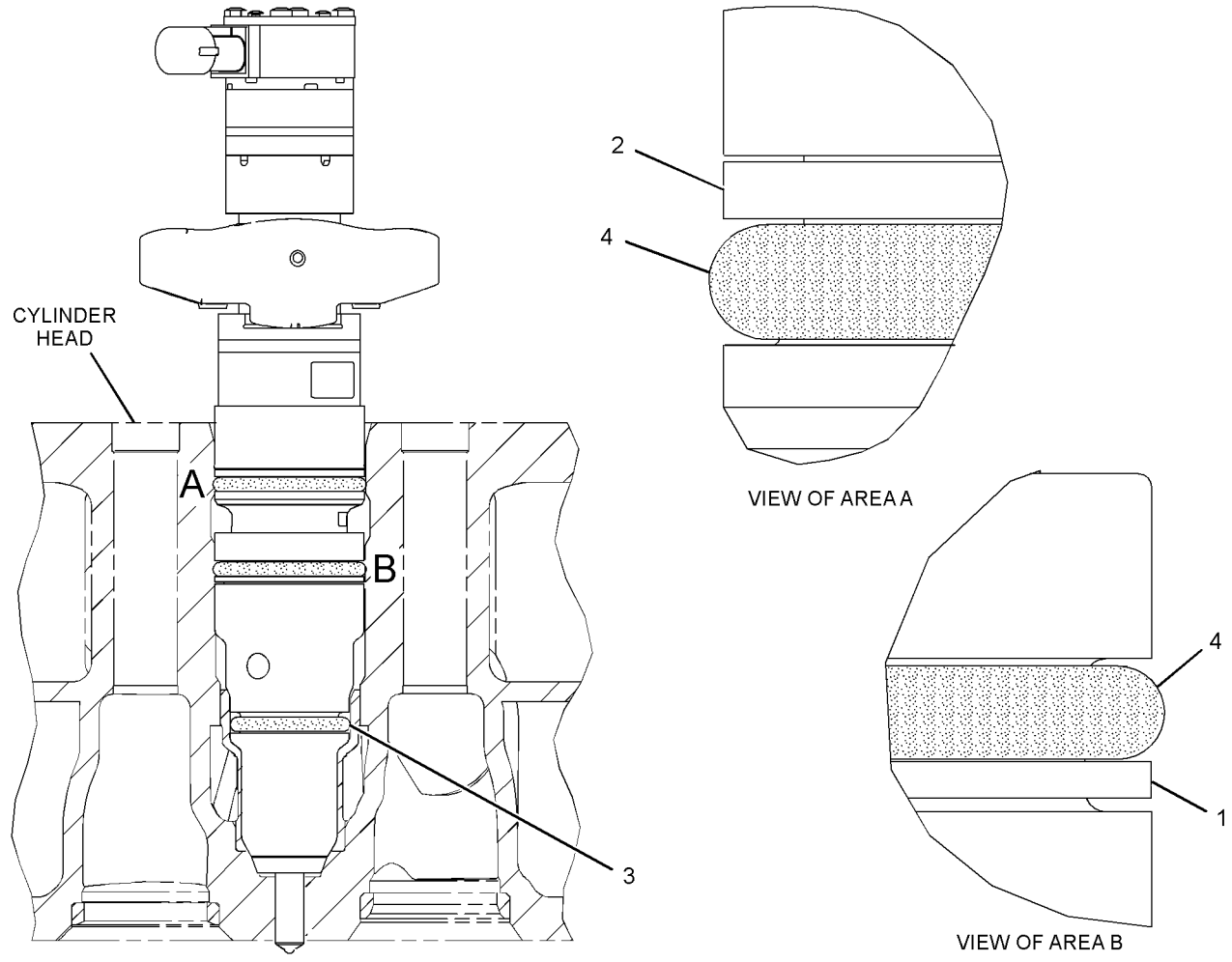

GRAPHIC #1 **<END>** g01290525

FUEL SYSTEM

328-2574 INJECTOR GP-FUEL*R

S/N: THX17739-UP

PART OF 267-3361 PUMP GP-FUEL INJECTION

SMCS-1251, 1254, 1290, 1713 **i03173640**

NOTE	REF NO	GRAPHIC REF	PART NUMBER	QTY	PART NAME 1 2 3 4 5 6 (PRODUCT LEVEL)	SEE PAGE
	1	1	**149-5240**	1	RING-BACKUP	
	2	1	**293-0730**	1	RING-BACKUP	
	3	1	**109-3207**	1	SEAL-O-RING	
	4	1	**148-2903**	2	SEAL-O-RING (FUEL SYSTEM)	

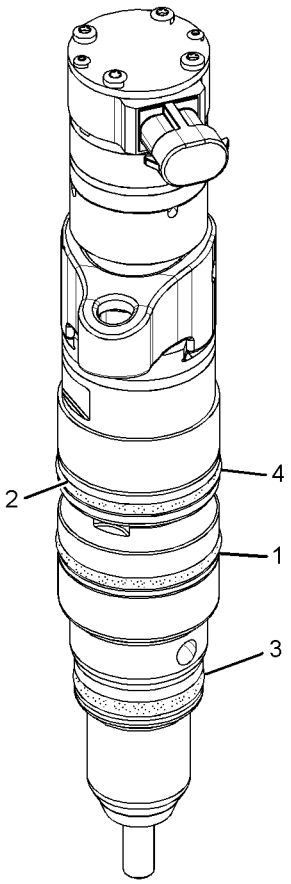

GRAPHIC #1 **<END>** g01624285

231-3039 LINES GP-FUEL

S/N: THX1-UP

PART OF 224-9843 ENGINE AR, 240-1861, 270-2771, 301-3082 ENGINE AR-COMPLETE

SMCS-1274 **i03341107**

NOTE	REF NO	GRAPHIC REF	PART NUMBER	QTY	PART NAME 1 2 3 4 5 6 (PRODUCT LEVEL)	SEE PAGE
	1	1	**7W-3447**	1	SPACER (10.2X19.05X10.2-MM THK)	
	2	1	**309-0175**	1	TUBE AS	
I	3	1	**193-0158**	1	HOSE AS	
	4	1	**231-3043**	1	TUBE AS	
Y	6	1	*205-1306*	1	REGULATOR GP-FUEL PRESSURE	205
	7	1	**005-4362**	1	ELBOW	
	8	1	**030-8188**	1	CONNECTOR	
	9	1	*148-8336*	1	CONNECTOR AS	
		1	**3J-1907**	1	SEAL-O-RING	
		1	**6V-8397**	1	SEAL-O-RING	
		1	**6V-8636**	1	CONNECTOR	
	10	1	*148-8378*	1	ELBOW AS	
		1	**3J-1907**	1	SEAL-O-RING	
		1	**6V-8397**	1	SEAL-O-RING	
		1	**6V-8724**	1	ELBOW	
	11	1	**186-0359**	1	CLIP	
	12	1	**2R-6806**	2	CONNECTOR-O-RING	
	13	1	**3J-1907**	2	SEAL-O-RING	
	14	1	**3K-0360**	2	SEAL-O-RING	
	15	1	**5P-9297**	1	CLIP	
	16	1	**119-5708**	1	CLIP	
	17	1	**6V-5839**	1	WASHER (11X21X2.5-MM THK)	
M	18	1	**6V-3822**	1	BOLT (M10X1.5X35-MM)	

I-REFER TO HYDRAULIC INFORMATION SYSTEM
M-METRIC PART
Y-SEPARATE ILLUSTRATION

231-3039 **LINES GP-FUEL** *(contd.)* **i03341107**

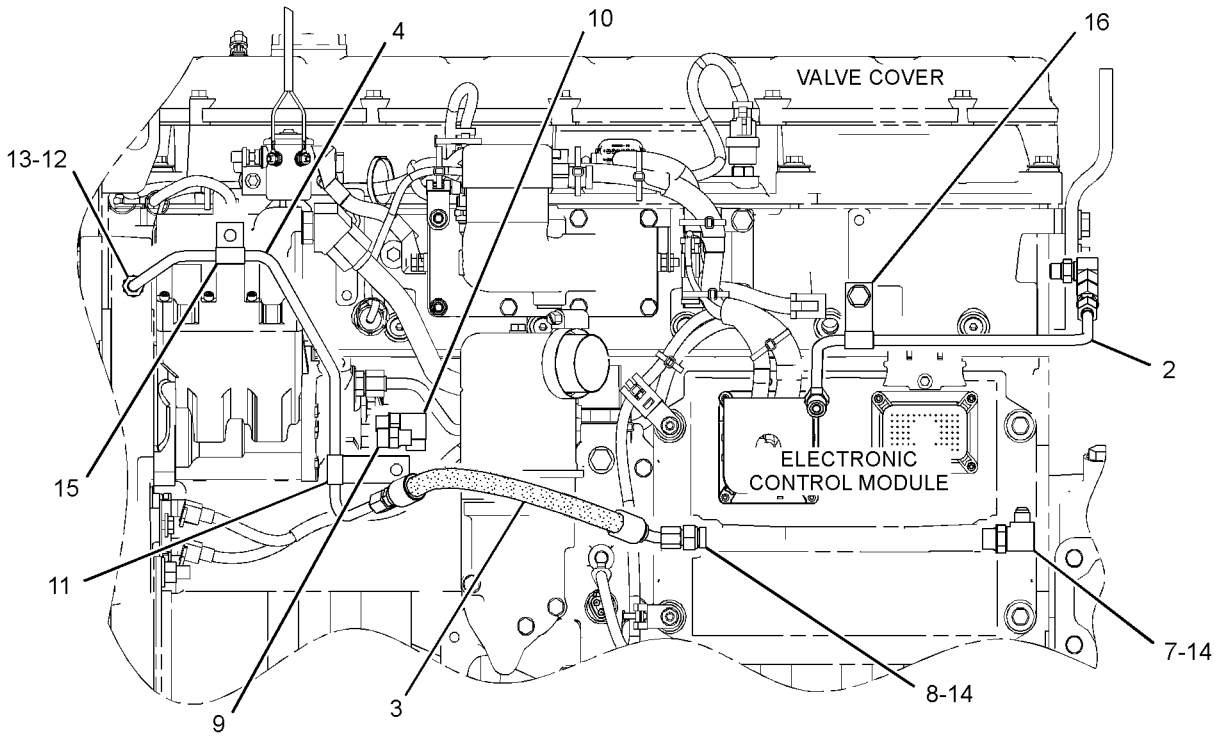

LEFT SIDE VIEW OF ENGINE

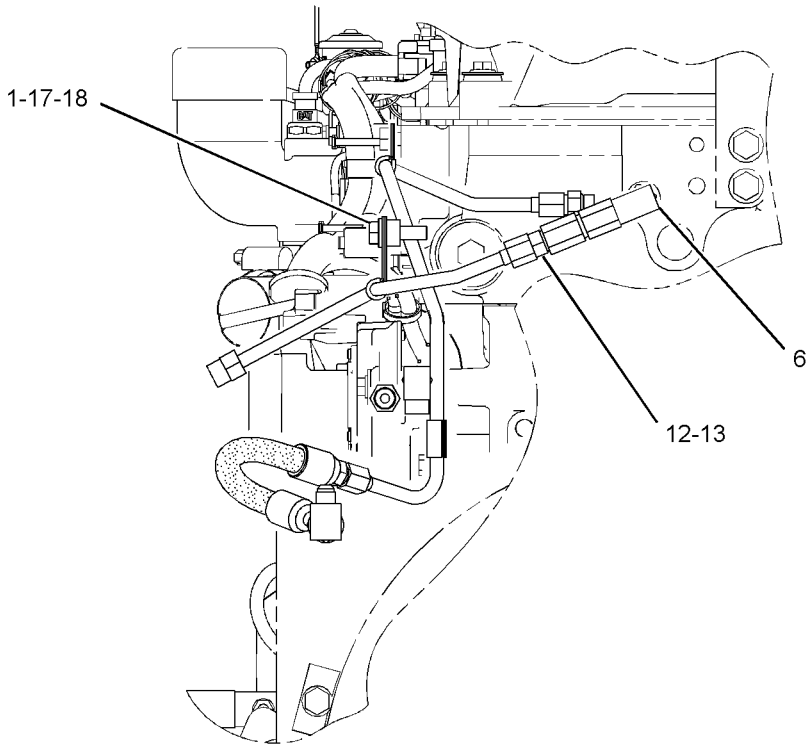

REAR VIEW OF ENGINE

GRAPHIC #1 **<END>** g01721633

FUEL SYSTEM

237-8752 LINES GP-FUEL

S/N: B6H1-652; JLP1-737
PART OF 247-7386 CHASSIS AR
TYPE 1

SMCS-1274 **i03601023**

NOTE	REF NO	GRAPHIC REF	PART NUMBER	QTY	PART NAME 1 2 3 4 5 6 (PRODUCT LEVEL)	SEE PAGE
	1	2	**4I-0379**	1	VALVE-MANUAL (DRAIN, FUEL TANK)	
	2	2	**4N-9624**	1	ADAPTER-PRIMING PUMP	
	3	1	**7Y-8165**	1	GROMMET	
	4	2	**9Y-8389**	1	GASKET (FUEL PRIMING PUMP)	
	5	2	**003-7764**	2	END-HOSE	
	6	1,2	**095-1386**	8	CLAMP-HOSE	
	7	2	**134-6852**	1	CONNECTOR	
M	8	2	**135-8575**	4	BOLT AS	
Y	9	2	**139-6873**	1	VALVE GP-FUEL BYPASS (FILTER)	217
	10	2	*150-3024*	2	ELBOW AS	
					(EACH INCLUDES)	
		2	**3J-1907**	1	SEAL-O-RING	
		2	**5P-4924**	1	ELBOW	
Y	11	2	*197-8391*	1	SENSOR GP-TEMPERATURE (FUEL)	313
Y	12	2	**258-0883**	1	SWITCH GP-PRESSURE (FUEL FILTER)	339
	13	2	**229-0999**	1	HOSE	
	14	2	**237-9312**	1	BASE AS-FUEL FILTER	
		2	**9S-4167**	1	STUD-HOLLOW (1-14X1.47-IN)	
Y	15	2	*239-2396*	1	SENSOR GP-PRESSURE (FUEL)	305
	16	2	**241-2374**	1	HOSE AS	
	17	2	**241-2375**	1	HOSE AS	
	18	2	**241-2376**	1	HOSE AS	
	19	2	**262-2598**	1	SUPPORT AS	
	20	1	**005-4362**	1	ELBOW	
	21	2	*148-8311*	1	ADAPTER AS	
		2	**3K-0360**	1	SEAL-O-RING	
		2	**8T-1715**	1	ADAPTER	
	22	2	*148-8318*	1	CONNECTOR AS	
		2	**3K-0360**	1	SEAL-O-RING	
		2	**6V-8397**	1	SEAL-O-RING	
		2	**6V-8634**	1	CONNECTOR	
	23	2	*148-8336*	1	CONNECTOR AS	
		2	**3J-1907**	1	SEAL-O-RING	
		2	**6V-8397**	1	SEAL-O-RING	
		2	**6V-8636**	1	CONNECTOR	
	24	2	*148-8378*	1	ELBOW AS	
		2	**3J-1907**	1	SEAL-O-RING	
		2	**6V-8397**	1	SEAL-O-RING	
		2	**6V-8724**	1	ELBOW	
	25	2	*148-8383*	1	ELBOW AS	
		2	**3K-0360**	1	SEAL-O-RING	
		2	**6V-8397**	1	SEAL-O-RING	
		2	**8T-1683**	1	ELBOW	
Y	26	2	*165-9154*	1	PUMP GP-FUEL PRIMING	181
	27	2	**1R-0762**	1	FILTER-FUEL (ADVANCED EFFICIENCY)	
	28	1	**2D-1290**	3	GROMMET	
	29	2	**3J-1907**	5	SEAL-O-RING	
	30	1	**3K-0360**	1	SEAL-O-RING	
	31	1,2	**5K-8451**	17	CLIP	
	32	2	**6V-4589**	1	SEAL-O-RING	
M	33	2	**6V-7357**	1	BOLT (M6X1X25-MM)	
	34	2	**8L-2786**	3	SEAL-O-RING	
	35	1,2	**8T-4121**	28	WASHER-HARD (11X21X2.5-MM THK)	
M	36	1	**8T-4133**	1	NUT (M10X1.5-THD)	
M	37	1,2	**8T-4136**	7	BOLT (M10X1.5X25-MM)	

237-8752 **LINES GP-FUEL** *(contd.)* **i03601023**

NOTE	REF NO	GRAPHIC REF	PART NUMBER	QTY	PART NAME 1 2 3 4 5 6 (PRODUCT LEVEL)	SEE PAGE
M	38	1,2	**8T-4137**	14	BOLT (M10X1.5X20-MM)	
M	39	2	**8T-4195**	4	BOLT (M10X1.5X30-MM)	
M	40	2	**8T-4196**	2	BOLT (M10X1.5X35-MM)	
	41	2	**8T-4224**	1	WASHER-HARD (8.8X16X2-MM THK)	
M	42	2	**8T-4908**	1	BOLT (M8X1.25X25-MM)	
	43	1,2	**9M-8406**	7	CLIP	
	44	2	**9S-8004**	5	PLUG	
	45	2	**9S-8005**	2	PLUG-O-RING	
	46	2	**9X-8256**	1	WASHER (6.6X12X2-MM THK)	
E	47	2	**5P-1442**		HOSE (568-CM)	
E	47A	1	**5P-1442**		HOSE (205-CM)	
E	47B	1	**5P-1442**		HOSE (544-CM)	
E	47C	1	**5P-1442**		HOSE (39-CM)	
	48	1	**7K-1181**	2	STRAP-CABLE	
Y	49	2	*174-9570*	1	FILTER GP-WATER SEP & FUEL	144
	50	2	**177-9778**	1	BASE AS	
		2	**9S-4167**	1	STUD-HOLLOW (1-14X1.47-IN)	

E-ORDER BY THE CENTIMETER
M-METRIC PART
Y-SEPARATE ILLUSTRATION

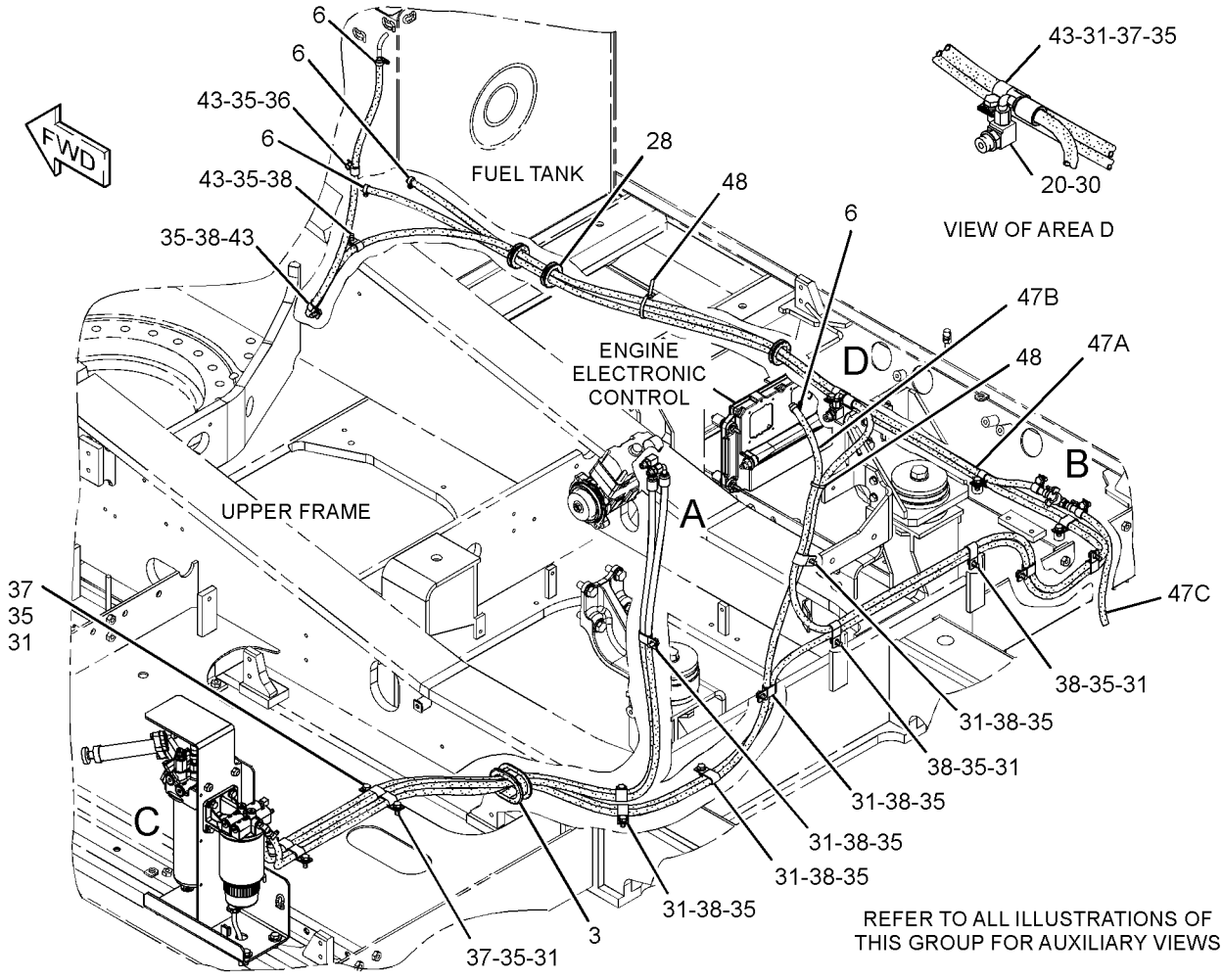

GRAPHIC #1 g01332512

237-8752 **LINES GP-FUEL** *(contd.)* **i03601023**

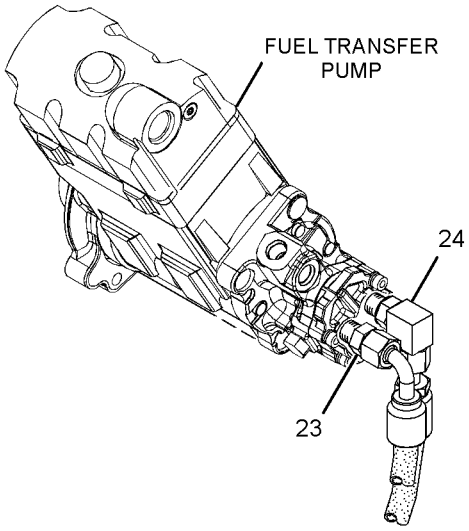

VIEW OF AREA A

90°

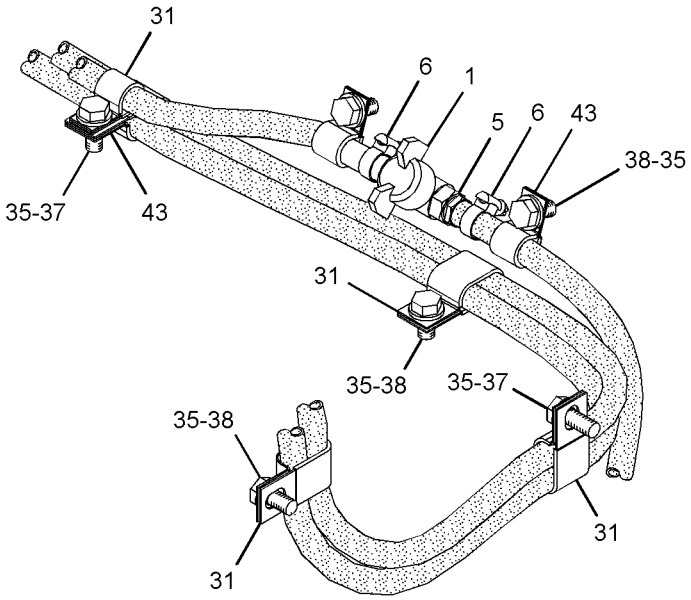

VIEW OF AREA B

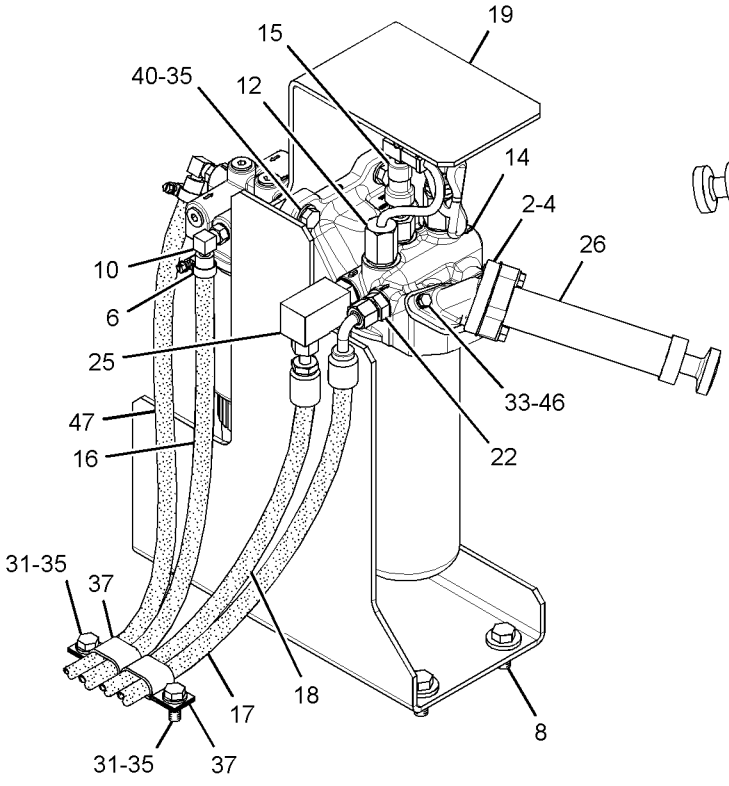

VIEW OF AREA C

180°

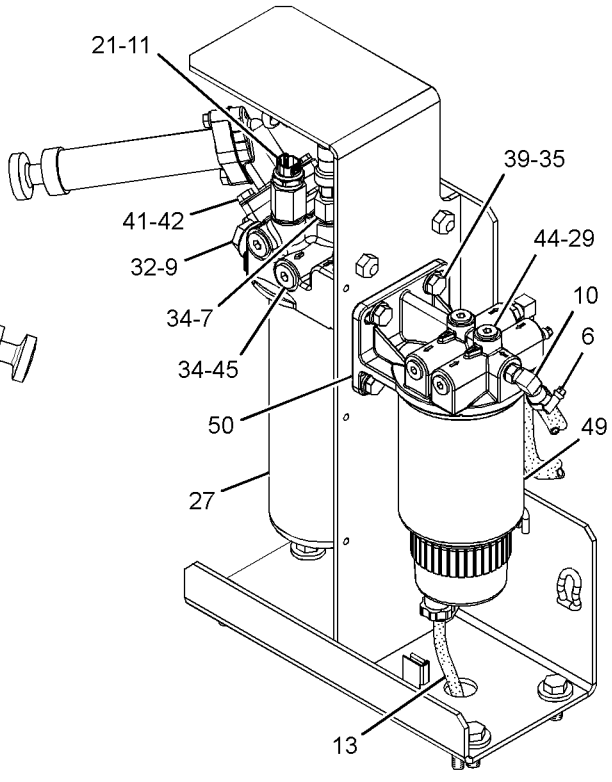

VIEW OF AREA C

GRAPHIC #2 **<END>** g01332514

FUEL SYSTEM

237-8752 LINES GP-FUEL

S/N: B6H1-652; JLP1-737
PART OF 247-7386 CHASSIS AR
TYPE 2

SMCS-1274 **i03601024**

NOTE	REF NO	GRAPHIC REF	PART NUMBER	QTY	PART NAME 1 2 3 4 5 6 (PRODUCT LEVEL)	SEE PAGE
	1	2	**4I-0379**	1	VALVE-MANUAL (DRAIN, FUEL TANK)	
	2	2	**4N-9624**	1	ADAPTER-PRIMING PUMP	
	3	1	**7Y-8165**	1	GROMMET	
	4	2	**9Y-8389**	1	GASKET	
	5	2	**003-7764**	2	END-HOSE	
	6	1,2	**095-1386**	8	CLAMP-HOSE	
	7	2	**134-6852**	1	CONNECTOR	
M	8	2	**135-8575**	4	BOLT AS	
Y	9	2	**139-6873**	1	VALVE GP-FUEL BYPASS (FILTER)	217
C	10	2	*150-3024*	1	ELBOW AS	
		2	**3J-1907**	1	SEAL-O-RING	
		2	**5P-4924**	1	ELBOW	
Y	11	2	*197-8391*	1	SENSOR GP-TEMPERATURE (FUEL)	313
Y	12	2	**258-0883**	1	SWITCH GP-PRESSURE (FUEL FILTER)	339
	13	2	**229-0999**	1	HOSE	
	14	2	**237-9312**	1	BASE AS-FUEL FILTER	
		2	**9S-4167**	1	STUD-HOLLOW (1-14X1.47-IN)	
Y	15	2	*239-2396*	1	SENSOR GP-PRESSURE (FUEL)	305
	16	2	**241-2374**	1	HOSE AS	
	17	2	**241-2375**	1	HOSE AS	
	18	2	**241-2376**	1	HOSE AS	
	19	2	**262-2598**	1	SUPPORT AS	
	21	2	*148-8311*	1	ADAPTER AS	
		2	**3K-0360**	1	SEAL-O-RING	
		2	**8T-1715**	1	ADAPTER	
	22	2	*148-8318*	1	CONNECTOR AS	
		2	**3K-0360**	1	SEAL-O-RING	
		2	**6V-8397**	1	SEAL-O-RING	
		2	**6V-8634**	1	CONNECTOR	
	25	2	*148-8383*	1	ELBOW AS	
		2	**3K-0360**	1	SEAL-O-RING	
		2	**6V-8397**	1	SEAL-O-RING	
		2	**8T-1683**	1	ELBOW	
Y	26	2	*165-9154*	1	PUMP GP-FUEL PRIMING	181
	27	2	**1R-0762**	1	FILTER-FUEL (ADVANCED EFFICIENCY)	
	28	1	**2D-1290**	3	GROMMET	
	29	2	**3J-1907**	5	SEAL-O-RING	
	31	1,2	**5K-8451**	17	CLIP	
	32	2	**6V-4589**	1	SEAL-O-RING	
M	33	2	**6V-7357**	1	BOLT (M6X1X25-MM)	
	34	2	**8L-2786**	3	SEAL-O-RING	
	35	1,2	**8T-4121**	28	WASHER-HARD (11X21X2.5-MM THK)	
M	36	1	**8T-4133**	1	NUT (M10X1.5-THD)	
M	37	1,2	**8T-4136**	7	BOLT (M10X1.5X25-MM)	
M	38	1,2	**8T-4137**	14	BOLT (M10X1.5X20-MM)	
M	39	2	**8T-4195**	4	BOLT (M10X1.5X30-MM)	
M	40	2	**8T-4196**	2	BOLT (M10X1.5X35-MM)	
	41	2	**8T-4224**	1	WASHER-HARD (8.8X16X2-MM THK)	
M	42	2	**8T-4908**	1	BOLT (M8X1.25X25-MM)	
	43	1,2	**9M-8406**	7	CLIP	
	44	2	**9S-8004**	5	PLUG	
	45	2	**9S-8005**	2	PLUG-O-RING	
	46	2	**9X-8256**	1	WASHER (6.6X12X2-MM THK)	
CE	47	2	**5P-1442**		HOSE (565-CM)	
CE	47A	1	**5P-1442**		HOSE (205-CM)	

237-8752 **LINES GP-FUEL** *(contd.)* **i03601024**

NOTE	REF NO	GRAPHIC REF	PART NUMBER	QTY	PART NAME 1 2 3 4 5 6 (PRODUCT LEVEL)	SEE PAGE
CE	47B	1	**5P-1442**		HOSE (544-CM)	
CE	47C	1	**5P-1442**		HOSE (39-CM)	
	48	1	**7K-1181**	2	STRAP-CABLE	
Y	49	2	*174-9570*	1	FILTER GP-WATER SEP & FUEL	144
	50	2	**177-9778**	1	BASE AS	
		2	**9S-4167**	1	STUD-HOLLOW (1-14X1.47-IN)	
CY	51	2	**298-3147**	1	VALVE GP-FUEL SHUTOFF	218
C	52	2	**5P-7175**	1	FITTING-STRAIGHT	

C-CHANGE FROM PREVIOUS TYPE
E-ORDER BY THE CENTIMETER
M-METRIC PART
Y-SEPARATE ILLUSTRATION

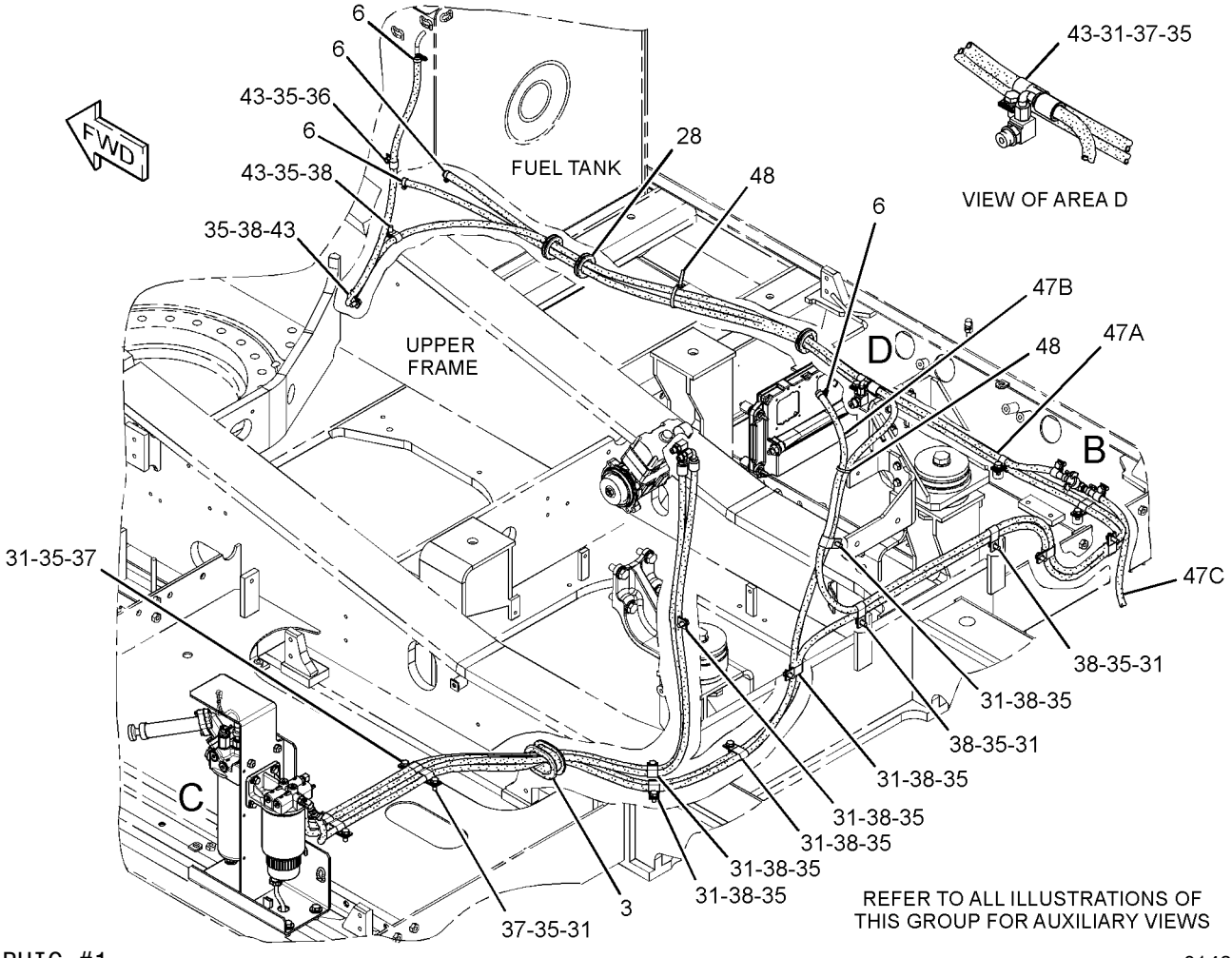

GRAPHIC #1 g01437250

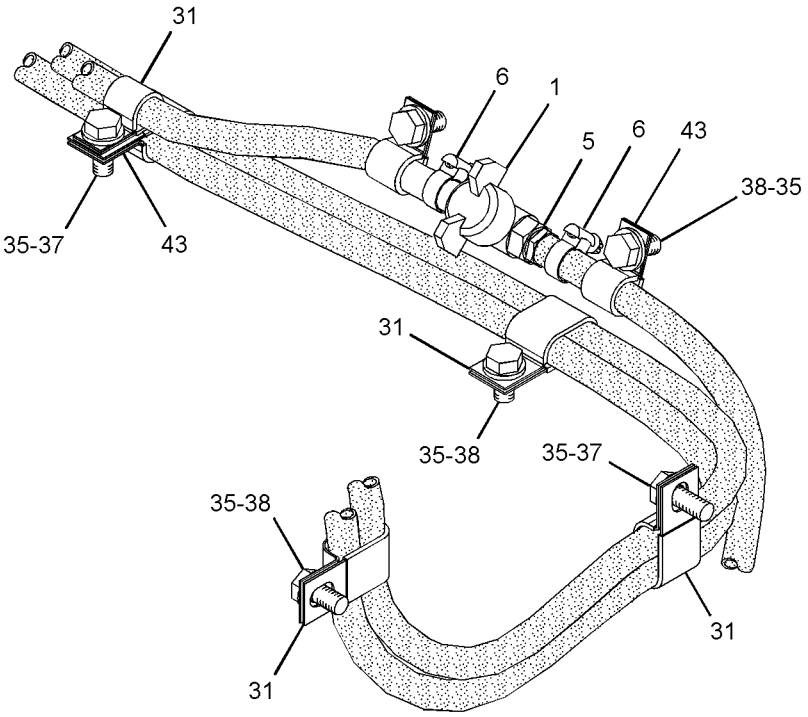

VIEW OF AREA B

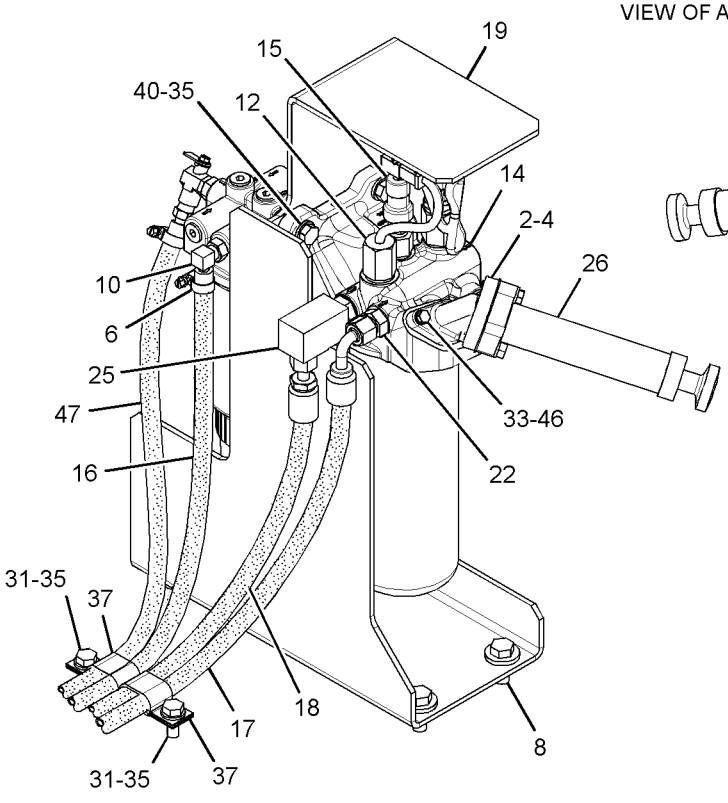

VIEW OF AREA C

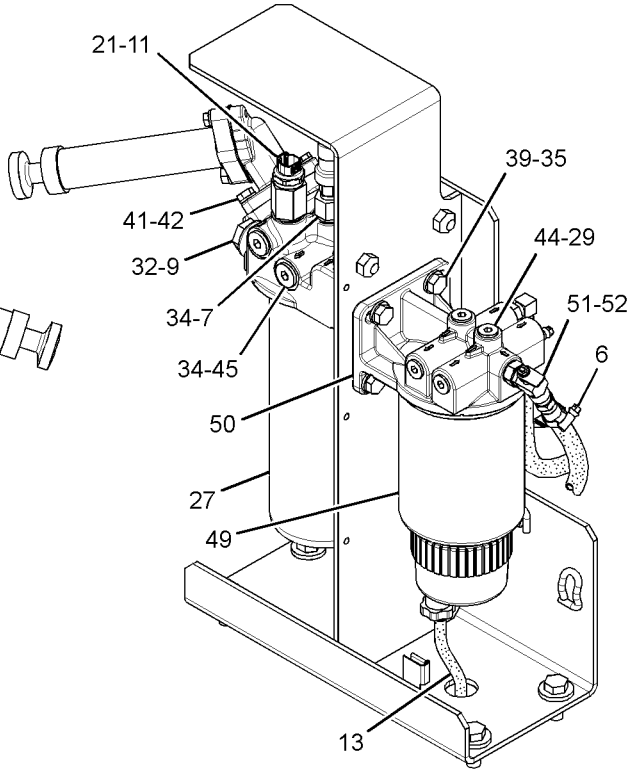

VIEW OF AREA C



GRAPHIC #2 **<END>** g01437251

FUEL SYSTEM

237-8752 LINES GP-FUEL

S/N: B6H653-UP; JLP738-UP

PART OF 247-7386 CHASSIS AR

SMCS-1274 **i03601025**

NOTE	REF NO	GRAPHIC REF	PART NUMBER	QTY	PART NAME 1 2 3 4 5 6 (PRODUCT LEVEL)	SEE PAGE
	1	2	**4I-0379**	1	VALVE-MANUAL (DRAIN, FUEL TANK)	
	2	2	**4N-9624**	1	ADAPTER-PRIMING PUMP	
	3	1	**7Y-8165**	1	GROMMET	
	4	2	**9Y-8389**	1	GASKET	
	5	2	**003-7764**	2	END-HOSE	
C	6	1,2	**095-1386**	4	CLAMP-HOSE	
	7	2	**134-6852**	1	CONNECTOR	
M	8	2	**135-8575**	4	BOLT AS	
Y	9	2	**139-6873**	1	VALVE GP-FUEL BYPASS (FILTER)	217
C	10	2	*164-5597*	1	CONNECTOR AS	
		2	**6V-8397**	1	SEAL-O-RING	
		2	**8C-6868**	1	CONNECTOR	
Y	11	2	*174-9570*	1	FILTER GP-WATER SEP & FUEL	144
	12	2	**177-9778**	1	BASE AS	
		2	**9S-4167**	1	STUD-HOLLOW (1-14X1.47-IN)	
Y	13	2	*197-8391*	1	SENSOR GP-TEMPERATURE (FUEL)	313
C	14	2	*150-3036*	1	ELBOW AS	
		2	**6V-8397**	1	SEAL-O-RING	
		2	**8T-1905**	1	ELBOW	
		2	**3J-1907**	1	SEAL-O-RING	
	15	2	**229-0999**	1	HOSE	
	16	2	**237-9312**	1	BASE AS-FUEL FILTER	
		2	**9S-4167**	1	STUD-HOLLOW (1-14X1.47-IN)	
Y	17	2	*239-2396*	1	SENSOR GP-PRESSURE (FUEL)	305
Y	18	2	**258-0883**	1	SWITCH GP-PRESSURE (FUEL FILTER)	339
	19	2	**262-2598**	1	SUPPORT AS	
C	20	1	*148-8371*	1	ELBOW AS	
		1	**6V-8397**	1	SEAL-O-RING	
		1	**8C-8988**	1	ELBOW	
Y	21	2	**298-3147**	1	VALVE GP-FUEL SHUTOFF	218
CI	22	1	**313-8153**	1	HOSE AS	
CI	23	1	**313-8154**	1	HOSE AS	
CI	24	1	**313-8155**	1	HOSE AS	
CI	25	1	**313-8156**	1	HOSE AS	
CI	26	1	**313-8157**	1	HOSE AS	
C	27	1	**313-8170**	1	HOSE AS	
	28	2	*148-8311*	1	ADAPTER AS	
		2	**3K-0360**	1	SEAL-O-RING	
		2	**8T-1715**	1	ADAPTER	
	29	2	*148-8318*	1	CONNECTOR AS	
		2	**3K-0360**	1	SEAL-O-RING	
		2	**6V-8397**	1	SEAL-O-RING	
		2	**6V-8634**	1	CONNECTOR	
	30	2	*148-8383*	1	ELBOW AS	
		2	**3K-0360**	1	SEAL-O-RING	
		2	**6V-8397**	1	SEAL-O-RING	
		2	**8T-1683**	1	ELBOW	
Y	31	1	*165-9154*	1	PUMP GP-FUEL PRIMING	181
	32	2	**1R-0762**	1	FILTER-FUEL (ADVANCED EFFICIENCY)	
	33	1	**2D-1290**	3	GROMMET	
	34	2	**3J-1907**	5	SEAL-O-RING	
C	35	1,2	**4D-7733**	14	CLIP	
C	36	1	**6V-1889**	1	CLIP	
	37	2	**6V-4589**	1	SEAL-O-RING	
M	38	2	**6V-7357**	1	BOLT (M6X1X25-MM)	
C	39	1,2	**6V-8397**	3	SEAL-O-RING	

237-8752 LINES GP-FUEL *(contd.)* i03601025

NOTE	REF NO	GRAPHIC REF	PART NUMBER	QTY	PART NAME 1 2 3 4 5 6 (PRODUCT LEVEL)	SEE PAGE
C	40	2	**6V-8730**	1	UNION (FACE SEAL)	
	41	2	**8L-2786**	3	SEAL-O-RING	
C	42	1,2	**8M-2773**	2	CLIP	
	43	1,2	**8T-4121**	28	WASHER-HARD (11X21X2.5-MM THK)	
M	44	1	**8T-4133**	1	NUT (M10X1.5-THD)	
CM	45	1,2	**8T-4136**	8	BOLT (M10X1.5X25-MM)	
CM	46	1,2	**8T-4137**	13	BOLT (M10X1.5X20-MM)	
M	47	2	**8T-4195**	4	BOLT (M10X1.5X30-MM)	
M	48	2	**8T-4196**	2	BOLT (M10X1.5X35-MM)	
	49	2	**8T-4224**	1	WASHER-HARD (8.8X16X2-MM THK)	
M	50	2	**8T-4908**	1	BOLT (M8X1.25X25-MM)	
C	51	1	**9D-1829**	2	CLIP	
C	52	1,2	**9M-8406**	6	CLIP	
	53	2	**9S-8004**	5	PLUG	
	54	2	**9S-8005**	2	PLUG-O-RING	
	55	2	**9X-8256**	1	WASHER (6.6X12X2-MM THK)	
CE	56	2	**5P-1442**		HOSE (205-CM)	
CE	56A	2	**5P-1442**		HOSE (39-CM)	
	57	1	**7K-1181**	2	STRAP-CABLE	

C-CHANGE FROM PREVIOUS TYPE
E-ORDER BY THE CENTIMETER
I-REFER TO HYDRAULIC INFORMATION SYSTEM
M-METRIC PART
Y-SEPARATE ILLUSTRATION

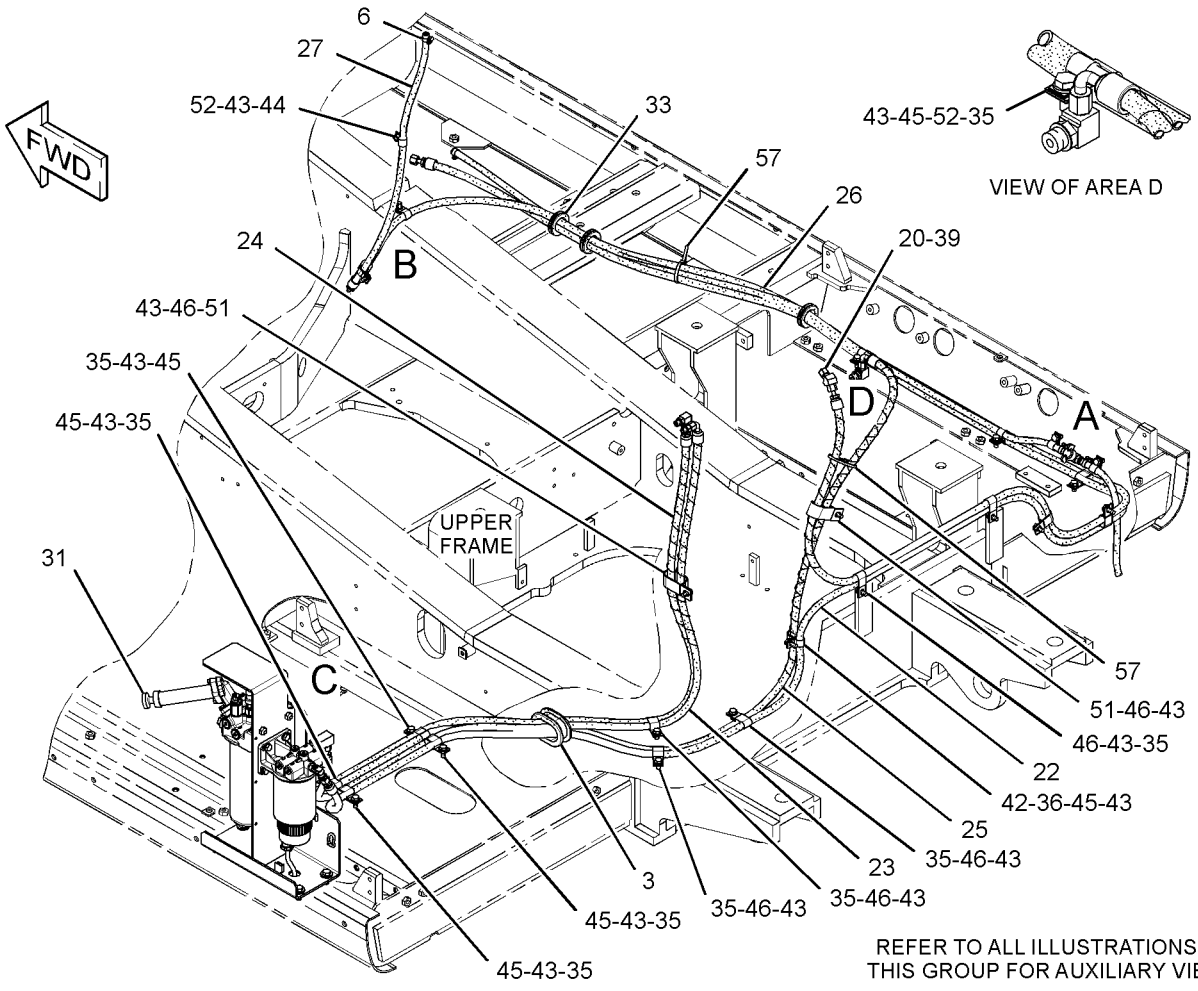

REFER TO ALL ILLUSTRATIONS OF THIS GROUP FOR AUXILIARY VIEWS

GRAPHIC #1 g01476612

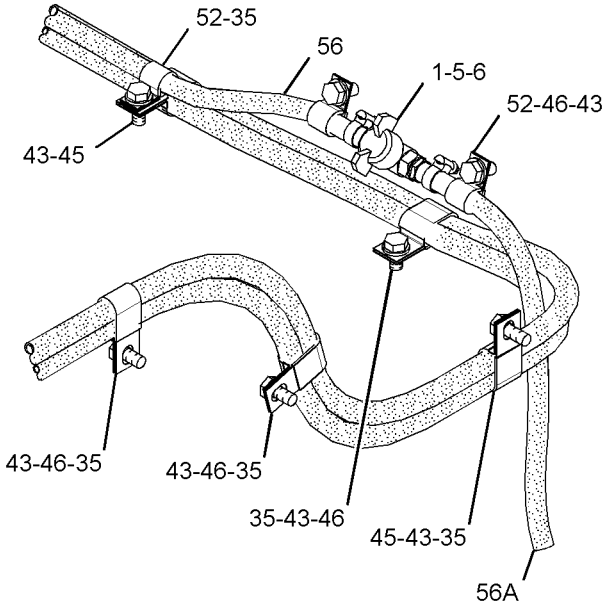

VIEW OF AREA A

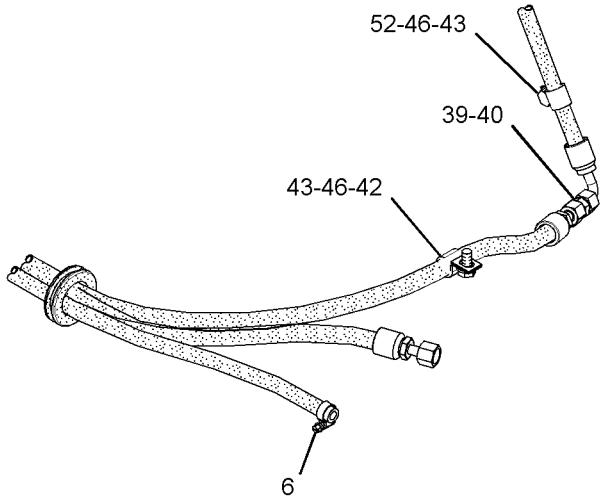

VIEW OF AREA B



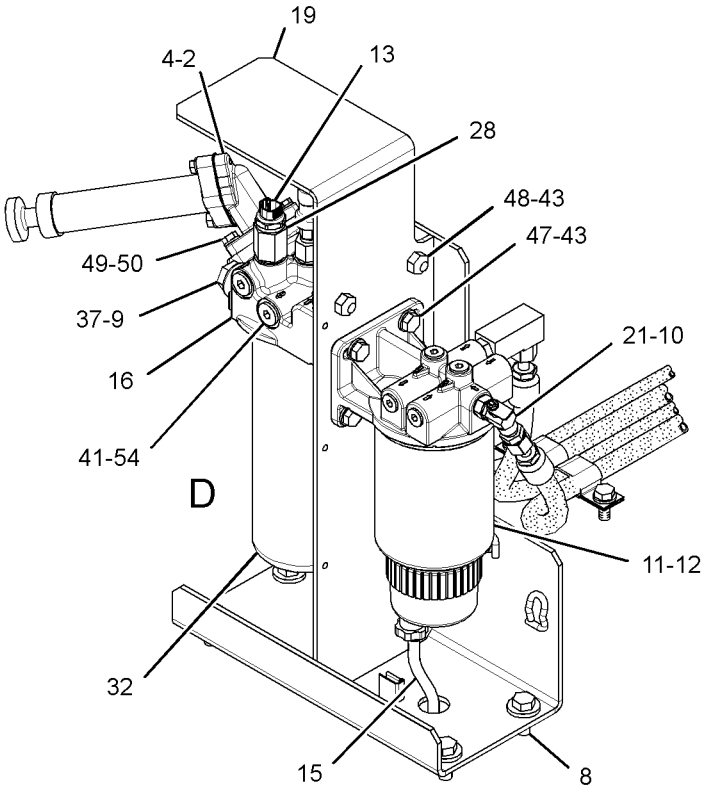

VIEW OF AREA C

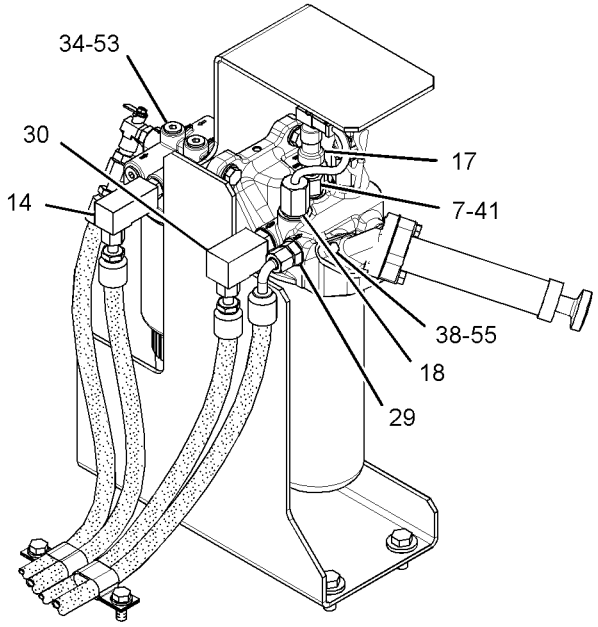

VIEW OF AREA D



GRAPHIC #2 **<END>** g01476613

FUEL SYSTEM

259-3918 LINES GP-FUEL

S/N: B6H1-652; JLP1-737
PART OF 247-7501 PUMP GP-FUEL PRIMING
AN ATTACHMENT
TYPE 1

SMCS-1274 **i03601141**

NOTE	REF NO	GRAPHIC REF	PART NUMBER	QTY	PART NAME 1 2 3 4 5 6 (PRODUCT LEVEL)	SEE PAGE
	1	1	**4I-0379**	1	VALVE-MANUAL (DRAIN, FUEL TANK)	
	2	2	**7Y-8165**	1	GROMMET	
	3	2	**8T-9655**	6	MOUNT-ISOLATION	
	4	1	**9Y-8389**	1	GASKET	
	5	1	**003-7764**	2	END-HOSE	
	6	1,2	**095-1386**	7	CLAMP-HOSE	
	7	1	**134-6852**	1	CONNECTOR	
M	8	2	**135-8575**	4	BOLT AS	
	9	1	**164-5619**	1	PLUG AS	
		1	**2M-9780**	1	SEAL-O-RING	
		1	**9S-8006**	1	PLUG-O-RING	
	10	2	**184-9114**	1	ELBOW	
Y	11	2	*188-6121*	1	PUMP GP-FUEL PRM & PRIM FILTER (WITH WATER SEPARATOR)	183
	12	2	**191-1782**	1	SPACER (8.5X12.7X38.2-MM THK)	
	13	2	**191-1783**	2	SPACER (8.5X12.7X87.3-MM THK)	
Y	14	1	*197-8391*	1	SENSOR GP-TEMPERATURE (FUEL)	313
Y	15	1	**212-2768**	1	SWITCH GP-PRESSURE (FUEL FILTER)	338
	16	1	**237-9312**	1	BASE AS-FUEL FILTER	
		1	**9S-4167**	1	STUD-HOLLOW (1-14X1.47-IN)	
Y	17	1	*239-2396*	1	SENSOR GP-PRESSURE (FUEL)	305
	18	2	**241-2375**	1	HOSE AS	
	19	2	**241-2376**	1	HOSE AS	
	20	1	**259-3915**	1	COVER	
I	21	2	**262-2208**	1	HOSE AS	
	22	2	**262-2604**	1	SUPPORT AS	
	23	1	**005-4362**	1	ELBOW	
	24	1	*148-8311*	1	ADAPTER AS	
		1	**3K-0360**	1	SEAL-O-RING	
		1	**8T-1715**	1	ADAPTER	
	25	2	*148-8318*	1	CONNECTOR AS	
		2	**3K-0360**	1	SEAL-O-RING	
		2	**6V-8397**	1	SEAL-O-RING	
		2	**6V-8634**	1	CONNECTOR	
	26	2	*148-8319*	1	CONNECTOR AS	
		2	**2M-9780**	1	SEAL-O-RING	
		2	**6V-8397**	1	SEAL-O-RING	
		2	**6V-8715**	1	CONNECTOR	
	27	2	*148-8336*	1	CONNECTOR AS	
		2	**3J-1907**	1	SEAL-O-RING	
		2	**6V-8397**	1	SEAL-O-RING	
		2	**6V-8636**	1	CONNECTOR	
	28	2	*148-8367*	2	ELBOW AS	
					(EACH INCLUDES)	
		2	**6V-8397**	1	SEAL-O-RING	
		2	**6V-9850**	1	ELBOW	
	29	2	*148-8378*	1	ELBOW AS	
		2	**3J-1907**	1	SEAL-O-RING	
		2	**6V-8397**	1	SEAL-O-RING	
		2	**6V-8724**	1	ELBOW	
	30	2	*148-8383*	1	ELBOW AS	
		2	**3K-0360**	1	SEAL-O-RING	
		2	**6V-8397**	1	SEAL-O-RING	
		2	**8T-1683**	1	ELBOW	

259-3918 **LINES GP-FUEL** ***(contd.)*** **i03601141**

NOTE	REF NO	GRAPHIC REF	PART NUMBER	QTY	PART NAME 1 2 3 4 5 6 (PRODUCT LEVEL)	SEE PAGE
	31	2	**1R-0762**	1	FILTER-FUEL (ADVANCED EFFICIENCY)	
	32	1	**2D-1290**	3	GROMMET	
	33	1	**3K-0360**	1	SEAL-O-RING	
	34	1,2	**5K-8451**	17	CLIP	
	35	2	**6V-4589**	1	SEAL-O-RING	
M	36	1	**6V-7357**	1	BOLT (M6X1X25-MM)	
M	37	2	**7X-2539**	2	BOLT (M8X1.25X110-MM)	
	38	1,2	**8L-2786**	3	SEAL-O-RING	
	39	1,2	**8T-4121**	24	WASHER-HARD (11X21X2.5-MM THK)	
M	40	1	**8T-4133**	1	NUT (M10X1.5-THD)	
M	41	1,2	**8T-4136**	7	BOLT (M10X1.5X25-MM)	
M	42	1,2	**8T-4137**	14	BOLT (M10X1.5X20-MM)	
M	43	2	**8T-4196**	2	BOLT (M10X1.5X35-MM)	
	44	1	**8T-4224**	1	WASHER-HARD (8.8X16X2-MM THK)	
M	45	1	**8T-4908**	1	BOLT (M8X1.25X25-MM)	
M	46	2	**8T-6869**	1	BOLT (M8X1.25X60-MM)	
	47	1	**9M-8406**	7	CLIP	
	48	2	**9N-0869**	3	WASHER-HARD (8.8X25.5X2-MM THK)	
	49	2	**9S-8005**	2	PLUG-O-RING	
	50	1	**9X-8256**	1	WASHER (6.6X12X2-MM THK)	
	51	2	**229-0999**	1	HOSE	
E	52	1	**5P-1442**		HOSE (205-CM)	
E	52A	2	**5P-1442**		HOSE (570-CM)	
E	52B	1	**5P-1442**		HOSE (39-CM)	
E	52C	1	**5P-1442**		HOSE (545-CM)	
	53	1	**7K-1181**	1	STRAP-CABLE	

E-ORDER BY THE CENTIMETER
I-REFER TO HYDRAULIC INFORMATION SYSTEM
M-METRIC PART
Y-SEPARATE ILLUSTRATION

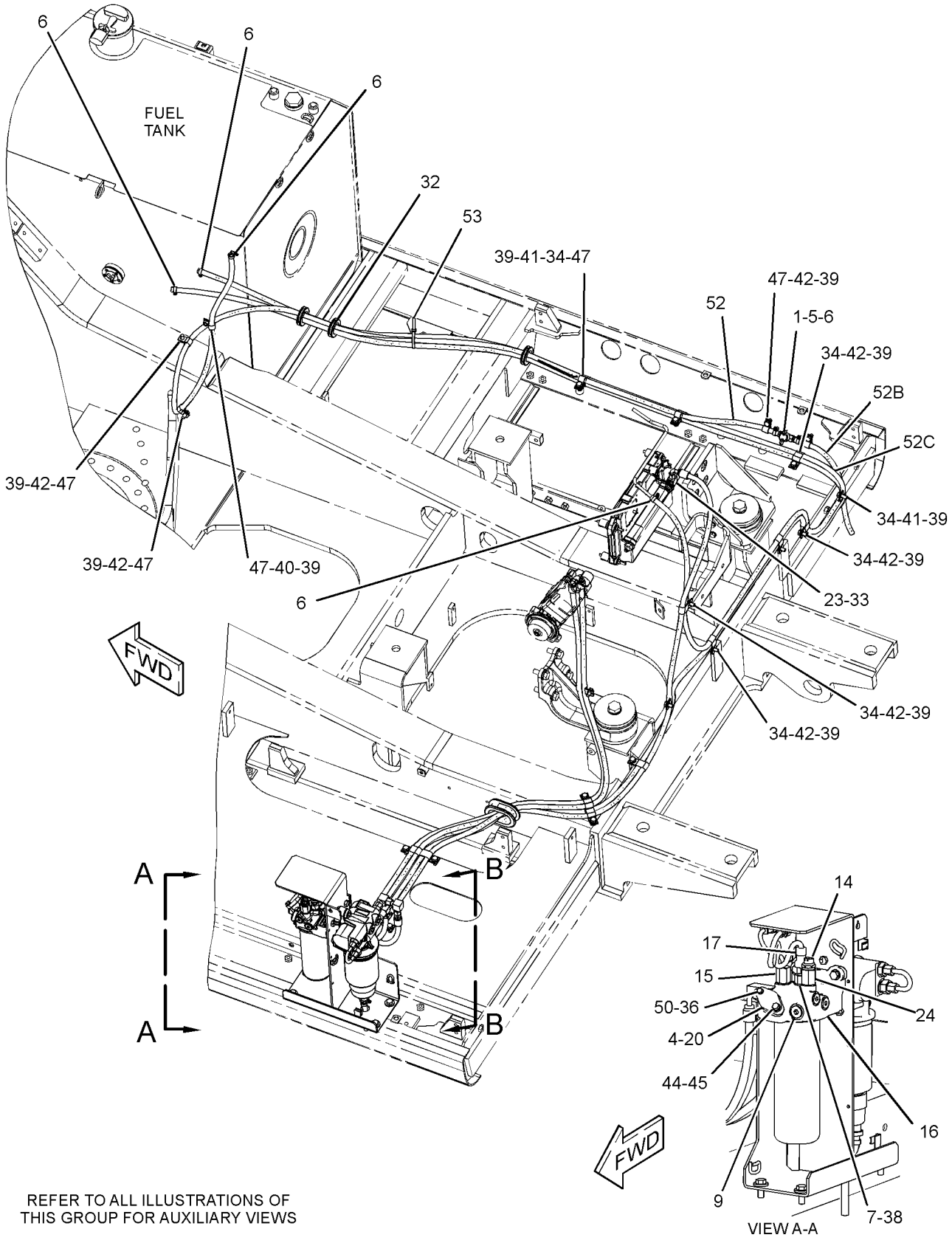

REFER TO ALL ILLUSTRATIONS OF THIS GROUP FOR AUXILIARY VIEWS

GRAPHIC #1

g01236495

259-3918 **LINES GP-FUEL** *(contd.)* **i03601141**

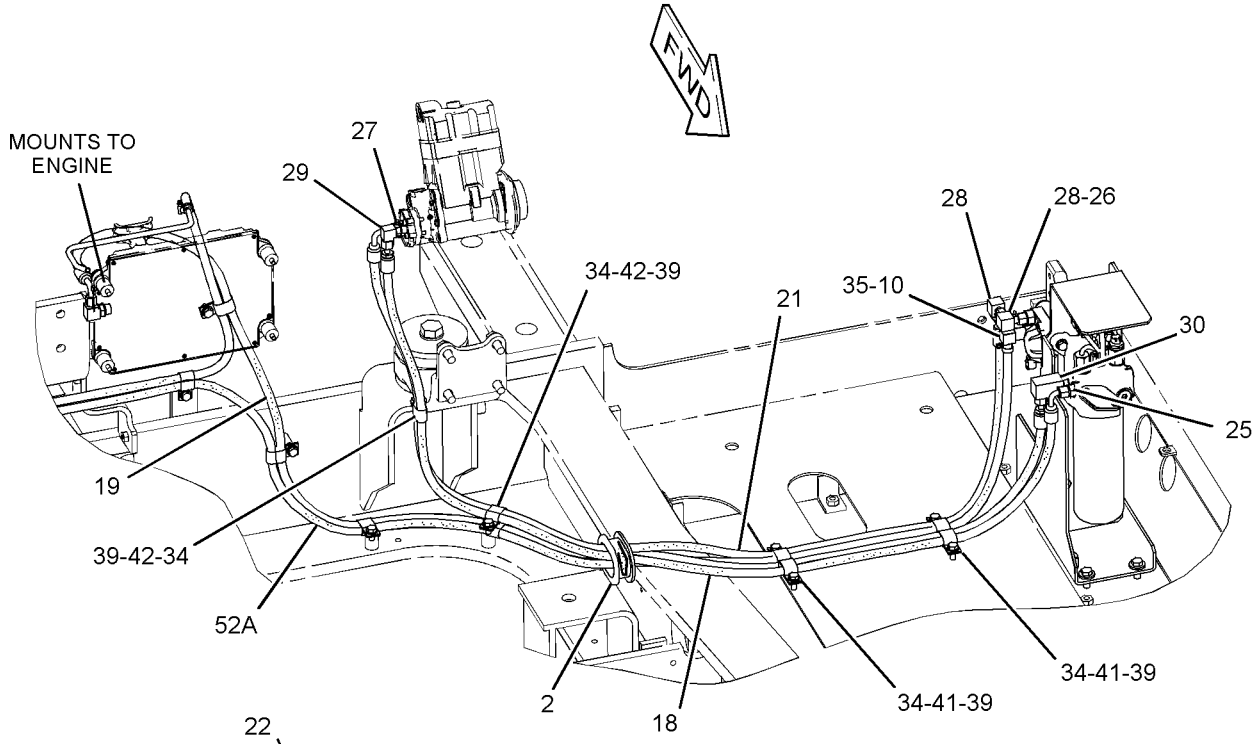

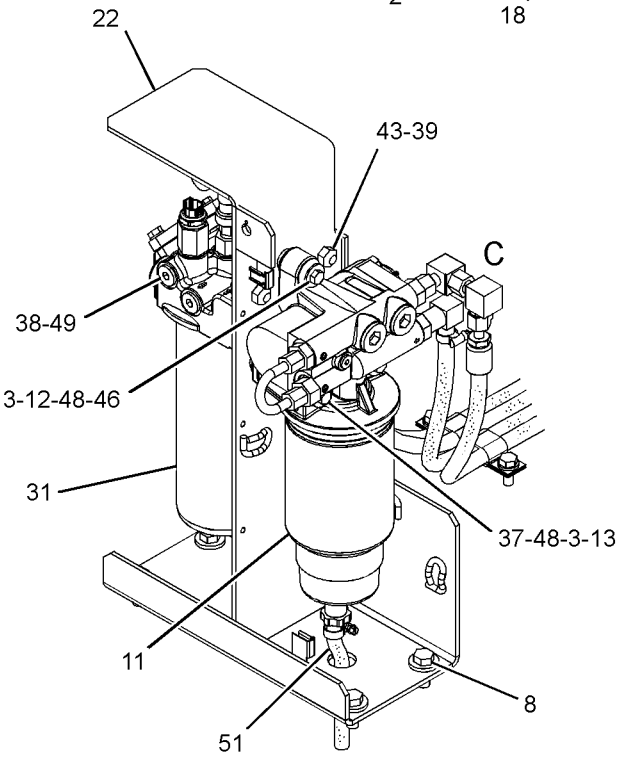

VIEW B-B

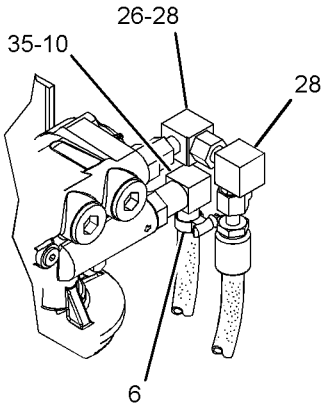

VIEW OF AREA C

GRAPHIC #2 **<END>** g01306059

FUEL SYSTEM

259-3918 LINES GP-FUEL

S/N: B6H1-652; JLP1-737
PART OF 247-7501 PUMP GP-FUEL PRIMING
AN ATTACHMENT
TYPE 2

SMCS-1274 **i03601163**

NOTE	REF NO	GRAPHIC REF	PART NUMBER	QTY	PART NAME 1 2 3 4 5 6 (PRODUCT LEVEL)	SEE PAGE
	1	1	**4I-0379**	1	VALVE-MANUAL (DRAIN, FUEL TANK)	
	2	2	**7Y-8165**	1	GROMMET	
	3	2	**8T-9655**	6	MOUNT-ISOLATION	
	4	2	**9Y-8389**	1	GASKET	
	5	1	**003-7764**	2	END-HOSE	
	6	1,2	**095-1386**	7	CLAMP-HOSE	
	7	2	**134-6852**	1	CONNECTOR	
M	8	2	**135-8575**	4	BOLT AS	
	9	2	**164-5619**	1	PLUG AS	
		2	**2M-9780**	1	SEAL-O-RING	
		2	**9S-8006**	1	PLUG-O-RING	
CY	10	2	**298-3147**	1	VALVE GP-FUEL SHUTOFF	218
Y	11	2	*188-6121*	1	PUMP GP-FUEL PRM & PRIM FILTER (WITH WATER SEPARATOR)	183
	12	2	**191-1782**	1	SPACER (8.5X12.7X38.2-MM THK)	
	13	2	**191-1783**	2	SPACER (8.5X12.7X87.3-MM THK)	
Y	14	2	*197-8391*	1	SENSOR GP-TEMPERATURE (FUEL)	313
Y	15	2	**258-0883**	1	SWITCH GP-PRESSURE (FUEL FILTER)	339
	16	2	**237-9312**	1	BASE AS-FUEL FILTER	
Y	17	2	*239-2396*	1	SENSOR GP-PRESSURE (FUEL)	305
	18	2	**241-2375**	1	HOSE AS	
	19	2	**241-2376**	1	HOSE AS	
	20	2	**259-3915**	1	COVER	
CI	21	2	**303-9689**	1	HOSE AS	
	22	2	**262-2604**	1	SUPPORT AS	
C	23	2	**6V-2606**	1	ADAPTER	
	24	2	*148-8311*	1	ADAPTER AS	
		2	**3K-0360**	1	SEAL-O-RING	
		2	**8T-1715**	1	ADAPTER	
	25	2	*148-8318*	1	CONNECTOR AS	
		2	**3K-0360**	1	SEAL-O-RING	
		2	**6V-8397**	1	SEAL-O-RING	
		2	**6V-8634**	1	CONNECTOR	
	26	2	*148-8319*	1	CONNECTOR AS	
		2	**2M-9780**	1	SEAL-O-RING	
		2	**6V-8397**	1	SEAL-O-RING	
		2	**6V-8715**	1	CONNECTOR	
C	27	2	**5P-7175**	1	FITTING-STRAIGHT	
C	28	2	*148-8367*	1	ELBOW AS	
		2	**6V-8397**	1	SEAL-O-RING	
		2	**6V-9850**	1	ELBOW	
C	29	2	**2M-9780**	1	SEAL-O-RING	
	30	2	*148-8383*	1	ELBOW AS	
		2	**3K-0360**	1	SEAL-O-RING	
		2	**6V-8397**	1	SEAL-O-RING	
		2	**8T-1683**	1	ELBOW	
	31	2	**1R-0762**	1	FILTER-FUEL (ADVANCED EFFICIENCY)	
	32	1	**2D-1290**	3	GROMMET	
	34	1,2	**5K-8451**	17	CLIP	
M	36	2	**6V-7357**	1	BOLT (M6X1X25-MM)	
M	37	2	**7X-2539**	2	BOLT (M8X1.25X110-MM)	
	38	2	**8L-2786**	3	SEAL-O-RING	
	39	1,2	**8T-4121**	24	WASHER-HARD (11X21X2.5-MM THK)	
M	40	1	**8T-4133**	1	NUT (M10X1.5-THD)	

259-3918 **LINES GP-FUEL** ***(contd.)*** **i03601163**

NOTE	REF NO	GRAPHIC REF	PART NUMBER	QTY	PART NAME 1 2 3 4 5 6 (PRODUCT LEVEL)	SEE PAGE
M	41	1,2	**8T-4136**	7	BOLT (M10X1.5X25-MM)	
M	42	1,2	**8T-4137**	14	BOLT (M10X1.5X20-MM)	
M	43	2	**8T-4196**	2	BOLT (M10X1.5X35-MM)	
	44	2	**8T-4224**	1	WASHER-HARD (8.8X16X2-MM THK)	
M	45	2	**8T-4908**	1	BOLT (M8X1.25X25-MM)	
M	46	2	**8T-6869**	1	BOLT (M8X1.25X60-MM)	
	47	1	**9M-8406**	7	CLIP	
	48	2	**9N-0869**	3	WASHER-HARD (8.8X25.5X2-MM THK)	
	49	2	**9S-8005**	2	PLUG-O-RING	
	50	2	**9X-8256**	1	WASHER (6.6X12X2-MM THK)	
	51	2	**229-0999**	1	HOSE	
E	52	1	**5P-1442**		HOSE (205-CM)	
CE	52A	2	**5P-1442**		HOSE (560-CM)	
E	52B	1	**5P-1442**		HOSE (39-CM)	
E	52C	1	**5P-1442**		HOSE (545-CM)	
	53	1,2	**7K-1181**	2	STRAP-CABLE	

C-CHANGE FROM PREVIOUS TYPE
E-ORDER BY THE CENTIMETER
I-REFER TO HYDRAULIC INFORMATION SYSTEM
M-METRIC PART
Y-SEPARATE ILLUSTRATION

259-3918 **LINES GP-FUEL** *(contd.)* **i03601163**

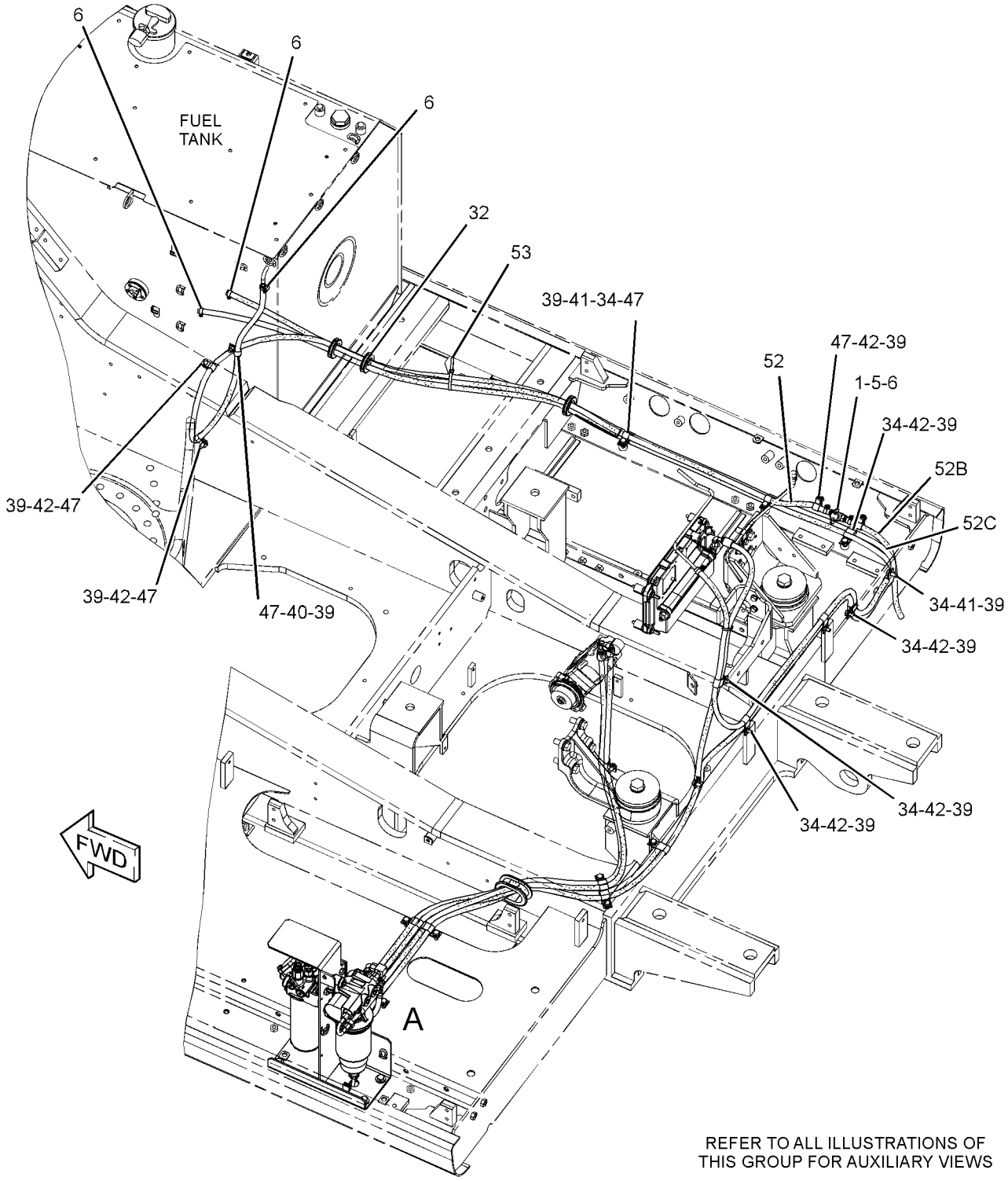

GRAPHIC #1

g01520298

259-3918 **LINES GP-FUEL** *(contd.)* **i03601163**

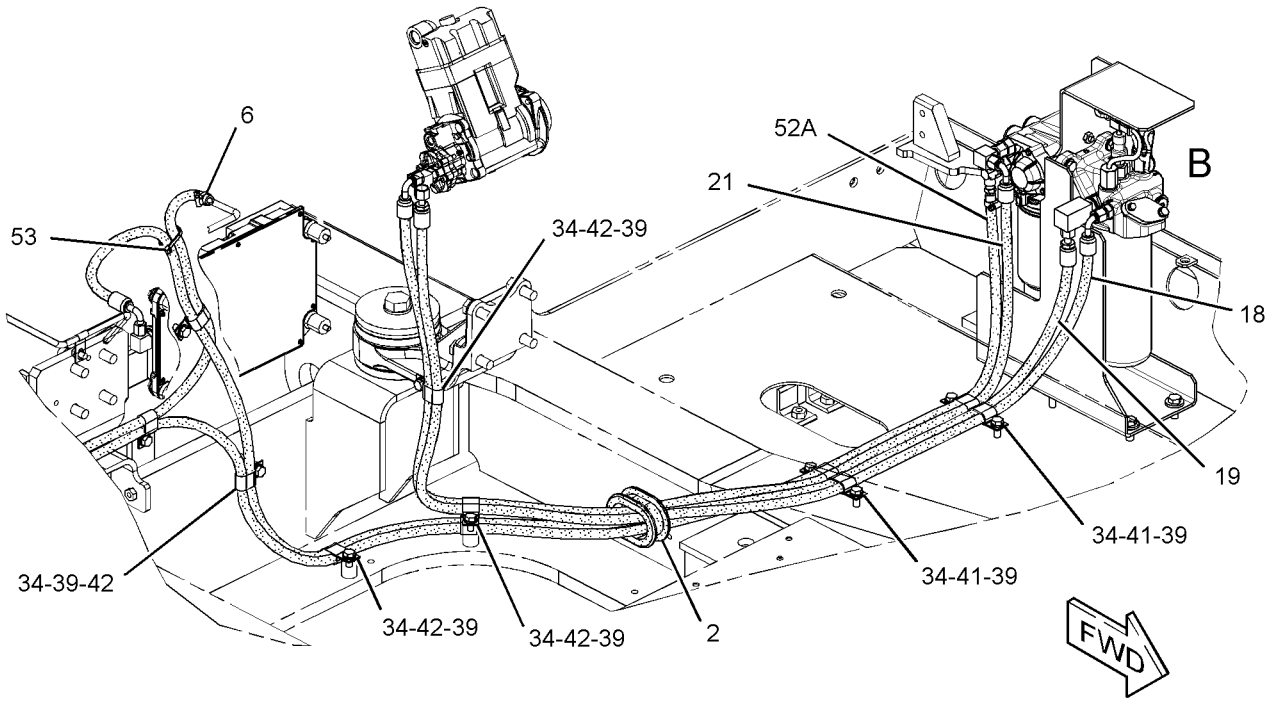

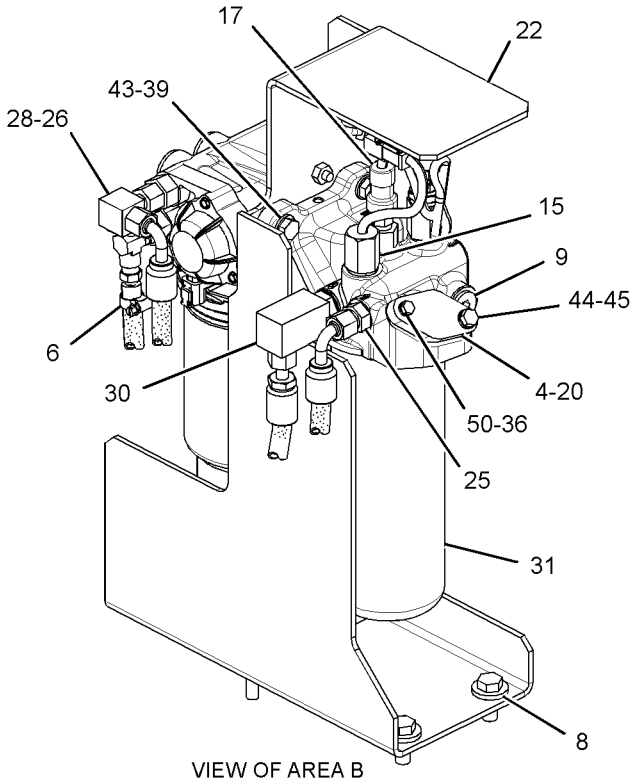

VIEW OF AREA B

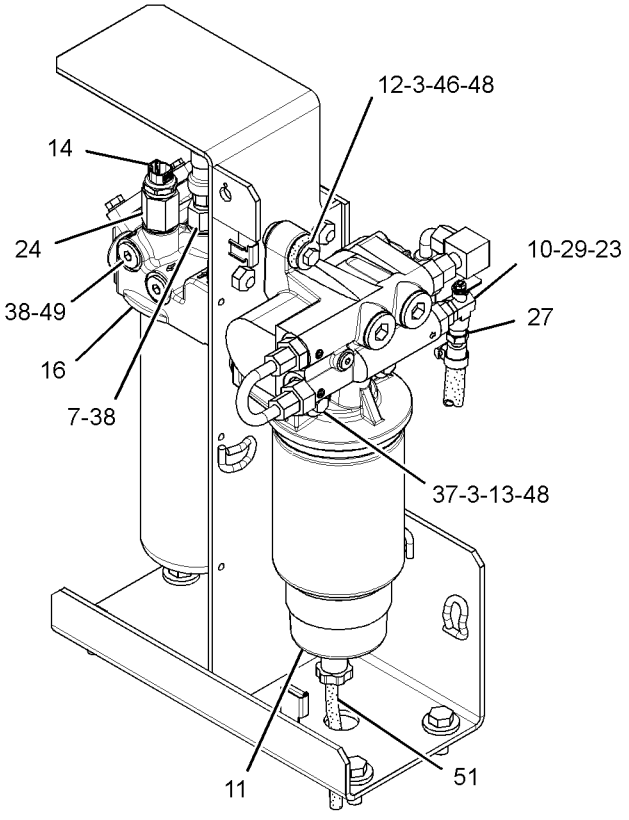

VIEW OF AREA A

GRAPHIC #2 **<END>** g01520299

FUEL SYSTEM

259-3918 LINES GP-FUEL

S/N: B6H653-UP; JLP738-UP

PART OF 247-7501 PUMP GP-FUEL PRIMING

AN ATTACHMENT

SMCS-1274 **i03379034**

NOTE	REF NO	GRAPHIC REF	PART NUMBER	QTY	PART NAME 1 2 3 4 5 6 (PRODUCT LEVEL)	SEE PAGE
	1	1	**4I-0379**	1	VALVE-MANUAL (DRAIN, FUEL TANK)	
	2	2	**7Y-8165**	1	GROMMET	
	3	2	**8T-9655**	6	MOUNT-ISOLATION	
	4	2	**9Y-8389**	1	GASKET (FUEL PRIMING PUMP)	
	5	1	**003-7764**	2	END-HOSE	
C	6	1	**095-1386**	4	CLAMP-HOSE	
	7	2	**134-6852**	1	CONNECTOR	
M	8	2	**135-8575**	4	BOLT AS	
C	9	2	*164-5597*	1	CONNECTOR AS	
		2	**6V-8397**	1	SEAL-O-RING	
		2	**8C-6868**	1	CONNECTOR	
	10	2	*164-5619*	1	PLUG AS	
		2	**2M-9780**	1	SEAL-O-RING	
		2	**9S-8006**	1	PLUG-O-RING	
Y	11	2	*188-6121*	1	PUMP GP-FUEL PRM & PRIM FILTER (WITH WATER SEPARATOR)	183
	12	2	**191-1782**	1	SPACER (8.5X12.7X38.2-MM THK)	
	13	2	**191-1783**	2	SPACER (8.5X12.7X87.3-MM THK)	
Y	14	2	*197-8391*	1	SENSOR GP-TEMPERATURE (FUEL)	313
	15	2	**229-0999**	1	HOSE	
	16	2	**237-9312**	1	BASE AS-FUEL FILTER	
Y	17	2	*239-2396*	1	SENSOR GP-PRESSURE (FUEL)	305
Y	18	2	**258-0883**	1	SWITCH GP-PRESSURE (FUEL FILTER)	339
	19	2	**259-3915**	1	COVER	
	20	2	**262-2604**	1	SUPPORT AS	
C	21	1	*148-8371*	1	ELBOW AS	
		1	**8C-8988**	1	ELBOW	
		1	**6V-8397**	1	SEAL-O-RING	
Y	22	2	**298-3147**	1	VALVE GP-FUEL SHUTOFF	218
CI	23	2	**313-8155**	1	HOSE AS	
CI	24	1,2	**313-8156**	1	HOSE AS	
CI	25	1	**313-8157**	1	HOSE AS	
C	26	1	**313-8170**	1	HOSE AS	
CI	27	2	**313-8232**	1	HOSE AS	
CI	28	2	**313-8238**	1	HOSE AS	
	29	2	*148-8311*	1	ADAPTER AS	
		2	**3K-0360**	1	SEAL-O-RING	
		2	**8T-1715**	1	ADAPTER	
	30	2	*148-8318*	1	CONNECTOR AS	
		2	**3K-0360**	1	SEAL-O-RING	
		2	**6V-8397**	1	SEAL-O-RING	
		2	**6V-8634**	1	CONNECTOR	
	31	2	*148-8319*	1	CONNECTOR AS	
		2	**2M-9780**	1	SEAL-O-RING	
		2	**6V-8397**	1	SEAL-O-RING	
		2	**6V-8715**	1	CONNECTOR	
	32	2	*148-8367*	1	ELBOW AS	
		2	**6V-8397**	1	SEAL-O-RING	
		2	**6V-9850**	1	ELBOW	
	33	2	*148-8383*	1	ELBOW AS	
		2	**3K-0360**	1	SEAL-O-RING	
		2	**6V-8397**	1	SEAL-O-RING	
		2	**8T-1683**	1	ELBOW	
	34	2	**1R-0762**	1	FILTER-FUEL (ADVANCED EFFICIENCY)	
	35	1	**2D-1290**	3	GROMMET	

259-3918 **LINES GP-FUEL** ***(contd.)*** **i03379034**

NOTE	REF NO	GRAPHIC REF	PART NUMBER	QTY	PART NAME 1 2 3 4 5 6 (PRODUCT LEVEL)	SEE PAGE
	36	2	**2M-9780**	1	SEAL-O-RING	
C	37	1,2	**4D-7733**	14	CLIP	
C	38	2	**6V-1889**	1	CLIP	
	39	2	**6V-2606**	1	ADAPTER	
M	40	2	**6V-7357**	1	BOLT (M6X1X25-MM)	
C	41	1	**6V-8397**	3	SEAL-O-RING	
C	42	1	**6V-8730**	1	UNION (FACE SEAL)	
M	43	2	**7X-2539**	2	BOLT (M8X1.25X110-MM)	
	44	2	**8L-2786**	3	SEAL-O-RING	
C	45	1,2	**8M-2773**	2	CLIP	
	46	1,2	**8T-4121**	24	WASHER-HARD (11X21X2.5-MM THK)	
M	47	1	**8T-4133**	1	NUT (M10X1.5-THD)	
CM	48	1,2	**8T-4136**	8	BOLT (M10X1.5X25-MM)	
CM	49	1,2	**8T-4137**	13	BOLT (M10X1.5X20-MM)	
M	50	2	**8T-4196**	2	BOLT (M10X1.5X35-MM)	
	51	2	**8T-4224**	1	WASHER-HARD (8.8X16X2-MM THK)	
M	52	2	**8T-4908**	1	BOLT (M8X1.25X25-MM)	
M	53	2	**8T-6869**	1	BOLT (M8X1.25X60-MM)	
C	54	1,2	**9D-1829**	2	CLIP	
C	55	1	**9M-8406**	6	CLIP	
	56	2	**7X-0579**	3	WASHER-HARD (8.8X25.5X2-MM THK)	
	57	2	**9S-8005**	2	PLUG-O-RING	
	58	2	**9X-8256**	1	WASHER (6.6X12X2-MM THK)	
E	59	1	**5P-1442**		HOSE (205-CM)	
E	59A	1	**5P-1442**		HOSE (39-CM)	
	60	1	**7K-1181**	2	STRAP-CABLE	

C-CHANGE FROM PREVIOUS TYPE
E-ORDER BY THE CENTIMETER
I-REFER TO HYDRAULIC INFORMATION SYSTEM
M-METRIC PART
Y-SEPARATE ILLUSTRATION

259-3918 **LINES GP-FUEL** *(contd.)* **i03379034**

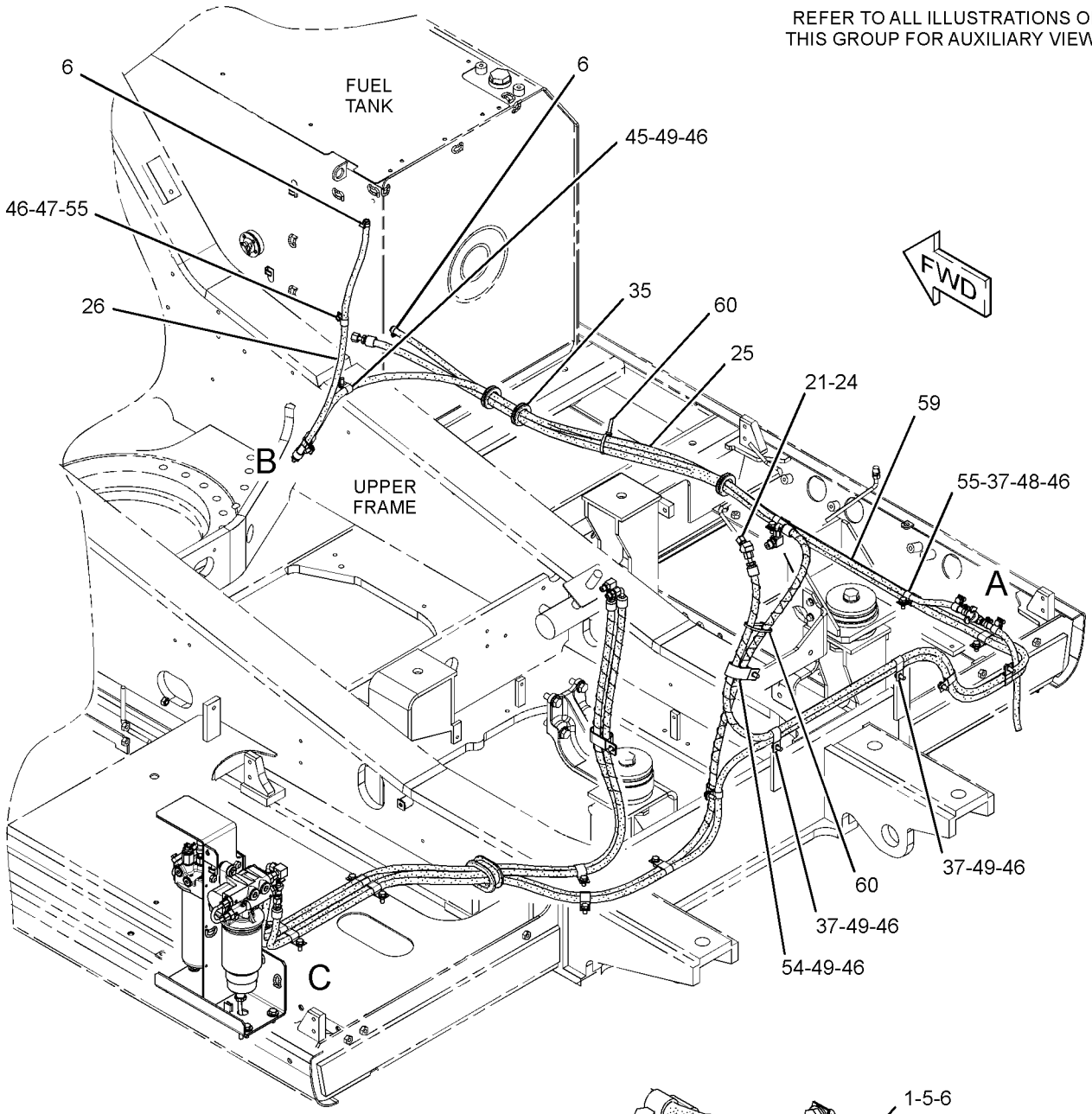

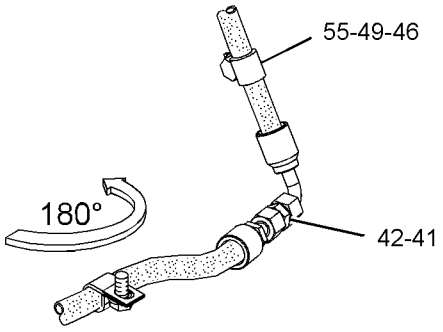

VIEW OF AREA B

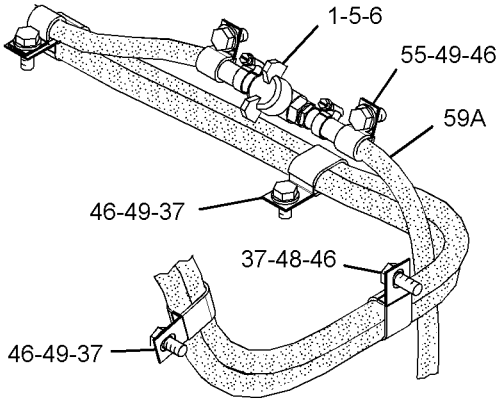

VIEW OF AREA A

GRAPHIC #1

g01561303

259-3918 **LINES GP-FUEL** *(contd.)* **i03379034**

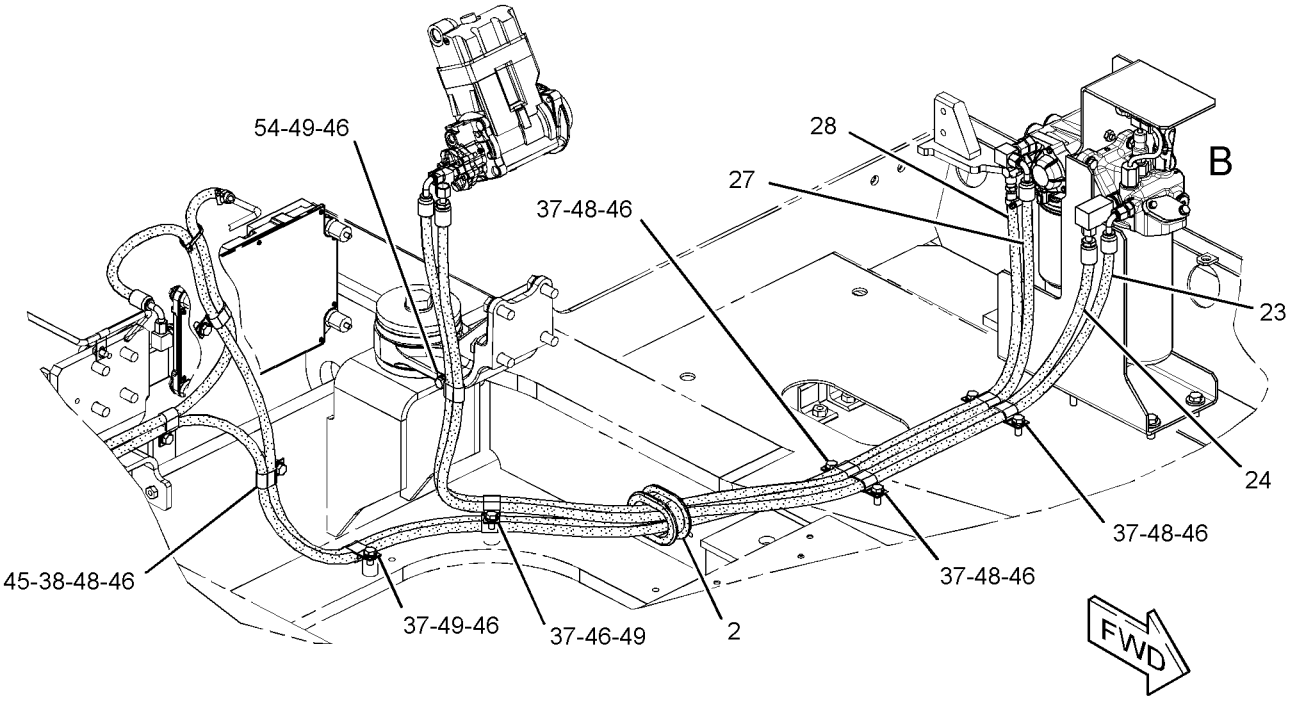

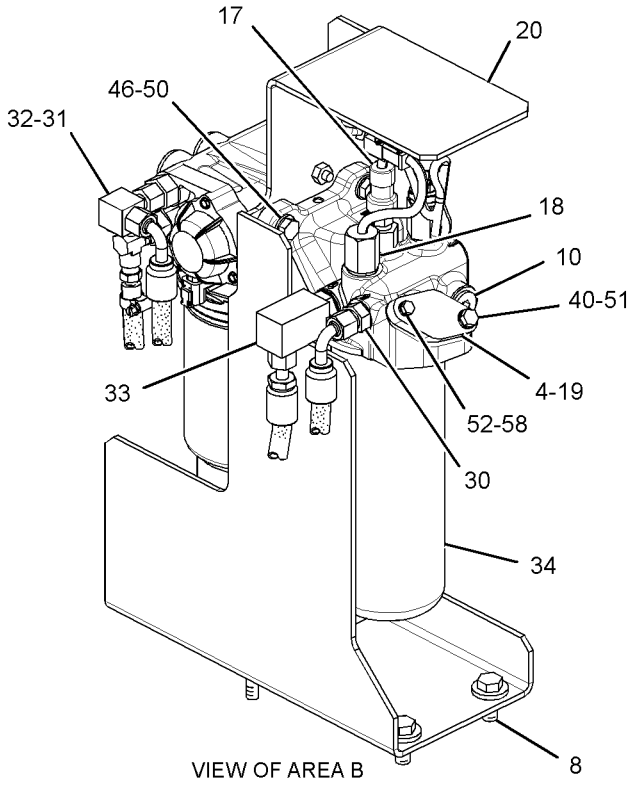

VIEW OF AREA B

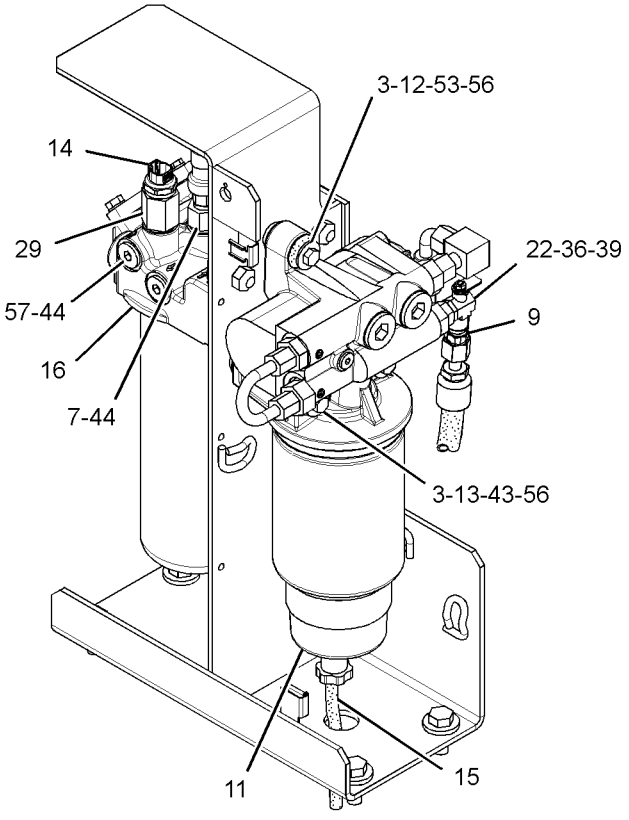

VIEW OF AREA C

GRAPHIC #2 **<END>** g01561304

FUEL SYSTEM

343-2392 LINES GP-FUEL

S/N: B6H1-UP; JLP1-UP
PART OF 247-7501 PUMP GP-FUEL PRIMING
AN ATTACHMENT

SMCS-1274 **i03691036**

NOTE	REF NO	GRAPHIC REF	PART NUMBER	QTY	PART NAME 1 2 3 4 5 6 (PRODUCT LEVEL)	SEE PAGE
	1	2	**4I-0379**	1	VALVE-MANUAL (DRAIN, FUEL TANK)	
	2	2	**5P-7175**	1	FITTING-STRAIGHT	
	3	1	**7Y-8165**	1	GROMMET	
	4	2	**8T-9655**	6	MOUNT-ISOLATION	
	5	2	**9Y-8389**	1	GASKET	
	6	2	**003-7764**	2	END-HOSE	
	7	1,2	**095-1386**	6	CLAMP-HOSE	
	8	2	**134-6852**	1	CONNECTOR	
M	9	2	**135-8575**	4	BOLT AS	
	10	2	*164-5619*	1	PLUG AS	
		2	**2M-9780**	1	SEAL-O-RING	
		2	**9S-8006**	1	PLUG-O-RING	
Y	11	2	*188-6121*	1	PUMP GP-FUEL PRM & PRIM FILTER (WITH WATER SEPARATOR)	183
	12	2	**191-1782**	1	SPACER (8.5X12.7X38.2-MM THK)	
	13	2	**191-1783**	2	SPACER (8.5X12.7X87.3-MM THK)	
Y	14	2	*197-8391*	1	SENSOR GP-TEMPERATURE	313
	15	2	**229-0999**	1	HOSE	
	16	2	**237-9312**	1	BASE AS-FUEL FILTER	
		2	**9S-4167**	1	STUD-HOLLOW (1-14X1.47-IN)	
Y	17	2	*239-2396*	1	SENSOR GP-PRESSURE (FUEL)	305
Y	18	2	**258-0883**	1	SWITCH GP-PRESSURE (FUEL)	339
	19	2	**259-3915**	1	COVER	
	20	2	**262-2604**	1	SUPPORT AS	
Y	21	2	**298-3147**	1	VALVE GP-FUEL SHUTOFF	218
	22	1	**343-2385**	3	CLIP	
	23	1,2	**343-2386**	17	CLIP	
	24	2	**343-2395**	1	HOSE AS	
	25	2	**343-2396**	1	HOSE AS	
	26	2	**343-2397**	1	HOSE AS	
	27	2	**343-2398**	1	HOSE	
	28	2	**343-2399**	1	HOSE AS	
	29	2	*148-8311*	1	ADAPTER AS	
		2	**3K-0360**	1	SEAL-O-RING	
		2	**8T-1715**	1	ADAPTER	
	30	2	*148-8318*	1	CONNECTOR AS	
		2	**3K-0360**	1	SEAL-O-RING	
		2	**6V-8397**	1	SEAL-O-RING	
		2	**6V-8634**	1	CONNECTOR	
	31	2	*148-8319*	1	CONNECTOR AS	
		2	**2M-9780**	1	SEAL-O-RING	
		2	**6V-8397**	1	SEAL-O-RING	
		2	**6V-8715**	1	CONNECTOR	
	32	2	*148-8367*	1	ELBOW AS	
		2	**6V-8397**	1	SEAL-O-RING	
		2	**6V-9850**	1	ELBOW	
	33	1	*148-8371*	1	ELBOW AS	
		1	**6V-8397**	1	SEAL-O-RING	
		1	**8C-8988**	1	ELBOW	
	34	2	*148-8383*	1	ELBOW AS	
		2	**3K-0360**	1	SEAL-O-RING	
		2	**6V-8397**	1	SEAL-O-RING	
		2	**8T-1683**	1	ELBOW	
	35	2	**1R-0762**	1	FILTER-FUEL (ADVANCED EFFICIENCY)	
	36	1	**2D-1290**	3	GROMMET	

343-2392 **LINES GP-FUEL** *(contd.)* **i03691036**

NOTE	REF NO	GRAPHIC REF	PART NUMBER	QTY	PART NAME 1 2 3 4 5 6 (PRODUCT LEVEL)	SEE PAGE
	37	2	**2M-9780**	1	SEAL-O-RING	
	38	2	**6V-2606**	1	ADAPTER	
M	39	2	**6V-7357**	1	BOLT (M6X1X25-MM)	
	40	1	**6V-8397**	1	SEAL-O-RING	
	41	2	**7X-0579**	3	WASHER-HARD (8.8X25.5X2-MM THK)	
M	42	2	**7X-2539**	2	BOLT (M8X1.25X110-MM)	
	43	2	**8L-2786**	3	SEAL-O-RING	
	44	1,2	**8T-4121**	24	WASHER-HARD (11X21X2.5-MM THK)	
M	45	1	**8T-4133**	1	NUT (M10X1.5-THD)	
M	46	1,2	**8T-4136**	6	BOLT (M10X1.5X25-MM)	
M	47	1,2	**8T-4137**	15	BOLT (M10X1.5X20-MM)	
M	48	2	**8T-4196**	2	BOLT (M10X1.5X35-MM)	
	49	2	**8T-4224**	1	WASHER-HARD (8.8X16X2-MM THK)	
M	50	2	**8T-4908**	1	BOLT (M8X1.25X25-MM)	
M	51	2	**8T-6869**	1	BOLT (M8X1.25X60-MM)	
	52	2	**9M-8406**	4	CLIP	
	53	2	**9S-8005**	2	PLUG-O-RING	
	54	2	**9X-8256**	1	WASHER (6.6X12X2-MM THK)	
E	55	1	**5P-1442**		HOSE (210-CM)	
E	55A	2	**5P-1442**		HOSE (39-CM)	
	56	1	**7K-1181**	2	STRAP-CABLE	

E-ORDER BY THE CENTIMETER
M-METRIC PART
Y-SEPARATE ILLUSTRATION

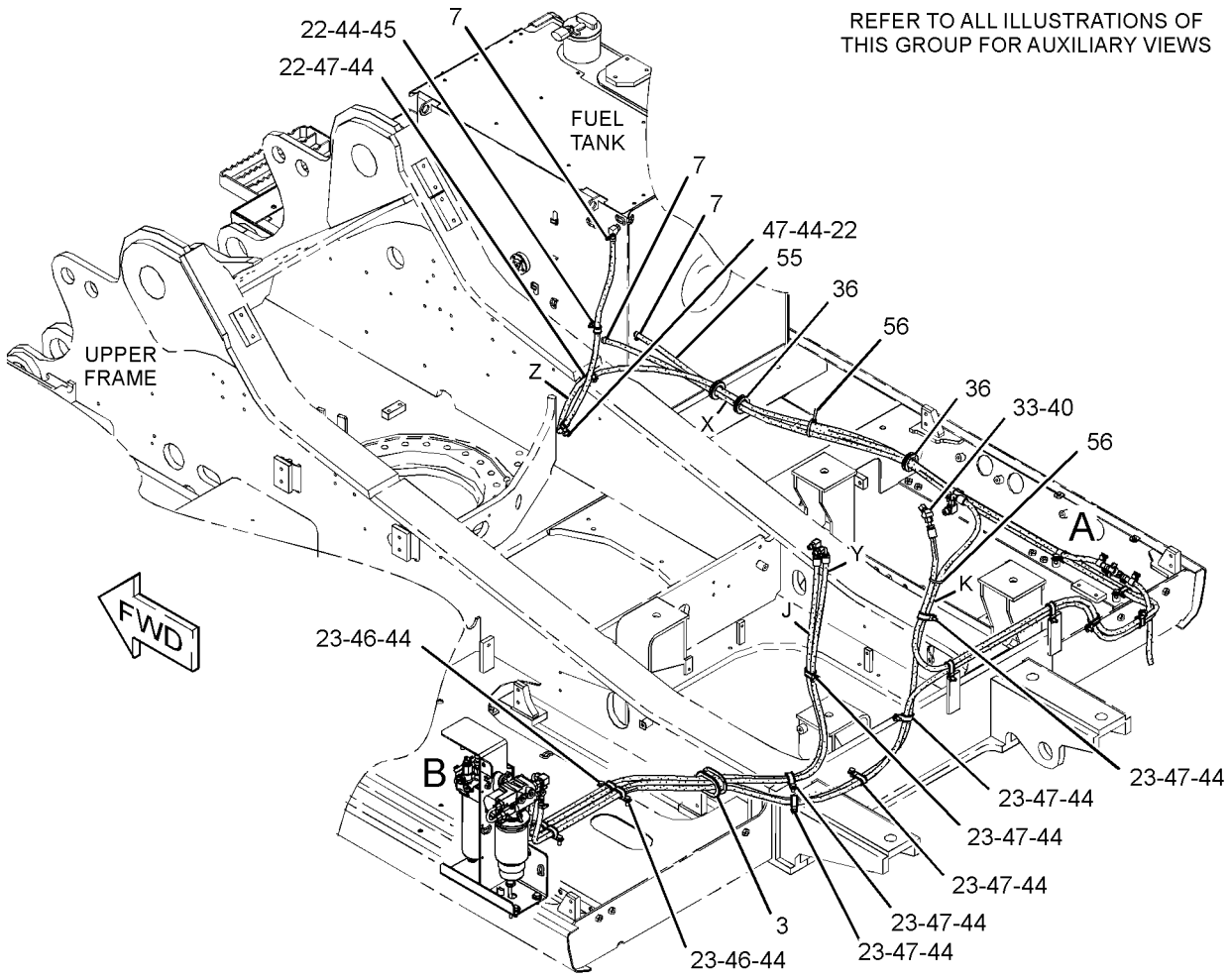

GRAPHIC #1 g01996264

343-2392 **LINES GP-FUEL** *(contd.)* **i03691036**

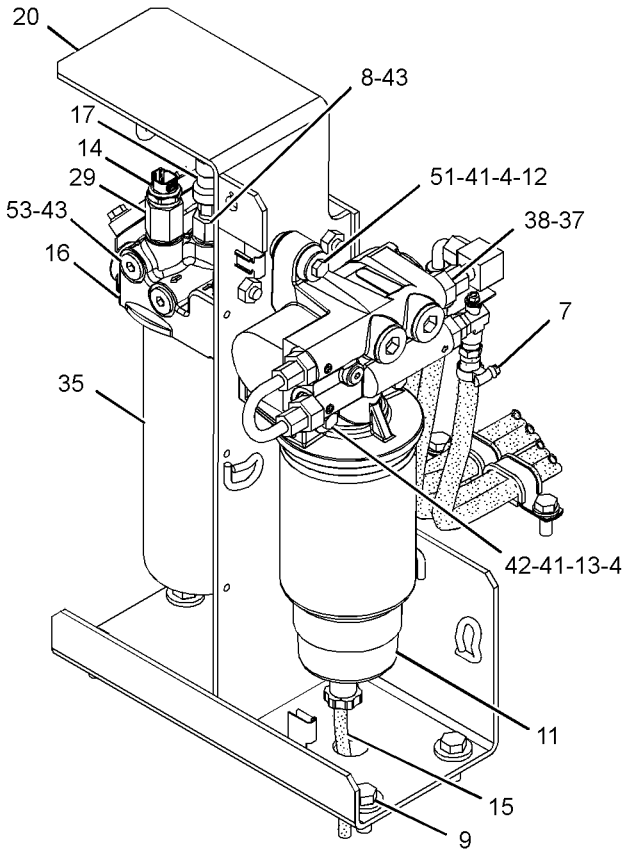

VIEW OF AREA B

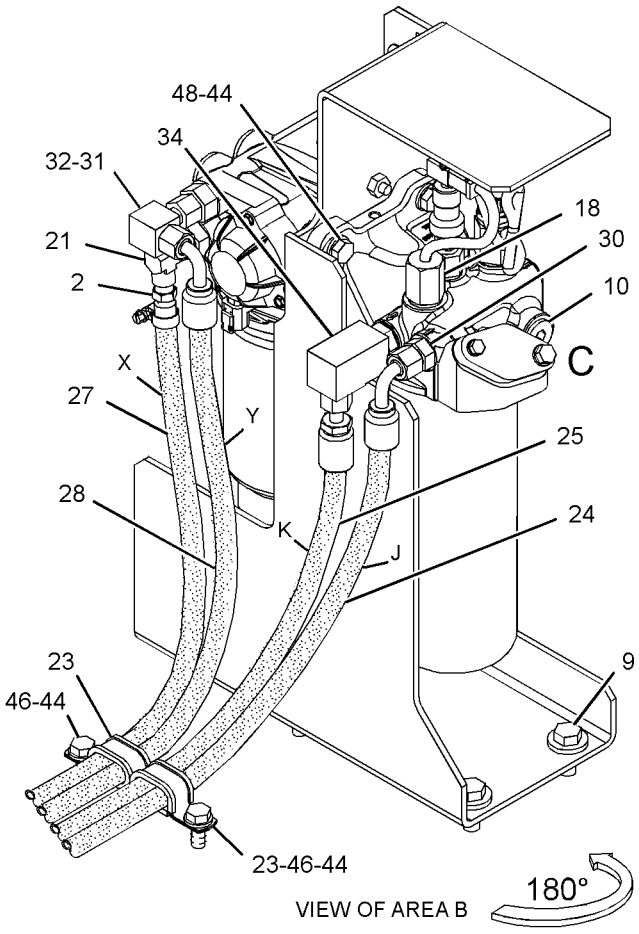

VIEW OF AREA B

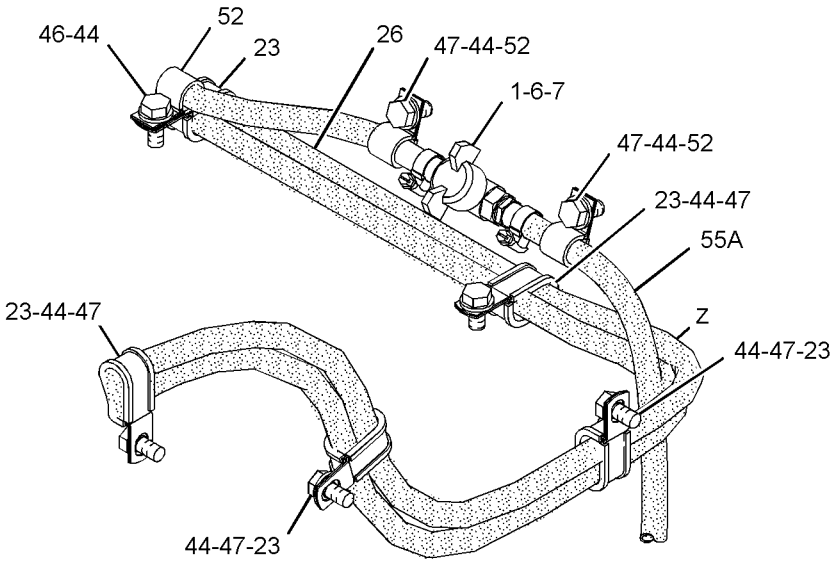

VIEW OF AREA A

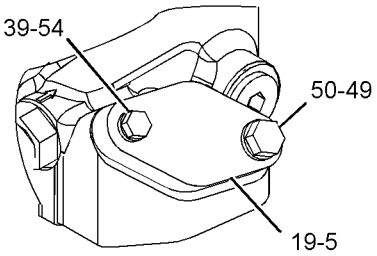

VIEW OF AREA C

GRAPHIC #2 **<END>** g01996265

229-1859 PUMP & MOTOR GP-REFUELING

S/N: B6H1-UP; JLP1-UP
PART OF 229-1785 PUMP GP-REFUELING
AN ATTACHMENT

SMCS-1295 **i02499702**

NOTE	REF NO	GRAPHIC REF	PART NUMBER	QTY	PART NAME 1 2 3 4 5 6 (PRODUCT LEVEL)	SEE PAGE
	1	1	**121-1038**	1	HOUSING-RECEPTACLE	
	2	1	**116-0128**	1	SEAL	
	3	1	**121-1039**	2	TERMINAL (MALE)	

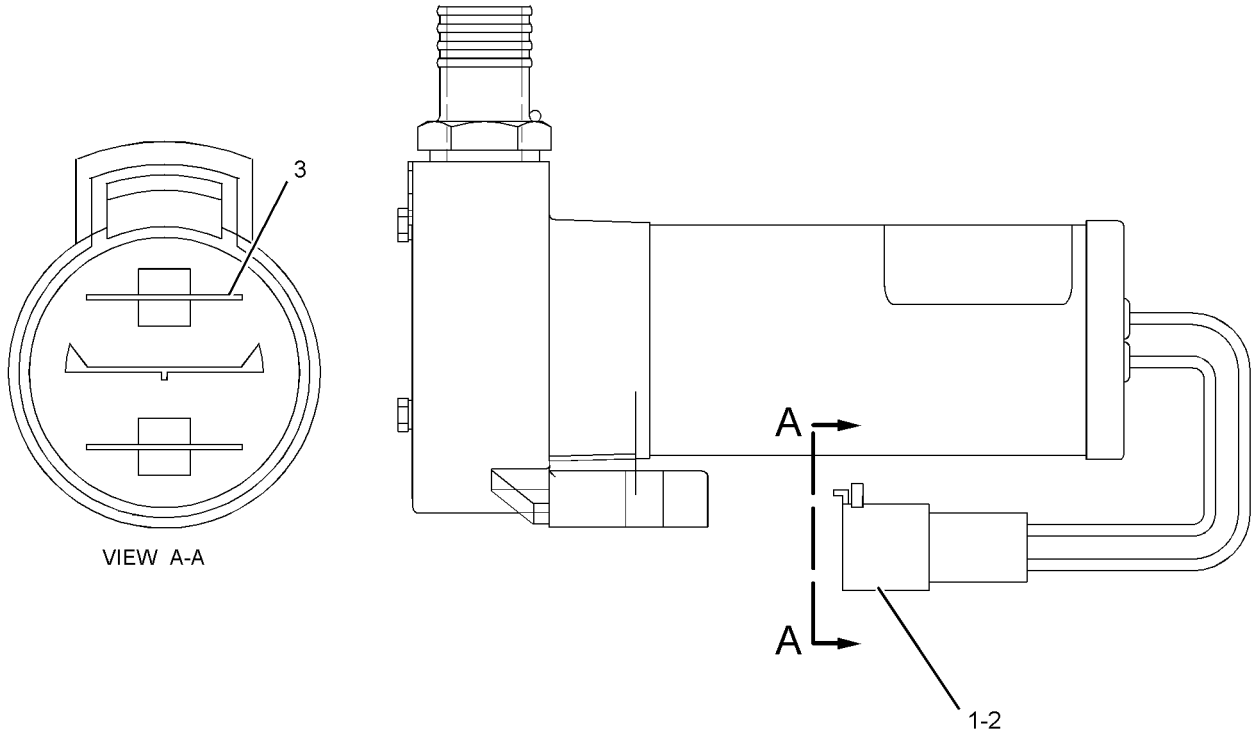

GRAPHIC #1 **<END>** g01104176

FUEL SYSTEM

229-1784 PUMP AR-FUEL TRANSFER

S/N: B6H1-UP; JLP1-UP

AN ATTACHMENT

SMCS-1256 **i02855200**

NOTE	PART NUMBER	QTY	PART NAME 1 2 3 4 5 6 (PRODUCT LEVEL)	SEE PAGE
Y	*298-4258*	1	FILM GP (FUEL TRANSFER PUMP)	1310
Y	*229-1785*	1	PUMP GP-REFUELING	185
Y	*238-1570*	1	WIRING GP-REFUELING PUMP	394

Y-SEPARATE ILLUSTRATION

<END>

267-3361 PUMP GP-FUEL INJECTION

S/N: THX1-UP

PART OF 267-3362 PUMP GP-FUEL INJECTION

SMCS-1251, 1290 **i02504057**

NOTE	REF NO	GRAPHIC REF	PART NUMBER	QTY	PART NAME 1 2 3 4 5 6 (PRODUCT LEVEL)	SEE PAGE
	1	1	**235-9651**	2	BOLT-SOCKET HEAD (M8X1.25X65-MM)	
Y	2	1	**267-3360**	1	INJECTOR GP-FUEL	145

Y-SEPARATE ILLUSTRATION

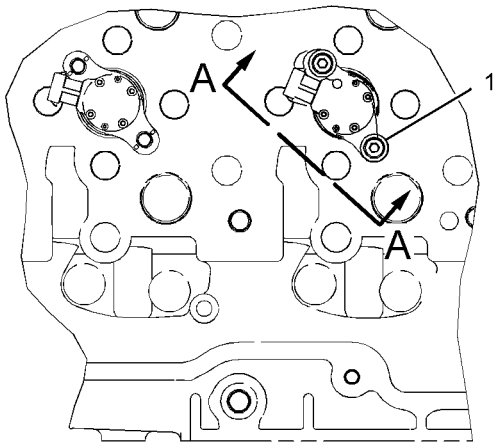

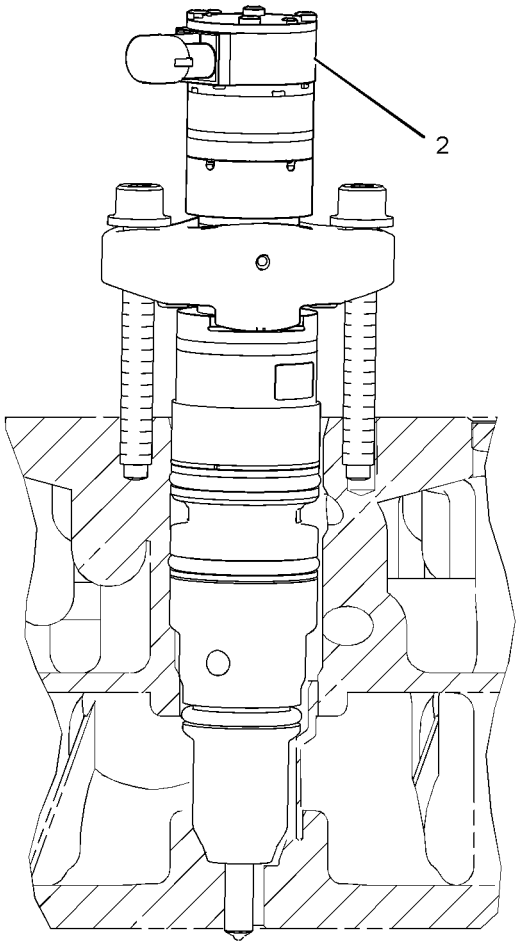

VIEW A-A
ROTATED 48° CCW

GRAPHIC #1 **<END>** g01147295

267-3361 PUMP GP-FUEL INJECTION

S/N: THX1-17738

PART OF 267-3362 PUMP GP-FUEL INJECTION

SMCS-1251, 1290 **i02571525**

NOTE	REF NO	GRAPHIC REF	PART NUMBER	QTY	PART NAME 1 2 3 4 5 6 (PRODUCT LEVEL)	SEE PAGE
	1	1	**235-9651**	2	BOLT-SOCKET HEAD (M8X1.25X65-MM)	
CY	2	1	**293-4072**	1	INJECTOR GP-FUEL	147

C-CHANGE FROM PREVIOUS TYPE
Y-SEPARATE ILLUSTRATION

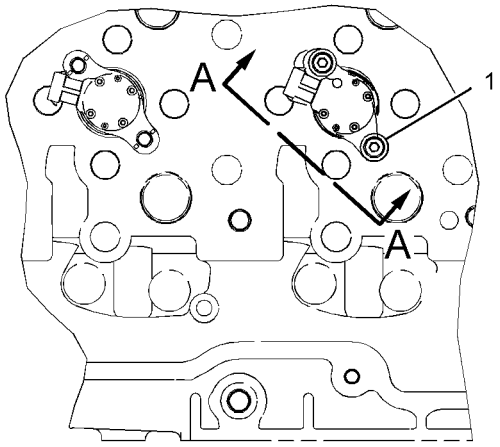

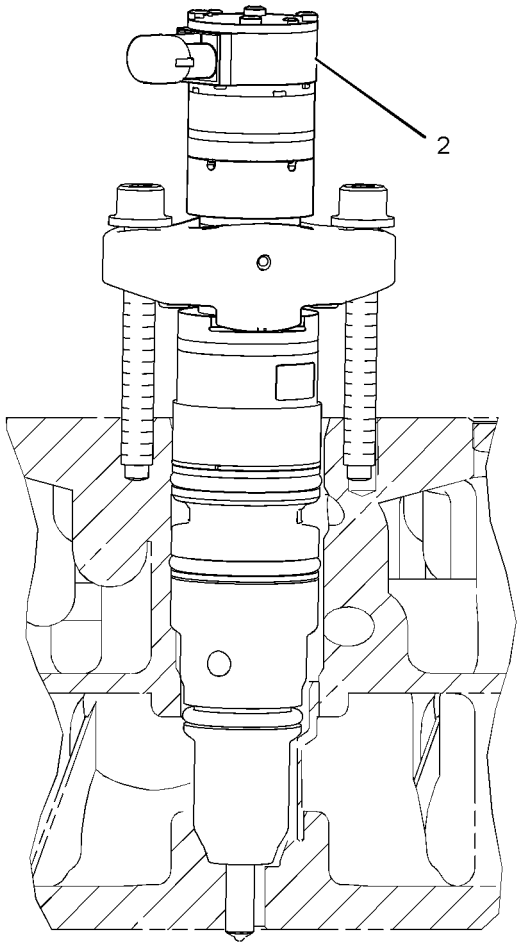

VIEW A-A
ROTATED 48° CCW

GRAPHIC #1 **<END>** g01147295

267-3361 PUMP GP-FUEL INJECTION

S/N: THX17739-UP

PART OF 267-3362 PUMP GP-FUEL INJECTION

SMCS-1251, 1290 **i03173440**

NOTE	REF NO	GRAPHIC REF	PART NUMBER	QTY	PART NAME 1 2 3 4 5 6 (PRODUCT LEVEL)	SEE PAGE
	1	1	**235-9651**	2	BOLT-SOCKET HEAD (M8X1.25X65-MM)	
CYR	2	1	**328-2574**	1	INJECTOR GP-FUEL	148

C-CHANGE FROM PREVIOUS TYPE
R-REMFG PART MAY BE AVAILABLE
Y-SEPARATE ILLUSTRATION

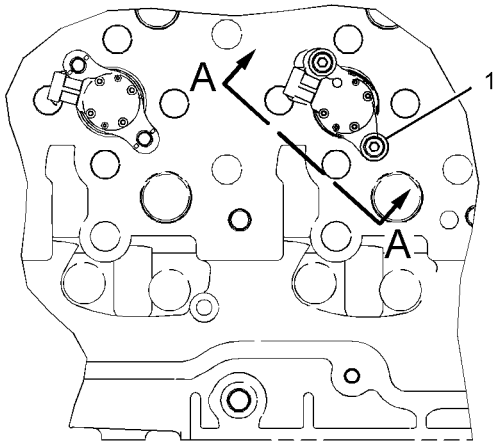

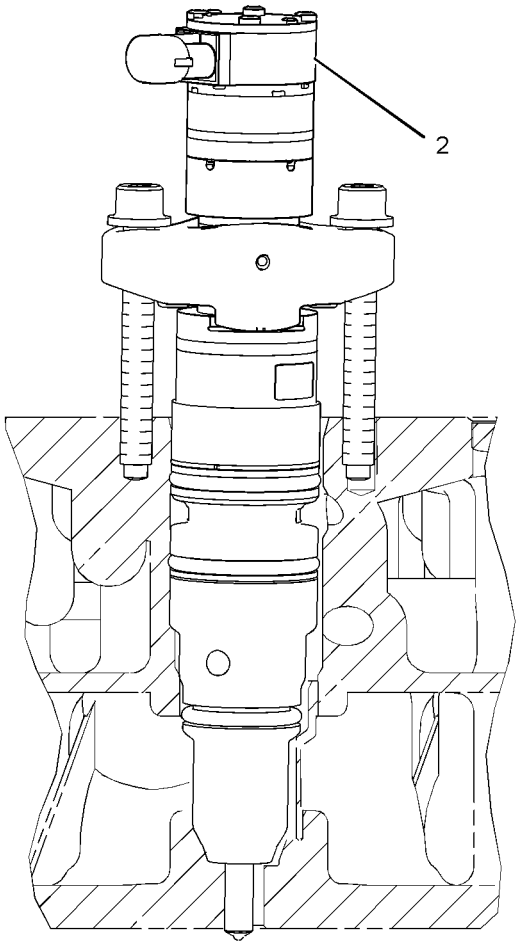

VIEW A-A
ROTATED 48° CCW

GRAPHIC #1 **<END>** g01147295

267-3362 PUMP GP-FUEL INJECTION

S/N: THX1-UP

PART OF 229-2665, 270-4216, 348-2746, 348-2747 ENGINE AR-CORE

SMCS-1251, 1290 **i02504055**

NOTE	REF NO	GRAPHIC REF	PART NUMBER	QTY	PART NAME 1 2 3 4 5 6 (PRODUCT LEVEL)	SEE PAGE
Y	1	1	*267-3361*	6	PUMP GP-FUEL INJECTION	177

Y-SEPARATE ILLUSTRATION

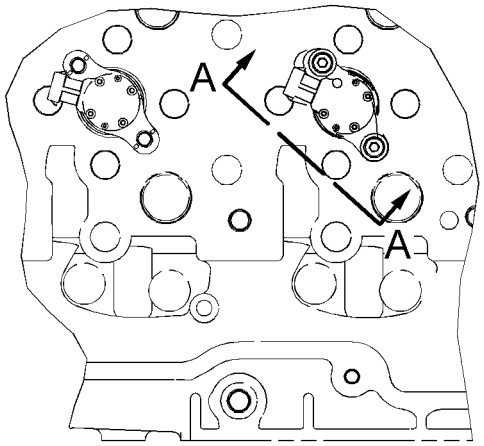

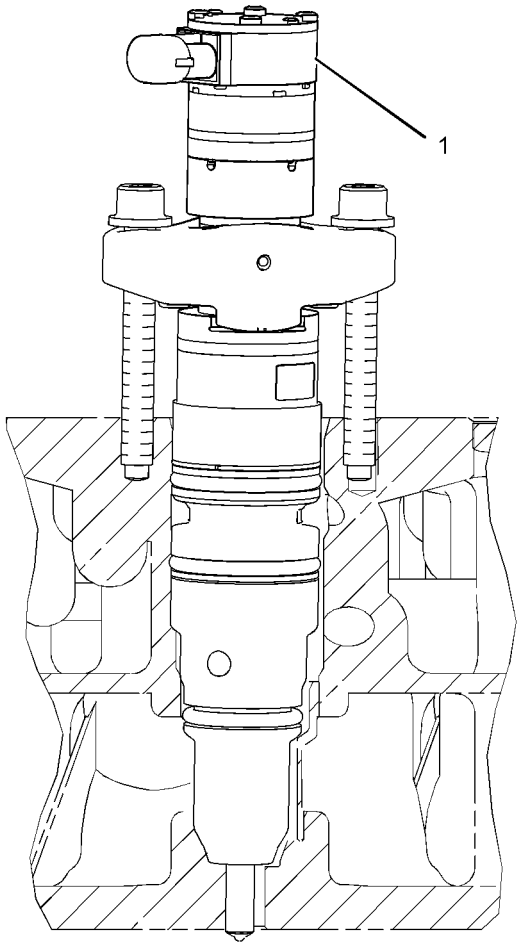

VIEW A-A
ROTATED 48° CCW

GRAPHIC #1 **<END>** g01147347

165-9154 PUMP GP-FUEL PRIMING

S/N: B6H1-UP; JLP1-UP

PART OF 237-8752 LINES GP-FUEL

SMCS-1258 **i02103107**

NOTE	REF NO	GRAPHIC REF	PART NUMBER	QTY	PART NAME 1 2 3 4 5 6 (PRODUCT LEVEL)	SEE PAGE
	1	1	**9Y-8389**	1	GASKET (FUEL PRIMING PUMP)	
	2	1	**183-2823**	1	PUMP AS-FUEL PRIMING	
	3	1	**8C-6561**	1	BOLT (5/16-18X1.375-IN)	
	4	1	**8T-4205**	1	WASHER-HARD (7.2X14.5X2-MM THK)	
	5	1	**7X-2501**	1	BOLT (1/4-20X1.25-IN)	
	6	1	**8T-4224**	1	WASHER-HARD (8.8X16X2-MM THK)	

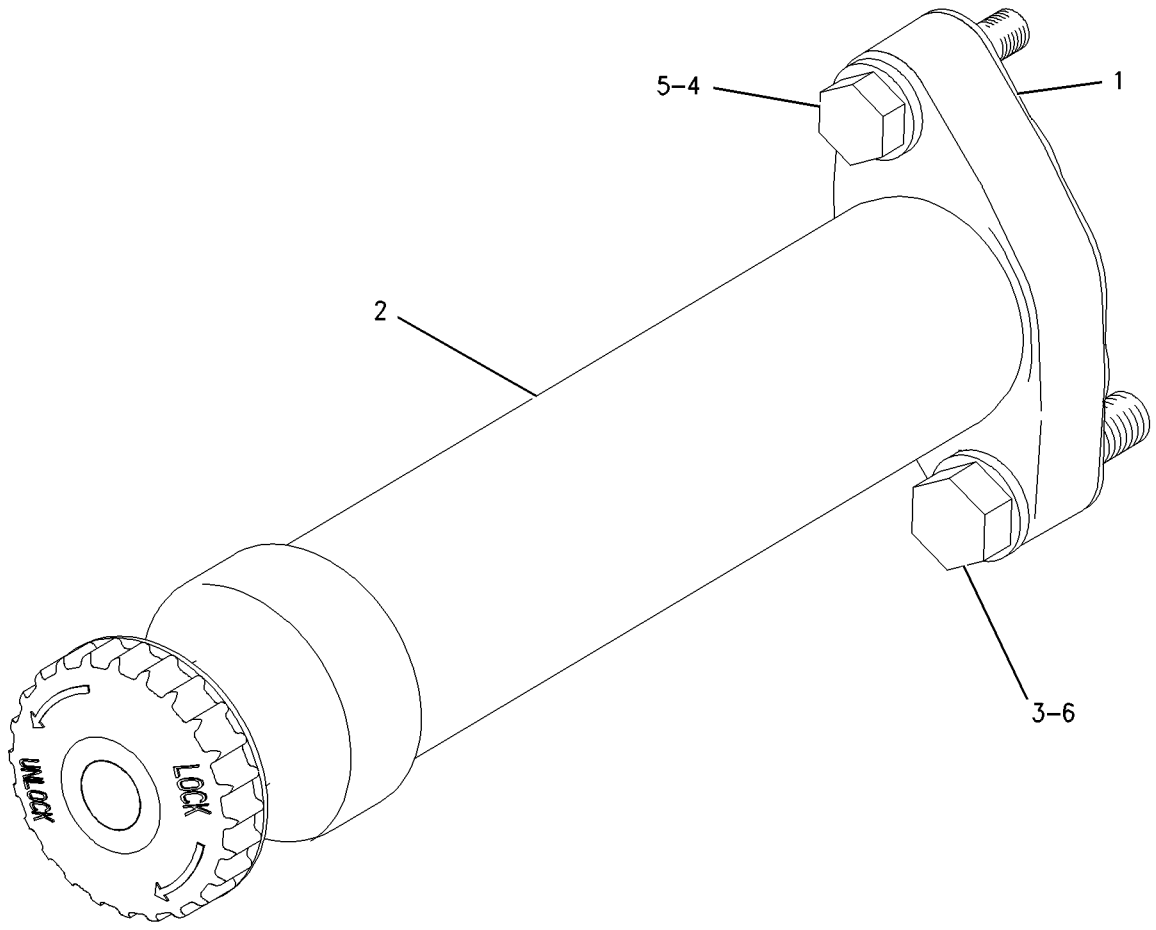

GRAPHIC #1 **<END>** g00655069

FUEL SYSTEM

247-7501 PUMP GP-FUEL PRIMING

S/N: B6H1-UP; JLP1-UP

AN ATTACHMENT

SMCS-1258 **i03691032**

NOTE	PART NUMBER	QTY	PART NAME 1 2 3 4 5 6 (PRODUCT LEVEL)	SEE PAGE
Y	*259-3918*	1	LINES GP-FUEL (PRIMING PUMP)	160
			—OR—	
Y	*343-2392*	1	LINES GP-FUEL (PRIMING PUMP)	172
Y	*259-5118*	1	WIRING GP-CAB (PRIMING PUMP)	361
Y	*259-5062*	1	WIRING GP-FUEL SYSTEM (PRIMING PUMP)	386

Y-SEPARATE ILLUSTRATION

<END>

188-6121 PUMP GP-FUEL PRM & PRIM FILTER–
WITH WATER SEPARATOR
S/N: B6H1-UP; JLP1-UP
PART OF 259-3918, 343-2392 LINES GP-FUEL
AN ATTACHMENT

SMCS-1258 **i01891413**

NOTE	REF NO	GRAPHIC REF	PART NUMBER	QTY	PART NAME 1 2 3 4 5 6 (PRODUCT LEVEL)	SEE PAGE
Y	1	1	**190-8977**	1	PUMP GP-FUEL PRM & WATER SEP	184
	2	1	**209-9234**	1	REGULATOR-PRESSURE (FUEL)	
	3	1	**211-7730**	1	TUBE AS	
	4	1	**030-8194**	1	CONNECTOR	
	5	1	**136-7227**	2	SEAL-O-RING	

Y-SEPARATE ILLUSTRATION

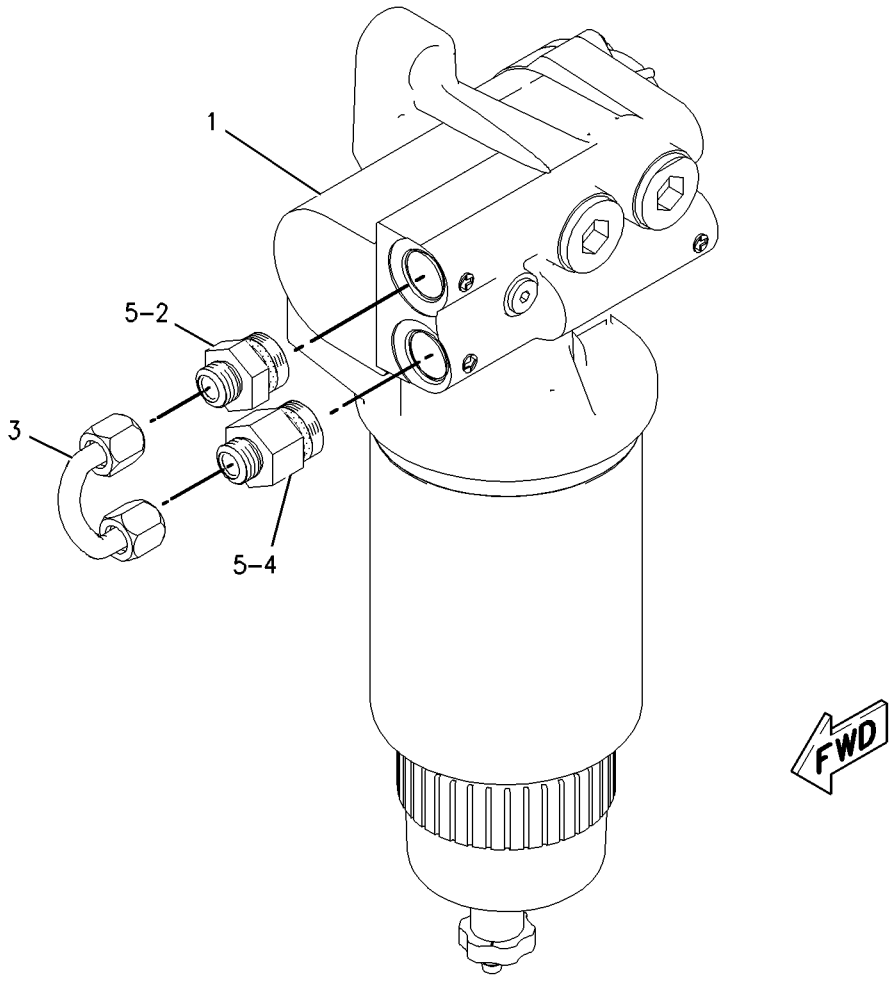

GRAPHIC #1 **<END>** g00850001

190-8977 PUMP GP-FUEL PRM & WATER SEP

S/N: B6H1-UP; JLP1-UP
PART OF 188-6121 PUMP GP-FUEL PRM & PRIM FILTER
AN ATTACHMENT

SMCS-1258, 1261, 1263 **i01934929**

NOTE	REF NO	GRAPHIC REF	PART NUMBER	QTY	PART NAME 1 2 3 4 5 6 (PRODUCT LEVEL)	SEE PAGE
Y	1	1	*174-9570*	1	FILTER GP-WATER SEP & FUEL (PRIMARY)	144
	2	1	**190-8970**	1	PUMP AS-FUEL PRIMING	

Y-SEPARATE ILLUSTRATION

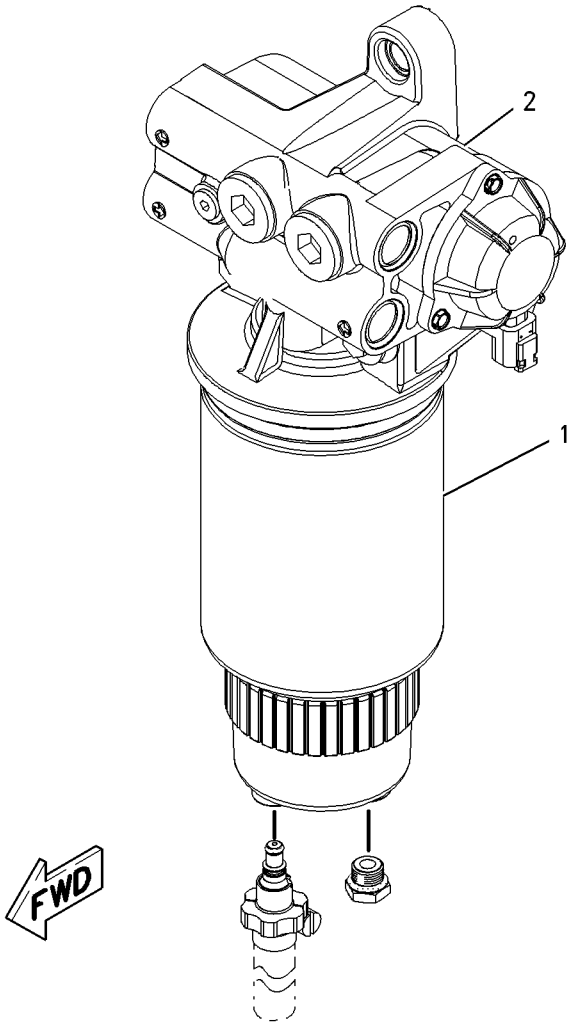

GRAPHIC #1 **<END>** g00904493

229-1785 PUMP GP-REFUELING

S/N: B6H1-UP; JLP1-UP
PART OF 229-1784 PUMP AR-FUEL TRANSFER
AN ATTACHMENT
TYPE 1

SMCS-1295 **i02499696**

NOTE	REF NO	GRAPHIC REF	PART NUMBER	QTY	PART NAME 1 2 3 4 5 6 (PRODUCT LEVEL)	SEE PAGE
Y	1	1	**5C-6108**	1	SWITCH GP-REFUELING (FUEL TANK SHUTOFF)	342
	2	1	**7K-1181**	1	STRAP-CABLE	
	3	1	**9M-7958**	4	CLAMP-HOSE	
	4	1	**120-5114**	1	FILM-INSTRUCTION (REFUELING PUMP)	
	5	1	**122-4021**	1	COVER	
M	6	1	**135-8572**	2	BOLT AS	
M	7	1	**135-8573**	4	BOLT AS	
Y	8	1	**229-1859**	1	PUMP & MOTOR GP-REFUELING	175
	9	1	**229-1860**	1	STRAINER AS-FUEL	
	10	1	**229-1861**	1	CONNECTOR-HOSE	
	11	1	**240-3920**	1	SUPPORT AS	
M	12	1	**8T-4194**	2	BOLT (M12X1.75X50-MM)	
	13	1	**8T-4223**	4	WASHER-HARD (13.5X25.5X3-MM THK)	
M	14	1	**8T-4244**	2	NUT (M12X1.75-THD)	
E	15	1	**229-1857**		HOSE (430-CM)	
E	15A	1	**229-1857**		HOSE (38-CM)	

E-ORDER BY THE CENTIMETER
M-METRIC PART
Y-SEPARATE ILLUSTRATION

229-1785 **PUMP GP-REFUELING** *(contd.)* **i02499696**

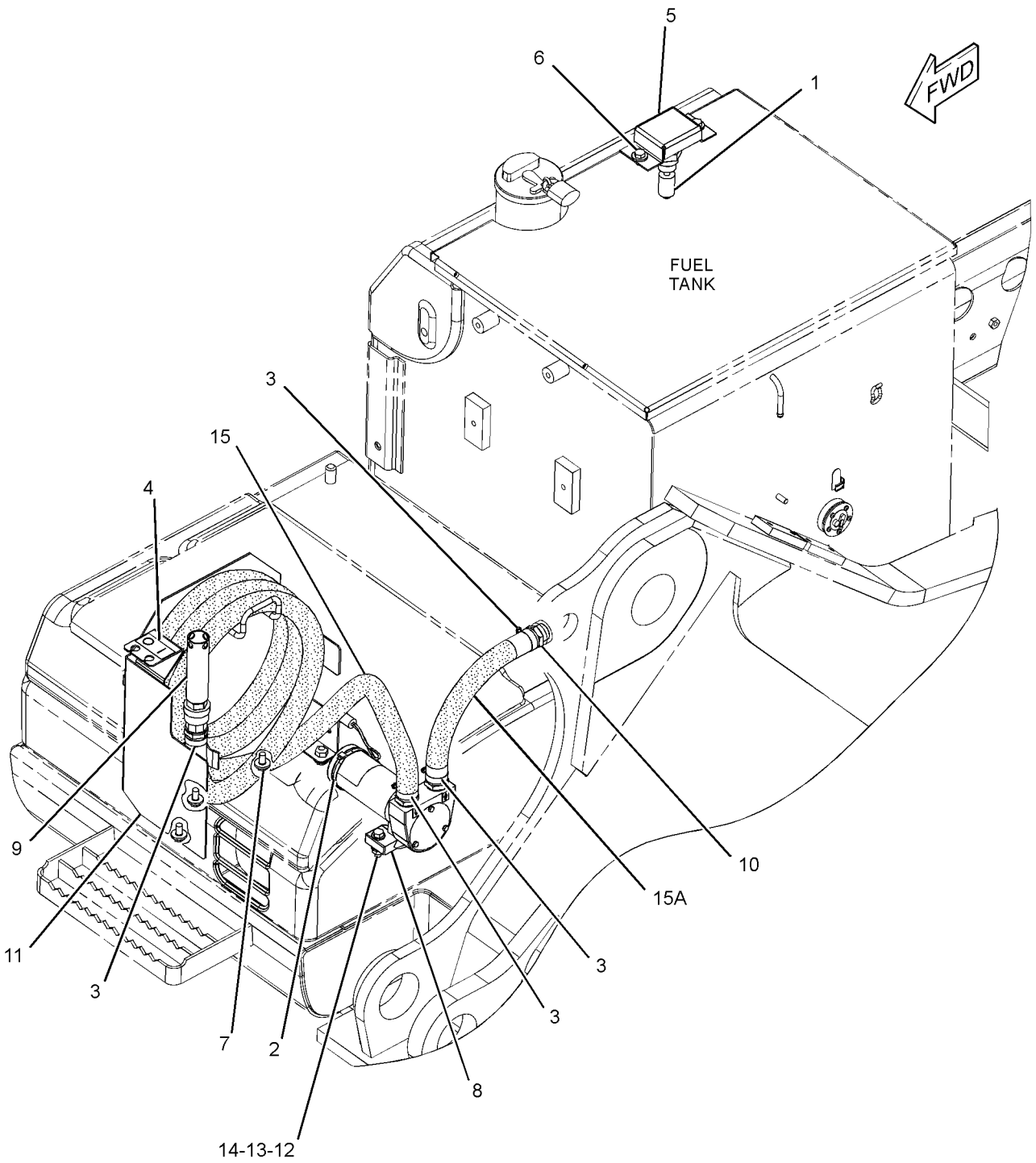

GRAPHIC #1 **<END>** g01236403

229-1785 PUMP GP-REFUELING

S/N: B6H1-UP; JLP1-UP
PART OF 229-1784 PUMP AR-FUEL TRANSFER
AN ATTACHMENT
TYPE 2

SMCS-1295 **i03161310**

NOTE	REF NO	GRAPHIC REF	PART NUMBER	QTY	PART NAME 1 2 3 4 5 6 (PRODUCT LEVEL)	SEE PAGE
C	1	1	**312-2645**	1	SWITCH AS-LIQUID LEVEL (FUEL TANK SHUTOFF)	
		1	**2S-4078**	1	SEAL-O-RING	
		1	**186-3735**	2	PIN-CONNECTOR (16-GA TO 18-GA)	
		1	**243-4505**	1	RECEPTACLE AS-CONNECTOR (2-PIN)	
	2	1	**7K-1181**	1	STRAP-CABLE	
	3	1	**9M-7958**	4	CLAMP-HOSE	
	4	1	**120-5114**	1	FILM-INSTRUCTION (REFUELING PUMP)	
C	5	1	**324-5761**	1	COVER AS	
M	6	1	**135-8572**	2	BOLT AS	
M	7	1	**135-8573**	4	BOLT AS	
Y	8	1	**229-1859**	1	PUMP & MOTOR GP-REFUELING	175
	9	1	**229-1860**	1	STRAINER AS-FUEL	
	10	1	**229-1861**	1	CONNECTOR-HOSE	
	11	1	**240-3920**	1	SUPPORT AS	
M	12	1	**8T-4194**	2	BOLT (M12X1.75X50-MM)	
	13	1	**8T-4223**	4	WASHER-HARD (13.5X25.5X3-MM THK)	
M	14	1	**8T-4244**	2	NUT (M12X1.75-THD)	
E	15	1	**229-1857**		HOSE (430-CM)	
E	15A	1	**229-1857**		HOSE (38-CM)	

C-CHANGE FROM PREVIOUS TYPE
E-ORDER BY THE CENTIMETER
M-METRIC PART
Y-SEPARATE ILLUSTRATION

229-1785 **PUMP GP-REFUELING** *(contd.)* **i03161310**

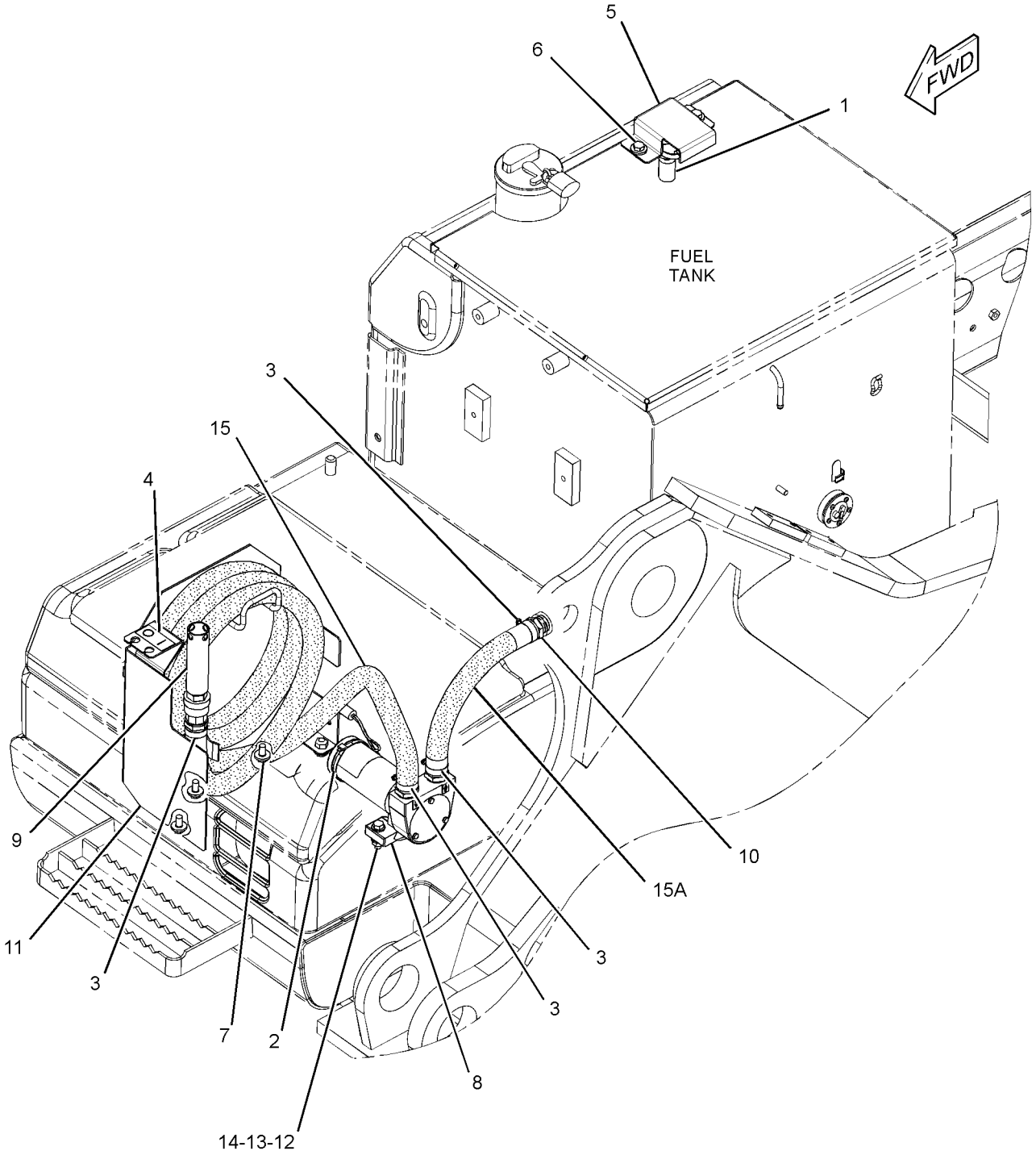

GRAPHIC #1 **<END>** g01582453

254-4357 PUMP GP-UNIT INJECTOR HYD*R

S/N: THX1-6775

PART OF 258-8745 PUMP GP-UNIT INJECTOR HYD

SMCS-1714 **i02455470**

NOTE	REF NO	GRAPHIC REF	PART NUMBER	QTY	PART NAME 1 2 3 4 5 6 (PRODUCT LEVEL)	SEE PAGE
	1	1	**178-2357**	1	PUMP GP-FUEL TRANSFER	
	2	1	**179-8128**	1	SEAL-O-RING (FUEL TRANSFER PUMP)	
	3	1	**227-5904**	1	SEAL-O-RING (UNIT INJECTOR HYD PUMP)	

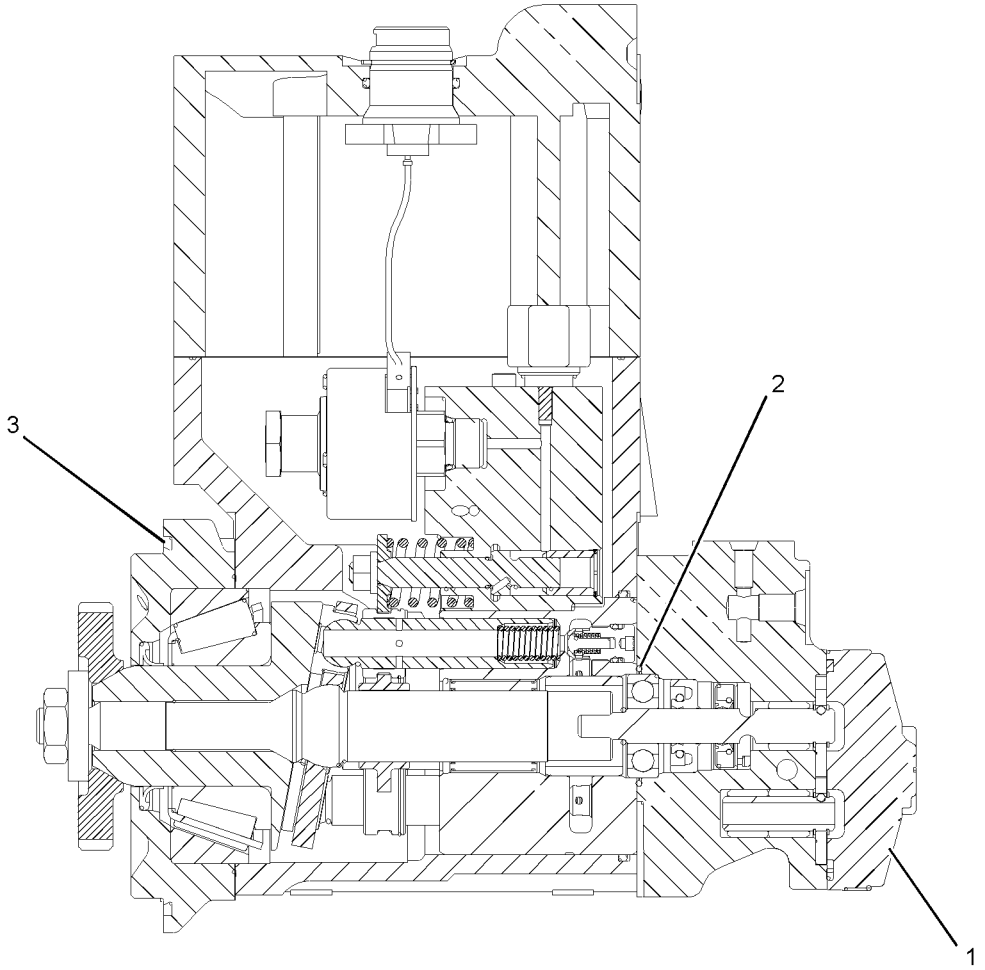

GRAPHIC #1 **<END>** g01225442

258-8745 PUMP GP-UNIT INJECTOR HYD

S/N: THX1-6775

PART OF 229-2665, 270-4216 ENGINE AR-CORE

SMCS-1714 **i02504047**

NOTE	REF NO	GRAPHIC REF	PART NUMBER	QTY	PART NAME 1 2 3 4 5 6 (PRODUCT LEVEL)	SEE PAGE
	1	1	**262-6074**	1	TUBE AS	
	2	1	*183-3399*	2	CONNECTOR AS	
					(EACH INCLUDES)	
		1	**6V-8636**	1	CONNECTOR	
		1	**214-7568**	1	SEAL-O-RING	
		1	**221-3494**	1	SEAL-O-RING	
	3	1	**193-2162**	1	TUBE AS	
	4	1	**227-5904**	1	SEAL-O-RING	
YR	5	1	**254-4357**	1	PUMP GP-UNIT INJECTOR HYD	189
	6	1	**030-7950**	1	ELBOW	
	7	1	*183-3407*	1	PLUG AS	
		1	**9S-8004**	1	PLUG	
		1	**153-4906**	1	SEAL-O-RING	
	8	1	**3E-9412**	1	DOWEL	
	9	1	**5P-3264**	1	ELBOW	
	10	1	**6V-4589**	1	SEAL-O-RING	
	11	1	**6V-5050**	1	SEAL-O-RING	
	12	1	**6V-5839**	2	WASHER (11X21X2.5-MM THK)	
M	13	1	**6V-7981**	2	BOLT (M10X1.5X70-MM)	

M-METRIC PART
R-REMFG PART MAY BE AVAILABLE
Y-SEPARATE ILLUSTRATION

258-8745 **PUMP GP-UNIT INJECTOR HYD** *(contd.)* **i02504047**

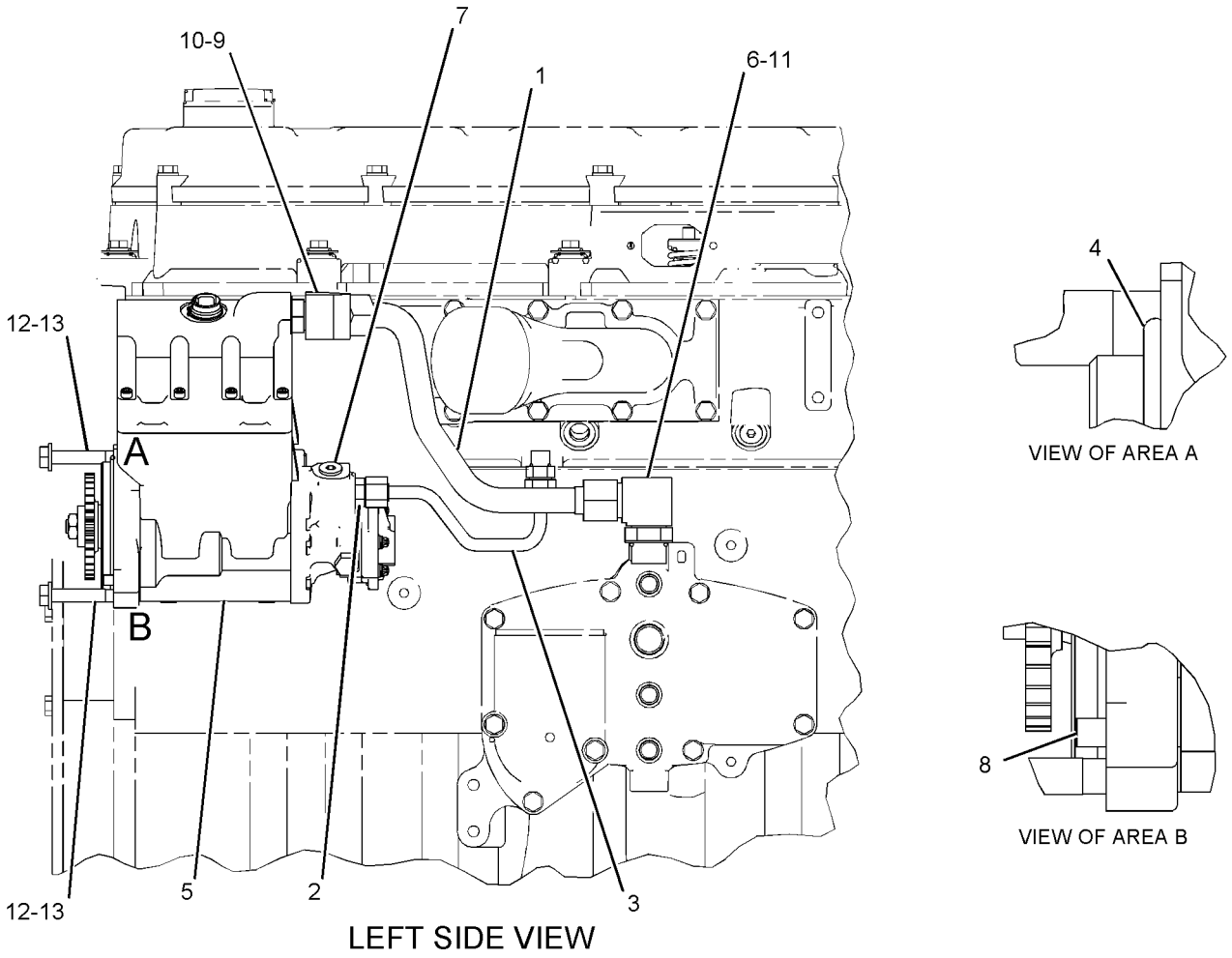

LEFT SIDE VIEW

GRAPHIC #1 **<END>** g01146833

258-8745 PUMP GP-UNIT INJECTOR HYD

S/N: THX6776-9084

PART OF 229-2665, 270-4216 ENGINE AR-CORE

SMCS-1714 **i02827630**

NOTE	REF NO	GRAPHIC REF	PART NUMBER	QTY	PART NAME 1 2 3 4 5 6 (PRODUCT LEVEL)	SEE PAGE
	1	1	**262-6074**	1	TUBE AS	
	2	1	*183-3399*	2	CONNECTOR AS	
					(EACH INCLUDES)	
		1	**6V-8636**	1	CONNECTOR	
		1	**214-7568**	1	SEAL-O-RING	
		1	**221-3494**	1	SEAL-O-RING	
	3	1	**193-2162**	1	TUBE AS	
	4	1	**227-5904**	1	SEAL-O-RING	
CYR	5	1	**295-4777**	1	PUMP GP-UNIT INJECTOR HYD	200
	6	1	**030-7950**	1	ELBOW	
	7	1	*183-3407*	1	PLUG AS	
		1	**9S-8004**	1	PLUG	
		1	**153-4906**	1	SEAL-O-RING	
	8	1	**3E-9412**	1	DOWEL	
	9	1	**5P-3264**	1	ELBOW	
	10	1	**6V-4589**	1	SEAL-O-RING	
	11	1	**6V-5050**	1	SEAL-O-RING	
	12	1	**6V-5839**	2	WASHER (11X21X2.5-MM THK)	
M	13	1	**6V-7981**	2	BOLT (M10X1.5X70-MM)	

C-CHANGE FROM PREVIOUS TYPE
M-METRIC PART
R-REMFG PART MAY BE AVAILABLE
Y-SEPARATE ILLUSTRATION

258-8745 **PUMP GP-UNIT INJECTOR HYD** *(contd.)* **i02827630**

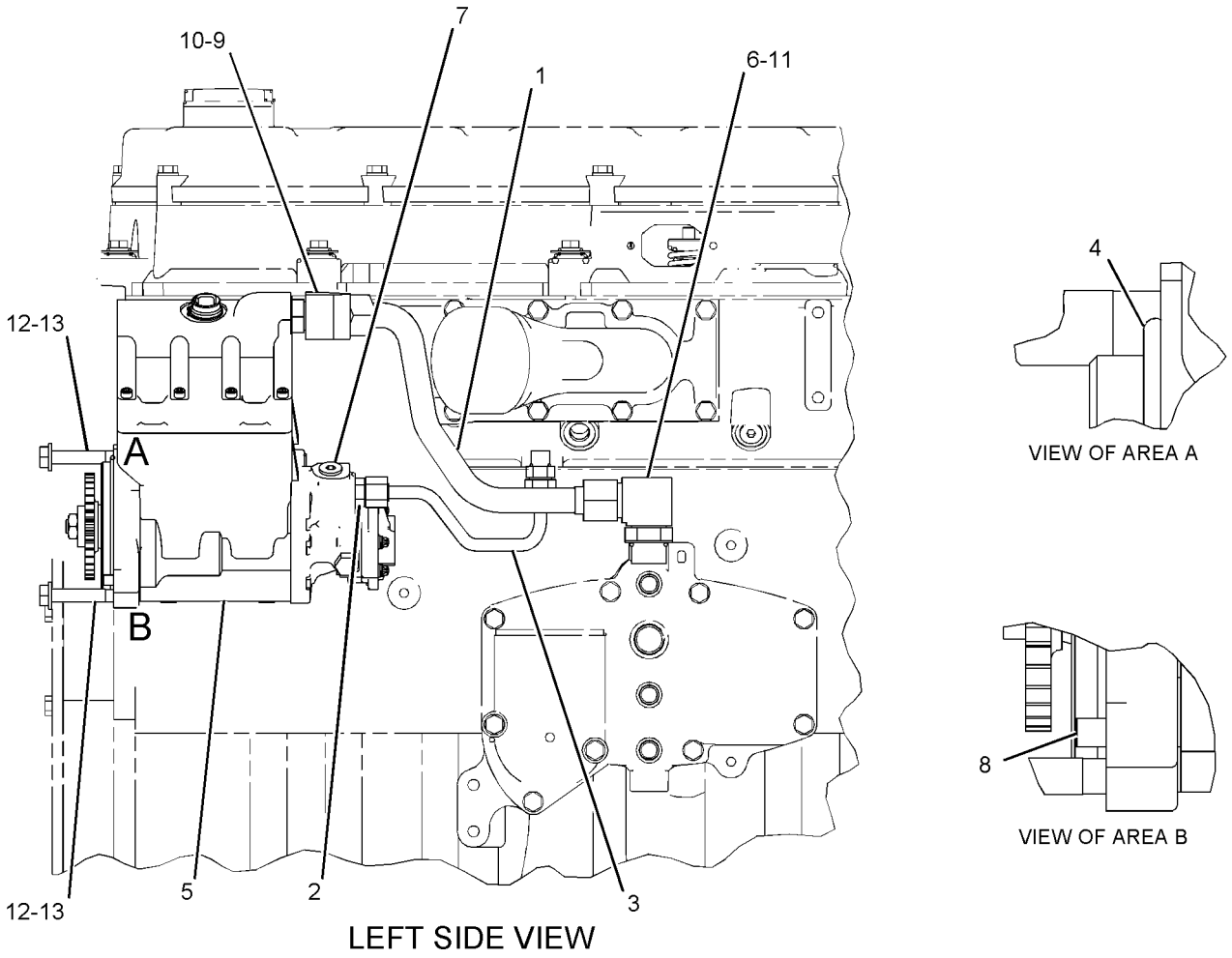

LEFT SIDE VIEW

GRAPHIC #1 **<END>** g01146833

258-8745 PUMP GP-UNIT INJECTOR HYD

S/N: THX9085-10924

PART OF 229-2665, 270-4216 ENGINE AR-CORE

SMCS-1714 **i02828031**

NOTE	REF NO	GRAPHIC REF	PART NUMBER	QTY	PART NAME 1 2 3 4 5 6 (PRODUCT LEVEL)	SEE PAGE
	1	1	**262-6074**	1	TUBE AS	
	2	1	*183-3399*	2	CONNECTOR AS	
					(EACH INCLUDES)	
		1	**6V-8636**	1	CONNECTOR	
		1	**214-7568**	1	SEAL-O-RING	
		1	**221-3494**	1	SEAL-O-RING	
	3	1	**193-2162**	1	TUBE AS	
	4	1	**227-5904**	1	SEAL-O-RING	
CYR	5	1	**304-0677**	1	PUMP GP-UNIT INJECTOR HYD	201
	6	1	**030-7950**	1	ELBOW	
	7	1	*183-3407*	1	PLUG AS	
		1	**9S-8004**	1	PLUG	
		1	**153-4906**	1	SEAL-O-RING	
	8	1	**3E-9412**	1	DOWEL	
	9	1	**5P-3264**	1	ELBOW	
	10	1	**6V-4589**	1	SEAL-O-RING	
	11	1	**6V-5050**	1	SEAL-O-RING	
	12	1	**6V-5839**	2	WASHER (11X21X2.5-MM THK)	
M	13	1	**6V-7981**	2	BOLT (M10X1.5X70-MM)	

C-CHANGE FROM PREVIOUS TYPE
M-METRIC PART
R-REMFG PART MAY BE AVAILABLE
Y-SEPARATE ILLUSTRATION

258-8745 **PUMP GP-UNIT INJECTOR HYD** *(contd.)* **i02828031**

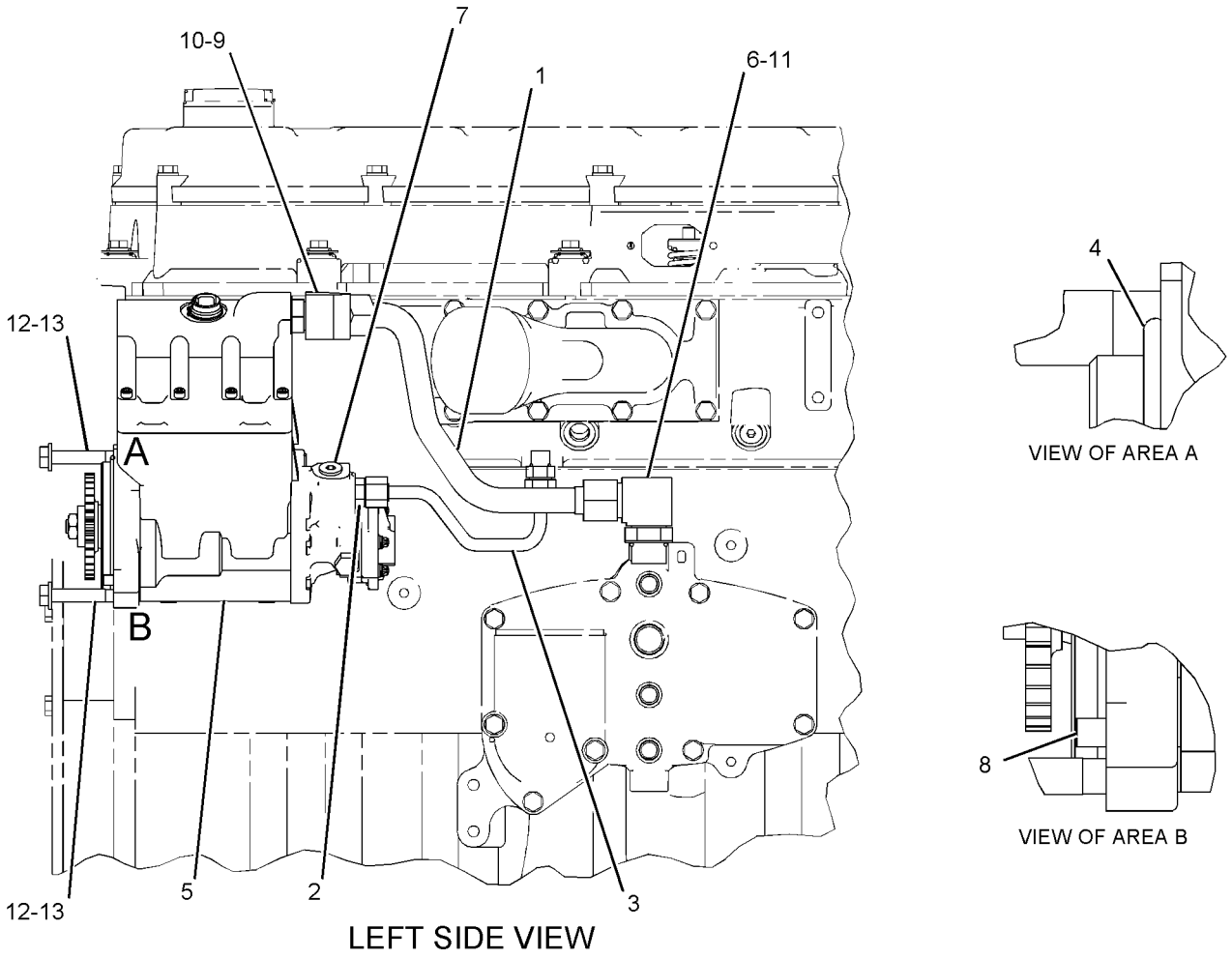

LEFT SIDE VIEW

GRAPHIC #1 **<END>** g01146833

258-8745 PUMP GP-UNIT INJECTOR HYD

S/N: THX10925-13075

PART OF 229-2665, 270-4216 ENGINE AR-CORE

SMCS-1714 **i02828392**

NOTE	REF NO	GRAPHIC REF	PART NUMBER	QTY	PART NAME 1 2 3 4 5 6 (PRODUCT LEVEL)	SEE PAGE
	1	1	**262-6074**	1	TUBE AS	
	2	1	*183-3399*	2	CONNECTOR AS	
					(EACH INCLUDES)	
		1	**6V-8636**	1	CONNECTOR	
		1	**214-7568**	1	SEAL-O-RING	
		1	**221-3494**	1	SEAL-O-RING	
	3	1	**193-2162**	1	TUBE AS	
	4	1	**227-5904**	1	SEAL-O-RING	
CYR	5	1	**312-0677**	1	PUMP GP-UNIT INJECTOR HYD	202
	6	1	**030-7950**	1	ELBOW	
	7	1	*183-3407*	1	PLUG AS	
		1	**9S-8004**	1	PLUG	
		1	**153-4906**	1	SEAL-O-RING	
	8	1	**3E-9412**	1	DOWEL	
	9	1	**5P-3264**	1	ELBOW	
	10	1	**6V-4589**	1	SEAL-O-RING	
	11	1	**6V-5050**	1	SEAL-O-RING	
	12	1	**6V-5839**	2	WASHER (11X21X2.5-MM THK)	
M	13	1	**6V-7981**	2	BOLT (M10X1.5X70-MM)	

C-CHANGE FROM PREVIOUS TYPE
M-METRIC PART
R-REMFG PART MAY BE AVAILABLE
Y-SEPARATE ILLUSTRATION

258-8745 **PUMP GP-UNIT INJECTOR HYD** *(contd.)* **i02828392**

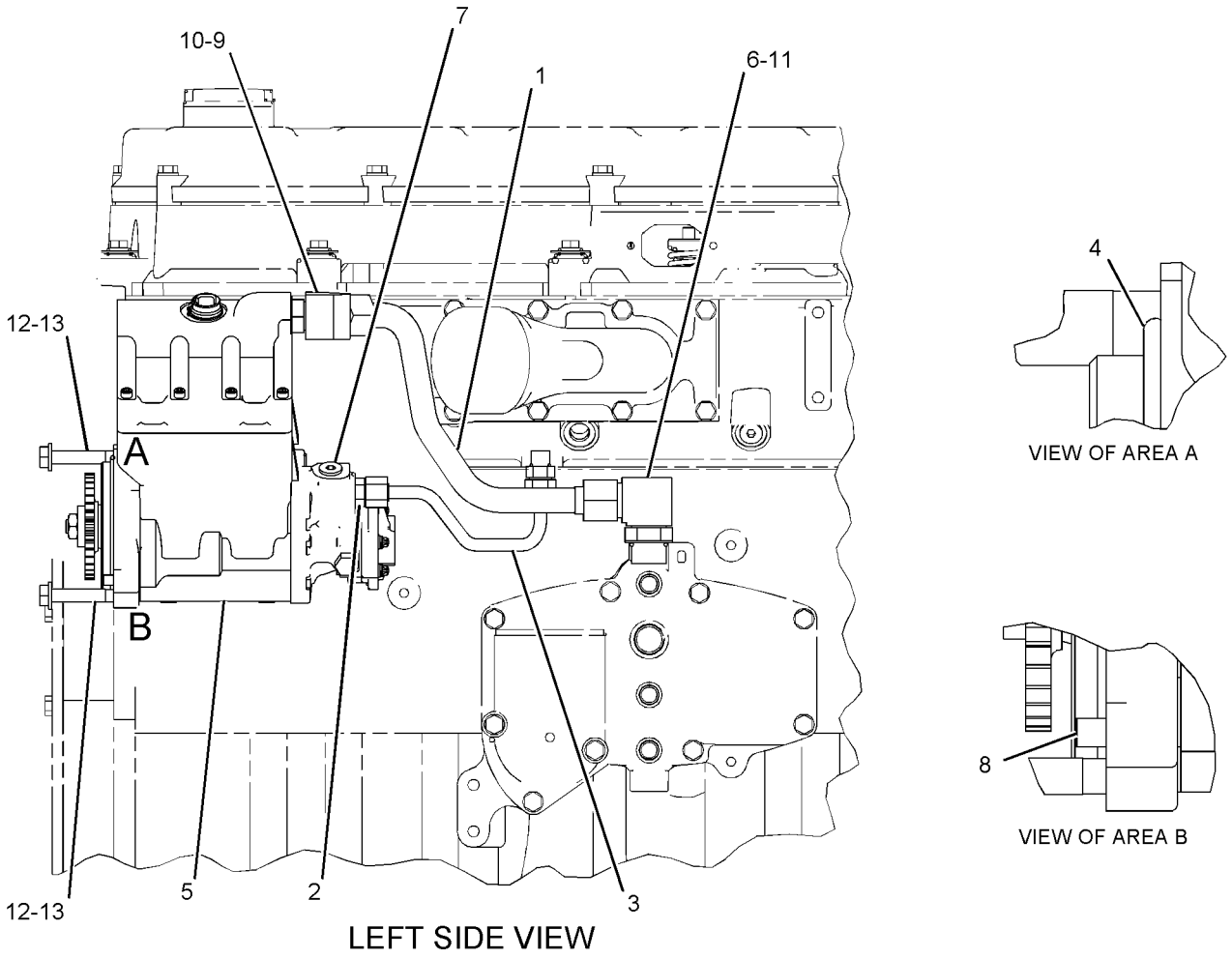

LEFT SIDE VIEW

GRAPHIC #1 **<END>** g01146833

258-8745 PUMP GP-UNIT INJECTOR HYD

S/N: THX13076-UP

PART OF 229-2665, 270-4216, 348-2746, 348-2747 ENGINE AR-CORE

SMCS-1714 **i03028830**

NOTE	REF NO	GRAPHIC REF	PART NUMBER	QTY	PART NAME 1 2 3 4 5 6 (PRODUCT LEVEL)	SEE PAGE
	1	1	**262-6074**	1	TUBE AS	
	2	1	*183-3399*	2	CONNECTOR AS	
					(EACH INCLUDES)	
		1	**6V-8636**	1	CONNECTOR	
		1	**214-7568**	1	SEAL-O-RING	
		1	**221-3494**	1	SEAL-O-RING	
	3	1	**193-2162**	1	TUBE AS	
	4	1	**227-5904**	1	SEAL-O-RING	
CYR	5	1	**319-0677**	1	PUMP GP-UNIT INJECTOR HYD	203
	6	1	**030-7950**	1	ELBOW	
	7	1	*183-3407*	1	PLUG AS	
		1	**9S-8004**	1	PLUG	
		1	**153-4906**	1	SEAL-O-RING	
	8	1	**3E-9412**	1	DOWEL	
	9	1	**5P-3264**	1	ELBOW	
	10	1	**6V-4589**	1	SEAL-O-RING	
	11	1	**6V-5050**	1	SEAL-O-RING	
	12	1	**6V-5839**	2	WASHER (11X21X2.5-MM THK)	
M	13	1	**6V-7981**	2	BOLT (M10X1.5X70-MM)	

C-CHANGE FROM PREVIOUS TYPE
M-METRIC PART
R-REMFG PART MAY BE AVAILABLE
Y-SEPARATE ILLUSTRATION

258-8745 **PUMP GP-UNIT INJECTOR HYD** *(contd.)* **i03028830**

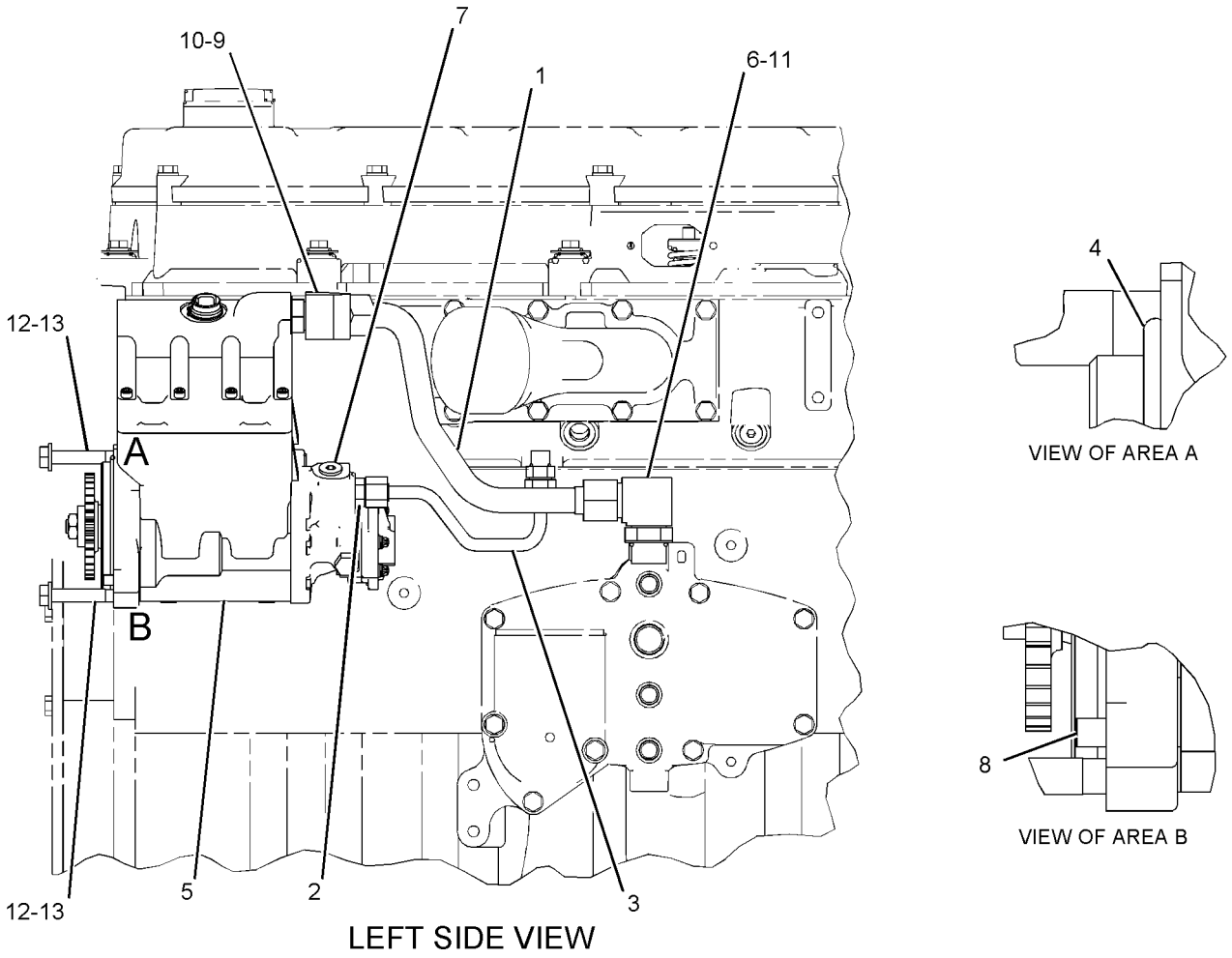

LEFT SIDE VIEW

GRAPHIC #1 **<END>** g01146833

295-4777 PUMP GP-UNIT INJECTOR HYD*R

S/N: THX6776-9084

PART OF 258-8745 PUMP GP-UNIT INJECTOR HYD

SMCS-1714 **i02707204**

NOTE	REF NO	GRAPHIC REF	PART NUMBER	QTY	PART NAME 1 2 3 4 5 6 (PRODUCT LEVEL)	SEE PAGE
	1	1	**178-2357**	1	PUMP GP-FUEL TRANSFER	
	2	1	**179-8128**	1	SEAL-O-RING (FUEL TRANSFER PUMP)	
	3	1	**227-5904**	1	SEAL-O-RING (UNIT INJECTOR HYD PUMP)	

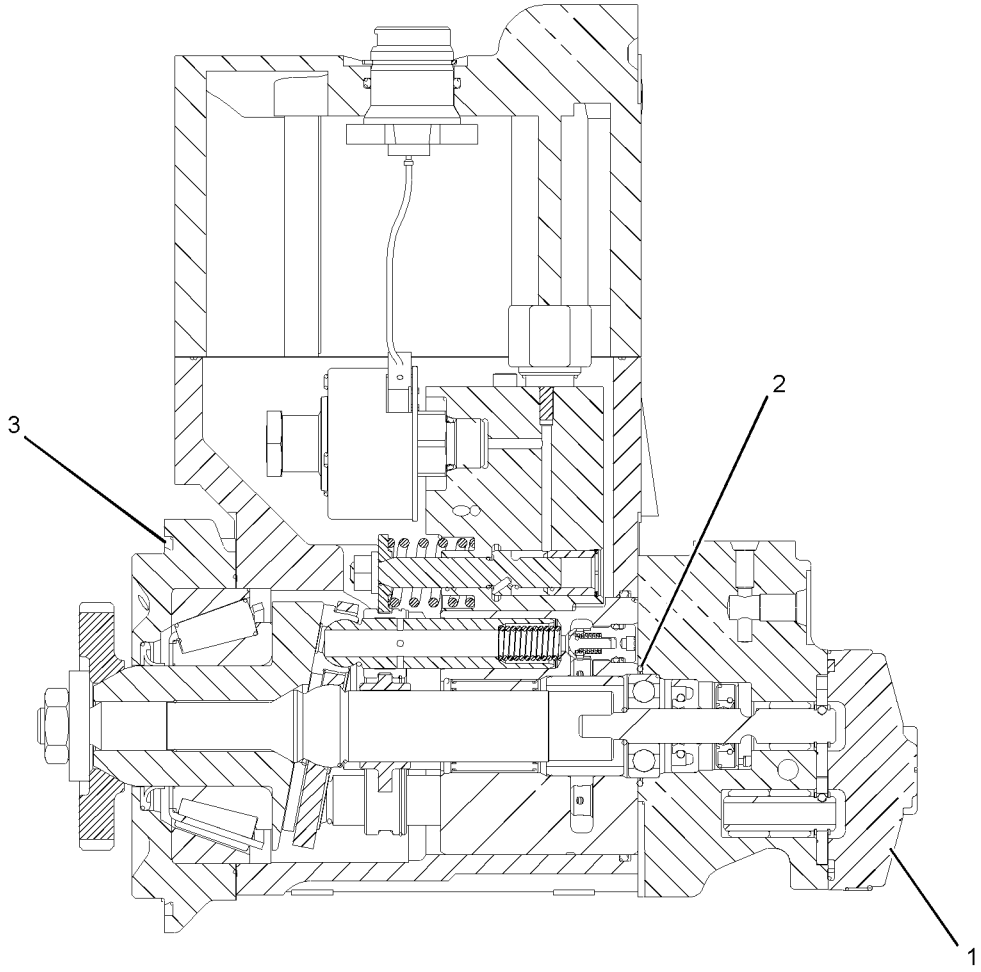

GRAPHIC #1 **<END>** g01225442

304-0677 PUMP GP-UNIT INJECTOR HYD*R

S/N: THX9085-10924

PART OF 258-8745 PUMP GP-UNIT INJECTOR HYD

SMCS-1714 **i02804871**

NOTE	REF NO	GRAPHIC REF	PART NUMBER	QTY	PART NAME 1 2 3 4 5 6 (PRODUCT LEVEL)	SEE PAGE
	1	1	**178-2357**	1	PUMP GP-FUEL TRANSFER	
	2	1	**179-8128**	1	SEAL-O-RING (FUEL TRANSFER PUMP)	
	3	1	**227-5904**	1	SEAL-O-RING (UNIT INJECTOR HYD PUMP)	

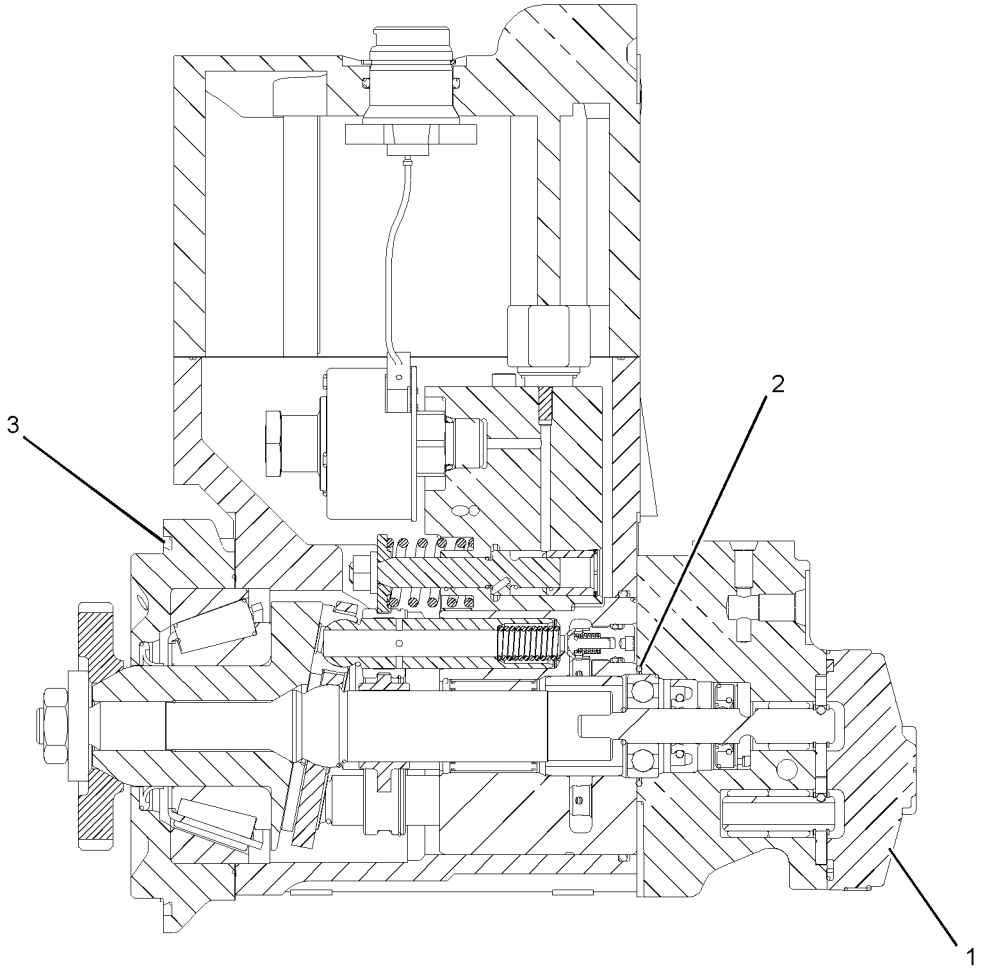

GRAPHIC #1 **<END>** g01225442

312-0677 PUMP GP-UNIT INJECTOR HYD*R

S/N: THX10925-UP

PART OF 258-8745 PUMP GP-UNIT INJECTOR HYD

SMCS-1714 **i02813625**

NOTE	REF NO	GRAPHIC REF	PART NUMBER	QTY	PART NAME 1 2 3 4 5 6 (PRODUCT LEVEL)	SEE PAGE
	1	1	**1F-7960**	1	WASHER (13.5X32X6-MM THK)	
M	2	1	**166-8636**	3	BOLT-SOCKET HEAD (M5X0.8X18-MM)	
	3	1	**178-2357**	1	PUMP GP-FUEL TRANSFER	
	4	1	**179-8128**	1	SEAL-O-RING (FUEL TRANSFER PUMP)	
M	5	1	**228-5897**	4	BOLT-TORX (M8X1.25X136.7-MM)	
	6	1	**239-2402**	4	SEAL-O-RING	

M-METRIC PART

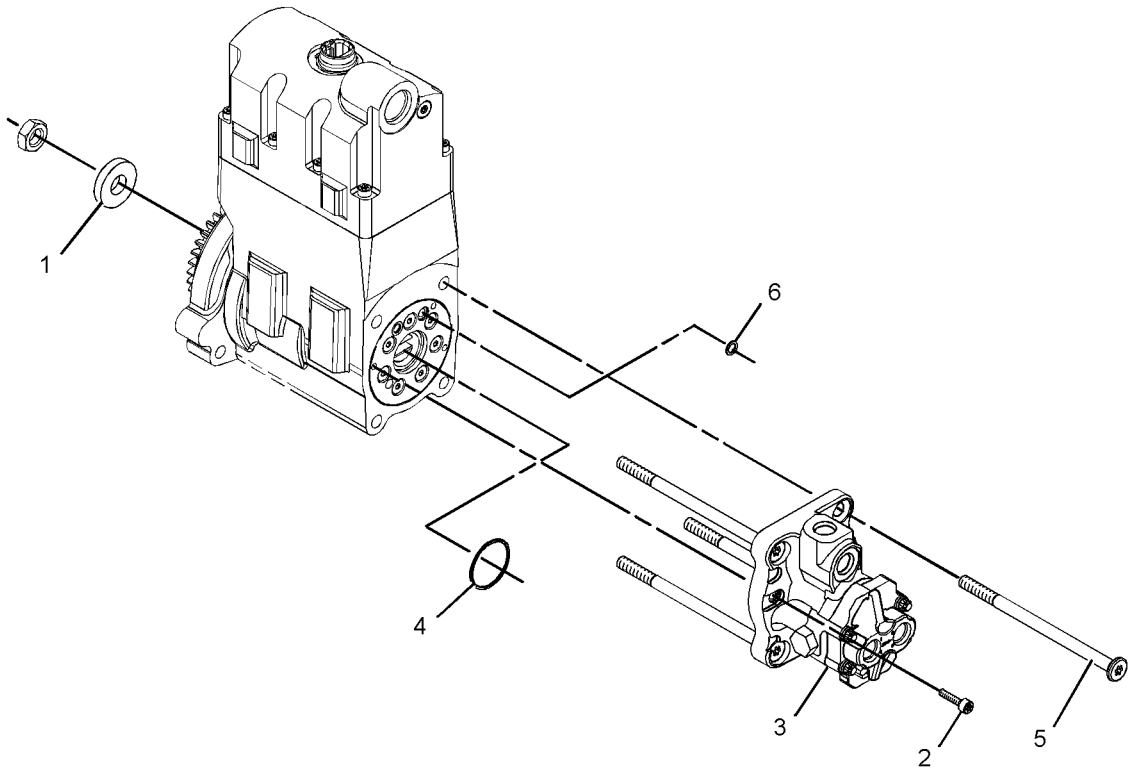

GRAPHIC #1 **<END>** g01401250

319-0677 PUMP GP-UNIT INJECTOR HYD*R

S/N: THX13076-UP

PART OF 258-8745 PUMP GP-UNIT INJECTOR HYD

SMCS-1714 **i03778133**

NOTE	REF NO	GRAPHIC REF	PART NUMBER	QTY	PART NAME 1 2 3 4 5 6 (PRODUCT LEVEL)	SEE PAGE
J	1	1	**313-4620**	3	SCREW-PAN HEAD	
J	2	1	**326-1006**	1	KIT-FUEL TRANSFER PUMP	
					(INCLUDES PUMP, BOLT, SEALS, SCREWS, & SEAL-O-RINGS)	
J	3	1	**179-8128**	1	SEAL-O-RING (FUEL SYSTEM)	
	4	1	**262-0284**	1	RING-RETAINING	
M	5	1	**228-5897**	4	BOLT-TORX (M8X1.25X136.7-MM)	
J	6	1	**239-2402**	4	SEAL-O-RING	
	7	1	**1F-7960**	1	WASHER (13.5X32X6-MM THK)	
	8	1	**1N-8062**	1	BEARING AS-NEEDLE	
M	9	1	**5C-2890**	1	NUT (M6X1-THD)	
	10	1	**8C-6711**	1	NUT-RETAINER (1/2-20-THD)	
	11	1	**9X-8267**	1	WASHER (6.6X12X2-MM THK)	
	12	1	**153-7036**	1	SPOOL	
	13	1	**260-5716**	1	SPOOL	

J-KIT MARKED J SERVICES PARTS MARKED J
M-METRIC PART

319-0677 **PUMP GP-UNIT INJECTOR HYD** *(contd.)* **i03778133**

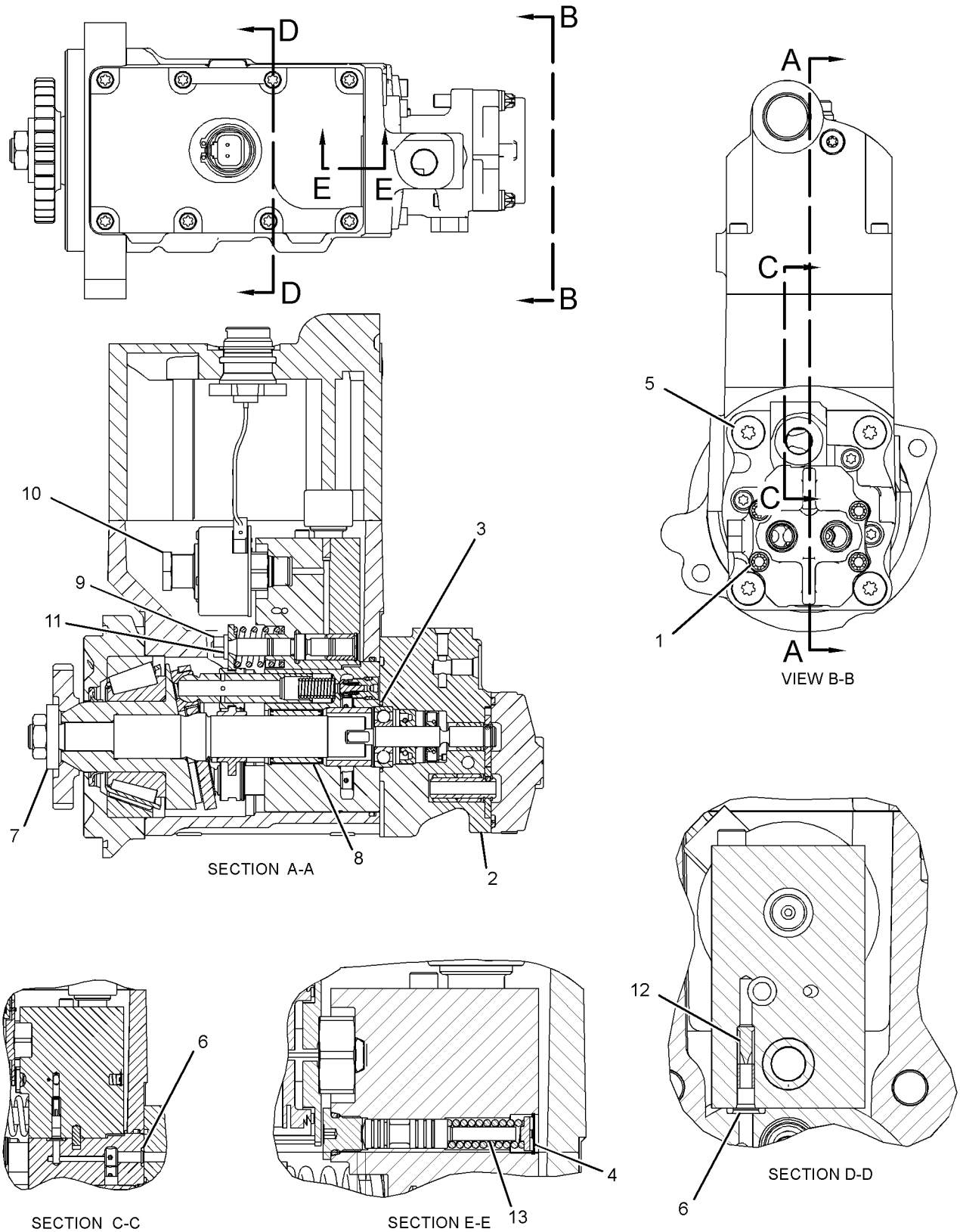

GRAPHIC #1 **<END>** g02039530

205-1306 REGULATOR GP-FUEL PRESSURE

S/N: THX1-UP

PART OF 231-3039 LINES GP-FUEL

SMCS-1715 **i02684188**

NOTE	REF NO	GRAPHIC REF	PART NUMBER	QTY	PART NAME 1 2 3 4 5 6 (PRODUCT LEVEL)	SEE PAGE
	1	1	*295-1803*	1	ELBOW AS	
	1A	1	**6V-5049**	1	SEAL-O-RING	
		1	**196-6838**		ELBOW	
Y	2	1	*232-0343*	1	REGULATOR GP-FUEL PRESSURE	206

Y-SEPARATE ILLUSTRATION

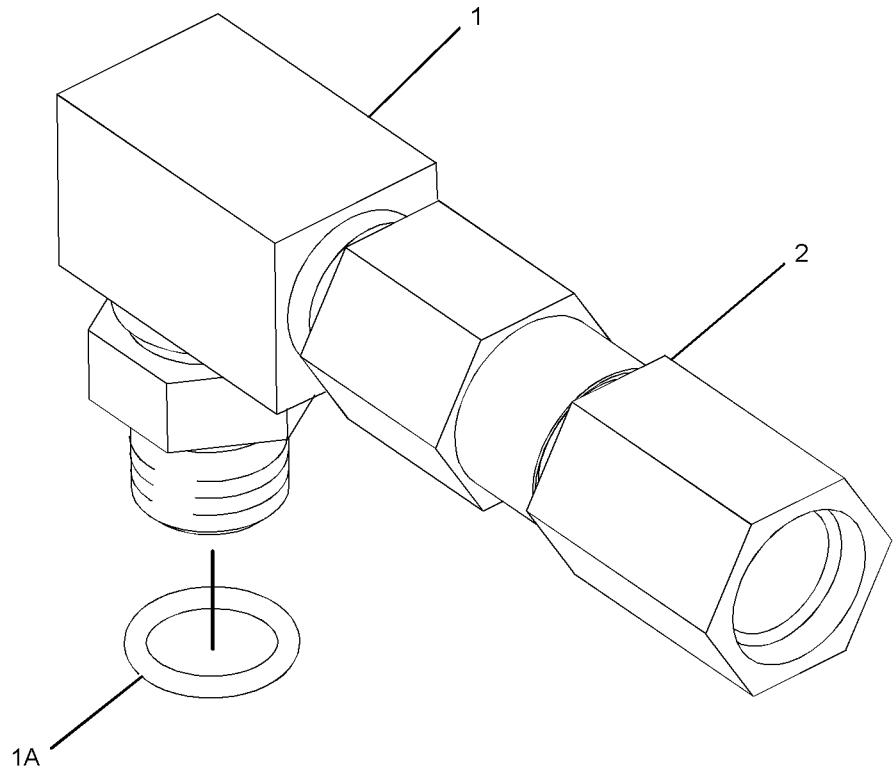

GRAPHIC #1 **<END>** g01349154

232-0343 REGULATOR GP-FUEL PRESSURE

S/N: THX1-UP

PART OF 205-1306 REGULATOR GP-FUEL PRESSURE

SMCS-1715 **i02676270**

NOTE	REF NO	GRAPHIC REF	PART NUMBER	QTY	PART NAME 1 2 3 4 5 6 (PRODUCT LEVEL)	SEE PAGE
	1	1	**6V-5049**	1	SEAL-O-RING	
	2	1	**294-8620**	1	REGULATOR AS (FUEL PRESSURE)	

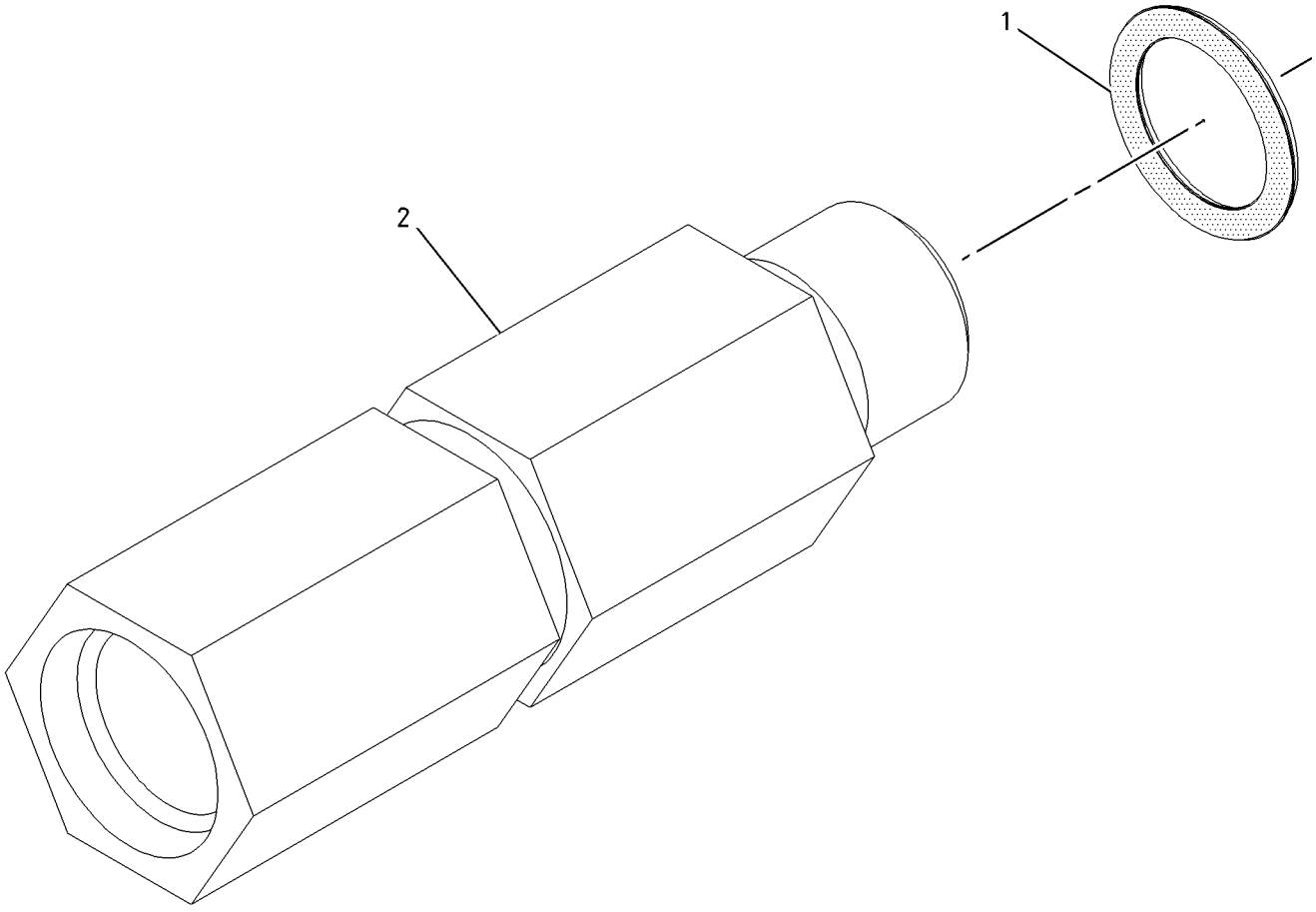

GRAPHIC #1 **<END>** g01004480

FUEL SYSTEM

237-8783 TANK & MTG GP-FUEL

S/N: B6H1-UP; JLP1-UP
PART OF 247-7386 CHASSIS AR

SMCS-1273 **i02495783**

NOTE	REF NO	GRAPHIC REF	PART NUMBER	QTY	PART NAME 1 2 3 4 5 6 (PRODUCT LEVEL)	SEE PAGE
	1	1	**246-2641**	1	PADLOCK GP	
		1	**5P-8500**	1	KEY	
M	2	1	**135-8572**	2	BOLT AS	
Y	3	1	**237-8784**	1	TANK GP-FUEL	208
	4	1	**085-9310**	4	SPACER (16.6X32X26-MM THK)	
M	5	1	**8T-4140**	4	BOLT (M16X2X60-MM)	

M-METRIC PART
Y-SEPARATE ILLUSTRATION

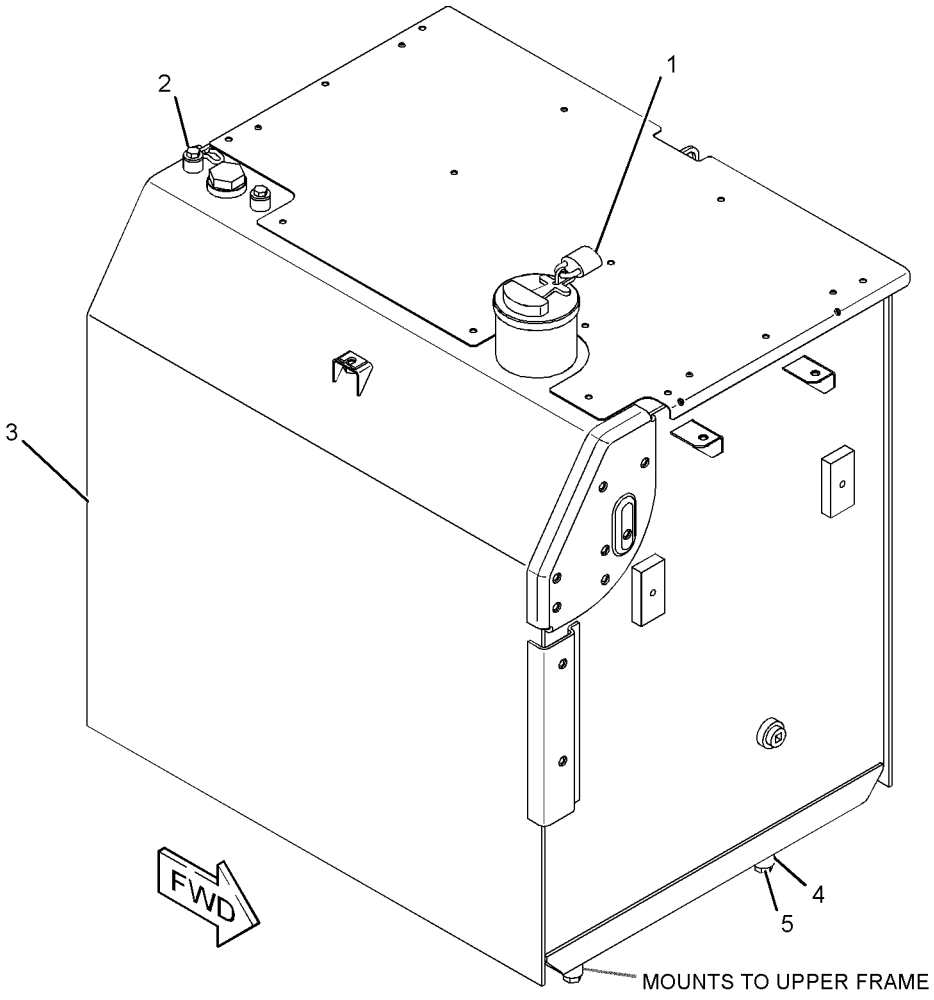

GRAPHIC #1 **<END>** g01197543

FUEL SYSTEM

237-8784 TANK GP-FUEL

S/N: B6H1-UP; JLP1-UP

PART OF 237-8783 TANK & MTG GP-FUEL

SMCS-1273 **i02495786**

NOTE	PART NUMBER	QTY	PART NAME 1 2 3 4 5 6 (PRODUCT LEVEL)	SEE PAGE
Y	*262-2222*	1	TANK GP-FUEL	209
			—OR—	
Y	*262-2223*	1	TANK GP-FUEL	213

Y-SEPARATE ILLUSTRATION

<END>

FUEL SYSTEM

262-2222 TANK GP-FUEL

S/N: B6H1-652; JLP1-737
615-L (162-US GAL)
PART OF 237-8784 TANK GP-FUEL

SMCS-1273 **i03200180**

NOTE	REF NO	GRAPHIC REF	PART NUMBER	QTY	PART NAME 1 2 3 4 5 6 (PRODUCT LEVEL)	SEE PAGE
	1	1	**4I-0378**	1	GASKET-RUBBER	
	2	1	**5P-4924**	1	ELBOW	
L	3	1	**7X-7700**	1	CAP AS-FILLER (FUEL TANK)	
		1	**9X-8600**	1	SEAL-O-RING	
	4	1	**003-7764**	1	END-HOSE	
	5	1	**128-4411**	1	VALVE AS (FUEL SHUTOFF)	
	6	1	**163-6700**	1	SENSOR GP-FUEL LEVEL	
		1	**186-3735**	2	PIN-CONNECTOR (16-GA TO 18-GA)	
		1	**102-8802**	1	KIT-RECEPTACLE (2-PIN)	
					(INCLUDES RECEPTACLE AS & WEDGE)	
J	8	1	**303-9933**	1	STRAINER AS-FUEL (FLOAT GAUGE)	
M	9	1	**095-0736**	5	SCREW-MACHINE (M5X0.8X10-MM)	
	10	1	**2S-4078**	1	SEAL-O-RING	
	11	1	**3B-0551**	1	PLUG-PIPE	
	12	1	**3J-1907**	1	SEAL-O-RING	
	13	1	**8T-0328**	5	WASHER-HARD (5.5X10X1-MM THK)	
	14	1	**9S-6130**	1	PLUG	
					PARTS SHOWN IN GRAPHIC(S) WITHOUT A REFERENCE NUMBER ARE NOT SERVICED SEPARATELY	
					AVAILABLE REPAIR KIT(S):	
J			**303-9937**	1	KIT-GAUGE (FUEL STRAINER) (FUEL STRAINER)	
					(INCLUDES STOPPER & GAUGE)	
L			**9X-2205**	1	KIT-CAP FILTER (FUEL TANK)	
					(INCLUDES FILTER AS, 2 SCREWS, 4 GASKETS & VALVE)	

J-KIT MARKED J SERVICED PART(S) MARKED J
L-KIT MARKED L SERVICES PART(S) MARKED L
M-METRIC PART

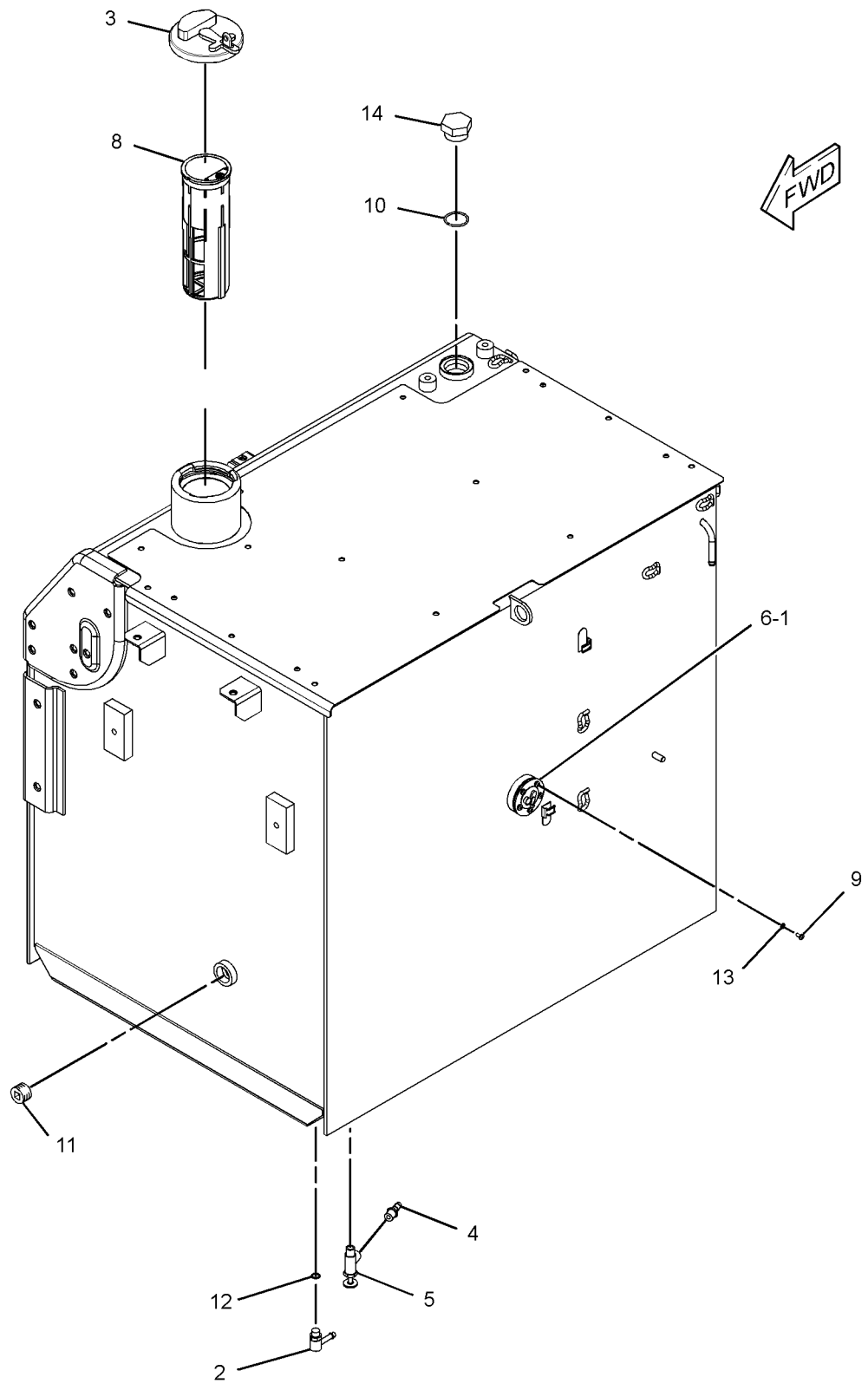

GRAPHIC #1 **<END>** g01429512

FUEL SYSTEM

262-2222 TANK GP-FUEL

S/N: B6H653-UP; JLP738-UP
615-L (162-US GAL)
PART OF 237-8784 TANK GP-FUEL

SMCS-1273 **i03201424**

NOTE	REF NO	GRAPHIC REF	PART NUMBER	QTY	PART NAME 1 2 3 4 5 6 (PRODUCT LEVEL)	SEE PAGE
	1	1	**4I-0378**	1	GASKET-RUBBER	
	2	1	**5P-4924**	1	ELBOW	
L	3	1	**7X-7700**	1	CAP AS-FILLER (FUEL TANK)	
		1	**9X-8600**	1	SEAL-O-RING	
C	4	1	*203-2059*	1	CONNECTOR AS	
		1	**6V-8397**	1	SEAL-O-RING	
		1	**8C-6869**	1	CONNECTOR	
	5	1	**128-4411**	1	VALVE AS (FUEL SHUTOFF)	
	6	1	**163-6700**	1	SENSOR GP-FUEL LEVEL	
		1	**186-3735**	2	PIN-CONNECTOR (16-GA TO 18-GA)	
		1	**102-8802**	1	KIT-RECEPTACLE (2-PIN)	
					(INCLUDES RECEPTACLE AS & WEDGE)	
	7	1	**9S-6130**	1	PLUG	
J	8	1	**303-9933**	1	STRAINER AS-FUEL (FLOAT GAUGE)	
M	9	1	**095-0736**	5	SCREW-MACHINE (M5X0.8X10-MM)	
	10	1	**2S-4078**	1	SEAL-O-RING	
	11	1	**3B-0551**	1	PLUG-PIPE	
	12	1	**3J-1907**	1	SEAL-O-RING	
	13	1	**8T-0328**	5	WASHER-HARD (5.5X10X1-MM THK)	
					PARTS SHOWN IN GRAPHIC(S) WITHOUT A REFERENCE NUMBER ARE NOT SERVICED SEPARATELY	
					AVAILABLE REPAIR KIT(S):	
J			**303-9937**	1	KIT-GAUGE (FUEL STRAINER) (FUEL STRAINER)	
					(INCLUDES STOPPER & GAUGE)	
L			**9X-2205**	1	KIT-CAP FILTER (FUEL TANK)	
					(INCLUDES FILTER AS, 2 SCREWS, 4 GASKETS & VALVE)	

C-CHANGE FROM PREVIOUS TYPE
J-KIT MARKED J SERVICED PART(S) MARKED J
L-KIT MARKED L SERVICES PART(S) MARKED L
M-METRIC PART

262-2222 **TANK GP-FUEL** *(contd.)* **i03201424**

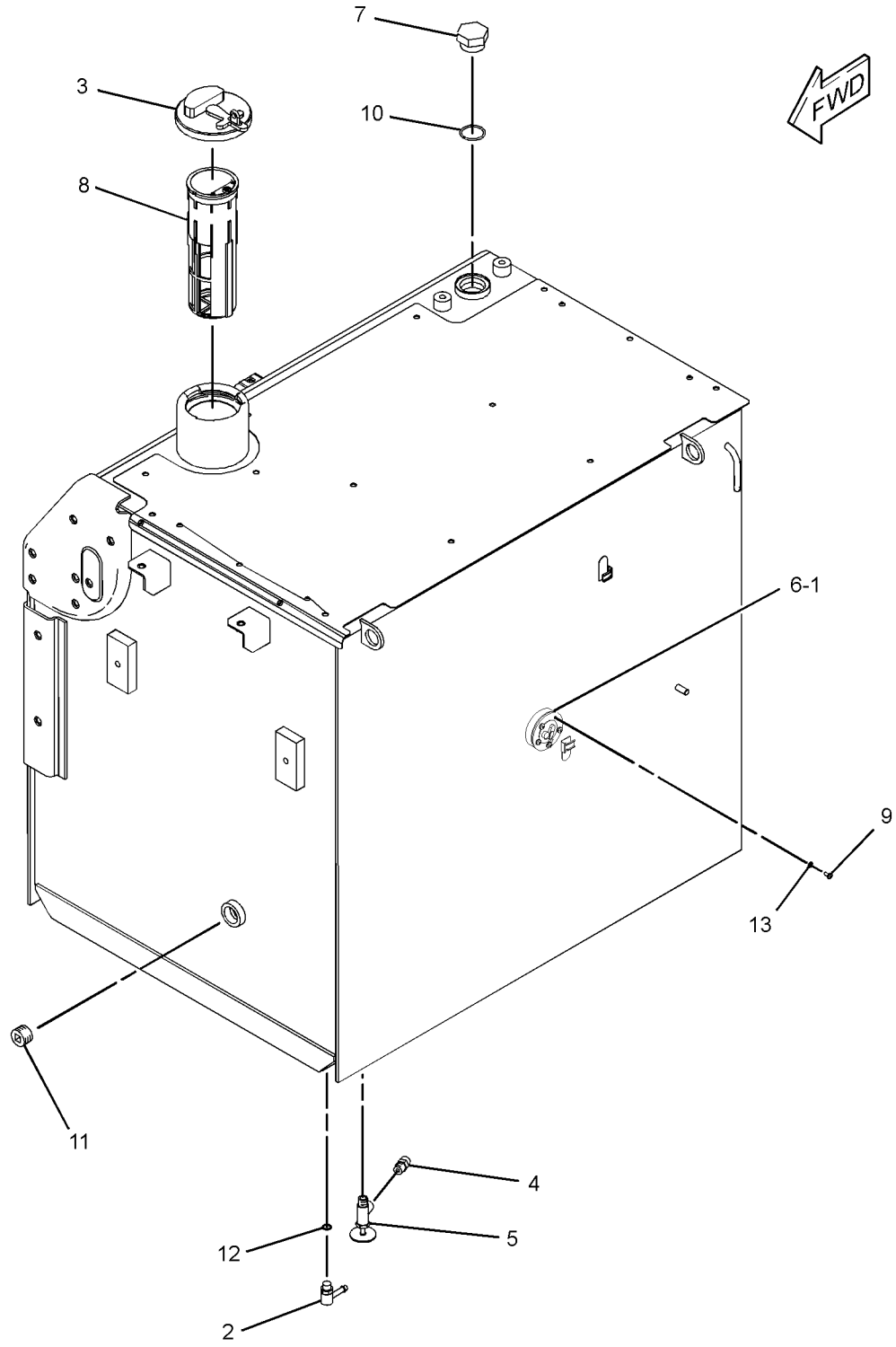

GRAPHIC #1 **<END>** g01618586

FUEL SYSTEM

262-2223 TANK GP-FUEL

S/N: B6H1-652; JLP1-737
615-L(162-US GAL)
PART OF 237-8784 TANK GP-FUEL

SMCS-1273 **i03171440**

NOTE	REF NO	GRAPHIC REF	PART NUMBER	QTY	PART NAME 1 2 3 4 5 6 (PRODUCT LEVEL)	SEE PAGE
	1	1	**4I-0378**	1	GASKET-RUBBER	
	2	1	**5P-4924**	1	ELBOW	
L	3	1	**7X-7700**	1	CAP AS-FILLER (FUEL TANK)	
		1	**9X-8600**	1	SEAL-O-RING	
	4	1	**003-7764**	1	END-HOSE	
	5	1	**128-4411**	1	VALVE AS (FUEL SHUTOFF)	
	6	1	**163-6700**	1	SENSOR GP-FUEL LEVEL	
		1	**186-3735**	2	PIN-CONNECTOR (16-GA TO 18-GA)	
		1	**102-8802**	1	KIT-RECEPTACLE (2-PIN)	
					(INCLUDES RECEPTACLE AS & WEDGE)	
J	8	1	**303-9933**	1	STRAINER AS-FUEL (FLOAT GAUGE)	
M	9	1	**095-0736**	5	SCREW-MACHINE (M5X0.8X10-MM)	
	10	1	**2S-4078**	1	SEAL-O-RING	
	11	1	**3B-0551**	1	PLUG-PIPE	
	12	1	**3J-1907**	1	SEAL-O-RING	
	13	1	**8T-0328**	5	WASHER-HARD (5.5X10X1-MM THK)	
	14	1	**9S-6130**	1	PLUG	
					PARTS SHOWN IN GRAPHIC(S) WITHOUT A REFERENCE NUMBER ARE NOT SERVICED SEPARATELY	
					AVAILABLE REPAIR KIT(S):	
J			**303-9937**	1	KIT-GAUGE (FUEL STRAINER) (FUEL STRAINER)	
					(INCLUDES STOPPER & GAUGE)	
L			**9X-2205**	1	KIT-CAP FILTER (FUEL TANK)	
					(INCLUDES FILTER AS, 2 SCREWS, 4 GASKETS & VALVE)	

J-KIT MARKED J SERVICED PART(S) MARKED J
L-KIT MARKED L SERVICES PART(S) MARKED L
M-METRIC PART

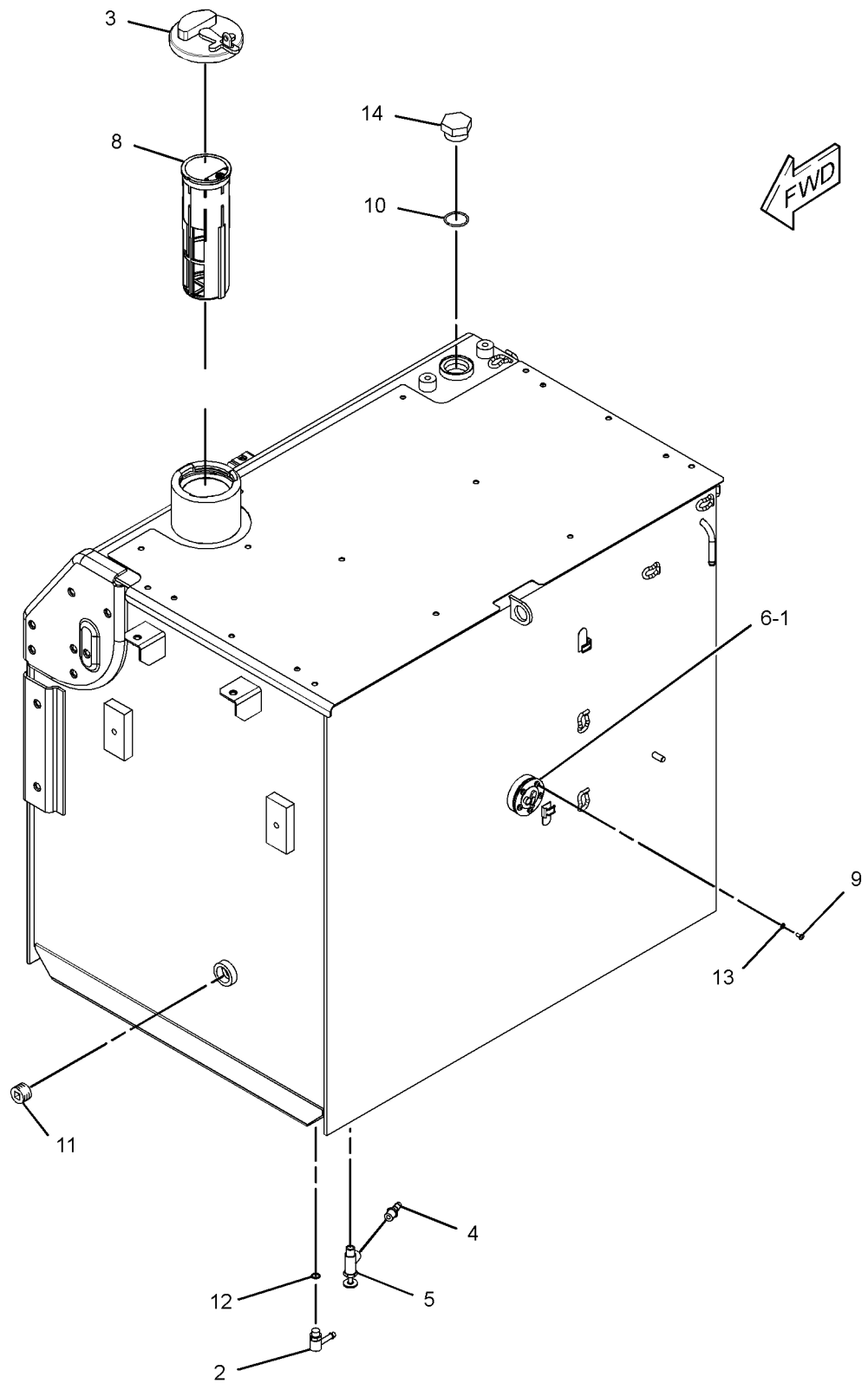

GRAPHIC #1 **<END>** g01429512

FUEL SYSTEM

262-2223 TANK GP-FUEL

S/N: B6H653-UP; JLP738-UP
615-L(162-US GAL)
PART OF 237-8784 TANK GP-FUEL

SMCS-1273 **i03201481**

NOTE	REF NO	GRAPHIC REF	PART NUMBER	QTY	PART NAME 1 2 3 4 5 6 (PRODUCT LEVEL)	SEE PAGE
	1	1	**4I-0378**	1	GASKET-RUBBER	
	2	1	**5P-4924**	1	ELBOW	
L	3	1	**7X-7700**	1	CAP AS-FILLER (FUEL TANK)	
		1	**9X-8600**	1	SEAL-O-RING	
C	4	1	*203-2059*	1	CONNECTOR AS	
		1	**6V-8397**	1	SEAL-O-RING	
		1	**8C-6869**	1	CONNECTOR	
	5	1	**128-4411**	1	VALVE AS (FUEL SHUTOFF)	
	6	1	**163-6700**	1	SENSOR GP-FUEL LEVEL	
		1	**186-3735**	2	PIN-CONNECTOR (16-GA TO 18-GA)	
		1	**102-8802**	1	KIT-RECEPTACLE (2-PIN)	
					(INCLUDES RECEPTACLE AS & WEDGE)	
	7	1	**9S-6130**	1	PLUG	
J	8	1	**303-9933**	1	STRAINER AS-FUEL (FLOAT GAUGE)	
M	9	1	**095-0736**	5	SCREW-MACHINE (M5X0.8X10-MM)	
	10	1	**2S-4078**	1	SEAL-O-RING	
	11	1	**3B-0551**	1	PLUG-PIPE	
	12	1	**3J-1907**	1	SEAL-O-RING	
	13	1	**8T-0328**	5	WASHER-HARD (5.5X10X1-MM THK)	
					PARTS SHOWN IN GRAPHIC(S) WITHOUT A REFERENCE NUMBER ARE NOT SERVICED SEPARATELY	
					AVAILABLE REPAIR KIT(S):	
J			**303-9937**	1	KIT-GAUGE (FUEL STRAINER) (FUEL STRAINER)	
					(INCLUDES STOPPER & GAUGE)	
L			**9X-2205**	1	KIT-CAP FILTER (FUEL TANK)	
					(INCLUDES FILTER AS, 2 SCREWS, 4 GASKETS & VALVE)	

C-CHANGE FROM PREVIOUS TYPE
J-KIT MARKED J SERVICED PART(S) MARKED J
L-KIT MARKED L SERVICES PART(S) MARKED L
M-METRIC PART

262-2223 **TANK GP-FUEL** *(contd.)* **i03201481**

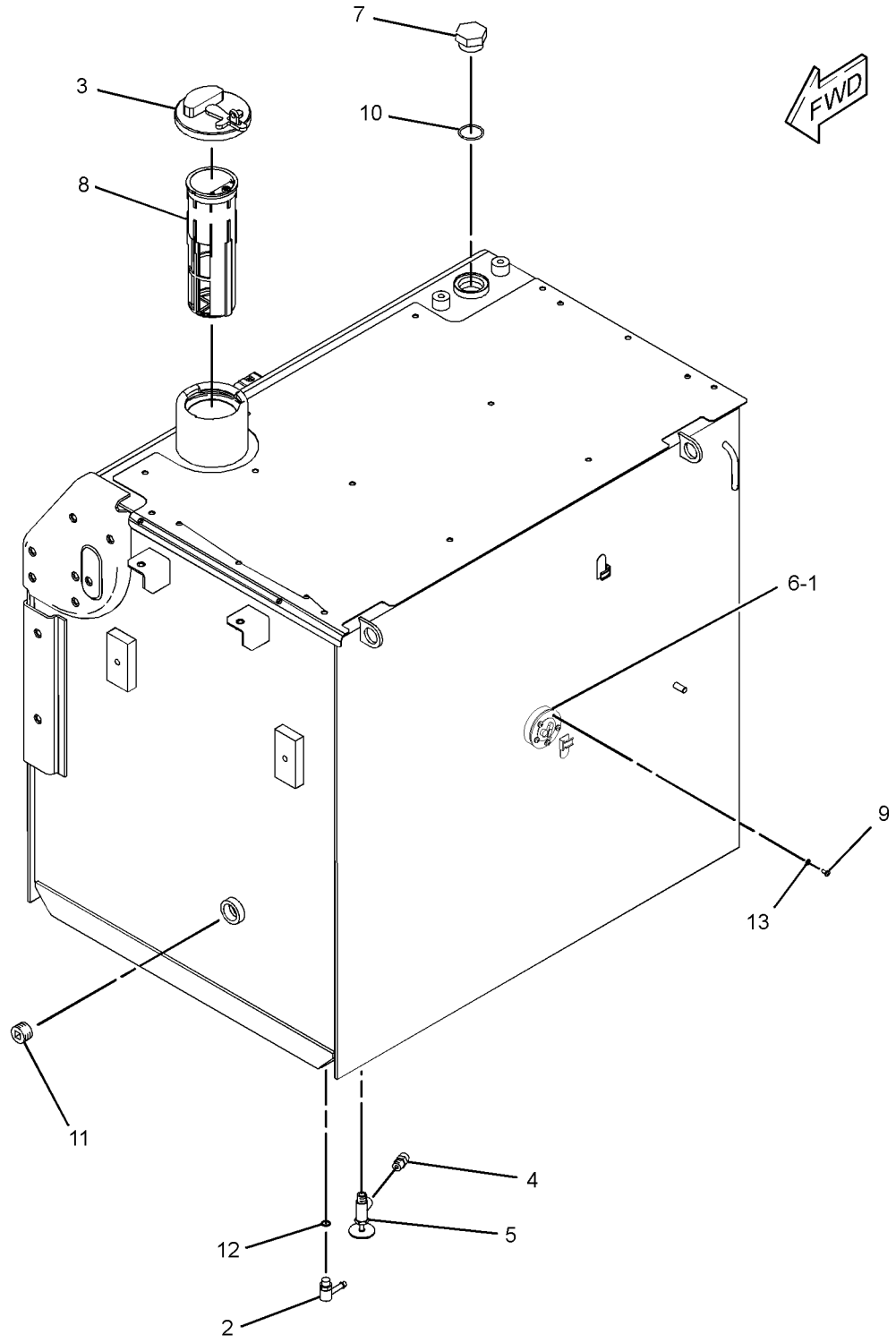

GRAPHIC #1 **<END>** g01618586

139-6873 VALVE GP-FUEL BYPASS

S/N: B6H1-UP; JLP1-UP
PART OF 237-8752 LINES GP-FUEL

SMCS-1250, 1261, 1715 **i01986136**

NOTE	REF NO	GRAPHIC REF	PART NUMBER	QTY	PART NAME 1 2 3 4 5 6 (PRODUCT LEVEL)	SEE PAGE
	1	1	**9X-7737**	1	SEAL-O-RING	

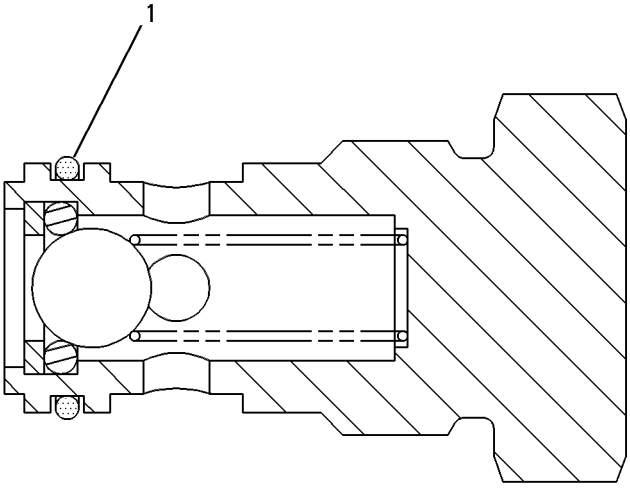

GRAPHIC #1 **<END>** g00266124

FUEL SYSTEM

298-3147 VALVE GP-FUEL SHUTOFF

S/N: B6H1-UP; JLP1-UP
PART OF 237-8752, 259-3918, 343-2392 LINES GP-FUEL
ALSO AN ATTACHMENT

SMCS-1273 **i02775704**

NOTE	REF NO	GRAPHIC REF	PART NUMBER	QTY	PART NAME 1 2 3 4 5 6 (PRODUCT LEVEL)	SEE PAGE
	1	1	**298-3257**	1	STOP	
	2	1	**298-3258**	1	LEVER	
M	3	1	**260-6692**	1	NUT (M5X0.8-THD)	
	4	1	**3J-1907**	1	SEAL-O-RING	
	5	1	**8T-0328**	1	WASHER-HARD (5.5X10X1-MM THK)	
					PARTS SHOWN IN GRAPHIC(S) WITHOUT A REFERENCE NUMBER ARE NOT SERVICED SEPARATELY	

M-METRIC PART

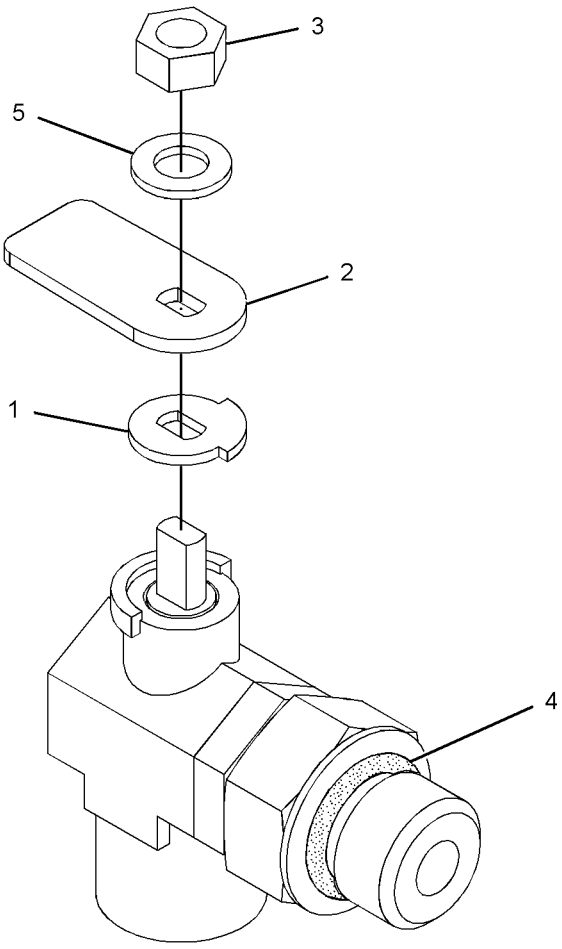

GRAPHIC #1 **<END>** g01377343

132-1829 ALARM GP–FAULT

S/N: B6H1-UP; JLP1-UP
24-VOLT
PART OF 251-0432 WIRING GP-CAB
ALSO AN ATTACHMENT

SMCS-7400, 7402, 7407 **i03601165**

NOTE	REF NO	GRAPHIC REF	PART NUMBER	QTY	PART NAME 1 2 3 4 5 6 (PRODUCT LEVEL)	SEE PAGE
	1	1	**102-8802**	1	KIT-RECEPTACLE (2-PIN)	
					(INCLUDES RECEPTACLE AS & WEDGE)	
	2	1	**186-3735**	2	PIN-CONNECTOR (16-GA TO 18-GA)	

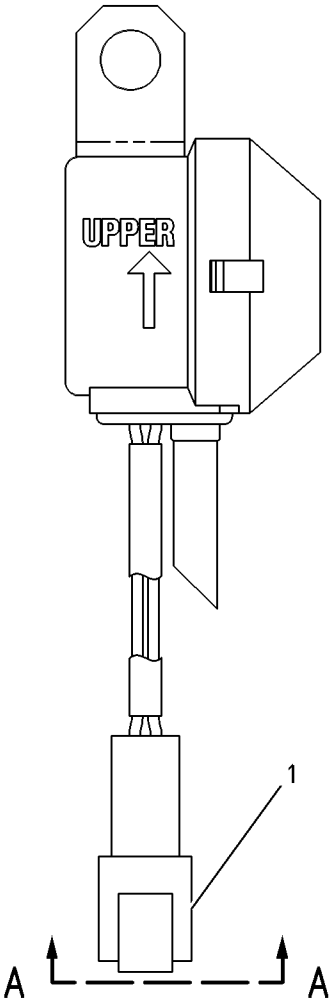

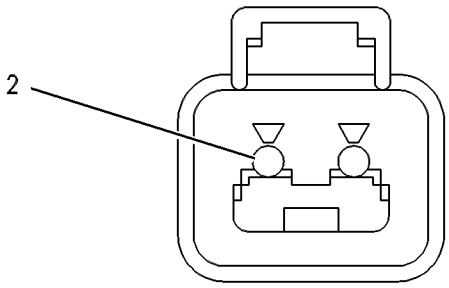

VIEW A-A

GRAPHIC #1 **<END>** g00272185

ELECTRICAL AND STARTING SYSTEM

231-1771 ALARM GP-TRAVEL

S/N: B6H1-UP; JLP1-UP
AN ATTACHMENT

SMCS-7429 **i03601166**

NOTE	REF NO	GRAPHIC REF	PART NUMBER	QTY	PART NAME 1 2 3 4 5 6 (PRODUCT LEVEL)	SEE PAGE
	1	1	**213-9100**	1	ALARM GP	
		1	**102-8802**	1	KIT-RECEPTACLE (2-PIN)	
					(INCLUDES RECEPTACLE AS & WEDGE)	
		1	**186-3735**	1	PIN-CONNECTOR (16-GA TO 18-GA)	
E		1	**9X-1813**		SLEEVE (29-CM)	
M	2	1	**8T-4189**	2	BOLT (M8X1.25X20-MM)	
	3	1	**5P-4116**	2	WASHER-HARD (8.8X20.5X2-MM THK)	

E-ORDER BY THE CENTIMETER
M-METRIC PART

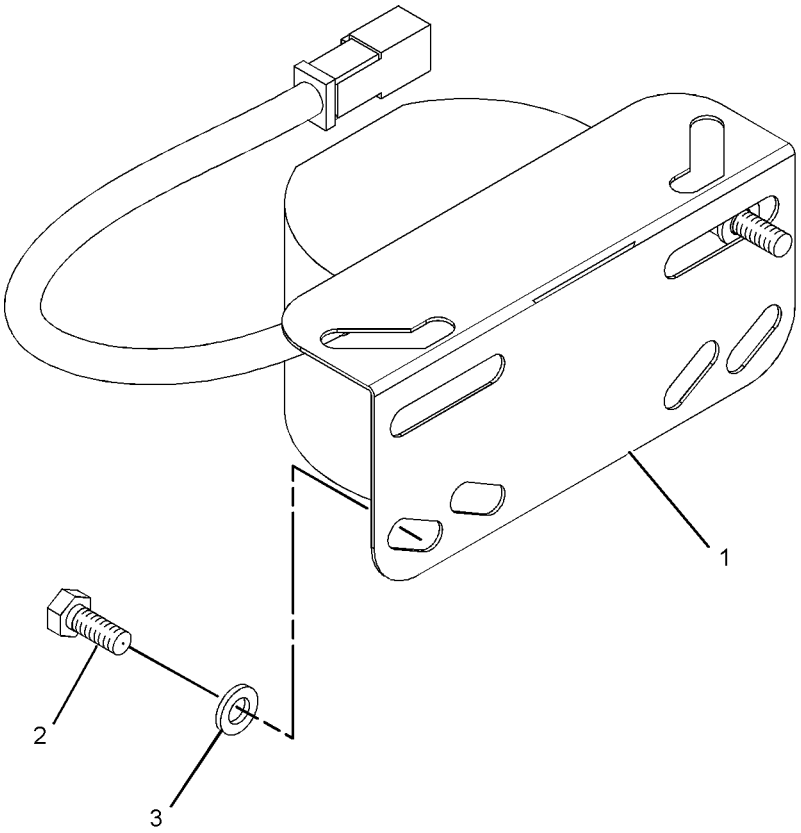

GRAPHIC #1 **<END>** g01071794

177-6972 ALTERNATOR GP-CHARGING

S/N: B6H529-UP; JLP220-UP; THX1-UP
24 VOLT, 65 AMPERE
PART OF 224-9843, 262-1359, 266-6263 ENGINE AR, 270-2771 ENGINE AR-COMPLETE

SMCS-1405 **i02246445**

NOTE	REF NO	GRAPHIC REF	PART NUMBER	QTY	PART NAME 1 2 3 4 5 6 (PRODUCT LEVEL)	SEE PAGE
	1	1	**129-5096**	1	PULLEY-ALTERNATOR	
YR	2	1	**185-5294**	1	ALTERNATOR GP-CHARGING (24-VOLT)	222
	3	1	**203-0199**	1	SPACER	
	4	1	**258-7531**	1	GUARD AS	
	5	1	**5P-2424**	1	BOLT (1/2-13X2.25-IN)	
	6	1	**6V-8188**	1	NUT (1/2-13-THD)	
	7	1	**7X-0339**	1	BOLT (1/2-13X6.25-IN)	
	8	1	**8T-4121**	1	WASHER-HARD (11X21X2.5-MM THK)	
M	9	1	**8T-4136**	1	BOLT (M10X1.5X25-MM)	
	10	1	**8T-4223**	3	WASHER-HARD (13.5X25.5X3-MM THK)	

M-METRIC PART
R-REMFG PART MAY BE AVAILABLE
Y-SEPARATE ILLUSTRATION

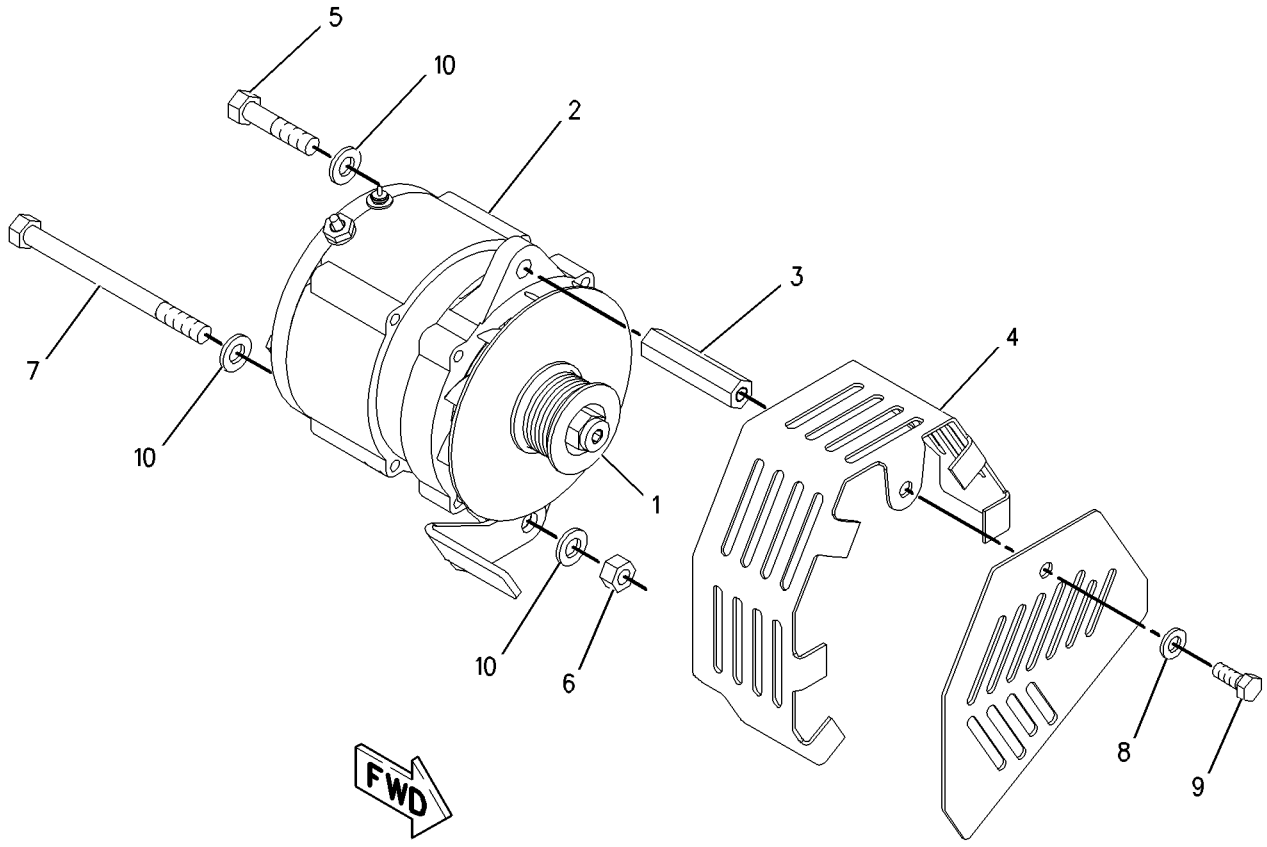

GRAPHIC #1 **<END>** g00775601

185-5294 ALTERNATOR GP-CHARGING*R

S/N: B6H529-UP; JLP220-UP; THX1-UP
24-VOLT, 65-AMPERE
PART OF 177-6972 ALTERNATOR GP-CHARGING

SMCS-1405 **i02941646**

NOTE	REF NO	GRAPHIC REF	PART NUMBER	QTY	PART NAME 1 2 3 4 5 6 (PRODUCT LEVEL)	SEE PAGE
	1	1	**185-2653**	1	FRAME	
	2	1	**5S-7349**	1	BOLT (1/4-20X0.5-IN)	
	3	1	**185-2639**	1	FAN AS	
	4	1	**1H-3244**	1	LOCKWASHER	
	5	1	**185-2645**	1	FRAME	
	6	1	**2K-4821**	1	LOCKNUT (5/8-18-THD)	
	7	1	**5P-8247**	1	WASHER-HARD (17X32X3.5-MM THK)	
	8	1	**185-2651**	1	COVER	
	9	1	**8T-4205**	1	WASHER-HARD (7.2X14.5X2-MM THK)	
	10	1	**185-2647**	1	GROMMET	
	11	1	**9L-6770**	1	CAP-DUST	
	12	1	**185-2642**	1	STATOR AS	
	13	1	**185-2638**	2	COLLAR	
	14	1	**185-2654**	1	PLATE	
	15	1	**185-2650**	1	ROTOR AS	
	16	1	**185-2644**	1	COIL AS	
	17	1	**185-2648**	1	REGULATOR AS-VOLTAGE (24-VOLT) (ALTERNATOR)	
	18	1	**6V-8189**	1	NUT (5/16-18-THD)	
	19	1	**8T-4224**	1	WASHER-HARD (8.8X16X2-MM THK)	
	20	1	**3F-9556**	1	LOCKWASHER	
					AVAILABLE REPAIR KIT(S):	
			185-2655		KIT-BEARING (ALTERNATOR)	
					(INCLUDES 2 BEARINGS)	
			199-8436		KIT-TERMINAL (ALTERNATOR)	
					(INCLUDES HOLDER AS, PLATE, INSULATOR, PIN, BOLT, GROMMET, & NUT)	
			199-7891		KIT-TERMINAL (ALTERNATOR)	
					(INCLUDES INSULATORS, WASHERS, & NUT)	
			185-2658		KIT-HARDWARE (ALTERNATOR)	
					(INCLUDES BOLTS)	

185-5294 **ALTERNATOR GP-CHARGING** *(contd.)* **i02941646**

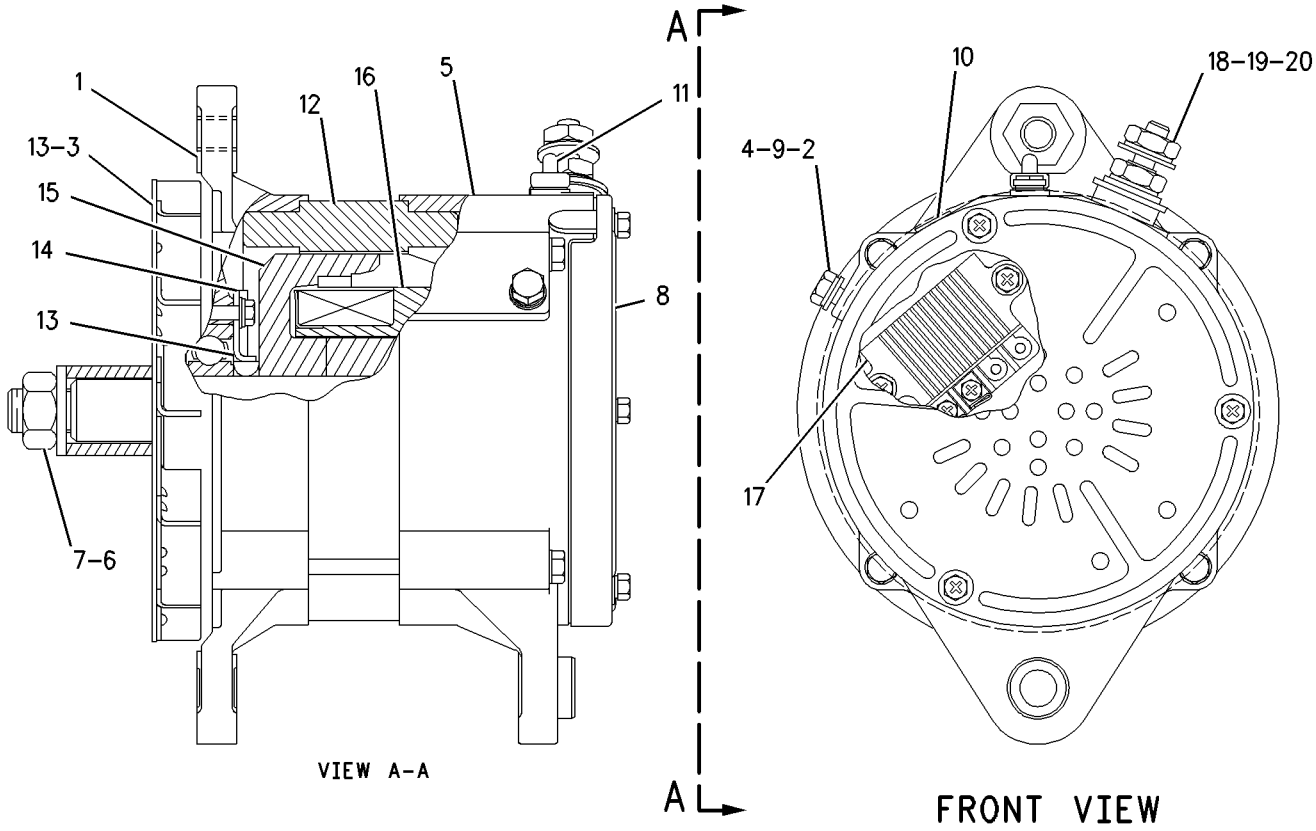

GRAPHIC #1 **<END>** g00806894

ELECTRICAL AND STARTING SYSTEM

251-0618 BATTERY & WIRING GP

S/N: B6H1-543; JLP1-238

PART OF 247-7386 CHASSIS AR

SMCS-1401, 1402, 1408 **i03601168**

NOTE	REF NO	GRAPHIC REF	PART NUMBER	QTY	PART NAME 1 2 3 4 5 6 (PRODUCT LEVEL)	SEE PAGE
	1	4	**2G-8767**	2	WASHER (10.5X60X3-MM THK)	
	2	2,3,5, 6,7	**3S-2093**	43	STRAP-CABLE	
	3	2	**3T-5760**	2	BATTERY (12-VOLT, MAINTENANCE FREE, WET)	
					(EACH INCLUDES)	
		2	**123-1373**	6	CAP AS-FILLER (BATTERY)	
	4	2	**5I-8270**	1	COVER-BATTERY	
	5	2	**6W-6005**	1	HOLD-DOWN-BATTERY	
	6	3,5	**7I-2673**	5	STRAP-CABLE	
	7	2,4,5, 6,7	**7K-1181**	22	STRAP-CABLE	
	8	2	**7Y-5456**	2	GROMMET	
	9	7	**7Y-8165**	2	GROMMET	
	10	3	**087-4587**	1	GROMMET	
	11	3	**107-8618**	1	SENSOR GP-TEMPERATURE (INLET AIR)	
		3	**102-8803**	1	KIT-RECEPTACLE (3-PIN)	
					(INCLUDES RECEPTACLE AS & WEDGE)	
		3	**112-4550**	1	SLEEVE	
		3	**186-3735**	1	PIN-CONNECTOR (16-GA TO 18-GA)	
	12	2,4,6, 7	**111-4836**	10	CLIP	
	13	2,3,4, 6,7	**111-4837**	12	CLIP	
	14	2,3,4, 5	**111-4838**	16	CLIP	
	15	2,3,4, 5	**111-4839**	16	STRAP	
	16	2,3,4, 6,7	**116-0118**	16	CLIP	
	17	5	**128-8886**	1	STRAP AS-GROUND	
	18	7	**130-1433**	1	SPACER (11X25X17-MM THK)	
	19	2	**132-1806**	1	STRAP AS-GROUND	
	20	4	**148-5018**	1	GROMMET	
	21	2	**170-6929**	1	CABLE AS	
E		2	**5P-0761**		CABLE (00-GA, RED) (31-CM)	
		2	**9G-0002**	1	COVER-TERMINAL (RED)	
		2	**9G-0005**	1	COVER-TERMINAL (BLACK)	
		2	**8C-5918**	1	TERMINAL AS (NEGATIVE)	
		2	**8T-9756**	1	TERMINAL AS (POSITIVE)	
					(EACH TERMINAL AS INCLUDES)	
		2	**1M-6119**	1	BOLT (5/16-18X1.375-IN)	
		2	**1M-6120**	1	NUT (5/16-18-THD)	
	22	5	**193-3509**	1	PLATE AS	
	23	7	**204-1611**	1	STRAP-CABLE	
	24	3	**204-1614**	1	BRACKET AS	
	25	2	**231-1827**	1	CABLE AS	
E		2	**5P-0747**		CABLE (00-GA, BLACK) (23-CM)	
		2	**1S-7252**	1	TERMINAL-CABLE (00-GA, 3/8-IN SCREW)	
		2	**9G-0003**	1	COVER AS-TERMINAL (BLACK)	
		2	**9G-8909**	1	COVER-TERMINAL (BLACK)	
		2	**8T-9757**	1	TERMINAL AS-BATTERY (NEGATIVE)	
		2	**1M-6119**	1	BOLT (5/16-18X1.375-IN)	
		2	**1M-6120**	1	NUT (5/16-18-THD)	
	26	2	**238-2501**	1	KNOB	
	27	2	**238-2528**	1	ROD	
	28	7	**251-0153**	1	BRACKET AS	
	29	2	**251-0467**	1	BRACKET AS	

251-0618 **BATTERY & WIRING GP** *(contd.)* **i03601168**

NOTE	REF NO	GRAPHIC REF	PART NUMBER	QTY	PART NAME 1 2 3 4 5 6 (PRODUCT LEVEL)	SEE PAGE
	30	3	**251-0625**	1	CABLE AS	
E		3	**5P-0761**		CABLE (00-GA, RED) (413-CM)	
		3	**1S-7251**	1	TERMINAL-CABLE (00-GA, 1/2-IN SCREW)	
		3	**8N-0869**	1	COVER-TERMINAL (RED)	
		3	**9G-0004**	1	COVER AS-TERMINAL (RED)	
		3	**8C-5917**	1	TERMINAL AS-BATTERY (POSITIVE)	
		3	**1M-6119**	1	BOLT (5/16-18X1.375-IN)	
		3	**1M-6120**	1	NUT (5/16-18-THD)	
	31	6	**259-5130**	1	BRACKET AS	
	32	6	**259-5132**	1	BRACKET AS	
	33	3	**275-6864**	1	HARNESS AS-CHASSIS	
		3	**102-8802**	4	KIT-RECEPTACLE (2-PIN)	
		3	**102-8803**	3	KIT-RECEPTACLE (3-PIN)	
		3	**102-8804**	1	KIT-RECEPTACLE (4-PIN)	
		3	**102-8806**	1	KIT-RECEPTACLE (8-PIN)	
					(EACH RECEPTACLE KIT INCLUDES RECEPTACLE AS & WEDGE)	
		3	**174-3016**	2	PLUG AS-CONNECTOR (3-PIN)	
		3	**155-2260**	4	KIT-CONNECTING PLUG (3-PIN)	
		3	**155-2270**	19	KIT-CONNECTING PLUG (2-PIN)	
		3	**155-2271**	1	KIT-CONNECTING PLUG (4-PIN)	
					(EACH PLUG KIT INCLUDES PLUG AS, WEDGE & INTERFACE SEAL)	
		3	**153-2620**	1	PLUG AS-CONNECTOR (54-PIN, BLACK)	
		3	**159-9322**	1	SEAL-O-RING	
		3	**153-2630**	1	PLUG AS-CONNECTOR (54-PIN, BROWN)	
		3	**159-9322**	1	SEAL-O-RING	
		3	**160-7689**	1	PLUG AS-CONNECTOR (70-PIN)	
		3	**159-9322**	1	SEAL-O-RING	
		3	**230-4009**	2	PLUG AS-CONNECTOR (12-PIN)	
		3	**230-4011**	8	PLUG AS-CONNECTOR (2-PIN)	
		3	**230-4013**	2	PLUG AS-CONNECTOR (3-PIN)	
		3	**230-5010**	2	PLUG AS-CONNECTOR (6-PIN)	
		3	**231-2295**	1	PLUG AS-CONNECTOR (8-PIN)	
		3	**163-6637**	1	RECEPTACLE AS-CONNECTOR (54-PIN, BLACK)	
		3	**243-4505**	7	RECEPTACLE AS-CONNECTOR (2-PIN)	
		3	**243-4506**	2	RECEPTACLE AS-CONNECTOR (3-PIN)	
		3	**243-4508**	2	RECEPTACLE AS-CONNECTOR (6-PIN)	
		3	**243-4509**	1	RECEPTACLE AS-CONNECTOR (8-PIN)	
		3	**243-4510**	2	RECEPTACLE AS-CONNECTOR (12-PIN)	
	34	5,7	**132-5789**	5	CLIP	
	35	3	**4K-8864**	2	CLIP	
	36	3	**4N-0205**	1	SPACER (0.42X0.75X0.6-IN THK)	
	37	5	**4P-7428**	1	CLIP	
	38	6	**4P-7429**	1	CLIP	
M	39	2	**5C-7261**	1	NUT (M8X1.25-THD)	
M	40	2	**5C-7883**	4	BOLT-SOCKET HEAD (M6X1X16-MM)	
	41	6	**5P-4116**	1	WASHER-HARD (8.8X20.5X2-MM THK)	
	42	7	**5P-8439**	1	GROMMET	
	43	4	**6G-2256**	2	CLAMP	
	44	2,4	**6G-2263**	3	SPACER (10.5X19X28.5-MM THK)	
	45	3,4	**6K-8178**	6	CLIP	
M	46	6	**7X-2548**	1	BOLT (M12X1.75X16-MM)	
M	47	2,3,4, 7	**7X-2621**	7	BOLT (M10X1.5X12-MM)	
	48	6	**8B-6561**	2	SPACER (5.56X22.22X55.58-MM THK)	
	49	2	**8M-2770**	1	CLIP	
	50	2,3,4, 5,6,7	**8T-4121**	64	WASHER-HARD (11X21X2.5-MM THK)	
M	51	2	**8T-4133**	1	NUT (M10X1.5-THD)	

251-0618 **BATTERY & WIRING GP** *(contd.)* **i03601168**

NOTE	REF NO	GRAPHIC REF	PART NUMBER	QTY	PART NAME 1 2 3 4 5 6 (PRODUCT LEVEL)	SEE PAGE
M	52	2,3,5, 6,7	**8T-4136**	9	BOLT (M10X1.5X25-MM)	
M	53	2,3,4, 6,7	**8T-4137**	21	BOLT (M10X1.5X20-MM)	
M	54	6	**8T-4178**	2	BOLT (M10X1.5X90-MM)	
M	55	2	**8T-4185**	1	BOLT (M10X1.5X50-MM)	
M	56	3	**8T-4186**	1	BOLT (M10X1.5X40-MM)	
M	57	2,3,4, 5,6,7	**8T-4191**	10	BOLT (M10X1.5X16-MM)	
M	58	2,7	**8T-4195**	4	BOLT (M10X1.5X30-MM)	
M	59	3,4,7	**8T-4196**	7	BOLT (M10X1.5X35-MM)	
M	60	6	**8T-4199**	1	BOLT (M8X1.25X12-MM)	
	61	6	**8T-4223**	1	WASHER-HARD (13.5X25.5X3-MM THK)	
	62	2	**8T-4226**	1	WASHER-PLATED (10.5X45X3-MM THK)	
M	63	4	**8T-5005**	1	BOLT (M10X1.5X70-MM)	
M	64	4	**8T-6466**	1	BOLT (M10X1.5X60-MM)	
	65	2	**9X-8256**	4	WASHER (6.6X12X2-MM THK)	

E-ORDER BY THE CENTIMETER
M-METRIC PART

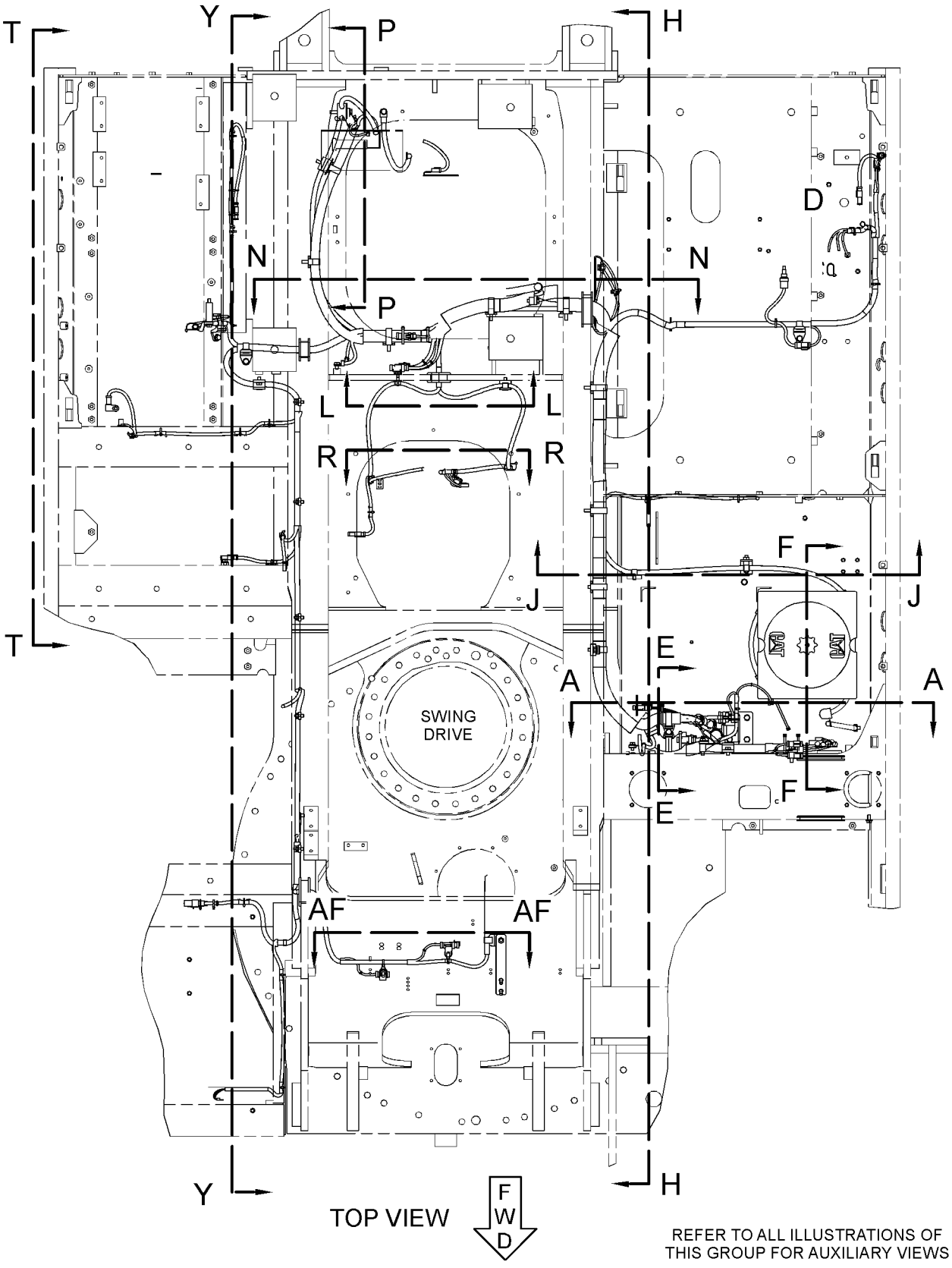

GRAPHIC #1

g01314834

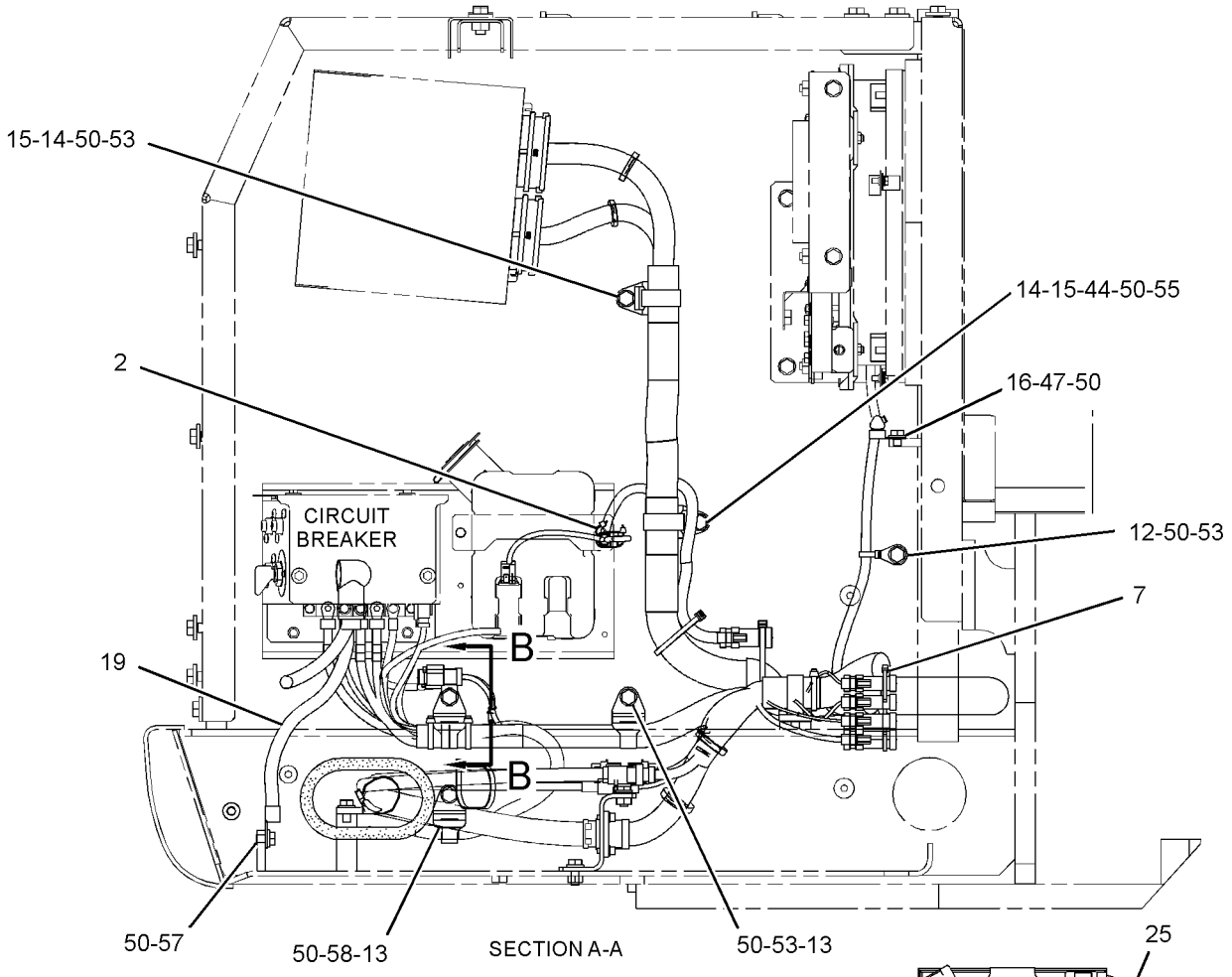

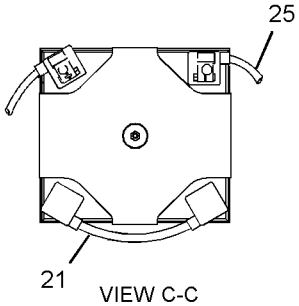

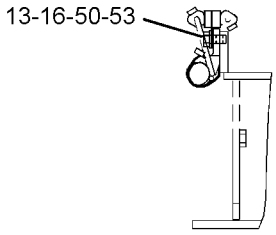

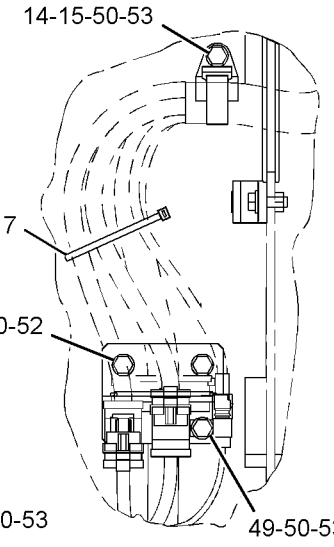

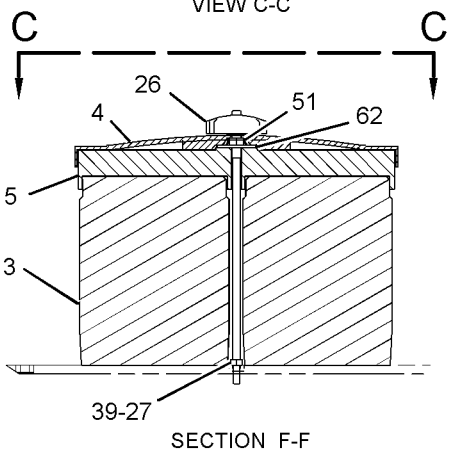

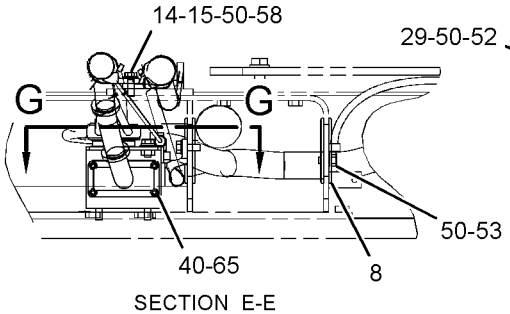

GRAPHIC #2

g01314835

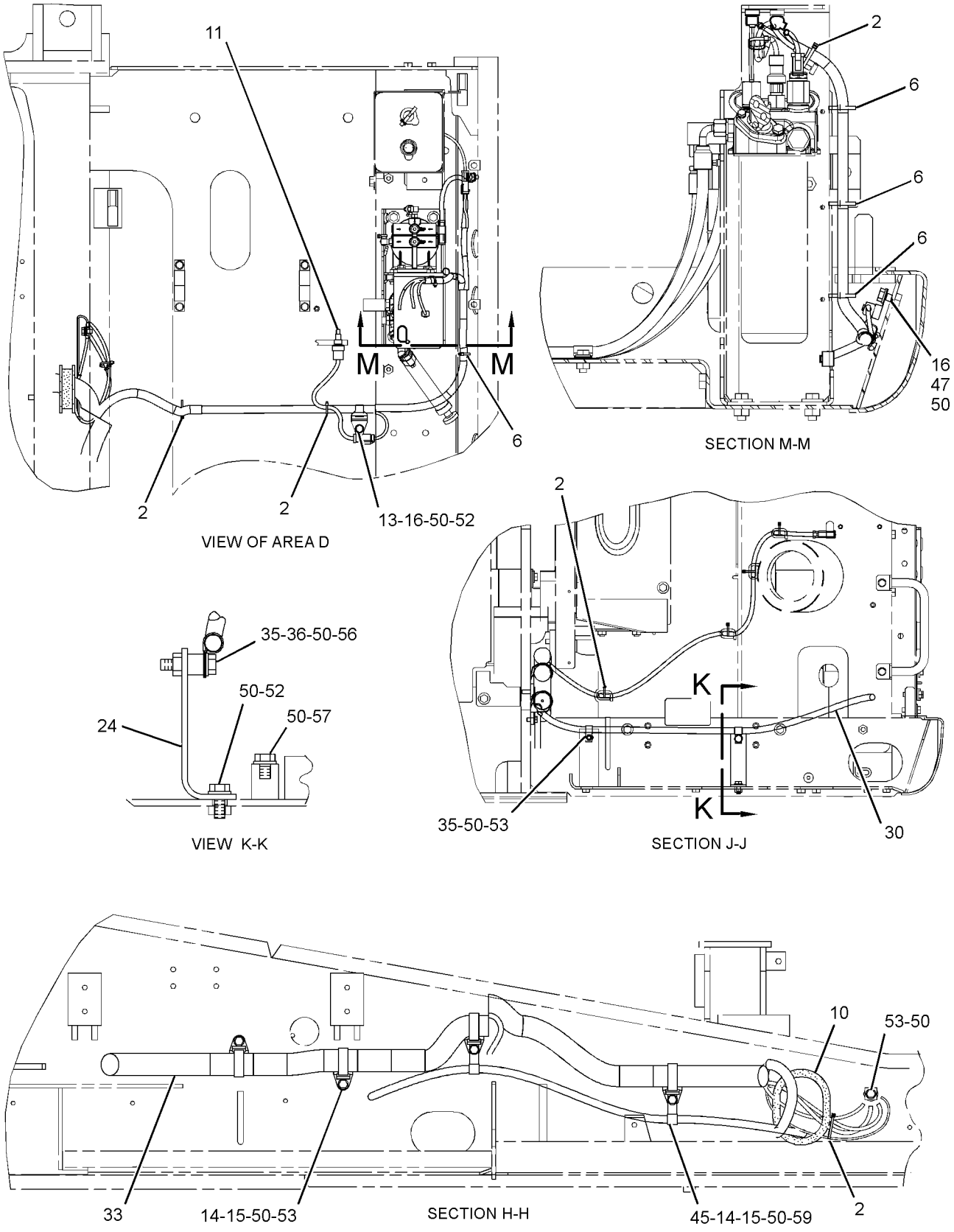

GRAPHIC #3

g01314837

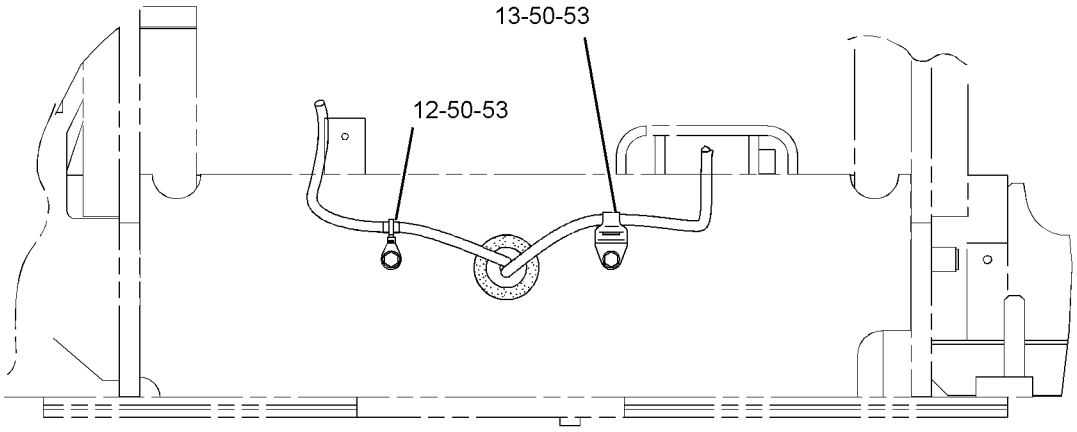

VIEW L-L

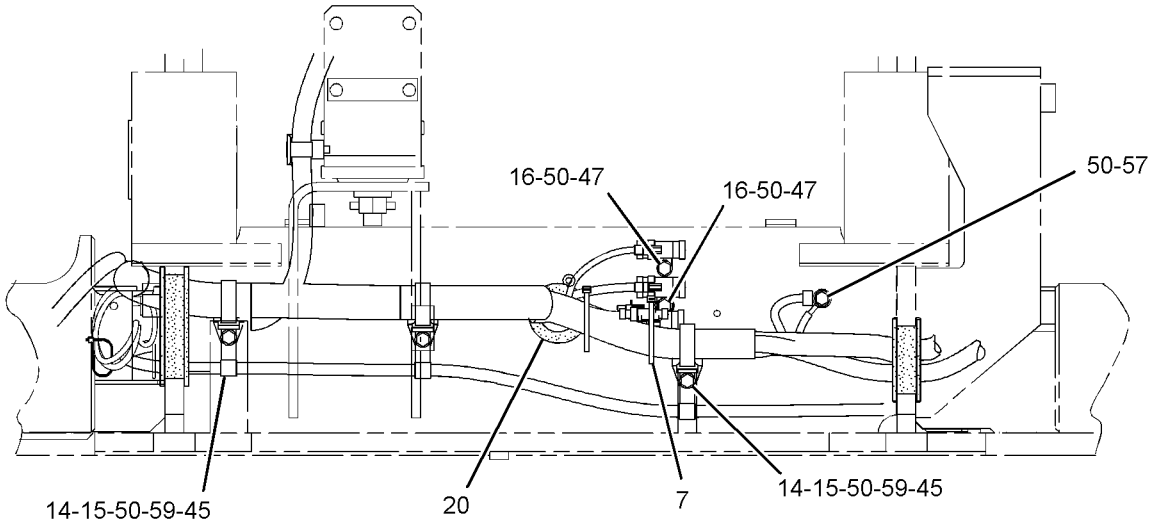

VIEW N-N

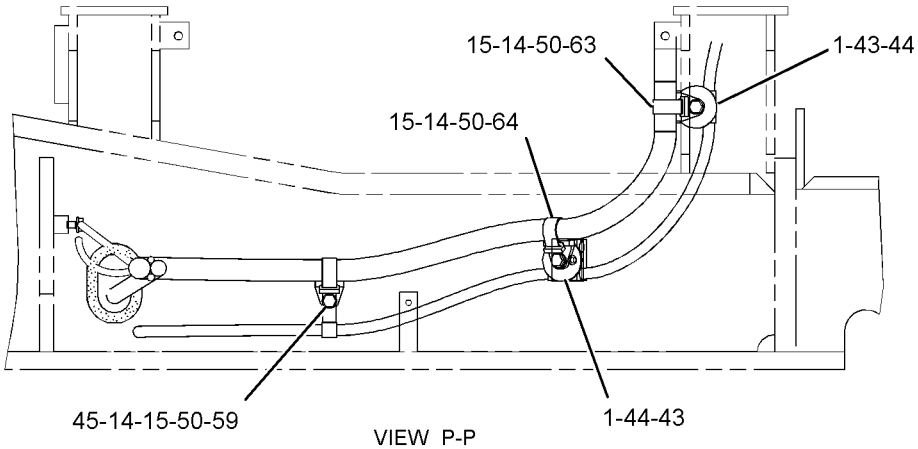

VIEW P-P

GRAPHIC #4 g01314838

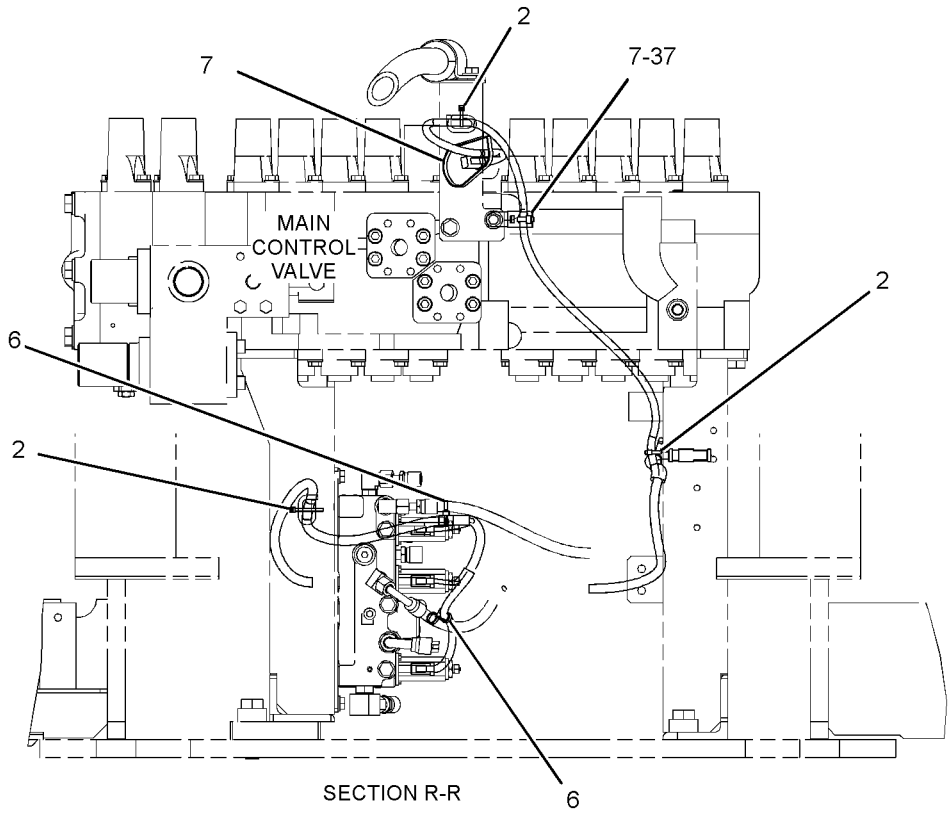

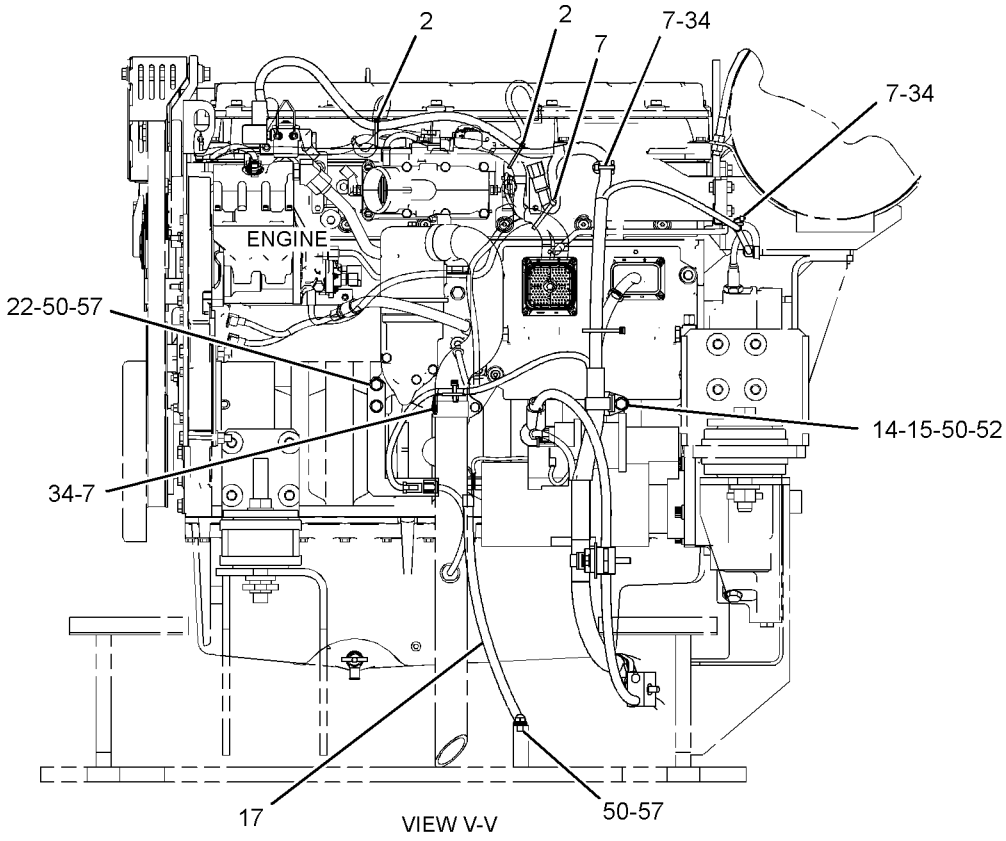

GRAPHIC #5

g01314839

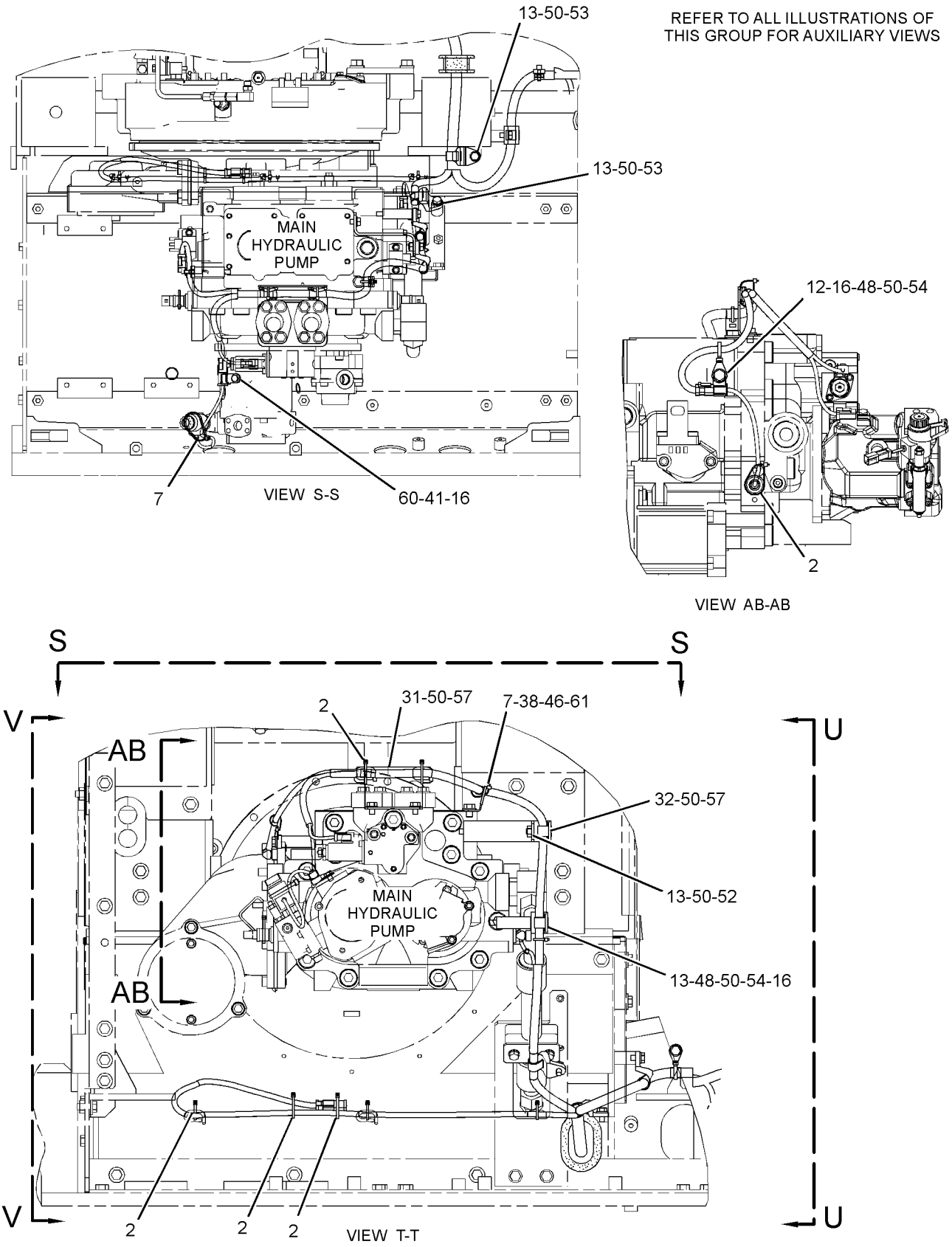

GRAPHIC #6

g01314840

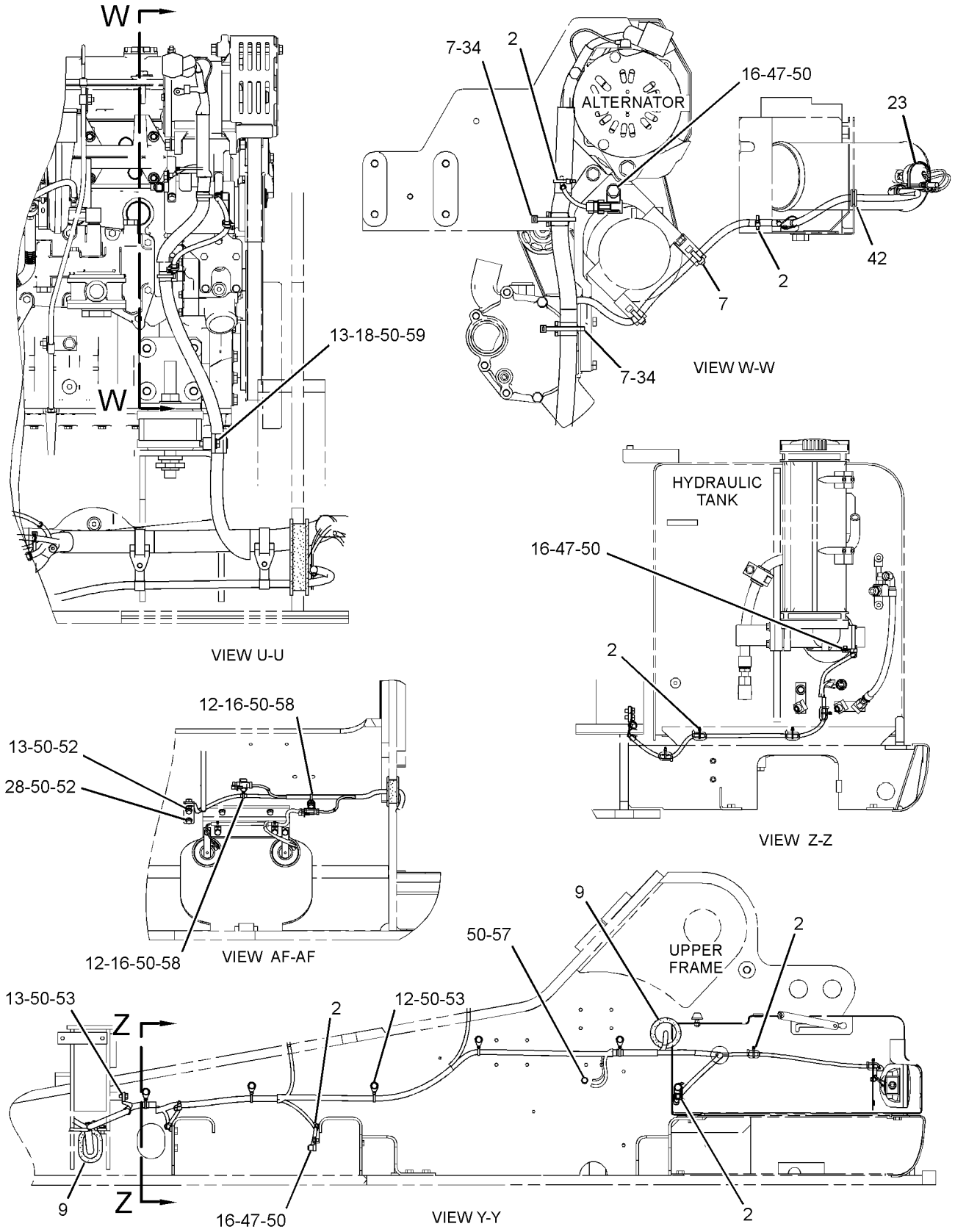

GRAPHIC #7 **<END>** g01314841

ELECTRICAL AND STARTING SYSTEM

251-0618 BATTERY & WIRING GP

S/N: B6H544-652; JLP239-737
PART OF 247-7386 CHASSIS AR

SMCS-1401, 1402, 1408 **i03628998**

NOTE	REF NO	GRAPHIC REF	PART NUMBER	QTY	PART NAME 1 2 3 4 5 6 (PRODUCT LEVEL)	SEE PAGE
	1	4	**2G-8767**	2	WASHER (10.5X60X3-MM THK)	
	2	2,3,5, 6,7	**3S-2093**	43	STRAP-CABLE	
	3	2	**3T-5760**	2	BATTERY (12-VOLT, MAINTENANCE FREE, WET)	
					(EACH INCLUDES)	
		2	**123-1373**	6	CAP AS-FILLER (BATTERY)	
	4	2	**5I-8270**	1	COVER-BATTERY	
	5	2	**6W-6005**	1	HOLD-DOWN-BATTERY	
	6	3,5	**7I-2673**	5	STRAP-CABLE	
	7	2,4,5, 6,7	**7K-1181**	22	STRAP-CABLE	
	8	2	**7Y-5456**	2	GROMMET	
	9	7	**7Y-8165**	2	GROMMET	
	10	3	**087-4587**	1	GROMMET	
	11	3	**107-8618**	1	SENSOR GP-TEMPERATURE (INLET AIR)	
		3	**102-8803**	1	KIT-RECEPTACLE (3-PIN)	
					(INCLUDES RECEPTACLE AS & WEDGE)	
E		3	**112-4550**		SLEEVE (31-CM)	
		3	**186-3735**	3	PIN-CONNECTOR (16-GA TO 18-GA)	
	12	2,4,6, 7	**111-4836**	10	CLIP	
	13	2,3,4, 6,7	**111-4837**	12	CLIP	
	14	2,3,4, 5	**111-4838**	16	CLIP	
	15	2,3,4, 5	**111-4839**	16	STRAP	
	16	2,3,4, 6,7	**116-0118**	16	CLIP	
	17	5	**128-8886**	1	STRAP AS-GROUND	
	18	7	**130-1433**	1	SPACER (11X25X17-MM THK)	
	19	2	**132-1806**	1	STRAP AS-GROUND	
	20	4	**148-5018**	1	GROMMET	
	21	2	**170-6929**	1	CABLE AS	
E		2	**5P-0761**		CABLE (00-GA, RED) (31-CM)	
		2	**9G-0002**	1	COVER-TERMINAL (RED)	
		2	**9G-0005**	1	COVER-TERMINAL (BLACK)	
		2	**8C-5918**	1	TERMINAL AS (NEGATIVE)	
		2	**8T-9756**	1	TERMINAL AS (POSITIVE)	
					(EACH TERMINAL AS INCLUDES)	
		2	**1M-6119**	1	BOLT (5/16-18X1.375-IN)	
		2	**1M-6120**	1	NUT (5/16-18-THD)	
C	22	5	**291-7780**	1	BRACKET AS	
	23	7	**204-1611**	1	STRAP-CABLE	
	24	3	**204-1614**	1	BRACKET AS	
	25	2	**231-1827**	1	CABLE AS	
E		2	**5P-0747**		CABLE (00-GA, BLACK) (23-CM)	
		2	**1S-7252**	1	TERMINAL-CABLE (00-GA, 3/8-IN SCREW)	
		2	**9G-0003**	1	COVER AS-TERMINAL (BLACK)	
		2	**9G-8909**	1	COVER-TERMINAL (BLACK)	
		2	**8T-9757**	1	TERMINAL AS-BATTERY (NEGATIVE)	
		2	**1M-6119**	1	BOLT (5/16-18X1.375-IN)	
		2	**1M-6120**	1	NUT (5/16-18-THD)	
	26	2	**238-2501**	1	KNOB	
	27	2	**238-2528**	1	ROD	
	28	7	**251-0153**	1	BRACKET AS	
	29	2	**251-0467**	1	BRACKET AS	

251-0618 **BATTERY & WIRING GP** *(contd.)* **i03628998**

NOTE	REF NO	GRAPHIC REF	PART NUMBER	QTY	PART NAME 1 2 3 4 5 6 (PRODUCT LEVEL)	SEE PAGE
	30	3	**251-0625**	1	CABLE AS	
E		3	**5P-0761**		CABLE (00-GA, RED) (413-CM)	
		3	**1S-7251**	1	TERMINAL-CABLE (00-GA, 1/2-IN SCREW)	
		3	**8N-0869**	1	COVER-TERMINAL (RED)	
		3	**9G-0004**	1	COVER AS-TERMINAL (RED)	
		3	**8C-5917**	1	TERMINAL AS-BATTERY (POSITIVE)	
		3	**1M-6119**	1	BOLT (5/16-18X1.375-IN)	
		3	**1M-6120**	1	NUT (5/16-18-THD)	
	31	6	**259-5130**	1	BRACKET AS	
	32	6	**259-5132**	1	BRACKET AS	
	33	3	**283-2933**	1	HARNESS AS-CHASSIS	
		3	**3S-2093**	33	STRAP-CABLE	
		3	**102-8802**	4	KIT-RECEPTACLE (2-PIN)	
		3	**102-8803**	3	KIT-RECEPTACLE (3-PIN)	
		3	**102-8804**	1	KIT-RECEPTACLE (4-PIN)	
		3	**102-8806**	1	KIT-RECEPTACLE (8-PIN)	
					(EACH RECEPTACLE KIT INCLUDES RECEPTACLE AS & WEDGE)	
		3	**174-3016**	2	PLUG AS-CONNECTOR (3-PIN)	
		3	**155-2260**	4	KIT-CONNECTING PLUG (3-PIN)	
		3	**155-2270**	18	KIT-CONNECTING PLUG (2-PIN)	
		3	**155-2271**	1	KIT-CONNECTING PLUG (4-PIN)	
					(EACH PLUG KIT INCLUDES PLUG AS, WEDGE & INTERFACE SEAL)	
		3	**153-2620**	1	PLUG AS-CONNECTOR (54-PIN, BLACK)	
		3	**163-6759**	1	SEAL	
		3	**153-2630**	1	PLUG AS-CONNECTOR (54-PIN, BROWN)	
		3	**163-6759**	1	SEAL	
		3	**160-7689**	1	PLUG AS-CONNECTOR (70-PIN)	
		3	**159-9322**	1	SEAL-O-RING	
		3	**230-4009**	2	PLUG AS-CONNECTOR (12-PIN)	
		3	**230-4011**	8	PLUG AS-CONNECTOR (2-PIN)	
		3	**230-4013**	2	PLUG AS-CONNECTOR (3-PIN)	
		3	**230-5010**	2	PLUG AS-CONNECTOR (6-PIN)	
		3	**231-2295**	1	PLUG AS-CONNECTOR (8-PIN)	
		3	**163-6637**	1	RECEPTACLE AS-CONNECTOR (54-PIN, BLACK)	
		3	**243-4505**	7	RECEPTACLE AS-CONNECTOR (2-PIN)	
		3	**243-4506**	2	RECEPTACLE AS-CONNECTOR (3-PIN)	
		3	**243-4508**	2	RECEPTACLE AS-CONNECTOR (6-PIN)	
		3	**243-4509**	1	RECEPTACLE AS-CONNECTOR (8-PIN)	
		3	**243-4510**	2	RECEPTACLE AS-CONNECTOR (12-PIN)	
	34	5,7	**132-5789**	5	CLIP	
	35	3	**4K-8864**	2	CLIP	
	36	3	**4N-0205**	1	SPACER (0.42X0.75X0.6-IN THK)	
	37	5	**4P-7428**	1	CLIP	
	38	6	**4P-7429**	1	CLIP	
M	39	2	**5C-7261**	1	NUT (M8X1.25-THD)	
M	40	2	**5C-7883**	4	BOLT-SOCKET HEAD (M6X1X16-MM)	
	41	6	**5P-4116**	1	WASHER-HARD (8.8X20.5X2-MM THK)	
	42	7	**5P-8439**	1	GROMMET	
	43	4	**6G-2256**	2	CLAMP	
	44	2,4	**6G-2263**	3	SPACER (10.5X19X28.5-MM THK)	
	45	3,4	**6K-8178**	6	CLIP	
M	46	6	**7X-2548**	1	BOLT (M12X1.75X16-MM)	
M	47	2,3,4, 7	**7X-2621**	7	BOLT (M10X1.5X12-MM)	
	48	6	**8B-6561**	2	SPACER (5.56X22.22X55.58-MM THK)	
	49	2	**8M-2770**	1	CLIP	
C	50	2,3,4, 5,6,7	**8T-4121**	62	WASHER-HARD (11X21X2.5-MM THK)	

251-0618 **BATTERY & WIRING GP** *(contd.)* **i03628998**

NOTE	REF NO	GRAPHIC REF	PART NUMBER	QTY	PART NAME 1 2 3 4 5 6 (PRODUCT LEVEL)	SEE PAGE
M	51	2	**8T-4133**	1	NUT (M10X1.5-THD)	
M	52	2,3,5, 6,7	**8T-4136**	9	BOLT (M10X1.5X25-MM)	
M	53	2,3,4, 6,7	**8T-4137**	21	BOLT (M10X1.5X20-MM)	
M	54	6	**8T-4178**	2	BOLT (M10X1.5X90-MM)	
M	55	2	**8T-4185**	1	BOLT (M10X1.5X50-MM)	
M	56	3	**8T-4186**	1	BOLT (M10X1.5X40-MM)	
CM	57	2,3,4, 5,6,7	**8T-4191**	8	BOLT (M10X1.5X16-MM)	
M	58	2,7	**8T-4195**	4	BOLT (M10X1.5X30-MM)	
CM	59	3,4,7	**8T-4196**	6	BOLT (M10X1.5X35-MM)	
M	60	6	**8T-4199**	1	BOLT (M8X1.25X12-MM)	
	61	6	**8T-4223**	1	WASHER-HARD (13.5X25.5X3-MM THK)	
	62	2	**8T-4226**	1	WASHER-PLATED (10.5X45X3-MM THK)	
M	63	4	**8T-5005**	1	BOLT (M10X1.5X70-MM)	
M	64	4	**8T-6466**	1	BOLT (M10X1.5X60-MM)	
	65	2	**9X-8256**	4	WASHER (6.6X12X2-MM THK)	
CM	66	4	**8T-4182**	1	BOLT (M10X1.5X45-MM)	
C	67	4	**091-9035**	1	SPACER (11X25X20-MM THK)	

C-CHANGE FROM PREVIOUS TYPE
E-ORDER BY THE CENTIMETER
M-METRIC PART

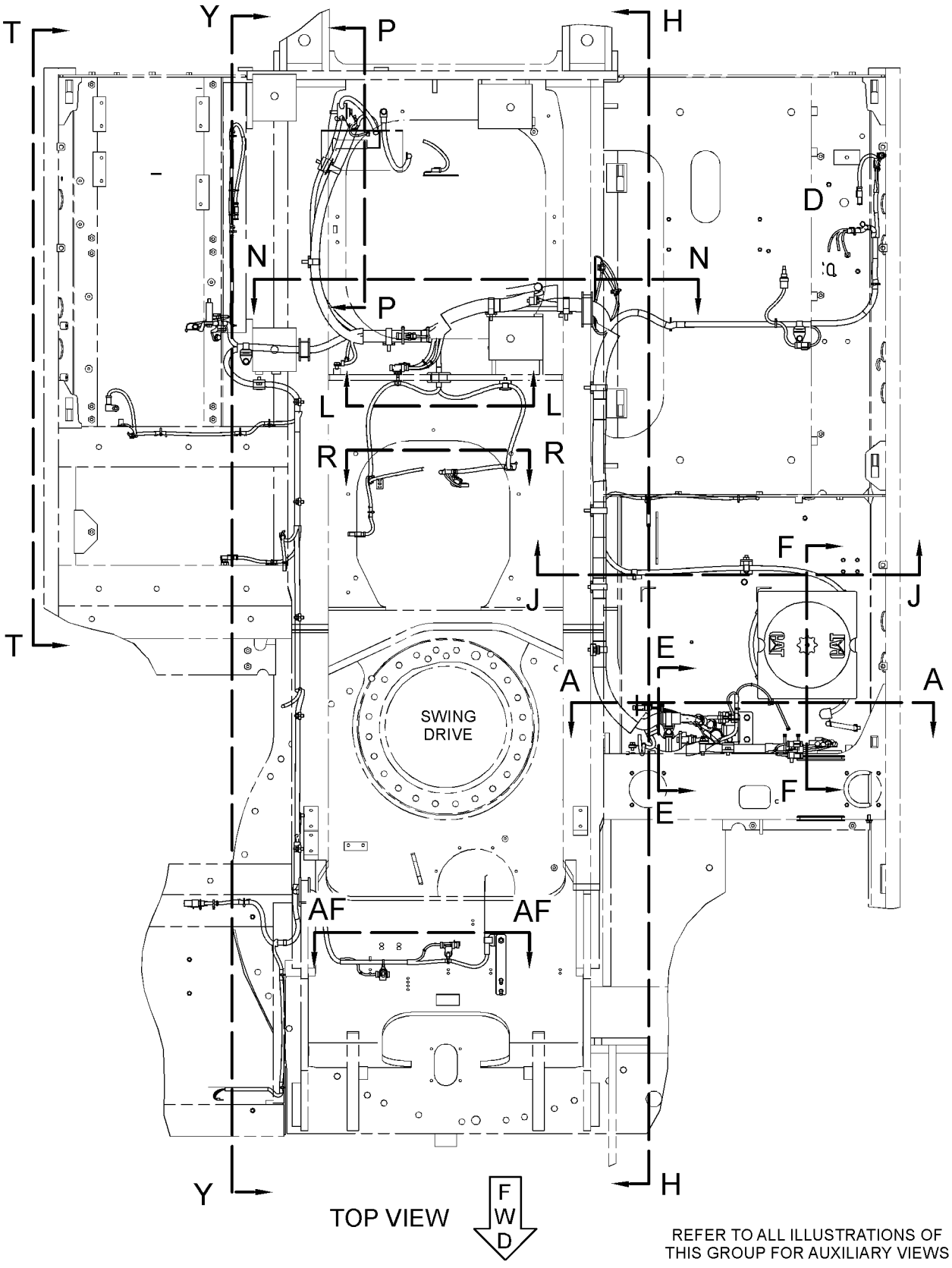

GRAPHIC #1

g01314834

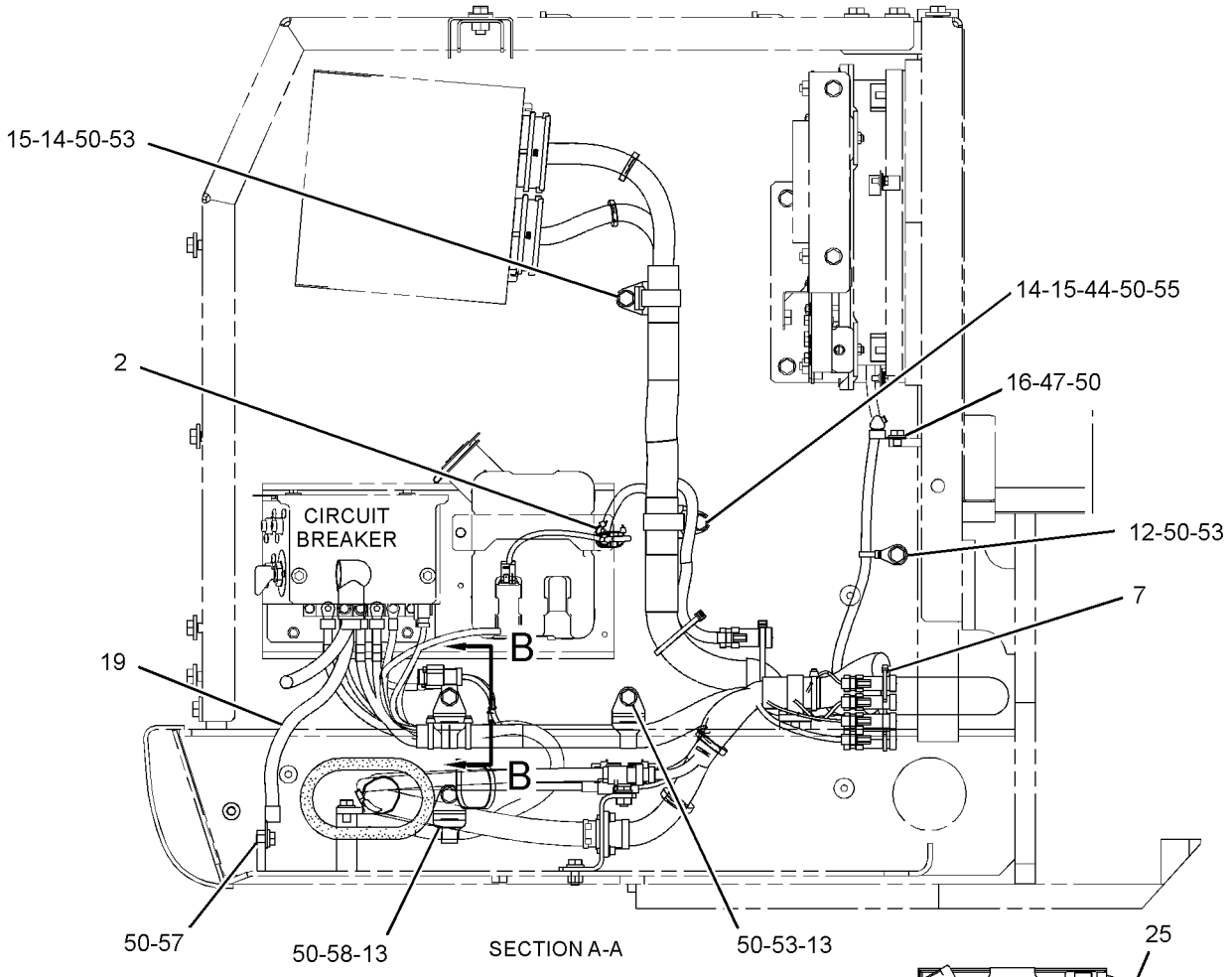

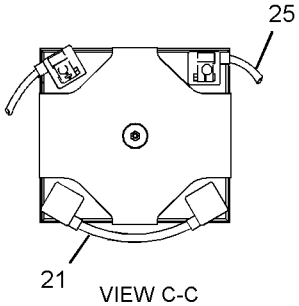

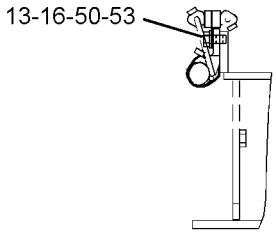

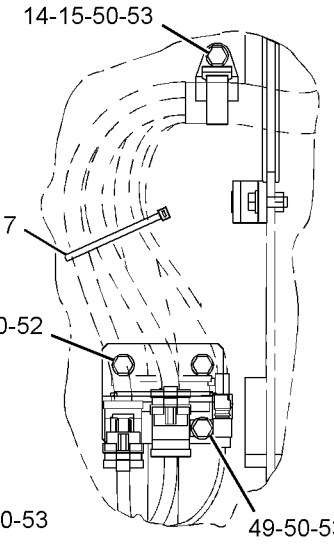

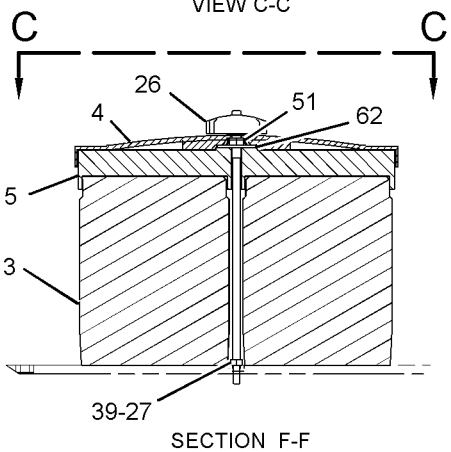

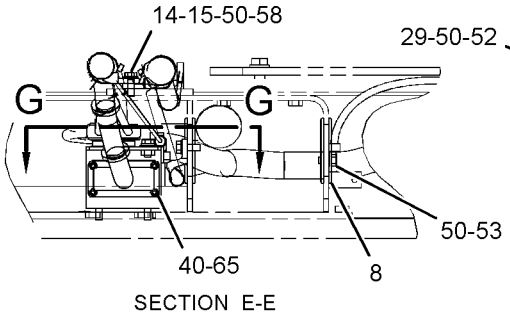

GRAPHIC #2

g01314835

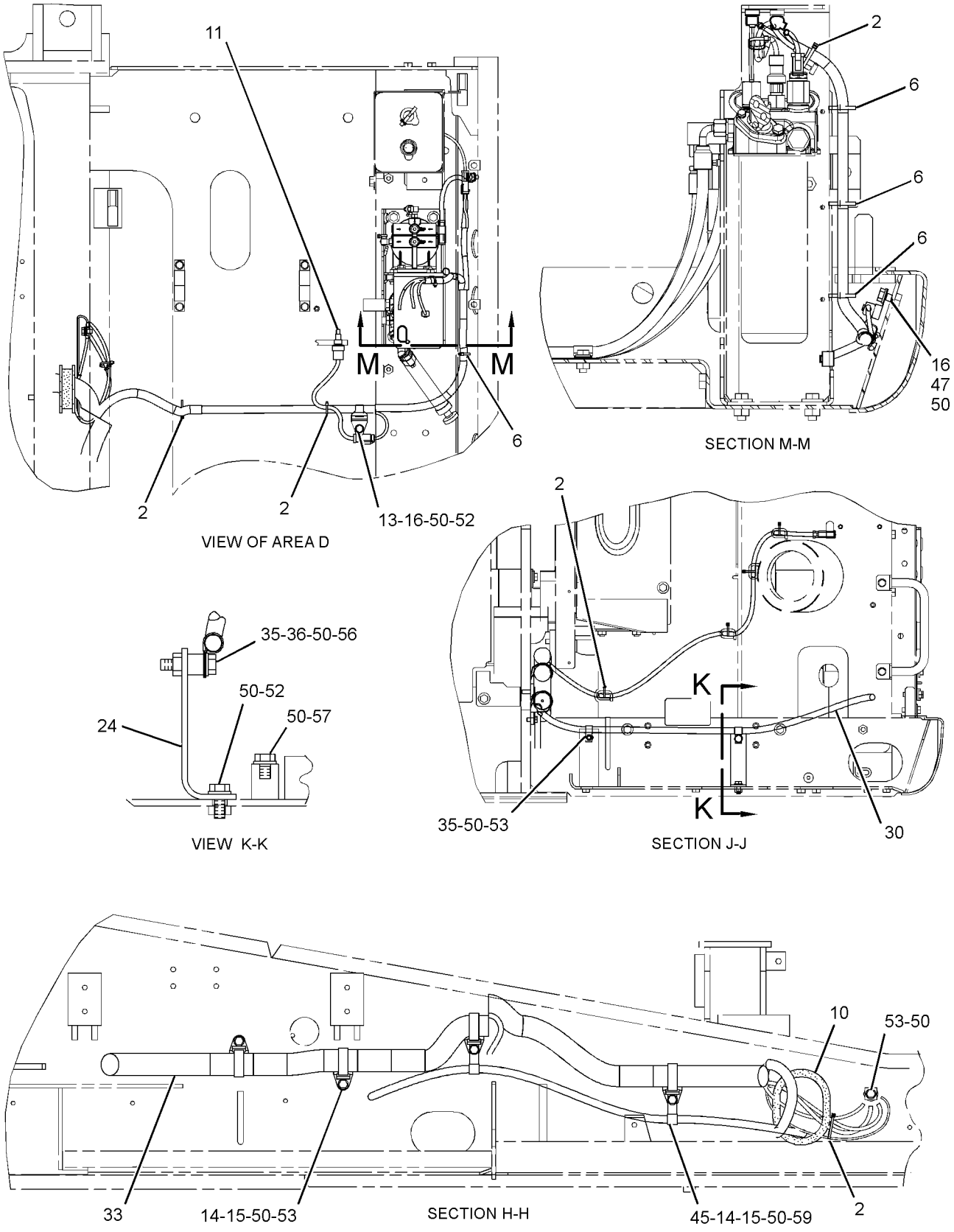

GRAPHIC #3

g01314837

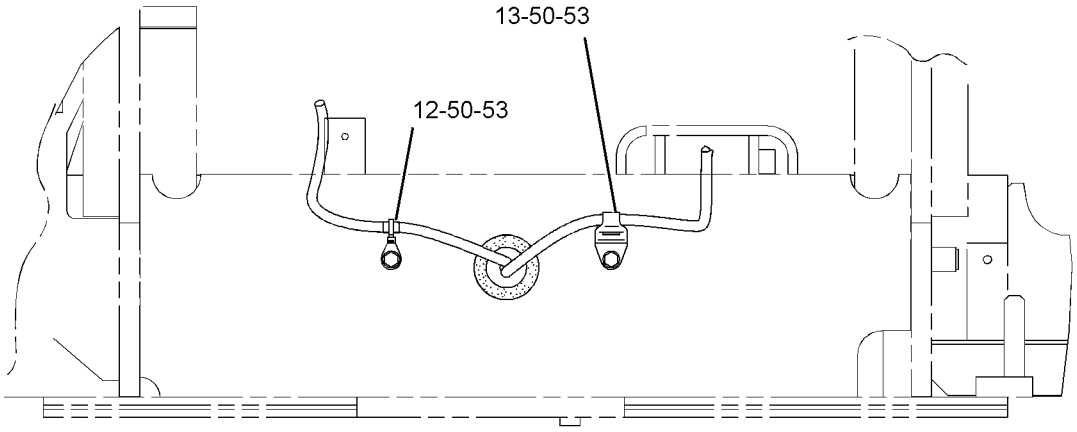

VIEW L-L

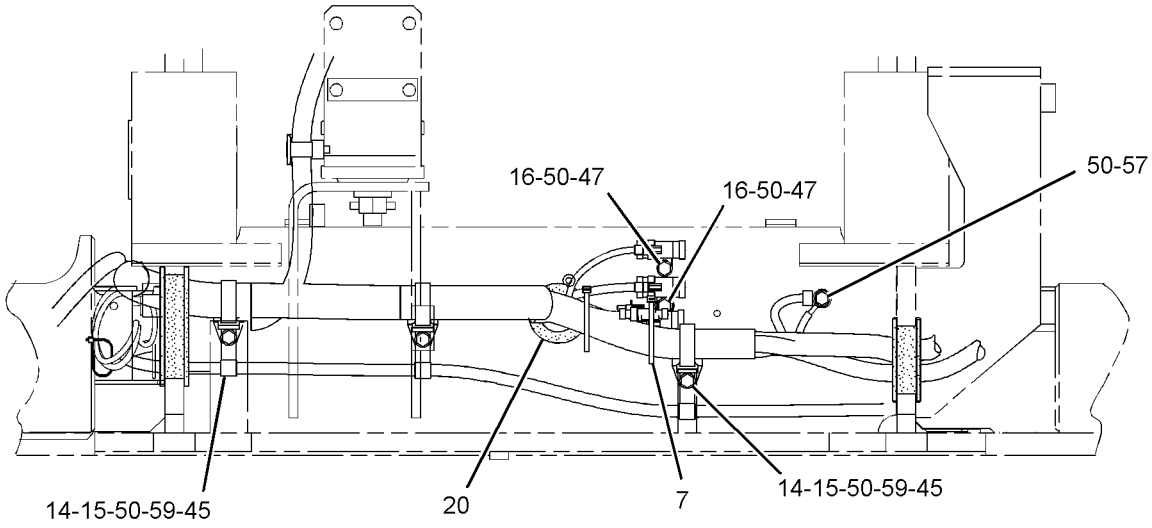

VIEW N-N

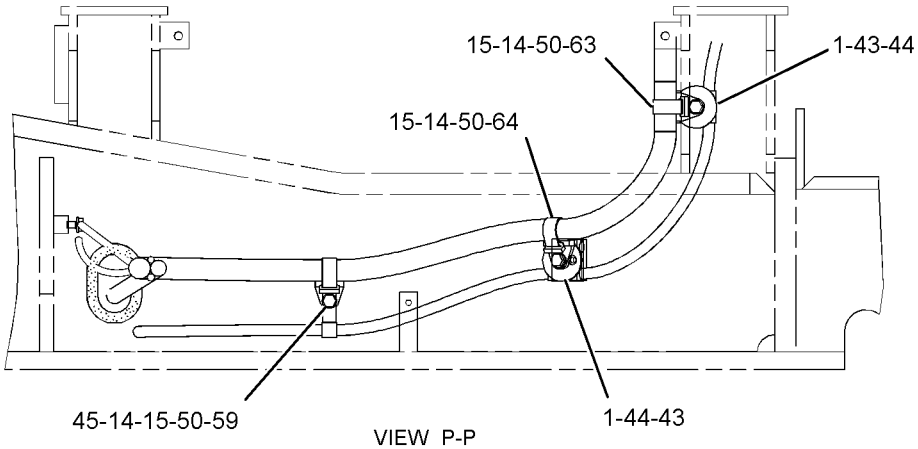

VIEW P-P

GRAPHIC #4 g01314838

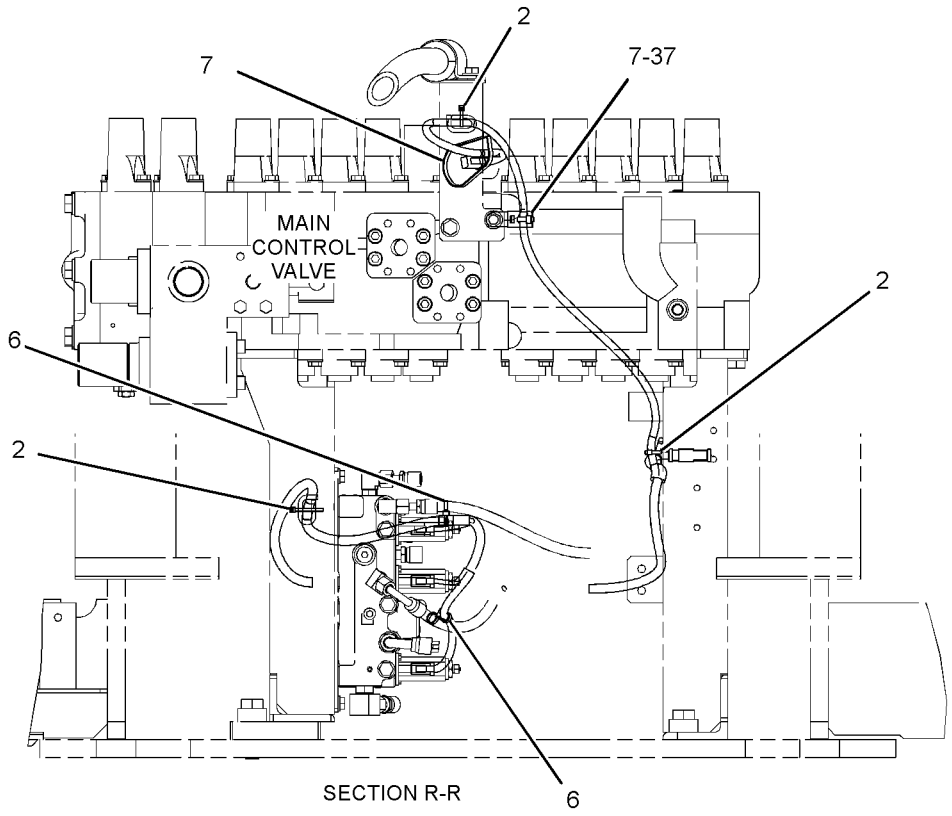

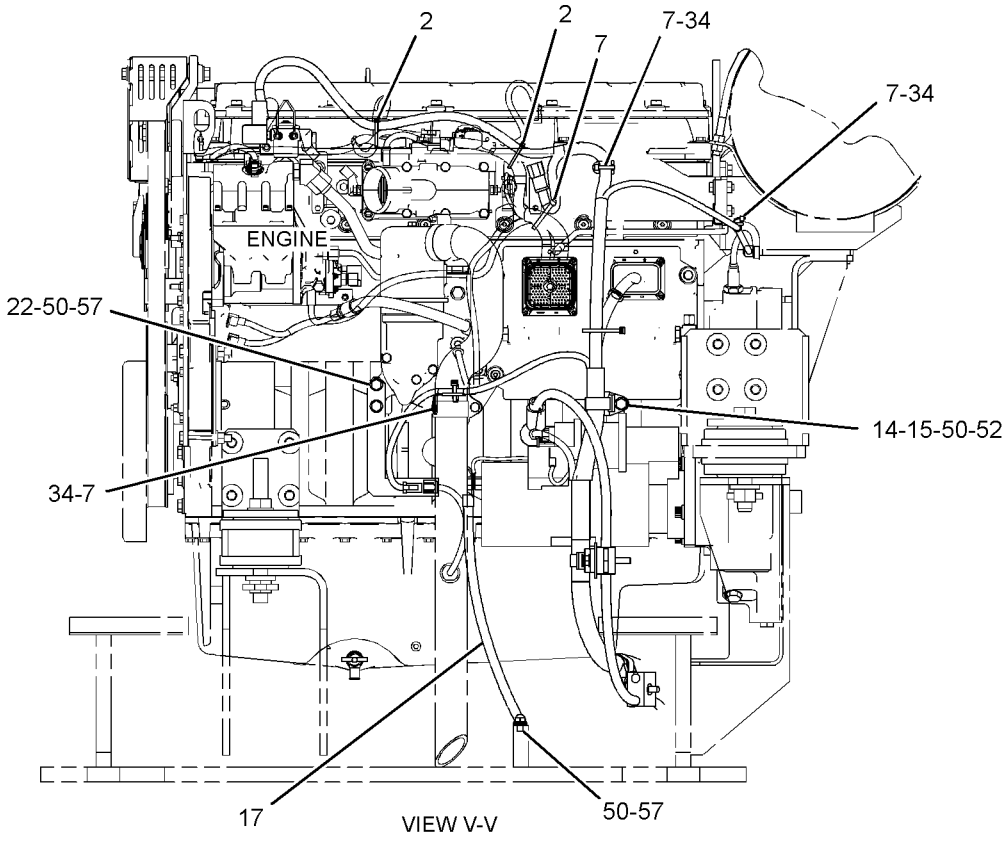

GRAPHIC #5

g01314839

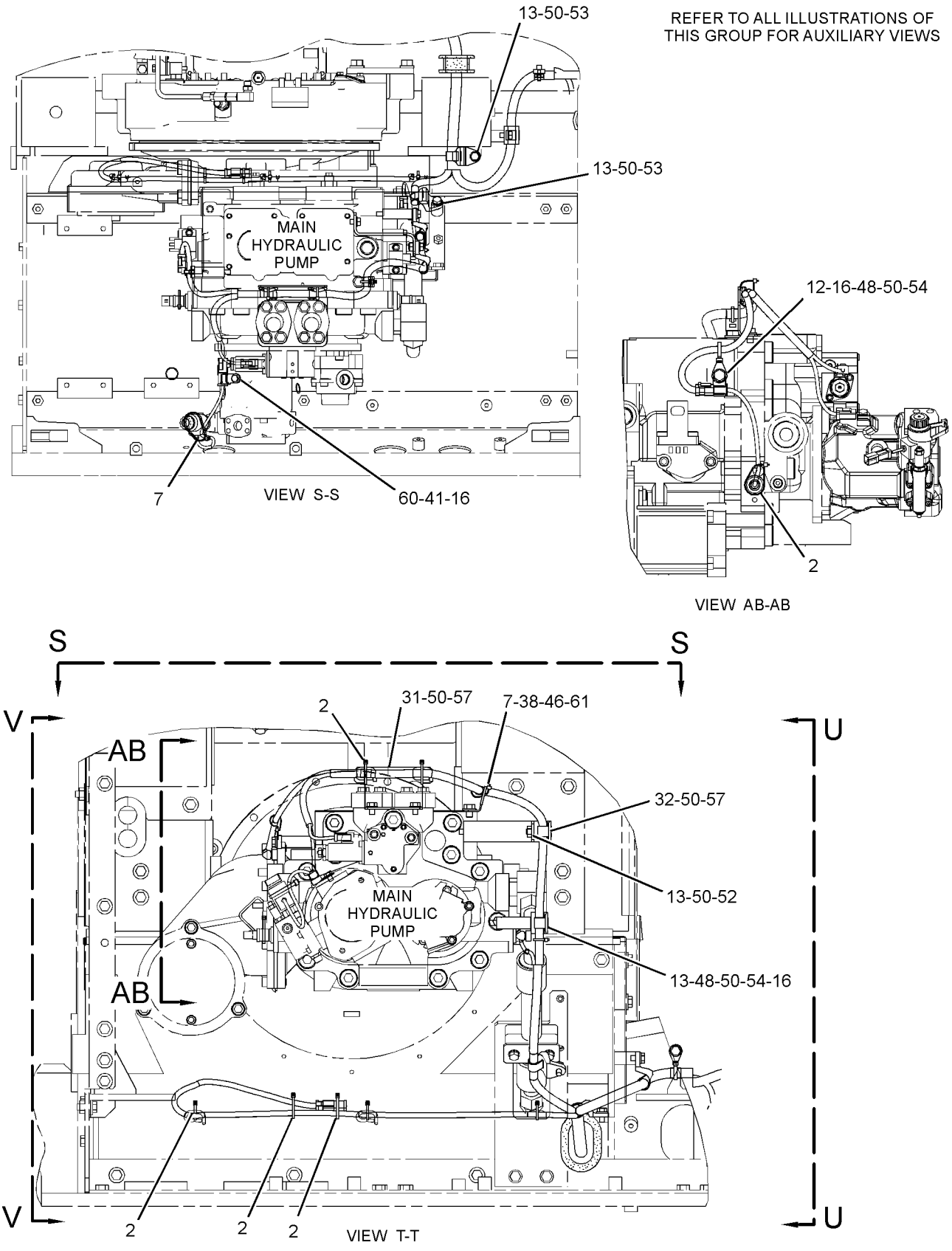

GRAPHIC #6

g01314840

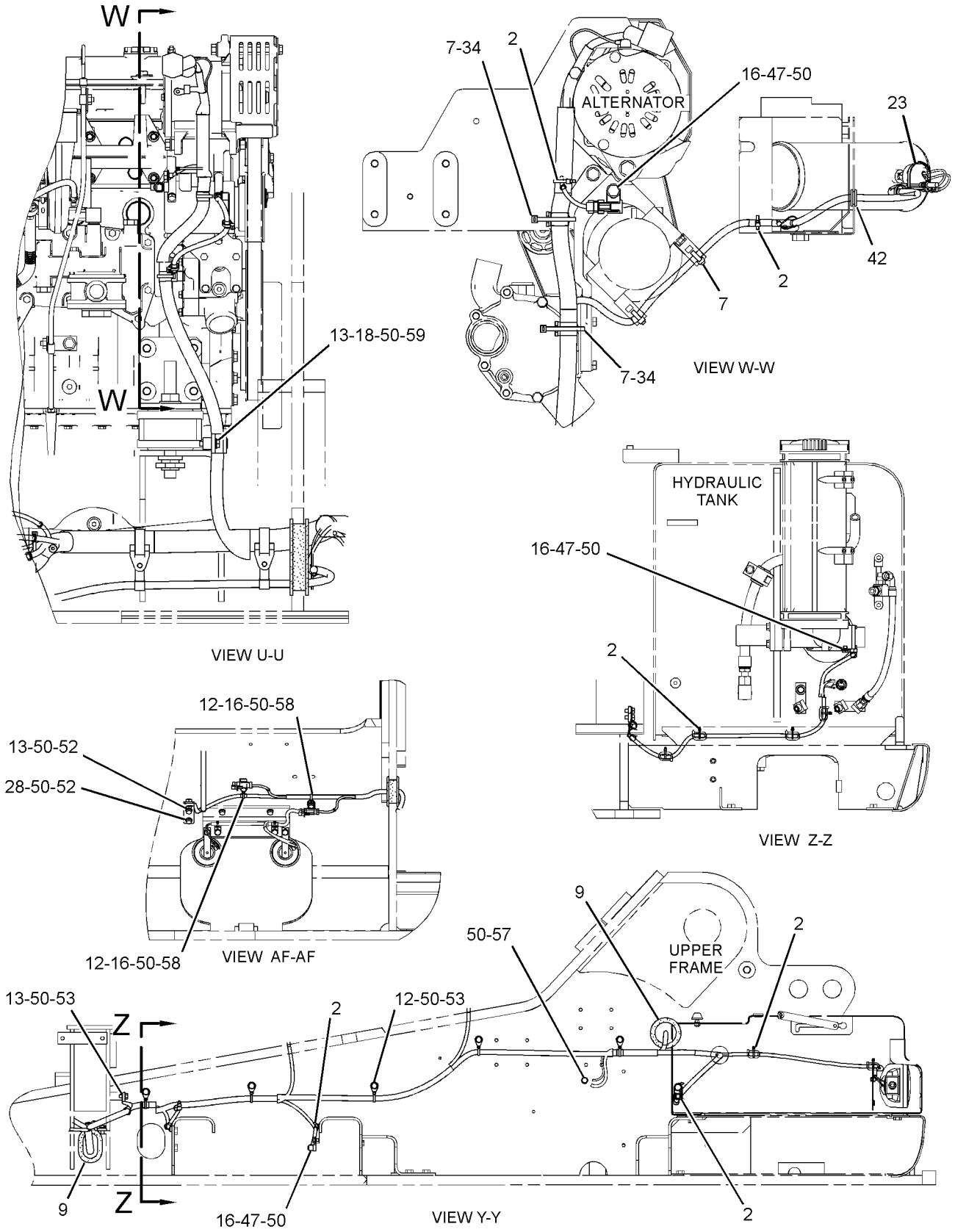

GRAPHIC #7 **<END>** g01314841

251-0620 BATTERY & WIRING GP–COLD WEATHER

S/N: B6H1-UP; JLP1-UP
PART OF 275-3748, 314-3587 STARTING AR-COLD WEATHER
AN ATTACHMENT

SMCS-1401, 1402, 1408 **i03601225**

NOTE	REF NO	GRAPHIC REF	PART NUMBER	QTY	PART NAME 1 2 3 4 5 6 (PRODUCT LEVEL)	SEE PAGE
	1	1	**263-9574**	2	BATTERY (12-VOLT, MAINTENANCE FREE)	
					(EACH INCLUDES)	
		1	**123-1373**	6	CAP AS-FILLER (BATTERY)	
	2	1	**5I-8270**	1	COVER-BATTERY	
	3	1	**6W-6005**	1	HOLD-DOWN-BATTERY	
	4	1	**170-6929**	1	CABLE AS	
E		1	**5P-0761**		CABLE (00-GA, RED) (31-CM)	
		1	**9G-0002**	1	COVER-TERMINAL (RED)	
		1	**8L-8413**	1	STRAP-CABLE	
		1	**9G-0005**	1	COVER-TERMINAL (BLACK)	
		1	**8L-8413**	1	STRAP-CABLE	
		1	**8C-5918**	1	TERMINAL AS (NEGATIVE) (RH)	
		1	**1M-6119**	1	BOLT (5/16-18X1.375-IN)	
		1	**1M-6120**	1	NUT (5/16-18-THD)	
		1	**8T-9756**	1	TERMINAL AS (POSITIVE) (LH)	
		1	**1M-6119**	1	BOLT (5/16-18X1.375-IN)	
		1	**1M-6120**	1	NUT (5/16-18-THD)	
	5	1	**291-7457**	1	CABLE AS	
BD		1	**6V-2722**		TUBE-HEAT SHRINK	
		1	**1S-7252**	1	TERMINAL-CABLE (00-GA, 3/8-IN SCREW)	
E		1	**5P-0747**		CABLE (00-GA, BLACK) (55-CM)	
		1	**7N-5274**	1	COVER-TERMINAL (BLACK)	
		1	**8L-8413**	1	STRAP-CABLE	
		1	**3S-6050**	1	TERMINAL AS-BATTERY (NEGATIVE)	
		1	**1M-6119**	1	BOLT (5/16-18X1.375-IN)	
		1	**1M-6120**	1	NUT (5/16-18-THD)	
	6	1	**238-2501**	1	KNOB	
	7	1	**238-2528**	1	ROD	
	8	1	**259-5126**	1	CABLE AS	
BD		1	**6V-2722**		TUBE-HEAT SHRINK	
		1	**1S-7251**	1	TERMINAL-CABLE (00-GA, 1/2-IN SCREW)	
E		1	**5P-0761**		CABLE (00-GA, RED) (356-CM)	
		1	**9G-0004**	1	COVER AS-TERMINAL (RED)	
		1	**8L-8413**	1	STRAP-CABLE	
		1	**8C-5917**	1	TERMINAL AS-BATTERY (POSITIVE)	
		1	**1M-6119**	1	BOLT (5/16-18X1.375-IN)	
		1	**1M-6120**	1	NUT (5/16-18-THD)	
	9	1	**4K-8864**	6	CLIP	
M	10	1	**5C-7261**	1	NUT (M8X1.25-THD)	
	11	1	**6K-8178**	1	CLIP	
M	12	1	**8T-4133**	1	NUT (M10X1.5-THD)	
	13	1	**8T-4226**	1	WASHER-PLATED (10.5X45X3-MM THK)	
	14	1	**204-1673**	2	STRAP-CABLE	

B-USE AS REQUIRED
D-ORDER BY THE METER
E-ORDER BY THE CENTIMETER
M-METRIC PART

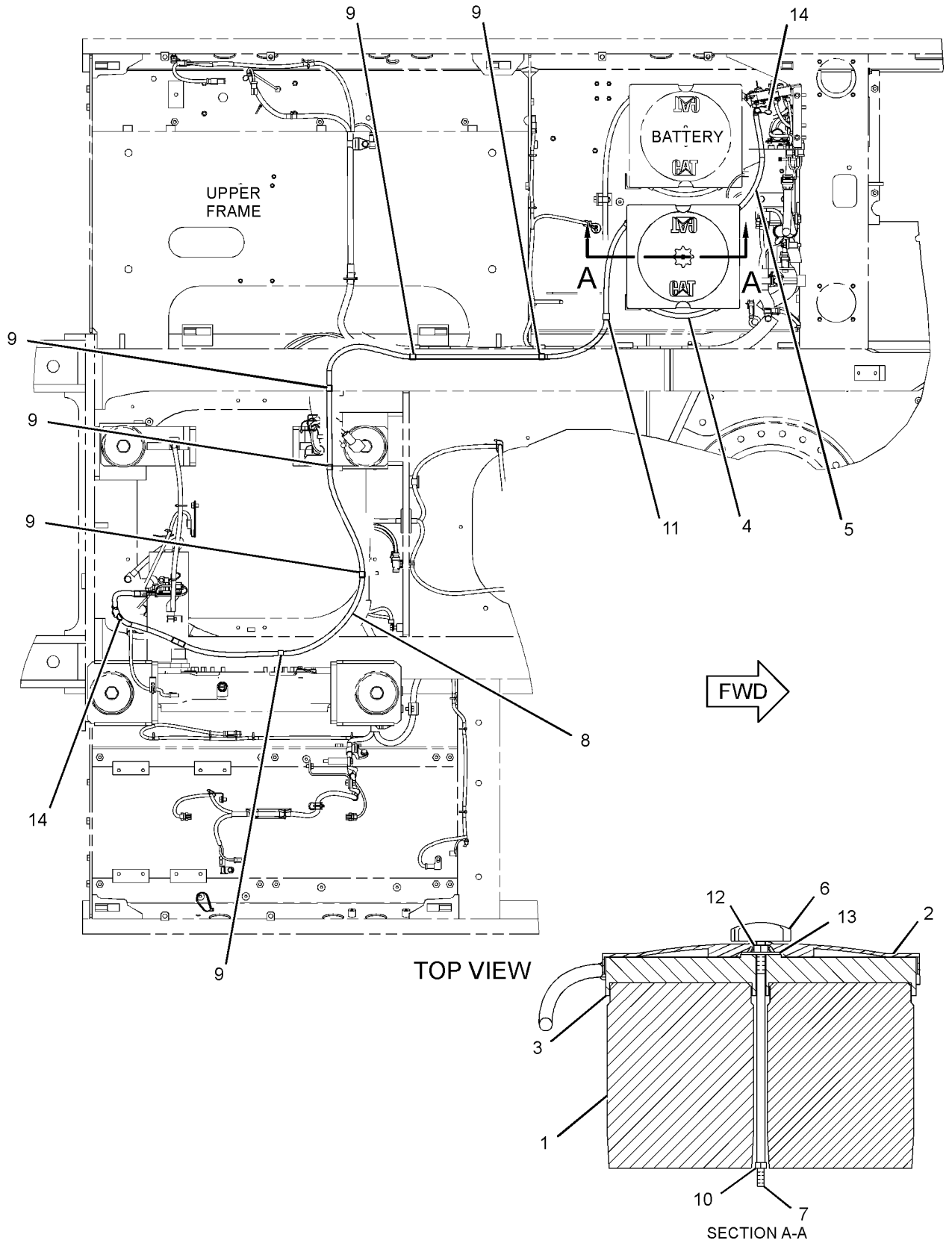

GRAPHIC #1 **<END>** g01736937

ELECTRICAL AND STARTING SYSTEM

306-8527 BATTERY & WIRING GP

S/N: JLP738-863

PART OF 247-7386 CHASSIS AR

SMCS-1401, 1402, 1408 **i03601351**

NOTE	REF NO	GRAPHIC REF	PART NUMBER	QTY	PART NAME 1 2 3 4 5 6 (PRODUCT LEVEL)	SEE PAGE
	1	3	**2G-8767**	2	WASHER (10.5X60X3-MM THK)	
	2	1,2,3, 4,5,6	**3S-2093**	42	STRAP-CABLE	
	3	1	**115-2422**	2	BATTERY GP (12-VOLT, MAINTENANCE FREE, WET)	
					(EACH INCLUDES)	
		1	**123-1373**	6	CAP AS-FILLER (BATTERY)	
	4	2	**4N-0205**	1	SPACER (0.42X0.75X0.6-IN THK)	
	5	1	**5I-8270**	1	COVER-BATTERY	
	6	3	**6G-2256**	2	CLAMP	
	7	2,3	**6G-2263**	3	SPACER (10.5X19X28.5-MM THK)	
	8	1	**6W-6005**	1	HOLD-DOWN-BATTERY	
	9	3,4	**7I-2673**	5	STRAP-CABLE	
	10	2,3,4, 5	**7K-1181**	25	STRAP-CABLE	
	11	1	**7Y-5456**	2	GROMMET	
	12	6	**7Y-8165**	2	GROMMET	
	13	2	**087-4587**	1	GROMMET	
	14	3	**091-9035**	1	SPACER (11X25X20-MM THK)	
	15	1	**107-8618**	1	SENSOR GP-TEMPERATURE (AMBIENT AIR)	
		1	**102-8803**	1	KIT-RECEPTACLE (3-PIN)	
					(INCLUDES RECEPTACLE AS & WEDGE)	
		1	**186-3735**	3	PIN-CONNECTOR (16-GA TO 18-GA)	
E		1	**112-4550**		SLEEVE (31-CM)	
	16	1,2,3, 6	**111-4836**	9	CLIP	
	17	1,2,3, 4,5,6	**111-4837**	12	CLIP	
	18	2,3,5	**111-4838**	16	CLIP	
	19	2,3,5	**111-4839**	16	STRAP	
	20	1,2,3, 4,5,6	**116-0118**	14	CLIP	
	21	5	**128-8886**	1	STRAP AS-GROUND	
	22	5	**130-1433**	1	SPACER (11X25X17-MM THK)	
	23	2	**132-1806**	1	STRAP AS-GROUND	
	24	3	**148-5018**	1	GROMMET	
	25	1	**170-6929**	1	CABLE AS	
E		1	**5P-0761**		CABLE (00-GA, RED) (31-CM)	
		1	**9G-0002**	1	COVER-TERMINAL (RED)	
		1	**8L-8413**	1	STRAP-CABLE	
		1	**9G-0005**	1	COVER-TERMINAL (BLACK)	
		1	**8L-8413**	1	STRAP-CABLE	
		1	**8C-5918**	1	TERMINAL AS (NEGATIVE)	
		1	**1M-6119**	1	BOLT (5/16-18X1.375-IN)	
		1	**1M-6120**	1	NUT (5/16-18-THD)	
		1	**8T-9756**	1	TERMINAL AS (POSITIVE)	
		1	**1M-6119**	1	BOLT (5/16-18X1.375-IN)	
		1	**1M-6120**	1	NUT (5/16-18-THD)	
	26	5	**204-1611**	1	STRAP-CABLE	
	27	2	**204-1614**	1	BRACKET AS	
	28	1	**231-1827**	1	CABLE AS	
		1	**1S-7252**	1	TERMINAL-CABLE (00-GA, 3/8-IN SCREW)	
E		1	**5P-0747**		CABLE (00-GA, BLACK) (23-CM)	
		1	**9G-0003**	1	COVER AS-TERMINAL (BLACK) (BATTERY)	
		1	**8L-8413**	1	STRAP-CABLE	
		1	**9G-8909**	1	COVER-TERMINAL (BLACK) (DISCONNECT SWITCH)	
		1	**8T-9757**	1	TERMINAL AS-BATTERY (NEGATIVE)	
		1	**1M-6119**	1	BOLT (5/16-18X1.375-IN)	

306-8527 **BATTERY & WIRING GP** *(contd.)* **i03601351**

NOTE	REF NO	GRAPHIC REF	PART NUMBER	QTY	PART NAME 1 2 3 4 5 6 (PRODUCT LEVEL)	SEE PAGE
		1	**1M-6120**	1	NUT (5/16-18-THD)	
	29	1	**238-2501**	1	KNOB	
	30	1	**238-2528**	1	ROD	
	31	1	**251-0153**	1	BRACKET AS	
	32	2	**251-0467**	1	BRACKET AS	
	33	2	**251-0625**	1	CABLE AS	
		2	**1S-7251**	1	TERMINAL-CABLE (00-GA, 1/2-IN SCREW)	
E		2	**5P-0761**		CABLE (00-GA, RED) (413-CM)	
		2	**8N-0869**	1	COVER-TERMINAL (RED) (STARTING MOTOR)	
		2	**9G-0004**	1	COVER AS-TERMINAL (RED) (BATTERY)	
		2	**8L-8413**	1	STRAP-CABLE	
		2	**8C-5917**	1	TERMINAL AS-BATTERY (POSITIVE)	
		1	**1M-6119**	1	BOLT (5/16-18X1.375-IN)	
		1	**1M-6120**	1	NUT (5/16-18-THD)	
	34	4	**259-5130**	1	BRACKET AS	
	35	4	**259-5132**	1	BRACKET AS	
	36	5	**291-7780**	1	BRACKET AS	
	37	2	**306-8528**	1	HARNESS AS-CHASSIS	
	38	4,5	**132-5789**	8	CLIP	
	39	2	**4K-8864**	2	CLIP	
	40	4	**4P-7428**	1	CLIP	
	41	4	**4P-7429**	1	CLIP	
M	42	1	**5C-7261**	1	NUT (M8X1.25-THD)	
M	43	2	**5C-7883**	4	BOLT-SOCKET HEAD (M6X1X16-MM)	
	44	4	**5P-4116**	1	WASHER-HARD (8.8X20.5X2-MM THK)	
	45	5	**5P-8439**	1	GROMMET	
	46	2,3	**6K-8178**	6	CLIP	
M	47	4	**7X-2548**	1	BOLT (M12X1.75X16-MM)	
M	48	2,3,5, 6	**7X-2621**	7	BOLT (M10X1.5X12-MM)	
	49	4	**8B-6561**	2	SPACER (5.56X22.22X55.58-MM THK)	
	50	2	**8M-2770**	1	CLIP	
	51	1,2,3, 4,5,6	**8T-4121**	62	WASHER-HARD (11X21X2.5-MM THK)	
M	52	1	**8T-4133**	1	NUT (M10X1.5-THD)	
M	53	1,2,4, 5	**8T-4136**	9	BOLT (M10X1.5X25-MM)	
M	54	1,2,3, 4,6	**8T-4137**	21	BOLT (M10X1.5X20-MM)	
M	55	4	**8T-4172**	1	BOLT (M10X1.5X80-MM)	
M	56	4	**8T-4178**	1	BOLT (M10X1.5X90-MM)	
M	57	3	**8T-4182**	1	BOLT (M10X1.5X45-MM)	
M	58	2	**8T-4185**	1	BOLT (M10X1.5X50-MM)	
M	59	2	**8T-4186**	1	BOLT (M10X1.5X40-MM)	
M	60	2,3,4, 5,6	**8T-4191**	8	BOLT (M10X1.5X16-MM)	
M	61	1,2	**8T-4195**	4	BOLT (M10X1.5X30-MM)	
M	62	2,3,5	**8T-4196**	6	BOLT (M10X1.5X35-MM)	
M	63	4	**8T-4199**	1	BOLT (M8X1.25X12-MM)	
	64	4	**8T-4223**	1	WASHER-HARD (13.5X25.5X3-MM THK)	
	65	1	**8T-4226**	1	WASHER-PLATED (10.5X45X3-MM THK)	
M	66	3	**8T-5005**	1	BOLT (M10X1.5X70-MM)	
M	67	3	**8T-6466**	1	BOLT (M10X1.5X60-MM)	
	68	2	**9X-8256**	4	WASHER (6.6X12X2-MM THK)	

E-ORDER BY THE CENTIMETER
M-METRIC PART

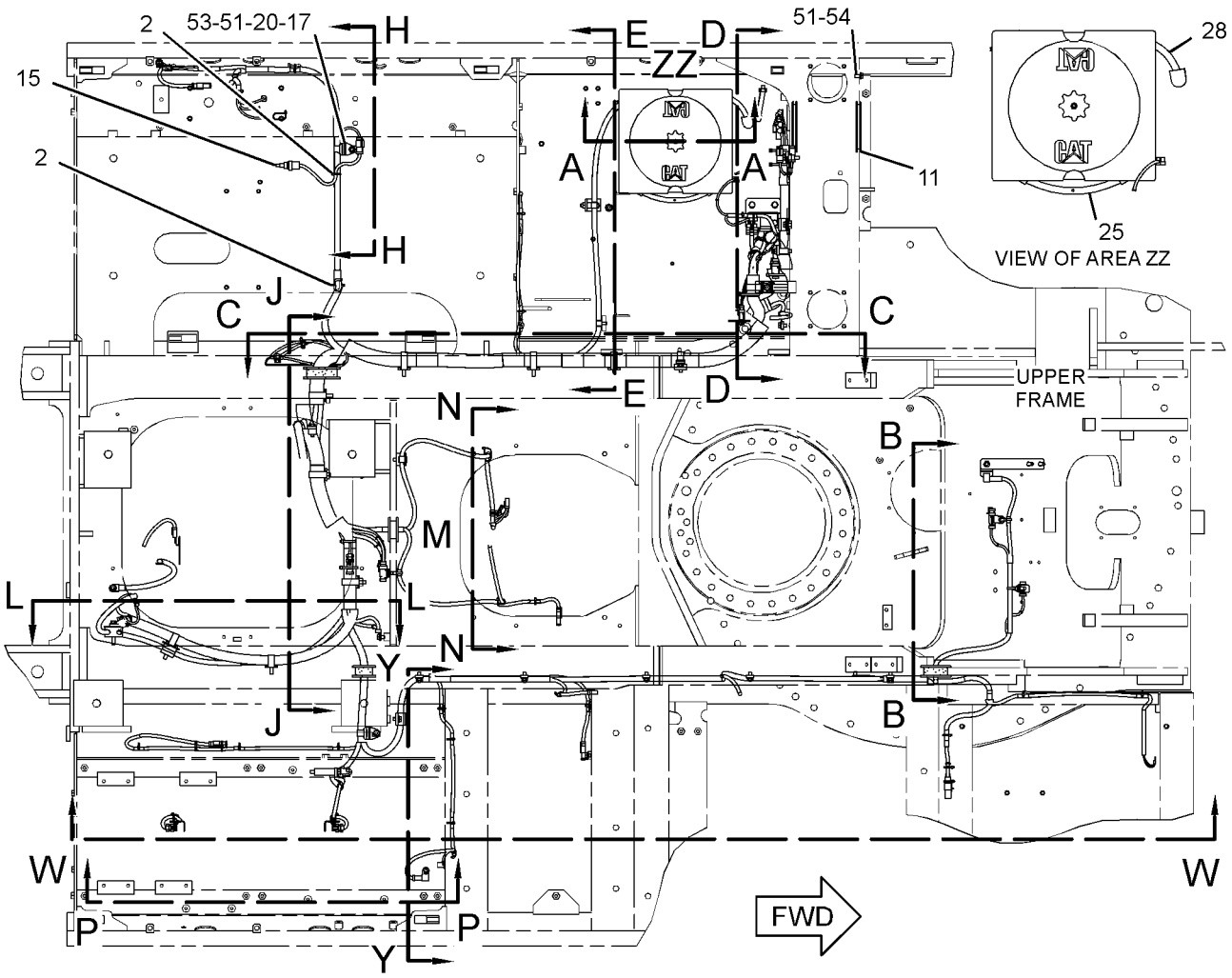

TOP VIEW

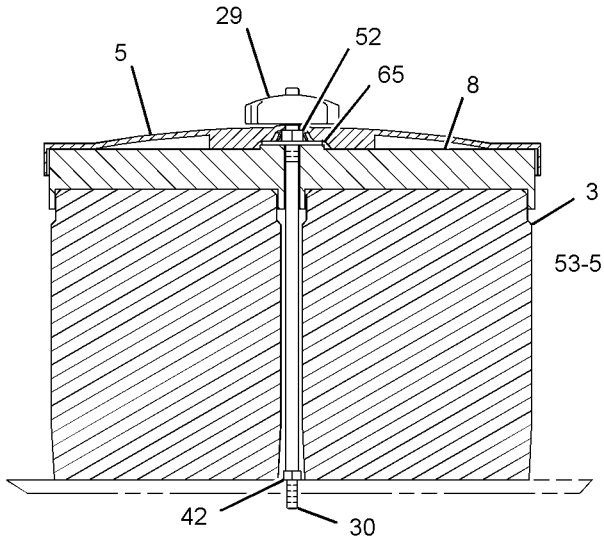

SECTION A-A

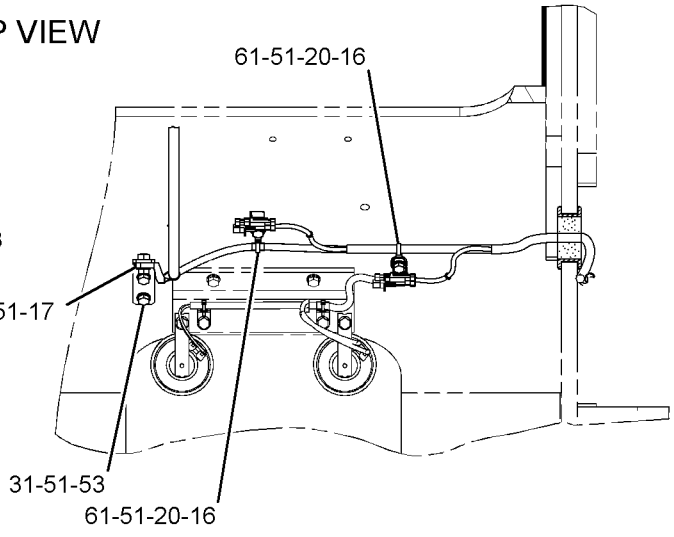

SECTION B-B

REFER TO ALL ILLUSTRATIONS OF
THIS GROUP FOR AUXILIARY VIEWS

GRAPHIC #1

g01442032

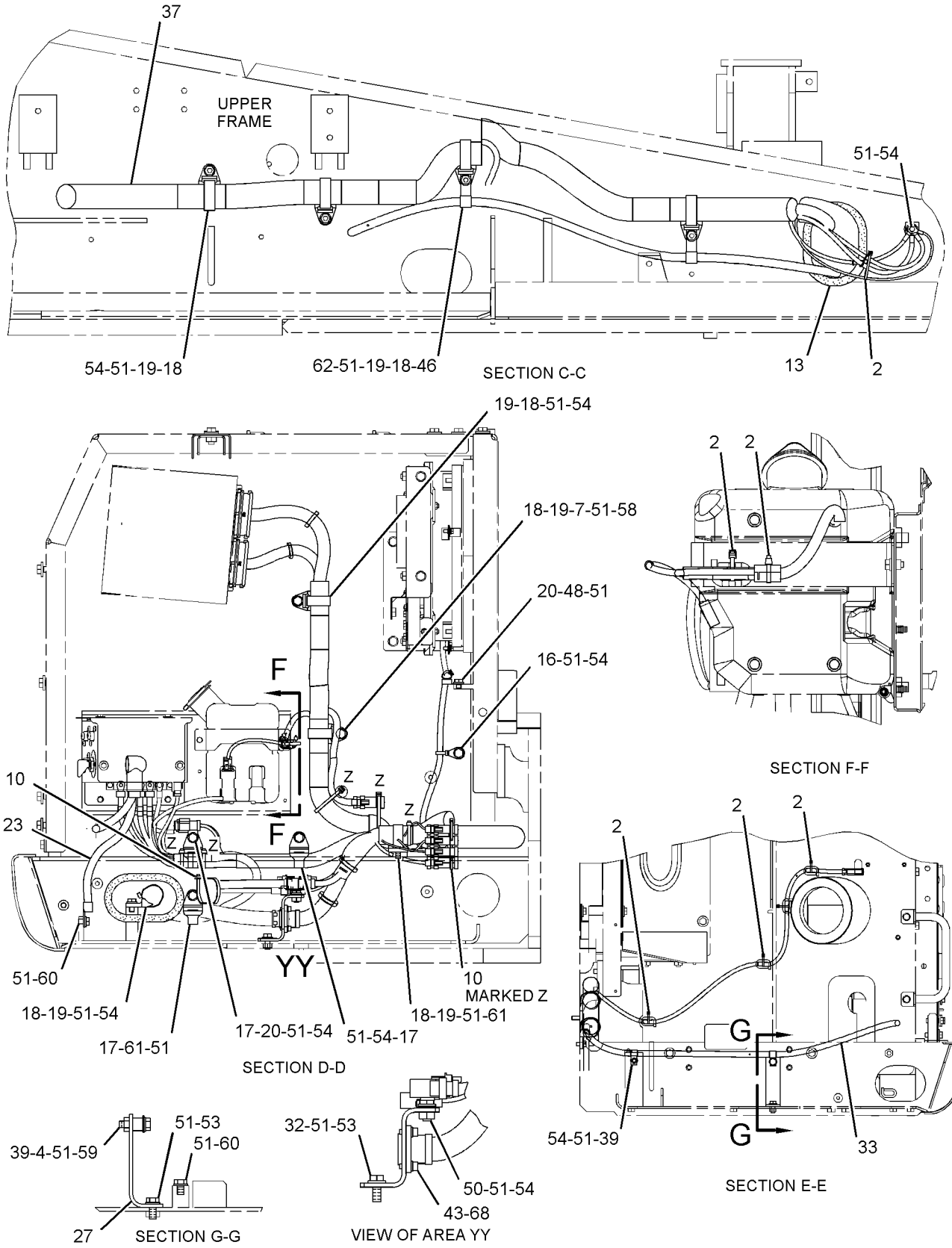

GRAPHIC #2

g01442034

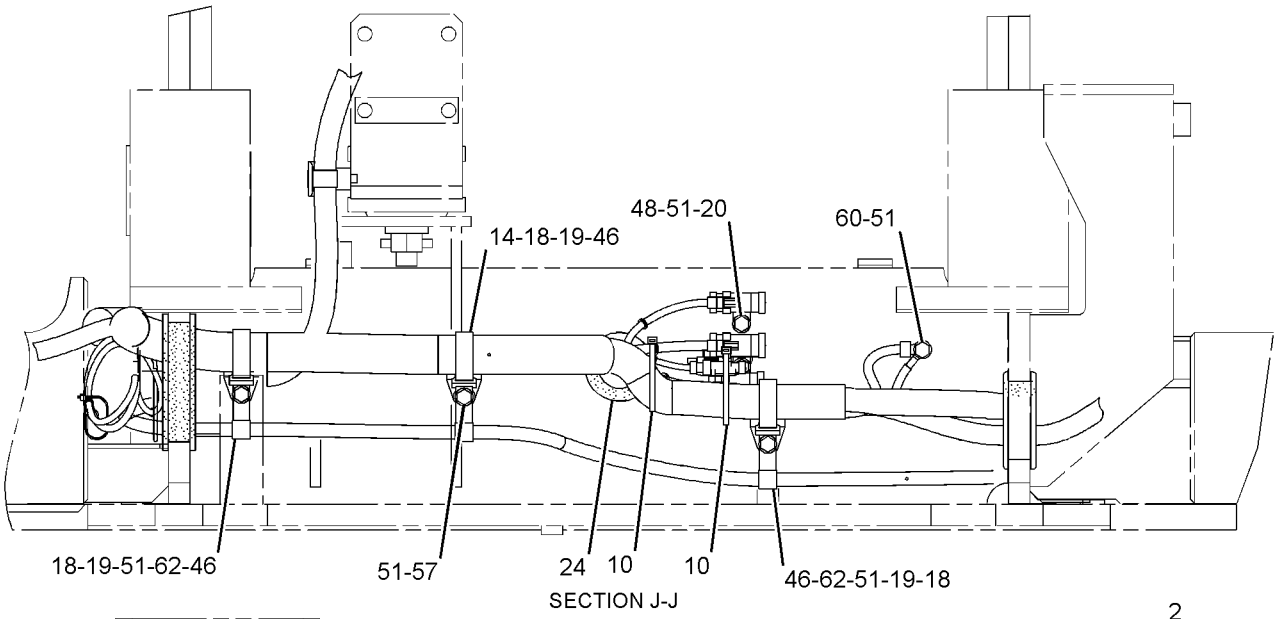

SECTION J-J

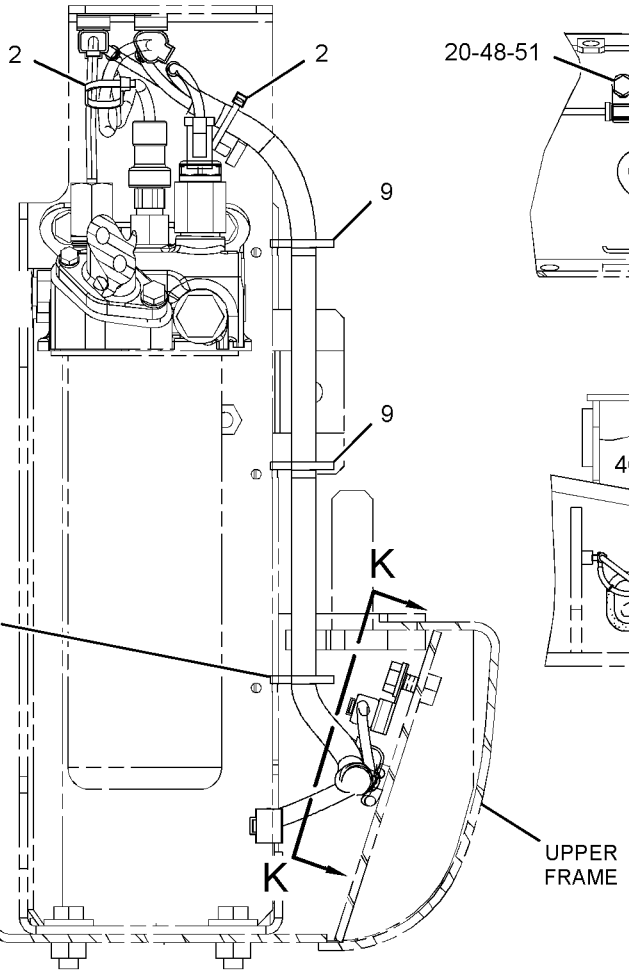

SECTION H-H

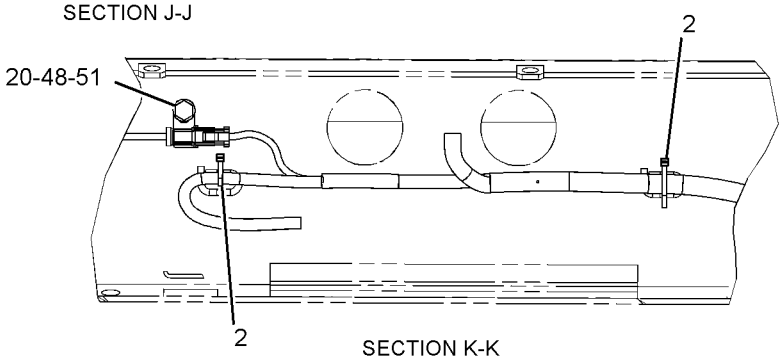

SECTION K-K

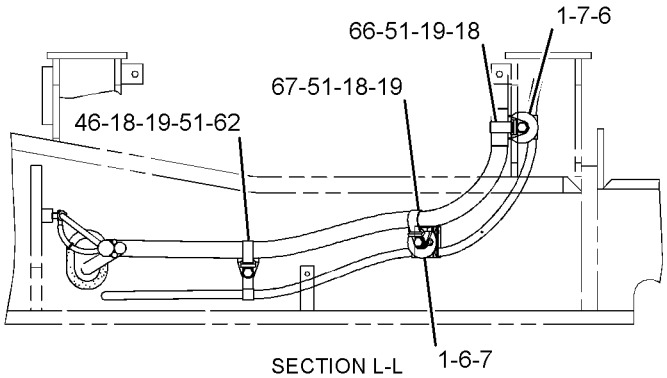

SECTION L-L

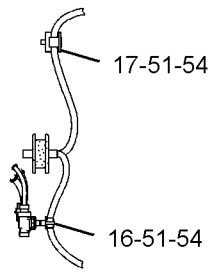

VIEW OF AREA M

GRAPHIC #3

g01442035

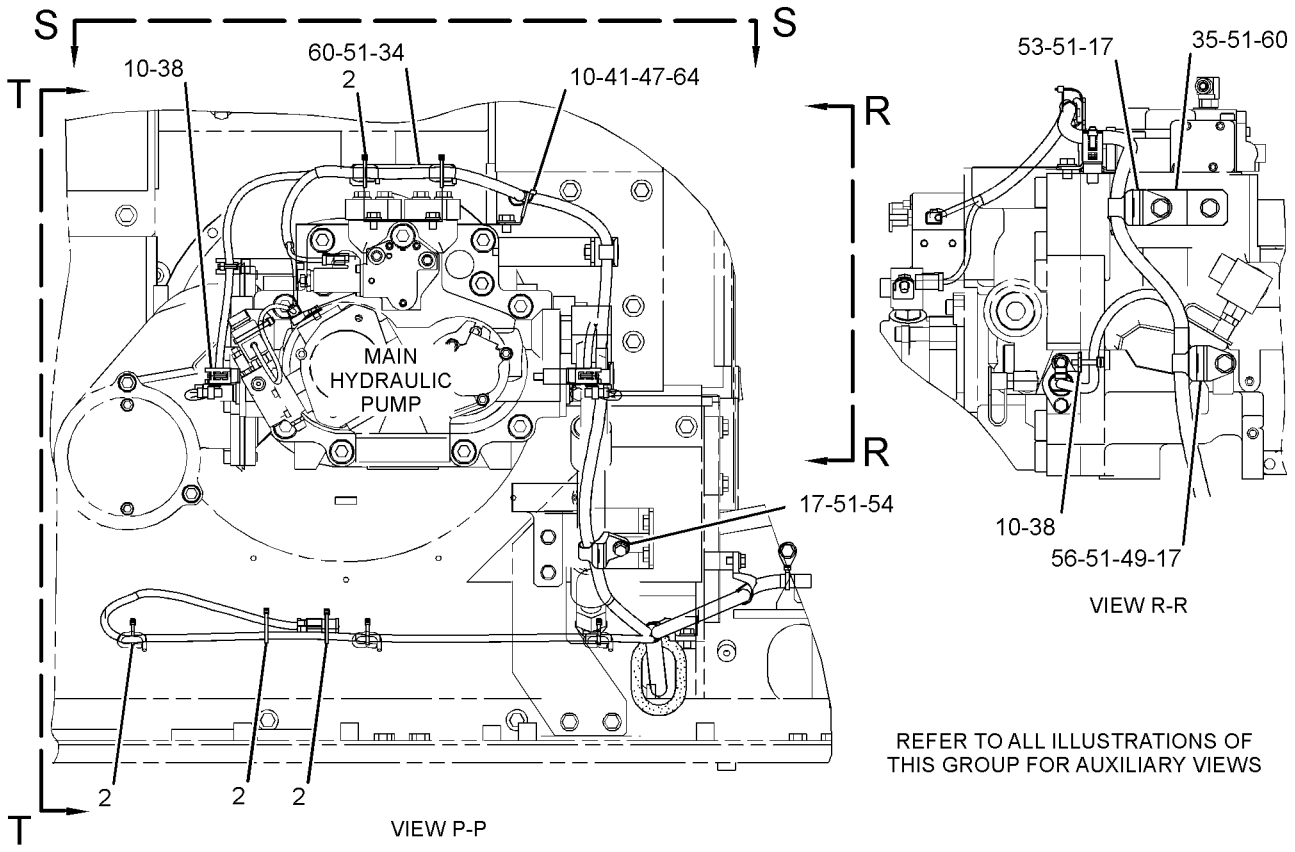

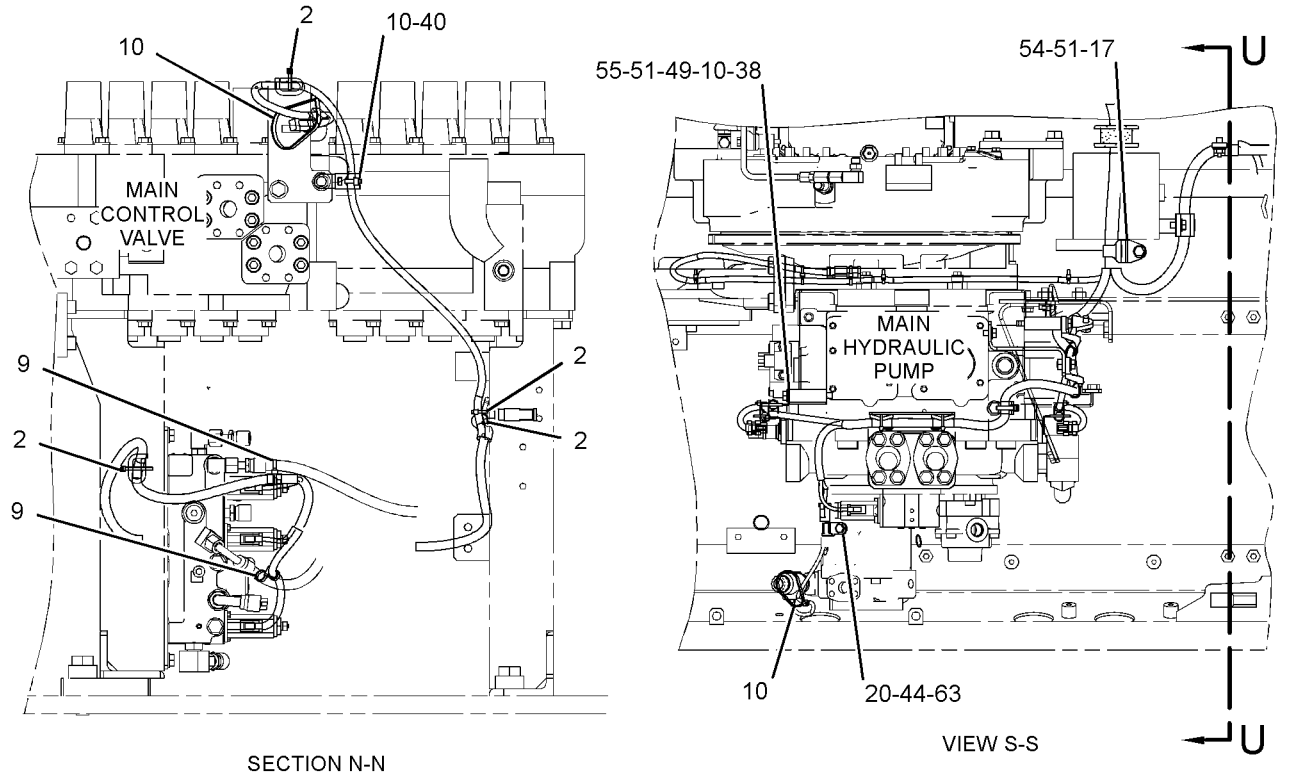

GRAPHIC #4 g01442036

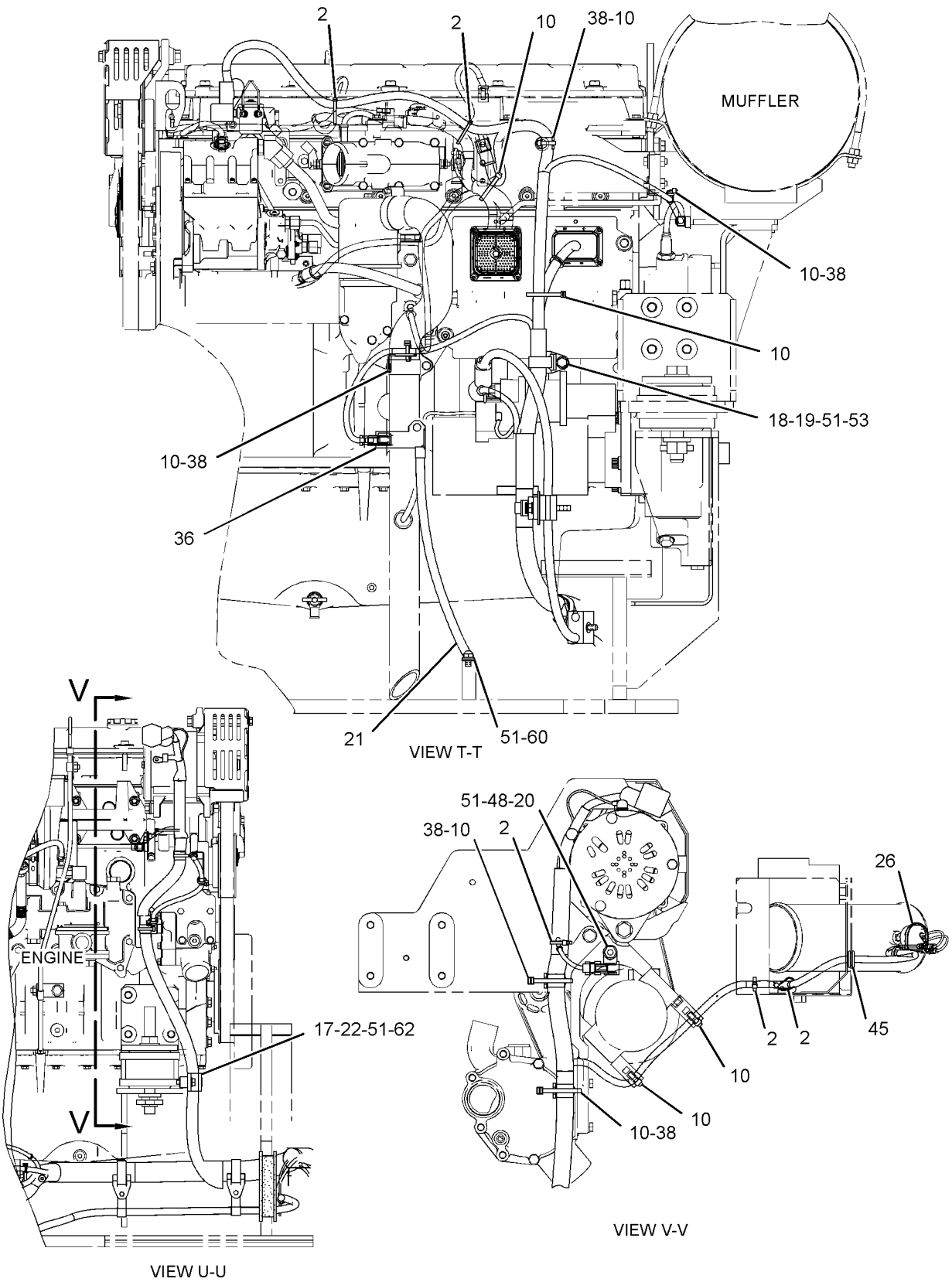

GRAPHIC #5

g01442037

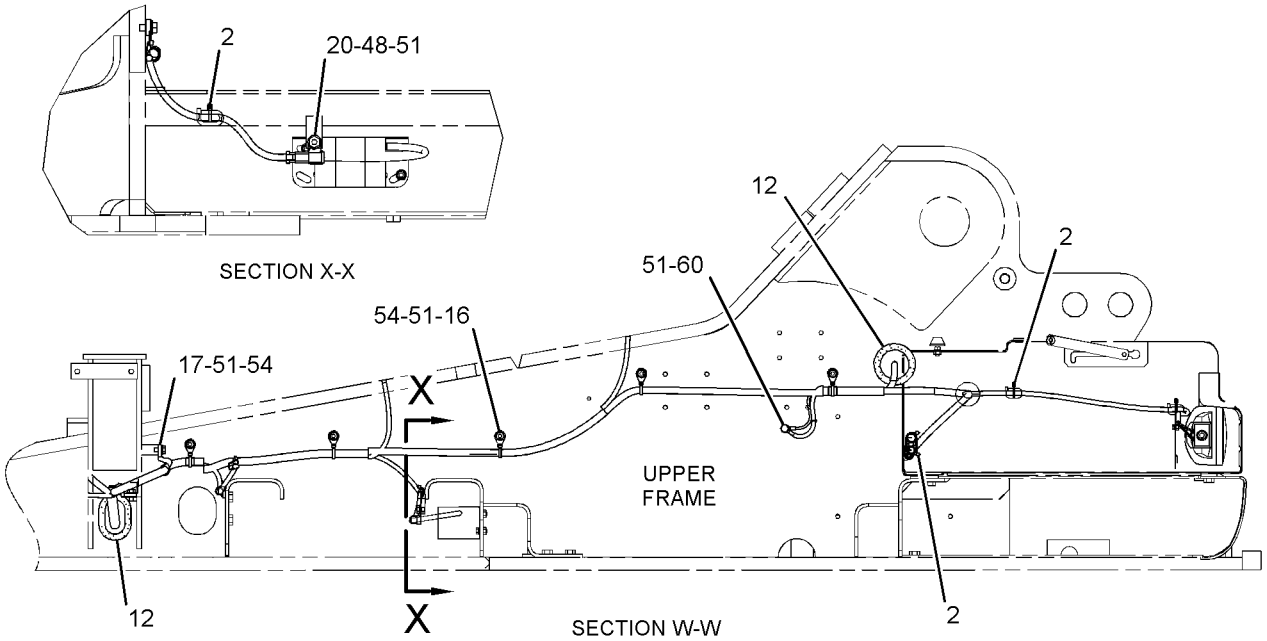

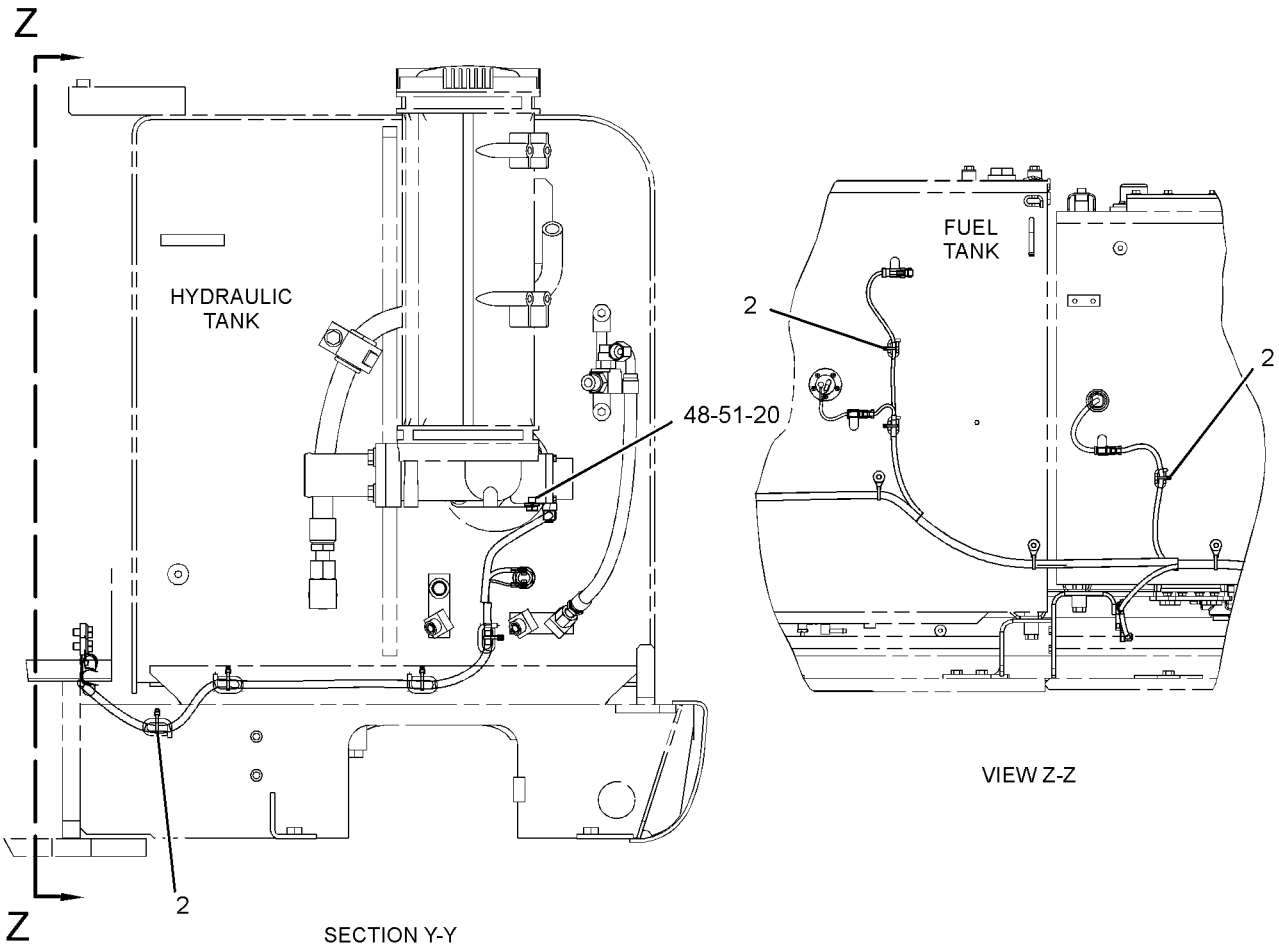

GRAPHIC #6 **<END>** g01442038

ELECTRICAL AND STARTING SYSTEM

306-8527 BATTERY & WIRING GP

S/N: B6H653-UP; JLP864-UP

PART OF 247-7386 CHASSIS AR

SMCS-1401, 1402, 1408 **i03601367**

NOTE	REF NO	GRAPHIC REF	PART NUMBER	QTY	PART NAME 1 2 3 4 5 6 (PRODUCT LEVEL)	SEE PAGE
	1	6	**2G-8767**	2	WASHER (10.5X60X3-MM THK)	
C	2	1,2,3, 4,5,6	**3S-2093**	43	STRAP-CABLE	
	3	1	**263-9574**	2	BATTERY (12-VOLT, MAINTENANCE FREE)	
					(EACH INCLUDES)	
		1	**123-1373**	6	CAP AS-FILLER (BATTERY)	
	4	2	**4N-0205**	2	SPACER (0.42X0.75X0.6-IN THK)	
	5	1	**5I-8270**	1	COVER-BATTERY	
	6	6	**6G-2256**	2	CLAMP	
	7	2,6	**6G-2263**	3	SPACER (10.5X19X28.5-MM THK)	
	8	1	**6W-6005**	1	HOLD-DOWN-BATTERY	
	9	3,6	**7I-2673**	5	STRAP-CABLE	
	10	2,3,4, 6	**7K-1181**	25	STRAP-CABLE	
	11	1	**7Y-5456**	2	GROMMET	
	12	5	**7Y-8165**	2	GROMMET	
	13	2	**087-4587**	1	GROMMET	
	14	6	**091-9035**	1	SPACER (11X25X20-MM THK)	
	15	1	**107-8618**	1	SENSOR GP-TEMPERATURE (AMBIENT AIR)	
		1	**102-8803**	1	KIT-RECEPTACLE (3-PIN)	
					(INCLUDES RECEPTACLE AS & WEDGE)	
		1	**186-3735**	3	PIN-CONNECTOR (16-GA TO 18-GA)	
E		1	**112-4550**		SLEEVE (31-CM)	
	16	1,2,5, 6	**111-4836**	9	CLIP	
	17	1,2,3, 5,6	**111-4837**	12	CLIP	
	18	2,4,6	**111-4838**	16	CLIP	
	19	2,4,6	**111-4839**	16	STRAP	
C	20	1,2,3, 5,6	**116-0118**	13	CLIP	
	21	4	**128-8886**	1	STRAP AS-GROUND	
	22	6	**130-1433**	1	SPACER (11X25X17-MM THK)	
	23	2	**132-1806**	1	STRAP AS-GROUND	
	24	6	**148-5018**	1	GROMMET	
	25	1	**170-6929**	1	CABLE AS	
E		1	**5P-0761**		CABLE (00-GA, RED) (31-CM)	
		1	**9G-0002**	1	COVER-TERMINAL (RED)	
		1	**8L-8413**	1	STRAP-CABLE	
		1	**9G-0005**	1	COVER-TERMINAL (BLACK)	
		1	**8L-8413**	1	STRAP-CABLE	
		1	**8C-5918**	1	TERMINAL AS (NEGATIVE)	
		1	**1M-6119**	1	BOLT (5/16-18X1.375-IN)	
		1	**1M-6120**	1	NUT (5/16-18-THD)	
		1	**8T-9756**	1	TERMINAL AS (POSITIVE)	
		1	**1M-6119**	1	BOLT (5/16-18X1.375-IN)	
		1	**1M-6120**	1	NUT (5/16-18-THD)	
	26	4	**204-1611**	1	STRAP-CABLE	
	27	2	**204-1614**	1	BRACKET AS	
	28	1	**231-1827**	1	CABLE AS	
		1	**1S-7252**	1	TERMINAL-CABLE (00-GA, 3/8-IN SCREW)	
E		1	**5P-0747**		CABLE (00-GA, BLACK) (23-CM)	
		1	**9G-0003**	1	COVER AS-TERMINAL (BLACK) (BATTERY)	
		1	**8L-8413**	1	STRAP-CABLE	
		1	**9G-8909**	1	COVER-TERMINAL (BLACK) (DISCONNECT SWITCH)	
		1	**8T-9757**	1	TERMINAL AS-BATTERY (NEGATIVE)	
		1	**1M-6119**	1	BOLT (5/16-18X1.375-IN)	

306-8527 **BATTERY & WIRING GP** *(contd.)* **i03601367**

NOTE	REF NO	GRAPHIC REF	PART NUMBER	QTY	PART NAME 1 2 3 4 5 6 (PRODUCT LEVEL)	SEE PAGE
		1	**1M-6120**	1	NUT (5/16-18-THD)	
	29	1	**238-2501**	1	KNOB	
	30	1	**238-2528**	1	ROD	
	31	1	**251-0153**	1	BRACKET AS	
	32	2	**251-0467**	1	BRACKET AS	
	33	2	**251-0625**	1	CABLE AS	
		2	**1S-7251**	1	TERMINAL-CABLE (00-GA, 1/2-IN SCREW)	
E		2	**5P-0761**		CABLE (00-GA, RED) (413-CM)	
		2	**8N-0869**	1	COVER-TERMINAL (RED) (STARTING MOTOR)	
		2	**9G-0004**	1	COVER AS-TERMINAL (RED) (BATTERY)	
		2	**8L-8413**	1	STRAP-CABLE	
		2	**8C-5917**	1	TERMINAL AS-BATTERY (POSITIVE)	
		2	**1M-6120**	1	NUT (5/16-18-THD)	
		2	**1M-6119**	1	BOLT (5/16-18X1.375-IN)	
	34	3	**259-5130**	1	BRACKET AS	
	35	3	**259-5132**	1	BRACKET AS	
	36	4	**291-7780**	1	BRACKET AS	
C	37	2	**306-8797**	1	HARNESS AS-CHASSIS	
	38	3,4	**132-5789**	8	CLIP	
	39	2	**4K-8864**	2	CLIP	
C	40	3	**4P-7428**	2	CLIP	
C	41	3	**5I-8748**	1	SPACER (11X18X5-MM THK)	
M	42	1	**5C-7261**	1	NUT (M8X1.25-THD)	
M	43	2	**5C-7883**	4	BOLT-SOCKET HEAD (M6X1X16-MM)	
C	44	3	**5P-4116**	2	WASHER-HARD (8.8X20.5X2-MM THK)	
	45	4	**5P-8439**	1	GROMMET	
	46	2,6	**6K-8178**	6	CLIP	
M	47	3	**7X-2548**	1	BOLT (M12X1.75X16-MM)	
CM	48	2,5,6	**7X-2621**	5	BOLT (M10X1.5X12-MM)	
C	49	3	**8B-6561**	1	SPACER (5.56X22.22X55.58-MM THK)	
	50	2	**8M-2770**	1	CLIP	
	51	1,2,3, 4,5,6	**8T-4121**	62	WASHER-HARD (11X21X2.5-MM THK)	
M	52	1	**8T-4133**	1	NUT (M10X1.5-THD)	
CM	53	1,2,3, 4	**8T-4136**	11	BOLT (M10X1.5X25-MM)	
M	54	1,2,3, 5,6	**8T-4137**	20	BOLT (M10X1.5X20-MM)	
M	55	3	**8T-4172**	1	BOLT (M10X1.5X80-MM)	
C	56	3	**306-8803**	1	BRACKET AS	
M	57	6	**8T-4182**	1	BOLT (M10X1.5X45-MM)	
M	58	2	**8T-4185**	1	BOLT (M10X1.5X50-MM)	
M	59	2	**8T-4186**	1	BOLT (M10X1.5X40-MM)	
M	60	2,3,4, 5,6	**8T-4191**	9	BOLT (M10X1.5X16-MM)	
M	61	1,2	**8T-4195**	4	BOLT (M10X1.5X30-MM)	
M	62	2,6	**8T-4196**	7	BOLT (M10X1.5X35-MM)	
M	63	3	**8T-4199**	1	BOLT (M8X1.25X12-MM)	
	64	3	**8T-4223**	1	WASHER-HARD (13.5X25.5X3-MM THK)	
	65	1	**8T-4226**	1	WASHER-PLATED (10.5X45X3-MM THK)	
M	66	6	**8T-5005**	1	BOLT (M10X1.5X70-MM)	
M	67	6	**8T-6466**	1	BOLT (M10X1.5X60-MM)	
	68	2	**9X-8256**	4	WASHER (6.6X12X2-MM THK)	
	69	4	**204-1673**	1	STRAP-CABLE	

C-CHANGE FROM PREVIOUS TYPE
E-ORDER BY THE CENTIMETER
M-METRIC PART

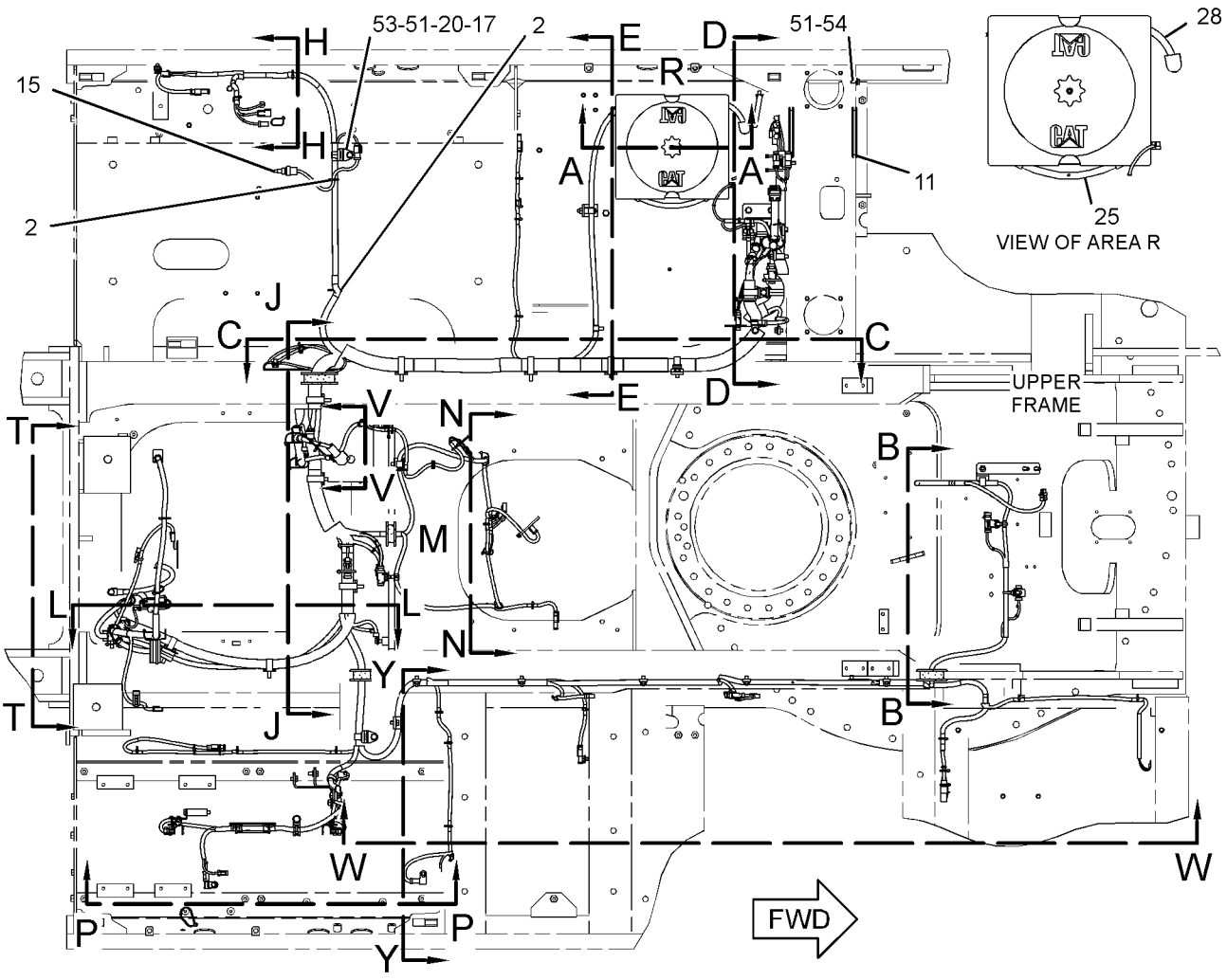

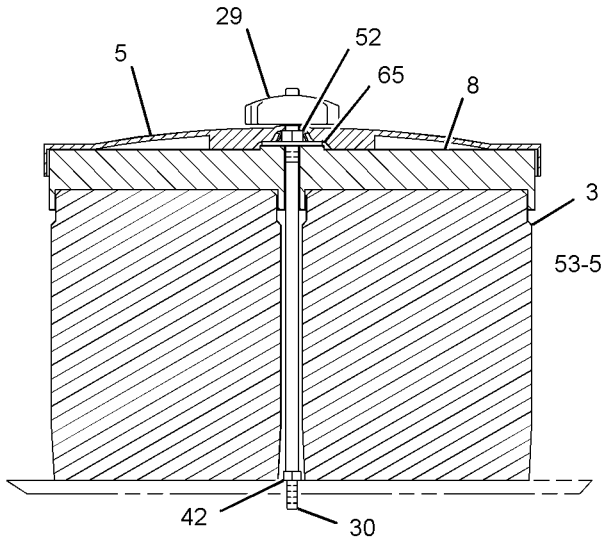

SECTION A-A

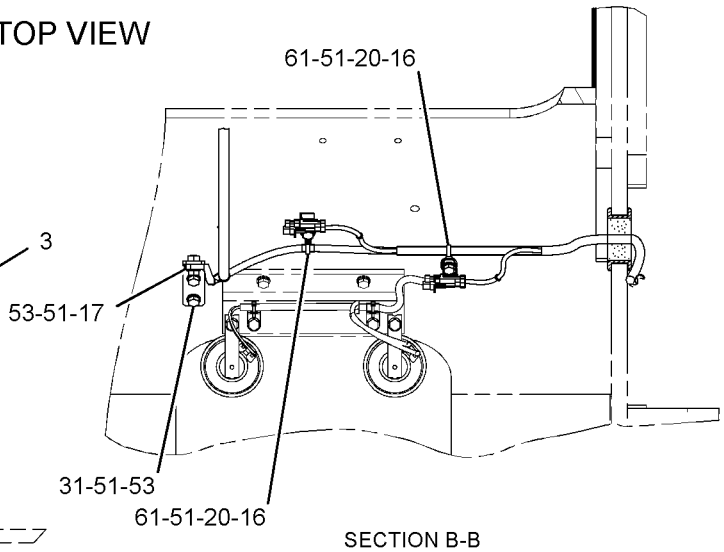

SECTION B-B

REFER TO ALL ILLUSTRATIONS OF THIS GROUP FOR AUXILIARY VIEWS

GRAPHIC #1

g01603953

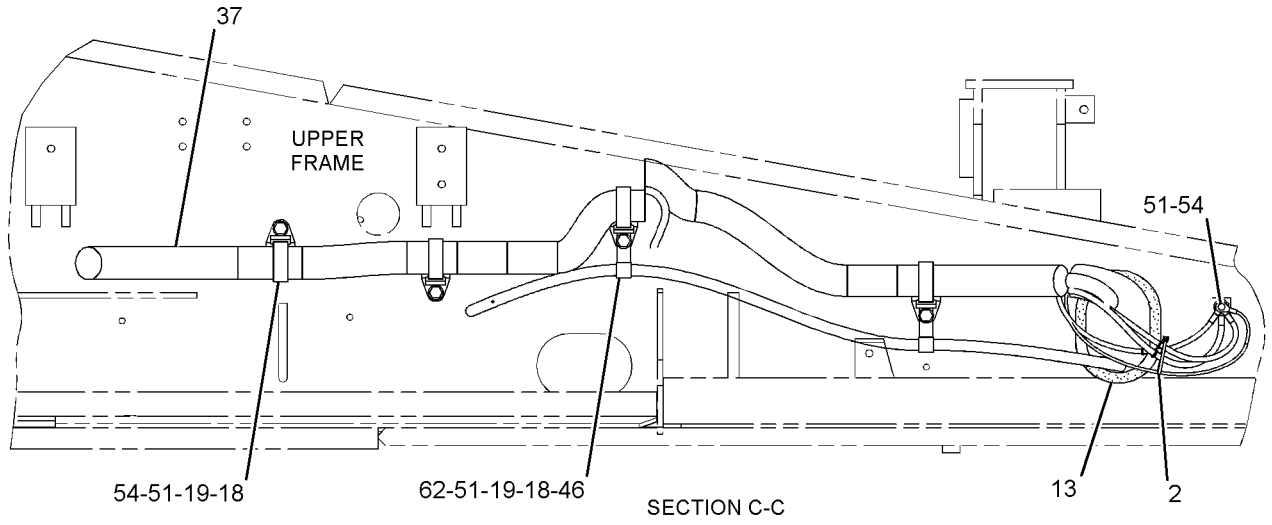

SECTION C-C

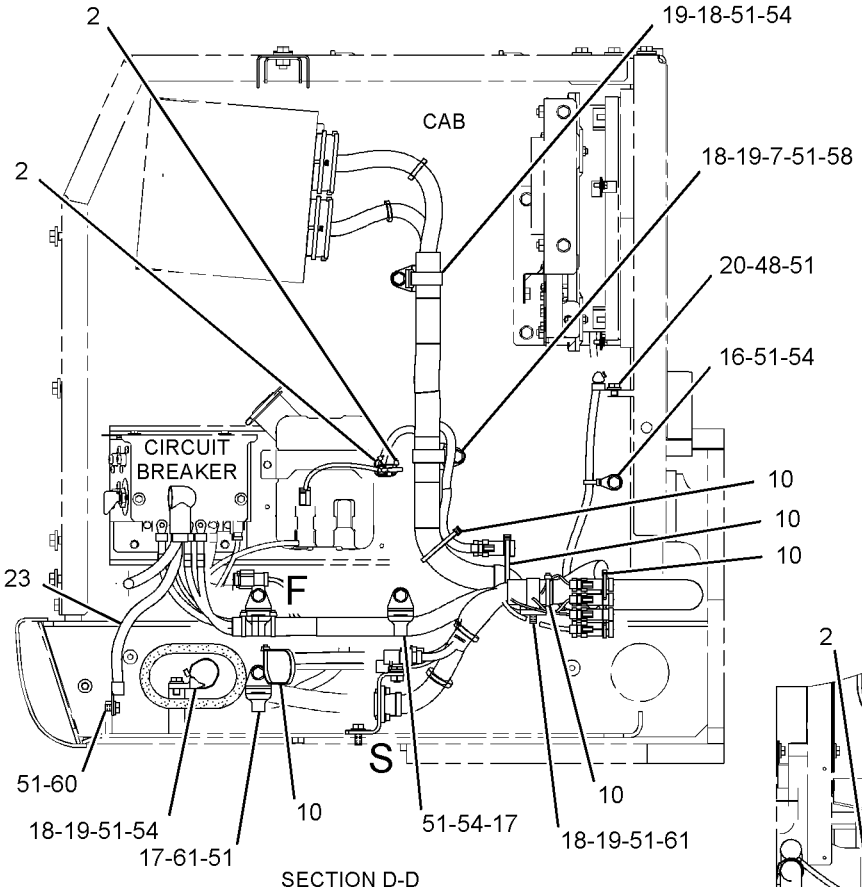

SECTION D-D

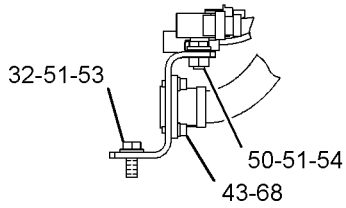

VIEW OF AREA S

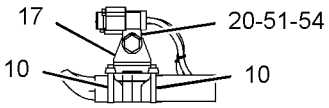

VIEW OF AREA F

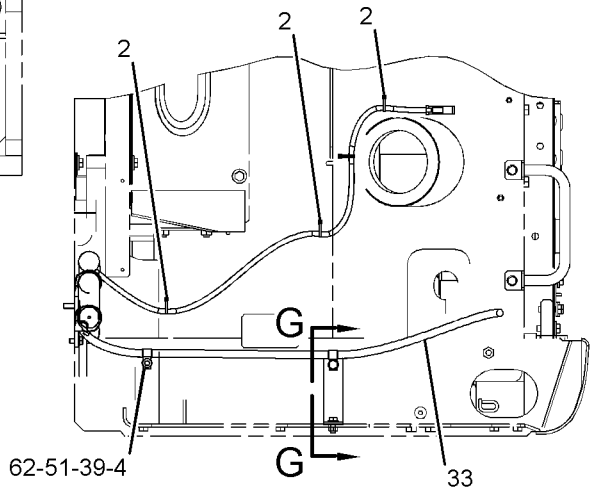

SECTION E-E

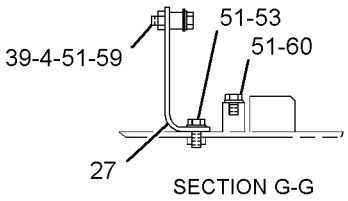

SECTION G-G

GRAPHIC #2

g01827454

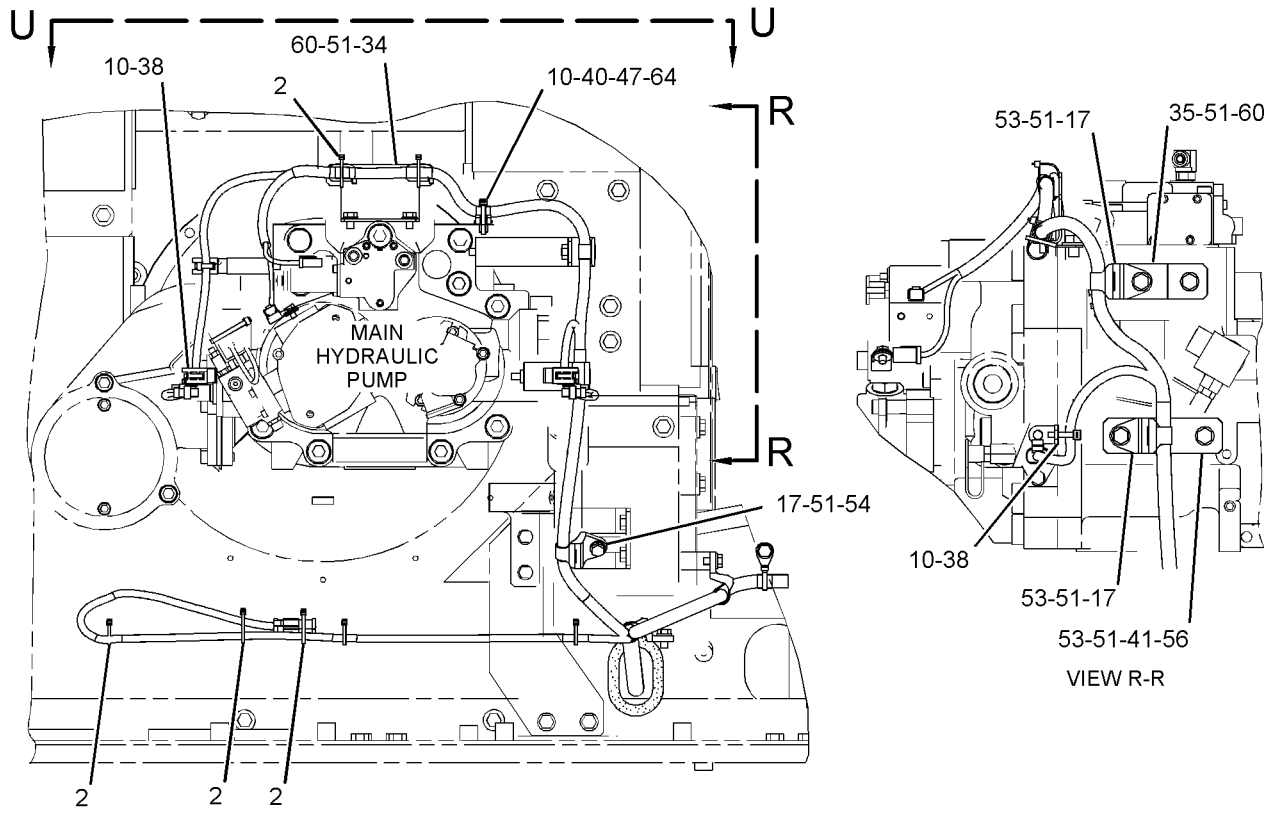

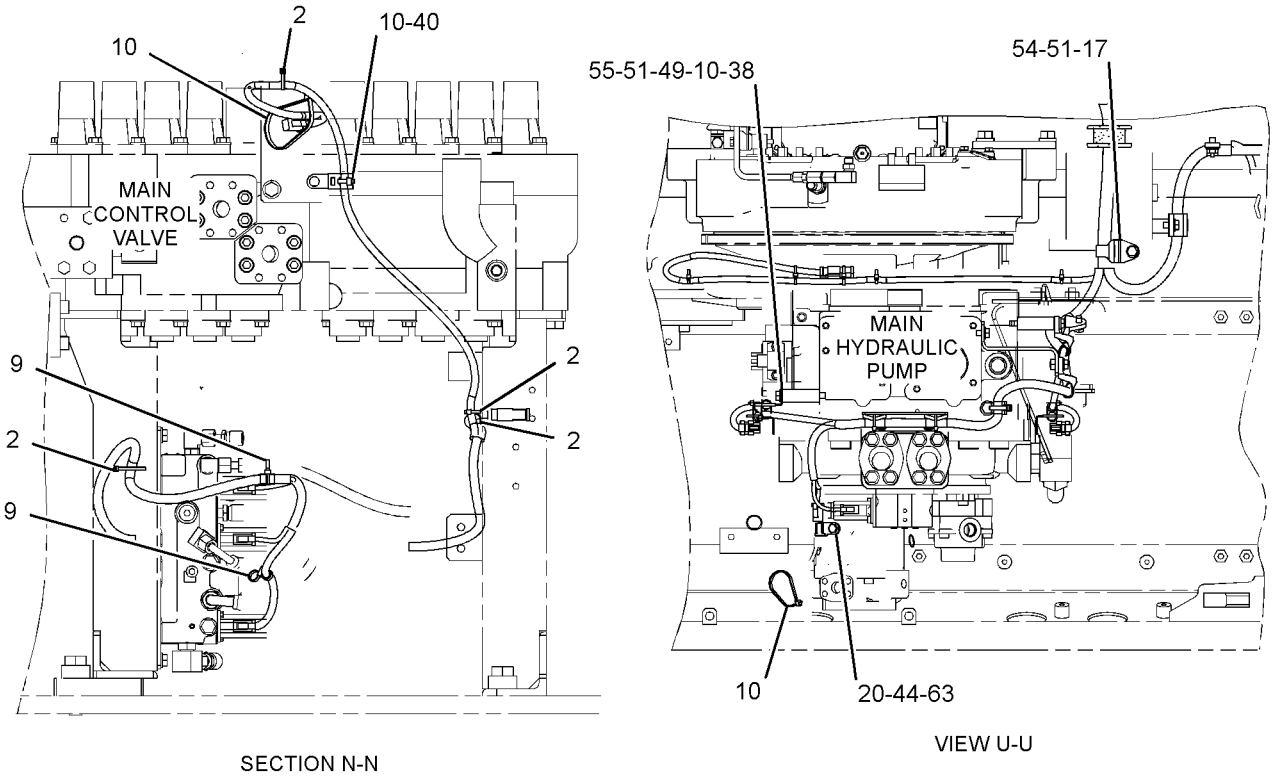

GRAPHIC #3 g01604496

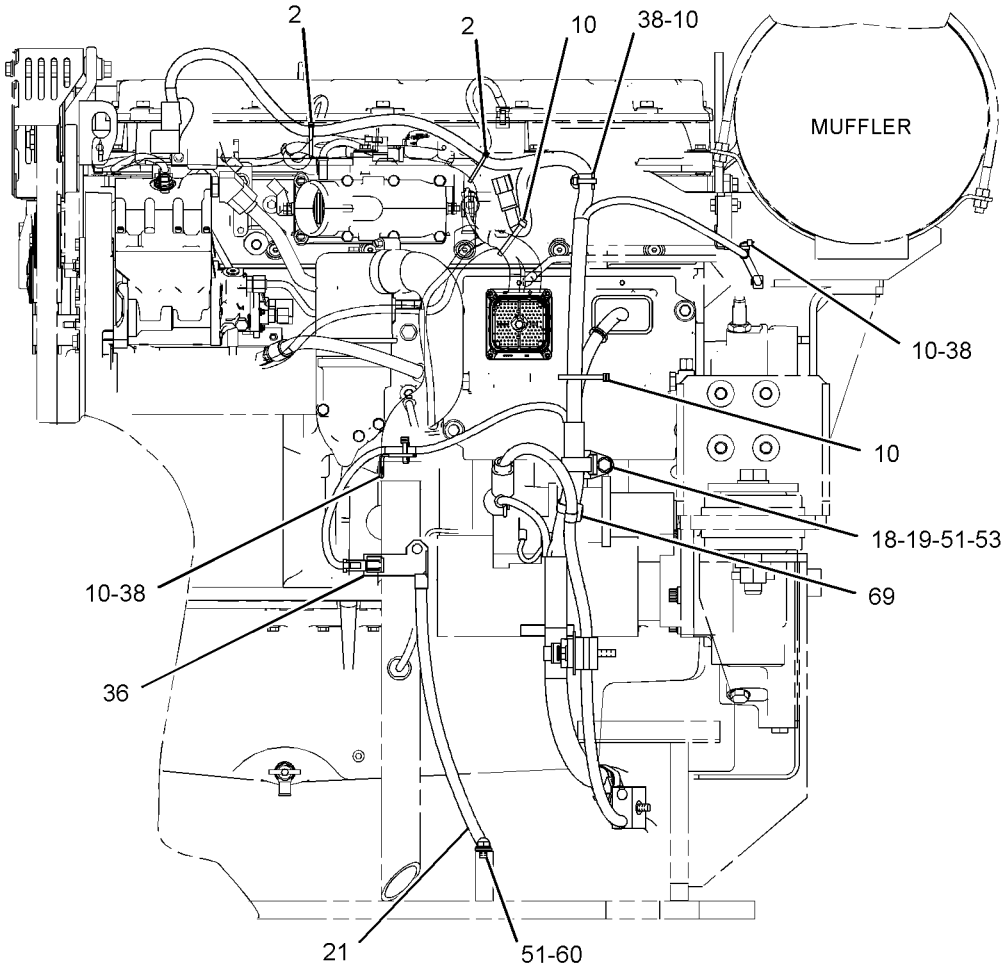

VIEW T-T

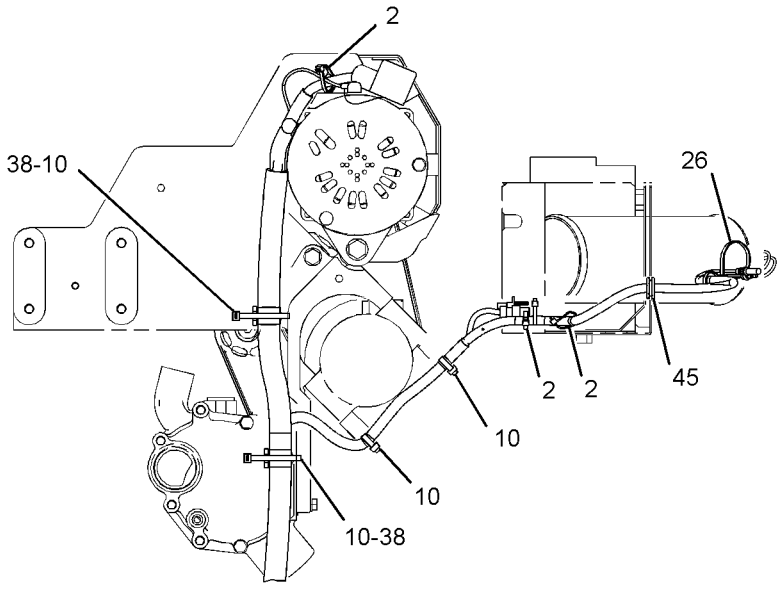

VIEW V-V

GRAPHIC #4 g01827455

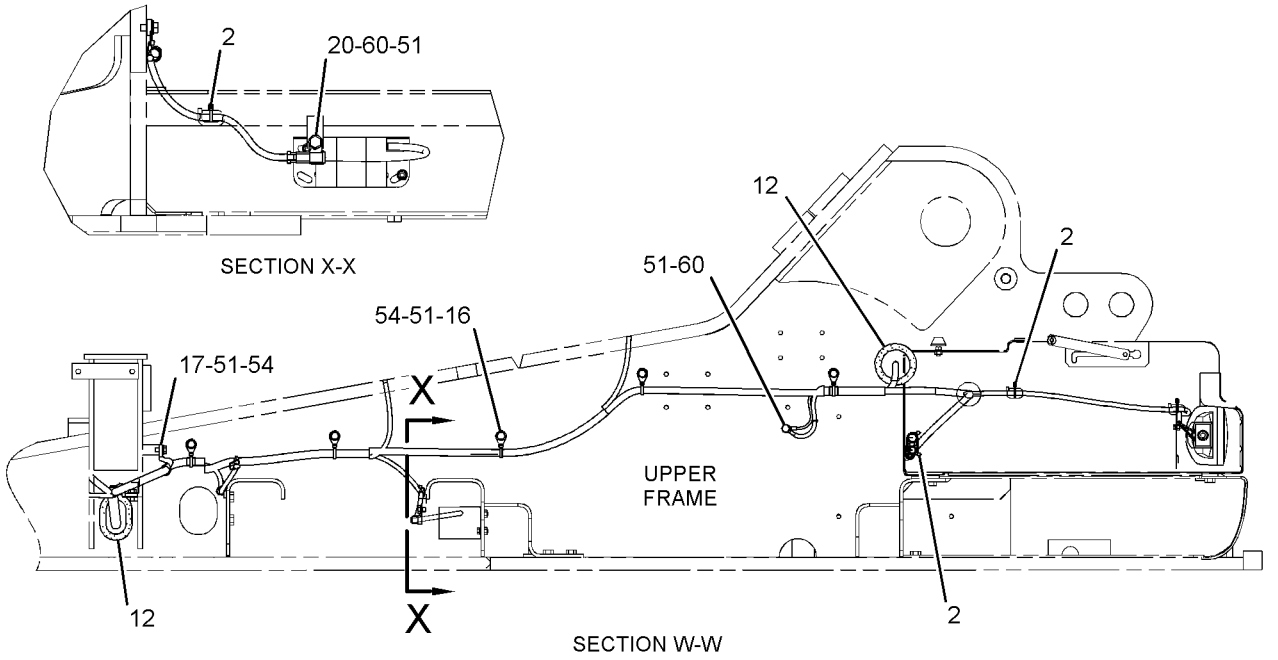

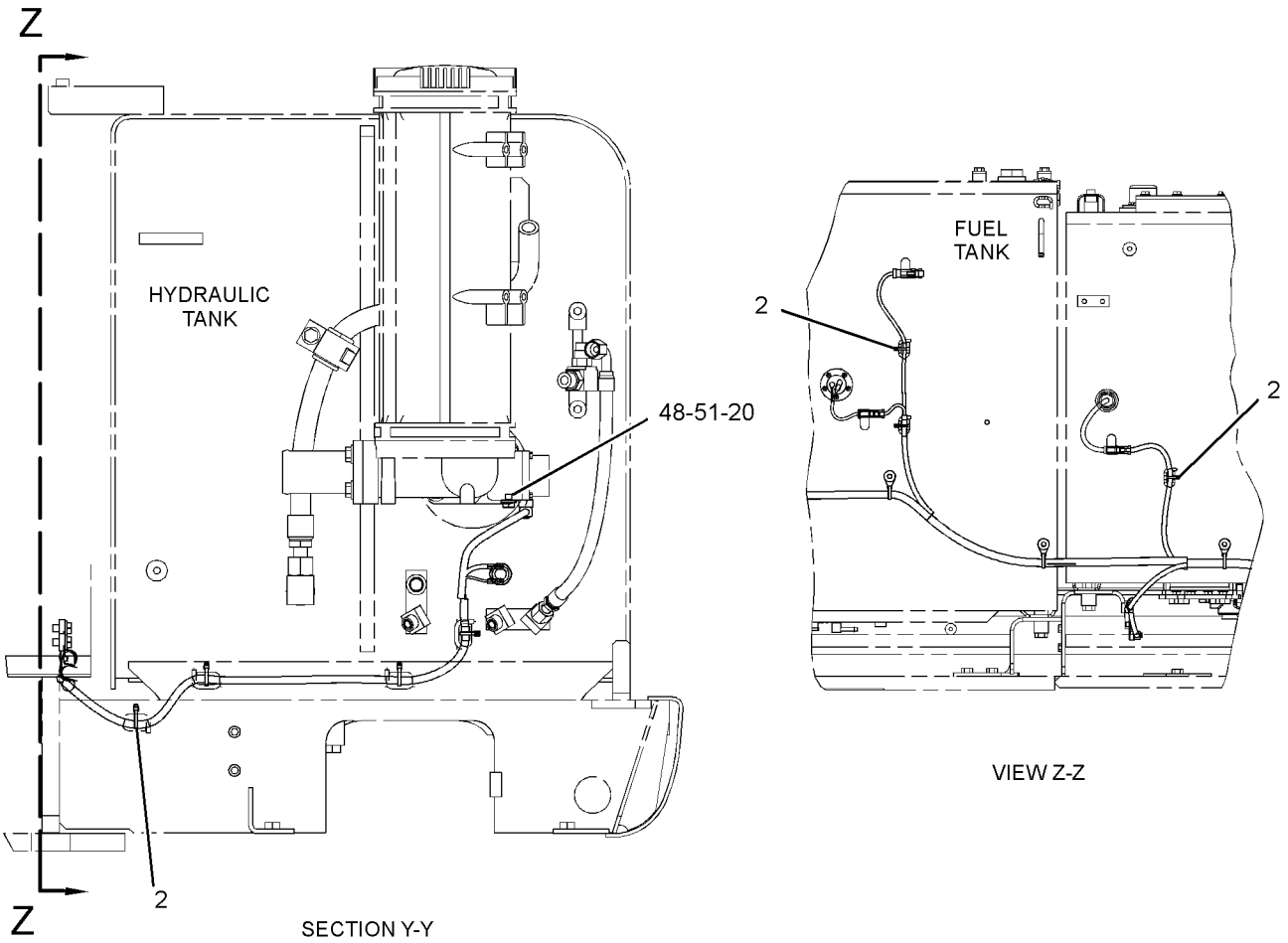

GRAPHIC #5 g01827456

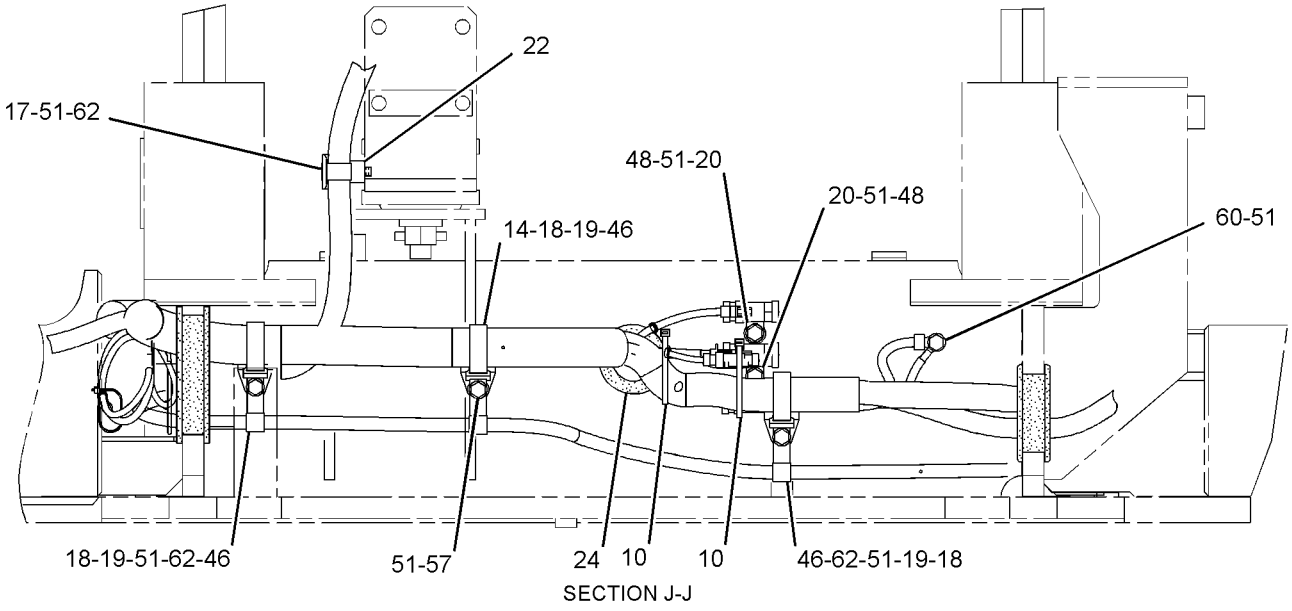

SECTION J-J

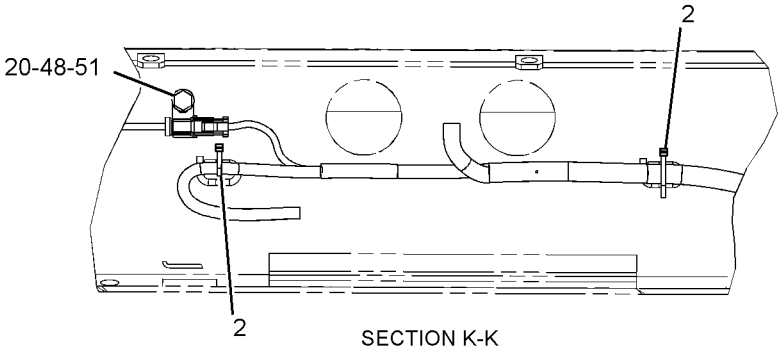

SECTION K-K

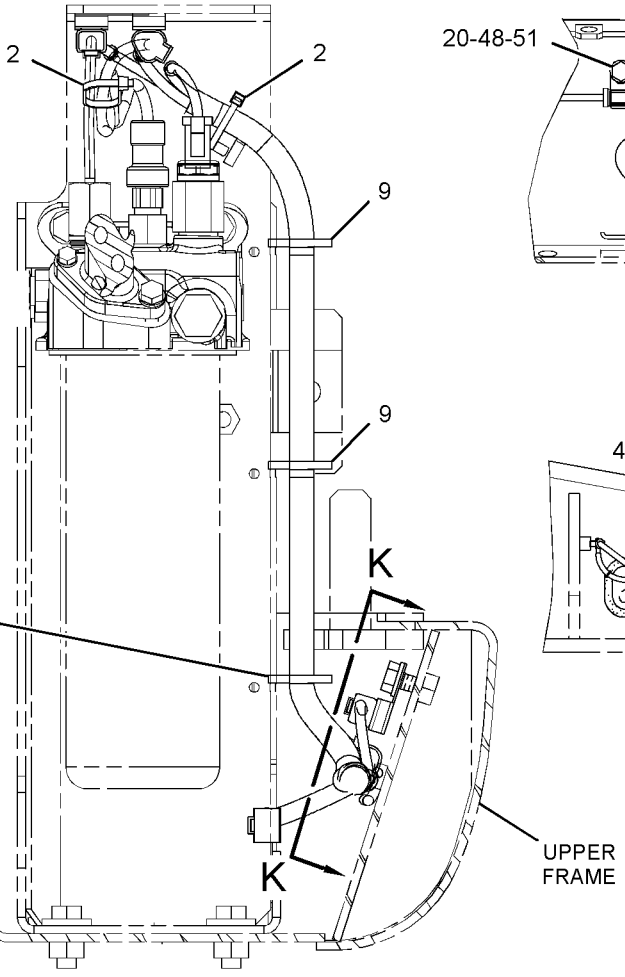

SECTION H-H

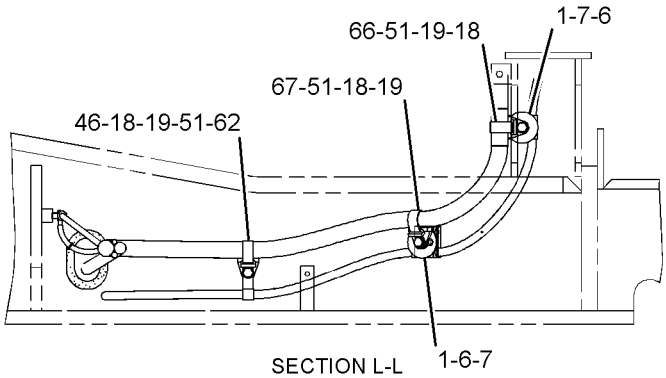

SECTION L-L

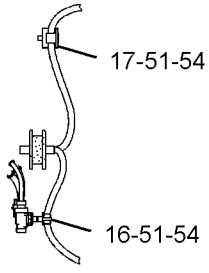

VIEW OF AREA M

GRAPHIC #6 **<END>** g01827457

9W-0742 BLOCK GP-JUNCTION–BATTERY

S/N: B6H1-UP; JLP1-UP
PART OF 251-0621 WIRING GP-AUX START RECEPTACLE
AN ATTACHMENT

SMCS-7426 **i02203621**

NOTE	REF NO	GRAPHIC REF	PART NUMBER	QTY	PART NAME 1 2 3 4 5 6 (PRODUCT LEVEL)	SEE PAGE
	1	1	**8C-6358**	1	BLOCK GP-JUNCTION (BATTERY)	
	2	1	**8T-3519**	3	BOLT-BRONZE (1/2-13X2-IN)	
	3	1	**8C-6921**	3	NUT-SPACER (1/2-13-THD)	
	4	1	**8T-3518**	6	NUT-FULL (1/2-13-THD)	
	5	1	**7F-0560**	6	WASHER (0.516X0.938X0.101-IN THK)	
BD	6	1	**6V-2722**		TUBE-HEAT SHRINK	

B-USE AS REQUIRED
D-ORDER BY THE METER

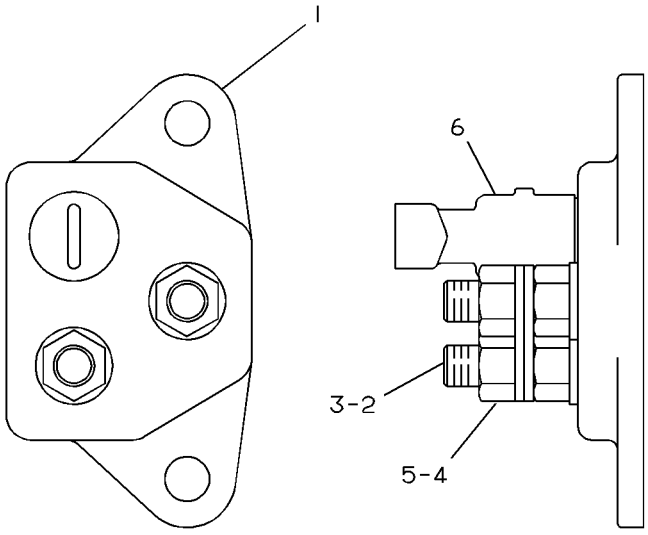

GRAPHIC #1 **<END>** g00082186

247-5284 CONTROL & MTG GP-COMMUNICATION–

PRODUCT LINK 300

S/N: B6H1-UP; JLP1-UP

PART OF 264-8552 INSTALLATION AR-COMMUNICATION

AN ATTACHMENT

SMCS-7606 **i03601377**

NOTE	REF NO	GRAPHIC REF	PART NUMBER	QTY	PART NAME 1 2 3 4 5 6 (PRODUCT LEVEL)	SEE PAGE
	1	1	**8C-5608**	4	SPACER (6.5X9.5X25.4-MM THK)	
	2	1	**9X-9896**	8	MOUNT (ISOLATION)	
Y	3	1	**239-9954**	1	CONTROL GP-UNPROGRAMMED (PRODUCT LINK 300)	270
	4	1	**260-2042**	1	BRACKET AS	
M	5	1	**8C-8451**	4	BOLT (M6X1X40-MM)	
	6	1	**9X-6165**	4	WASHER (6.5X22X2.5-MM THK)	

M-METRIC PART
Y-SEPARATE ILLUSTRATION

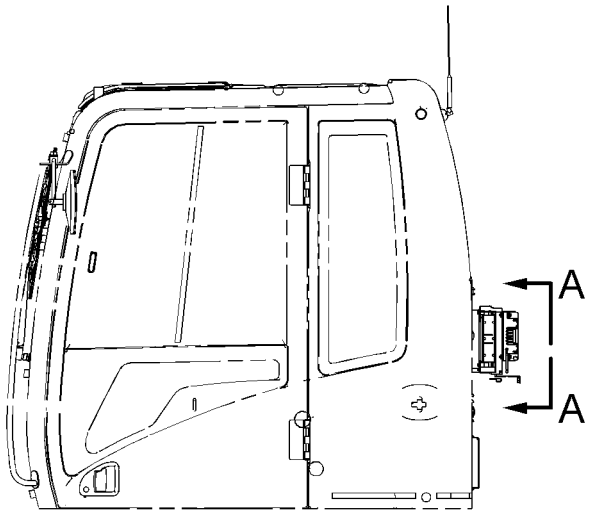

LEFT SIDE VIEW

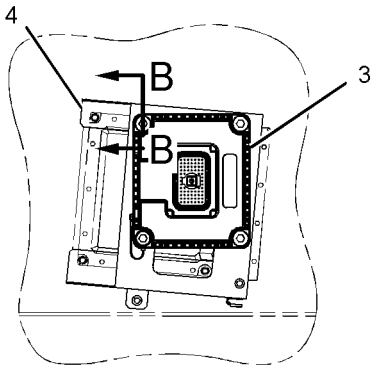

VIEW A-A

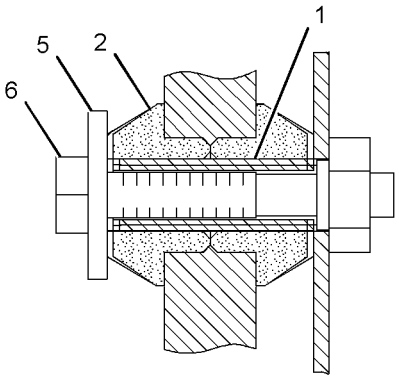

SECTION B-B

GRAPHIC #1 **<END>** g01126708

309-5842 CONTROL & MTG GP-COMMUNICATION–

PRODUCT LINK 300

S/N: B6H1-UP; JLP1-UP

PART OF 314-3533 INSTALLATION AR-COMMUNICATION

AN ATTACHMENT

SMCS-7606 **i03025066**

NOTE	REF NO	GRAPHIC REF	PART NUMBER	QTY	PART NAME 1 2 3 4 5 6 (PRODUCT LEVEL)	SEE PAGE
	1	1	**8C-5608**	4	SPACER (6.5X9.5X25.4-MM THK)	
	2	1	**9X-9896**	8	MOUNT (ISOLATION)	
	3	1	**260-2042**	1	BRACKET AS	
Y	4	1	*262-1421*	1	ELECTRONICS GP-COMMUNICATION (PRODUCT LINK 300)	271
M	5	1	**8C-8451**	4	BOLT (M6X1X40-MM)	
	6	1	**9X-6165**	4	WASHER (6.5X22X2.5-MM THK)	

M-METRIC PART
Y-SEPARATE ILLUSTRATION

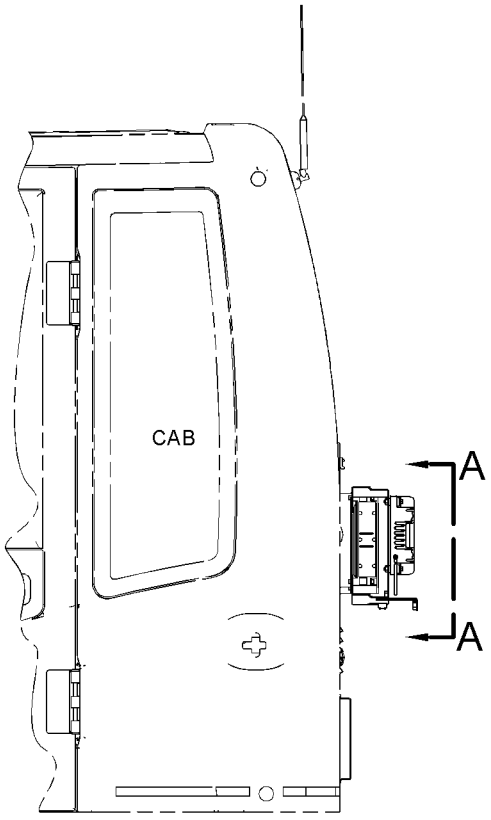

LEFT SIDE VIEW

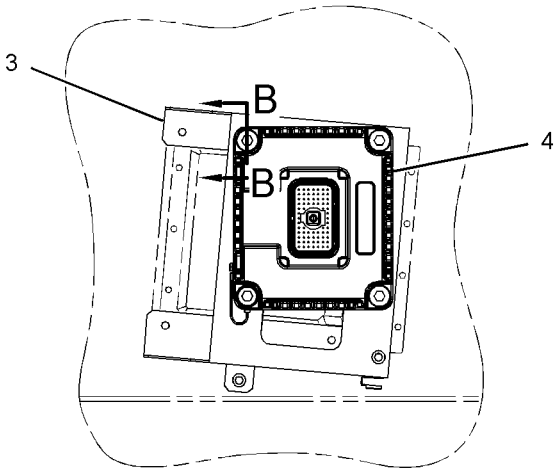

VIEW A-A

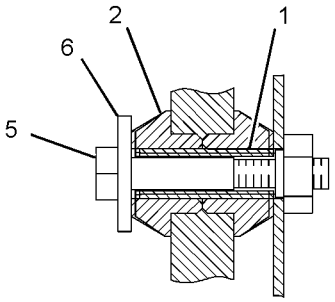

SECTION B-B

GRAPHIC #1 **<END>** g01447041

309-5887 CONTROL & MTG GP-COMMUNICATION–

PRODUCT LINK 121SR

S/N: B6H1-UP; JLP1-UP

PART OF 314-3533 INSTALLATION AR-COMMUNICATION

AN ATTACHMENT

SMCS-7606 **i03485543**

NOTE	REF NO	GRAPHIC REF	PART NUMBER	QTY	PART NAME 1 2 3 4 5 6 (PRODUCT LEVEL)	SEE PAGE
	1	1	**3S-2093**	6	STRAP-CABLE	
	2	2	**7K-1181**	4	STRAP-CABLE	
Y	3	1	**263-9088**	1	RADIO GP-COMMUNICATION (PRODUCT LINK 121SR)	1263
	4	1	**270-5455**	1	BRACKET AS	
	5	1	**111-4836**	1	CLIP	
	6	1	**8T-4121**	1	WASHER-HARD (11X21X2.5-MM THK)	
M	7	1	**8T-4137**	1	BOLT (M10X1.5X20-MM)	
M	8	1	**8T-4138**	4	BOLT (M6X1X20-MM)	
M	9	1	**8T-4179**	4	BOLT (M12X1.75X20-MM)	
	10	1	**8T-4223**	4	WASHER-HARD (13.5X25.5X3-MM THK)	
	11	1	**9X-8256**	4	WASHER (6.6X12X2-MM THK)	
	12	2	**230-1340**	1	FILM-WARNING (PRODUCT LINK RADIO, U.S.)	
					–OR–	
		2	**230-1341**	1	FILM-WARNING (PRODUCT LINK RADIO, INTL)	
	13	2	**307-0047**	1	FILM-INFORMATION (PRODUCT LINK, READ OMM)	

M-METRIC PART
Y-SEPARATE ILLUSTRATION

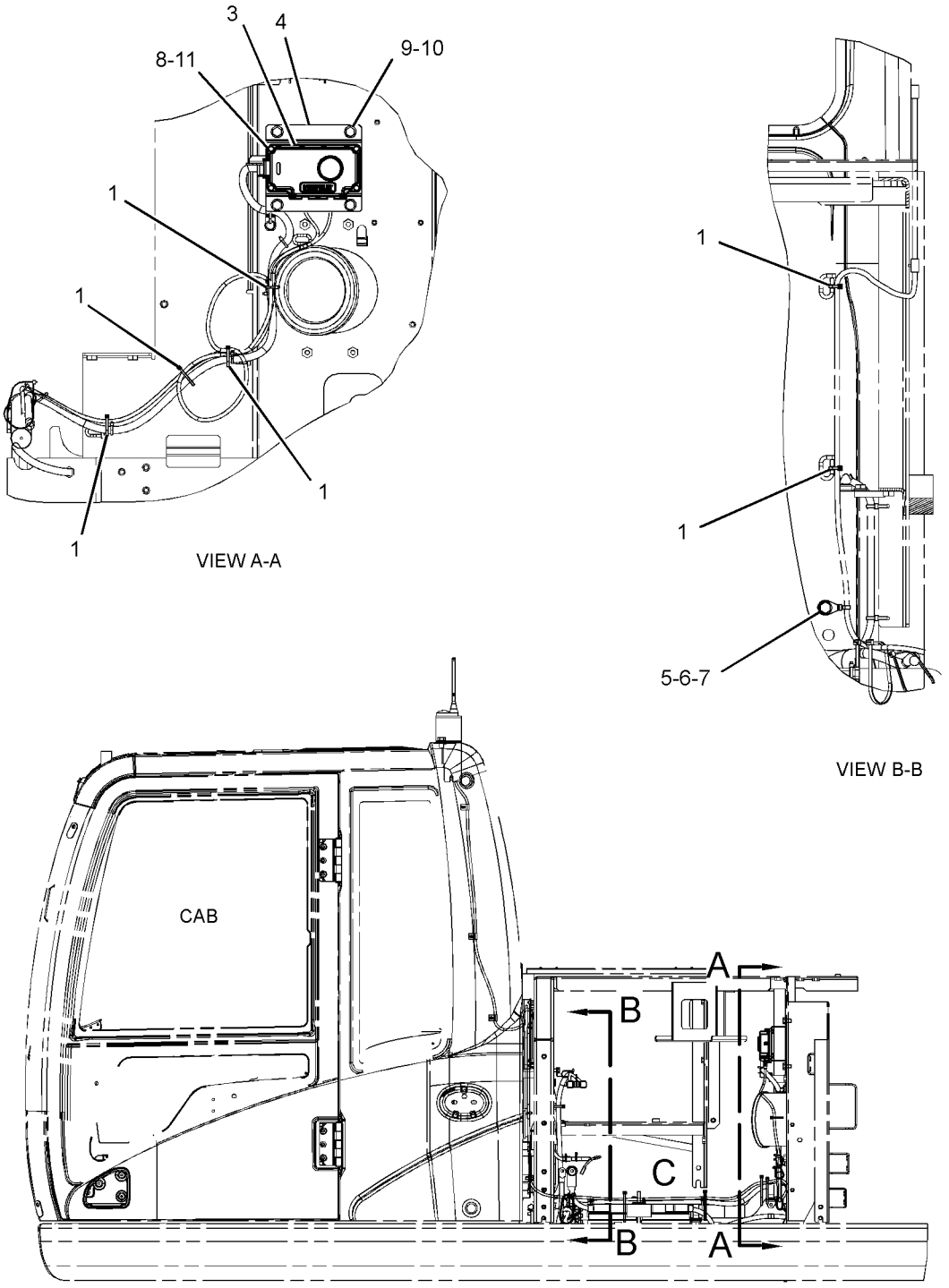

LEFT SIDE VIEW

REFER TO ALL ILLUSTRATIONS OF
THIS GROUP FOR AUXILIARY VIEWS.

GRAPHIC #1

g01508033

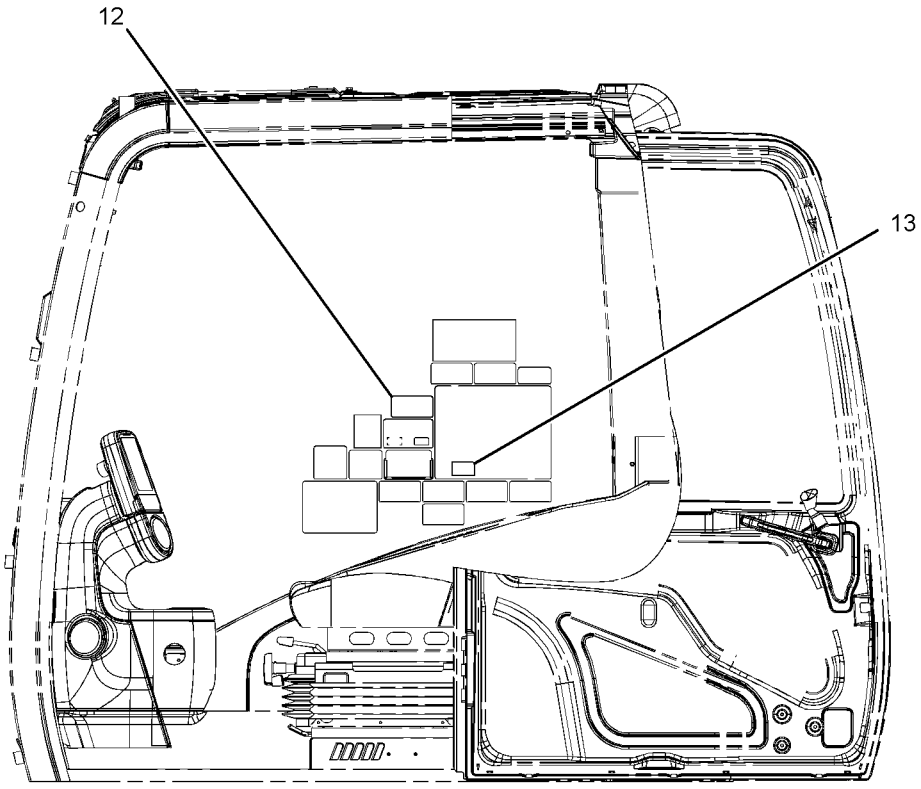

LEFT SIDE VIEW
(CAB)

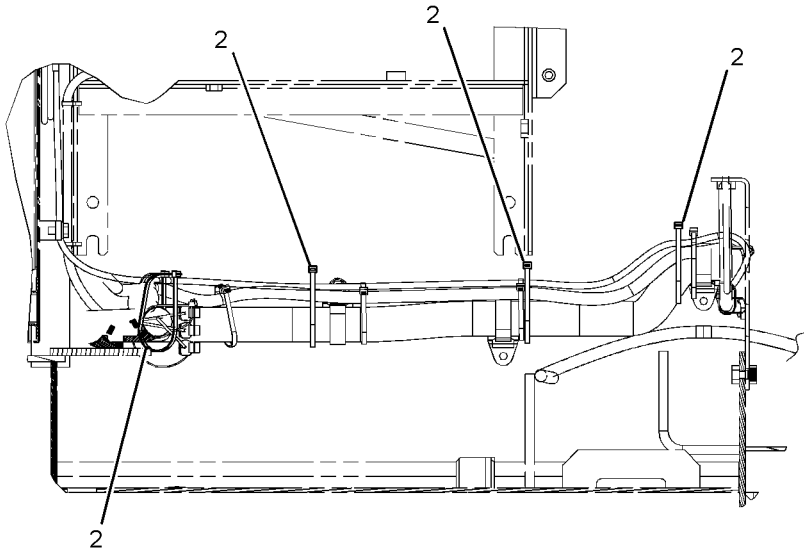

VIEW OF AREA C

GRAPHIC #2 **<END>** g01778673

253-4522 CONTROL & MTG GP-ENGINE ELEK

S/N: THX1-UP
FUEL COOLED
PART OF 224-9843 ENGINE AR, 240-1861, 270-2771, 301-3082 ENGINE AR-COMPLETE

SMCS-1901 **i03169487**

NOTE	REF NO	GRAPHIC REF	PART NUMBER	QTY	PART NAME 1 2 3 4 5 6 (PRODUCT LEVEL)	SEE PAGE
	1	1	**8T-9655**	8	MOUNT-ISOLATION	
	2	1	**101-3128**	4	SPACER-SPECIAL	
M	3	1	**143-9392**	2	STUD (M8X1.25-THD)	
R	5	1	**255-5285**	1	CONTROL GP-UNPROGRAMMED (ENGINE)	
	6	1	**233-0891**	1	BRACKET AS	
M	7	1	**5P-8347**	2	BOLT (M8X1.25X70-MM)	
	8	1	**9M-1974**	4	WASHER-HARD (8.8X16X2-MM THK)	
	9	1	**9N-0869**	4	WASHER-HARD (8.8X25.5X2-MM THK)	

M-METRIC PART
R-REMFG PART MAY BE AVAILABLE

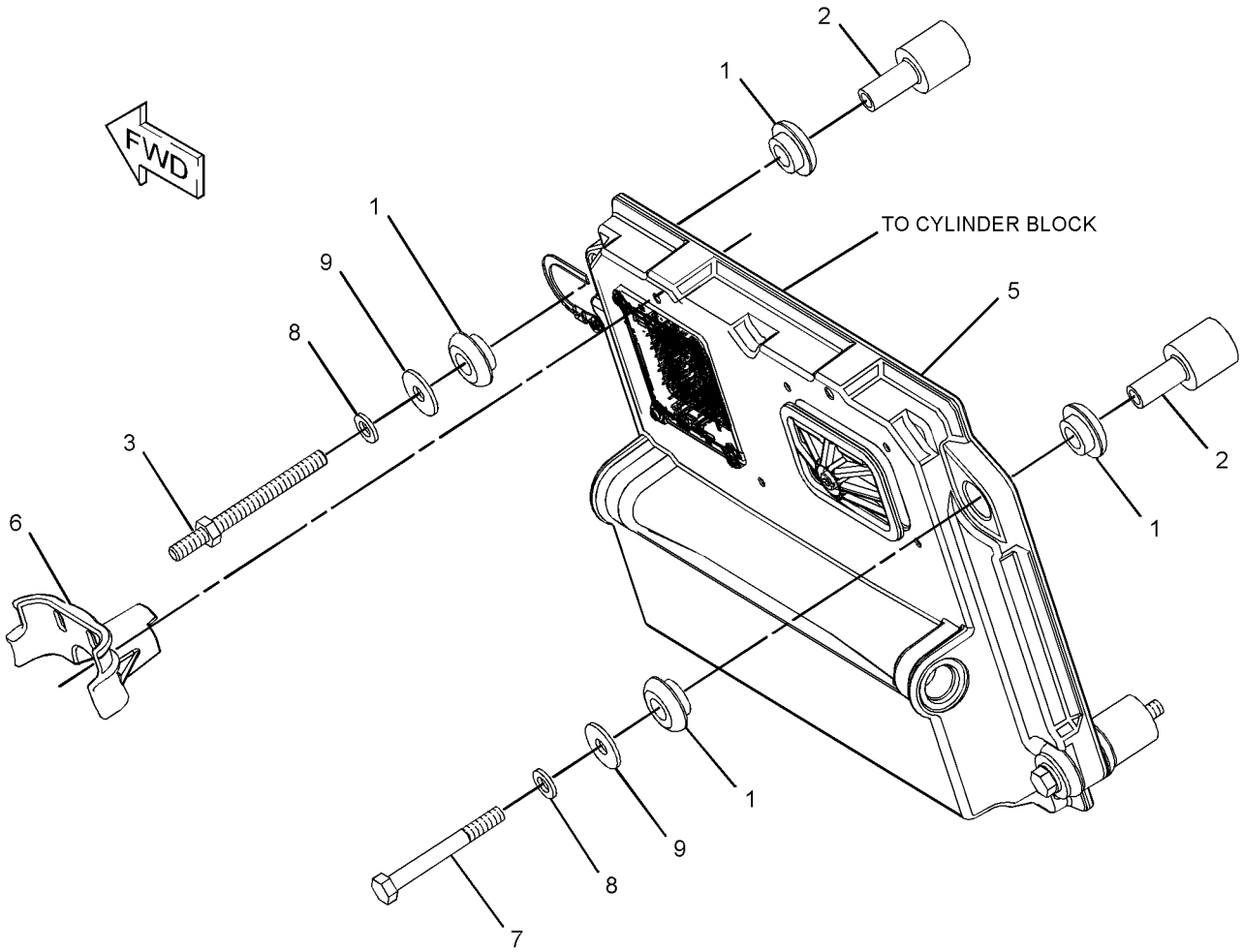

GRAPHIC #1 **<END>** g01178433

221-8872 CONTROL & MTG GP-MACHINE

S/N: B6H1-UP; JLP1-UP

PART OF 229-9072 OPERATOR AR

SMCS-1931, 7600 **i02489587**

NOTE	REF NO	GRAPHIC REF	PART NUMBER	QTY	PART NAME 1 2 3 4 5 6 (PRODUCT LEVEL)	SEE PAGE
	1	1	**221-8874**	1	CONTROL GP-UNPROGRAMMED	
M	2	1	**9X-2480**	4	BOLT (M6X1X45-MM)	
	3	1	**9X-8256**	4	WASHER (6.6X12X2-MM THK)	

M-METRIC PART

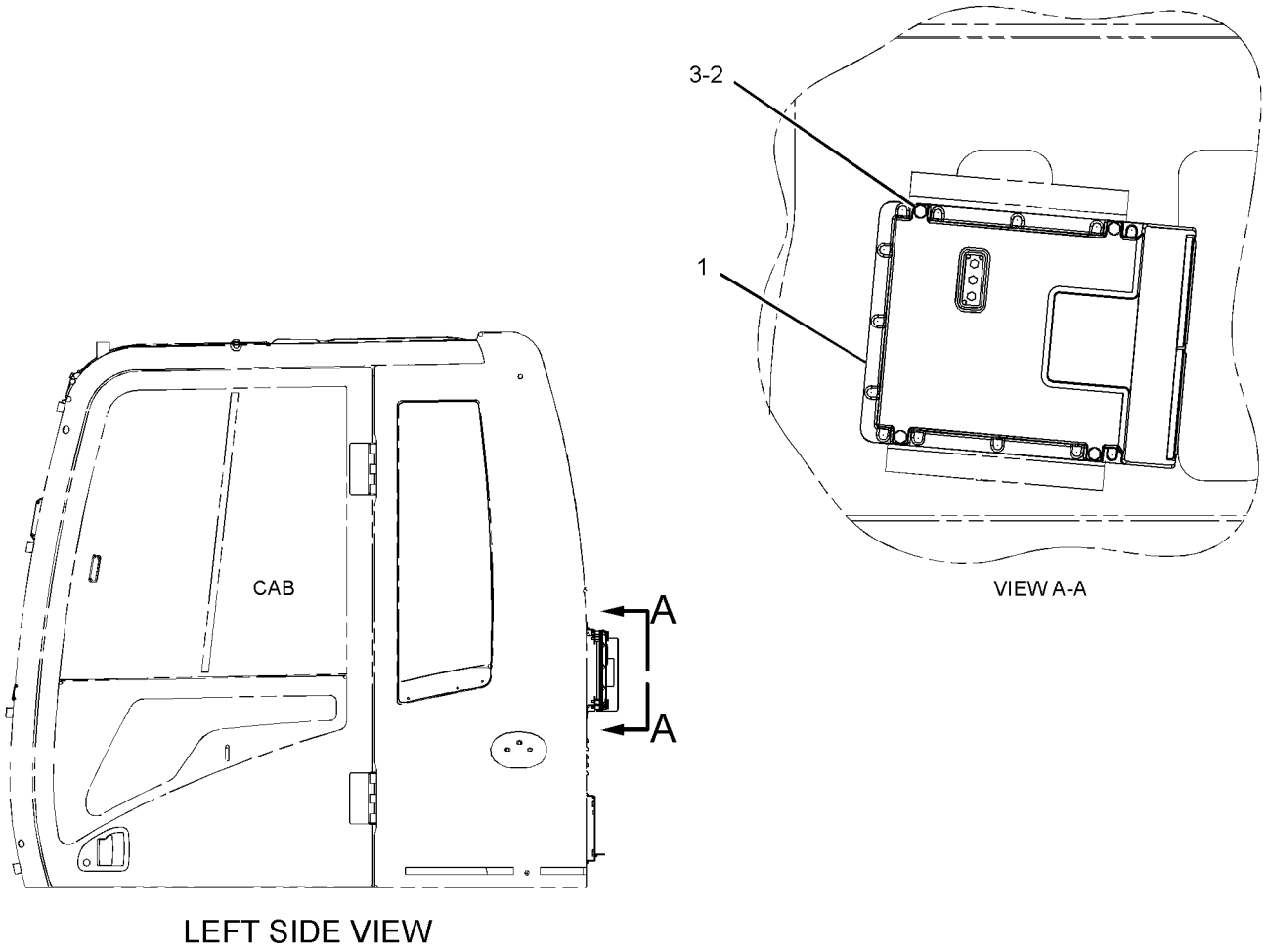

VIEW A-A

LEFT SIDE VIEW

GRAPHIC #1 **<END>** g01150750

239-9954 CONTROL GP-UNPROGRAMMED—PRODUCT LINK 300

S/N: B6H1-UP; JLP1-UP
PART OF 247-5284 CONTROL & MTG GP-COMMUNICATION
AN ATTACHMENT

SMCS-7610 **i02941986**

NOTE	REF NO	GRAPHIC REF	PART NUMBER	QTY	PART NAME 1 2 3 4 5 6 (PRODUCT LEVEL)	SEE PAGE
	1	1	**285-1133**	1	CONTROL GP-UNPROGRAMMED (PRODUCT LINK 300)	
	1A	1	**7X-6315**	1	STRAP AS-GROUND	
	1B	1	**126-7574**	1	SCREW-PAN HEAD (8-32X9.52-MM)	
	1C	1	**134-4126**	1	WASHER (4.52X8.28X0.76-MM THK)	

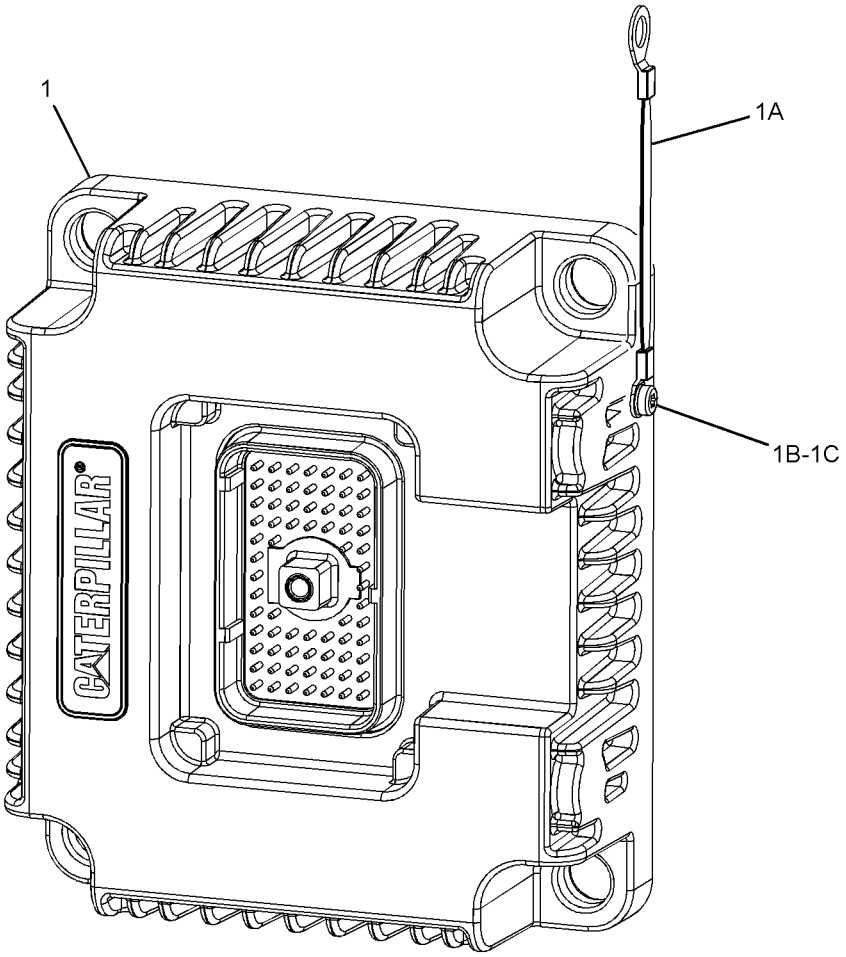

GRAPHIC #1 **<END>** g01400203

262-1421 ELECTRONICS GP-COMMUNICATION–

PRODUCT LINK 300

S/N: B6H1-UP; JLP1-UP

PART OF 309-5842 CONTROL & MTG GP-COMMUNICATION

AN ATTACHMENT

SMCS-7606, 7610, 7620 **i03601391**

NOTE	PART NUMBER	QTY	PART NAME 1 2 3 4 5 6 (PRODUCT LEVEL)	SEE PAGE
	330-3409	1	SOFTWARE GP-COMMUNICATION (PRODUCT LINK 300)	
			-OR-	
	330-3410	1	SERVICE GP-COMMUNICATION (PRODUCT LINK 300)	
			(OPTIONAL SERVICE REPLACEMENT)(INCLUDES CONTROL GP & SOFTWARE)	
	7X-6315	1	STRAP AS-GROUND	
	126-7574	1	SCREW-PAN HEAD (8-32X9.52-MM)	
	134-4126	1	WASHER (4.52X8.28X0.76-MM THK)	

<END>

262-2043 ELECTRONICS GP-COMMUNICATION–

PRODUCT LINK 300

S/N: B6H1-UP; JLP1-UP

PART OF 264-8552 INSTALLATION AR-COMMUNICATION

AN ATTACHMENT

SMCS-7606, 7610, 7620 **i03211353**

NOTE	PART NUMBER	QTY	PART NAME 1 2 3 4 5 6 (PRODUCT LEVEL)	SEE PAGE
	330-3409	1	SOFTWARE GP-COMMUNICATION (PRODUCT LINK 300)	
			-OR-	
	330-3410	1	SERVICE GP-COMMUNICATION (PRODUCT LINK 300)	
			(OPTIONAL SERVICE REPLACEMENT) (INCLUDES CONTROL GP & SOFTWARE)	
	7X-6315	1	STRAP AS-GROUND	
	126-7574	1	SCREW-PAN HEAD (8-32X9.52-MM)	
	134-4126	1	WASHER (4.52X8.28X0.76-MM THK)	

<END>

227-7683 ELECTRONICS GP-MACHINE

S/N: JLP1-218

PART OF 264-8594 GENERAL AR

SMCS-7610, 7620 **i02488264**

NOTE	PART NUMBER	QTY	PART NAME 1 2 3 4 5 6 (PRODUCT LEVEL)	SEE PAGE
	279-7613	1	SOFTWARE GP-MACHINE	
			-OR-	
	279-7614	1	SERVICE GP-MACHINE	
			(OPTIONAL SERVICE REPLACEMENT) (INCLUDES CONTROL GP & SOFTWARE)	

<END>

ELECTRICAL AND STARTING SYSTEM

260-2053 ELECTRONICS GP-MACHINE—HIGH POWER

S/N: B6H1-632; JLP219-559

PART OF 229-1873, 264-8594 GENERAL AR

SMCS-7610, 7620 **i02884752**

NOTE	PART NUMBER	QTY	PART NAME 1 2 3 4 5 6 (PRODUCT LEVEL)	SEE PAGE
	309-5731	1	SOFTWARE GP-MACHINE	
			—OR—	
	309-5732	1	SERVICE GP-MACHINE	
			(OPTIONAL SERVICE REPLACEMENT)(INCLUDES CONTROL GP & SOFTWARE)	

<END>

297-4426 ELECTRONICS GP-MACHINE—HIGH POWER

S/N: B6H633-UP; JLP560-UP

PART OF 229-1873, 264-8594 GENERAL AR

SMCS-7610, 7620 **i03678340**

NOTE	PART NUMBER	QTY	PART NAME 1 2 3 4 5 6 (PRODUCT LEVEL)	SEE PAGE
	327-7535	1	SOFTWARE GP-MACHINE	
			-OR-	
	327-7536	1	CONTROL GP-ELECTRONIC	
			(OPTIONAL SERVICE REPLACEMENT) (INCLUDES CONTROL GP & SOFTWARE)	

<END>

221-8861 ELECTRONICS GP-MONITOR

S/N: B6H1-UP; JLP1-UP

PART OF 229-1873, 264-8594 GENERAL AR

SMCS-7490, 7601, 7610, 7620 **i03704643**

NOTE	PART NUMBER	QTY	PART NAME 1 2 3 4 5 6 (PRODUCT LEVEL)	SEE PAGE
	349-5410	1	SOFTWARE GP-MONITOR	
			—OR—	
	349-5408	1	SERVICE GP-MONITOR	
			(OPTIONAL SERVICE REPLACEMENT)(INCLUDES MONITOR GP & SOFTWARE)	

<END>

251-0526 FASTENER GP-WIRING HARNESS–STRAIGHT TRAVEL

S/N: B6H1-UP; JLP1-UP
PART OF 259-7176 PEDAL AR-AUXILIARY
AN ATTACHMENT

SMCS-1408, 7553 **i03601465**

NOTE	REF NO	GRAPHIC REF	PART NUMBER	QTY	PART NAME 1 2 3 4 5 6 (PRODUCT LEVEL)	SEE PAGE
	1	1	**3S-2093**	1	STRAP-CABLE	
	2	1	**116-0118**	1	CLIP	
M	3	1	**7X-2621**	1	BOLT (M10X1.5X12-MM)	
	4	1	**8T-4121**	1	WASHER-HARD (11X21X2.5-MM THK)	

M-METRIC PART

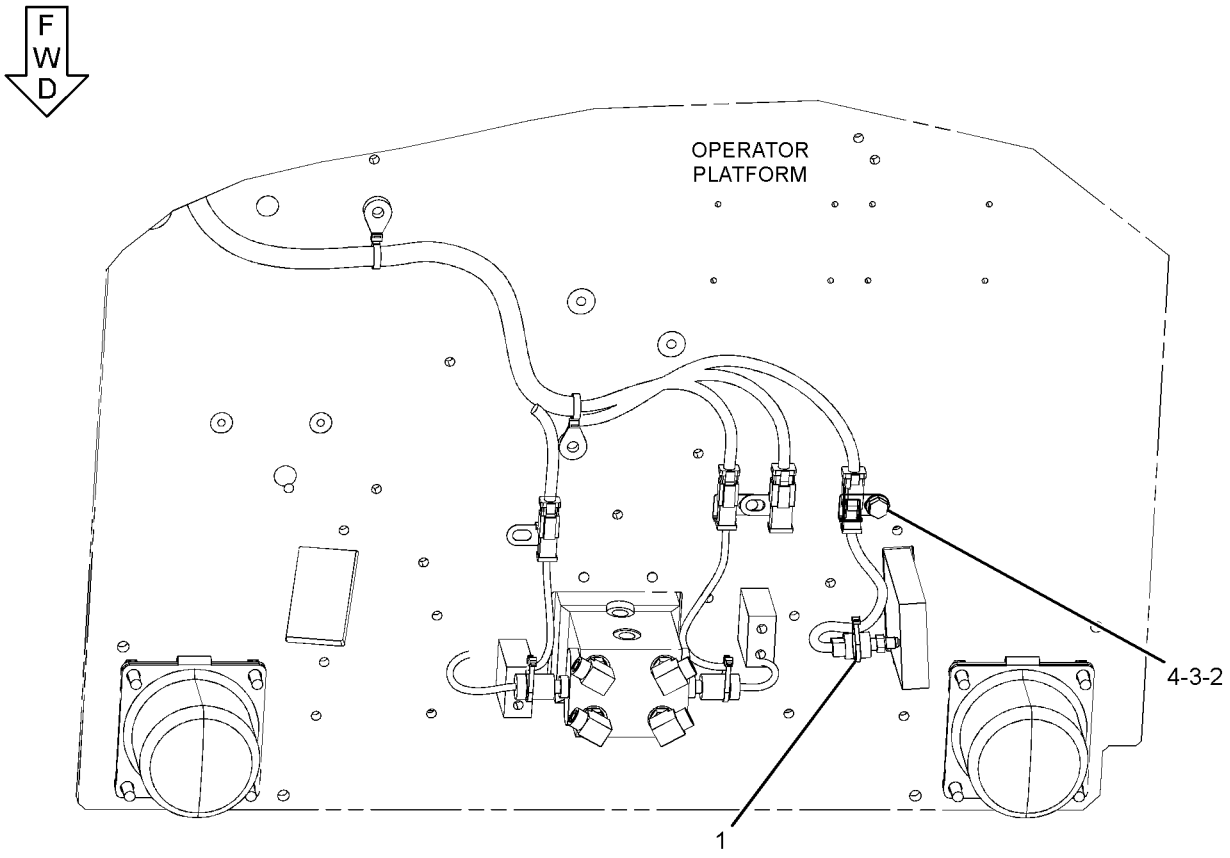

BOTTOM VIEW

GRAPHIC #1 **<END>** g01926299

259-5237 FASTENER GP-WIRING HARNESS–HEAVY LIFT

S/N: B6H1-UP; JLP1-UP

PART OF 259-7766 HYDRAULIC AR

SMCS-1408, 7553 **i02499398**

NOTE	REF NO	GRAPHIC REF	PART NUMBER	QTY	PART NAME 1 2 3 4 5 6 (PRODUCT LEVEL)	SEE PAGE
	1	1	**7I-2673**	1	STRAP-CABLE	

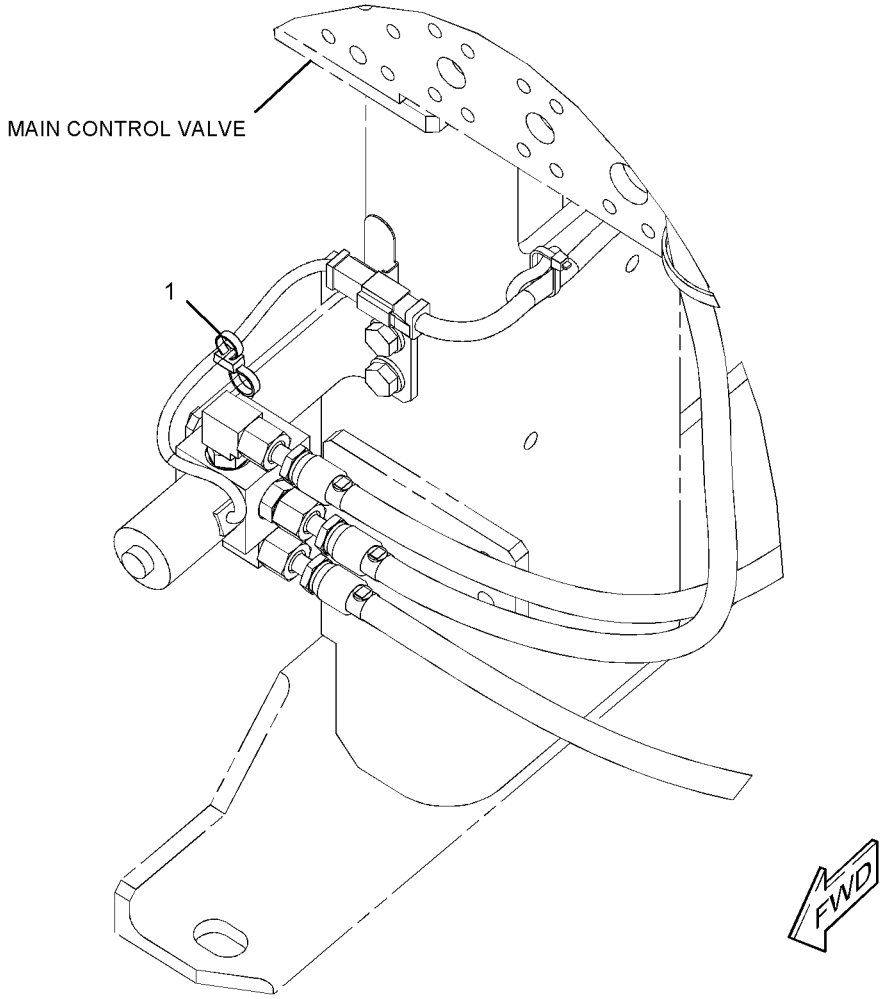

GRAPHIC #1 **<END>** g01200808

259-5293 FASTENER GP-WIRING HARNESS–PEDAL CONTROL

S/N: B6H1-UP; JLP1-UP

PART OF 272-9666 CONTROL AR-AUXILIARY, 255-5845 PEDAL AR-AUXILIARY AN ATTACHMENT

SMCS-1408, 7553 **i02507734**

NOTE	REF NO	GRAPHIC REF	PART NUMBER	QTY	PART NAME 1 2 3 4 5 6 (PRODUCT LEVEL)	SEE PAGE
	1	1	**116-0118**	1	CLIP	
M	2	1	**7X-2621**	1	BOLT (M10X1.5X12-MM)	
	3	1	**8T-4121**	1	WASHER-HARD (11X21X2.5-MM THK)	

M-METRIC PART

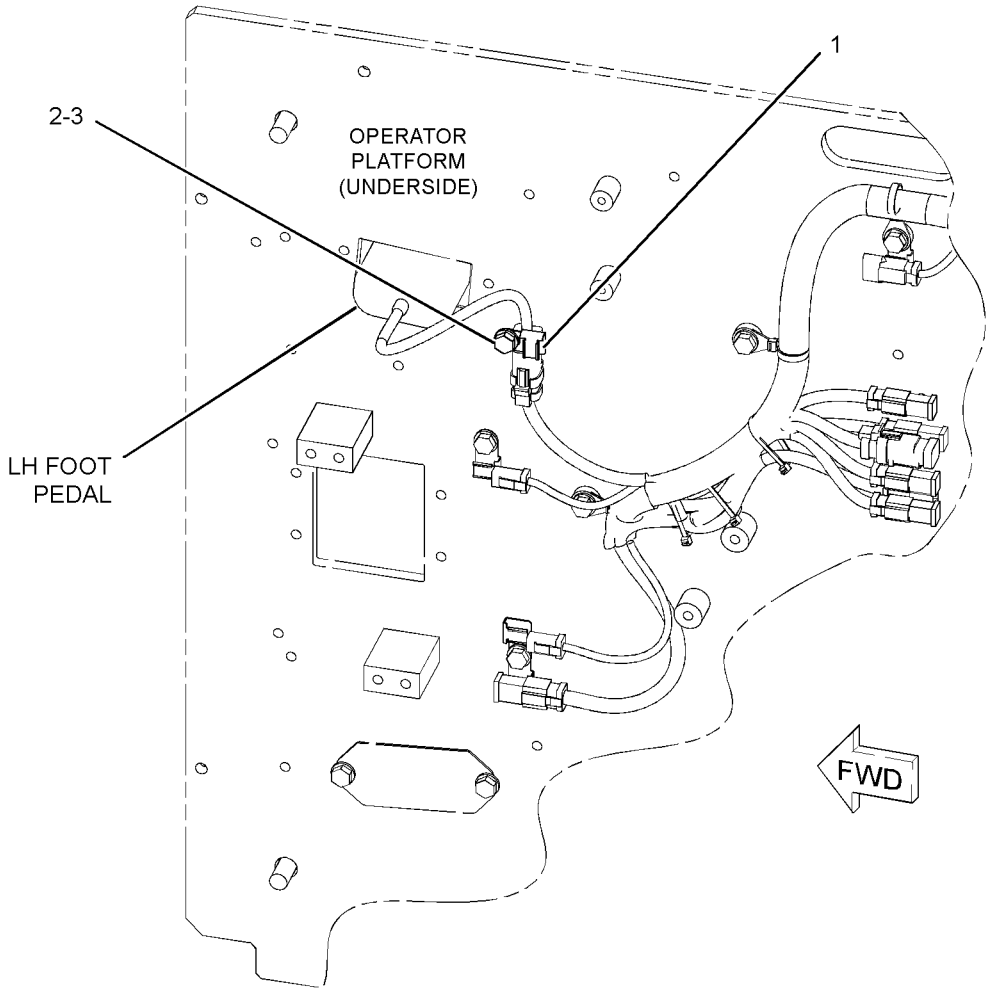

GRAPHIC #1 **<END>** g01264273

259-5294 FASTENER GP-WIRING HARNESS–FOOT SWITCH

S/N: B6H1-UP; JLP1-UP
PART OF 255-5846, 272-9663 CONTROL AR-AUXILIARY
AN ATTACHMENT

SMCS-1408, 7553 **i02510007**

NOTE	REF NO	GRAPHIC REF	PART NUMBER	QTY	PART NAME 1 2 3 4 5 6 (PRODUCT LEVEL)	SEE PAGE
	1	1	**116-0118**	1	CLIP	
M	2	1	**7X-2621**	1	BOLT (M10X1.5X12-MM)	
	3	1	**8T-4121**	1	WASHER-HARD (11X21X2.5-MM THK)	

M-METRIC PART

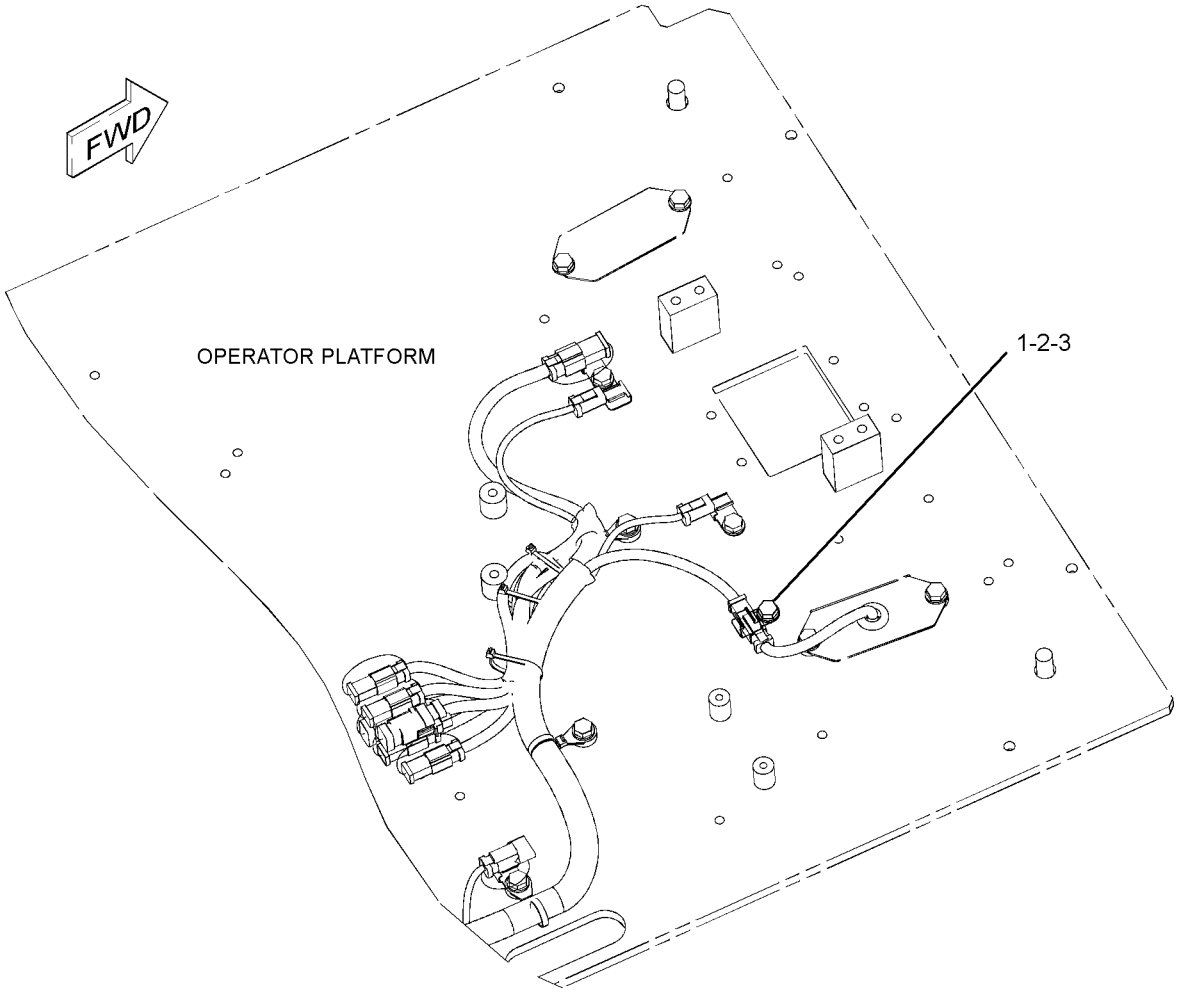

GRAPHIC #1 **<END>** g01156526

259-5295 FASTENER GP-WIRING HARNESS–JOYSTICK

S/N: B6H1-UP; JLP1-UP
PART OF 255-5843, 255-5844, 270-8795, 270-8796, 272-9664 CONTROL
AR-AUXILIARY
AN ATTACHMENT

SMCS-1408, 7553 **i02509129**

NOTE	REF NO	GRAPHIC REF	PART NUMBER	QTY	PART NAME 1 2 3 4 5 6 (PRODUCT LEVEL)	SEE PAGE
	1	1	**3S-2093**	2	STRAP - CABLE	

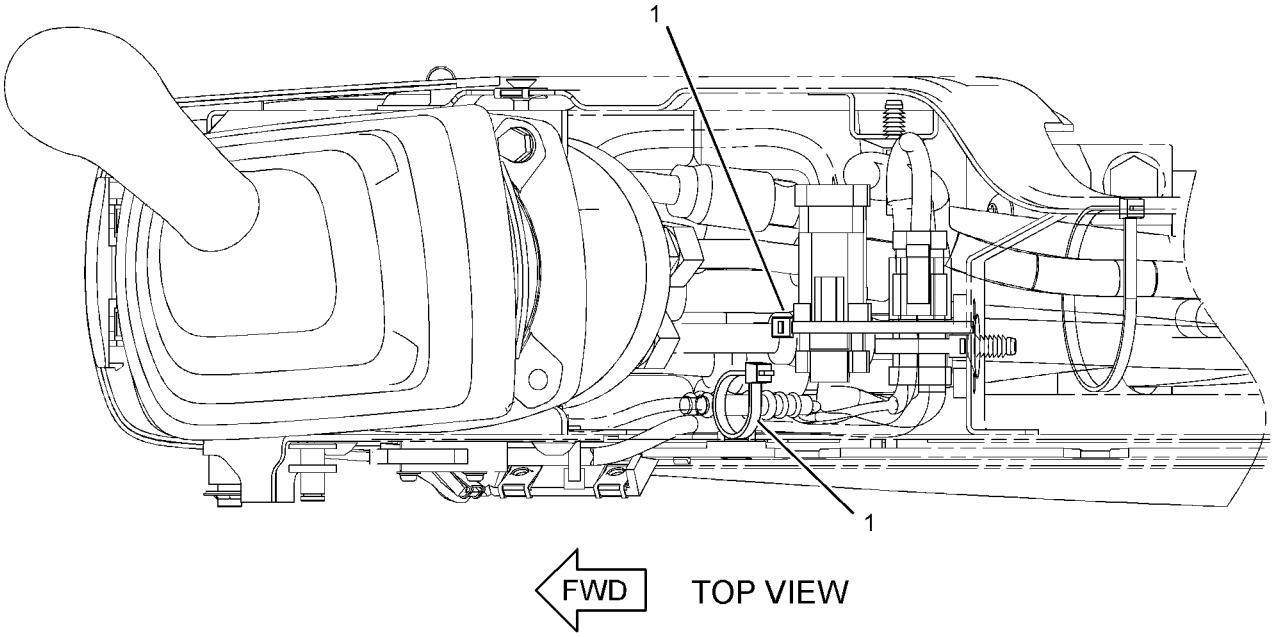

GRAPHIC #1 **<END>** g01160306

237-7621 HEATER GP-JACKET WATER

S/N: B6H1-UP; JLP1-UP
PART OF 267-8840 COLD WEATHER AR
AN ATTACHMENT

SMCS-1383 **i03601516**

NOTE	REF NO	GRAPHIC REF	PART NUMBER	QTY	PART NAME 1 2 3 4 5 6 (PRODUCT LEVEL)	SEE PAGE
	1	1	**6N-1604**	1	CAP AS-DUST	
	2	1	**9G-6655**	1	ELEMENT AS-JACKET WATER HEATER (120-VOLT, 1500-WATT)	
	3	1	**9N-5253**	1	CORD AS-HEATER ELEMENT (120-VOLT, 15-AMPERE)	

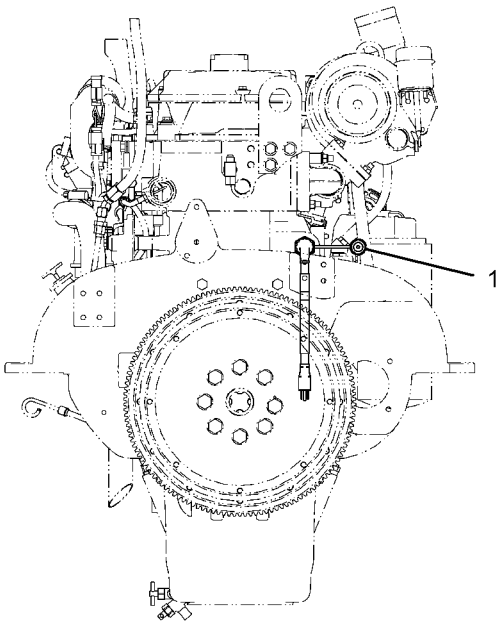

REAR VIEW OF ENGINE

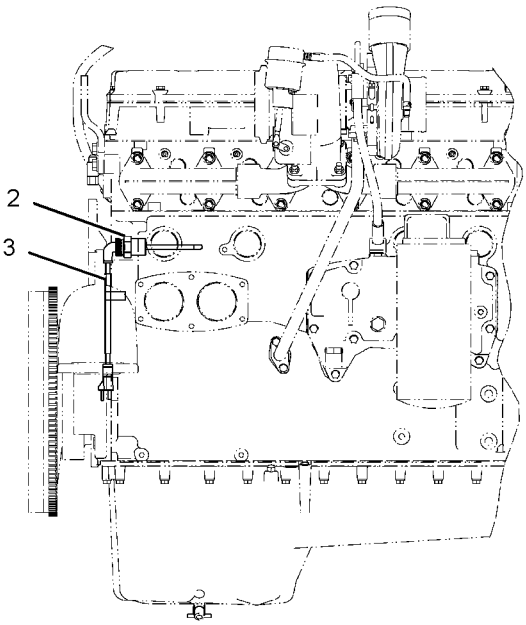

RIGHT SIDE VIEW OF ENGINE

GRAPHIC #1 **<END>** g01926400

264-8552 INSTALLATION AR-COMMUNICATION–
PRODUCT LINK 300
S/N: B6H1-UP; JLP1-UP
REPLACED BY 314-3533–PAGE 279
AN ATTACHMENT

SMCS-7606 **i02668382**

NOTE	PART NUMBER	QTY	PART NAME 1 2 3 4 5 6 (PRODUCT LEVEL)	SEE PAGE
Y	*247-5284*	1	CONTROL & MTG GP-COMMUNICATION (PRODUCT LINK 300)	263
Y	*262-2043*	1	ELECTRONICS GP-COMMUNICATION (PRODUCT LINK 300)	271
Y	*270-5450*	1	INSTALLATION GP-COMMUNICATION (PRODUCT LINK 121SR)	280
Y	*290-9467*	1	MOUNTING GP-ANTENNA	1257
Y	*267-7803*	1	WIRING GP-COMMUNICATION (PRODUCT LINK 321SR)	369
Y-SEPARATE ILLUSTRATION				

<END>

264-8553 INSTALLATION AR-COMMUNICATION–
PRODUCT LINK 121SR
S/N: B6H1-UP; JLP1-UP
AN ATTACHMENT

SMCS-7606 **i02668383**

NOTE	PART NUMBER	QTY	PART NAME 1 2 3 4 5 6 (PRODUCT LEVEL)	SEE PAGE
Y	*270-5450*	1	INSTALLATION GP-COMMUNICATION (PRODUCT LINK 121SR)	280
Y	*290-9467*	1	MOUNTING GP-ANTENNA	1257
Y	*267-7804*	1	WIRING GP-COMMUNICATION (PRODUCT LINK 121SR)	371
Y-SEPARATE ILLUSTRATION				

<END>

314-3533 INSTALLATION AR-COMMUNICATION–
PRODUCT LINK 321SR
S/N: B6H1-UP; JLP1-UP
AN ATTACHMENT

SMCS-7606 **i03171560**

NOTE	PART NUMBER	QTY	PART NAME 1 2 3 4 5 6 (PRODUCT LEVEL)	SEE PAGE
Y	*309-5789*	1	ANTENNA & MOUNTING GP (PRODUCT LINK)	1143
Y	*309-5842*	1	CONTROL & MTG GP-COMMUNICATION (PRODUCT LINK 321SR)	264
Y	*309-5887*	1	CONTROL & MTG GP-COMMUNICATION (PRODUCT LINK 121SR)	265
Y	*267-7803*	1	WIRING GP-COMMUNICATION (PRODUCT LINK 321SR)	369
Y-SEPARATE ILLUSTRATION				

<END>

270-5450 INSTALLATION GP-COMMUNICATION–
PRODUCT LINK 121SR
S/N: B6H1-UP; JLP1-UP
PART OF 264-8552, 264-8553 INSTALLATION AR-COMMUNICATION
AN ATTACHMENT

SMCS-7606 **i03602162**

NOTE	REF NO	GRAPHIC REF	PART NUMBER	QTY	PART NAME 1 2 3 4 5 6 (PRODUCT LEVEL)	SEE PAGE
	1	1	**3S-2093**	5	STRAP-CABLE	
	2	1	**7K-1181**	4	STRAP-CABLE	
Y	3	1	**263-9088**	1	RADIO GP-COMMUNICATION (PRODUCT LINK 121SR)	1263
	4	1	**270-5455**	1	BRACKET AS	
	5	1	**111-4836**	1	CLIP	
	6	1	**8T-4121**	1	WASHER-HARD (11X21X2.5-MM THK)	
M	7	1	**8T-4137**	1	BOLT (M10X1.5X20-MM)	
M	8	1	**8T-4138**	4	BOLT (M6X1X20-MM)	
M	9	1	**8T-4179**	4	BOLT (M12X1.75X20-MM)	
	10	1	**8T-4223**	4	WASHER-HARD (13.5X25.5X3-MM THK)	
	11	1	**9X-8256**	4	WASHER (6.6X12X2-MM THK)	
F			**230-1340**	1	FILM-WARNING (PRODUCT LINK RADIO, U.S.)	
					–OR–	
F			**230-1341**	1	FILM-WARNING (PRODUCT LINK RADIO, INTL)	
					(ON RH CAB WINDOW)	

F-NOT SHOWN
M-METRIC PART
Y-SEPARATE ILLUSTRATION

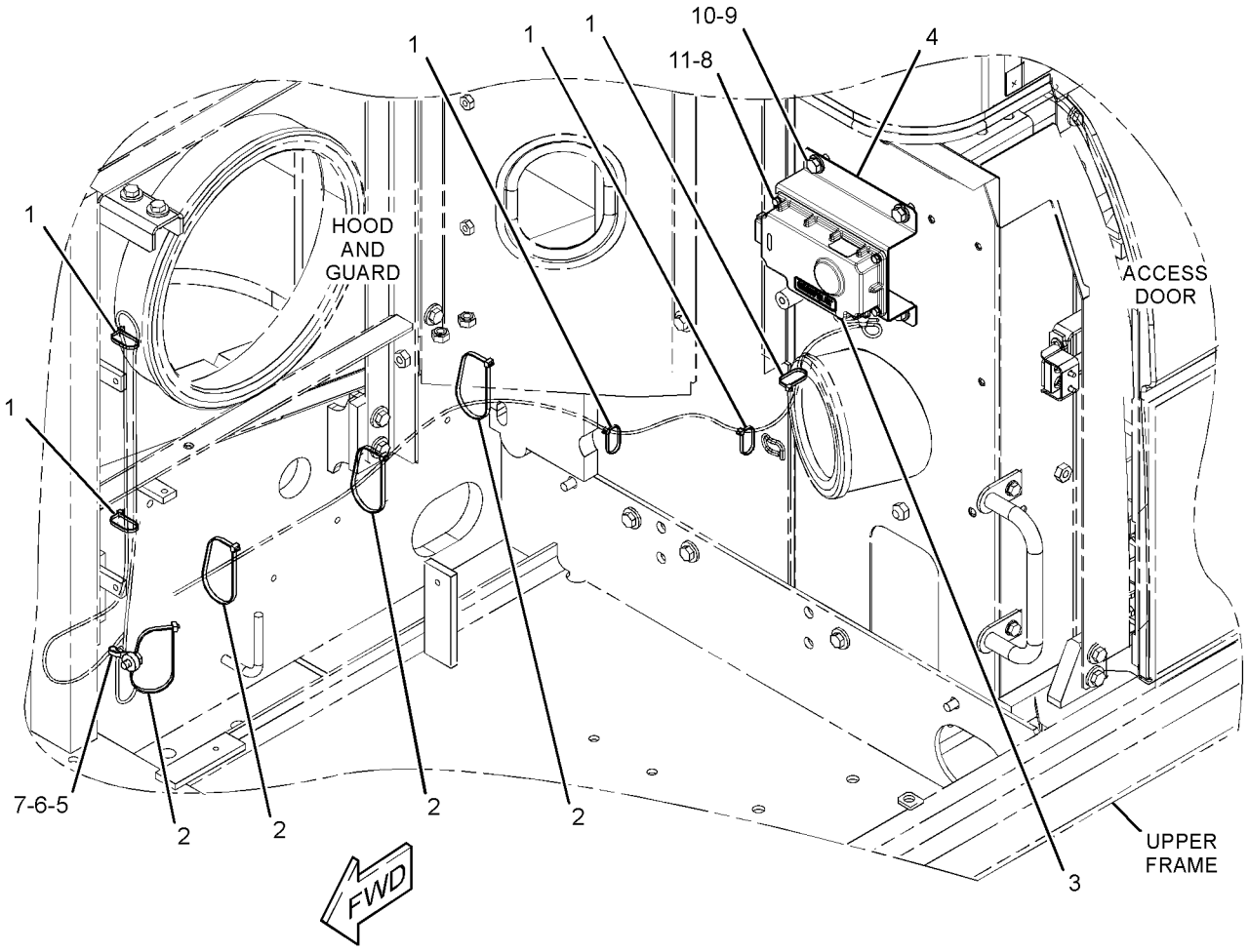

GRAPHIC #1 **<END>** g01367785

5I-8251 LAMP GP-FLOOD–24-VOLT

S/N: B6H1-UP; JLP1-UP

PART OF 4I-5409 LIGHTING GP-CHASSIS

SMCS-1434 **i03018325**

NOTE	REF NO	GRAPHIC REF	PART NUMBER	QTY	PART NAME 1 2 3 4 5 6 (PRODUCT LEVEL)	SEE PAGE
M	1	1	**9X-8488**	1	NUT-HEX THIN (M12X1.5-THD)	
	2	1	**8T-4223**	1	WASHER-HARD (13.5X25.5X3-MM THK)	
	3	1	**9X-3463**	1	LAMP-HALOGEN (24-VOLT, 70-WATT)	
M	4	1	**6V-5210**	2	SCREW-MACHINE (M4X0.7X10-MM)	
	5	1	**3B-4501**	2	LOCKWASHER (#8)	
	6	1	**106-0001**	1	LENS AS	
	7	1	**106-0002**	1	BAND	
	8	1	**106-0003**	1	RING-RUBBER	
	9	1	**106-0004**	1	RING-FITTING	
	10	1	**106-0005**	1	SEAT	
M	11	1	**7Y-5286**	1	BOLT-SQUARE NECK	
M	12	1	**7Y-5288**	2	SCREW-PAN HEAD (4X10-MM)	

M-METRIC PART

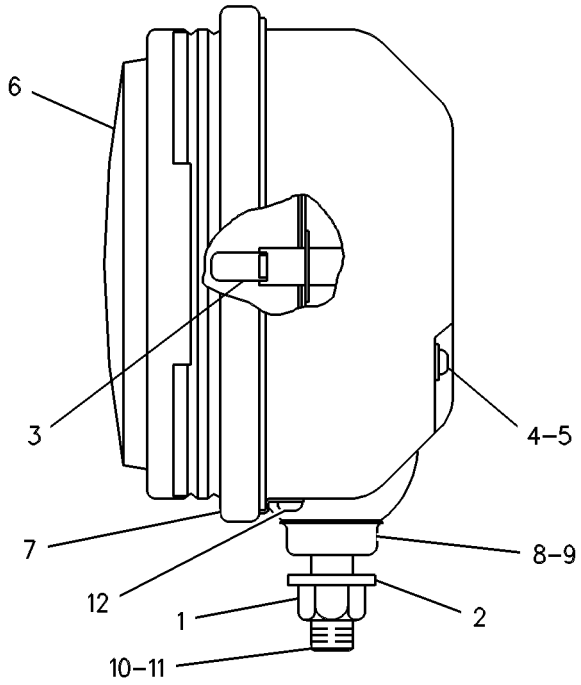

GRAPHIC #1 **<END>** g00252247

153-2521 LAMP GP-FLOOD–24-VOLT

S/N: B6H1-UP; JLP1-UP
PART OF 238-1584, 238-1586 LIGHTING GP-FLOOD
AN ATTACHMENT

SMCS-1434 **i03018476**

NOTE	REF NO	GRAPHIC REF	PART NUMBER	QTY	PART NAME 1 2 3 4 5 6 (PRODUCT LEVEL)	SEE PAGE
M	1	1	**6V-5210**	2	SCREW-MACHINE (M4X0.7X10-MM)	
	2	1	**3B-4501**	2	LOCKWASHER	
	3	1	**9X-3463**	1	LAMP-HALOGEN (24-VOLT, 70-WATT)	
	4	1	**8T-4223**	1	WASHER-HARD (13.5X25.5X3-MM THK)	
M	5	1	**8T-4244**	1	NUT (M12X1.75-THD)	
M	6	1	**174-7791**	1	SCREW-TAPPING	
	7	1	**5C-2889**	1	LOCKWASHER	
	8	1	**170-6993**	1	COVER	
M	9	1	**180-3861**	4	SCREW-TAPPING	
	10	1	**170-9417**	1	LENS AS	
	11	1	**170-9418**	1	BAND	

M-METRIC PART

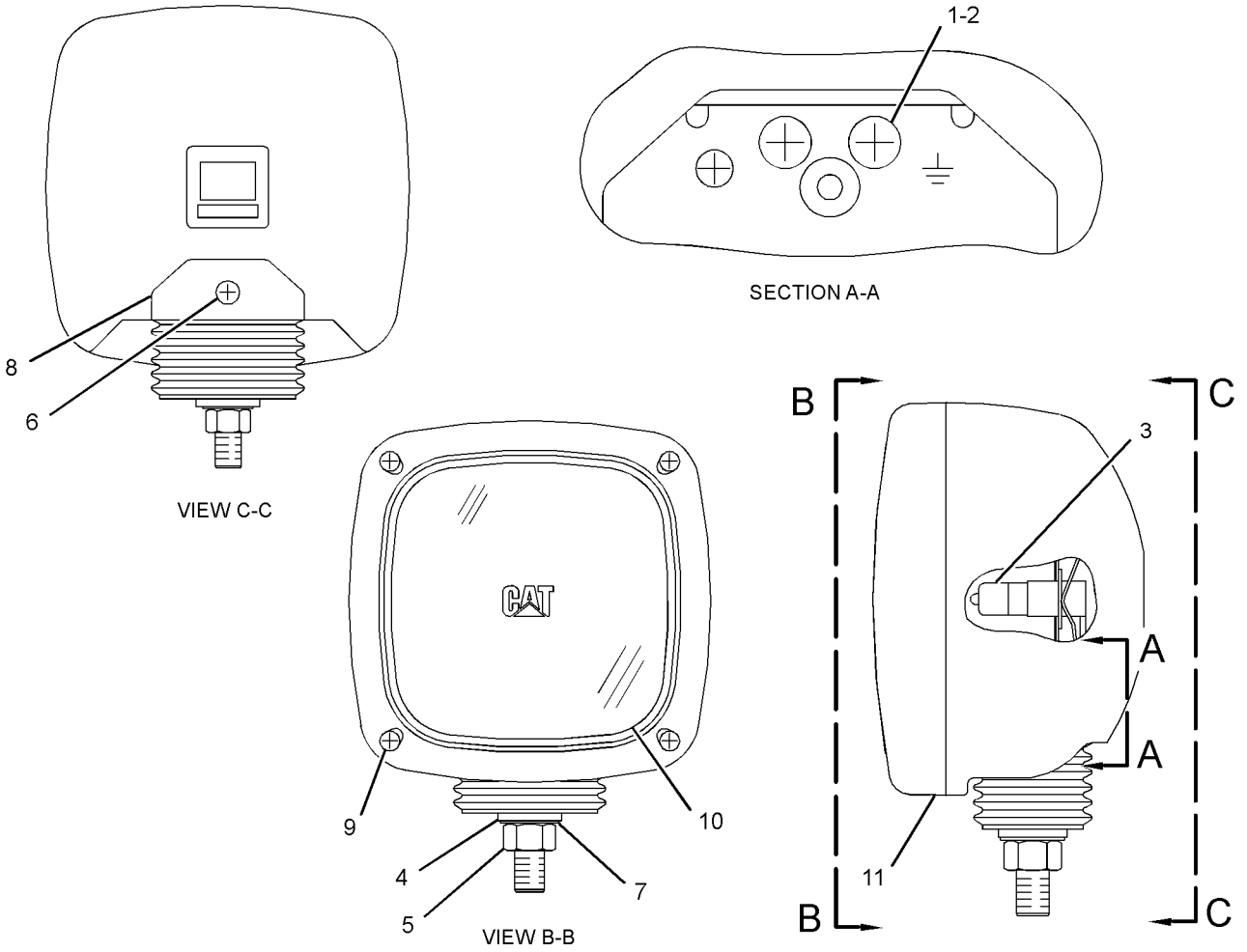

GRAPHIC #1 **<END>** g01528526

153-2523 LAMP GP-FLOOD–24-VOLT

S/N: B6H1-UP; JLP1-UP

PART OF 4I-5409 LIGHTING GP-CHASSIS

SMCS-1434 **i03018480**

NOTE	REF NO	GRAPHIC REF	PART NUMBER	QTY	PART NAME 1 2 3 4 5 6 (PRODUCT LEVEL)	SEE PAGE
M	1	1	**6V-5210**	2	SCREW-MACHINE (M4X0.7X10-MM)	
	2	1	**3B-4501**	2	LOCKWASHER	
	3	1	**9X-3463**	1	LAMP-HALOGEN (24-VOLT, 70-WATT)	
	4	1	**8T-4223**	1	WASHER-HARD (13.5X25.5X3-MM THK)	
M	5	1	**8T-4244**	1	NUT (M12X1.75-THD)	
M	6	1	**174-7791**	1	SCREW-TAPPING	
	7	1	**5C-2889**	1	LOCKWASHER	
	8	1	**170-6993**	1	COVER	
	9	1	**170-9417**	1	LENS AS	
M	10	1	**180-3861**	4	SCREW-TAPPING	
	11	1	**170-9418**	1	BAND	

M-METRIC PART

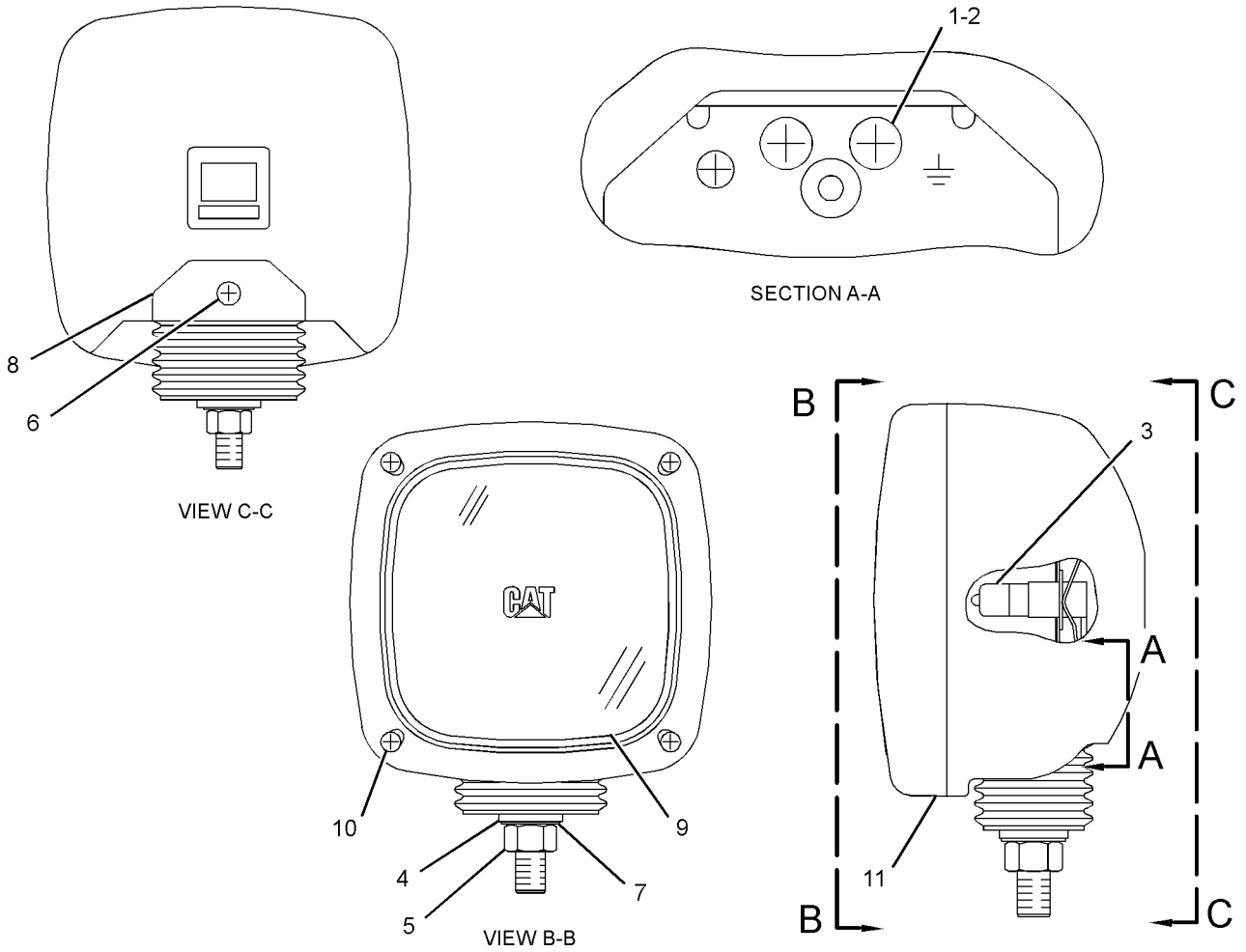

GRAPHIC #1 **<END>** g01528558

4I-5409 LIGHTING GP-CHASSIS

S/N: B6H1-UP; JLP1-UP
PART OF 247-7386 CHASSIS AR

SMCS-1429 **i03601519**

NOTE	REF NO	GRAPHIC REF	PART NUMBER	QTY	PART NAME 1 2 3 4 5 6 (PRODUCT LEVEL)	SEE PAGE
Y	1	1	**5I-8251**	1	LAMP GP-FLOOD (24-VOLT)	281
					—OR—	
Y		1	**153-2523**	1	LAMP GP-FLOOD (24-VOLT)	283
Y-SEPARATE ILLUSTRATION						

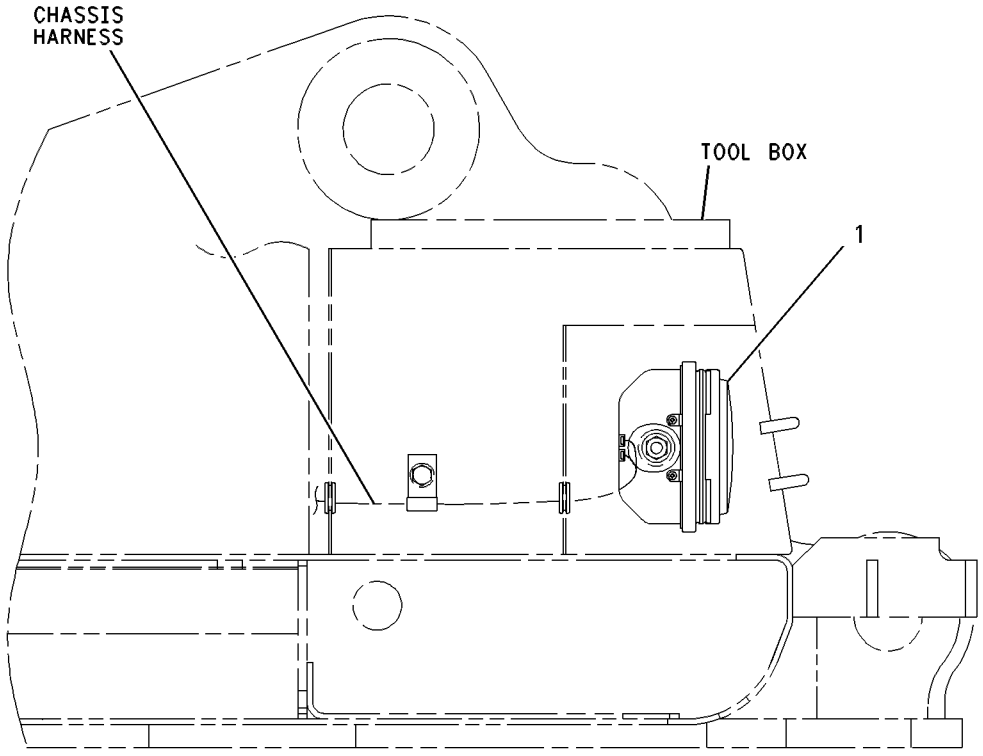

RIGHT SIDE VIEW

GRAPHIC #1 **<END>** g00547389

163-6772 LIGHTING GP-FLOOD–CAB

S/N: B6H1-UP; JLP1-UP

AN ATTACHMENT

SMCS-1434 **i02191879**

NOTE	REF NO	GRAPHIC REF	PART NUMBER	QTY	PART NAME 1 2 3 4 5 6 (PRODUCT LEVEL)	SEE PAGE
	1	1	**163-6814**	1	COVER (RH)	
	2	1	**163-6813**	1	COVER (LH)	
M	3	1	**8T-4970**	4	BOLT (M6X1X14-MM)	
	4	1	**9X-8256**	12	WASHER (6.6X12X2-MM THK)	
	5	1	**167-3441**	2	LAMP GP-FLOOD (24-VOLT)	
					(EACH INCLUDES)	
		1	**9X-3463**	1	LAMP-HALOGEN (24-VOLT, 70-WATT)	
	6	1	**167-3437**	1	BRACKET AS (LH)	
M	7	1	**8T-6411**	6	SCREW-MACHINE (M6X1X12-MM)	
	8	1	**167-3456**	2	HARNESS AS-LIGHTING (CAB FLOODLIGHT)	
	9	1	**167-3438**	1	BRACKET AS (RH)	
	10	1	**163-6795**	2	STRAP-CABLE	
B	11	1	**9X-8256**	4	WASHER (6.6X12X2-MM THK)	
M	12	1	**8T-6412**	2	SCREW-MACHINE (M6X1X20-MM)	

B-USE AS REQUIRED
M-METRIC PART

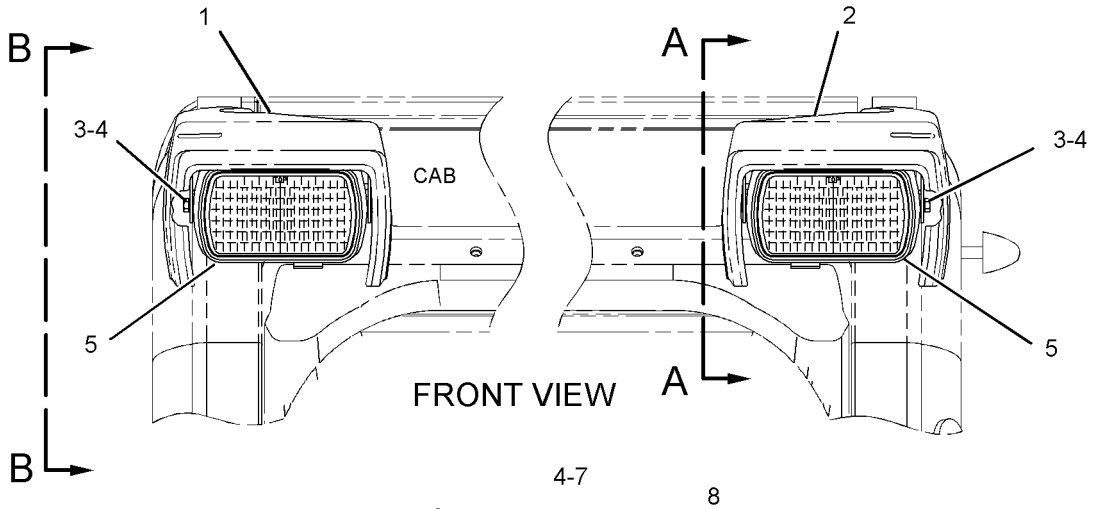

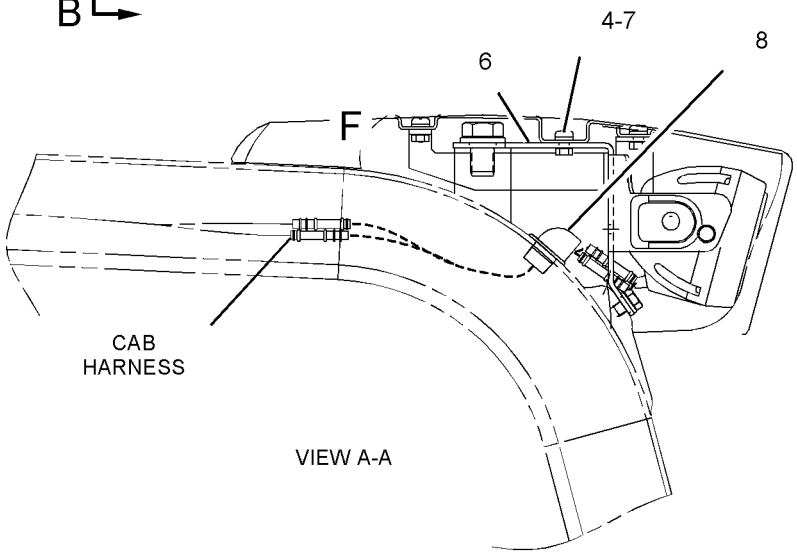

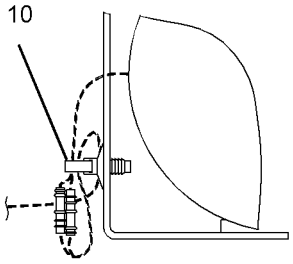

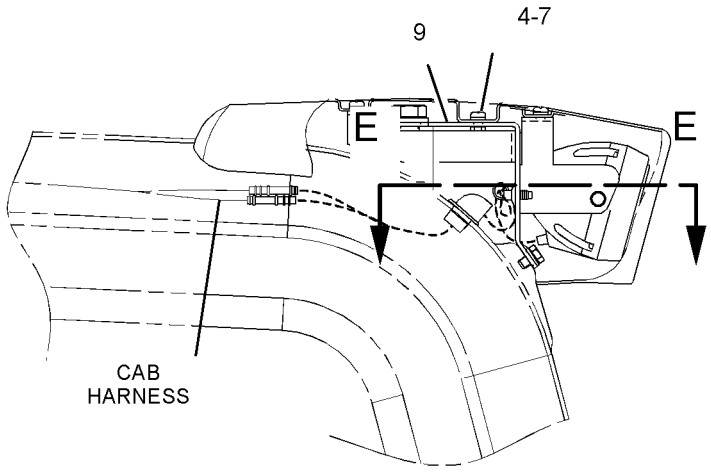

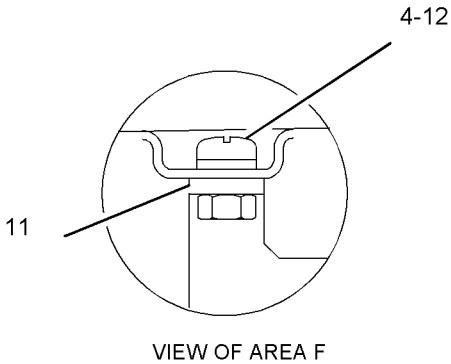

GRAPHIC #1 **<END>** g01116696

238-1584 LIGHTING GP-FLOOD–BOOM

S/N: B6H1-UP; JLP1-UP
PART OF 229-1905, 275-3701, 290-1817, 290-1827, 302-7339, 314-3615 BOOM
AR-1 PIECE LONG
AN ATTACHMENT

SMCS-1434 **i03601527**

NOTE	REF NO	GRAPHIC REF	PART NUMBER	QTY	PART NAME 1 2 3 4 5 6 (PRODUCT LEVEL)	SEE PAGE
	1	1	**7I-2673**	2	STRAP-CABLE	
	2	1	**111-4836**	10	CLIP	
	3	1	**111-4837**	1	CLIP	
	4	1	**116-0118**	1	CLIP	
Y	5	1	**153-2521**	2	LAMP GP-FLOOD (24-VOLT)	282
	6	1	**238-1585**	1	HARNESS AS-LIGHTING	
E		1	**125-7875**		TUBE-HEAT SHRINK (7.44-MM DIA) (10-CM)	
		1	**243-4505**	1	RECEPTACLE AS-CONNECTOR (2-PIN)	
	7	1	**134-3284**	2	BRACKET	
	8	1	**6V-3265**	2	CLIP	
	9	1	**8T-4121**	10	WASHER-HARD (11X21X2.5-MM THK)	
M	10	1	**8T-4133**	10	NUT (M10X1.5-THD)	
M	11	1	**8T-4190**	2	BOLT (M16X2X25-MM)	
	12	1	**9X-8257**	2	WASHER (17.5X30X3.5-MM THK)	

E-ORDER BY THE CENTIMETER
M-METRIC PART
Y-SEPARATE ILLUSTRATION

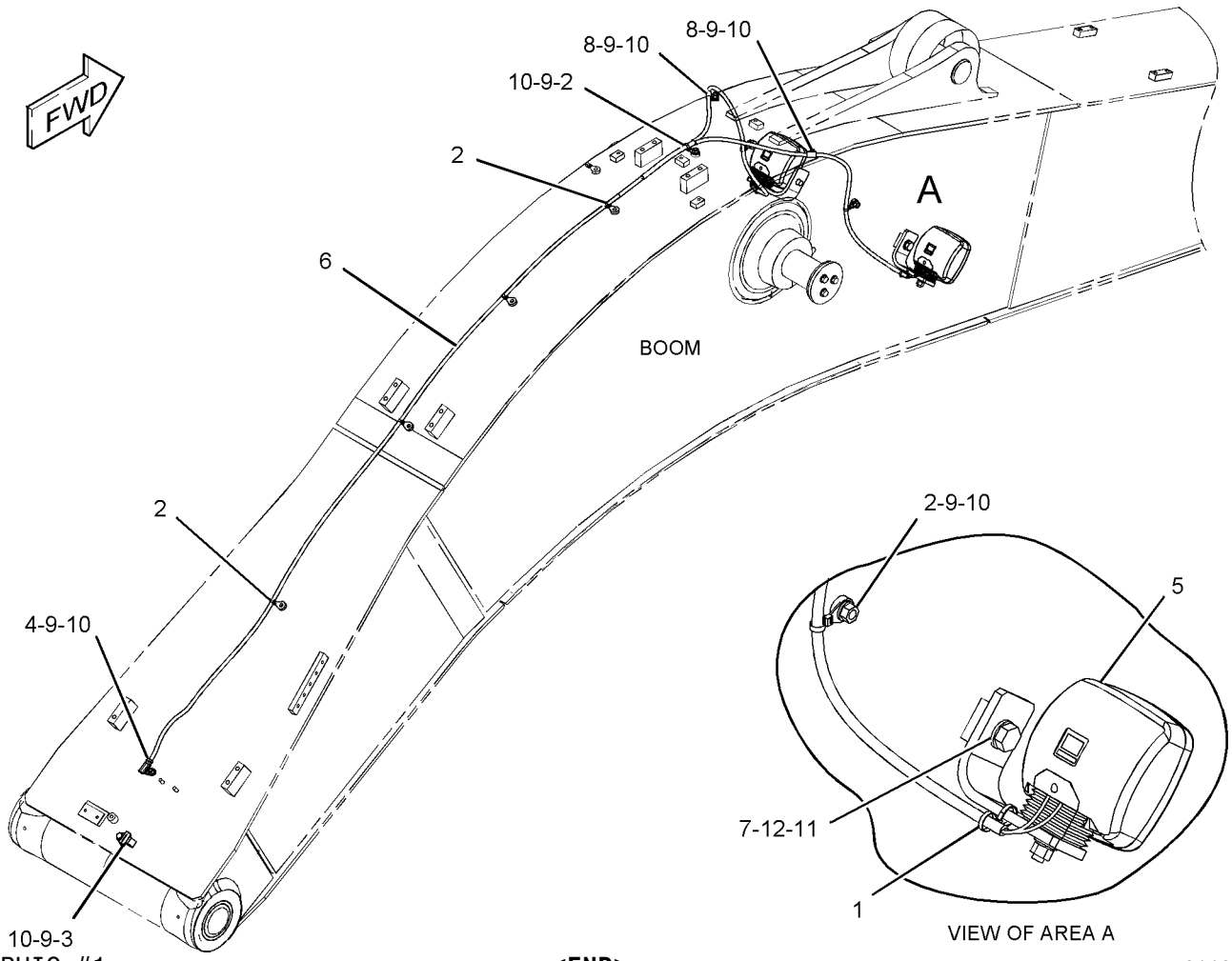

GRAPHIC #1

<END>

g01197782

238-1586 LIGHTING GP-FLOOD—MASS BOOM

S/N: B6H1-UP; JLP1-UP
PART OF 229-1908, 290-1818 BOOM AR-1 PIECE SHORT
AN ATTACHMENT

SMCS-1434 **i03202021**

NOTE	REF NO	GRAPHIC REF	PART NUMBER	QTY	PART NAME 1 2 3 4 5 6 (PRODUCT LEVEL)	SEE PAGE
	1	1	**7I-2673**	2	STRAP-CABLE	
	2	1	**111-4836**	11	CLIP	
	3	1	**111-4837**	1	CLIP	
	4	1	**116-0118**	1	CLIP	
Y	5	1	**153-2521**	2	LAMP GP-FLOOD (24-VOLT)	282
	6	1	**238-1587**	1	HARNESS AS-LIGHTING	
		1	**243-4505**	1	RECEPTACLE AS-CONNECTOR (2-PIN)	
E		1	**125-7875**		TUBE-HEAT SHRINK (7.44-MM DIA) (10-CM)	
	7	1	**134-3284**	2	BRACKET	
	8	1	**6V-3265**	2	CLIP	
	9	1	**8T-4121**	12	WASHER-HARD (11X21X2.5-MM THK)	
M	10	1	**8T-4133**	12	NUT (M10X1.5-THD)	
M	11	1	**8T-4190**	2	BOLT (M16X2X25-MM)	
	12	1	**9X-8257**	2	WASHER (17.5X30X3.5-MM THK)	

E-ORDER BY THE CENTIMETER
M-METRIC PART
Y-SEPARATE ILLUSTRATION

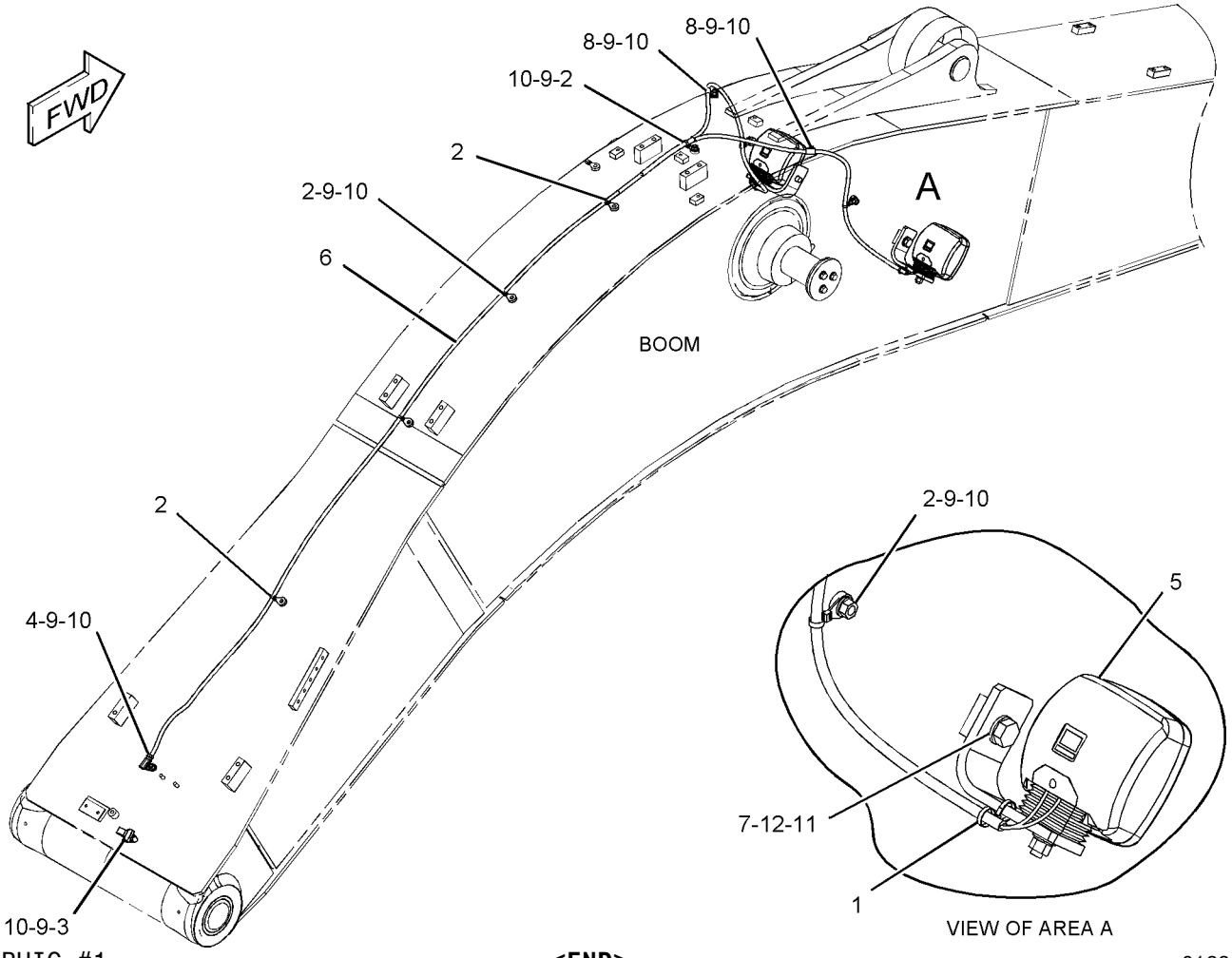

GRAPHIC #1 **<END>** g01236777

238-1432 PANEL & MTG GP-CIRCUIT BREAKER

S/N: B6H1-UP; JLP1-UP
PART OF 229-9072 OPERATOR AR

SMCS-1417, 1420 **i02489673**

NOTE	REF NO	GRAPHIC REF	PART NUMBER	QTY	PART NAME 1 2 3 4 5 6 (PRODUCT LEVEL)	SEE PAGE
Y	1	1	*231-1756*	1	PANEL GP-CIRCUIT BREAKER	290
	2	1	**8T-4121**	4	WASHER-HARD (11X21X2.5-MM THK)	
M	3	1	**8T-4137**	4	BOLT (M10X1.5X20-MM)	

M-METRIC PART
Y-SEPARATE ILLUSTRATION

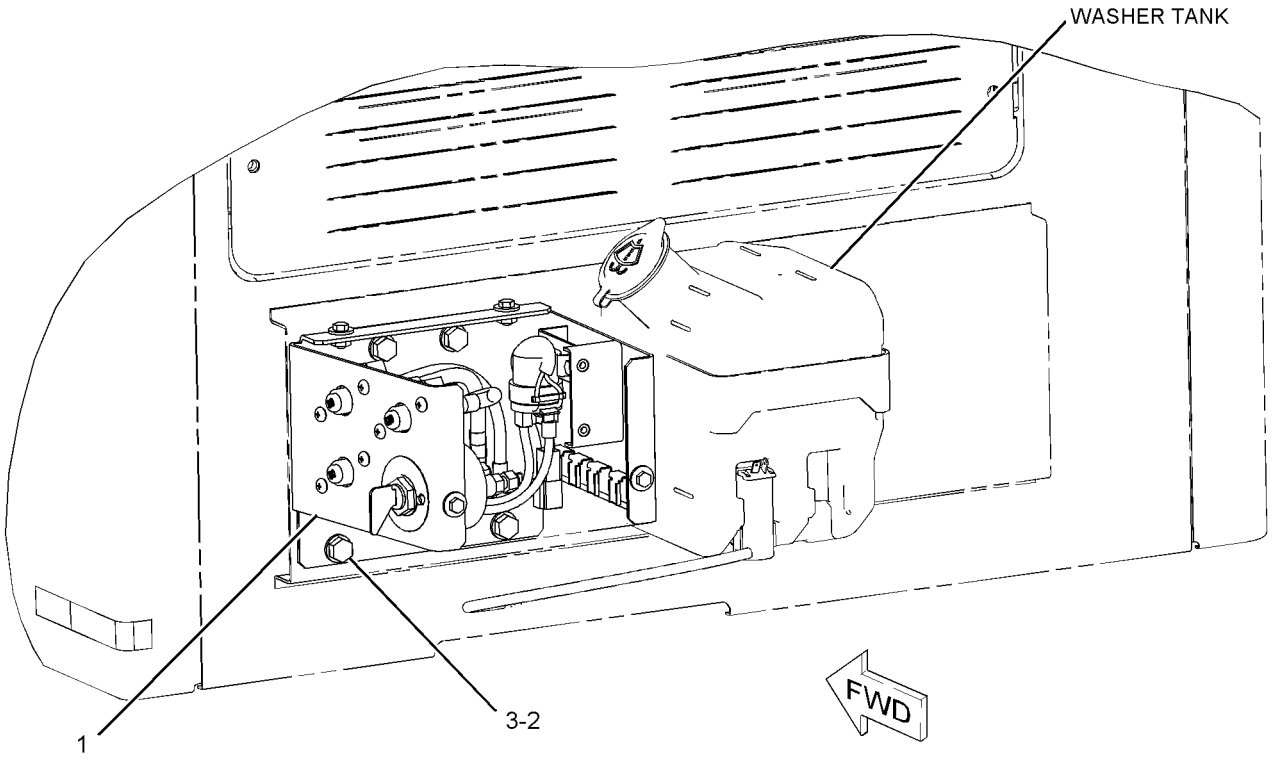

GRAPHIC #1 **<END>** g01150497

ELECTRICAL AND STARTING SYSTEM

231-1756 PANEL GP-CIRCUIT BREAKER

S/N: B6H1-UP; JLP1-UP

PART OF 238-1432 PANEL & MTG GP-CIRCUIT BREAKER

SMCS-1417 **i02668608**

NOTE	REF NO	GRAPHIC REF	PART NUMBER	QTY	PART NAME 1 2 3 4 5 6 (PRODUCT LEVEL)	SEE PAGE
	1	1	**3E-8320**	1	PLATE-INSTRUCTION (BATTERY)	
Y	2	1	**7N-0719**	1	SWITCH GP-DISCONNECT (BATTERY)	334
	3	1	**121-1023**	1	BLOCK-TERMINAL	
Y	4	1	**125-1302**	1	SWITCH GP-MAGNETIC (24-VOLT) (START RELAY)	335
	5	1	**216-4970**	1	CIRCUIT BREAKER AS (120-AMPERE) (HEATER)	
		1	**6V-8187**	2	NUT (1/4-28-THD)	
		1	**8T-4205**	2	WASHER-HARD (7.2X14.5X2-MM THK)	
		1	**253-2111**	2	LOCKWASHER	
	6	1	**291-7547**	1	BRACKET AS	
	7	1	**234-1035**	1	CABLE AS	
	8	1	**234-1037**	1	WIRE AS	
	9	1	**234-1038**	1	WIRE AS	
	10	1	**238-1506**	1	COVER	
	11	1	**238-2279**	1	BAR-BUS	
	12	1	**238-2280**	1	WIRE AS	
	13	1	**251-0303**	1	CABLE AS	
	14	1	**251-0304**	1	CABLE AS	
	15	1	**171-2210**	1	CIRCUIT BREAKER AS (80-AMPERE) (MAIN)	
	15A	1	**171-2210**	1	CIRCUIT BREAKER AS (80-AMPERE) (ALTERNATOR)	
					(EACH CIRCUIT BREAKER AS INCLUDES)	
		1	**6V-8187**	2	NUT (1/4-28-THD)	
		1	**8T-4205**	2	WASHER-HARD (7.2X14.5X2-MM THK)	
		1	**253-2111**	2	LOCKWASHER	
M	16	1	**5C-9553**	5	BOLT (M6X1X16-MM)	
	17	1	**5P-4115**	4	WASHER-HARD (7.2X19X2-MM THK)	
	18	1	**6V-5645**	6	SCREW-MACHINE (10-32X0.87-IN)	
	19	1	**8T-0328**	6	WASHER-HARD (5.5X10X1-MM THK)	
M	20	1	**8T-4171**	4	BOLT (M6X1X12-MM)	
M	21	1	**8T-4970**	4	BOLT (M6X1X14-MM)	
	22	1	**9X-8256**	11	WASHER (6.6X12X2-MM THK)	

M-METRIC PART
Y-SEPARATE ILLUSTRATION

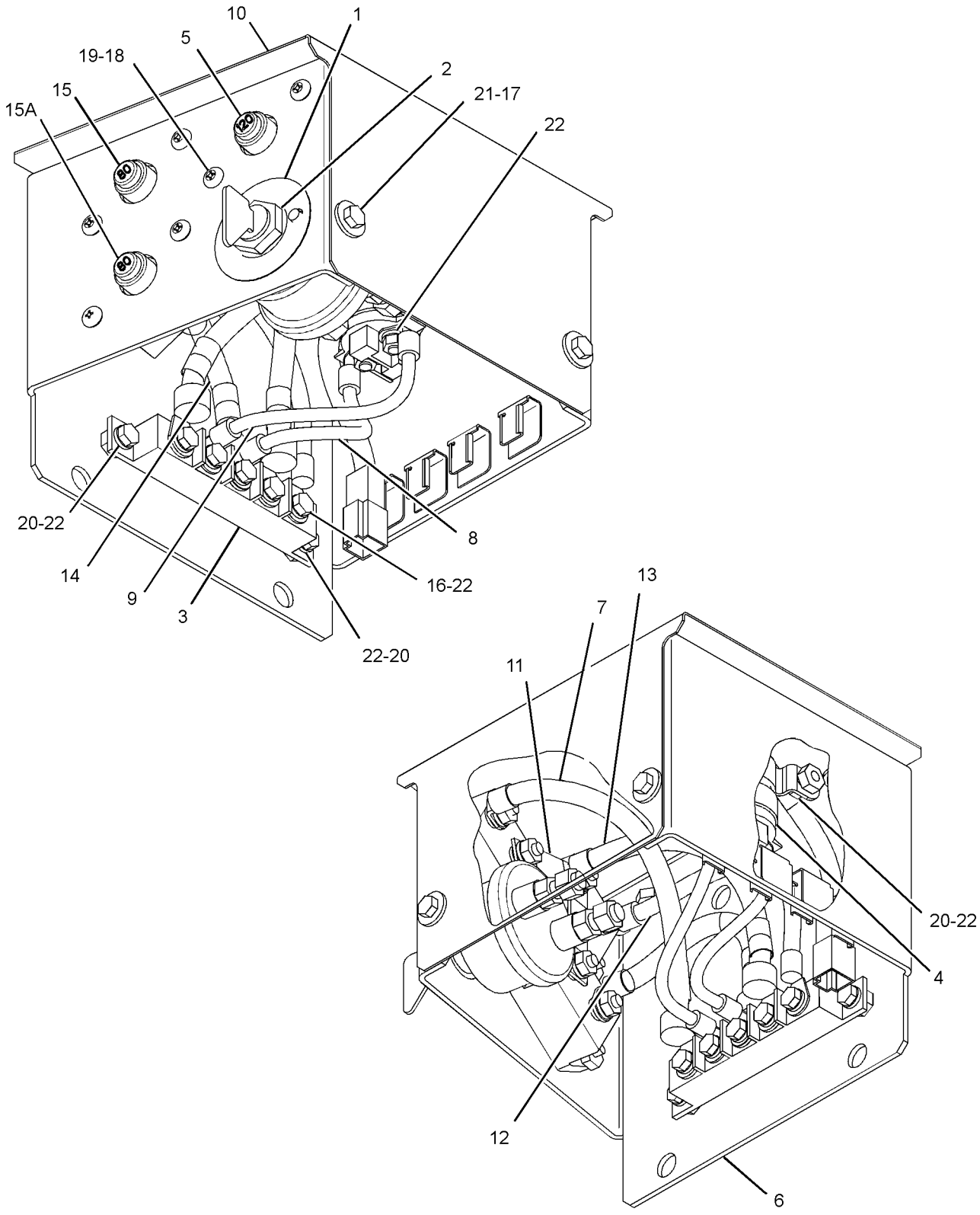

GRAPHIC #1 **<END>** g01326247

251-0542 PANEL GP-SWITCH—ENGINE SPEED, START

S/N: B6H1-UP; JLP1-UP

PART OF 274-7466 CONSOLE GP-OPERATOR

SMCS-1408, 1429, 7332, 7451 **i02500474**

NOTE	REF NO	GRAPHIC REF	PART NUMBER	QTY	PART NAME 1 2 3 4 5 6 (PRODUCT LEVEL)	SEE PAGE
	1	1	**3S-2093**	4	STRAP-CABLE	
Y	2	1	**9G-7641**	1	SWITCH GP-START (ENGINE, KEY)	344
Y	3	1	**106-0107**	1	SWITCH GP-ROTARY (THROTTLE POSITION)	343
	4	1	**170-9324**	1	LAMP AS (24-VOLT, 3-WATT)	
	5	1	**185-9208**	1	KNOB AS (THROTTLE POSITION)	
	6	1	**234-1156**	1	COVER	
	7	1	**234-1158**	1	COVER	
	8	1	**267-7976**	1	PANEL	
	9	1	**251-0543**	1	HARNESS AS-CONSOLE (RH)	
		1	**102-8802**	1	KIT-RECEPTACLE (2-PIN)	
					(INCLUDES RECEPTACLE AS & WEDGE)	
		1	**155-2270**	1	KIT-CONNECTING PLUG (2-PIN)	
		1	**155-2274**	1	KIT-CONNECTING PLUG (6-PIN)	
					(EACH CONNECTING PLUG KIT INCLUDES PLUG AS, WEDGE & INTERFACE SEAL)	
	10	1	**096-6166**	4	WASHER-HARD (4.5X9X1-MM THK)	
	11	1	**119-5026**	4	SCREW-PAN HEAD (10-16X0.63-IN)	
M	12	1	**6V-9491**	4	SCREW-MACHINE (M4X0.7X20-MM)	

M-METRIC PART
Y-SEPARATE ILLUSTRATION

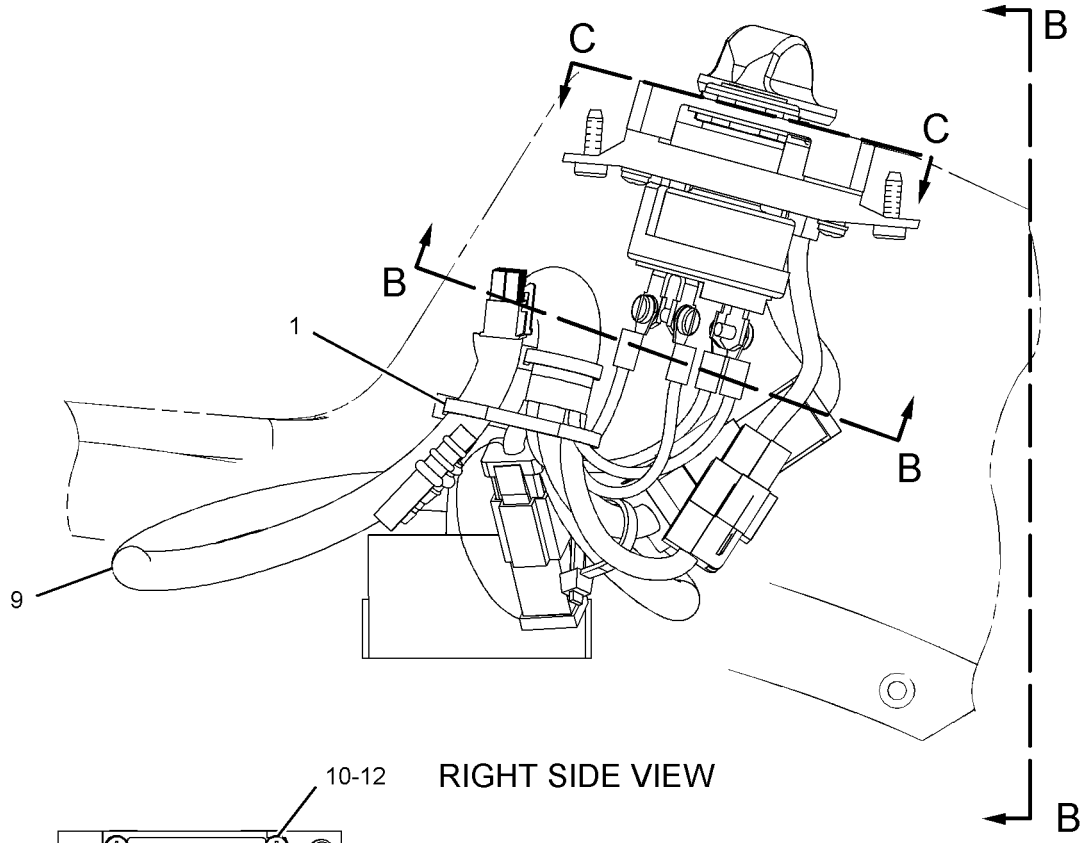

RIGHT SIDE VIEW

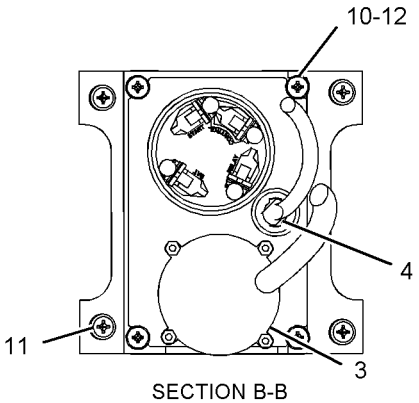

SECTION B-B

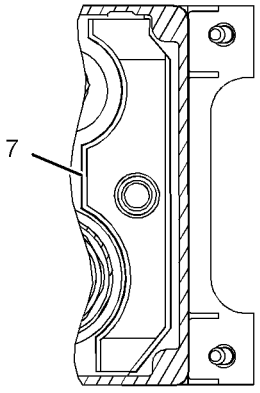

VIEW C-C

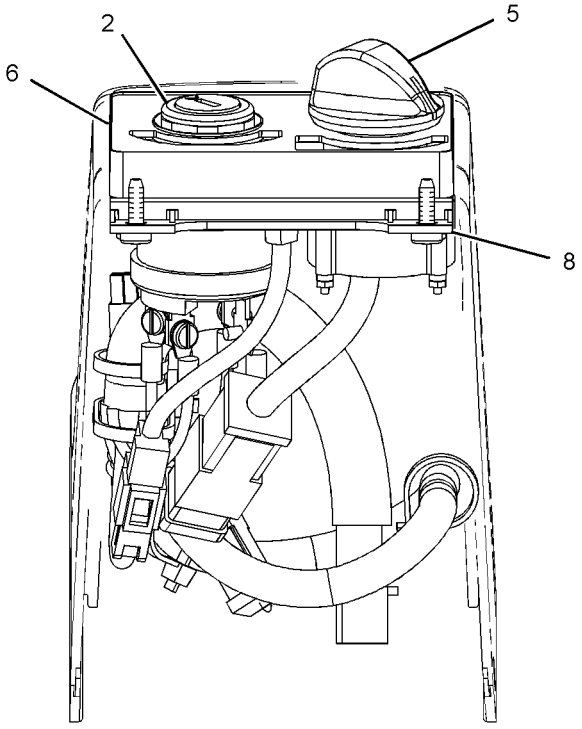

VIEW B-B

GRAPHIC #1 **<END>** g01112022

235-8200 PLUG GP-CONNECTOR–
ENGINE HARNESS, PROTECTIVE COVER

S/N: THX1-UP

PART OF 224-9843 ENGINE AR, 240-1861, 270-2771, 301-3082 ENGINE AR-COMPLETE

SMCS-1403, 1408 **i02951921**

NOTE	REF NO	GRAPHIC REF	PART NUMBER	QTY	PART NAME 1 2 3 4 5 6 (PRODUCT LEVEL)	SEE PAGE
	1	1	**246-9353**	1	PLUG AS	
	1A	1	**8T-8737**	8	PLUG-SEAL	
	1B	1	**102-8806**	1	KIT-RECEPTACLE (8-PIN)	
					(INCLUDES RECEPTACLE AS & WEDGE)	
	2	1	**3S-2093**	1	STRAP-CABLE	

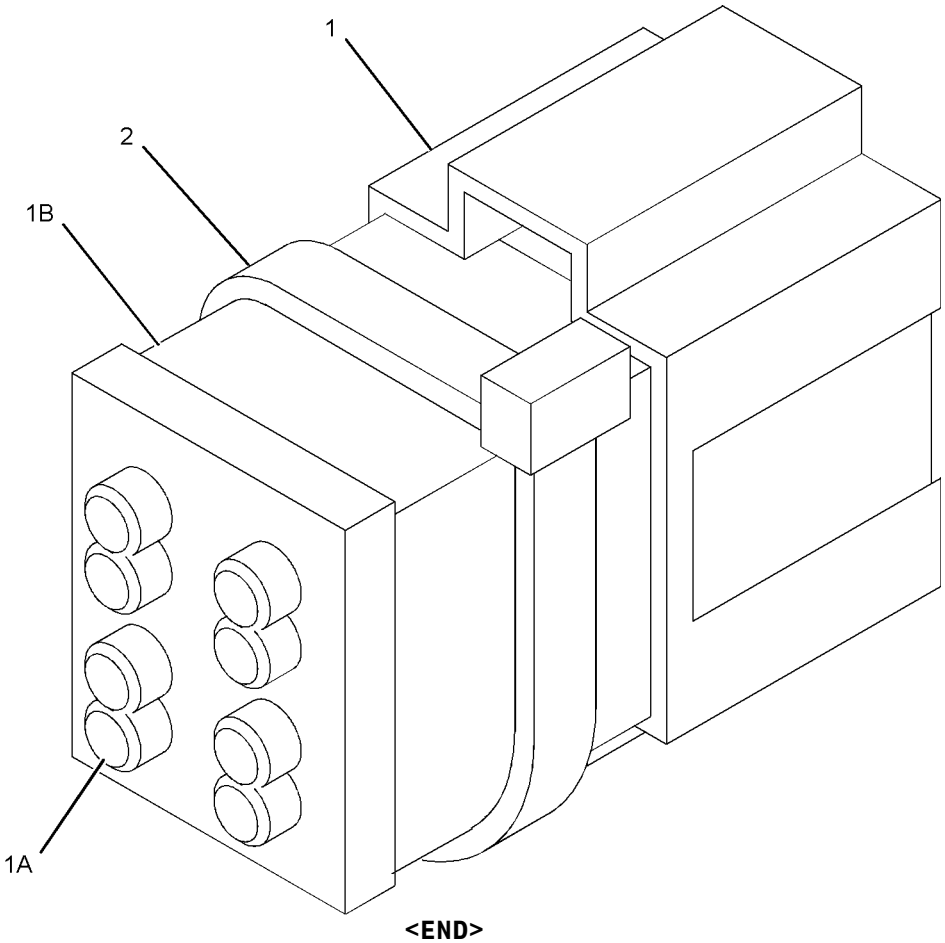

GRAPHIC #1 **<END>** g01105455

231-1978 SENSOR GP-ENGINE

S/N: THX1-UP

PART OF 224-9843 ENGINE AR, 240-1861, 270-2771, 301-3082 ENGINE AR-COMPLETE

SMCS-1000, 1906, 1907, 1924, 7422 **i02835981**

NOTE	REF NO	GRAPHIC REF	PART NUMBER	QTY	PART NAME 1 2 3 4 5 6 (PRODUCT LEVEL)	SEE PAGE
	1	1	**9X-0262**	1	ADAPTER	
Y	2	1	*274-7395*	1	SENSOR GP-TEMPERATURE (AIR INLET MANIFOLD)	317
Y	3	1	*274-7396*	1	SENSOR GP-TEMPERATURE (WATER, COOLANT)	318
Y	4	1	*197-8393*	1	SENSOR GP-PRESSURE (ATMOSPHERIC AIR)	300
Y	5	1	*197-8394*	1	SENSOR GP-PRESSURE (ENGINE OIL)	301
Y	6	1	*210-1747*	1	SENSOR GP-PRESSURE (TURBOCHARGER OUTLET)	302
Y	7	1	*236-6220*	1	SENSOR GP-PRESSURE (INJECTION ACTUATION)	304
Y	8	1	*236-6221*	1	SENSOR GP-SPEED (ENGINE TIMING)	311
	9	1	**3E-4352**	1	WASHER-HARD (8.8X20.5X2.5-MM THK)	
M	10	1	**6V-3940**	1	BOLT (M8X1.25X25-MM)	
	11	1	**6V-5048**	1	SEAL-O-RING	
	12	1	**6V-5049**	1	SEAL-O-RING	
	13	1	**9X-0261**	1	ADAPTER	

M-METRIC PART
Y-SEPARATE ILLUSTRATION

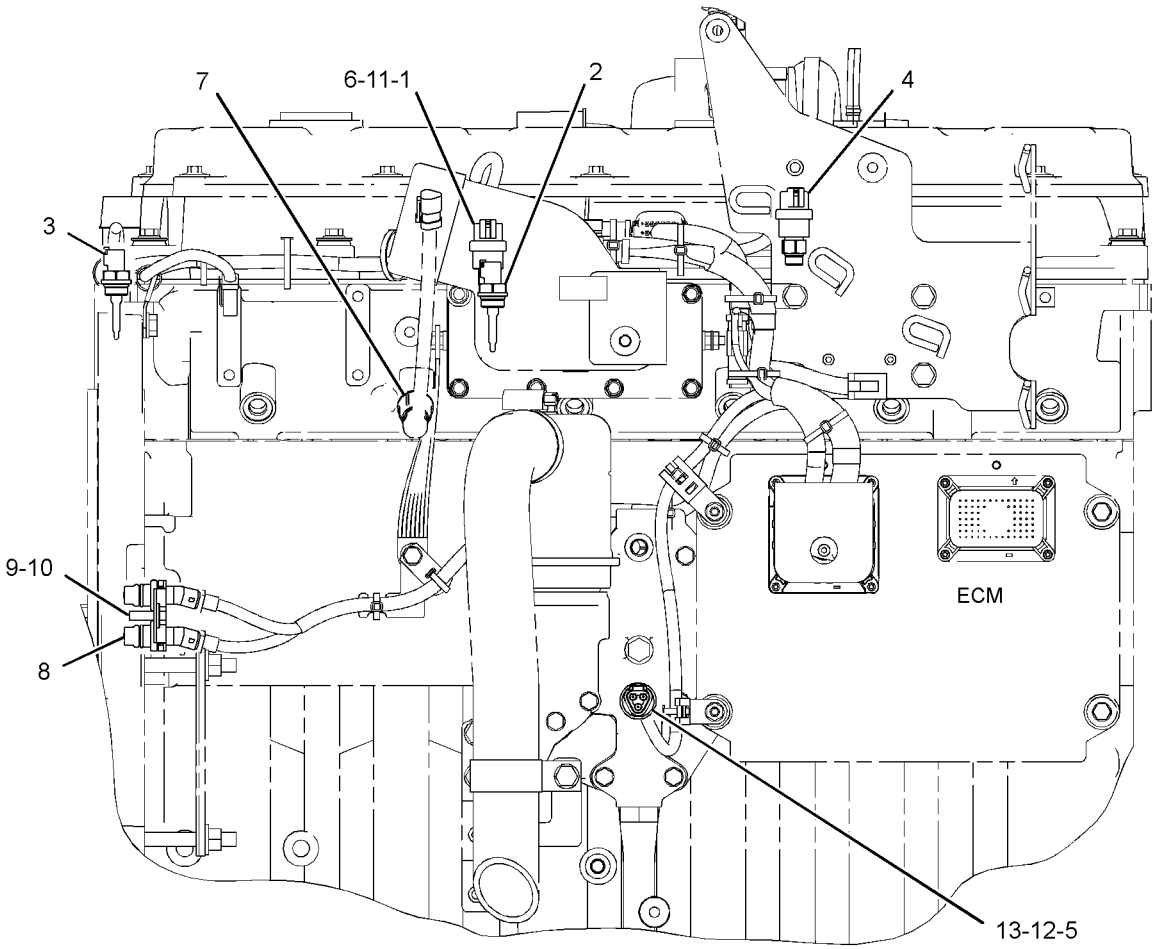

LEFT SIDE VIEW

GRAPHIC #1 **<END>** g01199708

330-6034 SENSOR GP-ENGINE

S/N: THX22180-UP

PART OF 224-9843 ENGINE AR, 240-1861, 301-3082 ENGINE AR-COMPLETE

SMCS-1000, 1906, 1907, 1924, 7422 **i03558745**

NOTE	REF NO	GRAPHIC REF	PART NUMBER	QTY	PART NAME 1 2 3 4 5 6 (PRODUCT LEVEL)	SEE PAGE
Y	1	1	*234-5012*	1	SENSOR GP-TEMPERATURE (COOLANT)	315
Y	2	1	*234-5013*	1	SENSOR GP-TEMPERATURE (INTAKE AIR TEMPERATURE)	316
Y	3	1	*236-6221*	1	SENSOR GP-SPEED (ENGINE TIMING)	311
Y	4	1	*266-8650*	1	SENSOR GP-PRESSURE (OUTLET AIR)	306
Y	5	1	*267-1402*	1	SENSOR GP-PRESSURE (INJECTION ACTUATION)	307
Y	6	1	*276-9067*	1	SENSOR GP-PRESSURE (ENGINE OIL)	308
Y	7	1	*303-3357*	1	SENSOR GP-PRESSURE (ATMOSPHERIC)	309
	8	1	**214-7568**	1	SEAL-O-RING	
	9	1	**3E-4352**	1	WASHER-HARD (8.8X20.5X2.5-MM THK)	
M	10	1	**6V-3940**	1	BOLT (M8X1.25X25-MM)	
	11	1	**6V-5048**	1	SEAL-O-RING	
	12	1	**9X-0261**	1	ADAPTER	
	13	1	**9X-0262**	1	ADAPTER	

M-METRIC PART
Y-SEPARATE ILLUSTRATION

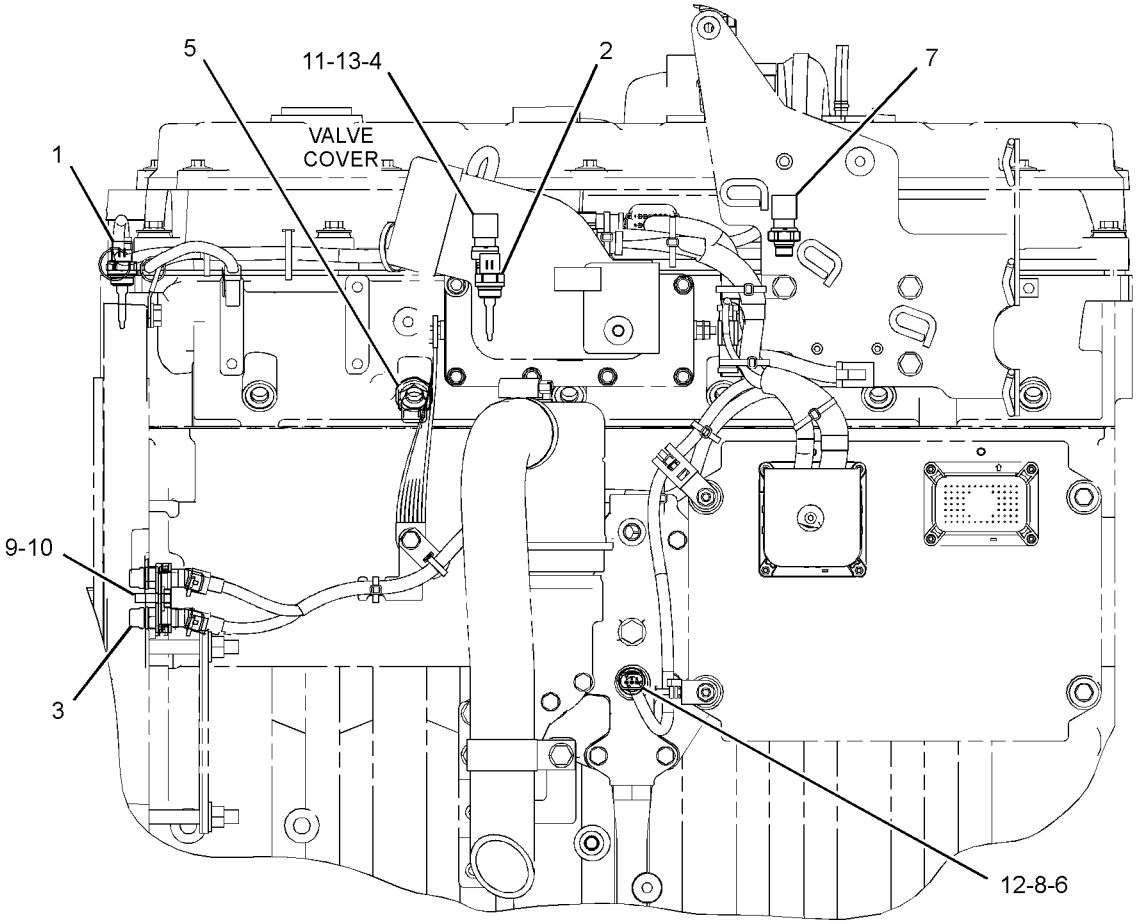

LEFT SIDE VIEW OF ENGINE

GRAPHIC #1 **<END>** g01913363

178-2345 SENSOR GP-LIQUID LEVEL

S/N: B6H1-UP; JLP1-UP

PART OF 233-1124 SENSOR GP-LIQUID LEVEL

SMCS-7422 **i03423327**

NOTE	REF NO	GRAPHIC REF	PART NUMBER	QTY	PART NAME 1 2 3 4 5 6 (PRODUCT LEVEL)	SEE PAGE
	1	1	**178-2334**	1	PROBE AS-LIQUID LEVEL (WATER SEPARATOR)	
	1A	1	**3J-1907**	1	SEAL-O-RING	
	2	1	**178-2335**	1	SENSOR AS-LIQUID LEVEL (WATER SEPARATOR)	
		1	**102-8804**	1	KIT-RECEPTACLE (4-PIN)	
					(INCLUDES RECEPTACLE AS & WEDGE)	
		1	**155-2270**	1	KIT-CONNECTING PLUG (2-PIN)	
					(INCLUDES PLUG AS, WEDGE, & INTERFACE SEAL)	
		1	**186-3735**	4	PIN-CONNECTOR (16-GA TO 18-GA)	
		1	**186-3736**	2	SOCKET-CONNECTOR (16-GA TO 18-GA)	

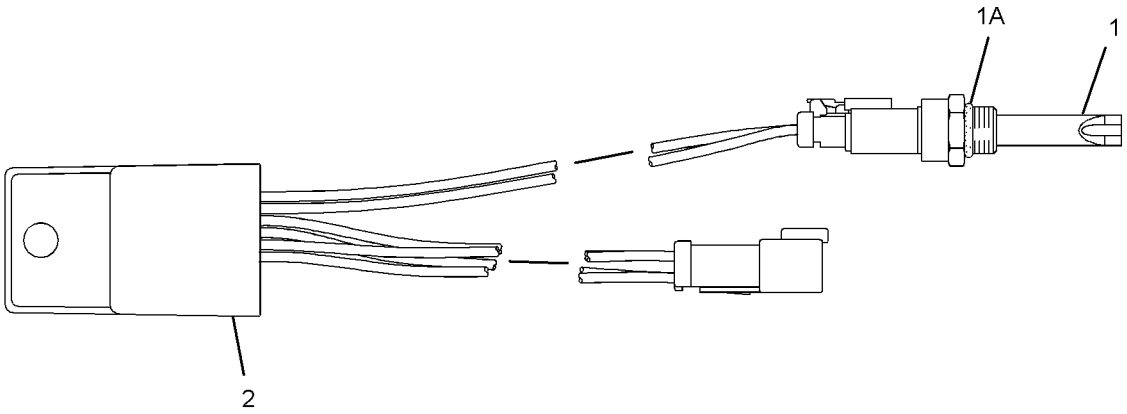

GRAPHIC #1 **<END>** g01285011

233-1124 SENSOR GP-LIQUID LEVEL–WATER IN FUEL

S/N: B6H1-UP; JLP1-UP
PART OF 247-7386 CHASSIS AR

SMCS-7422 **i02490245**

NOTE	REF NO	GRAPHIC REF	PART NUMBER	QTY	PART NAME 1 2 3 4 5 6 (PRODUCT LEVEL)	SEE PAGE
	1	1	**096-0061**	2	STRAP-CABLE	
Y	2	1	**178-2345**	1	SENSOR GP-LIQUID LEVEL (WATER IN FUEL)	297
	3	1	**6V-5049**	1	SEAL-O-RING	
	4	1	**8T-4121**	1	WASHER-HARD (11X21X2.5-MM THK)	
M	5	1	**8T-4137**	1	BOLT (M10X1.5X20-MM)	

M-METRIC PART
Y-SEPARATE ILLUSTRATION

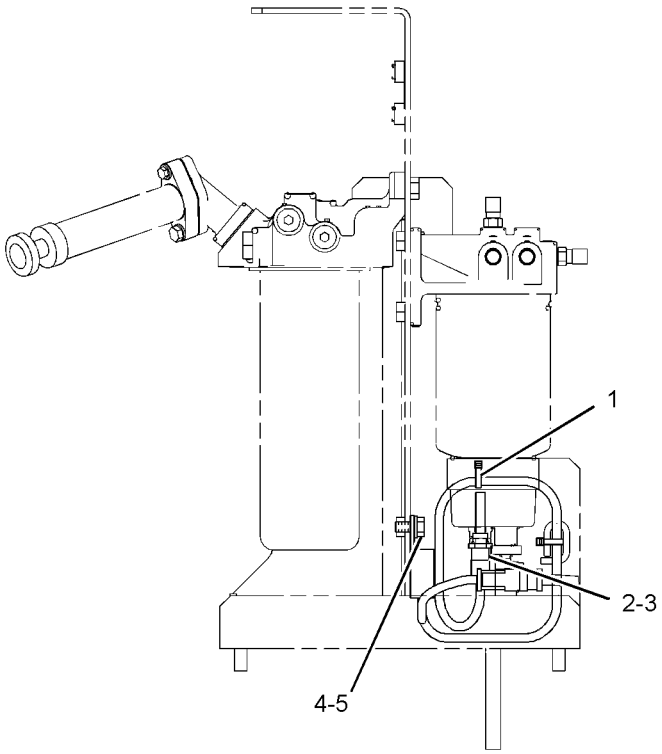

LEFT SIDE VIEW

GRAPHIC #1 **<END>** g01150641

194-6725 SENSOR GP-PRESSURE

S/N: B6H1-UP; JLP1-UP
PART OF 239-2396 SENSOR GP-PRESSURE
ALSO AN ATTACHMENT

SMCS-1439, 1916, 1917, 1923, 1924 **i03435081**

NOTE	REF NO	GRAPHIC REF	PART NUMBER	QTY	PART NAME 1 2 3 4 5 6 (PRODUCT LEVEL)	SEE PAGE
E	1	1	**9X-1813**		SLEEVE (34-CM)	
	2	1	**155-2260**	1	KIT-CONNECTING PLUG (3-PIN)	
					(INCLUDES PLUG AS, INTERFACE SEAL & WEDGE)	
	3	1	**180-9340**	3	SOCKET-CONNECTOR (14-GA TO 18-GA)	

E-ORDER BY THE CENTIMETER

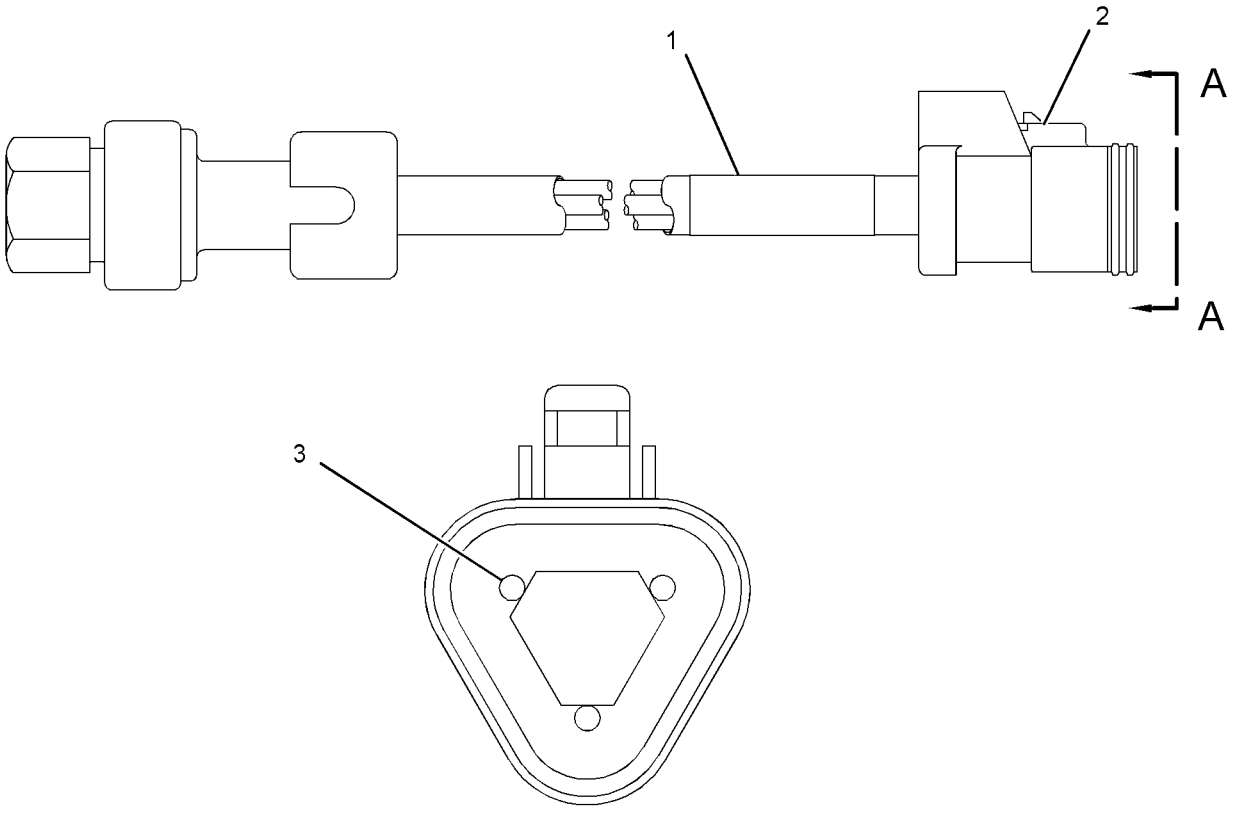

VIEW A-A

GRAPHIC #1 **<END>** g01662003

197-8393 SENSOR GP-PRESSURE

S/N: THX1-UP

PART OF 231-1978 SENSOR GP-ENGINE

SMCS-1439, 1916, 1917, 1923, 1924 **i03499761**

NOTE	REF NO	GRAPHIC REF	PART NUMBER	QTY	PART NAME 1 2 3 4 5 6 (PRODUCT LEVEL)	SEE PAGE
	1	1	**161-1703**	1	SENSOR GP-PRESSURE	
	2	1	**6V-5049**	1	SEAL-O-RING	

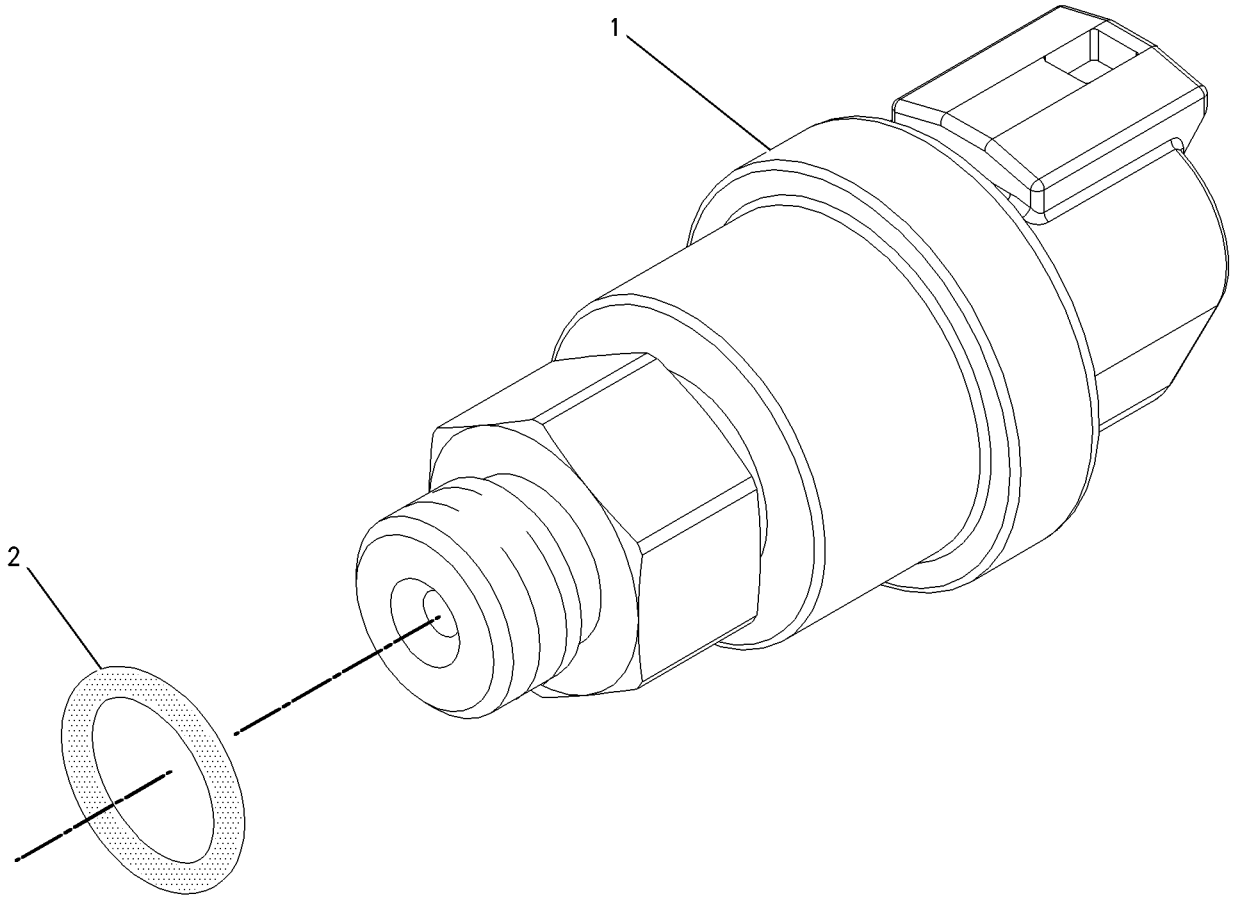

GRAPHIC #1 **<END>** g00855973

197-8394 SENSOR GP-PRESSURE

S/N: THX1-UP

PART OF 231-1978 SENSOR GP-ENGINE

SMCS-1439, 1916, 1917, 1923, 1924 **i03499862**

NOTE	REF NO	GRAPHIC REF	PART NUMBER	QTY	PART NAME 1 2 3 4 5 6 (PRODUCT LEVEL)	SEE PAGE
	1	1	**161-1705**	1	SENSOR AS-PRESSURE	
	2	1	**6V-5048**	1	SEAL-O-RING	

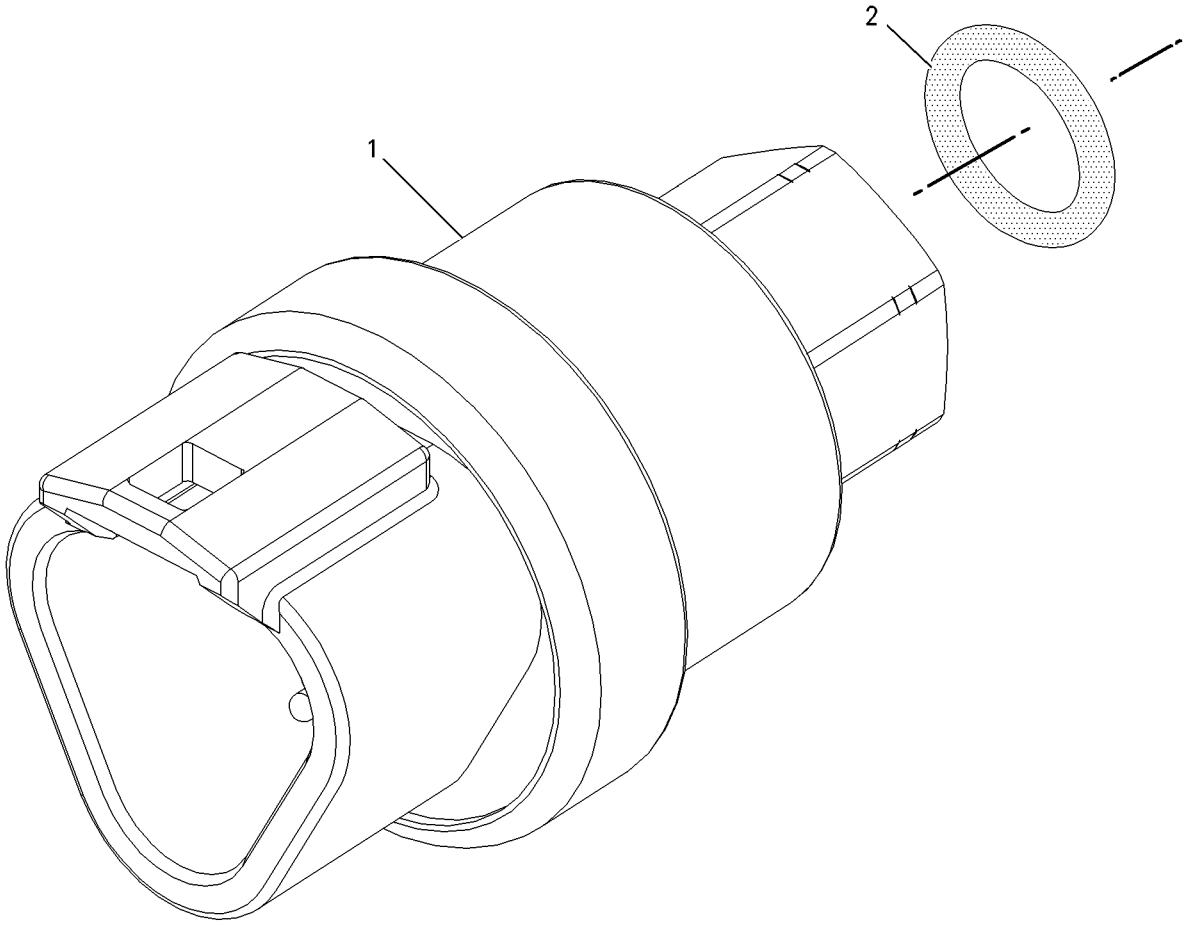

GRAPHIC #1 **<END>** g00856107

210-1747 SENSOR GP-PRESSURE

S/N: THX1-UP

PART OF 231-1978 SENSOR GP-ENGINE

SMCS-1439, 1916, 1917, 1923, 1924 **i03499901**

NOTE	REF NO	GRAPHIC REF	PART NUMBER	QTY	PART NAME 1 2 3 4 5 6 (PRODUCT LEVEL)	SEE PAGE
	1	1	**161-1704**	1	SENSOR GP-PRESSURE	
	2	1	**6V-5048**	1	SEAL-O-RING	

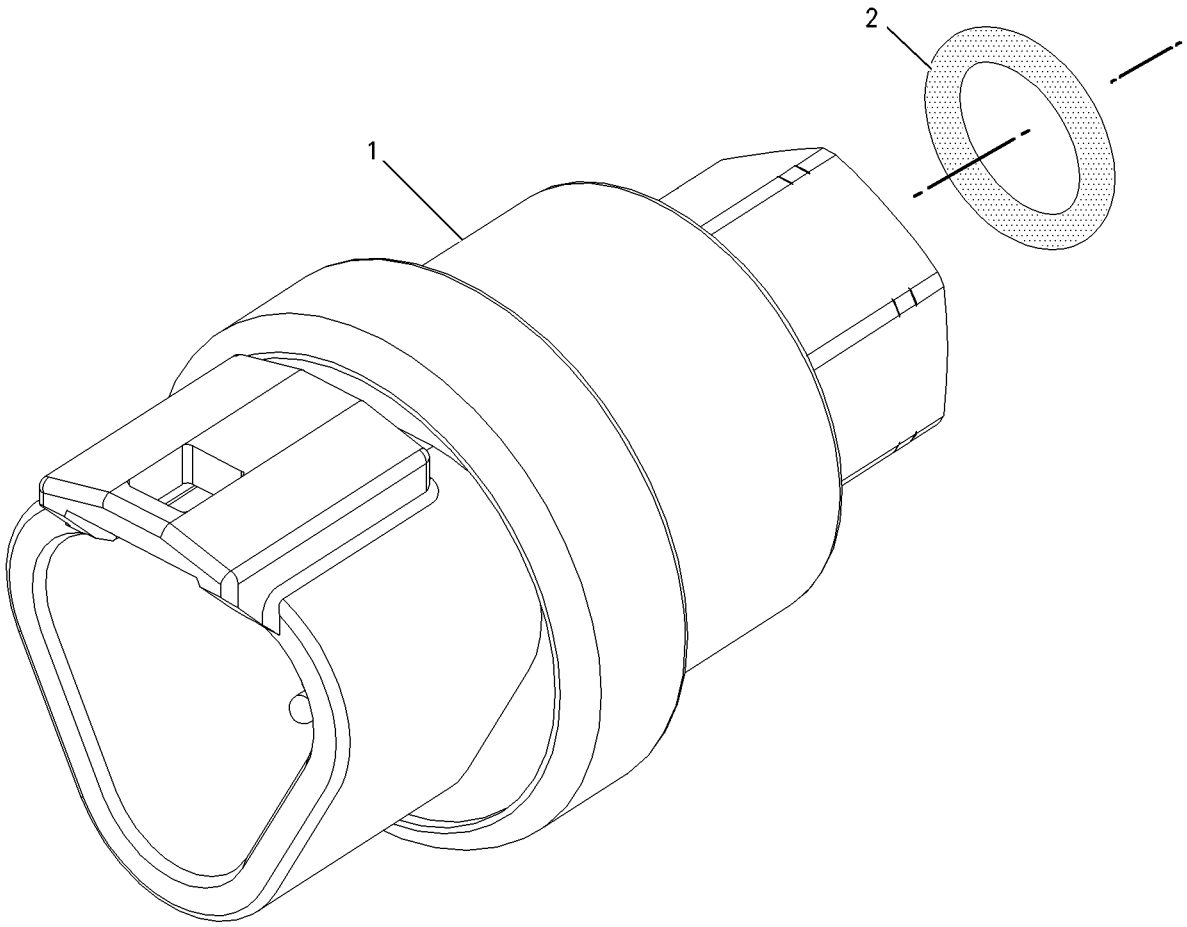

GRAPHIC #1 **<END>** g00856107

224-4536 SENSOR GP-PRESSURE

S/N: THX1-UP

PART OF 236-6220 SENSOR GP-PRESSURE

SMCS-1439, 1916, 1917, 1923, 1924 **i03172043**

NOTE	REF NO	GRAPHIC REF	PART NUMBER	QTY	PART NAME 1 2 3 4 5 6 (PRODUCT LEVEL)	SEE PAGE
BE	1	1	**9X-1813**		SLEEVE	
	2	1	**155-2260**	1	KIT-CONNECTING PLUG (3-PIN)	
					(INCLUDES PLUG AS, WEDGE, & INTERFACE SEAL)	
	3	1	**194-5226**	1	WIRE AS	
					—OR—	
		1	**194-5227**	1	WIRE AS (14-GA)	
	4	1	**155-2276**	1	WEDGE-PLUG LOCK (3-PIN)	

B-USE AS REQUIRED
E-ORDER BY THE CENTIMETER

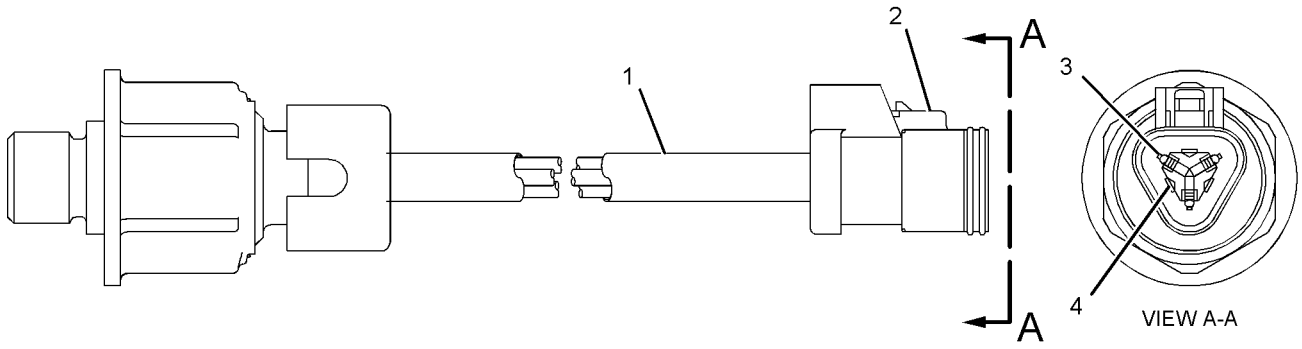

GRAPHIC #1 **<END>** g01040301

236-6220 SENSOR GP-PRESSURE

S/N: THX1-UP

PART OF 231-1978 SENSOR GP-ENGINE

SMCS-1439, 1916, 1917, 1923, 1924 **i03500600**

NOTE	REF NO	GRAPHIC REF	PART NUMBER	QTY	PART NAME 1 2 3 4 5 6 (PRODUCT LEVEL)	SEE PAGE
	1	1	**214-7567**	1	SEAL-O-RING	
Y	2	1	**224-4536**	1	SENSOR GP-PRESSURE	303

Y-SEPARATE ILLUSTRATION

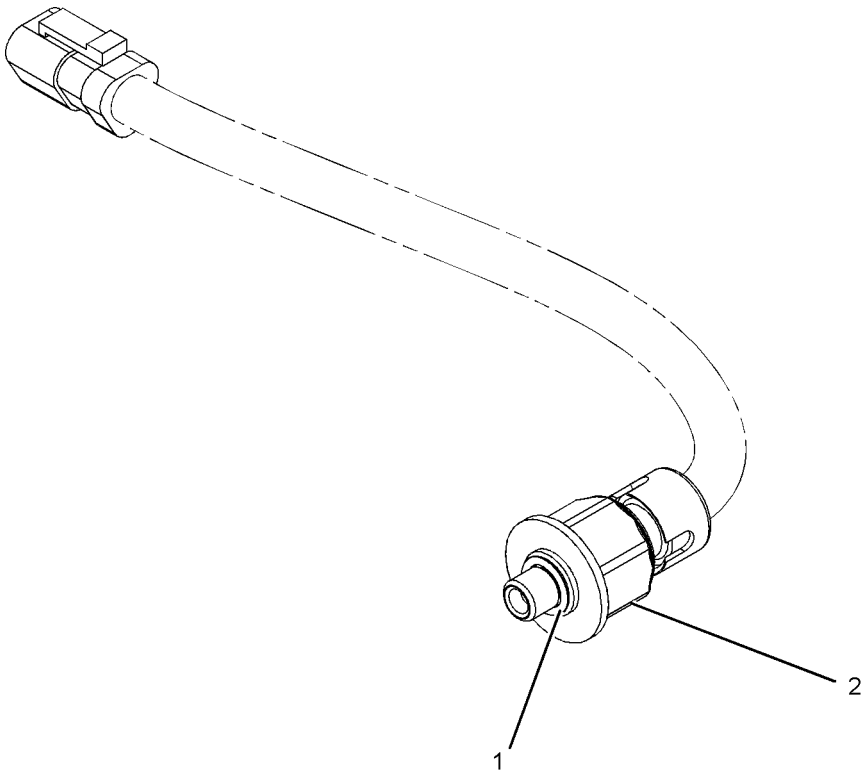

GRAPHIC #1 **<END>** g01054528

239-2396 SENSOR GP-PRESSURE

S/N: B6H1-UP; JLP1-UP
PART OF 237-8752, 259-3918, 343-2392 LINES GP-FUEL
ALSO AN ATTACHMENT

SMCS-1439, 1916, 1917, 1923, 1924 **i03435120**

NOTE	REF NO	GRAPHIC REF	PART NUMBER	QTY	PART NAME 1 2 3 4 5 6 (PRODUCT LEVEL)	SEE PAGE
Y	1	1	**194-6725**	1	SENSOR GP-PRESSURE	299
	2	1	**6V-5048**	1	SEAL-O-RING	

Y-SEPARATE ILLUSTRATION

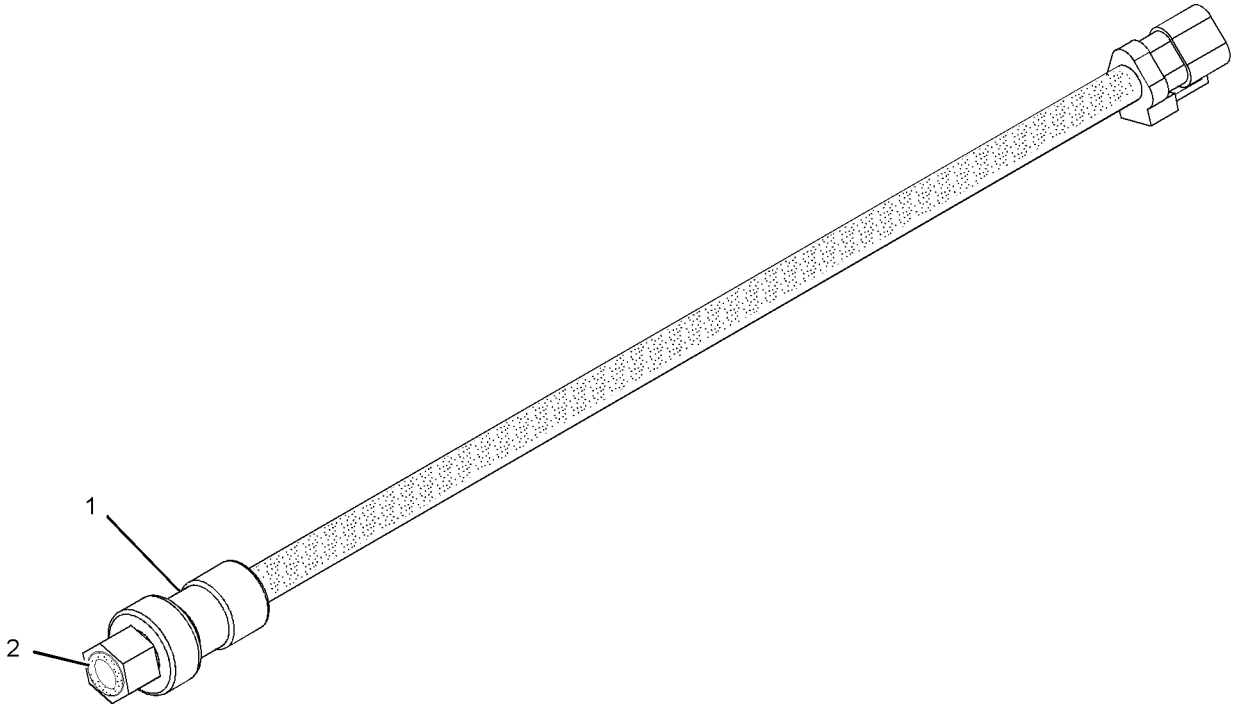

GRAPHIC #1 **<END>** g01019323

266-8650 SENSOR GP-PRESSURE

S/N: THX22180-UP
AMPSEAL CONNECTOR
PART OF 330-6034 SENSOR GP-ENGINE

SMCS-1439, 1916, 1917, 1923, 1924 **i03784310**

NOTE	REF NO	GRAPHIC REF	PART NUMBER	QTY	PART NAME 1 2 3 4 5 6 (PRODUCT LEVEL)	SEE PAGE
	1	1	**276-6793**	1	SENSOR GP-PRESSURE	
	2	1	**214-7566**	1	SEAL-O-RING	

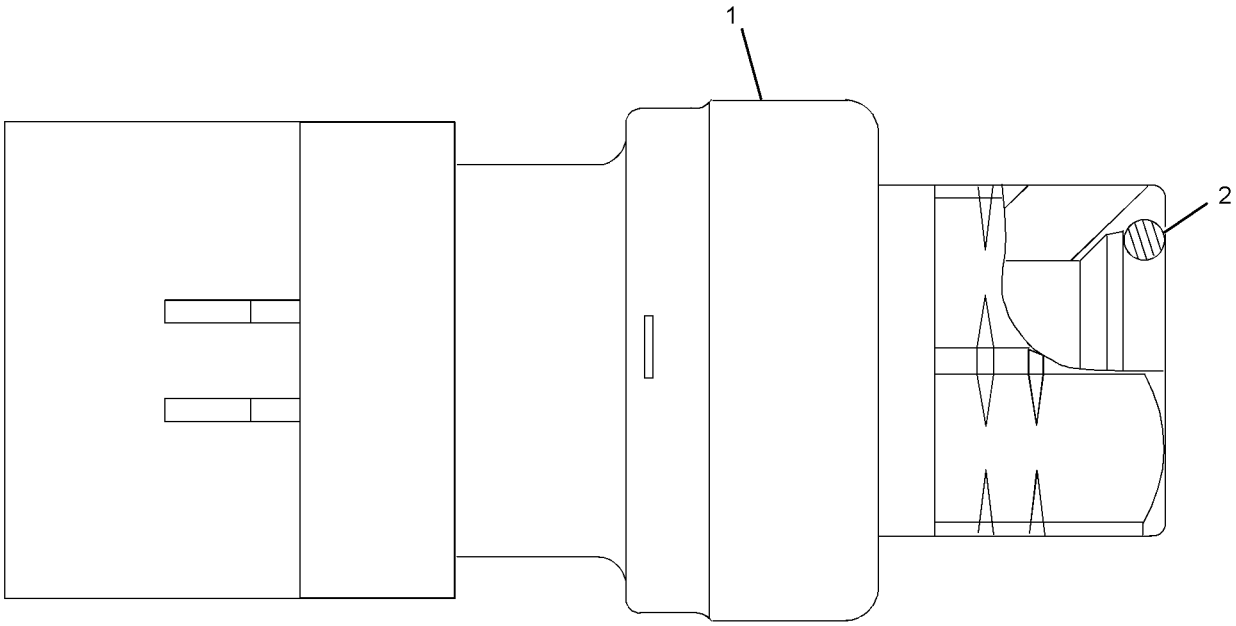

GRAPHIC #1 **<END>** g01164254

267-1402 SENSOR GP-PRESSURE

S/N: THX22180-UP
AMPSEAL CONNECTOR
PART OF 330-6034 SENSOR GP-ENGINE

SMCS-1439, 1916, 1917, 1923, 1924 **i03565217**

NOTE	REF NO	GRAPHIC REF	PART NUMBER	QTY	PART NAME 1 2 3 4 5 6 (PRODUCT LEVEL)	SEE PAGE
	1	1	**214-7567**	1	SEAL-O-RING	
	2	1	**248-2169**	1	SENSOR GP-PRESSURE	

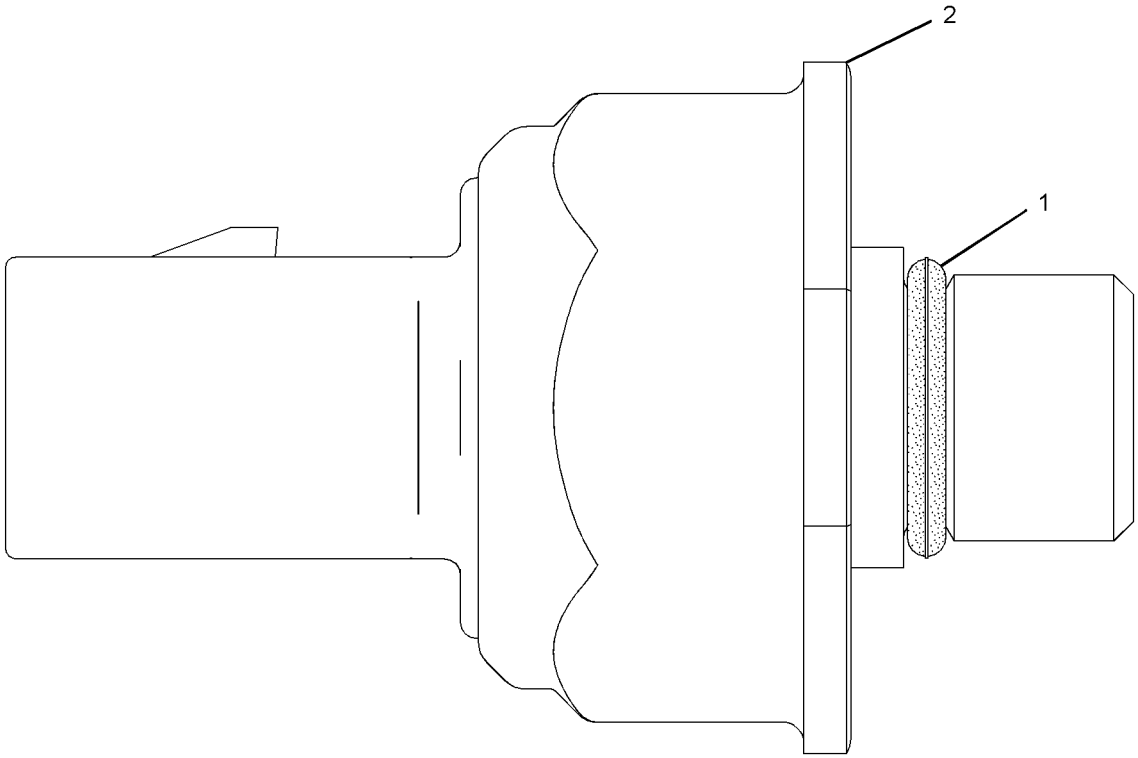

GRAPHIC #1 **<END>** g01164283

276-9067 SENSOR GP-PRESSURE

S/N: THX22180-UP
AMPSEAL CONNECTOR
PART OF 330-6034 SENSOR GP-ENGINE

SMCS-1439, 1916, 1917, 1923, 1924 **i03703689**

NOTE	REF NO	GRAPHIC REF	PART NUMBER	QTY	PART NAME 1 2 3 4 5 6 (PRODUCT LEVEL)	SEE PAGE
	1	1	**274-6719**	1	SENSOR-PRESSURE	
	2	1	**214-7566**	1	SEAL-O-RING	

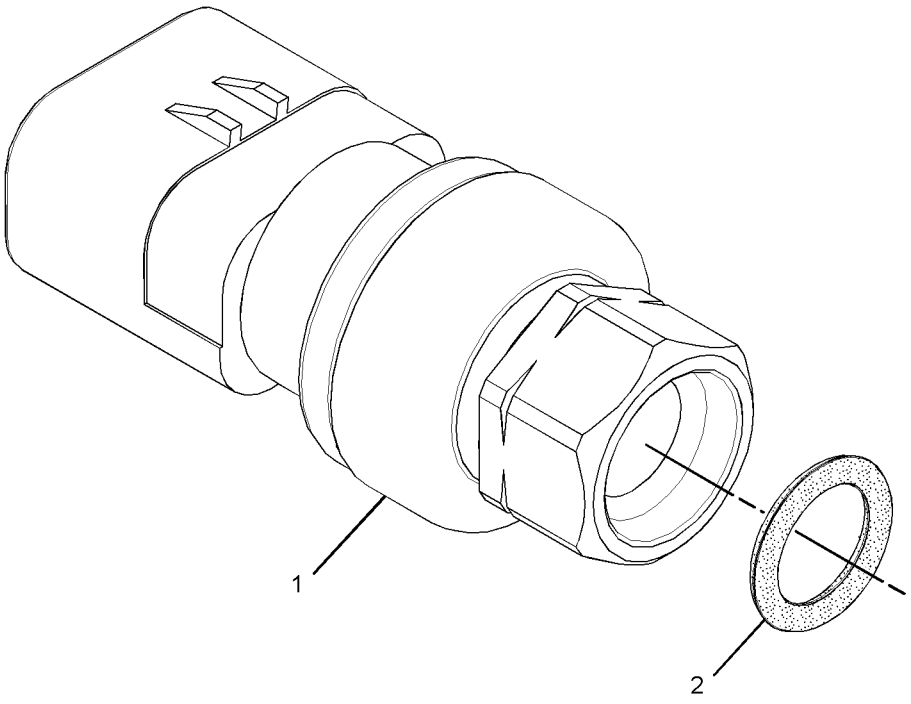

GRAPHIC #1 **<END>** g01994176

303-3357 SENSOR GP-PRESSURE

S/N: THX22180-UP

PART OF 330-6034 SENSOR GP-ENGINE

SMCS-1439, 1916, 1917, 1923, 1924 **i03565210**

NOTE	REF NO	GRAPHIC REF	PART NUMBER	QTY	PART NAME 1 2 3 4 5 6 (PRODUCT LEVEL)	SEE PAGE
	1	1	**296-8060**	1	SENSOR GP-PRESSURE	
	2	1	**6V-5049**	1	SEAL-O-RING	

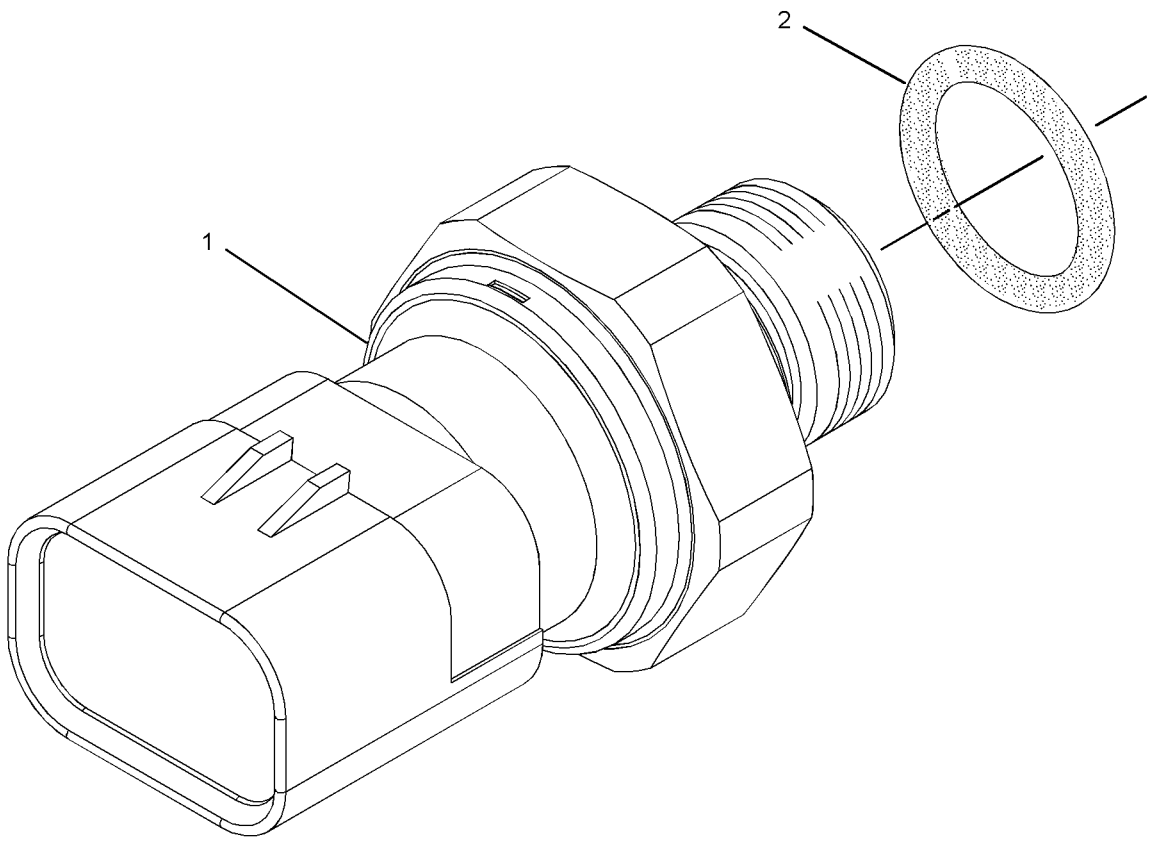

GRAPHIC #1 **<END>** g01331369

4P-5820 SENSOR GP-SPEED

S/N: THX1-UP

PART OF 242-9982 SENSOR GP-SPEED

SMCS-1907, 1912, 4803, 7493 **i02487695**

NOTE	REF NO	GRAPHIC REF	PART NUMBER	QTY	PART NAME 1 2 3 4 5 6 (PRODUCT LEVEL)	SEE PAGE
	1	1	**171-5349**	1	STRAP-MARKER	
	2	1	**102-8802**	2	KIT-RECEPTACLE (2-PIN)	
					(INCLUDES RECEPTACLE AS AND WEDGE)	
	3	1	**186-3735**	2	PIN-CONNECTOR (16-GA TO 18-GA)	
E	4	1	**9X-1386**		SLEEVE (14-CM)	

E-ORDER BY THE CENTIMETER

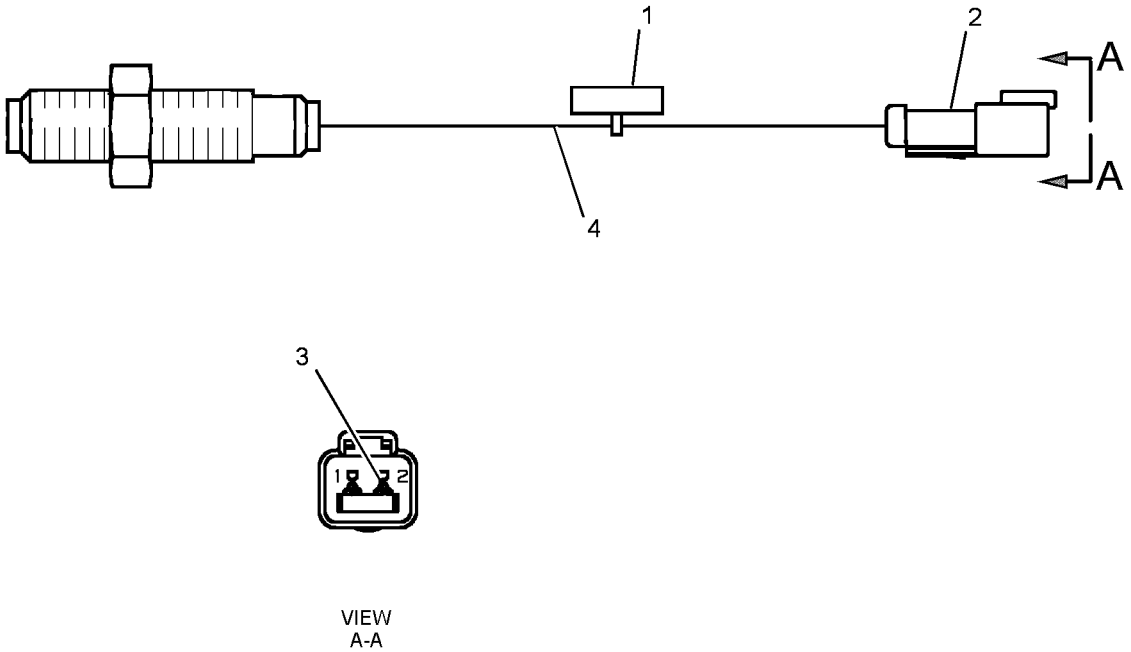

GRAPHIC #1 **<END>** g01242242

ELECTRICAL AND STARTING SYSTEM

236-6221 SENSOR GP-SPEED

S/N: THX1-UP

PART OF 231-1978, 330-6034 SENSOR GP-ENGINE

SMCS-1907, 1912, 4803, 7493 **i03594258**

NOTE	REF NO	GRAPHIC REF	PART NUMBER	QTY	PART NAME 1 2 3 4 5 6 (PRODUCT LEVEL)	SEE PAGE
	1	1	**3P-0647**	2	SEAL-O-RING	
	2	1	**245-4630**	1	SENSOR GP-SPEED	

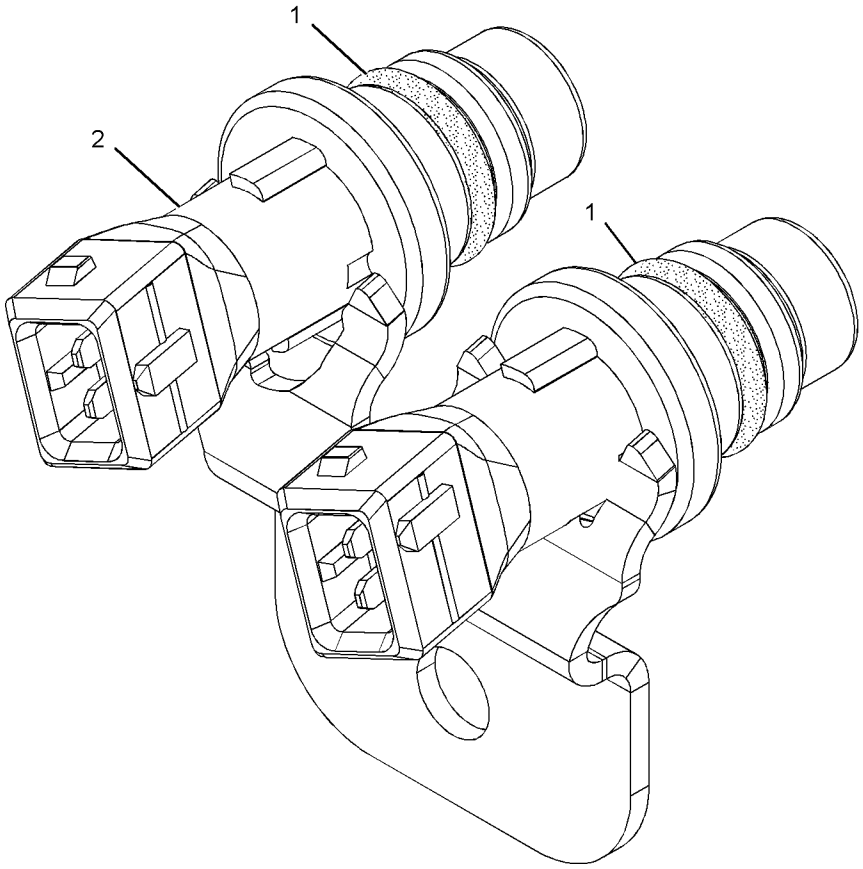

GRAPHIC #1 **<END>** g01013894

242-9982 SENSOR GP-SPEED–CRANKSHAFT

S/N: THX1-UP

PART OF 224-9843 ENGINE AR, 240-1861, 270-2771, 301-3082 ENGINE AR-COMPLETE

SMCS-1907, 1912, 4803, 7493 **i02504054**

NOTE	REF NO	GRAPHIC REF	PART NUMBER	QTY	PART NAME 1 2 3 4 5 6 (PRODUCT LEVEL)	SEE PAGE
Y	1	1	**4P-5820**	1	SENSOR GP-SPEED (CRANKSHAFT)	310
	2	1	**188-2128**	1	PLUG AS	
		1	**8T-8737**	2	PLUG-SEAL	
		1	**155-2270**	1	KIT-CONNECTING PLUG (2-PIN)	
					(INCLUDES PLUG AS AND WEDGE)	

Y-SEPARATE ILLUSTRATION

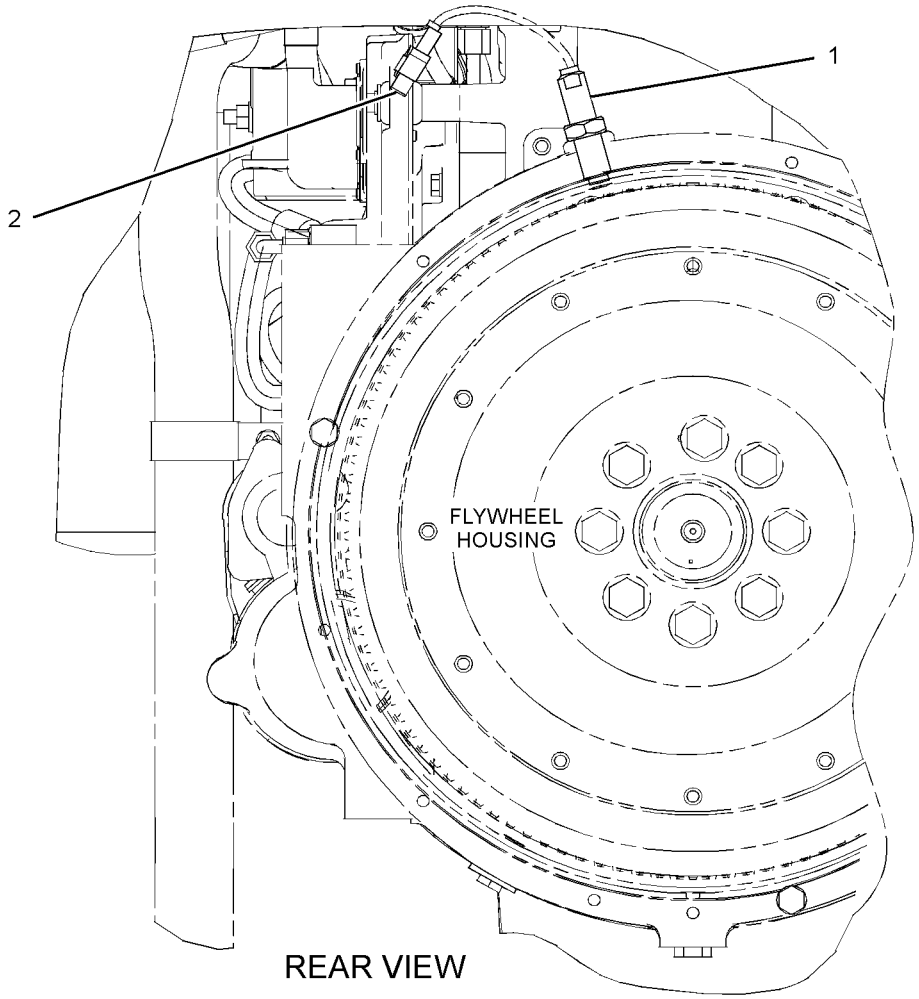

GRAPHIC #1 **<END>** g01186058

197-8391 SENSOR GP-TEMPERATURE

S/N: B6H1-UP; JLP1-UP
PART OF 237-8752, 259-3918 LINES GP-FUEL
ALSO AN ATTACHMENT
TYPE 1

SMCS-1906, 1921, 1922, 1928, 1929, 3290, 7344 **i02203394**

NOTE	REF NO	GRAPHIC REF	PART NUMBER	QTY	PART NAME 1 2 3 4 5 6 (PRODUCT LEVEL)	SEE PAGE
	1	1	**130-9811**	1	SENSOR GP-TEMPERATURE	
	2	1	**8L-2786**	1	SEAL-O-RING	

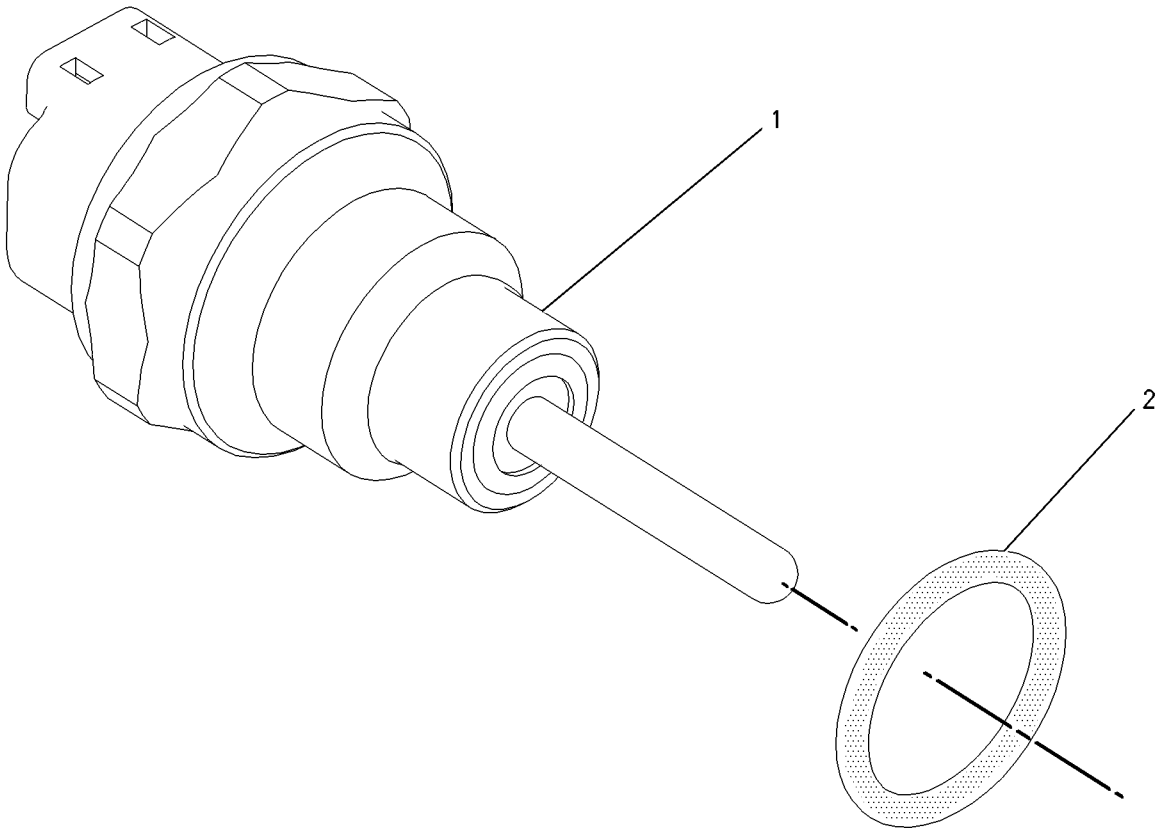

GRAPHIC #1 **<END>** g00856011

197-8391 SENSOR GP-TEMPERATURE

S/N: B6H1-UP; JLP1-UP
PART OF 237-8752, 259-3918, 343-2392 LINES GP-FUEL
ALSO AN ATTACHMENT
TYPE 2

SMCS-1906, 1921, 1922, 1928, 1929, 3290, 7344 **i03087540**

NOTE	REF NO	GRAPHIC REF	PART NUMBER	QTY	PART NAME 1 2 3 4 5 6 (PRODUCT LEVEL)	SEE PAGE
C	1	1	**264-4297**	1	SENSOR GP-TEMPERATURE (AIR)	
		1	**137-6645**		PAD	
	2	1	**8L-2786**	1	SEAL-O-RING	

C-CHANGE FROM PREVIOUS TYPE

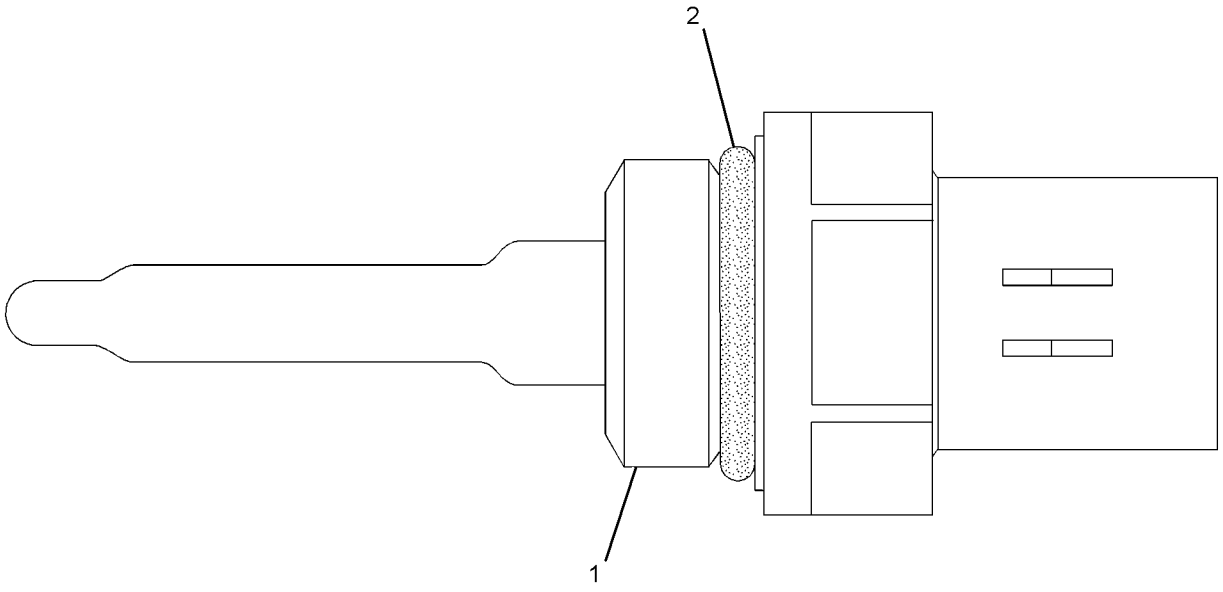

GRAPHIC #1 **<END>** g01164268

234-5012 SENSOR GP-TEMPERATURE

S/N: THX22180-UP
AMPSEAL CONNECTOR
PART OF 330-6034 SENSOR GP-ENGINE

SMCS-1906, 1921, 1922, 1928, 1929, 3290, 7344 **i03565212**

NOTE	REF NO	GRAPHIC REF	PART NUMBER	QTY	PART NAME 1 2 3 4 5 6 (PRODUCT LEVEL)	SEE PAGE
	1	1	**256-6453**	1	SENSOR AS-TEMPERATURE	
	2	1	**6V-6609**	1	SEAL-O-RING	

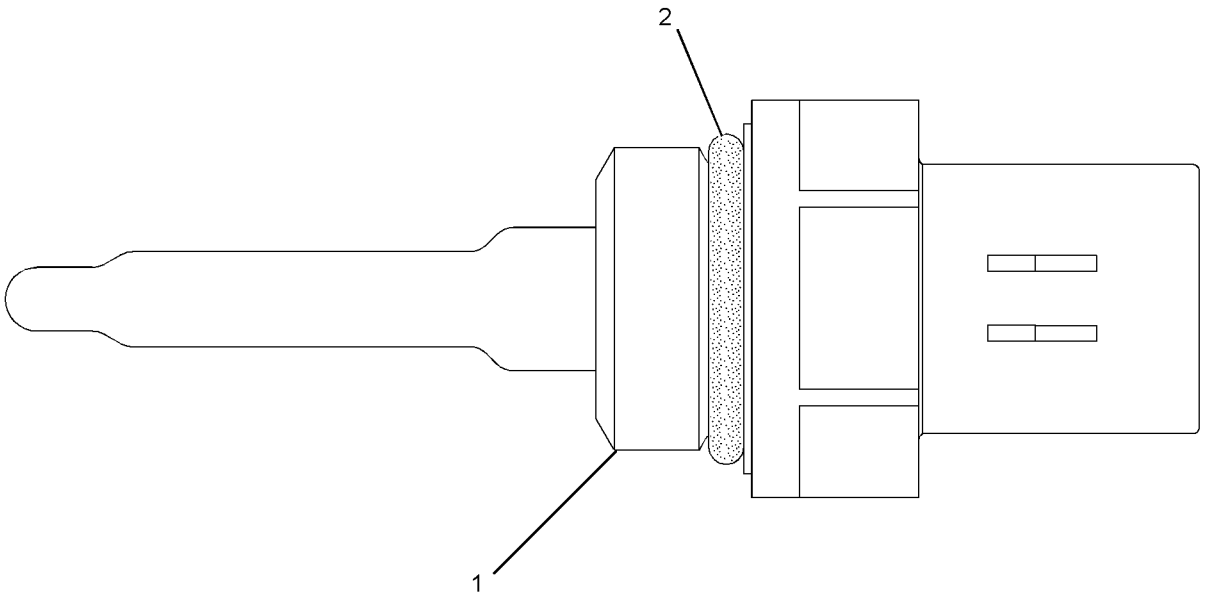

GRAPHIC #1 **<END>** g01164284

234-5013 SENSOR GP-TEMPERATURE

S/N: THX22180-UP
AMPSEAL CONNECTOR
PART OF 330-6034 SENSOR GP-ENGINE

SMCS-1906, 1921, 1922, 1928, 1929, 3290, 7344 **i03645027**

NOTE	REF NO	GRAPHIC REF	PART NUMBER	QTY	PART NAME 1 2 3 4 5 6 (PRODUCT LEVEL)	SEE PAGE
	1	1	**256-6453**	1	SENSOR AS-TEMPERATURE	
	2	1	**238-5080**	1	SEAL-O-RING	

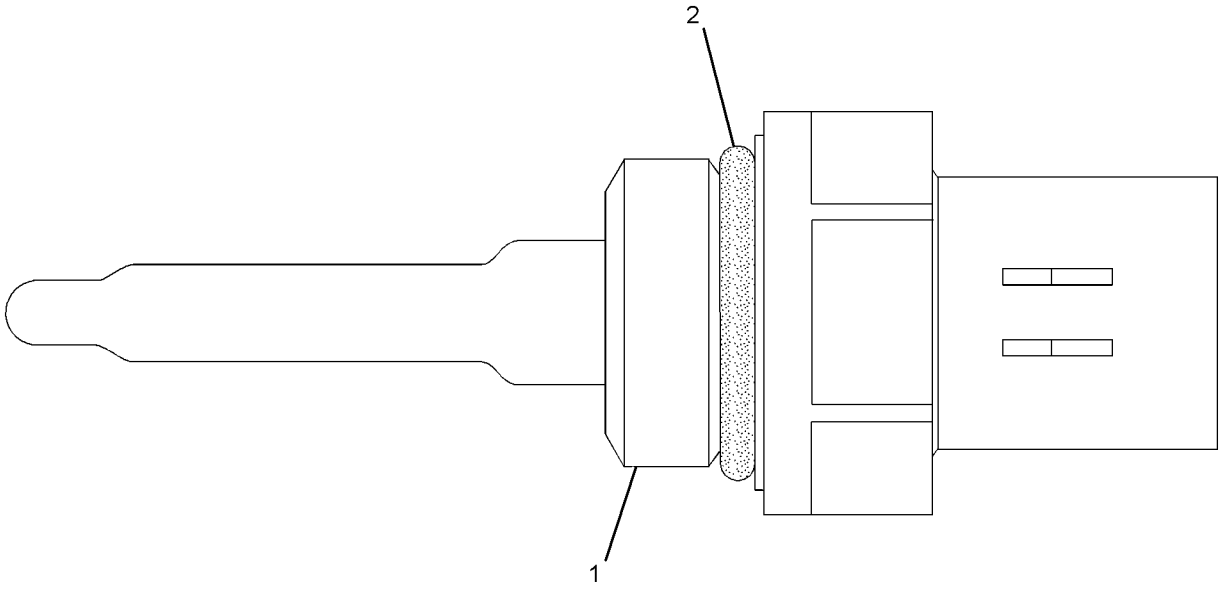

GRAPHIC #1 **<END>** g01164268

274-7395 SENSOR GP-TEMPERATURE

S/N: THX1-UP

PART OF 231-1978 SENSOR GP-ENGINE

SMCS-1906, 1921, 1922, 1928, 1929, 3290, 7344 **i03435385**

NOTE	REF NO	GRAPHIC REF	PART NUMBER	QTY	PART NAME 1 2 3 4 5 6 (PRODUCT LEVEL)	SEE PAGE
	1	1	**264-4297**	1	SENSOR GP-TEMPERATURE	
		1	**137-6645**	1	PAD	
	2	1	**8L-2786**	1	SEAL-O-RING	

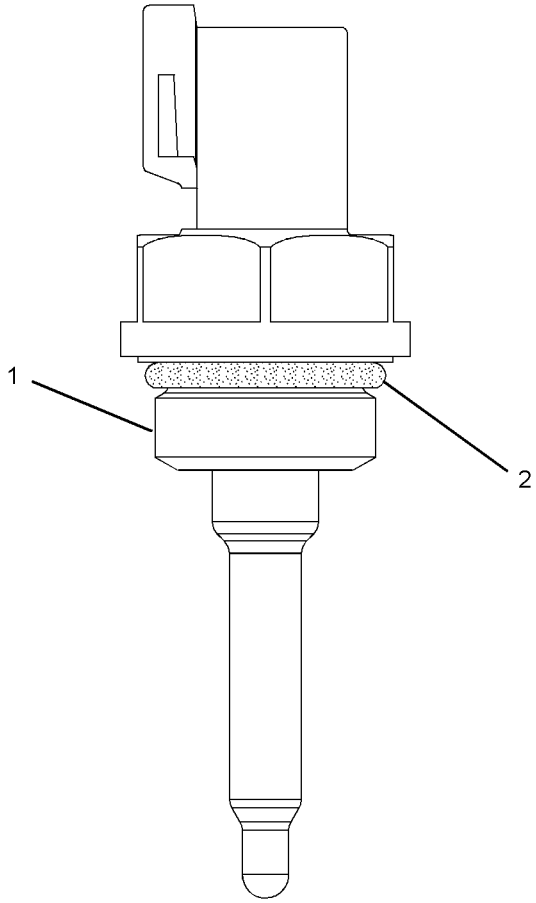

GRAPHIC #1 **<END>** g01353734

274-7396 SENSOR GP-TEMPERATURE

S/N: THX1-UP

PART OF 231-1978 SENSOR GP-ENGINE

SMCS-1906, 1921, 1922, 1928, 1929, 3290, 7344 **i03435390**

NOTE	REF NO	GRAPHIC REF	PART NUMBER	QTY	PART NAME 1 2 3 4 5 6 (PRODUCT LEVEL)	SEE PAGE
	1	1	**264-4297**	1	SENSOR GP-TEMPERATURE	
		1	**137-6645**	1	PAD	
	2	1	**6V-6609**	1	SEAL-O-RING	

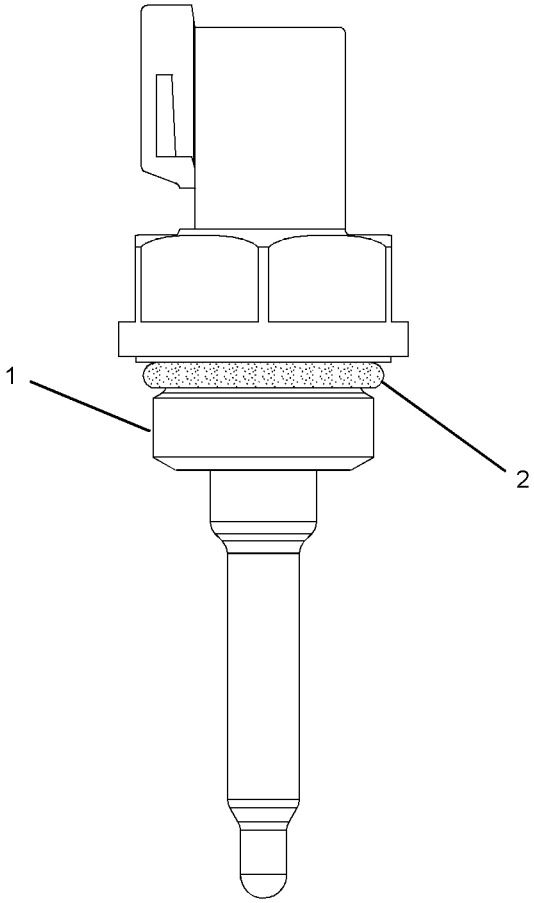

GRAPHIC #1 **<END>** g01353734

238-3215 STARTING AID GP–AIR INLET HEATER

S/N: THX1-UP

24-VOLT, 2000-WATT

PART OF 224-9843 ENGINE AR, 240-1861, 270-2771, 301-3082 ENGINE AR-COMPLETE

SMCS-1090 **i02504009**

NOTE	REF NO	GRAPHIC REF	PART NUMBER	QTY	PART NAME 1 2 3 4 5 6 (PRODUCT LEVEL)	SEE PAGE
	1	1	**7E-5714**	1	STRAP-GROUNDING	
	2	1	**238-3216**	1	HEATER AS (STARTING AID)	
M	3	1	**5C-2890**	2	NUT (M6X1-THD)	
	4	1	**9X-8256**	2	WASHER (6.6X12X2-MM THK)	
BF			**1U-8846**		SEALANT-GASKET	

B-USE AS REQUIRED
F-NOT SHOWN
M-METRIC PART

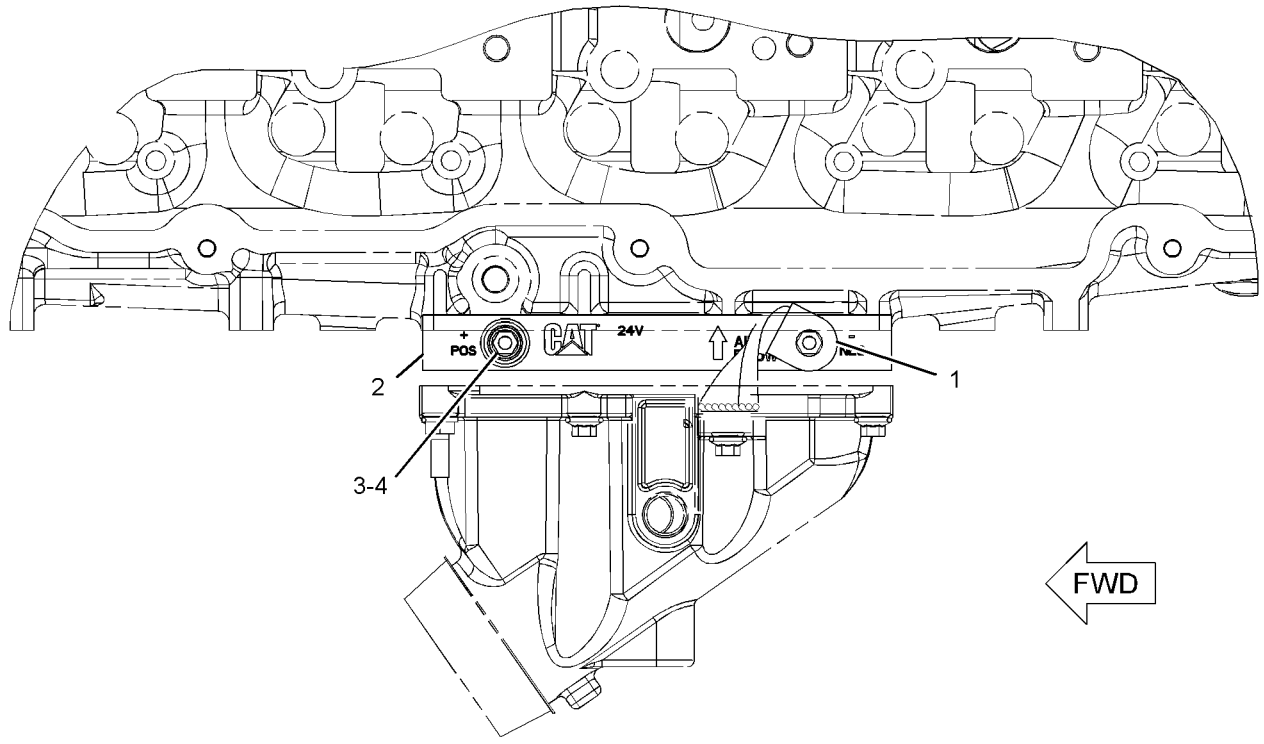

TOP VIEW

GRAPHIC #1 **<END>** g01200323

ELECTRICAL AND STARTING SYSTEM

239-6677 STARTING AID GP-ETHER

S/N: B6H1-UP; JLP1-UP
PART OF 275-3748 STARTING AR-COLD WEATHER
AN ATTACHMENT
TYPE 1

SMCS-1456 **i02562234**

NOTE	REF NO	GRAPHIC REF	PART NUMBER	QTY	PART NAME 1 2 3 4 5 6 (PRODUCT LEVEL)	SEE PAGE
	1	1	**5P-6312**	2	UNION	
	2	1,2	**5P-6313**	5	NUT (5/16-24-THD)	
	3	1,2	**5P-6314**	5	SLEEVE	
	4	2	**6H-4746**	1	ADAPTER	
		2	**4B-9044**	1	PLUG-TRANSFER PUMP	
	5	1	**7N-0140**	1	TUBE AS-COIL	
	6	2	**7N-2059**	1	CLAMP AS	
Y	7	2	**239-1134**	1	VALVE GP-ETHER STARTING (24-VOLT)	349
	8	2	**241-4194**	1	FITTING AS (CONTROL)	
		2	**236-4545**	1	NUT-SLEEVE (5/16-24-THD)	
	9	2	**251-4345**	1	ATOMIZER GP-ETHER	
	10	1	**255-2990**	1	TUBE	
	11	1	**255-2991**	1	PLATE AS	
	12	2	**279-7887**	1	TUBE	
	13	1	**279-7888**	1	TUBE	
	14	1	**255-3013**	1	TUBE	
	15	1,2	**1B-3581**	3	CLIP	
	16	2	**2M-9780**	1	SEAL-O-RING	
	17	1,2	**3D-5102**	8	GROMMET	
	18	2	**5K-0430**	2	CLIP	
	19	2	**8K-5440**	3	CLIP	
	20	1	**8T-4121**	2	WASHER-HARD (11X21X2.5-MM THK)	
M	21	1	**8T-4136**	2	BOLT (M10X1.5X25-MM)	
M	22	2	**8T-4179**	2	BOLT (M12X1.75X20-MM)	
M	23	2	**8T-4189**	4	BOLT (M8X1.25X20-MM)	
M	24	1,2	**8T-4192**	6	BOLT (M12X1.75X25-MM)	
	25	1,2	**8T-4223**	8	WASHER-HARD (13.5X25.5X3-MM THK)	
	26	2	**8T-4224**	4	WASHER-HARD (8.8X16X2-MM THK)	
A		1	**7N-0296**	1	CYLINDER AS-ETHER	
					(MUST BE PROCURED LOCALLY FROM YOUR CATERPILLAR DEALER)	

A-NOT PART OF THIS GROUP
M-METRIC PART
Y-SEPARATE ILLUSTRATION

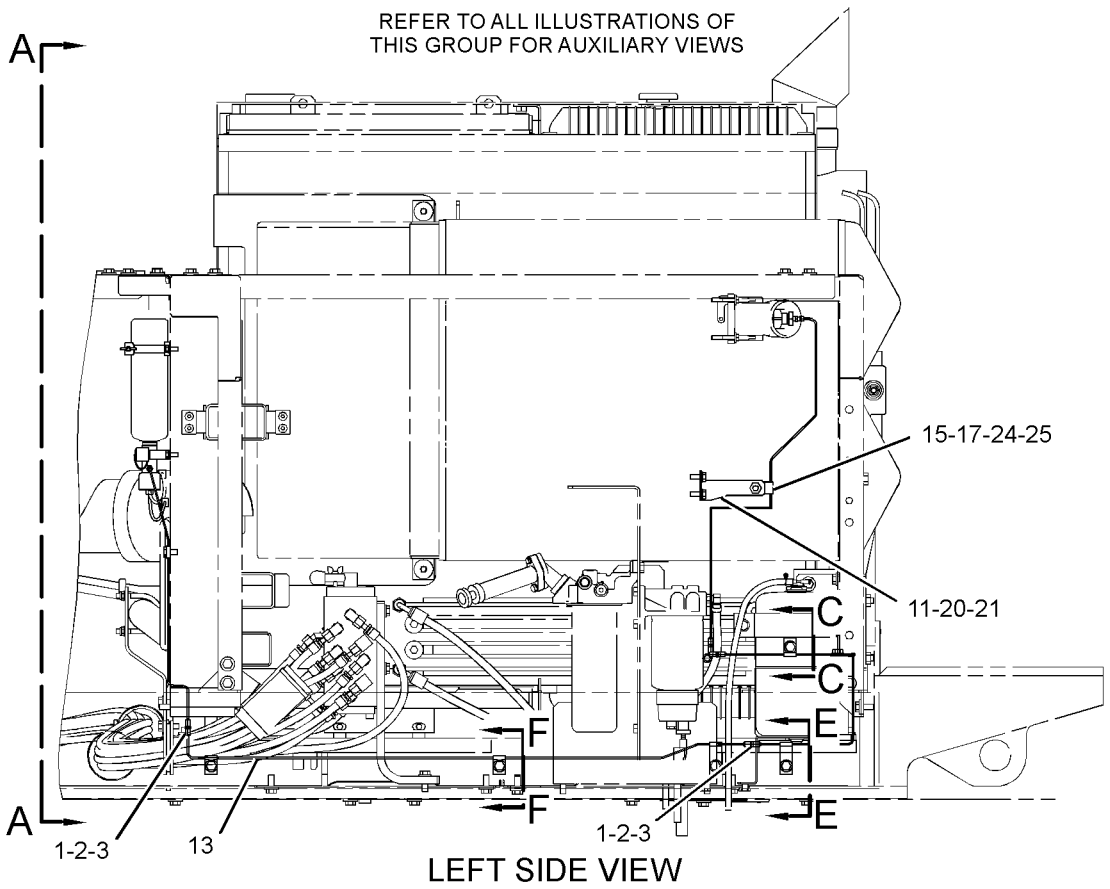

LEFT SIDE VIEW

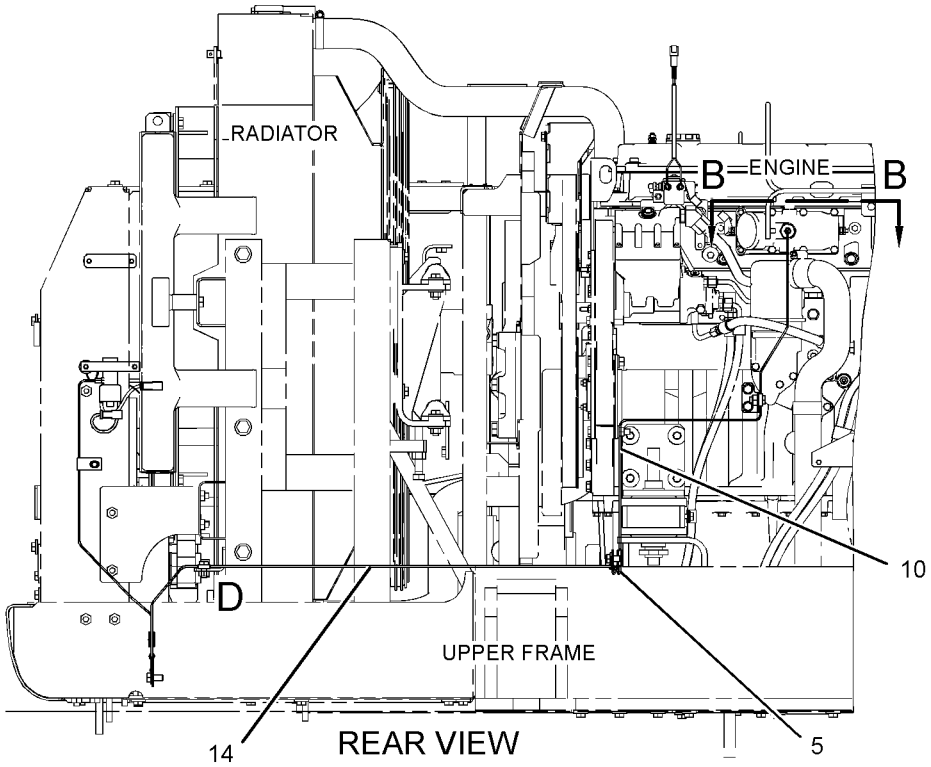

REAR VIEW

GRAPHIC #1

g01239244

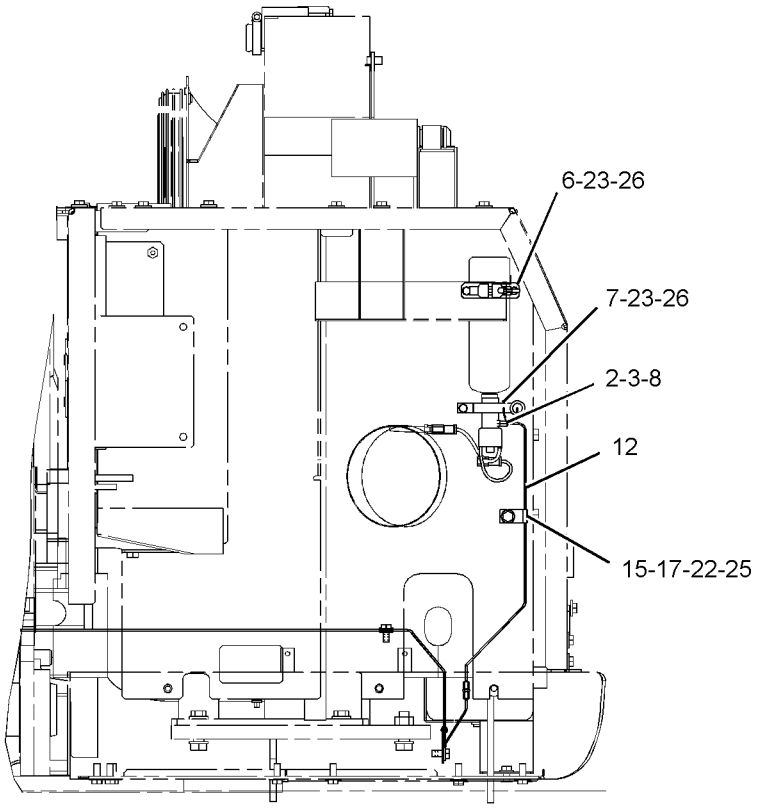

VIEW A-A

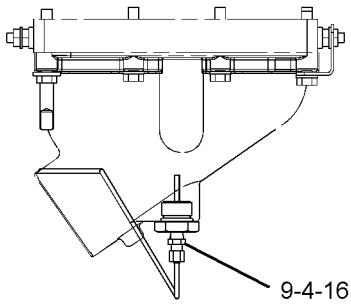

SECTION B-B

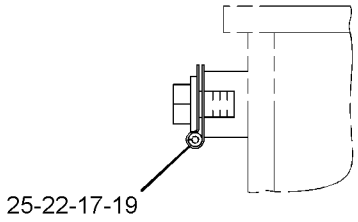

SECTION C-C

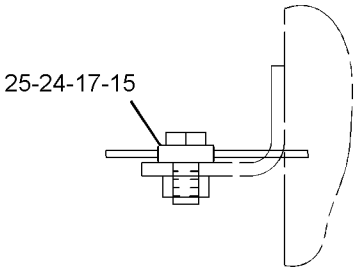

VIEW OF AREA D

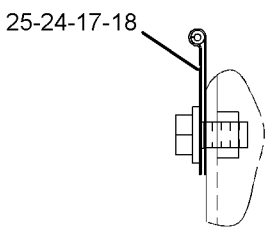

SECTION E-E

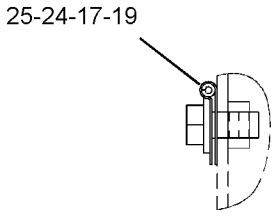

SECTION F-F

GRAPHIC #2 **<END>** g01239245

ELECTRICAL AND STARTING SYSTEM

239-6677 STARTING AID GP-ETHER

S/N: B6H1-UP; JLP1-UP
PART OF 275-3748, 314-3587 STARTING AR-COLD WEATHER
AN ATTACHMENT
TYPE 2

SMCS-1456 **i03143700**

NOTE	REF NO	GRAPHIC REF	PART NUMBER	QTY	PART NAME 1 2 3 4 5 6 (PRODUCT LEVEL)	SEE PAGE
	1	1	**5P-6312**	2	UNION	
	2	1,2	**5P-6313**	5	NUT (5/16-24-THD)	
	3	1,2	**5P-6314**	5	SLEEVE	
	4	2	**6H-4746**	1	ADAPTER	
		2	**4B-9044**	1	PLUG-TRANSFER PUMP	
	5	1	**7N-0140**	1	TUBE AS-COIL	
	6	2	**7N-2059**	1	CLAMP AS	
Y	7	2	**239-1134**	1	VALVE GP-ETHER STARTING (24-VOLT)	349
	8	2	**241-4194**	1	FITTING AS (CONTROL)	
		2	**236-4545**	1	NUT-SLEEVE (5/16-24-THD)	
	9	1	**255-2991**	1	PLATE AS	
	10	2	**279-7887**	1	TUBE	
	11	1	**279-7888**	1	TUBE	
	12	2	**297-6828**	1	ATOMIZER GP-ETHER	
		2	**236-4545**	1	NUT-SLEEVE (5/16-24-THD)	
C	13	1	**297-7710**	1	TUBE	
C	14	1	**297-7711**	1	TUBE	
C	15	2	**297-7713**	1	PLATE AS	
C	16	1,2	**1B-3581**	4	CLIP	
	17	2	**2M-9780**	1	SEAL-O-RING	
C	18	1,2	**3D-5102**	10	GROMMET	
C	19	1	**3L-2875**	1	CLIP	
	20	1	**5K-0430**	2	CLIP	
C	21	1	**5P-1075**	1	WASHER-HARD (10.2X22.5X3-MM THK)	
	22	1	**8K-5440**	3	CLIP	
C	23	1,2	**8T-4121**	3	WASHER-HARD (11X21X2.5-MM THK)	
CM	24	1,2	**8T-4136**	3	BOLT (M10X1.5X25-MM)	
CM	25	1	**8T-4137**	1	BOLT (M10X1.5X20-MM)	
CM	26	2	**8T-4139**	1	BOLT (M12X1.75X30-MM)	
CM	27	1	**8T-4179**	1	BOLT (M12X1.75X20-MM)	
M	28	2	**8T-4189**	4	BOLT (M8X1.25X20-MM)	
CM	29	1,2	**8T-4192**	7	BOLT (M12X1.75X25-MM)	
C	30	1,2	**8T-4223**	9	WASHER-HARD (13.5X25.5X3-MM THK)	
	31	2	**8T-4224**	4	WASHER-HARD (8.8X16X2-MM THK)	
A		1	**7N-0296**	1	CYLINDER AS-ETHER	
					(MUST BE PROCURED LOCALLY FROM YOUR CATERPILLAR DEALER)	

A-NOT PART OF THIS GROUP
C-CHANGE FROM PREVIOUS TYPE
M-METRIC PART
Y-SEPARATE ILLUSTRATION

REFER TO ALL ILLUSTRATIONS OF
THIS GROUP FOR AUXILIARY VIEWS

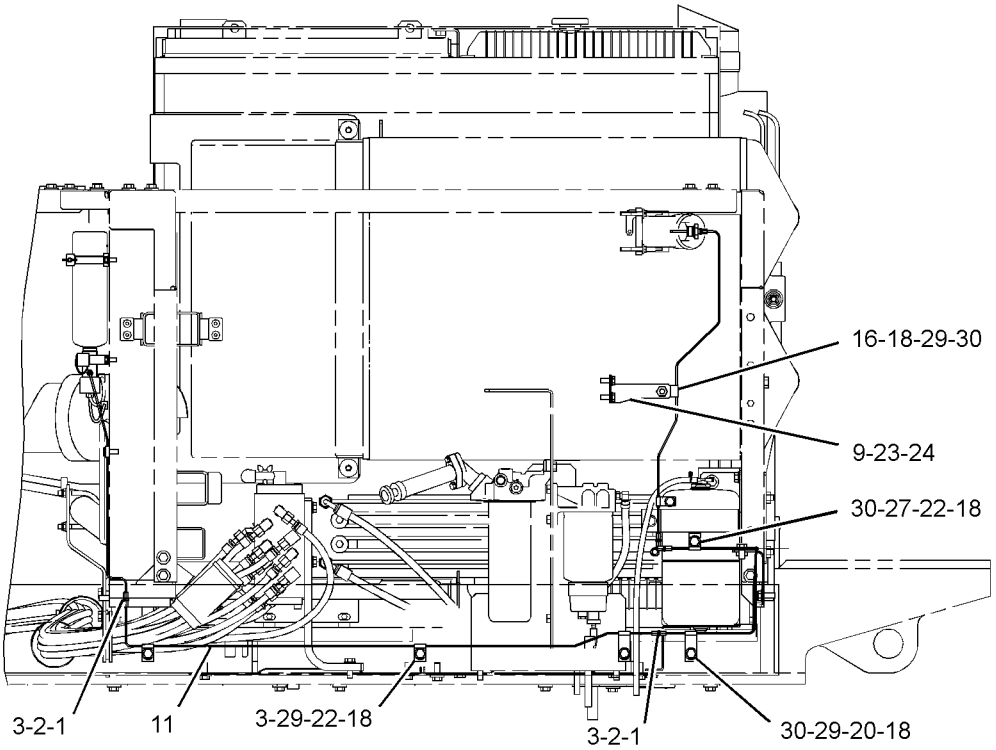

LEFT SIDE VIEW

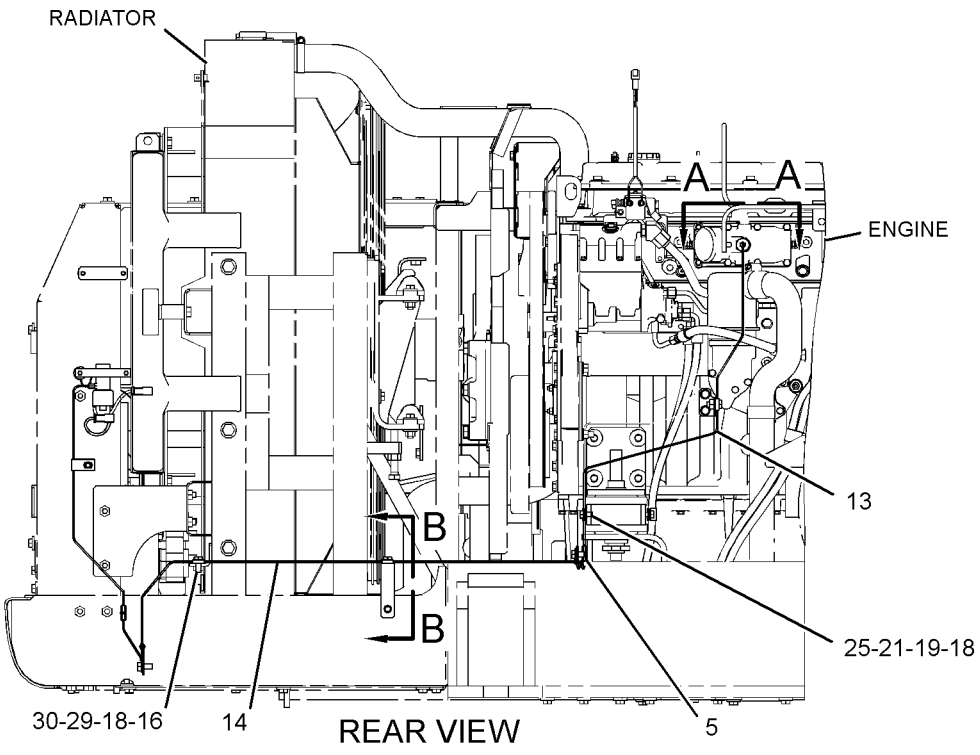

REAR VIEW

GRAPHIC #1 g01384032

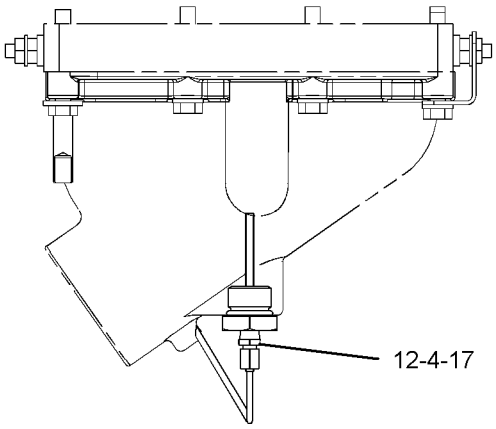

VIEW A-A

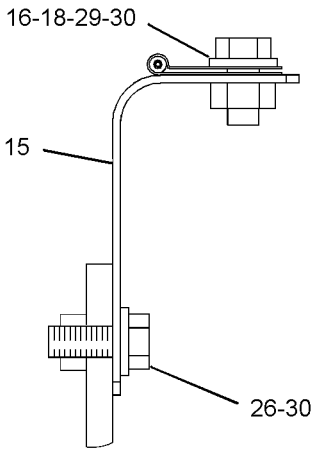

SECTION B-B

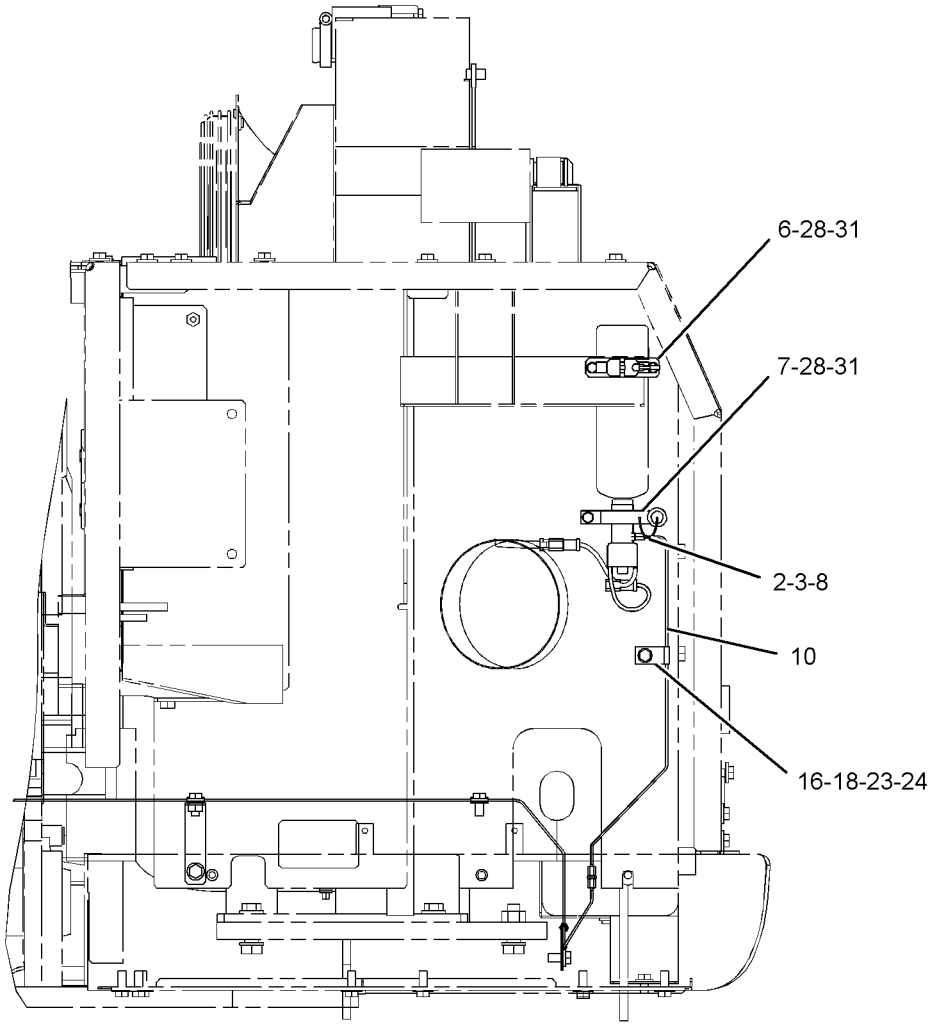

FRONT VIEW

GRAPHIC #2 **<END>** g01384034

ELECTRICAL AND STARTING SYSTEM

275-3748 STARTING AR-COLD WEATHER

S/N: B6H1-UP; JLP1-UP
PART OF 267-8840 COLD WEATHER AR
AN ATTACHMENT

SMCS-1450 **i02503619**

NOTE	PART NUMBER	QTY	PART NAME 1 2 3 4 5 6 (PRODUCT LEVEL)	SEE PAGE
Y	*251-0620*	1	BATTERY & WIRING GP	244
Y	*239-6677*	1	STARTING AID GP-ETHER	320
Y	*180-2435*	1	STARTING MOTOR GP-ELECTRIC	327
Y-SEPARATE ILLUSTRATION				

<END>

314-3587 STARTING AR-COLD WEATHER

S/N: B6H1-UP; JLP1-UP
PART OF 267-8840 COLD WEATHER AR
AN ATTACHMENT

SMCS-1450 **i03161480**

NOTE	PART NUMBER	QTY	PART NAME 1 2 3 4 5 6 (PRODUCT LEVEL)	SEE PAGE
Y	*251-0620*	1	BATTERY & WIRING GP	244
Y	*239-6677*	1	STARTING AID GP-ETHER	320
Y-SEPARATE ILLUSTRATION				

<END>

180-2435 STARTING MOTOR GP-ELECTRIC

S/N: B6H653-UP; JLP867-UP; THX14533-UP
24 VOLT
PART OF 224-9843, 262-1359, 266-6263 ENGINE AR, 275-3748 STARTING AR-COLD WEATHER
ALSO AN ATTACHMENT

SMCS-1453 **i02061346**

NOTE	REF NO	GRAPHIC REF	PART NUMBER	QTY	PART NAME 1 2 3 4 5 6 (PRODUCT LEVEL)	SEE PAGE
	1	1	**8S-2332**	3	BOLT-12 POINT HEAD (5/8-11X1.75-IN)	
YR	2	1	**237-1962**	1	STARTING MOTOR GP-ELECTRIC (24-VOLT)	331
	3	1	**4N-1059**	1	GASKET	
	4	1	**8Y-9603**	1	CABLE AS-STARTING MOTOR	
		1	**1S-7251**	1	TERMINAL-CABLE (00-GA, 1/2-IN BOLT)	
		1	**1S-7252**	1	TERMINAL-CABLE (00-GA, 3/8-IN BOLT)	
E		1	**5P-0747**		CABLE (00-GA, BLACK) (28-CM)	

E-ORDER BY THE CENTIMETER
R-REMFG PART MAY BE AVAILABLE
Y-SEPARATE ILLUSTRATION

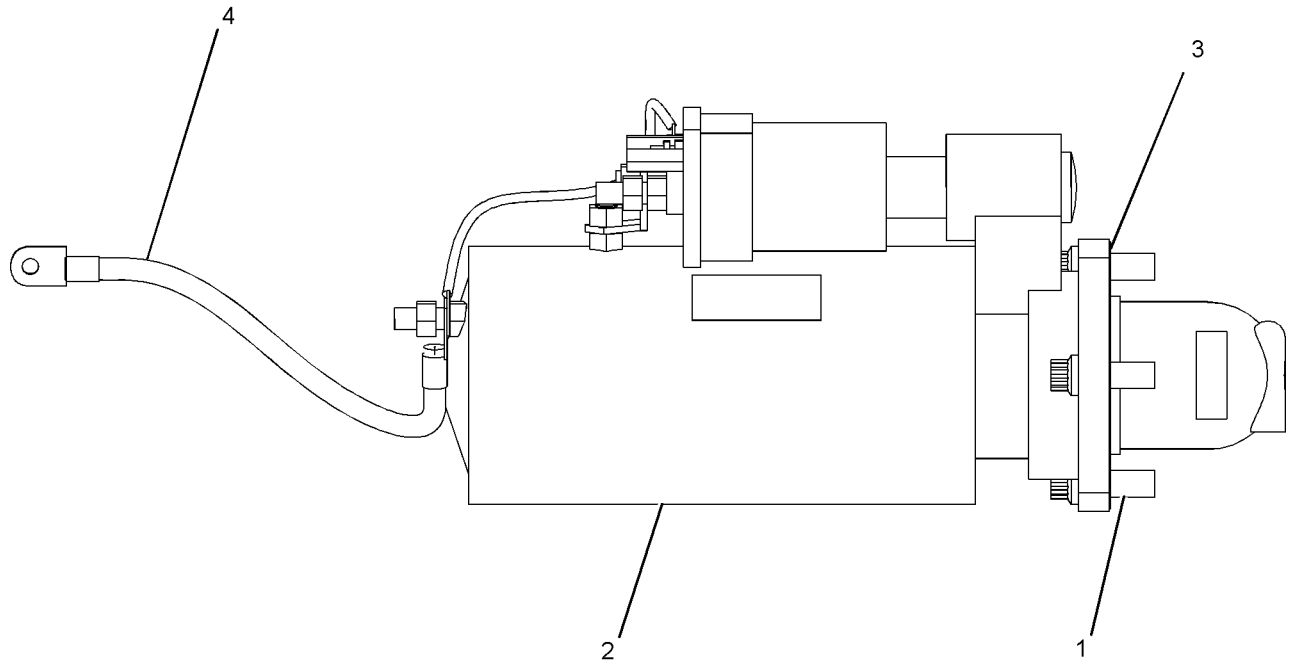

GRAPHIC #1 **<END>** g01061029

197-0986 STARTING MOTOR GP-ELECTRIC

S/N: B6H529-652; JLP220-866; THX1-UP

24-VOLT

PART OF 224-9843, 262-1359, 266-6263 ENGINE AR, 270-2771 ENGINE AR-COMPLETE

SMCS-1453 **i02153937**

NOTE	REF NO	GRAPHIC REF	PART NUMBER	QTY	PART NAME 1 2 3 4 5 6 (PRODUCT LEVEL)	SEE PAGE
	1	1	**8S-2332**	3	BOLT-12 POINT HEAD (5/8-11X1.75-IN)	
	2	1	**4H-7869**	1	GASKET	
YR	3	1	**207-1556**	1	STARTING MOTOR GP-ELECTRIC (24-VOLT)	329
	4	1	**8Y-9603**	1	CABLE AS-STARTING MOTOR	
		1	**1S-7251**	1	TERMINAL-CABLE (00-GA, 1/2-IN SCREW)	
		1	**1S-7252**	1	TERMINAL-CABLE (00-GA, 3/8-IN SCREW)	
E		1	**5P-0747**		CABLE (00-GA, BLACK) (28 CM)	

E-ORDER BY THE CENTIMETER
R-REMFG PART MAY BE AVAILABLE
Y-SEPARATE ILLUSTRATION

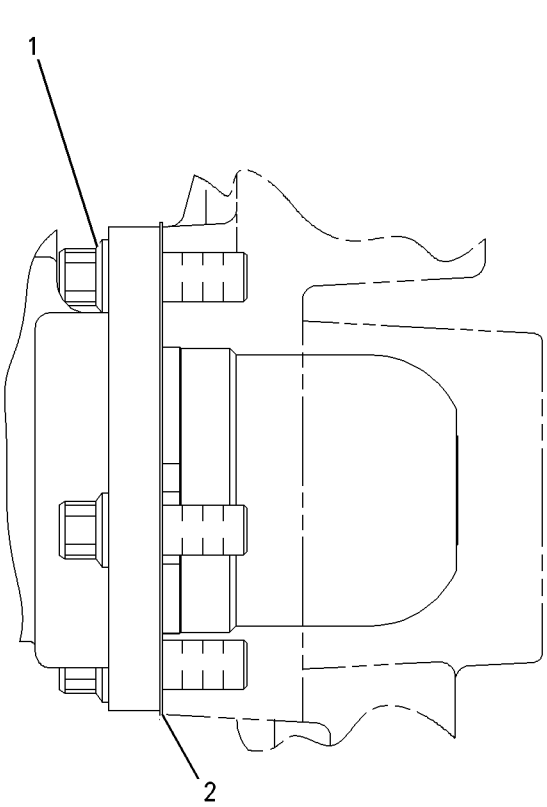

LEFT SIDE VIEW

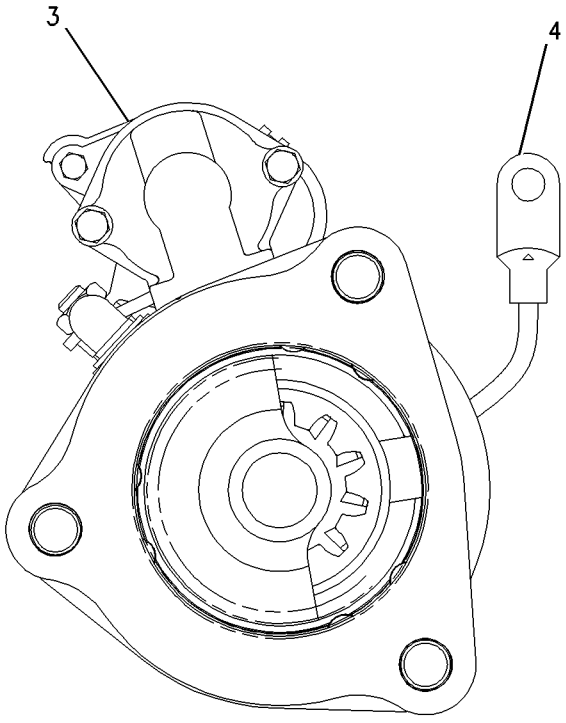

REAR VIEW

GRAPHIC #1 **<END>** g00816694

207-1556 STARTING MOTOR GP-ELECTRIC*R

S/N: B6H529-652; JLP220-866; THX1-UP

24-VOLT

PART OF 197-0986 STARTING MOTOR GP-ELECTRIC

SMCS-1453 **i03486036**

NOTE	REF NO	GRAPHIC REF	PART NUMBER	QTY	PART NAME 1 2 3 4 5 6 (PRODUCT LEVEL)	SEE PAGE
	1	1	**3T-3434**	6	PLUG	
	2	1	**7T-3279**	1	HOUSING AS	
	3	1	**8T-8566**	1	TERMINAL AS	
	4	1	**6V-8188**	4	NUT (1/2-13-THD)	
	5	1	**7X-0562**	4	WASHER-HARD (13.5X19X0.8-MM THK)	
	6	1	**3T-3422**	1	WIRE AS	
	7	1	**7T-3278**	1	HOLDER AS-BRUSH	
	8	1	**7T-3277**	1	COIL AS-FIELD	
	9	1	**7T-3454**	1	INSULATOR	
	10	1	**283-1107**	1	KIT-CONNECTOR (STARTING MOTOR)	
					(INCLUDES CONNECTORS, BOLT & TERMINAL-STARTER)	
	11	1	**7T-3451**	1	KIT-INSULATOR (TERMINAL)	
	12	1	**8T-8569**	1	INSULATOR-TERMINAL	
	13	1	**5S-7349**	4	BOLT (1/4-20X0.5-IN)	
	14	1	**8T-4205**	4	WASHER-HARD (7.2X14.5X2-MM THK)	
	15	1	**8H-1141**	4	SHOE-POLE	
	16	1	**3R-8797**	8	SCREW & WASHER AS (3/8-24X0.72-IN)	
	17	1	**7T-3276**	1	ARMATURE AS (24-VOLT)	
	18	1	**3E-7775**	1	HOUSING AS	
	19	1	**4M-1831**	1	PLUG-LEVER HOUSING	
	20	1	**7L-2894**	1	GASKET	
	21	1	**0S-1597**	5	BOLT (1/4-28X1-IN)	
	22	1	**6N-3826**	1	DRIVE AS-MOTOR	
	23	1	**7T-3974**	1	HOUSING AS-DRIVE	
	24	1	**7X-3373**	6	BOLT (5/16-18X0.88-IN)	
	25	1	**250-8279**	1	KIT-SOLENOID (24-VOLT)	
					(INCLUDES SOLENOID AS, BOLT, NUTS,COVER & CONNECTORS)	
	26	1	**6V-8378**	3	NUT (10-32-THD)	
	27	1	**8F-1434**	2	LOCKWASHER	
	28	1	**8T-0328**	3	WASHER-HARD (5.5X10X1-MM THK)	
	29	1	**9X-4824**	1	COVER-STARTING MOTOR	
	30	1	**8T-9884**	1	KIT-INSULATOR (STARTING MOTOR)	
					(INCLUDES INSULATORS & BUSHING)	
	31	1	**8C-3655**	1	KIT-BRUSH (STARTING MOTOR)	
					(INCLUDES BRUSHES, SPRINGS, SCREWS, SCREW ASSEMBLIES & SEAL)	
	32	1	**7T-3268**	1	KIT-LEVER (STARTING MOTOR)	
					(INCLUDES LEVER ASSEMBLIES, SEAL, NUT, GASKET & RETAINER)	
					AVAILABLE REPAIR KIT(S):	
			7T-3267	1	KIT-BUSHING (STARTING MOTOR)	
					(INCLUDES BUSHINGS, WICKS, CUPS, SEALS, GASKET, SCREW AS, WASHERS, SPACER & NUT)	

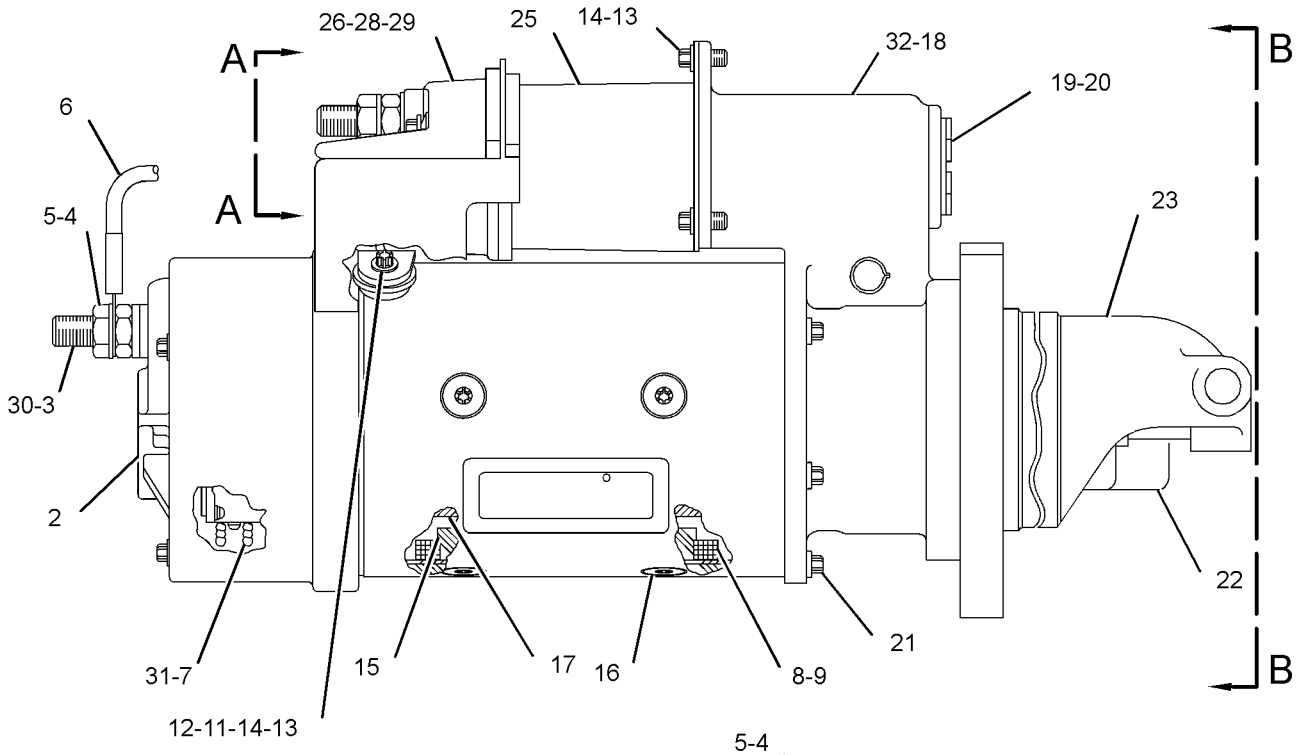

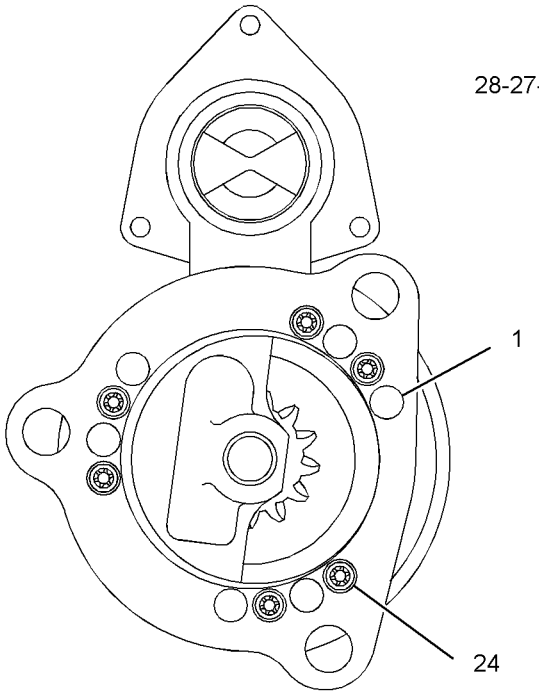

VIEW B-B

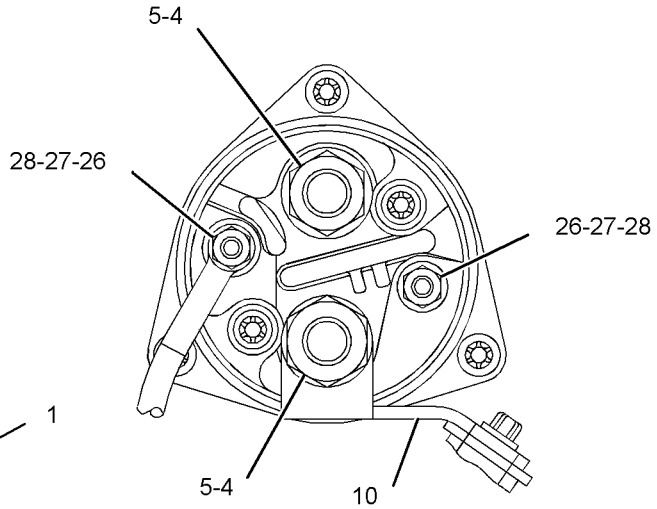

VIEW A-A

GRAPHIC #1 **<END>** g01478692

ELECTRICAL AND STARTING SYSTEM

237-1962 STARTING MOTOR GP-ELECTRIC*R

S/N: B6H653-UP; JLP867-UP; THX14533-UP
24-VOLT
PART OF 180-2435 STARTING MOTOR GP-ELECTRIC
ALSO AN ATTACHMENT

SMCS-1453 **i03630207**

NOTE	REF NO	GRAPHIC REF	PART NUMBER	QTY	PART NAME 1 2 3 4 5 6 (PRODUCT LEVEL)	SEE PAGE
	1	1	**7M-0326**	1	CONNECTOR	
	2	1	**9H-3757**	2	WASHER (0.516X1X0.094-IN THK)	
	3	1	**1S-7446**	3	SCREW-MACHINE (8-32X0.437-IN)	
	4	1	**8C-9660**	3	WASHER (4.6X7.9X0.8-MM THK)	
	5	1	**9S-2544**	9	SCREW-HEX HEAD (8-32X11.13-MM)	
	6	1	**7M-0327**	1	WASHER-THRUST (17.4X25.4X1.6-MM THK)	
	7	1	**3T-3418**	1	FRAME AS-END	
		1	**3T-3423**	1	CUP	
		1	**3T-3424**	1	PLUG-FELT	
		1	**9G-4101**	1	BUSHING-END	
	8	1	**3T-9525**	1	PLATE AS-BRUSH	
	8A	1	**6T-0371**	1	INSULATOR	
	8B	1	**5P-6298**	12	SCREW-MACHINE (10-32X0.5-IN)	
		1	**9F-5599**	12	LOCKWASHER	
	8C	1	**7F-3525**	6	WASHER-BUSHING (0.207X0.39X0.09-IN THK)	
	8D	1	**6T-0372**	1	PLATE	
	8E	1	**3T-4709**	3	PLATE	
	8F	1	**2L-6679**	3	PLATE-INSULATOR	
	8G	1	**3T-4710**	3	PLATE	
	8H	1	**6T-0363**	6	HOLDER AS-BRUSH (STARTING MOTOR)	
					(EACH INCLUDES)	
	8J	1	**3T-9494**	1	SPRING	
	9	1	**1T-0808**	2	WASHER (0.516X0.812X0.09-IN THK)	
	10	1	**3T-3422**	1	WIRE AS (STARTING MOTOR)	
	11	1	**2J-8163**	2	SEAL-O-RING	
	12	1	**7X-3373**	1	BOLT (5/16-18X0.88-IN)	
	13	1	**3T-3434**	6	PLUG	
	14	1	**5J-5314**	5	BOLT (5/16-18X1.5-IN)	
	15	1	**3L-3380**	1	BUSHING-TERMINAL	
	16	1	**036-9821**	1	WASHER	
	17	1	**4M-1828**	1	RETAINER-SPRING	
	18	1	**306-3998**	1	BOOT-RUBBER	
	19	1	**9M-7609**	1	SPRING (SHIFT LEVER)	
	20	1	**4M-1827**	1	RETAINER-SPRING	
	21	1	**8C-3089**	1	SEAL-O-RING	
	22	1	**4M-1853**	1	LEVER AS-SHIFT	
	23	1	**5M-3034**	1	LOCKNUT (5/16-24-THD)	
	24	1	**7L-2894**	4	GASKET	
	25	1	**4M-1831**	4	PLUG-LEVER HOUSING	
	26	1	**4M-1854**	1	SHAFT-LEVER	
	27	1	**1H-1023**	1	SEAL-O-RING	
	28	1	**2D-6392**	1	SEAL-O-RING	
	29	1	**7T-3974**	1	HOUSING AS-DRIVE	
	30	1	**6N-3826**	1	DRIVE AS-MOTOR	
	31	1	**2H-3429**	2	RING-RETAINING	
	32	1	**6V-1322**	4	BOLT (1/4-20X0.375-IN)	
	33	1	**8T-4205**	4	WASHER-HARD (7.2X14.5X2-MM THK)	
	34	1	**6N-3279**	1	INSULATOR	
	35	1	**0S-1597**	13	BOLT (1/4-28X1-IN)	
	36	1	**1M-9971**	1	SPACER (0.835X1.72X0.188-IN THK)	
	37	1	**1H-2629**	3	STRIP-INSULATION	
	38	1	**7M-0324**	1	COIL AS-FIELD	
	39	1	**3R-8797**	12	SCREW & WASHER AS (3/8-24X0.72-IN)	
	40	1	**7F-3488**	6	SHOE-POLE	

237-1962 STARTING MOTOR GP-ELECTRIC *(contd.)* i03630207

NOTE	REF NO	GRAPHIC REF	PART NUMBER	QTY	PART NAME 1 2 3 4 5 6 (PRODUCT LEVEL)	SEE PAGE
	41	1	**7M-8651**	1	ARMATURE AS	
	42	1	**7M-0325**	1	INSULATOR	
	43	1	**3T-9524**	6	BRUSH AS	
	44	1	**3N-3763**	1	KIT-TERMINAL (STARTING MOTOR)	
					(INCLUDES BUSHINGS & WASHERS)	
	45	1	**125-6537**	1	INSULATOR	
	46	1	**3R-8801**	1	CLAMP	
	47	1	**8F-1434**	2	LOCKWASHER	
	48	1	**6V-8188**	6	NUT (1/2-13-THD)	
	49	1	**7X-0562**	6	WASHER-HARD (13.5X19X0.8-MM THK)	
	50	1	**4B-2049**	6	NUT (10-32-THD)	
	51	1	**8T-0328**	10	WASHER-HARD (5.5X10X1-MM THK)	
	52	1	**3T-9494**	6	SPRING (STARTING MOTOR)	
	53	1	**3E-7771**	1	HOUSING AS (STARTING MOTOR)	
	54	1	**9G-4101**	1	BUSHING-END	
	55	1	**3T-3424**	3	PLUG-FELT	
	56	1	**3T-3423**	3	CUP	
	57	1	**1M-9968**	1	BUSHING	
	58	1	**2F-6678**	1	SEAL-LIP TYPE	
	59	1	**4L-2729**	1	WASHER (0.844X1.9X0.188-IN THK)	
	60	1	**4M-1896**	1	BUSHING-TERMINAL	
	61	1	**045-4065**	4	SCREW-MACHINE (10-32X0.75-IN)	
	62	1	**125-6535**	1	COVER-STARTING MOTOR	
	63	1	**7T-9123**	1	GASKET-PLATE	
	64	1	**318-2082**	1	SOLENOID AS-STARTING MOTOR (24-VOLT)	
	65	1	**125-6536**	1	TERMINAL AS	

237-1962 STARTING MOTOR GP-ELECTRIC *(contd.)* i03630207

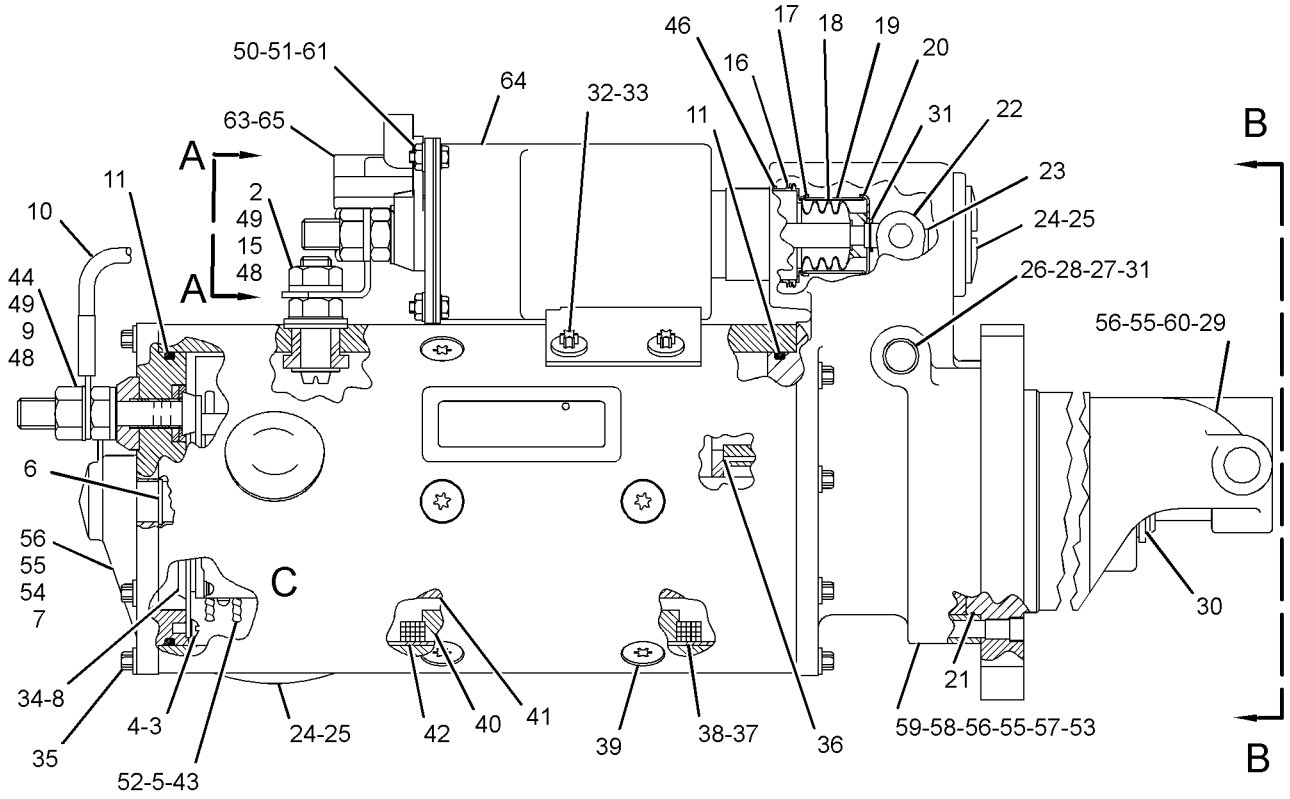

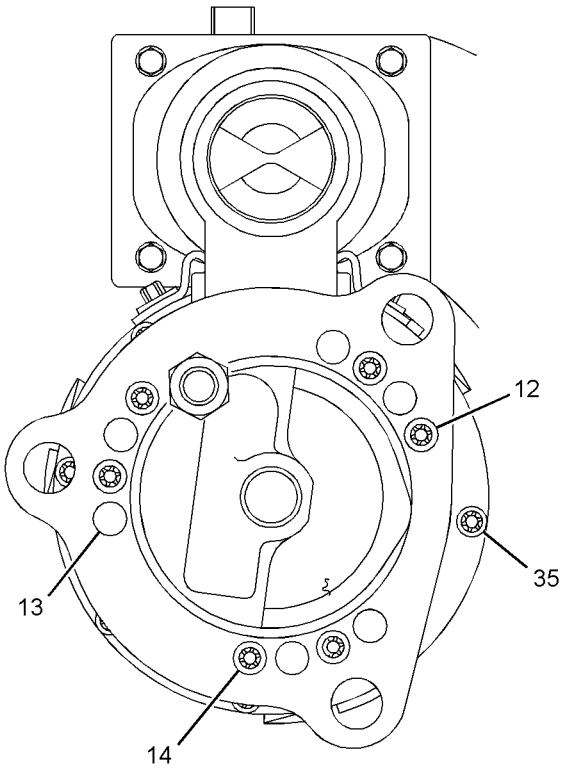

VIEW B-B

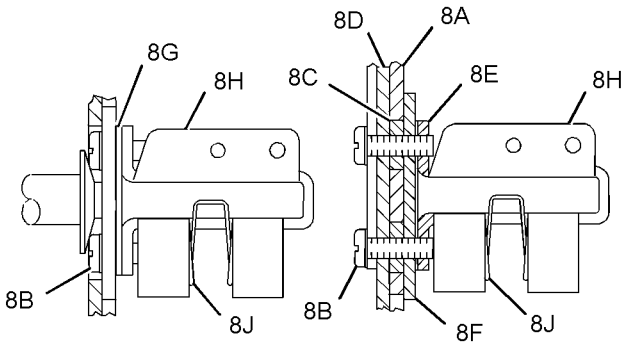

VIEW OF AREA C

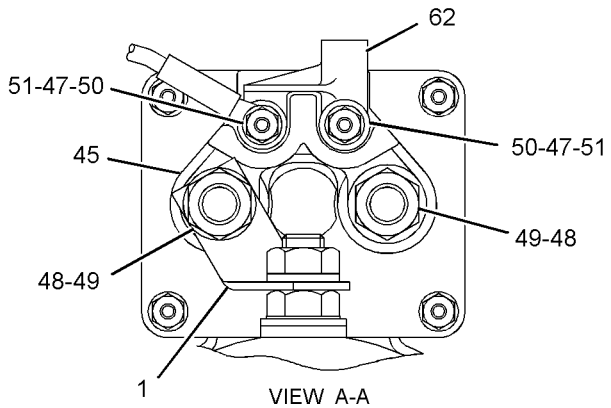

VIEW A-A

GRAPHIC #1 **<END>** g01453239

7N-0719 SWITCH GP-DISCONNECT–BATTERY

S/N: B6H1-UP; JLP1-UP

PART OF 231-1756 PANEL GP-CIRCUIT BREAKER

SMCS-1411 **i01087971**

NOTE	REF NO	GRAPHIC REF	PART NUMBER	QTY	PART NAME 1 2 3 4 5 6 (PRODUCT LEVEL)	SEE PAGE
	1	1	**8H-5306**	1	KEY (BATTERY DISCONNECT)	
	2	1	**8H-5303**	1	NUT (3/4-16-THD)	
	3	1	**2H-3922**	1	LOCKWASHER	
	4	1	**7F-7259**	4	LOCKWASHER	
	5	1	**6F-7045**	4	NUT-FULL (3/8-24-THD)	

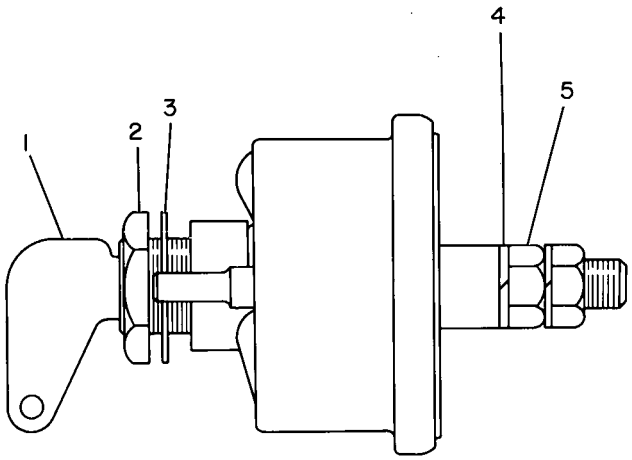

GRAPHIC #1 **<END>** g00136161

125-1302 SWITCH GP-MAGNETIC–START RELAY

S/N: B6H1-UP; JLP1-UP
24-VOLT
PART OF 231-1756 PANEL GP-CIRCUIT BREAKER

SMCS-7499 **i03546076**

NOTE	REF NO	GRAPHIC REF	PART NUMBER	QTY	PART NAME 1 2 3 4 5 6 (PRODUCT LEVEL)	SEE PAGE
	1	1	**102-8802**	1	KIT-RECEPTACLE (2-PIN)	
					(INCLUDES RECEPTACLE AS & WEDGE)	
	2	1	**186-3735**	2	PIN-CONNECTOR (16-GA TO 18-GA)	
	3	1	**1H-3338**	2	LOCKWASHER (EXTERNAL TOOTH)	
	4	1	**012-0380**	2	LOCKWASHER (SPLIT)	
M	5	1	**5C-2890**	2	NUT (M6X1-THD)	
BE	6	1	**9X-1813**		SLEEVE	

B-USE AS REQUIRED
E-ORDER BY THE CENTIMETER
M-METRIC PART

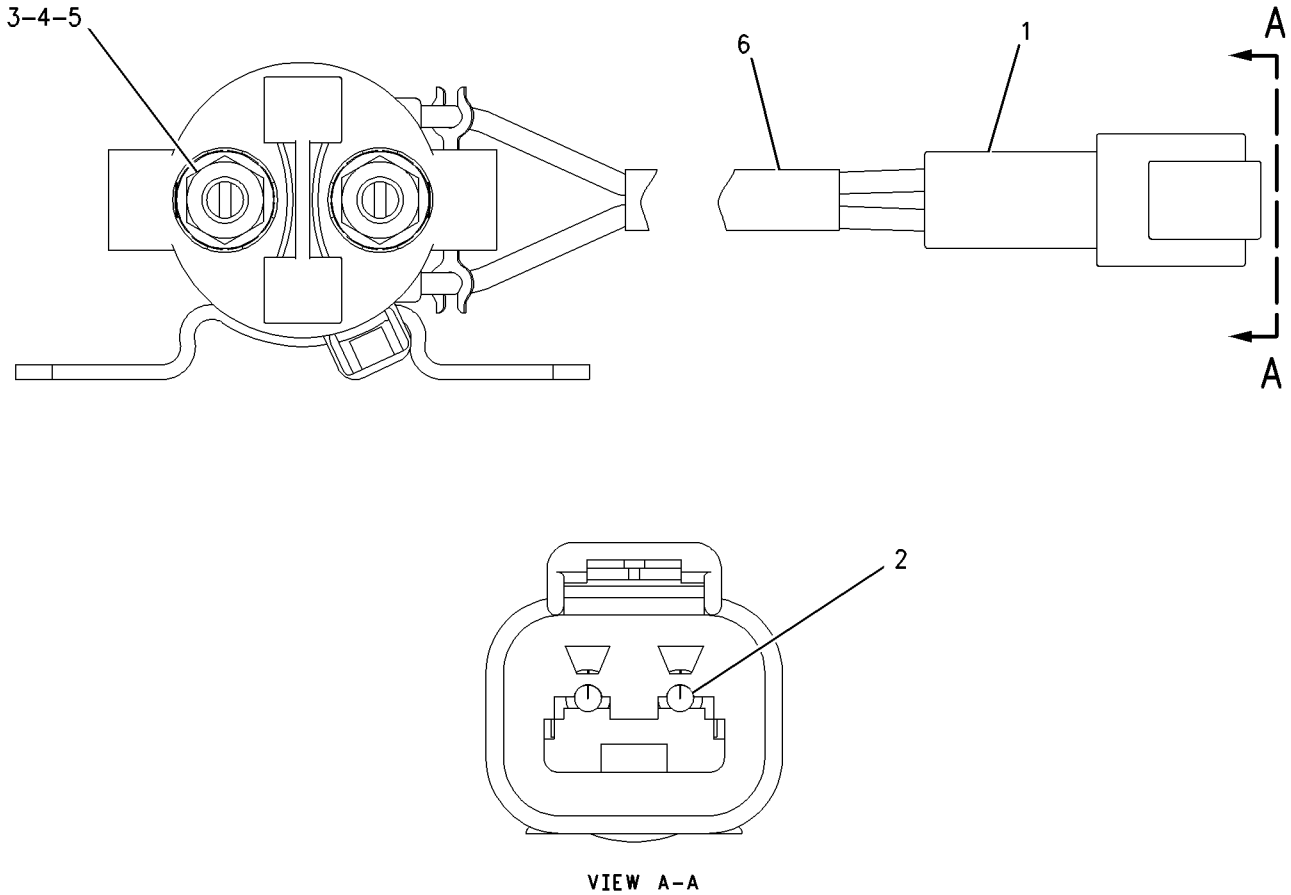

VIEW A–A

GRAPHIC #1 **<END>** g00987986

209-5582 SWITCH GP-MAGNETIC

S/N: THX1-UP

PART OF 269-3410 WIRING GP-HEATER

SMCS-7499 **i03753269**

NOTE	REF NO	GRAPHIC REF	PART NUMBER	QTY	PART NAME 1 2 3 4 5 6 (PRODUCT LEVEL)	SEE PAGE
	1	1	**102-8802**	1	KIT-RECEPTACLE (2-PIN)	
					(INCLUDES RECEPTACLE AS & WEDGE)	
	2	1	**8T-8729**	2	PIN-CONNECTOR (16-GA TO 18-GA)	
	3	1	**3F-9556**	2	LOCKWASHER	
	4	1	**6V-8186**	2	NUT-FULL (5/16-24-THD)	
	5	1	**6V-8378**	2	NUT (10-32-THD)	
	6	1	**8F-1434**	2	LOCKWASHER	

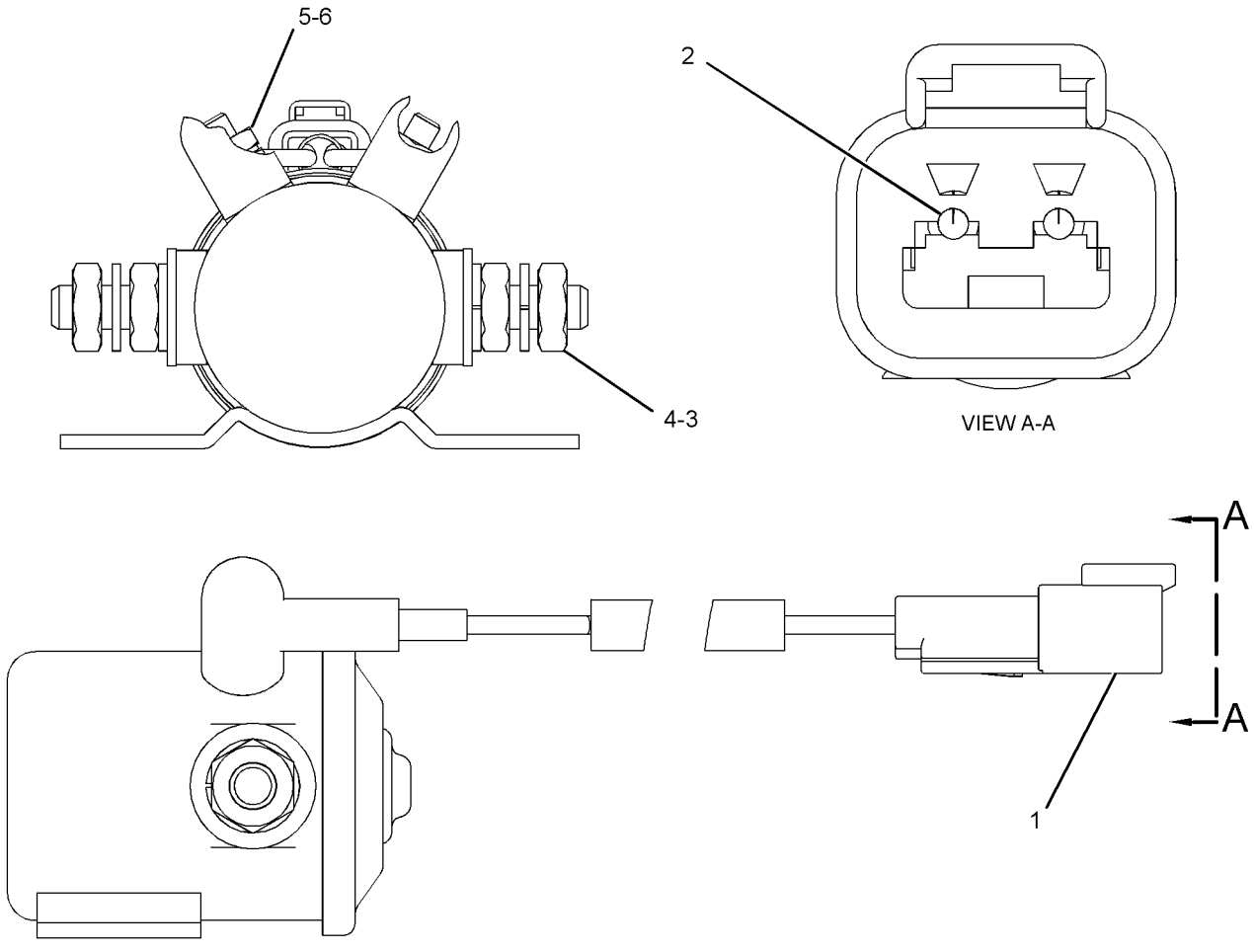

GRAPHIC #1 **<END>** g01279452

234-6613 SWITCH GP-POSITION–HYDRAULIC LOCKOUT

S/N: B6H1-UP; JLP1-UP

PART OF 245-7923, 259-7349 CONSOLE GP-OPERATOR

SMCS-1408, 1435 **i02489984**

NOTE	REF NO	GRAPHIC REF	PART NUMBER	QTY	PART NAME 1 2 3 4 5 6 (PRODUCT LEVEL)	SEE PAGE
	1	1	**3S-2093**	1	STRAP-CABLE	
	2	1	**4I-3038**	2	WASHER (3.3X8X0.5-MM THK)	
	3	1	**111-4799**	1	SWITCH AS-LIMIT (HYDRAULIC LOCKOUT)	
		1	**102-8803**	1	KIT-RECEPTACLE (3-PIN)	
					(INCLUDES RECEPTACLE AS & WEDGE)	
		1	**186-3735**		PIN-CONNECTOR (16-GA TO 18-GA)	
D		1	**5P-5998**		TUBE (.25-M)	
M	4	1	**185-8286**	2	SCREW-MACHINE (M4X0.7X8-MM)	
	5	1	**234-6615**	1	KNOB	
	6	1	**087-4683**	2	LOCKWASHER	
M	7	1	**120-9027**	2	SCREW-PAN HEAD (M3X0.5X16-MM)	

D-ORDER BY THE METER
M-METRIC PART

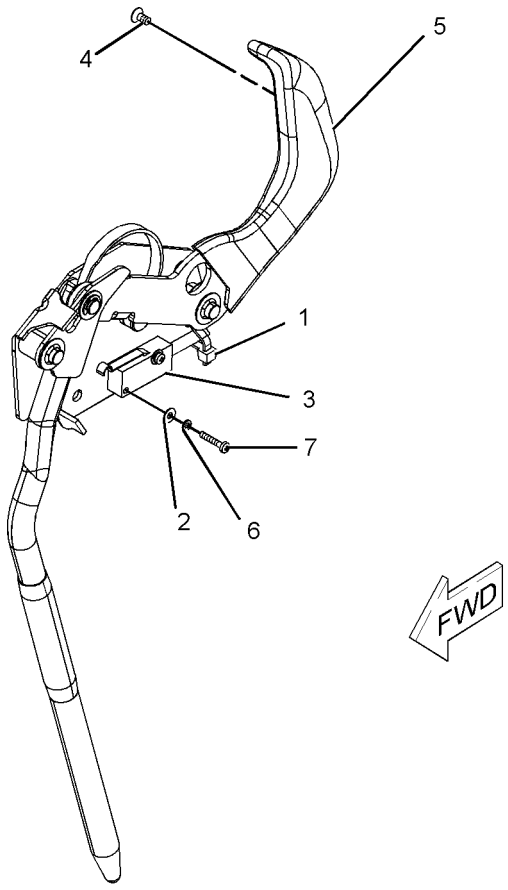

GRAPHIC #1 **<END>** g01096293

212-2768 SWITCH GP-PRESSURE–FUEL FILTER

S/N: B6H1-UP; JLP1-UP
PART OF 259-3918 LINES GP-FUEL
FIELD REPLACEMENT ORDER 258-0883–PAGE 339
AN ATTACHMENT

SMCS-1435 **i02490326**

NOTE	REF NO	GRAPHIC REF	PART NUMBER	QTY	PART NAME 1 2 3 4 5 6 (PRODUCT LEVEL)	SEE PAGE
	1	1	**102-8802**	1	KIT-RECEPTACLE (2-PIN)	
					(INCLUDES RECEPTACLE AS AND WEDGE)	
	2	1	**3E-3365**	1	WEDGE-RECEPTACLE LOCK (2-PIN)	
	3	1	**186-3735**	2	PIN-CONNECTOR (16-GA TO 18-GA)	
BE	4	1	**9X-1813**		SLEEVE	
	5	1	**6V-4589**	1	SEAL-O-RING	
	6	1	**7L-9061**	1	SEAL-O-RING	

B-USE AS REQUIRED
E-ORDER BY THE CENTIMETER

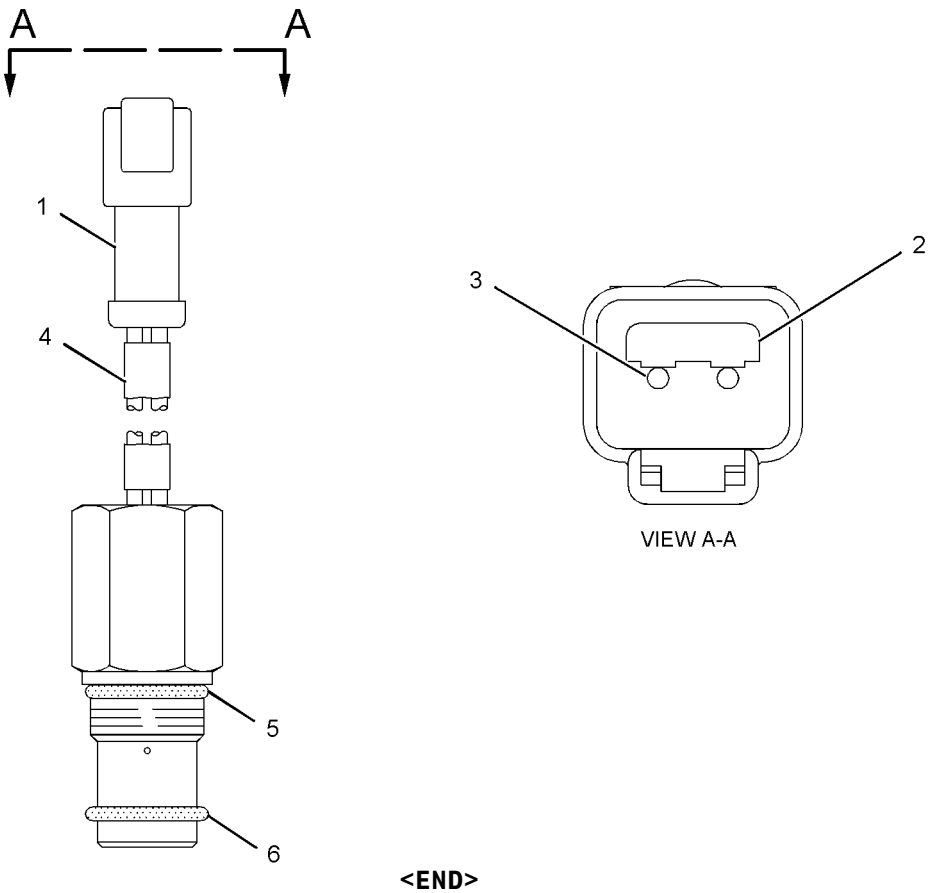

GRAPHIC #1 **<END>** g01072091

258-0883 SWITCH GP-PRESSURE–FUEL FILTER

S/N: B6H1-UP; JLP1-UP
PART OF 237-8752, 259-3918, 343-2392 LINES GP-FUEL
FIELD REPLACEMENT FOR 212-2768–PAGE 338
ALSO AN ATTACHMENT

SMCS-1435 **i03525581**

NOTE	REF NO	GRAPHIC REF	PART NUMBER	QTY	PART NAME 1 2 3 4 5 6 (PRODUCT LEVEL)	SEE PAGE
	1	1	**102-8802**	1	KIT-RECEPTACLE (2-PIN)	
					(INCLUDES RECEPTACLE AS & WEDGE)	
	2	1	**9X-7737**	1	SEAL-O-RING	
	3	1	**186-3735**	2	PIN-CONNECTOR (16-GA TO 18-GA)	
E	4	1	**9X-1813**		SLEEVE (14-CM)	
	5	1	**6V-4589**	1	SEAL-O-RING	

E-ORDER BY THE CENTIMETER

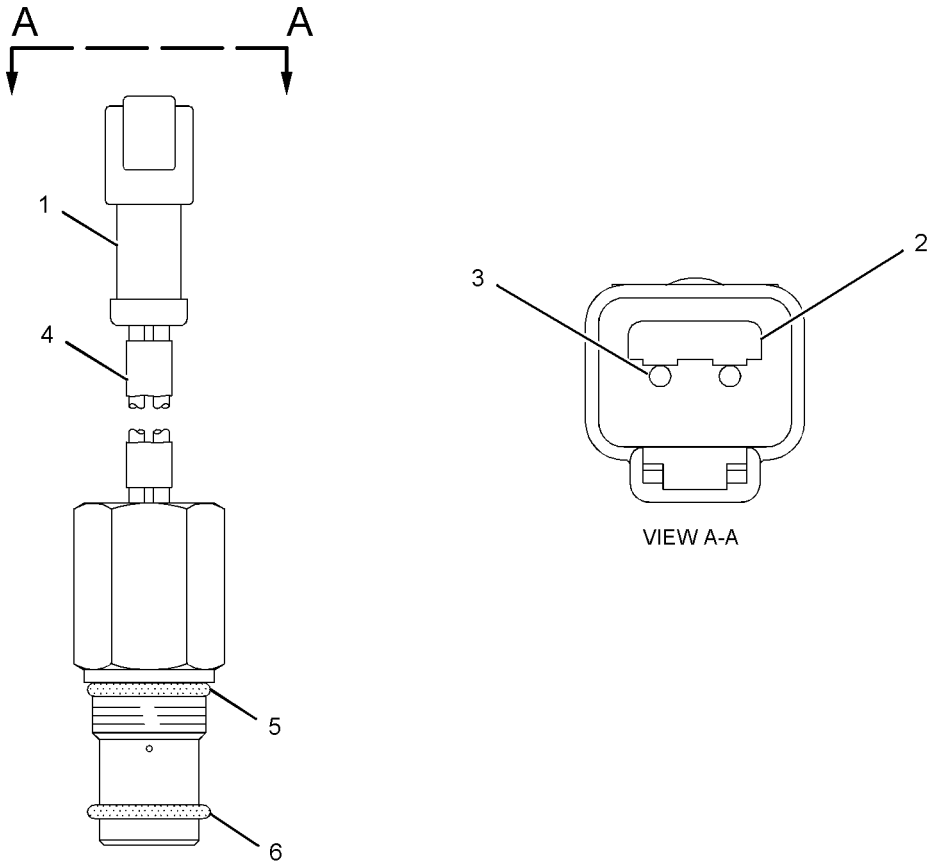

GRAPHIC #1 **<END>** g01072091

238-1594 SWITCH GP-PUSH BUTTON–REFUELING PUMP, START

S/N: B6H1-UP; JLP1-UP
PART OF 238-1570 WIRING GP-REFUELING PUMP
AN ATTACHMENT

SMCS-1435, 7332 **i03601625**

NOTE	REF NO	GRAPHIC REF	PART NUMBER	QTY	PART NAME 1 2 3 4 5 6 (PRODUCT LEVEL)	SEE PAGE
	1	1	**6T-9442**	1	SWITCH GP-PUSHBUTTON (REFUELING PUMP, START)	
		1	**1S-0812**	2	SCREW-TAPPING	
		1	**3K-0835**	1	NUT (5/8-24-THD)	
		1	**6F-0253**	1	LOCKWASHER	
		1	**8T-8748**	1	ADAPTER-MOUNT	
	2	1	**238-1595**	1	HARNESS AS-SWITCH (REFUELING PUMP, START)	
E	3	1	**125-7875**		TUBE-HEAT SHRINK (7.44-MM DIA) (6-CM)	

E-ORDER BY THE CENTIMETER

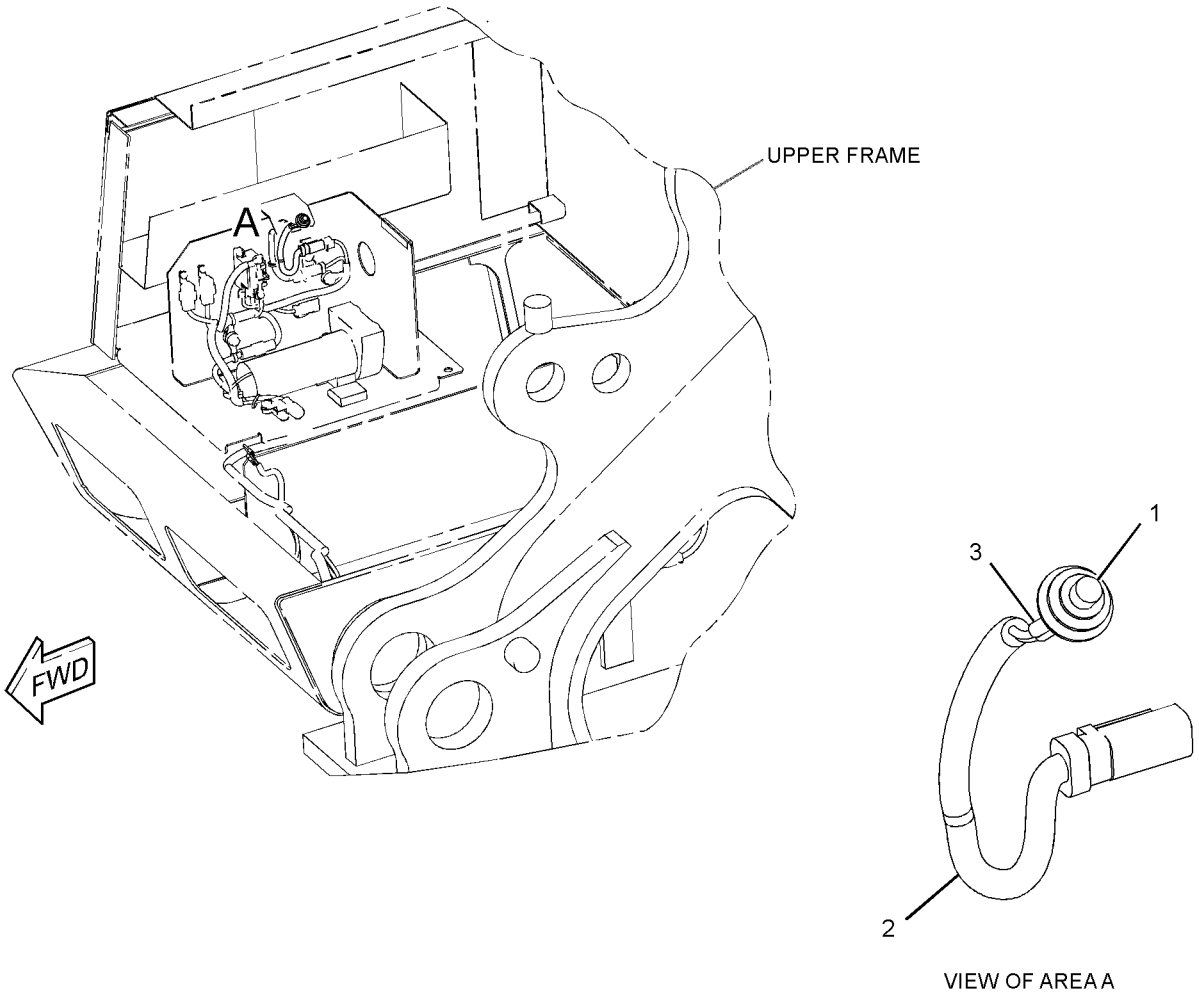

GRAPHIC #1 **<END>** g01560235

238-1596 SWITCH GP-PUSH BUTTON–REFUELING PUMP, STOP

S/N: B6H1-UP; JLP1-UP
PART OF 238-1570 WIRING GP-REFUELING PUMP
AN ATTACHMENT

SMCS-1435, 7332 **i03601626**

NOTE	REF NO	GRAPHIC REF	PART NUMBER	QTY	PART NAME 1 2 3 4 5 6 (PRODUCT LEVEL)	SEE PAGE
	1	1	*9X-4184*	1	SWITCH GP-PUSH BUTTON (REFUELING PUMP, STOP)	
		1	**1S-0812**	2	SCREW-TAPPING	
		1	**3K-0835**	1	NUT (5/8-24-THD)	
		1	**6F-0253**	1	LOCKWASHER	
		1	**8T-8748**	1	ADAPTER-MOUNT	
	2	1	**238-1597**	1	HARNESS AS-SWITCH (REFUELING PUMP, STOP)	
E	3	1	**125-7875**		TUBE-HEAT SHRINK (7.44-MM DIA) (6-CM)	

E-ORDER BY THE CENTIMETER

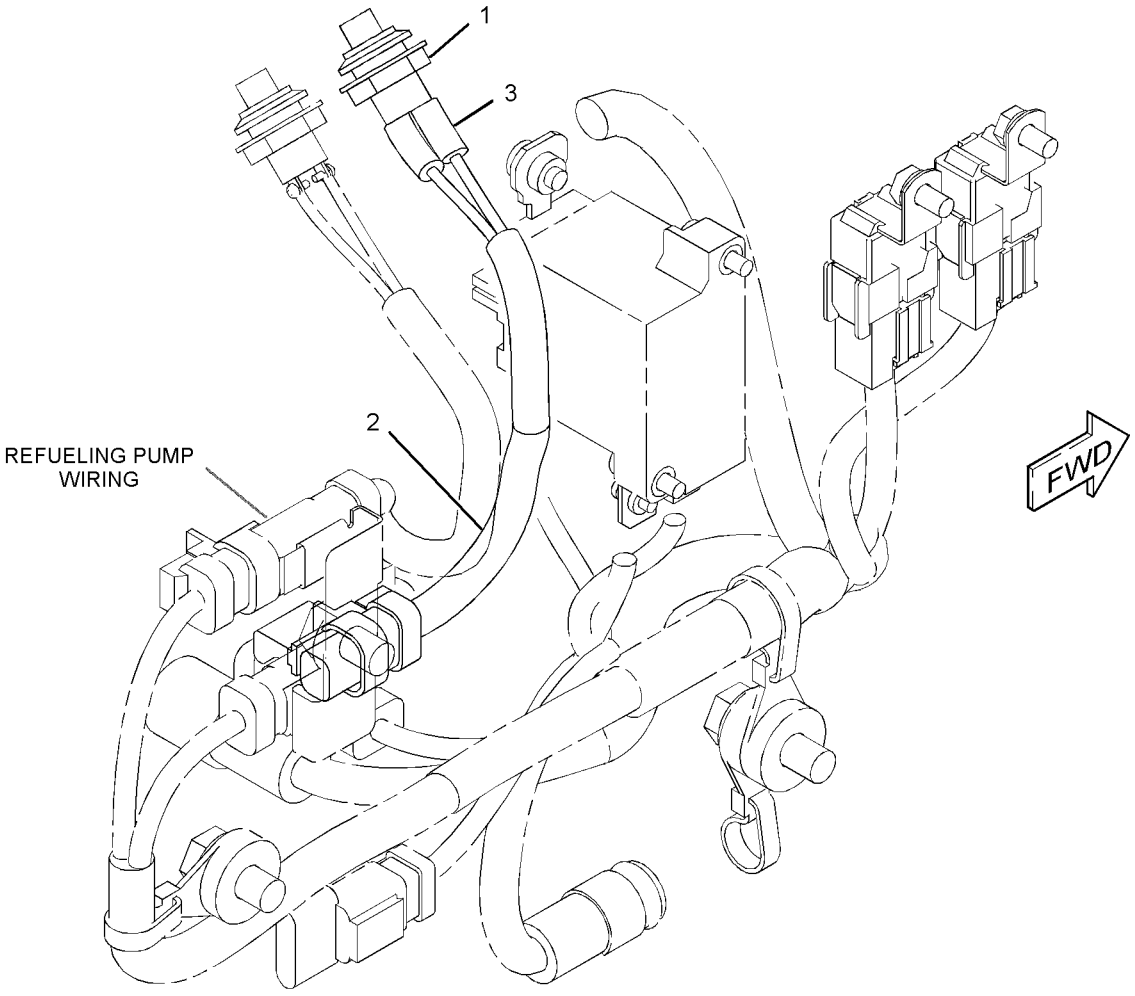

GRAPHIC #1 **<END>** g01560319

5C-6108 SWITCH GP-REFUELING—FUEL TANK SHUTOFF

S/N: B6H1-UP; JLP1-UP
PART OF 229-1785 PUMP GP-REFUELING
AN ATTACHMENT

SMCS-1295 **i03018640**

NOTE	REF NO	GRAPHIC REF	PART NUMBER	QTY	PART NAME 1 2 3 4 5 6 (PRODUCT LEVEL)	SEE PAGE
	1	1	**8J-9236**	1	SWITCH (LIQUID LEVEL) (FUEL)	
	2	1	**5C-6074**	1	FITTING	
	3	1	**2S-4078**	1	SEAL-O-RING	
	4	1	**3D-2824**	1	SEAL-O-RING	
	5	1	**8S-1815**	1	PLUG	
	6	1	**8S-1814**	2	INSULATOR	
	7	1	**4B-2049**	2	NUT (10-32-THD)	
	8	1	**8S-1812**	1	TERMINAL	
	9	1	**9B-4499**	1	SCREW-MACHINE (8-36X0.375-IN)	
	10	1	**7N-9194**	1	RING-TERMINAL (18-GA TO 22-GA)	
BE	11	1	**7X-3159**		TUBE-HEAT SHRINK	

B-USE AS REQUIRED
E-ORDER BY THE CENTIMETER

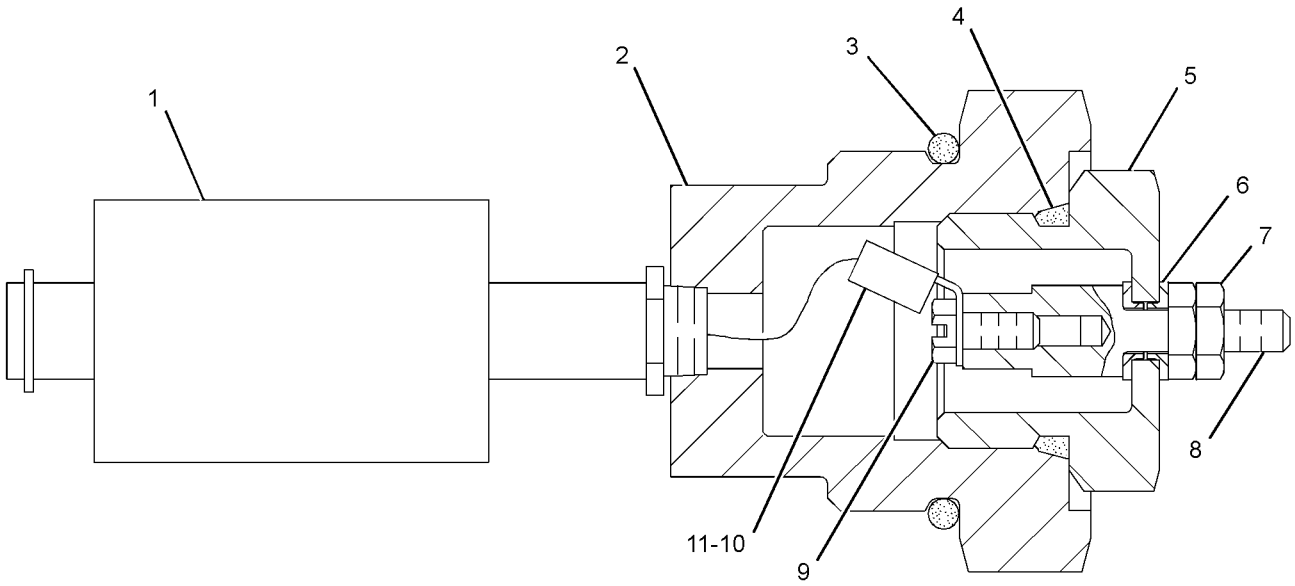

GRAPHIC #1 **<END>** g01420403

106-0107 SWITCH GP-ROTARY–THROTTLE POSITION

S/N: B6H1-UP; JLP1-UP

PART OF 251-0542 PANEL GP-SWITCH

SMCS-7332 **i02305918**

NOTE	REF NO	GRAPHIC REF	PART NUMBER	QTY	PART NAME 1 2 3 4 5 6 (PRODUCT LEVEL)	SEE PAGE
	1	1	**102-8805**	1	KIT-RECEPTACLE (6-PIN)	
					(INCLUDES RECEPTACLE AS & WEDGE)	
	2	1	**3E-3383**	1	WEDGE-RECEPTACLE LOCK (6-PIN)	
	3	1	**8T-8737**	1	PLUG-SEAL	
	4	1	**144-1636**	5	PIN-CONNECTOR (14-GA TO 18-GA)	
M	5	1	**7Y-5458**	1	NUT (M12X1-THD)	
	6	1	**7Y-5464**	1	WASHER (12.2X15.4X0.5-MM THK)	
	7	1	**106-0210**	1	SEAL	

M-METRIC PART

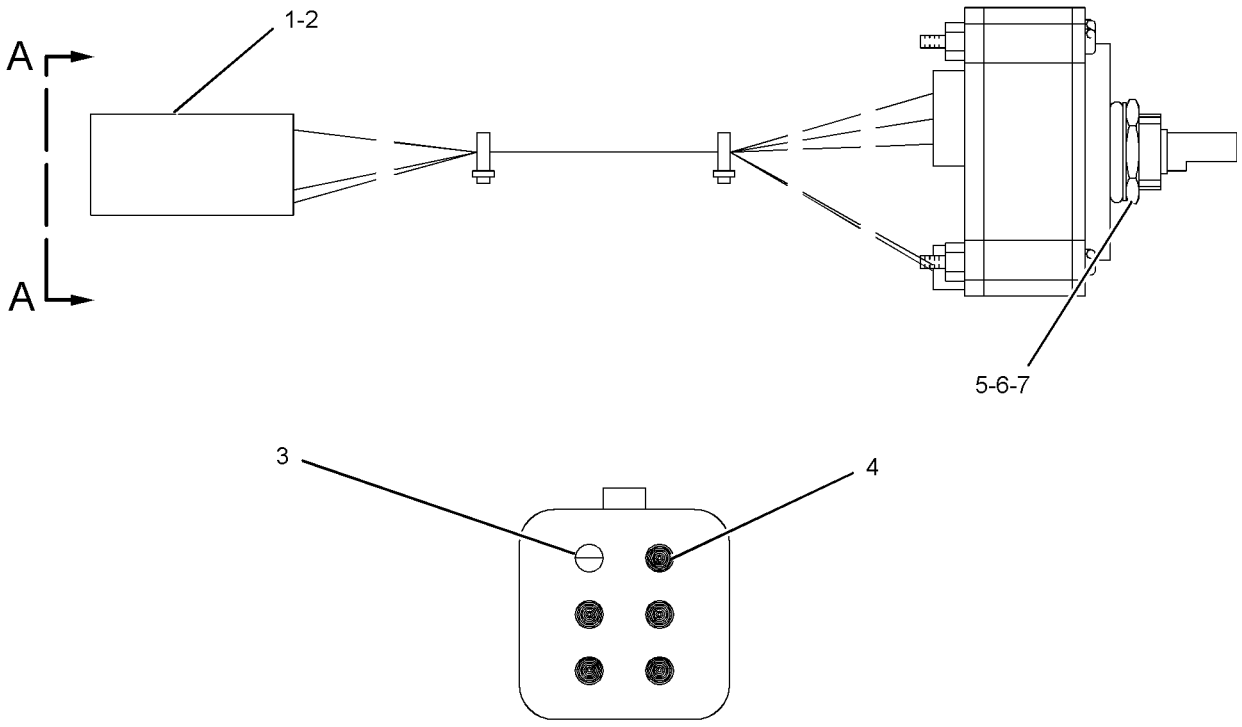

VIEW A-A

GRAPHIC #1 **<END>** g01098706

9G-7641 SWITCH GP-START–ENGINE, KEY

S/N: B6H1-UP; JLP1-UP

PART OF 251-0542 PANEL GP-SWITCH

SMCS-1416 **i03439600**

NOTE	REF NO	GRAPHIC REF	PART NUMBER	QTY	PART NAME 1 2 3 4 5 6 (PRODUCT LEVEL)	SEE PAGE
J	1	1	*6V-3324*	1	LOCK AS-CYLINDER	
	2	1	**6V-8362**	4	SCREW-MACHINE (8-32X0.31-IN)	
	3	1	**9B-7233**	4	LOCKWASHER	
	4	1	**7T-6799**	1	NUT-MOUNTING (1-32-THD)	

J-REQUIRES CORPORATE KEY

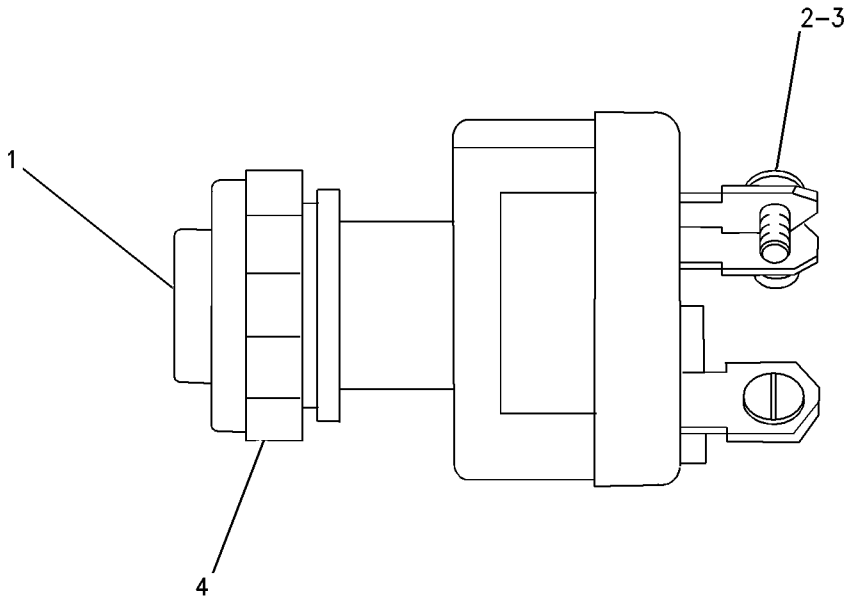

GRAPHIC #1 **<END>** g00706809

165-5970 SWITCH GP-TOGGLE–FUEL PRIMING PUMP

S/N: B6H1-UP; JLP1-UP
PART OF 259-5062 WIRING GP-FUEL SYSTEM
AN ATTACHMENT

SMCS-7332 **i02299813**

NOTE	REF NO	GRAPHIC REF	PART NUMBER	QTY	PART NAME 1 2 3 4 5 6 (PRODUCT LEVEL)	SEE PAGE
	1	1	**6T-3631**	2	NUT-HEX (15/32-32-THD)	
	2	1	**6T-3632**	1	LOCKWASHER	
	3	1	**6T-3633**	1	RING-LOCKING	
	4	1	**102-8803**	1	KIT-RECEPTACLE (3-PIN)	
					(INCLUDES RECEPTACLE AS & WEDGE)	
	5	1	**3E-3371**	1	WEDGE-RECEPTACLE LOCK (3-PIN)	
	6	1	**186-3735**	3	PIN-CONNECTOR (16-GA TO 18-GA)	

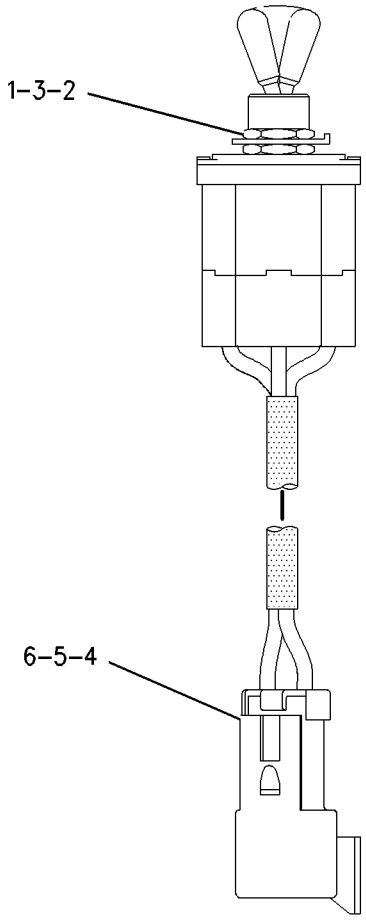

GRAPHIC #1 **<END>** g00749466

238-2478 SWITCH GP-TOGGLE–QUICK COUPLER

S/N: B6H1-UP; JLP1-UP
PART OF 238-2485 SWITCH GP-TOGGLE
AN ATTACHMENT

SMCS-7332 **i02515923**

NOTE	REF NO	GRAPHIC REF	PART NUMBER	QTY	PART NAME 1 2 3 4 5 6 (PRODUCT LEVEL)	SEE PAGE
	1	1	**7N-2353**	1	SWITCH AS-TOGGLE (QUICK COUPLER)	
	2	1	**238-2479**	1	HARNESS AS-WIRING (QUICK COUPLER SWITCH)	
		1	**7Y-3950**	2	TERMINAL-BLADE (14-GA TO 20-GA)	
		1	**7Y-3953**	1	CONNECTOR-RECEPTACLE	
		1	**3S-2093**	1	STRAP-CABLE	

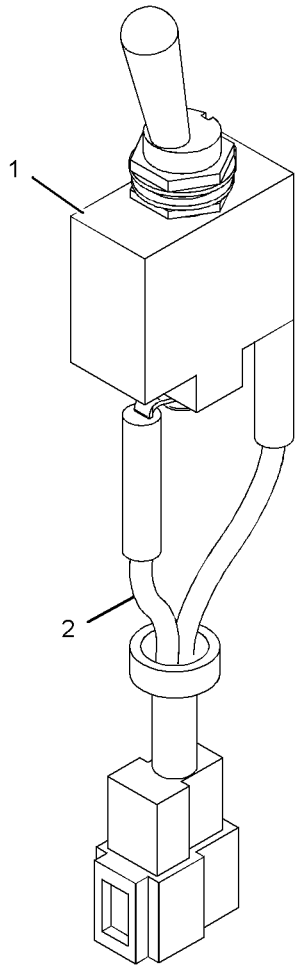

GRAPHIC #1 **<END>** g01125914

238-2485 SWITCH GP-TOGGLE–QUICK COUPLER LOCK

S/N: B6H1-UP; JLP1-UP

PART OF 237-3307 CONTROL AR-COUPLER, 279-5323 LINES GP-COUPLER AN ATTACHMENT

SMCS-7332 **i02508822**

NOTE	REF NO	GRAPHIC REF	PART NUMBER	QTY	PART NAME 1 2 3 4 5 6 (PRODUCT LEVEL)	SEE PAGE
Y	1	1	*238-2478*	1	SWITCH GP-TOGGLE (QUICK COUPLER)	346
	2	1	**259-4884**	1	BRACKET AS	
	3	1	**259-7180**	1	COVER	
M	4	1	**9X-2042**	3	SCREW-TRUSS HEAD (M6X1X12-MM)	

M-METRIC PART
Y-SEPARATE ILLUSTRATION

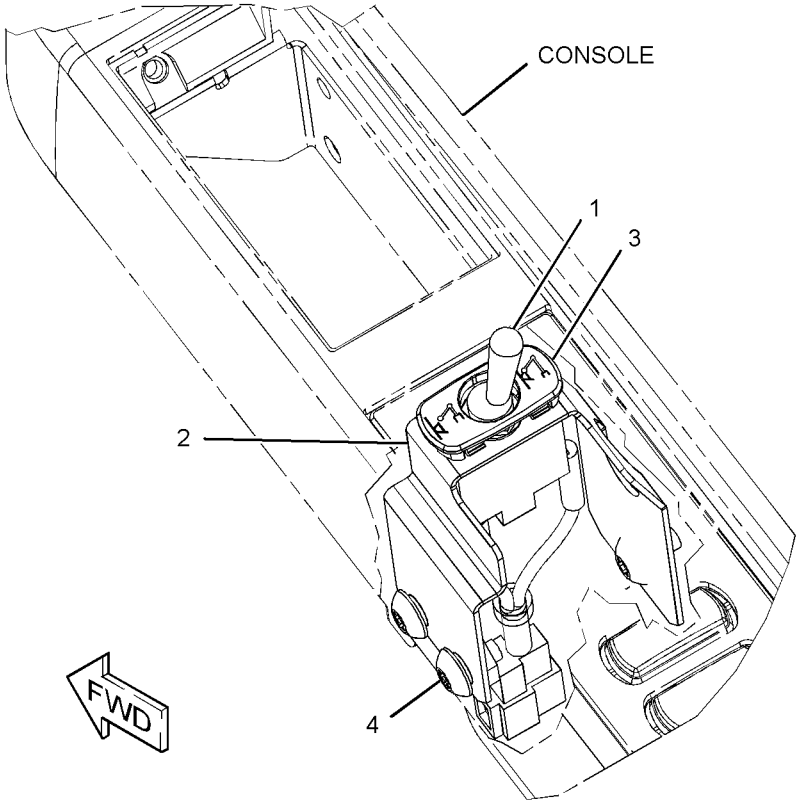

GRAPHIC #1 **<END>** g01259753

238-2208 SWITCH GP-WIPER–LOWER

S/N: B6H1-UP; JLP1-UP
PART OF 229-9086 WIPER AR-WINDOW
AN ATTACHMENT

SMCS-7305 **i03171740**

NOTE	REF NO	GRAPHIC REF	PART NUMBER	QTY	PART NAME 1 2 3 4 5 6 (PRODUCT LEVEL)	SEE PAGE
	1	1	**238-2209**	1	SWITCH AS-ROCKER (WIPER, LOWER)	
		1	**167-3542**	1	CONNECTOR-RECEPTACLE	
		1	**167-3543**	5	TERMINAL (MALE)	
	2	1	**238-2210**	1	SWITCH AS-ROCKER (LOWER WASHER)	
		1	**167-3542**	1	CONNECTOR-RECEPTACLE	
		1	**167-3543**	4	TERMINAL (MALE)	

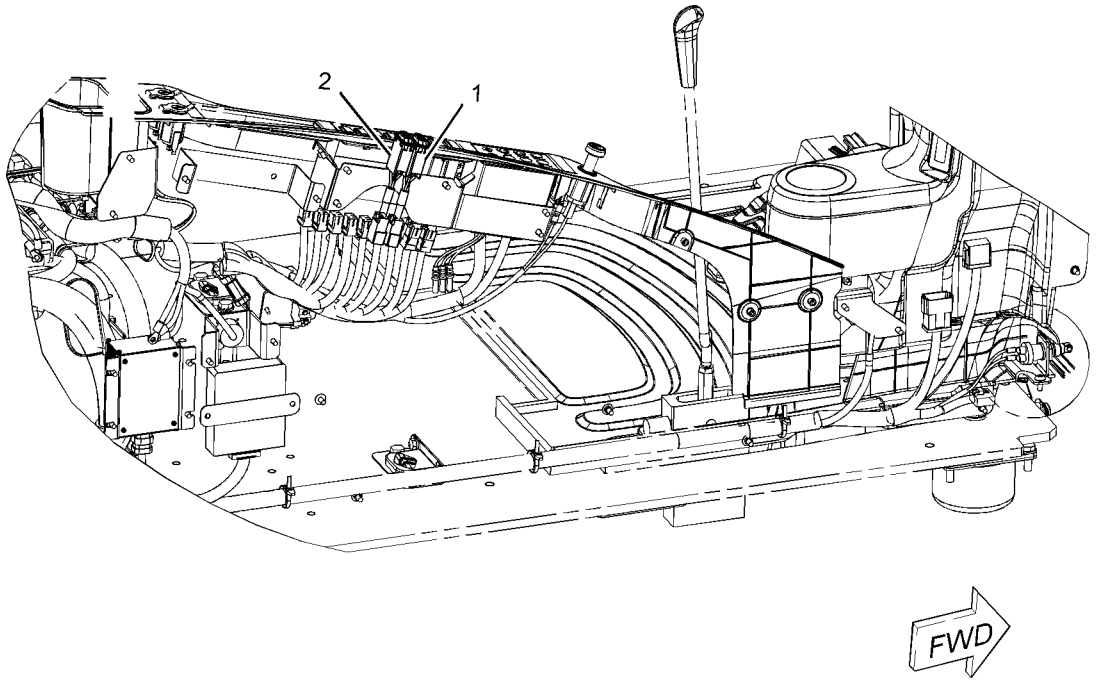

GRAPHIC #1 **<END>** g01098895

239-1134 VALVE GP-ETHER STARTING

S/N: B6H1-UP; JLP1-UP
24-VOLT
PART OF 239-6677 STARTING AID GP-ETHER
AN ATTACHMENT

SMCS-1456 **i03435882**

NOTE	REF NO	GRAPHIC REF	PART NUMBER	QTY	PART NAME 1 2 3 4 5 6 (PRODUCT LEVEL)	SEE PAGE
	1	1	**7N-9801**	1	GASKET	
	2	1	**102-8802**	1	KIT-RECEPTACLE (2-PIN)	
					(INCLUDES RECEPTACLE AS & WEDGE)	
	3	1	**186-3735**	2	PIN-CONNECTOR (16-GA TO 18-GA)	

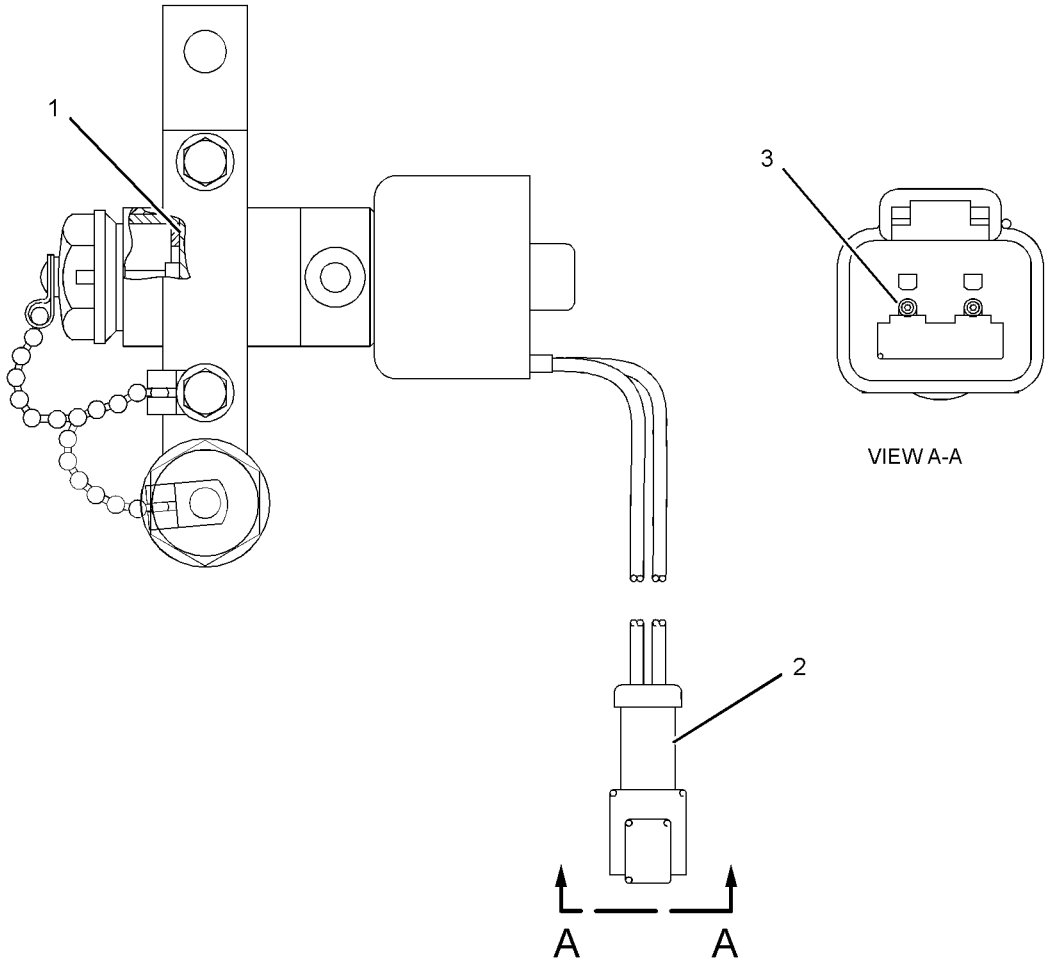

GRAPHIC #1 **<END>** g01375620

251-0621 WIRING GP-AUX START RECEPTACLE–JUMP START

S/N: B6H1-UP; JLP1-UP
PART OF 267-8840 COLD WEATHER AR
AN ATTACHMENT

SMCS-1408, 1463 **i03601967**

NOTE	REF NO	GRAPHIC REF	PART NUMBER	QTY	PART NAME 1 2 3 4 5 6 (PRODUCT LEVEL)	SEE PAGE
	1	1	**2G-1830**	1	RECEPTACLE AS (AUXILIARY START) (AUXILIARY START)	
E		1	**5P-0747**		CABLE (00-GA, BLACK) (49-CM)	
E		1	**5P-0761**		CABLE (00-GA, RED) (56-CM)	
D		1	**6V-2722**		TUBE-HEAT SHRINK (0.1-M)	
		1	**1S-7251**	2	TERMINAL-CABLE (00-GA, 1/2-IN SCREW)	
	2	1	**301-0091**	1	COVER-TERMINAL (RED)	
	3	1	**8S-2634**	1	COVER AS	
Y	4	1	*9W-0742*	1	BLOCK GP-JUNCTION (BATTERY)	262
	5	1	**231-1806**	1	BRACKET	
	6	1	**259-5127**	1	CABLE AS	
		1	**301-0091**	1	COVER-TERMINAL (RED)	
		1	**1S-7251**	2	TERMINAL-CABLE (00-GA, 1/2-IN SCREW)	
E		1	**5P-0761**		CABLE (00-GA, RED) (365-CM)	
		1	**8N-0869**	1	COVER-TERMINAL (RED)	
	7	1	**259-5128**	1	CABLE AS	
		1	**1S-7251**	1	TERMINAL-CABLE (00-GA, 1/2-IN SCREW)	
E		1	**5P-0761**		CABLE (00-GA, RED) (44-CM)	
		1	**301-0091**	1	COVER-TERMINAL (RED)	
		1	**9G-0004**	1	COVER AS-TERMINAL (RED)	
		1	**8C-5917**	1	TERMINAL AS-BATTERY (POSITIVE)	
		1	**1M-6119**	1	BOLT (5/16-18X1.375-IN)	
		1	**1M-6120**	1	NUT (5/16-18-THD)	
	8	1	**259-5206**	1	BRACKET AS	
M		1	**8T-3490**	2	NUT-WELD (M10X1.5-THD)	
M	9	1	**5C-9553**	4	BOLT (M6X1X16-MM)	
	10	1	**5P-4115**	4	WASHER-HARD (7.2X19X2-MM THK)	
	11	1	**8T-4121**	6	WASHER-HARD (11X21X2.5-MM THK)	
M	12	1	**8T-4136**	6	BOLT (M10X1.5X25-MM)	

D-ORDER BY THE METER
E-ORDER BY THE CENTIMETER
M-METRIC PART
Y-SEPARATE ILLUSTRATION

251-0621 **WIRING GP-AUX START RECEPTACLE** *(contd.)* **i03601967**

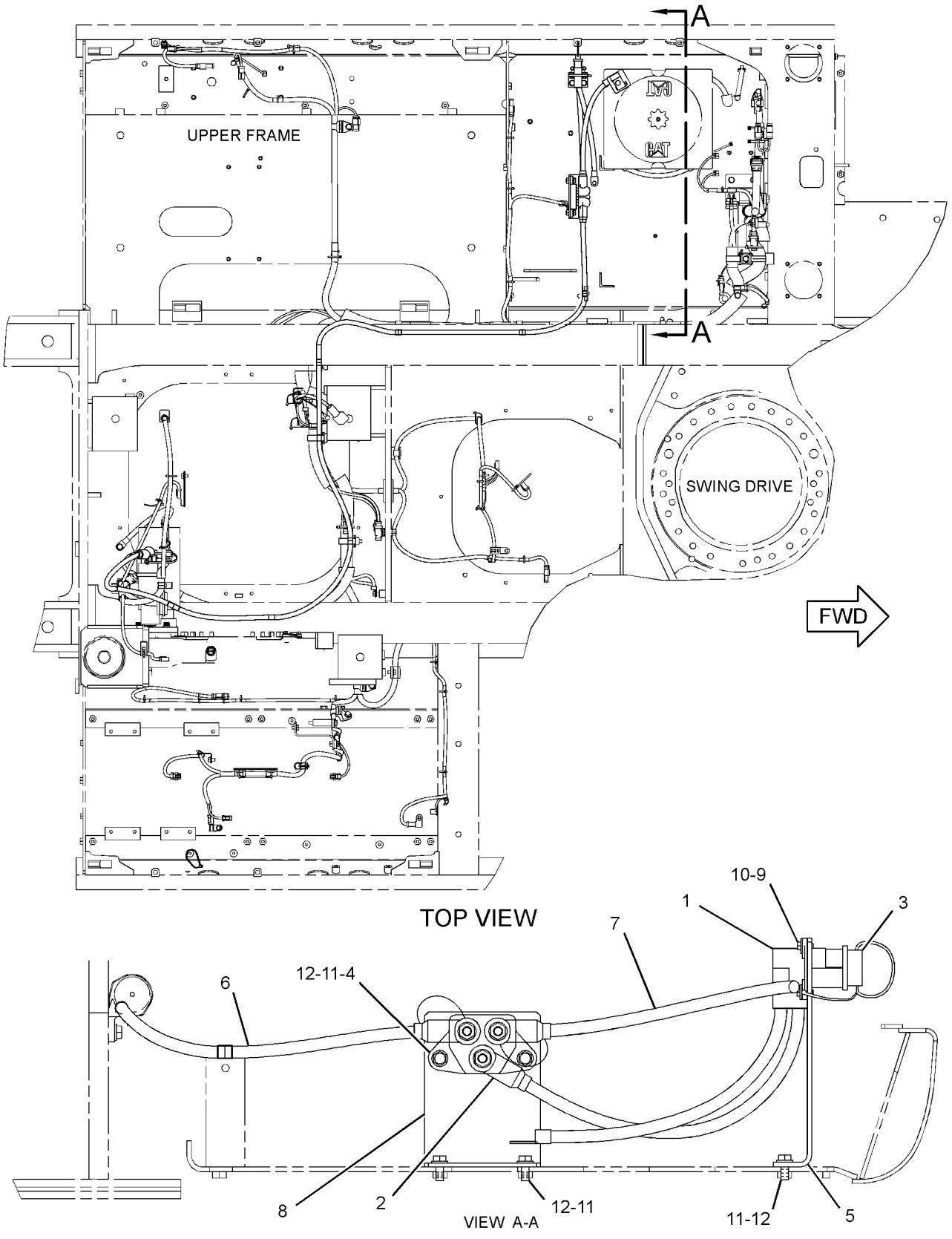

GRAPHIC #1 **<END>** g01442477

251-0623 WIRING GP-AUXILIARY CONTROL

S/N: B6H1-UP; JLP1-UP
PART OF 270-8795, 270-8796 CONTROL AR-AUXILIARY
AN ATTACHMENT

SMCS-1408 **i03602041**

NOTE	REF NO	GRAPHIC REF	PART NUMBER	QTY	PART NAME 1 2 3 4 5 6 (PRODUCT LEVEL)	SEE PAGE
	1	1,2	**3S-2093**	20	STRAP-CABLE	
H	2	1,2	**7I-2673**	2	STRAP-CABLE	
	3	1	**7K-1181**	7	STRAP-CABLE	
	4	1,2	**204-1611**	5	STRAP-CABLE	
	5	1,2	**259-5071**	2	BRACKET AS	
	6	2	**259-5075**	1	BRACKET AS	
	7	1	**267-7867**	1	BRACKET AS	
	8	1	**275-6936**	1	HARNESS AS-CONTROL	
		1	**102-8803**	1	KIT-RECEPTACLE (3-PIN)	
		1	**102-8802**	8	KIT-RECEPTACLE (2-PIN)	
					(EACH RECEPTACLE KIT INCLUDES RECEPTACLE AS & WEDGE)	
		1	**155-2270**	9	KIT-CONNECTING PLUG (2-PIN)	
		1	**155-2260**	1	KIT-CONNECTING PLUG (3-PIN)	
					(EACH PLUG KIT INCLUDES PLUG AS, WEDGE & INTERFACE SEAL)	
		1	**243-4509**	1	RECEPTACLE AS-CONNECTOR (8-PIN)	
		1	**243-4510**	1	RECEPTACLE AS-CONNECTOR (12-PIN)	
		1	**3S-2093**	4	STRAP-CABLE	
	9	1	**111-4836**	2	CLIP	
	10	1	**132-5789**	2	CLIP	
	11	1	**4P-7581**	1	CLIP	
	12	1,2	**8T-4121**	9	WASHER-HARD (11X21X2.5-MM THK)	
M	13	1	**8T-4137**	3	BOLT (M10X1.5X20-MM)	
M	14	1,2	**8T-4179**	4	BOLT (M12X1.75X20-MM)	
M	15	1,2	**8T-4191**	6	BOLT (M10X1.5X16-MM)	
	16	1,2	**8T-4223**	4	WASHER-HARD (13.5X25.5X3-MM THK)	

H-USE WITH FOOT PEDAL
M-METRIC PART

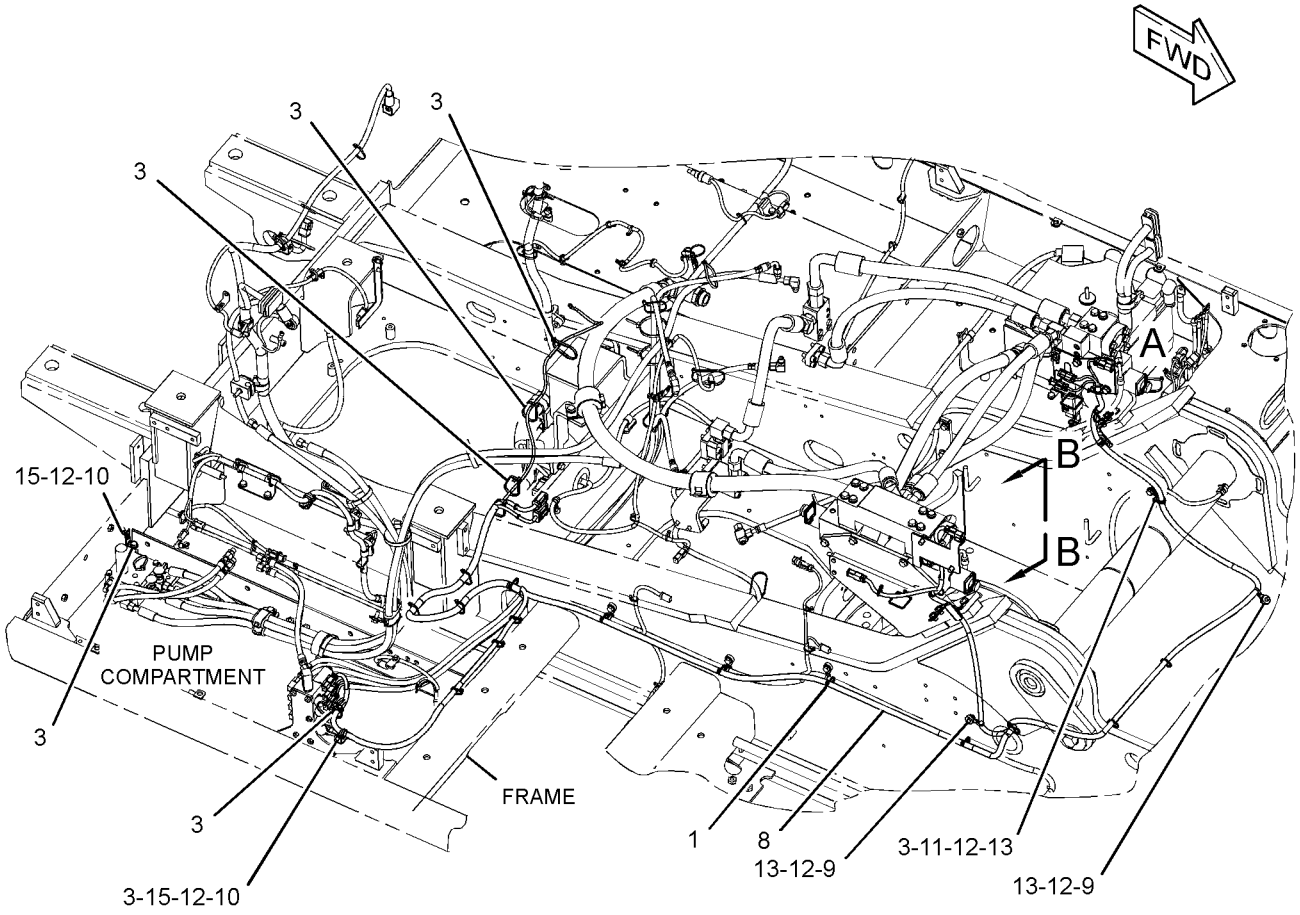

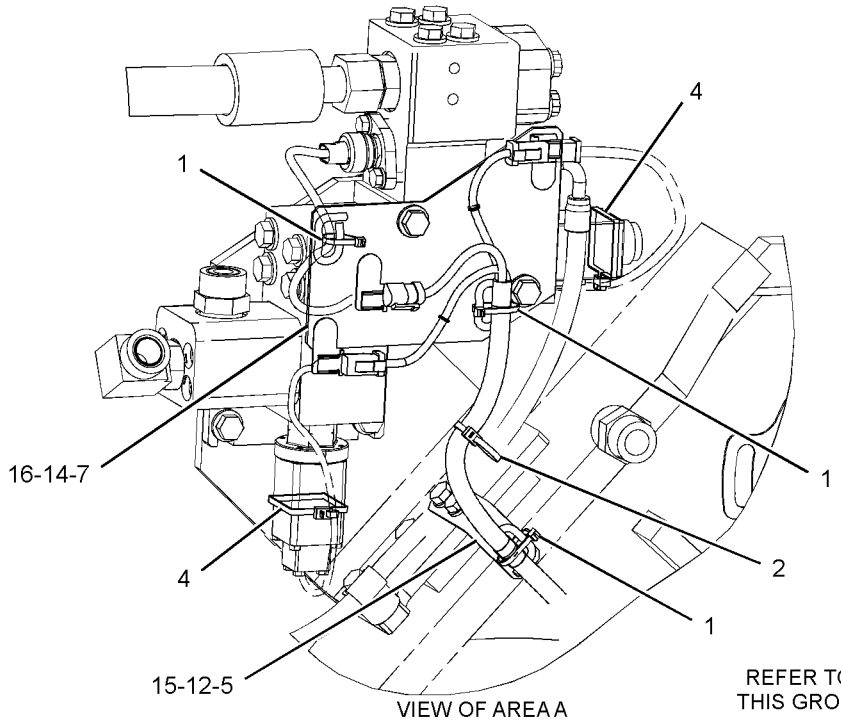

REFER TO ALL ILLUSTRATIONS OF THIS GROUP FOR AUXILIARY VIEWS

GRAPHIC #1

g01927273

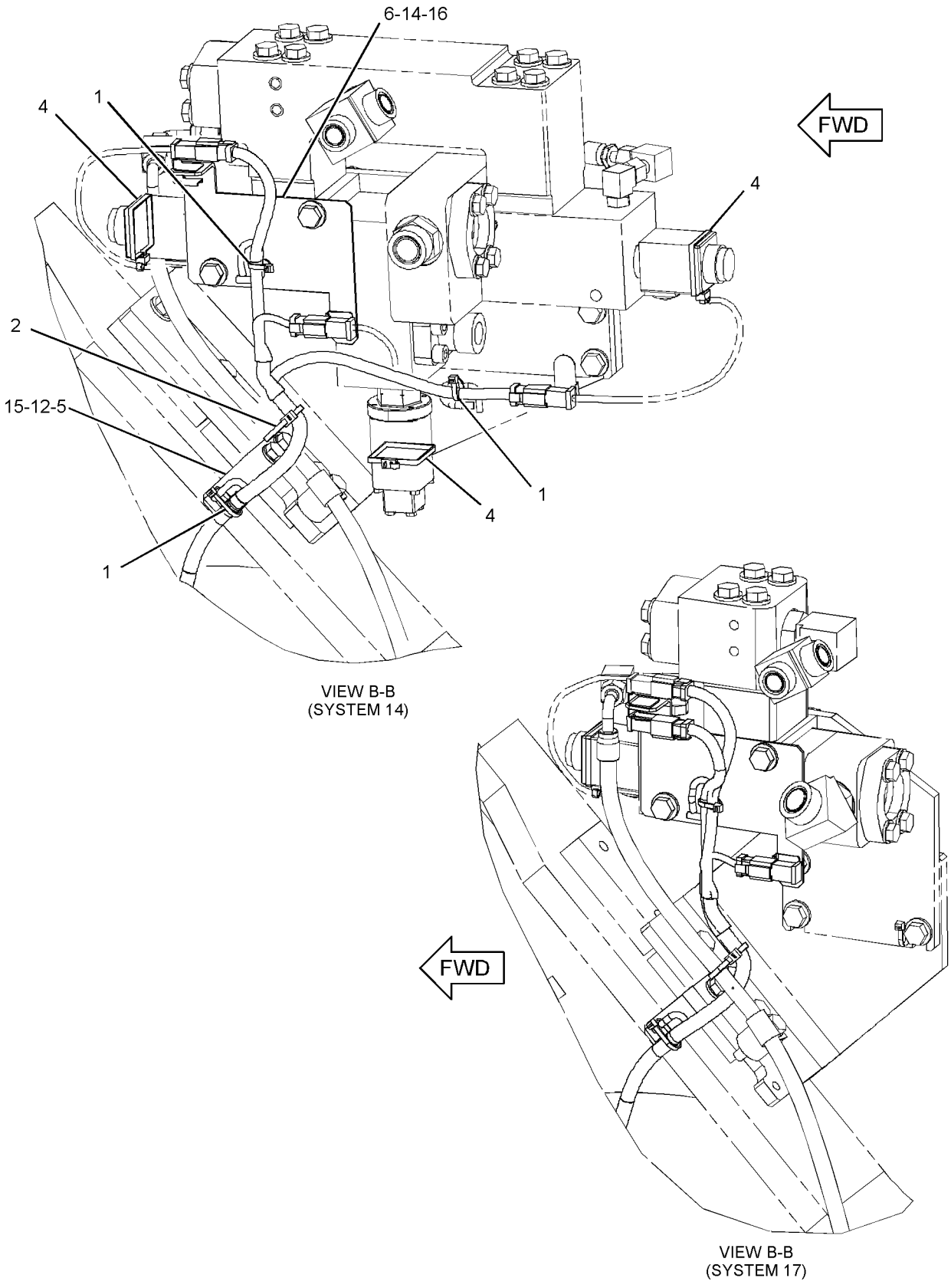

GRAPHIC #2 **<END>** g01944354

259-5340 WIRING GP-AUXILIARY CONTROL—SOLENOID

S/N: B6H1-UP; JLP1-UP

PART OF 272-9663, 272-9664, 272-9666 CONTROL AR-AUXILIARY

AN ATTACHMENT

SMCS-1408 **i02508270**

NOTE	REF NO	GRAPHIC REF	PART NUMBER	QTY	PART NAME 1 2 3 4 5 6 (PRODUCT LEVEL)	SEE PAGE
	1	1	**3S-2093**	14	STRAP-CABLE	
	2	1	**7K-1181**	11	STRAP-CABLE	
	3	1	**111-4836**	1	CLIP	
	4	1	**132-5789**	1	CLIP	
	5	1	**275-6936**	1	HARNESS AS-CONTROL	
		1	**102-8802**	8	KIT-RECEPTACLE (2-PIN)	
		1	**102-8803**	1	KIT-RECEPTACLE (3-PIN)	
					(EACH RECEPTACLE KIT INCLUDES RECEPTACLE AS & WEDGE)	
		1	**3S-2093**	4	STRAP-CABLE	
		1	**155-2260**	1	KIT-CONNECTING PLUG (3-PIN)	
		1	**155-2270**	9	KIT-CONNECTING PLUG (2-PIN)	
					(EACH PLUG KIT INCLUDES PLUG AS, WEDGE & INTERFACE SEAL)	
		1	**243-4509**	1	RECEPTACLE AS-CONNECTOR (8-PIN)	
		1	**243-4510**	1	RECEPTACLE AS-CONNECTOR (12-PIN)	
E		1	**125-7874**		TUBE-HEAT SHRINK (5.72-MM DIA) (10-CM)	
E		1	**125-7875**		TUBE-HEAT SHRINK (7.44-MM DIA) (5-CM)	
	6	1	**8T-4121**	2	WASHER-HARD (11X21X2.5-MM THK)	
M	7	1	**8T-4137**	1	BOLT (M10X1.5X20-MM)	
M	8	1	**8T-4191**	1	BOLT (M10X1.5X16-MM)	
J	9	1	**7K-1181**	1	STRAP-CABLE	
J	10	1	**132-5789**	1	CLIP	
J	11	1	**8T-4121**	1	WASHER-HARD (11X21X2.5-MM THK)	
JM	12	1	**8T-4191**	1	BOLT (M10X1.5X16-MM)	

E-ORDER BY THE CENTIMETER
J-USE FOR AUXILIARY CONFIGURATION FOR 2-PUMP, 1-WAY FLOW
M-METRIC PART

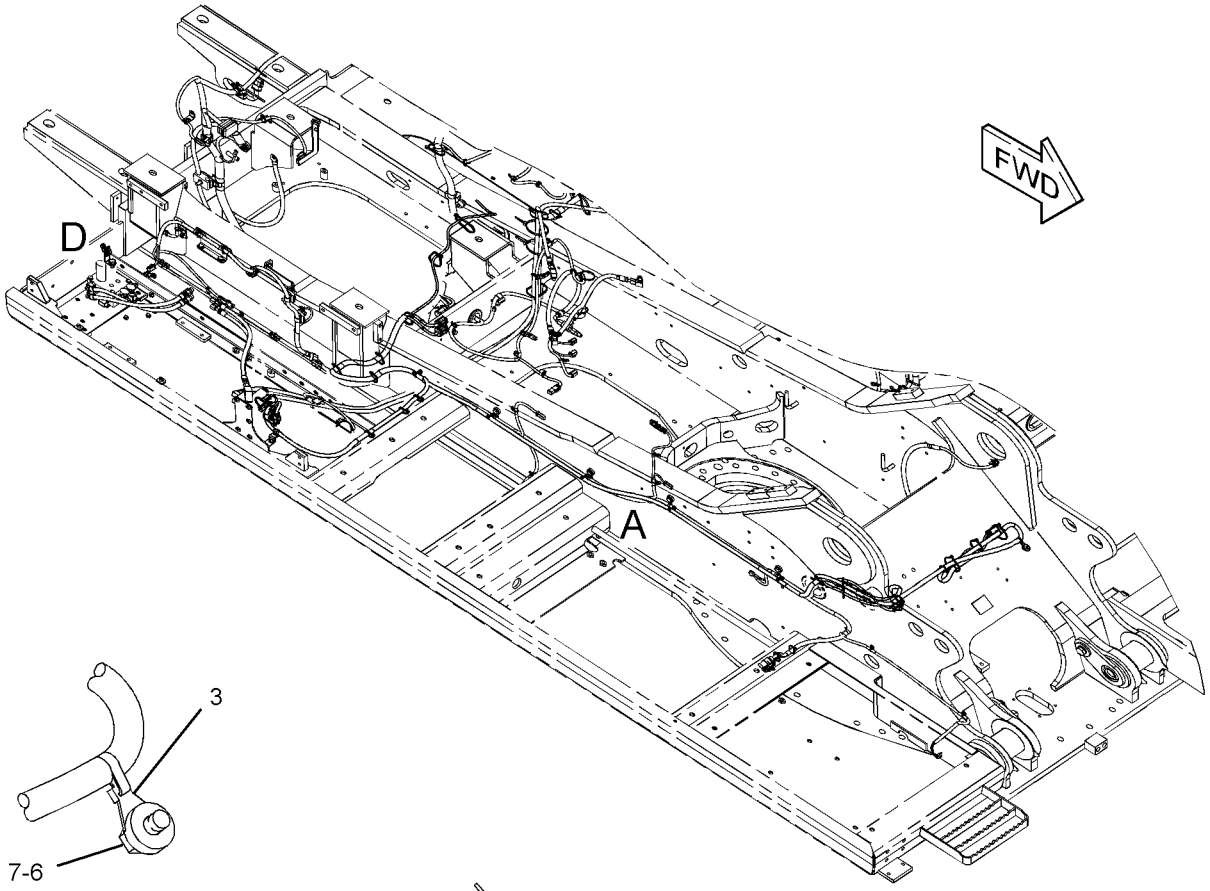

VIEW OF AREA B

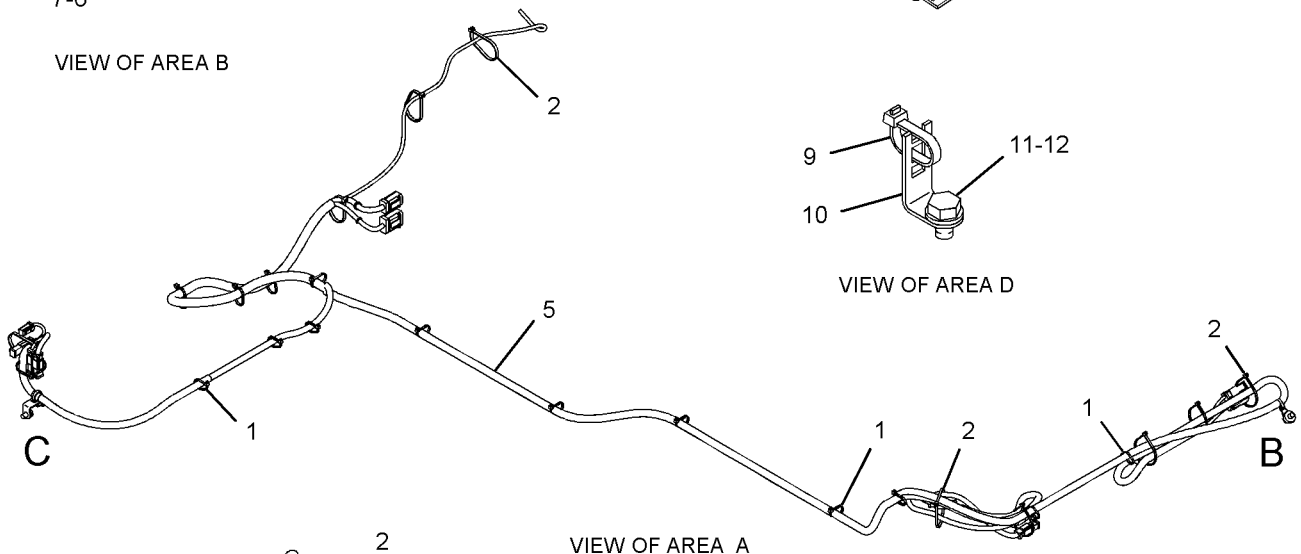

VIEW OF AREA A

VIEW OF AREA D

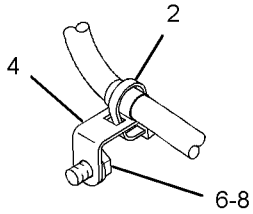

VIEW OF AREA C

GRAPHIC #1 **<END>** g01239663

251-0432 WIRING GP-CAB

S/N: B6H1-UP; JLP1-UP
PART OF 274-7468, 284-1605 CAB GP, 229-9072 OPERATOR AR
ALSO AN ATTACHMENT

SMCS-1408, 7301 **i03002032**

NOTE	REF NO	GRAPHIC REF	PART NUMBER	QTY	PART NAME 1 2 3 4 5 6 (PRODUCT LEVEL)	SEE PAGE
	1	1,2	**3S-2093**	9	STRAP-CABLE	
	2	1,2	**7Y-5505**	2	SPEAKER AS	
					(EACH INCLUDES)	
		1,2	**7Y-3951**	2	TERMINAL-BLADE (14-GA)	
		1,2	**7Y-3954**	1	CONNECTOR-PLUG (3-PIN)	
	3	1	**9W-0335**	1	LIGHTER AS-CIGAR (24-VOLT)	
					—OR—	
		1	**238-2318**	1	LIGHTER AS-CIGAR (24-VOLT)	
M	4	1,2	**099-7127**	8	SCREW-MACHINE (M4X0.7X12-MM)	
	5	1	**102-8016**	1	RESISTOR AS	
	6	2	**113-8490**	22	FUSE (10-AMPERE)	
	7	2	**113-8491**	5	FUSE (15-AMPERE)	
	8	2	**113-8493**	3	FUSE (25-AMPERE)	
	9	1,2	**116-0210**	4	BRACKET AS	
	10	2	**124-3548**	2	FUSE (30-AMPERE)	
Y	11	1	**132-1829**	1	ALARM GP (24-VOLT)	219
	12	2	**141-2759**	8	FUSE (5-AMPERE)	
	13	2	**161-3128**	1	RELAY (24-VOLT) (BOOM FLOODLIGHT)	
	13A	2	**161-3128**	1	RELAY (24-VOLT) (CHASSIS LIGHT)	
	13B	2	**161-3128**	1	RELAY (24-VOLT) (CAB FLOODLIGHT)	
	13C	2	**161-3128**	1	RELAY (24-VOLT) (HORN)	
	13D	2	**161-3128**	1	RELAY (24-VOLT) (NEUTRAL START)	
	13E	2	**161-3128**	1	RELAY (24-VOLT) (TRAVEL ALARM)	
	13F	2	**161-3128**	1	RELAY (24-VOLT) (ETHER)	
	14	1	**268-1964**	1	KIT-SERVICE METER	
					(INCLUDES SERVICE METER & FILM)	
	15	2	**163-6758**	1	WIRE AS	
	16	1	**167-3593**	1	STRAP	
	17	2	**170-6888**	1	PULLER-FUSE	
	18	2	**213-0772**	1	SWITCH AS-MAGNETIC (24-VOLT) (MAIN RELAY)	
	19	1	**227-7575**	1	PANEL-CONTROL (SWITCH)	
	20	1	**234-1097**	1	BRACKET	
	21	1	**238-2212**	1	SWITCH AS-ROCKER (FINE SWING)	
		1	**167-3542**	1	CONNECTOR-RECEPTACLE	
		1	**167-3543**	5	TERMINAL (MALE)	
	23	2	**238-2390**	1	CABLE AS	
D		2	**6V-2369**		CABLE (4-GA, BLACK) (0.3-M)	
		2	**9G-4343**	2	TERMINAL-RING (4-GA, 1/4-IN SCREW)	
	24	2	**238-2391**	1	CABLE AS	
D		2	**6V-2369**		CABLE (4-GA, BLACK) (0.3-M)	
		2	**9G-4343**	2	TERMINAL-RING (4-GA, 1/4-IN SCREW)	
	25	1	**245-7760**	8	INSULATION	
	26	1	**251-0637**	1	INSULATION	
	27	1	**259-4883**	1	ANTENNA AS	
	28	1	**267-7591**	1	HARNESS AS-CAB	
M	29	1	**095-0723**	3	SCREW (M3X0.5X10-MM)	
	30	1	**096-5962**	3	WASHER-HARD (3.4X7X0.8-MM THK)	
	31	1	**096-6166**	2	WASHER-HARD (4.5X9X1-MM THK)	
	32	1,2	**132-5789**	7	CLIP	
	33	1	**163-6795**	15	STRAP-CABLE	
	34	2	**4P-7581**	1	CLIP	
M	35	1	**5C-2890**	3	NUT (M6X1-THD)	
M	36	1,2	**6V-5210**	8	SCREW-MACHINE (M4X0.7X10-MM)	
M	37	1	**6V-9672**	2	SCREW-MACHINE (M4X0.7X16-MM)	
	38	2	**8T-0328**	3	WASHER-HARD (5.5X10X1-MM THK)	

251-0432 **WIRING GP-CAB** ***(contd.)*** **i03002032**

NOTE	REF NO	GRAPHIC REF	PART NUMBER	QTY	PART NAME 1 2 3 4 5 6 (PRODUCT LEVEL)	SEE PAGE
M	39	2	**8T-4127**	2	SCREW-MACHINE (M5X0.8X20-MM)	
M	40	2	**8T-6693**	1	SCREW-MACHINE (M5X0.8X16-MM)	
M	41	1,2	**9X-2042**	11	SCREW-TRUSS HEAD (M6X1X12-MM)	
M	42	1,2	**9X-2044**	5	SCREW-TRUSS HEAD (M6X1X16-MM)	
	43	1	**9X-8256**	3	WASHER (6.6X12X2-MM THK)	
E	44	1	**101-2846**		GUARD (9.5-CM)	
E	44A	1	**101-2846**		GUARD (9-CM EACH)	

D-ORDER BY THE METER
E-ORDER BY THE CENTIMETER
M-METRIC PART
Y-SEPARATE ILLUSTRATION

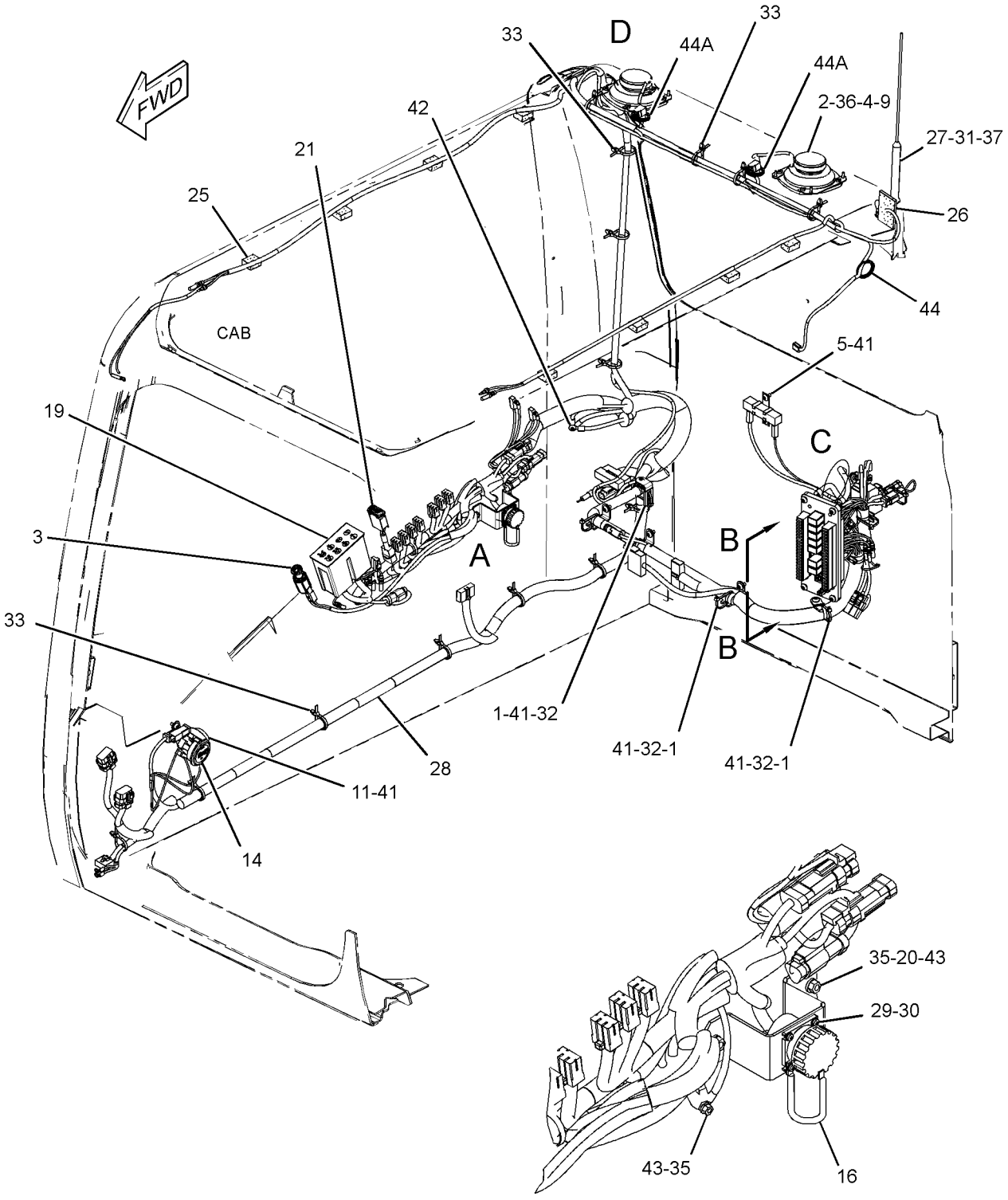

REFER TO ALL ILLUSTRATIONS OF THIS GROUP FOR AUXILIARY VIEWS

VIEW OF AREA A

GRAPHIC #1

g01505996

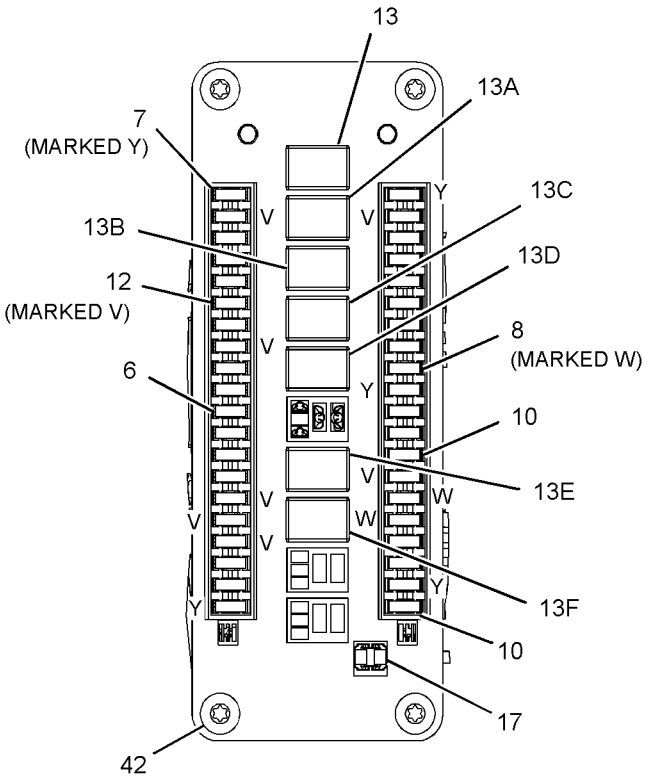

VIEW B-B

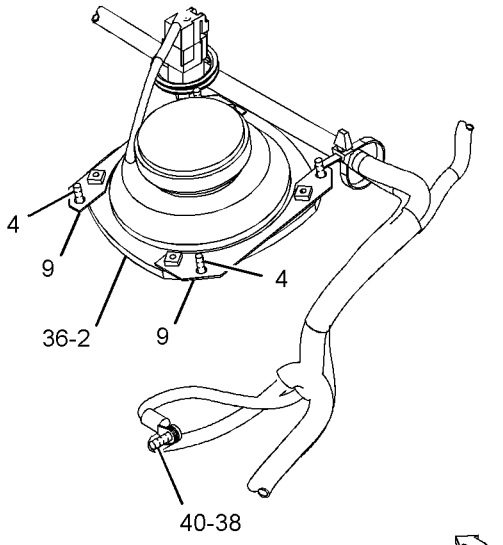

VIEW OF AREA D

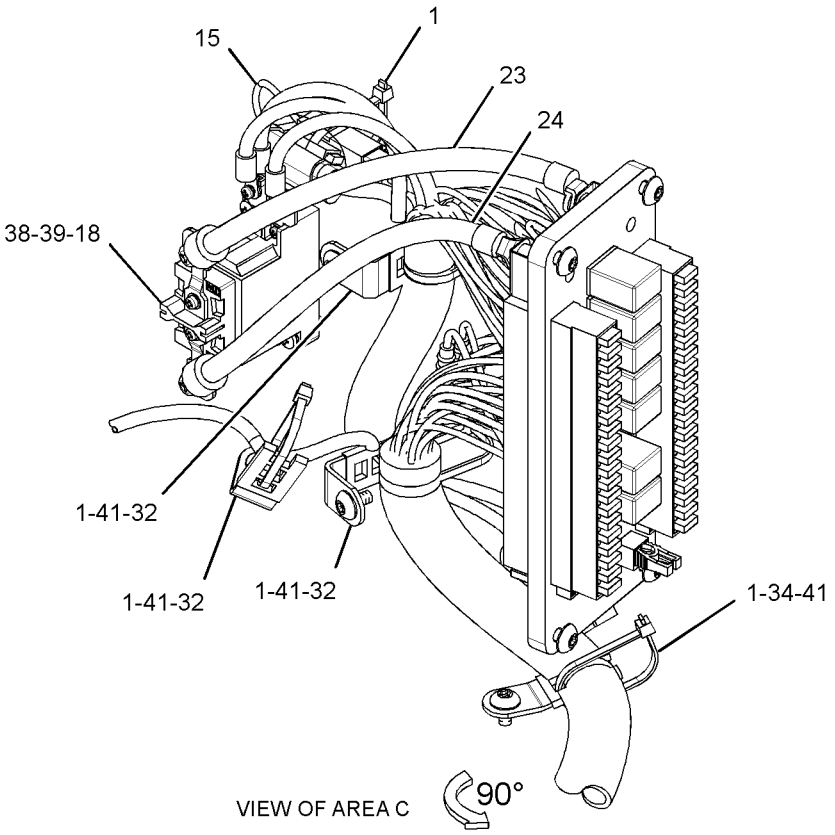

VIEW OF AREA C

GRAPHIC #2 **<END>** g01505997

259-5118 WIRING GP-CAB—PRIMING PUMP

S/N: B6H1-UP; JLP1-UP
PART OF 247-7501 PUMP GP-FUEL PRIMING
AN ATTACHMENT

SMCS-1408, 7301 **i02506658**

NOTE	REF NO	GRAPHIC REF	PART NUMBER	QTY	PART NAME 1 2 3 4 5 6 (PRODUCT LEVEL)	SEE PAGE
	1	1	**3S-2093**	5	STRAP-CABLE	
	2	1	**7K-1181**	9	STRAP-CABLE	
	3	1	**149-5050**	1	RELAY (24-VOLT) (PRIMING PUMP)	
	4	1	**259-5119**	1	HARNESS AS-CAB (PRIMING PUMP)	
		1	**3S-2093**	2	STRAP-CABLE	
		1	**230-5008**	1	PLUG AS-CONNECTOR (4-PIN)	
		1	**243-4505**	1	RECEPTACLE AS-CONNECTOR (2-PIN)	
M	5	1	**5C-2890**	1	NUT (M6X1-THD)	
	6	1	**9X-8256**	1	WASHER (6.6X12X2-MM THK)	

M-METRIC PART

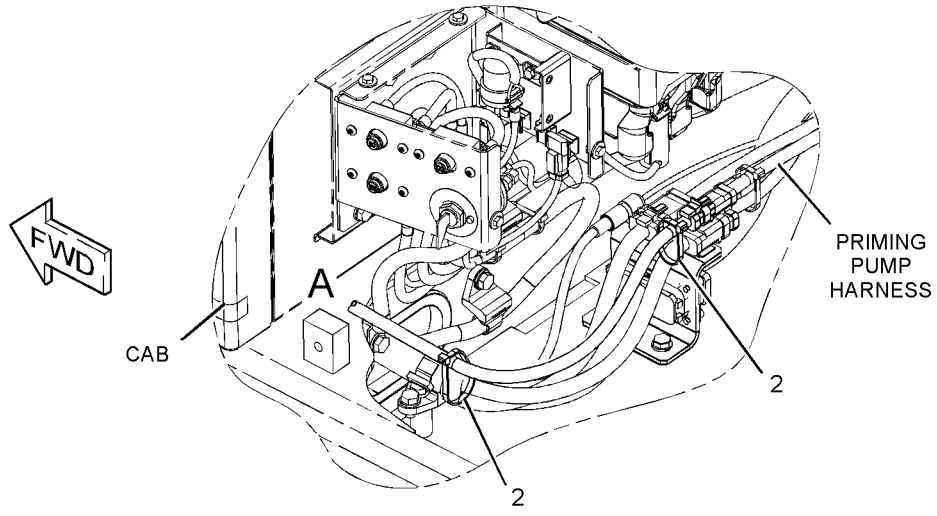

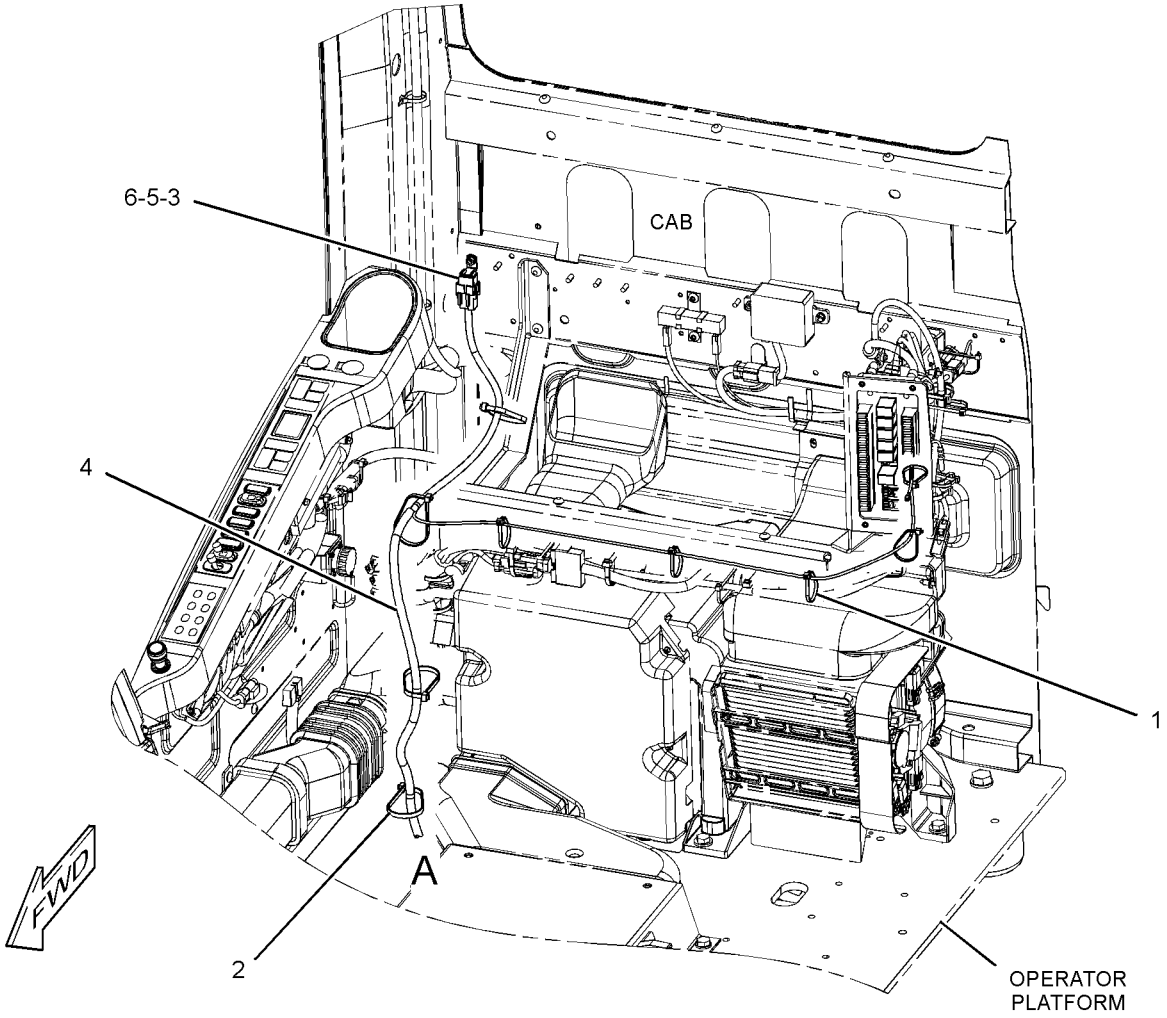

GRAPHIC #1 **<END>** g01155307

267-7642 WIRING GP-CAB–COUPLER

S/N: B6H1-UP; JLP1-UP
PART OF 268-6821 CONTROL AR-COUPLER
AN ATTACHMENT

SMCS-1408, 7301 **i02663229**

NOTE	REF NO	GRAPHIC REF	PART NUMBER	QTY	PART NAME 1 2 3 4 5 6 (PRODUCT LEVEL)	SEE PAGE
	1	1	**7K-1181**	13	STRAP-CABLE	
	2	1	**149-5050**	1	RELAY (24-VOLT) (QUICK COUPLER LOCK PRIORITY)	
	2A	1	**149-5050**	1	RELAY (24-VOLT) (QUICK COUPLER LOCK ON)	
	2B	1	**149-5050**	1	RELAY (24-VOLT) (QUICK COUPLER LOCK)	
	2C	1	**149-5050**	1	RELAY (24-VOLT) (QUICK COUPLER LOCK)	
	3	1	**259-4884**	1	BRACKET AS	
	4	1	**259-7220**	1	COVER	
	5	1	**267-7644**	1	HARNESS AS-QUICK COUPLER	
		1	**102-7965**	3	TERMINAL (FEMALE)	
E		1	**125-7874**		TUBE-HEAT SHRINK (5.72-MM DIA) (10-CM)	
E		1	**125-7875**		TUBE-HEAT SHRINK (7.44-MM DIA) (15-CM)	
		1	**149-5070**	9	TERMINAL-BLADE (16-GA TO 20-GA)	
		1	**163-6803**	1	CONNECTOR-PLUG	
		1	**230-5008**	1	PLUG AS-CONNECTOR (4-PIN)	
		1	**7Y-3950**	2	TERMINAL-BLADE (14-GA TO 20-GA)	
		1	**7Y-3953**	1	CONNECTOR-RECEPTACLE	
		1	**149-5069**	7	TERMINAL-BLADE (14-GA TO 20-GA)	
		1	**3S-2093**	15	STRAP-CABLE	
		1	**230-5008**	1	PLUG AS-CONNECTOR (4-PIN)	
	6	1	*267-7671*	1	SWITCH GP-TOGGLE (QUICK COUPLER)	
		1	**105-5175**	1	SWITCH AS-TOGGLE (QUICK COUPLER)	
		1	**3L-8187**	6	LOCKWASHER	
		1	**6T-3631**	2	NUT-HEX (15/32-32-THD)	
		1	**6T-3632**	1	LOCKWASHER	
		1	**6T-3633**	1	RING-LOCKING	
		1	**6V-8374**	6	SCREW-MACHINE (6-32X0.25-IN)	
		1	**267-7672**	1	HARNESS AS-WIRING (CAB)	
		1	**3S-2093**	1	STRAP-CABLE	
		1	**121-1173**	3	TERMINAL (MALE)	
		1	**167-3542**	1	CONNECTOR-RECEPTACLE	
	7	1	**267-7676**	1	BRACKET AS	
M	8	1	**9X-2042**	7	SCREW-TRUSS HEAD (M6X1X12-MM)	

E-ORDER BY THE CENTIMETER
M-METRIC PART

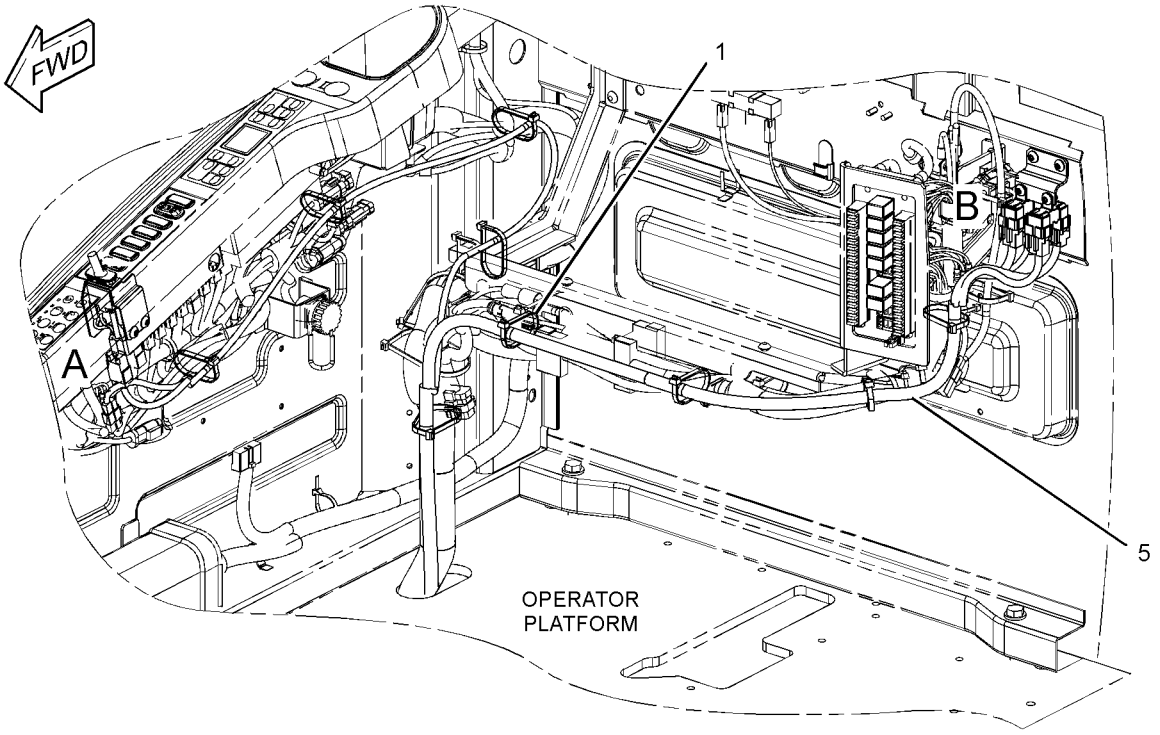

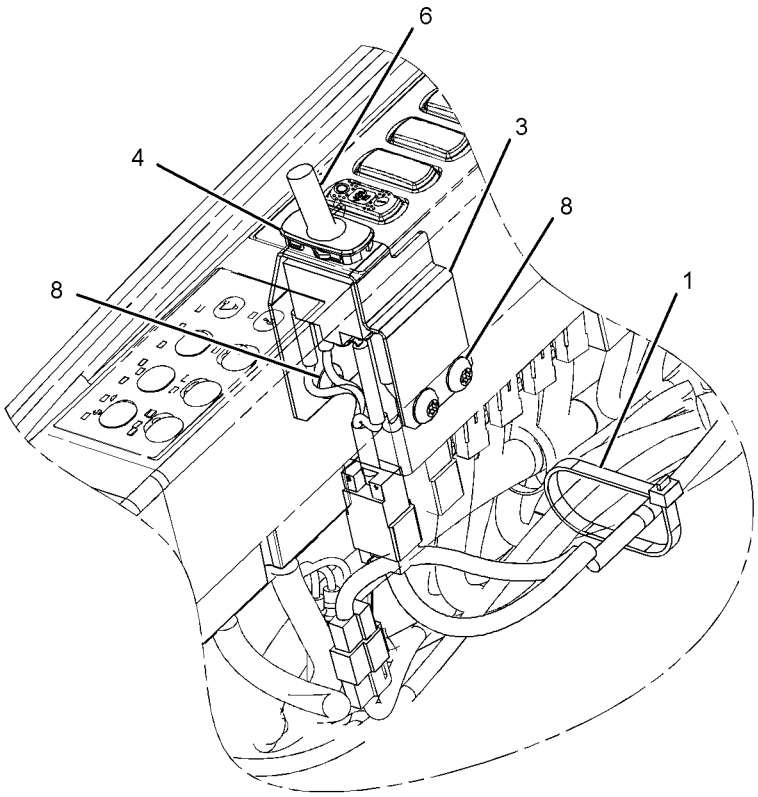

VIEW OF AREA A

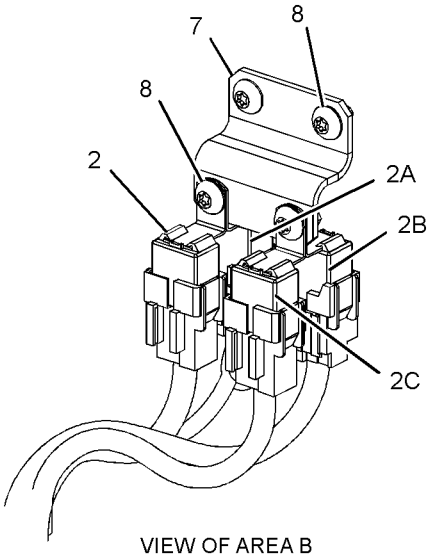

VIEW OF AREA B

GRAPHIC #1 **<END>** g01235651

306-8349 WIRING GP-CAB–ACCUGRADE READY

S/N: B6H1-UP; JLP1-UP
PART OF 290-1780 CONVERSION AR-MACHINE
AN ATTACHMENT

SMCS-1408, 7301 **i02825093**

NOTE	REF NO	GRAPHIC REF	PART NUMBER	QTY	PART NAME 1 2 3 4 5 6 (PRODUCT LEVEL)	SEE PAGE
	1	1	**7K-1181**	7	STRAP-CABLE	
	2	1	**113-8491**	1	FUSE (15-AMPERE)	
	3	1	**306-8350**	1	HARNESS AS-CAB	

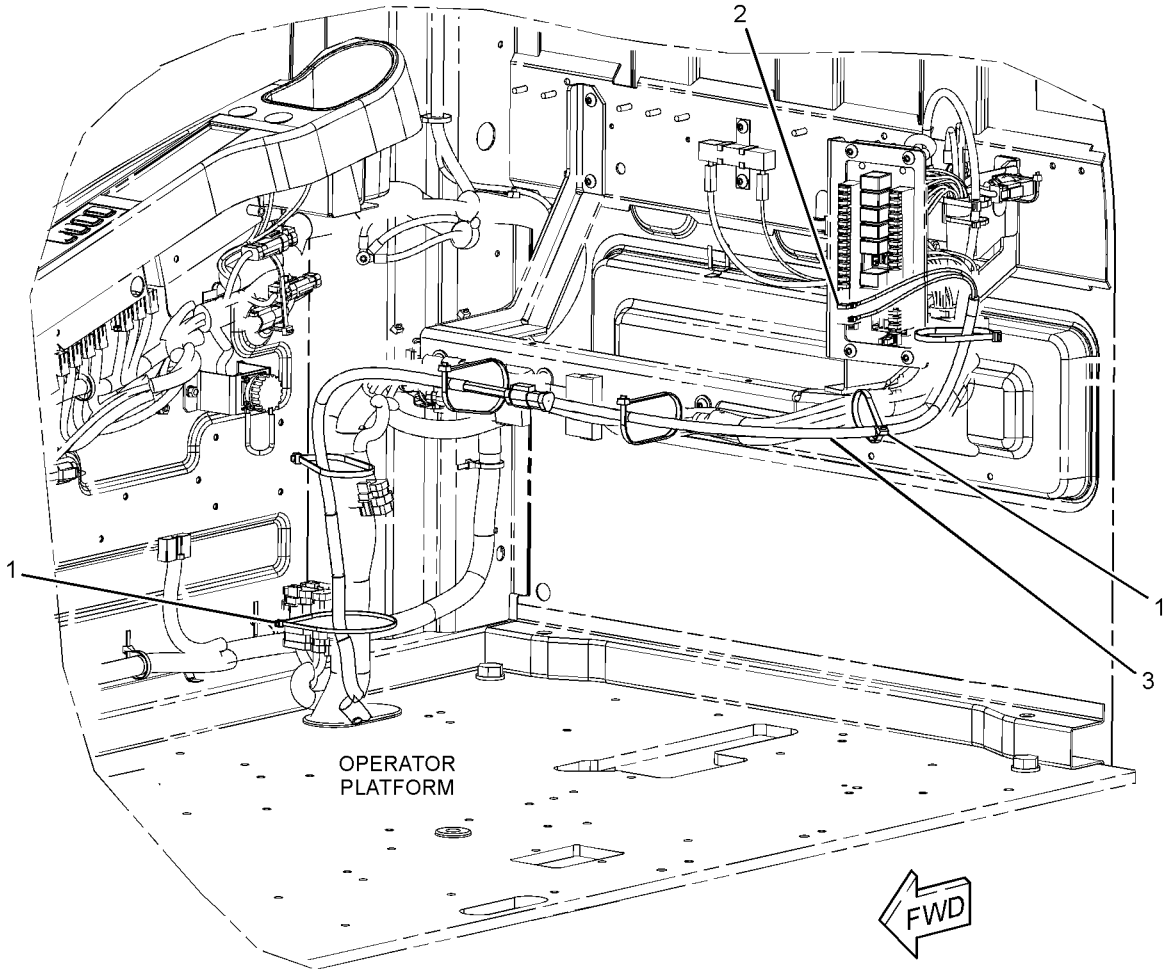

GRAPHIC #1 **<END>** g01422585

275-7194 WIRING GP-CHASSIS–ACCUGRADE READY

S/N: B6H1-UP; JLP1-UP
PART OF 290-1780 CONVERSION AR-MACHINE
AN ATTACHMENT

SMCS-1408 **i02819831**

NOTE	REF NO	GRAPHIC REF	PART NUMBER	QTY	PART NAME 1 2 3 4 5 6 (PRODUCT LEVEL)	SEE PAGE
	1	1,2	**7K-1181**	44	STRAP-CABLE	
	2	1	**177-7707**	2	BOSS	
	3	2	**275-6841**	1	HARNESS AS-CONTROL (BODY TILT SENSOR, GPS RECEIVER)	
E		2	**125-7874**		TUBE-HEAT SHRINK (5.72-MM DIA) (20-CM)	
		2	**230-4009**	1	PLUG AS-CONNECTOR (12-PIN)	
		2	**239-7356**	1	PLUG AS-CONNECTOR (12-PIN)	
		2	**243-4510**	1	RECEPTACLE AS-CONNECTOR (12-PIN)	
	4	2	**275-6842**	1	HARNESS AS-CONTROL (DISPLAY, GPS RADIO)	
		2	**167-8987**	1	PLUG AS-CONNECTOR (8-PIN)	
		2	**243-4510**	1	RECEPTACLE AS-CONNECTOR (12-PIN)	
		2	**263-6699**	1	FLANGE-CONNECTOR	
	5	1	**279-7609**	1	BRACKET AS	
	6	1	**306-8361**	1	HARNESS AS-CONTROL (ACCUGRADE READY)	
		1	**102-8803**	1	KIT-RECEPTACLE (3-PIN)	
					(INCLUDES RECEPTACLE AS & WEDGE)	
		1	**3R-9965**	1	PLUG AS-CONNECTOR (8-PIN)	
		1	**3S-2093**	1	STRAP-CABLE	
		1	**6D-5257**	1	PLUG AS-CONNECTOR (8-PIN)	
		1	**8L-8413**	3	STRAP-CABLE	
		1	**104-6871**	1	CAP-DUST	
E		1	**119-3662**		TUBE-HEAT SHRINK (10.85-MM DIA) (7-CM)	
E		1	**125-7874**		TUBE-HEAT SHRINK (5.72-MM DIA) (40-CM)	
E		1	**125-7875**		TUBE-HEAT SHRINK (7.44-MM DIA) (50-CM)	
		1	**134-2540**	1	RESISTOR AS-CONNECTION (3-PIN)	
		1	**155-2260**	2	KIT-CONNECTING PLUG (3-PIN)	
					(INCLUDES PLUG AS, WEDGE & INTERFACE SEAL)	
		1	**230-4009**	3	PLUG AS-CONNECTOR (12-PIN)	
		1	**231-2295**	1	PLUG AS-CONNECTOR (8-PIN)	
		1	**243-4510**	1	RECEPTACLE AS-CONNECTOR (12-PIN)	
		1	**243-5362**	1	CAP-DUST	
		1	**253-2695**	1	PLUG AS-CONNECTOR	
		1	**272-5000**	1	RECEPTACLE AS-CONNECTOR (12-PIN)	
	7	2	**132-5789**	1	CLIP	
	8	2	**2S-1647**	2	GROMMET	
	9	1	**4P-7428**	1	CLIP	
	10	2	**4P-7581**	1	CLIP	
	11	2	**8T-4121**	2	WASHER-HARD (11X21X2.5-MM THK)	
M	12	2	**8T-4191**	2	BOLT (M10X1.5X16-MM)	
	13	1	**8T-4223**	2	WASHER-HARD (13.5X25.5X3-MM THK)	
M	14	1	**8T-4648**	2	BOLT (M12X1.75X70-MM)	

E-ORDER BY THE CENTIMETER
M-METRIC PART

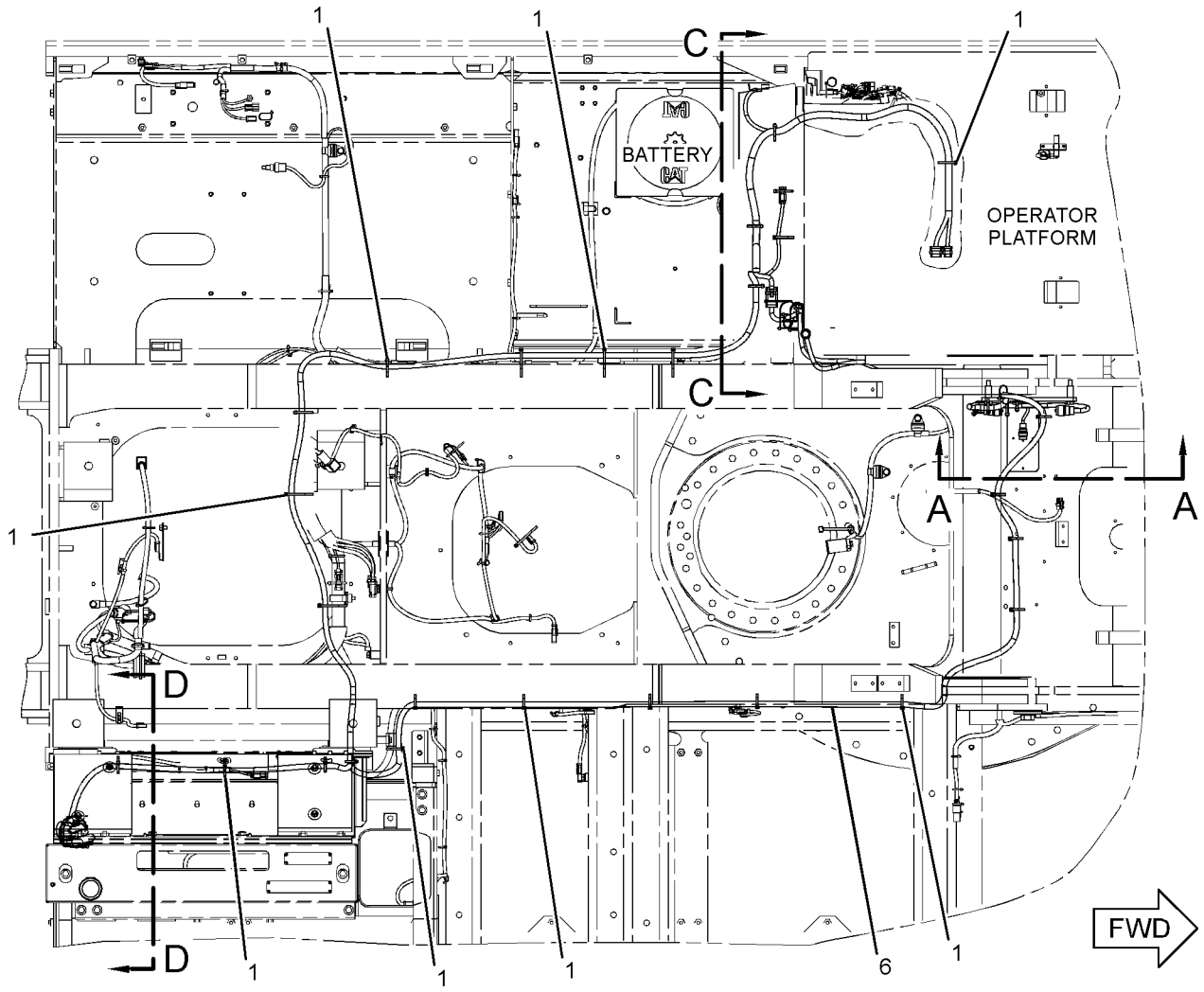

TOP VIEW

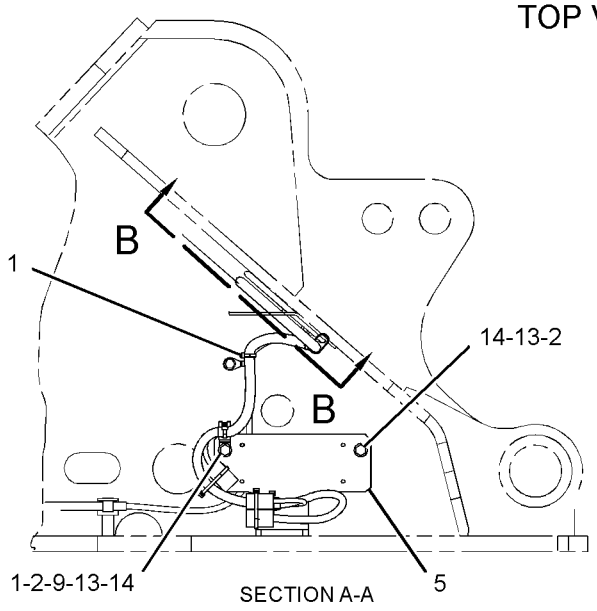

SECTION A-A

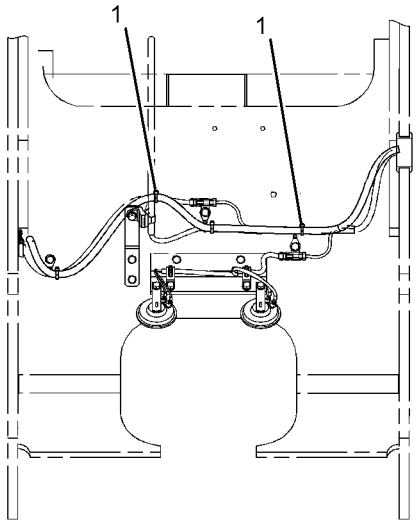

SECTION B-B

GRAPHIC #1 g01404380

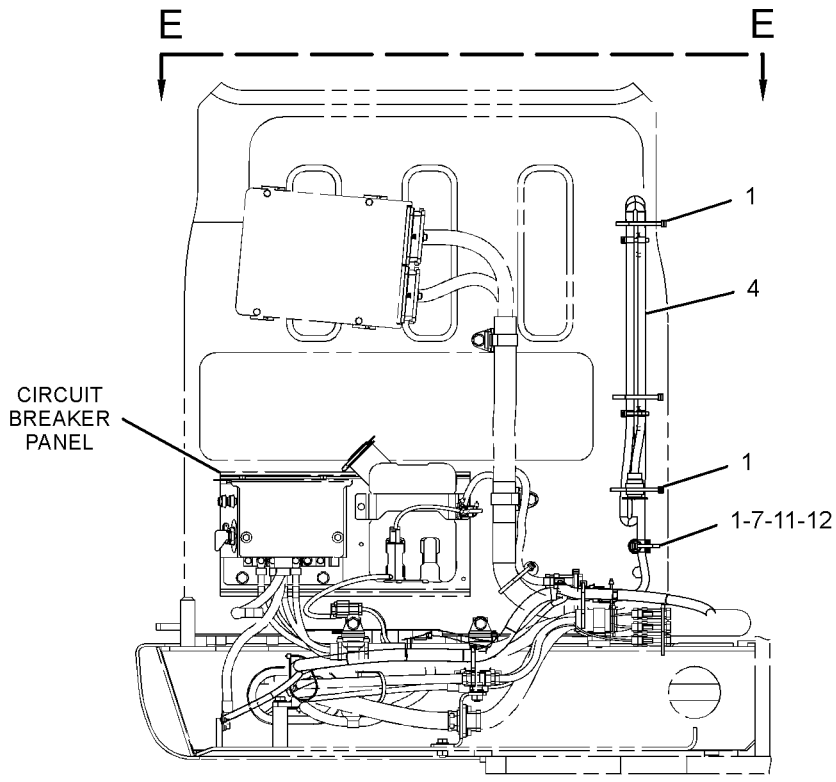

SECTION C-C

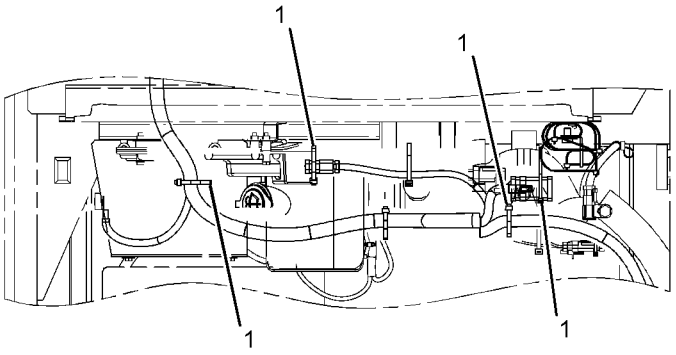

VIEW E-E

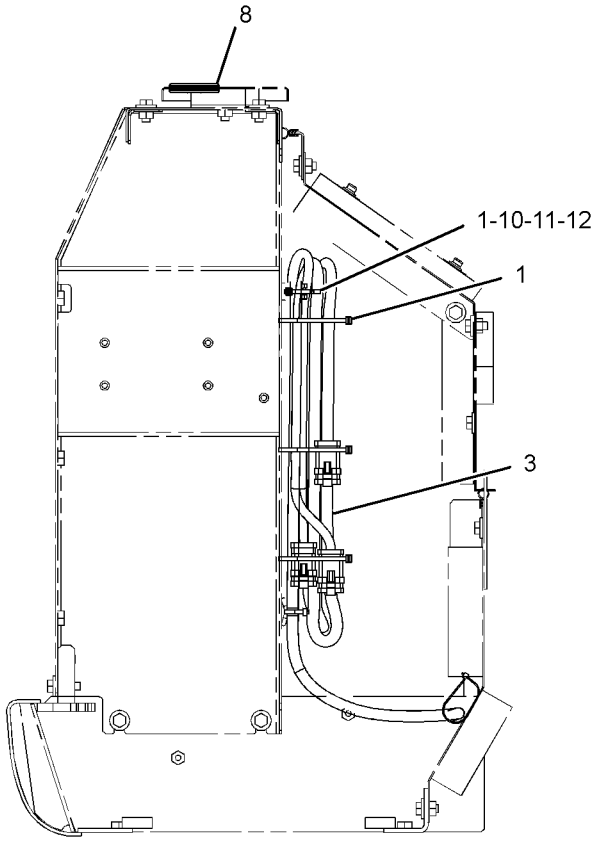

SECTION D-D

GRAPHIC #2 **<END>** g01404381

267-7803 WIRING GP-COMMUNICATION–PRODUCT LINK 321SR

S/N: B6H1-UP; JLP1-UP

PART OF 264-8552, 314-3533 INSTALLATION AR-COMMUNICATION

AN ATTACHMENT

SMCS-1408 **i03013411**

NOTE	REF NO	GRAPHIC REF	PART NUMBER	QTY	PART NAME 1 2 3 4 5 6 (PRODUCT LEVEL)	SEE PAGE
	1	1	**3S-2093**	7	STRAP-CABLE	
	2	1	**4I-7889**	1	SPACER (11X25X45-MM THK)	
	3	1	**7K-1181**	8	STRAP-CABLE	
	4	1	**9X-3495**	1	CLIP AS	
		1	**8C-3334**	2	RIVET-TUBULAR	
	6	1	**116-0118**	3	CLIP	
	7	1	**259-4887**	1	HARNESS AS-CONTROL (PRODUCT LINK)	
E		1	**125-7874**		TUBE-HEAT SHRINK (5.72-MM DIA) (15-CM)	
E		1	**125-7875**		TUBE-HEAT SHRINK (7.44-MM DIA) (5-CM)	
		1	**3S-2093**	2	STRAP-CABLE	
		1	**126-1774**	1	COVER-CONNECTOR	
		1	**160-7690**	1	PLUG AS-CONNECTOR (70-PIN)	
		1	**159-9322**	1	SEAL-O-RING	
		1	**230-5010**	2	PLUG AS-CONNECTOR (6-PIN)	
		1	**243-4508**	2	RECEPTACLE AS-CONNECTOR (6-PIN)	
	8	1	**259-4940**	1	HARNESS AS-WIRING (SERVICE CONNECTOR)	
		1	**243-4508**	1	RECEPTACLE AS-CONNECTOR (6-PIN)	
	9	1	**267-7813**	1	HARNESS AS-CONTROL (PRODUCT LINK, ANTENNA)	
		1	**155-2255**	1	KIT-CONNECTING PLUG (12-PIN)	
					(INCLUDES PLUG AS, WEDGE & INTERFACE SEAL)	
		1	**230-5010**	1	PLUG AS-CONNECTOR (6-PIN)	
		1	**243-4508**	1	RECEPTACLE AS-CONNECTOR (6-PIN)	
	10	1	**111-4837**	1	CLIP	
	11	1	**132-5789**	2	CLIP	
	12	1	**8T-4121**	3	WASHER-HARD (11X21X2.5-MM THK)	
M	13	1	**8T-4136**	1	BOLT (M10X1.5X25-MM)	
M	14	1	**8T-4185**	1	BOLT (M10X1.5X50-MM)	
		1	**091-9035**	1	SPACER (11X25X20-MM THK)	
					–OR–	
M		1	**8T-4136**	1	BOLT (M10X1.5X25-MM)	
M	15	1	**8T-4191**	2	BOLT (M10X1.5X16-MM)	
M	16	1	**8T-5005**	1	BOLT (M10X1.5X70-MM)	

E-ORDER BY THE CENTIMETER
M-METRIC PART

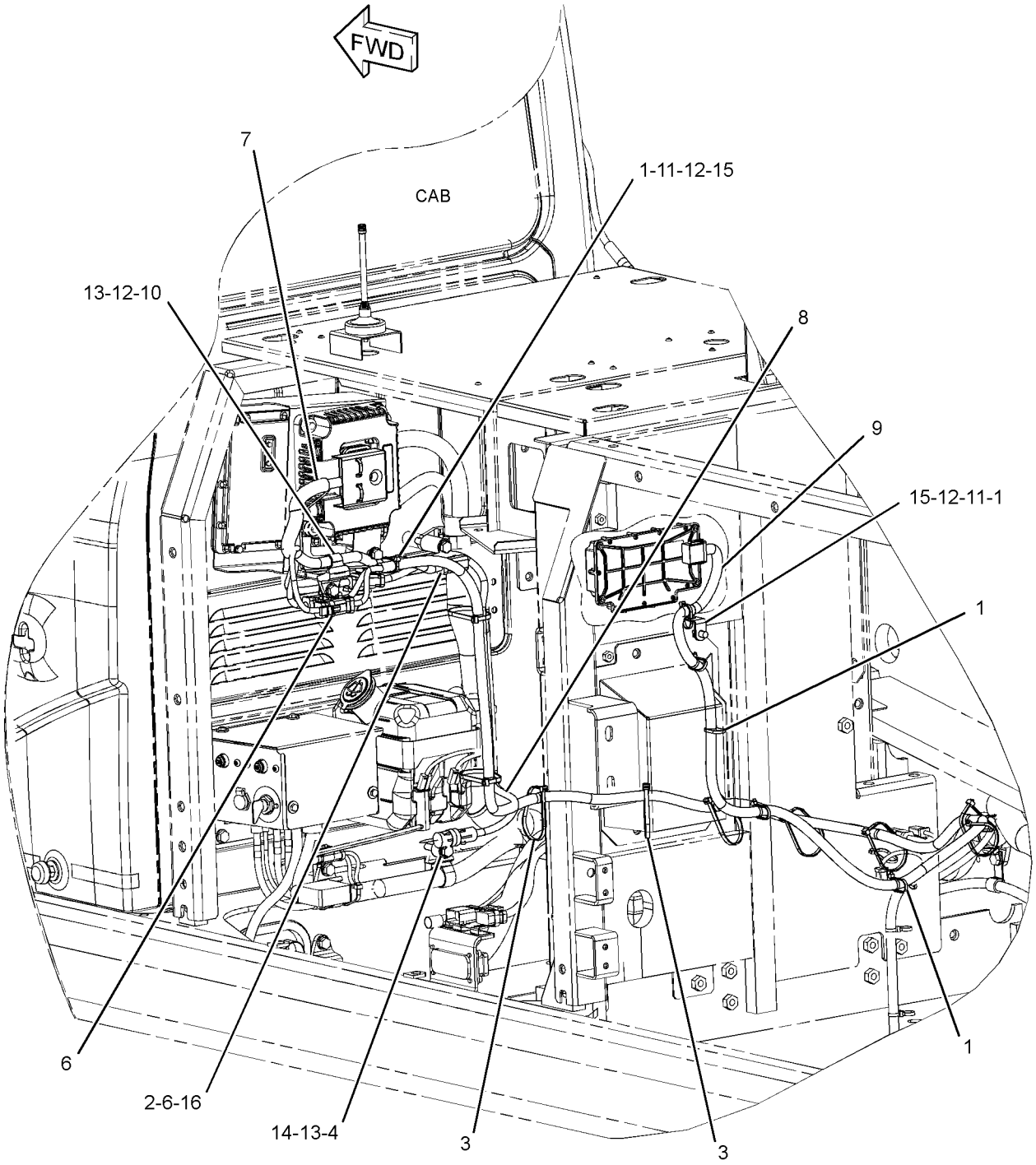

GRAPHIC #1 **<END>** g01528685

267-7804 WIRING GP-COMMUNICATION—PRODUCT LINK 121SR

S/N: B6H1-UP; JLP1-UP
PART OF 264-8553 INSTALLATION AR-COMMUNICATION
AN ATTACHMENT

SMCS-1408 **i03020843**

NOTE	REF NO	GRAPHIC REF	PART NUMBER	QTY	PART NAME 1 2 3 4 5 6 (PRODUCT LEVEL)	SEE PAGE
	1	1	**3S-2093**	7	STRAP-CABLE	
	2	1	**4I-7889**	1	SPACER (11X25X45-MM THK)	
	3	1	**7K-1181**	8	STRAP-CABLE	
	4	1	**9X-3495**	1	CLIP AS	
		1	**8C-3334**	2	RIVET-TUBULAR	
	6	1	**116-0118**	2	CLIP	
	7	1	**259-4940**	1	HARNESS AS-WIRING (SERVICE CONNECTOR)	
		1	**243-4508**	1	RECEPTACLE AS-CONNECTOR (6-PIN)	
	8	1	**267-7813**	1	HARNESS AS-CONTROL (PRODUCT LINK, ANTENNA)	
		1	**155-2255**	1	KIT-CONNECTING PLUG (12-PIN)	
					(INCLUDES PLUG AS, WEDGE & INTERFACE SEAL)	
		1	**230-5010**	1	PLUG AS-CONNECTOR (6-PIN)	
		1	**243-4508**	1	RECEPTACLE AS-CONNECTOR (6-PIN)	
	9	1	**132-5789**	1	CLIP	
	10	1	**8T-4121**	1	WASHER-HARD (11X21X2.5-MM THK)	
M	11	1	**8T-4185**	1	BOLT (M10X1.5X50-MM)	
		1	**091-9035**	1	SPACER (11X25X20-MM THK)	
					—OR—	
M		1	**8T-4136**	1	BOLT (M10X1.5X25-MM)	
M	12	1	**8T-4191**	1	BOLT (M10X1.5X16-MM)	
M	13	1	**8T-5005**	1	BOLT (M10X1.5X70-MM)	

M-METRIC PART

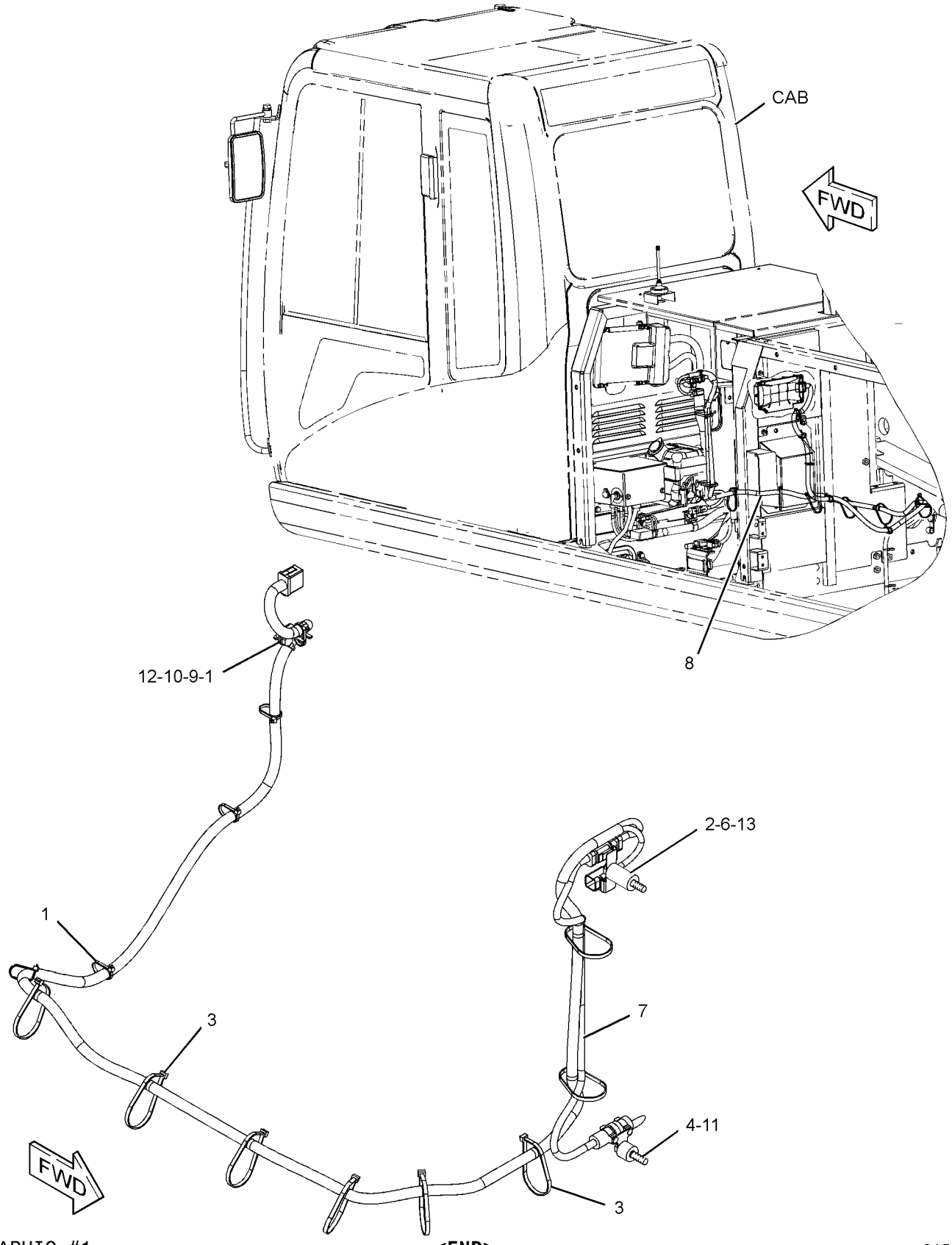

GRAPHIC #1 **<END>** g01527290

231-1836 WIRING GP-CONSOLE–LH

S/N: B6H1-UP; JLP1-UP

PART OF 274-7465 CONSOLE GP-OPERATOR, 251-0433 WIRING GP-CONSOLE

SMCS-1408 **i02490120**

NOTE	REF NO	GRAPHIC REF	PART NUMBER	QTY	PART NAME 1 2 3 4 5 6 (PRODUCT LEVEL)	SEE PAGE
	1	1	**3S-2093**	2	STRAP-CABLE	
	2	1	**7K-1181**	1	STRAP-CABLE	
	3	1	**163-6795**	2	STRAP-CABLE	
	4	1	**251-0580**	1	HARNESS AS-CONSOLE (LH)	
		1	**3S-2093**	9	STRAP-CABLE	
		1	**155-2260**	1	KIT-CONNECTING PLUG (3-PIN)	
					(INCLUDES PLUG AS, WEDGE & INTERFACE SEAL)	
		1	**230-4011**	1	PLUG AS-CONNECTOR (2-PIN)	
		1	**230-5010**	1	PLUG AS-CONNECTOR (6-PIN)	
		1	**239-7352**	1	PLUG AS-CONNECTOR (6-PIN)	
		1	**243-4505**	1	RECEPTACLE AS-CONNECTOR (2-PIN)	
		1	**243-4508**	1	RECEPTACLE AS-CONNECTOR (6-PIN)	
		1	**247-2693**	1	RECEPTACLE AS-CONNECTOR (6-PIN)	

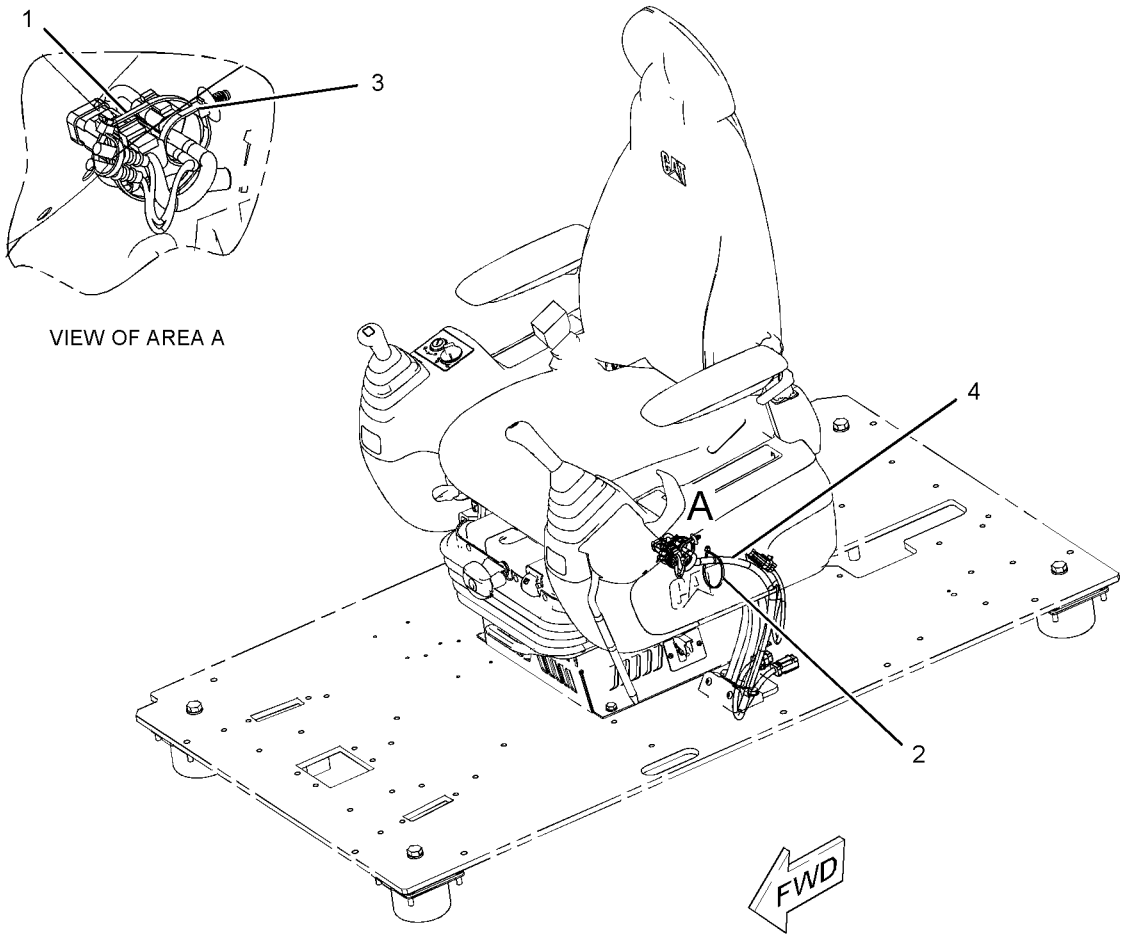

GRAPHIC #1 **<END>** g01150799

251-0433 WIRING GP-CONSOLE

S/N: B6H1-UP; JLP1-UP
PART OF 229-9072 OPERATOR AR

SMCS-1408 **i02490116**

NOTE	PART NUMBER	QTY	PART NAME 1 2 3 4 5 6 (PRODUCT LEVEL)	SEE PAGE
Y	*231-1836*	1	WIRING GP-CONSOLE (LH)	373
Y	*251-0435*	1	WIRING GP-CONSOLE (RH)	375

Y-SEPARATE ILLUSTRATION

<END>

251-0435 WIRING GP-CONSOLE–RH

S/N: B6H1-UP; JLP1-UP

PART OF 274-7466 CONSOLE GP-OPERATOR, 251-0433 WIRING GP-CONSOLE

SMCS-1408 **i02634692**

NOTE	REF NO	GRAPHIC REF	PART NUMBER	QTY	PART NAME 1 2 3 4 5 6 (PRODUCT LEVEL)	SEE PAGE
	1	1	**3S-2093**	3	STRAP-CABLE	
	2	1	**7K-1181**	1	STRAP-CABLE	
	3	1	**283-3074**	1	SWITCH AS-TOGGLE (AUTO/MANUAL ENG SPEED CONTROL)	
	4	1	**163-6711**	1	SWITCH AS-TOGGLE (MANUAL ENGINE SPEED CONTROL)	
	5	1	**163-6795**	3	STRAP-CABLE	
	6	1	**251-0602**	1	BRACKET	
	7	1	**259-4877**	1	HARNESS AS-CONSOLE (RH)	
		1	**3S-2093**	10	STRAP-CABLE	
		1	**8T-8737**	20	PLUG-SEAL	
		1	**102-8806**	1	KIT-RECEPTACLE (8-PIN)	
					(INCLUDES RECEPTACLE AS & WEDGE)	
		1	**155-2265**	1	KIT-CONNECTING PLUG (8-PIN)	
					(INCLUDES PLUG AS, WEDGE & INTERFACE SEAL)	
		1	**230-4009**	1	PLUG AS-CONNECTOR (12-PIN)	
		1	**230-4011**	1	PLUG AS-CONNECTOR (2-PIN)	
		1	**230-5008**	1	PLUG AS-CONNECTOR (4-PIN)	
		1	**230-5010**	1	PLUG AS-CONNECTOR (6-PIN)	
		1	**231-2295**	1	PLUG AS-CONNECTOR (8-PIN)	
		1	**239-7352**	1	PLUG AS-CONNECTOR (6-PIN)	
		1	**243-4505**	1	RECEPTACLE AS-CONNECTOR (2-PIN)	
		1	**243-4510**	1	RECEPTACLE AS-CONNECTOR (12-PIN)	
		1	**247-2693**	1	RECEPTACLE AS-CONNECTOR (6-PIN)	
M	8	1	**9X-2042**	3	SCREW-TRUSS HEAD (M6X1X12-MM)	

M-METRIC PART

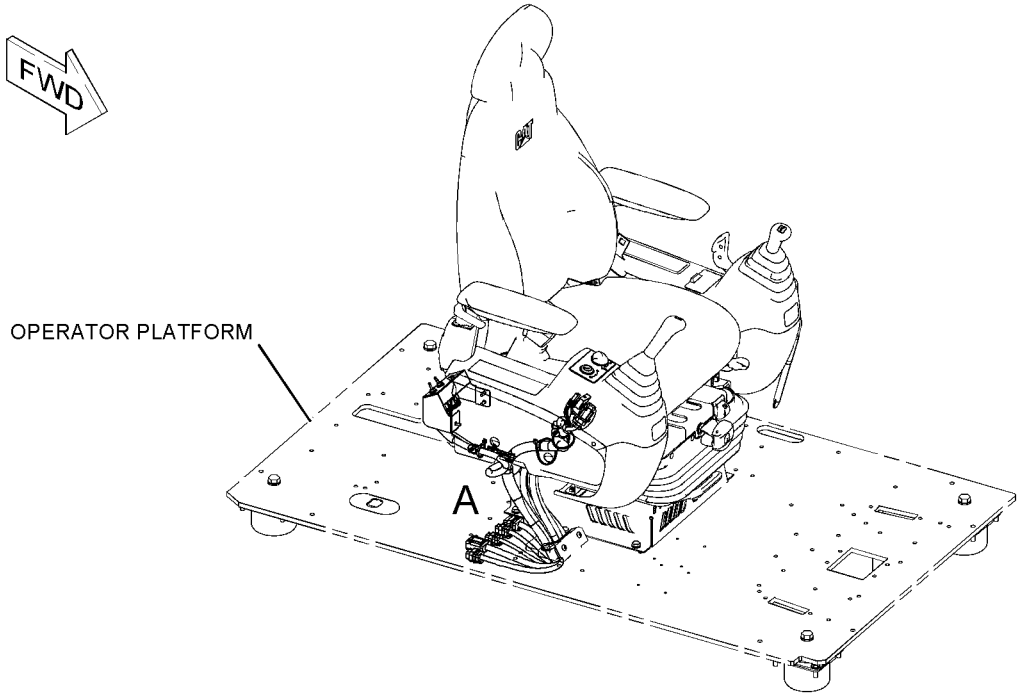

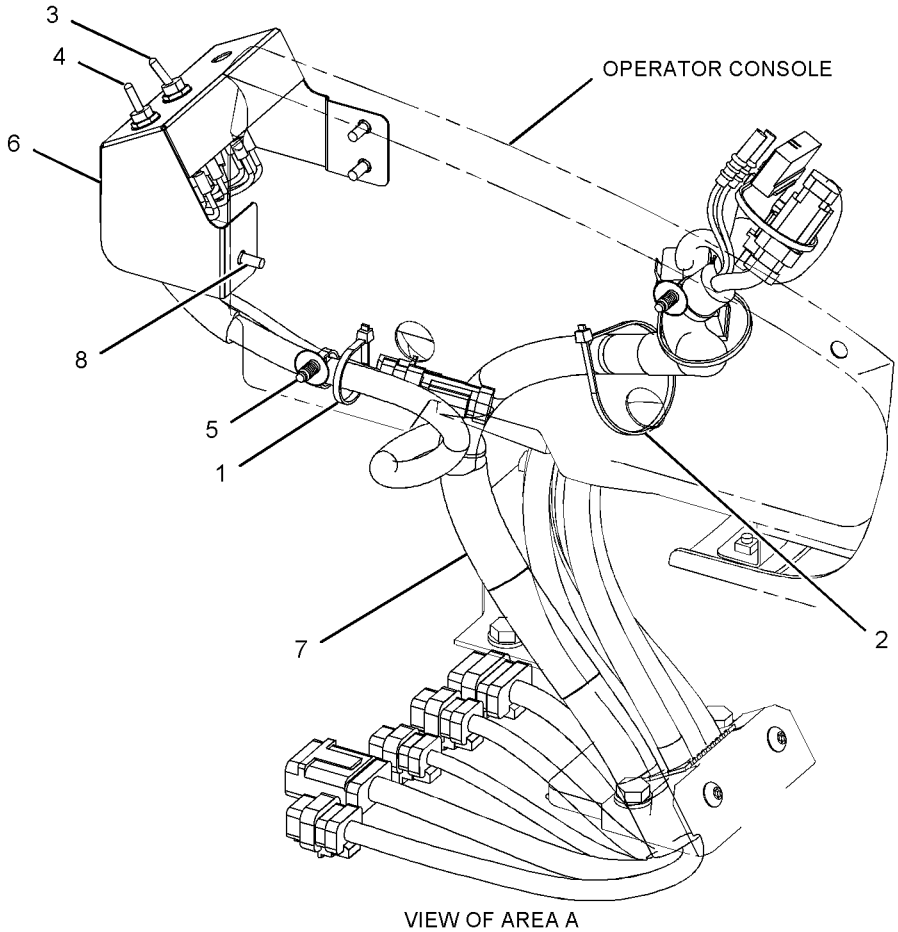

VIEW OF AREA A

GRAPHIC #1 **<END>** g01231684

251-0482 WIRING GP-CONVERTER–12-VOLT, 7-AMPERE

S/N: B6H1-UP; JLP1-UP
CANNOT BE USED WITH 251-0485–PAGE 378
AN ATTACHMENT

SMCS-1421 **i02662325**

NOTE	REF NO	GRAPHIC REF	PART NUMBER	QTY	PART NAME 1 2 3 4 5 6 (PRODUCT LEVEL)	SEE PAGE
	1	1	**7K-1181**	2	STRAP-CABLE	
	2	1	**121-0987**	1	SOCKET (12-VOLT, 7-AMPERE)	
	3	1	**283-2783**	1	CONVERTER-POWER (24-VOLT TO 12-VOLT)	
	4	1	**251-0483**	1	BRACKET	
	5	1	**8T-4121**	2	WASHER-HARD (11X21X2.5-MM THK)	
M	6	1	**8T-4136**	2	BOLT (M10X1.5X25-MM)	
M	7	1	**8T-4171**	4	BOLT (M6X1X12-MM)	
	8	1	**9X-8256**	4	WASHER (6.6X12X2-MM THK)	

M-METRIC PART

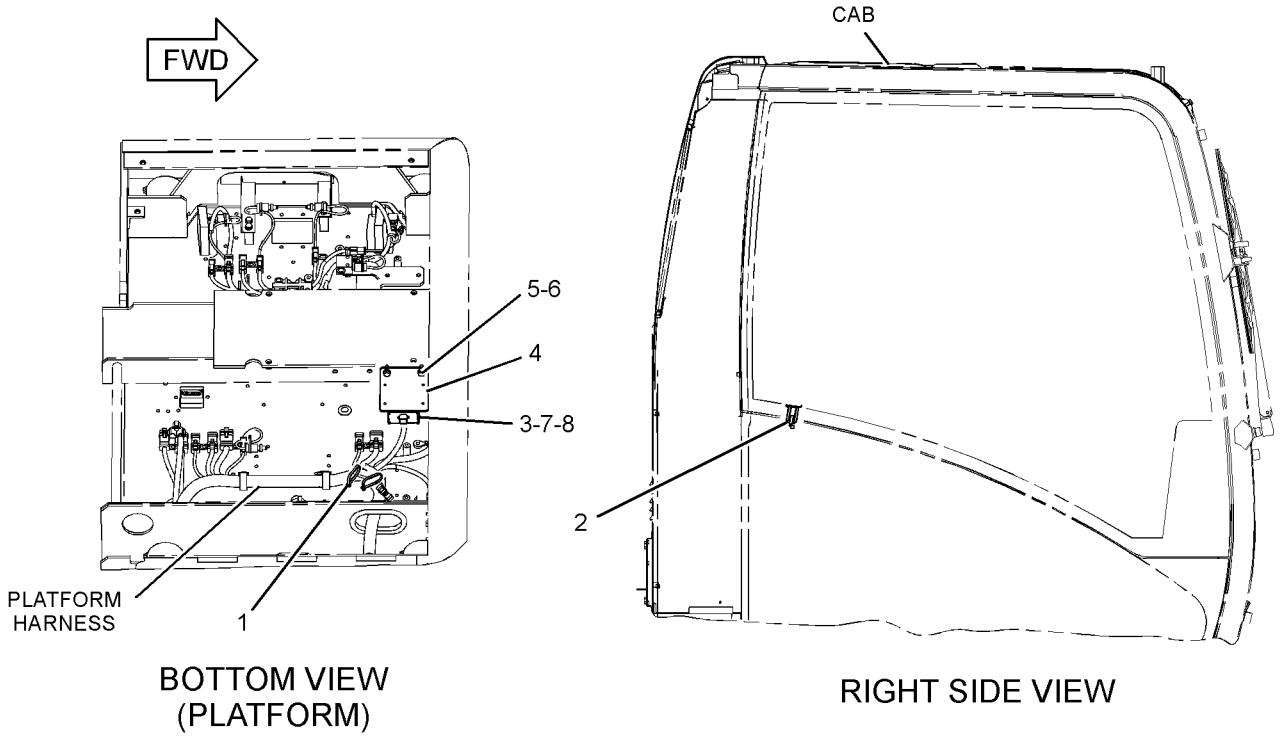

GRAPHIC #1 **<END>** g01155726

251-0485 WIRING GP-CONVERTER—12-VOLT, 7-AMPERE

S/N: B6H1-UP; JLP1-UP

CANNOT BE USED WITH 251-0482—PAGE 377

AN ATTACHMENT

SMCS-1421 **i02662326**

NOTE	REF NO	GRAPHIC REF	PART NUMBER	QTY	PART NAME 1 2 3 4 5 6 (PRODUCT LEVEL)	SEE PAGE
	1	1	**121-0987**	2	SOCKET (12-VOLT, 7-AMPERE)	
	2	1	**283-2783**	2	CONVERTER-POWER (24-VOLT TO 12-VOLT)	
	3	1	**251-0483**	2	BRACKET	
	4	1	**8T-4121**	4	WASHER-HARD (11X21X2.5-MM THK)	
M	5	1	**8T-4136**	4	BOLT (M10X1.5X25-MM)	
M	6	1	**8T-4171**	8	BOLT (M6X1X12-MM)	
	7	1	**9X-8256**	8	WASHER (6.6X12X2-MM THK)	

M-METRIC PART

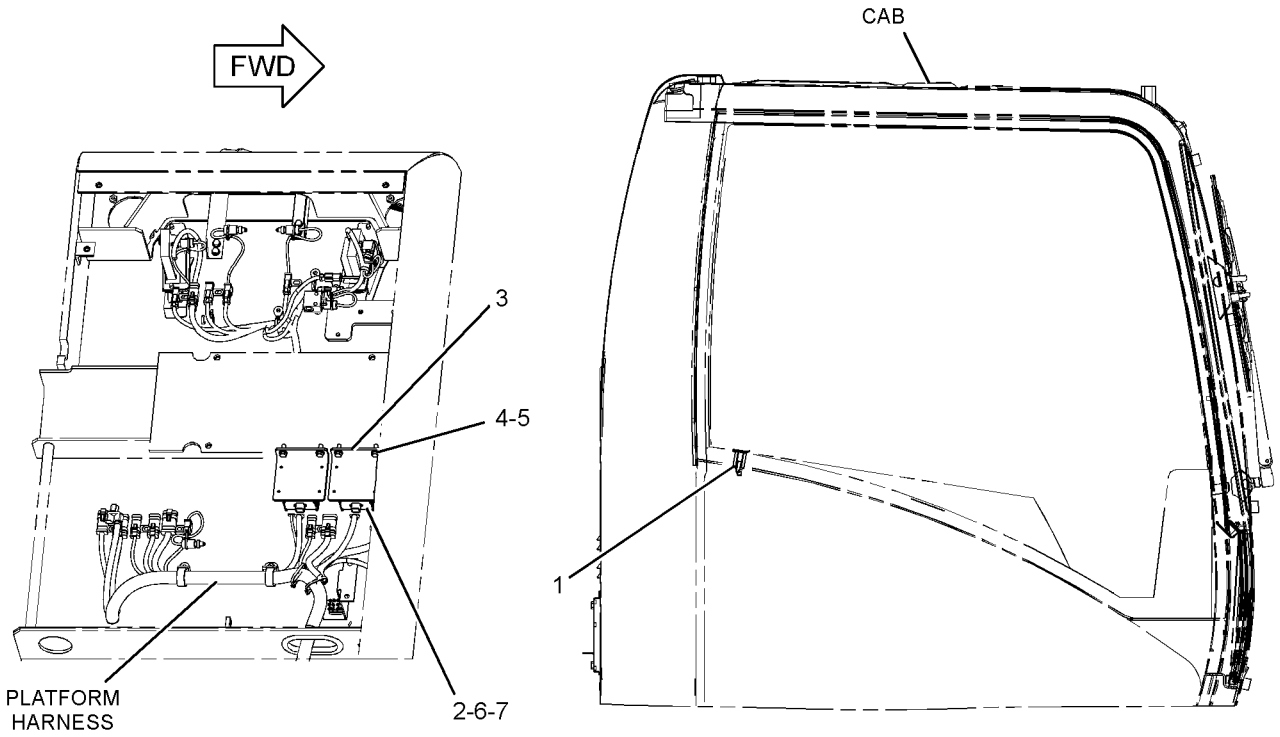

BOTTOM VIEW (PLATFORM)

RIGHT SIDE VIEW

GRAPHIC #1 **<END>** g01155779

236-6226 WIRING GP-ELECTRONIC CONTROL

S/N: THX1-5974

PART OF 224-9843 ENGINE AR, 270-2771 ENGINE AR-COMPLETE

SMCS-1408 **i02504059**

NOTE	REF NO	GRAPHIC REF	PART NUMBER	QTY	PART NAME 1 2 3 4 5 6 (PRODUCT LEVEL)	SEE PAGE
	1	1	**3S-2093**	18	STRAP-CABLE	
	2	1	**4P-5918**	1	CLIP	
	3	1	**215-3249**	1	HARNESS AS-ENGINE (UNIT INJECTOR)	
		1	**3S-2093**	5	STRAP-CABLE	
		1	**105-1797**	5	MOUNT	
		1	**191-7823**	1	RECEPTACLE AS	
	4	1	**235-8202**	1	HARNESS AS-ENGINE (ELECTRONIC CONTROL MODULE)	
		1	**102-8802**	1	KIT-RECEPTACLE (2-PIN)	
					(INCLUDES RECEPTACLE AS AND WEDGE)	
		1	**102-8803**	1	KIT-RECEPTACLE (3-PIN)	
					(INCLUDES RECEPTACLE AS AND WEDGE)	
		1	**100-3320**	1	PLUG AS-CONNECTOR (2-PIN)	
		1	**126-5011**	1	SEAL-CONNECTOR	
		1	**111-2416**	1	PLUG AS-CONNECTOR (2-PIN)	
		1	**126-5011**	1	SEAL-CONNECTOR	
		1	**155-2265**	1	KIT-CONNECTING PLUG (8-PIN)	
					(INCLUDES PLUG AS AND WEDGE)	
		1	**155-2260**	1	KIT-CONNECTING PLUG (3-PIN)	
					(INCLUDES PLUG AS AND WEDGE)	
		1	**155-2270**	5	KIT-CONNECTING PLUG (2-PIN)	
					(EACH INCLUDES PLUG AS AND WEDGE)	
		1	**172-6062**	1	PLUG AS-CONNECTOR (18-PIN)	
		1	**227-4002**	1	PLUG AS-CONNECTOR (108-PIN)	
	5	1	**4P-7581**	4	CLIP	
	6	1	**4P-8134**	2	CLIP	
M	7	1	**5P-7970**	3	NUT (M8X1.25-THD)	
	8	1	**6V-4369**	1	CLIP	
M	9	1	**6V-5217**	1	BOLT (M8X1.25X20-MM)	
	10	1	**6V-5839**	3	WASHER (11X21X2.5-MM THK)	
M	11	1	**6V-6317**	2	BOLT (M10X1.5X20-MM)	
M	12	1	**7I-2272**	2	BOLT (M5X0.8X12-MM)	
	13	1	**8T-0328**	2	WASHER-HARD (5.5X10X1-MM THK)	
M	14	1	**8T-4137**	1	BOLT (M10X1.5X20-MM)	
	15	1	**8T-4205**	1	WASHER-HARD (7.2X14.5X2-MM THK)	
M	16	1	**8T-5451**	1	BOLT (M6X1X12-MM)	
	17	1	**9M-1974**	3	WASHER-HARD (8.8X16X2-MM THK)	

M-METRIC PART

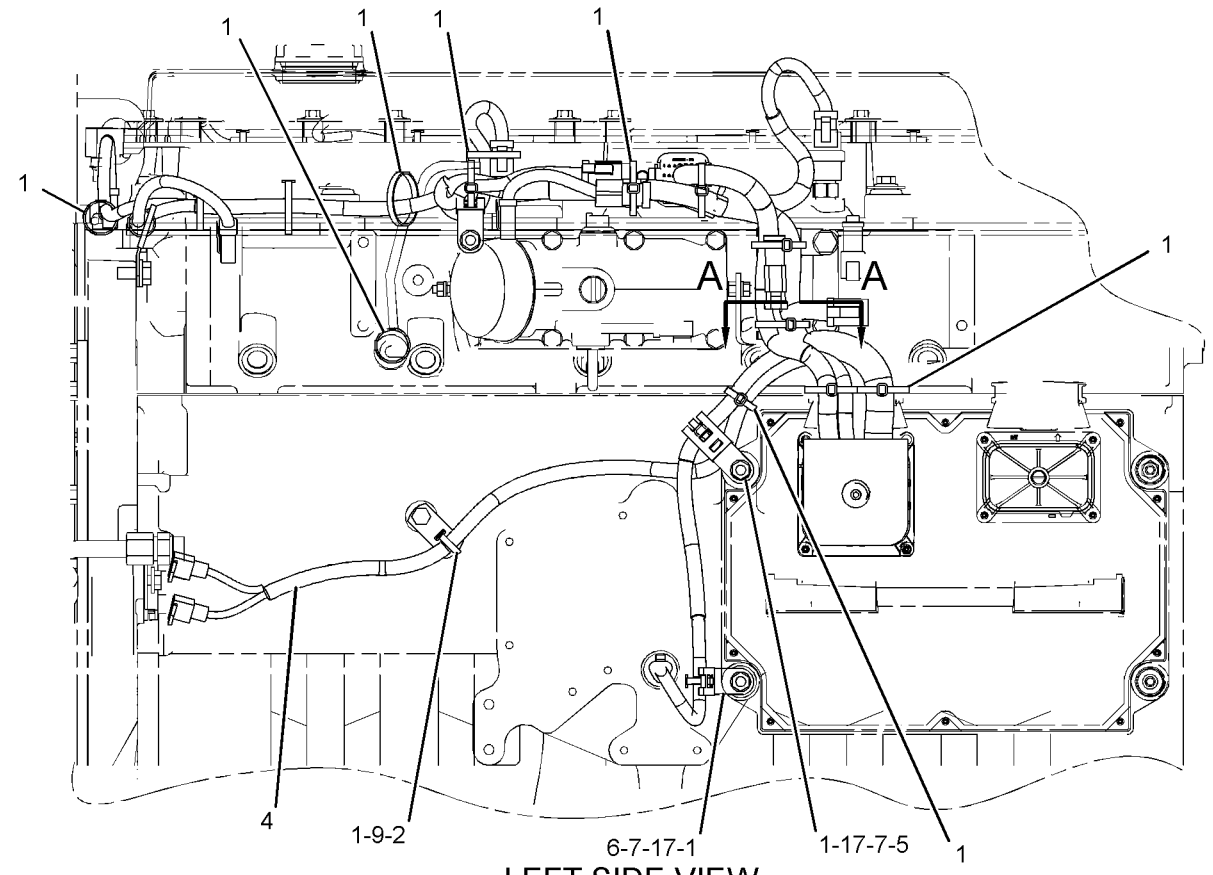

LEFT SIDE VIEW

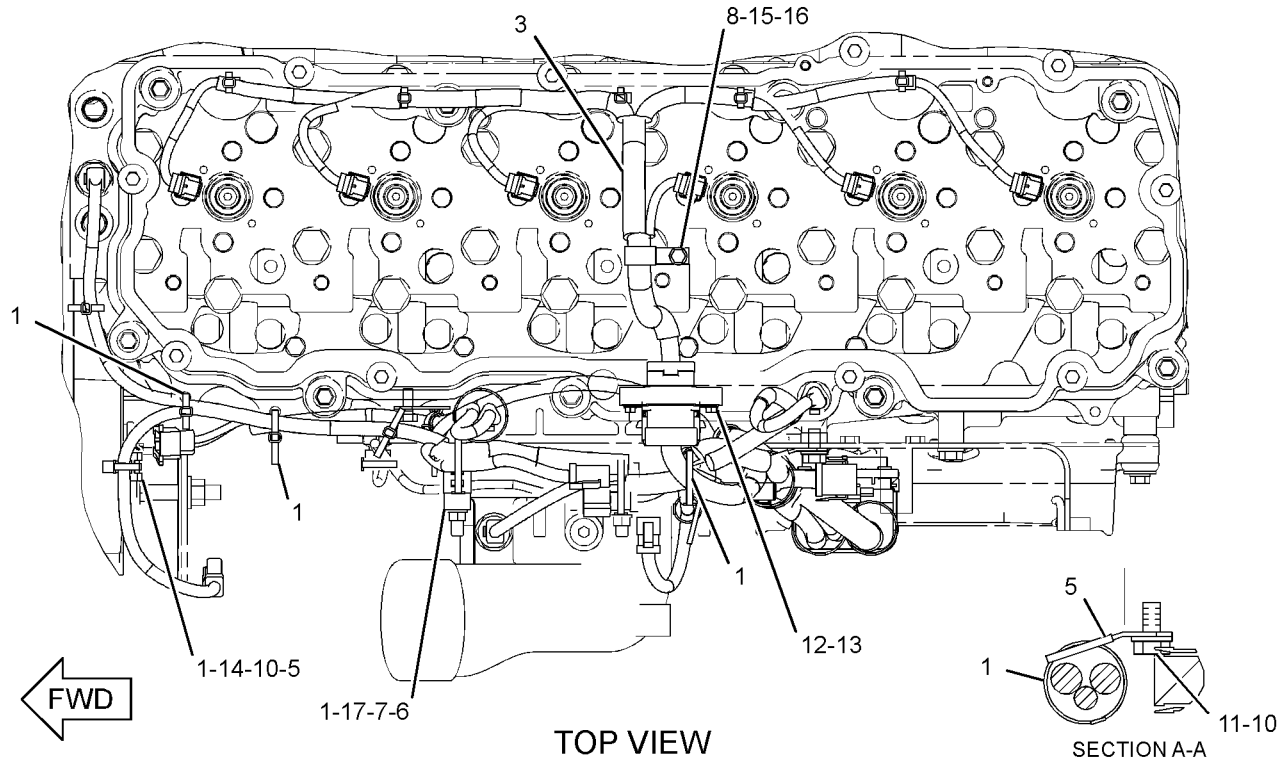

TOP VIEW

SECTION A-A

GRAPHIC #1

<END>

g01157134

236-6226 WIRING GP-ELECTRONIC CONTROL

S/N: THX1-UP

PART OF 224-9843 ENGINE AR, 240-1861, 270-2771, 301-3082 ENGINE AR-COMPLETE

SMCS-1408 **i03172046**

NOTE	REF NO	GRAPHIC REF	PART NUMBER	QTY	PART NAME 1 2 3 4 5 6 (PRODUCT LEVEL)	SEE PAGE
	1	1	**3S-2093**	19	STRAP-CABLE	
	3	1	**215-3249**	1	HARNESS AS-ENGINE (UNIT INJECTOR)	
		1	**3S-2093**	5	STRAP-CABLE	
		1	**105-1797**	5	MOUNT	
		1	**191-7823**	1	RECEPTACLE AS	
	4	1	**235-8202**	1	HARNESS AS-ENGINE (ELECTRONIC CONTROL MODULE)	
		1	**102-8802**	1	KIT-RECEPTACLE (2-PIN)	
		1	**102-8803**	1	KIT-RECEPTACLE (3-PIN)	
					(EACH RECEPTACLE KIT INCLUDES RECEPTACLE AS & WEDGE)	
		1	**100-3320**	1	PLUG AS-CONNECTOR (2-PIN)	
		1	**126-5011**	1	SEAL-CONNECTOR	
		1	**111-2416**	1	PLUG AS-CONNECTOR (2-PIN)	
		1	**126-5011**	1	SEAL-CONNECTOR	
		1	**155-2265**	1	KIT-CONNECTING PLUG (8-PIN)	
		1	**155-2260**	1	KIT-CONNECTING PLUG (3-PIN)	
		1	**155-2270**	5	KIT-CONNECTING PLUG (2-PIN)	
					(EACH PLUG KIT INCLUDES PLUG AS, WEDGE, & INTERFACE SEAL)	
		1	**172-6062**	1	PLUG AS-CONNECTOR (18-PIN)	
		1	**227-4002**	1	PLUG AS-CONNECTOR (108-PIN)	
C	5	1	**4P-7581**	5	CLIP	
	6	1	**4P-8134**	2	CLIP	
M	7	1	**5P-7970**	3	NUT (M8X1.25-THD)	
	8	1	**6V-4369**	1	CLIP	
M	9	1	**6V-5217**	1	BOLT (M8X1.25X20-MM)	
	10	1	**6V-5839**	3	WASHER (11X21X2.5-MM THK)	
M	11	1	**6V-6317**	2	BOLT (M10X1.5X20-MM)	
M	12	1	**7I-2272**	2	BOLT (M5X0.8X12-MM)	
	13	1	**8T-0328**	2	WASHER-HARD (5.5X10X1-MM THK)	
M	14	1	**8T-4137**	1	BOLT (M10X1.5X20-MM)	
	15	1	**8T-4205**	1	WASHER-HARD (7.2X14.5X2-MM THK)	
M	16	1	**8T-5451**	1	BOLT (M6X1X12-MM)	
	17	1	**9M-1974**	3	WASHER-HARD (8.8X16X2-MM THK)	

C-CHANGE FROM PREVIOUS TYPE
M-METRIC PART

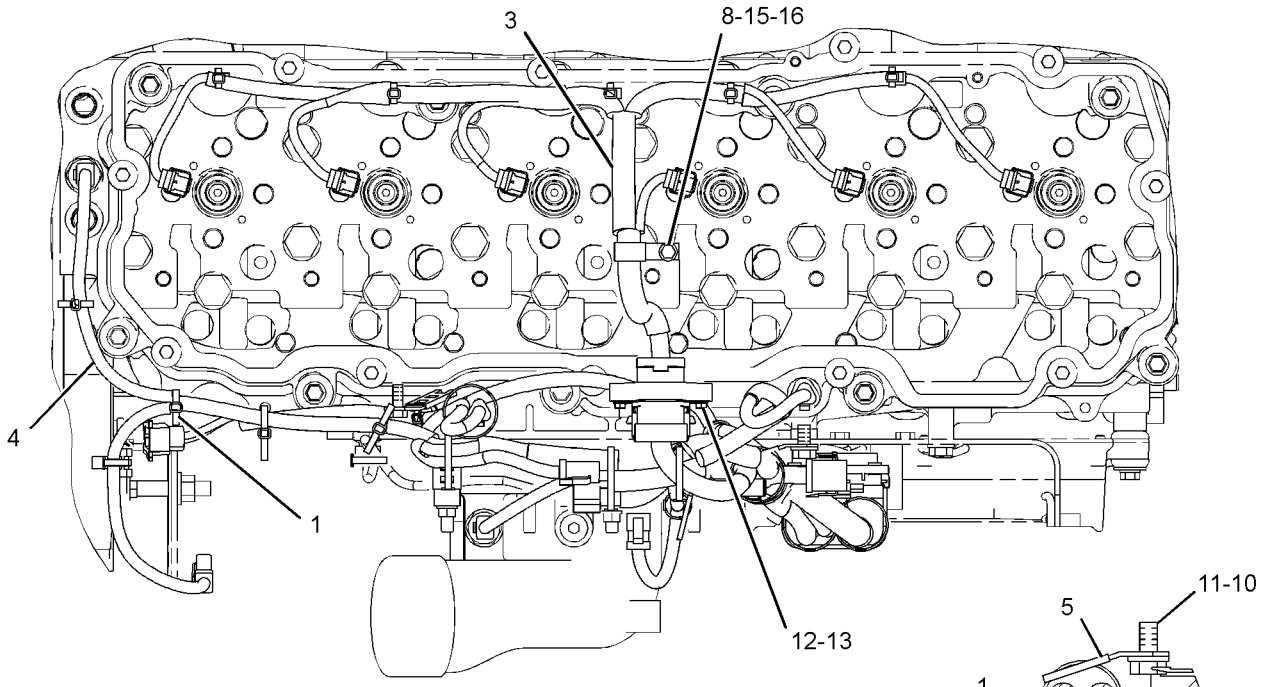

TOP VIEW OF ENGINE

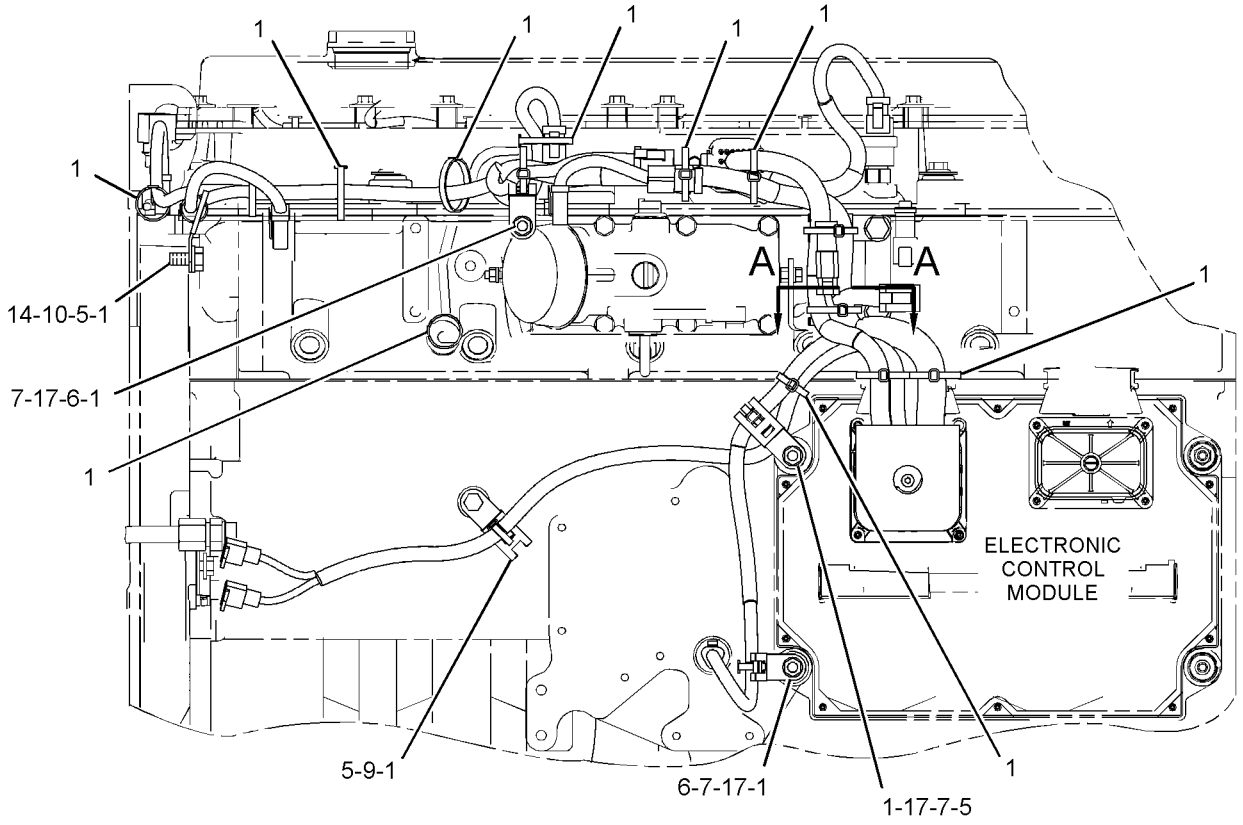

LEFT SIDE VIEW OF ENGINE

GRAPHIC #1 **<END>** g01336539

ELECTRICAL AND STARTING SYSTEM

330-6018 WIRING GP-ELECTRONIC CONTROL

S/N: THX22180-UP

PART OF 224-9843 ENGINE AR, 240-1861, 301-3082 ENGINE AR-COMPLETE

SMCS-1408 **i03614902**

NOTE	REF NO	GRAPHIC REF	PART NUMBER	QTY	PART NAME 1 2 3 4 5 6 (PRODUCT LEVEL)	SEE PAGE
	1	1	**3S-2093**	18	STRAP-CABLE	
	2	1	**215-3249**	1	HARNESS AS-ENGINE (UNIT INJECTOR)	
		1	**3S-2093**	5	STRAP-CABLE	
		1	**105-1797**	5	MOUNT	
		1	**9X-3401**	12	PIN-CONNECTOR (16-GA TO 18-GA)	
					—OR—	
		1	**126-1767**	12	PIN-CONNECTOR (14-GA)	
		1	**172-6064**	1	WEDGE-RECEPTACLE LOCK	
		1	**191-7823**	1	RECEPTACLE AS	
		1	**307-8428**	1	GASKET	
	3	1	**323-9140**	1	HARNESS AS-ENGINE	
		1	**102-8802**	1	KIT-RECEPTACLE (2-PIN)	
					(EACH RECEPTACLE KIT INCLUDES RECEPTACLE AS & WEDGE)	
		1	**8T-8737**	95	PLUG-SEAL	
		1	**100-3320**	1	PLUG AS-CONNECTOR (2-PIN)	
		1	**126-5011**	1	SEAL-CONNECTOR	
		1	**305-5362**	4	TERMINAL AS (18-GA)	
		1	**111-2416**	1	PLUG AS-CONNECTOR (2-PIN)	
		1	**126-5011**	1	SEAL-CONNECTOR	
E		1	**125-7874**		TUBE-HEAT SHRINK (5.72-MM DIA) (25-CM)	
E		1	**125-7875**		TUBE-HEAT SHRINK (7.44-MM DIA) (15-CM)	
		1	**155-2270**	3	KIT-CONNECTING PLUG (2-PIN)	
		1	**155-2265**	1	KIT-CONNECTING PLUG (8-PIN)	
					(EACH PLUG KIT INCLUDES PLUG AS & WEDGE)	
		1	**172-6062**	1	PLUG AS-CONNECTOR (18-PIN)	
		1	**172-6065**	1	WEDGE-PLUG LOCK	
		1	**211-6807**	1	COVER (CONNECTOR)	
		1	**230-4011**	2	PLUG AS-CONNECTOR (2-PIN)	
					(EACH INCLUDES)	
		1	**264-7029**	1	SEAL-CONNECTOR	
		1	**230-4013**	1	PLUG AS-CONNECTOR (3-PIN)	
		1	**264-7030**	1	SEAL-CONNECTOR	
		1	**237-0227**	3	PLUG AS-CONNECTOR (3-PIN)	
					(EACH INCLUDES)	
		1	**264-7030**	1	SEAL-CONNECTOR	
		1	**264-5732**	1	PLUG AS-CONNECTOR (120-PIN)	
		1	**288-7324**	1	SEAL-CONNECTOR	
	4	1	**4P-7581**	5	CLIP	
	5	1	**4P-8134**	2	CLIP	
M	6	1	**5P-7970**	3	NUT (M8X1.25-THD)	
M	7	1	**6V-5217**	1	BOLT (M8X1.25X20-MM)	
	8	1	**6V-5839**	3	WASHER (11X21X2.5-MM THK)	
M	9	1	**6V-6317**	2	BOLT (M10X1.5X20-MM)	
M	10	1	**7I-2272**	2	BOLT (M5X0.8X12-MM)	
	11	1	**8T-0328**	2	WASHER-HARD (5.5X10X1-MM THK)	
M	12	1	**8T-4137**	1	BOLT (M10X1.5X20-MM)	
	13	1	**8T-4205**	1	WASHER-HARD (7.2X14.5X2-MM THK)	
M	14	1	**8T-5451**	1	BOLT (M6X1X12-MM)	
	15	1	**9M-1974**	3	WASHER-HARD (8.8X16X2-MM THK)	
	16	1	**9X-2332**	1	CLIP	

E-ORDER BY THE CENTIMETER
M-METRIC PART

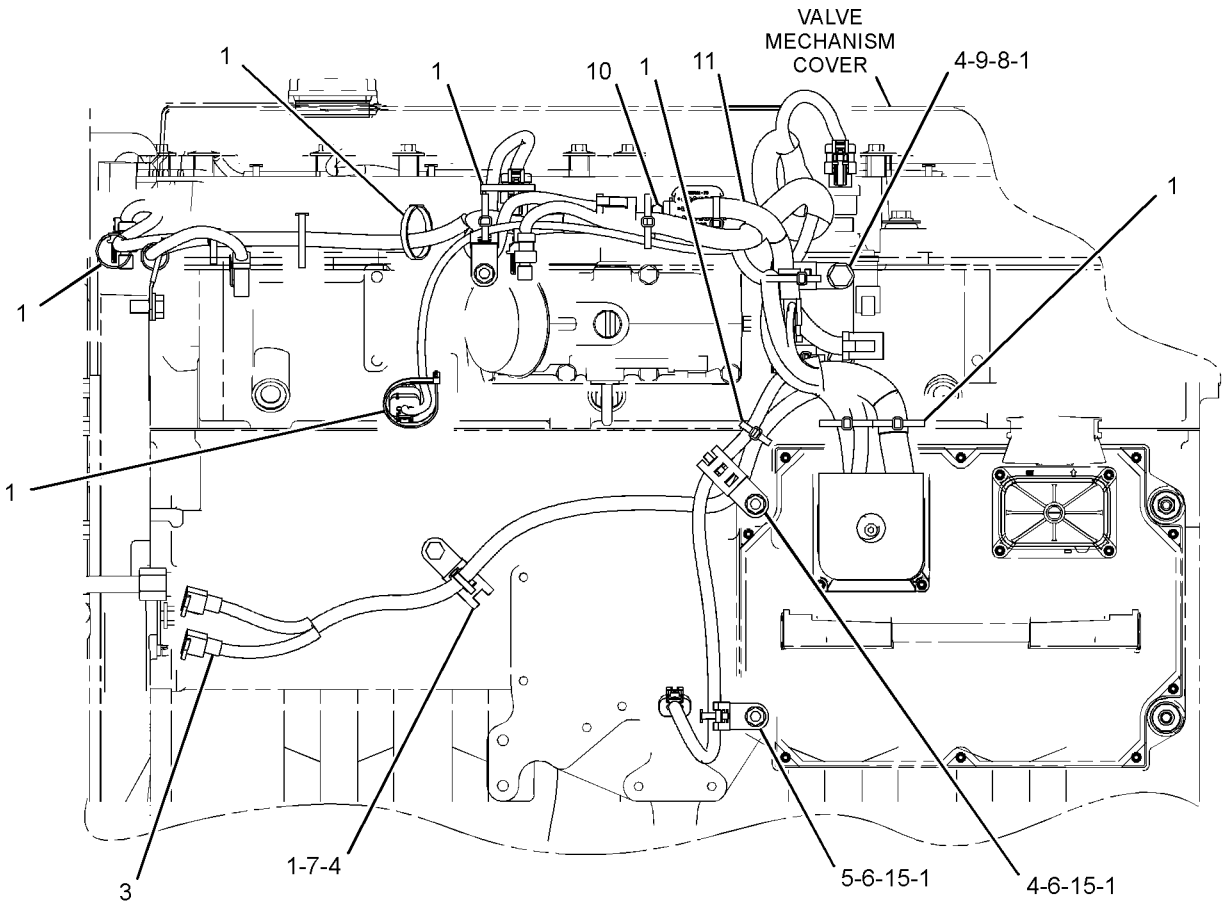

LEFT SIDE VIEW OF ENGINE

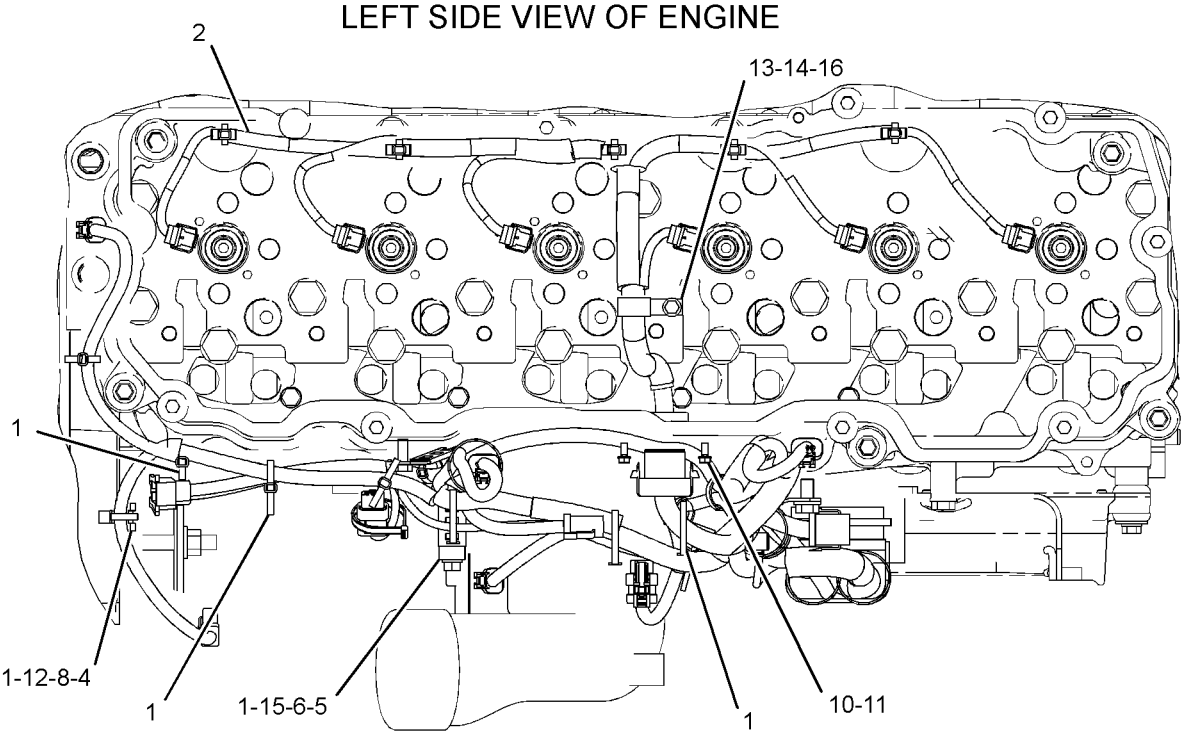

TOP VIEW OF ENGINE

GRAPHIC #1 **<END>** g01941313

238-1568 WIRING GP-FINE SWING

S/N: B6H1-UP; JLP1-UP
PART OF 247-7386 CHASSIS AR

SMCS-1408 **i02989641**

NOTE	REF NO	GRAPHIC REF	PART NUMBER	QTY	PART NAME 1 2 3 4 5 6 (PRODUCT LEVEL)	SEE PAGE
	1	1	**111-4836**	4	CLIP	
	2	1	**111-4837**	3	CLIP	
	3	1	**275-6865**	1	HARNESS AS-SOLENOID (FINE SWING)	
	4	1	**238-2171**	1	BRACKET AS	
	5	1	**8T-4121**	7	WASHER-HARD (11X21X2.5-MM THK)	
M	6	1	**8T-4136**	1	BOLT (M10X1.5X25-MM)	
M	7	1	**8T-4137**	6	BOLT (M10X1.5X20-MM)	

M-METRIC PART

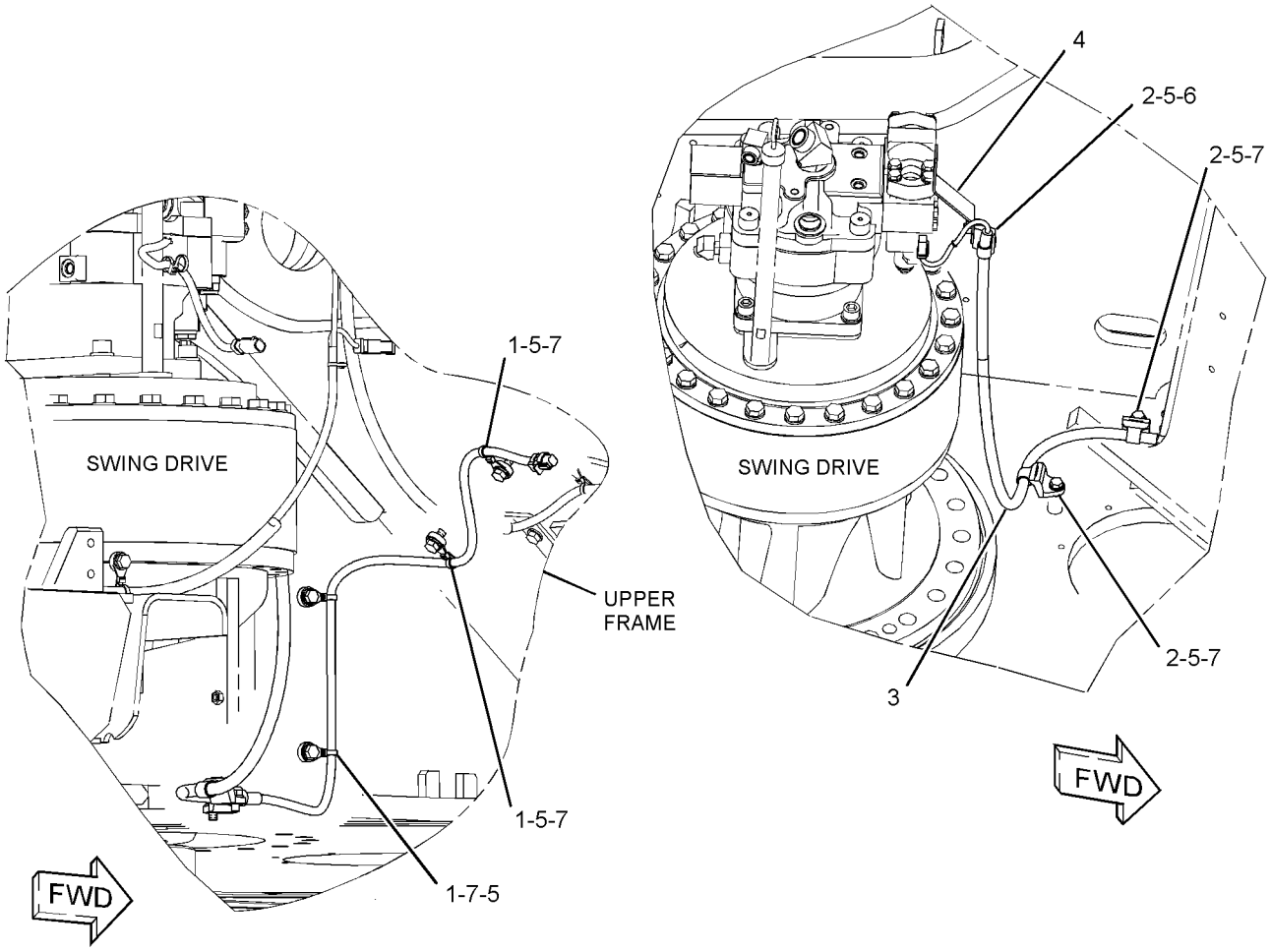

GRAPHIC #1 **<END>** g01520390

259-5062 WIRING GP-FUEL SYSTEM–PRIMING PUMP

S/N: B6H1-UP; JLP1-UP
PART OF 247-7501 PUMP GP-FUEL PRIMING
AN ATTACHMENT

SMCS-1408 **i03602227**

NOTE	REF NO	GRAPHIC REF	PART NUMBER	QTY	PART NAME 1 2 3 4 5 6 (PRODUCT LEVEL)	SEE PAGE
	1	1	**3S-2093**	10	STRAP-CABLE	
	2	1	**7K-1181**	16	STRAP-CABLE	
	3	1	**137-6606**	1	FILM-IDENTIFICATION (FUEL)	
Y	4	1	**165-5970**	1	SWITCH GP-TOGGLE (FUEL PRIMING PUMP)	345
	5	1	**275-6938**	1	HARNESS AS-PUMP (FUEL PRIMING)	
		1	**155-2260**	1	KIT-CONNECTING PLUG (3-PIN)	
		1	**155-2270**	1	KIT-CONNECTING PLUG (2-PIN)	
					(EACH PLUG KIT INCLUDES PLUG AS,WEDGE & INTERFACE SEAL)	
		1	**243-4507**	1	RECEPTACLE AS-CONNECTOR (4-PIN)	

Y-SEPARATE ILLUSTRATION

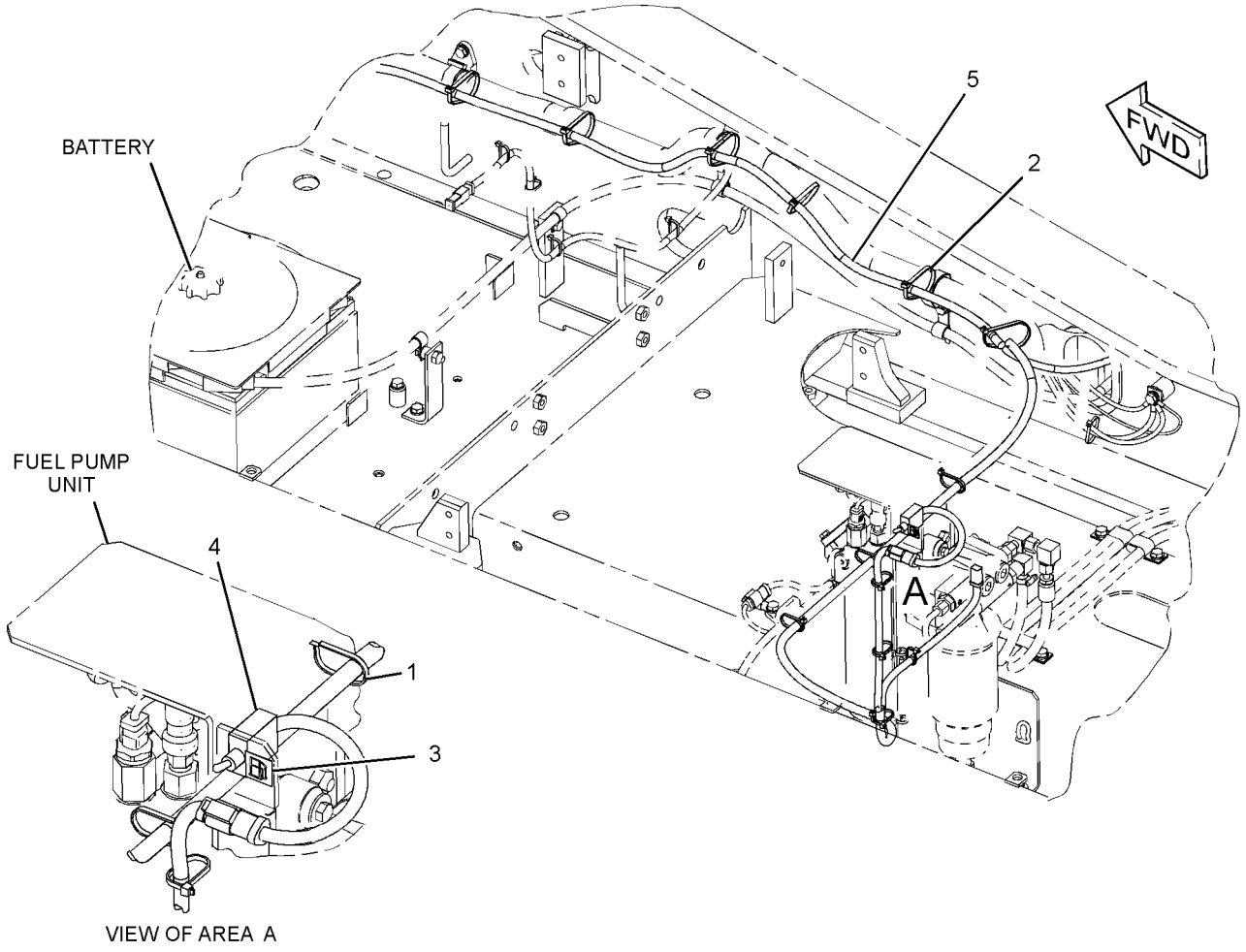

GRAPHIC #1 **<END>** g01238569

269-3410 WIRING GP-HEATER–AIR INLET MANIFOLD

S/N: THX1-UP

PART OF 224-9843 ENGINE AR, 240-1861, 270-2771, 301-3082 ENGINE AR-COMPLETE

SMCS-7304 **i03347965**

NOTE	REF NO	GRAPHIC REF	PART NUMBER	QTY	PART NAME 1 2 3 4 5 6 (PRODUCT LEVEL)	SEE PAGE
	1	1	**3S-2093**	1	STRAP-CABLE	
Y	2	1	**209-5582**	1	SWITCH GP-MAGNETIC (24-VOLT) (AIR INLET HEATER RELAY)	336
	3	1	**224-1377**	1	WIRE AS	
		1	**2L-0273**	2	FITTING (RUBBER)	
		1	**5P-3454**	1	TERMINAL-RING (4-GA, 5/16-IN SCREW)	
		1	**178-2513**	1	RING-TERMINAL	
	4	1	**283-1226**	1	BRACKET AS	
	5	1	**208-9277**	2	BOLT-FLANGE HEAD (M8X1X25-MM)	
	6	1	**6V-5839**	2	WASHER (11X21X2.5-MM THK)	
M	7	1	**6V-6317**	2	BOLT (M10X1.5X20-MM)	

M-METRIC PART
Y-SEPARATE ILLUSTRATION

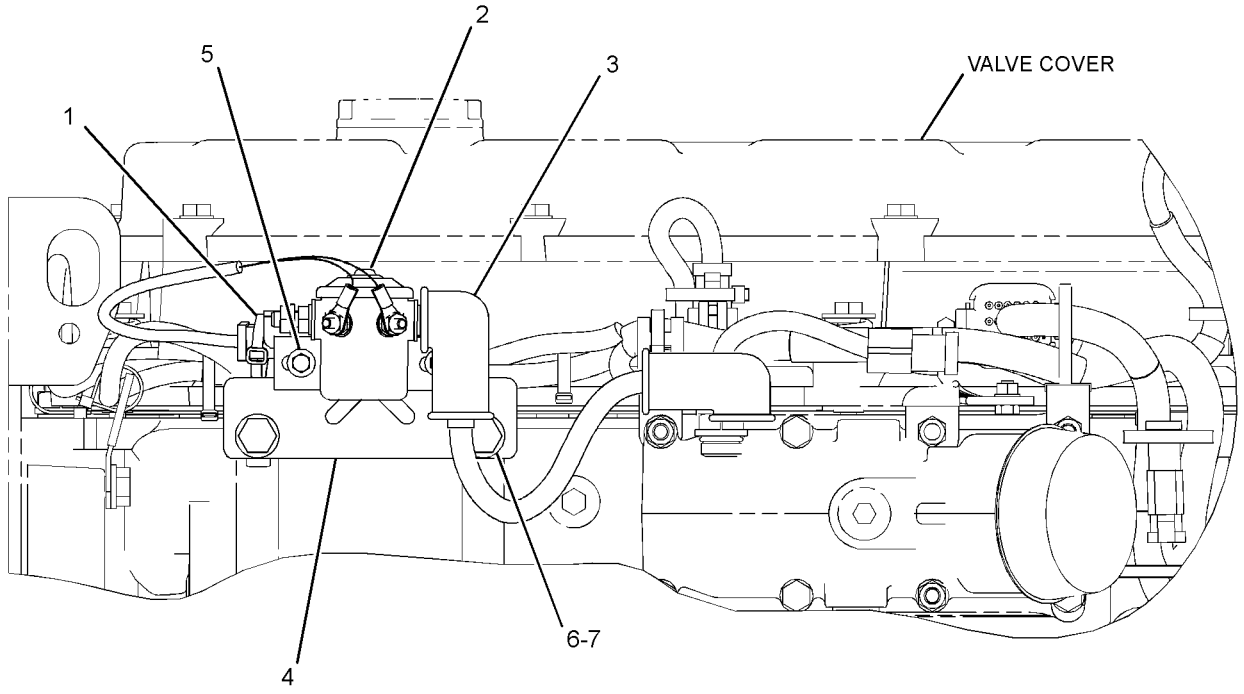

LEFT SIDE VIEW OF ENGINE

GRAPHIC #1 **<END>** g01724439

259-4964 WIRING GP-MEDIUM PRESSURE

S/N: B6H1-UP; JLP1-UP
PART OF 270-8795 CONTROL AR-AUXILIARY
AN ATTACHMENT

SMCS-1408 **i02567651**

NOTE	REF NO	GRAPHIC REF	PART NUMBER	QTY	PART NAME 1 2 3 4 5 6 (PRODUCT LEVEL)	SEE PAGE
	1	1	**3S-2093**	6	STRAP-CABLE	
	2	1	**7K-1181**	3	STRAP-CABLE	
	3	1	**102-7886**	1	SLEEVE	
	4	1	**204-1611**	1	STRAP-CABLE	
	5	1	**259-5125**	1	HARNESS AS-CONTROL	
		1	**155-2270**	1	KIT-CONNECTING PLUG (2-PIN)	
					(INCLUDES PLUG AS, WEDGE, AND INTERFACE SEAL)	
		1	**243-4508**	1	RECEPTACLE AS-CONNECTOR (6-PIN)	
	6	1	**132-5789**	1	CLIP	
	7	1	**8T-4121**	1	WASHER-HARD (11X21X2.5-MM THK)	
M	8	1	**8T-4198**	1	BOLT (M10X1.5X100-MM)	

M-METRIC PART

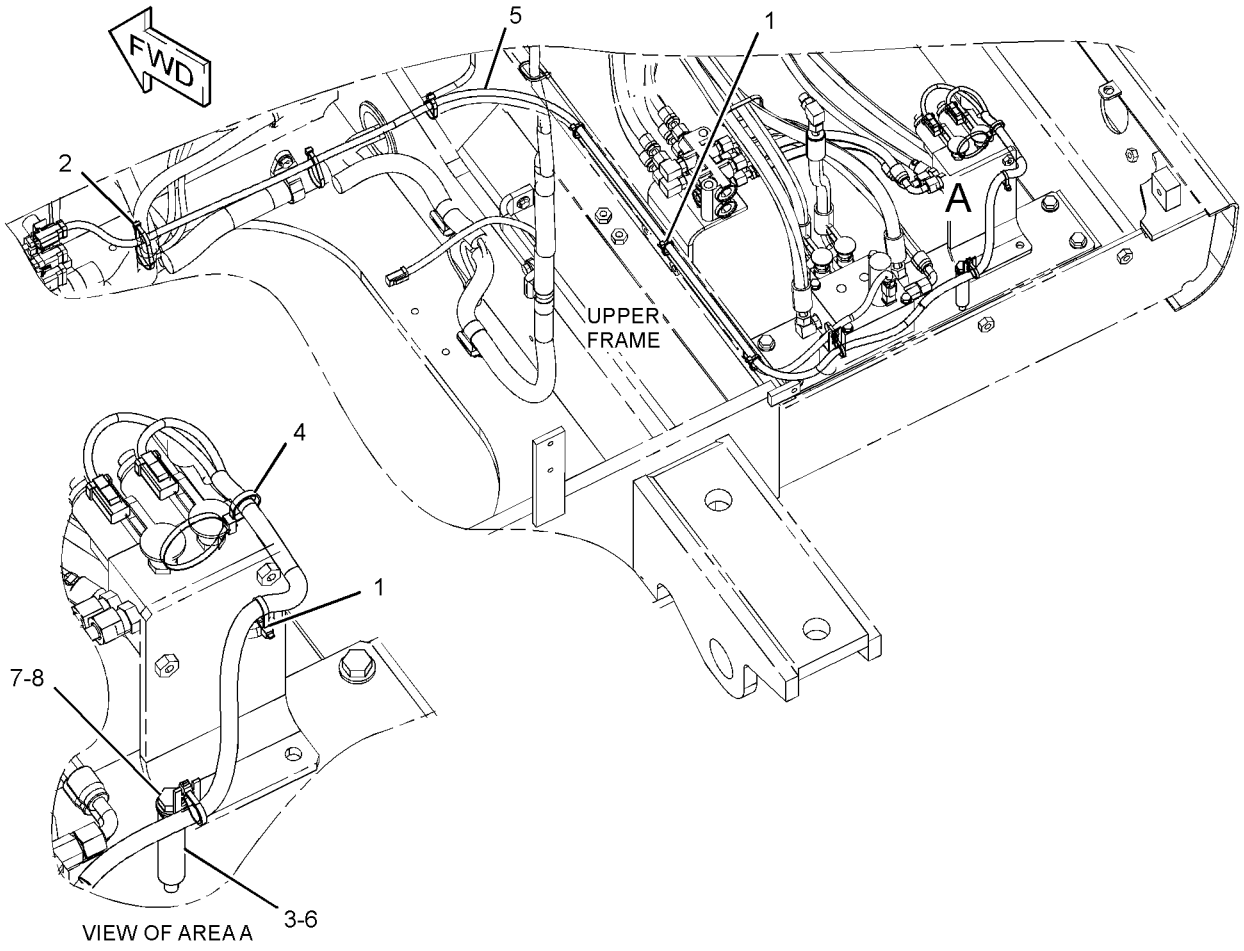

GRAPHIC #1 **<END>** g01154974

251-0430 WIRING GP-PLATFORM

S/N: B6H1-UP; JLP1-UP
PART OF 229-9072 OPERATOR AR

SMCS-1408 **i02490073**

NOTE	REF NO	GRAPHIC REF	PART NUMBER	QTY	PART NAME 1 2 3 4 5 6 (PRODUCT LEVEL)	SEE PAGE
	1	1	**3S-2093**	6	STRAP-CABLE	
	2	1	**7G-1060**	1	STRAP AS-GROUND	
	3	1	**7K-1181**	18	STRAP-CABLE	
	4	1	**111-4836**	4	CLIP	
	5	1	**111-4838**	2	CLIP	
	6	1	**111-4839**	2	STRAP	
	7	1	**116-0118**	14	CLIP	
	8	1	**234-1122**	1	COVER	
	9	1	**251-0299**	1	HARNESS AS-SWITCH (SECONDARY SHUTDOWN)	
		1	**243-4505**	1	RECEPTACLE AS-CONNECTOR (2-PIN)	
	10	1	**267-7592**	1	HARNESS AS-PLATFORM	
		1	**102-8802**	5	KIT-RECEPTACLE (2-PIN)	
		1	**102-8804**	1	KIT-RECEPTACLE (4-PIN)	
					(EACH RECEPTACLE KIT INCLUDES RECEPTACLE AS & WEDGE)	
		1	**3S-2093**	23	STRAP-CABLE	
		1	**155-2270**	12	KIT-CONNECTING PLUG (2-PIN)	
		1	**155-2271**	1	KIT-CONNECTING PLUG (4-PIN)	
					(EACH PLUG KIT INCLUDES PLUG AS,WEDGE & INTERFACE SEAL)	
		1	**197-4385**	3	DIODE	
		1	**243-4505**	2	RECEPTACLE AS-CONNECTOR (2-PIN)	
		1	**243-4507**	1	RECEPTACLE AS-CONNECTOR (4-PIN)	
		1	**243-4508**	4	RECEPTACLE AS-CONNECTOR (6-PIN)	
		1	**243-4509**	1	RECEPTACLE AS-CONNECTOR (8-PIN)	
		1	**243-4510**	2	RECEPTACLE AS-CONNECTOR (12-PIN)	
		1	**247-2693**	1	RECEPTACLE AS-CONNECTOR (6-PIN)	
		1	**239-7352**	2	PLUG AS-CONNECTOR (6-PIN)	
		1	**153-2620**	1	PLUG AS-CONNECTOR (54-PIN, BLACK)	
		1	**155-2272**	1	PLUG AS-CONNECTOR (4-PIN)	
		1	**230-4009**	3	PLUG AS-CONNECTOR (12-PIN)	
		1	**230-4011**	4	PLUG AS-CONNECTOR (2-PIN)	
		1	**230-5010**	3	PLUG AS-CONNECTOR (6-PIN)	
		1	**239-7352**	1	PLUG AS-CONNECTOR (6-PIN)	
M	11	1	**095-0728**	2	SCREW-MACHINE (M4X0.7X12-MM)	
	12	1	**096-6166**	2	WASHER-HARD (4.5X9X1-MM THK)	
	13	1	**3E-5169**	1	GUARD-SWITCH	
	14	1	**4D-1836**	1	SWITCH AS-TOGGLE (SECONDARY SHUTDOWN)	
M	15	1	**7X-2621**	7	BOLT (M10X1.5X12-MM)	
	16	1	**8T-4121**	14	WASHER-HARD (11X21X2.5-MM THK)	
M	17	1	**8T-4137**	7	BOLT (M10X1.5X20-MM)	

M-METRIC PART

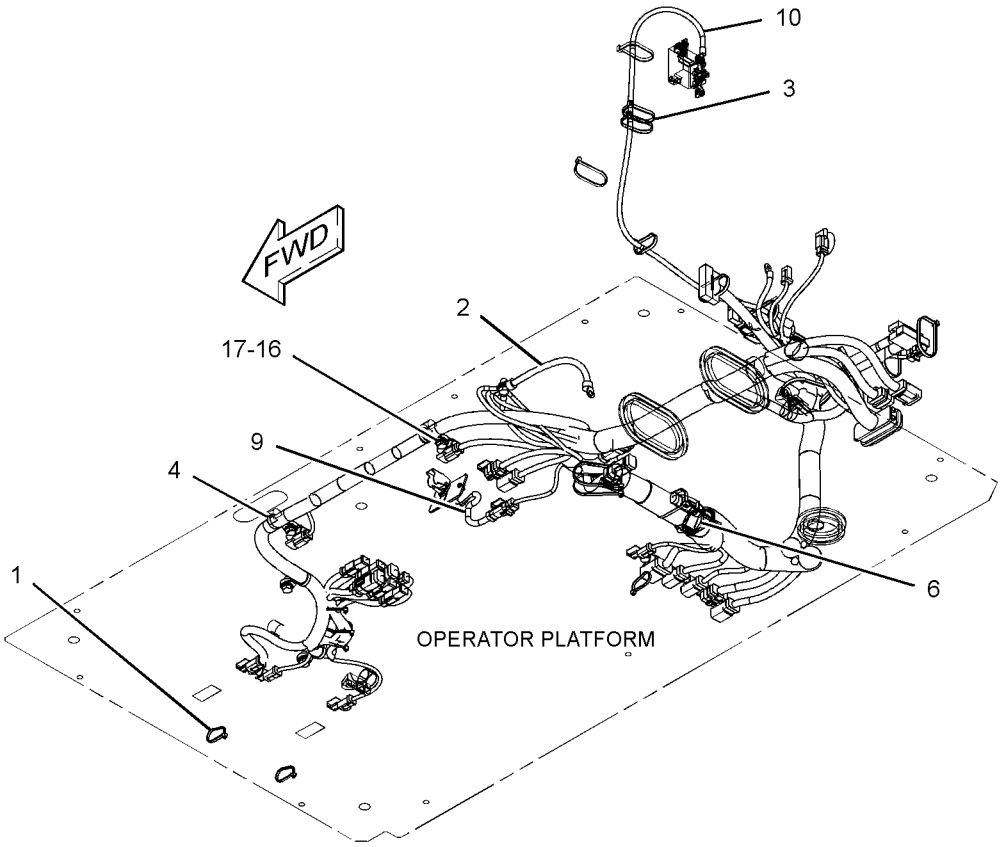

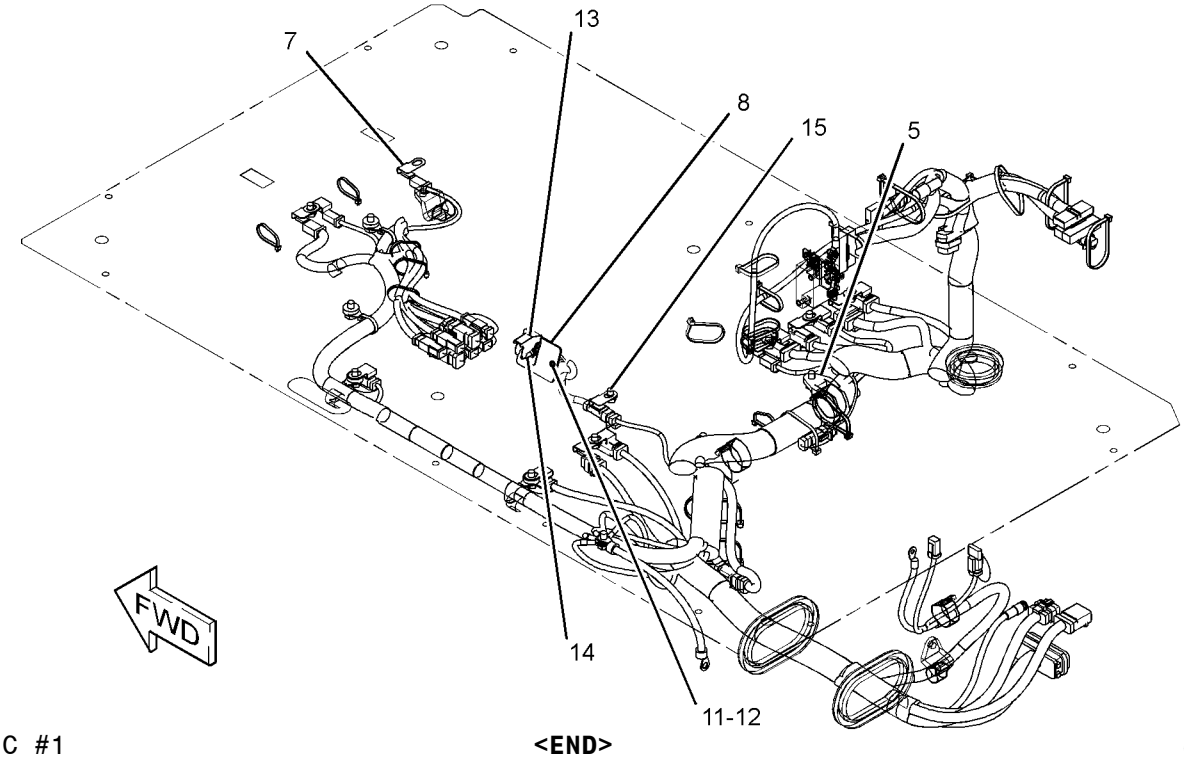

GRAPHIC #1 **<END>** g01152308

238-1565 WIRING GP-QUICK COUPLER

S/N: B6H1-UP; JLP1-UP
PART OF 237-3307 CONTROL AR-COUPLER, 279-5323 LINES GP-COUPLER
AN ATTACHMENT

SMCS-1408, 6129 **i02508808**

NOTE	REF NO	GRAPHIC REF	PART NUMBER	QTY	PART NAME 1 2 3 4 5 6 (PRODUCT LEVEL)	SEE PAGE
	1	1	**3S-2093**	7	STRAP-CABLE	
	2	1	**7K-1181**	16	STRAP-CABLE	
	3	1	**238-1588**	1	HARNESS AS-SOLENOID (QUICK COUPLER DISENGAGE)	
		1	**230-4011**	1	PLUG AS-CONNECTOR (2-PIN)	
		1	**243-4505**	1	RECEPTACLE AS-CONNECTOR (2-PIN)	

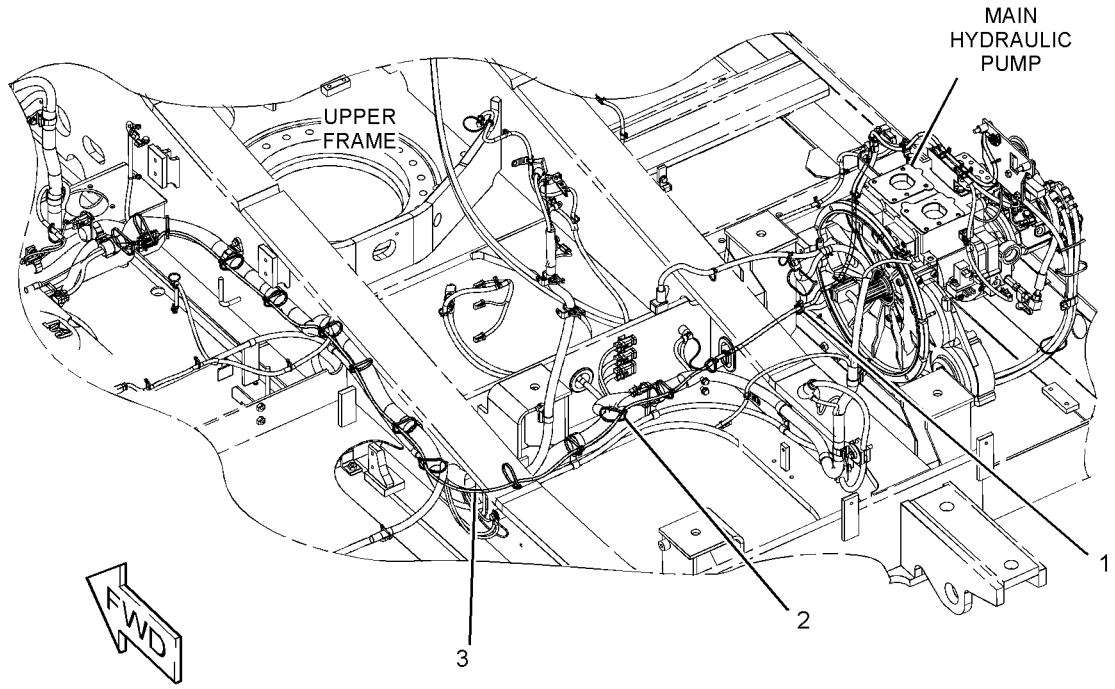

GRAPHIC #1 **<END>** g01217034

267-7748 WIRING GP-QUICK COUPLER

S/N: B6H1-UP; JLP1-UP
PART OF 268-6821 CONTROL AR-COUPLER
AN ATTACHMENT

SMCS-1408, 6129 **i02663242**

NOTE	REF NO	GRAPHIC REF	PART NUMBER	QTY	PART NAME 1 2 3 4 5 6 (PRODUCT LEVEL)	SEE PAGE
	1	1	**3S-2093**	21	STRAP-CABLE	
	2	1	**7K-1181**	22	STRAP-CABLE	
	3	1	**204-1611**	2	STRAP-CABLE	
	4	1	**267-7830**	1	HARNESS AS-QUICK COUPLER	
E		1	**125-7874**		TUBE-HEAT SHRINK (5.72-MM DIA) (10-CM)	
		1	**102-8802**	1	KIT-RECEPTACLE (2-PIN)	
					(INCLUDES RECEPTACLE AS & WEDGE)	
		1	**155-2270**	3	KIT-CONNECTING PLUG (2-PIN)	
					(EACH INCLUDES PLUG AS, WEDGE & INTERFACE SEAL)	
		1	**243-4507**	1	RECEPTACLE AS-CONNECTOR (4-PIN)	
	5	1	**4P-7581**	1	CLIP	
	6	1	**8T-4121**	1	WASHER-HARD (11X21X2.5-MM THK)	
M	7	1	**8T-4136**	1	BOLT (M10X1.5X25-MM)	

E-ORDER BY THE CENTIMETER
M-METRIC PART

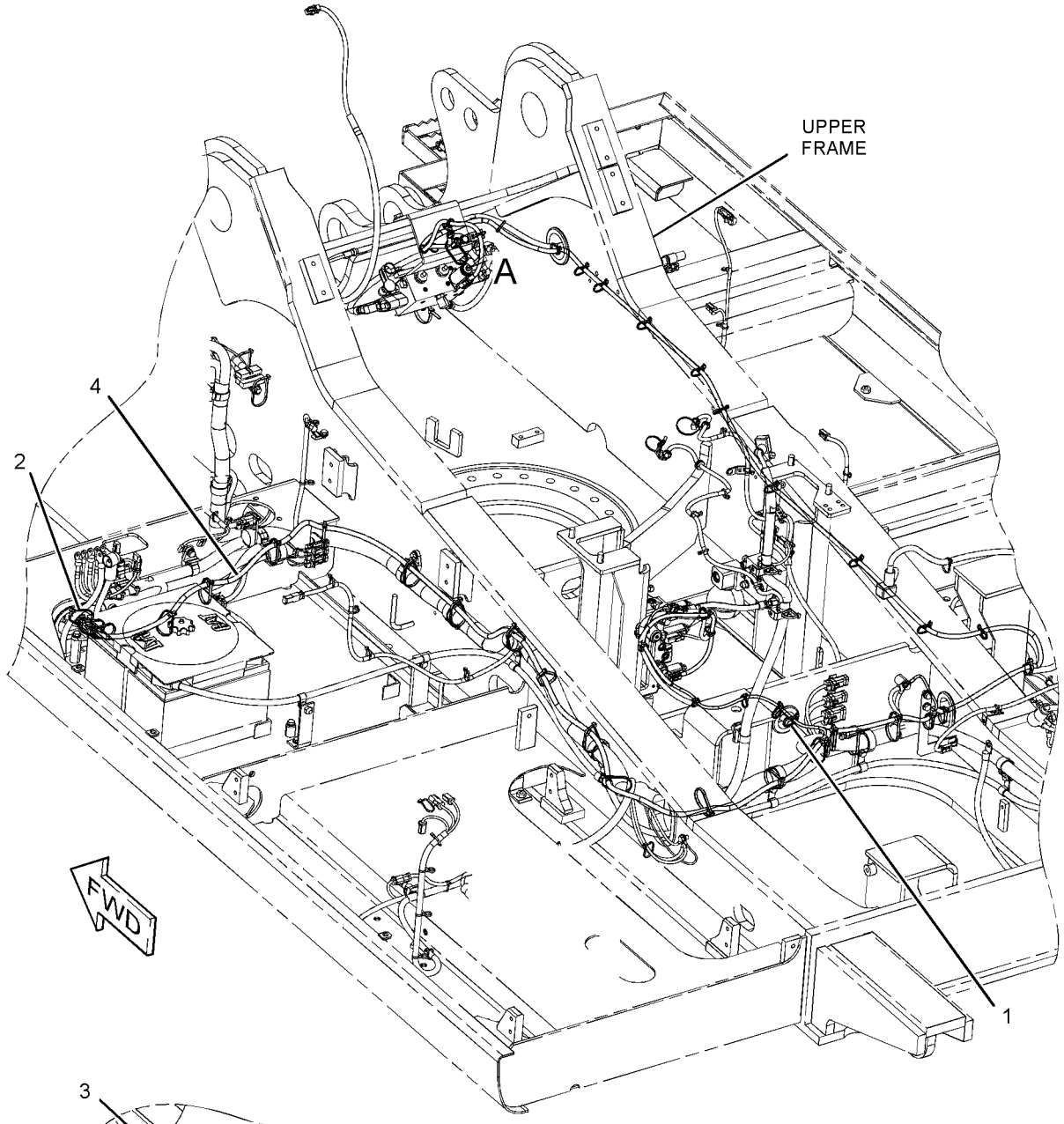

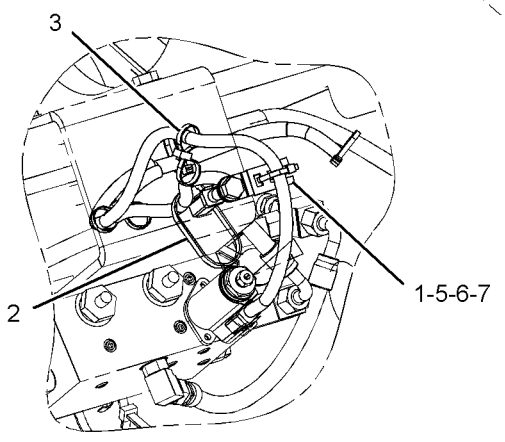

VIEW OF AREA A

GRAPHIC #1 **<END>** g01203697

238-1570 WIRING GP-REFUELING PUMP–REFUELING

S/N: B6H1-UP; JLP1-UP
PART OF 229-1784 PUMP AR-FUEL TRANSFER
AN ATTACHMENT
TYPE 1

SMCS-1408 **i03602220**

NOTE	REF NO	GRAPHIC REF	PART NUMBER	QTY	PART NAME 1 2 3 4 5 6 (PRODUCT LEVEL)	SEE PAGE
	1	1	**3S-2093**	16	STRAP-CABLE	
	2	1	**9X-3495**	1	CLIP AS	
	3	1	**149-5050**	1	RELAY (24-VOLT) (REFUELING PUMP, STOP)	
	3A	1	**149-5050**	1	RELAY (24-VOLT) (REFUELING PUMP, START)	
	4	1	**213-0772**	1	SWITCH AS-MAGNETIC (24-VOLT) (REFUELING POWER RELAY)	
	5	1	**238-1579**	1	HARNESS AS-PUMP (REFUELING)	
	6	1	**238-1593**	1	WIRE AS	
Y	7	1	**238-1594**	1	SWITCH GP-PUSH BUTTON (REFUELING PUMP, START)	340
Y	8	1	**238-1596**	1	SWITCH GP-PUSH BUTTON (REFUELING PUMP, STOP)	341
M	9	1	**096-2591**	2	SCREW-MACHINE (M5X0.8X35-MM)	
M	10	1	**7X-2619**	2	BOLT (M6X1X10-MM)	
	11	1	**8T-0328**	3	WASHER-HARD (5.5X10X1-MM THK)	
M	12	1	**8T-4199**	1	BOLT (M8X1.25X12-MM)	
	13	1	**8T-4224**	1	WASHER-HARD (8.8X16X2-MM THK)	
	14	1	**9X-8256**	2	WASHER (6.6X12X2-MM THK)	
	15	1	**275-6993**	1	COVER	

M-METRIC PART
Y-SEPARATE ILLUSTRATION

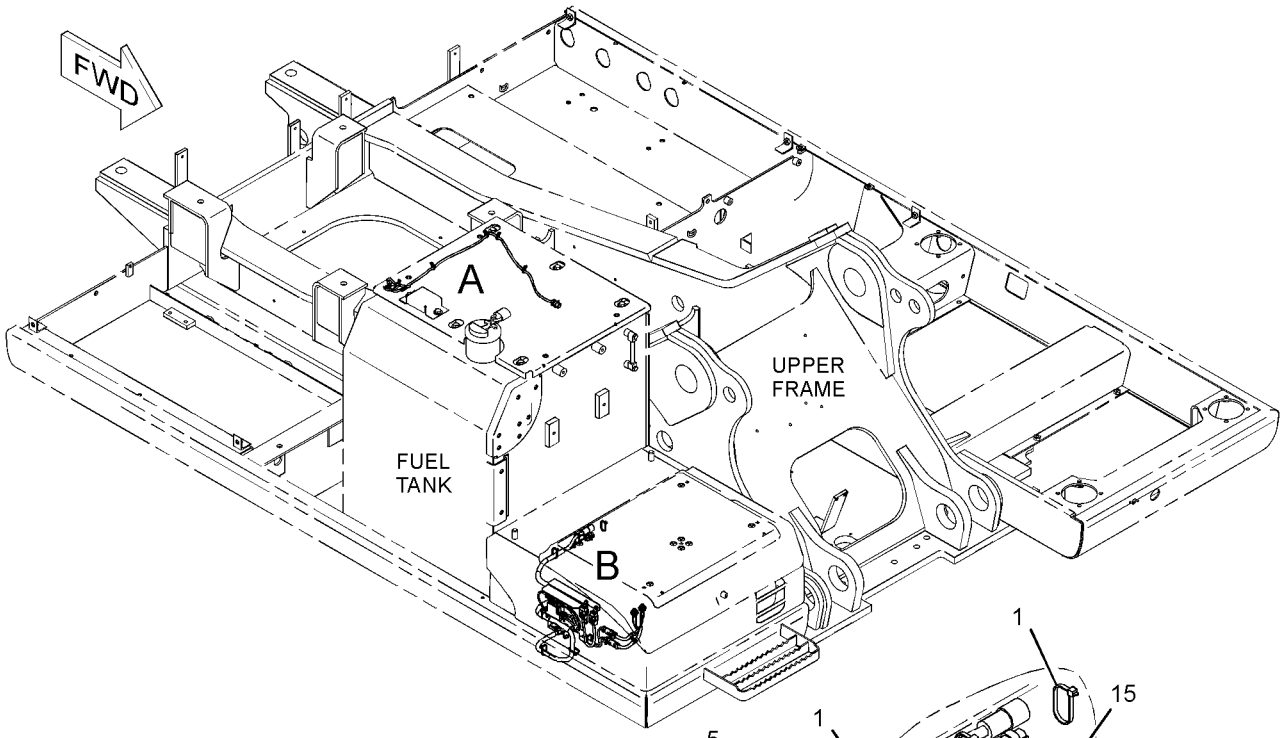

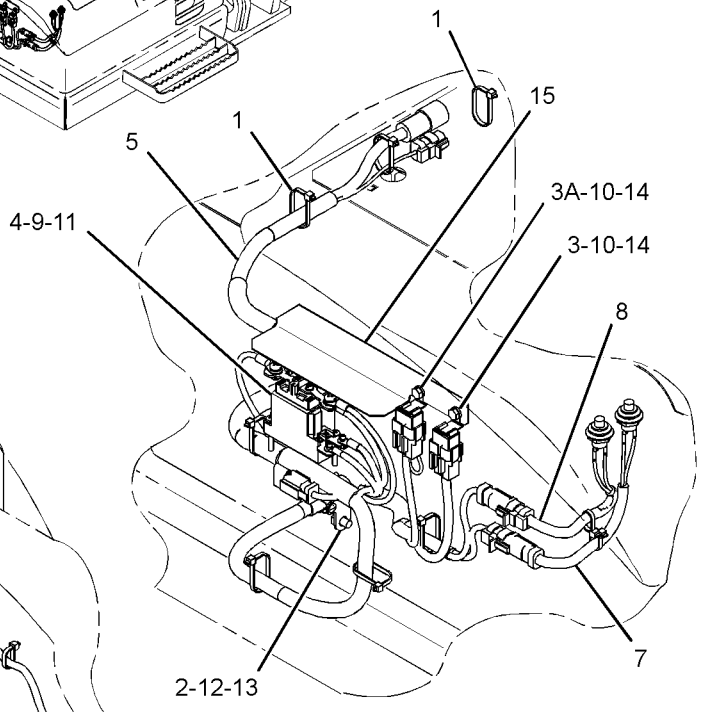

VIEW OF AREA B

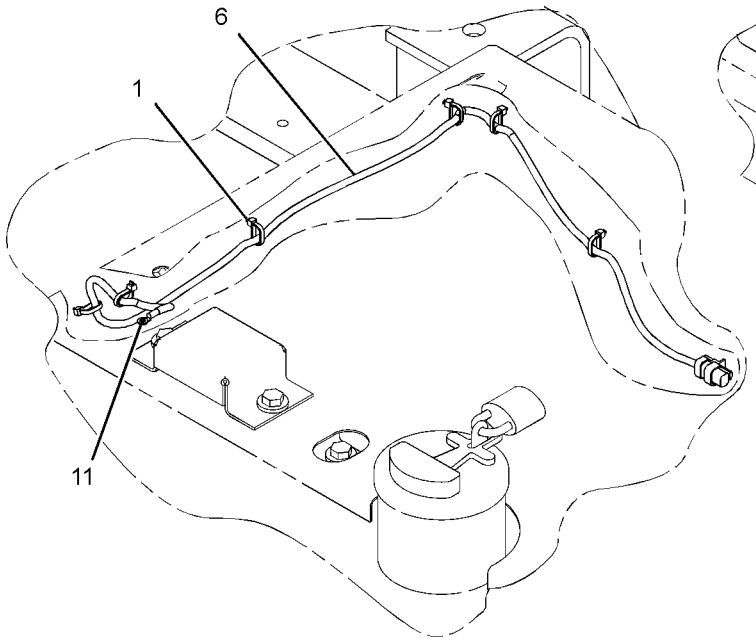

VIEW OF AREA A

GRAPHIC #1 **<END>** g01481290

238-1570 WIRING GP-REFUELING PUMP–REFUELING

S/N: B6H1-UP; JLP1-UP
PART OF 229-1784 PUMP AR-FUEL TRANSFER
AN ATTACHMENT
TYPE 2

SMCS-1408 **i03602222**

NOTE	REF NO	GRAPHIC REF	PART NUMBER	QTY	PART NAME 1 2 3 4 5 6 (PRODUCT LEVEL)	SEE PAGE
	1	1	**3S-2093**	16	STRAP-CABLE	
	2	1	**9X-3495**	1	CLIP AS	
	3	1	**149-5050**	1	RELAY (24-VOLT) (REFUELING PUMP, STOP)	
	3A	1	**149-5050**	1	RELAY (24-VOLT) (REFUELING PUMP, START)	
	4	1	**213-0772**	1	SWITCH AS-MAGNETIC (24-VOLT) (REFUELING POWER RELAY)	
	5	1	**238-1579**	1	HARNESS AS-PUMP (REFUELING)	
C	6	1	**319-1335**	1	HARNESS AS-WIRING	
Y	7	1	**238-1594**	1	SWITCH GP-PUSH BUTTON (REFUELING PUMP, START)	340
Y	8	1	**238-1596**	1	SWITCH GP-PUSH BUTTON (REFUELING PUMP, STOP)	341
M	9	1	**096-2591**	2	SCREW-MACHINE (M5X0.8X35-MM)	
M	10	1	**7X-2619**	2	BOLT (M6X1X10-MM)	
C	11	1	**8T-0328**	2	WASHER-HARD (5.5X10X1-MM THK)	
M	12	1	**8T-4199**	1	BOLT (M8X1.25X12-MM)	
	13	1	**8T-4224**	1	WASHER-HARD (8.8X16X2-MM THK)	
	14	1	**9X-8256**	2	WASHER (6.6X12X2-MM THK)	
	15	1	**275-6993**	1	COVER	
C	16	1	**7K-1181**	11	STRAP-CABLE	

C-CHANGE FROM PREVIOUS TYPE
M-METRIC PART
Y-SEPARATE ILLUSTRATION

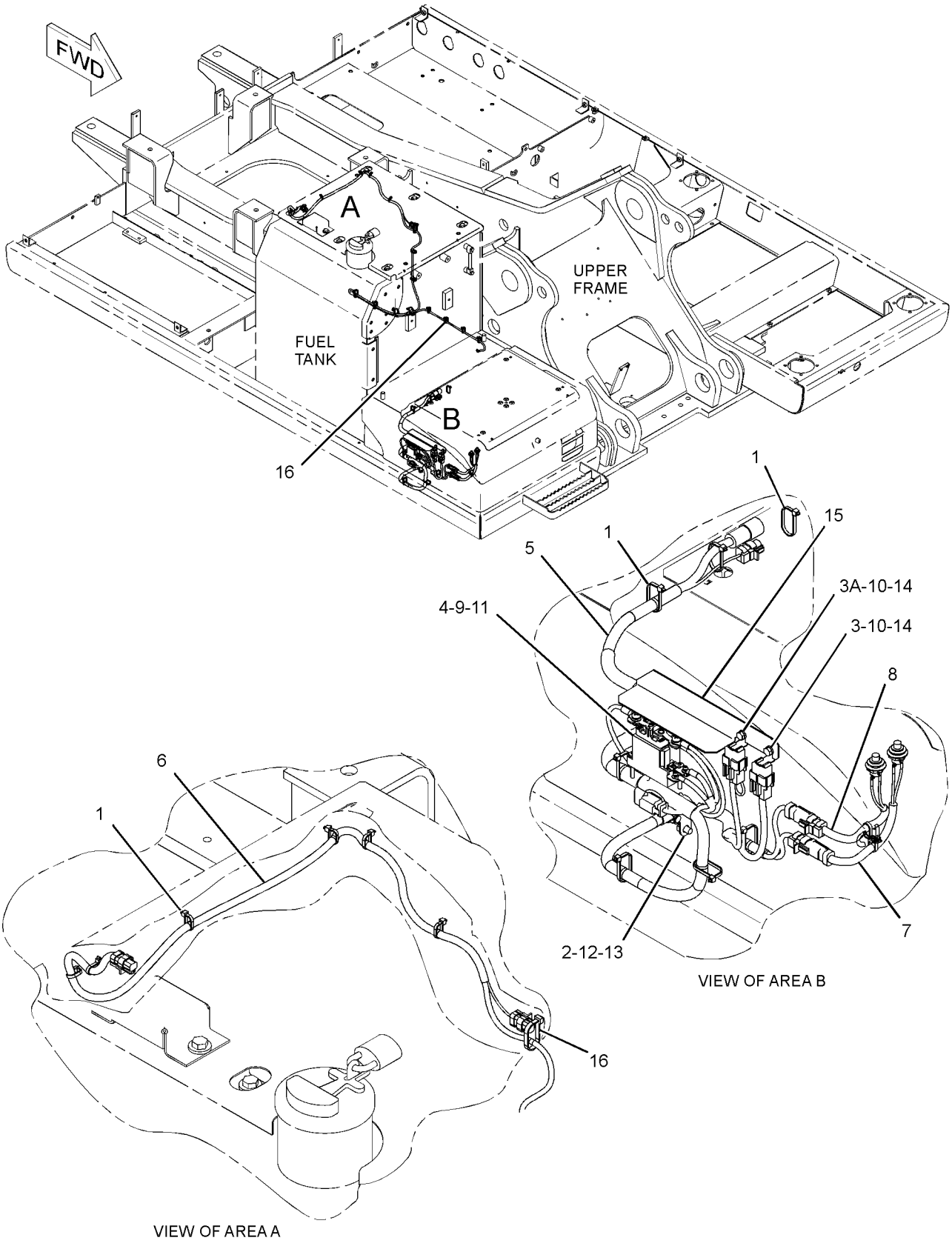

GRAPHIC #1 **<END>** g01620056

227-6188 FINAL DRIVE GP—WITH MOTOR

S/N: B6H270-567; JLP1-383

PART OF 267-6861 DRIVE GP-FINAL, 191-2576 POWER TRAIN AR

SMCS-4050 **i02604305**

NOTE	PART NUMBER	QTY	PART NAME 1 2 3 4 5 6 (PRODUCT LEVEL)	SEE PAGE
Y	**227-6189**	1	FINAL DRIVE GP (WITHOUT MOTOR)	399
Y	*191-5606*	1	MOTOR & MTG GP-TRAVEL	863

Y-SEPARATE ILLUSTRATION

<END>

POWER TRAIN

227-6189 DRIVE GP-FINAL—WITHOUT MOTOR

S/N: B6H270-567; JLP1-383

PART OF 227-6188 DRIVE GP-FINAL

SMCS-4050 **i03602306**

NOTE	REF NO	GRAPHIC REF	PART NUMBER	QTY	PART NAME 1 2 3 4 5 6 (PRODUCT LEVEL)	SEE PAGE
	1	2	**3E-2338**	2	PLUG-PIPE	
	2	2	**7Y-0639**	1	GEAR-SUN (21-TEETH)	
	3	2	**7Y-0642**	1	GEAR-RING (63-TEETH)	
	4	2	**7Y-0643**	1	CARRIER	
	5	2	**7Y-0645**	1	CARRIER	
	6	2	**7Y-0659**	3	GEAR-PLANETARY (22-TEETH)	
	7	2	**7Y-0661**	3	SHAFT-PLANETARY	
	8	2	**7Y-0662**	4	SHAFT-PLANETARY	
	9	2	**7Y-0663**	4	GEAR-PLANETARY (20-TEETH)	
	10	2	**7Y-0667**	1	RING-RETAINING	
	11	2	**7Y-0673**	1	GEAR-RING (73-TEETH)	
	12	2	**7Y-0676**	3	GEAR-PLANETARY (24-TEETH)	
	13	2	**7Y-0731**	1	CARRIER AS	
		2	**7Y-0656**	3	SHAFT-PLANETARY	
B	14	2	**7Y-1056**	1	SHIM (0.8-MM THK)	
B	15	2	**7Y-1057**	1	SHIM (1-MM THK)	
M	16	2	**7Y-1094**	14	WASHER (66X102X1-MM THK)	
M	17	1	**7Y-5235**	20	BOLT (M24X3X190-MM)	
B	18	2	**094-0577**	1	PLATE (7-MM THK)	
B	19	2	**094-0578**	1	PLATE (8-MM THK)	
B	20	2	**094-0579**	1	PLATE (9-MM THK)	
B	21	2	**094-0580**	1	PLATE (10-MM THK)	
	22	2	**110-7231**	1	GEAR-SUN (18-TEETH)	
	23	2	**114-1541**	6	PIN-DOWEL	
	24	2	**191-2521**	1	GEAR-SUN (23-TEETH)	
	25	2	**199-4582**	3	BEARING AS	
	26	2	**199-4583**	11	BEARING AS	
	27	2	**213-4737**	1	SEAL GP-DUO-CONE	
		2	**205-9114**	2	RING-TORIC	
	28	2	**227-6190**	1	HOUSING-MOTOR	
	29	2	**227-6191**	1	HOUSING	
	30	2	**227-6192**	1	GEAR-COUPLING	
B	31	2	**267-6809**	1	SHIM (0.75-MM THK)	
B	32	2	**267-6810**	1	SHIM (0.85-MM THK)	
B	33	2	**267-6811**	1	SHIM (0.9-MM THK)	
B	34	2	**267-6812**	1	SHIM (0.95-MM THK)	
B	35	2	**267-6813**	1	SHIM (1.2-MM THK)	
B	36	2	**267-6814**	1	SHIM (1.4-MM THK)	
B	37	2	**267-6815**	1	SHIM (1.8-MM THK)	
B	38	2	**267-6816**	1	SHIM (2-MM THK)	
B	39	2	**267-6817**	1	SHIM (2.3-MM THK)	
	40	2	**279-0344**	2	BEARING AS-TAPERED ROLLER	
	41	2	**093-1731**	1	RING-RETAINING	
	42	2	**094-0584**	6	WASHER (40.3X72X1-MM THK)	
	43	2	**095-0891**	7	PIN-SPRING	
M	44	1	**096-3216**	2	SETSCREW-SOCKET (M12X1.75X12-MM)	
	45	2	**191-2526**	1	COVER	
	46	2	**191-2645**	1	COUPLING	
	47	2	**2P-3628**	1	SEAL-O-RING	
M	48	2	**6V-8133**	10	BOLT (M24X3X80-MM)	
	49	2	**6V-8237**	10	WASHER (26X44X4-MM THK)	
	50	2	**7M-8485**	2	SEAL-O-RING	
	51	2	**7Y-0595**	2	SPACER (58X79.6X6-MM THK)	
	52	2	**7Y-0644**	1	SPACER (163X190X8-MM THK)	
	53	1	**8T-4167**	20	WASHER-HARD (26X44X4-MM THK)	
	54	2	**8T-4240**	3	RING-RETAINING	

227-6189 **DRIVE GP-FINAL** *(contd.)* **i03602306**

NOTE	REF NO	GRAPHIC REF	PART NUMBER	QTY	PART NAME 1 2 3 4 5 6 (PRODUCT LEVEL)	SEE PAGE
M	55	2	**9X-6032**	12	BOLT-SOCKET HEAD (M10X1.5X30-MM)	
B	56	2	**1U-8846**		SEALANT-GASKET	

B-USE AS REQUIRED
M-METRIC PART

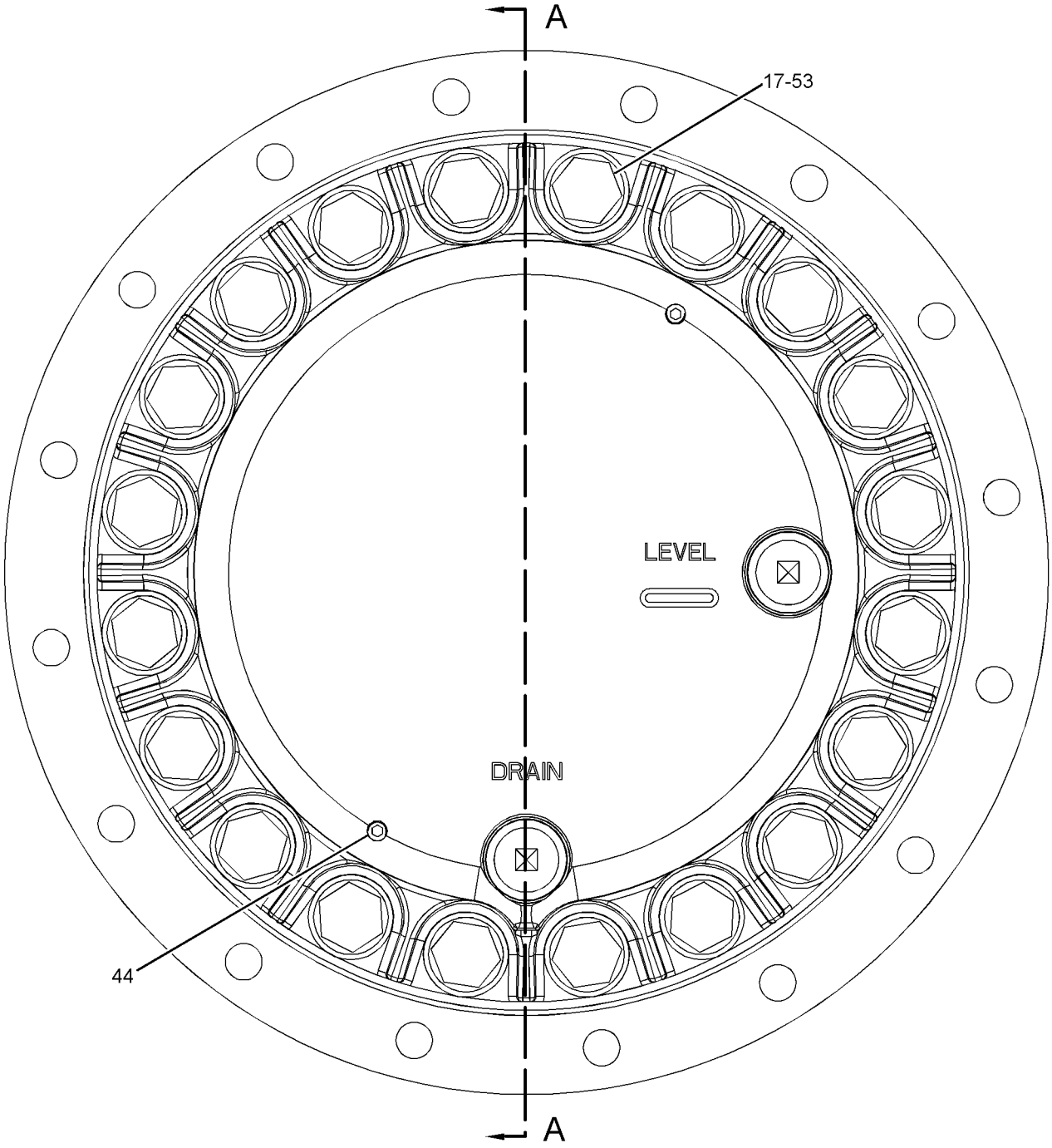

REFER TO ALL ILLUSTRATIONS OF
THIS GROUP FOR AUXILIARY VIEWS

GRAPHIC #1

g01940435

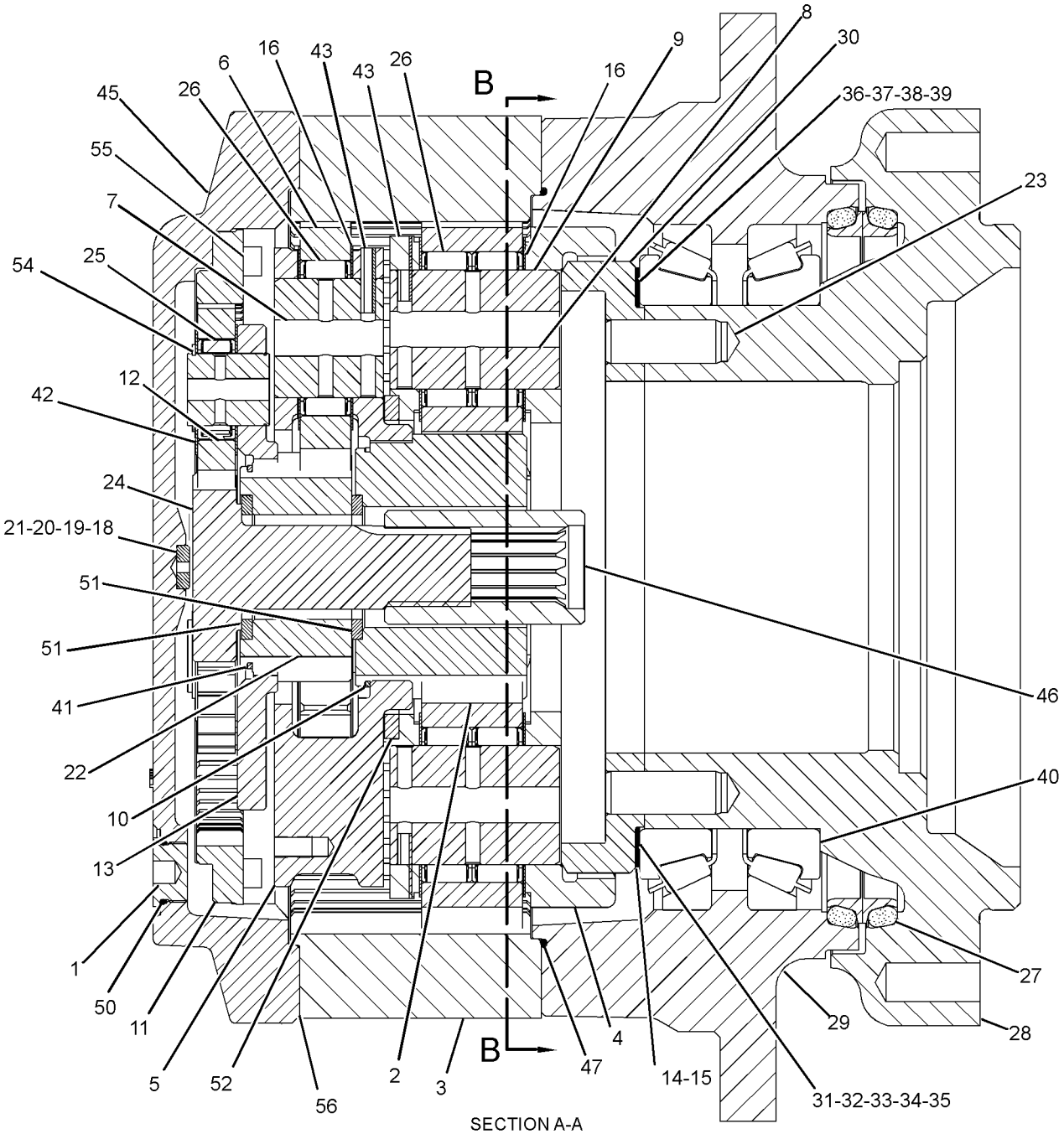

SECTION A-A

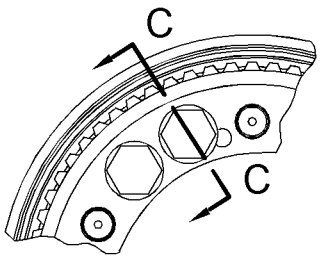

SECTION B-B

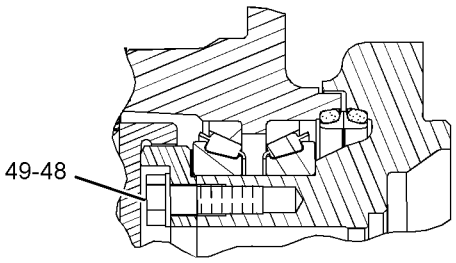

SECTION C-C

GRAPHIC #2 **<END>** g01940436

227-6195 FINAL DRIVE GP–WITH MOTOR

S/N: B6H1-566; JLP1-291

PART OF 267-6861 DRIVE GP-FINAL, 191-2576 POWER TRAIN AR

SMCS-4050 **i02333644**

NOTE	REF NO	GRAPHIC REF	PART NUMBER	QTY	PART NAME 1 2 3 4 5 6 (PRODUCT LEVEL)	SEE PAGE
Y	1	1	*191-5606*	1	MOTOR & MTG GP-TRAVEL	863
Y	2	1	**227-6196**	1	FINAL DRIVE GP (WITHOUT MOTOR)	404

Y-SEPARATE ILLUSTRATION

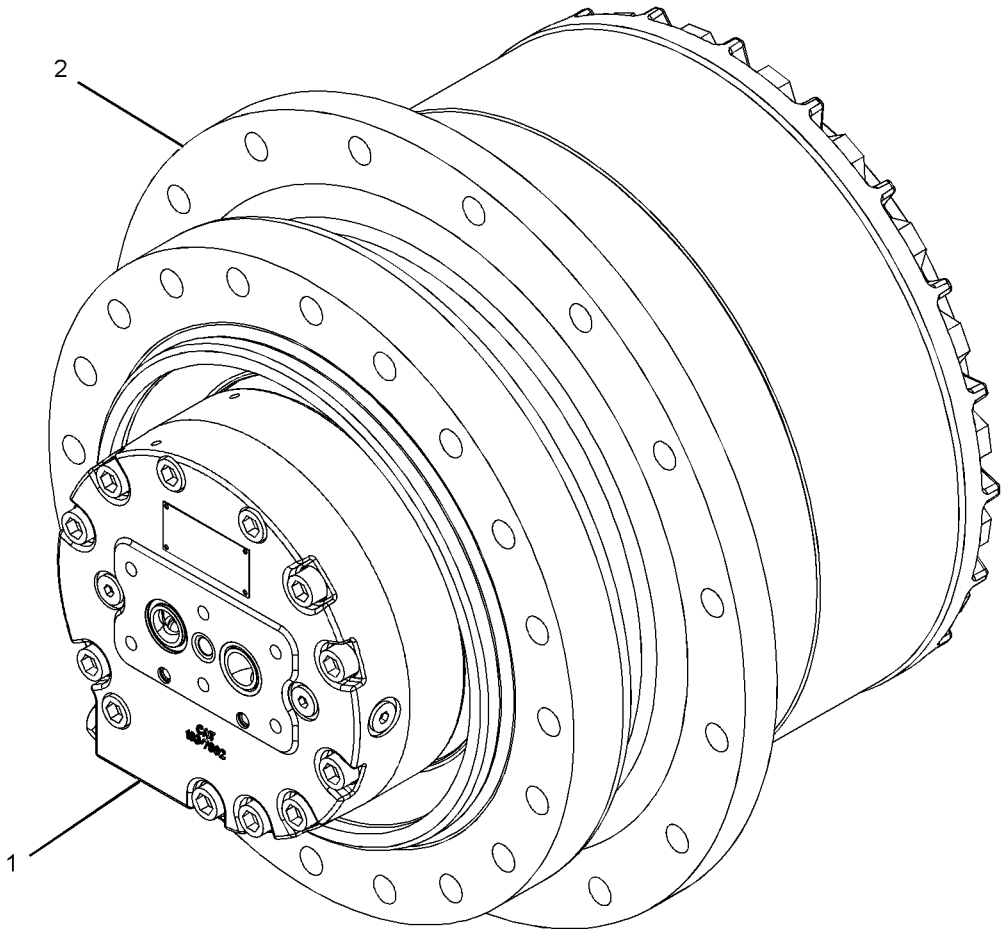

GRAPHIC #1 **<END>** g01187997

227-6196 DRIVE GP-FINAL—WITHOUT MOTOR

S/N: B6H1-566; JLP1-291

PART OF 227-6195 DRIVE GP-FINAL

SMCS-4050 **i03626113**

NOTE	REF NO	GRAPHIC REF	PART NUMBER	QTY	PART NAME 1 2 3 4 5 6 (PRODUCT LEVEL)	SEE PAGE
	1	1	**3E-2338**	2	PLUG-PIPE	
	2	1	**7Y-0639**	1	GEAR-SUN (21-TEETH)	
	3	1	**7Y-0642**	1	GEAR-RING (63-TEETH)	
	4	1	**7Y-0645**	1	CARRIER	
	5	1	**7Y-0659**	3	GEAR-PLANETARY (22-TEETH)	
	6	1	**7Y-0661**	3	SHAFT-PLANETARY	
	7	2	**7Y-0662**	4	SHAFT-PLANETARY	
	8	2	**7Y-0663**	4	GEAR-PLANETARY (20-TEETH)	
	9	1	**7Y-0667**	1	RING-RETAINING	
	10	1	**7Y-0673**	1	GEAR-RING (73-TEETH)	
	11	1	**7Y-0676**	3	GEAR-PLANETARY (24-TEETH)	
	12	1	**7Y-0731**	1	CARRIER AS	
		1	**7Y-0656**	3	SHAFT-PLANETARY	
M	13	1,2	**7Y-1094**	14	WASHER (66X102X1-MM THK)	
M	14	1	**7Y-5235**	20	BOLT (M24X3X190-MM)	
	15	1	**094-0577**	1	PLATE (7-MM THK)	
	16	1	**094-0578**	1	PLATE (8-MM THK)	
	17	1	**094-0579**	1	PLATE (9-MM THK)	
	18	1	**094-0580**	1	PLATE (10-MM THK)	
	19	1	**110-7231**	1	GEAR-SUN (18-TEETH)	
	20	1	**191-2521**	1	GEAR-SUN (23-TEETH)	
	21	1	**191-2526**	1	COVER	
	22	2	**196-4873**	2	BEARING AS-BALL	
	23	1	**199-4582**	3	BEARING AS	
	24	1,2	**199-4583**	11	BEARING AS	
	25	2	**199-4750**	1	CARRIER-PLANETARY	
	26	2	**213-4737**	1	SEAL GP-DUO-CONE	
		2	**205-9114**	1	RING-TORIC	
	27	2	**227-6100**	1	RETAINER	
	28	2	**227-6101**	2	PLATE-WASHER	
	29	2	**227-6102**	2	DOWEL	
	30	2	**227-6197**	1	HOUSING-MOTOR	
	31	1	**093-1731**	1	RING-RETAINING	
	32	1	**094-0584**	6	WASHER (40.3X72X1-MM THK)	
	33	1	**095-0891**	7	PIN-SPRING	
M	34	1	**096-3216**	2	SETSCREW-SOCKET (M12X1.75X12-MM)	
	35	1	**191-2645**	1	COUPLING	
	36	2	**199-4580**	1	HOUSING	
	37	2	**2P-3628**	1	SEAL-O-RING	
	38	1	**7M-8485**	2	SEAL-O-RING	
	39	1	**7Y-0595**	2	SPACER (58X79.6X6-MM THK)	
	40	1	**7Y-0644**	1	SPACER (163X190X8-MM THK)	
M	41	2	**8T-0293**	2	BOLT (M12X1.75X20-MM)	
	42	1	**8T-4167**	20	WASHER-HARD (26X44X4-MM THK)	
	43	1	**8T-4240**	3	RING-RETAINING	
M	44	1	**9X-6032**	12	BOLT-SOCKET HEAD (M10X1.5X30-MM)	
B	45	1	**1U-8846**		SEALANT-GASKET	

B-USE AS REQUIRED
M-METRIC PART

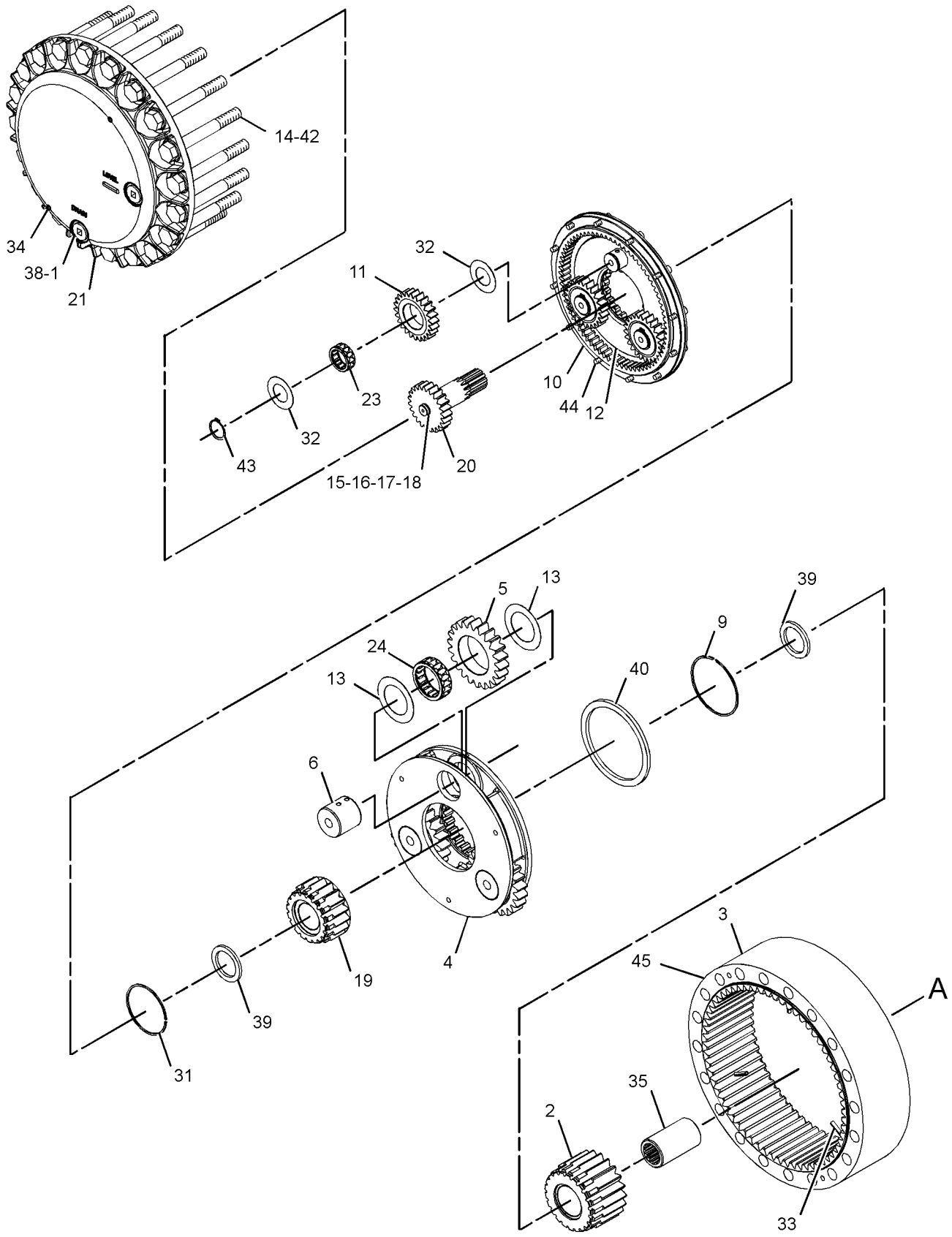

GRAPHIC #1

g01188582

227-6196 **DRIVE GP-FINAL** *(contd.)* **i03626113**

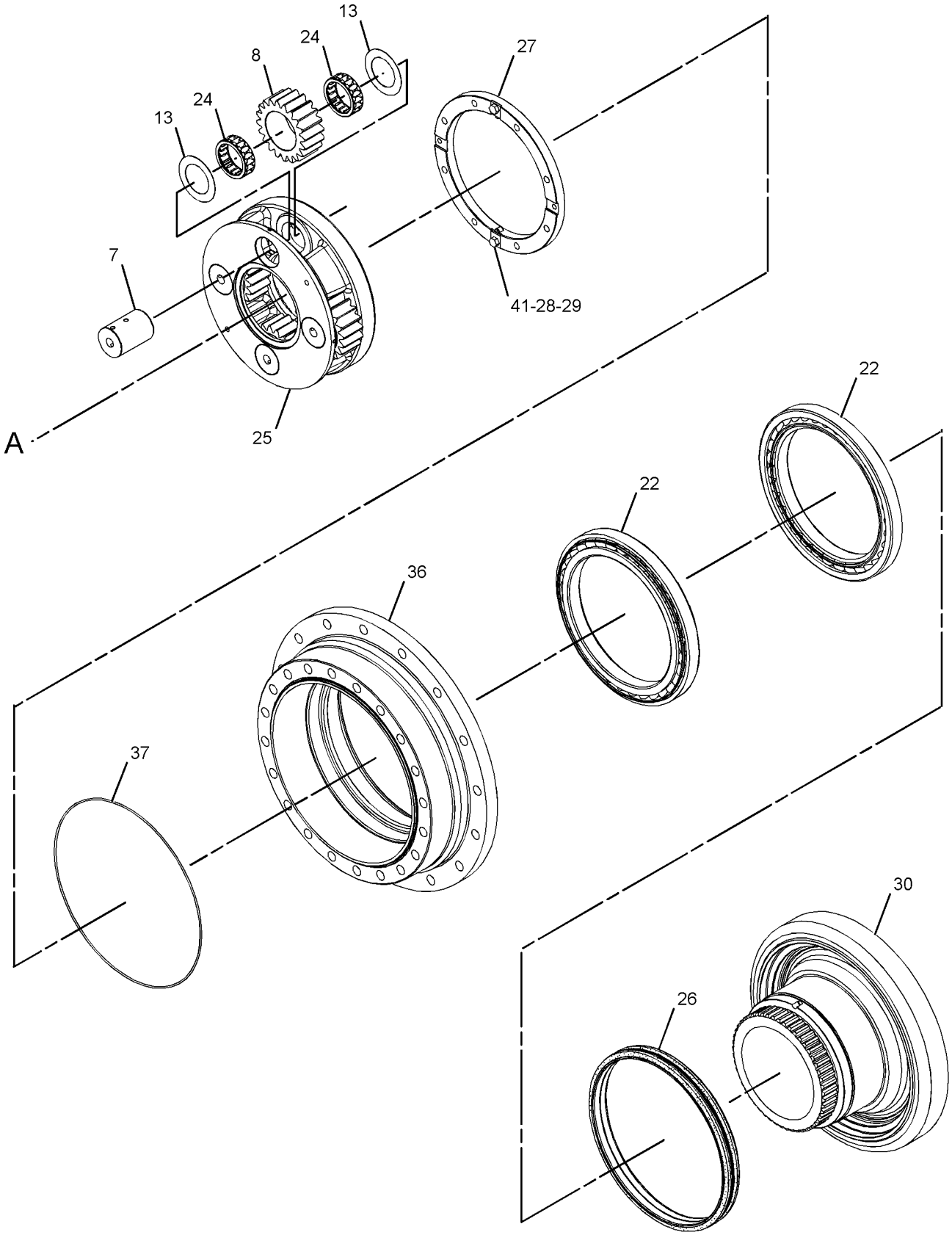

GRAPHIC #2 **<END>** g01188792

267-6861 FINAL DRIVE GP—WITH MOTOR

S/N: B6H270-566; JLP1-291
PART OF 191-2576 POWER TRAIN AR

SMCS-4050 **i02604214**

NOTE	PART NUMBER	QTY	PART NAME 1 2 3 4 5 6 (PRODUCT LEVEL)	SEE PAGE
Y	*227-6188*	1	FINAL DRIVE GP (WITH MOTOR)	398
			—OR—	
Y	*227-6195*	1	FINAL DRIVE GP (WITH MOTOR)	403

Y-SEPARATE ILLUSTRATION

<END>

296-6217 FINAL DRIVE GP–WITH MOTOR

S/N: B6H568-UP; JLP384-UP

PART OF 191-2576 POWER TRAIN AR

SMCS-4050 **i02833048**

NOTE	REF NO	GRAPHIC REF	PART NUMBER	QTY	PART NAME 1 2 3 4 5 6 (PRODUCT LEVEL)	SEE PAGE
Y	1	1	*191-5606*	1	MOTOR & MTG GP-TRAVEL	863
Y	2	1	**296-6218**	1	FINAL DRIVE GP (WITHOUT MOTOR)	409

Y-SEPARATE ILLUSTRATION

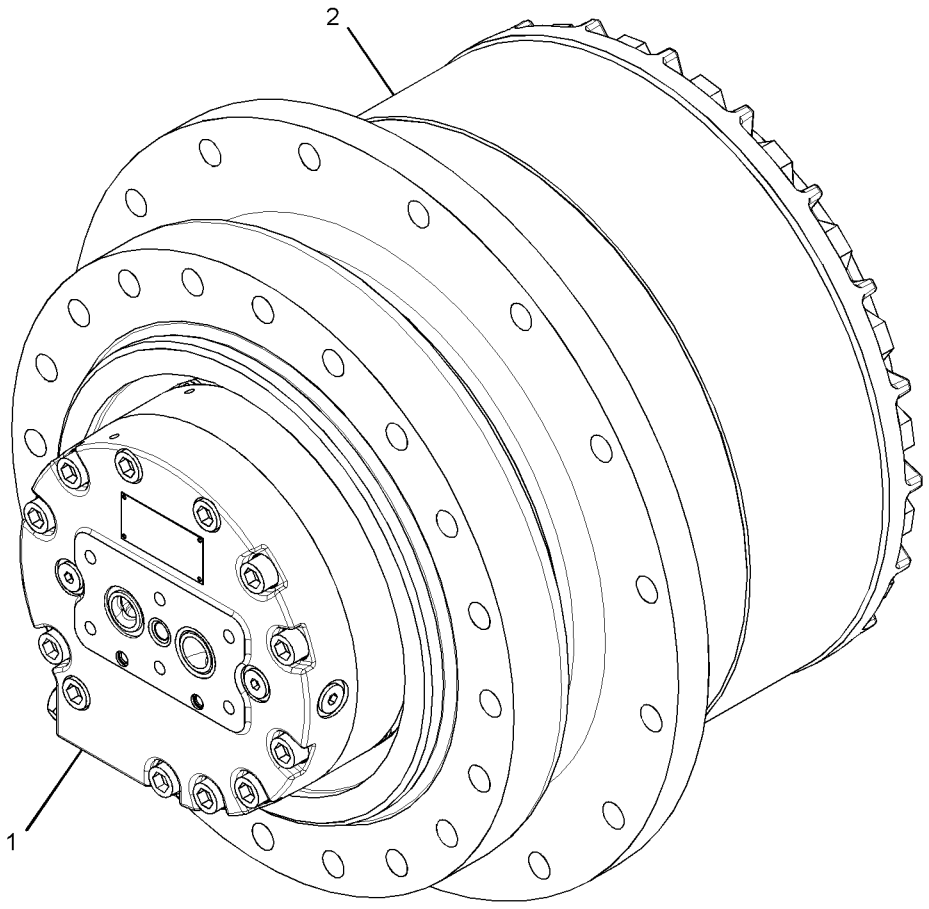

GRAPHIC #1 **<END>** g01479772

296-6218 DRIVE GP-FINAL—WITHOUT MOTOR

S/N: B6H568-UP; JLP384-UP

PART OF 296-6217 DRIVE GP-FINAL

SMCS-4050 **i02833148**

NOTE	REF NO	GRAPHIC REF	PART NUMBER	QTY	PART NAME 1 2 3 4 5 6 (PRODUCT LEVEL)	SEE PAGE
	1	1	**3E-2338**	2	PLUG-PIPE	
	2	1	**7Y-0639**	1	GEAR-SUN (21-TEETH)	
	3	1	**7Y-0642**	1	GEAR-RING (63-TEETH)	
	4	1	**7Y-0643**	1	CARRIER	
	5	1	**7Y-0645**	1	CARRIER	
	6	1	**7Y-0659**	3	GEAR-PLANETARY (22-TEETH)	
	7	1	**7Y-0661**	3	SHAFT-PLANETARY	
	8	1	**7Y-0662**	4	SHAFT-PLANETARY	
	9	1	**7Y-0663**	4	GEAR-PLANETARY (20-TEETH)	
	10	1	**7Y-0667**	1	RING-RETAINING	
	11	1	**7Y-0673**	1	GEAR-RING (73-TEETH)	
	12	1	**7Y-0676**	3	GEAR-PLANETARY (24-TEETH)	
	13	1	**7Y-0731**	1	CARRIER AS	
	13A	1	**7Y-0656**	3	SHAFT-PLANETARY	
BJ	14	1	**7Y-1056**	1	SHIM (0.8-MM THK)	
BJ		1	**7Y-1057**	1	SHIM (1-MM THK)	
BJ		1	**267-6809**	1	SHIM (0.75-MM THK)	
BJ		1	**267-6810**	1	SHIM (0.85-MM THK)	
BJ		1	**267-6811**	1	SHIM (0.9-MM THK)	
BJ		1	**267-6812**	1	SHIM (0.95-MM THK)	
BJ		1	**267-6813**	1	SHIM (1.2-MM THK)	
BJ		1	**267-6814**	1	SHIM (1.4-MM THK)	
BJ		1	**267-6815**	1	SHIM (1.8-MM THK)	
BJ		1	**267-6816**	1	SHIM (2-MM THK)	
BJ		1	**267-6817**	1	SHIM (2.3-MM THK)	
M	16	1	**7Y-1094**	14	WASHER (66X102X1-MM THK)	
M	17	1	**7Y-5235**	20	BOLT (M24X3X190-MM)	
	18	1	**094-0577**	1	PLATE (7-MM THK)	
	19	1	**094-0578**	1	PLATE (8-MM THK)	
	20	1	**094-0579**	1	PLATE (9-MM THK)	
	21	1	**094-0580**	1	PLATE (10-MM THK)	
	22	1	**110-7231**	1	GEAR-SUN (18-TEETH)	
J	23	1	**114-1541**	6	PIN-DOWEL	
	24	1	**191-2521**	1	GEAR-SUN (23-TEETH)	
	25	1	**191-2526**	1	COVER	
	26	1	**199-4582**	3	BEARING AS	
	27	1	**199-4583**	11	BEARING AS	
J	28	1	**227-6190**	1	HOUSING-MOTOR	
J	29	1	**227-6191**	1	HOUSING	
J	30	1	**227-6192**	1	GEAR-COUPLING (66-TEETH)	
CJ	31	1	**255-2272**	1	SEAL GP-DUO-CONE	
		1	**205-9114**	2	RING-TORIC	
J	41	1	**279-0344**	2	BEARING AS-TAPERED ROLLER	
	42	1	**093-1731**	1	RING-RETAINING	
	43	1	**094-0584**	6	WASHER (40.3X72X1-MM THK)	
	44	1	**095-0891**	7	PIN-SPRING	
M	45	1	**096-3216**	2	SETSCREW-SOCKET (M12X1.75X12-MM)	
	46	1	**191-2645**	1	COUPLING	
	47	1	**2P-3628**	1	SEAL-O-RING	
JM	48	1	**6V-8133**	10	BOLT (M24X3X80-MM)	
J	49	1	**6V-8237**	10	WASHER (26X44X4-MM THK)	
	50	1	**7M-8485**	2	SEAL-O-RING	
	51	1	**7Y-0595**	2	SPACER (58X79.6X6-MM THK)	
	52	1	**7Y-0644**	1	SPACER (163X190X8-MM THK)	
	53	1	**8T-4167**	20	WASHER-HARD (26X44X4-MM THK)	
	54	1	**8T-4240**	3	RING-RETAINING	

296-6218 DRIVE GP-FINAL *(contd.)* i02833148

NOTE	REF NO	GRAPHIC REF	PART NUMBER	QTY	PART NAME 1 2 3 4 5 6 (PRODUCT LEVEL)	SEE PAGE
M	55	1	**9X-6032**	12	BOLT-SOCKET HEAD (M10X1.5X30-MM)	
B	56	1	**1U-8846**		SEALANT-GASKET	
					AVAILABLE REPAIR KIT(S):	
J			**296-6219**	1	KIT-HOUSING (FINAL DRIVE)	

B-USE AS REQUIRED
C-CHANGE FROM PREVIOUS TYPE
J-KIT MARKED J SERVICES PART(S) MARKED J
M-METRIC PART

296-6218 DRIVE GP-FINAL *(contd.)* **i02833148**

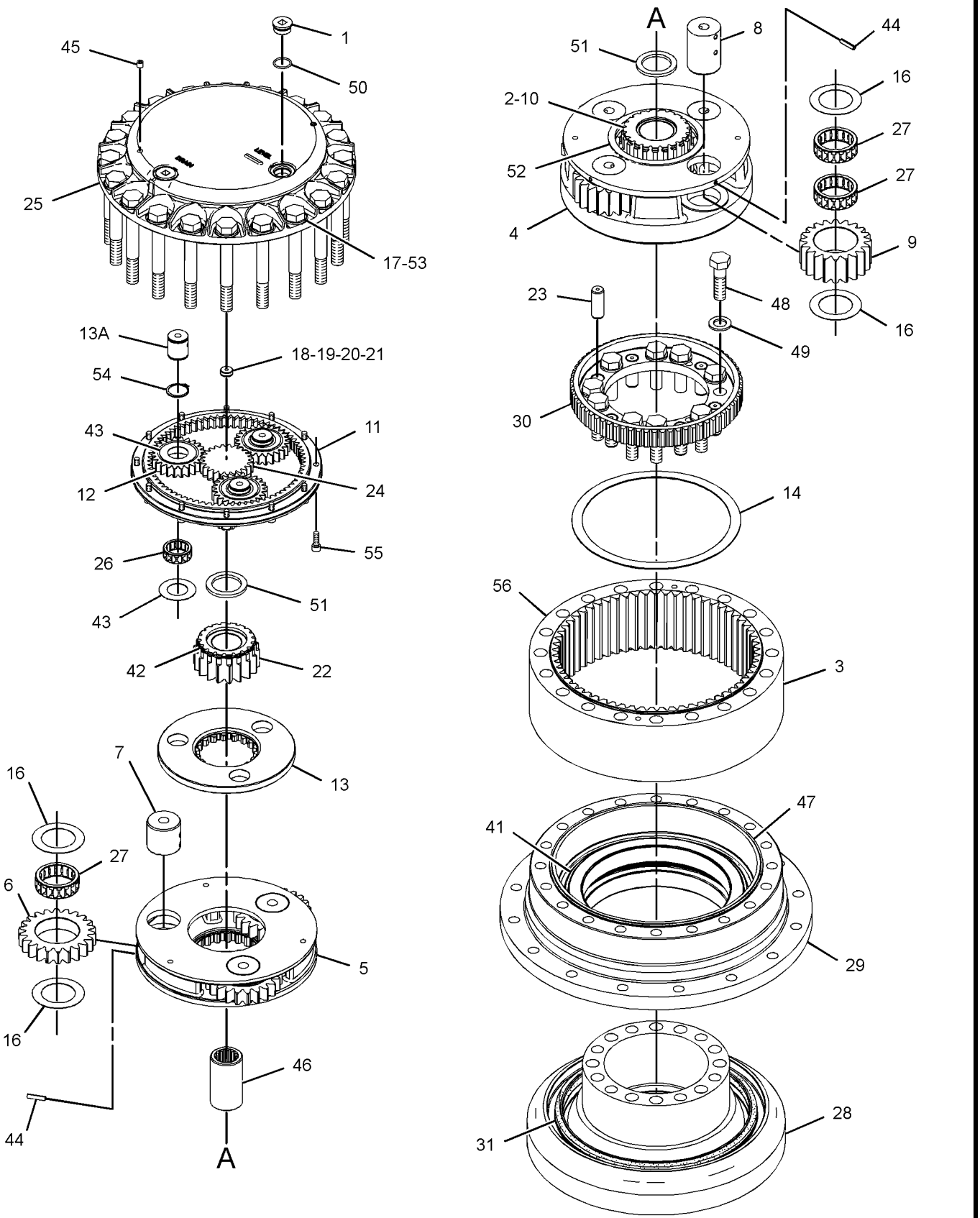

GRAPHIC #1 **<END>** g01378433

POWER TRAIN

191-2576 POWER TRAIN AR

S/N: B6H1-UP; JLP1-UP

PART OF 229-1873, 264-8594 GENERAL AR

SMCS-3000, 4000 **i03758612**

NOTE	PART NUMBER	QTY	PART NAME 1 2 3 4 5 6 (PRODUCT LEVEL)	SEE PAGE
Y	*199-4538*	1	DRIVE GP-SWING (WITH MOTOR)	587
Y	*191-2577*	1	FASTENER GP-SWING & FINAL DR	592
Y	*227-6195*	2	DRIVE GP-FINAL (WITH MOTOR)	403
			S/N: B6H1-269	
Y	*267-6861*	2	DRIVE GP-FINAL (WITH MOTOR)	407
			S/N: B6H270-566; JLP1-291	
Y	*227-6188*	2	DRIVE GP-FINAL (WITH MOTOR)	398
			S/N: B6H567; JLP292-383	
Y	**296-6217**	2	DRIVE GP-FINAL (WITH MOTOR)	408
			S/N: B6H568-UP; JLP384-UP	
Y	*168-6727*	2	SPROCKET GP	413

Y-SEPARATE ILLUSTRATION

<END>

168-6727 SPROCKET GP

S/N: B6H1-UP; JLP1-UP

PART OF 191-2576 POWER TRAIN AR

SMCS-4164 **i01685314**

NOTE	REF NO	GRAPHIC REF	PART NUMBER	QTY	PART NAME 1 2 3 4 5 6 (PRODUCT LEVEL)	SEE PAGE
	1	1	**6Y-5685**	1	SPROCKET-TRACK	
M	2	1	**7X-2575**	16	BOLT (M24X3X60MM)	

M-METRIC PART

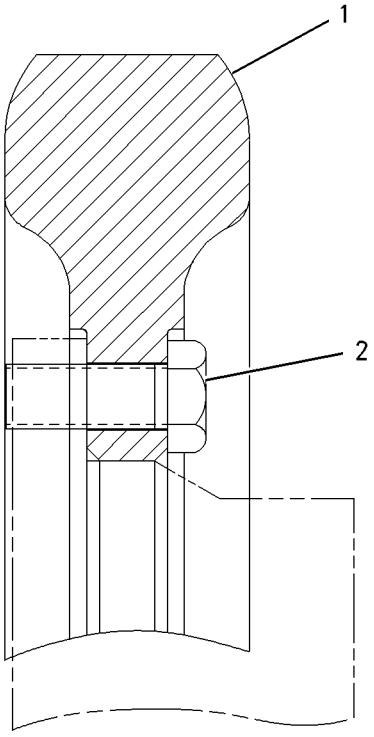

GRAPHIC #1 **<END>** g00801559

FRAME AND BODY

223-3040 BOX & MTG GP-STORAGE

S/N: B6H1-UP; JLP1-UP

PART OF 247-7386 CHASSIS AR

SMCS-7268 **i02489070**

NOTE	REF NO	GRAPHIC REF	PART NUMBER	QTY	PART NAME 1 2 3 4 5 6 (PRODUCT LEVEL)	SEE PAGE
Y	1	1	**223-3041**	1	BOX GP-STORAGE	415
M	2	1	**135-8577**	4	BOLT AS	

M-METRIC PART
Y-SEPARATE ILLUSTRATION

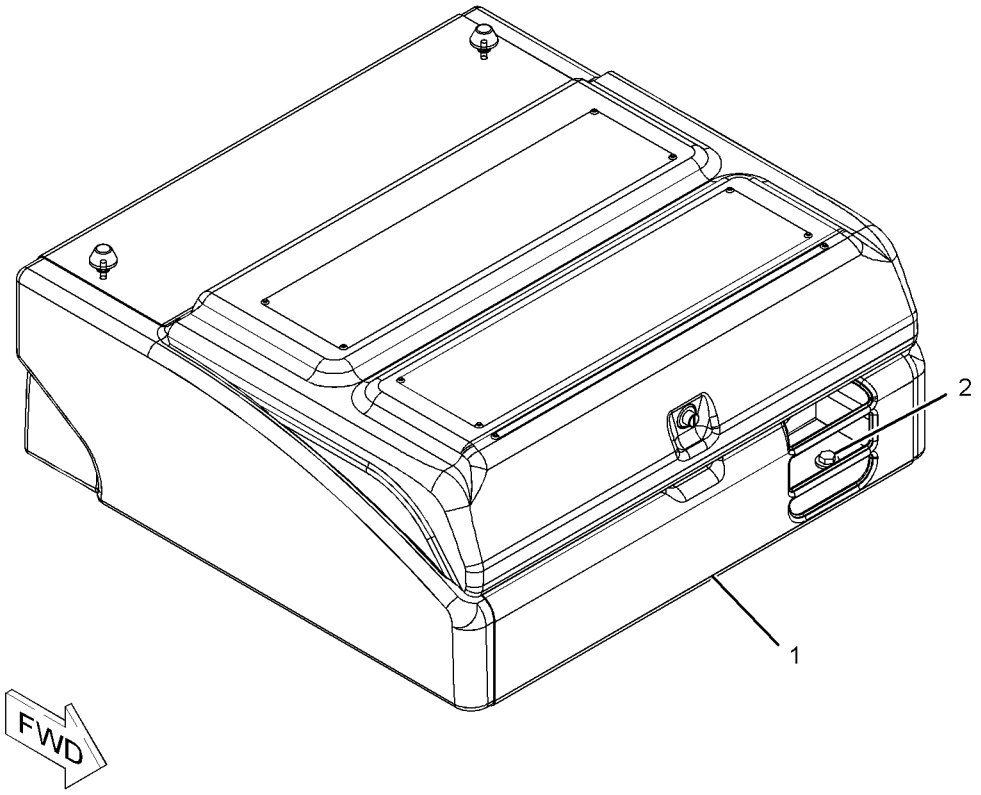

GRAPHIC #1 **<END>** g01150412

223-3041 BOX GP-STORAGE

S/N: B6H1-UP; JLP1-UP

PART OF 223-3040 BOX & MTG GP-STORAGE

SMCS-7268 **i03644983**

NOTE	REF NO	GRAPHIC REF	PART NUMBER	QTY	PART NAME 1 2 3 4 5 6 (PRODUCT LEVEL)	SEE PAGE
	1	1	**4I-2187**	1	SUPPORT AS	
J	2	1	**342-1110**	1	LOCK AS	
	3	1	**236-3670**	1	STRIKER AS	
	4	1	**236-3671**	1	SEAL	
	5	1	**236-9435**	1	BOX AS	
	6	1	**236-9437**	1	COVER AS	
	6A	1	**3D-9143**	2	HINGE-BUTT	
	7	1	**236-9438**	1	PLUNGER AS	
	8	1	**236-9440**	1	SHEET	
	9	1	**273-7964**	2	MOUNT	
	10	1	**095-0843**	1	PIN-COTTER	
	11	1	**096-3780**	1	PIN-CLEVIS	
M	12	1	**105-3487**	4	BOLT-SOCKET HEAD (M6X1X20-MM)	
	13	1	**170-9360**	1	GROMMET	
M	15	1	**5C-9553**	3	BOLT (M6X1X16-MM)	
	16	1	**5P-1075**	4	WASHER-HARD (10.2X22.5X3-MM THK)	
	17	1	**5P-4116**	1	WASHER-HARD (8.8X20.5X2-MM THK)	
M	18	1	**8T-4133**	4	NUT (M10X1.5-THD)	
M	19	1	**8T-4200**	2	BOLT (M8X1.25X16-MM)	
	20	1	**8T-4224**	2	WASHER-HARD (8.8X16X2-MM THK)	
	21	1	**9X-8256**	7	WASHER (6.6X12X2-MM THK)	
	22	1	**278-3581**	4	CUSHION	
B	23	1	**8T-4223**	2	WASHER-HARD (13.5X25.5X3-MM THK)	

B-USE AS REQUIRED
J-REQUIRES CORPORATE KEY
M-METRIC PART

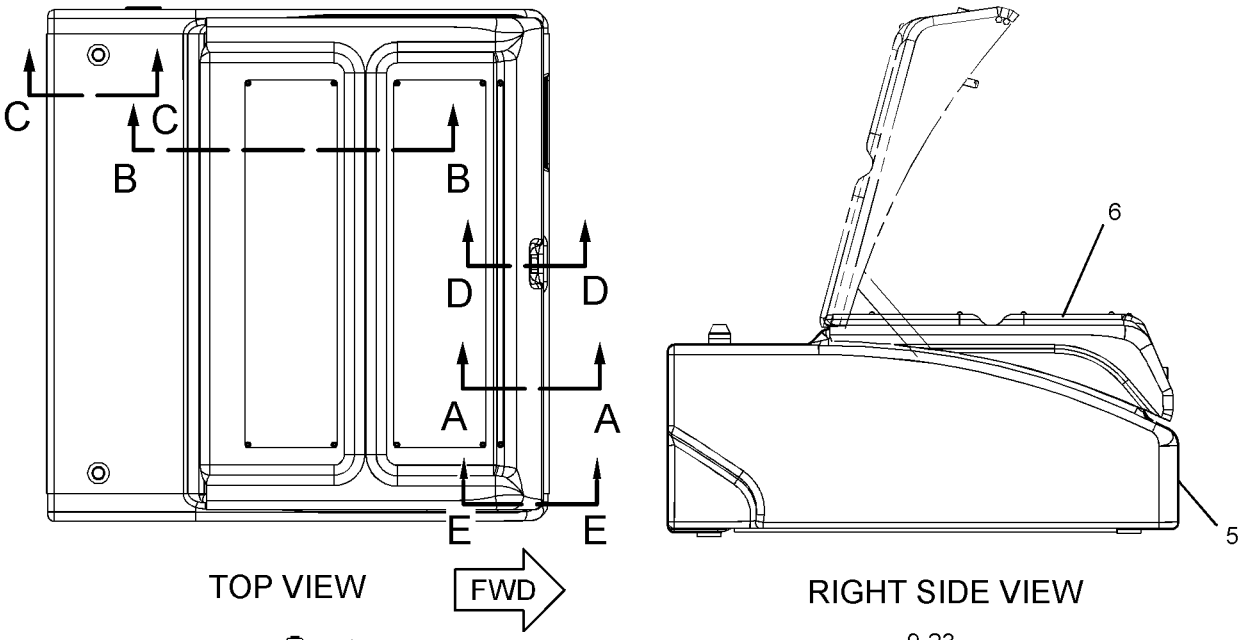

TOP VIEW

FWD

RIGHT SIDE VIEW

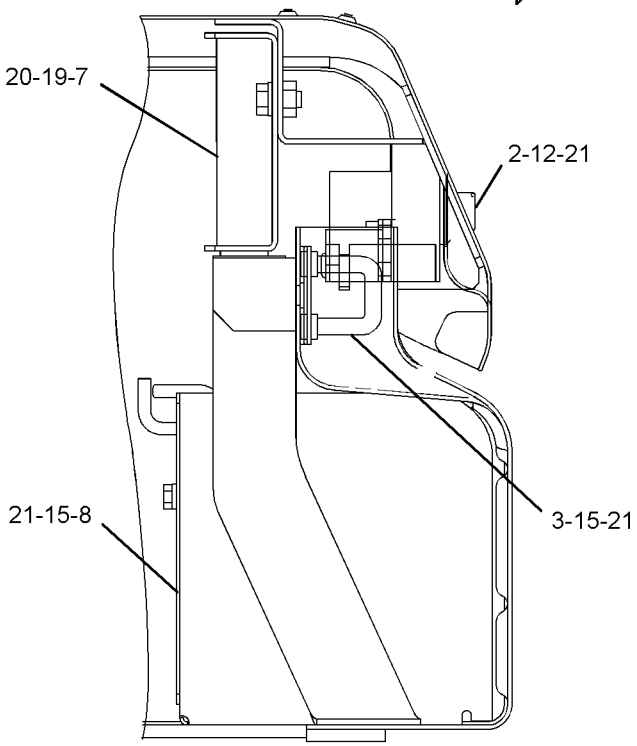

SECTION A-A

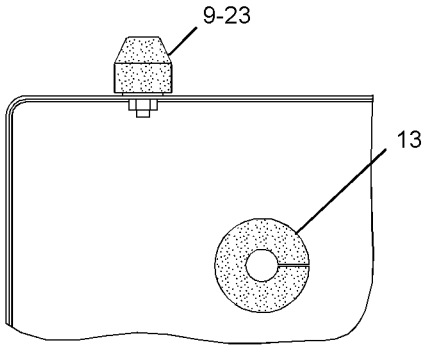

SECTION C-C

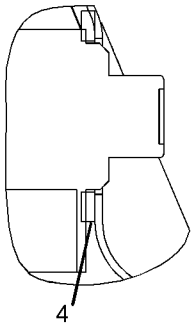

SECTION D-D

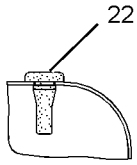

SECTION E-E

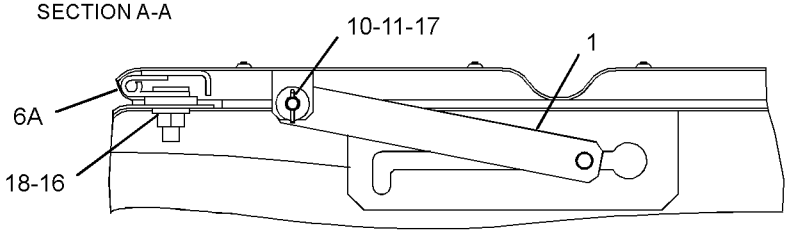

SECTION B-B

GRAPHIC #1 **<END>** g01238343

267-0118 BUMPER GP

S/N: B6H1-UP; JLP1-UP
AN ATTACHMENT

SMCS-7156 **i03626117**

NOTE	REF NO	GRAPHIC REF	PART NUMBER	QTY	PART NAME 1 2 3 4 5 6 (PRODUCT LEVEL)	SEE PAGE
	1	1	**180-7521**	1	BUMPER AS	
	2	1	**180-7525**	2	BUMPER AS	
	3	1	**180-7529**	2	BUMPER AS	
	4	1	**180-7537**	1	BUMPER AS	
	5	1	**186-5611**	1	BUMPER AS	
	6	1	**186-5614**	1	BUMPER AS	
C	7	1	**273-6729**	1	FRAME AS-UPPER	
	7A	1	**163-3729**	1	STEP AS	
	7B	1	**7Y-1113**	1	BOSS	
	8	1	**8T-4223**	18	WASHER-HARD (13.5X25.5X3-MM THK)	
M	9	1	**8T-4244**	18	NUT (M12X1.75-THD)	

C-CHANGE FROM PREVIOUS TYPE
M-METRIC PART

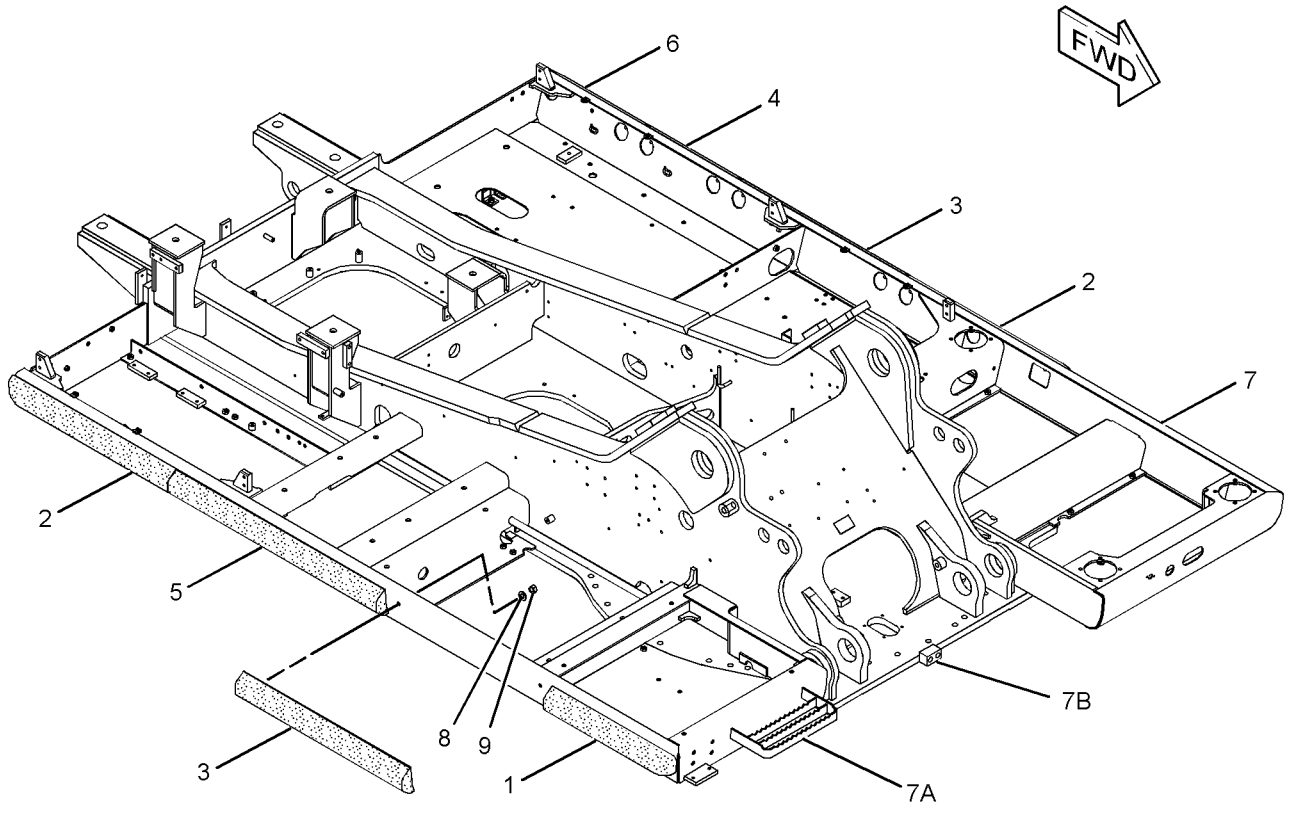

GRAPHIC #1 **<END>** g01945020

237-8756 COUNTERWEIGHT & MOUNTING GP

S/N: B6H1-652; JLP1-737

PART OF 247-7386 CHASSIS AR

SMCS-7056 **i02495743**

NOTE	REF NO	GRAPHIC REF	PART NUMBER	QTY	PART NAME 1 2 3 4 5 6 (PRODUCT LEVEL)	SEE PAGE
Y	1	1	**237-8757**	1	COUNTERWEIGHT GP	422
	2	1	**248-9337**	4	SPACER (39X75X20-MM THK)	
M	3	1	**4I-0191**	4	BOLT (M36X4X181-MM)	

M-METRIC PART
Y-SEPARATE ILLUSTRATION

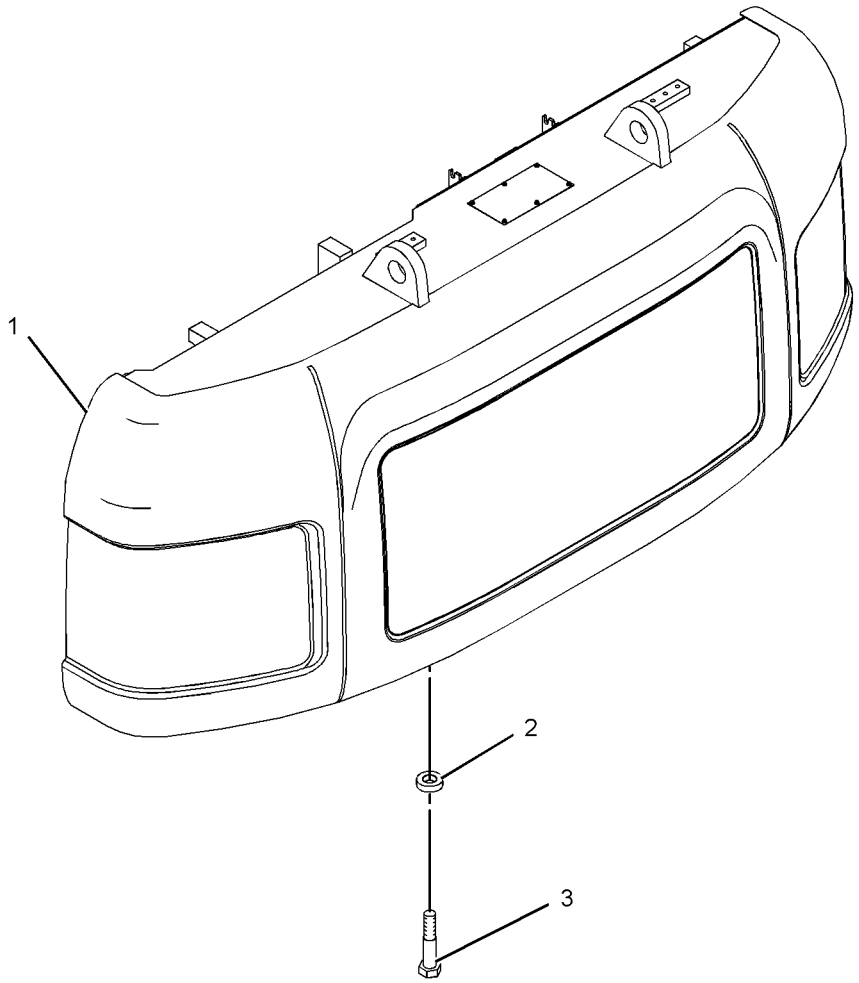

GRAPHIC #1 **<END>** g01236349

237-8759 COUNTERWEIGHT & MOUNTING GP

S/N: B6H653-UP; JLP738-UP
PART OF 247-7386 CHASSIS AR

SMCS-7056 **i03111447**

NOTE	REF NO	GRAPHIC REF	PART NUMBER	QTY	PART NAME 1 2 3 4 5 6 (PRODUCT LEVEL)	SEE PAGE
Y	1	1	*237-8760*	1	COUNTERWEIGHT GP	423
	2	1	**248-9337**	4	SPACER (39X75X20-MM THK)	
M	3	1	**4I-0191**	4	BOLT (M36X4X181-MM)	

M-METRIC PART
Y-SEPARATE ILLUSTRATION

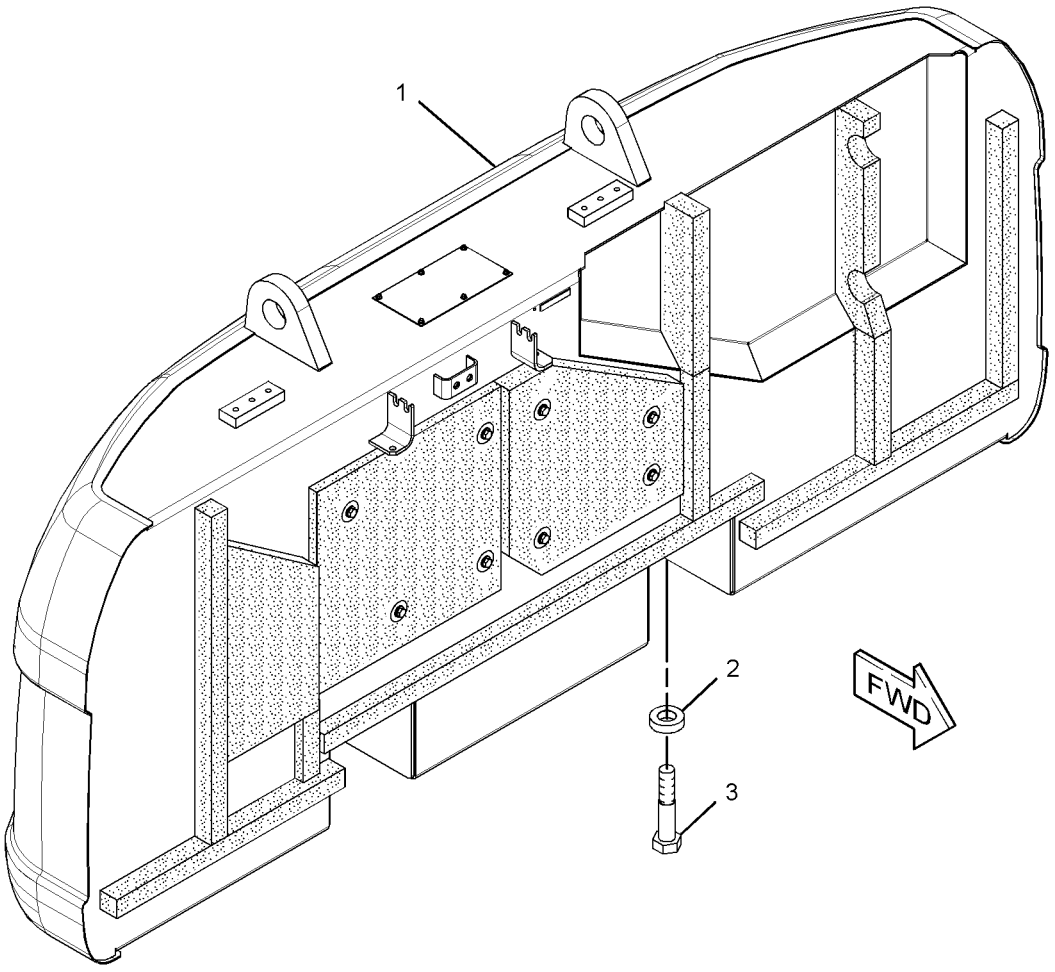

GRAPHIC #1 **<END>** g01619552

FRAME AND BODY

278-3928 COUNTERWEIGHT & MOUNTING GP

S/N: B6H1-UP; JLP1-UP
REPLACED BY 278-3932—PAGE 421
AN ATTACHMENT

SMCS-7056 **i03021173**

NOTE	REF NO	GRAPHIC REF	PART NUMBER	QTY	PART NAME 1 2 3 4 5 6 (PRODUCT LEVEL)	SEE PAGE
	1	1	**248-9337**	4	SPACER (39X75X20-MM THK)	
Y	2	1	*278-3929*	1	COUNTERWEIGHT GP	424
M	3	1	**4I-0191**	4	BOLT (M36X4X181-MM)	
M	4	1	**8T-4190**	8	BOLT (M16X2X25-MM)	

M-METRIC PART
Y-SEPARATE ILLUSTRATION

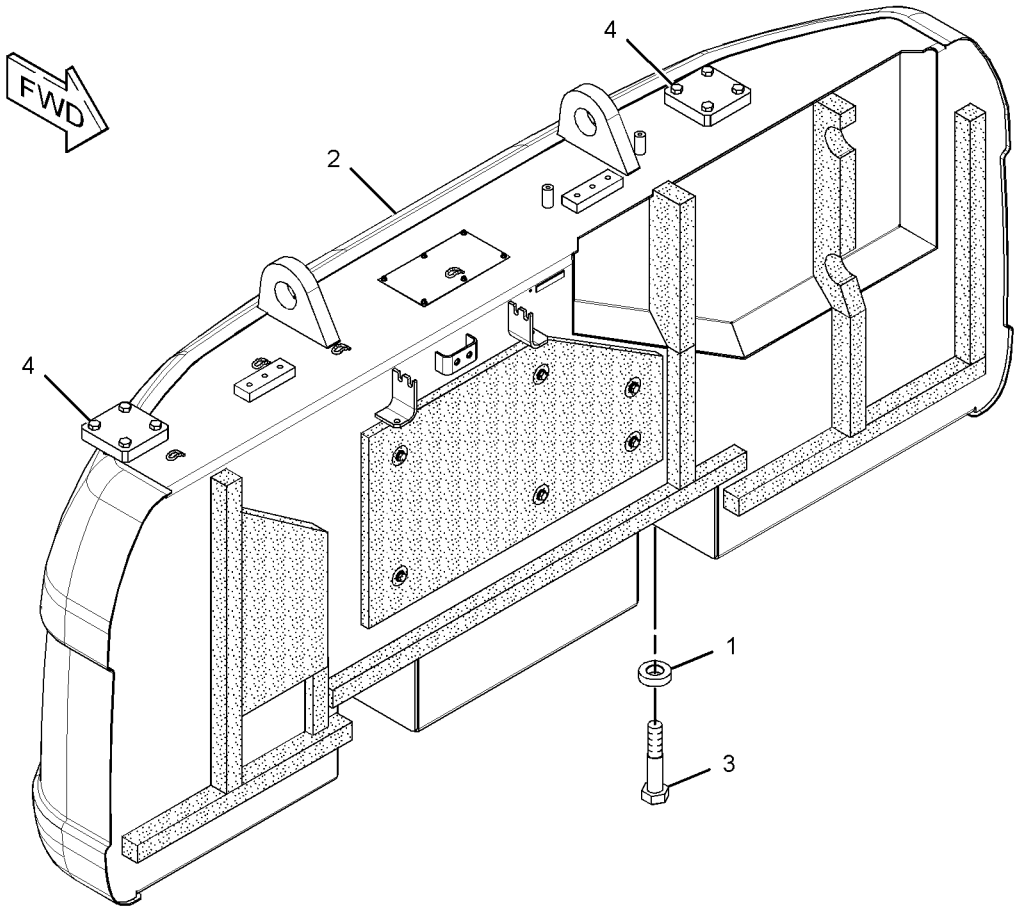

GRAPHIC #1 **<END>** g01422647

278-3932 COUNTERWEIGHT & MOUNTING GP

S/N: B6H1-UP; JLP1-UP
AN ATTACHMENT

SMCS-7056 **i03308594**

NOTE	REF NO	GRAPHIC REF	PART NUMBER	QTY	PART NAME 1 2 3 4 5 6 (PRODUCT LEVEL)	SEE PAGE
	1	1	**248-9337**	4	SPACER (39X75X20-MM THK)	
CY	2	1	*330-1284*	1	COUNTERWEIGHT GP	425
M	3	1	**4I-0191**	4	BOLT (M36X4X181-MM)	
M	4	1	**8T-4190**	8	BOLT (M16X2X25-MM)	

C-CHANGE FROM PREVIOUS TYPE
M-METRIC PART
Y-SEPARATE ILLUSTRATION

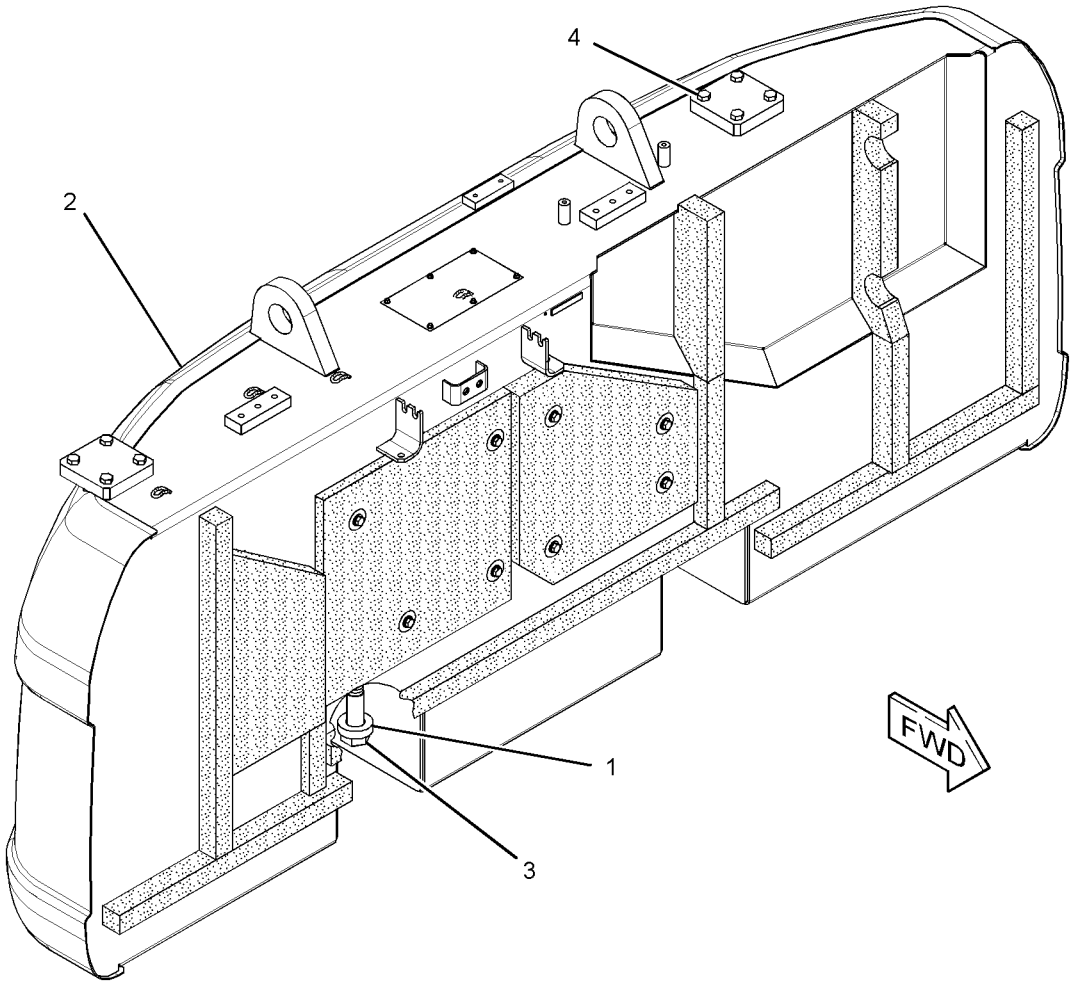

GRAPHIC #1 **<END>** g01620172

237-8757 COUNTERWEIGHT GP

S/N: B6H1-652; JLP1-737
6002-KG (13232-LB)
PART OF 237-8756 COUNTERWEIGHT & MOUNTING GP

SMCS-7056 **i03319284**

NOTE	REF NO	GRAPHIC REF	PART NUMBER	QTY	PART NAME 1 2 3 4 5 6 (PRODUCT LEVEL)	SEE PAGE
	1	1	**184-8722**	1	LINER	
	2	1	**129-3399**	1	LINER	
	3	1	**7I-0717**	1	LINER	
	4	1	**193-9389**	1	LINER	
	5	1	**237-8758**	1	COUNTERWEIGHT AS	
	6	1	**241-2365**	1	LINER	
	7	1	**241-2366**	1	LINER	
	8	1	**241-2367**	1	LINER	
	9	1	**241-2368**	1	LINER	
	10	1	**244-8044**	1	INSULATION	
	11	1	**244-8045**	1	LINER	
	12	1	**244-8046**	1	LINER	
	13	1	**259-3865**	1	LINER	
	14	1	**7Y-2292**	6	WASHER (13X50X2-MM THK)	
M	15	1	**8T-4179**	6	BOLT (M12X1.75X20-MM)	
	16	1	**8T-4223**	6	WASHER-HARD (13.5X25.5X3-MM THK)	

M-METRIC PART

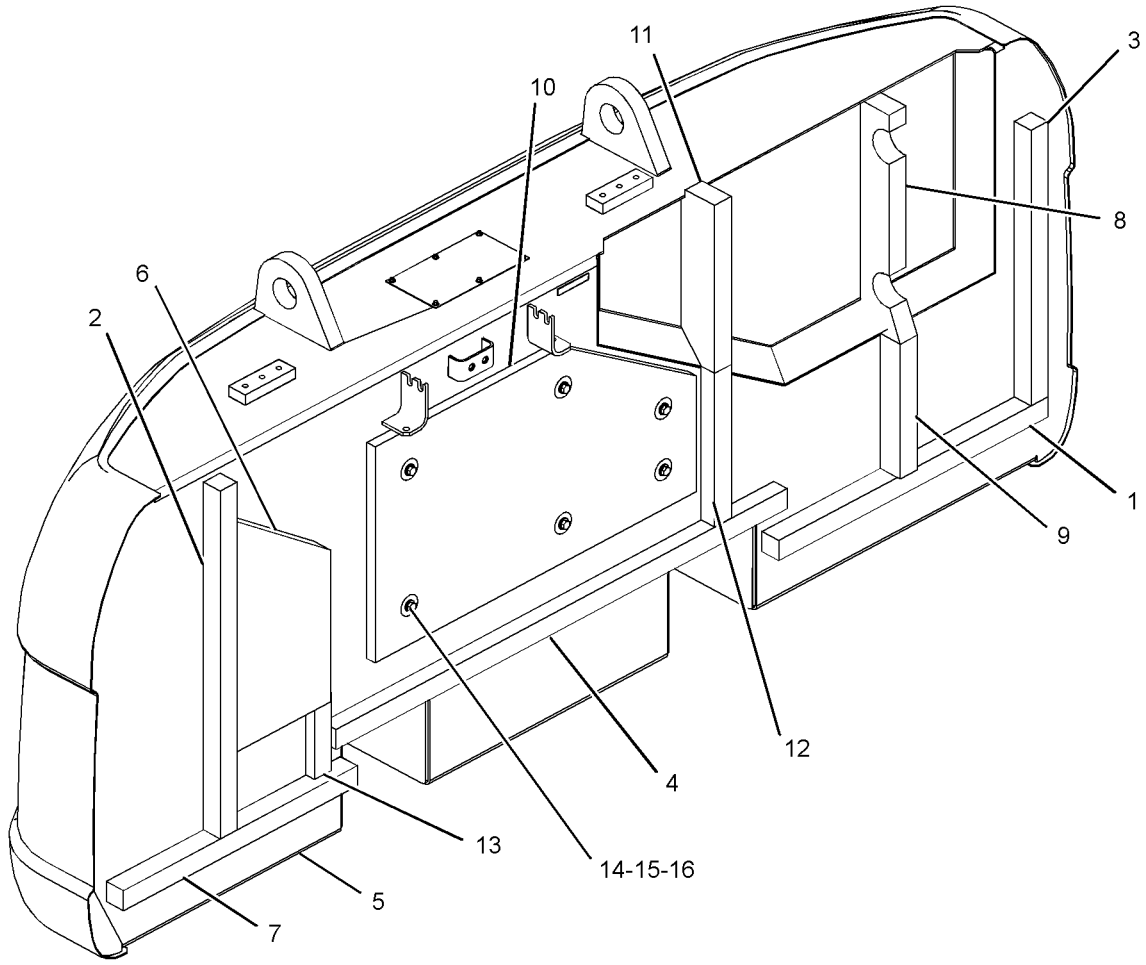

GRAPHIC #1 **<END>** g01236346

FRAME AND BODY

237-8760 COUNTERWEIGHT GP

S/N: B6H653-UP; JLP738-UP
6252-KG (13783-LB)
PART OF 237-8759 COUNTERWEIGHT & MOUNTING GP

SMCS-7056 **i03111463**

NOTE	REF NO	GRAPHIC REF	PART NUMBER	QTY	PART NAME 1 2 3 4 5 6 (PRODUCT LEVEL)	SEE PAGE
	1	1	**7I-0717**	1	LINER	
	2	1	**081-6344**	4	SPACER (13.3X21.3X25-MM THK)	
	3	1	**129-3399**	1	LINER	
	4	1	**184-8722**	1	LINER	
	5	1	**193-9389**	1	LINER	
	6	1	**237-8761**	1	COUNTERWEIGHT AS	
	7	1	**241-2365**	1	LINER	
	8	1	**241-2366**	1	LINER	
	9	1	**241-2367**	1	LINER	
	10	1	**241-2368**	1	LINER	
	11	1	**244-8045**	1	LINER	
	12	1	**244-8046**	1	LINER	
	13	1	**259-3865**	1	LINER	
	14	1	**270-9626**	1	INSULATION	
	15	1	**270-9627**	1	INSULATION	
	16	1	**7Y-2292**	8	WASHER (13X50X2-MM THK)	
M	17	1	**8T-4184**	4	BOLT (M12X1.75X45-MM)	
M	18	1	**8T-4179**	4	BOLT (M12X1.75X20-MM)	
	19	1	**8T-4223**	8	WASHER-HARD (13.5X25.5X3-MM THK)	

M-METRIC PART

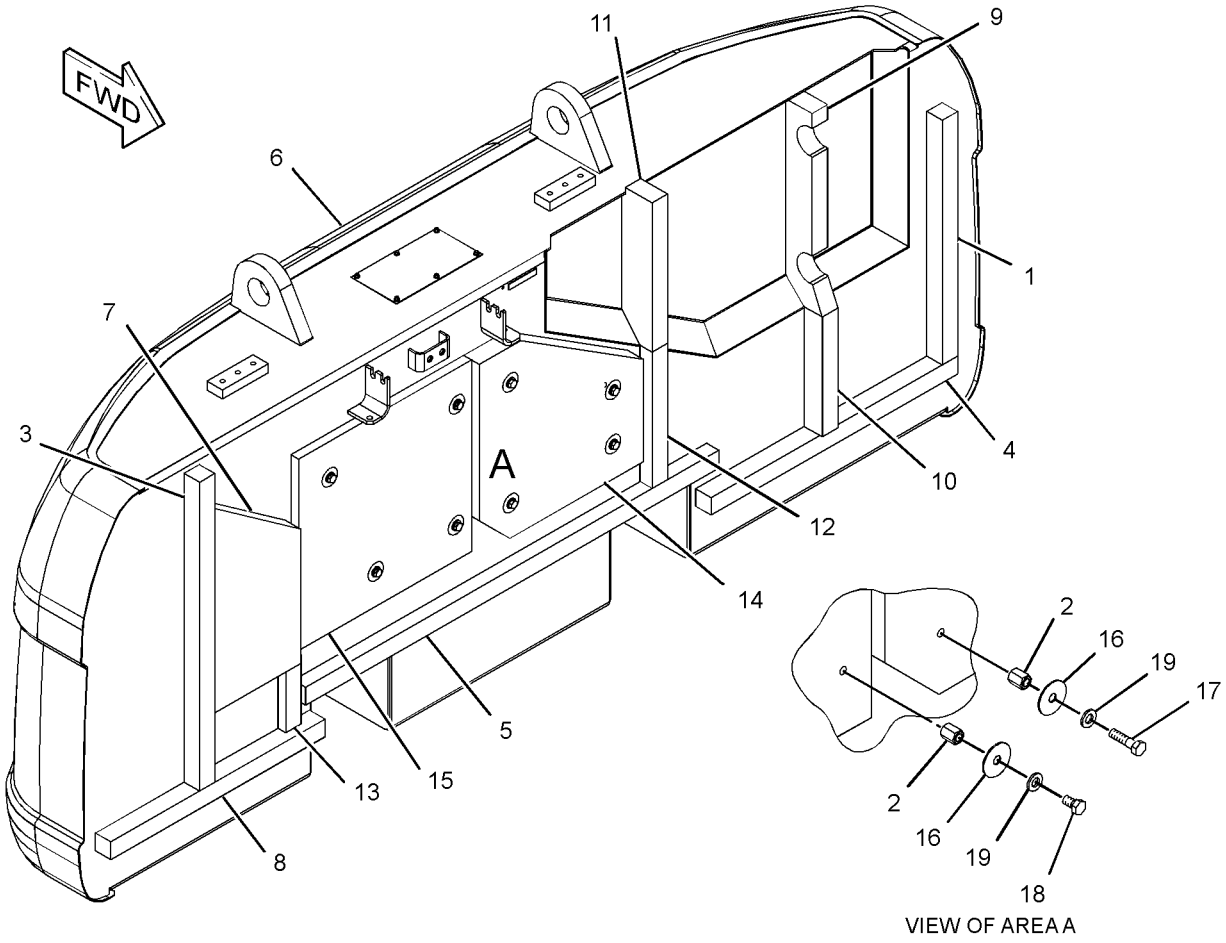

VIEW OF AREA A

GRAPHIC #1 **<END>** g01199142

278-3929 COUNTERWEIGHT GP

S/N: B6H1-UP; JLP1-UP
6002-KG (13232-LB)
PART OF 278-3928 COUNTERWEIGHT & MOUNTING GP
AN ATTACHMENT

SMCS-7056 **i02830775**

NOTE	REF NO	GRAPHIC REF	PART NUMBER	QTY	PART NAME 1 2 3 4 5 6 (PRODUCT LEVEL)	SEE PAGE
	1	1	**7I-0717**	1	LINER	
	2	1	**129-3399**	1	LINER	
	3	1	**184-8722**	1	LINER	
	4	1	**193-9389**	1	LINER	
	5	1	**241-2365**	1	LINER	
	6	1	**241-2366**	1	LINER	
	7	1	**241-2367**	1	LINER	
	8	1	**241-2368**	1	LINER	
	9	1	**244-8044**	1	INSULATION	
	10	1	**244-8045**	1	LINER	
	11	1	**244-8046**	1	LINER	
	12	1	**259-3865**	1	LINER	
	13	1	**278-4046**	1	COUNTERWEIGHT AS	
	14	1	**7Y-2292**	6	WASHER (13X50X2-MM THK)	
M	15	1	**8T-4179**	6	BOLT (M12X1.75X20-MM)	
	16	1	**8T-4223**	6	WASHER-HARD (13.5X25.5X3-MM THK)	

M-METRIC PART

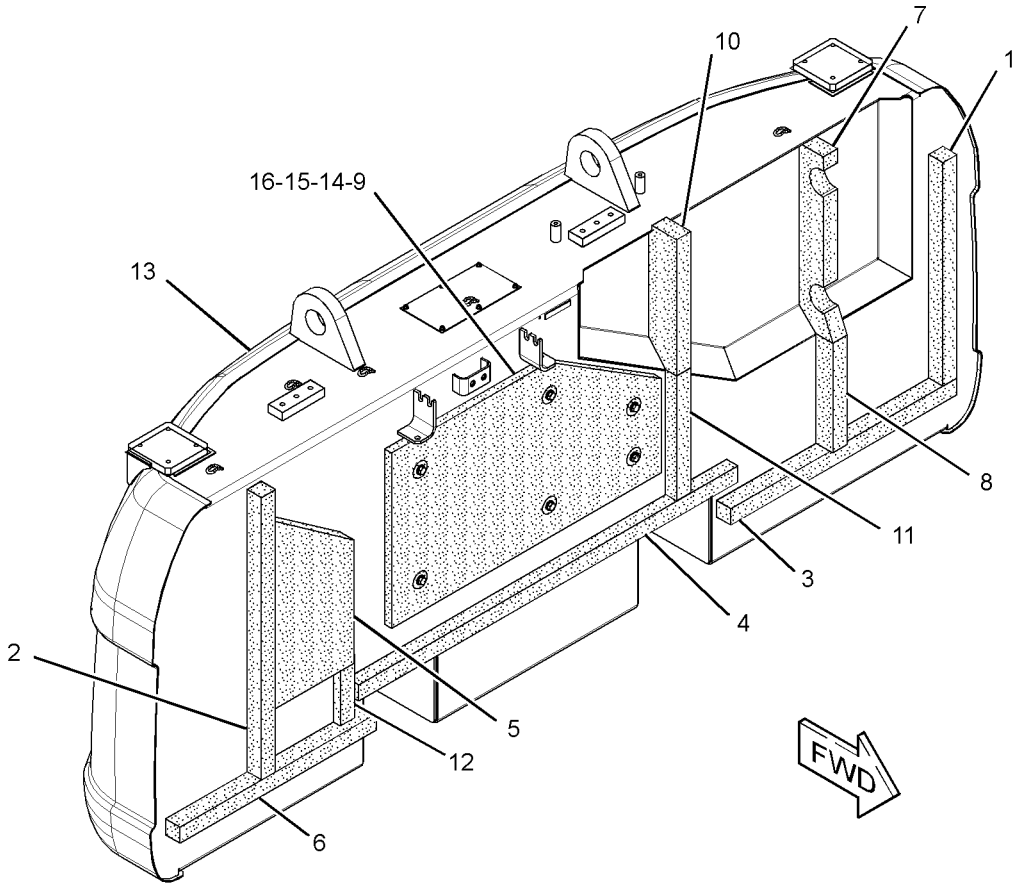

GRAPHIC #1 **<END>** g01306089

330-1284 COUNTERWEIGHT GP

S/N: B6H1-UP; JLP1-UP
6252-KG (13,783-LB)
PART OF 278-3932 COUNTERWEIGHT & MOUNTING GP
AN ATTACHMENT

SMCS-7056 **i03308641**

NOTE	REF NO	GRAPHIC REF	PART NUMBER	QTY	PART NAME 1 2 3 4 5 6 (PRODUCT LEVEL)	SEE PAGE
	1	1	**7I-0717**	1	LINER	
	2	1	**081-6344**	4	SPACER (13.3X21.3X25-MM THK)	
	3	1	**129-3399**	1	LINER	
	4	1	**184-8722**	1	LINER	
	5	1	**193-9389**	1	LINER	
	6	1	**241-2365**	1	LINER	
	7	1	**241-2366**	1	LINER	
	8	1	**241-2367**	1	LINER	
	9	1	**241-2368**	1	LINER	
	10	1	**244-8045**	1	LINER	
	11	1	**244-8046**	1	LINER	
	12	1	**259-3865**	1	LINER	
	13	1	**270-9626**	1	INSULATION	
	14	1	**270-9627**	1	INSULATION	
	15	1	**330-1285**	1	COUNTERWEIGHT GP	
	16	1	**7Y-2292**	8	WASHER (13X50X2-MM THK)	
M	17	1	**8T-4179**	4	BOLT (M12X1.75X20-MM)	
M	18	1	**8T-4184**	4	BOLT (M12X1.75X45-MM)	
	19	1	**8T-4223**	8	WASHER-HARD (13.5X25.5X3-MM THK)	

M-METRIC PART

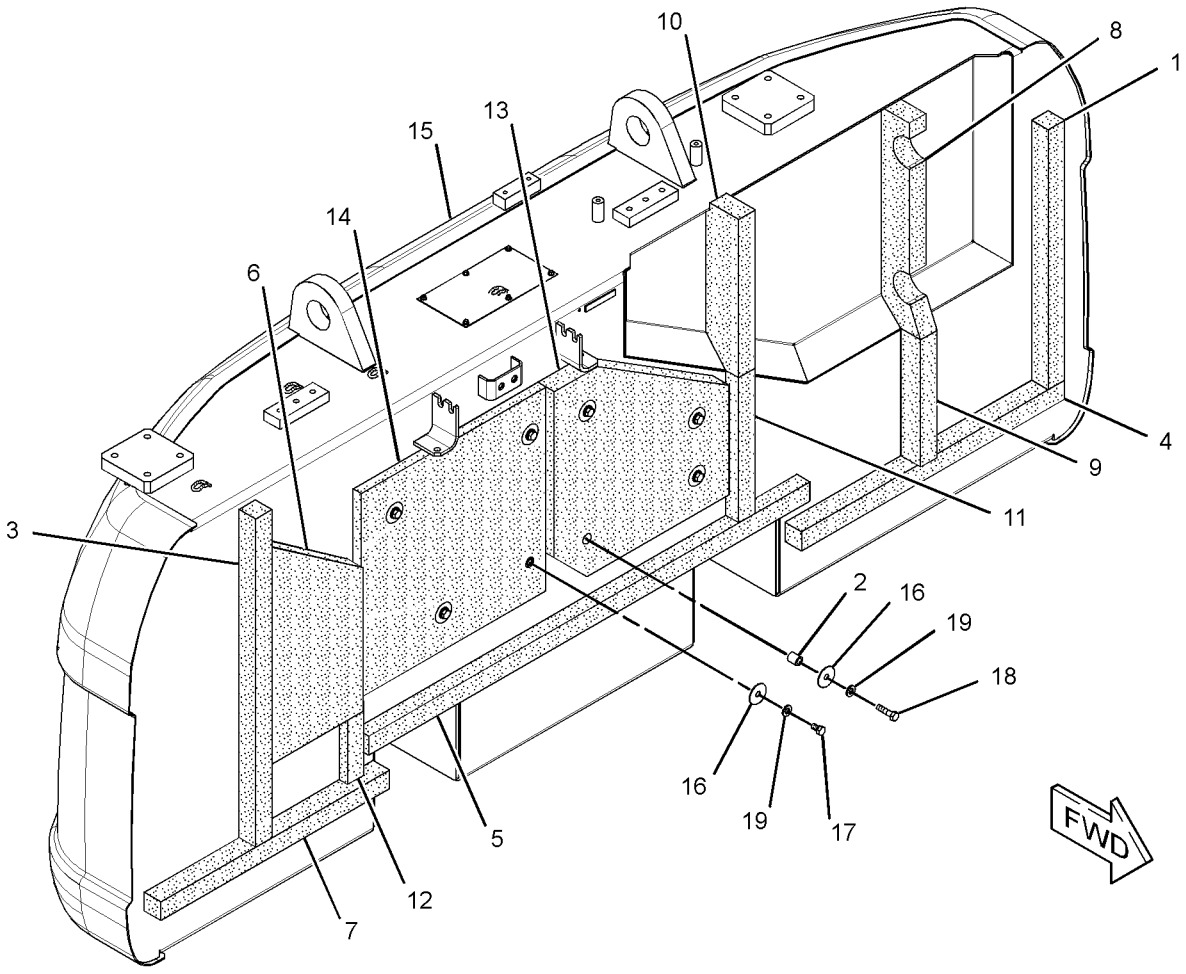

GRAPHIC #1 **<END>** g01620164

FRAME AND BODY

259-3552 COVER AS-SOUND SUPPRESSION

S/N: B6H1-UP; JLP1-UP

PART OF 237-8768 HOOD & GUARD GP

SMCS-7253, 7263, 7276, 795C **i02490652**

NOTE	REF NO	GRAPHIC REF	PART NUMBER	QTY	PART NAME 1 2 3 4 5 6 (PRODUCT LEVEL)	SEE PAGE
	1	1	**4I-7924**	4	WASHER (4.5X40X1.2-MM THK)	
	2	1	**6P-2216**	4	CAP	
Z	3	1		1	COVER AS	
	4	1	**259-3557**	1	LINER	
	5	1	**268-0507**	1	INSULATION	
	6	1	**268-0508**	1	INSULATION	

Z-NOT SERVICED SEPARATELY

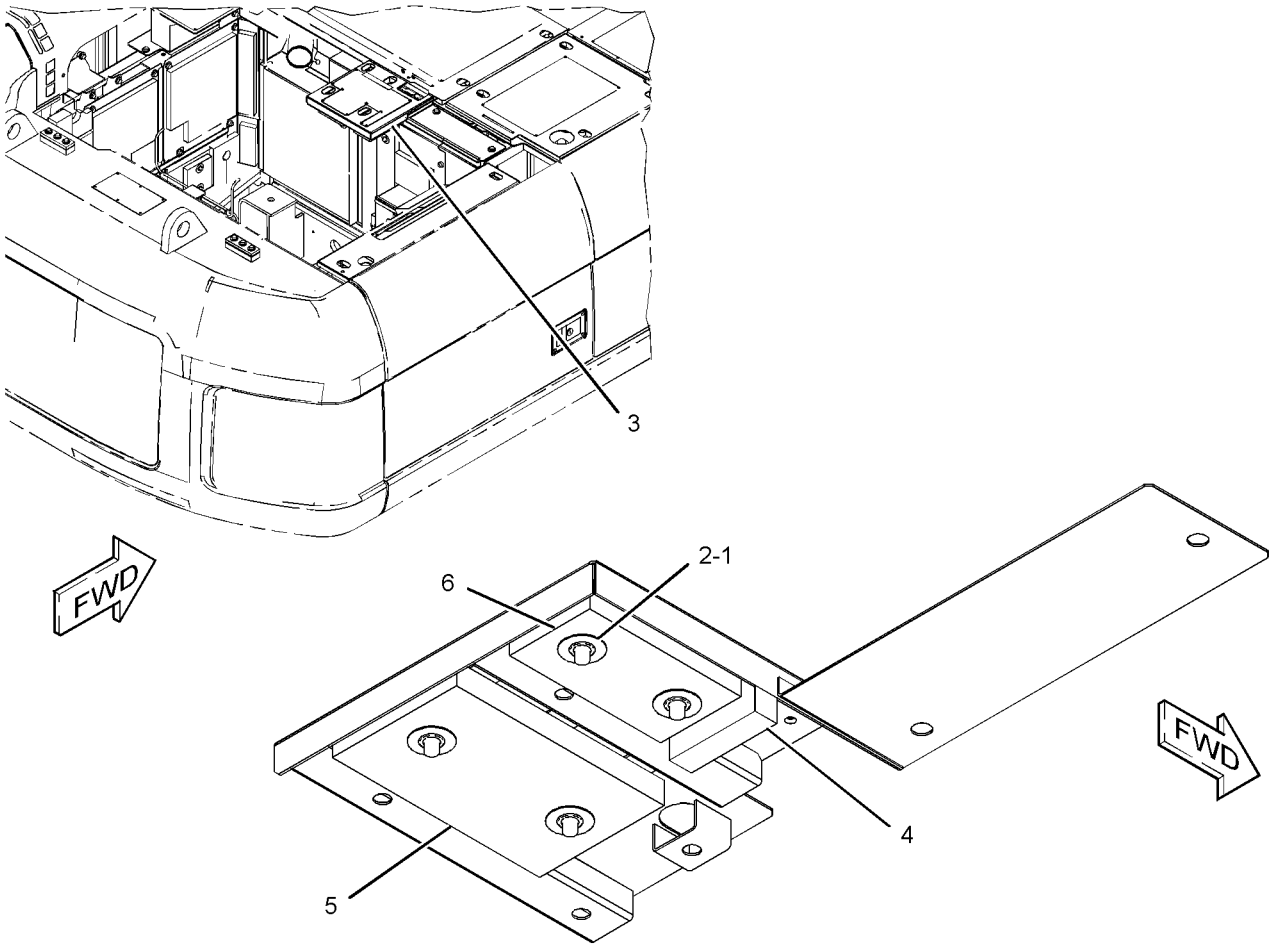

GRAPHIC #1 **<END>** g01238319

259-3667 COVER AS-SOUND SUPPRESSION–PRECLEANER

S/N: B6H1-UP; JLP1-UP
PART OF 237-8802 HOOD GP
AN ATTACHMENT

SMCS-7253, 7263, 7276, 795C **i03626159**

NOTE	REF NO	GRAPHIC REF	PART NUMBER	QTY	PART NAME 1 2 3 4 5 6 (PRODUCT LEVEL)	SEE PAGE
	1	1	**262-2571**	1	INSULATION	
	2	1	**262-2572**	1	INSULATION	
	3	1	**262-2573**	1	INSULATION	
Z	4	1		1	COVER AS-ACCESS	
	5	1	**278-3820**	1	INSULATION	

Z-NOT SERVICED SEPARATELY

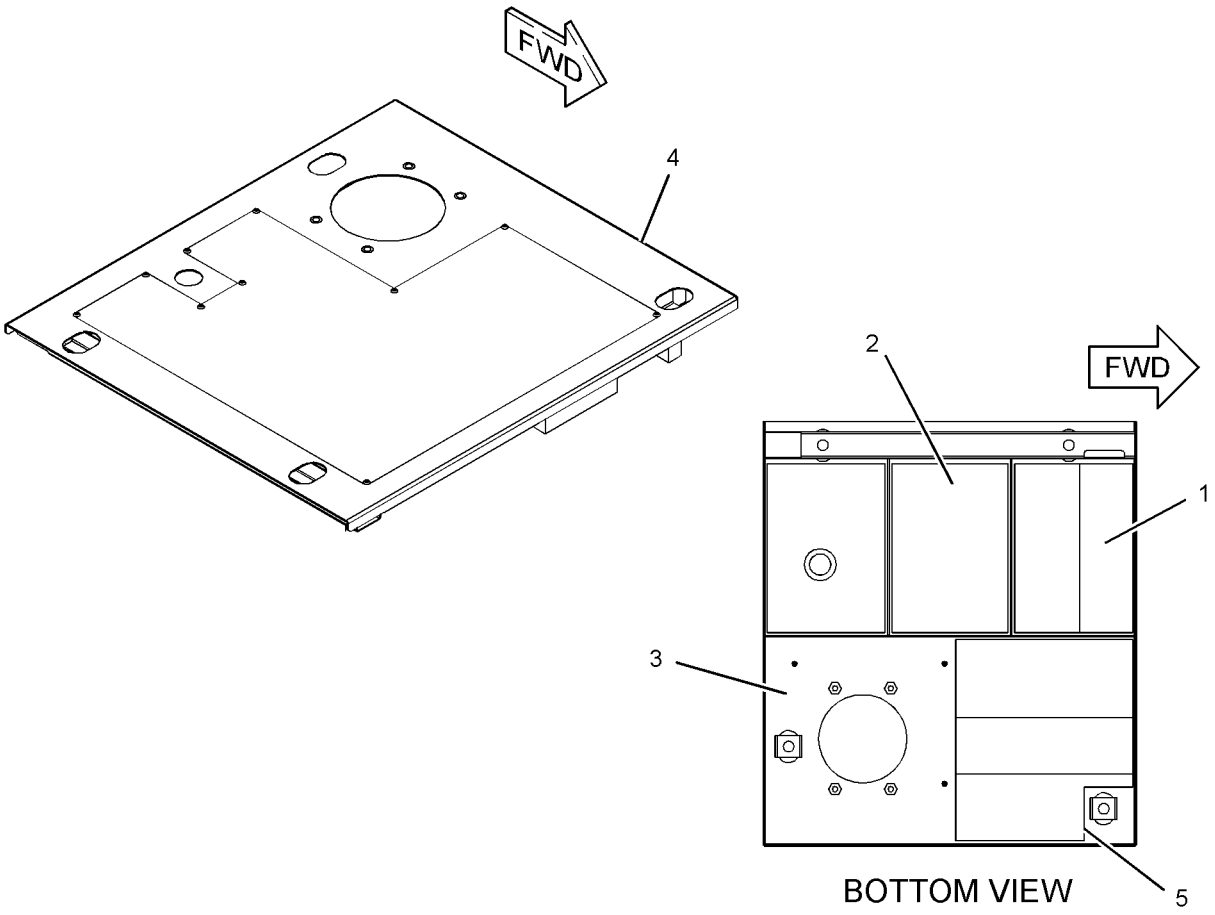

GRAPHIC #1 **<END>** g01239733

273-7873 COVER AS-SOUND SUPPRESSION

S/N: B6H1-UP; JLP1-UP

PART OF 237-8768 HOOD & GUARD GP

SMCS-7253, 7263, 7276, 795C **i02490655**

NOTE	REF NO	GRAPHIC REF	PART NUMBER	QTY	PART NAME 1 2 3 4 5 6 (PRODUCT LEVEL)	SEE PAGE
	1	1	**262-2192**	2	LINER	
Z	2	1		1	COVER AS	
	3	1	**273-7902**	3	LINER	

Z-NOT SERVICED SEPARATELY

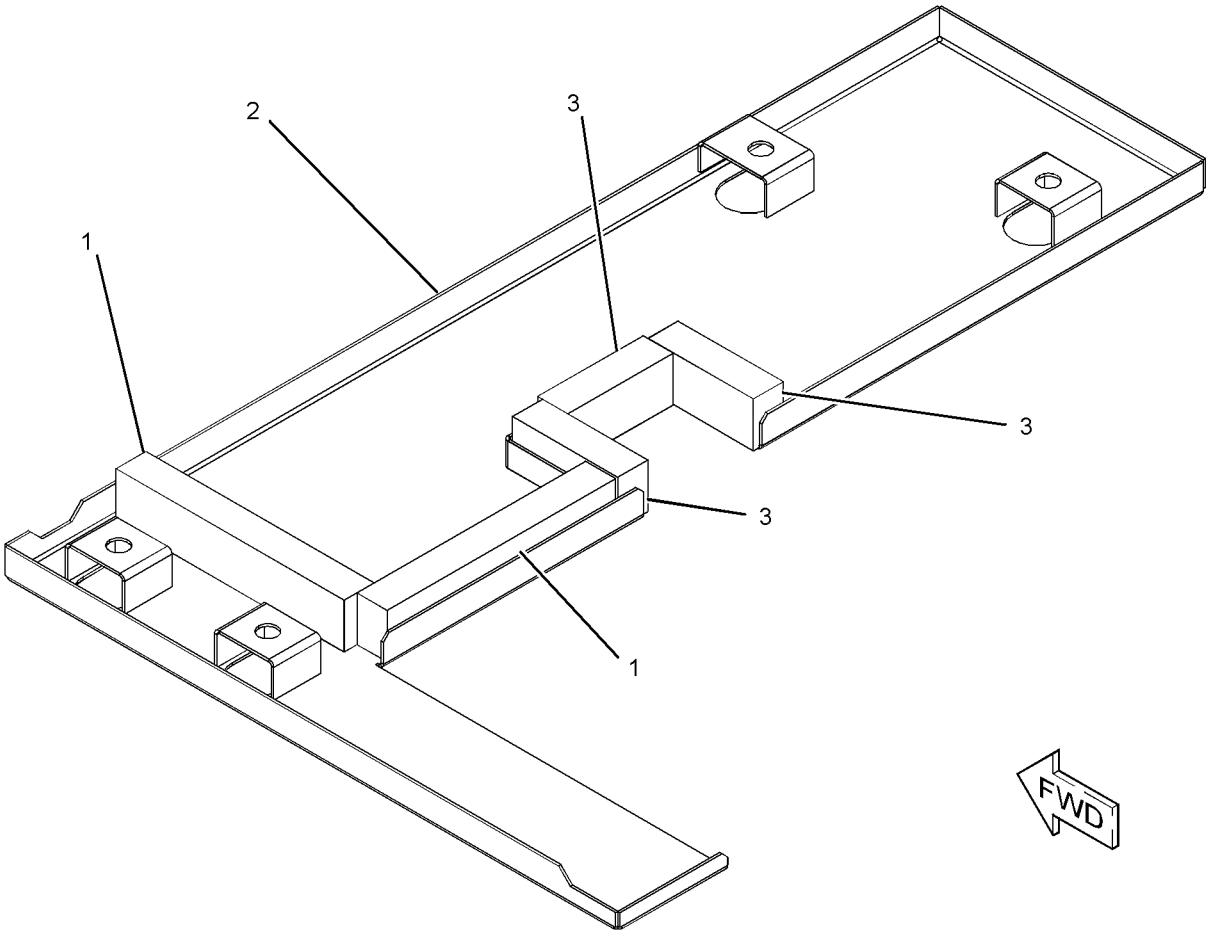

GRAPHIC #1 **<END>** g01236625

241-2130 COVER GP-ACCESS—FUEL, HYDRAULIC TANKS

S/N: B6H1-566; JLP1-308

PART OF 237-8768 HOOD & GUARD GP

SMCS-726A **i02490567**

NOTE	REF NO	GRAPHIC REF	PART NUMBER	QTY	PART NAME 1 2 3 4 5 6 (PRODUCT LEVEL)	SEE PAGE
	1	1	**170-3015**	1	BUMPER	
	2	1	**177-5739**	1	LINER	
	3	1	**203-4927**	1	LINER	
	4	1	**236-9568**	1	LINER	
Z	5	1		1	PANEL AS-SIDE	
	6	1	**241-2325**	1	LINER	

Z-NOT SERVICED SEPARATELY

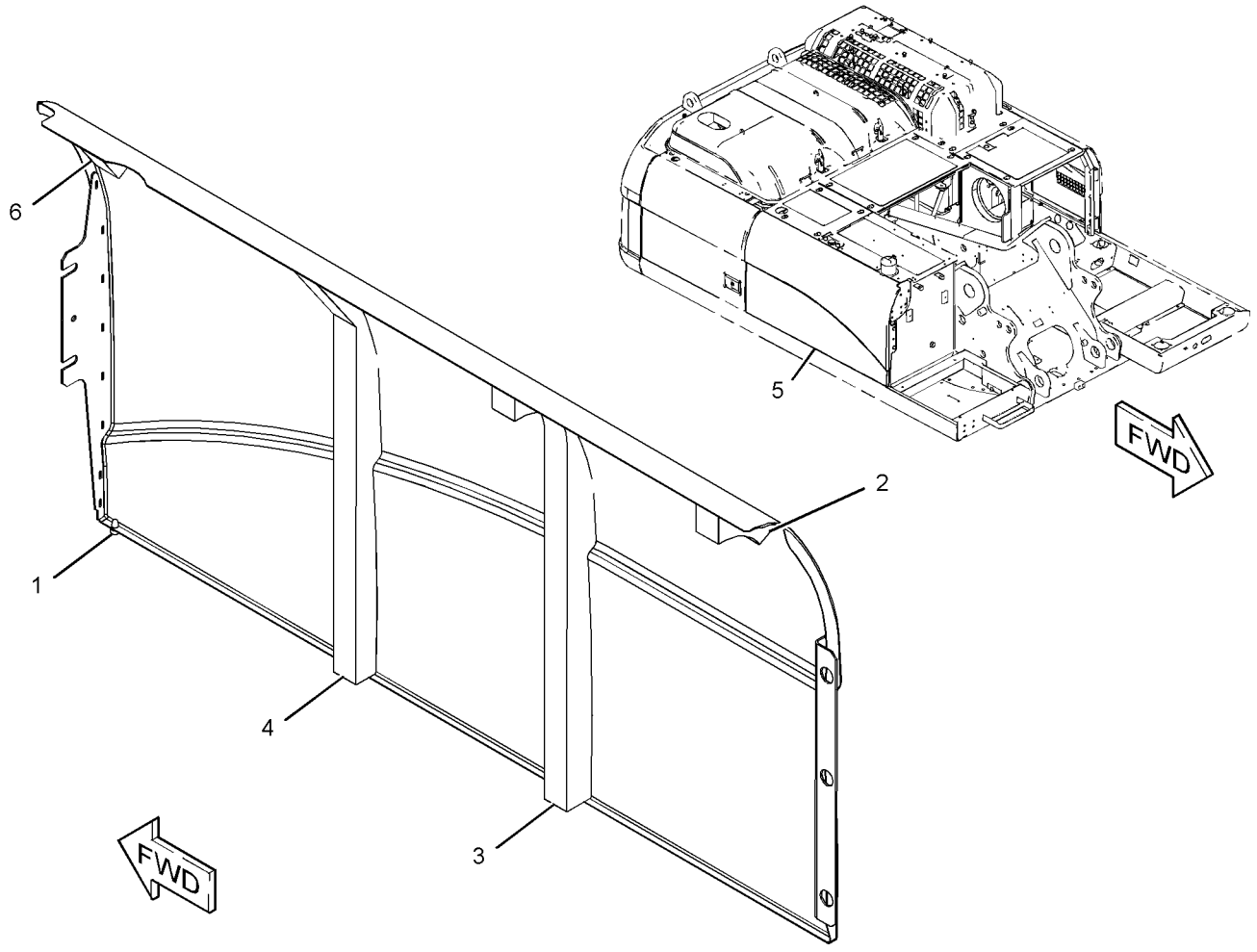

GRAPHIC #1 **<END>** g01232582

298-2975 COVER GP-ACCESS—FUEL, HYDRAULIC TANKS

S/N: B6H567-UP; JLP309-UP

PART OF 237-8768 HOOD & GUARD GP

SMCS-726A **i02831510**

NOTE	REF NO	GRAPHIC REF	PART NUMBER	QTY	PART NAME 1 2 3 4 5 6 (PRODUCT LEVEL)	SEE PAGE
	1	1	**170-3015**	1	BUMPER	
	2	1	**177-5739**	1	LINER	
	3	1	**203-4927**	1	LINER	
	4	1	**236-9568**	1	LINER	
	5	1	**241-2325**	1	LINER	

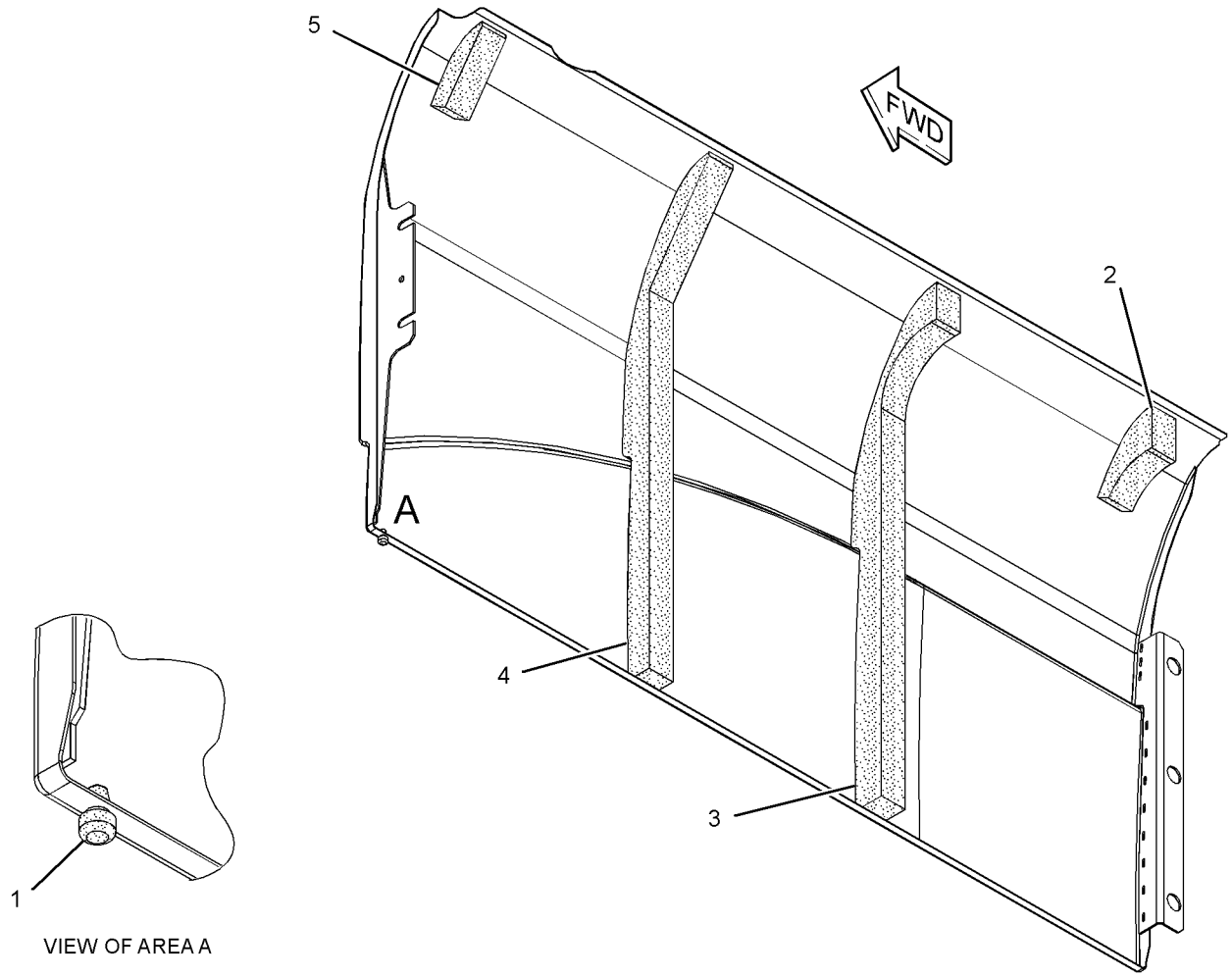

VIEW OF AREA A

GRAPHIC #1 **<END>** g01372999

273-7922 DOOR AS-ACCESS—AIR CLEANER, BATTERY

S/N: B6H1-566; JLP1-308

PART OF 237-8768 HOOD & GUARD GP

SMCS-7273 **i02490658**

NOTE	REF NO	GRAPHIC REF	PART NUMBER	QTY	PART NAME 1 2 3 4 5 6 (PRODUCT LEVEL)	SEE PAGE
	1	1	**241-2139**	1	INSULATION	
	2	1	**244-7980**	1	INSULATION	
	3	1	**262-2157**	1	LINER	
	4	1	*273-7923*	1	DOOR AS-ACCESS	
	4A	1	**165-2976**	2	HINGE	

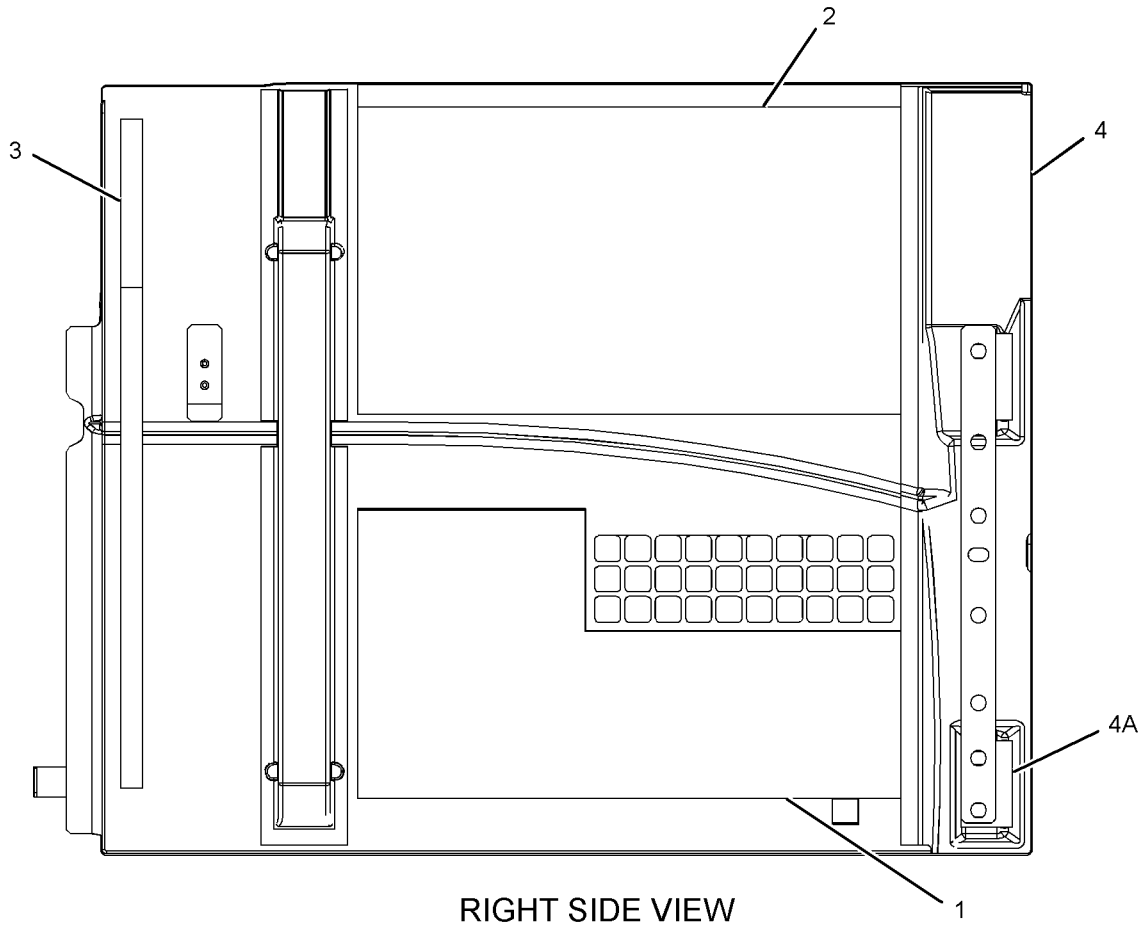

RIGHT SIDE VIEW

GRAPHIC #1 **<END>** g01238254

298-3191 DOOR AS-ACCESS—AIR CLEANER, BATTERY

S/N: B6H567-UP; JLP309-UP

PART OF 237-8768 HOOD & GUARD GP

SMCS-7273 **i03016437**

NOTE	REF NO	GRAPHIC REF	PART NUMBER	QTY	PART NAME 1 2 3 4 5 6 (PRODUCT LEVEL)	SEE PAGE
	1	1	**241-2139**	1	INSULATION	
	2	1	**244-7980**	1	INSULATION	
	3	1	**262-2157**	1	LINER	
	4	1	*298-2974*	1	DOOR AS-ACCESS	
	4A	1	**165-2976**	2	HINGE	
	5	1	**208-4289**	1	CUSHION	

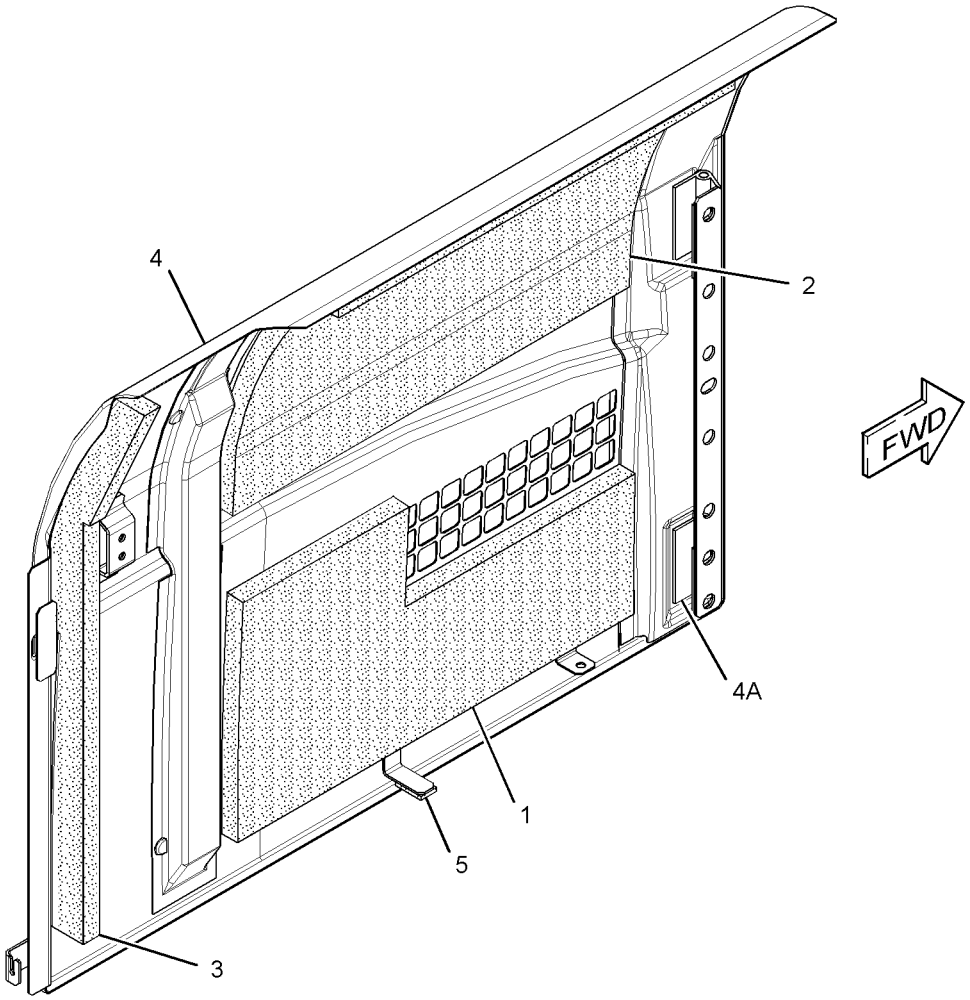

GRAPHIC #1 **<END>** g01520128

FRAME AND BODY

241-2133 DOOR GP-ACCESS—PUMP COMPARTMENT

S/N: B6H1-540; JLP1-250

PART OF 237-8768 HOOD & GUARD GP

SMCS-7273 **i02490575**

NOTE	REF NO	GRAPHIC REF	PART NUMBER	QTY	PART NAME 1 2 3 4 5 6 (PRODUCT LEVEL)	SEE PAGE
M	1	1	**099-6418**	4	NUT (M6X1-THD)	
	2	1	**193-9438**	1	INSULATION	
	3	1	*241-2134*	1	DOOR AS-SIDE	
	3A	1	**165-2976**	2	HINGE	
	4	1	**244-7979**	1	INSULATION	
	5	1	**268-0457**	1	LOCK AS	
	6	1	**273-7668**	1	LINER	

M-METRIC PART

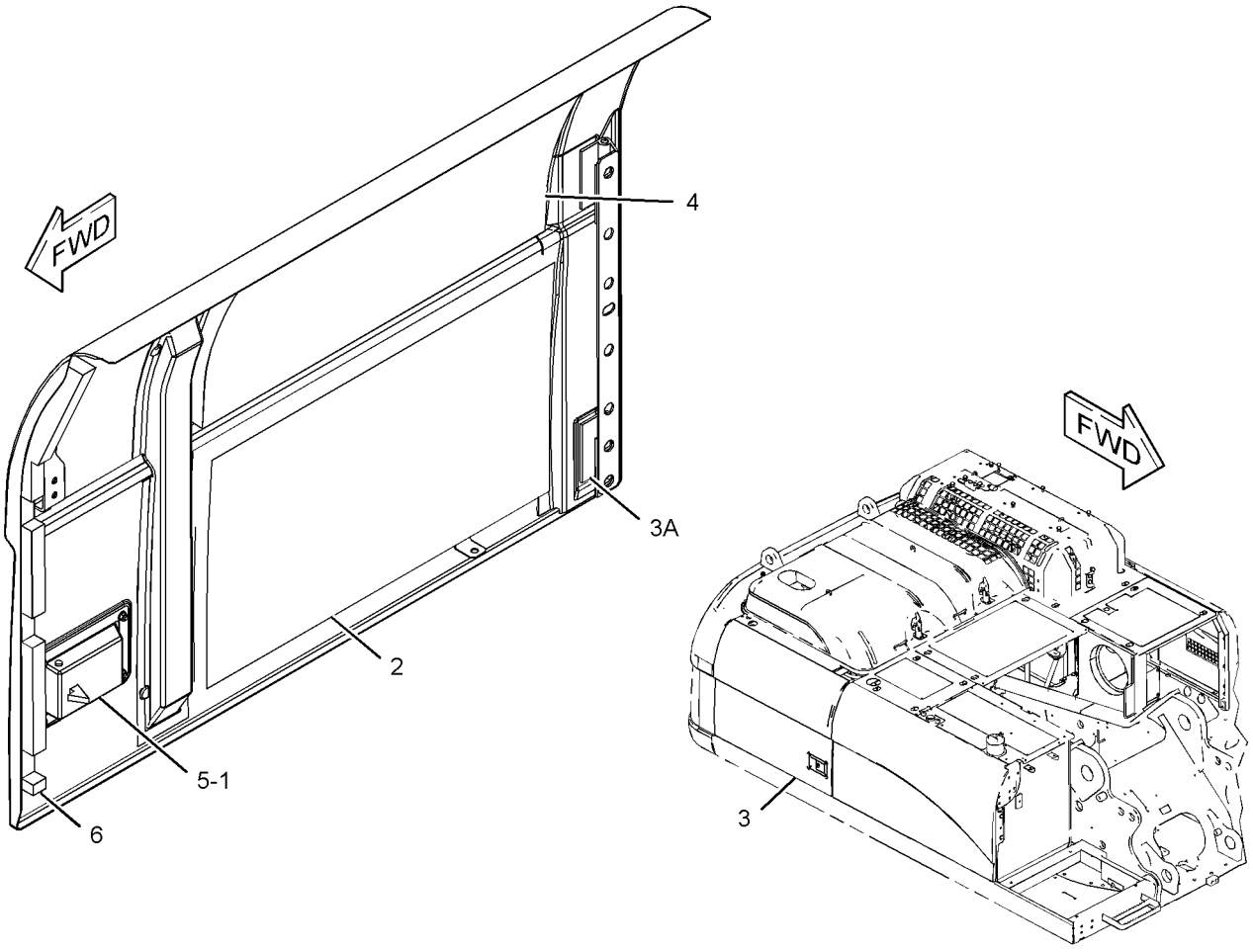

GRAPHIC #1 **<END>** g01232584

241-2140 DOOR GP-ACCESS–RADIATOR

S/N: B6H1-540; JLP1-250

PART OF 237-8768 HOOD & GUARD GP

SMCS-7273 **i03626209**

NOTE	REF NO	GRAPHIC REF	PART NUMBER	QTY	PART NAME 1 2 3 4 5 6 (PRODUCT LEVEL)	SEE PAGE
M	1	1	**099-6418**	4	NUT (M6X1-THD)	
	2	1	**122-4101**	1	RUBBER	
	3	1	**177-6395**	1	LINER	
	4	1	**208-4289**	1	CUSHION	
	5	1	*241-2141*	1	DOOR AS-ACCESS	
	5A	1	**165-2976**	2	HINGE	
J	6	1	**268-0457**	1	LOCK AS	

J-REQUIRES CORPORATE KEY
M-METRIC PART

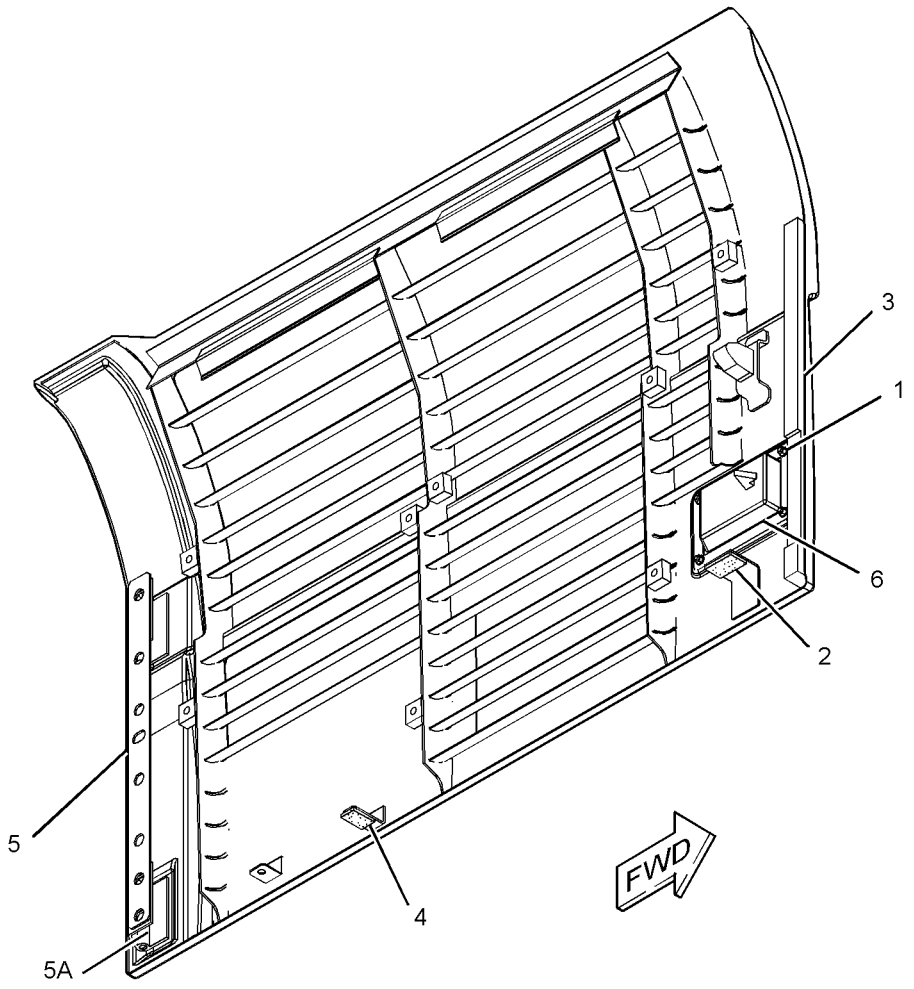

GRAPHIC #1 **<END>** g01236847

289-6893 DOOR GP-ACCESS–RADIATOR

S/N: B6H541-UP; JLP251-UP

PART OF 237-8768 HOOD & GUARD GP

SMCS-7273 **i02756124**

NOTE	REF NO	GRAPHIC REF	PART NUMBER	QTY	PART NAME 1 2 3 4 5 6 (PRODUCT LEVEL)	SEE PAGE
M	1	1	**099-6418**	4	NUT (M6X1-THD)	
	2	1	**122-4101**	1	RUBBER	
	3	1	**177-6395**	1	LINER	
	4	1	**208-4289**	1	CUSHION	
	5	1	*289-6894*	1	DOOR AS-ACCESS	
	5A	1	**165-2976**	2	HINGE	
J	6	1	**298-2942**	1	LOCK AS	

J-REQUIRES CORPORATE KEY
M-METRIC PART

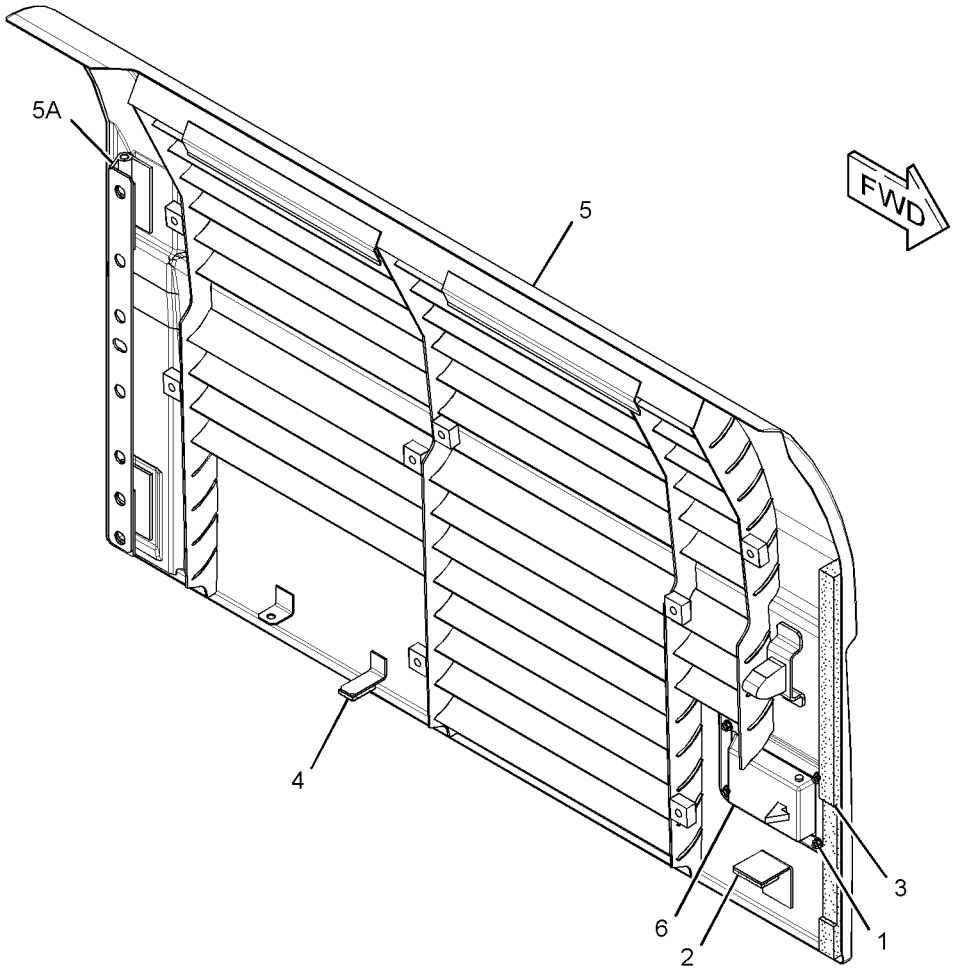

GRAPHIC #1 **<END>** g01390030

289-6895 DOOR GP-ACCESS—PUMP COMPARTMENT

S/N: B6H541-UP; JLP251-UP

PART OF 237-8768 HOOD & GUARD GP

SMCS-7273 **i02989634**

NOTE	REF NO	GRAPHIC REF	PART NUMBER	QTY	PART NAME 1 2 3 4 5 6 (PRODUCT LEVEL)	SEE PAGE
M	1	1	**099-6418**	4	NUT (M6X1-THD)	
	2	1	**193-9438**	1	INSULATION	
	3	1	**244-7979**	1	INSULATION	
J	4	1	**298-2942**	1	LOCK AS	
	5	1	**273-7668**	1	LINER	
	6	1	*289-6896*	1	DOOR AS-ACCESS	
	6A	1	**165-2976**	2	HINGE	
	7	1	**184-8862**	1	COVER	

J-REQUIRES CORPORATE KEY
M-METRIC PART

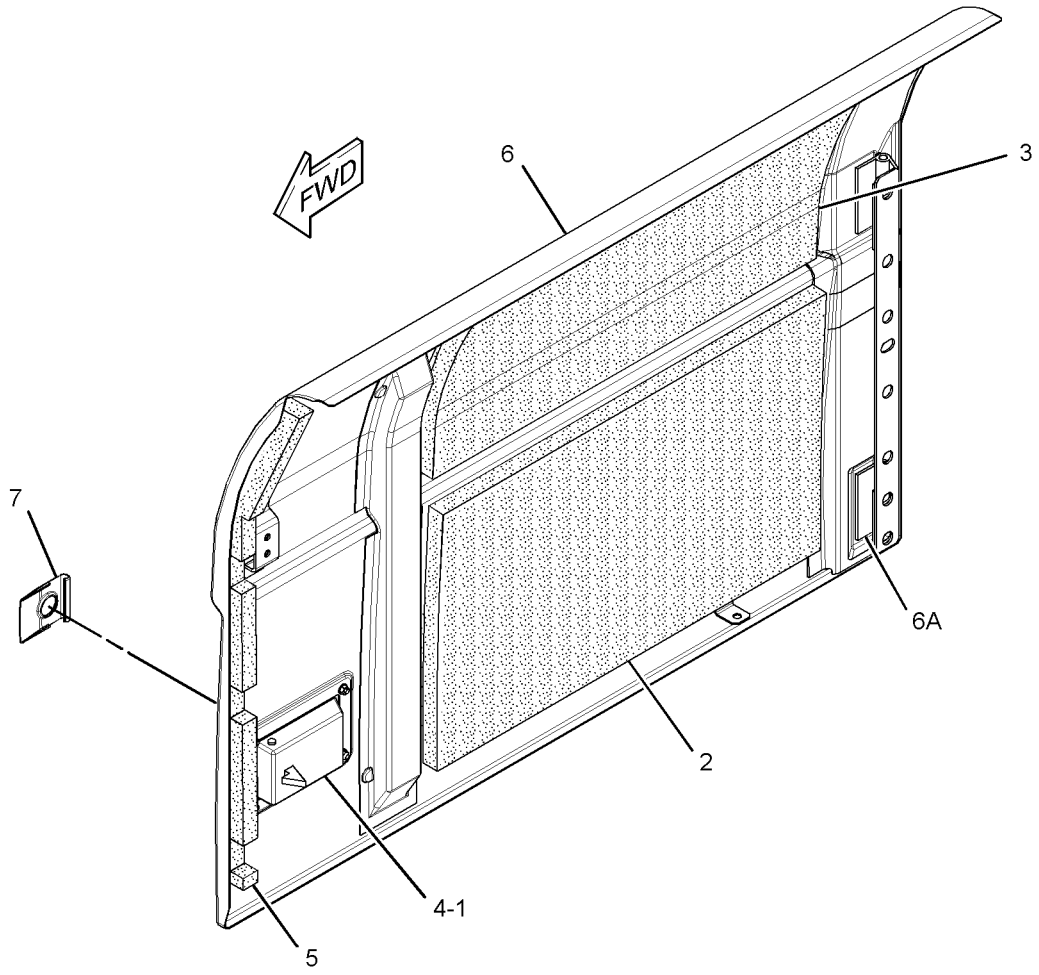

GRAPHIC #1 **<END>** g01407526

262-2595 FENDER & COVER GP

S/N: B6H1-UP; JLP1-UP
PART OF 247-7386 CHASSIS AR

SMCS-7252 **i02496572**

NOTE	REF NO	GRAPHIC REF	PART NUMBER	QTY	PART NAME 1 2 3 4 5 6 (PRODUCT LEVEL)	SEE PAGE
M	1	1	**135-8573**	2	BOLT AS	
	2	1	**236-3702**	2	SPACER (15X35X11-MM THK)	
	3	1	**236-3703**	2	WASHER (25X35X4-MM THK)	
	4	1	**259-3543**	1	STEP AS	
	5	1	**262-2596**	1	COVER AS-FENDER	
		1	**278-3818**	1	LINER	
	6	1	**5P-1075**	2	WASHER-HARD (10.2X22.5X3-MM THK)	
M	7	1	**8T-4195**	2	BOLT (M10X1.5X30-MM)	

M-METRIC PART

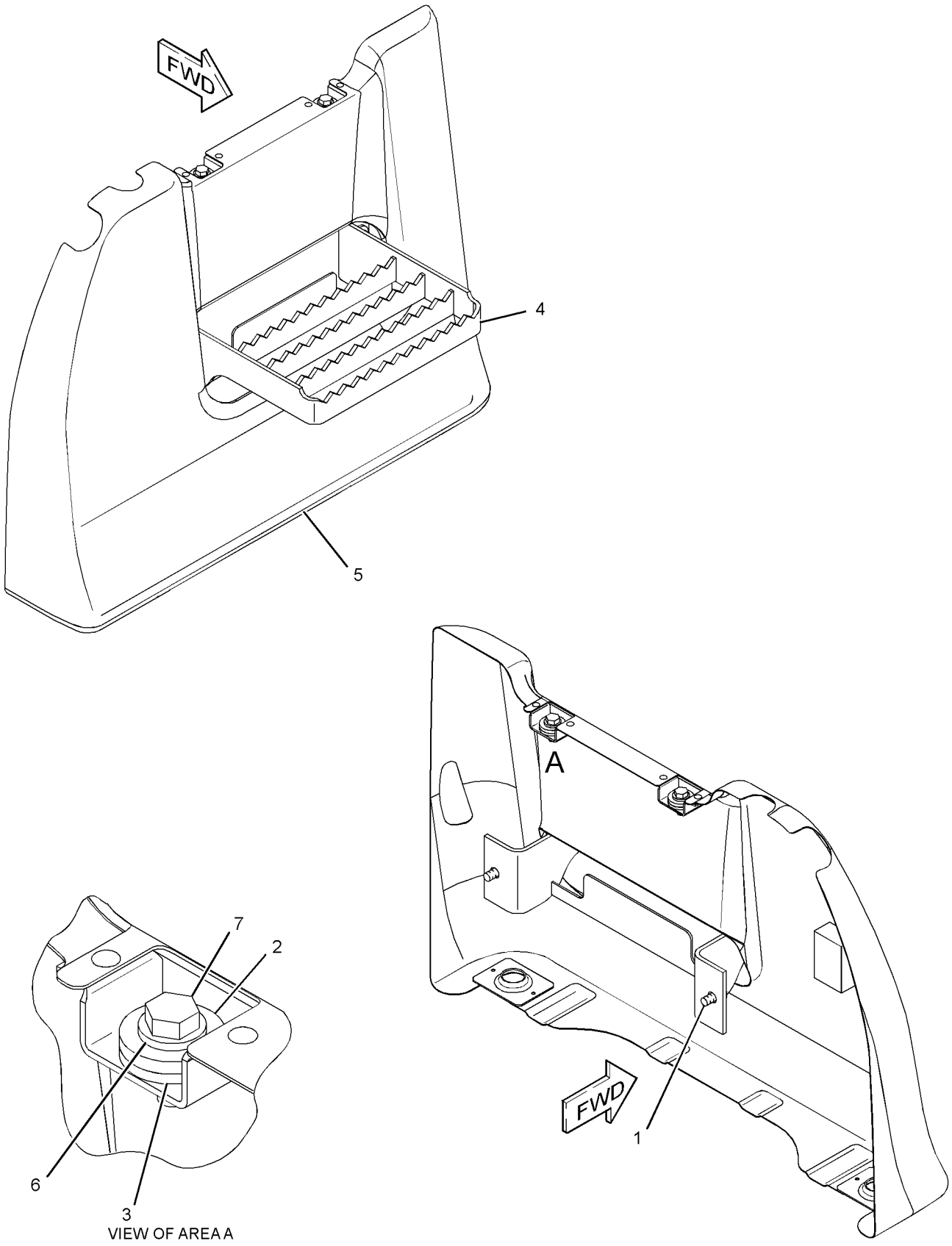

GRAPHIC #1 **<END>** g01199510

FRAME AND BODY

251-2755 FRAME GP-UPPER

S/N: B6H1-UP; JLP1-UP
PART OF 247-7386 CHASSIS AR

SMCS-7051 **i02989640**

NOTE	REF NO	GRAPHIC REF	PART NUMBER	QTY	PART NAME 1 2 3 4 5 6 (PRODUCT LEVEL)	SEE PAGE
B	1	1	**308-8785**	2	SHIM (1-MM THK)	
B	2	1	**093-0090**	4	SHIM (1-MM THK)	
B	3	1	**133-2427**	2	SHIM (0.5-MM THK)	
	4	1	**201-2771**	1	WASHER (26X90X8-MM THK)	
	5	1	**212-2841**	2	SHIM (2-MM THK)	
	6	1	**245-7900**	1	CAP	
	7	1	**245-7901**	1	CAP	
	8	1	**251-2542**	1	PIN AS	
	9	1	**251-2756**	1	FRAME AS-UPPER	
	9A	1	**163-3729**	1	STEP AS	
	9B	1	**7Y-1113**	1	BOSS	
B	10	1	**308-8786**	1	SHIM (2-MM THK)	
	11	1	**093-0364**	2	SPACER (103X140X12-MM THK)	
	12	1	**096-6467**	2	WASHER (22X60X8-MM THK)	
	13	1	**117-5435**	2	PIN AS	
B	14	1	**308-8784**	1	SHIM (0.5-MM THK)	
	15	1	**166-1488**	4	SHIM (2-MM THK)	
M	16	1	**7X-2572**	1	BOLT (M24X3X35-MM)	
	17	1	**8T-4123**	2	WASHER (22X35X3.5-MM THK)	
	18	1	**8T-4167**	1	WASHER-HARD (26X44X4-MM THK)	
M	19	1	**8T-4780**	2	BOLT (M20X2.5X30-MM)	

B-USE AS REQUIRED
M-METRIC PART

251-2755 **FRAME GP-UPPER** *(contd.)* **i02989640**

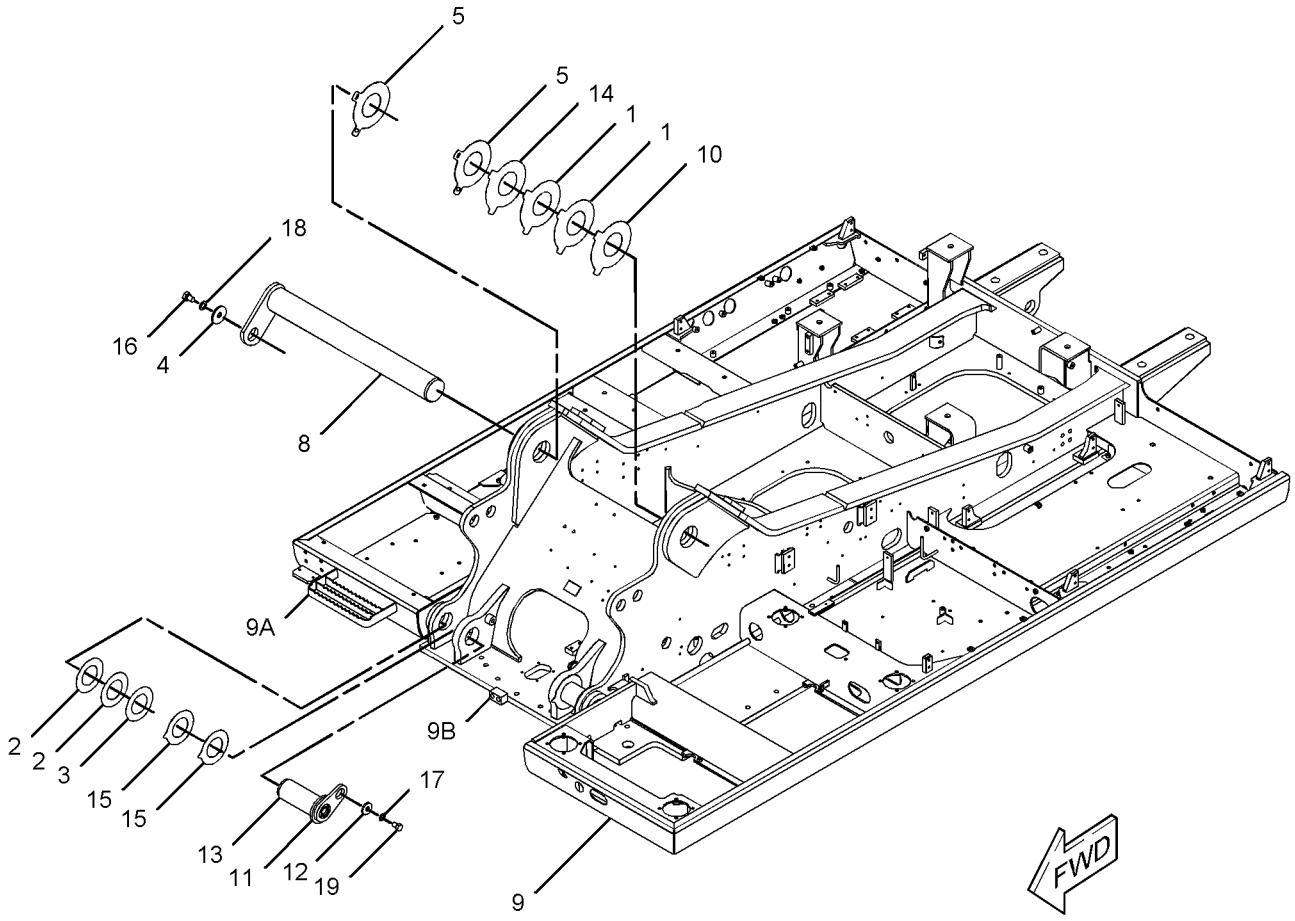

GRAPHIC #1 **<END>** g01609893

199-4559 GEAR & BEARING GP-SWING

S/N: B6H1-UP; JLP1-UP

PART OF 227-6089 GEAR & BEARING GP-SWING

SMCS-7063 **i03626236**

NOTE	REF NO	GRAPHIC REF	PART NUMBER	QTY	PART NAME 1 2 3 4 5 6 (PRODUCT LEVEL)	SEE PAGE
E	1	1	**110-7183**		SEAL (476-CM)	
E	1A	1	**110-7183**		SEAL (477-CM)	
	2	1	**3B-8489**	1	FITTING-GREASE	

E-ORDER BY THE CENTIMETER

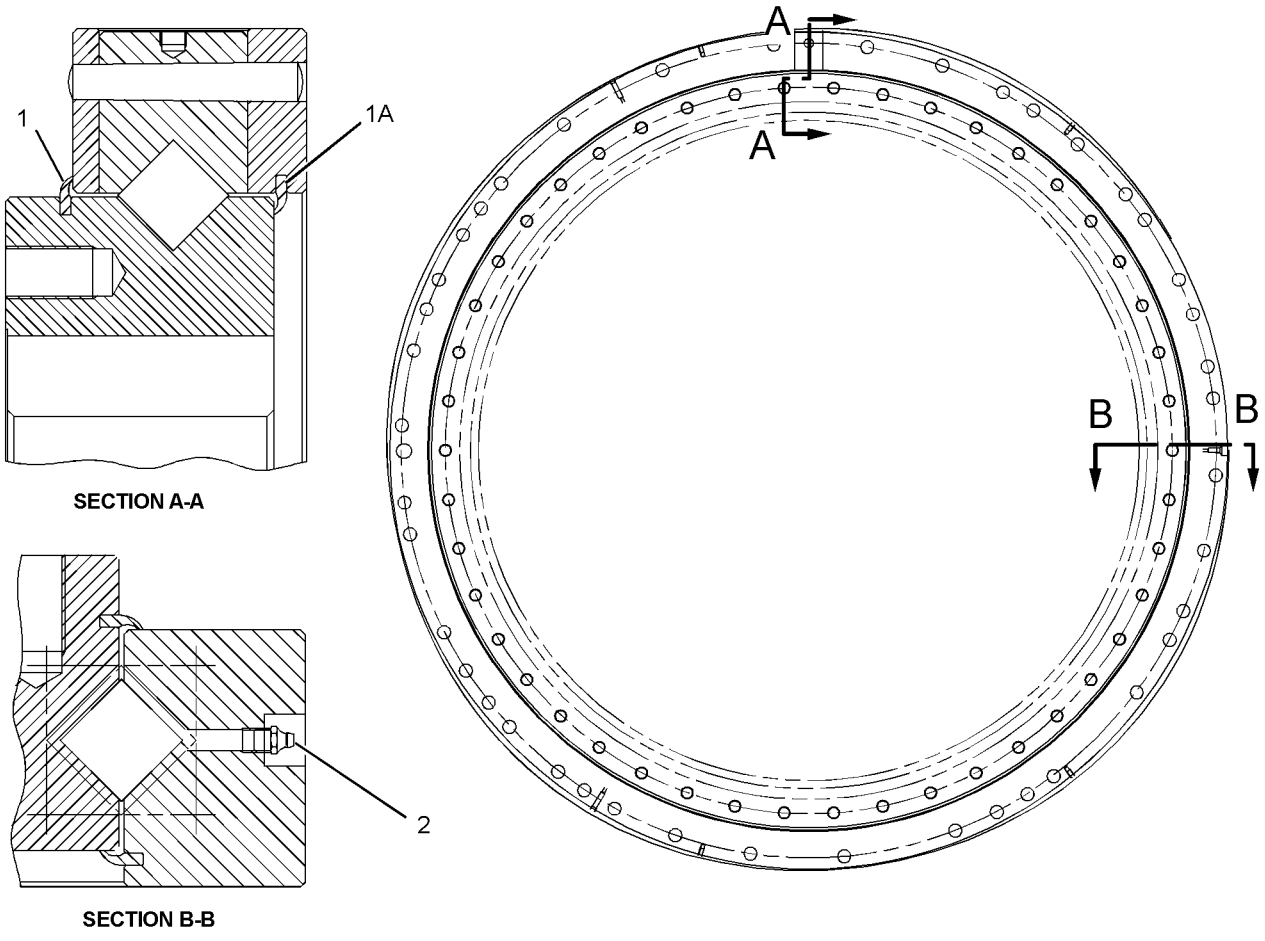

SECTION A-A

SECTION B-B

GRAPHIC #1 **<END>** g01945109

227-6089 GEAR & BEARING GP-SWING

S/N: B6H1-UP; JLP1-UP

PART OF 227-6145 GEAR & BEARING GP-SWING

SMCS-7063 **i02284009**

NOTE	PART NUMBER	QTY	PART NAME 1 2 3 4 5 6 (PRODUCT LEVEL)	SEE PAGE
Y	*199-4559*	1	GEAR & BEARING GP-SWING (114-BEARING)	442
			—OR—	
Y	*227-6090*	1	GEAR & BEARING GP-SWING (92-BEARING)	444

Y-SEPARATE ILLUSTRATION

<END>

227-6090 GEAR & BEARING GP-SWING

S/N: B6H1-UP; JLP1-UP

PART OF 227-6089 GEAR & BEARING GP-SWING

SMCS-7063 **i03626243**

NOTE	REF NO	GRAPHIC REF	PART NUMBER	QTY	PART NAME 1 2 3 4 5 6 (PRODUCT LEVEL)	SEE PAGE
Z	1	1		92	ROLLER	
Z	2	1		32	SEPARATOR	
Z	3	1		60	SEPARATOR	
Z	4	1		1	RACE-BEARING	
	5	1	**227-6074**	1	SEAL-DUST	
Z	6	1		1	RACE AS-OUTER	
	7	1	**3B-8489**	1	FITTING-GREASE	
E	8	1	**148-4685**		SEAL (465-CM)	

E-ORDER BY THE CENTIMETER
Z-NOT SERVICED SEPARATELY

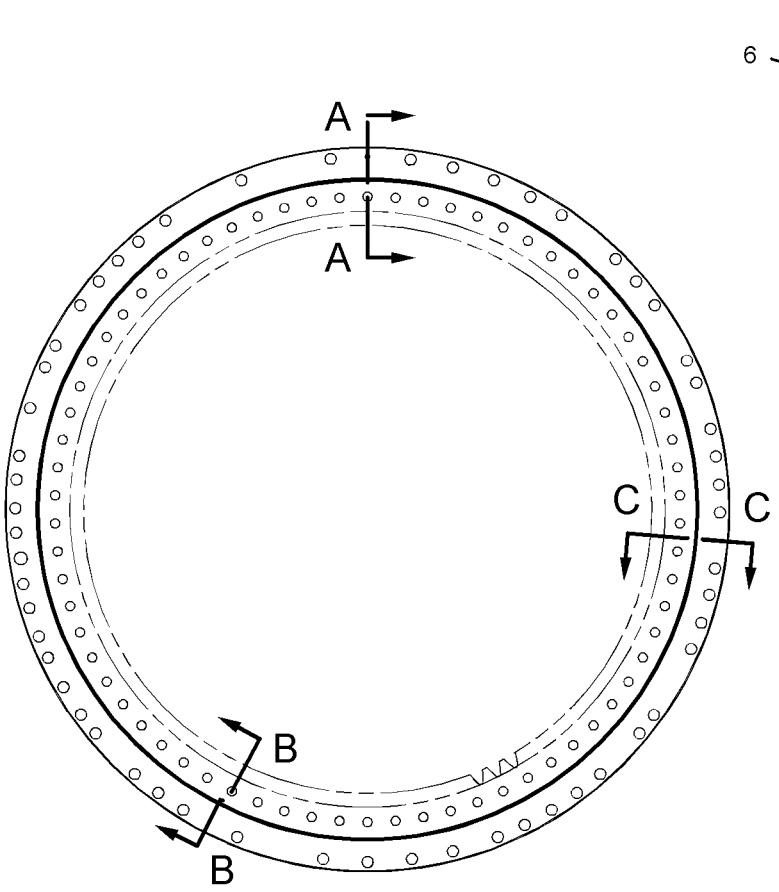

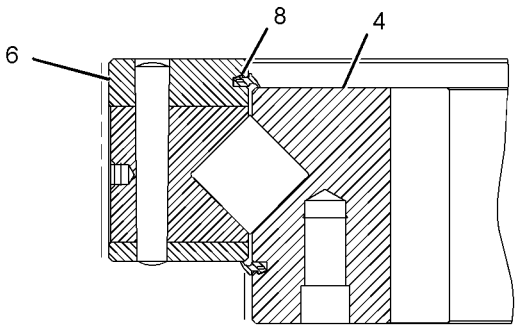

SECTION A-A

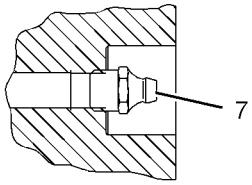

SECTION C-C

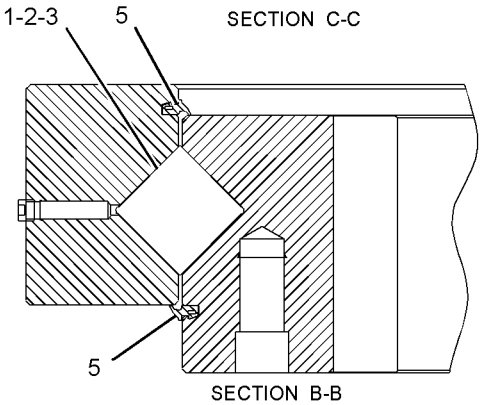

SECTION B-B

GRAPHIC #1 **<END>** g01945202

227-6145 GEAR & BEARING GP-SWING

S/N: B6H1-UP; JLP1-UP

PART OF 229-1898 FRAME AR-UNDERCARRIAGE

SMCS-7063 **i02488299**

NOTE	REF NO	GRAPHIC REF	PART NUMBER	QTY	PART NAME 1 2 3 4 5 6 (PRODUCT LEVEL)	SEE PAGE
	1	2	**2B-7561**	2	CORK	
	2	1,2	**5K-9243**	4	ELBOW-FLARED	
	3	2	**7Y-1507**	46	SPACER (24.5X44X43-MM THK)	
	4	1	**7Y-1647**	1	GASKET	
	5	2	**7Y-1650**	1	CLAMP-HOSE	
	6	2	**199-4523**	1	TUBE AS (RH)	
	7	1	**199-4524**	1	TUBE AS (LH)	
Y	8	2	**227-6089**	1	GEAR & BEARING GP-SWING	443
	9	2	**227-6105**	1	BOOT	
	10	2	**227-6106**	1	RETAINER	
M	11	2	**8T-0670**	42	BOLT (M24X3X140-MM)	
M	12	2	**6V-8132**	46	BOLT (M24X3X120-MM)	
	13	1	**148-4703**	1	COVER	
	14	1	**148-4704**	1	GASKET	
	15	1	**3B-8489**	2	FITTING-GREASE	
	16	2	**4N-9170**	4	CLIP	
	17	2	**7Y-1095**	1	DOWEL	
	18	1	**7Y-1648**	1	STRIP	
	19	1,2	**8T-4121**	14	WASHER-HARD (11X21X2.5-MM THK)	
M	20	1,2	**8T-4136**	12	BOLT (M10X1.5X25-MM)	
	21	2	**093-0020**	42	SPACER (25X44X6-MM THK)	
M	22	2	**8T-4199**	4	BOLT (M8X1.25X12-MM)	
B	23	2	**1U-8846**		SEALANT-GASKET	
M	24	1	**8T-4137**	2	BOLT (M10X1.5X20-MM)	

B-USE AS REQUIRED
M-METRIC PART
Y-SEPARATE ILLUSTRATION

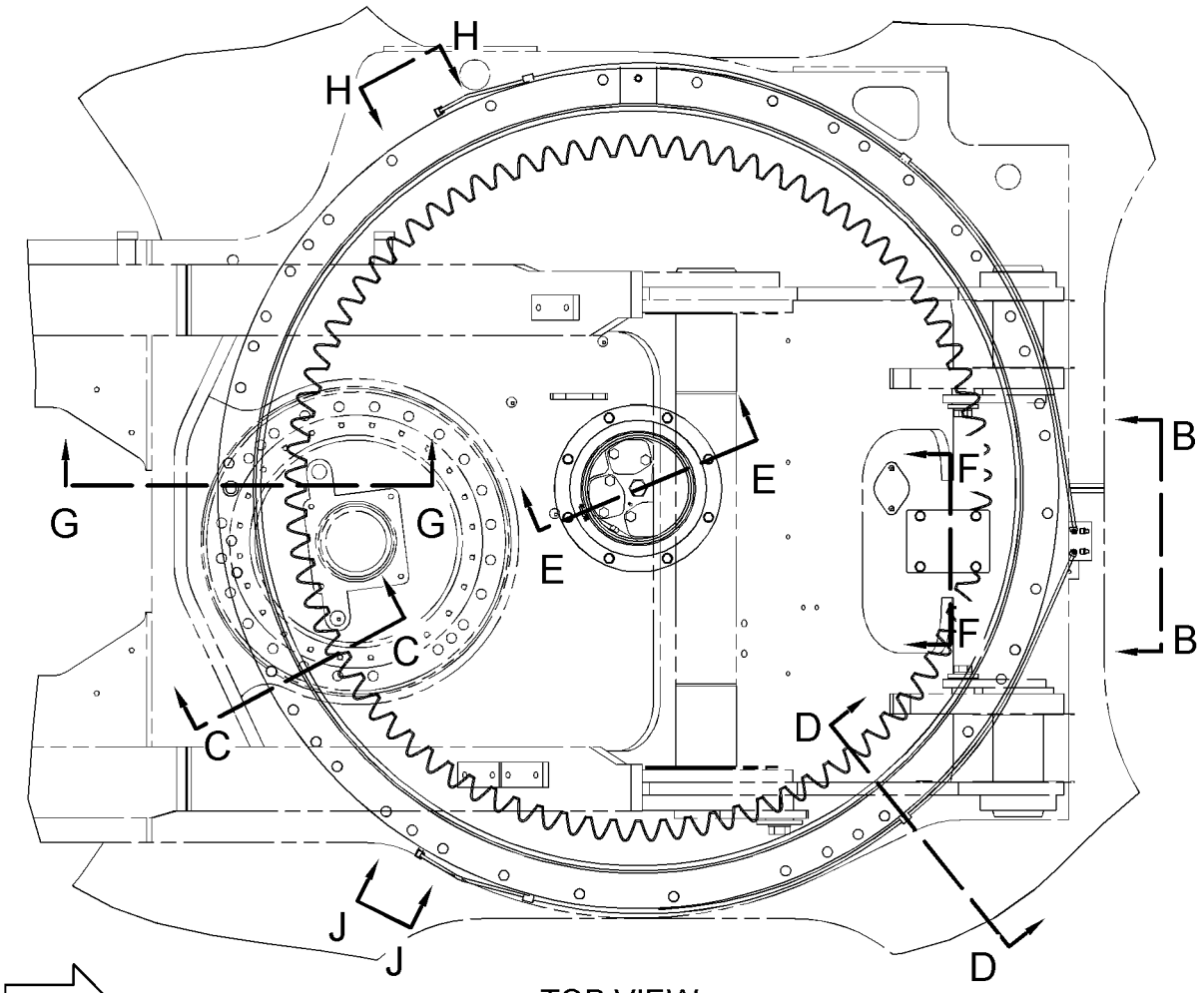

FWD

TOP VIEW

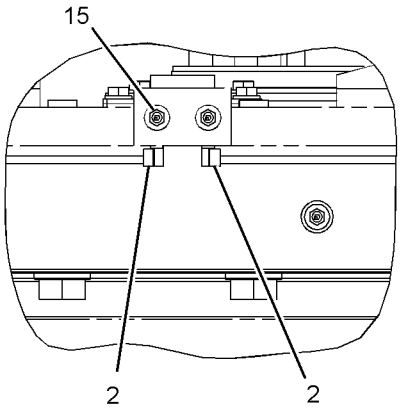

VIEW B-B

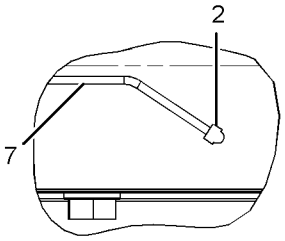

VIEW H-H

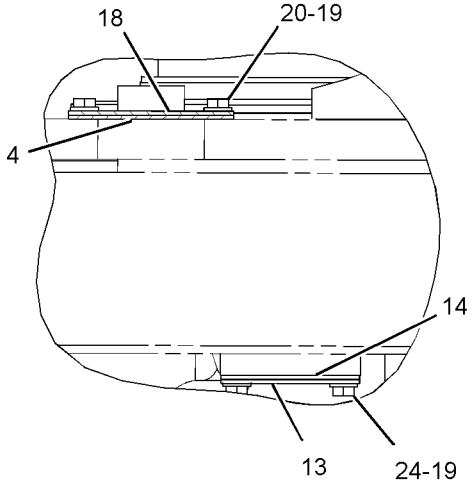

SECTION F-F

REFER TO ALL ILLUSTRATIONS OF
THIS GROUP FOR AUXILIARY VIEWS

GRAPHIC #1

g01237347

227-6145 **GEAR & BEARING GP-SWING** *(contd.)* **i02488299**

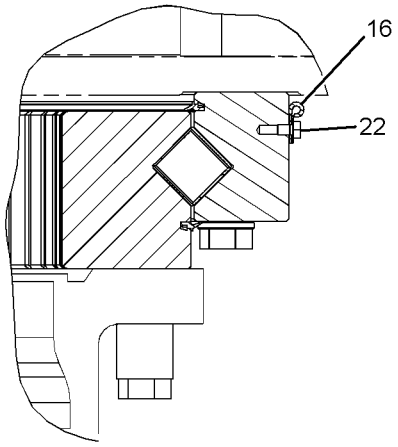

SECTION D-D

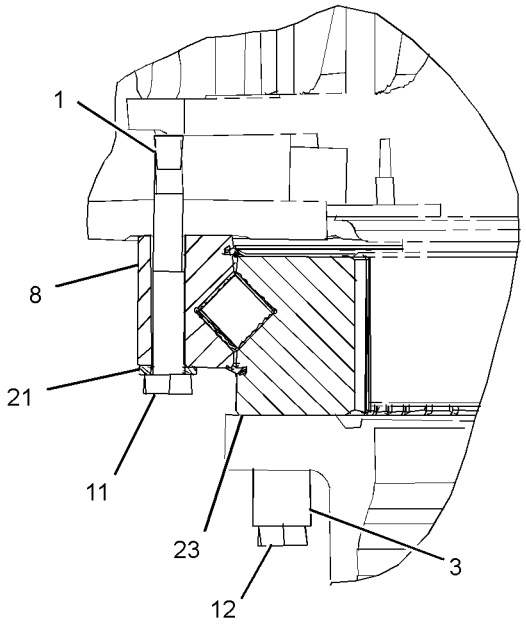

SECTION C-C

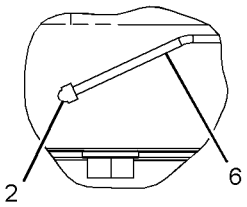

VIEW J-J

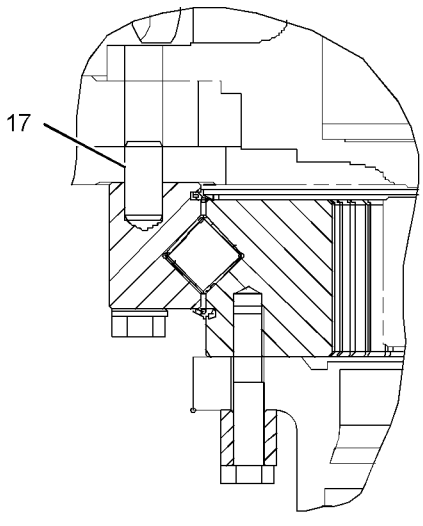

SECTION G-G

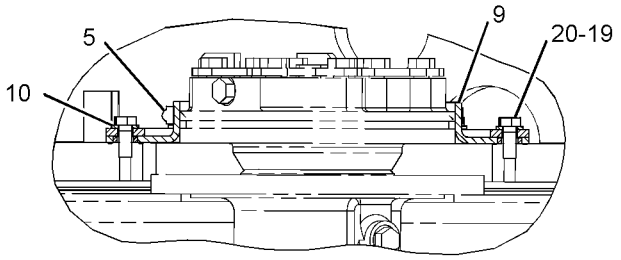

SECTION E-E

GRAPHIC #2 **<END>** g01237348

269-1167 GUARD AR-BOTTOM—HEAVY-DUTY

S/N: B6H1-UP; JLP1-UP

AN ATTACHMENT

SMCS-7153 **i02503050**

NOTE	PART NUMBER	QTY	PART NAME 1 2 3 4 5 6 (PRODUCT LEVEL)	SEE PAGE
Y	*237-8754*	1	GUARD GP-BOTTOM (HEAVY-DUTY)	451
Y	*134-8887*	1	GUARD GP-SWIVEL	454
Y	*241-7335*	1	GUARD GP-TRAVEL MOTOR	522

Y-SEPARATE ILLUSTRATION

<END>

FRAME AND BODY

237-8753 GUARD GP-BOTTOM

S/N: B6H1-652; JLP1-737

PART OF 247-7386 CHASSIS AR

SMCS-7153 **i02490482**

NOTE	REF NO	GRAPHIC REF	PART NUMBER	QTY	PART NAME 1 2 3 4 5 6 (PRODUCT LEVEL)	SEE PAGE
M	1	1	**135-8576**	48	BOLT AS-LOCKING (M12X1.75X30-MM)	
	2	1	**203-4930**	1	SHEET AS	
	3	1	**237-8868**	1	SHEET	
	4	1	**237-8869**	1	SHEET	
	5	1	**237-8877**	1	SHEET	
	6	1	**241-1904**	1	SHEET	
	7	1	**241-2195**	1	SHEET AS	
	8	1	**248-8984**	2	PLATE AS	
	9	1	**256-1938**	1	SHEET	
	10	1	**256-1939**	1	SHEET	

M-METRIC PART

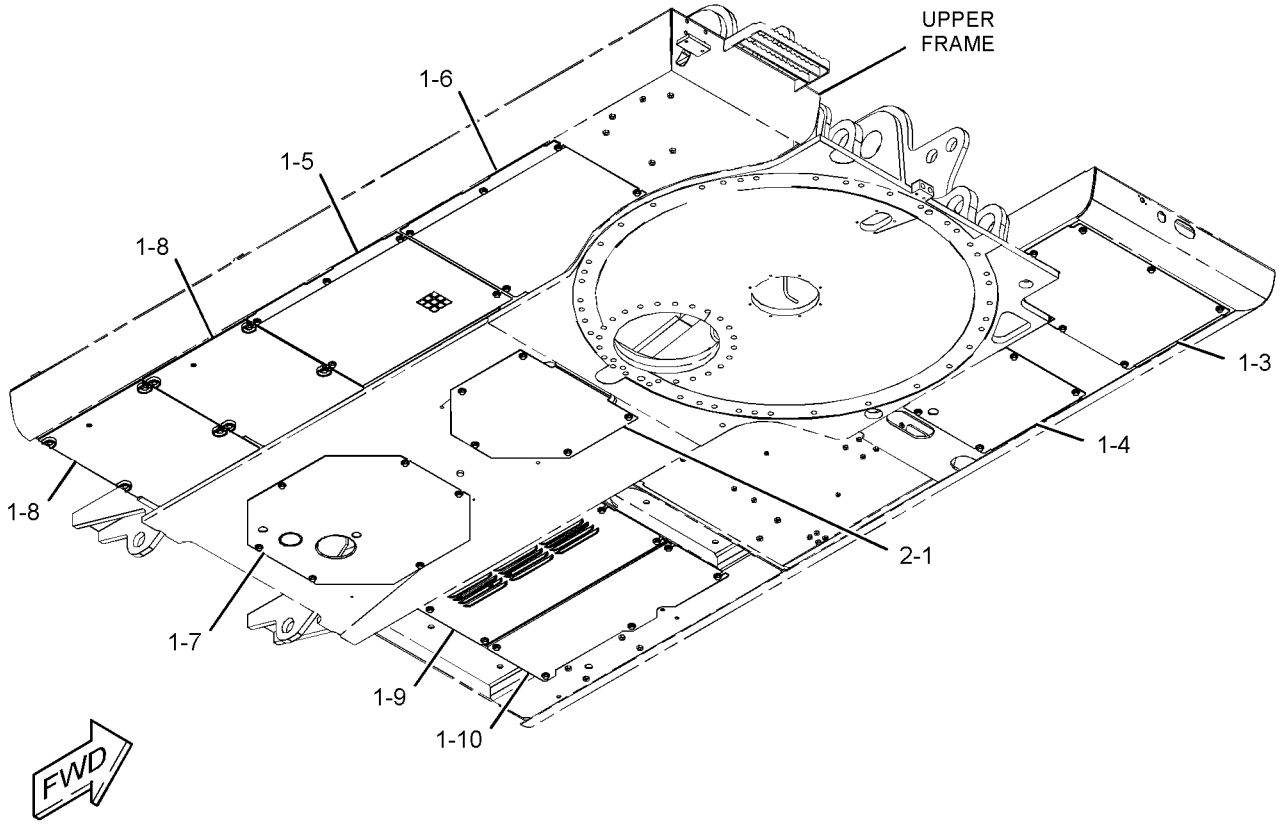

GRAPHIC #1 **<END>** g01232577

237-8753 GUARD GP-BOTTOM

S/N: B6H653-UP; JLP738-UP
PART OF 247-7386 CHASSIS AR

SMCS-7153 **i03067520**

NOTE	REF NO	GRAPHIC REF	PART NUMBER	QTY	PART NAME 1 2 3 4 5 6 (PRODUCT LEVEL)	SEE PAGE
M	1	1	**135-8576**	48	BOLT AS-LOCKING (M12X1.75X30-MM)	
	2	1	**203-4930**	1	SHEET AS	
	3	1	**237-8868**	1	SHEET	
	4	1	**237-8869**	1	SHEET	
	5	1	**237-8877**	1	SHEET	
	6	1	**241-1904**	1	SHEET	
	7	1	**241-2195**	1	SHEET AS	
	8	1	**248-8984**	2	PLATE AS	
C	9	1	**303-9626**	1	SHEET	
	10	1	**256-1939**	1	SHEET	

C-CHANGE FROM PREVIOUS TYPE
M-METRIC PART

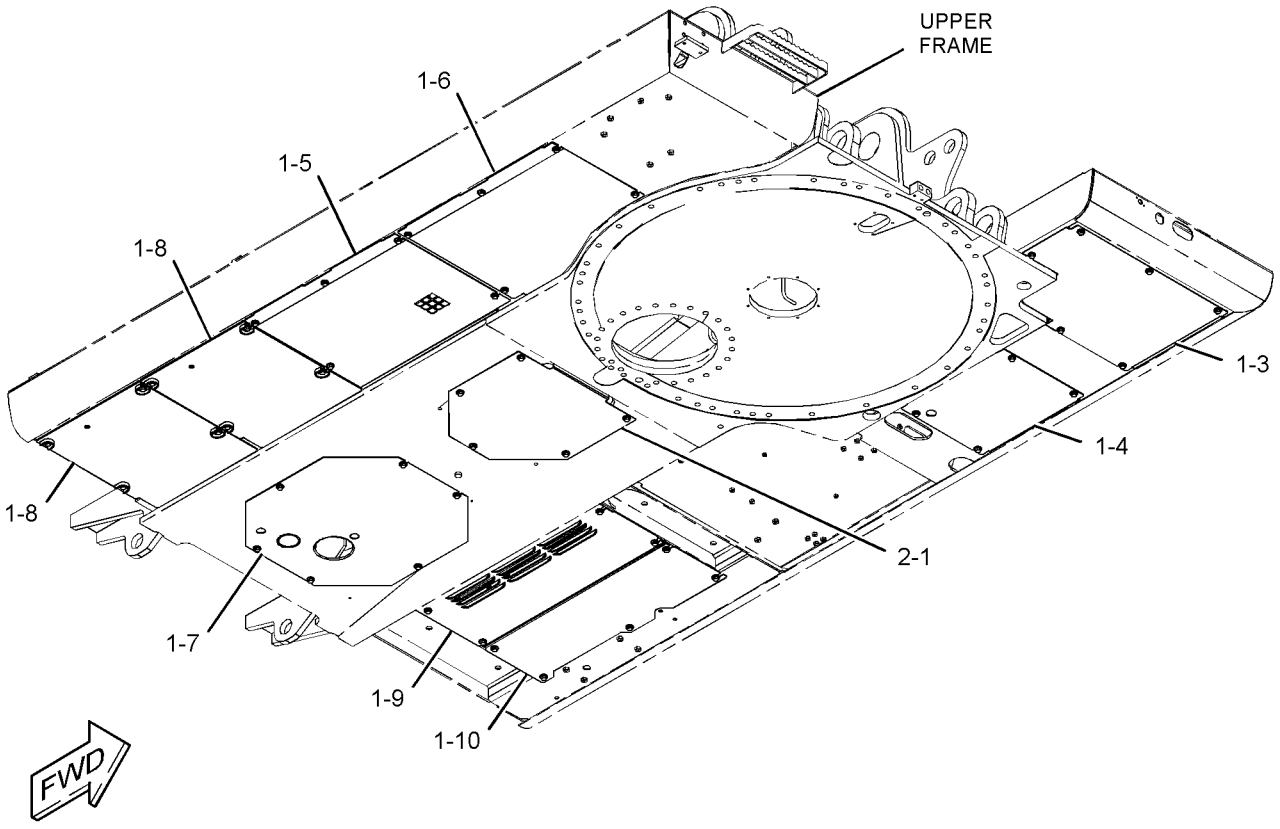

GRAPHIC #1 **<END>** g01232577

237-8754 GUARD GP-BOTTOM–HEAVY-DUTY

S/N: B6H1-UP; JLP1-UP
PART OF 269-1167 GUARD AR-BOTTOM
AN ATTACHMENT
TYPE 1

SMCS-7153 **i03626342**

NOTE	REF NO	GRAPHIC REF	PART NUMBER	QTY	PART NAME 1 2 3 4 5 6 (PRODUCT LEVEL)	SEE PAGE
M	1	1	**135-8576**	4	BOLT AS-LOCKING (M12X1.75X30-MM)	
	2	1	**190-7062**	1	PLATE AS	
	3	1	**214-8110**	1	PLATE AS	
	3A	1	**099-7857**	1	HINGE	
	4	1	**237-8875**	1	PLATE AS	
	5	1	**237-8880**	1	PLATE AS	
	6	1	**237-8882**	1	PLATE AS	
	7	1	**241-1900**	1	PLATE AS	
	8	1	**241-1902**	1	PLATE AS	
	9	1	**259-3507**	1	PLATE AS	
	10	1	**259-3509**	1	PLATE AS	

M-METRIC PART

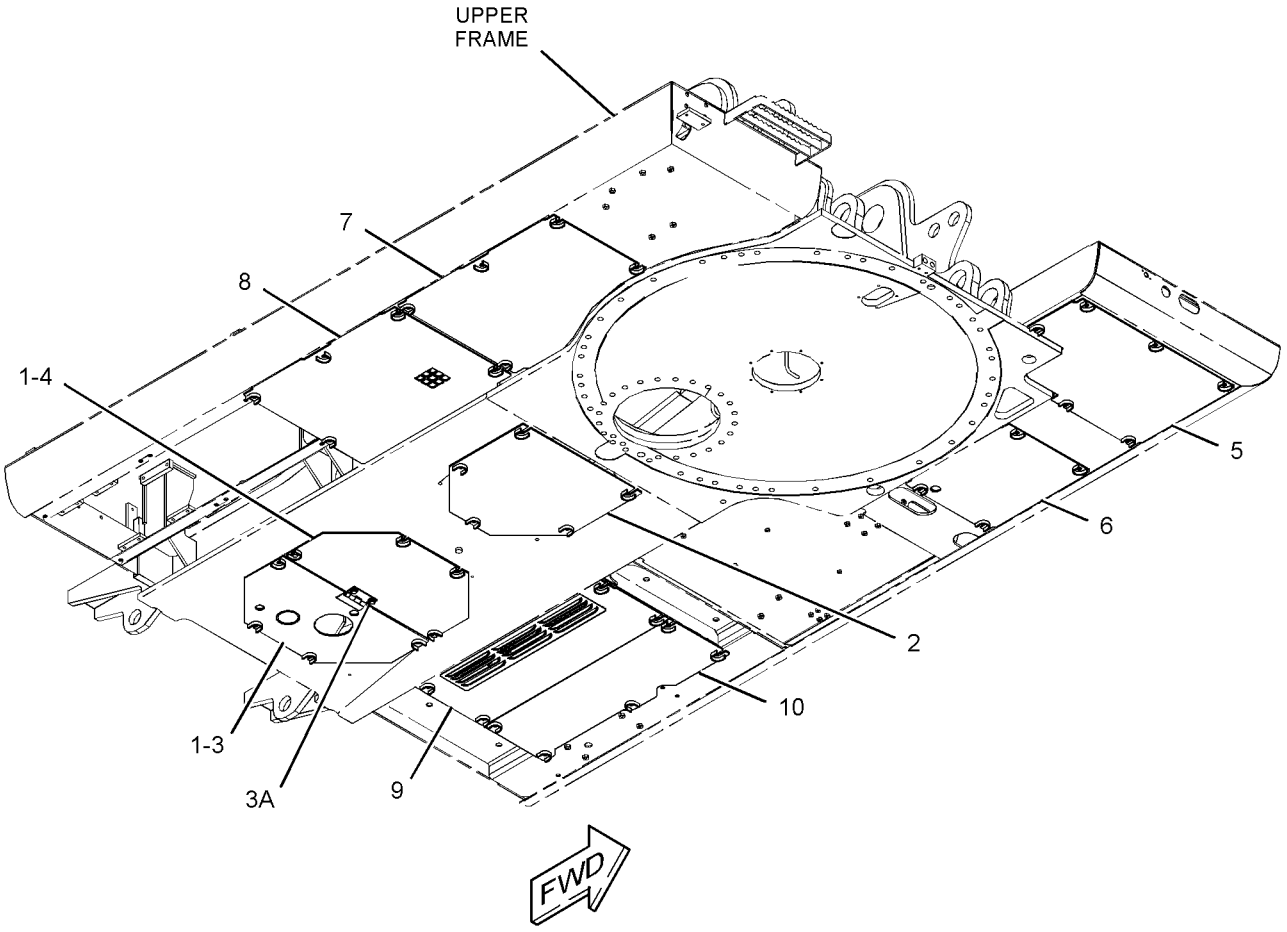

GRAPHIC #1 **<END>** g01945194

237-8754 GUARD GP-BOTTOM—HEAVY-DUTY

S/N: B6H1-UP; JLP1-UP
PART OF 269-1167 GUARD AR-BOTTOM
AN ATTACHMENT
TYPE 2

SMCS-7153 **i03626343**

NOTE	REF NO	GRAPHIC REF	PART NUMBER	QTY	PART NAME 1 2 3 4 5 6 (PRODUCT LEVEL)	SEE PAGE
M	1	1	**135-8576**	4	BOLT AS-LOCKING (M12X1.75X30-MM)	
	2	1	**190-7062**	1	PLATE AS	
	3	1	**214-8110**	1	PLATE AS	
	3A	1	**099-7857**	1	HINGE	
	4	1	**237-8875**	1	PLATE AS	
	5	1	**237-8880**	1	PLATE AS	
	6	1	**237-8882**	1	PLATE AS	
	7	1	**241-1900**	1	PLATE AS	
	8	1	**241-1902**	1	PLATE AS	
C	9	1	**303-9627**	1	PLATE AS	
	10	1	**259-3509**	1	PLATE AS	

C-CHANGE FROM PREVIOUS TYPE
M-METRIC PART

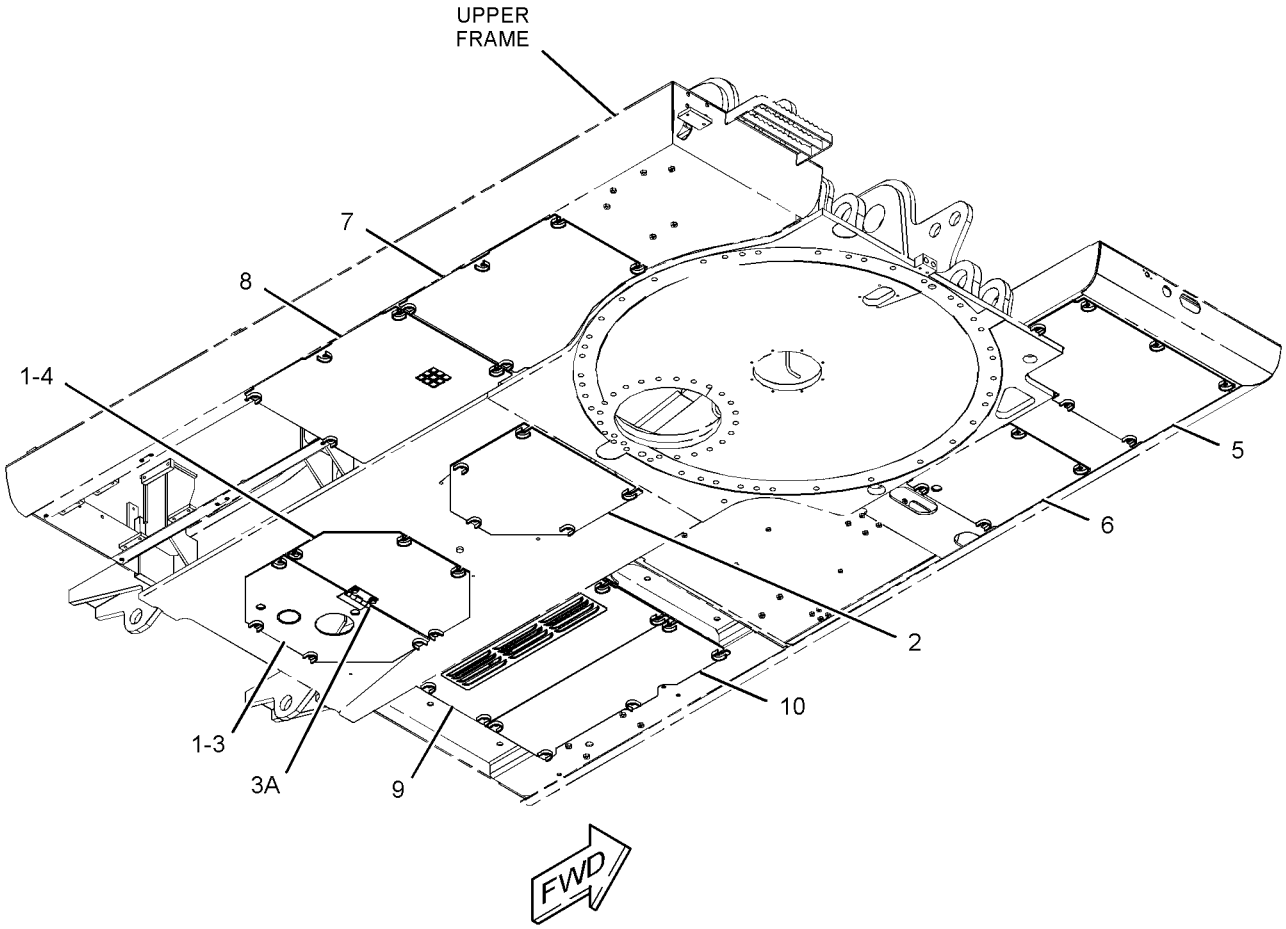

GRAPHIC #1 **<END>** g01945199

134-8856 GUARD GP-SWIVEL

S/N: B6H1-UP; JLP1-UP

AN ATTACHMENT

SMCS-7183 **i02499047**

NOTE	REF NO	GRAPHIC REF	PART NUMBER	QTY	PART NAME 1 2 3 4 5 6 (PRODUCT LEVEL)	SEE PAGE
	1	1	**134-8857**	1	PLATE AS	
	2	1	**130-4276**	4	PLATE	
M	3	1	**8T-4140**	8	BOLT (M16X2X60-MM)	
	4	1	**3E-9411**	8	WASHER-HARD (17.5X38X6-MM THK)	

M-METRIC PART

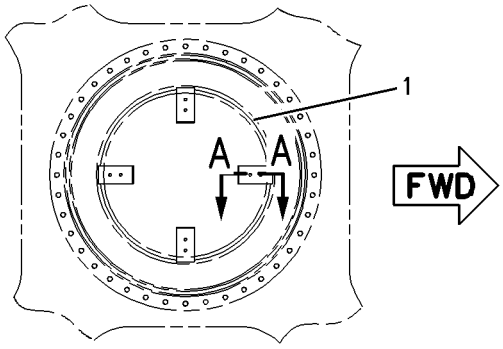

TOP VIEW

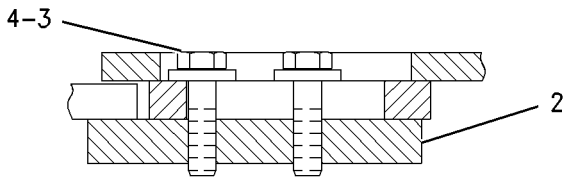

SECTION A-A

GRAPHIC #1 **<END>** g00837509

134-8887 GUARD GP-SWIVEL

S/N: B6H1-UP; JLP1-UP
PART OF 269-1167 GUARD AR-BOTTOM
AN ATTACHMENT

SMCS-7183 **i01681233**

NOTE	REF NO	GRAPHIC REF	PART NUMBER	QTY	PART NAME 1 2 3 4 5 6 (PRODUCT LEVEL)	SEE PAGE
	1	1	**134-8888**	1	PLATE AS	
	2	1	**134-8891**	1	PLATE AS	
M	3	1	**8C-8992**	6	BOLT-LOCKING (M12X1.75X30MM)	
	4	1	**5P-1076**	6	WASHER-HARD (13.5X30X4MM THK)	

M-METRIC PART

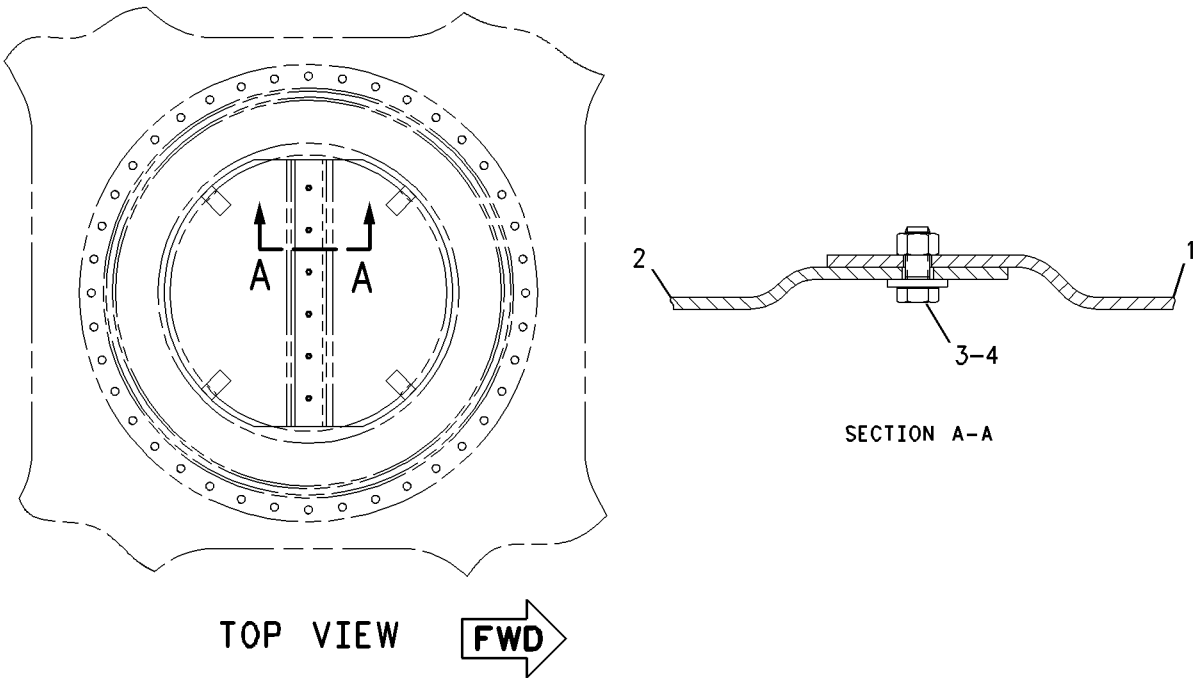

GRAPHIC #1 **<END>** g00790525

256-1644 HANDRAIL GP

S/N: B6H1-UP; JLP1-UP
PART OF 247-7386 CHASSIS AR

SMCS-7256 **i02496703**

NOTE	REF NO	GRAPHIC REF	PART NUMBER	QTY	PART NAME 1 2 3 4 5 6 (PRODUCT LEVEL)	SEE PAGE
M	1	1	**135-8573**	2	BOLT AS	
M	2	1	**135-8578**	3	BOLT AS	
	3	1	**177-5879**	2	CLAMP	
	4	1	**177-5880**	4	SLEEVE	
	5	1	**262-2209**	1	HANDRAIL AS	
M	6	1	**8T-4192**	2	BOLT (M12X1.75X25-MM)	
	7	1	**8T-4223**	2	WASHER-HARD (13.5X25.5X3-MM THK)	

M-METRIC PART

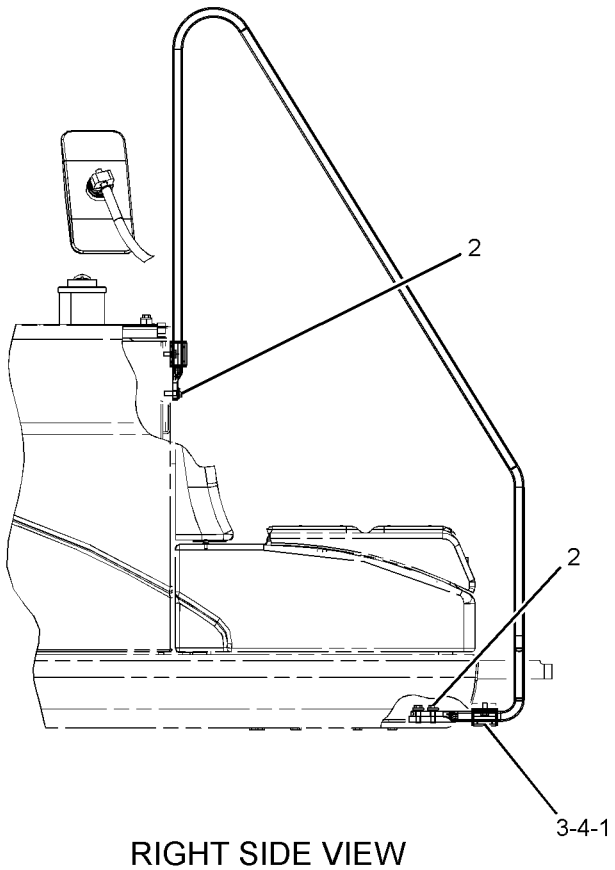

RIGHT SIDE VIEW

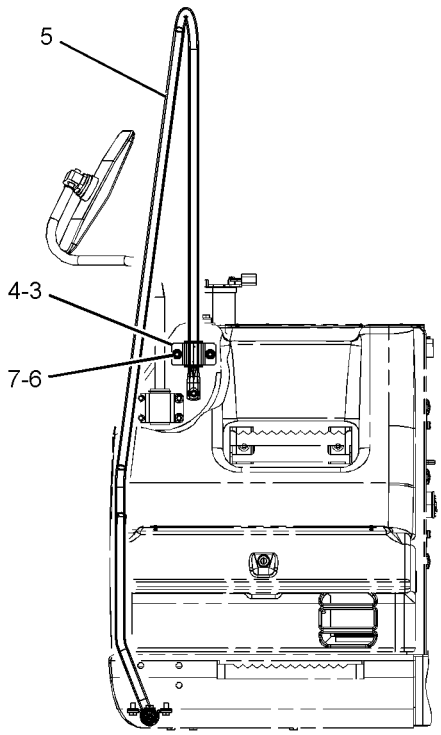

FRONT VIEW

GRAPHIC #1 **<END>** g01226096

FRAME AND BODY

237-8768 HOOD & GUARD GP

S/N: B6H1-540; JLP1-250

PART OF 247-7386 CHASSIS AR

SMCS-7251, 7276 **i03626347**

NOTE	REF NO	GRAPHIC REF	PART NUMBER	QTY	PART NAME 1 2 3 4 5 6 (PRODUCT LEVEL)	SEE PAGE
	1	4	**1R-9958**	1	FASTENER	
	2	4	**4I-0117**	1	FASTENER	
	3	6	**4I-0118**	2	HOOK AS	
	4	2	**4I-0232**	2	STRIKER	
	5	2	**4I-2599**	1	SOCKET	
	6	7	**4I-8019**	2	SUPPORT	
	7	4	**246-2641**	1	PADLOCK GP	
		4	**5P-8500**	1	KEY	
	8	2	**6I-6033**	2	STOP	
	9	2	**7I-1418**	2	SUPPORT AS	
	10	5	**7Y-2853**	3	SPACER (13X38X5-MM THK)	
B	11	2	**087-3908**	2	SHIM (1-MM THK)	
B	12	2	**087-3909**	2	SHIM (2-MM THK)	
	13	2	**122-3979**	1	BAND	
	14	2	**122-3980**	1	ROD	
	15	5,6	**122-4120**	3	ROD	
M	16	1,2,3, 4,6	**135-8573**	115	BOLT AS	
M	17	3	**135-8574**	6	BOLT AS	
M	18	1,2,3, 4,5,6	**135-8575**	68	BOLT AS	
M	19	6	**135-8577**	8	BOLT AS	
M	20	1,3,4, 5,6	**135-8578**	20	BOLT AS	
	21	1	**170-3016**	12	SPACER (19X32X2-MM THK)	
	22	2	**214-8310**	1	PLATE	
	23	1	**289-6796**	1	SUPPORT AS	
Y	24	1	**241-2130**	1	COVER GP-ACCESS (FUEL, HYDRAULIC TANKS)	430
Y	25	1	**241-2133**	1	DOOR GP-ACCESS (PUMP COMPARTMENT)	434
Y	26	1	**241-2140**	1	DOOR GP-ACCESS (RADIATOR)	435
	27	1	**241-2147**	1	COVER AS-HOOD	
	28	2	**241-2163**	1	SUPPORT AS	
	29	6	**241-2320**	1	PLATE AS	
	30	6	**241-2323**	1	SPRING	
	31	6	**241-2324**	1	SPRING	
	32	3	**256-1791**	1	SHEET AS	
Y	33	3	**256-1794**	1	SHEET AS-SOUND SUPPRESSION	495
Y	34	3	**256-1802**	1	SHEET AS-SOUND SUPPRESSION	496
Y	35	3	**256-1807**	1	SHEET AS-SOUND SUPPRESSION	497
	36	3	**256-1815**	1	SHEET AS-SOUND SUPPRESSION	
		3	**256-1818**	1	LINER	
D		3	**101-9848**		SEAL (0.3-M)	
Y	37	3	**256-1820**	1	SHEET AS-SOUND SUPPRESSION	498
Y	38	3	**256-1826**	1	SHEET AS-SOUND SUPPRESSION	499
Y	39	6	**256-1830**	1	SUPPORT AS-ENCLOSURE	510
Y	40	2	**256-1853**	1	SHEET AS-SOUND SUPPRESSION	500
	41	3	**256-1886**	1	SUPPORT AS	
Y	42	6	**256-1890**	1	SHEET AS-SOUND SUPPRESSION	501
	43	3	**256-1894**	1	SHEET AS	
	44	1	**256-1897**	1	COVER AS	
		1	**259-3622**	2	INSULATION	
	45	3	**256-1907**	1	SHEET AS	
		3	**256-1911**	1	LINER	
D		3	**5P-8309**		SEAL (0.2-M)	
Y	46	2	**256-1912**	1	SHEET AS-SOUND SUPPRESSION	502
Y	47	2	**256-1919**	1	SHEET AS-SOUND SUPPRESSION	503

237-8768 **HOOD & GUARD GP** *(contd.)* **i03626347**

NOTE	REF NO	GRAPHIC REF	PART NUMBER	QTY	PART NAME 1 2 3 4 5 6 (PRODUCT LEVEL)	SEE PAGE
Y	48	2	**256-1925**	1	SHEET AS-SOUND SUPPRESSION	504
	49	1	**259-3549**	1	SUPPORT AS	
Y	50	1	**259-3552**	1	COVER AS-SOUND SUPPRESSION	427
	51	3	**259-3559**	1	SUPPORT AS	
	52	3	**259-3563**	1	SUPPORT AS	
	53	1	**259-3575**	1	COVER AS	
	54	3	**259-3589**	1	SHEET AS	
Y	55	3	**259-3591**	1	SHEET AS-SOUND SUPPRESSION	505
	56	3	**259-3615**	1	SUPPORT AS	
	57	3	**259-3625**	1	HANDLE AS	
	58	3	**259-3629**	1	SHEET AS	
		3	**259-3633**	1	LINER	
	59	6	**259-3631**	1	SHEET AS	
		6	**259-3633**	1	LINER	
	60	2	**259-3634**	1	SHEET AS	
		2	**259-3636**	1	LINER	
	61	2	**259-3669**	1	SHEET	
	62	1	**259-3953**	1	SUPPORT AS	
Y	63	3	**262-2134**	1	SHEET AS-SOUND SUPPRESSION	506
	64	3	**262-2145**	1	SHEET AS	
	65	6	**262-2584**	1	HANDLE AS	
	66	2	**262-2592**	1	SHEET AS	
	67	1	**265-3505**	1	SCREEN AS	
	68	1	**265-3506**	1	SCREEN AS	
	69	4	**265-3571**	1	SCREEN AS	
	70	6	**273-7787**	1	SUPPORT AS	
	71	1	**273-7791**	1	COVER AS	
		1	**273-7792**	1	INSULATION	
	72	3	**273-7796**	1	SUPPORT AS	
	73	3	**273-7836**	1	SHEET AS	
	74	1	**273-7852**	1	SUPPORT AS	
	75	1	**273-7854**	1	SUPPORT AS	
	76	1	**273-7856**	1	SUPPORT AS	
	77	6	**273-7859**	1	SUPPORT AS	
	78	6	**273-7864**	1	SUPPORT AS	
	79	1	**273-7867**	1	SUPPORT AS	
		1	**259-3815**	1	INSULATION	
Y	80	1	**273-7873**	1	COVER AS-SOUND SUPPRESSION	429
Y	81	6	**273-7905**	1	SUPPORT AS-ENCLOSURE	511
Y	82	4	**273-7911**	1	HOOD GP-ENGINE (RADIATOR)	490
Y	83	1	**273-7922**	1	DOOR AS-ACCESS (AIR CLEANER, BATTERY)	432
	84	1	**273-7933**	1	SHEET AS	
		1	**273-7934**	1	LINER	
Y	85	4	*273-7937*	1	HOOD GP-ENGINE	491
	86	3	**273-7946**	1	SUPPORT AS	
	87	5,6	**3B-4618**	1	PIN-COTTER	
M	88	2	**096-4884**	2	LOCKNUT (M12X1.75-THD)	
M	89	2	**105-3487**	4	BOLT-SOCKET HEAD (M6X1X20-MM)	
	90	4	**114-6285**	2	BAR	
M	91	2	**5C-9553**	2	BOLT (M6X1X16-MM)	
	92	2,6	**5P-1076**	5	WASHER-HARD (13.5X30X4-MM THK)	
	93	2,7	**5P-4115**	12	WASHER-HARD (7.2X19X2-MM THK)	
	94	6	**7J-5925**	1	PIN-COTTER	
	95	5	**7Y-2854**	3	SPACER (24X38X3-MM THK)	
	96	6	**7Y-2916**	1	PIN-CLEVIS	
	97	3,5,6	**8T-4121**	7	WASHER-HARD (11X21X2.5-MM THK)	
M	98	3,6	**8T-4137**	4	BOLT (M10X1.5X20-MM)	
M	99	2	**8T-4138**	8	BOLT (M6X1X20-MM)	
M	100	7	**8T-4171**	4	BOLT (M6X1X12-MM)	

237-8768 **HOOD & GUARD GP** *(contd.)* **i03626347**

NOTE	REF NO	GRAPHIC REF	PART NUMBER	QTY	PART NAME 1 2 3 4 5 6 (PRODUCT LEVEL)	SEE PAGE
M	101	4,6	**8T-4189**	8	BOLT (M8X1.25X20-MM)	
	102	6	**8T-4223**	2	WASHER-HARD (13.5X25.5X3-MM THK)	
	103	4,6	**8T-4224**	8	WASHER-HARD (8.8X16X2-MM THK)	
M	104	2	**8T-4648**	2	BOLT (M12X1.75X70-MM)	
	105	2	**9X-8256**	6	WASHER (6.6X12X2-MM THK)	
	106	4	**278-4016**	1	SHEET AS	
E		4	**184-8580**		SEAL (70-CM)	
	107	4	**278-4018**	1	SHEET AS	
E		4	**184-8580**		SEAL (70-CM)	

B-USE AS REQUIRED
D-ORDER BY THE METER
E-ORDER BY THE CENTIMETER
M-METRIC PART
Y-SEPARATE ILLUSTRATION

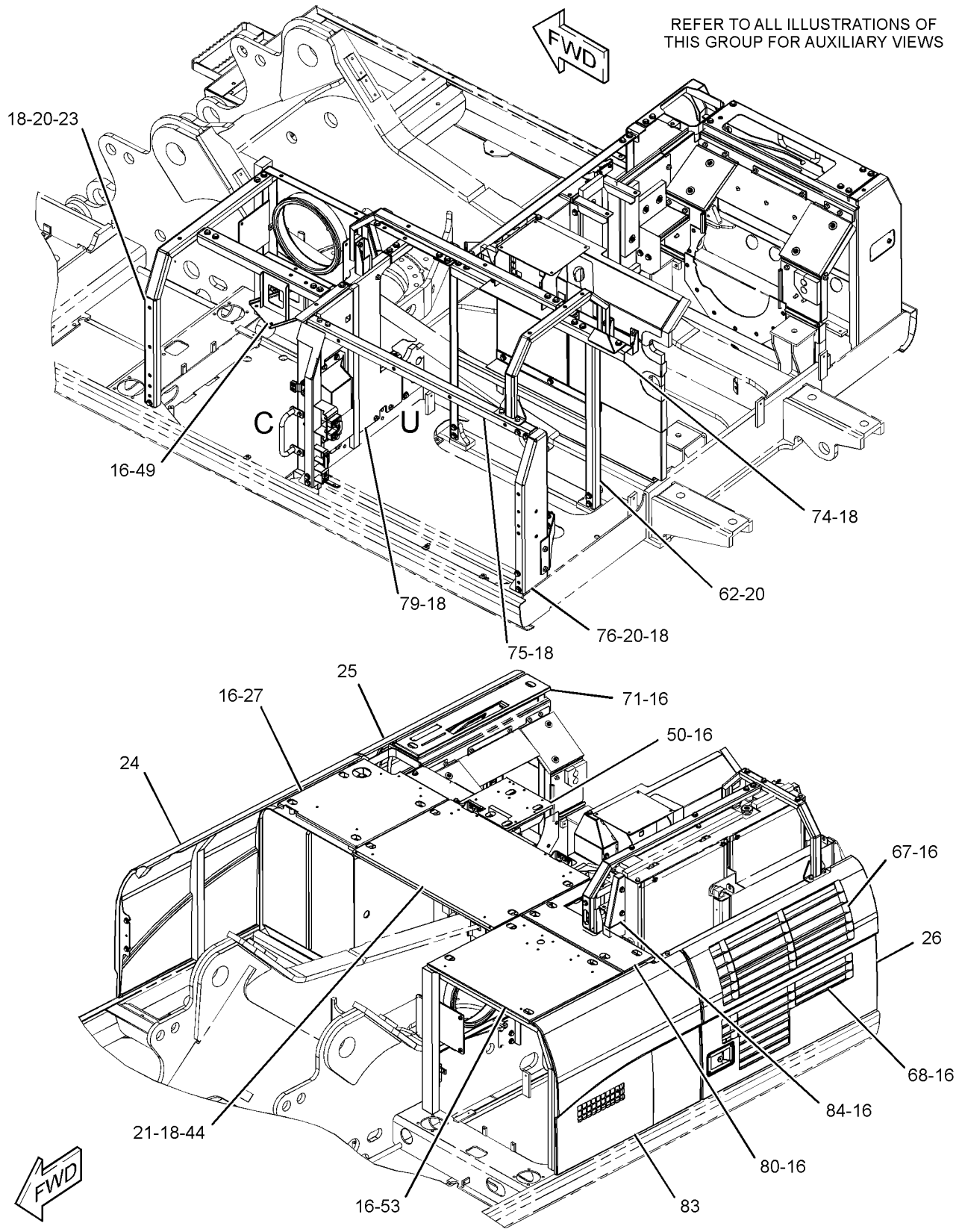

GRAPHIC #1

g01243258

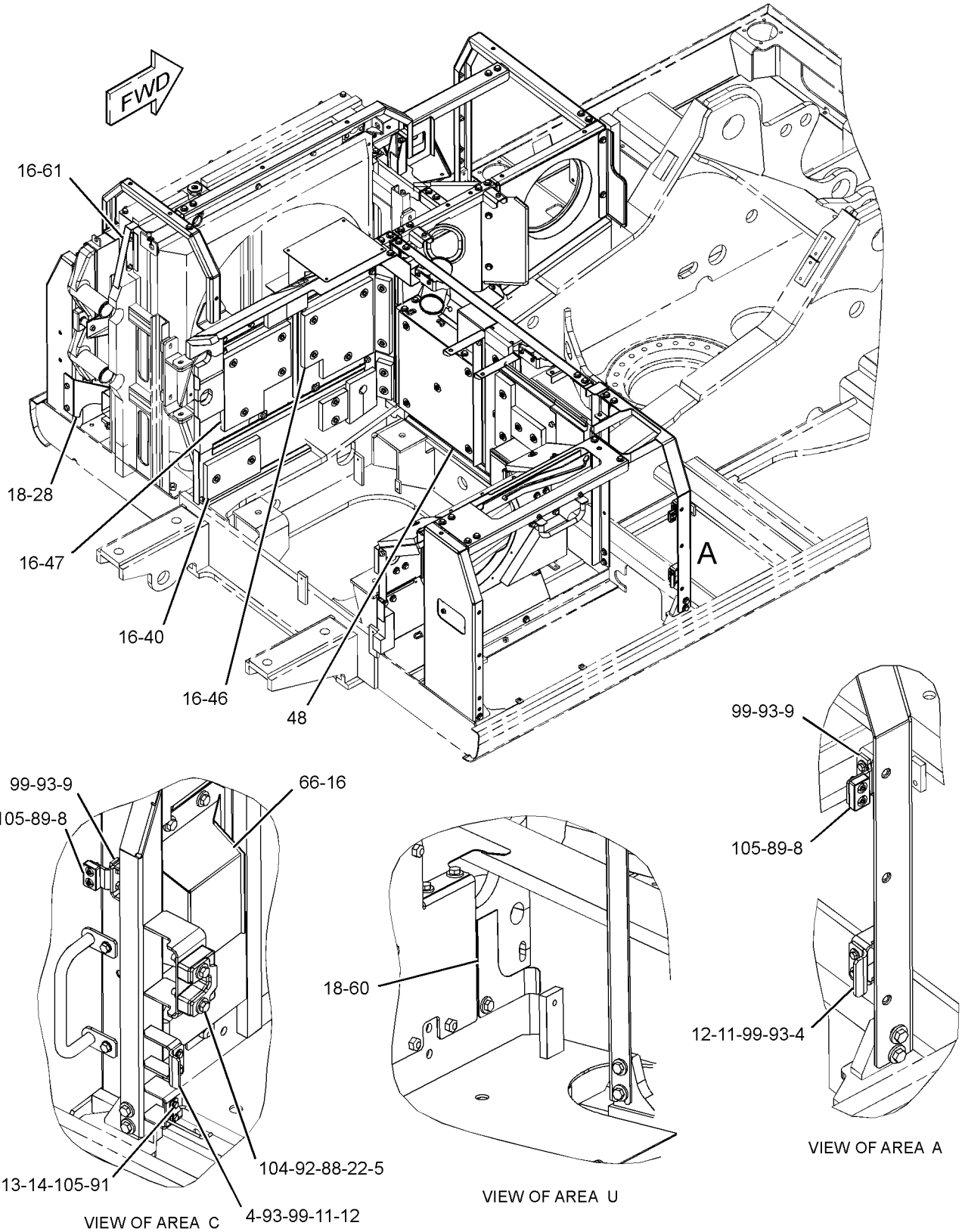

GRAPHIC #2 g01243256

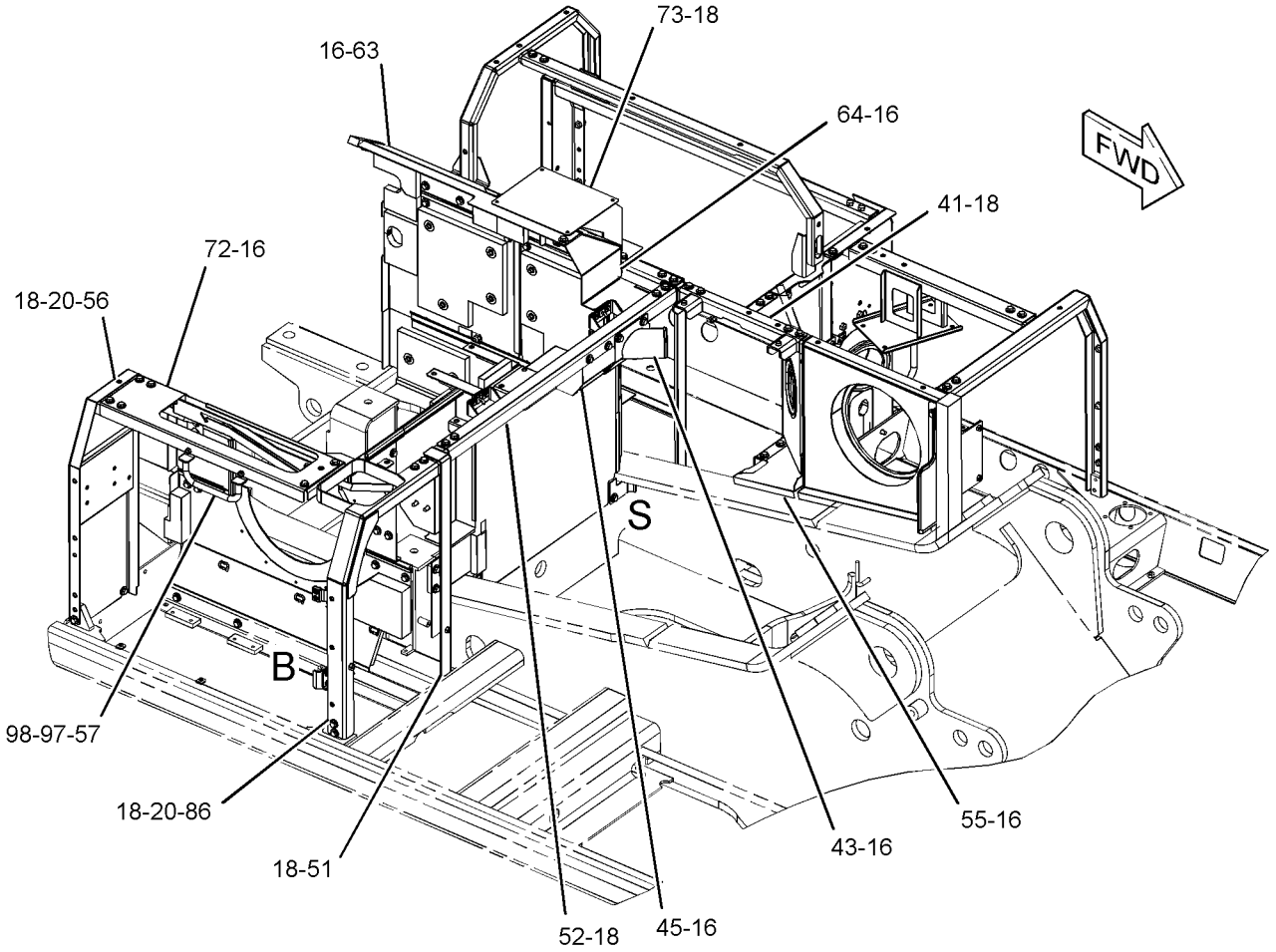

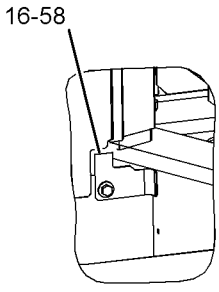

VIEW OF AREA S

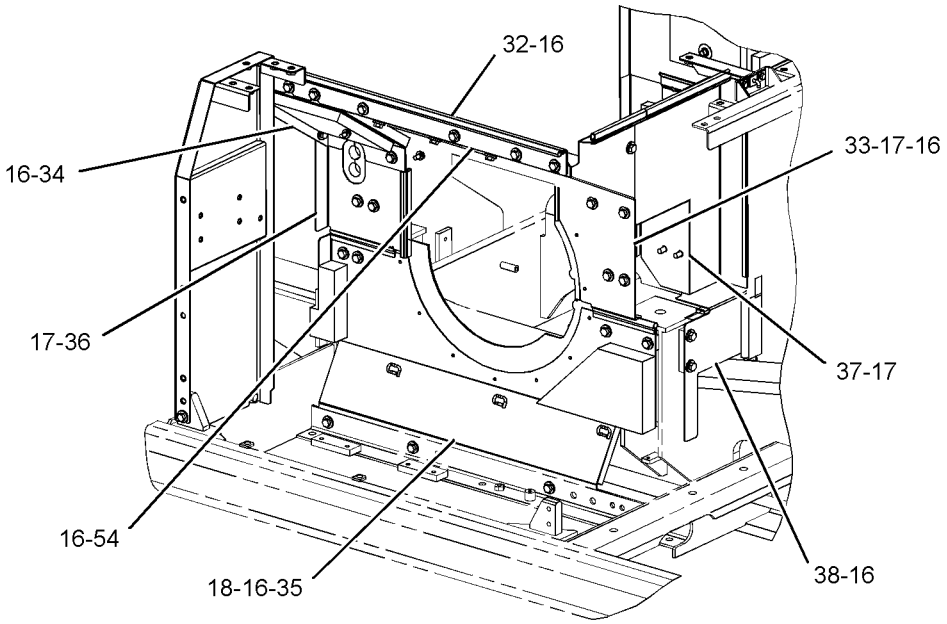

VIEW OF AREA B

GRAPHIC #3

g01243254

237-8768 **HOOD & GUARD GP** *(contd.)* **i03626347**

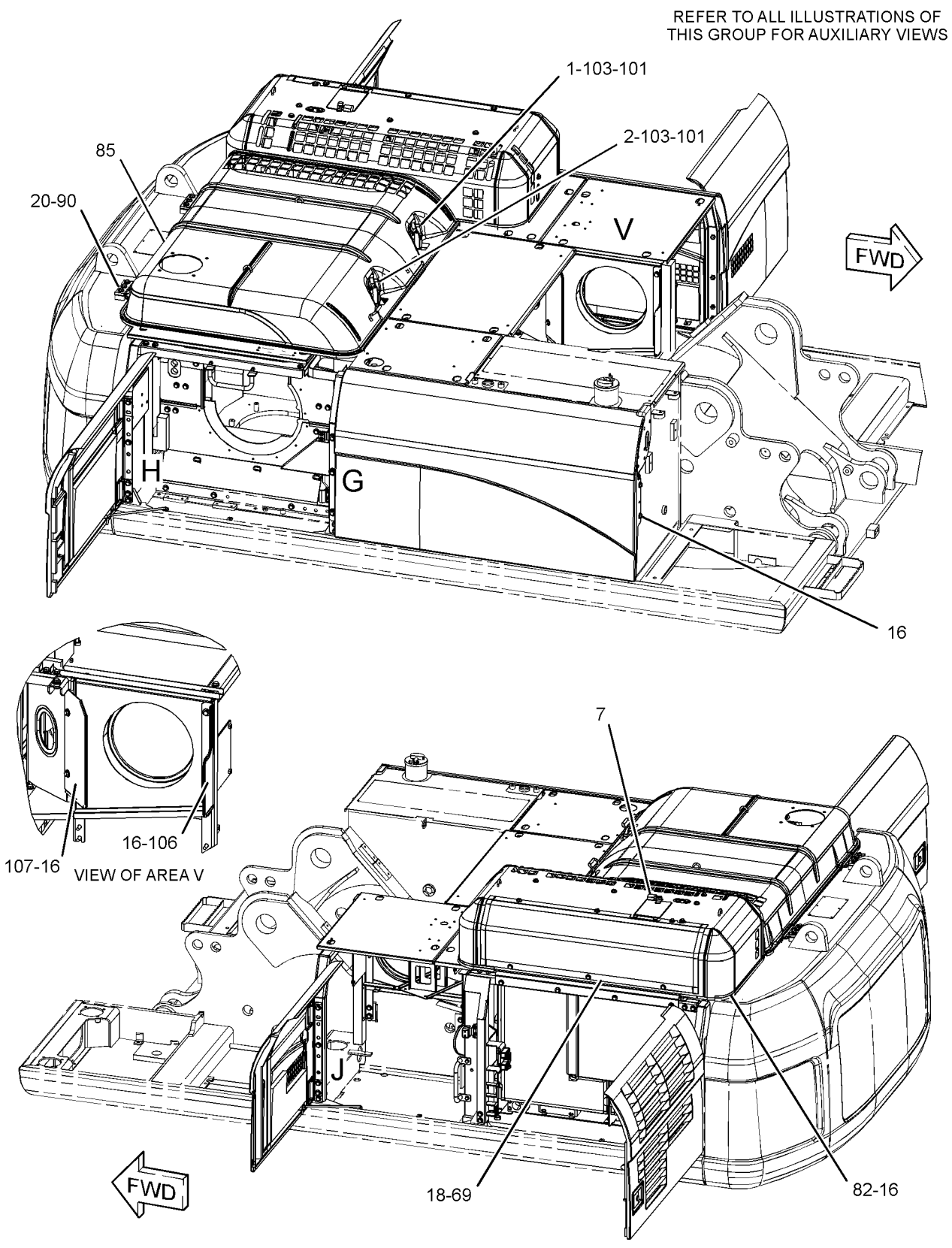

GRAPHIC #4

g01243259

REFER TO ALL ILLUSTRATIONS OF
THIS GROUP FOR AUXILIARY VIEWS

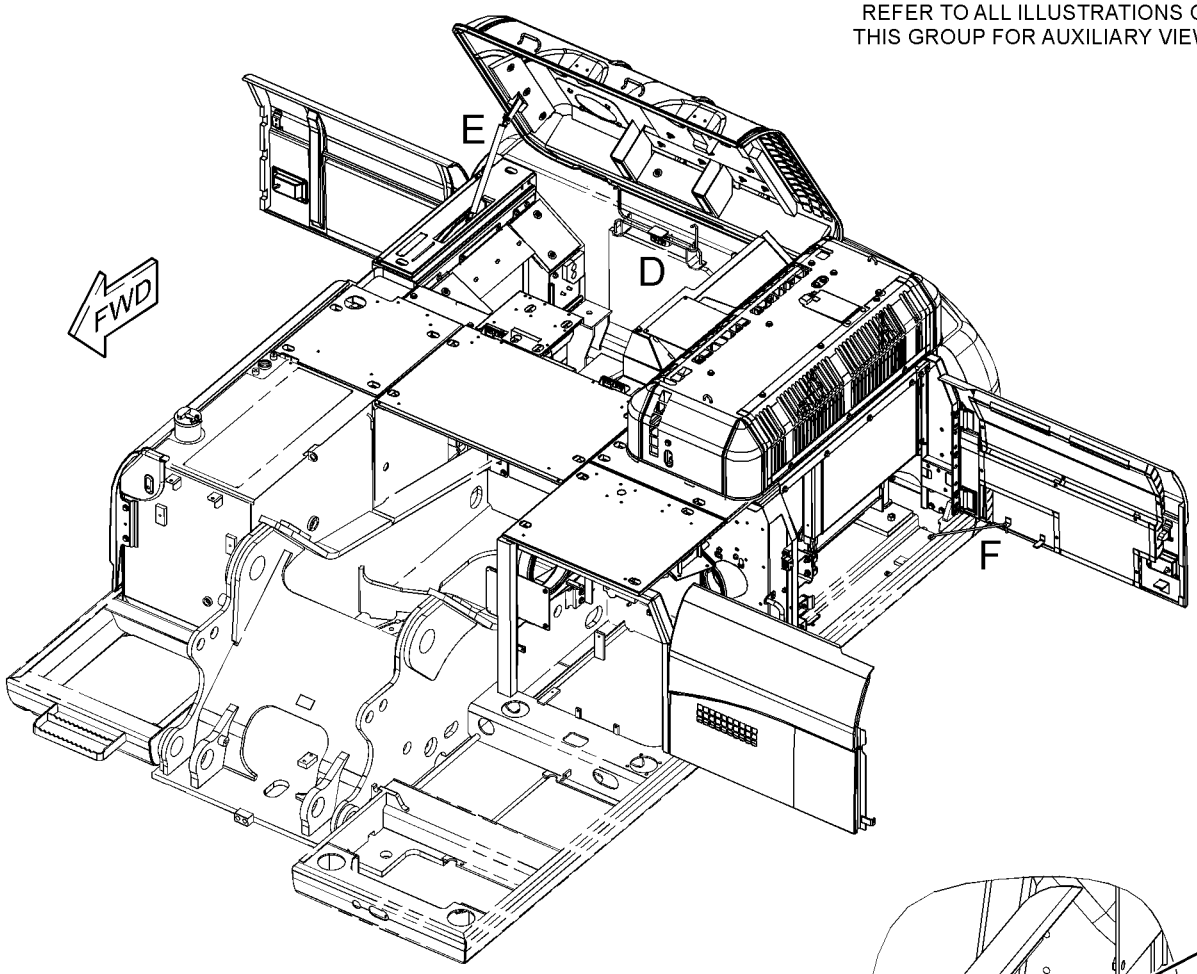

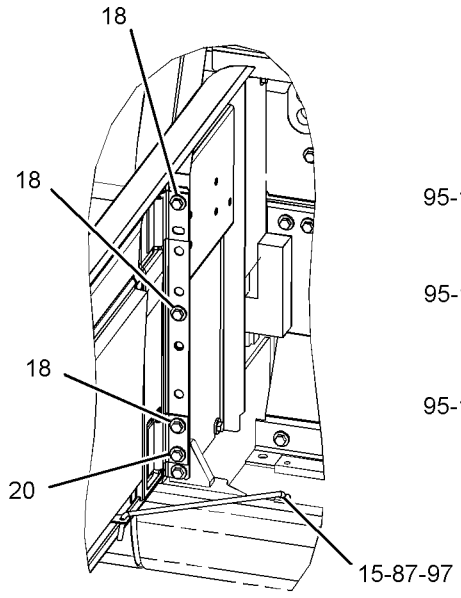

VIEW OF AREA H

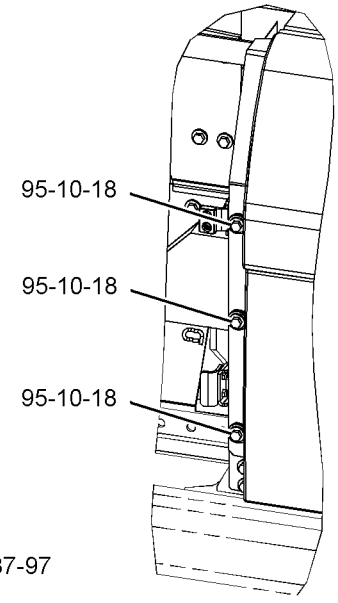

VIEW OF AREA G

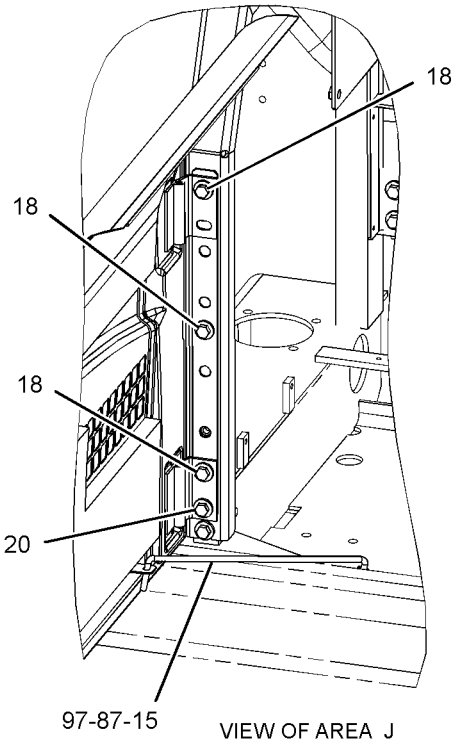

VIEW OF AREA J

GRAPHIC #5

g01243260

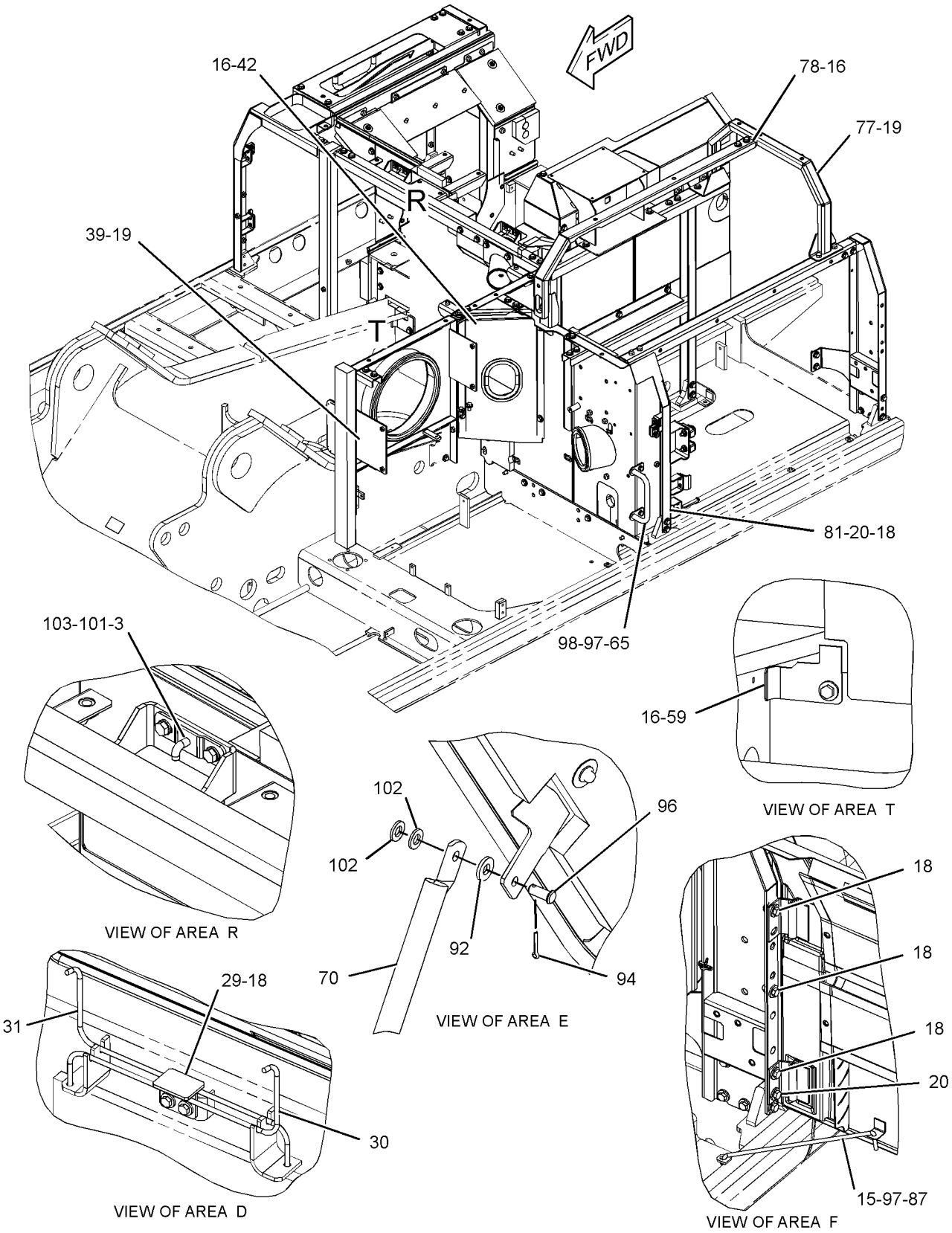

GRAPHIC #6

g01243253

237-8768 **HOOD & GUARD GP** *(contd.)* **i03626347**

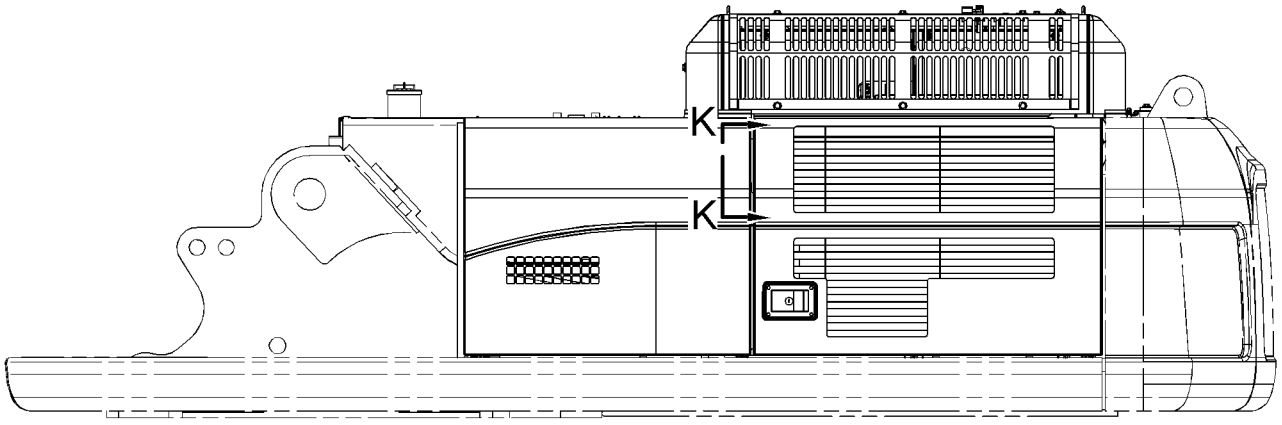

LEFT SIDE VIEW

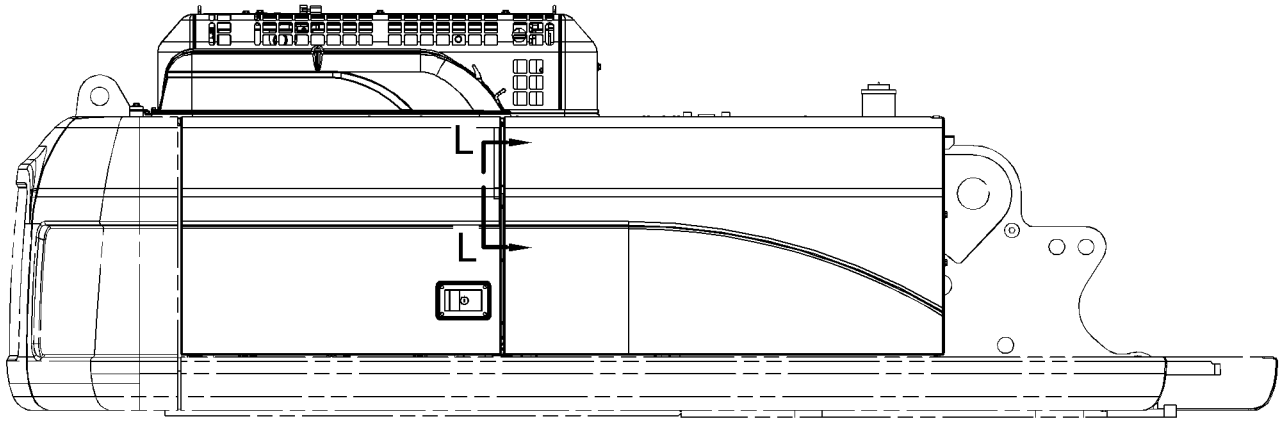

RIGHT SIDE VIEW

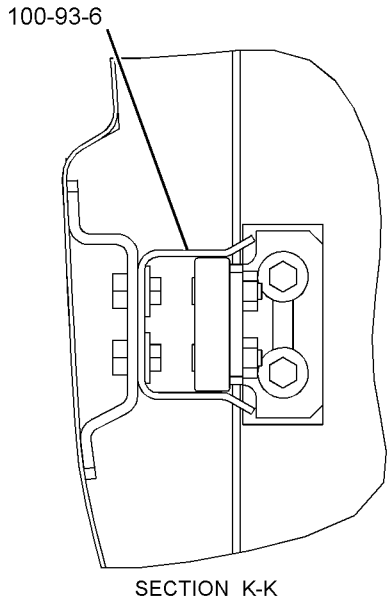

SECTION K-K

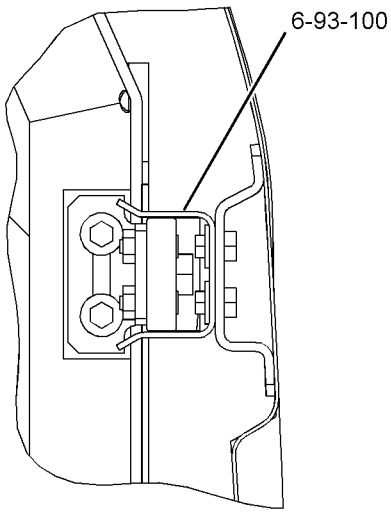

SECTION L-L

GRAPHIC #7 **<END>** g01243261

FRAME AND BODY

237-8768 HOOD & GUARD GP

S/N: B6H541-566; JLP251-308
PART OF 247-7386 CHASSIS AR

SMCS-7251, 7276 **i03626383**

NOTE	REF NO	GRAPHIC REF	PART NUMBER	QTY	PART NAME 1 2 3 4 5 6 (PRODUCT LEVEL)	SEE PAGE
	1	4	**1R-9958**	1	FASTENER	
	2	4	**4I-0117**	1	FASTENER	
	3	6	**4I-0118**	2	HOOK AS	
	4	2	**4I-0232**	2	STRIKER	
	5	2	**4I-2599**	1	SOCKET	
	6	7	**4I-8019**	2	SUPPORT	
	7	4	**246-2641**	1	PADLOCK GP	
		4	**5P-8500**	1	KEY	
	8	2	**6I-6033**	2	STOP	
	9	2	**7I-1418**	2	SUPPORT AS	
	10	5	**7Y-2853**	3	SPACER (13X38X5-MM THK)	
B	11	2	**087-3908**	2	SHIM (1-MM THK)	
B	12	2	**087-3909**	2	SHIM (2-MM THK)	
	13	2	**122-3979**	1	BAND	
	14	2	**122-3980**	1	ROD	
	15	5,6	**122-4120**	3	ROD	
M	16	1,2,3, 4,6	**135-8573**	115	BOLT AS	
M	17	3	**135-8574**	6	BOLT AS	
M	18	1,2,3, 4,5,6	**135-8575**	68	BOLT AS	
M	19	6	**135-8577**	8	BOLT AS	
M	20	1,3,4, 5,6	**135-8578**	20	BOLT AS	
	21	1	**170-3016**	12	SPACER (19X32X2-MM THK)	
	22	2	**214-8310**	1	PLATE	
	23	1	**289-6796**	1	SUPPORT AS	
Y	24	1	**241-2130**	1	COVER GP-ACCESS (FUEL, HYDRAULIC TANKS)	430
CY	25	1	**289-6895**	1	DOOR GP-ACCESS (PUMP COMPARTMENT)	437
CY	26	1	**289-6893**	1	DOOR GP-ACCESS (RADIATOR)	436
	27	1	**241-2147**	1	COVER AS-HOOD	
	28	2	**241-2163**	1	SUPPORT AS	
	29	6	**241-2320**	1	PLATE AS	
	30	6	**241-2323**	1	SPRING	
	31	6	**241-2324**	1	SPRING	
C	32	3	**289-6765**	1	SHEET AS	
		1	**289-6766**	1	LINER	
Y	33	3	**256-1794**	1	SHEET AS-SOUND SUPPRESSION	495
Y	34	3	**256-1802**	1	SHEET AS-SOUND SUPPRESSION	496
Y	35	3	**256-1807**	1	SHEET AS-SOUND SUPPRESSION	497
	36	3	**256-1815**	1	SHEET AS-SOUND SUPPRESSION	
		3	**256-1818**	1	LINER	
D		3	**101-9848**		SEAL (0.3-M)	
Y	37	3	**256-1820**	1	SHEET AS-SOUND SUPPRESSION	498
Y	38	3	**256-1826**	1	SHEET AS-SOUND SUPPRESSION	499
Y	39	6	**256-1830**	1	SUPPORT AS-ENCLOSURE	510
Y	40	2	**256-1853**	1	SHEET AS-SOUND SUPPRESSION	500
	41	3	**256-1886**	1	SUPPORT AS	
Y	42	6	**256-1890**	1	SHEET AS-SOUND SUPPRESSION	501
	43	3	**256-1894**	1	SHEET AS	
	44	1	**256-1897**	1	COVER AS	
		1	**259-3622**	2	INSULATION	
	45	3	**256-1907**	1	SHEET AS	
		3	**256-1911**	1	LINER	
D		3	**5P-8309**		SEAL (0.2-M)	
Y	46	2	**256-1912**	1	SHEET AS-SOUND SUPPRESSION	502

237-8768 **HOOD & GUARD GP** *(contd.)* **i03626383**

NOTE	REF NO	GRAPHIC REF	PART NUMBER	QTY	PART NAME 1 2 3 4 5 6 (PRODUCT LEVEL)	SEE PAGE
Y	47	2	**256-1919**	1	SHEET AS-SOUND SUPPRESSION	503
Y	48	2	**256-1925**	1	SHEET AS-SOUND SUPPRESSION	504
	49	1	**259-3549**	1	SUPPORT AS	
Y	50	1	**259-3552**	1	COVER AS-SOUND SUPPRESSION	427
	51	3	**259-3559**	1	SUPPORT AS	
	52	3	**259-3563**	1	SUPPORT AS	
	53	1	**259-3575**	1	COVER AS	
	54	3	**259-3589**	1	SHEET AS	
Y	55	3	**259-3591**	1	SHEET AS-SOUND SUPPRESSION	505
	56	3	**259-3615**	1	SUPPORT AS	
	57	3	**259-3625**	1	HANDLE AS	
	58	3	**259-3629**	1	SHEET AS	
		3	**259-3633**	1	LINER	
	59	6	**259-3631**	1	SHEET AS	
		6	**259-3633**	1	LINER	
	60	2	**259-3634**	1	SHEET AS	
		2	**259-3636**	1	LINER	
	61	2	**259-3669**	1	SHEET	
	62	1	**259-3953**	1	SUPPORT AS	
Y	63	3	**262-2134**	1	SHEET AS-SOUND SUPPRESSION	506
	64	3	**262-2145**	1	SHEET AS	
	65	6	**262-2584**	1	HANDLE AS	
	66	2	**262-2592**	1	SHEET AS	
	67	1	**265-3505**	1	SCREEN AS	
	68	1	**265-3506**	1	SCREEN AS	
	69	4	**265-3571**	1	SCREEN AS	
C	70	6	**212-5185**	1	SUPPORT AS	
C	71	1	**289-6758**	1	COVER AS	
		1	**289-6761**	1	INSULATION	
C	72	3	**289-6762**	1	SUPPORT AS	
	73	3	**273-7836**	1	SHEET AS	
	74	1	**273-7852**	1	SUPPORT AS	
	75	1	**273-7854**	1	SUPPORT AS	
	76	1	**273-7856**	1	SUPPORT AS	
	77	6	**273-7859**	1	SUPPORT AS	
	78	6	**273-7864**	1	SUPPORT AS	
	79	1	**273-7867**	1	SUPPORT AS	
		1	**259-3815**	1	INSULATION	
Y	80	1	**273-7873**	1	COVER AS-SOUND SUPPRESSION	429
Y	81	6	**273-7905**	1	SUPPORT AS-ENCLOSURE	511
Y	82	4	**273-7911**	1	HOOD GP-ENGINE (RADIATOR)	490
Y	83	1	**273-7922**	1	DOOR AS-ACCESS (AIR CLEANER, BATTERY)	432
	84	1	**273-7933**	1	SHEET AS	
		1	**273-7934**	1	LINER	
CY	85	4	**289-6767**	1	HOOD GP-ENGINE	492
	86	3	**273-7946**	1	SUPPORT AS	
	87	5,6	**3B-4618**	3	PIN-COTTER	
M	88	2	**096-4884**	2	LOCKNUT (M12X1.75-THD)	
M	89	2	**105-3487**	4	BOLT-SOCKET HEAD (M6X1X20-MM)	
	90	4	**114-6285**	2	BAR	
M	91	2	**5C-9553**	2	BOLT (M6X1X16-MM)	
	92	2,6	**5P-1076**	5	WASHER-HARD (13.5X30X4-MM THK)	
	93	2,7	**5P-4115**	12	WASHER-HARD (7.2X19X2-MM THK)	
	94	6	**7J-5925**	1	PIN-COTTER	
	95	5	**7Y-2854**	3	SPACER (24X38X3-MM THK)	
	96	6	**7Y-2916**	1	PIN-CLEVIS	
	97	3,5,6	**8T-4121**	7	WASHER-HARD (11X21X2.5-MM THK)	
M	98	3,6	**8T-4137**	4	BOLT (M10X1.5X20-MM)	
M	99	2	**8T-4138**	8	BOLT (M6X1X20-MM)	

237-8768 **HOOD & GUARD GP** *(contd.)* **i03626383**

NOTE	REF NO	GRAPHIC REF	PART NUMBER	QTY	PART NAME 1 2 3 4 5 6 (PRODUCT LEVEL)	SEE PAGE
M	100	7	**8T-4171**	4	BOLT (M6X1X12-MM)	
M	101	4,6	**8T-4189**	8	BOLT (M8X1.25X20-MM)	
	102	6	**8T-4223**	2	WASHER-HARD (13.5X25.5X3-MM THK)	
	103	4,6	**8T-4224**	8	WASHER-HARD (8.8X16X2-MM THK)	
M	104	2	**8T-4648**	2	BOLT (M12X1.75X70-MM)	
	105	2	**9X-8256**	6	WASHER (6.6X12X2-MM THK)	
	106	4	**278-4016**	1	SHEET AS	
E		4	**184-8580**		SEAL (70-CM)	
	107	4	**278-4018**	1	SHEET AS	
E		4	**184-8580**		SEAL (70-CM)	

B-USE AS REQUIRED
C-CHANGE FROM PREVIOUS TYPE
D-ORDER BY THE METER
E-ORDER BY THE CENTIMETER
M-METRIC PART
Y-SEPARATE ILLUSTRATION

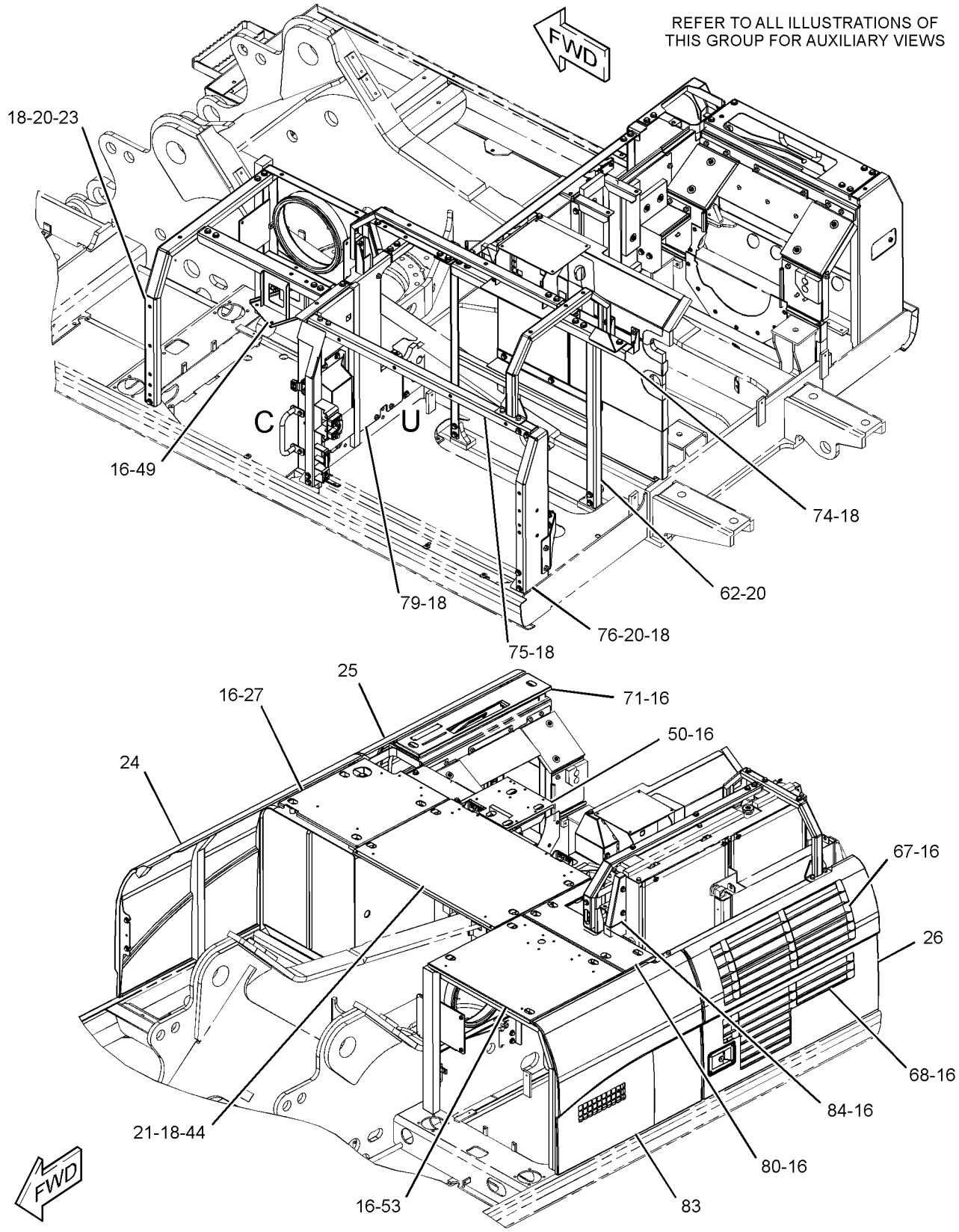

GRAPHIC #1 g01243258

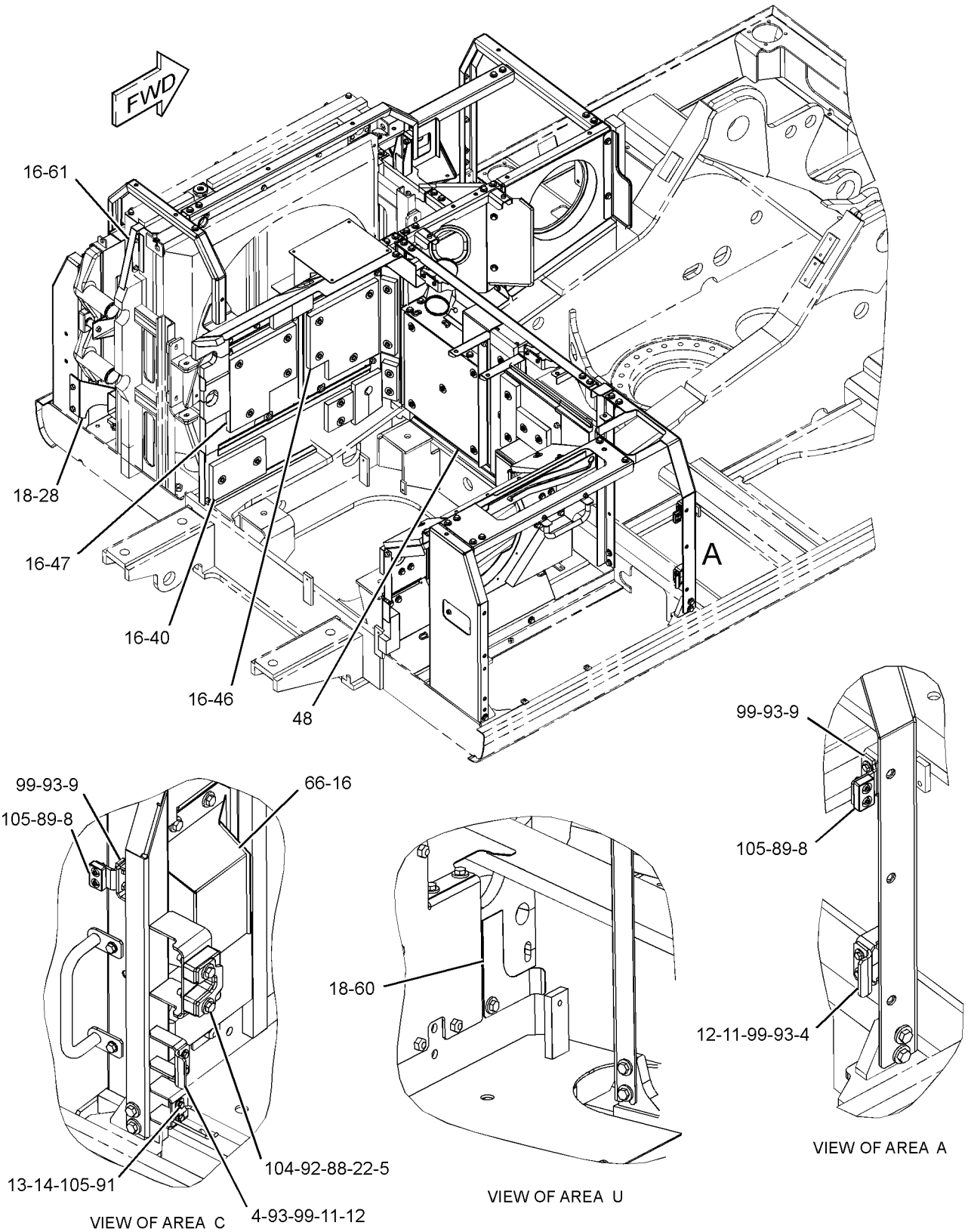

GRAPHIC #2 g01243256

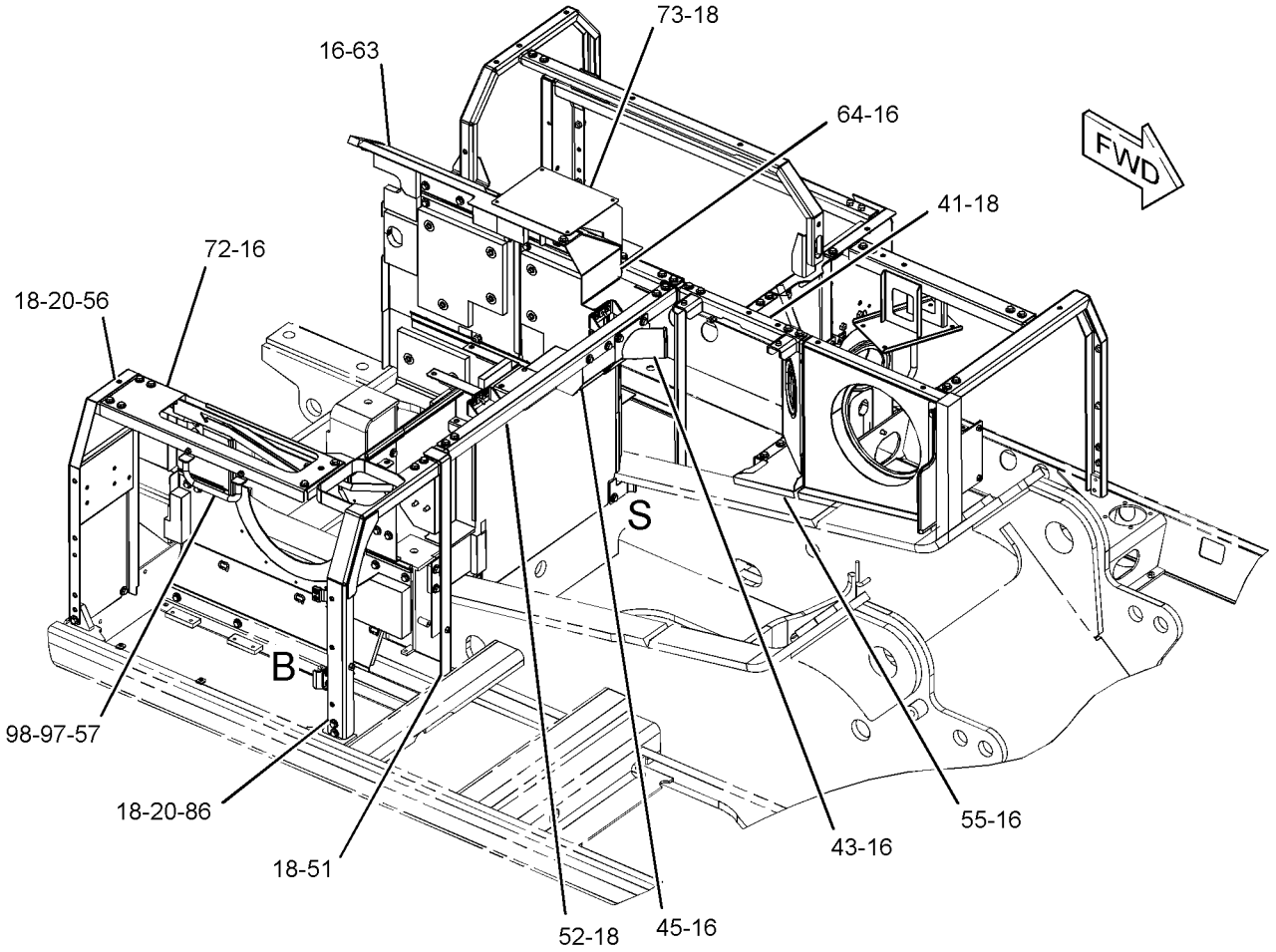

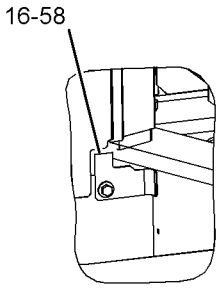

VIEW OF AREA S

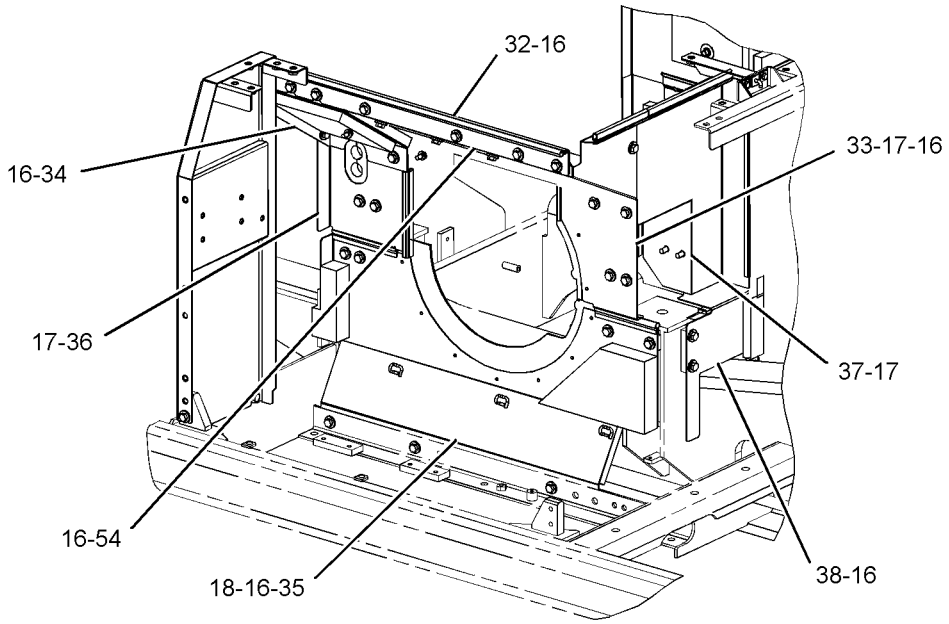

VIEW OF AREA B

GRAPHIC #3

g01243254

237-8768 **HOOD & GUARD GP** *(contd.)* **i03626383**

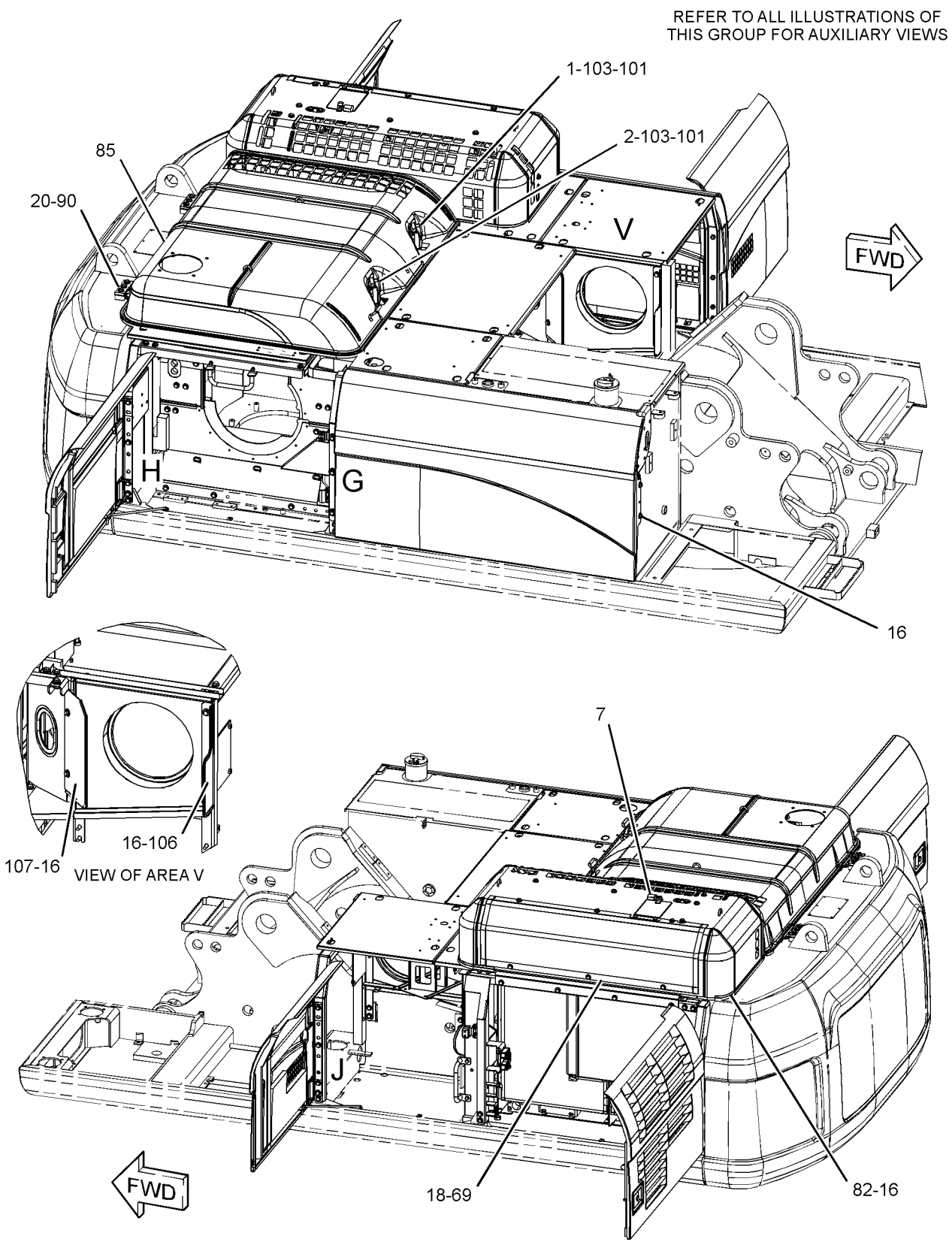

GRAPHIC #4 g01243259

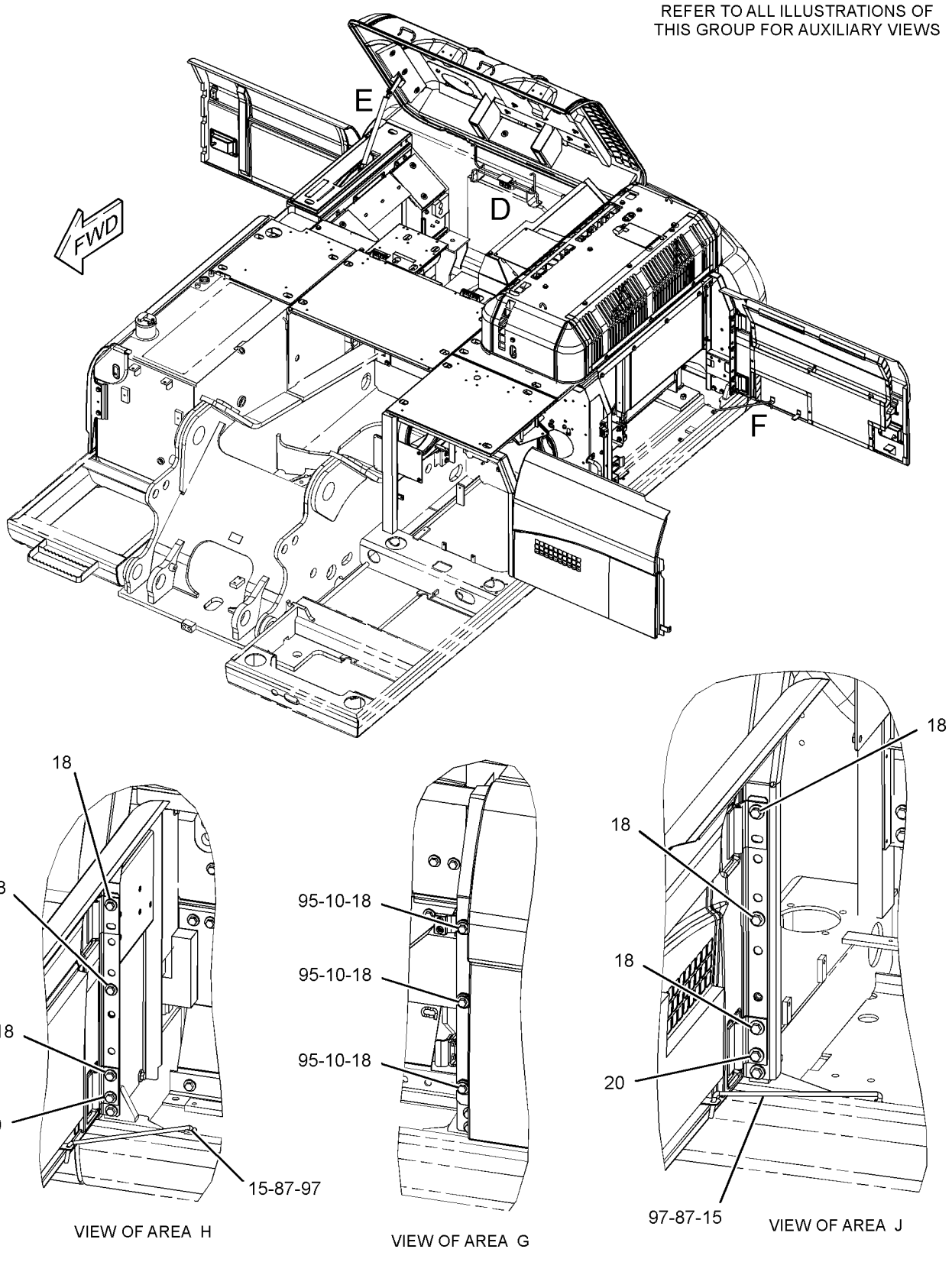

GRAPHIC #5

g01243260

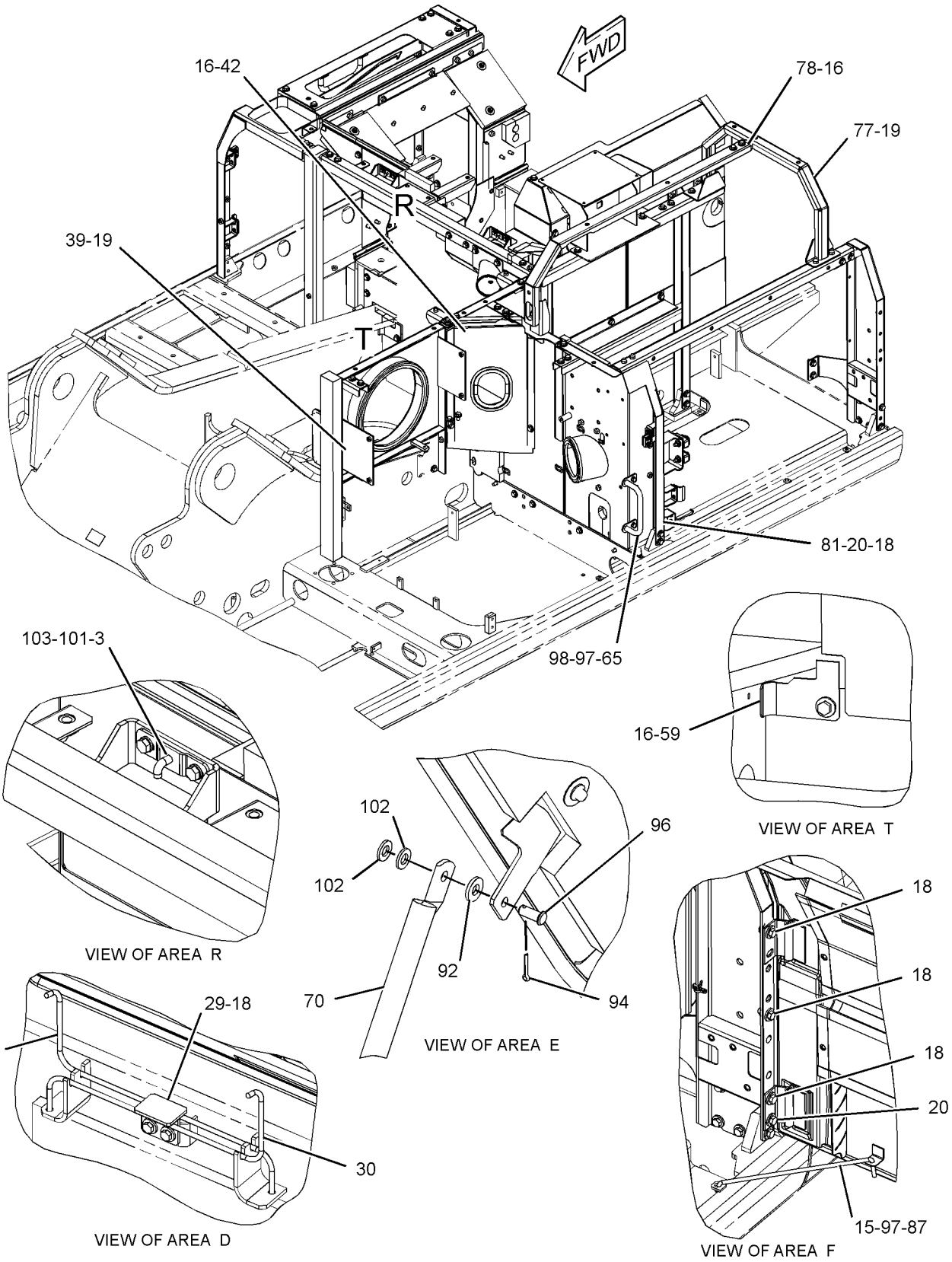

GRAPHIC #6

g01243253

237-8768 **HOOD & GUARD GP** *(contd.)* **i03626383**

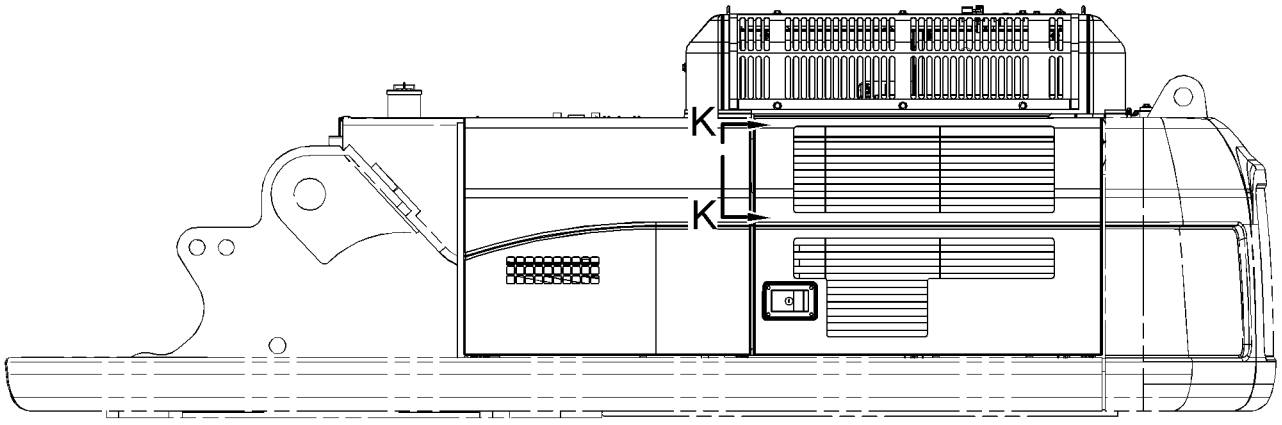

LEFT SIDE VIEW

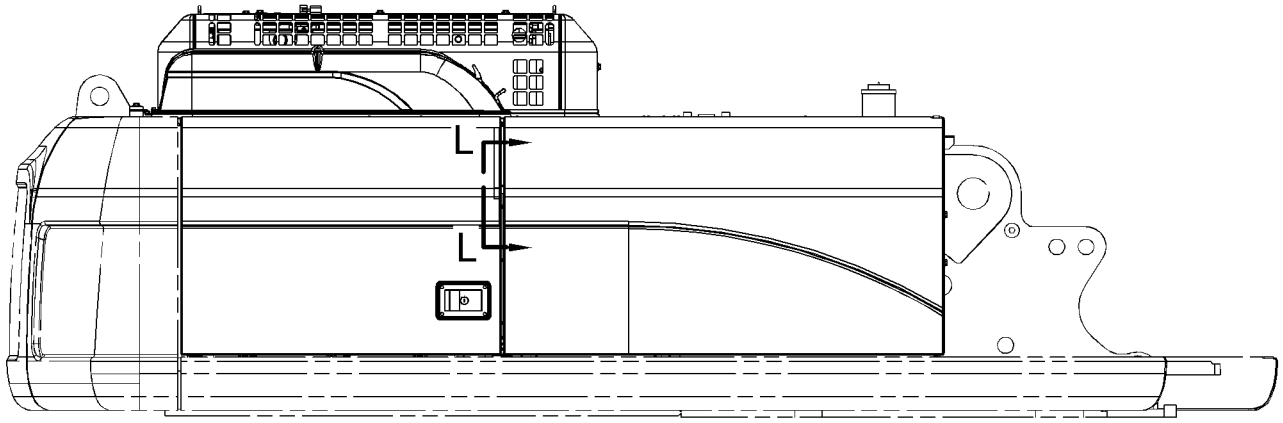

RIGHT SIDE VIEW

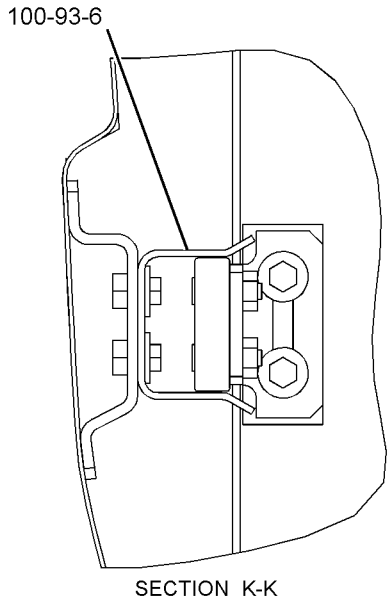

SECTION K-K

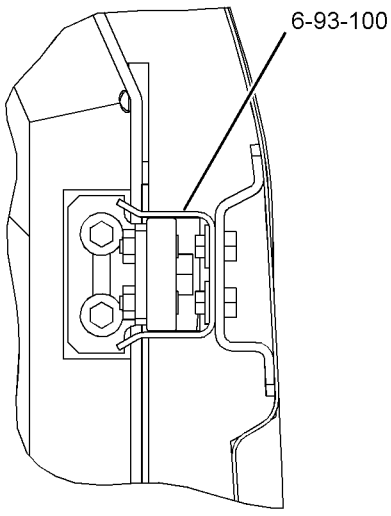

SECTION L-L

GRAPHIC #7 **<END>** g01243261

FRAME AND BODY

237-8768 HOOD & GUARD GP

S/N: B6H567-UP; JLP309-UP

PART OF 247-7386 CHASSIS AR

SMCS-7251, 7276 **i03172068**

NOTE	REF NO	GRAPHIC REF	PART NUMBER	QTY	PART NAME 1 2 3 4 5 6 (PRODUCT LEVEL)	SEE PAGE
	1	5	**1R-9958**	1	FASTENER	
	2	5	**4I-0117**	1	FASTENER	
	3	5	**4I-0118**	2	HOOK AS	
	4	2	**4I-0232**	2	STRIKER	
	5	2	**4I-2599**	1	SOCKET	
	6	5	**4I-8019**	2	SUPPORT	
	7	4	**246-2641**	1	PADLOCK GP	
		4	**5P-8500**	1	KEY	
	8	2	**6I-6033**	2	STOP	
	9	2	**7I-1418**	2	SUPPORT AS	
	10	5	**7Y-2853**	3	SPACER (13X38X5-MM THK)	
B	11	2	**087-3908**	2	SHIM (1-MM THK)	
B	12	2	**087-3909**	2	SHIM (2-MM THK)	
	13	2	**122-3979**	1	BAND	
	14	2	**122-3980**	1	ROD	
	15	4,5	**122-4120**	3	ROD	
M	16	1,2,3,4	**135-8573**	114	BOLT AS	
M	17	3	**135-8574**	6	BOLT AS	
M	18	1,2,3,4,5	**135-8575**	69	BOLT AS	
M	19	1	**135-8577**	8	BOLT AS	
M	20	1,3,4,5	**135-8578**	20	BOLT AS	
B	21	1	**170-3016**	14	SPACER (19X32X2-MM THK)	
	22	2	**214-8310**	1	PLATE	
	23	1	**289-6796**	1	SUPPORT AS	
CY	24	1	**298-2975**	1	COVER GP-ACCESS (FUEL, HYDRAULIC TANKS)	431
Y	25	1	**289-6895**	1	DOOR GP-ACCESS (PUMP COMPARTMENT)	437
Y	26	1	**289-6893**	1	DOOR GP-ACCESS (RADIATOR)	436
	27	1	**241-2147**	1	COVER AS-HOOD	
	28	2	**241-2163**	1	SUPPORT AS	
	29	5	**241-2320**	1	PLATE AS	
	30	5	**241-2323**	1	SPRING	
	31	5	**241-2324**	1	SPRING	
	32	3	**289-6765**	1	SHEET AS	
		3	**289-6766**	1	LINER	
Y	33	3	**256-1794**	1	SHEET AS-SOUND SUPPRESSION	495
Y	34	3	**256-1802**	1	SHEET AS-SOUND SUPPRESSION	496
Y	35	3	**256-1807**	1	SHEET AS-SOUND SUPPRESSION	497
	36	3	**256-1815**	1	SHEET AS-SOUND SUPPRESSION	
		3	**256-1818**	1	LINER	
D		3	**101-9848**		SEAL (0.3-M)	
Y	37	3	**256-1820**	1	SHEET AS-SOUND SUPPRESSION	498
Y	38	3	**256-1826**	1	SHEET AS-SOUND SUPPRESSION	499
Y	39	1	**256-1830**	1	SUPPORT AS-ENCLOSURE	510
Y	40	2	**256-1853**	1	SHEET AS-SOUND SUPPRESSION	500
	41	3	**256-1886**	1	SUPPORT AS	
Y	42	2	**256-1890**	1	SHEET AS-SOUND SUPPRESSION	501
	43	3	**256-1894**	1	SHEET AS	
	44	1	**256-1897**	1	COVER AS	
		1	**259-3622**	2	INSULATION	
	45	3	**256-1907**	1	SHEET AS	
		3	**256-1911**	1	LINER	
D		3	**5P-8309**		SEAL (0.2-M)	
Y	46	2	**256-1912**	1	SHEET AS-SOUND SUPPRESSION	502

237-8768 **HOOD & GUARD GP** *(contd.)* **i03172068**

NOTE	REF NO	GRAPHIC REF	PART NUMBER	QTY	PART NAME 1 2 3 4 5 6 (PRODUCT LEVEL)	SEE PAGE
Y	47	2	**256-1919**	1	SHEET AS-SOUND SUPPRESSION	503
Y	48	2	**256-1925**	1	SHEET AS-SOUND SUPPRESSION	504
	49	1	**259-3549**	1	SUPPORT AS	
Y	50	1	**259-3552**	1	COVER AS-SOUND SUPPRESSION	427
	51	3	**259-3559**	1	SUPPORT AS	
	52	3	**259-3563**	1	SUPPORT AS	
	53	1	**259-3575**	1	COVER AS	
	54	3	**259-3589**	1	SHEET AS	
Y	55	3	**259-3591**	1	SHEET AS-SOUND SUPPRESSION	505
	56	3	**259-3615**	1	SUPPORT AS	
	57	3	**298-3111**	1	HANDLE AS	
	58	3	**259-3629**	1	SHEET AS	
		3	**259-3633**	1	LINER	
	59	4	**259-3631**	1	SHEET AS	
		4	**259-3633**	1	LINER	
	60	1	**259-3634**	1	SHEET AS	
		1	**259-3636**	1	LINER	
	61	2	**259-3669**	1	SHEET	
	62	1	**259-3953**	1	SUPPORT AS	
Y	63	3	**262-2134**	1	SHEET AS-SOUND SUPPRESSION	506
	64	3	**262-2145**	1	SHEET AS	
	65	2	**298-3112**	1	HANDHOLD	
	66	2	**262-2592**	1	SHEET AS	
	67	1	**265-3505**	1	SCREEN AS	
	68	1	**265-3506**	1	SCREEN AS	
	69	4	**265-3571**	1	SCREEN AS	
	70	4	**212-5185**	1	SUPPORT AS	
	71	1	**289-6758**	1	COVER AS	
		1	**289-6761**	1	INSULATION	
	72	3	**289-6762**	1	SUPPORT AS	
	73	3	**273-7836**	1	SHEET AS	
	74	1	**273-7852**	1	SUPPORT AS	
	75	1	**273-7854**	1	SUPPORT AS	
	76	1	**273-7856**	1	SUPPORT AS	
	77	1	**273-7859**	1	SUPPORT AS	
	78	2	**273-7864**	1	SUPPORT AS	
	79	1	**273-7867**	1	SUPPORT AS	
		1	**259-3815**	1	INSULATION	
Y	80	1	**273-7873**	1	COVER AS-SOUND SUPPRESSION	429
Y	81	1	**273-7905**	1	SUPPORT AS-ENCLOSURE	511
Y	82	4	**273-7911**	1	HOOD GP-ENGINE (RADIATOR)	490
CY	83	1	**298-3191**	1	DOOR AS-ACCESS (AIR CLEANER, BATTERY)	433
	84	1	**273-7933**	1	SHEET AS	
		1	**273-7934**	1	LINER	
Y	85	5	**289-6767**	1	HOOD GP-ENGINE	492
	86	3	**273-7946**	1	SUPPORT AS	
	87	4,5	**3B-4618**	3	PIN-COTTER	
M	88	2	**096-4884**	2	LOCKNUT (M12X1.75-THD)	
M	89	2	**105-3487**	4	BOLT-SOCKET HEAD (M6X1X20-MM)	
	90	5	**114-6285**	2	BAR	
M	91	2	**5C-9553**	2	BOLT (M6X1X16-MM)	
	92	2,4	**5P-1076**	5	WASHER-HARD (13.5X30X4-MM THK)	
	93	2,5	**5P-4115**	12	WASHER-HARD (7.2X19X2-MM THK)	
	94	4	**7J-5925**	1	PIN-COTTER	
	95	5	**7Y-2854**	3	SPACER (24X38X3-MM THK)	
	96	4	**7Y-2916**	1	PIN-CLEVIS	
	97	2,3,4, 5	**8T-4121**	7	WASHER-HARD (11X21X2.5-MM THK)	
M	98	2,3	**8T-4195**	4	BOLT (M10X1.5X30-MM)	
M	99	2	**8T-4138**	8	BOLT (M6X1X20-MM)	

237-8768 **HOOD & GUARD GP** *(contd.)* **i03172068**

NOTE	REF NO	GRAPHIC REF	PART NUMBER	QTY	PART NAME 1 2 3 4 5 6 (PRODUCT LEVEL)	SEE PAGE
M	100	5	**8T-4171**	4	BOLT (M6X1X12-MM)	
M	101	5	**8T-4189**	8	BOLT (M8X1.25X20-MM)	
	102	4	**8T-4223**	2	WASHER-HARD (13.5X25.5X3-MM THK)	
	103	5	**8T-4224**	8	WASHER-HARD (8.8X16X2-MM THK)	
M	104	2	**8T-4648**	2	BOLT (M12X1.75X70-MM)	
	105	2	**9X-8256**	6	WASHER (6.6X12X2-MM THK)	
	106	2	**278-4016**	1	SHEET AS	
E		2	**184-8580**		SEAL (70-CM)	
	107	2	**278-4018**	1	SHEET AS	
E		2	**184-8580**		SEAL (70-CM)	
M	108	3	**135-8572**	1	BOLT AS	

B-USE AS REQUIRED
C-CHANGE FROM PREVIOUS TYPE
D-ORDER BY THE METER
E-ORDER BY THE CENTIMETER
M-METRIC PART
Y-SEPARATE ILLUSTRATION

237-8768 **HOOD & GUARD GP** *(contd.)* **i03172068**

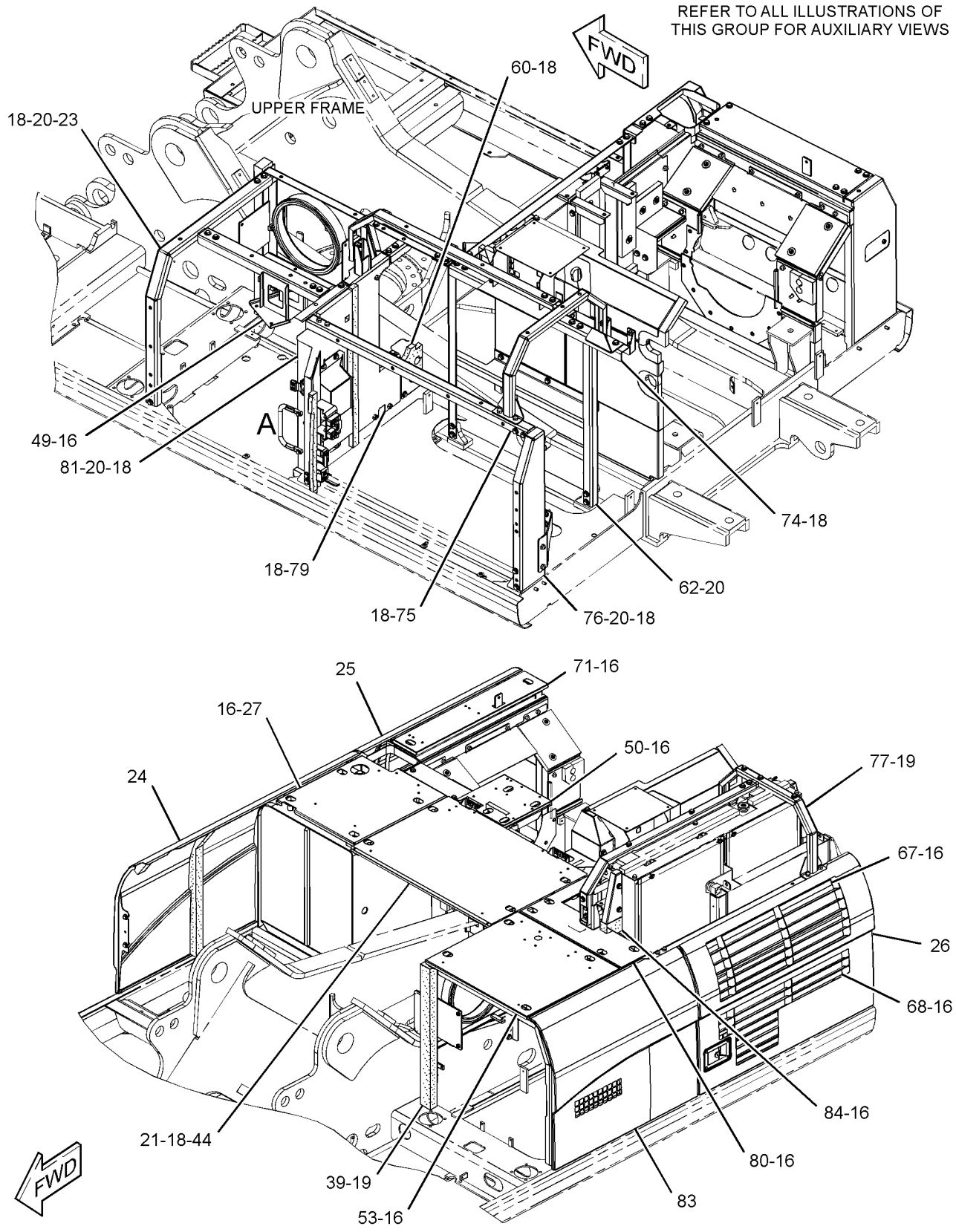

GRAPHIC #1

g01517965

237-8768 **HOOD & GUARD GP** *(contd.)* **i03172068**

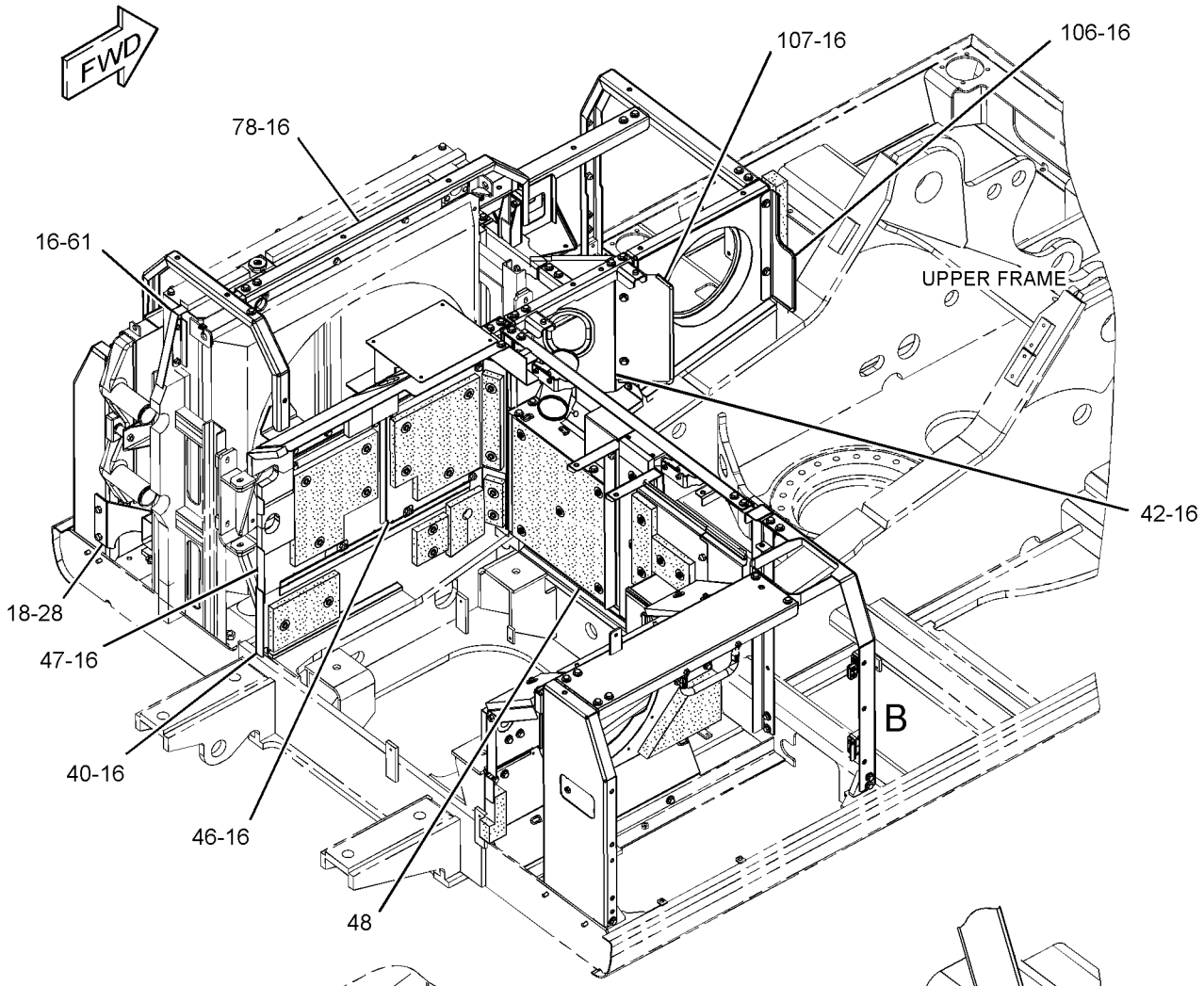

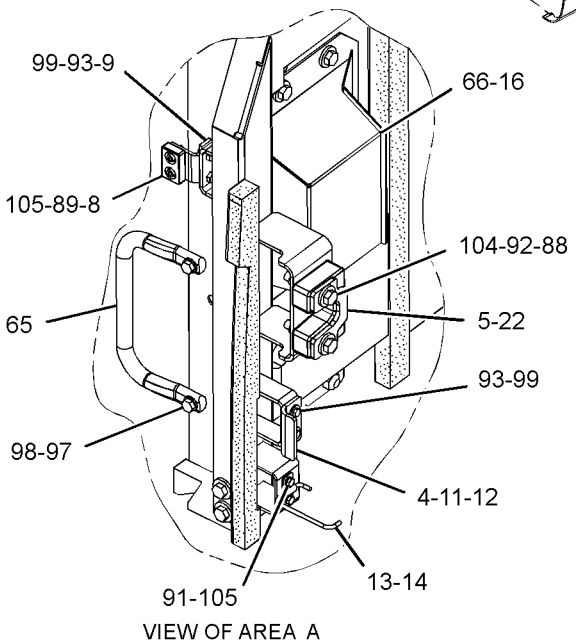

VIEW OF AREA A

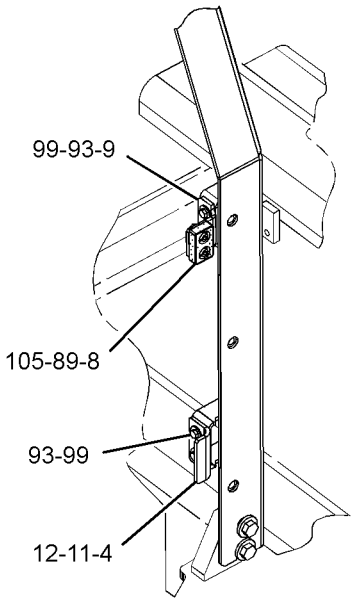

VIEW OF AREA B

GRAPHIC #2

g01518022

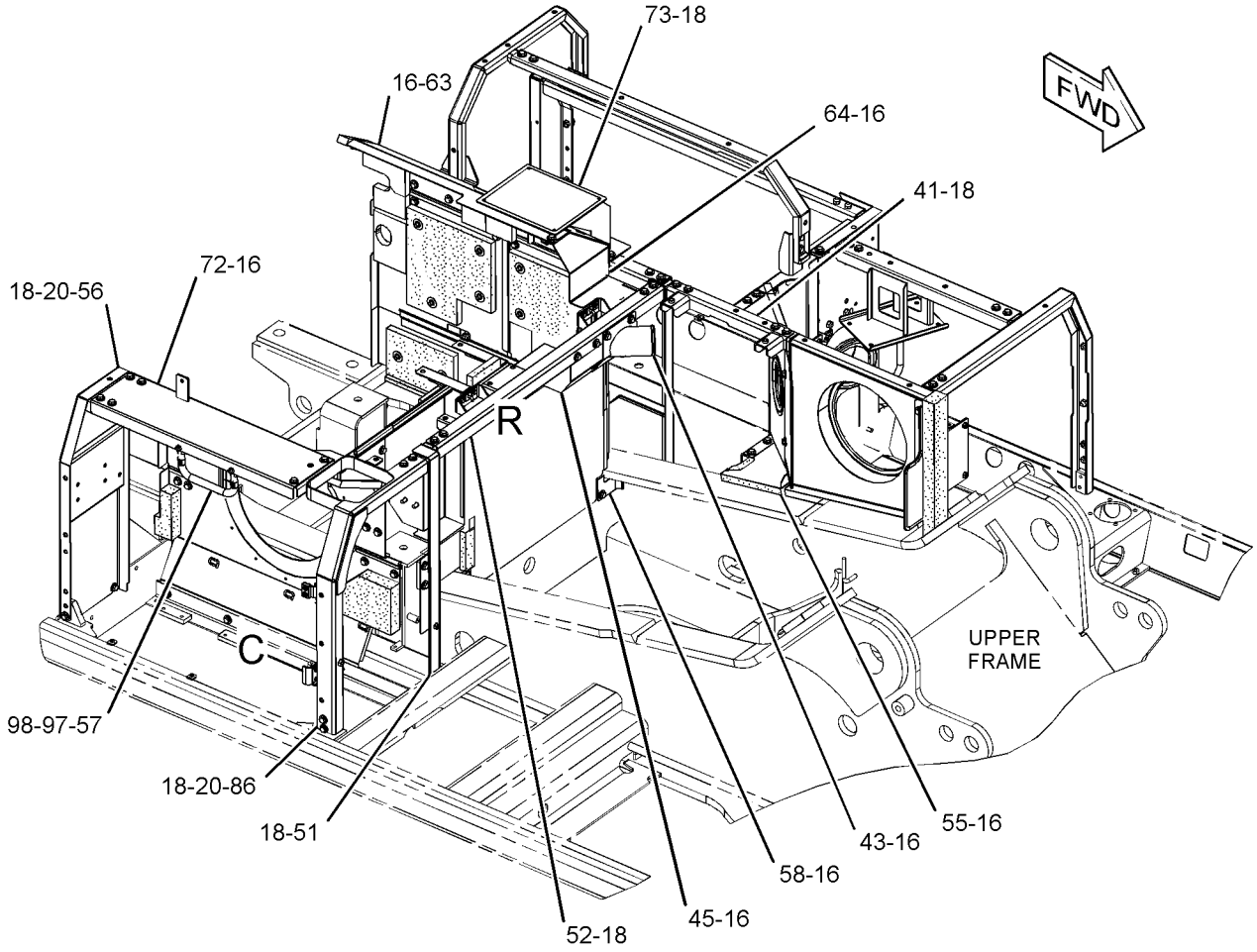

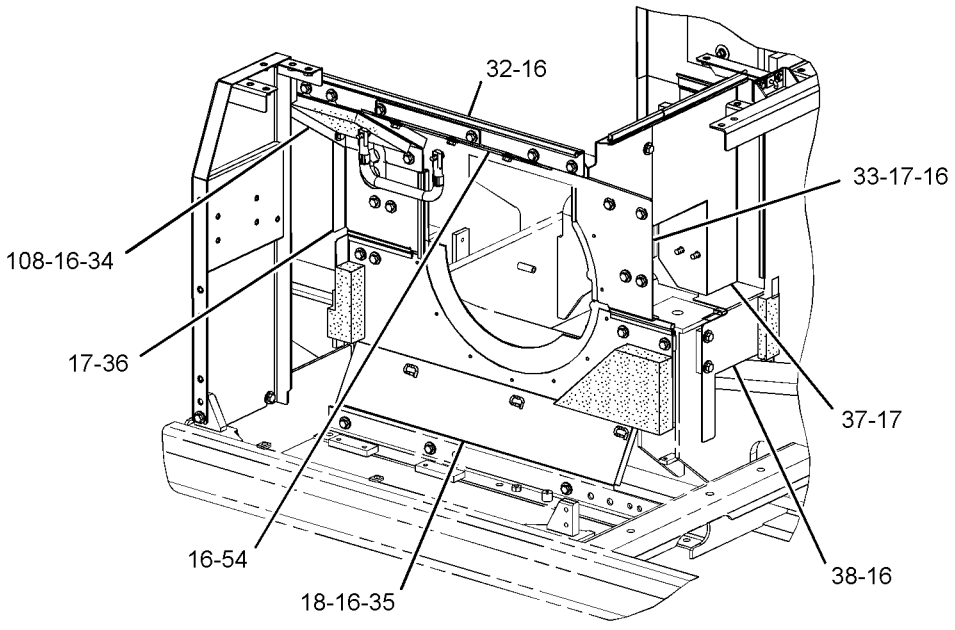

VIEW OF AREA C

GRAPHIC #3 g01518589

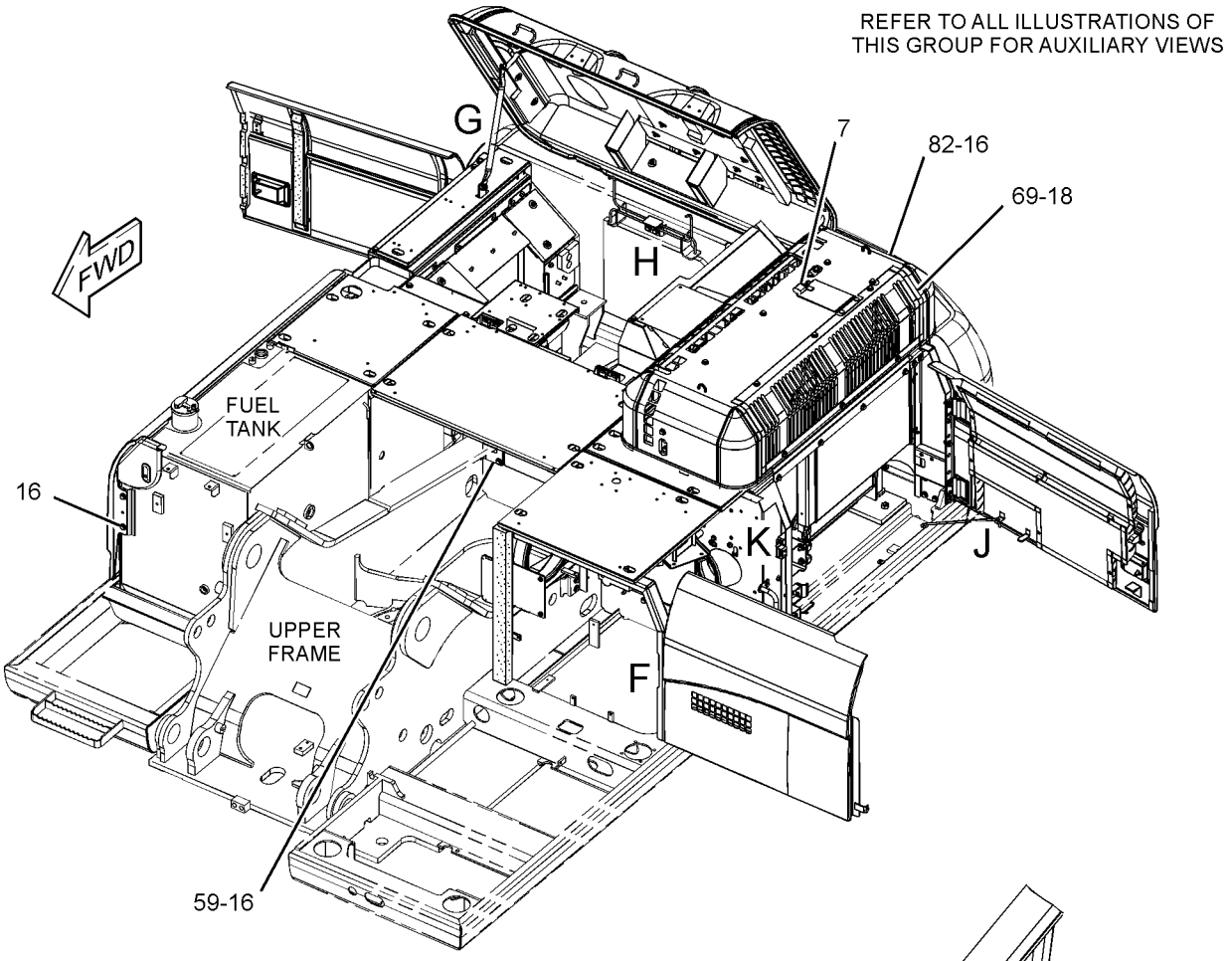

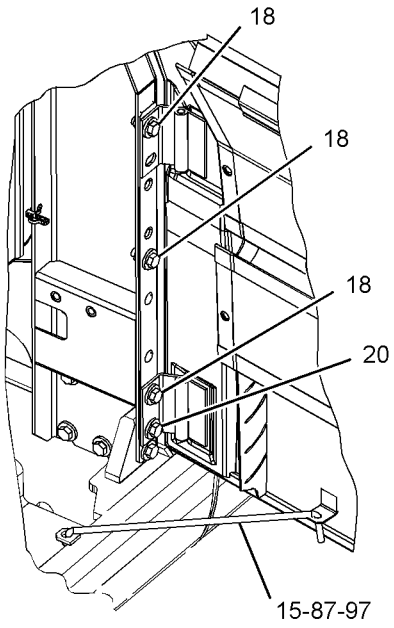

VIEW OF AREA J

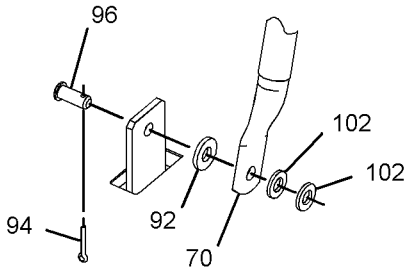

VIEW OF AREA G
(EXPLODED)

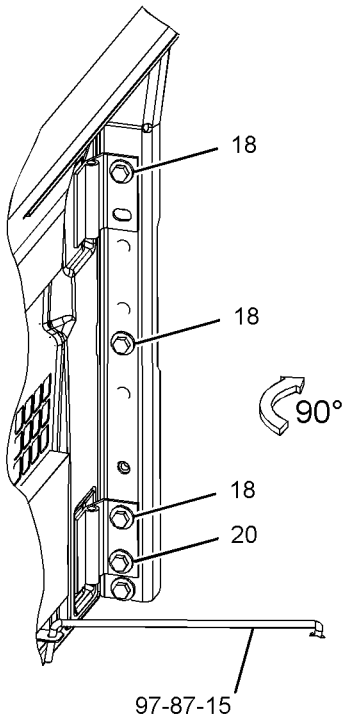

VIEW OF AREA F

GRAPHIC #4

g01518029

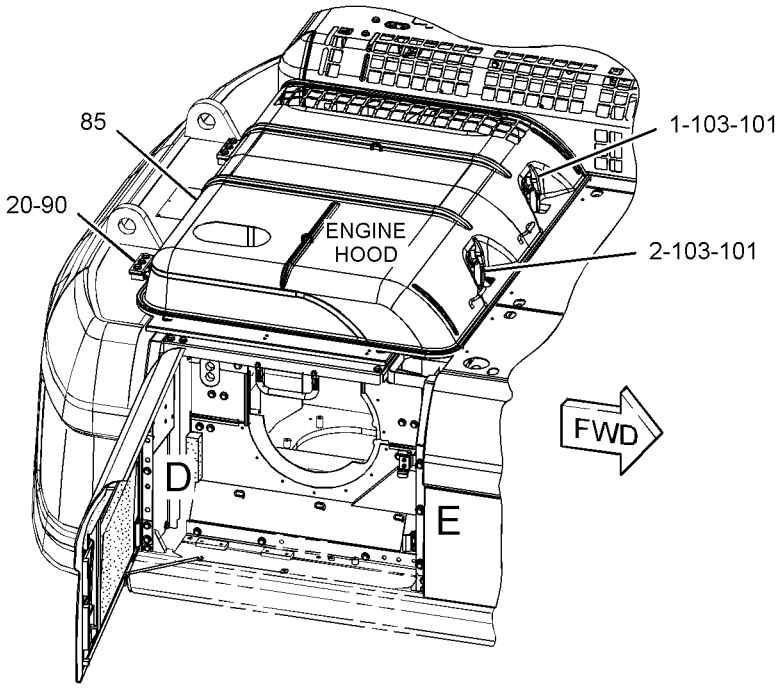

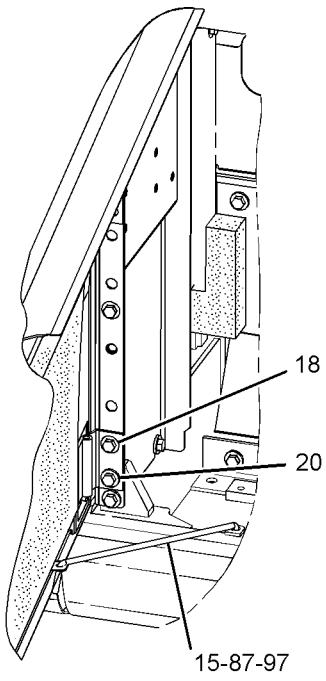

VIEW OF AREA D

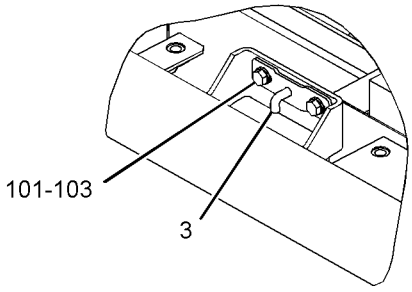

VIEW OF AREA R

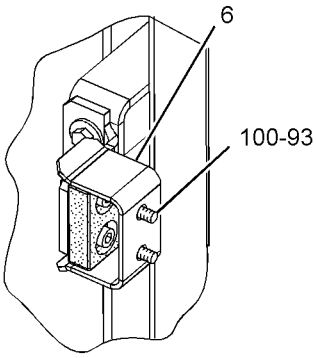

VIEW OF AREA K

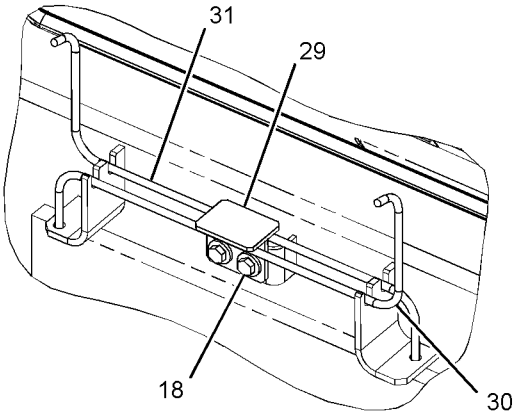

VIEW OF AREA H

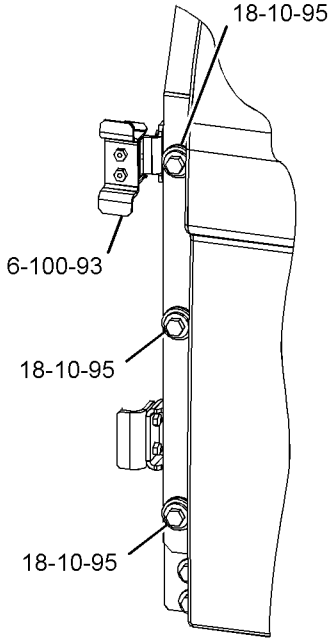

VIEW OF AREA E

GRAPHIC #5 **<END>** g01518540

237-8802 HOOD GP–PRECLEANER

S/N: B6H1-UP; JLP1-UP
PART OF 240-3769 AIR CLEANER AR
AN ATTACHMENT
TYPE 1

SMCS-7251 **i03626388**

NOTE	REF NO	GRAPHIC REF	PART NUMBER	QTY	PART NAME 1 2 3 4 5 6 (PRODUCT LEVEL)	SEE PAGE
	1	1	**259-3662**	1	SUPPORT AS	
Y	2	1	**259-3667**	1	COVER AS-SOUND SUPPRESSION (PRECLEANER)	428
Y	3	1	**273-7909**	1	SUPPORT AS-ENCLOSURE (AIR CLEANER)	512

Y-SEPARATE ILLUSTRATION

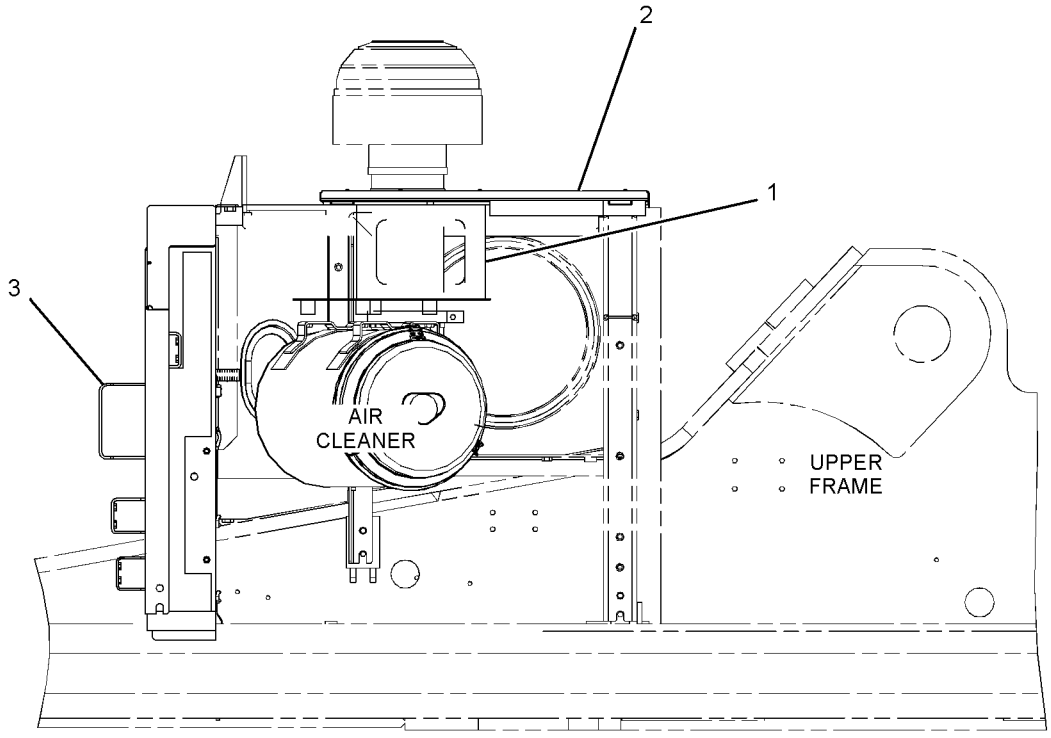

RIGHT SIDE VIEW

GRAPHIC #1 **<END>** g01203692

237-8802 HOOD GP–PRECLEANER

S/N: B6H1-UP; JLP1-UP
PART OF 240-3769 AIR CLEANER AR
AN ATTACHMENT
TYPE 2

SMCS-7251 **i03626392**

NOTE	REF NO	GRAPHIC REF	PART NUMBER	QTY	PART NAME 1 2 3 4 5 6 (PRODUCT LEVEL)	SEE PAGE
	1	1	**259-3662**	1	SUPPORT AS	
Y	2	1	**259-3667**	1	COVER AS-SOUND SUPPRESSION (PRECLEANER)	428
CY	3	1	**330-1444**	1	SUPPORT AS-ENCLOSURE (AIR CLEANER)	513

C-CHANGE FROM PREVIOUS TYPE
Y-SEPARATE ILLUSTRATION

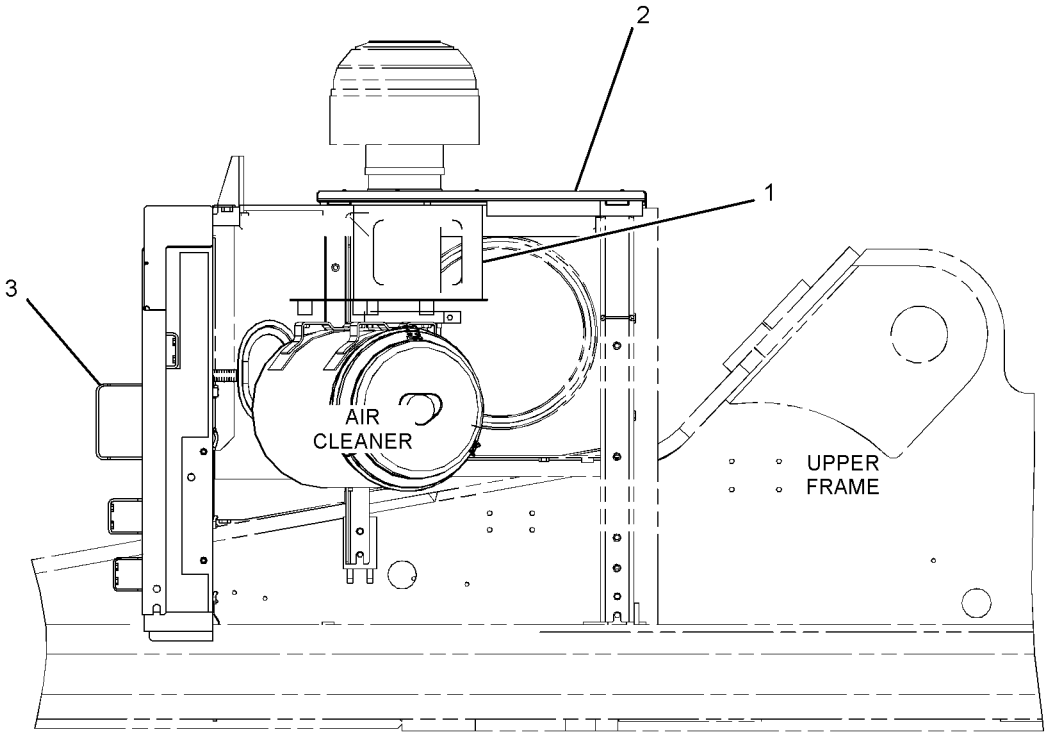

RIGHT SIDE VIEW

GRAPHIC #1 **<END>** g01203692

293-6867 HOOD GP—ACCUGRADE READY

S/N: B6H1-UP; JLP1-UP
PART OF 290-1780 CONVERSION AR-MACHINE
AN ATTACHMENT
TYPE 1

SMCS-7251 **i02819375**

NOTE	REF NO	GRAPHIC REF	PART NUMBER	QTY	PART NAME 1 2 3 4 5 6 (PRODUCT LEVEL)	SEE PAGE
Y	1	1	**293-6868**	1	HOOD GP (RADIATOR)	488
Y	2	1	**293-6873**	1	HOOD GP-ENGINE	493
	3	1	**293-6895**	1	SUPPORT AS	
	4	1	**293-6931**	1	COVER AS	
	5	1	**293-6935**	1	SUPPORT AS	

Y-SEPARATE ILLUSTRATION

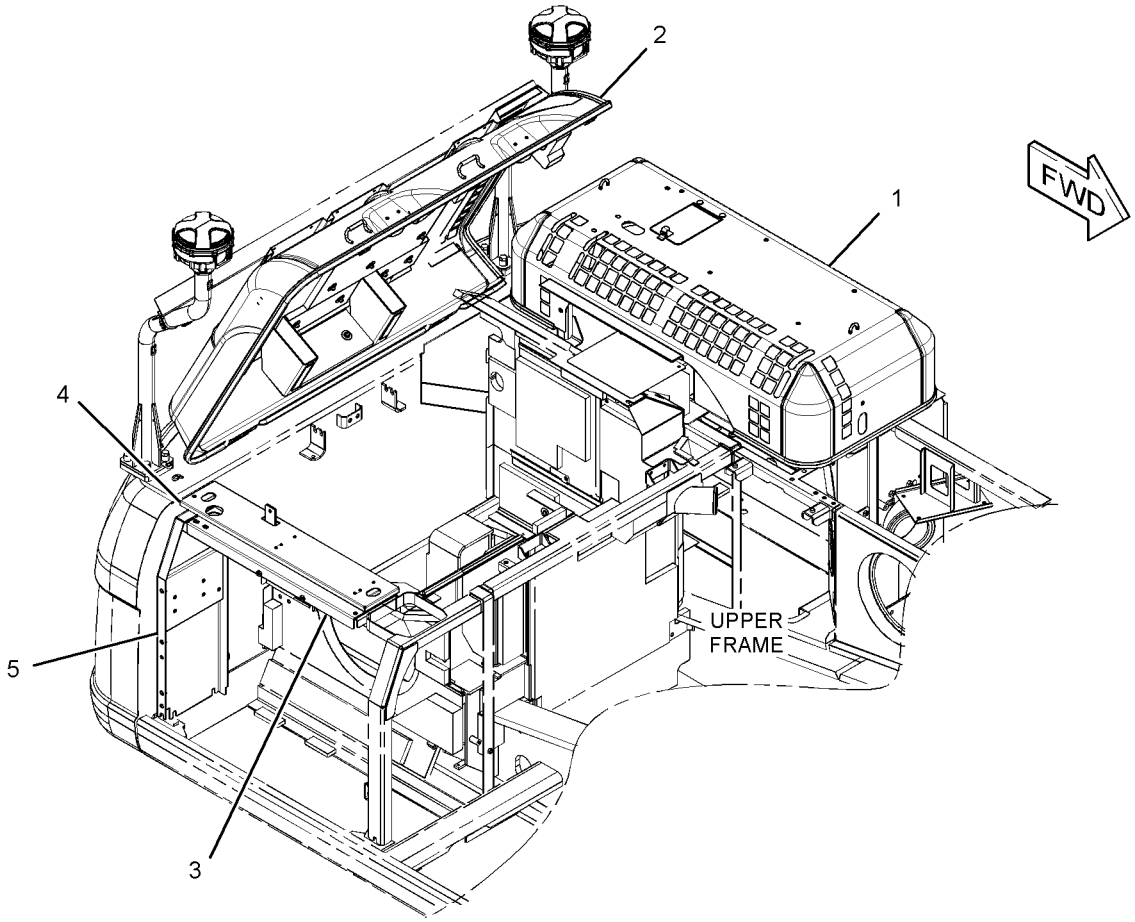

GRAPHIC #1 **<END>** g01369162

293-6867 HOOD GP–ACCUGRADE READY

S/N: B6H1-UP; JLP1-UP
PART OF 290-1780 CONVERSION AR-MACHINE
AN ATTACHMENT
TYPE 2

SMCS-7251 **i03296089**

NOTE	REF NO	GRAPHIC REF	PART NUMBER	QTY	PART NAME 1 2 3 4 5 6 (PRODUCT LEVEL)	SEE PAGE
CY	1	1	**330-1417**	1	HOOD GP (RADIATOR)	489
Y	2	1	**293-6873**	1	HOOD GP-ENGINE	493
	3	1	**293-6895**	1	SUPPORT AS	
	4	1	**293-6931**	1	COVER AS	
		1	**293-6960**	1	INSULATION	
	5	1	**293-6935**	1	SUPPORT AS	

C-CHANGE FROM PREVIOUS TYPE
Y-SEPARATE ILLUSTRATION

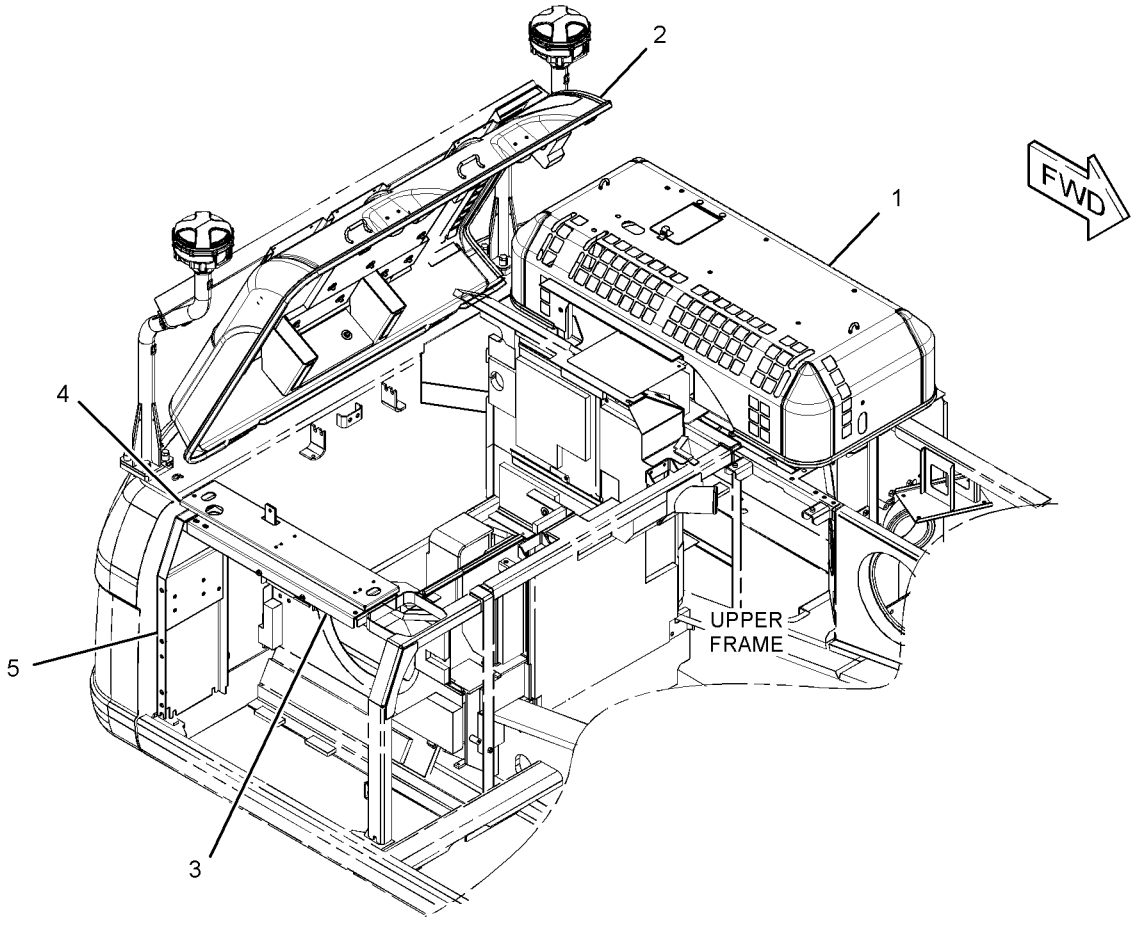

GRAPHIC #1 **<END>** g01369162

FRAME AND BODY

293-6868 HOOD GP—RADIATOR

S/N: B6H1-UP; JLP1-UP
PART OF 293-6867 HOOD GP
AN ATTACHMENT

SMCS-7251 **i03626399**

NOTE	REF NO	GRAPHIC REF	PART NUMBER	QTY	PART NAME 1 2 3 4 5 6 (PRODUCT LEVEL)	SEE PAGE
	1	1	**1K-8850**	1	SPRING	
	2	1	**5V-3854**	2	BUMPER	
	3	1	**7Y-8876**	1	DOOR AS	
	3A	1	**9V-3659**	1	HINGE	
	4	1	**262-2176**	1	LINER	
	5	1	**262-2435**	1	SHEET-RUBBER	
	6	1	**273-7918**	1	LINER	
	7	1	**273-7919**	1	LINER	
	8	1	**273-7920**	1	LINER	
	9	1	**273-7921**	1	LINER	
	10	1	**293-6869**	1	HOOD AS	
	11	1	**8T-4121**	2	WASHER-HARD (11X21X2.5-MM THK)	
M	12	1	**8T-4133**	2	NUT (M10X1.5-THD)	
D	13	1	**5P-8309**		SEAL (1.0-M)	
D	13A	1	**5P-8309**		SEAL (1.3-M)	

D-ORDER BY THE METER
M-METRIC PART

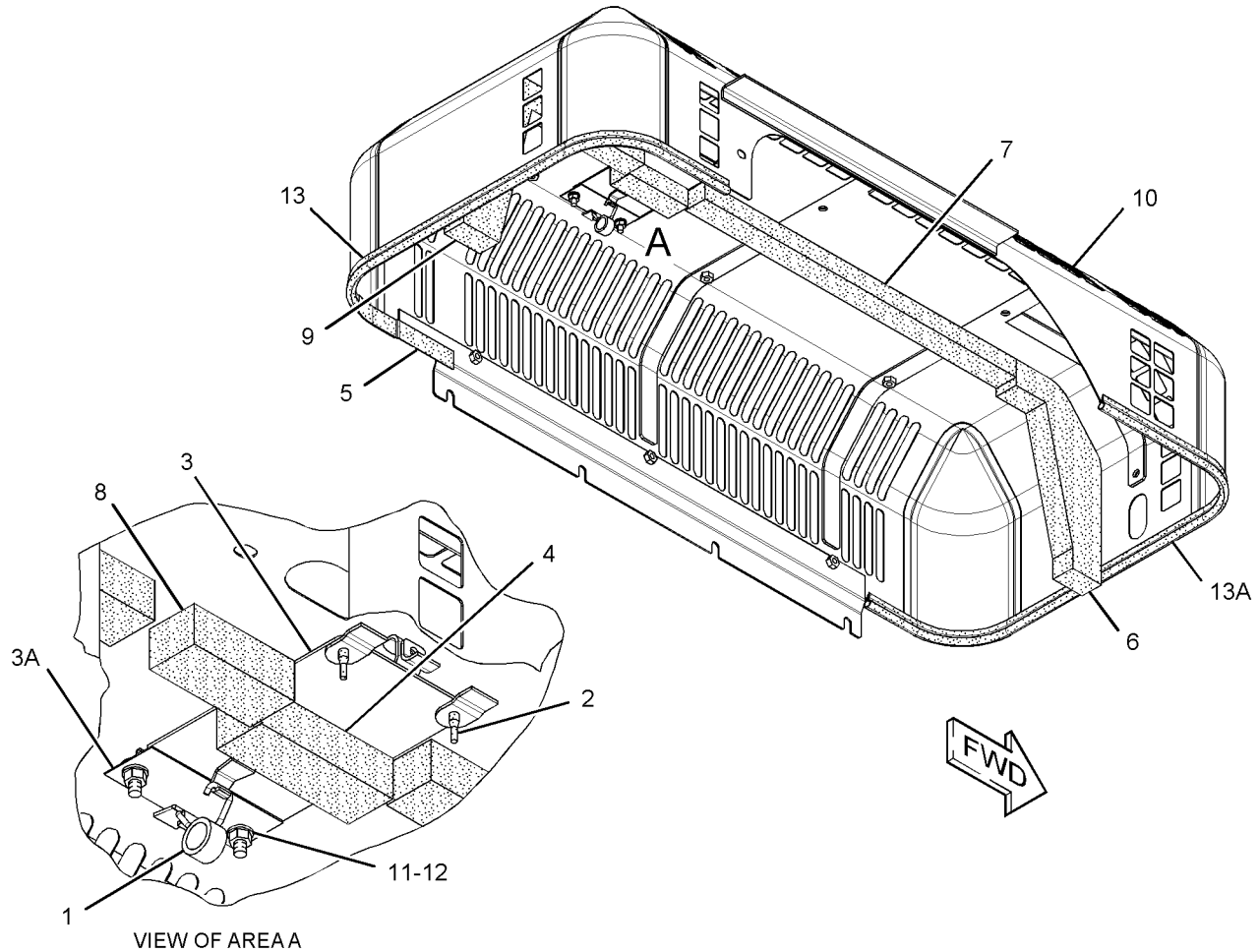

VIEW OF AREA A

GRAPHIC #1 **<END>** g01945224

330-1417 HOOD GP–RADIATOR

S/N: B6H1-UP; JLP1-UP
PART OF 293-6867 HOOD GP
AN ATTACHMENT

SMCS-7251 **i03296095**

NOTE	REF NO	GRAPHIC REF	PART NUMBER	QTY	PART NAME 1 2 3 4 5 6 (PRODUCT LEVEL)	SEE PAGE
	1	1	**1K-8850**	1	SPRING	
	2	1	**5V-3854**	2	BUMPER	
	3	1	**7Y-8876**	1	DOOR AS	
	3A	1	**9V-3659**	1	HINGE	
	4	1	**262-2176**	1	LINER	
	5	1	**262-2435**	1	SHEET-RUBBER	
	6	1	**273-7918**	1	LINER	
	7	1	**273-7919**	1	LINER	
	8	1	**273-7920**	1	LINER	
	9	1	**273-7921**	1	LINER	
	11	1	**8T-4121**	2	WASHER-HARD (11X21X2.5-MM THK)	
M	12	1	**8T-4133**	2	NUT (M10X1.5-THD)	
D	13	1	**5P-5952**		SEAL (0.1-M)	
D	14	1	**5P-8309**		SEAL (1.2-M)	
D	14A	1	**5P-8309**		SEAL (0.9-M)	
D	14B	1	**5P-8309**		SEAL (0.04-M)	

D-ORDER BY THE METER
M-METRIC PART

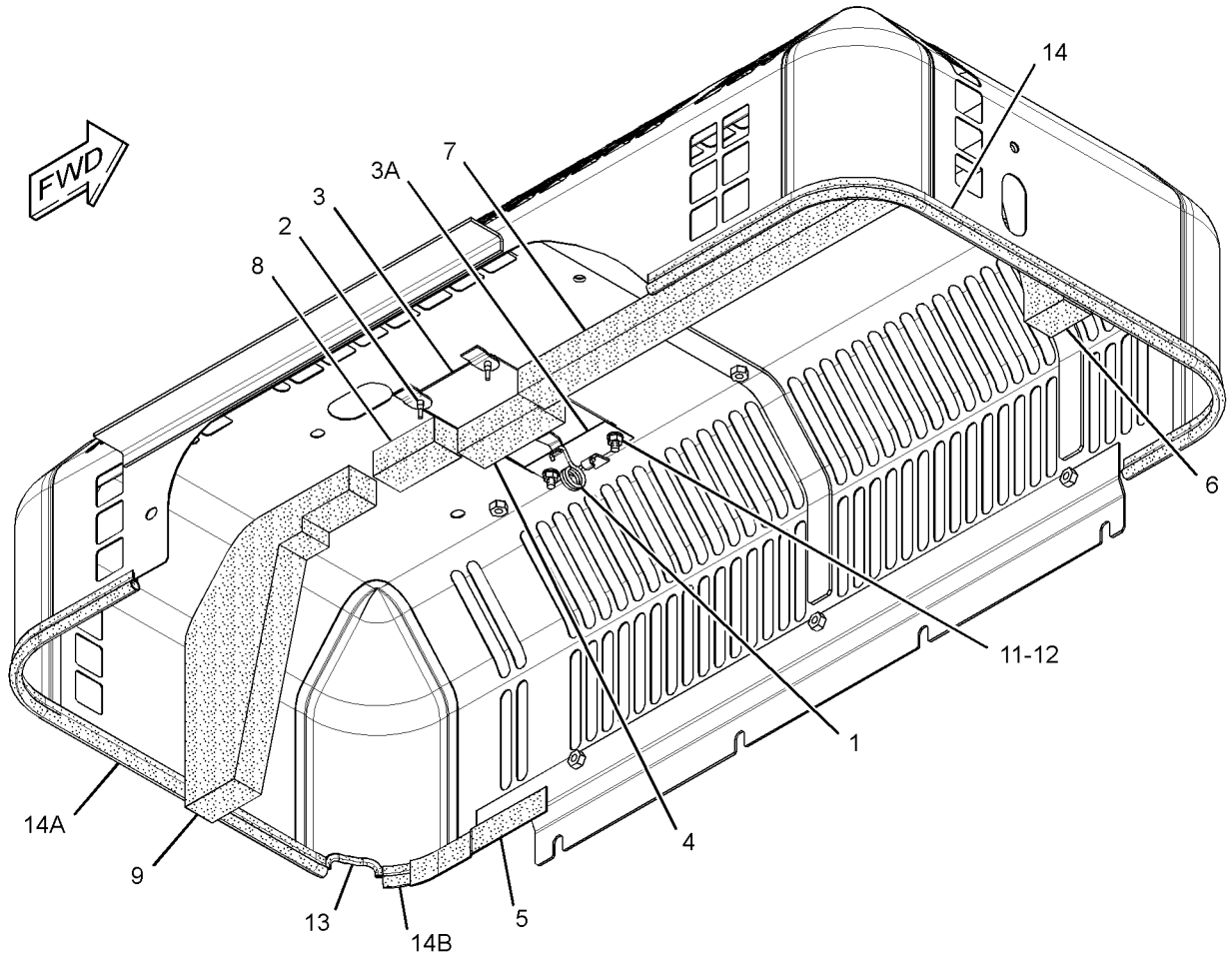

GRAPHIC #1 **<END>** g01615560

FRAME AND BODY

273-7911 HOOD GP-ENGINE–RADIATOR

S/N: B6H1-UP; JLP1-UP

PART OF 237-8768 HOOD & GUARD GP

SMCS-7251 **i03021075**

NOTE	REF NO	GRAPHIC REF	PART NUMBER	QTY	PART NAME 1 2 3 4 5 6 (PRODUCT LEVEL)	SEE PAGE
	1	1	**1K-8850**	1	SPRING	
	2	1	**5V-3854**	2	BUMPER	
	3	1	**7Y-8876**	1	DOOR AS	
	3A	1	**9V-3659**	1	HINGE	
	4	1	**262-2176**	1	LINER	
	5	1	**262-2435**	1	SHEET-RUBBER	
	7	1	**273-7918**	1	LINER	
	8	1	**273-7919**	1	LINER	
	9	1	**273-7920**	1	LINER	
	10	1	**273-7921**	1	LINER	
	11	1	**8T-4121**	2	WASHER-HARD (11X21X2.5-MM THK)	
M	12	1	**8T-4133**	2	NUT (M10X1.5-THD)	
D	13	1	**5P-8309**		SEAL (1-M)	
D	13A	1	**5P-8309**		SEAL (1.3-M)	

D-ORDER BY THE METER
M-METRIC PART

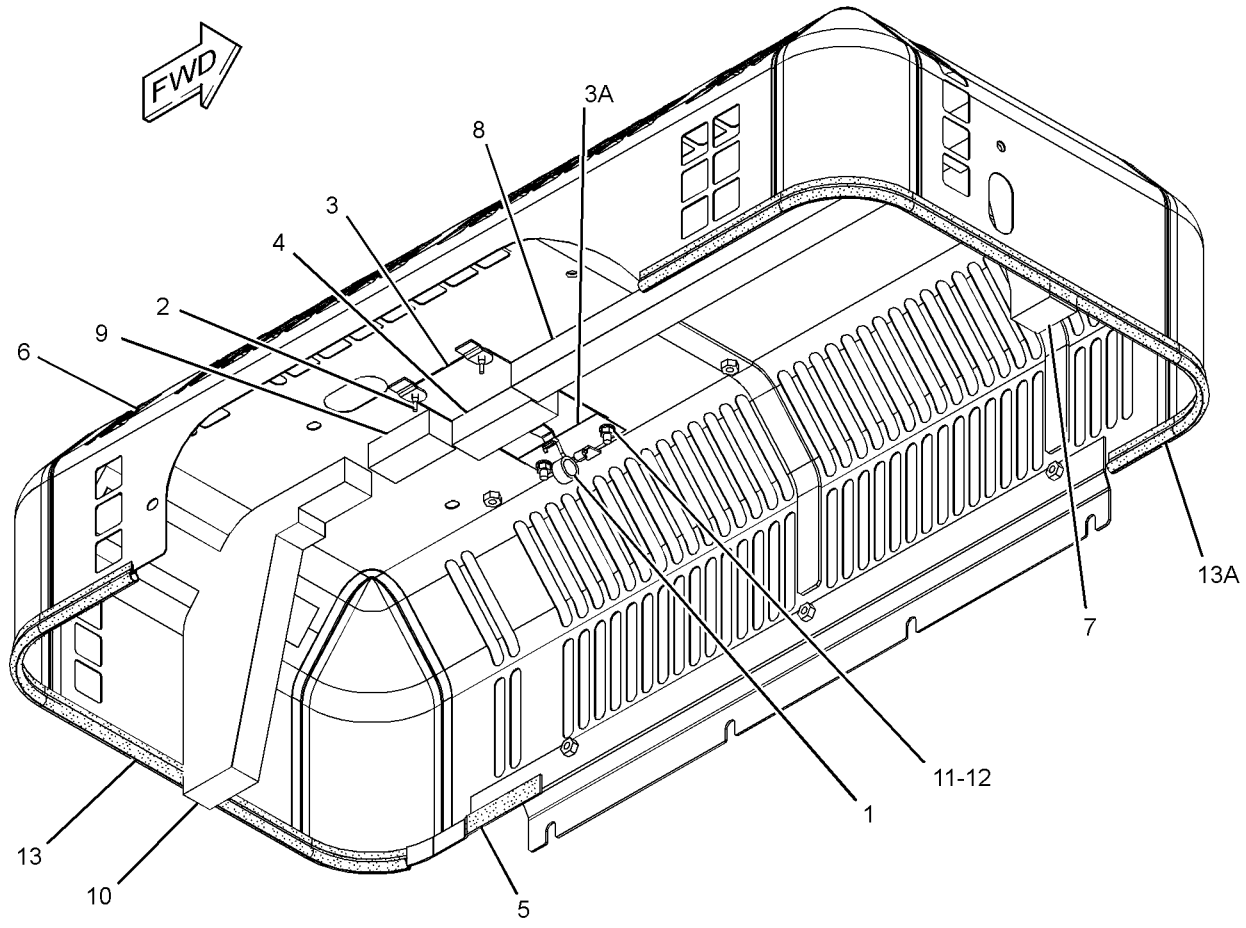

GRAPHIC #1 **<END>** g01250543

273-7937 HOOD GP-ENGINE

S/N: B6H1-UP; JLP1-UP
PART OF 237-8768 HOOD & GUARD GP

SMCS-7251 **i02490659**

NOTE	REF NO	GRAPHIC REF	PART NUMBER	QTY	PART NAME 1 2 3 4 5 6 (PRODUCT LEVEL)	SEE PAGE
	1	1	**4I-7924**	20	WASHER (4.5X40X1.2-MM THK)	
	2	1	**6P-2216**	20	CAP	
	3	1	**096-4129**	2	CUSHION	
	4	1	**259-3696**	2	LINER	
	5	1	**259-3697**	1	LINER	
	6	1	**259-3698**	1	LINER	
	7	1	**259-3699**	1	LINER	
	8	1	**259-3700**	1	LINER	
	9	1	**259-3701**	1	LINER	
	10	1	**262-2179**	1	LINER	
	11	1	**270-9602**	1	INSULATION	
	12	1	**273-7938**	1	HOOD AS-ENGINE	
	12A	1	**114-6289**	2	HINGE	
	13	1	**8T-0328**	4	WASHER-HARD (5.5X10X1-MM THK)	
M	14	1	**8T-6693**	4	SCREW-MACHINE (M5X0.8X16-MM)	
D	15	1	**5P-8309**		SEAL (1.5-M)	
D	16	1	**101-9848**		SEAL (4.7-M)	

D-ORDER BY THE METER
M-METRIC PART

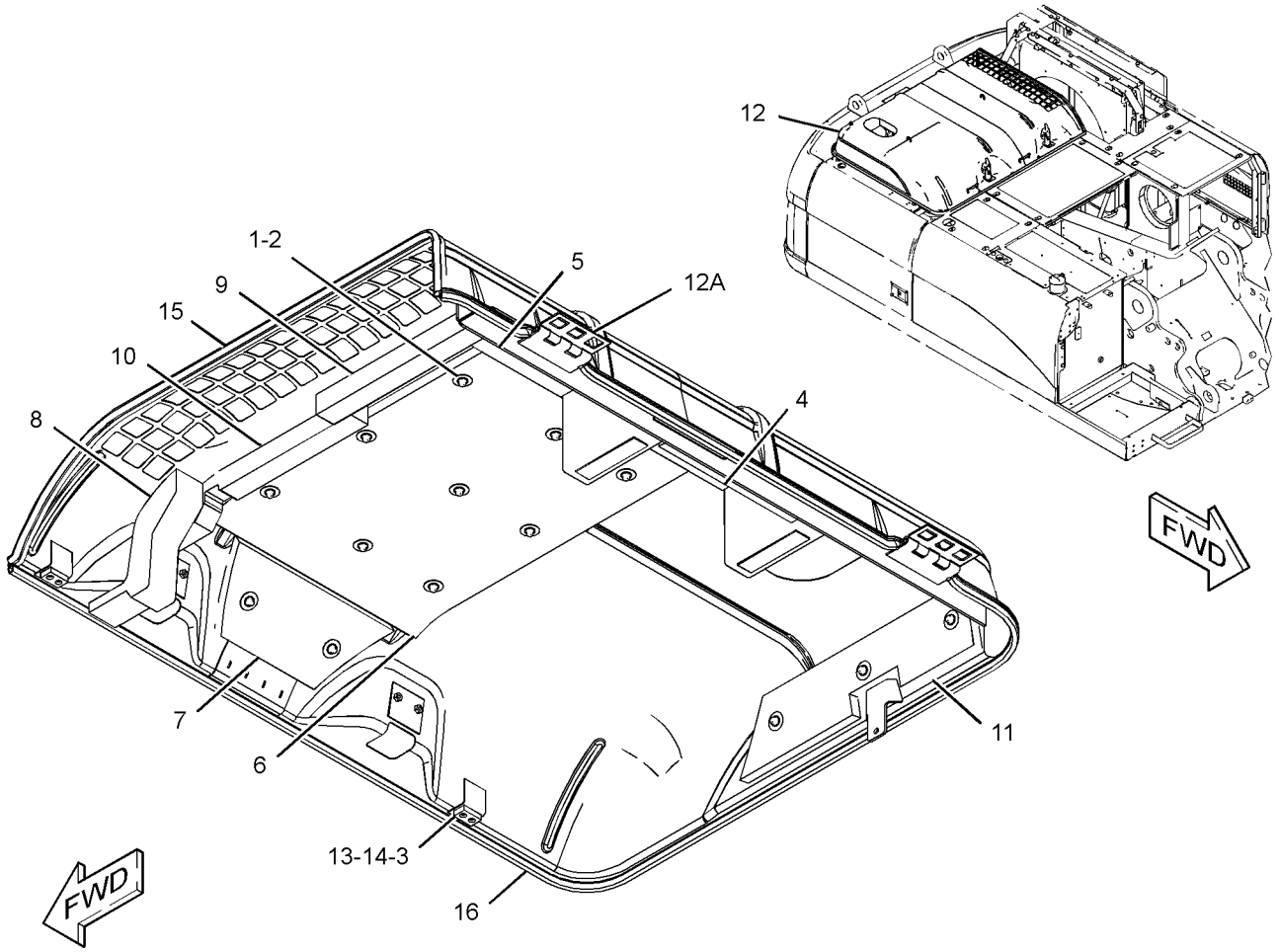

GRAPHIC #1 **<END>** g01250842

FRAME AND BODY

289-6767 HOOD GP-ENGINE

S/N: B6H1-UP; JLP1-UP

PART OF 237-8768 HOOD & GUARD GP

SMCS-7251 **i03626444**

NOTE	REF NO	GRAPHIC REF	PART NUMBER	QTY	PART NAME 1 2 3 4 5 6 (PRODUCT LEVEL)	SEE PAGE
	1	1	**4I-7924**	19	WASHER (4.5X40X1.2-MM THK)	
	2	1	**6P-2216**	19	CAP	
	3	1	**096-4129**	2	CUSHION	
	4	1	**203-5057**	1	LINER	
	5	1	**259-3696**	2	LINER	
	6	1	**259-3697**	1	LINER	
	7	1	**259-3698**	1	LINER	
	8	1	**259-3699**	1	LINER	
	9	1	**259-3700**	1	LINER	
	10	1	**259-3701**	1	LINER	
	11	1	**262-2179**	1	LINER	
	12	1	**289-6768**	1	HOOD AS-ENGINE	
	12A	1	**114-6289**	2	HINGE	
	13	1	**8T-0328**	4	WASHER-HARD (5.5X10X1-MM THK)	
M	14	1	**8T-6693**	4	SCREW-MACHINE (M5X0.8X16-MM)	
D	15	1	**5P-8309**	1	SEAL (1.6-M)	
D	16	1	**101-9848**	1	SEAL (4.7-M)	

D-ORDER BY THE METER
M-METRIC PART

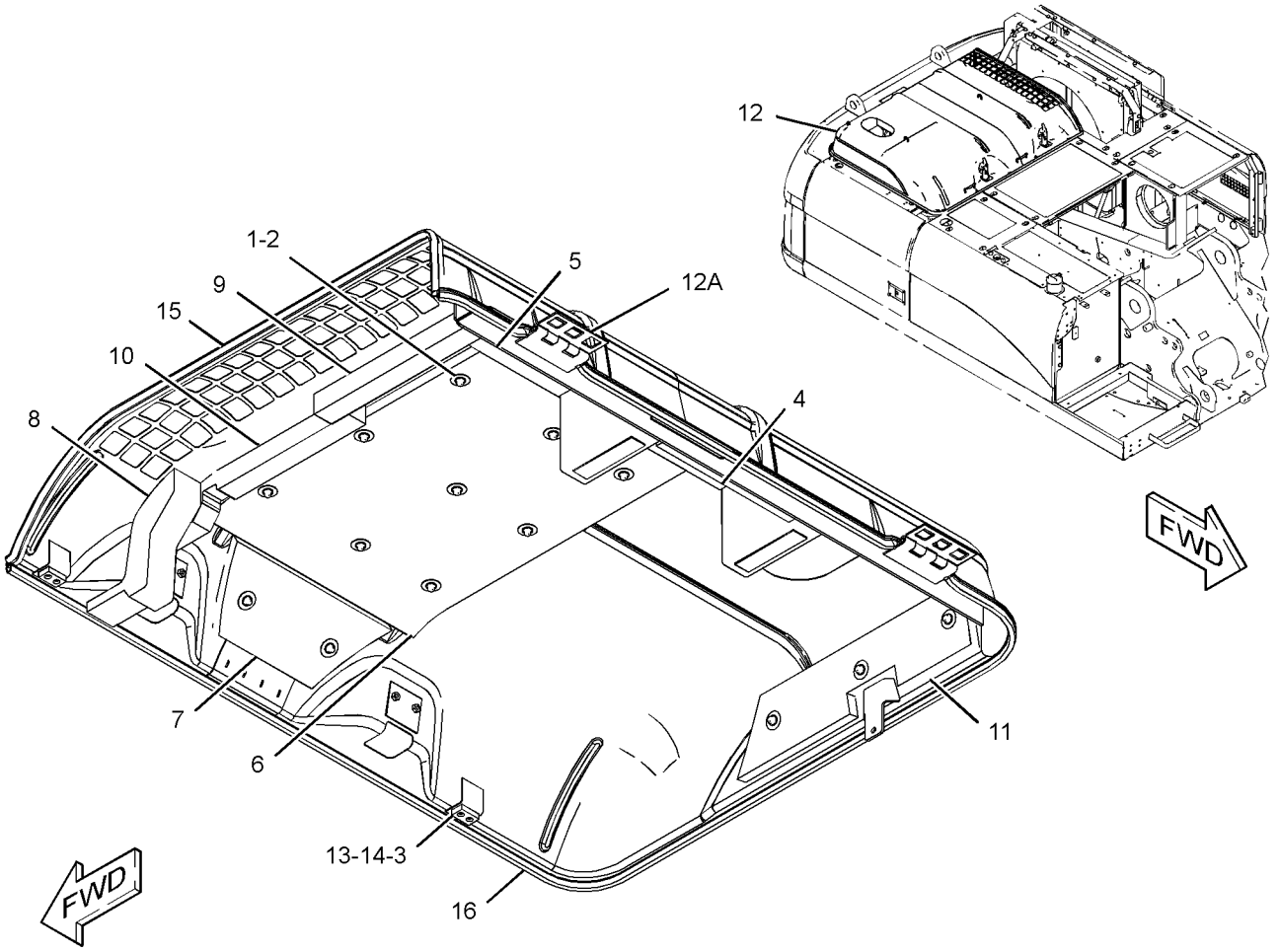

GRAPHIC #1 **<END>** g01250842

293-6873 HOOD GP-ENGINE

S/N: B6H1-UP; JLP1-UP
PART OF 293-6867 HOOD GP
AN ATTACHMENT

SMCS-7251 **i02819846**

NOTE	REF NO	GRAPHIC REF	PART NUMBER	QTY	PART NAME 1 2 3 4 5 6 (PRODUCT LEVEL)	SEE PAGE
	1	1	**4I-7924**	19	WASHER (4.5X40X1.2-MM THK)	
	2	1	**6P-2216**	19	CAP	
	3	1	**096-4129**	2	CUSHION	
	4	1	**203-5057**	1	LINER	
	5	1	**259-3696**	2	LINER	
	6	1	**259-3697**	1	LINER	
	7	1	**259-3698**	1	LINER	
	8	1	**259-3699**	1	LINER	
	9	1	**259-3700**	1	LINER	
	10	1	**259-3701**	1	LINER	
	11	1	**262-2179**	1	LINER	
	12	1	**307-7862**	1	HOOD AS-ENGINE	
	12A	1	**114-6289**	2	HINGE	
	12B	1	**146-4936**	2	HANDLE AS	
		1	**6C-3679**	80	RIVET-POP	
	13	1	**8T-0328**	4	WASHER-HARD (5.5X10X1-MM THK)	
M	14	1	**8T-6693**	4	SCREW-MACHINE (M5X0.8X16-MM)	
D	15	1	**5P-8309**		SEAL (1.6-M)	
D	16	1	**101-9848**		SEAL (4.7-M)	
E	17	1	**184-8580**		SEAL (35-CM)	
E	17A	1	**184-8580**		SEAL (41-CM)	

D-ORDER BY THE METER
E-ORDER BY THE CENTIMETER
M-METRIC PART

293-6873 HOOD GP-ENGINE *(contd.)* i02819846

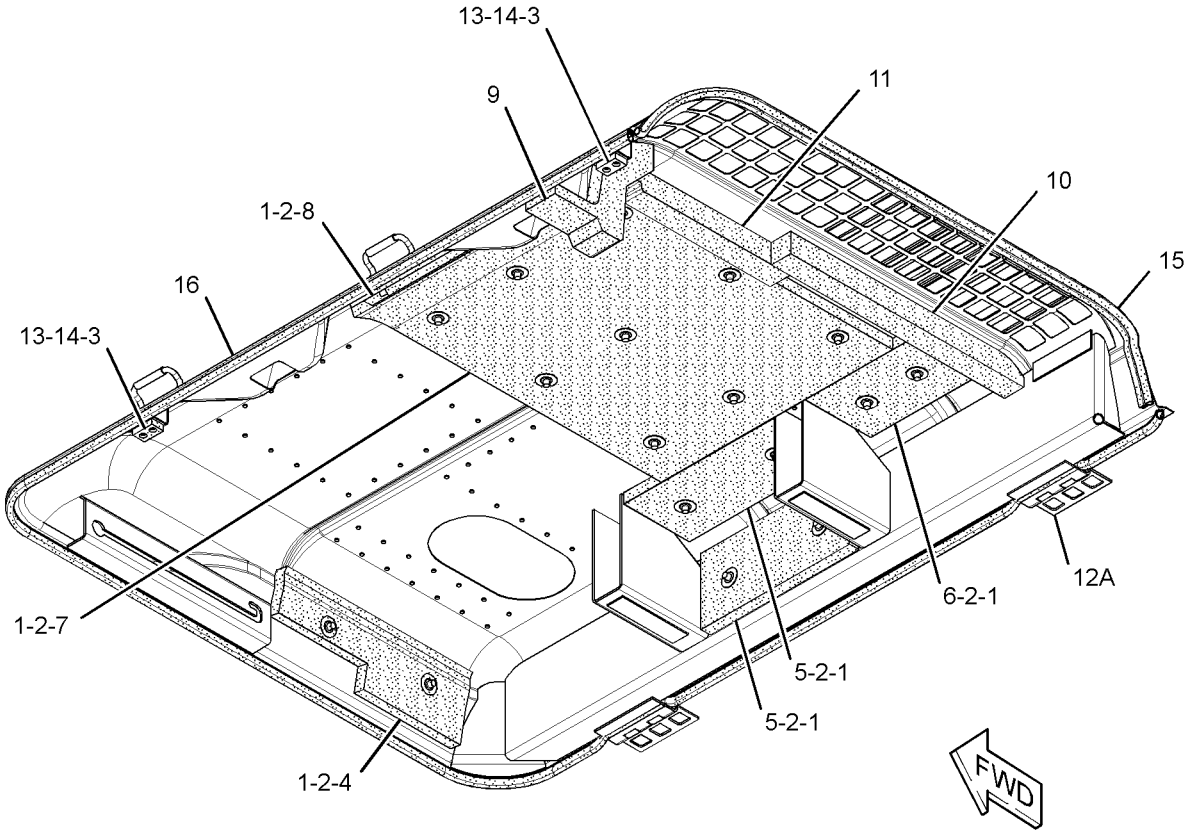

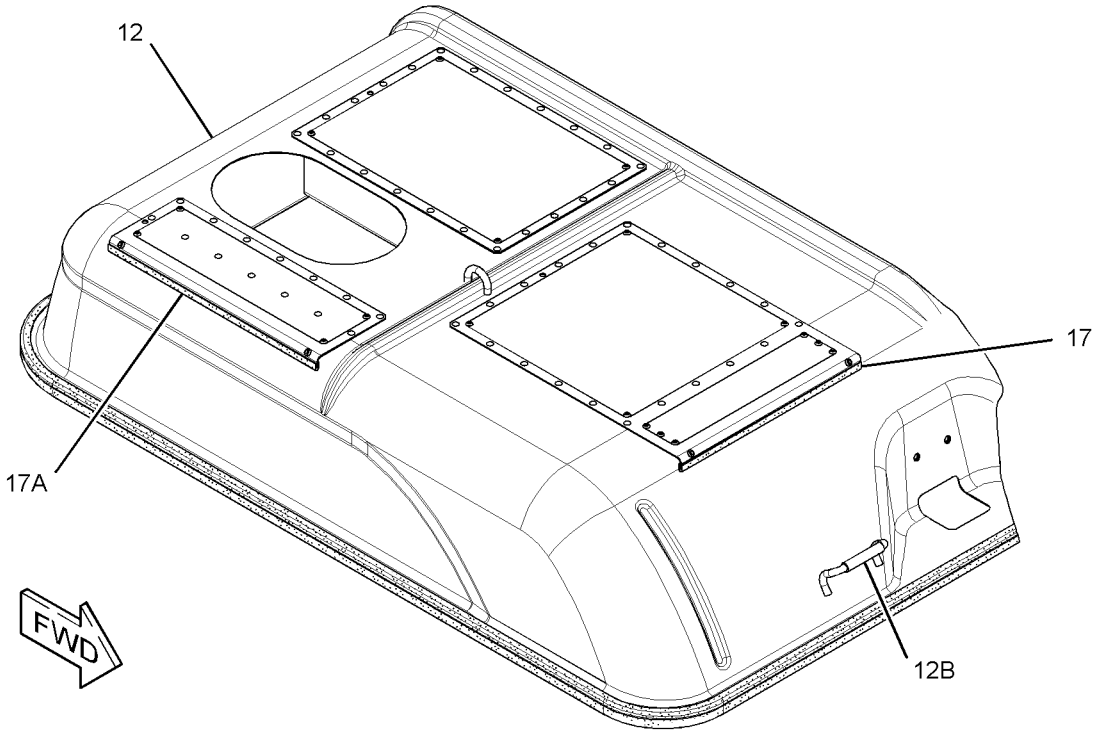

GRAPHIC #1 **<END>** g01619925

256-1794 SHEET AS-SOUND SUPPRESSION

S/N: B6H1-UP; JLP1-UP
PART OF 237-8768 HOOD & GUARD GP

SMCS-1801, 7076, 7251, 7267 **i02490606**

NOTE	REF NO	GRAPHIC REF	PART NUMBER	QTY	PART NAME 1 2 3 4 5 6 (PRODUCT LEVEL)	SEE PAGE
	1	1	**4I-7924**	2	WASHER (4.5X40X1.2-MM THK)	
	2	1	**6P-2216**	2	CAP	
	3	1	**9M-5732**	2	RIVET-POP	
Z	4	1		1	SHEET AS	
	5	1	**256-1797**	1	SHEET-RUBBER	
	6	1	**256-1799**	1	INSULATION	
	7	1	**270-9783**	1	INSULATION	
	8	1	**9M-2307**	2	WASHER (5.2X19X2-MM THK)	
D	9	1	**101-9848**		SEAL (0.2-M)	
D	9A	1	**101-9848**		SEAL (0.11-M)	

D-ORDER BY THE METER
Z-NOT SERVICED SEPARATELY

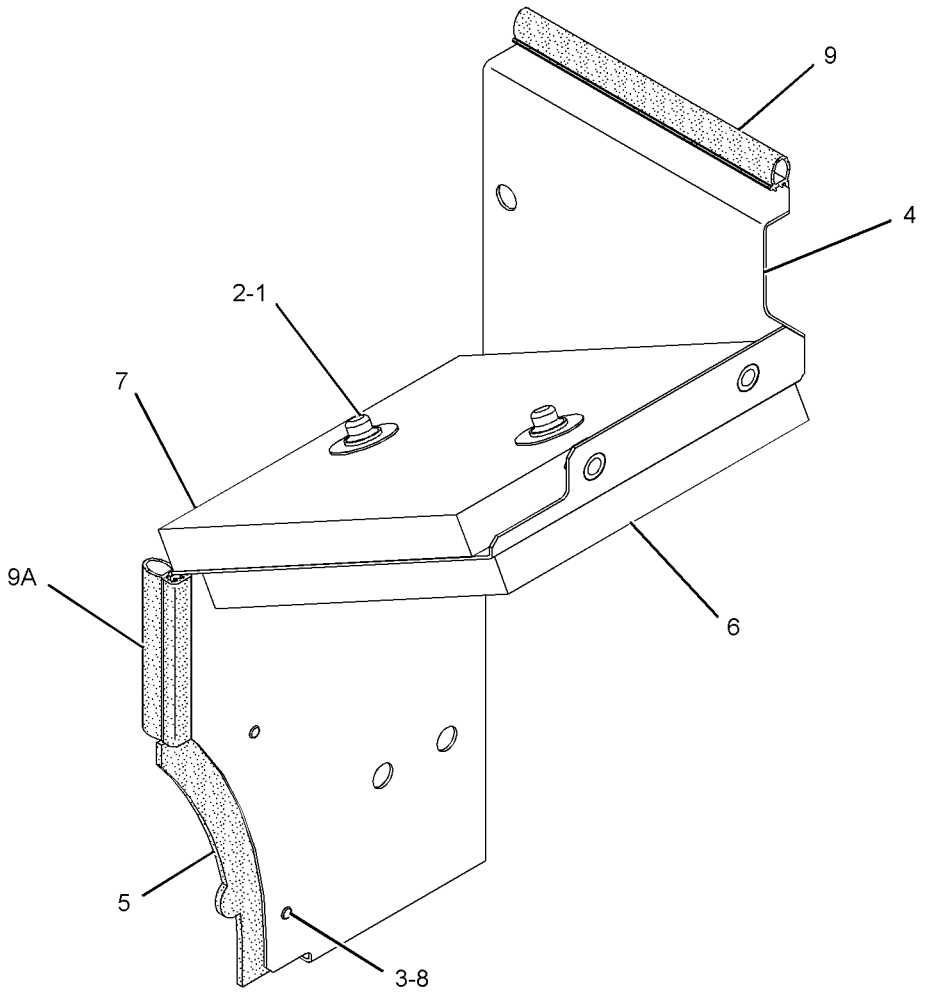

GRAPHIC #1 **<END>** g01236325

256-1802 SHEET AS-SOUND SUPPRESSION

S/N: B6H1-UP; JLP1-UP

PART OF 237-8768 HOOD & GUARD GP

SMCS-1801, 7076, 7251, 7267 **i02490607**

NOTE	REF NO	GRAPHIC REF	PART NUMBER	QTY	PART NAME 1 2 3 4 5 6 (PRODUCT LEVEL)	SEE PAGE
	1	1	**4I-7924**	2	WASHER (4.5X40X1.2-MM THK)	
	2	1	**6P-2216**	2	CAP	
Z	3	1		1	SHEET AS	
	4	1	**256-1805**	1	INSULATION	
	5	1	**256-1806**	1	INSULATION	

Z-NOT SERVICED SEPARATELY

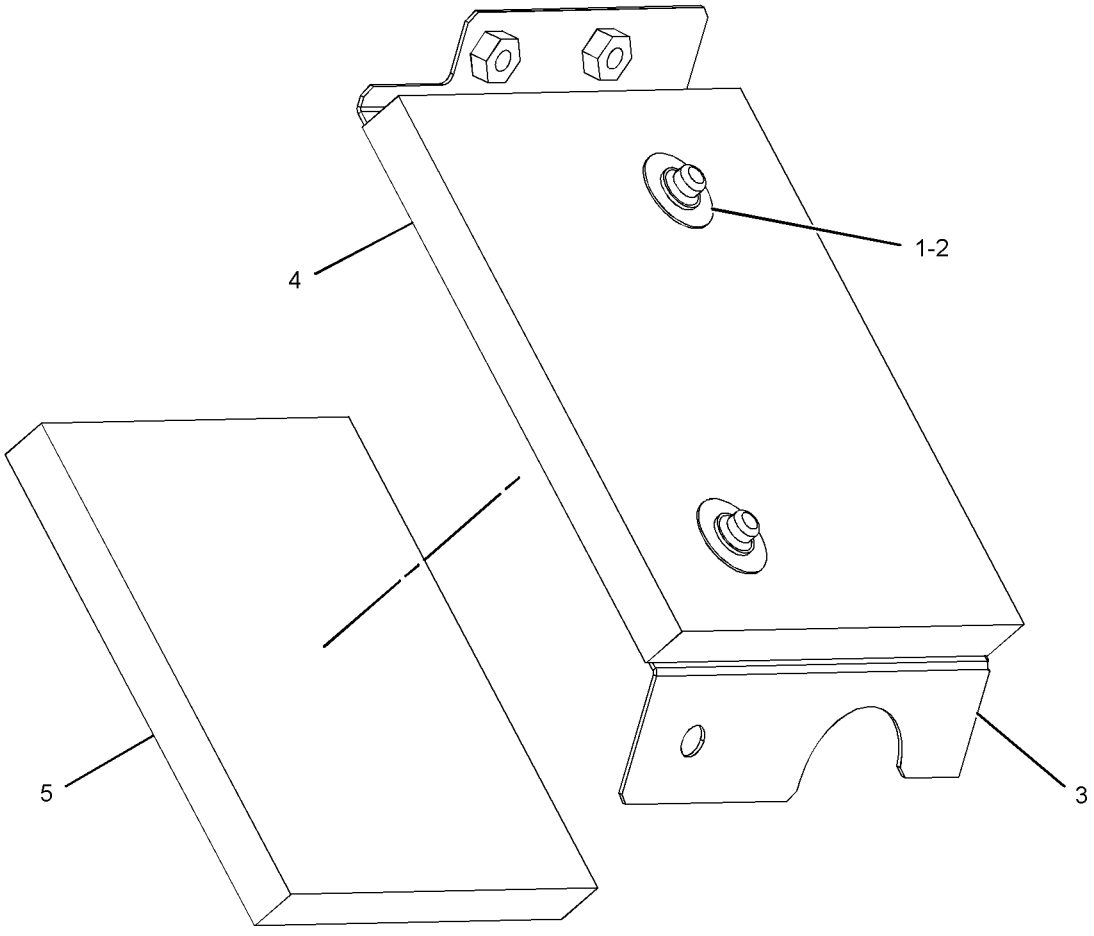

GRAPHIC #1 **<END>** g01236338

FRAME AND BODY

256-1807 SHEET AS-SOUND SUPPRESSION

S/N: B6H1-UP; JLP1-UP

PART OF 237-8768 HOOD & GUARD GP

SMCS-1801, 7076, 7251, 7267 **i02490619**

NOTE	REF NO	GRAPHIC REF	PART NUMBER	QTY	PART NAME 1 2 3 4 5 6 (PRODUCT LEVEL)	SEE PAGE
	1	1	**4I-7924**	3	WASHER (4.5X40X1.2-MM THK)	
	2	1	**6P-2216**	3	CAP	
	3	1	**9M-5732**	7	RIVET-POP	
Z	4	1		1	SHEET AS	
	5	1	**256-1810**	1	SHEET-RUBBER	
	6	1	**256-1811**	1	INSULATION	
	7	1	**256-1814**	1	INSULATION	
	8	1	**273-7943**	1	INSULATION	
	9	1	**9M-2307**	7	WASHER (5.2X19X2-MM THK)	
D	10	1	**5P-8309**		SEAL (0.2-M EACH)	

D-ORDER BY THE METER
Z-NOT SERVICED SEPARATELY

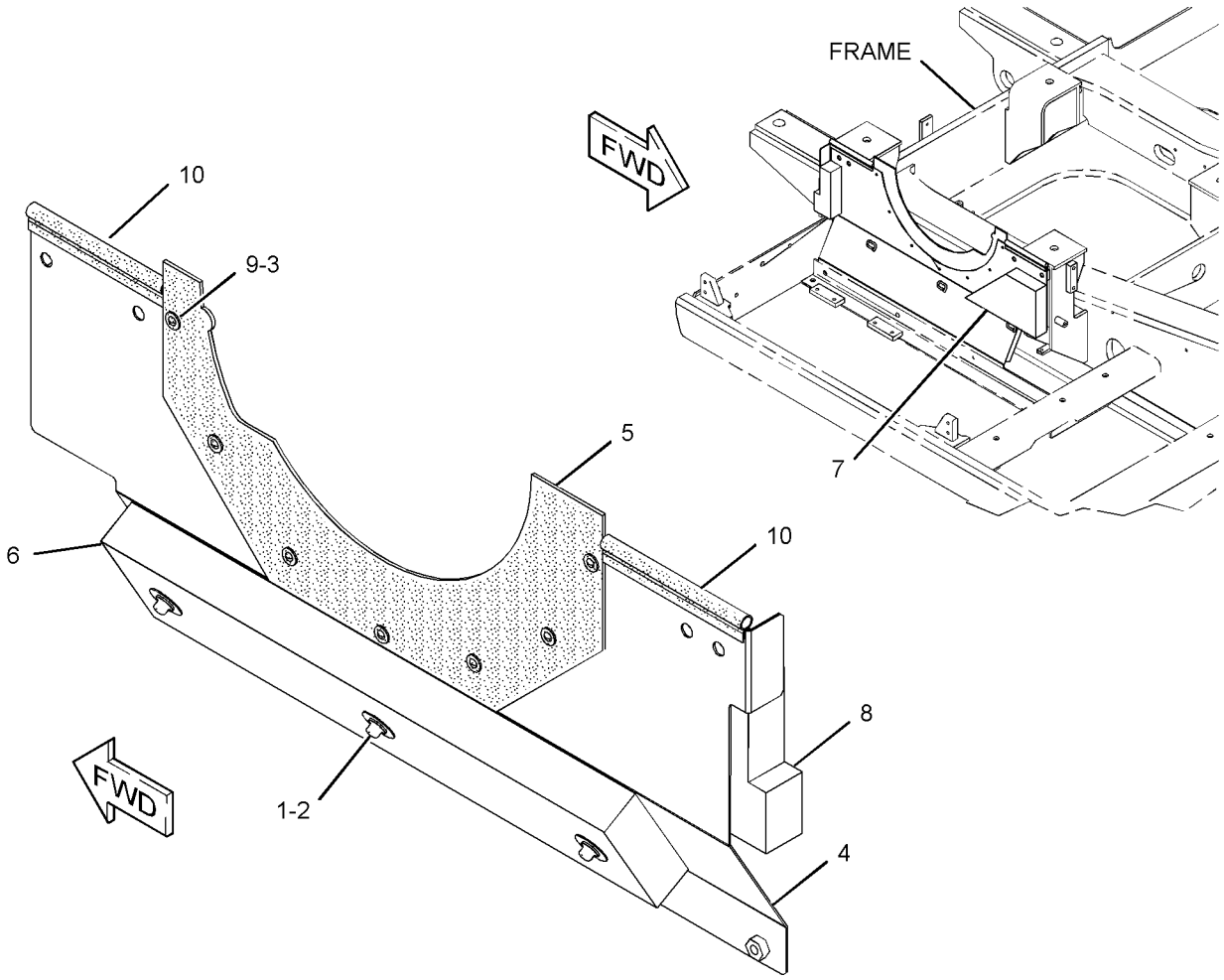

GRAPHIC #1 **<END>** g01241958

256-1820 SHEET AS-SOUND SUPPRESSION

S/N: B6H1-UP; JLP1-UP

PART OF 237-8768 HOOD & GUARD GP

SMCS-1801, 7076, 7251, 7267 **i02490620**

NOTE	REF NO	GRAPHIC REF	PART NUMBER	QTY	PART NAME 1 2 3 4 5 6 (PRODUCT LEVEL)	SEE PAGE
	1	1	**4I-7924**	4	WASHER (4.5X40X1.2-MM THK)	
	2	1	**6P-2216**	4	CAP	
Z	3	1		1	SHEET AS	
	4	1	**256-1824**	1	LINER	
	5	1	**256-1825**	1	LINER	
	6	1	**256-1905**	1	INSULATION	
	7	1	**256-1906**	1	INSULATION	
D	8	1	**5P-8309**		SEAL (0.6-M)	
D	9	1	**101-9848**		SEAL (0.33-M)	
D	9A	1	**101-9848**		SEAL (0.21-M)	

D-ORDER BY THE METER
Z-NOT SERVICED SEPARATELY

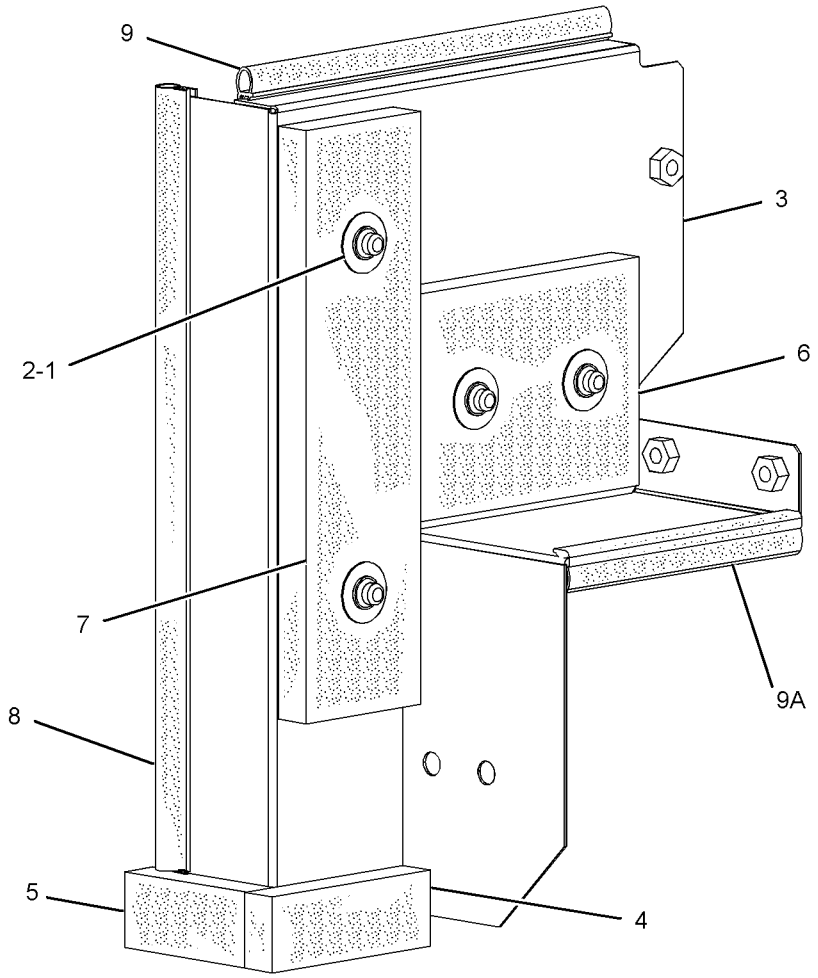

GRAPHIC #1 **<END>** g01236326

256-1826 SHEET AS-SOUND SUPPRESSION

S/N: B6H1-UP; JLP1-UP

PART OF 237-8768 HOOD & GUARD GP

SMCS-1801, 7076, 7251, 7267 **i02490621**

NOTE	REF NO	GRAPHIC REF	PART NUMBER	QTY	PART NAME 1 2 3 4 5 6 (PRODUCT LEVEL)	SEE PAGE
Z	1	1		1	SHEET	
	2	1	**256-1828**	1	LINER	
	3	1	**256-1829**	1	LINER	

Z-NOT SERVICED SEPARATELY

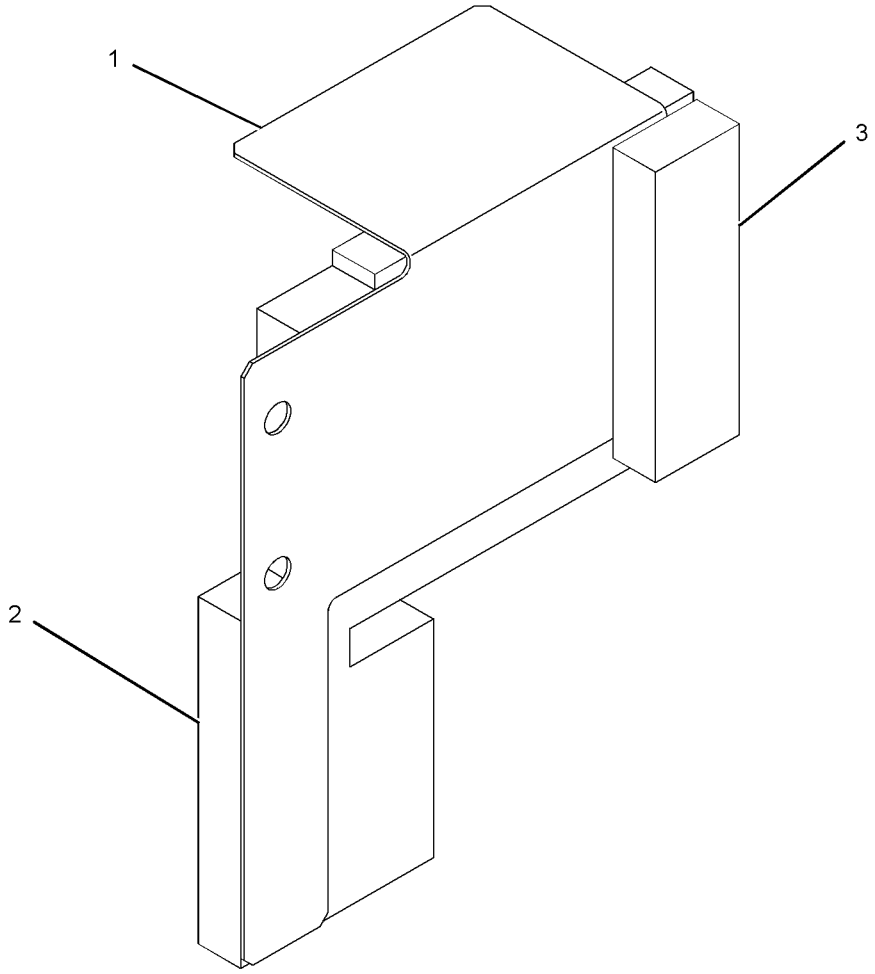

GRAPHIC #1 **<END>** g01236641

FRAME AND BODY

256-1853 SHEET AS-SOUND SUPPRESSION

S/N: B6H1-UP; JLP1-UP

PART OF 237-8768 HOOD & GUARD GP

SMCS-1801, 7076, 7251, 7267 **i02490634**

NOTE	REF NO	GRAPHIC REF	PART NUMBER	QTY	PART NAME 1 2 3 4 5 6 (PRODUCT LEVEL)	SEE PAGE
	1	1	**4I-7924**	6	WASHER (4.5X40X1.2-MM THK)	
	2	1	**6P-2216**	6	CAP	
Z	3	1		1	SHEET AS	
	4	1	**256-1858**	1	LINER	
	5	1	**256-1859**	1	INSULATION	
	6	1	**256-1860**	1	INSULATION	
	7	1	**256-1861**	1	LINER	
	8	1	**256-1863**	1	LINER	
	9	1	**256-1864**	1	LINER	
	10	1	**256-1865**	1	INSULATION	
	11	1	**256-1866**	3	SHEET-RUBBER	
	12	1	**262-2440**	1	LINER	

Z-NOT SERVICED SEPARATELY

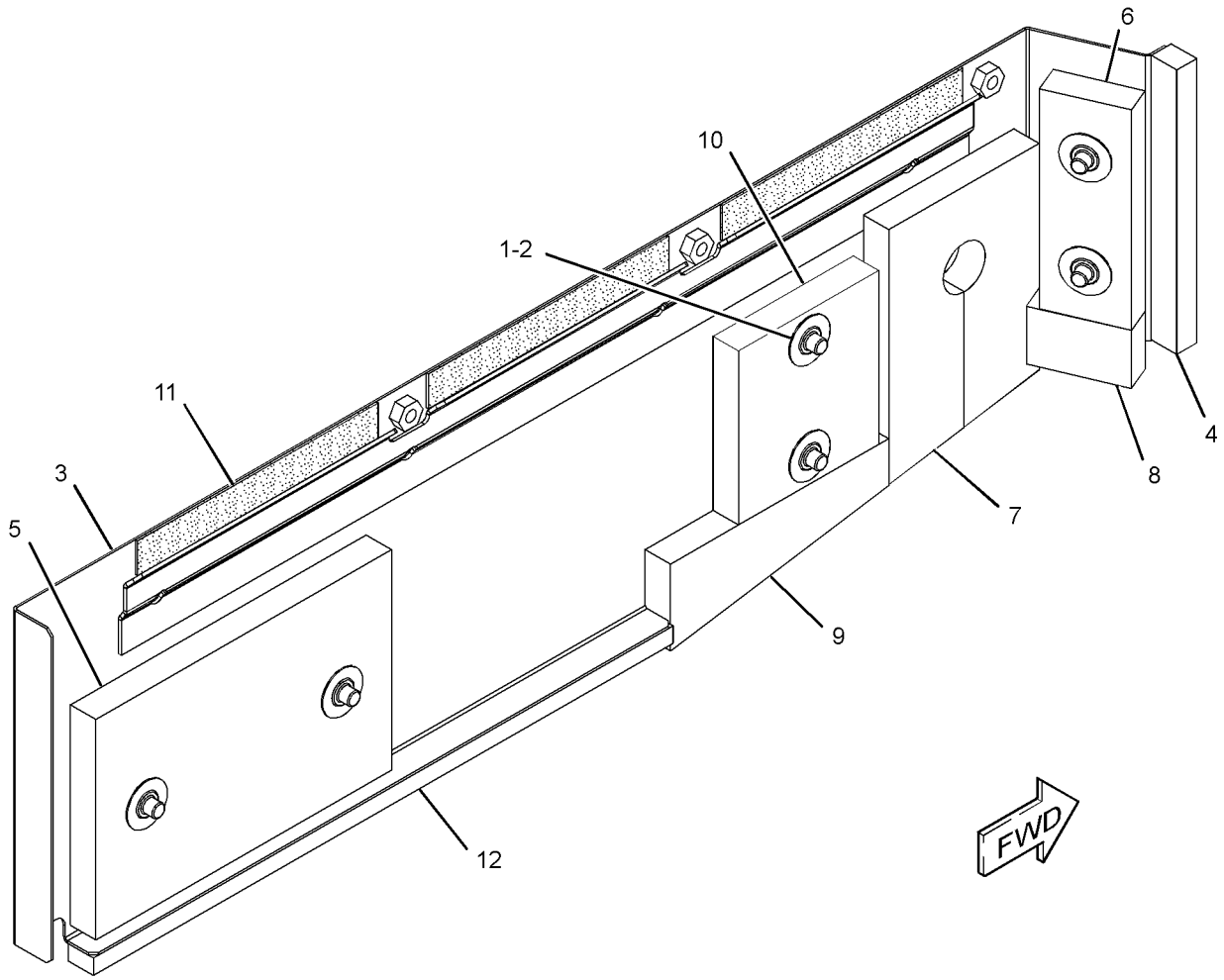

GRAPHIC #1 **<END>** g01198245

FRAME AND BODY

256-1890 SHEET AS-SOUND SUPPRESSION

S/N: B6H1-UP; JLP1-UP

PART OF 237-8768 HOOD & GUARD GP

SMCS-1801, 7076, 7251, 7267 **i02490635**

NOTE	REF NO	GRAPHIC REF	PART NUMBER	QTY	PART NAME 1 2 3 4 5 6 (PRODUCT LEVEL)	SEE PAGE
Z	1	1		1	SHEET	
	2	1	**256-1892**	1	LINER	
	3	1	**256-1893**	1	LINER	
D	4	1	**5P-8309**		SEAL (0.57-M)	

D-ORDER BY THE METER
Z-NOT SERVICED SEPARATELY

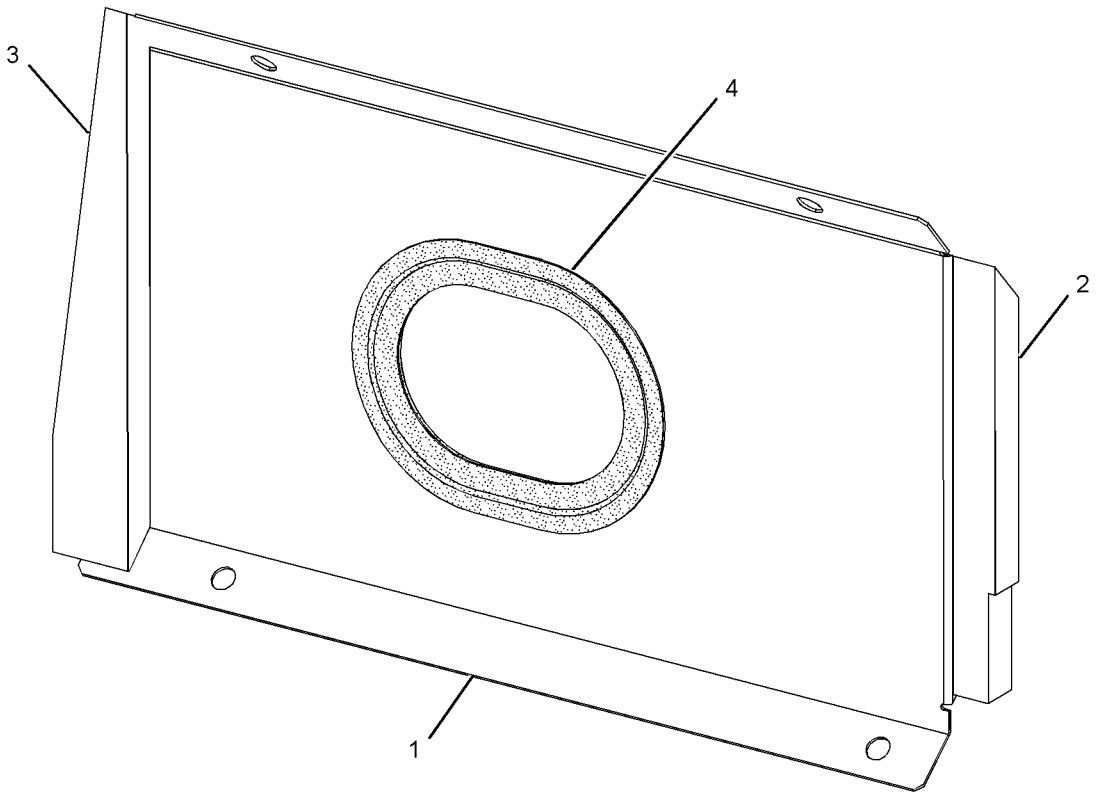

GRAPHIC #1 **<END>** g01236720

FRAME AND BODY

256-1912 SHEET AS-SOUND SUPPRESSION

S/N: B6H1-UP; JLP1-UP

PART OF 237-8768 HOOD & GUARD GP

SMCS-1801, 7076, 7251, 7267 **i02490646**

NOTE	REF NO	GRAPHIC REF	PART NUMBER	QTY	PART NAME 1 2 3 4 5 6 (PRODUCT LEVEL)	SEE PAGE
	1	1	**4I-7924**	6	WASHER (4.5X40X1.2-MM THK)	
	2	1	**6P-2216**	6	CAP	
Z	3	1		1	SHEET AS	
	4	1	**256-1915**	1	LINER	
	5	1	**256-1916**	1	INSULATION	
	6	1	**256-1917**	1	INSULATION	
	7	1	**256-1918**	1	LINER	

Z-NOT SERVICED SEPARATELY

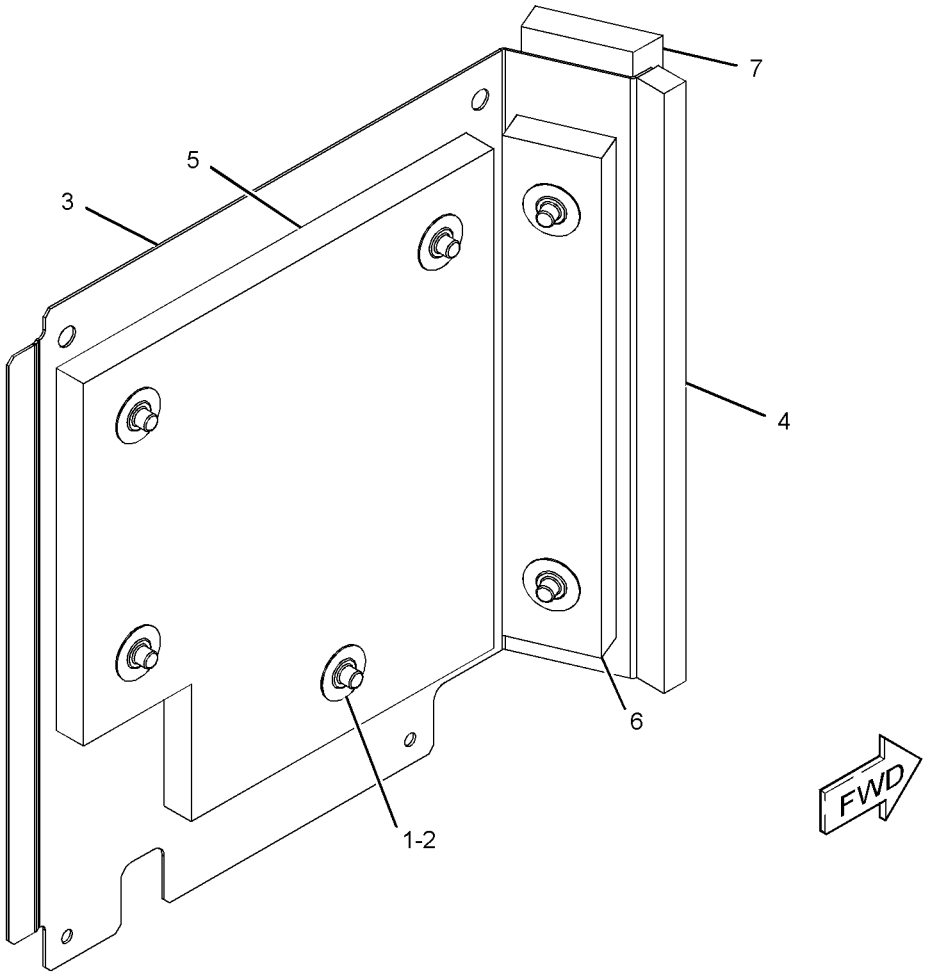

GRAPHIC #1 **<END>** g01198296

FRAME AND BODY

256-1919 SHEET AS-SOUND SUPPRESSION

S/N: B6H1-UP; JLP1-UP

PART OF 237-8768 HOOD & GUARD GP

SMCS-1801, 7076, 7251, 7267 **i02490648**

NOTE	REF NO	GRAPHIC REF	PART NUMBER	QTY	PART NAME 1 2 3 4 5 6 (PRODUCT LEVEL)	SEE PAGE
	1	1	**4I-7924**	4	WASHER (4.5X40X1.2-MM THK)	
	2	1	**6P-2216**	4	CAP	
Z	3	1		1	SHEET AS	
	4	1	**256-1922**	1	INSULATION	
	5	1	**256-1923**	1	LINER	
	6	1	**256-1924**	1	LINER	

Z-NOT SERVICED SEPARATELY

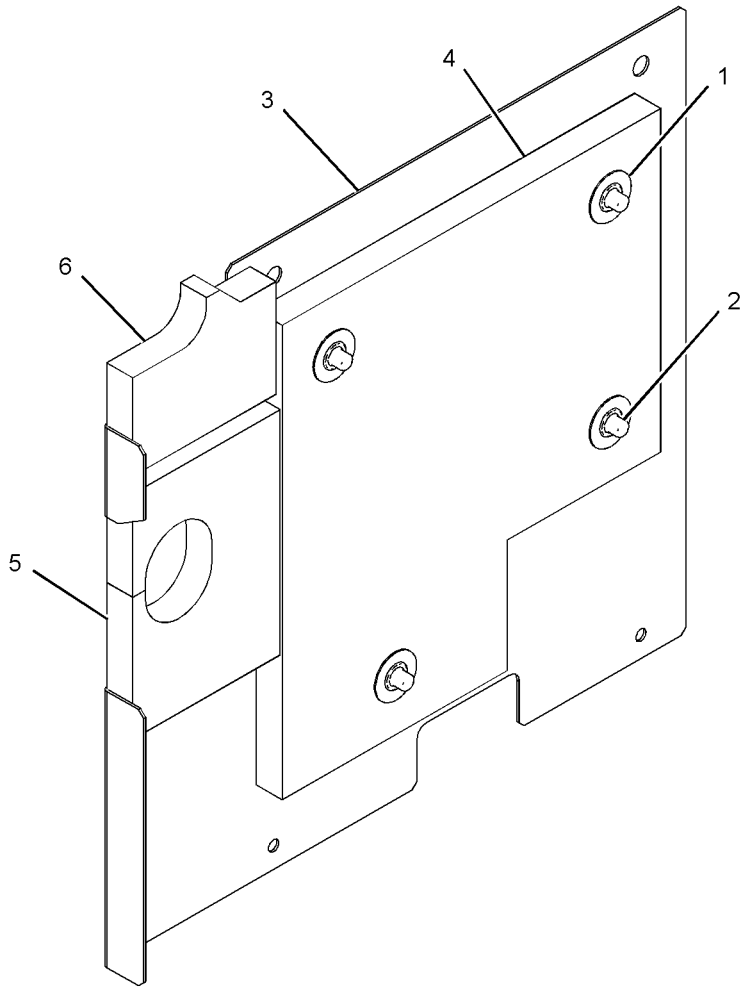

GRAPHIC #1 **<END>** g01199363

FRAME AND BODY

256-1925 SHEET AS-SOUND SUPPRESSION

S/N: B6H1-UP; JLP1-UP

PART OF 237-8768 HOOD & GUARD GP

SMCS-1801, 7076, 7251, 7267 **i02490650**

NOTE	REF NO	GRAPHIC REF	PART NUMBER	QTY	PART NAME 1 2 3 4 5 6 (PRODUCT LEVEL)	SEE PAGE
Z	1	1		1	SHEET AS	
	2	1	**4I-7924**	8	WASHER (4.5X40X1.2-MM THK)	
	3	1	**6P-2216**	8	CAP	
	4	1	**259-3546**	1	LINER	
	5	1	**259-3547**	1	INSULATION	
	6	1	**259-3548**	1	LINER	

Z-NOT SERVICED SEPARATELY

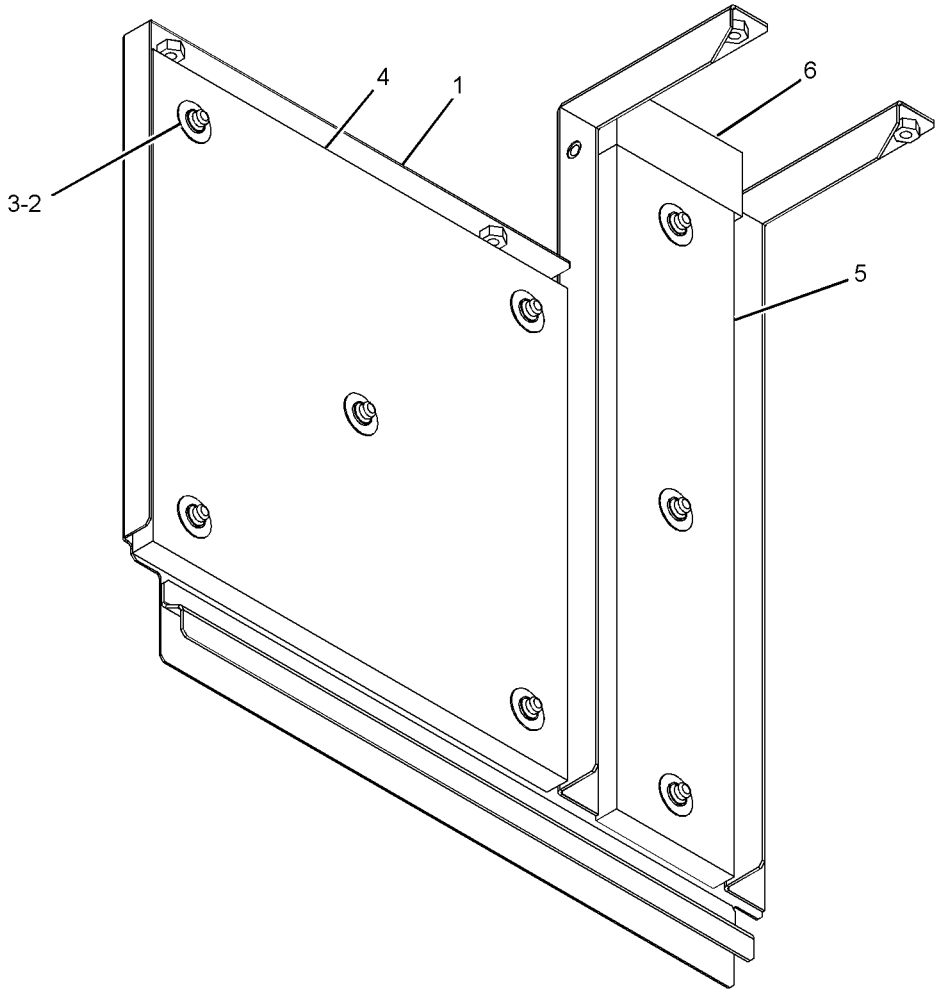

GRAPHIC #1 **<END>** g01236636

259-3591 SHEET AS-SOUND SUPPRESSION

S/N: B6H1-UP; JLP1-UP

PART OF 237-8768 HOOD & GUARD GP

SMCS-1801, 7076, 7251, 7267 **i02490653**

NOTE	REF NO	GRAPHIC REF	PART NUMBER	QTY	PART NAME 1 2 3 4 5 6 (PRODUCT LEVEL)	SEE PAGE
Z	1	1		1	SHEET	
	2	1	**259-3593**	1	LINER	
	3	1	**259-3637**	1	LINER	

Z-NOT SERVICED SEPARATELY

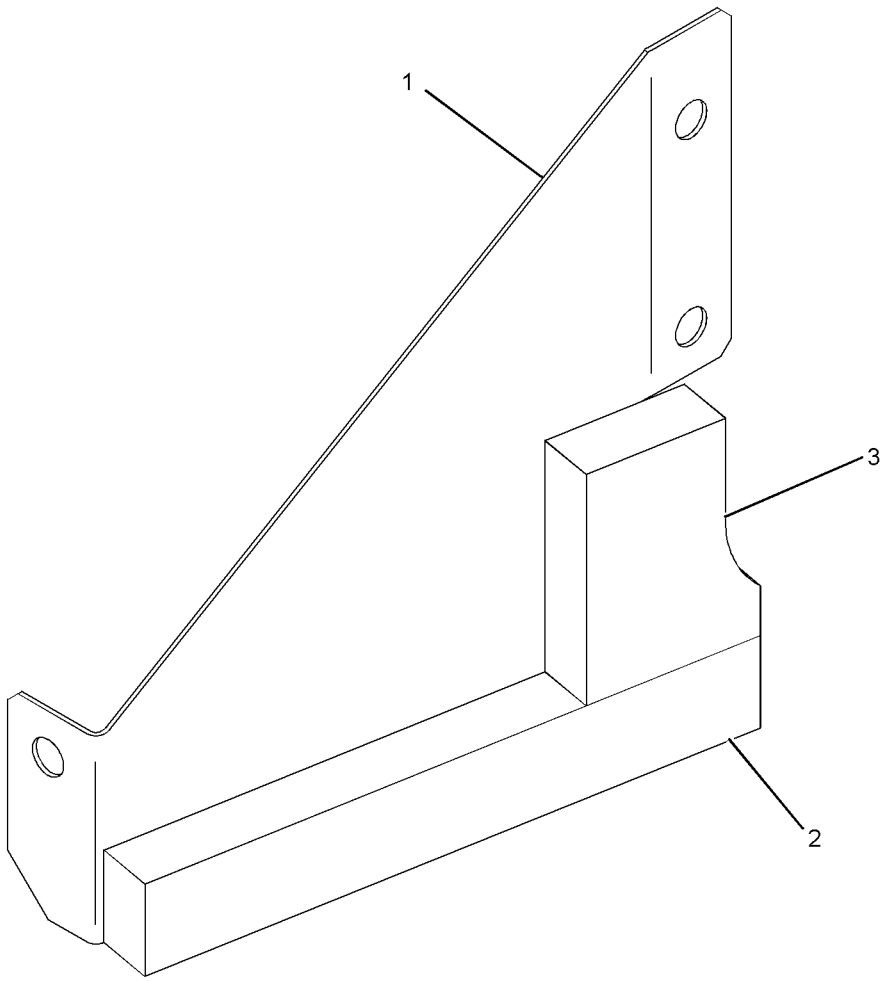

GRAPHIC #1 **<END>** g01236509

FRAME AND BODY

262-2134 SHEET AS-SOUND SUPPRESSION

S/N: B6H1-UP; JLP1-UP

PART OF 237-8768 HOOD & GUARD GP

SMCS-1801, 7076, 7251, 7267 **i02490654**

NOTE	REF NO	GRAPHIC REF	PART NUMBER	QTY	PART NAME 1 2 3 4 5 6 (PRODUCT LEVEL)	SEE PAGE
Z	1	1		1	SHEET AS	
	2	1	**262-2137**	1	LINER	
	3	1	**262-2138**	1	LINER	
	4	1	**262-2139**	1	LINER	
	5	1	**262-2140**	1	LINER	
	6	1	**262-2141**	1	LINER	
	7	1	**262-2435**	1	SHEET-RUBBER	

Z-NOT SERVICED SEPARATELY

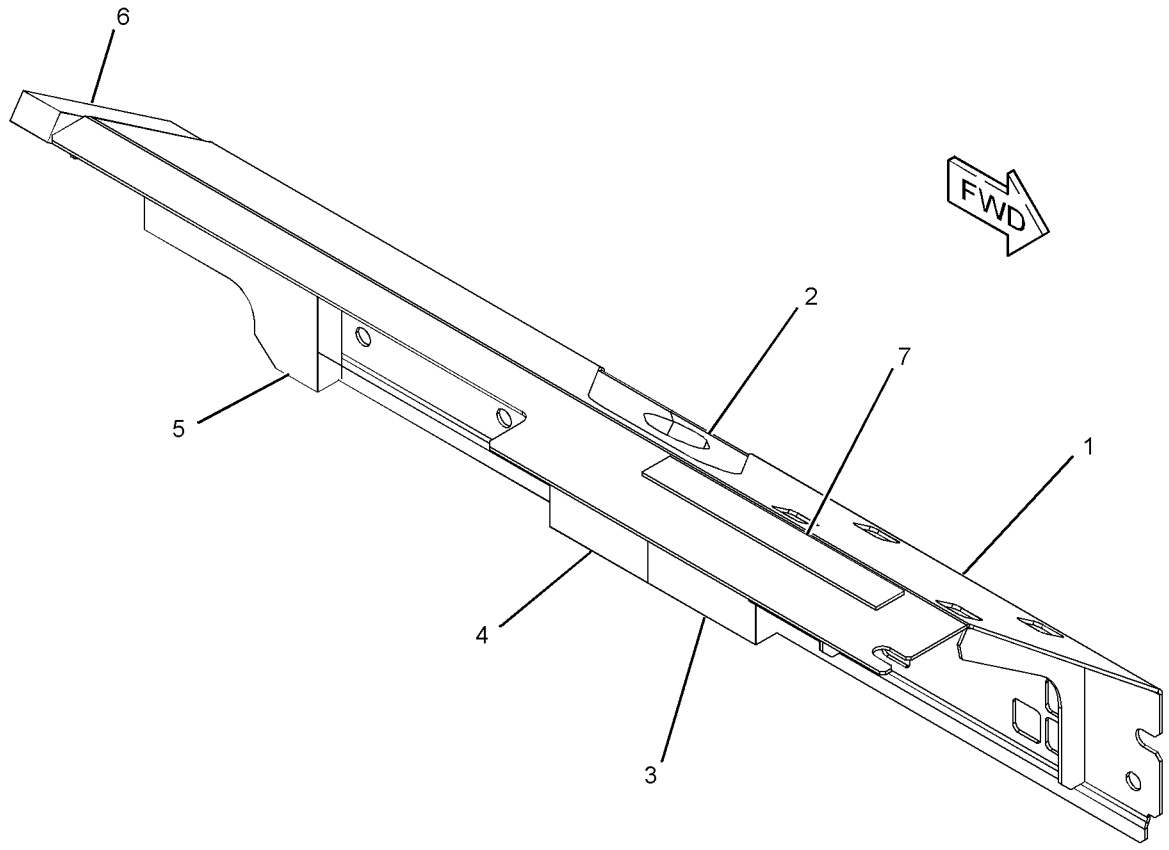

GRAPHIC #1 **<END>** g01236538

FRAME AND BODY

235-7764 STEP GP

S/N: B6H1-UP; JLP1-UP
PART OF 264-8494 TRACK AR, 264-8495 TRACK GP
AN ATTACHMENT

SMCS-7254 **i02503808**

NOTE	REF NO	GRAPHIC REF	PART NUMBER	QTY	PART NAME 1 2 3 4 5 6 (PRODUCT LEVEL)	SEE PAGE
	1	1	**235-7765**	2	STEP	
M	2	1	**8T-7338**	4	BOLT (M16X2X45-MM)	
	3	1	**9X-8257**	4	WASHER (17.5X30X3.5-MM THK)	

M-METRIC PART

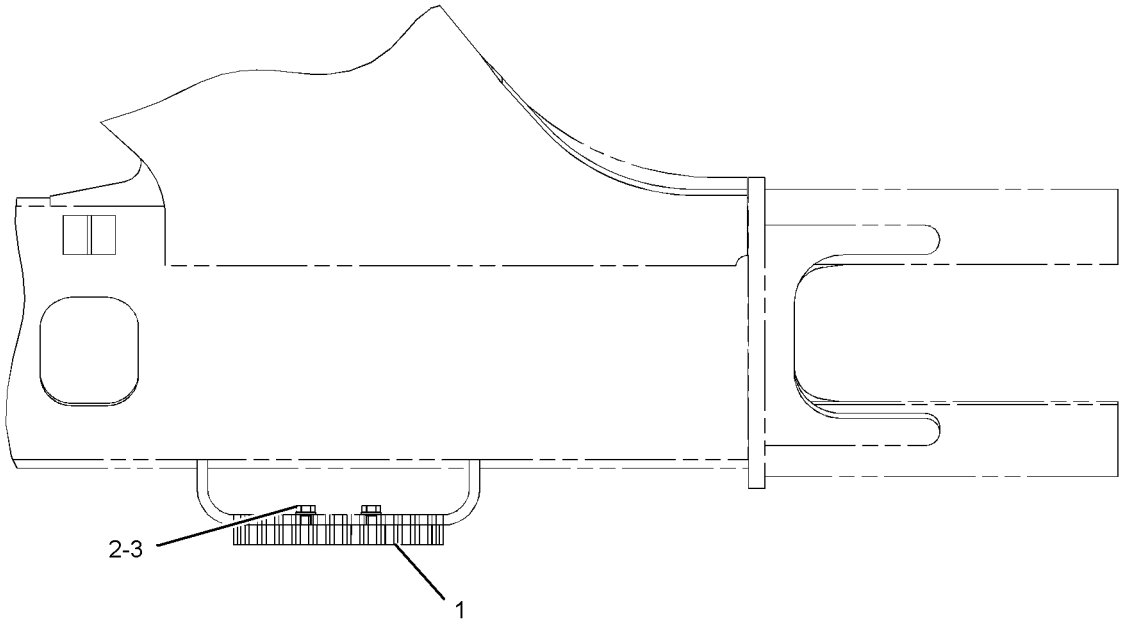

TOP VIEW

GRAPHIC #1 **<END>** g01150668

FRAME AND BODY

237-8801 STORAGE GP-VANDALISM GUARD

S/N: B6H1-652; JLP1-737
PART OF 240-3740, 240-3741 GUARD AR-VANDALISM
AN ATTACHMENT

SMCS-7315 **i02502301**

NOTE	REF NO	GRAPHIC REF	PART NUMBER	QTY	PART NAME 1 2 3 4 5 6 (PRODUCT LEVEL)	SEE PAGE
M	1	1	**135-8575**	2	BOLT AS	
	2	1	**241-1933**	1	BOLT AS-SPECIAL	
	3	1	**241-2311**	1	CABLE	
	4	1	**262-2230**	1	SHEET AS	
D		1	**5P-9205**		SEAL (0.5-M)	
E		1	**237-5586**		SEAL (55-CM)	
		1	**273-7963**	1	LINER	
	5	1	**5P-7958**	2	SLEEVE-CABLE SPLICE	

D-ORDER BY THE METER
E-ORDER BY THE CENTIMETER
M-METRIC PART

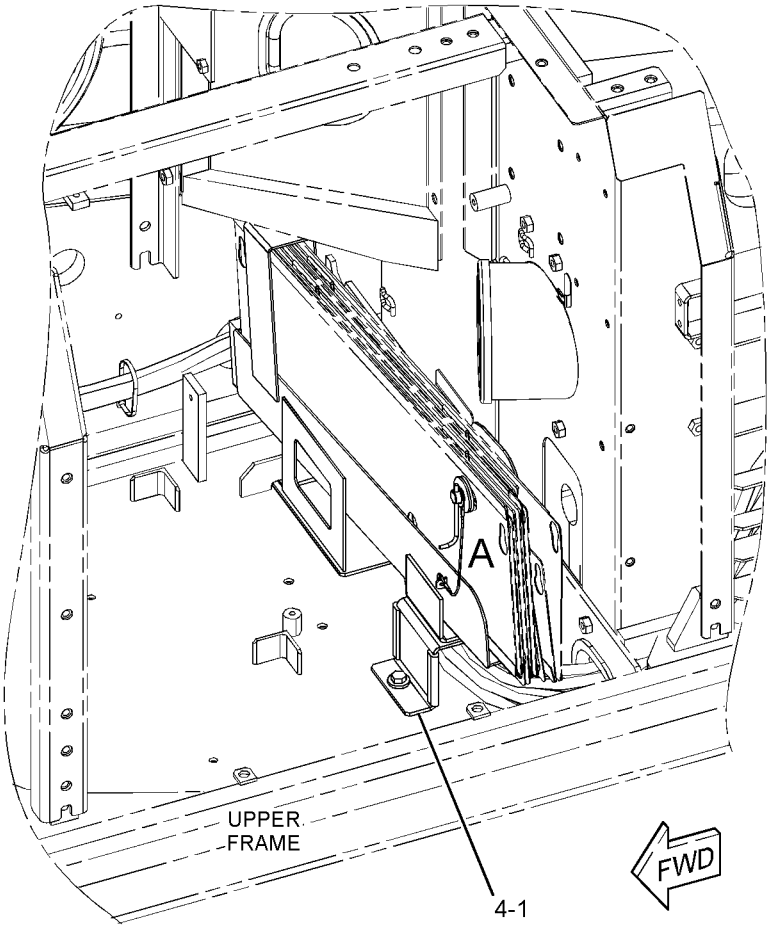

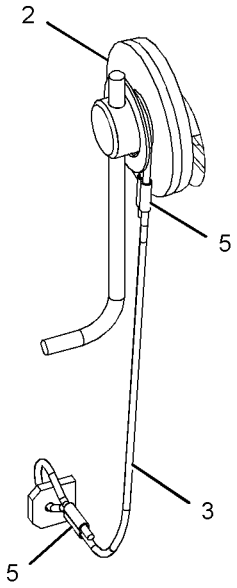

VIEW OF AREA A

GRAPHIC #1 **<END>** g01237111

237-8801 STORAGE GP-VANDALISM GUARD

S/N: B6H653-UP; JLP738-UP
PART OF 240-3740, 240-3741 GUARD AR-VANDALISM
AN ATTACHMENT

SMCS-7315 **i03146988**

NOTE	REF NO	GRAPHIC REF	PART NUMBER	QTY	PART NAME 1 2 3 4 5 6 (PRODUCT LEVEL)	SEE PAGE
M	1	1	**135-8575**	2	BOLT AS	
	2	1	**241-1933**	1	BOLT AS-SPECIAL	
	3	1	**241-2311**	1	CABLE	
C	4	1	**307-8119**	1	SHEET AS	
E		1	**237-5586**		SEAL (55-CM)	
		1	**273-7963**	1	LINER	
	5	1	**5P-7958**	2	SLEEVE-CABLE SPLICE	

C-CHANGE FROM PREVIOUS TYPE
E-ORDER BY THE CENTIMETER
M-METRIC PART

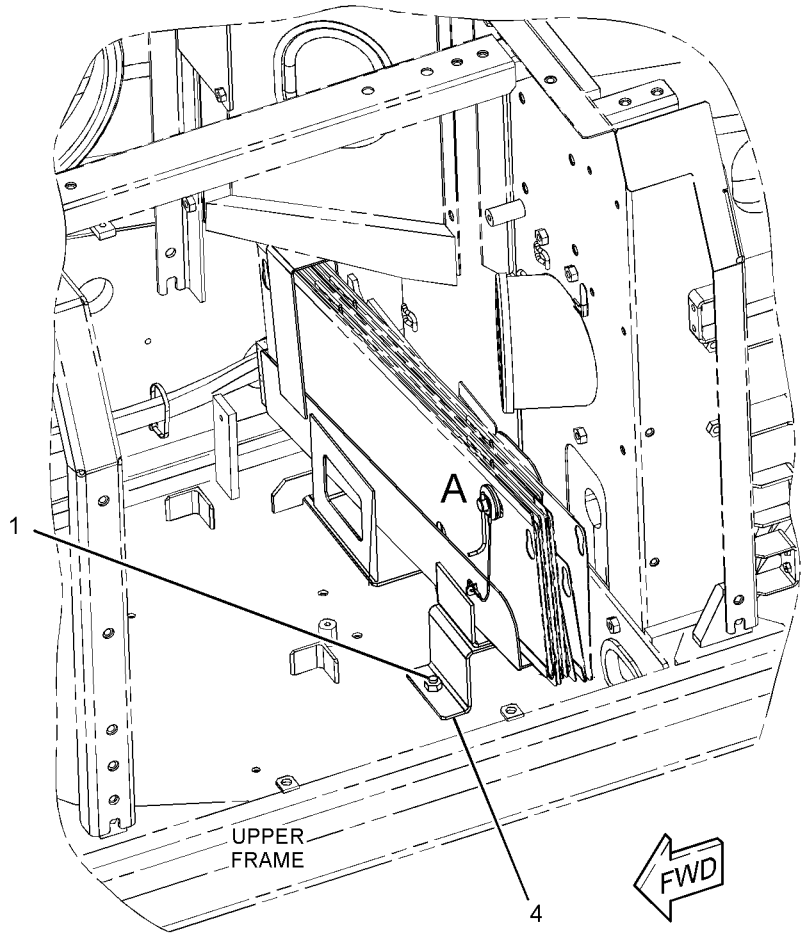

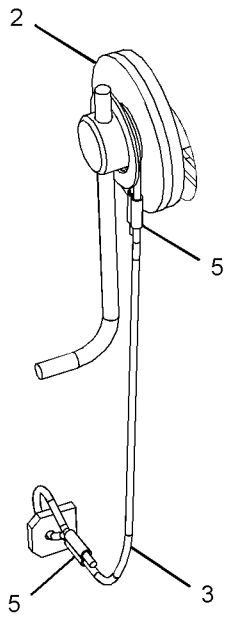

VIEW OF AREA A

GRAPHIC #1 **<END>** g01593206

FRAME AND BODY

256-1830 SUPPORT AS-ENCLOSURE

S/N: B6H1-UP; JLP1-UP

PART OF 237-8768 HOOD & GUARD GP

SMCS-0635, 1801, 7076, 7251, 7263, 7267, 7272, 7276 **i02490633**

NOTE	REF NO	GRAPHIC REF	PART NUMBER	QTY	PART NAME 1 2 3 4 5 6 (PRODUCT LEVEL)	SEE PAGE
Z	1	1		1	SUPPORT AS	
	2	1	**256-1841**	1	LINER	
	3	1	**259-3595**	1	INSULATION	
D	4	1	**101-9848**		SEAL (1.3-M)	

D-ORDER BY THE METER
Z-NOT SERVICED SEPARATELY

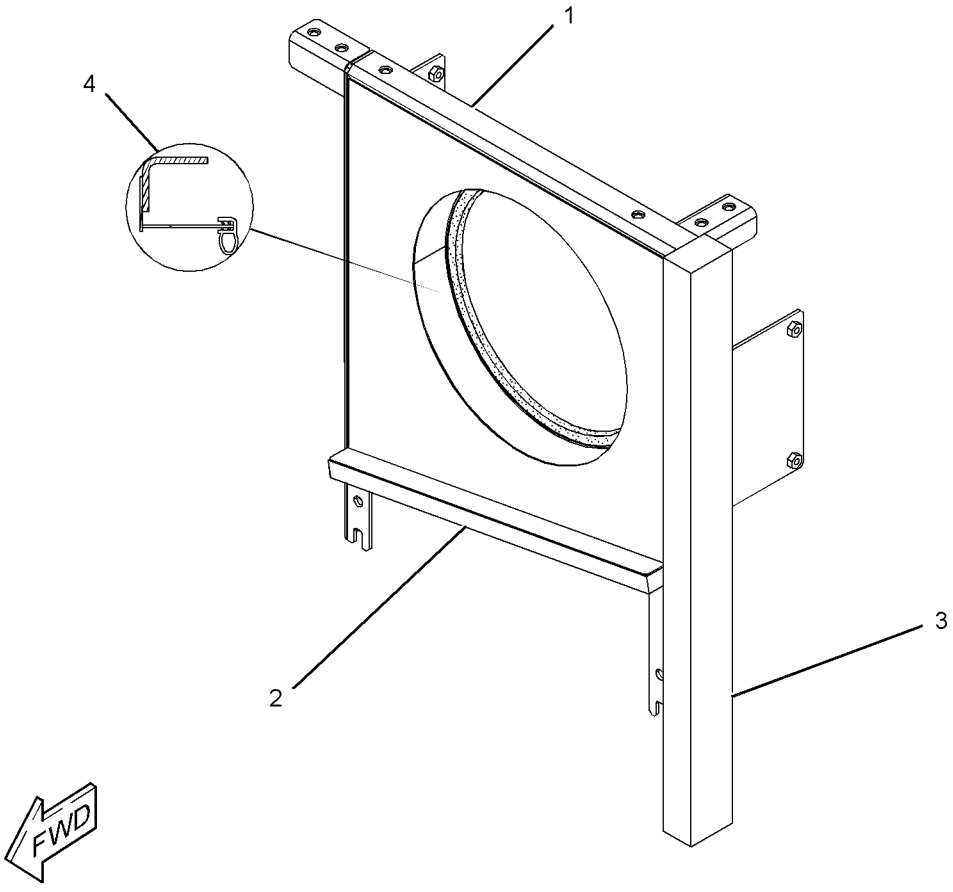

GRAPHIC #1 **<END>** g01236570

273-7905 SUPPORT AS-ENCLOSURE

S/N: B6H1-UP; JLP1-UP

PART OF 237-8768 HOOD & GUARD GP

SMCS-0635, 1801, 7076, 7251, 7263, 7267, 7272, 7276 **i03142926**

NOTE	REF NO	GRAPHIC REF	PART NUMBER	QTY	PART NAME 1 2 3 4 5 6 (PRODUCT LEVEL)	SEE PAGE
	1	1	**259-3609**	1	LINER	
	2	1	**259-3610**	1	LINER	
	3	1	**259-3611**	1	INSULATION	
D	4	1	**101-9848**		SEAL (0.54-M)	

D-ORDER BY THE METER

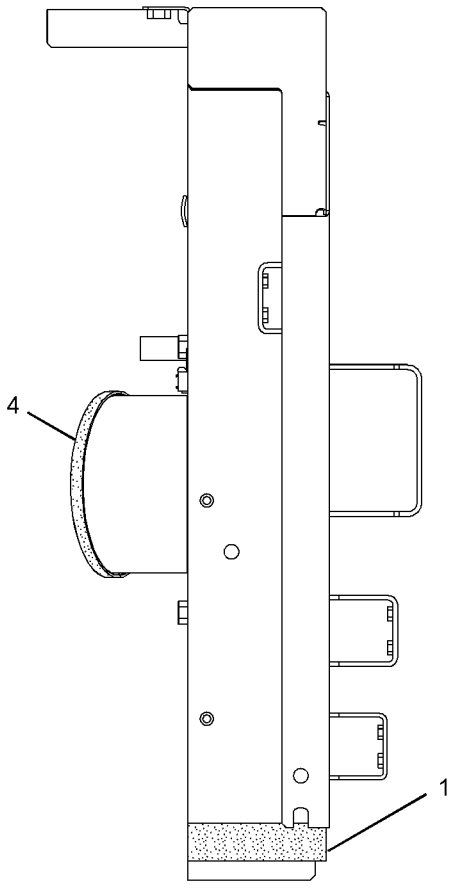

LEFT SIDE VIEW

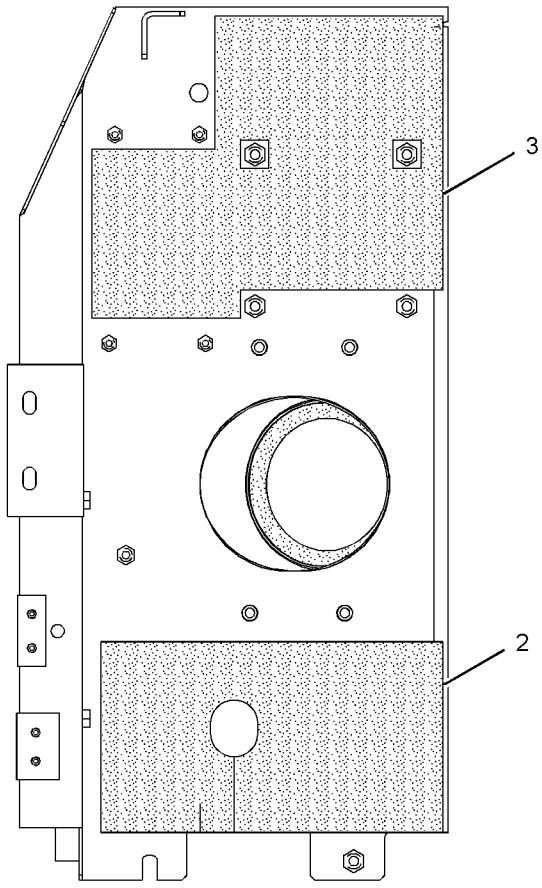

REAR VIEW

GRAPHIC #1 **<END>** g01609575

FRAME AND BODY

273-7909 SUPPORT AS-ENCLOSURE–AIR CLEANER

S/N: B6H1-UP; JLP1-UP
PART OF 237-8802 HOOD GP
AN ATTACHMENT

SMCS-0635, 1801, 7076, 7251, 7263, 7267, 7272, 7276 **i02502347**

NOTE	REF NO	GRAPHIC REF	PART NUMBER	QTY	PART NAME 1 2 3 4 5 6 (PRODUCT LEVEL)	SEE PAGE
	1	1	**259-3609**	1	LINER	
	2	1	**262-2559**	1	INSULATION	
	3	1	**268-0514**	1	INSULATION	
Z	4	1		1	SUPPORT AS	

Z-NOT SERVICED SEPARATELY

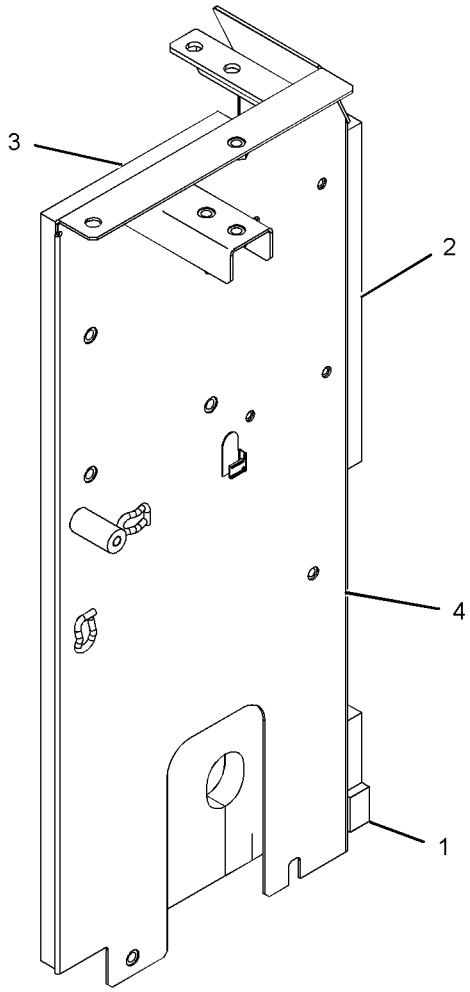

GRAPHIC #1 **<END>** g01242041

330-1444 SUPPORT AS-ENCLOSURE–AIR CLEANER

S/N: B6H1-UP; JLP1-UP
PART OF 237-8802 HOOD GP
AN ATTACHMENT

SMCS-0635, 1801, 7076, 7251, 7263, 7267, 7272, 7276 **i03309670**

NOTE	REF NO	GRAPHIC REF	PART NUMBER	QTY	PART NAME 1 2 3 4 5 6 (PRODUCT LEVEL)	SEE PAGE
	1	1	**259-3609**	1	LINER	
	2	1	**262-2559**	1	INSULATION	
	3	1	**330-1447**	1	INSULATION	

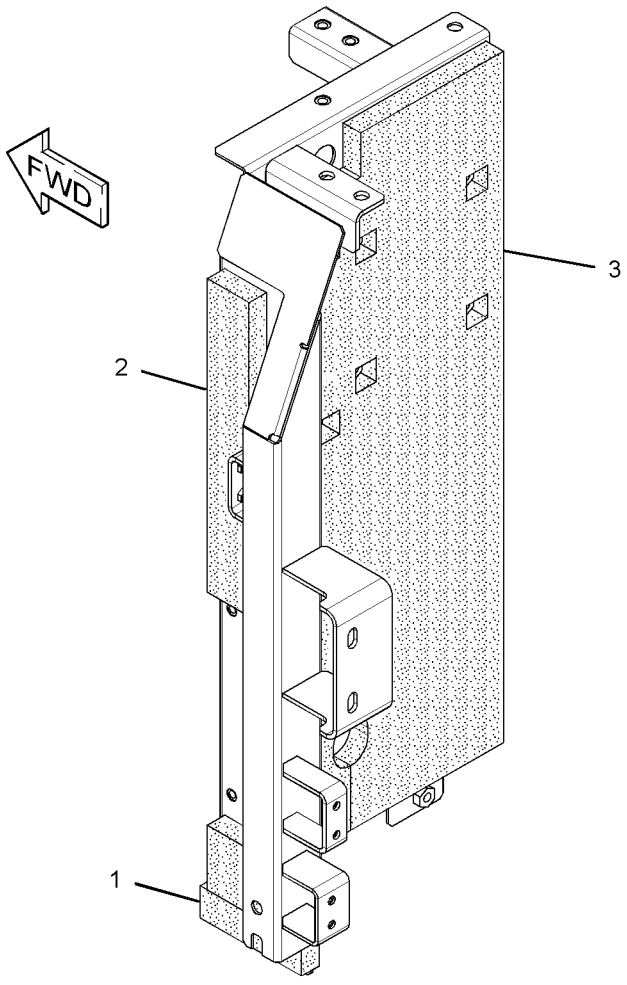

GRAPHIC #1 **<END>** g01618959

UNDERCARRIAGE

179-3043 ADJUSTMENT GP-HYDRAULIC TRACK

S/N: B6H1-UP; JLP1-660, 670

PART OF 239-4320 IDLER GP-FRONT

SMCS-4157 **i03626479**

NOTE	REF NO	GRAPHIC REF	PART NUMBER	QTY	PART NAME 1 2 3 4 5 6 (PRODUCT LEVEL)	SEE PAGE
	1	1	**2S-5926**	1	VALVE-RELIEF	
	2	1	**095-2927**	1	VALVE-FILL	
	3	1	**113-2824**	1	PLATE AS	
	3A	1	**4B-4158**	4	SCREW-DRIVE (4X0.25-IN)	
	3B	1	**5P-9891**	1	PLATE-WARNING (HIGH PRESSURE CYLINDER)	
	4	1	**179-3044**	1	CYLINDER	
	5	1	**179-3045**	1	PISTON	
	6	1	**179-3046**	1	SEAL-LIP TYPE	
	7	1	**179-3047**	2	RING-BACKUP (BLACK)	
	8	1	**179-3048**	2	RING-BACKUP (BROWN)	
	9	1	**248-7177**	2	SEAL-O-RING	
M	10	1	**8T-4191**	2	BOLT (M10X1.5X16-MM)	

M-METRIC PART

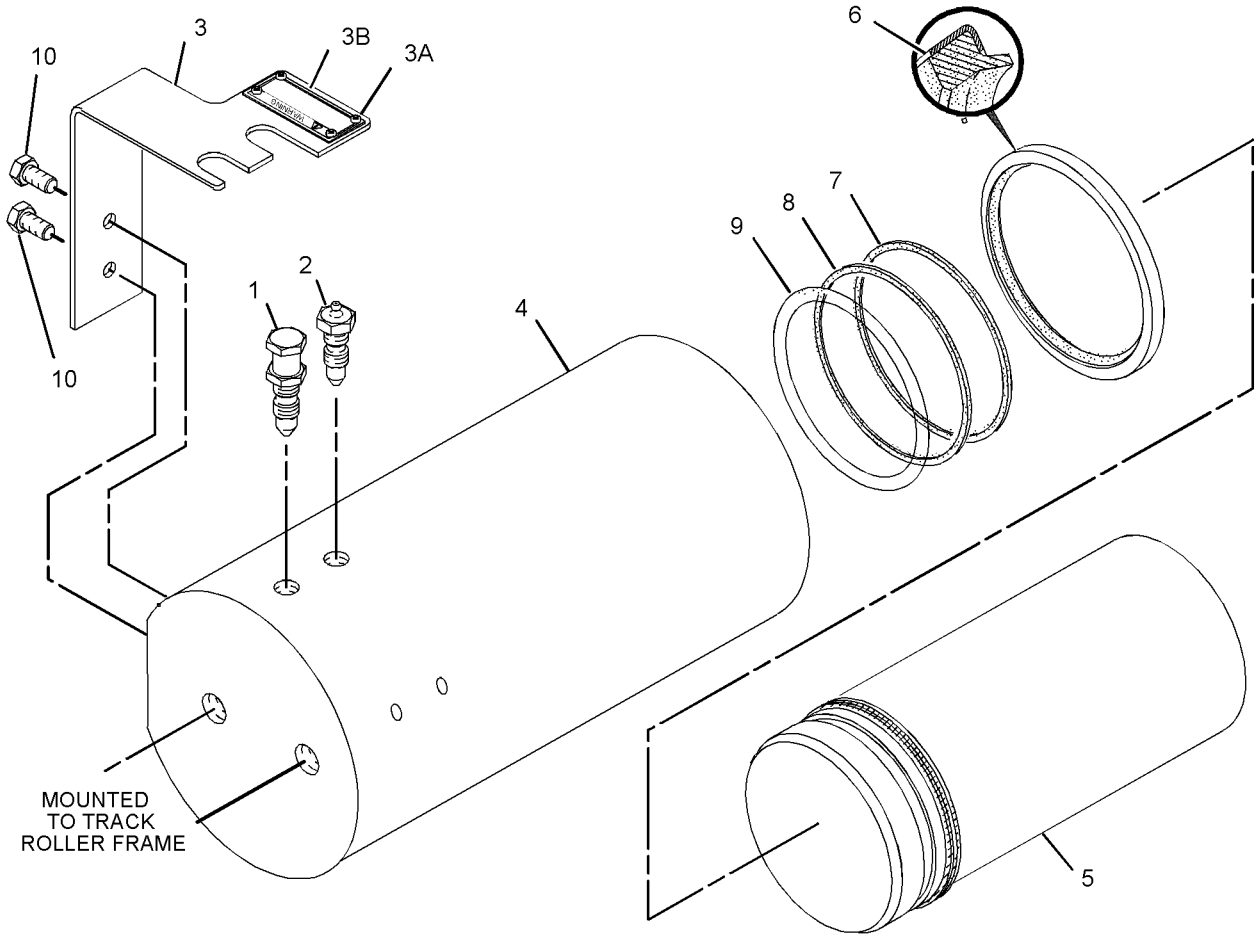

GRAPHIC #1 **<END>** g01945339

297-9151 ADJUSTMENT GP-HYDRAULIC TRACK

S/N: B6H1-UP; JLP661-669, 671-UP
PART OF 239-4320 IDLER GP-FRONT

SMCS-4157 **i03626490**

NOTE	REF NO	GRAPHIC REF	PART NUMBER	QTY	PART NAME 1 2 3 4 5 6 (PRODUCT LEVEL)	SEE PAGE
	1	1	**2S-5926**	1	VALVE-RELIEF (TRACK TENSION CYLINDER)	
	2	1	**095-2927**	1	VALVE-FILL (TRACK TENSION CYLINDER)	
	3	1	**113-2824**	1	PLATE AS	
	3A	1	**4B-4158**	4	SCREW-DRIVE (4X0.25-IN)	
	3B	1	**253-1346**	1	PLATE-WARNING (HIGH PRESSURE CYLINDER)	
	4	1	**179-3044**	1	CYLINDER	
	5	1	**179-3046**	1	SEAL-LIP TYPE	
	6	1	**179-3047**	2	RING-BACKUP (BLACK)	
	7	1	**179-3048**	2	RING-BACKUP (BROWN)	
	8	1	**248-7177**	2	SEAL-O-RING	
	9	1	**297-9156**	1	PISTON	
M	10	1	**8T-4191**	2	BOLT (M10X1.5X16-MM)	

M-METRIC PART

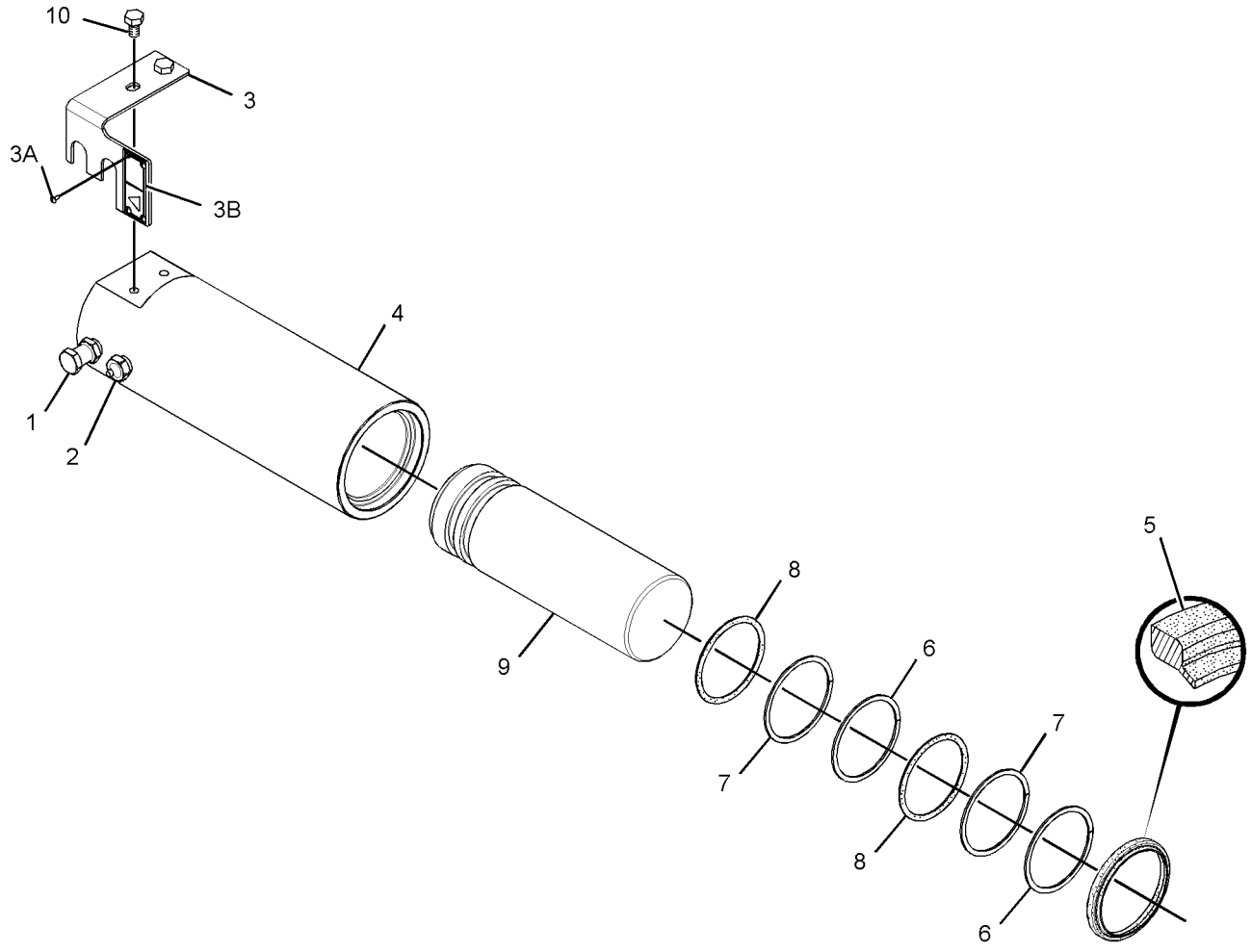

GRAPHIC #1 **<END>** g01945351

UNDERCARRIAGE

229-1898 FRAME AR-UNDERCARRIAGE

S/N: B6H1-UP; JLP1-UP

PART OF 229-1873, 264-8594 GENERAL AR

SMCS-4151 **i02993943**

NOTE	PART NUMBER	QTY	PART NAME 1 2 3 4 5 6 (PRODUCT LEVEL)	SEE PAGE
Y	**236-8335**	1	FRAME AS-UNDERCARRIAGE	517
Y	*227-6145*	1	GEAR & BEARING GP-SWING	445
Y	*192-8302*	1	GUARD GP-TRACK GUIDE	519
Y	*241-7333*	1	GUARD GP-TRAVEL MOTOR	521
Y	*239-4320*	1	IDLER GP-FRONT	524
Y	*176-4853*	1	ROLLER AR-TRACK & CARRIER	528

Y-SEPARATE ILLUSTRATION

<END>

236-8335 FRAME AS-UNDERCARRIAGE

S/N: B6H1-UP; JLP1-UP

PART OF 229-1898 FRAME AR-UNDERCARRIAGE

SMCS-4150, 7062 **i03586466**

NOTE	REF NO	GRAPHIC REF	PART NUMBER	QTY	PART NAME 1 2 3 4 5 6 (PRODUCT LEVEL)	SEE PAGE
	1	1	*236-8338*	1	FRAME AS-TRACK ROLLER (RH)	
	1A	1	**117-5372**	2	BRACKET	
	1B	1	**336-2583**	2	STEP	
	2	1	*236-8339*	1	FRAME AS-TRACK ROLLER (LH)	
	2A	1	**117-5372**	2	BRACKET	
	2B	1	**336-2583**	2	STEP	

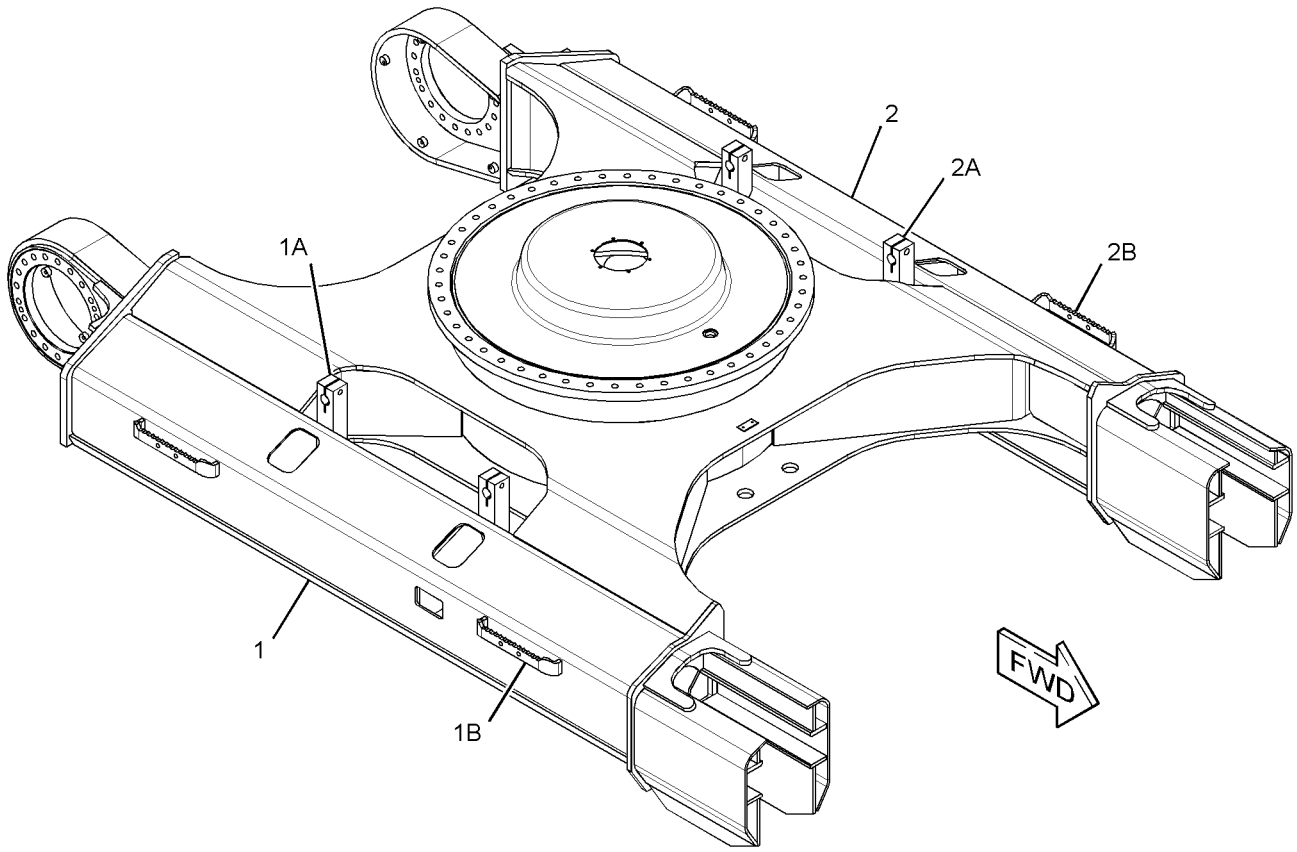

GRAPHIC #1 **<END>** g01879914

189-3860 GUARD GP-TRACK GUIDE

S/N: B6H1-UP; JLP1-UP
AN ATTACHMENT

SMCS-4177 **i01669504**

NOTE	REF NO	GRAPHIC REF	PART NUMBER	QTY	PART NAME 1 2 3 4 5 6 (PRODUCT LEVEL)	SEE PAGE
	1	1	**105-6324**	16	SUPPORT AS	
	2	1	**189-3861**	4	GUARD AS-TRACK GUIDE	
	3	1	**189-3862**	4	GUARD AS-TRACK GUIDE	
	4	1	**192-8358**	16	PIPE	
M	5	1	**140-3048**	16	BOLT-HEX HEAD	
	6	1	**8T-4167**	64	WASHER-HARD (26X44X4MM THK)	
M	7	1	**8T-5379**	32	BOLT (M24X3.0X50MM)	

QUANTITIES SHOWN ARE THOSE REQUIRED FOR BOTH LH AND RH SIDES
M-METRIC PART

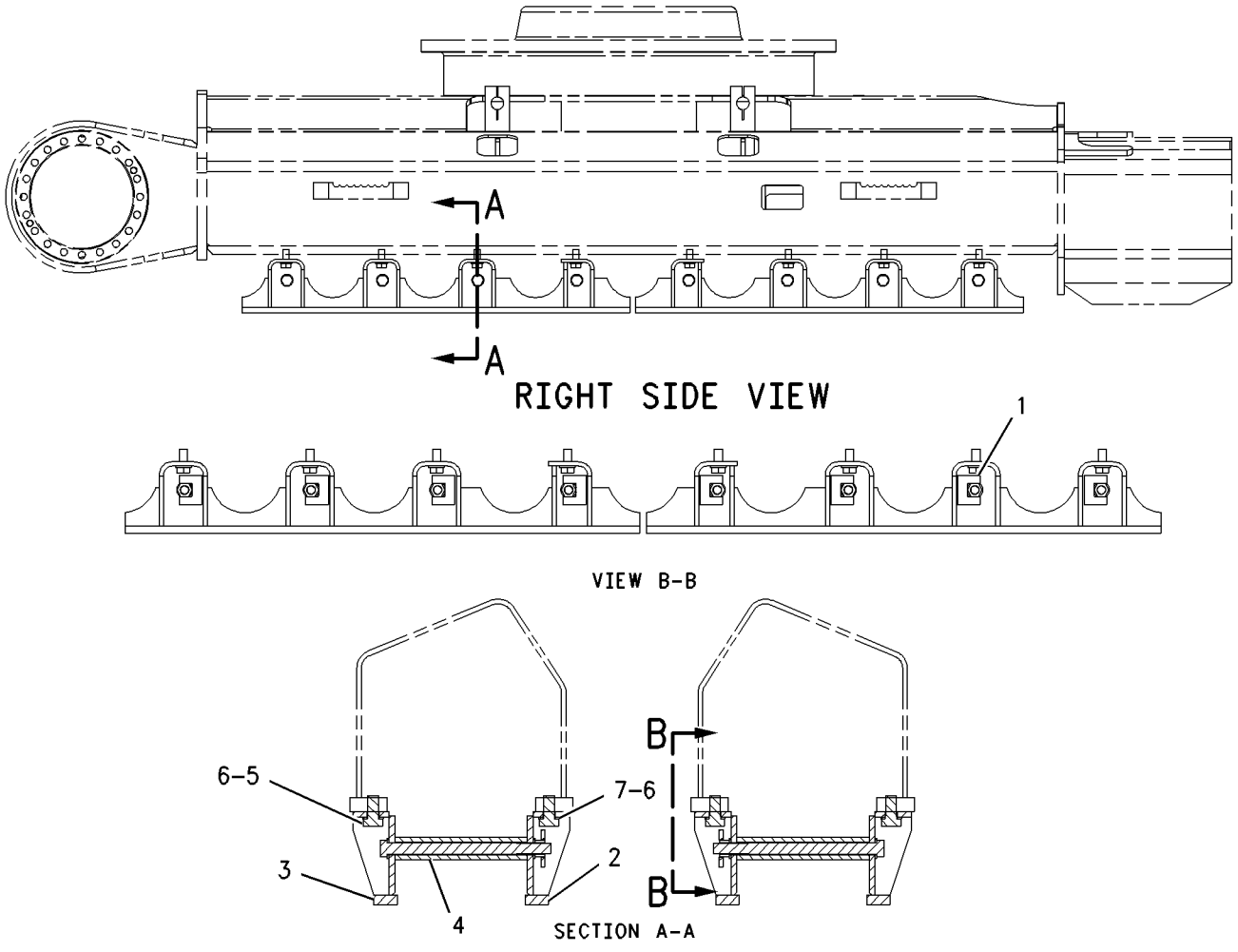

GRAPHIC #1 **<END>** g00826922

192-8302 GUARD GP-TRACK GUIDE

S/N: B6H1-UP; JLP1-UP

PART OF 229-1898 FRAME AR-UNDERCARRIAGE

SMCS-4177 **i01666873**

NOTE	REF NO	GRAPHIC REF	PART NUMBER	QTY	PART NAME 1 2 3 4 5 6 (PRODUCT LEVEL)	SEE PAGE
	1	1	**192-8303**	2	GUARD AS-TRACK GUIDE	
M	2	1	**8T-5379**	8	BOLT (M24X3.0X50MM)	
	3	1	**8T-4167**	8	WASHER-HARD (26X44X4MM THK)	

QUANTITIES SHOWN ARE THOSE REQUIRED FOR BOTH LH AND RH SIDES
M-METRIC PART

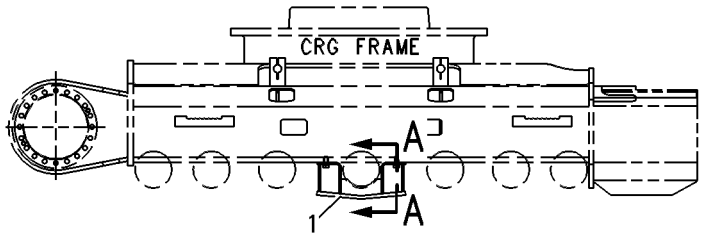

RIGHT SIDE VIEW

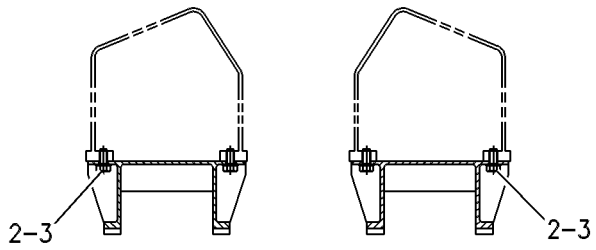

SECTION A-A

GRAPHIC #1 **<END>** g00261759

201-2774 GUARD GP-TRACK GUIDE

S/N: B6H1-UP; JLP1-UP
SPROCKET
AN ATTACHMENT

SMCS-4177 **i01677964**

NOTE	REF NO	GRAPHIC REF	PART NUMBER	QTY	PART NAME 1 2 3 4 5 6 (PRODUCT LEVEL)	SEE PAGE
	1	1	**105-6324**	8	SUPPORT AS	
	2	1	**189-3861**	2	GUARD AS-TRACK GUIDE	
	3	1	**189-3862**	2	GUARD AS-TRACK GUIDE	
	4	1	**192-8358**	8	PIPE	
M	5	1	**140-3048**	8	BOLT-HEX HEAD	
	6	1	**8T-4167**	32	WASHER-HARD (26X44X4MM THK)	
M	7	1	**8T-5379**	16	BOLT (M24X3.0X50MM)	

QUANTITIES SHOWN ARE THOSE REQUIRED FOR BOTH LH AND RH SIDES
M-METRIC PART

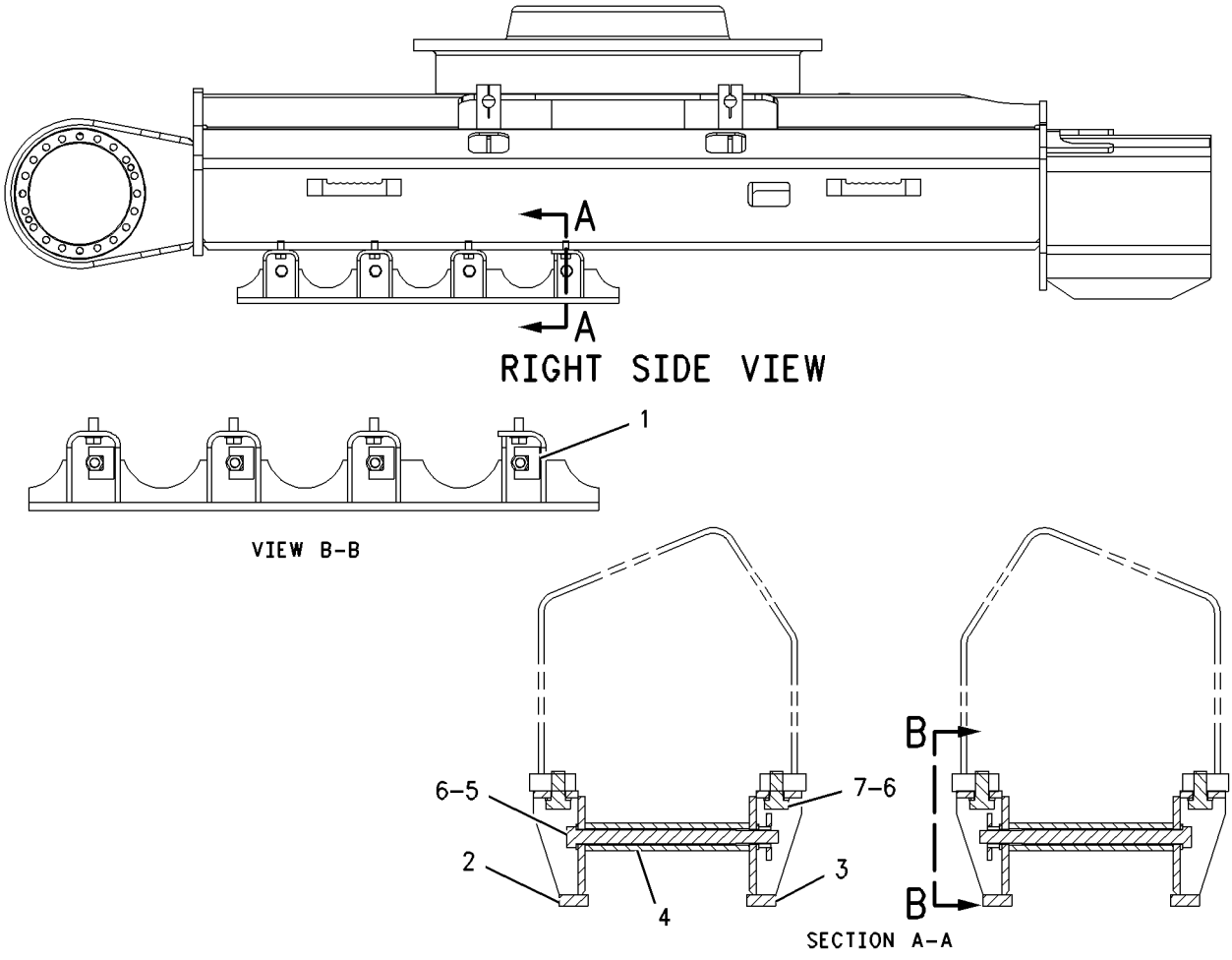

GRAPHIC #1 **<END>** g00826460

UNDERCARRIAGE

241-7333 GUARD GP-TRAVEL MOTOR

S/N: B6H1-UP; JLP1-UP

PART OF 229-1898 FRAME AR-UNDERCARRIAGE

SMCS-7163 **i02489025**

NOTE	REF NO	GRAPHIC REF	PART NUMBER	QTY	PART NAME 1 2 3 4 5 6 (PRODUCT LEVEL)	SEE PAGE
	1	1	**241-7334**	2	PLATE	
	2	1	**5P-1076**	10	WASHER-HARD (13.5X30X4-MM THK)	
M	3	1	**8C-8992**	10	BOLT-LOCKING (M12X1.75X30-MM)	

M-METRIC PART

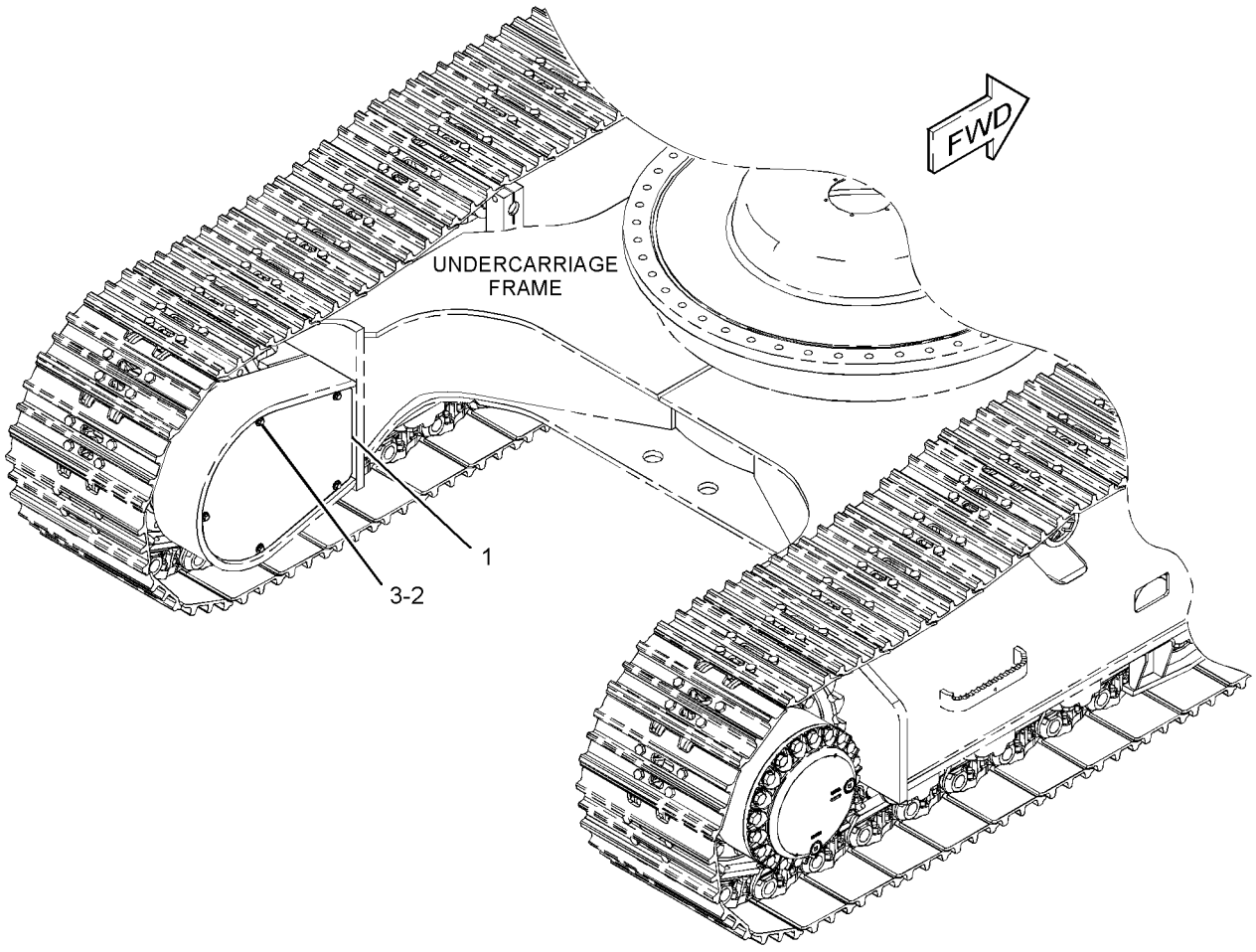

GRAPHIC #1 **<END>** g01199090

241-7335 GUARD GP-TRAVEL MOTOR

S/N: B6H1-UP; JLP1-UP
PART OF 269-1167 GUARD AR-BOTTOM
CANNOT BE USED WITH 269-1167—PAGE 448
AN ATTACHMENT

SMCS-7163 **i03626495**

NOTE	REF NO	GRAPHIC REF	PART NUMBER	QTY	PART NAME 1 2 3 4 5 6 (PRODUCT LEVEL)	SEE PAGE
	1	1	**241-7336**	1	COVER AS-ACCESS (LH)	
	2	1	**241-7337**	1	COVER AS-ACCESS (RH)	
	3	1	**5P-1076**	10	WASHER-HARD (13.5X30X4-MM THK)	
M	4	1	**8C-8992**	10	BOLT-LOCKING (M12X1.75X30-MM)	

M-METRIC PART

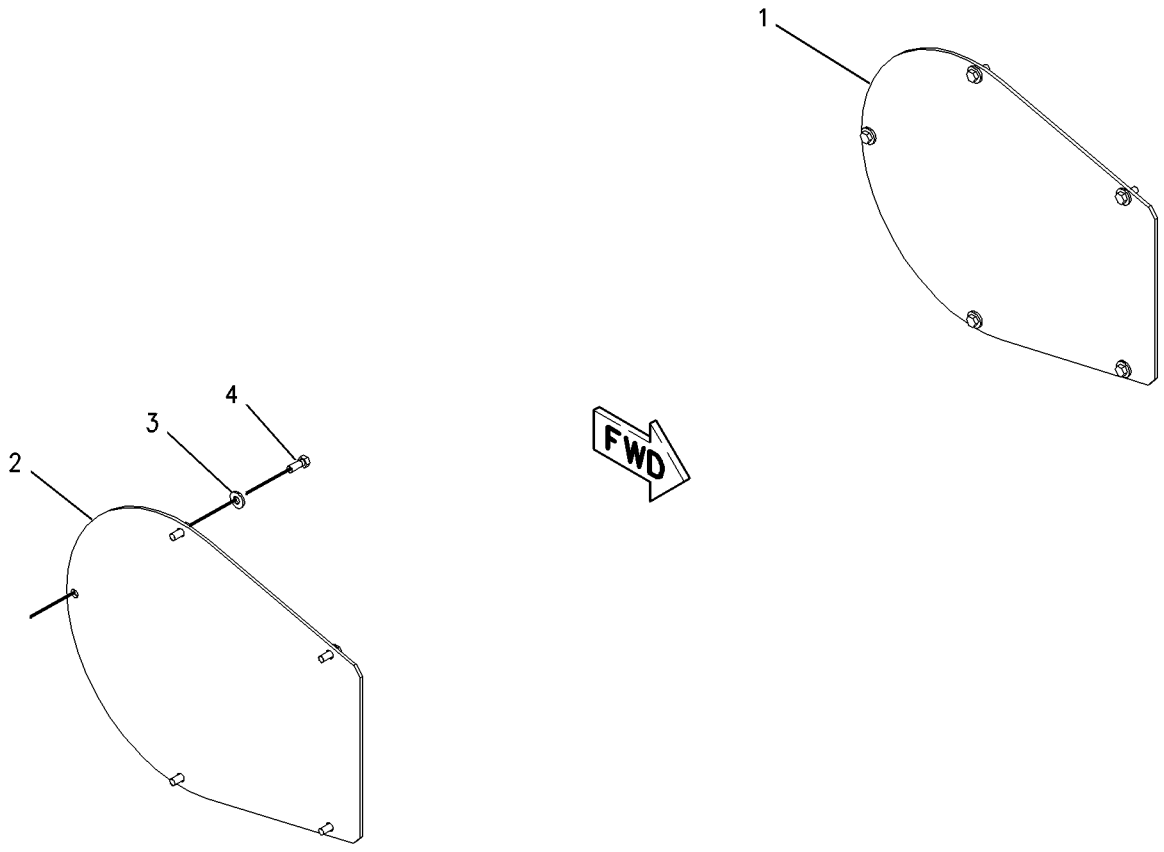

GRAPHIC #1 **<END>** g00850211

136-2422 IDLER GP-FRONT

S/N: B6H1-UP; JLP1-UP

PART OF 239-4321 IDLER GP-FRONT

SMCS-4159 **i01683295**

NOTE	REF NO	GRAPHIC REF	PART NUMBER	QTY	PART NAME 1 2 3 4 5 6 (PRODUCT LEVEL)	SEE PAGE
	1	1	**136-3847**	1	IDLER AS	
	1A	1	**6Y-8023**	2	BEARING-IDLER	
	2	1	**7H-3171**	1	PLUG-PIPE	
	3	1	**109-0881**	2	SEAL GP-DUO-CONE	
					(EACH INCLUDES)	
		1	**5P-9120**	2	RING-SEALING	
	4	1	**6Y-8029**	2	PIN-SPRING	
	5	1	**1H-7339**	2	SEAL-O-RING	
	6	1	**6Y-8028**	1	SHAFT-IDLER	
	7	1	**115-3699**	2	BEARING-FRONT	

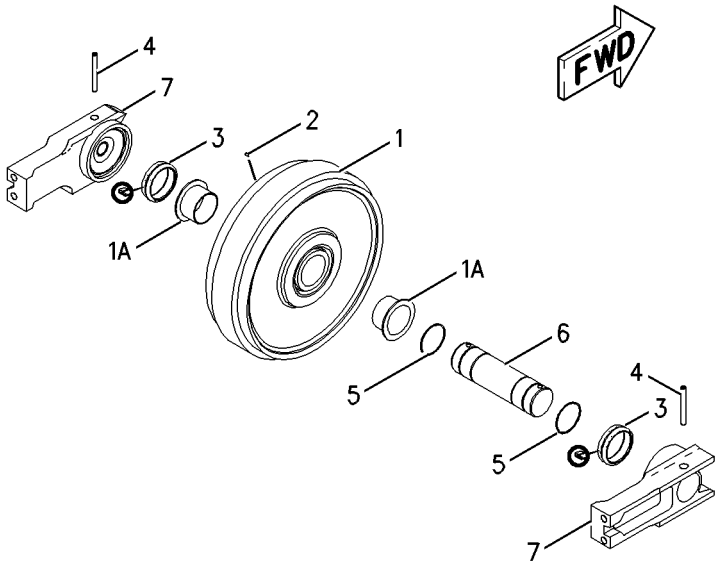

GRAPHIC #1 **<END>** g00836204

UNDERCARRIAGE

239-4320 IDLER GP-FRONT

S/N: B6H1-UP; JLP1-660, 670

PART OF 229-1898 FRAME AR-UNDERCARRIAGE

SMCS-4159 **i02488335**

NOTE	REF NO	GRAPHIC REF	PART NUMBER	QTY	PART NAME 1 2 3 4 5 6 (PRODUCT LEVEL)	SEE PAGE
Y	1	1	*179-3043*	2	ADJUSTMENT GP-HYDRAULIC TRACK	514
Y	2	1	*239-4321*	2	IDLER GP-FRONT	526
M	3	1	**7X-2563**	4	BOLT (M20X2.5X60-MM)	

M-METRIC PART
Y-SEPARATE ILLUSTRATION

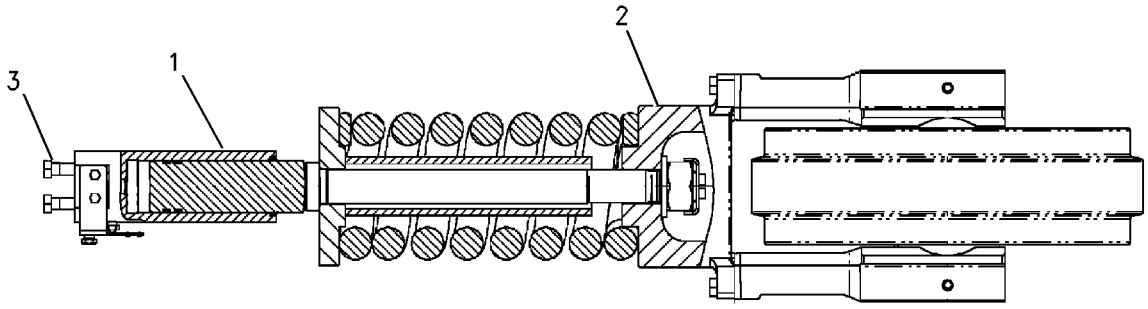

GRAPHIC #1 **<END>** g00837066

UNDERCARRIAGE

239-4320 IDLER GP-FRONT

S/N: B6H1-UP; JLP661-669, 671-UP
PART OF 229-1898 FRAME AR-UNDERCARRIAGE

SMCS-4159 **i03022467**

NOTE	REF NO	GRAPHIC REF	PART NUMBER	QTY	PART NAME 1 2 3 4 5 6 (PRODUCT LEVEL)	SEE PAGE
CY	1	1	**297-9151**	2	ADJUSTMENT GP-HYDRAULIC TRACK	515
Y	2	1	*239-4321*	2	IDLER GP-FRONT	526
M	3	1	**7X-2563**	4	BOLT (M20X2.5X60-MM)	

C-CHANGE FROM PREVIOUS TYPE
M-METRIC PART
Y-SEPARATE ILLUSTRATION

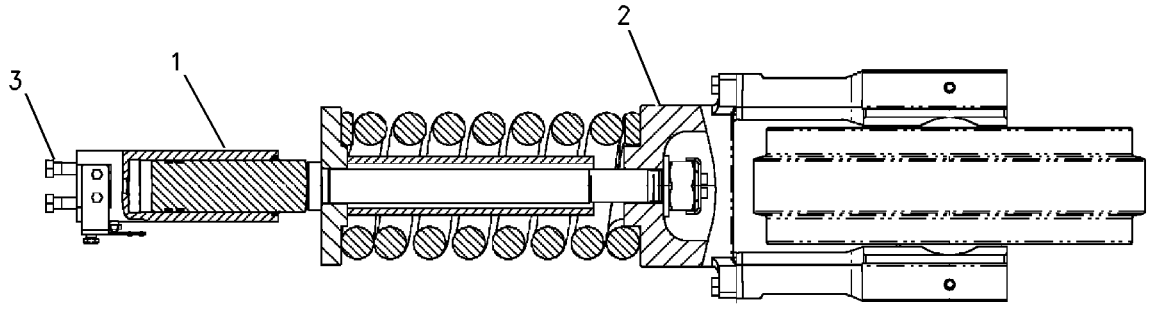

GRAPHIC #1 **<END>** g00837066

239-4321 IDLER GP-FRONT

S/N: B6H1-UP; JLP1-UP
PART OF 239-4320 IDLER GP-FRONT

SMCS-4159 **i02488364**

NOTE	REF NO	GRAPHIC REF	PART NUMBER	QTY	PART NAME 1 2 3 4 5 6 (PRODUCT LEVEL)	SEE PAGE
Y	1	1	**136-2422**	1	IDLER GP-FRONT	523
Y	2	1	*239-4322*	1	SPRING GP-RECOIL	531
M	3	1	**8T-6430**	4	BOLT (M20X2.5X50-MM)	

M-METRIC PART
Y-SEPARATE ILLUSTRATION

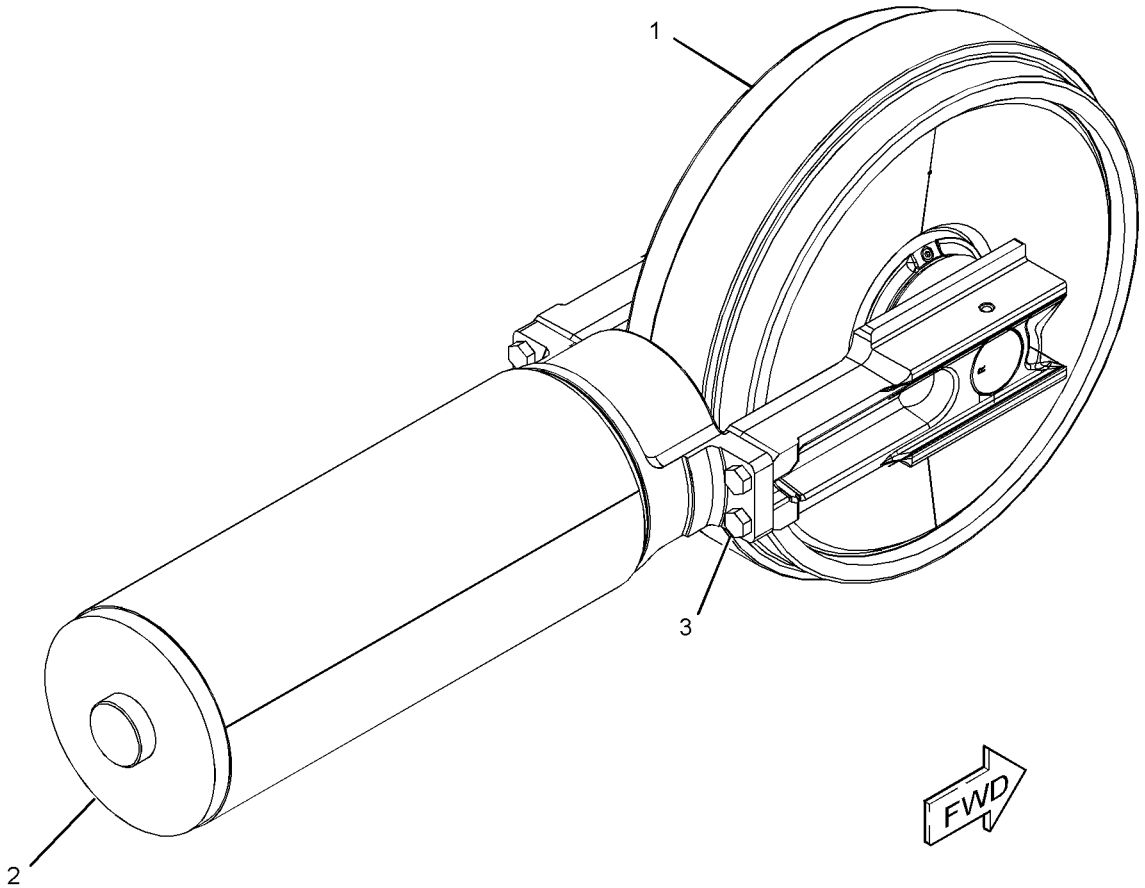

GRAPHIC #1 **<END>** g01196931

201-9119 LINK AS-TRACK

S/N: B6H1-UP; JLP1-UP
GREASE LUBRICATED TRACK
PART OF 203-0860, 203-0861, 203-0862, 241-0985, 260-9446, 260-9454 TRACK GP
AN ATTACHMENT

SMCS-4169, 4171 **i03021059**

NOTE	REF NO	GRAPHIC REF	PART NUMBER	QTY	PART NAME 1 2 3 4 5 6 (PRODUCT LEVEL)	SEE PAGE
	1	1	**6Y-2590**	48	LINK-TRACK (LH)	
	2	1	**095-7944**	1	PIN-COTTER	
	3	1	**118-7303**	1	LINK-TRACK MASTER (LH)	
	4	1	**201-0828**	1	BUSHING-TRACK MASTER	
	5	1	**118-7302**	1	LINK-TRACK MASTER (RH)	
	6	1	**188-3066**	1	PIN-TRACK MASTER	
	7	1	**179-3428**	2	SEAL-TRACK MASTER	
	8	1	**6Y-2589**	48	LINK-TRACK (RH)	
	9	1	**6Y-2751**	48	PIN-TRACK	
	10	1	**179-3426**	96	SEAL-TRACK	
	11	1	**321-1463**	48	BUSHING-TRACK	

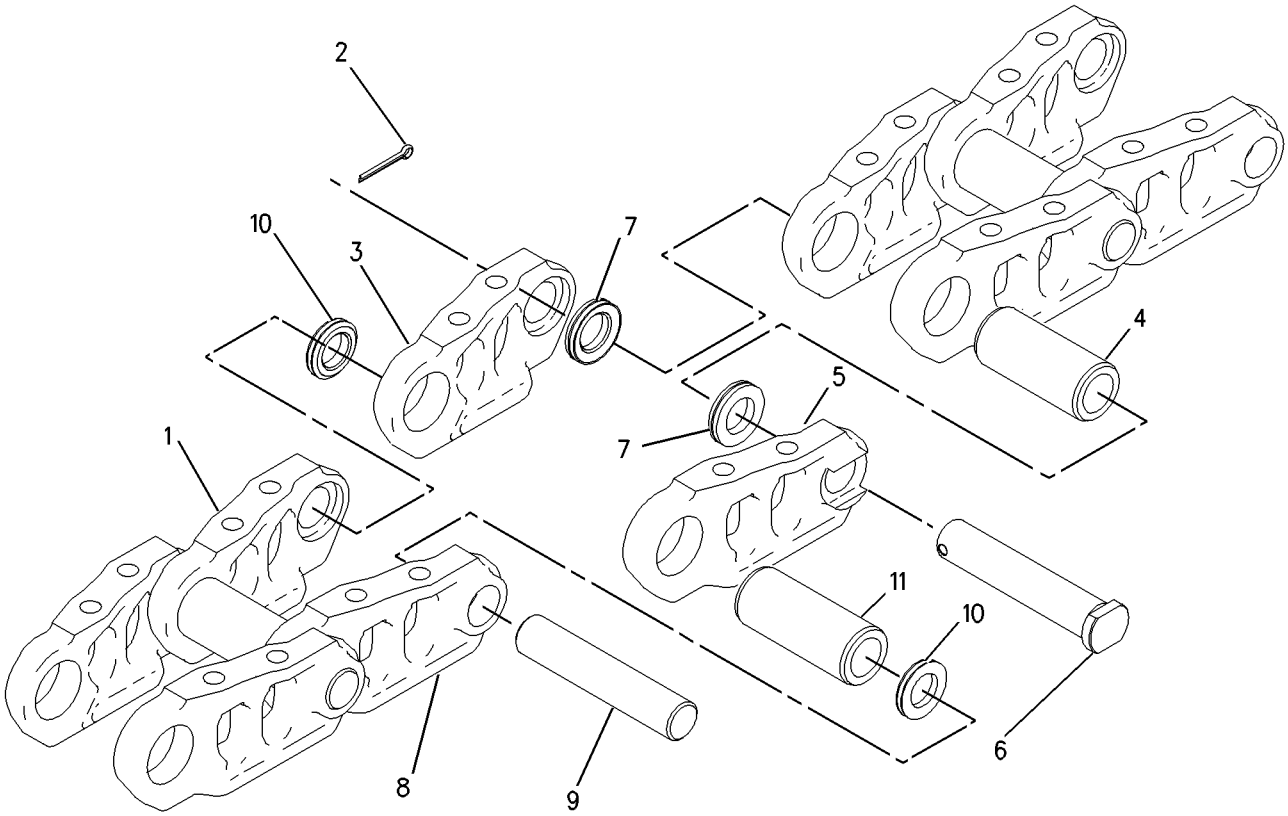

GRAPHIC #1 **<END>** g00826202

UNDERCARRIAGE

176-4853 ROLLER AR-TRACK & CARRIER

S/N: B6H1-UP; JLP1-UP

PART OF 229-1898 FRAME AR-UNDERCARRIAGE

SMCS-4154, 4180 **i02183298**

NOTE	REF NO	GRAPHIC REF	PART NUMBER	QTY	PART NAME 1 2 3 4 5 6 (PRODUCT LEVEL)	SEE PAGE
M	1	1	**7X-2577**	4	BOLT (M24X3X90-MM)	
Y	2	1	**6Y-5323**	4	ROLLER GP-TRACK CARRIER	529
Y	3	1	**183-2874**	18	ROLLER GP-TRACK-SINGLE FLANGE	530
M	4	1	**7X-2454**	72	BOLT (M24X3X110-MM)	
	5	1	**8T-4167**	72	WASHER-HARD (26X44X4-MM THK)	

QUANTITIES SHOWN ARE THOSE REQUIRED FOR BOTH LH AND RH SIDES
M-METRIC PART
Y-SEPARATE ILLUSTRATION

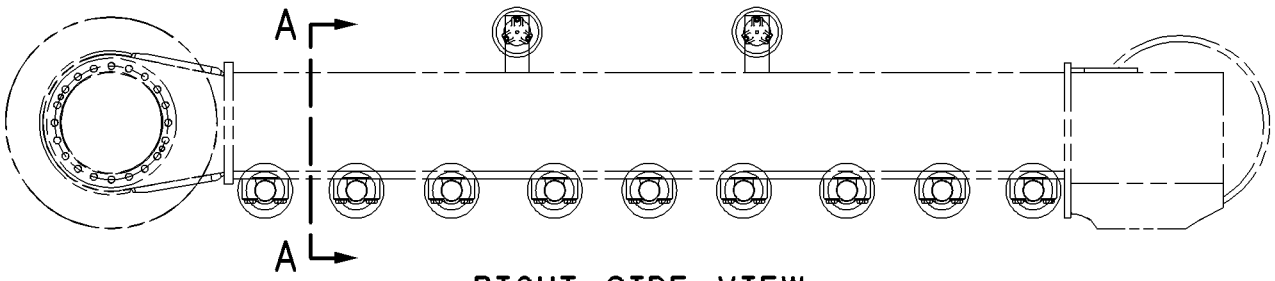

RIGHT SIDE VIEW

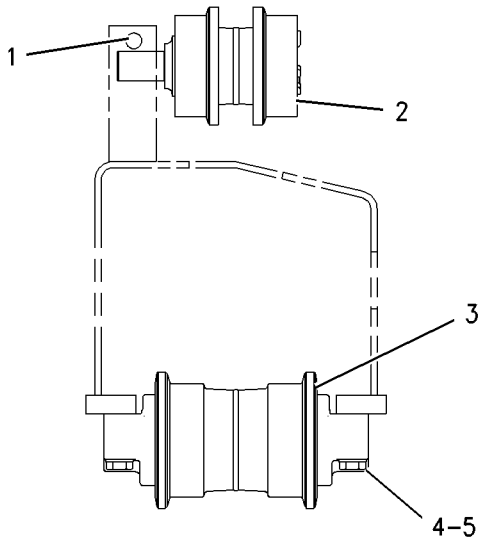

VIEW A-A

GRAPHIC #1 **<END>** g00791246

UNDERCARRIAGE

6Y-5323 ROLLER GP-TRACK CARRIER

S/N: B6H1-UP; JLP1-UP

PART OF 176-4853 ROLLER AR-TRACK & CARRIER

SMCS-4154 **i01666882**

NOTE	REF NO	GRAPHIC REF	PART NUMBER	QTY	PART NAME 1 2 3 4 5 6 (PRODUCT LEVEL)	SEE PAGE
	1	1	**6Y-9858**	1	SHAFT AS-TRACK ROLLER	
	2	1	**179-1292**	1	SEAL GP-DUO-CONE	
		1	**1M-3097**	2	RING-SEALING	
	3	1	**6Y-9859**	1	ROLLER & BEARING AS	
	3A	1	**6Y-9855**	1	BEARING-CARRIER ROLLER	
	3B	1	**6Y-9856**	1	BEARING-CARRIER ROLLER	
	4	1	**6Y-8075**	1	RETAINER	
	5	1	**6Y-8076**	1	WASHER-THRUST	
	6	1	**5H-8848**	1	SEAL-O-RING	
M	7	1	**8T-1159**	5	BOLT-SOCKET HEAD (M10X1.5X25MM)	
	8	1	**6Y-8077**	1	COVER-CARRIER ROLLER	
	9	1	**7H-3171**	1	PLUG-PIPE	

M-METRIC PART

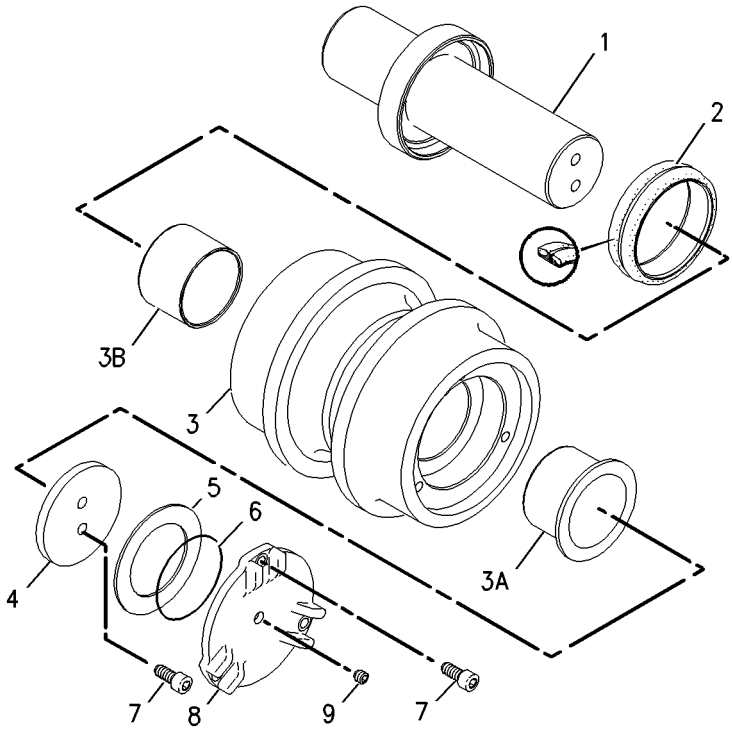

GRAPHIC #1 **<END>** g00850280

183-2874 ROLLER GP-TRACK-SINGLE FLANGE

S/N: B6H1-UP; JLP1-UP

PART OF 176-4853 ROLLER AR-TRACK & CARRIER

SMCS-4180 **i01682633**

NOTE	REF NO	GRAPHIC REF	PART NUMBER	QTY	PART NAME 1 2 3 4 5 6 (PRODUCT LEVEL)	SEE PAGE
	1	1	**183-2875**	1	ROLLER & BEARING AS	
	1A	1	**6Y-2792**	2	BEARING	
	2	1	**9W-2146**	1	PLUG	
	3	1	**148-3533**	2	SEAL GP-DUO-CONE	
					(EACH INCLUDES)	
		1	**160-6631**	2	RING-TORIC	
	4	1	**179-1497**	2	COLLAR-TRACK ROLLER	
	5	1	**179-1499**	2	DOWEL	
	6	1	**183-2883**	1	SHAFT-TRACK ROLLER	
	7	1	**8F-8882**	2	SEAL-O-RING	

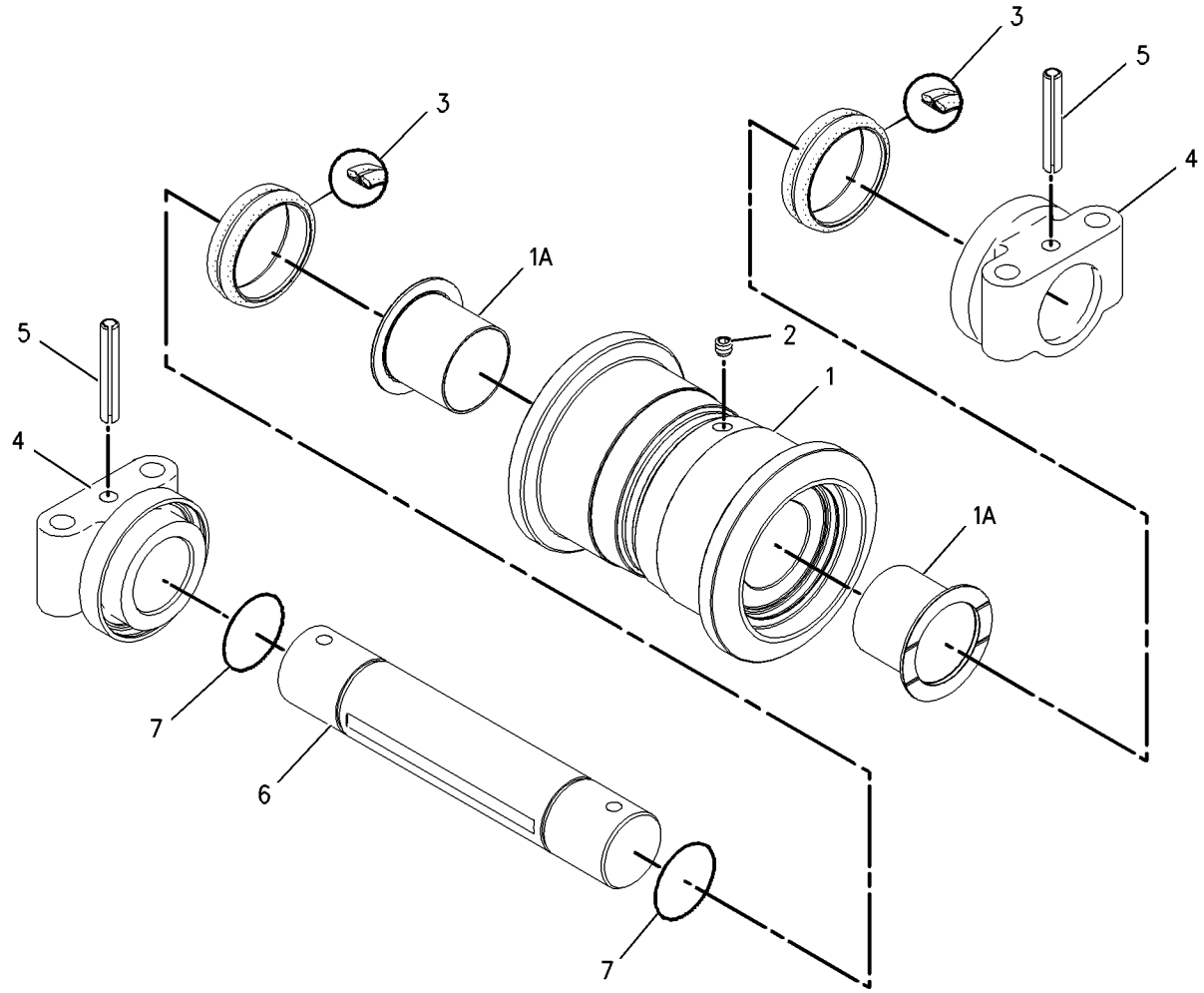

GRAPHIC #1 **<END>** g00686090

239-4322 SPRING GP-RECOIL

S/N: B6H1-UP; JLP1-UP

PART OF 239-4321 IDLER GP-FRONT

SMCS-4158 **i02488372**

NOTE	REF NO	GRAPHIC REF	PART NUMBER	QTY	PART NAME 1 2 3 4 5 6 (PRODUCT LEVEL)	SEE PAGE
	1	1	**179-3037**	1	WASHER (62X105X10-MM THK)	
	2	1	**179-3038**	1	NUT (M56X5.5-THD)	
	3	1	**179-3040**	1	STRIP	
	4	1	**239-4323**	1	SPRING	
	5	1	**239-4324**	1	ROD	
	6	1	**239-4326**	1	SUPPORT AS	
	7	1	**239-4330**	1	SUPPORT	
M	8	1	**8T-9080**	2	BOLT-SOCKET HEAD (M12X1.75X20-MM)	

M-METRIC PART

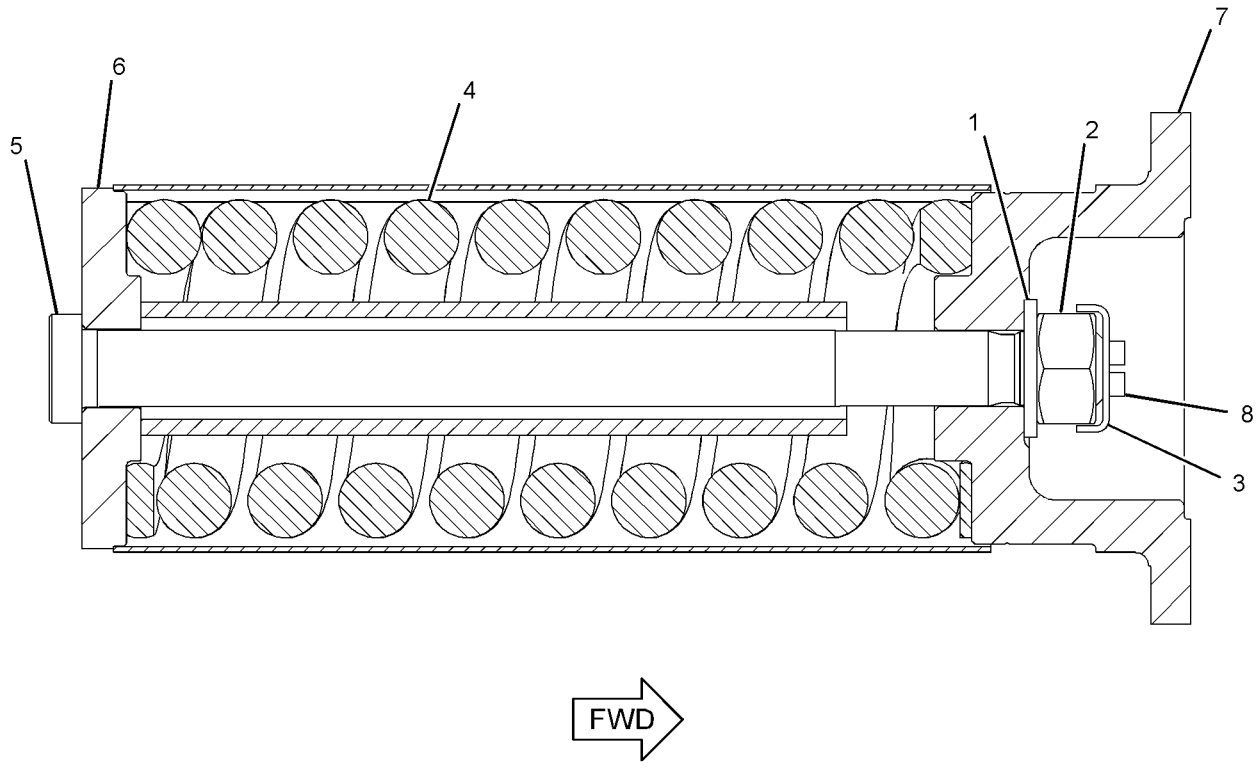

GRAPHIC #1 **<END>** g01196933

UNDERCARRIAGE

264-8494 TRACK AR

S/N: B6H1-UP; JLP1-UP
850-MM (33.5-IN) TRIPLE GROUSER SHOE
AN ATTACHMENT

SMCS-4170 **i02503810**

NOTE	PART NUMBER	QTY	PART NAME 1 2 3 4 5 6 (PRODUCT LEVEL)	SEE PAGE
Y	*235-7764*	1	STEP GP	507
Y	*260-9446*	1	TRACK GP	537

Y-SEPARATE ILLUSTRATION

<END>

203-0860 TRACK GP–2-REQUIRED

S/N: B6H1-UP; JLP1-UP

600-MM (23.6-IN) TRIPLE GROUSER SHOE. GREASE LUBRICATED TRACK, HEAVY-DUTY AN ATTACHMENT

SMCS-4170 **i03008152**

NOTE	REF NO	GRAPHIC REF	PART NUMBER	QTY	PART NAME 1 2 3 4 5 6 (PRODUCT LEVEL)	SEE PAGE
Y	1	1	**201-9119**	1	LINK AS-TRACK	527
	2	1	**121-0140**	49	SHOE-TRACK	
M	3	1	**318-2558**	196	BOLT-TRACK (M22X1.5X73-MM)	
M	4	1	**311-8150**	196	NUT-TRACK (M22X1.5-THD)	

M-METRIC PART
Y-SEPARATE ILLUSTRATION

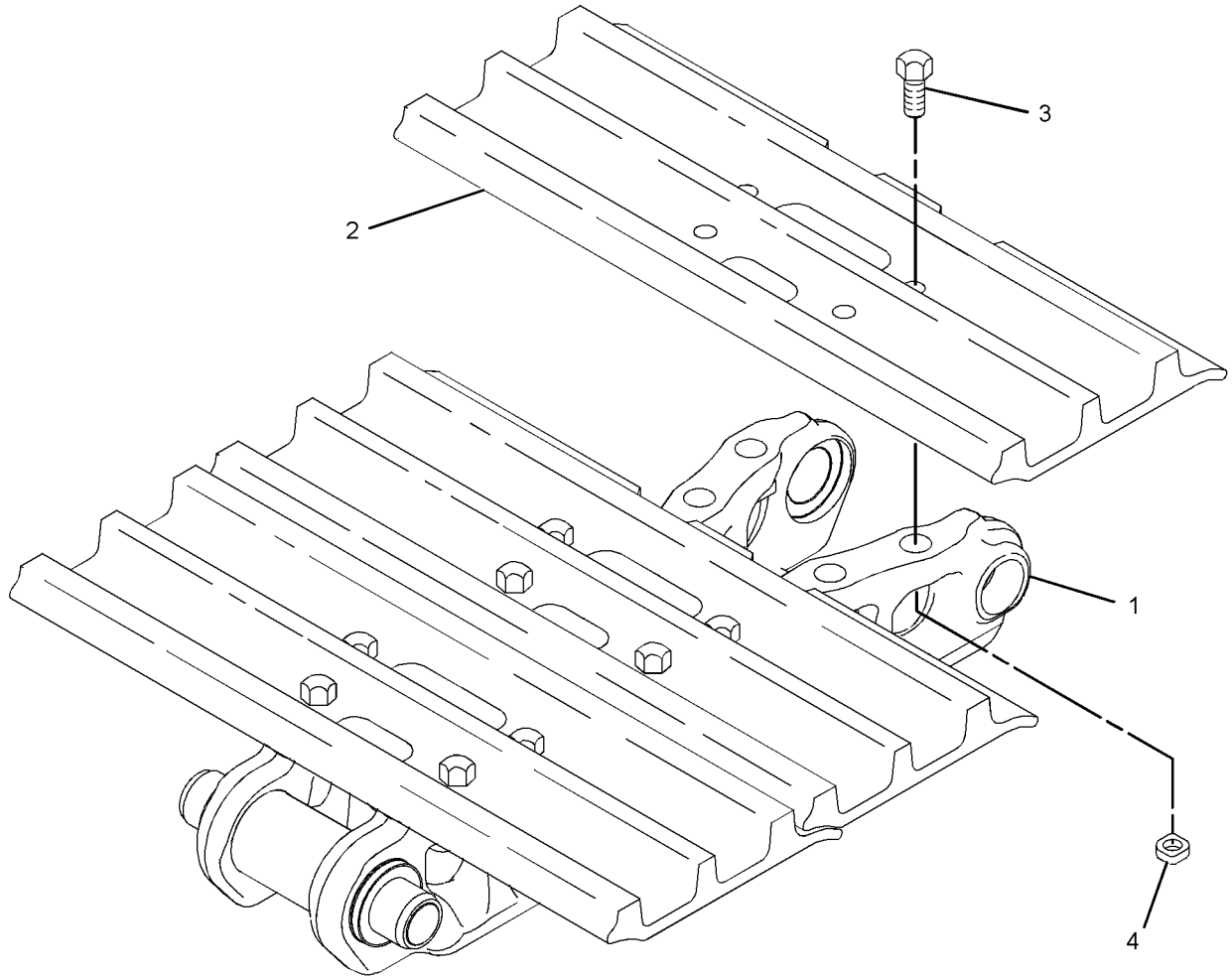

GRAPHIC #1 **<END>** g01201614

203-0861 TRACK GP–2-REQUIRED, HEAVY-DUTY

S/N: B6H1-UP; JLP1-UP
750-MM (29.5-IN) TRIPLE GROUSER SHOE. GREASE LUBRICATED TRACK
AN ATTACHMENT

SMCS-4170 **i02989431**

NOTE	REF NO	GRAPHIC REF	PART NUMBER	QTY	PART NAME 1 2 3 4 5 6 (PRODUCT LEVEL)	SEE PAGE
Y	1	1	**201-9119**	1	LINK AS-TRACK	527
	2	1	**121-0141**	49	SHOE-TRACK	
M	3	1	**318-2558**	196	BOLT-TRACK (M22X1.5X73-MM)	
M	4	1	**311-8150**	196	NUT-TRACK (M22X1.5-THD)	

M-METRIC PART
Y-SEPARATE ILLUSTRATION

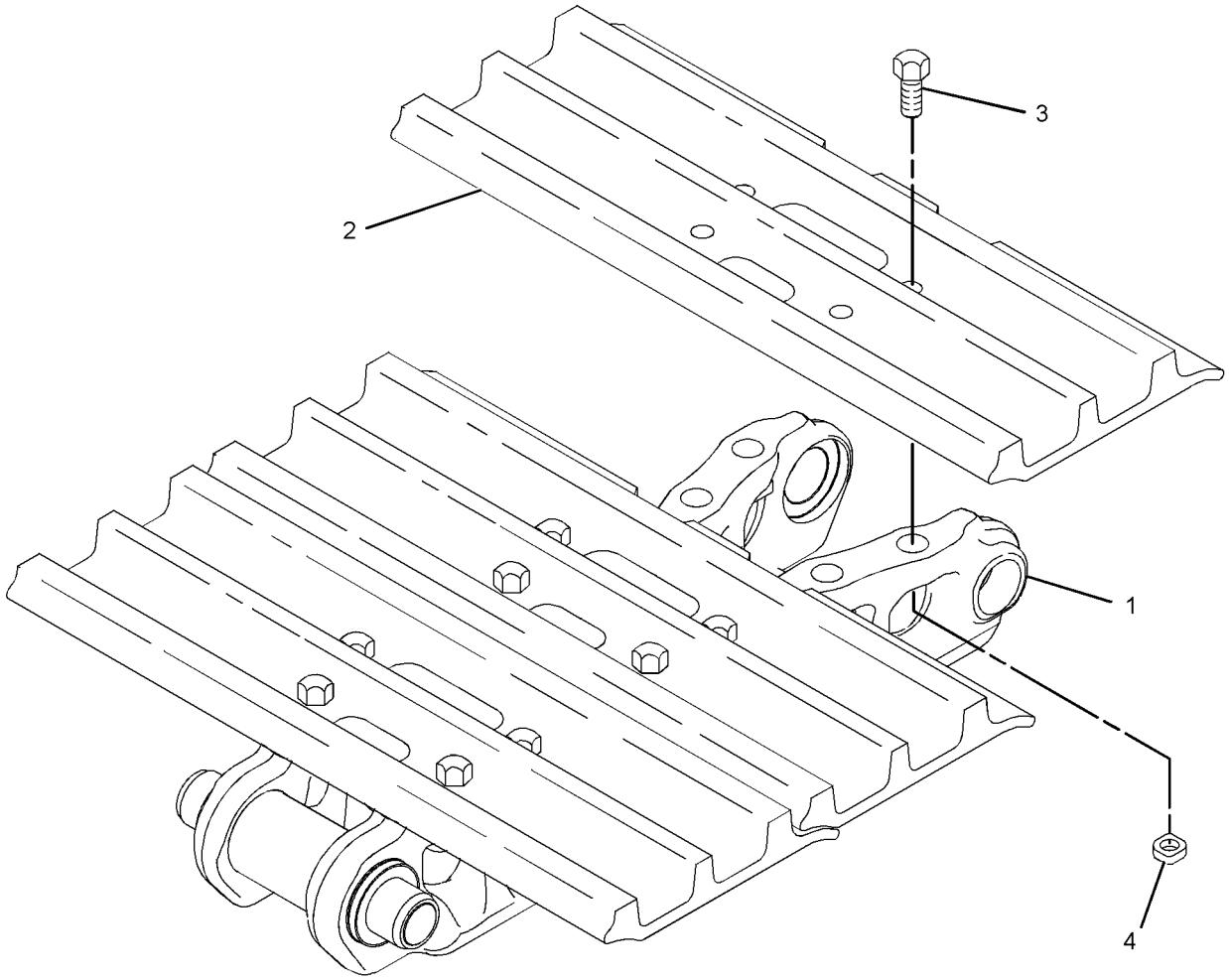

GRAPHIC #1 **<END>** g01201614

203-0862 TRACK GP–2-REQUIRED, HEAVY-DUTY

S/N: B6H1-UP; JLP1-UP
850-MM (33.5-IN) TRIPLE GROUSER SHOE. GREASE LUBRICATED TRACK
PART OF 264-8495 TRACK GP
AN ATTACHMENT

SMCS-4170 **i03626524**

NOTE	REF NO	GRAPHIC REF	PART NUMBER	QTY	PART NAME 1 2 3 4 5 6 (PRODUCT LEVEL)	SEE PAGE
Y	1	1	**201-9119**	1	LINK AS-TRACK	527
	2	1	**139-0246**	49	SHOE-TRACK	
M	3	1	**318-2558**	196	BOLT-TRACK (M22X1.5X73-MM)	
M	4	1	**311-8150**	196	NUT-TRACK (M22X1.5-THD)	

M-METRIC PART
Y-SEPARATE ILLUSTRATION

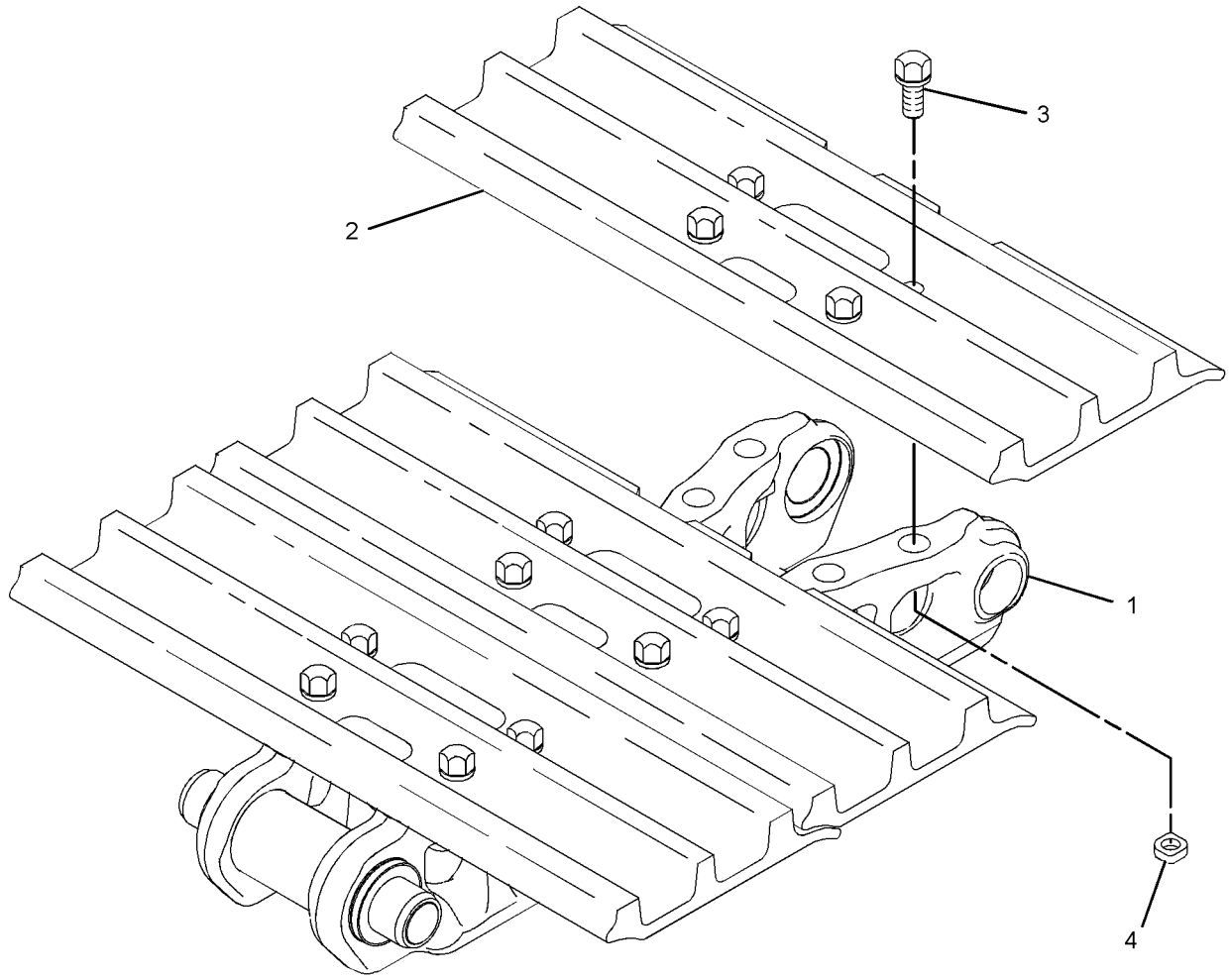

GRAPHIC #1 **<END>** g01525345

241-0985 TRACK GP–2-REQUIRED

S/N: B6H1-UP; JLP1-UP

700-MM (27.6-IN) TRIPLE GROUSER SHOE. GREASE LUBRICATED TRACK

AN ATTACHMENT

SMCS-4170 **i03013653**

NOTE	REF NO	GRAPHIC REF	PART NUMBER	QTY	PART NAME 1 2 3 4 5 6 (PRODUCT LEVEL)	SEE PAGE
Y	1	1	**201-9119**	1	LINK AS-TRACK	527
	2	1	**238-8591**	49	SHOE-TRACK	
M	3	1	**318-2559**	196	BOLT-TRACK (M22X1.5X67-MM)	
M	4	1	**311-8150**	196	NUT-TRACK (M22X1.5-THD)	

M-METRIC PART
Y-SEPARATE ILLUSTRATION

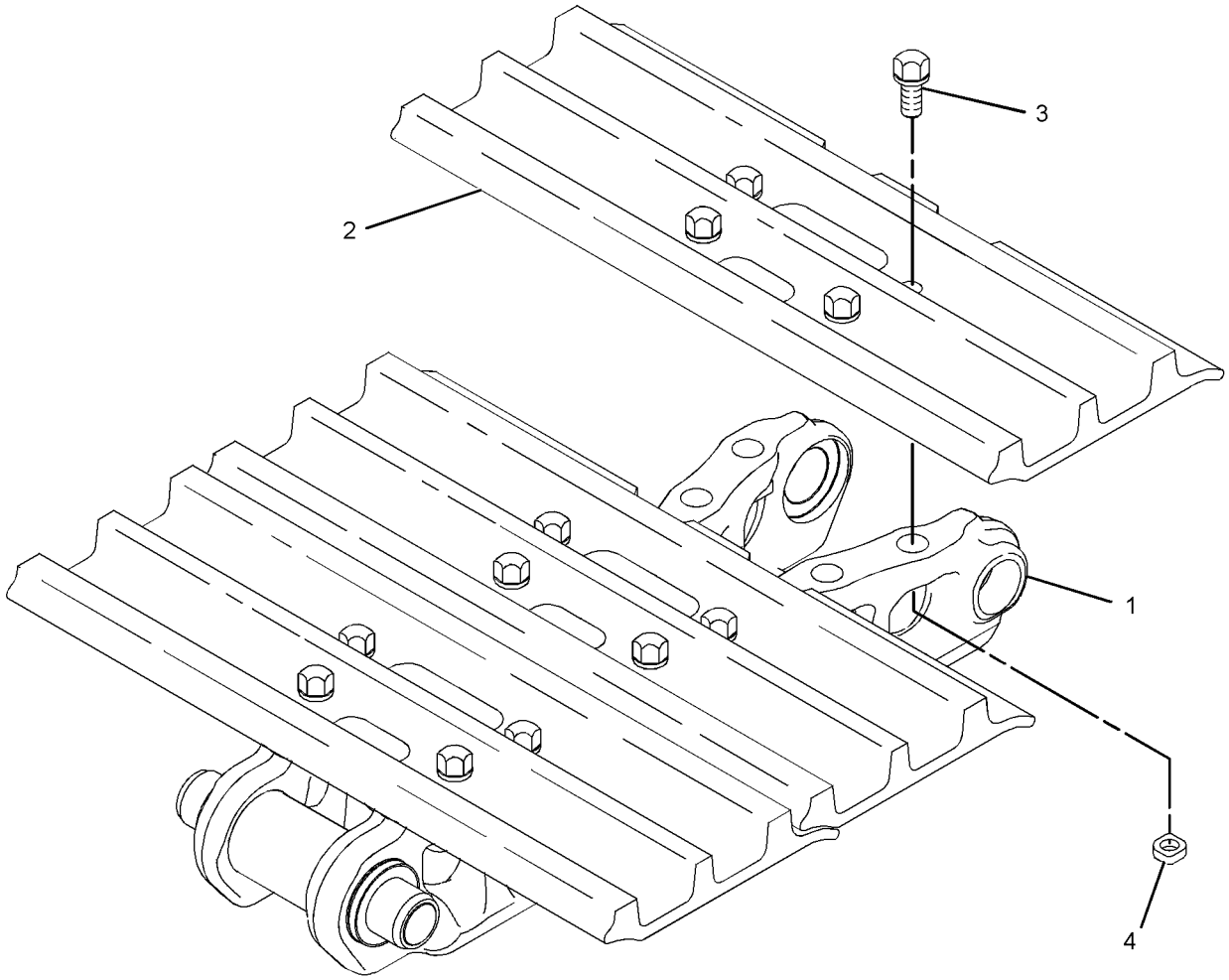

GRAPHIC #1 **<END>** g01525345

260-9446 TRACK GP–2-REQUIRED

S/N: B6H1-UP; JLP1-UP
850-MM (33.5-IN) TRIPLE GROUSER SHOE. GREASE LUBRICATED TRACK
PART OF 264-8494 TRACK AR
AN ATTACHMENT

SMCS-4170 **i03022074**

NOTE	REF NO	GRAPHIC REF	PART NUMBER	QTY	PART NAME 1 2 3 4 5 6 (PRODUCT LEVEL)	SEE PAGE
Y	1	1	**201-9119**	1	LINK AS-TRACK	527
	2	1	**6Y-8180**	49	SHOE-TRACK	
M	3	1	**318-2558**	196	BOLT-TRACK (M22X1.5X73-MM)	
M	4	1	**311-8150**	196	NUT-TRACK (M22X1.5-THD)	

M-METRIC PART
Y-SEPARATE ILLUSTRATION

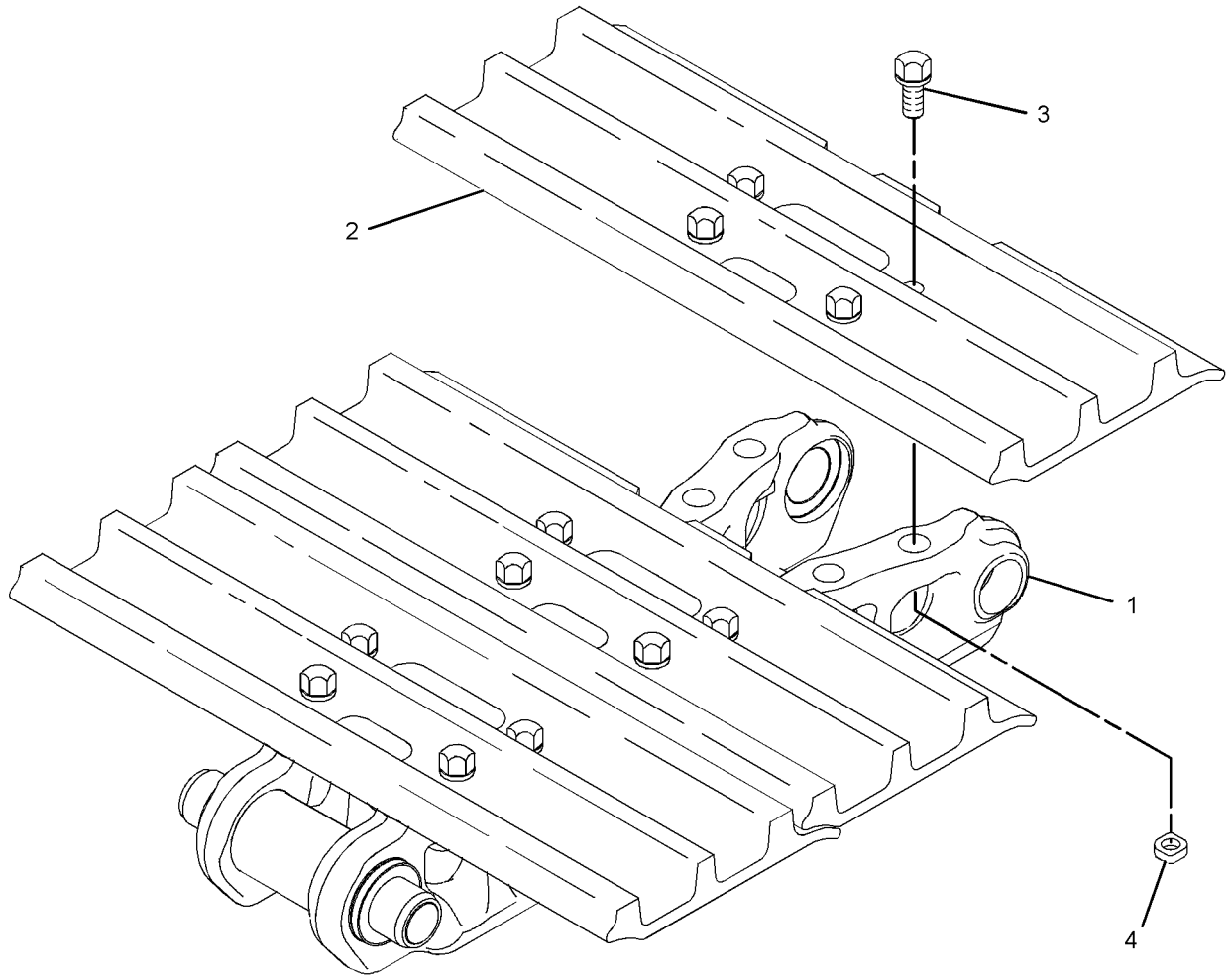

GRAPHIC #1 **<END>** g01525345

260-9454 TRACK GP–2-REQUIRED

S/N: B6H1-UP; JLP1-UP
800-MM (31.5-IN) TRIPLE GROUSER SHOE. GREASE LUBRICATED TRACK
AN ATTACHMENT

SMCS-4170 **i03013632**

NOTE	REF NO	GRAPHIC REF	PART NUMBER	QTY	PART NAME 1 2 3 4 5 6 (PRODUCT LEVEL)	SEE PAGE
Y	1	1	**201-9119**	1	LINK AS-TRACK	527
	2	1	**238-8592**	49	SHOE-TRACK	
M	3	1	**318-2558**	196	BOLT-TRACK (M22X1.5X73-MM)	
M	4	1	**311-8150**	196	NUT-TRACK (M22X1.5-THD)	

M-METRIC PART
Y-SEPARATE ILLUSTRATION

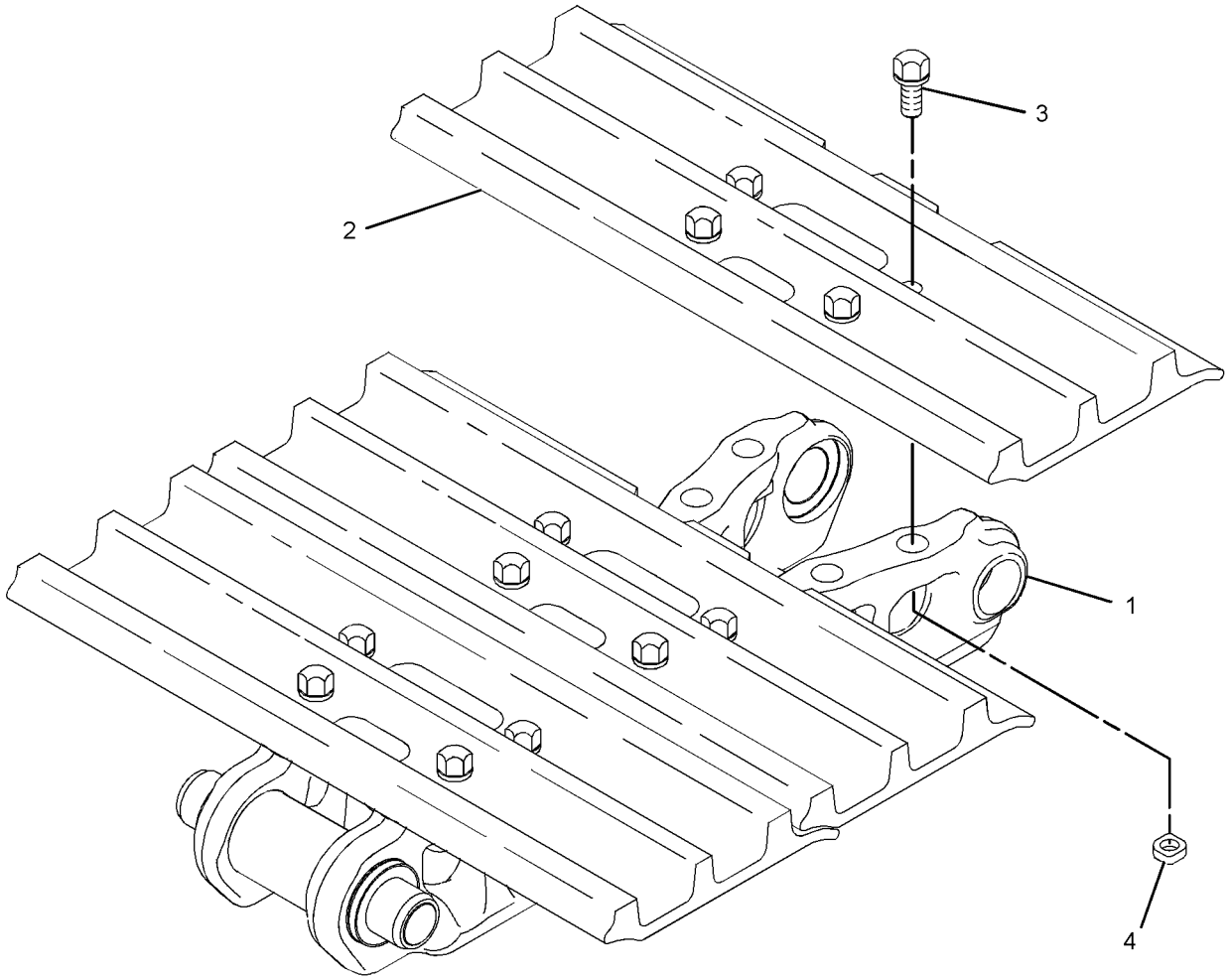

GRAPHIC #1 **<END>** g01525345

264-8495 TRACK GP—HEAVY-DUTY

S/N: B6H1-UP; JLP1-UP
850-MM (33.4-IN) TRIPLE GROUSER SHOE
AN ATTACHMENT

SMCS-4170 **i02503806**

NOTE	PART NUMBER	QTY	PART NAME 1 2 3 4 5 6 (PRODUCT LEVEL)	SEE PAGE
Y	*235-7764*	1	STEP GP	507
Y	**203-0862**	1	TRACK GP	535

Y-SEPARATE ILLUSTRATION

<END>

MEMORANDA

PART NUMBER INDEX

Part	Page
0	
0L-1026	30
0S-0519	32
0S-1589	22
0S-1597	329
	331
1	
1A-0621	1191
1B-3581	320
	323
1B-8705	20
	29
1D-4635	1111
1D-4637	1112
	1113
1F-7960	202
	203
1H-1023	331
1H-2629	331
1H-3244	222
1H-3338	335
1H-7339	523
1J-9671	705
	707
	963
	973
1K-8850	488
	489
	490
1M-3097	529
1M-6119	224
	225
	234
	235
	244
	246
	247
	254
	255
	350
1M-6120	224
	225
	234
	235
	244
	246
	247
	254
	255
	350
1M-9968	332
1M-9971	331
1N-8062	203
1P-0451	143
1P-2807	1313
	1318
1P-3702	685
	689
	691
	694
	698
	702
	724
	727
	919
	929
	954
	956
	990
1P-3703	613
	616
	660
	661
	663
	685
	689
	691
	694
	698
	702
	724
	727
	730
	732
	836
	848
	849
	850
	851
	853
	855
	857
1P-3704	618
	626
	634
	635
	638
	641
	643
	646
	647
	650
	652
	654
	657
	662
	694
	698
	702
	724
	727
	836
	850
	851
1P-3705	618
	626
	650
	652
	654
	657
	724
	852
1P-3706	852
1P-4578	685
	694
	698
	702
	724
	727
	729
	731
	732
	734
1P-5411	114
1P-5412	114
1P-5767	618
	626
	634
	635
	638
	641
	643
	646
	647
	650
	652
	654
	657
	724
	727
	730
	732
	836
	848
	849
	850
	851
1R-0762	151
	154
	157
	161
	164
	168
	172
1R-1808	83
	85
1R-5998	1156
	1157
1R-9953	129
	130
1R-9958	456
	466
	476
1S-0812	340
	341
1S-0994	1240
	1243
1S-7251	225
	235
	244
	247
	255
	327
	328
	350
1S-7252	224
	234
	244
	246
	254
	327
	328
1S-7446	331
1S-9593	1018
	1019
1T-0808	331
1T-0936	872
1U-8846	67
	68
	131
	319
	400
	404
	410
	445
	588
	590
	592
	853
	855
	857
1W-2715	41
	43
	45
	47
1W-8407	32
2	
2A-3746	40
	49
2A-4429	41
	43
	45
	47
2B-7561	445
	592
2C-9259	1082
	1083
	1084
	1085
	1086
	1087
	1088
	1093
	1094
	1095
	1096
	1097
	1098
	1099
2D-1290	151
	154
	157
	161
	164
	168
	172
2D-6392	331
2D-6642	872
	1002
2F-6678	332
2G-1830	350
2G-8767	224
	234
	246
	254
2H-3429	331

► **PRIMARY REFERENCE**

PART NUMBER INDEX

Part	Page
2H-3922	334
	1291
	1293
2J-3507	1111
	1112
	1113
2J-8163	331
2K-4821	222
2L-0273	387
2L-6679	331
2M-0849	912
	1247
2M-4453	118
2M-9780	83
	85
	160
	164
	168
	169
	172
	173
	320
	323
	705
	707
	740
	743
	770
	823
	825
	839
	842
	845
	853
	855
	857
	872
	931
	935
	945
2P-1279	679
2P-2975	998
2P-3628	399
	404
	409
2P-4304	83
	85
2Q-4703	1191
2R-1236	872
2R-6806	149
2S-1647	366
2S-2596	942
2S-4078	187
	209
	211
	213
	215
	342
	685
	694
	698
	702
	827
	829
	834
	836
2S-5926	514
	515
2U-5338	579
2W-1145	585
2W-7381	50
2W-8147	29
2Y-5685	1233
2Y-5829	78
	79

3

Part	Page
3B-0551	209
	211
	213
	215
3B-0623	30
3B-4501	281
	282
	283
3B-4505	1216
3B-4618	457
	467
	477
3B-8489	442
	444
	445
	558
	559
	560
	561
	562
	563
	564
	565
	1048
	1050
	1054
	1056
	1058
	1063
	1065
	1067
	1069
	1071
	1073
	1075
	1076
	1077
	1078
3D-2824	76
	342
	685
	689
	691
	693
	694
	697
	698
	701
	702
	730
	732
	735
	770
	823
	825
	831
	836
	839
	842
	845
	846
	853
	855
	857
	872
	877
	917
	991
	992
	995
	996
	997
	999
	1001
	1021
	1023
3D-5102	320
	323
3D-9143	415
3E-2310	792
	795
	798
	802
	806
	810
3E-2338	399
	404
	409
3E-3365	338
3E-3371	345
	697
	701
	770
3E-3383	343
3E-4297	598
3E-4352	131
	295
	296
3E-5169	389
3E-6910	863
3E-7771	332
3E-7775	329
3E-8004	636
	639
	648
3E-8005	21
3E-8017	139
	143
3E-8020	1156
3E-8025	602
	605
3E-8320	290
3E-9411	453
3E-9412	190
	192
	194
	196
	198
3E-9871	1291
3E-9872	1279
	1296
3F-1547	863
3F-9556	222
	336
3G-8054	755
	761
	766
3G-8057	755
	761
	766
3J-1907	144
	149
	151
	154
	157
	160
	209
	211
	213
	215
	217
	218
	297
	549
	664
	679
	681
	705
	707
	709
	712
	715
	718
	721
	730
	732
	734
	735
	746
	747
	750
	753
	754
	759
	760
	764
	765
	770
	772
	774
	776
	780
	783
	786
	789
	792
	795
	798
	799
	801
	802
	805

► **PRIMARY REFERENCE**

PART NUMBER INDEX

Part	Page	Part	Page	Part	Page	Part	Page
	806		693		265	3T-9494	331
	809		697		273		332
	810		701		277	3T-9524	332
	813		730		280	3T-9525	331
	815		732		292	3V-0046	664
	817		740		294		681
	819		743		337	3W-6399	1277
	821		746		346		1278
	823		754		352	3Y-9267	975
	825		755		355		
	827		759		357		
	829		760		361	**4**	
	834		761		363		
	853		764		366	4B-2049	332
	855		765		369		342
	857		766		371	4B-3665	55
	860		770		373		56
	867		821		375	4B-4158	514
	870		823		379		515
	912		827		381		872
	914		829		383	4B-4278	1156
	927		834		386	4B-9044	320
	935		836		387		323
	950		839		388	4B-9783	1003
	952		842		389		1004
	959		845		391		1006
	960		860		392	4B-9880	1005
	961		861		394	4C-9612	25
	1002		864		396		72
	1003		872		681	4D-1836	389
	1004		888		709	4D-3704	22
	1006		917		712	4D-7388	97
	1028		942		715	4D-7733	157
3J-5390	77		950		718		169
3J-7354	83		952		721	4F-5695	30
	85		1240		1129	4G-4972	32
	664		1243		1131	4H-1225	1191
	912	3K-0835	340		1133	4H-6112	590
	914		341		1237	4H-7869	328
	975	3K-5234	1111		1238	4I-0117	456
3K-0360	41		1112		1262		466
	43		1113		1277		476
	45	3K-8460	67		1278	4I-0118	456
	72	3L-2875	323		1279		466
	112	3L-3380	331		1291		476
	119	3L-8187	363		1293	4I-0191	418
	149	3N-3763	332	3S-6050	244		419
	151	3P-0647	311	3S-8536	1240		420
	154		998		1243		421
	157	3P-1156	94	3S-9643	111	4I-0232	456
	160	3P-9847	793		113		466
	161		796	3T-3418	331		476
	164		799	3T-3422	329	4I-0378	209
	168		802		331		211
	172		806	3T-3423	331		213
	546		810		332		215
	588	3R-8797	329	3T-3424	331	4I-0379	151
	590		331		332		154
	636	3R-8801	332	3T-3434	329		157
	639	3R-9965	366		331		160
	644	3S-2093	224	3T-4709	331		164
	648		234	3T-4710	331		168
	681		235	3T-5760	224		172
	682		246		234	4I-0420	1281
	685		254	3T-7528	598	4I-0716	750

► **PRIMARY REFERENCE**

PART NUMBER INDEX

Part	Page
4I-0806	801
	805
	809
4I-0812	853
	855
	857
4I-0836	753
	759
	764
4I-0839	753
	759
	764
4I-1025	734
4I-1163	1291
	1293
4I-1205	1156
4I-1206	1156
4I-1260	1234
4I-1536	▶541
	544
4I-1539	541
	547
4I-1671	798
4I-1688	792
	795
	798
	801
	805
	809
4I-1704	734
	774
	776
4I-1739	753
	759
	764
4I-2187	415
4I-2599	456
	466
	476
4I-2885	1304
	1305
4I-3038	337
4I-3063	1156
4I-3090	1157
	1296
4I-3144	1156
4I-3266	1261
4I-3503	1240
	1243
4I-3510	991
	992
	999
	1001
4I-3511	750
4I-3569	935
4I-3695	848
4I-4039	1079
4I-4043	1079
4I-4070	▶1079
	1081
	1082
	1083
	1084
	1087
	1089
	1090
	1091
	1092
4I-4270	1156
4I-4286	1214
	1216
4I-4298	1289
4I-4300	1289
4I-4361	1234
4I-4392	1156
4I-4978	1032
	1034
	1036
	1038
	1040
	1042
	1044
	1046
4I-5005	1032
	1034
	1036
	1038
	1040
	1042
	1044
	1046
4I-5020	1291
	1293
4I-5021	1291
	1293
4I-5049	1276
4I-5394	917
4I-5409	1
	▶284
4I-5490	917
4I-5849	867
	870
4I-5862	541
	547
4I-5900	753
	759
	764
4I-5906	753
	759
	764
4I-6027	780
	783
	786
	789
4I-6030	750
4I-6046	850
	851
4I-6121	753
	759
	764
4I-6130	851
4I-6248	772
4I-6365	965
	970
4I-6397	931
	935
	945
4I-6604	1080
4I-6605	1080
4I-6626	1079
	1080
4I-6897	1067
	1069
4I-7714	992
	999
4I-7889	369
	371
	776
	831
4I-7924	427
	491
	492
	493
	495
	496
	497
	498
	500
	502
	503
	504
4I-8019	456
	466
	476
4I-8267	542
4I-8472	1313
	1318
4I-8799	750
	780
4I-8965	950
	952
4I-9426	1101
4I-9521	681
	709
	712
	715
	718
	721
	734
	746
	750
	753
	759
	764
	772
	778
	780
	792
	795
	798
	801
	805
	809
	813
4I-9522	681
	709
	712
	715
	718
	721
	734
	746
	750
	753
	759
	764
	772
	778
	780
	783
	786
	789
	792
	795
	798
	801
	805
	809
4I-9523	734
	746
	750
	753
	759
	764
	772
	780
	792
	795
	798
	801
	805
	809
4I-9524	746
	750
	753
	759
	764
	778
	780
	783
	786
	789
	792
	795
	798
	801
	805
	809
4I-9525	734
	746
	750
	753
	759
	764
	778
	780
	783
	786
	789
	792
	795
	798
	801
	805
	809
4I-9526	746
	750

▶ **PRIMARY REFERENCE**

PART NUMBER INDEX

Part	Page	Part	Page	Part	Page	Part	Page
	778		677	4P-7581	352		467
	780		678		357		477
	815		679		366		917
	817		681		379		1129
	819		709		381		1131
	821		734		383		1133
4I-9527	734		735		392		1293
	746	4J-7385	983		747	5D-1026	592
	750		984	4P-8134	379		1240
	753	4J-7386	983		381		1243
	759		984		383	5D-4822	1229
	764	4J-7533	598	4R-9999	80		1231
	780		860	4S-9191	111	5F-9144	144
	783		922		113	5H-5672	909
	786		935	4T-3148	935	5H-8848	529
	789		950	4T-5074	935	5I-3088	850
	792		952	4W-1413	1313	5I-3299	1063
	795	4J-8998	919		1318		1065
	798		929	4W-2026	23		1071
	801		990				1073
	805	4K-1388	983				1075
	809		984	**5**			1076
	821	4K-2039	1013				1077
4I-9528	746	4K-4284	872	5B-0651	1056		1078
	750	4K-8864	225	5C-2889	282	5I-4000	963
	753		235		283		973
	759		244	5C-2890	203	5I-4001	963
	764		247		319	5I-4002	963
	780		255		335		973
4J-0519	954		755		357	5I-4003	963
	956		761		361	5I-4111	983
4J-0520	612		766		981		984
	615	4L-2729	332		1293	5I-4371	753
	931	4M-0189	102	5C-6074	342	5I-4376	681
	945		107	5C-6108	185		709
4J-0522	685	4M-1827	331		▶342		712
	694	4M-1828	331	5C-7261	24		715
	698	4M-1831	329		112		718
	702		331		225		721
	827	4M-1853	331		235		734
	829	4M-1854	331		244	5I-4387	734
	831	4M-1896	332		247	5I-4390	839
	834	4N-0205	225		255		842
4J-0524	836		235		602		845
4J-0525	118		246		605	5I-4396	753
4J-0527	740		254		977		759
	743	4N-1059	327		978		764
	831	4N-1114	22		981		792
	836	4N-2514	65		1128		795
	917	4N-9170	445		1266		798
4J-0528	963	4N-9624	151		1268		819
	973		154		1273	5I-7090	1189
4J-5267	724		157		1274		1190
	727	4P-4369	139	5C-7793	1156		1199
	740	4P-5820	▶310	5C-7883	225	5I-8251	▶281
	743		312		235		284
	827	4P-5918	379		247	5I-8270	224
	829	4P-7428	225		255		234
	834		235	5C-8138	1277		244
	927		247		1278		246
4J-5268	724		255	5C-8312	1281		254
	727		366	5C-9553	290	5I-8416	▶542
4J-5309	935	4P-7429	225		350		544
4J-5477	675		235		415	5I-8511	950
	676		247		457		952

▶ **PRIMARY REFERENCE**

PART NUMBER INDEX

Part	Page
5I-8670	594
5I-8708	753
	759
	764
5I-8748	255
	831
5I-8754	585
5I-8790	602
	605
5I-8791	602
	605
5I-8793	602
5I-8794	602
5I-8797	602
5I-8798	602
5I-8799	602
	605
5I-8800	602
	605
5I-8802	602
	605
5I-8803	602
5I-8804	602
5I-8805	602
5I-8806	602
5I-8808	602
	605
5I-8809	602
	605
5I-8810	602
	605
5I-8811	602
	605
5I-8812	602
	605
5I-8813	602
	605
5I-8815	602
	605
5I-8820	602
	605
5I-8853	780
	783
	786
5J-2383	867
	870
5J-2974	959
5J-5314	331
5K-0430	320
	323
5K-8451	151
	154
	161
	164
	815
	817
	819
	821
5K-9090	610
	613
	616
	660
	661
	685
	689
	691
	693
	694
	697
	698
	701
	702
	724
	727
	730
	732
	827
	829
	834
	836
5K-9243	445
	1048
	1050
5L-3233	129
	130
	136
5L-4758	549
	1013
5M-3034	331
5M-4454	588
	590
5N-4185	21
5P-0597	87
5P-0743	93
5P-0747	224
	234
	244
	246
	254
	327
	328
	350
5P-0761	224
	225
	234
	235
	244
	246
	247
	254
	255
	350
5P-0767	592
	1240
	1243
5P-1075	323
	415
	438
	831
5P-1076	102
	107
	128
	140
	454
	457
	467
	477
	521
	522
	730
5P-1318	705
	707
5P-1442	137
	152
	154
	155
	158
	161
	165
	169
	173
5P-2369	712
	715
	718
	721
5P-2424	221
5P-2568	1028
5P-3108	983
	984
5P-3264	190
	192
	194
	196
	198
5P-3454	387
5P-4115	290
	350
	457
	467
	477
5P-4116	220
	225
	235
	247
	255
	415
5P-4325	87
	783
	786
	789
5P-4536	142
5P-4924	151
	154
	209
	211
	213
	215
5P-4961	137
5P-5148	839
	842
	845
5P-5952	489
5P-5998	337
5P-6298	331
5P-6312	320
	323
5P-6313	320
	323
5P-6314	320
	323
5P-6944	770
	823
5P-7175	155
	164
	172
5P-7462	755
	761
	766
	770
	823
	825
5P-7463	755
	761
	766
	770
	823
	825
5P-7464	840
	843
	846
5P-7465	840
	843
	846
5P-7466	740
5P-7467	740
5P-7468	685
	694
	698
	702
	831
	836
5P-7469	685
	694
	698
	702
5P-7470	686
	694
	698
	702
5P-7471	686
	694
	698
	702
5P-7530	92
	96
5P-7701	67
	83
	85
5P-7814	67
5P-7854	681
	709
5P-7958	508
	509
	1246
5P-7970	87
	379
	381
	383
5P-8068	917
5P-8077	650
	652
	654
	657
	724
5P-8112	740

PART NUMBER INDEX

Part	Page	Part	Page	Part	Page	Part	Page
5P-8182	686	6C-3679	493		254		363
	694	6C-6760	636	6H-4746	320	6T-3633	345
	698		639		323		363
	702		644	6I-0723	917	6T-9442	340
	831		648	6I-0724	917	6V-0400	724
5P-8196	83	6C-8382	1229	6I-5298	1193		727
	85		1231		1194		848
5P-8245	23	6D-1641	815	6I-5342	1234		849
	61		817	6I-5470	1157		850
	67		819	6I-6033	456		851
	69	6D-3479	802		466		853
	81		806		476		855
	88		810	6I-6758	963		857
	90	6D-4246	740		973	6V-0405	679
5P-8247	65		743	6I-6795	991	6V-0545	686
	222	6D-5257	366		992		694
5P-8292	1276	6D-9157	917		999		698
5P-8309	456	6E-1435	802		1001		702
	466		806	6I-6798	566	6V-0683	709
	476		810		568		712
	488	6E-2163	942	6I-6923	962		715
	489	6E-2271	926	6J-2680	836		718
	490		940		840		721
	491		942		843		755
	492		949		846		761
	493	6E-2274	929		912		766
	497		931		914		770
	498		935	6K-0806	1203		823
	501		945		1204		825
5P-8347	268	6E-2313	927		1205	6V-0852	681
5P-8439	225	6E-2745	876		1206		705
	235		879		1207		707
	247	6E-2746	▶876		1208		709
	255		878	6K-8178	225		712
5P-8444	836	6E-3653	935		235		715
5P-8500	207	6E-4793	▶877		244		718
	456		878		247		721
	466	6E-4815	877		255		735
	476	6E-4816	▶878	6L-3616	1048		770
	1246		931		1050		793
5P-9120	523		945	6M-5062	877		796
5P-9205	508	6E-5102	51		1013		799
5P-9297	149		53	6N-1604	278		802
5P-9891	514	6E-5169	935	6N-3279	331		806
5P-9909	120	6E-5431	927	6N-3826	329		810
5Q-4212	665	6E-5434	927		331		813
	667	6E-5438	927	6P-2216	427		815
	669	6E-5439	927		491		817
	671	6E-5643	935		492		819
	673	6E-5731	929		493		823
	675		931		495		825
	676		935		496		912
	677		945		497		914
	678	6E-6528	981		498	6V-0974	755
5S-7349	222	6F-0253	340		500		761
	329		341		502		766
5V-3854	488	6F-4855	601		503	6V-1322	331
	489	6F-7045	334		504	6V-1572	836
	490	6G-2256	225	6P-8855	1240	6V-1573	836
			235	6T-0363	331	6V-1819	99
			246	6T-0371	331		100
			254	6T-0372	331	6V-1874	831
		6G-2263	225	6T-3631	345	6V-1875	836
6B-5072	111		235		363	6V-1889	157
	113		246	6T-3632	345		169

6

▶ **PRIMARY REFERENCE**

PART NUMBER INDEX

Part	Page	Part	Page	Part	Page	Part	Page
	735	6V-4249	60	6V-5782	705		194
6V-2317	24	6V-4298	596		707		196
6V-2369	357	6V-4369	379	6V-5839	51		198
6V-2606	164		381		53	6V-8077	817
	169	6V-4589	151		87		819
	173		154		88	6V-8132	445
6V-2722	244		157		90	6V-8133	399
	262		161		99		409
	350		190		100	6V-8149	23
6V-3265	88		192		139	6V-8186	336
	90		194		149	6V-8187	290
	287		196		190	6V-8188	221
	288		198		192		329
	1240		338		194		332
	1243		339		196	6V-8189	222
	1279	6V-5048	295		198	6V-8197	67
6V-3324	344		296		379	6V-8200	890
6V-3382	872		301		381		894
6V-3538	32		302		383		899
6V-3551	883		305		387		903
6V-3822	149	6V-5049	76	6V-5842	51	6V-8201	862
6V-3908	83		94		53	6V-8202	1265
	85		205	6V-5843	66	6V-8213	602
6V-3918	21		206	6V-6317	87		605
	68		295		88	6V-8218	991
	72		298		90		992
	119		300		379		999
6V-3922	931		309		381		1001
	935	6V-5050	190		383	6V-8231	1296
	945		192		387	6V-8237	399
6V-3938	963		194	6V-6609	111		409
	973		196		112	6V-8336	61
6V-3940	20		198		113	6V-8337	965
	21	6V-5192	872		315		970
	74	6V-5204	862		318	6V-8362	344
	75		890	6V-6707	831	6V-8363	1291
	92		894		917		1293
	94		899	6V-7238	72	6V-8370	1291
	96		903		588		1293
	295	6V-5210	281		590	6V-8374	363
	296		282		1240	6V-8378	329
6V-3965	681		283		1243		336
	705		357	6V-7357	151	6V-8397	149
	707	6V-5217	68		154		151
	709		87		157		154
	712		379		161		157
	715		381		164		160
	718		383		169		164
	721	6V-5218	51		173		168
	735		53		1184		169
	770		83		1185		172
	793		85		1186		173
	796		96		1187		211
	799	6V-5219	67		1188		215
	802	6V-5393	935		1240		675
	806	6V-5556	935		1243		676
	810		988		1276		677
	813	6V-5590	55		1291		678
	815		56	6V-7604	34		679
	817	6V-5597	929		36		681
	819		931		38		709
	823		935	6V-7636	1156		712
	825		945	6V-7658	598		715
	912	6V-5645	290	6V-7981	190		718
	914	6V-5696	23		192		721

PART NUMBER INDEX

Part	Page	Part	Page	Part	Page	Part	Page
	730		677		96	6V-8721	770
	732		678		149		823
	734		682		151		825
	735		705		160		839
	746		707		190		842
	747		735		192		845
	750		740		194	6V-8722	730
	753		743		196		732
	754		746		198	6V-8724	149
	755		754		681		151
	759		755		721		160
	760		759		730		681
	761		760		732		709
	764		761		734		712
	765		764		746		715
	766		765		754		718
	770		766		760		721
	772		770		765		734
	774		823		772		746
	776		825		774		750
	780		827		776		754
	783		829		792		760
	786		834		795		765
	789		836		798		770
	792		839		801		772
	795		842		805		774
	798		845		809		776
	801		1007		815		780
	802		1009		817		783
	805	6V-8400	686		819		786
	806		694		821		789
	809		698		853		792
	810		702		855		795
	813		968		857		798
	815		975	6V-8637	831		801
	817	6V-8554	679		839		805
	819	6V-8625	754		842		809
	821		759		845		813
	823		764		855		815
	825		836		857		817
	839	6V-8626	740	6V-8639	740		819
	842		743		743		823
	845	6V-8627	681		754		825
	853		709		760	6V-8729	681
	855		734		765	6V-8730	158
	857	6V-8629	853		839		169
	952		855		842		681
	1006		857		845	6V-8774	754
6V-8398	620	6V-8634	151	6V-8641	734		761
	622		154	6V-8642	740		766
	624		157		743	6V-8775	839
	628		160	6V-8675	69		842
	630		164	6V-8714	689		845
	632		168		691	6V-8781	735
	636		172		693		750
	639		681		697		754
	644	6V-8635	83		701		759
	648		85	6V-8715	160		764
	665		685		164		772
	667		693		168		821
	669		697		172	6V-8782	682
	671		701	6V-8716	694	6V-8784	694
	673		724		698		698
	675		727		702		702
	676	6V-8636	94		831	6V-8934	681

► **PRIMARY REFERENCE**

PART NUMBER INDEX

Part	Page
	709
6V-8935	675
	676
	677
	678
	679
	709
	735
6V-8936	675
	676
	677
	678
	712
	715
	718
	721
	735
6V-8943	730
	732
	735
6V-8978	991
	992
	999
	1001
6V-8979	679
6V-9001	730
	732
	734
	746
	754
	760
	765
	774
	776
	780
6V-9002	746
	754
	760
	765
	839
	842
	845
6V-9004	685
	694
	698
	702
	839
	842
	845
	853
	855
6V-9005	689
	691
	730
	732
6V-9007	685
	694
	698
	702
	825
	839
	842
	845
6V-9008	836
6V-9182	831
6V-9491	292
6V-9512	827
	829
	834
6V-9672	357
6V-9746	685
	694
	698
	702
	730
	732
	735
	770
	823
	825
	831
	839
	842
	845
	846
	853
	855
	857
	1021
	1023
6V-9829	821
6V-9836	709
	712
	715
	718
	721
	754
	759
	764
	792
	795
	798
	801
	805
	809
	821
6V-9837	735
6V-9839	730
	732
6V-9843	735
	802
	806
	810
6V-9846	735
	853
	855
	857
6V-9850	160
	164
	168
	172
	681
	709
	712
	715
	718
	721
	730
	732
	754
	760
	765
	772
	801
	805
	809
6V-9852	735
	740
	743
6V-9853	853
	855
6V-9854	689
6V-9873	770
	823
6V-9875	829
6V-9876	839
	842
	845
6W-2464	664
	681
6W-6005	224
	234
	244
	246
	254
6Y-2589	527
6Y-2590	527
6Y-2751	527
6Y-2792	530
6Y-5323	528
	▶529
6Y-5685	413
6Y-8023	523
6Y-8028	523
6Y-8029	523
6Y-8075	529
6Y-8076	529
6Y-8077	529
6Y-8180	537
6Y-9855	529
6Y-9856	529
6Y-9858	529
6Y-9859	529
7	
7B-7501	112
7C-1445	24
	67
7C-1493	83
	85
7E-5714	319
7E-6455	140
7F-0560	262
7F-3488	331
7F-3525	331
7F-7259	334
7F-8268	25
	26
	27
	28
7G-1060	389
7H-3171	523
	529
7I-0717	422
	423
	424
	425
7I-0966	988
7I-0986	1010
7I-1026	919
7I-1248	929
	931
	935
	945
7I-1418	456
	466
	476
7I-2272	379
	381
	383
	860
	861
	927
	936
7I-2673	120
	123
	224
	234
	246
	254
	274
	287
	288
	352
	1240
	1243
7I-7131	910
7I-7403	1010
7I-7420	634
	635
7I-7611	588
	590
7I-7619	588
	590
7I-7684	588
	590
7I-8084	602
	605
	890
	894
	899
	903
	1005
	1011
	1012
7I-8102	1010
7I-8152	890
	894
	899
	903
7I-8154	890
	894
	899
	903
7I-8164	890
7I-8166	890
	894
	899

▶ **PRIMARY REFERENCE**

PART NUMBER INDEX

Part	Page	Part	Page	Part	Page	Part	Page
	903		712		730	7X-2546	836
7I-8171	890		715		732	7X-2548	225
	894		718		831		235
	899		721		836		247
	903		734		852		255
7I-8172	890		740		922	7X-2549	671
	894		743		931		802
	899		746		936		806
	903		750		945		810
7J-5925	457		753	7M-8651	332	7X-2550	669
	467		759	7N-0140	320		705
	477		764		323		707
7J-9108	620		770	7N-0296	320	7X-2552	1255
	622		772		323	7X-2553	70
	624		778	7N-0719	290		102
	628		780		▶334		107
	630		783	7N-2059	320		852
	632		786		323		1229
	730		789	7N-2353	346		1261
	732		792	7N-5274	244	7X-2554	70
	735		795	7N-5683	32	7X-2555	620
	740		798	7N-9194	342		622
	743		801	7N-9801	349		624
	827		805	7T-3267	329		628
	829		809	7T-3268	329		630
	834		813	7T-3276	329		632
	836		815	7T-3277	329	7X-2557	852
7J-9933	988		817	7T-3278	329	7X-2559	1231
7K-1181	137		819	7T-3279	329	7X-2563	120
	152		821	7T-3451	329		123
	155		839	7T-3454	329		524
	158		842	7T-3974	329		525
	161		845		331		1079
	165		853	7T-6799	344		1080
	169		855	7T-8890	1277	7X-2567	70
	173		857		1278	7X-2572	440
	185		1169	7T-9123	332	7X-2573	1032
	187		1171	7V-2882	681		1034
	224		1173	7W-3447	149		1036
	234		1240	7X-0339	221		1038
	246		1243	7X-0513	1056		1040
	254		1262	7X-0515	102		1042
	265	7L-2894	329		107		1044
	280		331	7X-0562	329		1046
	352	7L-7556	117		332	7X-2575	413
	355	7L-9061	338	7X-0578	1156	7X-2576	592
	361	7M-0324	331		1281	7X-2577	528
	363	7M-0325	332	7X-0579	169	7X-2619	394
	365	7M-0326	331		173		396
	366	7M-0327	331	7X-0618	114	7X-2621	225
	369	7M-7410	861	7X-2454	528		235
	371	7M-8485	399	7X-2501	181		247
	373		404	7X-2533	1241		255
	375		409		1243		273
	377		685	7X-2536	1189		275
	386		689		1190		276
	388		691		1199		389
	389		693	7X-2539	161		936
	391		694		164	7X-2908	74
	392		697		169		75
	396		698		173	7X-3159	342
	664		701	7X-2543	636	7X-3164	636
	679		702		639		639
	681		724		644		644
	709		727		648		648

▶ **PRIMARY REFERENCE**

PART NUMBER INDEX

Part	Page
7X-3373	329
	331
7X-4803	561
	563
	564
	565
7X-6315	270
	271
7X-7644	1313
	1318
7X-7700	209
	211
	213
	215
7X-7729	97
	102
	107
	114
	134
	140
	1129
	1131
	1133
7Y-0059	1
	▶1246
7Y-0468	965
	970
7Y-0595	399
	404
	409
7Y-0623	1229
	1231
7Y-0639	399
	404
	409
7Y-0642	399
	404
	409
7Y-0643	399
	409
7Y-0644	399
	404
	409
7Y-0645	399
	404
	409
7Y-0656	399
	404
	409
7Y-0659	399
	404
	409
7Y-0661	399
	404
	409
7Y-0662	399
	404
	409
7Y-0663	399
	404
	409
7Y-0667	399
	404
	409
7Y-0673	399
	404
	409
7Y-0676	399
	404
	409
7Y-0731	399
	404
	409
7Y-1056	399
	409
7Y-1057	399
	409
7Y-1094	399
	404
	409
7Y-1095	445
7Y-1113	417
	440
7Y-1507	445
7Y-1647	445
7Y-1648	445
7Y-1650	445
7Y-1838	128
7Y-1976	114
	120
7Y-2292	422
	423
	424
	425
7Y-2397	1056
7Y-2853	456
	466
	476
7Y-2854	457
	467
	477
7Y-2916	457
	467
	477
7Y-3470	1296
7Y-3472	1296
7Y-3474	1277
	1278
	1279
7Y-3729	694
	698
	702
7Y-3730	724
	727
7Y-3731	613
	685
	693
	697
	701
7Y-3732	620
	622
	624
	628
	630
	632
	662
	663
7Y-3919	1237
	1238
7Y-3920	1237
	1238
7Y-3950	346
	363
	681
7Y-3951	357
7Y-3953	346
	363
7Y-3954	357
7Y-3955	681
7Y-4199	753
	759
	764
7Y-4294	867
	870
7Y-4387	734
	780
	783
	786
	792
	795
	798
	801
	805
	809
7Y-4390	734
7Y-4399	750
7Y-4660	566
	568
	570
	574
7Y-4669	566
	568
	570
	574
7Y-4672	566
	568
	570
	574
7Y-4673	566
	568
	570
	574
7Y-4695	566
	568
	570
	574
7Y-4817	910
7Y-4941	572
	576
7Y-4944	572
	576
7Y-4945	580
	582
7Y-4956	580
	582
7Y-5215	566
	568
	570
	574
7Y-5219	872
	936
	963
	973
7Y-5221	867
	870
7Y-5235	399
	404
	409
7Y-5239	572
	576
7Y-5247	740
	743
	836
7Y-5272	549
	963
	973
7Y-5286	281
7Y-5288	281
7Y-5456	224
	234
	246
	254
7Y-5458	343
7Y-5464	343
7Y-5505	357
7Y-7364	1296
7Y-8099	931
	945
7Y-8165	151
	154
	157
	160
	164
	168
	172
	224
	234
	246
	254
	1240
	1243
7Y-8167	1240
	1243
7Y-8436	989
7Y-8437	989
7Y-8463	1195
	1196
	1197
	1198
	1201
	1202
	1207
	1208
7Y-8478	681
7Y-8621	1227
	1228
7Y-8622	1227
	1228
7Y-8876	488
	489
	490
8B-6561	225
	235

8

▶ PRIMARY REFERENCE

PART NUMBER INDEX

Part	Page	Part	Page	Part	Page	Part	Page
	247		635		255		404
	255		638		350	8T-0328	209
	709		646	8P-9770	1082		211
	712		647		1083		213
	715	8C-9660	331		1084		215
	718	8F-0212	927		1085		218
	721	8F-1434	329		1086		290
8C-0563	34		332		1087		329
8C-0564	735		336		1088		332
8C-3089	331		1291		1093		357
8C-3206	612		1293		1094		379
	615	8F-6575	81		1095		381
8C-3334	369	8F-7219	144		1096		383
	371	8F-8882	530		1097		394
8C-3445	83	8H-1141	329		1098		396
	85	8H-2282	1227		1099		491
8C-3446	83		1228	8S-0934	1267		492
	85	8H-3481	1275	8S-1812	342		493
	912	8H-5303	334	8S-1814	342		596
	914	8H-5306	334	8S-1815	342		1129
8C-3451	912	8H-5352	585	8S-2332	327		1131
	914	8J-2559	872		328		1133
8C-3655	329	8J-9236	342	8S-2634	350	8T-0341	864
8C-4984	58	8K-5440	320	8S-4723	1267	8T-0343	890
	59		323	8S-4724	1267		894
8C-5608	263	8L-2779	94	8T-0075	734		899
	264		96		772		903
8C-5748	131		998		792		968
8C-5917	225	8L-2786	67		795	8T-0376	114
	235		76		798	8T-0404	836
	244		94		801	8T-0643	51
	247		96		805		53
	255		151		809	8T-0644	111
	350		154		815		113
8C-5918	224		158		817		118
	234		161		819	8T-0646	81
	244		164		821		883
	246		169	8T-0078	694	8T-0670	445
	254		173		698	8T-0706	959
8C-6358	262		313		702	8T-1158	968
8C-6561	181		314	8T-0100	24		975
	664		317		63	8T-1159	529
	682	8L-8413	244		64		962
8C-6711	203		246		131		963
8C-6868	157		247	8T-0114	1189		973
	168		254		1190	8T-1482	70
8C-6869	211		255		1199	8T-1683	151
	215		366	8T-0198	685		154
8C-6921	262	8M-0505	112		693		157
8C-6965	975	8M-2770	225		697		160
8C-7581	1257		235		701		164
8C-8400	831		247	8T-0266	1161		168
	846		255	8T-0267	917		172
8C-8451	263	8M-2772	1048	8T-0269	602	8T-1686	827
	264		1050		605		829
8C-8988	157	8M-2773	158	8T-0288	1011		834
	168		169		1012	8T-1687	755
	172		1240		1014		761
8C-8989	839		1243		1015		766
	842	8M-5860	34		1016	8T-1715	112
	845		36		1025		151
8C-8992	454		38		1026		154
	521	8N-0869	225	8T-0292	92		157
	522		235	8T-0293	88		160
	634		247		90		164

► **PRIMARY REFERENCE**

PART NUMBER INDEX

Part	Page	Part	Page	Part	Page	Part	Page
	168		173		715		1199
	172		221		718		1211
8T-1779	755		225		721		1229
	759		235		724		1231
	764		247		727		1235
	774		255		730		1236
	776		265		732		1237
	853		273		735		1238
	855		275		740		1240
	857		276		743		1243
8T-1905	157		280		747		1258
	681		287		755		1261
	709		288		761		1272
	712		289		766		1279
	715		298		770		1291
	718		320		772		1293
	721		323		783	8T-4123	120
	735		350		786		123
	774		352		789		440
	776		355		793		1032
	780		366		796		1034
	783		369		799		1036
	786		371		802		1038
	789		377		806		1040
	792		378		810		1042
	795		385		813		1044
	798		388		815		1046
	802		389		817		1054
	806		392		819		1058
	810		445		821		1063
	813		457		823		1065
	815		467		825		1067
	817		477		827		1069
8T-2393	872		488		829		1071
8T-2883	735		489		831		1073
8T-2920	840		490		834		1075
	843		620		836		1076
	846		622		852		1077
8T-2922	1012		624		853		1078
8T-3008	921		628		855		1079
	922		630		857		1080
8T-3490	350		632		881		1106
	1211		634		882	8T-4127	358
8T-3518	262		635		910	8T-4131	890
8T-3519	262		636		912		894
8T-3647	1163		638		914		899
	1164		639		917		903
8T-3666	50		641		929		1054
8T-4001	1054		643		931		1058
	1058		644		936	8T-4132	102
8T-4121	97		646		945		107
	102		647		963	8T-4133	97
	107		648		973		128
	123		660		1048		151
	126		661		1050		154
	132		662		1129		158
	134		663		1131		161
	137		679		1133		164
	140		682		1165		169
	151		686		1169		173
	154		694		1171		225
	158		698		1173		236
	161		702		1189		244
	164		709		1190		247
	169		712		1191		255

PART NUMBER INDEX

Part	Page	Part	Page	Part	Page	Part	Page
	287		743		679		669
	288		747		682		671
	415		755		709		673
	488		761		712		686
	489		766		735		689
	490		793		743		691
	620		796		747		694
	622		799		755		698
	624		802		761		702
	628		806		766		710
	630		810		772		712
	632		813		786		715
	909		815		802		718
	963		817		806		721
	968		819		810		730
	973		827		815		732
	975		829		817		735
	1048		831		819		821
	1050		834		917		827
	1229		853		1129		829
	1231		855		1131		831
8T-4134	1291		857		1133		834
	1296		910		1156		836
8T-4136	97		912		1165		840
	123		914		1191		843
	132		950		1229		846
	134		952		1231		1229
	140		1129		1240		1231
	151		1131		1243	8T-4140	207
	154		1133		1291		453
	158		1189	8T-4138	265		650
	161		1190		280		652
	165		1199		457		654
	169		1211		467		657
	173	8T-4137	102		477		724
	221		107		1143		916
	226		114		1228		954
	236		126		1240		956
	247		140		1243		1056
	255		152	8T-4139	102	8T-4141	1105
	320		154		107	8T-4167	70
	323		158		114		399
	350		161		323		404
	369		165		618		409
	371		169		620		440
	377		173		622		518
	378		226		624		519
	385		236		626		520
	392		247		628		528
	445		255		630		592
	636		265		632		1032
	639		280		636		1034
	644		289		639		1036
	648		298		644		1038
	686		323		648		1040
	694		352		650		1042
	698		355		652		1044
	702		379		654		1046
	709		381		657		1054
	712		383		660		1056
	715		385		661		1058
	718		389		662		1106
	721		445		663	8T-4171	290
	735		457		665		377
	740		467		667		378

► **PRIMARY REFERENCE**

PART NUMBER INDEX

Part	Page
	457
	468
	478
	1257
8T-4172	247
	255
	755
	761
	766
8T-4174	618
	626
	1231
8T-4176	114
	665
	667
	686
	694
	698
	702
8T-4177	793
	796
	799
	802
	806
	810
8T-4178	226
	236
	247
	709
	712
	715
	718
	721
	730
	732
	776
8T-4179	265
	280
	320
	323
	352
	422
	423
	424
	425
	1148
	1151
8T-4182	236
	247
	255
	730
	732
8T-4183	120
	123
	588
	590
	618
	626
	634
	635
	638
	646
	647
	650
	652
	654
	657
	912
	914
	1105
8T-4184	102
	107
	140
	423
	425
	618
	620
	622
	624
	626
	628
	630
	632
	665
	667
	669
	671
	673
	848
	849
	850
	851
	853
	855
	857
8T-4185	128
	140
	226
	236
	247
	255
	369
	371
	620
	622
	624
	628
	630
	632
	636
	639
	644
	648
	682
	710
	712
	715
	718
	721
	743
	789
	802
	806
	810
8T-4186	97
	226
	236
	247
	255
	694
	698
	702
	836
	881
	882
8T-4189	220
	320
	323
	458
	468
	478
	823
	825
	1276
8T-4190	287
	288
	420
	421
	1143
	1148
	1160
	1257
8T-4191	137
	226
	236
	247
	255
	352
	355
	366
	369
	371
	514
	515
	783
	1048
	1050
	1189
	1190
	1199
	1211
	1237
	1238
	1240
	1243
	1261
	1272
	1279
	1293
8T-4192	114
	120
	123
	128
	320
	323
	455
	755
	761
	766
	831
	912
	914
	1229
	1231
	1247
8T-4193	954
	956
8T-4194	102
	107
	185
	187
	596
	618
	622
	624
	626
	630
	632
	634
	635
	638
	641
	643
	646
	647
	650
	652
	654
	657
	682
	710
	712
	715
	718
	721
	724
	727
	827
	829
	834
	836
8T-4195	97
	123
	152
	154
	158
	226
	236
	247
	255
	438
	477
	755
	761
	766
	770
	793
	796
	799
	802
	806
	810
	823
	825
	829
	831
	834
	912
	914
	927

PART NUMBER INDEX

Part	Page
	929
	931
	936
	945
	1169
	1171
	1173
	1235
	1236
	1240
	1243
	1258
8T-4196	97
	102
	107
	140
	152
	154
	158
	161
	165
	169
	173
	226
	236
	247
	255
	660
	661
	662
	663
	686
	827
	829
	831
	834
	852
8T-4198	388
	747
	821
8T-4199	226
	236
	247
	255
	394
	396
	445
8T-4200	415
	1227
	1228
	1240
	1243
8T-4205	181
	222
	290
	329
	331
	379
	381
	383
8T-4223	102
	107
	114
	120
	123
	140
	185
	187
	221
	226
	236
	247
	255
	265
	280
	281
	282
	283
	320
	323
	352
	366
	415
	417
	422
	423
	424
	425
	455
	458
	468
	478
	554
	588
	590
	596
	618
	620
	622
	624
	626
	628
	630
	632
	634
	635
	636
	638
	639
	641
	643
	644
	646
	647
	648
	650
	652
	654
	657
	660
	661
	662
	663
	665
	667
	669
	671
	673
	675
	676
	677
	678
	682
	686
	689
	691
	694
	698
	702
	705
	707
	710
	712
	715
	718
	721
	724
	727
	730
	732
	735
	740
	743
	755
	761
	766
	780
	783
	786
	789
	793
	796
	799
	802
	806
	810
	821
	827
	829
	831
	834
	836
	840
	843
	846
	848
	849
	850
	851
	853
	855
	857
	880
	912
	914
	917
	1105
	1148
	1151
	1229
	1231
8T-4224	24
	62
	152
	154
	158
	161
	165
	169
	173
	181
	222
	320
	323
	394
	396
	415
	458
	468
	478
	705
	707
	774
	793
	796
	799
	802
	806
	810
	823
	825
	912
	914
	927
	1128
	1163
	1164
	1189
	1190
	1199
	1216
	1227
	1228
	1229
	1231
	1240
	1243
	1266
	1268
	1273
	1274
	1276
8T-4226	226
	236
	244
	247
	255
8T-4240	399
	404
	409
8T-4241	890
	894
	899
	903
8T-4244	102
	107
	140
	185
	187
	282

► **PRIMARY REFERENCE**

PART NUMBER INDEX

Part	Page	Part	Page	Part	Page	Part	Page
	283		912	8T-5001	848		493
	417		914		849		596
	620		963	8T-5005	226	8T-6703	120
	622	8T-4910	660		236		123
	624		661		247	8T-6757	1063
	628		662		255	8T-6759	861
	630		663		369		910
	632		1148		371		927
	665		1151		831		936
	667	8T-4944	585	8T-5041	114		968
	669	8T-4956	102		673		975
	671		107		850		1025
	673		114		851		1026
	682		140	8T-5092	686	8T-6761	117
8T-4648	366		650		689		917
	458		652		691	8T-6764	41
	468		654		694		43
	478		657		698		47
	620		665		702	8T-6842	1313
	622		667	8T-5379	518		1318
	624		669		519	8T-6868	1148
	628		671		520		1151
	630		673		1054	8T-6869	161
	632		675		1056		165
	730		676		1058		169
	732		677		1106		173
	852		678	8T-5412	694	8T-6870	793
8T-4779	102		686		698		796
	107		689		702		799
	1032		691	8T-5436	821		802
	1034		694	8T-5451	379		806
	1036		698		381		810
	1038		702		383		813
	1040		740	8T-5460	1054		815
	1042		743		1058		817
	1044		780		1106		819
	1046		783	8T-5878	592		927
	1156		786	8T-6383	588	8T-7044	139
8T-4780	440		789		590	8T-7338	70
	1032		793	8T-6404	862		507
	1034		796	8T-6411	285		827
	1036		799	8T-6412	285		829
	1038		802	8T-6430	526		834
	1040		806	8T-6466	226	8T-7811	1028
	1042		810		236	8T-7910	679
	1044		836		247	8T-7927	85
	1046		839		255	8T-7971	636
	1063		842		740		639
	1065		845		774		648
	1067		880	8T-6684	689		914
	1069		912		691	8T-8378	572
	1071		914		694	8T-8442	602
	1073		917		698		605
	1075	8T-4970	285		702		888
	1076		290	8T-6685	634	8T-8566	329
	1077		772		635	8T-8569	329
	1078		1277		638	8T-8729	336
8T-4908	152		1278		641	8T-8737	72
	154		1279		643		294
	158	8T-4971	1240		646		312
	161		1241		647		343
	165		1243		936		375
	169	8T-4986	136	8T-6693	358		383
	173	8T-4987	128		491		1197
	774		136		492		1198

► **PRIMARY REFERENCE**

PART NUMBER INDEX

Part	Page
	1209
	1210
	1252
	1253
	1254
8T-8748	340
	341
8T-8887	679
8T-8920	554
8T-8987	827
	829
	834
8T-9080	531
	585
	891
	895
	900
	904
8T-9403	724
	727
	730
	732
8T-9597	585
	864
	888
8T-9655	160
	164
	168
	172
	268
8T-9756	224
	234
	244
	246
	254
8T-9757	224
	234
	246
	254
8T-9884	329
8Y-6352	1154
8Y-6967	1148
	1151
8Y-9603	327
	328
9	
9B-4499	342
9B-7233	344
9D-1829	158
	169
9D-3769	120
	123
9F-2167	650
	652
	657
	730
	732
9F-2247	45
9F-4446	21
9F-5599	331
9F-7283	827
	829
9G-0002	224
	234
	244
	246
	254
9G-0003	224
	234
	246
	254
9G-0004	225
	235
	244
	247
	255
	350
9G-0005	224
	234
	244
	246
	254
9G-4101	331
	332
9G-4343	357
9G-6655	278
9G-7641	292
	►344
9G-8909	224
	234
	246
	254
9H-3757	331
9J-0705	877
9J-0707	998
9L-6770	222
9M-1974	21
	51
	53
	58
	59
	67
	68
	72
	83
	85
	87
	92
	94
	96
	112
	119
	131
	268
	379
	381
	383
9M-2307	495
	497
9M-3786	827
	829
	834
9M-5590	968
9M-5732	495
	497
9M-7609	331
9M-7958	185
	187
9M-8406	152
	154
	158
	161
	165
	169
	173
	802
	805
	809
9N-0869	63
	64
	161
	165
	268
9N-1941	140
9N-5253	278
9S-2544	331
9S-4167	151
	152
	154
	155
	157
	160
	172
9S-4180	598
	935
9S-4181	83
	85
	685
	694
	698
	702
	724
	727
	836
	852
9S-4182	83
	85
9S-4183	76
9S-4185	67
	111
	112
	113
	685
	821
	839
	842
	845
9S-4191	76
	746
	754
	760
	765
	821
	827
	829
	834
	927
	952
	960
	961
9S-6130	209
	211
	213
	215
	836
9S-8001	860
9S-8002	981
9S-8003	963
	973
9S-8004	41
	144
	152
	154
	158
	190
	192
	194
	196
	198
	735
	860
	950
	1028
9S-8005	41
	43
	45
	47
	72
	76
	119
	152
	154
	158
	161
	165
	169
	173
	860
	861
	864
	872
	888
	950
	952
9S-8006	160
	164
	168
	172
9S-8008	873
9S-9334	67
9T-4506	876
	879
9U-8693	588
	590
9V-3659	488
	489
	490
9W-0335	357
9W-0742	►262
	350
9W-2146	530
9W-3340	579
9X-0199	1291
	1293
9X-0261	295
	296

► **PRIMARY REFERENCE**

PART NUMBER INDEX

Part	Page
9X-0262	295
	296
9X-1386	310
9X-1813	220
	299
	303
	335
	338
	339
9X-2021	65
9X-2026	1143
9X-2041	1156
	1175
	1177
	1179
	1181
9X-2042	347
	358
	363
	375
	1154
	1156
	1175
	1181
	1214
	1216
	1281
	1284
	1296
9X-2043	1169
	1171
9X-2044	358
	1154
	1156
	1275
	1281
	1291
	1293
	1296
9X-2045	1157
	1169
	1171
	1173
	1234
	1281
9X-2046	1173
	1248
	1249
	1250
	1251
	1275
9X-2099	24
9X-2205	209
	211
	213
	215
9X-2332	383
9X-2480	269
9X-3401	72
	383
	693
	697
	701
	746
	770
	774
	776
	917
	1195
	1196
	1197
	1198
	1209
	1210
	1252
	1253
9X-3463	281
	282
	283
	285
	1229
	1231
9X-3495	369
	371
	394
	396
9X-3601	566
	568
	570
	574
9X-3604	572
	576
9X-3607	580
	582
9X-4184	341
9X-4597	558
	559
	561
	563
	1056
9X-4598	1067
	1069
9X-4824	329
9X-6032	400
	404
	410
	888
9X-6165	263
	264
	1143
	1257
9X-6419	864
9X-6582	675
	676
	677
	678
	709
	734
9X-6654	827
	829
	834
9X-7680	888
9X-7712	83
	85
9X-7737	217
	339
9X-8256	152
	154
	158
	161
	165
	169
	173
	226
	236
	247
	255
	265
	269
	280
	285
	290
	319
	358
	361
	377
	378
	394
	396
	415
	458
	468
	478
	772
	917
	1129
	1131
	1133
	1184
	1185
	1186
	1187
	1188
	1240
	1243
	1275
	1276
	1277
	1278
	1279
	1281
	1291
	1293
9X-8257	70
	287
	288
	507
	588
	590
	618
	620
	622
	624
	626
	628
	630
	632
	650
	652
	654
	657
	724
	827
	829
	834
9X-8267	203
9X-8268	30
	57
	59
9X-8488	281
9X-8600	209
	211
	213
	215
9X-8979	864
9X-9896	263
	264
9Y-0810	29
9Y-6089	22
9Y-8389	151
	154
	157
	160
	164
	168
	172
	181
0	
003-7764	151
	154
	157
	160
	164
	168
	172
	209
	213
005-4362	149
	151
	160
012-0380	335
030-0167	998
030-7935	83
030-7950	190

PART NUMBER INDEX

Part	Page	Part	Page	Part	Page	Part	Page
	192	087-4405	789		764		1071
	194	087-4411	753	087-5773	753		1073
	196		759		759		1075
	198		764		764		1076
030-8188	149		809	087-5774	753		1077
030-8194	183	087-4454	542		759		1078
033-5853	83		▶543		764	093-0364	440
	85	087-4456	▶544	087-5776	753	093-0366	1032
	981		546	087-5780	780		1034
033-6034	92	087-4531	753		783		1036
033-6036	998		759		786		1038
033-6043	981		764		789		1040
033-8248	1048	087-4534	753	087-6582	815		1042
	1050		759		817		1044
036-1865	114		764	087-6583	792		1046
036-9821	331	087-4575	543		795		1063
045-4065	332	087-4576	543		798		1065
061-9455	24	087-4577	543		801		1067
	67	087-4587	224		805		1069
081-6344	423		234		809		1071
	425		246		813		1073
085-6444	1289		254	087-6584	715		1075
085-6447	1289	087-4683	337		778		1076
085-6448	1289	087-4710	968	087-6643	849		1077
085-6449	1234		975	091-5928	579		1078
	1289	087-4786	872		1101	093-1291	620
085-6455	780	087-4932	724	091-9035	236		622
	▶962		727		246		624
085-7075	962	087-4935	724		254		628
085-7076	962		727		369		630
085-7077	962	087-4944	827		371		632
085-7078	962		829		789	093-1345	1054
085-7079	962		834	093-0020	445		1056
085-7080	962	087-5166	950	093-0074	1032		1058
085-7081	962		952		1034	093-1347	1056
085-7082	962	087-5306	801		1036	093-1349	1054
085-7083	962		805		1038		1058
085-7084	962		809		1040	093-1730	588
085-7085	962	087-5548	572		1042		590
085-7356	770		576		1044	093-1731	399
	792		1056		1046		404
	795	087-5550	572	093-0090	440		409
	798		576	093-0349	1032	093-5150	588
	801	087-5551	572		1034	093-7521	595
	805		576		1036		600
	809	087-5661	848		1038	094-0577	399
	813		849		1040		404
	815	087-5708	968		1042		409
	823		975		1044	094-0578	399
	825	087-5709	968		1046		404
085-7538	1021	087-5760	753		1054		409
	1023		759		1058	094-0579	399
085-8037	1279		764		1063		404
085-9310	207	087-5762	753		1065		409
	916		759		1067	094-0580	399
087-3908	456		764		1069		404
	466		774		1071		409
	476		776		1073	094-0584	399
087-3909	456	087-5765	774		1075		404
	466		776		1076		409
	476	087-5766	772		1077	094-0876	965
087-4402	746		774		1078		970
	772		776		1106	094-1528	588
	774	087-5772	753	093-0363	1063		590
	776		759		1065	095-0673	975

▶ **PRIMARY REFERENCE**

PART NUMBER INDEX

Part	Page
095-0705	1105
095-0723	357
095-0728	389
	1211
095-0735	1189
	1190
	1199
095-0736	209
	211
	213
	215
095-0755	1156
095-0772	1216
095-0826	917
	1237
	1238
095-0843	415
095-0882	890
	894
	899
	903
095-0891	399
	404
	409
095-0910	1143
	1257
095-0929	891
	895
	900
	904
095-0930	580
	582
095-0936	968
095-0944	890
	894
	899
	903
095-0965	890
	894
	899
	903
095-0966	890
	894
	899
	903
095-1260	968
	975
095-1386	151
	154
	157
	160
	164
	168
	172
095-1388	93
095-1519	601
	1010
095-1572	872
095-1575	935
	975
095-1576	1025
	1026
095-1578	968
	995
	996
	997
	1005
	1010
095-1579	991
	992
	999
	1001
095-1580	977
	978
095-1582	962
	977
	978
095-1584	594
	992
	999
095-1585	872
	922
095-1586	966
	971
	985
	989
	1007
	1008
	1009
	1013
	1017
095-1587	991
	992
	999
	1001
095-1590	594
	929
	931
	935
	945
	962
	977
	978
	989
	991
	992
	999
	1001
095-1594	950
	952
095-1596	594
	872
095-1600	867
	870
095-1601	921
	922
	989
095-1602	921
	922
095-1603	935
095-1608	917
095-1625	910
095-1633	566
	568
	570
	574
095-1635	572
	576
095-1657	922
095-1681	598
095-1698	988
	1025
	1026
095-1700	872
	921
	922
095-1710	962
095-1716	910
095-1726	580
	582
095-1735	917
095-1750	1007
	1009
095-1751	1007
	1009
095-1777	823
	825
095-1778	935
095-1783	959
095-1785	985
	989
095-1786	991
	992
	999
	1001
095-1787	929
	931
	935
	945
	962
	989
095-1789	950
	952
095-2927	514
	515
095-6639	909
095-7380	872
095-7424	55
	56
095-7930	1237
	1238
095-7944	527
096-0008	863
096-0015	907
096-0061	298
096-1441	588
	590
096-1533	867
	870
096-1545	1028
096-1628	965
	970
096-2323	602
	605
096-2591	394
	396
096-2617	1193
	1194
096-2622	1214
	1216
096-3216	399
	404
	409
096-3780	415
096-3872	1257
096-3884	1214
096-3978	872
096-4035	114
	120
	123
096-4129	491
	492
	493
096-4498	965
	970
096-4755	592
096-4882	1229
	1231
096-4883	740
	743
	836
096-4884	457
	467
	477
096-5919	872
096-5962	357
096-6166	292
	357
	389
	1211
096-6467	440
098-5747	1105
099-0139	1289
099-0822	1010
	1264
099-0823	1156
	1281
099-2374	602
	605
	1129
	1131
	1133
099-3095	883
099-3506	1233
099-3629	1287
	1288
099-3645	1246
099-3649	62
	754
	760
	765
099-5194	588
	590
099-5845	959
099-6136	968
099-6137	965
	968
	970
	975
099-6141	968
	975
099-6144	968
	975
099-6145	968
	975
099-6418	434
	435
	436
	437
099-7030	872

► **PRIMARY REFERENCE**

PART NUMBER INDEX

Part	Page
099-7127	357
099-7857	451
	452
099-8111	554
	867
	870
099-8232	685
	693
	697
	701
1	
100-2881	1234
100-3320	379
	381
	383
100-3866	875
101-2846	358
101-3128	268
101-7396	740
	743
101-7397	724
	727
101-7398	730
	732
101-7401	685
	689
	691
	693
	697
	701
101-7402	740
	743
	836
101-7403	724
	727
101-7404	685
	693
	697
	701
	724
	727
	730
	732
	827
	829
	834
101-8899	1214
	1216
	1219
101-8900	1214
	1216
	1281
101-9848	456
	466
	476
	491
	492
	493
	495
	498
	510
	511
102-0889	980
102-1157	759
	764
102-3596	5
	9
	10
	11
	▶65
102-5828	83
	85
102-5829	83
	85
102-7685	718
	721
	780
	783
	786
	789
102-7886	388
102-7965	363
102-8016	357
102-8802	72
	209
	211
	213
	215
	219
	220
	225
	235
	292
	310
	335
	336
	338
	339
	349
	352
	355
	379
	381
	383
	389
102-8803	224
	225
	234
	235
	246
	254
	337
	345
	352
	355
	366
	379
	381
	1167
102-8804	225
	235
	297
	389
102-8805	343
102-8806	225
	235
	294
	375
103-1384	709
	712
	715
	718
	721
	734
	754
	760
	765
103-5246	1032
	1034
	1036
	1038
	1040
	1042
	1044
	1046
103-8173	935
	980
103-8177	935
103-8252	995
	996
	997
103-8253	995
	996
	997
103-8254	995
	996
	997
103-8255	995
	996
	997
103-8345	580
	582
104-3173	1240
	1243
104-6871	366
104-7293	926
	940
	942
	949
104-7294	940
	942
	949
104-7296	940
	942
	949
104-8771	821
104-8783	801
	805
	809
	813
104-8838	753
	759
	764
104-8903	715
	718
	721
	753
	759
	764
105-1797	379
	381
	383
105-2169	1157
	1233
105-3477	685
	689
	691
	693
	697
	701
	724
	727
105-3479	693
	697
	701
105-3483	724
	727
105-3484	754
	760
	765
105-3485	693
	697
	701
	724
105-3487	415
	457
	467
	477
105-3489	836
105-5175	363
105-6324	518
	520
105-6431	1048
105-9526	1279
105-9527	1279
106-0001	281
106-0002	281
106-0003	281
106-0004	281
106-0005	281
106-0107	292
	▶343
106-0210	343
106-2704	1262
106-6248	878
	▶879
106-8715	831
	846
106-9586	83
	85
107-6370	983
	984
107-6371	983
	984
107-6479	968
	1005
107-6540	992
	999
107-6541	992
	999
	1023

▶ **PRIMARY REFERENCE**

PART NUMBER INDEX

Part	Page
107-6579	580
	582
107-6631	747
	774
	776
107-6933	580
	582
107-7017	1021
	1023
107-7018	1021
	1023
107-7640	579
107-7694	20
107-8618	224
	234
	246
	254
108-1781	584
	884
	885
	886
	887
108-4282	689
	691
	693
	697
	701
108-6503	872
108-7118	853
	855
	857
108-7191	827
	829
	834
108-7203	780
108-7387	734
108-7393	801
	805
108-7516	774
	776
108-7550	660
	661
	730
	732
109-0881	523
109-1294	890
	894
	899
	903
109-1296	890
	894
	899
	903
109-1641	883
109-1839	1305
109-3207	145
	146
	147
	148
109-9437	70
110-5496	753
	759
	764
110-5525	867
	870
	890
	894
	899
	903
	1012
110-7149	588
	590
110-7183	442
110-7231	399
	404
	409
111-2416	379
	381
	383
111-4799	337
111-4836	224
	234
	246
	254
	265
	280
	287
	288
	352
	355
	385
	389
	1129
	1131
	1133
111-4837	224
	234
	246
	254
	287
	288
	369
	385
111-4838	224
	234
	246
	254
	389
111-4839	224
	234
	246
	254
	389
111-6746	839
111-6752	734
	821
111-9916	▶1007
	1011
	1015
	1016
111-9959	931
	945
111-9977	1021
	1023
111-9985	1021
	1023
111-9986	1021
	1023
111-9998	977
	978
112-0065	912
112-0083	774
	776
	▶1002
112-0085	1002
112-0090	1021
	1023
112-2481	▶1111
112-2482	▶1107
112-2489	1107
	1109
112-4550	224
	234
	246
	254
113-2003	827
	829
	834
113-2532	1196
113-2824	514
	515
113-2963	1032
	1034
	1036
	1038
	1040
	1042
	1044
	1046
	1063
	1065
	1071
	1073
	1075
	1076
	1077
	1078
113-6069	66
113-6479	616
	724
	727
113-6738	780
	783
	786
	789
113-6741	750
113-6851	▶848
	1060
	1061
	1062
113-6853	▶849
	1060
	1061
	1062
113-6859	▶850
	1060
113-8490	357
113-8491	357
	365
113-8493	357
114-0489	1021
	1023
114-0623	1007
	1009
	1013
114-0760	566
	568
	570
	574
114-0762	572
	576
114-1322	588
	590
114-1398	588
	590
114-1399	588
	590
114-1541	399
	409
114-6285	457
	467
	477
114-6289	491
	492
	493
114-8234	588
115-2422	246
115-3699	523
115-4072	66
115-4219	66
115-8634	839
	842
	845
115-8645	750
	780
	783
	786
	789
115-8694	556
	▶662
115-8728	853
	855
115-8739	730
	732
115-8856	660
	661
115-8961	662
116-0068	1237
116-0118	224
	234
	246
	254
	273
	275
	276
	287
	288
	369
	371
	389
116-0128	175
116-0210	357
116-3526	▶1008
	1025
116-3715	139
116-4556	5
	9
	10
	11
	▶61

▶ **PRIMARY REFERENCE**

PART NUMBER INDEX

Part	Page	Part	Page	Part	Page	Part	Page
117-5372	517	121-1038	175		▶1004		369
117-5435	440	121-1039	175	123-2552	1003		383
117-6306	1281	121-1173	363		1004		392
117-6349	1211	121-1459	989	123-2809	730	125-7875	287
117-6350	1211	121-1491	860		732		288
117-6356	1211		861	123-4750	709		340
117-8683	1195		927		712		341
	1197		935		715		355
	1198		▶1009		718		363
118-0911	112		1014		734		366
118-1727	5	121-1865	1189	124-0887	660		369
	9		1190	124-0891	661		383
	10	121-6303	772	124-0903	852	126-1757	24
	11		▶1010	124-0909	852	126-1767	72
	▶23	121-6304	1010	124-0910	662		383
118-4044	950	121-7098	1240	124-0911	662		693
	952		1243	124-1008	780		697
118-4057	872	121-7136	1161		783		701
118-4086	966		1240		786		746
	971		1243		789		770
118-4087	965	121-7137	1240		821		776
	970		1243	124-1035	734		1195
118-4140	1101	121-7138	1161	124-1067	827		1196
118-5983	963		1240		829		1197
	973		1243		834		1198
118-5984	783	122-3979	456	124-1106	650		1209
	▶963		466		652		1210
118-7302	527		476		654		1252
118-7303	527	122-3980	456		657		1253
119-1353	960		466	124-1107	650	126-1774	369
119-2378	663		476		652	126-1865	968
119-2379	663	122-4021	185		654		975
119-3662	366	122-4101	435		657	126-1866	968
119-5026	292		436	124-1108	650		975
	1262	122-4120	456		652	126-1913	831
119-5162	917		466		654	126-2075	▶595
119-5259	1021		476		657		912
	1023	122-9605	1240	124-1109	650	126-2076	595
119-5260	1021	122-9608	1211		652	126-5011	379
	1023	122-9609	1211		654		381
119-5262	1021	122-9610	1211		657		383
	1023	122-9617	1169	124-1212	770	126-6514	1008
119-5388	968		1171		823		1017
	975		1173	124-1253	827	126-6515	1008
119-5389	968	122-9657	1240		829		1017
	975		1243		834	126-6516	1008
119-5391	968	123-1373	224	124-1541	872		1017
	975		234	124-1561	872	126-7574	270
119-5392	968		244	124-2111	681		271
119-5398	992		246	124-2113	681	127-0580	1156
	999		254	124-3548	357	127-5728	5
119-5708	140	123-2003	596	124-3953	1296		9
	149	123-2112	572	124-3966	1284		10
119-9447	959		576	124-4009	1193		11
120-4394	888	123-2139	867		1194		▶22
120-5107	1313		870	124-4010	1193	128-2135	1148
120-5114	185	123-2430	754		1194		1151
	187		765	125-1302	290		1154
120-9027	337		▶1003		▶335		1175
120-9127	112	123-2431	1003	125-6535	332		1177
121-0140	533	123-2485	935	125-6536	332		1179
121-0141	534	123-2511	1004	125-6537	332		1181
121-0987	377	123-2516	1021	125-7874	355	128-2136	1154
	378		1023		363	128-2173	1189
121-1023	290	123-2549	734		366		1190

▶ **PRIMARY REFERENCE**

PART NUMBER INDEX

Part	Page	Part	Page	Part	Page	Part	Page
	1199	131-9750	831		667	137-2270	1247
128-4411	209	132-0998	1108		669	137-3623	598
	211		1110		671	137-3624	598
	213	132-0999	1107		673	137-3625	598
	215		1108		677	137-3626	549
128-8886	224		1109	135-8572	185		598
	234		1110		187	137-3628	549
	246	132-1806	224		207		598
	254		234		478	137-3631	549
128-9170	588		246	135-8573	185	137-3708	872
	590		254		187	137-3746	55
128-9265	566	132-1829	▶219		438		56
	568		357		455	137-3749	55
	570	132-4099	1309		456		56
	574	132-4100	1309		466	137-3750	▶55
128-9266	572	132-5789	225		476		102
	576		235	135-8574	456	137-3751	55
129-3399	422		247		466	137-3780	888
	423		255		476	137-6606	386
	424		352	135-8575	151	137-6645	314
	425		355		154		317
129-5096	221		357		157		318
129-5874	650		366		160	138-5709	650
	652		369		164		652
	654		371		168		654
	657		388		172		657
129-6466	1291		1163		456	138-8175	907
	1293		1164		466	139-0246	535
129-7784	909		1237		476	139-6873	151
129-7925	56		1238		508		154
129-7970	602		1240		509		157
	605		1243	135-8576	449		▶217
129-7971	602	133-2427	440		450	139-7099	1150
	605	133-5813	746		451		1153
129-7973	602	133-6788	1025		452		▶1233
	605		1026	135-8577	414	139-7100	1150
129-7974	602	133-8016	1156		456		▶1214
	605	134-2540	366		466	139-7101	1150
129-8034	596	134-3284	287		476		1153
130-0252	1240		288	135-8578	455		▶1281
	1243	134-4126	270		456	139-7119	1285
130-1433	224		271		466	139-7126	1156
	234	134-6146	1160		476	139-7127	1156
	246	134-6852	151	135-8965	1261	139-8736	70
	254		154	135-8966	1261	139-8737	70
130-3280	128		157	135-9819	23	139-8794	129
130-4276	453		160	136-0155	1102	139-8873	70
130-4410	1050		164	136-0207	792	140-0674	980
130-9811	313		168		795	140-0677	980
131-0353	131		172		798	140-3048	518
131-5818	968	134-6918	810		801		520
	975	134-7258	1313		805	141-1313	685
131-5915	965		1318		809	141-2759	357
	970	134-7489	981	136-0289	770	141-3538	1048
131-8826	129	134-8856	▶453	136-0822	24		1050
	130	134-8857	453	136-2422	▶523	141-7251	825
131-8828	129	134-8887	448		526	142-1339	129
131-8829	129		▶454	136-3842	883		130
131-8847	140	134-8888	454	136-3847	523	142-1404	129
131-9453	740	134-8891	454	136-4182	102		130
	743	134-8951	1080		107	142-3836	1
131-9547	730	134-8952	1079	136-4183	66		▶1247
	732	134-9137	1048	136-4303	72	142-5546	1211
131-9548	730	135-2274	1199	136-7227	183	142-5834	1191
	732	135-3980	665	137-1602	142	142-6742	959

▶ **PRIMARY REFERENCE**

PART NUMBER INDEX

Part	Page	Part	Page	Part	Page	Part	Page
142-7764	613	148-4605	588		151		754
142-7765	610		590		160		760
143-4254	753	148-4607	588		721		765
	759		590		730		774
	764	148-4608	588		732		776
143-9392	268		590		734		780
143-9397	1143	148-4609	588		746	148-8354	746
144-0195	1277		590		754		754
	1278	148-4611	588		760		760
	1279		590		765		765
144-0367	120	148-4685	444		772		839
	123	148-4703	445		774		842
	132	148-4704	445		776		845
	134	148-5018	224		792	148-8355	689
	740		234		795		691
	743		246		798		730
	836		254		801		732
144-1636	343	148-8311	151		805	148-8357	836
	1254		154		809	148-8360	831
144-6650	83		157		815	148-8362	689
144-9691	1284		160		817		691
144-9692	1284		164		819		694
145-2237	735		168		821		698
145-2264	85		172		853		702
145-5106	544	148-8313	770		855	148-8363	839
	▶545		823		857		842
146-4936	493	148-8315	740	148-8338	734		845
146-6747	1313		743		772	148-8364	754
	1318	148-8317	689		792		759
147-3957	1032		691		795		764
	1034		693		798		836
	1036		697		801	148-8367	160
	1038		701		805		164
	1040	148-8318	151		809		168
	1042		154		815		172
	1044		157		817		681
	1046		160		819		709
147-4131	975		164		821		712
147-4161	▶983		168	148-8339	694		715
	990		172		697		718
147-4162	983	148-8319	160		701		721
147-4163	931		164		831		730
	945		168	148-8340	740		732
	▶984		172		743		754
147-4164	984	148-8321	735		754		760
147-4184	950	148-8323	829		760		765
147-4921	1273	148-8325	734		765		772
147-5088	119	148-8327	831		839		801
147-7170	102		839		842		805
	107		842		845		809
148-2903	145		845	148-8346	827	148-8368	681
	146		855		829		709
	147		857		834		734
	148	148-8330	685	148-8347	685	148-8371	157
148-3533	530		693		694		168
148-4600	588		697		698		172
	590		701		702	148-8372	770
148-4601	588	148-8335	685		825		823
	590		689		839		825
148-4602	588		693		842		839
	590		697		845		842
148-4603	588		701	148-8353	730		845
	590		724		732	148-8378	149
148-4604	588		727		734		151
	590	148-8336	149		746		160

▶ **PRIMARY REFERENCE**

PART NUMBER INDEX

Part	Page	Part	Page	Part	Page	Part	Page
	681		827		760	150-8896	1102
	709		829		765		1103
	712		834	148-8444	735	151-2939	29
	715		927	148-8449	730	151-6703	1214
	718		952		732		1216
	721	148-8408	76	149-5050	361		1281
	734	148-8411	112		363	151-6704	1214
	746		685		394		1216
	750		821		396		1281
	754		839	149-5069	363	151-6705	1284
	760		842	149-5070	363	151-6778	1281
	765		845	149-5240	145	151-6785	1281
	770	148-8413	681		146	151-6790	1287
	772		709		147	151-6792	1214
	774	148-8414	730		148		1216
	776		732	150-3024	151		▶1289
	780		735		154	151-6793	1289
	783	148-8415	675	150-3036	157	151-6813	1281
	786		676		681	151-6815	1281
	789		677		709	151-6831	1281
	792		678		712	151-6832	1281
	795		712		715	151-6841	1289
	798		715		718	151-6844	1281
	801		718		721	151-9461	1214
	805		721		735		1216
	809		735		774	151-9497	1214
	813	148-8419	675		776		1216
	815		676		780	151-9557	1281
	817		677		783	151-9576	1281
	819		678		786	152-3411	682
	823		679		789	153-1036	50
	825		709		792	153-2521	▶282
148-8382	836		735		795		287
148-8383	151	148-8421	735		798		288
	154	148-8428	682		802	153-2523	▶283
	157	148-8433	709		806		284
	160		712		810	153-2620	225
	164		715		813		235
	168		718		815		389
	172		721		817	153-2630	225
148-8384	679		754	150-3073	827		235
148-8388	853		759		829	153-4906	41
	855		764		834		190
	857		792	150-4027	792		192
148-8390	740		795		795		194
	743		798		798		196
148-8391	827		801		802		198
	829		805		806		890
	834		809		810		894
148-8392	853		821	150-4033	735		899
	855	148-8434	735		853		903
148-8393	734		801		855		1012
	740		805		857	153-5223	968
	743		809	150-4043	770		975
148-8395	41	148-8435	735		823	153-5239	990
	43		750	150-4044	754	153-5276	926
	45		754		759		940
	72		759		764		942
	950		764		774		949
	952		772		776	153-5286	931
148-8407	746		821		853		945
	754	148-8436	839		855	153-5288	931
	760		842		857		935
	765		845	150-4048	730		945
	821	148-8439	754		732	153-5289	931

▶ **PRIMARY REFERENCE**

PART NUMBER INDEX

Part	Page	Part	Page	Part	Page	Part	Page
	935		312	156-6648	1284	161-3684	1281
	945		352	156-6656	1154	161-3685	1156
153-5290	931		355	156-6657	1154	161-3694	1234
	935		379	157-0670	111	161-3695	1289
	945		381		113	161-3697	1156
153-5291	931		383	157-9338	669	161-3698	1281
	935		386	158-8150	935	161-3699	1214
	945		388	158-8159	929		1216
153-5292	931		389		931	161-3705	1289
	935		392		935	161-3717	1261
	945		1191		945	161-3732	1167
153-5293	931	155-2271	225	158-8186	980		1168
	935		235	158-8206	935	161-3734	1167
	945		389	158-8207	935		1168
153-5295	935	155-2272	389	158-8987	▶594	161-3750	▶1276
	▶980	155-2274	292		912	161-3751	▶1275
153-5298	935	155-2276	303		914	161-6963	142
153-5299	935	155-7042	1296	158-9090	730	161-6987	1143
153-5306	935	155-9117	908		▶1025		1257
153-5309	935	155-9122	864	159-0464	1093	162-0177	735
153-5311	935	155-9125	888	159-0465	1093		950
153-6237	685	155-9127	888	159-0466	1093	163-0424	65
	694	155-9131	888	159-4700	545	163-2437	82
	698	155-9134	888	159-7667	129	163-2445	81
	702	155-9137	908	159-7782	910	163-2447	78
	839	155-9139	548	159-7784	596	163-2459	81
	842	155-9141	548	159-8036	1102	163-2478	41
	845	155-9142	548		1103		43
	853	155-9143	548	159-9322	225		45
	855	156-5970	1018		235		47
153-6241	839		1019		369	163-3729	417
	842	156-6469	1287	160-6631	530		440
	845	156-6470	1281	160-7689	225	163-6637	225
153-7036	203	156-6471	1214		235		235
153-8644	959	156-6472	1281	160-7690	369	163-6700	209
153-8645	959	156-6473	1285	160-8194	74		211
153-8723	1189	156-6474	1289		75		213
	1190	156-6475	1289	160-8197	74		215
153-8748	959	156-6554	1281		75	163-6711	375
154-0690	1050	156-6555	1281	160-8199	74	163-6758	357
154-9025	111	156-6562	1281		75	163-6759	235
	113	156-6573	1154	161-1703	300	163-6772	▶285
155-2255	369	156-6575	1154	161-1704	302	163-6795	285
	371	156-6579	1281	161-1705	301		357
155-2260	225	156-6598	1214	161-3128	357		373
	235		1216	161-3398	139		375
	299	156-6599	1156	161-3406	13		1277
	303	156-6600	1214		14		1278
	352		1216		15		1279
	355	156-6601	1281		16		1296
	366	156-6617	1156		▶32	163-6803	363
	373	156-6627	1281	161-3411	139	163-6813	285
	379	156-6631	1285	161-3424	74	163-6814	285
	381	156-6642	1156	161-3639	1214	164-0499	1167
	386	156-6643	1214		1216		1168
	693		1216	161-3650	1214	164-0500	1167
155-2265	375	156-6644	1214		1216		1168
	379		1216	161-3663	1214	164-0514	1214
	381	156-6645	1214		1216		1216
	383		1216	161-3665	1214	164-0515	1214
155-2270	72	156-6646	1291		1216		1216
	225		1293	161-3668	1296	164-0516	1289
	235	156-6647	▶1284	161-3669	1296	164-0517	1289
	292		1291	161-3670	1296	164-0518	1289
	297		1293	161-3677	1296	164-0519	1214

▶ **PRIMARY REFERENCE**

PART NUMBER INDEX

Part	Page
	1216
164-0523	1156
164-0527	1156
164-0528	1156
164-0614	1199
164-0617	1199
164-0618	1276
164-0619	1276
164-0620	1276
164-0639	1275
164-0643	1228
164-0646	1154
164-0648	1281
164-0655	1154
164-0664	1156
164-0666	1287
	1288
164-4180	685
	694
	698
	702
	724
	727
	836
	852
164-5558	753
164-5567	681
	705
	707
	709
	712
	715
	718
	721
	735
	770
	792
	795
	798
	802
	806
	810
	813
	815
	817
	819
	823
	825
	912
	914
164-5574	694
	698
	702
164-5590	912
	914
164-5597	157
	168
164-5603	112
164-5606	694
	698
	702
164-5608	755
	761
	766
164-5616	836
164-5619	160
	164
	168
	172
164-5628	747
	774
	776
164-5629	774
	776
164-5669	81
164-6148	13
	14
	15
	16
	▶29
164-6872	839
	842
	845
164-6874	770
	792
	795
	798
	801
	805
	809
	813
	815
	823
	825
164-6981	▶546
	753
	759
	764
164-8474	1148
	1151
	1154
164-8977	753
	759
	764
164-8983	753
	759
	764
164-9640	735
165-2976	432
	433
	434
	435
	436
	437
165-3065	1247
165-3165	610
165-3169	613
165-3173	616
165-3256	917
165-3260	839
	843
	845
165-4444	5
	9
	10
	11
	▶139
165-4465	5
	9
	10
	11
	▶94
	▶96
165-4557	5
	9
	10
	11
	▶50
165-4931	817
	819
165-5970	▶345
	386
165-9154	151
	154
	157
	▶181
165-9290	566
	568
	570
	574
165-9291	572
	576
165-9431	965
	970
165-9435	966
	971
165-9436	965
	970
165-9438	966
	971
165-9439	965
	970
165-9442	965
	970
165-9443	966
	971
165-9444	965
	970
165-9448	965
	970
165-9460	965
	970
165-9461	965
165-9463	968
	975
165-9464	968
	1005
165-9551	968
165-9552	968
	975
165-9553	968
	975
165-9554	968
	975
165-9595	935
166-1487	1063
	1065
	1067
	1069
	1071
	1073
	1075
	1076
	1077
	1078
166-1488	440
	1054
	1058
166-1489	1032
	1034
	1036
	1038
	1040
	1042
	1044
	1046
166-1490	1032
	1034
	1036
	1038
	1040
	1042
	1044
	1046
166-1494	560
	562
	1067
	1069
166-1495	1054
	1058
166-1496	560
	562
	1054
	1058
	1063
	1065
	1071
	1073
	1075
	1076
	1077
	1078
166-1497	558
	559
166-1498	1032
	1034
	1036
	1038
	1040
	1042
	1044
	1046
	1063
	1065
	1067
	1069
	1071
	1073
	1075
	1076
	1077
	1078
166-1579	1048
	1050
166-1776	24
166-1781	24
166-1785	69
166-2877	1108
	1110
166-3511	▶1108

▶ **PRIMARY REFERENCE**

PART NUMBER INDEX

Part	Page	Part	Page	Part	Page	Part	Page
166-3648	74		1105		1001	173-3510	596
	75	169-0756	1105	171-0036	991	173-3513	598
166-8636	202	169-1165	962		1001	173-3515	598
167-0024	33	169-2519	1105	171-0037	991	173-3516	598
167-0166	94	169-3104	145		992	173-3517	598
167-0171	▶57	169-3105	5		999	173-3518	596
	58		9		1001	173-3529	598
167-3437	285		10	171-0087	965	173-3536	▶985
167-3438	285		11		970		1025
167-3441	285		▶76	171-0123	977		1026
167-3456	285	169-3923	578		978	173-4063	872
167-3466	774	169-6064	554	171-0124	977	173-4066	872
167-3542	348	169-8586	145		978	173-4816	836
	357	169-8598	145	171-0126	977	173-7916	618
	363	170-1612	872		978		626
167-3543	348	170-1616	872	171-0127	977		634
	357	170-1626	872		978		635
167-3593	357	170-1627	872	171-0128	977		638
167-3855	872	170-3015	430		978		646
167-3857	872		431	171-0150	929		647
167-3858	872	170-3016	456	171-0188	793	173-7992	634
167-3859	872		466		796		641
167-3862	872		476		799		646
167-3863	872	170-6888	357		802		▶958
167-3865	872	170-6929	224		806	173-9957	1102
167-3866	872		234		810		▶1104
167-3867	872		244		▶1011	173-9971	1104
167-3868	872		246	171-0198	1011	174-3016	225
167-3872	872		254	171-0596	697		235
167-7018	1156	170-6993	282		701	174-5415	128
167-7036	1288		283		770	174-7791	282
167-7037	1288	170-8553	831	171-2210	290		283
167-7038	1216	170-9324	292	171-3370	120	174-9570	▶144
167-7039	1214	170-9360	415		123		152
	1216	170-9417	282	171-5349	310		155
167-7042	1156		283	171-7325	1144		157
167-7079	1291	170-9418	282		1145		184
167-7141	1231		283		1146	175-0454	30
167-7270	1313	170-9492	1279		1147	175-7436	872
	1318	170-9497	▶1211		1175	175-7887	872
167-8121	50		1260		1181	176-1902	1240
167-8987	366	170-9498	1211	171-7413	1289		1243
168-0765	988	170-9499	1211	171-7414	1289	176-1916	1169
168-0794	965	170-9722	1281	171-7420	1154		1171
	970	170-9724	1154	171-7426	1156		1173
168-1969	705	170-9864	566	171-7477	1234	176-1925	1231
	707		568	171-7486	1231	176-1928	1229
168-6727	412		570	171-9073	137		1231
	▶413		574	171-9413	588	176-1931	1277
168-7211	74	170-9865	572		590		1278
168-7940	907		576	171-9892	130	176-1932	1279
168-7941	907	170-9964	585	172-0907	780	176-1937	1156
168-7942	907	170-9985	867	172-4432	927	176-1938	1156
168-8672	1102		870	172-6062	379	176-1939	1156
168-9523	616	170-9986	867		381	176-1941	1156
168-9759	746		870		383	176-1942	1156
	821	170-9996	867	172-6064	383	176-1946	1154
168-9760	609		870	172-6065	383	176-1947	1154
168-9762	615	171-0023	1021	172-8406	579	176-1951	1289
169-0737	1105		1023	172-8429	617	176-1952	1289
169-0738	1105	171-0034	991	173-3503	▶549	176-1953	1289
169-0739	1105		992		596	176-1954	1289
169-0740	1105		999	173-3505	549	176-1955	1289
169-0745	1105		1001	173-3506	549	176-1956	1289
169-0753	▶578	171-0035	991	173-3507	596	176-1957	1289

▶ **PRIMARY REFERENCE**

PART NUMBER INDEX

Part	Page
176-1958	1150
	1153
	▶1285
176-1964	1153
	▶1216
176-1972	1154
176-1986	1156
176-1996	1219
176-2815	1303
176-4463	753
	759
	764
176-4469	753
	759
	764
176-4708	750
	759
	764
176-4746	750
176-4755	764
176-4768	753
	759
176-4770	839
	842
	845
176-4853	516
	▶528
176-5913	81
176-5914	81
177-1044	119
177-1052	119
177-1056	119
177-2553	598
177-2619	549
177-2653	685
	▶986
	▶987
177-5739	430
	431
177-5879	455
177-5880	455
177-6315	1247
177-6395	435
	436
177-6972	5
	7
	8
	10
	▶221
177-7707	366
177-8407	678
177-8572	639
177-9778	152
	155
	157
178-2334	297
178-2335	297
178-2345	▶297
	298
178-2357	189
	200
	201
	202
178-2513	387
178-3899	5
	9
	10
	11
	▶80
178-5422	1169
	1171
	1173
178-5423	1169
	1171
	1173
178-5431	1277
	1278
178-5500	1279
178-5530	1175
178-5569	1285
178-5570	1156
178-5572	1287
	1288
178-5573	1214
	1216
	1287
	1288
178-5574	1214
	1216
	1287
	1288
178-5576	1281
178-5659	1266
178-6473	70
178-6474	70
179-1292	529
179-1497	530
179-1499	530
179-3037	531
179-3038	531
179-3040	531
179-3043	▶514
	524
179-3044	514
	515
179-3045	514
179-3046	514
	515
179-3047	514
	515
179-3048	514
	515
179-3426	527
179-3428	527
179-5090	620
	622
	628
	632
179-5235	665
	667
	669
	671
	673
179-7434	774
179-7435	774
179-7456	774
	776
179-7616	780
179-7662	689
	691
179-8128	189
	200
	201
	202
	203
179-9806	598
180-2435	6
	7
	8
	326
	▶327
180-3861	282
	283
180-6769	872
180-6770	872
180-7521	417
180-7525	417
180-7529	417
180-7537	417
180-9340	299
183-1035	1229
	1231
183-2317	41
183-2823	181
183-2874	528
	▶530
183-2875	530
183-2883	530
183-3398	94
183-3399	96
	190
	192
	194
	196
	198
183-3404	94
	96
183-3406	76
183-3407	41
	190
	192
	194
	196
	198
183-4494	19
	51
183-5163	57
183-8088	5
	▶1163
184-3835	867
	870
184-5394	123
184-8580	458
	468
	478
	493
184-8722	422
	423
	424
	425
184-8862	437
184-9114	160
184-9144	753
184-9336	746
184-9508	693
184-9593	753
	760
	765
184-9595	753
	760
	765
185-0230	572
	576
185-0231	572
	576
185-0232	572
	576
185-0303	864
185-0383	746
185-0407	1011
185-0423	977
	978
185-0462	746
	▶1005
185-0463	1005
185-2638	222
185-2639	222
185-2642	222
185-2644	222
185-2645	222
185-2647	222
185-2648	222
185-2650	222
185-2651	222
185-2653	222
185-2654	222
185-2655	222
185-2658	222
185-5294	221
	▶222
185-8161	1169
	1171
	1173
185-8180	1214
	1216
185-8181	1281
185-8182	1281
185-8187	1281
185-8196	1156
185-8197	1281
185-8205	1154
185-8214	1154
185-8221	1281
185-8280	1156
185-8281	1156
185-8284	2
	3
	1177
	1179
185-8286	337
	1144
	1145
	1146
	1147
185-8290	1296
185-8293	1240
	1243
185-8300	1136

▶ **PRIMARY REFERENCE**

PART NUMBER INDEX

Part	Page
	1138
	1141
	1239
185-8302	1136
	1138
	1141
185-9208	292
186-0359	149
186-3735	187
	209
	211
	213
	215
	219
	220
	224
	234
	246
	254
	297
	310
	335
	337
	338
	339
	345
	349
	1018
	1019
186-3736	297
186-5175	872
186-5611	417
186-5614	417
186-5649	1054
	1058
187-0472	5
	9
	10
	11
	▶72
187-0474	5
	9
	10
	11
	▶83
	▶85
187-0661	1313
	1318
187-1315	40
	49
187-5853	685
	689
	691
187-6720	693
	697
	701
187-9833	624
	630
187-9862	665
	667
187-9981	636
	639
	648
188-0055	644
188-0056	644
188-2128	312
188-3066	527
188-3826	13
	14
	15
	16
	▶101
188-4140	▶596
	912
	914
188-4142	596
	▶598
188-4143	598
188-4162	867
	870
188-4163	867
	870
188-4164	867
	870
188-4165	867
	870
188-4166	867
	870
188-4167	867
	870
188-4170	867
	870
188-4171	867
	870
188-4172	867
	870
188-4173	867
	870
188-4176	867
	870
188-4216	566
	568
	570
	574
188-4217	566
	568
	570
	574
188-4218	566
	568
	570
	574
188-6121	160
	164
	168
	172
	▶183
189-2449	51
	53
189-2678	1154
189-2690	1214
	1216
189-2693	1234
189-2694	1234
189-2702	1285
189-2704	1156
189-2711	1214
189-2716	1234
189-2847	1233
189-2849	1233
	▶1234
189-2855	1154
189-2864	1157
189-3189	872
189-3396	1156
189-3434	1240
	1243
189-3860	▶518
189-3861	518
	520
189-3862	518
	520
189-3922	1054
	1058
189-9377	72
189-9380	907
189-9382	907
190-0643	51
	53
190-3562	33
190-5386	1313
	1318
190-6114	72
190-6115	41
	43
	45
	47
190-6117	41
	43
	45
	47
190-7062	451
	452
190-7745	836
190-7750	965
	970
190-7751	965
	970
190-7819	1199
190-7865	952
190-8970	184
190-8977	183
	▶184
191-1782	160
	164
	168
	172
191-1783	160
	164
	168
	172
191-2511	588
	590
191-2513	588
	590
191-2514	588
	590
191-2521	399
	404
	409
191-2524	588
	590
191-2526	399
	404
	409
191-2576	2
	3
	▶412
191-2577	412
	▶592
191-2645	399
	404
	409
191-3063	5
	9
	10
	11
	▶69
191-3180	1067
	1069
191-4457	111
	113
191-5602	580
	582
191-5603	580
	582
191-5604	580
	582
191-5605	580
	582
191-5606	398
	403
	408
	▶863
191-5619	570
	574
191-5643	580
	582
191-5644	580
	582
191-5645	580
	582
191-5646	580
	582
191-5647	580
	582
191-5648	580
	582
191-5705	580
	582
191-7581	888
191-7582	864
	888
191-7583	864
	888
191-7584	548
191-7823	379
	381
	383
192-4697	139
192-6790	724
192-6908	555
	▶660
192-6909	555
	▶661
192-8302	516
	▶519
192-8303	519
192-8320	1029
	1030

▶ **PRIMARY REFERENCE**

PART NUMBER INDEX

Part	Page
	▶1048
192-8321	1032
	1034
	1036
	1038
	1040
	1042
	1044
	1046
192-8358	518
	520
193-0158	149
193-2162	190
	192
	194
	196
	198
193-2839	140
193-2844	140
193-3509	224
193-6648	618
193-6650	618
193-6662	620
	622
	624
	628
	630
	632
193-7901	872
193-9389	422
	423
	424
	425
193-9438	434
	437
193-9994	693
	697
	701
194-0101	724
	727
194-0105	724
194-0115	724
	727
194-0174	▶609
	724
	727
194-0176	609
	▶610
194-0177	▶611
	724
	727
194-0178	611
	▶612
194-0179	611
	▶613
194-0180	▶614
	724
	727
194-0181	614
	▶615
194-0182	614
	▶616
194-0242	836
194-0243	836
194-0280	724
	727
194-0409	654
194-0410	654
194-3526	90
194-5226	303
194-5227	303
194-6725	▶299
	305
194-9473	864
	888
194-9479	908
194-9480	908
194-9481	908
195-0452	92
195-5136	1112
195-7120	▶1112
195-7216	▶1109
195-7217	▶1110
195-8098	13
	14
	15
	16
	▶99
	▶100
196-0476	654
196-0477	654
	657
196-0478	650
	652
	654
	657
196-0479	654
196-0480	654
	657
196-0481	650
	652
	654
	657
196-0482	650
	652
	654
	657
196-0711	875
196-1569	1229
	1231
196-1571	1229
	1231
196-1572	1229
	1231
196-1574	1229
	1231
196-1599	1229
196-1665	1240
	1243
196-1666	1239
196-1829	5
	9
	10
	11
	▶87
196-1831	87
196-3784	975
196-4873	404
196-4987	872
196-6838	205
197-0196	860
	861
197-0199	860
	861
197-0252	1021
	1023
197-0273	860
	861
197-0758	962
197-0986	6
	7
	8
	10
	▶328
197-2100	618
197-2101	618
197-2247	958
	▶959
197-2248	958
	▶960
197-2362	639
197-2384	636
	639
	648
197-2471	864
197-2472	864
197-2474	864
197-4385	389
197-8391	151
	154
	157
	160
	164
	168
	172
	▶313
	▶314
197-8393	295
	▶300
197-8394	295
	▶301
197-8419	96
197-9367	74
	75
197-9392	74
197-9581	119
197-9642	51
	53
198-2003	681
	709
	712
	715
	718
	721
198-3899	1128
	1274
199-1286	724
	727
199-1773	685
	693
	697
	701
199-1914	792
	795
	815
	817
199-1918	694
	698
	702
199-4523	445
199-4524	445
199-4538	412
	▶587
199-4539	587
	▶588
	▶590
199-4540	588
	590
199-4559	▶442
	443
199-4580	404
199-4582	399
	404
199-4583	399
	404
199-4750	404
199-7447	▶547
199-7891	222
199-8436	222
	2
200-3292	890
	894
	899
	903
200-3311	55
	56
200-3372	587
	▶862
200-3373	862
	▶866
200-4495	66
200-6741	551
	552
	▶1184
201-0828	527
201-2771	440
	1032
	1034
	1036
	1038
	1040
	1042
	1044
	1046
	1054
	1056
	1058
	1106
201-2774	▶520
201-2816	1031
	▶1050
201-2836	1054
	1058
201-3003	1067
	1069

▶ PRIMARY REFERENCE

PART NUMBER INDEX

Part	Page
201-4391	1214
	1216
201-4417	1156
201-4530	1156
201-4534	1229
	1231
201-4535	1229
	1231
201-9119	▶527
	533
	534
	535
	536
	537
	538
201-9263	935
201-9299	598
202-3301	5
	9
	10
	11
	▶21
202-4004	753
202-6603	5
	9
	10
	11
	▶92
202-6758	618
	626
202-6857	626
202-6858	626
202-6859	626
202-6981	636
202-7001	636
	639
	644
	648
202-7002	636
	639
	644
	648
202-7021	620
	622
	624
	628
	630
	632
202-7674	5
	9
	10
	11
	▶118
203-0199	221
203-0860	▶533
203-0861	▶534
203-0862	▶535
	539
203-1022	83
203-1023	83
203-2059	211
	215
203-3237	41
	43
	45
	47
203-3238	41
	43
	45
	47
203-4927	430
	431
203-4930	449
	450
203-5057	492
	493
203-5805	30
203-6090	30
203-7775	139
204-0909	120
	123
204-0920	120
	123
204-1611	224
	234
	246
	254
	352
	388
	392
204-1614	224
	234
	246
	254
204-1673	244
	255
	1240
	1243
204-2676	867
	870
204-2677	867
	870
204-2678	866
	869
	▶988
204-2679	866
	▶867
204-2755	▶989
	1028
204-2762	598
204-2763	549
204-2799	888
204-2819	863
	▶1028
204-7368	883
204-7369	883
204-8210	650
	652
204-8212	650
	652
204-8358	660
204-8359	660
204-8360	661
204-8361	661
204-8428	693
	697
	701
204-8450	912
205-1306	149
	▶205
205-1320	66
205-1321	13
	14
	15
	16
	▶66
205-1339	1191
205-1340	1191
205-4013	5
	9
	10
	11
	▶117
205-6295	1156
205-6642	140
205-6781	137
205-9114	399
	404
	409
206-3164	954
	956
	▶990
206-3305	▶965
	1201
	1202
	1203
	1204
	1205
	1206
206-3336	1199
206-3719	80
206-9290	602
	605
	890
	894
	899
	903
	1012
206-9291	602
	605
	891
	895
	900
	904
206-9294	602
	605
206-9295	602
	605
206-9296	602
	605
206-9297	602
	605
206-9298	585
206-9299	602
	605
206-9300	602
	605
206-9301	602
	605
207-0159	1226
	▶1227
207-0160	1226
	▶1228
207-0161	1227
207-0164	1227
207-0167	1227
	1228
207-0170	1227
	1228
207-0173	1227
	1228
207-0176	1228
207-0216	1229
207-1556	328
	▶329
207-3590	617
	▶664
207-6231	705
	707
207-6395	654
	657
207-6398	654
	657
207-6403	917
207-6404	917
207-6443	685
207-6641	753
207-6683	730
	732
207-8235	880
	▶883
208-4289	433
	435
	436
208-7474	90
208-9277	387
208-9282	92
209-1434	117
209-3464	1102
	1103
	▶1105
209-3466	1105
209-4280	1274
209-5011	883
209-5582	▶336
	387
209-5917	1028
209-5920	1028
209-5940	981
209-5941	981
209-5942	981
209-5982	▶548
	888
209-6000	909
209-6003	981
209-6004	981
209-6005	981
209-7290	83
	85
209-7291	83
	85
209-7293	101
209-9234	183
210-1747	295
	▶302
210-5522	99
210-5808	1156
210-5827	1275
210-5828	1275

▶ **PRIMARY REFERENCE**

PART NUMBER INDEX

Part	Page
210-5829	1275
210-5834	1275
210-5836	1275
210-5837	1275
210-5838	1275
211-0546	99
211-2134	41
	43
	45
	47
211-3285	5
	9
	10
	11
	▶24
211-6807	383
211-7730	183
212-2768	160
	▶338
212-2829	1048
	1050
212-2830	1048
	1050
212-2841	440
212-5148	685
	689
	691
212-5185	467
	477
212-5443	730
	732
212-5580	650
	652
212-5583	650
	652
212-7002	30
212-8917	34
	36
	38
212-8926	▶81
	82
213-0677	72
	917
213-0772	357
	394
	396
213-2410	21
213-2411	21
213-3190	74
	75
213-3745	734
213-4363	13
	14
	15
	16
	▶58
	▶59
213-4737	399
	404
213-5206	27
213-5213	92
213-9100	220
213-9242	981
213-9243	981
213-9244	981
213-9246	981
213-9247	981
213-9248	888
213-9250	888
213-9320	▶78
	81
214-4531	1305
214-4532	1305
214-7566	306
	308
214-7567	304
	307
214-7568	43
	45
	47
	96
	190
	192
	194
	196
	198
	296
	681
214-7915	1313
	1318
214-8110	451
	452
214-8310	456
	466
	476
215-3249	379
	381
	383
215-4890	693
	▶921
215-4909	594
215-5037	753
	760
	765
	▶859
215-6662	▶1229
216-0611	▶1231
216-2941	119
216-2942	119
216-4970	290
216-5586	30
216-6485	676
216-6578	618
	626
216-6579	618
	626
216-6580	618
	626
217-0609	41
	43
	45
	47
217-4899	▶1120
217-4900	▶1121
217-4903	▶1116
217-5199	113
217-5200	111
	113
217-5701	25
	27
	28
218-0859	5
	9
	10
	11
	▶60
218-1002	693
	697
	701
218-1059	750
	778
	780
	783
	786
	789
218-1128	724
	727
218-1139	685
219-0305	1231
219-1322	578
219-4452	118
	▶119
220-0453	129
	130
220-1718	87
220-1952	32
	▶33
220-8678	144
220-9090	1117
	1122
	1124
220-9102	1122
220-9103	1124
220-9104	1085
	1086
220-9109	1117
220-9110	1114
	1116
	1120
	1121
220-9112	1120
220-9113	1121
220-9119	1116
220-9130	1115
	1117
	1125
220-9133	1125
220-9138	1115
220-9139	1117
220-9169	▶1114
221-0144	99
	100
221-3494	96
	190
	192
	194
	196
	198
221-6809	131
221-8045	1313
	1318
221-8813	1160
	▶1248
	▶1249
	▶1250
	▶1251
	1260
221-8859	693
	697
	701
	770
221-8861	2
	3
	▶272
221-8872	▶269
	1260
221-8874	269
221-8884	552
	▶1189
	▶1190
	1260
221-8912	823
	825
221-9806	72
222-0084	986
	▶991
222-0085	991
	1001
222-0225	1193
	1194
222-3901	119
222-4087	664
	681
222-4088	664
	681
222-4737	935
222-8297	2
	▶4
222-8300	4
	7
	8
	▶140
223-3040	1
	▶414
223-3041	414
	▶415
223-4296	1257
223-6768	750
223-6915	650
	652
	654
	657
223-7050	681
223-8112	1114
223-9020	14
	15
223-9818	1313
	1318
224-0554	1313
	1318
224-1377	387
224-3247	20
224-4536	▶303
	304
224-7717	1311
	1323
224-8945	1311
	1323
224-8946	1313
	1318

▶ **PRIMARY REFERENCE**

PART NUMBER INDEX

Part	Page
224-9843	4
	▶5
225-0312	1313
	1318
225-0313	1311
	1323
225-3305	1311
	1323
225-4256	1311
	1323
225-4257	1313
	1318
225-4516	891
	895
	900
	904
225-4517	585
225-4518	891
	895
	900
	904
	▶1012
225-4548	910
225-4549	910
225-4558	1012
	▶1013
225-4579	▶556
	1052
225-4580	556
	▶560
225-4581	560
	▶570
225-4625	572
	576
225-4804	922
	950
	952
225-4815	965
	970
225-4816	965
	970
225-4818	950
	952
225-5714	1240
	1243
227-0428	836
227-0590	917
227-0620	▶601
	917
227-1200	34
	36
	38
227-4002	379
	381
227-4531	25
	26
	27
	28
227-5904	189
	190
	192
	194
	196
	198
	200
	201
227-6074	444
227-6089	▶443
	445
227-6090	443
	▶444
227-6100	404
227-6101	404
227-6102	404
227-6105	445
227-6106	445
227-6145	▶445
	516
227-6188	▶398
	407
	412
227-6189	398
	▶399
227-6190	399
	409
227-6191	399
	409
227-6192	399
	409
227-6195	▶403
	407
	412
227-6196	403
	▶404
227-6197	404
227-6215	590
227-6221	590
227-6846	1167
	1168
227-7575	357
227-7616	1195
227-7617	1196
227-7625	1189
	1190
227-7683	3
	▶271
228-2780	1311
	1323
228-2781	1313
	1318
228-3621	60
228-4766	69
228-5615	1054
	1058
228-5617	570
	574
	1063
	1065
	1071
	1073
	1075
	1076
	1077
	1078
228-5619	1067
	1069
228-5621	1038
228-5897	202
	203
228-7094	85
228-7096	43
	45
	47
228-7315	1311
	1323
228-7316	1318
228-8147	740
228-9253	1311
	1323
228-9254	1313
	1318
229-0887	1313
	1318
229-0999	151
	154
	157
	161
	165
	168
	172
229-1744	▶1311
229-1784	▶176
229-1785	176
	▶185
	▶187
229-1857	185
	187
229-1859	▶175
	185
	187
229-1860	185
	187
229-1861	185
	187
229-1873	▶2
229-1894	1
	▶1313
	▶1318
229-1898	2
	3
	▶516
229-1905	▶1029
229-1908	▶1031
229-2665	5
	9
	▶13
229-3568	5
	9
	10
	11
	▶67
229-3569	67
229-6974	▶1122
229-6975	▶1124
229-6978	▶1117
229-7123	▶1125
229-7128	▶1115
229-7129	▶1117
229-7754	1093
229-7892	1093
229-7893	1093
229-7894	1093
229-7897	1093
229-8044	▶1081
229-8045	1081
	▶1093
229-9070	▶1277
	▶1278
229-9072	1
	▶1260
229-9077	1268
	▶1273
229-9078	1260
	▶1261
229-9079	▶1135
229-9080	▶1129
	▶1131
	▶1133
	1135
229-9081	1129
	▶1136
229-9082	1135
	▶1219
229-9086	▶1295
229-9087	▶1291
	▶1293
	1295
229-9088	▶1279
	1295
229-9089	1265
	▶1268
229-9090	▶1266
	1268
229-9094	1266
229-9098	▶1148
229-9099	▶1150
	1160
229-9100	▶1151
229-9101	▶1153
	1160
230-0155	677
230-0156	677
230-0496	671
230-1340	265
	280
230-1341	265
	280
230-2866	134
230-2896	17
	18
	▶120
	▶123
230-2898	17
	18
	▶132
	▶134
230-2899	17
	18
	▶102
	▶107
230-2930	120
	123
230-2931	120
	123
230-2933	132
	134
230-2934	132
230-2935	132
230-2939	132
	134

▶ **PRIMARY REFERENCE**

PART NUMBER INDEX

Part	Page
230-2940	132
	134
230-2941	132
230-2942	132
230-2946	102
	107
230-2953	102
	107
230-2956	102
	107
230-2960	102
	107
230-4009	225
	235
	366
	375
	389
230-4011	225
	235
	373
	375
	383
	389
	391
	1237
230-4012	1018
	1019
230-4013	225
	235
	383
230-5008	361
	363
	375
230-5010	225
	235
	369
	371
	373
	375
	389
231-1756	289
	▶290
231-1771	▶220
231-1806	350
231-1827	224
	234
	246
	254
231-1836	▶373
	374
	1183
231-1978	5
	9
	10
	11
	▶295
231-2294	1154
231-2295	225
	235
	366
	375
231-3039	5
	9
	10
	11
	▶149
231-3043	149
231-4707	864
231-6843	580
	582
231-6844	580
	582
231-6864	588
231-6969	588
232-0114	1082
	1083
	1084
	1087
	1088
	1099
232-0115	1082
	1083
	1084
	1099
232-0116	1082
	1083
	1084
	1099
232-0343	205
	▶206
232-2105	1085
	1086
232-2106	1085
	1086
232-2147	1111
232-2148	1111
232-4102	753
	760
	▶977
232-4103	705
	▶924
	▶925
232-4113	921
	922
232-4114	922
232-4157	1187
	▶1201
232-4158	1187
	▶1202
233-0423	5
	9
	10
	11
	▶64
233-0891	268
233-1124	1
	▶298
233-2530	864
	▶907
233-2535	907
233-4880	908
233-4885	907
234-0203	92
234-1035	290
234-1037	290
234-1038	290
234-1097	357
234-1122	389
234-1156	292
234-1158	292
234-4440	853
	855
	857
	▶910
234-4492	730
	732
234-4539	890
	894
	899
	903
234-4595	▶555
	1029
	1031
234-4596	▶555
	1029
	1031
234-4597	555
	▶558
234-4598	558
	▶566
234-4599	▶557
	1029
	1031
234-4600	557
	▶564
234-4601	564
	▶580
234-4602	▶556
	1052
234-4603	556
	▶561
234-4604	561
	▶572
234-4620	551
	▶584
234-4638	102
	107
	▶864
234-5012	296
	▶315
234-5013	296
	▶316
234-6468	1154
234-6469	1154
234-6470	1154
234-6471	1154
234-6472	1154
234-6473	1154
234-6474	1154
234-6475	1154
234-6476	1154
234-6477	1154
234-6478	1154
234-6480	1154
234-6483	1154
234-6485	1154
234-6489	1287
234-6490	1154
234-6497	1154
234-6498	1154
234-6499	1212
234-6500	▶1213
234-6501	1148
	1151
	▶1212
234-6502	1212
234-6521	1154
234-6547	1154
234-6548	1154
234-6550	1154
234-6579	1154
234-6580	1175
	1177
	1179
	1181
234-6593	1212
234-6594	1150
	1153
	▶1296
234-6602	1177
	1179
234-6603	1175
	1181
234-6604	1177
	1179
234-6605	1175
	1181
234-6606	▶1144
	1177
234-6607	▶1145
	1175
234-6608	1175
	1177
	1179
	1181
234-6609	1175
	1177
	1179
	1181
234-6610	1175
	1177
	1179
	1181
234-6611	1175
	1181
234-6612	1175
	1181
234-6613	▶337
	1175
	1181
234-6614	1175
	1181
234-6615	337
235-5507	142
235-7626	1056
235-7627	1056
235-7628	1056
235-7636	1056
235-7639	1056
235-7642	1056
235-7679	1063
	1065
	1071
	1073
	1075
	1076

▶ **PRIMARY REFERENCE**

PART NUMBER INDEX

Part	Page	Part	Page	Part	Page	Part	Page
	1077	235-8929	1154	236-3670	415		1073
	1078	235-8932	1296	236-3671	415		1075
235-7764	▶507	235-8933	1156	236-3702	438		1076
	532	235-8950	1154	236-3703	438		1077
	539	235-8951	1144	236-4545	320		1078
235-7765	507		1146		323	236-9435	415
235-7770	570	235-8952	1145	236-6220	295	236-9437	415
	574		1147		▶304	236-9438	415
235-8174	5	235-8965	1175	236-6221	295	236-9440	415
	9		1181		296	236-9568	430
	10	235-8966	1177		▶311		431
	11		1179	236-6226	6	237-0227	383
	▶25	235-8969	▶1193		9	237-1962	327
	▶26		1201		10		▶331
235-8200	5		1207		11	237-3191	▶618
	9	235-8970	▶1194		▶379	237-3192	▶620
	10		1202		▶381		▶622
	11		1208	236-6339	740		▶624
	▶294	235-8971	1193		743	237-3194	▶665
235-8202	379	235-8972	1194	236-6419	929		▶667
	381	235-8974	1291		931		▶669
235-8856	1260		1293		935	237-3195	▶626
	▶1272	235-8995	1144		945	237-3196	▶628
235-8857	1272		1145	236-6421	931		▶630
235-8862	1258	235-8996	1144		935		▶632
235-8873	1129		1145		945	237-3198	▶671
	1131		1146	236-6422	935		▶673
	1133		1147	236-6919	585	237-3203	▶1060
235-8874	1129	235-8997	1144		880	237-3207	▶1060
	1131		1146		884	237-3208	1060
	1133	235-8998	1145		885		▶1065
235-8875	1129		1147		886	237-3209	1065
	1131	235-9001	1148		887	237-3307	▶553
	1133		1151	236-7315	5	237-5176	111
235-8876	1219	235-9006	1129		9		113
235-8877	1219		1131		10	237-5586	508
235-8878	1219		1133		11		509
235-8879	1219	235-9012	1277		▶62	237-7621	1
235-8891	1240		1278	236-8335	516		▶278
	1243		1279		▶517	237-8752	1
235-8893	1169	235-9014	1240	236-8338	517		▶151
	1171		1243	236-8339	517		▶154
	1173	235-9015	1240	236-8378	1029		▶157
235-8894	1169	235-9020	1267		▶1032	237-8753	1
	1171	235-9021	1	236-8379	1032		▶449
	1173		▶1240	236-8386	1031		▶450
235-8908	1150		▶1243		▶1034	237-8754	448
	1153	235-9651	177	236-8387	1034		▶451
	▶1154		178	236-8390	1060		▶452
235-8909	1150		179		▶1063	237-8756	1
	▶1287	236-2839	730	236-8391	1063		▶418
235-8910	1150		732	236-8415	1052	237-8757	418
	1153	236-2843	746		▶1054		▶422
	▶1156	236-2844	746	236-8561	1032	237-8758	422
235-8911	1288	236-2848	746		1034	237-8759	1
235-8912	1156	236-3170	917		1036		▶419
235-8914	1175	236-3200	681		1040	237-8760	419
	1177		709		1042		▶423
	1179		712		1044	237-8761	423
	1181		715		1046	237-8768	1
235-8915	1153		718		1063		▶456
	▶1288		721		1065		▶466
235-8922	1154	236-3257	601		1067		▶476
235-8923	1154	236-3258	601		1069	237-8783	1
235-8928	1154	236-3259	601		1071		▶207

▶ **PRIMARY REFERENCE**

PART NUMBER INDEX

Part	Page
237-8784	207
	▶208
237-8801	▶508
	▶509
	1226
237-8802	127
	▶484
	▶485
237-8868	449
	450
237-8869	449
	450
237-8875	451
	452
237-8877	449
	450
237-8880	451
	452
237-8882	451
	452
237-9312	151
	154
	157
	160
	164
	168
	172
238-1432	▶289
	1260
238-1506	290
238-1565	▶391
	553
	681
238-1568	1
	▶385
238-1570	176
	▶394
	▶396
238-1579	394
	396
238-1584	▶287
	1029
	1030
238-1585	287
238-1586	▶288
	1031
238-1587	288
238-1588	391
238-1593	394
238-1594	▶340
	394
	396
238-1595	340
238-1596	▶341
	394
	396
238-1597	341
238-2171	385
238-2208	▶348
	1295
238-2209	348
238-2210	348
238-2212	357
238-2260	1262
238-2279	290
238-2280	290
238-2318	357
238-2390	357
238-2391	357
238-2478	▶346
	347
238-2479	346
238-2485	▶347
	553
	681
238-2501	224
	234
	244
	247
	255
238-2528	224
	234
	244
	247
	255
238-3215	5
	9
	10
	11
	▶319
238-3216	319
238-5080	47
	316
238-8591	536
238-8592	538
239-1134	320
	323
	▶349
239-1610	617
	▶916
239-1611	▶912
	▶914
	916
239-1618	617
	▶853
	▶855
	▶857
239-1626	▶650
	▶652
	1031
239-1627	556
	▶663
239-1872	650
	652
	654
	657
239-1876	557
	▶852
239-1877	852
239-1878	852
239-1892	853
	855
	857
239-1986	663
239-2396	151
	154
	157
	160
	164
	168
	172
	▶305
239-2402	202
	203
239-4320	516
	▶524
	▶525
239-4321	524
	525
	▶526
239-4322	526
	▶531
239-4323	531
239-4324	531
239-4326	531
239-4330	531
239-6405	2
	3
	▶17
239-6406	17
	18
	▶136
239-6407	17
	18
	▶126
239-6408	17
	18
	▶93
239-6409	17
	18
	▶97
239-6411	127
	▶128
239-6474	17
	18
	▶70
239-6475	70
239-6494	140
239-6500	97
239-6677	▶320
	▶323
	326
239-6986	1313
	1318
239-7352	373
	375
	389
239-7356	366
239-8696	550
	552
	▶1191
239-8697	859
	▶860
239-8774	935
	▶992
239-8998	859
	▶861
239-9097	753
	760
	765
239-9098	753
	760
	765
239-9117	753
	760
	765
239-9118	753
	760
	765
239-9954	263
	▶270
240-0041	21
240-1861	7
	▶9
240-3740	▶1226
240-3741	▶1226
240-3769	▶127
240-3776	▶1298
240-3920	185
	187
240-5003	▶1265
	1267
240-5025	1228
240-5043	1240
	1243
240-5044	1240
	1243
240-5066	1195
	1197
240-5067	1196
	1198
240-5071	▶1220
	1225
240-5073	▶1221
240-5074	1219
241-0985	▶536
241-1900	451
	452
241-1902	451
	452
241-1904	449
	450
241-1933	508
	509
241-2130	▶430
	456
	466
241-2133	▶434
	456
241-2134	434
241-2139	432
	433
241-2140	▶435
	456
241-2141	435
241-2147	456
	466
	476
241-2163	456
	466
	476
241-2195	449
	450
241-2311	508
	509
241-2320	456
	466
	476
241-2323	456
	466

▶ **PRIMARY REFERENCE**

PART NUMBER INDEX

Part	Page
	476
241-2324	456
	466
	476
241-2325	430
	431
241-2365	422
	423
	424
	425
241-2366	422
	423
	424
	425
241-2367	422
	423
	424
	425
241-2368	422
	423
	424
	425
241-2374	151
	154
241-2375	151
	154
	160
	164
241-2376	151
	154
	160
	164
241-4194	320
	323
241-6723	1082
	1084
241-7129	1054
	1058
241-7150	1054
241-7231	1063
	1065
	1071
	1073
	1075
	1076
	1077
	1078
241-7280	1054
	1058
241-7333	516
	▶521
241-7334	521
241-7335	448
	▶522
241-7336	522
241-7337	522
241-7340	566
	568
241-7341	566
	568
241-7342	580
	582
241-7604	51
	53
241-7605	5
	10
	11
	▶51
241-8382	41
	43
	45
241-8383	41
	43
	45
	47
241-8384	41
	43
	45
	47
241-8385	41
	43
	45
	47
241-8386	41
	43
	45
	47
241-8387	41
	43
	45
	47
241-8388	34
	36
	38
241-8390	41
	43
	45
	47
241-9265	140
242-0328	79
242-0329	▶79
	81
242-0447	13
	14
	15
	16
	▶82
242-0672	13
	14
	▶40
242-0673	20
242-0674	13
	14
	15
	16
	▶20
242-1510	1313
	1318
242-1586	5
	9
	10
	11
	▶88
	▶90
242-1588	1313
	1318
242-1589	1311
	1323
242-1598	88
	90
242-1599	88
	90
242-1934	5
	9
	10
	11
	▶131
242-3122	▶1267
242-3360	142
242-3864	83
	85
242-6092	1313
	1318
242-6781	570
242-6787	570
	574
242-6795	566
242-6799	566
242-6806	580
242-6811	580
242-6833	566
	568
242-6840	566
	568
242-6912	890
	894
	899
	903
242-6913	890
	894
	899
	903
242-6914	890
	894
	899
	903
242-6915	890
	894
	899
	903
242-6916	890
	894
	899
	903
242-6917	890
	894
	899
	903
242-6918	890
	894
	899
	903
242-6919	890
	894
	899
	903
242-6920	890
	894
	899
	903
242-8768	1273
242-9982	5
	9
	10
	11
	▶312
243-4505	187
	225
	235
	287
	288
	361
	373
	375
	389
	391
	1164
243-4506	225
	235
243-4507	386
	389
	392
243-4508	225
	235
	369
	371
	373
	388
	389
243-4509	225
	235
	352
	355
	389
243-4510	225
	235
	352
	355
	366
	375
	389
243-5362	366
243-6716	29
244-0988	112
244-0989	5
	9
	10
	11
	▶112
244-3889	1083
244-4500	63
	64
244-5891	82
244-7979	434
	437
244-7980	432
	433
244-8044	422
	424
244-8045	422
	423
	424
	425
244-8046	422
	423
	424
	425
244-8400	▶926
	929
244-8494	965
	970
244-8495	965

▶ **PRIMARY REFERENCE**

PART NUMBER INDEX

Part	Page
	970
244-8496	965
	970
244-8497	966
	971
244-8498	965
	970
244-8499	966
	970
244-8500	965
	970
244-8501	966
	971
244-8506	693
	697
	▶1020
244-8507	1020
	▶1021
244-8522	689
	691
245-2184	620
	622
	624
245-2187	620
	622
	624
245-2190	620
	622
	624
245-2193	620
	622
	624
245-2196	620
	622
	624
245-2199	620
	622
	624
245-2211	665
	667
245-2215	665
245-2219	665
	667
245-2223	665
	667
	669
245-2290	665
245-2294	665
	667
	669
245-2425	636
	677
245-3259	68
245-3260	13
	14
	15
	16
	▶68
245-4630	311
245-5079	746
245-5457	1313
	1318
245-7339	80
245-7760	357
245-7790	1154
	1175
	1177
	1179
	1181
245-7791	1219
245-7792	1219
245-7793	1219
245-7794	▶1222
245-7795	▶1223
245-7796	▶1224
245-7811	1
	▶1258
245-7812	1136
	1138
	1141
	▶1239
245-7813	1239
245-7814	1239
245-7815	1239
245-7816	1239
245-7817	1136
	1138
	1141
245-7818	1136
	1138
	1141
245-7819	1136
	1138
	1141
245-7820	1136
	1138
	1141
245-7821	1136
	1138
	1141
245-7823	1136
	1138
	1141
245-7824	1136
	1138
	1141
245-7825	1136
	1138
	1141
245-7826	1136
	1138
	1141
245-7827	1136
	1138
	1141
245-7828	1136
	1138
	1141
245-7829	1136
	1138
	1141
245-7830	1136
	1138
	1141
245-7831	1136
	1138
	1141
245-7832	1136
	1138
	1141
245-7833	1136
	1138
	1141
245-7834	1136
	1138
	1141
245-7835	1136
	1138
	1141
	▶1161
245-7836	1136
	1138
	1141
245-7837	1161
245-7838	1136
	1138
	1141
245-7839	1136
	1138
	1141
245-7842	1193
245-7844	1194
245-7850	1240
	1243
245-7851	1240
	1243
245-7856	1136
	1138
	1141
245-7868	1167
	1168
245-7869	1167
245-7870	1167
	1168
245-7871	1167
	1168
245-7872	1219
245-7873	1219
245-7876	1167
	1168
245-7877	1167
	1168
245-7881	▶1264
245-7884	1266
245-7886	1128
245-7887	1266
245-7888	1266
245-7889	1273
245-7890	1273
245-7892	1273
	▶1274
245-7895	1273
245-7896	▶1128
	1273
245-7897	1128
	1273
	1274
245-7898	1128
	1266
	1274
245-7899	1273
	1274
245-7900	440
245-7901	440
245-7903	1167
	1168
245-7904	1167
245-7905	1161
245-7906	1167
	1168
245-7911	1167
	1168
245-7916	1261
245-7922	▶1169
	▶1171
	▶1173
	1260
245-7923	1169
	▶1175
	1183
245-7924	1169
	▶1177
	1183
245-7925	1175
	1181
245-7926	1177
	1179
245-7927	1240
245-7928	1240
	1243
245-7929	1212
245-7931	1296
245-7940	17
	18
	▶1165
245-7942	1165
245-7943	1165
245-7948	1175
	1177
	1179
	1181
245-9170	120
	123
245-9171	102
	107
245-9174	120
	123
245-9206	120
	123
245-9287	120
	123
245-9288	120
	123
245-9289	120
	123
245-9292	102
	107
245-9293	102
	107
245-9294	102
	107
245-9359	114
245-9360	114
246-2641	207
	456
	466
	476
246-3150	29
246-5083	25
	27

▶ **PRIMARY REFERENCE**

PART NUMBER INDEX

Part	Page	Part	Page	Part	Page	Part	Page
	28	247-8709	890		894		899
246-6036	96	247-8710	890		899		903
246-9353	294	247-8712	890		903	249-6658	602
246-9867	891		894	247-8904	572		605
	894		899		576	249-6659	602
	899		903	247-8927	890		605
	903	247-8713	890	247-8928	602	249-6660	602
247-2693	373		895		605		605
	375		900	247-8929	602	249-6661	602
	389		904		605		605
	1195	247-8715	890	247-8982	890	249-6670	585
	1196		894	247-8985	890		891
	1197		899		894		895
	1198		903		899		900
	1209	247-8717	891		903		904
	1210		895	247-8992	881	249-9230	94
247-2694	1252		900		▶884		96
	1253		904	248-2169	307	250-1440	636
	1254	247-8718	890	248-5513	111		639
247-2695	1252		894	248-5576	142		644
	1253		899	248-7177	514		648
	1254		903		515	250-2446	935
247-5112	1209	247-8719	890	248-8835	5	250-2447	935
	1210		894		9	250-2508	689
247-5185	1197		899		10		691
	1198		903		11		▶994
247-5276	1189	247-8720	891		▶111	250-6430	▶1080
	▶1209		895	248-8984	449		1085
247-5284	▶263		900		450		1086
	279		904	248-9337	418		1088
247-7133	113	247-8725	890		419	250-6448	1079
247-7333	▶1052		894		420	250-6457	1080
247-7386	▶1		899		421	250-7700	▶142
	2		903	248-9825	617		143
	3	247-8726	891		▶746	250-8054	1299
247-7410	550		895	248-9838	617		1301
	551		900		▶836		1302
	552		904	248-9839	617		1303
	▶1299	247-8729	890		▶827	250-8279	329
247-7411	550		894		▶829	251-0153	224
	▶1301		899	248-9840	617		234
247-7418	552		903		▶740		247
	1260	247-8732	602		▶743		255
	▶1302		605	248-9842	617	251-0299	389
247-7436	1313	247-8733	602		▶750	251-0303	290
	1318		605	248-9843	617	251-0304	290
247-7437	1313	247-8734	602		▶753	251-0430	▶389
	1318		605		▶759		1260
247-7438	1313	247-8735	602		▶764	251-0432	▶357
	1318		605	248-9844	617		1160
247-7441	1313	247-8736	602		▶770		1260
	1318		605	248-9845	▶839	251-0433	▶374
247-7465	550	247-8737	602		▶842		1260
	552		605		▶845	251-0435	374
	▶1303	247-8738	602		916		▶375
247-7490	920		605	249-1306	890		1183
	▶1304	247-8786	890		894	251-0467	224
247-7494	920		894		899		234
	▶1305		899		903		247
247-7501	▶182		903	249-1307	890		255
247-7503	▶1052	247-8787	890		895	251-0482	▶377
247-7518	1313		894		900	251-0483	377
	1318		899		904		378
247-7587	927		903	249-6657	890	251-0485	▶378
247-8708	890	247-8841	891		894	251-0526	▶273

▶ **PRIMARY REFERENCE**

PART NUMBER INDEX

Part	Page
	1260
251-0538	▶1262
251-0542	▶292
	1183
251-0543	292
251-0580	373
251-0602	375
251-0618	1
	▶224
	▶234
251-0620	▶244
	326
251-0621	1
	▶350
251-0623	▶352
	551
251-0625	225
	235
	247
	255
251-0637	357
251-2542	440
251-2547	1032
	1034
	1036
	1038
	1040
	1042
	1044
	1046
251-2552	1054
	1058
	1106
251-2557	1054
	1058
251-2558	1054
	1058
	1106
251-2651	1052
	1053
	▶1056
251-2652	1056
251-2755	1
	▶440
251-2756	440
251-4345	320
252-2216	1082
	1083
252-7803	47
252-8438	▶34
	41
252-8439	40
	▶41
	▶43
	▶45
253-0861	1313
	1318
253-1346	515
253-2111	290
253-2695	366
253-4522	5
	9
	10
	11
	▶268
253-6434	618
	626
253-6441	618
	626
253-6444	665
	667
	669
	671
	673
253-6454	646
	647
253-6455	648
253-6458	620
	622
	624
	628
	630
	632
253-6495	▶675
253-6501	▶676
253-6548	675
253-6551	675
253-6554	675
253-6562	646
	647
253-6566	648
253-6585	620
	628
253-6586	620
	628
253-6594	▶634
	▶635
253-6595	▶636
253-6596	▶677
253-6603	▶638
253-6604	▶639
253-6607	▶641
	▶643
253-6608	▶644
253-6609	▶678
253-6611	▶646
	▶647
253-6635	665
	667
	669
	671
	673
253-6682	641
	643
253-6688	676
253-6691	676
254-3025	1054
	1058
254-3080	734
	▶927
254-3941	41
	43
	45
254-3942	41
	43
	45
254-3946	34
	36
	38
254-3947	34
	36
254-4357	▶189
	190
255-0404	1093
255-1659	617
	▶772
255-1665	746
255-1666	746
255-1671	780
	783
	786
	789
255-1741	724
255-1745	724
	727
255-1749	724
	727
255-1753	724
255-1826	705
	707
	801
	805
	809
255-1843	▶774
	▶776
	1260
255-1844	▶778
	1260
255-1849	▶780
	920
255-1850	780
	783
	786
	789
255-1851	▶783
	▶786
	▶789
	920
255-1892	685
	693
	697
	701
255-1894	685
	693
	697
	701
255-1900	821
255-1920	552
	▶685
255-1921	552
	▶689
	▶691
255-1922	551
	▶693
	▶697
	▶701
255-1926	551
	▶705
	▶707
255-1933	852
255-1936	685
255-1939	827
	829
	834
255-1941	827
	829
	834
255-1943	827
255-1947	827
	829
	834
255-1971	836
255-1979	836
255-1981	836
255-1986	836
255-1989	836
255-2021	740
	743
255-2025	740
	743
255-2028	740
	743
255-2068	815
	817
255-2272	409
255-2900	140
255-2914	126
	▶129
255-2915	17
	▶137
255-2929	128
255-2966	136
255-2990	320
255-2991	320
	323
255-3013	320
255-3170	1304
255-3171	1304
255-3173	1304
255-4410	1264
255-5285	268
255-5661	929
	931
	935
	945
	▶995
255-5662	950
	952
	▶996
255-5680	724
	727
	▶950
255-5683	724
	727
	▶952
255-5713	551
	552
	▶919
255-5843	▶550
255-5844	▶550
255-5845	▶1260
255-5846	▶550
255-8674	82
256-1644	1
	▶455
256-1791	456
256-1794	456
	466
	476

▶ **PRIMARY REFERENCE**

PART NUMBER INDEX

Part	Page	Part	Page	Part	Page	Part	Page
	▶495		476		▶28		477
256-1797	495	256-1905	498	258-8728	5	259-3557	427
256-1799	495	256-1906	498		▶63	259-3559	457
256-1802	456	256-1907	456	258-8745	13		467
	466		466		14		477
	476		476		15	259-3563	457
	▶496	256-1911	456		16		467
256-1805	496		466		▶190		477
256-1806	496		476		▶192	259-3575	457
256-1807	456	256-1912	456		▶194		467
	466		466		▶196		477
	476		476		▶198	259-3589	457
	▶497		▶502	258-9892	1163		467
256-1810	497	256-1915	502		1164		477
256-1811	497	256-1916	502	259-0682	551	259-3591	457
256-1814	497	256-1917	502		▶880		467
256-1815	456	256-1918	502	259-0815	884		477
	466	256-1919	456		885		▶505
	476		467		886	259-3593	505
256-1818	456		477		887	259-3595	510
	466		▶503		▶888	259-3609	511
	476	256-1922	503	259-0824	740		512
256-1820	456	256-1923	503		743		513
	466	256-1924	503	259-0825	572	259-3610	511
	476	256-1925	457	259-0830	▶602	259-3611	511
	▶498		467		891	259-3615	457
256-1824	498		477	259-0831	891		467
256-1825	498		▶504		895		477
256-1826	456	256-1938	449		900	259-3622	456
	466	256-1939	449		904		466
	476		450	259-0832	890		476
	▶499	256-3030	1082		894	259-3625	457
256-1828	499	256-3031	1083		899		467
256-1829	499	256-3052	1082		903	259-3629	457
256-1830	456	256-3053	1083	259-0833	890		467
	466	256-3085	1082	259-0834	890		477
	476	256-3086	1083	259-0835	890	259-3631	457
	▶510	256-6453	315		894		467
256-1841	510		316		899		477
256-1853	456	256-8690	1113	259-0907	888	259-3633	457
	466	256-8691	1113		▶981		467
	476	257-4502	1160	259-0908	888		477
	▶500		1313	259-0918	909	259-3634	457
256-1858	500		1318	259-0922	▶909		467
256-1859	500	257-4547	1305		917		477
256-1860	500	257-5015	1304	259-1930	1084	259-3636	457
256-1861	500	257-7329	▶1082		1087		467
256-1863	500	257-7330	▶1083		1094		477
256-1864	500	258-0883	151		1097	259-3637	505
256-1865	500		154	259-2358	27	259-3662	484
256-1866	500		157	259-2993	96		485
256-1886	456		164	259-2994	96	259-3667	▶428
	466		168	259-3507	451		484
	476		172	259-3509	451		485
256-1890	456		▶339		452	259-3669	457
	466	258-6749	734	259-3543	438		467
	476		▶1014	259-3546	504		477
	▶501	258-7531	221	259-3547	504	259-3696	491
256-1892	501	258-8337	13	259-3548	504		492
256-1893	501		14	259-3549	457		493
256-1894	456		15		467	259-3697	491
	466		16		477		492
	476		▶143	259-3552	▶427		493
256-1897	456	258-8724	5		457	259-3698	491
	466		▶27		467		492

▶ **PRIMARY REFERENCE**

PART NUMBER INDEX

Part	Page	Part	Page	Part	Page	Part	Page
	493		552		▶997	260-4856	41
259-3699	491	259-5295	▶277	259-7707	▶1187		43
	492		550		▶1188		45
	493		551	259-7732	760		47
259-3700	491		552		▶1006	260-5716	203
	492	259-5340	▶355	259-7733	1006	260-6692	218
	493		552	259-7762	1184	260-6941	1299
259-3701	491	259-5829	41		1185	260-6942	1301
	492		43		▶1203	260-6948	1260
	493		45	259-7763	1184		1302
259-3815	457		47		1185	260-7524	78
	467	259-7176	▶1260		▶1204		79
	477	259-7179	▶1199	259-7764	1186	260-7840	831
259-3865	422		1260		▶1205	260-7841	831
	423	259-7180	347	259-7765	1186	260-7842	831
	424	259-7202	1181		▶1206	260-7844	740
	425	259-7214	1264	259-7766	2	260-7845	831
259-3915	160	259-7215	1264		3	260-7852	553
	164	259-7220	363		▶617		▶709
	168	259-7243	1164	259-7848	992		▶712
	172	259-7285	1164		999		▶715
259-3918	▶160	259-7295	1156	259-7849	992		▶718
	▶164	259-7345	1147		999		▶721
	▶168	259-7346	▶1146	259-7850	992	260-7855	552
	182		1179		999		▶792
259-3953	457	259-7347	▶1147	259-7851	992		▶795
	467		1181		999		▶798
	477	259-7348	1171	259-7852	992	260-7857	551
259-4877	375		1173		999		▶801
259-4883	357		▶1179	260-2042	263		▶805
259-4884	347		1183		264		▶809
	363	259-7349	1171	260-2053	2	260-7858	552
259-4887	369		1173		3		▶813
259-4914	1262		▶1181		▶272	260-7861	551
259-4940	369		1183	260-2109	▶1195		▶815
	371	259-7378	919		1203		▶817
259-4964	▶388		▶929	260-2110	▶1196		▶819
	551	259-7401	▶931		1204	260-7862	551
259-5062	182		954	260-2111	1195		▶831
	▶386	259-7412	617		1196	260-7863	551
259-5071	352		▶954		1197		552
259-5075	352	259-7417	▶920		1198		▶821
259-5118	182	259-7422	▶920	260-2127	▶1197	260-7868	617
	▶361	259-7429	801		1205		▶875
259-5119	361		805	260-2128	▶1198	260-7869	617
259-5125	388		809		1206		▶724
259-5126	244		▶1015	260-2180	823		▶727
259-5127	350	259-7430	792		825	260-7870	617
259-5128	350		795	260-2191	823		▶730
259-5130	225		798		825		▶732
	235		813	260-2193	1248	260-7871	▶654
	247		815		▶1252		▶657
	255		817		1269		1029
259-5132	225		819		1270		1030
	235		▶1016	260-2552	572	260-7895	740
	247	259-7448	▶935		576		743
	255		954	260-3003	925	260-7904	875
259-5206	350		956		944	260-7906	875
259-5237	▶274	259-7598	550	260-3877	709	260-7912	612
	617		▶1185		712	260-7956	831
259-5293	▶275	259-7599	550		715	260-7959	685
	552		▶1186		718		689
	1260	259-7600	924		▶1018		691
259-5294	▶276	259-7601	924	260-3883	1018		693
	550	259-7646	994		1019		697

▶ **PRIMARY REFERENCE**

PART NUMBER INDEX

Part	Page	Part	Page	Part	Page	Part	Page
	701	262-2230	508	262-6074	190		120
260-8027	693	262-2435	488		192		123
	697		489		194	265-3561	132
	701		490		196		134
260-8030	685		506		198	265-3571	457
	689	262-2440	500	262-9965	88		467
	691	262-2559	512	263-1193	88		477
	693		513	263-2915	59	265-3595	120
	697	262-2571	428	263-6699	366		123
	701	262-2572	428	263-7821	25	265-7514	617
260-8031	705	262-2573	428		28		▶1101
260-8045	693	262-2584	457	263-7825	26	266-0545	1231
	697		467	263-8948	1257	266-0546	1231
	701	262-2592	457	263-9088	265	266-0953	693
260-8078	839		467		280		697
260-8098	685		477		▶1263		701
	689	262-2595	1	263-9574	244	266-0954	693
	691		▶438		254		697
260-8148	801	262-2596	438	264-2115	1088		701
	805	262-2598	151	264-2116	1088	266-1133	715
	809		154	264-4297	314		718
260-8197	724		157		317		721
	727	262-2604	160		318	266-1278	685
260-8254	▶851		164	264-5732	383		693
	1060		168	264-6156	82		697
260-9446	532		172	264-7029	383		701
	▶537	262-3147	▶648	264-7030	383	266-1279	685
260-9454	▶538	262-3152	678	264-8028	▶1098		689
261-1544	29	262-3155	678	264-8029	▶1099		691
262-0284	203	262-3177	628	264-8043	1098		693
262-1359	2		630	264-8266	890		697
	▶7		632		894		701
262-1421	264	262-3180	628		899	266-1303	685
	▶271		630		903		693
262-2043	▶271		632	264-8494	▶532		697
	279	262-3183	628	264-8495	▶539		701
262-2134	457		630	264-8552	▶279	266-5431	1313
	467		632	264-8553	▶279		1318
	477	262-3186	628	264-8594	▶3	266-6189	128
	▶506		630	264-9982	1164	266-6190	128
262-2137	506		632	264-9983	1164		▶130
262-2138	506	262-3189	628	264-9984	1164	266-6217	136
262-2139	506		630	265-1400	13	266-6263	3
262-2140	506		632		14		▶8
262-2141	506	262-3192	628		▶74	266-7833	888
262-2145	457		630	265-1401	74		▶908
	467		632		75	266-7834	888
	477	262-3207	671	265-3505	457	266-7835	888
262-2157	432	262-3210	671		467	266-7836	908
	433	262-3213	671		477	266-7837	908
262-2176	488		673	265-3506	457	266-7838	908
	489	262-3216	671		467	266-7955	890
	490		673		477	266-8403	1098
262-2179	491	262-3219	671	265-3534	114	266-8404	1099
	492		673	265-3535	114	266-8425	1098
	493	262-3222	671	265-3536	114		1099
262-2192	429		673	265-3537	114	266-8429	1098
262-2208	160	262-3225	638	265-3539	114	266-8431	1099
262-2209	455	262-3233	634	265-3540	114	266-8650	296
262-2222	208		635	265-3542	114		▶306
	▶209	262-3347	638	265-3543	114	266-8816	1098
	▶211	262-3348	639	265-3544	114	266-8817	1099
262-2223	208	262-3390	644	265-3552	102	267-0118	▶417
	▶213	262-3814	▶1084		107	267-1402	296
	▶215	262-3840	1086	265-3553	▶114		▶307

▶ **PRIMARY REFERENCE**

PART NUMBER INDEX

Part	Page
267-3360	▶145
	177
267-3361	▶177
	▶178
	▶179
	180
267-3362	13
	14
	15
	16
	▶180
267-3727	994
	▶998
267-4495	1311
	1323
267-6785	590
267-6809	399
	409
267-6810	399
	409
267-6811	399
	409
267-6812	399
	409
267-6813	399
	409
267-6814	399
	409
267-6815	399
	409
267-6816	399
	409
267-6817	399
	409
267-6861	▶407
	412
267-7591	357
267-7592	389
267-7642	▶363
	553
267-7644	363
267-7671	363
267-7672	363
267-7676	363
267-7748	▶392
	553
267-7803	279
	▶369
267-7804	279
	▶371
267-7813	369
	371
267-7830	392
267-7867	352
267-7965	682
267-7976	292
267-8071	1
	▶1235
	▶1236
267-8072	1235
	▶1237
267-8073	1237
267-8840	▶1
268-0457	434
	435
268-0507	427
268-0508	427
268-0514	512
268-1964	357
268-3490	25
	26
	27
	28
268-4530	1308
268-4531	1308
268-5606	▶1106
268-6816	553
	▶1307
268-6817	1307
268-6821	▶553
268-7112	620
	622
	624
	628
	630
	632
268-8872	1308
269-0120	1308
269-0121	1308
269-1167	▶448
269-2673	▶1085
269-2674	▶1086
269-3410	6
	9
	10
	11
	▶387
269-8788	96
269-9562	553
	▶734
269-9714	823
	825
269-9754	815
	817
	819
269-9761	730
	732
269-9766	853
	855
269-9775	839
	842
	845
269-9864	734
269-9919	772
269-9932	827
	829
	834
269-9952	734
269-9955	734
269-9970	681
	709
269-9973	709
	712
270-0012	705
	707
270-0013	705
	707
270-0014	705
	707
270-0015	705
	707
270-0090	▶1060
270-0091	1060
	▶1067
270-0092	1067
270-2771	8
	▶10
270-4216	10
	11
	▶14
270-5433	1257
270-5450	279
	▶280
270-5455	265
	280
270-5603	2
	▶1255
270-5660	931
	▶940
270-5661	935
	▶942
270-5947	746
	▶968
270-5949	968
	975
270-5950	968
	975
270-5951	1188
	▶1207
270-5952	1188
	▶1208
270-5953	970
270-8795	▶551
270-8796	▶551
270-9602	491
270-9626	423
	425
270-9627	423
	425
270-9783	495
271-2418	25
	26
	28
271-6376	863
	▶872
271-6377	872
271-6432	864
271-7425	1084
271-7427	1084
271-7429	1084
271-7442	41
	43
	45
	47
272-0290	873
272-2896	▶1060
272-2897	1060
	▶1069
272-2898	1069
272-4650	554
272-4668	617
	▶881
272-4669	▶554
	881
	882
272-5000	366
272-9625	13
	16
272-9663	▶552
272-9664	▶552
272-9666	▶552
273-2838	26
273-3420	1085
	1086
273-3424	1085
273-4159	1101
273-5274	1281
273-5307	1168
273-5315	1165
	▶1167
	▶1168
273-5316	1167
	1168
273-5337	1167
	1168
273-5345	1281
273-5346	1281
273-5358	2
	▶1225
273-5359	1225
273-5360	1225
273-5428	1240
	1243
273-6729	417
273-7668	434
	437
273-7787	457
273-7791	457
273-7792	457
273-7796	457
273-7836	457
	467
	477
273-7852	457
	467
	477
273-7854	457
	467
	477
273-7856	457
	467
	477
273-7859	457
	467
	477
273-7864	457
	467
	477
273-7867	457
	467
	477
273-7873	▶429
	457
	467
	477
273-7902	429
273-7905	457
	467
	477
	▶511

▶ **PRIMARY REFERENCE**

PART NUMBER INDEX

Part	Page
273-7909	484
	▶512
273-7911	457
	467
	477
	▶490
273-7918	488
	489
	490
273-7919	488
	489
	490
273-7920	488
	489
	490
273-7921	488
	489
	490
273-7922	▶432
	457
	467
273-7923	432
273-7933	457
	467
	477
273-7934	457
	467
	477
273-7937	457
	▶491
273-7938	491
273-7943	497
273-7946	457
	467
	477
273-7963	508
	509
273-7964	415
274-2490	891
	894
	899
274-4512	872
274-4513	872
274-5992	1101
274-5993	1101
274-5994	1101
274-6001	1101
274-6719	308
274-7395	295
	▶317
274-7396	295
	▶318
274-7465	2
	3
	▶1183
274-7466	2
	3
	▶1183
274-7468	1148
	▶1160
275-0496	1101
275-0497	1101
275-0498	1101
275-0499	1101
275-1361	842
	845
275-1362	914
275-1384	685
	693
	697
	701
275-1388	693
	697
	701
275-1392	693
	697
	701
275-1396	693
	697
	701
275-1439	685
	689
	691
	693
	697
	701
275-1440	689
	691
	693
	697
	701
275-1442	792
	795
	798
	801
	805
	809
275-1443	792
	795
	798
	801
	805
	809
275-1444	792
	795
	798
	801
	805
	809
275-1601	689
	691
275-1624	753
	760
	765
275-1663	734
275-1675	836
275-1678	792
	801
275-1680	831
275-1693	792
	795
	798
	801
	805
	809
275-1731	839
	842
	845
275-1739	740
	743
275-1740	740
	743
275-1741	740
	743
275-1818	792
	795
	798
	801
	805
	809
	813
275-3701	▶1029
275-3705	▶1061
275-3706	▶1061
275-3713	▶1052
275-3748	1
	▶326
275-5982	1107
	1109
275-5998	1112
275-5999	1112
275-6321	1100
	▶1102
275-6631	83
	85
275-6841	366
275-6842	366
275-6864	225
275-6865	385
275-6936	352
	355
275-6938	386
275-6993	394
	396
275-7194	2
	▶366
275-7738	▶679
	1100
275-7752	▶1100
276-3814	5
	7
	8
	10
	▶1164
276-5799	1085
276-5801	1086
276-6793	306
276-9067	296
	▶308
277-0954	635
	638
	643
	647
	▶961
277-5814	▶1113
277-6304	679
277-8279	9
	11
	▶53
277-9864	679
277-9865	679
278-3581	415
278-3818	438
278-3820	428
278-3928	▶420
278-3929	420
	▶424
278-3932	▶421
278-4016	458
	468
	478
278-4018	458
	468
	478
278-4046	424
278-6523	839
	842
	845
278-9885	▶617
279-0344	399
	409
279-3161	1146
279-4099	1085
279-4103	1085
279-4104	1086
279-4118	1086
279-5323	▶681
279-7609	366
279-7613	271
279-7614	271
279-7820	18
	▶77
279-7825	2
	3
	▶18
279-7887	320
	323
279-7888	320
	323
280-0543	27
280-2747	686
	694
	698
	702
280-6794	111
	113
281-3510	134
281-3512	134
281-3515	134
281-3546	123
281-3548	102
	107
281-9154	7
	8
	▶19
282-1771	29
282-1772	29
282-2478	74
	75
282-2479	74
	75
282-4557	1029
	▶1036
282-4558	1036
282-4560	1061
	▶1071
282-4561	1071
282-4563	1061
	▶1073
282-4564	1073

▶ **PRIMARY REFERENCE**

PART NUMBER INDEX

Part	Page
282-4566	1052
	1053
	▶1058
282-4567	1058
282-5705	553
	▶1308
282-7048	827
282-7050	770
	823
	825
282-7092	753
	760
	765
282-7106	740
	743
	842
	845
282-7126	912
	914
282-7373	740
	743
282-7566	754
	760
	793
	796
	799
	801
	805
	809
282-7569	754
	760
	765
283-1107	329
283-1226	387
283-2783	377
	378
283-2933	235
283-3074	375
283-6116	884
	▶890
284-1605	1151
	▶1160
284-3682	1154
285-1133	270
285-1327	▶970
	1207
	1208
285-1399	760
	765
285-1465	760
	765
285-1531	707
	▶944
285-1537	▶945
	956
285-1538	945
	▶949
285-1540	617
	▶956
285-1764	973
285-1765	786
	789
	▶973
285-1766	973
285-1767	973
285-1777	944
285-2520	730
	732
285-4073	80
285-4106	26
286-2110	1118
	1119
	1123
	1126
286-2113	1123
286-2114	1126
286-2117	1118
286-2119	1119
286-4106	673
286-4942	681
286-6526	827
	829
286-6528	827
	829
	834
286-6556	792
	795
	798
	801
	805
	809
	813
286-6824	857
287-0169	554
287-0215	70
287-0216	70
287-2352	927
288-7324	383
288-7412	622
	630
	632
288-7413	622
	630
	632
288-7416	622
	630
	632
288-7417	622
	630
	632
288-7641	622
	624
288-7643	667
	669
288-7646	667
	669
289-3484	▶1087
289-5283	793
	796
	799
	801
	805
	809
289-5286	793
	796
	799
	801
	805
	809
289-5289	793
	796
	799
	801
	805
	809
	813
289-5347	836
289-5355	740
	743
289-5372	709
	712
289-5432	709
	712
	715
	718
	721
289-5565	912
	914
	▶917
289-5657	747
289-5705	712
289-6758	467
	477
289-6761	467
	477
289-6762	467
	477
289-6765	466
	476
289-6766	466
	476
289-6767	467
	477
	▶492
289-6768	492
289-6796	456
	466
	476
289-6893	▶436
	466
	476
289-6894	436
289-6895	▶437
	466
	476
289-6896	437
289-7917	891
	903
289-8010	▶556
	1052
	1053
289-8011	556
	▶562
289-8012	562
	▶574
289-8013	574
289-8018	▶555
	1029
	1030
	1031
289-8019	▶555
	1029
	1030
	1031
289-8020	555
	▶559
289-8021	559
	▶568
289-8022	568
289-8027	568
289-8029	▶557
	1029
289-8030	557
	▶565
289-8031	565
	▶582
289-8032	582
289-8037	582
289-8039	▶556
	1053
289-8040	556
	▶563
289-8041	563
	▶576
289-8042	576
289-8172	894
	899
	903
289-8173	894
	899
	903
289-8174	894
	899
	903
289-8175	894
	899
	903
289-8179	605
289-8180	605
289-8194	▶600
	914
289-8195	600
290-1719	1031
	▶1309
290-1727	1313
	1318
290-1728	1313
	1318
290-1729	1313
	1318
290-1730	1313
290-1731	1313
290-1755	1313
	1318
290-1757	1298
290-1780	▶2
290-1817	▶1029
290-1818	▶1031
290-1819	▶1061
290-1820	▶1061
290-1825	▶1052
290-1826	▶1053
290-1827	▶1030
290-1828	▶1062
290-1829	▶1062
290-1830	▶1053
290-1906	1318
290-2808	1087
290-2816	1087

▶ **PRIMARY REFERENCE**

PART NUMBER INDEX

Part	Page
	1094
	1095
	1096
	1097
290-2817	1087
	1094
	1097
290-2819	1087
	1094
	1097
290-2832	1088
290-6884	59
290-9204	1029
	▶1038
290-9205	1038
290-9236	1030
	▶1040
290-9237	1040
290-9248	1031
	▶1042
290-9249	1042
290-9251	1061
	▶1075
290-9252	1075
290-9263	1061
	▶1076
290-9264	1076
290-9467	279
	▶1257
290-9514	1269
290-9515	1249
	▶1269
291-7457	244
291-7547	290
291-7559	1236
	▶1238
291-7560	1238
291-7561	1238
291-7780	234
	247
	255
292-7223	836
292-7299	914
293-0730	146
	147
	148
293-1135	1240
	1243
293-1136	1129
	1131
	1133
293-1137	1136
	1138
	1141
293-1140	1293
293-1183	1160
293-1184	1160
293-1256	1279
293-4066	▶146
293-4072	▶147
	178
293-6867	2
	▶486
	▶487
293-6868	486
	▶488
293-6869	488
293-6873	486
	487
	▶493
293-6895	486
	487
293-6931	486
	487
293-6935	486
	487
293-6960	487
293-9367	101
294-1455	1048
294-1501	1030
	▶1044
294-1502	1044
294-1504	1062
	▶1077
294-1505	1077
294-1507	1062
	▶1078
294-1508	1078
294-3794	624
	630
294-3795	624
	630
294-3798	624
	630
294-3799	624
	630
294-8620	206
295-1803	205
295-2010	▶1088
295-2014	1088
295-2015	1088
295-2016	1088
295-2018	1088
295-4777	192
	▶200
295-9439	▶56
	107
295-9441	584
	▶585
295-9552	864
295-9553	864
295-9554	864
295-9555	864
295-9574	605
295-9575	606
295-9577	605
295-9578	605
295-9579	605
295-9580	605
295-9583	605
295-9584	605
295-9655	885
	▶894
295-9656	894
	899
	903
295-9657	895
	900
	904
295-9658	894
	899
	903
295-9659	894
	899
	903
295-9660	▶605
	895
	900
	904
295-9674	882
	▶885
	▶886
	▶887
295-9686	867
295-9695	899
	903
296-6217	▶408
	412
296-6218	408
	▶409
296-6219	410
296-6980	743
296-7072	857
296-7079	829
	834
296-7081	829
	834
296-7232	715
	718
	721
296-7348	657
296-7350	657
296-7351	657
296-7352	650
	652
296-7353	650
296-7354	650
	652
296-7355	650
	652
296-8060	309
297-0370	697
	701
	▶922
297-4426	2
	3
	▶272
297-6828	323
297-7710	323
297-7711	323
297-7713	323
297-7920	85
297-9151	▶515
	525
297-9156	515
298-2942	436
	437
298-2974	433
298-2975	▶431
	476
298-3111	477
298-3112	477
298-3147	155
	157
	164
298-3191	▶433
	477
298-3257	218
298-3258	218
298-4258	176
	▶1310

3

Part	Page
300-2300	1127
300-2301	1103
	▶1127
300-2303	1127
301-0091	350
301-0589	1143
301-3082	8
	▶11
302-3208	760
	765
302-5147	1100
	▶1103
302-7339	▶1030
302-9466	961
303-3357	296
	▶309
303-9626	450
303-9627	452
303-9689	164
303-9933	209
	211
	213
	215
303-9937	209
	211
	213
	215
304-0677	194
	▶201
304-5260	82
305-0324	1163
305-0329	1219
305-0361	1285
305-0441	1241
	1244
305-0442	1241
	1244
305-4903	97
305-5362	383
305-7812	789
306-3998	331
306-8349	2
	▶365
306-8350	365
306-8361	366
306-8527	1
	▶246
	▶254
306-8528	247
306-8797	255
306-8802	1262
306-8803	255

▶ **PRIMARY REFERENCE**

PART NUMBER INDEX

Part	Page
307-0047	265
307-2673	47
307-5106	617
	▶823
	▶825
307-5122	617
	▶834
307-5123	834
307-5129	834
307-5130	834
307-6480	85
307-6481	85
307-7862	493
307-8119	509
307-8428	383
308-8784	440
308-8785	440
308-8786	440
309-0175	149
309-1114	1094
	1095
	1096
	1097
	1098
309-1117	1098
309-1118	1098
309-1123	▶1123
309-1124	▶1126
309-1127	▶1118
309-1129	▶1119
309-3872	1310
309-5731	272
309-5732	272
309-5751	1143
309-5769	746
	776
309-5789	279
	▶1143
309-5791	1270
309-5793	1250
	▶1270
309-5808	1190
	▶1210
309-5842	▶264
	279
309-5849	1255
309-5887	▶265
	279
309-9941	925
	944
310-0210	765
	▶978
310-0393	▶999
310-0394	987
	▶1001
310-0414	▶975
310-0419	975
310-0420	975
310-0421	975
310-0422	975
310-2393	1143
310-6252	1318
310-7255	36
	38
310-7257	36
	38
310-9486	617
	▶882
310-9725	140
310-9771	140
311-3971	▶1100
311-7229	▶36
	43
	47
311-8150	533
	534
	535
	536
	537
	538
311-8377	1263
311-9548	894
	899
	903
312-0677	196
	▶202
312-1284	681
312-2645	187
313-4620	203
313-8153	157
313-8154	157
313-8155	157
	168
313-8156	157
	168
313-8157	157
	168
313-8170	157
	168
313-8232	168
313-8238	168
314-3533	▶279
314-3538	▶1323
314-3587	1
	▶326
314-3615	▶1030
314-8113	819
315-4393	886
	▶899
315-4412	▶1017
	1026
316-3915	669
316-3918	669
316-8812	1131
	▶1138
316-8845	1138
316-8846	1138
	1141
316-8847	1138
	1141
316-8848	1138
316-8849	1138
	1141
316-8850	1138
316-8917	1133
	▶1141
316-8918	1141
316-8920	1141
316-8921	1141
317-4881	657
317-4882	652
317-7210	34
	36
	38
317-7211	34
	36
	38
317-7212	34
	36
	38
317-7213	34
	36
	38
318-2082	332
318-2558	533
	534
	535
	537
	538
318-2559	536
318-5883	673
318-5884	673
319-0677	198
	▶203
319-1335	396
319-4353	▶1253
	1271
319-4354	1251
	▶1271
319-4357	1271
319-6237	43
	45
	47
319-9702	727
319-9771	831
321-1463	527
321-8635	47
321-8638	43
	45
	47
322-8716	732
	▶1026
322-8733	887
	▶903
322-8734	903
323-7558	701
	▶1022
323-7559	1022
	▶1023
323-7770	975
323-7772	1023
323-9140	383
324-0057	▶1089
324-0058	1089
	▶1094
324-0059	1094
	1097
324-0162	1095
324-0164	1096
324-0177	▶1090
324-0178	1090
	▶1095
324-0180	1095
324-0184	1095
324-1093	1030
	▶1046
324-1094	1046
324-3632	▶1091
324-3633	1091
	▶1096
324-3635	1096
324-3639	1096
324-3640	1096
324-3900	1095
324-4169	136
324-5761	187
324-7380	74
	75
325-3412	1101
325-3915	▶30
	33
325-9029	707
325-9220	743
326-1006	203
326-1644	144
326-3898	114
326-4405	825
326-5051	579
327-0338	▶579
	1101
327-6548	1243
327-6549	1243
327-6581	1276
327-7482	▶1254
327-7535	272
327-7536	272
327-7594	1254
328-2035	681
	721
	▶1019
328-2574	▶148
	179
330-1284	421
	▶425
330-1285	425
330-1417	487
	▶489
330-1444	485
	▶513
330-1447	513
330-2316	765
330-2568	766
330-3409	271
330-3410	271
330-6018	6
	9
	11
	▶383
330-6034	5
	9
	11
	▶296
331-8905	100
331-8906	100
332-3619	▶38
	45
333-7060	821
334-9940	1028
334-9973	▶869
334-9979	869

▶ **PRIMARY REFERENCE**

PART NUMBER INDEX

Part	Page	Part	Page	Part	Page	Part	Page
	▶870						
334-9982	870						
336-2583	517						
337-1157	727						
337-1161	727						
337-1165	727						
337-1205	750						
341-0087	111						
	113						
341-5135	1056						
341-5272	1056						
342-1110	415						
343-2083	▶1092						
343-2084	1092						
	▶1097						
343-2385	172						
343-2386	172						
343-2392	▶172						
	182						
343-2395	172						
343-2396	172						
343-2397	172						
343-2398	172						
343-2399	172						
343-5527	144						
344-2149	▶47						
	49						
345-8414	15						
	16						
	▶49						
347-2380	75						
347-2381	75						
347-2382	75						
347-7908	15						
	16						
	▶75						
348-2746	11						
	▶15						
348-2747	5						
	9						
	▶16						
348-4301	5						
	9						
	11						
	▶113						
349-5408	272						
349-5410	272						

▶ **PRIMARY REFERENCE**

MEMORANDA



© 2009 CATERPILLAR
ALL RIGHTS
RESERVED

CAT, CATERPILLAR, THEIR RESPECTIVE LOGOS, “CATERPILLAR YELLOW” AND THE POWER EDGE TRADE DRESS, AS WELL AS CORPORATE AND PRODUCT IDENTITY USED HEREIN, ARE TRADEMARKS OF CATERPILLAR AND MAY NOT BE USED WITHOUT PERMISSION.

PRINTED IN
U.S.A.

SEBP4865-09
VOLUME I
Pages 1-540

330D L Excavators

B6H1-Up
JLP1-Up