M0096839-09 (en-us)
August 2019

RUTHZIL TRATOR COMERCIAL DE PEÇAS LTDA 11 97083-6812 ROLANDO

Parts Manual

336 Excavator

SP91-UP (Machine)
NTB1-UP (Engine)

Powered By C9.3 Engine

PUBLICATIONS.CAT.COM

Product and Dealer Information

Note: For product identification plate locations, see the section “Product Identification Information” in the Operation and Maintenance Manual.

Delivery Date: _____

Product Information

Model: _____

Product Identification Number: _____

Engine Serial Number: _____

Transmission Serial Number: _____

Generator Serial Number: _____

Attachment Serial Numbers: _____

Attachment Information: _____

Customer Equipment Number: _____

Dealer Equipment Number: _____

Dealer Information

Name: _____ Branch: _____

Address: _____

_____

_____

	Dealer Contact	Phone Number	Hours
Sales:	_____	_____	_____
Parts:	_____	_____	_____
Service:	_____	_____	_____

MEMORANDA

TABLE OF CONTENTS

NAME	PAGE
GENERAL INFORMATION	A5
REPAIR ALTERNATIVES	A8
SUPPLEMENTAL COOLANT ADDITIVES	A9
MAINTENANCE PARTS	A10
INDEX	A12
MACHINE ARRANGEMENT	1
COMMON AR	1
EXCAVATOR AR	1
INSTALLATION AR-MACHINE	1
OPTION AR-HYDRAULIC	2
ENGINE ARRANGEMENT	3
ENGINE AR	3
ENGINE AR-COMPLETE	4
ENGINE AR-CORE	5
INSTALLATION AR-ENGINE	6
BASIC ENGINE	7
BELT GP-SERPENTINE	7
CAMSHAFT GP	8
COVER & MTG GP-CYLINDER BLOCK	9
COVER GP-ENGINE	10
COVER GP-FRONT HOUSING	11
COVER GP-SOUND SUPPRESSION	14
COVER GP-VALVE MECHANISM	17
CRANKSHAFT GP	18
CYLINDER BLOCK AS	19
CYLINDER BLOCK GP	21
CYLINDER HEAD AS	22
CYLINDER HEAD GP	23
DAMPER & PULLEY GP	25
DRAIN GP-ENGINE OIL	26
FASTENER GP-CYLINDER HEAD	29
FASTENER GP-FRONT HOUSING	30
FLYWHEEL GP	31
GEAR GP-FRONT	32
HOUSING GP-FLYWHEEL	33
HOUSING GP-FRONT	35
KIT-ENGINE GASKET	36
KIT-FRONT COVER GASKET	37
KIT-REAR COVER GASKET	38
LIFTING GP-ENGINE	39
MOUNTING GP-ALTERNATOR & COMPR	40
MOUNTING GP-ENGINE	42
PAN GP-OIL	44
PISTON & ROD GP	46
PLUG GP-CYLINDER BLOCK	47
PLUG GP-CYLINDER HEAD	49
PLUG GP-ENGINE	50
PLUG GP-OIL PAN	51
PULLEY GP-CRANKSHAFT	52
ROCKER ARM GP	53
SEAL GP-CRANKSHAFT	55
VALVE MECHANISM GP	56
LUBRICATION SYSTEM	58
BASE GP-OIL FILTER	58
FILTER & MTG GP-ENGINE OIL	61
FILTER GP-ENGINE OIL	63
FUMES DISPOSAL GP	64
GAUGE GP-OIL LEVEL (DIPSTICK)	65
LINES GP-ENGINE OIL	66
LINES GP-ENGINE OIL DRAIN	68
LINES GP-TURBOCHARGER OIL	70
OIL CHANGE AR-HIGH SPEED	71
PUMP GP-ENGINE OIL	72
COOLING SYSTEM	74
COOLER GP-ENGINE OIL	74
COOLING GP	75
CORE AS-RADIATOR	77
COVER GP-PROTECTION	78
ELBOW GP-WATER	81
FAN AR-SUCTION	82
FAN GP-SUCTION	83
FASTENER GP-WATER PUMP	87
KIT-OIL COOLER & LINES GASKET	88
KIT-WATER PUMP GASKET	89
LINES GP-COOLING	90
LINES GP-OIL COOLER	92
MODULE GP-COOLING	94
PLUG GP-WATER LINES	95
PUMP GP-WATER	96
RADIATOR & HYD OIL COOLER GP	98
REGULATOR GP-TEMPERATURE	101
SHROUD GP-RADIATOR	102
AIR INLET AND EXHAUST SYSTEM	103
AFTERCOOLER GP-AIR	103
AIR CLEANER GP	104
KIT-TURBOCHARGER GASKET	106
LINES GP-AIR	107
LINES GP-TURBOCHARGER AIR	109
MANIFOLD GP-EXHAUST	111
MANIFOLD GP-INLET	112
MUFFLER GP	113
TURBOCHARGER GP	114
FUEL SYSTEM	116
CONNECTION GP-FUEL	116
FILTER GP-WATER SEP & FUEL	117
FITTING GP-FUEL	119
LINES GP-FUEL	120
LINES GP-FUEL INJECTION	125

TABLE OF CONTENTS

NAME	PAGE
MOUNTING GP-PUMP	126
PUMP AR-FUEL TRANSFER	127
PUMP GP-FUEL INJECTION	128
PUMP GP-FUEL TRANSFER	130
TANK & MTG GP-FUEL	133
TANK GP-FUEL	134
VALVE GP-CHECK	136
VALVE GP-REFUELING	137
ELECTRICAL AND STARTING SYSTEM	138
ALARM GP-TRAVEL	138
ALTERNATOR GP-CHARGING	140
ANTENNA & MOUNTING GP	142
BATTERY & WIRING GP	143
CABLE GP-GROUND	154
CAMERA & MOUNTING GP	157
CAMERA AR	162
CONTROL & MTG GP-COMMUNICATION	163
CONTROL & MTG GP-ELECTRONIC	164
CONTROL & MTG GP-MACHINE	167
CONTROL GP-ELECTRONIC	168
CONTROL GP-UNPROGRAMMED	170
CONVERTER & MOUNTING GP-POWER	171
ELECTRICAL AR	172
ELECTRONICS GP-ENGINE	172
ELECTRONICS GP-MACHINE	172
ELECTRONICS GP-MONITOR	173
FASTENER GP-WIRING HARNESS	175
GRADE CONTROL AR	177
HARNESS AS-CAB	178
HARNESS AS-CAMERA	179
HARNESS AS-CHASSIS	181
HARNESS AS-CONSOLE	192
HARNESS AS-CONTROL	194
HARNESS AS-ENGINE	197
HARNESS AS-FRONT	199
HARNESS AS-LIGHTING	200
HARNESS AS-MONITOR	201
HARNESS AS-PLATFORM	202
HARNESS AS-SENSOR	203
HARNESS AS-SOLENOID	203
HARNESS AS-SWITCH	204
HARNESS AS-VALVE	204
INSTALLATION AR-COMMUNICATION	205
INSTL AR-MACHINE SECURITY SYS	206
INSTL GP-MACHINE SECURITY SYS	207
LAMP GP-DOME	208
LIGHTING AR-FLOOD	209
LIGHTING GP-CAB	210
LIGHTING GP-FLOOD	211
MODULE GP-CAB WIRING	219
MOUNTING GP-CONNECTOR	220
MOUNTING GP-WIRING	221
PANEL GP-FUSE	222
PLATE AS-BRUSH	223
PLUG GP-CONNECTOR	224
PROTECTION GP-WIRING	225
RELAY GP	227
SENSOR & MTG GP-POSITION	228
SENSOR GP-ENGINE	234
SENSOR GP-PRESSURE	236
SENSOR GP-TEMPERATURE	241
SENSOR-TEMPERATURE	243
STARTING AID GP-ETHER	244
STARTING MOTOR GP-ELECTRIC	246
SWITCH AS-PUSH BUTTON	250
SWITCH GP-DISCONNECT	251
SWITCH GP-ROCKER	254
WIRING & MTG GP- MAIN CONT V	256
WIRING GP-AUX START RECEPTACLE	257
WIRING GP-CAB	258
WIRING GP-CAMERA	265
WIRING GP-CHASSIS	266
WIRING GP-CONSOLE	279
WIRING GP-ELECTRONIC CONTROL	283
WIRING GP-ENGINE	285
WIRING GP-FRONT	289
WIRING GP-PLATFORM	294
WIRING GP-SENSOR	296
WIRING GP-UNIT INJECTOR	297
WIRING GP-VALVE	298
POWER TRAIN	304
DRIVE & MOUNTING GP-FINAL	304
DRIVE GP-FINAL	305
POWER TRAIN AR	317
SPROCKET GP	317
FRAME AND BODY	320
BOX & MTG GP-STORAGE	320
BOX GP-STORAGE	321
BUMPER GP-FRONT	323
COUNTERWEIGHT AS	325
COVER AS-SOUND SUPPRESSION	326
COVER GP-ACCESS	327
COVER GP-ENCLOSURE	330
COVER GP-SOUND SUPPRESSION	331
DOOR & MTG GP-ACCESS	333
DOOR GP-ACCESS	336
ENCLOSURE AR	340
FENDER & COVER GP	341
FRAME GP-UPPER	342
GEAR & BEARING GP-SWING	344

TABLE OF CONTENTS

NAME PAGE

GUARD GP-BOTTOM 347
GUARD GP-SWIVEL 348
HANDRAIL GP 349
HOOD & GUARD GP 351
HOOD GP-ENGINE 362
LINER GP-SOUND SUPPRESSION 363
MOUNTING GP-COUNTERWEIGHT 364
SHEET AS-SOUND SUPPRESSION 365
SUPPORT AS-SOUND SUPPRESSION 380

UNDERCARRIAGE 381
FRAME AS-UNDERCARRIAGE 381
GUARD GP-TRACK GUIDE 382
GUARD GP-TRAVEL MOTOR 385
IDLER GP 386
IDLER GP-FRONT 387
LINK AS-TRACK 390
ROLLER AR-TRACK & CARRIER 391
ROLLER GP-TRACK CARRIER 392
ROLLER GP-TRACK-SINGLE FLANGE 393
TRACK ADJUSTER & RECOIL GP 394
TRACK AR 398
TRACK GP 399
UNDERCARRIAGE AR 402

HYDRAULIC SYSTEM 403
ACCUMULATOR GP-HYDRAULIC 403
BREATHER GP 407
CONTROL AR-AUXILIARY 408
CONTROL AR-BOOM 409
COUPLING GP-PUMP 410
COVER GP-VALVE END 412
CYLINDER & LINES GP-BOOM 416
CYLINDER & LINES GP-BUCKET 416
CYLINDER & LINES GP-STICK 416
CYLINDER & SEAL GP-BOOM 417
CYLINDER & SEAL GP-BUCKET 418
CYLINDER & SEAL GP-STICK 420
CYLINDER AR-BOOM 421
CYLINDER GP-BOOM 422
CYLINDER GP-BUCKET 424
CYLINDER GP-COUPLER 428
CYLINDER GP-STICK 429
DRIVE & MOTOR GP-SWING 431
DRIVE & MTG GP-SWING 434
DRIVE GP-SWING 438
FILTER GP-OIL 443
GAUGE GP-SIGHT 444
HEAD GP-PUMP 445
HYDRAULIC AR 452
LINES AR-BOOM 452
LINES GP-AUXILIARY HYDRAULIC 453
LINES GP-BOOM 461
LINES GP-BOOM CYLINDER 465

NAME PAGE

LINES GP-BUCKET CYLINDER 472
LINES GP-COUPLER 474
LINES GP-DRAIN 482
LINES GP-FRONT 486
LINES GP-HYDRAULIC 501
LINES GP-HYDRAULIC OIL COOLER 503
LINES GP-HYDRAULIC PUMP 510
LINES GP-PILOT 511
LINES GP-PUMP 519
LINES GP-RETURN 521
LINES GP-STICK 523
LINES GP-STICK CYLINDER 525
LINES GP-TRAVEL MOTOR 526
MOTOR & MTG GP-SWING 528
MOTOR & MTG GP-TRAVEL 529
MOTOR GP-SWING 530
MOTOR GP-TRAVEL 531
MOUNTING GP-LINES 533
MOUNTING GP-MAIN CONTROL VALVE 534
PUMP & MTG GP-MAIN HYDRAULIC 535
PUMP GP-HYDRAULIC 536
PUMP GP-MAIN HYDRAULIC 541
PUMP GP-PISTON 542
SCREEN GP-HYDRAULIC 543
SWIVEL & MOUNTING GP 545
SWIVEL GP 546
TANK & FILTER GP-HYDRAULIC 547
TANK & MTG GP-HYDRAULIC 553
TANK GP-HYDRAULIC 554
VALVE & MTG GP-MAIN CONTROL 555
VALVE & MTG GP-SOLENOID 558
VALVE AR-MAIN CONTROL 563
VALVE AR-SWING 563
VALVE GP-CHECK 564
VALVE GP-CONTROL 567
VALVE GP-LOAD CONTROL 577
VALVE GP-MAIN CONTROL 578
VALVE GP-MANUAL 582
VALVE GP-MODULATING 583
VALVE GP-RELIEF 584
VALVE GP-SOLENOID & MANIFOLD 589

IMPLEMENTS 593
BOOM AR-1 PIECE LONG 593
BOOM AR-1 PIECE SHORT 593
BOOM GP 594
LINES GP-GREASE 598
LINKAGE GP-BUCKET 602
STICK AR-HOE 606
STICK GP-HOE 607

WORK TOOLS 609

TABLE OF CONTENTS

NAME	PAGE
ADJUSTER GP-BUCKET	609
BUCKET & ADJUSTER GP	611
BUCKET AR-SEVERE SERVICE SPADE	612
BUCKET AS-EXTREME SERV SPADE	614
BUCKET AS-HEAVY DUTY	616
BUCKET AS-SEVERE SERVICE SPADE	618
BUCKET GP-SEVERE SERVICE SPADE	623
CONTROL AR-QUICK COUPLER	625
COUPLER AR-QUICK	625
COUPLER GP-QUICK	626
HOOK GP-LIFTING	628
LOCK GP-QUICK COUPLER	629
PROTECTOR GP-SIDE BAR	630
RIPPER GP	632
SIDECUTTER GP	633
TIP GP-PENETRATION	635
TIP GP-PENETRATION PLUS	636
OPERATOR STATION	638
AIR CONDITIONER & MOUNTING GP	638
AIR CONDITIONER GP	640
ARMREST GP	642
BRACKET GP-MOUNTING	644
CAB GP	645
CAMERA & MIRROR AR	653
COMPRESSOR GP-REFRIGERANT	654
CONDENSER & MTG GP-REFRIGERANT	656
CONDENSER GP-REFRIGERANT	657
CONSOLE GP	658
CONSOLE GP-OPERATOR	660
CONTROL & MTG GP-JOYSTICK	668
CONTROL & MTG GP-PEDAL	669
COVER GP-CAB	671
COVER GP-CONSOLE	678
DOOR GP-CAB	679
DUCT GP-CAB AIR	680
FLOOR MAT GP	682
GROMMET & MTG GP-WINDOW WASHER	683
GUARD & MTG GP-CAB	684
HATCH GP-ROOF	685
HOLDER GP-CUP	688
HORN GP-ELECTRIC	689
INSTALLATION AR-RADIO	690
INSTALLATION AR-WIPER	690
INSTL AR-BUMPER & WASHER LINES	690
KIT-SEAT SUSPENSION	691
LINES GP-AIR CONDITIONER	693
LINES GP-WASHER	695
LITERATURE GP	698
MIRROR GP	699
MIRROR GP-REAR VIEW	700
MIRROR GP-SIDE VIEW	702
MODULE GP-DISPLAY	704
MONITOR & MTG GP-OPERATOR	705
MONITOR AR	707
MOTOR GP-WINDOW WIPER	708
MOUNTING GP-CAB	709
MOUNTING GP-ROPS	710
OPERATOR AR	711
PARTS GP-DOOR	713
PLATE & INSULN GP-CAB PLATFORM	715
PLATFORM GP-OPERATOR	716
RADIO GP	717
SCREEN & MTG GP-CAB	718
SCREEN GP-SUN	719
SEAT BELT GP	720
SEAT GP	721
SEAT GP-SUSPENSION	725
SUPPORT GP-SEAT	727
SUSPENSION GP-SEAT	728
VISOR GP-PROTECTION	730
WASHER GP-WINDOW	731
WINDOW GP-CAB	732
WIPER GP-WINDOW	740
SERVICE EQUIPMENT AND SUPPLIES	743
FILM GP	743
PLATE & FILM GP	764
PART NUMBER INDEX	B1

1. MACHINE IDENTIFICATION

Cat machines are identified by Product Identification Numbers (PIN). Some components included in a machine may be identified by Serial Numbers (S/N). Typical components that will be serialized include engines, transmissions, bulldozers, and rippers. The machine and engine are further identified by arrangement numbers and in some cases modification numbers. These numbers are shown on the product identification plate(s) and on the master plate in the operator's compartment.

Cat dealers need all of these numbers to determine accurate parts identification.

Effective First Quarter 2001 the Cat Product Identification Number (PIN) changed from 8 to 17 characters. In an effort to provide uniform equipment identification, Caterpillar and other construction equipment manufacturers are moving to comply with the latest version of the product identification numbering standard. Non-road machine PINs are defined by ISO 10261. The new PIN format will apply to all Cat machines and generator sets. The PIN plates and frame marking will display the 17 character PIN. The new format will look like the following:

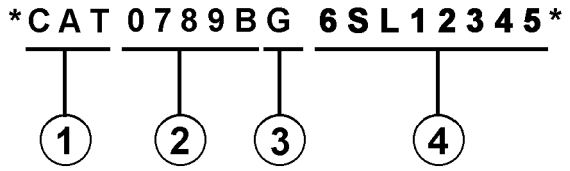

Where:

1. Caterpillar's World Manufacturing Code (characters 1-3)

2. Machine Descriptor (characters 4-8)

3. Check Character (character 9)

4. Machine Indicator Section (MIS) or Product Sequence Number (characters 10-17). These were previously referred to as the Serial Number.

Machines and generator sets produced before First Quarter 2001 will maintain their 8 character PIN format.

Components such as engines, transmissions, axles, etc. and work tools will continue to use an 8 character Serial Number (S/N).

2. ORDERING PARTS

⚠ WARNING

When replacement parts are required for this product Caterpillar recommends using Caterpillar replacement parts or parts with equivalent specifications including, but not limited to, physical dimensions, type, strength and material.

Failure to heed this warning can lead to premature failures, product damage, personal injury or death.

Quality Cat replacement parts are available from Cat dealers throughout the world. Their parts inventories are up to date and include all parts normally required to protect your investment in Cat machines. Dealers may offer repair kits or remanufactured parts to allow selection of the most effective repair alternative for a particular situation. When ordering parts, your order should specify the quantity, part number, part name, and the serial number/product identification number of the machine for which the parts are needed.

3. PARTS MANUAL ORGANIZATION

Product information in this manual is presented as "information elements" that represent all of the components for the specific model. Engine Arrangement and Seat Group are examples of information elements. The information elements are organized alphabetically by part name and secondarily by part number within each major section of the manual.

4. TABLE OF CONTENTS

A table of contents (TOC) is found at the beginning of the manual. The TOC lists each section of the manual with a complete list of all information elements organized as they appear in the manual. Page numbers are provided for quick reference to detailed parts identification illustrations and serviceable consist lists.

5. MAINTENANCE PARTS INDEX

The Maintenance Parts Index, located near the beginning of the manual, references most frequently used maintenance part numbers, providing description, quantity, usage and page number. This information is organized alphabetically by part description.

6. INDEX

The index located near the front of the manual is an alphabetical listing of all information elements included in the manual. Page numbers are provided for quick reference to detailed parts identification illustrations and serviceable consist lists.

7. PART NUMBER INDEX

A numerical index listing all part numbers and the corresponding page number(s) appears at the back of the manual.

8. CAPTIONS

Captions located at the beginning of each information element identify the part number and part name along with additional descriptive information. PIN and S/N information found in each caption should be used to select correct information for a specific machine. Field replacement options, identification of optional attachment components, and where used ("part of") information is also provided.

The first line of a caption is shown in larger type font to indicate the beginning of an information element. Captions for additional pages that may be required to illustrate an information element will be shown in standard type font and will include the term (contd.).

9. NON-SERVICED PARTS

In some instances it is necessary to display non-serviced parts that are a link to a lower level serviceable consist lists. These non-serviced part numbers are shown in italic type indicating that they are not available.

10. PARTS LIST REFERENCE NUMBERS

Numbers shown in the Ref No column correspond to numbers used in the associated graphic(s). An alphabetic suffix may be added to a reference number to identify lower level consist items. Numbers shown in the Graphic Ref column refer to the graphic number identifier displayed in the lower left corner of each illustration. The Graphic Ref number may be used in combination with the item Ref No to determine the correct part number. There may be intentional omission of a Ref No in a consist list as information is updated to reflect the latest serviceable part numbers.

11. INDENTED PART NAMES

When a part name is indented in a parts list, it is part of (included in) the group or assembly under which it is indented.

12. ILLUSTRATION REFERENCE LETTERS

When necessary, illustrations contain reference letters (A, B, C etc.) that are intended to track lines and harnesses from one point to another. They are also used to show where to reconnect illustrations that have been separated.

13. ABBREVIATIONS AND SYMBOLS

O.D. – Outside Diameter
I.D. – Inside Diameter
A – Not Part Of This Group
B – Use As Required
C – Change From Previous Type
D – Order By The Meter
E – Order By The Centimeter
F – Not Shown
G – Order By The Inch
I – Refer To Hydraulic Information System
M – Metric Part
R – Remfg Part May Be Available
Y – Separate Illustration
Z – Not Serviced Separately

14. DESCRIPTION OF TYPE CHANGES

Type - A type is defined as any configuration change that requires an additional Information Element for an Arrangement, Group, or Assembly. If serial number breaks for types are not available, a type # (Type 1, Type 2, etc.) will be displayed in the caption. These "type" changes are identified with a "C" note (change from previous type) in the Parts List. Only the "types" that apply to this Parts Manual will be included. Additional types may exist causing "C" notes to appear on an Information Element when no other types are shown.

15.<END>

This symbol indicates the end of an information element.

NOTE:

Continuing improvement and advancement of product design may cause changes to your machine which may not be included in this publication. Whenever a question arises regarding your Cat product or this publication, please consult your Cat dealer for the latest available information.

FRAME AND BODY

8E-3299 PLATFORM GP-CAB

PIN 38K1-99999

SMCS-7283 100090751

NOTE	REF NO	GRAPHIC REF	PART NUMBER	QTY	PART NAME (1 2 3 4 5 6 PRODUCT LEVEL)	SEE PAGE
	1	1	3T-3963	1	PLATE AS	
	2	1	5H-2962	25	BOLT (3/8-16X.750IN)	
	3	1	6P-1075	41	WASHER-HARD (9MM THK)	
	4	1	9P-1444	2	SUPPORT AS-FOOT	
	5	1	5P-2229	19	BOLT (1/2-13X1IN)	
		1	9J-[illegible]	19	WASHER-HARD (4MM THK)	
	6	1	9E-8134	1	COVER AS-LH	
		1	9F-2979	6	NUT-WELD (3/8-16 THD)	
		1	1F-9189	1	CLIP	
	7	1	7S-2411	4	COVER	
	8	1	5J-0468	19	SCREW-HEAD (3/8-16X.87SIN)	
	9	1	[illegible]074	1	COVER	
		1	9E-8[illegible]	1	GASKET	
	10	1	9E-3248	1	[illegible]	
		1	9E-3250	1	GASKET	
	11	1	3T-3930	1	HANDHOLD	
	12	1	9E-8078	1	COVER AS	
		1	9F-2979	6	NUT-WELD (3/8-16 THD)	
		1	9E-8079	1	GASKET	
	13	1	7T-0131	1	FLOORPLATE AS	
		1	1F-0748	4	NUT-WELD (1/2-13 THD)	
	14	1	7V-8067	1	PLUG-BUTTON	
	15	1	7T-0136	1	PLATE AS	
		1	9F-2979	5	NUT-WELD (3/8-16 THD)	
	16	1	7T-8066	1	COVER	
		1	7T-0779	1	GASKET	
	17	1	3T-3951	1	PLATE AS	
	18	1	9T-9364	4	BOLT (1/4-20X.62SIN)	
M		1	9T-4286	4	WASHER-HARD (2MM THK)	
	19	1	6I-9464	1	FLOOR MAT	
	20	1	9E-8946	1	MODULE AS-OPERATOR	
	21	1	3T-3934	1	HANDHOLD	
	22	1	9P-8571	2	PLUG	
	23	2	9T-9364	4	BOLT (1/4-20X.62SIN)	
M		2	9T-4286	4	WASHER-HARD (2MM THK)	
	24	2	5H-2962	17	BOLT (3/8-16X.750IN)	
	25	2	6P-1075	21	WASHER-HARD (9MM THK)	
	26	2	7T-0136	1	SEAL	
	27	2	7X-0375	2	BOLT (3/4-10X5IN)	
		2	7X-0682	2	WASHER-HARD (6MM THK)	
	28	2	3T-3482	2	PLATE	
	29	2	3T-8280	1	PLATE AS	
		2	7S-4828	6	SPACER	
	30	2	3T-8281	1	SEAL	
	31	2	7S-8017	1	GASKET	
	32	2	7S-8016	1	COVER AS	
		2	2R-2376	2	WASHER	
		2	6P-8626	2	SCREW-KNURLED	
	33	2	9W-3429	1	COVER	
	34	2	8E-9697	1	COVER	
	35	2	9D-3091	8	SCREW-SOCKET HEAD	
	36	2	9W-3142	8	MOUNTING	
	37	2	9W-9527	2	PLATE	
	38	2	7X-0390	2	BOLT (7/8-9X6IN)	
		2	7X-0672	2	WASHER-HARD	
	39	2	4L-6454	4	BOLT (3/8-16X1.0IN)	
	40	2	3T-4788	1	COVER	

12 FRAME AND BODY 1 of 4 SELP4570-01

FRAME AND BODY

8E-3299 PLATFORM GP-CAB (contd.)

100090751

NOTE	REF NO	GRAPHIC REF	PART NUMBER	QTY	PART NAME (1 2 3 4 5 6 PRODUCT LEVEL)	SEE PAGE
	41	2	8E-2515	1	COVER	
	42	2	7T-0134	1	PLATE	
	43	2	7T-0126	1	GASKET	
	44	2	7S-8724	1	GASKET	
	45	2	7S-8723	1	COVER	
	46	2	6V-1960	2	PLUG-BUTTON	

M-METRIC PART

SELP4570-01 2 of 4 FRAME AND BODY 13

FRAME AND BODY

8E-3299 PLATFORM GP-CAB (contd.)

100090751

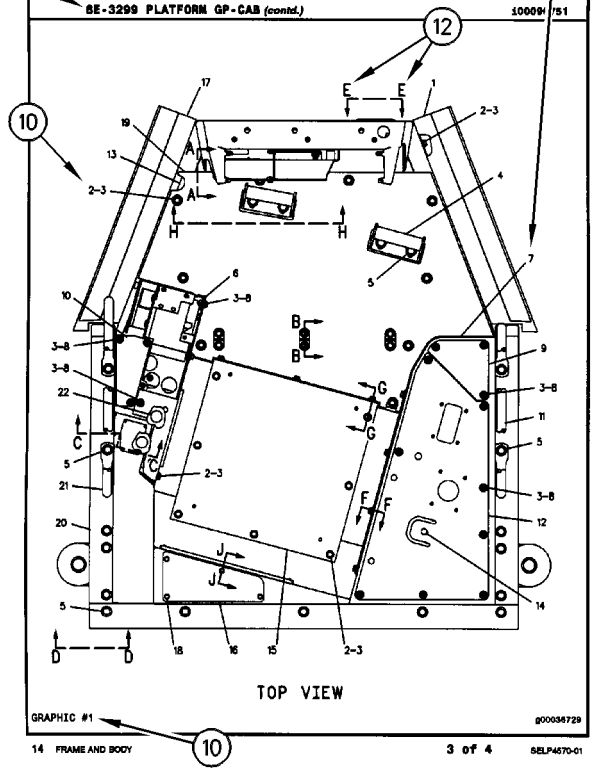

14 FRAME AND BODY 3 of 4 SELP4570-01

FRAME AND BODY

8E-3299 PLATFORM GP-CAB (contd.)

100090751

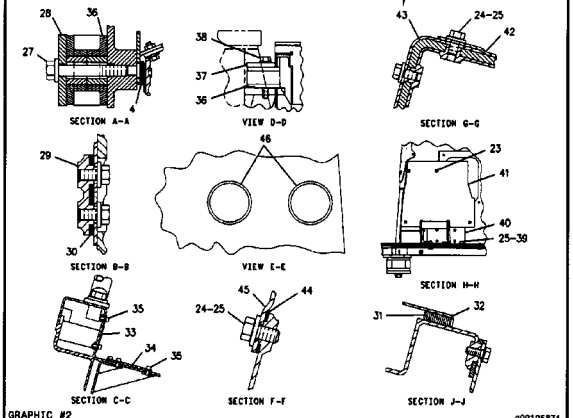

SELP4570-01 4 of 4 FRAME AND BODY 15

REMANUFACTURED COMPONENTS

As an option when making repairs consider Cat Remanufactured Components. Components that are available through the Cat Remanufactured Program are identified three ways in the parts book:

- with the letter R in the note field of the parts list
- with an R* at the beginning of the first line of the caption
- with an *R at the end of the first line of the caption

Typical components included in the Remanufacturing Program include:

ALTERNATORS
CONNECTING RODS
CRANKSHAFTS - UNDERSIZE
CRANKSHAFTS - UPGRADE TO NEW
CYLINDER HEADS
ELECTRONIC CONTROL MODULES (ECM)
ELECTRONIC SENSORS
FUEL INJECTORS
FUEL NOZZLES
FUEL PUMPS
GOVERNORS
OIL PUMPS
PISTONS
SHORT BLOCKS
STARTERS
TURBOCHARGERS - COMPLETE
TURBOCHARGER CARTRIDGES
WATER PUMPS

Cat Remanufactured engines for many engine arrangements are also available.

SUPPLEMENTAL COOLANT ADDITIVES

CUSTOMER BENEFITS:

Protects against cavitation, foam, erosion, corrosion, and scale buildup in cooling systems.

- Provides measured coolant conditioner.

DESCRIPTION:

Additives deplete from the coolant with normal operation. For this reason, Supplemental Coolant Additives (SCA) must be added to all heavy duty coolants at regular intervals. In addition, when not using a fully formulated, pre-charged antifreeze, like Cat DEAC, an initial charge of SCA must be added to the cooling system. The amount of SCA added to the system is dependent on the capacity of the system.

The SCA for initial fill is provided as a liquid. SCA's for maintenance intervals are available in liquid form and as a spin-on element. (No Spin-on available for 3600 Family of Engines)

NOTE:

The amount of SCA added at initial fill is not the same as the amount added at maintenance intervals.

The coolant additive elements can be used with any ethylene or propylene glycol type antifreeze which meets ASTM D4985 or ASTM D5345 Specifications.

NOTE:

For use with standard heavy duty coolant only, not for use with Extended Life Coolant.

PARTS NEEDED:

Cooling System Capacity		Liquid SCA at Initial Fill	Liquid SCA at Maintenance*	Spin-on SCA Maintenance Element*
Liters	Gallons			
22-30	(6-8)	3P-2044 (1)	6V-3542 (1)	111-2370 (1)
30-38	(8-10)	3P-2044 (1) 6V-3542 (1)	111-2372 (1)	111-2369 (1)
38-49	(10-13)	3P-2044 (1) 8T-1589 (1)	111-2372 (1)	111-2369 (1)
49-64	(13-17)	3P-2044 (2)	8T-1589 (1)	9N-3368 (1)
64-83	(17-22)	3P-2044 (2) 8T-1589 (1)	111-2372 (1) 6V-3542 (1)	111-2371 (1)
83-114	(22-30)	3P-2044 (3) 8T-1589 (1)	3P-2044 (1)	9N-3718 (1)
114-163	(30-43)	3P-2044 (5)	3P-2044 (1) 6V-3542 (1)	111-2371 (2)
163-242	(43-64)	3P-2044 (8)	3P-2044 (2)	9N-3718 (2)

* Normal maintenance period is 250 hrs. See your Operation and Maintenance Manual for complete coolant maintenance instructions.

( ) Indicates quantity required.

MAINTENANCE PARTS

DESCRIPTION	PART NUMBER	QTY	WHERE USED	PAGE
AIR INLET AND EXHAUST SYSTEM				
FILTER-AIR (PRIMARY)	496-9841	1	AIR CLEANER GP	104
FILTER-AIR (SECONDARY)	496-9842	1	AIR CLEANER GP	104
BASIC ENGINE				
BELT-SERPENTINE	348-5783	1	BELT GP-SERPENTINE	7
CAP AS-ENGINE OIL FILLER	536-6980	1	COVER GP-VALVE MECHANISM	17
PLUG AS-DRAIN	392-0775	2	PAN GP-OIL	44
PLUG-DRAIN (MAGNETIC)	6V-1176	1	HOUSING GP-FLYWHEEL	33
	9X-6451	1	PAN GP-OIL	44
SEAL-VALVE COVER	260-0113	1	COVER GP-VALVE MECHANISM	17
		1	KIT-ENGINE GASKET	37
COOLING SYSTEM				
CAP AS-COOLANT TANK	251-3227	1	COOLING GP	75
HOSE-RADIATOR (LOWER)	526-9052	1	LINES GP-COOLING	90
HOSE-RADIATOR (UPPER)	524-4983	1	LINES GP-COOLING	90
REGULATOR-WATER TEMPERATURE	377-3016	1	REGULATOR GP-TEMPERATURE	101
ELECTRICAL AND STARTING SYSTEM				
BATTERY AS (12-VOLT, MAINTENANCE FREE)	263-9574	2	BATTERY & WIRING GP	143
CAP AS-FILLER	461-5232	6	BATTERY & WIRING GP	149
CAP AS-FILLER (7/8-9-THD)	123-1373	6	BATTERY & WIRING GP	143
FILTER (ETHER)	160-8761	1	STARTING AID GP-ETHER	244
FUSE (10-AMPERE)	113-8490	10	WIRING GP-CAB	263
FUSE (100-AMPERE)	378-1012	2	PANEL GP-FUSE	222
FUSE (125-AMPERE)	425-9809	2	PANEL GP-FUSE	222
FUSE (15-AMPERE)	113-8491	13	WIRING GP-CAB	263
FUSE (20-AMPERE)	113-8492	2	WIRING GP-CAB	263
FUSE (25-AMPERE)	113-8493	4	WIRING GP-CAB	263
FUSE (30-AMPERE)	124-3548	2	WIRING GP-CAB	263
FUSE (30-AMPERE) (KEEP ALIVE)	124-3548	1	WIRING GP-CAB	258
FUSE (40-AMPERE)	510-8930	2	PANEL GP-FUSE	222
FUSE (5-AMPERE)	141-2759	9	WIRING GP-CAB	263
FUSE (70-AMPERE)	455-2302	2	PANEL GP-FUSE	222
FUSE AS (KEEP ALIVE)	484-9066	1	WIRING GP-CAB	258
KEY (BATTERY DISCONNECT)	8H-5306	1	SWITCH GP-DISCONNECT	253
LAMP AS-INDICATOR (12-VOLT, 24-VOLT)	456-0632	1	LIGHTING GP-CAB	210
FRAME AND BODY				
KEY	5P-8500	1	HOOD & GUARD GP	351
FUEL SYSTEM				
CAP AS-FUEL (LOCKABLE, VENTED)	349-7059	1	TANK GP-FUEL	134
ELEMENT-WATER SEPARATOR	523-4987	1	FILTER GP-WATER SEP & FUEL	117

MAINTENANCE PARTS

DESCRIPTION	PART NUMBER	QTY	WHERE USED	PAGE
FILTER AS-FUEL (ULTRA HIGH EFFICIENCY)	434-3928	1	FILTER GP-WATER SEP & FUEL	117
KEY	5P-8500	1	TANK & MTG GP-FUEL	133
STRAINER (REFUELING)	451-6724	1	VALVE GP-REFUELING	137
STRAINER AS-FUEL (FLOAT GAUGE)	303-9933	1	TANK GP-FUEL	134
HYDRAULIC SYSTEM				
BREATHER (FLYWHEEL HOUSING)	4H-6112	1	COUPLING GP-PUMP	410
BREATHER (SWING DRIVE)	4H-6112	1	DRIVE & MOTOR GP-SWING	432
		1	DRIVE GP-SWING	438
ELEMENT AS (BREATHER) (HYDRAULIC TANK)	522-1451	1	BREATHER GP	407
FILTER ELEMENT-OIL (HYDRAULIC RETURN)	491-5241	1	FILTER GP-OIL	443
PLUG-DRAIN	136-8074	2	DRIVE GP-SWING	441
PLUG-DRAIN (HYDRAULIC TANK)	9J-7031	1	TANK & FILTER GP-HYDRAULIC	547
SCREEN AS (HYDRAULIC TANK)	209-6000	1	SCREEN GP-HYDRAULIC	543
SCREEN-FILTER (RELIEF VALVE)	119-5398	1	VALVE GP-RELIEF	584
LUBRICATION SYSTEM				
FILTER AS-ENGINE OIL	500-0482	1	FILTER GP-ENGINE OIL	63
FILTER-ENGINE OIL	500-0483	1	FILTER GP-ENGINE OIL	63
OPERATOR STATION				
BLADE AS-WIPER	488-6509	1	WIPER GP-WINDOW	740
CAP AS-FILLER (WINDOW WASHER)	178-5431	1	WASHER GP-WINDOW	731
DRYER AS-REFRIGERANT (RECEIVER)	176-1902	1	LINES GP-AIR CONDITIONER	693
FILTER AS-AIR	488-6446	1	DUCT GP-CAB AIR	680
KEY	5P-8500	2	LITERATURE GP	698
RELAY (AIR CONDITIONER, HEATER)	420-2380	2	AIR CONDITIONER GP	640
SEAT BELT GP (RETRACTABLE, 2-IN)	526-8600	1	SEAT GP	721

INDEX

NAME PAGE

A

ACCUMULATOR GP-HYDRAULIC–CHARGED. . . 403
405
ACCUMULATOR GP-HYDRAULIC–
UNCHARGED 404
ADJUSTER GP-BUCKET–DB-FAMILY 609
ADJUSTER GP-BUCKET–G/U/V/TB-FAMILY 610
AFTERCOOLER GP-AIR 103
AIR CLEANER GP 104
105
AIR CONDITIONER & MOUNTING GP. 638
AIR CONDITIONER GP 640
ALARM GP-TRAVEL 139
ALARM GP-TRAVEL–BACKUP. 138
ALTERNATOR GP-CHARGING 140
141
ALTERNATOR GP-CHARGING (24-VOLT, 115-
AMPERE) 141
ANTENNA & MOUNTING GP–PRODUCT LINK 631
SATELLITE. 142
ARMREST GP 642
643
ATOMIZER GP-ETHER 244

B

BASE GP-OIL FILTER 60
BASE GP-OIL FILTER–REMOTE MOUNTED 58
59
BATTERY & WIRING GP 143
149
BATTERY & WIRING GP–COLD WEATHER. . . . 147
BATTERY AS (12-VOLT, MAINTENANCE
FREE) 143
147
149
BELT GP-SERPENTINE. 7
BELT-SERPENTINE. 7
BLADE AS-WIPER. 740
BOOM AR-1 PIECE LONG. 593
BOOM AR-1 PIECE SHORT 593
BOOM GP–GRADE CONTROL 594
596
BOX & MTG GP-STORAGE. 320
BOX GP-STORAGE. 321
BRACKET GP-MOUNTING 644
BREATHER (FLYWHEEL HOUSING). 410
BREATHER (SWING DRIVE) 432
438
BREATHER GP 407
BUCKET & ADJUSTER GP–GENERAL PURPOSE,
HB-FAMILY 611
BUCKET & ADJUSTER GP–SEVERE SERVICE
SPADE, DB-FAMILY 612
BUCKET & ADJUSTER GP–TB-FAMILY. 611
BUCKET & ADJUSTER GP–TB-FAMILY, HEAVY-
DUTY. 612
BUCKET & ADJUSTER GP–TB-FAMILY, SEVERE
SERV SPADE 611

NAME PAGE

BUCKET AR-SEVERE SERVICE SPADE–DB-
FAMILY 612
BUCKET AR-SEVERE SERVICE SPADE–TB-
FAMILY 613
BUCKET AR-SEVERE SERVICE SPADE–TB-
FAMILY, SEVERE SERV SPADE 613
BUCKET AS-EXTREME SERV SPADE–TB-
FAMILY 614
BUCKET AS-HEAVY DUTY–TB-FAMILY 616
BUCKET AS-SEVERE SERVICE SPADE–DB-
FAMILY 621
BUCKET AS-SEVERE SERVICE SPADE–TB-
FAMILY 618
619
BUCKET GP-SEVERE SERVICE SPADE–TB-
FAMILY 623
BUMPER GP-FRONT 323
324

C

CAB GP 645
647
649
650
651
652
CAB GP–INTERIOR. 648
CABLE GP-GROUND 154
CAMERA & MIRROR AR–REAR RH. 653
CAMERA & MOUNTING GP–FRONT. 158
CAMERA & MOUNTING GP–FRONT GUARD . . 161
CAMERA & MOUNTING GP–LH SIDE 160
CAMERA & MOUNTING GP–REAR VIEW. 157
CAMERA & MOUNTING GP–RH SIDE. 159
CAMERA AR–360 VISIBILITY. 162
CAMERA GP. 158
161
CAMERA GP (12-VOLT) 157
159
160
CAMSHAFT GP 8
CAP AS-COOLANT TANK. 75
CAP AS-ENGINE OIL FILLER 17
CAP AS-FILLER 149
CAP AS-FILLER (7/8-9-THD) 143
147
149
CAP AS-FILLER (WINDOW WASHER) 731
CAP AS-FUEL (LOCKABLE, VENTED) 134
COMMON AR 1
COMPRESSOR GP-REFRIGERANT. 654
655
CONDENSER & MTG GP-REFRIGERANT. 656
CONDENSER GP-REFRIGERANT 657
CONNECTION GP-FUEL 116
117
CONSOLE GP 658

INDEX

NAME PAGE

CONSOLE GP-OPERATOR. 660
662
663
665
CONSOLE GP-OPERATOR–LH 666
CONTROL & MTG GP-COMMUNICATION–PRODUCT LINK 631 SATELLITE 163
CONTROL & MTG GP-ELECTRONIC 164
165
CONTROL & MTG GP-ELECTRONIC–PRODUCT LINK. 166
CONTROL & MTG GP-JOYSTICK 668
CONTROL & MTG GP-MACHINE. 167
CONTROL & MTG GP-PEDAL 669
CONTROL AR-AUXILIARY–1-PUMP, 2-PUMP, 1-WAY, 2-WAY. 408
CONTROL AR-AUXILIARY–2-WAY FLOW, 1-PUMP, ELEC CONT 408
CONTROL AR-AUXILIARY–JOYSTICK, SLIDERS. 408
CONTROL AR-BOOM–PRESSURE CONTROL 409
CONTROL AR-QUICK COUPLER. 625
CONTROL GP-ELECTRONIC. 165
166
168
169
CONTROL GP-ELECTRONIC (ECM) 167
CONTROL GP-JOYSTICK. 660
663
CONTROL GP-UNPROGRAMMED 164
170
CONVERTER & MOUNTING GP-POWER 171
COOLER GP-ENGINE OIL 74
COOLING GP 75
CORE AS-AFTERCOOLER 103
CORE AS-OIL COOLER (ENGINE) 74
CORE AS-OIL COOLER (HYDRAULIC) 98
CORE AS-RADIATOR. 77
COUNTERWEIGHT AS. 325
COUPLER AR-QUICK–WITH HOOK. 625
COUPLER GP-QUICK. 627
COUPLER GP-QUICK–WITH HOOK. 626
COUPLING GP-FLEXIBLE. 410
COUPLING GP-PUMP 410
COVER & MTG GP-CYLINDER BLOCK. 9
COVER AS-SOUND SUPPRESSION–RADIATOR. 326
COVER GP-ACCESS 328
329
357
COVER GP-ACCESS (PILOT) 578
COVER GP-ACCESS–RADIATOR. 327
COVER GP-CAB 671
673
675
676
677
COVER GP-CONSOLE. 678
COVER GP-ENCLOSURE 330
COVER GP-ENGINE. 10

NAME PAGE

COVER GP-FRONT HOUSING 11
12
COVER GP-FRONT HOUSING–CAM, IDLER GEAR 13
COVER GP-PROTECTION 78
79
80
COVER GP-SOUND SUPPRESSION. 14
332
COVER GP-SOUND SUPPRESSION–FUEL, HYDRAULIC TANKS. 15
16
331
COVER GP-VALVE END–LH 412
414
COVER GP-VALVE END–RH. 413
415
COVER GP-VALVE MECHANISM. 17
CRANKSHAFT GP. 18
CYLINDER & LINES GP-BOOM–LH. 416
CYLINDER & LINES GP-BOOM–RH 416
CYLINDER & LINES GP-BUCKET 416
CYLINDER & LINES GP-STICK 416
CYLINDER & SEAL GP-BOOM. 417
CYLINDER & SEAL GP-BUCKET. 418
419
CYLINDER & SEAL GP-STICK 420
CYLINDER AR-BOOM 421
CYLINDER BLOCK AS. 19
20
CYLINDER BLOCK GP 21
CYLINDER GP-BOOM 422
CYLINDER GP-BUCKET 424
426
CYLINDER GP-COUPLER–LOCK 428
CYLINDER GP-STICK. 429
CYLINDER HEAD AS. 22
CYLINDER HEAD GP. 23
24

D

DAMPER & PULLEY GP. 25
DOOR & MTG GP-ACCESS–AIR CLEANER, BATTERY. 334
335
DOOR & MTG GP-ACCESS–RADIATOR 333
DOOR GP-ACCESS–AIR CLEANER, BATTERY. 339
DOOR GP-ACCESS–BATTERY COMPARTMENT 338
DOOR GP-ACCESS–PUMP COMPARTMENT. . . 337
DOOR GP-ACCESS–RADIATOR. 336
DOOR GP-CAB 679
DRAIN GP-ENGINE OIL 28
DRAIN GP-ENGINE OIL–ENGINE OIL SUMP. . . . 26
DRIVE & MOTOR GP-SWING. 431
DRIVE & MOTOR GP-SWING–WITH MOTOR . . 432
DRIVE & MOUNTING GP-FINAL. 304

INDEX

NAME PAGE

DRIVE & MTG GP-SWING 434 436
DRIVE GP-FINAL 305 306 310 311 316
DRIVE GP-FINAL–WITH MOTOR, SPROCKET, LH 315
DRIVE GP-SWING–WITHOUT MOTOR 438 441
DRYER AS-REFRIGERANT (RECEIVER) 693
DUCT GP-CAB AIR 680 681

E

ELBOW GP-WATER 81
ELECTRICAL AR 172
ELECTRICAL AR–LESSER REGULATED COUNTRY 172
ELECTRONICS GP-ENGINE 172
ELECTRONICS GP-MACHINE 173
ELECTRONICS GP-MACHINE–CONTROL 173
ELECTRONICS GP-MACHINE–PRIMARY 172
ELECTRONICS GP-MACHINE–SECONDARY . . . 173
ELECTRONICS GP-MACHINE–SECURITY SYSTEM 173
ELECTRONICS GP-MONITOR 173 174
ELECTRONICS GP-MONITOR–TELEMATICS . . . 174
ELEMENT AS (BREATHER) (HYDRAULIC TANK) 407
ELEMENT-WATER SEPARATOR 117
ENCLOSURE AR 340
ENGINE AR 3
ENGINE AR-COMPLETE 4
ENGINE AR-CORE 5
EXCAVATOR AR 1

F

FAN AR-SUCTION 82
FAN GP-SUCTION 83 85
FASTENER GP-CYLINDER HEAD 29
FASTENER GP-FRONT HOUSING 30
FASTENER GP-WATER PUMP 87
FASTENER GP-WIRING HARNESS–JOYSTICK 175
FASTENER GP-WIRING HARNESS–PRESSURE CONTROL 176
FENDER & COVER GP 341
FILM GP 743 747 755
FILM GP–BOOM 745
FILM GP–BOOM PRESSURE CONTROL 756
FILM GP–CAB 746
FILM GP–CAB, EXTERIOR 748 750 761
FILM GP–FUEL 753
FILM GP–INTERNATIONAL 744
FILM GP–JOYSTICK 752
FILM GP–JOYSTICK PATTERN 758
FILM GP–OIL FILL 754
FILM GP–ROPS 757 759
FILM GP–STICK 760
FILM-IDENTIFICATION (336) 761
FILM-IDENTIFICATION (BOOM PRESSURE CONTROL) 756
FILM-IDENTIFICATION (CAT 336, LH) 748 750
FILM-IDENTIFICATION (CAT 336, RH) 748 750
FILM-IDENTIFICATION (CAT BOOM, LH) 745
FILM-IDENTIFICATION (CAT BOOM, RH) 745
FILM-IDENTIFICATION (CAT) 769 773
FILM-IDENTIFICATION (CAT) (CAT) 773
FILM-IDENTIFICATION (FUSE/RELAY PANEL) 748 750 761
FILM-IDENTIFICATION (HYDRAULIC ACCUMULATOR) 403 404
FILM-IDENTIFICATION (HYDRAULIC OIL FILL) 407
FILM-IDENTIFICATION (HYDRAULIC OIL SYSTEM) 769 773
FILM-IDENTIFICATION (LIFT EYE LOCATION) 769 773
FILM-IDENTIFICATION (NO STEP) 764
FILM-IDENTIFICATION (OIL FILL, READ OMM) 754
FILM-IDENTIFICATION (OIL FILTER) 748 750 761
FILM-IDENTIFICATION (REFLECTIVE, RED, LH) 769 773
FILM-IDENTIFICATION (REFLECTIVE, RED, RH) 769 773
FILM-IDENTIFICATION (RETROFIT) 408
FILM-IDENTIFICATION (RH) 769
FILM-IDENTIFICATION (TIE-DOWN) 769 773
FILM-INFORMATION (BRAZIL) 755
FILM-INFORMATION (ENGINE OIL) 764
FILM-INFORMATION (LOW SULFUR DIESEL FUEL) 769
FILM-INFORMATION (LUBRICATION CHART, READ OMM) 769 773

INDEX

NAME PAGE

FILM-INFORMATION (OPERATOR CONTROLS, READ OMM) 747
FILM-INFORMATION (PRODUCT LINK, READ OMM) 766
FILM-INSTRUCTION (ALTERNATE EXIT) 766
FILM-INSTRUCTION (BELT ROUTING) 764
FILM-INSTRUCTION (ENGINE SHUTOFF) 766
FILM-INSTRUCTION (FUEL, READ OMM) 748 750 753 761
FILM-INSTRUCTION (NO STEP) 769 773
FILM-INSTRUCTION (PULL RING, ALTERNATE EXIT) 766
FILM-NOTICE (HAMMER, READ OMM) 747
FILM-NOTICE (LIFT EYE LOCATION) 626 632
FILM-ROPS (WARNING, READ OMM) 759
FILM-WARNING (ACCUMULATOR PRESSURE) 769 773
FILM-WARNING (CRUSH HAZARD, READ OMM, INTL) 766
FILM-WARNING (CRUSH HAZARD, STAY BACK, INTL) 760
FILM-WARNING (CUTTING HAZARD HAND, STAY BACK) 769 773
FILM-WARNING (DO NOT OPERATE, READ OMM) 766
FILM-WARNING (EXPLOSION, WIRELESS, OMM, INTL) 632
FILM-WARNING (FLYING DEBRIS) 632
FILM-WARNING (FRONT WINDOW, READ OMM, INTL) 766
FILM-WARNING (HIGH PRESSURE, READ OMM) 321 764
FILM-WARNING (HOT FLUID UNDER PRESS) 769 773
FILM-WARNING (HOT SURFACE, HANDS CLEAR, INTL) 769 773
FILM-WARNING (JUMP START, READ OMM, INTL) 769 773
FILM-WARNING (LIFTING EYE, READ OMM) 769 773
FILM-WARNING (MACHINE SWING, CRUSHING) 769 773
FILM-WARNING (NO ETHER SPRAY/AIR INTK, INTL) 769 773
FILM-WARNING (NO WELD, NO DRILL, READ OMM) 757 766

NAME PAGE

FILM-WARNING (PRODUCT LINK RADIO, INTL) 766
FILM-WARNING (READ OMM) 632
FILM-WARNING (UNIVERSAL, READ OMM) 764
FILTER (ETHER) 244
FILTER & MTG GP-ENGINE OIL 61
FILTER AS-AIR 680
FILTER AS-ENGINE OIL 63
FILTER AS-FUEL (ULTRA HIGH EFFICIENCY) 117
FILTER ELEMENT-OIL (HYDRAULIC RETURN) 443
FILTER GP-ENGINE OIL–REMOTE 63
FILTER GP-OIL (HYDRAULIC CASE DRAIN) (HYDRAULIC TANK) 547 550
FILTER GP-OIL–HYDRAULIC RETURN 443
FILTER GP-WATER SEP & FUEL 117
FILTER-AIR (PRIMARY) 104
FILTER-AIR (SECONDARY) 104
FILTER-ENGINE OIL 63
FITTING GP-FUEL 119
FLOOR MAT 682
FLOOR MAT GP 682
FLYWHEEL GP 31
FRAME AS-UNDERCARRIAGE 381
FRAME GP-UPPER 342
FUMES DISPOSAL GP 64
FUSE (10-AMPERE) 263
FUSE (100-AMPERE) 222
FUSE (125-AMPERE) 222
FUSE (15-AMPERE) 263
FUSE (20-AMPERE) 263
FUSE (25-AMPERE) 263
FUSE (30-AMPERE) 263
FUSE (30-AMPERE) (KEEP ALIVE) 258
FUSE (40-AMPERE) 222
FUSE (5-AMPERE) 263
FUSE (70-AMPERE) 222
FUSE AS (KEEP ALIVE) 258

G

GAUGE AS-OIL LEVEL (DIPSTICK) 65
GAUGE GP-OIL LEVEL (DIPSTICK) 65
GAUGE GP-SIGHT–HYDRAULIC OIL LEVEL . . . 444
GAUGE-OIL LEVEL (HYDRAULIC) 432
GAUGE-OIL LEVEL (SWING DRIVE) 438
GAUGE-SIGHT (FLYWHEEL HOUSING) 410
GEAR & BEARING GP-SWING 344 345
GEAR GP-FRONT 32
GRADE CONTROL AR 177
GRADE CONTROL AR–BOOM 177
GRADE CONTROL AR–LASER RECEIVER 177
GRADE CONTROL AR–MASS BOOM 177
GROMMET & MTG GP-WINDOW WASHER 683
GUARD & MTG GP-CAB 684
GUARD GP-BOTTOM–HEAVY DUTY 347
GUARD GP-SWIVEL 348

INDEX

NAME PAGE

GUARD GP-TRACK GUIDE 382
GUARD GP-TRACK GUIDE–FULL LENGTH 384
GUARD GP-TRACK GUIDE–SEGMENTED. 383
GUARD GP-TRAVEL MOTOR–HEAVY DUTY . . . 385

H

HANDRAIL GP 349
HANDRAIL GP–PLATFORM 350
HARNESS AS-BOX 161
HARNESS AS-CAB 178
262
265
HARNESS AS-CAB (RH) 215
217
HARNESS AS-CAB–FLOODLIGHTS 178
HARNESS AS-CAB–LH 178
HARNESS AS-CAB–PRODUCT LINK 243, 083 179
HARNESS AS-CAMERA. 180
181
HARNESS AS-CAMERA–CAMERA, RH. 179
HARNESS AS-CAMERA–CAMERA, SIDE 179
HARNESS AS-CHASSIS 167
184
186
189
HARNESS AS-CHASSIS–AIR CLEANER. 181
HARNESS AS-CHASSIS–BOOM PRESSURE CONTROL 183
HARNESS AS-CHASSIS–COOLANT TANK 181
HARNESS AS-CHASSIS–FINE SWING 185
HARNESS AS-CHASSIS–FUEL TANK 182
HARNESS AS-CHASSIS–HYDRAULIC TANK . . . 183
HARNESS AS-CHASSIS–PUMP. 184
HARNESS AS-CHASSIS–REFUELING PUMP . . . 182
HARNESS AS-CHASSIS–REVERSING FAN. 182
HARNESS AS-CONSOLE 192
193
194
HARNESS AS-CONTROL 194
196
287
HARNESS AS-CONTROL–GRADE CONTROL . . 195
HARNESS AS-CONTROL–INJECTOR 195
HARNESS AS-CONTROL–STICK 196
HARNESS AS-ENGINE 198
199
HARNESS AS-ENGINE–ALTERNATOR 197
HARNESS AS-ENGINE–REAR 197
HARNESS AS-FRONT 293
HARNESS AS-FRONT–GRADE CONTROL 199
HARNESS AS-HEATER & AIR COND 640
HARNESS AS-LIGHTING. 200
210
HARNESS AS-LIGHTING–MASS BOOM 201
HARNESS AS-LIGHTING–REACH BOOM. 201
HARNESS AS-MONITOR. 161
201
202

NAME PAGE

HARNESS AS-PLATFORM 202
HARNESS AS-SENSOR. 203
HARNESS AS-SENSOR–GRADE CONTROL 203
HARNESS AS-SOLENOID 203
HARNESS AS-SOLENOID–COUPLER 204
HARNESS AS-SWITCH 204
HARNESS AS-VALVE. 204
205
HARNESS AS-WIRING. 198
HATCH GP-ROOF 685
686
687
HEAD GP-PUMP 449
450
HEAD GP-PUMP–CONTROL 445
447
HOLDER GP-CUP 688
HOOD & GUARD GP. 351
356
HOOD GP-ENGINE 362
HOOK GP-LIFTING–14-TON CAPACITY 628
HORN GP-ELECTRIC. 689
HOSE-RADIATOR (LOWER). 90
HOSE-RADIATOR (UPPER) 90
HOUSING GP-FLYWHEEL 33
HOUSING GP-FRONT 35
HYDRAULIC AR. 452

I

IDLER GP 386
IDLER GP-FRONT. 387
IDLER GP-FRONT–LH 389
IDLER GP-FRONT–RH. 388
INDICATOR AS-AIR FILTER CHANGE 105
INJECTOR AS-FUEL. 128
INSTALLATION AR-COMMUNICATION 205
INSTALLATION AR-COMMUNICATION–PRODUCT LINK 631 205
INSTALLATION AR-COMMUNICATION–PRODUCT LINK 631 SATELLITE. 206
INSTALLATION AR-ENGINE. 6
INSTALLATION AR-MACHINE–GRADE CONTROL 1
INSTALLATION AR-RADIO–INSTALLATION 690
INSTALLATION AR-WIPER–CAB. 690
INSTL AR-BUMPER & WASHER LINES. 690
INSTL AR-MACHINE SECURITY SYS–SECURITY SYSTEM 206
INSTL GP-MACHINE SECURITY SYS–MOUNTING 207

K

KEY 133
351
358
698
KEY (BATTERY DISCONNECT) 253

NAME PAGE

KIT-ENGINE GASKET. 36
37
KIT-FRONT COVER GASKET 37
KIT-OIL COOLER & LINES GASKET 88
KIT-REAR COVER GASKET. 38
KIT-SEAT SUSPENSION–MECHANICAL 691
KIT-TURBOCHARGER GASKET 106
KIT-WATER PUMP GASKET 89

L

LAMP AS-INDICATOR (12-VOLT, 24-VOLT) 210
LAMP GP-DOME 208
LAMP GP-FLOOD (850 LUMENS) 214
217
LAMP GP-FLOOD (850 LUMENS) (WIDE). 215
LIFTING GP-ENGINE 39
LIGHTING AR-FLOOD–CAB 209
LIGHTING GP-CAB 210
LIGHTING GP-FLOOD–CAB 217
LIGHTING GP-FLOOD–CAB, LED. 214
215
LIGHTING GP-FLOOD–CHASSIS 213
LIGHTING GP-FLOOD–MASS BOOM 212
LIGHTING GP-FLOOD–REACH BOOM 211
LINER GP-SOUND SUPPRESSION 363
LINES AR-BOOM. 452
LINES AR-BOOM–PRESSURE CONTROL 452
LINES GP-AIR 108
LINES GP-AIR CONDITIONER 693
LINES GP-AIR–INLET. 107
LINES GP-AUXILIARY HYDRAULIC–MASS BOOM, HIGH PRESSURE 459
LINES GP-AUXILIARY HYDRAULIC–REACH BOOM, HIGH PRESSURE 457
LINES GP-AUXILIARY HYDRAULIC–STICK, HIGH PRESSURE 453
455
LINES GP-BOOM. 461
463
LINES GP-BOOM CYLINDER. 467
469
LINES GP-BOOM CYLINDER–LH 465
LINES GP-BOOM CYLINDER–PRESSURE CONTROL 470
LINES GP-BOOM CYLINDER–RH. 466
LINES GP-BUCKET CYLINDER. 472
473
LINES GP-COOLING–ENGINE 90
LINES GP-COUPLER 475
477
LINES GP-COUPLER–MASS BOOM 480
LINES GP-COUPLER–REACH BOOM 478
LINES GP-COUPLER–STICK 474
LINES GP-DRAIN. 484
LINES GP-DRAIN–HYDRAULIC OIL. 482
LINES GP-ENGINE OIL 66
67
LINES GP-ENGINE OIL DRAIN. 68
LINES GP-FRONT 486
488
LINES GP-FRONT–1-PUMP, 1-WAY FLOW. 499
LINES GP-FRONT–2-WAY FLOW, 1-PUMP, ELEC CONT 494
LINES GP-FRONT–PIN GRABBER. 496
497
LINES GP-FRONT–QUICK COUPLER. 492
LINES GP-FRONT–SMARTBOOM. 490
LINES GP-FRONT–TOOL 489
LINES GP-FUEL. 120
122
123
LINES GP-FUEL INJECTION 125
LINES GP-GREASE–LONG BOOM. 598
LINES GP-GREASE–SHORT BOOM 600
LINES GP-HYDRAULIC 501
LINES GP-HYDRAULIC OIL COOLER. 503
LINES GP-HYDRAULIC OIL COOLER–FAN. 504
508
LINES GP-HYDRAULIC OIL COOLER–REVERSING FAN 506
LINES GP-HYDRAULIC PUMP 510
LINES GP-OIL COOLER 92
LINES GP-OIL COOLER–WORK TOOL, RETURN. 93
LINES GP-PILOT 511
516
518
LINES GP-PILOT–HEAVY LIFT 512
LINES GP-PILOT–LIFT MODE, TOOL. 514
LINES GP-PUMP–MAIN HYDRAULIC 519
LINES GP-RETURN–IMPLEMENT RETURN 521
LINES GP-STICK. 524
LINES GP-STICK CYLINDER. 525
LINES GP-STICK–BUCKET CYLINDER. 523
LINES GP-TRAVEL MOTOR. 526
LINES GP-TURBOCHARGER AIR 109
LINES GP-TURBOCHARGER OIL. 70
LINES GP-WASHER 695
697
LINES GP-WASHER–LOWER. 696
LINES GP-WINDOW WASHER 740
LINK AS-TRACK–GREASE LUBRICATED TRACK 390
LINKAGE GP-BUCKET–DB-FAMILY, WITH LIFTING EYE 604
LINKAGE GP-BUCKET–TB-FAMILY, WITH LIFTING EYE 602
LITERATURE GP 698
LOCK GP-QUICK COUPLER–HYDRAULIC. 629

M

MANIFOLD GP-EXHAUST. 111
MANIFOLD GP-INLET. 112
MIRROR GP 699
MIRROR GP-REAR VIEW. 700
701
MIRROR GP-SIDE VIEW. 702

INDEX

NAME PAGE

MIRROR GP-SIDE VIEW–REAR, RH. 703
MODULE GP-CAB WIRING 219
MODULE GP-COOLING. 94
MODULE GP-DISPLAY. 704
MODULE GP-DISPLAY (8-IN TOUCH SCREEN) 705
MODULE GP-KEYPAD (JOG DIAL) 282
MODULE GP-KEYPAD (ROTARY DIAL). 282
MONITOR & MTG GP-OPERATOR 705
MONITOR & MTG GP-OPERATOR–10 INCH TOUCHSCREEN. 706
MONITOR AR–10 INCH TOUCHSCREEN 707
MONITOR AR–TOUCHSCREEN 707
MOTOR & MTG GP-SWING. 528
MOTOR & MTG GP-TRAVEL. 529
MOTOR GP-SWING 530
MOTOR GP-TRAVEL 531
MOTOR GP-WINDOW WIPER. 708
MOUNTING GP-ALTERNATOR & COMPR 40 41
MOUNTING GP-CAB–PLATFORM. 709
MOUNTING GP-CONNECTOR. 220
MOUNTING GP-COUNTERWEIGHT. 364
MOUNTING GP-ENGINE 42 43
MOUNTING GP-LINES–HYDRAULIC FAN OIL COOLER. 533
MOUNTING GP-MAIN CONTROL VALVE 534
MOUNTING GP-MIRROR. 645
MOUNTING GP-PUMP 126
MOUNTING GP-ROPS 710
MOUNTING GP-WIRING 221
MUFFLER GP. 113

O

OIL CHANGE AR-HIGH SPEED 71
OPERATOR AR 711 712
OPERATOR AR–COMFORT 711
OPERATOR AR–DELUXE 711
OPTION AR-HYDRAULIC 2

P

PADLOCK GP. 133 351 358
PAN GP-OIL 44
PANEL GP-FUSE. 222
PARTS GP-DOOR. 713
PISTON & ROD GP 46
PLATE & FILM GP 764 766
PLATE & FILM GP–OUTSIDE, INTERNATIONAL 769 773
PLATE & INSULN GP-CAB PLATFORM. 715
PLATE AS-BRUSH 223
PLATFORM GP-OPERATOR 716
PLUG AS-DRAIN 44
PLUG GP-CONNECTOR 224
PLUG GP-CYLINDER BLOCK 47
PLUG GP-CYLINDER BLOCK–COOLANT. 48
PLUG GP-CYLINDER HEAD 49
PLUG GP-ENGINE–FUEL MANIFOLD 50
PLUG GP-OIL PAN. 51
PLUG GP-WATER LINES 95
PLUG-DRAIN. 441
PLUG-DRAIN (HYDRAULIC TANK). 547 550
PLUG-DRAIN (MAGNETIC) 33 44
POWER TRAIN AR. 317
PROTECTION GP-WIRING 225 226
PROTECTOR GP-SIDE BAR 630 631
PULLER-FUSE 262
PULLEY GP-CRANKSHAFT 52
PUMP & MTG GP-MAIN HYDRAULIC 535
PUMP AR-FUEL TRANSFER 127
PUMP GP-ENGINE OIL. 72 73
PUMP GP-FUEL INJECTION 128 129
PUMP GP-FUEL TRANSFER. 130 132
PUMP GP-HYDRAULIC 536 539
PUMP GP-MAIN HYDRAULIC 541
PUMP GP-PISTON 542
PUMP GP-WATER. 96 97

R

RADIATOR & HYD OIL COOLER GP. 98
RADIO GP 717
RADIO GP–MOUNTING 717
RAIL GP-FUEL 125
REGULATOR GP-TEMPERATURE 101
REGULATOR-WATER TEMPERATURE. 101
RELAY (24-VOLT) 741
RELAY (24-VOLT) (BOOM LIGHTS) 263
RELAY (24-VOLT) (CAB LIFT PUMP). 263
RELAY (24-VOLT) (CHASSIS LIGHTS). 263
RELAY (24-VOLT) (DEF PUMP) 258
RELAY (24-VOLT) (ETHER) 258
RELAY (24-VOLT) (FUEL PUMP) 258
RELAY (24-VOLT) (HORN) 263
RELAY (24-VOLT) (KEEP ALIVE). 258
RELAY (24-VOLT) (KEY). 258
RELAY (24-VOLT) (MAIN POWER) 258
RELAY (24-VOLT) (POWER) 263
RELAY (24-VOLT) (PRIMING PUMP) 258
RELAY (24-VOLT) (REFUELING PUMP). 227
RELAY (70-AMPERE) (MAIN). 258
RELAY (AIR CONDITIONER, HEATER) 640

NAME PAGE

RELAY GP–REFUELING PUMP 227
RIPPER GP–SINGLE SHANK. 632
ROCKER ARM GP 54
ROCKER ARM GP (EXHAUST) 57
ROCKER ARM GP–INTAKE 53
ROLLER AR-TRACK & CARRIER. 391
ROLLER GP-TRACK CARRIER. 392
ROLLER GP-TRACK-SINGLE FLANGE. 393
ROTATING GP-MOTOR. 531
ROTATING GP-PUMP 539

S

SCREEN & MTG GP-CAB–REAR WINDOW 718
SCREEN AS (HYDRAULIC TANK) 543
544
SCREEN GP-HYDRAULIC. 543
544
SCREEN GP-SUN 719
SCREEN-FILTER (RELIEF VALVE) 584
SEAL GP-CRANKSHAFT 35
37
55
SEAL GP-CRANKSHAFT (REAR) 38
55
SEAL GP-DUO-CONE. 392
393
SEAL-VALVE COVER. 17
37
SEAT BELT GP 720
SEAT BELT GP (RETRACTABLE, 2-IN). 721
722
SEAT GP 721
722
SEAT GP-SUSPENSION–COMFORT 725
SEAT GP–DELUXE 723
SENDER AS-FUEL LEVEL (TANK) 134
SENSOR & MTG GP-POSITION–BODY TILT . . . 228
SENSOR & MTG GP-POSITION–GRADE CONTROL, BOOM. 229
SENSOR & MTG GP-POSITION–GRADE CONTROL, BUCKET. 231
232
SENSOR & MTG GP-POSITION–GRADE CONTROL, STICK. 230
SENSOR & MTG GP-POSITION–LASER RECEIVER 233
SENSOR AS-POSITION (INERTIAL MEASUREMENT UNIT) 228
229
230
SENSOR AS-PRESSURE (PRIMARY FUEL, WATER SEPARATOR) 117
SENSOR AS-SPEED (LH). 234
SENSOR AS-SPEED (RH) 234
SENSOR GP-ENGINE 234
SENSOR GP-LIQUID LEVEL (WATER IN FUEL) 117
SENSOR GP-POSITION (BUCKET) 231
232
SENSOR GP-POSITION (SWING) 546
SENSOR GP-PRESSURE 234
236
237
238
239
240
SENSOR GP-PRESSURE (BAROMETRIC) 234
SENSOR GP-PRESSURE (ENGINE OIL). 234
SENSOR GP-PRESSURE (FUEL FILTER INLET). 117
SENSOR GP-PRESSURE (FUEL FILTER OUTLET). 117
SENSOR GP-PRESSURE (FUEL). 236
SENSOR GP-PRESSURE (HYDRAULIC OIL) . . . 240
492
497
SENSOR GP-PRESSURE (HYDRAULIC OIL) (BOOM CYLINDER, HEAD END) 469
470
SENSOR GP-PRESSURE (HYDRAULIC OIL) (BOOM CYLINDER, ROD END) 469
470
SENSOR GP-PRESSURE (HYDRAULIC OIL) (EXTEND). 494
SENSOR GP-PRESSURE (HYDRAULIC OIL) (PUMP 1). 516
SENSOR GP-PRESSURE (HYDRAULIC OIL) (PUMP 2). 516
SENSOR GP-PRESSURE (HYDRAULIC OIL) (RETRACT) 494
SENSOR GP-PRESSURE (HYDRAULIC OIL) (STICK CYLINDER, HEAD END) 516
SENSOR GP-TEMPERATURE 241
242
SENSOR GP-TEMPERATURE (2-PIN) (AIR INLET). 105
SENSOR GP-TEMPERATURE (2-PIN) (FUEL). 117
SENSOR GP-TEMPERATURE (COOLANT TEMPERATURE) 234
SENSOR GP-TEMPERATURE (INTAKE MANIFOLD) 234
SENSOR-POSITION 546
SENSOR-POSITION (BUCKET) 231
232
SENSOR-SPEED 234
SENSOR-TEMPERATURE 243
SENSOR-TEMPERATURE (2-PIN) 241
242
SENSOR-TEMPERATURE (2-PIN) (HYDRAULIC TANK OIL) 547
550

INDEX

NAME PAGE

SHEET AS-SOUND SUPPRESSION 365
366
367
368
369
370
371
372
373
374
375
376
377
378
379
SHROUD GP-RADIATOR. 102
SIDECUTTER GP 633
634
SOFTWARE GP-ENGINE. 172
SOFTWARE GP-MACHINE (SECURITY SYSTEM) 173
SOFTWARE GP-MONITOR. 173
174
705
SOFTWARE GP-MONITOR (SATELLITE RADIO) 170
174
SOFTWARE GP-MONITOR (WORK TOOL). 168
SOLENOID AS 450
SOLENOID AS-STARTING MOTOR (24-VOLT) 247
SPRING AS-GAS 352
357
SPRING AS-GAS (HATCH). 685
686
SPRING AS-GAS (STORAGE BOX). 321
SPROCKET GP 317
318
319
STARTING AID GP-ETHER 244
STARTING MOTOR GP-ELECTRIC 246
249
STICK AR-HOE–MASS. 606
STICK AR-HOE–REACH 606
STICK GP-HOE–MASS. 608
STICK GP-HOE–REACH 607
STRAINER (REFUELING) 137
STRAINER AS-FUEL (FLOAT GAUGE). 134
SUPPORT AS-SOUND SUPPRESSION 380
SUPPORT GP-SEAT. 727
SUSPENSION GP-SEAT–AIR. 728
SWITCH AS (REFUELING PUMP RELAY) 130
SWITCH AS-CONTROL 732
SWITCH AS-CONTROL (CAB). 713
SWITCH AS-DIFF PRESSURE (RETURN FILTER). 547
550
SWITCH AS-LIMIT (HYDRAULIC LOCK) 666
SWITCH AS-LIMIT (HYDRAULIC LOCKOUT) . . . 658
SWITCH AS-PRESSURE (REFRIGERANT) 693

NAME PAGE

SWITCH AS-PUSH BUTTON 221
250
SWITCH AS-ROCKER (QUICK COUPLER) 254
SWITCH AS-TOGGLE (SECONDARY SHUTDOWN). 294
SWITCH GP-DISCONNECT–BATTERY 251
253
SWITCH GP-DISCONNECT–JUMP START 252
SWITCH GP-POSITION (HYDRAULIC LOCK). . . 666
SWITCH GP-ROCKER–COUPLER 254
SWITCH GP-ROCKER–TRAVEL ALARM CANCEL 255
SWIVEL & MOUNTING GP 545
SWIVEL GP. 546

T

TANK & FILTER GP-HYDRAULIC 547
550
TANK & MTG GP-FUEL 133
TANK & MTG GP-HYDRAULIC 553
TANK GP-COOLANT. 75
TANK GP-FUEL 134
TANK GP-HYDRAULIC. 550
554
TIP GP-PENETRATION 635
TIP GP-PENETRATION PLUS 636
TIP GP-PENETRATION PLUS–110. 637
TRACK ADJUSTER & RECOIL GP 396
397
TRACK ADJUSTER & RECOIL GP–LH. 395
TRACK ADJUSTER & RECOIL GP–RH 394
TRACK AR. 398
TRACK GP–2-REQUIRED 399
400
401
TUBE GP-HYDRAULIC. 519
TURBOCHARGER GP 114
115

U

UNDERCARRIAGE AR. 402

V

VALVE & MTG GP-MAIN CONTROL–AUXILIARY. 556
557
VALVE & MTG GP-MAIN CONTROL–HEAVY LIFT 555
VALVE & MTG GP-SOLENOID 559
560
VALVE & MTG GP-SOLENOID (CONTROL VALVE) 492
497
512
514

NAME PAGE

VALVE & MTG GP-SOLENOID–LOWER 561
VALVE & MTG GP-SOLENOID–ON/OFF 562
VALVE & MTG GP-SOLENOID–UPPER 558
VALVE AR-MAIN CONTROL–HEAVY LIFT. 563
VALVE AR-MAIN CONTROL–HEAVY LIFT, AUXILIARY. 563
VALVE AR-SWING–FINE SWING 563
VALVE AS-CONTROL. 584
VALVE AS-RELIEF 531 579
VALVE AS-RELIEF (CONTROL) 567
VALVE GP-CHECK 136 564
VALVE GP-CHECK (PILOT) 516
VALVE GP-CHECK–RETURN. 566
VALVE GP-CONTROL 569 571 573
VALVE GP-CONTROL (AUXILIARY). 574
VALVE GP-CONTROL–AUXILIARY 574
VALVE GP-CONTROL–REVERSE FLOW 567
VALVE GP-CONTROL–TOOL CONTROL 576
VALVE GP-LOAD CONTROL–DRIFT REDUCTION 577
VALVE GP-MAIN CONTROL–HEAVY LIFT 578
VALVE GP-MANUAL–AUXILIARY, SHUTOFF . . . 582
VALVE GP-MODULATING. 109 583
VALVE GP-REFUELING. 137
VALVE GP-RELIEF 586 587
VALVE GP-RELIEF–LINE. 588
VALVE GP-RELIEF–PILOT OPERATED 584
VALVE GP-SOLENOID. 445 447 560
VALVE GP-SOLENOID (12-VOLT) 558 561 589
VALVE GP-SOLENOID (12-VOLT) (BOOM UP). 591
VALVE GP-SOLENOID (12-VOLT) (BUCKET OPEN). 591
VALVE GP-SOLENOID (12-VOLT) (STICK 2) . . . 591
VALVE GP-SOLENOID (12-VOLT) (STICK IN) 591
VALVE GP-SOLENOID (12-VOLT) (STICK OUT) 591
VALVE GP-SOLENOID (12-VOLT) (SWING PRIORITY) 591
VALVE GP-SOLENOID (12-VOLT) (SWING RIGHT) 591
VALVE GP-SOLENOID (12-VOLT) (TRAVEL, LH FRONT). 591
VALVE GP-SOLENOID (12-VOLT) (TRAVEL, RH FRONT). 591
VALVE GP-SOLENOID (24-VOLT) 562 589
VALVE GP-SOLENOID (24-VOLT) (HYDRAULIC LOCKOUT). 591
VALVE GP-SOLENOID (24-VOLT) (ON/OFF) . . . 567
VALVE GP-SOLENOID & MANIFOLD 578 589
VALVE GP-SOLENOID & MANIFOLD–LOWER. 591
VALVE GP-SOLENOID & PRESS REDC 492 497
VALVE MECHANISM GP. 56 57
VISOR GP-PROTECTION 730

W

WASHER GP-WINDOW 731
WINDOW GP-CAB. 732 734 735 737 738 739
WIPER GP-WINDOW 740
WIPER GP-WINDOW–LOWER. 741
WIRING & MTG GP- MAIN CONT V 256
WIRING GP-AUX START RECEPTACLE–JUMP START. 257
WIRING GP-CAB 258 262
WIRING GP-CAMERA–PRODUCT LINK 265
WIRING GP-CHASSIS 273 277
WIRING GP-CHASSIS–1-WAY FLOW, HYD CONT, MECH RLF 272
WIRING GP-CHASSIS–2-WAY FLOW, 1-PUMP, ELEC CONT 275
WIRING GP-CHASSIS–BOOM PRESSURE CONTROL 276
WIRING GP-CHASSIS–CAMERA. 266
WIRING GP-CHASSIS–CAMERA, RH 270 271
WIRING GP-CHASSIS–FINE SWING 267
WIRING GP-CHASSIS–REAR VIEW, CAMERA. 269
WIRING GP-CHASSIS–REFUELING PUMP 268
WIRING GP-CHASSIS–REVERSING FAN. 274
WIRING GP-CONSOLE 279 280 281 282
WIRING GP-ELECTRONIC CONTROL 283
WIRING GP-ENGINE 285 288
WIRING GP-ENGINE–INJECTOR 287
WIRING GP-FRONT–GRADE CONTROL, BOOM 289 292
WIRING GP-FRONT–GRADE CONTROL, STICK 290 291 293
WIRING GP-PLATFORM 294

INDEX

NAME	PAGE
WIRING GP-SENSOR–VALVE	296
WIRING GP-UNIT INJECTOR–WITHOUT BRAKES	297
WIRING GP-VALVE	298
	300
WIRING GP-VALVE–1-PUMP, 1-WAY FLOW	303
WIRING GP-VALVE–COUPLER	301
WIRING GP-VALVE–HEAVY LIFT	302

MACHINE ARRANGEMENT

526-5211 COMMON AR

S/N: SP91-UP

SMCS-7000 **i07854424**

NOTE	PART NUMBER	QTY	PART NAME 1 2 3 4 5 6 (PRODUCT LEVEL)	SEE PAGE
Y	*502-5376*	1	COOLING GP	75
Y	*522-0500*	1	ELECTRICAL AR	172
Y	*490-7871*	1	ELECTRONICS GP-MACHINE	173
Y	*575-9544*	1	ENCLOSURE AR	340
Y	*525-2937*	1	HYDRAULIC AR	452
Y	*359-2563*	1	LITERATURE GP	698
Y	*578-9785*	1	OPERATOR AR	712

Y - SEPARATE ILLUSTRATION

<END>

523-7792 EXCAVATOR AR

S/N: SP91-UP

SMCS-7000 **i07877337**

NOTE	PART NUMBER	QTY	PART NAME 1 2 3 4 5 6 (PRODUCT LEVEL)	SEE PAGE
Y	*502-9958*	1	DRIVE & MTG GP-SWING	434
Y	*576-7683*	1	ELECTRICAL AR	172
			—OR—	
Y	*525-3763*	1	ELECTRICAL AR	172
Y	*575-9537*	1	ENCLOSURE AR	340
			—OR—	
Y	*516-7428*	1	ENCLOSURE AR	340
Y	*568-9820*	1	ENGINE AR	3
			—OR—	
Y	**522-6120**	1	ENGINE AR-COMPLETE	4
Y	*578-1021*	1	FILM GP	761
			—OR—	
Y	*533-7833*	1	FILM GP	748
Y	*527-7800*	1	HYDRAULIC AR	452
Y	*502-4246*	1	INSTALLATION AR-ENGINE	6
Y	*504-1117*	1	LINES GP-AIR CONDITIONER	693
Y	*568-3011*	1	POWER TRAIN AR	317

Y - SEPARATE ILLUSTRATION

<END>

517-5971 INSTALLATION AR-MACHINE—GRADE CONTROL

S/N: SP91-UP

FOR USE WITH 3.2-M (10.5-FT) STICK

SMCS-7000 **i07527311**

NOTE	PART NUMBER	QTY	PART NAME 1 2 3 4 5 6 (PRODUCT LEVEL)	SEE PAGE
Y	*490-2769*	1	SENSOR & MTG GP-POSITION (GRADE CONTROL, STICK)	230
Y	*517-2403*	1	SENSOR & MTG GP-POSITION (GRADE CONTROL, BUCKET)	231
Y	*517-3162*	1	WIRING GP-FRONT (GRADE CONTROL)	290

Y - SEPARATE ILLUSTRATION

<END>

550-7573 OPTION AR-HYDRAULIC

S/N: SP91-UP

SMCS-7000 **i07526810**

NOTE	PART NUMBER	QTY	PART NAME 1 2 3 4 5 6 (PRODUCT LEVEL)	SEE PAGE
Y	*528-6835*	1	CONTROL AR-AUXILIARY (JOYSTICK, SLIDERS)	408
Y	*503-9789*	1	LINES GP-FRONT	488
Y	*503-9779*	1	LINES GP-OIL COOLER	92
Y	*504-1790*	1	VALVE AR-MAIN CONTROL (HEAVY LIFT)	563

Y - SEPARATE ILLUSTRATION

<END>

550-7581 OPTION AR-HYDRAULIC

S/N: SP91-UP

SMCS-7000 **i07526603**

NOTE	PART NUMBER	QTY	PART NAME 1 2 3 4 5 6 (PRODUCT LEVEL)	SEE PAGE
Y	*528-6835*	1	CONTROL AR-AUXILIARY (JOYSTICK, SLIDERS)	408
Y	*538-3026*	1	CONTROL AR-AUXILIARY (2-PUMP, 2-WAY FLOW)	408
Y	*503-9790*	1	LINES GP-FRONT (TOOL)	489
Y	*503-9780*	1	LINES GP-RETURN (IMPLEMENT RETURN)	521
Y	*504-1791*	1	VALVE AR-MAIN CONTROL (HEAVY LIFT, AUXILIARY)	563

Y - SEPARATE ILLUSTRATION

<END>

526-2125 ENGINE AR

S/N: NTB1-UP

PART OF 522-6120 ENGINE AR-COMPLETE

SMCS-1000 **i07498899**

NOTE	PART NUMBER	QTY	PART NAME 1 2 3 4 5 6 (PRODUCT LEVEL)	SEE PAGE
Y	*546-5240*	1	ENGINE AR-CORE	5
Y	*510-7283*	1	PLATE & FILM GP	764
	527-7336	1	ELECTRONICS GP-ENGINE	

Y - SEPARATE ILLUSTRATION

<END>

568-9820 ENGINE AR

S/N: SP91000-UP

PART OF 523-7792 EXCAVATOR AR

SMCS-1000 **i07877329**

NOTE	PART NUMBER	QTY	PART NAME 1 2 3 4 5 6 (PRODUCT LEVEL)	SEE PAGE
Y	*527-7336*	1	ELECTRONICS GP-ENGINE	172
Y	**522-6120**	1	ENGINE AR-COMPLETE	4

Y - SEPARATE ILLUSTRATION

<END>

522-6120 ENGINE AR-COMPLETE

S/N: NTB1-UP

PART OF 568-9820 ENGINE AR, 523-7792 EXCAVATOR AR

SMCS-1000 **i07819329**

NOTE	PART NUMBER	QTY	PART NAME 1 2 3 4 5 6 (PRODUCT LEVEL)	SEE PAGE
Y	*506-3265*	1	ALTERNATOR GP-CHARGING	141
Y	*526-9175*	1	BASE GP-OIL FILTER	60
Y	*505-6957*	1	BELT GP-SERPENTINE	7
Y	*505-1238*	1	COMPRESSOR GP-REFRIGERANT	654
Y	*525-6524*	1	CONTROL & MTG GP-ELECTRONIC	165
Y	*188-3826*	1	COOLER GP-ENGINE OIL	74
Y	*495-1682*	1	COVER & MTG GP-CYLINDER BLOCK	9
Y	*325-8452*	1	COVER GP-ENGINE	10
Y	*269-5311*	1	COVER GP-FRONT HOUSING (ENGINE OIL FILL)	11
Y	*269-5325*	1	COVER GP-FRONT HOUSING (OPTIONAL EQUIPMENT)	12
Y	*517-4580*	1	COVER GP-FRONT HOUSING	13
Y	*350-1302*	1	COVER GP-SOUND SUPPRESSION (ENGINE OIL PAN)	14
Y	*507-1742*	1	COVER GP-VALVE MECHANISM	17
Y	*505-1453*	1	DAMPER & PULLEY GP	25
Y	*508-3032*	1	ELBOW GP-WATER	81
Y	*526-2125*	1	ENGINE AR	3
Y	*116-4556*	1	FASTENER GP-FRONT HOUSING	30
Y	*348-1099*	1	FASTENER GP-WATER PUMP	87
Y	*525-6754*	1	FITTING GP-FUEL	119
Y	*563-3117*	1	FLYWHEEL GP	31
Y	*524-4771*	1	GAUGE GP-OIL LEVEL (DIPSTICK)	65
Y	*505-5876*	1	HOUSING GP-FLYWHEEL	33
Y	*517-4573*	1	HOUSING GP-FRONT	35
Y	*507-2596*	1	LIFTING GP-ENGINE	39
Y	*500-6854*	1	LINES GP-AIR	107
Y	*286-9679*	1	LINES GP-ENGINE OIL (REAR SUMP)	66
Y	*516-6701*	1	LINES GP-ENGINE OIL	67
Y	*528-4125*	1	LINES GP-FUEL	122
Y	*528-6870*	1	LINES GP-FUEL	123
Y	*524-5332*	1	LINES GP-TURBOCHARGER AIR	109
Y	*507-2528*	1	LINES GP-TURBOCHARGER OIL	70
Y	*505-8956*	1	MANIFOLD GP-EXHAUST	111
Y	*512-5701*	1	MANIFOLD GP-INLET	112
Y	*342-8963*	1	MOUNTING GP-ALTERNATOR & COMPR	40
			—OR—	
Y	*557-7709*	1	MOUNTING GP-ALTERNATOR & COMPR	41
Y	*523-7344*	1	MOUNTING GP-CONNECTOR	220
Y	*523-7485*	1	MOUNTING GP-ENGINE	43
Y	*523-2199*	1	MOUNTING GP-PUMP	126
Y	*569-1216*	1	PAN GP-OIL	44
Y	*275-8699*	1	PLUG GP-CYLINDER BLOCK (AUXILIARY COOLER)	47
Y	*475-0353*	1	PLUG GP-CYLINDER BLOCK (COOLANT)	48
Y	*495-5748*	1	PLUG GP-CYLINDER HEAD	49
Y	*514-5296*	1	PLUG GP-ENGINE	50
Y	*523-5990*	1	PLUG GP-OIL PAN	51
Y	*347-2324*	1	PLUG GP-WATER LINES	95
Y	*535-6785*	1	PROTECTION GP-WIRING	225
Y	*541-6658*	1	PROTECTION GP-WIRING	226

522-6120 **ENGINE AR-COMPLETE (**contd.**)** **i07819329**

NOTE	PART NUMBER	QTY	PART NAME 1 2 3 4 5 6 (PRODUCT LEVEL)	SEE PAGE
Y	*485-5474*	1	PULLEY GP-CRANKSHAFT	52
Y	*506-6361*	1	REGULATOR GP-TEMPERATURE	101
Y	*295-2351*	1	SEAL GP-CRANKSHAFT	55
Y	*522-1694*	1	STARTING MOTOR GP-ELECTRIC	249
Y	*505-5694*	1	TURBOCHARGER GP	114
Y	*525-8061*	1	WIRING GP-ELECTRONIC CONTROL	283
			PLEASE USE THE GASKET KIT LINK IN SIS OR CONTACT YOUR LOCAL DEALER FOR THE LATEST GASKET KIT INFORMATION	

Y - SEPARATE ILLUSTRATION

<END>

546-5240 ENGINE AR-CORE

S/N: NTB1-UP

PART OF 526-2125 ENGINE AR

SMCS-1000 **i07500689**

NOTE	PART NUMBER	QTY	PART NAME 1 2 3 4 5 6 (PRODUCT LEVEL)	SEE PAGE
Y	*516-8214*	1	CAMSHAFT GP	8
Y	*463-1705*	1	CRANKSHAFT GP	18
Y	*535-7519*	1	CYLINDER BLOCK GP	21
Y	*523-4231*	1	CYLINDER HEAD GP	24
Y	*512-1653*	1	GEAR GP-FRONT	32
Y	*503-7395*	1	LINES GP-FUEL INJECTION	125
Y	*562-1130*	6	PISTON & ROD GP	46
Y	*259-2976*	1	PUMP GP-ENGINE OIL	72
Y	*510-9241*	6	PUMP GP-FUEL INJECTION	128
Y	*516-4624*	1	PUMP GP-FUEL INJECTION	129
Y	*346-9561*	1	PUMP GP-WATER	97
Y	*525-7118*	1	SENSOR GP-ENGINE	234
Y	*348-9896*	1	VALVE MECHANISM GP	56
Y	*527-3316*	1	WIRING GP-UNIT INJECTOR	297

Y - SEPARATE ILLUSTRATION

<END>

502-4246 INSTALLATION AR-ENGINE

S/N: SP91-UP

PART OF 523-7792 EXCAVATOR AR

SMCS-1000 **i07516065**

NOTE	PART NUMBER	QTY	PART NAME 1 2 3 4 5 6 (PRODUCT LEVEL)	SEE PAGE
Y	*502-4792*	1	AIR CLEANER GP	105
Y	*502-4797*	1	COUPLING GP-PUMP	410
Y	*502-5364*	1	DRAIN GP-ENGINE OIL	28
Y	*502-5366*	1	FILTER & MTG GP-ENGINE OIL	61
Y	*502-4785*	1	FUMES DISPOSAL GP	64
Y	*502-4255*	1	LINES GP-AIR	108
Y	*502-4174*	1	LINES GP-COOLING	90
Y	*502-4787*	1	LINES GP-FUEL	120
Y	*502-4252*	1	MOUNTING GP-ENGINE	42
Y	*502-5356*	1	MUFFLER GP	113

Y - SEPARATE ILLUSTRATION

<END>

505-6957 BELT GP-SERPENTINE

S/N: NTB1-UP

PART OF 522-6120 ENGINE AR-COMPLETE

SMCS-1397 **i07498889**

NOTE	REF NO	GRAPHIC REF	PART NUMBER	QTY	PART NAME 1 2 3 4 5 6 (PRODUCT LEVEL)	SEE PAGE
	1	1	**348-5783**	1	BELT-SERPENTINE	

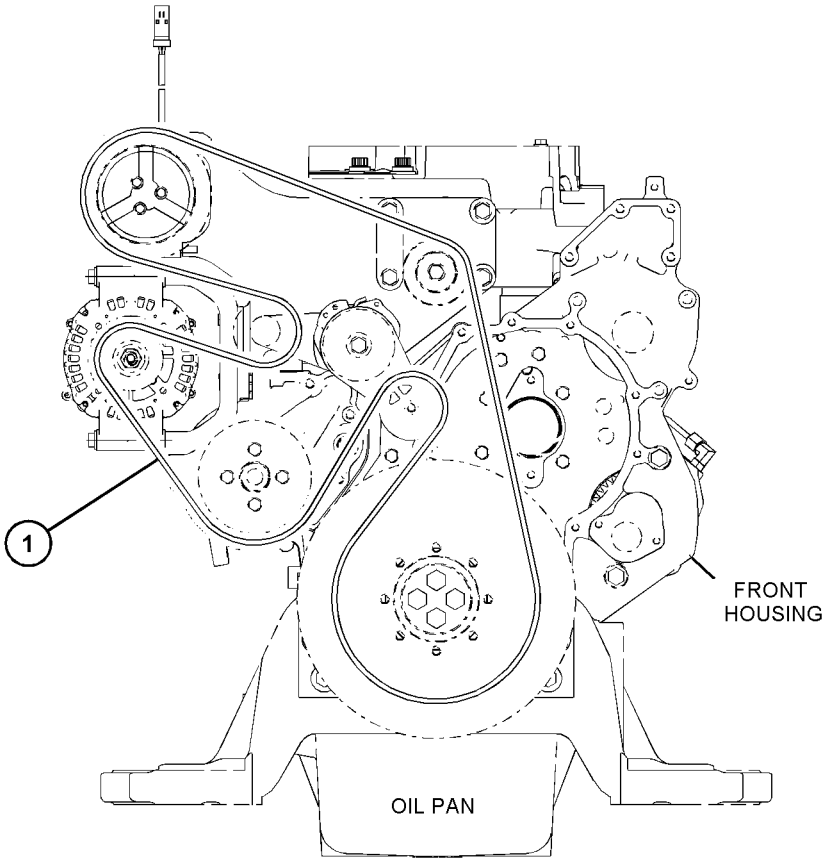

GRAPHIC #1 <END> g06286578

516-8214 CAMSHAFT GP

S/N: NTB1-UP

PART OF 546-5240 ENGINE AR-CORE

SMCS-1210 **i07231019**

NOTE	REF NO	GRAPHIC REF	PART NUMBER	QTY	PART NAME 1 2 3 4 5 6 (PRODUCT LEVEL)	SEE PAGE
	1	1	**107-7694**	1	PLATE-THRUST	
	2	1	**516-8215**	1	CAMSHAFT AS	
		1	**1B-8705**	1	KEY-WOODRUFF	
M	3	1	**6V-3940**	2	BOLT (M8X1.25X25-MM)	

M - METRIC PART

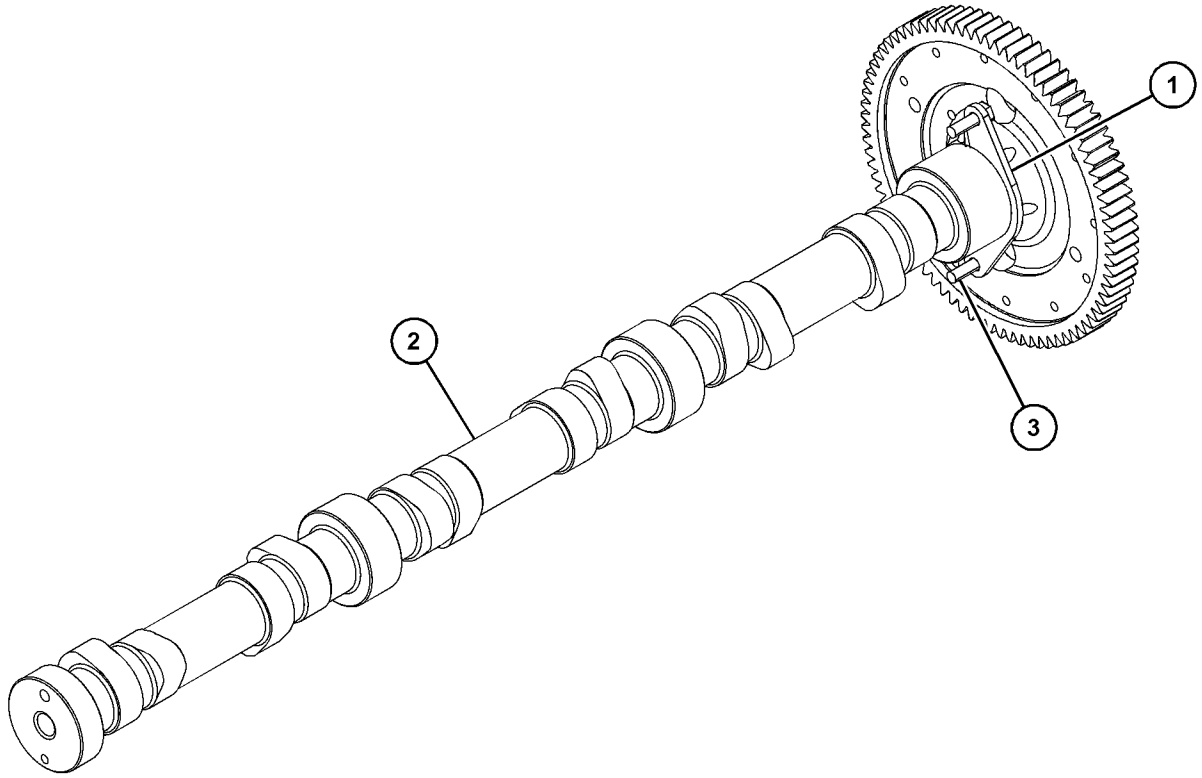

GRAPHIC #1 <END> g06246207

495-1682 COVER & MTG GP-CYLINDER BLOCK

S/N: NTB1-UP

PART OF 522-6120 ENGINE AR-COMPLETE

SMCS-1201 **i07498892**

NOTE	REF NO	GRAPHIC REF	PART NUMBER	QTY	PART NAME 1 2 3 4 5 6 (PRODUCT LEVEL)	SEE PAGE
	1	1	**280-4322**	1	GASKET	
	2	1	**355-7407**	1	COVER-CYLINDER	
	3	1	*389-3708*	2	PLUG AS	
					(EACH INCLUDES)	
		1	**214-7568**	1	SEAL-O-RING	
		1	**360-3679**	1	PLUG-CONNECTOR (9/16-18-THD)	
	4	1	*398-5597*	2	PLUG AS	
					(EACH INCLUDES)	
		1	**214-7568**	1	SEAL-O-RING	
		1	**360-3692**	1	PLUG	
M	5	1	**131-0353**	1	STUD (M8X1.25X82.75-MM)	
M	6	1	**241-0542**	3	STUD (M8X1.25X30-MM)	
M	7	1	**6V-2317**	4	BOLT (M8X1.25X30-MM)	
M	8	1	**6V-5219**	2	BOLT (M8X1.25X40-MM)	
	9	1	**9M-1974**	10	WASHER-HARD (8.8X16X2-MM THK)	

M - METRIC PART

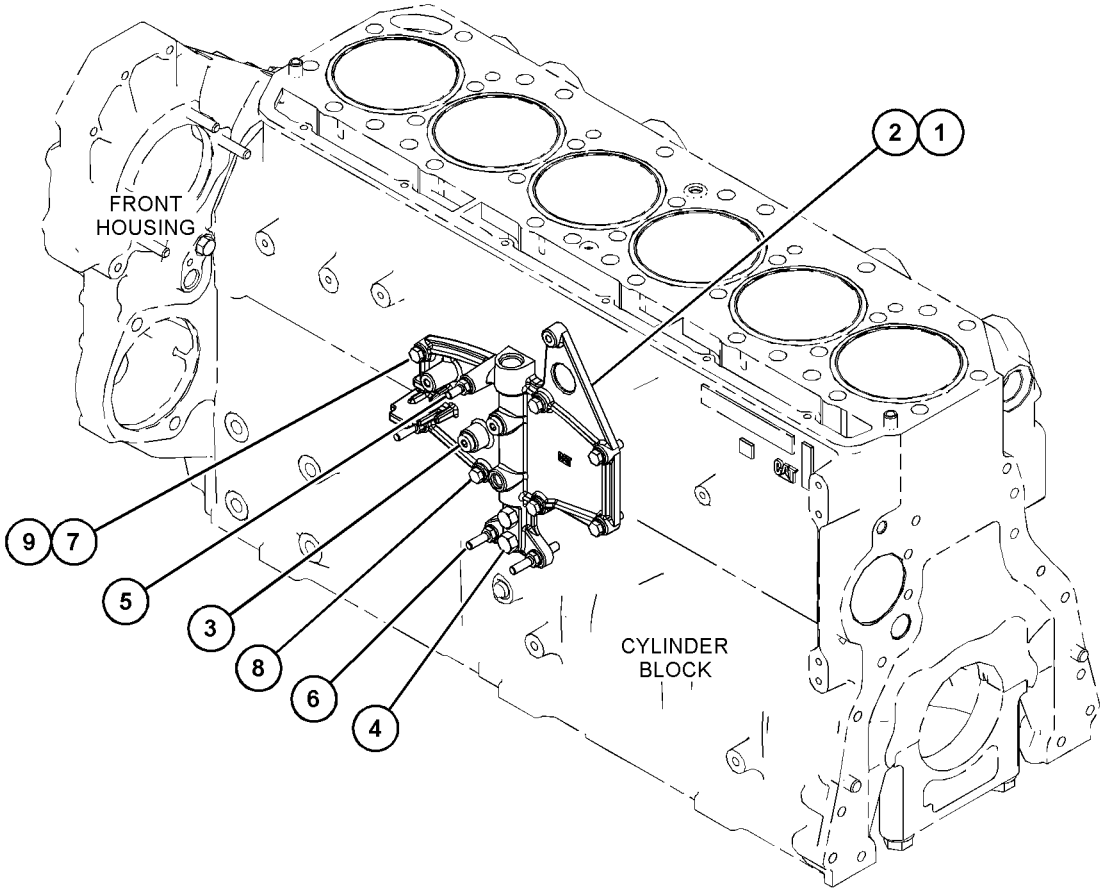

GRAPHIC #1 <END> g06272429

325-8452 COVER GP-ENGINE

S/N: NTB1-UP

PROVIDES A THERMOSTAT HOUSING SIDE COVER WITHOUT A PORT FOR COOLANT SAMPLING

PART OF 522-6120 ENGINE AR-COMPLETE

SMCS-1000 **i05327502**

NOTE	REF NO	GRAPHIC REF	PART NUMBER	QTY	PART NAME 1 2 3 4 5 6 (PRODUCT LEVEL)	SEE PAGE
	1	1	**421-8488**	1	COVER	
M	2	1	**142-3953**	1	STUD (M10X1.5-THD)	
M	3	1	**6V-4248**	1	BOLT (M10X1.5X25-MM)	
	4	1	**6V-5839**	1	WASHER (11X21X2.5-MM THK)	
	5	1	**8T-4121**	1	WASHER-HARD (11X21X2.5-MM THK)	
	6	1	**8T-5917**	1	SEAL-O-RING	

M - METRIC PART

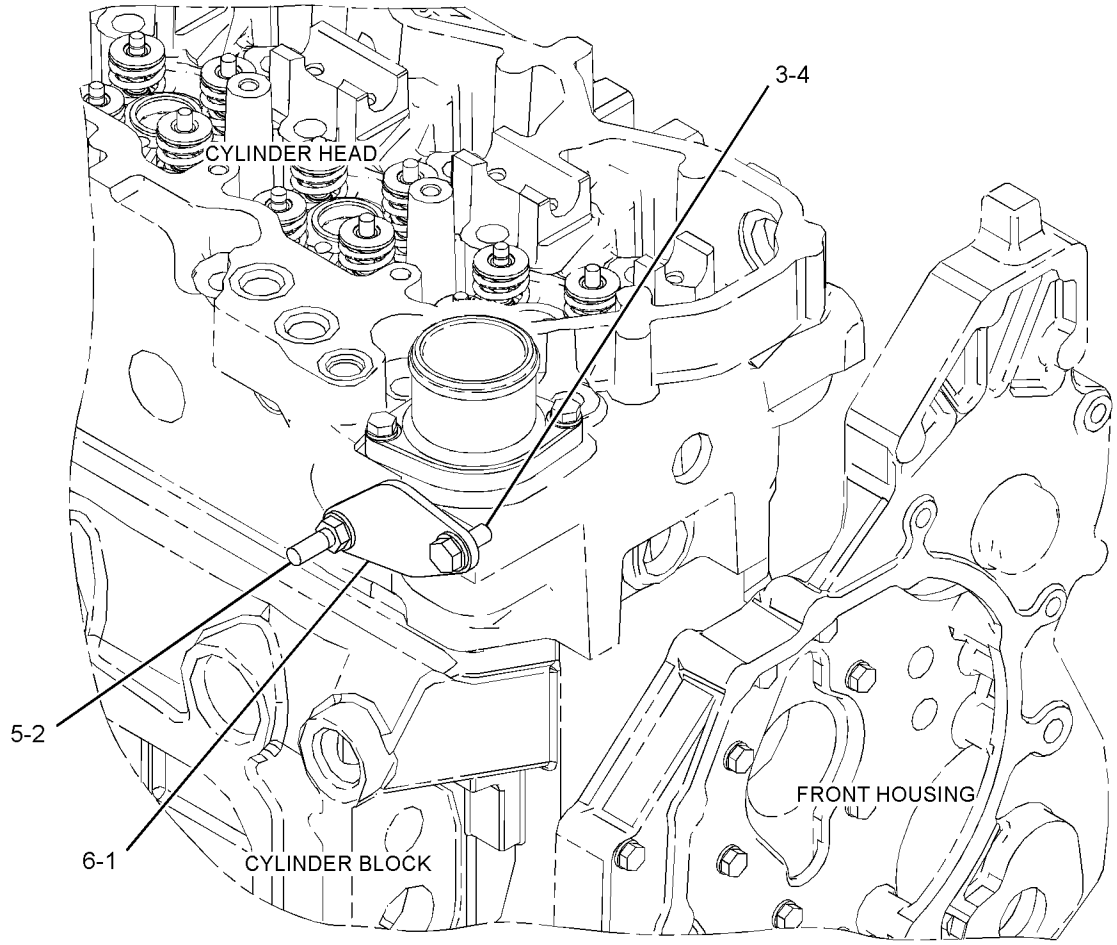

GRAPHIC #1 <END> g02151162

269-5311 COVER GP-FRONT HOUSING

S/N: NTB1-UP

PART OF 522-6120 ENGINE AR-COMPLETE

SMCS-1150 **i06896602**

NOTE	REF NO	GRAPHIC REF	PART NUMBER	QTY	PART NAME 1 2 3 4 5 6 (PRODUCT LEVEL)	SEE PAGE
	1	1	**7C-1445**	1	COVER	
	2	1	**061-9455**	1	SEAL-O-RING	
M	3	1	**6V-3940**	2	BOLT (M8X1.25X25-MM)	
	4	1	**9M-1974**	2	WASHER-HARD (8.8X16X2-MM THK)	

M - METRIC PART

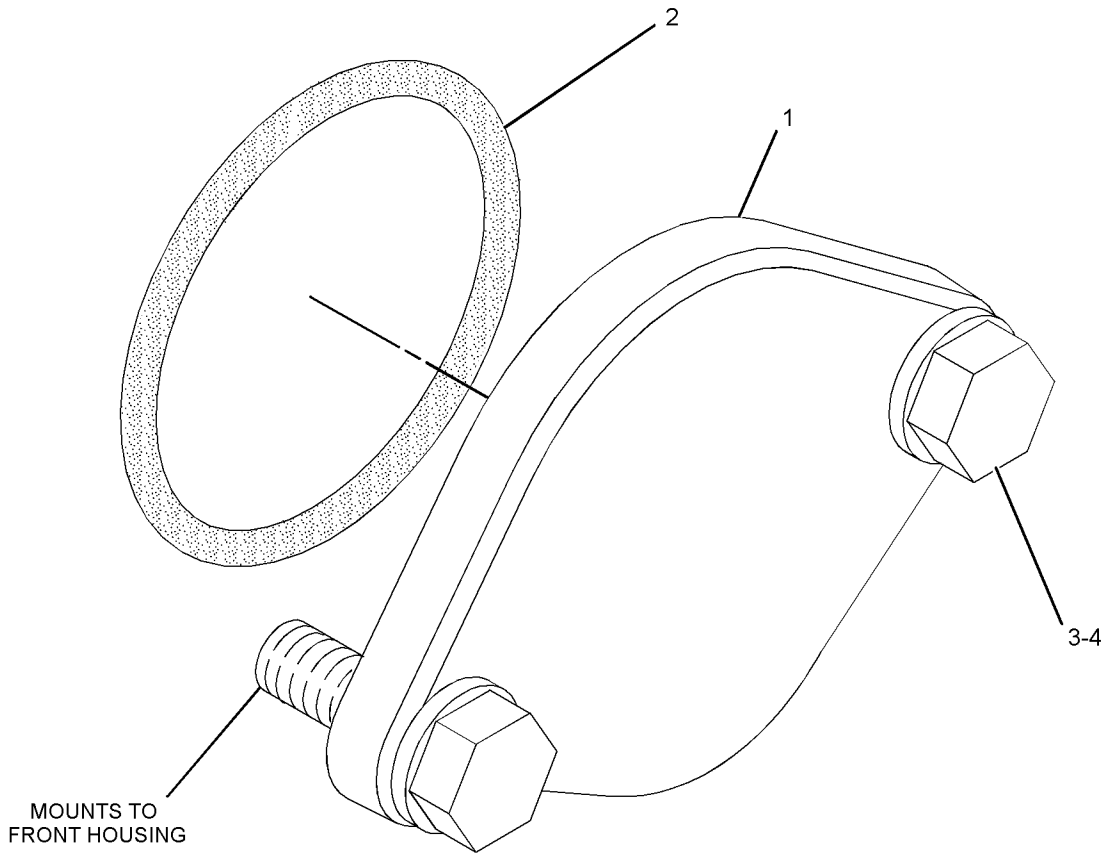

GRAPHIC #1 <END> g01280243

269-5325 COVER GP-FRONT HOUSING

S/N: NTB1-UP

PART OF 522-6120 ENGINE AR-COMPLETE

SMCS-1150 **i05832909**

NOTE	REF NO	GRAPHIC REF	PART NUMBER	QTY	PART NAME 1 2 3 4 5 6 (PRODUCT LEVEL)	SEE PAGE
	1	1	**269-5778**	1	COVER	
	2	1	**275-2164**	1	SEAL	
	3	1	**5P-8245**	4	WASHER-HARD (13.5X25.5X3-MM THK)	
M	4	1	**6V-8149**	2	NUT (M12X1.75-THD)	
M	5	1	**6V-8336**	2	BOLT (M12X1.75X70-MM)	

M - METRIC PART

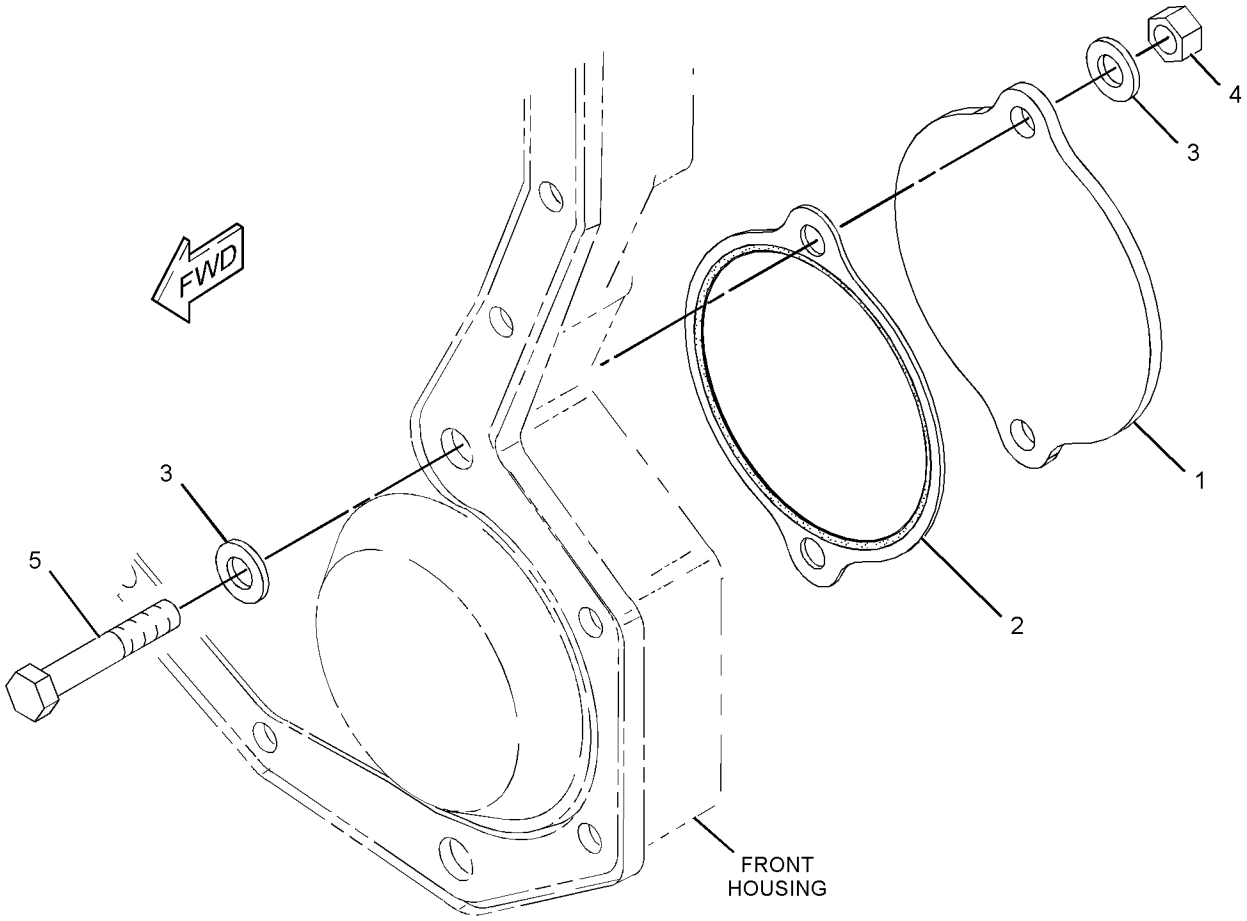

GRAPHIC #1 <END> g01179047

517-4580 COVER GP-FRONT HOUSING–CAM, IDLER GEAR

S/N: NTB1-UP

PART OF 522-6120 ENGINE AR-COMPLETE

SMCS-1150 **i07498893**

NOTE	REF NO	GRAPHIC REF	PART NUMBER	QTY	PART NAME 1 2 3 4 5 6 (PRODUCT LEVEL)	SEE PAGE
	1	1	**499-0001**	1	SEAL	
	2	1	**517-4579**	1	COVER-FRONT	
	3	1	**295-4302**	13	BOLT-12 POINT HEAD (M8X1.25X25-MM)	

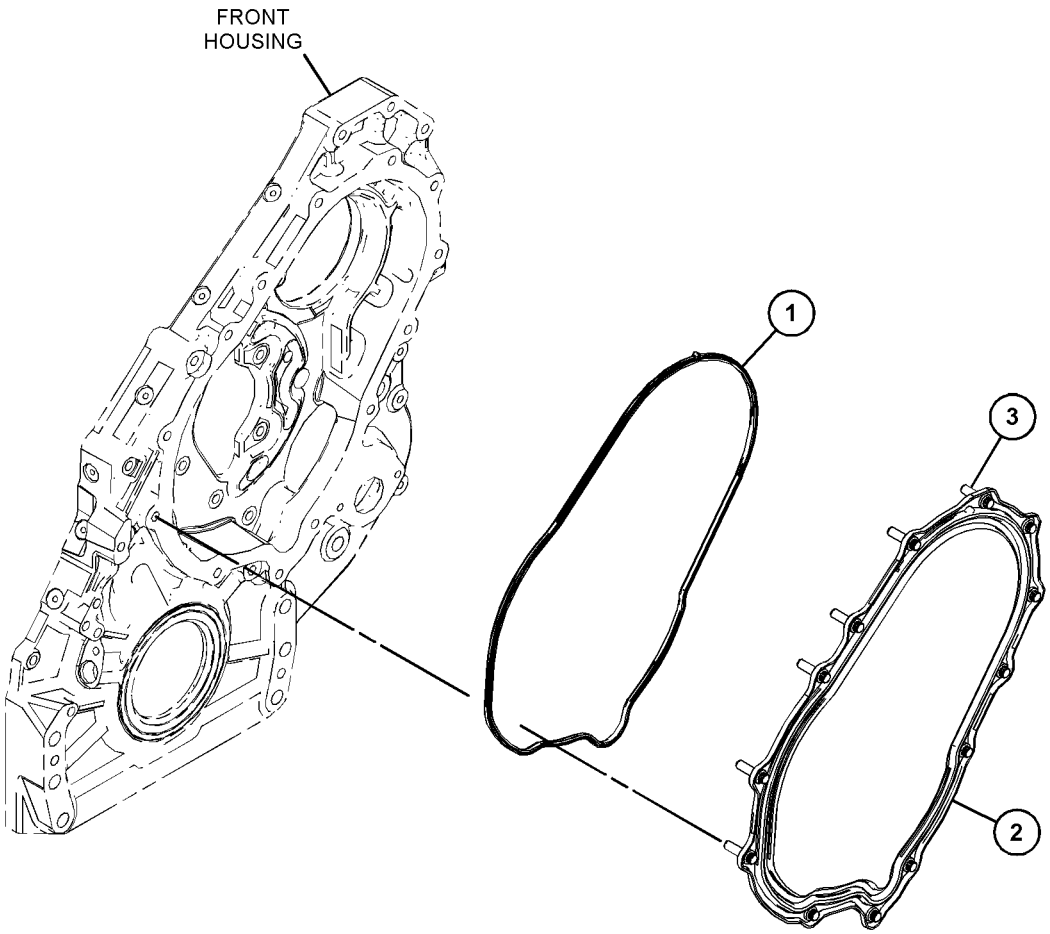

GRAPHIC #1 <END> g06272582

350-1302 COVER GP-SOUND SUPPRESSION

S/N: NTB1-UP

PART OF 522-6120 ENGINE AR-COMPLETE

SMCS-1801 **i07498895**

NOTE	REF NO	GRAPHIC REF	PART NUMBER	QTY	PART NAME 1 2 3 4 5 6 (PRODUCT LEVEL)	SEE PAGE
	1	1	**350-1300**	1	COVER AS-SOUND SUPPRESSION (OIL PAN)	
M	2	1	**178-3336**	8	NUT-HEX FLANGE (M8X1.25-THD)	

M - METRIC PART

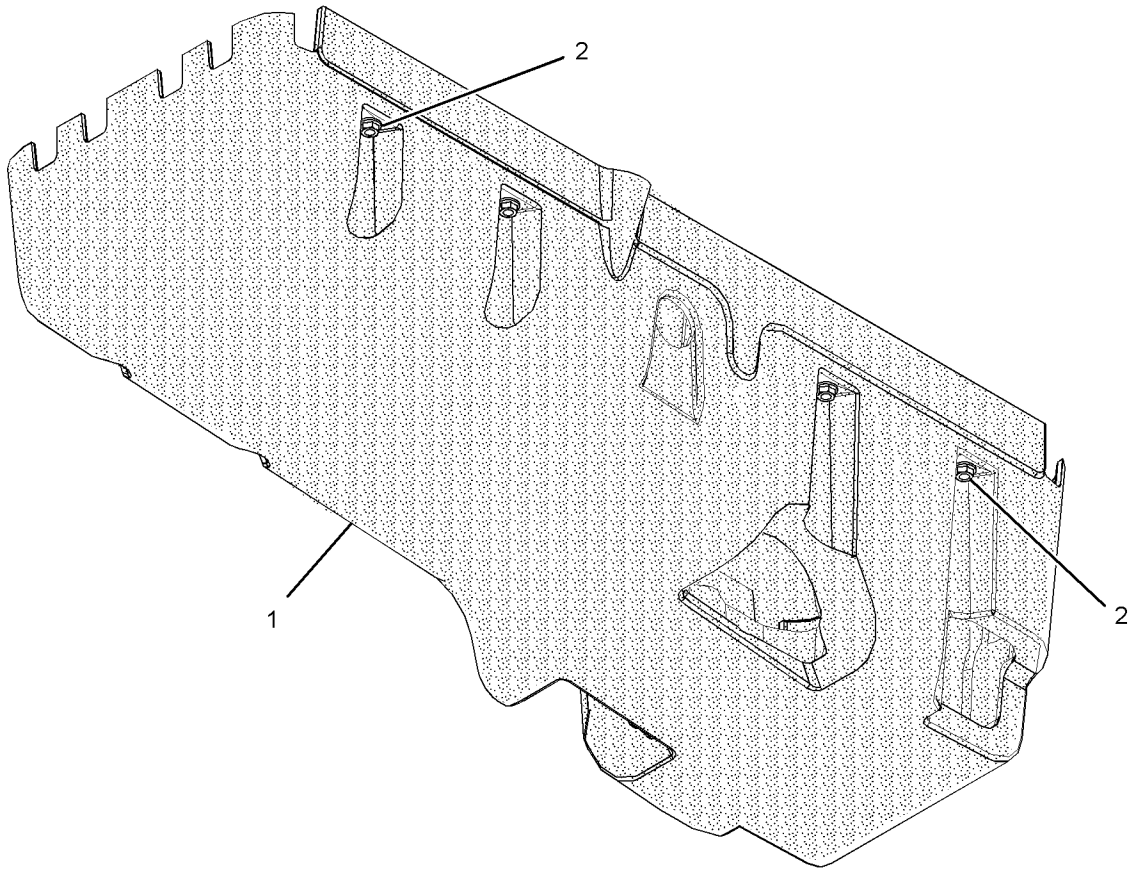

GRAPHIC #1 <END> g02149459

528-3539 COVER GP-SOUND SUPPRESSION—FUEL, HYDRAULIC TANKS

S/N: SP91-UP
WITH CAMERA
PART OF 512-1337, 555-9457 CAMERA AR

SMCS-1801 **i07525324**

NOTE	REF NO	GRAPHIC REF	PART NUMBER	QTY	PART NAME 1 2 3 4 5 6 (PRODUCT LEVEL)	SEE PAGE
	1	1	**7Y-2853**	3	SPACER (13X38X5-MM THK)	
	2	1	**8T-4121**	3	WASHER-HARD (11X21X2.5-MM THK)	
M	3	1	**8T-4137**	3	BOLT (M10X1.5X20-MM)	
	4	1	**135-8573**	3	BOLT AS	
	5	1	**135-8577**	3	BOLT AS	
	6	1	**385-2306**	3	SPACER (24X50X2-MM THK)	
Y	7	1	**548-0409**	1	COVER GP-SOUND SUPPRESSION (FUEL, HYDRAULIC TANKS)	16
	8	1	**554-2190**	1	COVER (FUEL LEVEL SENSOR)	

M - METRIC PART
Y - SEPARATE ILLUSTRATION

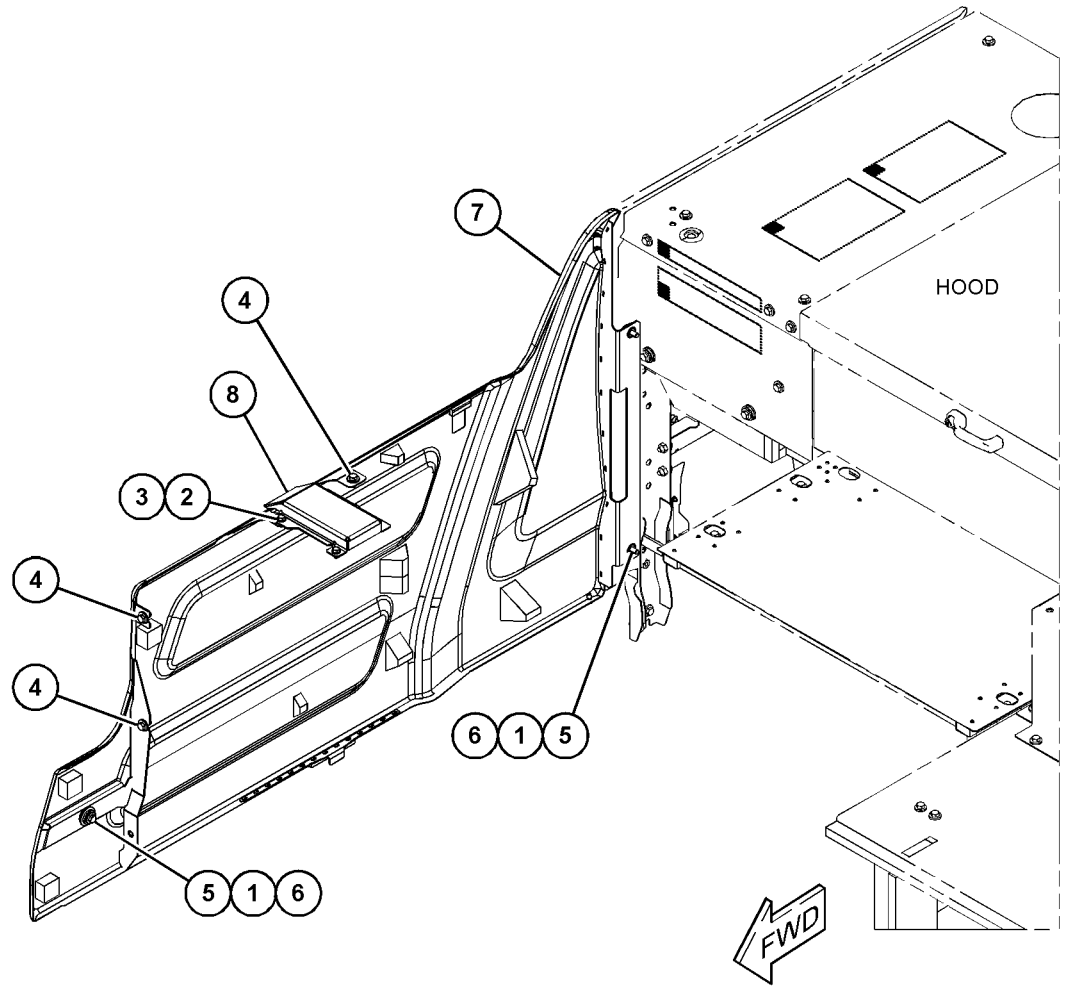

GRAPHIC #1 <END> g06308400

548-0409 COVER GP-SOUND SUPPRESSION–FUEL, HYDRAULIC TANKS

S/N: SP91-UP
WITH CAMERA
PART OF 528-3539 COVER GP-SOUND SUPPRESSION

SMCS-1801 **i07680958**

NOTE	REF NO	GRAPHIC REF	PART NUMBER	QTY	PART NAME 1 2 3 4 5 6 (PRODUCT LEVEL)	SEE PAGE
	1	1	**510-3326**	3	LINER	
	2	1	**554-9346**	1	LINER	
	3	1	**535-9353**	3	LINER	
	4	1	**535-9354**	3	LINER	
	5	1	**535-9355**	1	LINER	
	6	1	**535-9356**	1	LINER	
	7	1	**543-2457**	1	LINER	
	8	1	**543-2458**	1	LINER	
	9	1	**510-3317**	1	BUMPER	

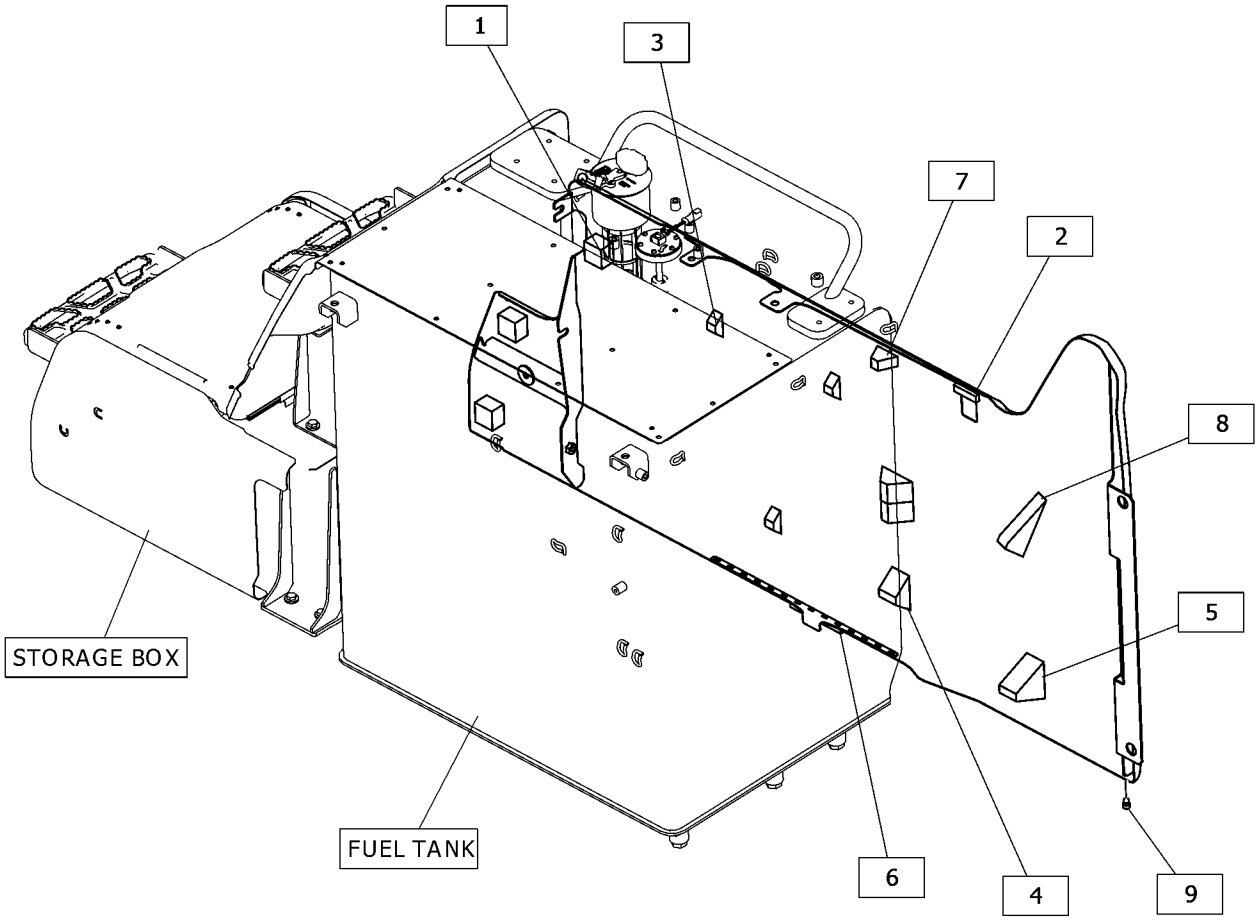

GRAPHIC #1 <END> g06434477

507-1742 COVER GP-VALVE MECHANISM

S/N: NTB1-UP

PART OF 522-6120 ENGINE AR-COMPLETE

SMCS-1107 **i07868044**

NOTE	REF NO	GRAPHIC REF	PART NUMBER	QTY	PART NAME 1 2 3 4 5 6 (PRODUCT LEVEL)	SEE PAGE
	1	1	**536-6980**	1	CAP AS-ENGINE OIL FILLER	
		1	**124-1858**	1	SEAL-O-RING	
	2	1	**244-4500**	10	SPRING	
	3	1	**260-0113**	1	SEAL-VALVE COVER	
	4	1	**324-9326**	1	COVER-VALVE MECHANISM	
	5	1	**358-7347**	1	BRACKET	
	6	1	**582-6323**	1	BREATHER AS (VALVE MECHANISM)	
		1	**8T-9527**		SEAL-O-RING	
		1	**061-9456**	1	SEAL-O-RING	
		1	**574-1230**	1	CLAMP-V-BAND	
M	7	1	**131-0353**	2	STUD (M8X1.25X82.75-MM)	
	8	1	**5P-4116**	10	WASHER-HARD (8.8X20.5X2-MM THK)	
M	9	1	**5P-7970**	2	NUT (M8X1.25-THD)	
	10	1	**5P-8244**	10	WASHER-HARD (12X22.5X2.5-MM THK)	
M	11	1	**8T-0100**	8	BOLT (M8X1.25X60-MM)	
	12	1	**9M-1974**	2	WASHER-HARD (8.8X16X2-MM THK)	

M - METRIC PART

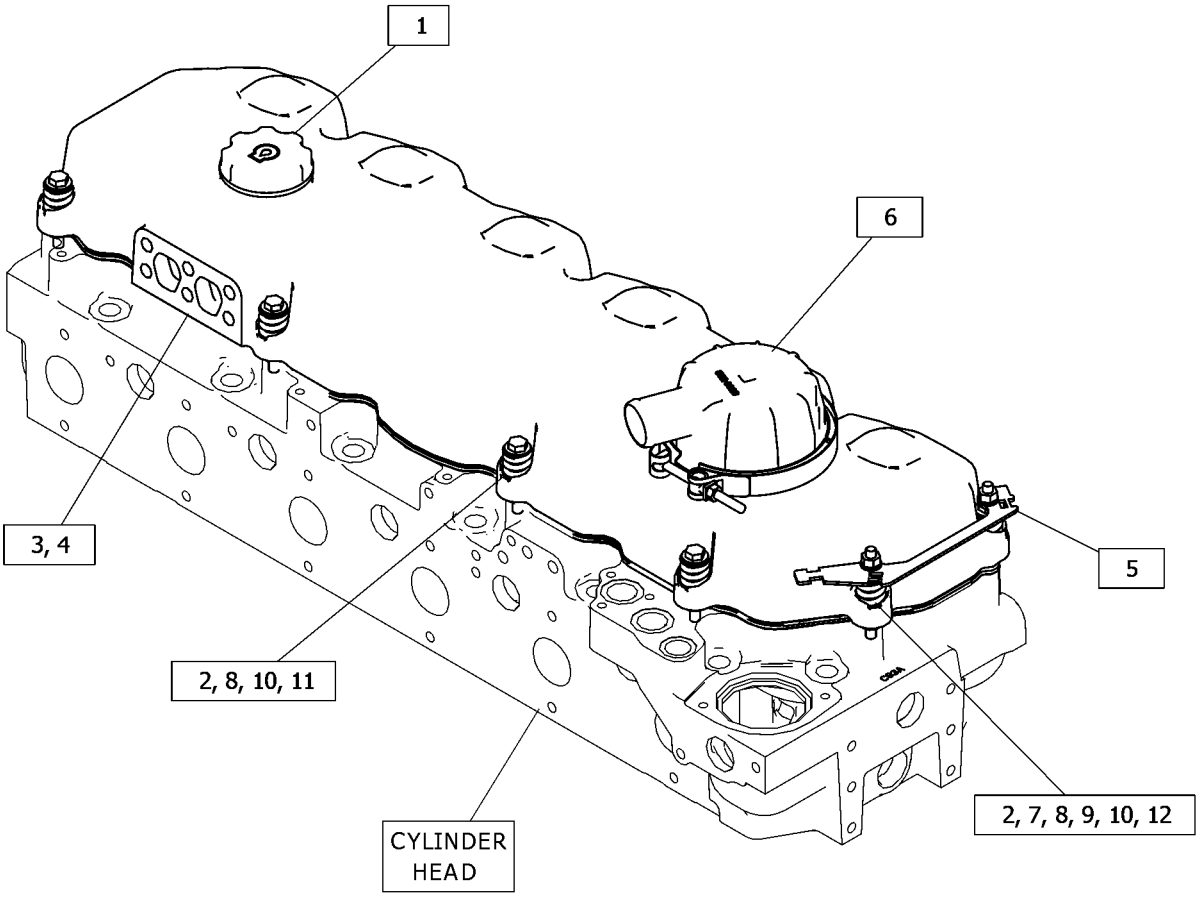

GRAPHIC #1 <END> g06461772

463-1705 CRANKSHAFT GP

S/N: NTB1-UP

PART OF 546-5240 ENGINE AR-CORE

SMCS-1202 **i07231016**

NOTE	REF NO	GRAPHIC REF	PART NUMBER	QTY	PART NAME 1 2 3 4 5 6 (PRODUCT LEVEL)	SEE PAGE
	1	1	**151-2939**	7	BEARING-MAIN	
	2	1	**246-3150**	2	PLATE-THRUST	
	3	1	**463-1704**	1	CRANKSHAFT AS	
		1	**1B-8705**	1	KEY-WOODRUFF	
		1	**9Y-0810**	1	SLEEVE-WEAR	
		1	**1W-6448**	2	DOWEL	
		1	**460-3127**	1	GEAR-CRANKSHAFT	

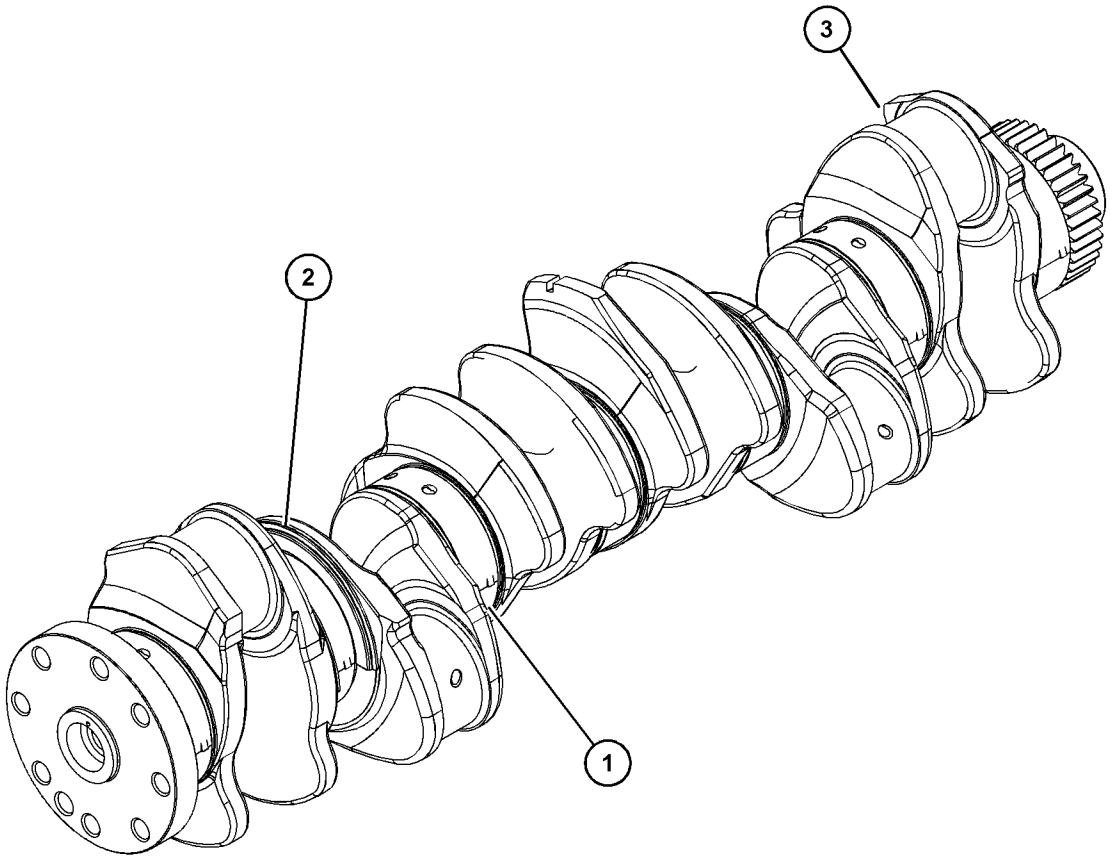

GRAPHIC #1 <END> g06250684

523-9619 CYLINDER BLOCK AS

S/N: NTB1-UP

PART OF 535-7519 CYLINDER BLOCK GP

SMCS-1201 **i07245651**

NOTE	REF NO	GRAPHIC REF	PART NUMBER	QTY	PART NAME 1 2 3 4 5 6 (PRODUCT LEVEL)	SEE PAGE
	1	1	**167-0024**	6	SEAL-LINER	
	2	1	**469-5313**	6	LINER-CYLINDER	
Y	3	1	**524-2485**	1	CYLINDER BLOCK AS	20

Y - SEPARATE ILLUSTRATION

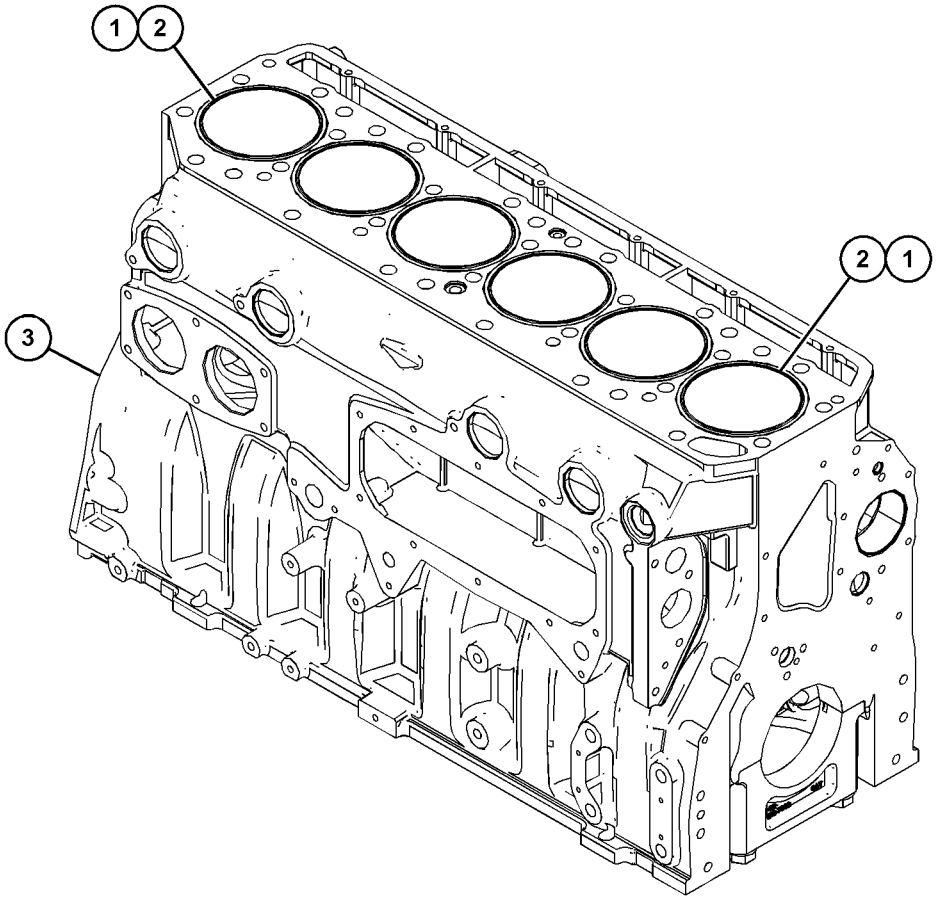

GRAPHIC #1 <END> g06249219

524-2485 CYLINDER BLOCK AS

S/N: NTB1-UP

PART OF 523-9619 CYLINDER BLOCK AS

SMCS-1201 **i07245654**

NOTE	REF NO	GRAPHIC REF	PART NUMBER	QTY	PART NAME 1 2 3 4 5 6 (PRODUCT LEVEL)	SEE PAGE
	1	1	**203-5805**	2	BUSHING	
	2	1	**203-6090**	1	BUSHING	
	3	1	**216-5586**	1	BUSHING (CAMSHAFT)	
	4	1	**0L-1026**	2	PLUG-CUP	
M	5	1	**175-0454**	14	BOLT (M16X2X160-MM)	
	6	1	**212-7002**	7	CAP-BEARING	
	7	1	**3B-0623**	2	PLUG-CUP	
	8	1	**4F-5695**	4	PLUG-CUP	
	9	1	**9X-8268**	14	WASHER (17.5X30X3.5-MM THK)	

M - METRIC PART

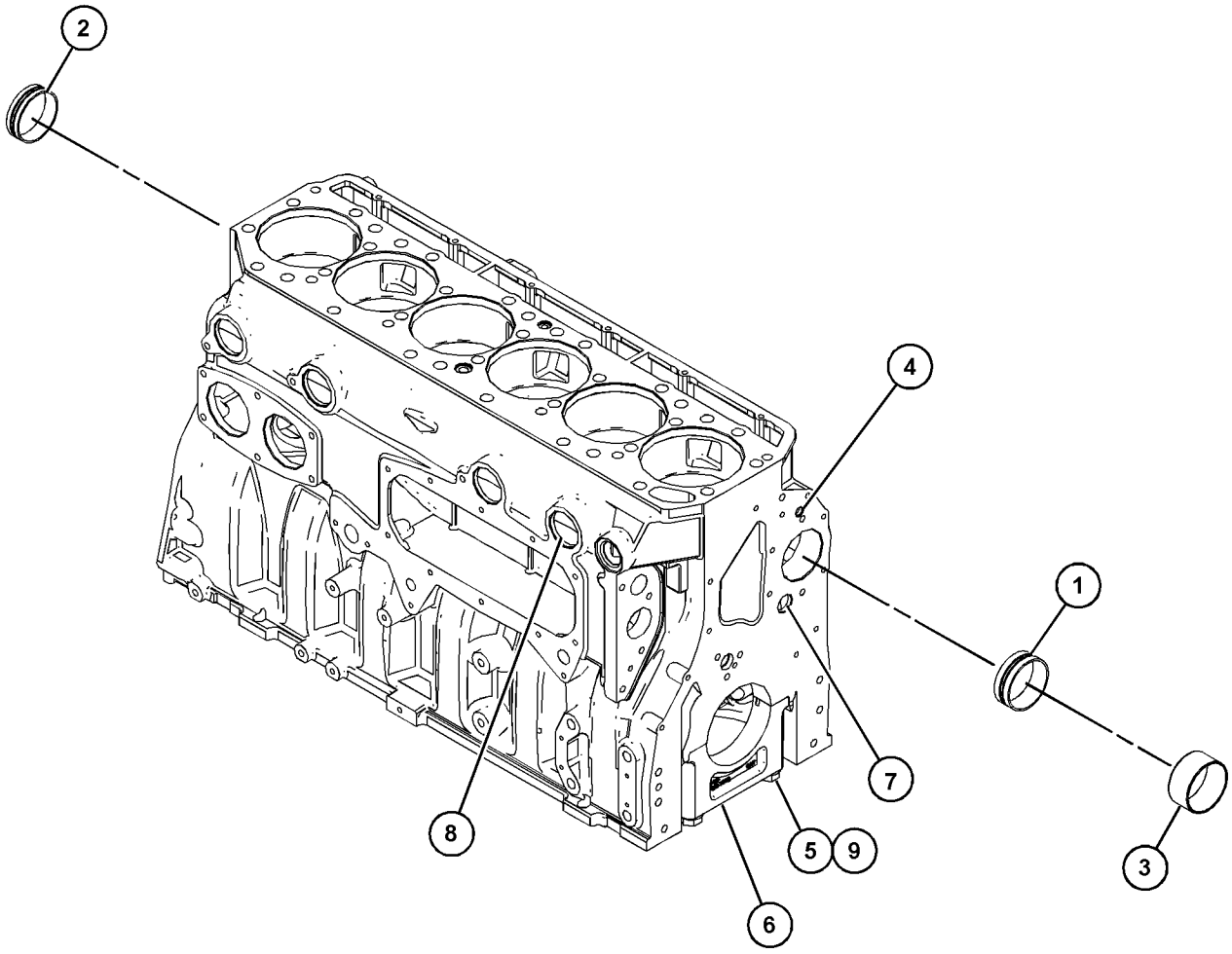

GRAPHIC #1 <END> g06246779

535-7519 CYLINDER BLOCK GP

S/N: NTB1-UP

PART OF 546-5240 ENGINE AR-CORE

SMCS-1201 **i07231015**

NOTE	REF NO	GRAPHIC REF	PART NUMBER	QTY	PART NAME 1 2 3 4 5 6 (PRODUCT LEVEL)	SEE PAGE
	1	1	**0S-0519**	1	PLUG-CUP	
	2	1	**256-2209**	1	SEAL	
	3	1	*396-0393*	1	PLUG AS	
		1	**214-7566**	1	SEAL-O-RING	
		1	**360-3677**	1	PLUG (7/16-20-THD)	
Y	4	1	**523-9619**	1	CYLINDER BLOCK AS	19
	5	1	**1W-8407**	2	SLEEVE	
	6	1	**4G-4972**	1	SEAL-O-RING	
	7	1	**6V-3538**	2	DOWEL	
	8	1	**7N-5683**	2	DOWEL	

Y - SEPARATE ILLUSTRATION

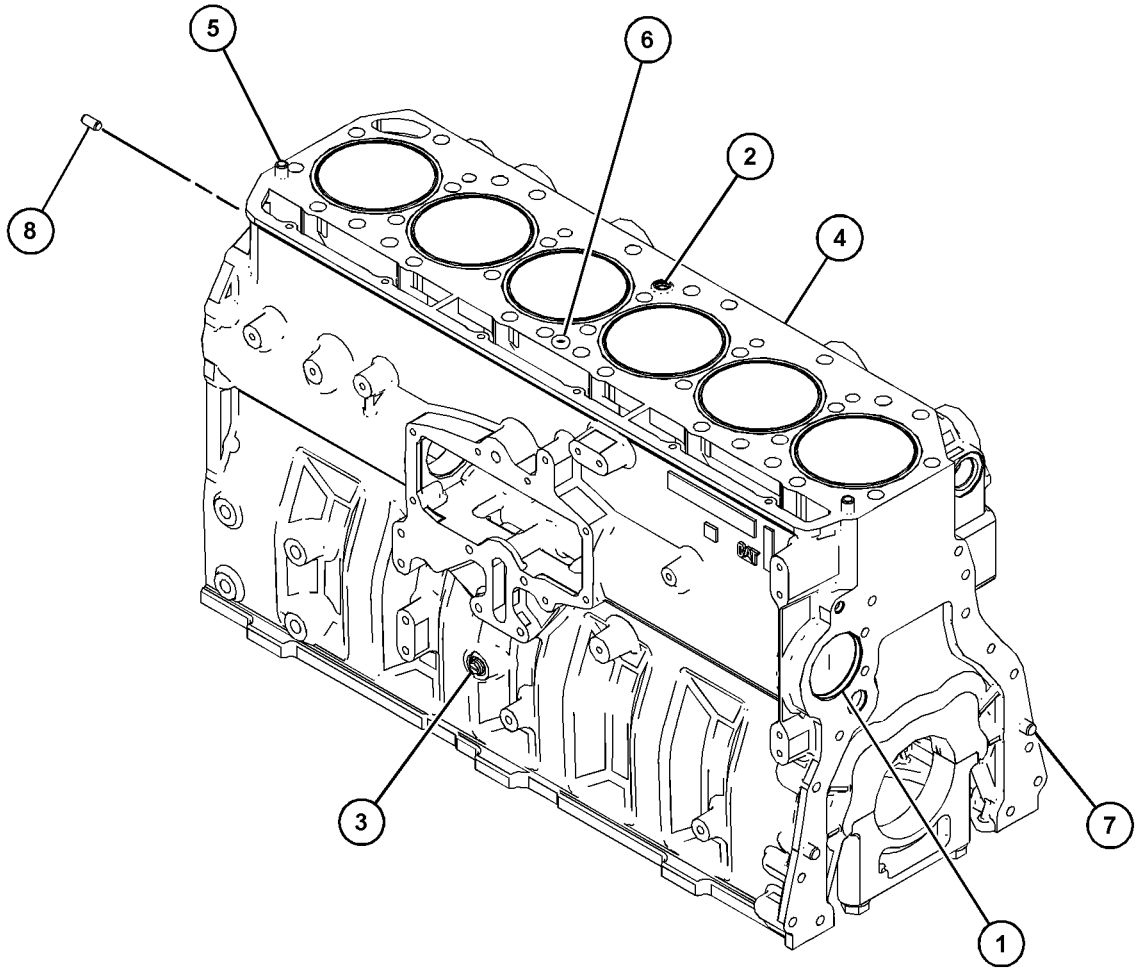

GRAPHIC #1 <END> g06246775

507-2700 CYLINDER HEAD AS

S/N: NTB1-UP

PART OF 507-2701 CYLINDER HEAD GP

SMCS-1100 **i07790503**

NOTE	REF NO	GRAPHIC REF	PART NUMBER	QTY	PART NAME 1 2 3 4 5 6 (PRODUCT LEVEL)	SEE PAGE
	1	1	**501-9547**	6	SEAL-O-RING	
	2	1	**501-9548**	6	SEAL-O-RING	
	3	1	**564-8811**	12	INSERT-VALVE SEAT	
	4	1	**564-8812**	12	INSERT-VALVE SEAT	
	5	1	*507-2699*	1	HEAD-CYLINDER	
		1	**484-7573**	1	HEAD-CYLINDER	
	6	1	**521-2977**	6	SLEEVE	
	7	1	**3B-0623**	6	PLUG-CUP	
	8	1	**8M-5860**	11	PLUG-CUP	

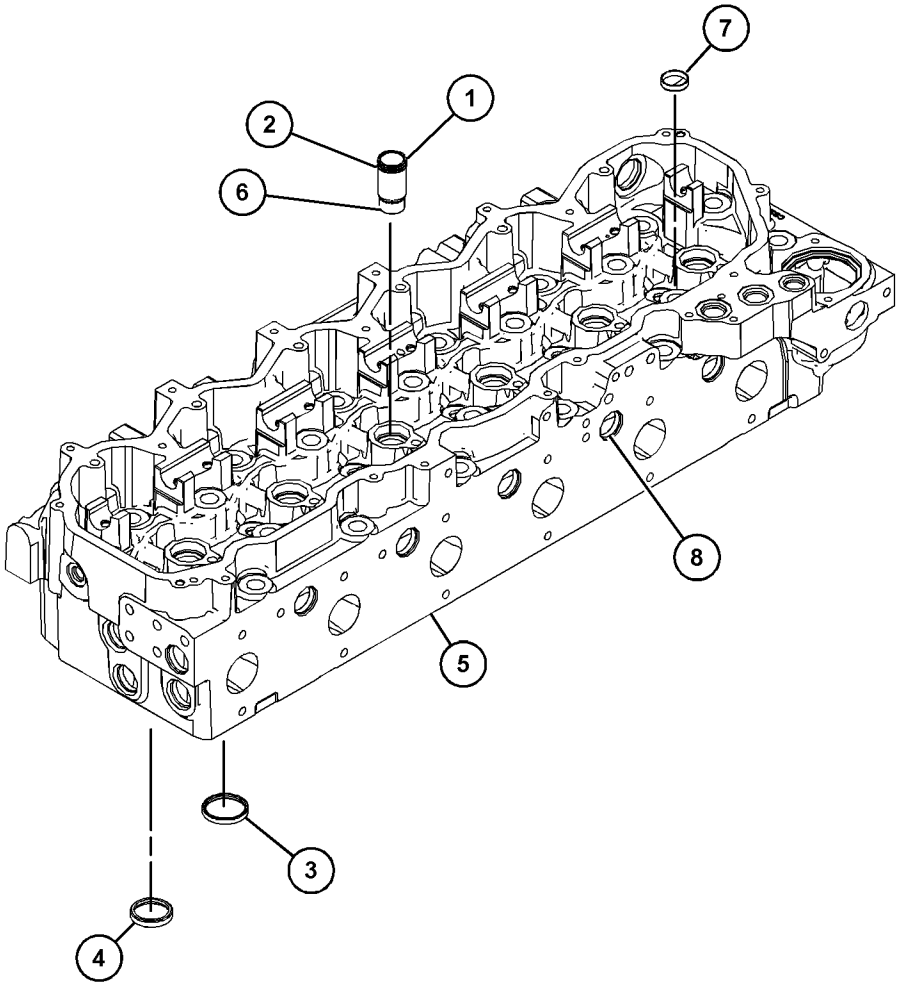

GRAPHIC #1 <END> g06272417

507-2701 CYLINDER HEAD GP

S/N: NTB1-UP

PART OF 523-4231 CYLINDER HEAD GP

SMCS-1100 **i07500767**

NOTE	REF NO	GRAPHIC REF	PART NUMBER	QTY	PART NAME 1 2 3 4 5 6 (PRODUCT LEVEL)	SEE PAGE
	1	1	**1W-2715**	48	LOCK-RETAINER	
	2	1	**241-8384**	24	RETAINER (SPRING)	
	3	1	**255-8665**	24	GUIDE-VALVE	
	4	1	**255-8679**	24	WASHER-VALVE SPRING	
	5	1	**312-8619**	24	SEAL (VALVE STEM)	
	6	1	**349-5303**	24	SPRING-VALVE	
	7	1	**349-5307**	24	SPRING-VALVE	
	8	1	**490-1728**	12	VALVE-EXHAUST	
	9	1	**490-1729**	12	VALVE-INLET	
Y	10	1	*507-2700*	1	CYLINDER HEAD AS	22
	11	1	**2A-3746**	1	PLUG-CUP	
	12	1	**7Y-5272**	1	PIN-SPRING	

Y - SEPARATE ILLUSTRATION

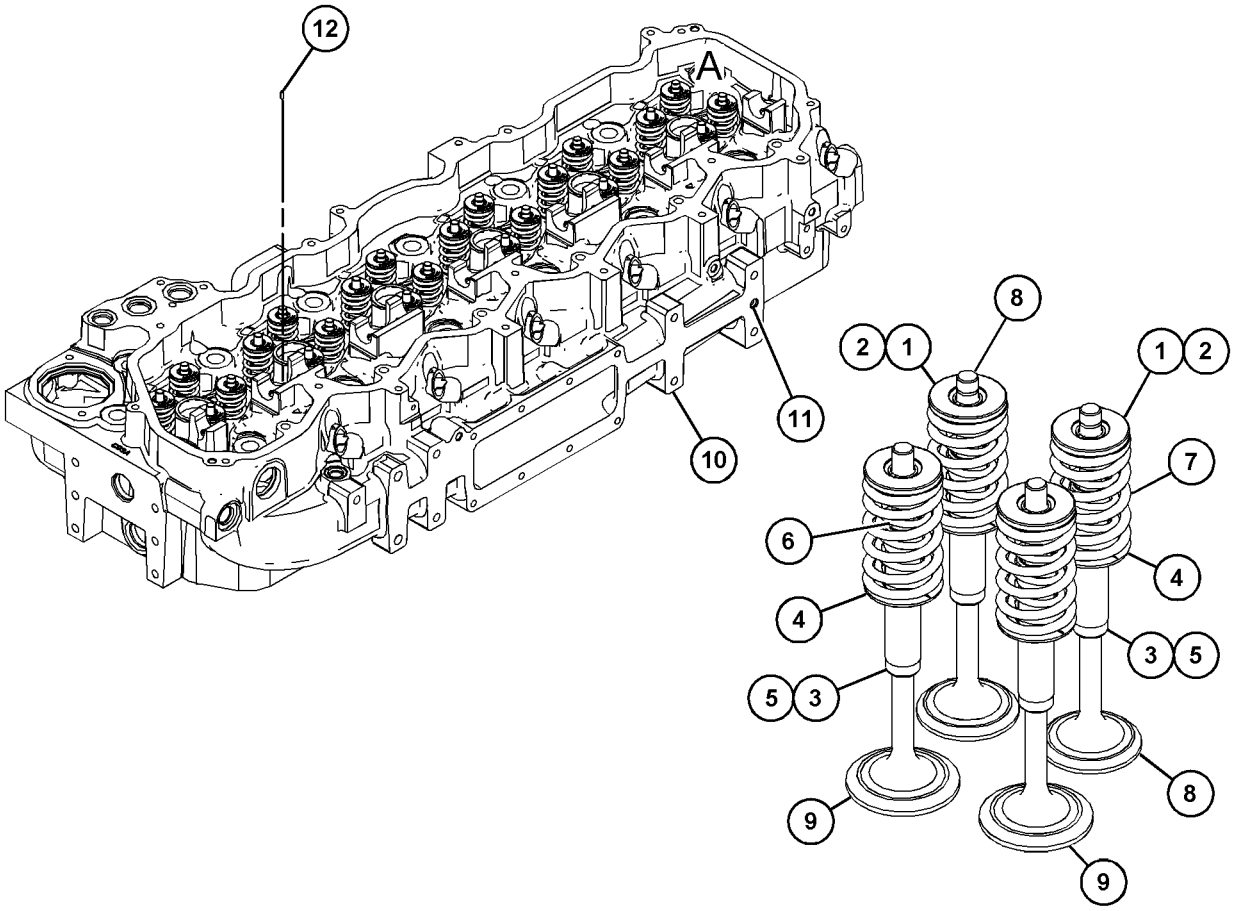

VIEW OF AREA A
(PARTS REMOVED FOR CLARITY)

GRAPHIC #1 <END> g06272418

523-4231 CYLINDER HEAD GP

S/N: NTB1-UP

PART OF 546-5240 ENGINE AR-CORE

SMCS-1100 **i07500755**

NOTE	REF NO	GRAPHIC REF	PART NUMBER	QTY	PART NAME 1 2 3 4 5 6 (PRODUCT LEVEL)	SEE PAGE
	1	1	**262-1940**	1	GASKET AS-CYLINDER HEAD	
Y	2	1	*290-6884*	26	FASTENER GP-CYLINDER HEAD	29
Y	3	1	**507-2701**	1	CYLINDER HEAD GP	23
	4	1	**9M-1974**	6	WASHER-HARD (8.8X16X2-MM THK)	
M	5	1	**9X-6000**	6	BOLT (M8X1.25X180-MM)	

M - METRIC PART
Y - SEPARATE ILLUSTRATION

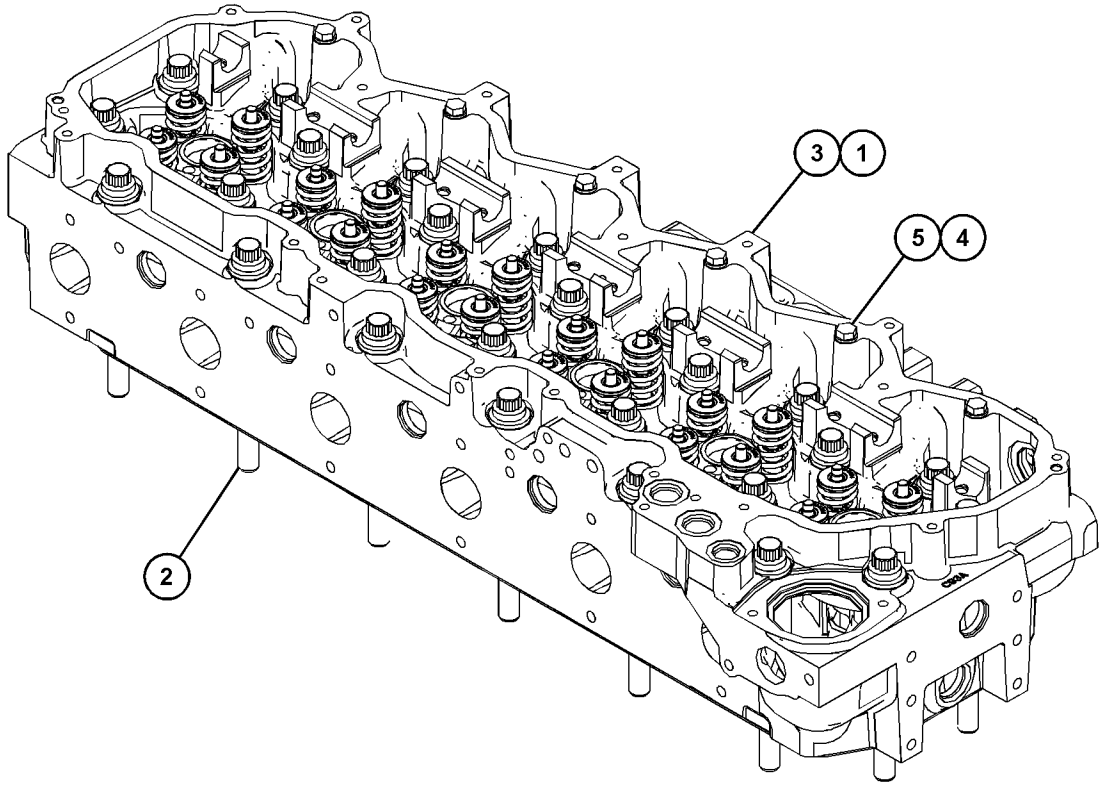

GRAPHIC #1 <END> g06272424

505-1453 DAMPER & PULLEY GP

S/N: NTB1-UP

PART OF 522-6120 ENGINE AR-COMPLETE

SMCS-1205 **i07498897**

NOTE	REF NO	GRAPHIC REF	PART NUMBER	QTY	PART NAME 1 2 3 4 5 6 (PRODUCT LEVEL)	SEE PAGE
	1	1	**167-8121**	1	DAMPER AS	
	2	1	**228-3621**	1	SPACER (101.5X167X8-MM THK)	
M	3	1	**6V-4249**	8	BOLT (M10X1.5X50-MM)	

M - METRIC PART

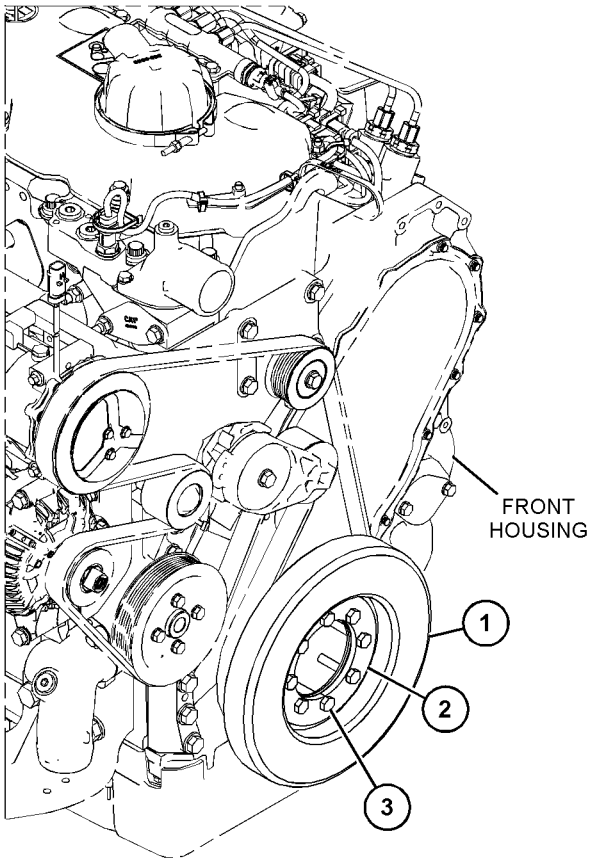

GRAPHIC #1 <END> g06243280

502-5363 DRAIN GP-ENGINE OIL—ENGINE OIL SUMP

S/N: SP91-UP

PART OF 546-6209 OIL CHANGE AR-HIGH SPEED

SMCS-1302 **i07665146**

NOTE	REF NO	GRAPHIC REF	PART NUMBER	QTY	PART NAME 1 2 3 4 5 6 (PRODUCT LEVEL)	SEE PAGE
M	1	1	**8T-4172**	1	BOLT (M10X1.5X80-MM)	
	2	1	**2V-2043**	1	NUT-BULKHEAD (1-5/8-12-THD)	
	3	1	**5P-7464**	1	CLIP (SLOT)	
	4	1	**5P-7465**	1	CLIP (TAB)	
	5	1	**8T-2920**	1	GROMMET (27-MM ID)	
	6	1	**356-9305**	1	SPACER (13.5X30X40-MM THK)	
	7	1	**110-8827**	1	FITTING (QUICK DISCONNECT, MALE)	
	8	1	**277-4567**	1	ADAPTER	
	9	1	**279-2252**	1	SEAL-O-RING	
	10	1	*319-6216*	1	CONNECTOR AS	
		1	**6V-8716**	1	CONNECTOR (STRAIGHT)	
		1	**228-7092**	1	SEAL-O-RING	
		1	**238-5084**	1	SEAL-O-RING	
	11	1	**228-7092**	1	SEAL-O-RING	
	12	1	**503-9595**	1	PLATE	
I	13	1	**503-9596**	1	HOSE AS	
	14	1	**8T-4121**	3	WASHER-HARD (11X21X2.5-MM THK)	
M	15	1	**8T-4136**	2	BOLT (M10X1.5X25-MM)	

I - REFER TO HYDRAULIC INFORMATION SYSTEM
M - METRIC PART

502-5363 **DRAIN GP-ENGINE OIL (**contd.**)** **i07665146**

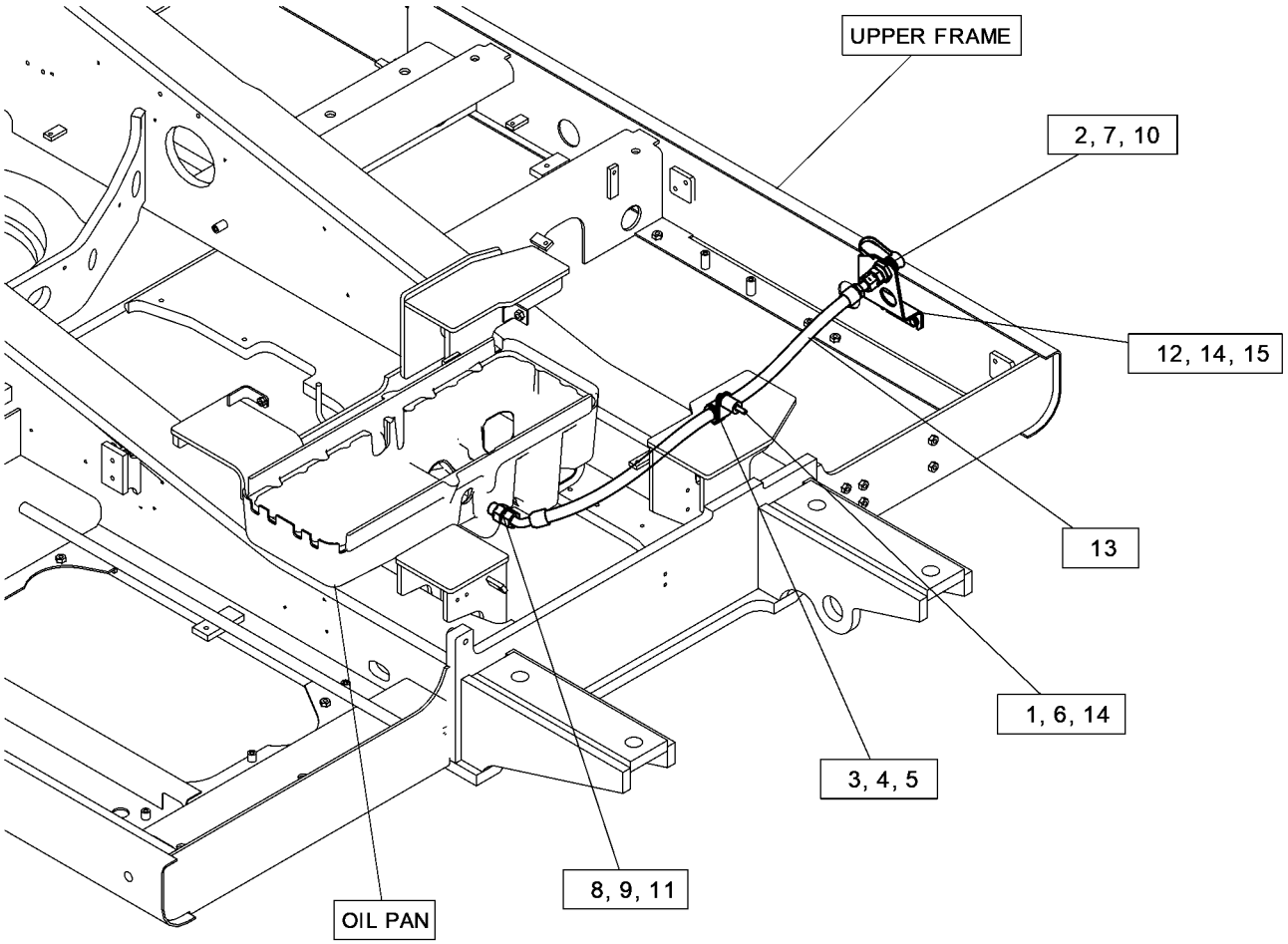

GRAPHIC #1 <END> g06431781

502-5364 DRAIN GP-ENGINE OIL

S/N: SP91-UP

PART OF 502-4246 INSTALLATION AR-ENGINE

SMCS-1302 **i07516150**

NOTE	REF NO	GRAPHIC REF	PART NUMBER	QTY	PART NAME 1 2 3 4 5 6 (PRODUCT LEVEL)	SEE PAGE
	1	1	**095-1388**	1	CLAMP-HOSE	
G	2	1	**423-1984**		HOSE (12.3-IN)	

G - ORDER BY THE INCH

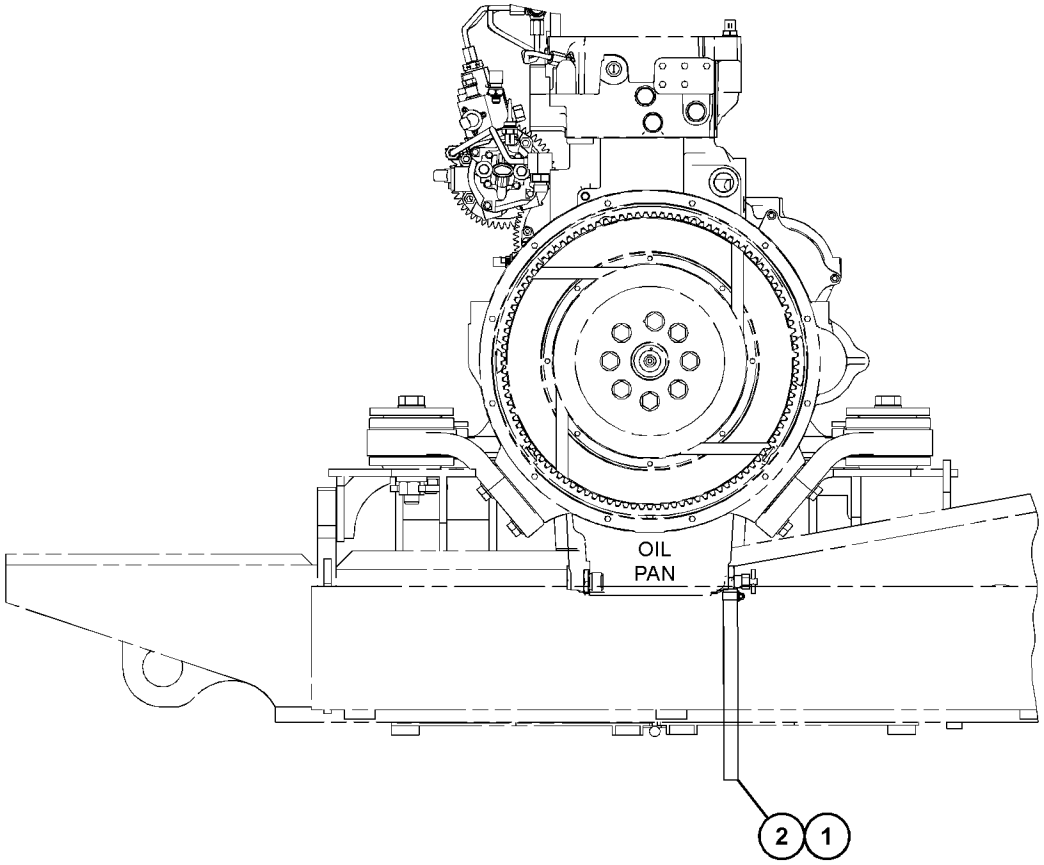

REAR VIEW OF ENGINE

GRAPHIC #1 <END> g06279038

290-6884 FASTENER GP-CYLINDER HEAD

S/N: NTB1-UP

PART OF 523-4231 CYLINDER HEAD GP

SMCS-1100 **i03975409**

NOTE	REF NO	GRAPHIC REF	PART NUMBER	QTY	PART NAME 1 2 3 4 5 6 (PRODUCT LEVEL)	SEE PAGE
M	1	1	**263-2915**	1	BOLT-12 POINT HEAD (M16X2X180-MM)	
	2	1	**9X-8268**	1	WASHER (17.5X30X3.5-MM THK)	

M - METRIC PART

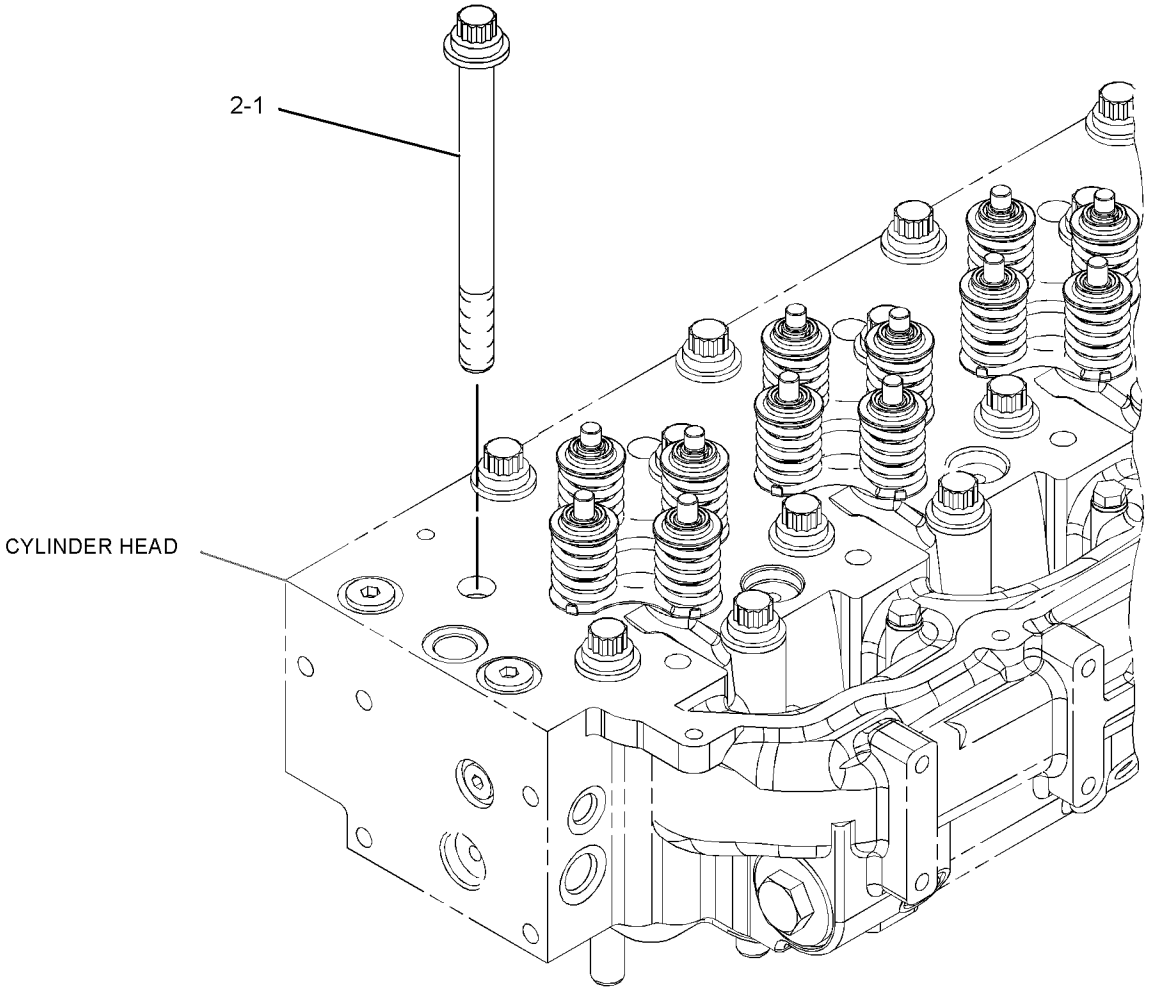

GRAPHIC #1 <END> g01684533

116-4556 FASTENER GP-FRONT HOUSING

S/N: NTB1-UP

PART OF 522-6120 ENGINE AR-COMPLETE

SMCS-1162 **i01487429**

NOTE	REF NO	GRAPHIC REF	PART NUMBER	QTY	PART NAME 1 2 3 4 5 6 (PRODUCT LEVEL)	SEE PAGE
M	1	1	**6V-8336**	6	BOLT (M12X1.75X70-MM)	
		1	**5P-8245**	6	WASHER-HARD (13.5X25.5X3-MM THK)	

M - METRIC PART

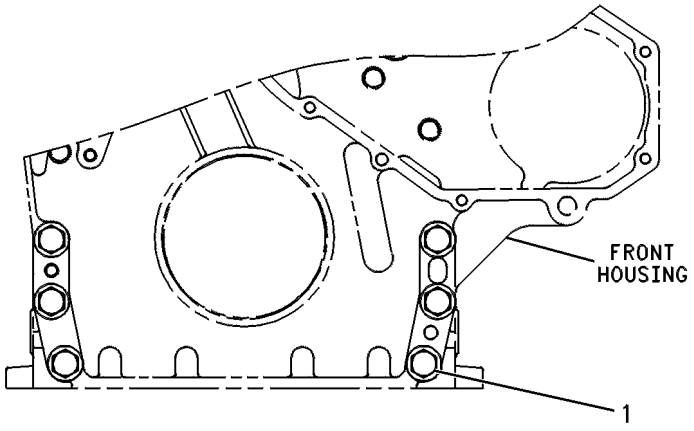

FRONT VIEW

GRAPHIC #1 <END> g00244671

563-3117 FLYWHEEL GP

S/N: NTB1-UP

PART OF 522-6120 ENGINE AR-COMPLETE

SMCS-1156 **i07498904**

NOTE	REF NO	GRAPHIC REF	PART NUMBER	QTY	PART NAME 1 2 3 4 5 6 (PRODUCT LEVEL)	SEE PAGE
	1	1	**559-5559**	1	FLYWHEEL AS	
		1	**4N-2514**	1	GEAR (113-TEETH)	
	2	1	**5P-8247**	8	WASHER-HARD (17X32X3.5-MM THK)	
M	3	1	**9X-2021**	8	BOLT-LOCKING (M16X2X45-MM)	

M - METRIC PART

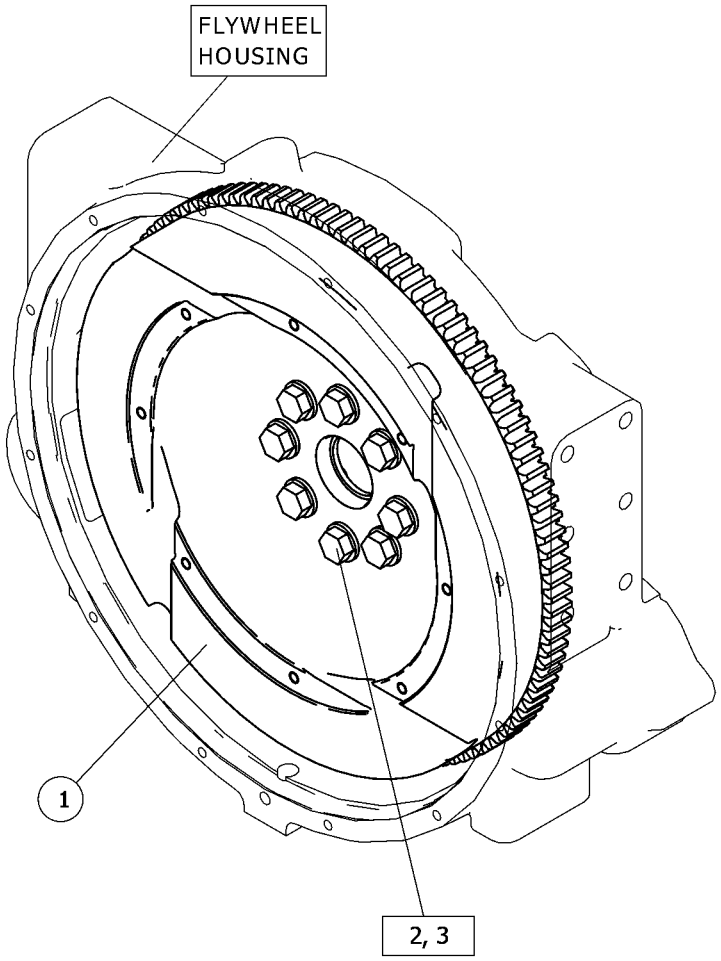

GRAPHIC #1 <END> g06324859

512-1653 GEAR GP-FRONT

S/N: NTB1-UP

PART OF 546-5240 ENGINE AR-CORE

SMCS-1151, 1162, 1206 **i07500758**

NOTE	REF NO	GRAPHIC REF	PART NUMBER	QTY	PART NAME 1 2 3 4 5 6 (PRODUCT LEVEL)	SEE PAGE
	1	1	**113-6069**	1	PLATE-THRUST	
	2	1	**115-4219**	1	PLATE-RETAINING	
	3	1	**200-4495**	1	SHAFT-IDLER	
	4	1	**296-5412**	1	GEAR AS-IDLER (40-TEETH)	
	5	1	**505-2337**	1	WHEEL (TIMING)	
	6	1	**512-7217**	1	GEAR AS (CAM)	
		1	**2H-1190**	1	PIN-DOWEL	
M	7	1	**434-0776**	1	BOLT-12 POINT HEAD (M10X1.5X30-MM)	
	8	1	**5P-1075**	6	WASHER-HARD (10.2X22.5X3-MM THK)	
M	9	1	**6V-1820**	6	BOLT (M10X1.5X30-MM)	
M	10	1	**6V-5843**	2	BOLT (M10X1.5X45-MM)	

PARTS SHOWN IN GRAPHIC(S) WITHOUT A REFERENCE NUMBER ARE NOT SERVICED SEPARATELY

M - METRIC PART

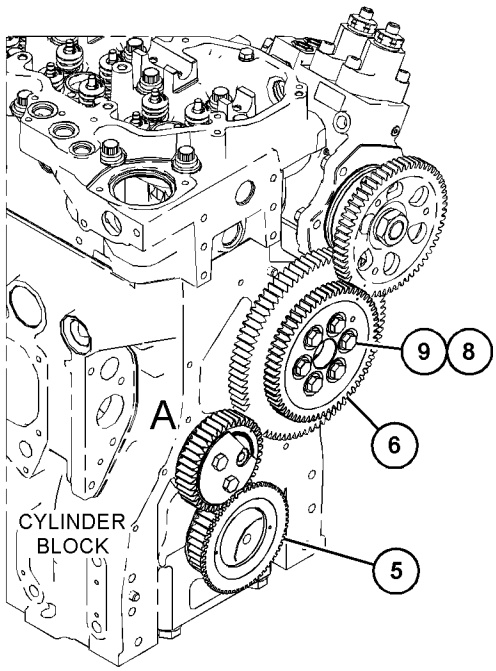

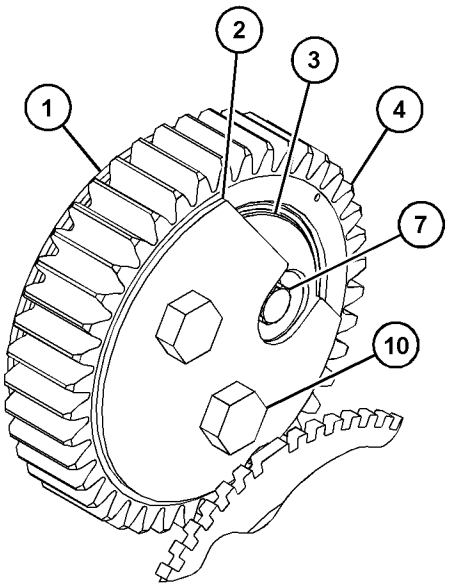

VIEW OF AREA A

GRAPHIC #1 <END> g06270053

505-5876 HOUSING GP-FLYWHEEL

S/N: NTB1-UP

PART OF 522-6120 ENGINE AR-COMPLETE

SMCS-1157 **i07498961**

NOTE	REF NO	GRAPHIC REF	PART NUMBER	QTY	PART NAME 1 2 3 4 5 6 (PRODUCT LEVEL)	SEE PAGE
	1	1	**6V-1176**	1	PLUG-DRAIN (MAGNETIC)	
	2	1	**7C-1445**	1	COVER	
	3	1	**9M-1974**	2	WASHER-HARD (8.8X16X2-MM THK)	
	4	1	*371-7186*	1	PLUG AS	
		1	**214-7567**	1	SEAL-O-RING	
		1	**360-3678**	1	PLUG-O-RING	
	5	1	*389-3728*	1	PLUG AS	
		1	**238-5084**	1	SEAL-O-RING	
		1	**360-3684**	1	PLUG	
	6	1	*421-6207*	1	PLUG AS	
		1	**214-7567**	1	SEAL-O-RING	
		1	**360-3691**	1	PLUG	
	7	1	**524-5428**	1	HOUSING-FLYWHEEL	
	8	1	**061-9455**	1	SEAL-O-RING	
	9	1	**3B-1925**	1	WASHER (0.766X1X0.064-IN THK)	
	10	1	**5P-8245**	14	WASHER-HARD (13.5X25.5X3-MM THK)	
M	11	1	**6V-5219**	2	BOLT (M8X1.25X40-MM)	
M	12	1	**6V-8197**	14	BOLT (M12X1.75X40-MM)	
BF		1	**8C-8422**		SEALANT	

B - USE AS REQUIRED
F - NOT SHOWN
M - METRIC PART

505-5876 **HOUSING GP-FLYWHEEL (**contd.**)** **i07498961**

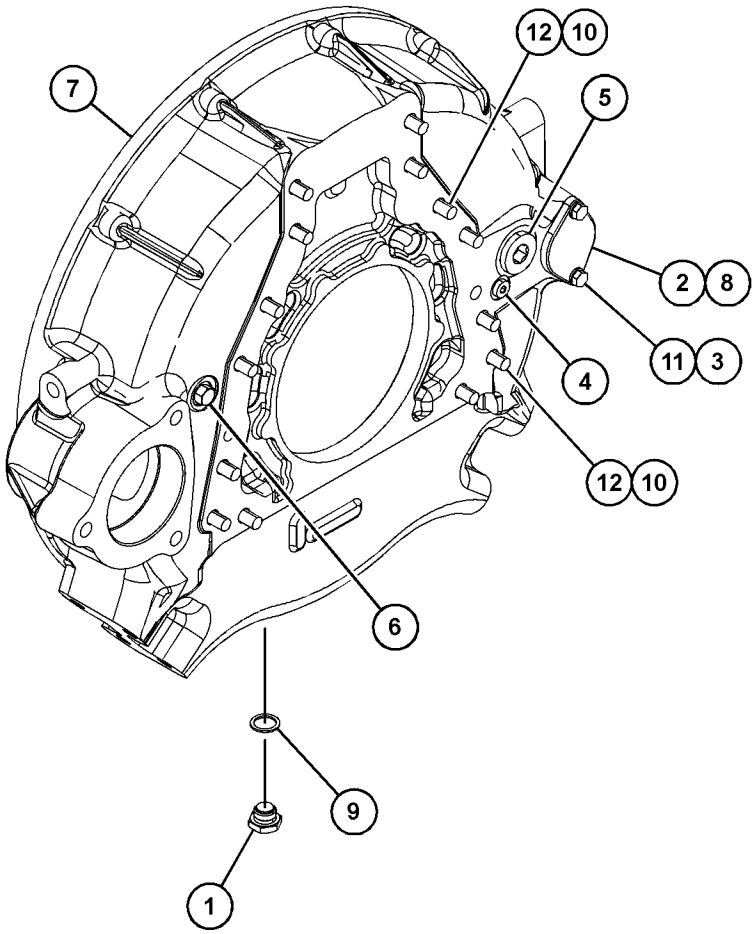

GRAPHIC #1 <END> g06286149

517-4573 HOUSING GP-FRONT

S/N: NTB1-UP

PART OF 522-6120 ENGINE AR-COMPLETE

SMCS-1151, 1162, 1206 **i07498964**

NOTE	REF NO	GRAPHIC REF	PART NUMBER	QTY	PART NAME 1 2 3 4 5 6 (PRODUCT LEVEL)	SEE PAGE
	1	1	*421-6207*	1	PLUG AS	
		1	**214-7567**	1	SEAL-O-RING	
		1	**360-3691**	1	PLUG	
	2	1	*517-4572*	1	HOUSING AS-FRONT	
		1	**288-5726**	1	SEAL GP-CRANKSHAFT	
		1	**516-9796**	1	HOUSING-FRONT	
M	3	1	**264-0168**	4	STUD-TAPERLOCK (M10X1.5X50-MM)	
M	4	1	**6V-2317**	1	BOLT (M8X1.25X30-MM)	
M	5	1	**6V-5217**	8	BOLT (M8X1.25X20-MM)	
M	6	1	**8T-0100**	5	BOLT (M8X1.25X60-MM)	
	7	1	**9M-1974**	14	WASHER-HARD (8.8X16X2-MM THK)	
BF		1	**8C-8422**		SEALANT	

B - USE AS REQUIRED
F - NOT SHOWN
M - METRIC PART

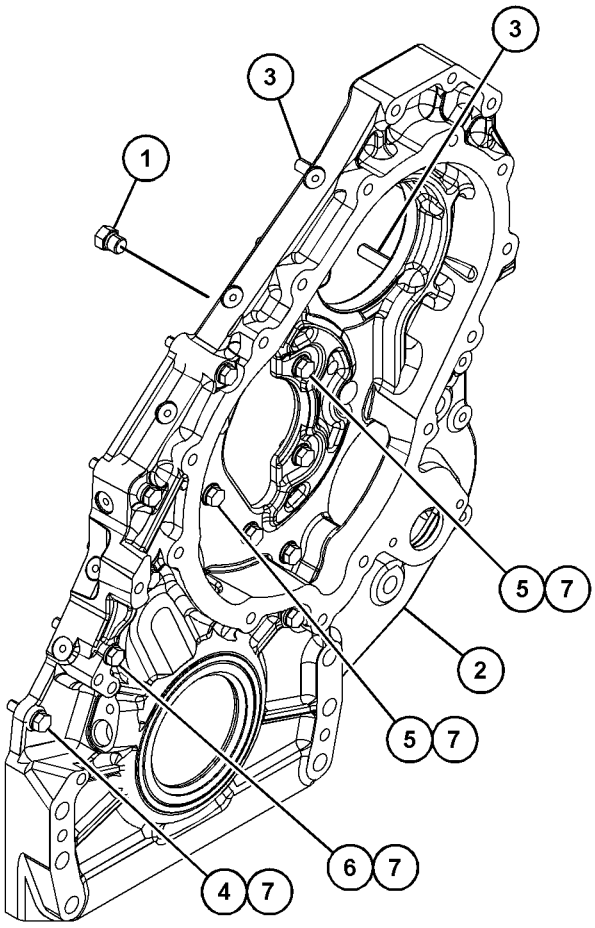

GRAPHIC #1 <END> g06272920

565-5546 KIT-ENGINE GASKET

CENTRAL AND LOWER STRUCTURE

FOR USE WITH 522-6120—PAGE: 4

SMCS-1000, 7555

i07495615

NOTE	PART NUMBER	QTY	PART NAME 1 2 3 4 5 6 (PRODUCT LEVEL)	SEE PAGE
	195-0452	1	GASKET	
	280-4322	1	GASKET	
	190-6114	1	GASKET-OIL PAN	
	5P-7530	1	SEAL-O-RING	
	6V-5064	2	SEAL-O-RING	
	210-9246	1	SEAL-O-RING	
	214-7566	1	SEAL-O-RING	
	214-7568	4	SEAL-O-RING	
	228-7090	1	SEAL-O-RING	
	238-5080	1	SEAL-O-RING	
	238-5082	1	SEAL-O-RING	
	238-5084	2	SEAL-O-RING	
	279-2252	2	SEAL-O-RING	
	330-8197	1	SEAL-O-RING	
			FOR A LIST OF RELATED PARTS THAT MAY BE REQUIRED FOR THE ENGINE REBUILD TO THE KIT CONSIST, PLEASE VISIT	
			HTTP://DEALER.CAT.COM/RELATED	
			<END>	

565-5548 KIT-ENGINE GASKET

SINGLE CYLINDER HEAD

FOR USE WITH 522-6120—PAGE: 4

SMCS-1000, 7555 **i07495579**

NOTE	PART NUMBER	QTY	PART NAME 1 2 3 4 5 6 (PRODUCT LEVEL)	SEE PAGE
	161-3411	6	GASKET	
	197-8418	1	GASKET	
	197-8419	1	GASKET (TURBOCHARGER)	
	349-9658	1	GASKET	
	262-1940	1	GASKET AS-CYLINDER HEAD	
M	**375-2467**	4	LOCKNUT-FLANGE (M10X1.5-THD)	
	256-2209	1	SEAL	
	4G-4972	1	SEAL-O-RING	
	6V-3250	1	SEAL-O-RING	
	6V-3251	2	SEAL-O-RING	
	6V-6609	2	SEAL-O-RING	
	8T-5917	1	SEAL-O-RING	
	124-1858	1	SEAL-O-RING	
	214-7568	3	SEAL-O-RING	
	228-7101	1	SEAL-O-RING	
	238-5080	1	SEAL-O-RING	
	260-0113	1	SEAL-VALVE COVER	
M	**376-3408**	4	STUD-TAPERLOCK (M10X1.5X55-MM)	
			FOR A LIST OF RELATED PARTS THAT MAY BE REQUIRED FOR THE ENGINE REBUILD TO THE KIT CONSIST, PLEASE VISIT	
			HTTP://DEALER.CAT.COM/RELATED	
M - METRIC PART				
			<END>	

565-7974 KIT-FRONT COVER GASKET

FOR USE WITH 522-6120—PAGE: 4

SMCS-1000, 7555 **i07495546**

NOTE	PART NUMBER	QTY	PART NAME 1 2 3 4 5 6 (PRODUCT LEVEL)	SEE PAGE
	4R-9999	1	EXCLUDER-CRANKSHAFT SEAL	
	275-2164	1	SEAL	
	499-0001	1	SEAL	
	288-5726	1	SEAL GP-CRANKSHAFT	
	061-9455	1	SEAL-O-RING	
	214-7567	1	SEAL-O-RING	
	228-4947	2	SEAL-O-RING	
			FOR A LIST OF RELATED PARTS THAT MAY BE REQUIRED FOR THE ENGINE REBUILD TO THE KIT CONSIST, PLEASE VISIT	
			HTTP://DEALER.CAT.COM/RELATED	
			<END>	

458-9490 KIT-REAR COVER GASKET

S/N: NTB1-UP

KIT CONTAINS GASKETS, SEALS, AND BENDABLE LOCKS TO REINSTALL THE REAR COVER. KIT DOES NOT INCLUDE THE OIL PAN GASKET

SMCS-1000, 7555

i07475341

NOTE	PART NUMBER	QTY	PART NAME 1 2 3 4 5 6 (PRODUCT LEVEL)	SEE PAGE
	9Y-6089	2	GASKET	
	528-5684	1	SEAL GP-CRANKSHAFT (REAR)	
	061-9455	1	SEAL-O-RING	
	214-7567	2	SEAL-O-RING	
	238-5080	1	SEAL-O-RING	
	238-5084	1	SEAL-O-RING	
			FOR A LIST OF RELATED PARTS THAT MAY BE REQUIRED FOR THE ENGINE REBUILD TO THE KIT CONSIST, PLEASE VISIT	
			HTTP://DEALER.CAT.COM/RELATED	
			<END>	

507-2596 LIFTING GP-ENGINE

S/N: NTB1-UP

PART OF 522-6120 ENGINE AR-COMPLETE

SMCS-1122 **i07498965**

NOTE	REF NO	GRAPHIC REF	PART NUMBER	QTY	PART NAME 1 2 3 4 5 6 (PRODUCT LEVEL)	SEE PAGE
	1	1	**193-2844**	1	PLATE	
	2	1	**355-7363**	1	PLATE-LIFTING (FRONT)	
	3	1	**5P-8245**	3	WASHER-HARD (13.5X25.5X3-MM THK)	
M	4	1	**6V-8675**	3	BOLT (M12X1.75X35-MM)	

M - METRIC PART

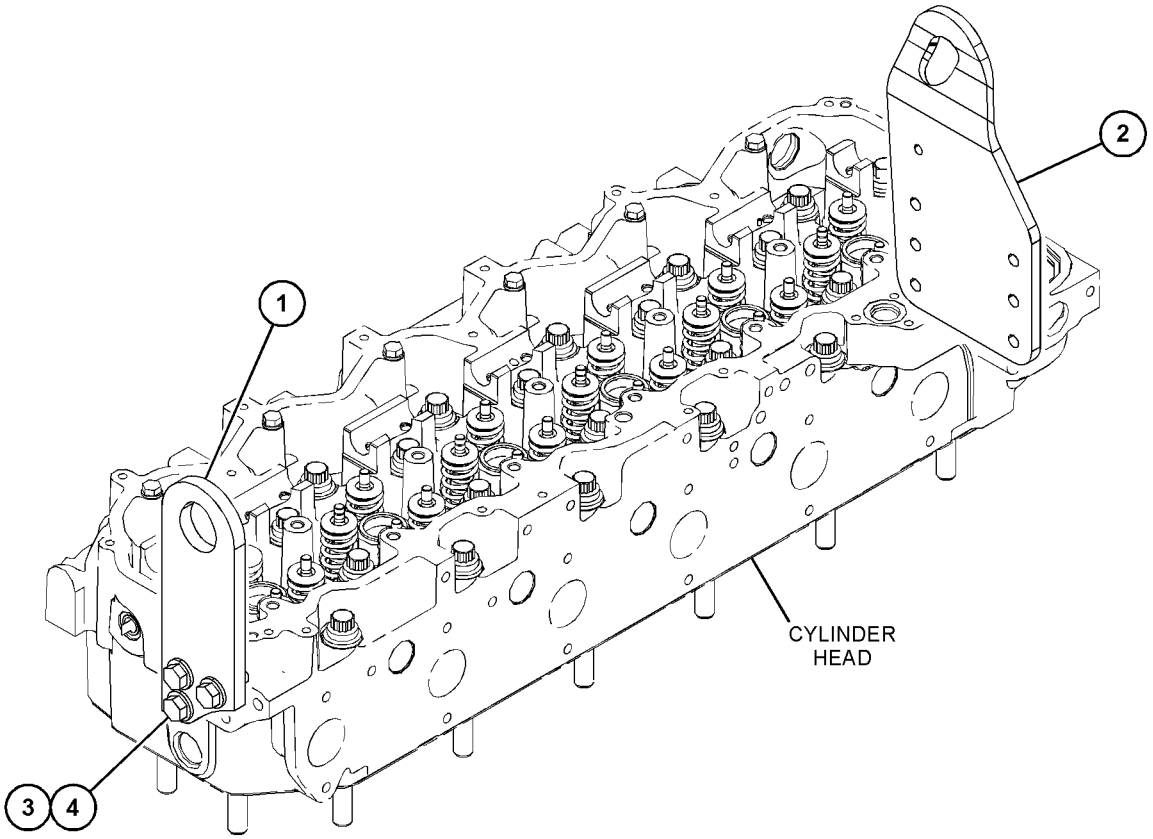

GRAPHIC #1 <END> g06286109

342-8963 MOUNTING GP-ALTERNATOR & COMPR

S/N: NTB1-UP

FOR USE WITH PAD MOUNTED ALTERNATORS AND COMPRESSORS

CANNOT BE USED WITH HINGE MOUNTED ALTERNATORS AND COMPRESSORS, FAN DRIVES

PART OF 522-6120 ENGINE AR-COMPLETE

SMCS-1405, 1802 **i06896665**

NOTE	REF NO	GRAPHIC REF	PART NUMBER	QTY	PART NAME 1 2 3 4 5 6 (PRODUCT LEVEL)	SEE PAGE
	1	1	**243-2310**	1	COVER	
	2	1	**279-2589**	1	PULLEY AS-IDLER (8-GROOVE)	
	3	1	**333-1207**	1	IDLER AS	
	4	1	**345-6703**	1	BRACKET	
	5	1	**347-7963**	1	TENSIONER-BELT	
	6	1	**350-2665**	1	SUPPORT AS	
		1	**203-2533**	2	DOWEL	
		1	**332-9270**	1	BUSHING	
M	7	1	**6V-4249**	5	BOLT (M10X1.5X50-MM)	
M	8	1	**6V-5219**	4	BOLT (M8X1.25X40-MM)	
	9	1	**6V-5839**	5	WASHER (11X21X2.5-MM THK)	
	10	1	**8T-4121**	1	WASHER-HARD (11X21X2.5-MM THK)	
M	11	1	**8T-4172**	1	BOLT (M10X1.5X80-MM)	
	12	1	**9M-1974**	4	WASHER-HARD (8.8X16X2-MM THK)	

M - METRIC PART

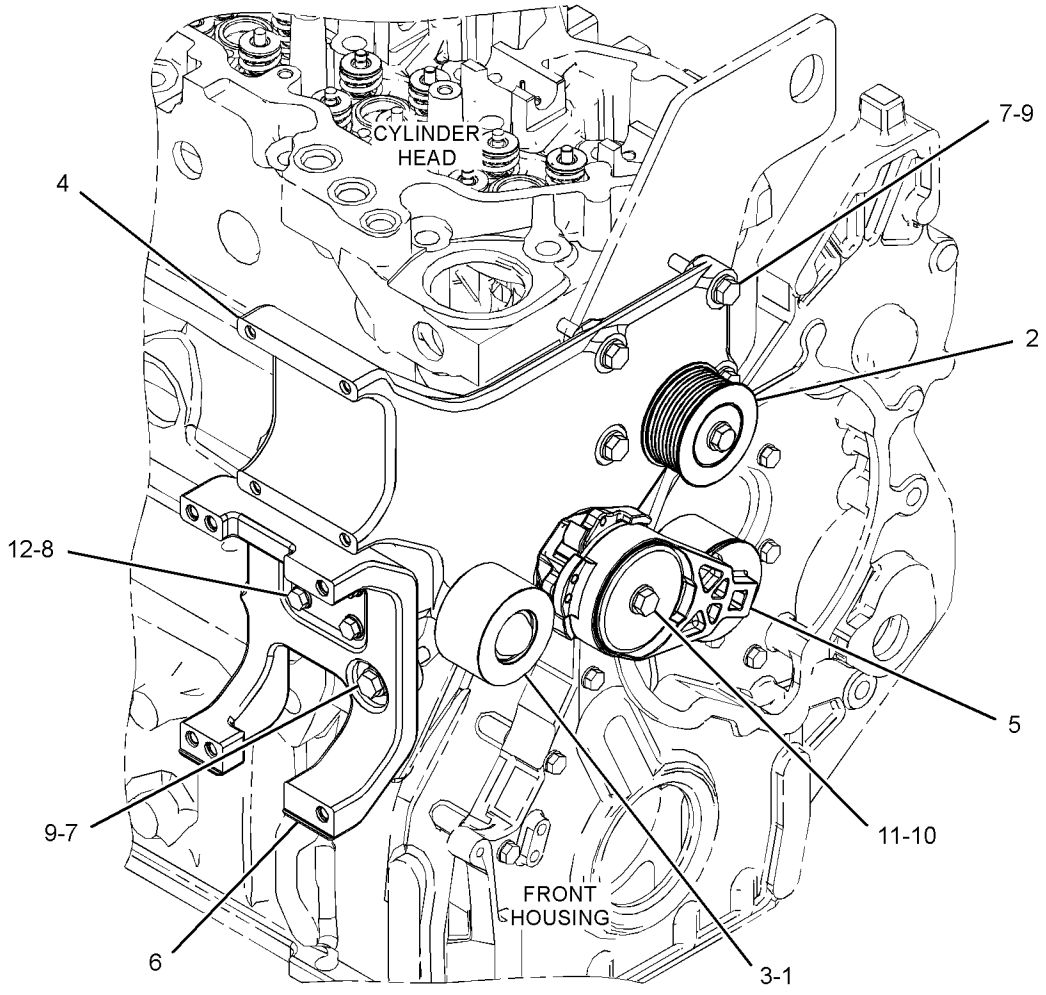

GRAPHIC #1 <END> g02186713

557-7709 MOUNTING GP-ALTERNATOR & COMPR

S/N: NTB1-UP

PART OF 522-6120 ENGINE AR-COMPLETE

SMCS-1405, 1802 **i07819333**

NOTE	REF NO	GRAPHIC REF	PART NUMBER	QTY	PART NAME 1 2 3 4 5 6 (PRODUCT LEVEL)	SEE PAGE
	1	1	**279-2589**	1	PULLEY AS-IDLER (8-GROOVE)	
	2	1	**333-1207**	1	IDLER AS	
	3	1	**347-7963**	1	TENSIONER-BELT	
	4	1	**552-5318**	1	BRACKET AS	
	4A	1	**332-9270**	2	BUSHING	
M	5	1	**6V-4249**	6	BOLT (M10X1.5X50-MM)	
	6	1	**6V-5839**	6	WASHER (11X21X2.5-MM THK)	
	7	1	**8T-4121**	1	WASHER-HARD (11X21X2.5-MM THK)	
M	8	1	**8T-4172**	1	BOLT (M10X1.5X80-MM)	

M - METRIC PART

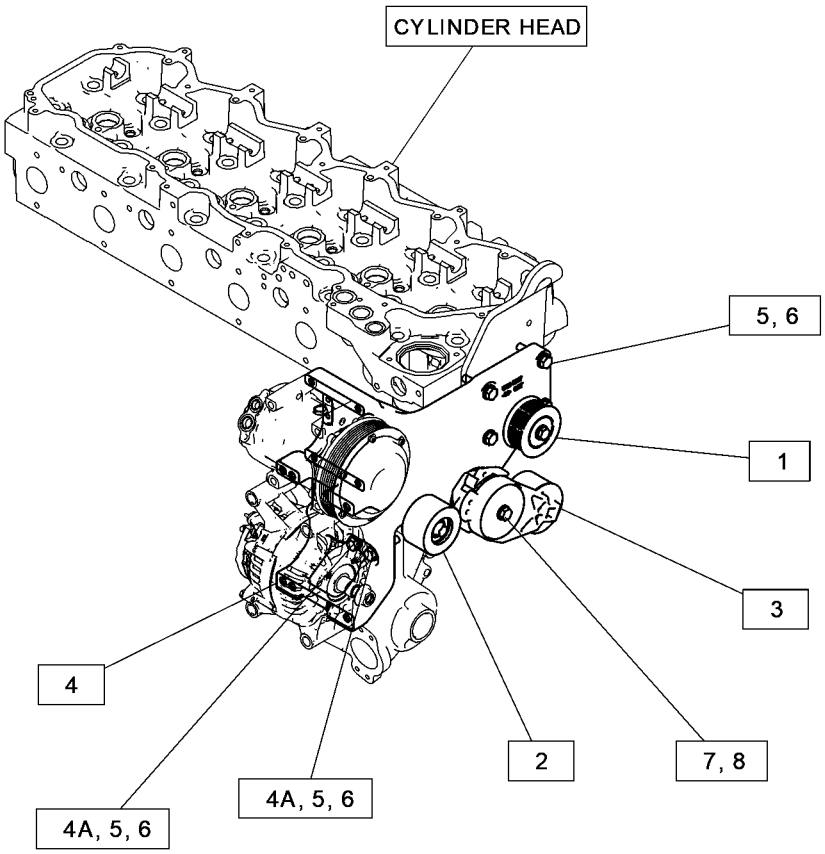

GRAPHIC #1 <END> g06402235

502-4252 MOUNTING GP-ENGINE

S/N: SP91-UP

PART OF 502-4246 INSTALLATION AR-ENGINE

SMCS-1152 **i07516334**

NOTE	REF NO	GRAPHIC REF	PART NUMBER	QTY	PART NAME 1 2 3 4 5 6 (PRODUCT LEVEL)	SEE PAGE
	1	1	**511-8260**	4	MOUNT	
	2	1	**109-9437**	2	WASHER (24.5X135X12-MM THK)	
	3	1	**118-9930**	2	SUPPORT AS	
					(EACH INCLUDES)	
M		1	**451-2184**	1	NUT (M20X2.5-THD)	
M	4	1	**139-8873**	2	SUPPORT AS	
					(EACH INCLUDES)	
M		1	**451-2185**	1	NUT (M24X3-THD)	
M	5	1	**447-1715**	2	BOLT (M20X2.5X120-MM)	
M	6	1	**447-1721**	2	BOLT (M24X3X160-MM)	
	7	1	**451-2176**	4	WASHER-HARD (22X35X3.5-MM THK)	
	8	1	**451-2188**	4	WASHER-HARD (26X50X8-MM THK)	
	9	1	**507-9361**	4	MOUNT-RUBBER	
	10	1	**109-9329**	2	WASHER (21.5X120X8-MM THK)	

M - METRIC PART

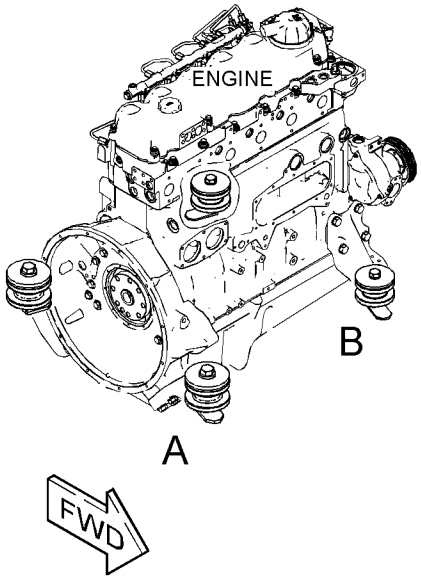

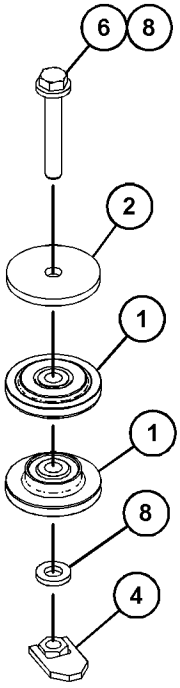

VIEW OF AREA A

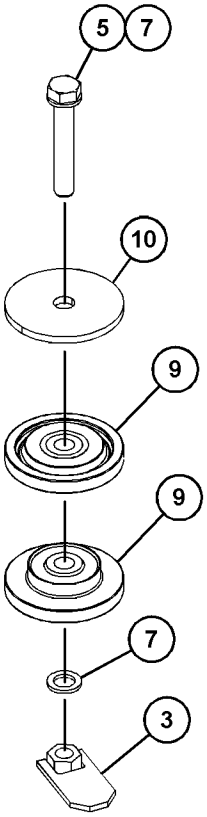

VIEW OF AREA B

GRAPHIC #1

<END>

g06278229

523-7485 MOUNTING GP-ENGINE

S/N: NTB1-UP

PART OF 522-6120 ENGINE AR-COMPLETE

SMCS-1152 **i07499038**

NOTE	REF NO	GRAPHIC REF	PART NUMBER	QTY	PART NAME 1 2 3 4 5 6 (PRODUCT LEVEL)	SEE PAGE
	1	1	**508-4406**	2	BRACKET-REAR	
	2	1	**509-0696**	1	BRACKET-FRONT	
	3	1	**509-0697**	1	BRACKET-FRONT	
M	4	1	**118-4977**	8	BOLT (M16X2X65-MM)	
M	5	1	**7X-2553**	4	BOLT (M16X2X40-MM)	
M	6	1	**118-7313**	4	BOLT (M16X2X70-MM)	
	7	1	**9X-8257**	16	WASHER (17.5X30X3.5-MM THK)	

M - METRIC PART

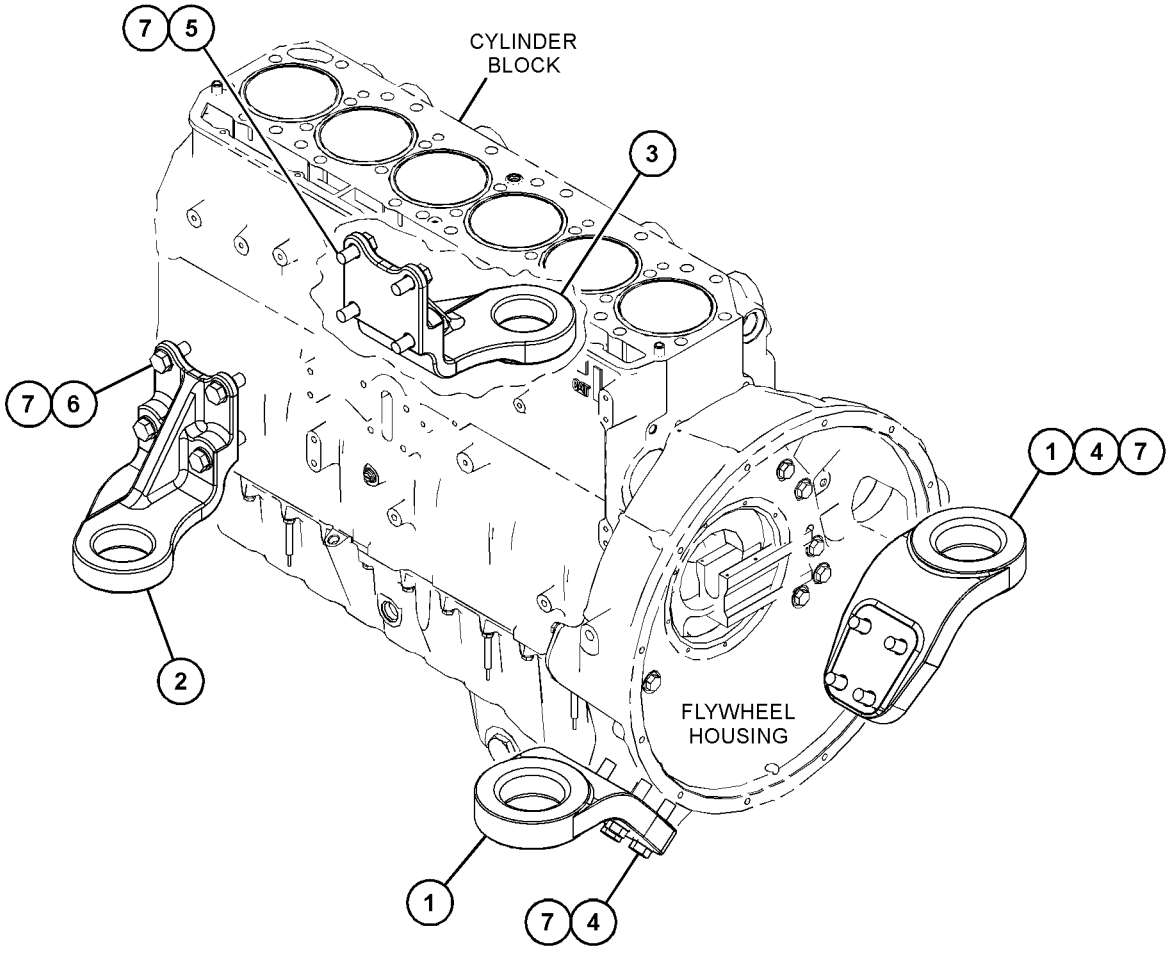

GRAPHIC #1 <END> g06288759

569-1216 PAN GP-OIL

S/N: NTB1-UP

PART OF 522-6120 ENGINE AR-COMPLETE

SMCS-1302 **i07563487**

NOTE	REF NO	GRAPHIC REF	PART NUMBER	QTY	PART NAME 1 2 3 4 5 6 (PRODUCT LEVEL)	SEE PAGE
	1	1	**193-1167**	1	SEAL-INTEGRAL	
	2	1	**329-3706**	8	STUD (M8X1.25X42.25-MM, 22.00-MM)	
	3	1	**348-8373**	1	PAN-OIL	
	4	1	*351-0283*	1	VALVE AS-SHUTOFF	
		1	**6V-7238**	1	VALVE-SHUTOFF	
		1	**238-5080**	1	SEAL-O-RING	
	5	1	*363-8107*	1	ADAPTER AS	
		1	**5P-5777**	1	ADAPTER-O-RING	
		1	**238-5084**	1	SEAL-O-RING	
	6	1	*389-3728*	1	PLUG AS	
		1	**238-5084**	1	SEAL-O-RING	
		1	**360-3684**	1	PLUG	
	7	1	*392-0775*	2	PLUG AS-DRAIN	
					(EACH INCLUDES)	
		1	**9X-6451**	1	PLUG-DRAIN (MAGNETIC)	
		1	**279-2252**	1	SEAL-O-RING	
M	8	1	**6V-3918**	24	BOLT (M8X1.25X50-MM)	
	9	1	**9M-1974**	32	WASHER-HARD (8.8X16X2-MM THK)	

M - METRIC PART

569-1216 **PAN GP-OIL (**contd.**)** **i07563487**

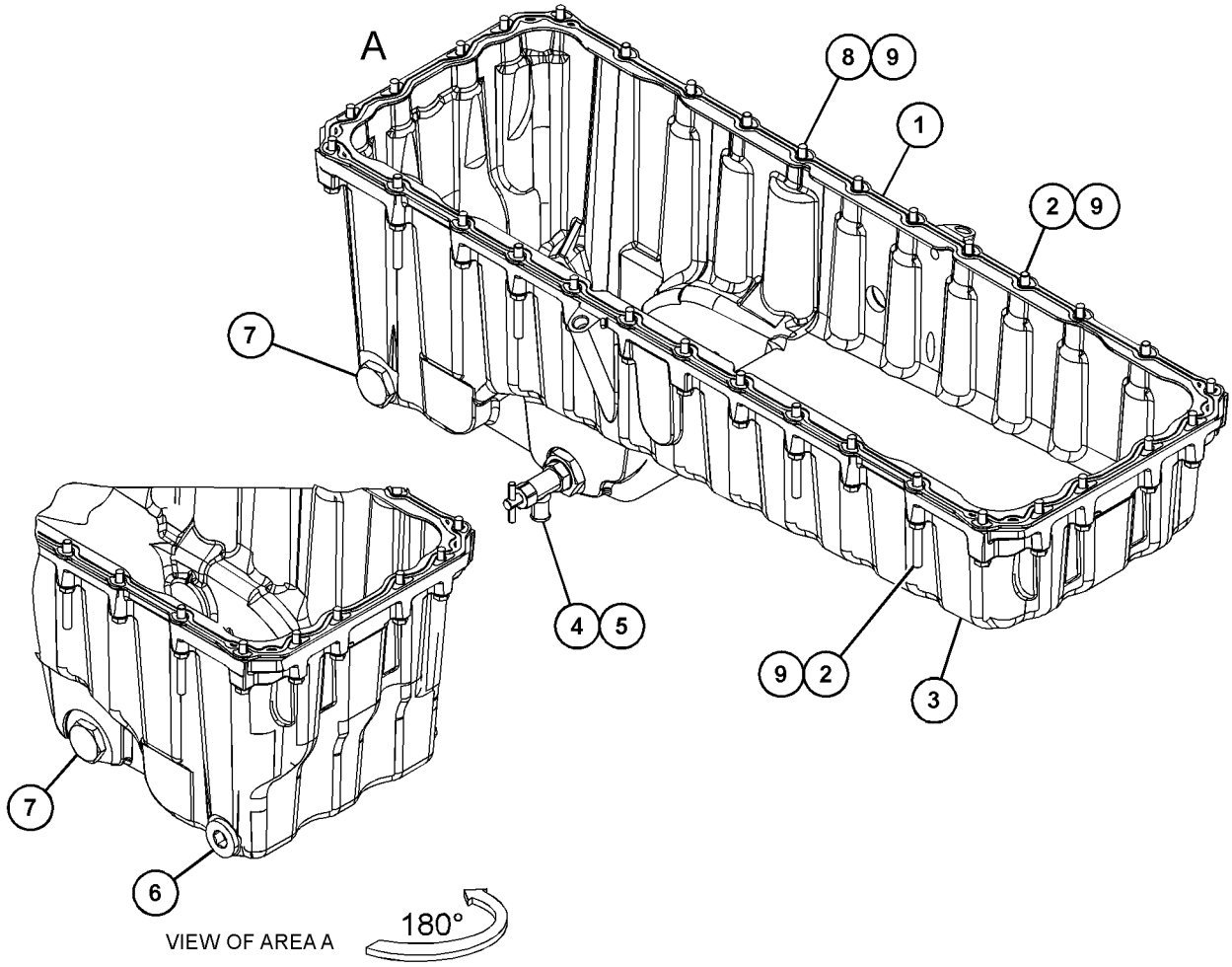

GRAPHIC #1 <END> g06350588

562-1130 PISTON & ROD GP

S/N: NTB1-UP

16.5:1

PART OF 546-5240 ENGINE AR-CORE

SMCS-1225 **i07636066**

NOTE	REF NO	GRAPHIC REF	PART NUMBER	QTY	PART NAME 1 2 3 4 5 6 (PRODUCT LEVEL)	SEE PAGE
	1	1	**524-5566**	1	PIN-PISTON	
	2	1	**490-8380**	1	ROD AS-CONNECTING	
M		1	**160-8197**	2	BOLT (M12X1.25X62-MM)	
	3	1	**269-7290**	1	BEARING-CONNECTING ROD	
	4	1	**262-2891**	1	RING-PISTON	
	5	1	**273-2600**	1	TUBE AS-OIL JET	
	6	1	**549-8397**	1	RING-PISTON	
	7	1	**551-0841**	1	BODY AS-PISTON	
	8	1	**559-0752**	1	RING-PISTON	
M	9	1	**6V-3940**	1	BOLT (M8X1.25X25-MM)	
	10	1	**6V-5589**	2	RING-RETAINING	

M - METRIC PART

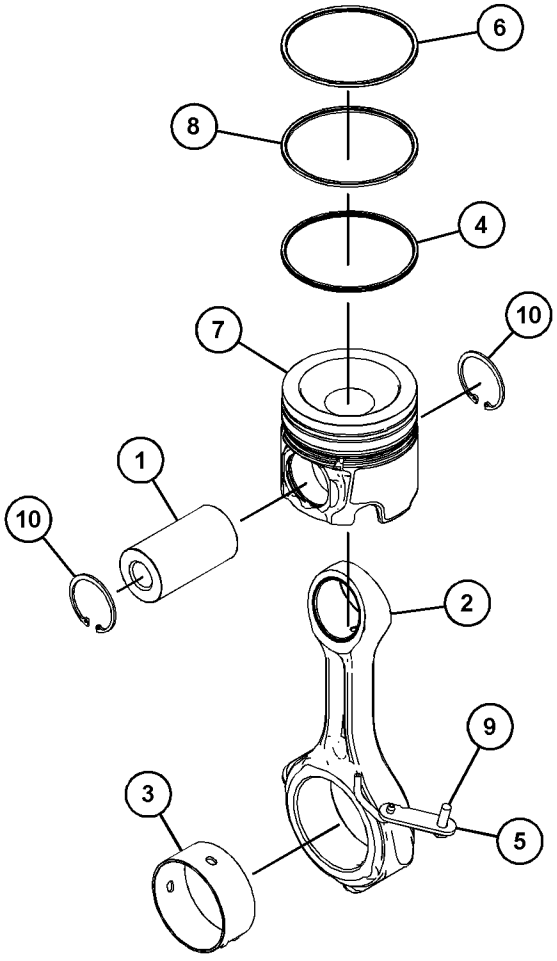

GRAPHIC #1 <END> g06306140

275-8699 PLUG GP-CYLINDER BLOCK

S/N: NTB1-UP

PROVIDES AN O-RING PORT PLUG FOR THE RH SIDE OF BLOCK
FOR USE WITH ENGINES NOT USING A BYPASS AUXILIARY COOLER
PART OF 522-6120 ENGINE AR-COMPLETE

SMCS-1201 **i05832910**

NOTE	REF NO	GRAPHIC REF	PART NUMBER	QTY	PART NAME 1 2 3 4 5 6 (PRODUCT LEVEL)	SEE PAGE
	1	1	*398-5614*	1	PLUG AS	
		1	**6V-5064**	1	SEAL-O-RING	
		1	**360-3684**	1	PLUG	

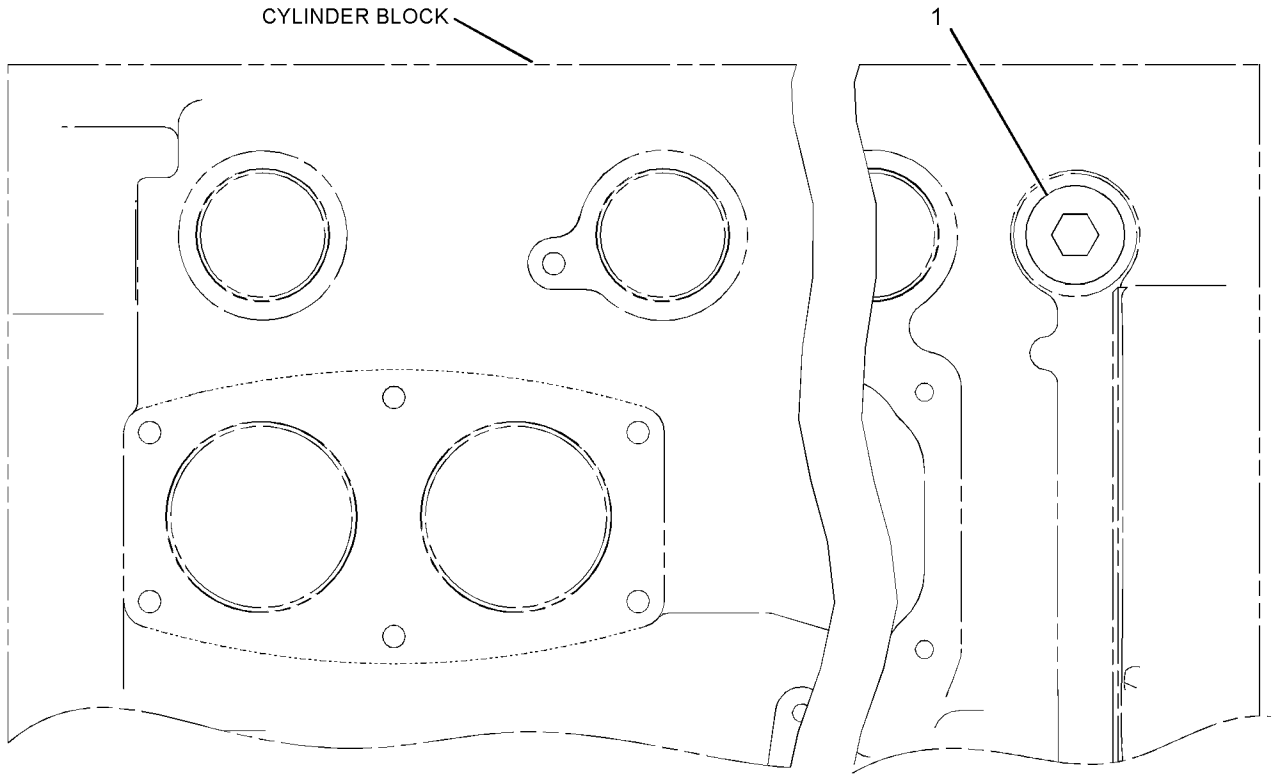

RIGHT SIDE VIEW

GRAPHIC #1 <END> g01217275

475-0353 PLUG GP-CYLINDER BLOCK–COOLANT

S/N: NTB1-UP

PART OF 522-6120 ENGINE AR-COMPLETE

SMCS-1201 **i07499044**

NOTE	REF NO	GRAPHIC REF	PART NUMBER	QTY	PART NAME 1 2 3 4 5 6 (PRODUCT LEVEL)	SEE PAGE
	1	1	**209-1434**	2	PLUG-CUP	
	2	1	*398-5614*	1	PLUG AS	
		1	**6V-5064**	1	SEAL-O-RING	
		1	**360-3684**	1	PLUG	

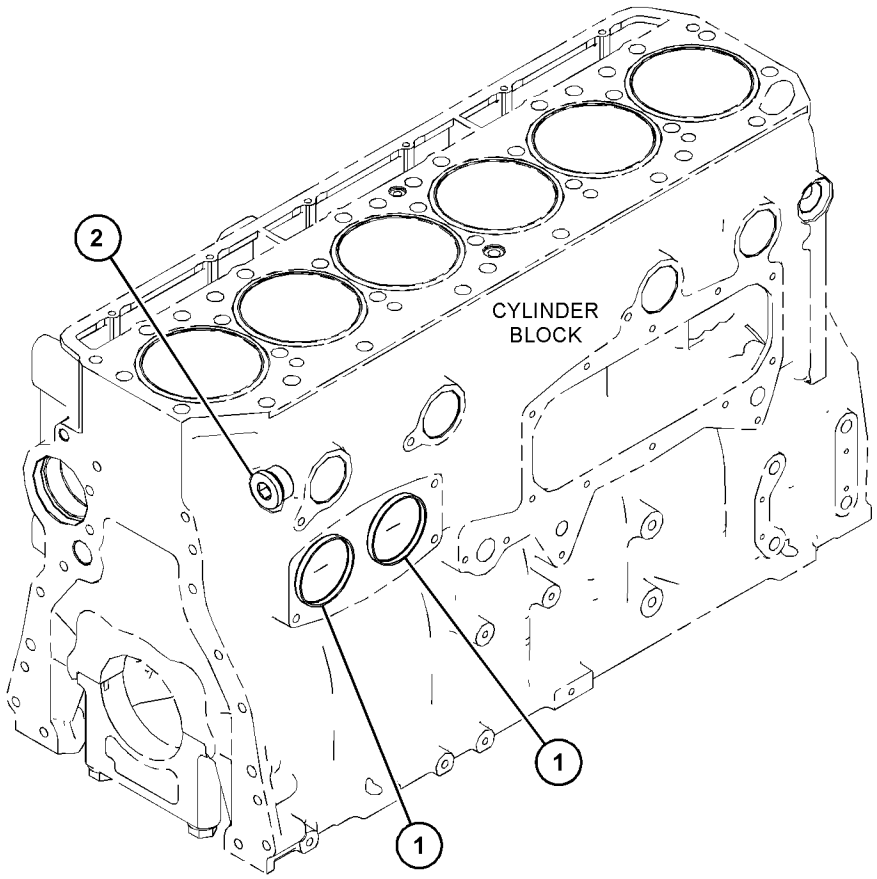

GRAPHIC #1 <END> g06271712

495-5748 PLUG GP-CYLINDER HEAD

S/N: NTB1-UP

PART OF 522-6120 ENGINE AR-COMPLETE

SMCS-1100 **i06757967**

NOTE	REF NO	GRAPHIC REF	PART NUMBER	QTY	PART NAME 1 2 3 4 5 6 (PRODUCT LEVEL)	SEE PAGE
	1	1	*396-0404*	2	PLUG AS	
					(EACH INCLUDES)	
		1	**6V-3251**	1	SEAL-O-RING	
		1	**360-3681**	1	PLUG (7/8-14-THD)	
	2	1	*396-0405*	1	PLUG AS	
		1	**6V-6609**	1	SEAL-O-RING	
		1	**360-3680**	1	PLUG	

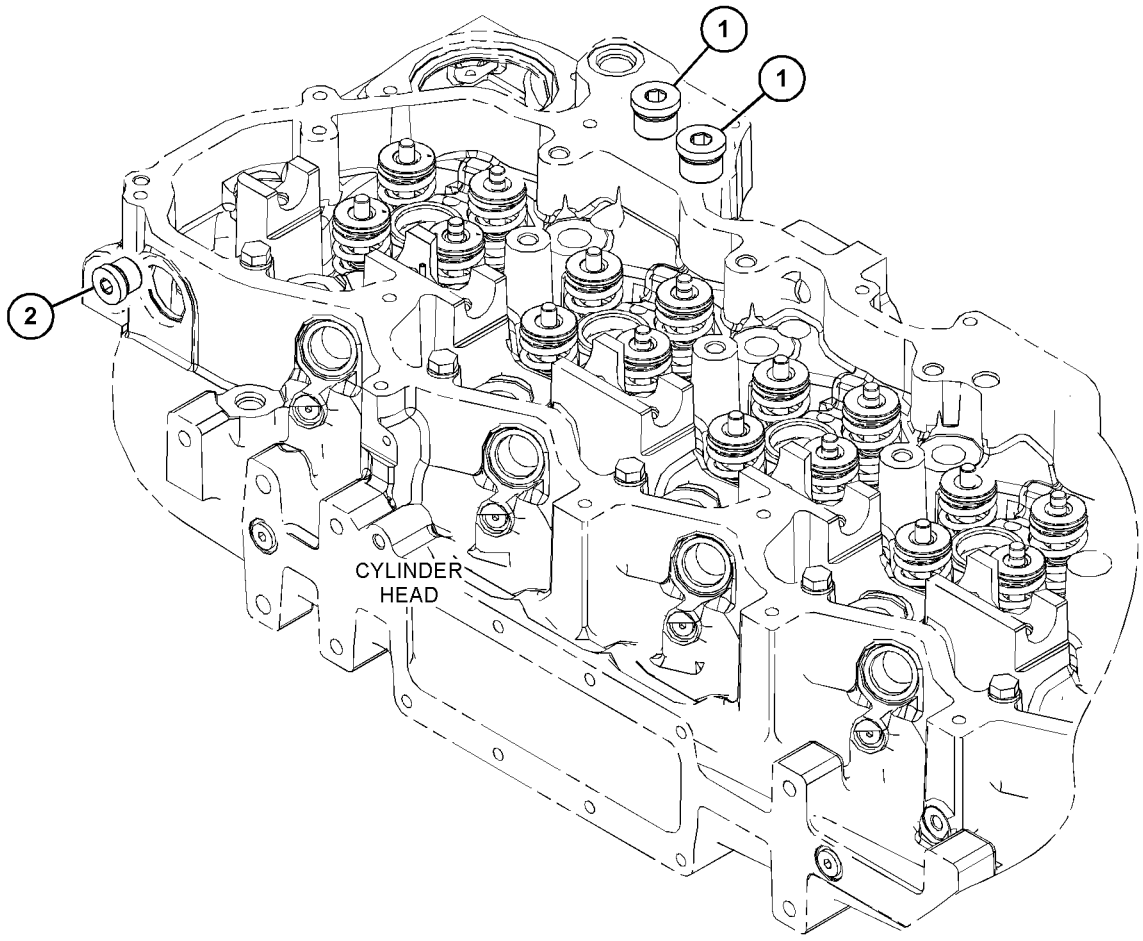

GRAPHIC #1 <END> g06109745

514-5296 PLUG GP-ENGINE—FUEL MANIFOLD

S/N: NTB1-UP

PART OF 522-6120 ENGINE AR-COMPLETE

SMCS-1000 **i07499045**

NOTE	REF NO	GRAPHIC REF	PART NUMBER	QTY	PART NAME 1 2 3 4 5 6 (PRODUCT LEVEL)	SEE PAGE
	1	1	*398-5596*	1	PLUG AS	
		1	**238-5080**	1	SEAL-O-RING	
		1	**360-3680**	1	PLUG	

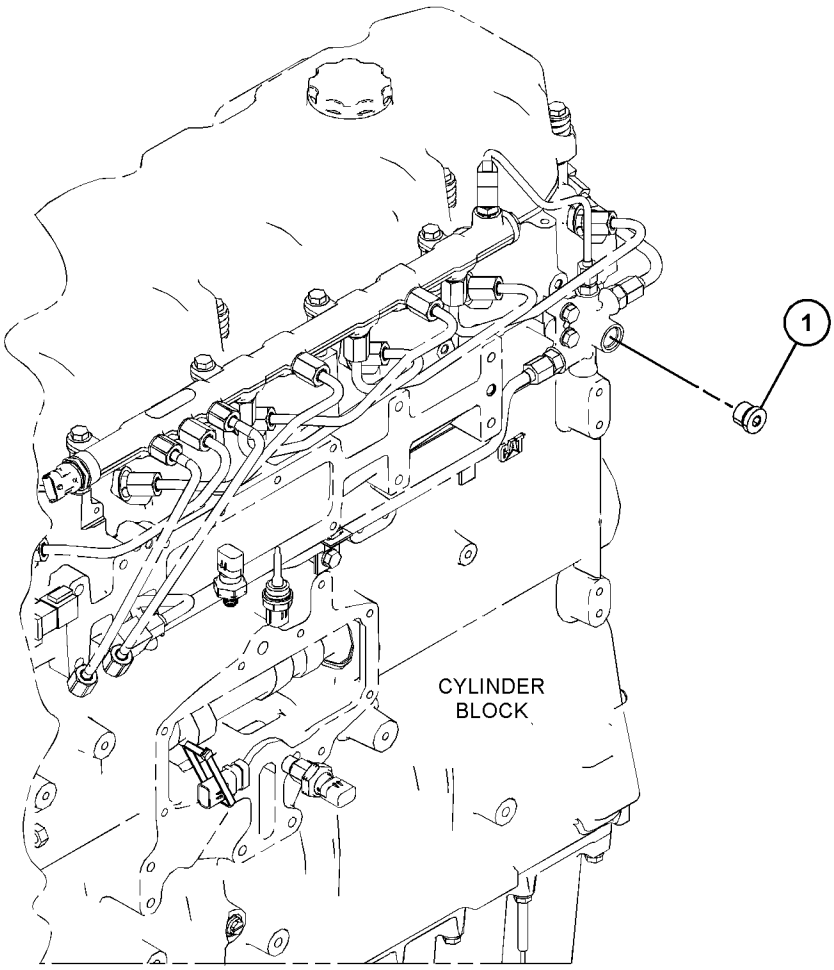

GRAPHIC #1 <END> g06158900

523-5990 PLUG GP-OIL PAN

S/N: NTB1-UP

PART OF 522-6120 ENGINE AR-COMPLETE

SMCS-1302 **i07499046**

NOTE	REF NO	GRAPHIC REF	PART NUMBER	QTY	PART NAME 1 2 3 4 5 6 (PRODUCT LEVEL)	SEE PAGE
	1	1	*389-3709*	1	PLUG AS	
		1	**238-5082**	1	SEAL-O-RING	
		1	**360-3682**	1	PLUG-O-RING	
	2	1	*396-0403*	1	PLUG AS	
		1	**6V-3250**	1	SEAL-O-RING	
		1	**360-3679**	1	PLUG-CONNECTOR (9/16-18-THD)	

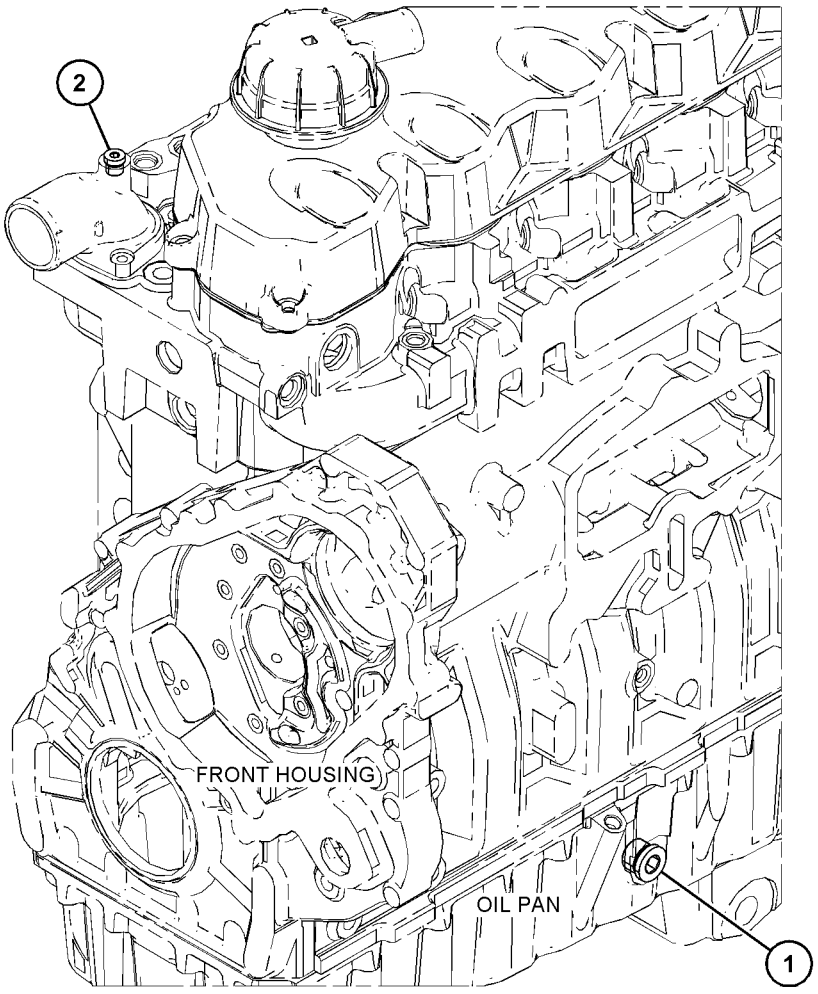

GRAPHIC #1 <END> g06288248

485-5474 PULLEY GP-CRANKSHAFT

S/N: NTB1-UP

PART OF 522-6120 ENGINE AR-COMPLETE

SMCS-1205 **i07762742**

NOTE	REF NO	GRAPHIC REF	PART NUMBER	QTY	PART NAME 1 2 3 4 5 6 (PRODUCT LEVEL)	SEE PAGE
	1	1	**2W-7381**	1	PLATE-CLAMP	
	2	1	**228-3621**	1	SPACER (101.5X167X8-MM THK)	
	3	1	**342-7220**	1	PULLEY (8-GROOVE)	
	4	1	**485-5473**	1	ADAPTER	
M	5	1	**214-6277**	4	BOLT (M14X2X60-MM)	

M - METRIC PART

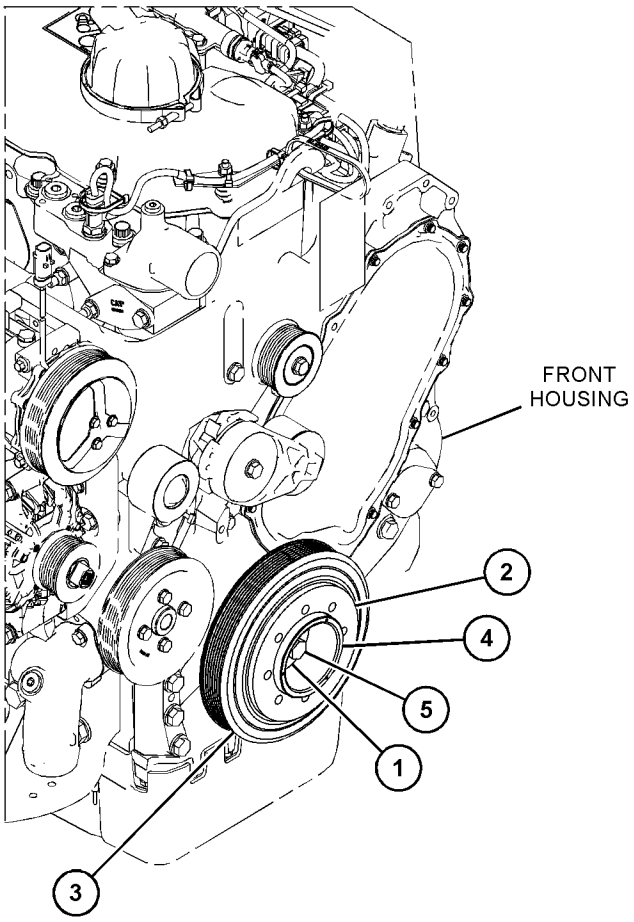

GRAPHIC #1 <END> g06243285

263-0033 ROCKER ARM GP–INTAKE

S/N: NTB1-UP

PART OF 492-1194 VALVE MECHANISM GP

SMCS-1123 **i07775678**

NOTE	REF NO	GRAPHIC REF	PART NUMBER	QTY	PART NAME 1 2 3 4 5 6 (PRODUCT LEVEL)	SEE PAGE
M	1	1	**260-7524**	1	SCREW-VALVE ADJUSTMENT (M10X1.5-THD)	
R	2	1	**544-0524**	1	ROCKER ARM AS (INTAKE)	
M	3	1	**2Y-5829**	1	NUT (M10X1.5-THD)	

M - METRIC PART
R - REMANUFACTURED PART MAY BE AVAILABLE

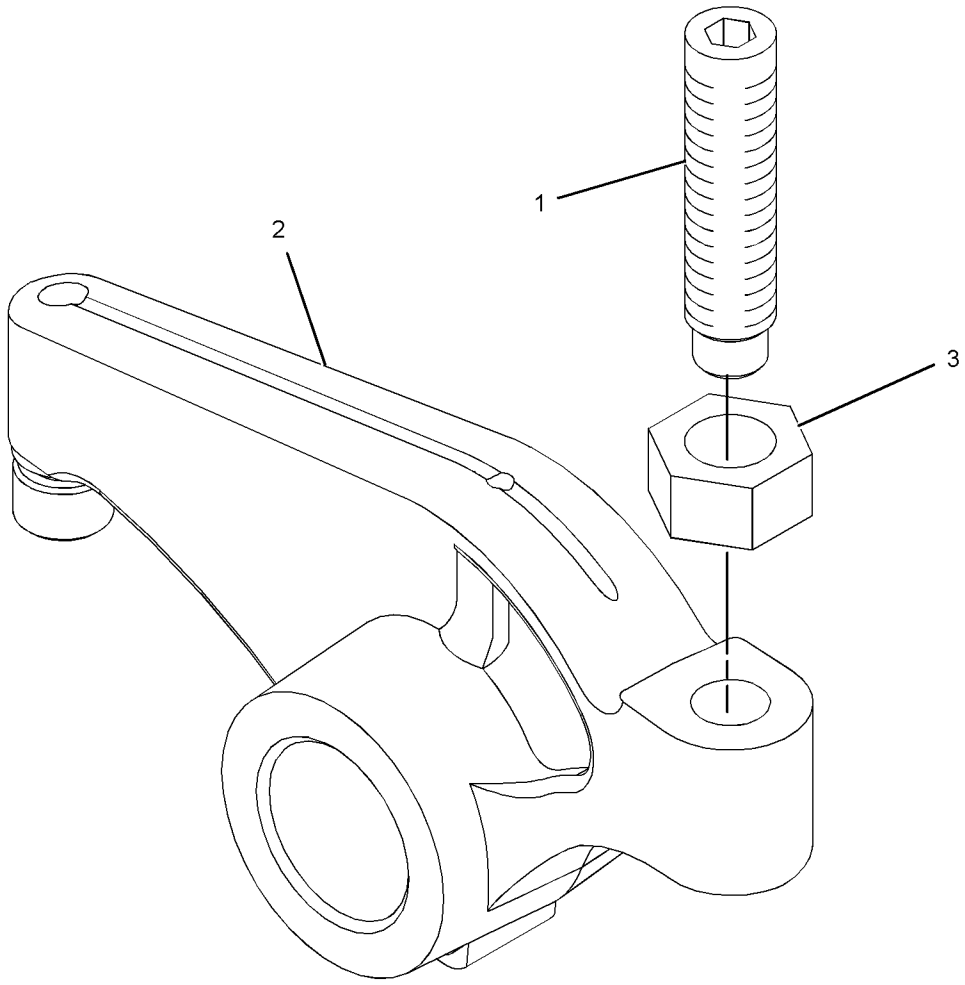

GRAPHIC #1 <END> g01267444

347-8782 ROCKER ARM GP

S/N: NTB1-UP

PART OF 492-1194 VALVE MECHANISM GP

SMCS-1123 **i06545121**

NOTE	REF NO	GRAPHIC REF	PART NUMBER	QTY	PART NAME 1 2 3 4 5 6 (PRODUCT LEVEL)	SEE PAGE
M	1	1	**260-7524**	1	SCREW-VALVE ADJUSTMENT (M10X1.5-THD)	
R	2	1	**347-8748**	1	ROCKER ARM AS (EXHAUST)	
M	3	1	**2Y-5829**	1	NUT (M10X1.5-THD)	

M - METRIC PART
R - REMANUFACTURED PART MAY BE AVAILABLE

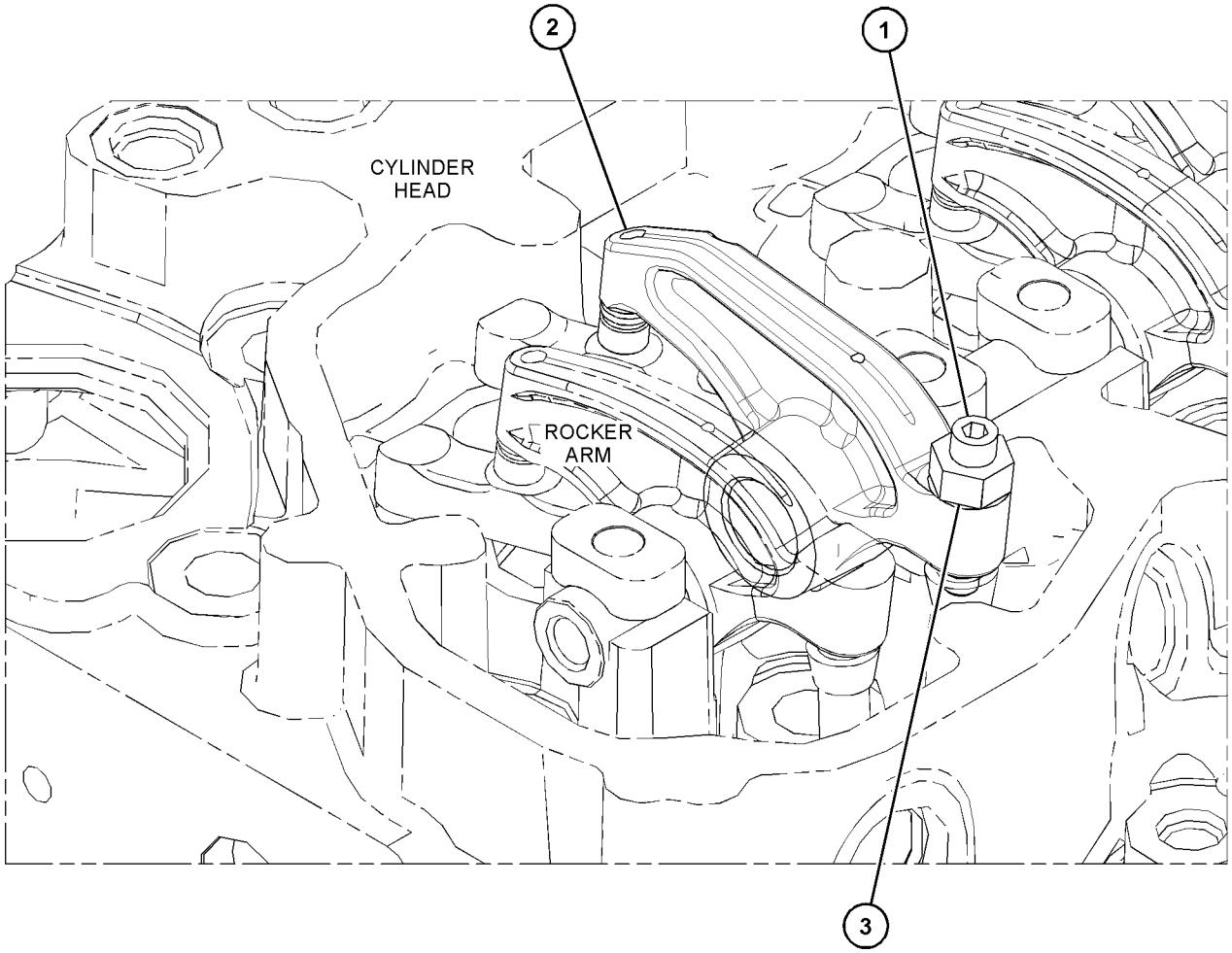

GRAPHIC #1 <END> g06020356

295-2351 SEAL GP-CRANKSHAFT

S/N: NTB1-UP

PART OF 522-6120 ENGINE AR-COMPLETE

SMCS-1160, 1161

i07400849

NOTE	REF NO	GRAPHIC REF	PART NUMBER	QTY	PART NAME 1 2 3 4 5 6 (PRODUCT LEVEL)	SEE PAGE
	1	1	**4R-9999**	1	EXCLUDER-CRANKSHAFT SEAL	
M	2	1	**206-3719**	9	BOLT AS	
	3	1	**285-4074**	1	SEAL GP-CRANKSHAFT (REAR)	

M - METRIC PART

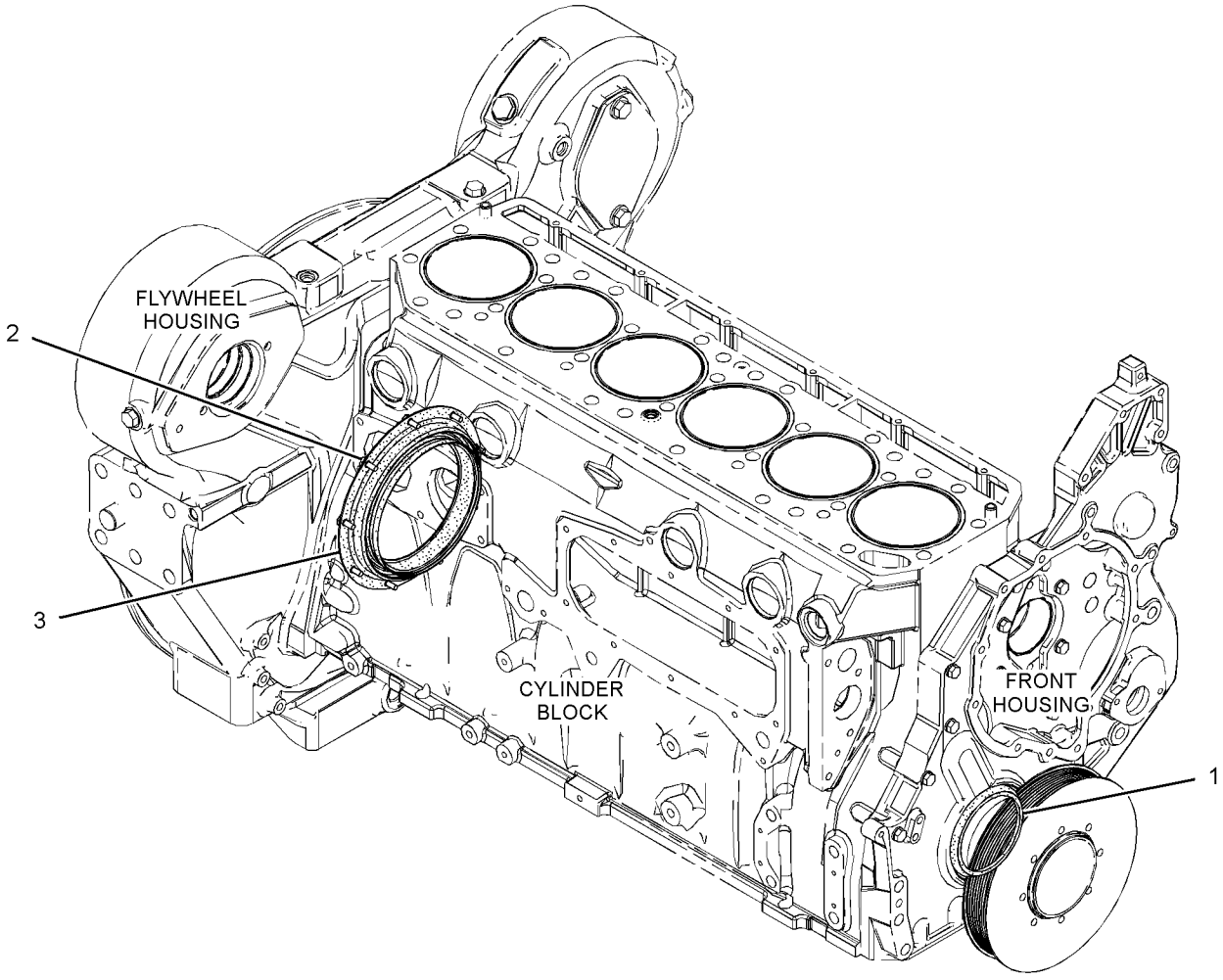

GRAPHIC #1 <END> g02196174

348-9896 VALVE MECHANISM GP

S/N: NTB1-UP

PART OF 546-5240 ENGINE AR-CORE

SMCS-1209 **i07776539**

NOTE	REF NO	GRAPHIC REF	PART NUMBER	QTY	PART NAME 1 2 3 4 5 6 (PRODUCT LEVEL)	SEE PAGE
	1	1	**467-4243**	12	SPRING-GUIDE	
	2	1	**581-1372**	12	BRIDGE-VALVE	
	3	1	**261-0205**	12	ROD-VALVE PUSH	
	4	1	**575-4995**	12	LIFTER AS-VALVE	
CY	5	1	*492-1194*	1	VALVE MECHANISM GP	57

C - CHANGE FROM PREVIOUS TYPE
Y - SEPARATE ILLUSTRATION

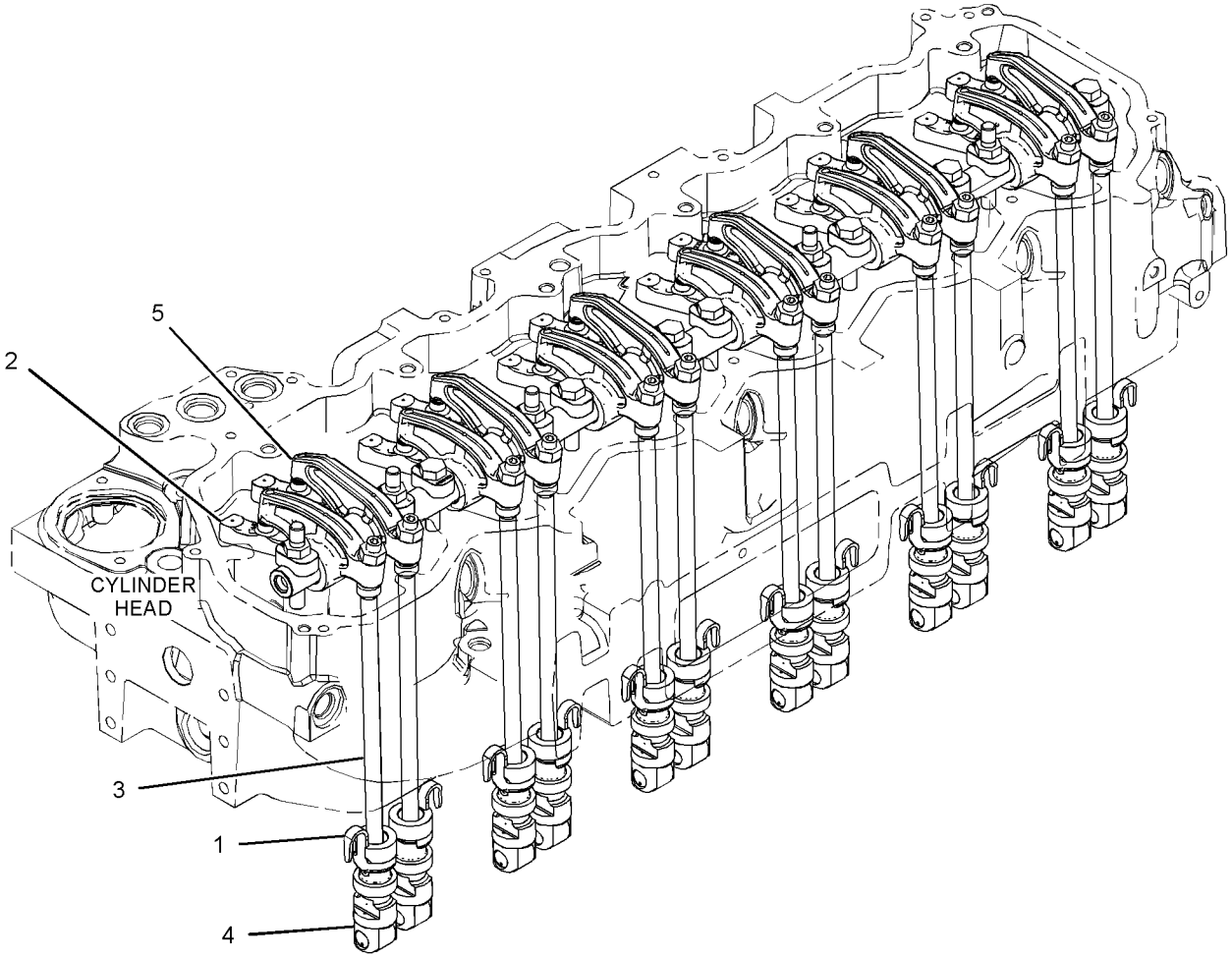

GRAPHIC #1 <END> g06017190

492-1194 VALVE MECHANISM GP

S/N: NTB1-UP

PART OF 348-9896 VALVE MECHANISM GP

SMCS-1209 **i06540863**

NOTE	REF NO	GRAPHIC REF	PART NUMBER	QTY	PART NAME 1 2 3 4 5 6 (PRODUCT LEVEL)	SEE PAGE
Y	1	1	*263-0033*	6	ROCKER ARM GP (INTAKE)	53
	2	1	**274-5873**	1	SHAFT AS-ROCKER ARM	
	2A	1	**0L-1026**	2	PLUG-CUP	
	3	1	**276-5754**	12	WASHER	
Y	4	1	*347-8782*	6	ROCKER ARM GP (EXHAUST)	54
	5	1	**282-3736**	5	STUD	
M	6	1	**6V-5843**	7	BOLT (M10X1.5X45-MM)	

M - METRIC PART
Y - SEPARATE ILLUSTRATION

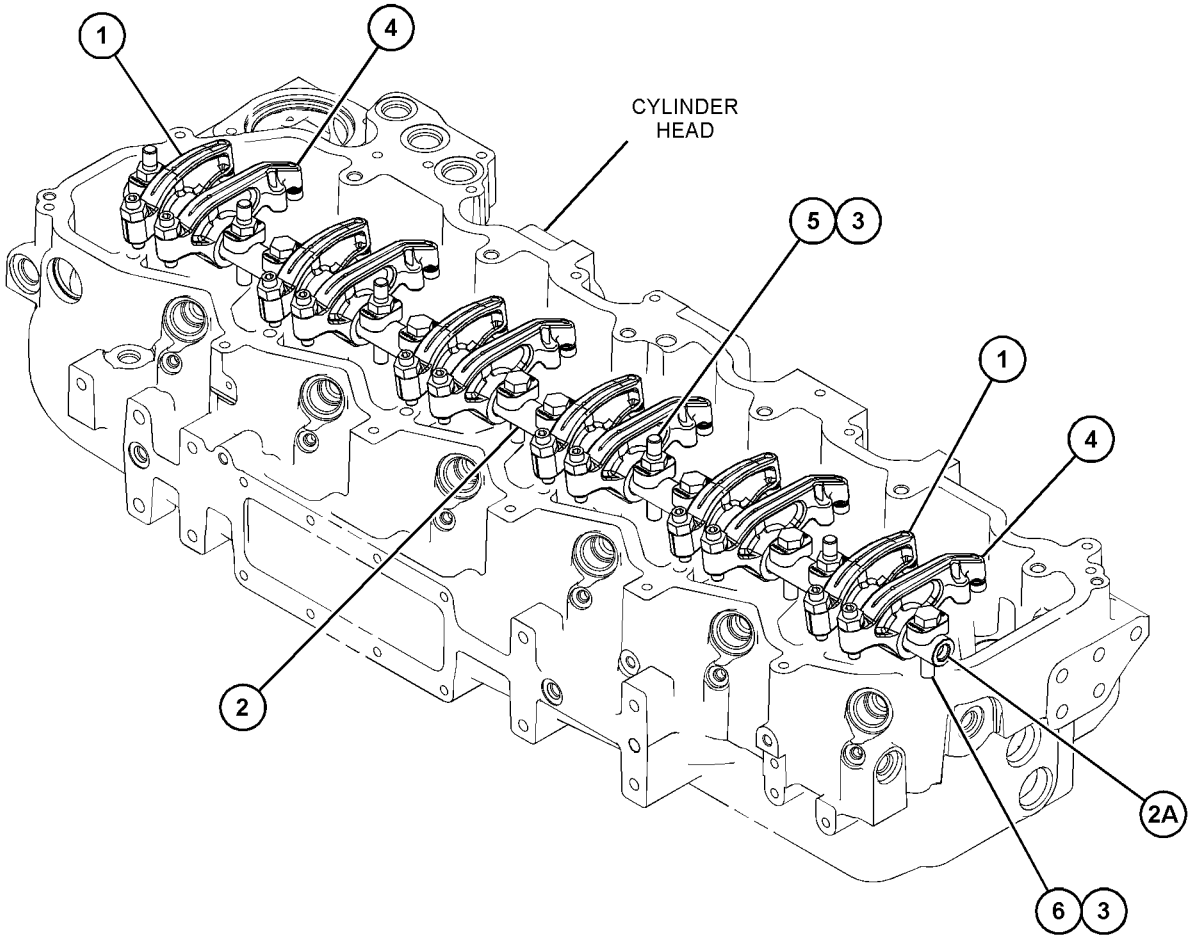

GRAPHIC #1 <END> g06017538

450-1111 BASE GP-OIL FILTER—REMOTE MOUNTED

S/N: NTB1-UP

PART OF 526-9175 BASE GP-OIL FILTER

SMCS-1306 **i07816157**

NOTE	REF NO	GRAPHIC REF	PART NUMBER	QTY	PART NAME 1 2 3 4 5 6 (PRODUCT LEVEL)	SEE PAGE
	1	1	*319-6234*	1	PLUG AS	
		1	**9S-9334**	1	PLUG (1-5/16-12-THD)	
		1	**238-5084**	1	SEAL-O-RING	
	2	1	*377-9593*	1	PLUG AS	
		1	**9N-6152**	1	PLUG	
		1	**238-5081**	1	SEAL-O-RING	
	3	1	**392-9208**	1	PLUNGER-VALVE (RELIEF)	
	4	1	**450-1108**	1	BASE-OIL FILTER	
	5	1	**561-2933**	1	SPRING AS	

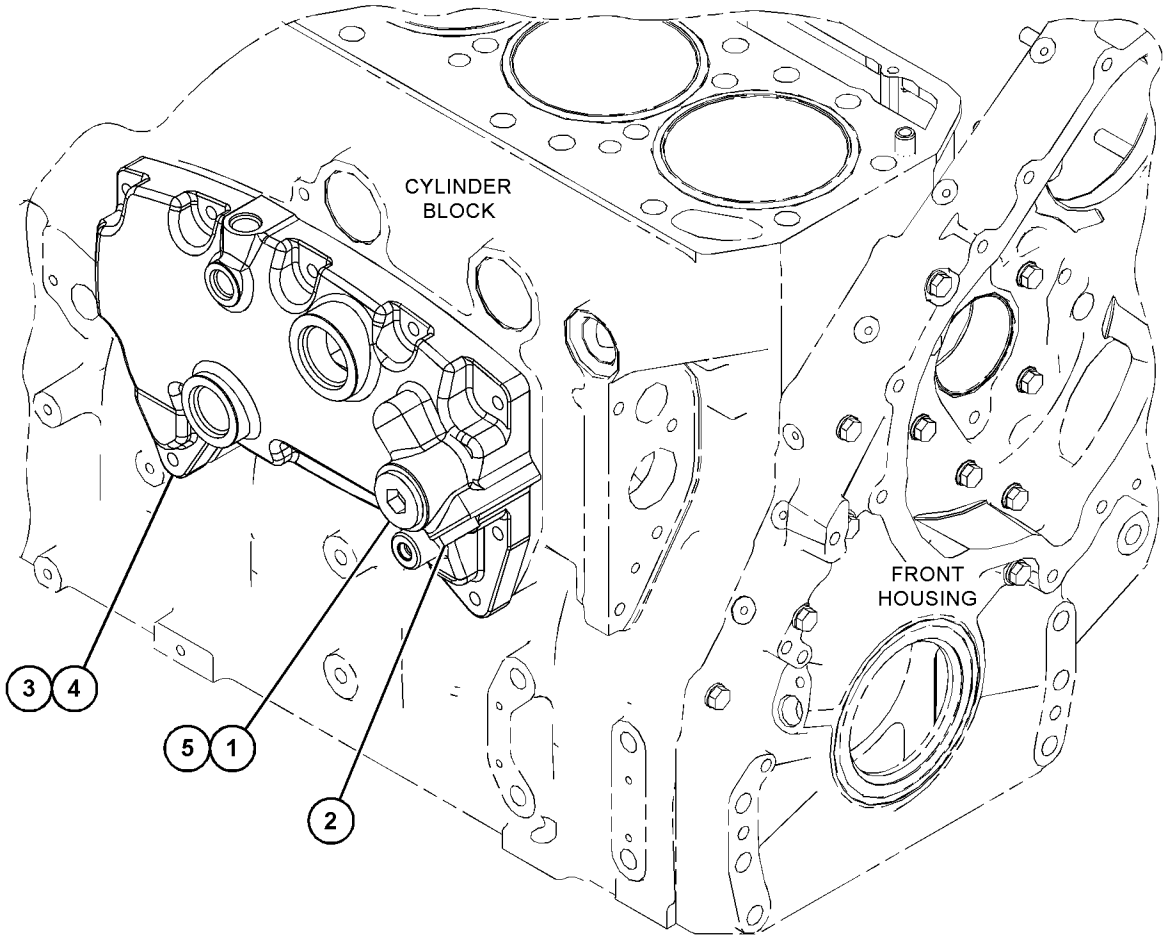

GRAPHIC #1 <END> g06268064

485-6989 BASE GP-OIL FILTER–REMOTE MOUNTED

S/N: SP91-UP

PART OF 532-7138 FILTER GP-ENGINE OIL

SMCS-1306 **i07622846**

NOTE	REF NO	GRAPHIC REF	PART NUMBER	QTY	PART NAME 1 2 3 4 5 6 (PRODUCT LEVEL)	SEE PAGE
	1	1	*319-6234*	1	PLUG AS	
		1	**9S-9334**	1	PLUG (1-5/16-12-THD)	
		1	**238-5084**	1	SEAL-O-RING	
	2	1	**362-9689**	1	SCREW-SPECIAL	
	3	1	**392-9208**	1	PLUNGER-VALVE (RELIEF)	
	4	1	**561-2933**	1	SPRING AS	
	5	1	**493-9731**	1	BASE-OIL FILTER	

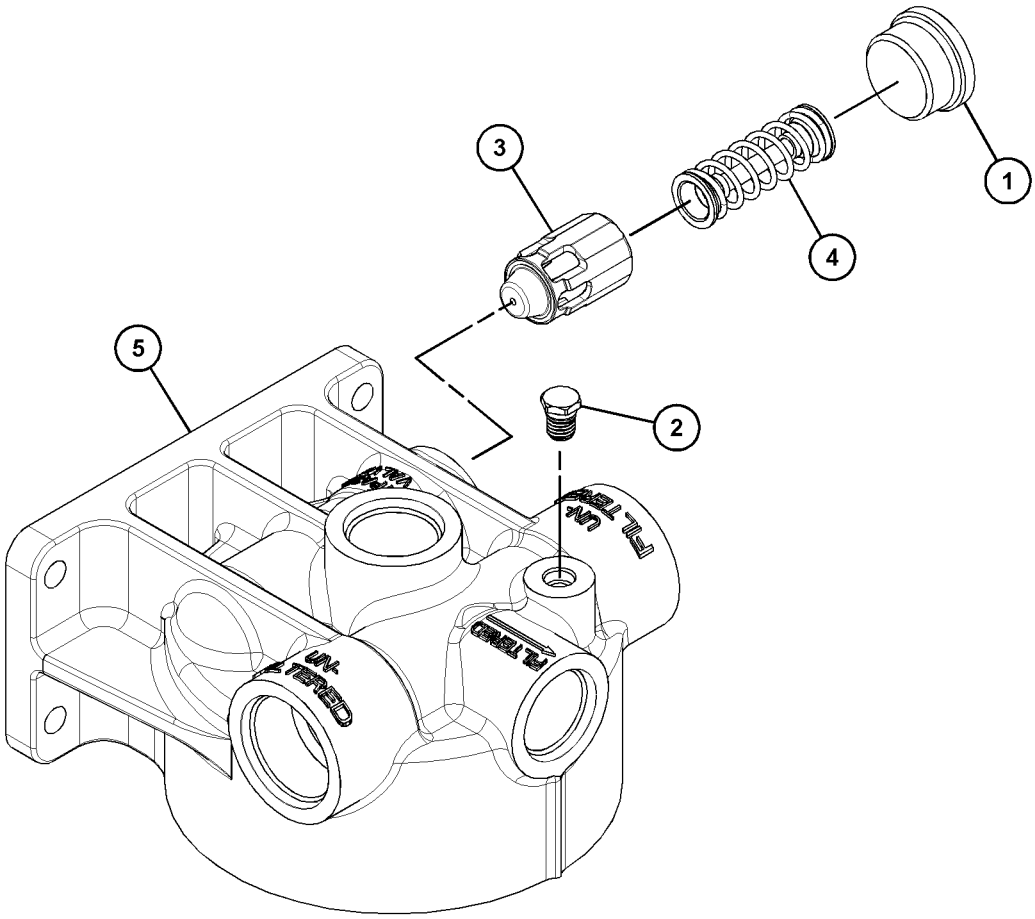

GRAPHIC #1 <END> g06383057

526-9175 BASE GP-OIL FILTER

S/N: NTB1-UP

PART OF 522-6120 ENGINE AR-COMPLETE

SMCS-1306 **i07498887**

NOTE	REF NO	GRAPHIC REF	PART NUMBER	QTY	PART NAME 1 2 3 4 5 6 (PRODUCT LEVEL)	SEE PAGE
	1	1	**460-0644**	1	GASKET	
	2	1	*309-5137*	1	CONNECTOR AS	
		1	**6V-8635**	1	CONNECTOR	
		1	**228-7093**	1	SEAL-O-RING	
		1	**238-5084**	1	SEAL-O-RING	
	3	1	*330-9754*	1	CONNECTOR AS	
		1	**8T-3611**	1	CONNECTOR	
		1	**228-7094**	1	SEAL-O-RING	
		1	**228-7096**	1	SEAL-O-RING	
	4	1	*398-5596*	1	PLUG AS	
		1	**238-5080**	1	SEAL-O-RING	
		1	**360-3680**	1	PLUG	
Y	5	1	**450-1111**	1	BASE GP-OIL FILTER	58
M	6	1	**382-3965**	2	STUD (M8X1.25X40.7-MM, M8X1.25X40-MM)	
M	7	1	**6V-5219**	11	BOLT (M8X1.25X40-MM)	
	8	1	**8T-4224**	12	WASHER-HARD (8.8X16X2-MM THK)	

M - METRIC PART
Y - SEPARATE ILLUSTRATION

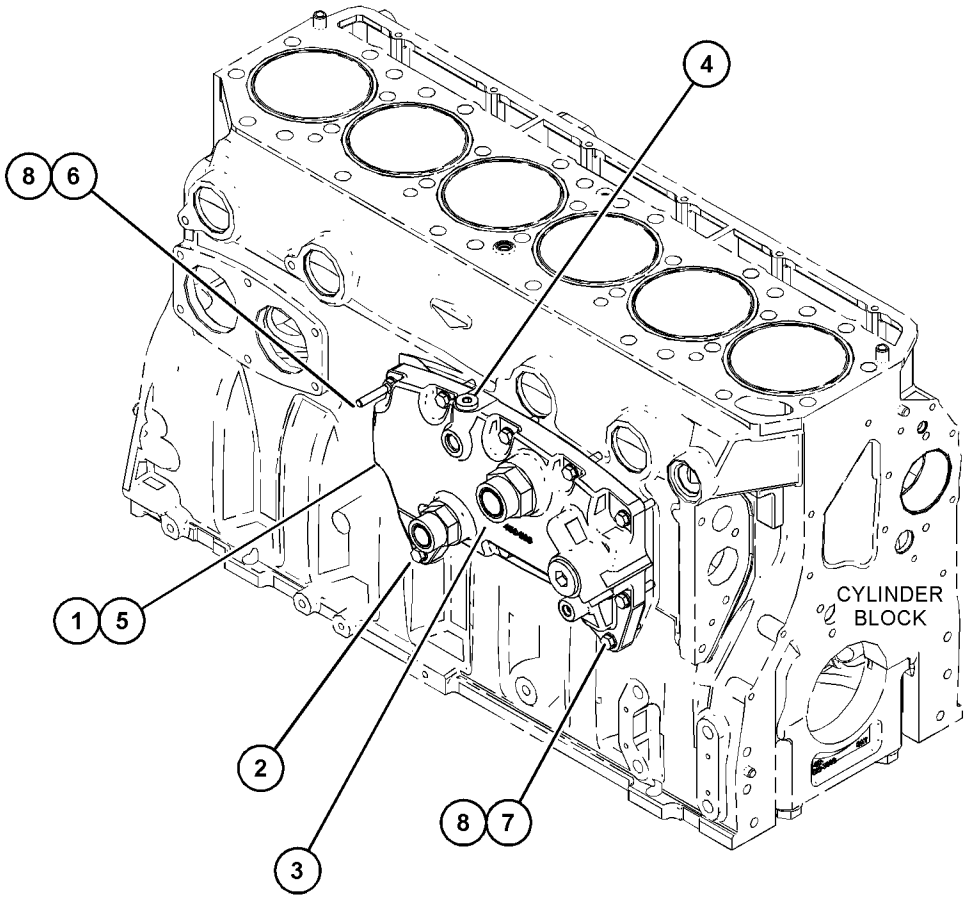

GRAPHIC #1 <END> g06305860

502-5366 FILTER & MTG GP-ENGINE OIL

S/N: SP91-UP

PART OF 502-4246 INSTALLATION AR-ENGINE

SMCS-1306, 1308 **i07516152**

NOTE	REF NO	GRAPHIC REF	PART NUMBER	QTY	PART NAME 1 2 3 4 5 6 (PRODUCT LEVEL)	SEE PAGE
M	1	1	**8T-4136**	6	BOLT (M10X1.5X25-MM)	
M	2	1	**8T-4182**	1	BOLT (M10X1.5X45-MM)	
	3	1	**228-7093**	1	SEAL-O-RING	
	4	1	**8T-4121**	7	WASHER-HARD (11X21X2.5-MM THK)	
	5	1	**8T-4224**	3	WASHER-HARD (8.8X16X2-MM THK)	
M	6	1	**8T-7547**	3	BOLT (M8X1.25X30-MM)	
	7	1	**228-7094**	1	SEAL-O-RING	
	8	1	*319-6220*	1	ELBOW AS	
		1	**6V-9008**	1	ELBOW	
		1	**228-7093**	1	SEAL-O-RING	
		1	**238-5084**	1	SEAL-O-RING	
	9	1	*321-8649*	1	VALVE AS-FLUID SAMPLING (ENGINE OIL)	
		1	**8C-3446**	1	VALVE-SAMPLING	
		1	**214-7566**	1	SEAL-O-RING	
	10	1	*330-9754*	1	CONNECTOR AS	
		1	**8T-3611**	1	CONNECTOR	
		1	**228-7094**	1	SEAL-O-RING	
		1	**228-7096**	1	SEAL-O-RING	
	11	1	*357-4574*	1	ADAPTER AS	
		1	**8D-8428**	1	ADAPTER	
		1	**238-5084**	1	SEAL-O-RING	
	12	1	**396-7759**	1	SUPPORT AS	
	13	1	**483-7800**	1	SPACER (11X20X20-MM THK)	
Y	15	1	*532-7138*	1	FILTER GP-ENGINE OIL (REMOTE)	63
	16	1	**512-7950**	1	PLATE AS	
I	17	1	**513-2230**	1	HOSE AS	
I	18	1	**513-2231**	1	HOSE AS	
	19	1	**228-2775**	3	CLIP (LOOP)	
	20	1	*326-0316*	1	PLUG AS	
		1	**9S-6130**	1	PLUG	
		1	**228-7096**	1	SEAL-O-RING	
	21	1	**8C-3445**	1	CAP-DUST	

I - REFER TO HYDRAULIC INFORMATION SYSTEM
M - METRIC PART
Y - SEPARATE ILLUSTRATION

502-5366 **FILTER & MTG GP-ENGINE OIL (**contd.**)** **i07516152**

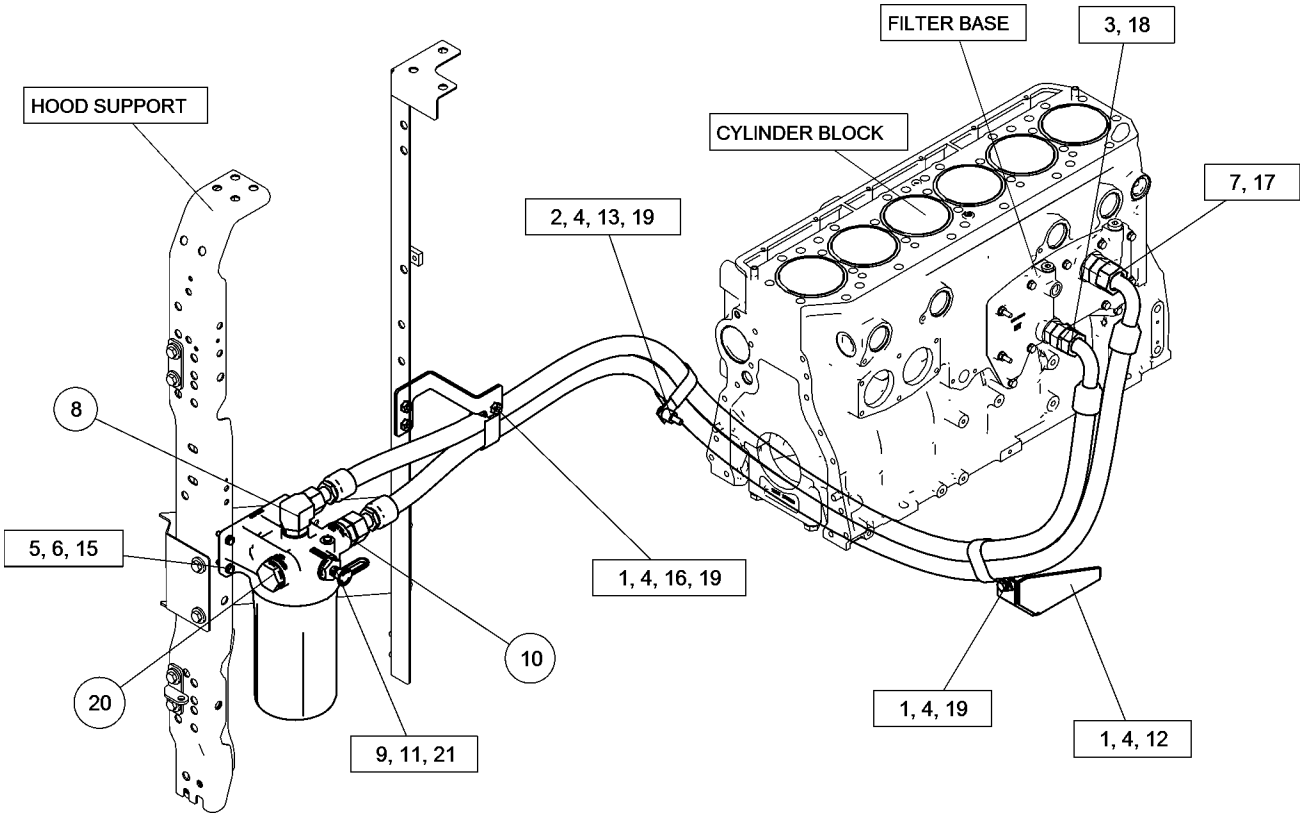

GRAPHIC #1 <END> g06286649

532-7138 FILTER GP-ENGINE OIL–REMOTE

S/N: SP91-UP

PART OF 502-5366 FILTER & MTG GP-ENGINE OIL

SMCS-1308 **i07482920**

NOTE	REF NO	GRAPHIC REF	PART NUMBER	QTY	PART NAME 1 2 3 4 5 6 (PRODUCT LEVEL)	SEE PAGE
	1	1	*319-6234*	2	PLUG AS	
					(EACH INCLUDES)	
		1	**9S-9334**	1	PLUG (1-5/16-12-THD)	
		1	**238-5084**	1	SEAL-O-RING	
	2	1	*329-5455*	2	PLUG AS	
					(EACH INCLUDES)	
		1	**9S-8010**	1	PLUG	
		1	**228-7096**	1	SEAL-O-RING	
Y	3	1	**485-6989**	1	BASE GP-OIL FILTER (REMOTE MOUNTED)	59
	4	1	*500-0482*	1	FILTER AS-ENGINE OIL	
		1	**354-5833**	1	KIT-DRAIN	
					(INCLUDES DRAIN, KNOB, & SEALS)	
		1	**500-0483**	1	FILTER-ENGINE OIL	
		1	**508-9490**	1	HOUSING-FILTER	

Y - SEPARATE ILLUSTRATION

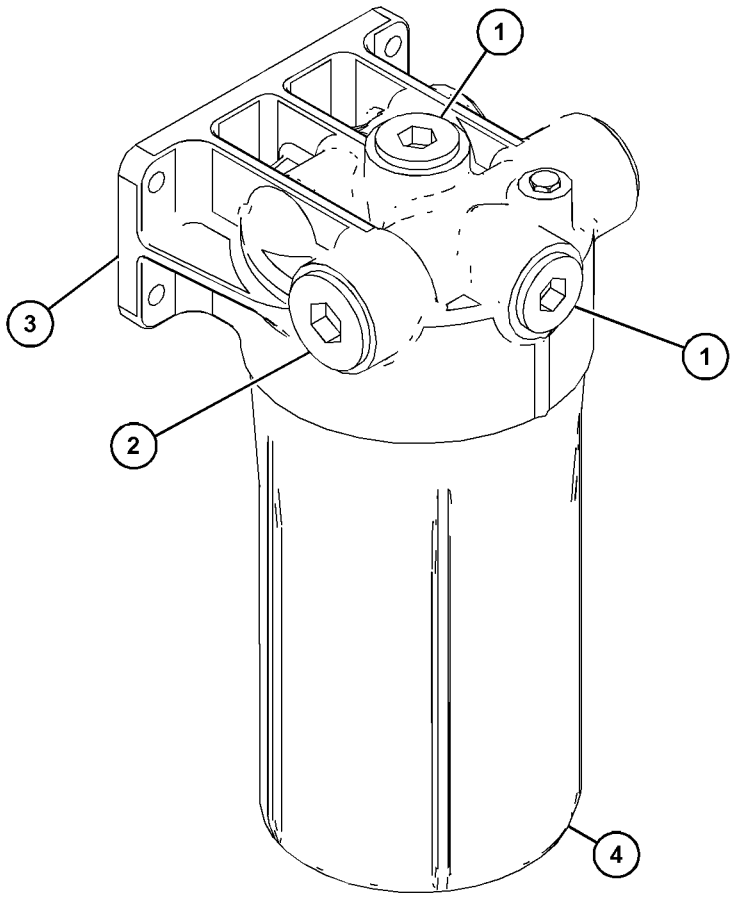

GRAPHIC #1 <END> g06286223

502-4785 FUMES DISPOSAL GP

S/N: SP91-UP

PART OF 502-4246 INSTALLATION AR-ENGINE

SMCS-1317 **i07516154**

NOTE	REF NO	GRAPHIC REF	PART NUMBER	QTY	PART NAME 1 2 3 4 5 6 (PRODUCT LEVEL)	SEE PAGE
M	1	1	**8T-4136**	2	BOLT (M10X1.5X25-MM)	
	2	1	**8T-4121**	3	WASHER-HARD (11X21X2.5-MM THK)	
	3	1	**507-1887**	1	HOSE	
	4	1	**095-9785**	1	CLAMP-HOSE	
	5	1	**4D-7388**	2	CLIP (LOOP)	
	6	1	**513-2102**	1	PLATE AS	
M	7	1	**8T-4137**	1	BOLT (M10X1.5X20-MM)	

M - METRIC PART

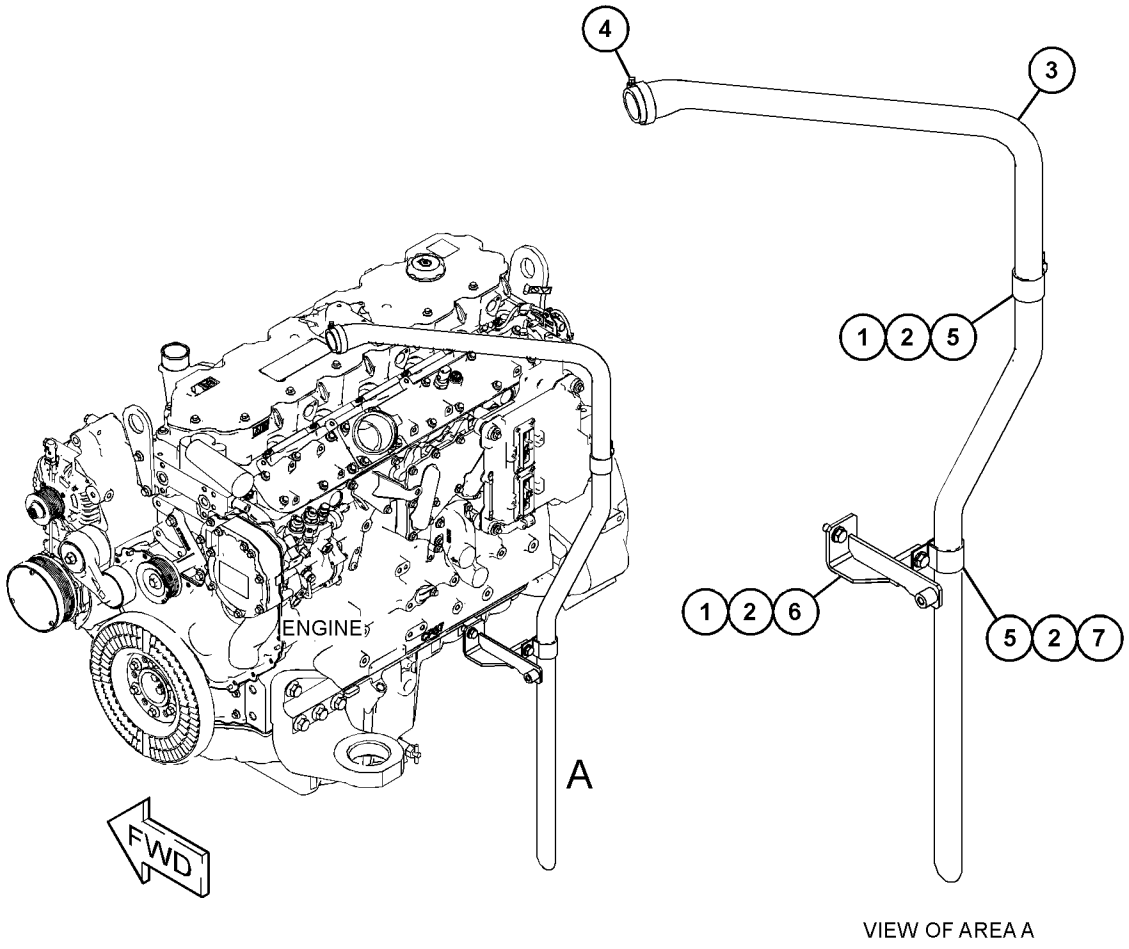

VIEW OF AREA A

GRAPHIC #1 <END> g06277533

524-4771 GAUGE GP-OIL LEVEL (DIPSTICK)

S/N: NTB1-UP

PART OF 522-6120 ENGINE AR-COMPLETE

SMCS-1326 **i07498955**

NOTE	REF NO	GRAPHIC REF	PART NUMBER	QTY	PART NAME 1 2 3 4 5 6 (PRODUCT LEVEL)	SEE PAGE
	1	1	**1S-2563**	1	PLUG	
	2	1	**206-1345**	1	STRAP-CABLE	
	3	1	*524-4819*	1	GAUGE GP-OIL LEVEL (DIPSTICK)	
		1	**391-9889**	1	TUBE AS-OIL GAUGE	
		1	**524-4821**	1	GAUGE AS-OIL LEVEL (DIPSTICK)	
	4	1	**527-8123**	1	BRACKET AS	
M		1	**8T-3490**	2	NUT-WELD (M10X1.5-THD)	
	5	1	**3E-4353**	3	WASHER-HARD (11X25X3-MM THK)	
M	6	1	**6V-4248**	3	BOLT (M10X1.5X25-MM)	
	7	1	**8T-1887**	1	CLIP (SLOT)	
	8	1	**8T-1888**	1	CLIP (TAB)	
	9	1	**3E-4352**	2	WASHER-HARD (8.8X20.5X2.5-MM THK)	
	10	1	**3S-2093**	1	STRAP-CABLE	
M	11	1	**5P-7970**	1	NUT (M8X1.25-THD)	
	12	1	**309-4314**	1	CLIP (LADDER)	

M - METRIC PART

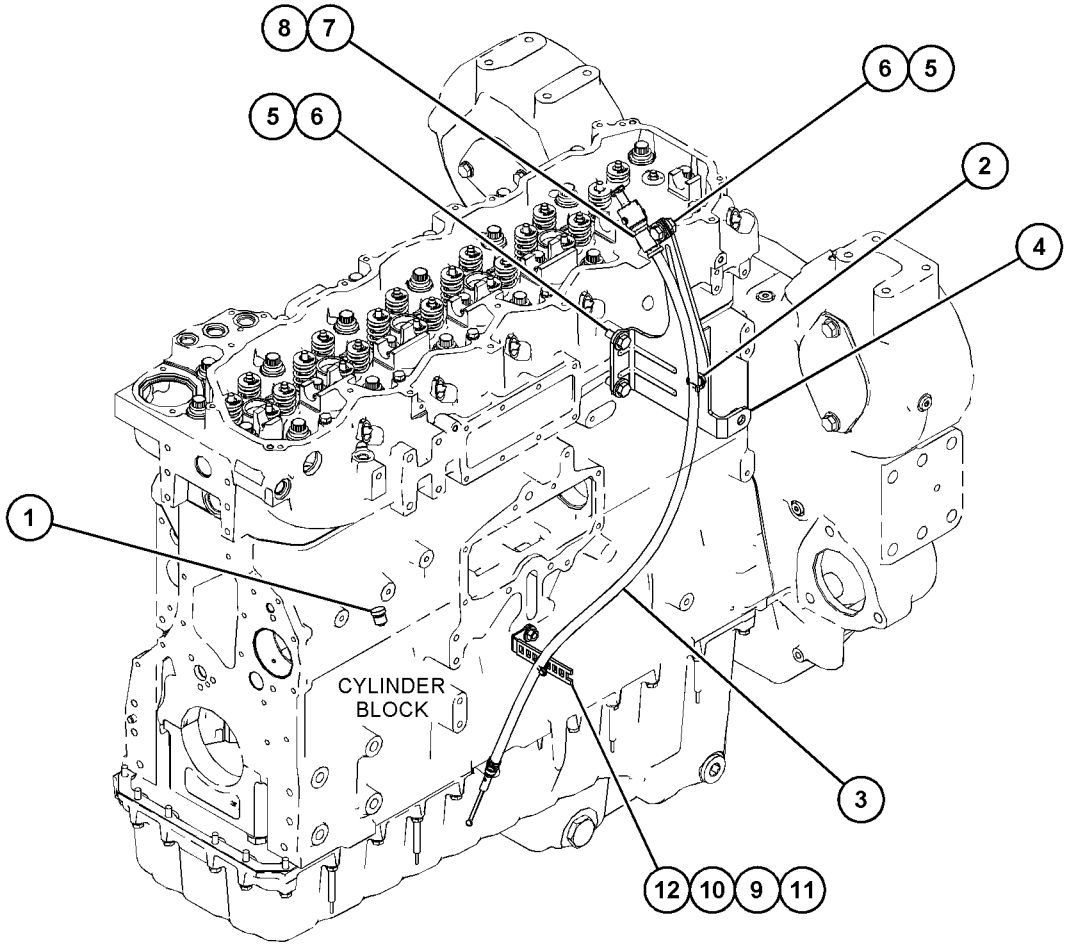

GRAPHIC #1 <END> g06352250

286-9679 LINES GP-ENGINE OIL

S/N: NTB1-UP
REAR SUMP
PART OF 522-6120 ENGINE AR-COMPLETE

SMCS-1307 **i05832913**

NOTE	REF NO	GRAPHIC REF	PART NUMBER	QTY	PART NAME 1 2 3 4 5 6 (PRODUCT LEVEL)	SEE PAGE
	1	1	**281-2210**	1	ELBOW-OUTLET	
	2	1	**195-0452**	1	GASKET	
	3	1	**420-3657**	1	TUBE AS	
	4	1	**033-6034**	1	SEAL-O-RING	
	5	1	**9M-1974**	6	WASHER-HARD (8.8X16X2-MM THK)	
	6	1	**5P-7530**	1	SEAL-O-RING	
M	7	1	**6V-5217**	2	BOLT (M8X1.25X20-MM)	
M	8	1	**8T-0292**	1	BOLT (M8X1.25X90-MM)	
M	9	1	**6V-3940**	3	BOLT (M8X1.25X25-MM)	

M - METRIC PART

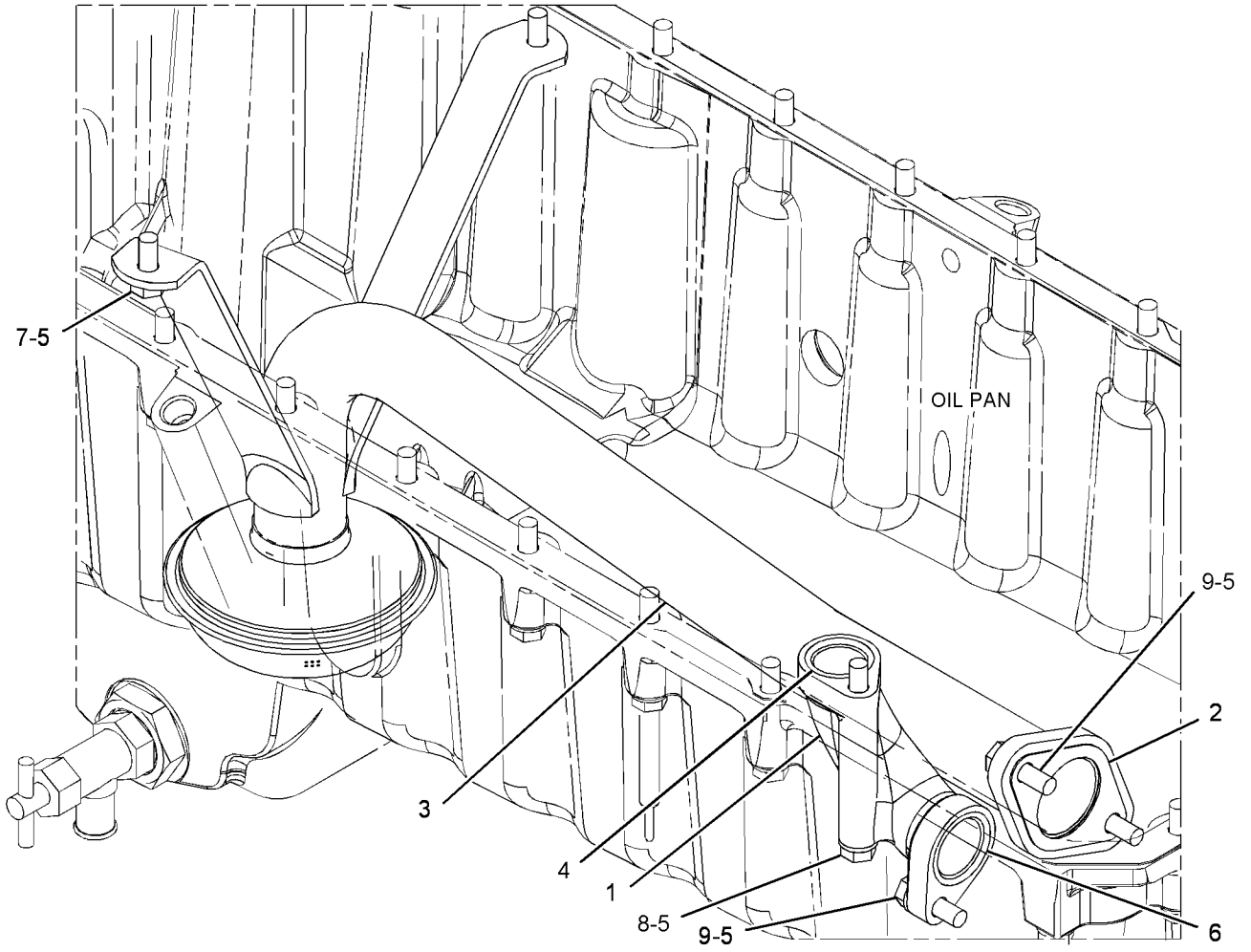

GRAPHIC #1 <END> g03323632

516-6701 LINES GP-ENGINE OIL

S/N: NTB1-UP
FOR USE WITH FUEL PUMP
PART OF 522-6120 ENGINE AR-COMPLETE

SMCS-1307 **i07498969**

NOTE	REF NO	GRAPHIC REF	PART NUMBER	QTY	PART NAME 1 2 3 4 5 6 (PRODUCT LEVEL)	SEE PAGE
	1	1	*349-8520*	1	ELBOW AS	
		1	**138-5049**	1	ELBOW	
		1	**238-5081**	1	SEAL-O-RING	
	2	1	**492-6780**	1	ELBOW AS	
	3	1	**535-8584**	1	TUBE AS	

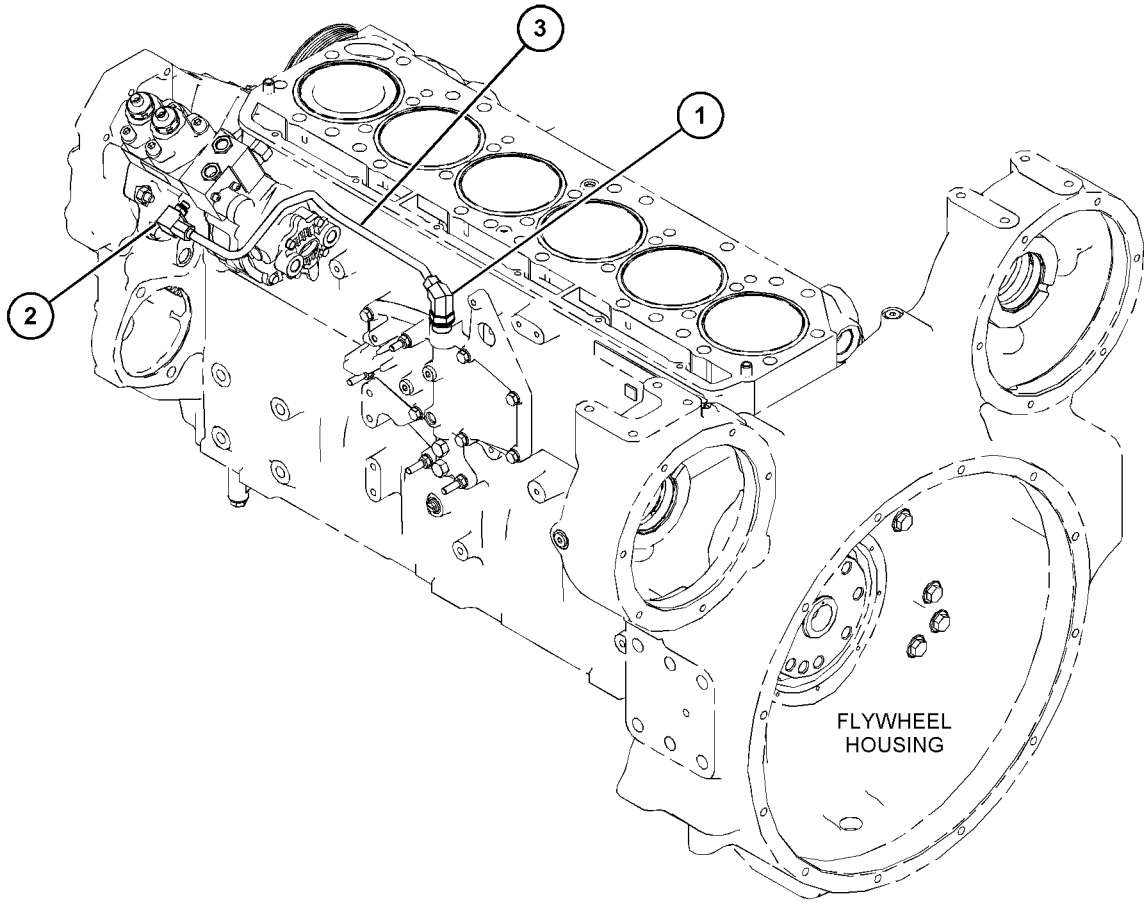

GRAPHIC #1 <END> g06266486

571-1754 LINES GP-ENGINE OIL DRAIN

S/N: SP91-UP

PART OF 546-6209 OIL CHANGE AR-HIGH SPEED

SMCS-1307 **i07756348**

NOTE	REF NO	GRAPHIC REF	PART NUMBER	QTY	PART NAME 1 2 3 4 5 6 (PRODUCT LEVEL)	SEE PAGE
M	1	1	**8T-4172**	1	BOLT (M10X1.5X80-MM)	
	2	1	**110-8827**	1	FITTING (QUICK DISCONNECT, MALE)	
	3	1	**228-7092**	1	SEAL-O-RING	
	4	1	**277-4567**	1	ADAPTER	
	5	1	**279-2252**	1	SEAL-O-RING	
	6	1	**2V-2043**	1	NUT-BULKHEAD (1-5/8-12-THD)	
	7	1	*319-6216*	1	CONNECTOR AS	
		1	**6V-8716**	1	CONNECTOR (STRAIGHT)	
		1	**228-7092**	1	SEAL-O-RING	
		1	**238-5084**	1	SEAL-O-RING	
	8	1	**356-9305**	1	SPACER (13.5X30X40-MM THK)	
	9	1	**572-5541**	1	PLATE	
I	10	1	**572-5542**	1	HOSE AS	
	11	1	**5P-7464**	1	CLIP (SLOT)	
	12	1	**5P-7465**	1	CLIP (TAB)	
	13	1	**8T-2920**	1	GROMMET (27-MM ID)	
	14	1	**8T-4121**	3	WASHER-HARD (11X21X2.5-MM THK)	
M	15	1	**8T-4136**	2	BOLT (M10X1.5X25-MM)	

I - REFER TO HYDRAULIC INFORMATION SYSTEM
M - METRIC PART

571-1754 **LINES GP-ENGINE OIL DRAIN (**contd.**)** **i07756348**

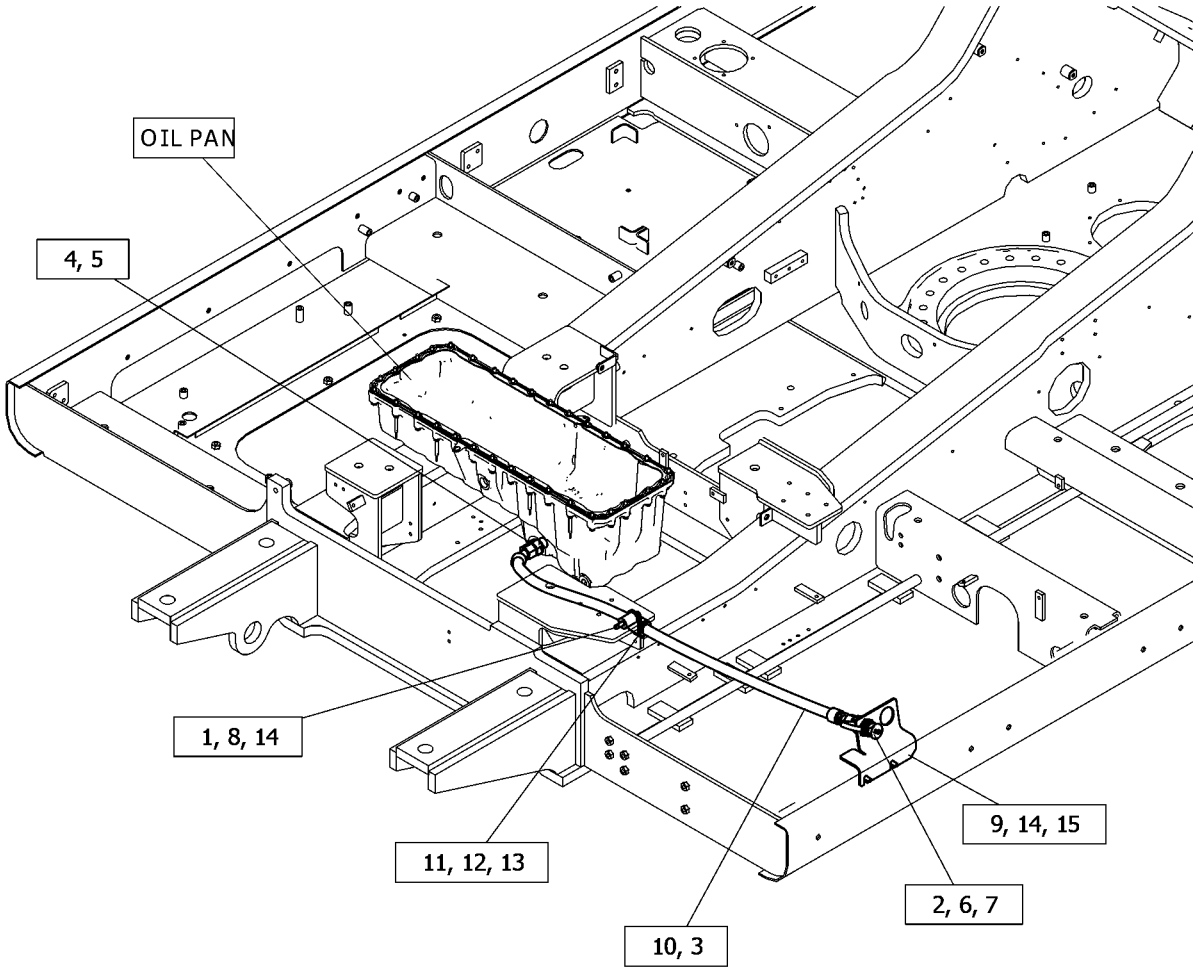

GRAPHIC #1 <END> g06397546

507-2528 LINES GP-TURBOCHARGER OIL

S/N: NTB1-UP

PART OF 522-6120 ENGINE AR-COMPLETE

SMCS-1052 **i07498979**

NOTE	REF NO	GRAPHIC REF	PART NUMBER	QTY	PART NAME 1 2 3 4 5 6 (PRODUCT LEVEL)	SEE PAGE
	1	1	**197-8418**	1	GASKET	
	2	1	**462-7085**	1	HOSE	
	3	1	**507-9917**	1	HOSE & TUBE AS	
	4	1	**507-9918**	1	TUBE AS	
	5	1	**511-8733**	1	TUBE AS	
	6	1	**197-8419**	1	GASKET (TURBOCHARGER)	
	7	1	**210-9246**	1	SEAL-O-RING	
	8	1	**284-3502**	2	CLAMP-BAND	
	9	1	*319-6213*	1	CONNECTOR AS	
		1	**6V-8634**	1	CONNECTOR	
		1	**228-7089**	1	SEAL-O-RING	
		1	**238-5080**	1	SEAL-O-RING	
M	10	1	**6V-2317**	2	BOLT (M8X1.25X30-MM)	
M	11	1	**6V-5192**	2	BOLT-SOCKET HEAD (M8X1.25X30-MM)	
M	12	1	**6V-5218**	2	BOLT (M8X1.25X35-MM)	
	13	1	**9M-1974**	6	WASHER-HARD (8.8X16X2-MM THK)	

M - METRIC PART

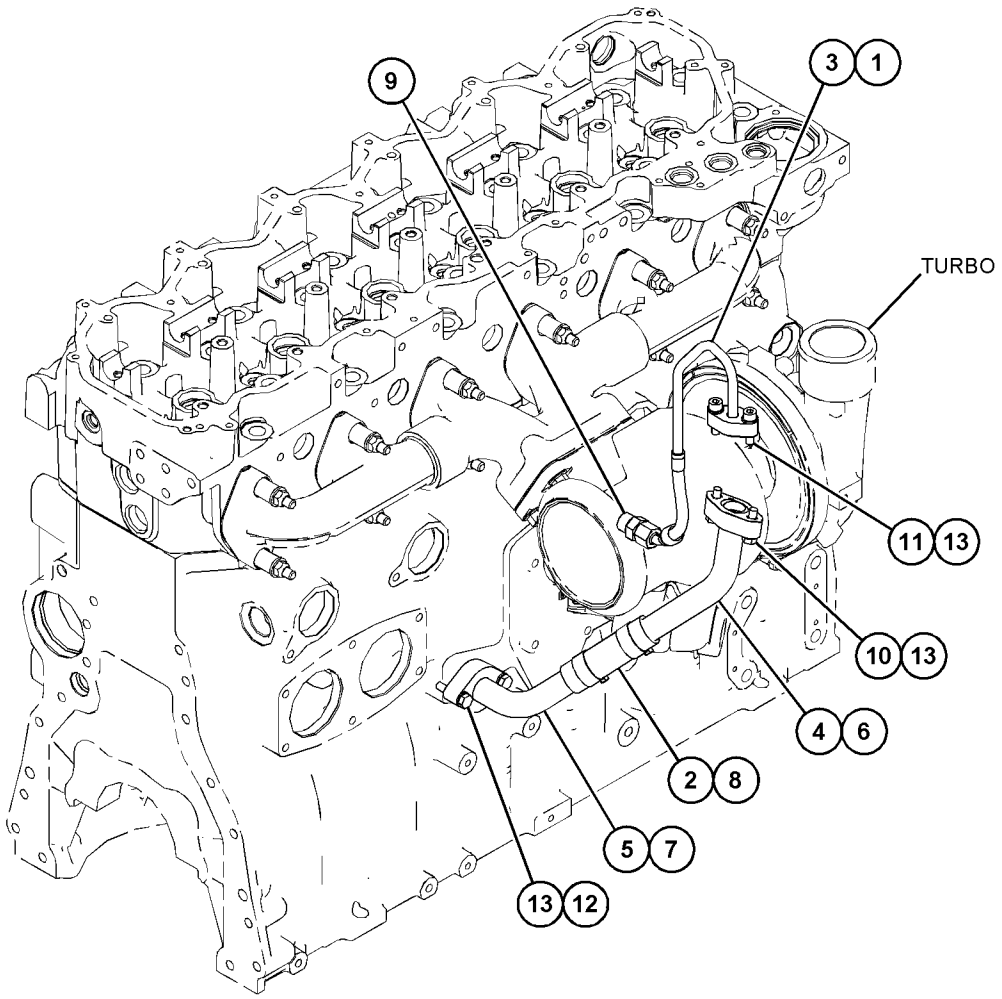

GRAPHIC #1 <END> g06286637

546-6209 OIL CHANGE AR-HIGH SPEED

S/N: SP91-UP

SMCS-1325 **i07756351**

NOTE	PART NUMBER	QTY	PART NAME 1 2 3 4 5 6 (PRODUCT LEVEL)	SEE PAGE
Y	*502-5363*	1	DRAIN GP-ENGINE OIL	26
			—OR—	
Y	*571-1754*	1	LINES GP-ENGINE OIL DRAIN	68
Y	*547-9051*	1	FILM GP (OIL FILL)	754
Y	*503-9829*	1	LINES GP-DRAIN (HYDRAULIC OIL)	482
			—OR—	
Y	*571-0753*	1	LINES GP-DRAIN (HYDRAULIC OIL)	484

Y - SEPARATE ILLUSTRATION

<END>

259-2976 PUMP GP-ENGINE OIL

S/N: NTB1-UP

PART OF 546-5240 ENGINE AR-CORE

SMCS-1304, 1315 **i03983191**

NOTE	REF NO	GRAPHIC REF	PART NUMBER	QTY	PART NAME 1 2 3 4 5 6 (PRODUCT LEVEL)	SEE PAGE
YR	1	1	**293-9798**	1	PUMP GP-ENGINE OIL	73
M	2	1	**6V-1819**	2	BOLT (M10X1.5X100-MM)	
	3	1	**6V-5839**	2	WASHER (11X21X2.5-MM THK)	

M - METRIC PART
R - REMANUFACTURED PART MAY BE AVAILABLE
Y - SEPARATE ILLUSTRATION

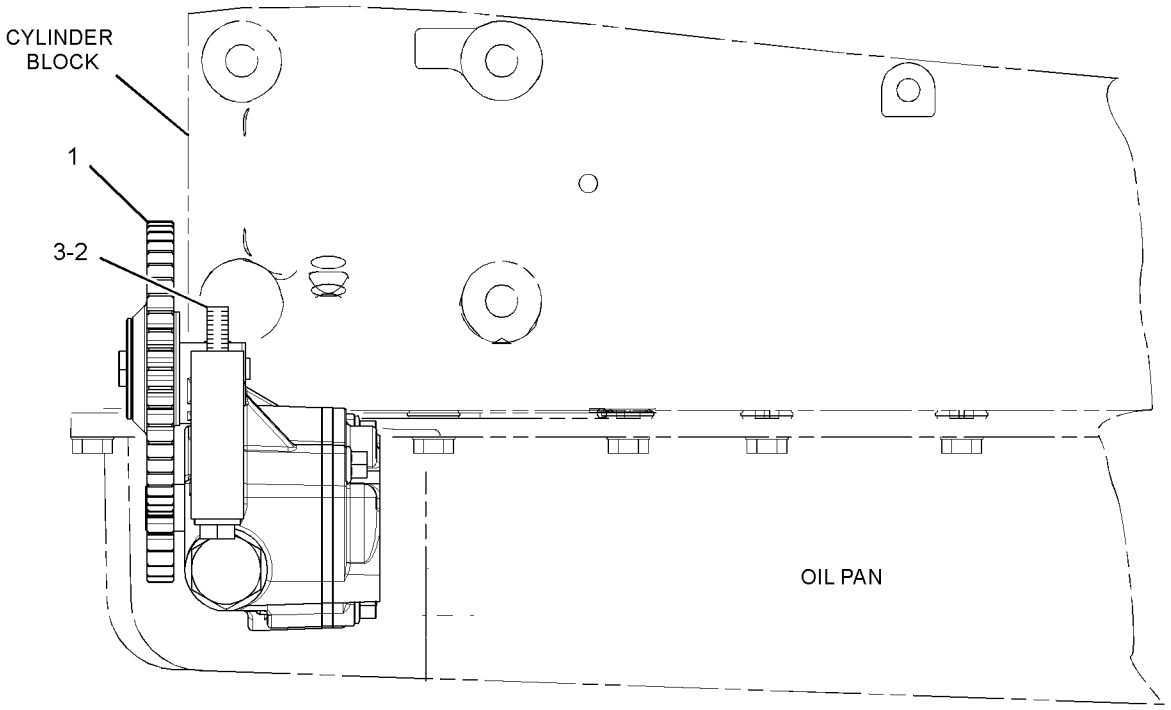

LEFT SIDE VIEW OF ENGINE

GRAPHIC #1 <END> g01377400

293-9798 PUMP GP-ENGINE OIL*R

S/N: NTB1-UP

PART OF 259-2976 PUMP GP-ENGINE OIL

SMCS-1304, 1315

i03978281

NOTE	REF NO	GRAPHIC REF	PART NUMBER	QTY	PART NAME 1 2 3 4 5 6 (PRODUCT LEVEL)	SEE PAGE
	1	1	**293-9797**	1	PUMP AS-ENGINE OIL	
	1A	1	**293-4170**	1	GEAR-OIL PUMP DRIVE (23-TEETH)	
	2	1	**294-0107**	1	GEAR AS-IDLER (48-TEETH)	
M	2A	1	**8T-1160**	1	BOLT-SOCKET HEAD (M10X1.5X50-MM)	

M - METRIC PART

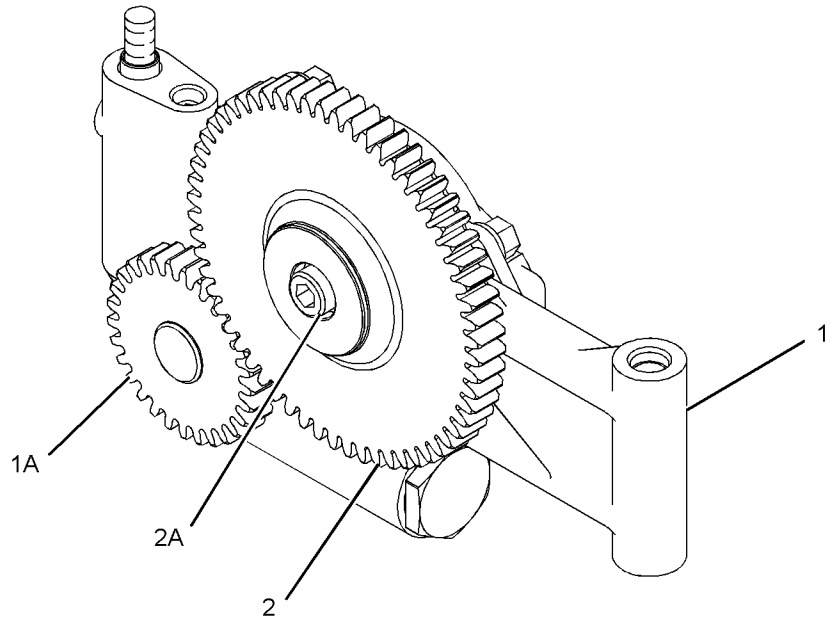

GRAPHIC #1 <END> g01378779

188-3826 COOLER GP-ENGINE OIL

S/N: NTB1-UP

PART OF 522-6120 ENGINE AR-COMPLETE

SMCS-1378 **i05832911**

NOTE	REF NO	GRAPHIC REF	PART NUMBER	QTY	PART NAME 1 2 3 4 5 6 (PRODUCT LEVEL)	SEE PAGE
	1	1	**209-7293**	1	GASKET	
R	2	1	**293-9367**	1	CORE AS-OIL COOLER (ENGINE)	

R - REMANUFACTURED PART MAY BE AVAILABLE

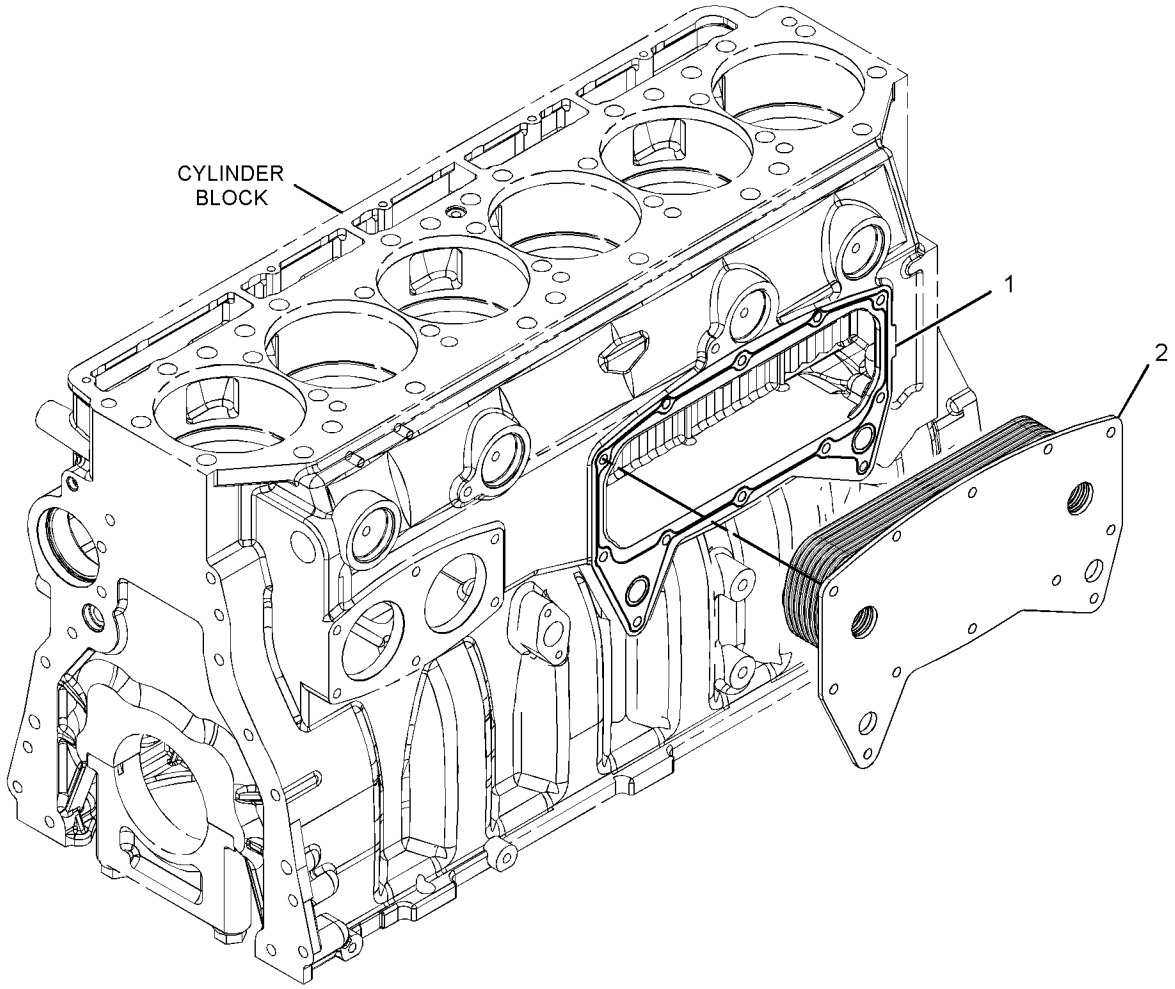

GRAPHIC #1 <END> g01419332

502-5376 COOLING GP

S/N: SP91-UP

PART OF 526-5211 COMMON AR

SMCS-1350 **i07774426**

NOTE	REF NO	GRAPHIC REF	PART NUMBER	QTY	PART NAME 1 2 3 4 5 6 (PRODUCT LEVEL)	SEE PAGE
M	1	1	**8T-4196**	7	BOLT (M10X1.5X35-MM)	
M	2	1	**8T-4648**	1	BOLT (M12X1.75X70-MM)	
	3	1	**3S-2093**	2	STRAP-CABLE	
	4	1	**4I-7573**	1	BRACE	
	5	1	**5P-1076**	4	WASHER-HARD (13.5X30X4-MM THK)	
	6	1	**7K-1181**	2	STRAP-CABLE	
	7	1	**7X-7729**	12	WASHER (11X25X3-MM THK)	
	8	1	**7Y-1697**	1	BRACE	
M	9	1	**8T-4136**	2	BOLT (M10X1.5X25-MM)	
M	10	1	**8T-4137**	3	BOLT (M10X1.5X20-MM)	
M	11	1	**8T-4183**	3	BOLT (M12X1.75X40-MM)	
	13	1	**356-9305**	1	SPACER (13.5X30X40-MM THK)	
	14	1	**242-6099**	2	CLIP (LOOP)	
M	15	1	**447-1718**	4	BOLT (M20X2.5X50-MM)	
	16	1	**453-2866**	4	WASHER-HARD (21.5X45X6-MM THK)	
	17	1	**502-4178**	1	TANK GP-COOLANT	
		1	**251-3227**	1	CAP AS-COOLANT TANK	
Y	18	1	**506-1199**	1	SHEET AS-SOUND SUPPRESSION	365
	19	1	**506-1201**	1	PIPE-WATER	
	20	1	**506-8332**	1	LINER	
	21	1	**506-8333**	1	LINER	
	22	1	**526-9053**	1	HOSE-WATER	
	23	1	**527-0496**	1	PLATE AS	
	24	1	**095-1390**	2	CLAMP-HOSE	
	25	1	**266-7379**	1	STRAP-CABLE	
Y	26	1	**511-7590**	1	MODULE GP-COOLING	94
	27	1	**552-8843**	1	LINER	
	28	1	**552-8844**	1	LINER	
E	29	1	**7Y-1976**		HOSE-WATER (156-CM)	
D	30	1	**5P-5649**		SEAL-BULK (1.1-M)	

D - ORDER BY THE METER
E - ORDER BY THE CENTIMETER
M - METRIC PART
Y - SEPARATE ILLUSTRATION

502-5376 **COOLING GP (**contd.**)** **i07774426**

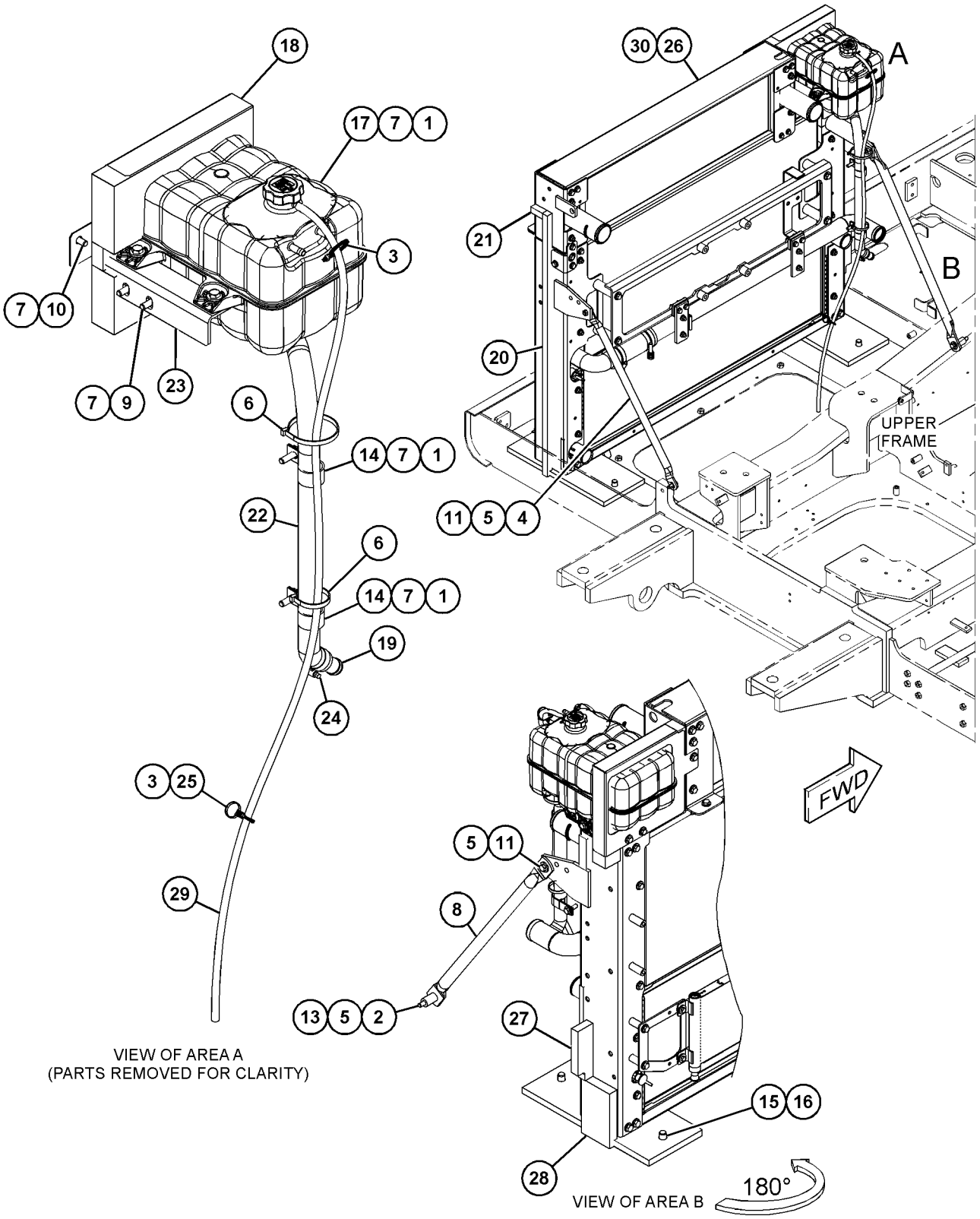

GRAPHIC #1 <END> g06341738

475-6622 CORE AS-RADIATOR

S/N: SP91-UP

PART OF 511-7588 RADIATOR & HYD OIL COOLER GP

SMCS-1353 **i07522014**

NOTE	REF NO	GRAPHIC REF	PART NUMBER	QTY	PART NAME 1 2 3 4 5 6 (PRODUCT LEVEL)	SEE PAGE
	1	1	**6V-7238**	1	VALVE-SHUTOFF (RADIATOR DRAIN)	
	2	1	**475-6660**	1	ADAPTER	
	3	1	**154-9023**	1	VALVE-SAMPLING (COOLANT)	
	4	1	**157-0670**	1	CAP-DUST	
	5	1	**6V-6609**	2	SEAL-O-RING	
	6	1	**6V-9027**	1	SEAL-O-RING	

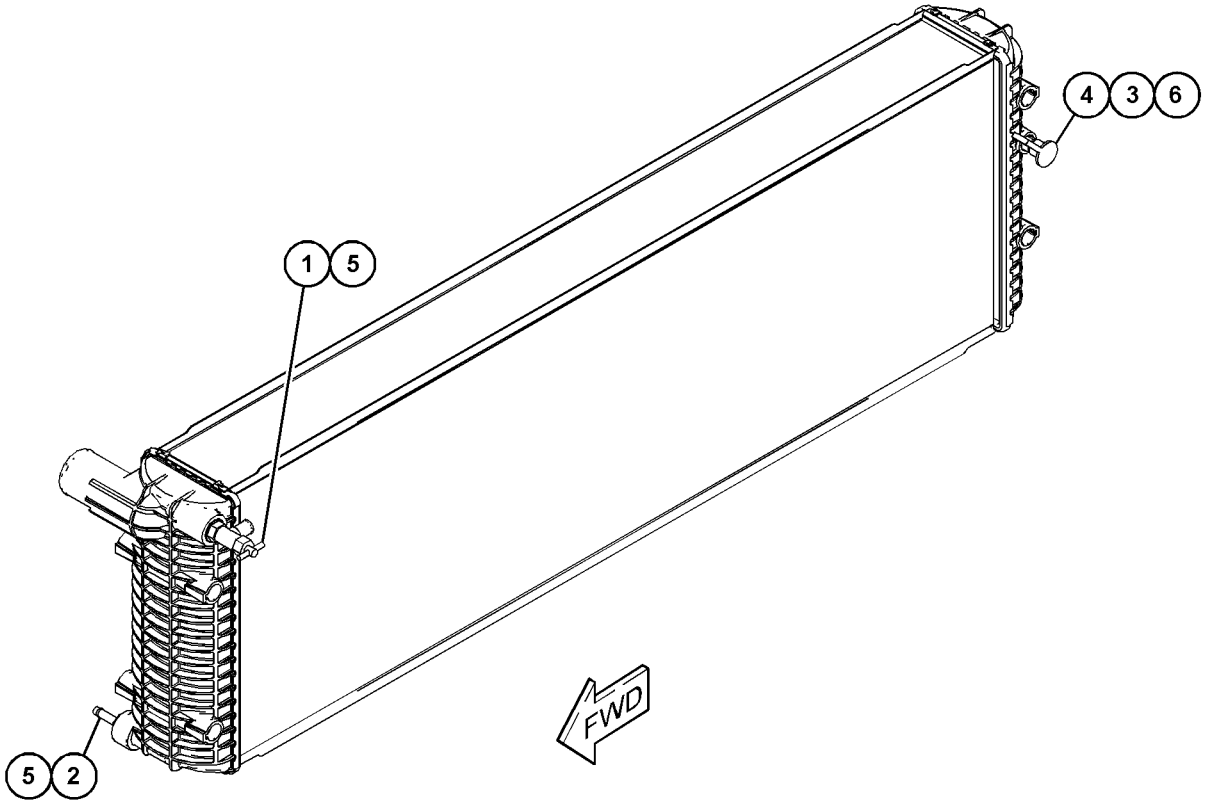

GRAPHIC #1 <END> g06284116

508-9636 COVER GP-PROTECTION

S/N: SP91-UP

PART OF 512-5993 FAN AR-SUCTION

TYPE 1

SMCS-7315 **i07527756**

NOTE	REF NO	GRAPHIC REF	PART NUMBER	QTY	PART NAME 1 2 3 4 5 6 (PRODUCT LEVEL)	SEE PAGE
	1	1	**7Y-2853**	2	SPACER (13X38X5-MM THK)	
	2	1	**7Y-2854**	2	SPACER (24X38X3-MM THK)	
	3	1	**135-8577**	5	BOLT AS	
Y	4	1	**548-0158**	1	SHEET AS-SOUND SUPPRESSION	372

Y - SEPARATE ILLUSTRATION

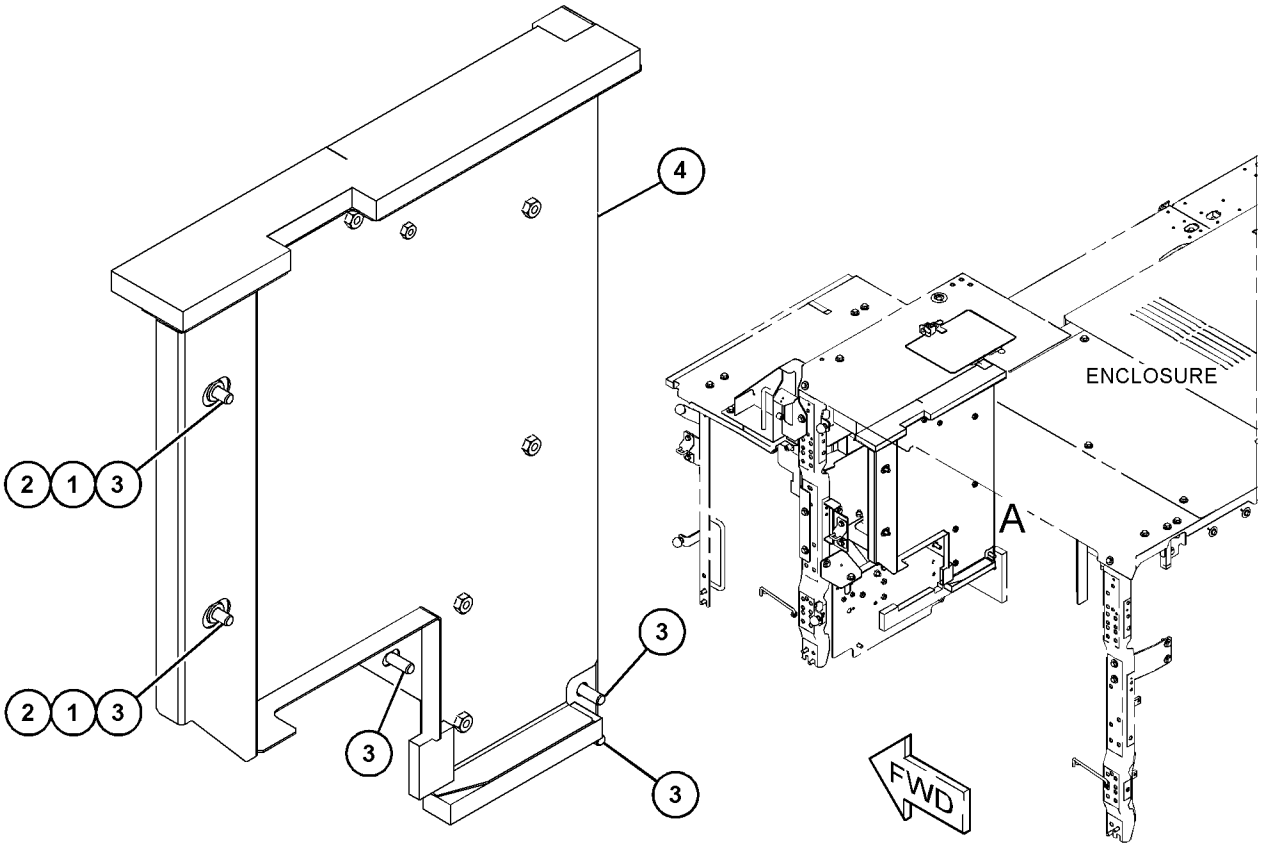

VIEW OF AREA A

GRAPHIC #1 <END> g06282339

508-9636 COVER GP-PROTECTION

S/N: SP91-UP
PART OF 512-5993 FAN AR-SUCTION
TYPE 2

SMCS-7315 **i07824365**

NOTE	REF NO	GRAPHIC REF	PART NUMBER	QTY	PART NAME 1 2 3 4 5 6 (PRODUCT LEVEL)	SEE PAGE
	1	1	**7Y-2853**	2	SPACER (13X38X5-MM THK)	
	2	1	**7Y-2854**	2	SPACER (24X38X3-MM THK)	
C	3	1	**135-8577**	6	BOLT AS	
CY	4	1	**577-8348**	1	SHEET AS-SOUND SUPPRESSION	379

C - CHANGE FROM PREVIOUS TYPE
Y - SEPARATE ILLUSTRATION

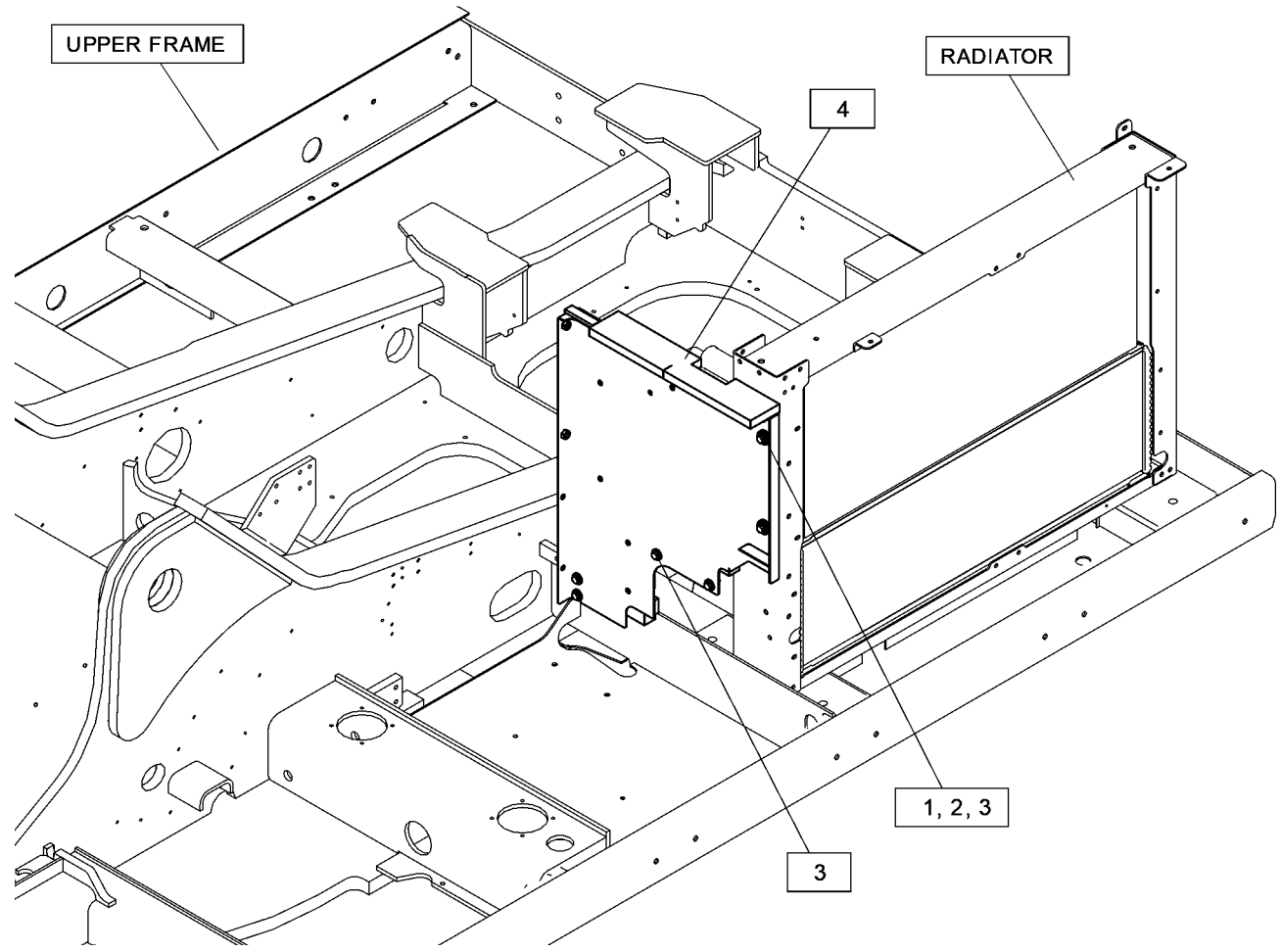

GRAPHIC #1 <END> g06450980

508-9637 COVER GP-PROTECTION

S/N: SP91-UP

PART OF 512-5995 FAN AR-SUCTION

SMCS-7315 **i07757573**

NOTE	REF NO	GRAPHIC REF	PART NUMBER	QTY	PART NAME 1 2 3 4 5 6 (PRODUCT LEVEL)	SEE PAGE
	1	1	**7Y-2853**	2	SPACER (13X38X5-MM THK)	
	2	1	**7Y-2854**	2	SPACER (24X38X3-MM THK)	
	3	1	**135-8577**	6	BOLT AS	
Y	4	1	**577-8346**	1	SHEET AS-SOUND SUPPRESSION	378

Y - SEPARATE ILLUSTRATION

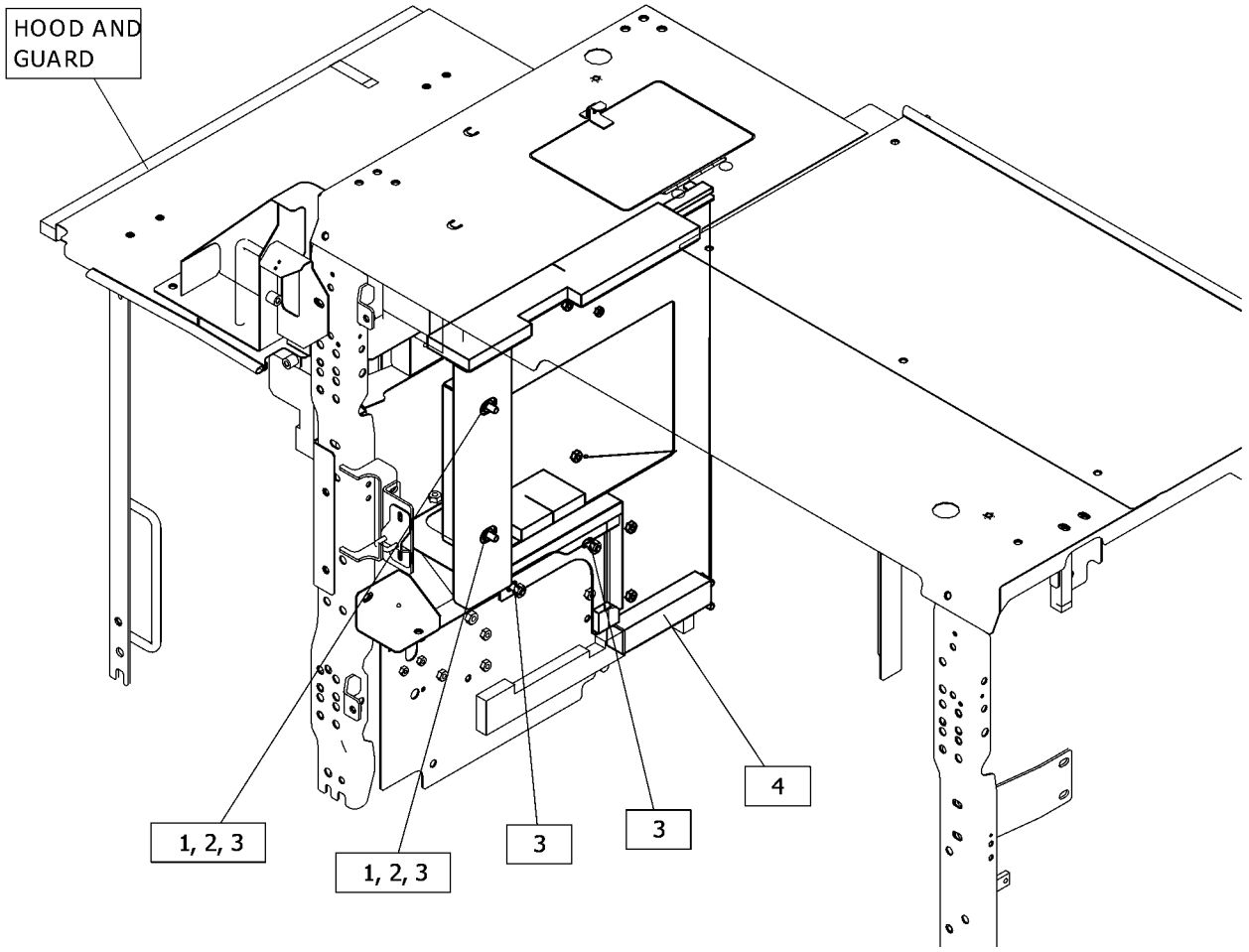

GRAPHIC #1 <END> g06453229

508-3032 ELBOW GP-WATER

S/N: NTB1-UP

PART OF 522-6120 ENGINE AR-COMPLETE

SMCS-1380 **i07498898**

NOTE	REF NO	GRAPHIC REF	PART NUMBER	QTY	PART NAME 1 2 3 4 5 6 (PRODUCT LEVEL)	SEE PAGE
	1	1	**200-2258**	1	GASKET	
	2	1	**348-8327**	1	ELBOW	
	3	1	*396-0405*	1	PLUG AS	
		1	**6V-6609**	1	SEAL-O-RING	
		1	**360-3680**	1	PLUG	
	4	1	*398-5614*	1	PLUG AS	
		1	**6V-5064**	1	SEAL-O-RING	
		1	**360-3684**	1	PLUG	
M	5	1	**6V-3940**	2	BOLT (M8X1.25X25-MM)	
	6	1	**9M-1974**	2	WASHER-HARD (8.8X16X2-MM THK)	

M - METRIC PART

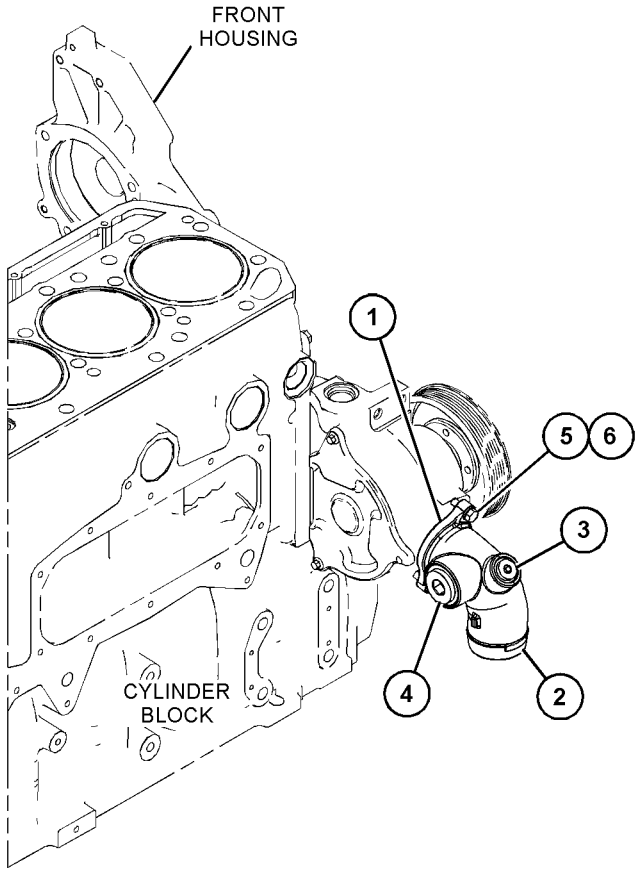

GRAPHIC #1 <END> g06167681

512-5993 FAN AR-SUCTION

S/N: SP91-UP

SMCS-1356 **i07880479**

NOTE	PART NUMBER	QTY	PART NAME 1 2 3 4 5 6 (PRODUCT LEVEL)	SEE PAGE
Y	*508-9636*	1	COVER GP-PROTECTION	78
Y	*511-7587*	1	FAN GP-SUCTION	83
Y	*503-9782*	1	LINES GP-HYDRAULIC OIL COOLER (FAN)	504
			—OR—	
CY	*571-1670*	1	LINES GP-HYDRAULIC OIL COOLER (FAN)	508

C - CHANGE FROM PREVIOUS TYPE
Y - SEPARATE ILLUSTRATION

<END>

512-5995 FAN AR-SUCTION

S/N: SP91-UP

SMCS-1356 **i07527333**

NOTE	PART NUMBER	QTY	PART NAME 1 2 3 4 5 6 (PRODUCT LEVEL)	SEE PAGE
Y	*508-9637*	1	COVER GP-PROTECTION	80
Y	*521-5230*	1	FAN GP-SUCTION	85
Y	*503-9784*	1	LINES GP-HYDRAULIC OIL COOLER (REVERSING FAN)	506
Y	*514-5702*	1	WIRING GP-CHASSIS (REVERSING FAN)	274

Y - SEPARATE ILLUSTRATION

<END>

511-7587 FAN GP-SUCTION

S/N: SP91-UP

PART OF 512-5993 FAN AR-SUCTION

SMCS-1356 **i07690729**

NOTE	REF NO	GRAPHIC REF	PART NUMBER	QTY	PART NAME 1 2 3 4 5 6 (PRODUCT LEVEL)	SEE PAGE
	1	1	**118-9901**	4	SPACER (12X20X10-MM THK)	
M	2	1	**455-3798**	6	BOLT (M10X1.5X25-MM)	
	3	1	**475-6644**	1	PLATE AS	
	4	1	**475-6647**	1	ADAPTER	
	5	1	**505-5180**	1	MOTOR GP-PISTON (FAN, SUCTION)	
	6	1	**511-7558**	1	SPIDER AS-FAN (6-BLADE)	
Y	7	1	**511-7581**	1	SHROUD GP-RADIATOR	102
	8	1	**527-3674**	1	LINER	
	9	1	**527-3675**	1	LINER	
	10	1	**527-3676**	1	PLATE	
	11	1	**527-3677**	1	PLATE	
	12	1	**5P-1076**	6	WASHER-HARD (13.5X30X4-MM THK)	
	13	1	**7X-0613**	10	WASHER-HARD (8.8X25.5X5-MM THK)	
	14	1	**7X-7729**	4	WASHER (11X25X3-MM THK)	
	15	1	**8D-5054**	1	WASHER-HARD (17X30X3-MM THK)	
M	16	1	**8T-3980**	1	NUT (M16X1.5-THD)	
	17	1	**8T-4121**	6	WASHER-HARD (11X21X2.5-MM THK)	
M	18	1	**8T-4184**	2	BOLT (M12X1.75X45-MM)	
M	19	1	**8T-4196**	4	BOLT (M10X1.5X35-MM)	
M	20	1	**8T-4648**	4	BOLT (M12X1.75X70-MM)	
M	21	1	**8T-4908**	10	BOLT (M8X1.25X25-MM)	

M - METRIC PART
Y - SEPARATE ILLUSTRATION

511-7587 **FAN GP-SUCTION (**contd.**)** **i07690729**

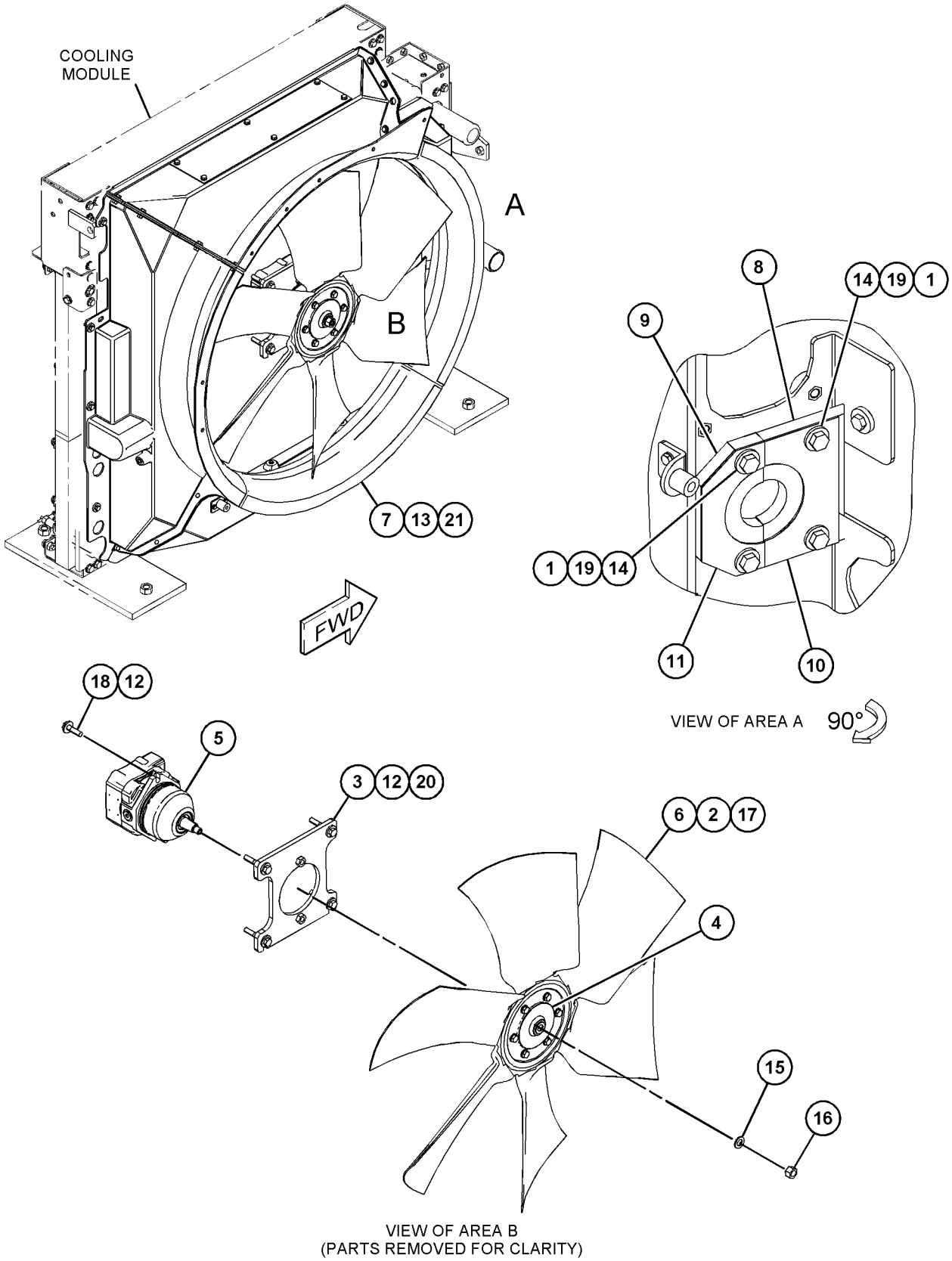

GRAPHIC #1 <END> g06286656

521-5230 FAN GP-SUCTION

S/N: SP91-UP

PART OF 512-5995 FAN AR-SUCTION

SMCS-1356 **i07527707**

NOTE	REF NO	GRAPHIC REF	PART NUMBER	QTY	PART NAME 1 2 3 4 5 6 (PRODUCT LEVEL)	SEE PAGE
	1	1	**118-9901**	4	SPACER (12X20X10-MM THK)	
M	2	1	**455-3798**	6	BOLT (M10X1.5X25-MM)	
	3	1	**475-6644**	1	PLATE AS	
	4	1	**475-6647**	1	ADAPTER	
	5	1	**511-7558**	1	SPIDER AS-FAN (6-BLADE)	
Y	6	1	**511-7581**	1	SHROUD GP-RADIATOR	102
	7	1	**512-0949**	1	MOTOR GP-PISTON	
	8	1	**527-3674**	1	LINER	
	9	1	**527-3675**	1	LINER	
	10	1	**527-3676**	1	PLATE	
	11	1	**527-3677**	1	PLATE	
	12	1	**5P-1076**	6	WASHER-HARD (13.5X30X4-MM THK)	
	13	1	**7X-0613**	10	WASHER-HARD (8.8X25.5X5-MM THK)	
	14	1	**7X-7729**	4	WASHER (11X25X3-MM THK)	
	15	1	**8D-5054**	1	WASHER-HARD (17X30X3-MM THK)	
M	16	1	**8T-3980**	1	NUT (M16X1.5-THD)	
	17	1	**8T-4121**	6	WASHER-HARD (11X21X2.5-MM THK)	
M	18	1	**8T-4184**	2	BOLT (M12X1.75X45-MM)	
M	19	1	**8T-4196**	4	BOLT (M10X1.5X35-MM)	
M	20	1	**8T-4648**	4	BOLT (M12X1.75X70-MM)	
M	21	1	**8T-4908**	10	BOLT (M8X1.25X25-MM)	

M - METRIC PART
Y - SEPARATE ILLUSTRATION

521-5230 **FAN GP-SUCTION (**contd.**)** **i07527707**

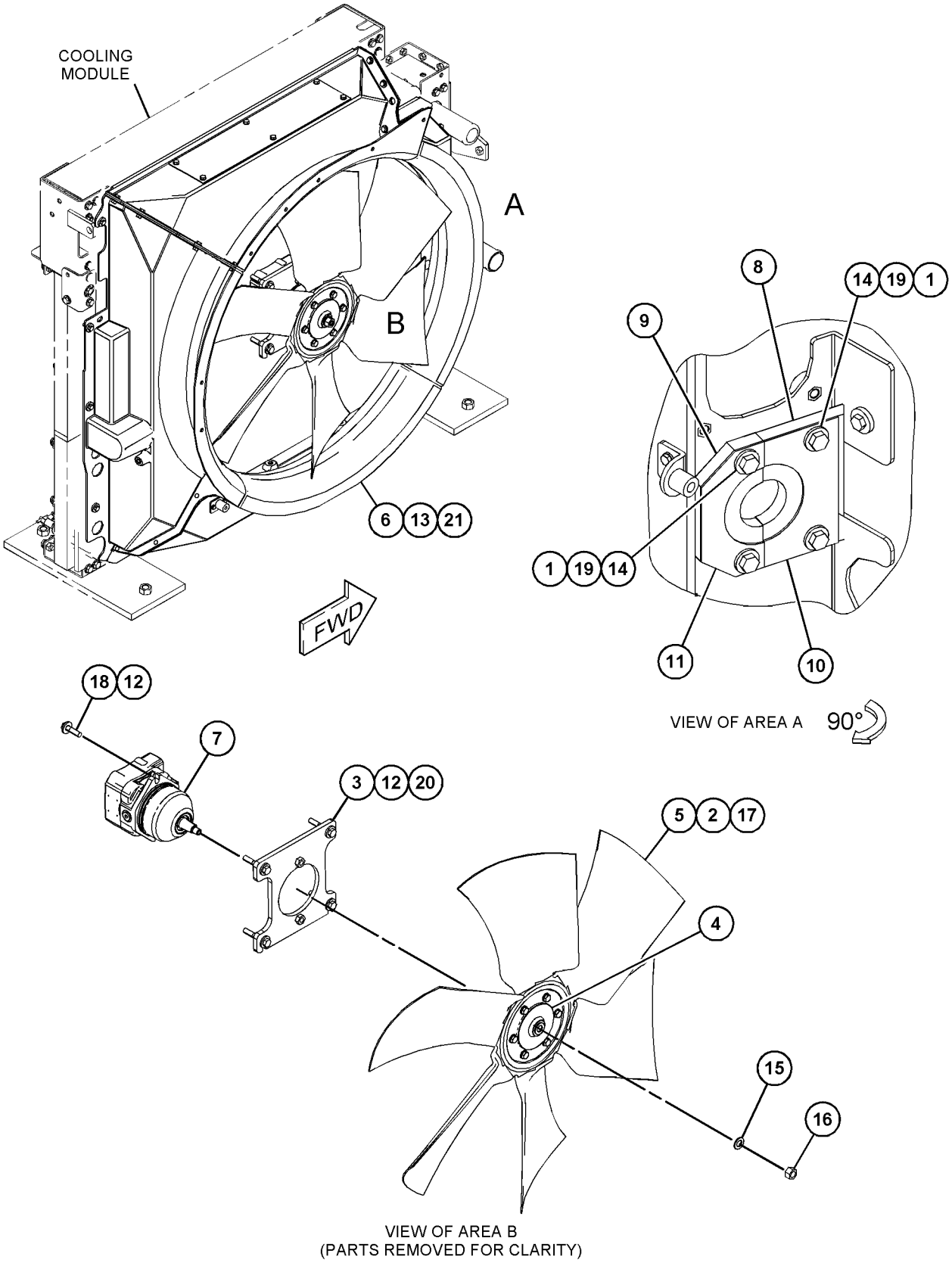

GRAPHIC #1 <END> g06290148

348-1099 FASTENER GP-WATER PUMP

S/N: NTB1-UP

CANNOT BE USED WITH C9 TIER 4 ENGINES WITH A SPACER BETWEEN THE WATER PUMP AND BLOCK

PART OF 522-6120 ENGINE AR-COMPLETE

SMCS-1361 **i05536867**

NOTE	REF NO	GRAPHIC REF	PART NUMBER	QTY	PART NAME 1 2 3 4 5 6 (PRODUCT LEVEL)	SEE PAGE
	1	1	**6V-5839**	4	WASHER (11X21X2.5-MM THK)	
M	2	1	**6V-7981**	4	BOLT (M10X1.5X70-MM)	

M - METRIC PART

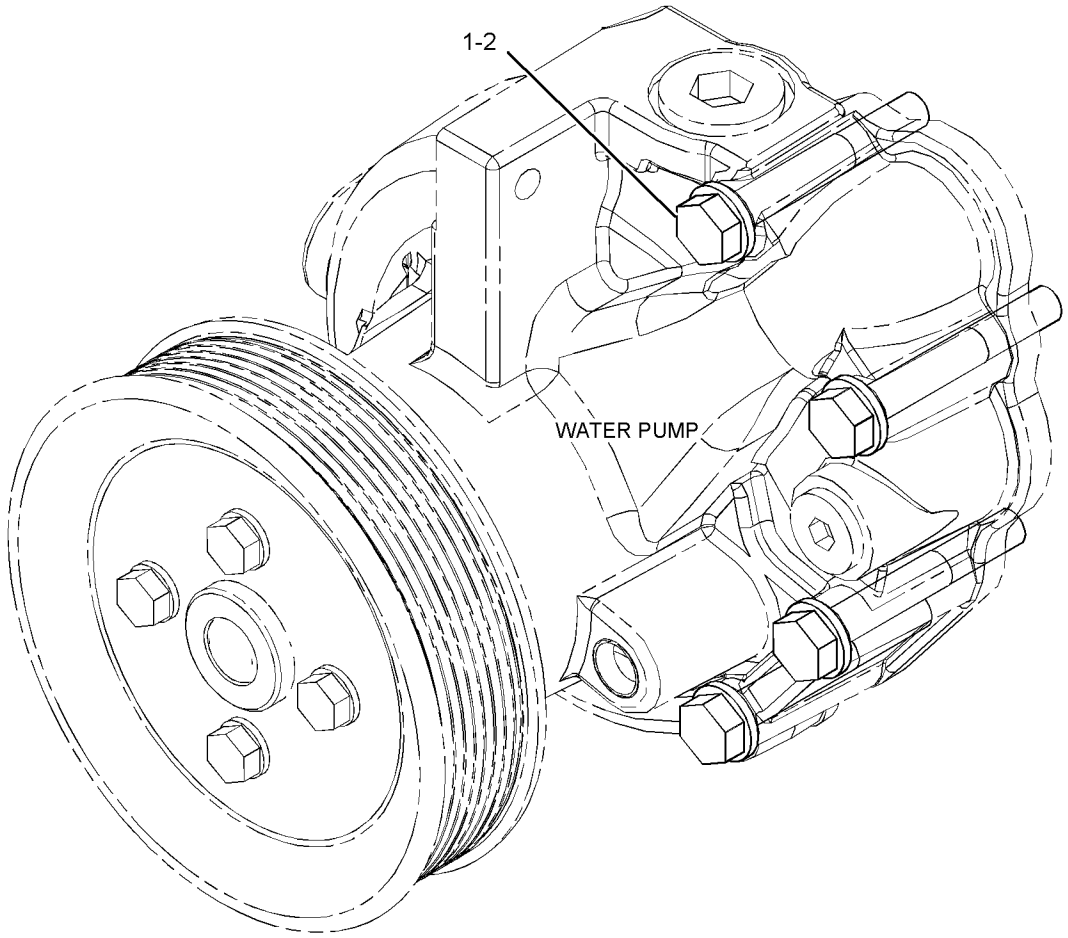

GRAPHIC #1 <END> g02092494

565-5547 KIT-OIL COOLER & LINES GASKET

SMCS-1378, 7555

i07495600

NOTE	PART NUMBER	QTY	PART NAME 1 2 3 4 5 6 (PRODUCT LEVEL)	SEE PAGE
	209-7293	1	GASKET	
	460-0644	1	GASKET	
	214-7568	1	SEAL-O-RING	
	228-7089	1	SEAL-O-RING	
	228-7093	1	SEAL-O-RING	
	228-7094	1	SEAL-O-RING	
	228-7096	1	SEAL-O-RING	
	228-7100	1	SEAL-O-RING	
	238-5080	2	SEAL-O-RING	
	238-5081	3	SEAL-O-RING	
	238-5084	3	SEAL-O-RING	
			FOR A LIST OF RELATED PARTS THAT MAY BE REQUIRED FOR THE ENGINE REBUILD TO THE KIT CONSIST, PLEASE VISIT	
			HTTP://DEALER.CAT.COM/RELATED	
			<END>	

458-9491 KIT-WATER PUMP GASKET

S/N: SP91-UP

KIT CONTAINS GASKETS AND SEALS TO REINSTALL WATER PUMP AND ATTACHING LINES

SMCS-1361, 1380, 7555

i06146354

NOTE	REF NO	GRAPHIC REF	PART NUMBER	QTY	PART NAME 1 2 3 4 5 6 (PRODUCT LEVEL)	SEE PAGE
	1	1	**200-2258**	1	GASKET	
	2	1	**269-5304**	1	SEAL	
	3	1	**269-5305**	1	SEAL-LIP	
	4	1	**147-0182**	1	SEAL-O-RING	
					FOR A LIST OF RELATED PARTS THAT MAY BE REQUIRED FOR THE ENGINE REBUILD TO THE KIT CONSIST, PLEASE VISIT	
					HTTP://DEALER.CAT.COM/RELATED	

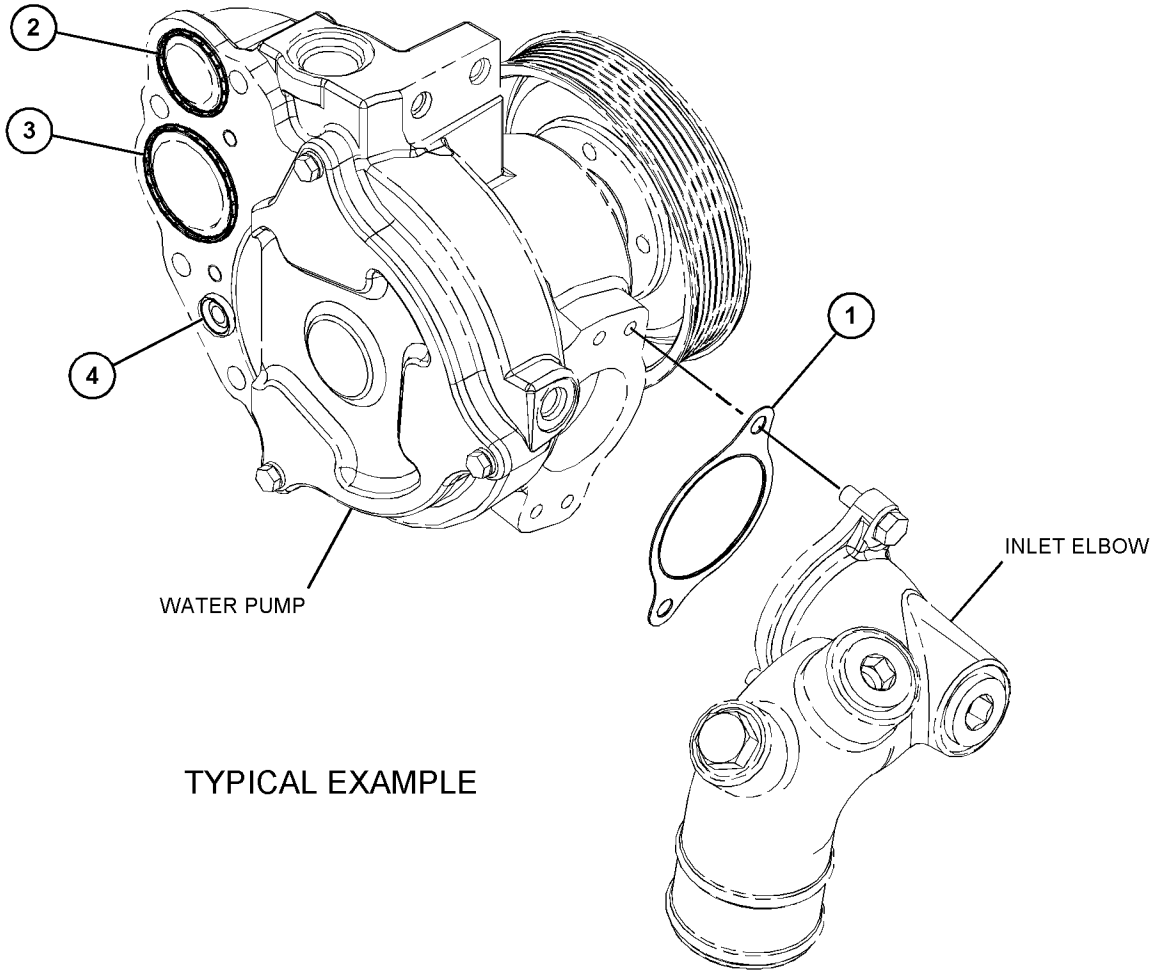

TYPICAL EXAMPLE

GRAPHIC #1 <END> g03842040

502-4174 LINES GP-COOLING—ENGINE

S/N: SP91-UP

PART OF 502-4246 INSTALLATION AR-ENGINE

SMCS-1380, 5057 **i07681029**

NOTE	REF NO	GRAPHIC REF	PART NUMBER	QTY	PART NAME 1 2 3 4 5 6 (PRODUCT LEVEL)	SEE PAGE
M	1	1	**8T-4182**	2	BOLT (M10X1.5X45-MM)	
M	2	1	**8T-4196**	1	BOLT (M10X1.5X35-MM)	
	4	1	**7K-1181**	6	STRAP-CABLE	
	5	1	**8T-4121**	3	WASHER-HARD (11X21X2.5-MM THK)	
	6	1	**144-0367**	2	CLAMP-HOSE	
	7	1	**327-0325**	1	STRAP-CABLE	
	8	1	**335-6983**	6	CLAMP-BAND	
	9	1	*357-4588*	1	ELBOW AS	
		1	**5P-4924**	1	ELBOW	
		1	**6V-3250**	1	SEAL-O-RING	
	10	1	*360-3666*	1	CONNECTOR AS	
		1	**5P-1046**	1	CONNECTOR	
		1	**6V-3250**	1	SEAL-O-RING	
	11	1	*392-0791*	1	TEE AS	
		1	**3E-7410**	1	TEE	
		1	**6V-3250**	1	SEAL-O-RING	
	12	1	**397-9301**	2	WASHER-HARD (11.5X20X15-MM THK)	
	13	1	*512-7127*	1	ADAPTER AS	
		1	**6V-3251**	1	SEAL-O-RING	
		1	**512-7126**	1	ADAPTER	
	14	1	**524-4983**	1	HOSE-RADIATOR (UPPER)	
	15	1	**526-6036**	1	HOSE-AFTERCOOLER (LOW TEMPERATURE)	
	16	1	**526-9052**	1	HOSE-RADIATOR (LOWER)	
	17	1	**539-2132**	1	HOSE (HIGH TEMPERATURE)	
	18	1	**095-1390**	1	CLAMP-HOSE	
	19	1	**120-5867**	1	CLIP	
	20	1	**184-5394**	2	CLIP (LOOP)	
	21	1	**8T-4984**	4	CLAMP-HOSE	
	22	1	**8T-4985**	2	CLAMP-HOSE	
G	23	1	**6V-8523**		HOSE (49.7-IN)	
G	23A	1	**6V-8523**		HOSE (46.3-IN)	
G	23B	1	**6V-8523**		HOSE (38-IN)	

G - ORDER BY THE INCH
M - METRIC PART

502-4174 **LINES GP-COOLING (**contd.**)** **i07681029**

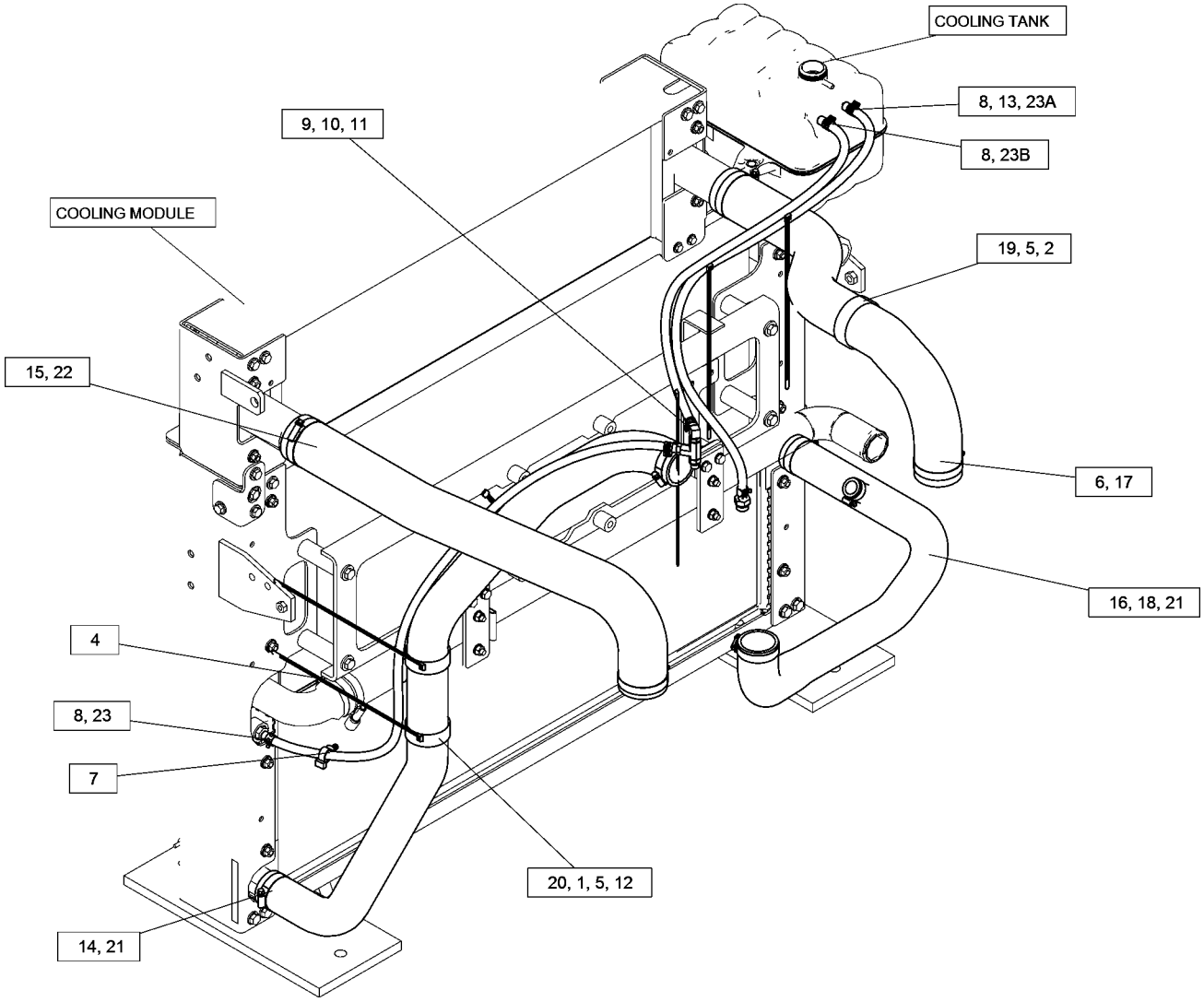

GRAPHIC #1 <END> g06305669

503-9779 LINES GP-OIL COOLER

S/N: SP91-UP

PART OF 550-7573 OPTION AR-HYDRAULIC

SMCS-1378 **i07774433**

NOTE	REF NO	GRAPHIC REF	PART NUMBER	QTY	PART NAME 1 2 3 4 5 6 (PRODUCT LEVEL)	SEE PAGE
	1	1	*148-8408*	1	PLUG AS	
		1	**3D-2824**	1	SEAL-O-RING	
		1	**9S-4183**	1	PLUG (1-1/16-12-THD)	
M	2	1	**7Y-5247**	1	U-BOLT (M10X1.5-THD)	
	3	1	**236-6339**	1	HOSE	
	4	1	**528-1627**	1	PIPE AS	
	5	1	**574-3108**	1	PIPE AS	
	6	1	**144-0367**	6	CLAMP-HOSE	
	7	1	**4J-0527**	2	SEAL-O-RING	
	8	1	**7X-0584**	4	WASHER-HARD (13.5X20.5X2-MM THK)	
	9	1	**8T-4121**	2	WASHER-HARD (11X21X2.5-MM THK)	
	10	1	**8T-4223**	2	WASHER-HARD (13.5X25.5X3-MM THK)	
M	11	1	**8T-4956**	2	BOLT (M12X1.75X35-MM)	
M	12	1	**096-4883**	2	LOCKNUT (M10X1.5-THD)	
	13	1	*148-8407*	1	PLUG AS	
		1	**3J-1907**	1	SEAL-O-RING	
		1	**9S-4191**	1	PLUG (9/16-18-THD)	
M	14	1	**170-8553**	8	BOLT-SOCKET HEAD (M12X1.75X40-MM)	
	15	1	**227-0428**	1	HOSE	
	16	1	**480-3465**	4	WASHER-HARD (13.5X20.5X3-MM THK)	
	17	1	**555-5189**	1	SUPPORT AS	

M - METRIC PART

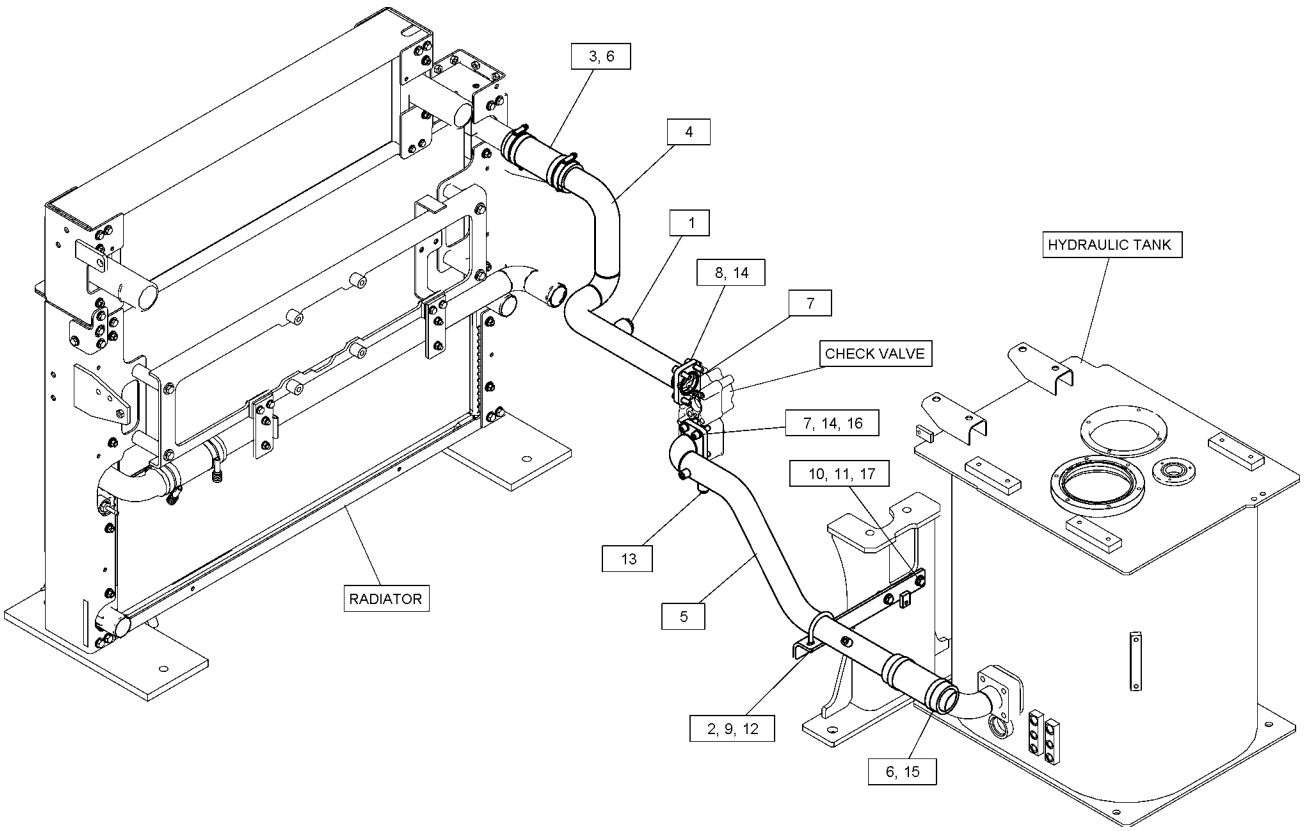

GRAPHIC #1 <END> g06283979

550-3493 LINES GP-OIL COOLER—WORK TOOL, RETURN

S/N: SP91-UP

PART OF 559-3854 CONTROL AR-AUXILIARY

SMCS-1378 **i07519032**

NOTE	REF NO	GRAPHIC REF	PART NUMBER	QTY	PART NAME 1 2 3 4 5 6 (PRODUCT LEVEL)	SEE PAGE
	1	1	**4J-0527**	1	SEAL-O-RING	
	2	1	**7X-0584**	4	WASHER-HARD (13.5X20.5X2-MM THK)	
	3	1	*148-8408*	1	PLUG AS	
		1	**3D-2824**	1	SEAL-O-RING	
		1	**9S-4183**	1	PLUG (1-1/16-12-THD)	
M	4	1	**170-8553**	4	BOLT-SOCKET HEAD (M12X1.75X40-MM)	
	5	1	**528-1728**	1	PIPE AS	

M - METRIC PART

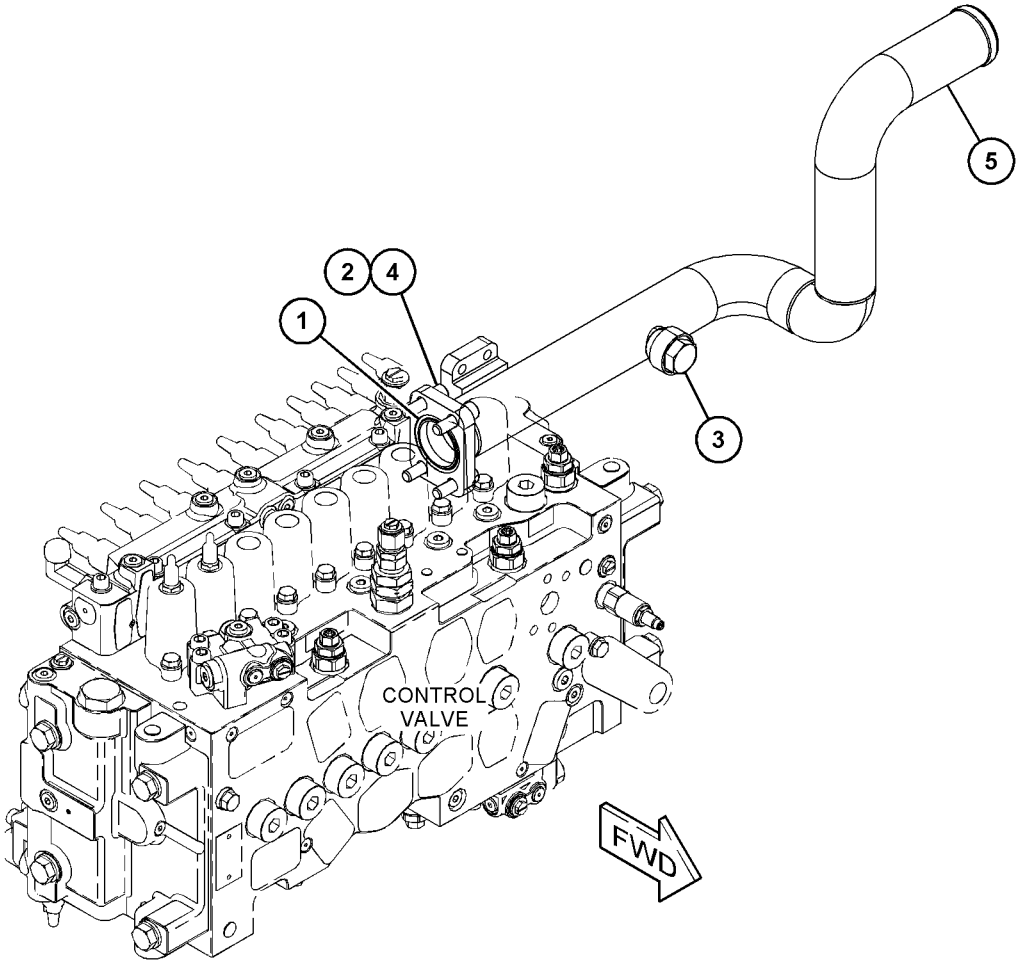

GRAPHIC #1 <END> g06279806

511-7590 MODULE GP-COOLING

S/N: SP91-UP

PART OF 502-5376 COOLING GP

SMCS-1064, 1350, 1374, 1375, 1378, 137T, 1712, 1811, 4346

i07521918

NOTE	REF NO	GRAPHIC REF	PART NUMBER	QTY	PART NAME 1 2 3 4 5 6 (PRODUCT LEVEL)	SEE PAGE
Y	1	1	**511-7588**	1	RADIATOR & HYD OIL COOLER GP	98
Y	2	1	**511-7589**	1	AFTERCOOLER GP-AIR	103
	3	1	**5P-4116**	2	WASHER-HARD (8.8X20.5X2-MM THK)	
	4	1	**7X-7729**	5	WASHER (11X25X3-MM THK)	
M	5	1	**8T-4136**	5	BOLT (M10X1.5X25-MM)	
M	6	1	**8T-4189**	2	BOLT (M8X1.25X20-MM)	

M - METRIC PART
Y - SEPARATE ILLUSTRATION

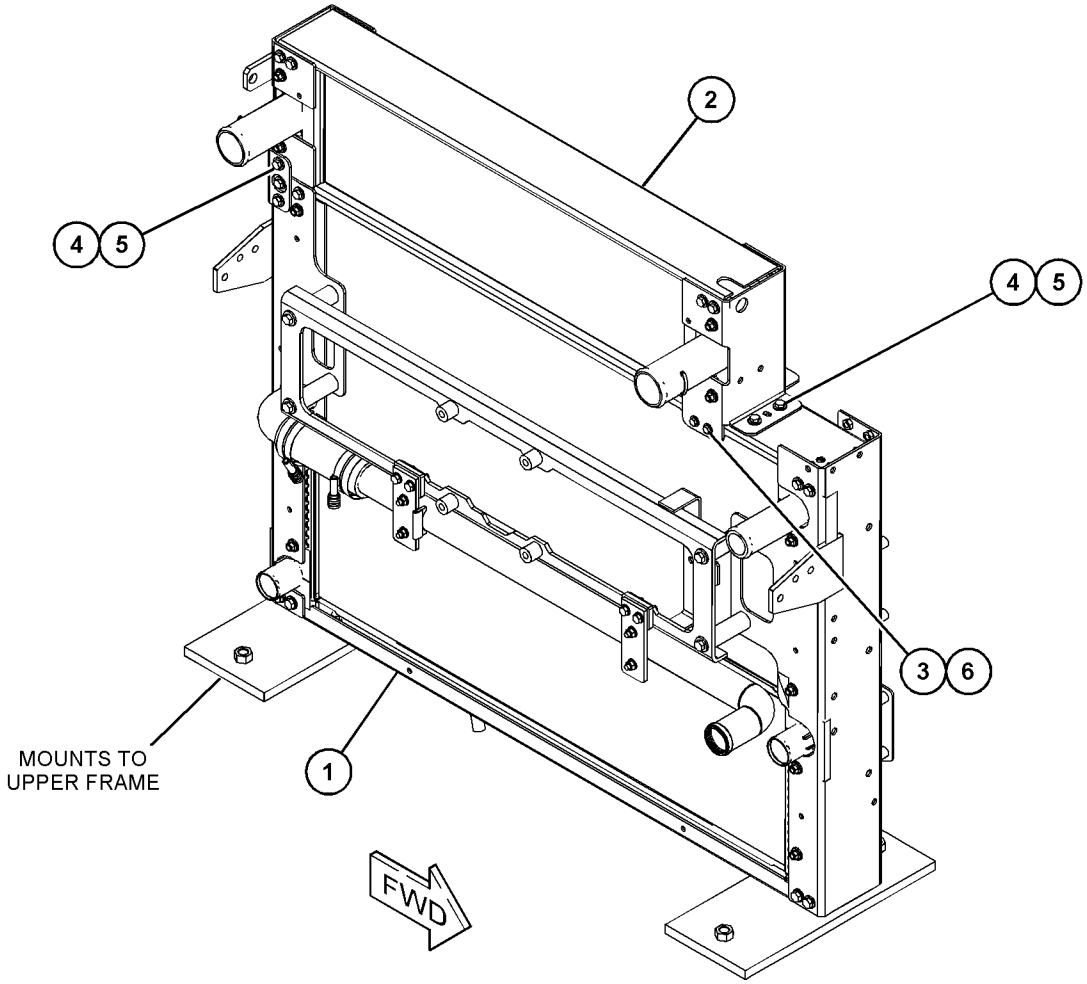

GRAPHIC #1 <END> g06277661

347-2324 PLUG GP-WATER LINES

S/N: NTB1-UP

PROVIDES A PLUG GP FOR ENGINES WITH BELT DRIVEN WATER PUMP

CANNOT BE USED WITH APPLICATIONS REQUIRING AIR COMPRESSOR OR ELECTRIC WATER PUMP

PART OF 522-6120 ENGINE AR-COMPLETE

SMCS-1393 **i05537195**

NOTE	REF NO	GRAPHIC REF	PART NUMBER	QTY	PART NAME 1 2 3 4 5 6 (PRODUCT LEVEL)	SEE PAGE
	1	1	*396-0403*	1	PLUG AS	
		1	**6V-3250**	1	SEAL-O-RING	
		1	**360-3679**	1	PLUG-CONNECTOR (9/16-18-THD)	
	2	1	*396-0405*	1	PLUG AS	
		1	**6V-6609**	1	SEAL-O-RING	
		1	**360-3680**	1	PLUG	
	3	1	*398-5612*	1	PLUG AS	
		1	**6V-5063**	1	SEAL-O-RING	
		1	**360-3682**	1	PLUG-O-RING	

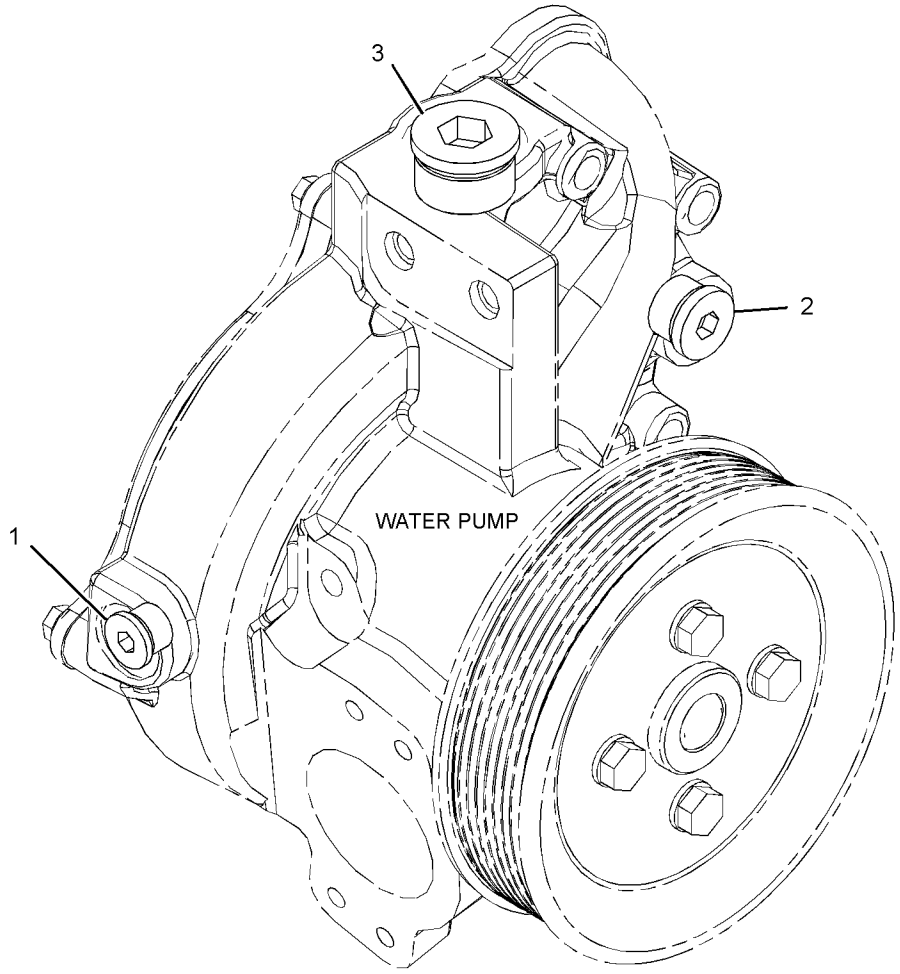

GRAPHIC #1 <END> g03097336

338-1148 PUMP GP-WATER*R

S/N: NTB1-UP

PART OF 346-9561 PUMP GP-WATER

SMCS-1361 **i05215170**

NOTE	REF NO	GRAPHIC REF	PART NUMBER	QTY	PART NAME 1 2 3 4 5 6 (PRODUCT LEVEL)	SEE PAGE
	1	1	**350-5417**	1	SEAL-WATER PUMP	
	2	1	**397-1832**	1	SHAFT AS	
	3	1	**177-1058**	1	PLUG	
	4	1	**203-6098**	1	HUB	
	5	1	**261-3422**	1	COVER	
M	6	1	**6V-8837**	3	BOLT (M6X1X16-MM)	
	7	1	**9X-8267**	3	WASHER (6.6X12X2-MM THK)	
	8	1	**5F-3999**	1	SEAL-O-RING	
	9	1	**261-3423**	1	IMPELLER	
	10	1	**338-1149**	1	HOUSING-WATER PUMP	

M - METRIC PART

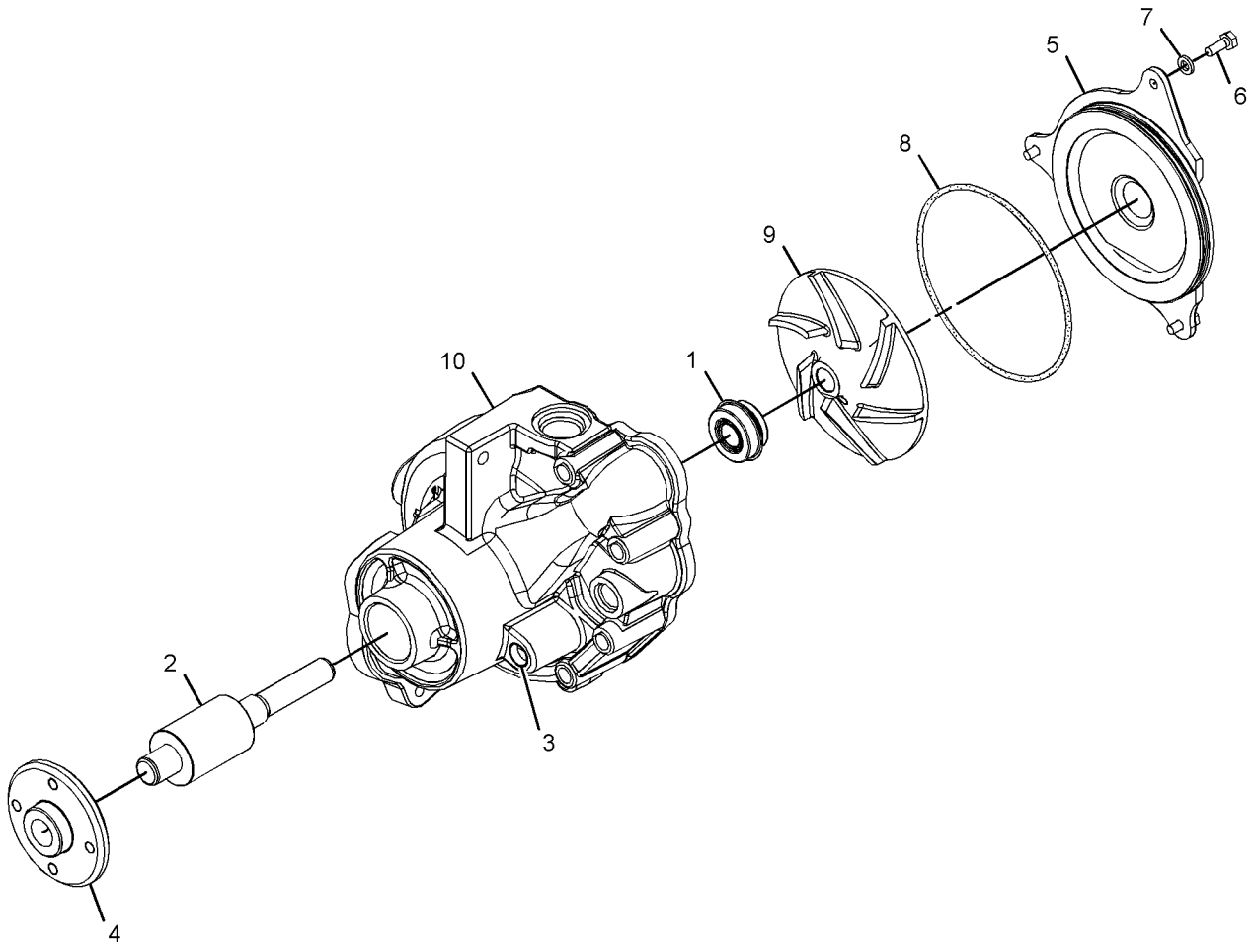

GRAPHIC #1 <END> g02626488

346-9561 PUMP GP-WATER

S/N: NTB1-UP

PART OF 546-5240 ENGINE AR-CORE

SMCS-1361 **i04525201**

NOTE	REF NO	GRAPHIC REF	PART NUMBER	QTY	PART NAME 1 2 3 4 5 6 (PRODUCT LEVEL)	SEE PAGE
	1	1	**217-8992**	1	PULLEY (8-GROOVE)	
YR	2	1	**338-1148**	1	PUMP GP-WATER	96
	3	1	**269-5304**	1	SEAL	
	4	1	**269-5305**	1	SEAL-LIP	
	5	1	**147-0182**	1	SEAL-O-RING	
M	6	1	**6V-5215**	4	BOLT (M8X1.25X16-MM)	
	7	1	**9M-1974**	4	WASHER-HARD (8.8X16X2-MM THK)	

M - METRIC PART
R - REMANUFACTURED PART MAY BE AVAILABLE
Y - SEPARATE ILLUSTRATION

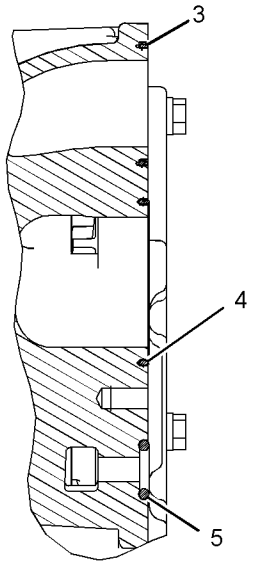

SECTION A-A

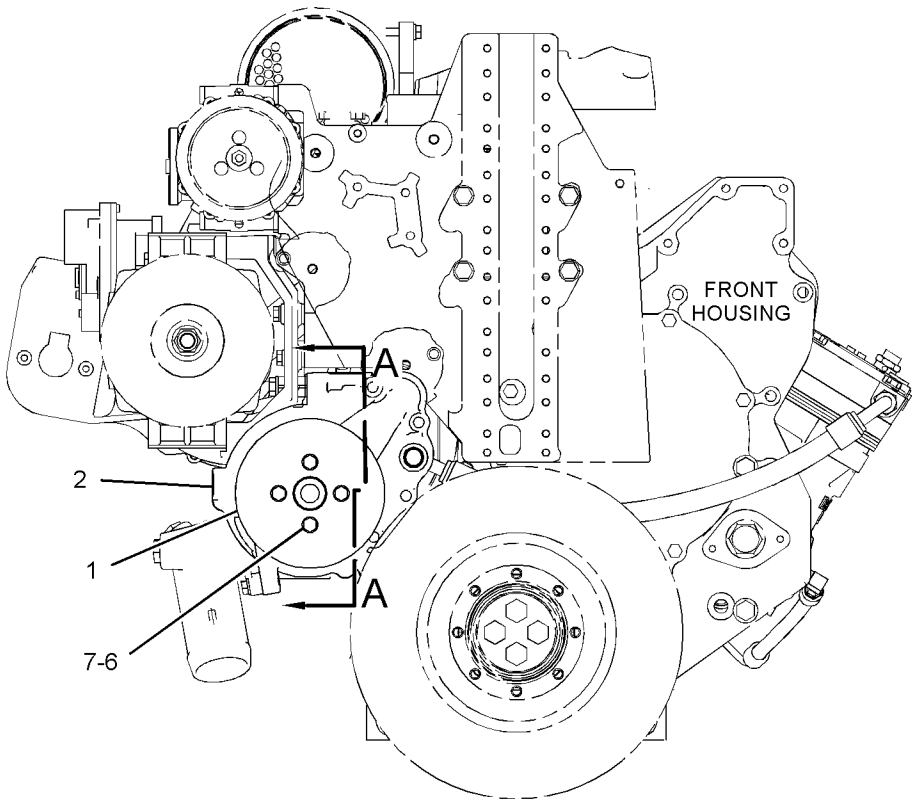

FRONT VIEW OF ENGINE

GRAPHIC #1 <END> g02149310

511-7588 RADIATOR & HYD OIL COOLER GP

S/N: SP91-UP

PART OF 511-7590 MODULE GP-COOLING

SMCS-1351, 1374 **i07522009**

NOTE	REF NO	GRAPHIC REF	PART NUMBER	QTY	PART NAME 1 2 3 4 5 6 (PRODUCT LEVEL)	SEE PAGE
	1	1	**236-6339**	1	HOSE	
M	2	1	**175-7141**	8	NUT-HEX FLANGE (M10X1.5-THD)	
	3	1	**319-9804**	1	GUARD	
Y	4	2	**475-6622**	1	CORE AS-RADIATOR	77
	5	2	**475-6623**	1	CORE AS-OIL COOLER (HYDRAULIC)	
	6	2	**357-0003**	16	PIN	
	7	1	**475-6627**	1	FRAME AS-RADIATOR	
	8	1	**475-6633**	1	BRACKET AS	
	9	1	**475-6643**	1	BRACKET AS	
	10	2	**475-6652**	2	SEAL-AIR	
	11	2	**475-6654**	2	SEAL-AIR	
	12	2	**475-6656**	2	SEAL-AIR	
	13	2	**475-6659**	1	SEAL-AIR	
	14	1	**484-1456**	1	STRAP-CABLE	
	15	1	**508-6337**	1	PIPE AS	
	16	1	**508-6342**	2	PLATE AS	
	17	1	**511-7544**	1	FRAME AS	
	18	1	**511-7546**	1	BRACKET AS	
	19	1	**511-7582**	1	BRACKET	
	20	1	**511-7583**	1	FRAME AS	
	21	1	**511-7584**	1	FRAME AS	
	22	2	**541-1343**	2	SEAL-AIR	
	23	2	**541-1345**	1	SEAL-AIR	
M	24	1	**096-4883**	4	LOCKNUT (M10X1.5-THD)	
	25	1	**144-0367**	4	CLAMP-HOSE	
	26	1	**5D-1026**	1	CLAMP-BAND	
	27	1	**5P-1076**	4	WASHER-HARD (13.5X30X4-MM THK)	
	28	1	**5P-4116**	2	WASHER-HARD (8.8X20.5X2-MM THK)	
M	29	1	**7X-2546**	8	BOLT (M10X1.5X180-MM)	
	30	1	**7X-7729**	30	WASHER (11X25X3-MM THK)	
M	31	1	**7Y-5247**	2	U-BOLT (M10X1.5-THD)	
	32	1	**8T-4121**	8	WASHER-HARD (11X21X2.5-MM THK)	
M	33	1	**8T-4136**	12	BOLT (M10X1.5X25-MM)	
M	34	1	**8T-4139**	8	BOLT (M12X1.75X30-MM)	
M	35	1	**8T-4182**	4	BOLT (M10X1.5X45-MM)	
M	36	1	**8T-4189**	4	BOLT (M8X1.25X20-MM)	
	37	1	**8T-4223**	8	WASHER-HARD (13.5X25.5X3-MM THK)	
M	38	1	**8T-5001**	4	BOLT (M12X1.75X130-MM)	
E	39	1	**5P-0767**		HOSE (43.6-CM)	

E - ORDER BY THE CENTIMETER
M - METRIC PART
Y - SEPARATE ILLUSTRATION

511-7588 **RADIATOR & HYD OIL COOLER GP (**contd.**)** **i07522009**

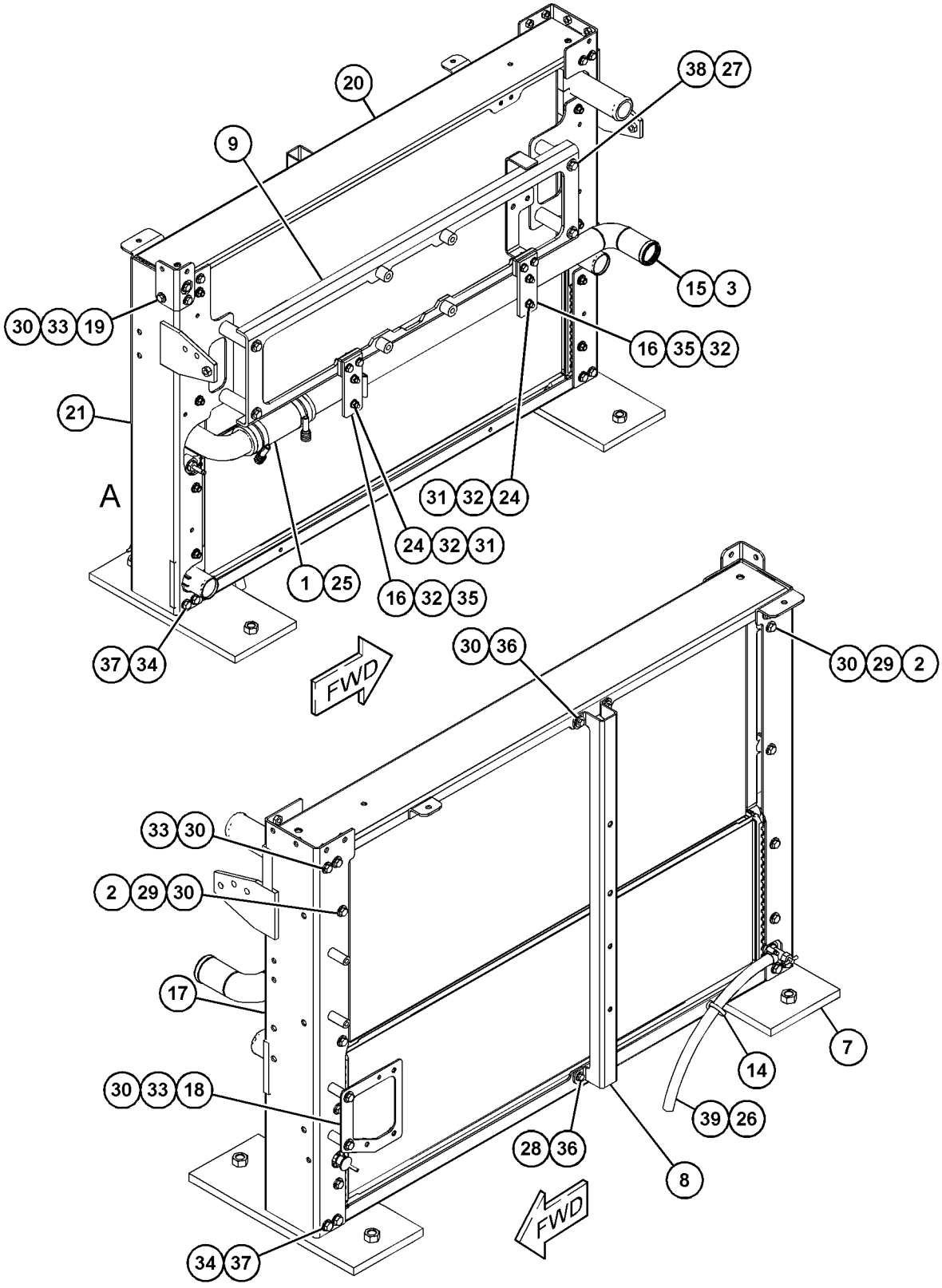

GRAPHIC #1 g06286134

511-7588 **RADIATOR & HYD OIL COOLER GP (**contd.**)** **i07522009**

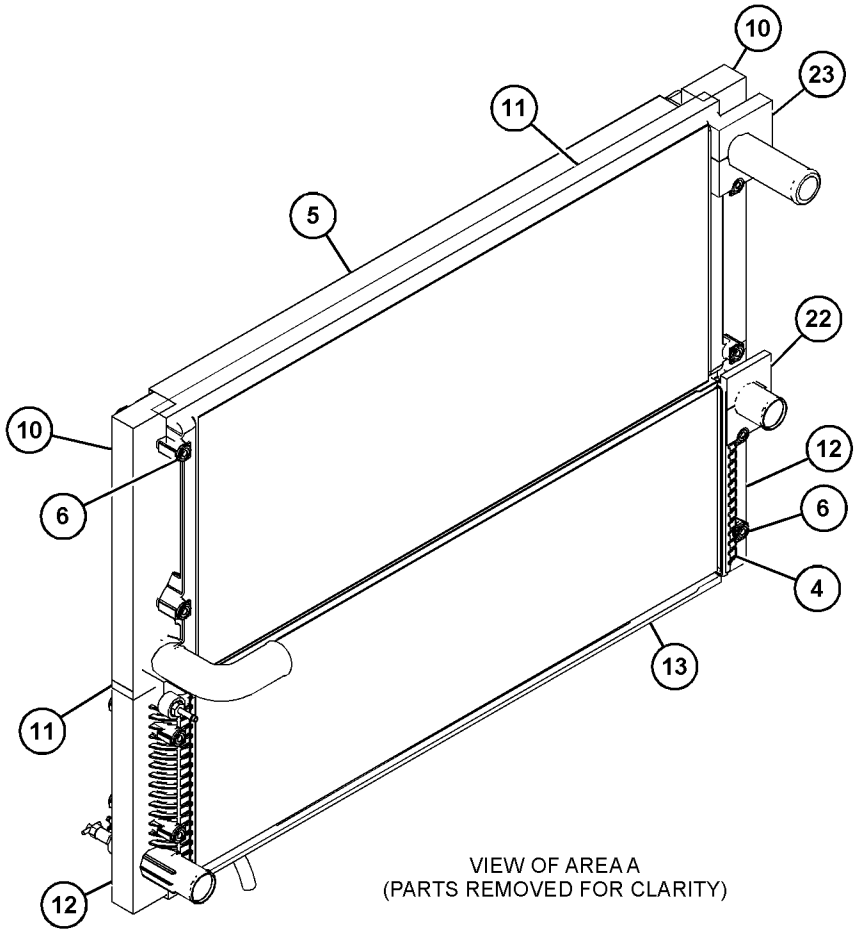

VIEW OF AREA A
(PARTS REMOVED FOR CLARITY)

GRAPHIC #2 <END> g06286135

506-6361 REGULATOR GP-TEMPERATURE

S/N: NTB1-UP

PART OF 522-6120 ENGINE AR-COMPLETE

SMCS-1355 **i07499049**

NOTE	REF NO	GRAPHIC REF	PART NUMBER	QTY	PART NAME 1 2 3 4 5 6 (PRODUCT LEVEL)	SEE PAGE
	1	1	**377-3016**	1	REGULATOR-WATER TEMPERATURE	
	2	1	**506-5459**	1	ELBOW	
M	3	1	**6V-2317**	2	BOLT (M8X1.25X30-MM)	
	4	1	**8T-4224**	2	WASHER-HARD (8.8X16X2-MM THK)	

M - METRIC PART

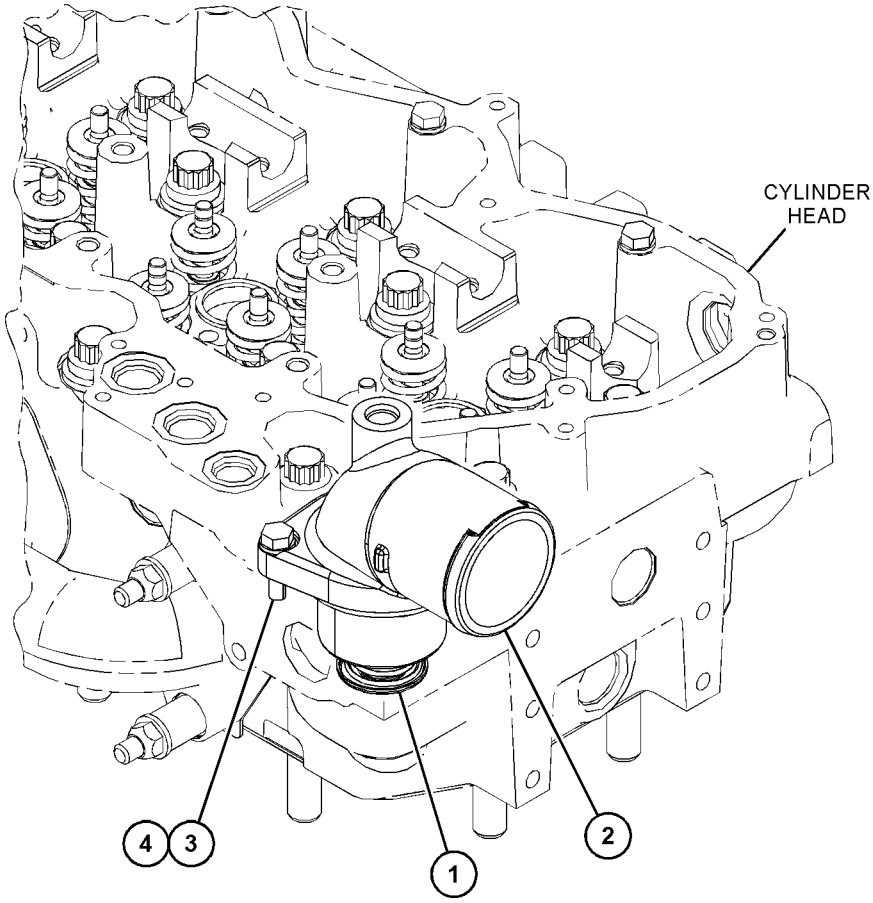

GRAPHIC #1 <END> g06286120

511-7581 SHROUD GP-RADIATOR

S/N: SP91-UP

PART OF 511-7587, 521-5230 FAN GP-SUCTION

SMCS-7272 **i07527710**

NOTE	REF NO	GRAPHIC REF	PART NUMBER	QTY	PART NAME 1 2 3 4 5 6 (PRODUCT LEVEL)	SEE PAGE
	1	1	**8T-4224**	12	WASHER-HARD (8.8X16X2-MM THK)	
M	2	1	**8T-4908**	12	BOLT (M8X1.25X25-MM)	
	3	1	**528-0126**	2	BRACKET	
	4	1	**5P-4116**	16	WASHER-HARD (8.8X20.5X2-MM THK)	
M	5	1	**5P-7970**	8	NUT (M8X1.25-THD)	
M	6	1	**8T-4189**	8	BOLT (M8X1.25X20-MM)	

M - METRIC PART

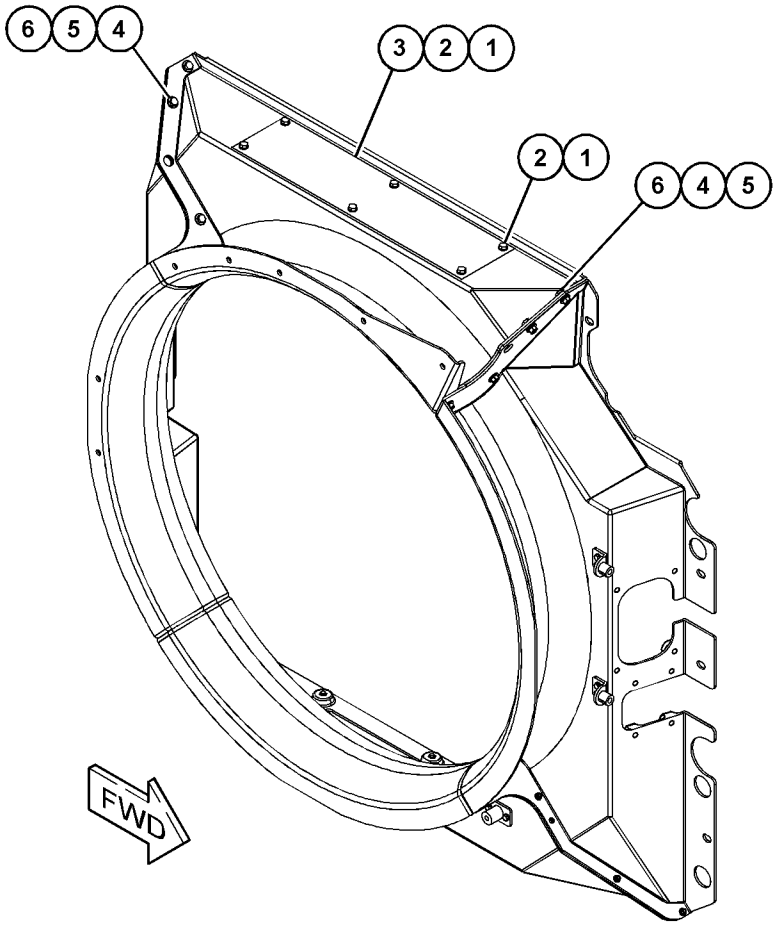

GRAPHIC #1 <END> g06281204

511-7589 AFTERCOOLER GP-AIR

S/N: SP91-UP

PART OF 511-7590 MODULE GP-COOLING

SMCS-1063 **i07786041**

NOTE	REF NO	GRAPHIC REF	PART NUMBER	QTY	PART NAME 1 2 3 4 5 6 (PRODUCT LEVEL)	SEE PAGE
	1	1	**475-6626**	1	FRAME AS	
	2	1	**475-6649**	2	SEAL	
	3	1	**475-6650**	2	SEAL	
	4	1	**475-6662**	8	PIN	
	5	1	**511-7541**	1	CORE AS-AFTERCOOLER	
	6	1	**511-7585**	1	FRAME AS	
M		1	**8T-3490**	1	NUT-WELD (M10X1.5-THD)	
M		1	**8T-3597**	2	NUT-WELD (M12X1.75-THD)	
M		1	**8T-3612**	1	NUT-WELD (M8X1.25-THD)	
	7	1	**511-7586**	1	FRAME AS	
M		1	**8T-3490**	3	NUT-WELD (M10X1.5-THD)	
M		1	**8T-3612**	1	NUT-WELD (M8X1.25-THD)	
	8	1	**541-1346**	2	SEAL-AIR	
M	9	1	**175-7141**	4	NUT-HEX FLANGE (M10X1.5-THD)	
M	10	1	**7X-2546**	4	BOLT (M10X1.5X180-MM)	
	11	1	**7X-7729**	16	WASHER (11X25X3-MM THK)	
M	12	1	**8T-4136**	8	BOLT (M10X1.5X25-MM)	

M - METRIC PART

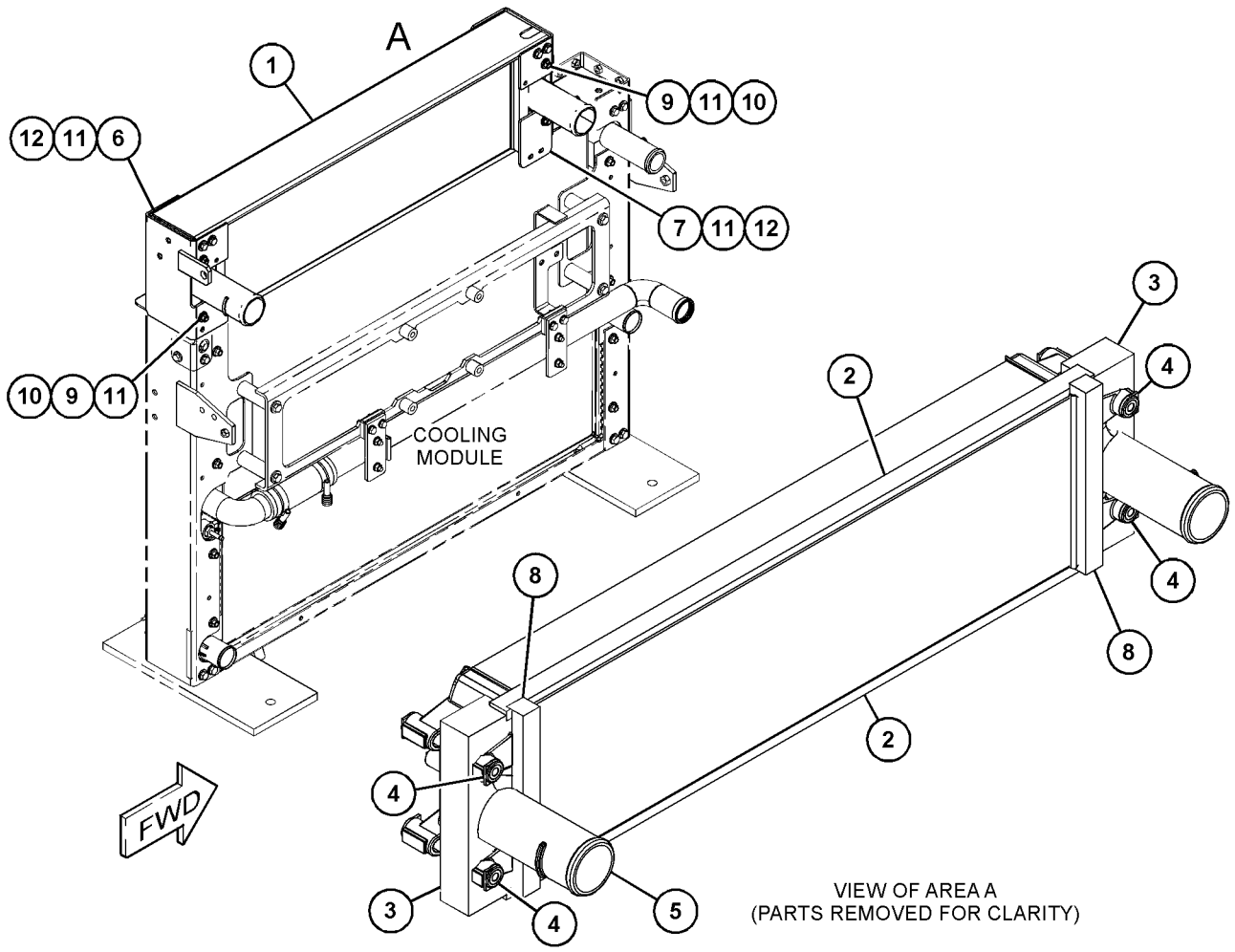

GRAPHIC #1 <END> g06280053

496-9840 AIR CLEANER GP

S/N: SP91-UP

PART OF 502-4792 AIR CLEANER GP

SMCS-1051, 1054 **i07516140**

NOTE	REF NO	GRAPHIC REF	PART NUMBER	QTY	PART NAME 1 2 3 4 5 6 (PRODUCT LEVEL)	SEE PAGE
	1	1	**496-9841**	1	FILTER-AIR (PRIMARY)	
	2	1	**496-9842**	1	FILTER-AIR (SECONDARY)	
	3	1	**496-9843**	1	PRECLEANER AS	
		1	**479-8995**	4	COVER-LATCH	
		1	**507-9909**	1	SEAL	

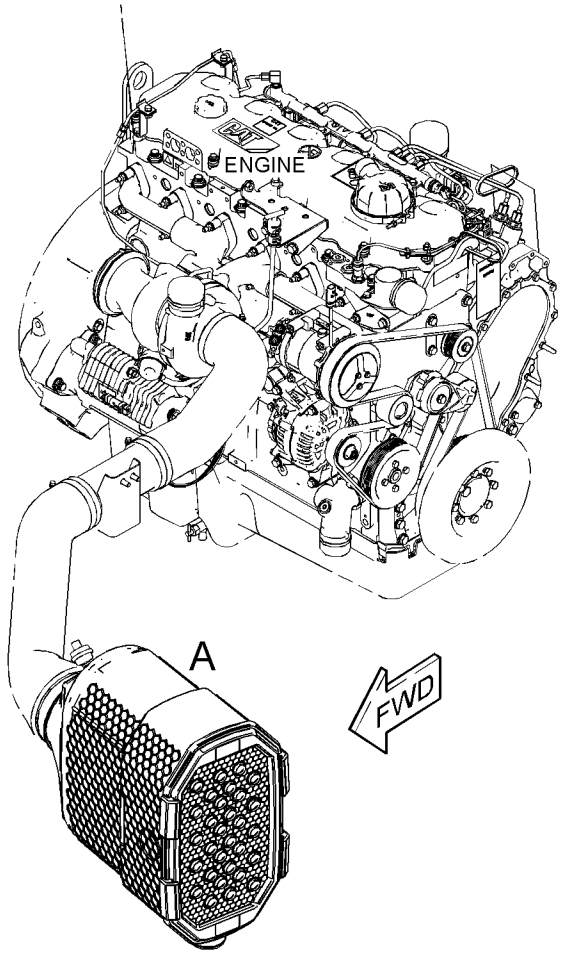

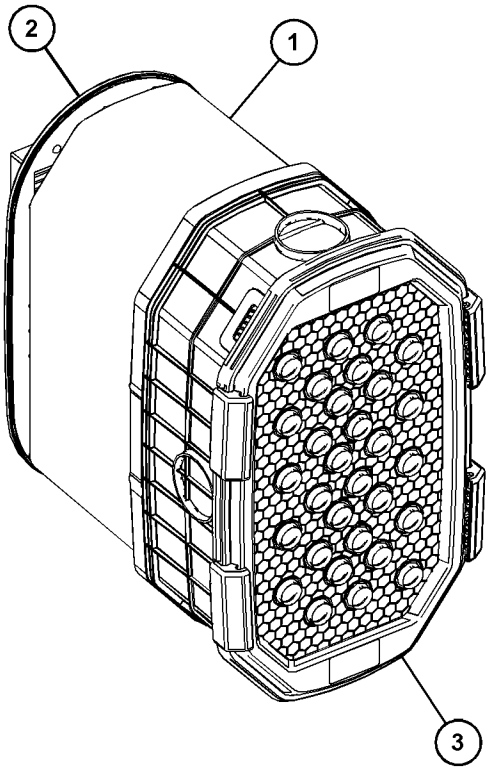

VIEW OF AREA A
(PARTS REMOVED FOR CLARITY)

GRAPHIC #1 <END> g06287069

502-4792 AIR CLEANER GP

S/N: SP91-UP

PART OF 502-4246 INSTALLATION AR-ENGINE

SMCS-1051, 1054

i07654735

NOTE	REF NO	GRAPHIC REF	PART NUMBER	QTY	PART NAME 1 2 3 4 5 6 (PRODUCT LEVEL)	SEE PAGE
	1	1	**228-7100**	1	SEAL-O-RING	
M	2	1	**8T-4200**	4	BOLT (M8X1.25X16-MM)	
	3	1	**8T-4224**	4	WASHER-HARD (8.8X16X2-MM THK)	
	4	1	**8U-6668**	1	VALVE	
	5	1	**238-0112**	1	SENSOR GP-TEMPERATURE (2-PIN) (AIR INLET)	
	6	1	**296-2735**	1	INDICATOR AS-AIR FILTER CHANGE	
	7	1	**492-8275**	1	ADAPTER AS	
		1	**6V-9028**	1	SEAL-O-RING	
		1	**8T-7876**	1	SEAL-O-RING	
Y	8	1	**496-9840**	1	AIR CLEANER GP	104
	9	1	**204-2281**	1	STRAP-CABLE	
	10	1	**505-2336**	1	COVER	

M - METRIC PART
Y - SEPARATE ILLUSTRATION

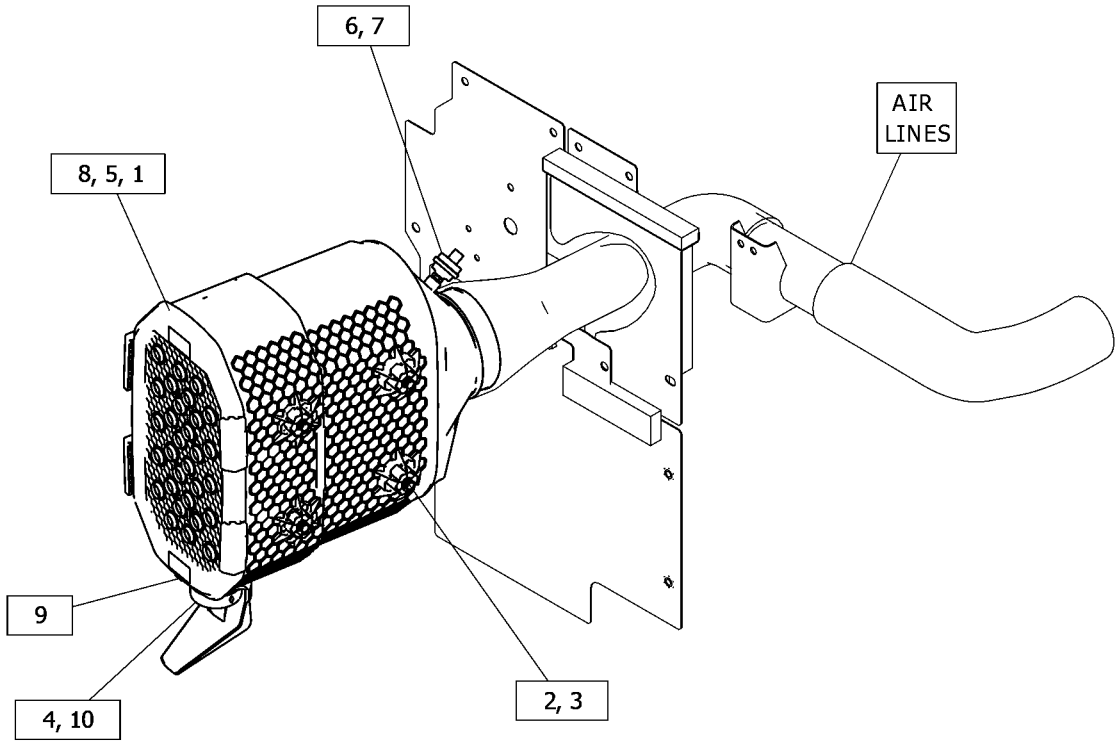

GRAPHIC #1

<END>

g06346028

565-5549 KIT-TURBOCHARGER GASKET

FOR USE WITH 522-6120—PAGE: 4

SMCS-1052, 1053, 7555 **i07495625**

NOTE	PART NUMBER	QTY	PART NAME 1 2 3 4 5 6 (PRODUCT LEVEL)	SEE PAGE
	197-8418	1	GASKET	
	197-8419	1	GASKET (TURBOCHARGER)	
	349-9658	1	GASKET	
M	**375-2467**	4	LOCKNUT-FLANGE (M10X1.5-THD)	
	210-9246	1	SEAL-O-RING	
	228-7089	1	SEAL-O-RING	
	238-5080	1	SEAL-O-RING	
M	**376-3408**	4	STUD-TAPERLOCK (M10X1.5X55-MM)	
			FOR A LIST OF RELATED PARTS THAT MAY BE REQUIRED FOR THE ENGINE REBUILD TO THE KIT CONSIST, PLEASE VISIT	
			HTTP://DEALER.CAT.COM/RELATED	

M - METRIC PART

<END>

500-6854 LINES GP-AIR–INLET

S/N: NTB1-UP

PART OF 522-6120 ENGINE AR-COMPLETE

SMCS-1071 **i07498967**

NOTE	REF NO	GRAPHIC REF	PART NUMBER	QTY	PART NAME 1 2 3 4 5 6 (PRODUCT LEVEL)	SEE PAGE
	1	1	**500-6853**	1	ELBOW-AIR	
	2	1	**1W-5455**	1	CLAMP-V BAND	
	3	1	**8T-6757**	1	PLUG-PIPE	

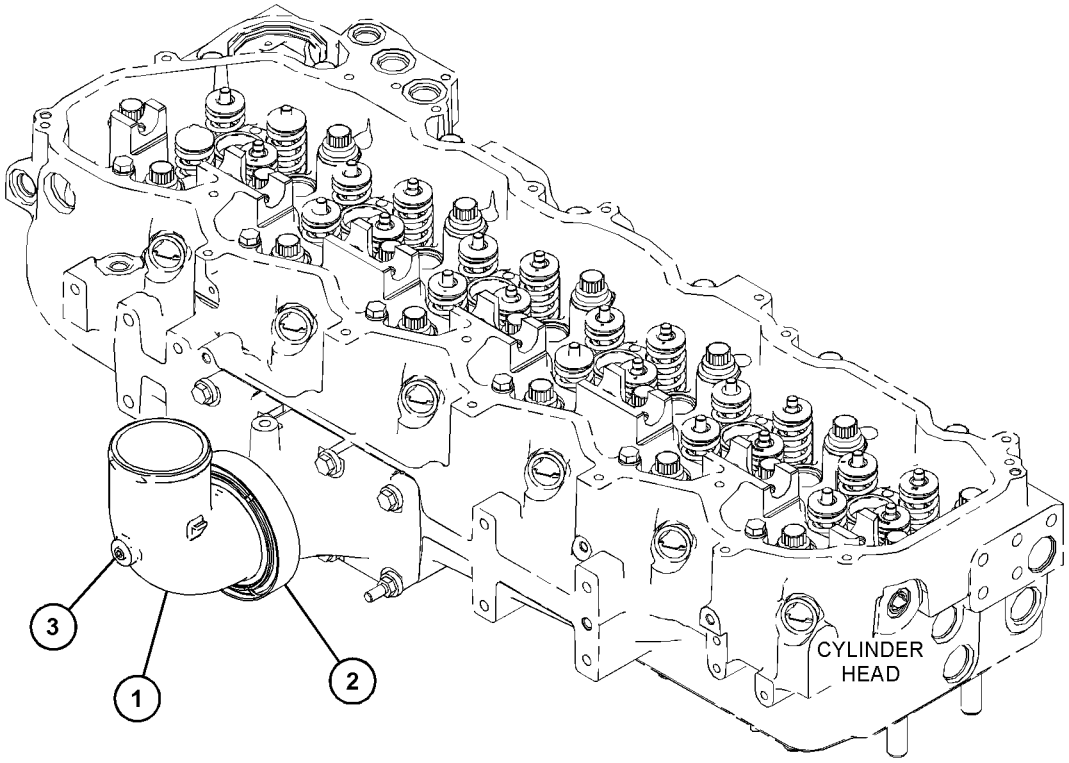

GRAPHIC #1 <END> g06272863

502-4255 LINES GP-AIR

S/N: SP91-UP

PART OF 502-4246 INSTALLATION AR-ENGINE

SMCS-1071 **i07516411**

NOTE	REF NO	GRAPHIC REF	PART NUMBER	QTY	PART NAME 1 2 3 4 5 6 (PRODUCT LEVEL)	SEE PAGE
M	1	1	**8T-4136**	2	BOLT (M10X1.5X25-MM)	
	2	1	**8T-4121**	2	WASHER-HARD (11X21X2.5-MM THK)	
	3	1	**8T-4986**	3	CLAMP-HOSE	
	4	1	**505-5949**	1	PIPE AS	
	5	1	**511-4747**	1	HOSE	
	6	1	**511-4748**	1	HOSE	
	7	1	**8T-4989**	1	CLAMP-HOSE	

M - METRIC PART

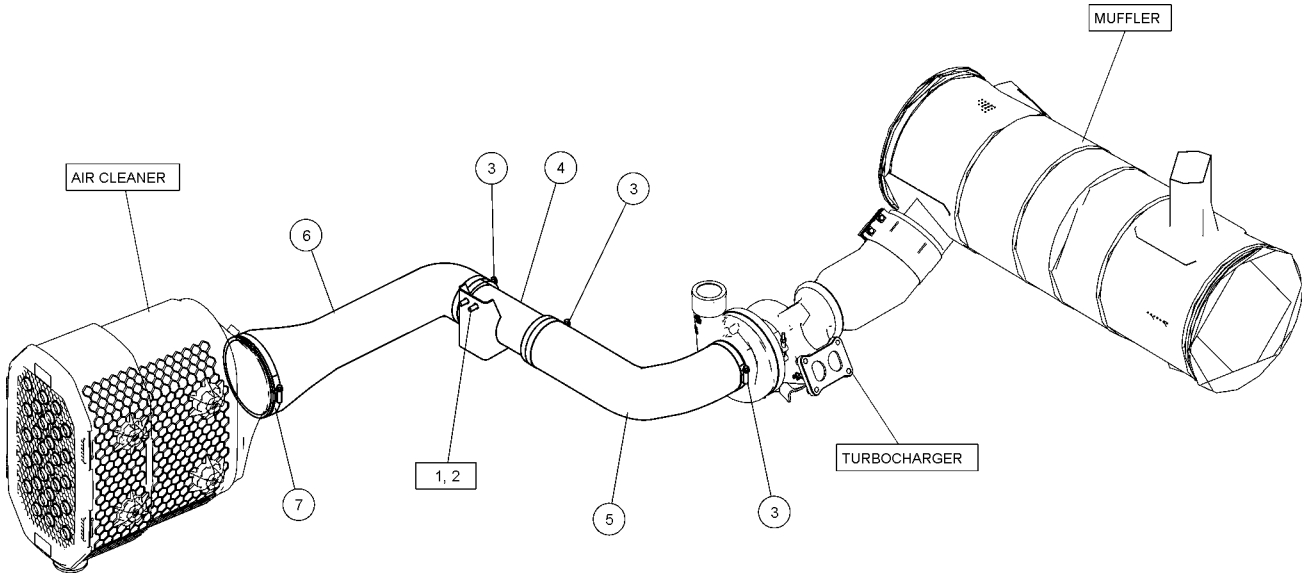

GRAPHIC #1 <END> g06277902

524-5332 LINES GP-TURBOCHARGER AIR

S/N: NTB1-UP

PART OF 522-6120 ENGINE AR-COMPLETE

SMCS-1052, 1071

i07498974

NOTE	REF NO	GRAPHIC REF	PART NUMBER	QTY	PART NAME 1 2 3 4 5 6 (PRODUCT LEVEL)	SEE PAGE
E	1	1	**337-4178**		HOSE (49-CM)	
M	2	1	**6V-3940**	1	BOLT (M8X1.25X25-MM)	
	3	1	**227-5922**	1	TEE (SPECIAL)	
Y	4	1	**230-9944**	1	VALVE GP-MODULATING	583
	5	1	**290-1993**	3	STRAP-CABLE	
	6	1	**317-7012**	2	CLAMP-BAND	
	7	1	*343-8121*	1	CONNECTOR AS	
		1	**3J-7352**	1	CONNECTOR	
		1	**214-7566**	1	SEAL-O-RING	
	8	1	**091-0081**	1	SPACER (10.5X20X10-MM THK)	
	9	1	**124-6275**	1	CLAMP-HOSE	
	10	1	**280-8377**	1	SPACER (11.1X19.1X25-MM THK)	
	11	1	**285-6393**	1	CLIP	
	12	1	**363-0253**	2	CLIP (TAB)	
	13	1	**363-0254**	2	CLIP (SLOT)	
	14	1	**3E-4352**	1	WASHER-HARD (8.8X20.5X2.5-MM THK)	
	15	1	**525-2293**	1	BRACKET AS	
M		1	**8T-3612**	1	NUT-WELD (M8X1.25-THD)	
	16	1	**556-9108**	1	TUBE AS	
M	17	1	**5P-7970**	2	NUT (M8X1.25-THD)	
M	18	1	**6V-1820**	1	BOLT (M10X1.5X30-MM)	
	19	1	**6V-5839**	1	WASHER (11X21X2.5-MM THK)	
	20	1	**9M-1974**	2	WASHER-HARD (8.8X16X2-MM THK)	
E	21	1	**330-4374**		SLEEVE (24-CM)	

E - ORDER BY THE CENTIMETER
M - METRIC PART
Y - SEPARATE ILLUSTRATION

524-5332 **LINES GP-TURBOCHARGER AIR (**contd.**)** **i07498974**

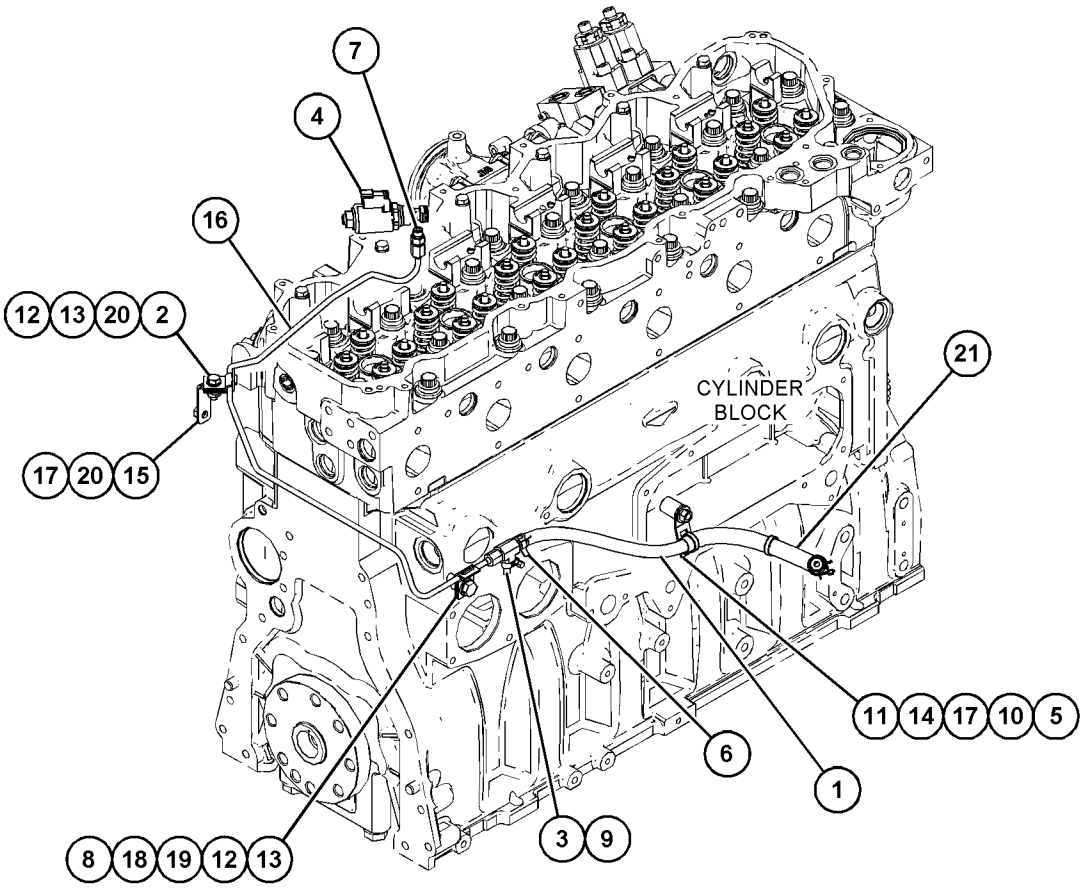

GRAPHIC #1 <END> g06307966

505-8956 MANIFOLD GP-EXHAUST

S/N: NTB1-UP

PART OF 522-6120 ENGINE AR-COMPLETE

SMCS-1059 **i07498984**

NOTE	REF NO	GRAPHIC REF	PART NUMBER	QTY	PART NAME 1 2 3 4 5 6 (PRODUCT LEVEL)	SEE PAGE
	1	1	**161-3398**	2	MANIFOLD-EXHAUST	
	2	1	**161-3411**	6	GASKET	
	3	1	**496-3679**	1	MANIFOLD-EXHAUST	
M	4	1	**116-3715**	12	STUD-TAPERLOCK (M10X1.5X85-MM)	
M	5	1	**376-3408**	4	STUD-TAPERLOCK (M10X1.5X55-MM)	
	6	1	**4P-4369**	12	SPACER (12X19X23.5-MM THK)	
	7	1	**6V-5839**	12	WASHER (11X21X2.5-MM THK)	
M	8	1	**9X-6620**	12	LOCKNUT (M10X1.5-THD)	

M - METRIC PART

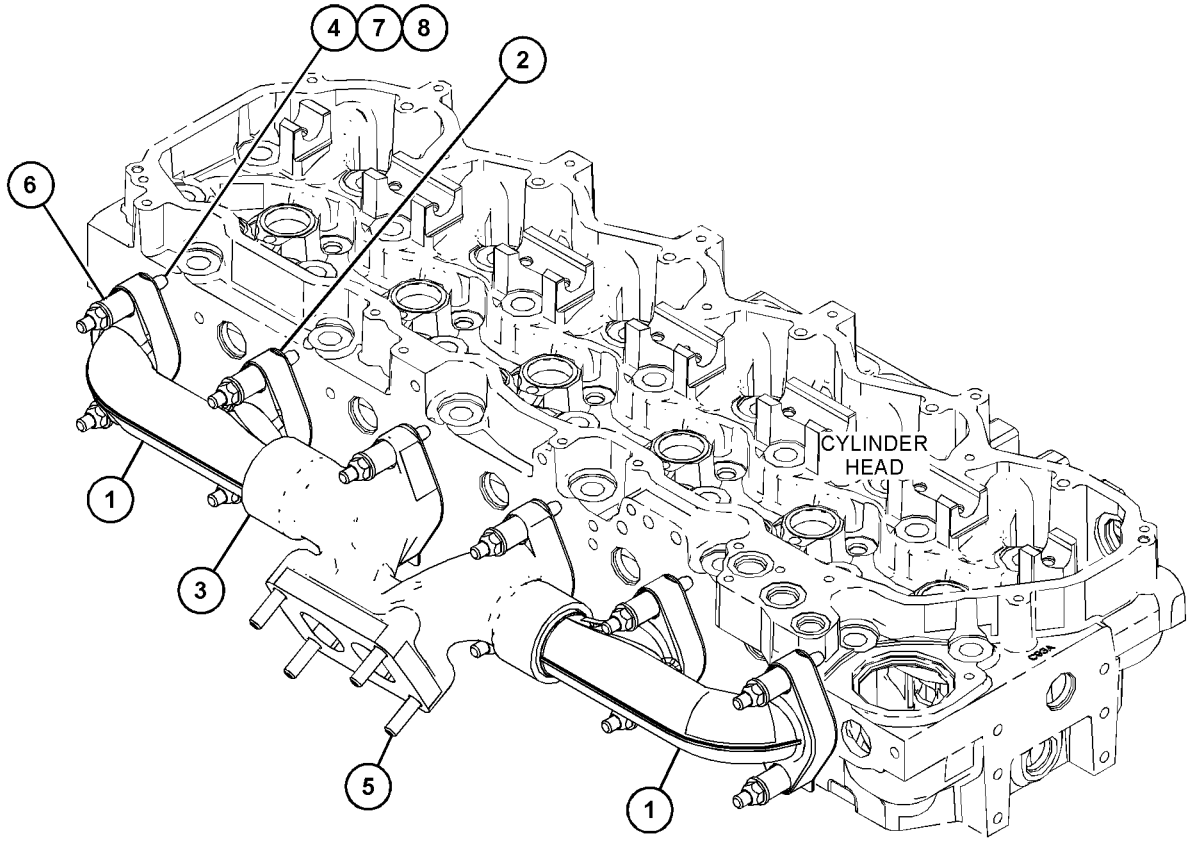

GRAPHIC #1 <END> g06286602

512-5701 MANIFOLD GP-INLET

S/N: NTB1-UP

PART OF 522-6120 ENGINE AR-COMPLETE

SMCS-1058, 1090 **i07498987**

NOTE	REF NO	GRAPHIC REF	PART NUMBER	QTY	PART NAME 1 2 3 4 5 6 (PRODUCT LEVEL)	SEE PAGE
	1	1	**527-9286**	1	MANIFOLD-AIR INLET	
M	2	1	**145-2264**	2	STUD (M8X1.25X35-MM)	
	3	1	**7S-6369**	8	WASHER (0.344X0.75X0.188-IN THK)	
M	4	1	**7X-2537**	6	BOLT (M8X1.25X35-MM)	
BF		1	**8C-8422**	1	SEALANT	

B - USE AS REQUIRED
F - NOT SHOWN
M - METRIC PART

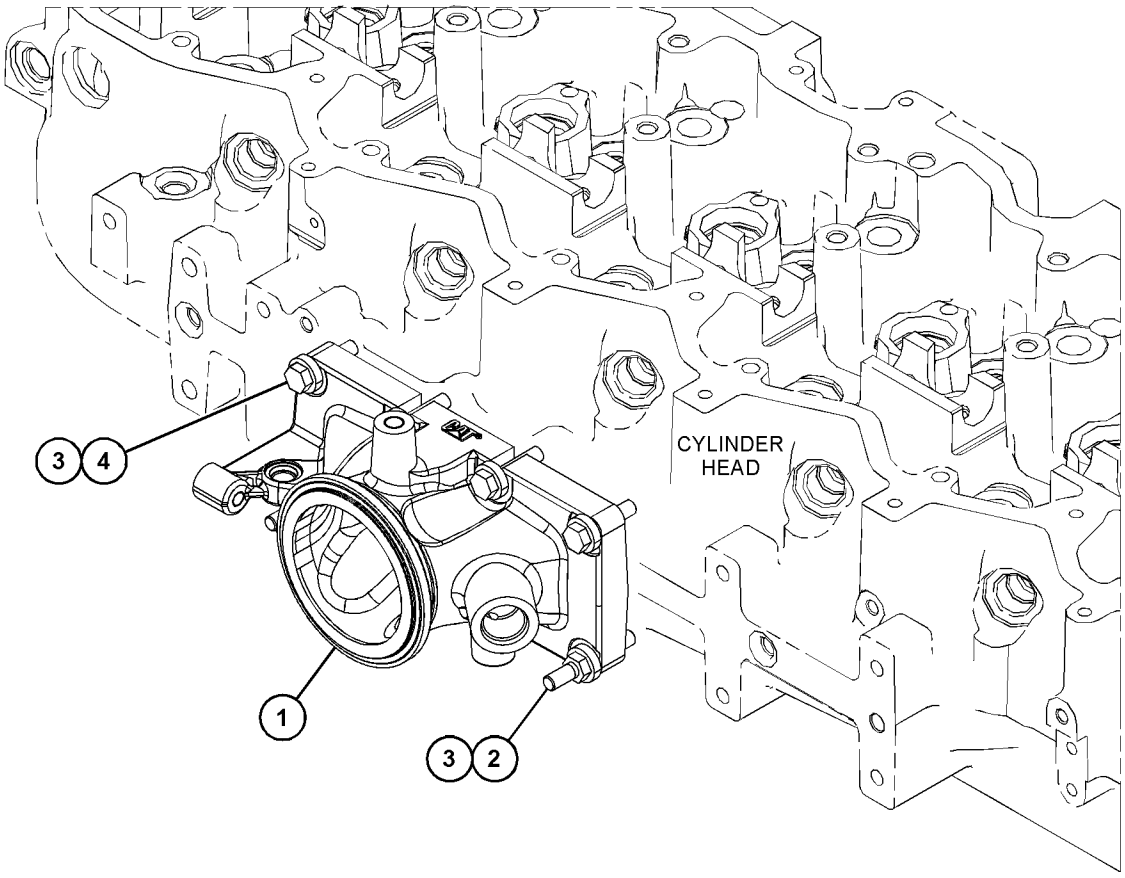

GRAPHIC #1 <END> g06292903

502-5356 MUFFLER GP

S/N: SP91-UP

PART OF 502-4246 INSTALLATION AR-ENGINE

SMCS-1062 **i07756732**

NOTE	REF NO	GRAPHIC REF	PART NUMBER	QTY	PART NAME 1 2 3 4 5 6 (PRODUCT LEVEL)	SEE PAGE
M	1	1	**8T-4244**	8	NUT (M12X1.75-THD)	
	2	1	**131-8847**	2	U-BOLT	
	3	1	**255-2900**	1	PIPE AS-EXHAUST	
	4	1	**282-8228**	1	CLAMP (V-BAND)	
	5	1	**289-2492**	1	CLAMP-MUFFLER	
	6	1	**388-7017**	1	CLAMP-BENT BOLT	
	7	1	**451-2182**	3	WASHER-HARD (13.5X25.5X3-MM THK)	
M	8	1	**453-3447**	4	BOLT (M12X1.75X40-MM)	
M	9	1	**453-3448**	3	BOLT (M12X1.75X45-MM)	
	10	1	**453-8033**	4	WASHER-HARD (13.5X30X4-MM THK)	
	11	1	**483-7800**	2	SPACER (11X20X20-MM THK)	
	12	1	**512-6066**	1	SUPPORT AS	
	13	1	**515-3334**	1	MUFFLER AS	
	14	1	**524-4046**	1	PIPE	
	15	1	**564-7074**	1	PLATE AS	
	16	1	**564-7198**	1	PLATE	
	17	1	**512-6073**	1	BRACKET AS	
	18	1	**7X-7729**	8	WASHER (11X25X3-MM THK)	
M	19	1	**8T-4182**	2	BOLT (M10X1.5X45-MM)	
M	20	1	**8T-4196**	6	BOLT (M10X1.5X35-MM)	

M - METRIC PART

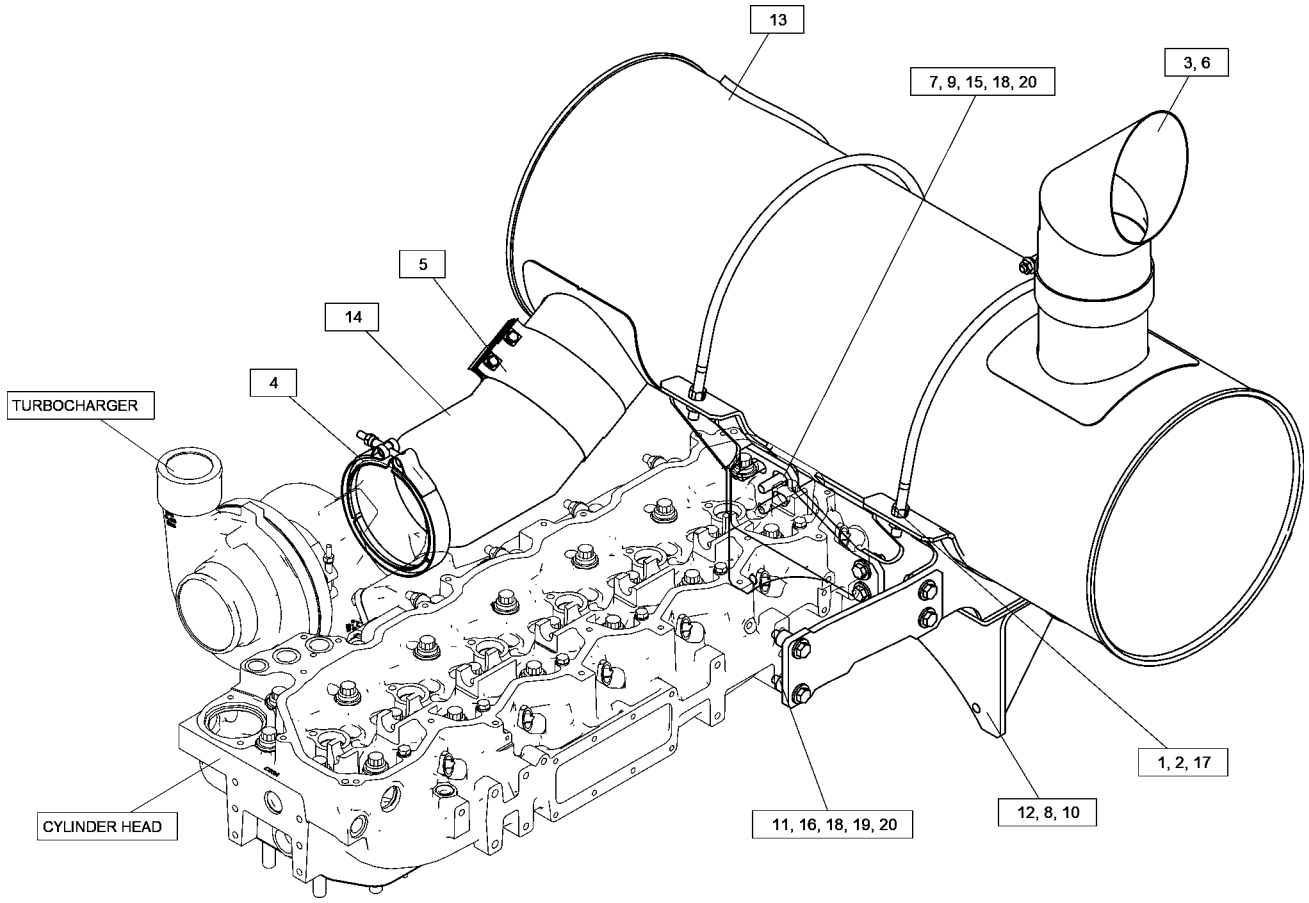

GRAPHIC #1 <END> g06351919

505-5694 TURBOCHARGER GP

S/N: NTB1-UP

PART OF 522-6120 ENGINE AR-COMPLETE

SMCS-1052, 1053

i07499052

NOTE	REF NO	GRAPHIC REF	PART NUMBER	QTY	PART NAME 1 2 3 4 5 6 (PRODUCT LEVEL)	SEE PAGE
	1	1	**349-9658**	1	GASKET	
M	2	1	**375-2467**	4	LOCKNUT-FLANGE (M10X1.5-THD)	
Y	3	1	**528-1450**	1	TURBOCHARGER GP	115

M - METRIC PART
Y - SEPARATE ILLUSTRATION

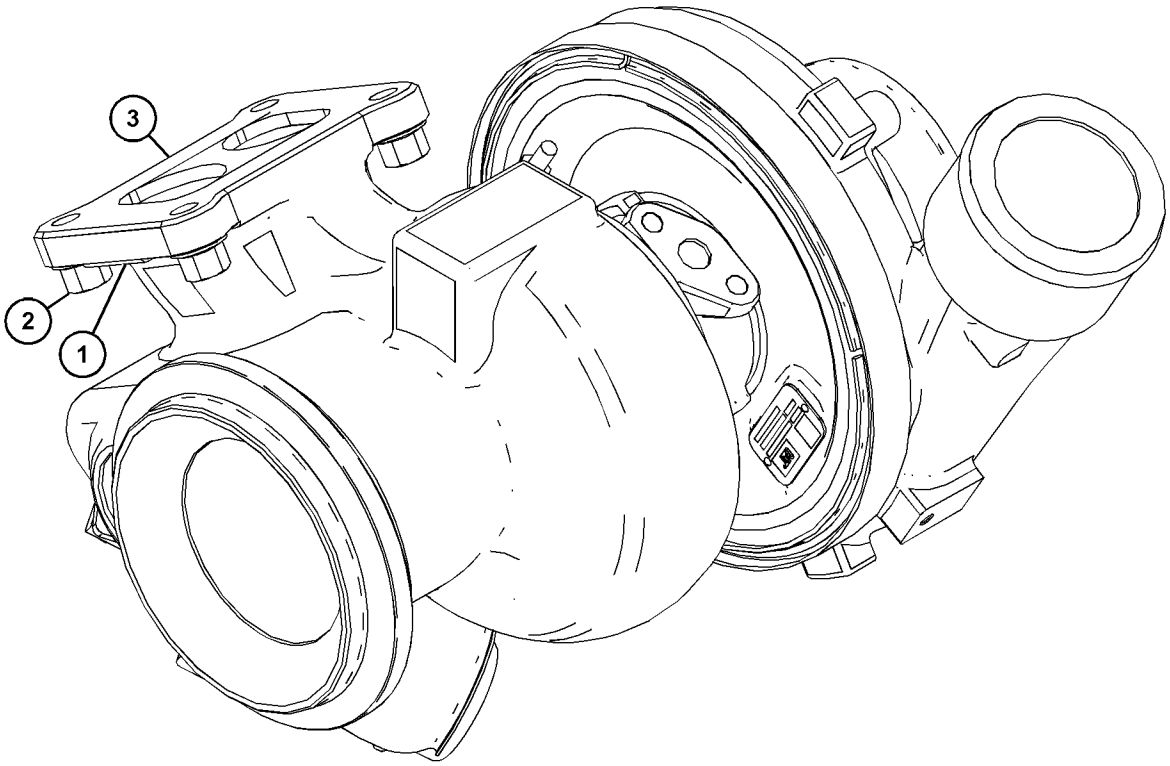

GRAPHIC #1 <END> g06305760

528-1450 TURBOCHARGER GP

S/N: NTB1-UP

PART OF 505-5694 TURBOCHARGER GP

SMCS-1052, 1053

i07499120

NOTE	REF NO	GRAPHIC REF	PART NUMBER	QTY	PART NAME 1 2 3 4 5 6 (PRODUCT LEVEL)	SEE PAGE
	1	1	**239-5858**	1	CLAMP AS-COMPRESSOR	
	2	1	**361-7981**	1	CLAMP-BAND (TURBINE)	

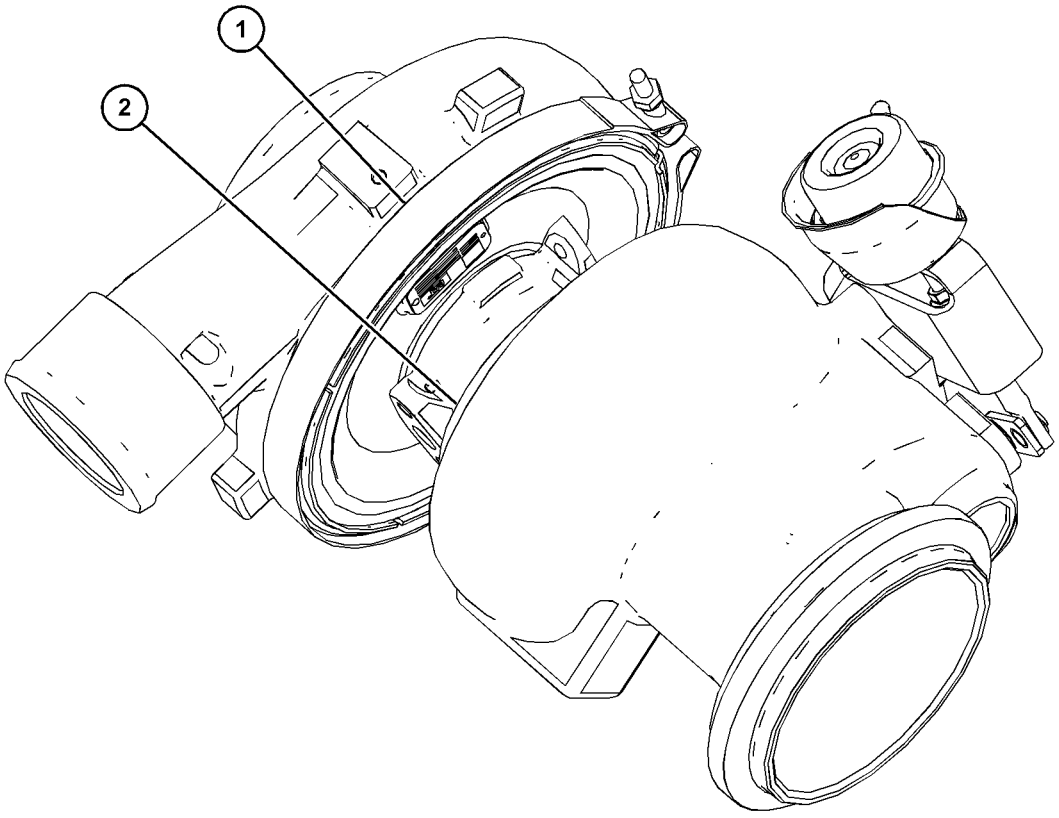

GRAPHIC #1

<END>

g06305856

361-7347 CONNECTION GP-FUEL

S/N: SP91-UP
9.49 SAE, M16
PART OF 552-1669 FILTER GP-WATER SEP & FUEL

SMCS-1274 **i05804998**

NOTE	REF NO	GRAPHIC REF	PART NUMBER	QTY	PART NAME 1 2 3 4 5 6 (PRODUCT LEVEL)	SEE PAGE
	1	1	**361-7346**	1	CONNECTION	
	2	1	**228-7102**	1	SEAL-O-RING	

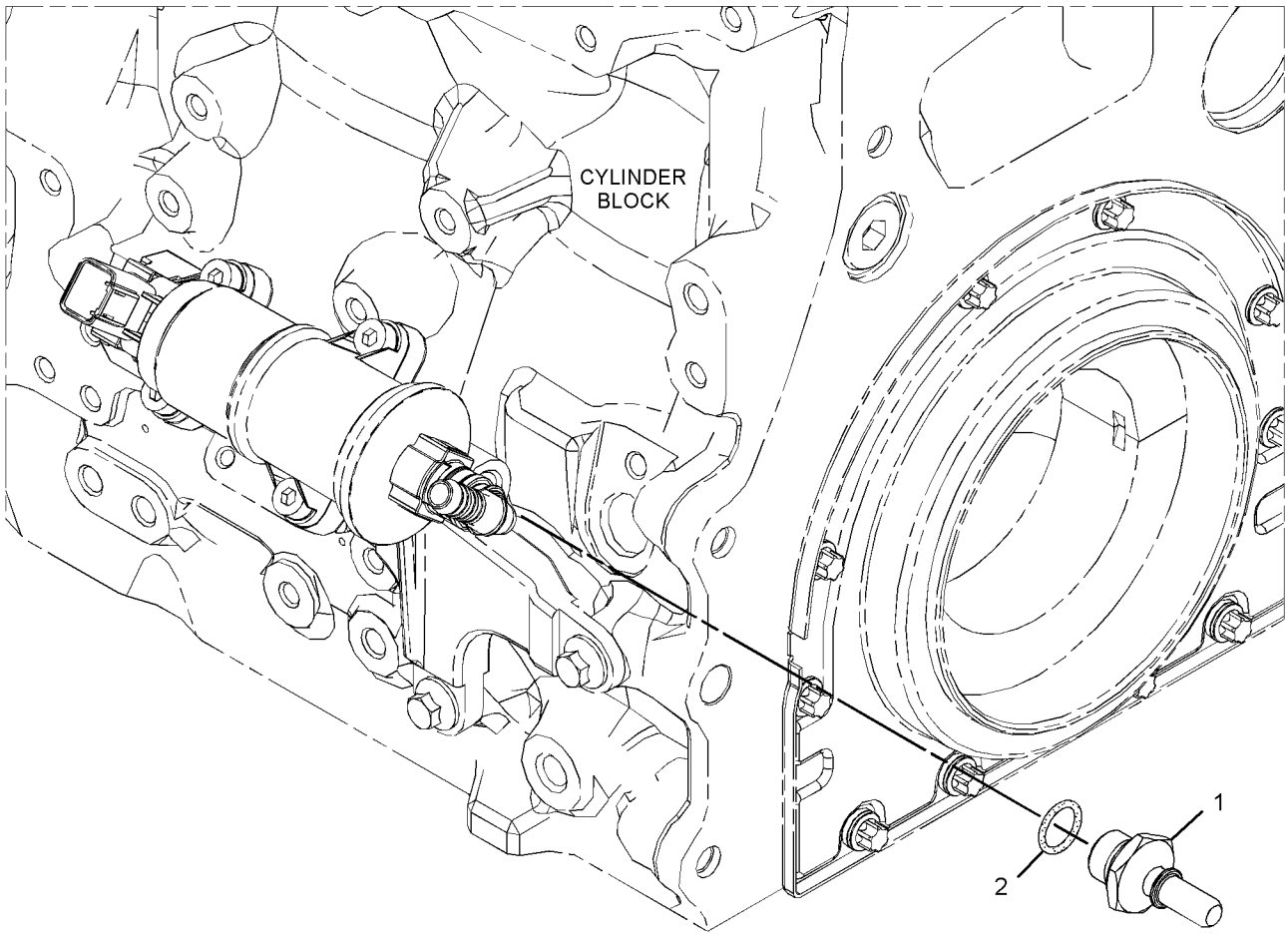

GRAPHIC #1 <END> g02716582

552-1669 FILTER GP-WATER SEP & FUEL

S/N: SP91-UP

PART OF 502-4787 LINES GP-FUEL

SMCS-1261, 1263 **i07869597**

NOTE	REF NO	GRAPHIC REF	PART NUMBER	QTY	PART NAME 1 2 3 4 5 6 (PRODUCT LEVEL)	SEE PAGE
	1	1	**199-7560**	1	RING-RETAINING	
	2	1	**228-7102**	1	SEAL-O-RING	
	3	1	**238-0112**	1	SENSOR GP-TEMPERATURE (2-PIN) (FUEL)	
Y	4	1	**361-7347**	2	CONNECTION GP-FUEL	116
	5	1	**362-9435**	1	CONNECTION AS	
		1	**228-7102**	1	SEAL-O-RING	
	6	1	**433-4841**	1	ADAPTER	
	7	1	**439-5039**	1	SENSOR GP-LIQUID LEVEL (WATER IN FUEL)	
	8	1	**277-4993**	5	SEAL-O-RING	
	9	1	**320-3060**	1	SENSOR GP-PRESSURE (FUEL FILTER OUTLET)	
	9A	1	**320-3060**	1	SENSOR GP-PRESSURE (FUEL FILTER INLET)	
	10	1	**356-3986**	1	CONNECTOR AS	
		1	**277-4993**	1	SEAL-O-RING	
	11	1	**434-5089**	1	HOUSING AS-FUEL FILTER	
	11A	1	**434-3928**	1	FILTER AS-FUEL (ULTRA HIGH EFFICIENCY)	
		1	**354-5833**	1	KIT-DRAIN (FUEL FILTER)	
					(INCLUDES DRAIN,KNOB & SEAL)	
		1	**509-1568**	1	HOUSING-FUEL FILTER	
J	15	1	**511-4824**	1	SEAL-O-RING	
	17	1	**515-6467**	1	CONNECTION	
	18	1	**523-4986**	1	HOUSING AS (FUEL, WATER SEPARATOR)	
		1	**460-5302**	1	KIT-DRAIN (FUEL FILTER, WATER SEPARATOR)	
					(INCLUDES DRAIN, KNOB & SEAL)	
		1	**523-4987**	1	ELEMENT-WATER SEPARATOR	
	21	1	**533-2245**	1	SENSOR AS-PRESSURE (PRIMARY FUEL, WATER SEPARATOR)	
	22	1	**539-7999**	1	VALVE AS-CHECK	
	23	1	**6V-7723**	1	RING-RETAINING	
					AVAILABLE REPAIR KIT(S):	
J			**562-1852**	1	KIT-FUEL PUMP (WATER SEPARATOR)	
					(ALSO INCLUDES SPRING,SEAL-O-RING,SPACER & PUMP AS)	

J - KIT MARKED J SERVICES PART(S) MARKED J
Y - SEPARATE ILLUSTRATION

552-1669 **FILTER GP-WATER SEP & FUEL (**contd.**)** **i07869597**

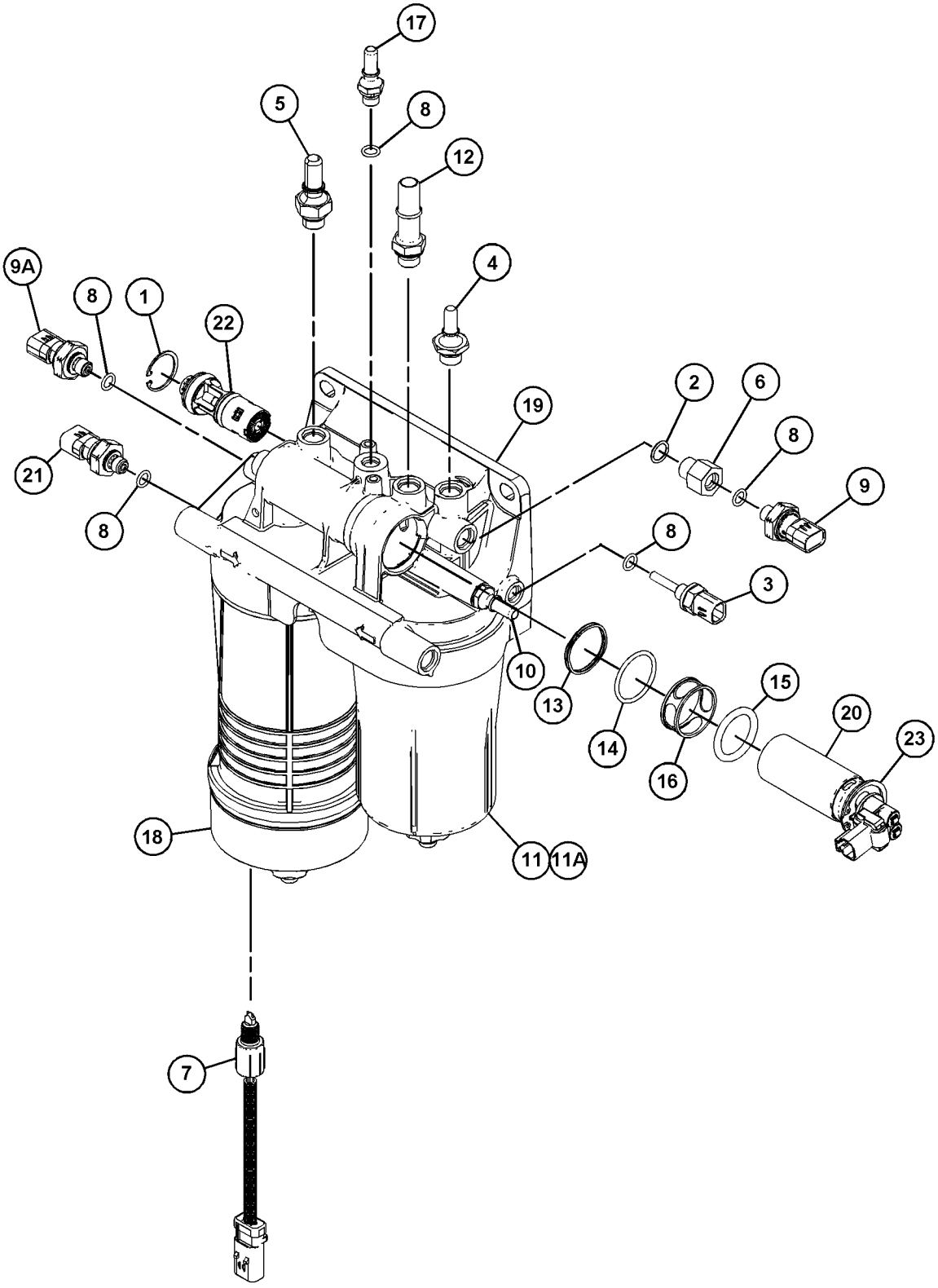

GRAPHIC #1 <END> g06307135

525-6754 FITTING GP-FUEL

S/N: NTB1-UP

PART OF 522-6120 ENGINE AR-COMPLETE

SMCS-1274 **i07498901**

NOTE	REF NO	GRAPHIC REF	PART NUMBER	QTY	PART NAME 1 2 3 4 5 6 (PRODUCT LEVEL)	SEE PAGE
	1	1	*442-1579*	1	FITTING AS	
		1	**126-9093**	1	SEAL	
		1	**439-1840**	1	FITTING	
	2	1	*448-8981*	2	FITTING AS	
					(EACH INCLUDES)	
		1	**126-9093**	1	SEAL	
		1	**448-8980**	1	FITTING	

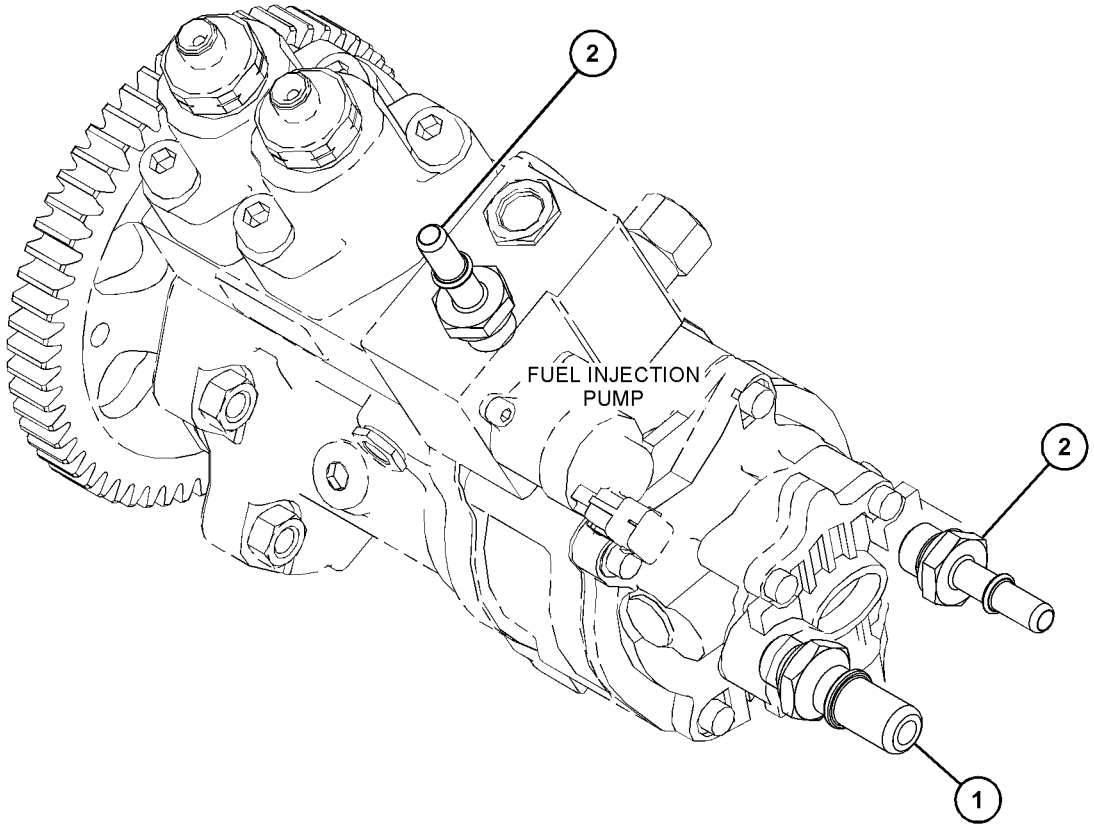

GRAPHIC #1 <END> g06243271

502-4787 LINES GP-FUEL

S/N: SP91-UP

PART OF 502-4246 INSTALLATION AR-ENGINE

SMCS-1274 **i07686572**

NOTE	REF NO	GRAPHIC REF	PART NUMBER	QTY	PART NAME 1 2 3 4 5 6 (PRODUCT LEVEL)	SEE PAGE
M	1	1	**8T-4196**	4	BOLT (M10X1.5X35-MM)	
M	2	1	**7X-2543**	1	BOLT (M10X1.5X120-MM)	
	3	1	**4I-0379**	1	VALVE-MANUAL (FUEL SHUTOFF)	
	4	1	**5P-7462**	1	CLIP (SLOT)	
	5	1	**5P-7463**	1	CLIP (TAB)	
	6	1	**7K-1181**	3	STRAP-CABLE	
	7	1	**8T-1890**	2	CLIP (TAB)	
	8	1	**157-1669**	1	CONNECTOR	
	9	1	**228-7090**	1	SEAL-O-RING	
	10	1	**275-1443**	2	CLIP (SLOT)	
	11	1	*321-8657*	1	ELBOW AS	
		1	**6V-8076**	1	ELBOW	
		1	**214-7568**	1	SEAL-O-RING	
	12	1	**327-0325**	1	STRAP-CABLE	
	13	1	*330-9724*	1	PLUG AS-CONNECTOR	
		1	**228-7102**	1	SEAL-O-RING	
		1	**241-6158**	1	PLUG	
	14	1	**385-3821**	2	GROMMET	
	15	1	**437-2150**	1	CLIP (LOOP)	
	16	1	**440-6233**	4	CLIP	
	17	1	**093-2065**	2	GROMMET	
	18	1	**214-7568**	1	SEAL-O-RING	
	19	1	**266-7379**	1	STRAP-CABLE	
	20	1	**275-1442**	2	CLIP (TAB)	
	21	1	**343-2387**	1	CLIP (LOOP)	
	22	1	**344-5360**	3	CLIP (LOOP)	
	23	1	**347-4416**	2	ADAPTER	
	24	1	**351-4318**	3	CLIP (LOOP)	
	25	1	**351-4319**	4	CLIP (LOOP)	
	26	1	**3D-5279**	1	GROMMET	
	27	1	**3S-2093**	2	STRAP-CABLE	
	28	1	**484-1453**	1	CLIP (RETAINER)	
	29	1	**494-9165**	2	CLIP (LOOP)	
	31	1	**513-8034**	1	VALVE AS-BALL	
		1	**228-7102**	1	SEAL-O-RING	
	32	1	**513-8035**	1	ADAPTER AS	
		1	**519-8103**	1	SEAL-O-RING	
	33	1	**522-1048**	4	CLIP	
Y	34	1	*552-1669*	1	FILTER GP-WATER SEP & FUEL	117
	35	1	**566-5436**	1	PLATE AS	
	36	1	**552-5560**	1	HOSE AS	
	37	1	**555-5143**	1	PLATE AS	
M		1	**8T-3490**	1	NUT-WELD (M10X1.5-THD)	
	38	1	**555-5159**	1	LINER	
I	39	1	**555-5169**	1	HOSE AS	
	40	1	**555-5170**	1	HOSE AS	
	41	1	**555-5171**	1	HOSE AS	

502-4787 **LINES GP-FUEL (**contd.**)** **i07686572**

NOTE	REF NO	GRAPHIC REF	PART NUMBER	QTY	PART NAME 1 2 3 4 5 6 (PRODUCT LEVEL)	SEE PAGE
	42	1	**555-5172**	1	HOSE AS	
	43	1	**5G-3676**	2	GROMMET	
	44	1	**6S-8620**	6	CLAMP-HOSE	
	45	1	**6V-0683**	1	GROMMET	
	46	1	**8D-0482**	1	GROMMET	
	47	1	**8T-1889**	2	CLIP (SLOT)	
	48	1	**8T-4121**	22	WASHER-HARD (11X21X2.5-MM THK)	
M	49	1	**8T-4136**	17	BOLT (M10X1.5X25-MM)	
	50	1	**347-8646**		HOSE (42-CM)	
E	50A	1	**347-8646**	1	HOSE (177-CM)	
E	51	1	**347-8645**		HOSE (38-CM)	
E	51A	1	**347-8645**		HOSE (131-CM)	

E - ORDER BY THE CENTIMETER
I - REFER TO HYDRAULIC INFORMATION SYSTEM
M - METRIC PART
Y - SEPARATE ILLUSTRATION

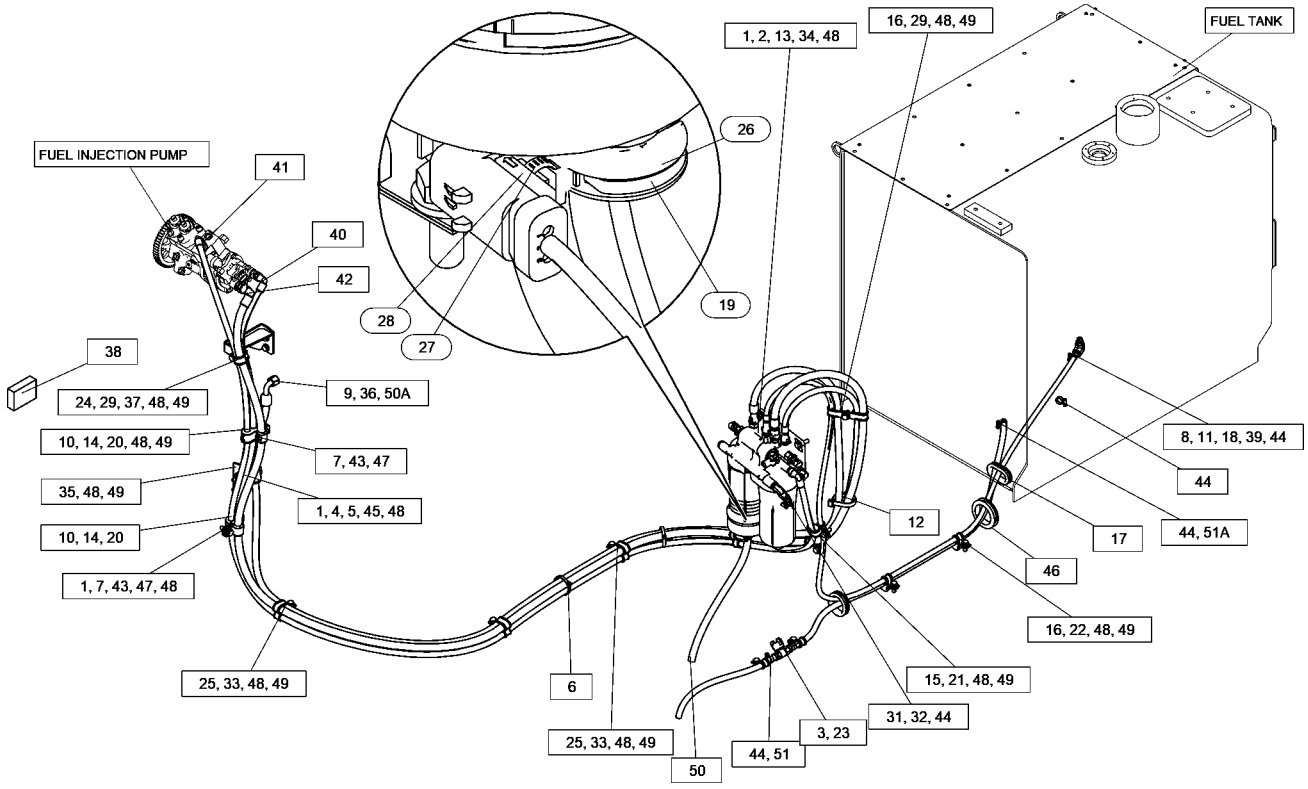

GRAPHIC #1 <END> g06305920

528-4125 LINES GP-FUEL

S/N: NTB1-UP

PART OF 522-6120 ENGINE AR-COMPLETE

SMCS-1274 **i07498971**

NOTE	REF NO	GRAPHIC REF	PART NUMBER	QTY	PART NAME 1 2 3 4 5 6 (PRODUCT LEVEL)	SEE PAGE
	1	1	**528-4127**	1	TUBE AS	
	2	1	**228-7090**	1	SEAL-O-RING	
	3	1	*332-8555*	1	ADAPTER AS	
		1	**8M-0506**	1	ADAPTER-O-RING	
		1	**214-7568**	1	SEAL-O-RING	
	4	1	**353-7957**	1	GROMMET	
	5	1	**3E-4352**	2	WASHER-HARD (8.8X20.5X2.5-MM THK)	
M	6	1	**5P-7970**	1	NUT (M8X1.25-THD)	
	7	1	**8T-1888**	1	CLIP (TAB)	
	8	1	**8T-1887**	1	CLIP (SLOT)	

M - METRIC PART

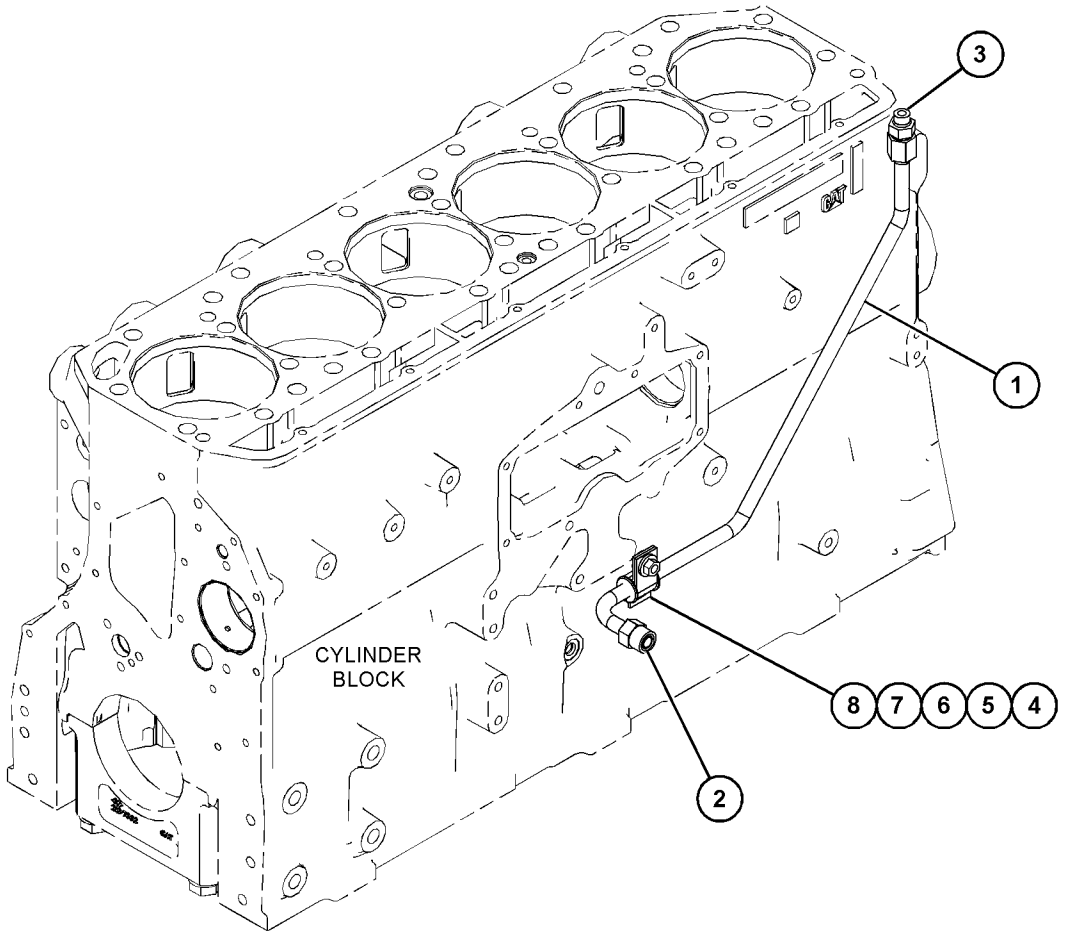

GRAPHIC #1 <END> g06243245

528-6870 LINES GP-FUEL

S/N: NTB1-UP

PART OF 522-6120 ENGINE AR-COMPLETE

SMCS-1274 **i07498973**

NOTE	REF NO	GRAPHIC REF	PART NUMBER	QTY	PART NAME 1 2 3 4 5 6 (PRODUCT LEVEL)	SEE PAGE
	1	1	**164-0150**	1	SPACER (9X20X20-MM THK)	
	2	1	*191-7805*	1	ELBOW AS	
		1	**030-7947**	1	ADAPTER-ELBOW	
		1	**214-7568**	1	SEAL-O-RING	
Y	3	1	*420-1792*	1	VALVE GP-CHECK	136
	4	1	*439-1963*	1	ELBOW AS	
		1	**214-7568**	1	SEAL-O-RING	
		1	**439-1962**	1	ADAPTER-ELBOW	
	5	1	*451-0364*	1	CONNECTOR AS	
		1	**030-3978**	1	CONNECTOR	
		1	**214-7566**	1	SEAL-O-RING	
	6	1	**505-5313**	1	TUBE AS	
	7	1	**505-5315**	1	MANIFOLD-FUEL	
	8	1	**526-7268**	1	ELBOW AS	
	9	1	**526-7271**	1	ELBOW AS	
	10	1	**527-1081**	1	TUBE AS	
	11	1	**528-5070**	1	TUBE AS	
	12	1	**353-7957**	1	GROMMET	
M	13	1	**382-3965**	1	STUD (M8X1.25X40.7-MM, M8X1.25X40-MM)	
	14	1	**5P-4116**	1	WASHER-HARD (8.8X20.5X2-MM THK)	
M	15	1	**6V-2317**	2	BOLT (M8X1.25X30-MM)	
	16	1	**8T-1887**	1	CLIP (SLOT)	
	17	1	**8T-1888**	1	CLIP (TAB)	
	18	1	**9M-1974**	2	WASHER-HARD (8.8X16X2-MM THK)	

M - METRIC PART
Y - SEPARATE ILLUSTRATION

528-6870 **LINES GP-FUEL (**contd.**)** **i07498973**

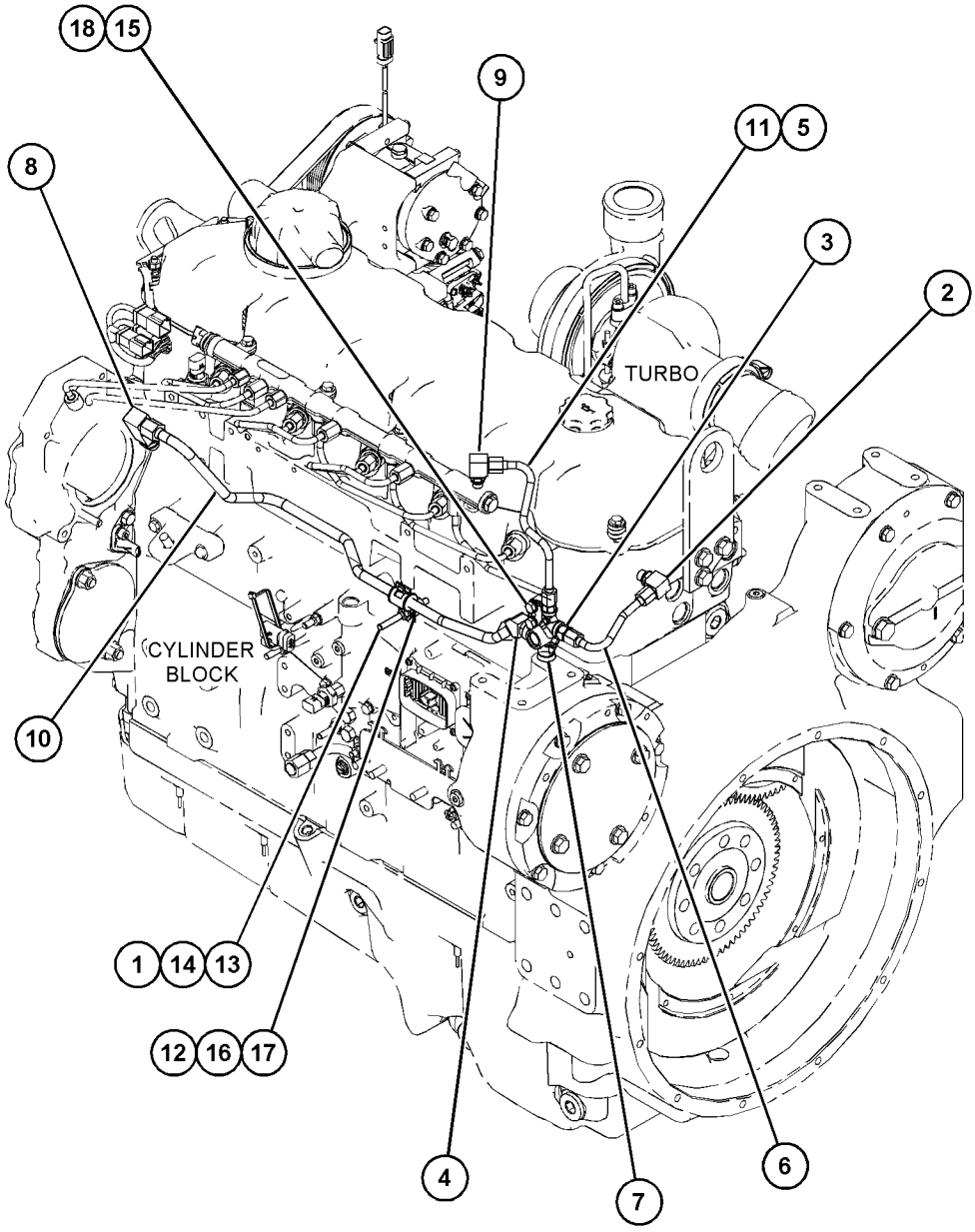

GRAPHIC #1 <END> g06246755

503-7395 LINES GP-FUEL INJECTION

S/N: NTB1-UP

PART OF 546-5240 ENGINE AR-CORE

SMCS-1252, 1254 **i07231017**

NOTE	REF NO	GRAPHIC REF	PART NUMBER	QTY	PART NAME 1 2 3 4 5 6 (PRODUCT LEVEL)	SEE PAGE
	1	1	**490-5470**	1	RAIL GP-FUEL	
	2	1	**490-5473**	1	TUBE AS	
	3	1	**490-5474**	2	TUBE AS	
	4	1	**490-5475**	2	TUBE AS	
	5	1	**490-5476**	1	TUBE AS	
	6	1	**490-5477**	4	SPACER (9X16X41-MM THK)	
	7	1	**503-7393**	1	TUBE AS	
	8	1	**503-7394**	1	TUBE AS	
M	9	1	**6V-5220**	4	BOLT (M8X1.25X65-MM)	

M - METRIC PART

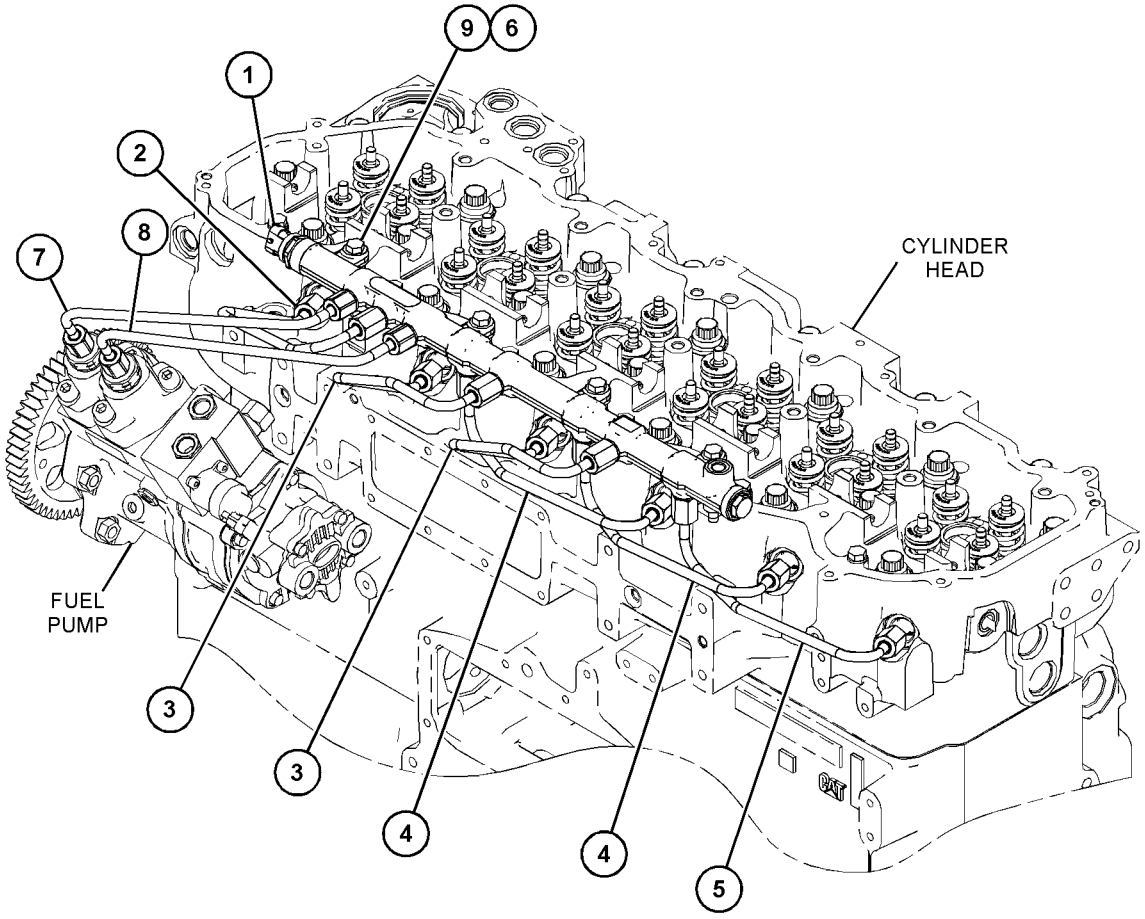

GRAPHIC #1 <END> g06255569

523-2199 MOUNTING GP-PUMP

S/N: NTB1-UP
FOR USE WITH FUEL INJECTOR PUMP
PART OF 522-6120 ENGINE AR-COMPLETE

SMCS-1256 **i07499074**

NOTE	REF NO	GRAPHIC REF	PART NUMBER	QTY	PART NAME 1 2 3 4 5 6 (PRODUCT LEVEL)	SEE PAGE
	1	1	**526-7488**	1	BRACKET	
	2	1	**3E-4352**	2	WASHER-HARD (8.8X20.5X2.5-MM THK)	
M	3	1	**6V-3668**	1	BOLT (M12X1.75X30-MM)	
M	4	1	**6V-5219**	2	BOLT (M8X1.25X40-MM)	
	5	1	**7D-1649**	1	WASHER-HARD (13.5X32X5-MM THK)	

M - METRIC PART

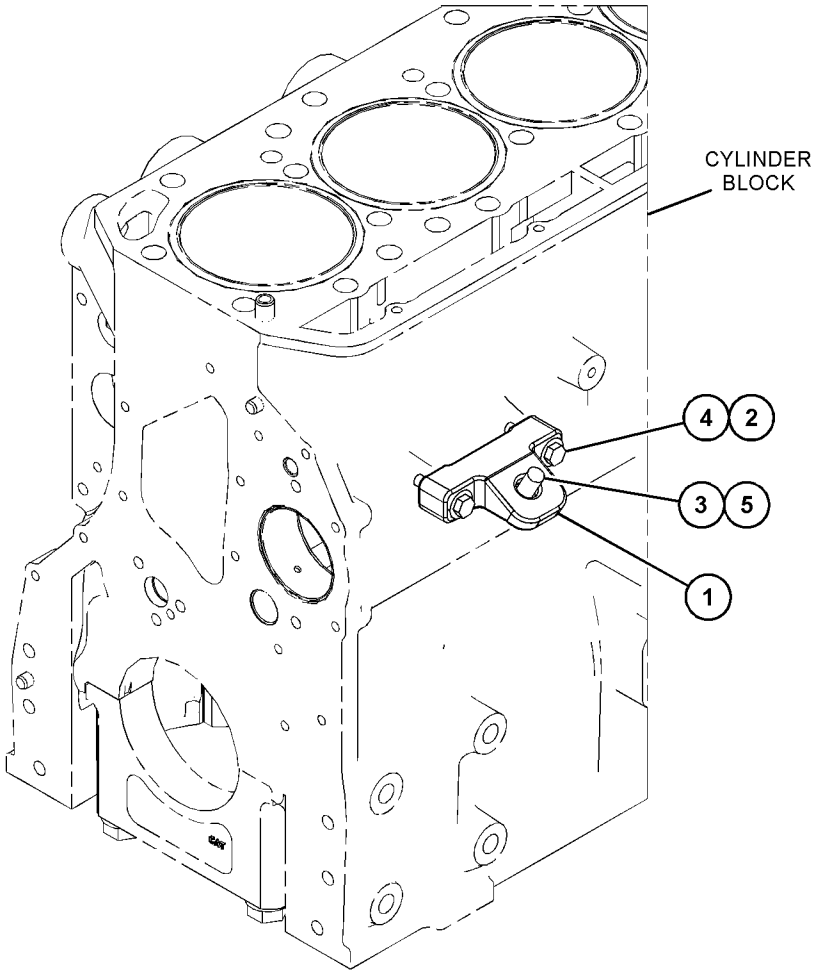

GRAPHIC #1 <END> g06266490

546-1255 PUMP AR-FUEL TRANSFER

S/N: SP91-UP

SMCS-1256 **i07526883**

NOTE	PART NUMBER	QTY	PART NAME 1 2 3 4 5 6 (PRODUCT LEVEL)	SEE PAGE
Y	*546-5663*	1	FILM GP (FUEL)	753
Y	*502-5360*	1	PUMP GP-FUEL TRANSFER	130
Y	*490-2765*	1	RELAY GP (REFUELING PUMP)	227
Y	*502-7210*	1	WIRING GP-CHASSIS (REFUELING PUMP)	268

Y - SEPARATE ILLUSTRATION

<END>

510-9241 PUMP GP-FUEL INJECTION

S/N: NTB1-UP

PART OF 546-5240 ENGINE AR-CORE

SMCS-1251, 1290 **i07500761**

NOTE	REF NO	GRAPHIC REF	PART NUMBER	QTY	PART NAME 1 2 3 4 5 6 (PRODUCT LEVEL)	SEE PAGE
M	1	1	**261-7595**	1	BOLT-SOCKET HEAD (M8X1.25X50-MM)	
	2	1	**490-5462**	1	CLAMP-INJECTOR	
	3	1	**490-5464**	1	NUT (QUILL)	
	4	1	**490-5466**	1	QUILL AS	
	5	1	**490-5468**	1	WASHER (M8X1.25-THD)	
	6	1	**510-1695**	1	INJECTOR AS-FUEL	

M - METRIC PART

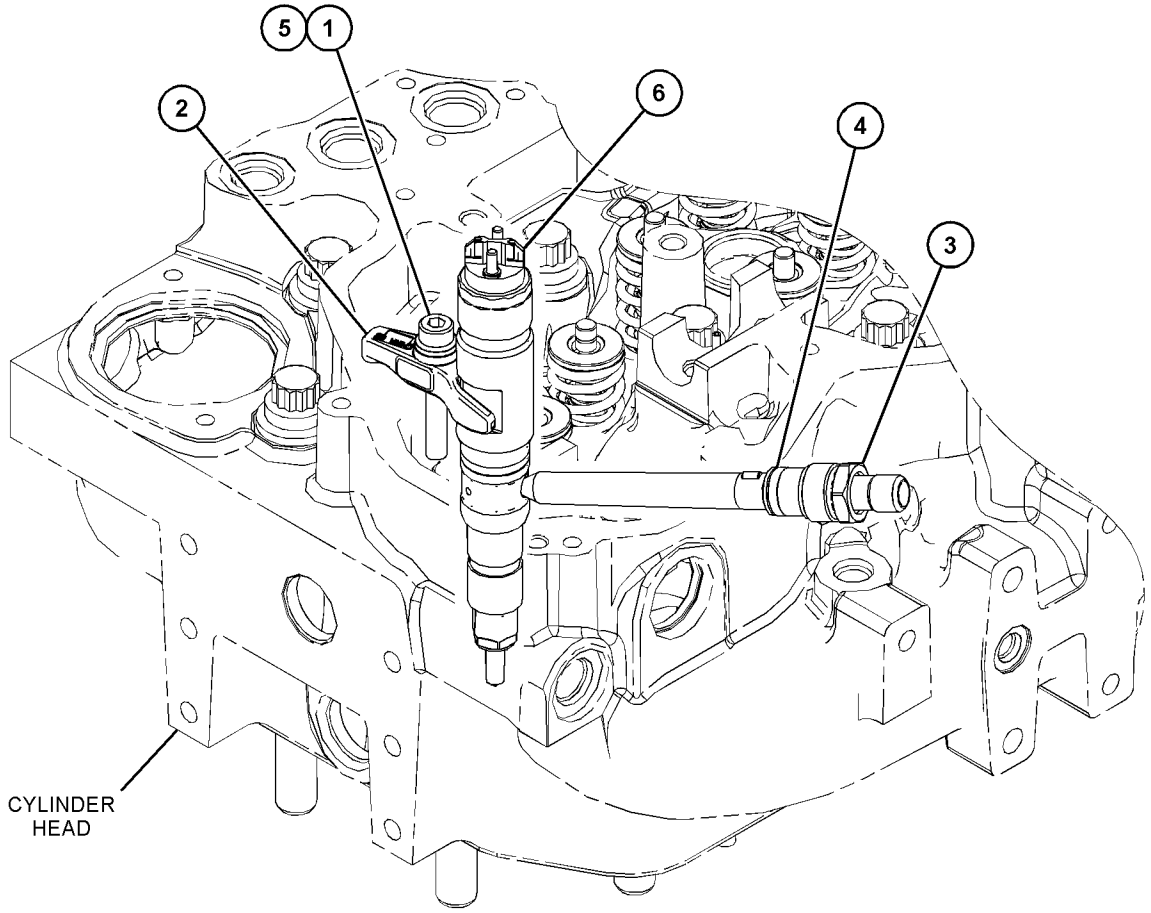

GRAPHIC #1 <END> g06311847

516-4624 PUMP GP-FUEL INJECTION

S/N: NTB1-UP

PART OF 546-5240 ENGINE AR-CORE

SMCS-1251, 1290

i07850333

NOTE	REF NO	GRAPHIC REF	PART NUMBER	QTY	PART NAME 1 2 3 4 5 6 (PRODUCT LEVEL)	SEE PAGE
M	1	1	**2Y-5829**	4	NUT (M10X1.5-THD)	
	2	1	**490-5709**	1	PUMP GP-FUEL	
		1	**499-4442**	1	VALVE GP-FUEL	
	3	1	**540-3720**	1	GEAR-PUMP	

M - METRIC PART

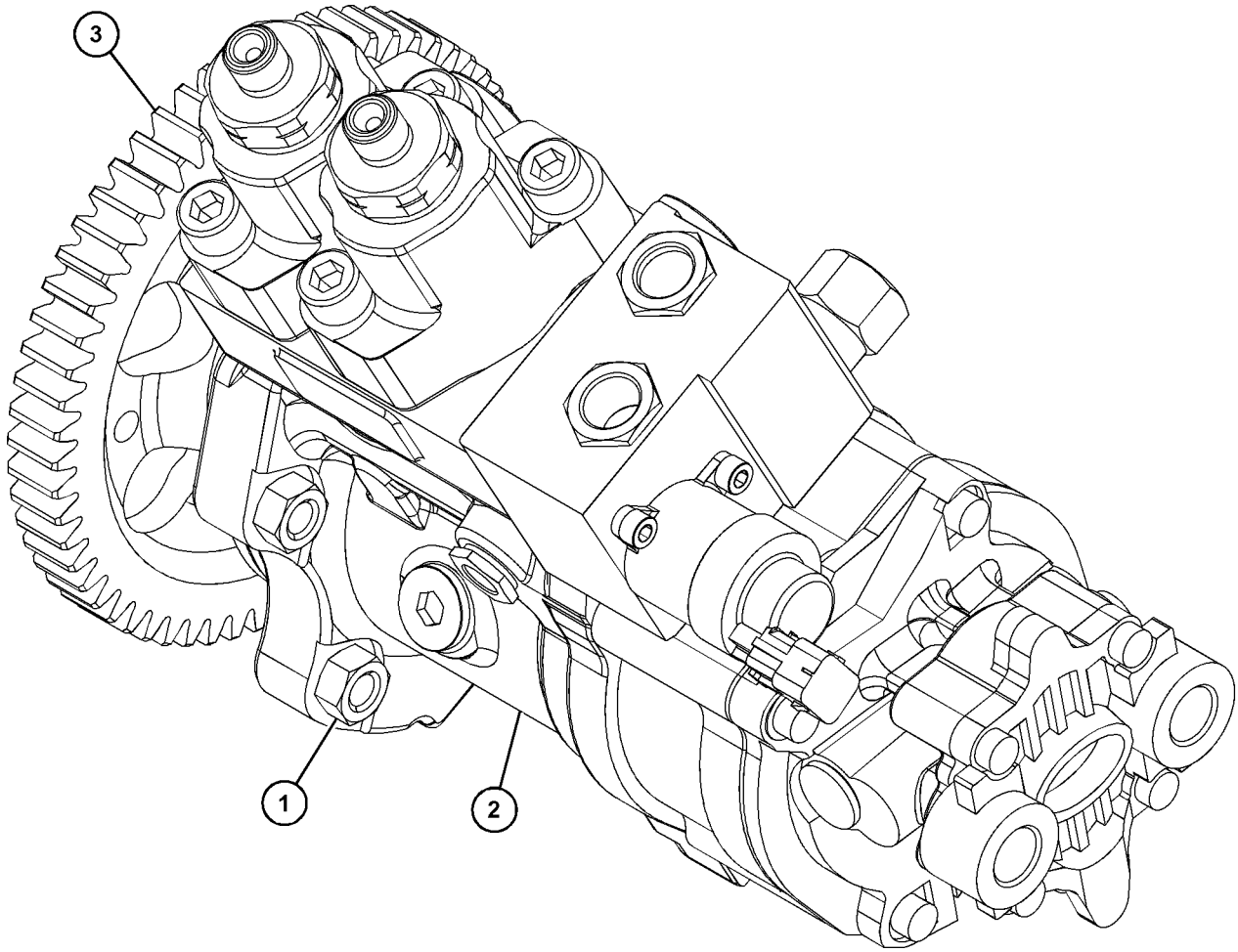

GRAPHIC #1 <END> g06243526

502-5360 PUMP GP-FUEL TRANSFER

S/N: SP91-UP

PART OF 546-1255 PUMP AR-FUEL TRANSFER

SMCS-1256 **i07526891**

NOTE	REF NO	GRAPHIC REF	PART NUMBER	QTY	PART NAME 1 2 3 4 5 6 (PRODUCT LEVEL)	SEE PAGE
M	1	1	**8T-4192**	2	BOLT (M12X1.75X25-MM)	
M	2	1	**8T-4648**	1	BOLT (M12X1.75X70-MM)	
	3	1	**8T-4121**	5	WASHER-HARD (11X21X2.5-MM THK)	
M	4	1	**8T-4136**	1	BOLT (M10X1.5X25-MM)	
M	5	1	**8T-4137**	4	BOLT (M10X1.5X20-MM)	
	6	1	**8T-4223**	3	WASHER-HARD (13.5X25.5X3-MM THK)	
	7	1	**196-5650**	1	SWITCH AS (REFUELING PUMP RELAY)	
M		1	**197-6076**	1	NUT (M30X1-THD)	
		1	**197-6082**	1	BOOT	
	8	1	**368-5219**	1	CONNECTOR-HOSE	
	9	1	**483-7804**	1	SPACER (13.5X25X50-MM THK)	
	10	1	**484-1454**	1	CLIP-RETAINING	
Y	11	1	**501-4186**	1	VALVE GP-REFUELING (FOOT)	137
	12	1	**513-9412**	1	PLATE AS	
D		1	**5P-5930**		SEAL (0.1-M)	
		1	**272-4215**	1	GROMMET	
Y	13	1	**521-8981**	1	PUMP GP-FUEL TRANSFER	132
	14	1	**521-8986**	1	PLATE AS	
	15	1	**9M-7958**	4	CLAMP-HOSE	
E	16	1	**457-1157**		HOSE (460-CM)	
E	16A	1	**457-1157**		HOSE (40-CM)	

D - ORDER BY THE METER
E - ORDER BY THE CENTIMETER
M - METRIC PART
Y - SEPARATE ILLUSTRATION

502-5360 **PUMP GP-FUEL TRANSFER (**contd.**)** **i07526891**

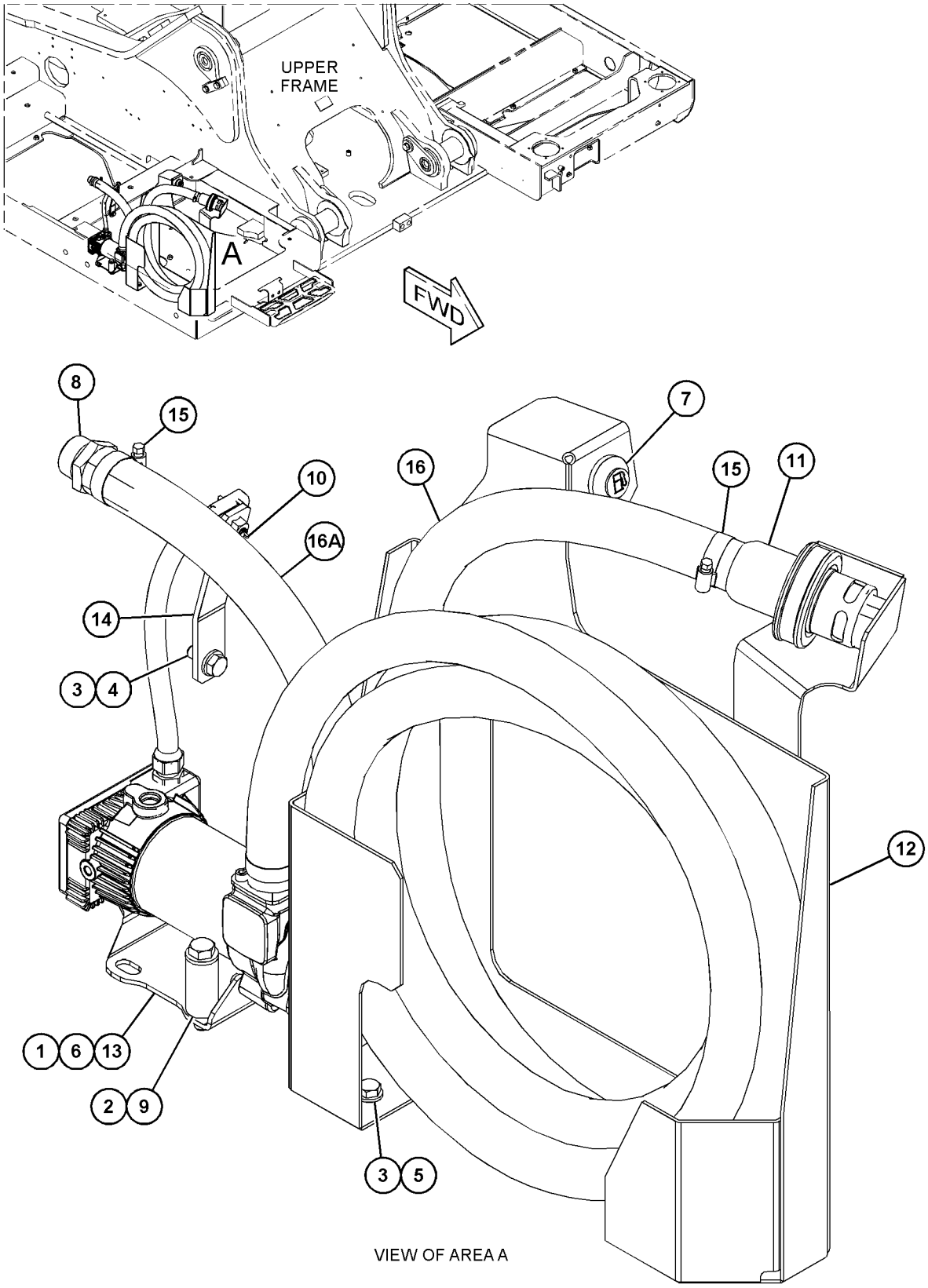

VIEW OF AREA A

GRAPHIC #1 <END> g06285072

521-8981 PUMP GP-FUEL TRANSFER

S/N: SP91-UP

PART OF 502-5360 PUMP GP-FUEL TRANSFER

SMCS-1256 **i07527074**

NOTE	REF NO	GRAPHIC REF	PART NUMBER	QTY	PART NAME 1 2 3 4 5 6 (PRODUCT LEVEL)	SEE PAGE
					(NO BREAKDOWN OF SERVICEABLE PARTS AVAILABLE AT TIME OF PUBLICATION)	

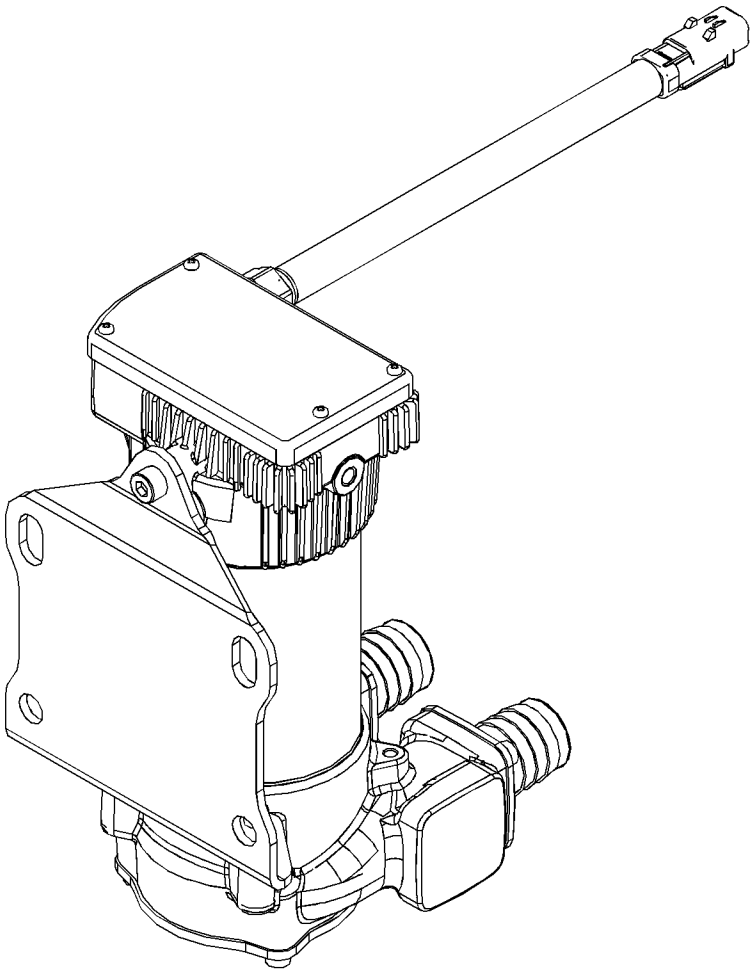

GRAPHIC #1 <END> g06284233

498-7501 TANK & MTG GP-FUEL

S/N: SP91-UP

PART OF 516-7423, 575-9544 ENCLOSURE AR

SMCS-1273 **i07686595**

NOTE	REF NO	GRAPHIC REF	PART NUMBER	QTY	PART NAME 1 2 3 4 5 6 (PRODUCT LEVEL)	SEE PAGE
	1	1	**246-2641**	1	PADLOCK GP	
		1	**5P-8500**	1	KEY	
	2	1	**9S-8178**	6	SPACER (0.891X1.625X1.5-IN THK)	
M	3	1	**447-1716**	6	BOLT (M20X2.5X80-MM)	
Y	4	1	**535-9173**	1	TANK GP-FUEL	134

M - METRIC PART
Y - SEPARATE ILLUSTRATION

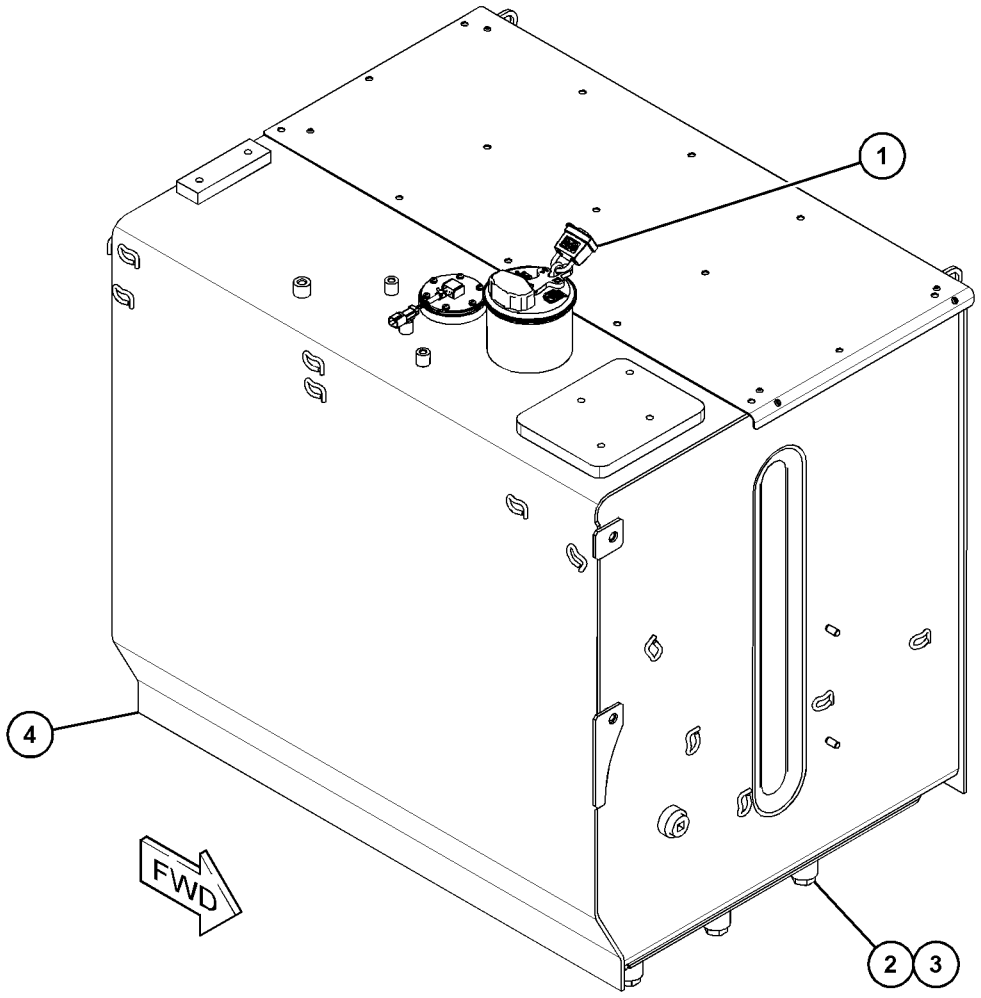

GRAPHIC #1 <END> g06278864

535-9173 TANK GP-FUEL

S/N: SP91-UP
600-L (158.5-US GAL)
PART OF 498-7501 TANK & MTG GP-FUEL

SMCS-1273 **i07523654**

NOTE	REF NO	GRAPHIC REF	PART NUMBER	QTY	PART NAME 1 2 3 4 5 6 (PRODUCT LEVEL)	SEE PAGE
	1	1	**3B-0551**	1	PLUG-PIPE	
	2	1	**8T-0328**	6	WASHER-HARD (5.5X10X1-MM THK)	
	3	1	**363-4122**	1	GASKET	
	4	1	**394-0437**	1	SENDER AS-FUEL LEVEL (TANK)	
		1	**9X-3401**	2	PIN-CONNECTOR (16-GA TO 18-GA)	
		1	**102-8802**	1	KIT-RECEPTACLE (2-PIN)	
					(INCLUDES RECEPTACLE AS & WEDGE)	
	5	1	*396-0382*	1	ELBOW AS	
		1	**6V-4292**	1	ELBOW	
		1	**238-5080**	1	SEAL-O-RING	
J	6	1	**303-9933**	1	STRAINER AS-FUEL (FLOAT GAUGE)	
H	7	1	**349-7059**	1	CAP AS-FUEL (LOCKABLE, VENTED)	
	8	1	*502-6363*	1	ELBOW AS	
		1	**5P-4924**	1	ELBOW	
		1	**214-7568**	1	SEAL-O-RING	
	9	1	**535-9174**	1	TANK AS-FUEL	
M	10	1	**6V-9673**	6	SCREW-MACHINE (M5X0.8X12-MM)	
					AVAILABLE REPAIR KIT(S):	
J			**303-9937**	1	KIT-GAUGE (FUEL STRAINER)	
					(INCLUDES STOPPER & GAUGE)	
H			**350-7735**	1	KIT-CAP FILTER (FUEL TANK)	
					(INCLUDES BREATHER BODY, BREATHER GASKET, SCREWS & WASHERS)	

H - KIT MARKED H SERVICES PART(S) MARKED H
J - KIT MARKED J SERVICES PART(S) MARKED J
M - METRIC PART

535-9173 **TANK GP-FUEL (**contd.**)** **i07523654**

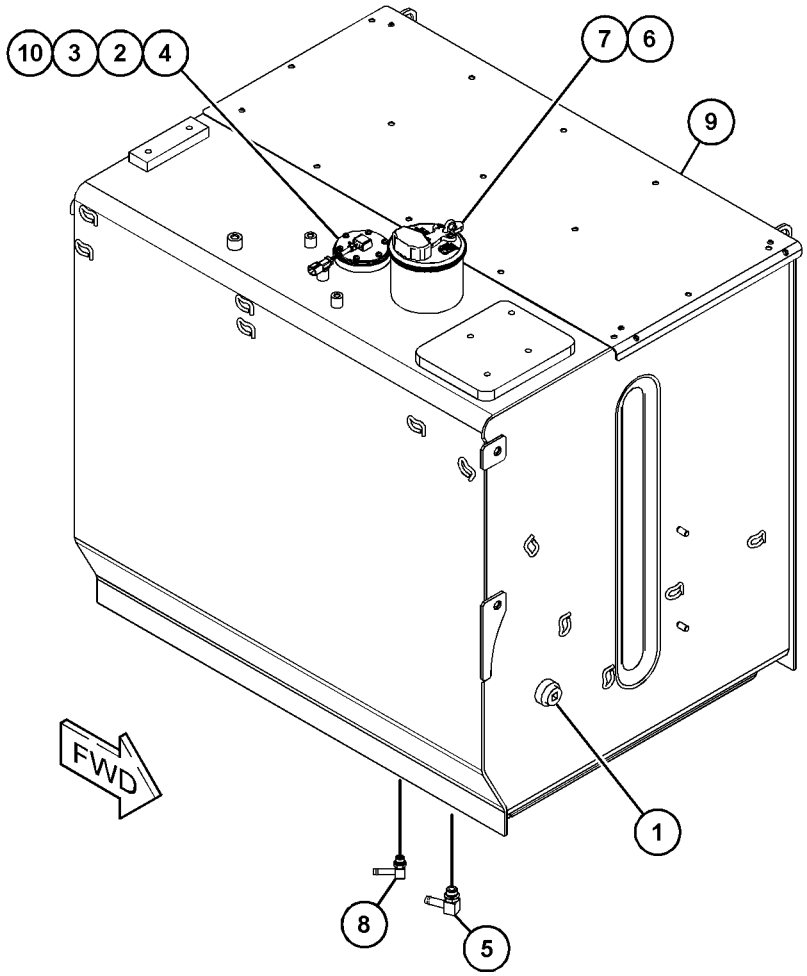

GRAPHIC #1 <END> g06279464

420-1792 VALVE GP-CHECK

S/N: NTB1-UP

PART OF 528-6870 LINES GP-FUEL

SMCS-1251 **i07499173**

NOTE	REF NO	GRAPHIC REF	PART NUMBER	QTY	PART NAME 1 2 3 4 5 6 (PRODUCT LEVEL)	SEE PAGE
	1	1	**420-1793**	1	VALVE-CHECK	
	2	1	**214-7568**	1	SEAL-O-RING	

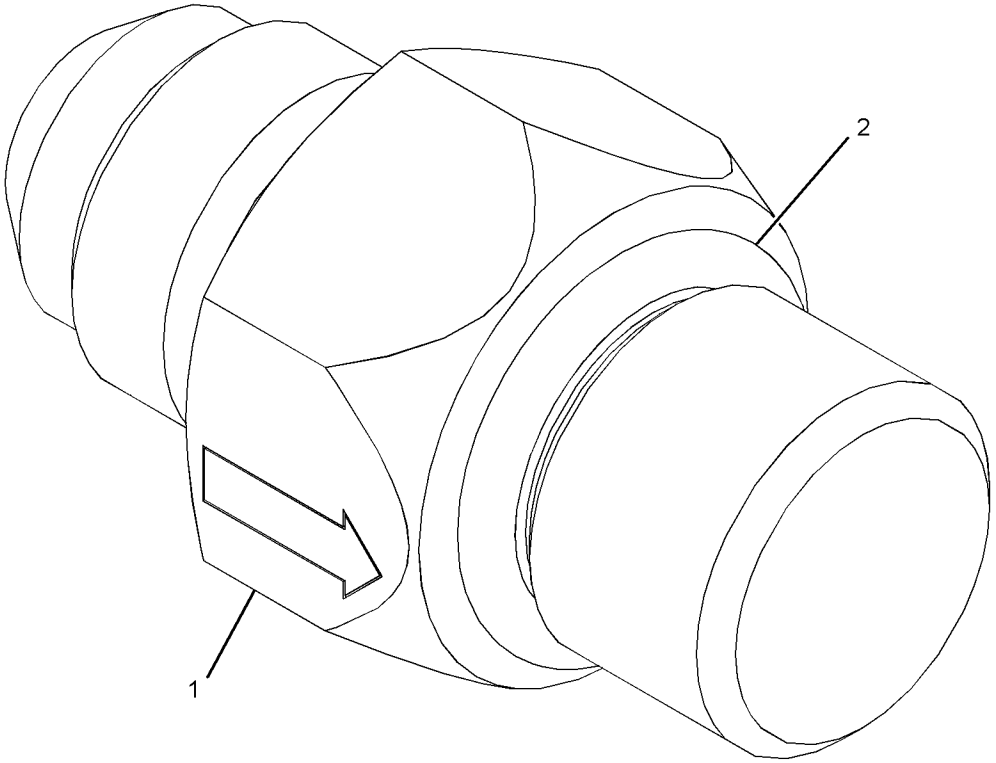

GRAPHIC #1 <END> g03327209

501-4186 VALVE GP-REFUELING

S/N: SP91-UP

PART OF 502-5360 PUMP GP-FUEL TRANSFER

SMCS-1256 **i07493528**

NOTE	REF NO	GRAPHIC REF	PART NUMBER	QTY	PART NAME 1 2 3 4 5 6 (PRODUCT LEVEL)	SEE PAGE
	1	1	**451-6724**	1	STRAINER (REFUELING)	
	2	1	**451-6726**	1	SPRING (STRAINER)	
	3	1	**451-6728**	1	SPRING	
	4	1	**501-4188**	1	KIT-VALVE (FOOT)	
					(INCLUDES CAP & SEAL)	

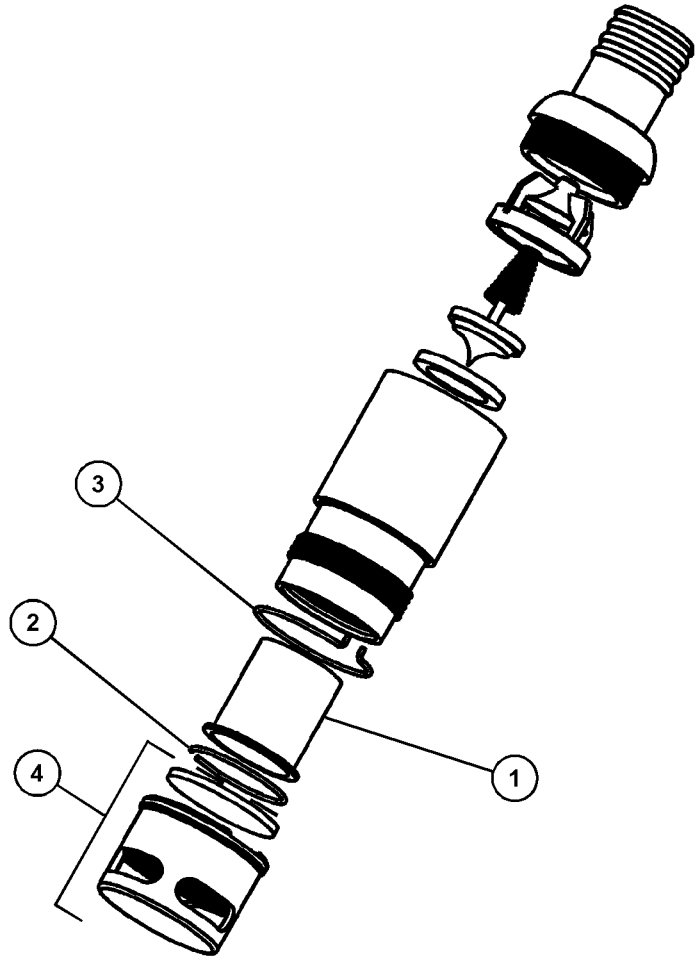

GRAPHIC #1 <END> g06035437

231-1771 ALARM GP-TRAVEL–BACKUP

S/N: SP91-UP

PART OF 522-0461 ALARM GP-TRAVEL

SMCS-7429 **i06950380**

NOTE	REF NO	GRAPHIC REF	PART NUMBER	QTY	PART NAME 1 2 3 4 5 6 (PRODUCT LEVEL)	SEE PAGE
	1	1	**213-9100**	1	ALARM AS (BACKUP)	
		1	**102-8802**	1	KIT-RECEPTACLE (2-PIN)	
					(INCLUDES RECEPTACLE AS & WEDGE)	
		1	**186-3735**	1	PIN-CONNECTOR (16-GA TO 18-GA)	
E		1	**9X-1813**		SLEEVE (29-CM)	
M	2	1	**8T-4189**	2	BOLT (M8X1.25X20-MM)	
	3	1	**5P-4116**	2	WASHER-HARD (8.8X20.5X2-MM THK)	

E - ORDER BY THE CENTIMETER
M - METRIC PART

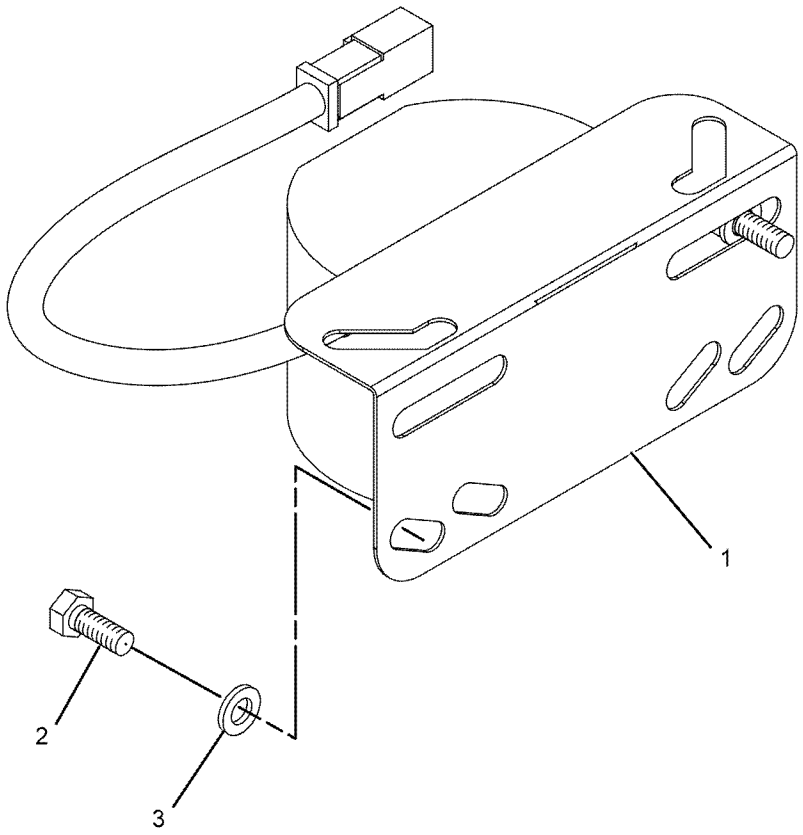

GRAPHIC #1 <END> g01071794

522-0461 ALARM GP-TRAVEL

S/N: SP91-UP

SMCS-7429 **i07527309**

NOTE	PART NUMBER	QTY	PART NAME 1 2 3 4 5 6 (PRODUCT LEVEL)	SEE PAGE
Y	*231-1771*	1	ALARM GP-TRAVEL (BACKUP)	138
Y	*516-2546*	1	SWITCH GP-ROCKER (TRAVEL ALARM CANCEL)	255

Y - SEPARATE ILLUSTRATION

<END>

344-5081 ALTERNATOR GP-CHARGING*R

S/N: NTB1-UP
24-VOLT, 115-AMPERE
PART OF 506-3265 ALTERNATOR GP-CHARGING

SMCS-1405 **i07519279**

NOTE	REF NO	GRAPHIC REF	PART NUMBER	QTY	PART NAME 1 2 3 4 5 6 (PRODUCT LEVEL)	SEE PAGE
					(NO SERVICED PARTS)	

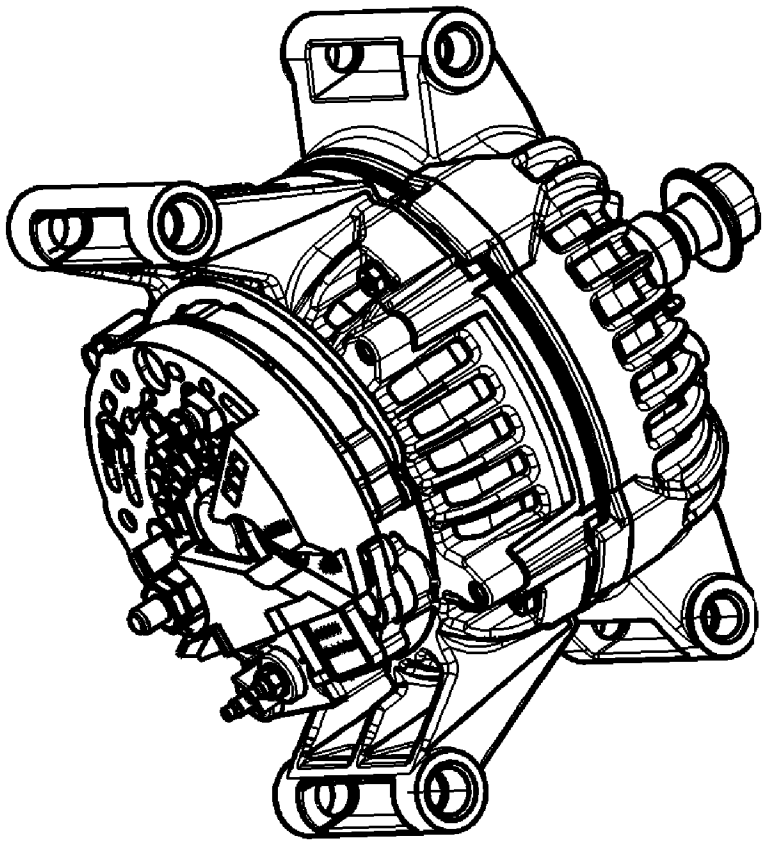

GRAPHIC #1 <END> g06347398

506-3265 ALTERNATOR GP-CHARGING

S/N: NTB1-UP
24 VOLT, 115 AMP
PART OF 522-6120 ENGINE AR-COMPLETE

SMCS-1405 **i07498886**

NOTE	REF NO	GRAPHIC REF	PART NUMBER	QTY	PART NAME 1 2 3 4 5 6 (PRODUCT LEVEL)	SEE PAGE
	1	1	**123-0858**	1	PULLEY-ALTERNATOR (8-GROOVE)	
YR	2	1	**344-5081**	1	ALTERNATOR GP-CHARGING (24-VOLT, 115-AMPERE)	140
	3	1	**8T-4121**	4	WASHER-HARD (11X21X2.5-MM THK)	
M	4	1	**8T-4198**	4	BOLT (M10X1.5X100-MM)	

M - METRIC PART
R - REMANUFACTURED PART MAY BE AVAILABLE
Y - SEPARATE ILLUSTRATION

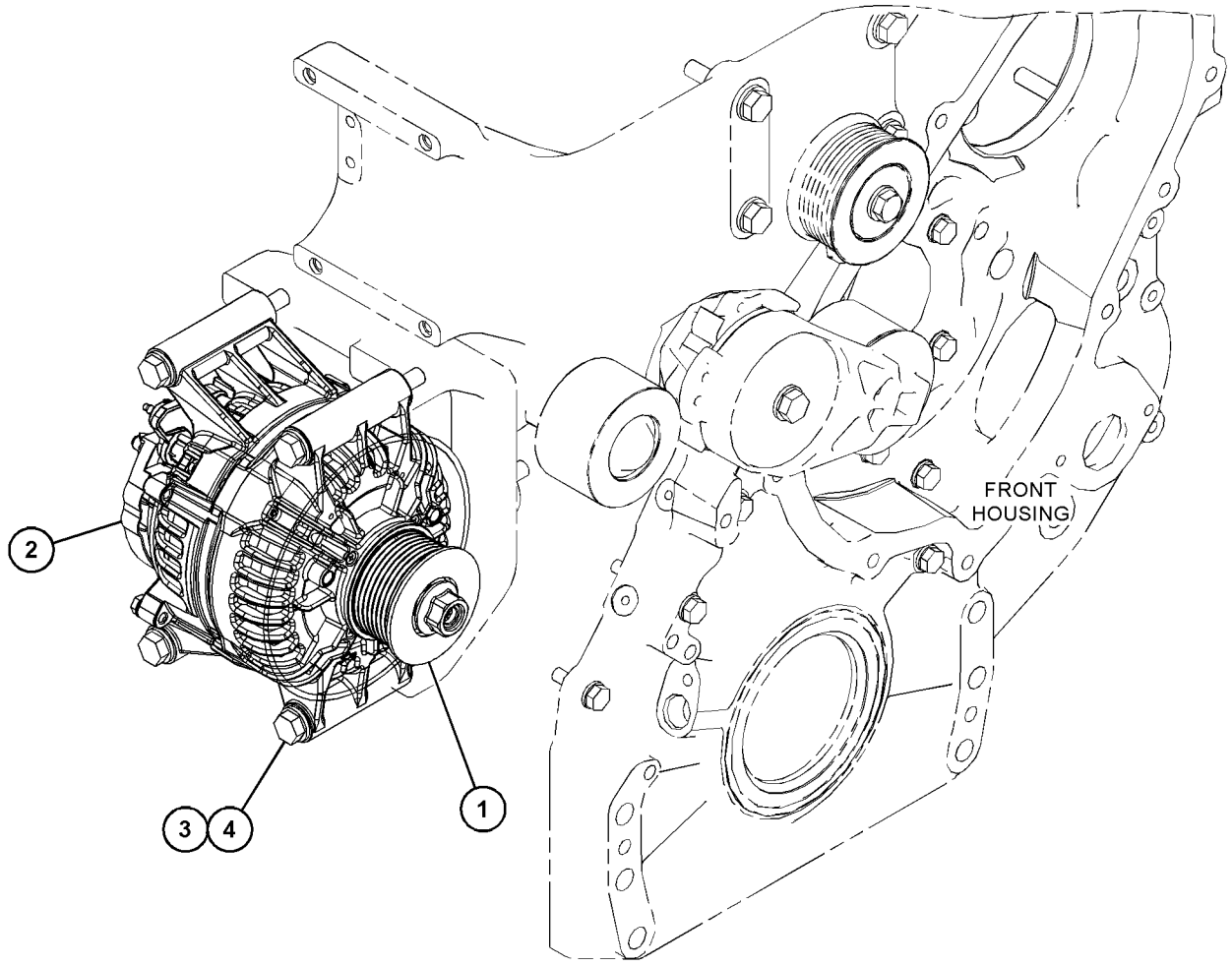

GRAPHIC #1 <END> g06257322

488-6821 ANTENNA & MOUNTING GP–PRODUCT LINK 631 SATELLITE

S/N: SP91-UP

PART OF 555-7258 INSTALLATION AR-COMMUNICATION

SMCS-7338, 733T

i07713866

NOTE	REF NO	GRAPHIC REF	PART NUMBER	QTY	PART NAME 1 2 3 4 5 6 (PRODUCT LEVEL)	SEE PAGE
	1	1	**3S-2093**	3	STRAP-CABLE	
	2	1	**443-8462**	1	ANTENNA AS (CELLULAR)	
		1	**361-1045**	1	NUT-SPECIAL (5/8-18-THD)	
		1	**385-8201**	1	CAP AS-CONNECTOR	
	3	1	**491-7831**	1	BASE	
E	4	1	**201-4441**		SEAL (5-CM EACH)	

E - ORDER BY THE CENTIMETER

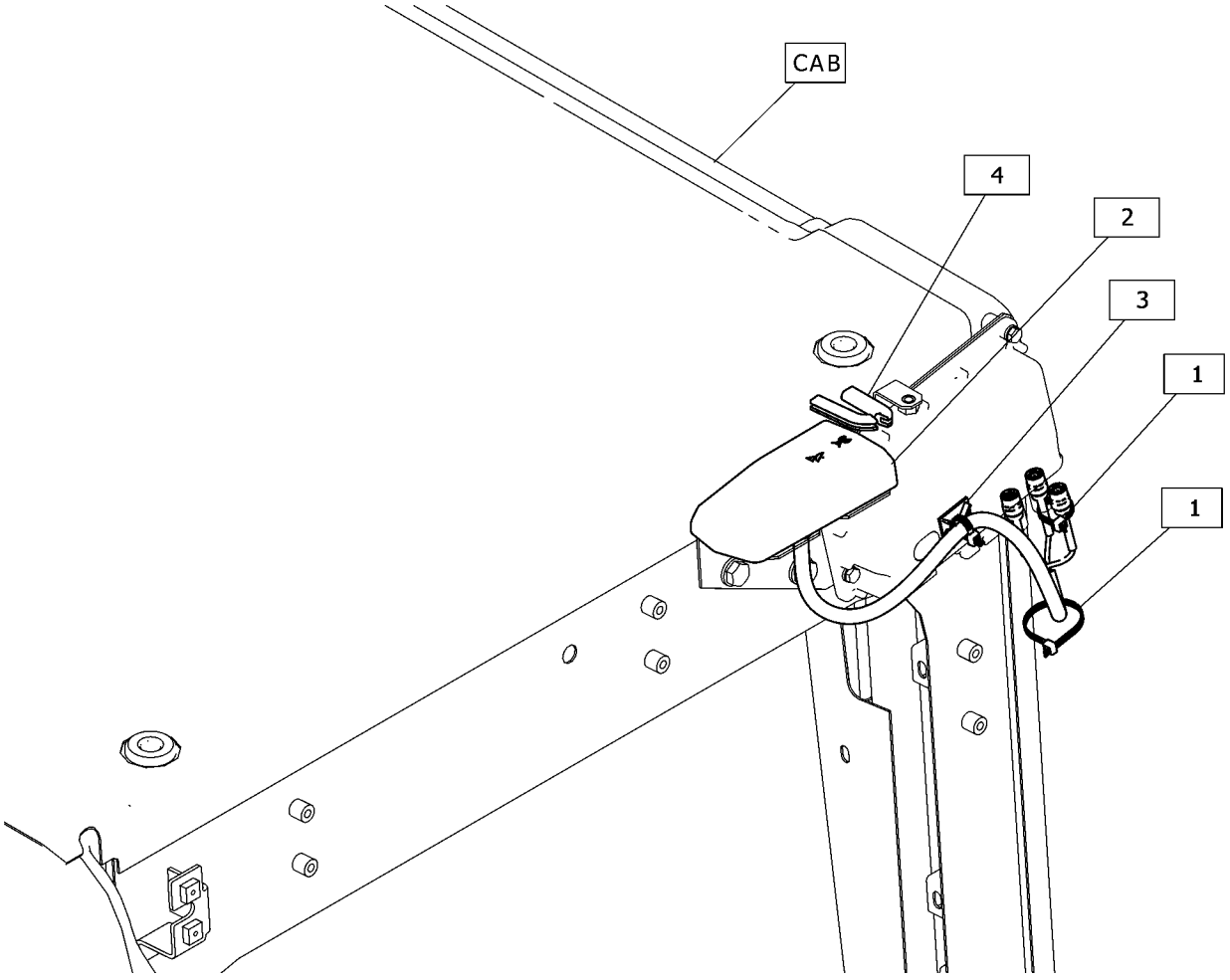

GRAPHIC #1 <END> g06404638

502-7224 BATTERY & WIRING GP

S/N: SP91-10000

PART OF 525-3763 ELECTRICAL AR

SMCS-1401, 1402, 1408 **i07792971**

NOTE	REF NO	GRAPHIC REF	PART NUMBER	QTY	PART NAME 1 2 3 4 5 6 (PRODUCT LEVEL)	SEE PAGE
M	1	3	**8T-4182**	1	BOLT (M10X1.5X45-MM)	
M	2	3	**8T-4196**	2	BOLT (M10X1.5X35-MM)	
	3	3	**204-2281**	5	STRAP-CABLE	
M	4	3	**8T-4172**	1	BOLT (M10X1.5X80-MM)	
M	5	3	**8T-4198**	2	BOLT (M10X1.5X100-MM)	
	6	1,2	**3S-2093**	42	STRAP-CABLE	
	7	3	**5F-9757**	1	GROMMET	
	8	2	**6W-6005**	1	HOLD-DOWN-BATTERY	
	9	1,3	**7K-1181**	27	STRAP-CABLE	
	10	1	**8T-4222**	1	WASHER-PLATED (11X32X2.5-MM THK)	
	11	2	**8T-4226**	1	WASHER-PLATED (10.5X45X3-MM THK)	
	12	2	**263-9574**	2	BATTERY AS (12-VOLT, MAINTENANCE FREE)	
					(EACH INCLUDES)	
		2	**123-1373**	6	CAP AS-FILLER (7/8-9-THD)	
	13	3	**325-8700**	1	PLUG AS	
		3	**8T-8737**	12	PLUG-SEAL	
		3	**230-4009**	1	PLUG AS-CONNECTOR (12-PIN)	
		3	**455-0709**	1	SEAL-CONNECTOR	
	14	3	**483-7800**	1	SPACER (11X20X20-MM THK)	
	15	3	**483-7805**	2	SPACER (11X20X65-MM THK)	
	16	1	**093-2065**	1	GROMMET	
	17	3	**124-0986**	2	GROMMET	
	18	3	**199-7854**	1	SPACER (11.8X20X45-MM THK)	
	19	3	**204-1611**	2	STRAP-CABLE (DUAL)	
	20	1	**266-7379**	3	STRAP-CABLE	
M	21	2	**344-5675**	1	NUT (M10X1.5-THD)	
	22	3	**484-1451**	20	CLIP	
	23	3	**484-1452**	5	CLIP	
	24	3	**484-1453**	8	CLIP (RETAINER)	
	25	1,2,3	**484-1454**	10	CLIP-RETAINING	
	26	1,2,3	**484-1456**	50	STRAP-CABLE	
	27	3	**508-0556**	1	BRACKET AS	
	28	3	**508-0558**	1	BRACKET AS	
Y	29	3	**510-1207**	1	HARNESS AS-CHASSIS (AIR CLEANER)	181
Y	30	3	**510-1208**	1	HARNESS AS-CHASSIS (COOLANT TANK)	181
	31	3	**510-1210**	1	BRACKET AS	
	32	2	**520-2491**	1	ROD	
Y	33	1	**524-2766**	1	HARNESS AS-CHASSIS (FUEL TANK)	182
	34	2	**528-2466**	1	BRACKET AS	
	35	1	**528-2468**	1	BRACKET AS	
	36	1,3	**538-8999**	2	BRACKET AS	
	37	2	**544-5384**	1	STRIP	
	38	1	**548-4075**	1	BRACKET AS	
Y	39	1	**560-1052**	1	HARNESS AS-CHASSIS (MAIN)	186
	40	1	**551-3741**	1	CABLE AS-CHASSIS (ETHERNET)	
		1	**490-0571**	1	PLUG AS-CONNECTOR (2-PIN)	
		1	**490-0572**	2	RECEPTACLE AS (2-PIN)	
Y	41	2	**551-3742**	1	HARNESS AS-CHASSIS (HYDRAULIC TANK)	183

502-7224 **BATTERY & WIRING GP (**contd.**)** **i07792971**

NOTE	REF NO	GRAPHIC REF	PART NUMBER	QTY	PART NAME 1 2 3 4 5 6 (PRODUCT LEVEL)	SEE PAGE
Y	42	1	**551-3743**	1	HARNESS AS-CHASSIS (PUMP)	184
	43	3	**551-3744**	1	BRACKET AS	
	44	2	**551-3746**	1	BRACKET AS	
M	45	2	**5C-7261**	1	NUT (M8X1.25-THD)	
	46	3	**7I-2673**	1	STRAP-CABLE	
	47	1,2,3	**8T-4121**	42	WASHER-HARD (11X21X2.5-MM THK)	
M	48	1,2	**8T-4133**	3	NUT (M10X1.5-THD)	
M	49	2	**8T-4136**	6	BOLT (M10X1.5X25-MM)	
M	50	1,2,3	**8T-4137**	28	BOLT (M10X1.5X20-MM)	
	51	2	**8T-4223**	3	WASHER-HARD (13.5X25.5X3-MM THK)	

M - METRIC PART
Y - SEPARATE ILLUSTRATION

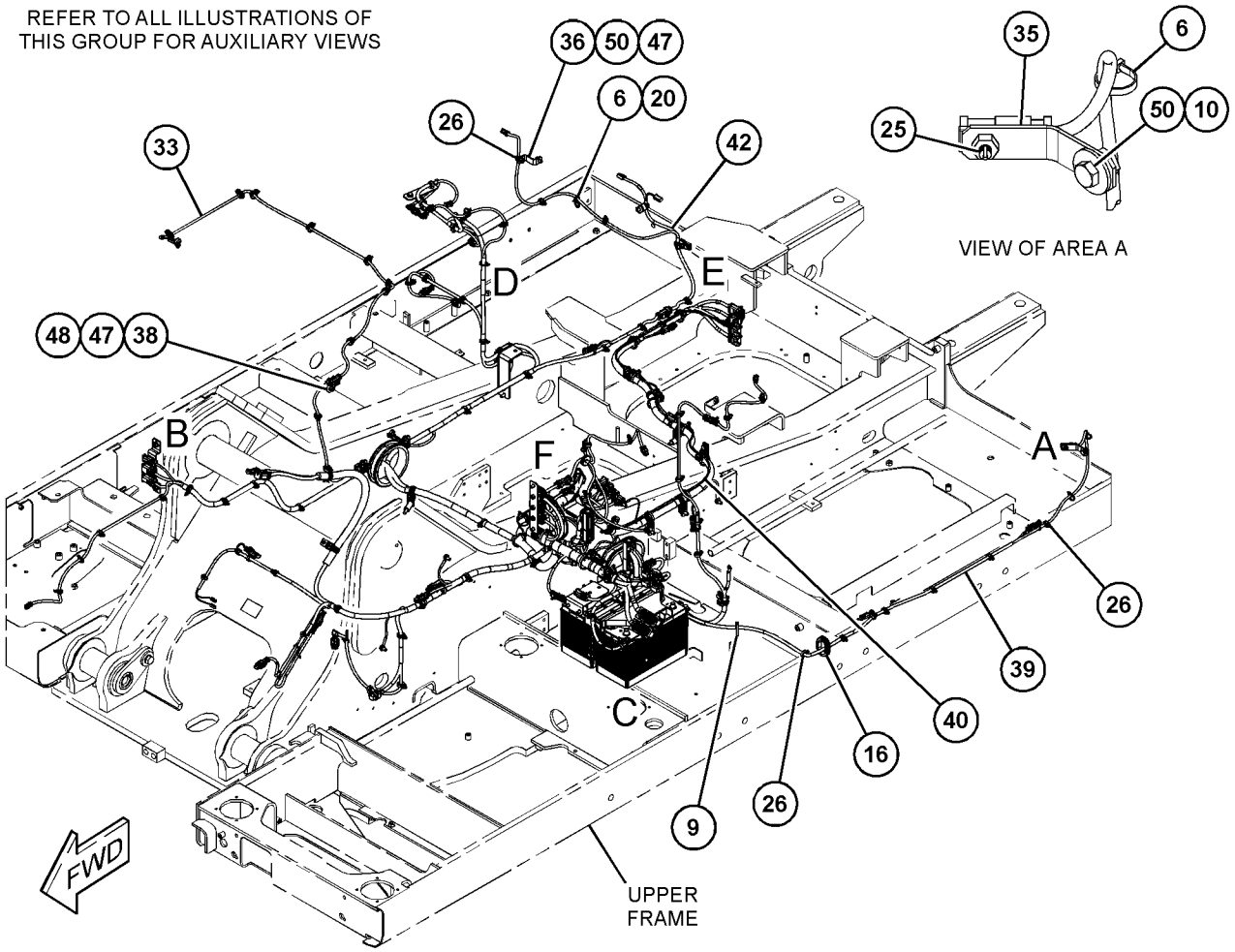

GRAPHIC #1 g06307812

502-7224 **BATTERY & WIRING GP (**contd.**)** **i07792971**

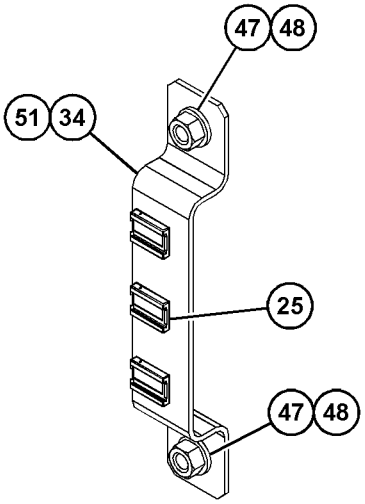

VIEW OF AREA B
(PARTS REMOVED FOR CLARITY)

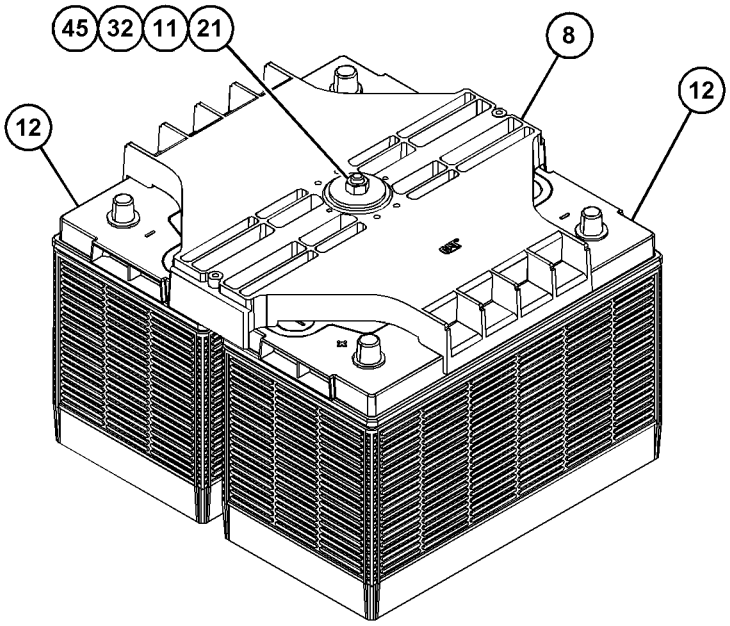

VIEW OF AREA C
(PARTS REMOVED FOR CLARITY)

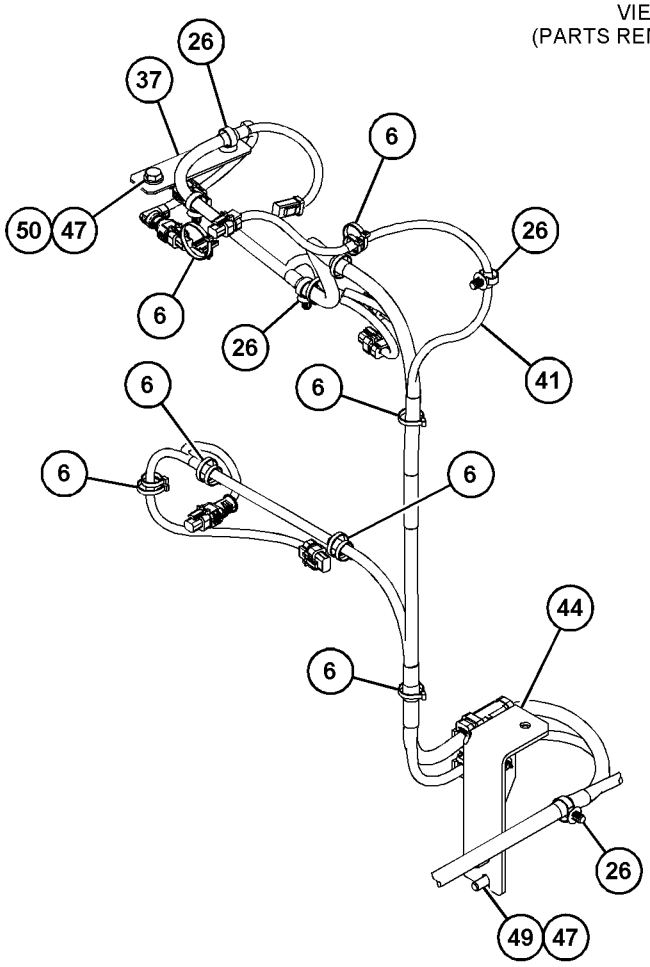

VIEW OF AREA D

GRAPHIC #2

g06308195

502-7224 **BATTERY & WIRING GP (**contd.**)** **i07792971**

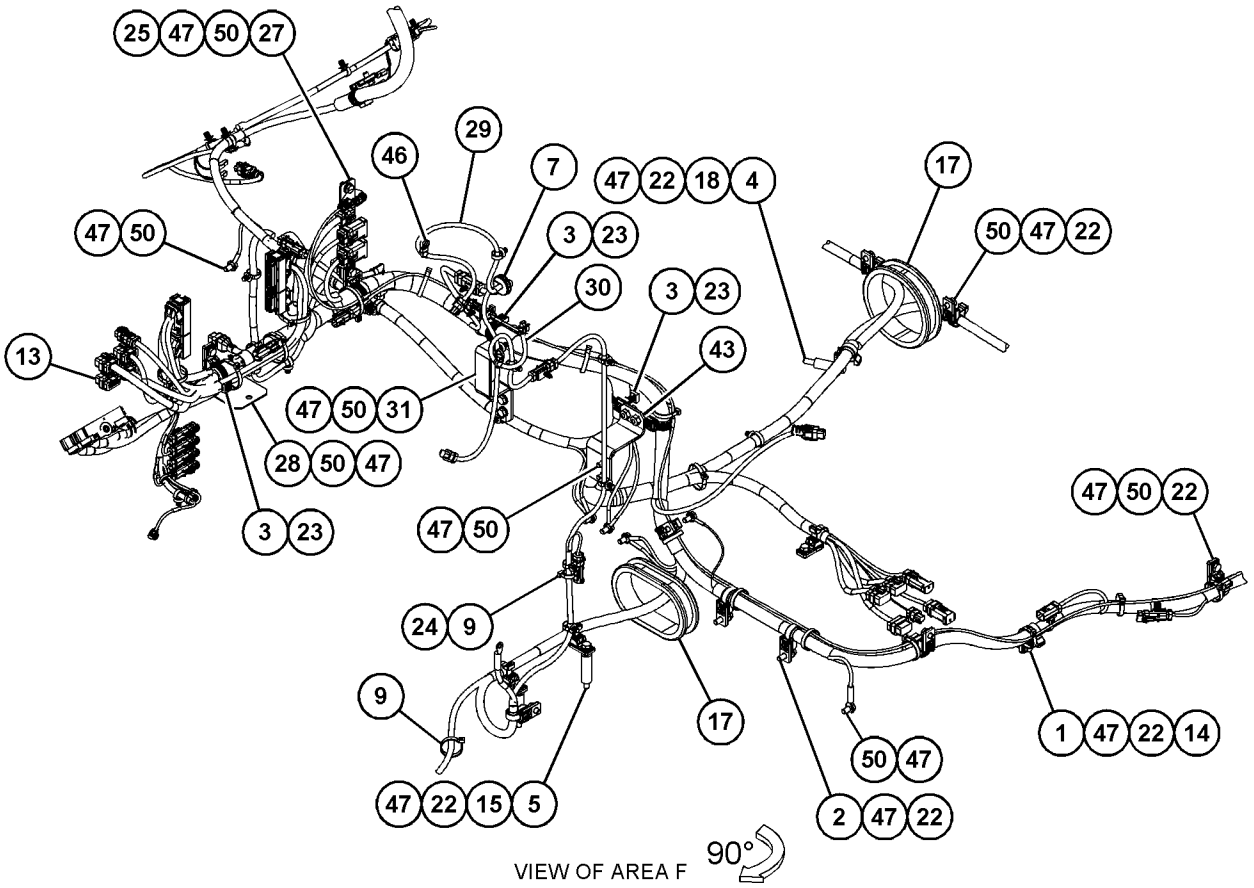

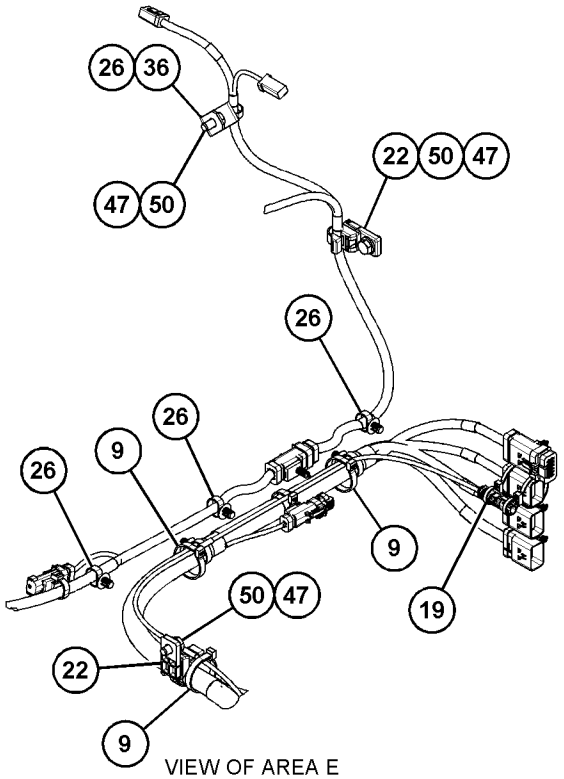

GRAPHIC #3 <END> g06307906

513-4370 BATTERY & WIRING GP–COLD WEATHER

S/N: SP91-UP

SMCS-1401, 1402, 1408 **i07520088**

NOTE	REF NO	GRAPHIC REF	PART NUMBER	QTY	PART NAME 1 2 3 4 5 6 (PRODUCT LEVEL)	SEE PAGE
	1	1	**6W-6005**	1	HOLD-DOWN-BATTERY	
	2	1	**263-9574**	2	BATTERY AS (12-VOLT, MAINTENANCE FREE)	
					(EACH INCLUDES)	
		1	**123-1373**	6	CAP AS-FILLER (7/8-9-THD)	
	3	1	**328-0132**	1	CABLE AS	
		1	**9G-0002**	1	COVER AS-TERMINAL (RED)	
		1	**9G-0005**	1	COVER AS-TERMINAL (BLACK)	
					(EACH COVER AS INCLUDES)	
		1	**8L-8413**	1	STRAP-CABLE (WHITE)	
		1	**8C-5918**	1	TERMINAL AS-BATTERY (NEGATIVE)	
		1	**8T-9756**	1	TERMINAL AS-BATTERY (POSITIVE)	
					(EACH TERMINAL AS INCLUDES)	
		1	**1M-6119**	1	BOLT (5/16-18X1.375-IN)	
		1	**1M-6120**	1	NUT (5/16-18-THD)	
E		1	**159-8049**		CABLE (00-GA, RED) (31-CM)	
	4	1	**513-4371**	1	CABLE AS (POSITIVE)	
D		1	**6V-2722**		TUBE-HEAT SHRINK (25.4-MM DIA) (0.1-M)	
		1	**9G-0002**	1	COVER AS-TERMINAL (RED)	
		1	**8L-8413**	1	STRAP-CABLE (WHITE)	
		1	**8T-9756**	1	TERMINAL AS-BATTERY (POSITIVE)	
		1	**1M-6119**	1	BOLT (5/16-18X1.375-IN)	
		1	**1M-6120**	1	NUT (5/16-18-THD)	
		1	**030-1705**	1	TERMINAL-CABLE (00-GA, 5/16-IN SCREW)	
E		1	**159-8049**		CABLE (00-GA, RED) (38-CM)	
	5	1	**513-4372**	1	CABLE AS (NEGATIVE)	
		1	**1S-7252**	1	TERMINAL-CABLE (00-GA, 3/8-IN SCREW)	
D		1	**6V-2722**		TUBE-HEAT SHRINK (25.4-MM DIA) (0.1-M)	
		1	**9G-0005**	1	COVER AS-TERMINAL (BLACK)	
		1	**8L-8413**	1	STRAP-CABLE (WHITE)	
		1	**8C-5918**	1	TERMINAL AS-BATTERY (NEGATIVE)	
		1	**1M-6119**	1	BOLT (5/16-18X1.375-IN)	
		1	**1M-6120**	1	NUT (5/16-18-THD)	
E		1	**159-8050**		CABLE (00-GA, BLACK) (39-CM)	
	6	1	**520-2491**	1	ROD	
M	7	1	**344-5675**	1	NUT (M10X1.5-THD)	
M	8	1	**5C-7261**	1	NUT (M8X1.25-THD)	
	9	1	**8T-4226**	1	WASHER-PLATED (10.5X45X3-MM THK)	

D - ORDER BY THE METER
E - ORDER BY THE CENTIMETER
M - METRIC PART

513-4370 **BATTERY & WIRING GP (**contd.**)** **i07520088**

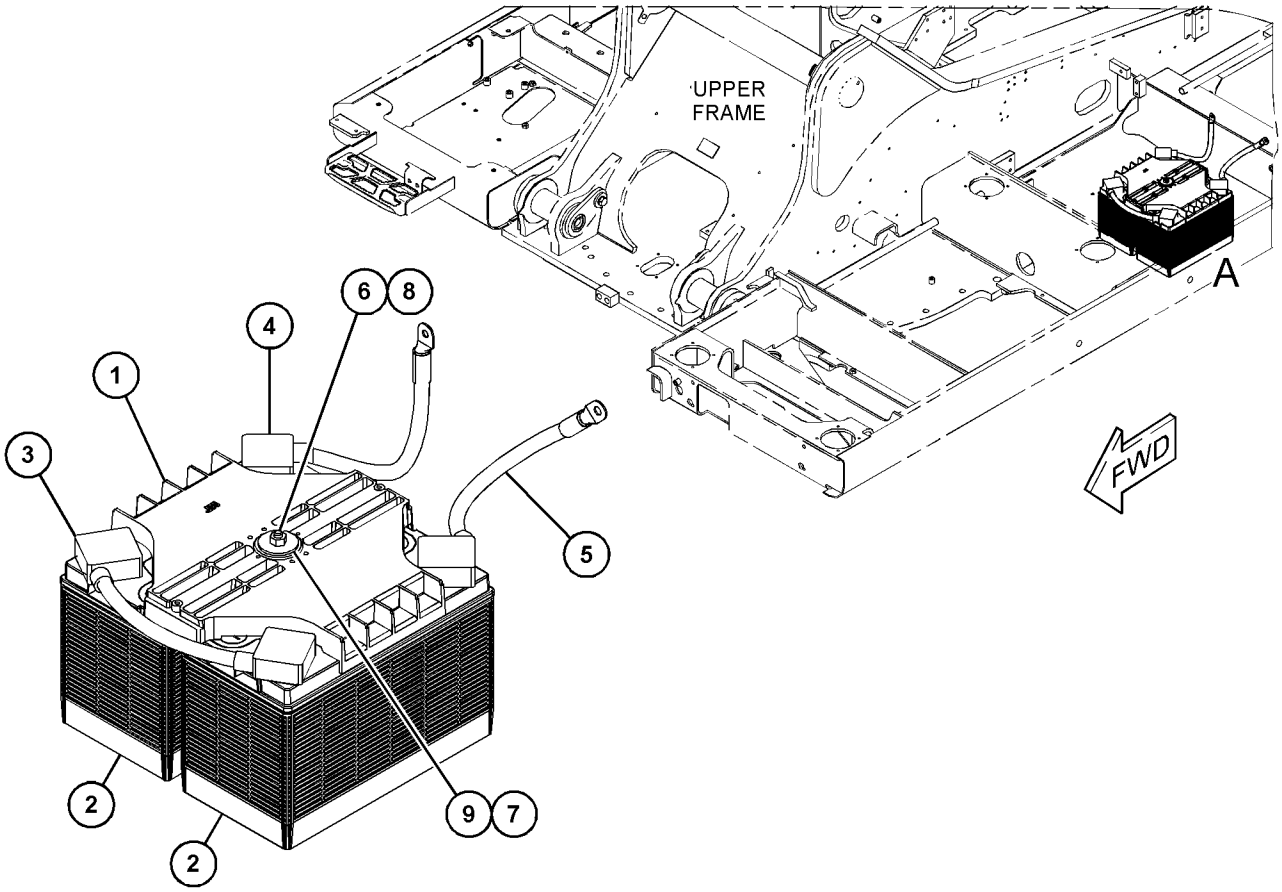

VIEW OF AREA A

GRAPHIC #1 <END> g06281216

576-7678 BATTERY & WIRING GP

S/N: SP910001-UP

PART OF 576-7683 ELECTRICAL AR

SMCS-1401, 1402, 1408 **i07877837**

NOTE	REF NO	GRAPHIC REF	PART NUMBER	QTY	PART NAME 1 2 3 4 5 6 (PRODUCT LEVEL)	SEE PAGE
	1	3	**204-2281**	6	STRAP-CABLE	
M	2	3	**8T-4182**	1	BOLT (M10X1.5X45-MM)	
M	3	3	**8T-4196**	3	BOLT (M10X1.5X35-MM)	
M	4	3	**8T-4172**	1	BOLT (M10X1.5X80-MM)	
M	5	3	**8T-4198**	2	BOLT (M10X1.5X100-MM)	
	6	1,2	**3S-2093**	44	STRAP-CABLE	
M	7	2	**9X-2042**	2	SCREW-TRUSS HEAD (M6X1X12-MM)	
	8	3	**204-1611**	2	STRAP-CABLE (DUAL)	
	9	1	**093-2065**	1	GROMMET	
	10	3	**118-9901**	1	SPACER (12X20X10-MM THK)	
	11	3	**124-0986**	2	GROMMET	
	12	3	**199-7854**	1	SPACER (11.8X20X45-MM THK)	
	13	2	**263-9574**	2	BATTERY AS (12-VOLT, MAINTENANCE FREE)	
					(EACH INCLUDES)	
		2	**461-5232**	6	CAP AS-FILLER	
					—OR—	
		2	**123-1373**	6	CAP AS-FILLER (7/8-9-THD)	
	14	1	**266-7379**	3	STRAP-CABLE	
M	15	2	**344-5675**	1	NUT (M10X1.5-THD)	
	16	3	**483-7800**	1	SPACER (11X20X20-MM THK)	
	17	3	**483-7805**	2	SPACER (11X20X65-MM THK)	
	18	3	**484-1451**	21	CLIP	
	19	3	**484-1452**	6	CLIP	
	20	3	**484-1453**	6	CLIP (RETAINER)	
	21	1,2,3	**484-1454**	9	CLIP-RETAINING	
	22	1,2,3	**484-1456**	50	STRAP-CABLE	
	23	3	**508-0558**	1	BRACKET AS	
M		3	**8T-3612**	3	NUT-WELD (M8X1.25-THD)	
Y	24	3	**510-1207**	1	HARNESS AS-CHASSIS (AIR CLEANER)	181
Y	25	3	**510-1208**	1	HARNESS AS-CHASSIS (COOLANT TANK)	181
	26	3	**510-1210**	1	BRACKET AS	
M		3	**8T-3490**	1	NUT-WELD (M10X1.5-THD)	
	27	2	**520-2491**	1	ROD	
Y	28	1	**524-2766**	1	HARNESS AS-CHASSIS (FUEL TANK)	182
	29	2	**524-4506**	1	BRACKET AS	
M		2	**6V-9632**	2	NUT-WELD (M6X1-THD)	
M		2	**8T-3490**	1	NUT-WELD (M10X1.5-THD)	
	30	2	**528-2466**	1	BRACKET AS	
M		2	**8T-3612**	3	NUT-WELD (M8X1.25-THD)	
	31	1	**528-2468**	1	BRACKET AS	
M		1	**8T-3490**	1	NUT-WELD (M10X1.5-THD)	
M		1	**8T-3612**	1	NUT-WELD (M8X1.25-THD)	
	32	1,3	**538-8999**	2	BRACKET AS	
M		1,3	**8T-3490**	1	NUT-WELD (M10X1.5-THD)	
	33	2	**544-5384**	1	STRIP	
	34	1	**548-4075**	1	BRACKET AS	
M		1	**8T-3612**	1	NUT-WELD (M8X1.25-THD)	
Y	35	2	**551-3742**	1	HARNESS AS-CHASSIS (HYDRAULIC TANK)	183

576-7678 **BATTERY & WIRING GP** (contd.) **i07877837**

NOTE	REF NO	GRAPHIC REF	PART NUMBER	QTY	PART NAME 1 2 3 4 5 6 (PRODUCT LEVEL)	SEE PAGE
Y	36	1	**551-3743**	1	HARNESS AS-CHASSIS (PUMP)	184
	37	3	**551-3744**	1	BRACKET AS	
M		3	**8T-3490**	2	NUT-WELD (M10X1.5-THD)	
	38	2	**551-3746**	1	BRACKET AS	
M		2	**8T-3612**	3	NUT-WELD (M8X1.25-THD)	
Y	39	1	**576-6849**	1	HARNESS AS-CAB (PRODUCT LINK 243, 083)	179
	40	3	**576-6919**	1	BRACKET AS	
M		3	**8T-3490**	2	NUT-WELD (M10X1.5-THD)	
M		3	**8T-3612**	4	NUT-WELD (M8X1.25-THD)	
Y	41	1	**576-8419**	1	HARNESS AS-CHASSIS	189
	42	1	**577-2009**	1	CABLE AS-CHASSIS	
		1	**3S-2093**	2	STRAP-CABLE	
		1	**490-0571**	1	PLUG AS-CONNECTOR (2-PIN)	
		1	**490-0572**	1	RECEPTACLE AS (2-PIN)	
		1	**490-0586**	2	BACKSHELL	
M	43	2	**5C-7261**	1	NUT (M8X1.25-THD)	
	44	3	**5F-9757**	1	GROMMET	
	45	2	**6W-6005**	1	HOLD-DOWN-BATTERY	
	46	3	**7I-2673**	1	STRAP-CABLE	
	47	1,3	**7K-1181**	27	STRAP-CABLE	
	48	1,2,3	**8T-4121**	43	WASHER-HARD (11X21X2.5-MM THK)	
M	49	1,2	**8T-4133**	3	NUT (M10X1.5-THD)	
M	50	2	**8T-4136**	6	BOLT (M10X1.5X25-MM)	
M	51	1,2,3	**8T-4137**	28	BOLT (M10X1.5X20-MM)	
	52	1	**8T-4222**	1	WASHER-PLATED (11X32X2.5-MM THK)	
	53	1,3	**8T-4223**	3	WASHER-HARD (13.5X25.5X3-MM THK)	
	54	2	**8T-4226**	1	WASHER-PLATED (10.5X45X3-MM THK)	
	55	2	**9R-7941**	1	SOCKET AS	
		2	**9R-7980**	1	COVER	

M - METRIC PART
Y - SEPARATE ILLUSTRATION

576-7678 **BATTERY & WIRING GP (**contd.**)** **i07877837**

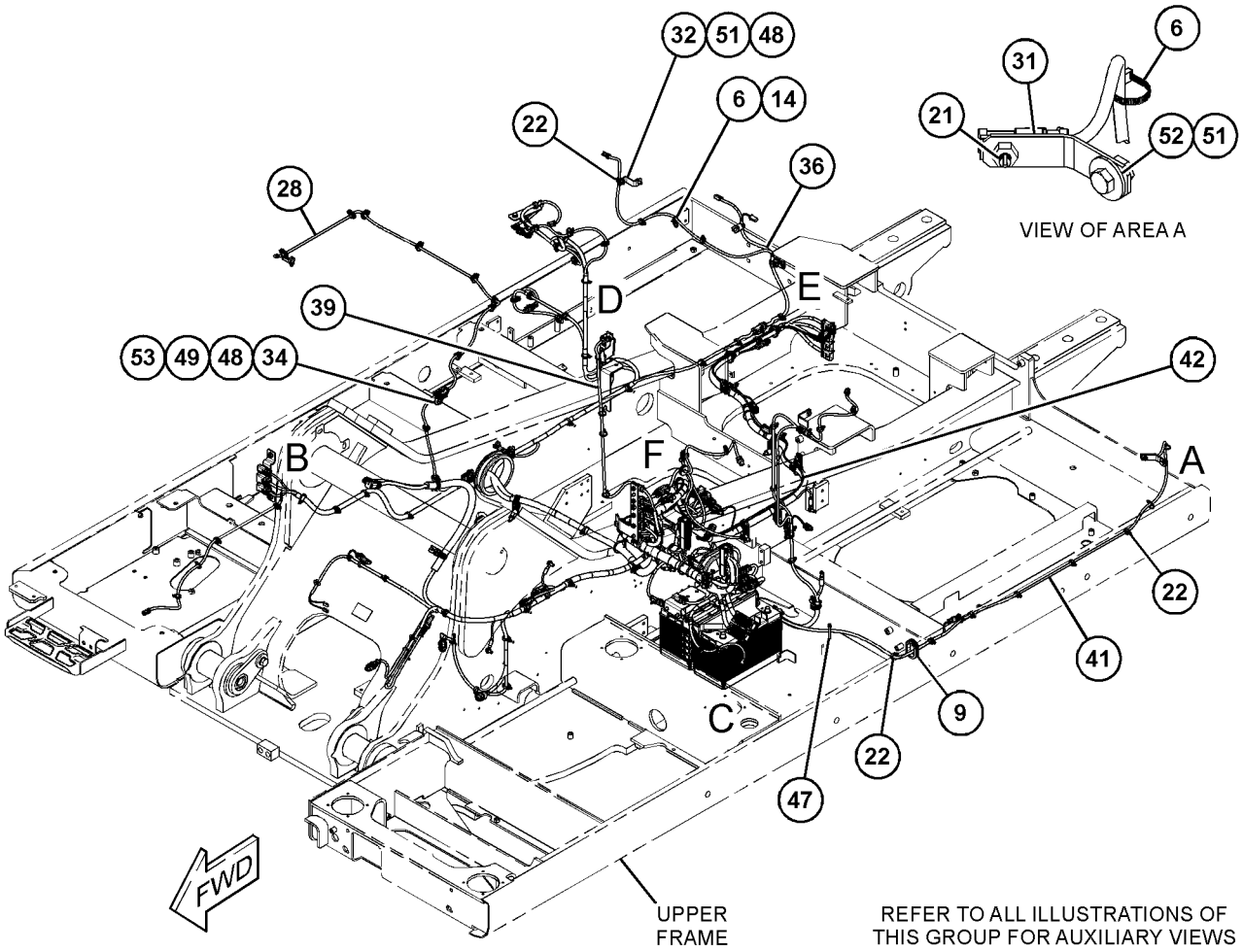

GRAPHIC #1

g06456749

576-7678 **BATTERY & WIRING GP (**contd.**)** **i07877837**

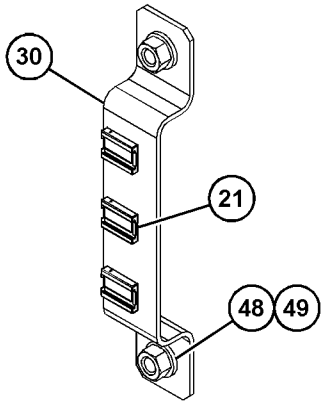

VIEW OF AREA B

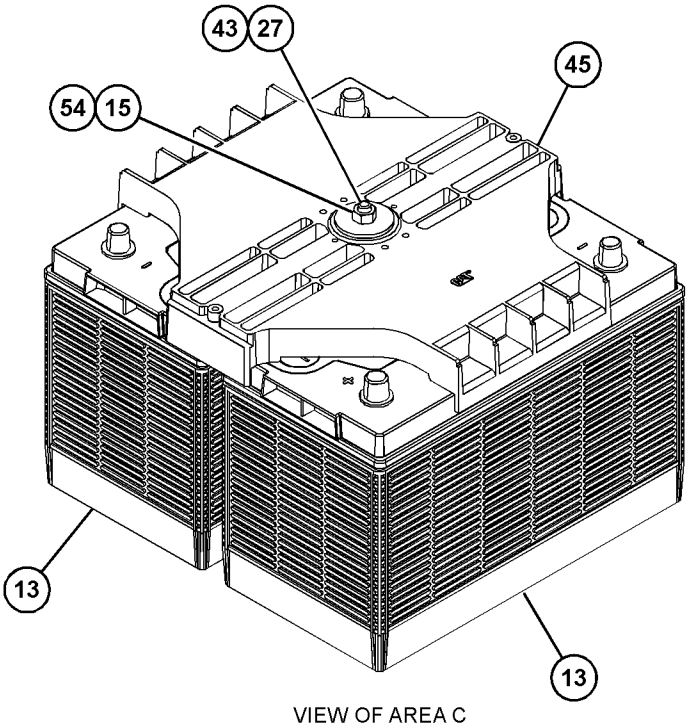

VIEW OF AREA C

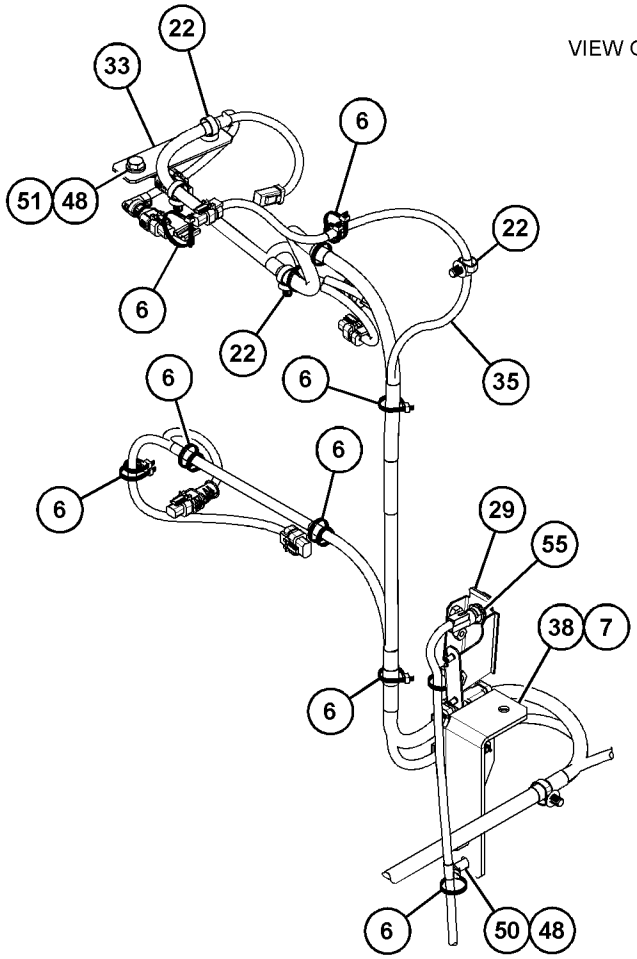

VIEW OF AREA D

GRAPHIC #2 g06456750

576-7678 **BATTERY & WIRING GP (**contd.**)** **i07877837**

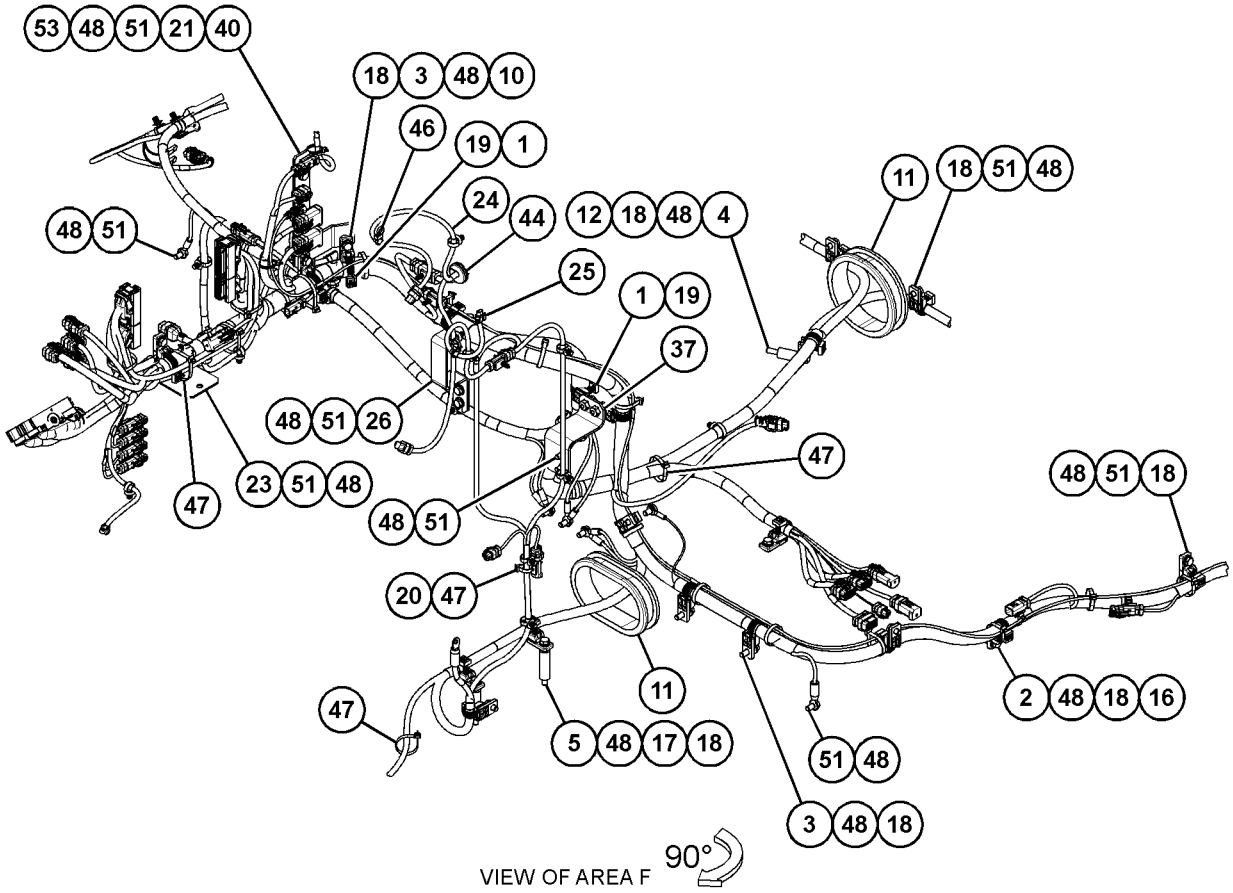

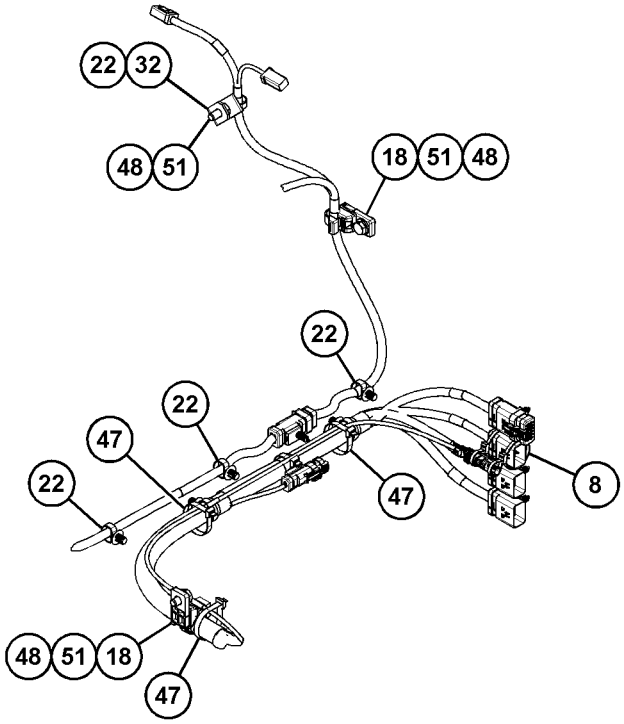

VIEW OF AREA E

GRAPHIC #3 <END> g06456751

504-3553 CABLE GP-GROUND

S/N: SP91-UP

PART OF 525-3763, 576-7683 ELECTRICAL AR

SMCS-4459, 7423 **i07511354**

NOTE	REF NO	GRAPHIC REF	PART NUMBER	QTY	PART NAME 1 2 3 4 5 6 (PRODUCT LEVEL)	SEE PAGE
M	1	1	**8T-6466**	2	BOLT (M10X1.5X60-MM)	
M	2	1	**8T-4908**	3	BOLT (M8X1.25X25-MM)	
	3	1	**2G-8767**	4	WASHER (10.5X60X3-MM THK)	
	4	1	**6G-2256**	2	CLAMP	
	5	1	**6G-2263**	2	SPACER (10.5X19X28.5-MM THK)	
	6	1	**8T-4121**	8	WASHER-HARD (11X21X2.5-MM THK)	
M	7	1	**8T-4136**	1	BOLT (M10X1.5X25-MM)	
M	8	1	**8T-4137**	7	BOLT (M10X1.5X20-MM)	
	9	1	**8T-4224**	6	WASHER-HARD (8.8X16X2-MM THK)	
	10	1	**132-1805**	1	STRAP AS-GROUND	
	11	1	**328-0132**	1	CABLE AS	
		1	**9G-0002**	1	COVER AS-TERMINAL (RED)	
		1	**9G-0005**	1	COVER AS-TERMINAL (BLACK)	
					(EACH COVER AS INCLUDES)	
		1	**8L-8413**	1	STRAP-CABLE (WHITE)	
		1	**8C-5918**	1	TERMINAL AS-BATTERY (NEGATIVE)	
		1	**8T-9756**	1	TERMINAL AS-BATTERY (POSITIVE)	
					(EACH TERMINAL AS INCLUDES)	
		1	**1M-6119**	1	BOLT (5/16-18X1.375-IN)	
		1	**1M-6120**	1	NUT (5/16-18-THD)	
E		1	**159-8049**		CABLE (00-GA, RED) (31-CM)	
	12	1	**484-1451**	6	CLIP	
	13	1	**484-1456**	2	STRAP-CABLE	
	14	1	**509-5001**	1	CABLE AS (GROUND)	
		1	**1S-7252**	1	TERMINAL-CABLE (00-GA, 3/8-IN SCREW)	
D		1	**6V-2722**		TUBE-HEAT SHRINK (25.4-MM DIA) (0.1-M)	
E		1	**159-8050**		CABLE (00-GA, BLACK) (25-CM)	
		1	**276-7278**	1	TERMINAL-RING	
Y	15	1	**510-9082**	1	PANEL GP-FUSE	222
	16	1	**177-2215**	1	STRAP-DUAL CLAMP	
	17	1	**551-3753**	1	CABLE AS (FUSE)	
		1	**030-1705**	1	TERMINAL-CABLE (00-GA, 5/16-IN SCREW)	
E		1	**159-8049**		CABLE (00-GA, RED) (68-CM)	
D		1	**6V-2722**		TUBE-HEAT SHRINK (25.4-MM DIA) (0.1-M)	
		1	**9G-0002**	1	COVER AS-TERMINAL (RED)	
		1	**8L-8413**	1	STRAP-CABLE (WHITE)	
		1	**8T-9756**	1	TERMINAL AS-BATTERY (POSITIVE)	
		1	**1M-6119**	1	BOLT (5/16-18X1.375-IN)	
		1	**1M-6120**	1	NUT (5/16-18-THD)	
	18	1	**551-3754**	1	CABLE AS (DISCONNECT)	
		1	**1S-7252**	1	TERMINAL-CABLE (00-GA, 3/8-IN SCREW)	
D		1	**6V-2722**		TUBE-HEAT SHRINK (25.4-MM DIA) (0.1-M)	
		1	**9G-0005**	1	COVER AS-TERMINAL (BLACK)	
		1	**8L-8413**	1	STRAP-CABLE (WHITE)	
		1	**9G-8909**	1	COVER-TERMINAL (BLACK)	
		1	**8C-5918**	1	TERMINAL AS-BATTERY (NEGATIVE)	
		1	**1M-6119**	1	BOLT (5/16-18X1.375-IN)	

504-3553 **CABLE GP-GROUND** (contd.) **i07511354**

NOTE	REF NO	GRAPHIC REF	PART NUMBER	QTY	PART NAME 1 2 3 4 5 6 (PRODUCT LEVEL)	SEE PAGE
		1	**1M-6120**	1	NUT (5/16-18-THD)	
E		1	**159-8050**		CABLE (00-GA, BLACK) (54-CM)	
	19	1	**551-3755**	1	CABLE AS-STARTER	
		1	**1S-7251**	1	TERMINAL-CABLE (00-GA, 1/2-IN SCREW)	
D		1	**6V-2722**		TUBE-HEAT SHRINK (25.4-MM DIA) (0.1-M)	
		1	**8N-0869**	1	COVER-TERMINAL (RED)	
		1	**030-1705**	1	TERMINAL-CABLE (00-GA, 5/16-IN SCREW)	
E		1	**159-8049**		CABLE (00-GA, RED) (281-CM)	
		1	**204-2281**	6	STRAP-CABLE	
		1	**484-1452**	6	CLIP	
	20	1	**551-3756**	1	BRACKET AS	
M		1	**8T-3612**	3	NUT-WELD (M8X1.25-THD)	

D - ORDER BY THE METER
E - ORDER BY THE CENTIMETER
M - METRIC PART
Y - SEPARATE ILLUSTRATION

504-3553 **CABLE GP-GROUND (**contd.**)** **i07511354**

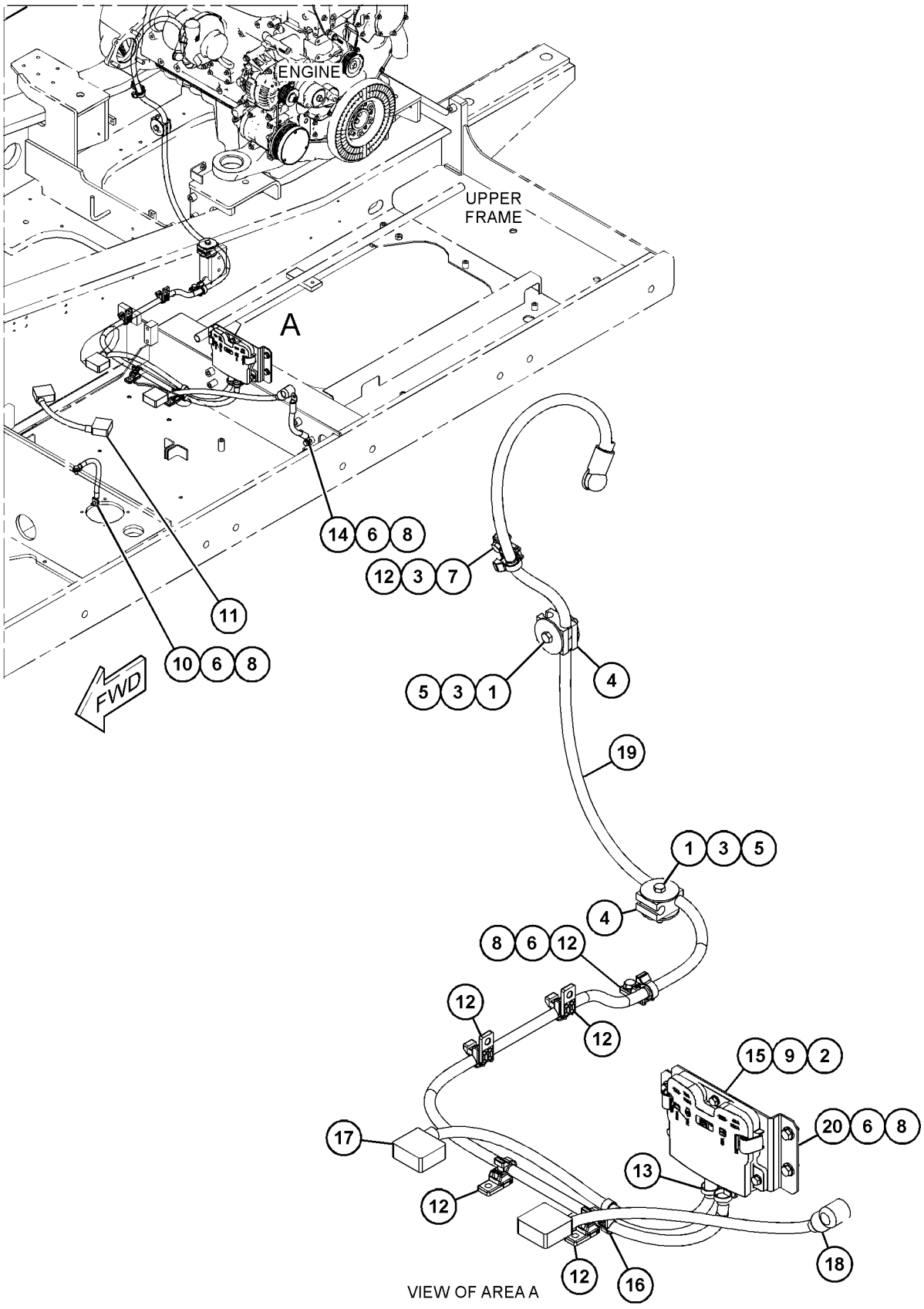

VIEW OF AREA A

GRAPHIC #1

<END>

g06277943

502-7171 CAMERA & MOUNTING GP–REAR VIEW

S/N: SP91-UP

PART OF 512-1338 CAMERA & MIRROR AR, 512-1337, 555-9457 CAMERA AR

SMCS-7348 **i07352873**

NOTE	REF NO	GRAPHIC REF	PART NUMBER	QTY	PART NAME 1 2 3 4 5 6 (PRODUCT LEVEL)	SEE PAGE
	1	1	**488-5838**	2	WASHER-HARD (4.5X9X1-MM THK)	
	2	1	**488-9163**	1	CAMERA GP (12-VOLT)	
		1	**490-0582**	1	RECEPTACLE AS (2-PIN)	
		1	**490-0572**	1	RECEPTACLE AS (2-PIN)	
	3	1	**498-4574**	1	COVER AS	
M	4	1	**3E-4313**	2	SCREW-BUTTON HEAD (M4X0.7X8-MM)	
M	5	1	**9X-2043**	4	SCREW-TRUSS HEAD (M6X1X14-MM)	

M - METRIC PART

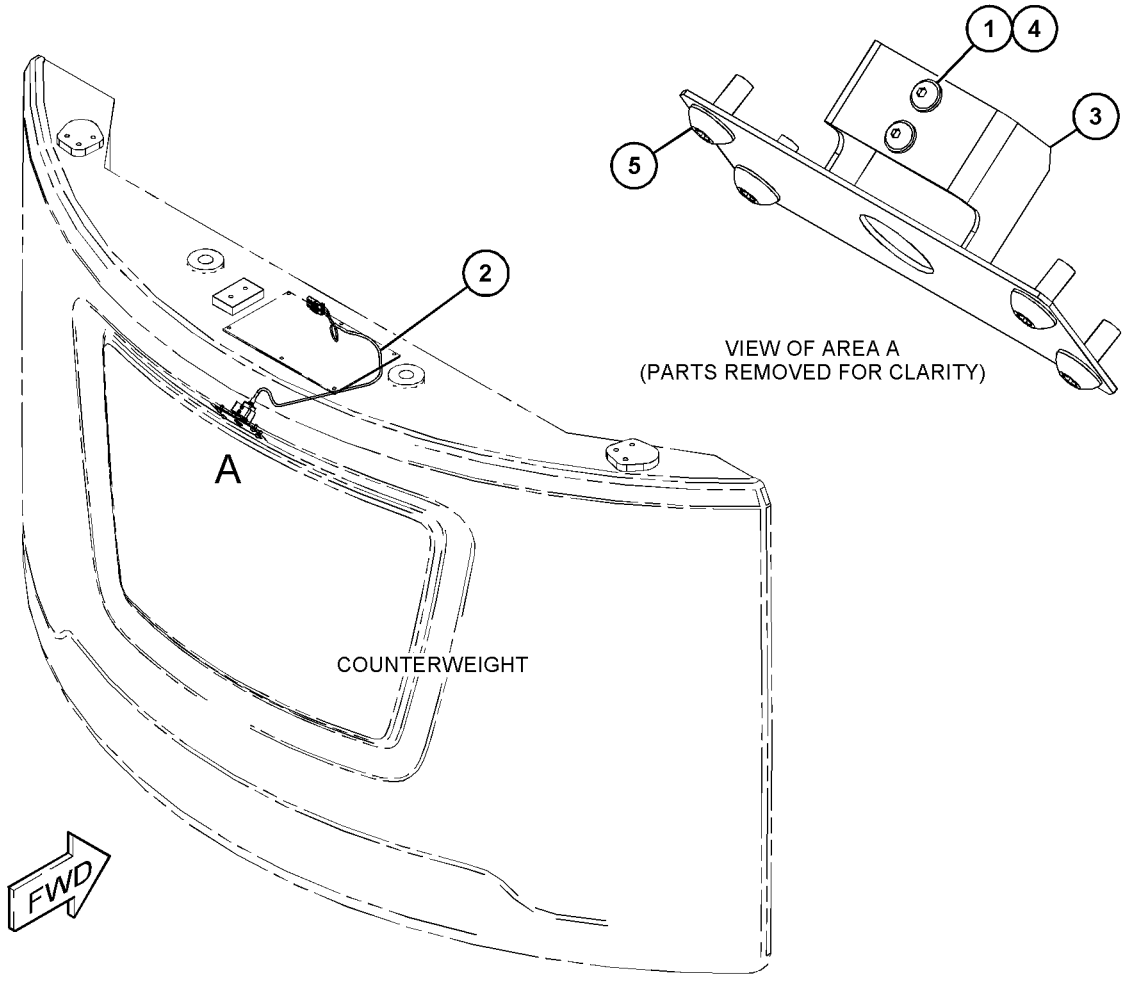

GRAPHIC #1 <END> g06229448

502-7174 CAMERA & MOUNTING GP–FRONT

S/N: SP91-UP

PART OF 512-1337 CAMERA AR

SMCS-7348 **i07358874**

NOTE	REF NO	GRAPHIC REF	PART NUMBER	QTY	PART NAME 1 2 3 4 5 6 (PRODUCT LEVEL)	SEE PAGE
	1	1	**533-2344**	1	BRACKET (CAMERA)	
	2	1	**488-5838**	2	WASHER-HARD (4.5X9X1-MM THK)	
	3	1	**512-6385**	1	CAMERA GP	
		1	**490-0572**	1	RECEPTACLE AS (2-PIN)	
		1	**490-0582**	1	RECEPTACLE AS (2-PIN)	
M	4	1	**101-7401**	2	BOLT-SOCKET HEAD (M10X1.5X20-MM)	
M	5	1	**3E-4313**	2	SCREW-BUTTON HEAD (M4X0.7X8-MM)	
	6	1	**8T-4121**	2	WASHER-HARD (11X21X2.5-MM THK)	

M - METRIC PART

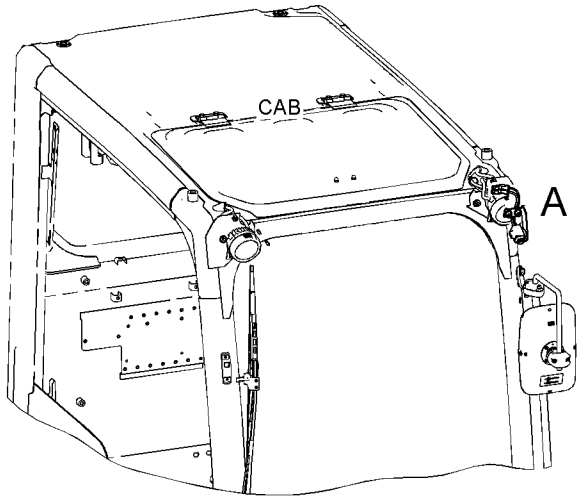

FRONT VIEW
(UPPER RIGHT)

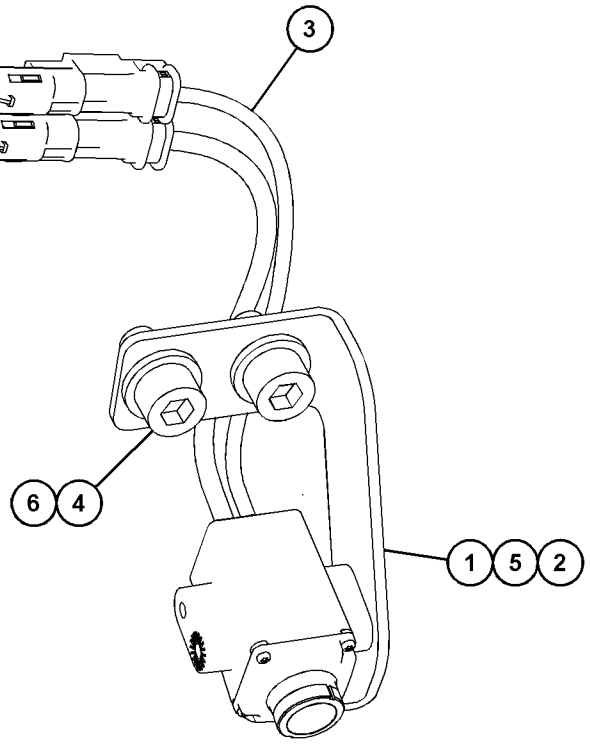

VIEW OF AREA A

GRAPHIC #1 <END> g06231110

502-7217 CAMERA & MOUNTING GP–RH SIDE

S/N: SP91-UP

PART OF 512-1337, 555-9457 CAMERA AR

SMCS-7348 **i07525026**

NOTE	REF NO	GRAPHIC REF	PART NUMBER	QTY	PART NAME 1 2 3 4 5 6 (PRODUCT LEVEL)	SEE PAGE
M	1	1	**3E-4313**	4	SCREW-BUTTON HEAD (M4X0.7X8-MM)	
	2	1	**488-5838**	4	WASHER-HARD (4.5X9X1-MM THK)	
	3	1	**488-9163**	1	CAMERA GP (12-VOLT)	
		1	**490-0572**	1	RECEPTACLE AS (2-PIN) (ETHERNET)	
		1	**490-0582**	1	RECEPTACLE AS (2-PIN) (ETHERNET)	
	4	1	**528-3690**	1	BRACKET	
	5	1	**529-7073**	1	COVER	
	6	1	**8T-4121**	2	WASHER-HARD (11X21X2.5-MM THK)	
M	7	1	**8T-4136**	2	BOLT (M10X1.5X25-MM)	

M - METRIC PART

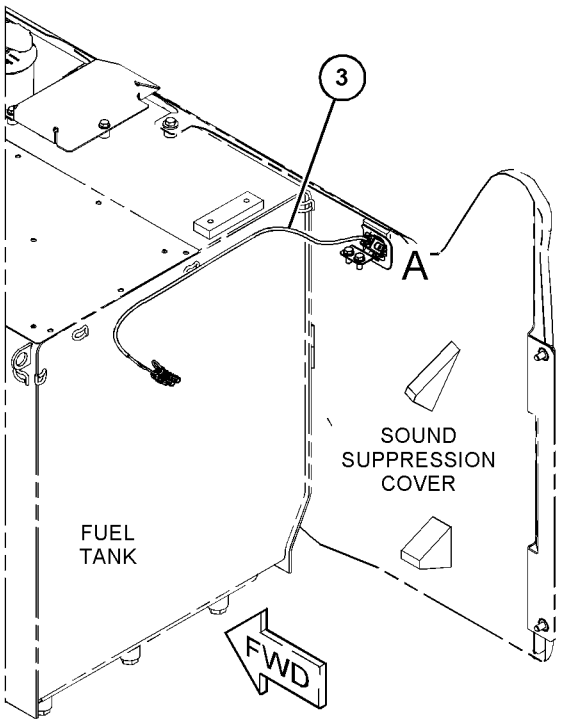

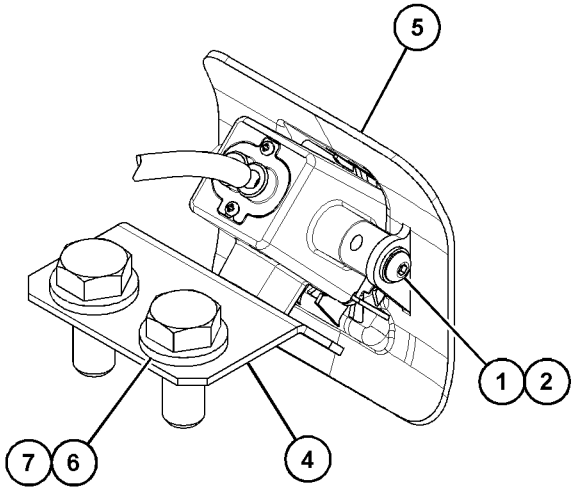

VIEW OF AREA A

GRAPHIC #1 <END> g06274732

502-7218 CAMERA & MOUNTING GP–LH SIDE

S/N: SP91-UP

PART OF 512-1337, 555-9457 CAMERA AR

SMCS-7348 **i07525250**

NOTE	REF NO	GRAPHIC REF	PART NUMBER	QTY	PART NAME 1 2 3 4 5 6 (PRODUCT LEVEL)	SEE PAGE
	1	1	**488-5838**	4	WASHER-HARD (4.5X9X1-MM THK)	
	2	1	**488-9163**	1	CAMERA GP (12-VOLT)	
		1	**490-0572**	1	RECEPTACLE AS (2-PIN)	
		1	**490-0582**	1	RECEPTACLE AS (2-PIN)	
	3	1	**529-7073**	1	COVER	
M	4	1	**3E-4313**	4	SCREW-BUTTON HEAD (M4X0.7X8-MM)	

M - METRIC PART

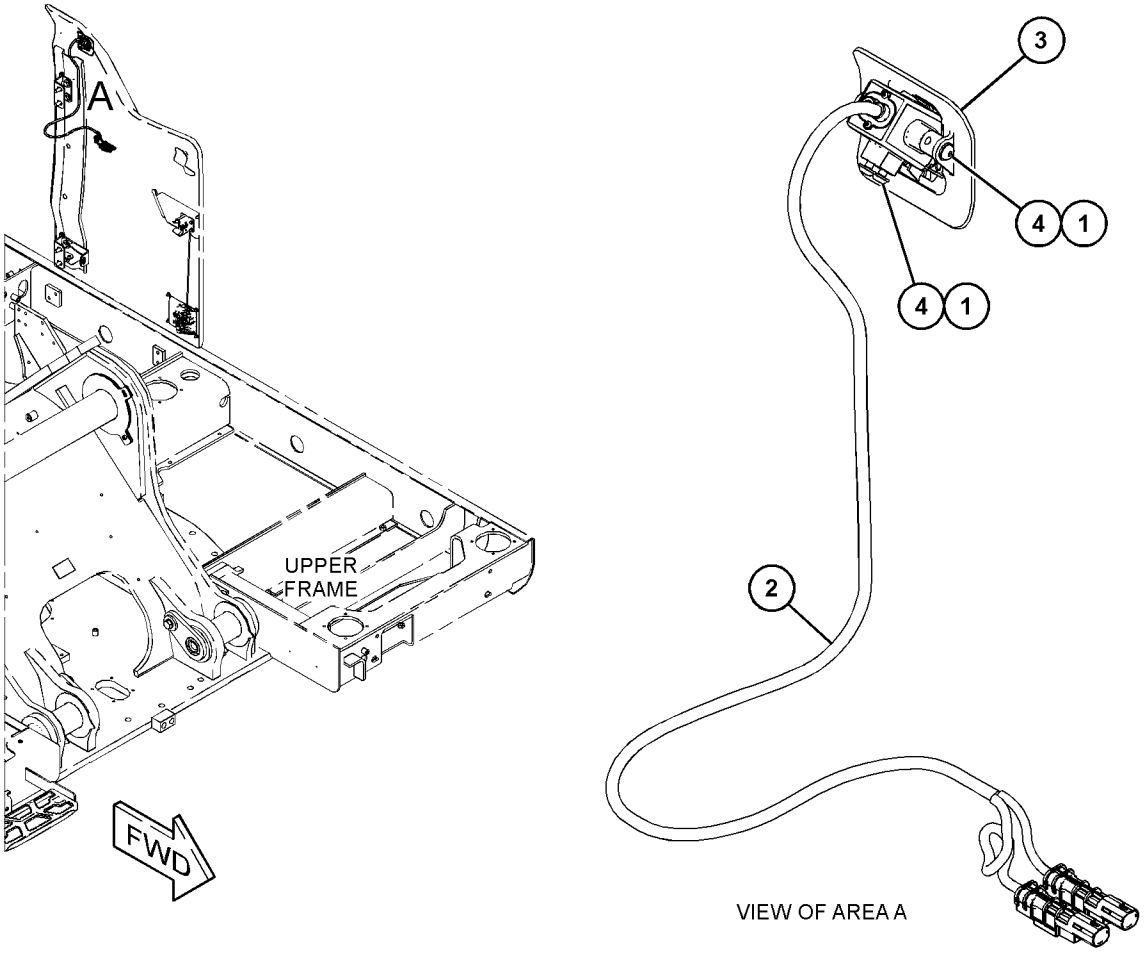

GRAPHIC #1 <END> g06274725

554-3616 CAMERA & MOUNTING GP–FRONT GUARD

S/N: SP91-UP

PART OF 555-9457 CAMERA AR

SMCS-7348 **i07434649**

NOTE	REF NO	GRAPHIC REF	PART NUMBER	QTY	PART NAME 1 2 3 4 5 6 (PRODUCT LEVEL)	SEE PAGE
M	1	1	**3E-4313**	2	SCREW-BUTTON HEAD (M4X0.7X8-MM)	
	2	1	**488-5838**	2	WASHER-HARD (4.5X9X1-MM THK)	
	3	1	**484-1456**	2	STRAP-CABLE	
	4	1	**512-6385**	1	CAMERA GP	
		1	**490-0572**	1	RECEPTACLE AS (2-PIN)	
		1	**490-0582**	1	RECEPTACLE AS (2-PIN)	
	5	1	**539-2833**	1	HARNESS AS-BOX	
		1	**490-0571**	1	PLUG AS-CONNECTOR (2-PIN)	
		1	**490-0572**	1	RECEPTACLE AS (2-PIN)	
	6	1	**539-2834**	1	HARNESS AS-MONITOR	
E		1	**196-8876**		BRAID (BLACK, ONE GOLD STRAND) (33-CM)	
		1	**490-0578**	1	PLUG AS-CONNECTOR (2-PIN)	
		1	**490-0582**	1	RECEPTACLE AS (2-PIN)	
	7	1	**539-2835**	1	BRACKET	
	8	1	**8T-4121**	1	WASHER-HARD (11X21X2.5-MM THK)	
M	9	1	**8T-4137**	1	BOLT (M10X1.5X20-MM)	

E - ORDER BY THE CENTIMETER
M - METRIC PART

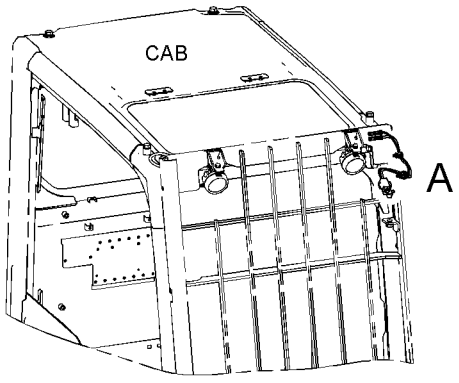

FRONT VIEW
(UPPER RIGHT)

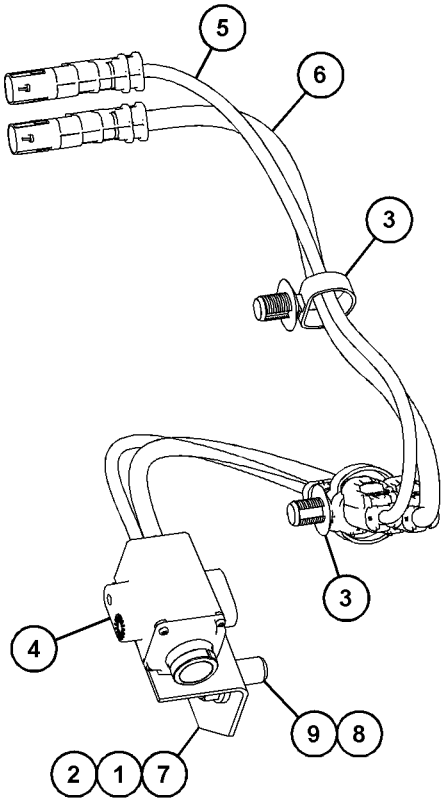

VIEW OF AREA A

GRAPHIC #1 <END> g06293129

512-1337 CAMERA AR–360 VISIBILITY

S/N: SP91-UP

SMCS-7348 **i07528730**

NOTE	PART NUMBER	QTY	PART NAME 1 2 3 4 5 6 (PRODUCT LEVEL)	SEE PAGE
Y	*502-7171*	1	CAMERA & MOUNTING GP (REAR VIEW)	157
Y	*502-7174*	1	CAMERA & MOUNTING GP (FRONT)	158
Y	*502-7217*	1	CAMERA & MOUNTING GP (RH SIDE)	159
Y	*502-7218*	1	CAMERA & MOUNTING GP (LH SIDE)	160
Y	*528-3539*	1	COVER GP-SOUND SUPPRESSION (FUEL, HYDRAULIC TANKS)	15
Y	*548-8356*	1	DOOR & MTG GP-ACCESS (AIR CLEANER, BATTERY)	335
Y	*490-2700*	1	WIRING GP-CHASSIS (CAMERA, LH)	266
Y	*502-7213*	1	WIRING GP-CHASSIS (REAR VIEW, CAMERA)	269
Y	*502-7214*	1	WIRING GP-CHASSIS (CAMERA, RH)	270

Y - SEPARATE ILLUSTRATION

<END>

555-9457 CAMERA AR–360 VISIBILITY

S/N: SP91-UP

SMCS-7348 **i07524869**

NOTE	PART NUMBER	QTY	PART NAME 1 2 3 4 5 6 (PRODUCT LEVEL)	SEE PAGE
Y	*502-7171*	1	CAMERA & MOUNTING GP (REAR VIEW)	157
Y	*554-3616*	1	CAMERA & MOUNTING GP (LED, FRONT GUARD)	161
Y	*502-7217*	1	CAMERA & MOUNTING GP (RH SIDE)	159
Y	*502-7218*	1	CAMERA & MOUNTING GP (LH SIDE)	160
Y	*528-3539*	1	COVER GP-SOUND SUPPRESSION (FUEL, HYDRAULIC TANKS)	15
Y	*548-8356*	1	DOOR & MTG GP-ACCESS (AIR CLEANER, BATTERY)	335
Y	*490-2700*	1	WIRING GP-CHASSIS (CAMERA, LH)	266
Y	*502-7213*	1	WIRING GP-CHASSIS (REAR VIEW, CAMERA)	269
Y	*502-7214*	1	WIRING GP-CHASSIS (CAMERA, RH)	270

Y - SEPARATE ILLUSTRATION

<END>

488-6822 CONTROL & MTG GP-COMMUNICATION—PRODUCT LINK

631 SATELLITE

S/N: SP91-UP

PART OF 555-7258 INSTALLATION AR-COMMUNICATION

SMCS-7606 **i07678779**

NOTE	REF NO	GRAPHIC REF	PART NUMBER	QTY	PART NAME 1 2 3 4 5 6 (PRODUCT LEVEL)	SEE PAGE
YR	1	1	**544-1881**	1	CONTROL GP-UNPROGRAMMED (PRODUCT LINK 631 SATELLITE)	170
	2	1	**495-9813**	1	BRACKET AS	
M	3	1	**7X-2621**	2	BOLT (M10X1.5X12-MM)	
	4	1	**8T-4121**	2	WASHER-HARD (11X21X2.5-MM THK)	
M	5	1	**8T-4138**	4	BOLT (M6X1X20-MM)	
	6	1	**9X-8256**	4	WASHER (6.6X12X2-MM THK)	

M - METRIC PART
R - REMANUFACTURED PART MAY BE AVAILABLE
Y - SEPARATE ILLUSTRATION

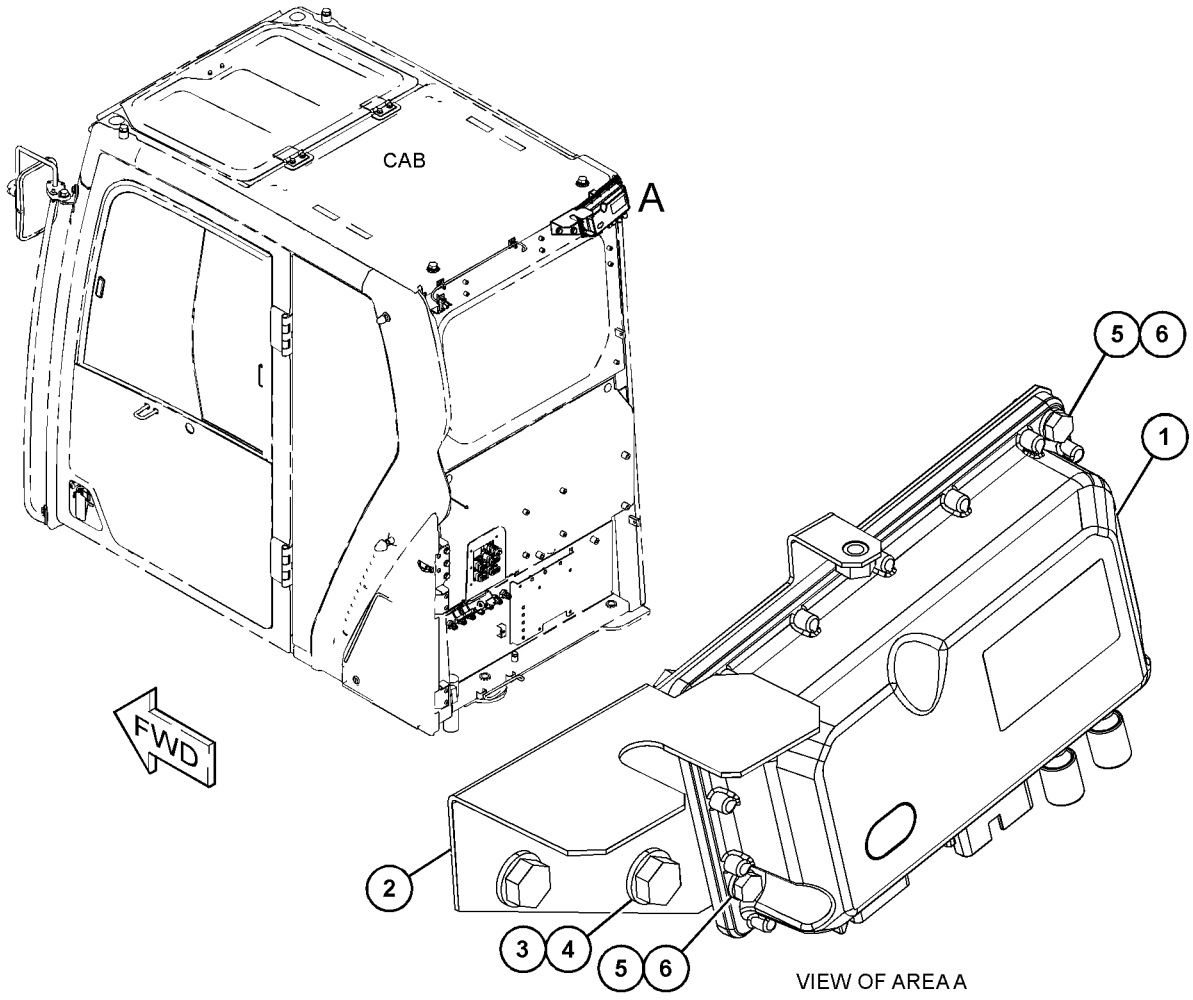

VIEW OF AREA A

GRAPHIC #1 <END> g06234130

502-7159 CONTROL & MTG GP-ELECTRONIC

S/N: SP91-UP

PART OF 489-7847 MODULE GP-CAB WIRING

SMCS-1901, 3168, 7490, 7610 **i07348767**

NOTE	REF NO	GRAPHIC REF	PART NUMBER	QTY	PART NAME 1 2 3 4 5 6 (PRODUCT LEVEL)	SEE PAGE
	1	1	**489-7907**	1	CONTROL GP-UNPROGRAMMED	
	2	1	**114-6658**	4	WASHER (6.5X17X1-MM THK)	
M	3	1	**7X-2534**	4	BOLT (M6X1X50-MM)	

M - METRIC PART

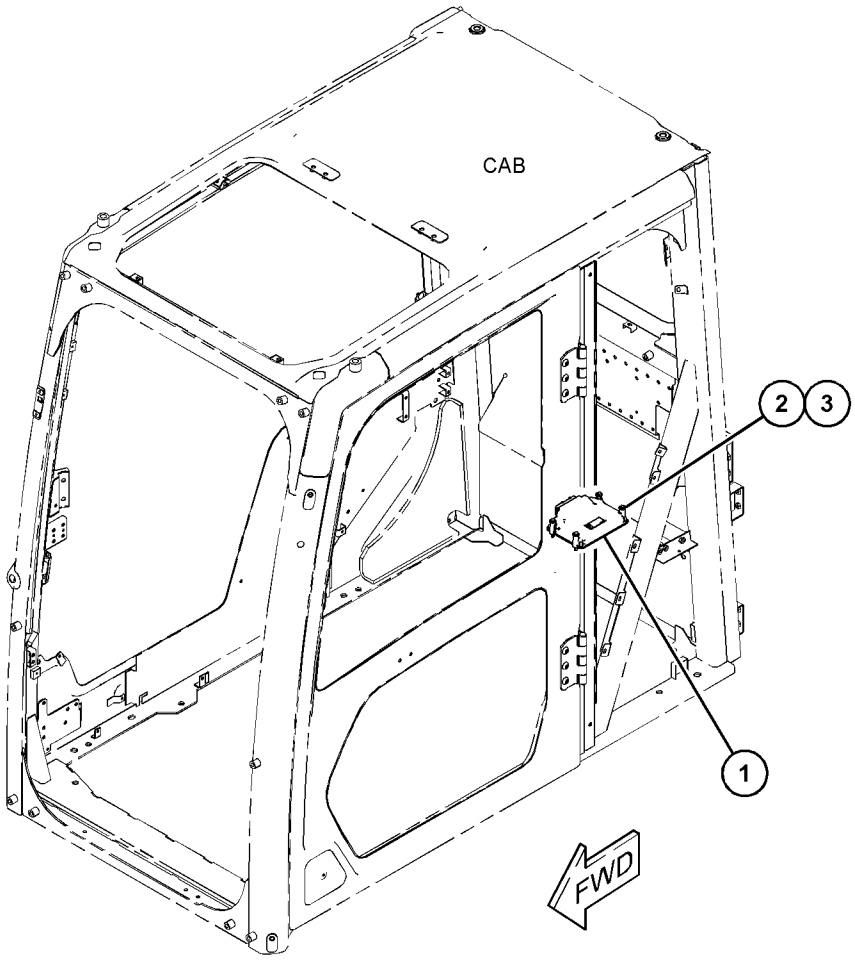

GRAPHIC #1 <END> g06233616

525-6524 CONTROL & MTG GP-ELECTRONIC

S/N: NTB1-UP

PART OF 522-6120 ENGINE AR-COMPLETE

SMCS-1901, 3168, 7490, 7610 **i07567356**

NOTE	REF NO	GRAPHIC REF	PART NUMBER	QTY	PART NAME 1 2 3 4 5 6 (PRODUCT LEVEL)	SEE PAGE
	1	1	**101-3128**	4	SPACER-SPECIAL	
	2	1	**9M-1974**	2	WASHER-HARD (8.8X16X2-MM THK)	
M	3	1	**143-9392**	4	STUD (M8X1.25-THD)	
	4	1	**9N-0869**	4	WASHER-HARD (8.8X25.5X2-MM THK)	
	5	1	**490-0590**	1	CAP-RECEPTACLE	
	6	1	**521-0783**	1	CONTROL GP-ELECTRONIC	
	7	1	**8T-9655**	8	MOUNT-ISOLATION	

M - METRIC PART

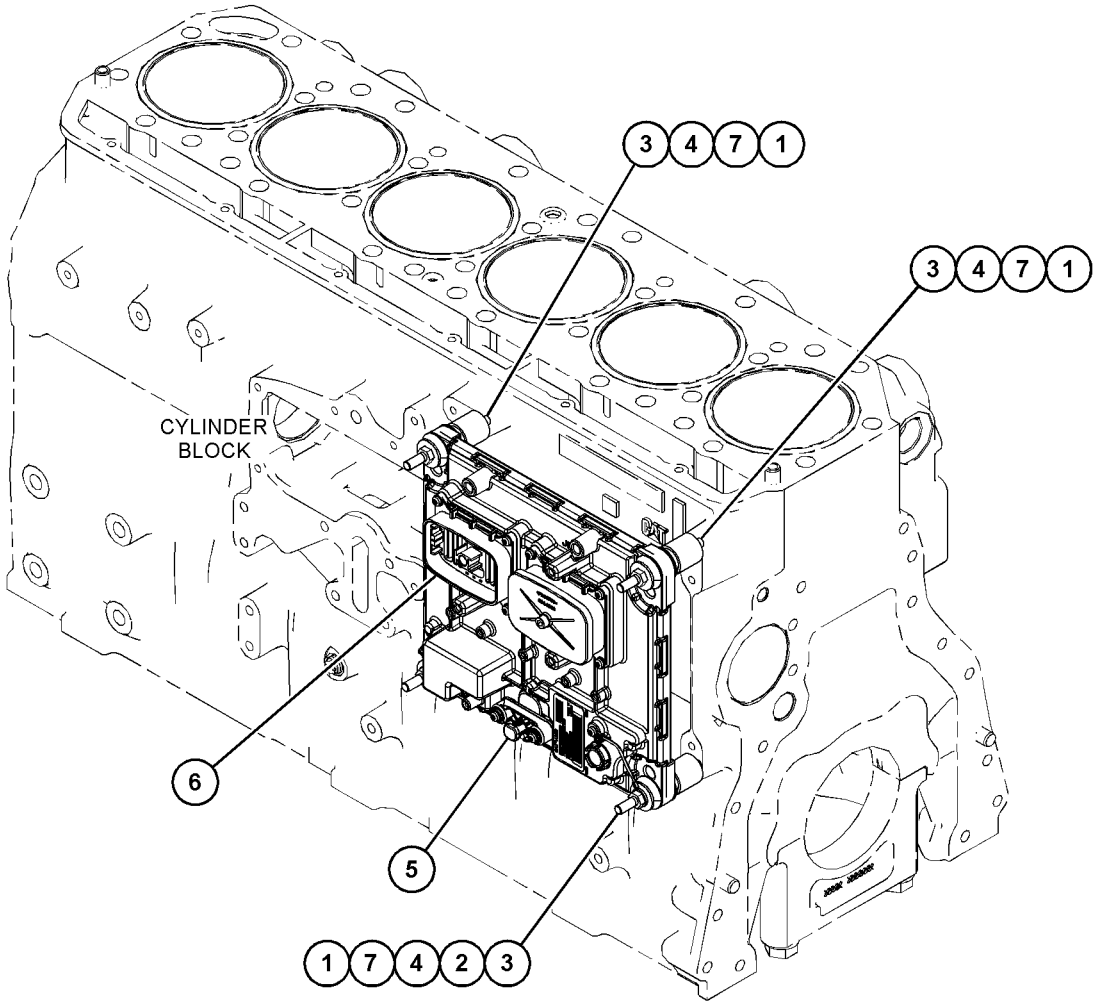

GRAPHIC #1 <END> g06360821

526-7712 CONTROL & MTG GP-ELECTRONIC—PRODUCT LINK

S/N: SP91-UP

PART OF 555-7286 INSTALLATION AR-COMMUNICATION

SMCS-1901, 3168, 7490, 7610 **i07815207**

NOTE	REF NO	GRAPHIC REF	PART NUMBER	QTY	PART NAME 1 2 3 4 5 6 (PRODUCT LEVEL)	SEE PAGE
	1	1	**8C-5607**	8	MOUNT-ISOLATION	
	2	1	**8C-5608**	4	SPACER (6.5X9.5X25.4-MM THK)	
M	3	1	**8C-8451**	4	BOLT (M6X1X40-MM)	
	4	1	**9X-6165**	4	WASHER (6.5X22X2.5-MM THK)	
	5	1	**517-4512**	1	CONTROL GP-ELECTRONIC	
		1	**7X-6315**	1	STRAP AS-GROUND	
D		1	**5P-6006**		TUBE-HEAT SHRINK (9.52-MM DIA) (0.1-M)	
		1	**2L-8078**	1	TERMINAL-RING (14-GA TO 16-GA, 5/16-IN SCREW)	
		1	**2L-8075**	1	TERMINAL-RING (14-GA TO 16-GA, NO. 8 SCREW)	

D - ORDER BY THE METER
M - METRIC PART

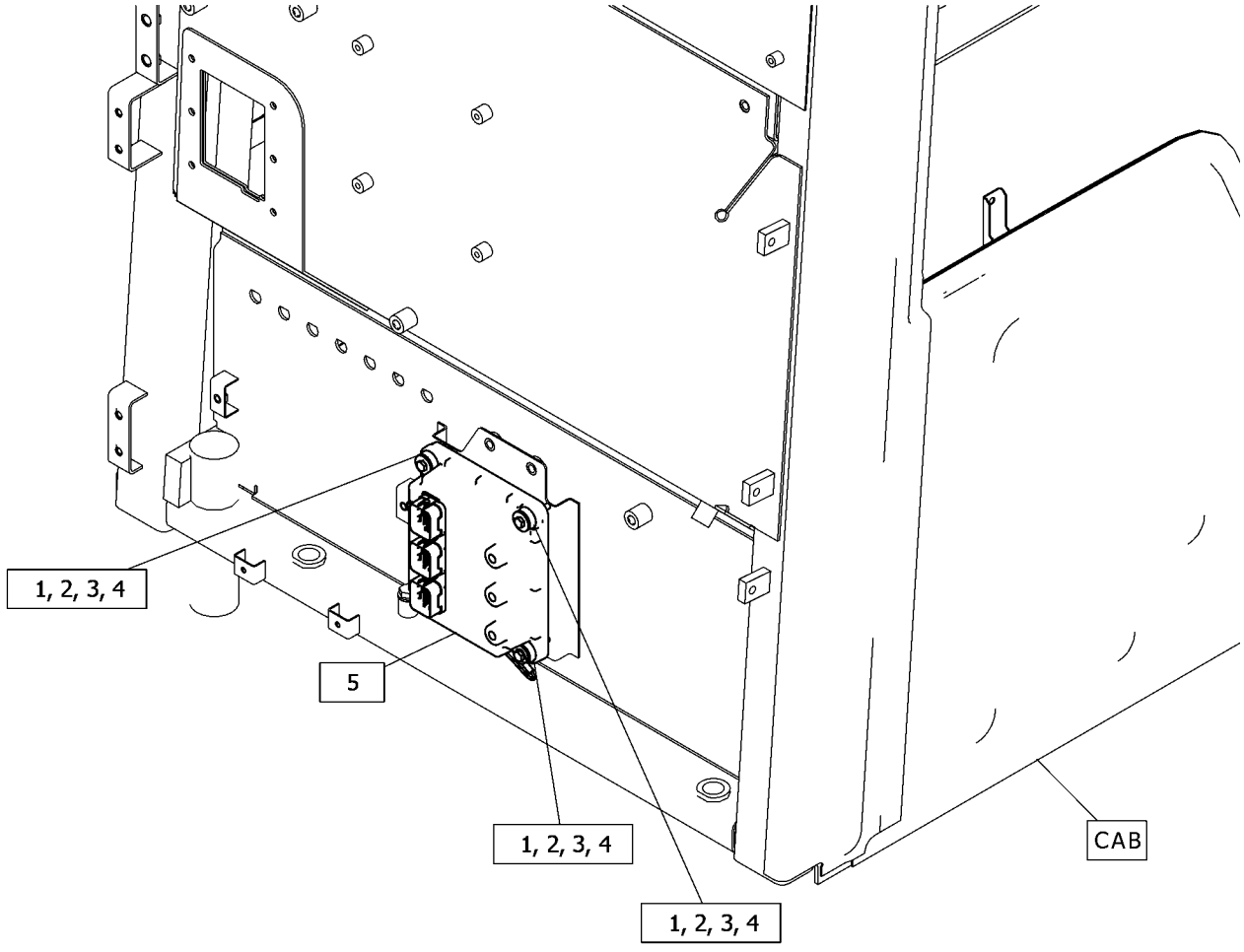

GRAPHIC #1 <END> g06384800

488-6816 CONTROL & MTG GP-MACHINE

S/N: SP91-UP

SMCS-1931, 7600 **i07350399**

NOTE	REF NO	GRAPHIC REF	PART NUMBER	QTY	PART NAME 1 2 3 4 5 6 (PRODUCT LEVEL)	SEE PAGE
R	1	1	**430-7160**	2	CONTROL GP-ELECTRONIC (ECM)	
					(EACH INCLUDES)	
		1	**467-6039**	1	CAP-CONNECTOR	
		1	**467-6040**	1	CAP-CONNECTOR	
		1	**479-8364**	2	CLIP-CONNECTOR	
	2	1	**516-4870**	4	COLLAR	
	3	1	**523-7667**	1	HARNESS AS-CHASSIS	
		1	**9W-0844**	2	SOCKET-CONNECTOR (14-GA TO 16-GA)	
		1	**2L-8077**	2	TERMINAL-RING (14-GA TO 16-GA, 1/4-IN SCREW)	
		1	**230-4011**	1	PLUG AS-CONNECTOR (2-PIN)	
		1	**455-0704**	1	SEAL-CONNECTOR	
	4	1	**114-6658**	4	WASHER (6.5X17X1-MM THK)	
M	5	1	**7X-7888**	4	BOLT (M6X1X90-MM)	

M - METRIC PART
R - REMANUFACTURED PART MAY BE AVAILABLE

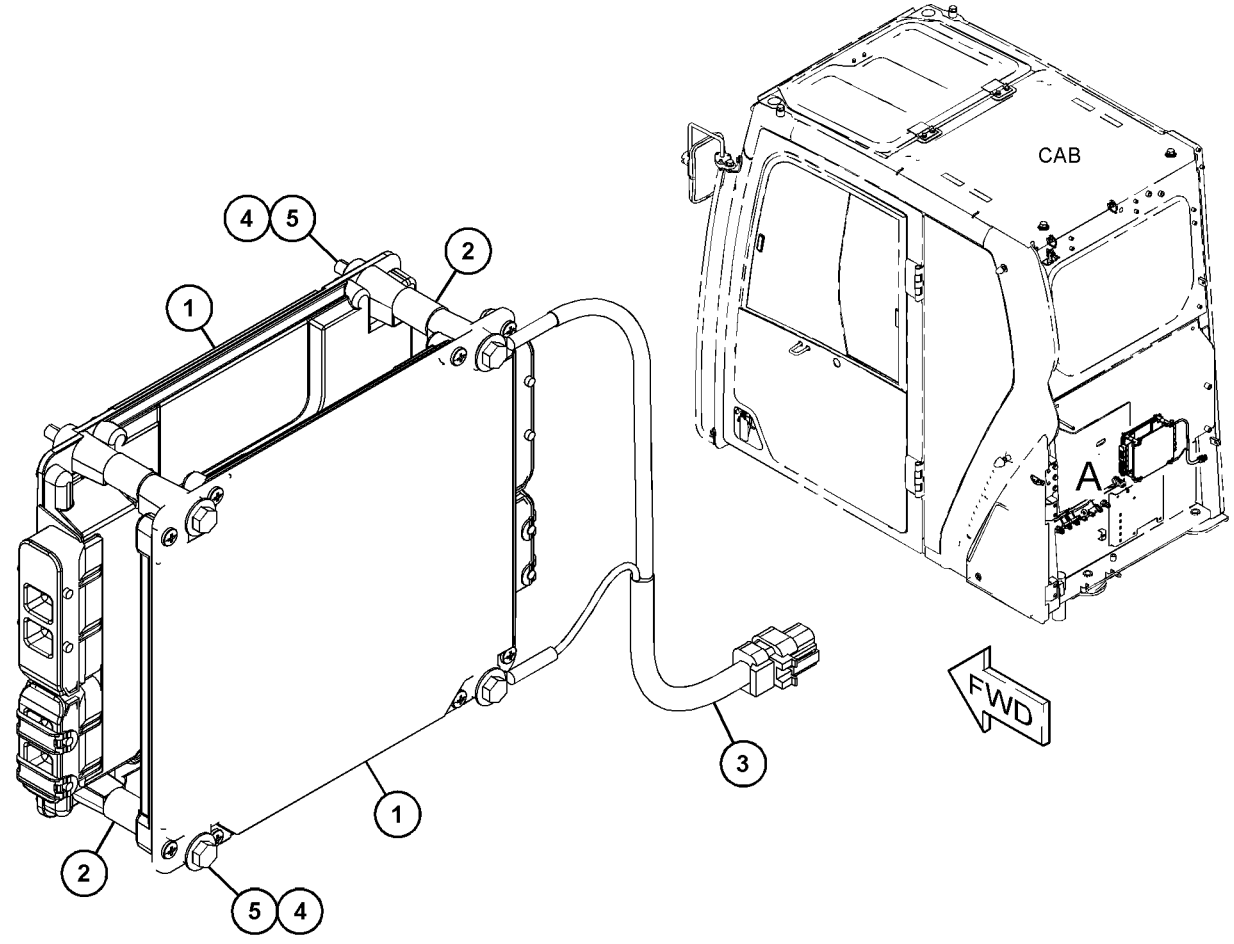

VIEW OF AREA A

GRAPHIC #1 <END> g06229476

503-2958 CONTROL GP-ELECTRONIC

S/N: SP91-UP

PART OF 568-0343 CONTROL GP-ELECTRONIC

SMCS-1901 **i07838502**

NOTE	PART NUMBER	QTY	PART NAME 1 2 3 4 5 6 (PRODUCT LEVEL)	SEE PAGE
	580-6460	1	SOFTWARE GP-MONITOR (WORK TOOL)	

<END>

568-0343 CONTROL GP-ELECTRONIC

S/N: SP91-UP

PART OF 355-1224 RIPPER GP

SMCS-1901 **i07756879**

NOTE	REF NO	GRAPHIC REF	PART NUMBER	QTY	PART NAME 1 2 3 4 5 6 (PRODUCT LEVEL)	SEE PAGE
M	1	1	**191-8920**	2	BOLT-SOCKET HEAD (M6X1X12-MM)	
Y	2	1	**503-2958**	1	CONTROL GP-ELECTRONIC (WORK TOOL)	168
	3	1	**9X-8256**	2	WASHER (6.6X12X2-MM THK)	

M - METRIC PART
Y - SEPARATE ILLUSTRATION

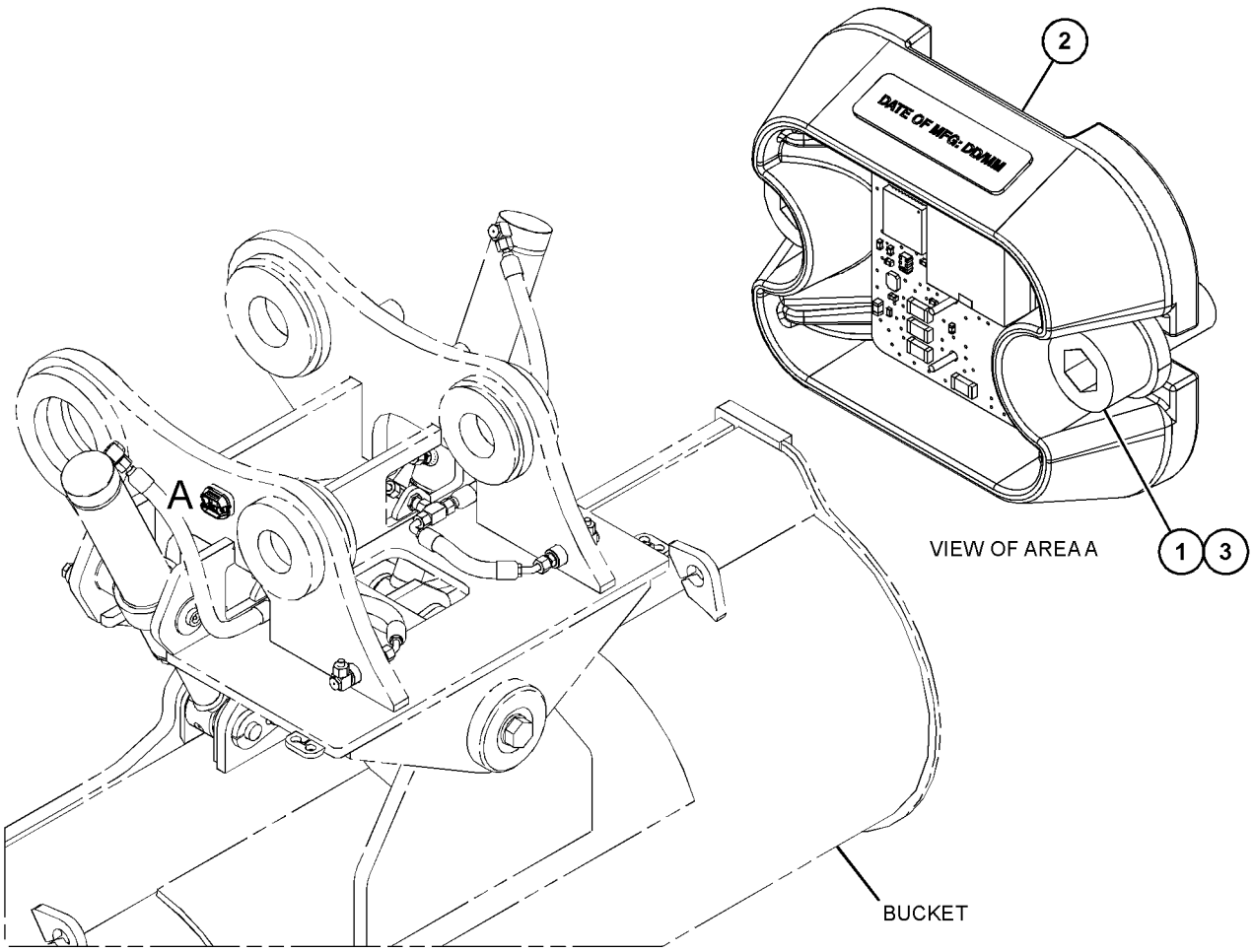

GRAPHIC #1 <END> g06430488

544-1881 CONTROL GP-UNPROGRAMMED*R

S/N: SP91-UP

PART OF 488-6822 CONTROL & MTG GP-COMMUNICATION

SMCS-7610 **i07676797**

NOTE	REF NO	GRAPHIC REF	PART NUMBER	QTY	PART NAME 1 2 3 4 5 6 (PRODUCT LEVEL)	SEE PAGE
F			**568-5140**	1	SOFTWARE GP-MONITOR (SATELLITE RADIO)	

F - NOT SHOWN

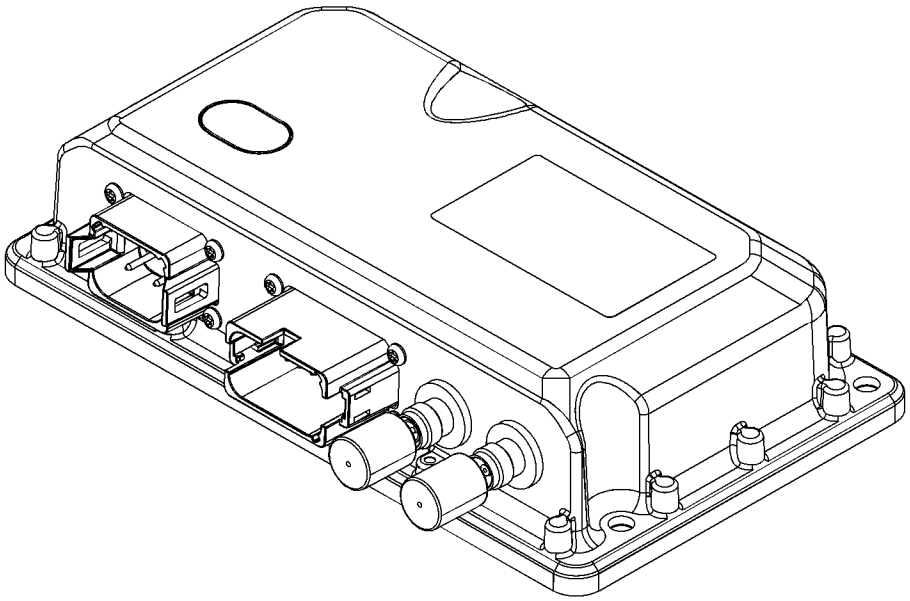

GRAPHIC #1 <END> g06131298

503-2027 CONVERTER & MOUNTING GP-POWER

S/N: SP91-UP

PART OF 489-7847 MODULE GP-CAB WIRING

SMCS-1421 **i07348772**

NOTE	REF NO	GRAPHIC REF	PART NUMBER	QTY	PART NAME 1 2 3 4 5 6 (PRODUCT LEVEL)	SEE PAGE
	1	1	**508-8884**	1	CONVERTER-POWER (24-VOLT TO 12-VOLT)	
M	2	1	**9X-2042**	2	SCREW-TRUSS HEAD (M6X1X12-MM)	

M - METRIC PART

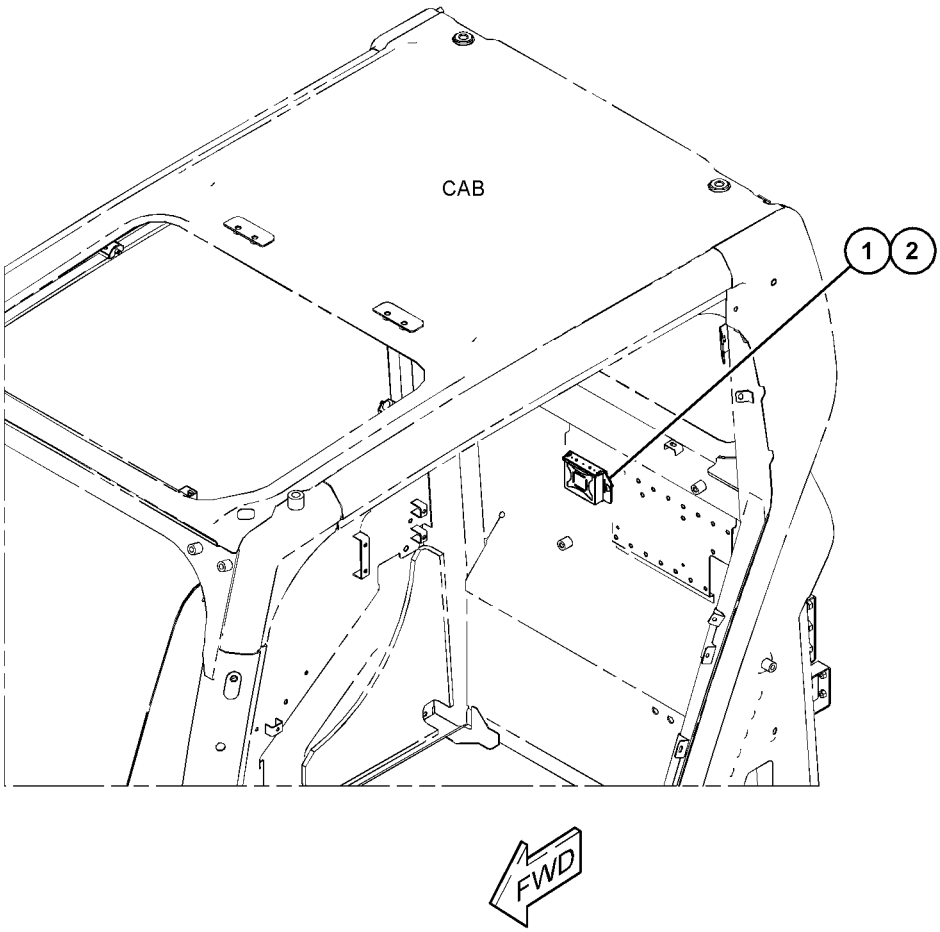

GRAPHIC #1 <END> g06233614

522-0500 ELECTRICAL AR

S/N: SP91-UP

PART OF 526-5211 COMMON AR

SMCS-1408 **i07522035**

NOTE	PART NUMBER	QTY	PART NAME 1 2 3 4 5 6 (PRODUCT LEVEL)	SEE PAGE
Y	*490-2682*	1	HORN GP-ELECTRIC	689
Y	*490-2693*	1	WIRING GP-VALVE (MAIN CONTROL)	298

Y - SEPARATE ILLUSTRATION

<END>

525-3763 ELECTRICAL AR

S/N: SP91-10000

PART OF 523-7792 EXCAVATOR AR

SMCS-1408 **i07511337**

NOTE	PART NUMBER	QTY	PART NAME 1 2 3 4 5 6 (PRODUCT LEVEL)	SEE PAGE
Y	*502-7224*	1	BATTERY & WIRING GP	143
Y	*504-3553*	1	CABLE GP-GROUND	154
Y	*504-3557*	1	WIRING GP-ENGINE	285

Y - SEPARATE ILLUSTRATION

<END>

576-7683 ELECTRICAL AR—LESSER REGULATED COUNTRY

S/N: SP910001-UP

PART OF 523-7792 EXCAVATOR AR

SMCS-1408 **i07877828**

NOTE	PART NUMBER	QTY	PART NAME 1 2 3 4 5 6 (PRODUCT LEVEL)	SEE PAGE
Y	*576-7678*	1	BATTERY & WIRING GP	149
Y	*504-3553*	1	CABLE GP-GROUND	154
Y	*504-3557*	1	WIRING GP-ENGINE	285

Y - SEPARATE ILLUSTRATION

<END>

527-7336 ELECTRONICS GP-ENGINE

S/N: SP91000-UP

PART OF 568-9820 ENGINE AR

SMCS-1901, 1920 **i07881521**

NOTE	PART NUMBER	QTY	PART NAME 1 2 3 4 5 6 (PRODUCT LEVEL)	SEE PAGE
	577-3418	1	SOFTWARE GP-ENGINE	

<END>

489-3449 ELECTRONICS GP-MACHINE—PRIMARY

S/N: SP91-UP

PART OF 490-7871 ELECTRONICS GP-MACHINE

SMCS-7610, 7620 **i07850287**

NOTE	PART NUMBER	QTY	PART NAME 1 2 3 4 5 6 (PRODUCT LEVEL)	SEE PAGE
	575-8232	1	SOFTWARE GP-MACHINE	

<END>

489-3451 ELECTRONICS GP-MACHINE–SECONDARY

S/N: SP91-UP

PART OF 490-7871 ELECTRONICS GP-MACHINE

SMCS-7610, 7620 **i07787763**

NOTE	PART NUMBER	QTY	PART NAME 1 2 3 4 5 6 (PRODUCT LEVEL)	SEE PAGE
	575-8230	1	SOFTWARE GP-MONITOR	

<END>

490-7871 ELECTRONICS GP-MACHINE

S/N: SP91-UP

PART OF 526-5211 COMMON AR

SMCS-7610, 7620 **i07851891**

NOTE	PART NUMBER	QTY	PART NAME 1 2 3 4 5 6 (PRODUCT LEVEL)	SEE PAGE
Y	*489-3451*	1	ELECTRONICS GP-MACHINE (SECONDARY)	173
Y	*489-3449*	1	ELECTRONICS GP-MACHINE (PRIMARY)	172
Y	*489-3460*	1	ELECTRONICS GP-MONITOR	173

Y - SEPARATE ILLUSTRATION

<END>

504-4980 ELECTRONICS GP-MACHINE–CONTROL

S/N: SP91-UP

PART OF 490-4919 INSTL GP-MACHINE SECURITY SYS

SMCS-7610, 7620 **i07838415**

NOTE	PART NUMBER	QTY	PART NAME 1 2 3 4 5 6 (PRODUCT LEVEL)	SEE PAGE
	569-7620	1	SOFTWARE GP-MACHINE (SECURITY SYSTEM)	

<END>

517-0824 ELECTRONICS GP-MACHINE–SECURITY SYSTEM

S/N: SP91-UP

PART OF 524-8272 INSTL AR-MACHINE SECURITY SYS

SMCS-7610, 7620 **i07838444**

NOTE	PART NUMBER	QTY	PART NAME 1 2 3 4 5 6 (PRODUCT LEVEL)	SEE PAGE
	569-7620	1	SOFTWARE GP-MACHINE (SECURITY SYSTEM)	

<END>

489-3460 ELECTRONICS GP-MONITOR

S/N: SP91-UP

8-IN

PART OF 490-7871 ELECTRONICS GP-MACHINE

SMCS-7490, 7601, 7610, 7620 **i07812645**

NOTE	PART NUMBER	QTY	PART NAME 1 2 3 4 5 6 (PRODUCT LEVEL)	SEE PAGE
	575-8231	1	SOFTWARE GP-MONITOR	

<END>

519-6970 ELECTRONICS GP-MONITOR

S/N: SP91-UP

PART OF 490-5874 MODULE GP-DISPLAY

SMCS-7490, 7601, 7610, 7620 **i07420887**

NOTE	PART NUMBER	QTY	PART NAME 1 2 3 4 5 6 (PRODUCT LEVEL)	SEE PAGE
	557-3629	1	SOFTWARE GP-MONITOR	

<END>

555-8043 ELECTRONICS GP-MONITOR—TELEMATICS

S/N: SP91-UP

SATELLITE

PART OF 555-7258 INSTALLATION AR-COMMUNICATION

SMCS-7490, 7601, 7610, 7620 **i07850114**

NOTE	PART NUMBER	QTY	PART NAME 1 2 3 4 5 6 (PRODUCT LEVEL)	SEE PAGE
	568-5140	1	SOFTWARE GP-MONITOR (SATELLITE RADIO)	

<END>

561-3610 ELECTRONICS GP-MONITOR

S/N: SP91-UP

PART OF 561-2292 MONITOR AR

SMCS-7490, 7601, 7610, 7620 **i07666401**

NOTE	PART NUMBER	QTY	PART NAME 1 2 3 4 5 6 (PRODUCT LEVEL)	SEE PAGE
	569-9053	1	SOFTWARE GP-MONITOR	

<END>

561-3611 ELECTRONICS GP-MONITOR

S/N: SP91-UP

PART OF 561-2293 MONITOR AR

SMCS-7490, 7601, 7610, 7620 **i07756620**

NOTE	PART NUMBER	QTY	PART NAME 1 2 3 4 5 6 (PRODUCT LEVEL)	SEE PAGE
	569-9053	1	SOFTWARE GP-MONITOR	

<END>

493-0982 FASTENER GP-WIRING HARNESS–JOYSTICK

S/N: SP91-UP

PART OF 528-6835 CONTROL AR-AUXILIARY

SMCS-1408, 7553

i07352319

NOTE	REF NO	GRAPHIC REF	PART NUMBER	QTY	PART NAME 1 2 3 4 5 6 (PRODUCT LEVEL)	SEE PAGE
	1	1	**3S-2093**	4	STRAP-CABLE	
	2	1	**448-1297**	2	TIE	
	3	1	**491-7831**	4	BASE	

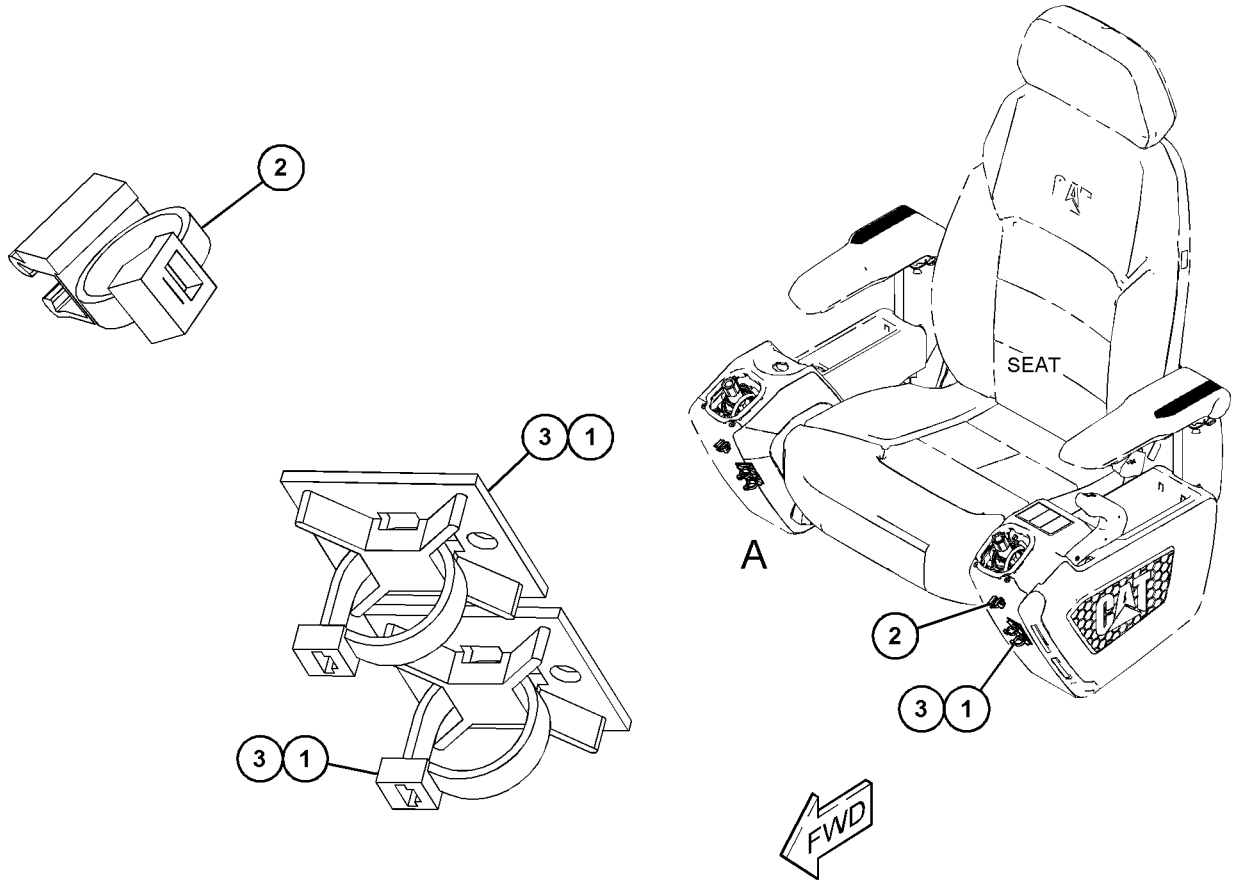

VIEW OF AREA A

GRAPHIC #1 <END> g06229129

522-8201 FASTENER GP-WIRING HARNESS–PRESSURE CONTROL

S/N: SP91-UP

PART OF 523-7799, 523-7803 LINES AR-BOOM

SMCS-1408, 7553

i07527241

NOTE	REF NO	GRAPHIC REF	PART NUMBER	QTY	PART NAME 1 2 3 4 5 6 (PRODUCT LEVEL)	SEE PAGE
	1	1	**484-1456**	1	STRAP - CABLE	

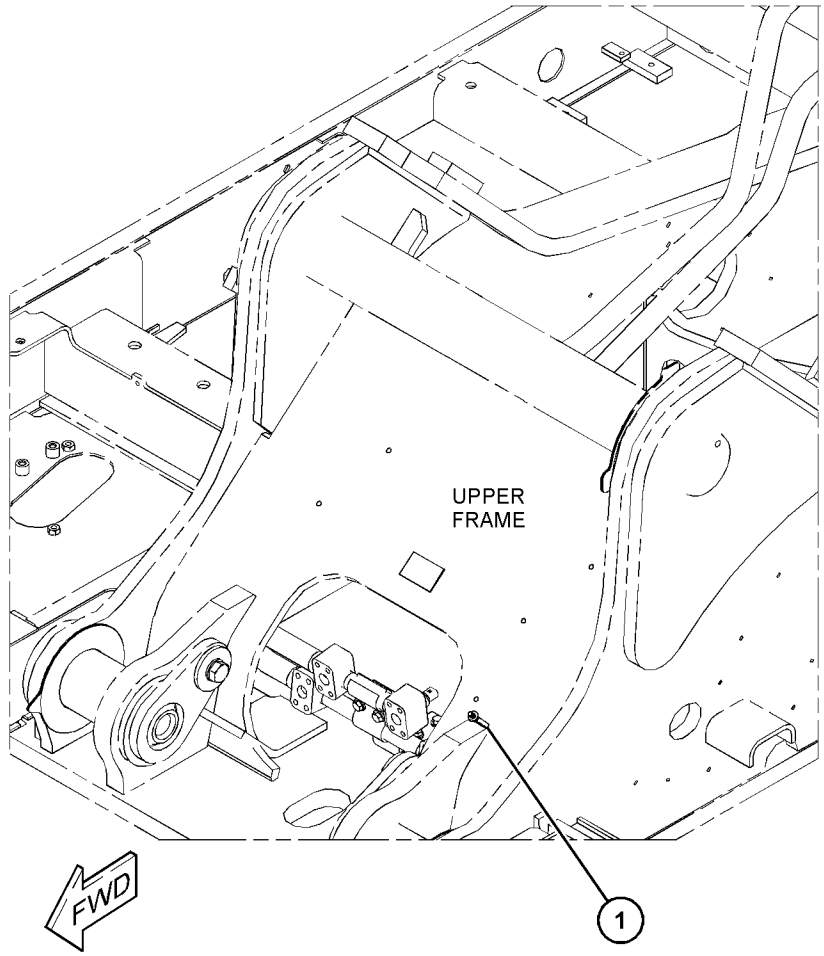

GRAPHIC #1 <END> g06280871

516-0550 GRADE CONTROL AR

S/N: SP91-UP

SMCS-7220 **i07493468**

NOTE	PART NUMBER	QTY	PART NAME 1 2 3 4 5 6 (PRODUCT LEVEL)	SEE PAGE
Y	*490-2767*	1	SENSOR & MTG GP-POSITION	228

Y - SEPARATE ILLUSTRATION

<END>

517-5967 GRADE CONTROL AR–BOOM

S/N: SP91-UP

SMCS-7220 **i07877326**

NOTE	PART NUMBER	QTY	PART NAME 1 2 3 4 5 6 (PRODUCT LEVEL)	SEE PAGE
Y	*490-2768*	1	SENSOR & MTG GP-POSITION (BOOM)	229
Y	*504-3560*	1	WIRING GP-FRONT (GRADE CONTROL, BOOM)	289

Y - SEPARATE ILLUSTRATION

<END>

522-8798 GRADE CONTROL AR

S/N: SP91-UP

FOR USE WITH 2.55-M (8.4-FT) STICK

SMCS-7220 **i07527267**

NOTE	PART NUMBER	QTY	PART NAME 1 2 3 4 5 6 (PRODUCT LEVEL)	SEE PAGE
Y	*490-2769*	1	SENSOR & MTG GP-POSITION (GRADE CONTROL, STICK)	230
Y	*522-0445*	1	SENSOR & MTG GP-POSITION (BUCKET)	232
Y	*522-8795*	1	WIRING GP-FRONT (GRADE CONTROL)	291

Y - SEPARATE ILLUSTRATION

<END>

525-4121 GRADE CONTROL AR–MASS BOOM

S/N: SP91-UP

SMCS-7220 **i07527123**

NOTE	PART NUMBER	QTY	PART NAME 1 2 3 4 5 6 (PRODUCT LEVEL)	SEE PAGE
Y	*490-2768*	1	SENSOR & MTG GP-POSITION (BOOM)	229
Y	*525-4122*	1	WIRING GP-FRONT (GRADE CONTROL)	292

Y - SEPARATE ILLUSTRATION

<END>

560-5681 GRADE CONTROL AR–LASER RECEIVER

S/N: SP91-UP

SMCS-7220 **i07877346**

NOTE	PART NUMBER	QTY	PART NAME 1 2 3 4 5 6 (PRODUCT LEVEL)	SEE PAGE
Y	*560-5553*	1	SENSOR & MTG GP-POSITION (LASER RECEIVER)	233
Y	*560-5566*	1	WIRING GP-FRONT (GRADE CONTROL, STICK)	293

Y - SEPARATE ILLUSTRATION

<END>

530-1948 HARNESS AS-CAB—LH

S/N: SP91-UP
WITH COVER
PART OF 527-5711, 554-3615 LIGHTING GP-FLOOD

SMCS-1408 **i07711423**

NOTE	PART NUMBER	QTY	PART NAME 1 2 3 4 5 6 (PRODUCT LEVEL)	SEE PAGE
	490-0587	1	BACKSHELL	
	538-9804	1	HARNESS AS-CAB	
	505-7637	1	PLUG AS-CONNECTOR	
	490-0571	1	PLUG AS-CONNECTOR (2-PIN)	
	169-0705	2	PLUG-SEAL	
	490-0572	2	RECEPTACLE AS (2-PIN)	
	538-9805	1	HARNESS AS-CAB	
	505-7638	1	PLUG AS-CONNECTOR	
	490-0578	1	PLUG AS-CONNECTOR (2-PIN)	
	169-0705	2	PLUG-SEAL	
	490-0582	2	RECEPTACLE AS (2-PIN)	
	155-2270	1	KIT-CONNECTING PLUG (2-PIN)	
			(INCLUDES PLUG AS, WEDGE, & INTERFACE SEAL)	
	490-0571	2	PLUG AS-CONNECTOR (2-PIN)	
	490-0578	2	PLUG AS-CONNECTOR (2-PIN)	
	9W-0844	2	SOCKET-CONNECTOR (14-GA TO 16-GA)	
	3S-2093	3	STRAP-CABLE	
	487-2948	2	STRAP-CABLE	
	7Y-3966	1	TERMINAL AS	
	7Y-3962	1	TERMINAL-BULLET (MALE)	
	7Y-3964	1	TUBE	
	7Y-3967	1	TERMINAL AS	
	7Y-3963	1	TERMINAL-BULLET (FEMALE)	
	7Y-3965	1	TUBE	
			<END>	

539-2832 HARNESS AS-CAB—FLOODLIGHTS

S/N: SP91-UP
PART OF 554-3615 LIGHTING GP-FLOOD

SMCS-1408 **i07519608**

NOTE	PART NUMBER	QTY	PART NAME 1 2 3 4 5 6 (PRODUCT LEVEL)	SEE PAGE
	155-2270	1	KIT-CONNECTING PLUG (2-PIN)	
			(INCLUDES PLUG AS, WEDGE, & INTERFACE SEAL)	
	102-8802	1	KIT-RECEPTACLE (2-PIN)	
			(INCLUDES RECEPTACLE AS & WEDGE)	
	8T-8729	2	PIN-CONNECTOR (16-GA TO 20-GA)	
			—OR—	
	126-1767	2	PIN-CONNECTOR (14-GA TO 16-GA)	
	8T-8730	2	SOCKET-CONNECTOR (16-GA TO 18-GA)	
	3S-2093	1	STRAP-CABLE	
			<END>	

576-6849 HARNESS AS-CAB—PRODUCT LINK 243, 083

S/N: SP910001-UP

PART OF 576-7678 BATTERY & WIRING GP

SMCS-1408 **i07837734**

NOTE	PART NUMBER	QTY	PART NAME 1 2 3 4 5 6 (PRODUCT LEVEL)	SEE PAGE
	484-1454	1	CLIP-RETAINING	
	123-7615	1	CONNECTOR (1-PIN)	
	8T-8729	2	PIN-CONNECTOR (16-GA TO 20-GA)	
			—OR—	
	126-1767	2	PIN-CONNECTOR (14-GA TO 16-GA)	
	243-4505	1	RECEPTACLE AS-CONNECTOR (2-PIN)	
	104-1995	2	TERMINAL-BLADE (14-GA TO 18-GA)	

<END>

552-1788 HARNESS AS-CAMERA—CAMERA, RH

S/N: SP91-UP

PART OF 502-7214 WIRING GP-CHASSIS

SMCS-1408 **i07526554**

NOTE	PART NUMBER	QTY	PART NAME 1 2 3 4 5 6 (PRODUCT LEVEL)	SEE PAGE
	484-1454	1	CLIP-RETAINING	
	8T-8729	2	PIN-CONNECTOR (16-GA TO 20-GA)	
	490-0571	1	PLUG AS-CONNECTOR (2-PIN)	
	490-0578	1	PLUG AS-CONNECTOR (2-PIN)	
	490-0572	1	RECEPTACLE AS (2-PIN)	
	3S-2093	7	STRAP-CABLE	

<END>

552-1789 HARNESS AS-CAMERA—CAMERA, SIDE

S/N: SP91-UP

RH

PART OF 502-7214 WIRING GP-CHASSIS

SMCS-1408 **i07526561**

NOTE	PART NUMBER	QTY	PART NAME 1 2 3 4 5 6 (PRODUCT LEVEL)	SEE PAGE
	240-7874	1	PLUG AS-CONNECTOR (2-PIN)	
	455-0704	1	SEAL-CONNECTOR	
	490-0571	2	PLUG AS-CONNECTOR (2-PIN)	
	490-0578	1	PLUG AS-CONNECTOR (2-PIN)	
	8T-8730	2	SOCKET-CONNECTOR (16-GA TO 18-GA)	
	3S-2093	3	STRAP-CABLE	

<END>

570-5397 HARNESS AS-CAMERA

S/N: SP91-UP
CHASSIS, REAR
PART OF 502-7213 WIRING GP-CHASSIS

SMCS-1408 **i07690613**

NOTE	PART NUMBER	QTY	PART NAME 1 2 3 4 5 6 (PRODUCT LEVEL)	SEE PAGE
	484-1454	1	CLIP-RETAINING	
	8T-8729	4	PIN-CONNECTOR (16-GA TO 20-GA)	
	240-7874	1	PLUG AS-CONNECTOR (2-PIN)	
	455-0704	1	SEAL-CONNECTOR	
	490-0571	1	PLUG AS-CONNECTOR (2-PIN)	
	490-0578	1	PLUG AS-CONNECTOR (2-PIN)	
	8T-8737	2	PLUG-SEAL	
	490-0572	1	RECEPTACLE AS (2-PIN)	
	3S-2093	16	STRAP-CABLE	
E	**125-7874**		TUBE-HEAT SHRINK (5.72-MM DIA) (10-CM)	

E - ORDER BY THE CENTIMETER

<END>

570-5399 HARNESS AS-CAMERA

S/N: SP91-UP
COUNTERWEIGHT, REAR
PART OF 502-7213 WIRING GP-CHASSIS

SMCS-1408 **i07690635**

NOTE	PART NUMBER	QTY	PART NAME 1 2 3 4 5 6 (PRODUCT LEVEL)	SEE PAGE
	240-7874	1	PLUG AS-CONNECTOR (2-PIN)	
	455-0704	1	SEAL-CONNECTOR	
	490-0571	2	PLUG AS-CONNECTOR (2-PIN)	
	490-0578	1	PLUG AS-CONNECTOR (2-PIN)	
	8T-8730	2	SOCKET-CONNECTOR (16-GA TO 18-GA)	
	3S-2093	5	STRAP-CABLE	

<END>

570-5400 HARNESS AS-CAMERA

S/N: SP91-UP
PART OF 502-7214 WIRING GP-CHASSIS

SMCS-1408 **i07757032**

NOTE	PART NUMBER	QTY	PART NAME 1 2 3 4 5 6 (PRODUCT LEVEL)	SEE PAGE
	490-0586	3	BACKSHELL (CONNECTOR)	
	484-1454	1	CLIP-RETAINING	
	8T-8729	2	PIN-CONNECTOR (16-GA TO 20-GA)	
	490-0571	1	PLUG AS-CONNECTOR (2-PIN)	
	490-0578	1	PLUG AS-CONNECTOR (2-PIN)	
	490-0572	1	RECEPTACLE AS (2-PIN)	
	3S-2093	10	STRAP-CABLE	

<END>

570-5401 HARNESS AS-CAMERA

S/N: SP91-UP

PART OF 502-7214 WIRING GP-CHASSIS

SMCS-1408 **i07757041**

NOTE	PART NUMBER	QTY	PART NAME 1 2 3 4 5 6 (PRODUCT LEVEL)	SEE PAGE
	490-0586	3	BACKSHELL (CONNECTOR)	
	240-7874	1	PLUG AS-CONNECTOR (2-PIN)	
	455-0704	1	SEAL-CONNECTOR	
	490-0571	2	PLUG AS-CONNECTOR (2-PIN)	
	490-0578	1	PLUG AS-CONNECTOR (2-PIN)	
	8T-8730	2	SOCKET-CONNECTOR (16-GA TO 18-GA)	
	3S-2093	6	STRAP-CABLE	

<END>

510-1207 HARNESS AS-CHASSIS–AIR CLEANER

S/N: SP91-UP

PART OF 502-7224, 576-7678 BATTERY & WIRING GP

SMCS-1408 **i07511638**

NOTE	PART NUMBER	QTY	PART NAME 1 2 3 4 5 6 (PRODUCT LEVEL)	SEE PAGE
	484-1454	1	CLIP-RETAINING	
	8T-8729	4	PIN-CONNECTOR (16-GA TO 20-GA)	
	230-4011	2	PLUG AS-CONNECTOR (2-PIN)	
			(EACH INCLUDES)	
	455-0704	1	SEAL-CONNECTOR	
	230-5009	1	RECEPTACLE AS-CONNECTOR (4-PIN)	
	8T-8730	4	SOCKET-CONNECTOR (16-GA TO 18-GA)	

<END>

510-1208 HARNESS AS-CHASSIS–COOLANT TANK

S/N: SP91-UP

PART OF 502-7224, 576-7678 BATTERY & WIRING GP

SMCS-1408 **i07511640**

NOTE	PART NUMBER	QTY	PART NAME 1 2 3 4 5 6 (PRODUCT LEVEL)	SEE PAGE
	484-1454	1	CLIP-RETAINING	
	8T-8729	2	PIN-CONNECTOR (16-GA TO 20-GA)	
	116-6158	1	PLUG AS-CONNECTOR (2-PIN)	
	243-4505	1	RECEPTACLE AS-CONNECTOR (2-PIN)	
	100-6674	2	SEAL-CONNECTOR	
	124-5640	2	TERMINAL-SOCKET	

<END>

513-4373 HARNESS AS-CHASSIS—REFUELING PUMP

S/N: SP91-UP

PART OF 502-7210 WIRING GP-CHASSIS

SMCS-1408 **i07527082**

NOTE	PART NUMBER	QTY	PART NAME 1 2 3 4 5 6 (PRODUCT LEVEL)	SEE PAGE
	155-2271	1	KIT-CONNECTING PLUG (4-PIN)	
			(INCLUDES PLUG AS, WEDGE, & INTERFACE SEAL)	
	3E-3390	2	PIN-CONNECTOR (16-GA TO 18-GA)	
	9W-0852	2	PIN-CONNECTOR (14-GA TO 16-GA)	
	230-4011	1	PLUG AS-CONNECTOR (2-PIN)	
	455-0704	1	SEAL-CONNECTOR	
	243-4507	1	RECEPTACLE AS-CONNECTOR (4-PIN)	
	8T-8730	4	SOCKET-CONNECTOR (16-GA TO 18-GA)	
	9W-0844	2	SOCKET-CONNECTOR (14-GA TO 16-GA)	
E	**125-7875**		TUBE-HEAT SHRINK (7.44-MM DIA) (10-CM)	

E - ORDER BY THE CENTIMETER

<END>

514-7350 HARNESS AS-CHASSIS—REVERSING FAN

S/N: SP91-UP

PART OF 514-5702 WIRING GP-CHASSIS

SMCS-1408 **i07527749**

NOTE	PART NUMBER	QTY	PART NAME 1 2 3 4 5 6 (PRODUCT LEVEL)	SEE PAGE
	484-1454	1	CLIP-RETAINING	
	155-2270	1	KIT-CONNECTING PLUG (2-PIN)	
			(INCLUDES PLUG AS, WEDGE, & INTERFACE SEAL)	
	3E-3390	2	PIN-CONNECTOR (16-GA TO 18-GA)	
	243-4505	1	RECEPTACLE AS-CONNECTOR (2-PIN)	
	8T-8730	2	SOCKET-CONNECTOR (16-GA TO 18-GA)	
	3S-2093	1	STRAP-CABLE	

<END>

524-2766 HARNESS AS-CHASSIS—FUEL TANK

S/N: SP91-UP

PART OF 502-7224, 576-7678 BATTERY & WIRING GP

SMCS-1408 **i07511646**

NOTE	PART NUMBER	QTY	PART NAME 1 2 3 4 5 6 (PRODUCT LEVEL)	SEE PAGE
	155-2270	1	KIT-CONNECTING PLUG (2-PIN)	
			(INCLUDES PLUG AS, WEDGE & INTERFACE SEAL)	
	3E-3390	2	PIN-CONNECTOR (16-GA TO 18-GA)	
	243-4505	1	RECEPTACLE AS-CONNECTOR (2-PIN)	
	8T-8730	2	SOCKET-CONNECTOR (16-GA TO 18-GA)	

<END>

550-0785 HARNESS AS-CHASSIS—BOOM PRESSURE CONTROL

S/N: SP91-UP

PART OF 549-8055 WIRING GP-CHASSIS

SMCS-1408 **i07527167**

NOTE	PART NUMBER	QTY	PART NAME 1 2 3 4 5 6 (PRODUCT LEVEL)	SEE PAGE
	155-2270	1	KIT-CONNECTING PLUG (2-PIN)	
			(INCLUDES PLUG AS, WEDGE, & INTERFACE SEAL)	
	3E-3390	2	PIN-CONNECTOR (16-GA TO 18-GA)	
	8T-8737	10	PLUG-SEAL	
	272-5000	1	RECEPTACLE AS-CONNECTOR (12-PIN)	
	8T-8730	2	SOCKET-CONNECTOR (16-GA TO 18-GA)	

<END>

551-3742 HARNESS AS-CHASSIS—HYDRAULIC TANK

S/N: SP91-UP

PART OF 502-7224, 576-7678 BATTERY & WIRING GP

SMCS-1408 **i07511654**

NOTE	PART NUMBER	QTY	PART NAME 1 2 3 4 5 6 (PRODUCT LEVEL)	SEE PAGE
	283-0055	2	ADAPTER-CONNECTOR	
	311-8727	1	ADAPTER-CONNECTOR	
	311-8728	1	ADAPTER-CONNECTOR	
	155-2270	1	KIT-CONNECTING PLUG (2-PIN)	
			(INCLUDES PLUG AS, WEDGE, & INTERFACE SEAL)	
	230-4009	1	PLUG AS-CONNECTOR (12-PIN)	
	455-0709	1	SEAL-CONNECTOR	
	230-4011	3	PLUG AS-CONNECTOR (2-PIN)	
			(EACH INCLUDES)	
	455-0704	1	SEAL-CONNECTOR	
	281-8803	1	PLUG AS-CONNECTOR (3-PIN)	
	281-8804	2	PLUG AS-CONNECTOR (3-PIN)	
	230-4013	1	PLUG AS-CONNECTOR (3-PIN)	
			(EACH PLUG AS INCLUDES)	
	455-0705	1	SEAL-CONNECTOR	
	230-5010	1	PLUG AS-CONNECTOR (6-PIN)	
	455-0707	1	SEAL-CONNECTOR	
	8T-8737	2	PLUG-SEAL	
	8T-8730	32	SOCKET-CONNECTOR (16-GA TO 18-GA)	
	9W-0844	4	SOCKET-CONNECTOR (14-GA TO 16-GA)	
E	**125-7875**		TUBE-HEAT SHRINK (7.44-MM DIA) (10-CM)	

E - ORDER BY THE CENTIMETER

<END>

551-3743 HARNESS AS-CHASSIS–PUMP

S/N: SP91-UP

PART OF 502-7224, 576-7678 BATTERY & WIRING GP

SMCS-1408 **i07511657**

NOTE	PART NUMBER	QTY	PART NAME 1 2 3 4 5 6 (PRODUCT LEVEL)	SEE PAGE
	484-1452	1	CLIP	
	155-2270	3	KIT-CONNECTING PLUG (2-PIN)	
			(EACH INCLUDES PLUG AS, WEDGE, & INTERFACE SEAL)	
	230-5010	1	PLUG AS-CONNECTOR (6-PIN)	
	455-0707	1	SEAL-CONNECTOR	
	8T-8730	12	SOCKET-CONNECTOR (16-GA TO 18-GA)	
	204-2281	1	STRAP-CABLE	

<END>

551-3758 HARNESS AS-CHASSIS

S/N: SP91-UP

PART OF 504-3561, 538-5287 WIRING GP-CHASSIS

SMCS-1408 **i07519020**

NOTE	PART NUMBER	QTY	PART NAME 1 2 3 4 5 6 (PRODUCT LEVEL)	SEE PAGE
	283-0056	4	ADAPTER-CONNECTOR	
	342-2972	3	CAP-CONNECTOR (2-PIN)	
	342-2976	2	CAP-CONNECTOR (12-PIN)	
	8T-8729	27	PIN-CONNECTOR (16-GA TO 20-GA)	
	230-4009	1	PLUG AS-CONNECTOR (12-PIN)	
	239-7356	1	PLUG AS-CONNECTOR (12-PIN)	
			(EACH PLUG AS INCLUDES)	
	455-0709	1	SEAL-CONNECTOR	
	230-4011	3	PLUG AS-CONNECTOR (2-PIN)	
			(EACH INCLUDES)	
	455-0704	1	SEAL-CONNECTOR	
	230-4013	2	PLUG AS-CONNECTOR (3-PIN)	
			(EACH INCLUDES)	
	455-0705	1	SEAL-CONNECTOR	
	8T-8737	20	PLUG-SEAL	
	243-4508	1	RECEPTACLE AS-CONNECTOR (6-PIN)	
	243-4510	1	RECEPTACLE AS-CONNECTOR (12-PIN)	
	272-5000	1	RECEPTACLE AS-CONNECTOR (12-PIN)	
	8T-8730	19	SOCKET-CONNECTOR (16-GA TO 18-GA)	
	3S-2093	1	STRAP-CABLE	
E	**125-7874**		TUBE-HEAT SHRINK (5.72-MM DIA) (20-CM)	

E - ORDER BY THE CENTIMETER

<END>

551-5004 HARNESS AS-CHASSIS–FINE SWING

S/N: SP91-UP

PART OF 502-7185 WIRING GP-CHASSIS

SMCS-1408 **i07531050**

NOTE	PART NUMBER	QTY	PART NAME 1 2 3 4 5 6 (PRODUCT LEVEL)	SEE PAGE
	484-1452	1	CLIP	
G	**423-1982**		HOSE (39.4-IN)	
	155-2270	1	KIT-CONNECTING PLUG (2-PIN)	
			(INCLUDES PLUG AS, WEDGE, & INTERFACE SEAL)	
	230-4011	1	PLUG AS-CONNECTOR (2-PIN)	
	455-0704	1	SEAL-CONNECTOR	
	8T-8730	4	SOCKET-CONNECTOR (16-GA TO 18-GA)	
	3S-2093	1	STRAP-CABLE	
	204-2281	1	STRAP-CABLE	
G - ORDER BY THE INCH				

<END>

560-1052 HARNESS AS-CHASSIS

S/N: SP91-UP

PART OF 502-7224 BATTERY & WIRING GP

SMCS-1408 **i07511650**

NOTE	PART NUMBER	QTY	PART NAME 1 2 3 4 5 6 (PRODUCT LEVEL)	SEE PAGE
	283-0056	6	ADAPTER-CONNECTOR	
	311-8729	1	ADAPTER-CONNECTOR	
	311-8732	1	ADAPTER-CONNECTOR	
E	**196-8876**		BRAID (BLACK, ONE GOLD STRAND) (282-CM)	
	342-2972	5	CAP-CONNECTOR (2-PIN)	
	342-2973	2	CAP-CONNECTOR (3-PIN)	
	342-2974	1	CAP-CONNECTOR (6-PIN)	
	342-2975	2	CAP-CONNECTOR (8-PIN)	
	342-2976	3	CAP-CONNECTOR (12-PIN)	
	342-2978	3	CAP-CONNECTOR (4-PIN)	
	484-1452	15	CLIP	
	484-1453	5	CLIP (RETAINER)	
	484-1454	12	CLIP-RETAINING	
	153-2602	4	RECEPTACLE-CONNECTOR (1-PIN)	
G	**423-1985**		HOSE (27.6-IN)	
	8T-8729	100	PIN-CONNECTOR (16-GA TO 20-GA)	
			—OR—	
	186-3735	100	PIN-CONNECTOR (16-GA TO 18-GA)	
	202-5397	13	PLUG	
	202-5400	54	PLUG	
	155-2270	4	KIT-CONNECTING PLUG (2-PIN)	
			(EACH INCLUDES PLUG AS, WEDGE, & INTERFACE SEAL)	
	241-8834	1	PLUG AS-CONNECTOR (12-PIN)	
	281-3395	4	PLUG AS-CONNECTOR (12-PIN)	
	281-3396	2	PLUG AS-CONNECTOR (12-PIN)	
	230-4009	4	PLUG AS-CONNECTOR (12-PIN)	
			(EACH PLUG AS INCLUDES)	
	455-0709	1	SEAL-CONNECTOR	
	238-8245	3	PLUG AS-CONNECTOR (2-PIN)	
	240-7874	2	PLUG AS-CONNECTOR (2-PIN)	
	230-4011	6	PLUG AS-CONNECTOR (2-PIN)	
			(EACH PLUG AS INCLUDES)	
	455-0704	1	SEAL-CONNECTOR	
	261-0524	3	PLUG AS-CONNECTOR (4-PIN)	
	230-5008	2	PLUG AS-CONNECTOR (4-PIN)	
			(EACH PLUG AS INCLUDES)	
	455-0706	1	SEAL-CONNECTOR	
	281-3132	1	PLUG AS-CONNECTOR (6-PIN)	
	230-5010	1	PLUG AS-CONNECTOR (6-PIN)	
			(EACH PLUG AS INCLUDES)	
	455-0707	1	SEAL-CONNECTOR	
	231-2295	3	PLUG AS-CONNECTOR (8-PIN)	
			(EACH INCLUDES)	
	455-0708	1	SEAL-CONNECTOR	
	281-3119	1	PLUG AS-CONNECTOR (3-PIN)	
	240-7878	3	PLUG AS-CONNECTOR (3-PIN)	
			(EACH PLUG AS INCLUDES)	
	455-0705	1	SEAL-CONNECTOR	

560-1052 **HARNESS AS-CHASSIS (**contd.**)** **i07511650**

NOTE	PART NUMBER	QTY	PART NAME 1 2 3 4 5 6 (PRODUCT LEVEL)	SEE PAGE
	324-5824	1	PLUG AS-CONNECTOR (1-PIN)	
	442-7945	2	PLUG AS-CONNECTOR (81-PIN)	
			(EACH INCLUDES)	
	453-6477	1	COVER-CONNECTOR	
	442-7946	2	PLUG AS-CONNECTOR (40-PIN)	
			(EACH INCLUDES)	
	442-9496	1	COVER-CONNECTOR	
	506-5909	1	PLUG AS-CONNECTOR (62-PIN)	
	506-2794	2	PLUG AS-CONNECTOR (2-PIN)	
	324-5678	6	RESISTOR AS (120-OHM)	
			(EACH INCLUDES)	
	455-0704	1	SEAL-CONNECTOR	
	8T-8737	61	PLUG-SEAL	
	453-7871	87	PLUG-SEAL	
	107-3136	4	PLUG-SEAL	
	102-8802	3	KIT-RECEPTACLE (2-PIN)	
			(EACH INCLUDES RECEPTACLE AS & WEDGE)	
	243-4505	6	RECEPTACLE AS-CONNECTOR (2-PIN)	
	243-4507	1	RECEPTACLE AS-CONNECTOR (4-PIN)	
	243-4508	1	RECEPTACLE AS-CONNECTOR (6-PIN)	
	243-4510	3	RECEPTACLE AS-CONNECTOR (12-PIN)	
	272-5000	1	RECEPTACLE AS-CONNECTOR (12-PIN)	
	361-7886	1	RECEPTACLE AS-CONNECTOR (6-PIN)	
	279-5772	58	SEAL	
	185-1861	7	SEAL-WIRE	
	8T-8730	181	SOCKET-CONNECTOR (16-GA TO 18-GA)	
	324-5825	1	SOCKET-CONNECTOR (4-GA)	
	368-4833	58	SOCKET-CONNECTOR (16GA TO 18GA)	
	456-0575	18	TERMINAL AS	
			(EACH INCLUDES)	
	313-5671	1	PLUG-SEAL	
BJ	**339-5442**		WIRE (16-GA, BLACK)	
	506-5913	4	SOCKET-CONNECTOR (16-GA TO 22-GA)	
	3S-2093	32	STRAP-CABLE	
	7K-1181	5	STRAP-CABLE	
	204-2281	15	STRAP-CABLE	
	5P-3454	1	TERMINAL-RING (4-GA, 5/16-IN SCREW)	
	2L-8052	1	TERMINAL-RING (6-GA, 3/8-IN SCREW)	
			—OR—	
	2L-8060	1	TERMINAL-RING (8-GA, 3/8-IN SCREW)	
	2L-8069	8	TERMINAL-RING (2-GA TO 10-GA, 3/8-IN SCREW)	
	2L-8079	1	TERMINAL-RING (14-GA TO 16-GA, 3/8-IN SCREW)	
	342-8419	7	TERMINAL (14-GA TO 16-GA)	
	153-2631	4	TERMINAL (14-GA TO 20-GA)	
	456-0574	129	TERMINAL AS (18-GA)	
E	**119-3662**		TUBE-HEAT SHRINK (10.85-MM DIA) (20-CM)	
E	**125-7874**		TUBE-HEAT SHRINK (5.72-MM DIA) (255-CM)	
E	**125-7875**		TUBE-HEAT SHRINK (7.44-MM DIA) (50-CM)	

560-1052 **HARNESS AS-CHASSIS** (contd.) **i07511650**

NOTE	PART NUMBER	QTY	PART NAME 1 2 3 4 5 6 (PRODUCT LEVEL)	SEE PAGE
B - USE AS REQUIRED E - ORDER BY THE CENTIMETER G - ORDER BY THE INCH J - ORDER BY THE DECIMETER				

<END>

576-8419 HARNESS AS-CHASSIS

S/N: SP910001-UP

PART OF 576-7678 BATTERY & WIRING GP

SMCS-1408 **i07877841**

NOTE	PART NUMBER	QTY	PART NAME 1 2 3 4 5 6 (PRODUCT LEVEL)	SEE PAGE
	283-0056	6	ADAPTER-CONNECTOR	
	311-8729	1	ADAPTER-CONNECTOR	
	311-8732	1	ADAPTER-CONNECTOR	
	342-2972	2	CAP-CONNECTOR (2-PIN)	
	342-2973	2	CAP-CONNECTOR (3-PIN)	
	342-2974	1	CAP-CONNECTOR (6-PIN)	
	342-2975	2	CAP-CONNECTOR (8-PIN)	
	342-2976	3	CAP-CONNECTOR (12-PIN)	
	342-2978	4	CAP-CONNECTOR (4-PIN)	
	484-1452	15	CLIP	
	484-1453	5	CLIP (RETAINER)	
	484-1454	13	CLIP-RETAINING	
G	**423-1985**		HOSE (27.6-IN)	
	155-2270	4	KIT-CONNECTING PLUG (2-PIN)	
			(EACH INCLUDES PLUG AS, WEDGE, & INTERFACE SEAL)	
	102-8802	3	KIT-RECEPTACLE (2-PIN)	
			(EACH INCLUDES RECEPTACLE AS & WEDGE)	
	8T-8729	100	PIN-CONNECTOR (16-GA TO 20-GA)	
			—OR—	
	126-1767	100	PIN-CONNECTOR (14-GA TO 16-GA)	
	202-5397	13	PLUG	
	202-5400	55	PLUG	
	230-4009	4	PLUG AS-CONNECTOR (12-PIN)	
			(EACH INCLUDES)	
	455-0709	1	SEAL-CONNECTOR	
	230-4011	7	PLUG AS-CONNECTOR (2-PIN)	
			(EACH INCLUDES)	
	455-0704	1	SEAL-CONNECTOR	
	230-5008	3	PLUG AS-CONNECTOR (4-PIN)	
			(EACH INCLUDES)	
	455-0706	1	SEAL-CONNECTOR	
	230-5010	2	PLUG AS-CONNECTOR (6-PIN)	
			(EACH INCLUDES)	
	455-0707	1	SEAL-CONNECTOR	
	231-2295	2	PLUG AS-CONNECTOR (8-PIN)	
			(EACH INCLUDES)	
	455-0708	1	SEAL-CONNECTOR	
	240-7874	2	PLUG AS-CONNECTOR (2-PIN)	
			(EACH INCLUDES)	
	455-0704	1	SEAL-CONNECTOR	
	240-7878	3	PLUG AS-CONNECTOR (3-PIN)	
			(EACH INCLUDES)	
	455-0705	1	SEAL-CONNECTOR	
	241-8834	1	PLUG AS-CONNECTOR (12-PIN)	
	455-0709	1	SEAL-CONNECTOR	
	261-0524	3	PLUG AS-CONNECTOR (4-PIN)	
			(EACH INCLUDES)	
	455-0706	1	SEAL-CONNECTOR	
	281-3119	1	PLUG AS-CONNECTOR (3-PIN)	

576-8419 **HARNESS AS-CHASSIS (**contd.**)** **i07877841**

NOTE	PART NUMBER	QTY	PART NAME 1 2 3 4 5 6 (PRODUCT LEVEL)	SEE PAGE
	455-0705	1	SEAL-CONNECTOR	
	281-3132	1	PLUG AS-CONNECTOR (6-PIN)	
	455-0707	1	SEAL-CONNECTOR	
	281-3395	4	PLUG AS-CONNECTOR (12-PIN)	
	281-3396	2	PLUG AS-CONNECTOR (12-PIN)	
			(EACH PLUG AS INCLUDES)	
	455-0709	1	SEAL-CONNECTOR	
	324-5824	1	PLUG AS-CONNECTOR (1-PIN)	
	368-4832	1	PLUG AS-CONNECTOR (62-PIN)	
	442-7945	2	PLUG AS-CONNECTOR (81-PIN)	
			(EACH INCLUDES)	
	453-6477	1	COVER-CONNECTOR	
	442-7946	2	PLUG AS-CONNECTOR (40-PIN)	
			(EACH INCLUDES)	
	442-9496	1	COVER-CONNECTOR	
	506-2794	1	PLUG AS-CONNECTOR (2-PIN)	
	506-5909	1	PLUG AS-CONNECTOR (62-PIN)	
	8T-8737	61	PLUG-SEAL	
	107-3136	2	PLUG-SEAL	
	453-7871	87	PLUG-SEAL	
	243-4505	6	RECEPTACLE AS-CONNECTOR (2-PIN)	
	243-4507	1	RECEPTACLE AS-CONNECTOR (4-PIN)	
	243-4508	1	RECEPTACLE AS-CONNECTOR (6-PIN)	
	243-4510	3	RECEPTACLE AS-CONNECTOR (12-PIN)	
	272-5000	1	RECEPTACLE AS-CONNECTOR (12-PIN)	
	361-7886	1	RECEPTACLE AS-CONNECTOR (6-PIN)	
	153-2602	4	RECEPTACLE-CONNECTOR (1-PIN)	
	324-5678	6	RESISTOR AS (120-OHM)	
			(EACH INCLUDES)	
	455-0704	1	SEAL-CONNECTOR	
	279-5772	57	SEAL	
	185-1861	7	SEAL-WIRE	
	8T-8730	179	SOCKET-CONNECTOR (16-GA TO 18-GA)	
	324-5825	1	SOCKET-CONNECTOR (4-GA)	
	368-4833	57	SOCKET-CONNECTOR (16GA TO 18GA)	
	506-5913	2	SOCKET-CONNECTOR (16-GA TO 22-GA)	
	3S-2093	32	STRAP-CABLE	
	7K-1181	5	STRAP-CABLE	
	204-2281	15	STRAP-CABLE	
	153-2631	4	TERMINAL (14-GA TO 20-GA)	
	342-8419	7	TERMINAL (14-GA TO 16-GA)	
	2L-8052	1	TERMINAL-RING (6-GA, 3/8-IN SCREW)	
			—OR—	
	2L-8060	1	TERMINAL-RING (8-GA, 3/8-IN SCREW)	
	456-0575	4	TERMINAL AS	
	456-0574	129	TERMINAL AS (18-GA)	
	542-1570	14	TERMINAL AS	
	5P-3454	1	TERMINAL-RING (4-GA, 5/16-IN SCREW)	
	2L-8069	8	TERMINAL-RING (2-GA TO 10-GA, 3/8-IN SCREW)	
	2L-8079	1	TERMINAL-RING (14-GA TO 16-GA, 3/8-IN SCREW)	
E	**119-3662**		TUBE-HEAT SHRINK (10.85-MM DIA) (7-CM)	

576-8419 **HARNESS AS-CHASSIS (**contd.**)** **i07877841**

NOTE	PART NUMBER	QTY	PART NAME 1 2 3 4 5 6 (PRODUCT LEVEL)	SEE PAGE
E	**125-7874**		TUBE-HEAT SHRINK (5.72-MM DIA) (260-CM)	
E	**125-7875**		TUBE-HEAT SHRINK (7.44-MM DIA) (55-CM)	

E - ORDER BY THE CENTIMETER
G - ORDER BY THE INCH

<END>

530-1943 HARNESS AS-CONSOLE

S/N: SP91-UP

PART OF 488-6765 WIRING GP-CONSOLE

SMCS-1408 **i07349120**

NOTE	PART NUMBER	QTY	PART NAME 1 2 3 4 5 6 (PRODUCT LEVEL)	SEE PAGE
	484-1452	1	CLIP	
	484-1453	1	CLIP (RETAINER)	
	484-1454	2	CLIP-RETAINING	
	163-6699	1	CONNECTOR-PLUG (18-PIN)	
	490-6690	3	CONNECTOR-PLUG	
	155-2255	1	KIT-CONNECTING PLUG (12-PIN)	
	155-2265	1	KIT-CONNECTING PLUG (8-PIN)	
			(EACH PLUG KIT INCLUDES PLUG AS, WEDGE, & INTERFACE SEAL)	
	155-2260	1	KIT-CONNECTING PLUG (3-PIN)	
			(INCLUDES PLUG AS, WEDGES & INTERFACE SEAL)	
	102-8802	1	KIT-RECEPTACLE (2-PIN)	
	102-8805	1	KIT-RECEPTACLE (6-PIN)	
	102-8806	1	KIT-RECEPTACLE (8-PIN)	
	102-8801	1	KIT-RECEPTACLE (12-PIN)	
			(EACH RECEPTACLE KIT INCLUDES RECEPTACLE AS & WEDGE)	
	8T-8729	20	PIN-CONNECTOR (16-GA TO 20-GA)	
	281-3132	1	PLUG AS-CONNECTOR (6-PIN)	
	455-0707	1	SEAL-CONNECTOR	
	8T-8737	23	PLUG-SEAL	
	8T-8730	14	SOCKET-CONNECTOR (16-GA TO 18-GA)	
	3S-2093	8	STRAP-CABLE	
	204-2281	1	STRAP-CABLE	
	125-4785	18	TERMINAL (FEMALE)	
	153-2631	15	TERMINAL (14-GA TO 20-GA)	
	170-6827	18	TERMINAL (MALE)	
E	**125-7874**		TUBE-HEAT SHRINK (5.72-MM DIA) (5-CM)	
E	**125-7875**		TUBE-HEAT SHRINK (7.44-MM DIA) (25-CM)	
	155-2259	1	WEDGE-PLUG LOCK (8-PIN)	
	3E-3383	1	WEDGE-RECEPTACLE LOCK (6-PIN)	

E - ORDER BY THE CENTIMETER

<END>

530-1944 HARNESS AS-CONSOLE

S/N: SP91-UP

PART OF 488-6766 WIRING GP-CONSOLE

SMCS-1408 **i07349202**

NOTE	PART NUMBER	QTY	PART NAME 1 2 3 4 5 6 (PRODUCT LEVEL)	SEE PAGE
	342-2972	2	CAP-CONNECTOR (2-PIN)	
	342-2973	1	CAP-CONNECTOR (3-PIN)	
	342-2978	1	CAP-CONNECTOR (4-PIN)	
	484-1452	1	CLIP	
	484-1454	4	CLIP-RETAINING	
	163-6659	1	CONNECTOR-PLUG (12-PIN)	
	163-6699	1	CONNECTOR-PLUG (18-PIN)	
	163-6800	1	CONNECTOR-RECEPTACLE	
	483-9066	1	CONNECTOR-RECEPTACLE	
	491-8349	2	CONNECTOR-RECEPTACLE	
	155-2255	1	KIT-CONNECTING PLUG (12-PIN)	
	155-2274	1	KIT-CONNECTING PLUG (6-PIN)	
			(EACH PLUG KIT INCLUDES PLUG AS, WEDGE, & INTERFACE SEAL)	
	102-8805	1	KIT-RECEPTACLE (6-PIN)	
	102-8801	1	KIT-RECEPTACLE (12-PIN)	
			(EACH RECEPTACLE KIT INCLUDES RECEPTACLE AS & WEDGE)	
	8T-8729	18	PIN-CONNECTOR (16-GA TO 20-GA)	
	240-7874	1	PLUG AS-CONNECTOR (2-PIN)	
	240-7876	1	PLUG AS-CONNECTOR (2-PIN)	
			(EACH PLUG AS INCLUDES)	
	455-0704	1	SEAL-CONNECTOR	
	240-7878	1	PLUG AS-CONNECTOR (3-PIN)	
	455-0705	1	SEAL-CONNECTOR	
	261-0524	1	PLUG AS-CONNECTOR (4-PIN)	
	455-0706	1	SEAL-CONNECTOR	
	281-3132	1	PLUG AS-CONNECTOR (6-PIN)	
	455-0707	1	SEAL-CONNECTOR	
	7Y-3952	1	PLUG-CONNECTOR (2-PIN)	
	8T-8737	13	PLUG-SEAL	
	8T-8730	20	SOCKET-CONNECTOR (16-GA TO 18-GA)	
	9W-0844	2	SOCKET-CONNECTOR (14-GA TO 16-GA)	
	3S-2093	22	STRAP-CABLE	
	204-2281	1	STRAP-CABLE	
	125-4785	27	TERMINAL (FEMALE)	
	170-6827	106	TERMINAL (MALE)	
	7Y-3951	2	TERMINAL-BLADE (14-GA)	
E	**119-3662**		TUBE-HEAT SHRINK (10.85-MM DIA) (5-CM)	
E	**125-7874**		TUBE-HEAT SHRINK (5.72-MM DIA) (50-CM)	
E	**125-7875**		TUBE-HEAT SHRINK (7.44-MM DIA) (30-CM)	
	3E-3383	1	WEDGE-RECEPTACLE LOCK (6-PIN)	

E - ORDER BY THE CENTIMETER

<END>

530-1945 HARNESS AS-CONSOLE

S/N: SP91-UP

PART OF 488-6767 WIRING GP-CONSOLE

SMCS-1408 **i07349273**

NOTE	PART NUMBER	QTY	PART NAME 1 2 3 4 5 6 (PRODUCT LEVEL)	SEE PAGE
	163-6659	1	CONNECTOR-PLUG (12-PIN)	
	490-6690	1	CONNECTOR-PLUG	
	487-8430	2	PLUG AS-CONNECTOR	
	369-3774	8	SEAL-CONNECTOR	
	3S-2093	3	STRAP-CABLE	
	125-4785	10	TERMINAL (FEMALE)	
	153-2631	4	TERMINAL (14-GA TO 20-GA)	
E	**125-7874**		TUBE-HEAT SHRINK (5.72-MM DIA) (10-CM)	

E - ORDER BY THE CENTIMETER

<END>

525-3964 HARNESS AS-CONTROL

S/N: NTB1-UP

PART OF 525-8061 WIRING GP-ELECTRONIC CONTROL

SMCS-1408 **i07863921**

NOTE	PART NUMBER	QTY	PART NAME 1 2 3 4 5 6 (PRODUCT LEVEL)	SEE PAGE
	9X-3401	3	PIN-CONNECTOR (16-GA TO 18-GA)	
			—OR—	
	126-1767	3	PIN-CONNECTOR (14-GA TO 16-GA)	
	536-7943	1	PLUG AS-CONNECTOR	
	369-3774	3	SEAL-CONNECTOR	
	281-3122	1	RECEPTACLE AS-CONNECTOR	
	369-3774	3	SEAL-CONNECTOR	
B	**1P-0810**		TAPE-ELECTRICAL	

B - USE AS REQUIRED

<END>

527-3314 HARNESS AS-CONTROL–INJECTOR

S/N: NTB1-UP
WITHOUT BRAKES
PART OF 527-3315 WIRING GP-ENGINE

SMCS-1408 **i07245770**

NOTE	PART NUMBER	QTY	PART NAME 1 2 3 4 5 6 (PRODUCT LEVEL)	SEE PAGE
	9X-3401	8	PIN-CONNECTOR (16-GA TO 18-GA)	
			–OR–	
	126-1767	8	PIN-CONNECTOR (14-GA TO 16-GA)	
	155-2271	1	KIT-CONNECTING PLUG (4-PIN)	
			(INCLUDES PLUG AS, WEDGE, & INTERFACE SEAL)	
	8T-8737	2	PLUG-SEAL	
	102-8804	1	KIT-RECEPTACLE (4-PIN)	
	102-8805	1	KIT-RECEPTACLE (6-PIN)	
			(EACH RECEPTACLE KIT INCLUDES RECEPTACLE AS & WEDGE)	
	9X-3402	4	SOCKET-CONNECTOR (16-GA TO 18-GA)	
			–OR–	
	126-1768	4	SOCKET-CONNECTOR (14-GA TO 16-GA)	
B	**329-3734**		TAPE-ELECTRICAL	
E	**125-7874**		TUBE-HEAT SHRINK (5.72-MM DIA) (60-CM)	
	6N-7523	1	WASHER (6.48X11.9X1.57-MM THK)	
	3E-3377	1	WEDGE-RECEPTACLE LOCK (4-PIN)	
	3E-3383	1	WEDGE-RECEPTACLE LOCK (6-PIN)	

B - USE AS REQUIRED
E - ORDER BY THE CENTIMETER

<END>

528-3696 HARNESS AS-CONTROL–GRADE CONTROL

S/N: SP91-UP
PART OF 525-4122 WIRING GP-FRONT

SMCS-1408 **i07527130**

NOTE	PART NUMBER	QTY	PART NAME 1 2 3 4 5 6 (PRODUCT LEVEL)	SEE PAGE
	311-8732	1	ADAPTER-CONNECTOR	
	3E-3390	6	PIN-CONNECTOR (16-GA TO 18-GA)	
	9W-0852	2	PIN-CONNECTOR (14-GA TO 16-GA)	
	230-4009	1	PLUG AS-CONNECTOR (12-PIN)	
	455-0709	1	SEAL-CONNECTOR	
	230-5010	1	PLUG AS-CONNECTOR (6-PIN)	
	455-0707	1	SEAL-CONNECTOR	
	8T-8737	4	PLUG-SEAL	
	243-4509	1	RECEPTACLE AS-CONNECTOR (8-PIN)	
	8T-8730	9	SOCKET-CONNECTOR (16-GA TO 18-GA)	
	9W-0844	5	SOCKET-CONNECTOR (14-GA TO 16-GA)	
E	**125-7874**		TUBE-HEAT SHRINK (5.72-MM DIA) (15-CM)	
E	**125-7875**		TUBE-HEAT SHRINK (7.44-MM DIA) (15-CM)	

E - ORDER BY THE CENTIMETER

<END>

529-0428 HARNESS AS-CONTROL—STICK

S/N: SP91-UP

PART OF 517-3162, 522-8795 WIRING GP-FRONT

SMCS-1408 **i07507914**

NOTE	PART NUMBER	QTY	PART NAME 1 2 3 4 5 6 (PRODUCT LEVEL)	SEE PAGE
	283-0056	2	ADAPTER-CONNECTOR	
	174-0503	1	KIT-CONNECTING PLUG (3-PIN)	
	155-2260	1	KIT-CONNECTING PLUG (3-PIN)	
			(EACH PLUG KIT INCLUDES PLUG AS, WEDGES, & INTERFACE SEAL)	
	176-2947	1	KIT-CONNECTING PLUG (4-PIN)	
	155-2271	1	KIT-CONNECTING PLUG (4-PIN)	
			(EACH PLUG KIT INCLUDES PLUG AS, WEDGE, & INTERFACE SEAL)	
	151-9274	1	KIT-RECEPTACLE (4-PIN)	
			(INCLUDES RECEPTACLE AS & WEDGE)	
	9W-0852	2	PIN-CONNECTOR (14-GA TO 16-GA)	
	3E-3390	6	PIN-CONNECTOR (16-GA TO 18-GA)	
	230-4013	1	PLUG AS-CONNECTOR (3-PIN)	
	455-0705	1	SEAL-CONNECTOR	
	230-5010	1	PLUG AS-CONNECTOR (6-PIN)	
	455-0707	1	SEAL-CONNECTOR	
	8T-8737	9	PLUG-SEAL	
	243-4510	1	RECEPTACLE AS-CONNECTOR (12-PIN)	
	134-2540	1	RECEPTACLE AS-CONNECTOR (3-PIN)	
	8T-8730	12	SOCKET-CONNECTOR (16-GA TO 18-GA)	
	9W-0844	3	SOCKET-CONNECTOR (14-GA TO 16-GA)	
E	**125-7874**		TUBE-HEAT SHRINK (5.72-MM DIA) (20-CM)	
E	**125-7875**		TUBE-HEAT SHRINK (7.44-MM DIA) (10-CM)	

E - ORDER BY THE CENTIMETER

<END>

552-4919 HARNESS AS-CONTROL

S/N: SP91-UP

PL631/PL641

PART OF 506-7031 WIRING GP-CHASSIS

SMCS-1408 **i07696951**

NOTE	PART NUMBER	QTY	PART NAME 1 2 3 4 5 6 (PRODUCT LEVEL)	SEE PAGE
	484-1454	1	CLIP-RETAINING	
	123-7615	1	CONNECTOR (1-PIN)	
	331-4222	1	KIT-CONNECTING PLUG (12-PIN)	
			(INCLUDES PLUG AS, WEDGE, & INTERFACE SEAL)	
	8T-8729	11	PIN-CONNECTOR (16-GA TO 20-GA)	
			—OR—	
	126-1767	11	PIN-CONNECTOR (14-GA TO 16-GA)	
	8T-8737	4	PLUG-SEAL	
	335-8849	1	RECEPTACLE AS	
	325-9571	1	RECEPTACLE AS-CONNECTOR (8-PIN)	
	8T-8730	9	SOCKET-CONNECTOR (16-GA TO 18-GA)	
	155-2258	1	WEDGE-PLUG LOCK (12-PIN)	

<END>

522-7072 HARNESS AS-ENGINE—REAR

S/N: SP91-UP

PART OF 504-3557 WIRING GP-ENGINE

SMCS-1408 **i07682215**

NOTE	PART NUMBER	QTY	PART NAME 1 2 3 4 5 6 (PRODUCT LEVEL)	SEE PAGE
	484-1452	3	CLIP	
	239-7356	1	PLUG AS-CONNECTOR (12-PIN)	
	241-8834	1	PLUG AS-CONNECTOR (12-PIN)	
	281-8813	2	PLUG AS-CONNECTOR (12-PIN)	
	230-4009	1	PLUG AS-CONNECTOR (12-PIN)	
			(EACH PLUG AS INCLUDES)	
	455-0709	1	SEAL-CONNECTOR	
	374-8331	1	PLUG AS-CONNECTOR (86-PIN)	
	435-5221	1	KIT-BOLT (CONNECTOR)	
	435-5222	1	SEAL	
	8T-8737	26	PLUG-SEAL	
	169-0705	66	PLUG-SEAL	
	8T-8730	32	SOCKET-CONNECTOR (16-GA TO 18-GA)	
	7T-0094	6	SOCKET-CONNECTOR (12-GA TO 14-GA)	
	9W-0844	2	SOCKET-CONNECTOR (14-GA TO 16-GA)	
	394-9569	14	SOCKET-CONNECTOR (16-GA TO 18-GA)	
			—OR—	
	358-4098	14	WIRE AS (16-GA)	
	3S-2093	6	STRAP-CABLE	
	204-2281	3	STRAP-CABLE	
E	**119-3662**		TUBE-HEAT SHRINK (10.85-MM DIA) (13-CM)	

E - ORDER BY THE CENTIMETER

<END>

522-7073 HARNESS AS-ENGINE—ALTERNATOR

S/N: SP91-UP

PART OF 504-3557 WIRING GP-ENGINE

SMCS-1408 **i07511704**

NOTE	PART NUMBER	QTY	PART NAME 1 2 3 4 5 6 (PRODUCT LEVEL)	SEE PAGE
	8T-8827	1	BOOT (RED)	
	484-1452	3	CLIP	
	204-2281	3	STRAP-CABLE	
	261-0747	1	TERMINAL AS	
E	**125-7876**		TUBE-HEAT SHRINK (17.78-MM DIA) (4-CM)	
	311-6185	1	TERMINAL AS	
E	**125-7876**		TUBE-HEAT SHRINK (17.78-MM DIA) (4-CM)	
	311-6184	1	TERMINAL-RING (2-GA, 3/8-IN SCREW)	
	6T-5598	2	TERMINAL-RING (1-GA TO 2-GA, 5/16-IN SCREW)	

E - ORDER BY THE CENTIMETER

<END>

542-9914 HARNESS AS-ENGINE

S/N: NTB1-UP

PART OF 542-9915 WIRING GP-ENGINE

SMCS-1408 **i07499276**

NOTE	PART NUMBER	QTY	PART NAME 1 2 3 4 5 6 (PRODUCT LEVEL)	SEE PAGE
	536-7946	1	PLUG AS-CONNECTOR	
	444-7604	2	SOCKET-CONNECTOR	
	536-7945	1	HARNESS AS-WIRING	
	444-7604	3	SOCKET-CONNECTOR	
	155-2270	1	KIT-CONNECTING PLUG (2-PIN)	
	155-2271	1	KIT-CONNECTING PLUG (4-PIN)	
	155-2274	1	KIT-CONNECTING PLUG (6-PIN)	
			(EACH PLUG KIT INCLUDES PLUG AS, WEDGE, & INTERFACE SEAL)	
	102-8804	1	KIT-RECEPTACLE (4-PIN)	
			(INCLUDES RECEPTACLE AS & WEDGE)	
	9X-3401	23	PIN-CONNECTOR (16-GA TO 18-GA)	
			—OR—	
	126-1767	23	PIN-CONNECTOR (14-GA TO 16-GA)	
	536-7943	1	PLUG AS-CONNECTOR	
	339-5431	6	WIRE (18-GA, BLACK)	
	369-3774	3	SEAL-CONNECTOR	
	230-4009	1	PLUG AS-CONNECTOR (12-PIN)	
	455-0709	1	SEAL-CONNECTOR	
	230-4011	2	PLUG AS-CONNECTOR (2-PIN)	
			(EACH INCLUDES)	
	455-0704	1	SEAL-CONNECTOR	
	230-4013	1	PLUG AS-CONNECTOR (3-PIN)	
	455-0705	1	SEAL-CONNECTOR	
	237-0227	1	PLUG AS-CONNECTOR (3-PIN)	
	455-0705	1	SEAL-CONNECTOR	
	281-8803	1	PLUG AS-CONNECTOR (3-PIN)	
	455-0705	1	SEAL-CONNECTOR	
	281-8804	2	PLUG AS-CONNECTOR (3-PIN)	
			(EACH INCLUDES)	
	455-0705	1	SEAL-CONNECTOR	
	374-8332	1	PLUG AS-CONNECTOR	
	435-5221	1	KIT-BOLT (CONNECTOR)	
	435-5222	1	SEAL	
	8T-8737	16	PLUG-SEAL	
	230-4010	1	RECEPTACLE AS-CONNECTOR (12-PIN)	
	169-0705	34	PLUG-SEAL	
	369-3774	3	SEAL-CONNECTOR	
	185-1860	5	SEAL-WIRE	
E	**289-5150**		SLEEVE (58-CM)	
	9X-3402	38	SOCKET-CONNECTOR (16-GA TO 18-GA)	
			—OR—	
	126-1768	38	SOCKET-CONNECTOR (14-GA TO 16-GA)	
	394-9569	46	SOCKET-CONNECTOR (16-GA TO 18-GA)	
	372-6382	5	SOCKET-CONNECTOR (17-GA TO 20-GA)	
	1S-9593	2	STRAP-CABLE	
B	**1P-0810**		TAPE-ELECTRICAL	
E	**329-3734**		TAPE-ELECTRICAL (60-CM)	

542-9914 **HARNESS AS-ENGINE (**contd.**)** **i07499276**

NOTE	PART NUMBER	QTY	PART NAME 1 2 3 4 5 6 (PRODUCT LEVEL)	SEE PAGE
E	**125-7874**		TUBE-HEAT SHRINK (5.72-MM DIA) (45-CM)	
E	**125-7875**		TUBE-HEAT SHRINK (7.44-MM DIA) (10-CM)	

B - USE AS REQUIRED
E - ORDER BY THE CENTIMETER

<END>

570-2258 HARNESS AS-ENGINE

S/N: SP91-UP
FRONT
PART OF 504-3557 WIRING GP-ENGINE

SMCS-1408 **i07690705**

NOTE	PART NUMBER	QTY	PART NAME 1 2 3 4 5 6 (PRODUCT LEVEL)	SEE PAGE
	311-8727	1	ADAPTER-CONNECTOR	
	230-4011	2	PLUG AS-CONNECTOR (2-PIN)	
			(EACH INCLUDES)	
	455-0704	1	SEAL-CONNECTOR	
	230-5008	1	PLUG AS-CONNECTOR (4-PIN)	
	455-0706	1	SEAL-CONNECTOR	
	8T-8730	8	SOCKET-CONNECTOR (16-GA TO 18-GA)	

<END>

536-5437 HARNESS AS-FRONT—GRADE CONTROL

S/N: SP91-UP
PART OF 517-3162, 522-8795 WIRING GP-FRONT

SMCS-1408 **i07376905**

NOTE	PART NUMBER	QTY	PART NAME 1 2 3 4 5 6 (PRODUCT LEVEL)	SEE PAGE
G	**423-1983**		HOSE (63-IN)	
	9W-0852	2	PIN-CONNECTOR (14-GA TO 16-GA)	
	3E-3390	6	PIN-CONNECTOR (16-GA TO 18-GA)	
	230-4009	1	PLUG AS-CONNECTOR (12-PIN)	
	455-0709	1	SEAL-CONNECTOR	
	8T-8737	8	PLUG-SEAL	
	243-4510	1	RECEPTACLE AS-CONNECTOR (12-PIN)	
	8T-8730	6	SOCKET-CONNECTOR (16-GA TO 18-GA)	
	9W-0844	2	SOCKET-CONNECTOR (14-GA TO 16-GA)	

G - ORDER BY THE INCH

<END>

506-9947 HARNESS AS-LIGHTING

S/N: SP91-UP

PART OF 489-7848 WIRING GP-CAB

SMCS-1408 **i07348792**

NOTE	PART NUMBER	QTY	PART NAME 1 2 3 4 5 6 (PRODUCT LEVEL)	SEE PAGE
	3S-2093	18	STRAP-CABLE	
	170-6827	4	TERMINAL (MALE)	
	7Y-3966	2	TERMINAL AS	
			(EACH INCLUDES)	
	7Y-3962	1	TERMINAL-BULLET (MALE)	
	7Y-3964	1	TUBE	
	7Y-3967	2	TERMINAL AS	
			(EACH INCLUDES)	
	7Y-3963	1	TERMINAL-BULLET (FEMALE)	
	7Y-3965	1	TUBE	
	266-2905	3	TERMINAL AS	
			(EACH INCLUDES)	
	6V-2689	1	TUBE-HEAT SHRINK (6.35-MM DIA)	
E	**119-3662**		TUBE-HEAT SHRINK (10.85-MM DIA) (7-CM)	
E	**125-7875**		TUBE-HEAT SHRINK (7.44-MM DIA) (5-CM)	

E - ORDER BY THE CENTIMETER

<END>

526-4014 HARNESS AS-LIGHTING

S/N: SP91-UP

PART OF 524-8314 LIGHTING GP-FLOOD

SMCS-1408 **i07351548**

NOTE	PART NUMBER	QTY	PART NAME 1 2 3 4 5 6 (PRODUCT LEVEL)	SEE PAGE
	155-2270	1	KIT-CONNECTING PLUG (2-PIN)	
			(INCLUDES PLUG AS, WEDGE, & INTERFACE SEAL)	
	9W-0844	2	SOCKET-CONNECTOR (14-GA TO 16-GA)	
	7Y-3966	1	TERMINAL AS	
	7Y-3962	1	TERMINAL-BULLET (MALE)	
	7Y-3964	1	TUBE	
	7Y-3967	1	TERMINAL AS	
	7Y-3963	1	TERMINAL-BULLET (FEMALE)	
	7Y-3965	1	TUBE	

<END>

539-1900 HARNESS AS-LIGHTING—REACH BOOM

S/N: SP91-UP

PART OF 502-7186 LIGHTING GP-FLOOD

SMCS-1408 **i07519887**

NOTE	PART NUMBER	QTY	PART NAME 1 2 3 4 5 6 (PRODUCT LEVEL)	SEE PAGE
	155-2270	2	KIT-CONNECTING PLUG (2-PIN)	
			(EACH INCLUDES PLUG AS, WEDGE, & INTERFACE SEAL)	
	9W-0852	2	PIN-CONNECTOR (14-GA TO 16-GA)	
	243-4505	1	RECEPTACLE AS-CONNECTOR (2-PIN)	
	9W-0844	4	SOCKET-CONNECTOR (14-GA TO 16-GA)	
E	**125-7875**		TUBE-HEAT SHRINK (7.44-MM DIA) (10-CM)	

E - ORDER BY THE CENTIMETER

<END>

540-1916 HARNESS AS-LIGHTING—MASS BOOM

S/N: SP91-UP

PART OF 502-7187 LIGHTING GP-FLOOD

SMCS-1408 **i07527285**

NOTE	PART NUMBER	QTY	PART NAME 1 2 3 4 5 6 (PRODUCT LEVEL)	SEE PAGE
	155-2270	2	KIT-CONNECTING PLUG (2-PIN)	
			(EACH INCLUDES PLUG AS, WEDGE, & INTERFACE SEAL)	
	9W-0852	2	PIN-CONNECTOR (14-GA TO 16-GA)	
	243-4505	1	RECEPTACLE AS-CONNECTOR (2-PIN)	
	9W-0844	4	SOCKET-CONNECTOR (14-GA TO 16-GA)	
E	**125-7875**		TUBE-HEAT SHRINK (7.44-MM DIA) (10-CM)	

E - ORDER BY THE CENTIMETER

<END>

515-9533 HARNESS AS-MONITOR

S/N: SP91-UP

PART OF 489-7848 WIRING GP-CAB

SMCS-1408, 7490 **i07348794**

NOTE	PART NUMBER	QTY	PART NAME 1 2 3 4 5 6 (PRODUCT LEVEL)	SEE PAGE
	8T-8729	2	PIN-CONNECTOR (16-GA TO 20-GA)	
	490-0578	1	PLUG AS-CONNECTOR (2-PIN)	
	490-0572	1	RECEPTACLE AS (2-PIN)	
	490-0582	1	RECEPTACLE AS (2-PIN)	
	273-3288	1	RECEPTACLE AS-CONNECTOR	
	3S-2093	9	STRAP-CABLE	

<END>

529-8758 HARNESS AS-MONITOR

S/N: SP91-UP

PART OF 490-2700 WIRING GP-CHASSIS

SMCS-1408, 7490 **i07366577**

NOTE	PART NUMBER	QTY	PART NAME 1 2 3 4 5 6 (PRODUCT LEVEL)	SEE PAGE
	240-7874	1	PLUG AS-CONNECTOR (2-PIN)	
	455-0704	1	SEAL-CONNECTOR	
	490-0571	2	PLUG AS-CONNECTOR (2-PIN)	
	490-0578	1	PLUG AS-CONNECTOR (2-PIN)	
	8T-8730	2	SOCKET-CONNECTOR (16-GA TO 18-GA)	
	3S-2093	3	STRAP-CABLE	

<END>

530-1947 HARNESS AS-PLATFORM

S/N: SP91-UP

PART OF 488-6768 WIRING GP-PLATFORM

SMCS-1408 **i07349308**

NOTE	PART NUMBER	QTY	PART NAME 1 2 3 4 5 6 (PRODUCT LEVEL)	SEE PAGE
	342-2974	1	CAP-CONNECTOR (6-PIN)	
	342-2978	1	CAP-CONNECTOR (4-PIN)	
	484-1452	4	CLIP	
	155-2271	2	KIT-CONNECTING PLUG (4-PIN)	
	155-2274	1	KIT-CONNECTING PLUG (6-PIN)	
	155-2270	1	KIT-CONNECTING PLUG (2-PIN)	
			(EACH PLUG KIT INCLUDES PLUG AS, WEDGE, & INTERFACE SEAL)	
	155-2260	1	KIT-CONNECTING PLUG (3-PIN)	
			(INCLUDES PLUG AS, WEDGES & INTERFACE SEAL)	
	102-8802	1	KIT-RECEPTACLE (2-PIN)	
	102-8804	2	KIT-RECEPTACLE (4-PIN)	
			(EACH RECEPTACLE KIT INCLUDES RECEPTACLE AS & WEDGE)	
	8T-8729	22	PIN-CONNECTOR (16-GA TO 20-GA)	
	9W-0852	5	PIN-CONNECTOR (14-GA TO 16-GA)	
	230-5008	1	PLUG AS-CONNECTOR (4-PIN)	
	455-0706	1	SEAL-CONNECTOR	
	230-5010	1	PLUG AS-CONNECTOR (6-PIN)	
	455-0707	1	SEAL-CONNECTOR	
	8T-8737	22	PLUG-SEAL	
	328-0076	3	RECEPTACLE AS-CONNECTOR (12-PIN)	
	8T-8730	20	SOCKET-CONNECTOR (16-GA TO 18-GA)	
	9W-0844	6	SOCKET-CONNECTOR (14-GA TO 16-GA)	
	3S-2093	4	STRAP-CABLE	
	204-2281	4	STRAP-CABLE	
E	**125-7874**		TUBE-HEAT SHRINK (5.72-MM DIA) (10-CM)	
E	**125-7875**		TUBE-HEAT SHRINK (7.44-MM DIA) (5-CM)	

E - ORDER BY THE CENTIMETER

<END>

525-3740 HARNESS AS-SENSOR

S/N: SP91-UP

PART OF 514-7718 WIRING GP-SENSOR

SMCS-1408 **i07356326**

NOTE	PART NUMBER	QTY	PART NAME 1 2 3 4 5 6 (PRODUCT LEVEL)	SEE PAGE
	283-0056	4	ADAPTER-CONNECTOR	
	8T-8729	4	PIN-CONNECTOR (16-GA TO 20-GA)	
	230-4013	2	PLUG AS-CONNECTOR (3-PIN)	
			(EACH INCLUDES)	
	455-0705	1	SEAL-CONNECTOR	
	243-4507	1	RECEPTACLE AS-CONNECTOR (4-PIN)	
	8T-8730	6	SOCKET-CONNECTOR (16-GA TO 18-GA)	
E	**125-7874**		TUBE-HEAT SHRINK (5.72-MM DIA) (10-CM)	

E - ORDER BY THE CENTIMETER

<END>

556-3718 HARNESS AS-SENSOR—GRADE CONTROL

S/N: SP91-UP

PART OF 504-3560 WIRING GP-FRONT

SMCS-1408 **i07527329**

NOTE	PART NUMBER	QTY	PART NAME 1 2 3 4 5 6 (PRODUCT LEVEL)	SEE PAGE
	311-8732	1	ADAPTER-CONNECTOR	
	3E-3390	6	PIN-CONNECTOR (16-GA TO 18-GA)	
	9W-0852	2	PIN-CONNECTOR (14-GA TO 16-GA)	
	230-4009	1	PLUG AS-CONNECTOR (12-PIN)	
	455-0709	1	SEAL-CONNECTOR	
	230-5010	1	PLUG AS-CONNECTOR (6-PIN)	
	455-0707	1	SEAL-CONNECTOR	
	8T-8737	4	PLUG-SEAL	
	243-4509	1	RECEPTACLE AS-CONNECTOR (8-PIN)	
	8T-8730	9	SOCKET-CONNECTOR (16-GA TO 18-GA)	
	9W-0844	5	SOCKET-CONNECTOR (14-GA TO 16-GA)	
E	**125-7874**		TUBE-HEAT SHRINK (5.72-MM DIA) (15-CM)	
E	**125-7875**		TUBE-HEAT SHRINK (7.44-MM DIA) (15-CM)	

E - ORDER BY THE CENTIMETER

<END>

525-2621 HARNESS AS-SOLENOID

S/N: SP91-UP

PART OF 524-8376 WIRING GP-VALVE

SMCS-1408, 1467 **i07361047**

NOTE	PART NUMBER	QTY	PART NAME 1 2 3 4 5 6 (PRODUCT LEVEL)	SEE PAGE
	155-2270	1	KIT-CONNECTING PLUG (2-PIN)	
			(INCLUDES PLUG AS, WEDGE, & INTERFACE SEAL)	
	102-8802	1	KIT-RECEPTACLE (2-PIN)	
			(INCLUDES RECEPTACLE AS & WEDGE)	
	8T-8729	2	PIN-CONNECTOR (16-GA TO 20-GA)	
	8T-8730	2	SOCKET-CONNECTOR (16-GA TO 18-GA)	

<END>

558-7716 HARNESS AS-SOLENOID—COUPLER

S/N: SP91-UP

PART OF 511-9446 WIRING GP-VALVE

SMCS-1408, 1467 **i07668795**

NOTE	PART NUMBER	QTY	PART NAME 1 2 3 4 5 6 (PRODUCT LEVEL)	SEE PAGE
	155-2270	3	KIT-CONNECTING PLUG (2-PIN)	
			(EACH INCLUDES PLUG AS, WEDGE, & INTERFACE SEAL)	
	8T-8729	6	PIN-CONNECTOR (16-GA TO 20-GA)	
			—OR—	
	126-1767	6	PIN-CONNECTOR (14-GA TO 16-GA)	
	243-4508	1	RECEPTACLE AS-CONNECTOR (6-PIN)	
	8T-8730	6	SOCKET-CONNECTOR (16-GA TO 18-GA)	
	3S-2093	1	STRAP-CABLE	
			<END>	

355-1642 HARNESS AS-SWITCH

S/N: NTB1-UP

PART OF 522-1694 STARTING MOTOR GP-ELECTRIC

SMCS-1408 **i07358145**

NOTE	PART NUMBER	QTY	PART NAME 1 2 3 4 5 6 (PRODUCT LEVEL)	SEE PAGE
	8T-8737	2	PLUG-SEAL	
	2L-8076	2	TERMINAL-RING (14-GA TO 16-GA, NO. 10 SCREW)	
	9X-3401	2	PIN-CONNECTOR (16-GA TO 18-GA)	
			—OR—	
	126-1767	2	PIN-CONNECTOR (14-GA TO 16-GA)	
	230-4011	1	PLUG AS-CONNECTOR (2-PIN)	
	264-7029	1	SEAL-CONNECTOR	
	243-4505	1	RECEPTACLE AS-CONNECTOR (2-PIN)	
			<END>	

527-1870 HARNESS AS-VALVE

S/N: SP91-UP

PART OF 490-2714, 551-6783 WIRING GP-VALVE

SMCS-1408 **i07360995**

NOTE	PART NUMBER	QTY	PART NAME 1 2 3 4 5 6 (PRODUCT LEVEL)	SEE PAGE
	155-2270	4	KIT-CONNECTING PLUG (2-PIN)	
			(EACH INCLUDES PLUG AS, WEDGE, & INTERFACE SEAL)	
	102-8802	2	KIT-RECEPTACLE (2-PIN)	
			(EACH INCLUDES RECEPTACLE AS & WEDGE)	
	230-5010	1	PLUG AS-CONNECTOR (6-PIN)	
	455-0707	1	SEAL-CONNECTOR	
	8T-8737	5	PLUG-SEAL	
	8T-8730	13	SOCKET-CONNECTOR (16-GA TO 18-GA)	
E	**125-7874**		TUBE-HEAT SHRINK (5.72-MM DIA) (5-CM)	
E	**125-7875**		TUBE-HEAT SHRINK (7.44-MM DIA) (5-CM)	
E - ORDER BY THE CENTIMETER				
			<END>	

549-9283 HARNESS AS-VALVE

S/N: SP91-UP

PART OF 490-2693 WIRING GP-VALVE

SMCS-1408 **i07360220**

NOTE	PART NUMBER	QTY	PART NAME 1 2 3 4 5 6 (PRODUCT LEVEL)	SEE PAGE
	484-1452	3	CLIP	
	484-1454	4	CLIP-RETAINING	
	155-2270	21	KIT-CONNECTING PLUG (2-PIN)	
			(EACH INCLUDES PLUG AS, WEDGE, & INTERFACE SEAL)	
	102-8802	1	KIT-RECEPTACLE (2-PIN)	
			(INCLUDES RECEPTACLE AS & WEDGE)	
	8T-8729	37	PIN-CONNECTOR (16-GA TO 20-GA)	
	230-4013	3	PLUG AS-CONNECTOR (3-PIN)	
			(EACH INCLUDES)	
	455-0705	1	SEAL-CONNECTOR	
	8T-8737	3	PLUG-SEAL	
	243-4505	1	RECEPTACLE AS-CONNECTOR (2-PIN)	
	243-4510	1	RECEPTACLE AS-CONNECTOR (12-PIN)	
	272-5000	1	RECEPTACLE AS-CONNECTOR (12-PIN)	
	8T-8730	51	SOCKET-CONNECTOR (16-GA TO 18-GA)	
	3S-2093	13	STRAP-CABLE	
	204-2281	3	STRAP-CABLE	
E	**125-7874**		TUBE-HEAT SHRINK (5.72-MM DIA) (25-CM)	
E	**125-7875**		TUBE-HEAT SHRINK (7.44-MM DIA) (15-CM)	

E - ORDER BY THE CENTIMETER

<END>

555-7258 INSTALLATION AR-COMMUNICATION—PRODUCT LINK 631

S/N: SP91-UP

PART OF 557-3370 INSTALLATION AR-COMMUNICATION

SMCS-7606 **i07434521**

NOTE	PART NUMBER	QTY	PART NAME 1 2 3 4 5 6 (PRODUCT LEVEL)	SEE PAGE
Y	*488-6821*	1	ANTENNA & MOUNTING GP	142
Y	*488-6822*	1	CONTROL & MTG GP-COMMUNICATION (PRODUCT LINK 631 SATELLITE)	163
Y	*555-8043*	1	ELECTRONICS GP-MONITOR (SATELLITE) (TELEMATICS)	174

Y - SEPARATE ILLUSTRATION

<END>

555-7286 INSTALLATION AR-COMMUNICATION

S/N: SP910001-UP

SMCS-7606 **i07836454**

NOTE	PART NUMBER	QTY	PART NAME 1 2 3 4 5 6 (PRODUCT LEVEL)	SEE PAGE
Y	*526-7712*	1	CONTROL & MTG GP-ELECTRONIC (PRODUCT LINK)	166

Y - SEPARATE ILLUSTRATION

<END>

557-3370 INSTALLATION AR-COMMUNICATION—PRODUCT LINK 631 SATELLITE

S/N: SP91-UP

SMCS-7606 **i07524684**

NOTE	PART NUMBER	QTY	PART NAME 1 2 3 4 5 6 (PRODUCT LEVEL)	SEE PAGE
Y	*555-7258*	1	INSTALLATION AR-COMMUNICATION (PRODUCT LINK 631) (SATELLITE)	205
Y	*506-7031*	1	WIRING GP-CHASSIS (PRODUCT LINK 631, 641)	273

Y - SEPARATE ILLUSTRATION

<END>

524-8272 INSTL AR-MACHINE SECURITY SYS—SECURITY SYSTEM

S/N: SP91-UP

SMCS-7631 **i07367959**

NOTE	PART NUMBER	QTY	PART NAME 1 2 3 4 5 6 (PRODUCT LEVEL)	SEE PAGE
Y	*517-0824*	1	ELECTRONICS GP-MACHINE (SECURITY SYSTEM)	173
Y	*490-4919*	1	INSTL GP-MACHINE SECURITY SYS	207

Y - SEPARATE ILLUSTRATION

<END>

490-4919 INSTL GP-MACHINE SECURITY SYS—MOUNTING

S/N: SP91-UP

PART OF 524-8272 INSTL AR-MACHINE SECURITY SYS

SMCS-7631 **i07367947**

NOTE	REF NO	GRAPHIC REF	PART NUMBER	QTY	PART NAME 1 2 3 4 5 6 (PRODUCT LEVEL)	SEE PAGE
	1	1	**3S-2093**	2	STRAP-CABLE	
M	2	1	**5C-2890**	2	NUT (M6X1-THD)	
	3	1	**8C-5607**	4	MOUNT-ISOLATION	
	4	1	**9X-8256**	2	WASHER (6.6X12X2-MM THK)	
Y	5	1	**504-4980**	1	ELECTRONICS GP-MACHINE (SECURITY SYSTEM)	173
	6	1	**526-8586**	1	COVER	
	7	1	**527-9502**	1	BRACKET	
	8	1	**427-9771**	1	TIE	
	9	1	**8C-5608**	2	SPACER (6.5X9.5X25.4-MM THK)	
M	10	1	**8C-8451**	2	BOLT (M6X1X40-MM)	
M	11	1	**9X-2042**	2	SCREW-TRUSS HEAD (M6X1X12-MM)	
	12	1	**9X-6165**	2	WASHER (6.5X22X2.5-MM THK)	

M - METRIC PART
Y - SEPARATE ILLUSTRATION

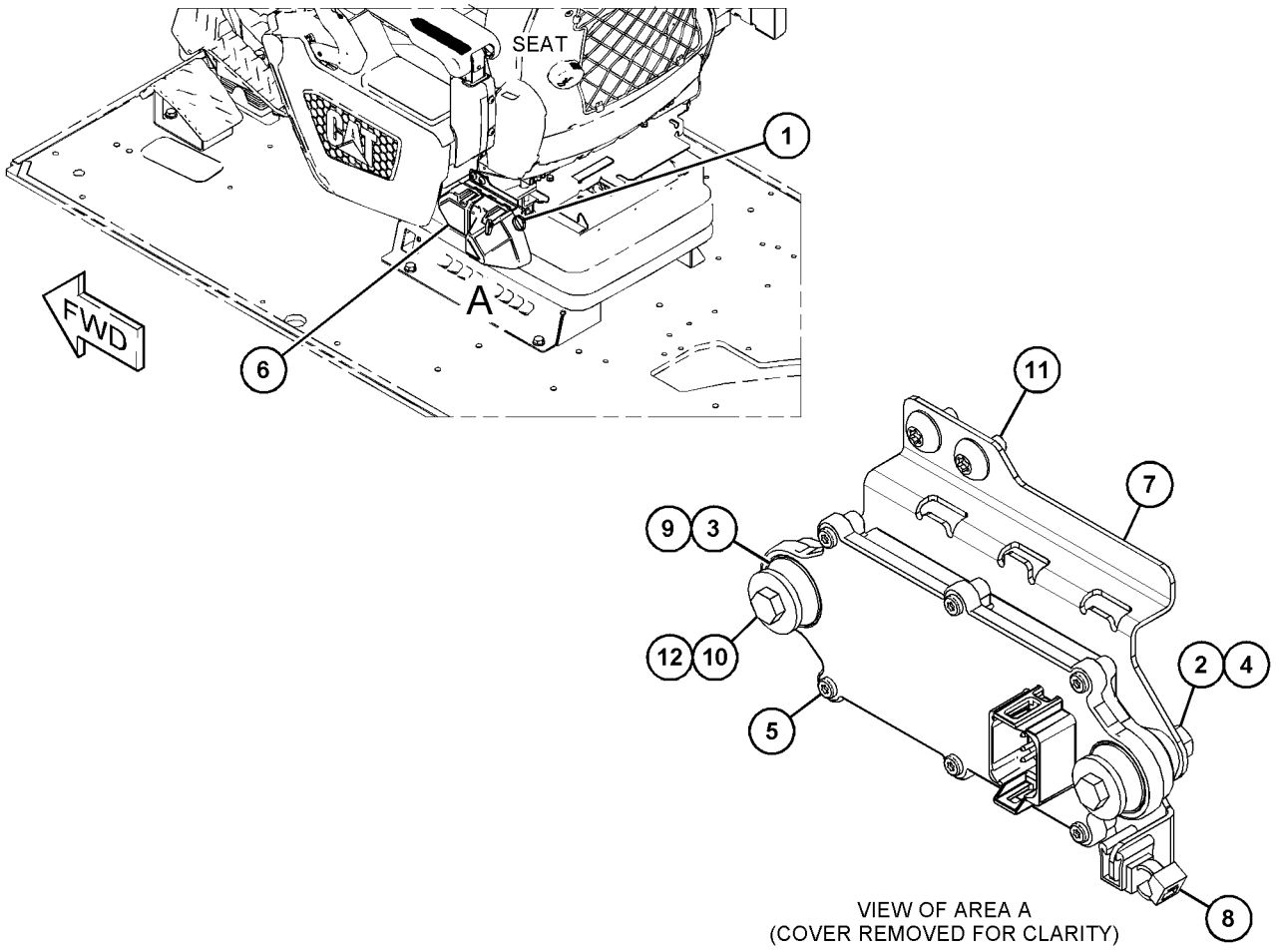

GRAPHIC #1 <END> g06230417

431-9515 LAMP GP-DOME

S/N: SP91-UP

PART OF 489-7848 WIRING GP-CAB

SMCS-1433 **i07074478**

NOTE	REF NO	GRAPHIC REF	PART NUMBER	QTY	PART NAME 1 2 3 4 5 6 (PRODUCT LEVEL)	SEE PAGE
					(NO SERVICED PARTS)	

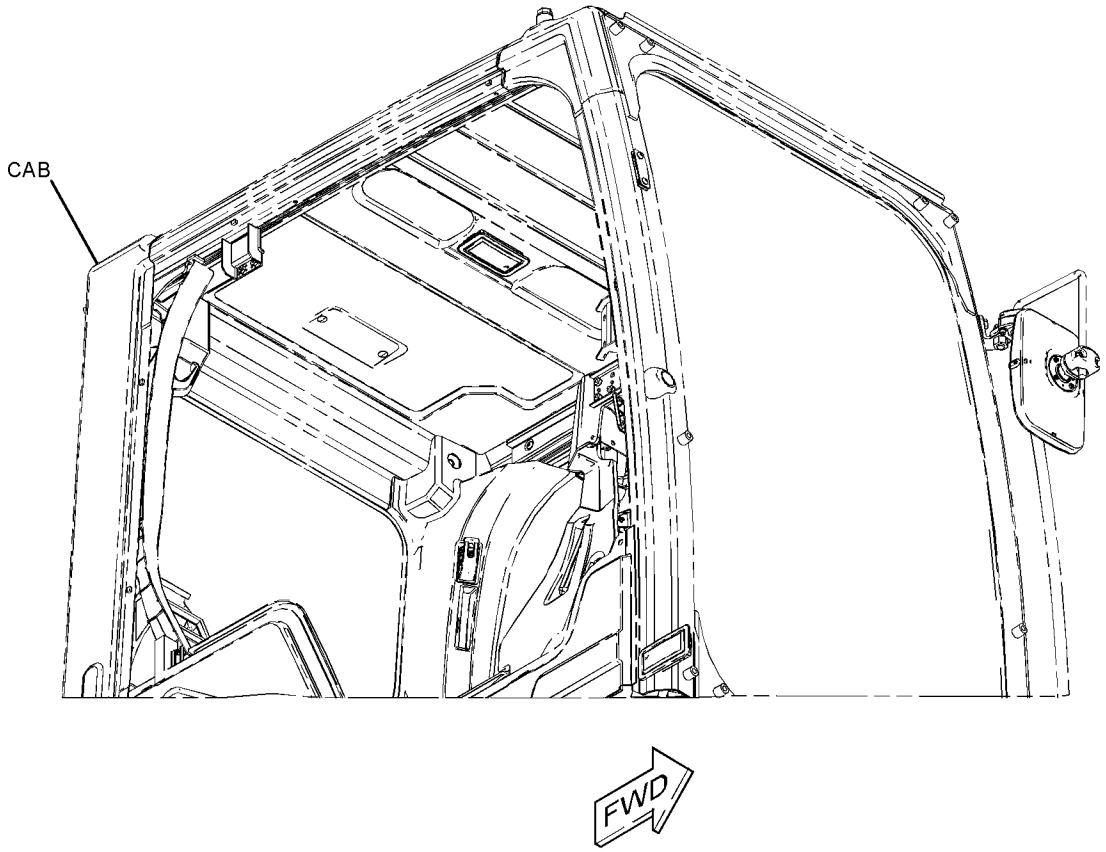

(VIEWED FROM BOTTOM)

GRAPHIC #1 <END> g06210018

555-9458 LIGHTING AR-FLOOD–CAB

S/N: SP91-UP

SMCS-1434 **i07524842**

NOTE	PART NUMBER	QTY	PART NAME 1 2 3 4 5 6 (PRODUCT LEVEL)	SEE PAGE
Y	*527-5711*	1	LIGHTING GP-FLOOD (CAB, LED)	215
Y	*541-3433*	1	VISOR GP-PROTECTION	730

Y - SEPARATE ILLUSTRATION

<END>

528-0022 LIGHTING GP-CAB

S/N: SP91-UP

PART OF 488-6764 WIRING GP-CONSOLE

SMCS-1433 **i07349033**

NOTE	REF NO	GRAPHIC REF	PART NUMBER	QTY	PART NAME 1 2 3 4 5 6 (PRODUCT LEVEL)	SEE PAGE
	1	1	**3S-2093**	4	STRAP-CABLE	
	2	1	**456-0632**	1	LAMP AS-INDICATOR (12-VOLT, 24-VOLT)	
		1	**8T-8729**	2	PIN-CONNECTOR (16-GA TO 20-GA)	
		1	**102-8802**	1	KIT-RECEPTACLE (2-PIN)	
					(INCLUDES RECEPTACLE AS & WEDGE)	
	3	1	**530-1946**	1	HARNESS AS-LIGHTING	
		1	**155-2270**	2	KIT-CONNECTING PLUG (2-PIN)	
					(EACH INCLUDES PLUG AS, WEDGE, & INTERFACE SEAL)	
		1	**8T-8730**	4	SOCKET-CONNECTOR (16-GA TO 18-GA)	
		1	**3S-2093**	2	STRAP-CABLE	
	4	1	**533-2342**	1	BRACKET	
	5	1	**533-4958**	1	BRACKET AS	
M	6	1	**9X-2042**	2	SCREW-TRUSS HEAD (M6X1X12-MM)	

M - METRIC PART

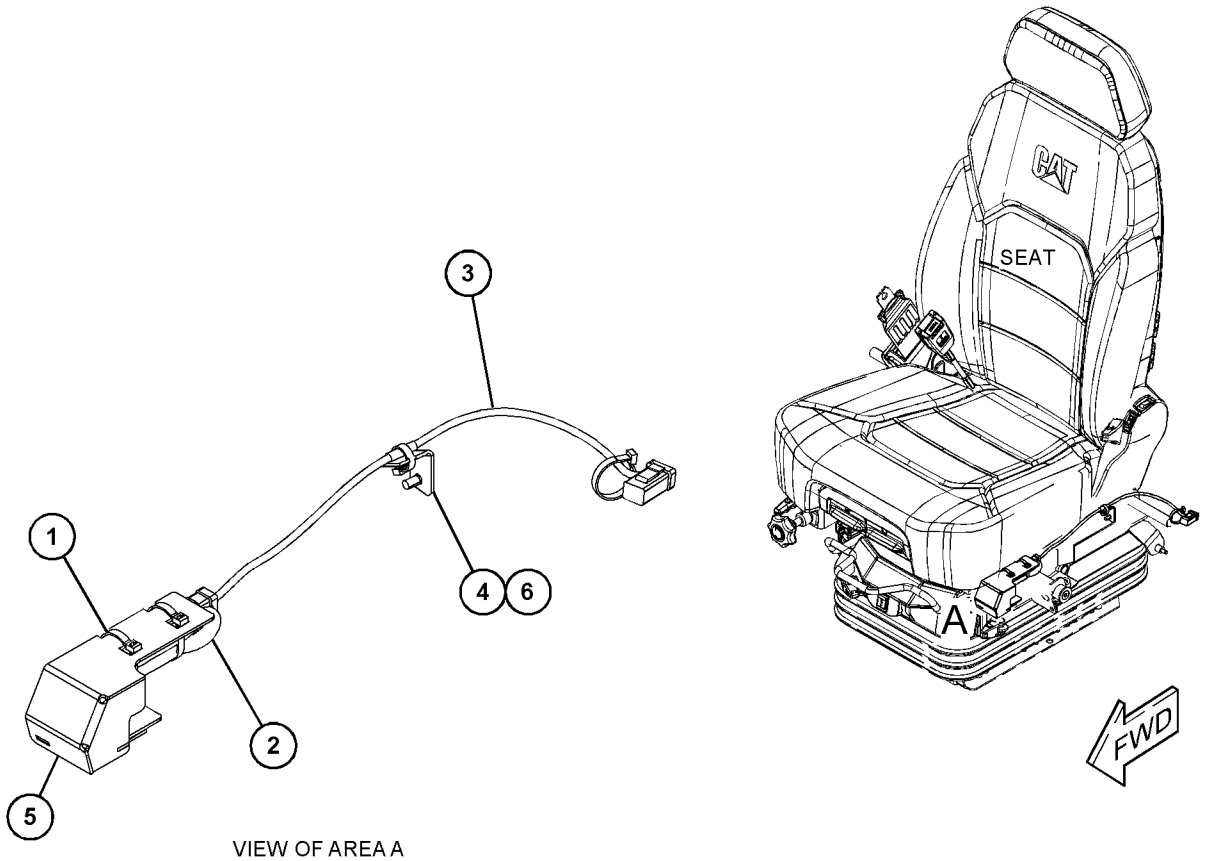

VIEW OF AREA A

GRAPHIC #1 <END> g06227891

502-7186 LIGHTING GP-FLOOD–REACH BOOM

S/N: SP91-UP

SMCS-1434 **i07519867**

NOTE	REF NO	GRAPHIC REF	PART NUMBER	QTY	PART NAME 1 2 3 4 5 6 (PRODUCT LEVEL)	SEE PAGE
	1	1	**3S-2093**	10	STRAP-CABLE	
	2	1	**116-0118**	2	CLIP	
	3	1	**204-1611**	3	STRAP-CABLE (DUAL)	
	4	1	**178-3620**	4	STRAP-DUAL CLAMP	
	5	1	**484-1451**	1	CLIP	
	6	1	**484-1456**	2	STRAP-CABLE	
	7	1	**491-8343**	2	BRACKET	
	8	1	**526-4904**	2	LAMP GP-FLOOD (9-32 VOLT, 850 LM. LED)	
					(EACH INCLUDES)	
M		1	**3T-0852**	2	LOCKNUT (M8X1.25-THD)	
		1	**5P-4116**	1	WASHER-HARD (8.8X20.5X2-MM THK)	
M		1	**8T-6912**	1	BOLT (M8X1.25X50-MM)	
Y	9	1	**539-1900**	1	HARNESS AS-LIGHTING (REACH BOOM)	201
	10	1	**7I-2673**	2	STRAP-CABLE	
	11	1	**8T-4121**	6	WASHER-HARD (11X21X2.5-MM THK)	
M	12	1	**8T-4136**	5	BOLT (M10X1.5X25-MM)	
M	13	1	**8T-4137**	1	BOLT (M10X1.5X20-MM)	

M - METRIC PART
Y - SEPARATE ILLUSTRATION

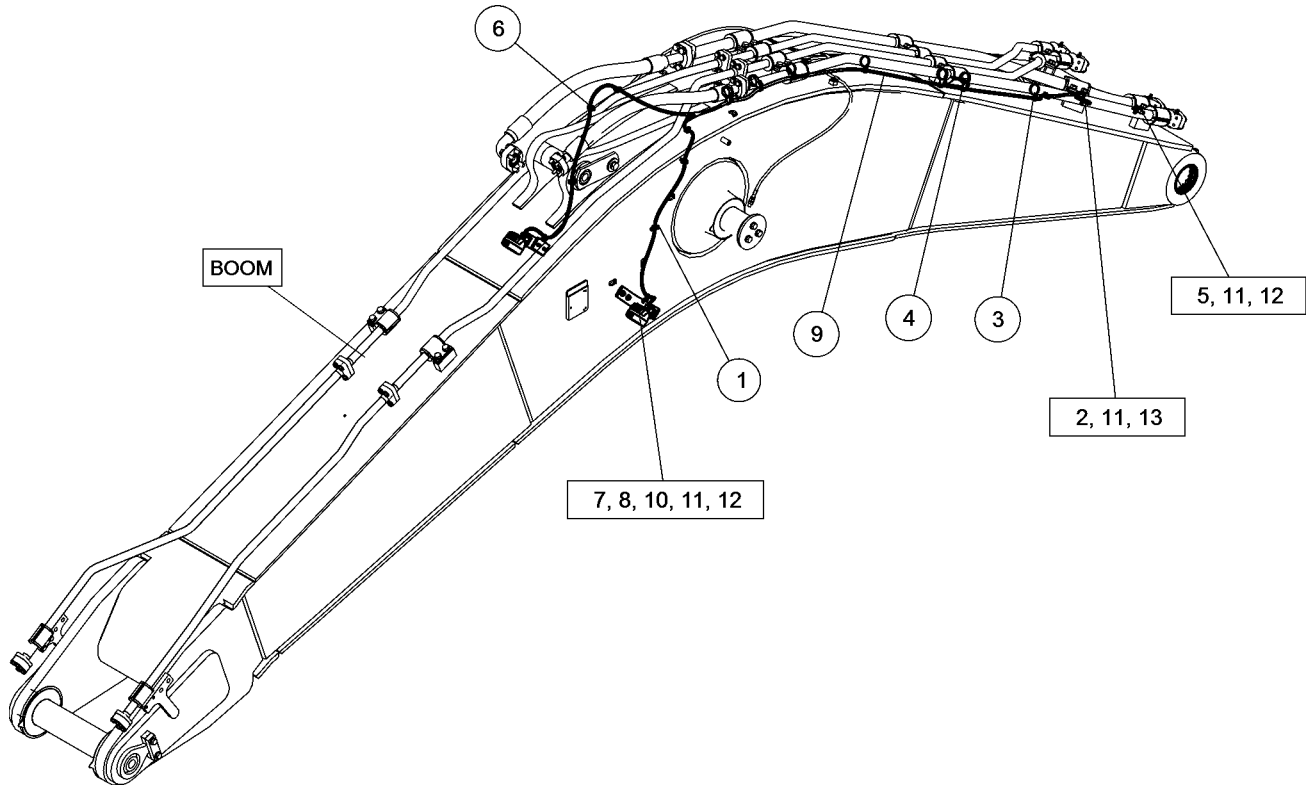

GRAPHIC #1 <END> g06279341

502-7187 LIGHTING GP-FLOOD–MASS BOOM

S/N: SP91-UP

SMCS-1434 **i07527278**

NOTE	REF NO	GRAPHIC REF	PART NUMBER	QTY	PART NAME 1 2 3 4 5 6 (PRODUCT LEVEL)	SEE PAGE
	1	1	**3S-2093**	14	STRAP-CABLE	
	2	1	**116-0118**	2	CLIP	
	3	1	**204-1611**	2	STRAP-CABLE (DUAL)	
	4	1	**178-3620**	4	STRAP-DUAL CLAMP	
	5	1	**484-1451**	1	CLIP	
	6	1	**484-1456**	2	STRAP-CABLE	
	7	1	**491-8343**	2	BRACKET	
	8	1	**526-4904**	2	LAMP GP-FLOOD (9-32 VOLT, 850 LM. LED)	
					(EACH INCLUDES)	
M		1	**3T-0852**	2	LOCKNUT (M8X1.25-THD)	
		1	**5P-4116**	1	WASHER-HARD (8.8X20.5X2-MM THK)	
M		1	**8T-6912**	1	BOLT (M8X1.25X50-MM)	
Y	9	1	**540-1916**	1	HARNESS AS-LIGHTING (MASS BOOM)	201
	10	1	**7I-2673**	2	STRAP-CABLE	
	11	1	**8T-4121**	6	WASHER-HARD (11X21X2.5-MM THK)	
M	12	1	**8T-4136**	5	BOLT (M10X1.5X25-MM)	
M	13	1	**8T-4137**	1	BOLT (M10X1.5X20-MM)	

M - METRIC PART
Y - SEPARATE ILLUSTRATION

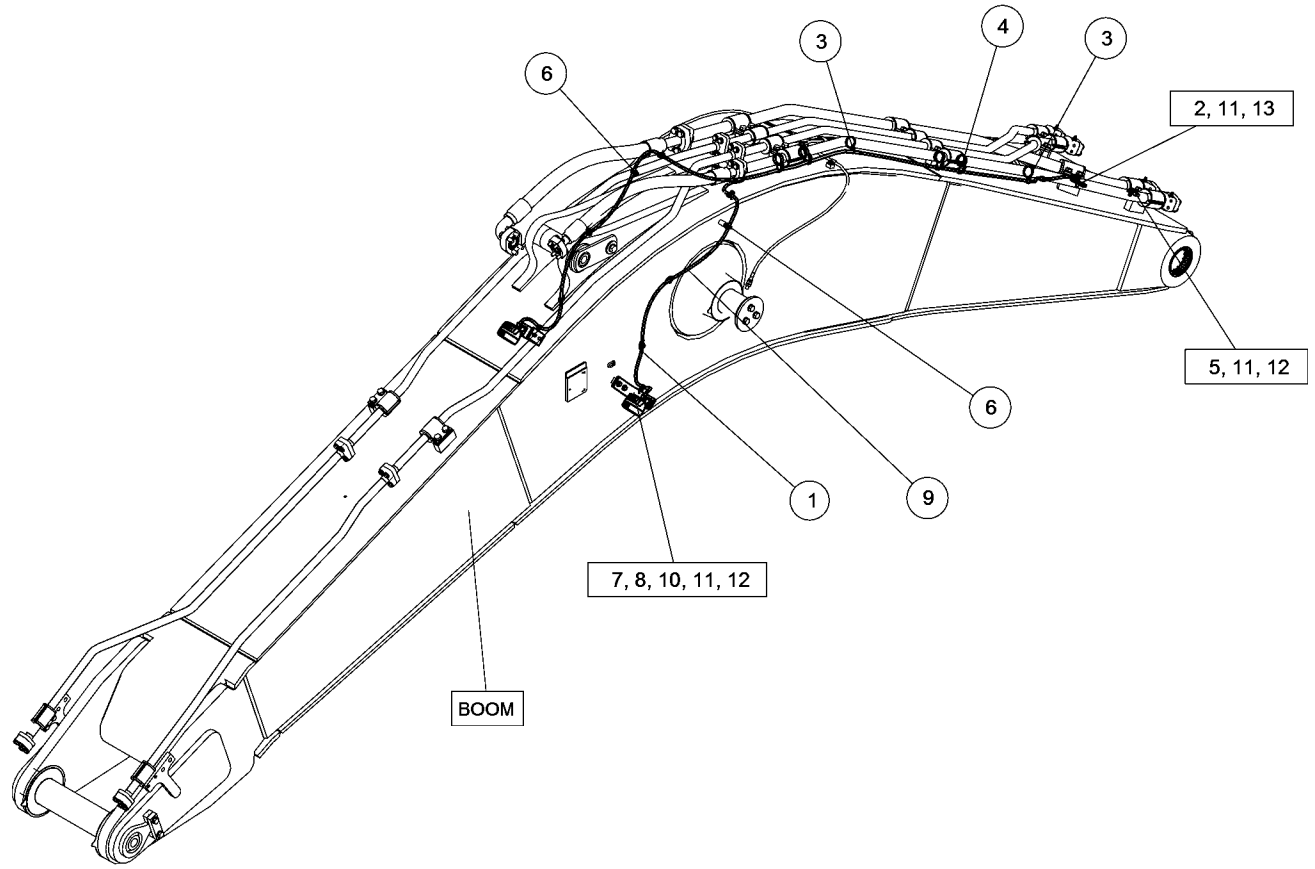

GRAPHIC #1 <END> g06279231

511-0961 LIGHTING GP-FLOOD–CHASSIS

S/N: SP91-UP

SMCS-1434 **i07620568**

NOTE	REF NO	GRAPHIC REF	PART NUMBER	QTY	PART NAME 1 2 3 4 5 6 (PRODUCT LEVEL)	SEE PAGE
	1	1	**526-4904**	1	LAMP GP-FLOOD (9-32 VOLT, 850 LM. LED)	
M		1	**3T-0852**	2	LOCKNUT (M8X1.25-THD)	
		1	**5P-4116**	1	WASHER-HARD (8.8X20.5X2-MM THK)	
M		1	**8T-6912**	1	BOLT (M8X1.25X50-MM)	

M - METRIC PART

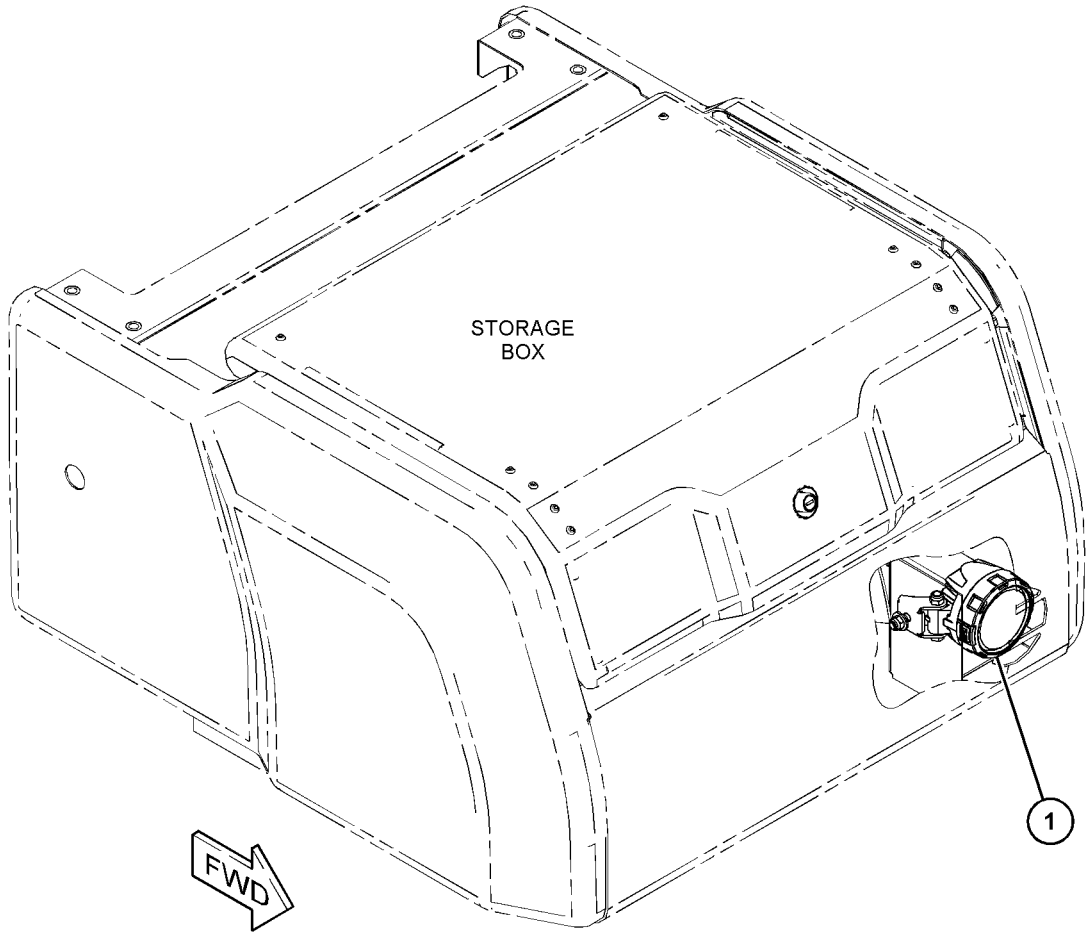

GRAPHIC #1 <END> g06276135

524-8314 LIGHTING GP-FLOOD—CAB, LED

S/N: SP91-UP

SMCS-1434 **i07495609**

NOTE	REF NO	GRAPHIC REF	PART NUMBER	QTY	PART NAME 1 2 3 4 5 6 (PRODUCT LEVEL)	SEE PAGE
	1	1	**524-8521**	2	LAMP GP-FLOOD (850 LUMENS)	
					(EACH INCLUDES)	
M		1	**3T-0852**	1	LOCKNUT (M8X1.25-THD)	
M		1	**8T-6912**	1	BOLT (M8X1.25X50-MM)	
Y	2	1	**526-4014**	2	HARNESS AS-LIGHTING (CAB)	200
	3	1	**8T-4121**	2	WASHER-HARD (11X21X2.5-MM THK)	
M	4	1	**8T-4137**	2	BOLT (M10X1.5X20-MM)	

M - METRIC PART
Y - SEPARATE ILLUSTRATION

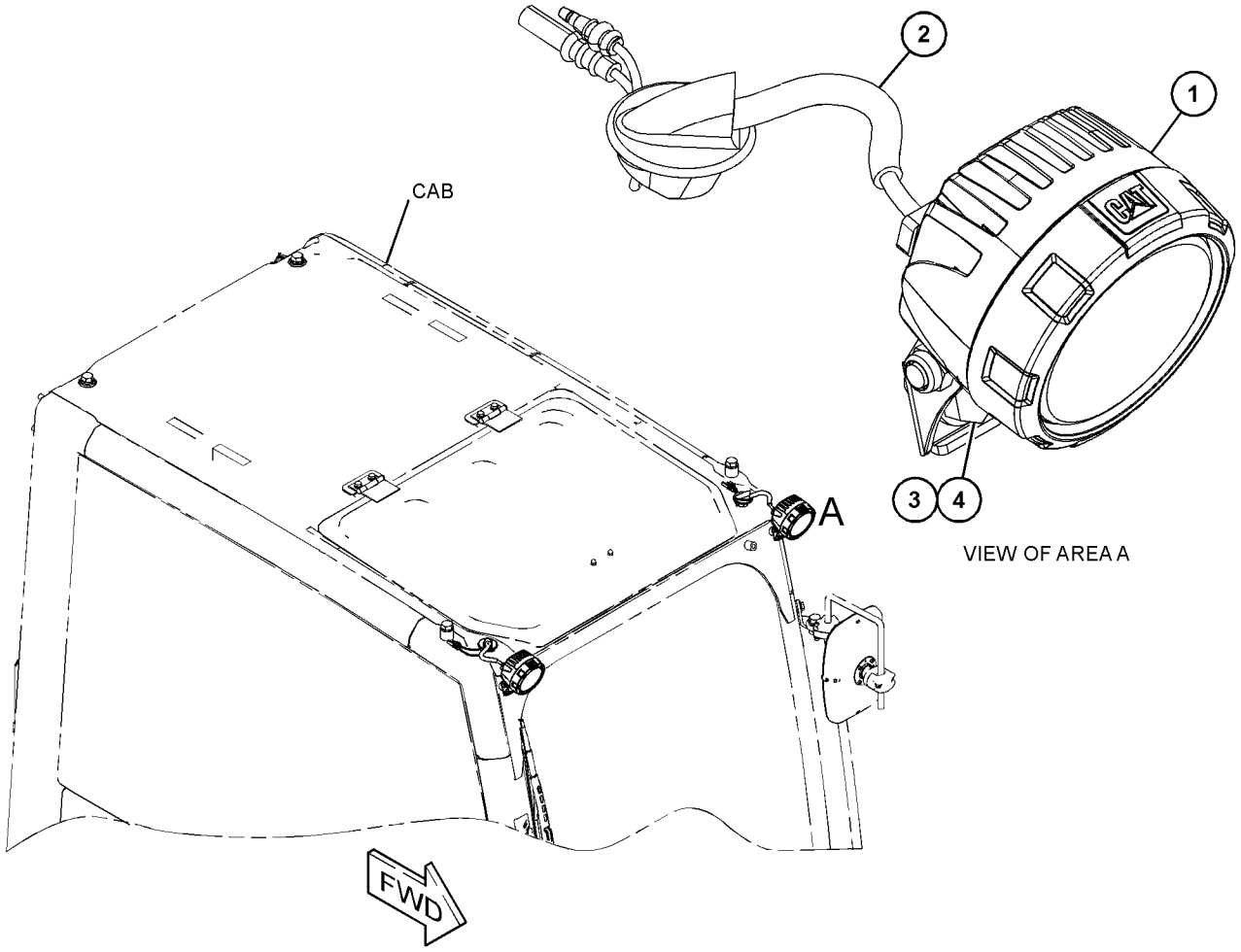

VIEW OF AREA A

GRAPHIC #1 <END> g06227948

527-5711 LIGHTING GP-FLOOD—CAB, LED

S/N: SP91-UP

PART OF 555-9458 LIGHTING AR-FLOOD

SMCS-1434 **i07756621**

NOTE	REF NO	GRAPHIC REF	PART NUMBER	QTY	PART NAME 1 2 3 4 5 6 (PRODUCT LEVEL)	SEE PAGE
	1	1	**3S-2093**	3	STRAP-CABLE	
	2	1	**524-8521**	2	LAMP GP-FLOOD (850 LUMENS) (WIDE)	
					(EACH INCLUDES)	
M		1	**3T-0852**	1	LOCKNUT (M8X1.25-THD)	
M		1	**8T-6912**	1	BOLT (M8X1.25X50-MM)	
Y	3	1	**530-1948**	1	HARNESS AS-CAB (LH)	178
	4	1	**532-7317**	1	COVER AS (FRONT)	
M		1	**6V-9632**	2	NUT-WELD (M6X1-THD)	
M		1	**8T-3490**	1	NUT-WELD (M10X1.5-THD)	
M		1	**8T-3612**	1	NUT-WELD (M8X1.25-THD)	
	5	1	**532-7318**	1	COVER AS (REAR)	
M		1	**6V-9632**	2	NUT-WELD (M6X1-THD)	
M		1	**8T-3490**	3	NUT-WELD (M10X1.5-THD)	
M		1	**8T-3612**	1	NUT-WELD (M8X1.25-THD)	
	6	1	**533-2343**	1	HARNESS AS-CAB (RH)	
		1	*7Y-3966*	1	TERMINAL AS	
		1	**7Y-3962**	1	TERMINAL-BULLET (MALE)	
		1	**7Y-3964**	1	TUBE	
		1	*7Y-3967*	1	TERMINAL AS	
		1	**7Y-3963**	1	TERMINAL-BULLET (FEMALE)	
		1	**7Y-3965**	1	TUBE	
		1	**9W-0844**	2	SOCKET-CONNECTOR (14-GA TO 16-GA)	
		1	**155-2270**	1	KIT-CONNECTING PLUG (2-PIN)	
					(INCLUDES PLUG AS, WEDGE, & INTERFACE SEAL)	
E		1	**196-8876**		BRAID (BLACK, ONE GOLD STRAND) (25-CM)	
M	7	1	**101-7401**	6	BOLT-SOCKET HEAD (M10X1.5X20-MM)	
	8	1	**163-6795**	2	STRAP-CABLE	
	9	1	**8T-4121**	6	WASHER-HARD (11X21X2.5-MM THK)	
J	10	1	**348-5410**		SEAL (1.2-DM EACH)	
E	11	1	**3E-6600**		SEAL (3-CM)	

E - ORDER BY THE CENTIMETER
J - ORDER BY THE DECIMETER
M - METRIC PART
Y - SEPARATE ILLUSTRATION

527-5711 **LIGHTING GP-FLOOD (**contd.**)** **i07756621**

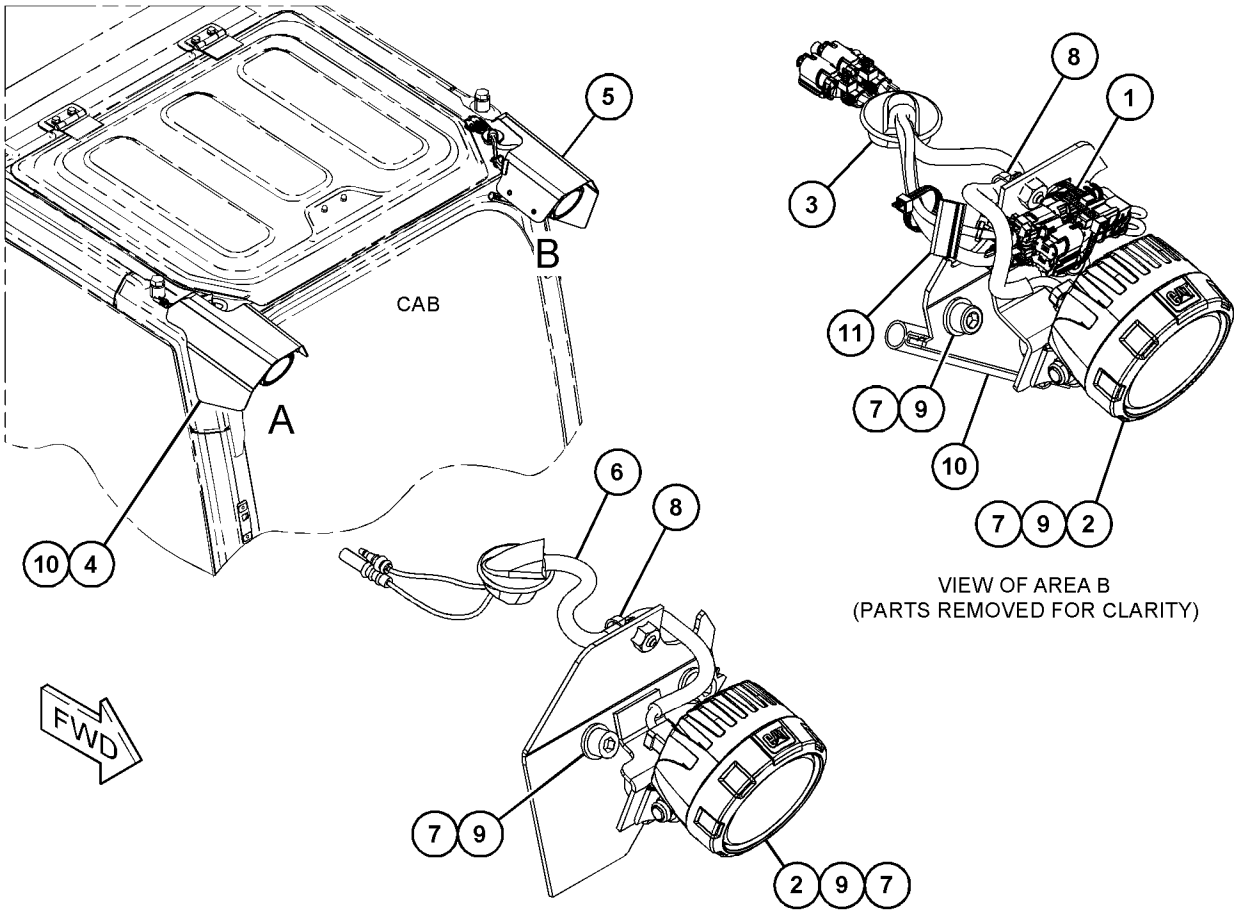

VIEW OF AREA B
(PARTS REMOVED FOR CLARITY)

VIEW OF AREA A
(PARTS REMOVED FOR CLARITY)

GRAPHIC #1 <END> g06462069

554-3615 LIGHTING GP-FLOOD—CAB

S/N: SP91-UP

FRONT WINDOW GUARD

SMCS-1434 **i07434617**

NOTE	REF NO	GRAPHIC REF	PART NUMBER	QTY	PART NAME 1 2 3 4 5 6 (PRODUCT LEVEL)	SEE PAGE
	1	1	**7K-1181**	1	STRAP-CABLE	
	2	1	**484-1453**	1	CLIP (RETAINER)	
	3	1	**484-1456**	2	STRAP-CABLE	
	4	1	**524-8521**	2	LAMP GP-FLOOD (850 LUMENS)	
					(EACH INCLUDES)	
M		1	**3T-0852**	1	LOCKNUT (M8X1.25-THD)	
M		1	**8T-6912**	1	BOLT (M8X1.25X50-MM)	
Y	5	1	**530-1948**	1	HARNESS AS-CAB (LH)	178
	6	1	**533-2343**	1	HARNESS AS-CAB (RH)	
		1	**155-2270**	1	KIT-CONNECTING PLUG (2-PIN)	
					(INCLUDES PLUG AS, WEDGE, & INTERFACE SEAL)	
		1	**9W-0844**	2	SOCKET-CONNECTOR (14-GA TO 16-GA)	
		1	*7Y-3966*	1	TERMINAL AS	
		1	**7Y-3962**	1	TERMINAL-BULLET (MALE)	
		1	**7Y-3964**	1	TUBE	
		1	*7Y-3967*	1	TERMINAL AS	
		1	**7Y-3963**	1	TERMINAL-BULLET (FEMALE)	
		1	**7Y-3965**	1	TUBE	
Y	7	1	**539-2832**	2	HARNESS AS-CAB (FLOODLIGHTS)	178
	8	1	**8T-4121**	2	WASHER-HARD (11X21X2.5-MM THK)	
M	9	1	**8T-4133**	2	NUT (M10X1.5-THD)	
M	10	1	**8T-4137**	2	BOLT (M10X1.5X20-MM)	

M - METRIC PART
Y - SEPARATE ILLUSTRATION

554-3615 **LIGHTING GP-FLOOD (**contd.**)** **i07434617**

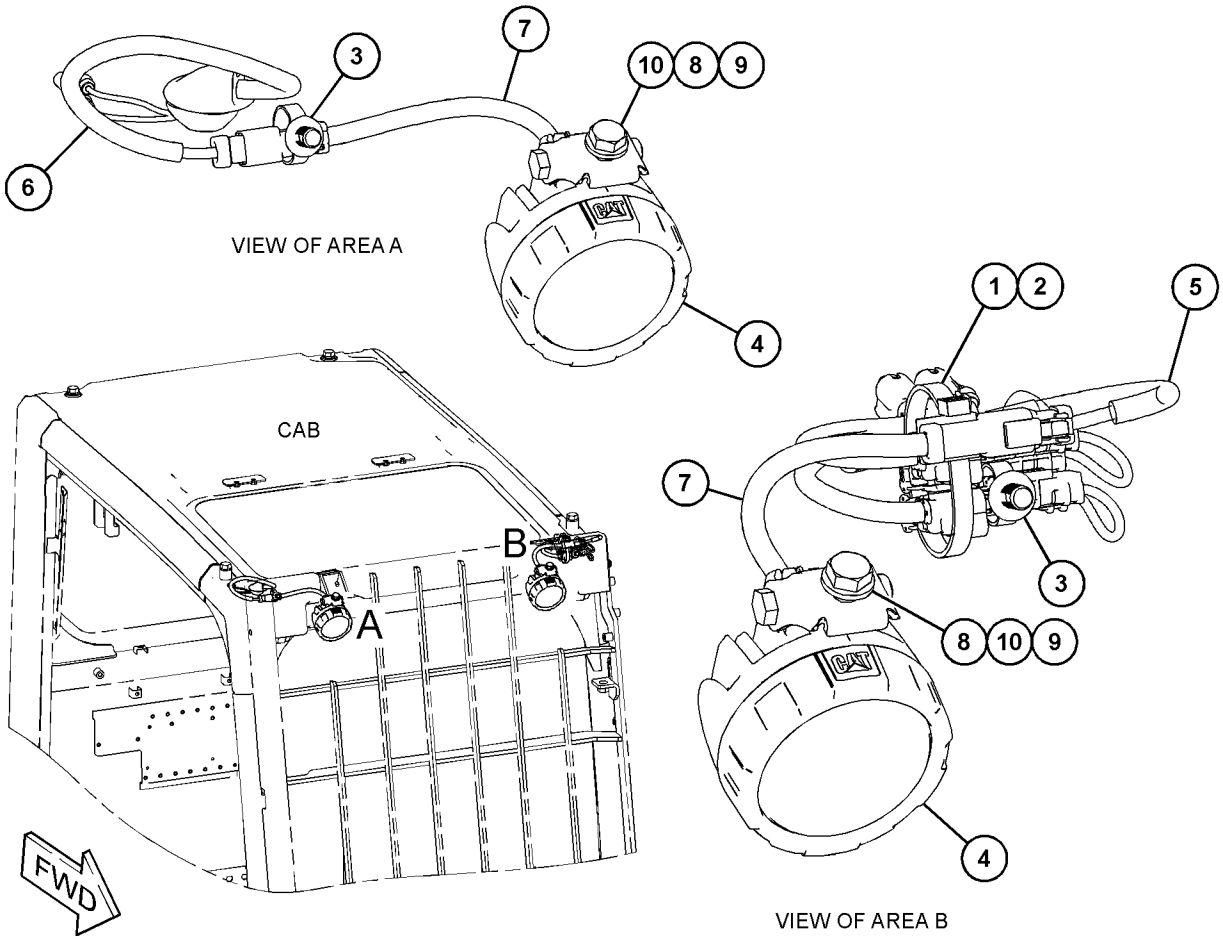

GRAPHIC #1 <END> g06274369

489-7847 MODULE GP-CAB WIRING

S/N: SP91-UP

PART OF 500-0999, 500-1000 OPERATOR AR

SMCS-1408, 1421, 7610, 7620 **i07348761**

NOTE	PART NUMBER	QTY	PART NAME 1 2 3 4 5 6 (PRODUCT LEVEL)	SEE PAGE
Y	*502-7159*	1	CONTROL & MTG GP-ELECTRONIC (BODY)	164
Y	*503-2027*	1	CONVERTER & MOUNTING GP-POWER (24-VOLT TO 12-VOLT)	171
Y	*489-7848*	1	WIRING GP-CAB	258
Y	*488-6764*	1	WIRING GP-CONSOLE	279
Y	*488-6768*	1	WIRING GP-PLATFORM	294

Y - SEPARATE ILLUSTRATION

<END>

523-7344 MOUNTING GP-CONNECTOR

S/N: NTB1-UP

PART OF 522-6120 ENGINE AR-COMPLETE

SMCS-1408 **i07498990**

NOTE	REF NO	GRAPHIC REF	PART NUMBER	QTY	PART NAME 1 2 3 4 5 6 (PRODUCT LEVEL)	SEE PAGE
	1	1	**523-7342**	1	PLATE AS	
M		1	**8T-5413**	5	STUD-WELD (M10X1.5X25-MM)	
M	2	1	**178-3336**	2	NUT-HEX FLANGE (M8X1.25-THD)	
	3	1	**9M-1974**	2	WASHER-HARD (8.8X16X2-MM THK)	

M - METRIC PART

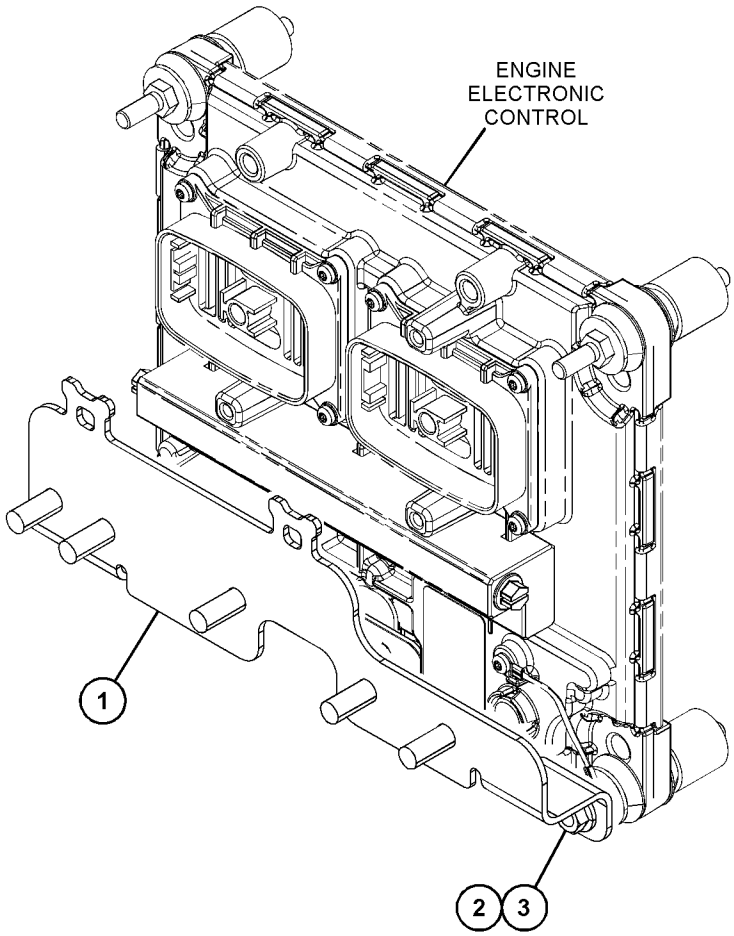

GRAPHIC #1 <END> g06288213

502-7168 MOUNTING GP-WIRING

S/N: SP91-UP

PART OF 488-6764 WIRING GP-CONSOLE

SMCS-1408 **i07349043**

NOTE	REF NO	GRAPHIC REF	PART NUMBER	QTY	PART NAME 1 2 3 4 5 6 (PRODUCT LEVEL)	SEE PAGE
	1	1	**7K-1181**	1	STRAP-CABLE	
	2	1	**526-5708**	1	SWITCH AS-PUSH BUTTON	
		1	**8T-8729**	6	PIN-CONNECTOR (16-GA TO 20-GA)	
		1	**102-8805**	1	KIT-RECEPTACLE (6-PIN)	
					(INCLUDES RECEPTACLE AS & WEDGE)	

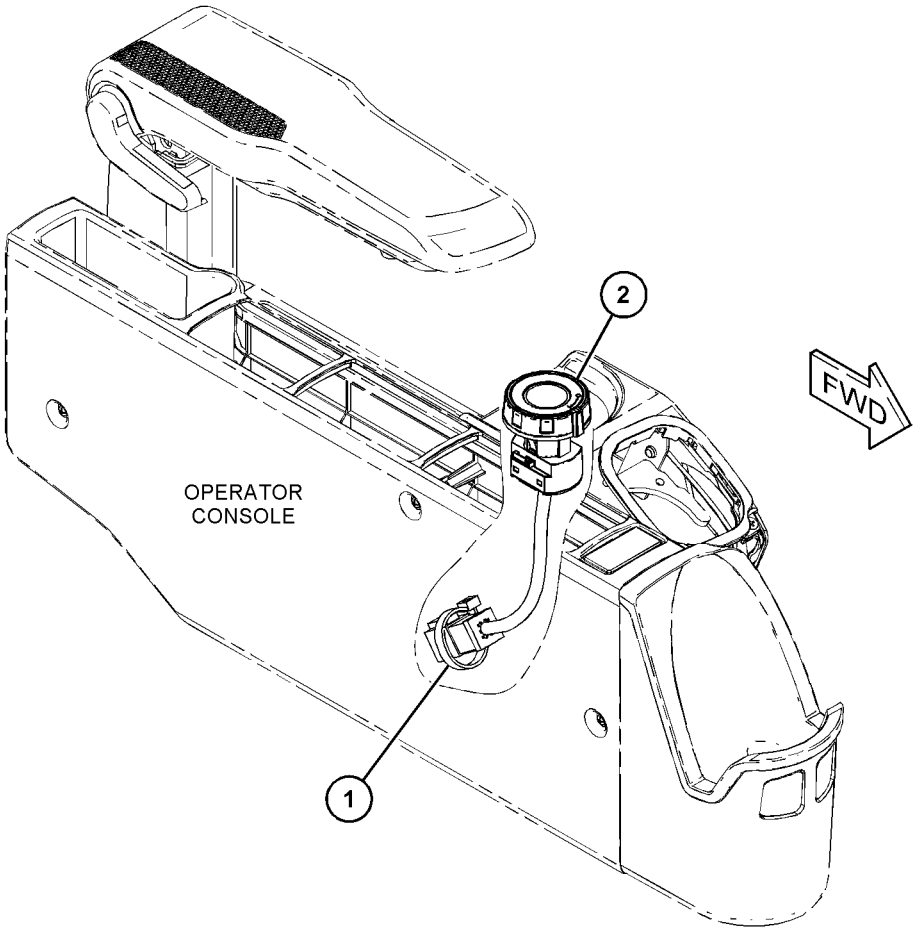

GRAPHIC #1 <END> g06227438

510-9082 PANEL GP-FUSE

S/N: SP91-UP

PART OF 504-3553 CABLE GP-GROUND

SMCS-1417 **i07511682**

NOTE	REF NO	GRAPHIC REF	PART NUMBER	QTY	PART NAME 1 2 3 4 5 6 (PRODUCT LEVEL)	SEE PAGE
	1	1	**378-1012**	2	FUSE (100-AMPERE)	
	2	1	**455-2302**	2	FUSE (70-AMPERE)	
	3	1	**510-8930**	2	FUSE (40-AMPERE)	
	4	1	**425-9809**	2	FUSE (125-AMPERE)	
	5	1	**510-9083**	1	COVER	
	6	1	**425-9879**	2	SEAL-COVER	
M	7	1	**5C-2874**	8	NUT (M5X0.8-THD)	
	8	1	**204-6101**	8	WASHER-HARD (5.3X10X1-MM THK)	
	9	1	**096-0192**	8	LOCKWASHER	
M	10	1	**5C-7261**	7	NUT (M8X1.25-THD)	
	11	1	**7H-3937**	7	LOCKWASHER	
	12	1	**8T-4224**	7	WASHER-HARD (8.8X16X2-MM THK)	

M - METRIC PART

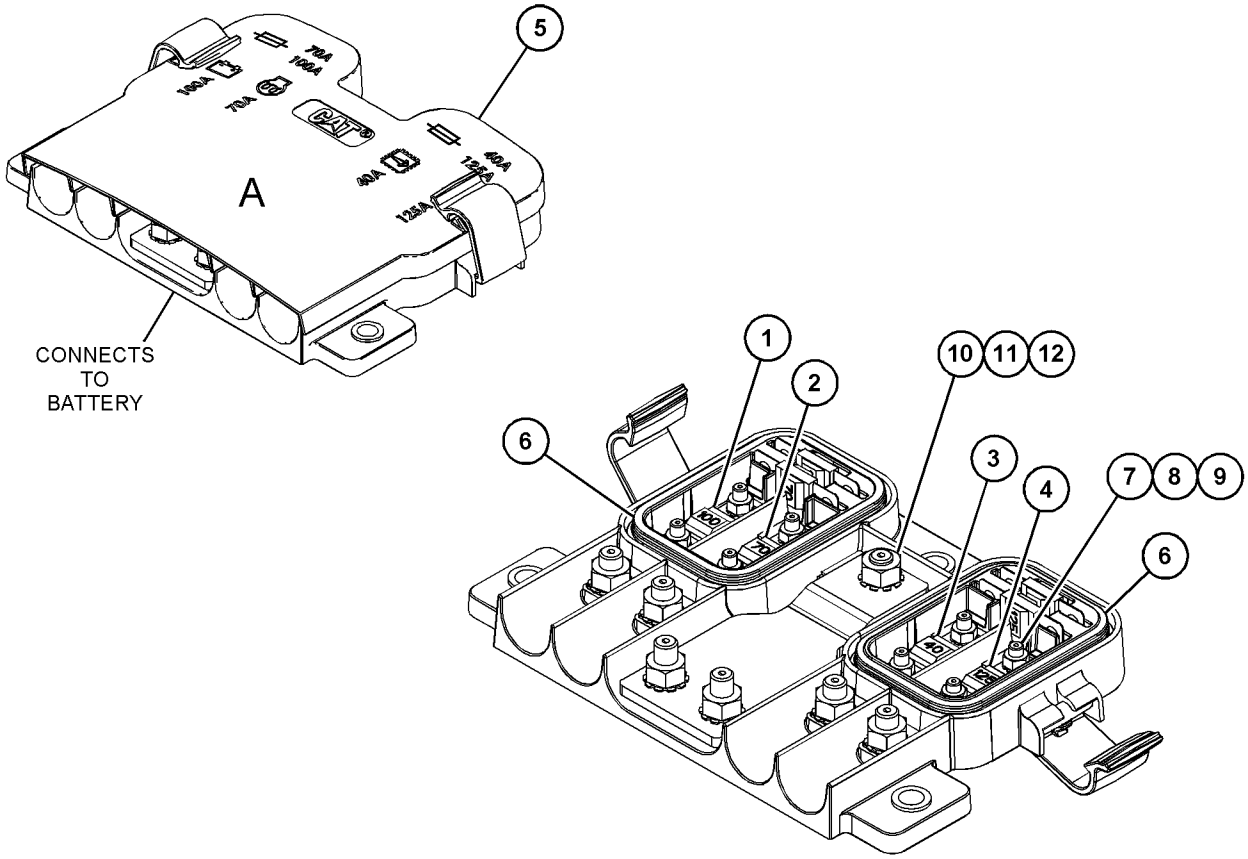

VIEW OF AREA A
(COVER REMOVED FOR CLARITY)

GRAPHIC #1 <END> g06279143

3T-9525 PLATE AS-BRUSH

S/N: NTB1-UP

PART OF 349-6554 STARTING MOTOR GP-ELECTRIC

SMCS-4463 **i04924049**

NOTE	REF NO	GRAPHIC REF	PART NUMBER	QTY	PART NAME 1 2 3 4 5 6 (PRODUCT LEVEL)	SEE PAGE
	1	1	**6T-0372**	1	PLATE	
	2	1	**6T-0371**	1	INSULATOR	
	3	1	**9F-5599**	12	LOCKWASHER	
	4	1	**6T-0363**	6	HOLDER AS-BRUSH	
					(EACH INCLUDES)	
		1	**3T-9494**	1	SPRING	
	5	1	**3T-4709**	3	PLATE	
	6	1	**3T-4710**	3	PLATE	
	7	1	**2L-6679**	3	PLATE-INSULATOR	
	8	1	**7F-3525**	6	WASHER-SPECIAL (0.207X0.39X0.09-IN THK)	
	9	1	**5P-6298**	12	SCREW-MACHINE (10-32X0.5-IN)	

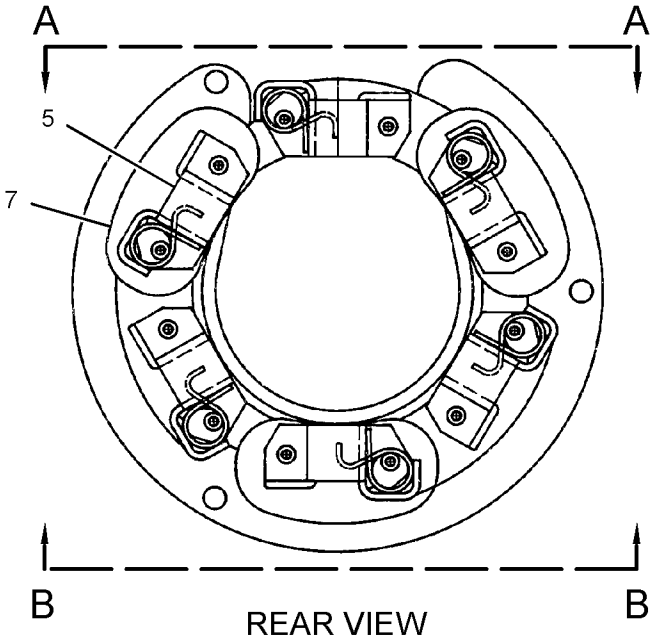

REAR VIEW

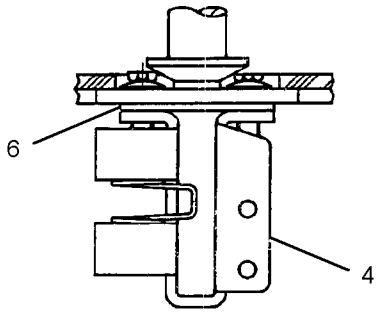

VIEW A-A

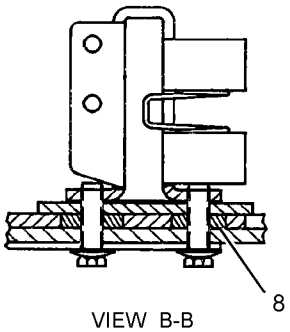

VIEW B-B

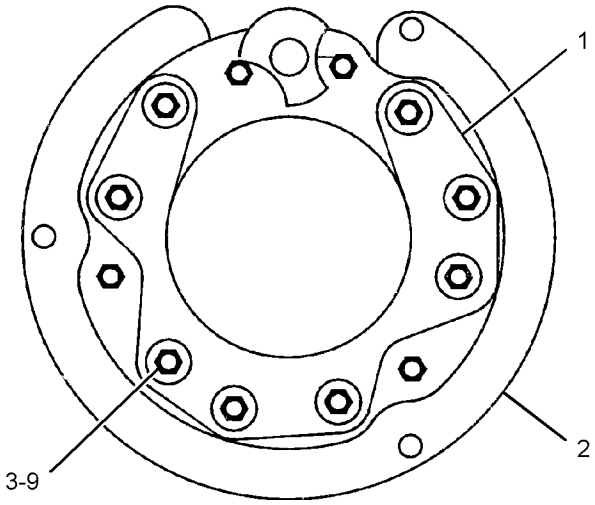

FRONT VIEW

GRAPHIC #1 <END> g02294074

307-8698 PLUG GP-CONNECTOR

S/N: NTB1-UP

PART OF 525-7118 SENSOR GP-ENGINE

SMCS-1403, 1408 **i07500769**

NOTE	REF NO	GRAPHIC REF	PART NUMBER	QTY	PART NAME 1 2 3 4 5 6 (PRODUCT LEVEL)	SEE PAGE
	1	1	**8T-8737**	3	PLUG-SEAL	
	2	1	**230-4014**	1	RECEPTACLE AS-CONNECTOR (3-PIN)	

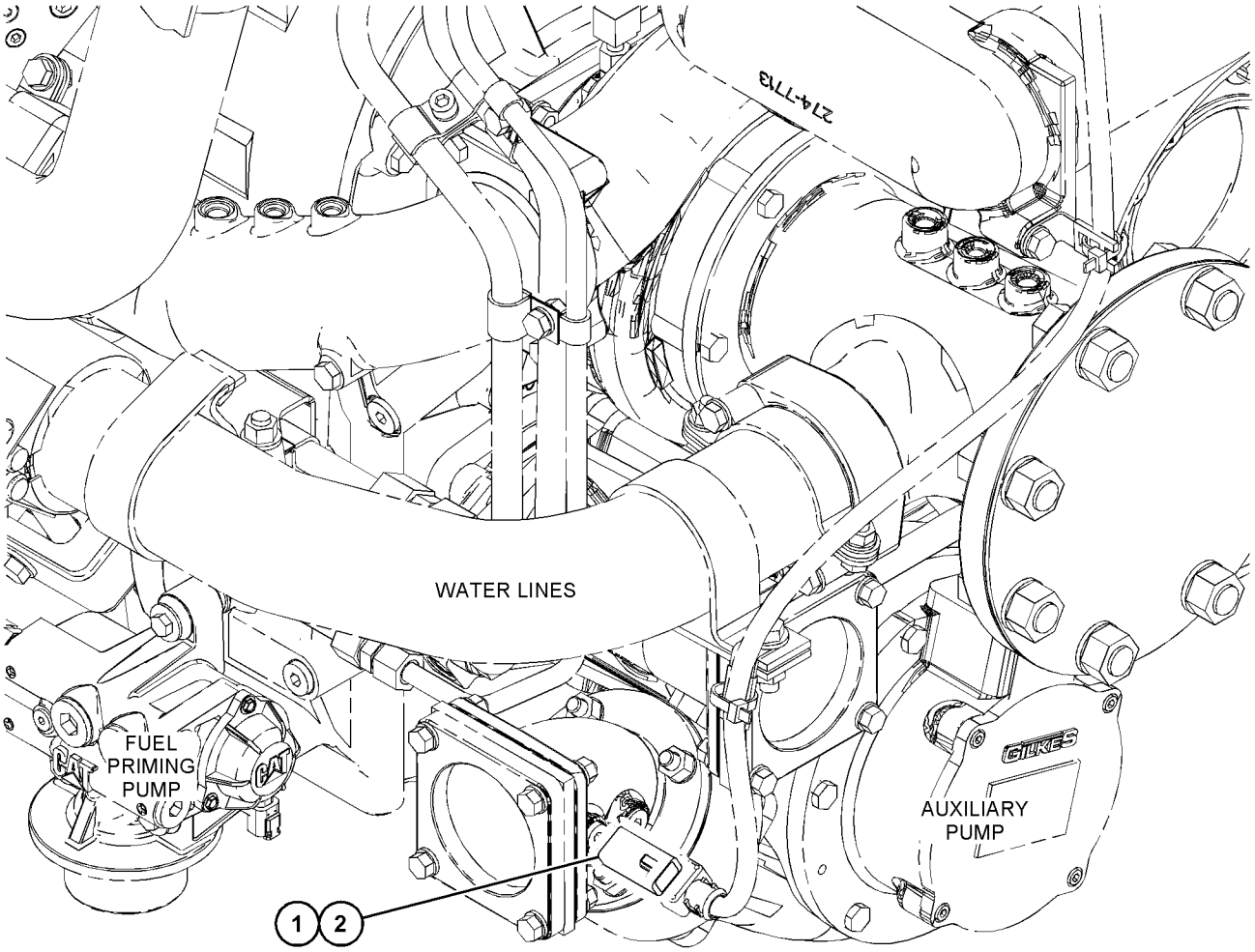

GRAPHIC #1 <END> g06292378

535-6785 PROTECTION GP-WIRING

S/N: NTB1-UP
LH PRIMARY AND SECONDARY FUEL FILTER
PART OF 522-6120 ENGINE AR-COMPLETE

SMCS-1408, 7553

i07499067

NOTE	REF NO	GRAPHIC REF	PART NUMBER	QTY	PART NAME 1 2 3 4 5 6 (PRODUCT LEVEL)	SEE PAGE
	1	1	**342-2976**	1	CAP-CONNECTOR (12-PIN)	

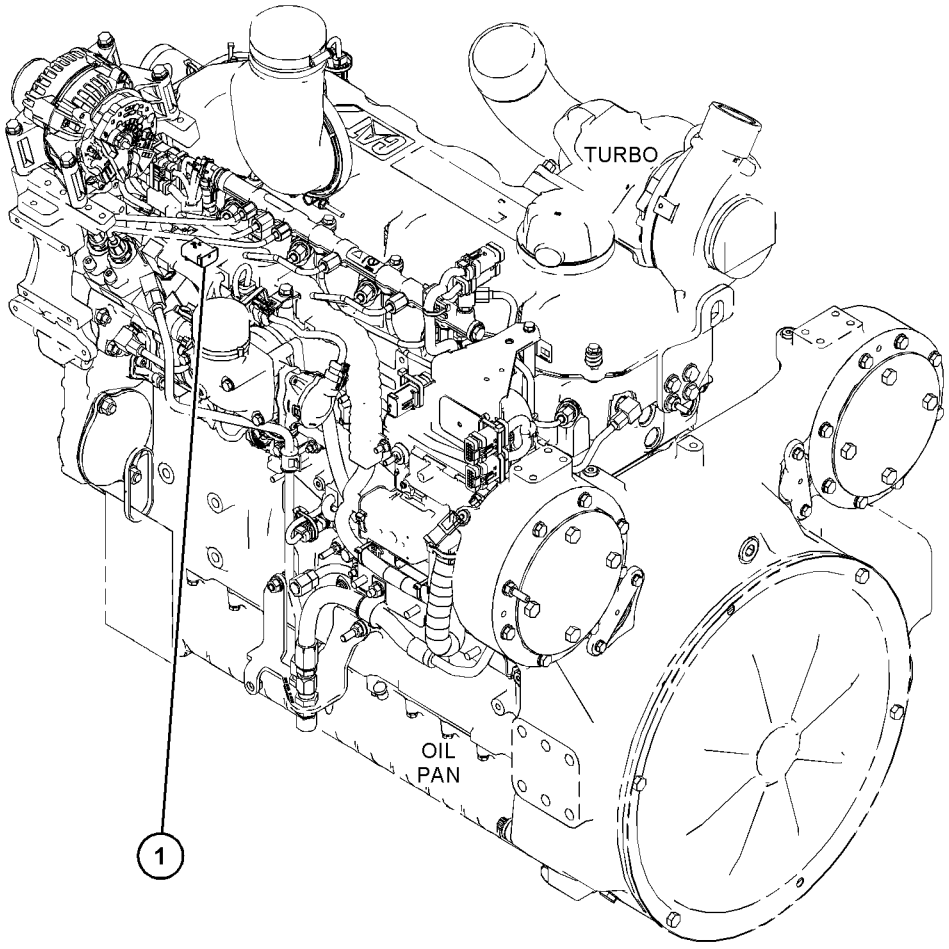

GRAPHIC #1

<END>

g06246912

541-6658 PROTECTION GP-WIRING

S/N: NTB1-UP

PART OF 522-6120 ENGINE AR-COMPLETE

SMCS-1408, 7553 **i07499068**

NOTE	REF NO	GRAPHIC REF	PART NUMBER	QTY	PART NAME 1 2 3 4 5 6 (PRODUCT LEVEL)	SEE PAGE
	1	1	**325-8700**	1	PLUG AS	
		1	**8T-8737**	12	PLUG-SEAL	
		1	**230-4009**	1	PLUG AS-CONNECTOR (12-PIN)	
		1	**455-0709**	1	SEAL-CONNECTOR	
	2	1	**541-2564**	1	PLUG AS-CONNECTOR	
		1	**8T-8737**	12	PLUG-SEAL	
		1	**455-0709**	1	SEAL-CONNECTOR	

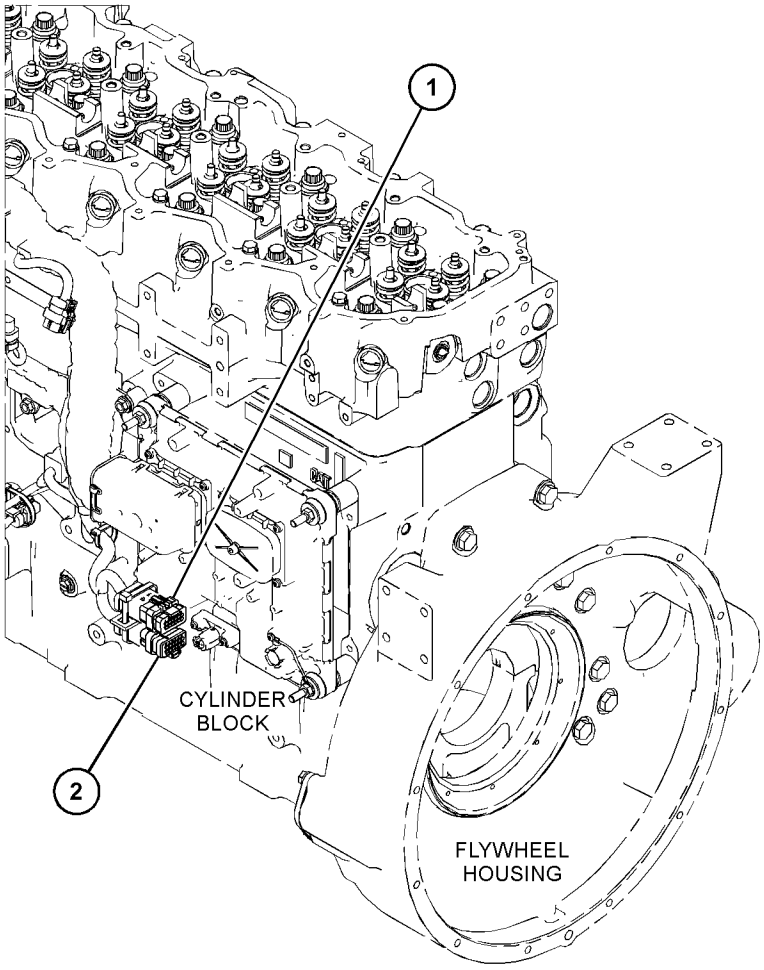

GRAPHIC #1 <END> g06296823

490-2765 RELAY GP–REFUELING PUMP

S/N: SP91-UP

PART OF 546-1255 PUMP AR-FUEL TRANSFER

SMCS-1422, 4493

i07527077

NOTE	REF NO	GRAPHIC REF	PART NUMBER	QTY	PART NAME 1 2 3 4 5 6 (PRODUCT LEVEL)	SEE PAGE
	1	1	**161-3128**	1	RELAY (24-VOLT) (REFUELING PUMP)	

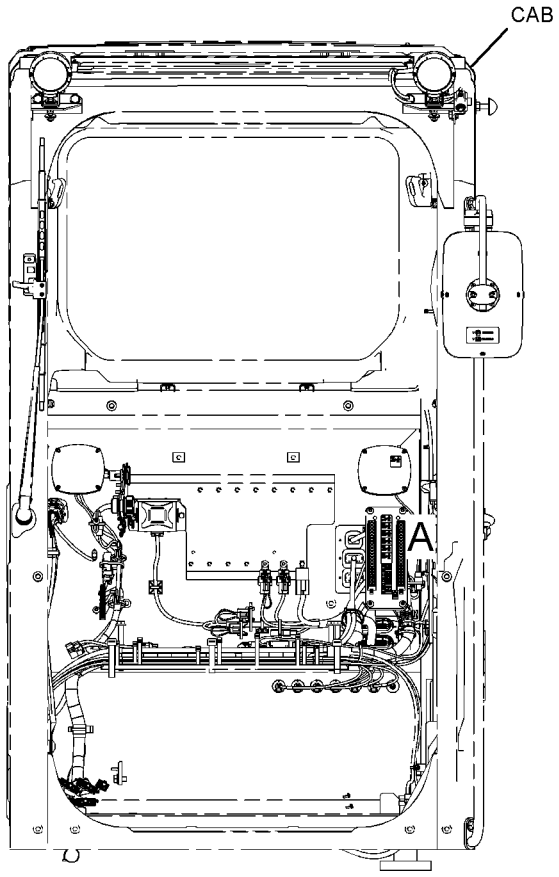

FRONT VIEW

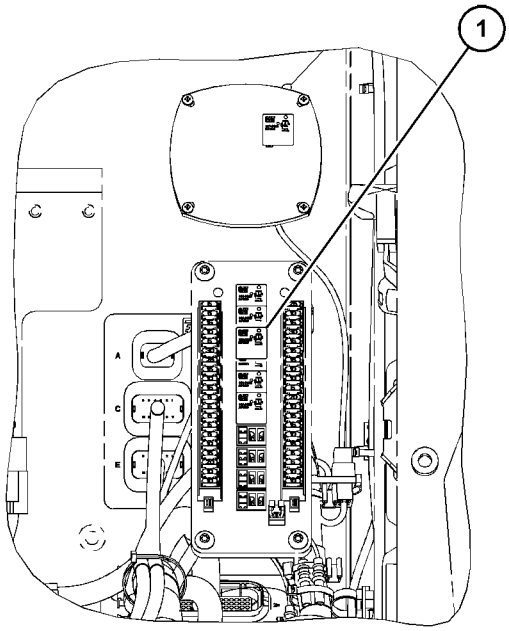

VIEW OF AREA A

GRAPHIC #1 <END> g06229581

490-2767 SENSOR & MTG GP-POSITION—BODY TILT

S/N: SP91-UP

PART OF 516-0550 GRADE CONTROL AR

SMCS-5736 **i07490869**

NOTE	REF NO	GRAPHIC REF	PART NUMBER	QTY	PART NAME 1 2 3 4 5 6 (PRODUCT LEVEL)	SEE PAGE
	1	1	**150-5785**	2	DOWEL	
	2	1	**563-0598**	1	SENSOR AS-POSITION (INERTIAL MEASUREMENT UNIT)	
	3	1	**525-6177**	1	BRACKET-SENSOR	
	4	1	**8T-4121**	2	WASHER-HARD (11X21X2.5-MM THK)	
M	5	1	**8T-4136**	2	BOLT (M10X1.5X25-MM)	
	6	1	**8T-4224**	3	WASHER-HARD (8.8X16X2-MM THK)	
M	7	1	**8T-7547**	3	BOLT (M8X1.25X30-MM)	

M - METRIC PART

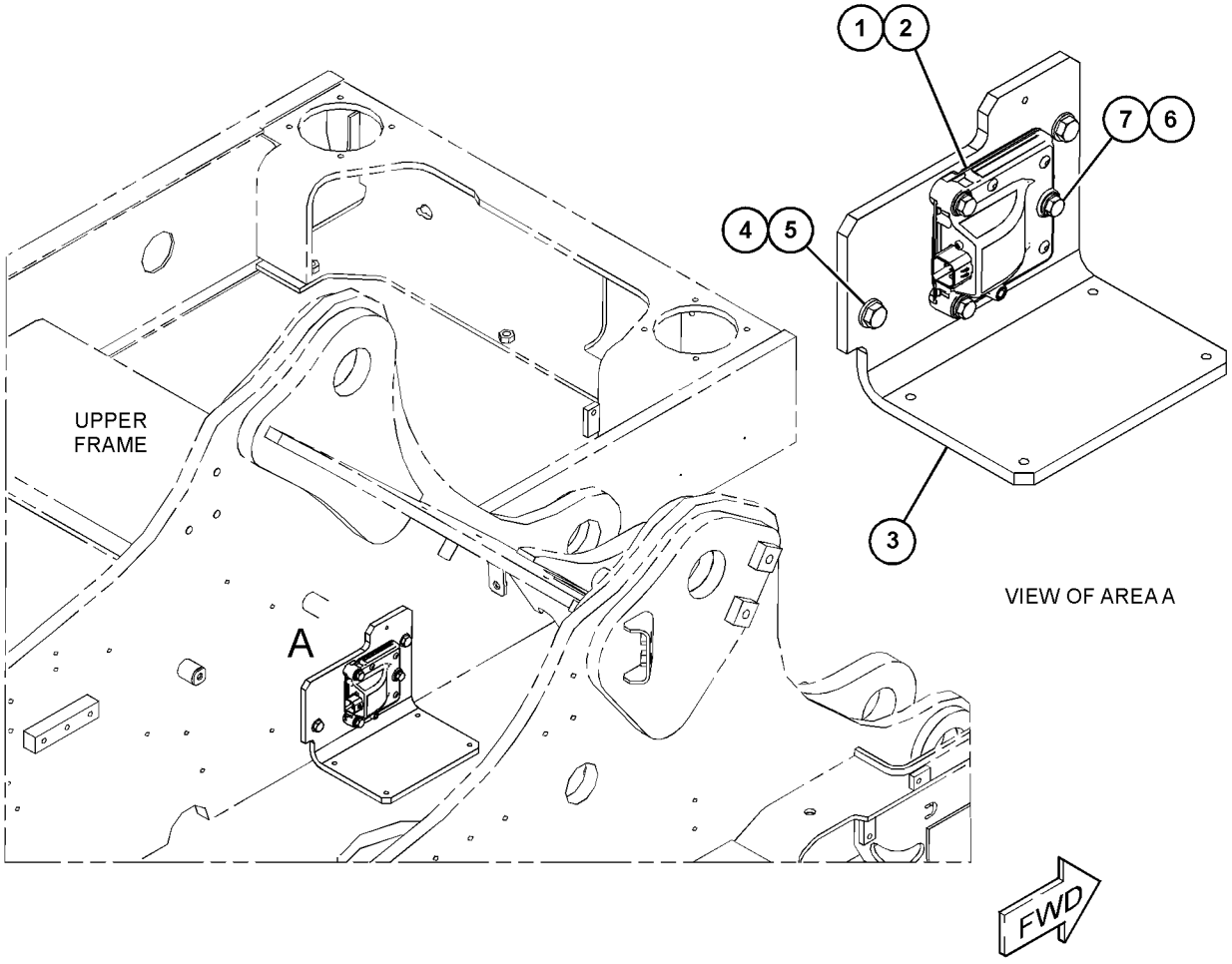

GRAPHIC #1 <END> g06230485

490-2768 SENSOR & MTG GP-POSITION—GRADE CONTROL, BOOM

S/N: SP91-UP

PART OF 517-5967, 525-4121 GRADE CONTROL AR

SMCS-5736 **i07571666**

NOTE	REF NO	GRAPHIC REF	PART NUMBER	QTY	PART NAME 1 2 3 4 5 6 (PRODUCT LEVEL)	SEE PAGE
	1	1	**150-5785**	2	DOWEL	
	2	1	**563-0598**	1	SENSOR AS-POSITION (INERTIAL MEASUREMENT UNIT)	
	3	1	**8T-4224**	3	WASHER-HARD (8.8X16X2-MM THK)	
M	4	1	**8T-7547**	3	BOLT (M8X1.25X30-MM)	

M - METRIC PART

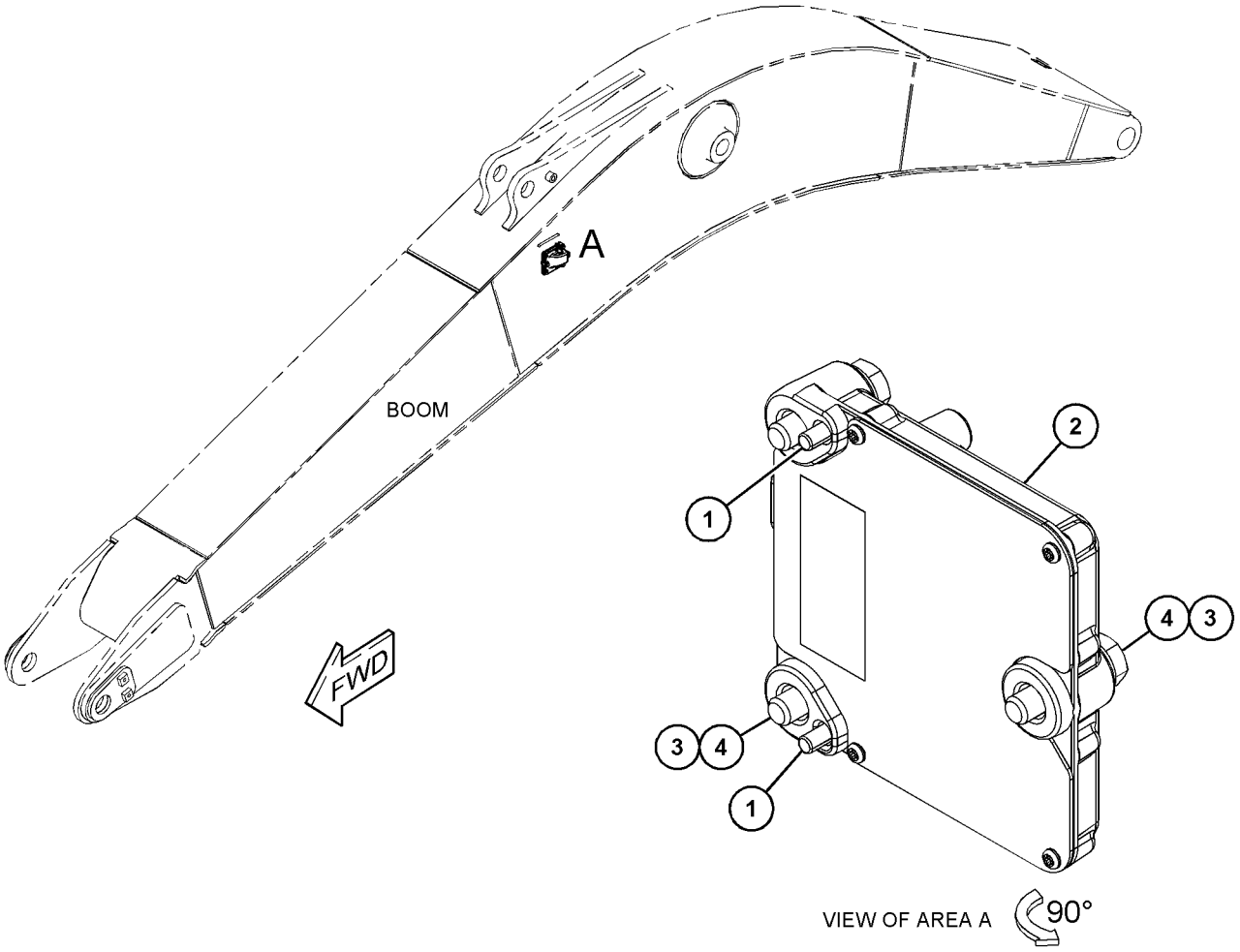

GRAPHIC #1 <END> g06230573

490-2769 SENSOR & MTG GP-POSITION—GRADE CONTROL, STICK

S/N: SP91-UP

PART OF 522-8798 GRADE CONTROL AR, 517-5971 INSTALLATION AR-MACHINE

SMCS-5736 **i07519670**

NOTE	REF NO	GRAPHIC REF	PART NUMBER	QTY	PART NAME 1 2 3 4 5 6 (PRODUCT LEVEL)	SEE PAGE
	1	1	**150-5785**	2	DOWEL	
	2	1	**563-0598**	1	SENSOR AS-POSITION (INERTIAL MEASUREMENT UNIT)	
	3	1	**8T-4224**	3	WASHER-HARD (8.8X16X2-MM THK)	
M	4	1	**8T-7547**	3	BOLT (M8X1.25X30-MM)	

M - METRIC PART

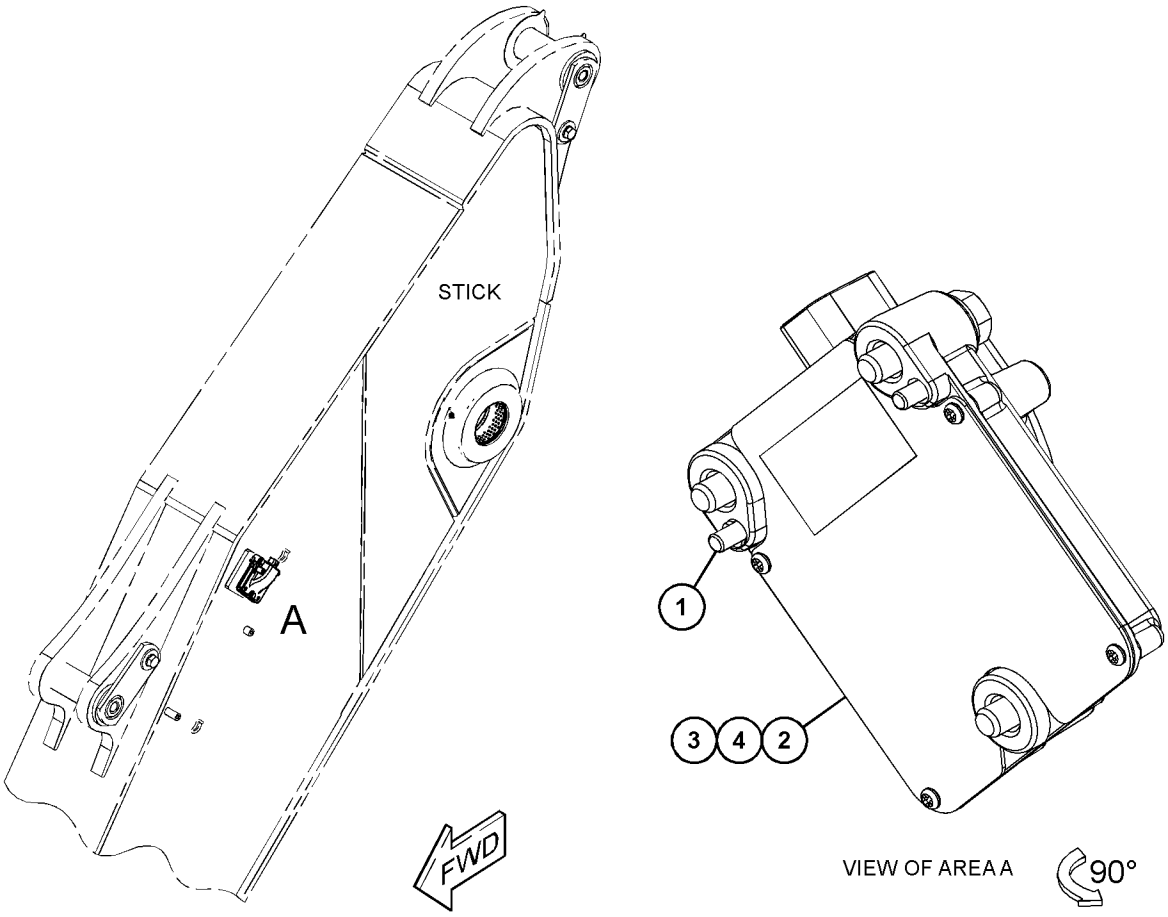

GRAPHIC #1 <END> g06230932

517-2403 SENSOR & MTG GP-POSITION—GRADE CONTROL, BUCKET

S/N: SP91-UP

PART OF 517-5971 INSTALLATION AR-MACHINE

SMCS-5736 **i07774440**

NOTE	REF NO	GRAPHIC REF	PART NUMBER	QTY	PART NAME 1 2 3 4 5 6 (PRODUCT LEVEL)	SEE PAGE
M	1	1	**8T-4196**	1	BOLT (M10X1.5X35-MM)	
M	2	1	**8T-4189**	3	BOLT (M8X1.25X20-MM)	
	3	1	**3S-2093**	18	STRAP-CABLE	
	4	1	**8T-4222**	4	WASHER-PLATED (11X32X2.5-MM THK)	
	5	1	**8T-4224**	3	WASHER-HARD (8.8X16X2-MM THK)	
	6	1	**8T-7934**	1	WASHER-HARD (11X21X5-MM THK)	
M	7	1	**136-4192**	5	BOLT (M6X1X35-MM)	
	8	1	**478-4876**	1	SENSOR GP-POSITION (BUCKET)	
		1	**230-4014**	1	RECEPTACLE AS-CONNECTOR (3-PIN)	
	9	1	**478-4873**	1	SENSOR-POSITION (BUCKET)	
	10	1	**501-9243**	1	COVER AS	
	11	1	**8T-4121**	3	WASHER-HARD (11X21X2.5-MM THK)	
M	12	1	**8T-4137**	3	BOLT (M10X1.5X20-MM)	
	13	1	**9X-8256**	5	WASHER (6.6X12X2-MM THK)	
E	14	1	**3E-6600**		SEAL (1.5-CM EACH)	
	15	1	**575-4554**	3	PLATE	

E - ORDER BY THE CENTIMETER
M - METRIC PART

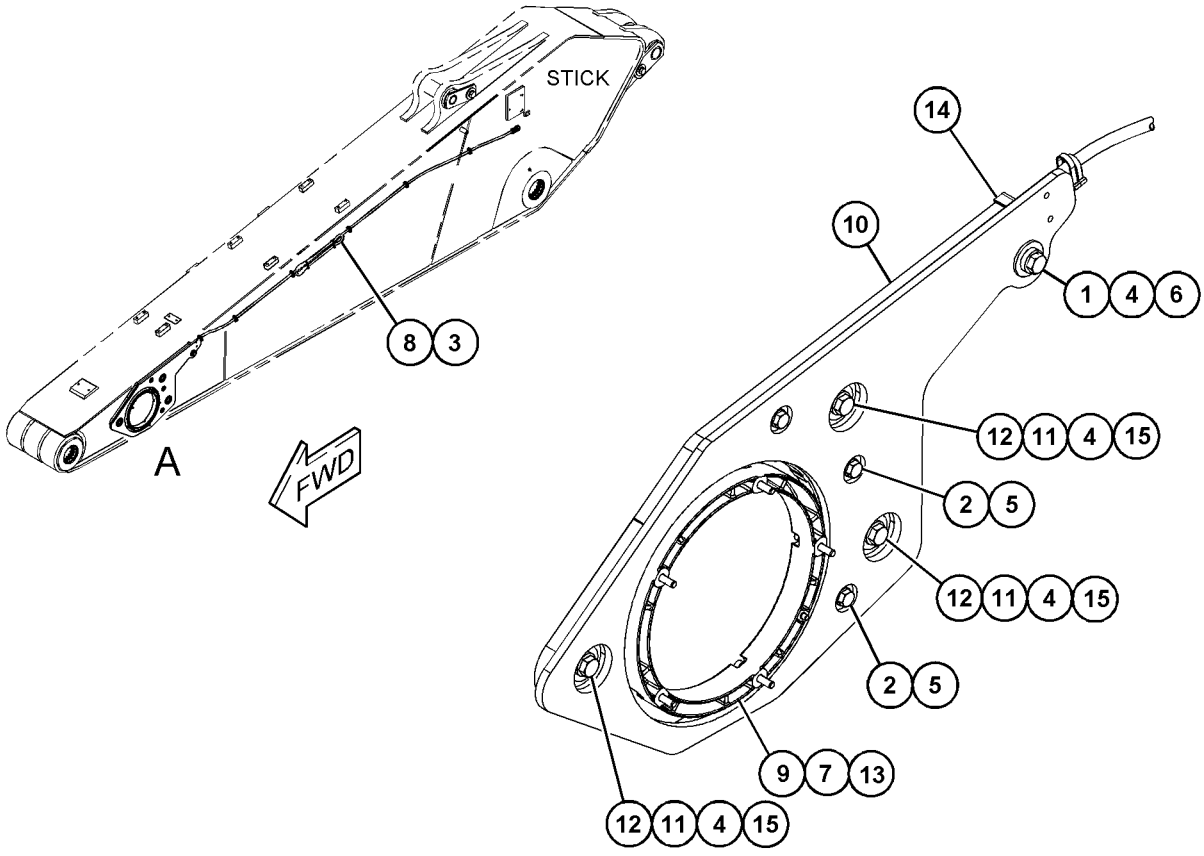

VIEW OF AREA A

GRAPHIC #1 <END> g06413163

522-0445 SENSOR & MTG GP-POSITION—GRADE CONTROL, BUCKET

S/N: SP91-UP

PART OF 522-8798 GRADE CONTROL AR

SMCS-5736 **i07690699**

NOTE	REF NO	GRAPHIC REF	PART NUMBER	QTY	PART NAME 1 2 3 4 5 6 (PRODUCT LEVEL)	SEE PAGE
	1	1	**3S-2093**	20	STRAP-CABLE	
	2	1	**478-4873**	1	SENSOR-POSITION (BUCKET)	
	3	1	**478-4876**	1	SENSOR GP-POSITION (BUCKET)	
		1	**230-4014**	1	RECEPTACLE AS-CONNECTOR (3-PIN)	
	4	1	**506-6195**	1	COVER AS	
		1	**7T-1099**	2	LINK	
M	5	1	**136-4192**	5	BOLT (M6X1X35-MM)	
	6	1	**8T-4121**	4	WASHER-HARD (11X21X2.5-MM THK)	
M	7	1	**8T-4137**	3	BOLT (M10X1.5X20-MM)	
M	8	1	**8T-4189**	3	BOLT (M8X1.25X20-MM)	
M	9	1	**8T-4196**	1	BOLT (M10X1.5X35-MM)	
	10	1	**8T-4222**	4	WASHER-PLATED (11X32X2.5-MM THK)	
	11	1	**8T-4224**	3	WASHER-HARD (8.8X16X2-MM THK)	
	12	1	**9X-8256**	5	WASHER (6.6X12X2-MM THK)	
E	13	1	**3E-6600**		SEAL (1.5-CM EACH)	

E - ORDER BY THE CENTIMETER
M - METRIC PART

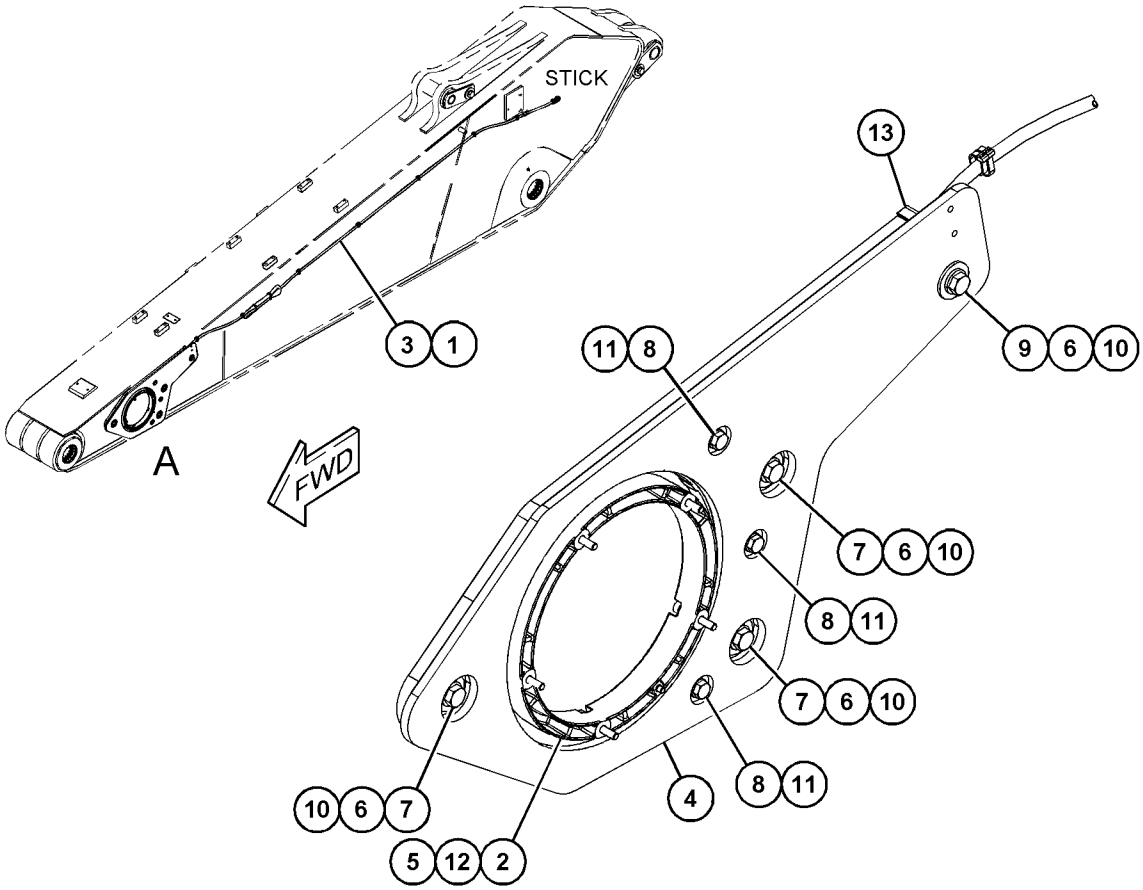

VIEW OF AREA A

GRAPHIC #1 <END> g06281753

560-5553 SENSOR & MTG GP-POSITION—LASER RECEIVER

S/N: SP91-UP

PART OF 560-5681 GRADE CONTROL AR

SMCS-5736 **i07518507**

NOTE	REF NO	GRAPHIC REF	PART NUMBER	QTY	PART NAME 1 2 3 4 5 6 (PRODUCT LEVEL)	SEE PAGE
M	1	1	**8T-4908**	4	BOLT (M8X1.25X25-MM)	
	2	1	**7X-7729**	1	WASHER (11X25X3-MM THK)	
	3	1	**8T-4121**	2	WASHER-HARD (11X21X2.5-MM THK)	
M	4	1	**8T-4137**	3	BOLT (M10X1.5X20-MM)	
	5	1	**8T-4224**	4	WASHER-HARD (8.8X16X2-MM THK)	
	6	1	**369-1562**	1	RECEIVER AS-LASER	
	7	1	**560-6486**	1	PLATE AS	
M		1	**8T-3612**	4	NUT-WELD (M8X1.25-THD)	

M - METRIC PART

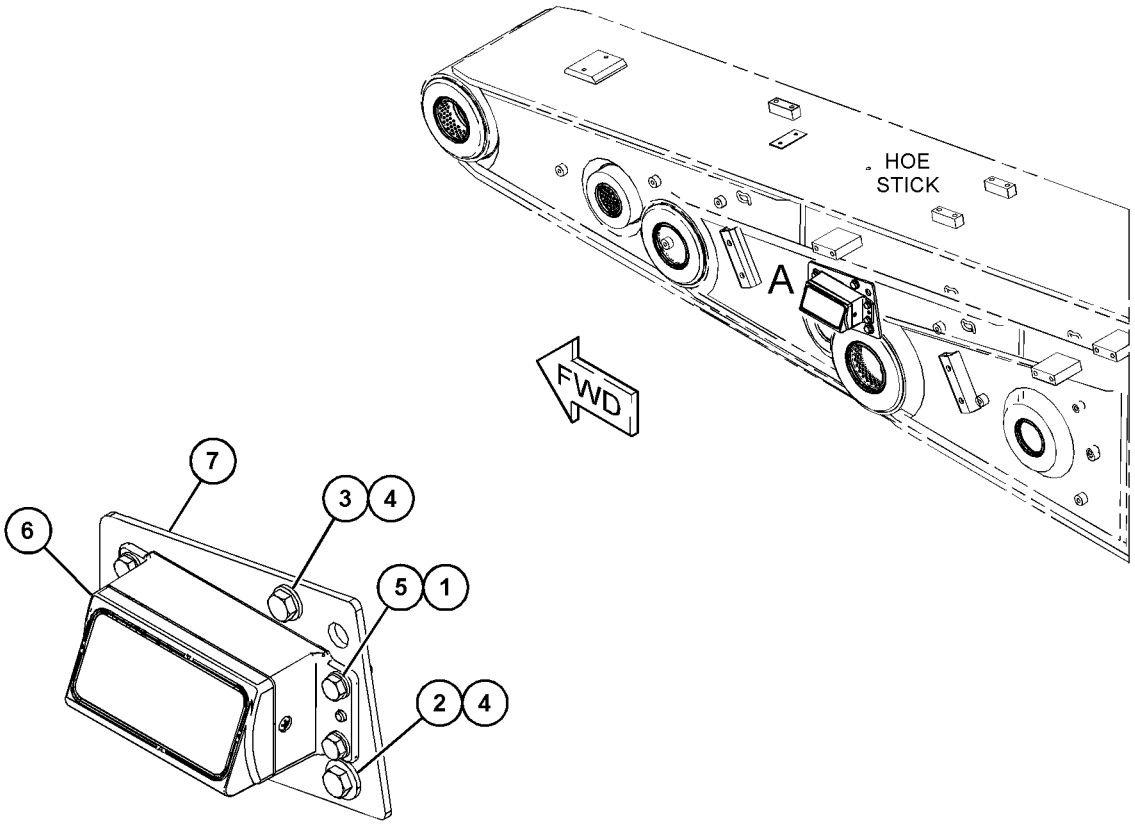

VIEW OF AREA A

GRAPHIC #1 <END> g06307828

525-7118 SENSOR GP-ENGINE

S/N: NTB1-UP

PART OF 546-5240 ENGINE AR-CORE

SMCS-1000, 1906, 1907, 1924, 7422 **i07500763**

NOTE	REF NO	GRAPHIC REF	PART NUMBER	QTY	PART NAME 1 2 3 4 5 6 (PRODUCT LEVEL)	SEE PAGE
	1	1	**3S-2093**	1	STRAP-CABLE	
Y	2	1	*234-5012*	1	SENSOR GP-TEMPERATURE (COOLANT TEMPERATURE)	241
Y	3	1	*234-5013*	1	SENSOR GP-TEMPERATURE (INTAKE MANIFOLD)	242
Y	4	1	*307-8698*	1	PLUG GP-CONNECTOR	224
Y	5	1	*325-8634*	1	SENSOR GP-PRESSURE (ENGINE OIL)	236
Y	6	1	*331-1134*	1	SENSOR GP-PRESSURE (BAROMETRIC)	237
Y	7	1	*332-0296*	1	SENSOR GP-PRESSURE	238
	8	1	*371-7152*	1	CONNECTOR AS	
		1	**214-7568**	1	SEAL-O-RING	
		1	**335-3999**	1	CONNECTOR	
	9	1	*492-1070*	1	SENSOR AS-SPEED (LH)	
	9A	1	*492-1070*	1	SENSOR AS-SPEED (RH)	
					(EACH SENSOR AS INCLUDES)	
		1	**228-4947**	1	SEAL-O-RING	
		1	**481-5928**	1	SENSOR-SPEED	
M	10	1	**105-3482**	2	BOLT-SOCKET HEAD (M8X1.25X16-MM)	
	11	1	**211-9032**	2	WASHER-HARD (8.8X13X2-MM THK)	

M - METRIC PART
Y - SEPARATE ILLUSTRATION

525-7118 **SENSOR GP-ENGINE (**contd.**)** **i07500763**

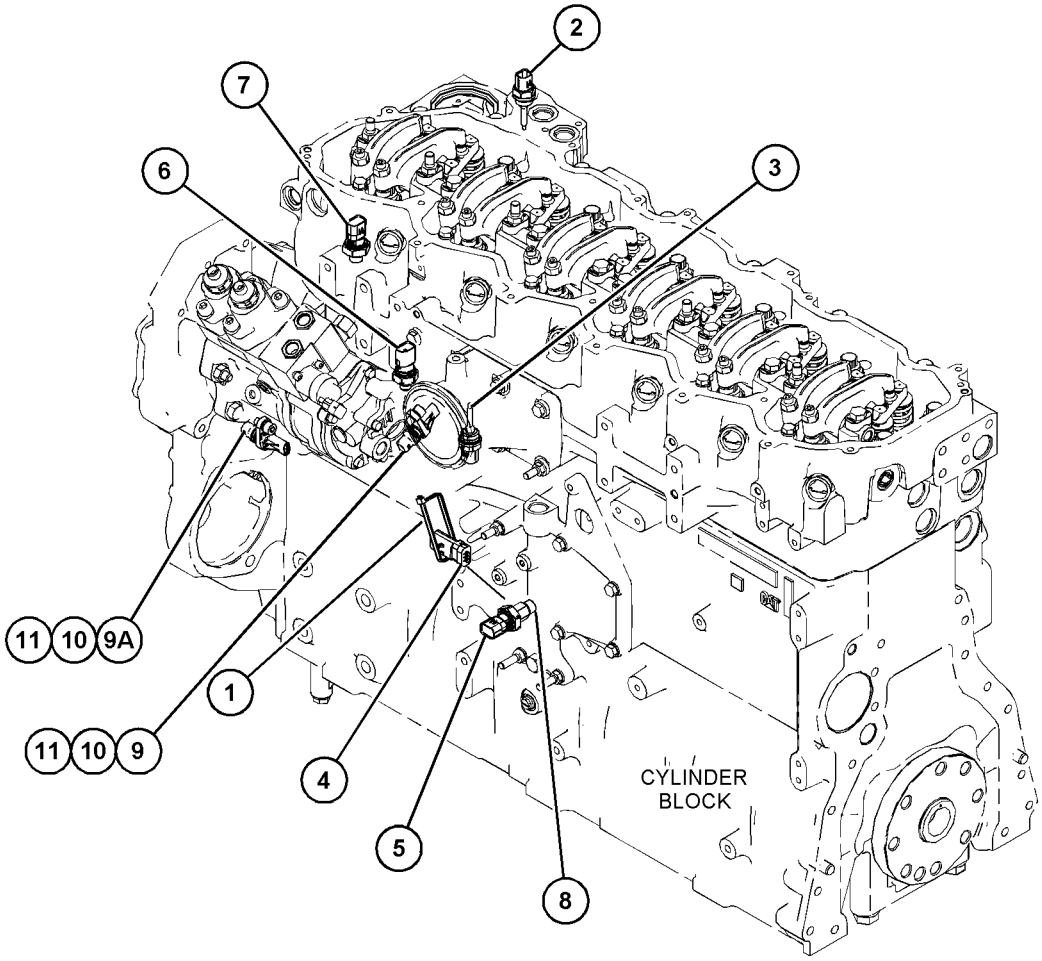

GRAPHIC #1 <END> g06272859

325-8634 SENSOR GP-PRESSURE

S/N: NTB1-UP

PART OF 525-7118 SENSOR GP-ENGINE

SMCS-1439, 1916, 1917, 1923, 1924 **i04407512**

NOTE	REF NO	GRAPHIC REF	PART NUMBER	QTY	PART NAME 1 2 3 4 5 6 (PRODUCT LEVEL)	SEE PAGE
	1	1	**320-3060**	1	SENSOR GP-PRESSURE (FUEL)	
	2	1	**228-7100**	1	SEAL-O-RING	

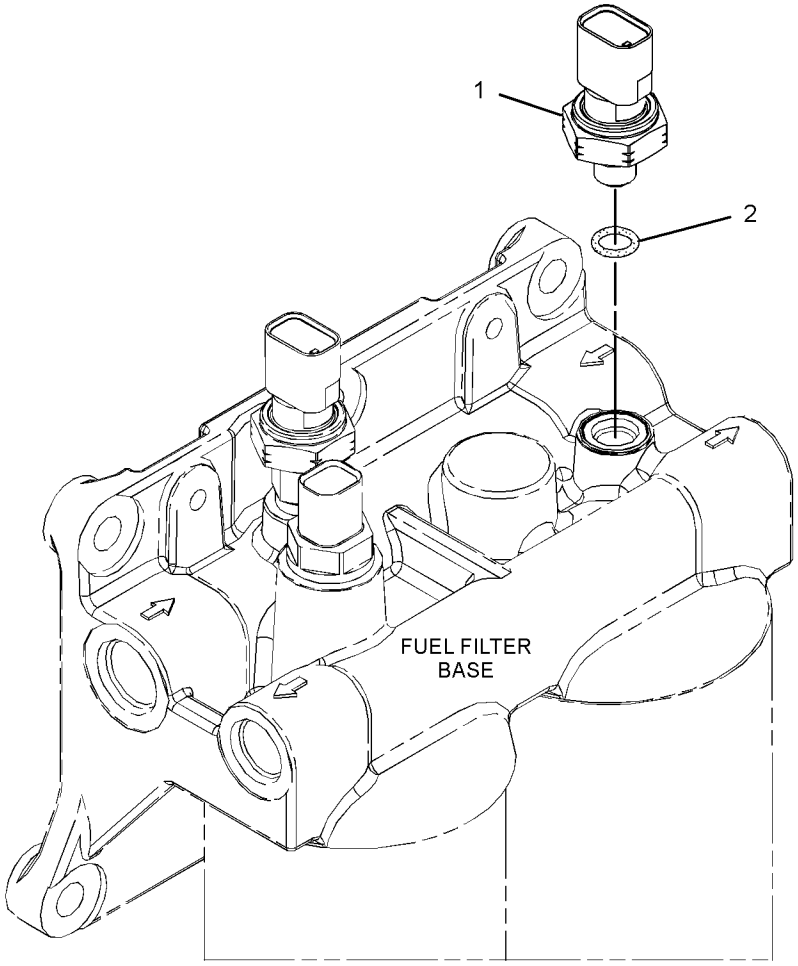

GRAPHIC #1 <END> g02080674

331-1134 SENSOR GP-PRESSURE

S/N: NTB1-UP

PART OF 525-7118 SENSOR GP-ENGINE

SMCS-1439, 1916, 1917, 1923, 1924

i05254696

NOTE	REF NO	GRAPHIC REF	PART NUMBER	QTY	PART NAME 1 2 3 4 5 6 (PRODUCT LEVEL)	SEE PAGE
	1	1	**320-3063**	1	SENSOR GP-PRESSURE	
	2	1	**228-7100**	1	SEAL-O-RING	

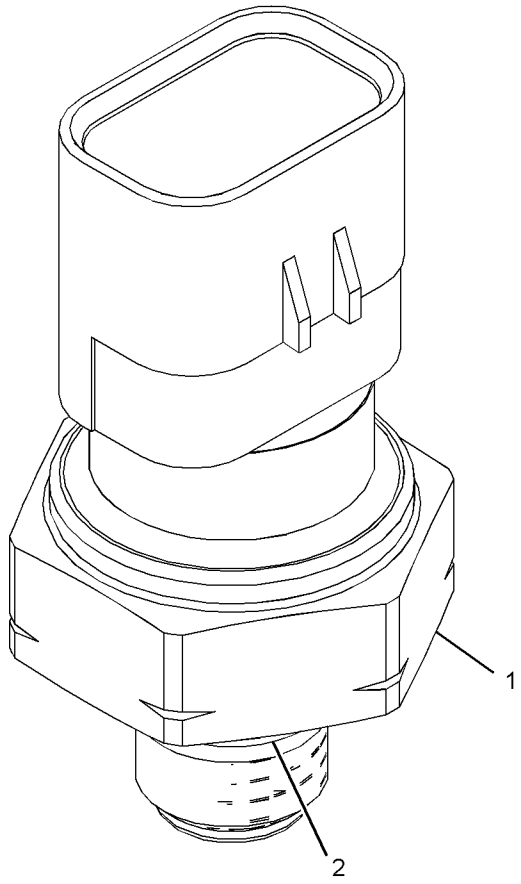

GRAPHIC #1

<END>

g03346854

332-0296 SENSOR GP-PRESSURE

S/N: NTB1-UP

PART OF 525-7118 SENSOR GP-ENGINE

SMCS-1439, 1916, 1917, 1923, 1924 **i06034933**

NOTE	REF NO	GRAPHIC REF	PART NUMBER	QTY	PART NAME 1 2 3 4 5 6 (PRODUCT LEVEL)	SEE PAGE
	1	1	**320-3061**	1	SENSOR GP-PRESSURE	
	2	1	**228-7101**	1	SEAL-O-RING	

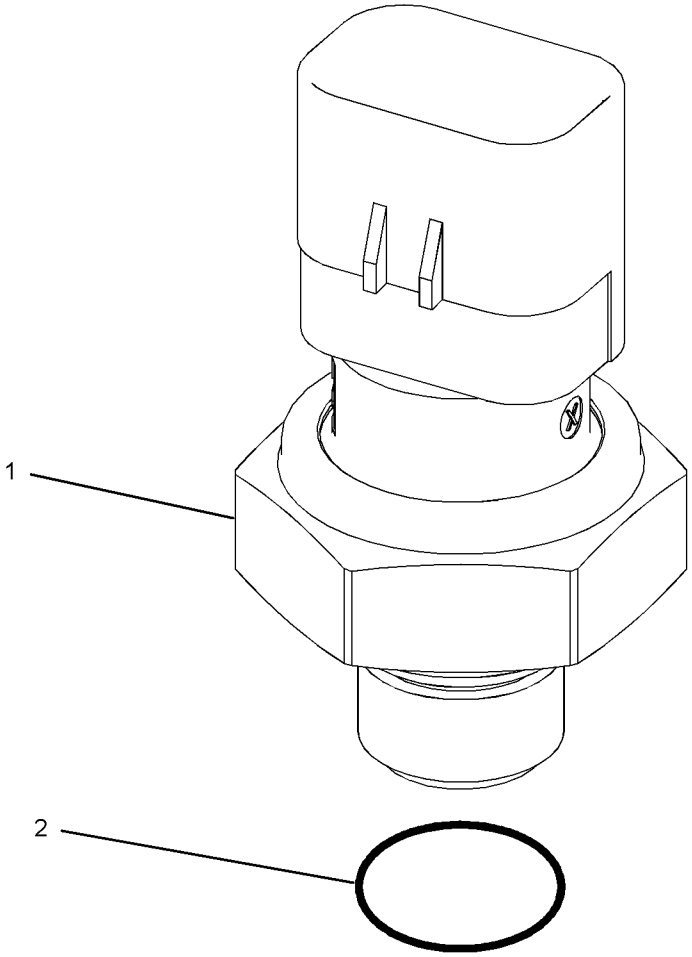

GRAPHIC #1 <END> g03783456

338-6971 SENSOR GP-PRESSURE

S/N: SP91-UP

PART OF 503-9771, 503-9774 LINES GP-BOOM CYLINDER, 522-7155, 538-8825, 551-6886 LINES GP-FRONT, 558-0345 LINES GP-PILOT, 512-6145 SENSOR GP-PRESSURE

SMCS-1439, 1916, 1917, 1923, 1924 **i06125695**

NOTE	REF NO	GRAPHIC REF	PART NUMBER	QTY	PART NAME 1 2 3 4 5 6 (PRODUCT LEVEL)	SEE PAGE
	1	1	**344-7392**	1	SENSOR GP-PRESSURE	
	2	1	**3J-1907**	1	SEAL-O-RING	

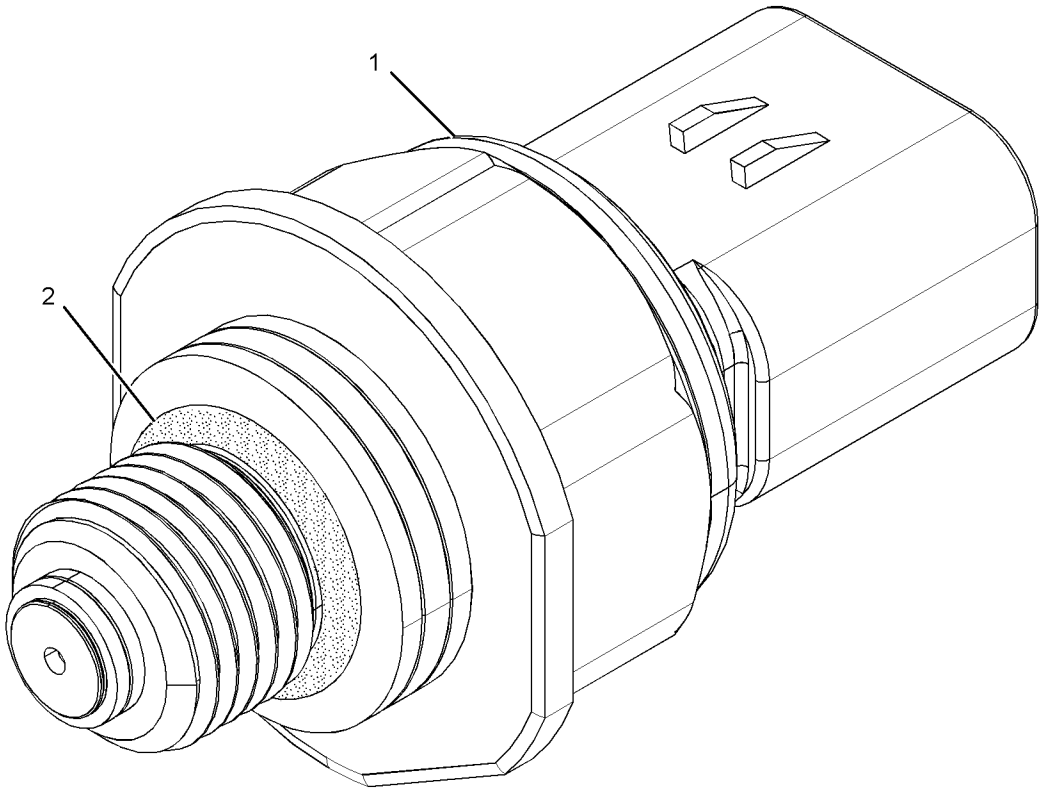

GRAPHIC #1 <END> g02262995

512-6145 SENSOR GP-PRESSURE

S/N: SP91-UP

PART OF 513-3214 WIRING & MTG GP- MAIN CONT V

SMCS-1439, 1916, 1917, 1923, 1924 **i07838423**

NOTE	REF NO	GRAPHIC REF	PART NUMBER	QTY	PART NAME 1 2 3 4 5 6 (PRODUCT LEVEL)	SEE PAGE
	1	1	*164-6874*	2	FITTING AS-ELBOW (QUICK DISCONNECT, MALE)	
					(EACH INCLUDES)	
		1	**3J-1907**	1	SEAL-O-RING	
		1	**085-7356**	1	FITTING	
Y	2	1	*338-6971*	3	SENSOR GP-PRESSURE (HYDRAULIC OIL)	239

Y - SEPARATE ILLUSTRATION

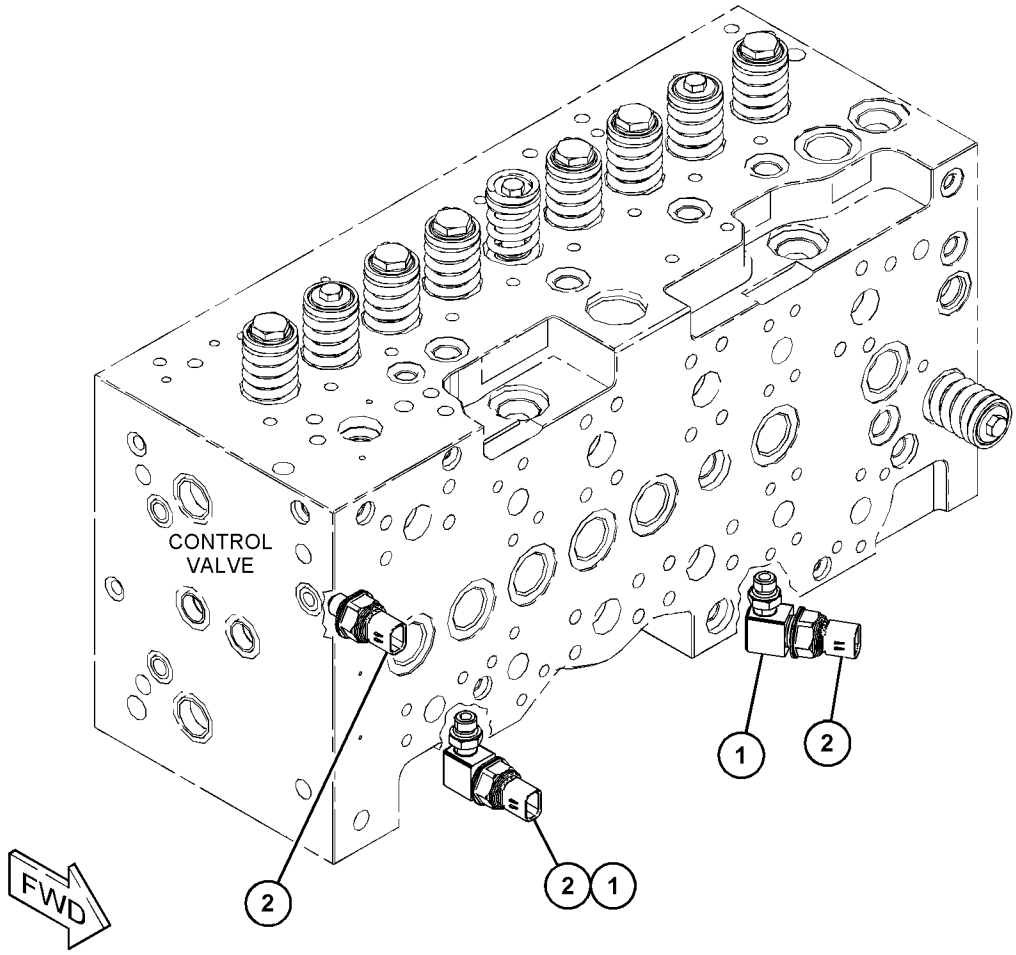

GRAPHIC #1 <END> g06229976

234-5012 SENSOR GP-TEMPERATURE

S/N: NTB1-UP
AMPSEAL CONNECTOR
PART OF 525-7118 SENSOR GP-ENGINE

SMCS-1906, 1921, 1922, 1928, 1929, 3290, 7344 **i03565212**

NOTE	REF NO	GRAPHIC REF	PART NUMBER	QTY	PART NAME 1 2 3 4 5 6 (PRODUCT LEVEL)	SEE PAGE
	1	1	**256-6453**	1	SENSOR-TEMPERATURE (2-PIN)	
	2	1	**6V-6609**	1	SEAL-O-RING	

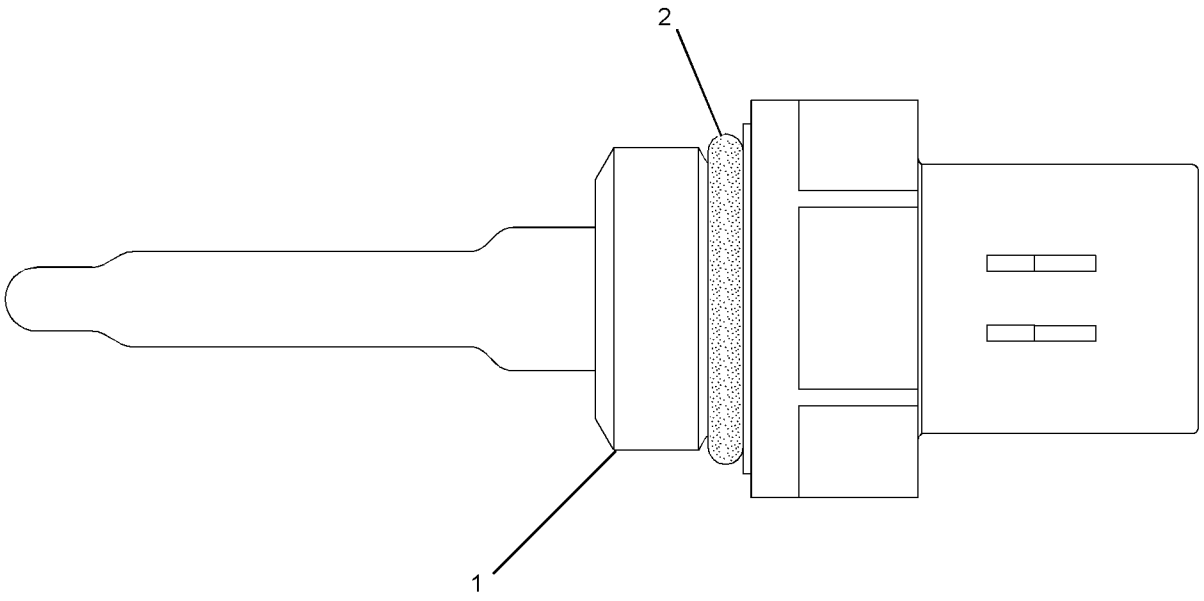

GRAPHIC #1 <END> g01164284

234-5013 SENSOR GP-TEMPERATURE

S/N: NTB1-UP
AMPSEAL CONNECTOR
PART OF 525-7118 SENSOR GP-ENGINE

SMCS-1906, 1921, 1922, 1928, 1929, 3290, 7344 **i03645027**

NOTE	REF NO	GRAPHIC REF	PART NUMBER	QTY	PART NAME 1 2 3 4 5 6 (PRODUCT LEVEL)	SEE PAGE
	1	1	**256-6453**	1	SENSOR-TEMPERATURE (2-PIN)	
	2	1	**238-5080**	1	SEAL-O-RING	

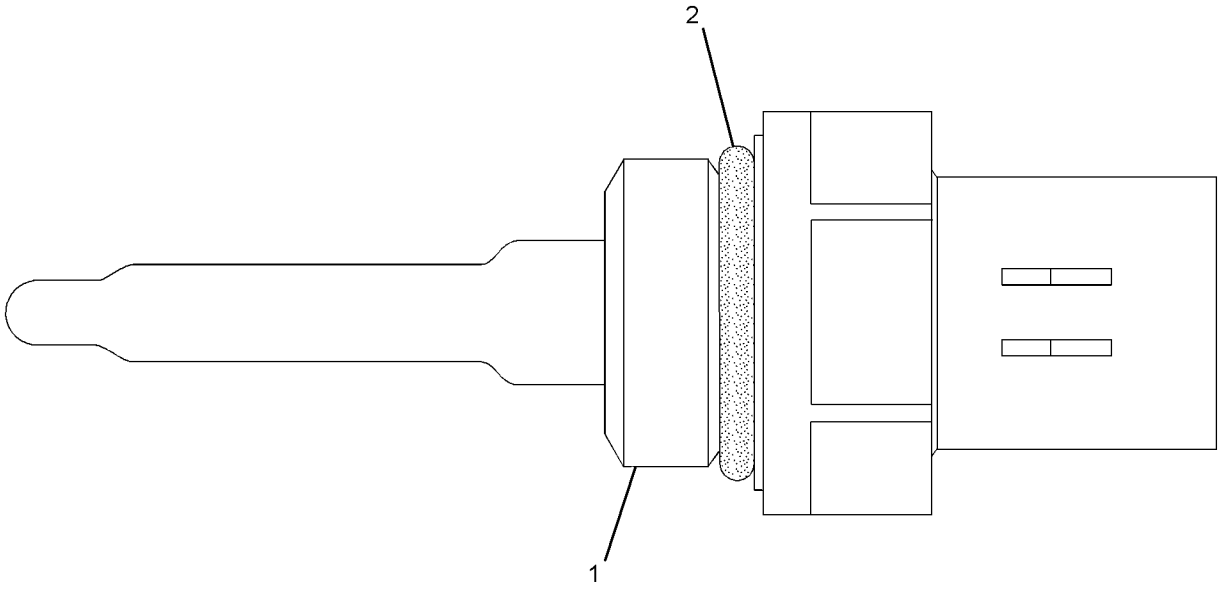

GRAPHIC #1 <END> g01164268

256-6453 SENSOR-TEMPERATURE

S/N: SP91-UP

PART OF 503-9758 TANK & FILTER GP-HYDRAULIC

SMCS-7400 **i07203557**

NOTE	REF NO	GRAPHIC REF	PART NUMBER	QTY	PART NAME 1 2 3 4 5 6 (PRODUCT LEVEL)	SEE PAGE

(NO SERVICED PARTS)

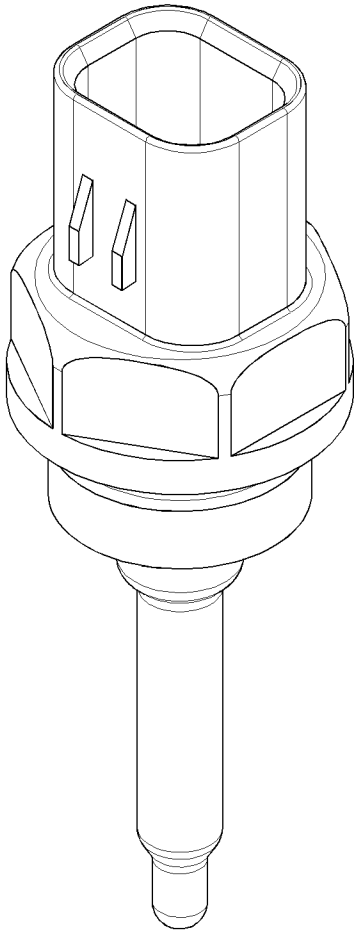

GRAPHIC #1 <END> g02888818

502-5358 STARTING AID GP-ETHER

S/N: SP91-UP

SMCS-1456 **i07519861**

NOTE	REF NO	GRAPHIC REF	PART NUMBER	QTY	PART NAME 1 2 3 4 5 6 (PRODUCT LEVEL)	SEE PAGE
M	1	1	**8T-4189**	2	BOLT (M8X1.25X20-MM)	
	2	1	**3S-2093**	1	STRAP-CABLE	
M	3	1	**8T-4139**	5	BOLT (M12X1.75X30-MM)	
	4	1	**8T-4223**	5	WASHER-HARD (13.5X25.5X3-MM THK)	
	5	1	**8T-4224**	2	WASHER-HARD (8.8X16X2-MM THK)	
E	6	1	**174-9169**		TUBE (114-CM)	
	7	1	**266-7379**	1	STRAP-CABLE	
	8	1	**339-6891**	3	STRAP-CABLE	
	9	1	**352-0399**	1	ATOMIZER GP-ETHER	
	10	1	**447-5581**	1	VALVE GP-ETHER STARTING (24-VOLT)	
	10A	1	**160-8763**	1	FITTING AS	
		1	**160-8761**	1	FILTER (ETHER)	
		1	**8T-8729**	2	PIN-CONNECTOR (16-GA TO 20-GA)	
		1	**102-8802**	1	KIT-RECEPTACLE (2-PIN)	
					(INCLUDES RECEPTACLE AS & WEDGE)	
	11	1	**514-0550**	1	PLATE AS	
	12	1	**514-5914**	1	PLATE AS	
	13	1	**538-1189**	1	SUPPORT	
	14	1	**7I-2673**	1	STRAP-CABLE	
AF			**7N-0296**	1	CYLINDER AS-ETHER	
					(MUST BE PROCURED LOCALLY FROM YOUR CAT DEALER)	

A - NOT PART OF THIS GROUP
E - ORDER BY THE CENTIMETER
F - NOT SHOWN
M - METRIC PART

502-5358 **STARTING AID GP-ETHER** (contd.) **i07519861**

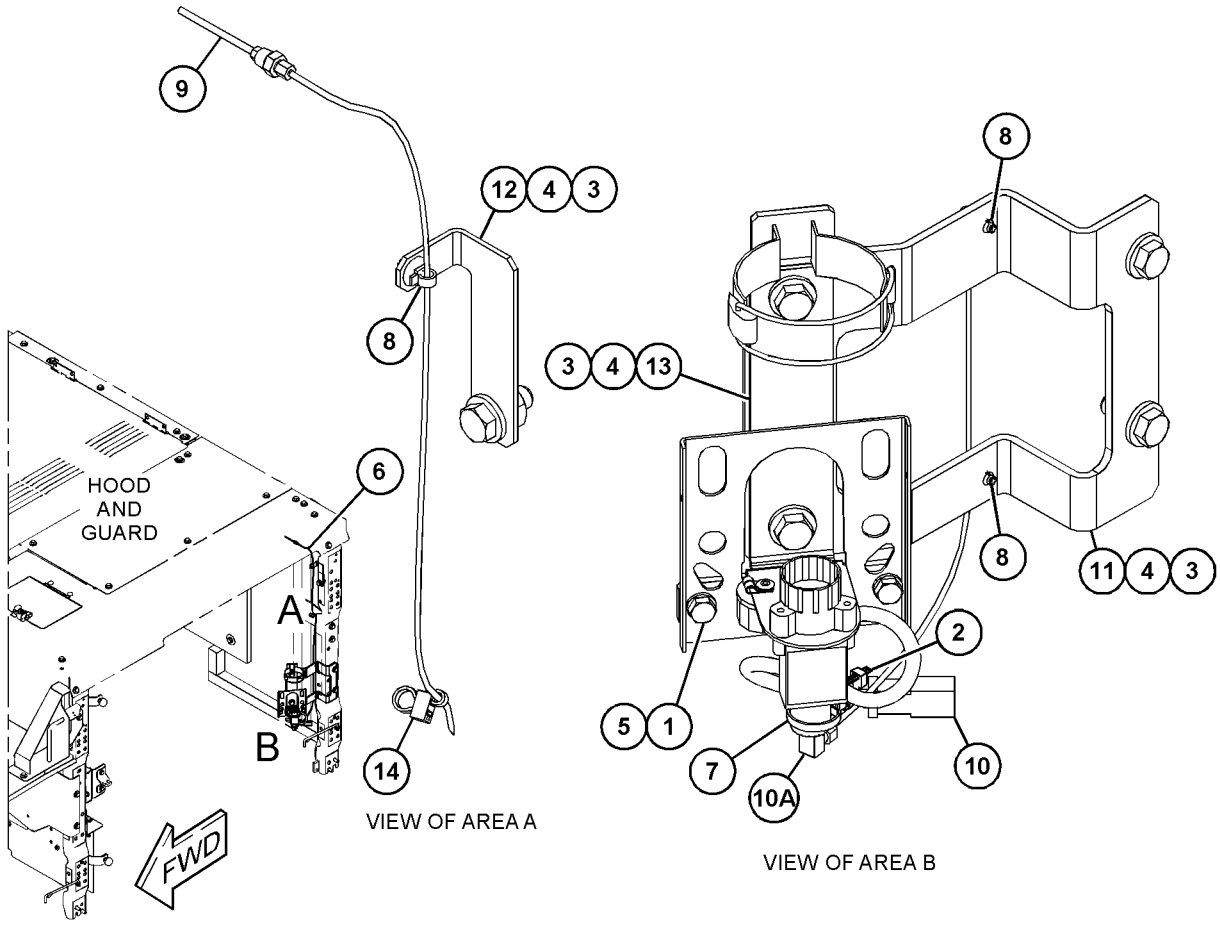

GRAPHIC #1 <END> g06285700

349-6554 STARTING MOTOR GP-ELECTRIC

S/N: NTB1-UP

24-VOLT

PART OF 522-1694 STARTING MOTOR GP-ELECTRIC

SMCS-1453 **i07499150**

NOTE	REF NO	GRAPHIC REF	PART NUMBER	QTY	PART NAME 1 2 3 4 5 6 (PRODUCT LEVEL)	SEE PAGE
	1	2	**7M-0326**	1	CONNECTOR	
	2	2	**9H-3757**	2	WASHER (0.516X1X0.094-IN THK)	
	3	1	**1S-7446**	3	SCREW-MACHINE (8-32X0.437-IN)	
	4	1	**8C-9660**	3	WASHER (4.6X7.9X0.8-MM THK)	
	5	1	**9S-2544**	9	SCREW-HEX HEAD (8-32X11.13-MM)	
	6	1	**7M-0327**	1	WASHER-THRUST (17.4X25.4X1.6-MM THK)	
	7	1	**3T-3418**	1	FRAME AS-END	
		1	**3T-3423**	1	CUP	
		1	**3T-3424**	1	PLUG-FELT	
	7A	1	**9G-4101**	1	BUSHING-END	
Y	8	1	**3T-9525**	1	PLATE AS-BRUSH (STARTING MOTOR)	223
	9	1	**1T-0808**	2	WASHER (0.516X0.812X0.09-IN THK)	
	10	1	**3T-3422**	1	WIRE AS	
	11	1	**2J-8163**	2	SEAL-O-RING	
	12	2	**7X-3373**	1	BOLT (5/16-18X0.88-IN)	
	13	2	**5J-5314**	5	BOLT (5/16-18X1.5-IN)	
	14	2	**3L-3380**	1	BUSHING-TERMINAL	
	15	1	**8C-3089**	1	SEAL-O-RING	
	16	1	**4M-1853**	1	LEVER AS-SHIFT	
	17	1	**5M-3034**	1	LOCKNUT (5/16-24-THD)	
	18	1	**7L-2894**	4	GASKET	
	19	1	**4M-1831**	4	PLUG-LEVER HOUSING	
	20	1	**4M-1854**	1	SHAFT-LEVER	
	21	1	**1H-1023**	1	SEAL-O-RING	
	22	1	**2D-6392**	1	SEAL-O-RING	
	23	1	**7T-3974**	1	HOUSING AS-DRIVE	
R	24	1	**6N-3826**	1	DRIVE AS-MOTOR	
	25	1	**2H-3429**	1	RING-RETAINING	
	26	1	**6V-1322**	4	BOLT (1/4-20X0.375-IN)	
	27	1	**8T-4205**	1	WASHER-HARD (7.2X14.5X2-MM THK)	
	28	1	**6N-3279**	1	INSULATOR	
	29	1,2	**0S-1597**	13	BOLT (1/4-28X1-IN)	
	30	1	**1M-9968**	1	BUSHING	
	31	1	**1H-2629**	3	STRIP-INSULATION	
	32	1	**7M-0324**	1	COIL AS-FIELD	
	33	1	**3R-8797**	12	SCREW & WASHER AS (3/8-24X0.72-IN)	
	34	1	**7F-3488**	6	SHOE-POLE	
R	35	1	**7M-8651**	1	ARMATURE AS	
	36	1	**7M-0325**	1	INSULATOR	
	37	1	**3T-9524**	6	BRUSH AS	
	38	1	**3N-3763**	1	KIT-TERMINAL (STARTING MOTOR)	
	40	1	**3R-8801**	1	CLAMP	
	41	2	**8F-1434**	2	LOCKWASHER	
	42	1,2	**6V-8188**	6	NUT (1/2-13-THD)	
	43	1,2	**7X-0562**	6	WASHER-HARD (13.5X19X0.8-MM THK)	
	44	1,2	**4B-2049**	6	NUT (10-32-THD)	

349-6554 **STARTING MOTOR GP-ELECTRIC (**contd.**)** **i07499150**

NOTE	REF NO	GRAPHIC REF	PART NUMBER	QTY	PART NAME 1 2 3 4 5 6 (PRODUCT LEVEL)	SEE PAGE
	45	1,2	**8T-0328**	10	WASHER-HARD (5.5X10X1-MM THK)	
	46	1	**3T-9494**	6	SPRING	
	47	1	**349-6255**	1	HOUSING AS	
	48	1	**9G-4101**	1	BUSHING-END	
	49	1	**3T-3423**	3	CUP	
	50	1	**3T-3424**	3	PLUG-FELT	
	51	1	**1M-9971**	1	SPACER (0.835X1.72X0.188-IN THK)	
	52	1	**2F-6678**	1	SEAL-LIP TYPE	
	53	1	**4L-2729**	1	WASHER (0.844X1.9X0.188-IN THK)	
	54	1	**4M-1896**	1	BUSHING-TERMINAL	
	55	1	**045-4065**	4	SCREW-MACHINE (10-32X0.75-IN)	
	56	2	**125-6535**	1	COVER-STARTING MOTOR	
R	57	1	**338-3453**	1	SOLENOID AS-STARTING MOTOR (24-VOLT)	
		1	**3R-8801**	1	CLAMP	
	58	2	**352-7993**	1	KIT-SWITCH	
					(INCLUDES SWITCH AS, COVER, BOLT, ANCHOR & CLAMP)	

R - REMANUFACTURED PART MAY BE AVAILABLE
Y - SEPARATE ILLUSTRATION

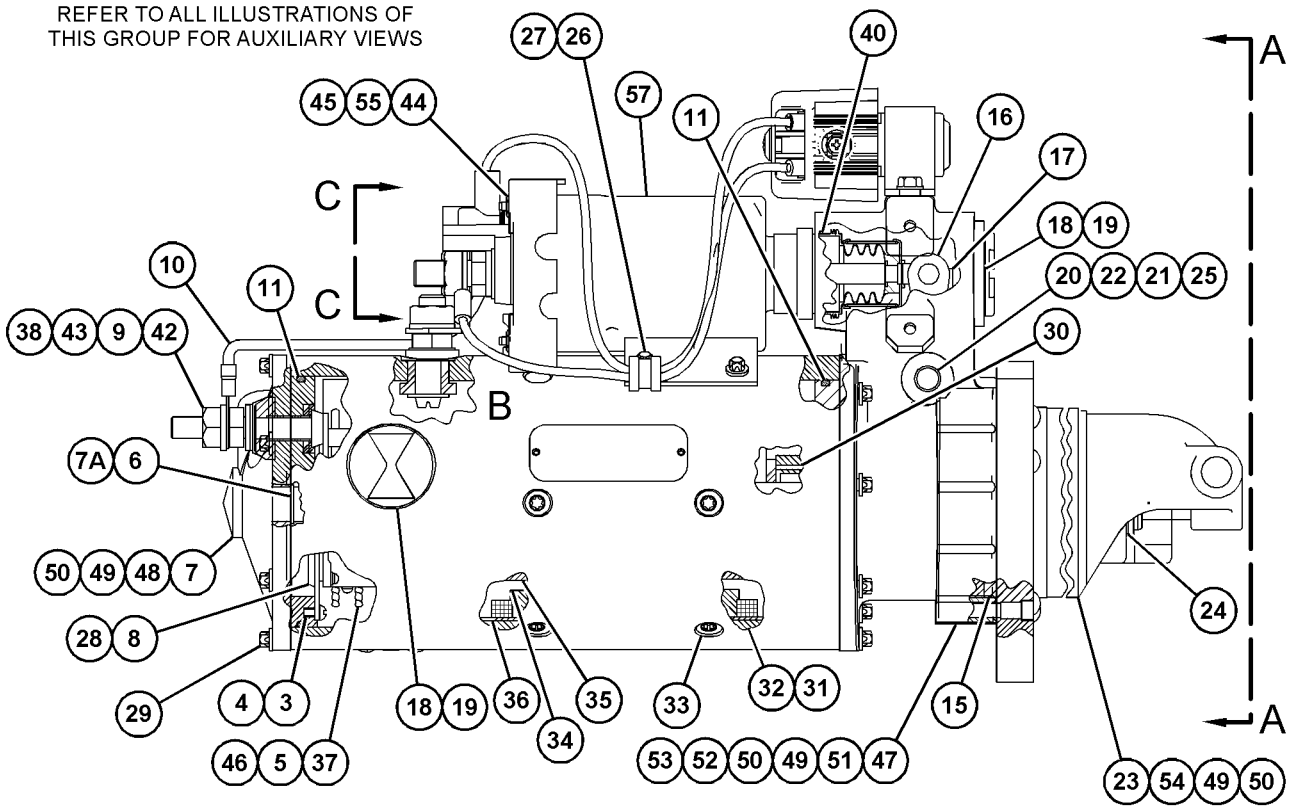

GRAPHIC #1 g06159159

349-6554 **STARTING MOTOR GP-ELECTRIC (**contd.**)** **i07499150**

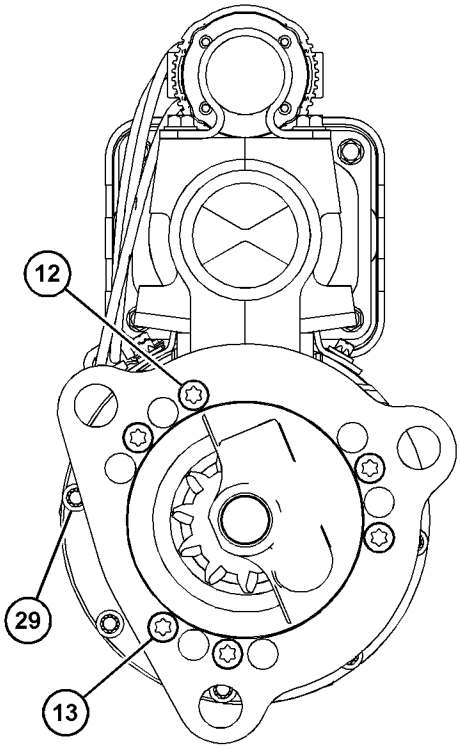

VIEW A-A

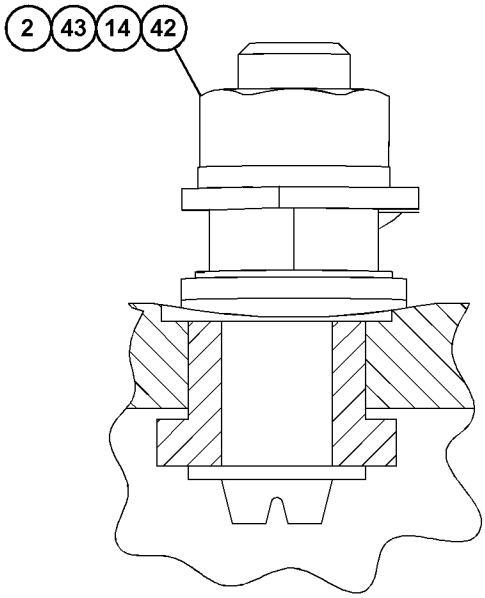

VIEW OF AREA B

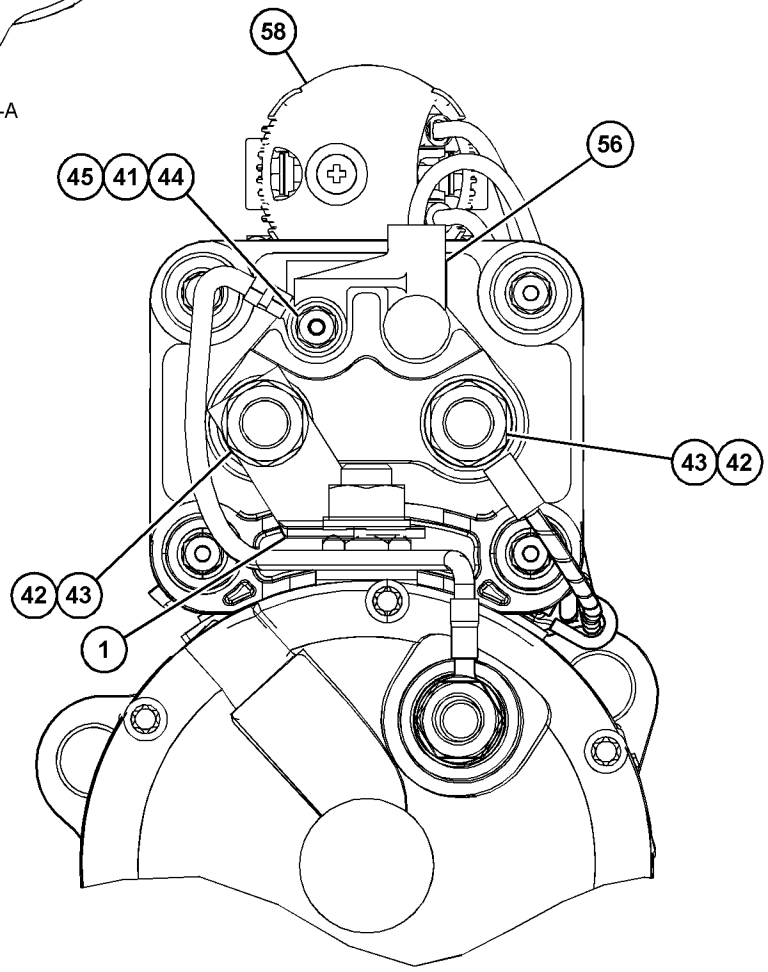

VIEW C-C

GRAPHIC #2

<END>

g06159163

522-1694 STARTING MOTOR GP-ELECTRIC

S/N: NTB1-UP
24 VOLT
PART OF 522-6120 ENGINE AR-COMPLETE

SMCS-1453 **i07762748**

NOTE	REF NO	GRAPHIC REF	PART NUMBER	QTY	PART NAME 1 2 3 4 5 6 (PRODUCT LEVEL)	SEE PAGE
	1	1	**9Y-6089**	1	GASKET	
	2	1	**290-5664**	1	STRAP-CABLE	
Y	3	1	*349-6554*	1	STARTING MOTOR GP-ELECTRIC (24-VOLT)	246
Y	4	1	**355-1642**	1	HARNESS AS-SWITCH (JUMPER)	204
	5	1	**450-4408**	1	STRAP-GROUNDING	
	6	1	**7X-0584**	1	WASHER-HARD (13.5X20.5X2-MM THK)	
	7	1	**8S-2332**	3	BOLT-12 POINT HEAD (5/8-11X1.75-IN)	
M	8	1	**8T-4179**	1	BOLT (M12X1.75X20-MM)	

M - METRIC PART
Y - SEPARATE ILLUSTRATION

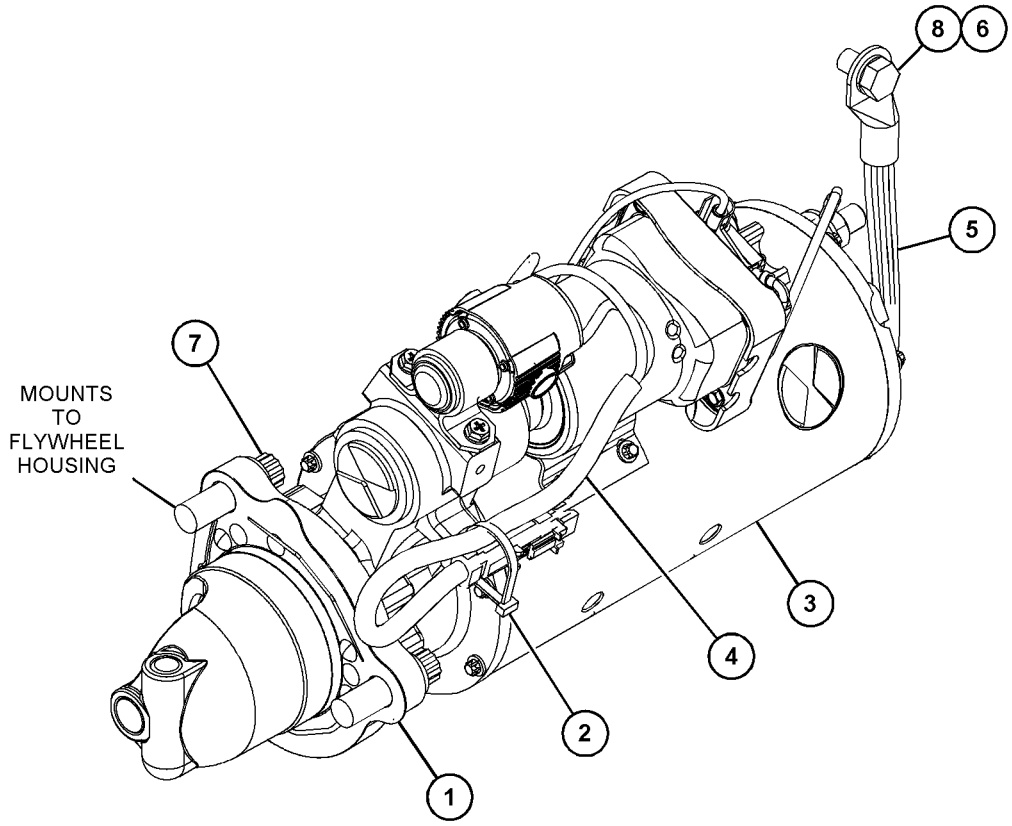

GRAPHIC #1 <END> g06286610

502-7165 SWITCH AS-PUSH BUTTON

S/N: SP91-UP

PART OF 488-6764 WIRING GP-CONSOLE

SMCS-1416, 7332 **i07349050**

NOTE	REF NO	GRAPHIC REF	PART NUMBER	QTY	PART NAME 1 2 3 4 5 6 (PRODUCT LEVEL)	SEE PAGE
	1	1	**7K-1181**	1	STRAP-CABLE	
	2	1	**526-5708**	1	SWITCH AS-PUSH BUTTON	
		1	**8T-8729**	6	PIN-CONNECTOR (16-GA TO 20-GA)	
		1	**102-8805**	1	KIT-RECEPTACLE (6-PIN)	
					(INCLUDES RECEPTACLE AS & WEDGE)	

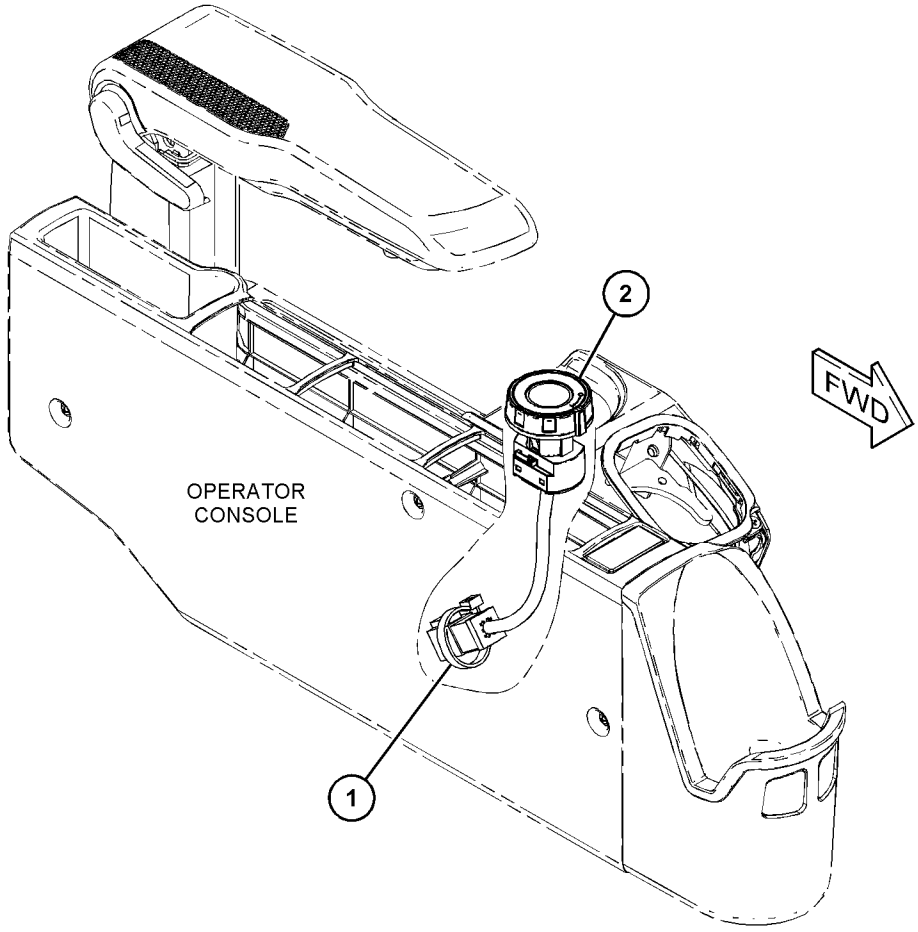

GRAPHIC #1 <END> g06227438

514-7209 SWITCH GP-DISCONNECT–BATTERY

S/N: SP91-UP

SMCS-1411 **i07520375**

NOTE	REF NO	GRAPHIC REF	PART NUMBER	QTY	PART NAME 1 2 3 4 5 6 (PRODUCT LEVEL)	SEE PAGE
	1	1	**3E-8320**	1	PLATE-INSTRUCTION (BATTERY)	
Y	2	1	**7N-0719**	1	SWITCH GP-DISCONNECT (BATTERY)	253
	3	1	**527-0641**	1	PLATE	
M	4	1	**8T-4200**	5	BOLT (M8X1.25X16-MM)	
	5	1	**8T-4224**	5	WASHER-HARD (8.8X16X2-MM THK)	

M - METRIC PART
Y - SEPARATE ILLUSTRATION

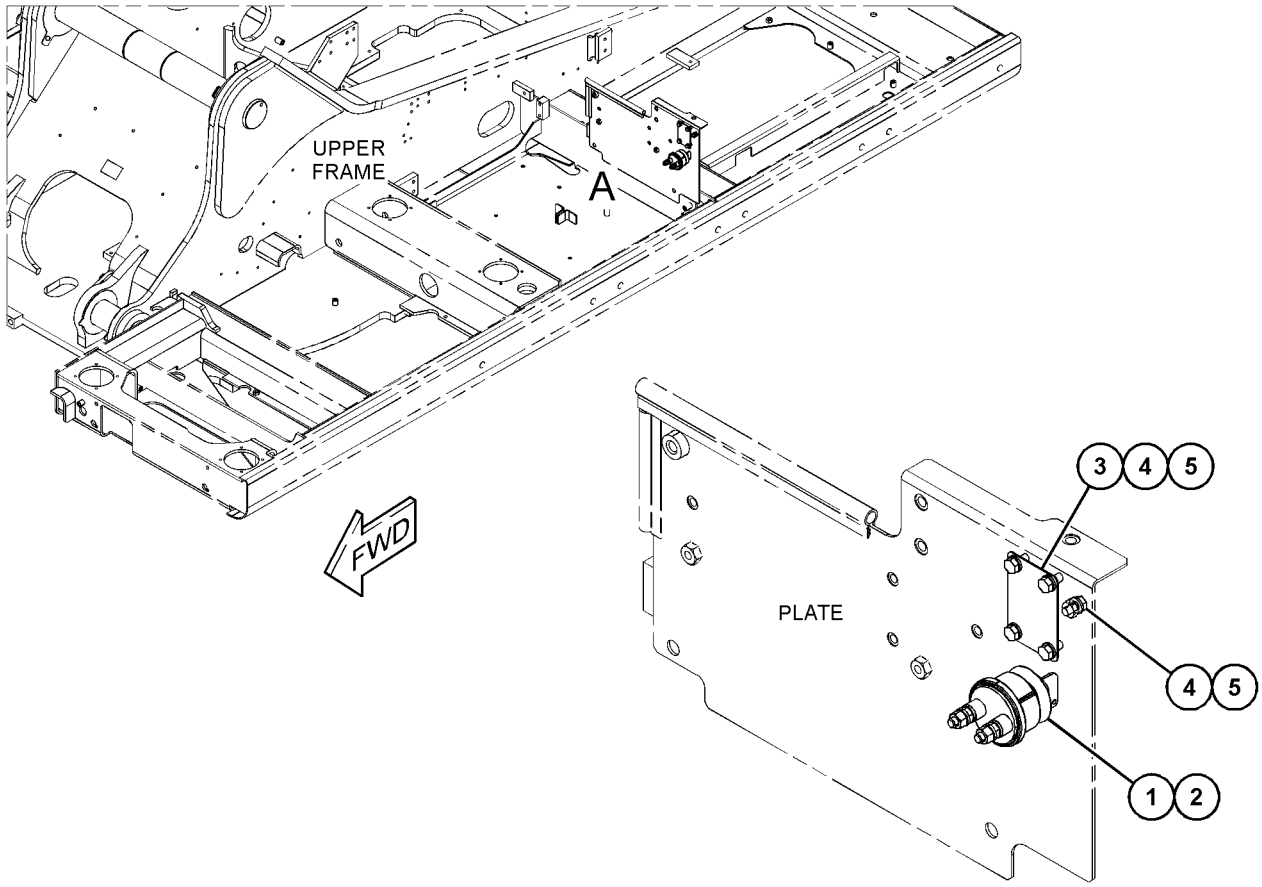

VIEW OF AREA A

GRAPHIC #1 <END> g06280621

514-7210 SWITCH GP-DISCONNECT–JUMP START

S/N: SP91-UP

SMCS-1411 **i07520376**

NOTE	REF NO	GRAPHIC REF	PART NUMBER	QTY	PART NAME 1 2 3 4 5 6 (PRODUCT LEVEL)	SEE PAGE
	1	1	**3E-8320**	1	PLATE-INSTRUCTION (BATTERY)	
Y	2	1	**7N-0719**	1	SWITCH GP-DISCONNECT (BATTERY)	253
	3	1	**8S-2634**	1	COVER AS	
	4	1	**342-9671**	1	RECEPTACLE AS-AUXILIARY START	
M	5	1	**8T-4189**	4	BOLT (M8X1.25X20-MM)	
M	6	1	**8T-4200**	1	BOLT (M8X1.25X16-MM)	
	7	1	**8T-4224**	5	WASHER-HARD (8.8X16X2-MM THK)	

M - METRIC PART
Y - SEPARATE ILLUSTRATION

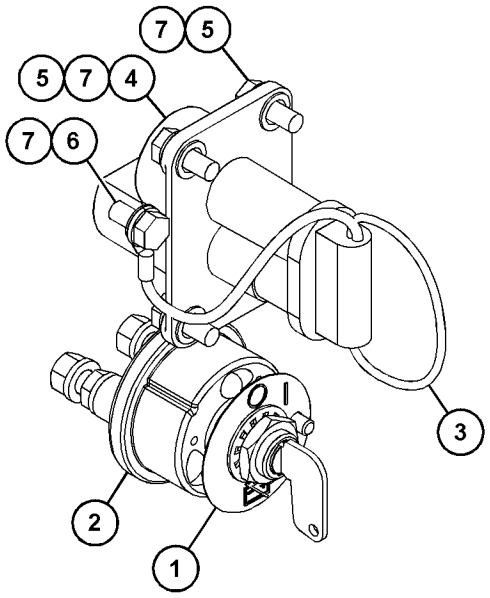

VIEW OF AREA A

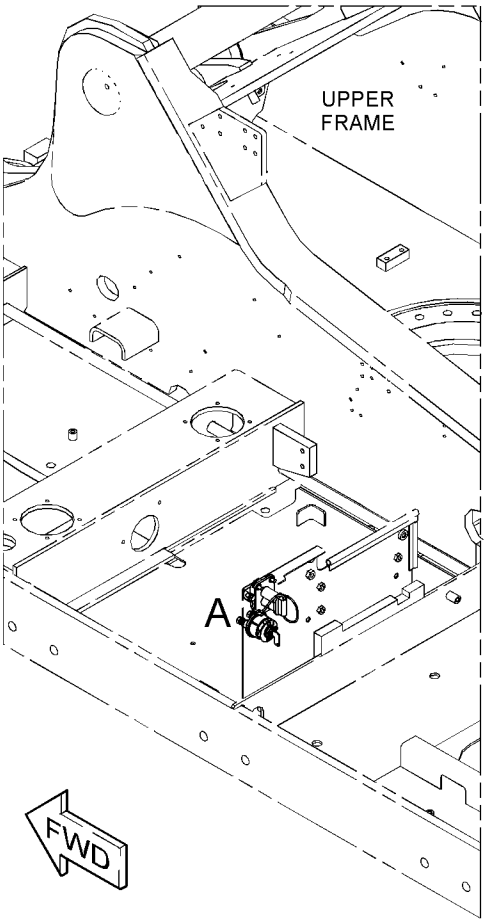

GRAPHIC #1 <END> g06280077

7N-0719 SWITCH GP-DISCONNECT–BATTERY

S/N: SP91-UP

PART OF 514-7209, 514-7210 SWITCH GP-DISCONNECT

SMCS-1411 **i07376863**

NOTE	REF NO	GRAPHIC REF	PART NUMBER	QTY	PART NAME 1 2 3 4 5 6 (PRODUCT LEVEL)	SEE PAGE
	1	1	**2H-3922**	2	LOCKWASHER	
	2	1	**8H-5303**	1	NUT (3/4-16-THD)	
	3	1	**264-3617**	2	LOCKWASHER	
	4	1	**6F-7045**	2	NUT-FULL (3/8-24-THD)	
	5	1	**8H-5306**	1	KEY (BATTERY DISCONNECT)	

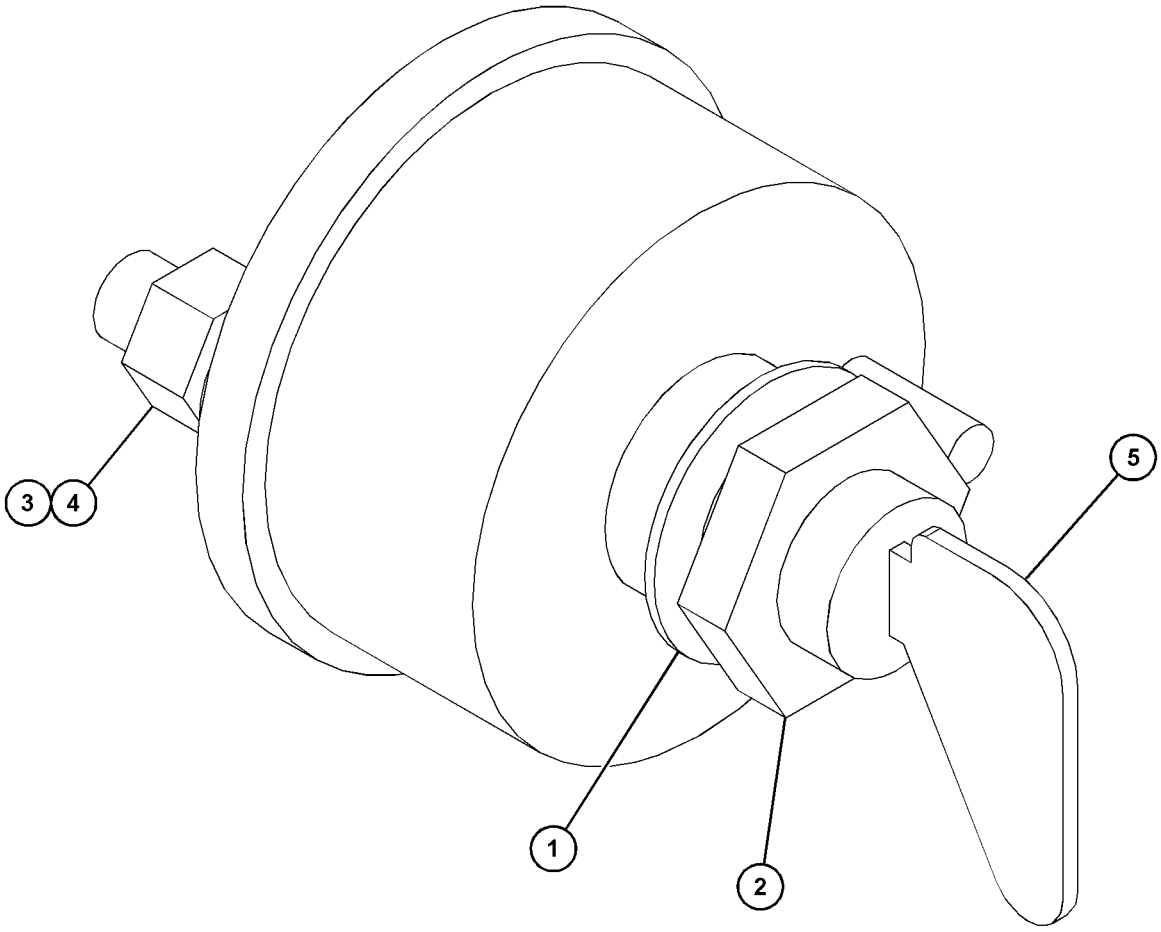

GRAPHIC #1 <END> g06307177

488-6825 SWITCH GP-ROCKER—COUPLER

S/N: SP91-UP

PART OF 517-4758 CONTROL AR-QUICK COUPLER

SMCS-1435 **i07376582**

NOTE	REF NO	GRAPHIC REF	PART NUMBER	QTY	PART NAME 1 2 3 4 5 6 (PRODUCT LEVEL)	SEE PAGE
	1	1	**498-9091**	1	SWITCH AS-ROCKER (QUICK COUPLER)	
	2	1	**3S-2093**	1	STRAP-CABLE	

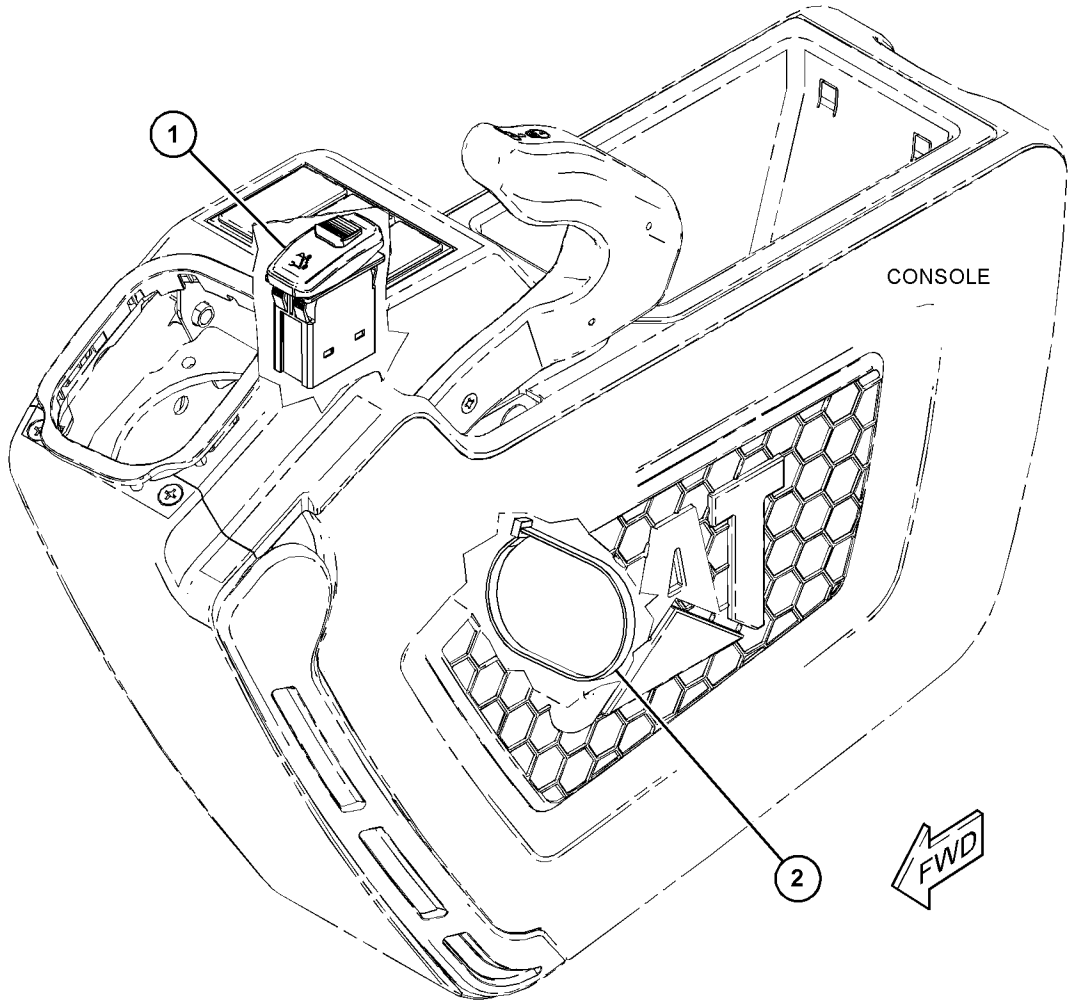

GRAPHIC #1 <END> g06228999

516-2546 SWITCH GP-ROCKER–TRAVEL ALARM CANCEL

S/N: SP91-UP

PART OF 522-0461 ALARM GP-TRAVEL

SMCS-1435 **i07516256**

NOTE	REF NO	GRAPHIC REF	PART NUMBER	QTY	PART NAME 1 2 3 4 5 6 (PRODUCT LEVEL)	SEE PAGE
	1	1	**516-3432**	1	SWITCH AS-ROCKER (TRAVEL ALARM CANCEL)	

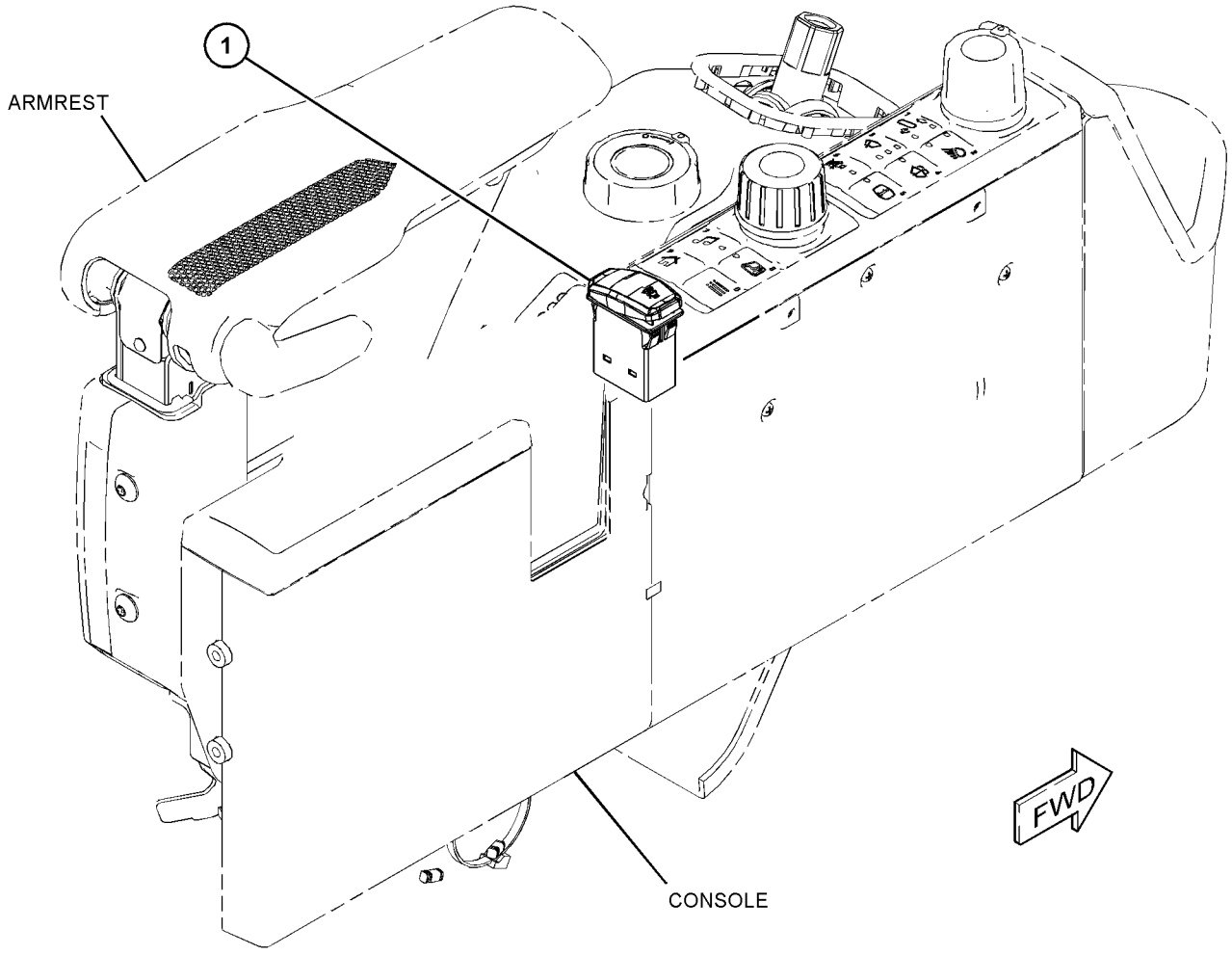

GRAPHIC #1 <END> g06229224

513-3214 WIRING & MTG GP- MAIN CONT V

S/N: SP91-UP

SMCS-1408 **i07368001**

NOTE	PART NUMBER	QTY	PART NAME 1 2 3 4 5 6 (PRODUCT LEVEL)	SEE PAGE
Y	*512-6145*	1	SENSOR GP-PRESSURE (MOUNTING)	240
Y	*514-7718*	1	WIRING GP-SENSOR (VALVE)	296

Y - SEPARATE ILLUSTRATION

<END>

504-3550 WIRING GP-AUX START RECEPTACLE–JUMP START

S/N: SP91-UP

SMCS-1408, 1463 **i07520058**

NOTE	REF NO	GRAPHIC REF	PART NUMBER	QTY	PART NAME 1 2 3 4 5 6 (PRODUCT LEVEL)	SEE PAGE
M	1	1	**8T-4189**	1	BOLT (M8X1.25X20-MM)	
	2	1	**8T-4224**	1	WASHER-HARD (8.8X16X2-MM THK)	
	3	1	**484-1451**	1	CLIP	
	4	1	**493-3272**	1	BUS BAR	
	5	1	**513-4324**	1	CABLE AS (JUMP START) (POSITIVE)	
D		1	**6V-2722**		TUBE-HEAT SHRINK (25.4-MM DIA) (0.1-M)	
		1	**030-1705**	2	TERMINAL-CABLE (00-GA, 5/16-IN SCREW)	
E		1	**159-8049**		CABLE (00-GA, RED) (62-CM)	
		1	**204-2281**	1	STRAP-CABLE	
		1	**301-0091**	1	COVER-TERMINAL (RED)	
		1	**484-1452**	1	CLIP	
	6	1	**8T-4121**	2	WASHER-HARD (11X21X2.5-MM THK)	
M	7	1	**8T-4136**	1	BOLT (M10X1.5X25-MM)	
M	8	1	**8T-4137**	1	BOLT (M10X1.5X20-MM)	

D - ORDER BY THE METER
E - ORDER BY THE CENTIMETER
M - METRIC PART

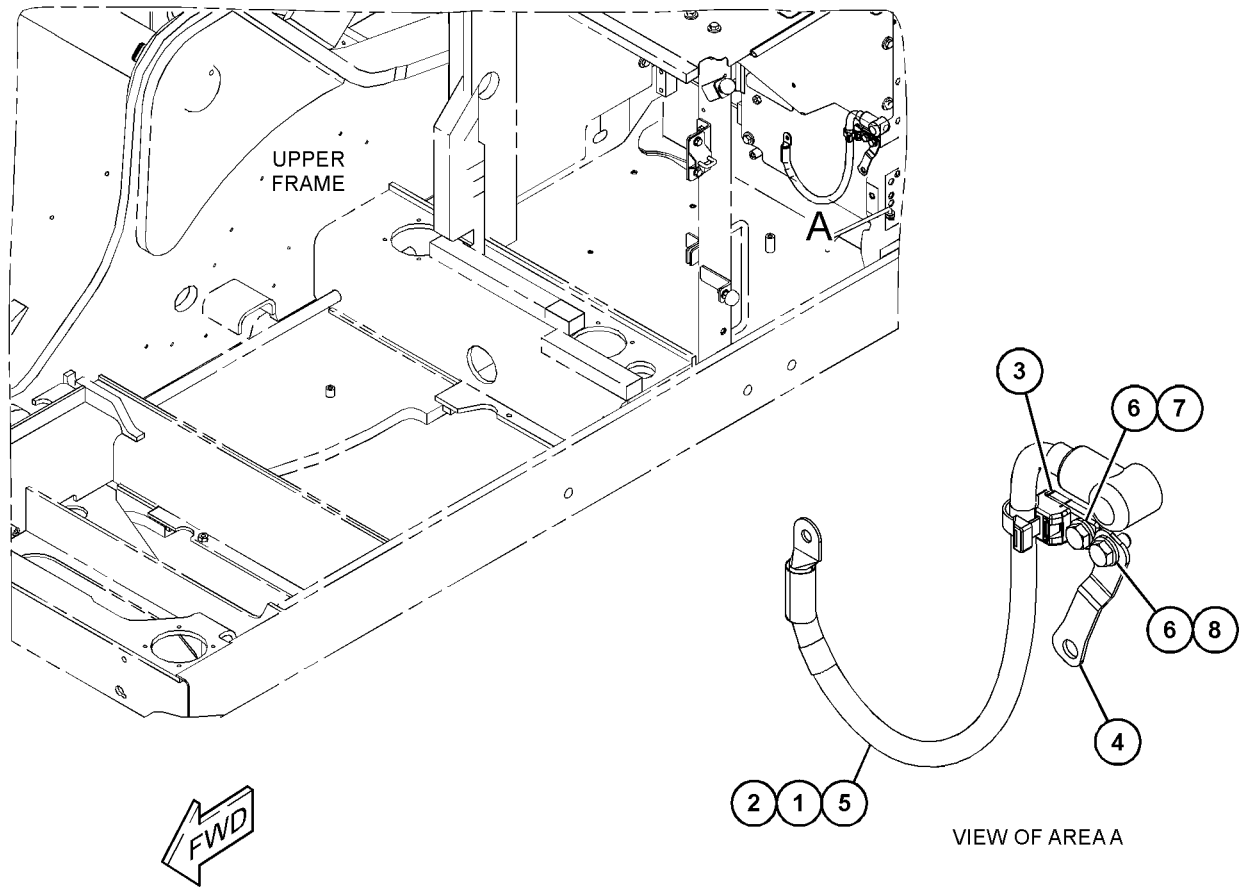

GRAPHIC #1 <END> g06282840

489-7848 WIRING GP-CAB

S/N: SP91-UP

PART OF 489-7847 MODULE GP-CAB WIRING

SMCS-1408, 7301 **i07348778**

NOTE	REF NO	GRAPHIC REF	PART NUMBER	QTY	PART NAME 1 2 3 4 5 6 (PRODUCT LEVEL)	SEE PAGE
	1	1	**3S-2093**	34	STRAP-CABLE	
	2	1	**7K-1181**	8	STRAP-CABLE	
	3	2	**149-5050**	1	RELAY (24-VOLT) (MAIN POWER)	
	3A	2	**149-5050**	1	RELAY (24-VOLT) (DEF PUMP)	
	3B	2	**149-5050**	1	RELAY (24-VOLT) (PRIMING PUMP)	
	3C	2	**149-5050**	1	RELAY (24-VOLT) (FUEL PUMP)	
	3D	2	**149-5050**	1	RELAY (24-VOLT) (ETHER)	
	3E	2	**149-5050**	2	RELAY (24-VOLT) (KEEP ALIVE)	
	3F	2	**149-5050**	1	RELAY (24-VOLT) (KEY)	
	4	2	**167-3593**	1	STRAP	
	5	1	**251-0637**	18	INSULATION	
	6	2	**270-2679**	1	LOCKWASHER	
	7	2	**272-5841**	1	RELAY (70-AMPERE) (MAIN)	
	8	2	**324-5682**	1	PANEL AS	
		2	**324-5683**	1	SEAL	
	9	2	**327-9955**	1	CAP (1-PIN CONNECTOR)	
	10	2	**335-5365**	1	SOCKET-AUXILIARY POWER (12-VOLT)	
Y	11	1	**431-9515**	1	LAMP GP-DOME (12/24-VOLT, LED)	208
	12	1	**484-1456**	1	STRAP-CABLE	
	13	2	**484-9066**	1	FUSE AS (KEEP ALIVE)	
		2	**7Y-3952**	2	PLUG-CONNECTOR (2-PIN)	
		2	**7Y-3993**	2	TERMINAL-BLADE (12-GA)	
		2	**124-3548**	1	FUSE (30-AMPERE) (KEEP ALIVE)	
	14	2	**490-0579**	4	ADAPTER AS	
	15	2	**490-0585**	3	ADAPTER AS	
	16	2	**490-0588**	7	NUT (PANEL)	
	17	2	**490-3875**	1	CABLE AS (CAB)	
		2	**328-0111**	1	PIN-CONNECTOR	
		2	**324-5685**	1	RECEPTACLE AS-CONNECTOR (1-PIN)	
		2	**9G-4343**	1	TERMINAL-RING (4-GA, 1/4-IN SCREW)	
D		2	**6V-2369**		CABLE (4-GA, BLACK) (0.4-M)	
	18	1	**491-7831**	17	BASE	
	19	1	**492-2012**	3	TIE	
	20	1	**494-0022**	1	BASE AS (ANTENNA)	
	21	2	**505-7637**	4	PLUG AS-CONNECTOR	
					(EACH INCLUDES)	
		2	**169-0705**	2	PLUG-SEAL	
		2	**490-0571**	1	PLUG AS-CONNECTOR (2-PIN)	
	22	2	**505-7638**	3	PLUG AS-CONNECTOR	
					(EACH INCLUDES)	
		2	**490-0578**	1	PLUG AS-CONNECTOR (2-PIN)	
		2	**169-0705**	2	PLUG-SEAL	
Y	23	1	**506-9947**	1	HARNESS AS-LIGHTING (ROOF)	200
	24	2	**515-7178**	1	BRACKET	
Y	25	1	**515-9533**	1	HARNESS AS-MONITOR (CAMERA, FRONT)	201
	26	2	**524-8403**	1	BRACKET AS	
	27	2	**524-8405**	1	BRACKET AS	
	28	2	**524-8408**	1	BRACKET AS	

489-7848 **WIRING GP-CAB (**contd.**)** **i07348778**

NOTE	REF NO	GRAPHIC REF	PART NUMBER	QTY	PART NAME 1 2 3 4 5 6 (PRODUCT LEVEL)	SEE PAGE
	29	2	**528-1514**	2	SPEAKER AS	
					(EACH INCLUDES)	
		2	**7Y-3951**	2	TERMINAL-BLADE (14-GA)	
		2	**7Y-3954**	1	CONNECTOR-PLUG (3-PIN)	
Y	30	1	**530-1939**	1	WIRING GP-CAB	262
	31	2	**096-5962**	1	WASHER-HARD (3.4X7X0.8-MM THK)	
	32	1	**096-6166**	2	WASHER-HARD (4.5X9X1-MM THK)	
	33	2	**163-6795**	1	STRAP-CABLE	
	34	2	**203-9007**	1	NUT (1-1/2-18-THD)	
	35	2	**204-2281**	3	STRAP-CABLE	
M	36	2	**3C-6969**	1	NUT (M3X0.5-THD)	
	37	2	**427-9771**	3	TIE	
M	38	1	**6V-9491**	2	SCREW-MACHINE (M4X0.7X20-MM)	
M	39	2	**6V-9669**	1	SCREW-MACHINE (M3X0.5X8-MM)	
M	40	2	**7I-2272**	1	BOLT (M5X0.8X12-MM)	
	41	2	**8T-0328**	1	WASHER-HARD (5.5X10X1-MM THK)	
M	42	2	**8T-0337**	8	SCREW-MACHINE (M4X0.7X12-MM)	
	43	2	**8T-4121**	3	WASHER-HARD (11X21X2.5-MM THK)	
M	44	2	**8T-4198**	3	BOLT (M10X1.5X100-MM)	
M	45	2	**9X-2042**	27	SCREW-TRUSS HEAD (M6X1X12-MM)	
M	46	2	**9X-2043**	2	SCREW-TRUSS HEAD (M6X1X14-MM)	

D - ORDER BY THE METER
M - METRIC PART
Y - SEPARATE ILLUSTRATION

489-7848 **WIRING GP-CAB (**contd.**)** **i07348778**

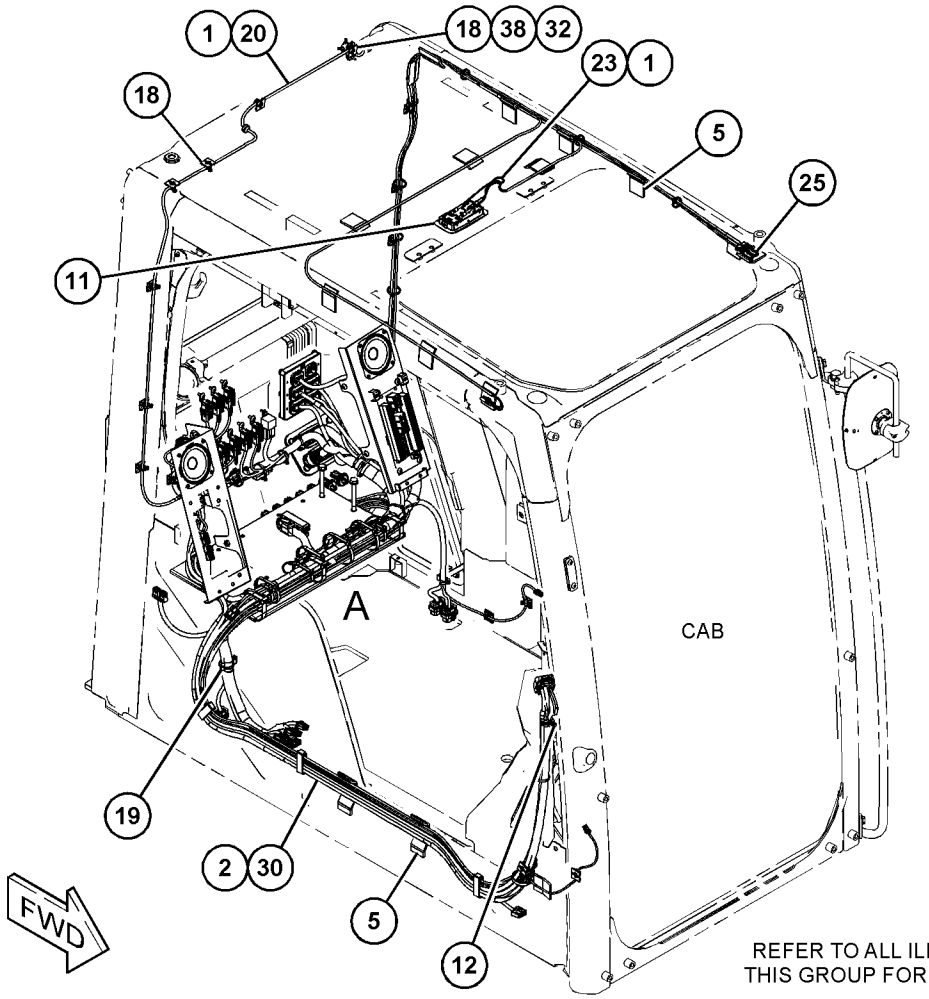

REFER TO ALL ILLUSTRATIONS OF
THIS GROUP FOR AUXILIARY VIEWS

GRAPHIC #1 g06229374

489-7848 **WIRING GP-CAB (**contd.**)** **i07348778**

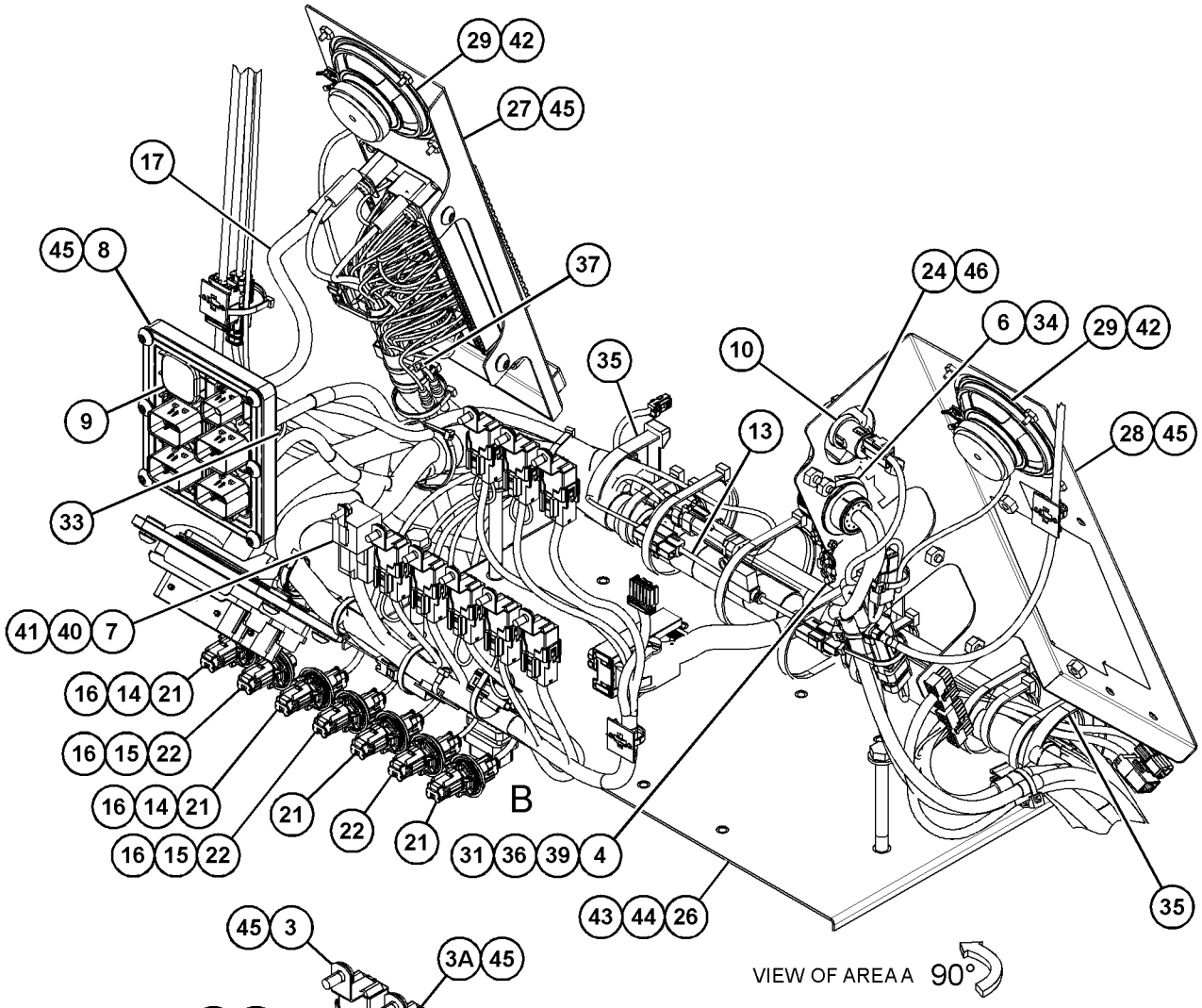

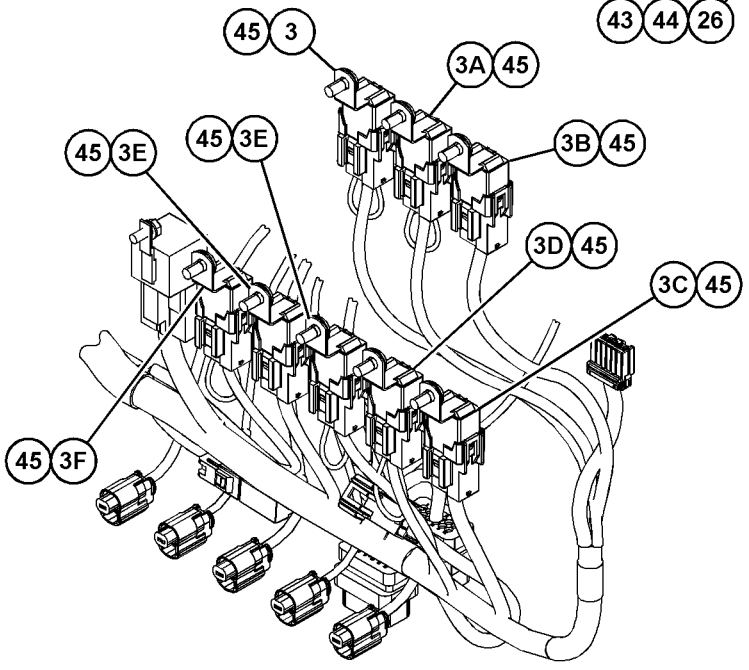

VIEW OF AREA B
(PARTS REMOVED FOR CLARITY)

GRAPHIC #2 <END> g06229378

530-1939 WIRING GP-CAB

S/N: SP91-UP

PART OF 489-7848 WIRING GP-CAB

SMCS-1408, 7301 **i07426360**

NOTE	REF NO	GRAPHIC REF	PART NUMBER	QTY	PART NAME 1 2 3 4 5 6 (PRODUCT LEVEL)	SEE PAGE
	1	1	**3S-2093**	1	STRAP-CABLE	
	2	1	**7K-1181**	2	STRAP-CABLE	
	3	1	**492-2011**	3	CLIP	
	4	1	*530-1940*	1	HARNESS AS-CAB	
		1	**8T-8729**	27	PIN-CONNECTOR (16-GA TO 20-GA)	
		1	**8T-8730**	22	SOCKET-CONNECTOR (16-GA TO 18-GA)	
		1	**3S-2093**	64	STRAP-CABLE	
D		1	**5P-5999**		TUBE (0.3-M)	
		1	**7Y-3950**	6	TERMINAL-BLADE (14-GA TO 20-GA)	
		1	**7Y-3951**	9	TERMINAL-BLADE (14-GA)	
		1	**7Y-3952**	2	PLUG-CONNECTOR (2-PIN)	
		1	**7Y-3953**	2	CONNECTOR-RECEPTACLE	
		1	**7Y-3955**	2	CONNECTOR-RECEPTACLE	
		1	**7Y-3958**	1	CONNECTOR-PLUG (6-PIN)	
		1	*7Y-3967*	3	TERMINAL AS	
					(EACH INCLUDES)	
		1	**7Y-3963**	1	TERMINAL-BULLET (FEMALE)	
		1	**7Y-3965**	1	TUBE	
		1	**8T-8737**	33	PLUG-SEAL	
		1	**102-7965**	12	TERMINAL (14-GA TO 20-GA)	
		1	**9W-0852**	18	PIN-CONNECTOR (14-GA TO 16-GA)	
		1	**9W-0844**	7	SOCKET-CONNECTOR (14-GA TO 16-GA)	
		1	**111-4816**	1	PLUG-CONNECTOR (13-PIN)	
E		1	**119-3662**		TUBE-HEAT SHRINK (10.85-MM DIA) (44-CM)	
		1	**121-1022**	1	DIODE	
		1	**125-4785**	87	TERMINAL (FEMALE)	
		1	**125-4840**	1	WEDGE-PLUG LOCK (13-PIN)	
E		1	**125-7874**		TUBE-HEAT SHRINK (5.72-MM DIA) (170-CM)	
E		1	**125-7875**		TUBE-HEAT SHRINK (7.44-MM DIA) (40-CM)	
		1	**2L-8067**	2	TERMINAL-RING (10-GA TO 12-GA, 1/4-IN SCREW)	
		1	**149-5051**	9	CONNECTOR-RECEPTACLE	
		1	**149-5069**	30	TERMINAL-BLADE (14-GA TO 20-GA)	
		1	**149-5070**	40	TERMINAL-BLADE (16-GA TO 20-GA)	
		1	**149-5071**	7	TERMINAL-BLADE (12-GA TO 14-GA)	
		1	**153-2540**	22	TERMINAL (FEMALE)	
		1	**163-6659**	1	CONNECTOR-PLUG (12-PIN)	
		1	**163-6699**	1	CONNECTOR-PLUG (18-PIN)	
		1	**170-6827**	4	TERMINAL (MALE)	
		1	**170-6888**	1	PULLER-FUSE	
		1	**170-6890**	16	TERMINAL-BLADE (14-GA)	
		1	**170-6891**	20	TERMINAL-BLADE (16-GA TO 18-GA)	
		1	**185-1861**	12	SEAL-WIRE	
		1	**202-5400**	17	PLUG	
		1	**281-3395**	2	PLUG AS-CONNECTOR (12-PIN)	
		1	**230-4009**	1	PLUG AS-CONNECTOR (12-PIN)	
					(EACH PLUG AS INCLUDES)	
		1	**455-0709**	1	SEAL-CONNECTOR	
		1	**240-7874**	1	PLUG AS-CONNECTOR (2-PIN)	

530-1939 **WIRING GP-CAB (**contd.**)** **i07426360**

NOTE	REF NO	GRAPHIC REF	PART NUMBER	QTY	PART NAME 1 2 3 4 5 6 (PRODUCT LEVEL)	SEE PAGE
		1	**455-0704**	1	SEAL-CONNECTOR	
		1	**240-7878**	1	PLUG AS-CONNECTOR (3-PIN)	
		1	**455-0705**	1	SEAL-CONNECTOR	
		1	**267-9973**	1	CONNECTOR (4-PIN)	
		1	**279-5772**	95	SEAL	
		1	**324-5678**	2	RESISTOR AS (120-OHM)	
					(EACH INCLUDES)	
		1	**455-0704**	1	SEAL-CONNECTOR	
		1	**324-5684**	4	RECEPTACLE AS-CONNECTOR (12-PIN)	
		1	**342-2973**	1	CAP-CONNECTOR (3-PIN)	
		1	**363-9173**	2	TERMINAL (14-GA TO 18-GA)	
		1	**424-4322**	1	COVER-CONNECTOR	
		1	**431-2103**	5	SOCKET-CONNECTOR (14-GA TO 18-GA)	
		1	**442-7945**	1	PLUG AS-CONNECTOR (81-PIN)	
		1	**444-7595**	1	PLUG AS-CONNECTOR	
		1	**451-8019**	1	RECEPTACLE AS-CONNECTOR (14-PIN)	
		1	**483-2762**	1	PLUG AS-CONNECTOR (44-PIN)	
		1	**483-2765**	13	TERMINAL AS (20-GA)	
		1	**483-2767**	15	TERMINAL AS (18-GA)	
		1	**483-2768**	16	PLUG-SEAL	
		1	**490-0571**	2	PLUG AS-CONNECTOR (2-PIN)	
		1	**490-0578**	2	PLUG AS-CONNECTOR (2-PIN)	
		1	**491-4402**	12	TERMINAL (14-GA TO 16-GA)	
		1	**491-4409**	95	TERMINAL (18-GA TO 20-GA)	
		1	**492-2010**	1	PANEL AS	
		1	**506-5910**	1	RECEPTACLE AS-CONNECTOR	
		1	**506-5911**	2	LOCK-CONNECTOR	
		1	**506-5915**	2	CONNECTOR-PLUG	
		1	**506-5916**	4	TERMINAL	
		1	**506-5917**	1	CONNECTOR-RECEPTACLE	
		1	**506-5918**	2	TERMINAL (14-GA TO 20-GA)	
		1	**507-1383**	1	PLUG AS-CONNECTOR	
		1	**507-1384**	1	PLUG AS-CONNECTOR	
	4A	1	**161-3128**	1	RELAY (24-VOLT) (HORN)	
	4B	1	**161-3128**	1	RELAY (24-VOLT) (POWER)	
	4C	1	**161-3128**	1	RELAY (24-VOLT) (CAB LIFT PUMP)	
	4D	1	**161-3128**	1	RELAY (24-VOLT) (BOOM LIGHTS)	
	4E	1	**161-3128**	1	RELAY (24-VOLT) (CHASSIS LIGHTS)	
	4F	1	**113-8490**	10	FUSE (10-AMPERE)	
	4G	1	**113-8491**	13	FUSE (15-AMPERE)	
	4H	1	**113-8492**	2	FUSE (20-AMPERE)	
	4J	1	**113-8493**	4	FUSE (25-AMPERE)	
	4K	1	**124-3548**	2	FUSE (30-AMPERE)	
	4L	1	**141-2759**	9	FUSE (5-AMPERE)	
	4M	1	**238-2319**	1	BASE AS (FUSE, RELAY PANEL)	
		1	**9X-8256**	2	WASHER (6.6X12X2-MM THK)	
M		1	**095-0742**	2	SCREW-MACHINE (M6X1X16-MM)	
		1	**170-9394**	40	TERMINAL	
	5	1	*530-1941*	1	CABLE AS (ETHERNET)	
		1	**483-2765**	2	TERMINAL AS (20-GA)	
					(EACH INCLUDES)	

530-1939 **WIRING GP-CAB (**contd.**)** **i07426360**

NOTE	REF NO	GRAPHIC REF	PART NUMBER	QTY	PART NAME 1 2 3 4 5 6 (PRODUCT LEVEL)	SEE PAGE
N		1	**340-9272**		WIRE (20-GA, BLACK) (2-DM)	
		1	**490-0571**	1	PLUG AS-CONNECTOR (2-PIN)	
	6	1	*530-1942*	1	CABLE AS (ETHERNET)	
		1	**483-2765**	2	TERMINAL AS (20-GA)	
					(EACH INCLUDES)	
N		1	**340-9272**		WIRE (20-GA, BLACK) (2-DM)	
		1	**490-0582**	1	RECEPTACLE AS (2-PIN)	

D - ORDER BY THE METER
E - ORDER BY THE CENTIMETER
M - METRIC PART
N - ORDER BY THE DECIMETER

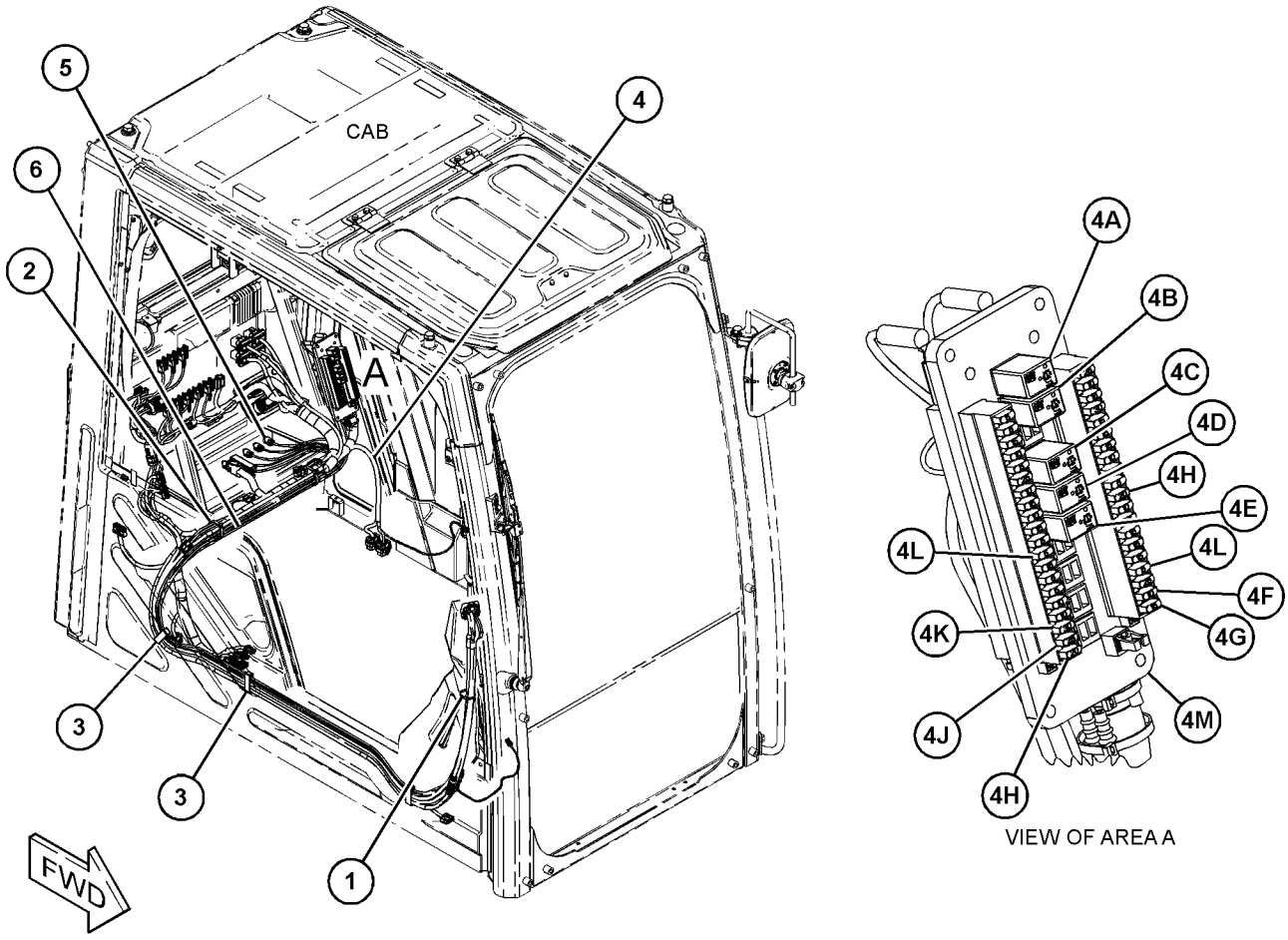

GRAPHIC #1 <END> g06286114

561-0731 WIRING GP-CAMERA—PRODUCT LINK

S/N: SP91-UP

SMCS-1408, 7348 **i07518483**

NOTE	REF NO	GRAPHIC REF	PART NUMBER	QTY	PART NAME 1 2 3 4 5 6 (PRODUCT LEVEL)	SEE PAGE
	1	1	**7K-1181**	1	STRAP-CABLE	
	2	1	*538-9804*	1	HARNESS AS-CAB	
		1	**505-7637**	1	PLUG AS-CONNECTOR	
		1	**169-0705**	2	PLUG-SEAL	
		1	**490-0571**	1	PLUG AS-CONNECTOR (2-PIN)	
		1	**490-0572**	2	RECEPTACLE AS (2-PIN)	

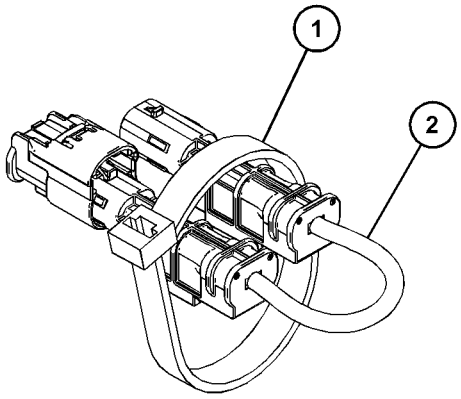

VIEW OF AREA A

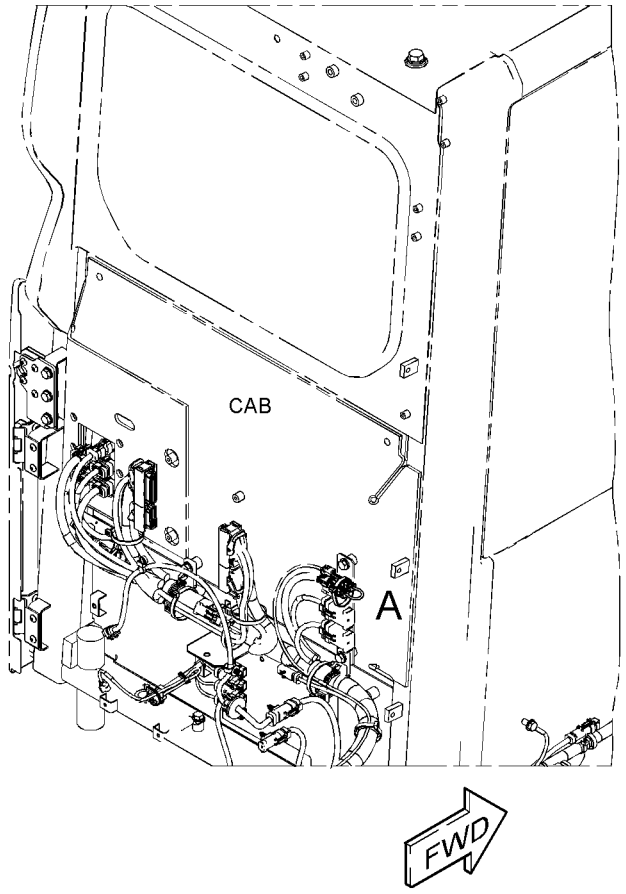

GRAPHIC #1 <END> g06310815

490-2700 WIRING GP-CHASSIS–CAMERA

S/N: SP91-UP
LEFT SIDE
PART OF 512-1337, 555-9457 CAMERA AR

SMCS-1408 **i07366573**

NOTE	REF NO	GRAPHIC REF	PART NUMBER	QTY	PART NAME 1 2 3 4 5 6 (PRODUCT LEVEL)	SEE PAGE
	1	1	**3S-2093**	5	STRAP-CABLE	
	2	1	**266-7379**	1	STRAP-CABLE	
	3	1	**484-1456**	6	STRAP-CABLE	
Y	4	1	**529-8758**	1	HARNESS AS-MONITOR (CAMERA, LH)	202

Y - SEPARATE ILLUSTRATION

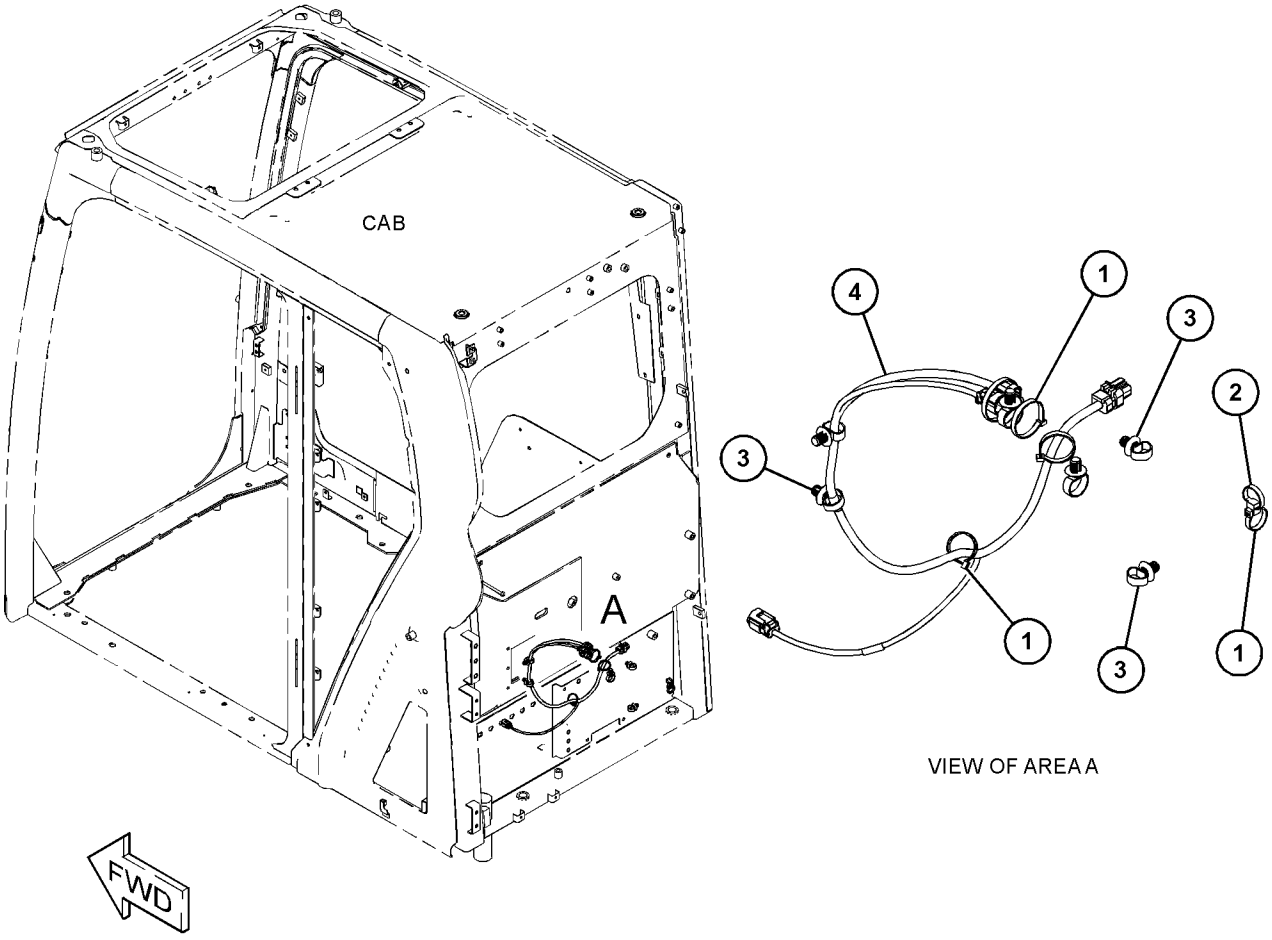

GRAPHIC #1 <END> g06230915

502-7185 WIRING GP-CHASSIS–FINE SWING

S/N: SP91-UP

PART OF 504-4483 VALVE AR-SWING

SMCS-1408 **i07531042**

NOTE	REF NO	GRAPHIC REF	PART NUMBER	QTY	PART NAME 1 2 3 4 5 6 (PRODUCT LEVEL)	SEE PAGE
	1	1	**3S-2093**	2	STRAP-CABLE	
	2	1	**484-1451**	1	CLIP	
	3	1	**484-1456**	2	STRAP-CABLE	
	4	1	**514-7352**	1	PLATE (FINE SWING)	
Y	5	1	**551-5004**	1	HARNESS AS-CHASSIS (FINE SWING)	185
	6	1	**8T-4121**	2	WASHER-HARD (11X21X2.5-MM THK)	
M	7	1	**8T-4137**	1	BOLT (M10X1.5X20-MM)	
M	8	1	**8T-4191**	1	BOLT (M10X1.5X16-MM)	

M - METRIC PART
Y - SEPARATE ILLUSTRATION

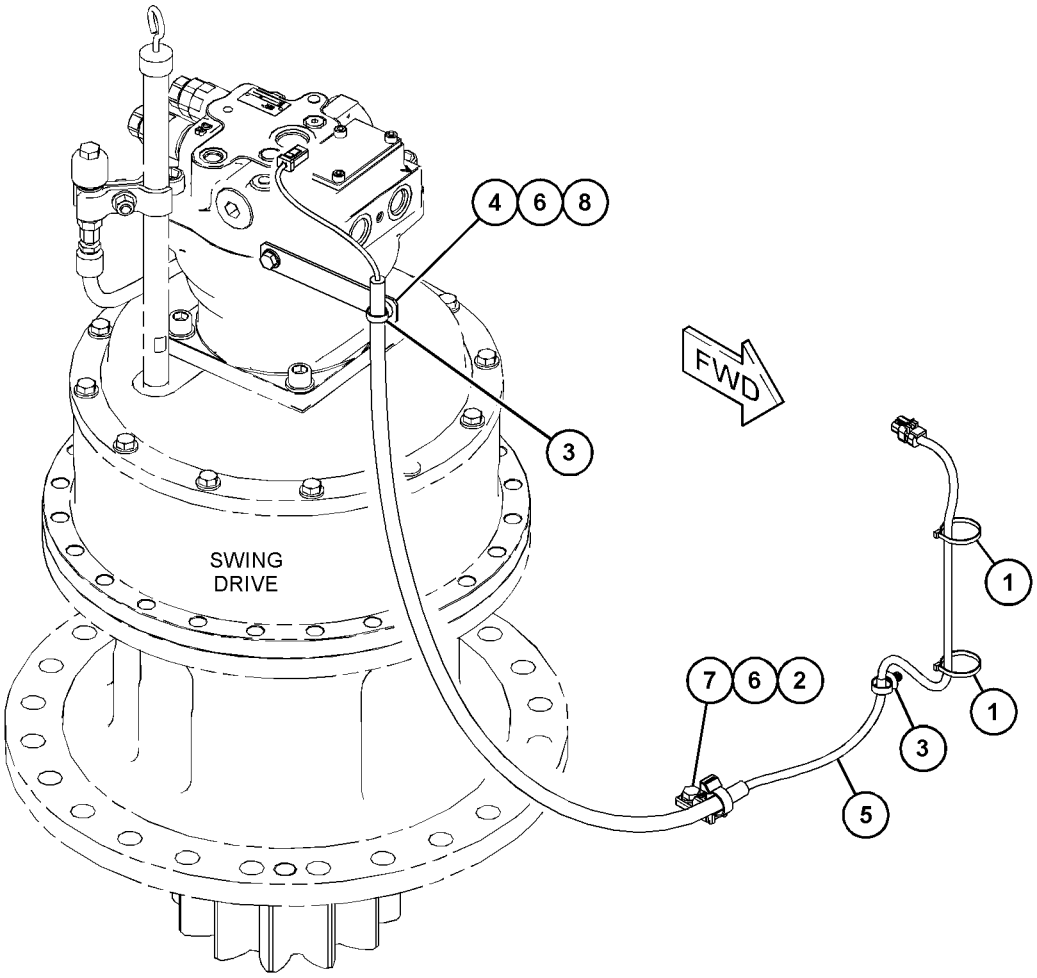

GRAPHIC #1 <END> g06286159

502-7210 WIRING GP-CHASSIS—REFUELING PUMP

S/N: SP91-UP

PART OF 546-1255 PUMP AR-FUEL TRANSFER

SMCS-1408 **i07680287**

NOTE	REF NO	GRAPHIC REF	PART NUMBER	QTY	PART NAME 1 2 3 4 5 6 (PRODUCT LEVEL)	SEE PAGE
	1	1	**3S-2093**	2	STRAP-CABLE	
Y	2	1	**513-4373**	1	HARNESS AS-CHASSIS (REFUELING PUMP)	182
	3	1	**204-1611**	1	STRAP-CABLE (DUAL)	
	4	1	**514-1499**	1	BRACKET	
	5	1	**8T-4121**	1	WASHER-HARD (11X21X2.5-MM THK)	
M	6	1	**8T-4136**	1	BOLT (M10X1.5X25-MM)	

M - METRIC PART
Y - SEPARATE ILLUSTRATION

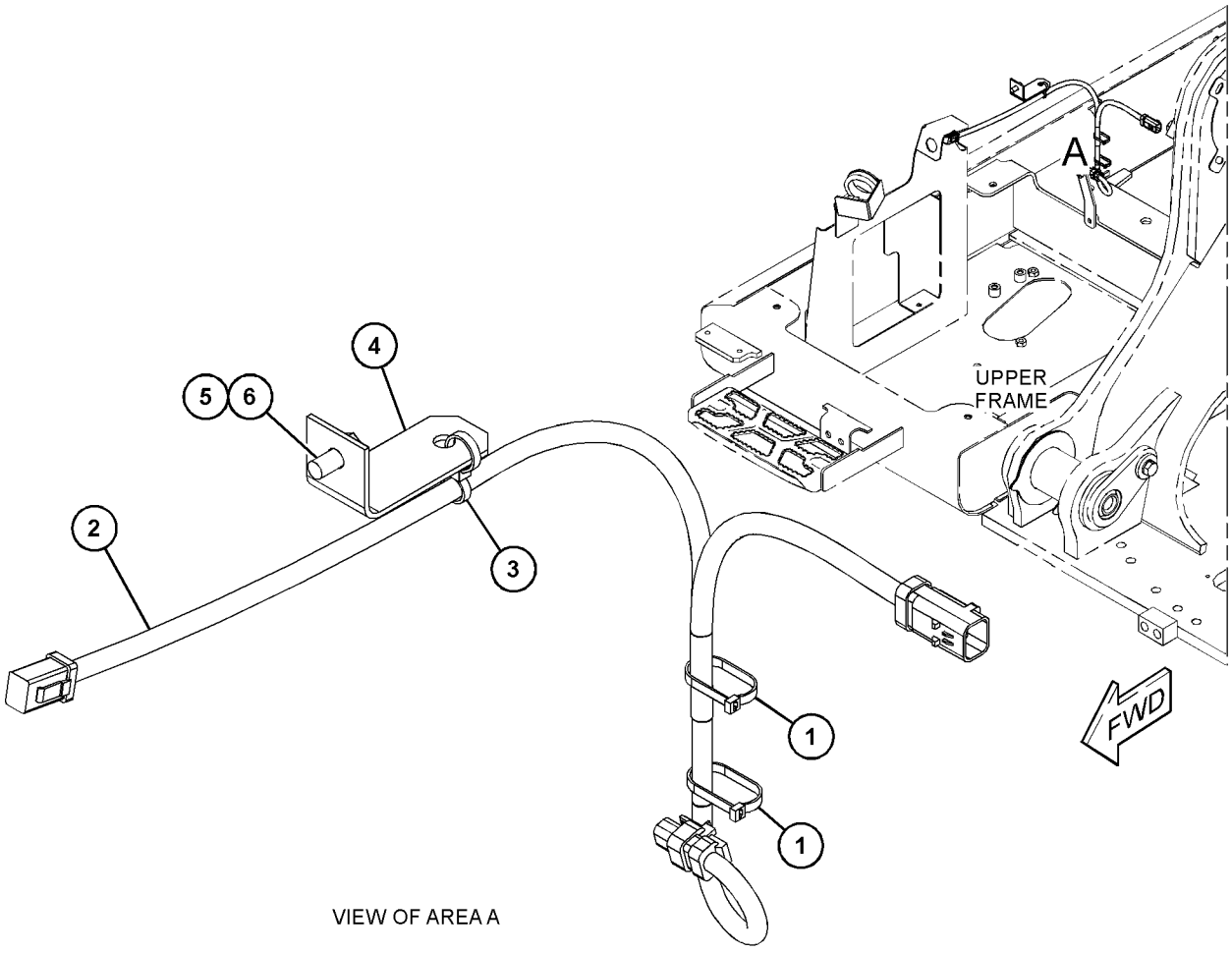

VIEW OF AREA A

GRAPHIC #1 <END> g06284242

502-7213 WIRING GP-CHASSIS–REAR VIEW, CAMERA

S/N: SP91-UP

PART OF 512-1338 CAMERA & MIRROR AR, 512-1337, 555-9457 CAMERA AR

SMCS-1408 **i07690608**

NOTE	REF NO	GRAPHIC REF	PART NUMBER	QTY	PART NAME 1 2 3 4 5 6 (PRODUCT LEVEL)	SEE PAGE
	1	1	**3S-2093**	16	STRAP-CABLE	
	2	1	**7K-1181**	13	STRAP-CABLE	
	3	1	**8T-4121**	1	WASHER-HARD (11X21X2.5-MM THK)	
M	4	1	**8T-4137**	1	BOLT (M10X1.5X20-MM)	
	5	1	**484-1453**	1	CLIP (RETAINER)	
	6	1	**484-1456**	6	STRAP-CABLE	
	7	1	**514-7346**	1	BRACKET AS	
Y	8	1	**570-5397**	1	HARNESS AS-CAMERA (CHASSIS, REAR)	180
Y	9	1	**570-5399**	1	HARNESS AS-CAMERA (COUNTERWEIGHT)	180

M - METRIC PART
Y - SEPARATE ILLUSTRATION

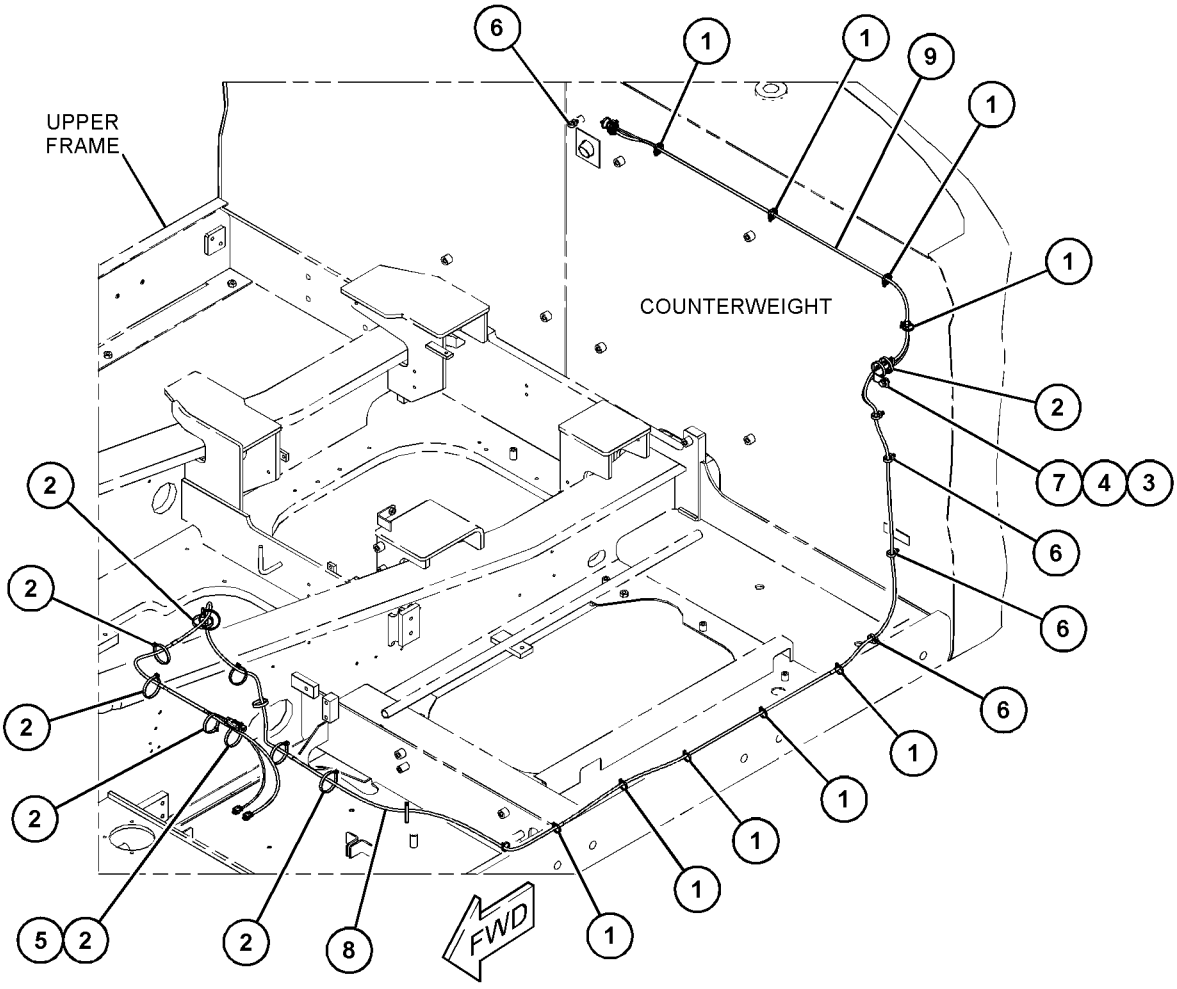

GRAPHIC #1 <END> g06274411

502-7214 WIRING GP-CHASSIS–CAMERA, RH

S/N: SP91-UP

PART OF 512-1337, 555-9457 CAMERA AR

TYPE 1

SMCS-1408 **i07526528**

NOTE	REF NO	GRAPHIC REF	PART NUMBER	QTY	PART NAME 1 2 3 4 5 6 (PRODUCT LEVEL)	SEE PAGE
	1	1	**3S-2093**	13	STRAP-CABLE	
	2	1	**7K-1181**	11	STRAP-CABLE	
	3	1	**484-1456**	2	STRAP-CABLE	
Y	4	1	**552-1788**	1	HARNESS AS-CAMERA (CHASSIS, RH)	179
Y	5	1	**552-1789**	1	HARNESS AS-CAMERA (HYDRAULIC TANK) (RH)	179

Y - SEPARATE ILLUSTRATION

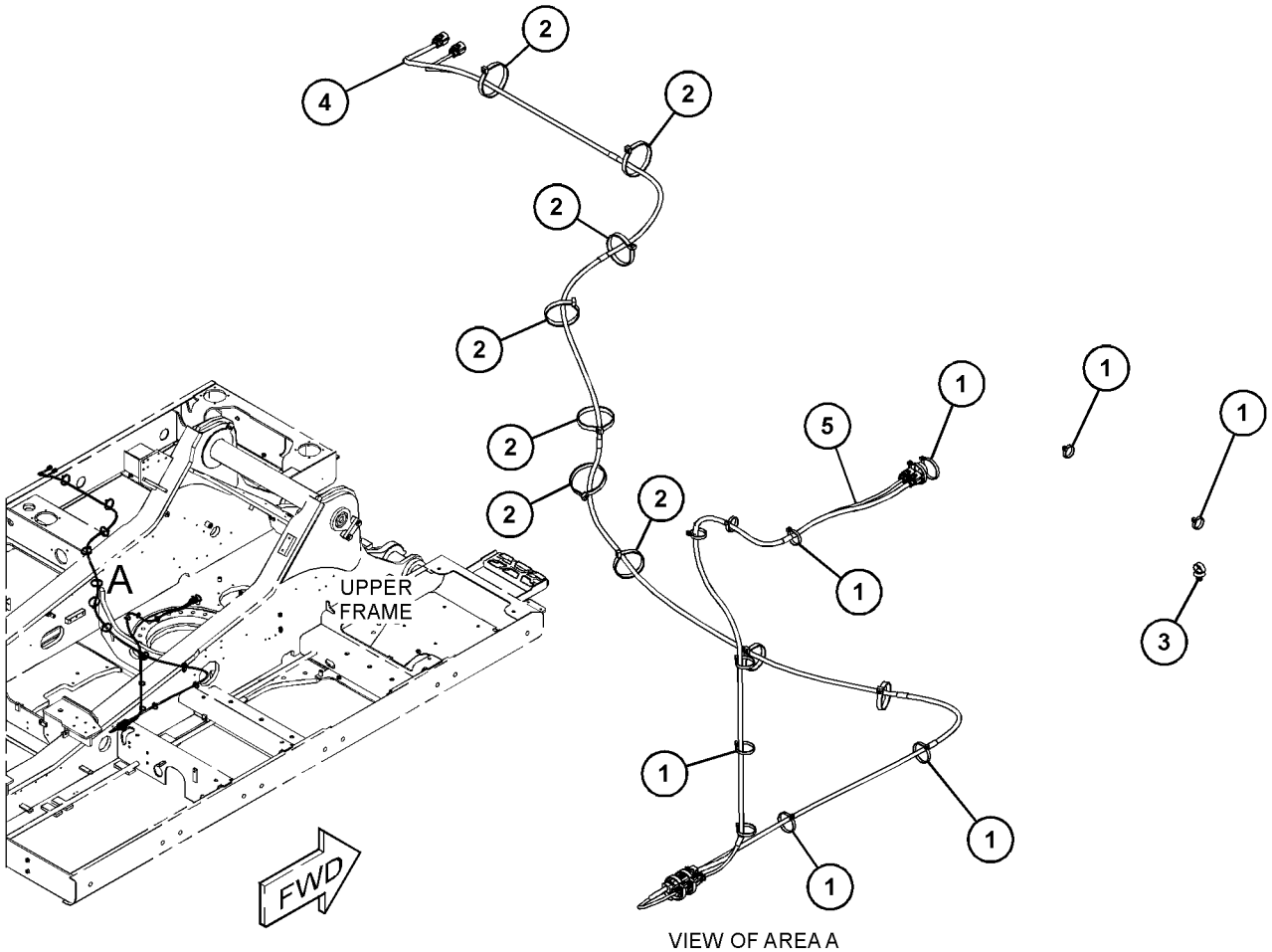

VIEW OF AREA A

GRAPHIC #1 <END> g06274311

502-7214 WIRING GP-CHASSIS–CAMERA, RH

S/N: SP91-UP

PART OF 512-1337, 555-9457 CAMERA AR

TYPE 2

SMCS-1408 **i07757003**

NOTE	REF NO	GRAPHIC REF	PART NUMBER	QTY	PART NAME 1 2 3 4 5 6 (PRODUCT LEVEL)	SEE PAGE
	1	1	**484-1456**	2	STRAP-CABLE	
CY	2	1	**570-5400**	1	HARNESS AS-CAMERA (CHASSIS, RH)	180
CY	3	1	**570-5401**	1	HARNESS AS-CAMERA (HYDRAULIC TANK) (RH)	181
C	4	1	**3S-2093**	15	STRAP-CABLE	
C	5	1	**7K-1181**	9	STRAP-CABLE	

C - CHANGE FROM PREVIOUS TYPE
Y - SEPARATE ILLUSTRATION

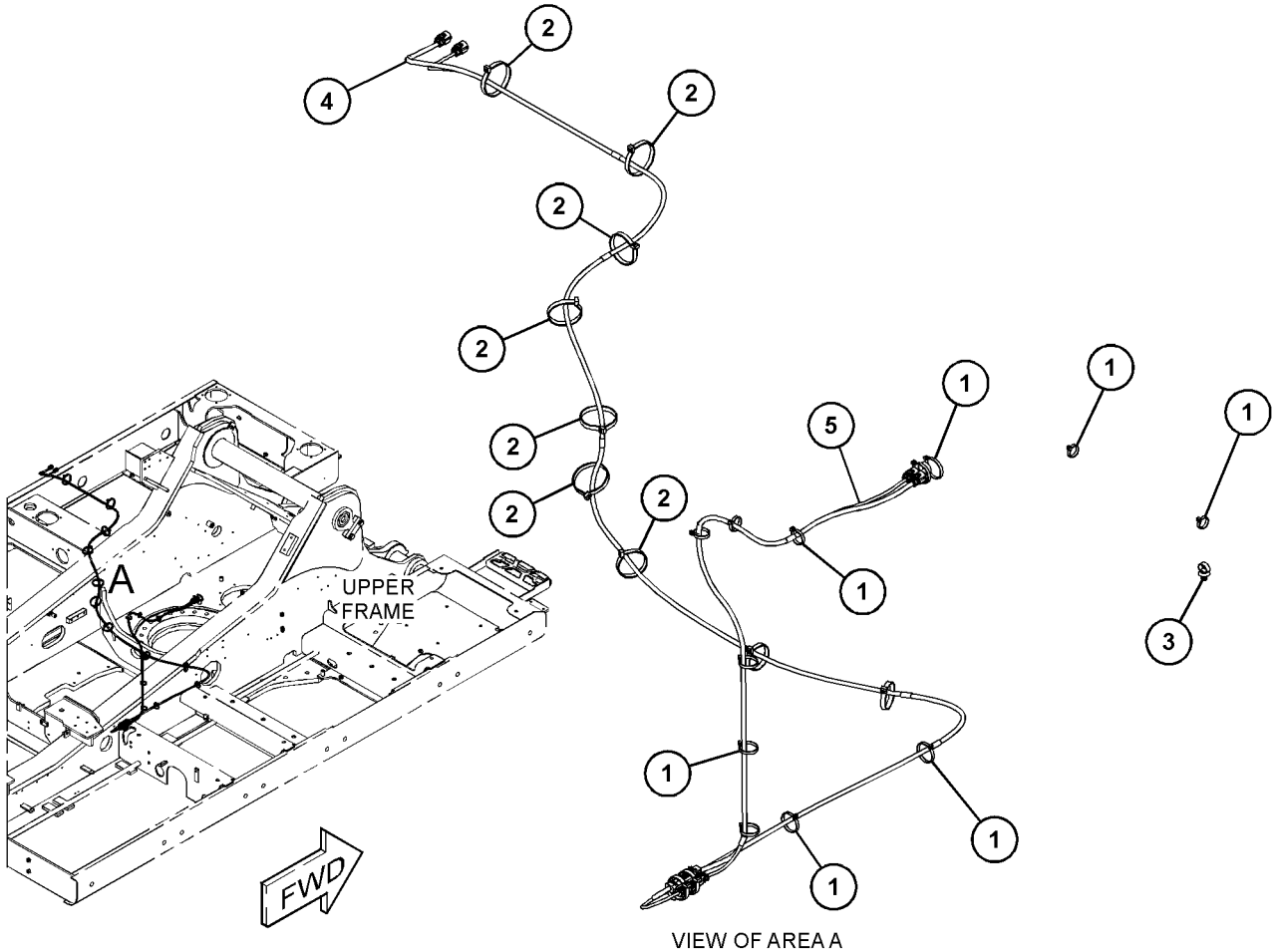

VIEW OF AREA A

GRAPHIC #1 <END> g06274311

504-3561 WIRING GP-CHASSIS–1-WAY FLOW, HYD CONT, MECH RLF

S/N: SP91-UP

PART OF 559-3854 CONTROL AR-AUXILIARY

SMCS-1408 **i07519017**

NOTE	REF NO	GRAPHIC REF	PART NUMBER	QTY	PART NAME 1 2 3 4 5 6 (PRODUCT LEVEL)	SEE PAGE
	1	1	**7K-1181**	24	STRAP-CABLE	
	2	1	**342-2973**	2	CAP-CONNECTOR (3-PIN)	
	3	1	**484-1453**	8	CLIP (RETAINER)	
Y	4	1	**551-3758**	1	HARNESS AS-CHASSIS (TOOL)	184

Y - SEPARATE ILLUSTRATION

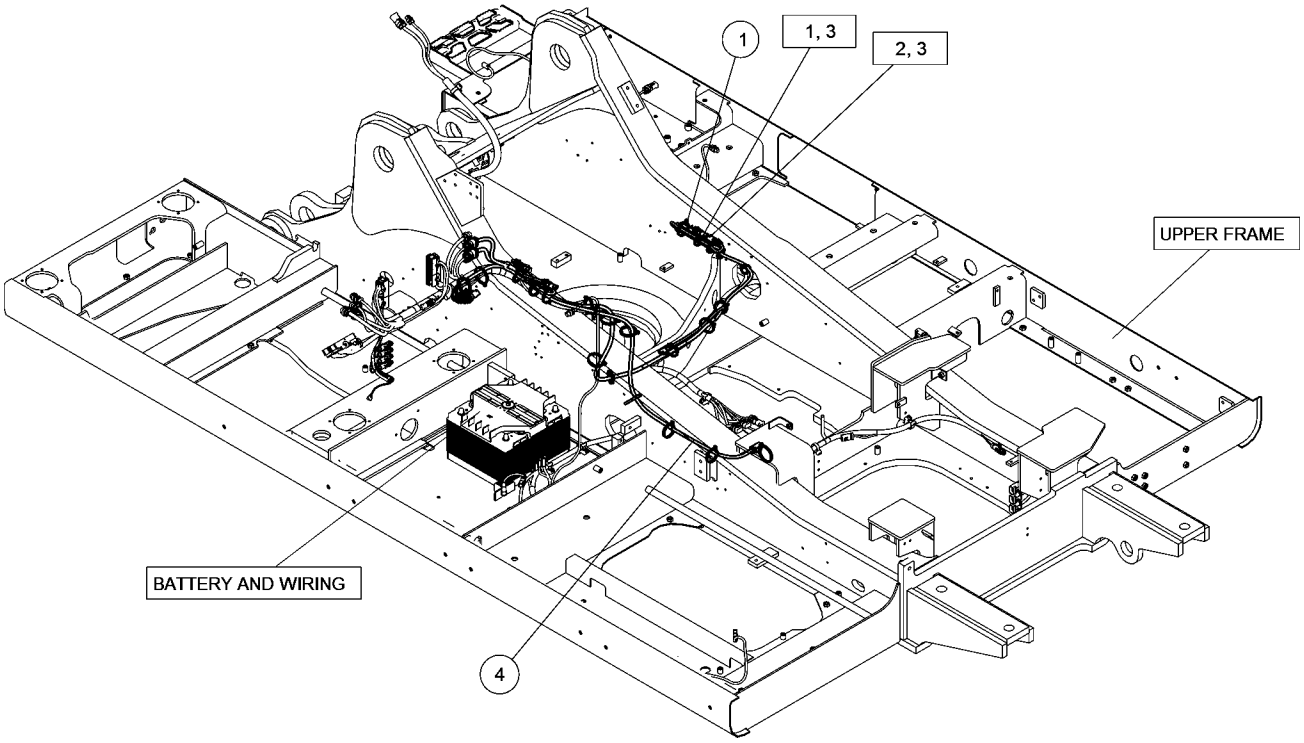

GRAPHIC #1 <END> g06287551

506-7031 WIRING GP-CHASSIS

S/N: SP91-UP

PART OF 557-3370 INSTALLATION AR-COMMUNICATION

SMCS-1408 **i07434531**

NOTE	REF NO	GRAPHIC REF	PART NUMBER	QTY	PART NAME 1 2 3 4 5 6 (PRODUCT LEVEL)	SEE PAGE
	1	1	**3S-2093**	2	STRAP-CABLE	
	2	1	**7K-1181**	1	STRAP-CABLE	
	3	1	**9R-7941**	1	SOCKET AS	
		1	**9R-7980**	1	COVER	
	4	1	**484-1456**	3	STRAP-CABLE	
CY	5	1	**552-4919**	1	HARNESS AS-CONTROL (CHASSIS)	196
	6	1	**524-4506**	1	BRACKET AS	
M		1	**6V-9632**	2	NUT-WELD (M6X1-THD)	
M		1	**8T-3490**	1	NUT-WELD (M10X1.5-THD)	
M	7	1	**9X-2042**	2	SCREW-TRUSS HEAD (M6X1X12-MM)	

C - CHANGE FROM PREVIOUS TYPE
M - METRIC PART
Y - SEPARATE ILLUSTRATION

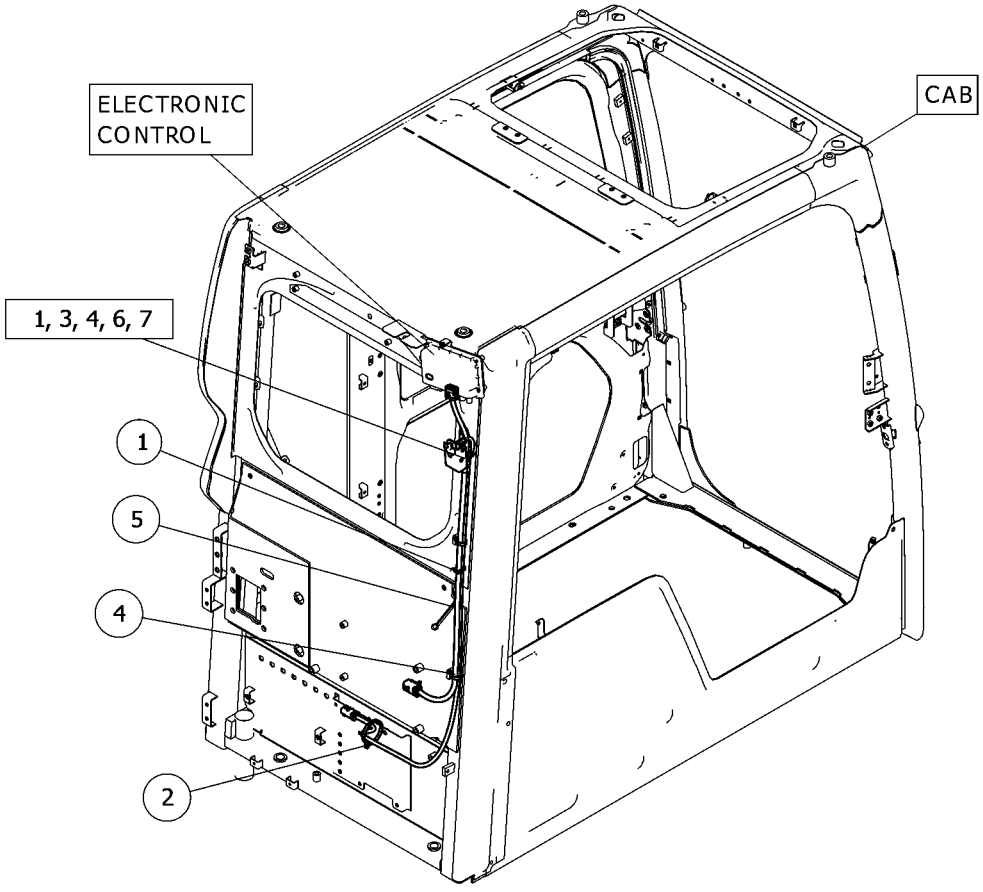

GRAPHIC #1 <END> g06323475

514-5702 WIRING GP-CHASSIS–REVERSING FAN

S/N: SP91-UP

PART OF 512-5995 FAN AR-SUCTION

SMCS-1408 **i07527746**

NOTE	REF NO	GRAPHIC REF	PART NUMBER	QTY	PART NAME 1 2 3 4 5 6 (PRODUCT LEVEL)	SEE PAGE
Y	1	1	**514-7350**	1	HARNESS AS-CHASSIS (REVERSING FAN)	182

Y - SEPARATE ILLUSTRATION

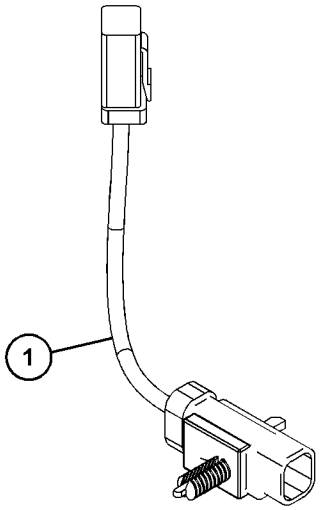

VIEW OF AREA A

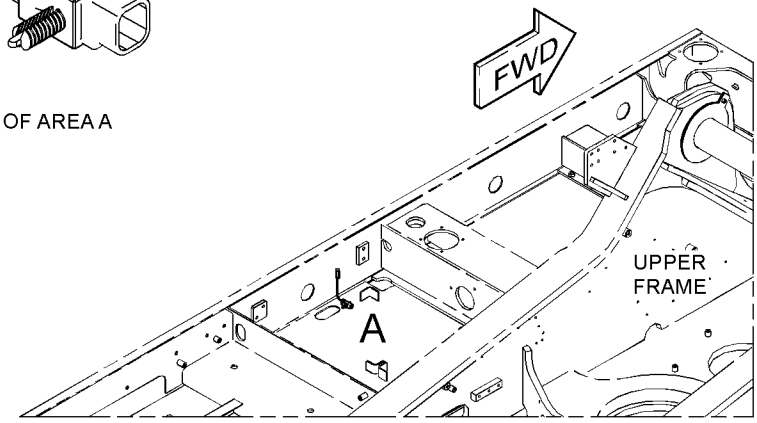

GRAPHIC #1

<END>

g06281238

538-5287 WIRING GP-CHASSIS—2-WAY FLOW, 1-PUMP, ELEC CONT

S/N: SP91-UP

PART OF 538-3026 CONTROL AR-AUXILIARY

SMCS-1408 **i07526624**

NOTE	REF NO	GRAPHIC REF	PART NUMBER	QTY	PART NAME 1 2 3 4 5 6 (PRODUCT LEVEL)	SEE PAGE
	1	1	**3S-2093**	8	STRAP-CABLE	
	2	1	**7K-1181**	20	STRAP-CABLE	
	3	1	**266-7379**	1	STRAP-CABLE	
	4	1	**484-1453**	6	CLIP (RETAINER)	
	5	1	**484-1456**	1	STRAP-CABLE	
Y	6	1	**551-3758**	1	HARNESS AS-CHASSIS (TOOL)	184
	7	1	**204-1611**	1	STRAP-CABLE (DUAL)	

Y - SEPARATE ILLUSTRATION

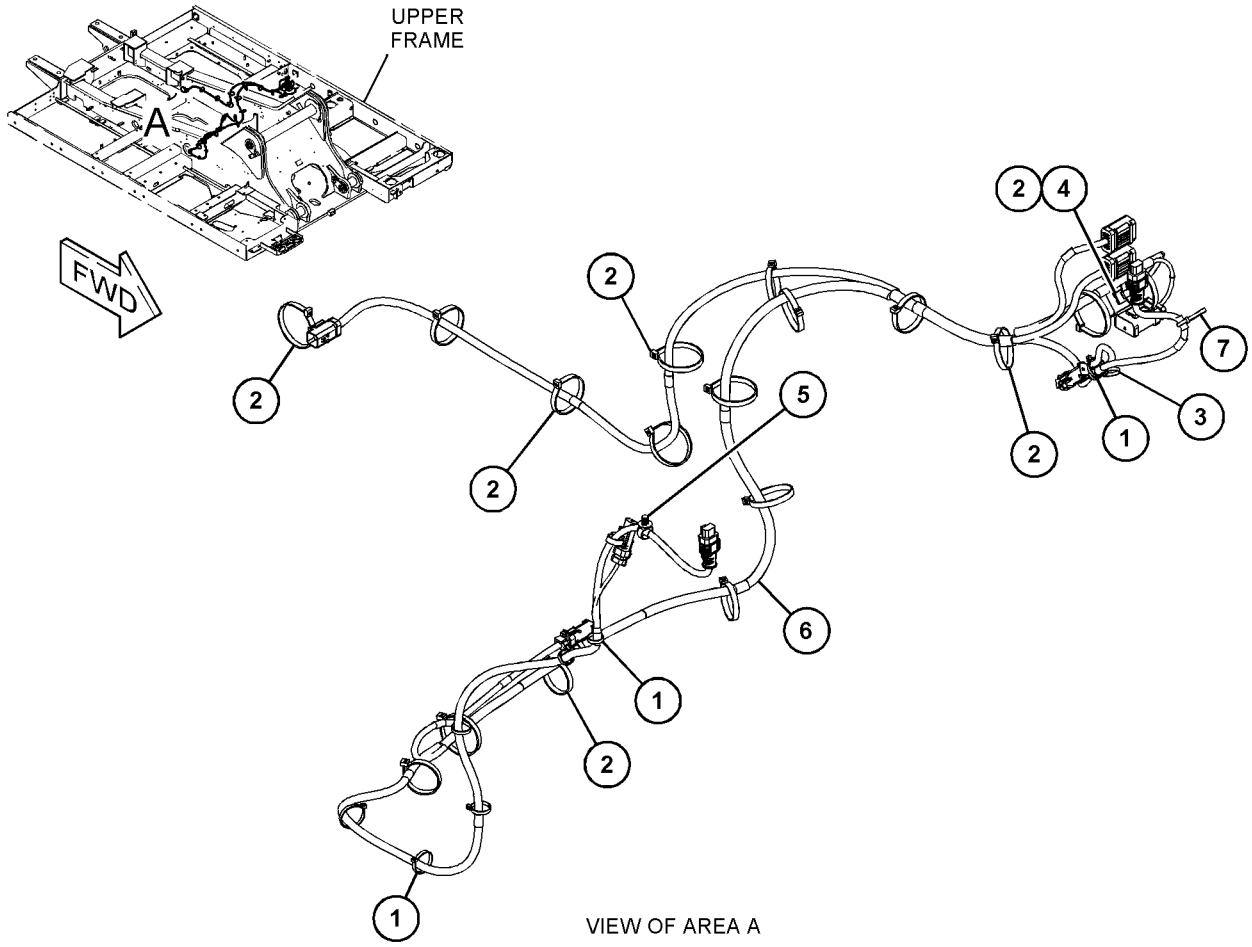

VIEW OF AREA A

GRAPHIC #1 <END> g06274378

549-8055 WIRING GP-CHASSIS–BOOM PRESSURE CONTROL

S/N: SP91-UP

PART OF 525-2618 CONTROL AR-BOOM

SMCS-1408 **i07527161**

NOTE	REF NO	GRAPHIC REF	PART NUMBER	QTY	PART NAME 1 2 3 4 5 6 (PRODUCT LEVEL)	SEE PAGE
	1	1	**7K-1181**	13	STRAP-CABLE	
	2	1	**8T-4121**	2	WASHER-HARD (11X21X2.5-MM THK)	
M	3	1	**8T-4137**	2	BOLT (M10X1.5X20-MM)	
	4	1	**484-1453**	1	CLIP (RETAINER)	
	5	1	**204-1611**	1	STRAP-CABLE (DUAL)	
Y	6	1	**550-0785**	1	HARNESS AS-CHASSIS (BOOM)	183
	7	1	**550-0786**	1	BRACKET	

M - METRIC PART
Y - SEPARATE ILLUSTRATION

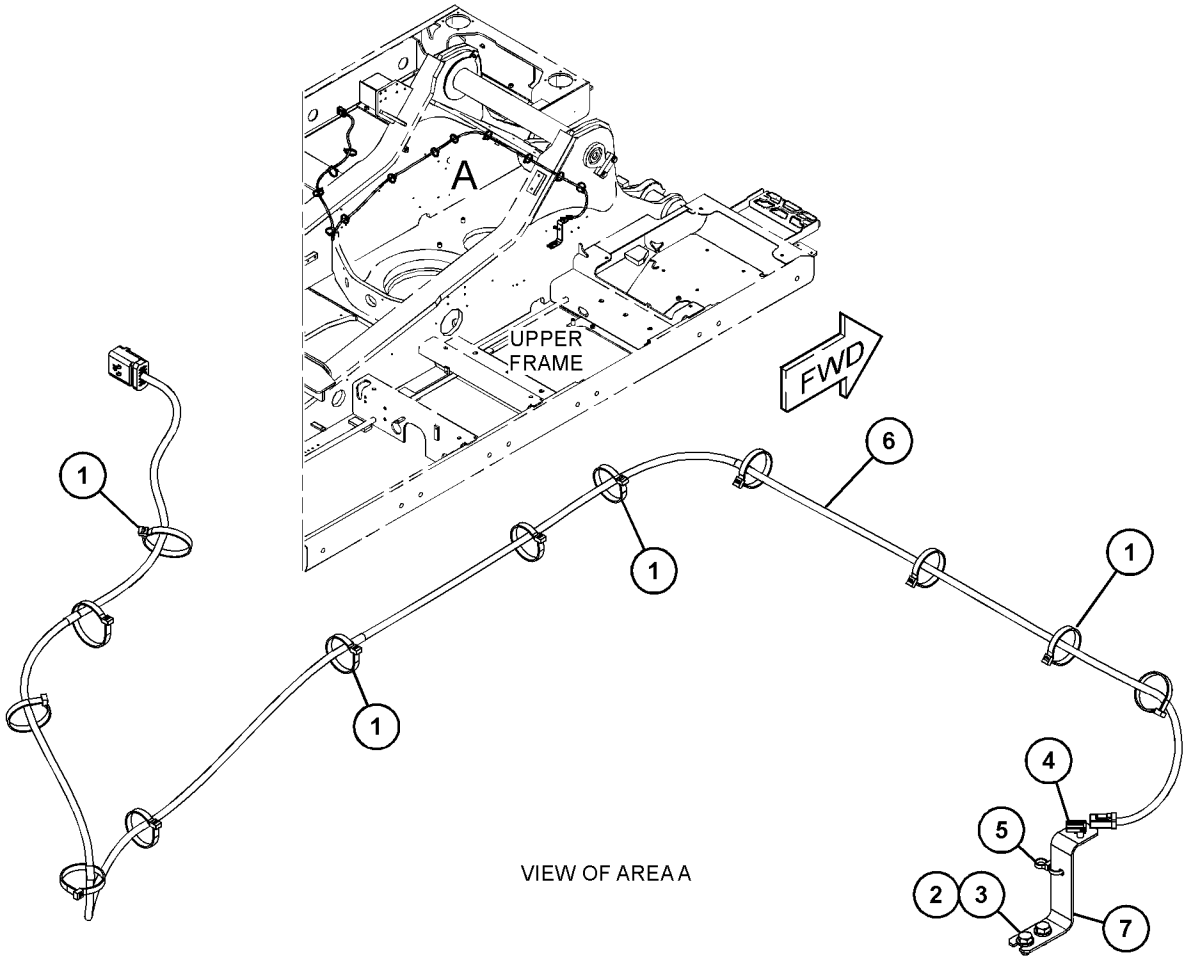

VIEW OF AREA A

GRAPHIC #1 <END> g06281291

577-2118 WIRING GP-CHASSIS

S/N: SP91-UP

SMCS-1408 **i07785959**

NOTE	REF NO	GRAPHIC REF	PART NUMBER	QTY	PART NAME 1 2 3 4 5 6 (PRODUCT LEVEL)	SEE PAGE
M	1	1	**7X-2621**	2	BOLT (M10X1.5X12-MM)	
	2	1	**8T-4121**	2	WASHER-HARD (11X21X2.5-MM THK)	
	3	1	**342-2974**	1	CAP-CONNECTOR (6-PIN)	
	4	1	**484-1454**	1	CLIP-RETAINING	
	5	1	**484-1456**	3	STRAP-CABLE	
	6	1	**577-2124**	1	BRACKET AS	
M		1	**6V-9632**	1	NUT-WELD (M6X1-THD)	
M		1	**9R-2672**	3	BOSS-THREADED (M10X1.5X120-MM)	

M - METRIC PART

577-2118 **WIRING GP-CHASSIS (**contd.**)** **i07785959**

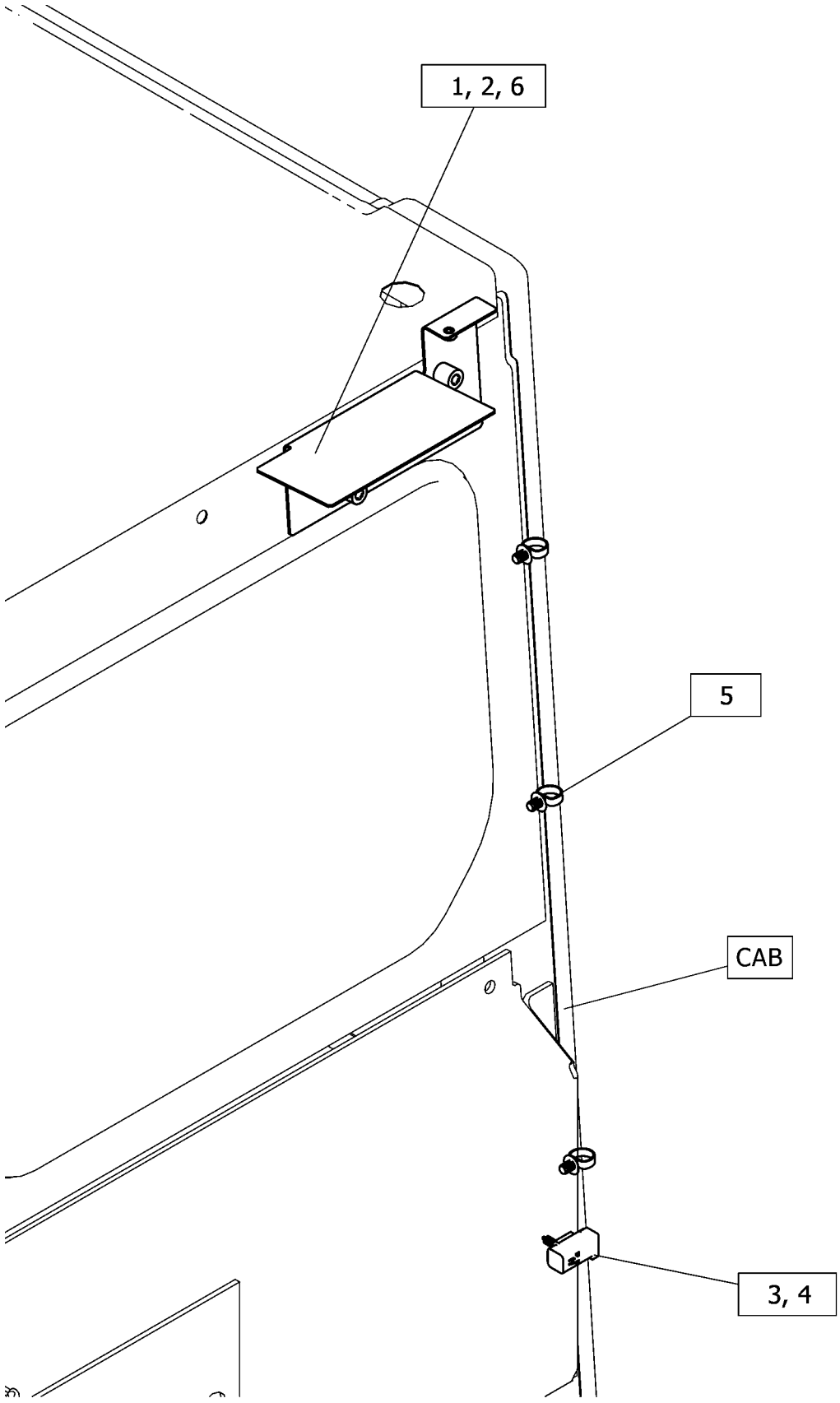

GRAPHIC #1 <END> g06448888

488-6764 WIRING GP-CONSOLE

S/N: SP91-UP

PART OF 489-7847 MODULE GP-CAB WIRING

SMCS-1408 **i07348806**

NOTE	PART NUMBER	QTY	PART NAME 1 2 3 4 5 6 (PRODUCT LEVEL)	SEE PAGE
Y	*528-0022*	1	LIGHTING GP-CAB (FOOT)	210
Y	*502-7168*	1	MOUNTING GP-WIRING	221
Y	*502-7165*	1	SWITCH AS-PUSH BUTTON (ENGINE START)	250
Y	*488-6765*	1	WIRING GP-CONSOLE (LH)	280
Y	*488-6766*	1	WIRING GP-CONSOLE (RH)	281
Y	*488-6767*	1	WIRING GP-CONSOLE	282

Y - SEPARATE ILLUSTRATION

<END>

488-6765 WIRING GP-CONSOLE

S/N: SP91-UP

PART OF 488-6764 WIRING GP-CONSOLE

SMCS-1408 **i07349055**

NOTE	REF NO	GRAPHIC REF	PART NUMBER	QTY	PART NAME 1 2 3 4 5 6 (PRODUCT LEVEL)	SEE PAGE
	1	1	**3S-2093**	6	STRAP-CABLE	
	2	1	**7K-1181**	4	STRAP-CABLE	
	3	1	**484-1451**	1	CLIP	
Y	4	1	**530-1943**	1	HARNESS AS-CONSOLE (LH)	192
M	5	1	**128-2136**	1	SCREW-TRUSS HEAD (M6X1X16-MM)	

M - METRIC PART
Y - SEPARATE ILLUSTRATION

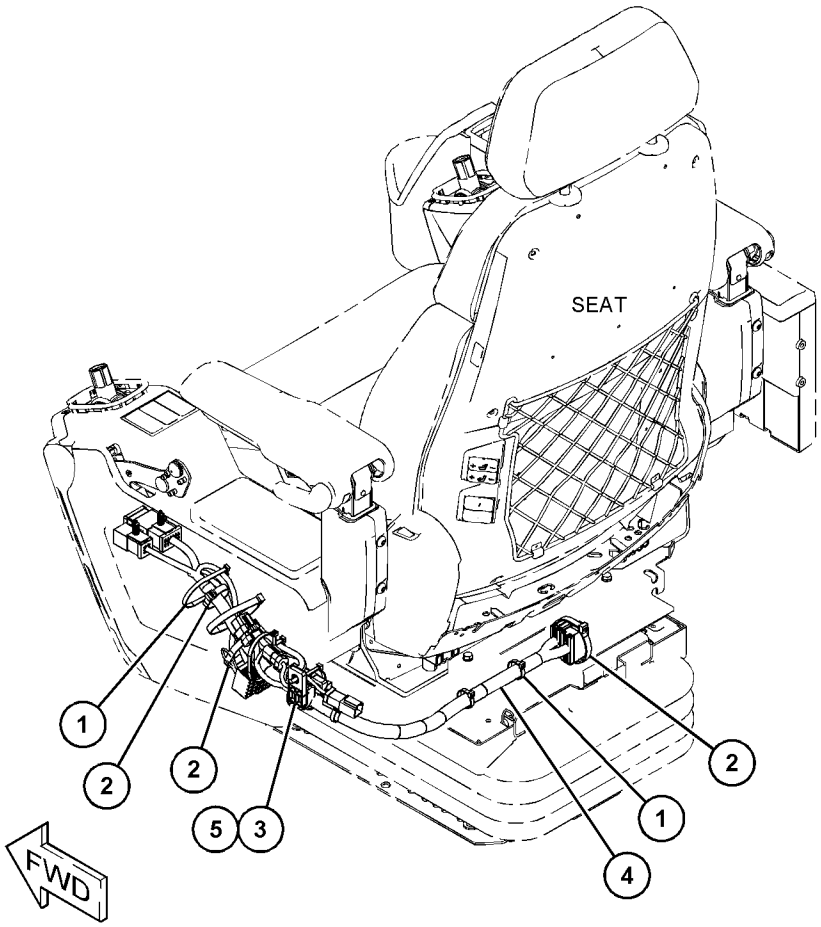

GRAPHIC #1 <END> g06226980

488-6766 WIRING GP-CONSOLE

S/N: SP91-UP

PART OF 488-6764 WIRING GP-CONSOLE

SMCS-1408 **i07349170**

NOTE	REF NO	GRAPHIC REF	PART NUMBER	QTY	PART NAME 1 2 3 4 5 6 (PRODUCT LEVEL)	SEE PAGE
	1	1	**3S-2093**	4	STRAP-CABLE	
	2	1	**7K-1181**	3	STRAP-CABLE	
	3	1	**335-5365**	1	SOCKET-AUXILIARY POWER (12-VOLT)	
	4	1	**448-1297**	1	TIE	
	5	1	**484-1451**	1	CLIP	
	6	1	**484-1453**	1	CLIP (RETAINER)	
	7	1	**484-1456**	2	STRAP-CABLE	
	8	1	**491-7831**	1	BASE	
Y	9	1	**530-1944**	1	HARNESS AS-CONSOLE (RH)	193
	10	1	**533-5685**	1	SUPPORT AS	
M	11	1	**128-2136**	1	SCREW-TRUSS HEAD (M6X1X16-MM)	
	12	1	**427-9771**	3	TIE	
M	13	1	**9X-2042**	2	SCREW-TRUSS HEAD (M6X1X12-MM)	

M - METRIC PART
Y - SEPARATE ILLUSTRATION

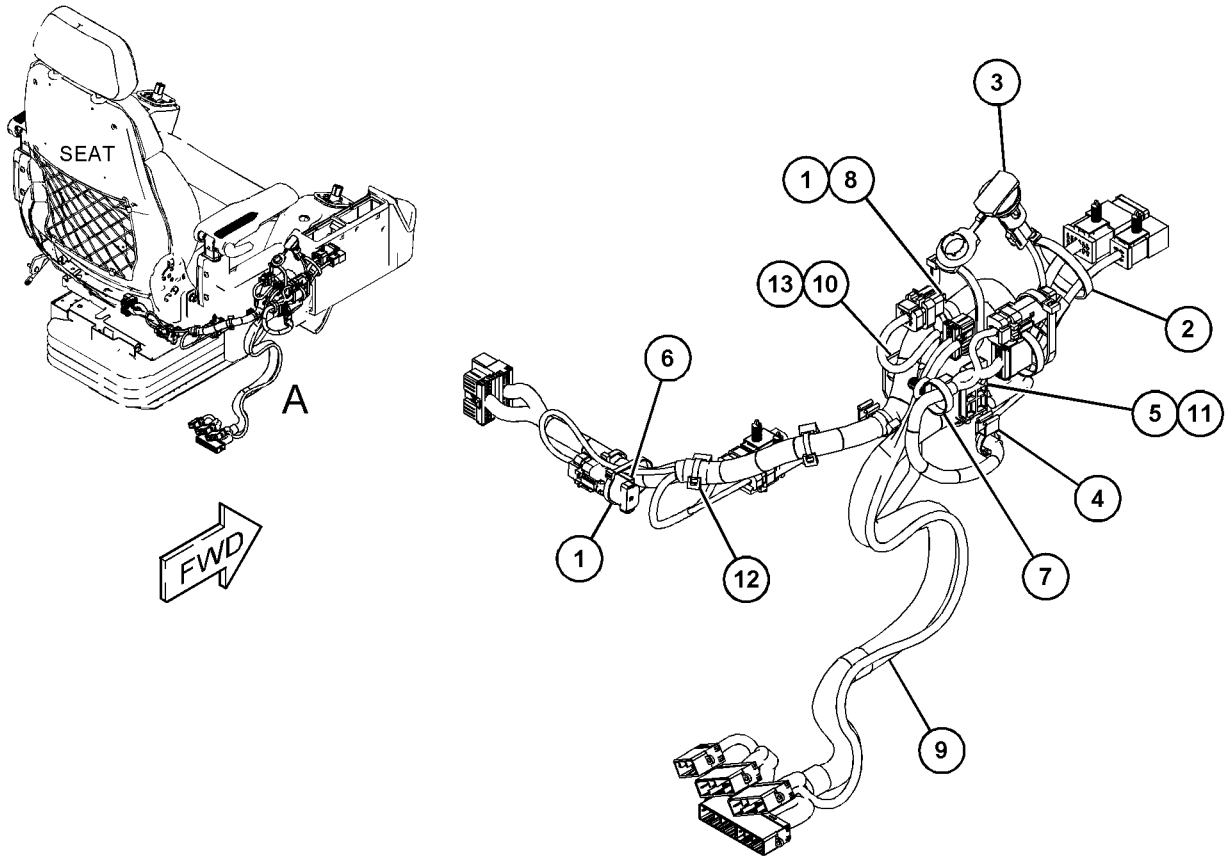

VIEW OF AREA A

GRAPHIC #1 <END> g06227022

488-6767 WIRING GP-CONSOLE

S/N: SP91-UP

PART OF 488-6764 WIRING GP-CONSOLE

SMCS-1408 **i07349265**

NOTE	REF NO	GRAPHIC REF	PART NUMBER	QTY	PART NAME 1 2 3 4 5 6 (PRODUCT LEVEL)	SEE PAGE
	1	1	**3S-2093**	1	STRAP-CABLE	
	2	1	**448-1297**	1	TIE	
	3	1	**478-8975**	1	MODULE GP-KEYPAD (JOG DIAL)	
	4	1	**478-8977**	1	MODULE GP-KEYPAD (ROTARY DIAL)	
Y	5	1	**530-1945**	1	HARNESS AS-CONSOLE	194
	6	1	**427-9771**	1	TIE	
M	7	1	**9X-2044**	8	SCREW-TRUSS HEAD (M6X1X16-MM)	

M - METRIC PART
Y - SEPARATE ILLUSTRATION

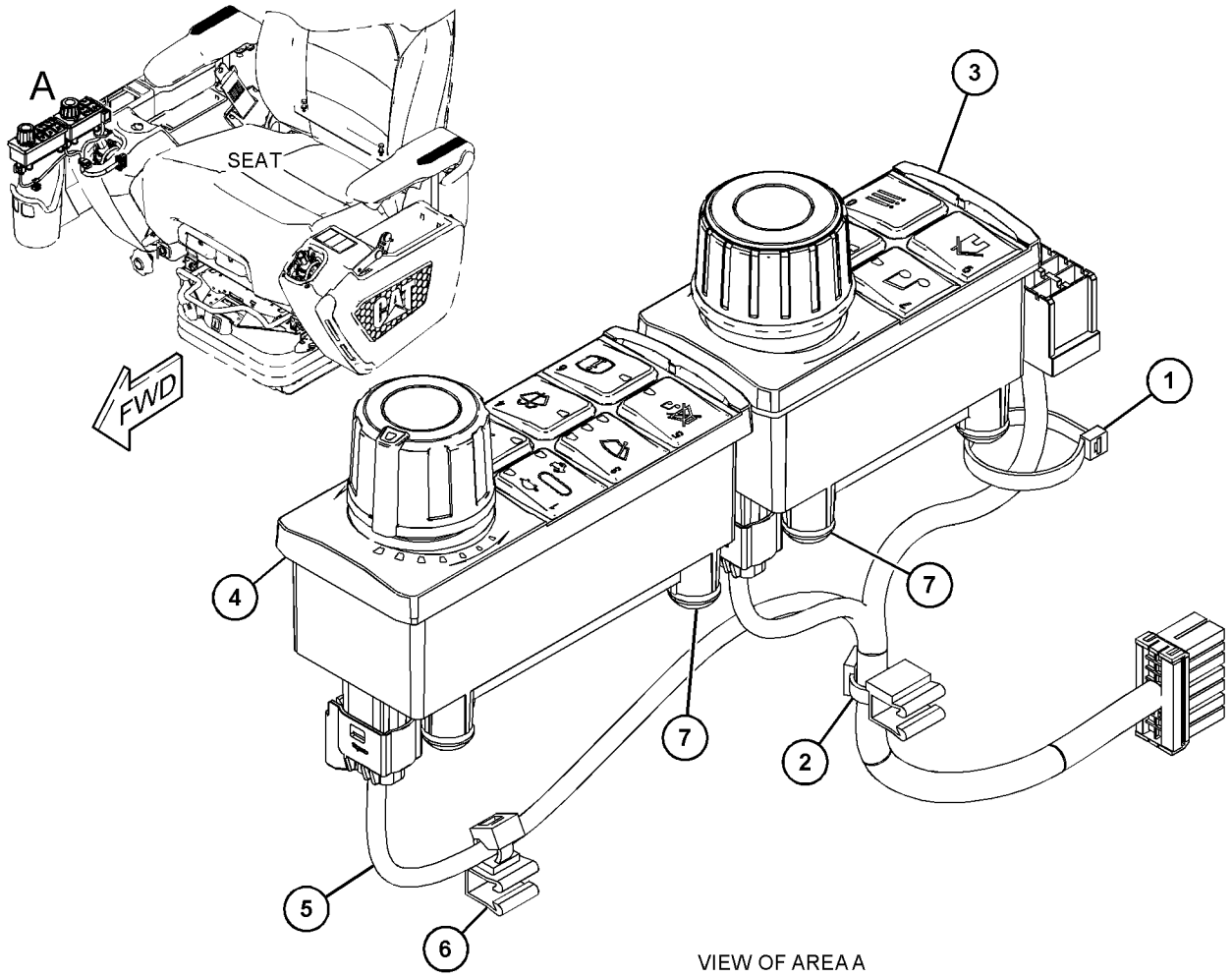

VIEW OF AREA A

GRAPHIC #1 <END> g06227094

525-8061 WIRING GP-ELECTRONIC CONTROL

S/N: NTB1-UP

PART OF 522-6120 ENGINE AR-COMPLETE

SMCS-1408 **i07499055**

NOTE	REF NO	GRAPHIC REF	PART NUMBER	QTY	PART NAME 1 2 3 4 5 6 (PRODUCT LEVEL)	SEE PAGE
	1	1	**3S-2093**	11	STRAP-CABLE	
	2	1	**7K-1181**	5	STRAP-CABLE	
	3	1	**164-0150**	1	SPACER (9X20X20-MM THK)	
	4	1	**290-5664**	6	STRAP-CABLE	
Y	5	1	**525-3964**	1	HARNESS AS-CONTROL	194
M	6	1	**101-3129**	1	STUD (M10X1.5-THD)	
	7	1	**106-4159**	1	SPACER (11.13X19.05X13.5-MM THK)	
	8	1	**132-5789**	1	CLIP (LADDER)	
M	9	1	**178-3336**	2	NUT-HEX FLANGE (M8X1.25-THD)	
M	10	1	**175-7141**	2	NUT-HEX FLANGE (M10X1.5-THD)	
	11	1	**352-3968**	1	CLIP (LADDER)	
	12	1	**3E-4353**	1	WASHER-HARD (11X25X3-MM THK)	
Y	13	1	**542-9915**	1	WIRING GP-ENGINE	288
	14	1	**5L-2087**	1	SPACER (9.25X13.72X50.8-MM THK)	
M	15	1	**5P-8347**	1	BOLT (M8X1.25X70-MM)	
M	16	1	**6V-5215**	1	BOLT (M8X1.25X16-MM)	
	17	1	**6V-5839**	1	WASHER (11X21X2.5-MM THK)	
M	18	1	**8T-4196**	1	BOLT (M10X1.5X35-MM)	
	19	1	**9M-1974**	3	WASHER-HARD (8.8X16X2-MM THK)	

M - METRIC PART
Y - SEPARATE ILLUSTRATION

525-8061 **WIRING GP-ELECTRONIC CONTROL (**contd.**)** **i07499055**

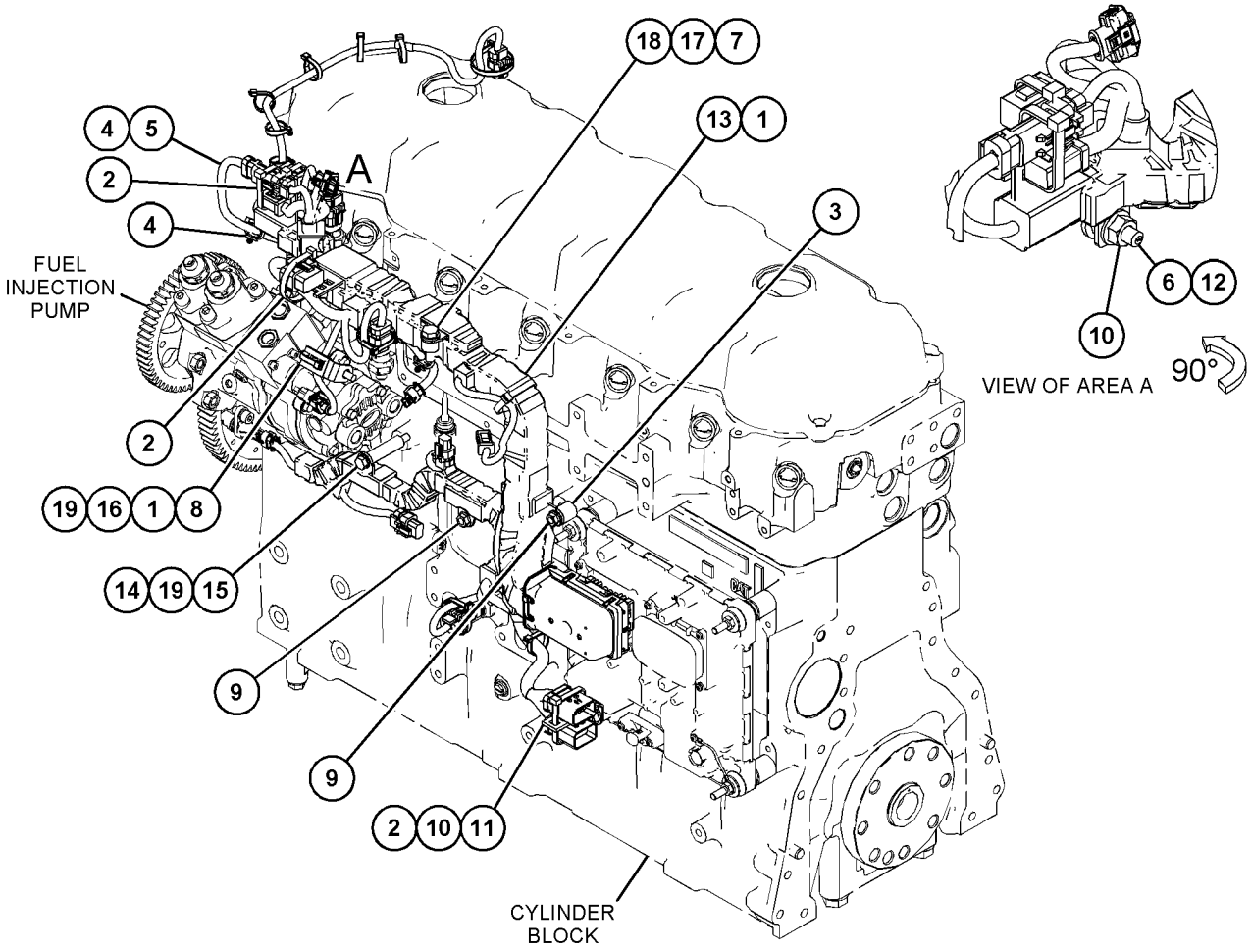

GRAPHIC #1 <END> g06306784

504-3557 WIRING GP-ENGINE

S/N: SP91-UP

PART OF 525-3763, 576-7683 ELECTRICAL AR

SMCS-1408 **i07690703**

NOTE	REF NO	GRAPHIC REF	PART NUMBER	QTY	PART NAME 1 2 3 4 5 6 (PRODUCT LEVEL)	SEE PAGE
M	1	1	**8T-4196**	1	BOLT (M10X1.5X35-MM)	
M	2	1	**8T-4172**	2	BOLT (M10X1.5X80-MM)	
	3	1	**3S-2093**	1	STRAP-CABLE	
M	4	1	**5C-7261**	1	NUT (M8X1.25-THD)	
	5	1	**7K-1181**	11	STRAP-CABLE	
	6	1	**8T-4121**	17	WASHER-HARD (11X21X2.5-MM THK)	
M	7	1	**8T-4133**	2	NUT (M10X1.5-THD)	
M	8	1	**8T-4136**	4	BOLT (M10X1.5X25-MM)	
M	9	1	**8T-4137**	8	BOLT (M10X1.5X20-MM)	
	10	1	**167-3583**	1	STRAP AS-GROUND	
	11	1	**266-7379**	1	STRAP-CABLE	
	12	1	**483-7806**	2	SPACER (11X20X56-MM THK)	
	13	1	**484-1451**	6	CLIP	
	14	1	**484-1454**	1	CLIP-RETAINING	
	15	1	**484-1456**	2	STRAP-CABLE	
	16	1	**509-5008**	1	BRACKET AS	
	17	1	**513-3120**	1	BRACKET AS	
	18	1	**513-3122**	1	BRACKET AS	
	19	1	**513-3126**	1	BRACKET AS	
Y	20	1	**522-7072**	1	HARNESS AS-ENGINE (REAR)	197
Y	21	1	**522-7073**	1	HARNESS AS-ENGINE (ALTERNATOR)	197
	22	1	**528-3399**	1	BRACKET AS	
	23	1	**177-2215**	1	STRAP-DUAL CLAMP	
	24	1	**204-1611**	2	STRAP-CABLE (DUAL)	
Y	25	1	**570-2258**	1	HARNESS AS-ENGINE (FRONT)	199
	26	1	**552-2526**	1	CABLE AS-ENGINE	
		1	**490-0571**	2	PLUG AS-CONNECTOR (2-PIN)	
	27	1	**552-2527**	1	BRACKET AS	
	28	1	**554-3153**	1	BRACKET AS-ENGINE	

M - METRIC PART
Y - SEPARATE ILLUSTRATION

504-3557 **WIRING GP-ENGINE (**contd.**)** **i07690703**

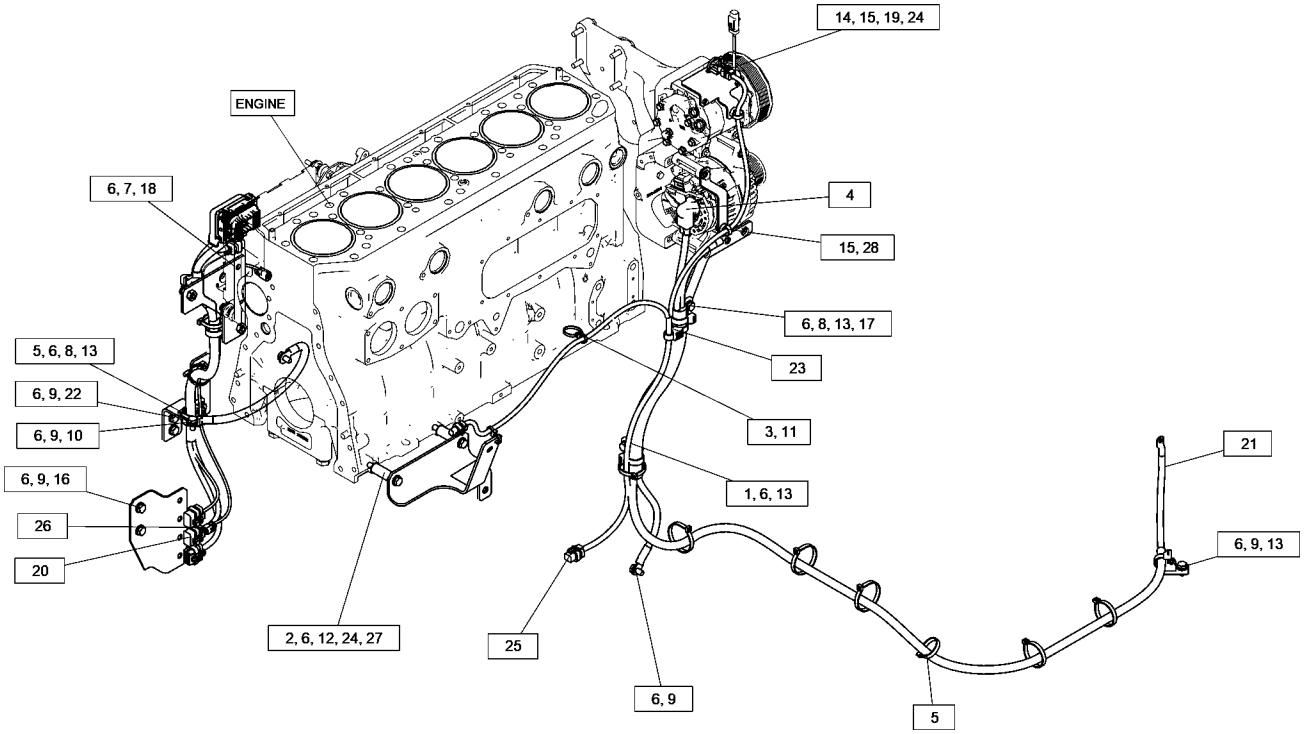

GRAPHIC #1 <END> g06305695

527-3315 WIRING GP-ENGINE–INJECTOR

S/N: NTB1-UP

WITHOUT BRAKES

PART OF 527-3316 WIRING GP-UNIT INJECTOR

SMCS-1408 **i07245769**

NOTE	PART NUMBER	QTY	PART NAME 1 2 3 4 5 6 (PRODUCT LEVEL)	SEE PAGE
Y	*527-3314*	1	HARNESS AS-CONTROL	195

Y - SEPARATE ILLUSTRATION

<END>

542-9915 WIRING GP-ENGINE

S/N: NTB1-UP

PART OF 525-8061 WIRING GP-ELECTRONIC CONTROL

SMCS-1408 **i07499246**

NOTE	REF NO	GRAPHIC REF	PART NUMBER	QTY	PART NAME 1 2 3 4 5 6 (PRODUCT LEVEL)	SEE PAGE
	1	1	**3S-2093**	1	STRAP-CABLE	
Y	2	1	*542-9914*	1	HARNESS AS-ENGINE	198

Y - SEPARATE ILLUSTRATION

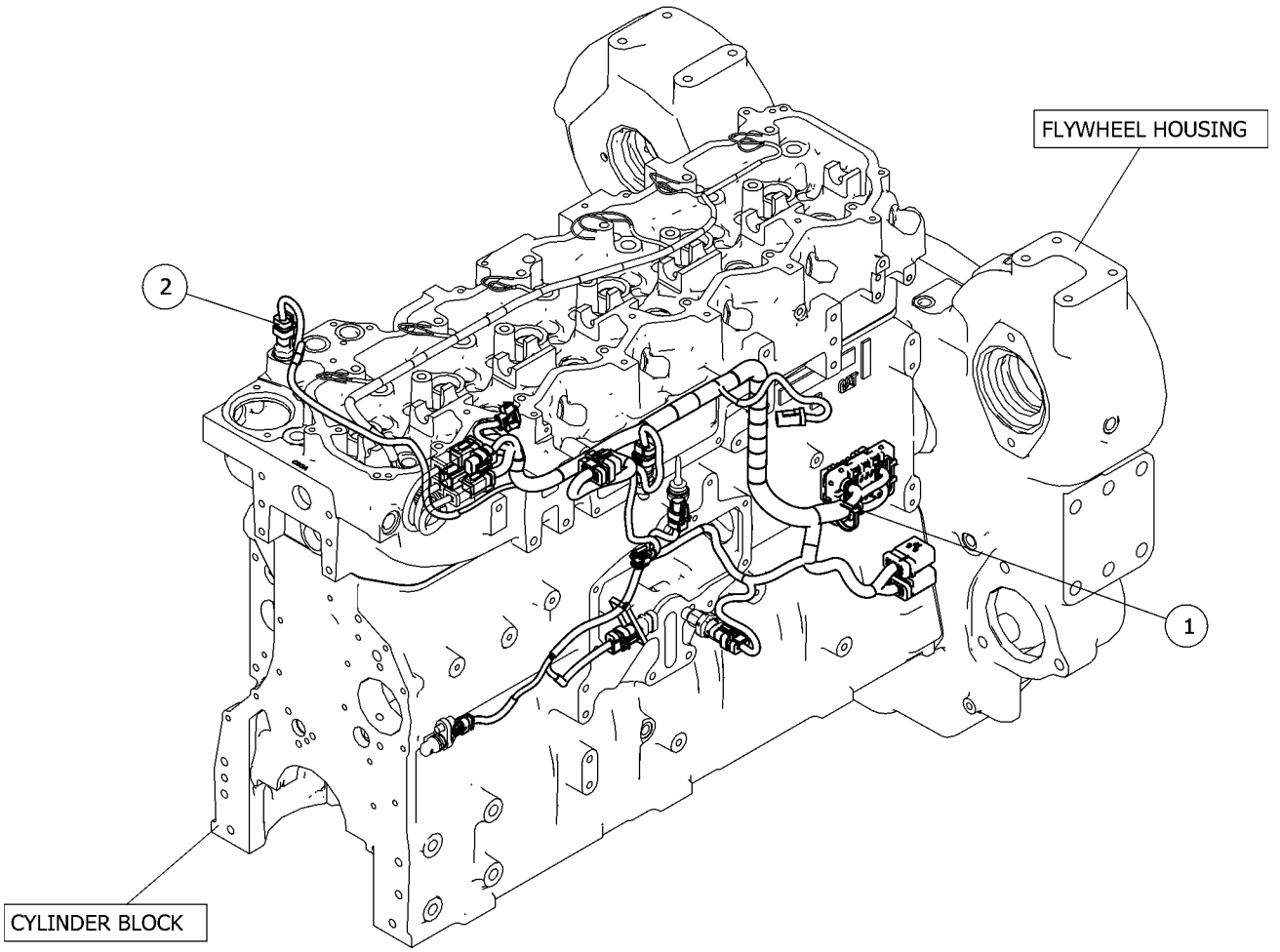

GRAPHIC #1 <END> g06306198

504-3560 WIRING GP-FRONT–GRADE CONTROL, BOOM

S/N: SP91-UP

PART OF 517-5967 GRADE CONTROL AR

SMCS-1408, 5734

i07527327

NOTE	REF NO	GRAPHIC REF	PART NUMBER	QTY	PART NAME 1 2 3 4 5 6 (PRODUCT LEVEL)	SEE PAGE
	1	1	**3S-2093**	17	STRAP-CABLE	
	2	1	**204-1611**	10	STRAP-CABLE (DUAL)	
	3	1	**178-3620**	5	STRAP-DUAL CLAMP	
	4	1	**484-1456**	1	STRAP-CABLE	
Y	5	1	**556-3718**	1	HARNESS AS-SENSOR (GRADE CONTROL, BOOM)	203

Y - SEPARATE ILLUSTRATION

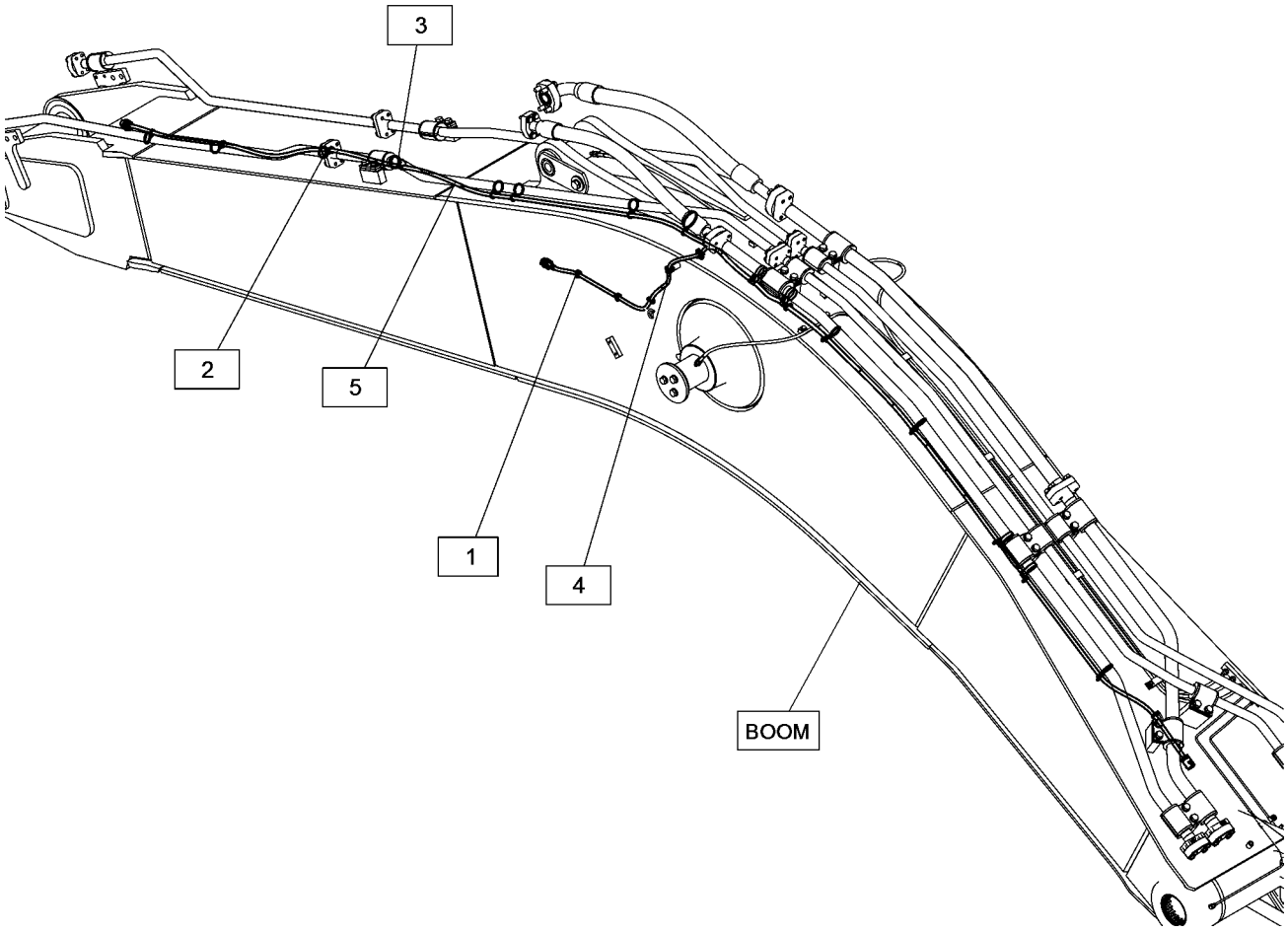

GRAPHIC #1 <END> g06280483

517-3162 WIRING GP-FRONT—GRADE CONTROL, STICK

S/N: SP91-UP
FOR USE WITH 3.2-M (10.5-FT) STICK
PART OF 517-5971 INSTALLATION AR-MACHINE

SMCS-1408, 5734 **i07527320**

NOTE	REF NO	GRAPHIC REF	PART NUMBER	QTY	PART NAME 1 2 3 4 5 6 (PRODUCT LEVEL)	SEE PAGE
	1	1	**3S-2093**	6	STRAP-CABLE	
	2	1	**7K-1181**	1	STRAP-CABLE	
	3	1	**116-0118**	1	CLIP	
	4	1	**178-3620**	4	STRAP-DUAL CLAMP	
	5	1	**484-1453**	3	CLIP (RETAINER)	
	6	1	**484-1456**	1	STRAP-CABLE	
Y	7	1	**529-0428**	1	HARNESS AS-CONTROL (STICK)	196
Y	8	1	**536-5437**	1	HARNESS AS-FRONT (GRADE CONTROL)	199
	9	1	**204-1611**	6	STRAP-CABLE (DUAL)	
	10	1	**347-4734**	1	CLIP	
	11	1	**8T-4121**	1	WASHER-HARD (11X21X2.5-MM THK)	
M	12	1	**8T-4137**	1	BOLT (M10X1.5X20-MM)	

M - METRIC PART
Y - SEPARATE ILLUSTRATION

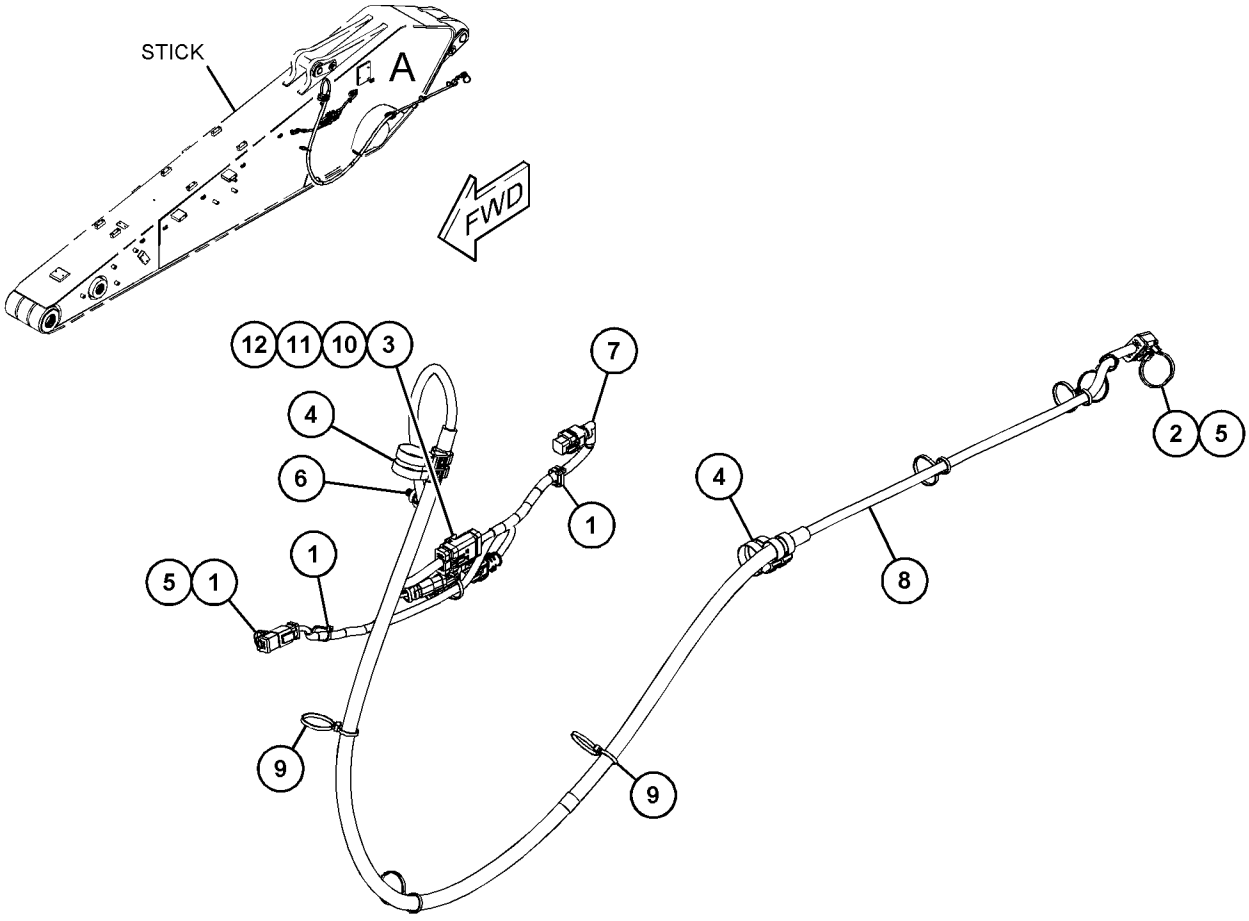

VIEW OF AREA A

GRAPHIC #1 <END> g06281264

522-8795 WIRING GP-FRONT—GRADE CONTROL, STICK

S/N: SP91-UP
FOR USE WITH 2.55-M (8.4-FT) STICK
PART OF 522-8798 GRADE CONTROL AR

SMCS-1408, 5734

i07527273

NOTE	REF NO	GRAPHIC REF	PART NUMBER	QTY	PART NAME 1 2 3 4 5 6 (PRODUCT LEVEL)	SEE PAGE
	1	1	**3S-2093**	6	STRAP-CABLE	
	2	1	**7K-1181**	1	STRAP-CABLE	
	3	1	**116-0118**	1	CLIP	
	4	1	**484-1453**	3	CLIP (RETAINER)	
	5	1	**204-1611**	6	STRAP-CABLE (DUAL)	
	6	1	**178-3620**	4	STRAP-DUAL CLAMP	
	7	1	**347-4734**	1	CLIP	
	8	1	**484-1456**	1	STRAP-CABLE	
Y	9	1	**529-0428**	1	HARNESS AS-CONTROL (STICK)	196
Y	10	1	**536-5437**	1	HARNESS AS-FRONT (GRADE CONTROL)	199
	11	1	**8T-4121**	1	WASHER-HARD (11X21X2.5-MM THK)	
M	12	1	**8T-4137**	1	BOLT (M10X1.5X20-MM)	

M - METRIC PART
Y - SEPARATE ILLUSTRATION

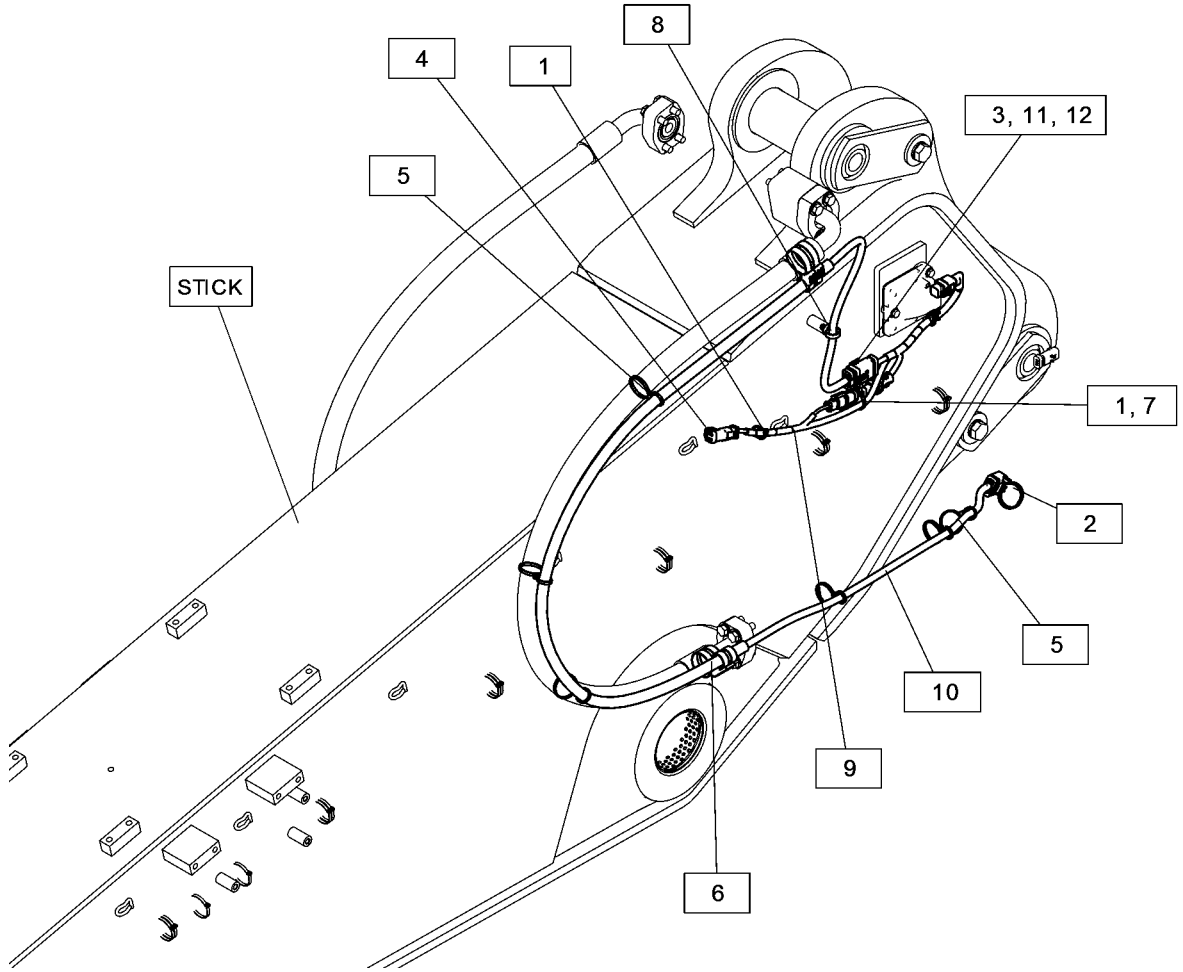

GRAPHIC #1 <END> g06281061

525-4122 WIRING GP-FRONT—GRADE CONTROL, BOOM

S/N: SP91-UP

PART OF 525-4121 GRADE CONTROL AR

SMCS-1408, 5734 **i07527126**

NOTE	REF NO	GRAPHIC REF	PART NUMBER	QTY	PART NAME 1 2 3 4 5 6 (PRODUCT LEVEL)	SEE PAGE
	1	1	**3S-2093**	16	STRAP-CABLE	
	2	1	**204-1611**	10	STRAP-CABLE (DUAL)	
	3	1	**178-3620**	5	STRAP-DUAL CLAMP	
	4	1	**484-1456**	1	STRAP-CABLE	
Y	5	1	**528-3696**	1	HARNESS AS-CONTROL (GRADE CONTROL, BOOM)	195

Y - SEPARATE ILLUSTRATION

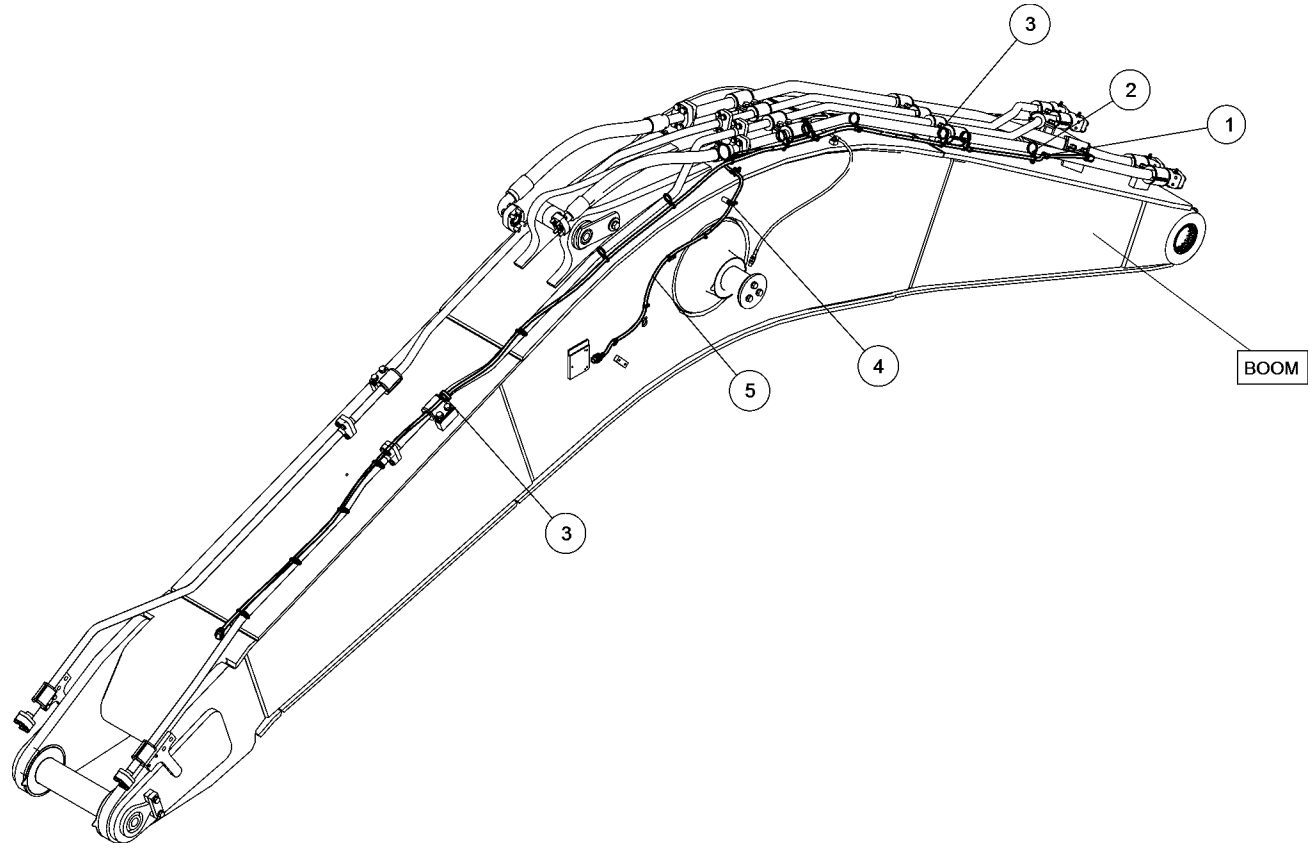

GRAPHIC #1 <END> g06279113

560-5566 WIRING GP-FRONT—GRADE CONTROL, STICK

S/N: SP91-UP

PART OF 560-5681 GRADE CONTROL AR

SMCS-1408, 5734

i07518806

NOTE	REF NO	GRAPHIC REF	PART NUMBER	QTY	PART NAME 1 2 3 4 5 6 (PRODUCT LEVEL)	SEE PAGE
	1	1	**3S-2093**	4	STRAP-CABLE	
	2	1	**559-8643**	1	HARNESS AS-FRONT	
		1	**102-8804**	1	KIT-RECEPTACLE (4-PIN)	
		1	**151-9274**	1	KIT-RECEPTACLE (4-PIN)	
					(EACH RECEPTACLE KIT INCLUDES RECEPTACLE AS & WEDGE)	
		1	**8T-8729**	4	PIN-CONNECTOR (16-GA TO 20-GA)	
					—OR—	
		1	**186-3735**	4	PIN-CONNECTOR (16-GA TO 18-GA)	
		1	**253-2695**	1	PLUG AS-CONNECTOR	

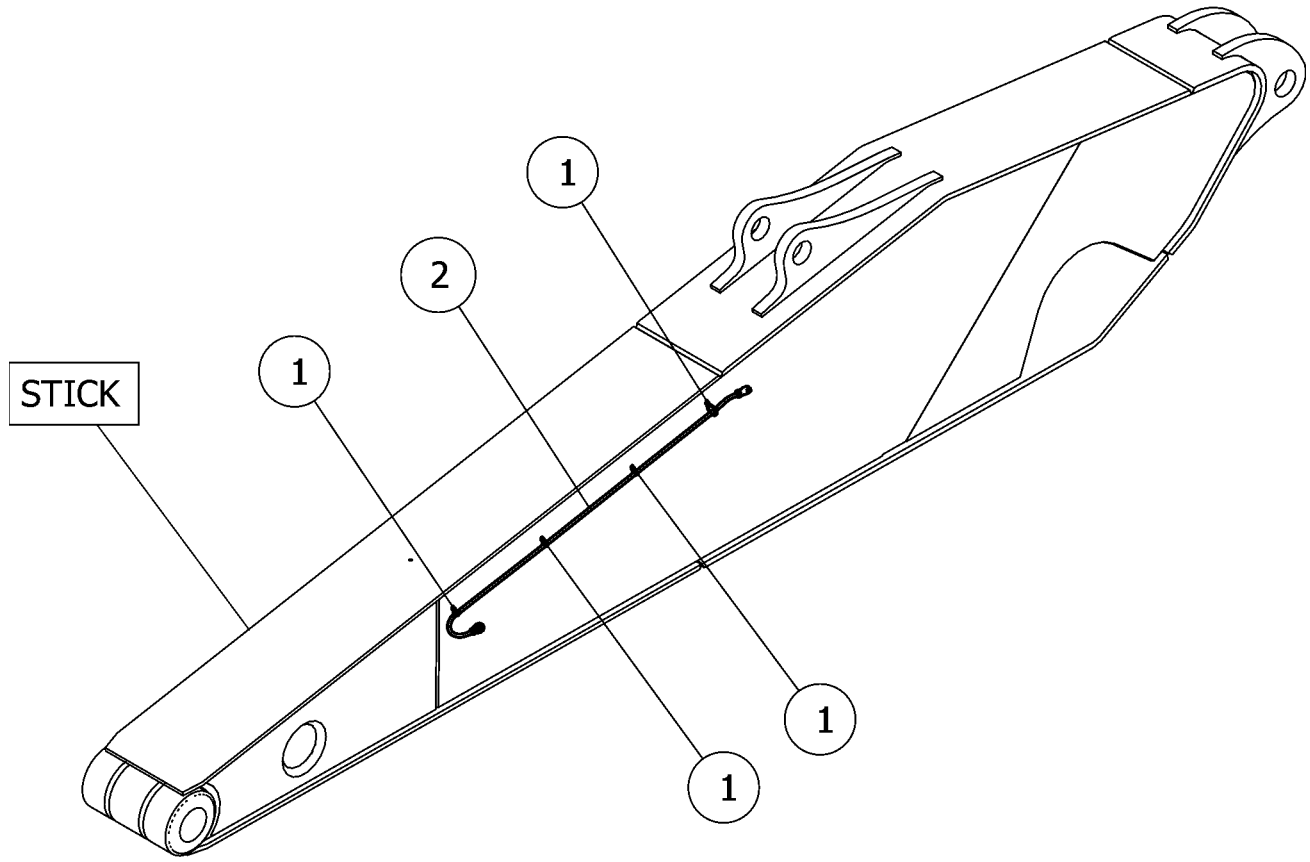

GRAPHIC #1 <END> g06304994

488-6768 WIRING GP-PLATFORM

S/N: SP91-UP

PART OF 489-7847 MODULE GP-CAB WIRING

SMCS-1408 **i07349284**

NOTE	REF NO	GRAPHIC REF	PART NUMBER	QTY	PART NAME 1 2 3 4 5 6 (PRODUCT LEVEL)	SEE PAGE
	1	1	**3E-5169**	1	GUARD-SWITCH (SECONDARY SHUTDOWN)	
	2	1	**3S-2093**	4	STRAP-CABLE	
	3	1	**6S-4039**	1	GROMMET	
	4	1	**116-0118**	7	CLIP	
	5	1	**301-2981**	1	SWITCH AS-TOGGLE (SECONDARY SHUTDOWN)	
		1	**102-8803**	1	KIT-RECEPTACLE (3-PIN)	
					(INCLUDES RECEPTACLE AS & WEDGE)	
		1	**3E-3371**	1	WEDGE-RECEPTACLE LOCK (3-PIN)	
		1	**8T-8729**	3	PIN-CONNECTOR (16-GA TO 20-GA)	
	6	1	**319-1260**	2	PANEL	
	7	1	**328-0077**	1	CAP	
	8	1	**484-1451**	6	CLIP	
	9	1	**484-1452**	2	CLIP	
	10	1	**484-1456**	2	STRAP-CABLE	
	11	1	**503-8899**	1	PLATE	
	12	1	**516-4987**	1	BRACKET AS	
Y	13	1	**530-1947**	1	HARNESS AS-PLATFORM	202
	14	1	**533-2339**	1	BRACKET AS	
	15	1	**204-2281**	2	STRAP-CABLE	
M	16	1	**6V-9671**	8	SCREW-MACHINE (M3X0.5X12-MM)	
M	17	1	**7X-2621**	5	BOLT (M10X1.5X12-MM)	
	18	1	**8T-4121**	18	WASHER-HARD (11X21X2.5-MM THK)	
M	19	1	**8T-4136**	4	BOLT (M10X1.5X25-MM)	
M	20	1	**8T-4137**	9	BOLT (M10X1.5X20-MM)	
M	21	1	**9X-2042**	2	SCREW-TRUSS HEAD (M6X1X12-MM)	

M - METRIC PART
Y - SEPARATE ILLUSTRATION

488-6768 **WIRING GP-PLATFORM (**contd.**)** **i07349284**

NO GRAPHIC AVAILABLE AT TIME OF PUBLICATION

GRAPHIC #1 <END> g01269539

514-7718 WIRING GP-SENSOR–VALVE

S/N: SP91-UP

PART OF 513-3214 WIRING & MTG GP- MAIN CONT V

SMCS-1408 **i07865180**

NOTE	REF NO	GRAPHIC REF	PART NUMBER	QTY	PART NAME 1 2 3 4 5 6 (PRODUCT LEVEL)	SEE PAGE
	1	1	**3S-2093**	8	STRAP-CABLE	
	2	1	**266-7379**	4	STRAP-CABLE	
Y	3	1	**525-3740**	1	HARNESS AS-SENSOR (QUICK COUPLER)	203

Y - SEPARATE ILLUSTRATION

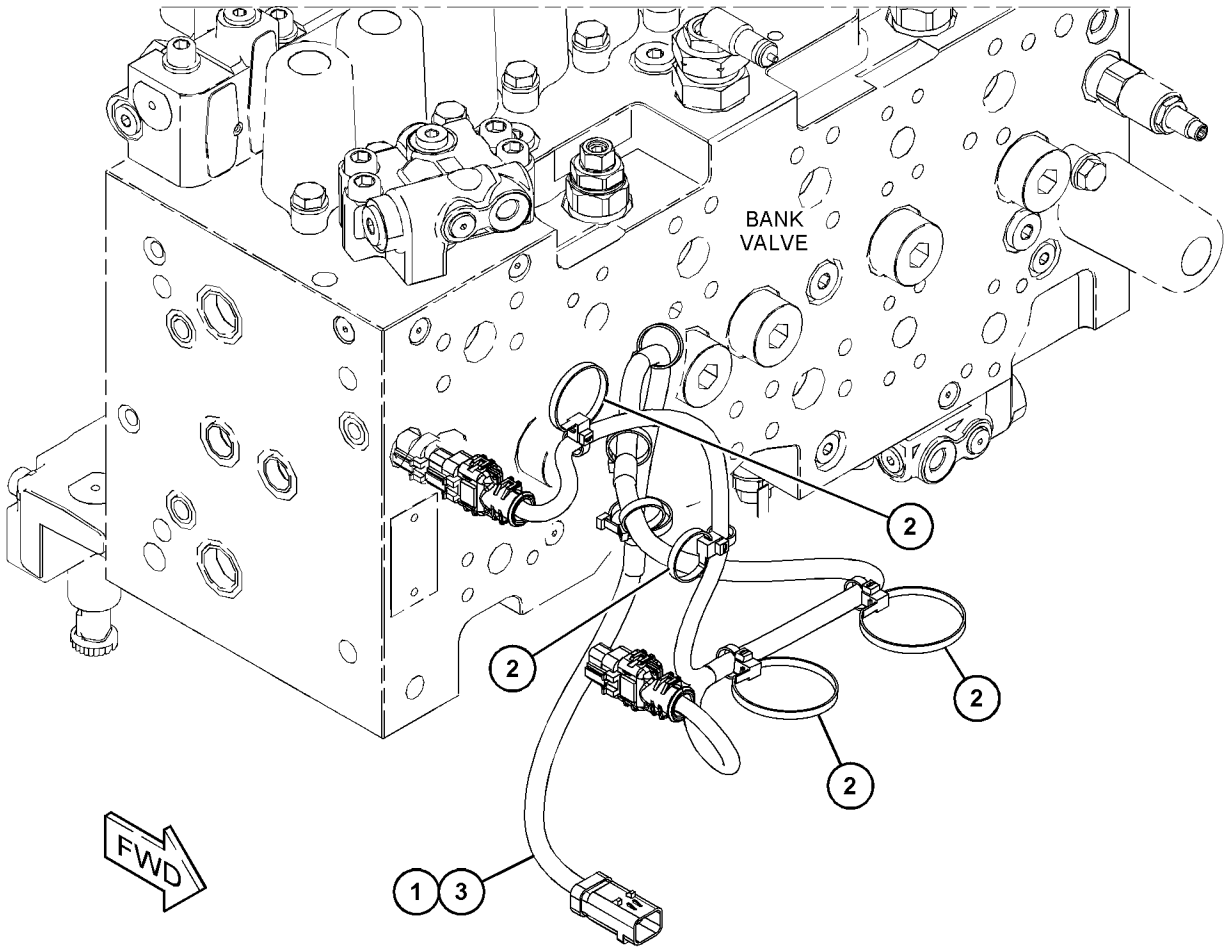

GRAPHIC #1 <END> g06230459

527-3316 WIRING GP-UNIT INJECTOR—WITHOUT BRAKES

S/N: NTB1-UP

PART OF 546-5240 ENGINE AR-CORE

SMCS-1290, 1408 **i07231020**

NOTE	REF NO	GRAPHIC REF	PART NUMBER	QTY	PART NAME 1 2 3 4 5 6 (PRODUCT LEVEL)	SEE PAGE
Y	1	1	**527-3315**	1	WIRING GP-ENGINE (WITHOUT BRAKES)	287
M	2	1	**175-7141**	5	NUT-HEX FLANGE (M10X1.5-THD)	

M - METRIC PART
Y - SEPARATE ILLUSTRATION

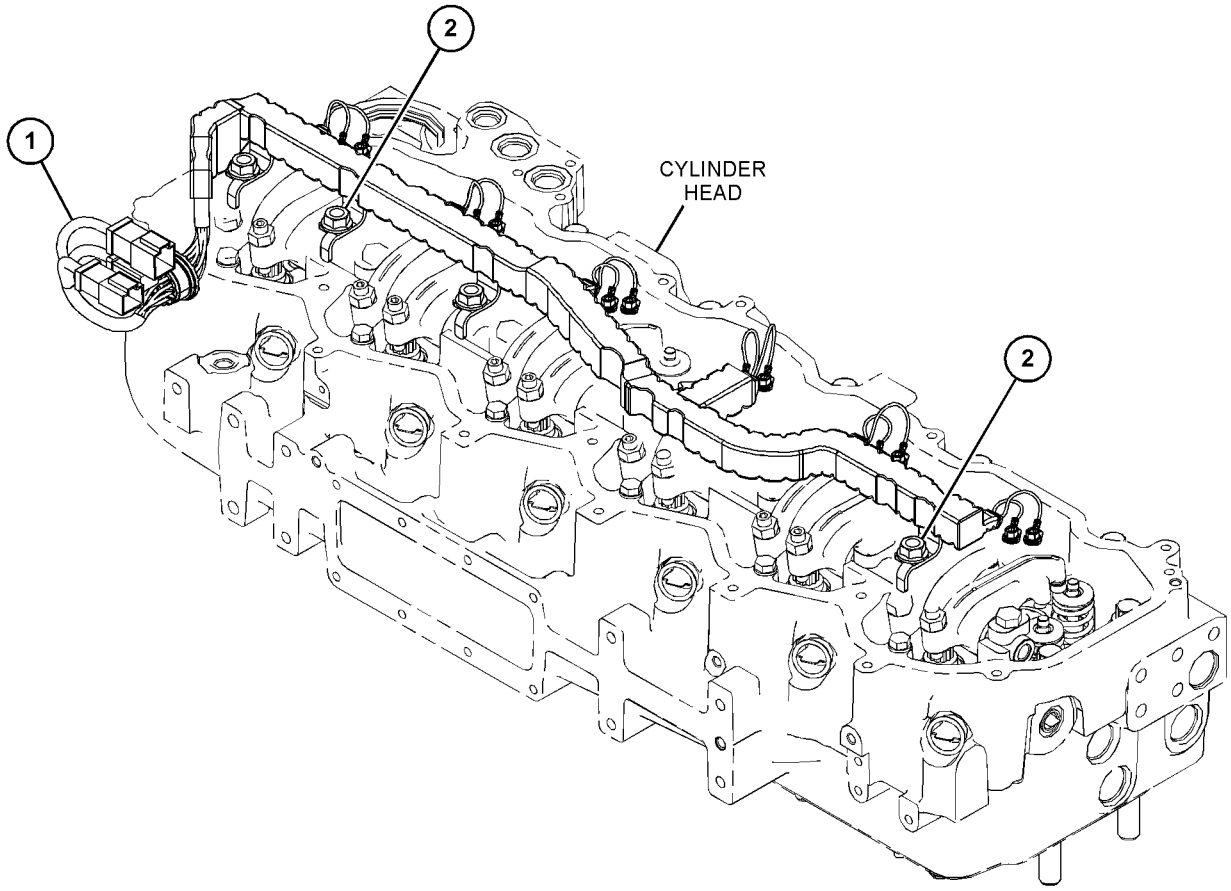

GRAPHIC #1 <END> g06243322

490-2693 WIRING GP-VALVE

S/N: SP91-UP

PART OF 522-0500 ELECTRICAL AR

SMCS-1408, 5734 **i07360216**

NOTE	REF NO	GRAPHIC REF	PART NUMBER	QTY	PART NAME 1 2 3 4 5 6 (PRODUCT LEVEL)	SEE PAGE
	1	1	**3S-2093**	13	STRAP-CABLE	
	2	1	**266-7379**	12	STRAP-CABLE	
	3	1	**483-7803**	2	SPACER (11X20X30-MM THK)	
	4	1	**484-1451**	3	CLIP	
	5	1	**484-1453**	1	CLIP (RETAINER)	
	6	1	**484-1454**	2	CLIP-RETAINING	
	7	1	**484-1456**	2	STRAP-CABLE	
	8	1	**506-7016**	1	BRACKET AS-VALVE	
	9	1	**506-7018**	1	BRACKET AS-VALVE	
Y	10	1	**549-9283**	1	HARNESS AS-VALVE	205
	11	1	**8T-4121**	6	WASHER-HARD (11X21X2.5-MM THK)	
M	12	1	**8T-4136**	1	BOLT (M10X1.5X25-MM)	
M	13	1	**8T-4137**	3	BOLT (M10X1.5X20-MM)	
M	14	1	**8T-4185**	1	BOLT (M10X1.5X50-MM)	
M	15	1	**8T-6466**	1	BOLT (M10X1.5X60-MM)	

M - METRIC PART
Y - SEPARATE ILLUSTRATION

490-2693 **WIRING GP-VALVE (**contd.**)** **i07360216**

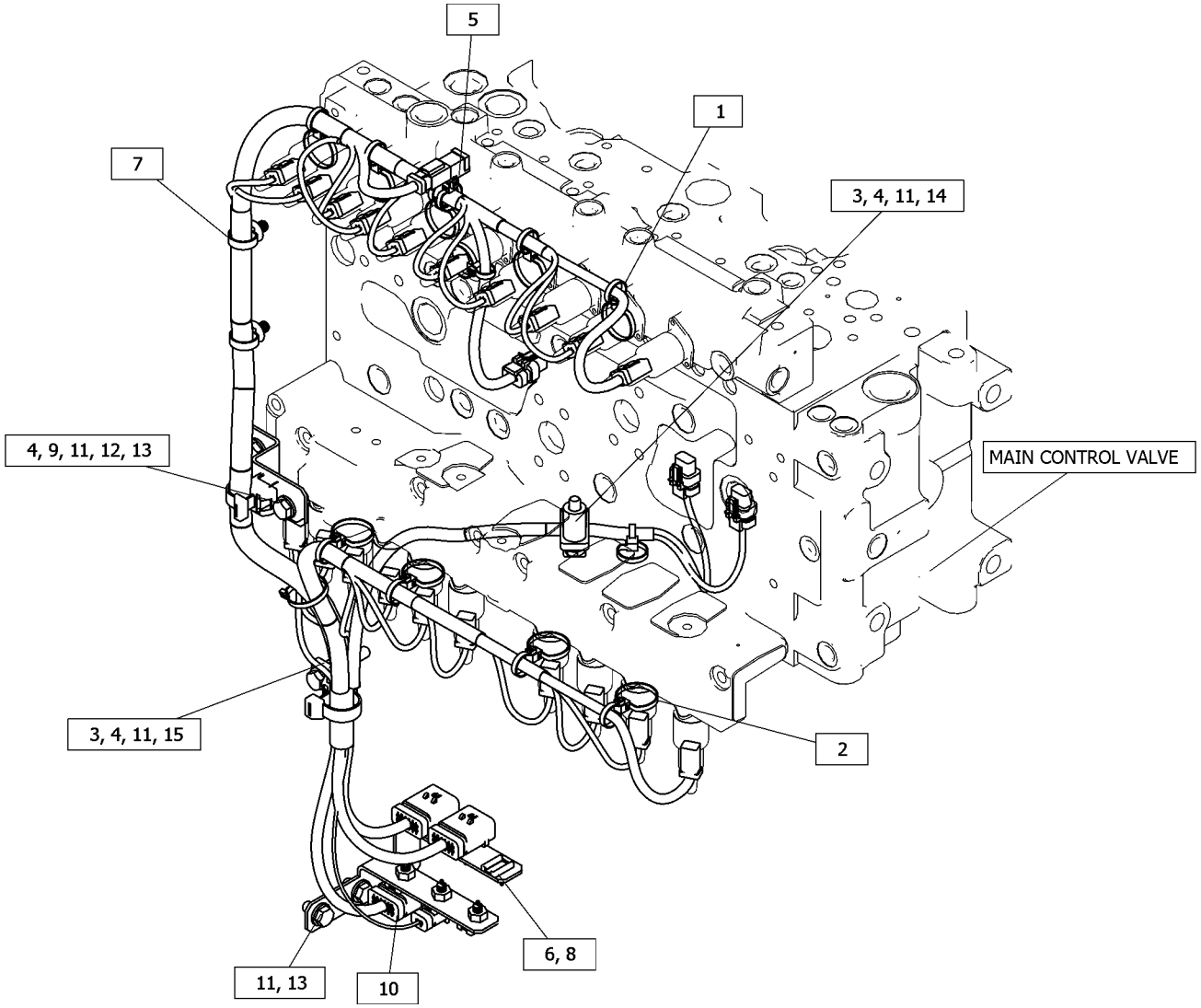

GRAPHIC #1 <END> g06289688

490-2714 WIRING GP-VALVE

S/N: SP91-UP

PART OF 538-3026 CONTROL AR-AUXILIARY

SMCS-1408, 5734 **i07360260**

NOTE	REF NO	GRAPHIC REF	PART NUMBER	QTY	PART NAME 1 2 3 4 5 6 (PRODUCT LEVEL)	SEE PAGE
	1	1	**3S-2093**	12	STRAP-CABLE	
	2	1	**266-7379**	2	STRAP-CABLE	
Y	3	1	**527-1870**	1	HARNESS AS-VALVE (TOOL CONTROL SYSTEM)	204

Y - SEPARATE ILLUSTRATION

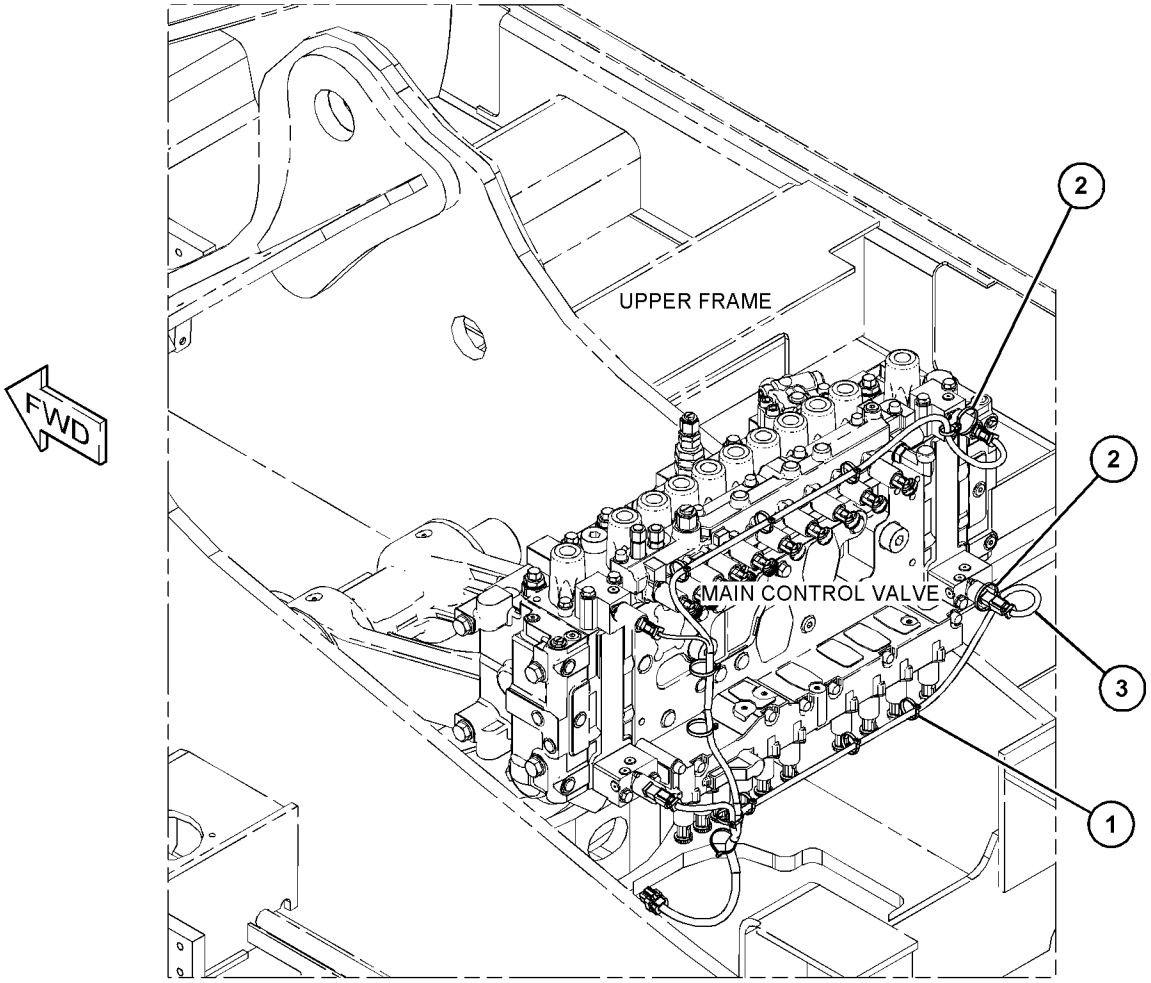

GRAPHIC #1 <END> g06229336

511-9446 WIRING GP-VALVE–COUPLER

S/N: SP91-UP

PART OF 517-4758 CONTROL AR-QUICK COUPLER

SMCS-1408, 5734 **i07668777**

NOTE	REF NO	GRAPHIC REF	PART NUMBER	QTY	PART NAME 1 2 3 4 5 6 (PRODUCT LEVEL)	SEE PAGE
	1	1	**494-0773**	1	BRACKET	
C	2	1	**204-1611**	3	STRAP-CABLE (DUAL)	
	3	1	**484-1456**	1	STRAP-CABLE	
CY	4	1	**558-7716**	1	HARNESS AS-SOLENOID (QUICK COUPLER)	204
	5	1	**8T-4121**	1	WASHER-HARD (11X21X2.5-MM THK)	
M	6	1	**8T-4137**	1	BOLT (M10X1.5X20-MM)	

C - CHANGE FROM PREVIOUS TYPE
M - METRIC PART
Y - SEPARATE ILLUSTRATION

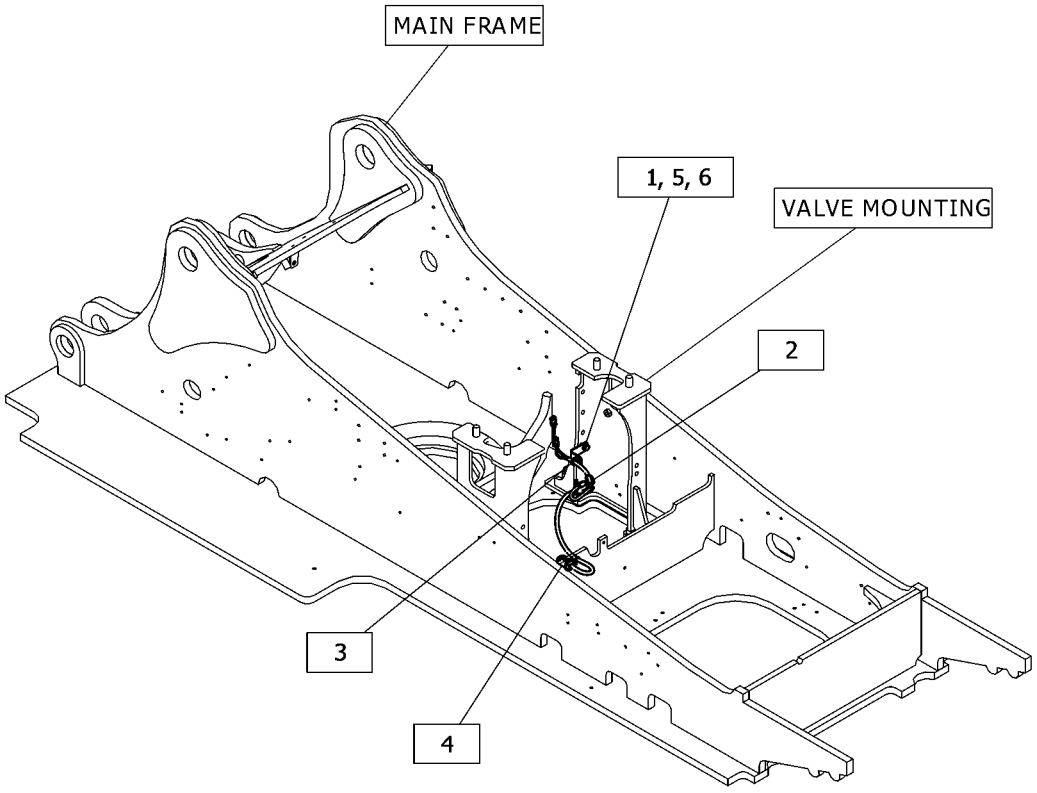

GRAPHIC #1 <END> g06368509

524-8376 WIRING GP-VALVE–HEAVY LIFT

S/N: SP91-UP

PART OF 504-1790, 504-1791 VALVE AR-MAIN CONTROL

SMCS-1408, 5734

i07361046

NOTE	REF NO	GRAPHIC REF	PART NUMBER	QTY	PART NAME 1 2 3 4 5 6 (PRODUCT LEVEL)	SEE PAGE
Y	1	1	**525-2621**	1	HARNESS AS-SOLENOID (HEAVY LIFT)	203
	2	1	**204-1611**	1	STRAP-CABLE (DUAL)	

Y - SEPARATE ILLUSTRATION

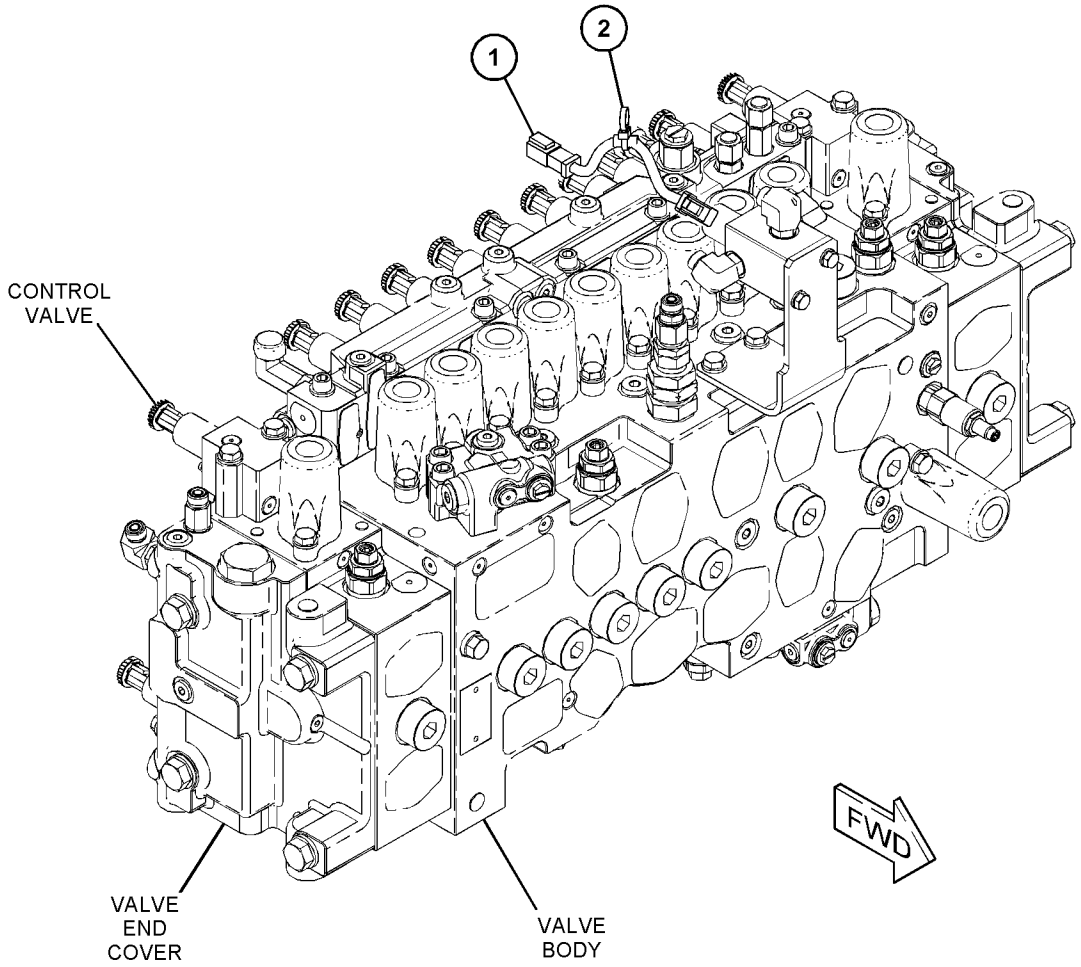

GRAPHIC #1 <END> g06229653

551-6783 WIRING GP-VALVE–1-PUMP, 1-WAY FLOW

S/N: SP91-UP

PART OF 559-3854 CONTROL AR-AUXILIARY

SMCS-1408, 5734 **i07519206**

NOTE	REF NO	GRAPHIC REF	PART NUMBER	QTY	PART NAME 1 2 3 4 5 6 (PRODUCT LEVEL)	SEE PAGE
	1	1	**3S-2093**	12	STRAP-CABLE	
	2	1	**7K-1181**	2	STRAP-CABLE	
	3	1	**266-7379**	2	STRAP-CABLE	
	4	1	**484-1453**	2	CLIP (RETAINER)	
Y	5	1	**527-1870**	1	HARNESS AS-VALVE (TOOL CONTROL SYSTEM) (CHASSIS)	204

Y - SEPARATE ILLUSTRATION

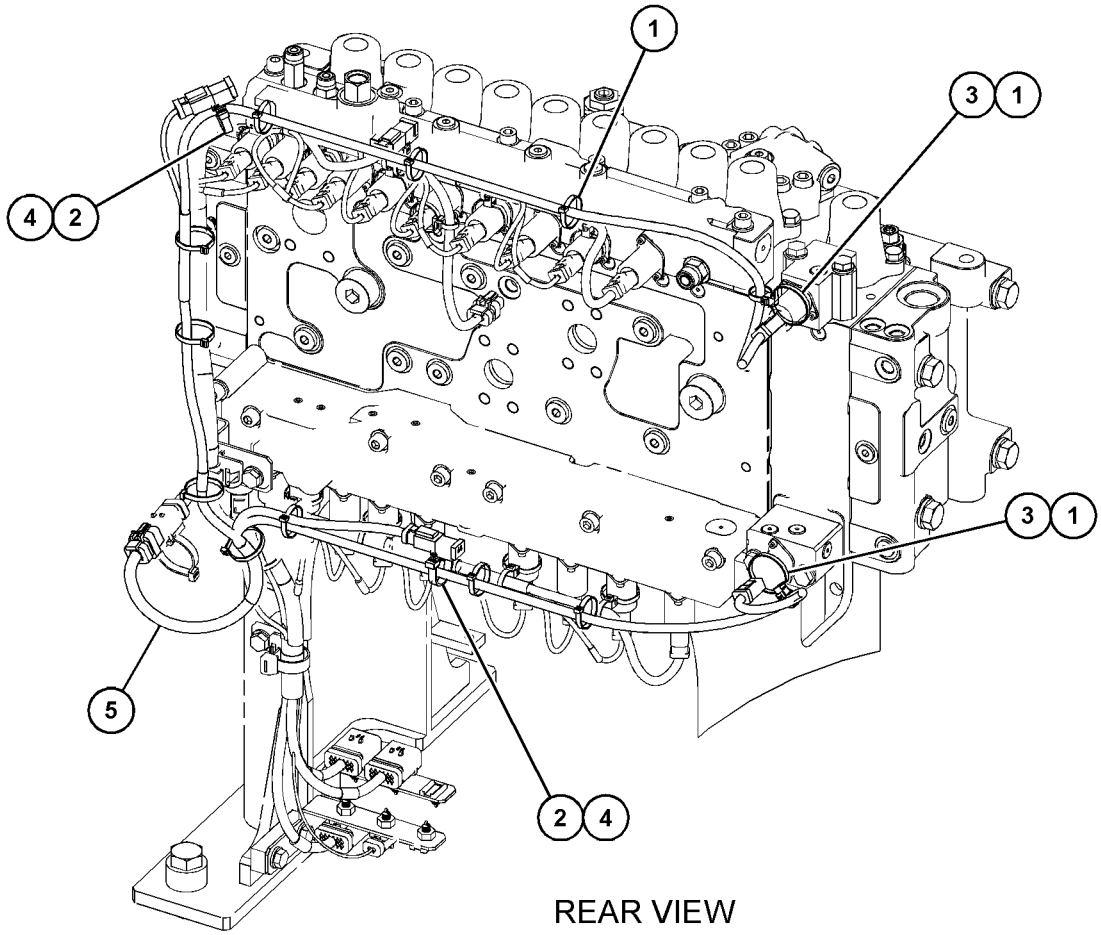

REAR VIEW
(UPPER RIGHT)

GRAPHIC #1 <END> g06310717

525-2616 DRIVE & MOUNTING GP-FINAL

S/N: SP91-UP

PART OF 523-7795 UNDERCARRIAGE AR

SMCS-4050 **i07864922**

NOTE	REF NO	GRAPHIC REF	PART NUMBER	QTY	PART NAME 1 2 3 4 5 6 (PRODUCT LEVEL)	SEE PAGE
M	1	1	**173-9779**	40	BOLT (M24X3X80-MM)	
Y	2	1	*525-2614*	1	DRIVE GP-FINAL (WITH MOTOR, SPROCKET, LH)	315
Y	3	1	*525-2615*	1	DRIVE GP-FINAL (WITH MOTOR, SPROCKET, RH)	316
	4	1	**6V-8237**	40	WASHER (26X44X4-MM THK)	

M - METRIC PART
Y - SEPARATE ILLUSTRATION

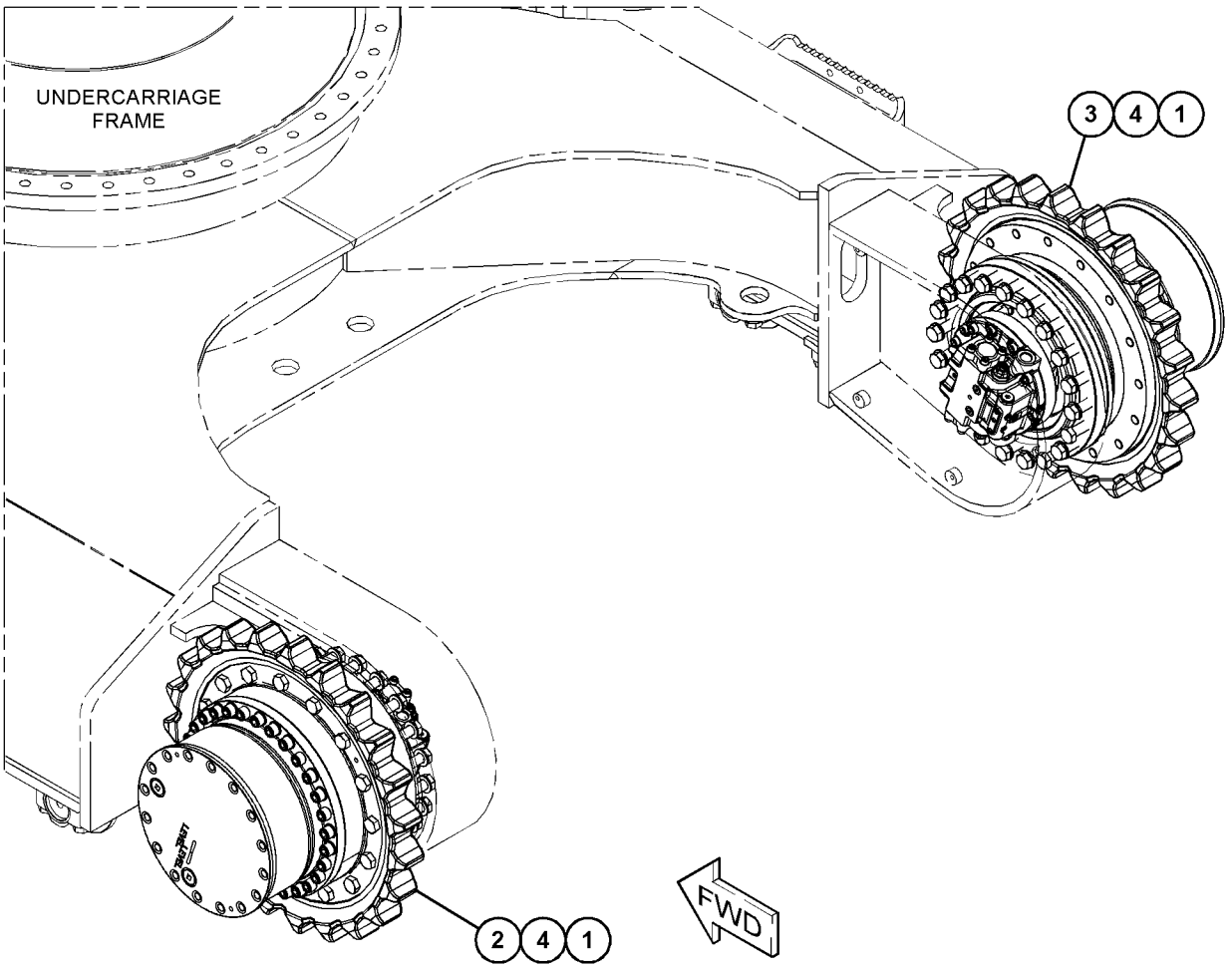

GRAPHIC #1 <END> g06280680

511-6010 DRIVE GP-FINAL

S/N: SP91-UP

PART OF 525-2615 DRIVE GP-FINAL

SMCS-4050 **i07243745**

NOTE	REF NO	GRAPHIC REF	PART NUMBER	QTY	PART NAME 1 2 3 4 5 6 (PRODUCT LEVEL)	SEE PAGE
Y	1	1	*511-6011*	1	DRIVE GP-FINAL (WITHOUT MOTOR, RH)	306
Y	2	1	*519-2479*	1	MOTOR & MTG GP-TRAVEL	529
M	3	1	**096-5348**	1	SETSCREW-SOCKET (M12X1.75-THD)	

M - METRIC PART
Y - SEPARATE ILLUSTRATION

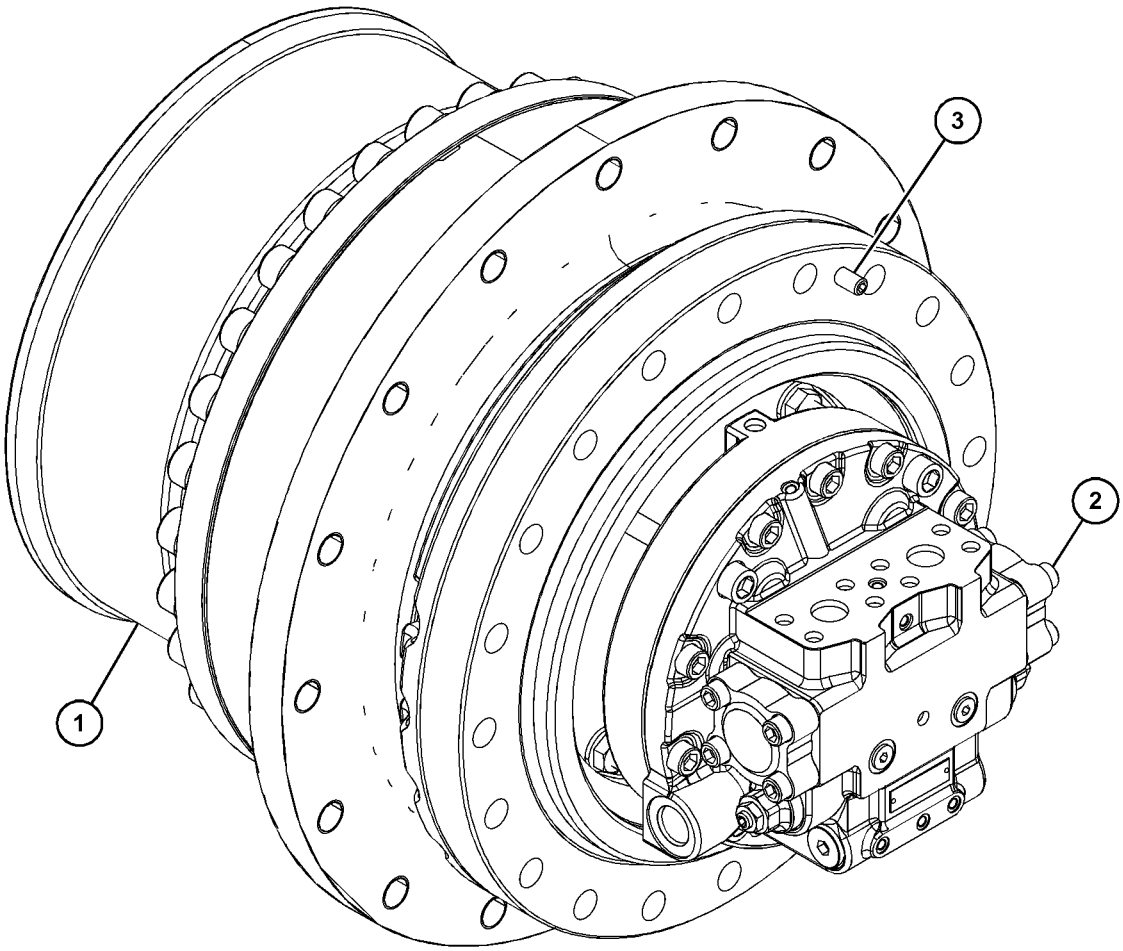

GRAPHIC #1 <END> g06257711

511-6011 DRIVE GP-FINAL

S/N: SP91-UP

PART OF 511-6010 DRIVE GP-FINAL

SMCS-4050 **i07243750**

NOTE	REF NO	GRAPHIC REF	PART NUMBER	QTY	PART NAME 1 2 3 4 5 6 (PRODUCT LEVEL)	SEE PAGE
	1	1	**094-0577**	1	PLATE (7-MM THK)	
	2	1	**094-0578**	1	PLATE (8-MM THK)	
	3	1	**094-0579**	1	PLATE (9-MM THK)	
	4	1	**094-0580**	1	PLATE (10-MM THK)	
	5	2	**136-2898**	14	WASHER (58.3X89X1-MM THK)	
	6	2	**191-2690**	6	WASHER (42.3X70X1-MM THK)	
	7	1	**227-6192**	1	GEAR-COUPLING	
	8	1	**255-2272**	1	SEAL GP-DUO-CONE	
		1	**205-9114**	2	RING-TORIC	
	9	1	**295-9234**	1	SEAL-O-RING	
	10	1	**296-6181**	1	HOUSING	
	11	1	**296-6183**	1	CARRIER-PLANETARY	
	12	2	**296-6184**	4	GEAR-PLANETARY (21-TEETH)	
	13	2	**296-6185**	4	SHAFT	
	14	2	**296-6186**	3	GEAR-PLANETARY (21-TEETH)	
	15	1	**296-6189**	1	GEAR-SUN (20-TEETH)	
	16	1	**296-6190**	1	GEAR-SUN (20-TEETH)	
	17	1	**296-6192**	1	SPACER (143X170X8-MM THK)	
	18	1	**296-6194**	1	CARRIER-PLANETARY	
	19	2	**296-6195**	3	SHAFT	
	20	2	**296-6230**	3	GEAR-PLANETARY (21-TEETH)	
	21	1	**296-6231**	1	GEAR-SUN (20-TEETH)	
	22	1	**296-6232**	1	CARRIER AS	
	23	1	**296-6311**	1	GEAR-RING (64-TEETH)	
	24	1	**451-2176**	30	WASHER-HARD (22X35X3.5-MM THK)	
	25	1	**452-3518**	1	HOUSING-MOTOR	
	26	1	**470-7587**	1	COVER	
	27	1	**501-7237**	1	GASKET	
	28	1	**507-8035**	1	COUPLING	
	29	1	**093-1731**	2	RING-RETAINING	
	30	2	**095-0891**	7	PIN-SPRING	
M	31	1	**096-3216**	2	SETSCREW-SOCKET (M12X1.75X12-MM)	
	32	2	**096-8058**	3	RING-RETAINING	
	33	1	**114-1541**	6	PIN-DOWEL	
M	34	1	**143-0811**	16	BOLT (12X1.75X35-MM)	
B	35	1	**267-6809**	1	SHIM (0.75-MM THK)	
B		1	**267-6810**	1	SHIM (0.85-MM THK)	
B		1	**267-6811**	1	SHIM (0.9-MM THK)	
B		1	**267-6812**	1	SHIM (0.95-MM THK)	
B		1	**267-6813**	1	SHIM (1.2-MM THK)	
B		1	**267-6814**	1	SHIM (1.4-MM THK)	
B		1	**267-6815**	1	SHIM (1.8-MM THK)	
B		1	**267-6816**	1	SHIM (2-MM THK)	
B		1	**267-6817**	1	SHIM (2.3-MM THK)	
B		1	**7Y-1056**	1	SHIM (0.8-MM THK)	
B		1	**7Y-1057**	1	SHIM (1-MM THK)	
	44	1	**279-0344**	2	BEARING AS-TAPERED ROLLER	

511-6011 **DRIVE GP-FINAL (**contd.**)** **i07243750**

NOTE	REF NO	GRAPHIC REF	PART NUMBER	QTY	PART NAME 1 2 3 4 5 6 (PRODUCT LEVEL)	SEE PAGE
	45	2	**296-6247**	11	BEARING AS-ROLLER	
	46	2	**296-6248**	3	BEARING AS-ROLLER	
	47	1	**3E-2338**	2	PLUG-PIPE	
	48	1	**5P-8245**	16	WASHER-HARD (13.5X25.5X3-MM THK)	
M	49	1	**6V-8133**	10	BOLT (M24X3X80-MM)	
	50	1	**6V-8237**	10	WASHER (26X44X4-MM THK)	
	51	1	**7M-8485**	2	SEAL-O-RING	
	52	1	**7Y-0595**	2	SPACER (58X79.6X6-MM THK)	
M	55	1	**7Y-5217**	30	BOLT-SOCKET HEAD (M20X2.5X70-MM)	

B - USE AS REQUIRED
M - METRIC PART

511-6011 **DRIVE GP-FINAL (**contd.**)** **i07243750**

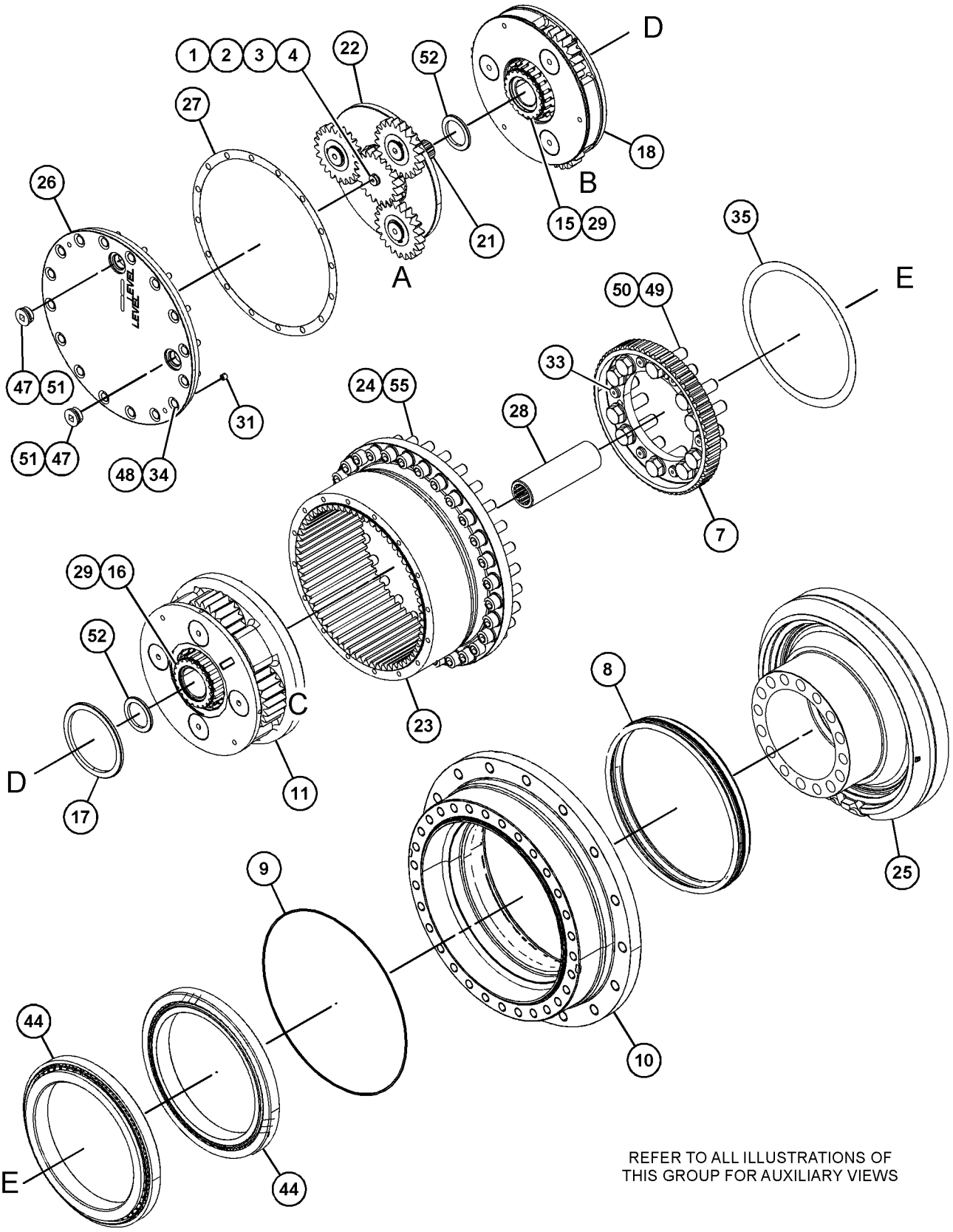

GRAPHIC #1 g06258533

511-6011 **DRIVE GP-FINAL (**contd.**)** **i07243750**

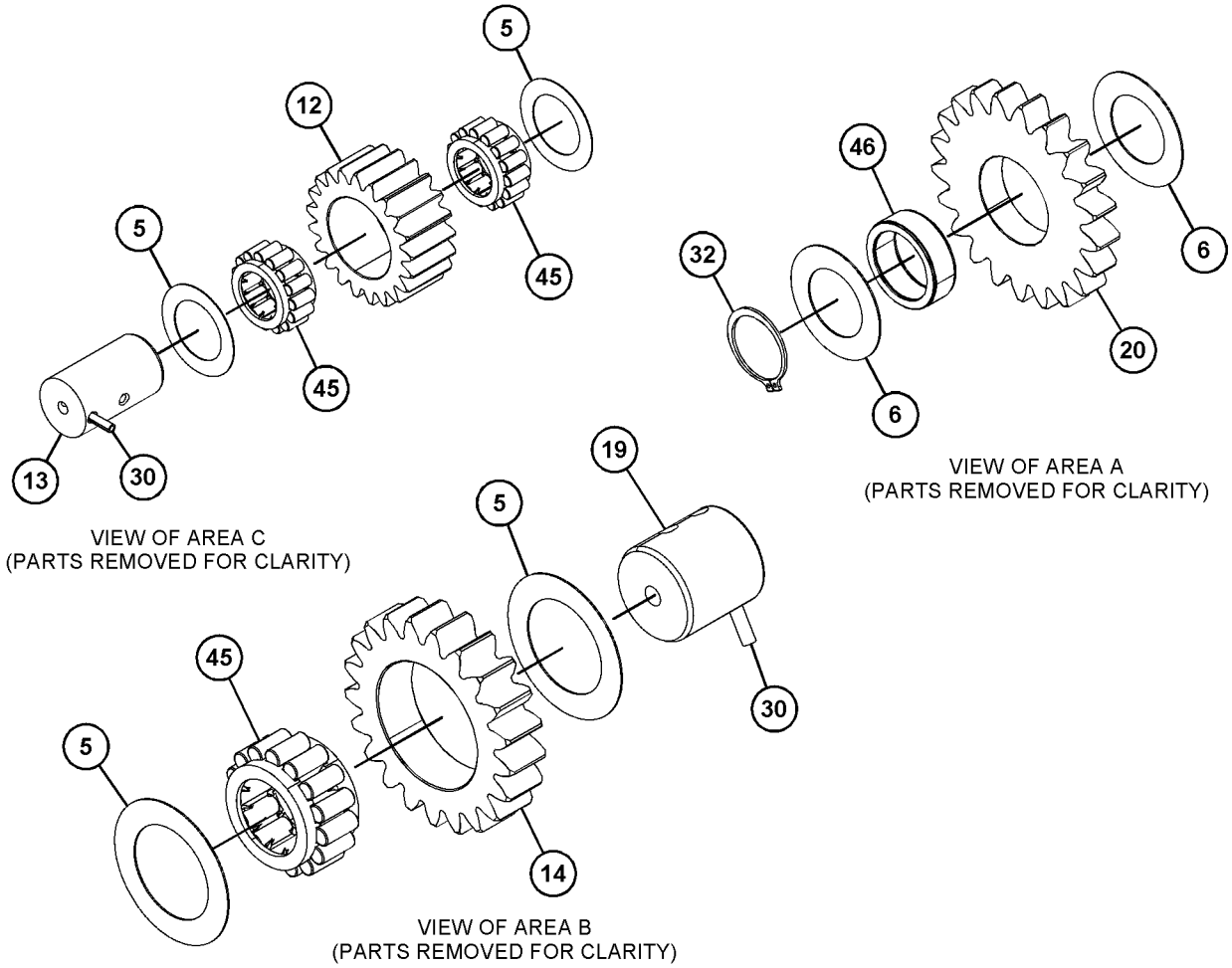

GRAPHIC #2 <END> g06258534

511-6017 DRIVE GP-FINAL

S/N: SP91-UP

PART OF 525-2614 DRIVE GP-FINAL

SMCS-4050 **i07243695**

NOTE	REF NO	GRAPHIC REF	PART NUMBER	QTY	PART NAME 1 2 3 4 5 6 (PRODUCT LEVEL)	SEE PAGE
Y	1	1	**511-6018**	1	DRIVE GP-FINAL (WITHOUT MOTOR, LH)	311
Y	2	1	*519-2479*	1	MOTOR & MTG GP-TRAVEL	529
M	3	1	**096-5348**	1	SETSCREW-SOCKET (M12X1.75-THD)	

M - METRIC PART
Y - SEPARATE ILLUSTRATION

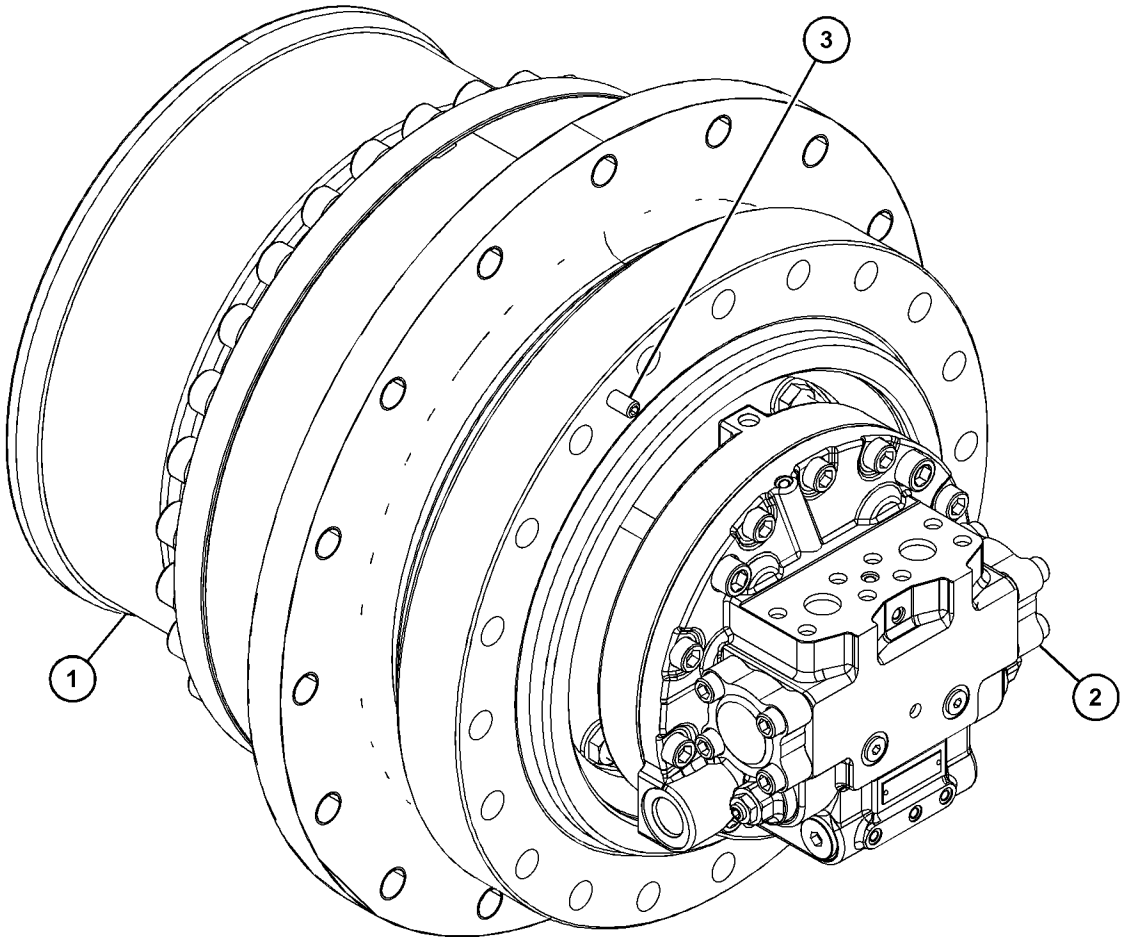

GRAPHIC #1 <END> g06257708

511-6018 DRIVE GP-FINAL

S/N: SP91-UP

PART OF 511-6017 DRIVE GP-FINAL

SMCS-4050 **i07243703**

NOTE	REF NO	GRAPHIC REF	PART NUMBER	QTY	PART NAME 1 2 3 4 5 6 (PRODUCT LEVEL)	SEE PAGE
B	1	1	**094-0577**	1	PLATE (7-MM THK)	
B		1	**094-0578**	1	PLATE (8-MM THK)	
B		1	**094-0579**	1	PLATE (9-MM THK)	
B		1	**094-0580**	1	PLATE (10-MM THK)	
	5	2	**136-2898**	14	WASHER (58.3X89X1-MM THK)	
	6	1	**191-2690**	6	WASHER (42.3X70X1-MM THK)	
	7	2	**227-6192**	1	GEAR-COUPLING	
	8	1	**255-2272**	1	SEAL GP-DUO-CONE	
		1	**205-9114**	2	RING-TORIC	
	9	1	**295-9234**	1	SEAL-O-RING	
	10	1	**296-6181**	1	HOUSING	
	11	2	**296-6183**	1	CARRIER-PLANETARY	
	12	2	**296-6184**	4	GEAR-PLANETARY (21-TEETH)	
	13	2	**296-6185**	4	SHAFT	
	14	2	**296-6186**	3	GEAR-PLANETARY (21-TEETH)	
	15	2	**296-6189**	1	GEAR-SUN (20-TEETH)	
	16	2	**296-6190**	1	GEAR-SUN (20-TEETH)	
	17	2	**296-6192**	1	SPACER (143X170X8-MM THK)	
	18	2	**296-6194**	1	CARRIER-PLANETARY	
	19	2	**296-6195**	3	SHAFT	
	20	1	**296-6230**	3	GEAR-PLANETARY (21-TEETH)	
	21	1	**296-6231**	1	GEAR-SUN (20-TEETH)	
	22	1	**296-6232**	1	CARRIER AS	
	23	1	**296-6311**	1	GEAR-RING (64-TEETH)	
	24	1	**451-2176**	30	WASHER-HARD (22X35X3.5-MM THK)	
	25	1	**452-3519**	1	HOUSING-MOTOR	
	26	1	**470-7587**	1	COVER	
	27	1	**501-7237**	1	GASKET	
	28	2	**507-8035**	1	COUPLING	
	29	2	**093-1731**	2	RING-RETAINING	
	30	2	**095-0891**	7	PIN-SPRING	
M	31	1	**096-3216**	2	SETSCREW-SOCKET (M12X1.75X12-MM)	
	32	1	**096-8058**	3	RING-RETAINING	
	33	2	**114-1541**	6	PIN-DOWEL	
M	34	1	**143-0811**	16	BOLT (12X1.75X35-MM)	
B	35	1	**267-6809**	1	SHIM (0.75-MM THK)	
B		1	**267-6810**	1	SHIM (0.85-MM THK)	
B		1	**267-6811**	1	SHIM (0.9-MM THK)	
B		1	**267-6812**	1	SHIM (0.95-MM THK)	
B		1	**267-6813**	1	SHIM (1.2-MM THK)	
B		1	**267-6814**	1	SHIM (1.4-MM THK)	
B		1	**267-6815**	1	SHIM (1.8-MM THK)	
B		1	**267-6816**	1	SHIM (2-MM THK)	
B		1	**267-6817**	1	SHIM (2.3-MM THK)	
B		1	**7Y-1056**	1	SHIM (0.8-MM THK)	
B		1	**7Y-1057**	1	SHIM (1-MM THK)	
	44	1	**279-0344**	2	BEARING AS-TAPERED ROLLER	

511-6018 **DRIVE GP-FINAL (**contd.**)** **i07243703**

NOTE	REF NO	GRAPHIC REF	PART NUMBER	QTY	PART NAME 1 2 3 4 5 6 (PRODUCT LEVEL)	SEE PAGE
	45	2	**296-6247**	11	BEARING AS-ROLLER	
	46	1	**296-6248**	3	BEARING AS-ROLLER	
	47	1	**3E-2338**	2	PLUG-PIPE	
	48	1	**5P-8245**	16	WASHER-HARD (13.5X25.5X3-MM THK)	
M	49	2	**6V-8133**	10	BOLT (M24X3X80-MM)	
	50	2	**6V-8237**	10	WASHER (26X44X4-MM THK)	
	51	1	**7M-8485**	2	SEAL-O-RING	
	52	2	**7Y-0595**	2	SPACER (58X79.6X6-MM THK)	
M	55	1	**7Y-5217**	30	BOLT-SOCKET HEAD (M20X2.5X70-MM)	

B - USE AS REQUIRED
M - METRIC PART

511-6018 **DRIVE GP-FINAL (**contd.**)** **i07243703**

REFER TO ALL ILLUSTRATIONS OF
THIS GROUP FOR AUXILIARY VIEWS

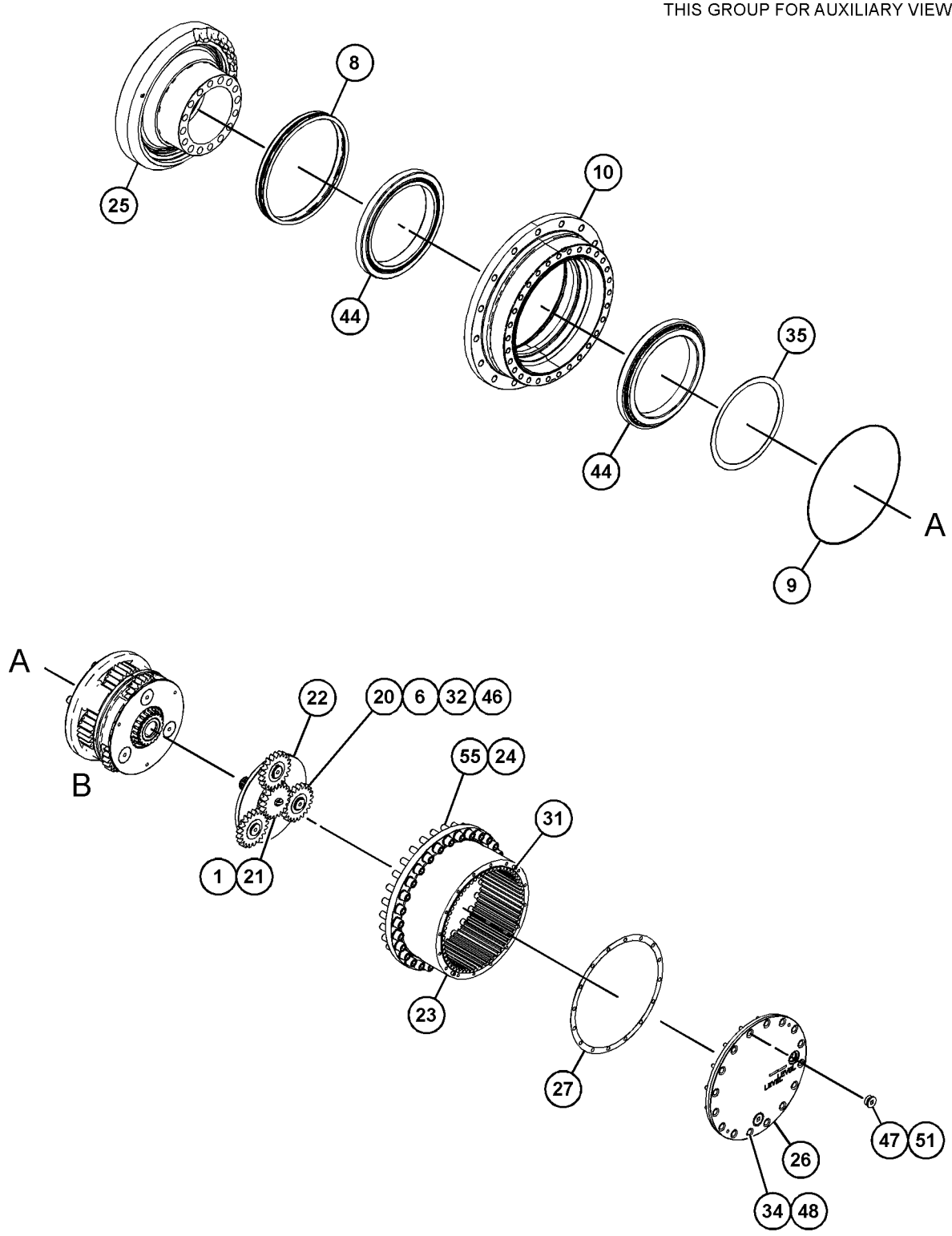

GRAPHIC #1 g06275638

511-6018 **DRIVE GP-FINAL (**contd.**)** **i07243703**

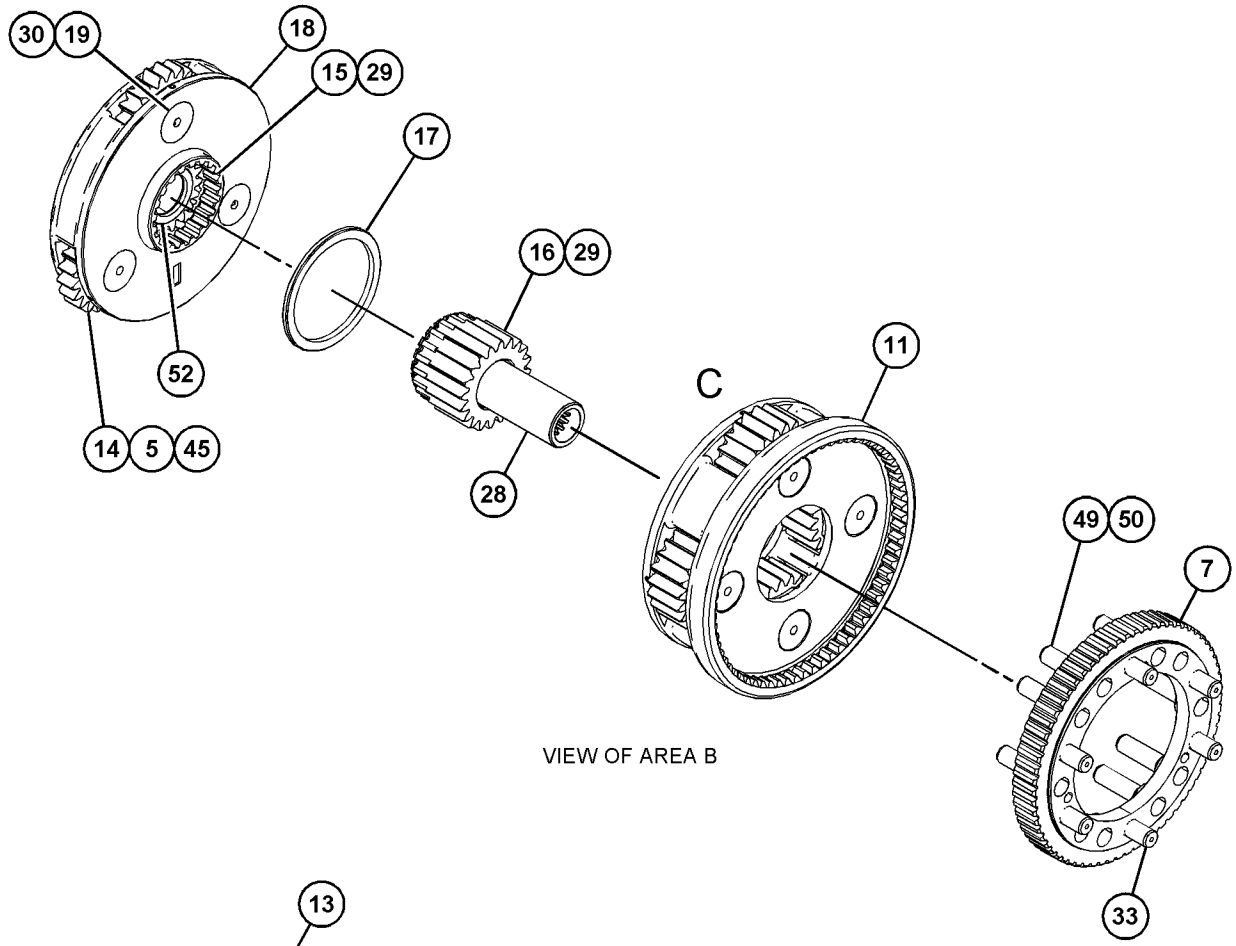

VIEW OF AREA B

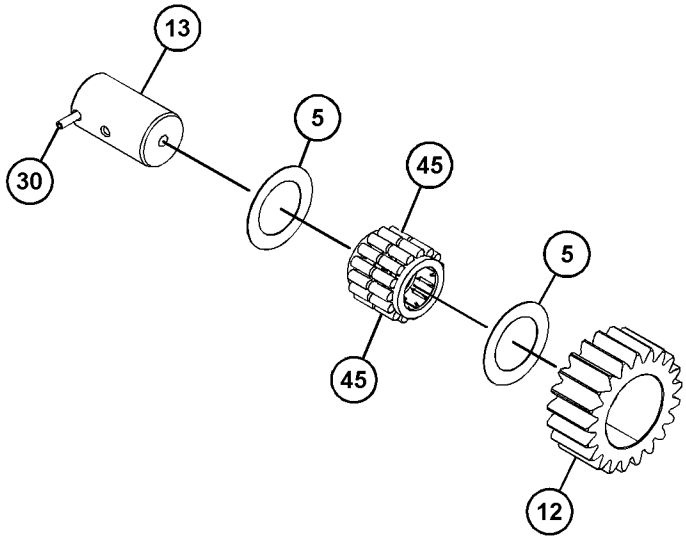

VIEW OF AREA C
(PARTS REMOVED FOR CLARITY)

180°

GRAPHIC #2 <END> g06275639

525-2614 DRIVE GP-FINAL—WITH MOTOR, SPROCKET, LH

S/N: SP91-UP

PART OF 525-2616 DRIVE & MOUNTING GP-FINAL

SMCS-4050 **i07243674**

NOTE	REF NO	GRAPHIC REF	PART NUMBER	QTY	PART NAME 1 2 3 4 5 6 (PRODUCT LEVEL)	SEE PAGE
Y	1	1	*168-6727*	1	SPROCKET GP (NON-SEGMENTED)	317
Y	2	1	*511-6017*	1	DRIVE GP-FINAL (WITH MOTOR, LH)	310

Y - SEPARATE ILLUSTRATION

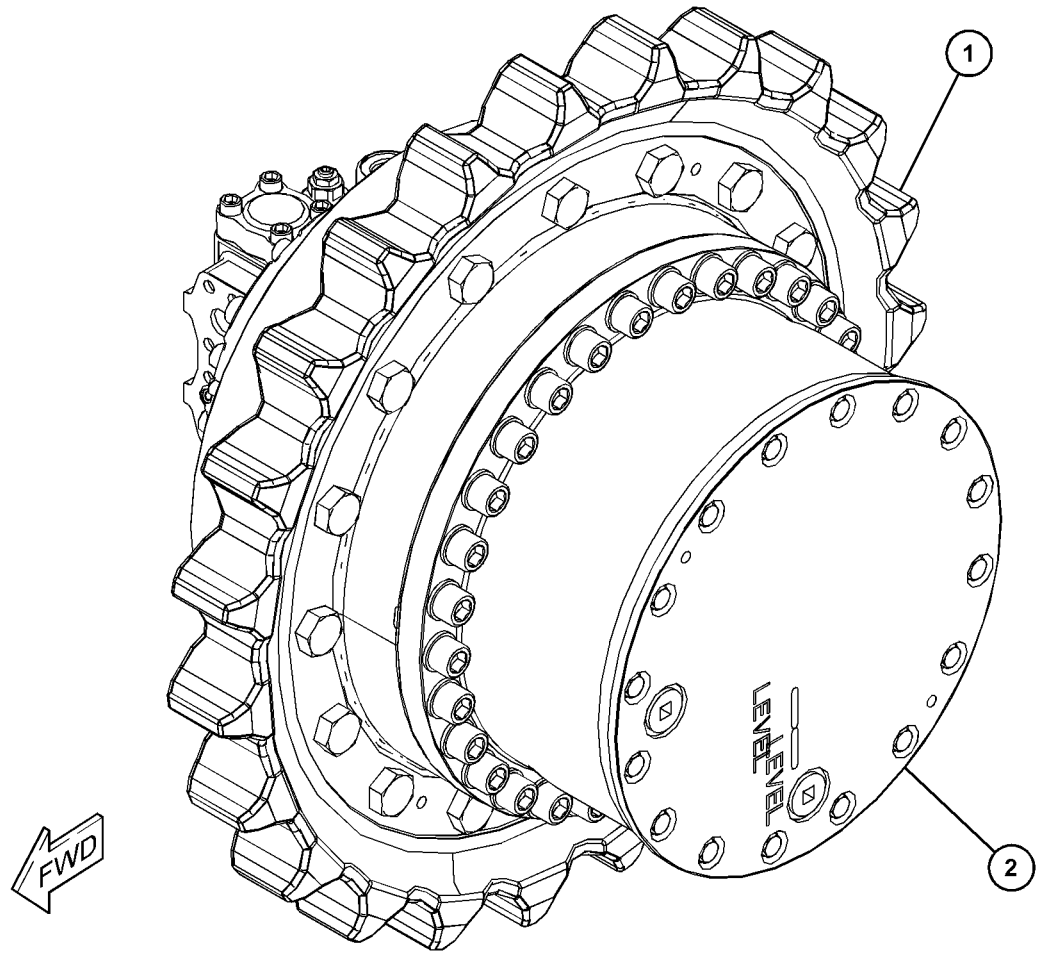

GRAPHIC #1 <END> g06257018

525-2615 DRIVE GP-FINAL

S/N: SP91-UP

PART OF 525-2616 DRIVE & MOUNTING GP-FINAL

SMCS-4050 **i07243730**

NOTE	REF NO	GRAPHIC REF	PART NUMBER	QTY	PART NAME 1 2 3 4 5 6 (PRODUCT LEVEL)	SEE PAGE
Y	1	1	*168-6727*	1	SPROCKET GP (NON-SEGMENTED)	317
Y	2	1	*511-6010*	1	DRIVE GP-FINAL (WITH MOTOR, RH)	305

Y - SEPARATE ILLUSTRATION

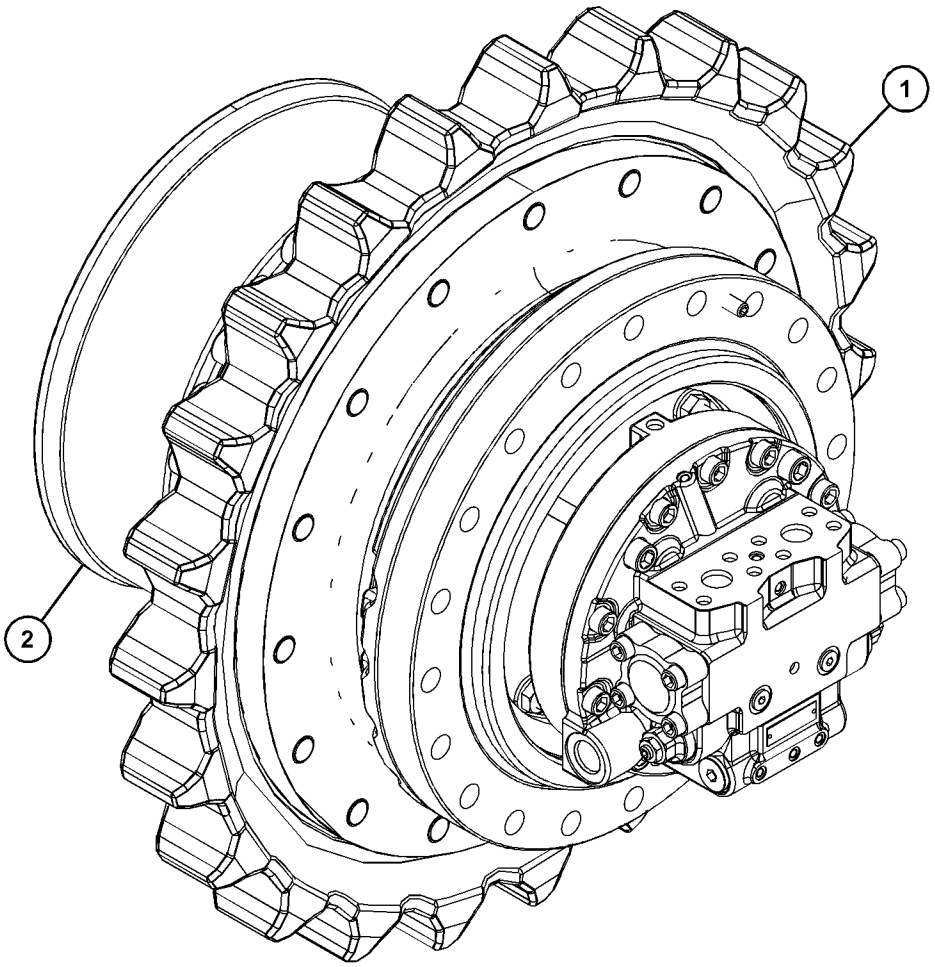

GRAPHIC #1 <END> g06257715

568-3011 POWER TRAIN AR

S/N: SP91-UP

PART OF 523-7792 EXCAVATOR AR

SMCS-3000, 4000 **i07877315**

NOTE	PART NUMBER	QTY	PART NAME 1 2 3 4 5 6 (PRODUCT LEVEL)	SEE PAGE
Y	*560-2458*	1	DRIVE & MTG GP-SWING	436

Y - SEPARATE ILLUSTRATION

<END>

168-6727 SPROCKET GP

S/N: SP91-UP

PART OF 525-2614, 525-2615 DRIVE GP-FINAL

SMCS-4164 **i05867539**

NOTE	PART NUMBER	QTY	PART NAME 1 2 3 4 5 6 (PRODUCT LEVEL)	SEE PAGE
Y	*448-5101*	1	SPROCKET GP (NON-SEGMENTED)	318
			—OR—	
Y	*448-5102*	1	SPROCKET GP (NON-SEGMENTED)	319

Y - SEPARATE ILLUSTRATION

<END>

448-5101 SPROCKET GP

S/N: SP91-UP

PART OF 168-6727 SPROCKET GP

SMCS-4164 **i05867519**

NOTE	REF NO	GRAPHIC REF	PART NUMBER	QTY	PART NAME 1 2 3 4 5 6 (PRODUCT LEVEL)	SEE PAGE
	1	1	**6Y-5685**	1	SPROCKET-TRACK	
M	2	1	**447-1722**	16	BOLT (M24X3X60-MM)	

M - METRIC PART

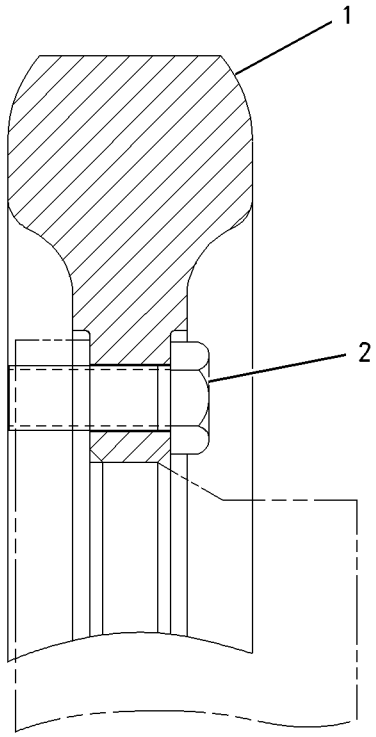

GRAPHIC #1 <END> g00801559

448-5102 SPROCKET GP

S/N: SP91-UP

PART OF 168-6727 SPROCKET GP

SMCS-4164 **i05867510**

NOTE	REF NO	GRAPHIC REF	PART NUMBER	QTY	PART NAME 1 2 3 4 5 6 (PRODUCT LEVEL)	SEE PAGE
	1	1	**6Y-5685**	1	SPROCKET-TRACK	
M	2	1	**8T-0380**	16	BOLT (M24X3X60-MM)	

M - METRIC PART

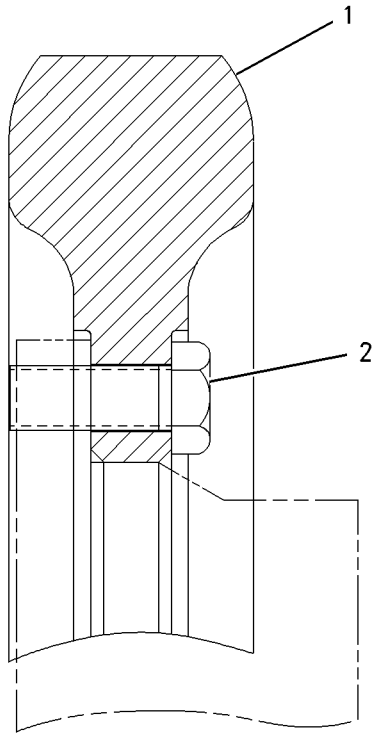

GRAPHIC #1 <END> g00801559

498-7500 BOX & MTG GP-STORAGE

S/N: SP91-UP

PART OF 516-7423, 575-9544 ENCLOSURE AR

SMCS-7268 **i07522052**

NOTE	REF NO	GRAPHIC REF	PART NUMBER	QTY	PART NAME 1 2 3 4 5 6 (PRODUCT LEVEL)	SEE PAGE
	1	1	**135-8575**	4	BOLT AS	
Y	2	1	*540-0547*	1	BOX GP-STORAGE	321

Y - SEPARATE ILLUSTRATION

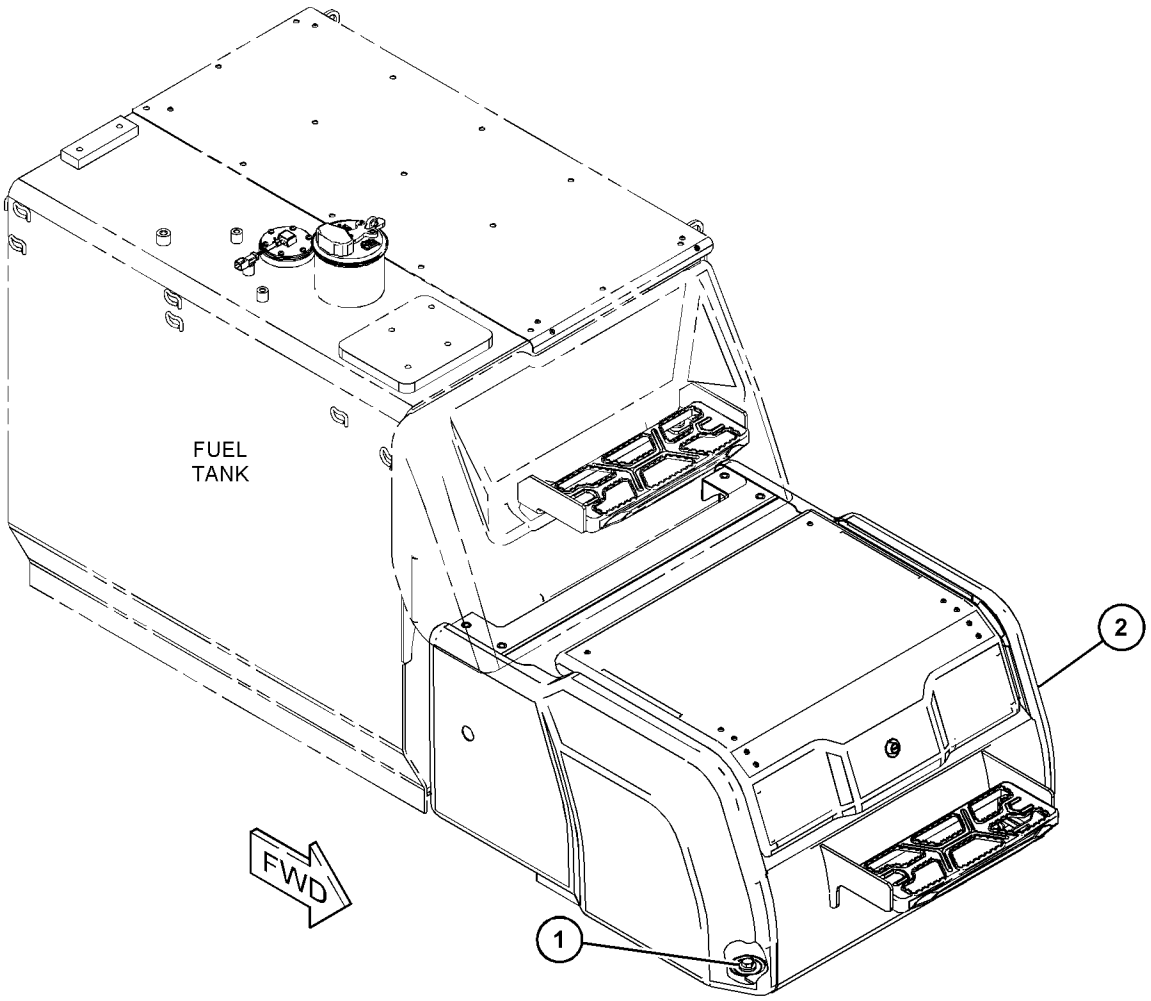

GRAPHIC #1 <END> g06278858

540-0547 BOX GP-STORAGE

S/N: SP91-UP

PART OF 498-7500 BOX & MTG GP-STORAGE

SMCS-7268 **i07881620**

NOTE	REF NO	GRAPHIC REF	PART NUMBER	QTY	PART NAME 1 2 3 4 5 6 (PRODUCT LEVEL)	SEE PAGE
M	1	1	**5C-9553**	2	BOLT (M6X1X16-MM)	
	2	1	**5P-1075**	4	WASHER-HARD (10.2X22.5X3-MM THK)	
	3	1	**5P-4116**	4	WASHER-HARD (8.8X20.5X2-MM THK)	
	4	1	**8T-4224**	3	WASHER-HARD (8.8X16X2-MM THK)	
	5	1	**170-2755**	1	HOOK AS	
	6	1	**178-5576**	4	STOP	
J	7	1	**510-3135**	1	LOCK AS	
	8	1	**516-7395**	2	SPRING AS-GAS (STORAGE BOX)	
					(EACH INCLUDES)	
		1	**549-4357**	1	FILM-WARNING (HIGH PRESSURE, READ OMM)	
	9	1	**540-2244**	1	BOX AS-STORAGE	
D		1	**101-9848**		SEAL (1.1-M)	
		1	**531-3313**	1	LINER	
	10	1	**556-7715**	1	COVER AS-BOX	
M		1	**6V-9632**	3	NUT-WELD (M6X1-THD)	
M	11	1	**5C-7261**	4	NUT (M8X1.25-THD)	
	12	1	**8T-4121**	4	WASHER-HARD (11X21X2.5-MM THK)	
M	13	1	**8T-4133**	8	NUT (M10X1.5-THD)	
M	14	1	**8T-4138**	3	BOLT (M6X1X20-MM)	
	15	1	**9X-8256**	5	WASHER (6.6X12X2-MM THK)	

D - ORDER BY THE METER
J - REQUIRES CORPORATE KEY
M - METRIC PART

540-0547 **BOX GP-STORAGE (**contd.**)** **i07881620**

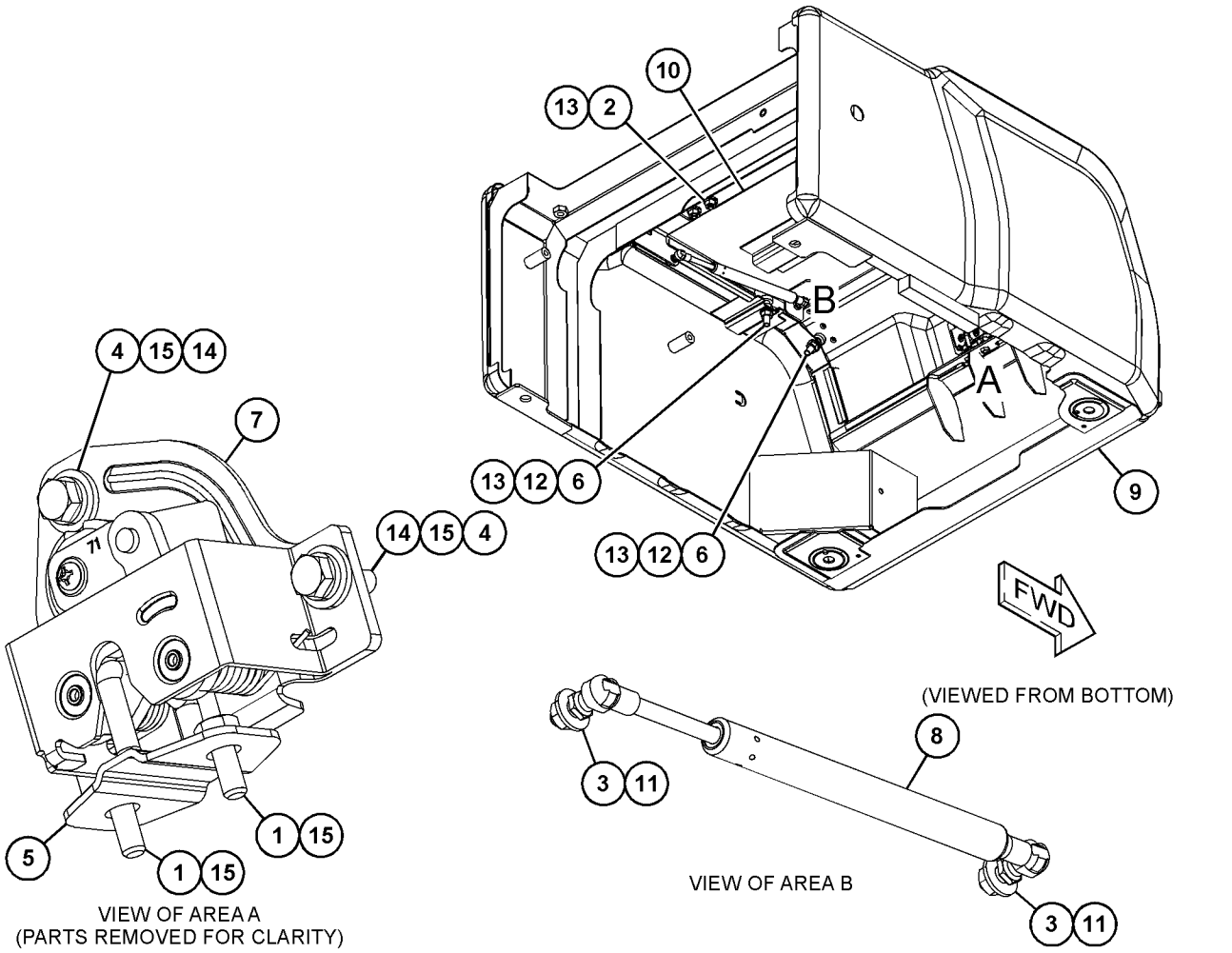

GRAPHIC #1 <END> g06430557

487-6760 BUMPER GP-FRONT

S/N: SP91-UP

PART OF 484-8021 INSTL AR-BUMPER & WASHER LINES

SMCS-7156 **i07344690**

NOTE	REF NO	GRAPHIC REF	PART NUMBER	QTY	PART NAME 1 2 3 4 5 6 (PRODUCT LEVEL)	SEE PAGE
	1	1	**487-6761**	1	BUMPER AS	
M		1	**8T-3490**	4	NUT-WELD (M10X1.5-THD)	
M	2	1	**172-5291**	4	SCREW (M10X1.5X30-MM)	
E	3	1	**201-4441**		SEAL (12-CM)	

E - ORDER BY THE CENTIMETER
M - METRIC PART

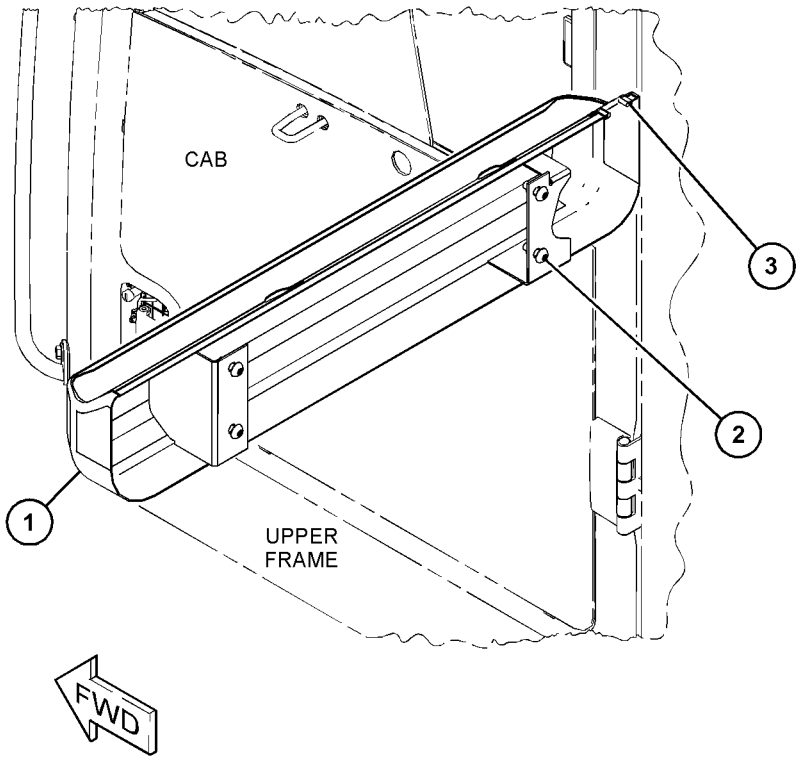

GRAPHIC #1 <END> g06229449

526-8596 BUMPER GP-FRONT

S/N: SP91-UP

PART OF 484-8022 INSTALLATION AR-WIPER

SMCS-7156 **i07519248**

NOTE	REF NO	GRAPHIC REF	PART NUMBER	QTY	PART NAME 1 2 3 4 5 6 (PRODUCT LEVEL)	SEE PAGE
M	1	1	**172-5291**	4	SCREW (M10X1.5X30-MM)	
	2	1	**526-8597**	1	BUMPER AS-FRONT	
M		1	**8T-3490**	4	NUT-WELD (M10X1.5-THD)	
E	3	1	**201-4441**		SEAL (12-CM)	

E - ORDER BY THE CENTIMETER
M - METRIC PART

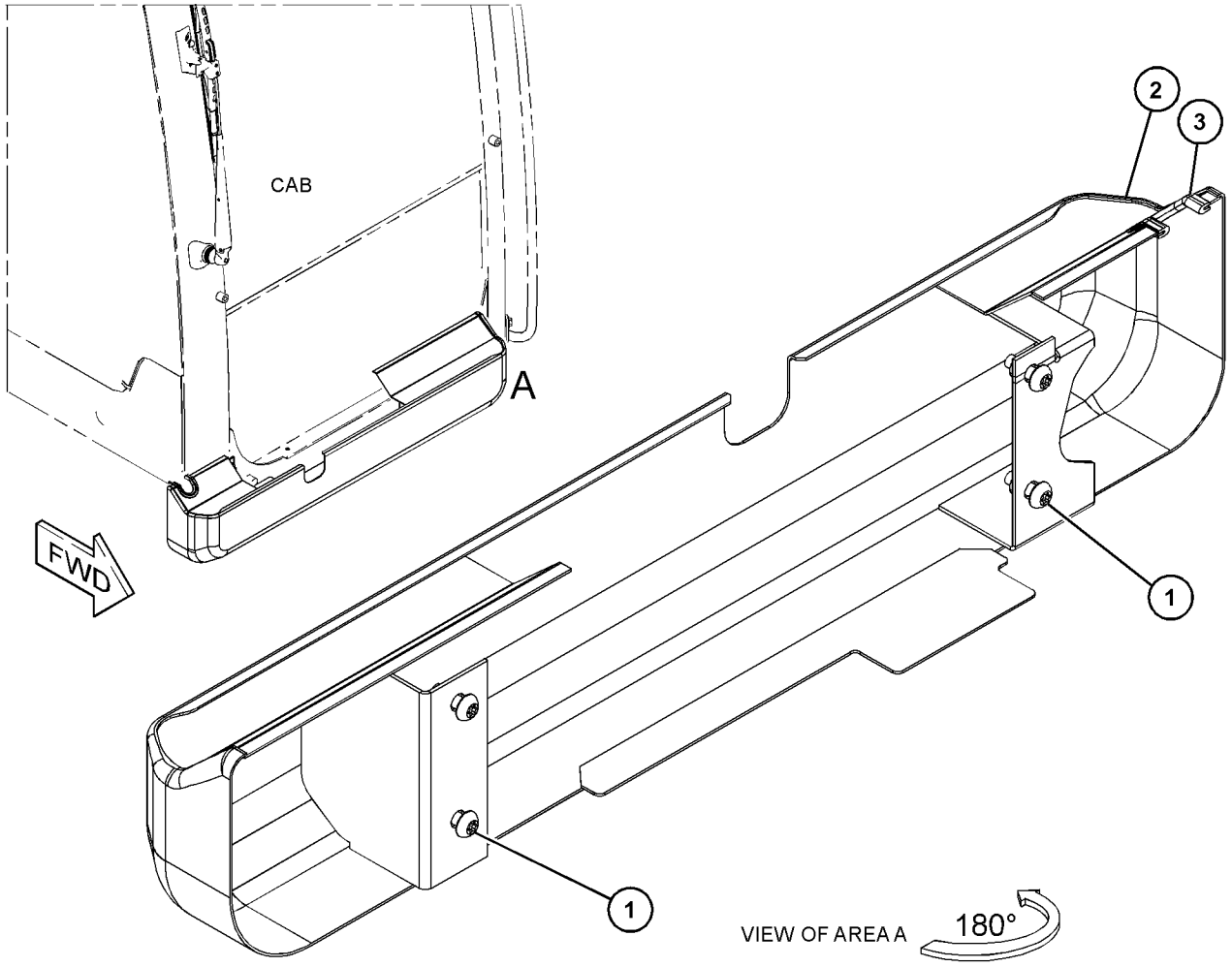

GRAPHIC #1 <END> g06270065

525-0760 COUNTERWEIGHT AS

S/N: SP91-UP

6800-KG (14991-LB)

SMCS-7056 **i07521829**

NOTE	REF NO	GRAPHIC REF	PART NUMBER	QTY	PART NAME 1 2 3 4 5 6 (PRODUCT LEVEL)	SEE PAGE
					(INDIVIDUAL PARTS ARE NOT SERVICED SEPARATELY)	

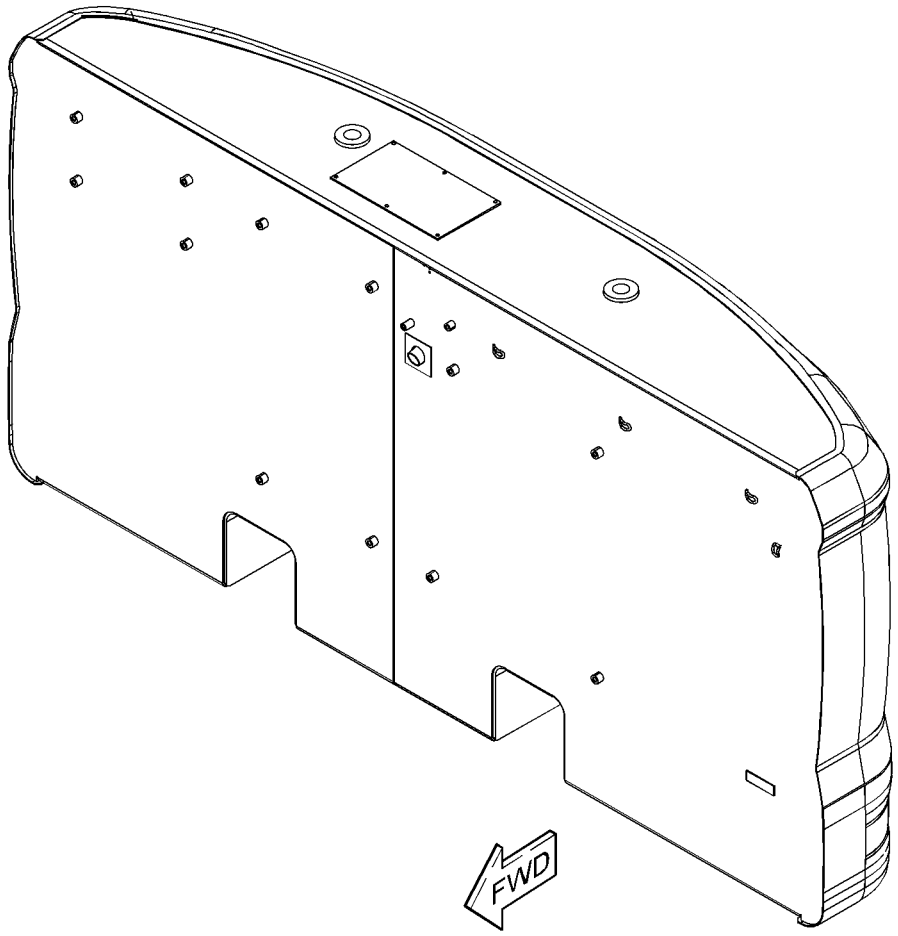

GRAPHIC #1 <END> g06280289

528-3580 COVER AS-SOUND SUPPRESSION–RADIATOR

S/N: SP91-UP

PART OF 528-3579 COVER GP-ACCESS

SMCS-7253, 7263, 7276, 795C

i07512287

NOTE	REF NO	GRAPHIC REF	PART NUMBER	QTY	PART NAME 1 2 3 4 5 6 (PRODUCT LEVEL)	SEE PAGE
	1	1	**5V-3854**	4	BUMPER	
	2	1	**528-3581**	1	COVER AS-SOUND SUPPRESSION	
	3	1	**528-3678**	1	LINER	
	4	1	**528-3679**	1	LINER	

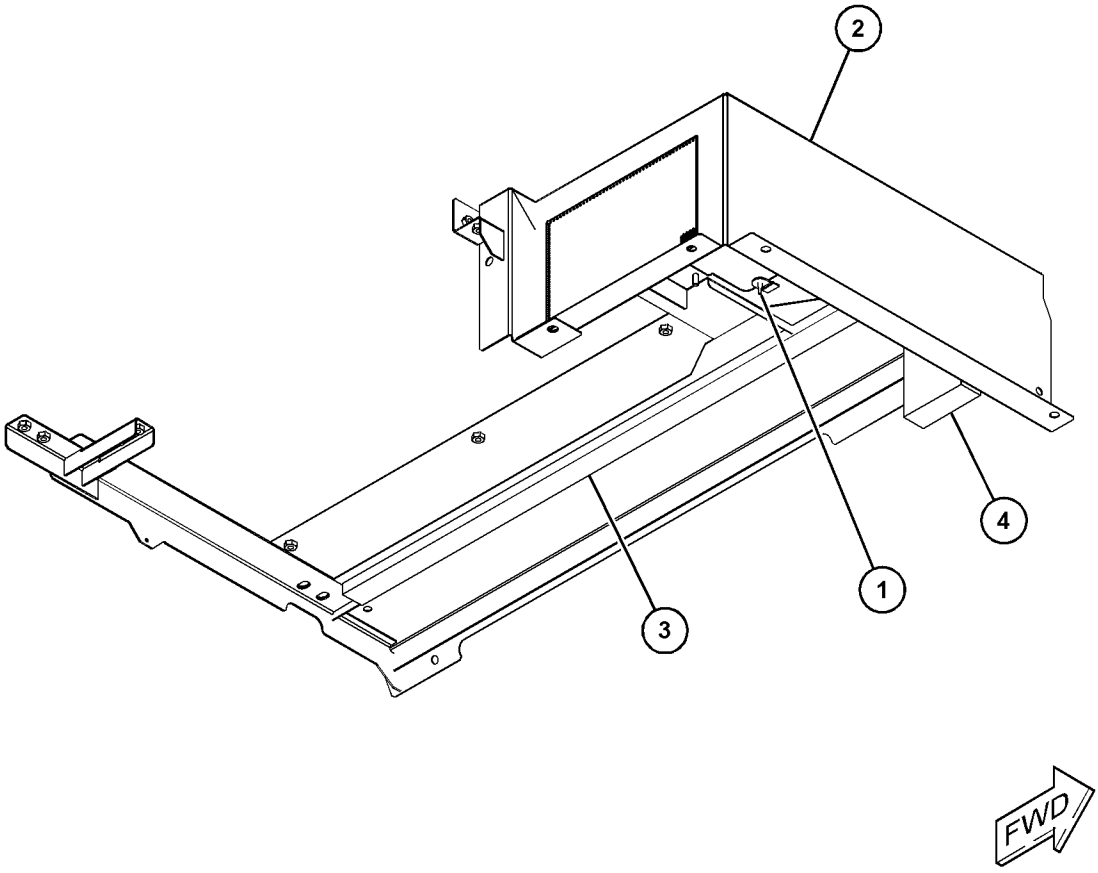

(VIEWED FROM BOTTOM)

GRAPHIC #1 <END> g06289719

528-3579 COVER GP-ACCESS—RADIATOR

S/N: SP91-UP

PART OF 498-7495 HOOD & GUARD GP

SMCS-726A **i07512117**

NOTE	REF NO	GRAPHIC REF	PART NUMBER	QTY	PART NAME 1 2 3 4 5 6 (PRODUCT LEVEL)	SEE PAGE
	1	1	**1K-8850**	1	SPRING	
	2	1	**8T-4121**	2	WASHER-HARD (11X21X2.5-MM THK)	
Y	3	1	**528-3580**	1	COVER AS-SOUND SUPPRESSION (RADIATOR)	326
	4	1	**528-3582**	1	COVER AS-ACCESS (RADIATOR)	
	4A	1	**9V-3659**	1	HINGE	
		1	**4K-8501**	2	CLIP	
M	5	1	**8T-4133**	2	NUT (M10X1.5-THD)	

M - METRIC PART
Y - SEPARATE ILLUSTRATION

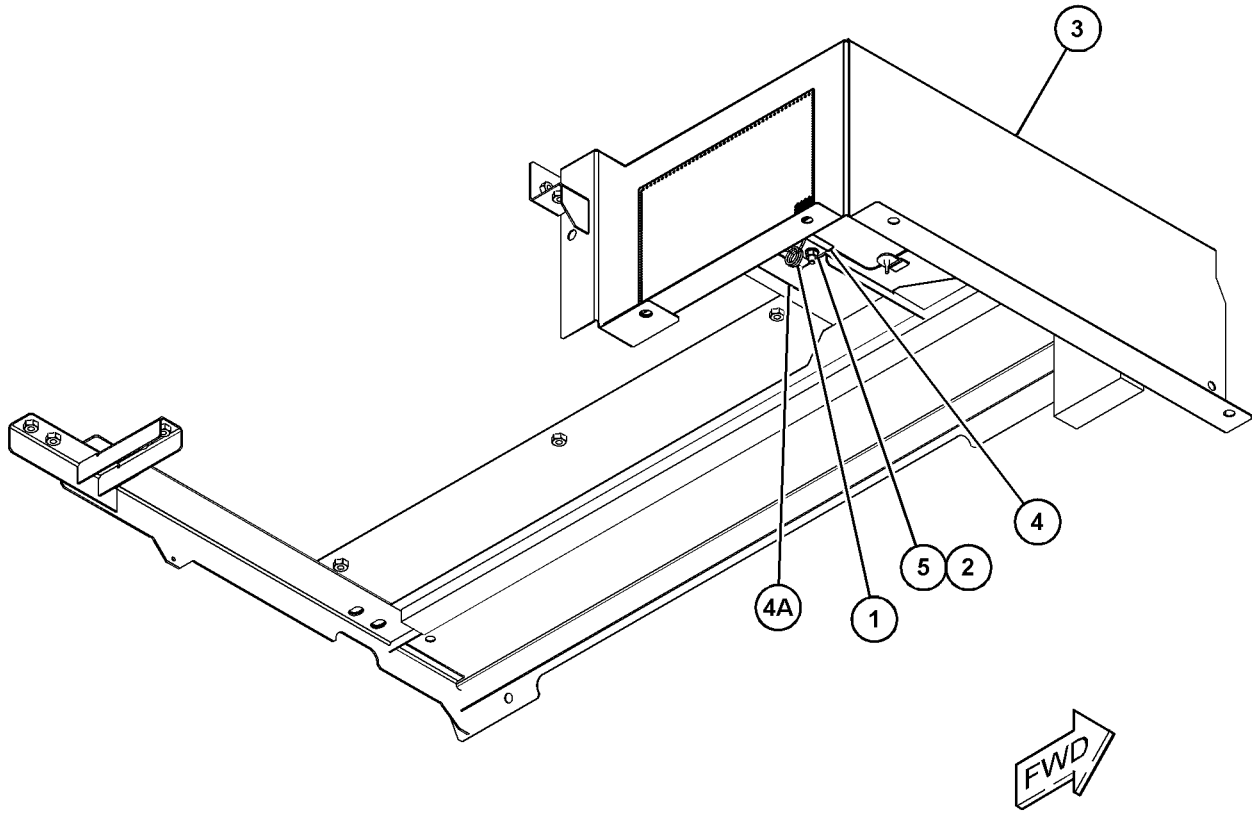

(VIEWED FROM BOTTOM)

GRAPHIC #1 <END> g06289834

576-9464 COVER GP-ACCESS

S/N: SP910001-UP

PART OF 575-9545 HOOD & GUARD GP

SMCS-726A **i07862256**

NOTE	REF NO	GRAPHIC REF	PART NUMBER	QTY	PART NAME 1 2 3 4 5 6 (PRODUCT LEVEL)	SEE PAGE
	1	1	**1K-8850**	1	SPRING	
	2	1	**8T-4121**	2	WASHER-HARD (11X21X2.5-MM THK)	
M	3	1	**8T-4133**	2	NUT (M10X1.5-THD)	
	4	1	**528-3582**	1	COVER AS-ACCESS	
		1	**4K-8501**	2	CLIP	
	4A	1	**9V-3659**	1	HINGE	
Y	5	1	**576-9465**	1	COVER GP-ACCESS	329

M - METRIC PART
Y - SEPARATE ILLUSTRATION

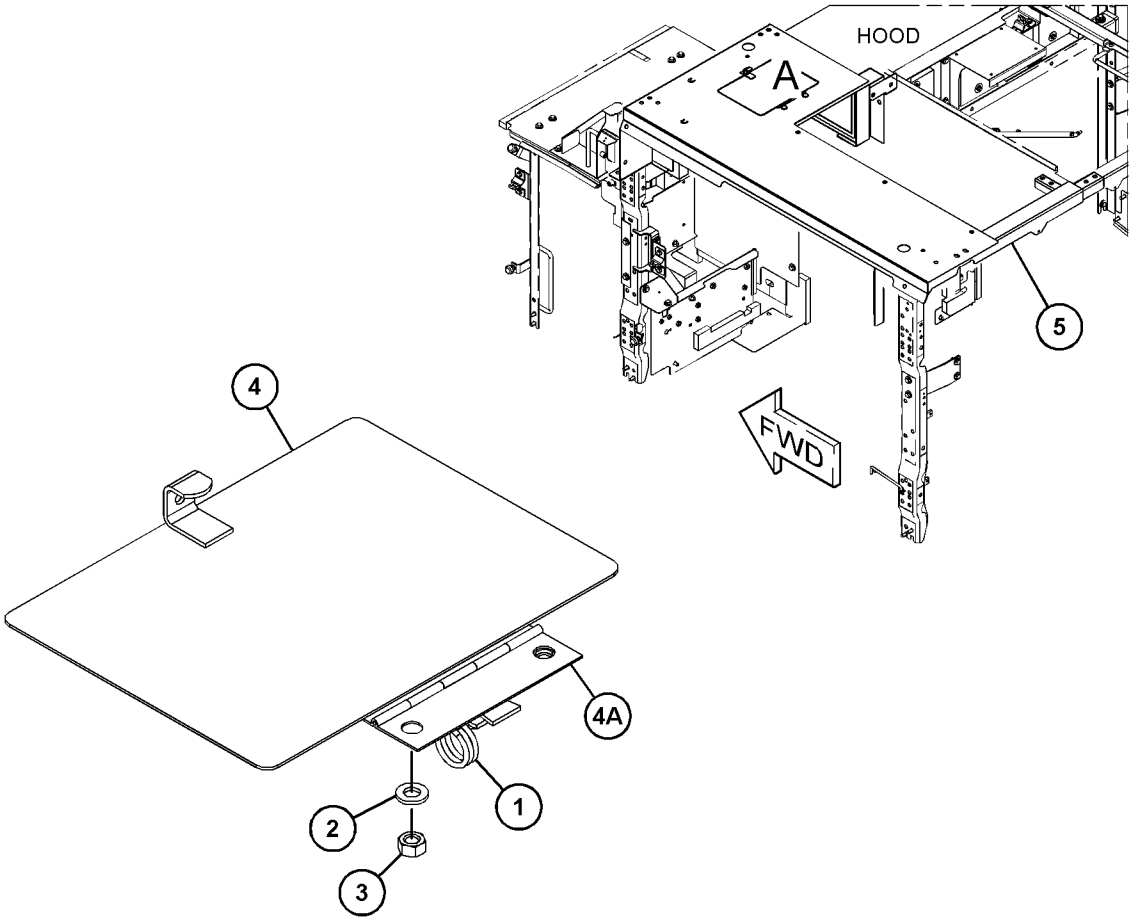

VIEW OF AREA A
(PARTS REMOVED FOR CLARITY)

GRAPHIC #1 <END> g06455100

576-9465 COVER GP-ACCESS

S/N: SP910001-UP

PART OF 576-9464 COVER GP-ACCESS

SMCS-726A **i07862252**

NOTE	REF NO	GRAPHIC REF	PART NUMBER	QTY	PART NAME 1 2 3 4 5 6 (PRODUCT LEVEL)	SEE PAGE
	1	1	**5V-3854**	4	BUMPER	
	2	1	**528-3678**	1	LINER	
	3	1	**528-3679**	1	LINER	
	4	1	*576-9466*	1	COVER AS-HOOD	
M		1	**8T-3490**	2	NUT-WELD (M10X1.5-THD)	
M		1	**8T-3597**	13	NUT-WELD (M12X1.75-THD)	
M		1	**8T-5413**	2	STUD-WELD (M10X1.5X25-MM)	
M		1	**8Y-3795**	1	BOSS (M10X1.5X39-MM)	
M		1	**9R-2672**	2	BOSS-THREADED (M10X1.5X120-MM)	

M - METRIC PART

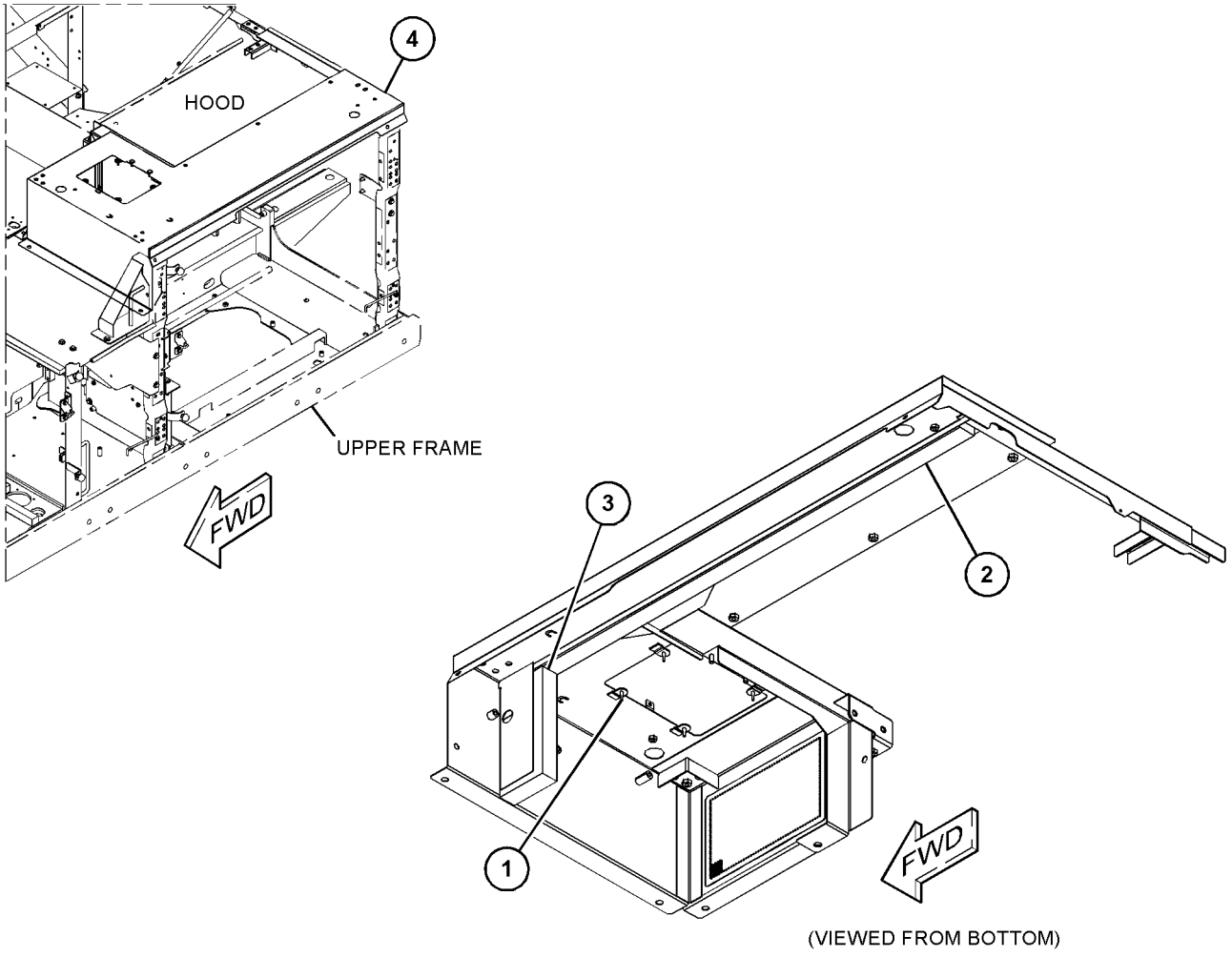

(VIEWED FROM BOTTOM)

GRAPHIC #1 <END> g06461301

575-9542 COVER GP-ENCLOSURE

S/N: SP910001-UP

PART OF 575-9537 ENCLOSURE AR

SMCS-7263 **i07861894**

NOTE	REF NO	GRAPHIC REF	PART NUMBER	QTY	PART NAME 1 2 3 4 5 6 (PRODUCT LEVEL)	SEE PAGE
Y	1	1	**548-0333**	1	HOOD GP-ENGINE	362
	2	1	**8T-4121**	2	WASHER-HARD (11X21X2.5-MM THK)	
M	3	1	**8T-4136**	2	BOLT (M10X1.5X25-MM)	
	4	1	**135-8575**	24	BOLT AS	
	5	1	**170-9360**	1	GROMMET	
Y	6	1	**510-3149**	1	SHEET AS-SOUND SUPPRESSION	367
Y	7	1	**510-3150**	1	SHEET AS-SOUND SUPPRESSION	368
Y	8	1	**548-0194**	1	SHEET AS-SOUND SUPPRESSION	373
Y	9	1	**527-1391**	1	SHEET AS-SOUND SUPPRESSION	369
	10	1	**548-0300**	1	HANDLE AS	
	11	1	**576-9475**	1	COVER AS-SOUND SUPPRESSION	
D		1	**101-9848**		SEAL (0.9-M)	
		1	**510-3291**	1	INSULATION	
M		1	**8T-3597**	1	NUT-WELD (M12X1.75-THD)	
		1	**576-9528**	1	INSULATION	

D - ORDER BY THE METER
M - METRIC PART
Y - SEPARATE ILLUSTRATION

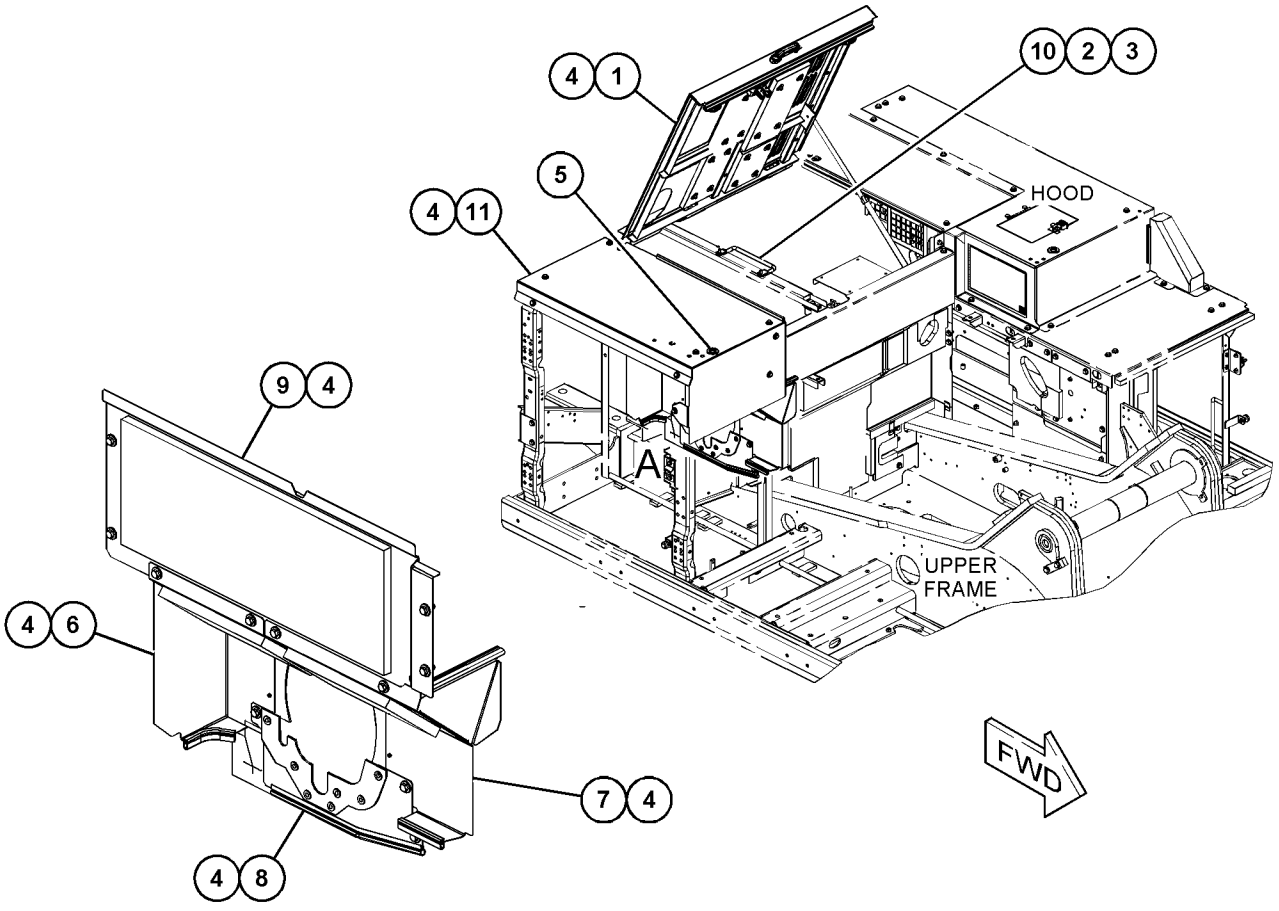

VIEW OF AREA A
(PARTS REMOVED FOR CLARITY)

GRAPHIC #1 <END> g06456773

528-3529 COVER GP-SOUND SUPPRESSION–FUEL, HYDRAULIC TANKS

S/N: SP91-UP
WITHOUT CAMERA
PART OF 512-1338 CAMERA & MIRROR AR

SMCS-7251 **i07756259**

NOTE	REF NO	GRAPHIC REF	PART NUMBER	QTY	PART NAME 1 2 3 4 5 6 (PRODUCT LEVEL)	SEE PAGE
	1	1	**7Y-2853**	3	SPACER (13X38X5-MM THK)	
	2	1	**8T-4121**	3	WASHER-HARD (11X21X2.5-MM THK)	
M	3	1	**8T-4137**	3	BOLT (M10X1.5X20-MM)	
	4	1	**135-8573**	3	BOLT AS	
	5	1	**135-8577**	3	BOLT AS	
	6	1	**385-2306**	3	SPACER (24X50X2-MM THK)	
Y	7	1	*556-6446*	1	COVER GP-SOUND SUPPRESSION (FUEL, HYDRAULIC TANKS)	332
	8	1	**554-2190**	1	COVER	

M - METRIC PART
Y - SEPARATE ILLUSTRATION

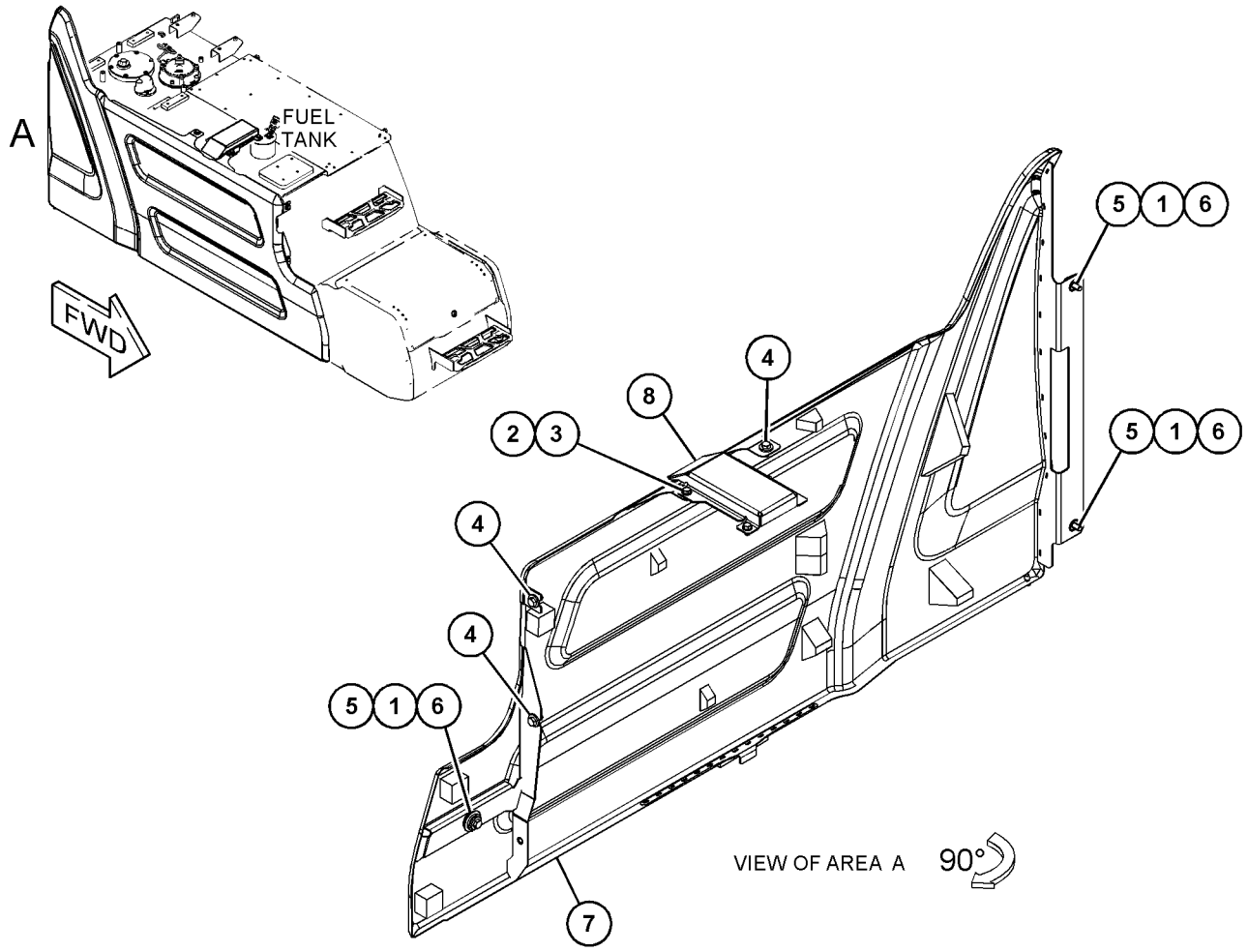

GRAPHIC #1 <END> g06357925

556-6446 COVER GP-SOUND SUPPRESSION

S/N: SP91-UP

PART OF 528-3529 COVER GP-SOUND SUPPRESSION

SMCS-7251 **i07756261**

NOTE	REF NO	GRAPHIC REF	PART NUMBER	QTY	PART NAME 1 2 3 4 5 6 (PRODUCT LEVEL)	SEE PAGE
	1	1	**510-3326**	3	LINER	
	2	1	**556-6448**	1	COVER AS-ACCESS	
M		1	**8T-3597**	2	NUT-WELD (M12X1.75-THD)	
	3	1	**535-9353**	3	LINER	
	4	1	**535-9354**	3	LINER	
	5	1	**535-9355**	1	LINER	
	6	1	**535-9356**	1	LINER	
	7	1	**543-2457**	1	LINER	
	8	1	**543-2458**	1	LINER	
	9	1	**510-3317**	1	BUMPER	

M - METRIC PART

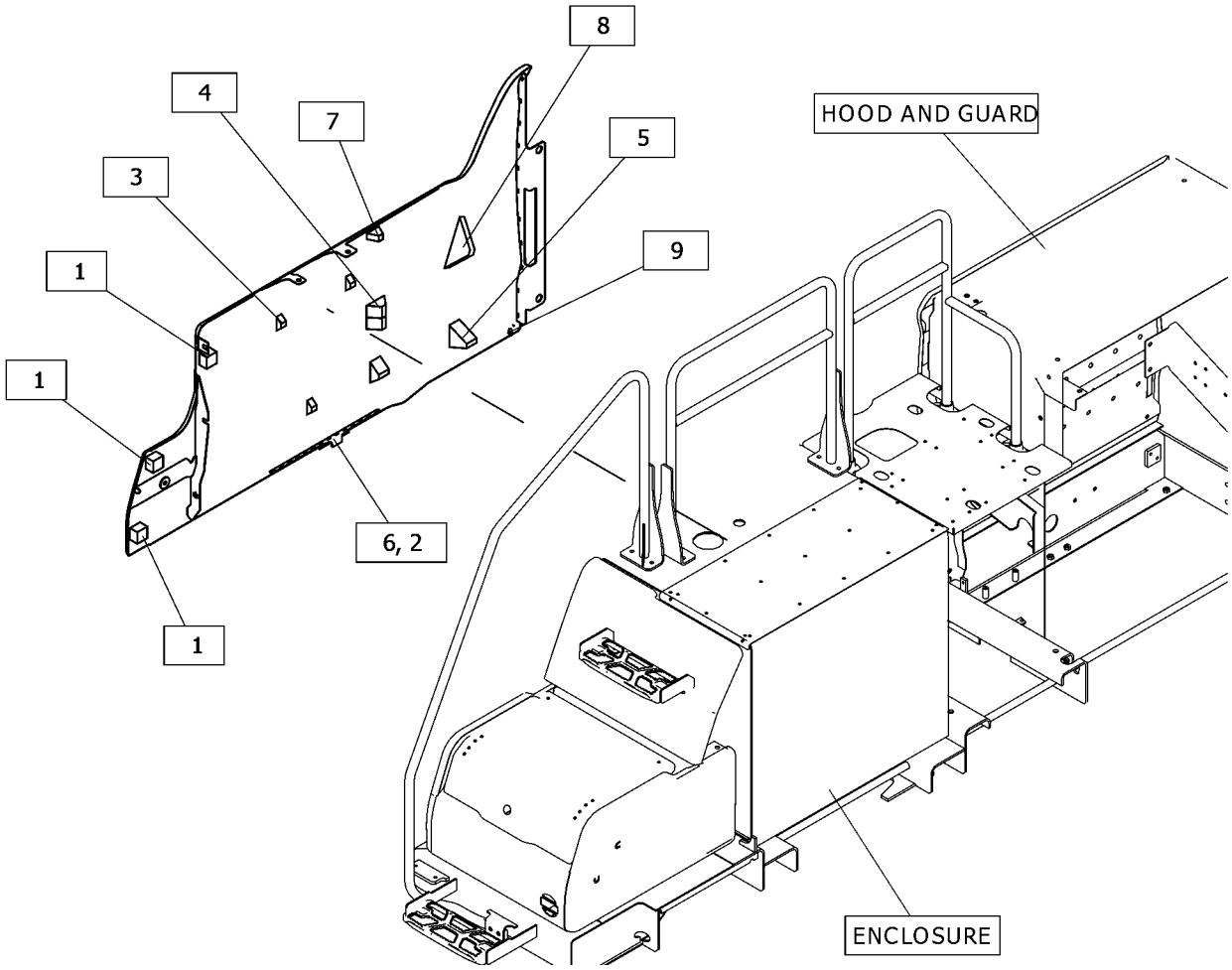

GRAPHIC #1 <END> g06390561

548-0199 DOOR & MTG GP-ACCESS—RADIATOR

S/N: SP91-UP

SMCS-7273 **i07526823**

NOTE	REF NO	GRAPHIC REF	PART NUMBER	QTY	PART NAME 1 2 3 4 5 6 (PRODUCT LEVEL)	SEE PAGE
Y	1	1	**547-4740**	1	DOOR GP-ACCESS (RADIATOR)	336
	2	1	**135-8575**	4	BOLT AS	
	3	1	**536-0278**	1	PLATE	
	4	1	**548-0197**	1	PLATE AS	

Y - SEPARATE ILLUSTRATION

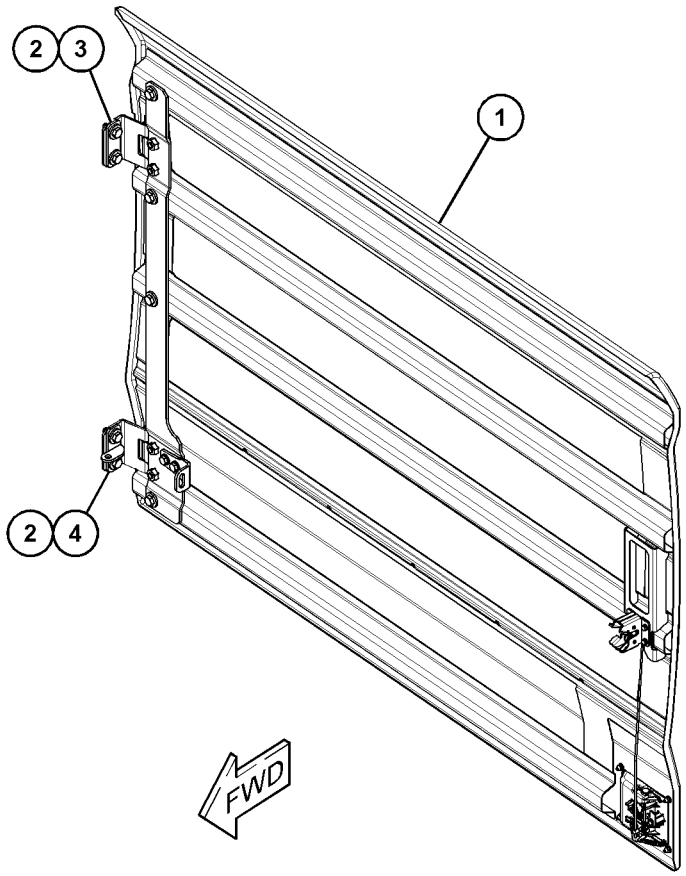

GRAPHIC #1 <END> g06286112

548-8355 DOOR & MTG GP-ACCESS—AIR CLEANER, BATTERY

S/N: SP91-UP
WITHOUT CAMERA
PART OF 512-1338 CAMERA & MIRROR AR

SMCS-7273 **i07432890**

NOTE	REF NO	GRAPHIC REF	PART NUMBER	QTY	PART NAME 1 2 3 4 5 6 (PRODUCT LEVEL)	SEE PAGE
Y	1	1	**547-7514**	1	DOOR GP-ACCESS (BATTERY COMPARTMENT)	338
	2	1	**135-8575**	4	BOLT AS	

Y - SEPARATE ILLUSTRATION

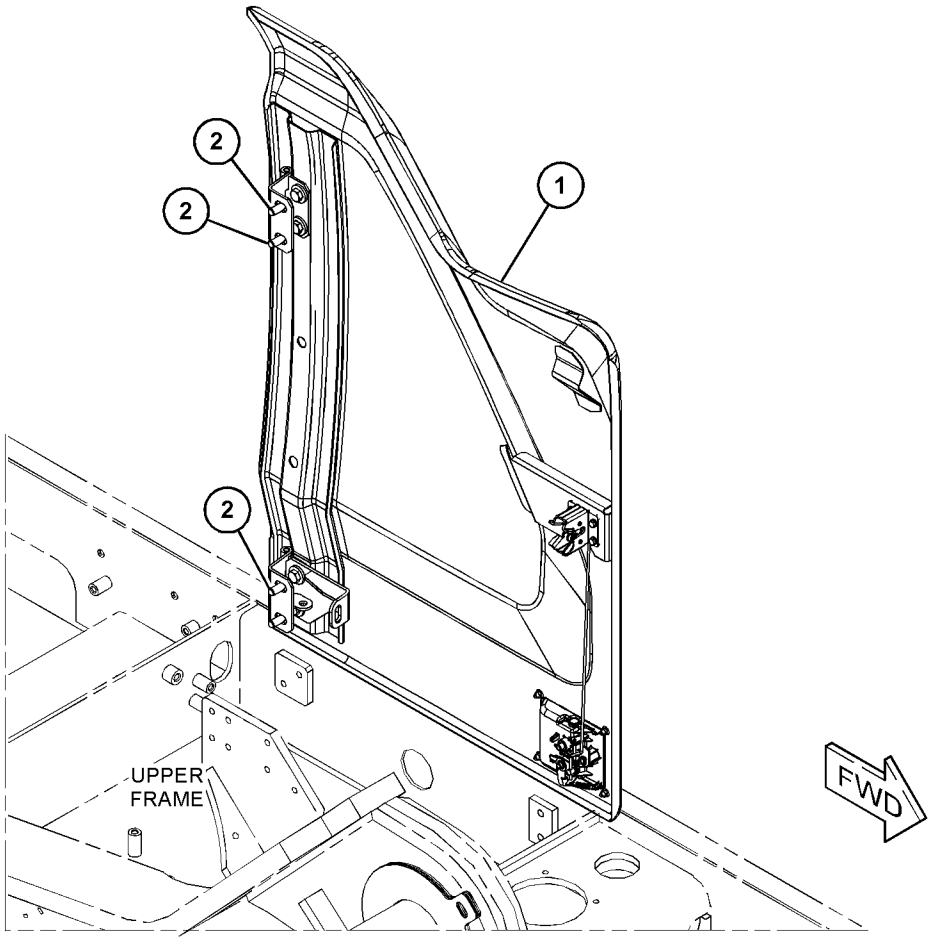

GRAPHIC #1 <END> g06282009

548-8356 DOOR & MTG GP-ACCESS—AIR CLEANER, BATTERY

S/N: SP91-UP
WITH CAMERA
PART OF 512-1337, 555-9457 CAMERA AR

SMCS-7273 **i07432892**

NOTE	REF NO	GRAPHIC REF	PART NUMBER	QTY	PART NAME 1 2 3 4 5 6 (PRODUCT LEVEL)	SEE PAGE
Y	1	1	*547-7515*	1	DOOR GP-ACCESS (AIR CLEANER, BATTERY)	339
	2	1	**135-8575**	4	BOLT AS	

Y - SEPARATE ILLUSTRATION

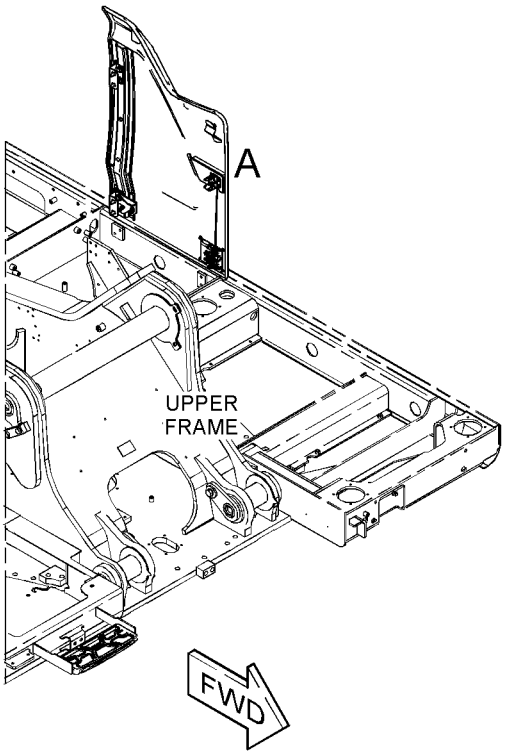

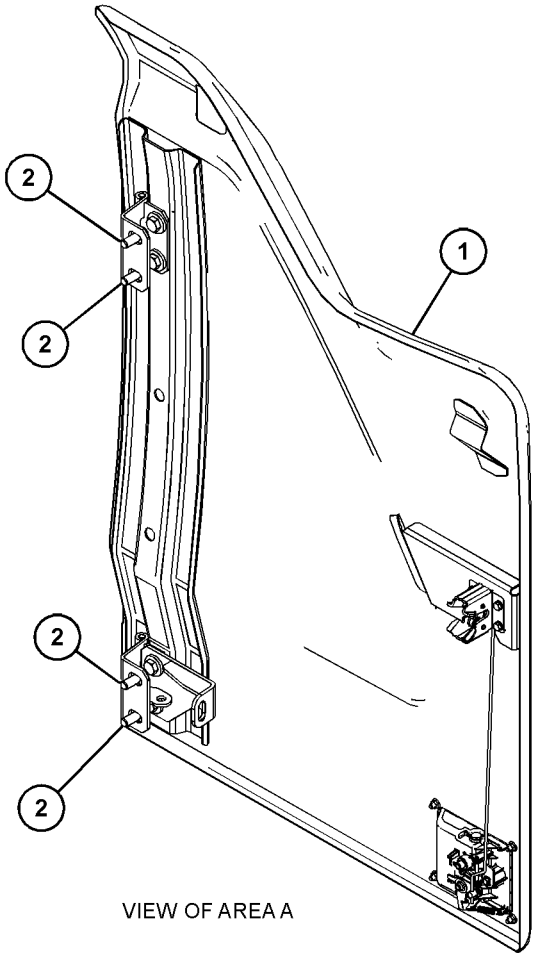

VIEW OF AREA A

GRAPHIC #1 <END> g06274290

547-4740 DOOR GP-ACCESS—RADIATOR

S/N: SP91-UP

PART OF 548-0199 DOOR & MTG GP-ACCESS

SMCS-7273 **i07669700**

NOTE	REF NO	GRAPHIC REF	PART NUMBER	QTY	PART NAME 1 2 3 4 5 6 (PRODUCT LEVEL)	SEE PAGE
M	1	1	**5C-9553**	8	BOLT (M6X1X16-MM)	
	2	1	**8T-4121**	2	WASHER-HARD (11X21X2.5-MM THK)	
M	3	1	**8T-4136**	2	BOLT (M10X1.5X25-MM)	
	4	1	**9X-8256**	4	WASHER (6.6X12X2-MM THK)	
M	5	1	**099-6418**	4	NUT (M6X1-THD)	
	6	1	**135-8573**	4	BOLT AS	
	7	1	**135-8575**	4	BOLT AS	
	8	1	**508-9591**	2	HINGE	
J	9	1	**508-9603**	1	HANDLE AS	
	10	1	**508-9604**	1	LOCK AS	
	11	1	**546-4983**	1	SHEET	
	12	1	**547-7511**	1	SHEET AS	

J - REQUIRES CORPORATE KEY
M - METRIC PART

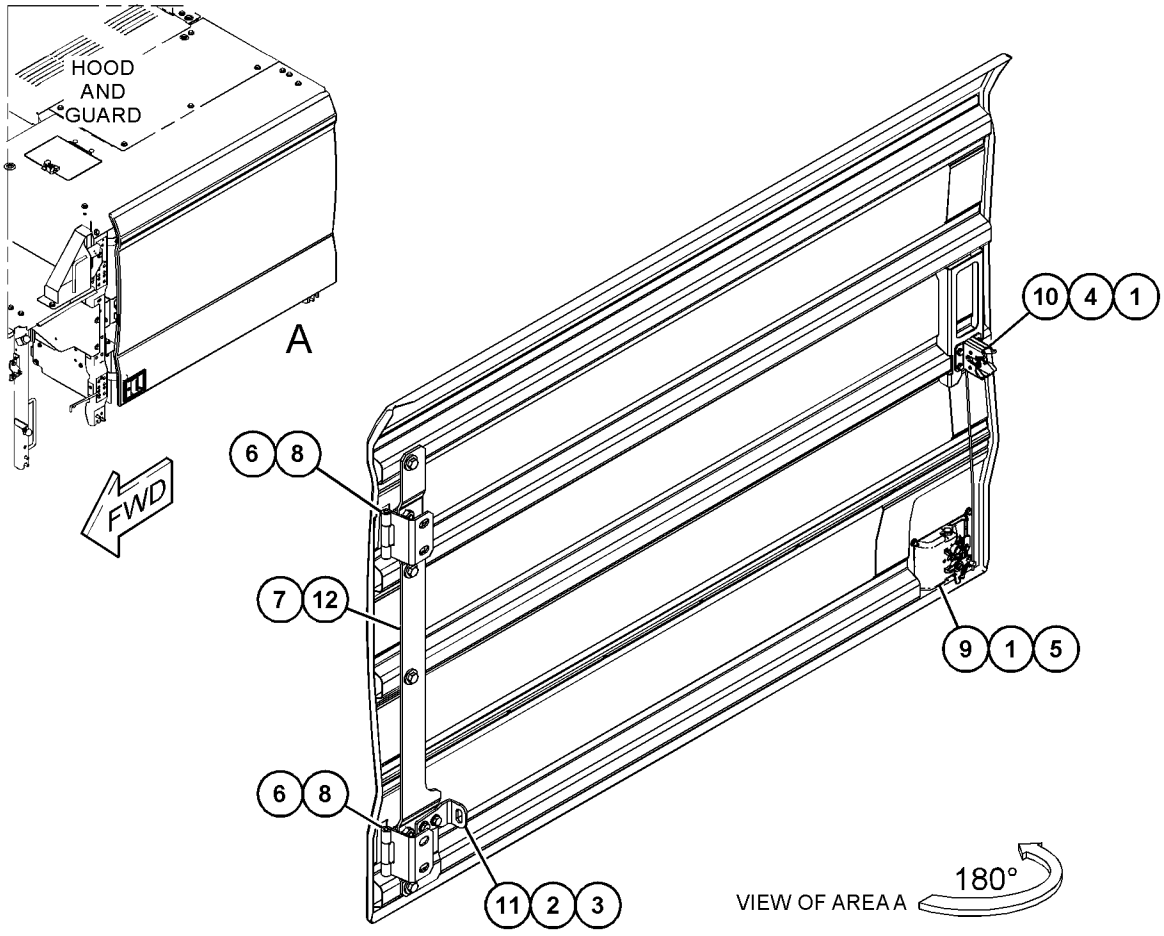

GRAPHIC #1 <END> g06286249

547-4745 DOOR GP-ACCESS—PUMP COMPARTMENT

S/N: SP91-UP

PART OF 498-7495, 575-9545 HOOD & GUARD GP

SMCS-7273 **i07512349**

NOTE	REF NO	GRAPHIC REF	PART NUMBER	QTY	PART NAME 1 2 3 4 5 6 (PRODUCT LEVEL)	SEE PAGE
M	1	1	**5C-9553**	8	BOLT (M6X1X16-MM)	
	2	1	**8T-4121**	2	WASHER-HARD (11X21X2.5-MM THK)	
M	3	1	**8T-4136**	2	BOLT (M10X1.5X25-MM)	
	4	1	**9X-8256**	4	WASHER (6.6X12X2-MM THK)	
M	5	1	**099-6418**	4	NUT (M6X1-THD)	
	6	1	**135-8573**	4	BOLT AS	
	7	1	**135-8575**	4	BOLT AS	
	8	1	**508-9591**	2	HINGE	
	9	1	**508-9604**	1	LOCK AS	
J	10	1	**508-9607**	1	HANDLE AS	
	11	1	**546-4983**	1	SHEET	
	12	1	**547-7510**	1	SHEET AS	

J - REQUIRES CORPORATE KEY
M - METRIC PART

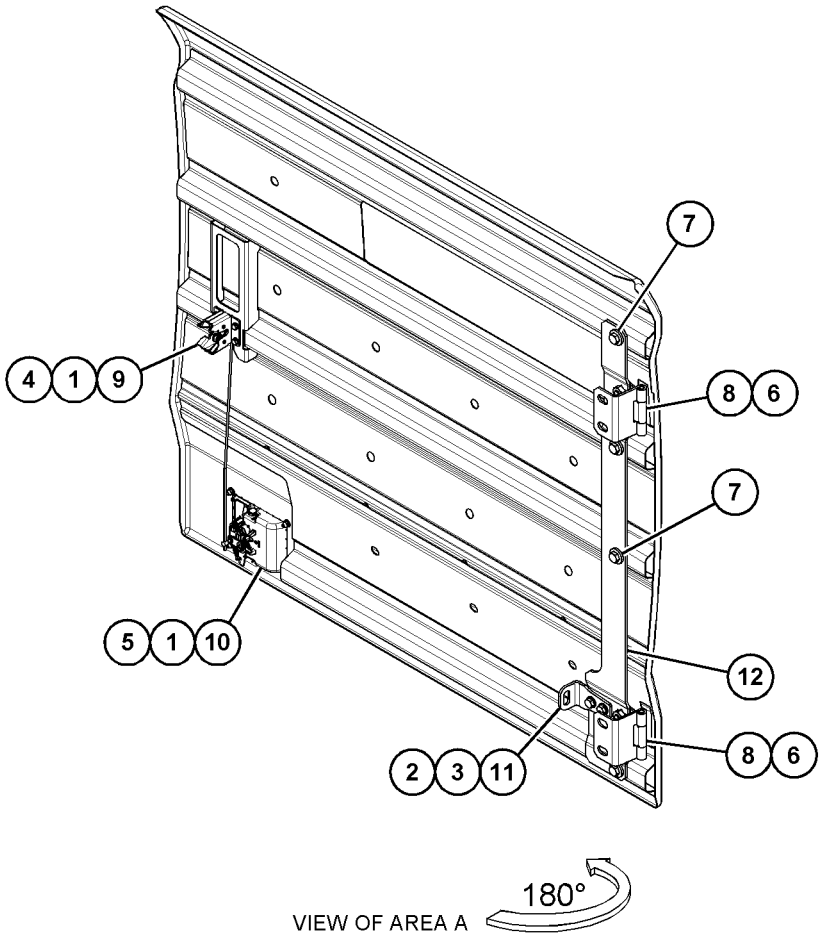

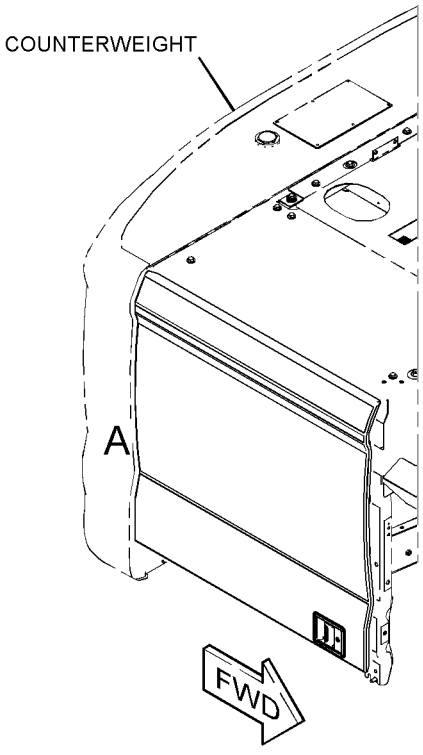

GRAPHIC #1 <END> g06286037

547-7514 DOOR GP-ACCESS—BATTERY COMPARTMENT

S/N: SP91-UP

PART OF 548-8355 DOOR & MTG GP-ACCESS

SMCS-7273 **i07432891**

NOTE	REF NO	GRAPHIC REF	PART NUMBER	QTY	PART NAME 1 2 3 4 5 6 (PRODUCT LEVEL)	SEE PAGE
	1	1	**508-9591**	1	HINGE	
	2	1	**547-2608**	1	HINGE AS	
M	3	1	**5C-9553**	8	BOLT (M6X1X16-MM)	
	4	1	**9X-8256**	4	WASHER (6.6X12X2-MM THK)	
M	5	1	**099-6418**	4	NUT (M6X1-THD)	
	6	1	**135-8573**	2	BOLT AS	
	7	1	**135-8575**	2	BOLT AS	
J	8	1	**508-9603**	1	HANDLE AS	
	9	1	**508-9608**	1	LOCK AS	
	10	1	**546-4980**	1	BRACKET AS	
	11	1	*547-8270*	1	DOOR AS-ACCESS	
M		1	**6V-9632**	4	NUT-WELD (M6X1-THD)	
M		1	**8T-3597**	4	NUT-WELD (M12X1.75-THD)	

J - REQUIRES CORPORATE KEY
M - METRIC PART

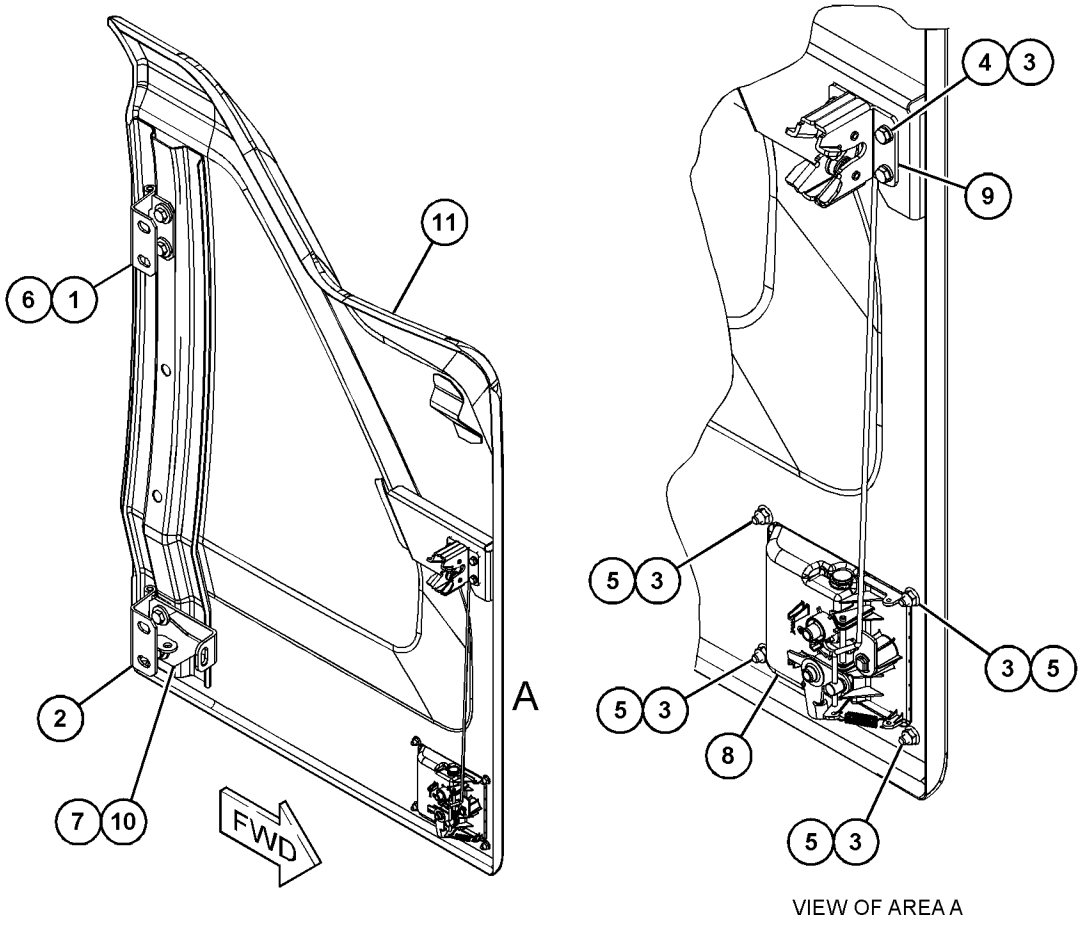

VIEW OF AREA A

GRAPHIC #1 <END> g06282029

547-7515 DOOR GP-ACCESS—AIR CLEANER, BATTERY

S/N: SP91-UP

PART OF 548-8356 DOOR & MTG GP-ACCESS

SMCS-7273 **i07432894**

NOTE	REF NO	GRAPHIC REF	PART NUMBER	QTY	PART NAME 1 2 3 4 5 6 (PRODUCT LEVEL)	SEE PAGE
	1	1	**508-9591**	1	HINGE	
	2	1	**547-2608**	1	HINGE AS	
M	3	1	**5C-9553**	8	BOLT (M6X1X16-MM)	
	4	1	**9X-8256**	4	WASHER (6.6X12X2-MM THK)	
M	5	1	**099-6418**	4	NUT (M6X1-THD)	
	6	1	**135-8573**	2	BOLT AS	
	7	1	**135-8575**	2	BOLT AS	
	8	1	**508-9603**	1	HANDLE AS	
	9	1	**508-9608**	1	LOCK AS	
	10	1	**546-4980**	1	BRACKET AS	
	11	1	*547-8271*	1	DOOR AS-ACCESS	
M		1	**6V-9632**	4	NUT-WELD (M6X1-THD)	
M		1	**8T-3597**	4	NUT-WELD (M12X1.75-THD)	

M - METRIC PART

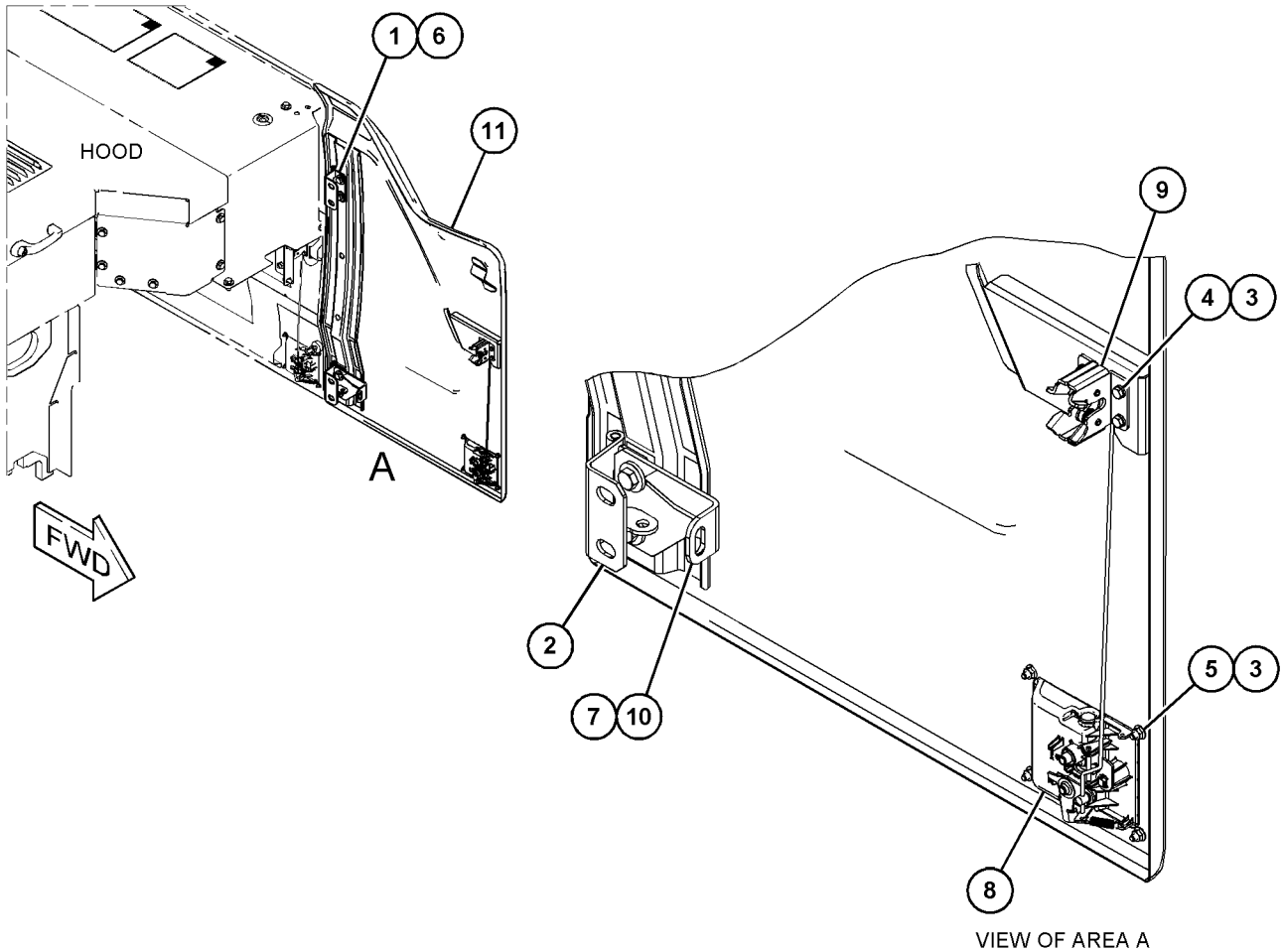

VIEW OF AREA A

GRAPHIC #1 <END> g06274780

516-7423 ENCLOSURE AR

S/N: SP91-10000

PART OF 526-5211 COMMON AR

SMCS-7251, 7263 **i07522041**

NOTE	PART NUMBER	QTY	PART NAME 1 2 3 4 5 6 (PRODUCT LEVEL)	SEE PAGE
Y	*498-7500*	1	BOX & MTG GP-STORAGE	320
Y	*498-7497*	1	FENDER & COVER GP	341
Y	*498-7499*	1	HANDRAIL GP	349
Y	*510-3132*	1	HANDRAIL GP (PLATFORM)	350
Y	*498-7498*	1	MOUNTING GP-COUNTERWEIGHT	364
Y	*498-7501*	1	TANK & MTG GP-FUEL	133

Y - SEPARATE ILLUSTRATION

<END>

516-7428 ENCLOSURE AR

S/N: SP91-10000

PART OF 523-7792 EXCAVATOR AR

SMCS-7251, 7263 **i07511717**

NOTE	PART NUMBER	QTY	PART NAME 1 2 3 4 5 6 (PRODUCT LEVEL)	SEE PAGE
Y	*498-7495*	1	HOOD & GUARD GP	351
Y	*510-3129*	1	LINER GP-SOUND SUPPRESSION	363

Y - SEPARATE ILLUSTRATION

<END>

575-9537 ENCLOSURE AR

S/N: SP910001-UP

PART OF 523-7792 EXCAVATOR AR

SMCS-7251, 7263 **i07861893**

NOTE	PART NUMBER	QTY	PART NAME 1 2 3 4 5 6 (PRODUCT LEVEL)	SEE PAGE
Y	*575-9542*	1	COVER GP-ENCLOSURE	330
Y	*510-3129*	1	LINER GP-SOUND SUPPRESSION	363

Y - SEPARATE ILLUSTRATION

<END>

575-9544 ENCLOSURE AR

S/N: SP910001-UP

PART OF 526-5211 COMMON AR

SMCS-7251, 7263 **i07854425**

NOTE	PART NUMBER	QTY	PART NAME 1 2 3 4 5 6 (PRODUCT LEVEL)	SEE PAGE
Y	*498-7500*	1	BOX & MTG GP-STORAGE	320
Y	*498-7497*	1	FENDER & COVER GP	341
Y	*498-7499*	1	HANDRAIL GP (STAIRWAY)	349
Y	*510-3132*	1	HANDRAIL GP (PLATFORM)	350
Y	*575-9545*	1	HOOD & GUARD GP	356
Y	*498-7501*	1	TANK & MTG GP-FUEL	133

Y - SEPARATE ILLUSTRATION

<END>

498-7497 FENDER & COVER GP

S/N: SP91-UP

PART OF 516-7423, 575-9544 ENCLOSURE AR

SMCS-7252 **i07522253**

NOTE	REF NO	GRAPHIC REF	PART NUMBER	QTY	PART NAME 1 2 3 4 5 6 (PRODUCT LEVEL)	SEE PAGE
	1	1	**517-0686**	1	STEP AS	
	2	1	**538-9251**	1	SUPPORT AS	
J		1	**348-5409**		SEAL (7-DM)	
	3	1	**539-0973**	1	COVER AS-SOUND SUPPRESSION	
		1	**528-9402**	2	LINER	
	4	1	**135-8573**	4	BOLT AS	
	5	1	**135-8575**	2	BOLT AS	

J - ORDER BY THE DECIMETER

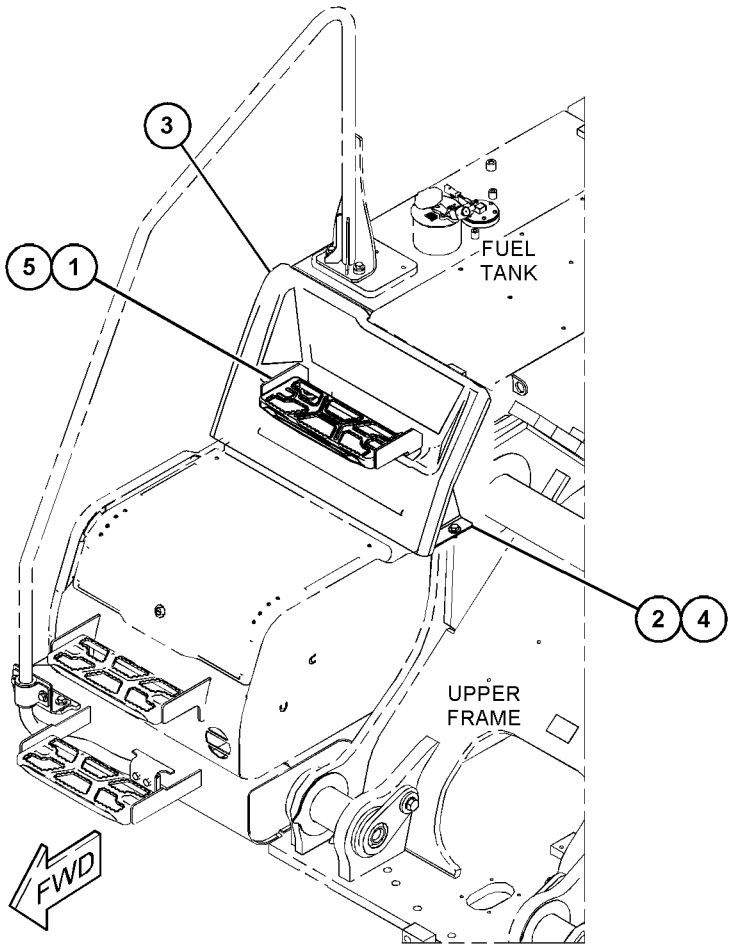

GRAPHIC #1 <END> g06278077

465-4853 FRAME GP-UPPER

S/N: SP91-UP

SMCS-7051 **i07705198**

NOTE	REF NO	GRAPHIC REF	PART NUMBER	QTY	PART NAME 1 2 3 4 5 6 (PRODUCT LEVEL)	SEE PAGE
B	1	1	**093-0090**	4	SHIM (1-MM THK)	
	2	1	**093-0364**	2	SPACER (103X140X12-MM THK)	
	3	1	**096-6467**	2	WASHER (22X60X8-MM THK)	
	4	1	**117-5435**	2	PIN AS	
B	5	1	**133-2427**	2	SHIM (0.5-MM THK)	
	6	1	**166-1488**	4	SHIM (2-MM THK)	
	7	1	**177-6315**	18	PLUG	
	8	1	**212-2841**	1	SHIM (2-MM THK)	
	9	1	**324-0938**	1	PLATE	
	10	1	**324-0941**	1	PIN AS	
B	11	1	**436-0262**	2	SHIM (3-MM THK)	
M	12	1	**447-1709**	2	BOLT (M16X2X45-MM)	
	13	1	**451-2175**	2	WASHER-HARD (17.5X30X3.5-MM THK)	
	14	1	**451-2176**	2	WASHER-HARD (22X35X3.5-MM THK)	
M	15	1	**453-2844**	2	BOLT (M20X2.5X30-MM)	
	16	1	**543-9772**	1	FRAME AS-UPPER	
	16A	1	**7Y-1113**	1	BOSS	
	16B	1	**461-7743**	1	PLATE AS-STEP	
B	17	1	**212-2841**	2	SHIM (2-MM THK)	
					THE FOLLOWING REPAIR PARTS ARE AVAILABLE FOR REPAIR OF DAMAGED SKIRTS	
F			**507-4952**	1	PLATE (1100-MM)	
F			**507-4953**	1	PLATE (2000-MM)	

B - USE AS REQUIRED
F - NOT SHOWN
M - METRIC PART

465-4853 **FRAME GP-UPPER (**contd.**)** **i07705198**

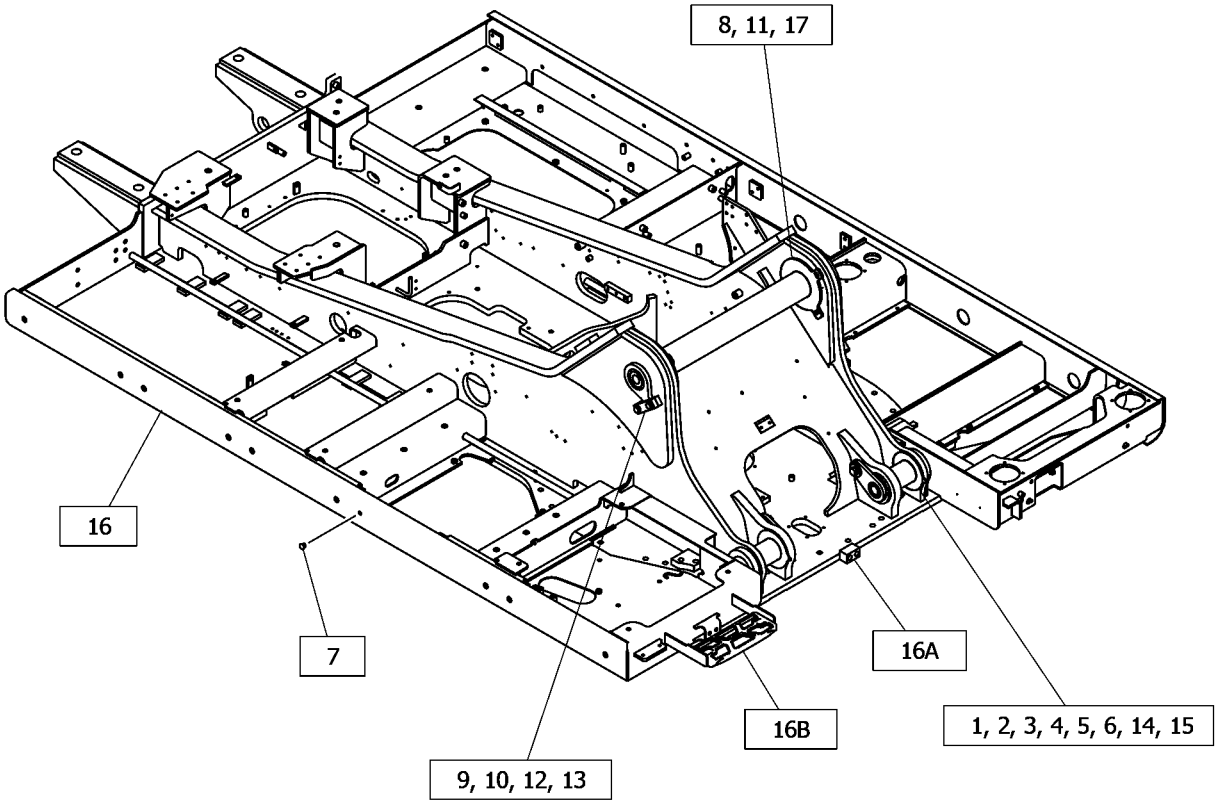

GRAPHIC #1 <END> g06400844

393-6549 GEAR & BEARING GP-SWING

S/N: SP91-UP

PART OF 514-3560 GEAR & BEARING GP-SWING

SMCS-7063 **i07520371**

NOTE	REF NO	GRAPHIC REF	PART NUMBER	QTY	PART NAME 1 2 3 4 5 6 (PRODUCT LEVEL)	SEE PAGE
	1	1	**3B-8489**	1	ADAPTER	
	2	1	**227-6074**	1	SEAL-DUST	
E	3	1	**148-4685**		SEAL (465-CM)	
	4	1	**352-7064**	1	CAP	

E - ORDER BY THE CENTIMETER

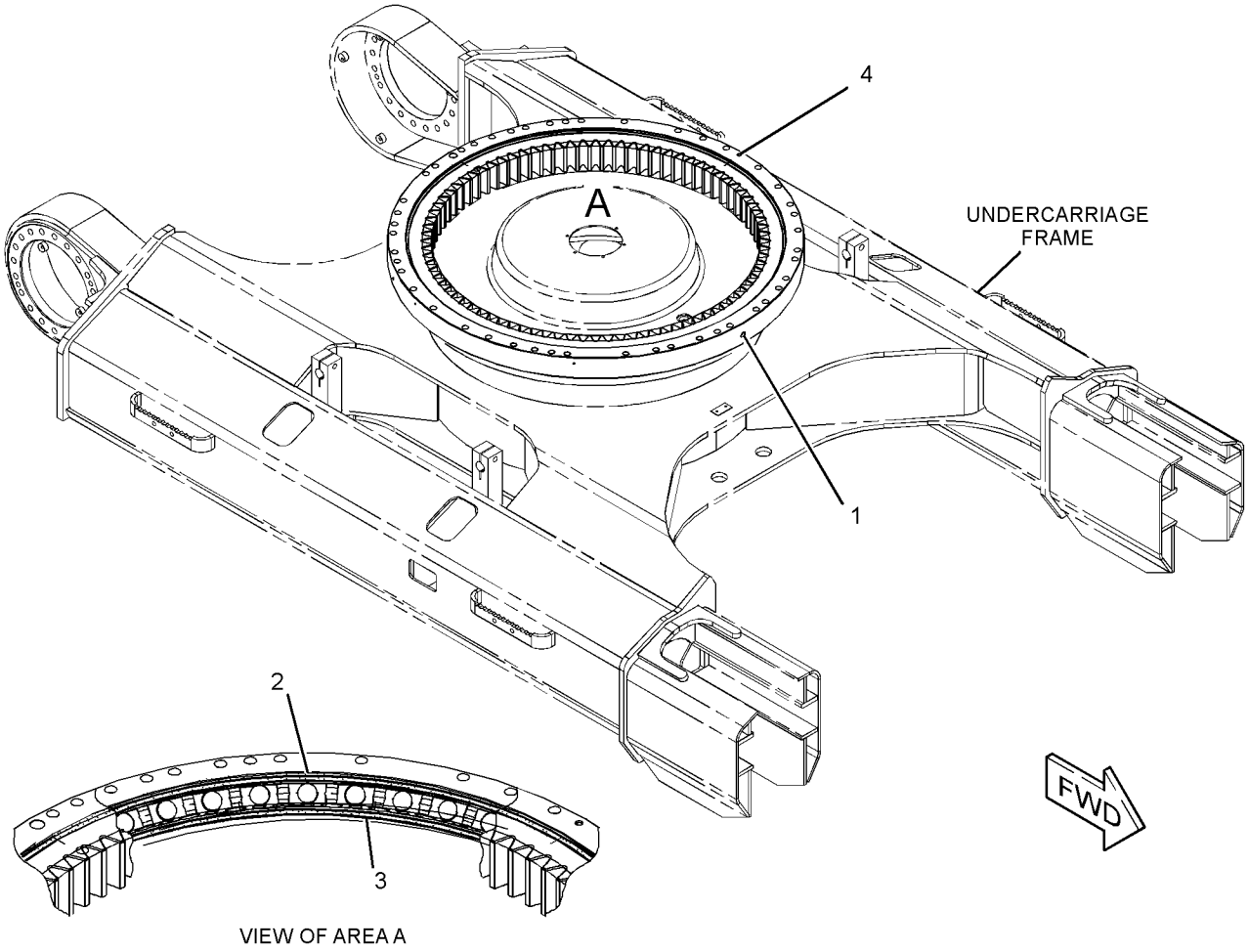

GRAPHIC #1 <END> g06165594

514-3560 GEAR & BEARING GP-SWING

S/N: SP91-UP

SMCS-7063 **i07520096**

NOTE	REF NO	GRAPHIC REF	PART NUMBER	QTY	PART NAME 1 2 3 4 5 6 (PRODUCT LEVEL)	SEE PAGE
	1	1	**2B-7561**	2	CORK	
	2	1	**3B-8489**	2	ADAPTER	
	3	1	**5K-9243**	4	ELBOW-FLARED	
	4	1	**7Y-1647**	1	GASKET	
	5	1	**199-4523**	1	TUBE AS (RH)	
	6	1	**199-4524**	1	TUBE AS (LH)	
	7	1	**227-6105**	1	BOOT	
Y	8	1	**393-6549**	1	GEAR & BEARING GP-SWING	344
M	9	1	**112-1531**	46	BOLT (M24X3X120-MM)	
M	10	1	**141-6373**	42	BOLT (M24X3X150-MM)	
	11	1	**492-2153**	1	PLATE AS	
	12	1	**093-0020**	42	SPACER (25X44X6-MM THK)	
	13	1	**148-4703**	1	COVER	
	14	1	**148-4704**	1	GASKET	
	15	1	**4N-9170**	4	CLIP	
	16	1	**7Y-1095**	1	DOWEL	
	17	1	**7Y-1507**	46	SPACER (24.5X44X43-MM THK)	
	18	1	**7Y-1648**	1	STRIP	
	19	1	**7Y-1650**	1	CLAMP-HOSE	
	20	1	**8T-4121**	14	WASHER-HARD (11X21X2.5-MM THK)	
M	21	1	**8T-4136**	12	BOLT (M10X1.5X25-MM)	
M	22	1	**8T-4137**	2	BOLT (M10X1.5X20-MM)	
M	23	1	**8T-4199**	4	BOLT (M8X1.25X12-MM)	
BF		1	**1U-8846**		SEALANT-GASKET	

B - USE AS REQUIRED
F - NOT SHOWN
M - METRIC PART
Y - SEPARATE ILLUSTRATION

514-3560 **GEAR & BEARING GP-SWING (**contd.**)** **i07520096**

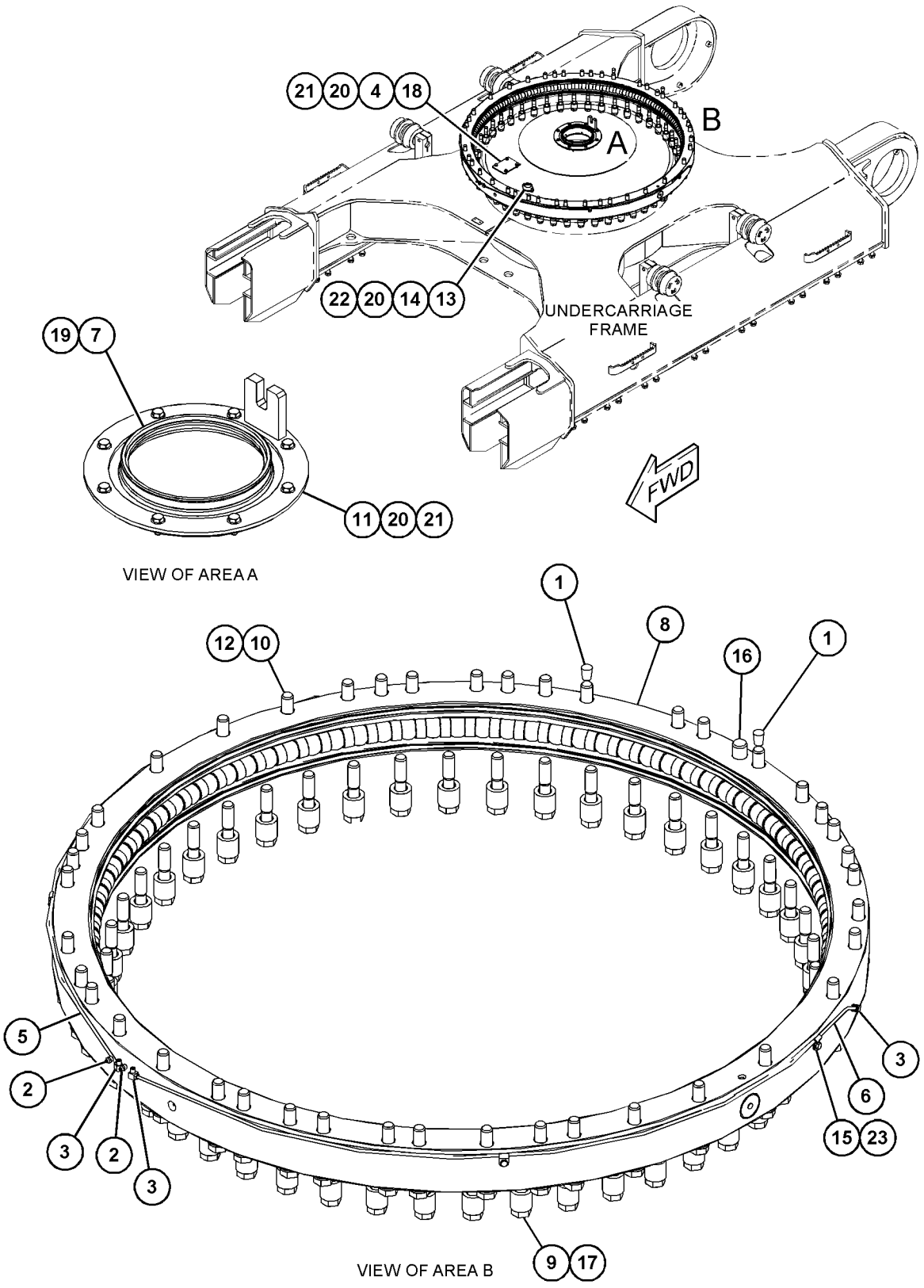

GRAPHIC #1 <END> g06284699

498-7505 GUARD GP-BOTTOM–HEAVY DUTY

S/N: SP91-UP

SMCS-7153 **i07519787**

NOTE	REF NO	GRAPHIC REF	PART NUMBER	QTY	PART NAME 1 2 3 4 5 6 (PRODUCT LEVEL)	SEE PAGE
	1	1	**453-8030**	54	BOLT AS	
	2	1	**505-7165**	1	PLATE AS	
	3	1	**505-7169**	1	PLATE AS	
	4	1	**505-7170**	1	PLATE AS	
	5	1	**505-7171**	1	PLATE AS	
	5A	1	**099-7857**	1	HINGE	
	6	1	**505-7172**	1	PLATE AS	
	7	1	**558-9990**	2	PLATE AS	
	8	1	**508-9631**	1	PLATE AS	
	9	1	**525-9758**	1	PLATE AS	
	10	1	**525-9759**	1	PLATE AS	
	11	1	**525-9760**	1	PLATE AS	

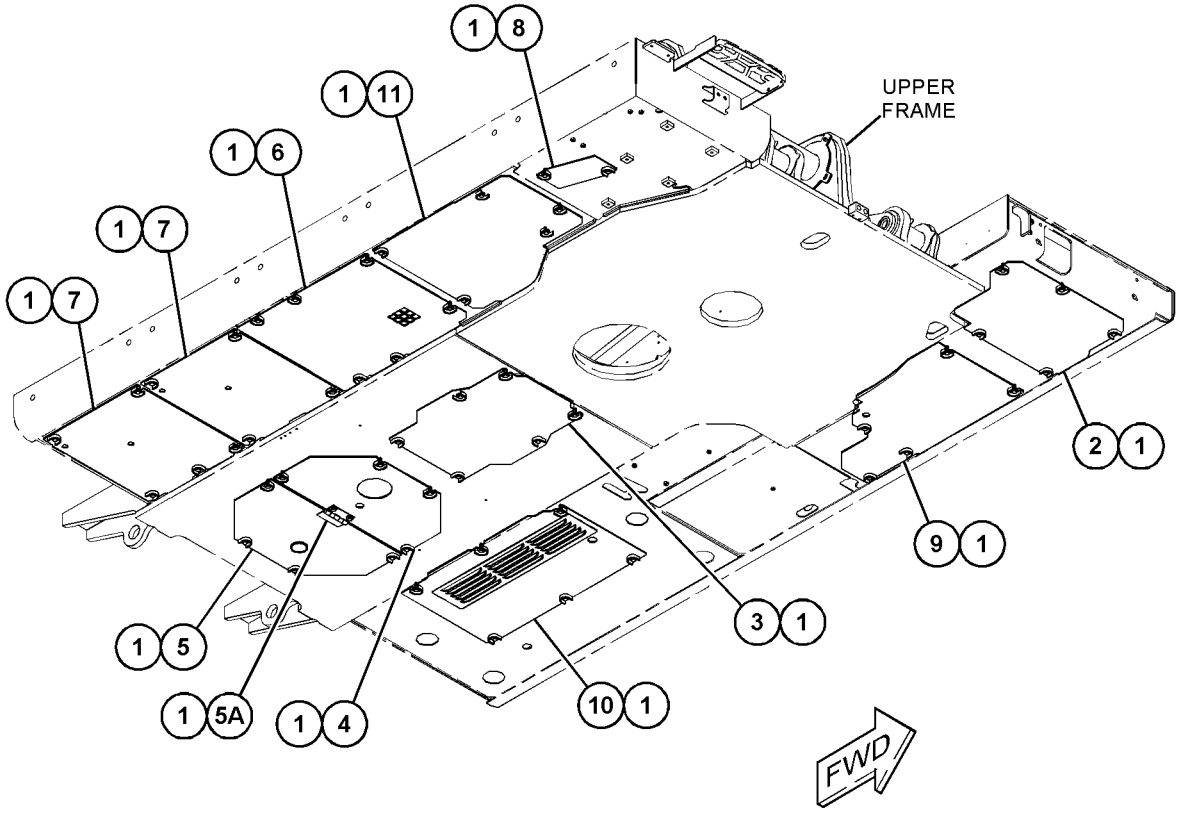

(VIEWED FROM BOTTOM)

GRAPHIC #1 <END> g06344972

134-8887 GUARD GP-SWIVEL

S/N: SP91-UP

SMCS-7183 **i06589029**

NOTE	REF NO	GRAPHIC REF	PART NUMBER	QTY	PART NAME 1 2 3 4 5 6 (PRODUCT LEVEL)	SEE PAGE
	1	1	**134-8888**	1	PLATE AS	
	2	1	**134-8891**	1	PLATE AS	
M	3	1	**8C-8992**	6	BOLT-LOCKING (M12X1.75X30-MM)	
	4	1	**5P-1076**	6	WASHER-HARD (13.5X30X4-MM THK)	

M - METRIC PART

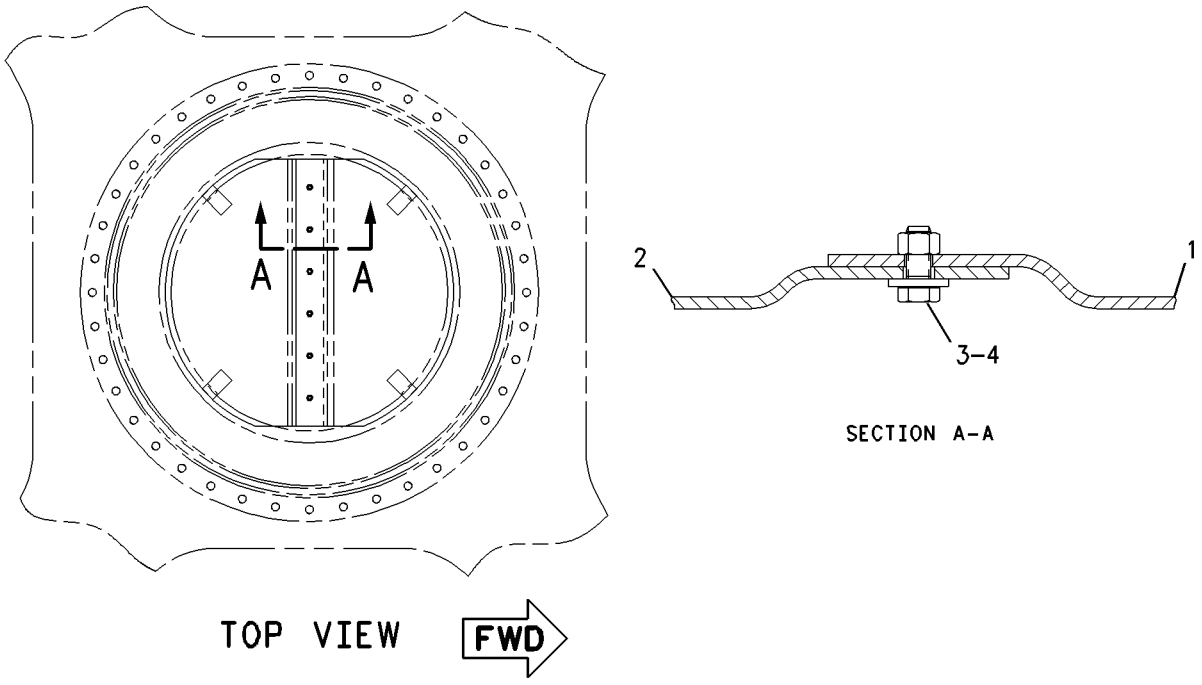

GRAPHIC #1 <END> g00790525

498-7499 HANDRAIL GP

S/N: SP91-UP

PART OF 516-7423, 575-9544 ENCLOSURE AR

SMCS-7256 **i07522057**

NOTE	REF NO	GRAPHIC REF	PART NUMBER	QTY	PART NAME 1 2 3 4 5 6 (PRODUCT LEVEL)	SEE PAGE
	1	1	**135-8575**	4	BOLT AS	
	2	1	**135-8578**	4	BOLT AS	
	3	1	**141-6518**	2	SPACER (13.5X30X10-MM THK)	
	4	1	**327-2994**	1	CLAMP	
	5	1	**327-2995**	2	SLEEVE	
	6	1	**423-5225**	1	PLATE AS	
	7	1	**525-9761**	1	HANDRAIL AS	
M		1	**8T-3597**	2	NUT-WELD (M12X1.75-THD)	

M - METRIC PART

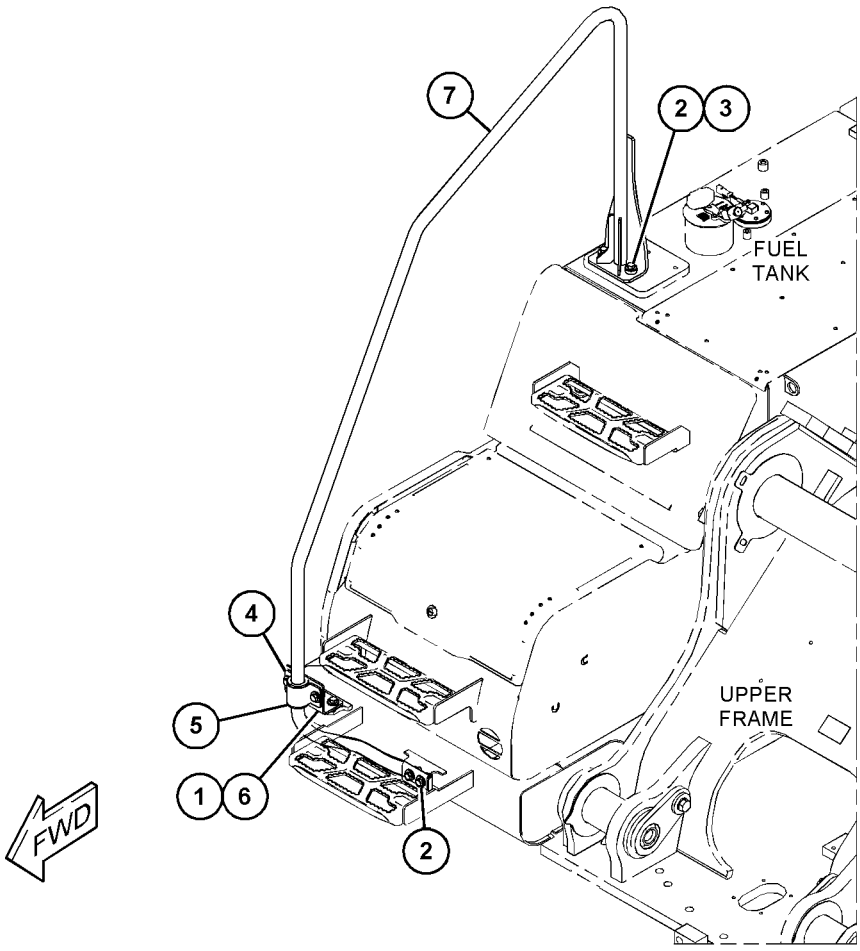

GRAPHIC #1 <END> g06278074

510-3132 HANDRAIL GP–PLATFORM

S/N: SP91-UP

PART OF 516-7423, 575-9544 ENCLOSURE AR

SMCS-7256 **i07839306**

NOTE	REF NO	GRAPHIC REF	PART NUMBER	QTY	PART NAME 1 2 3 4 5 6 (PRODUCT LEVEL)	SEE PAGE
	1	1	**135-8575**	6	BOLT AS	
	2	1	**262-2603**	4	SPACER (13.5X30X16-MM THK)	
	3	1	**535-9248**	1	HANDRAIL AS	
	4	1	**560-5876**	1	HANDRAIL AS	
	5	1	**5P-1076**	4	WASHER-HARD (13.5X30X4-MM THK)	
M	6	1	**8T-4184**	4	BOLT (M12X1.75X45-MM)	

M - METRIC PART

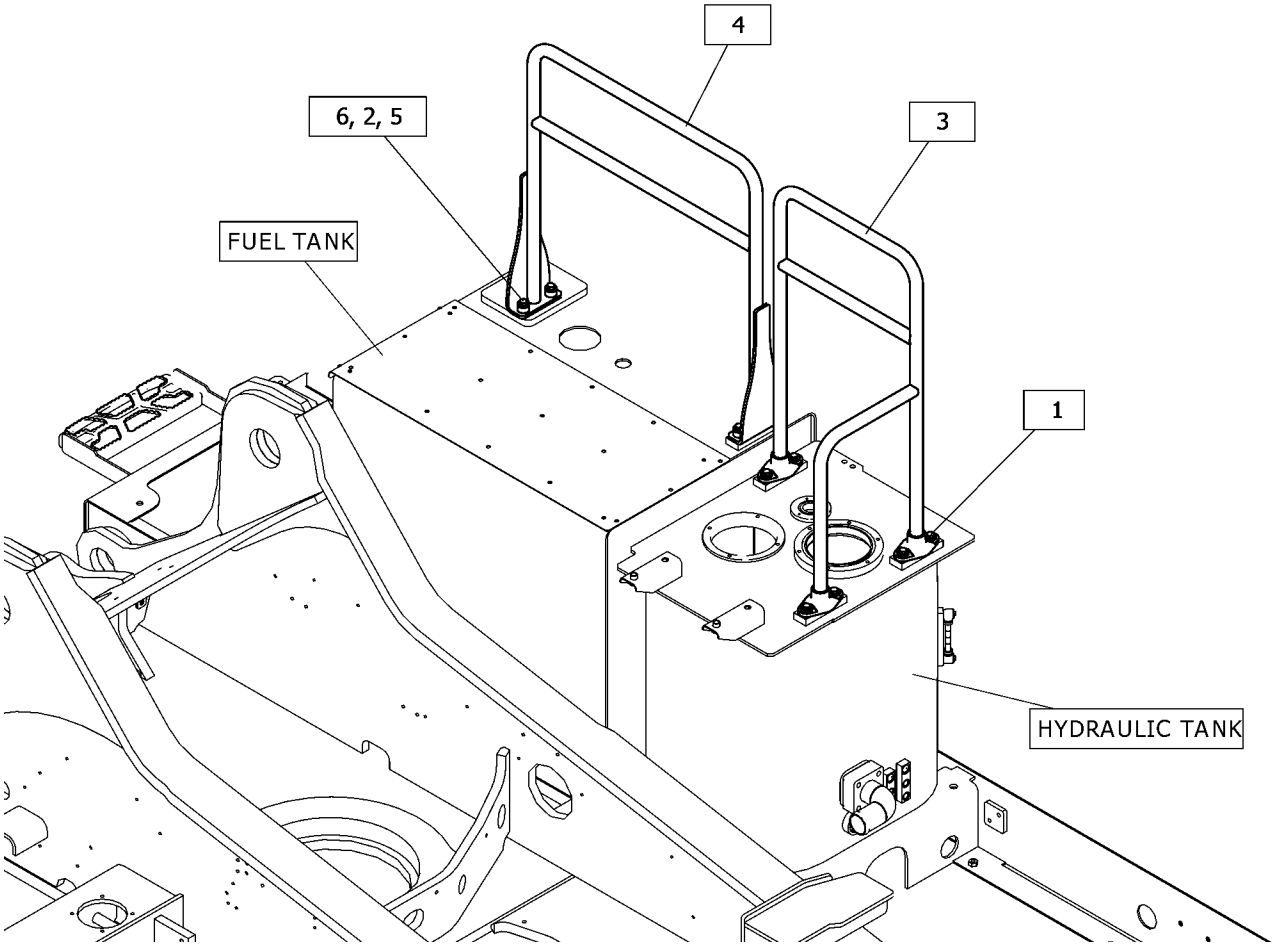

GRAPHIC #1 <END> g06422043

498-7495 HOOD & GUARD GP

S/N: SP91-10000

PART OF 516-7428 ENCLOSURE AR

SMCS-7251, 7276 **i07669694**

NOTE	REF NO	GRAPHIC REF	PART NUMBER	QTY	PART NAME 1 2 3 4 5 6 (PRODUCT LEVEL)	SEE PAGE
M	1	1	**5C-7261**	2	NUT (M8X1.25-THD)	
	2	1	**5P-4116**	2	WASHER-HARD (8.8X20.5X2-MM THK)	
	3	1	**246-2641**	1	PADLOCK GP	
		1	**5P-8500**	1	KEY	
	4	1,2	**7Y-2853**	3	SPACER (13X38X5-MM THK)	
	5	1	**7Y-2854**	1	SPACER (24X38X3-MM THK)	
	6	1,2	**7Y-8990**	2	SPACER (24X38X1.5-MM THK)	
	7	1,2	**8T-4121**	25	WASHER-HARD (11X21X2.5-MM THK)	
M	8	2	**8T-4133**	6	NUT (M10X1.5-THD)	
M	9	1,2	**8T-4136**	16	BOLT (M10X1.5X25-MM)	
	10	2	**3B-4611**	3	PIN-COTTER	
	11	1,2	**135-8573**	7	BOLT AS	
	12	1,2	**135-8575**	140	BOLT AS	
	13	1,2	**135-8577**	3	BOLT AS	
	14	1	**135-8579**	2	BOLT AS	
	15	1	**170-3016**	8	SPACER (19X32X2-MM THK)	
	16	1	**170-9360**	2	GROMMET	
	17	2	**327-2886**	4	STRIKER AS	
	18	2	**343-2465**	6	BUMPER	
	19	2	**508-9583**	2	BRACKET AS	
	20	2	**508-9584**	1	BRACKET AS	
	21	2	**508-9685**	1	LINER	
	22	2	**510-2391**	1	SUPPORT AS	
	23	2	**510-2420**	1	SUPPORT AS	
Y	24	2	**510-3106**	1	SHEET AS-SOUND SUPPRESSION	366
Y	25	2	**510-3149**	1	SHEET AS-SOUND SUPPRESSION	367
Y	26	2	**510-3150**	1	SHEET AS-SOUND SUPPRESSION	368
	27	1	**510-3164**	1	LINER	
	28	1	**516-7468**	1	SUPPORT AS	
	29	1	**516-7469**	1	SUPPORT AS	
	30	1	**516-7545**	1	LINER	
	31	1	**516-7546**	1	LINER	
	32	2	**522-8605**	1	SUPPORT AS	
	33	1	**522-8630**	1	SUPPORT AS	
	34	2	**522-8633**	1	SUPPORT AS	
	35	1	**525-9771**	1	SUPPORT AS	
Y	36	1	**527-1391**	1	SHEET AS-SOUND SUPPRESSION	369
B	37	2	**527-7804**	1	SHIM (1-MM THK)	
B		2	**527-7805**	1	SHIM (2-MM THK)	
	39	1	**528-3558**	1	SUPPORT AS	
	40	1	**528-3561**	1	SUPPORT AS	
	41	1	**528-3563**	1	SUPPORT AS	
	42	2	**528-3564**	1	SUPPORT AS	
		2	**528-3651**	1	LINER	
Y	43	1	**528-3566**	1	SHEET AS-SOUND SUPPRESSION	370
	44	1	**528-3575**	1	COVER AS-SOUND SUPPRESSION	
D		1	**101-9848**		SEAL (0.5-M)	

498-7495 **HOOD & GUARD GP (**contd.**)** **i07669694**

NOTE	REF NO	GRAPHIC REF	PART NUMBER	QTY	PART NAME 1 2 3 4 5 6 (PRODUCT LEVEL)	SEE PAGE
		1	**528-3665**	1	LINER	
Y	45	1	**528-3579**	1	COVER GP-ACCESS (RADIATOR)	327
	46	1	**528-3583**	1	COVER AS-SOUND SUPPRESSION	
		1	**4I-7924**	3	WASHER (4.5X40X1.2-MM THK)	
		1	**6P-2216**	3	CAP (PUSH ON)	
		1	**510-3280**	1	SILENCER	
	47	2	**528-3652**	1	SUPPORT	
	48	1	**535-9175**	1	COVER AS-SOUND SUPPRESSION	
D		1	**101-9848**		SEAL (0.9-M)	
		1	**510-3290**	1	INSULATION	
		1	**510-3291**	1	INSULATION	
	49	1	**535-9190**	1	COVER AS	
J		1	**348-5409**		SEAL (3-DM)	
Y	50	2	**535-9211**	1	SUPPORT AS-SOUND SUPPRESSION	380
	51	2	**536-0278**	1	PLATE	
	52	2	**543-2338**	1	SUPPORT AS	
Y	53	1	**546-2598**	1	SHEET AS-SOUND SUPPRESSION	371
	54	2	**546-4979**	3	ROD AS	
		2	**4B-4278**	1	WASHER (10.2X20.5X1.6-MM THK)	
	55	1	**547-4722**	1	SUPPORT AS	
Y	56	1	**547-4745**	1	DOOR GP-ACCESS (PUMP)	337
	57	1	**548-0152**	1	SUPPORT AS	
Y	58	1	**548-0194**	1	SHEET AS-SOUND SUPPRESSION	373
	59	1	**548-0208**	1	COVER AS	
		1	**548-9976**	2	INSULATION	
	60	2	**543-2337**	1	SUPPORT AS	
	61	1	**543-2339**	1	SUPPORT AS	
	62	2	**543-2425**	1	PLATE AS	
J		2	**348-5409**		SEAL (5-DM)	
		2	**519-2384**	1	LINER	
	63	1	**548-0197**	1	PLATE AS	
	64	1	**548-0299**	1	SUPPORT AS	
	65	1	**548-0300**	1	HANDLE AS	
	66	2	**548-0316**	1	COVER AS	
		2	**4I-7924**	6	WASHER (4.5X40X1.2-MM THK)	
		2	**6P-2216**	6	CAP (PUSH ON)	
		2	**510-3263**	3	SILENCER	
Y	67	1	**548-0333**	1	HOOD GP-ENGINE (HINGED)	362
	68	2	**548-0376**	1	SUPPORT AS	
Y	69	1	**548-0377**	1	SHEET AS-SOUND SUPPRESSION	374
Y	70	1	**548-0379**	1	SHEET AS-SOUND SUPPRESSION	375
Y	71	1	**548-0381**	1	SHEET AS-SOUND SUPPRESSION	376
	72	1	**548-0389**	1	COVER AS	
	73	1	**548-0420**	1	SHEET AS	
	74	1	**548-0452**	1	SPRING AS-GAS	
	75	1	**548-0453**	1	SHEET AS	
		1	**535-9273**	1	LINER	
	76	1	**551-2612**	1	LINER	
	77	1	**552-3923**	1	LINER	

498-7495 **HOOD & GUARD GP (**contd.**)** **i07669694**

NOTE	REF NO	GRAPHIC REF	PART NUMBER	QTY	PART NAME 1 2 3 4 5 6 (PRODUCT LEVEL)	SEE PAGE

B - USE AS REQUIRED
D - ORDER BY THE METER
J - ORDER BY THE DECIMETER
M - METRIC PART
Y - SEPARATE ILLUSTRATION

498-7495 **HOOD & GUARD GP** (contd.) **i07669694**

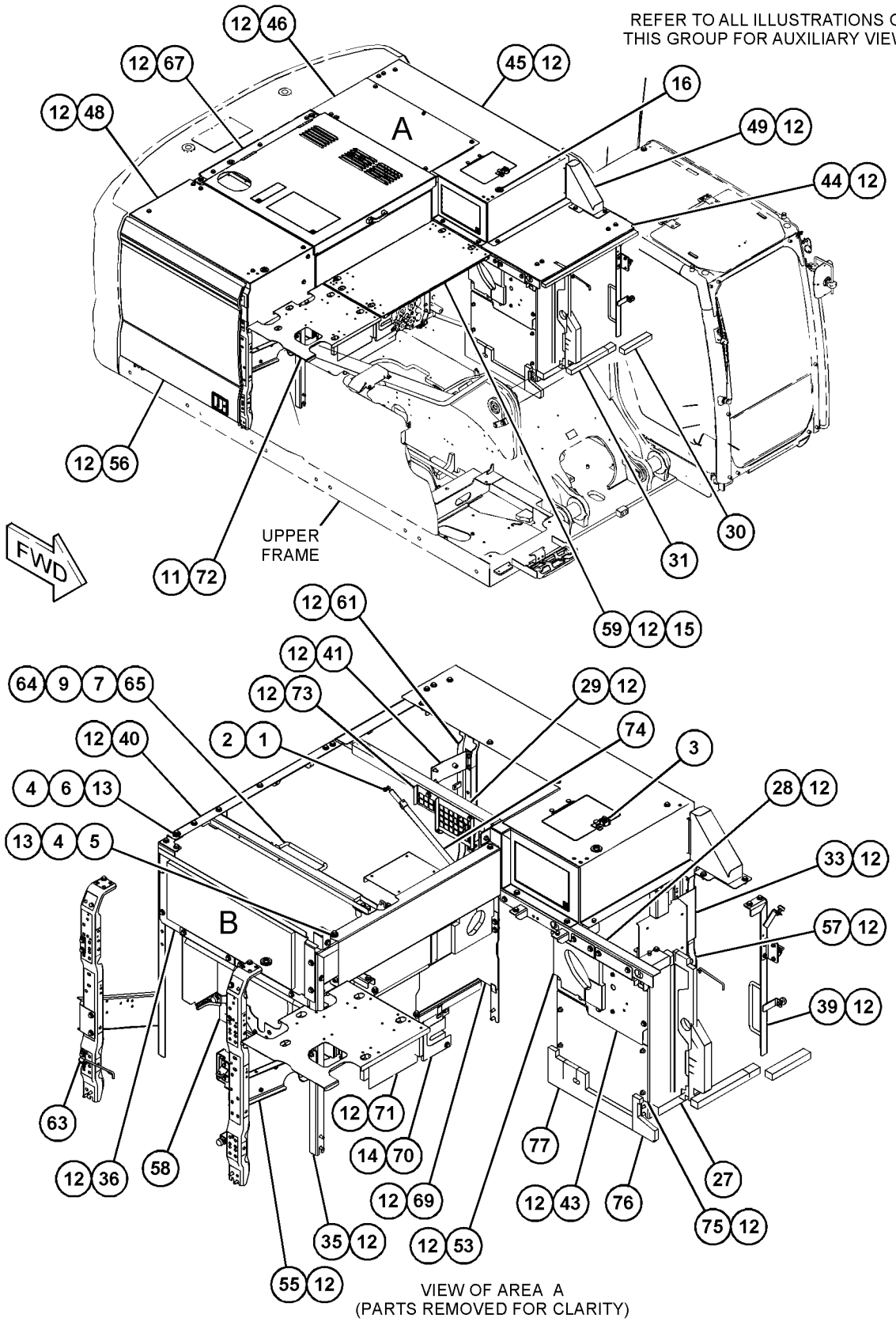

GRAPHIC #1 g06307110

498-7495 **HOOD & GUARD GP (**contd.**)** **i07669694**

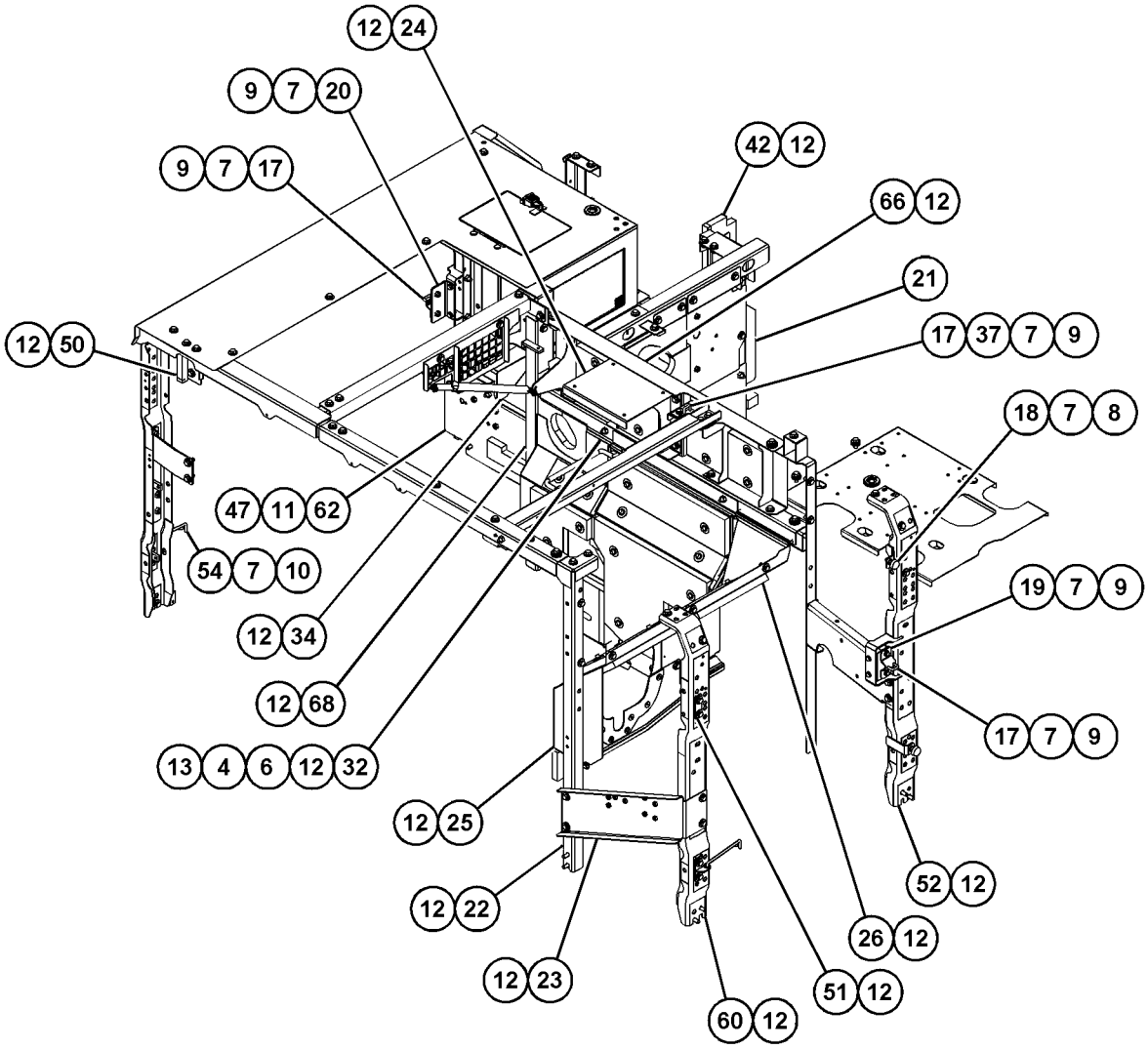

VIEW OF AREA B
(PARTS REMOVED FOR CLARITY) 90°

GRAPHIC #2 <END> g06393926

575-9545 HOOD & GUARD GP

S/N: SP910001-UP

PART OF 575-9544 ENCLOSURE AR

SMCS-7251, 7276 **i07854426**

NOTE	REF NO	GRAPHIC REF	PART NUMBER	QTY	PART NAME 1 2 3 4 5 6 (PRODUCT LEVEL)	SEE PAGE
	1	1,3	**135-8573**	7	BOLT AS	
	2	1,2,3	**135-8575**	116	BOLT AS	
	3	1,2	**135-8577**	3	BOLT AS	
	4	2	**135-8579**	2	BOLT AS	
	5	1	**170-3016**	8	SPACER (19X32X2-MM THK)	
	6	2	**170-9360**	2	GROMMET	
	7	2,3	**327-2886**	4	STRIKER AS	
	8	2,3	**343-2465**	6	BUMPER	
	9	1,3	**3B-4611**	3	PIN-COTTER	
	10	2	**508-9583**	2	BRACKET AS	
					(EACH INCLUDES)	
M		2	**8T-3490**	4	NUT-WELD (M10X1.5-THD)	
	11	2	**508-9584**	1	BRACKET AS	
M		2	**8T-3490**	2	NUT-WELD (M10X1.5-THD)	
	12	2	**508-9685**	1	LINER	
Y	13	1	**510-3106**	1	SHEET AS-SOUND SUPPRESSION	366
	14	2	**510-3164**	1	LINER	
	15	2	**516-7469**	1	SUPPORT AS	
M		2	**8T-3597**	3	NUT-WELD (M12X1.75-THD)	
	16	1	**516-7545**	1	LINER	
	17	1	**516-7546**	1	LINER	
B	18	3	**527-7804**	2	SHIM (1-MM THK)	
	19	1	**510-2391**	1	SUPPORT AS	
M		1	**8T-3490**	3	NUT-WELD (M10X1.5-THD)	
M		1	**8T-3597**	8	NUT-WELD (M12X1.75-THD)	
	20	3	**510-2420**	1	SUPPORT AS	
M		3	**8T-3612**	8	NUT-WELD (M8X1.25-THD)	
B	21	3	**527-7805**	2	SHIM (2-MM THK)	
	22	1	**528-3561**	1	SUPPORT AS	
M		1	**8T-3597**	3	NUT-WELD (M12X1.75-THD)	
	23	2	**528-3564**	1	SUPPORT AS	
		2	**528-3651**	1	LINER	
Y	24	2	**528-3566**	1	SHEET AS-SOUND SUPPRESSION	370
	25	2	**576-1793**	1	SUPPORT AS	
M		2	**8T-3490**	2	NUT-WELD (M10X1.5-THD)	
M		2	**8T-3597**	11	NUT-WELD (M12X1.75-THD)	
	26	2	**535-9190**	1	COVER AS	
L		2	**348-5409**		SEAL (3-DM)	
M		2	**9R-2672**	1	BOSS-THREADED (M10X1.5X120-MM)	
Y	27	3	**535-9211**	1	SUPPORT AS-SOUND SUPPRESSION	380
	28	3	**536-0278**	1	PLATE	
	29	2	**576-1769**	1	SUPPORT AS	
		2	**576-1770**	1	LINER	
M		2	**8T-3597**	5	NUT-WELD (M12X1.75-THD)	
	30	1	**522-8630**	1	SUPPORT AS	
M		1	**8T-3597**	4	NUT-WELD (M12X1.75-THD)	
	31	3	**543-2337**	1	SUPPORT AS	

575-9545 **HOOD & GUARD GP (**contd.**)** **i07854426**

NOTE	REF NO	GRAPHIC REF	PART NUMBER	QTY	PART NAME 1 2 3 4 5 6 (PRODUCT LEVEL)	SEE PAGE
M		3	**8T-3597**	9	NUT-WELD (M12X1.75-THD)	
M		3	**9R-2672**	1	BOSS-THREADED (M10X1.5X120-MM)	
M		3	**178-7023**	1	BOSS (M10X1.5X30-MM)	
	32	2	**525-9771**	1	SUPPORT AS	
M		2	**8T-3597**	7	NUT-WELD (M12X1.75-THD)	
	33	2	**543-2338**	1	SUPPORT AS	
M		2	**8T-3490**	2	NUT-WELD (M10X1.5-THD)	
M		2	**8T-3597**	10	NUT-WELD (M12X1.75-THD)	
Y	34	2	**546-2598**	1	SHEET AS-SOUND SUPPRESSION	371
	35	3	**548-0197**	1	PLATE AS	
	36	1	**528-3558**	1	SUPPORT AS	
M		1	**8T-3490**	2	NUT-WELD (M10X1.5-THD)	
M		1	**8T-3597**	3	NUT-WELD (M12X1.75-THD)	
	37	1	**548-0208**	1	COVER AS	
		1	**548-9976**	2	INSULATION	
	38	1	**528-3563**	1	SUPPORT AS	
M		1	**8T-3597**	2	NUT-WELD (M12X1.75-THD)	
	39	2	**548-0299**	1	SUPPORT AS	
M		2	**8T-3490**	2	NUT-WELD (M10X1.5-THD)	
M		2	**8T-3597**	1	NUT-WELD (M12X1.75-THD)	
	40	2	**548-0316**	1	COVER AS	
		2	**4I-7924**	6	WASHER (4.5X40X1.2-MM THK)	
		2	**6P-2216**	6	CAP (PUSH ON)	
		2	**510-3263**	3	SILENCER	
		2	**6P-2215**	6	PIN-WELD	
M		2	**8T-3490**	2	NUT-WELD (M10X1.5-THD)	
M		2	**8T-3597**	6	NUT-WELD (M12X1.75-THD)	
	41	1	**576-9469**	1	COVER AS	
D		1	**101-9848**		SEAL (0.5-M)	
		1	**528-3665**	1	LINER	
M		1	**8T-3597**	2	NUT-WELD (M12X1.75-THD)	
M		1	**9R-2672**	5	BOSS-THREADED (M10X1.5X120-MM)	
Y	42	2	*576-9464*	1	COVER GP-ACCESS	328
	43	1	**528-3583**	1	COVER AS-SOUND SUPPRESSION	
		1	**101-9848**		SEAL (1-M)	
		1	**4I-7924**	3	WASHER (4.5X40X1.2-MM THK)	
		1	**6P-2216**	3	CAP (PUSH ON)	
		1	**510-3280**	1	SILENCER	
		1	**6P-2215**	3	PIN-WELD	
	44	2	**548-0376**	1	SUPPORT AS	
M		2	**8T-3597**	6	NUT-WELD (M12X1.75-THD)	
Y	45	2	**548-0379**	1	SHEET AS-SOUND SUPPRESSION	375
Y	46	2	**548-0381**	1	SHEET AS-SOUND SUPPRESSION	376
	47	1	**548-0389**	1	COVER AS	
	48	2	**548-0420**	1	SHEET AS	
	49	1	**548-0452**	1	SPRING AS-GAS	
M		1	**265-8463**	2	STUD-BALL (M8X1.25X16-MM)	
	50	1,3	**546-4979**	3	ROD AS	
					(EACH INCLUDES)	
		1,3	**4B-4278**	1	WASHER (10.2X20.5X1.6-MM THK)	
	51	2	**547-4722**	1	SUPPORT AS	

575-9545 **HOOD & GUARD GP (**contd.**)** **i07854426**

NOTE	REF NO	GRAPHIC REF	PART NUMBER	QTY	PART NAME 1 2 3 4 5 6 (PRODUCT LEVEL)	SEE PAGE
M		2	**8T-3490**	6	NUT-WELD (M10X1.5-THD)	
M		2	**8T-3597**	2	NUT-WELD (M12X1.75-THD)	
	52	2	**551-2612**	1	LINER	
	53	2	**576-1764**	1	LINER	
	54	2	**576-1765**	1	SHEET AS-SOUND SUPPRESSION	
M		2	**8T-3597**	5	NUT-WELD (M12X1.75-THD)	
		2	**535-9273**	1	LINER	
		2	**576-1766**	1	LINER	
Y	55	2	**576-1767**	1	SHEET AS-SOUND SUPPRESSION	377
	56	1	**576-9468**	1	SUPPORT AS	
		1	**7Y-6215**	3	PLATE	
M		1	**8T-3597**	9	NUT-WELD (M12X1.75-THD)	
M		1	**9R-2672**	1	BOSS-THREADED (M10X1.5X120-MM)	
	57	3	**577-3722**	1	PLATE AS	
L		3	**348-5409**		SEAL (3-DM)	
		3	**519-2384**	1	LINER	
M		3	**8T-3490**	6	NUT-WELD (M10X1.5-THD)	
M		3	**8T-3597**	5	NUT-WELD (M12X1.75-THD)	
M		3	**8T-3612**	5	NUT-WELD (M8X1.25-THD)	
	58	3	**577-3751**	1	SUPPORT	
	59	3	**577-3753**	1	SUPPORT AS	
	60	1	**578-8177**	1	SUPPORT AS	
M		1	**8T-3490**	4	NUT-WELD (M10X1.5-THD)	
M		1	**8T-3597**	15	NUT-WELD (M12X1.75-THD)	
Y	61	1	**547-4745**	1	DOOR GP-ACCESS (PUMP)	337
M	62	1	**5C-7261**	2	NUT (M8X1.25-THD)	
	63	1	**5P-4116**	2	WASHER-HARD (8.8X20.5X2-MM THK)	
	64	2	**246-2641**	1	PADLOCK GP	
		2	**5P-8500**	1	KEY	
	65	1,2	**7Y-2853**	3	SPACER (13X38X5-MM THK)	
	66	2	**7Y-2854**	1	SPACER (24X38X3-MM THK)	
	67	1	**7Y-8990**	2	SPACER (24X38X1.5-MM THK)	
	68	1,2,3	**8T-4121**	23	WASHER-HARD (11X21X2.5-MM THK)	
M	69	2	**8T-4133**	6	NUT (M10X1.5-THD)	
M	70	2,3	**8T-4136**	14	BOLT (M10X1.5X25-MM)	

B - USE AS REQUIRED
D - ORDER BY THE METER
L - ORDER BY THE DECIMETER
M - METRIC PART
Y - SEPARATE ILLUSTRATION

575-9545 **HOOD & GUARD GP (**contd.**)** **i07854426**

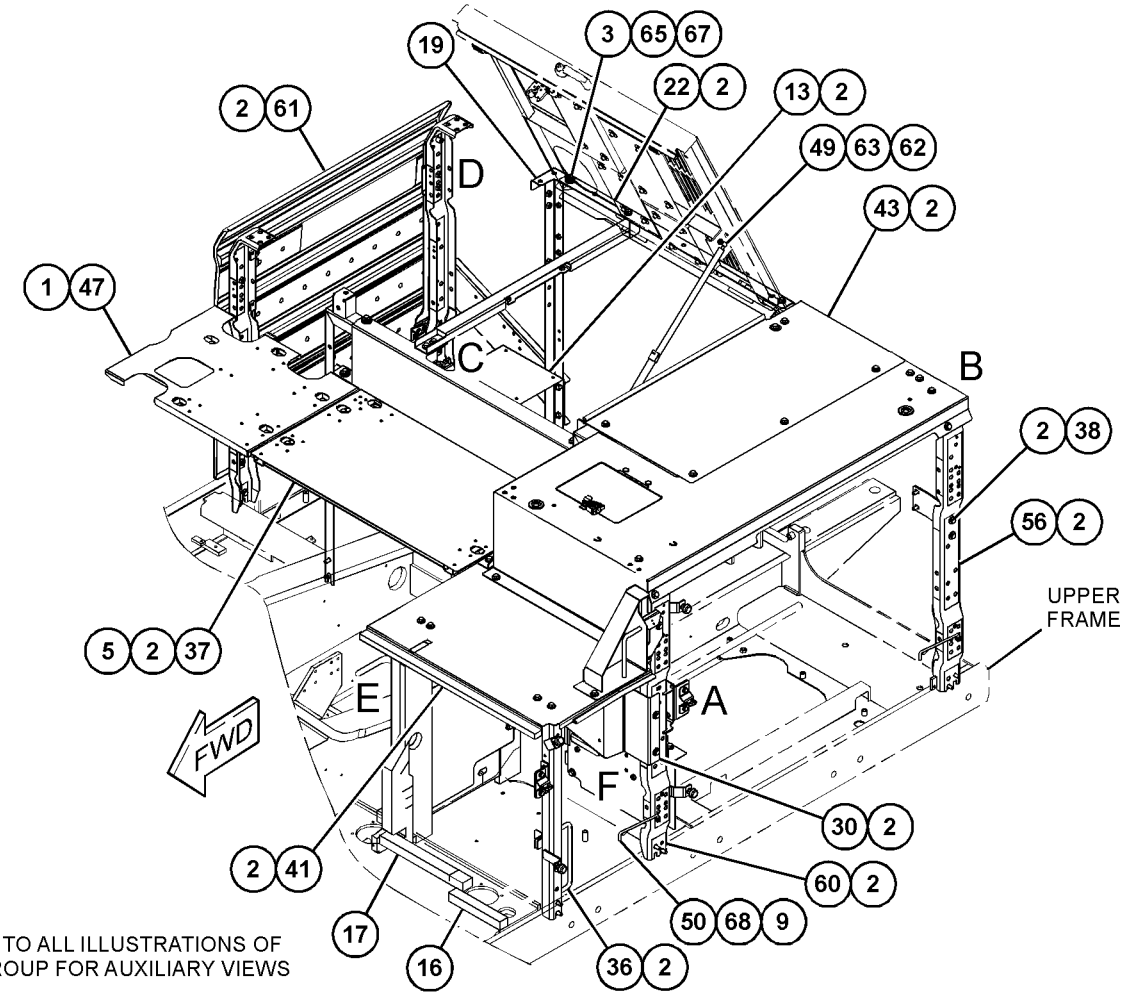

REFER TO ALL ILLUSTRATIONS OF
THIS GROUP FOR AUXILIARY VIEWS

GRAPHIC #1 g06455219

575-9545 **HOOD & GUARD GP** (contd.) **i07854426**

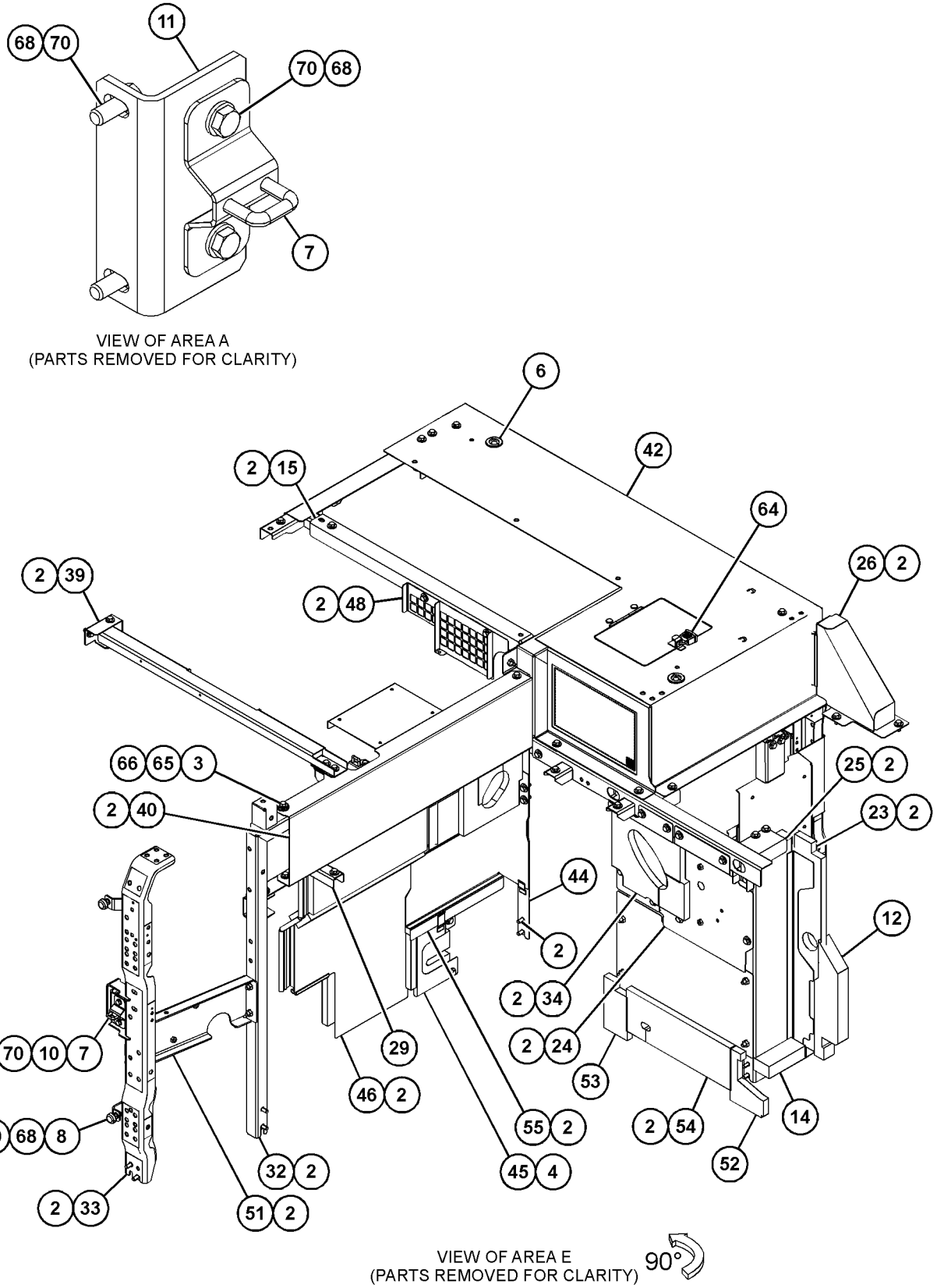

GRAPHIC #2 g06455220

575-9545 **HOOD & GUARD GP (**contd.**)** **i07854426**

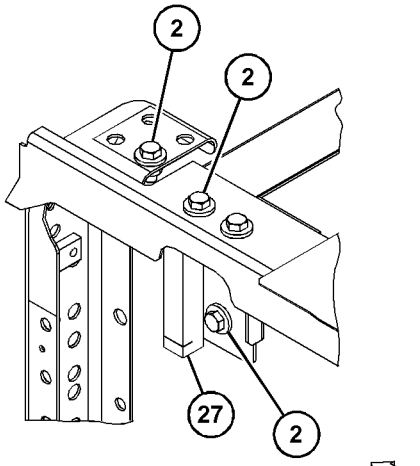

VIEW OF AREA B
(PARTS REMOVED FOR CLARITY)

180°

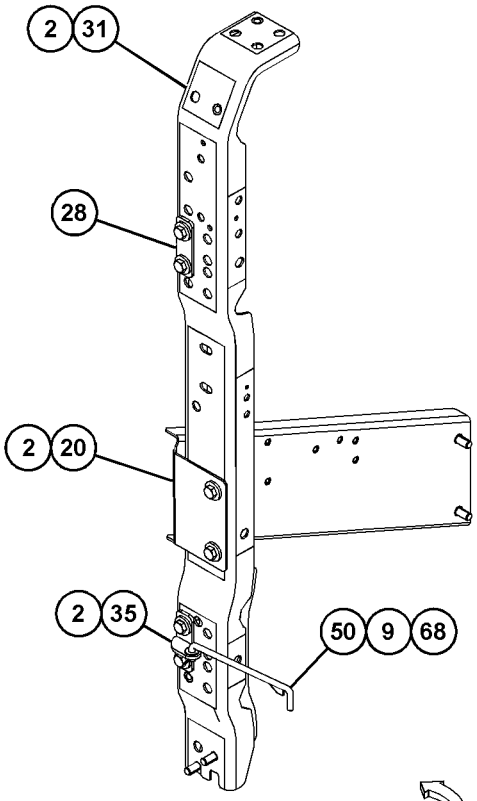

VIEW OF AREA D
(PARTS REMOVED FOR CLARITY)

90°

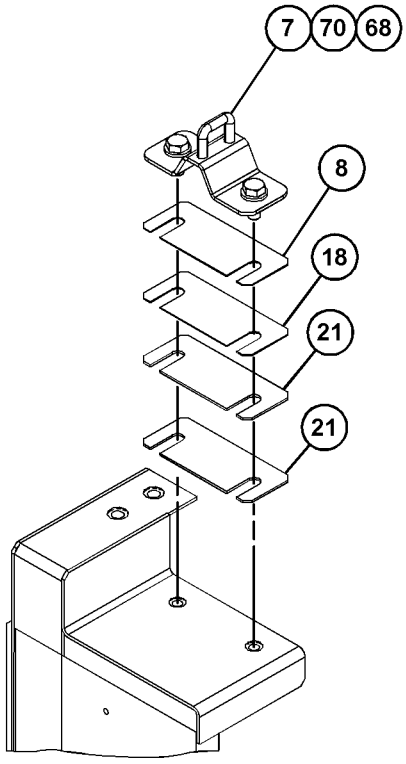

VIEW OF AREA C
(PARTS REMOVED FOR CLARITY)

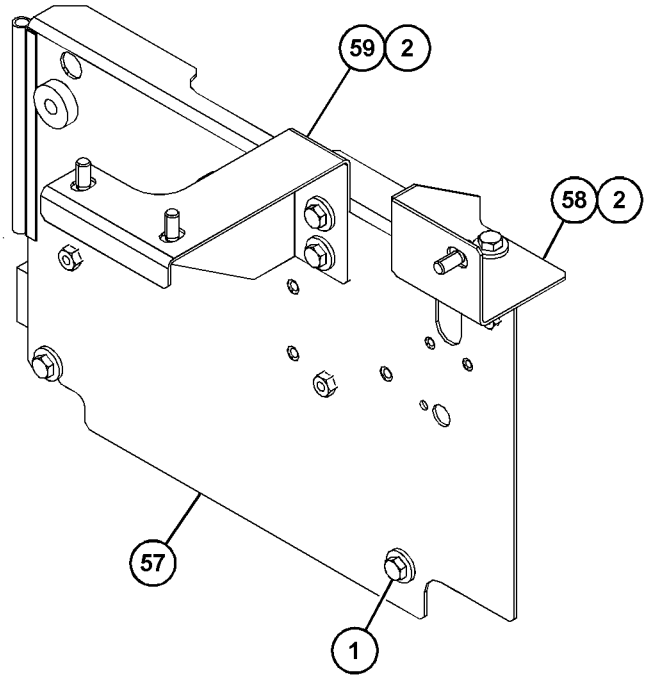

VIEW OF AREA F
(PARTS REMOVED FOR CLARITY)

GRAPHIC #3 <END> g06455985

548-0333 HOOD GP-ENGINE

S/N: SP91-UP

PART OF 575-9542 COVER GP-ENCLOSURE, 498-7495 HOOD & GUARD GP

SMCS-7251 **i07512358**

NOTE	REF NO	GRAPHIC REF	PART NUMBER	QTY	PART NAME 1 2 3 4 5 6 (PRODUCT LEVEL)	SEE PAGE
	1	1	*548-0334*	1	HOOD AS	
	1A	1	**099-7857**	2	HINGE	
M	2	1	**5C-9553**	4	BOLT (M6X1X16-MM)	
M	3	1	**8T-4200**	1	BOLT (M8X1.25X16-MM)	
	4	1	**4I-7924**	16	WASHER (4.5X40X1.2-MM THK)	
	5	1	**6P-2216**	16	CAP (PUSH ON)	
	6	1	**8T-4224**	1	WASHER-HARD (8.8X16X2-MM THK)	
	7	1	**9X-8256**	4	WASHER (6.6X12X2-MM THK)	
	8	1	**489-3697**	2	BUMPER	
	9	1	**525-9735**	1	HANDLE AS	
	10	1	**525-9736**	1	LOCK	
	11	1	**527-1504**	1	SILENCER	
	12	1	**527-1505**	1	SILENCER	
	13	1	**527-1521**	1	SILENCER	
	14	1	**527-1522**	1	SILENCER	
D	15	1	**101-9848**	1	SEAL (1.2-M)	

D - ORDER BY THE METER
M - METRIC PART

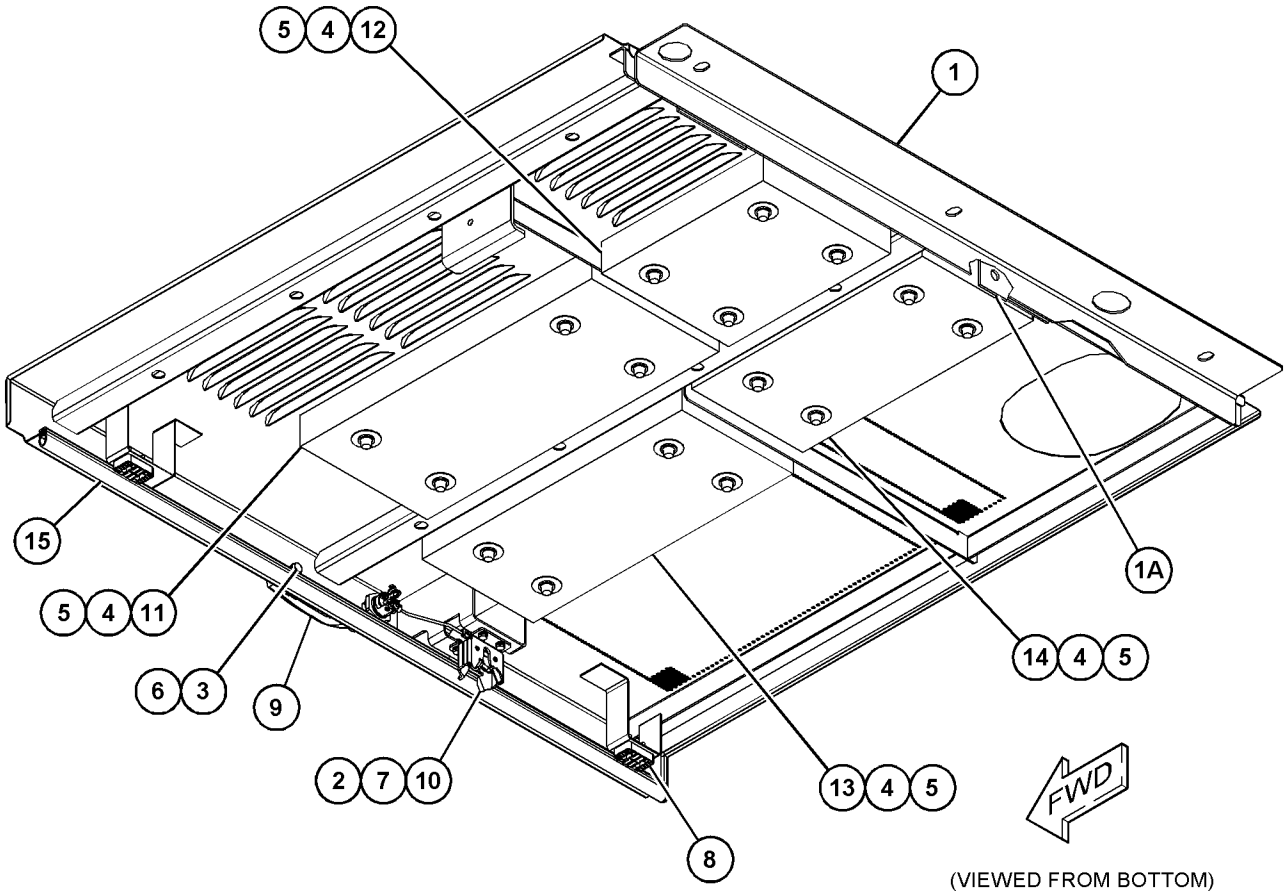

(VIEWED FROM BOTTOM)

GRAPHIC #1 <END> g06307910

510-3129 LINER GP-SOUND SUPPRESSION

S/N: SP91-UP

PART OF 516-7428, 575-9537 ENCLOSURE AR

SMCS-1801, 7056

i07512640

NOTE	REF NO	GRAPHIC REF	PART NUMBER	QTY	PART NAME 1 2 3 4 5 6 (PRODUCT LEVEL)	SEE PAGE
	1	1	**510-3153**	1	LINER	
	2	1	**510-3155**	1	LINER	
	3	1	**510-3156**	1	LINER	
	4	1	**510-3157**	1	LINER	

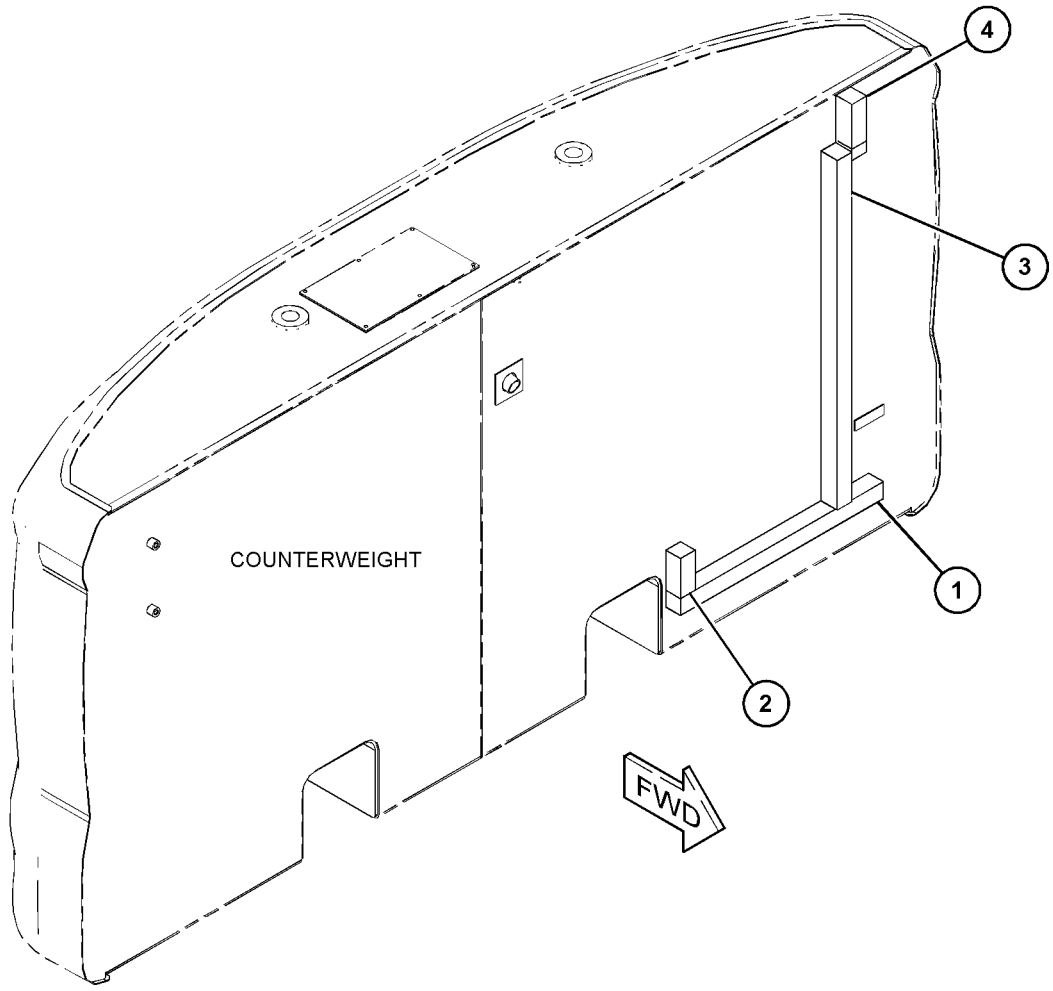

GRAPHIC #1

<END>

g06305140

498-7498 MOUNTING GP-COUNTERWEIGHT

S/N: SP91-10000

PART OF 516-7423 ENCLOSURE AR

SMCS-7055 **i07774460**

NOTE	REF NO	GRAPHIC REF	PART NUMBER	QTY	PART NAME 1 2 3 4 5 6 (PRODUCT LEVEL)	SEE PAGE
	1	1	**570-6844**	2	CAP	
	2	1	**6I-6645**	4	SPACER (39X75X75-MM THK)	
M	3	1	**447-2465**	4	BOLT (M36X4X240-MM)	
	4	1	**535-9328**	2	PACKING	

M - METRIC PART

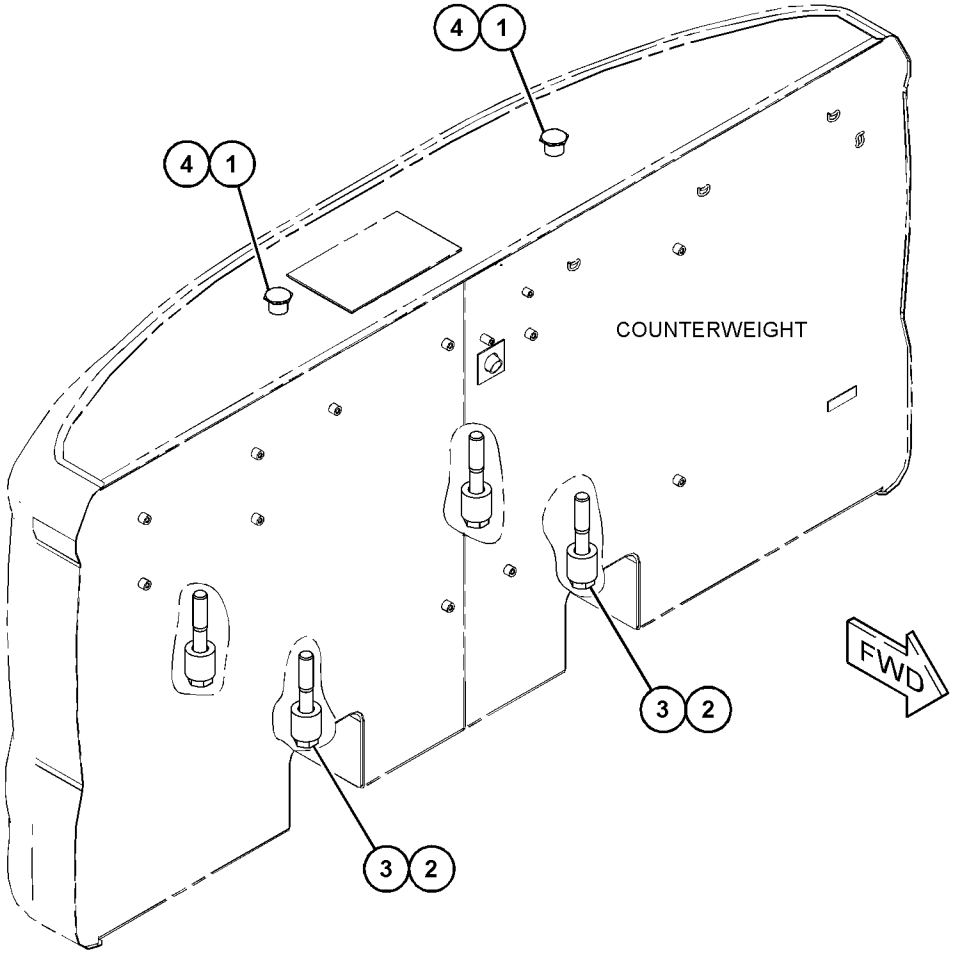

GRAPHIC #1 <END> g06326019

506-1199 SHEET AS-SOUND SUPPRESSION

S/N: SP91-UP

PART OF 502-5376 COOLING GP

SMCS-1801, 7076, 7251, 7267

i07521913

NOTE	REF NO	GRAPHIC REF	PART NUMBER	QTY	PART NAME 1 2 3 4 5 6 (PRODUCT LEVEL)	SEE PAGE
	1	1	**511-1371**	1	LINER	
	2	1	**511-1370**	1	LINER	

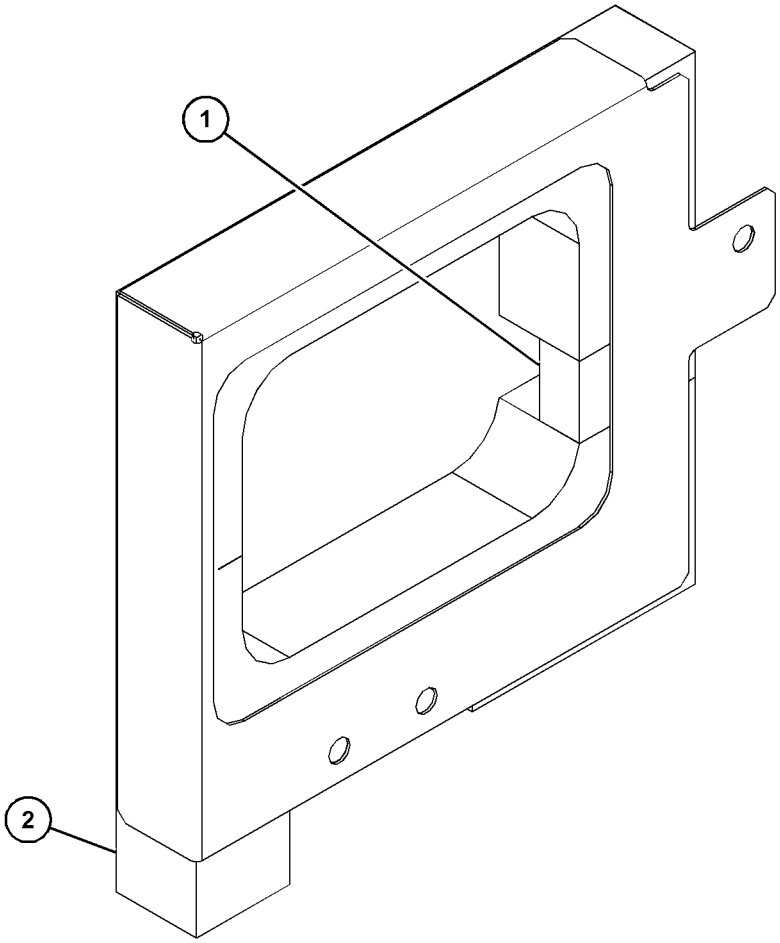

GRAPHIC #1

<END>

g06284157

510-3106 SHEET AS-SOUND SUPPRESSION

S/N: SP91-UP

PART OF 498-7495, 575-9545 HOOD & GUARD GP

SMCS-1801, 7076, 7251, 7267 **i07512077**

NOTE	REF NO	GRAPHIC REF	PART NUMBER	QTY	PART NAME 1 2 3 4 5 6 (PRODUCT LEVEL)	SEE PAGE
	1	1	**4I-7924**	4	WASHER (4.5X40X1.2-MM THK)	
	2	1	**6P-2216**	4	CAP (PUSH ON)	
	3	1	**510-3107**	1	SHEET AS	
	4	1	**510-3263**	1	SILENCER	
	5	1	**510-3265**	1	SILENCER	

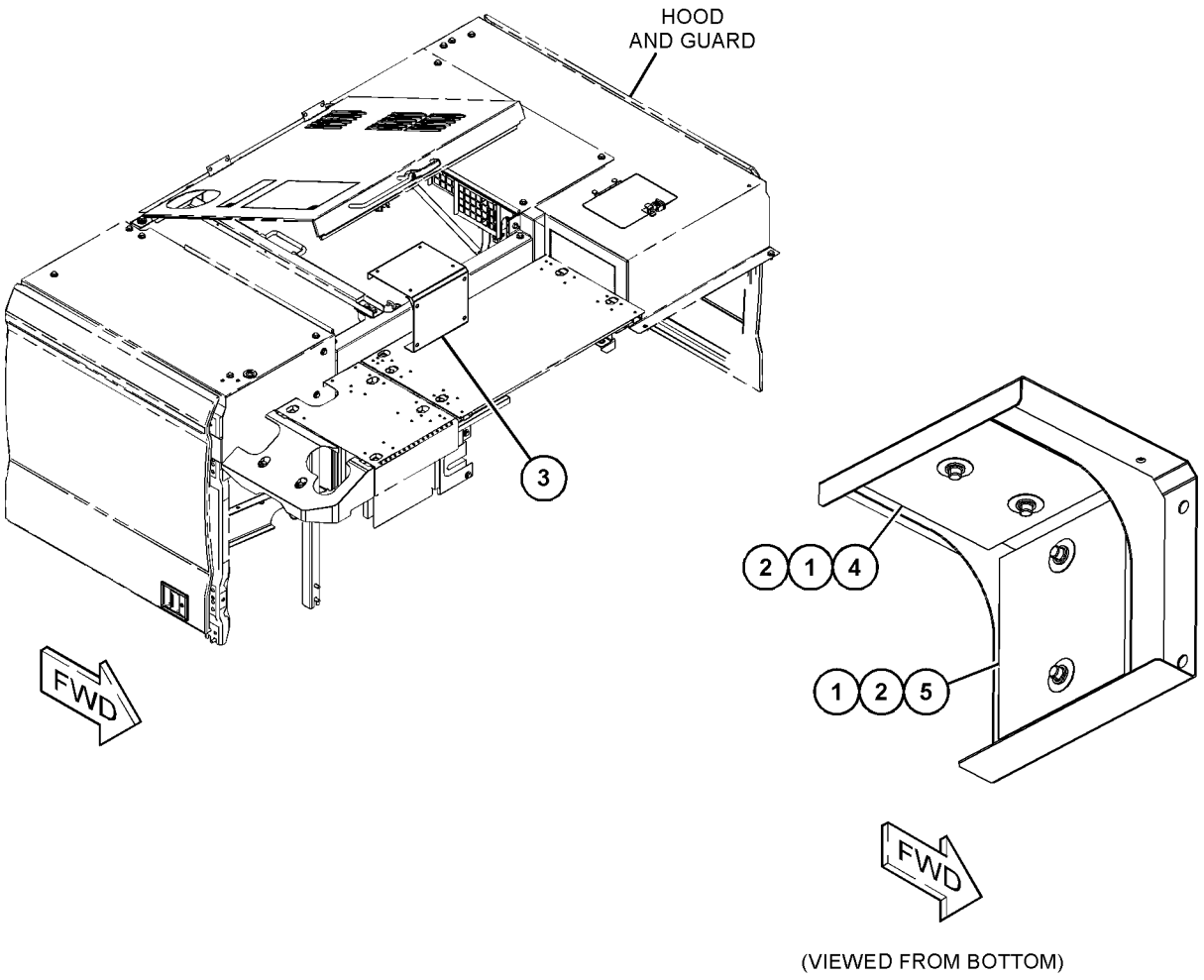

(VIEWED FROM BOTTOM)

GRAPHIC #1 <END> g06305330

510-3149 SHEET AS-SOUND SUPPRESSION

S/N: SP91-UP

PART OF 575-9542 COVER GP-ENCLOSURE, 498-7495 HOOD & GUARD GP

SMCS-1801, 7076, 7251, 7267 **i07512081**

NOTE	REF NO	GRAPHIC REF	PART NUMBER	QTY	PART NAME 1 2 3 4 5 6 (PRODUCT LEVEL)	SEE PAGE
	1	1	**4I-7924**	2	WASHER (4.5X40X1.2-MM THK)	
	2	1	**6P-2216**	2	CAP (PUSH ON)	
	3	1	**9M-5732**	5	RIVET-POP	
	4	1	**9X-6165**	5	WASHER (6.5X22X2.5-MM THK)	
	5	1	**510-2439**	1	SHEET AS	
	6	1	**510-3242**	1	SILENCER	
	7	1	**510-3247**	1	INSULATION	
	8	1	**510-3375**	1	SHEET-RUBBER	
	9	1	**510-3376**	1	SHEET-RUBBER	
D	10	1	**101-9848**		SEAL (0.2-M)	

D - ORDER BY THE METER

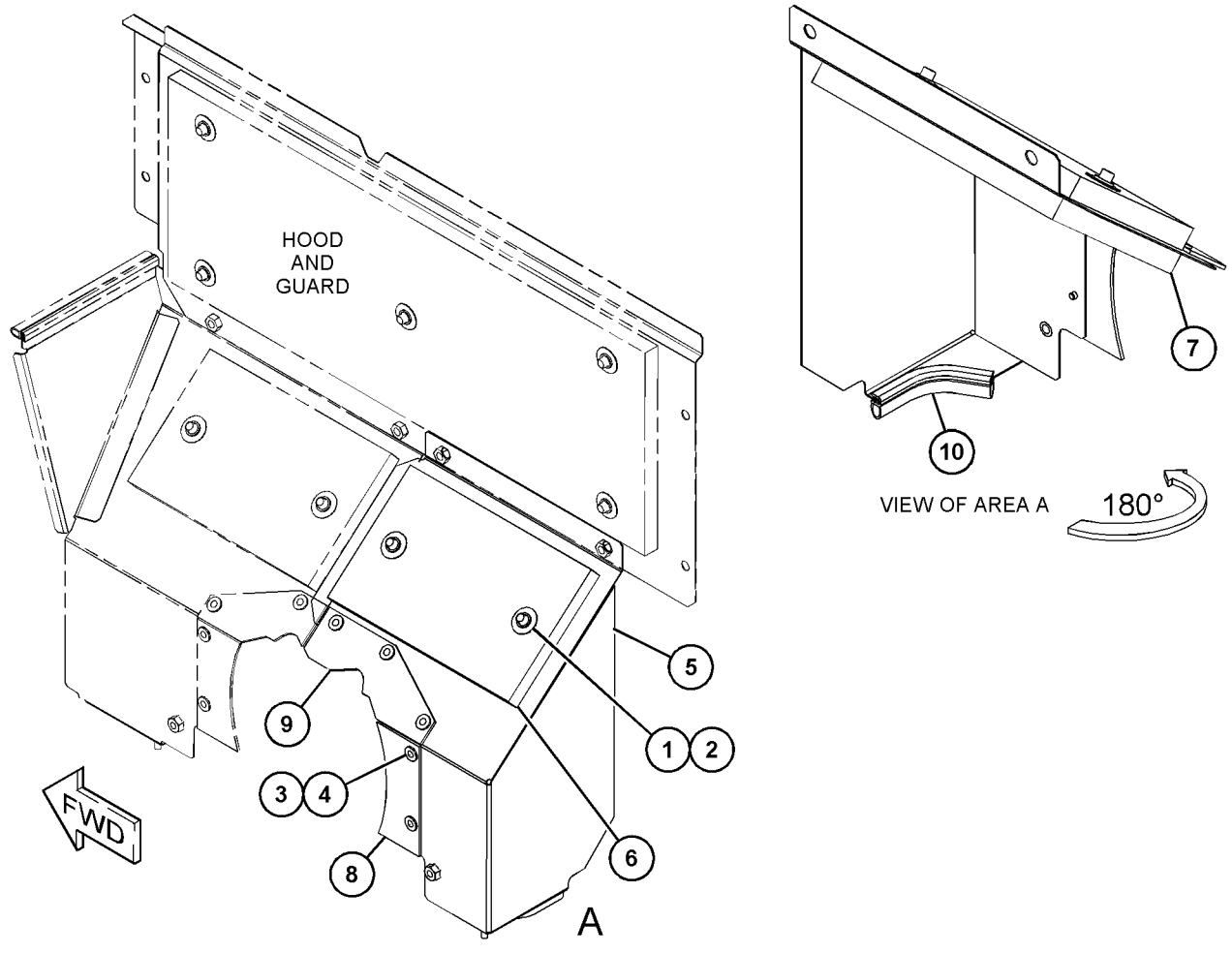

GRAPHIC #1 <END> g06305157

510-3150 SHEET AS-SOUND SUPPRESSION

S/N: SP91-UP

PART OF 575-9542 COVER GP-ENCLOSURE, 498-7495 HOOD & GUARD GP

SMCS-1801, 7076, 7251, 7267 **i07512087**

NOTE	REF NO	GRAPHIC REF	PART NUMBER	QTY	PART NAME 1 2 3 4 5 6 (PRODUCT LEVEL)	SEE PAGE
	1	1	**4I-7924**	2	WASHER (4.5X40X1.2-MM THK)	
	2	1	**6P-2216**	2	CAP (PUSH ON)	
	3	1	**9M-5732**	4	RIVET-POP	
	4	1	**9X-6165**	4	WASHER (6.5X22X2.5-MM THK)	
D	5	1	**101-9848**		SEAL (0.3-M)	
D	5A	1	**101-9848**		SEAL (0.2-M)	
	6	1	**510-3242**	1	SILENCER	
	7	1	**510-3247**	1	INSULATION	
	8	1	**510-3374**	1	SHEET-RUBBER	
	9	1	**510-3375**	1	SHEET-RUBBER	

D - ORDER BY THE METER

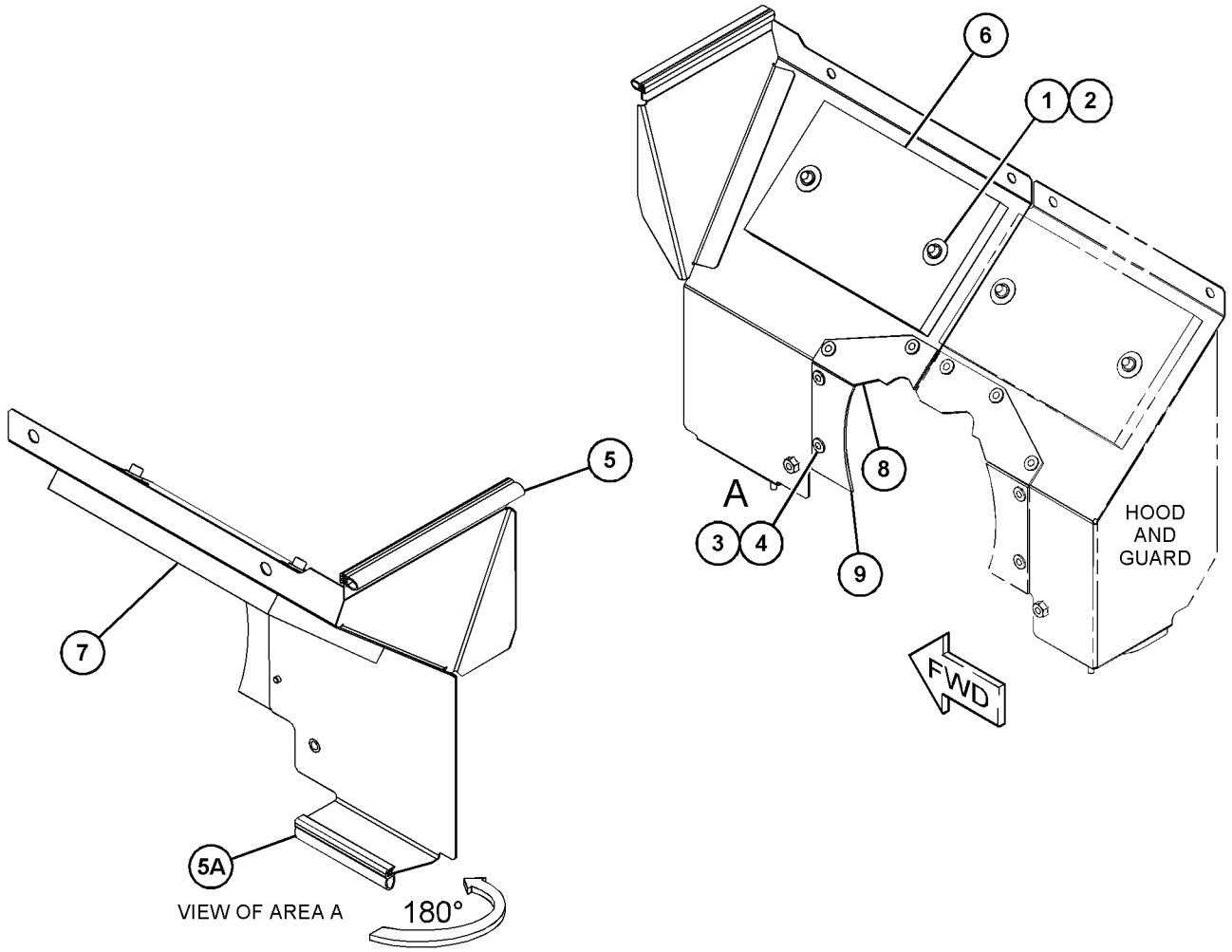

GRAPHIC #1 <END> g06305233

527-1391 SHEET AS-SOUND SUPPRESSION

S/N: SP91-UP

PART OF 575-9542 COVER GP-ENCLOSURE, 498-7495 HOOD & GUARD GP

SMCS-1801, 7076, 7251, 7267

i07512095

NOTE	REF NO	GRAPHIC REF	PART NUMBER	QTY	PART NAME 1 2 3 4 5 6 (PRODUCT LEVEL)	SEE PAGE
	1	1	**4I-7924**	5	WASHER (4.5X40X1.2-MM THK)	
	2	1	**6P-2216**	5	CAP (PUSH ON)	
	3	1	**510-3236**	1	INSULATION	
	4	1	**510-3237**	1	SILENCER	
	5	1	**527-1392**	1	SHEET AS	

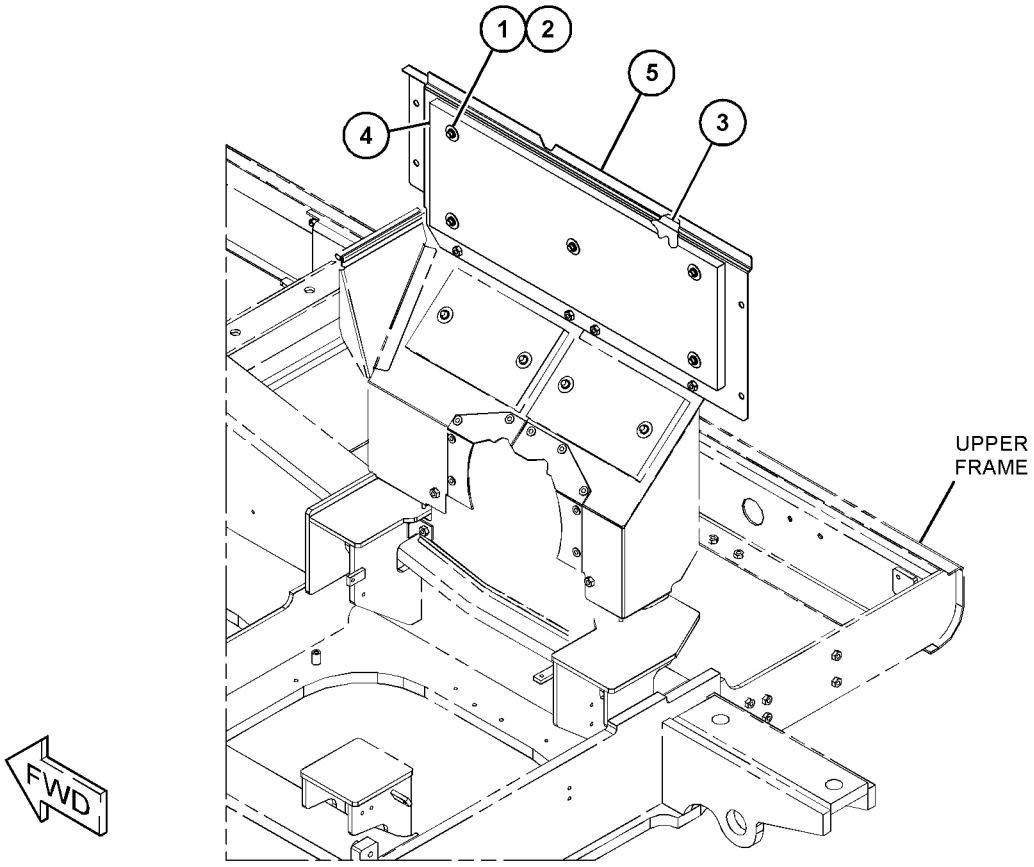

GRAPHIC #1

<END>

g06305359

528-3566 SHEET AS-SOUND SUPPRESSION

S/N: SP91-UP

PART OF 498-7495, 575-9545 HOOD & GUARD GP

SMCS-1801, 7076, 7251, 7267 **i07512111**

NOTE	REF NO	GRAPHIC REF	PART NUMBER	QTY	PART NAME 1 2 3 4 5 6 (PRODUCT LEVEL)	SEE PAGE
	1	1	**519-2343**	1	LINER	
	2	1	**528-3691**	1	LINER	

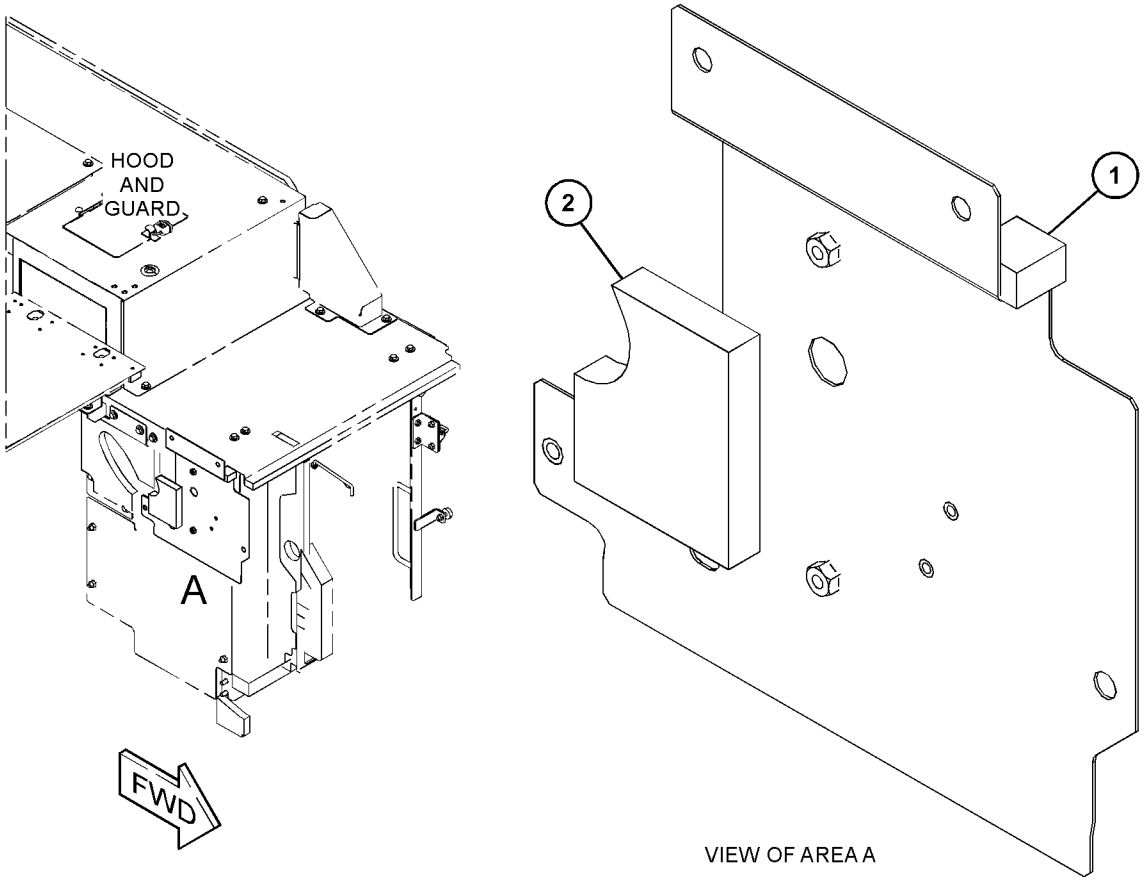

VIEW OF AREA A

GRAPHIC #1 <END> g06285377

546-2598 SHEET AS-SOUND SUPPRESSION

S/N: SP91-UP

PART OF 498-7495, 575-9545 HOOD & GUARD GP

SMCS-1801, 7076, 7251, 7267

i07512341

NOTE	REF NO	GRAPHIC REF	PART NUMBER	QTY	PART NAME 1 2 3 4 5 6 (PRODUCT LEVEL)	SEE PAGE
	1	1	**510-3213**	1	LINER	
	2	1	**546-2714**	1	LINER	

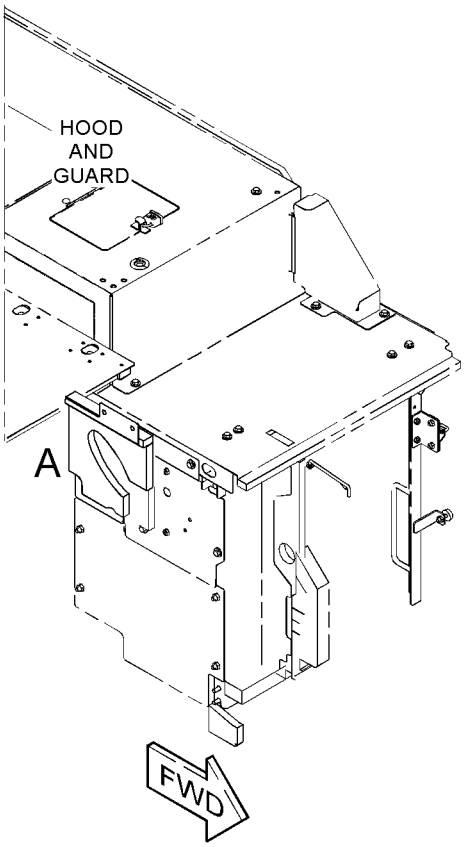

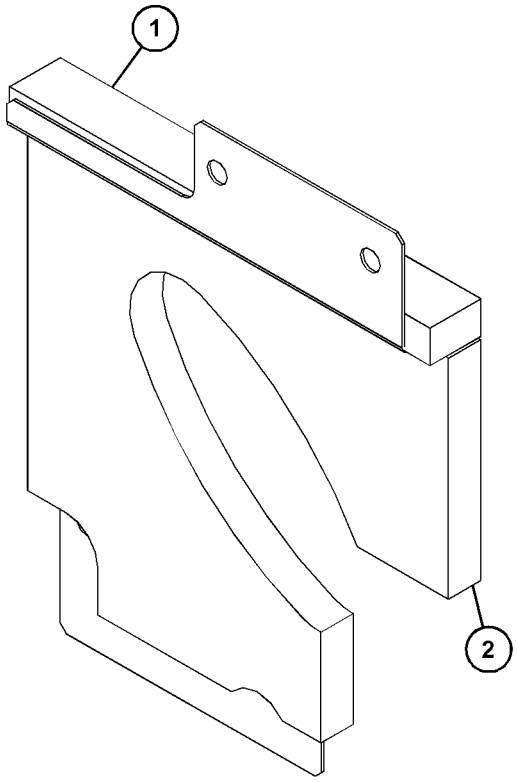

VIEW OF AREA A

GRAPHIC #1

<END>

g06285387

548-0158 SHEET AS-SOUND SUPPRESSION

S/N: SP91-UP

PART OF 508-9636 COVER GP-PROTECTION

SMCS-1801, 7076, 7251, 7267 **i07527767**

NOTE	REF NO	GRAPHIC REF	PART NUMBER	QTY	PART NAME 1 2 3 4 5 6 (PRODUCT LEVEL)	SEE PAGE
	1	1	**510-3209**	1	LINER	
	2	1	**519-2389**	1	LINER	
	3	1	**519-2388**	1	LINER	

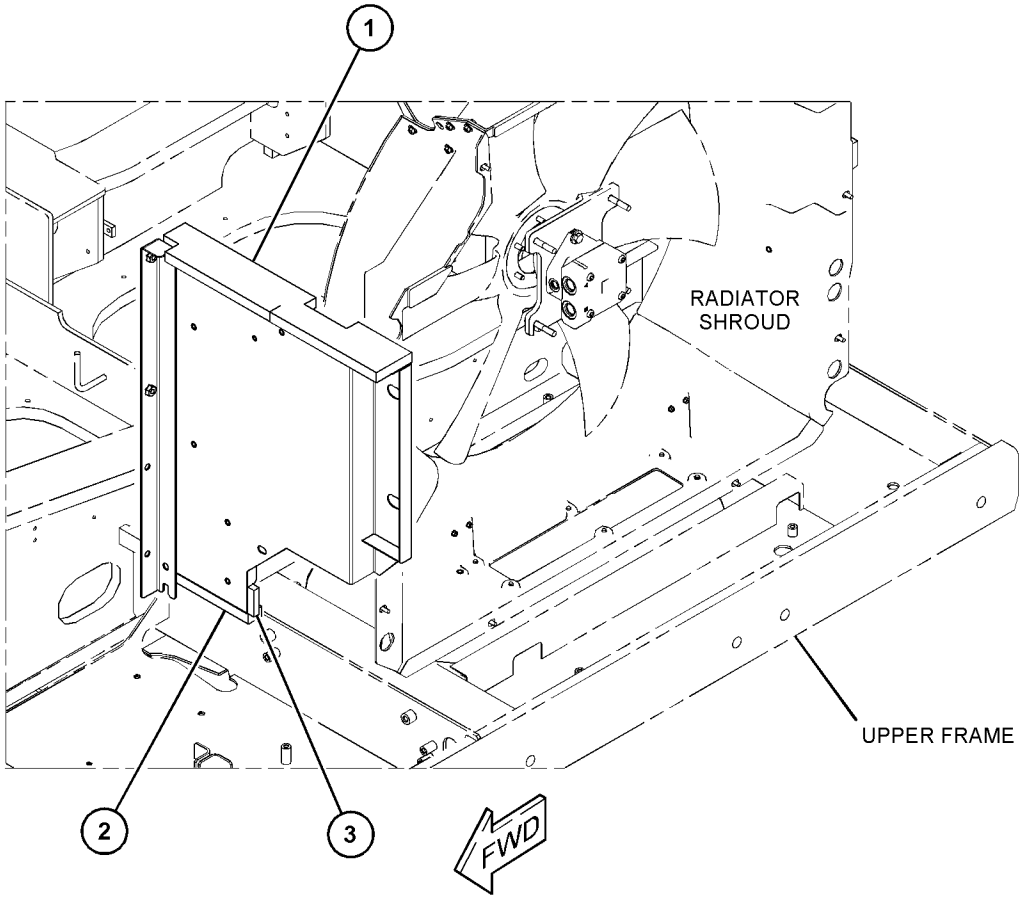

GRAPHIC #1 <END> g06282373

548-0194 SHEET AS-SOUND SUPPRESSION

S/N: SP91-UP

PART OF 575-9542 COVER GP-ENCLOSURE, 498-7495 HOOD & GUARD GP

SMCS-1801, 7076, 7251, 7267 **i07512353**

NOTE	REF NO	GRAPHIC REF	PART NUMBER	QTY	PART NAME 1 2 3 4 5 6 (PRODUCT LEVEL)	SEE PAGE
	1	1	**9M-5732**	7	RIVET-POP	
	2	1	**9X-6165**	7	WASHER (6.5X22X2.5-MM THK)	
	3	1	**510-3373**	1	SHEET-RUBBER	
	4	1	**548-0769**	1	LINER	
H	5	1	**348-5409**		SEAL (6-DM)	

H - ORDER BY THE DECIMETER

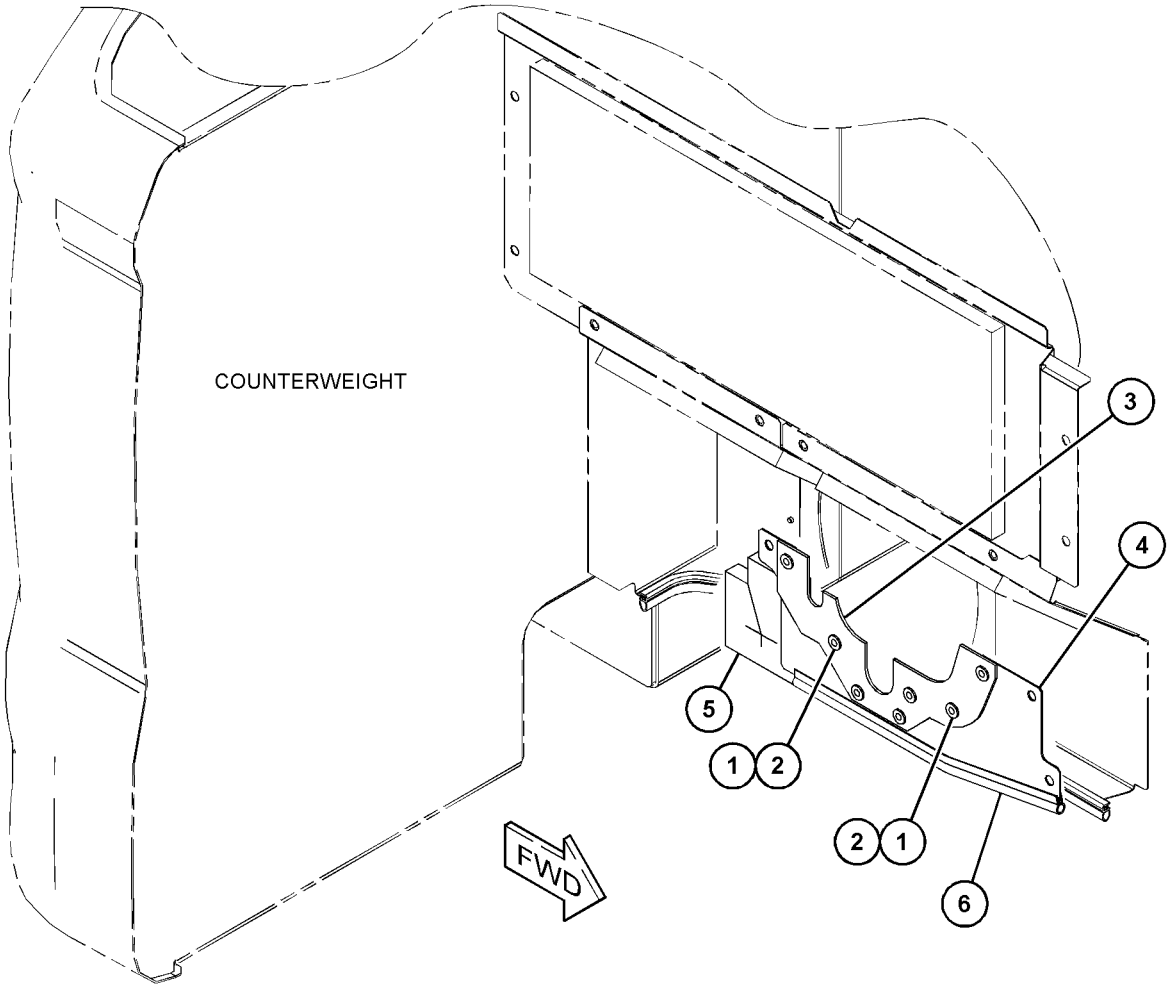

GRAPHIC #1 <END> g06286044

548-0377 SHEET AS-SOUND SUPPRESSION

S/N: SP91-UP

PART OF 498-7495 HOOD & GUARD GP

SMCS-1801, 7076, 7251, 7267 **i07512372**

NOTE	REF NO	GRAPHIC REF	PART NUMBER	QTY	PART NAME 1 2 3 4 5 6 (PRODUCT LEVEL)	SEE PAGE
	1	1	**4I-7924**	5	WASHER (4.5X40X1.2-MM THK)	
	2	1	**6P-2216**	5	CAP (PUSH ON)	
	3	1	**516-7543**	1	LINER	
	4	1	**528-3658**	1	SILENCER	
	5	1	**528-3659**	1	SILENCER	
	6	1	**528-3660**	1	LINER	

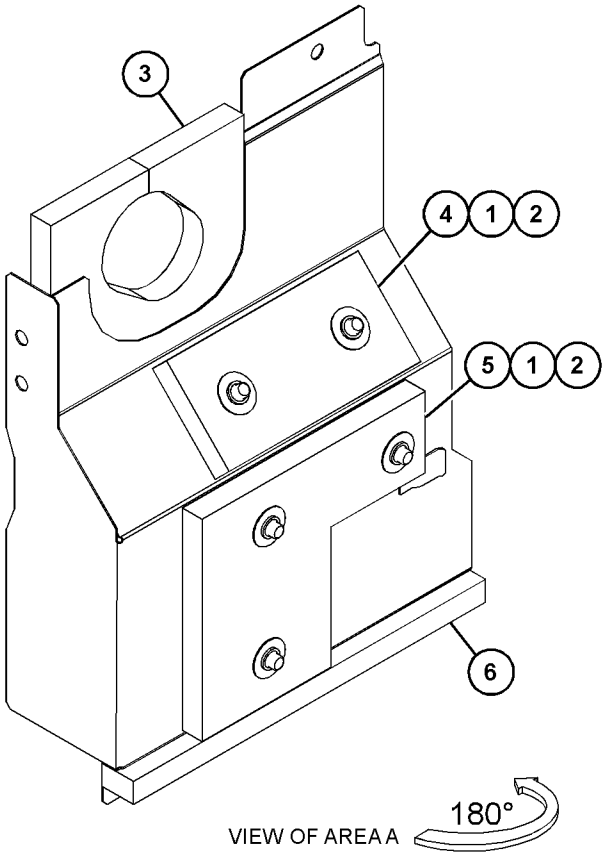

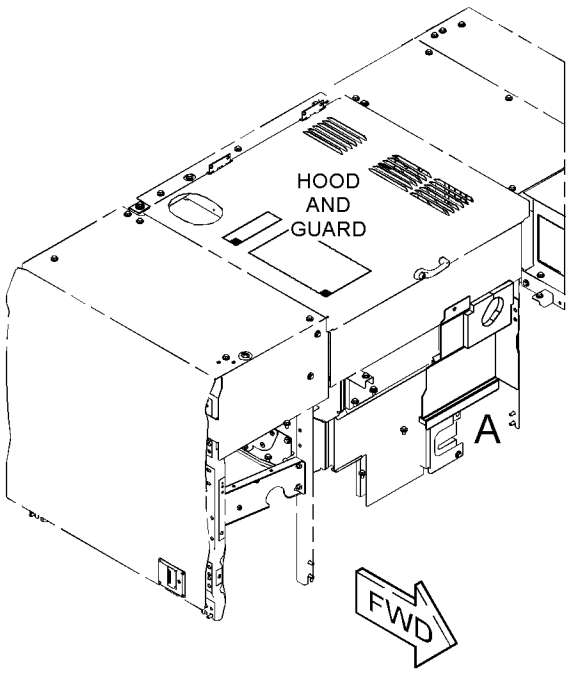

GRAPHIC #1 <END> g06286028

548-0379 SHEET AS-SOUND SUPPRESSION

S/N: SP91-UP

PART OF 498-7495, 575-9545 HOOD & GUARD GP

SMCS-1801, 7076, 7251, 7267

i07512562

NOTE	REF NO	GRAPHIC REF	PART NUMBER	QTY	PART NAME 1 2 3 4 5 6 (PRODUCT LEVEL)	SEE PAGE
	1	1	**528-3684**	1	LINER	
	2	1	**528-3685**	1	LINER	

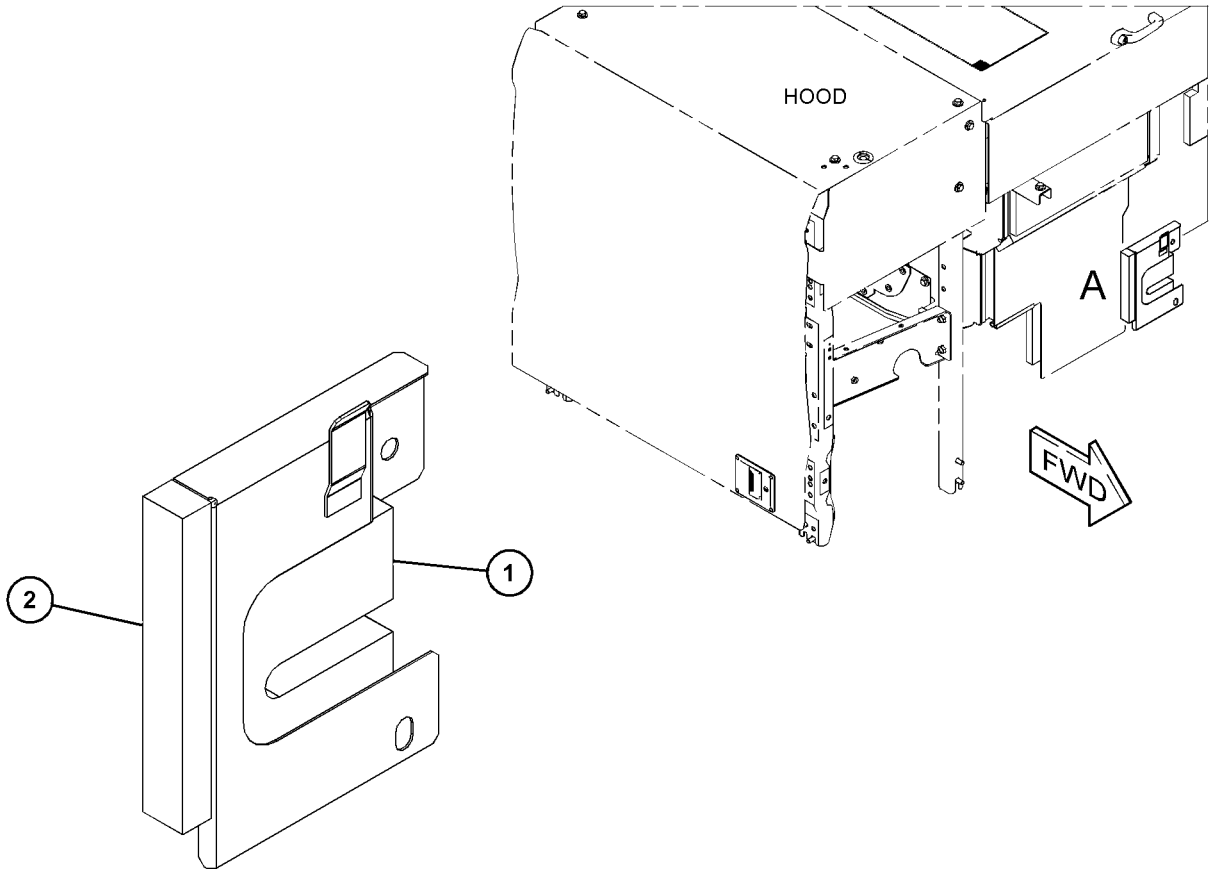

VIEW OF AREA A

GRAPHIC #1 <END> g06285601

548-0381 SHEET AS-SOUND SUPPRESSION

S/N: SP91-UP

PART OF 498-7495, 575-9545 HOOD & GUARD GP

SMCS-1801, 7076, 7251, 7267 **i07512579**

NOTE	REF NO	GRAPHIC REF	PART NUMBER	QTY	PART NAME 1 2 3 4 5 6 (PRODUCT LEVEL)	SEE PAGE
	1	1	**4I-7924**	8	WASHER (4.5X40X1.2-MM THK)	
	2	1	**6P-2216**	8	CAP (PUSH ON)	
	3	1	**510-3222**	1	INSULATION	
	4	1	**510-3223**	1	SILENCER	
	5	1	**510-3384**	1	INSULATION	
	6	1	**510-3385**	1	SILENCER	
	7	1	**527-1475**	1	LINER	
J	8	1	**348-5409**		SEAL (1.8-DM)	
J	8A	1	**348-5409**		SEAL (1.3-DM)	
J	8B	1	**348-5409**		SEAL (2.5-DM)	
	9	1	**554-2180**	1	SILENCER	
D	10	1	**101-9848**		SEAL (0.2-M EACH)	
D	10A	1	**101-9848**		SEAL (0.1-M)	

D - ORDER BY THE METER
J - ORDER BY THE DECIMETER

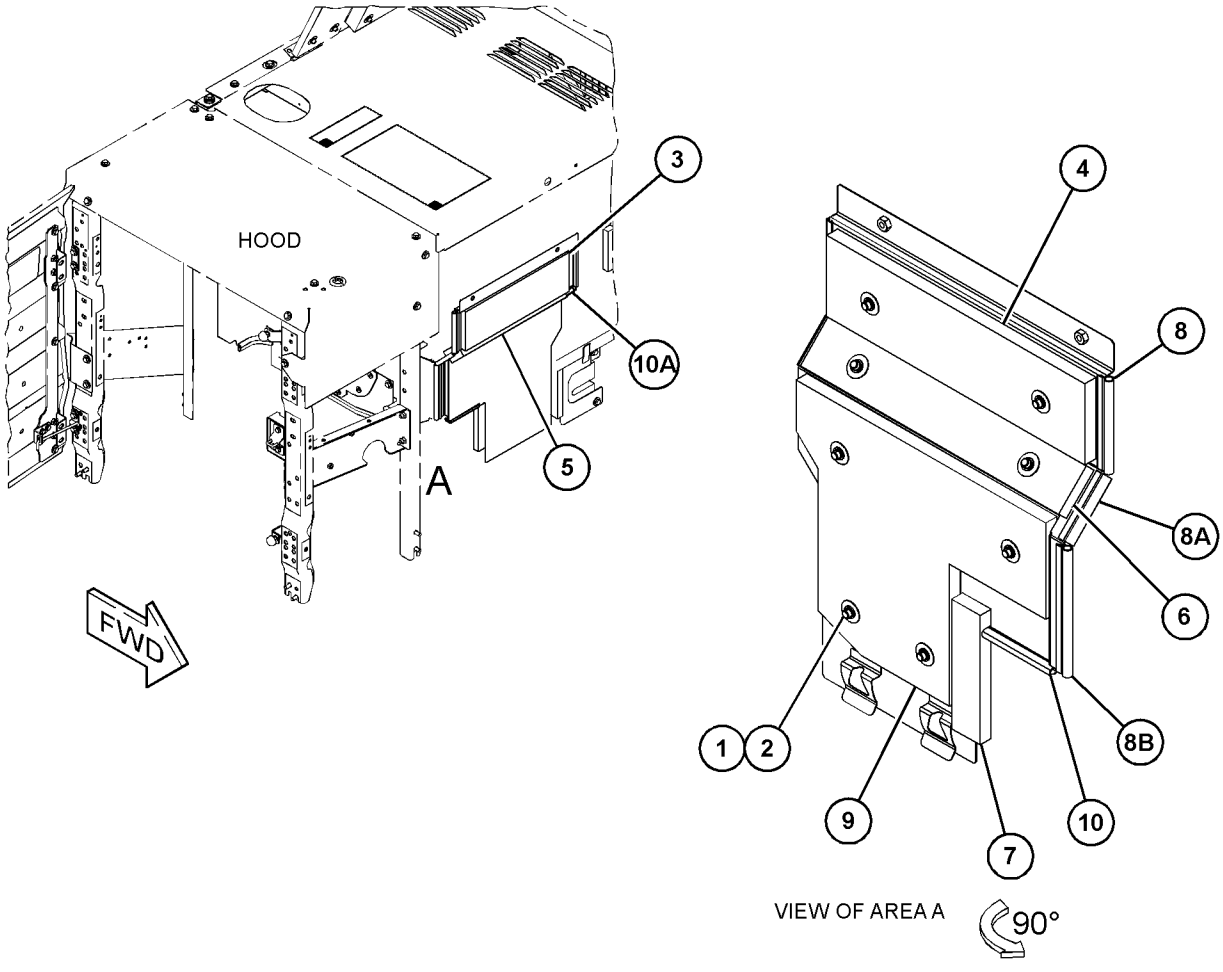

GRAPHIC #1 <END> g06286038

576-1767 SHEET AS-SOUND SUPPRESSION

S/N: SP910001-UP

PART OF 575-9545 HOOD & GUARD GP

SMCS-1801, 7076, 7251, 7267

i07854428

NOTE	REF NO	GRAPHIC REF	PART NUMBER	QTY	PART NAME 1 2 3 4 5 6 (PRODUCT LEVEL)	SEE PAGE
	1	1	**4I-7924**	5	WASHER (4.5X40X1.2-MM THK)	
	2	1	**6P-2216**	5	CAP (PUSH ON)	
	3	1	**528-3658**	1	SILENCER	
	4	1	**528-3659**	1	SILENCER	
	5	1	**528-3660**	1	LINER	
	6	1	*548-0378*	1	SHEET AS	
		1	**6P-2215**	5	PIN-WELD	

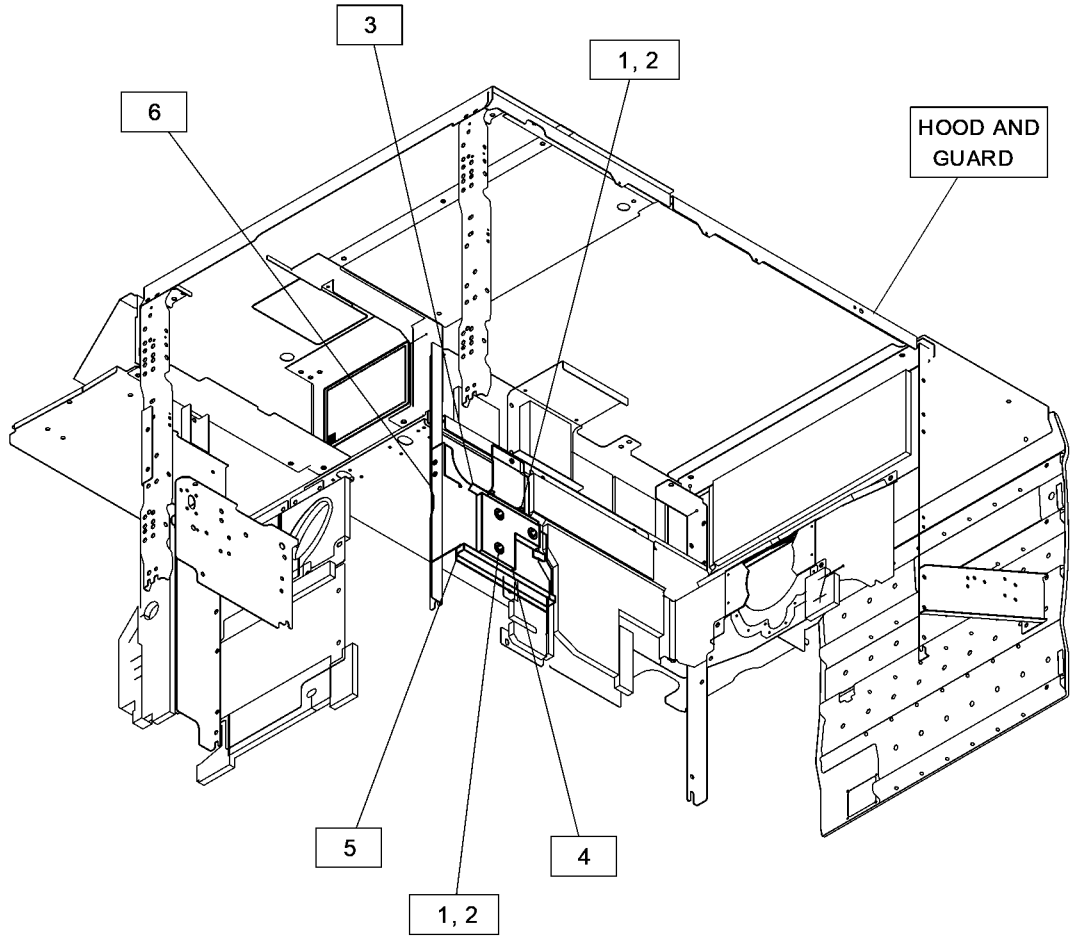

GRAPHIC #1

<END>

g06437138

577-8346 SHEET AS-SOUND SUPPRESSION

S/N: SP91-UP

PART OF 508-9637 COVER GP-PROTECTION

SMCS-1801, 7076, 7251, 7267 **i07765789**

NOTE	REF NO	GRAPHIC REF	PART NUMBER	QTY	PART NAME 1 2 3 4 5 6 (PRODUCT LEVEL)	SEE PAGE
	1	1	**510-3341**	1	LINER	
	2	1	**577-5889**	1	LINER	
	3	1	**577-7423**	1	LINER	
	4	1	**577-7425**	1	LINER	
	5	1	**577-5886**	1	LINER	
	6	1	**577-5888**	1	LINER	

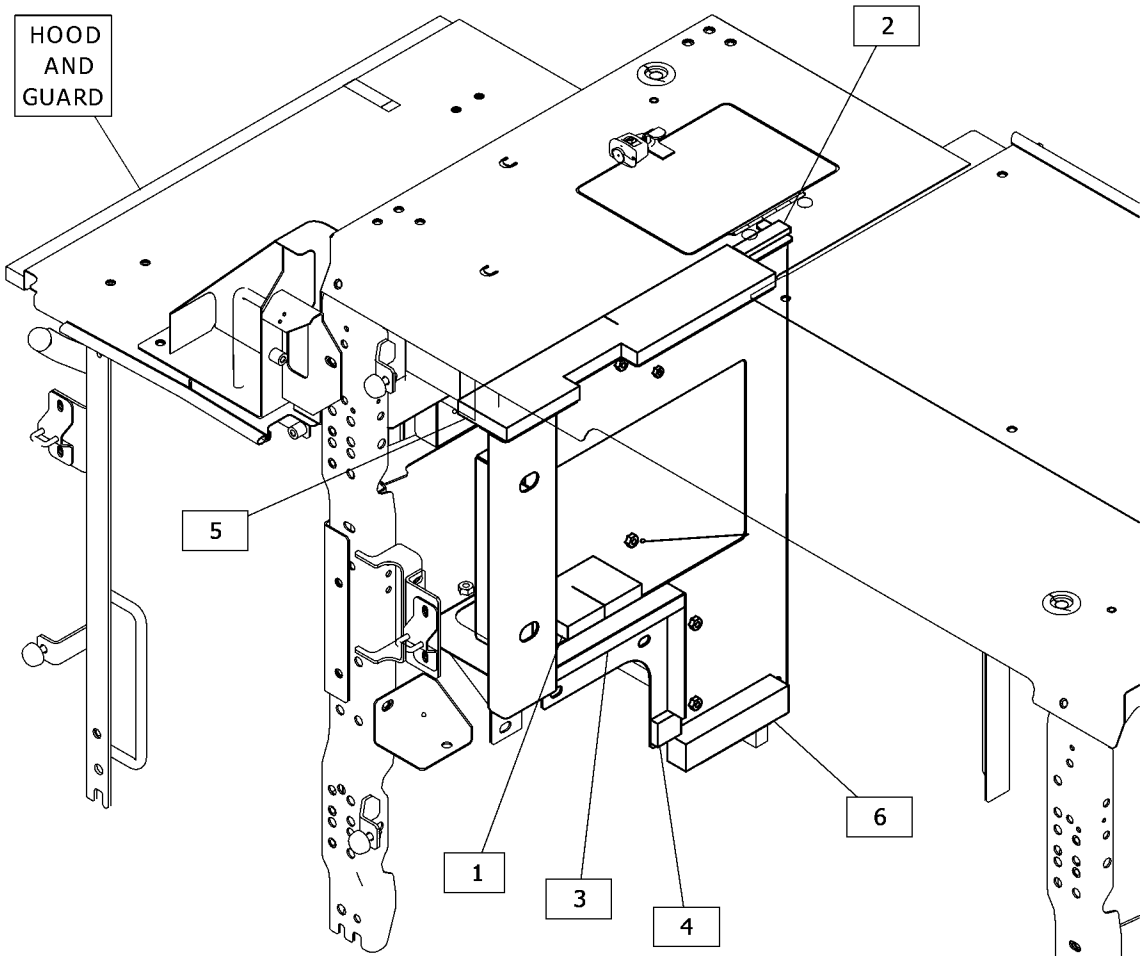

GRAPHIC #1 <END> g06422181

577-8348 SHEET AS-SOUND SUPPRESSION

S/N: SP91-UP

PART OF 508-9636 COVER GP-PROTECTION

SMCS-1801, 7076, 7251, 7267 **i07824376**

NOTE	REF NO	GRAPHIC REF	PART NUMBER	QTY	PART NAME 1 2 3 4 5 6 (PRODUCT LEVEL)	SEE PAGE
	1	1	**577-5889**	1	LINER	
	2	1	**577-7423**	1	LINER	
	3	1	**577-5886**	1	LINER	
	4	1	**577-5888**	1	LINER	
	5	1	**577-7425**	1	LINER	
	6	1	*577-7882*	1	SHEET AS	
M		1	**8T-3490**	5	NUT-WELD (M10X1.5-THD)	
M		1	**8T-3597**	2	NUT-WELD (M12X1.75-THD)	
M		1	**8T-3612**	1	NUT-WELD (M8X1.25-THD)	

M - METRIC PART

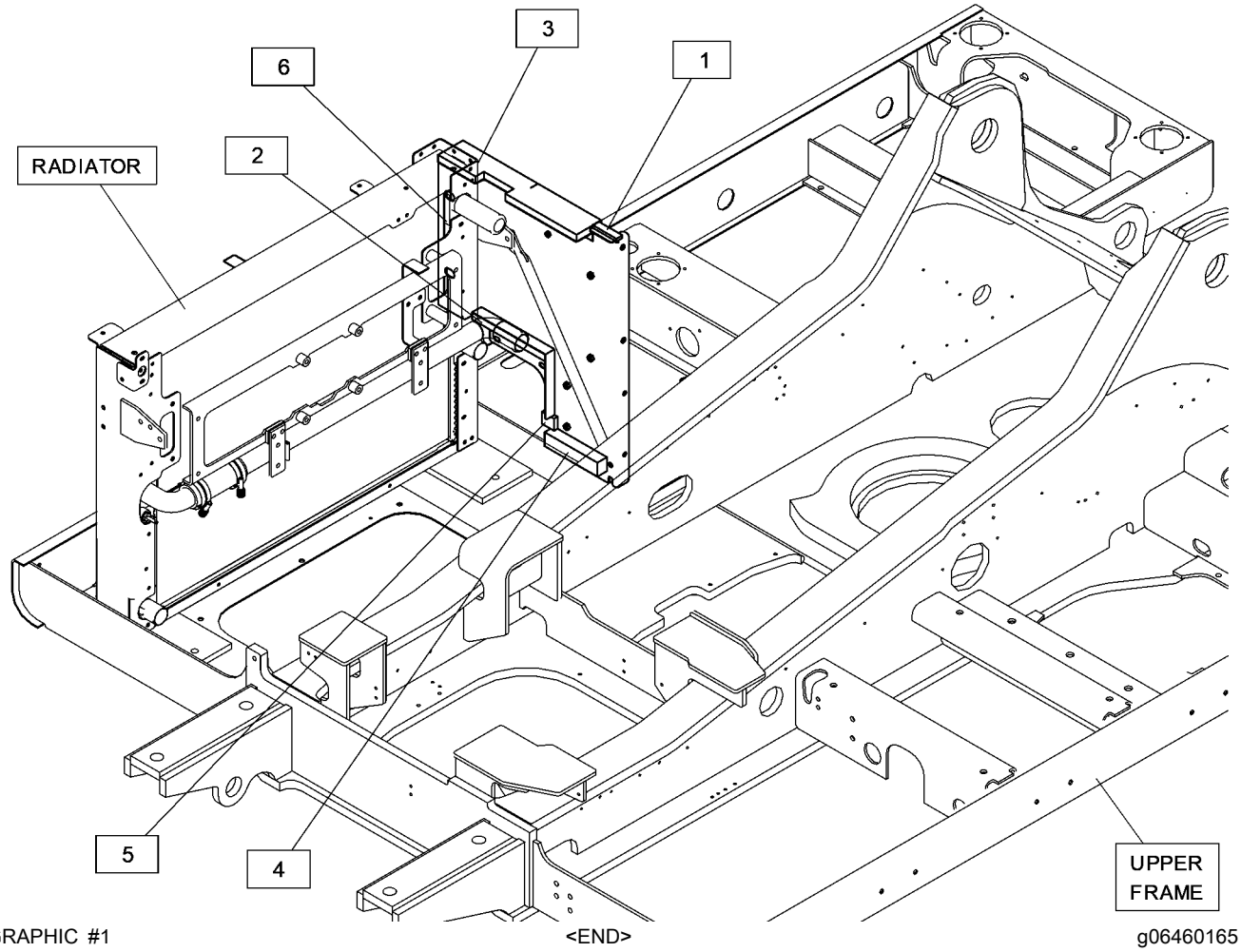

GRAPHIC #1 <END> g06460165

535-9211 SUPPORT AS-SOUND SUPPRESSION

S/N: SP91-UP

PART OF 498-7495, 575-9545 HOOD & GUARD GP

SMCS-7276 **i07512310**

NOTE	REF NO	GRAPHIC REF	PART NUMBER	QTY	PART NAME 1 2 3 4 5 6 (PRODUCT LEVEL)	SEE PAGE
	1	1	**519-2337**	1	LINER	
	2	1	**519-2338**	1	LINER	

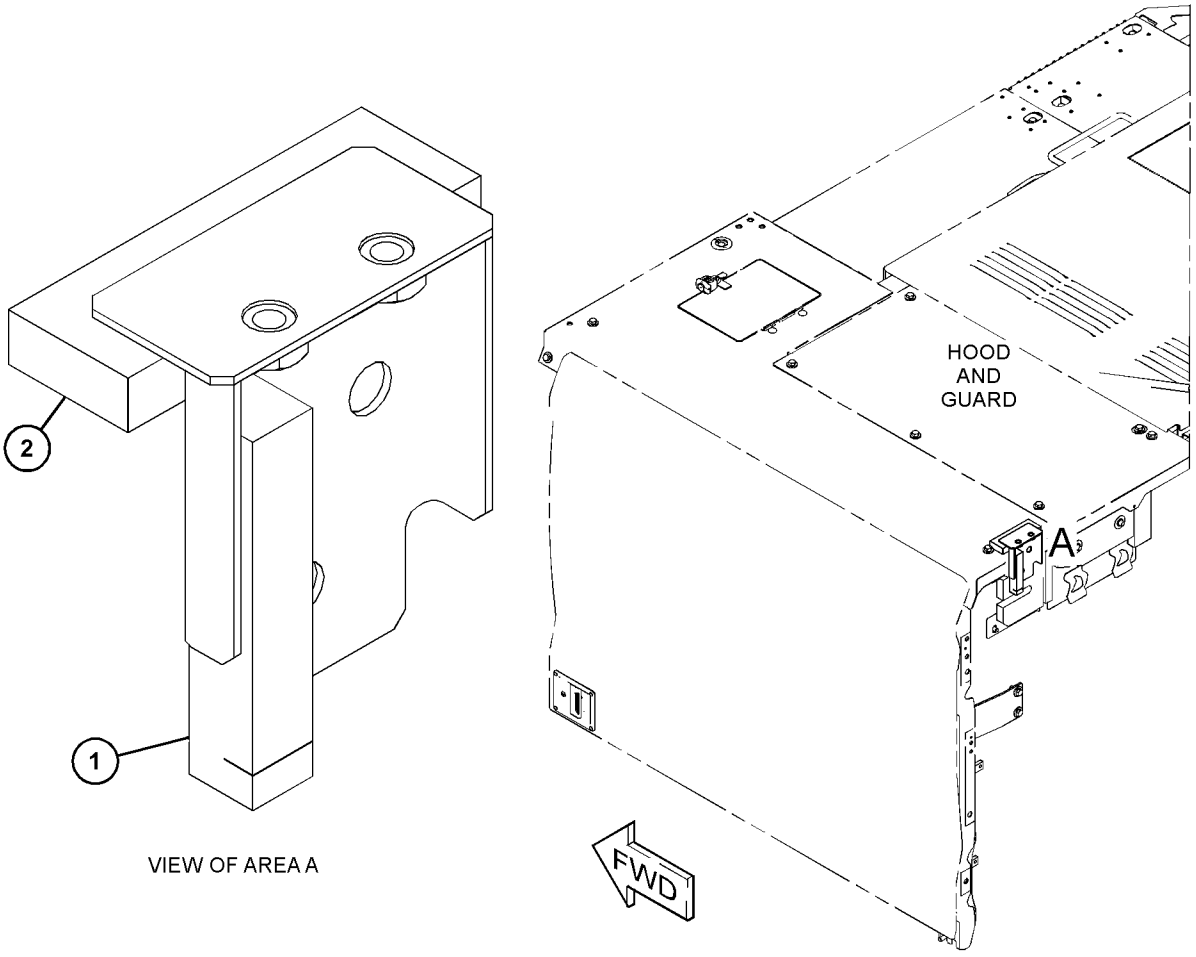

GRAPHIC #1 <END> g06285365

498-5695 FRAME AS-UNDERCARRIAGE

S/N: SP91-UP

PART OF 523-7795 UNDERCARRIAGE AR

SMCS-4150, 7062 **i07531009**

NOTE	REF NO	GRAPHIC REF	PART NUMBER	QTY	PART NAME 1 2 3 4 5 6 (PRODUCT LEVEL)	SEE PAGE
	1	1	**241-7163**	1	COVER AS	
	2	1	*521-0280*	1	FRAME AS-TRACK (RH)	
	2A	1	**117-5372**	2	BRACKET	
	2B	1	**336-2583**	2	STEP	
	3	1	*521-0281*	1	FRAME AS-TRACK (LH)	
	3A	1	**117-5372**	2	BRACKET	
	3B	1	**336-2583**	2	STEP	

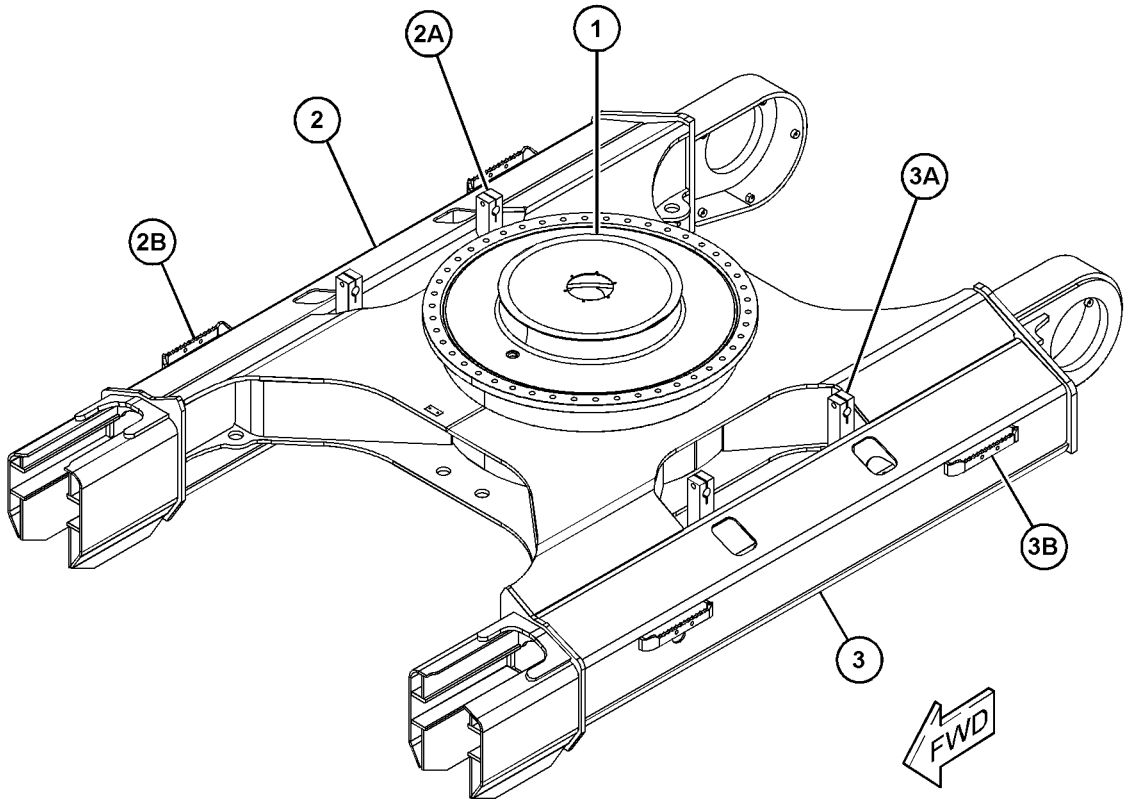

GRAPHIC #1 <END> g06283297

502-1303 GUARD GP-TRACK GUIDE

S/N: SP91-UP

SMCS-4177 **i07519791**

NOTE	REF NO	GRAPHIC REF	PART NUMBER	QTY	PART NAME 1 2 3 4 5 6 (PRODUCT LEVEL)	SEE PAGE
	1	1	**451-2177**	8	WASHER-HARD (26X44X4-MM THK)	
M	2	1	**453-2854**	8	BOLT (M24X3X50-MM)	
	3	1	**528-8101**	2	GUARD AS-TRACK GUIDE	
					QUANTITIES SHOWN ARE THOSE REQUIRED FOR BOTH LH AND RH SIDES	

M - METRIC PART

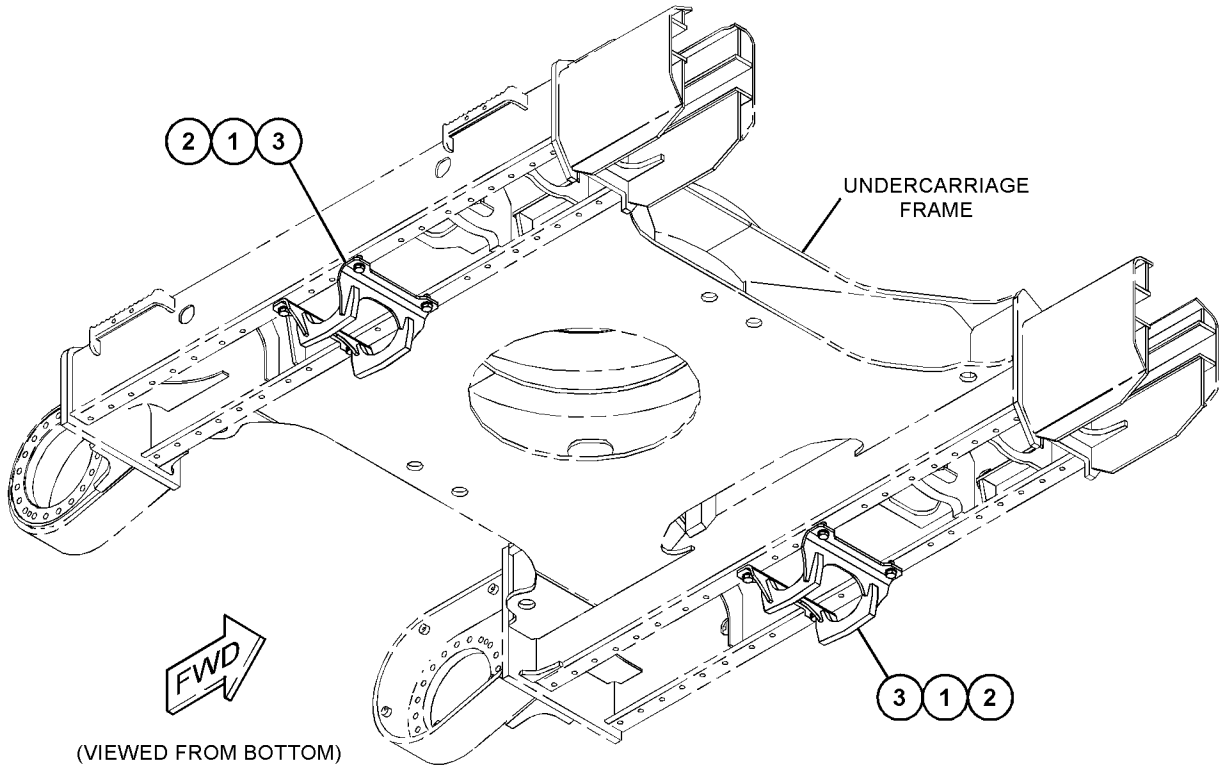

(VIEWED FROM BOTTOM)

GRAPHIC #1 <END> g06284187

502-1304 GUARD GP-TRACK GUIDE—SEGMENTED

S/N: SP91-UP

SMCS-4177 **i07519797**

NOTE	REF NO	GRAPHIC REF	PART NUMBER	QTY	PART NAME 1 2 3 4 5 6 (PRODUCT LEVEL)	SEE PAGE
	1	1	**451-2177**	16	WASHER-HARD (26X44X4-MM THK)	
M	2	1	**453-2854**	16	BOLT (M24X3X50-MM)	
	3	1	**528-8101**	4	GUARD AS-TRACK GUIDE	
					QUANTITIES SHOWN ARE THOSE REQUIRED FOR BOTH LH AND RH SIDES	

M - METRIC PART

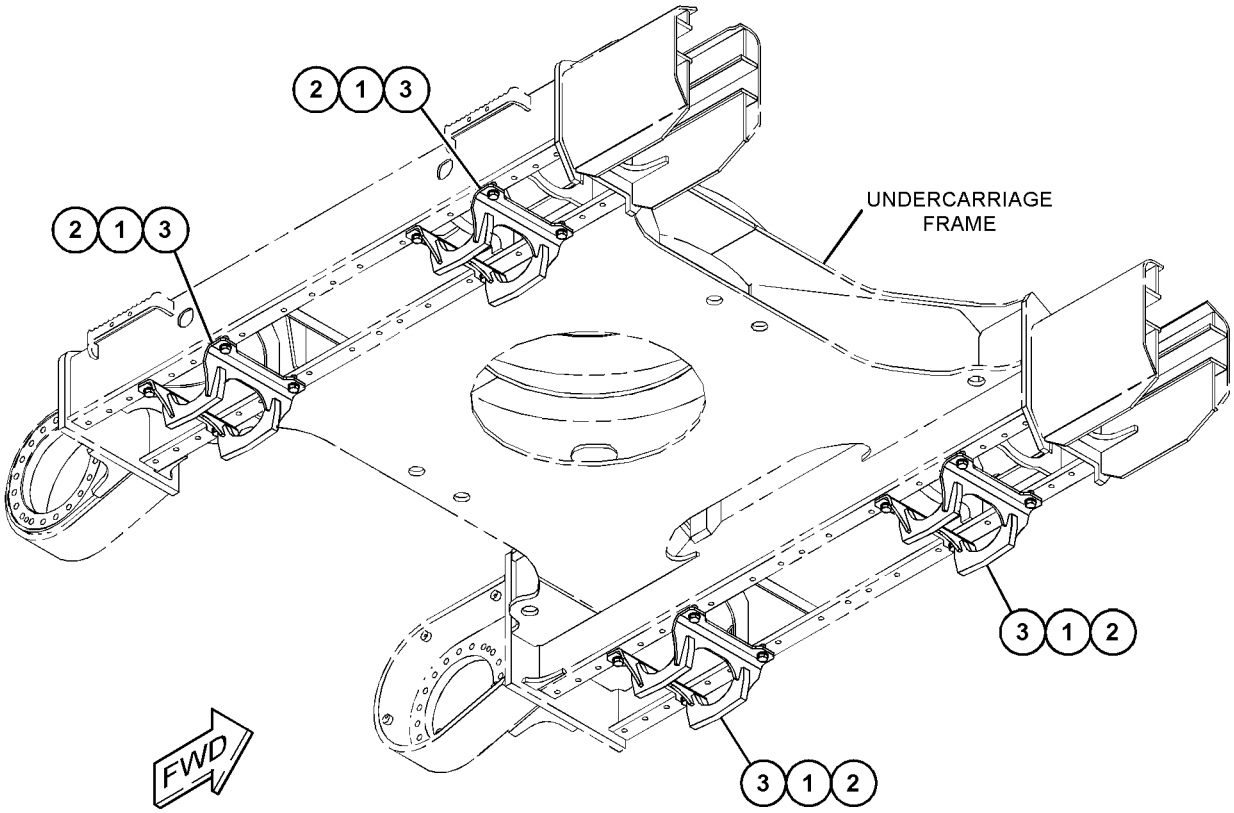

(VIEWED FROM BOTTOM)

GRAPHIC #1 <END> g06284206

502-1306 GUARD GP-TRACK GUIDE—FULL LENGTH

S/N: SP91-UP

SMCS-4177 **i07519801**

NOTE	REF NO	GRAPHIC REF	PART NUMBER	QTY	PART NAME 1 2 3 4 5 6 (PRODUCT LEVEL)	SEE PAGE
	1	1	**451-2177**	36	WASHER-HARD (26X44X4-MM THK)	
M	2	1	**453-2854**	36	BOLT (M24X3X50-MM)	
	3	1	**506-1096**	2	GUARD AS-TRACK GUIDE	
	4	1	**527-1704**	2	GUARD AS-TRACK GUIDE	
	5	1	**527-1705**	2	GUARD AS-TRACK GUIDE	
					QUANTITIES SHOWN ARE THOSE REQUIRED FOR BOTH LH AND RH SIDES	

M - METRIC PART

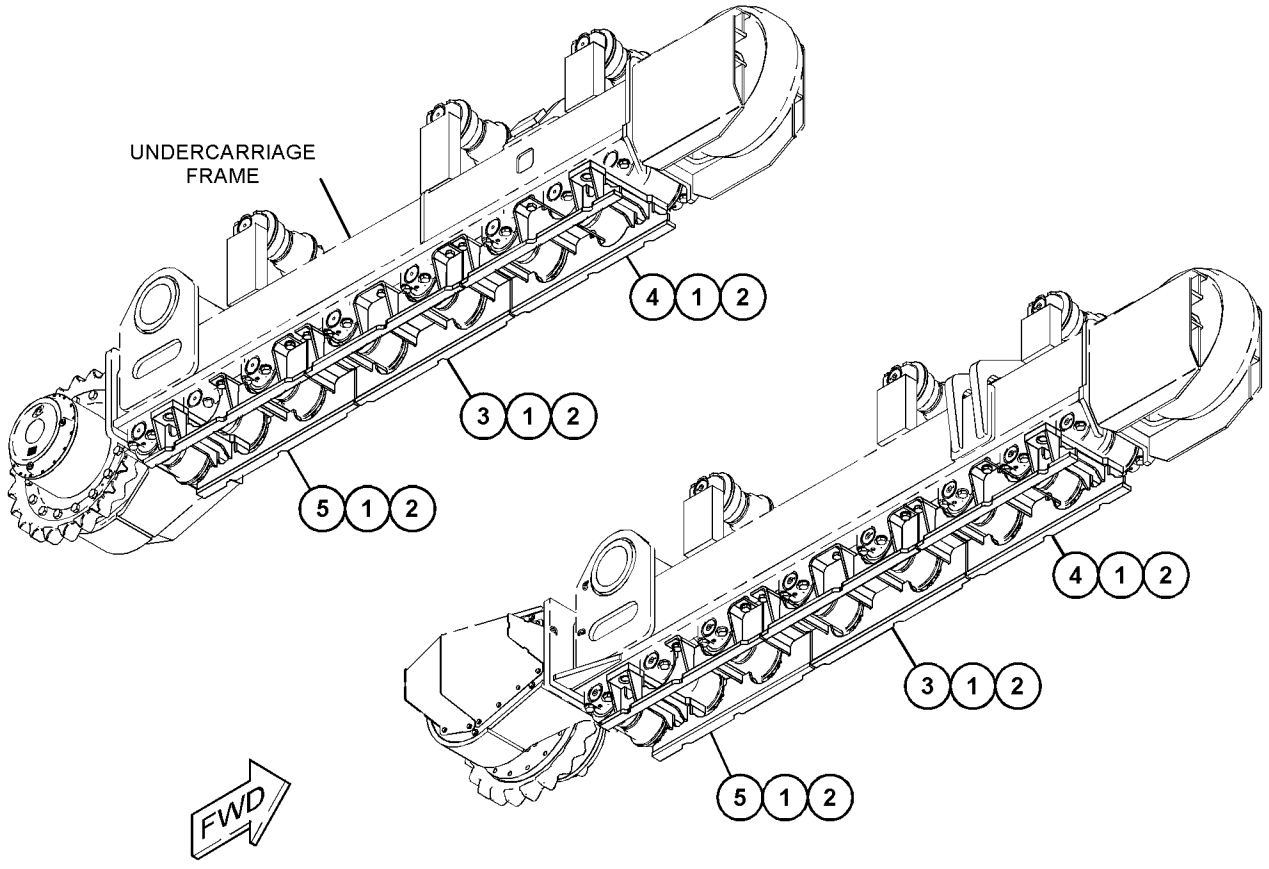

(VIEWED FROM BOTTOM)

GRAPHIC #1 <END> g06284321

502-1308 GUARD GP-TRAVEL MOTOR–HEAVY DUTY

S/N: SP91-UP

SMCS-7163 **i07519803**

NOTE	REF NO	GRAPHIC REF	PART NUMBER	QTY	PART NAME 1 2 3 4 5 6 (PRODUCT LEVEL)	SEE PAGE
	1	1	**453-8030**	10	BOLT AS	
	2	1	**506-1097**	1	COVER AS-ACCESS (RH)	
	3	1	**506-1098**	1	COVER AS-ACCESS (LH)	

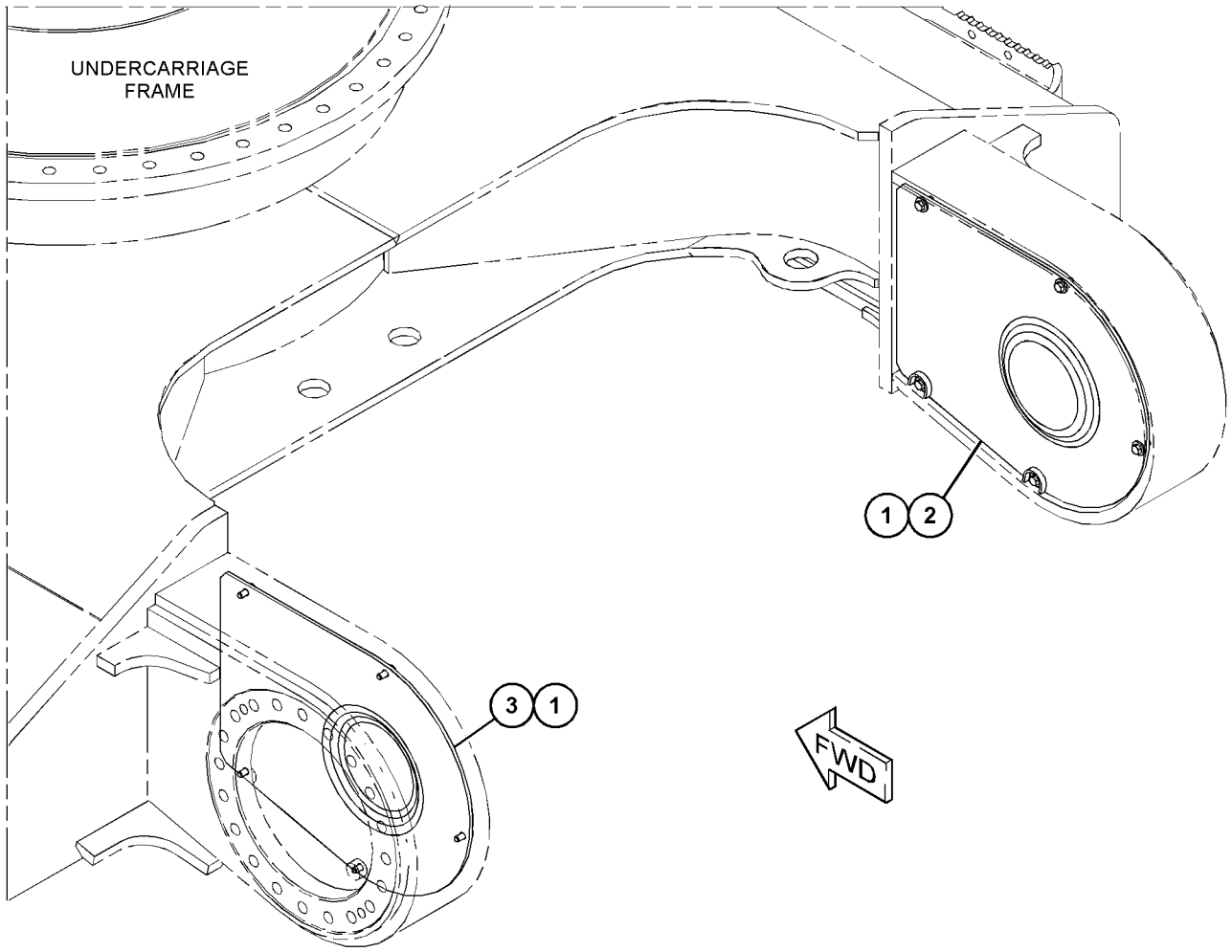

GRAPHIC #1 <END> g06284227

136-2422 IDLER GP

S/N: SP91-UP

PART OF 496-2920, 496-2921 IDLER GP-FRONT

SMCS-4159 **i07517542**

NOTE	REF NO	GRAPHIC REF	PART NUMBER	QTY	PART NAME 1 2 3 4 5 6 (PRODUCT LEVEL)	SEE PAGE
	1	1	**136-3847**	1	IDLER AS	
	1A	1	**6Y-8023**	2	BEARING-IDLER	
	2	1	**7H-3171**	1	PLUG-PIPE	
	3	1	**109-0881**	2	SEAL GP-DUO-CONE	
					(EACH INCLUDES)	
		1	**5P-9120**	2	RING-SEALING	
	4	1	**6Y-8029**	2	PIN-SPRING	
	5	1	**1H-7339**	2	SEAL-O-RING	
	6	1	**6Y-8028**	1	SHAFT-IDLER	
	7	1	**115-3699**	2	BEARING-FRONT	

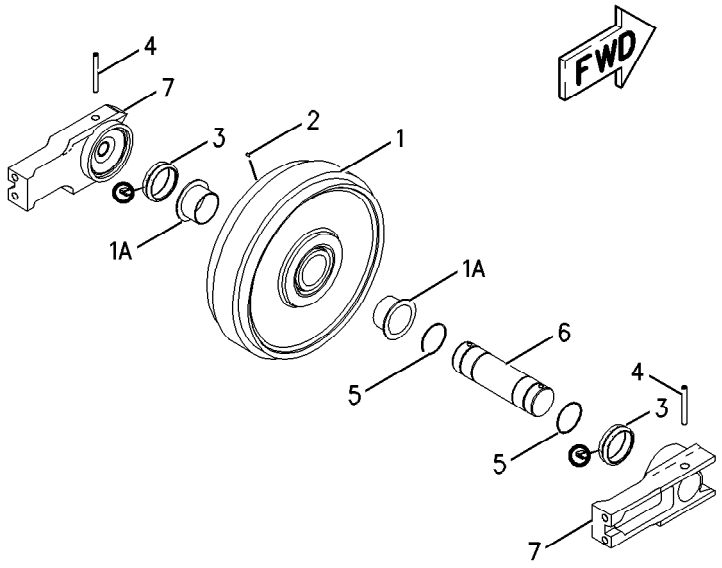

GRAPHIC #1 <END> g00836204

496-2895 IDLER GP-FRONT

S/N: SP91-UP

PART OF 523-7795 UNDERCARRIAGE AR

SMCS-4159 **i07531010**

NOTE	REF NO	GRAPHIC REF	PART NUMBER	QTY	PART NAME 1 2 3 4 5 6 (PRODUCT LEVEL)	SEE PAGE
Y	1	1	*496-2920*	1	IDLER GP-FRONT (RH)	388
Y	2	1	*496-2921*	1	IDLER GP-FRONT (LH)	389

Y - SEPARATE ILLUSTRATION

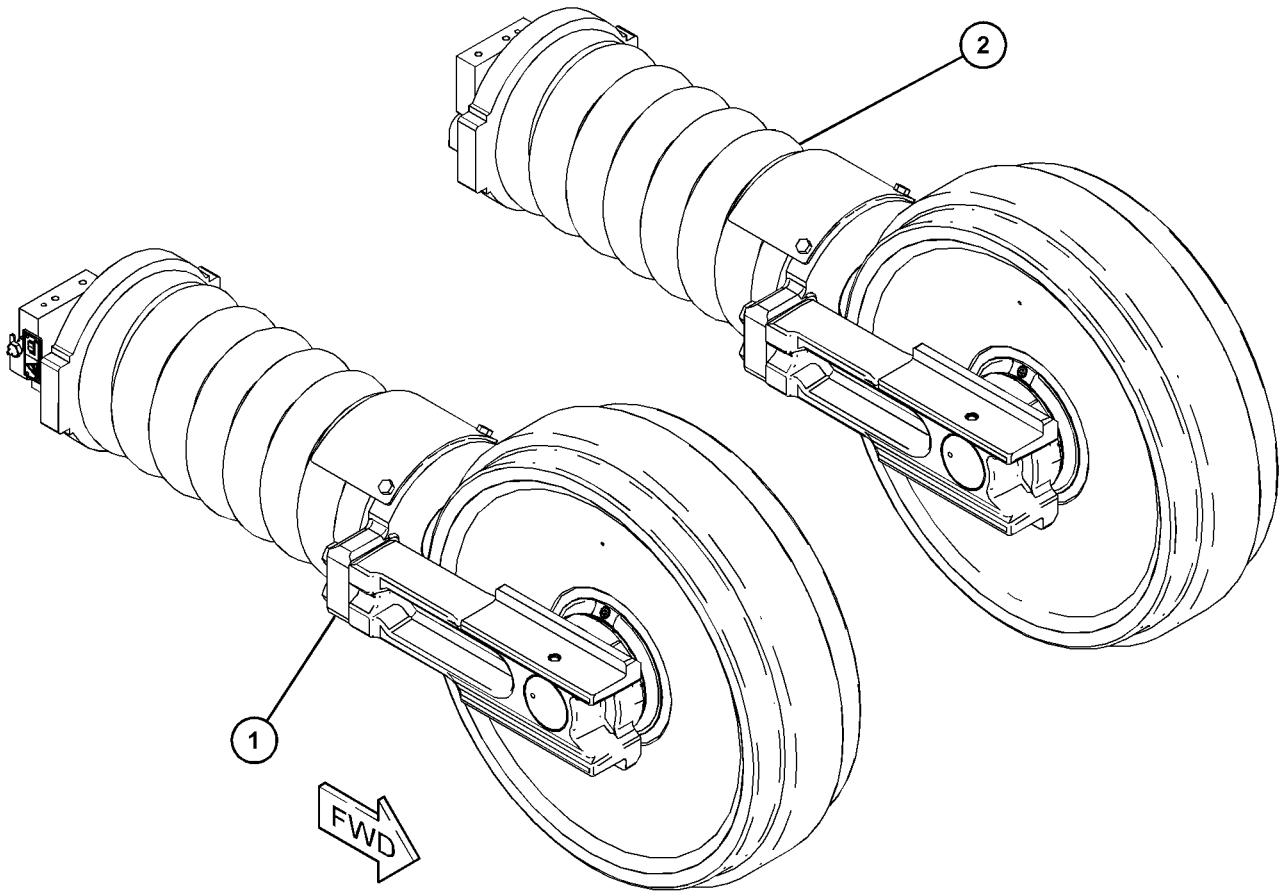

GRAPHIC #1 <END> g06278875

496-2920 IDLER GP-FRONT—RH

S/N: SP91-UP

PART OF 496-2895 IDLER GP-FRONT

SMCS-4159 **i07531012**

NOTE	REF NO	GRAPHIC REF	PART NUMBER	QTY	PART NAME 1 2 3 4 5 6 (PRODUCT LEVEL)	SEE PAGE
Y	1	1	*496-2922*	1	TRACK ADJUSTER & RECOIL GP (RH)	394
Y	2	1	**136-2422**	1	IDLER GP (FRONT)	386
M	3	1	**447-1719**	4	BOLT (M20X2.5X60-MM)	

M - METRIC PART
Y - SEPARATE ILLUSTRATION

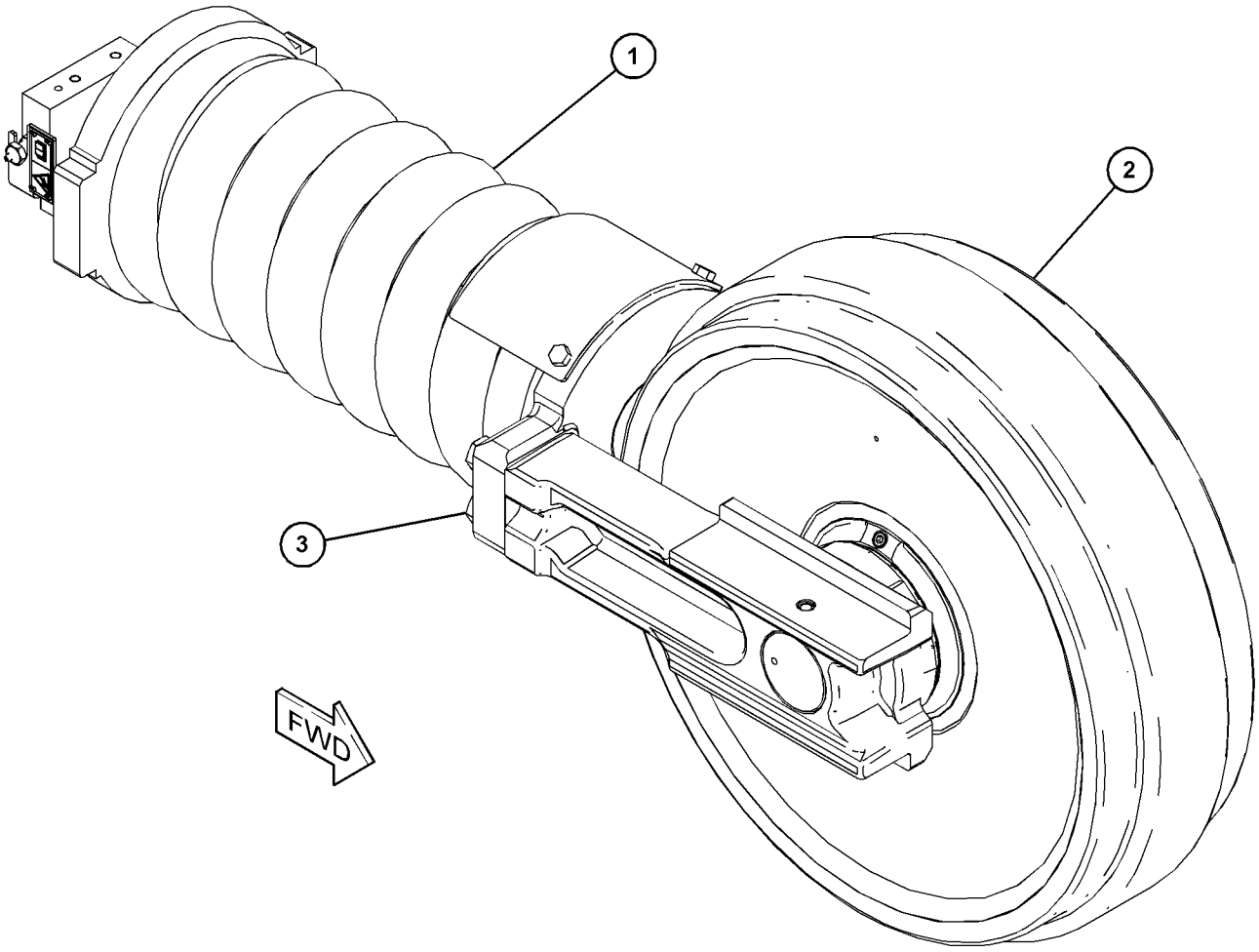

GRAPHIC #1 <END> g06278879

496-2921 IDLER GP-FRONT—LH

S/N: SP91-UP

PART OF 496-2895 IDLER GP-FRONT

SMCS-4159 **i07531014**

NOTE	REF NO	GRAPHIC REF	PART NUMBER	QTY	PART NAME 1 2 3 4 5 6 (PRODUCT LEVEL)	SEE PAGE
Y	1	1	*496-2923*	1	TRACK ADJUSTER & RECOIL GP (LH)	395
Y	2	1	**136-2422**	1	IDLER GP (FRONT)	386
M	3	1	**447-1719**	4	BOLT (M20X2.5X60-MM)	

M - METRIC PART
Y - SEPARATE ILLUSTRATION

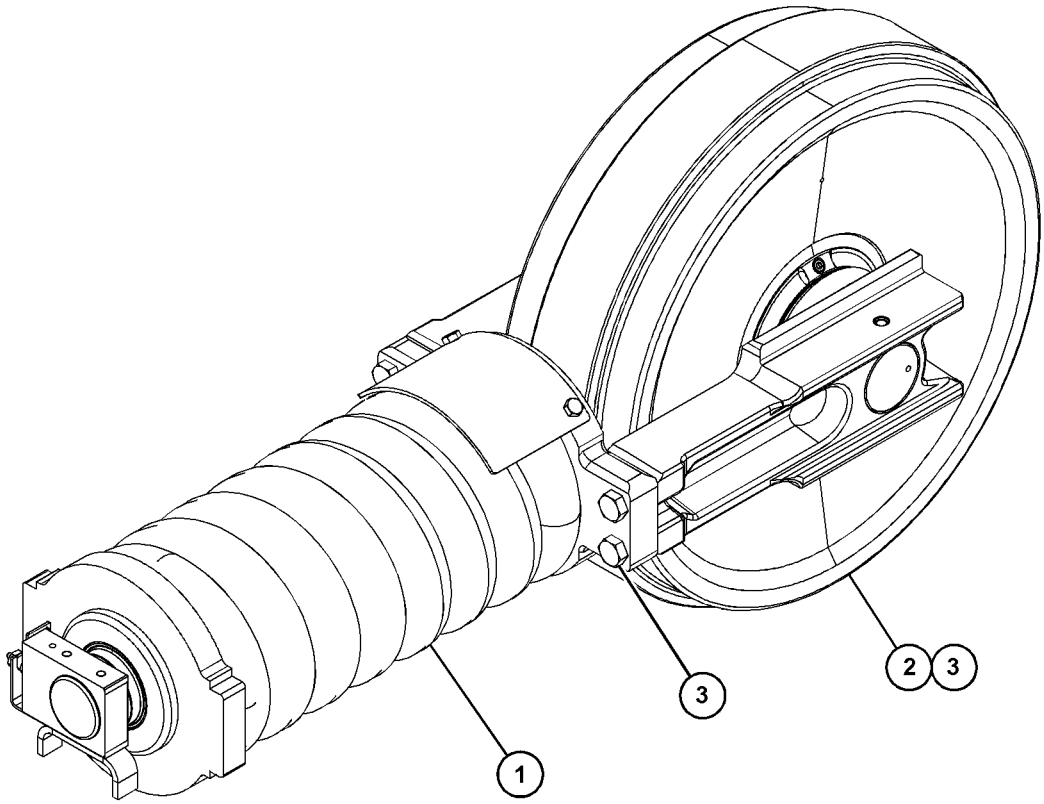

GRAPHIC #1 <END> g06279412

524-3181 LINK AS-TRACK—GREASE LUBRICATED TRACK

S/N: SP91-UP

PART OF 524-3169, 524-3173, 524-3174 TRACK GP

SMCS-4169, 4171

i07416771

NOTE	REF NO	GRAPHIC REF	PART NUMBER	QTY	PART NAME 1 2 3 4 5 6 (PRODUCT LEVEL)	SEE PAGE
	1	1	**6Y-2748**	1	PIN-TRACK MASTER	
	2	1	**6Y-2751**	48	PIN-TRACK	
	3	1	**179-3426**	96	SEAL-TRACK	
	4	1	**179-3428**	2	SEAL-TRACK MASTER	
	5	1	**201-0828**	1	BUSHING-TRACK MASTER	
	6	1	**321-1463**	48	BUSHING-TRACK	
	7	1	**513-0097**	49	LINK-TRACK (RH)	
	8	1	**513-0098**	49	LINK-TRACK (LH)	

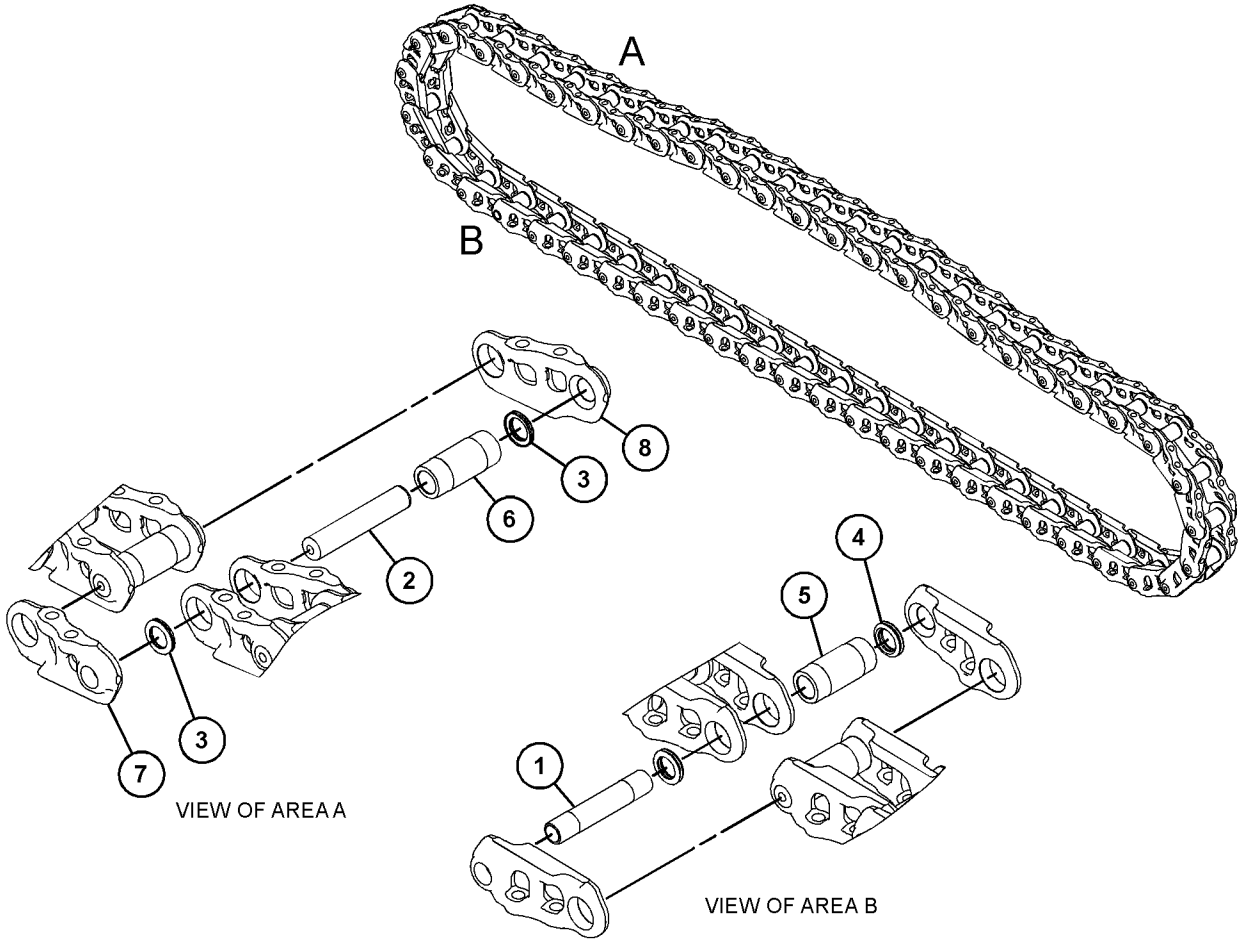

GRAPHIC #1 <END> g06282466

511-9710 ROLLER AR-TRACK & CARRIER

S/N: SP91-UP

PART OF 523-7795 UNDERCARRIAGE AR

SMCS-4154, 4180 **i07531031**

NOTE	REF NO	GRAPHIC REF	PART NUMBER	QTY	PART NAME 1 2 3 4 5 6 (PRODUCT LEVEL)	SEE PAGE
Y	1	1	**300-4545**	4	ROLLER GP-TRACK CARRIER	392
M	2	1	**447-1723**	64	BOLT (M24X3X110-MM)	
	3	1	**451-2177**	64	WASHER-HARD (26X44X4-MM THK)	
M	4	1	**453-2855**	4	BOLT (M24X3X90-MM)	
Y	5	1	**491-3844**	16	ROLLER GP-TRACK-SINGLE FLANGE	393

M - METRIC PART
Y - SEPARATE ILLUSTRATION

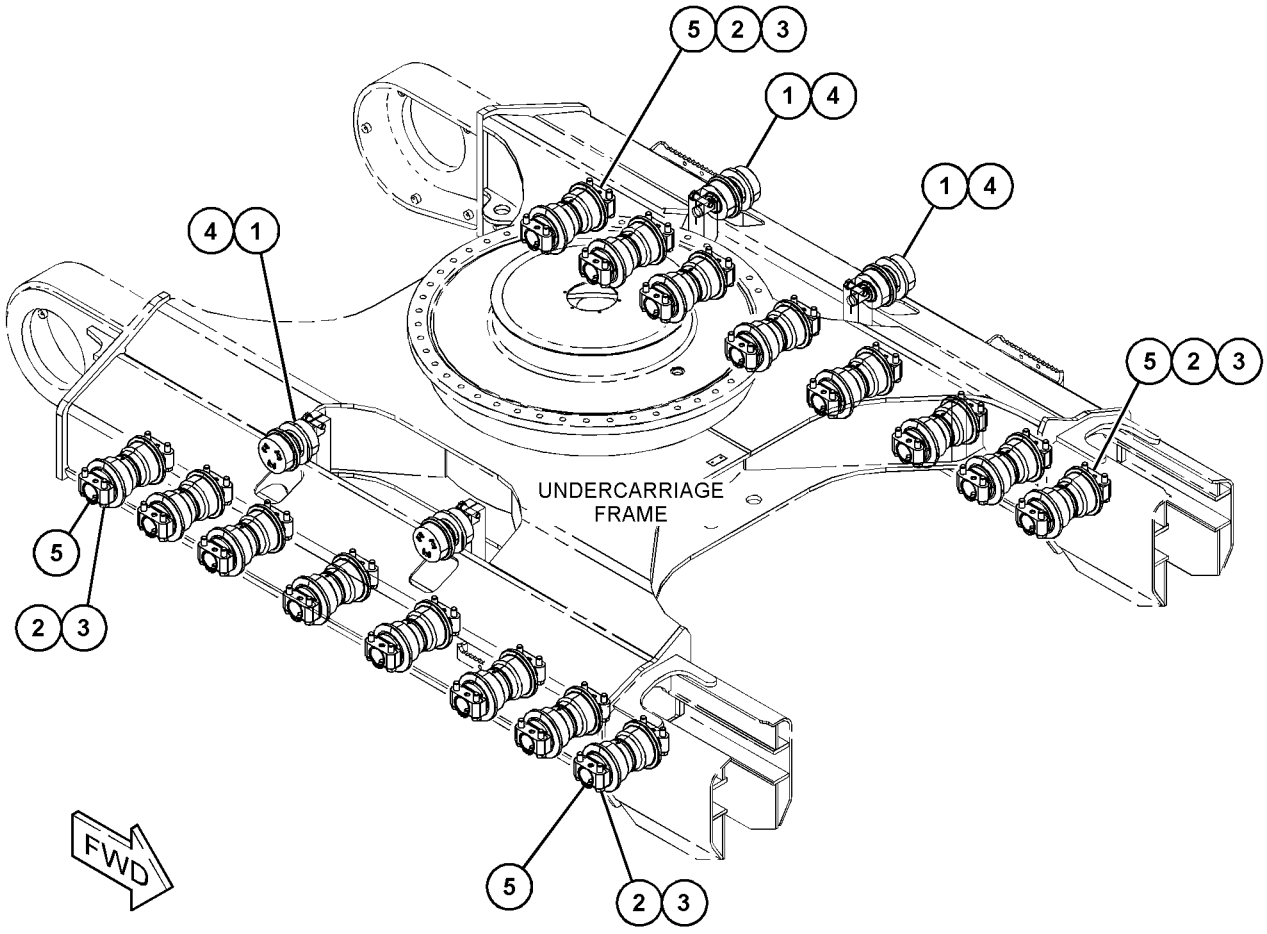

GRAPHIC #1 <END> g06310618

300-4545 ROLLER GP-TRACK CARRIER

S/N: SP91-UP

PART OF 511-9710 ROLLER AR-TRACK & CARRIER

SMCS-4154 **i05519009**

NOTE	REF NO	GRAPHIC REF	PART NUMBER	QTY	PART NAME 1 2 3 4 5 6 (PRODUCT LEVEL)	SEE PAGE
	1	1	**6Y-9858**	1	SHAFT AS-TRACK ROLLER	
	2	1	*179-1292*	1	SEAL GP-DUO-CONE	
		1	**1M-3097**	2	RING-SEALING	
	3	1	**300-4544**	1	ROLLER & BEARING AS	
	3A	1	**6Y-9855**	1	BEARING-CARRIER ROLLER	
	3B	1	**6Y-9856**	1	BEARING-CARRIER ROLLER	
	4	1	**6Y-8075**	1	RETAINER	
	5	1	**300-4538**	1	WASHER-THRUST	
	6	1	**5H-8848**	1	SEAL-O-RING	
M	7	1	**8T-1159**	5	BOLT-SOCKET HEAD (M10X1.5X25-MM)	
	8	1	**6Y-8077**	1	COVER-CARRIER ROLLER	
	9	1	**7H-3171**	1	PLUG-PIPE	

M - METRIC PART

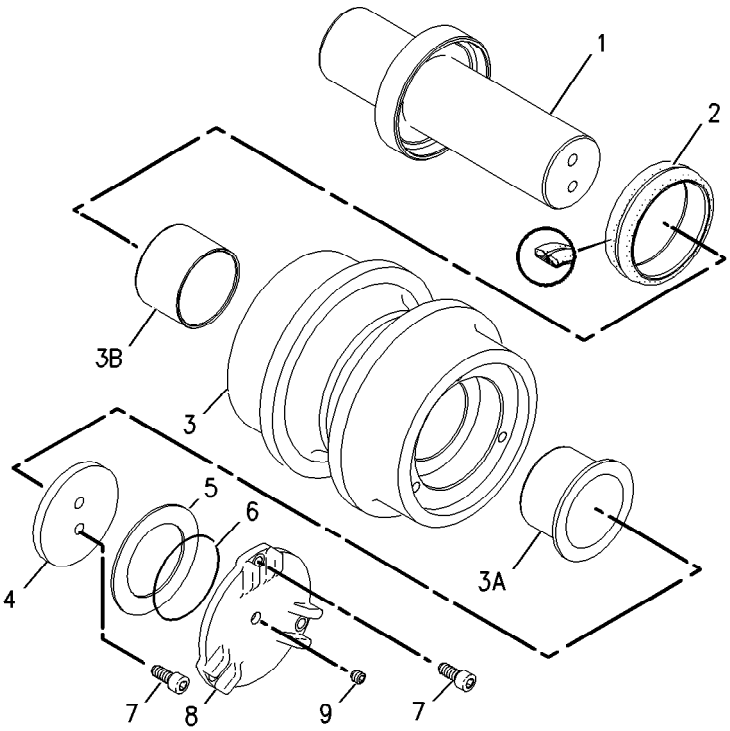

GRAPHIC #1 <END> g00850280

491-3844 ROLLER GP-TRACK-SINGLE FLANGE

S/N: SP91-UP

PART OF 511-9710 ROLLER AR-TRACK & CARRIER

SMCS-4180 **i07531033**

NOTE	REF NO	GRAPHIC REF	PART NUMBER	QTY	PART NAME 1 2 3 4 5 6 (PRODUCT LEVEL)	SEE PAGE
	1	1	**148-3533**	2	SEAL GP-DUO-CONE	
					(EACH INCLUDES)	
		1	**160-6631**	2	RING-TORIC	
	2	1	**179-1499**	2	DOWEL	
	3	1	**8F-8882**	2	SEAL-O-RING	
	4	1	**9W-2146**	1	PLUG	

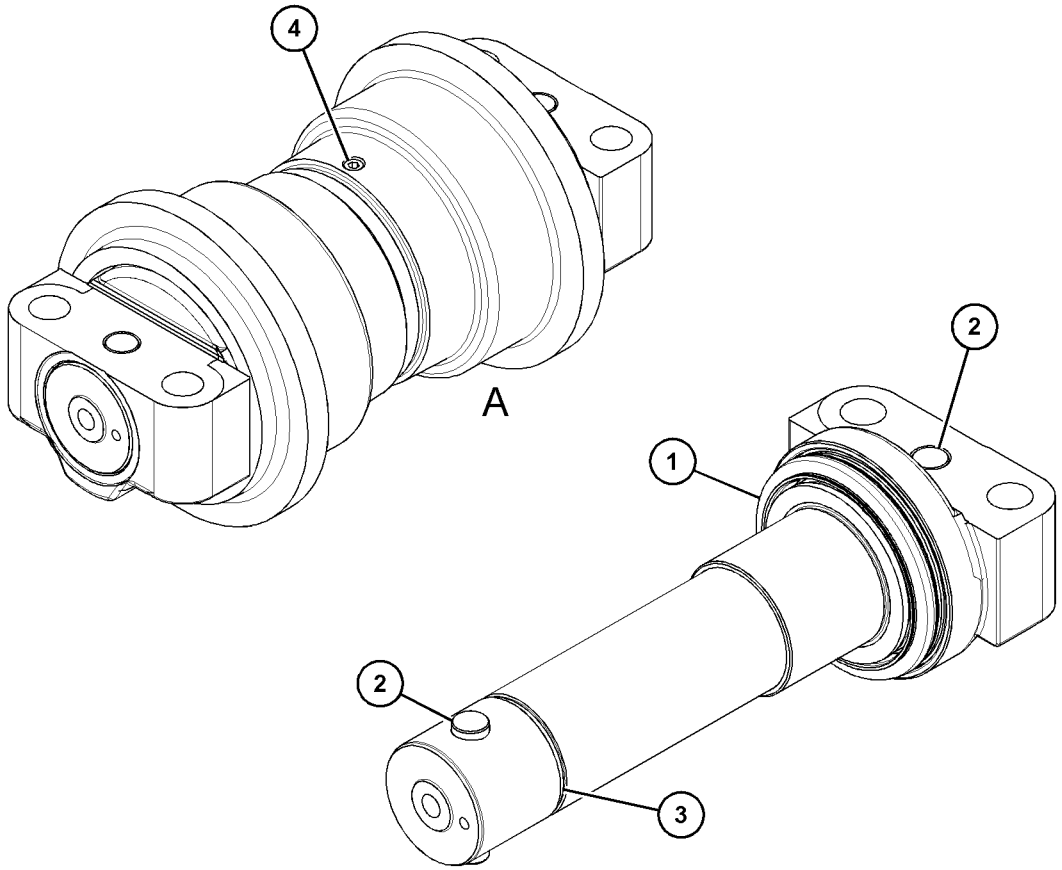

VIEW OF AREA A
(PARTS REMOVED FOR CLARITY)

GRAPHIC #1 <END> g06280772

496-2922 TRACK ADJUSTER & RECOIL GP–RH

S/N: SP91-UP

PART OF 496-2920 IDLER GP-FRONT

SMCS-4157, 4158 **i07531015**

NOTE	REF NO	GRAPHIC REF	PART NUMBER	QTY	PART NAME 1 2 3 4 5 6 (PRODUCT LEVEL)	SEE PAGE
Y	1	1	*496-2993*	1	TRACK ADJUSTER & RECOIL GP	396
M	2	1	**6V-6317**	2	BOLT (M10X1.5X20-MM)	
	3	1	**7Y-1746**	1	PLATE	
	4	1	**496-2925**	1	PLATE AS-SIDE (RH)	
		1	**4B-4158**	4	SCREW-DRIVE (NO 4X0.25-IN)	
		1	**543-2007**	1	PLATE-WARNING (HIGH PRESSURE CYLINDER)	

M - METRIC PART
Y - SEPARATE ILLUSTRATION

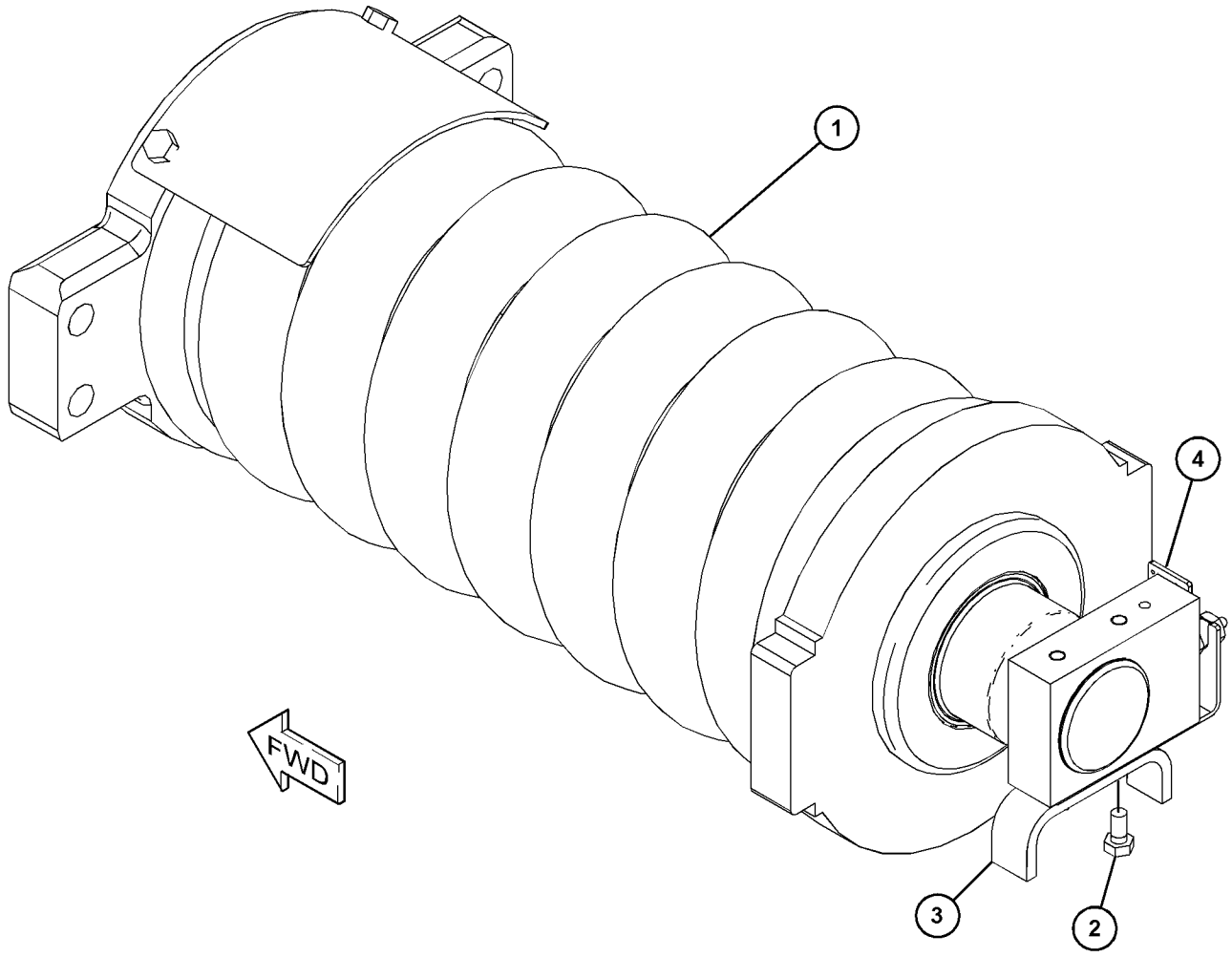

GRAPHIC #1 <END> g06278887

496-2923 TRACK ADJUSTER & RECOIL GP–LH

S/N: SP91-UP

PART OF 496-2921 IDLER GP-FRONT

SMCS-4157, 4158 **i07531016**

NOTE	REF NO	GRAPHIC REF	PART NUMBER	QTY	PART NAME 1 2 3 4 5 6 (PRODUCT LEVEL)	SEE PAGE
Y	1	1	*496-2993*	1	TRACK ADJUSTER & RECOIL GP	396
M	2	1	**6V-6317**	2	BOLT (M10X1.5X20-MM)	
	3	1	**7Y-1746**	1	PLATE	
	4	1	**496-2924**	1	PLATE AS-SIDE (LH)	
		1	**4B-4158**	4	SCREW-DRIVE (NO 4X0.25-IN)	
		1	**543-2007**	1	PLATE-WARNING (HIGH PRESSURE CYLINDER)	

M - METRIC PART
Y - SEPARATE ILLUSTRATION

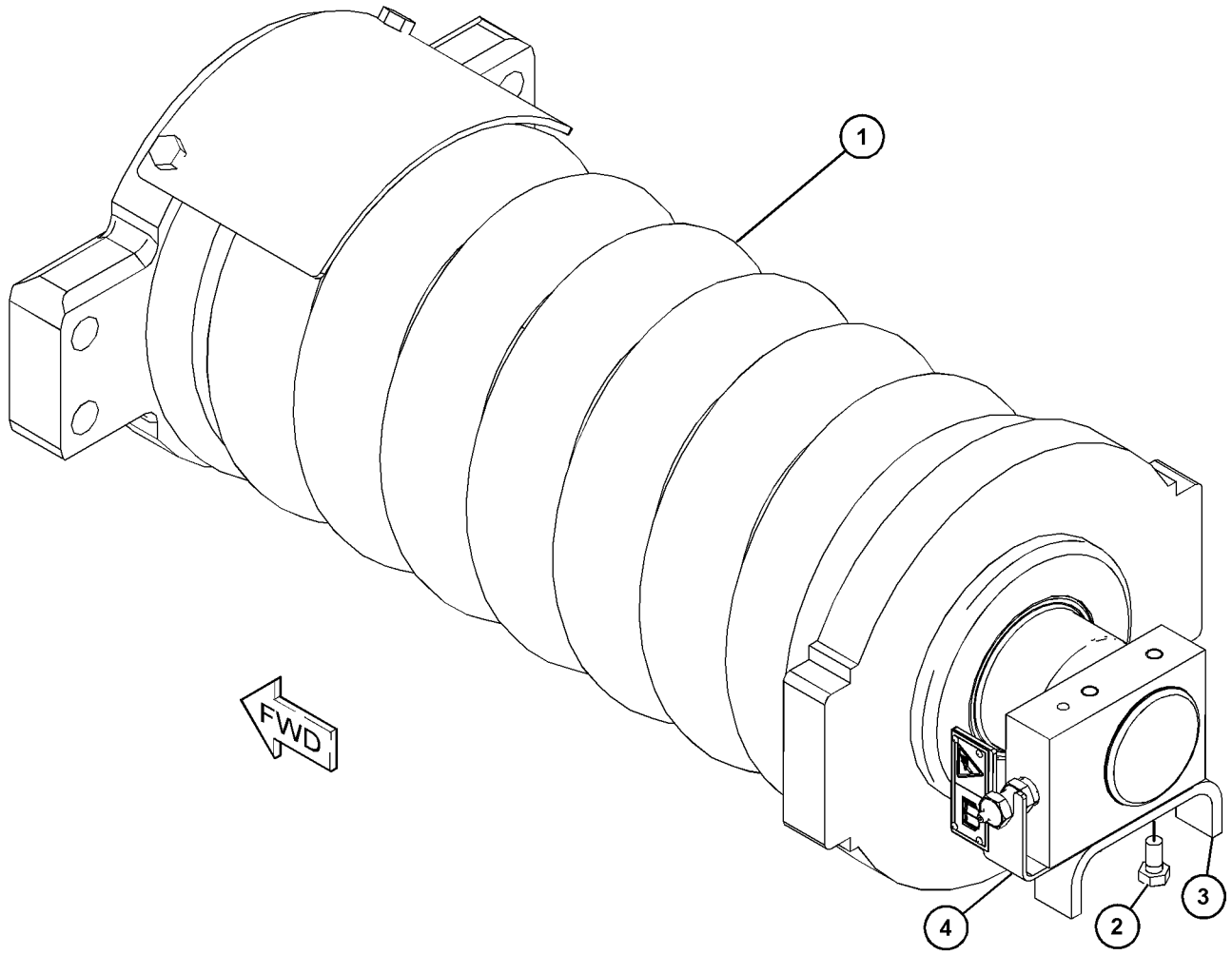

GRAPHIC #1 <END> g06278883

496-2993 TRACK ADJUSTER & RECOIL GP

S/N: SP91-UP

PART OF 496-2922, 496-2923 TRACK ADJUSTER & RECOIL GP

SMCS-4157, 4158 **i07531017**

NOTE	REF NO	GRAPHIC REF	PART NUMBER	QTY	PART NAME 1 2 3 4 5 6 (PRODUCT LEVEL)	SEE PAGE
Y	1	1	**496-3002**	1	TRACK ADJUSTER & RECOIL GP	397
M	2	1	**496-2994**	1	NUT (M56X5.5-THD)	
	3	1	**496-2995**	1	COVER	
	4	1	**496-2998**	1	WASHER (60X86X9-MM THK)	
	5	1	**496-2999**	1	STRIP	
	6	1	**496-3000**	1	PLATE	
	7	1	**496-3001**	1	SUPPORT	
	8	1	**509-2009**	1	SPACER	
	9	1	**548-1589**	1	SPRING	
M	10	1	**8T-0293**	2	BOLT (M12X1.75X20-MM)	
M	11	1	**8T-9080**	2	BOLT-SOCKET HEAD (M12X1.75X20-MM)	

M - METRIC PART
Y - SEPARATE ILLUSTRATION

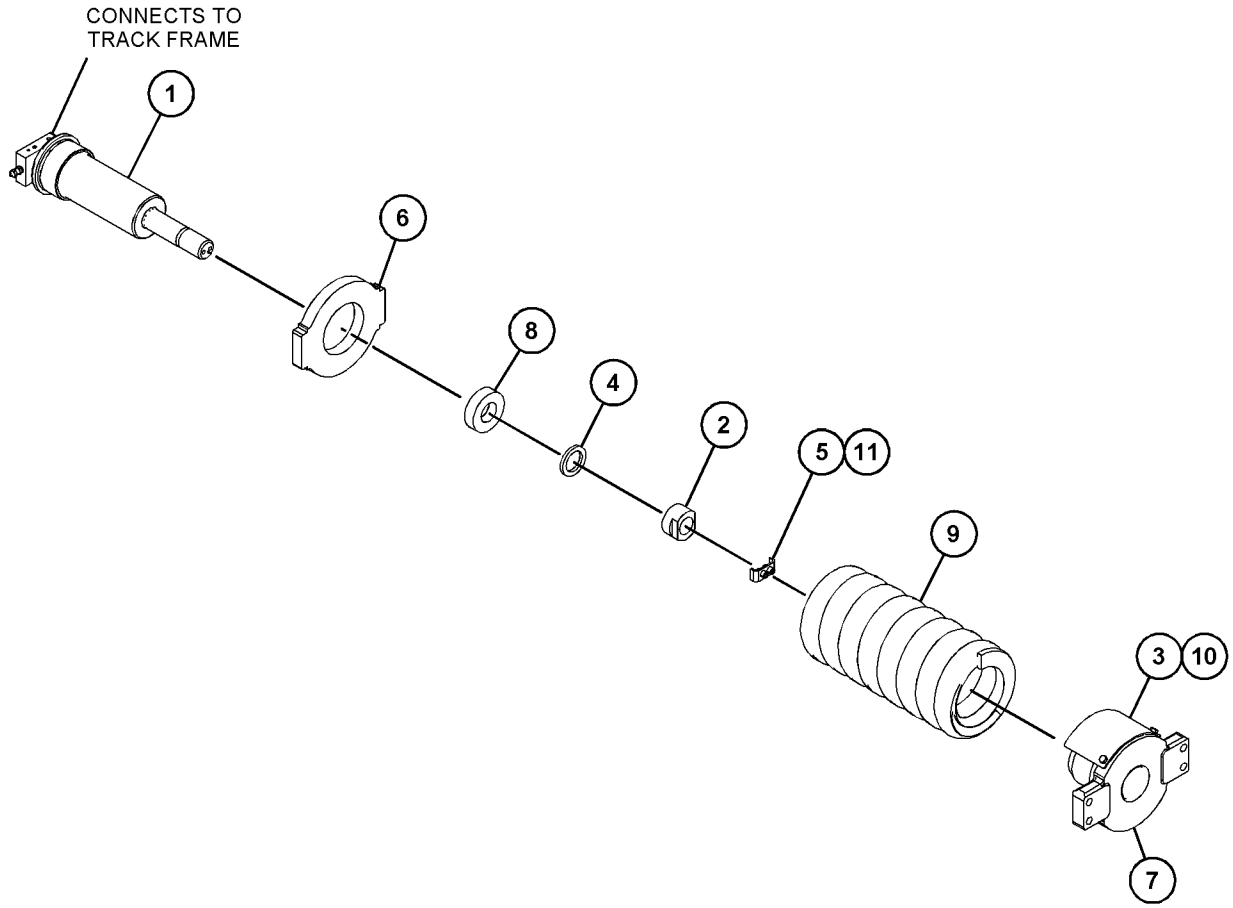

GRAPHIC #1 <END> g06285155

496-3002 TRACK ADJUSTER & RECOIL GP

S/N: SP91-UP

PART OF 496-2993 TRACK ADJUSTER & RECOIL GP

SMCS-4157, 4158

i07531022

NOTE	REF NO	GRAPHIC REF	PART NUMBER	QTY	PART NAME 1 2 3 4 5 6 (PRODUCT LEVEL)	SEE PAGE
	1	1	**093-1512**	1	RING	
	2	1	**179-3046**	1	SEAL-LIP TYPE	
	3	1	**179-3047**	2	RING-BACKUP	
	4	1	**179-3048**	2	RING-BACKUP	
	5	1	**248-7177**	2	SEAL-O-RING	
	6	1	**489-7202**	1	VALVE-FILL	
	7	1	**496-3003**	1	CYLINDER	
	8	1	**496-3026**	1	ROD	
	9	1	**528-7391**	1	PISTON AS	
	10	1	**095-1619**	1	SEAL-O-RING	

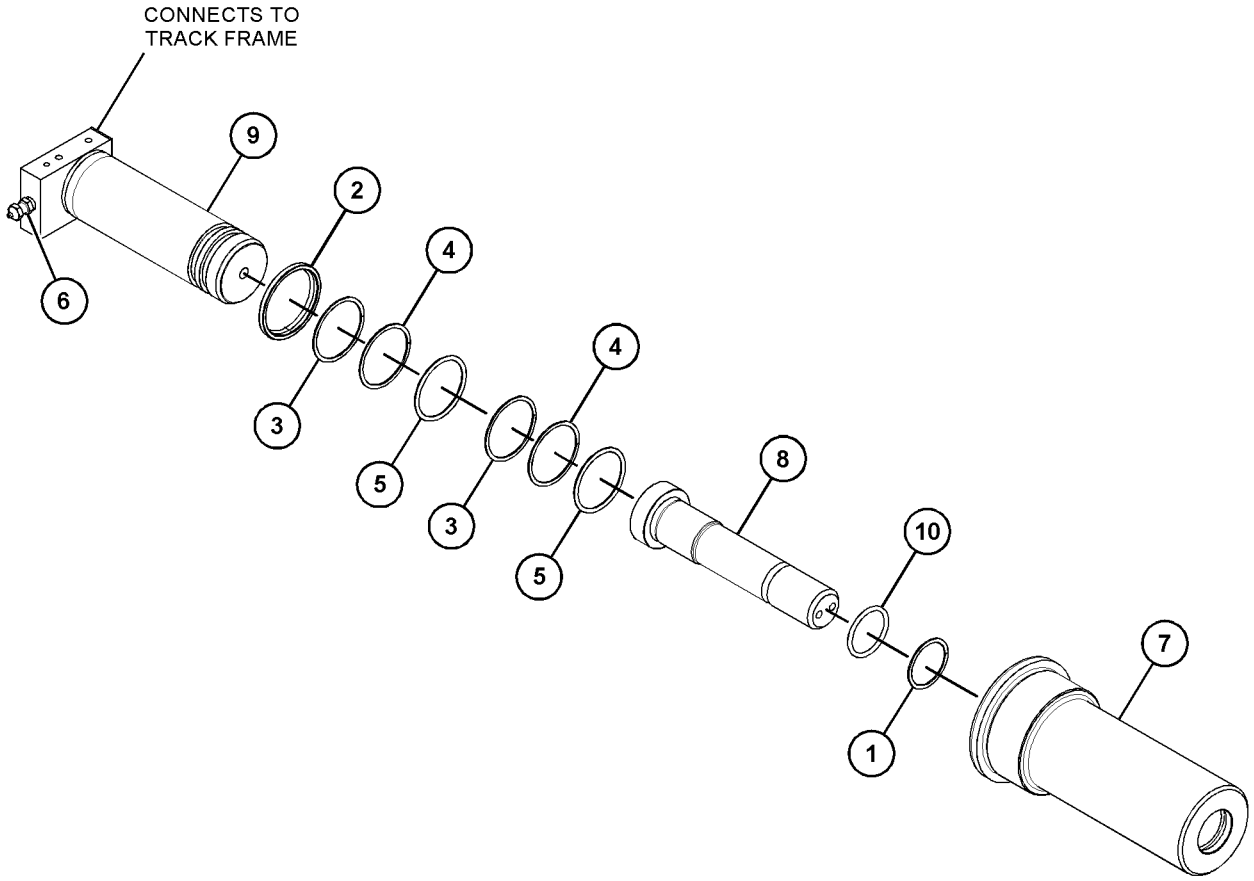

GRAPHIC #1 <END> g06279047

511-9745 TRACK AR

S/N: SP91-UP

600-MM (23.6-IN) DOUBLE GROUSER SHOE. GREASE LUBRICATED TRACK, HEAVY-DUTY

SMCS-4170 **i07527779**

NOTE	PART NUMBER	QTY	PART NAME 1 2 3 4 5 6 (PRODUCT LEVEL)	SEE PAGE
Y	*524-3169*	2	TRACK GP	399

Y - SEPARATE ILLUSTRATION

<END>

511-9751 TRACK AR

S/N: SP91-UP

700-MM (27.6-IN) TRIPLE GROUSER SHOE. GREASE LUBRICATED TRACK

SMCS-4170 **i07416629**

NOTE	PART NUMBER	QTY	PART NAME 1 2 3 4 5 6 (PRODUCT LEVEL)	SEE PAGE
Y	*524-3173*	2	TRACK GP	400

Y - SEPARATE ILLUSTRATION

<END>

511-9757 TRACK AR

S/N: SP91-UP

800-MM (31.5-IN) TRIPLE GROUSER SHOE. GREASE LUBRICATED TRACK. TRAPEZOIDAL

SMCS-4170 **i07416606**

NOTE	PART NUMBER	QTY	PART NAME 1 2 3 4 5 6 (PRODUCT LEVEL)	SEE PAGE
Y	*524-3174*	2	TRACK GP	401

Y - SEPARATE ILLUSTRATION

<END>

524-3169 TRACK GP–2-REQUIRED

S/N: SP91-UP

600-MM (23.7-IN) DOUBLE GROUSER SHOE. GREASE LUBRICATED TRACK, HEAVY-DUTY

PART OF 511-9745 TRACK AR

SMCS-4170 **i07531634**

NOTE	REF NO	GRAPHIC REF	PART NUMBER	QTY	PART NAME 1 2 3 4 5 6 (PRODUCT LEVEL)	SEE PAGE
Y	1	1	**524-3181**	1	LINK AS-TRACK (GREASE LUBRICATED TRACK)	390
	2	1	**524-3184**	49	SHOE-TRACK (600-MM DOUBLE GROUSER SHOE)	
M	3	1	**301-2299**	196	BOLT-TRACK (M24X1.5X71-MM)	
M	4	1	**150-4742**	196	NUT-TRACK (M24X1.5-THD)	

M - METRIC PART
Y - SEPARATE ILLUSTRATION

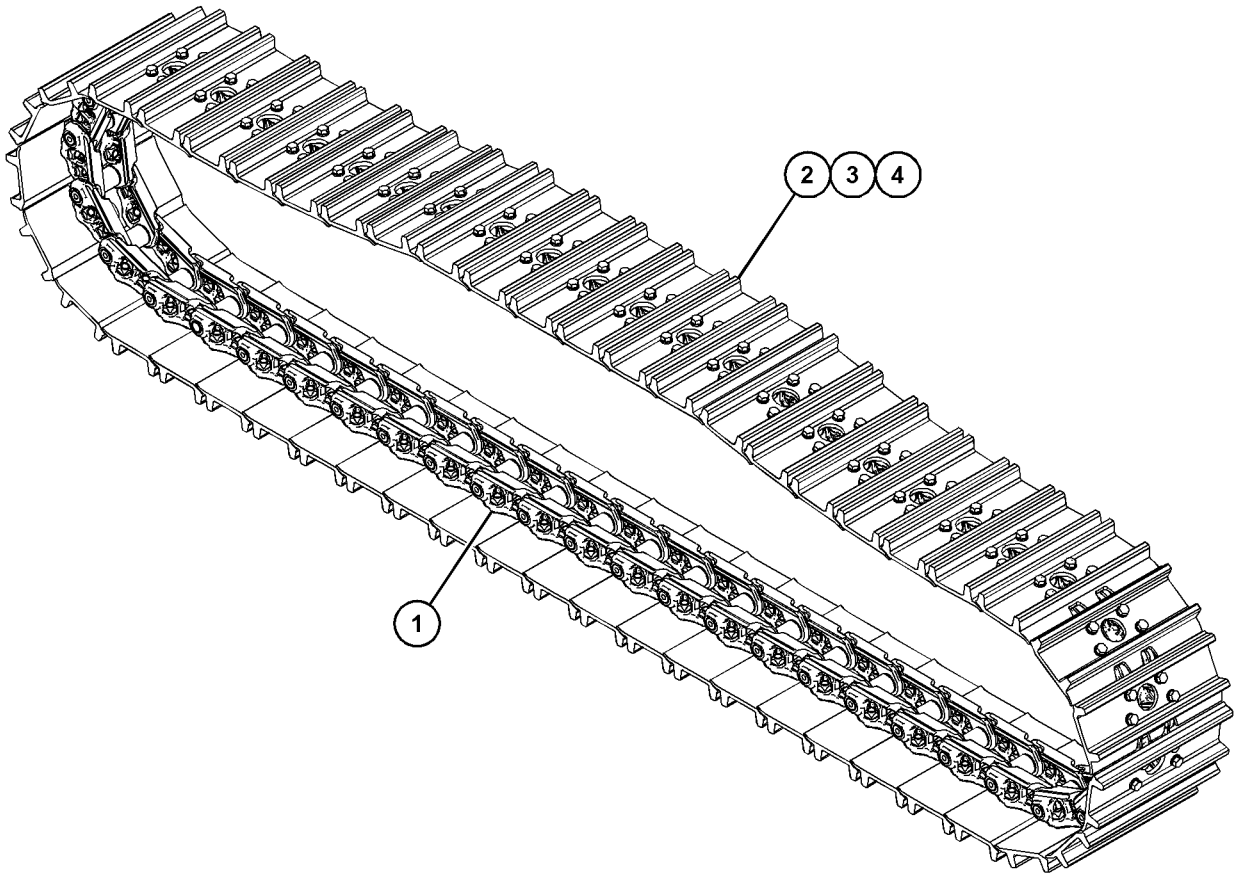

GRAPHIC #1 <END> g06282449

524-3173 TRACK GP–2-REQUIRED

S/N: SP91-UP

700-MM (27.6-IN) TRIPLE GROUSER SHOE. GREASE LUBRICATED TRACK

PART OF 511-9751 TRACK AR

SMCS-4170 **i07416834**

NOTE	REF NO	GRAPHIC REF	PART NUMBER	QTY	PART NAME 1 2 3 4 5 6 (PRODUCT LEVEL)	SEE PAGE
Y	1	1	**524-3181**	1	LINK AS-TRACK (GREASE LUBRICATED TRACK)	390
	2	1	**524-3188**	49	SHOE-TRACK (700-MM TRIPLE GROUSER SHOE)	
M	3	1	**301-2299**	196	BOLT-TRACK (M24X1.5X71-MM)	
M	4	1	**150-4742**	196	NUT-TRACK (M24X1.5-THD)	

M - METRIC PART
Y - SEPARATE ILLUSTRATION

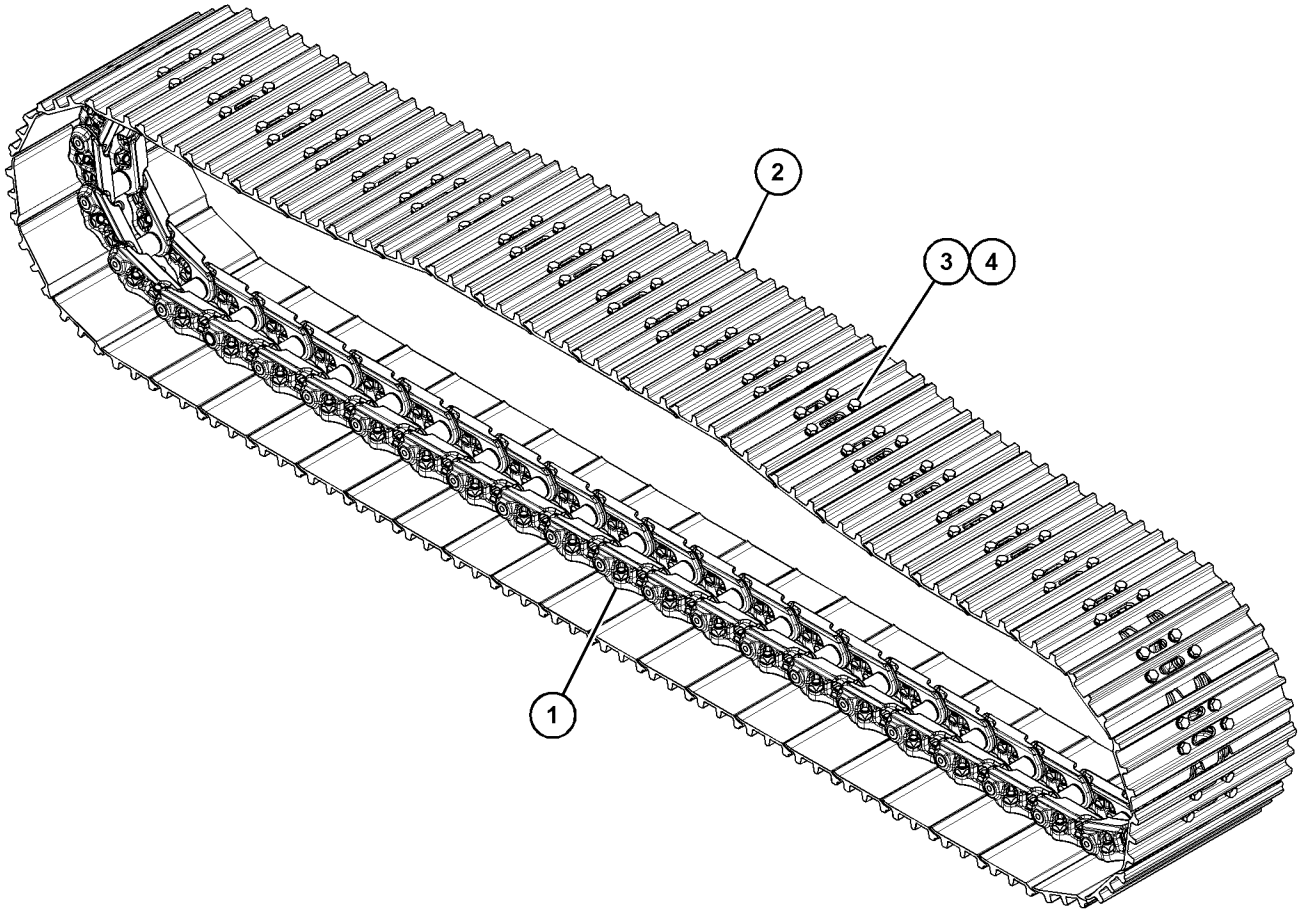

GRAPHIC #1 <END> g06282380

524-3174 TRACK GP–2-REQUIRED

S/N: SP91-UP

800-MM (31.5-IN) TRIPLE GROUSER SHOE. GREASE LUBRICATED TRACK

PART OF 511-9757 TRACK AR

SMCS-4170 **i07416770**

NOTE	REF NO	GRAPHIC REF	PART NUMBER	QTY	PART NAME 1 2 3 4 5 6 (PRODUCT LEVEL)	SEE PAGE
Y	1	1	**524-3181**	1	LINK AS-TRACK (GREASE LUBRICATED TRACK)	390
	2	1	**524-3189**	49	SHOE-TRACK (800-MM TRIPLE GROUSER SHOE)	
M	3	1	**301-2299**	196	BOLT-TRACK (M24X1.5X71-MM)	
M	4	1	**150-4742**	196	NUT-TRACK (M24X1.5-THD)	

M - METRIC PART
Y - SEPARATE ILLUSTRATION

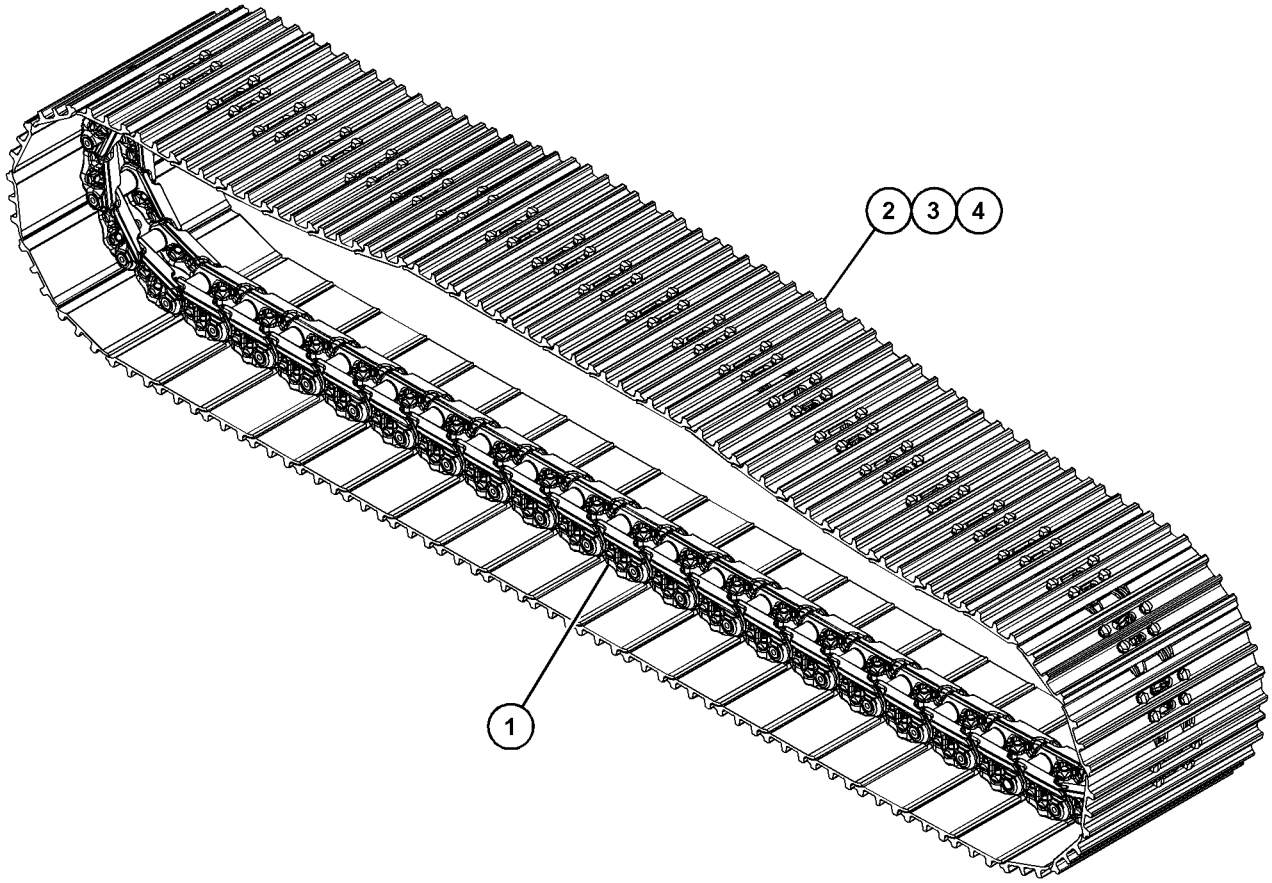

GRAPHIC #1 <END> g06282358

523-7795 UNDERCARRIAGE AR

S/N: SP91-UP

SMCS-4150 **i07530970**

NOTE	PART NUMBER	QTY	PART NAME 1 2 3 4 5 6 (PRODUCT LEVEL)	SEE PAGE
Y	*525-2616*	1	DRIVE & MOUNTING GP-FINAL	304
Y	*498-5695*	1	FRAME AS-UNDERCARRIAGE	381
Y	*496-2895*	1	IDLER GP-FRONT	387
Y	*524-8715*	1	LINES GP-TRAVEL MOTOR	526
Y	*511-9710*	1	ROLLER AR-TRACK & CARRIER	391

Y - SEPARATE ILLUSTRATION

<END>

245-2975 ACCUMULATOR GP-HYDRAULIC–CHARGED

S/N: SP91-UP
FIELD REPLACEMENT ORDER 351-0320–PAGE: 404
PART OF 558-0345 LINES GP-PILOT

SMCS-5077 **i07664552**

NOTE	REF NO	GRAPHIC REF	PART NUMBER	QTY	PART NAME 1 2 3 4 5 6 (PRODUCT LEVEL)	SEE PAGE
	1	1	**232-3317**	1	FILM-IDENTIFICATION (HYDRAULIC ACCUMULATOR)	

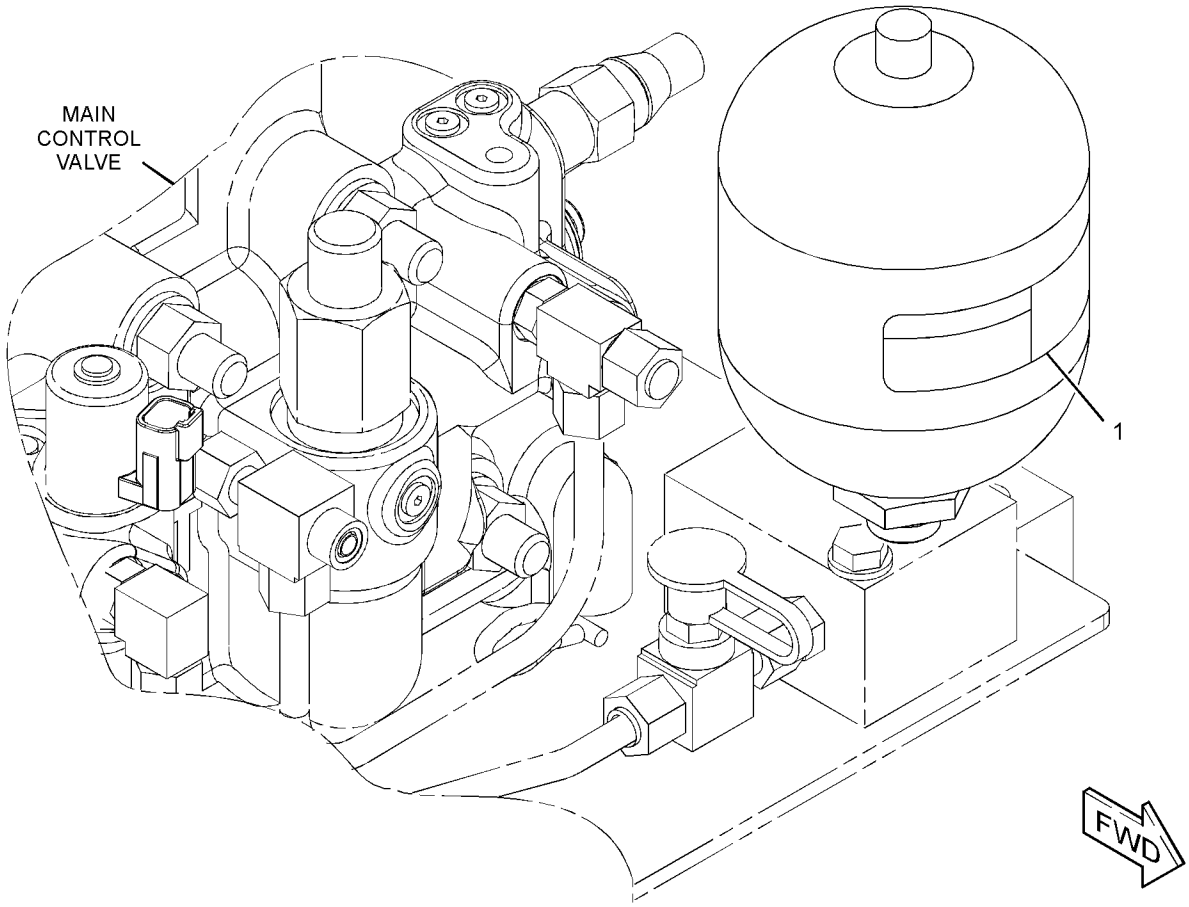

GRAPHIC #1 <END> g01407582

351-0320 ACCUMULATOR GP-HYDRAULIC—UNCHARGED

S/N: SP91-UP

SMCS-5077 **i06876201**

NOTE	REF NO	GRAPHIC REF	PART NUMBER	QTY	PART NAME 1 2 3 4 5 6 (PRODUCT LEVEL)	SEE PAGE
	1	1	**312-1139**	1	CAP	
M	2	1	**222-3785**	1	SCREW-VENT (M8X1.5-THD)	
	3	1	**222-5765**	1	SEAL-RING	
	4	1	**232-3317**	2	FILM-IDENTIFICATION (HYDRAULIC ACCUMULATOR)	

M - METRIC PART

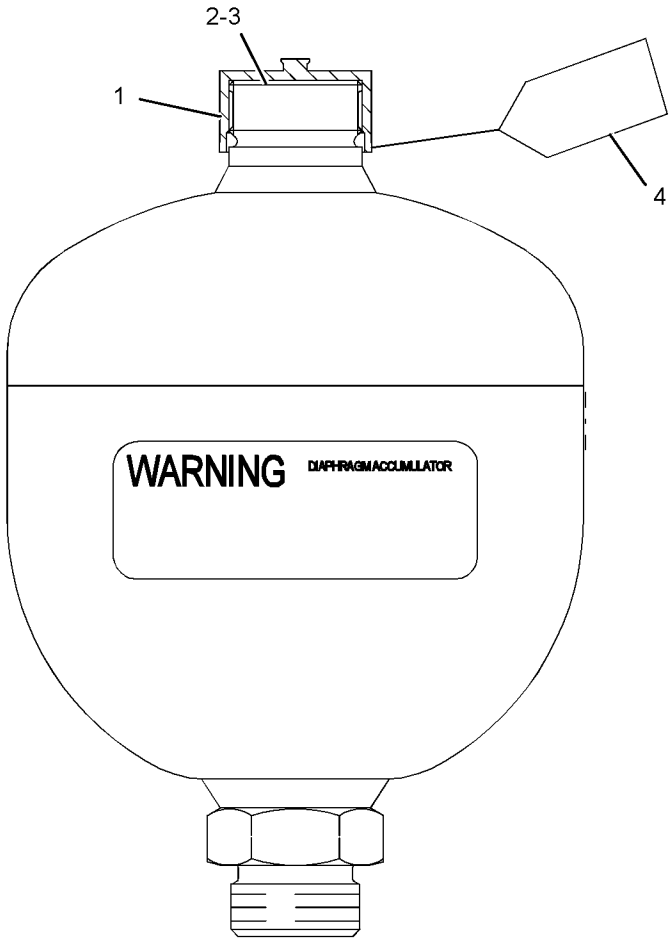

GRAPHIC #1 <END> g02078353

352-6860 ACCUMULATOR GP-HYDRAULIC—CHARGED

S/N: SP91-UP

PART OF 558-0345 LINES GP-PILOT

SMCS-5077 **i07717029**

NOTE	REF NO	GRAPHIC REF	PART NUMBER	QTY	PART NAME 1 2 3 4 5 6 (PRODUCT LEVEL)	SEE PAGE
	1	1	**3K-0360**	1	SEAL-O-RING	

352-6860 **ACCUMULATOR GP-HYDRAULIC (**contd.**)** **i07717029**

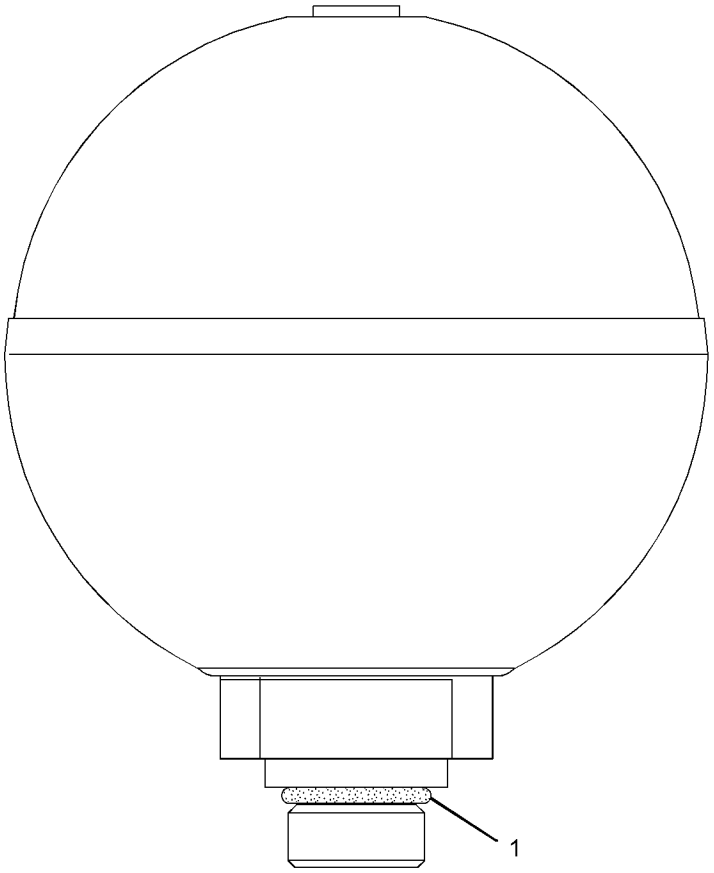

GRAPHIC #1 <END> g06392373

540-7019 BREATHER GP

S/N: SP91-UP

PART OF 503-9758 TANK & FILTER GP-HYDRAULIC

SMCS-5056 **i07358586**

NOTE	REF NO	GRAPHIC REF	PART NUMBER	QTY	PART NAME 1 2 3 4 5 6 (PRODUCT LEVEL)	SEE PAGE
	1	1	**492-3016**	1	BODY AS	
	2	1	**540-7039**	1	COVER AS-VALVE	
	3	1	**499-1657**	1	FILM-IDENTIFICATION (HYDRAULIC OIL FILL)	
	4	1	**522-1451**	1	ELEMENT AS (BREATHER) (HYDRAULIC TANK)	
	5	1	**523-7061**	1	WASHER	
	6	1	**523-7062**	1	BOLT-SPECIAL	
	7	1	**540-7040**	1	VALVE AS-PRESSURE	

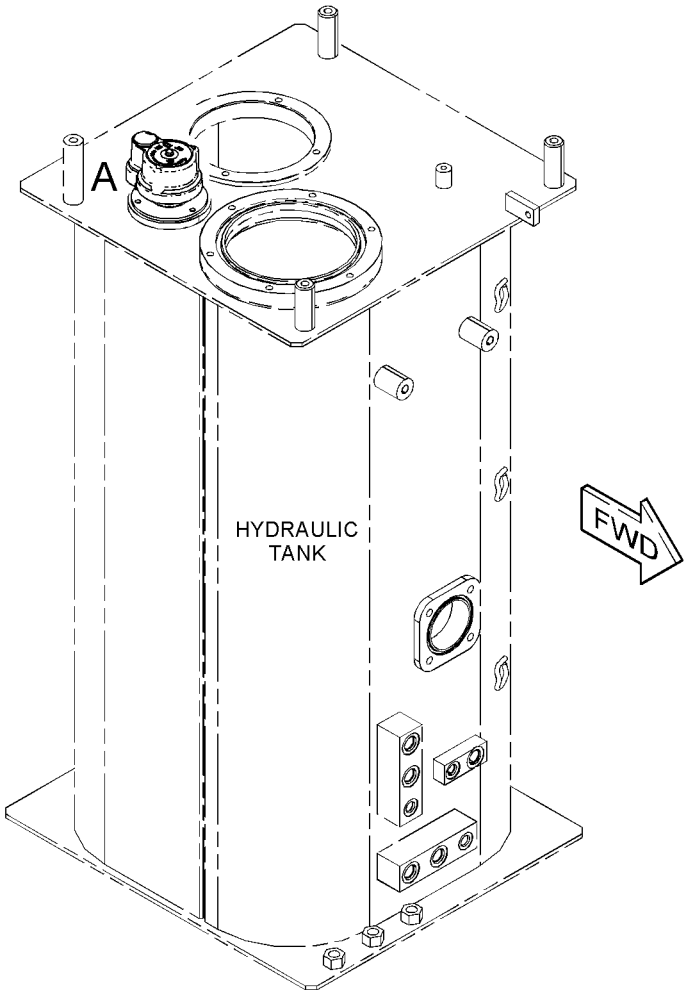

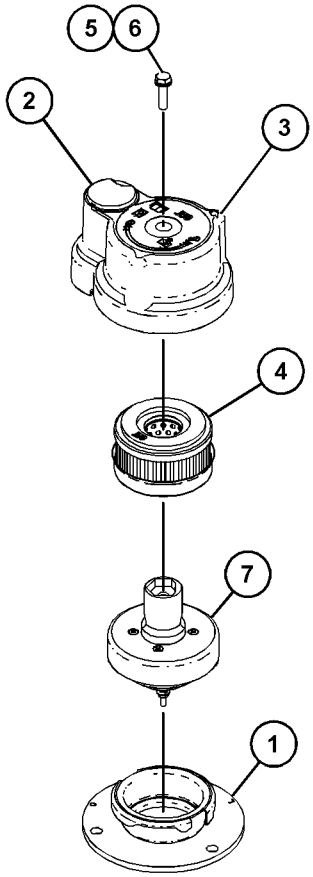

VIEW OF AREA A

GRAPHIC #1 <END> g06233052

528-6835 CONTROL AR-AUXILIARY—JOYSTICK, SLIDERS

S/N: SP91-UP

PART OF 550-7573, 550-7581 OPTION AR-HYDRAULIC

SMCS-5051 **i07420718**

NOTE	PART NUMBER	QTY	PART NAME 1 2 3 4 5 6 (PRODUCT LEVEL)	SEE PAGE
Y	*538-2111*	1	FILM GP	752
Y	*529-7141*	1	CONTROL & MTG GP-JOYSTICK	668
Y	*493-0982*	1	FASTENER GP-WIRING HARNESS (JOYSTICK)	175
Y - SEPARATE ILLUSTRATION				

<END>

538-3026 CONTROL AR-AUXILIARY—2-WAY FLOW, 1-PUMP, ELEC CONT

S/N: SP91-UP

PART OF 550-7581 OPTION AR-HYDRAULIC

SMCS-5051 **i07526604**

NOTE	PART NUMBER	QTY	PART NAME 1 2 3 4 5 6 (PRODUCT LEVEL)	SEE PAGE
Y	*520-9420*	1	FILM GP (INTERNATIONAL)	744
Y	*538-8825*	1	LINES GP-FRONT (2-WAY FLOW, 1-PUMP, ELEC CONT)	494
Y	*538-5287*	1	WIRING GP-CHASSIS (2-WAY FLOW, 1-PUMP, ELEC CONT)	275
Y	*490-2714*	1	WIRING GP-VALVE	300
Y - SEPARATE ILLUSTRATION				

<END>

559-3854 CONTROL AR-AUXILIARY—1-PUMP, 2-PUMP, 1-WAY, 2-WAY

S/N: SP91-UP

SMCS-5051 **i07518981**

NOTE	PART NUMBER	QTY	PART NAME 1 2 3 4 5 6 (PRODUCT LEVEL)	SEE PAGE
Y	*533-1781*	1	FILM GP (HAMMER, OPERATOR CONTROLS)	747
Y	*503-9790*	1	LINES GP-FRONT (TOOL)	489
Y	*555-9027*	1	LINES GP-FRONT (TOOL CONTROL SYSTEM)	499
Y	*550-3493*	1	LINES GP-OIL COOLER (WORK TOOL, RETURN) (WORK TOOL, RETURN)	93
Y	*557-7853*	1	VALVE GP-CONTROL (AUX, TOOL CONTROL SYSTEM) (TOOL CONTROL)	576
Y	*504-3561*	1	WIRING GP-CHASSIS (TOOL)	272
Y	*551-6783*	1	WIRING GP-VALVE (TOOL CONTROL SYSTEM)	303
	533-1276	1	FILM-IDENTIFICATION (RETROFIT)	
Y - SEPARATE ILLUSTRATION				

<END>

525-2618 CONTROL AR-BOOM–PRESSURE CONTROL

S/N: SP91-UP

SMCS-5063, 6501

i07527159

NOTE	PART NUMBER	QTY	PART NAME 1 2 3 4 5 6 (PRODUCT LEVEL)	SEE PAGE
Y	*549-0911*	1	FILM GP (PRESSURE CONTROL)	756
Y	*549-8055*	1	WIRING GP-CHASSIS (PRESSURE CONTROL)	276

Y - SEPARATE ILLUSTRATION

<END>

502-4797 COUPLING GP-PUMP

S/N: SP91-UP

PART OF 502-4246 INSTALLATION AR-ENGINE

SMCS-5062 **i07756629**

NOTE	REF NO	GRAPHIC REF	PART NUMBER	QTY	PART NAME 1 2 3 4 5 6 (PRODUCT LEVEL)	SEE PAGE
M	1	1	**8T-4136**	1	BOLT (M10X1.5X25-MM)	
M	2	1	**8T-4182**	12	BOLT (M10X1.5X45-MM)	
M	3	1	**8T-4189**	2	BOLT (M8X1.25X20-MM)	
	4	1	**4H-6112**	1	BREATHER (FLYWHEEL HOUSING)	
	5	1	**6S-8620**	1	CLAMP-HOSE	
	6	1	**7X-7729**	12	WASHER (11X25X3-MM THK)	
	7	1	**8T-4121**	3	WASHER-HARD (11X21X2.5-MM THK)	
M	8	1	**8T-4137**	2	BOLT (M10X1.5X20-MM)	
	9	1	**8T-4224**	2	WASHER-HARD (8.8X16X2-MM THK)	
	10	1	**9Y-9236**	1	GAUGE-SIGHT (FLYWHEEL HOUSING)	
	11	1	**204-2281**	1	STRAP-CABLE	
	12	1	**238-5084**	1	SEAL-O-RING	
	13	1	*332-8598*	1	ADAPTER AS	
		1	**034-3679**	1	ADAPTER	
		1	**238-5080**	1	SEAL-O-RING	
	14	1	**484-1451**	1	CLIP	
	15	1	**484-1452**	1	CLIP	
	16	1	**513-3732**	1	COUPLING GP-FLEXIBLE	
	17	1	**513-9457**	1	COVER	
	18	1	**514-4956**	1	PLATE AS	
	19	1	**514-4960**	1	PLATE AS	
	20	1	**514-4962**	1	HOSE	
	21	1	**528-7979**	1	PLUG	
	22	1	**0S-0509**	8	BOLT (3/8-16X0.75-IN)	
	24	1	**6V-5043**	1	SEAL-O-RING	

M - METRIC PART

502-4797 **COUPLING GP-PUMP (**contd.**)** **i07756629**

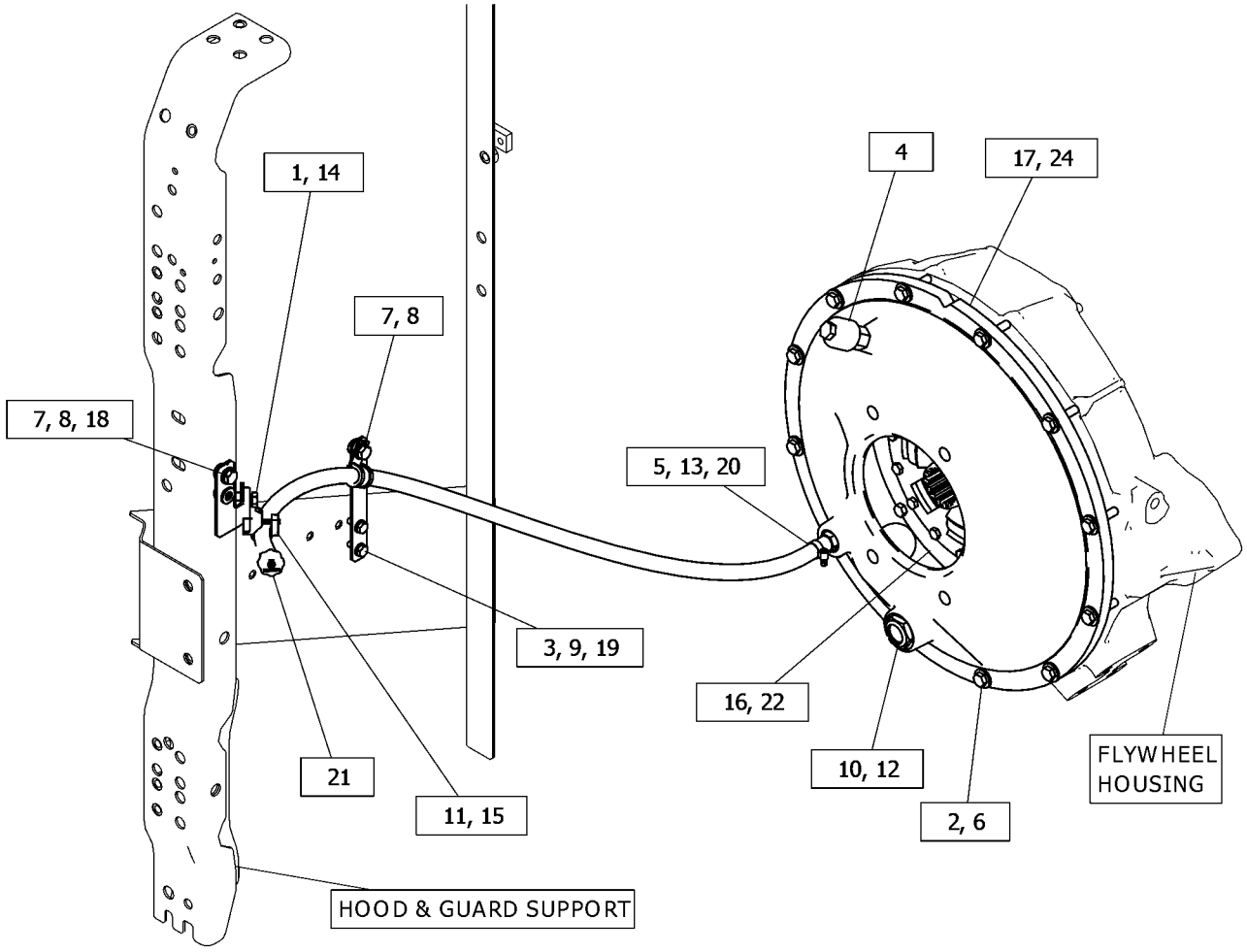

GRAPHIC #1 <END> g06349430

487-5869 COVER GP-VALVE END–LH

S/N: SP91-UP
MAIN CONTROL
PART OF 504-1792, 504-1793 VALVE & MTG GP-MAIN CONTROL

SMCS-5051, 5137 **i07356662**

NOTE	REF NO	GRAPHIC REF	PART NUMBER	QTY	PART NAME 1 2 3 4 5 6 (PRODUCT LEVEL)	SEE PAGE
	1	1	**3J-7354**	1	SEAL-O-RING	
	2	1	*162-0177*	5	PLUG AS	
					(EACH INCLUDES)	
		1	**3J-1907**	1	SEAL-O-RING	
		1	**9S-8004**	1	PLUG (9/16-18-THD)	
	3	1	*225-4818*	1	PLUG AS	
		1	**4J-7533**	1	SEAL-O-RING	
		1	**225-4804**	1	PLUG	
	4	1	*225-4820*	1	PLUG AS	
		1	**3J-7354**	1	SEAL-O-RING	
		1	**225-4821**	1	PLUG	
	5	1	**520-3179**	1	PLUG-ORIFICE	

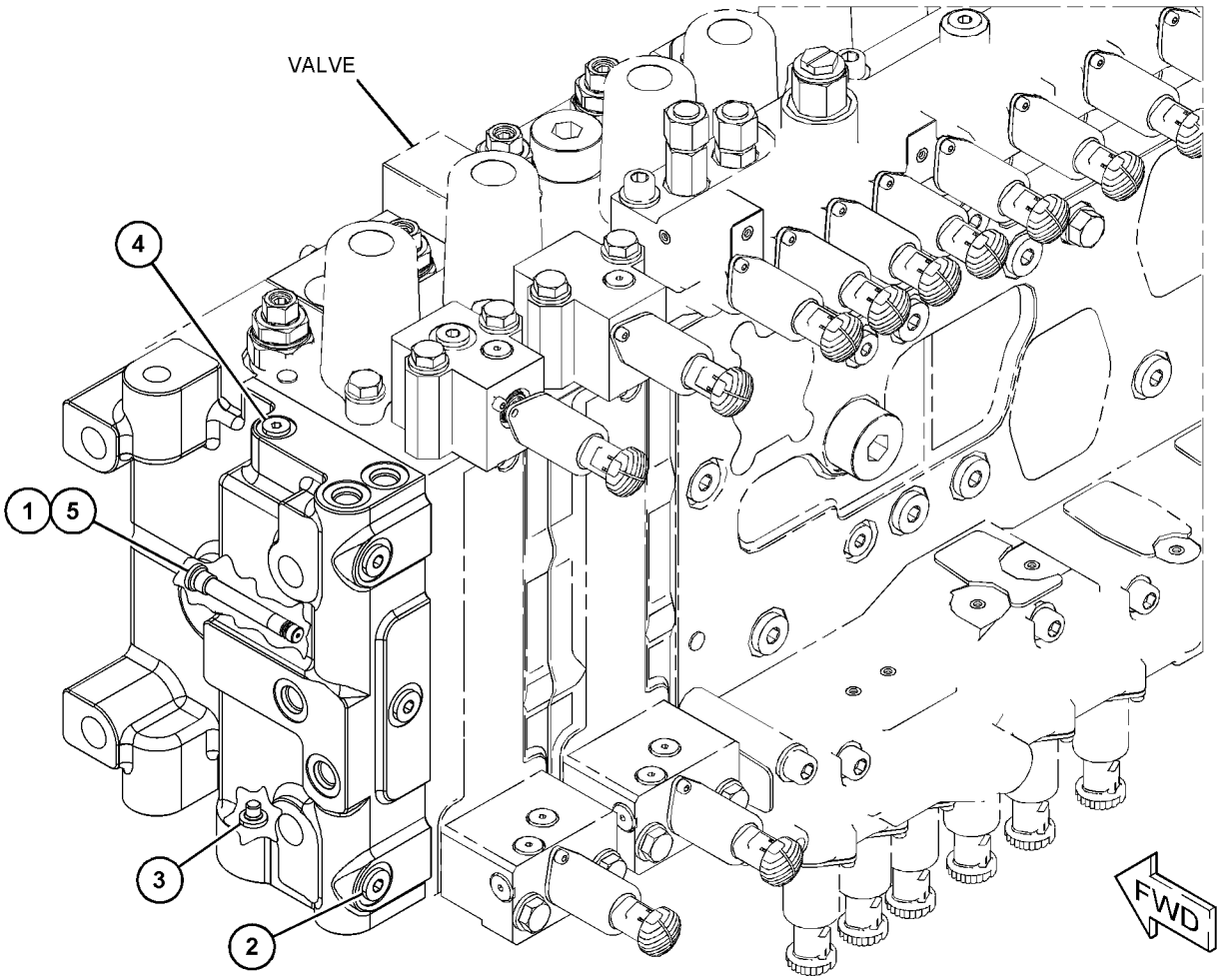

GRAPHIC #1 <END> g06229175

488-7773 COVER GP-VALVE END–RH

S/N: SP91-UP
MAIN CONTROL
PART OF 504-1792, 504-1793 VALVE & MTG GP-MAIN CONTROL

SMCS-5051, 5137 **i07356478**

NOTE	REF NO	GRAPHIC REF	PART NUMBER	QTY	PART NAME 1 2 3 4 5 6 (PRODUCT LEVEL)	SEE PAGE
	1	1	**3J-7354**	1	SEAL-O-RING	
	2	1	*162-0177*	2	PLUG AS	
					(EACH INCLUDES)	
		1	**3J-1907**	1	SEAL-O-RING	
		1	**9S-8004**	1	PLUG (9/16-18-THD)	
	3	1	**520-3179**	1	PLUG-ORIFICE	

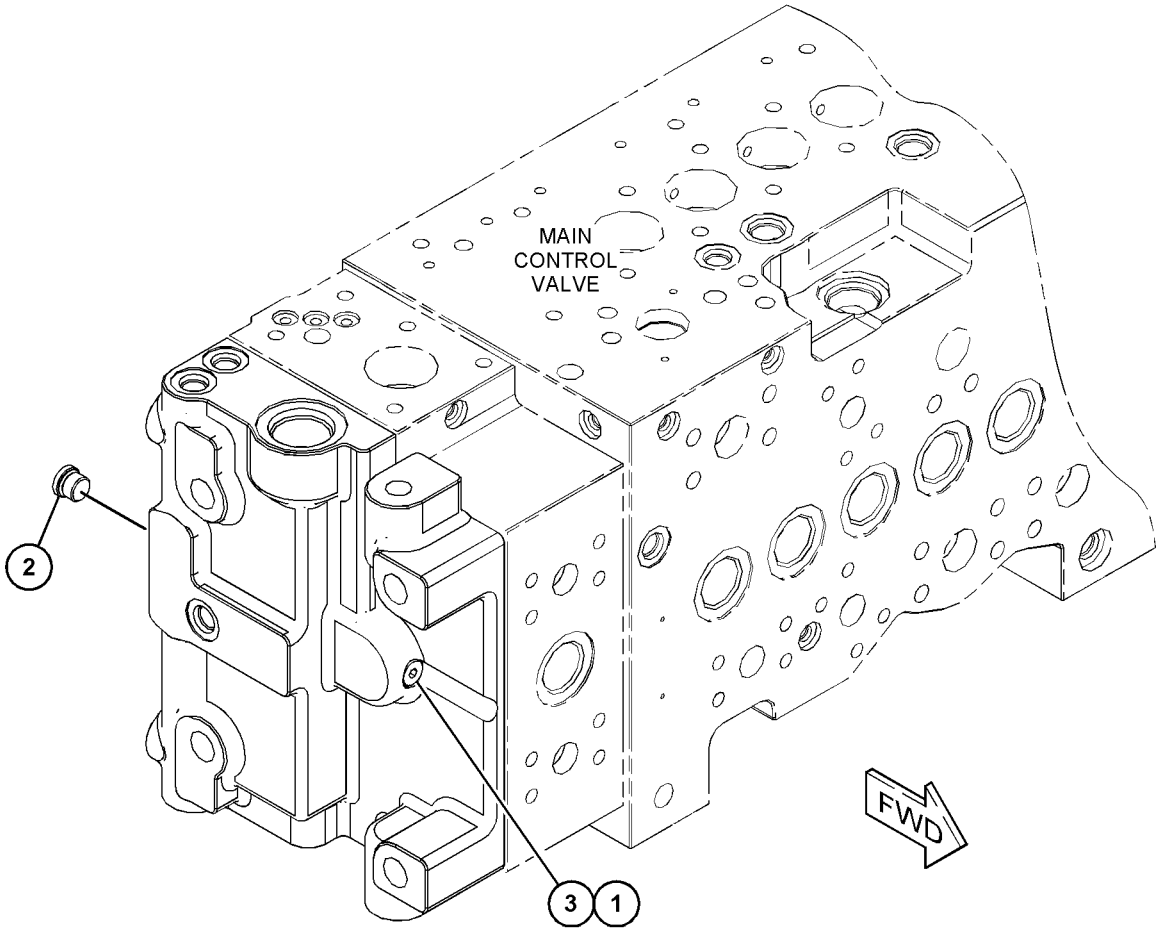

GRAPHIC #1 <END> g06230836

564-4856 COVER GP-VALVE END—LH

S/N: SP91-UP
MAIN CONTROL
FIELD REPLACEMENT FOR 487-5869—PAGE: 412
PART OF 504-1793 VALVE & MTG GP-MAIN CONTROL

SMCS-5051, 5137 **i07668631**

NOTE	REF NO	GRAPHIC REF	PART NUMBER	QTY	PART NAME 1 2 3 4 5 6 (PRODUCT LEVEL)	SEE PAGE
	1	1	**3J-7354**	1	SEAL-O-RING	
	2	1	*162-0177*	5	PLUG AS	
					(EACH INCLUDES)	
		1	**3J-1907**	1	SEAL-O-RING	
		1	**9S-8004**	1	PLUG (9/16-18-THD)	
	3	1	*225-4818*	1	PLUG AS	
		1	**4J-7533**	1	SEAL-O-RING	
		1	**225-4804**	1	PLUG	
	4	1	*225-4820*	1	PLUG AS	
		1	**3J-7354**	1	SEAL-O-RING	
		1	**225-4821**	1	PLUG	
	5	1	**520-3179**	1	PLUG-ORIFICE	

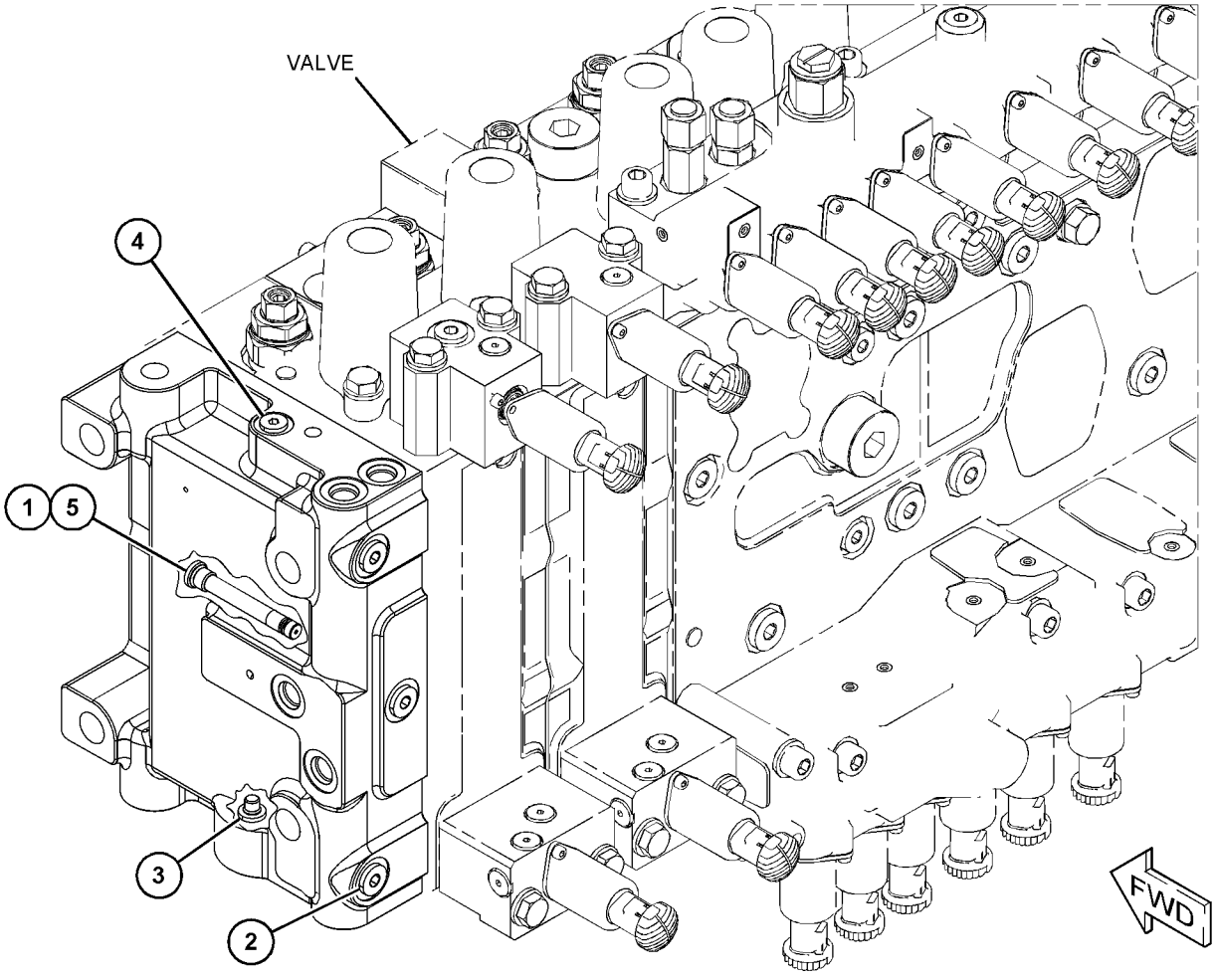

GRAPHIC #1 <END> g06329966

564-4858 COVER GP-VALVE END–RH

S/N: SP91-UP
MAIN CONTROL
FIELD REPLACEMENT FOR 488-7773–PAGE: 413
PART OF 504-1793 VALVE & MTG GP-MAIN CONTROL

SMCS-5051, 5137 **i07668644**

NOTE	REF NO	GRAPHIC REF	PART NUMBER	QTY	PART NAME 1 2 3 4 5 6 (PRODUCT LEVEL)	SEE PAGE
	1	1	**3J-7354**	1	SEAL-O-RING	
	2	1	*162-0177*	2	PLUG AS	
					(EACH INCLUDES)	
		1	**3J-1907**	1	SEAL-O-RING	
		1	**9S-8004**	1	PLUG (9/16-18-THD)	
	3	1	**520-3179**	1	PLUG-ORIFICE	

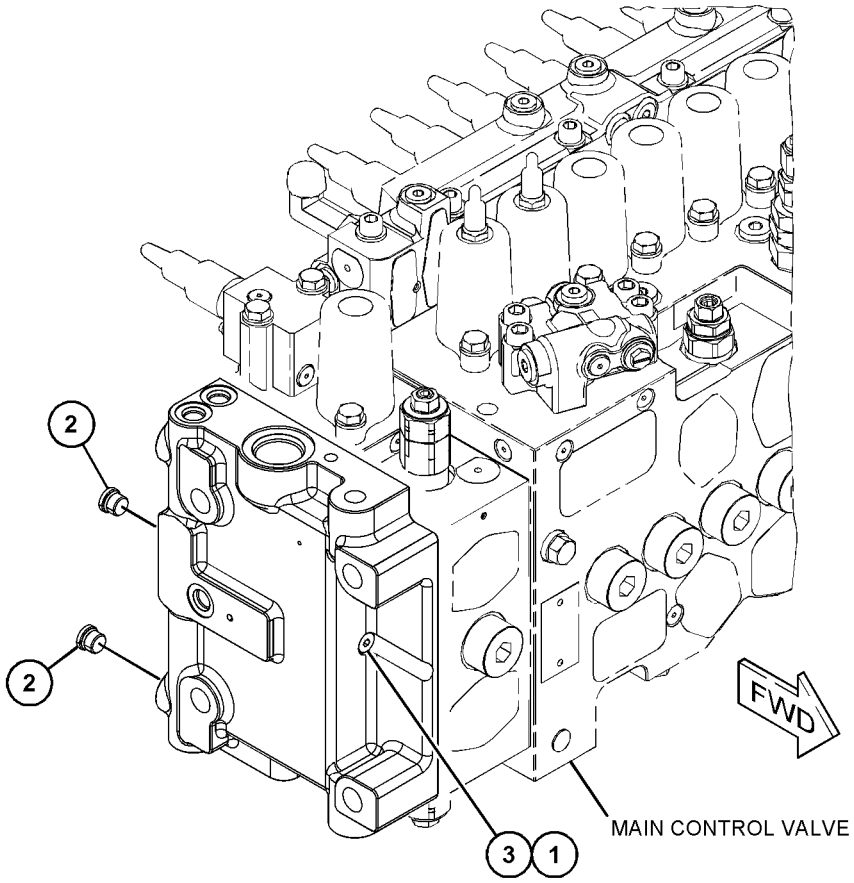

GRAPHIC #1 <END> g06329562

512-0984 CYLINDER & LINES GP-BOOM—LH

S/N: SP91-UP

PART OF 512-0983 CYLINDER AR-BOOM

SMCS-5456, 7562 **i07528898**

NOTE	PART NUMBER	QTY	PART NAME 1 2 3 4 5 6 (PRODUCT LEVEL)	SEE PAGE
Y	*512-2356*	1	CYLINDER & SEAL GP-BOOM	417
Y	*358-7451*	1	LINES GP-BOOM CYLINDER (LH)	465

Y - SEPARATE ILLUSTRATION

<END>

512-0985 CYLINDER & LINES GP-BOOM—RH

S/N: SP91-UP

PART OF 512-0983 CYLINDER AR-BOOM

SMCS-5456, 7562 **i07529091**

NOTE	PART NUMBER	QTY	PART NAME 1 2 3 4 5 6 (PRODUCT LEVEL)	SEE PAGE
Y	*512-2356*	1	CYLINDER & SEAL GP-BOOM	417
Y	*358-7452*	1	LINES GP-BOOM CYLINDER (RH)	466

Y - SEPARATE ILLUSTRATION

<END>

512-0999 CYLINDER & LINES GP-BUCKET

S/N: SP91-UP

SMCS-5457 **i07528731**

NOTE	PART NUMBER	QTY	PART NAME 1 2 3 4 5 6 (PRODUCT LEVEL)	SEE PAGE
Y	*512-2364*	1	CYLINDER & SEAL GP-BUCKET	418
Y	*239-1627*	1	LINES GP-BUCKET CYLINDER	473

Y - SEPARATE ILLUSTRATION

<END>

522-0747 CYLINDER & LINES GP-BUCKET

S/N: SP91-UP

SMCS-5457 **i07527297**

NOTE	PART NUMBER	QTY	PART NAME 1 2 3 4 5 6 (PRODUCT LEVEL)	SEE PAGE
Y	*522-0835*	1	CYLINDER & SEAL GP-BUCKET	419
Y	*115-8694*	1	LINES GP-BUCKET CYLINDER	472

Y - SEPARATE ILLUSTRATION

<END>

512-0995 CYLINDER & LINES GP-STICK

S/N: SP91-UP

SMCS-5458 **i07528758**

NOTE	PART NUMBER	QTY	PART NAME 1 2 3 4 5 6 (PRODUCT LEVEL)	SEE PAGE
Y	*512-2360*	1	CYLINDER & SEAL GP-STICK	420
Y	*358-7466*	1	LINES GP-STICK CYLINDER	525

Y - SEPARATE ILLUSTRATION

<END>

512-2356 CYLINDER & SEAL GP-BOOM

S/N: SP91-UP

PART OF 512-0984, 512-0985 CYLINDER & LINES GP-BOOM

SMCS-5456 **i07528953**

NOTE	REF NO	GRAPHIC REF	PART NUMBER	QTY	PART NAME 1 2 3 4 5 6 (PRODUCT LEVEL)	SEE PAGE
	1	1	**3B-8489**	1	ADAPTER	
	2	1	**166-1496**	2	SEAL-LIP TYPE	
	3	1	**166-1497**	2	SEAL-LIP TYPE	
Y	4	1	**512-2357**	1	CYLINDER GP-BOOM	422

Y - SEPARATE ILLUSTRATION

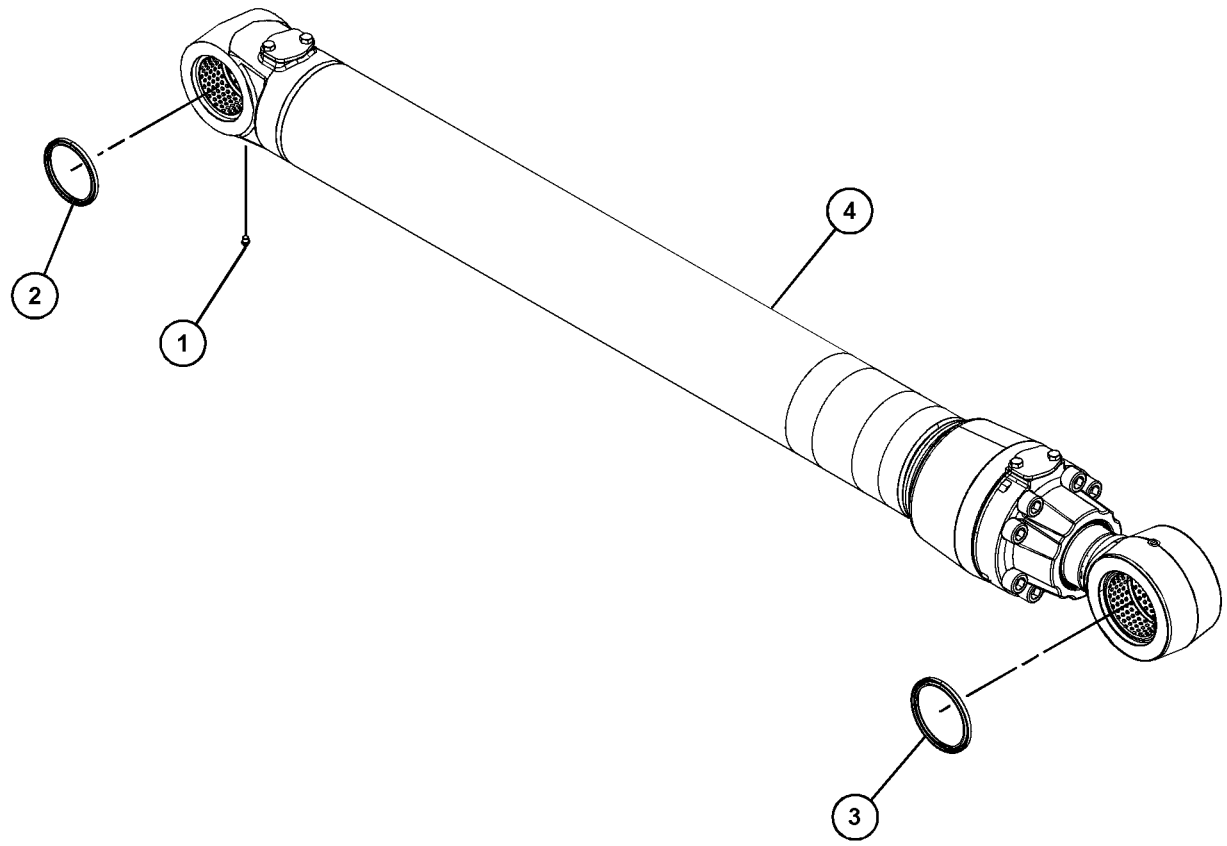

GRAPHIC #1 <END> g06281965

512-2364 CYLINDER & SEAL GP-BUCKET

S/N: SP91-UP

PART OF 512-0999 CYLINDER & LINES GP-BUCKET

SMCS-5457 **i07528734**

NOTE	REF NO	GRAPHIC REF	PART NUMBER	QTY	PART NAME 1 2 3 4 5 6 (PRODUCT LEVEL)	SEE PAGE
	1	1	**3B-8489**	2	ADAPTER	
	2	1	**166-1494**	2	SEAL-LIP TYPE	
Y	3	1	**512-2365**	1	CYLINDER GP-BUCKET	424
	4	1	**166-1496**	2	SEAL-LIP TYPE	

Y - SEPARATE ILLUSTRATION

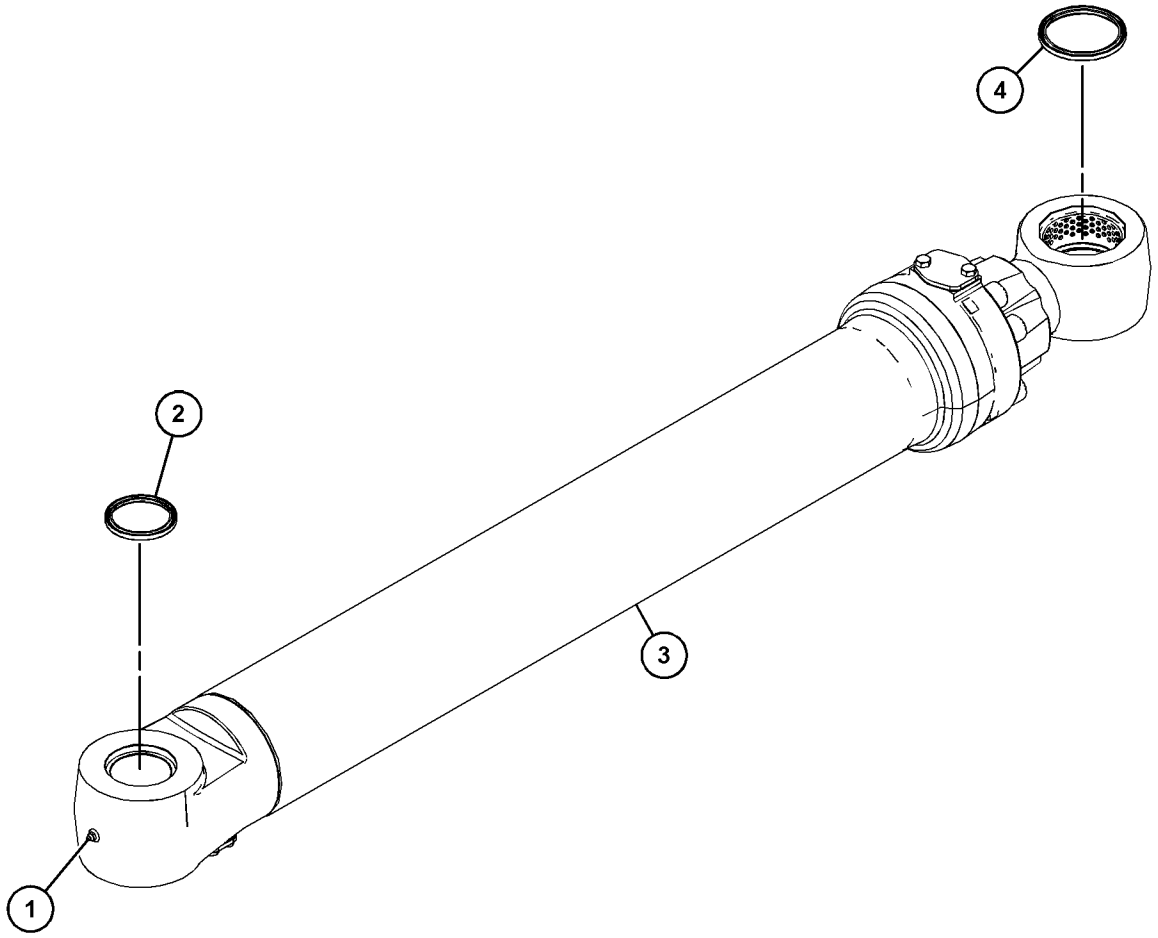

GRAPHIC #1 <END> g06282269

522-0835 CYLINDER & SEAL GP-BUCKET

S/N: SP91-UP

PART OF 522-0747 CYLINDER & LINES GP-BUCKET

SMCS-5457 **i07527299**

NOTE	REF NO	GRAPHIC REF	PART NUMBER	QTY	PART NAME 1 2 3 4 5 6 (PRODUCT LEVEL)	SEE PAGE
	1	1	**3B-8489**	2	ADAPTER	
	2	1	**166-1495**	2	SEAL-LIP TYPE	
	3	1	**166-1496**	2	SEAL-LIP TYPE	
Y	4	1	**522-3895**	1	CYLINDER GP-BUCKET	426

Y - SEPARATE ILLUSTRATION

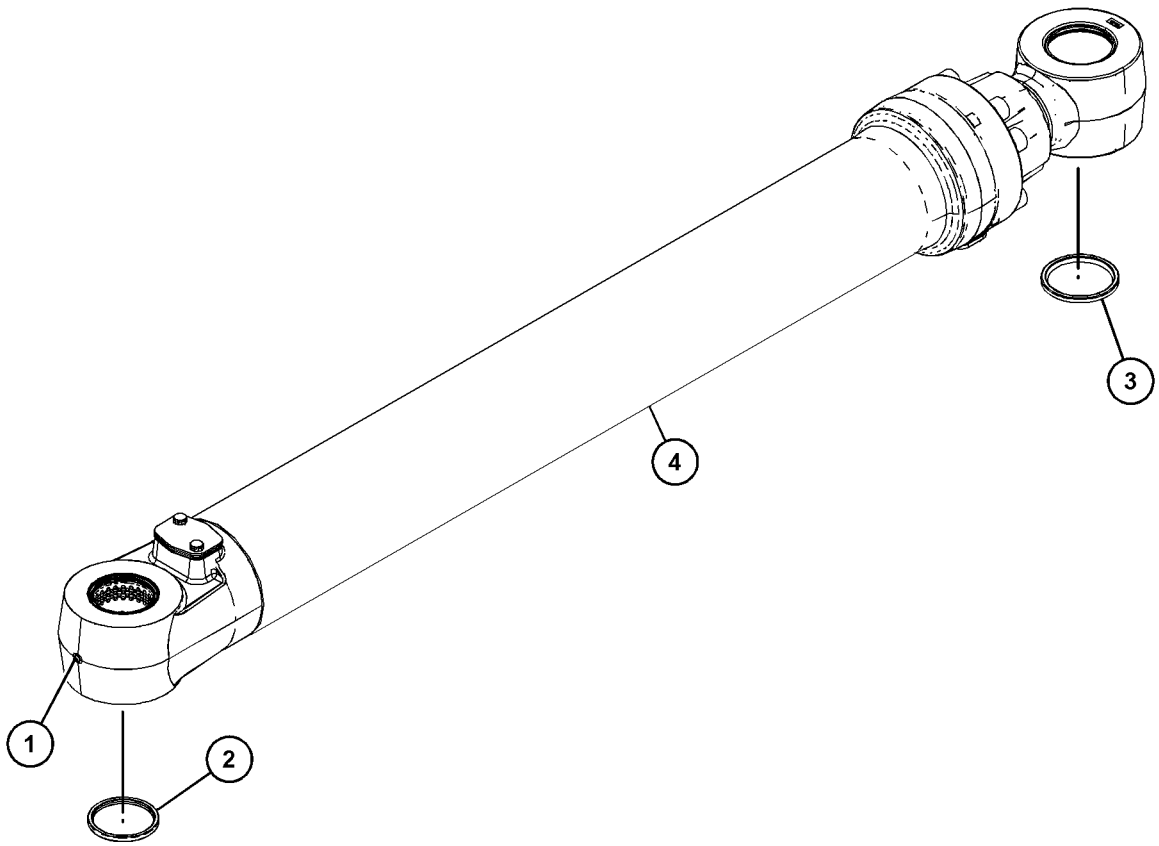

GRAPHIC #1 <END> g06281148

512-2360 CYLINDER & SEAL GP-STICK

S/N: SP91-UP

PART OF 512-0995 CYLINDER & LINES GP-STICK

SMCS-5458 **i07528773**

NOTE	REF NO	GRAPHIC REF	PART NUMBER	QTY	PART NAME 1 2 3 4 5 6 (PRODUCT LEVEL)	SEE PAGE
	1	1	**3B-8489**	1	ADAPTER	
	2	1	**166-1495**	4	SEAL-LIP TYPE	
Y	3	1	*512-2361*	1	CYLINDER GP-STICK	429

Y - SEPARATE ILLUSTRATION

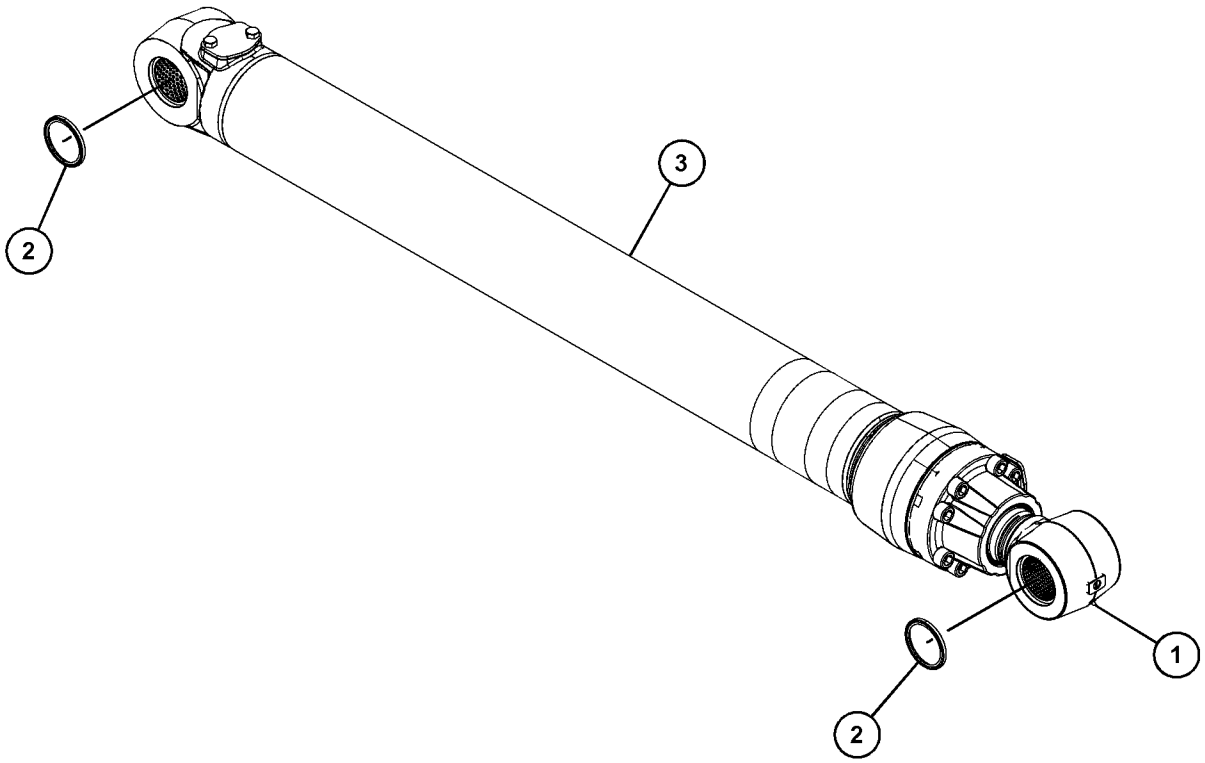

GRAPHIC #1 <END> g06281968

512-0983 CYLINDER AR-BOOM

S/N: SP91-UP

SMCS-5456 **i07528807**

NOTE	PART NUMBER	QTY	PART NAME 1 2 3 4 5 6 (PRODUCT LEVEL)	SEE PAGE
Y	*512-0984*	1	CYLINDER & LINES GP-BOOM (LH)	416
Y	*512-0985*	1	CYLINDER & LINES GP-BOOM (RH)	416

Y - SEPARATE ILLUSTRATION

<END>

512-2357 CYLINDER GP-BOOM

S/N: SP91-UP

150-MM (5.9-IN) BORE X 1440-MM (56.7-IN) STROKE

PART OF 512-2356 CYLINDER & SEAL GP-BOOM

SMCS-5456 **i07528959**

NOTE	REF NO	GRAPHIC REF	PART NUMBER	QTY	PART NAME 1 2 3 4 5 6 (PRODUCT LEVEL)	SEE PAGE
J	1	1	**7Y-4669**	1	RING-BACKUP	
	2	1	**7Y-4672**	1	RING-RETAINING	
J	3	1	**7Y-4673**	1	RING-BACKUP	
M	4	1	**7Y-5215**	8	BOLT-SOCKET HEAD (M24X3X90-MM)	
J	5	1	**095-1633**	1	SEAL-O-RING	
	6	1	**114-0760**	1	BUSHING	
J	7	1	**165-9290**	1	SEAL-LIP TYPE	
J	8	1	**188-4217**	2	RING	
J	9	1	**188-4218**	1	RING	
J	10	1	**242-6833**	1	RING-SEAL	
J	11	1	**324-6438**	1	SEAL-BUFFER	
J	12	1	**324-6439**	1	SEAL-U-CUP	
	13	1	**358-8523**	1	PISTON	
	14	1	**359-7191**	1	STOP	
J	15	1	**553-6505**	1	SEAL AS	
	16	1	**518-6237**	1	HEAD	
	17	1	**518-6324**	1	ROD AS	
	17A	1	**504-7629**	1	BEARING-SLEEVE	
	18	1	**518-6326**	1	CYLINDER AS	
	18A	1	**504-7634**	1	BEARING-SLEEVE	
M	19	1	**7Y-4695**	1	LOCKNUT (M80X2-THD)	
					AVAILABLE REPAIR KIT(S):	
J			**555-1814**	1	KIT-SEAL (BOOM CYLINDER)	

J - KIT MARKED J SERVICES PART(S) MARKED J
M - METRIC PART

512-2357 **CYLINDER GP-BOOM (**contd.**)** **i07528959**

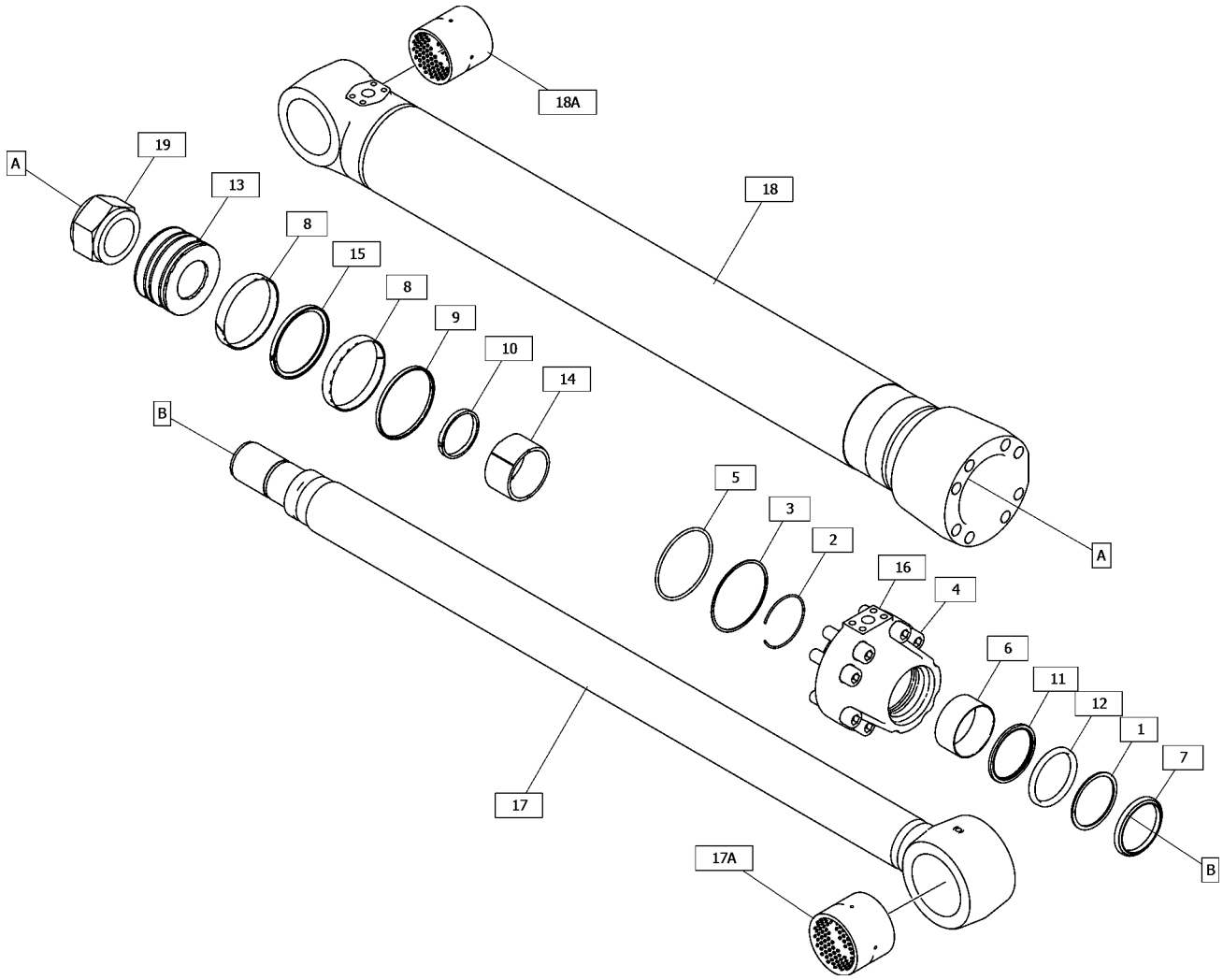

GRAPHIC #1 <END> g06289056

512-2365 CYLINDER GP-BUCKET

S/N: SP91-UP

150-MM (5.9-IN) BORE X 1151-MM (45.3-IN) STROKE

PART OF 512-2364 CYLINDER & SEAL GP-BUCKET

SMCS-5457 **i07528736**

NOTE	REF NO	GRAPHIC REF	PART NUMBER	QTY	PART NAME 1 2 3 4 5 6 (PRODUCT LEVEL)	SEE PAGE
J	1	1	**7Y-4669**	1	RING-BACKUP	
	2	1	**7Y-4672**	1	RING-RETAINING	
J	3	1	**7Y-4673**	1	RING-BACKUP	
M	4	1	**7Y-5215**	8	BOLT-SOCKET HEAD (M24X3X90-MM)	
J	5	1	**095-1633**	1	SEAL-O-RING	
J	6	1	**165-9290**	1	SEAL-LIP TYPE	
J	7	1	**188-4217**	2	RING	
J	8	1	**188-4218**	1	RING	
J	9	1	**324-6438**	1	SEAL-BUFFER	
J	10	1	**324-6439**	1	SEAL-U-CUP	
	11	1	**358-8523**	1	PISTON	
	12	1	**358-8524**	1	HEAD	
J	13	1	**495-8212**	1	SEAL AS	
	14	1	**521-0631**	1	CYLINDER AS	
	15	1	**521-0634**	1	ROD AS	
	16	1	**114-0760**	1	BUSHING	
M	17	1	**7Y-4695**	1	LOCKNUT (M80X2-THD)	
					AVAILABLE REPAIR KIT(S):	
J			**376-4331**	1	KIT-SEAL (BUCKET CYLINDER)	

J - KIT MARKED J SERVICES PART(S) MARKED J
M - METRIC PART

512-2365 **CYLINDER GP-BUCKET (**contd.**)** **i07528736**

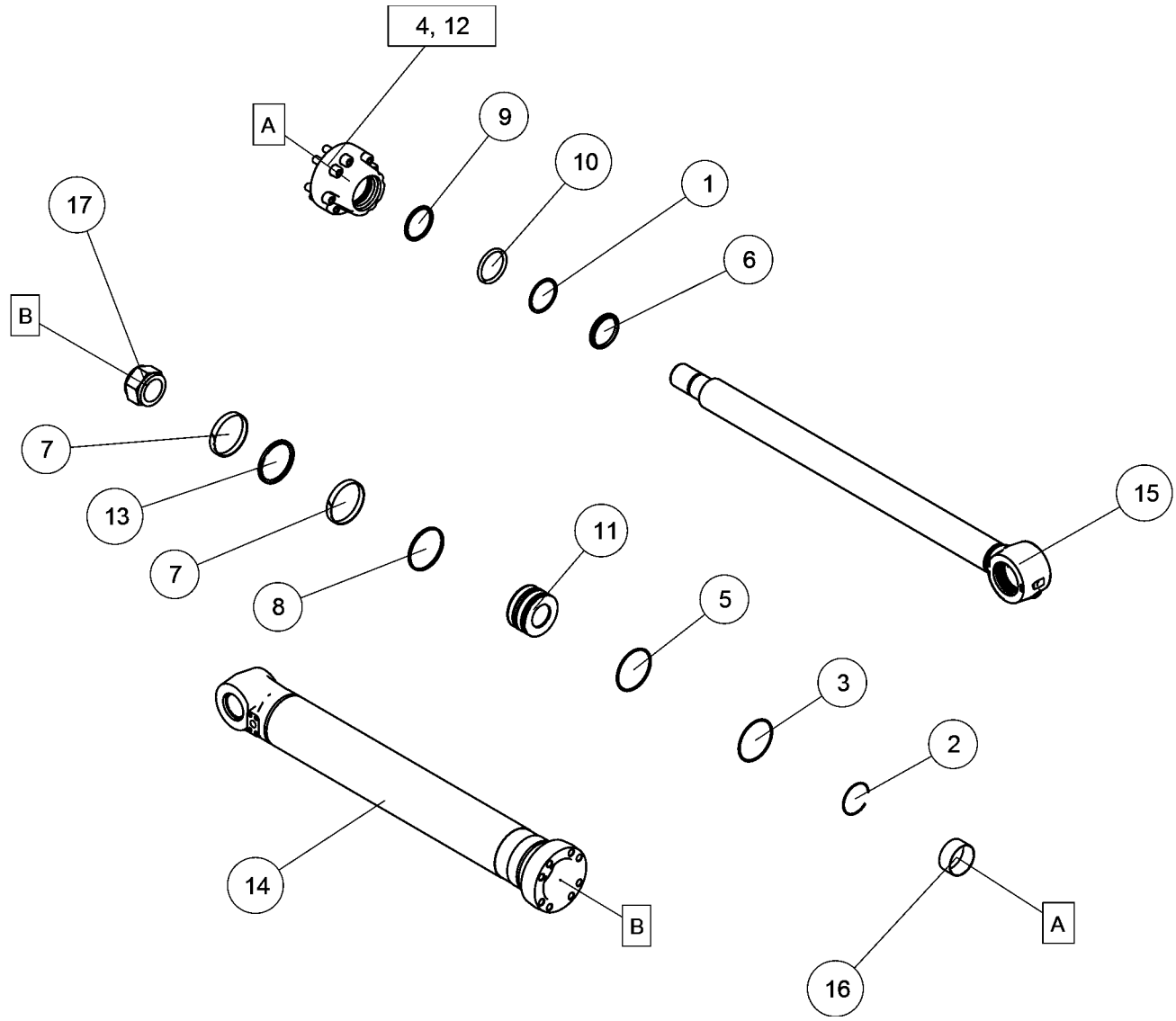

GRAPHIC #1 <END> g06281516

522-3895 CYLINDER GP-BUCKET

S/N: SP91-UP

160-MM (6.3—IN) BORE X 1356-MM (53.4-IN) STROKE

PART OF 522-0835 CYLINDER & SEAL GP-BUCKET

SMCS-5457 **i07527301**

NOTE	REF NO	GRAPHIC REF	PART NUMBER	QTY	PART NAME 1 2 3 4 5 6 (PRODUCT LEVEL)	SEE PAGE
J	1	1	**7Y-4941**	1	RING-BACKUP	
	2	1	**7Y-4944**	1	RING-RETAINING	
M	3	1	**7Y-5239**	8	BOLT-SOCKET HEAD (M24X3X100-MM)	
J	4	1	**087-5550**	1	RING-BACKUP	
J	5	1	**095-1635**	1	SEAL-O-RING	
M	6	1	**123-2112**	1	LOCKNUT-SPECIAL (M90X2-THD)	
J	7	1	**165-9291**	1	SEAL-LIP TYPE	
J	8	1	**185-0230**	2	RING	
J	9	1	**185-0231**	1	RING	
J	10	1	**333-8687**	1	SEAL-BUFFER	
J	11	1	**333-8688**	1	SEAL-U-CUP	
R	12	1	**357-9794**	1	ROD AS	
	12A	1	**087-5548**	1	BUSHING	
	13	1	**358-8527**	1	PISTON	
	14	1	**358-8528**	1	HEAD	
J	15	1	**506-2321**	1	SEAL AS	
	16	1	**114-0762**	1	BUSHING	
	17	1	**522-3896**	1	CYLINDER AS	
					AVAILABLE REPAIR KIT(S):	
J			**518-5136**	1	KIT-SEAL (BUCKET CYLINDER)	

J - KIT MARKED J SERVICES PART(S) MARKED J
M - METRIC PART
R - REMANUFACTURED PART MAY BE AVAILABLE

522-3895 **CYLINDER GP-BUCKET (**contd.**)** **i07527301**

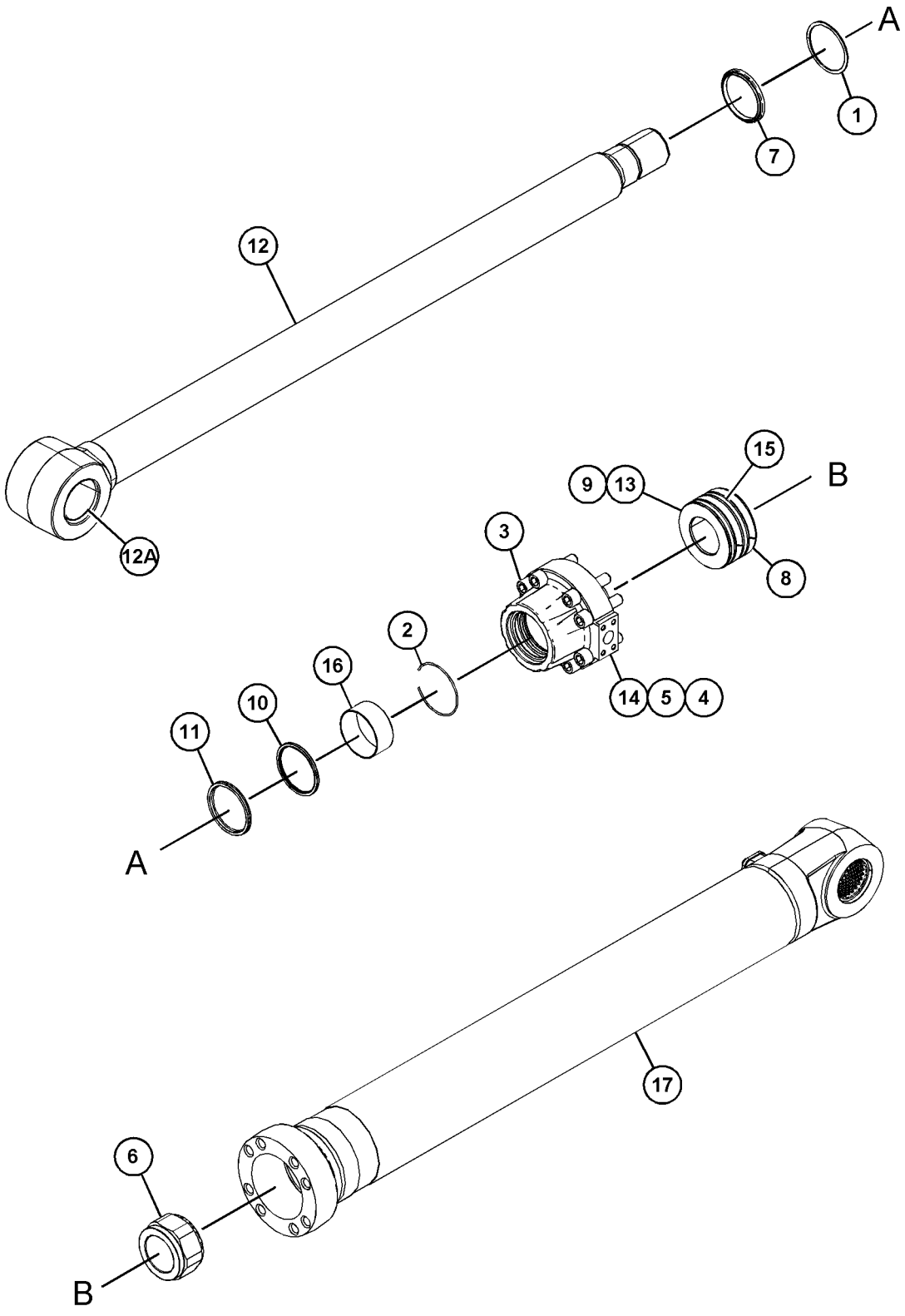

GRAPHIC #1 <END> g06281766

169-0753 CYLINDER GP-COUPLER–LOCK

S/N: SP91-UP
70-MM (2.8-IN) BORE X 130-MM (5.1-IN) STROKE
PART OF 209-3464 LOCK GP-QUICK COUPLER

SMCS-5133 **i03626695**

NOTE	REF NO	GRAPHIC REF	PART NUMBER	QTY	PART NAME 1 2 3 4 5 6 (PRODUCT LEVEL)	SEE PAGE
	1	1	**169-3923**	1	KIT-VALVE (QUICK COUPLER)	
					AVAILABLE REPAIR KIT(S):	
			219-1322	1	KIT-SEAL	

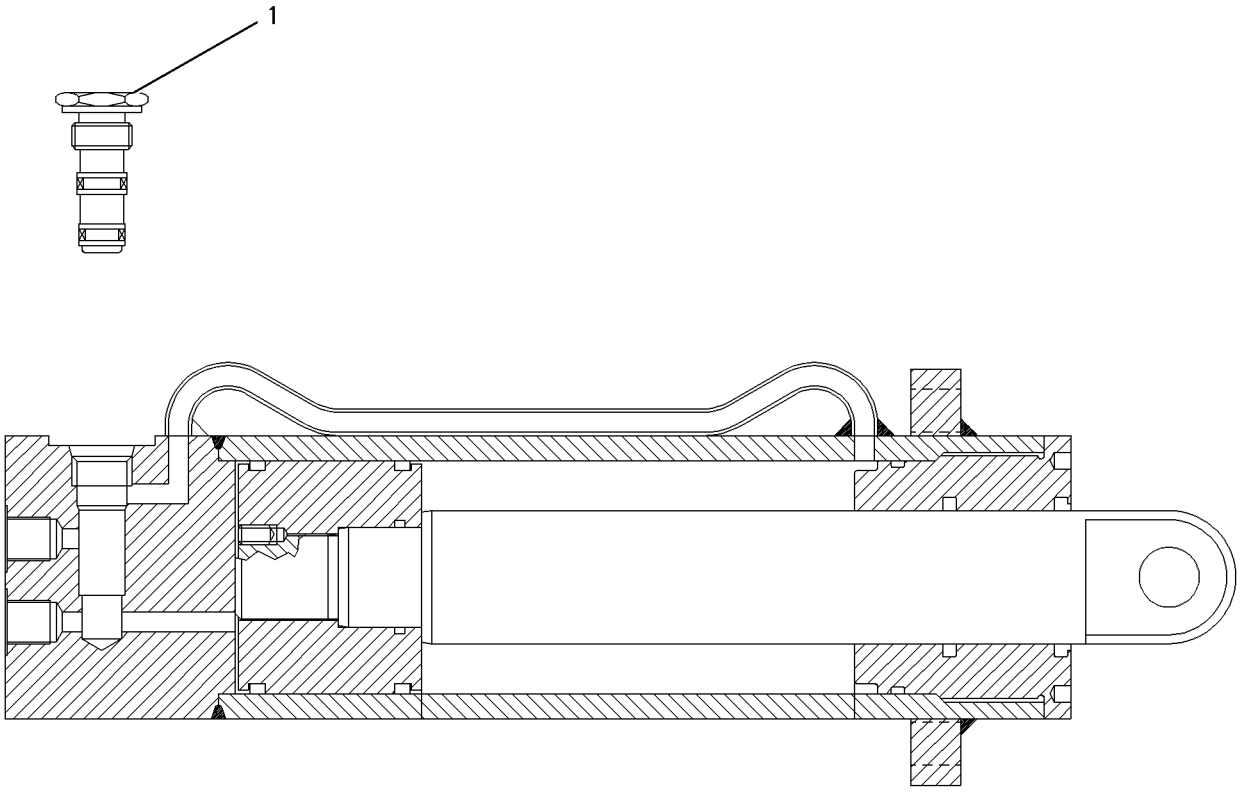

GRAPHIC #1 <END> g00562763

512-2361 CYLINDER GP-STICK

S/N: SP91-UP
170-MM (6.7-IN) BORE X 1738-MM (68.4-IN) STROKE
PART OF 512-2360 CYLINDER & SEAL GP-STICK

SMCS-5458 **i07528780**

NOTE	REF NO	GRAPHIC REF	PART NUMBER	QTY	PART NAME 1 2 3 4 5 6 (PRODUCT LEVEL)	SEE PAGE
M	1	1	**7Y-5239**	8	BOLT-SOCKET HEAD (M24X3X100-MM)	
	2	1	**103-8345**	1	RING-RETAINING	
	3	1	**107-6579**	1	RING	
J	4	1	**140-0240**	1	SEAL-O-RING	
J	5	1	**191-5604**	2	RING	
J	6	1	**191-5605**	1	RING	
	7	1	**191-5643**	1	RING-RETAINING	
J	8	1	**191-5647**	1	RING-BACKUP	
J	9	1	**191-5648**	1	SEAL-LIP TYPE	
J	10	1	**231-6843**	1	RING-SEAL	
J	11	1	**324-9484**	1	SEAL-BUFFER	
J	12	1	**324-9486**	1	SEAL-U-CUP	
	13	1	**358-8525**	1	PISTON	
	14	1	**359-7188**	1	STOP	
	15	1	**359-7192**	1	STOP	
	16	1	**375-1723**	1	HEAD	
J	17	1	**375-1732**	2	RING-BACKUP	
J	18	1	**506-2322**	1	SEAL AS	
	19	1	**521-0639**	1	CYLINDER AS	
	19A	1	**504-7630**	1	BEARING-SLEEVE	
	20	1	**521-0642**	1	ROD AS	
	20A	1	**504-7630**	1	BEARING-SLEEVE	
	21	1	**095-0930**	2	RING-RETAINING (EXTERNAL)	
	22	1	**191-5644**	1	BUSHING	
M	23	1	**7Y-4956**	1	LOCKNUT (M90X2-THD)	
					AVAILABLE REPAIR KIT(S):	
J			**518-5137**	1	KIT-SEAL (STICK CYLINDER)	

J - KIT MARKED J SERVICES PART(S) MARKED J
M - METRIC PART

512-2361 **CYLINDER GP-STICK (**contd.**)** **i07528780**

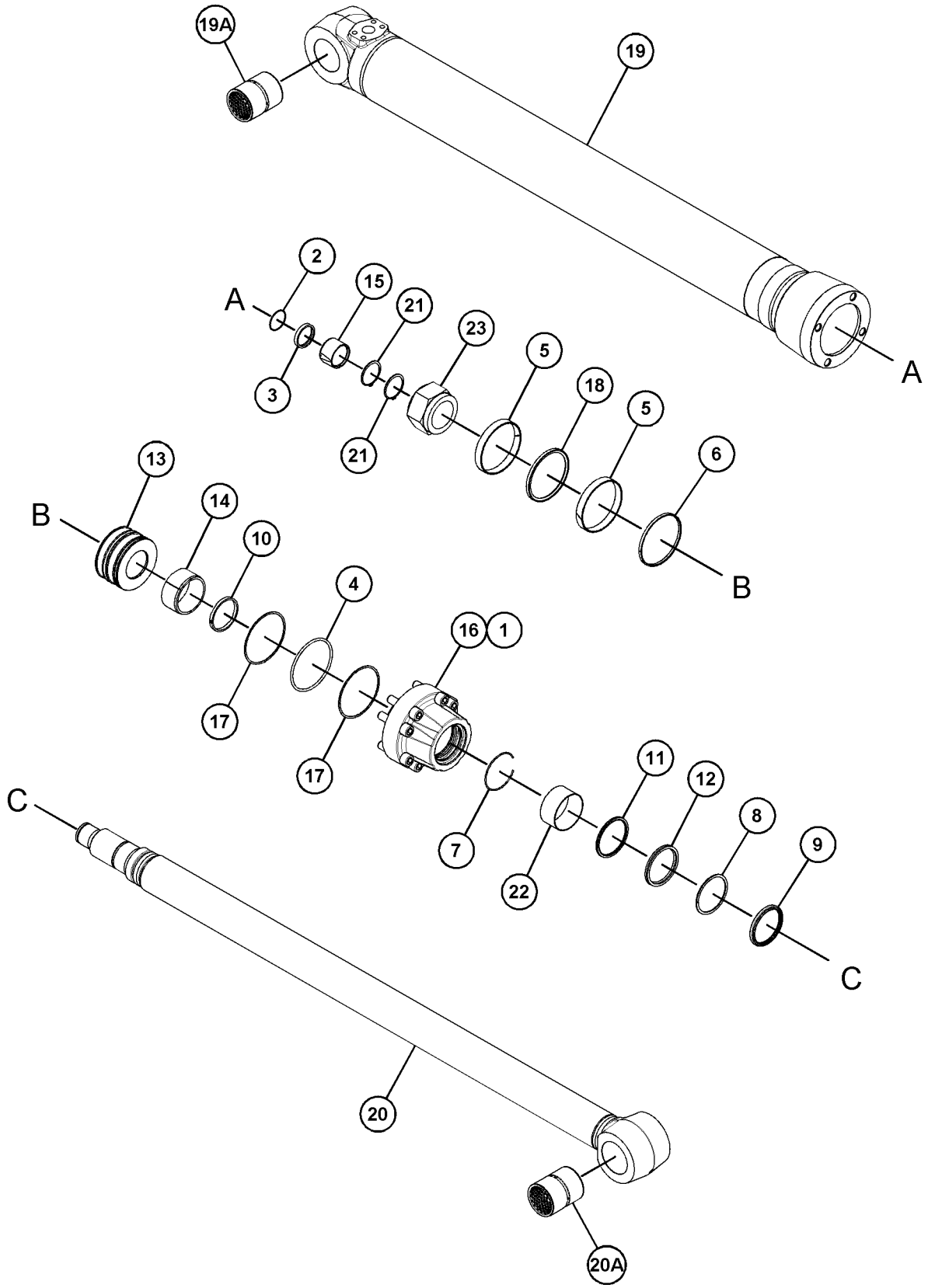

GRAPHIC #1 <END> g06286145

512-9908 DRIVE & MOTOR GP-SWING

S/N: SP91-UP

PART OF 502-9958 DRIVE & MTG GP-SWING

SMCS-5459, 79PA **i07511281**

NOTE	REF NO	GRAPHIC REF	PART NUMBER	QTY	PART NAME 1 2 3 4 5 6 (PRODUCT LEVEL)	SEE PAGE
Y	1	1	**482-6619**	1	DRIVE GP-SWING (WITHOUT MOTOR)	438
Y	2	1	*505-0530*	1	MOTOR & MTG GP-SWING	528

Y - SEPARATE ILLUSTRATION

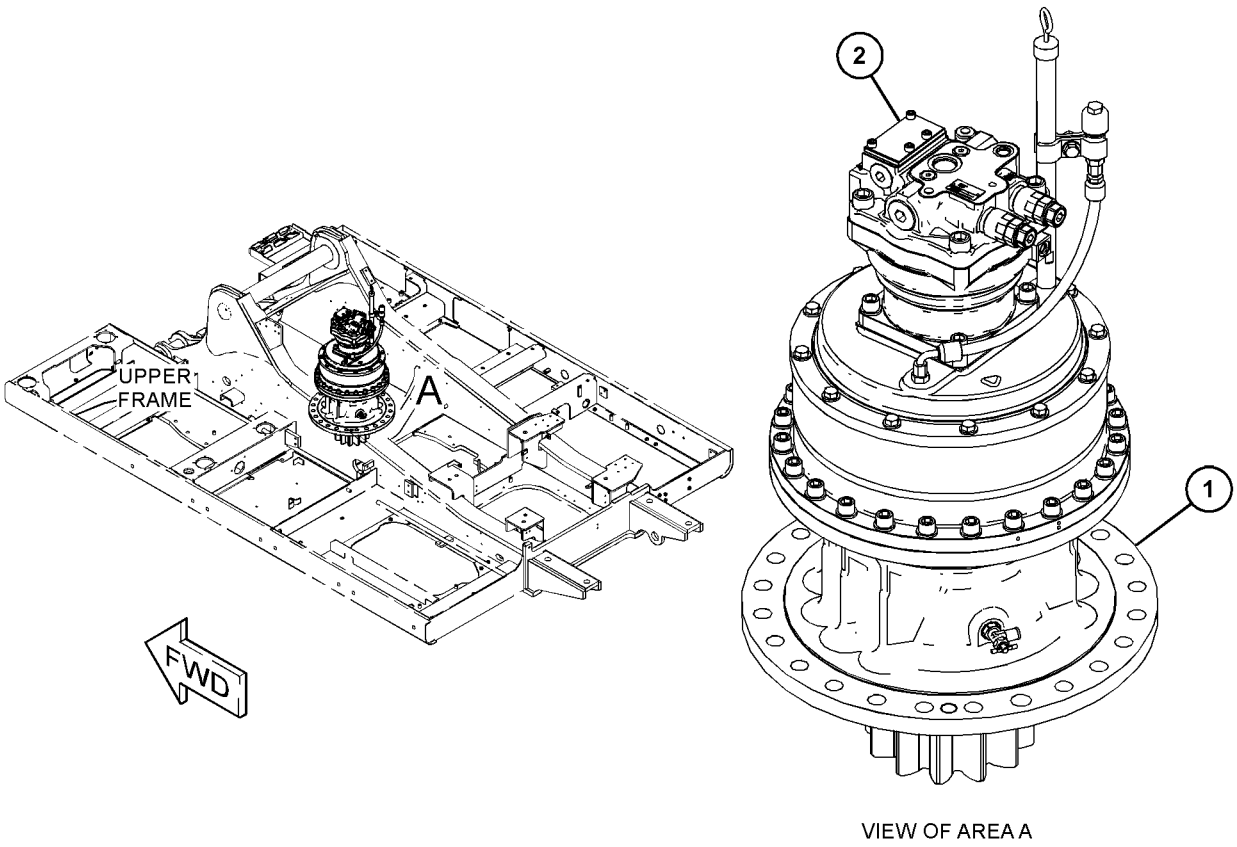

VIEW OF AREA A

GRAPHIC #1 <END> g06278043

558-0344 DRIVE & MOTOR GP-SWING—WITH MOTOR

S/N: SP91-UP

PART OF 560-2458 DRIVE & MTG GP-SWING

SMCS-5459, 79PA **i07880463**

NOTE	REF NO	GRAPHIC REF	PART NUMBER	QTY	PART NAME 1 2 3 4 5 6 (PRODUCT LEVEL)	SEE PAGE
	1	1	**3K-0360**	1	SEAL-O-RING	
	2	1	**4H-6112**	1	BREATHER (SWING DRIVE)	
	3	1	**6V-7238**	1	VALVE-SHUTOFF (HYDRAULIC OIL)	
M	4	1	**6V-8201**	4	BOLT-SOCKET HEAD (M16X2X45-MM)	
	5	1	**7D-5363**	2	CONNECTOR (9/16-18-THD)	
M	6	1	**8T-4244**	1	NUT (M12X1.75-THD)	
	7	1	**8T-6404**	1	SEAL-O-RING	
	8	1	**136-2803**	2	CLIP	
	9	1	**227-6215**	1	BOSS (1/4-18-THD)	
	10	1	**451-2175**	4	WASHER-HARD (17.5X30X3.5-MM THK)	
	11	1	**451-2182**	2	WASHER-HARD (13.5X25.5X3-MM THK)	
M	12	1	**453-3446**	1	BOLT (M12X1.75X35-MM)	
Y	13	1	**505-0531**	1	MOTOR GP-SWING	530
Y	14	1	**536-7288**	1	DRIVE GP-SWING (WITHOUT MOTOR)	441
I	15	1	**544-5577**	1	HOSE AS	
	16	1	**562-4378**	1	GAUGE-OIL LEVEL (HYDRAULIC)	
	17	1	**562-4379**	1	PIPE-GAUGE	
	18	1	**6V-5204**	1	RING-RETAINING	

I - REFER TO HYDRAULIC INFORMATION SYSTEM
M - METRIC PART
Y - SEPARATE ILLUSTRATION

558-0344 **DRIVE & MOTOR GP-SWING (**contd.**)** **i07880463**

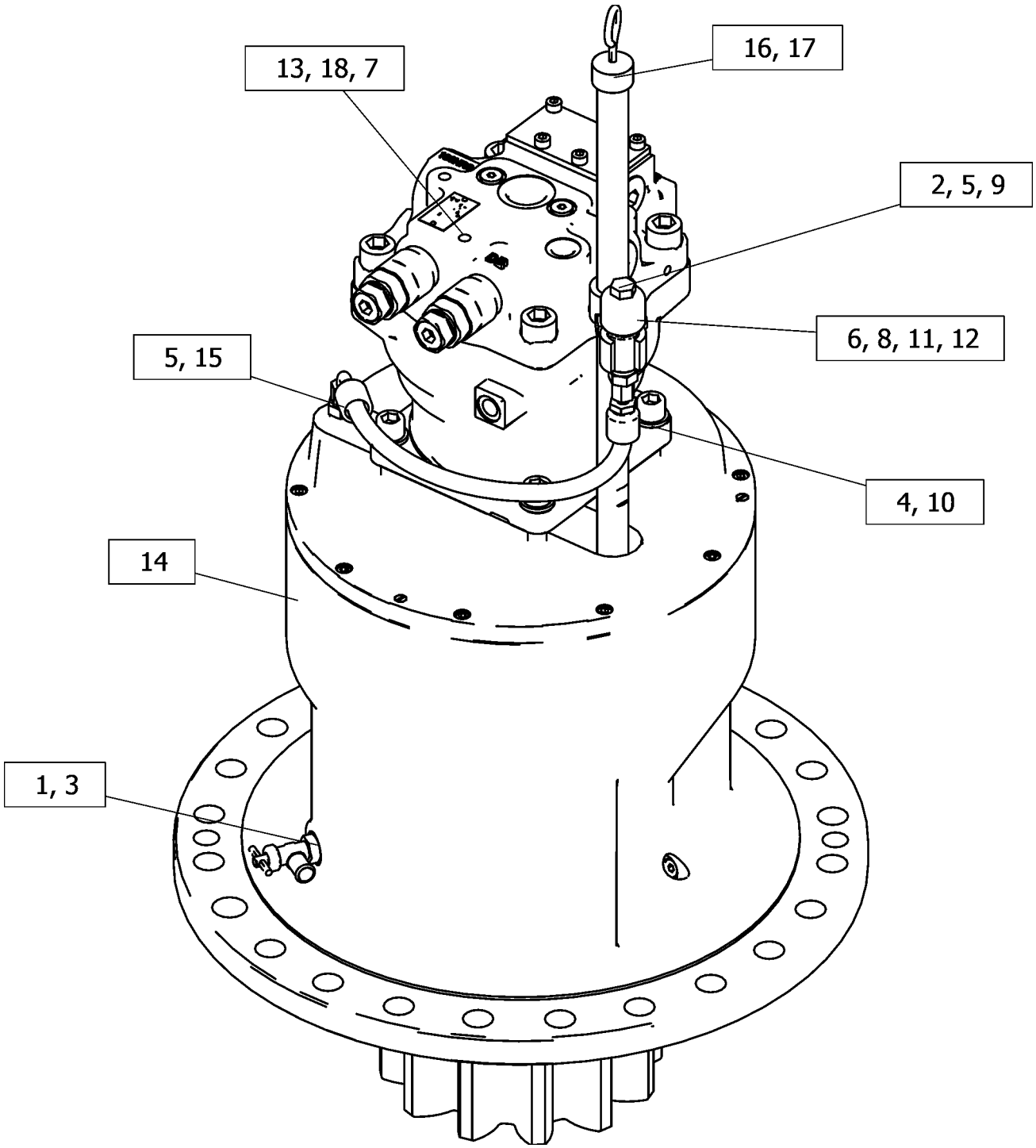

GRAPHIC #1 <END> g06366118

502-9958 DRIVE & MTG GP-SWING

S/N: SP91-UP

PART OF 523-7792 EXCAVATOR AR

SMCS-5459 **i07511279**

NOTE	REF NO	GRAPHIC REF	PART NUMBER	QTY	PART NAME 1 2 3 4 5 6 (PRODUCT LEVEL)	SEE PAGE
	1	1	**2B-7561**	2	CORK	
	2	1	**5D-1026**	1	CLAMP-BAND	
	3	1	**8T-4121**	2	WASHER-HARD (11X21X2.5-MM THK)	
M	4	1	**8T-4192**	1	BOLT (M12X1.75X25-MM)	
	5	1	**8T-4223**	1	WASHER-HARD (13.5X25.5X3-MM THK)	
	6	1	**096-4755**	1	PIN	
M	7	1	**096-4883**	2	LOCKNUT (M10X1.5-THD)	
M	8	1	**122-8705**	1	U-BOLT (M10X1.5-MM THD)	
M	9	1	**201-7949**	23	BOLT (M24X3X70-MM)	
Y	10	1	*512-9908*	1	DRIVE & MOTOR GP-SWING	431
	11	1	**544-4700**	1	SUPPORT	
	12	1	**6V-8237**	23	WASHER (26X44X4-MM THK)	
E	13	1	**5P-0767**		HOSE (90-CM)	
BF			**1U-8846**		SEALANT-GASKET	

B - USE AS REQUIRED
E - ORDER BY THE CENTIMETER
F - NOT SHOWN
M - METRIC PART
Y - SEPARATE ILLUSTRATION

502-9958 **DRIVE & MTG GP-SWING (**contd.**)** **i07511279**

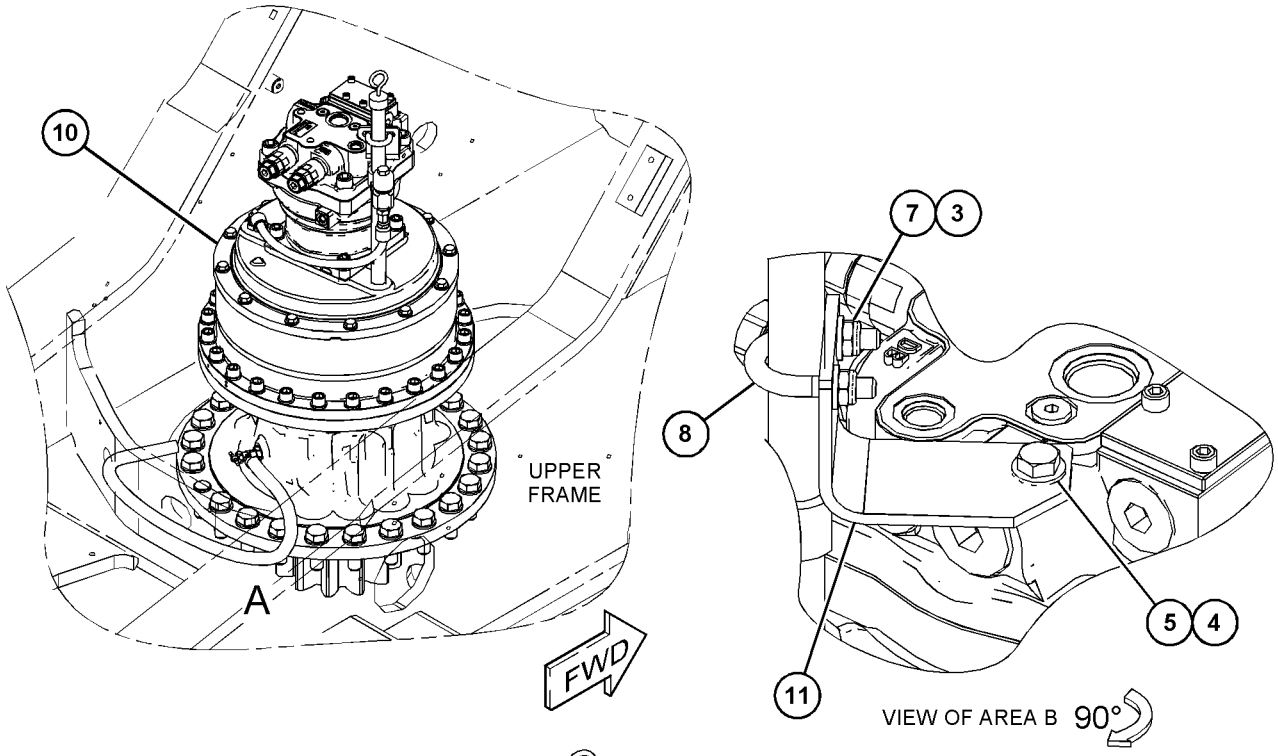

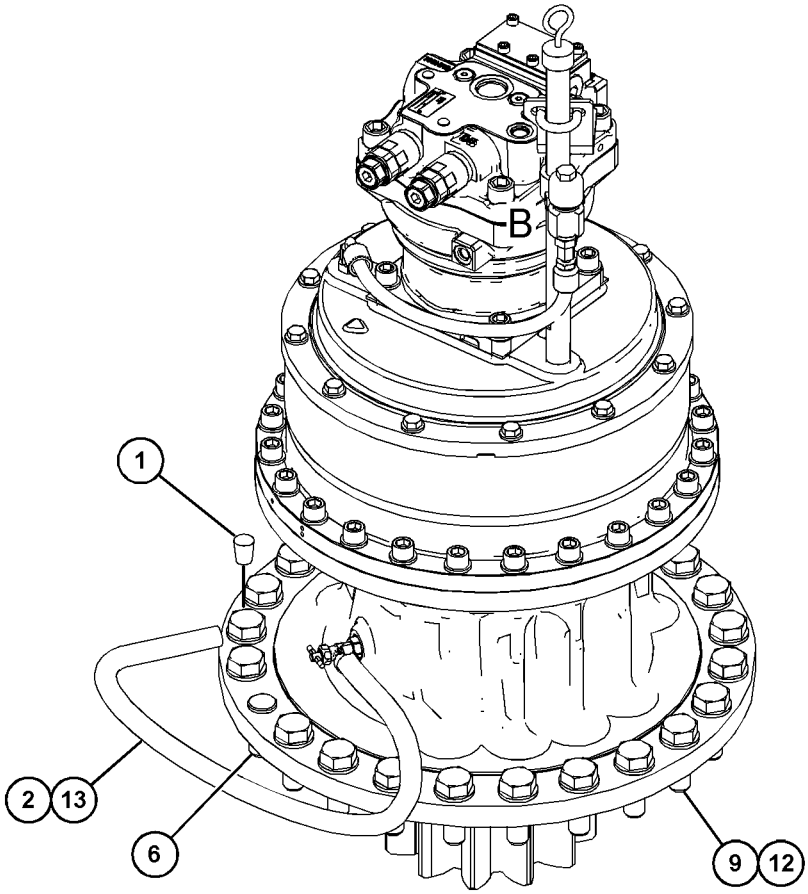

VIEW OF AREA A

GRAPHIC #1 <END> g06303977

560-2458 DRIVE & MTG GP-SWING

S/N: SP91-UP

PART OF 568-3011 POWER TRAIN AR

SMCS-5459 **i07880282**

NOTE	REF NO	GRAPHIC REF	PART NUMBER	QTY	PART NAME 1 2 3 4 5 6 (PRODUCT LEVEL)	SEE PAGE
M	1	1	**8T-4192**	1	BOLT (M12X1.75X25-MM)	
	2	1	**2B-7561**	2	CORK	
	3	1	**5D-1026**	1	CLAMP-BAND	
	4	1	**6V-8237**	23	WASHER (26X44X4-MM THK)	
	5	1	**8T-4121**	2	WASHER-HARD (11X21X2.5-MM THK)	
	6	1	**8T-4223**	1	WASHER-HARD (13.5X25.5X3-MM THK)	
	7	1	**096-4755**	1	PIN	
M	8	1	**096-4883**	2	LOCKNUT (M10X1.5-THD)	
M	9	1	**122-8705**	1	U-BOLT (M10X1.5-MM THD)	
	10	1	**352-7064**	2	CAP	
M	11	1	**201-7949**	23	BOLT (M24X3X70-MM)	
	12	1	**544-4700**	1	SUPPORT	
Y	13	1	*558-0344*	1	DRIVE & MOTOR GP-SWING	432
E	14	1	**5P-0767**		HOSE (90-CM)	
BF			**1U-8846**		SEALANT-GASKET	

B - USE AS REQUIRED
E - ORDER BY THE CENTIMETER
F - NOT SHOWN
M - METRIC PART
Y - SEPARATE ILLUSTRATION

560-2458 **DRIVE & MTG GP-SWING (**contd.**)** **i07880282**

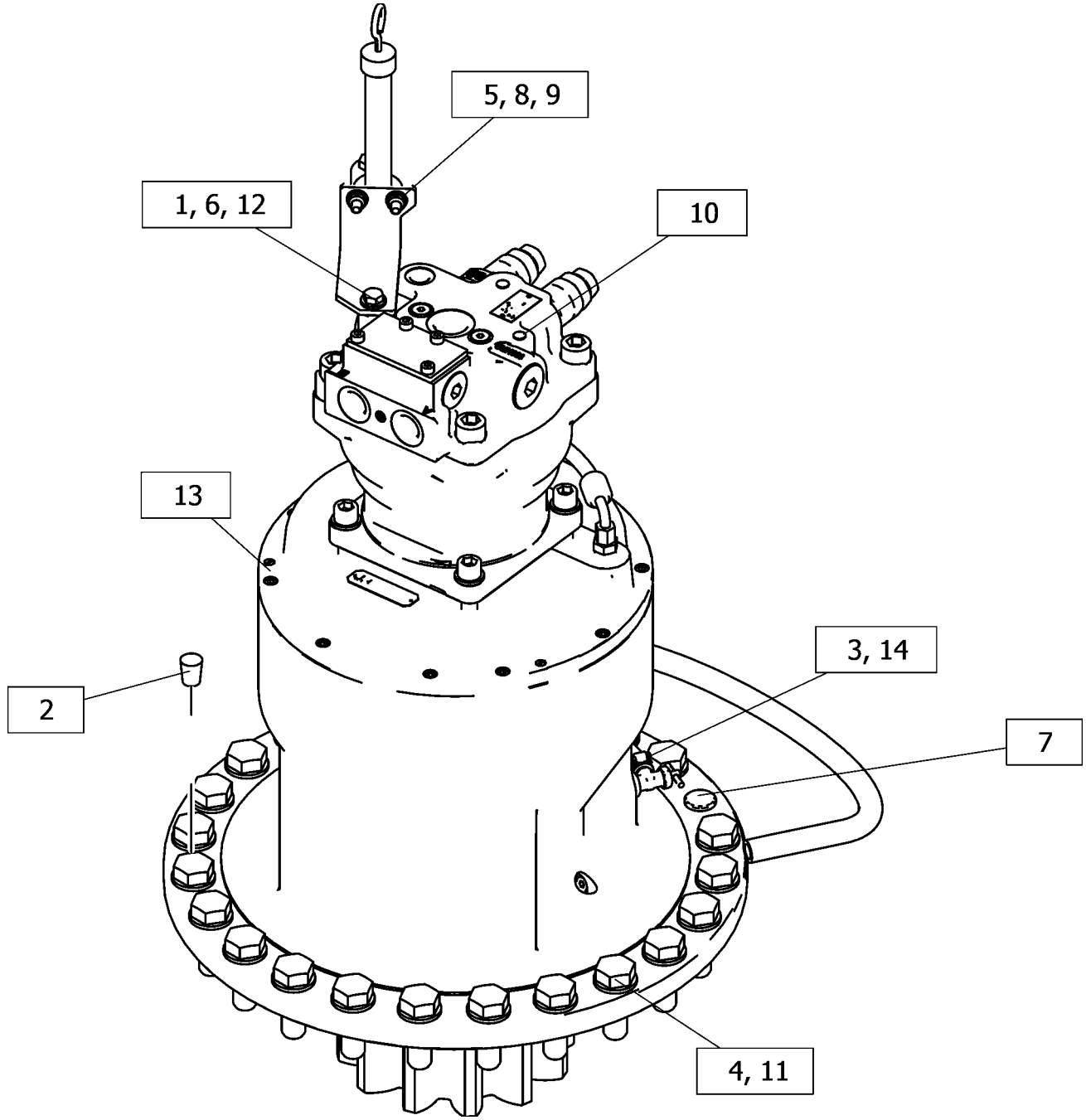

GRAPHIC #1 <END> g06366537

482-6619 DRIVE GP-SWING—WITHOUT MOTOR

S/N: SP91-UP

PART OF 512-9908 DRIVE & MOTOR GP-SWING

SMCS-5459 **i07511286**

NOTE	REF NO	GRAPHIC REF	PART NUMBER	QTY	PART NAME 1 2 3 4 5 6 (PRODUCT LEVEL)	SEE PAGE
	1	1	**4H-6112**	1	BREATHER (SWING DRIVE)	
	2	2	**6V-7238**	1	VALVE-SHUTOFF (SWING DRIVE)	
	3	2	**7Y-1100**	1	BEARING-ROLLER	
	4	1	**094-1528**	6	WASHER (53X84X1-MM THK)	
	5	1	**110-7149**	1	RING-RETAINING	
	6	1	**114-1322**	1	RING-RETAINING	
	7	1	**114-1398**	1	GAUGE-OIL LEVEL (SWING DRIVE)	
	8	1	**114-1399**	1	PIPE-GAUGE	
	9	2	**148-4605**	1	SHAFT-PINION	
	10	1	**227-6215**	1	BOSS (1/4-18-THD)	
	11	1	**378-9524**	4	SHAFT	
	12	1	**378-9525**	8	WASHER (62.3X104X1-MM THK)	
	13	1	**378-9526**	1	GEAR-RING (67-TEETH)	
	14	1	**378-9527**	4	GEAR-PLANETARY (24-TEETH)	
	15	1	**296-6269**	3	BEARING-ROLLER	
	16	1	**453-1671**	1	CARRIER-PLANETARY	
	17	1	**378-9528**	3	GEAR-PLANETARY (24-TEETH)	
	18	1	**378-9529**	1	GEAR-SUN (13-TEETH)	
	19	1	**378-9530**	1	GEAR-SUN (17-TEETH)	
	20	1	**378-9531**	1	CARRIER AS	
	21	1	**378-9560**	1	COVER-HOUSING	
	22	1	**451-2175**	24	WASHER-HARD (17.5X30X3.5-MM THK)	
	23	1,2	**451-2182**	24	WASHER-HARD (13.5X25.5X3-MM THK)	
M	24	1,2	**453-3447**	22	BOLT (M12X1.75X40-MM)	
	25	2	**481-4229**	1	HOUSING	
	26	2	**481-4230**	1	CAGE	
	27	1	**481-4232**	1	BEARING	
	28	1	**506-5904**	1	SPACER	
	29	1	**510-1989**	4	PIN-SPRING	
I	30	1	**544-5577**	1	HOSE AS	
	31	1	**093-1730**	1	RING-RETAINING	
	32	1	**095-0927**	3	RING-RETAINING	
	33	1	**096-1441**	1	RING-RETAINING	
	34	2	**128-9170**	2	SEAL-LIP TYPE	
	35	1	**136-2803**	2	CLIP	
	36	2	**2H-6340**	1	SEAL-O-RING	
	37	1	**378-9593**	8	BEARING AS	
	38	2	**3K-0360**	1	SEAL-O-RING	
	39	1	**7D-5363**	2	CONNECTOR (9/16-18-THD)	
M	40	1	**7I-7684**	2	SPACER (50X79.6X6-MM THK)	
M	41	1	**8T-0348**	24	BOLT-SOCKET HEAD (M16X2X50-MM)	
M	42	1	**8T-4244**	1	NUT (M12X1.75-THD)	
M	43	1	**453-3446**	1	BOLT (M12X1.75X35-MM)	
BF		1	**1U-8846**		SEALANT-GASKET	

B - USE AS REQUIRED
F - NOT SHOWN
I - REFER TO HYDRAULIC INFORMATION SYSTEM
M - METRIC PART

482-6619 **DRIVE GP-SWING (**contd.**)** **i07511286**

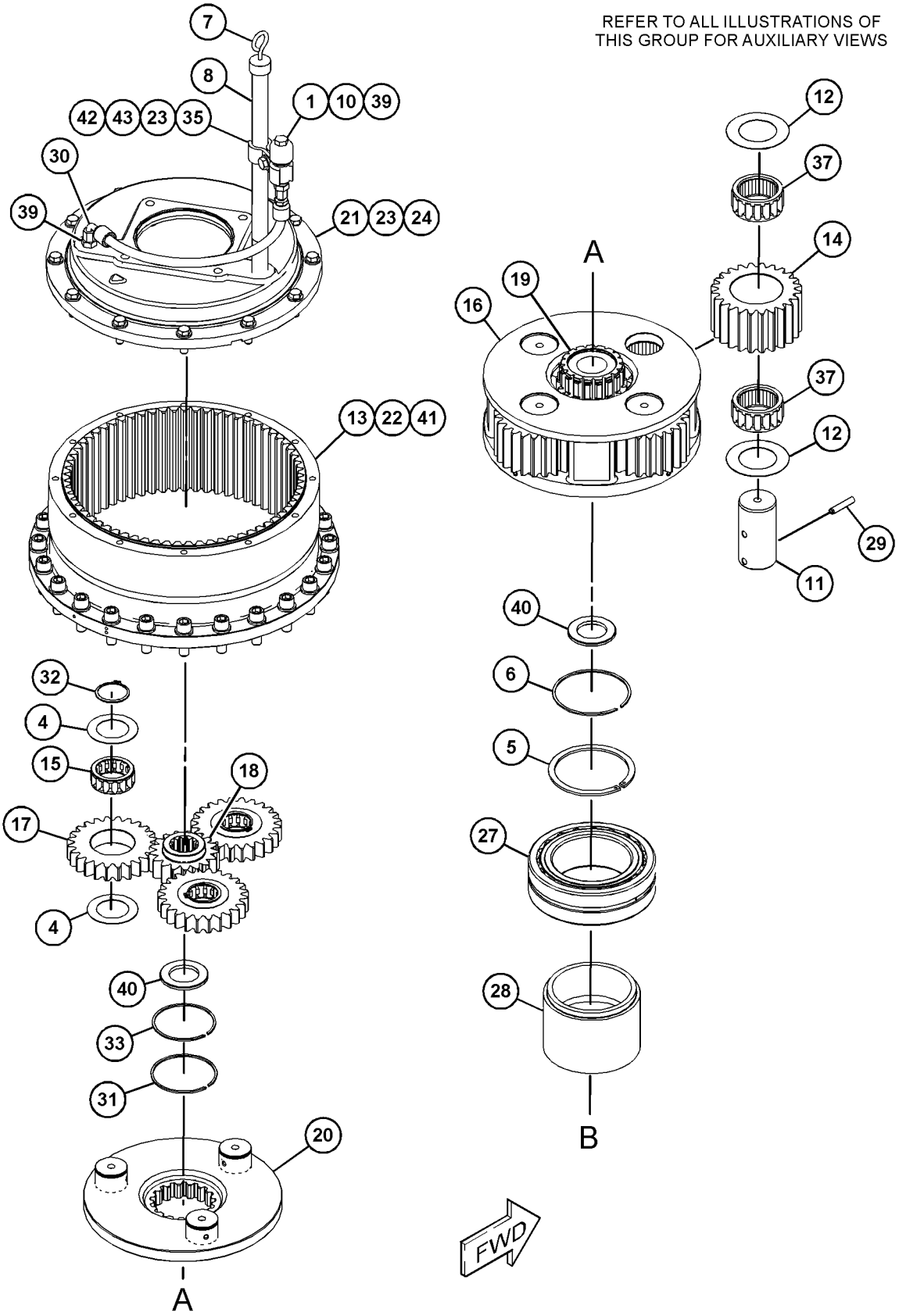

GRAPHIC #1 g06286097

482-6619 **DRIVE GP-SWING (**contd.**)** **i07511286**

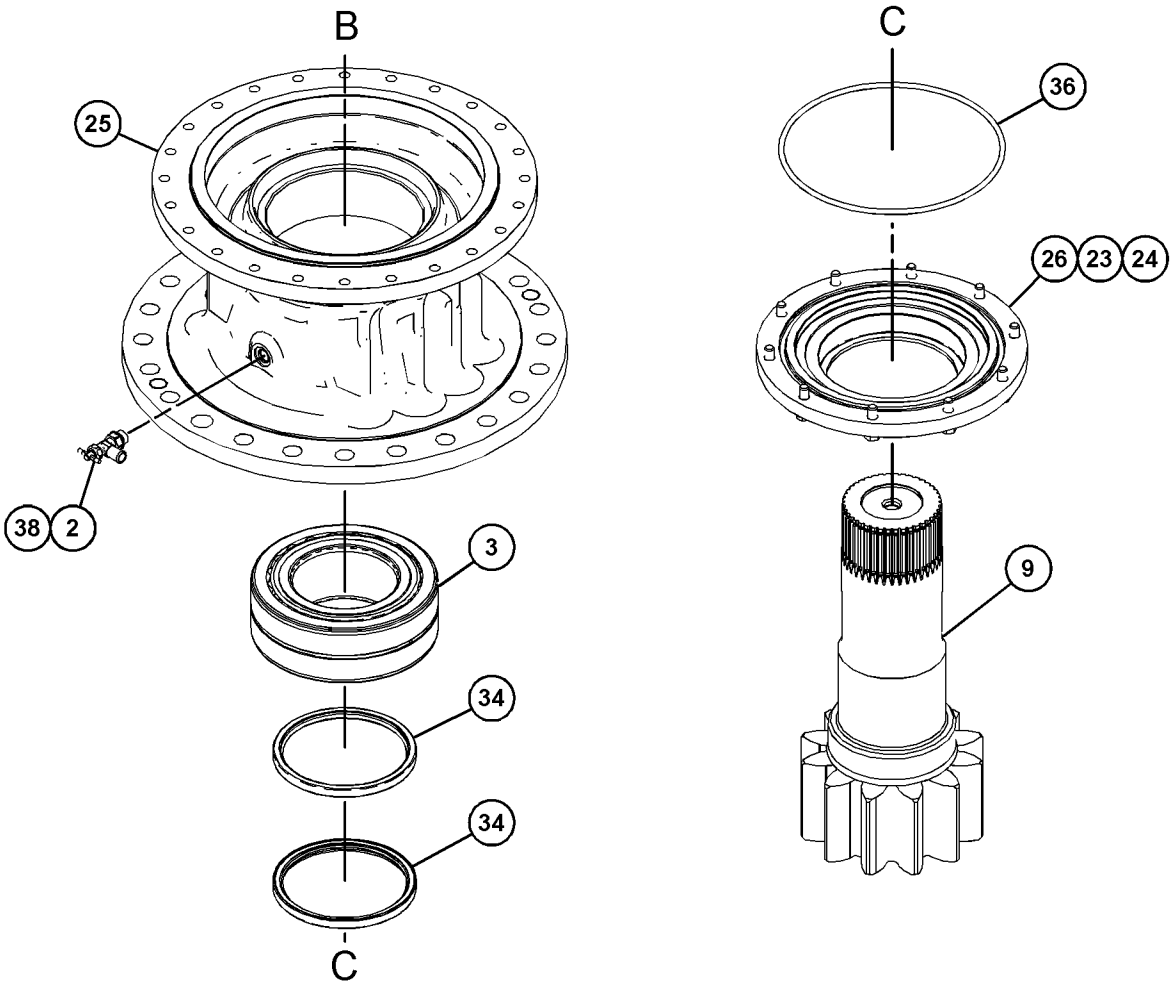

GRAPHIC #2 <END> g06286098

536-7288 DRIVE GP-SWING—WITHOUT MOTOR

S/N: SP91-UP

PART OF 558-0344 DRIVE & MOTOR GP-SWING

SMCS-5459 **i07880465**

NOTE	REF NO	GRAPHIC REF	PART NUMBER	QTY	PART NAME 1 2 3 4 5 6 (PRODUCT LEVEL)	SEE PAGE
	1	1	**570-5850**	1	GEAR-SUN	
	2	1	**570-5851**	1	HOUSING AS-DRIVE	
	3	1	**570-5852**	1	HOUSING-OUTPUT	
	4	1	**570-5853**	1	SHAFT-PINION	
M	5	1	**570-5854**	1	NUT-RING (M102X2-THD)	
	6	1	**570-5855**	1	SPACER	
	7	1	**570-5856**	1	RING-RETAINING	
	8	1	**570-5857**	2	SEAL	
	9	1	**570-5858**	1	SEAL	
	10	1	**570-5860**	1	SEAL-RING	
	11	1	**570-5861**	1	BEARING	
	12	1	**570-5862**	1	BEARING	
	13	1	**570-5863**	1	SHIM-PACK	
	14	1	**570-5864**	1	PLANETARY AS	
	15	1	**570-5865**	1	PLANETARY AS	
	16	1	**569-4288**	1	GEAR-RING	
	17	1	**136-8074**	2	PLUG-DRAIN	
M	18	1	**311-0501**	10	BOLT (M8X1.25X25-MM)	

M - METRIC PART

536-7288 **DRIVE GP-SWING (**contd.**)** **i07880465**

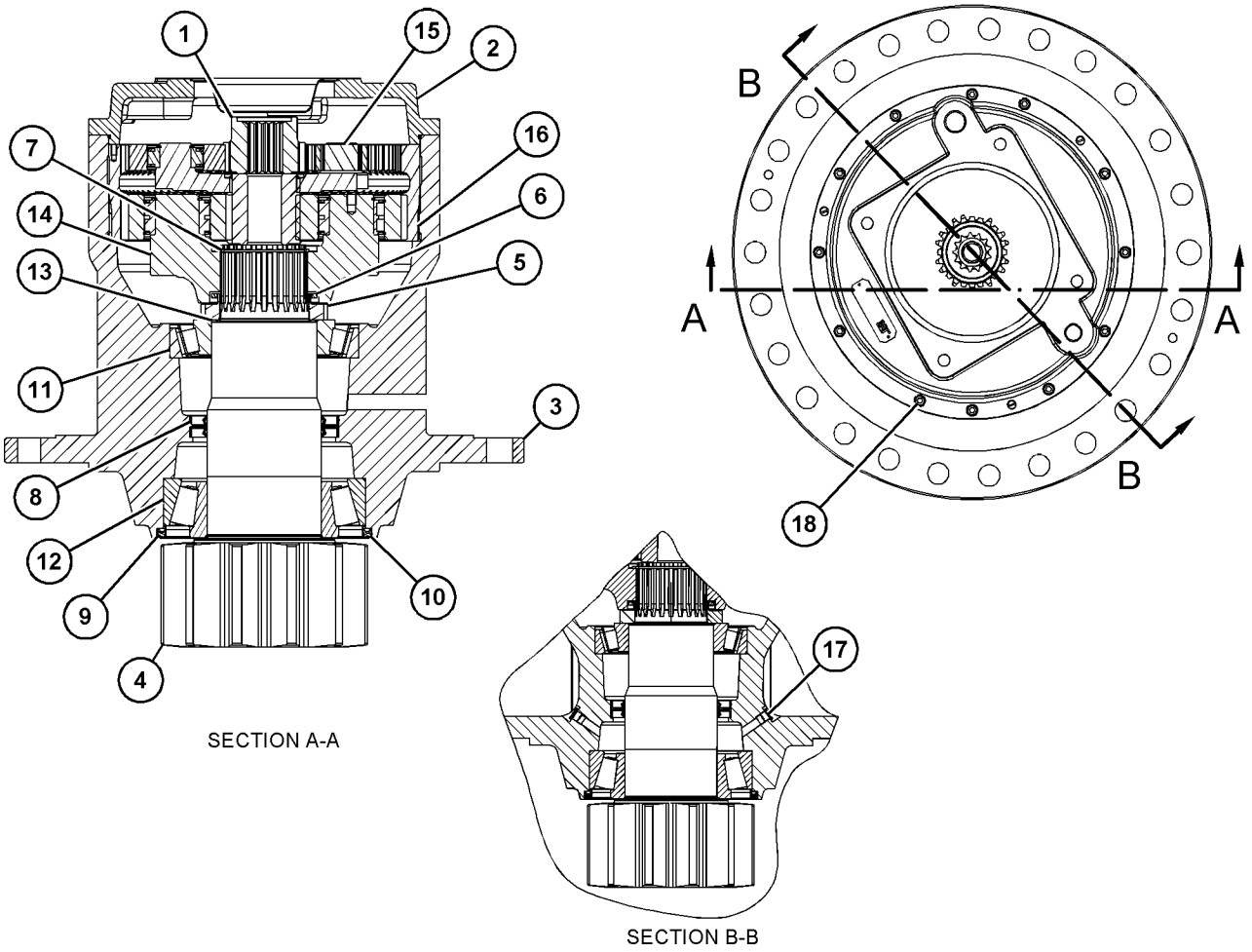

SECTION A-A

SECTION B-B

GRAPHIC #1 <END> g06460665

504-9687 FILTER GP-OIL—HYDRAULIC RETURN

S/N: SP91-UP

PART OF 503-9758 TANK & FILTER GP-HYDRAULIC

SMCS-3004, 4295, 431F, 5068, 5091, 5092

i07787225

NOTE	REF NO	GRAPHIC REF	PART NUMBER	QTY	PART NAME 1 2 3 4 5 6 (PRODUCT LEVEL)	SEE PAGE
M	1	1	**105-3484**	4	BOLT-SOCKET HEAD (M10X1.5X25-MM)	
	2	1	**141-0749**	1	SEAL-O-RING	
	3	1	**175-6176**	1	SEAL-O-RING	
	4	1	**491-5241**	1	FILTER ELEMENT-OIL (HYDRAULIC RETURN)	
	5	1	**512-5573**	1	COVER AS	

M - METRIC PART

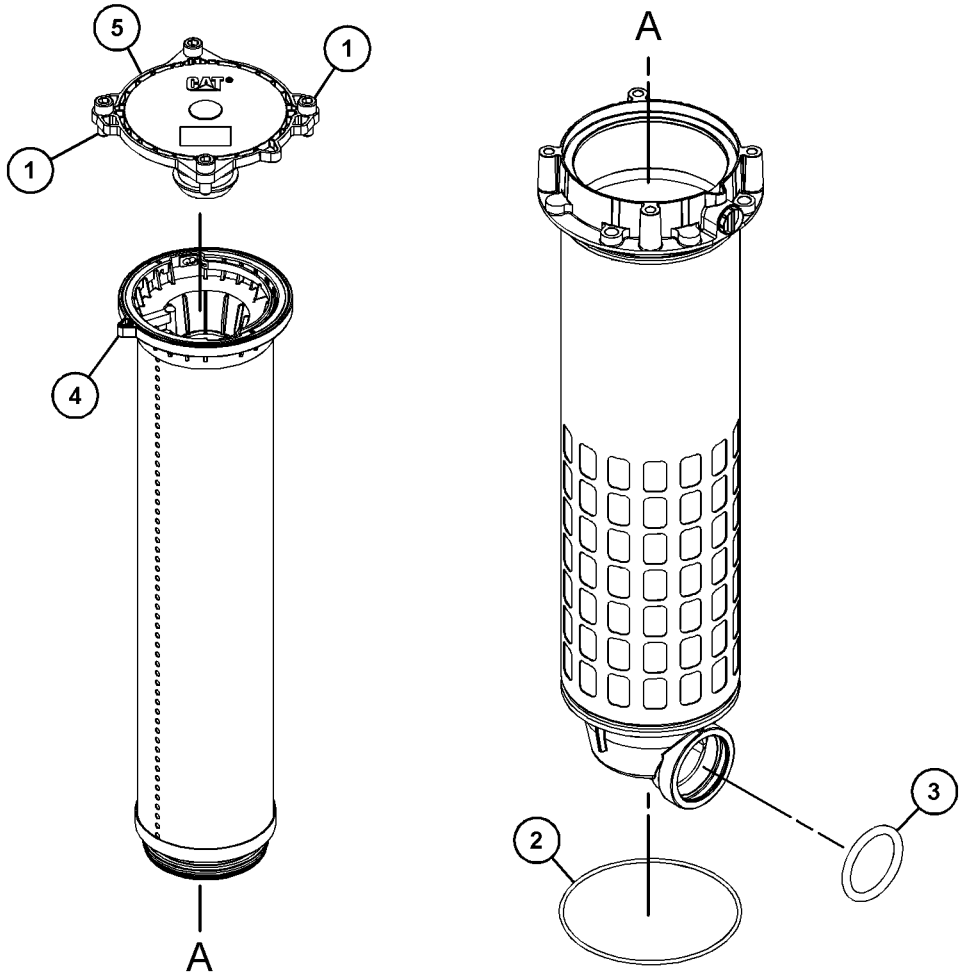

GRAPHIC #1 <END> g06278996

347-6081 GAUGE GP-SIGHT—HYDRAULIC OIL LEVEL

S/N: SP91-UP

PART OF 503-9758 TANK & FILTER GP-HYDRAULIC

SMCS-7479 **i04281574**

NOTE	REF NO	GRAPHIC REF	PART NUMBER	QTY	PART NAME 1 2 3 4 5 6 (PRODUCT LEVEL)	SEE PAGE
	1	1	**236-3257**	1	PIPE	
M	2	1	**236-3259**	2	BOLT-SPECIAL	
	3	1	**347-6082**	2	BLOCK	
	4	1	**6F-6672**	4	SEAL-O-RING	
	5	1	**6F-4855**	4	SEAL-O-RING	

M - METRIC PART

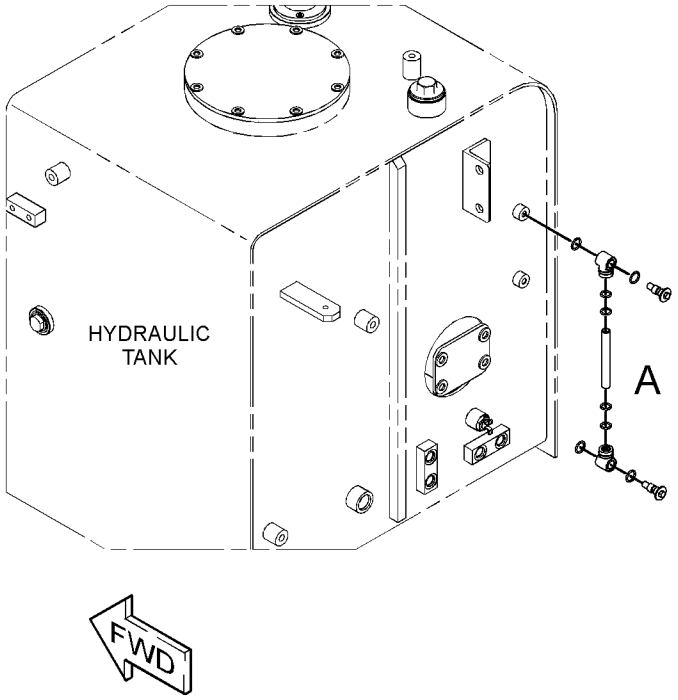

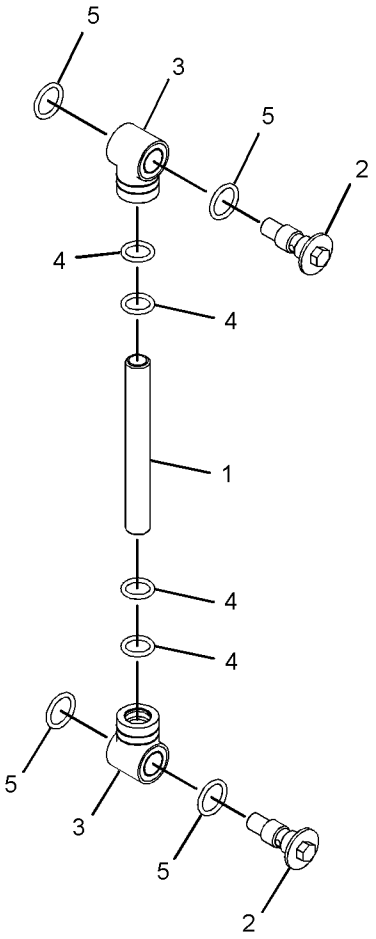

VIEW OF AREA A

GRAPHIC #1 <END> g02303838

551-1135 HEAD GP-PUMP—CONTROL

S/N: SP91-UP

PART OF 550-4341 PUMP GP-MAIN HYDRAULIC

SMCS-3222, 5070, 5086

i07860713

NOTE	REF NO	GRAPHIC REF	PART NUMBER	QTY	PART NAME 1 2 3 4 5 6 (PRODUCT LEVEL)	SEE PAGE
	1	1	**551-1127**	1	PISTON-PILOT	
	2	1	**382-4825**	1	SEAL-O-RING	
	3	1	**110-5525**	1	PLUG	
	4	1	**551-1125**	1	SPOOL AS	
	5	1	**295-9577**	1	SEAT	
M	6	1	**099-2374**	2	BOLT-SOCKET HEAD (M5X0.8X12-MM)	
	7	1	**551-1130**	1	SPRING-PILOT	
	8	1	**543-5391**	1	VALVE GP-SOLENOID	
	9	1	**206-9295**	2	SEAL-O-RING	
	10	1	**551-1131**	1	RETAINER	
	11	1	**551-1129**	1	COVER	
	12	1	**551-1128**	1	NUT	
M	13	1	**096-2966**	1	SETSCREW-SOCKET (M10X1.5X30-MM)	
M	14	1	**6V-5683**	3	BOLT (M6X1X16-MM)	
	15	1	**095-1663**	1	SEAL-O-RING	
	16	1	**425-3985**	10	SEAL-RECTANGULAR	
	17	1	**559-3652**	1	SEAL-SQUARE	
	18	1	**551-1133**	1	PLUG	
	19	1	**095-1582**	1	SEAL-O-RING	
	20	1	**551-1126**	1	BODY AS	
	21	1	**371-7201**	10	PLUG	
M	22	1	**096-0001**	5	BOLT-SOCKET HEAD (M8X1.25X40-MM)	
	23	1	**551-1124**	1	LEVER AS	
M	24	1	**5A-3604**	1	BOLT-SOCKET HEAD (M8X1.25X25-MM)	
	25	1	**551-1134**	1	PLUG	

M - METRIC PART

551-1135 **HEAD GP-PUMP (**contd.**)** **i07860713**

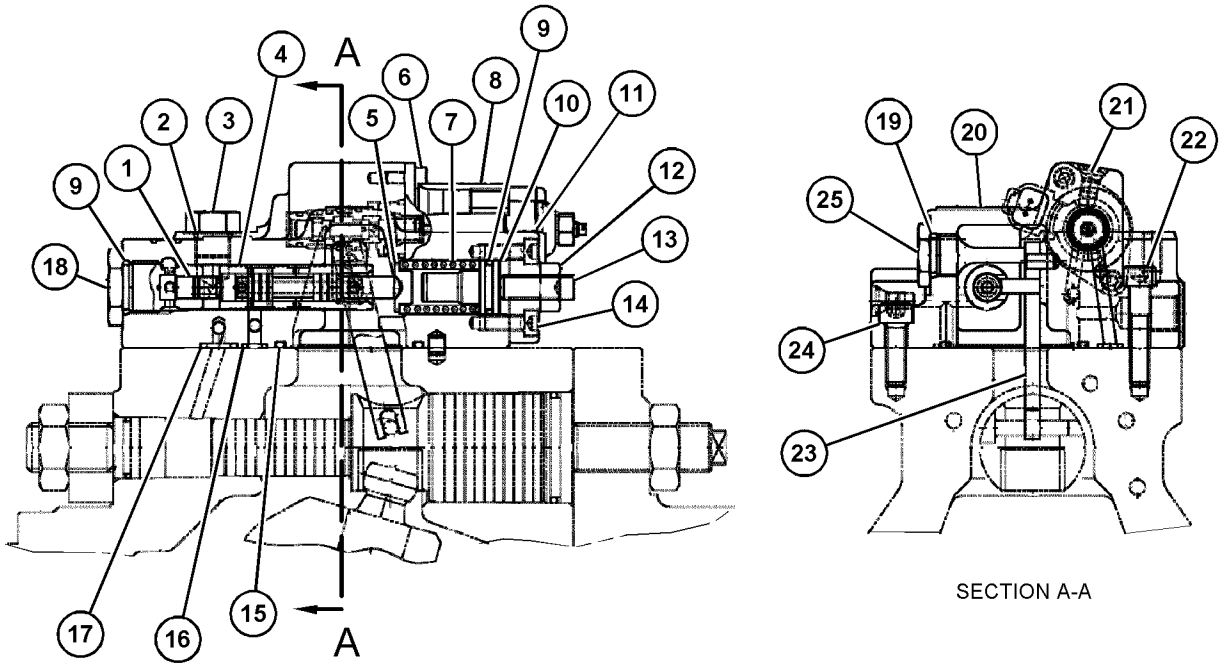

GRAPHIC #1 <END> g06307596

551-1136 HEAD GP-PUMP—CONTROL

S/N: SP91-UP

PART OF 550-4341 PUMP GP-MAIN HYDRAULIC

SMCS-3222, 5070, 5086

i07860707

NOTE	REF NO	GRAPHIC REF	PART NUMBER	QTY	PART NAME 1 2 3 4 5 6 (PRODUCT LEVEL)	SEE PAGE
	1	1	**551-1127**	1	PISTON-PILOT	
	2	1	**382-4825**	2	SEAL-O-RING	
	3	1	**110-5525**	2	PLUG	
	4	1	**551-1125**	1	SPOOL AS	
	5	1	**295-9577**	1	SEAT	
M	6	1	**099-2374**	2	BOLT-SOCKET HEAD (M5X0.8X12-MM)	
	7	1	**551-1130**	1	SPRING-PILOT	
	8	1	**543-5391**	1	VALVE GP-SOLENOID	
	9	1	**206-9295**	2	SEAL-O-RING	
	10	1	**551-1131**	1	RETAINER	
	11	1	**551-1129**	1	COVER	
	12	1	**551-1128**	1	NUT	
M	13	1	**096-2966**	1	SETSCREW-SOCKET (M10X1.5X30-MM)	
M	14	1	**6V-5683**	3	BOLT (M6X1X16-MM)	
	15	1	**095-1663**	1	SEAL-O-RING	
	16	1	**425-3985**	10	SEAL-RECTANGULAR	
	17	1	**559-3652**	1	SEAL-SQUARE	
	18	1	**551-1133**	1	PLUG	
	19	1	**095-1582**	1	SEAL-O-RING	
	20	1	**551-1126**	1	BODY AS	
	21	1	**371-7201**	10	PLUG	
M	22	1	**096-0001**	5	BOLT-SOCKET HEAD (M8X1.25X40-MM)	
	23	1	**551-1124**	1	LEVER AS	
M	24	1	**5A-3604**	1	BOLT-SOCKET HEAD (M8X1.25X25-MM)	
	25	1	**551-1134**	1	PLUG	

M - METRIC PART

551-1136 **HEAD GP-PUMP (**contd.**)** **i07860707**

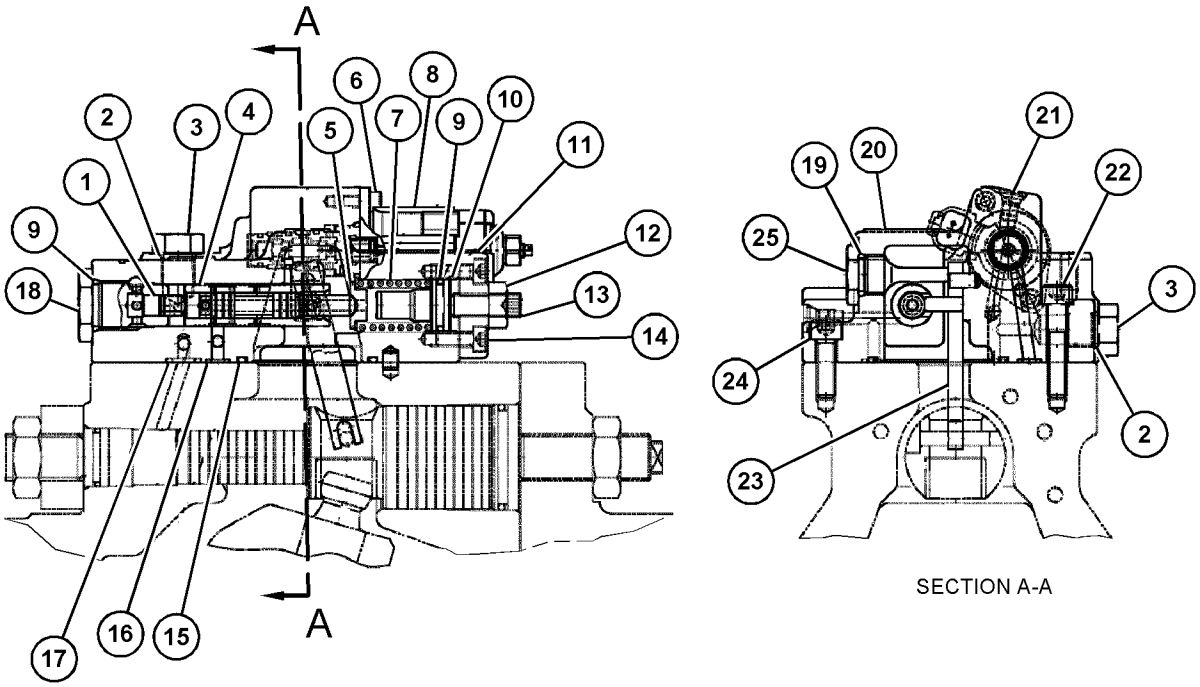

SECTION A-A

GRAPHIC #1 <END> g06307607

553-7279 HEAD GP-PUMP

S/N: SP91-UP

PART OF 524-0924 PUMP GP-PISTON

SMCS-3222, 5070, 5086

i07708619

NOTE	REF NO	GRAPHIC REF	PART NUMBER	QTY	PART NAME 1 2 3 4 5 6 (PRODUCT LEVEL)	SEE PAGE
Y	1	1	**553-7280**	1	HEAD GP-PUMP	450
M	2	1	**8T-8442**	4	BOLT-SOCKET HEAD (M6X1X30-MM)	
	3	1	**280-7870**	1	GASKET	

M - METRIC PART
Y - SEPARATE ILLUSTRATION

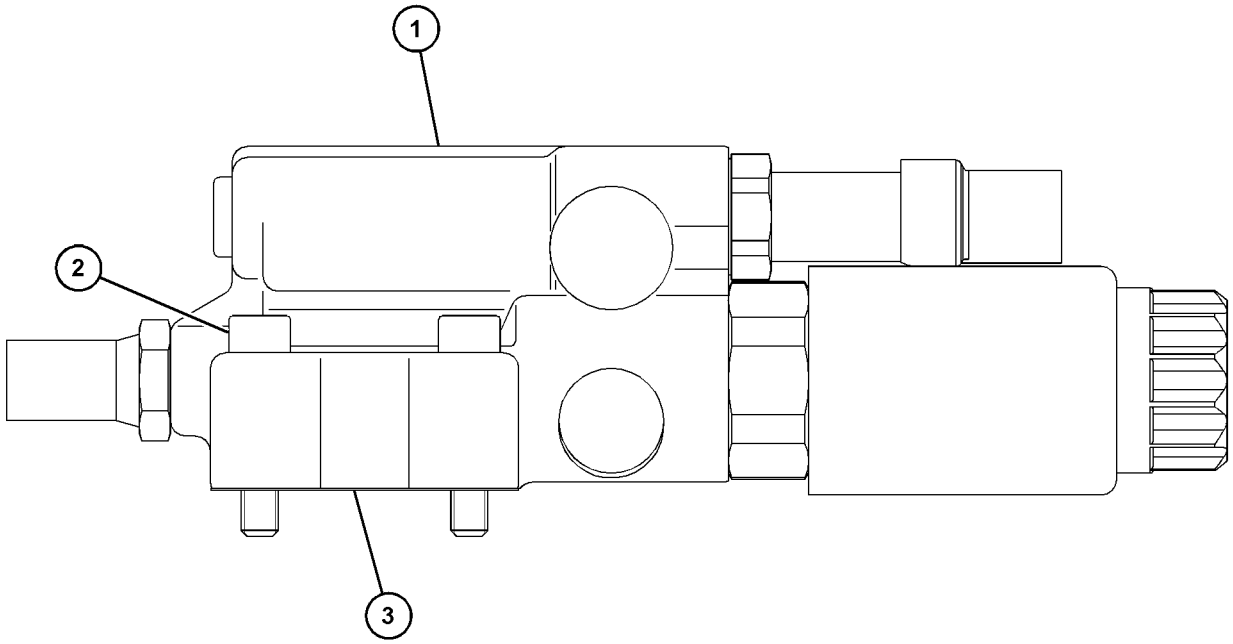

GRAPHIC #1 <END> g06305825

553-7280 HEAD GP-PUMP

S/N: SP91-UP

PART OF 553-7279 HEAD GP-PUMP

SMCS-3222, 5070, 5086 **i07708360**

NOTE	REF NO	GRAPHIC REF	PART NUMBER	QTY	PART NAME 1 2 3 4 5 6 (PRODUCT LEVEL)	SEE PAGE
	1	1	**6E-6528**	1	SEAL	
	2	1	**6E-6527**	1	PLUG	
	3	1	**553-7282**	1	SPOOL	
	4	1	**553-7281**	1	HOUSING	
	5	1	**335-8235**	1	PLUG	
	6	1	**553-7285**	1	SEAT	
	7	1	**553-7290**	1	SPRING	
	8	1	**6E-3272**	1	SEAT	
Y	9	1	**553-7287**	1	VALVE GP-CONTROL	573
	10	1	**553-7302**	1	SOLENOID AS	
	11	1	**553-7307**	1	GUIDE-VALVE	
	12	1	**553-7284**	1	SPOOL	
	13	1	**213-9242**	1	SEAL-O-RING	
	14	1	**213-9247**	1	SEAL-O-RING	
	15	1	**553-7301**	1	RING-BACKUP	
	16	1	**553-7286**	1	SEAT	
	17	1	**6E-3855**	1	SPRING	
	18	1	**469-3316**	1	ORIFICE	
	19	1	**213-9803**	1	PLUG-ORIFICE	
	20	1	**553-7300**	1	SEAL-O-RING	
	21	1	**553-7283**	1	SETSCREW	
	22	1	**553-7298**	1	PLUG	
	23	1	**553-7299**	1	NUT	

Y - SEPARATE ILLUSTRATION

553-7280 **HEAD GP-PUMP (**contd.**)** **i07708360**

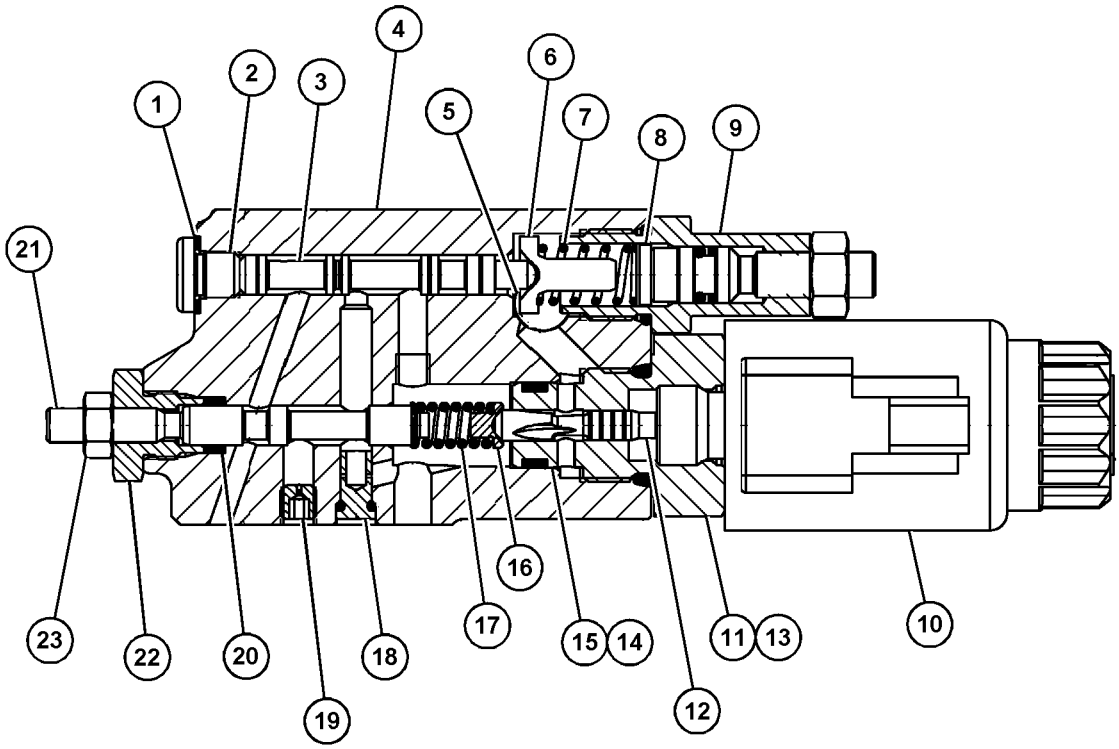

GRAPHIC #1 <END> g06309141

525-2937 HYDRAULIC AR

S/N: SP91-UP

PART OF 526-5211 COMMON AR

SMCS-5050 **i07690738**

NOTE	PART NUMBER	QTY	PART NAME 1 2 3 4 5 6 (PRODUCT LEVEL)	SEE PAGE
Y	*503-9762*	1	LINES GP-BOOM CYLINDER	467
Y	*503-9761*	1	LINES GP-FRONT	486
Y	*503-9760*	1	LINES GP-HYDRAULIC OIL COOLER (REAR)	503
Y	*558-0345*	1	LINES GP-PILOT (CONTROL VALVE)	516
Y	*503-9763*	1	LINES GP-PUMP (MAIN HYDRAULIC)	519
Y	*489-2939*	1	MOUNTING GP-MAIN CONTROL VALVE	534
Y	*488-8576*	1	SWIVEL & MOUNTING GP	545
Y	*503-9756*	1	TANK & MTG GP-HYDRAULIC	553

Y - SEPARATE ILLUSTRATION

<END>

527-7800 HYDRAULIC AR

S/N: SP91-UP

PART OF 523-7792 EXCAVATOR AR

SMCS-5050 **i07513015**

NOTE	PART NUMBER	QTY	PART NAME 1 2 3 4 5 6 (PRODUCT LEVEL)	SEE PAGE
Y	*527-7812*	1	LINES GP-HYDRAULIC PUMP	510
Y	*555-2409*	1	MOUNTING GP-LINES (HYDRAULIC FAN OIL COOLER)	533
Y	*505-0526*	1	PUMP & MTG GP-MAIN HYDRAULIC	535

Y - SEPARATE ILLUSTRATION

<END>

523-7799 LINES AR-BOOM

S/N: SP91-UP

SMCS-5057 **i07527263**

NOTE	PART NUMBER	QTY	PART NAME 1 2 3 4 5 6 (PRODUCT LEVEL)	SEE PAGE
Y	*522-8201*	1	FASTENER GP-WIRING HARNESS (PRESSURE CONTROL)	176
Y	*503-9771*	1	LINES GP-BOOM CYLINDER	469

Y - SEPARATE ILLUSTRATION

<END>

523-7803 LINES AR-BOOM—PRESSURE CONTROL

S/N: SP91-UP

SMCS-5057 **i07527218**

NOTE	PART NUMBER	QTY	PART NAME 1 2 3 4 5 6 (PRODUCT LEVEL)	SEE PAGE
Y	*522-8201*	1	FASTENER GP-WIRING HARNESS (PRESSURE CONTROL)	176
Y	*503-9774*	1	LINES GP-BOOM CYLINDER (PRESSURE CONTROL)	470

Y - SEPARATE ILLUSTRATION

<END>

321-0140 LINES GP-AUXILIARY HYDRAULIC—STICK, HIGH PRESSURE

S/N: SP91-UP

FOR USE WITH 3.2-M (10.5-FT) STICK

SMCS-5057 **i07519212**

NOTE	REF NO	GRAPHIC REF	PART NUMBER	QTY	PART NAME 1 2 3 4 5 6 (PRODUCT LEVEL)	SEE PAGE
	1	1	**173-7916**	8	CLAMP-HALF	
	2	1	**253-6454**	2	TUBE AS	
Y	3	1	**389-2407**	2	VALVE GP-MANUAL (AUXILIARY, SHUTOFF, 2-WAY FLOW)	582
I	4	1	**356-8084**	2	HOSE AS	
	5	1	**1P-3704**	8	SEAL-RECTANGULAR	
	6	1	**1P-5767**	12	FLANGE-HALF	
M	7	1	**8C-8992**	8	BOLT-LOCKING (M12X1.75X30-MM)	
	8	1	**8T-4121**	4	WASHER-HARD (11X21X2.5-MM THK)	
M	9	1	**8T-4183**	8	BOLT (M12X1.75X40-MM)	
M	10	1	**8T-4194**	16	BOLT (M12X1.75X50-MM)	
	11	1	**8T-4223**	32	WASHER-HARD (13.5X25.5X3-MM THK)	
M	12	1	**8T-6685**	4	BOLT (M10X1.5X110-MM)	
	13	1	**5P-0048**	2	COVER	
M	14	1	**8T-4184**	8	BOLT (M12X1.75X45-MM)	
	15	1	**7X-0584**	8	WASHER-HARD (13.5X20.5X2-MM THK)	

I - REFER TO HYDRAULIC INFORMATION SYSTEM
M - METRIC PART
Y - SEPARATE ILLUSTRATION

321-0140 **LINES GP-AUXILIARY HYDRAULIC (**contd.**)** **i07519212**

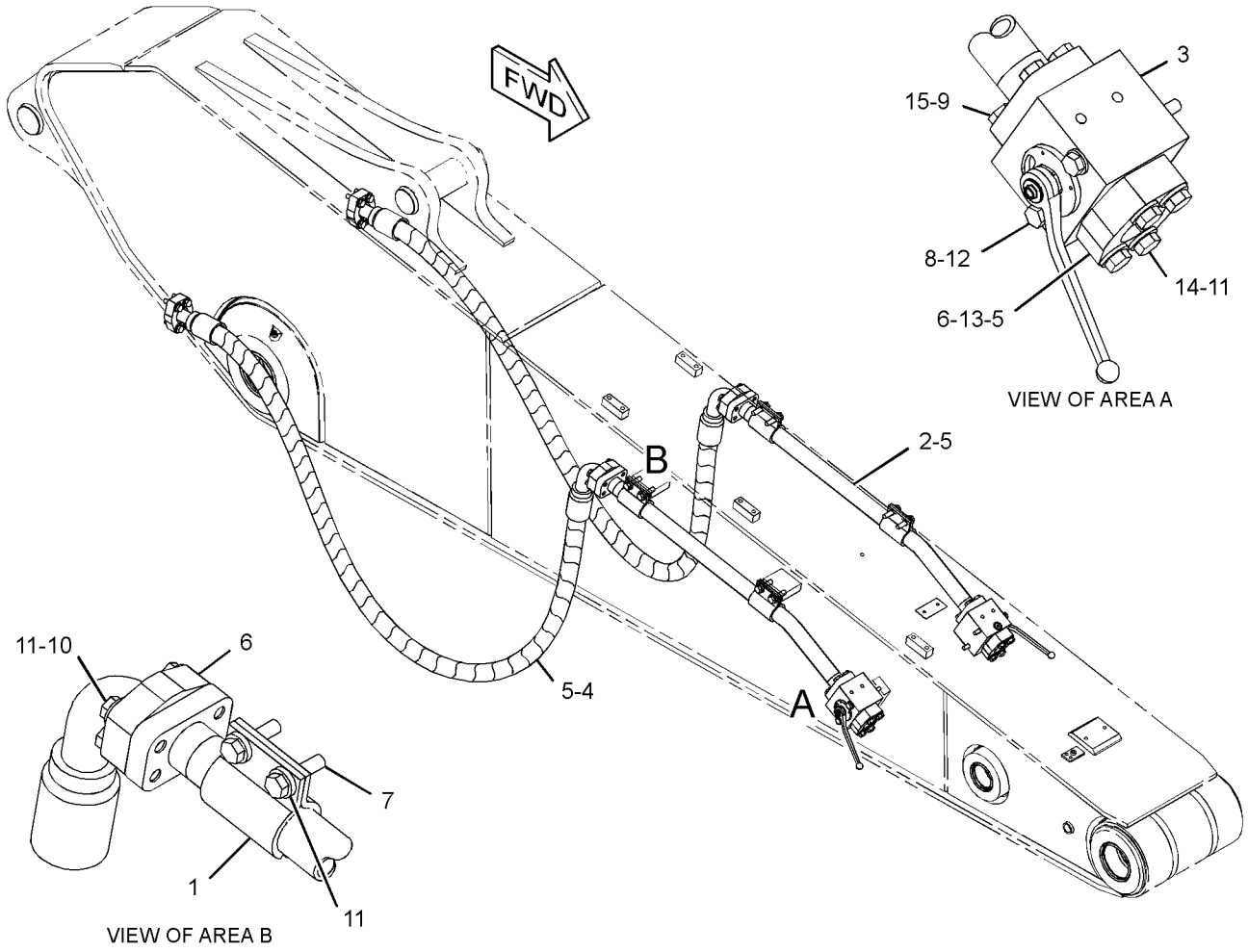

GRAPHIC #1 <END> g03885660

356-8075 LINES GP-AUXILIARY HYDRAULIC—STICK, HIGH PRESSURE

S/N: SP91-UP

FOR USE WITH 2.55-M (8.4-FT) STICK

SMCS-5057 **i07519218**

NOTE	REF NO	GRAPHIC REF	PART NUMBER	QTY	PART NAME 1 2 3 4 5 6 (PRODUCT LEVEL)	SEE PAGE
	1	1	**173-7916**	8	CLAMP-HALF	
	2	1	**262-3347**	2	TUBE AS	
Y	3	1	**389-2407**	2	VALVE GP-MANUAL (AUXILIARY, SHUTOFF, 2-WAY FLOW)	582
I	4	1	**356-8079**	2	HOSE AS	
	5	1	**1P-3704**	8	SEAL-RECTANGULAR	
	6	1	**1P-5767**	12	FLANGE-HALF	
M	7	1	**8C-8992**	8	BOLT-LOCKING (M12X1.75X30-MM)	
	8	1	**8T-4121**	4	WASHER-HARD (11X21X2.5-MM THK)	
M	9	1	**8T-4183**	8	BOLT (M12X1.75X40-MM)	
M	10	1	**8T-4194**	16	BOLT (M12X1.75X50-MM)	
	11	1	**8T-4223**	32	WASHER-HARD (13.5X25.5X3-MM THK)	
M	12	1	**8T-6685**	4	BOLT (M10X1.5X110-MM)	
	13	1	**5P-0048**	2	COVER	
M	14	1	**8T-4184**	8	BOLT (M12X1.75X45-MM)	
	15	1	**7X-0584**	8	WASHER-HARD (13.5X20.5X2-MM THK)	

I - REFER TO HYDRAULIC INFORMATION SYSTEM
M - METRIC PART
Y - SEPARATE ILLUSTRATION

356-8075 **LINES GP-AUXILIARY HYDRAULIC (**contd.**)** **i07519218**

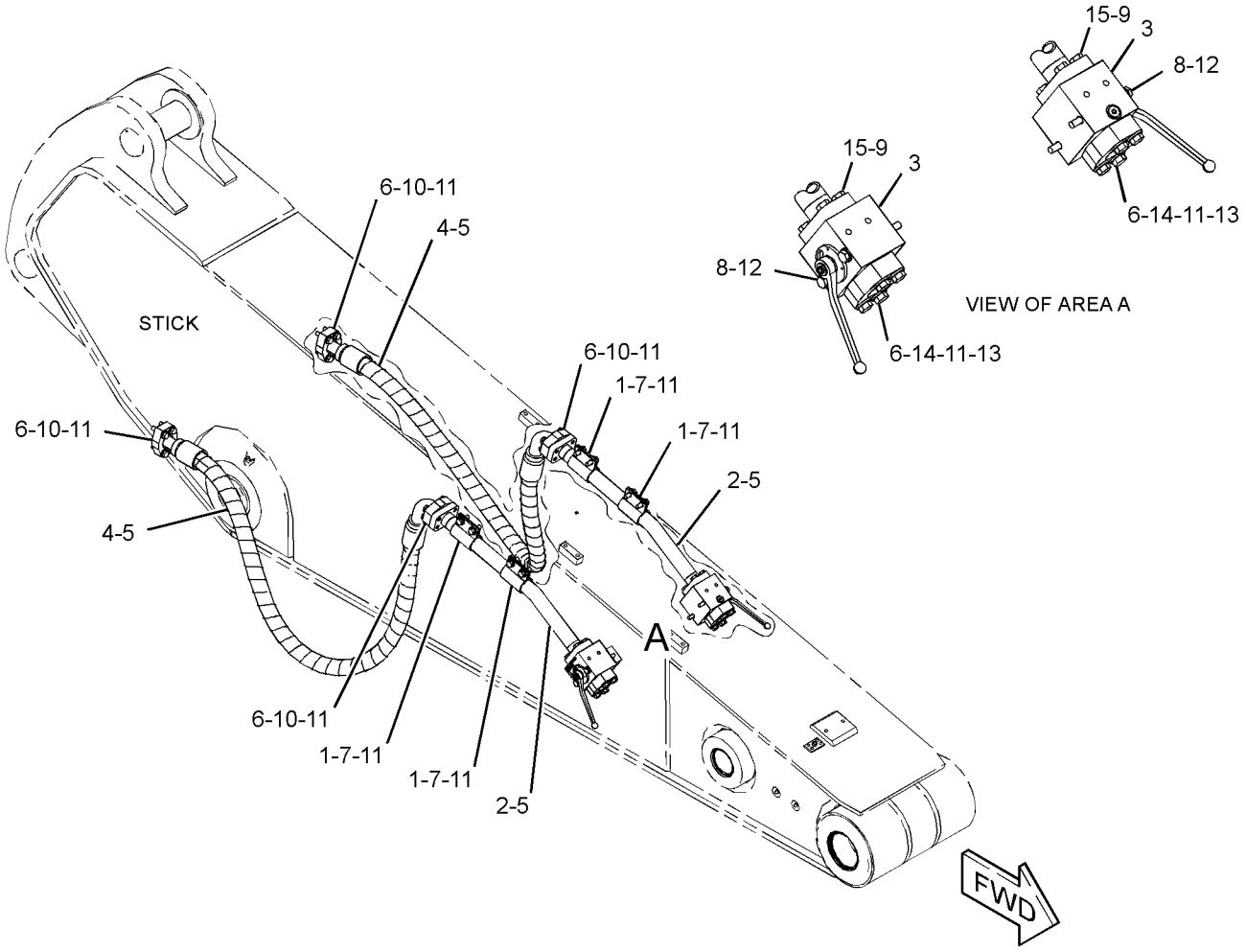

GRAPHIC #1 <END> g06002392

503-9808 LINES GP-AUXILIARY HYDRAULIC—REACH BOOM, HIGH PRESSURE

S/N: SP91-UP

SMCS-5057 **i07520019**

NOTE	REF NO	GRAPHIC REF	PART NUMBER	QTY	PART NAME 1 2 3 4 5 6 (PRODUCT LEVEL)	SEE PAGE
	1	1	**1P-3704**	4	SEAL-RECTANGULAR	
	2	1	**1P-3705**	2	SEAL-RECTANGULAR	
	3	1	**1P-5767**	8	FLANGE-HALF	
	4	1	**7X-0584**	8	WASHER-HARD (13.5X20.5X2-MM THK)	
M	5	1	**8T-4184**	8	BOLT (M12X1.75X45-MM)	
M	6	1	**8T-4194**	16	BOLT (M12X1.75X50-MM)	
	7	1	**8T-4223**	16	WASHER-HARD (13.5X25.5X3-MM THK)	
	8	1	**253-6441**	4	PLATE	
I	9	1	**356-8077**	2	HOSE AS	
M	10	1	**447-1703**	8	BOLT (M16X2X120-MM)	
M	11	1	**447-1707**	4	BOLT (M16X2X60-MM)	
M	12	1	**447-1708**	4	BOLT (M16X2X80-MM)	
M	13	1	**447-1709**	4	BOLT (M16X2X45-MM)	
	14	1	**451-2175**	28	WASHER-HARD (17.5X30X3.5-MM THK)	
M	15	1	**453-1259**	8	BOLT (M16X2X40-MM)	
J	16	1	**512-4576**	1	TUBE GP-HYDRAULIC (BOOM)	
L	16A	1	**1P-3705**	1	SEAL-RECTANGULAR	
L	16B	1	**7X-0584**	4	WASHER-HARD (13.5X20.5X2-MM THK)	
LM	16C	1	**8T-4184**	4	BOLT (M12X1.75X45-MM)	
L	16D	1	**512-4579**	1	TUBE AS	
L	16E	1	**512-4580**	1	TUBE AS	
JL	17	1	**512-4582**	1	TUBE GP-HYDRAULIC (BOOM)	
L	17A	1	**1P-3705**	1	SEAL-RECTANGULAR	
L	17B	1	**7X-0584**	4	WASHER-HARD (13.5X20.5X2-MM THK)	
LM	17C	1	**8T-4184**	4	BOLT (M12X1.75X45-MM)	
L	17D	1	**325-3923**	1	TUBE AS	
L	17E	1	**512-4585**	1	TUBE AS	
	18	1	**512-4592**	2	PLATE	
	19	1	**558-5156**	2	PLATE	
	20	1	**525-2135**	1	TUBE AS	
	21	1	**525-2136**	1	TUBE AS	
	22	1	**306-1354**	16	CLAMP-HALF	

I - REFER TO HYDRAULIC INFORMATION SYSTEM
J - TUBE MAY BE 1-PIECE OR 2-PIECE DESIGN (2-PIECE SHOWN)
L - PARTS REQUIRED ONLY WITH 2-PIECE TUBE DESIGN
M - METRIC PART

503-9808 **LINES GP-AUXILIARY HYDRAULIC (**contd.**)** **i07520019**

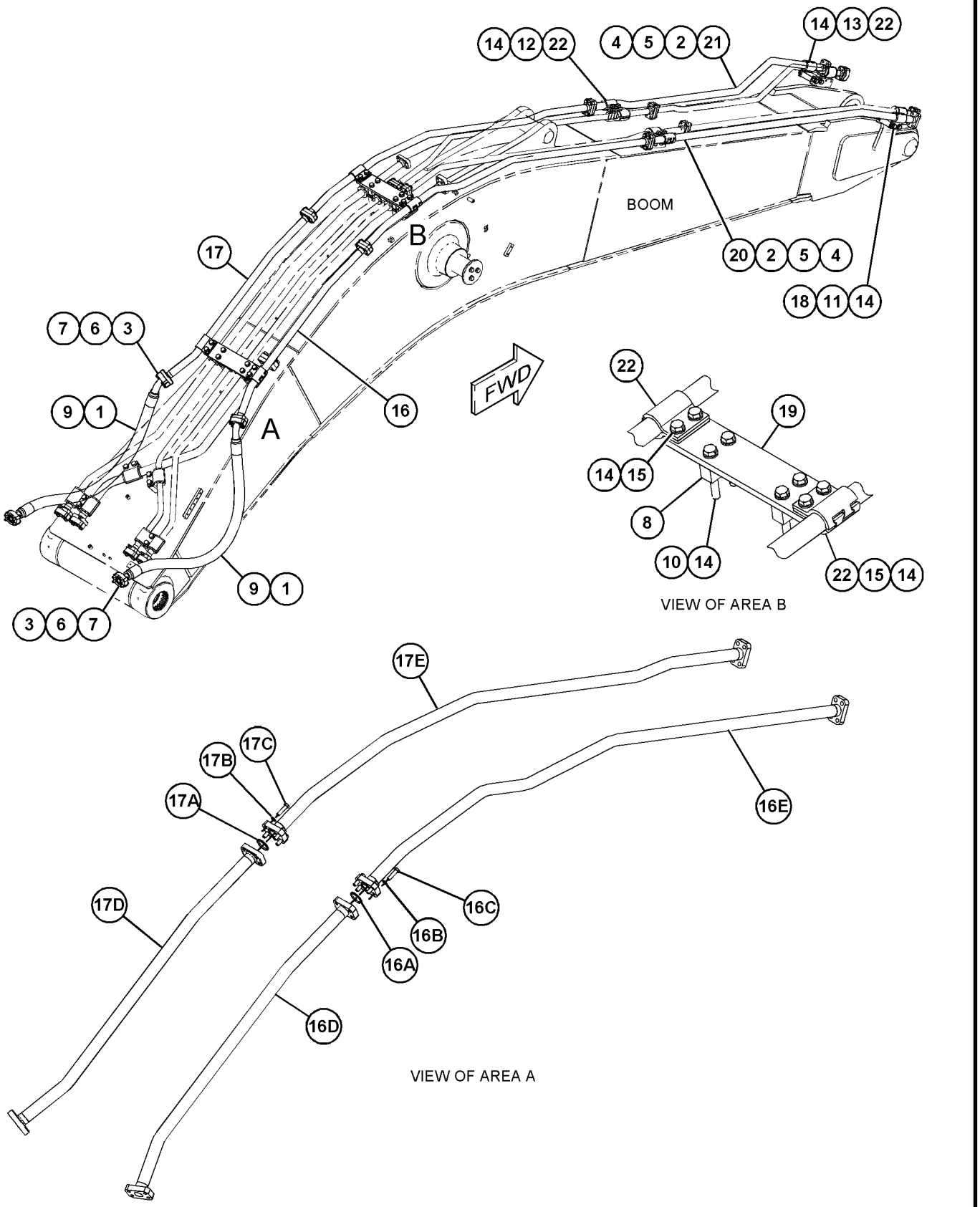

GRAPHIC #1 <END> g06289117

503-9811 LINES GP-AUXILIARY HYDRAULIC—MASS BOOM, HIGH PRESSURE

S/N: SP91-UP

SMCS-5057 **i07520043**

NOTE	REF NO	GRAPHIC REF	PART NUMBER	QTY	PART NAME 1 2 3 4 5 6 (PRODUCT LEVEL)	SEE PAGE
	1	1	**1P-3704**	4	SEAL-RECTANGULAR	
M	2	1	**8T-4184**	16	BOLT (M12X1.75X45-MM)	
M	3	1	**8T-4194**	16	BOLT (M12X1.75X50-MM)	
	4	1	**1P-3705**	4	SEAL-RECTANGULAR	
	5	1	**1P-5767**	8	FLANGE-HALF	
	6	1	**7X-0584**	16	WASHER-HARD (13.5X20.5X2-MM THK)	
	7	1	**8T-4223**	16	WASHER-HARD (13.5X25.5X3-MM THK)	
	8	1	**121-1676**	2	PLATE	
	9	1	**253-6441**	4	PLATE	
	10	1	**341-0182**	1	TUBE AS	
I	11	1	**356-8077**	2	HOSE AS	
M	12	1	**447-1703**	8	BOLT (M16X2X120-MM)	
M	13	1	**447-1708**	4	BOLT (M16X2X80-MM)	
M	14	1	**447-1709**	4	BOLT (M16X2X45-MM)	
M	15	1	**447-1711**	4	BOLT (M16X2X50-MM)	
	16	1	**451-2175**	28	WASHER-HARD (17.5X30X3.5-MM THK)	
M	17	1	**453-1259**	8	BOLT (M16X2X40-MM)	
	18	1	**512-9978**	2	PLATE	
	19	1	**527-9127**	1	TUBE AS	
	20	1	**527-9128**	1	TUBE AS	
	21	1	**527-9129**	1	TUBE AS	
	22	1	**527-9130**	1	TUBE AS	
	23	1	**527-9131**	1	TUBE AS	
	24	1	**306-1354**	16	CLAMP-HALF	

I - REFER TO HYDRAULIC INFORMATION SYSTEM
M - METRIC PART

503-9811 **LINES GP-AUXILIARY HYDRAULIC (**contd.**)** **i07520043**

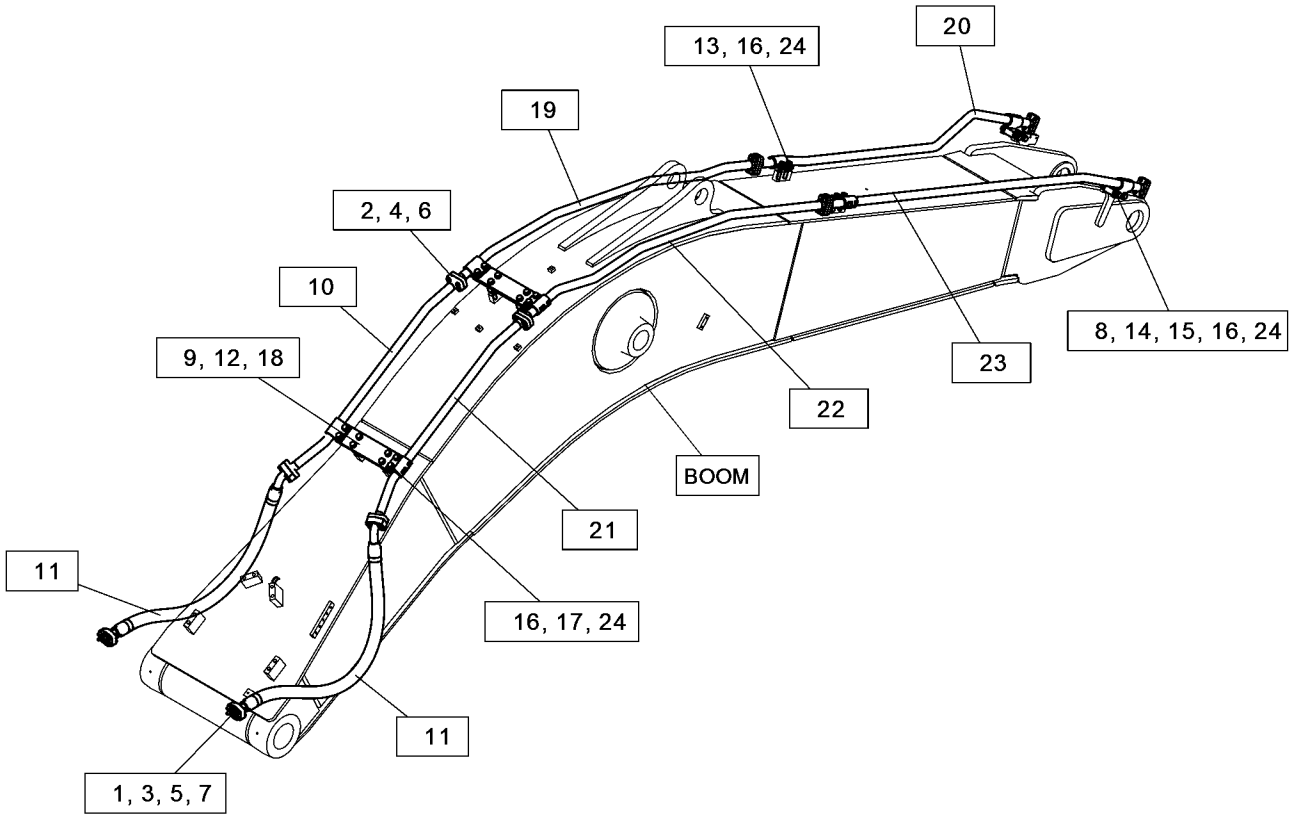

GRAPHIC #1 <END> g06283532

503-9793 LINES GP-BOOM

S/N: SP91-UP

PART OF 512-1349 BOOM AR-1 PIECE LONG

SMCS-5057 **i07527819**

NOTE	REF NO	GRAPHIC REF	PART NUMBER	QTY	PART NAME 1 2 3 4 5 6 (PRODUCT LEVEL)	SEE PAGE
	1	1	**1P-3704**	4	SEAL-RECTANGULAR	
	2	1	**1P-3705**	2	SEAL-RECTANGULAR	
	3	1	**1P-5767**	4	FLANGE-HALF	
	4	1	**5P-8077**	4	FLANGE-HALF	
	5	1	**6H-3615**	4	PLUG-PROTECTION	
M	6	1	**8T-4194**	8	BOLT (M12X1.75X50-MM)	
	7	1	**8T-4223**	20	WASHER-HARD (13.5X25.5X3-MM THK)	
M	8	1	**8T-4956**	4	BOLT (M12X1.75X35-MM)	
	9	1	**9F-2167**	4	SCREW-PURGE (3/8-24X1.164-IN)	
	10	1	**124-1106**	2	CLIP	
	11	1	**124-1107**	3	GROMMET	
	12	1	**124-1108**	4	CLIP	
	13	1	**129-5874**	11	GROMMET	
	14	1	**138-5708**	2	CLIP-HALF	
	15	1	**138-5709**	4	GROMMET	
	16	1	**196-0482**	8	CLIP	
I	17	1	**239-1872**	1	HOSE AS	
I	18	1	**350-0806**	1	HOSE AS	
M	19	1	**447-1707**	24	BOLT (M16X2X60-MM)	
M	20	1	**447-1709**	4	BOLT (M16X2X45-MM)	
	21	1	**451-2175**	28	WASHER-HARD (17.5X30X3.5-MM THK)	
	22	1	**512-4558**	1	TUBE AS	
	23	1	**512-4564**	1	TUBE AS	
	24	1	**512-5335**	2	CLIP	
	25	1	**512-5336**	6	CLIP	
J	26	1	**525-2129**	1	TUBE GP-HYDRAULIC (BOOM)	
L	26A	1	**1P-3704**	1	SEAL-RECTANGULAR	
L	26B	1	**512-4562**	1	TUBE AS	
L	26C	1	**525-2130**	1	TUBE AS	
LM	26D	1	**8T-4184**	4	BOLT (M12X1.75X45-MM)	
L	26E	1	**8T-4223**	4	WASHER-HARD (13.5X25.5X3-MM THK)	
J	27	1	**525-2133**	1	TUBE GP-HYDRAULIC (BOOM)	
L	27A	1	**1P-3704**	1	SEAL-RECTANGULAR	
L	27B	1	**512-4568**	1	TUBE AS	
L	27C	1	**525-2134**	1	TUBE AS	
LM	27D	1	**8T-4184**	4	BOLT (M12X1.75X45-MM)	
L	27E	1	**8T-4223**	4	WASHER-HARD (13.5X25.5X3-MM THK)	
J	28	1	**526-1922**	1	TUBE GP-HYDRAULIC (BOOM)	
L	28A	1	**451-2175**	4	WASHER-HARD (17.5X30X3.5-MM THK)	
LM	28B	1	**453-2837**	4	BOLT (M16X2X55-MM)	
L	28C	1	**512-4556**	1	TUBE AS	
L	28D	1	**526-1923**	1	TUBE AS	
L	28E	1	**1P-3706**	1	SEAL-RECTANGULAR	
	29	1	**538-1151**	1	TUBE AS	
M	30	1	**8T-4184**	8	BOLT (M12X1.75X45-MM)	

I - REFER TO HYDRAULIC INFORMATION SYSTEM
J - TUBE MAY BE 1-PIECE OR 2-PIECE DESIGN (2-PIECE SHOWN)
L - PART(S) REQUIRED ONLY WITH 2-PIECE TUBE DESIGN
M - METRIC PART

503-9793 **LINES GP-BOOM (**contd.**)** **i07527819**

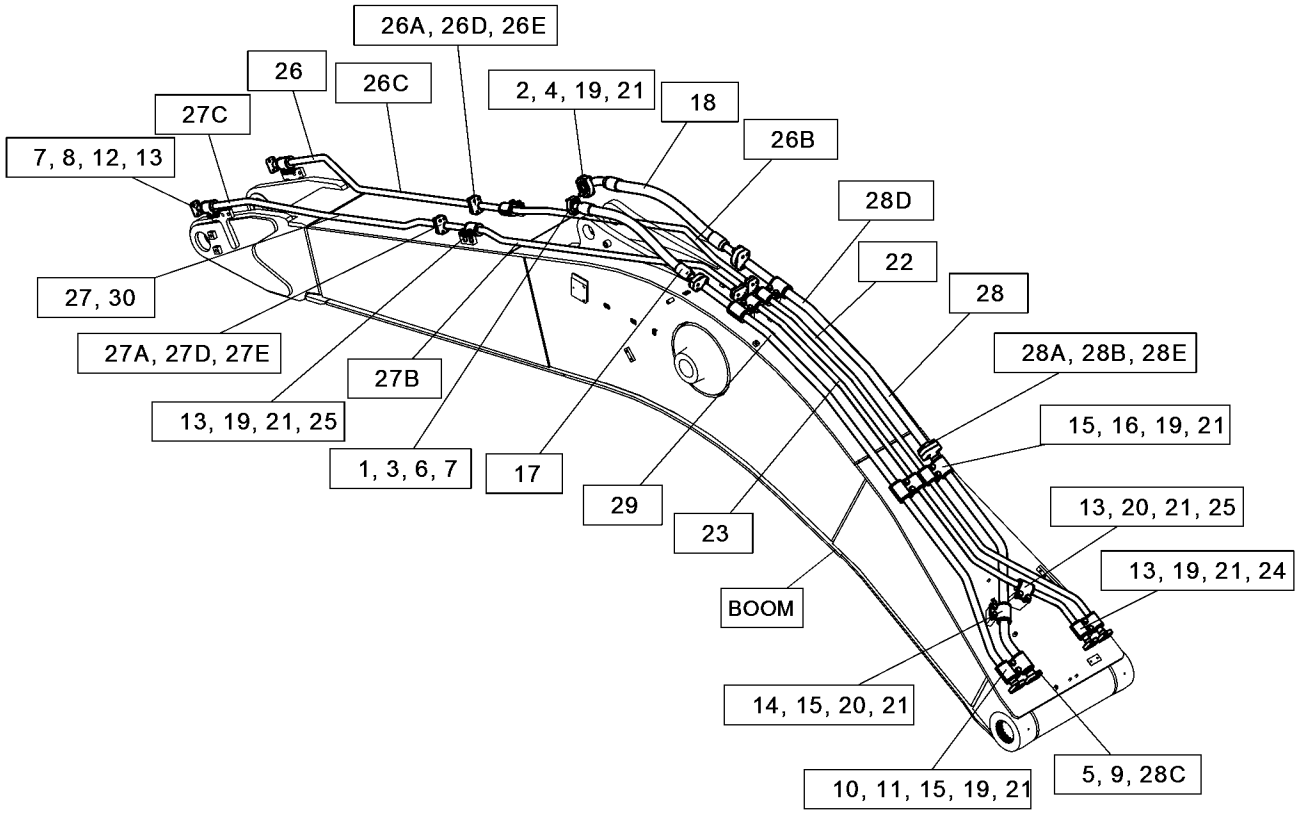

GRAPHIC #1 <END> g06282053

503-9794 LINES GP-BOOM

S/N: SP91-UP

PART OF 512-1348 BOOM AR-1 PIECE SHORT

SMCS-5057 **i07528632**

NOTE	REF NO	GRAPHIC REF	PART NUMBER	QTY	PART NAME 1 2 3 4 5 6 (PRODUCT LEVEL)	SEE PAGE
M	1	1	**8T-4184**	8	BOLT (M12X1.75X45-MM)	
	2	1	**1P-3704**	4	SEAL-RECTANGULAR	
M	3	1	**8T-4194**	8	BOLT (M12X1.75X50-MM)	
	4	1	**1P-3705**	2	SEAL-RECTANGULAR	
	5	1	**1P-5767**	4	FLANGE-HALF	
	6	1	**5P-8077**	4	FLANGE-HALF	
	7	1	**6H-3615**	4	PLUG-PROTECTION	
M	8	1	**8T-4956**	4	BOLT (M12X1.75X35-MM)	
	9	1	**9F-2167**	4	SCREW-PURGE (3/8-24X1.164-IN)	
	10	1	**124-1106**	2	CLIP	
	11	1	**124-1107**	3	GROMMET	
	12	1	**124-1108**	4	CLIP	
	13	1	**129-5874**	11	GROMMET	
	14	1	**138-5708**	2	CLIP-HALF	
	15	1	**138-5709**	4	GROMMET	
	16	1	**196-0482**	8	CLIP	
M	17	1	**447-1707**	24	BOLT (M16X2X60-MM)	
M	18	1	**447-1709**	4	BOLT (M16X2X45-MM)	
	19	1	**451-2175**	28	WASHER-HARD (17.5X30X3.5-MM THK)	
I	20	1	**239-1872**	1	HOSE AS	
I	21	1	**350-0806**	1	HOSE AS	
	22	1	**361-8952**	1	TUBE AS	
	23	1	**512-5335**	2	CLIP	
	24	1	**512-5336**	6	CLIP	
	25	1	**527-9114**	1	TUBE AS	
	26	1	**527-9115**	1	TUBE AS	
	27	1	**527-9116**	1	TUBE AS	
J	28	1	**527-9117**	1	TUBE GP-HYDRAULIC (BOOM)	
L	28A	1	**527-9120**	1	TUBE AS	
L	28B	1	**527-9121**	1	TUBE AS	
L	28C	1	**1P-3704**	1	SEAL-RECTANGULAR	
LM	28D	1	**8T-4184**	4	BOLT (M12X1.75X45-MM)	
L	28E	1	**8T-4223**	4	WASHER-HARD (13.5X25.5X3-MM THK)	
J	29	1	**527-9122**	1	TUBE GP-HYDRAULIC (BOOM)	
L	29A	1	**527-9125**	1	TUBE AS	
L	29B	1	**527-9126**	1	TUBE AS	
L	29C	1	**1P-3704**	1	SEAL-RECTANGULAR	
LM	29D	1	**8T-4184**	4	BOLT (M12X1.75X45-MM)	
L	29E	1	**8T-4223**	4	WASHER-HARD (13.5X25.5X3-MM THK)	
	30	1	**8T-4223**	20	WASHER-HARD (13.5X25.5X3-MM THK)	

I - REFER TO HYDRAULIC INFORMATION SYSTEM
J - TUBE MAY BE 1-PIECE OR 2-PIECE DESIGN (2-PIECE SHOWN)
L - PARTS REQUIRED ONLY WITH 2-PIECE TUBE DESIGN
M - METRIC PART

503-9794 **LINES GP-BOOM (**contd.**)** **i07528632**

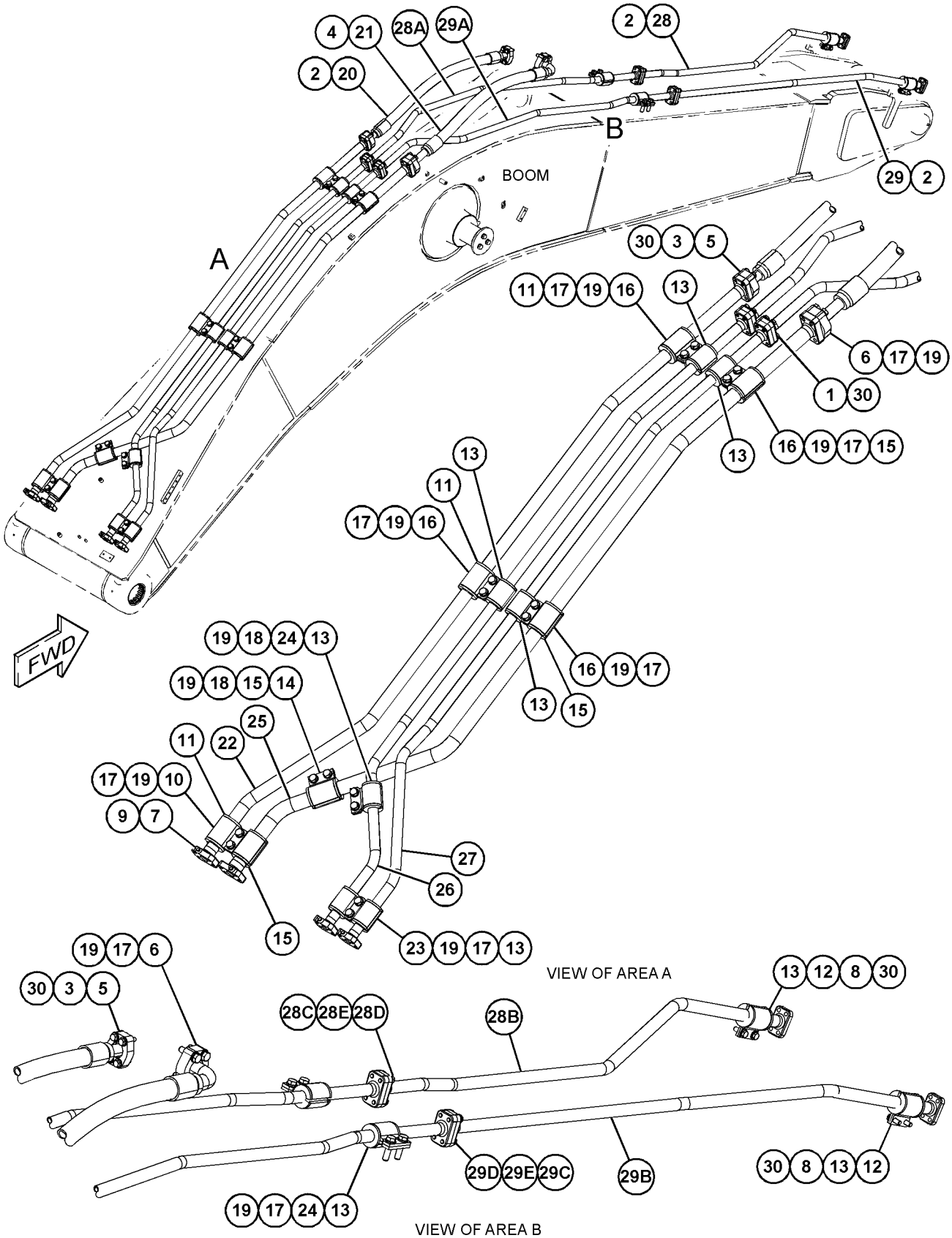

GRAPHIC #1

<END>

g06286585

358-7451 LINES GP-BOOM CYLINDER–LH

S/N: SP91-UP

PART OF 512-0984 CYLINDER & LINES GP-BOOM

SMCS-5057, 5456 **i07529087**

NOTE	REF NO	GRAPHIC REF	PART NUMBER	QTY	PART NAME 1 2 3 4 5 6 (PRODUCT LEVEL)	SEE PAGE
	1	1	**465-5185**	1	SUPPORT AS	
	2	1	**358-7453**	1	TUBE AS	
	3	1	**358-7454**	1	TUBE AS	
	4	1	**465-8763**	1	SUPPORT AS	
	5	1	**362-1095**	2	CLIP-SADDLE	
	6	1	**1P-3703**	2	SEAL-RECTANGULAR	
	7	1	**453-3454**	4	WASHER-HARD (11X21X2.5-MM THK)	
M	8	1	**457-5821**	4	BOLT (M10X1.5X35-MM)	
	9	1	**8T-4223**	10	WASHER-HARD (13.5X25.5X3-MM THK)	
M	10	1	**172-9966**	8	BOLT (M12X1.75X65-MM)	
M	11	1	**8T-4956**	2	BOLT (M12X1.75X35-MM)	

M - METRIC PART

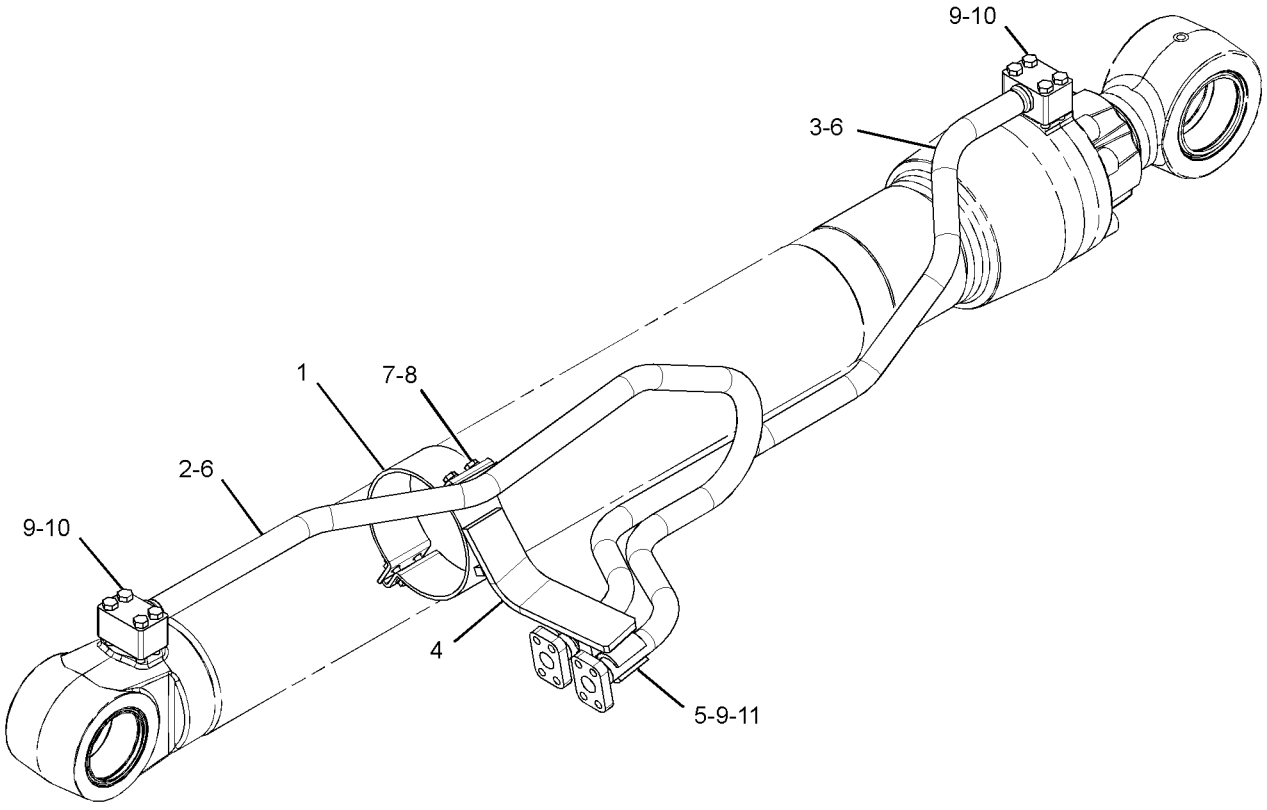

GRAPHIC #1 <END> g06141190

358-7452 LINES GP-BOOM CYLINDER—RH

S/N: SP91-UP

PART OF 512-0985 CYLINDER & LINES GP-BOOM

SMCS-5057, 5456 **i07529098**

NOTE	REF NO	GRAPHIC REF	PART NUMBER	QTY	PART NAME 1 2 3 4 5 6 (PRODUCT LEVEL)	SEE PAGE
	1	1	**465-5185**	1	SUPPORT AS	
	2	1	**358-7455**	1	TUBE AS	
	3	1	**358-7456**	1	TUBE AS	
	4	1	**465-8764**	1	SUPPORT AS	
	5	1	**362-1095**	2	CLIP-SADDLE	
	6	1	**1P-3703**	2	SEAL-RECTANGULAR	
	7	1	**453-3454**	4	WASHER-HARD (11X21X2.5-MM THK)	
M	8	1	**457-5821**	4	BOLT (M10X1.5X35-MM)	
	9	1	**8T-4223**	10	WASHER-HARD (13.5X25.5X3-MM THK)	
M	10	1	**172-9966**	8	BOLT (M12X1.75X65-MM)	
M	11	1	**8T-4956**	2	BOLT (M12X1.75X35-MM)	

M - METRIC PART

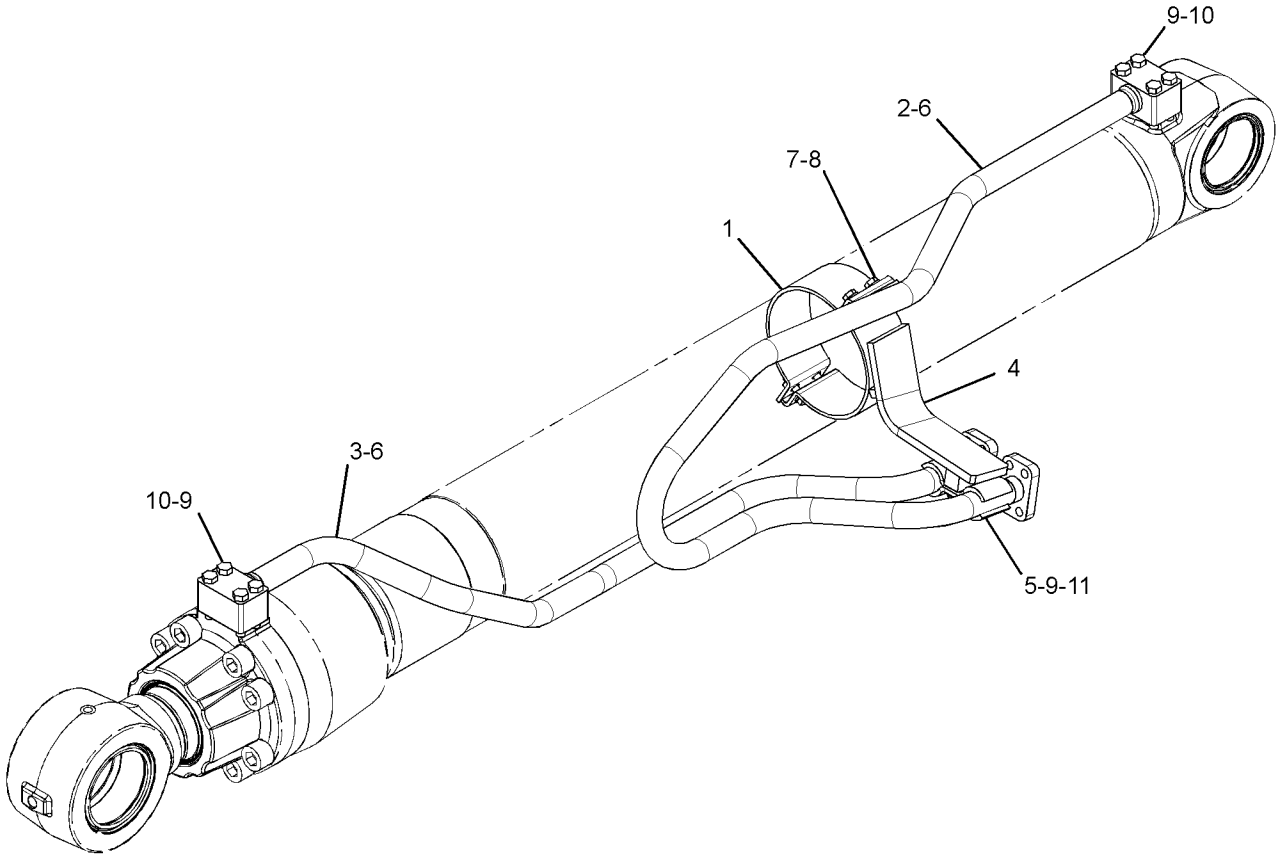

GRAPHIC #1 <END> g06136753

503-9762 LINES GP-BOOM CYLINDER

S/N: SP91-UP

PART OF 525-2937 HYDRAULIC AR

SMCS-5057, 5456 **i07523687**

NOTE	REF NO	GRAPHIC REF	PART NUMBER	QTY	PART NAME 1 2 3 4 5 6 (PRODUCT LEVEL)	SEE PAGE
M	1	1	**8T-4184**	32	BOLT (M12X1.75X45-MM)	
	2	1	**1P-3703**	8	SEAL-RECTANGULAR	
	3	1	**6V-0400**	16	FLANGE-HALF	
	4	1	**8T-4223**	32	WASHER-HARD (13.5X25.5X3-MM THK)	
	5	1	*148-8342*	1	CONNECTOR AS	
		1	**3K-0360**	1	SEAL-O-RING	
		1	**6V-8632**	1	CONNECTOR	
		1	**7J-9108**	1	SEAL-O-RING	
	6	1	*148-8347*	2	ELBOW AS	
					(EACH INCLUDES)	
		1	**3D-2824**	1	SEAL-O-RING	
		1	**6V-9007**	1	ELBOW	
		1	**6V-9746**	1	SEAL-O-RING	
	7	1	*148-8353*	1	ELBOW AS	
		1	**3J-1907**	1	SEAL-O-RING	
		1	**6V-8397**	1	SEAL-O-RING	
		1	**6V-9001**	1	ELBOW	
	8	1	*148-8354*	1	ELBOW AS	
		1	**3K-0360**	1	SEAL-O-RING	
		1	**6V-8398**	1	SEAL-O-RING	
		1	**6V-9002**	1	ELBOW	
	9	1	*148-8414*	1	REDUCER AS	
		1	**6V-8943**	1	REDUCER	
		1	**7J-9108**	1	SEAL-O-RING	
	10	1	*150-3036*	1	ELBOW AS	
		1	**3J-1907**	1	SEAL-O-RING	
		1	**6V-8397**	1	SEAL-O-RING	
		1	**8T-1905**	1	ELBOW	
	11	1	*150-4033*	1	ADAPTER AS	
		1	**6V-9746**	2	SEAL-O-RING	
		1	**6V-9846**	1	TEE	
	12	1	*150-4036*	1	TEE AS	
		1	**3K-0360**	1	SEAL-O-RING	
		1	**118-0911**	1	TEE-O-RING PORT	
	13	1	*285-2520*	1	CONNECTOR AS	
		1	**3D-2824**	1	SEAL-O-RING	
		1	**6V-9746**	1	SEAL-O-RING	
		1	**236-2839**	1	CONNECTOR AS	
I	14	1	**359-8587**	4	HOSE AS	
I	15	1	**505-7669**	1	HOSE AS	

I - REFER TO HYDRAULIC INFORMATION SYSTEM
M - METRIC PART

503-9762 **LINES GP-BOOM CYLINDER (**contd.**)** **i07523687**

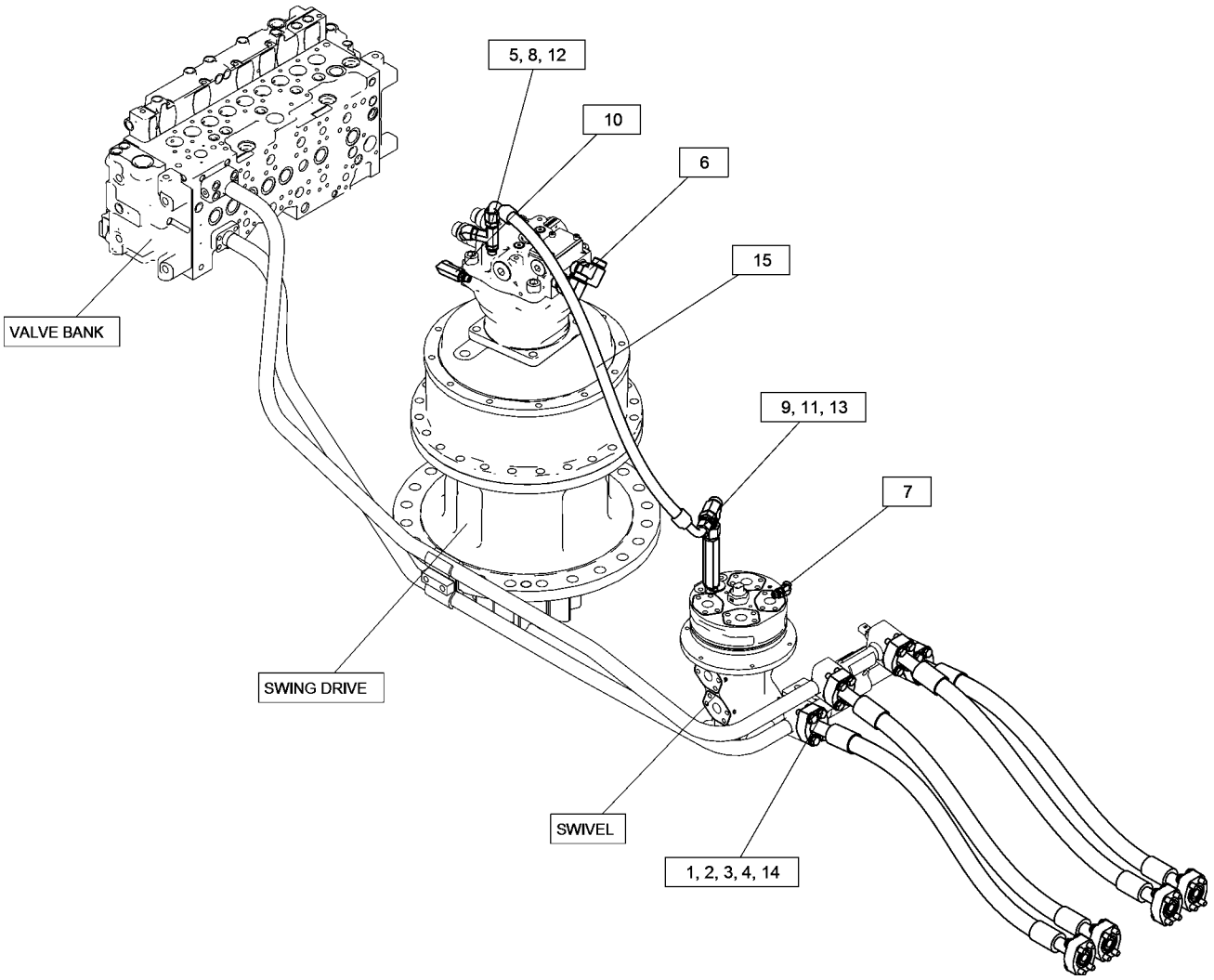

GRAPHIC #1 <END> g06278814

503-9771 LINES GP-BOOM CYLINDER

S/N: SP91-UP

PART OF 523-7799 LINES AR-BOOM

SMCS-5057, 5456 **i07527264**

NOTE	REF NO	GRAPHIC REF	PART NUMBER	QTY	PART NAME 1 2 3 4 5 6 (PRODUCT LEVEL)	SEE PAGE
	1	1	**9F-2167**	1	SCREW-PURGE (3/8-24X1.164-IN)	
	2	1	**133-5828**	1	SUPPORT AS	
	3	1	**325-8995**	1	SUPPORT AS	
Y	4	1	**338-6971**	1	SENSOR GP-PRESSURE (HYDRAULIC OIL) (BOOM CYLINDER, HEAD END)	239
Y	4A	1	**338-6971**	1	SENSOR GP-PRESSURE (HYDRAULIC OIL) (BOOM CYLINDER, ROD END)	239
	5	1	**505-9564**	1	TUBE AS	
	6	1	**511-8284**	1	TUBE AS	
M	7	1	**101-7404**	4	BOLT-SOCKET HEAD (M10X1.5X30-MM)	
	8	1	**108-7550**	3	CLIP	
M	9	1	**170-8553**	4	BOLT-SOCKET HEAD (M12X1.75X40-MM)	
	10	1	**1P-3703**	2	SEAL-RECTANGULAR	
	11	1	**6H-3615**	1	PLUG-PROTECTION	
M	12	1	**8T-4139**	2	BOLT (M12X1.75X30-MM)	
M	13	1	**8T-4194**	2	BOLT (M12X1.75X50-MM)	
	14	1	**8T-4223**	6	WASHER-HARD (13.5X25.5X3-MM THK)	
M	15	1	**8T-4956**	2	BOLT (M12X1.75X35-MM)	

M - METRIC PART
Y - SEPARATE ILLUSTRATION

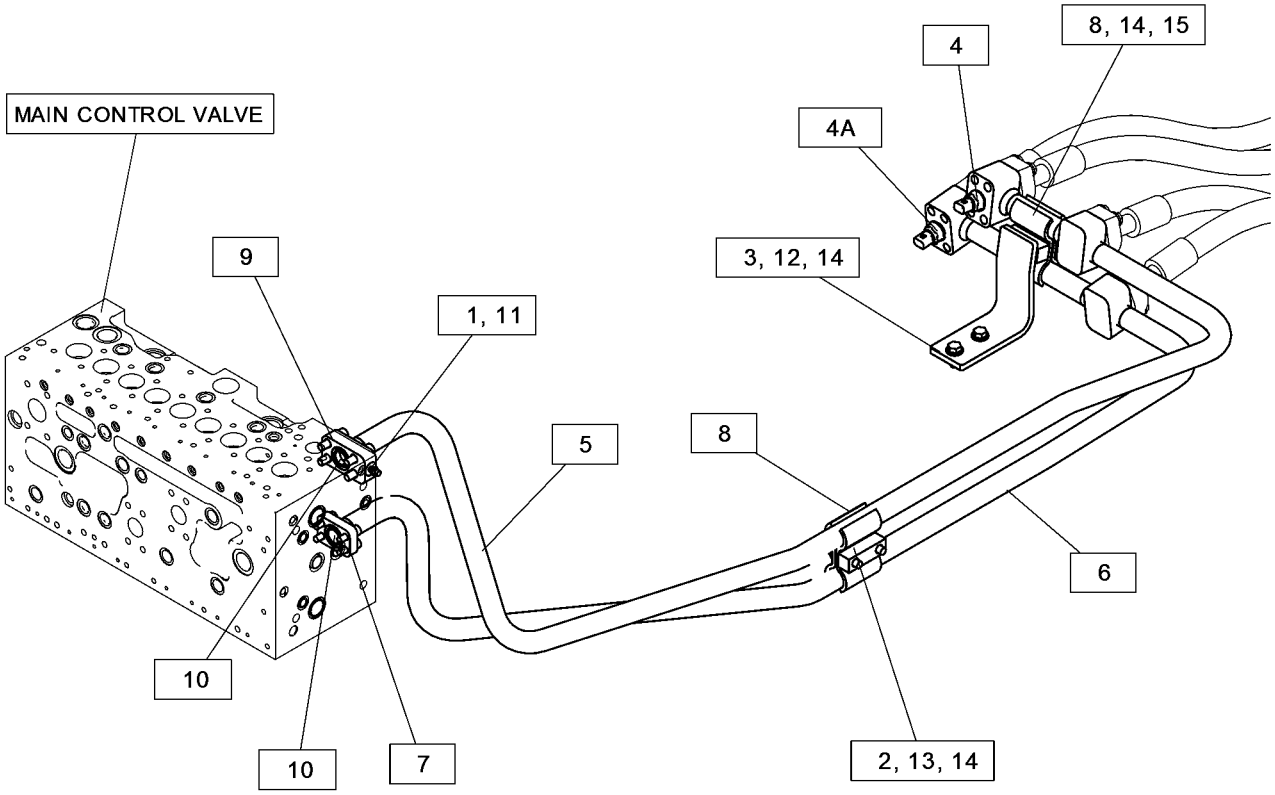

GRAPHIC #1 <END> g06279861

503-9774 LINES GP-BOOM CYLINDER—PRESSURE CONTROL

S/N: SP91-UP

PART OF 523-7803 LINES AR-BOOM

SMCS-5057, 5456 **i07527247**

NOTE	REF NO	GRAPHIC REF	PART NUMBER	QTY	PART NAME 1 2 3 4 5 6 (PRODUCT LEVEL)	SEE PAGE
	1	1	**1P-3704**	1	SEAL-RECTANGULAR	
M	2	1	**7X-2549**	4	BOLT (M12X1.75X100-MM)	
	3	1	**1P-3703**	3	SEAL-RECTANGULAR	
	4	1	**4J-0520**	1	SEAL-O-RING	
	5	1	**6H-3615**	1	PLUG-PROTECTION	
	6	1	**7K-1181**	2	STRAP-CABLE	
	7	1	**7Y-3732**	1	CLIP	
	8	1	**8T-4121**	1	WASHER-HARD (11X21X2.5-MM THK)	
M	9	1	**8T-4136**	1	BOLT (M10X1.5X25-MM)	
M	10	1	**8T-4139**	6	BOLT (M12X1.75X30-MM)	
	11	1	**8T-4223**	18	WASHER-HARD (13.5X25.5X3-MM THK)	
M	12	1	**8T-4956**	6	BOLT (M12X1.75X35-MM)	
	13	1	**9F-2167**	1	SCREW-PURGE (3/8-24X1.164-IN)	
	14	1	**099-8232**	1	SEAL-O-RING	
M	15	1	**101-7404**	4	BOLT-SOCKET HEAD (M10X1.5X30-MM)	
M	16	1	**107-2724**	4	BOLT-SOCKET HEAD (M12X1.75X100-MM)	
	17	1	**108-7550**	2	CLIP	
	18	1	*148-8353*	1	ELBOW AS	
		1	**3J-1907**	1	SEAL-O-RING	
		1	**6V-8397**	1	SEAL-O-RING	
		1	**6V-9001**	1	ELBOW	
	19	1	*148-8355*	1	ELBOW AS	
		1	**5K-9090**	1	SEAL-O-RING	
		1	**6V-9005**	1	ELBOW	
		1	**7M-8485**	1	SEAL-O-RING	
	20	1	*148-8357*	1	ELBOW AS	
		1	**5K-9090**	1	SEAL-O-RING	
		1	**6V-9008**	1	ELBOW	
		1	**7M-8485**	1	SEAL-O-RING	
	21	1	*148-8378*	1	ELBOW AS	
		1	**3J-1907**	1	SEAL-O-RING	
		1	**6V-8397**	1	SEAL-O-RING	
		1	**6V-8724**	1	ELBOW	
	22	1	*148-8408*	1	PLUG AS	
		1	**3D-2824**	1	SEAL-O-RING	
		1	**9S-4183**	1	PLUG (1-1/16-12-THD)	
M	23	1	**170-8553**	4	BOLT-SOCKET HEAD (M12X1.75X40-MM)	
	24	1	**204-8000**	1	MOUNTING-CABLE TIE	
Y	25	1	**297-0370**	1	VALVE GP-CHECK (BOOM PRESSURE CONTROL)	564
Y	26	1	**323-7791**	1	VALVE GP-RELIEF (BOOM PRESSURE CONTROL)	586
	27	1	**325-8995**	1	SUPPORT AS	
Y	28	1	**338-6971**	1	SENSOR GP-PRESSURE (HYDRAULIC OIL) (BOOM CYLINDER, HEAD END)	239
Y	28A	1	**338-6971**	1	SENSOR GP-PRESSURE (HYDRAULIC OIL) (BOOM CYLINDER, ROD END)	239
	29	1	**348-1244**	1	CLIP AS	
	30	1	**505-9564**	1	TUBE AS	
	31	1	**517-6833**	1	TUBE AS	

503-9774 **LINES GP-BOOM CYLINDER** (contd.) **i07527247**

NOTE	REF NO	GRAPHIC REF	PART NUMBER	QTY	PART NAME 1 2 3 4 5 6 (PRODUCT LEVEL)	SEE PAGE
	32	1	**517-6836**	1	TUBE AS	
	33	1	**528-3717**	1	BLOCK	
M	34	1	**101-7398**	4	BOLT-SOCKET HEAD (M10X1.5X40-MM)	
	35	1	**204-2281**	1	STRAP-CABLE	
I	36	1	**556-1592**	1	HOSE AS	
I	37	1	**556-1595**	1	HOSE AS	
	38	1	**556-1596**	1	SUPPORT	
M	39	1	**8T-4194**	2	BOLT (M12X1.75X50-MM)	

I - REFER TO HYDRAULIC INFORMATION SYSTEM
M - METRIC PART
Y - SEPARATE ILLUSTRATION

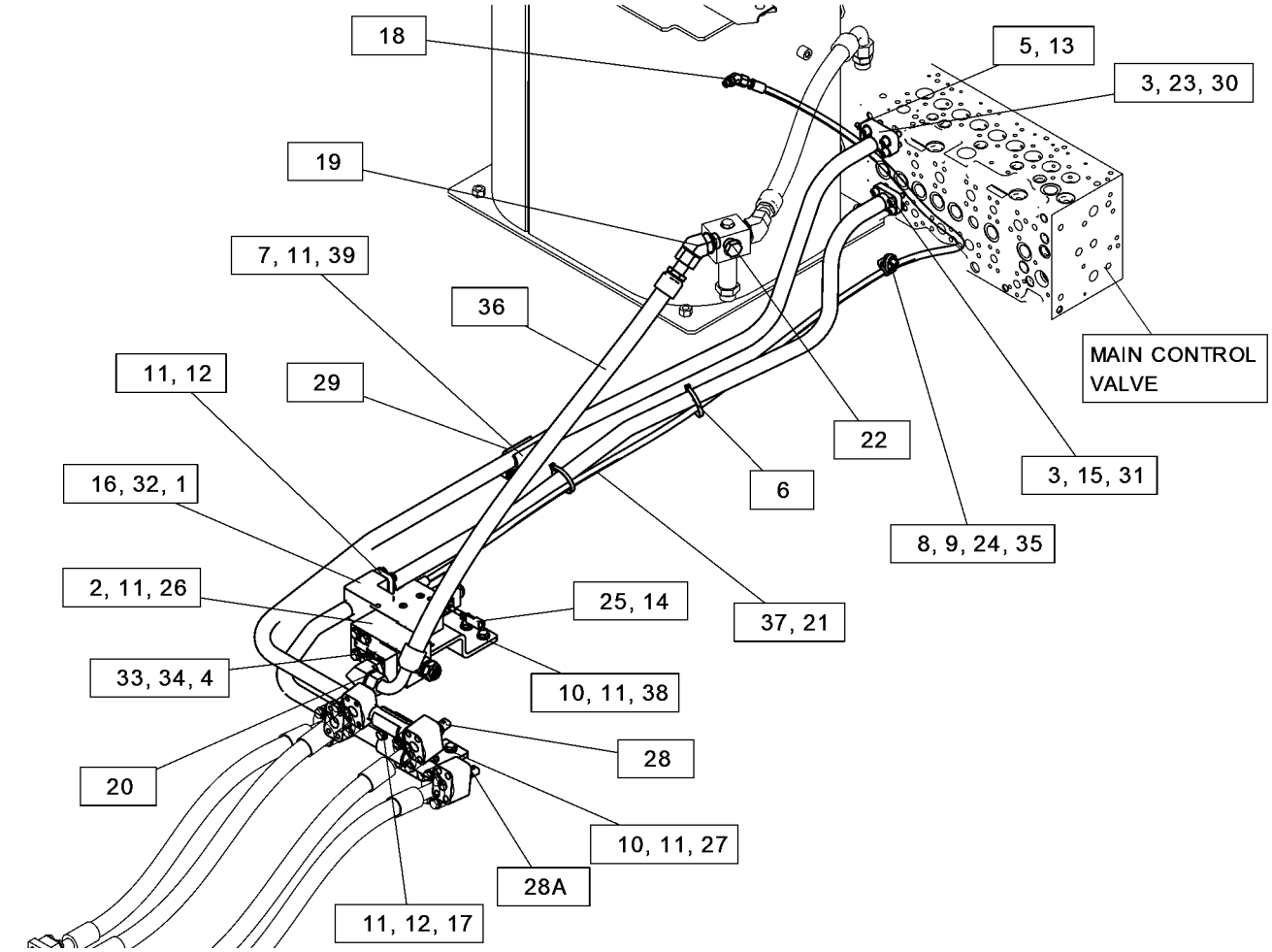

GRAPHIC #1 <END> g06279766

115-8694 LINES GP-BUCKET CYLINDER

S/N: SP91-UP

PART OF 522-0747 CYLINDER & LINES GP-BUCKET

SMCS-5457 **i01685295**

NOTE	REF NO	GRAPHIC REF	PART NUMBER	QTY	PART NAME 1 2 3 4 5 6 (PRODUCT LEVEL)	SEE PAGE
	1	1	**115-8961**	1	TUBE AS	
	2	1	**1P-3704**	1	SEAL-RECTANGULAR	
M	3	1	**8T-4910**	4	BOLT (M12X1.75X60-MM)	
M	4	1	**8T-4139**	4	BOLT (M12X1.75X30-MM)	
	5	1	**8T-4223**	4	WASHER-HARD (13.5X25.5X3-MM THK)	
	6	1	**7Y-3732**	4	CLIP	
	7	1	**124-0910**	2	SUPPORT AS	
	8	1	**8T-4121**	8	WASHER-HARD (11X21X2.5-MM THK)	
M	9	1	**8T-4196**	8	BOLT (M10X1.5X35-MM)	
	10	1	**124-0911**	2	SUPPORT AS	

M - METRIC PART

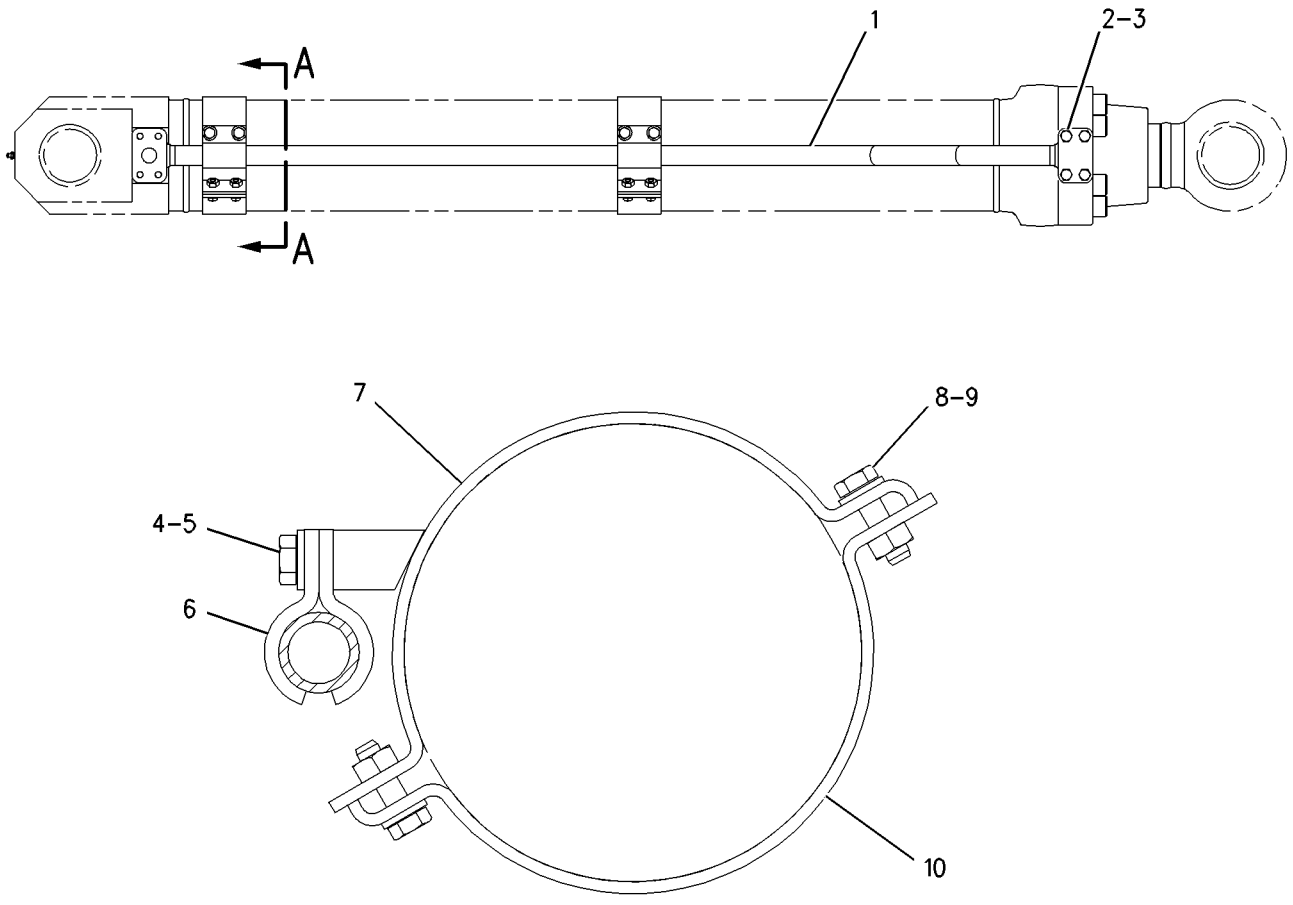

SECTION A-A

GRAPHIC #1 <END> g00673835

239-1627 LINES GP-BUCKET CYLINDER

S/N: SP91-UP

PART OF 512-0999 CYLINDER & LINES GP-BUCKET

SMCS-5457 **i02505072**

NOTE	REF NO	GRAPHIC REF	PART NUMBER	QTY	PART NAME 1 2 3 4 5 6 (PRODUCT LEVEL)	SEE PAGE
	1	1	**7Y-3732**	2	CLIP	
	2	1	**119-2378**	1	SUPPORT AS	
	3	1	**119-2379**	1	SUPPORT AS	
	4	1	**239-1986**	1	TUBE AS	
	5	1	**1P-3703**	1	SEAL-RECTANGULAR	
	6	1	**8T-4121**	4	WASHER-HARD (11X21X2.5-MM THK)	
M	7	1	**8T-4139**	2	BOLT (M12X1.75X30-MM)	
M	8	1	**8T-4196**	4	BOLT (M10X1.5X35-MM)	
	9	1	**8T-4223**	2	WASHER-HARD (13.5X25.5X3-MM THK)	
M	10	1	**8T-4910**	4	BOLT (M12X1.75X60-MM)	

M - METRIC PART

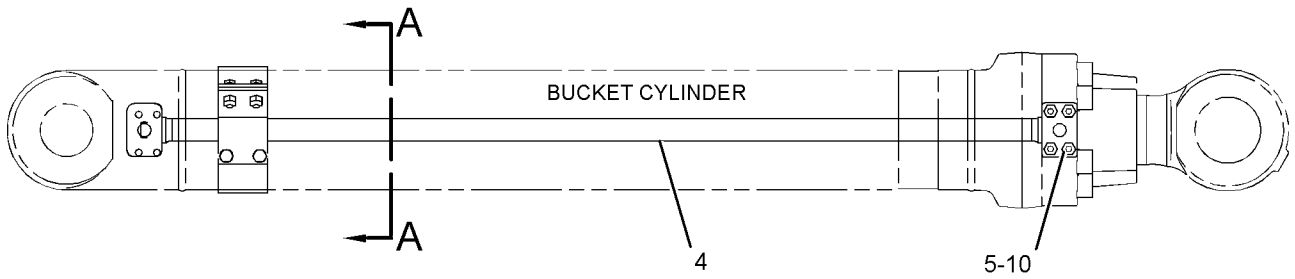

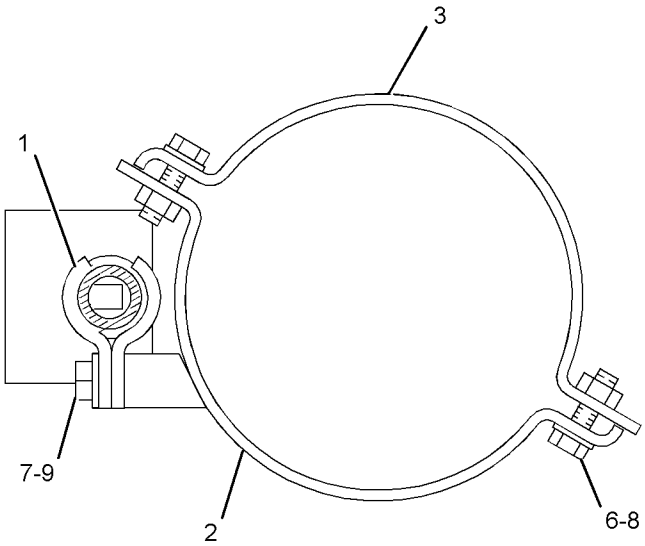

GRAPHIC #1 <END> g01154022

253-6501 LINES GP-COUPLER—STICK

S/N: SP91-UP

FOR USE WITH 2.55 TO 2.65-M (8.4 TO 8.7-FT) STICK

SMCS-5057, 5133

i06588726

NOTE	REF NO	GRAPHIC REF	PART NUMBER	QTY	PART NAME 1 2 3 4 5 6 (PRODUCT LEVEL)	SEE PAGE
	1	1	**9X-6582**	1	NUT (13/16-16-THD)	
I	2	1	**382-7079**	2	HOSE AS	
	3	1	**253-6688**	1	TUBE AS	
	4	1	**253-6691**	1	TUBE AS	
	5	1	*148-8415*	1	REDUCER AS	
		1	**6V-8397**	1	SEAL-O-RING	
		1	**6V-8936**	1	REDUCER	
	6	1	*148-8419*	1	REDUCER AS	
		1	**4J-5477**	1	SEAL-O-RING	
		1	**6V-8935**	1	REDUCER	
	7	1	**5Q-4212**	12	CLIP	
	8	1	**6V-8398**	4	SEAL-O-RING	
	9	1	**8T-4223**	12	WASHER-HARD (13.5X25.5X3-MM THK)	
M	10	1	**8T-4956**	12	BOLT (M12X1.75X35-MM)	

I - REFER TO HYDRAULIC INFORMATION SYSTEM
M - METRIC PART

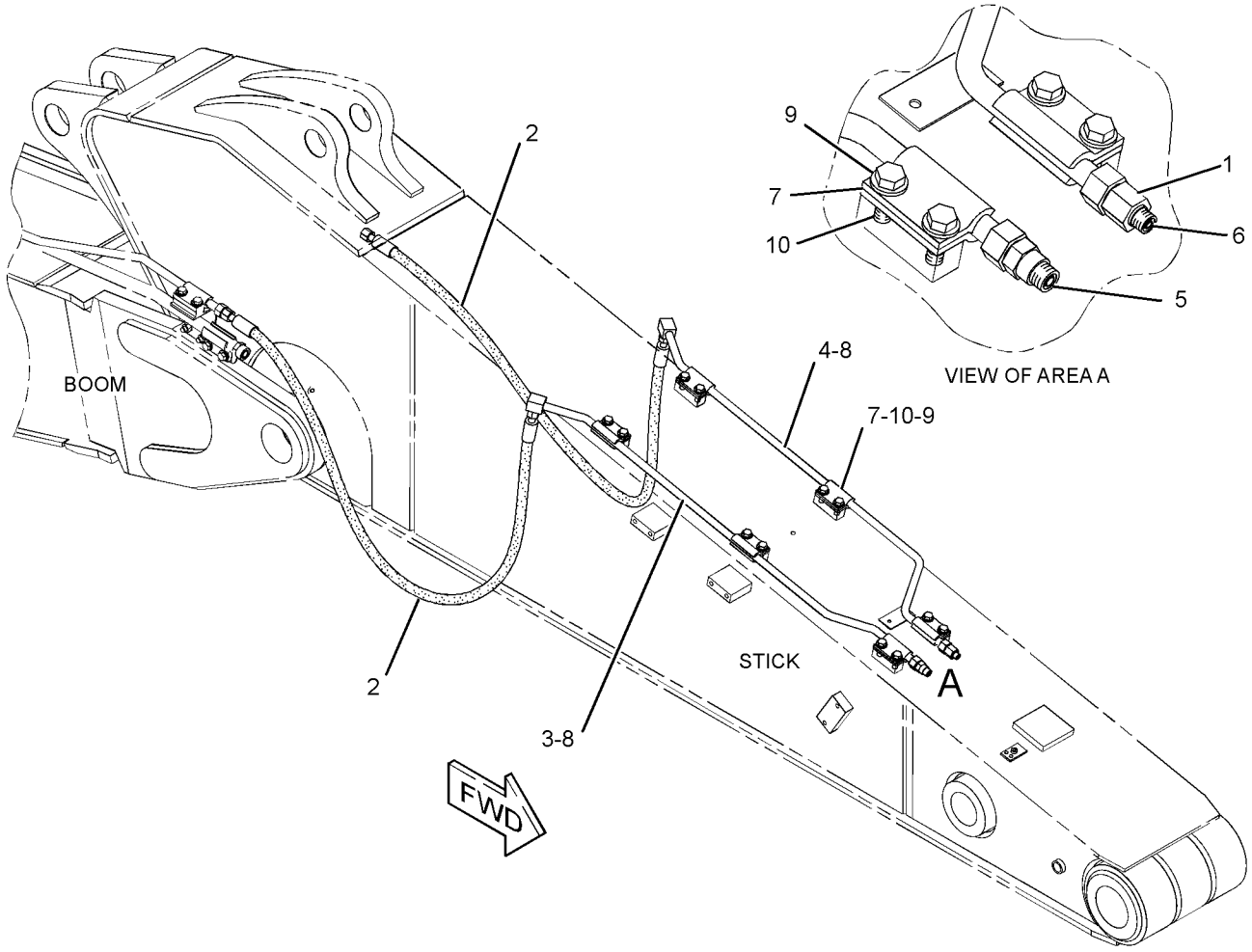

GRAPHIC #1 <END> g01191358

275-7738 LINES GP-COUPLER

S/N: SP91-UP

PART OF 275-7752 COUPLER AR-QUICK

SMCS-5057, 5133

i05520757

NOTE	REF NO	GRAPHIC REF	PART NUMBER	QTY	PART NAME 1 2 3 4 5 6 (PRODUCT LEVEL)	SEE PAGE
	1	1	*148-8419*	1	REDUCER AS (ORFS)	
		1	**4J-5477**	1	SEAL-O-RING	
		1	**6V-8935**	1	REDUCER	
	2	1	**6V-8554**	1	NUT (13/16-16-THD)	
	3	1	**7K-1181**	4	STRAP-CABLE	
	4	1	**6V-0405**	2	SEAL-BONDED	
	5	1	**8T-7910**	2	ADAPTER	
	6	1	**8T-8887**	2	CONNECTOR	
	7	1	**3J-1907**	2	SEAL-O-RING	
	8	1	**6V-8397**	2	SEAL-O-RING	
	9	1	*148-8384*	2	ELBOW AS	
					(EACH INCLUDES)	
		1	**4J-5477**	2	SEAL-O-RING	
		1	**6V-8979**	1	ELBOW	
	10	1	**2P-1279**	2	LOCKNUT (9/16-18-THD)	
M	11	1	**8T-4137**	2	BOLT (M10X1.5X20-MM)	
	12	1	**8T-4121**	2	WASHER-HARD (11X21X2.5-MM THK)	
	13	1	**277-6304**	1	BRACKET AS	
I	14	1	**277-9864**	2	HOSE AS	
I	15	1	**277-9865**	2	HOSE AS	

I - REFER TO HYDRAULIC INFORMATION SYSTEM
M - METRIC PART

275-7738 **LINES GP-COUPLER (**contd.**)** **i05520757**

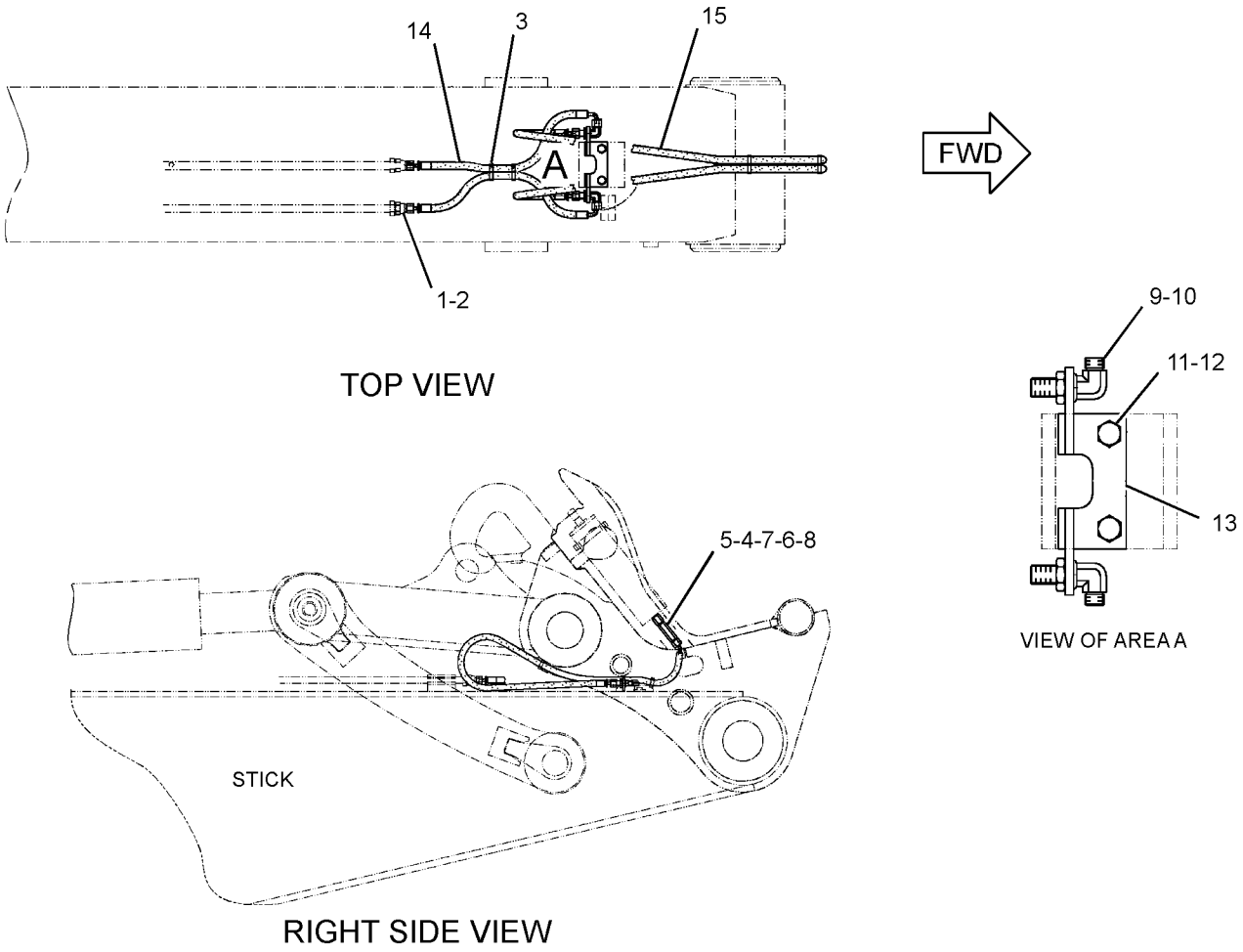

GRAPHIC #1 <END> g01260761

321-0150 LINES GP-COUPLER

S/N: SP91-UP

FOR USE WITH 3.2-M (10.5-FT) STICK

SMCS-5057, 5133 **i07519213**

NOTE	REF NO	GRAPHIC REF	PART NUMBER	QTY	PART NAME 1 2 3 4 5 6 (PRODUCT LEVEL)	SEE PAGE
	1	1	**9X-6582**	1	NUT (13/16-16-THD)	
	2	1	**253-6548**	1	TUBE AS	
	3	1	**253-6551**	1	TUBE AS	
I	4	1	**368-1565**	2	HOSE AS	
	5	1	*148-8415*	1	REDUCER AS	
		1	**6V-8397**	1	SEAL-O-RING	
		1	**6V-8936**	1	REDUCER	
	6	1	*148-8419*	1	REDUCER AS	
		1	**4J-5477**	1	SEAL-O-RING	
		1	**6V-8935**	1	REDUCER	
	7	1	**5Q-4212**	12	CLIP	
	8	1	**6V-8398**	4	SEAL-O-RING	
	9	1	**8T-4223**	12	WASHER-HARD (13.5X25.5X3-MM THK)	
M	10	1	**8T-4956**	12	BOLT (M12X1.75X35-MM)	

I - REFER TO HYDRAULIC INFORMATION SYSTEM
M - METRIC PART

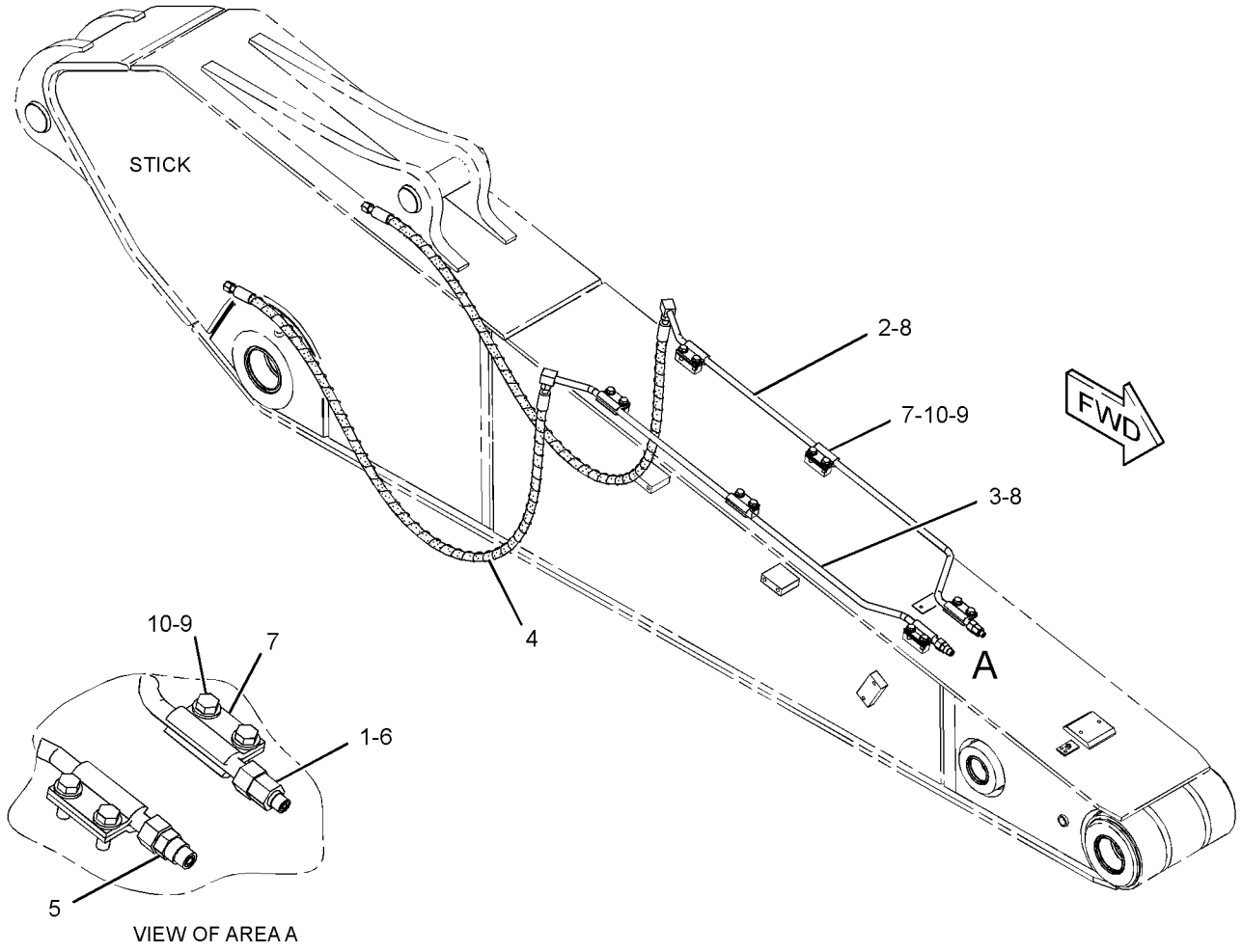

GRAPHIC #1 <END> g02222333

503-9810 LINES GP-COUPLER—REACH BOOM

S/N: SP91-UP

SMCS-5057, 5133 **i07520028**

NOTE	REF NO	GRAPHIC REF	PART NUMBER	QTY	PART NAME 1 2 3 4 5 6 (PRODUCT LEVEL)	SEE PAGE
M	1	1	**8T-4139**	16	BOLT (M12X1.75X30-MM)	
M	2	1	**8T-4648**	2	BOLT (M12X1.75X70-MM)	
	3	1	**6V-8397**	2	SEAL-O-RING	
	4	1	**6V-8398**	4	SEAL-O-RING	
	5	1	**8T-4223**	22	WASHER-HARD (13.5X25.5X3-MM THK)	
M	6	1	**8T-4956**	4	BOLT (M12X1.75X35-MM)	
	7	1	**135-3980**	2	CLIP	
	8	1	**179-5253**	1	PLATE	
	9	1	**193-6662**	1	PLATE	
	10	1	**253-6444**	8	CLIP	
M	11	1	**447-1707**	4	BOLT (M16X2X60-MM)	
M	12	1	**447-1708**	2	BOLT (M16X2X80-MM)	
	13	1	**451-2175**	6	WASHER-HARD (17.5X30X3.5-MM THK)	
M	14	1	**451-2183**	4	NUT (M16X2-THD)	
	15	1	**468-4633**	8	CLIP AS	
J	16	1	**512-4616**	1	TUBE GP-HYDRAULIC (BOOM)	
L	16A	1	**6V-8398**	1	SEAL-O-RING	
L	16B	1	**512-4619**	1	TUBE AS	
L	16C	1	**512-4623**	1	TUBE AS	
J	17	1	**512-4631**	1	TUBE GP-HYDRAULIC (BOOM)	
L	17A	1	**6V-8398**	1	SEAL-O-RING	
L	17B	1	**512-4634**	1	TUBE AS	
L	17C	1	**512-4642**	1	TUBE AS	
	18	1	**512-4650**	2	SUPPORT AS	
	19	1	**525-2145**	1	TUBE AS	
	20	1	**525-2150**	1	TUBE AS	
	21	1	**5Q-4212**	4	CLIP	

J - TUBE MAY BE 1-PIECE OR 2-PIECE DESIGN (2-PIECE SHOWN)
L - PARTS REQUIRED ONLY WITH 2-PIECE TUBE DESIGN
M - METRIC PART

503-9810 **LINES GP-COUPLER (**contd.**)** **i07520028**

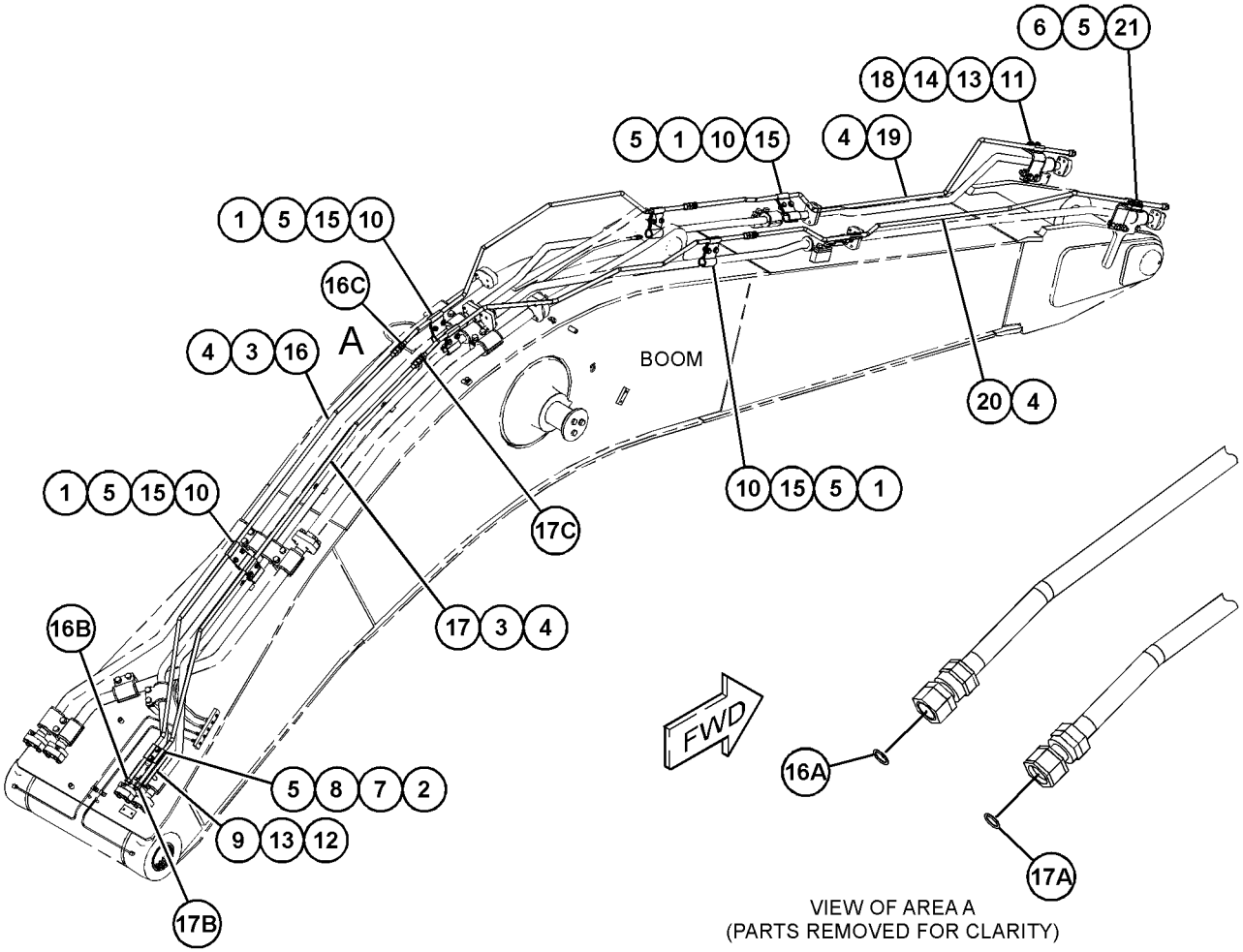

GRAPHIC #1 <END> g06289400

503-9812 LINES GP-COUPLER–MASS BOOM

S/N: SP91-UP

SMCS-5057, 5133 **i07520047**

NOTE	REF NO	GRAPHIC REF	PART NUMBER	QTY	PART NAME 1 2 3 4 5 6 (PRODUCT LEVEL)	SEE PAGE
M	1	1	**8T-4139**	16	BOLT (M12X1.75X30-MM)	
M	2	1	**8T-4648**	2	BOLT (M12X1.75X70-MM)	
	3	1	**6V-8397**	2	SEAL-O-RING	
	4	1	**6V-8398**	6	SEAL-O-RING	
	5	1	**135-3980**	2	CLIP	
	6	1	**179-5253**	1	PLATE	
	7	1	**193-6662**	1	PLATE	
	8	1	**247-9304**	2	PLATE	
	9	1	**253-6444**	8	CLIP	
M	10	1	**447-1704**	4	BOLT (M16X2X90-MM)	
M	11	1	**447-1708**	2	BOLT (M16X2X80-MM)	
	12	1	**451-2175**	6	WASHER-HARD (17.5X30X3.5-MM THK)	
M	13	1	**451-2183**	4	NUT (M16X2-THD)	
	14	1	**468-4633**	8	CLIP AS	
	15	1	**512-4650**	2	SUPPORT AS	
	16	1	**527-9138**	1	TUBE AS	
	17	1	**527-9142**	1	TUBE AS	
	18	1	**527-9146**	1	TUBE AS	
	19	1	**527-9150**	1	TUBE AS	
	20	1	**527-9154**	1	TUBE AS	
	21	1	**527-9158**	1	TUBE AS	
	22	1	**5Q-4212**	4	CLIP	
	23	1	**8T-4223**	22	WASHER-HARD (13.5X25.5X3-MM THK)	
M	24	1	**8T-4956**	4	BOLT (M12X1.75X35-MM)	

M - METRIC PART

503-9812 **LINES GP-COUPLER (**contd.**)** **i07520047**

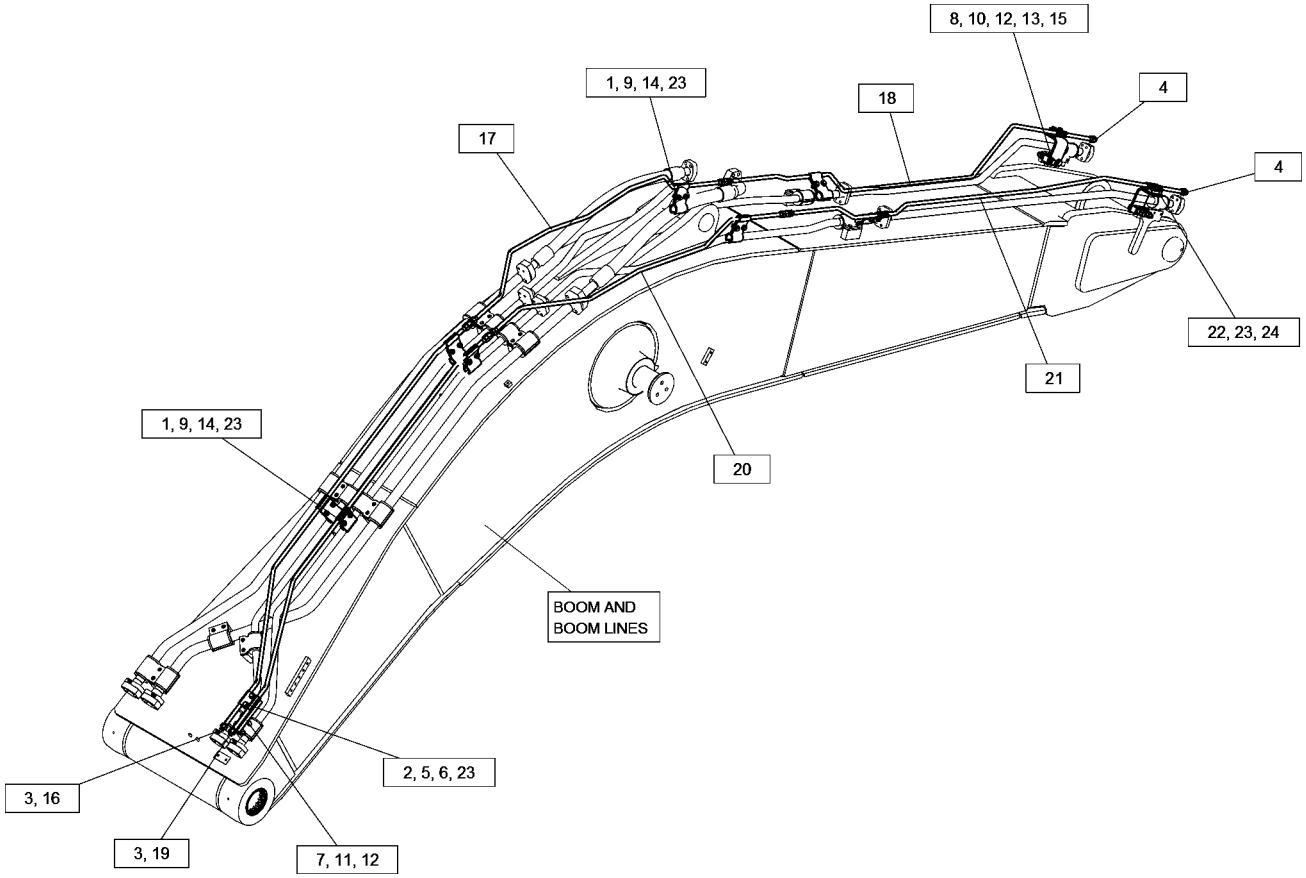

GRAPHIC #1 <END> g06283607

503-9829 LINES GP-DRAIN—HYDRAULIC OIL

S/N: SP91-UP

PART OF 546-6209 OIL CHANGE AR-HIGH SPEED

SMCS-5057 **i07526846**

NOTE	REF NO	GRAPHIC REF	PART NUMBER	QTY	PART NAME 1 2 3 4 5 6 (PRODUCT LEVEL)	SEE PAGE
	1	1	**118-0166**	1	FITTING (QUICK DISCONNECT, MALE)	
I	2	1	**289-5506**	1	HOSE AS	
	3	1	**449-5735**	1	BLOCK	
	4	1	**514-0568**	1	SUPPORT AS	
	5	1	**117-8568**	1	NUT-BULKHEAD (1-7/8-12-THD)	
	6	1	*148-8323*	1	CONNECTOR AS	
		1	**2S-4078**	1	SEAL-O-RING	
		1	**5K-9090**	1	SEAL-O-RING	
		1	**6V-9875**	1	CONNECTOR	
	7	1	*148-8335*	1	CONNECTOR AS	
		1	**5K-9090**	1	SEAL-O-RING	
		1	**6V-8635**	1	CONNECTOR	
		1	**7M-8485**	1	SEAL-O-RING	
	8	1	**204-2281**	1	STRAP-CABLE	
	9	1	**204-8000**	1	MOUNTING-CABLE TIE	
	10	1	**4J-0525**	1	SEAL-O-RING	
M	11	1	**7X-2543**	2	BOLT (M10X1.5X120-MM)	
	12	1	**7Y-3195**	1	GROMMET	
	13	1	**8T-4121**	5	WASHER-HARD (11X21X2.5-MM THK)	
M	14	1	**8T-4136**	1	BOLT (M10X1.5X25-MM)	
M	15	1	**8T-4196**	2	BOLT (M10X1.5X35-MM)	

I - REFER TO HYDRAULIC INFORMATION SYSTEM
M - METRIC PART

503-9829 **LINES GP-DRAIN (**contd.**)** **i07526846**

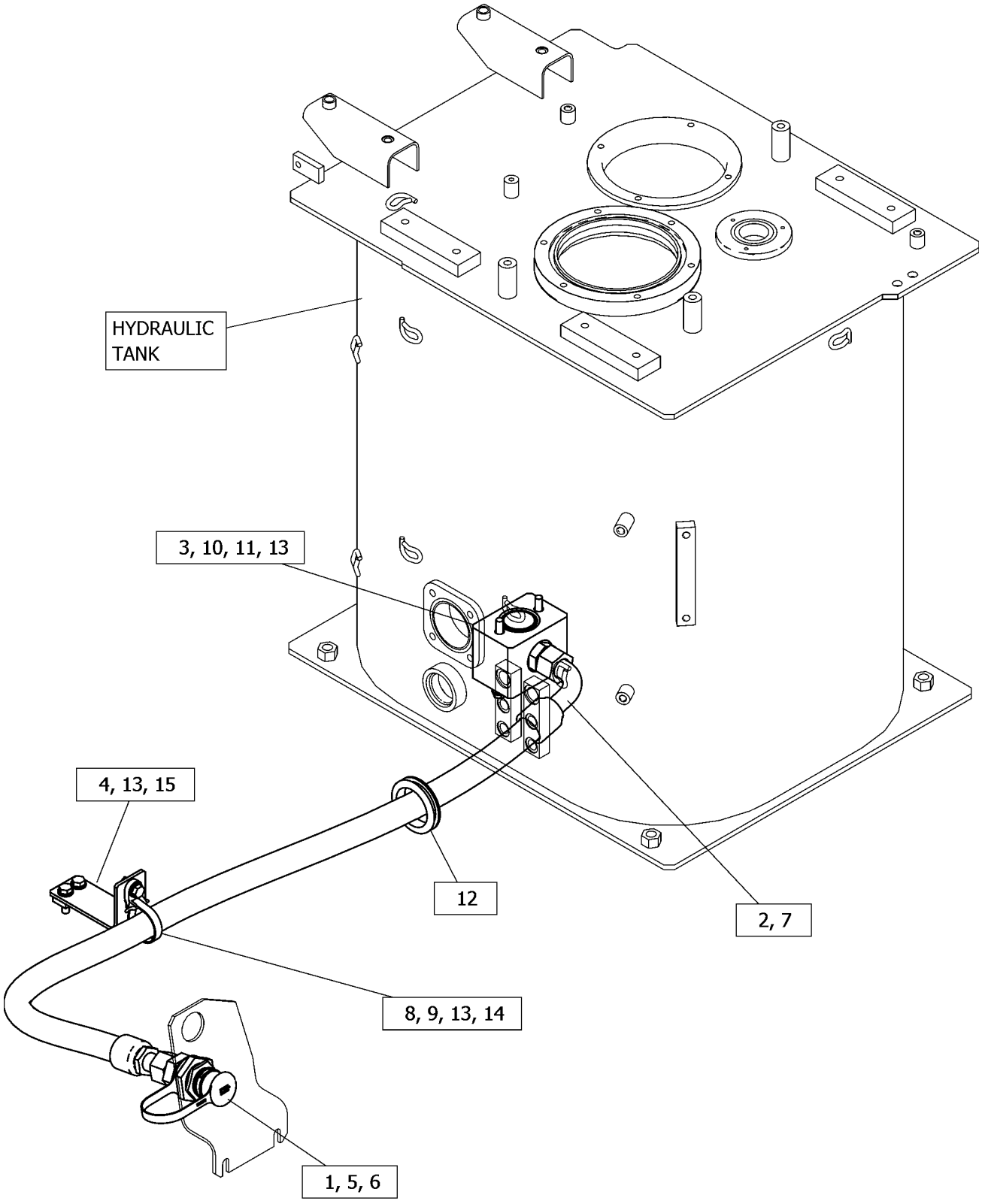

GRAPHIC #1 <END> g06275327

571-0753 LINES GP-DRAIN

S/N: SP91-UP

PART OF 546-6209 OIL CHANGE AR-HIGH SPEED

SMCS-5057 **i07756345**

NOTE	REF NO	GRAPHIC REF	PART NUMBER	QTY	PART NAME 1 2 3 4 5 6 (PRODUCT LEVEL)	SEE PAGE
M	1	1	**8T-4196**	3	BOLT (M10X1.5X35-MM)	
M	2	1	**7X-2543**	2	BOLT (M10X1.5X120-MM)	
	3	1	**4J-0525**	1	SEAL-O-RING	
	4	1	**7Y-3195**	1	GROMMET	
	5	1	**8T-4121**	5	WASHER-HARD (11X21X2.5-MM THK)	
	6	1	**117-8568**	1	NUT-BULKHEAD (1-7/8-12-THD)	
	7	1	**118-0166**	1	FITTING (QUICK DISCONNECT, MALE)	
	8	1	*148-8335*	1	CONNECTOR AS	
		1	**5K-9090**	1	SEAL-O-RING	
		1	**6V-8635**	1	CONNECTOR	
		1	**7M-8485**	1	SEAL-O-RING	
	9	1	**204-8000**	1	MOUNTING-CABLE TIE	
	10	1	**449-5735**	1	BLOCK	
	11	1	*148-8391*	1	ELBOW AS	
		1	**2S-4078**	1	SEAL-O-RING	
		1	**5K-9090**	1	SEAL-O-RING	
		1	**8T-8987**	1	ELBOW	
	12	1	**204-2281**	1	STRAP-CABLE	
	13	1	**571-6368**	1	SUPPORT AS	
	14	1	**571-6384**	1	HOSE AS	

M - METRIC PART

571-0753 **LINES GP-DRAIN (**contd.**)** **i07756345**

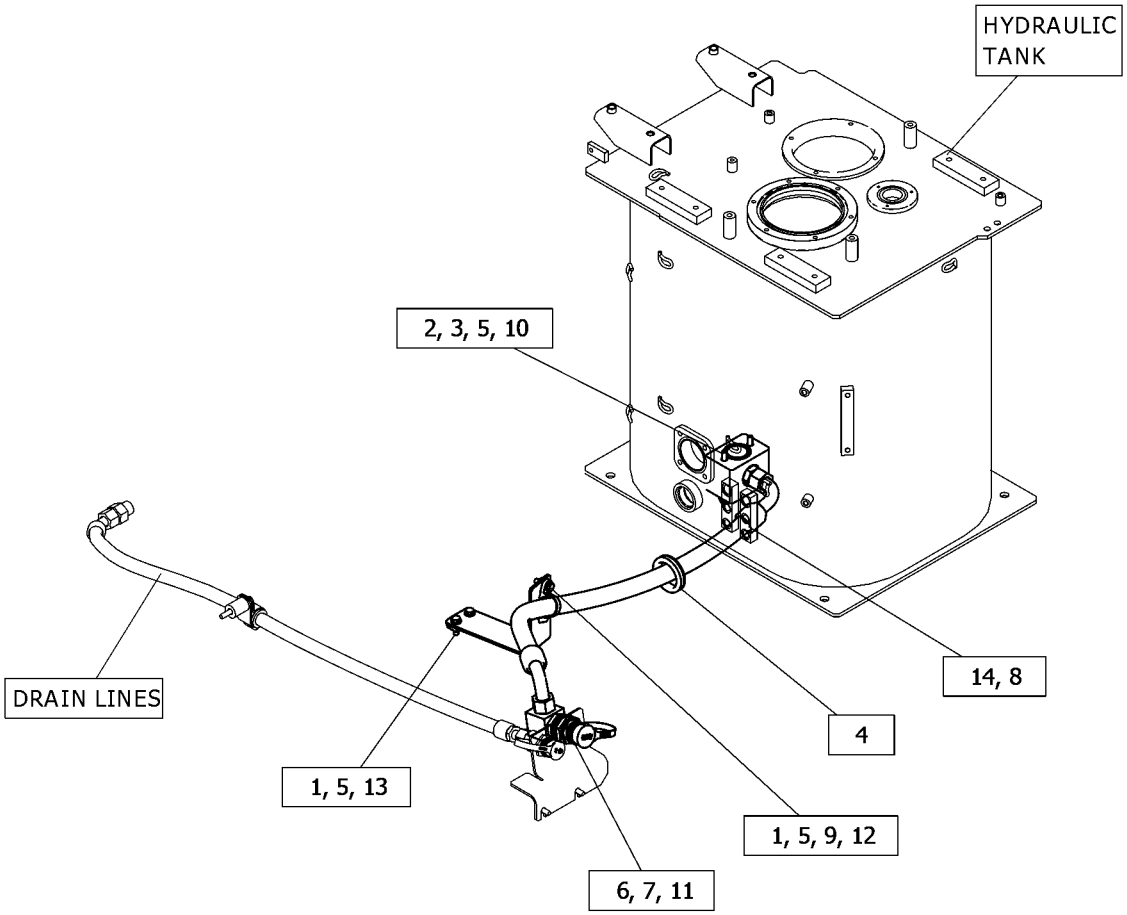

GRAPHIC #1 <END> g06397429

503-9761 LINES GP-FRONT

S/N: SP91-UP

PART OF 525-2937 HYDRAULIC AR

SMCS-5057 **i07523702**

NOTE	REF NO	GRAPHIC REF	PART NUMBER	QTY	PART NAME 1 2 3 4 5 6 (PRODUCT LEVEL)	SEE PAGE
M	1	1	**8T-4182**	8	BOLT (M10X1.5X45-MM)	
M	2	1	**8T-4184**	20	BOLT (M12X1.75X45-MM)	
	3	1	**1P-3702**	2	SEAL-RECTANGULAR	
	4	1	**1P-3703**	14	SEAL-RECTANGULAR	
	5	1	**1P-3704**	2	SEAL-RECTANGULAR	
	6	1	**6V-0400**	14	FLANGE-HALF	
	7	1	**8T-4121**	8	WASHER-HARD (11X21X2.5-MM THK)	
M	8	1	**8T-4194**	16	BOLT (M12X1.75X50-MM)	
	9	1	**8T-4223**	36	WASHER-HARD (13.5X25.5X3-MM THK)	
I	10	1	**506-6494**	1	HOSE AS	
I	11	1	**506-6501**	1	HOSE AS	
I	12	1	**506-6506**	1	HOSE AS	
I	13	1	**506-6511**	1	HOSE AS	
I	14	1	**506-6540**	1	HOSE AS	
I	15	1	**520-8469**	1	HOSE AS	
I	16	1	**520-8475**	1	HOSE AS	
I	17	1	**528-8509**	1	HOSE AS	
I	18	1	**528-8512**	1	HOSE AS	
I	19	1	**541-9491**	1	HOSE AS	
M	20	1	**101-7404**	12	BOLT-SOCKET HEAD (M10X1.5X30-MM)	
	21	1	**1P-5767**	4	FLANGE-HALF	
	22	1	**8T-9403**	4	FLANGE-HALF	

I - REFER TO HYDRAULIC INFORMATION SYSTEM
M - METRIC PART

503-9761 **LINES GP-FRONT (**contd.**)** **i07523702**

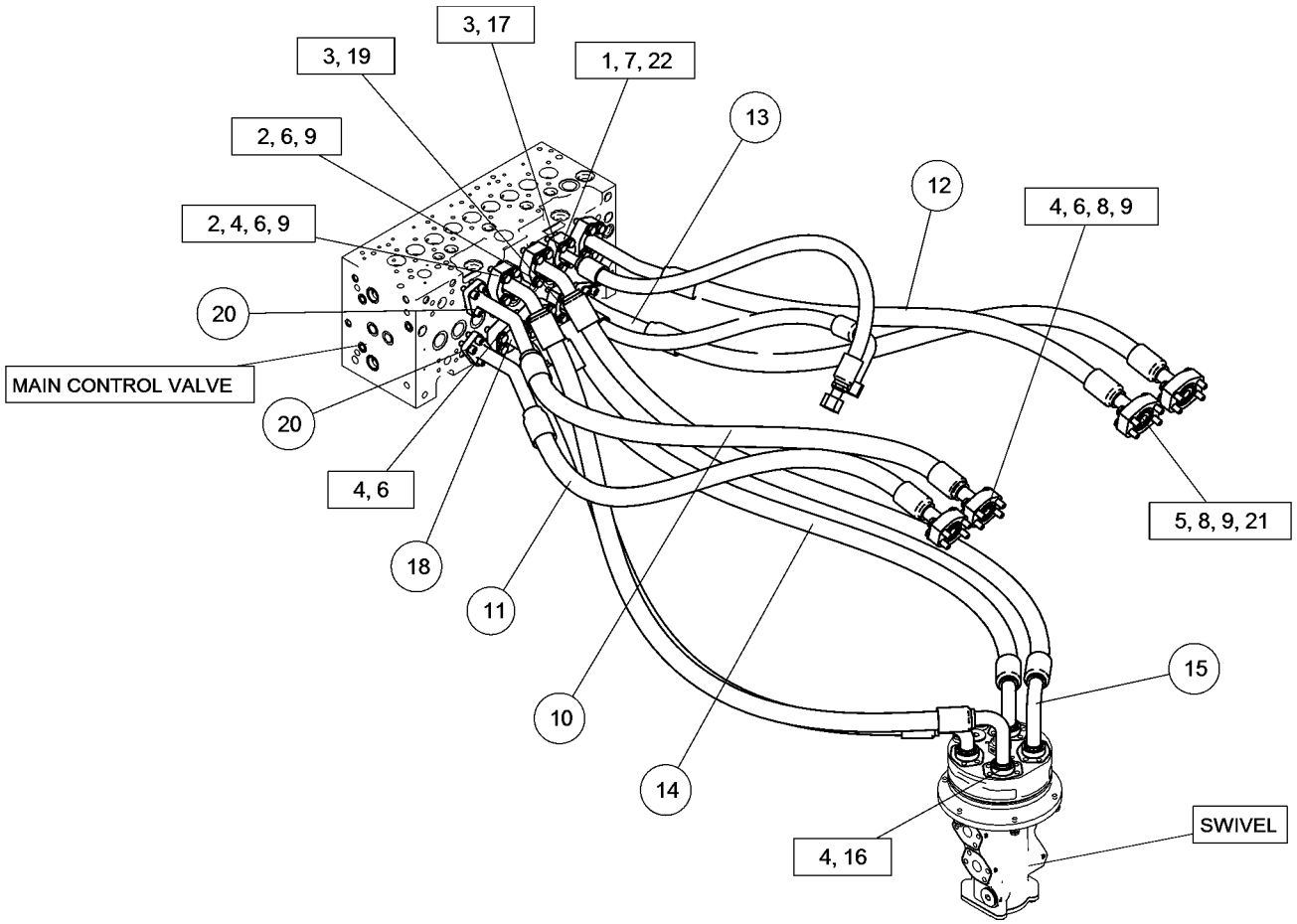

GRAPHIC #1 <END> g06278498

503-9789 LINES GP-FRONT

S/N: SP91-UP

PART OF 550-7573 OPTION AR-HYDRAULIC

SMCS-5057 **i07519944**

NOTE	REF NO	GRAPHIC REF	PART NUMBER	QTY	PART NAME 1 2 3 4 5 6 (PRODUCT LEVEL)	SEE PAGE
I	1	1	**528-3771**	1	HOSE AS	
	2	1	*148-8335*	1	CONNECTOR AS	
		1	**5K-9090**	1	SEAL-O-RING	
		1	**6V-8635**	1	CONNECTOR	
		1	**7M-8485**	1	SEAL-O-RING	
	3	1	*148-8357*	1	ELBOW AS	
		1	**5K-9090**	1	SEAL-O-RING	
		1	**6V-9008**	1	ELBOW	
		1	**7M-8485**	1	SEAL-O-RING	

I - REFER TO HYDRAULIC INFORMATION SYSTEM

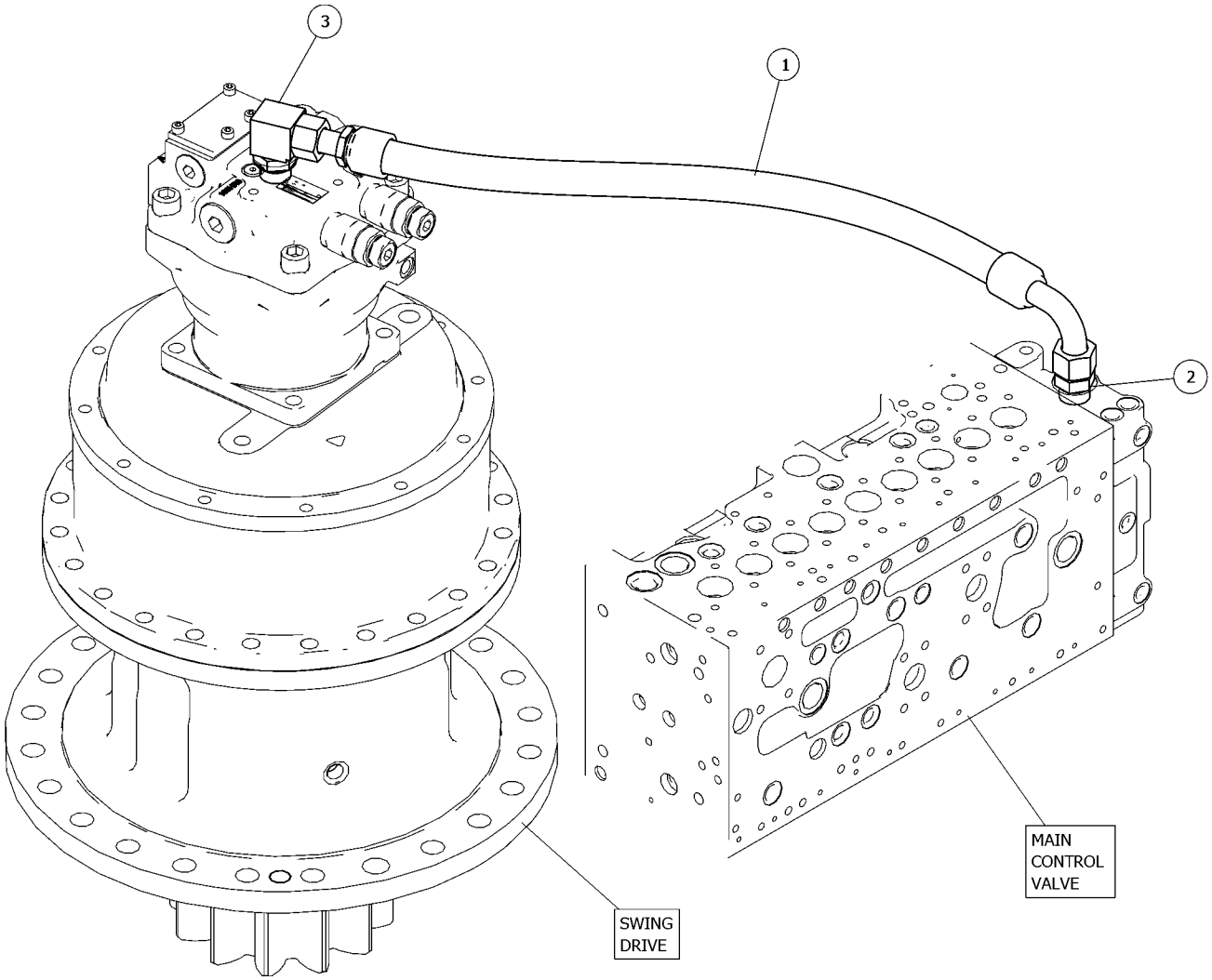

GRAPHIC #1 <END> g06274550

503-9790 LINES GP-FRONT–TOOL

S/N: SP91-UP

PART OF 559-3854 CONTROL AR-AUXILIARY, 550-7581 OPTION AR-HYDRAULIC

SMCS-5057 **i07519949**

NOTE	REF NO	GRAPHIC REF	PART NUMBER	QTY	PART NAME 1 2 3 4 5 6 (PRODUCT LEVEL)	SEE PAGE
I	1	1	**528-3774**	1	HOSE AS	
	2	1	*148-8335*	1	CONNECTOR AS	
		1	**5K-9090**	1	SEAL-O-RING	
		1	**6V-8635**	1	CONNECTOR	
		1	**7M-8485**	1	SEAL-O-RING	
	3	1	*148-8357*	1	ELBOW AS	
		1	**5K-9090**	1	SEAL-O-RING	
		1	**6V-9008**	1	ELBOW	
		1	**7M-8485**	1	SEAL-O-RING	

I - REFER TO HYDRAULIC INFORMATION SYSTEM

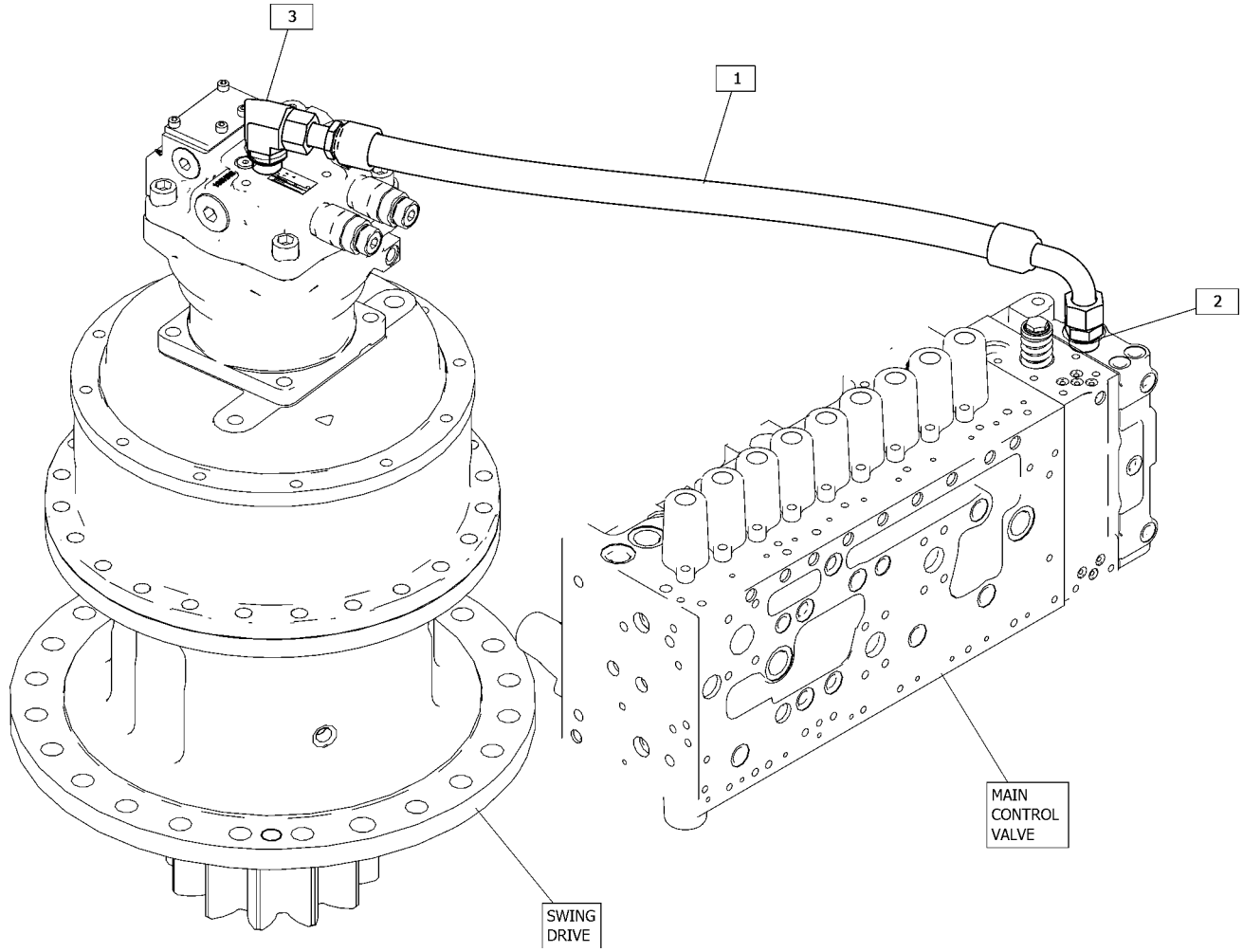

GRAPHIC #1 <END> g06274462

503-9792 LINES GP-FRONT–SMARTBOOM

S/N: SP91-UP

SMCS-5057 **i07519955**

NOTE	REF NO	GRAPHIC REF	PART NUMBER	QTY	PART NAME 1 2 3 4 5 6 (PRODUCT LEVEL)	SEE PAGE
	1	1	**7M-8485**	1	SEAL-O-RING	
I	2	1	**113-6666**	1	HOSE AS	
	3	1	*148-8335*	1	CONNECTOR AS	
		1	**5K-9090**	1	SEAL-O-RING	
		1	**6V-8635**	1	CONNECTOR	
		1	**7M-8485**	1	SEAL-O-RING	
	4	1	*148-8355*	1	ELBOW AS	
		1	**5K-9090**	1	SEAL-O-RING	
		1	**6V-9005**	1	ELBOW	
		1	**7M-8485**	1	SEAL-O-RING	
	5	1	*148-8411*	1	PLUG AS	
		1	**3K-0360**	1	SEAL-O-RING	
		1	**9S-4185**	1	PLUG (3/4-16-THD)	
	6	1	**363-2460**	1	BLOCK	

I - REFER TO HYDRAULIC INFORMATION SYSTEM

503-9792 **LINES GP-FRONT (**contd.**)** **i07519955**

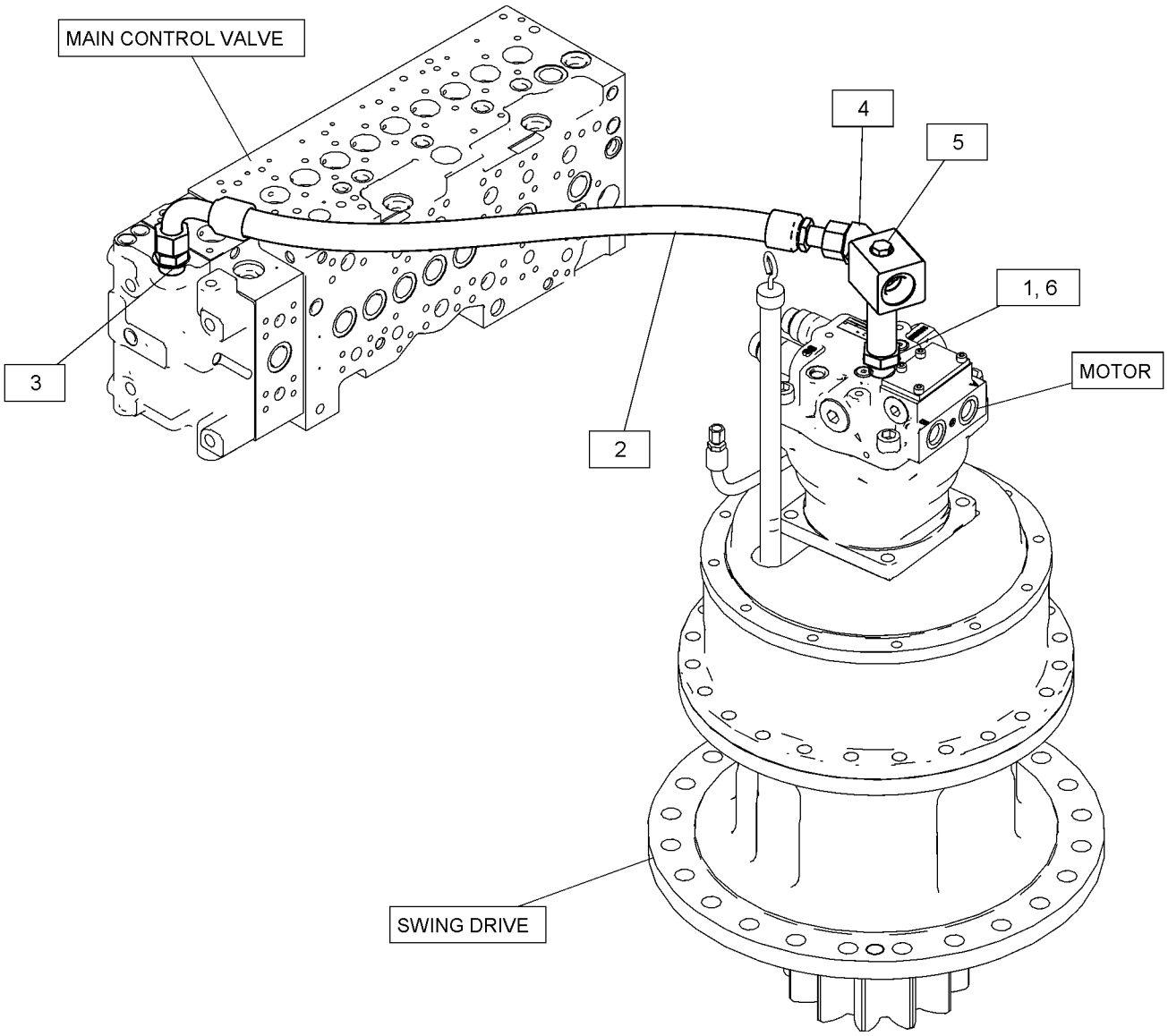

GRAPHIC #1 <END> g06283605

522-7155 LINES GP-FRONT—QUICK COUPLER

S/N: SP91-UP

SMCS-5057 **i07521773**

NOTE	REF NO	GRAPHIC REF	PART NUMBER	QTY	PART NAME 1 2 3 4 5 6 (PRODUCT LEVEL)	SEE PAGE
M	1	1	**8T-4196**	4	BOLT (M10X1.5X35-MM)	
M	2	1	**8T-4189**	2	BOLT (M8X1.25X20-MM)	
	3	1	**3J-1907**	1	SEAL-O-RING	
	4	1	**4I-9521**	4	BAND-MARKER (RED, L1)	
	5	1	**4I-9522**	4	BAND-MARKER (YELLOW, L2)	
	6	1	**7K-1181**	2	STRAP-CABLE	
	7	1	**8T-4224**	2	WASHER-HARD (8.8X16X2-MM THK)	
	8	1	*148-8336*	4	CONNECTOR AS	
					(EACH INCLUDES)	
		1	**3J-1907**	1	SEAL-O-RING	
		1	**6V-8397**	1	SEAL-O-RING	
		1	**6V-8636**	1	CONNECTOR	
	9	1	*164-5546*	1	TEE AS	
		1	**3E-7410**	1	TEE	
		1	**3J-1907**	1	SEAL-O-RING	
	10	1	**203-3470**	1	CONNECTOR	
	11	1	**123-4750**	1	VALVE AS-CHECK	
		1	**6V-8397**	1	SEAL-O-RING	
		1	**3J-1907**	1	SEAL-O-RING	
	12	1	*148-8378*	5	ELBOW AS	
					(EACH INCLUDES)	
		1	**3J-1907**	1	SEAL-O-RING	
		1	**6V-8397**	1	SEAL-O-RING	
		1	**6V-8724**	1	ELBOW	
I	13	1	**266-1392**	1	HOSE AS	
I	14	1	**275-1818**	1	HOSE AS	
Y	15	1	**338-6971**	1	SENSOR GP-PRESSURE (HYDRAULIC OIL)	239
I	16	1	**358-7523**	1	HOSE AS	
	17	1	**514-7723**	1	VALVE GP-SOLENOID & PRESS REDC	
I	18	1	**518-3834**	1	HOSE AS	
I	19	1	**561-6328**	1	HOSE AS	
I	20	1	**275-1681**	1	HOSE AS	
	21	1	**524-0912**	1	VALVE & MTG GP-SOLENOID (CONTROL VALVE)	
	22	1	**525-2970**	1	SUPPORT AS	
M		1	**8T-3490**	2	NUT-WELD (M10X1.5-THD)	
	23	1	**548-8139**	1	PLATE AS	
M		1	**8T-3490**	2	NUT-WELD (M10X1.5-THD)	
I	24	1	**7Y-7955**	1	HOSE AS	
	25	1	**8T-4121**	6	WASHER-HARD (11X21X2.5-MM THK)	
M	26	1	**8T-4137**	2	BOLT (M10X1.5X20-MM)	

I - REFER TO HYDRAULIC INFORMATION SYSTEM
M - METRIC PART
Y - SEPARATE ILLUSTRATION

522-7155 **LINES GP-FRONT (**contd.**)** **i07521773**

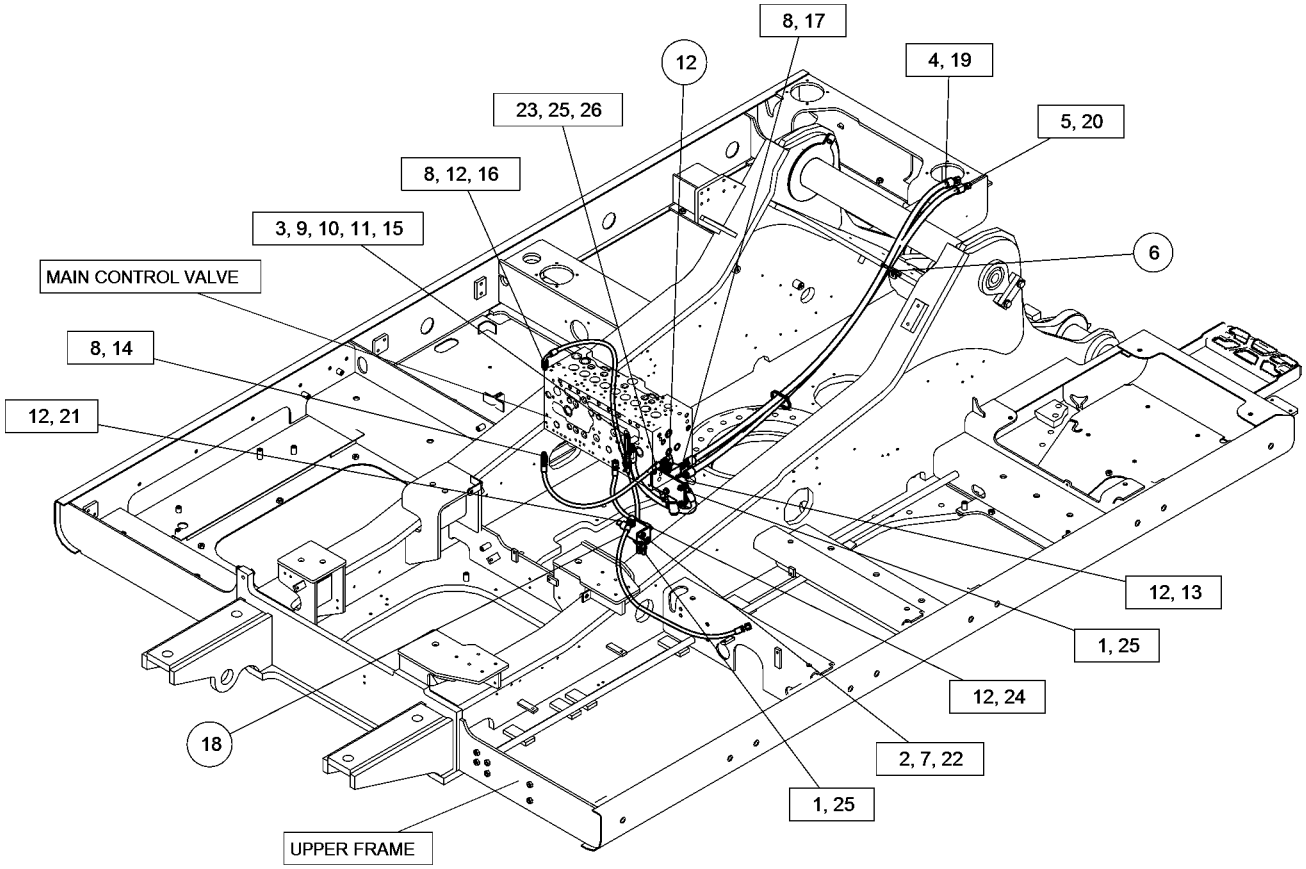

GRAPHIC #1 <END> g06282568

538-8825 LINES GP-FRONT—2-WAY FLOW, 1-PUMP, ELEC CONT

S/N: SP91-UP

PART OF 538-3026 CONTROL AR-AUXILIARY

SMCS-5057 **i07526615**

NOTE	REF NO	GRAPHIC REF	PART NUMBER	QTY	PART NAME 1 2 3 4 5 6 (PRODUCT LEVEL)	SEE PAGE
	1	1	**4J-0524**	1	SEAL-O-RING	
M	2	1	**8T-4182**	16	BOLT (M10X1.5X45-MM)	
M	3	1	**8T-4196**	8	BOLT (M10X1.5X35-MM)	
M	4	1	**8T-5041**	8	BOLT (M12X1.75X120-MM)	
	5	1	**1P-3702**	4	SEAL-RECTANGULAR	
	6	1	**1P-3705**	2	SEAL-RECTANGULAR	
	7	1	**1P-4578**	4	FLANGE-HALF	
	8	1	**6V-3922**	1	SEAL-O-RING	
	9	1	**7X-0584**	4	WASHER-HARD (13.5X20.5X2-MM THK)	
	10	1	**7Y-5237**	1	U-BOLT	
	11	1	**8T-9403**	8	FLANGE-HALF	
M	12	1	**096-4883**	2	LOCKNUT (M10X1.5-THD)	
M	13	1	**107-2723**	4	BOLT-SOCKET HEAD (M12X1.75X20-MM)	
M	14	1	**113-2001**	4	BOLT-SOCKET HEAD (M12X1.75X25-MM)	
	15	1	*148-8442*	2	TEE AS	
					(EACH INCLUDES)	
		1	**6V-9746**	2	SEAL-O-RING	
		1	**7M-8485**	1	SEAL-O-RING	
		1	**8T-1685**	1	TEE	
	16	1	*241-6215*	1	ELBOW AS	
		1	**3J-1907**	1	SEAL-O-RING	
		1	**6V-8076**	1	ELBOW	
M	17	1	**447-1703**	4	BOLT (M16X2X120-MM)	
	18	1	**451-2175**	4	WASHER-HARD (17.5X30X3.5-MM THK)	
	19	1	**107-6656**	1	FLANGE	
M	20	1	**170-8553**	4	BOLT-SOCKET HEAD (M12X1.75X40-MM)	
	21	1	*285-2663*	1	FITTING AS (QUICK DISCONNECT, MALE)	
		1	**3J-1907**	1	SEAL-O-RING	
		1	**285-2664**	1	FITTING	
Y	22	1	*338-6971*	1	SENSOR GP-PRESSURE (HYDRAULIC OIL) (EXTEND)	239
Y	22A	1	*338-6971*	1	SENSOR GP-PRESSURE (HYDRAULIC OIL) (RETRACT)	239
	23	1	**352-7063**	2	CAP	
	24	1	**352-7064**	2	CAP	
	25	1	**442-0234**	1	VALVE AS-BALL	
		1	**3J-1907**	2	SEAL-O-RING	
		1	**302-9466**	1	HANDLE	
		1	**360-3692**	2	PLUG	
	26	1	**4J-0522**	3	SEAL-O-RING	
	27	1	**512-2635**	1	PLATE	
I	28	1	**514-7112**	1	HOSE AS	
	29	1	**528-3383**	1	PIPE AS	
I	30	1	**528-5515**	1	HOSE AS	
	31	1	**530-2707**	1	BLOCK	
	32	1	**539-1606**	1	BLOCK	
	33	1	**539-1607**	1	BLOCK	
	34	1	**539-1608**	1	BLOCK	
	35	1	**539-1611**	1	SUPPORT	
	36	1	**539-1614**	1	SUPPORT	

538-8825 **LINES GP-FRONT (**contd.**)** **i07526615**

NOTE	REF NO	GRAPHIC REF	PART NUMBER	QTY	PART NAME 1 2 3 4 5 6 (PRODUCT LEVEL)	SEE PAGE
	37	1	**539-1617**	1	SUPPORT	
I	38	1	**540-4537**	1	HOSE AS	
I	39	1	**540-4540**	1	HOSE AS	
	40	1	**553-6344**	1	SUPPORT	
I	41	1	**557-1685**	1	HOSE AS	
	42	1	**8T-4121**	30	WASHER-HARD (11X21X2.5-MM THK)	
M	43	1	**8T-4136**	2	BOLT (M10X1.5X25-MM)	
M	44	1	**8T-4137**	2	BOLT (M10X1.5X20-MM)	
M	45	1	**8T-4139**	10	BOLT (M12X1.75X30-MM)	
	46	1	**8T-4223**	22	WASHER-HARD (13.5X25.5X3-MM THK)	
M	47	1	**8T-4956**	4	BOLT (M12X1.75X35-MM)	

I - REFER TO HYDRAULIC INFORMATION SYSTEM
M - METRIC PART
Y - SEPARATE ILLUSTRATION

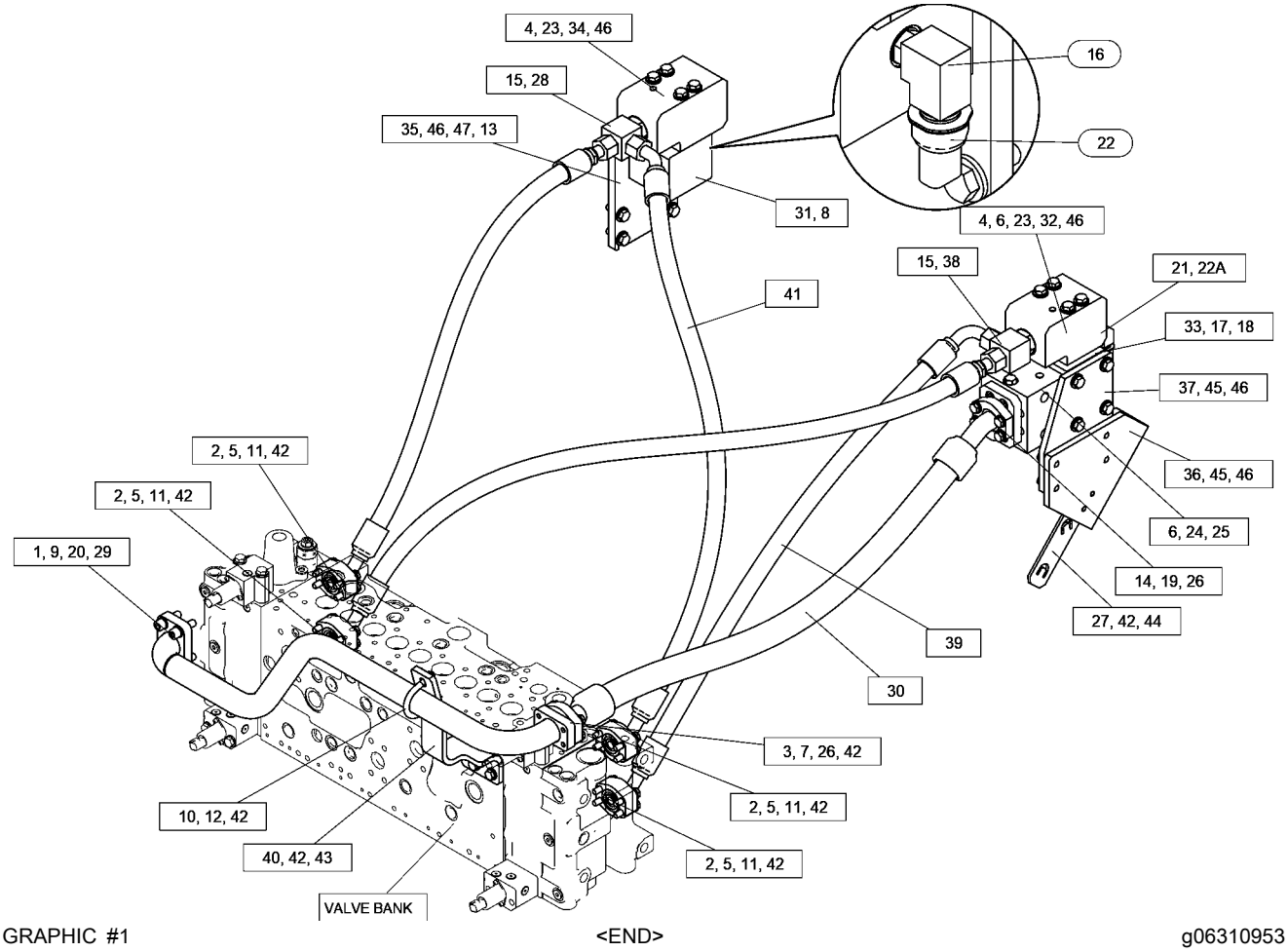

GRAPHIC #1 <END> g06310953

550-7622 LINES GP-FRONT—PIN GRABBER

S/N: SP91-UP

QUICK COUPLER

SMCS-5057 **i07526566**

NOTE	PART NUMBER	QTY	PART NAME 1 2 3 4 5 6 (PRODUCT LEVEL)	SEE PAGE
Y	*532-7907*	1	FILM GP (COUPLER OPERATION)	746
Y	*551-6886*	1	LINES GP-FRONT (QUICK COUPLER)	497

Y - SEPARATE ILLUSTRATION

<END>

551-6886 LINES GP-FRONT—PIN GRABBER

S/N: SP91-UP
QUICK COUPLER
PART OF 550-7622 LINES GP-FRONT

SMCS-5057 **i07526571**

NOTE	REF NO	GRAPHIC REF	PART NUMBER	QTY	PART NAME 1 2 3 4 5 6 (PRODUCT LEVEL)	SEE PAGE
M	1	1	**8T-4196**	4	BOLT (M10X1.5X35-MM)	
M	2	1	**8T-4189**	2	BOLT (M8X1.25X20-MM)	
	3	1	**3J-1907**	1	SEAL-O-RING	
	4	1	**4I-9521**	4	BAND-MARKER (RED, L1)	
	5	1	**4I-9522**	4	BAND-MARKER (YELLOW, L2)	
	6	1	**7K-1181**	2	STRAP-CABLE	
	7	1	**8T-4224**	2	WASHER-HARD (8.8X16X2-MM THK)	
	8	1	*148-8336*	4	CONNECTOR AS	
					(EACH INCLUDES)	
		1	**3J-1907**	1	SEAL-O-RING	
		1	**6V-8397**	1	SEAL-O-RING	
		1	**6V-8636**	1	CONNECTOR	
	9	1	*164-5546*	1	TEE AS	
		1	**3E-7410**	1	TEE	
		1	**3J-1907**	1	SEAL-O-RING	
	10	1	**203-3470**	1	CONNECTOR	
	11	1	**123-4750**	1	VALVE AS-CHECK	
		1	**3J-1907**	1	SEAL-O-RING	
		1	**6V-8397**	1	SEAL-O-RING	
	12	1	*148-8378*	5	ELBOW AS	
					(EACH INCLUDES)	
		1	**3J-1907**	1	SEAL-O-RING	
		1	**6V-8397**	1	SEAL-O-RING	
		1	**6V-8724**	1	ELBOW	
I	13	1	**266-1392**	1	HOSE AS	
I	14	1	**275-1818**	1	HOSE AS	
Y	15	1	*338-6971*	1	SENSOR GP-PRESSURE (HYDRAULIC OIL)	239
I	16	1	**358-7523**	1	HOSE AS	
I	17	1	**518-3834**	1	HOSE AS	
I	18	1	**518-3835**	1	HOSE AS	
I	19	1	**518-3838**	1	HOSE AS	
Y	20	1	**524-0912**	1	VALVE & MTG GP-SOLENOID (CONTROL VALVE)	562
	21	1	**525-2970**	1	SUPPORT AS	
	22	1	**548-8139**	1	PLATE AS	
	23	1	**549-7972**	1	VALVE GP-SOLENOID & PRESS REDC	
I	24	1	**7Y-7955**	1	HOSE AS	
	25	1	**8T-4121**	6	WASHER-HARD (11X21X2.5-MM THK)	
M	26	1	**8T-4137**	2	BOLT (M10X1.5X20-MM)	

I - REFER TO HYDRAULIC INFORMATION SYSTEM
M - METRIC PART
Y - SEPARATE ILLUSTRATION

551-6886 **LINES GP-FRONT (**contd.**)** **i07526571**

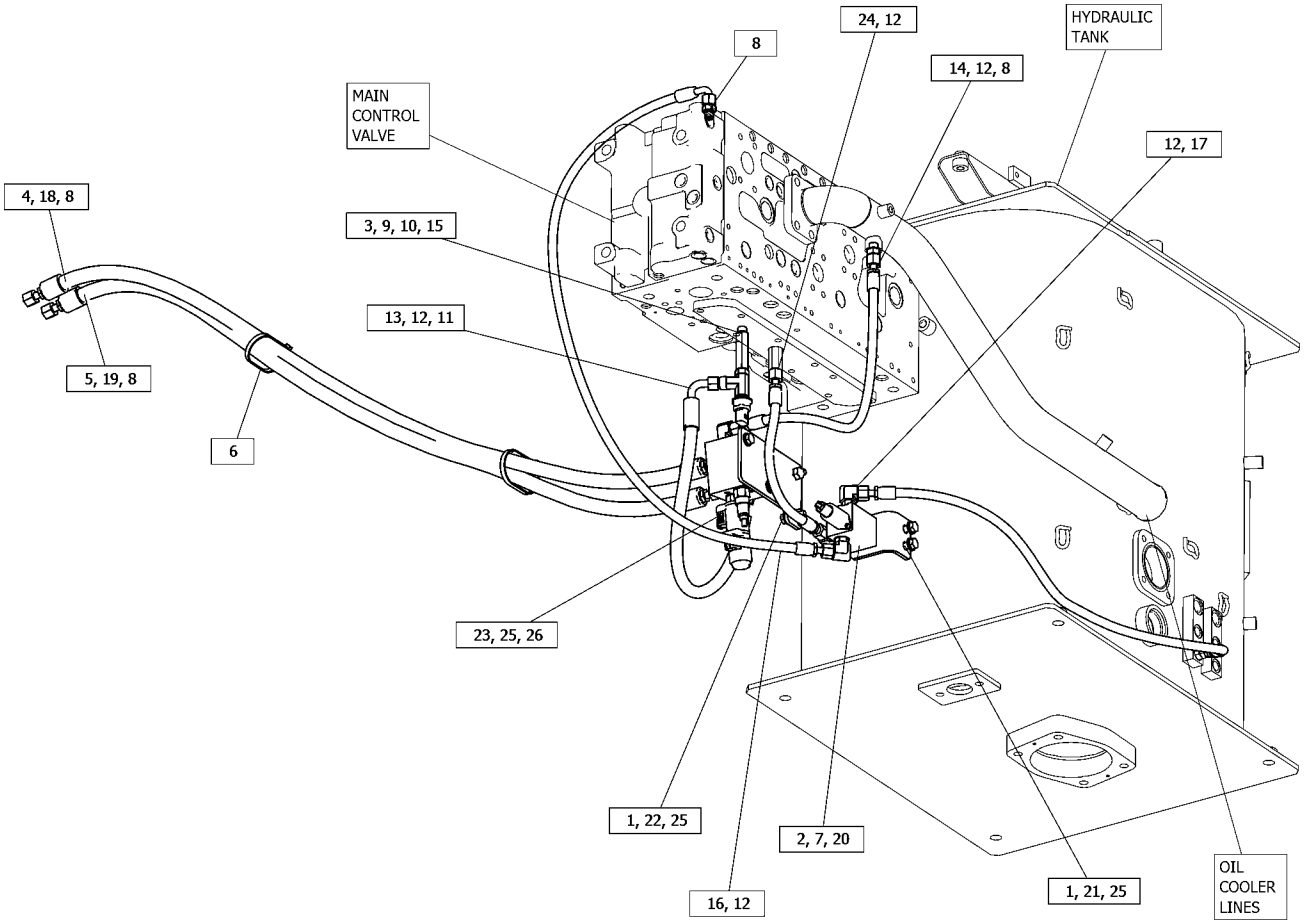

GRAPHIC #1 <END> g06275238

555-9027 LINES GP-FRONT—1-PUMP, 1-WAY FLOW

S/N: SP91-UP

PART OF 559-3854 CONTROL AR-AUXILIARY

SMCS-5057 **i07519207**

NOTE	REF NO	GRAPHIC REF	PART NUMBER	QTY	PART NAME 1 2 3 4 5 6 (PRODUCT LEVEL)	SEE PAGE
	1	1	**4J-0524**	1	SEAL-O-RING	
M	3	1	**8T-4196**	8	BOLT (M10X1.5X35-MM)	
	4	1	**1P-3702**	2	SEAL-RECTANGULAR	
	5	1	**1P-4578**	4	FLANGE-HALF	
	6	1	**7X-0584**	4	WASHER-HARD (13.5X20.5X2-MM THK)	
	7	1	**7Y-5237**	1	U-BOLT	
	8	1	**8T-9403**	4	FLANGE-HALF	
M	9	1	**096-4883**	2	LOCKNUT (M10X1.5-THD)	
M	10	1	**170-8553**	4	BOLT-SOCKET HEAD (M12X1.75X40-MM)	
	11	1	**352-7064**	2	CAP	
	12	1	**4J-0522**	2	SEAL-O-RING	
	13	1	**528-3383**	1	PIPE AS	
	14	1	**552-7480**	1	BLOCK	
	15	1	**553-6344**	1	SUPPORT	
	16	1	**558-1717**	1	BLOCK	
	17	1	**558-1719**	1	SUPPORT	
	18	1	**558-1720**	1	SUPPORT	
I	19	1	**558-1723**	1	HOSE AS	
I	20	1	**558-1727**	1	HOSE AS	
	21	1	**8T-4121**	20	WASHER-HARD (11X21X2.5-MM THK)	
M	22	1	**8T-4136**	2	BOLT (M10X1.5X25-MM)	
M	23	1	**8T-4139**	8	BOLT (M12X1.75X30-MM)	
	24	1	**8T-4223**	8	WASHER-HARD (13.5X25.5X3-MM THK)	
M	25	1	**8T-4182**	12	BOLT (M10X1.5X45-MM)	
	26	1	**8T-7934**	4	WASHER-HARD (11X21X5-MM THK)	
	27	1	**7Y-6007**	1	COVER	
	28	1	**1P-3703**	1	SEAL-RECTANGULAR	

I - REFER TO HYDRAULIC INFORMATION SYSTEM
M - METRIC PART

555-9027 **LINES GP-FRONT (**contd.**)** **i07519207**

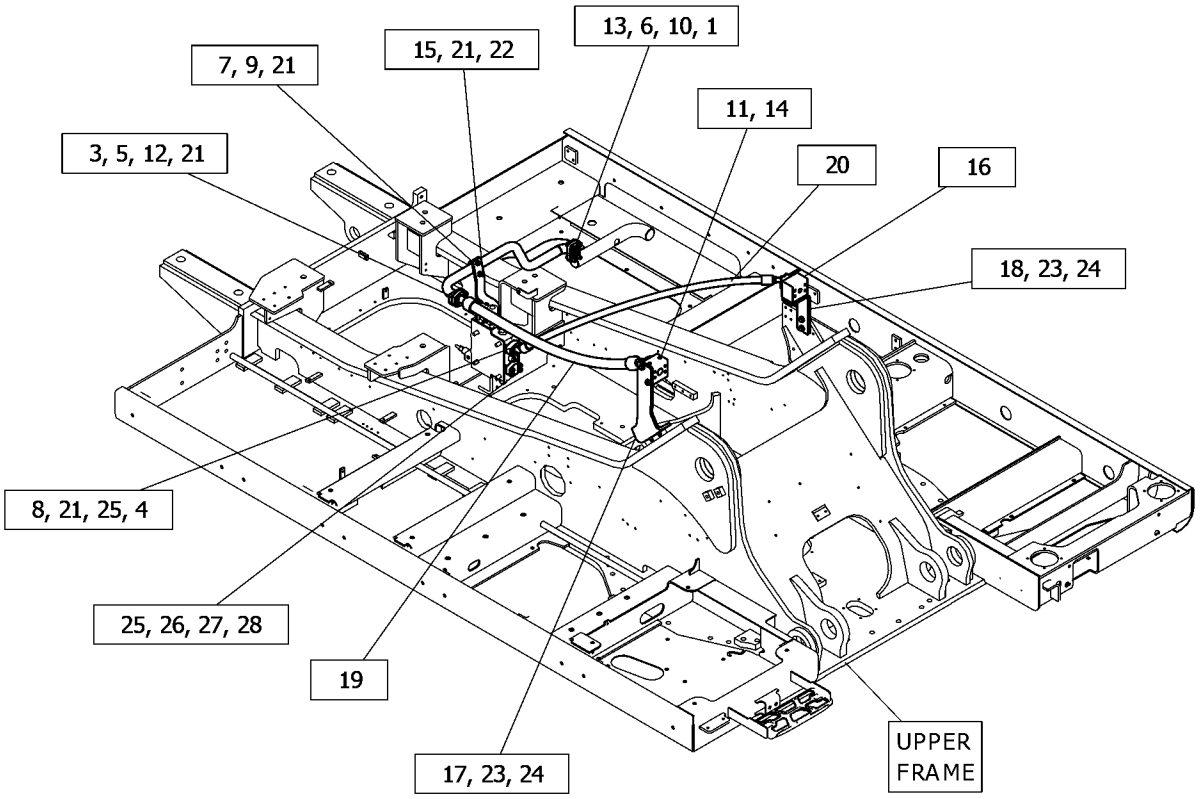

GRAPHIC #1 <END> g06352657

503-9759 LINES GP-HYDRAULIC

S/N: SP91-UP

PART OF 503-9757 TANK GP-HYDRAULIC

SMCS-5057 **i07524575**

NOTE	REF NO	GRAPHIC REF	PART NUMBER	QTY	PART NAME 1 2 3 4 5 6 (PRODUCT LEVEL)	SEE PAGE
M	1	1	**8T-6466**	1	BOLT (M10X1.5X60-MM)	
	2	1	**5I-4366**	1	GROMMET	
	3	1	*148-8353*	1	ELBOW AS	
		1	**3J-1907**	1	SEAL-O-RING	
		1	**6V-8397**	1	SEAL-O-RING	
		1	**6V-9001**	1	ELBOW	
	4	1	*148-8354*	1	ELBOW AS	
		1	**3K-0360**	1	SEAL-O-RING	
		1	**6V-8398**	1	SEAL-O-RING	
		1	**6V-9002**	1	ELBOW	
	5	1	*150-4033*	1	ADAPTER AS	
		1	**6V-9746**	2	SEAL-O-RING	
		1	**6V-9846**	1	TEE	
	6	1	**483-7803**	1	SPACER (11X20X30-MM THK)	
	7	1	*148-8407*	3	PLUG AS	
					(EACH INCLUDES)	
		1	**3J-1907**	1	SEAL-O-RING	
		1	**9S-4191**	1	PLUG (9/16-18-THD)	
	8	1	**204-2281**	3	STRAP-CABLE	
	9	1	**204-8000**	3	MOUNTING-CABLE TIE	
	10	1	*285-2520*	1	CONNECTOR AS	
		1	**3D-2824**	1	SEAL-O-RING	
		1	**6V-9746**	1	SEAL-O-RING	
		1	**236-2839**	1	CONNECTOR AS	
I	11	1	**528-0949**	1	HOSE AS	
	12	1	**528-0952**	1	SUPPORT AS	
	13	1	**8T-4121**	5	WASHER-HARD (11X21X2.5-MM THK)	
M	14	1	**8T-4136**	4	BOLT (M10X1.5X25-MM)	

I - REFER TO HYDRAULIC INFORMATION SYSTEM
M - METRIC PART

503-9759 **LINES GP-HYDRAULIC (**contd.**)** **i07524575**

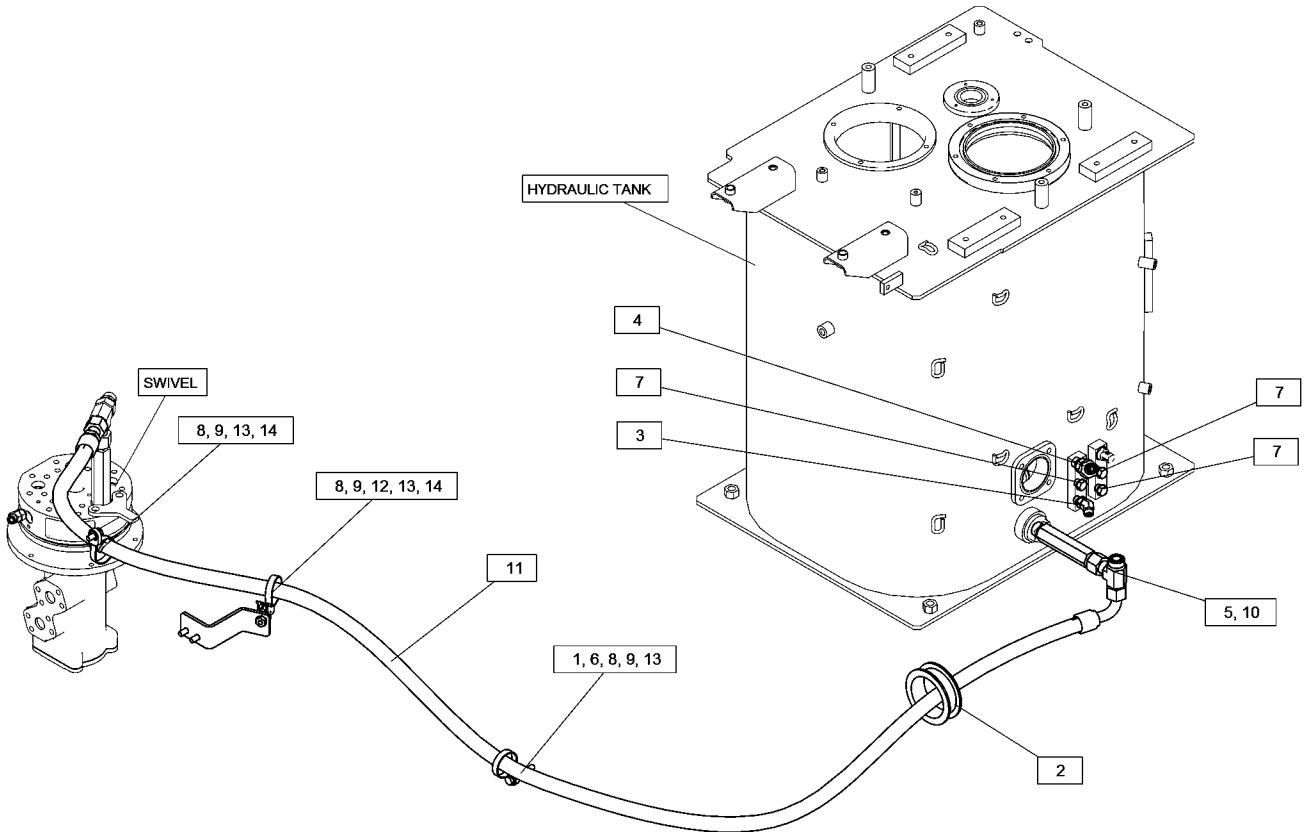

GRAPHIC #1 <END> g06279343

503-9760 LINES GP-HYDRAULIC OIL COOLER

S/N: SP91-UP

PART OF 525-2937 HYDRAULIC AR

SMCS-1374 **i07523728**

NOTE	REF NO	GRAPHIC REF	PART NUMBER	QTY	PART NAME 1 2 3 4 5 6 (PRODUCT LEVEL)	SEE PAGE
	1	1	**4J-0524**	1	SEAL-O-RING	
M	2	1	**8T-4194**	8	BOLT (M12X1.75X50-MM)	
M	3	1	**8T-5041**	4	BOLT (M12X1.75X120-MM)	
	4	1	**4J-0527**	1	SEAL-O-RING	
	5	1	**7X-0584**	4	WASHER-HARD (13.5X20.5X2-MM THK)	
	6	1	**8T-4223**	12	WASHER-HARD (13.5X25.5X3-MM THK)	
	7	1	**236-6339**	1	HOSE	
Y	8	1	**490-3958**	1	VALVE GP-CHECK (RETURN)	566
	9	1	**521-3183**	1	PIPE AS	
	10	1	**144-0367**	4	CLAMP-HOSE	
M	11	1	**170-8553**	4	BOLT-SOCKET HEAD (M12X1.75X40-MM)	
	12	1	**1P-5767**	4	FLANGE-HALF	

M - METRIC PART
Y - SEPARATE ILLUSTRATION

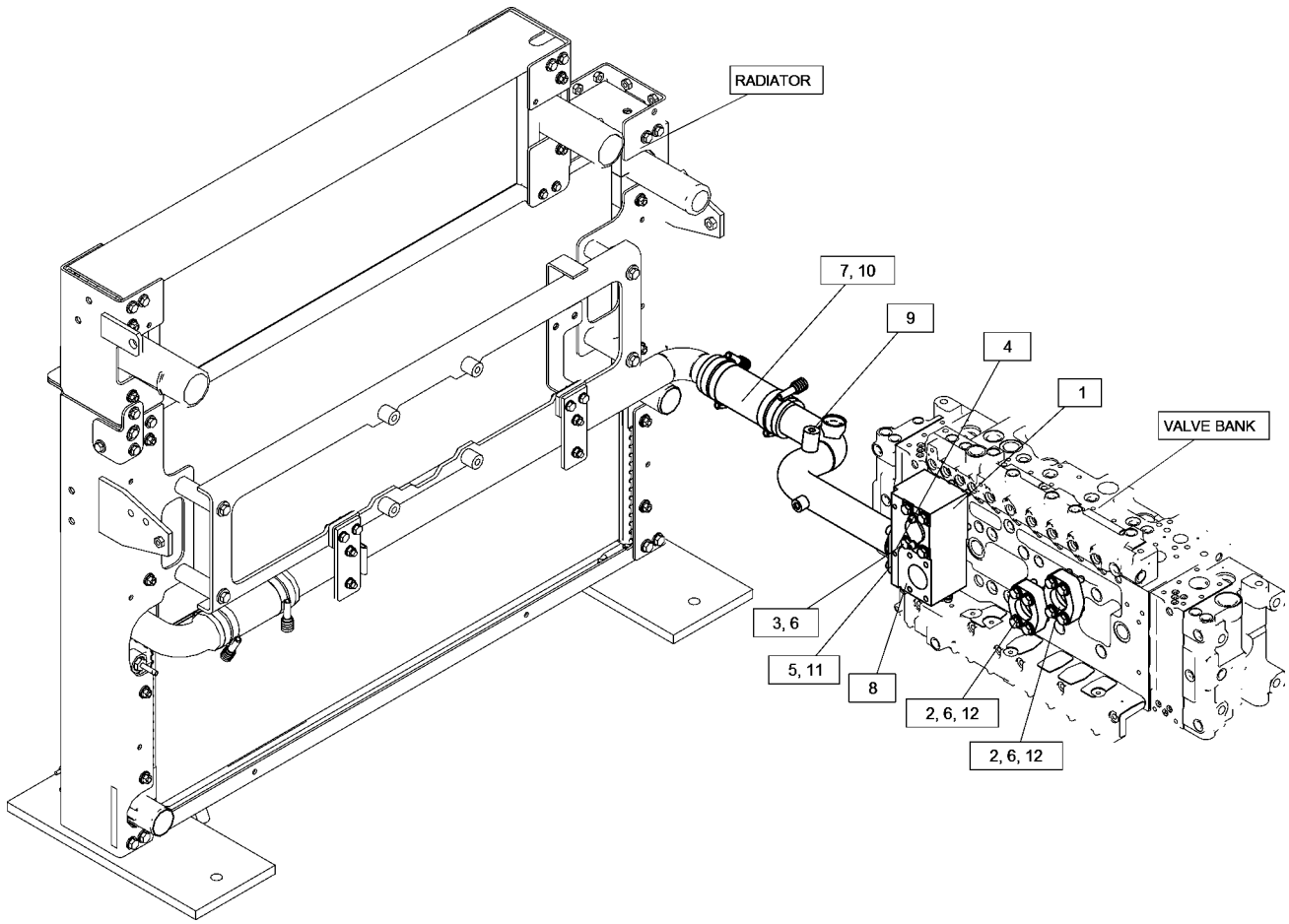

GRAPHIC #1 <END> g06278728

503-9782 LINES GP-HYDRAULIC OIL COOLER–FAN

S/N: SP91-UP

PART OF 512-5993 FAN AR-SUCTION

SMCS-1374 **i07756867**

NOTE	REF NO	GRAPHIC REF	PART NUMBER	QTY	PART NAME 1 2 3 4 5 6 (PRODUCT LEVEL)	SEE PAGE
M	1	1	**8T-4196**	6	BOLT (M10X1.5X35-MM)	
M	2	1	**8T-4192**	1	BOLT (M12X1.75X25-MM)	
	3	1	**5P-7466**	2	CLIP (SLOT)	
	4	1	**5P-7467**	2	CLIP (TAB)	
	5	1	**7K-1181**	6	STRAP-CABLE	
	6	1	**7X-7729**	4	WASHER (11X25X3-MM THK)	
	7	1	**8T-4121**	7	WASHER-HARD (11X21X2.5-MM THK)	
M	8	1	**8T-4136**	5	BOLT (M10X1.5X25-MM)	
	9	1	**8T-4223**	2	WASHER-HARD (13.5X25.5X3-MM THK)	
	10	1	**118-9901**	4	SPACER (12X20X10-MM THK)	
	11	1	*148-8347*	1	ELBOW AS	
		1	**3D-2824**	1	SEAL-O-RING	
		1	**6V-9007**	1	ELBOW	
		1	**6V-9746**	1	SEAL-O-RING	
	12	1	*153-6237*	1	ELBOW AS	
		1	**3D-2824**	1	SEAL-O-RING	
		1	**6V-9004**	1	ELBOW	
		1	**6V-9746**	1	SEAL-O-RING	
	13	1	*164-5606*	2	CONNECTOR AS	
					(EACH INCLUDES)	
		1	**3D-2824**	1	SEAL-O-RING	
		1	**6V-9746**	1	SEAL-O-RING	
		1	**8T-0078**	1	CONNECTOR	
	14	1	*164-8908*	1	CONNECTOR AS	
		1	**3K-0360**	1	SEAL-O-RING	
		1	**6V-8398**	1	SEAL-O-RING	
		1	**8T-0077**	1	CONNECTOR	
	15	1	**204-8000**	5	MOUNTING-CABLE TIE	
	16	1	**575-2713**	1	SUPPORT AS	
I	17	1	**521-5686**	1	HOSE AS	
	18	1	**527-3604**	1	LINER	
	19	1	**527-3605**	1	LINER	
	20	1	**527-3606**	1	PLATE	
	21	1	**527-3607**	1	PLATE	
	22	1	**204-2281**	5	STRAP-CABLE	
	23	1	**206-2423**	2	SADDLE-MOUNTING	
I	24	1	**556-1411**	1	HOSE AS	
	25	1	**566-7222**	1	HOSE AS	
	26	1	**5P-8112**	2	GROMMET	
M	27	1	**8T-4956**	1	BOLT (M12X1.75X35-MM)	

I - REFER TO HYDRAULIC INFORMATION SYSTEM
M - METRIC PART

503-9782 **LINES GP-HYDRAULIC OIL COOLER (**contd.**)** **i07756867**

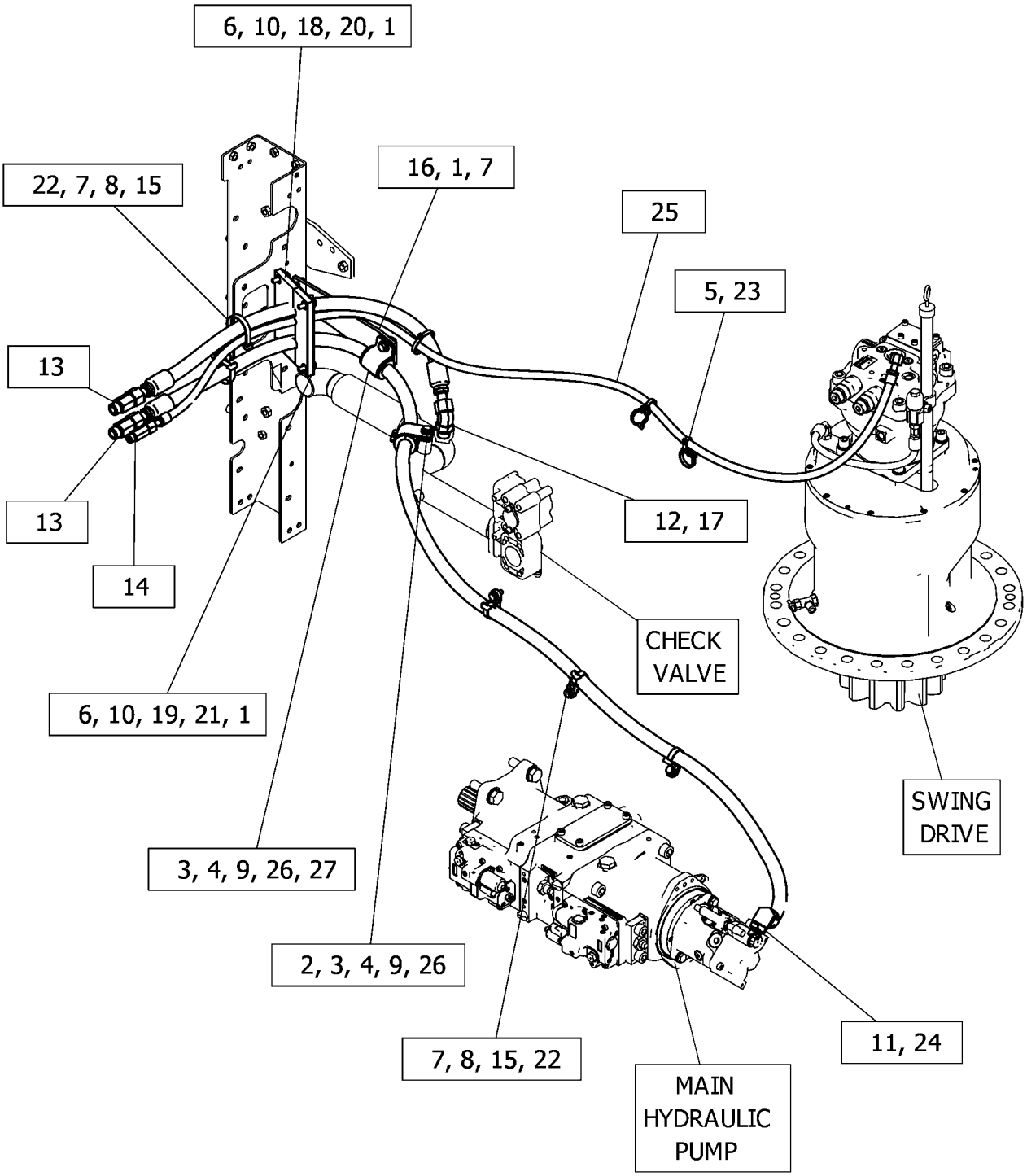

GRAPHIC #1 <END> g06420974

503-9784 LINES GP-HYDRAULIC OIL COOLER–REVERSING FAN

S/N: SP91-UP

PART OF 512-5995 FAN AR-SUCTION

SMCS-1374 **i07527731**

NOTE	REF NO	GRAPHIC REF	PART NUMBER	QTY	PART NAME 1 2 3 4 5 6 (PRODUCT LEVEL)	SEE PAGE
M	1	1	**8T-4196**	4	BOLT (M10X1.5X35-MM)	
	2	1	**204-2281**	2	STRAP-CABLE	
M	3	1	**8T-4192**	1	BOLT (M12X1.75X25-MM)	
	4	1	**5P-7467**	1	CLIP (TAB)	
	5	1	**5P-8112**	1	GROMMET	
	6	1	**7K-1181**	8	STRAP-CABLE	
	7	1	**7X-7729**	4	WASHER (11X25X3-MM THK)	
	8	1	*106-8715*	3	ELBOW AS	
					(EACH INCLUDES)	
		1	**3D-2824**	1	SEAL-O-RING	
		1	**6V-9746**	1	SEAL-O-RING	
		1	**8C-8400**	1	ELBOW	
	9	1	**118-9901**	4	SPACER (12X20X10-MM THK)	
	10	1	**133-5813**	2	BAND-MARKER (GRAY, P)	
	11	1	*148-8327*	1	CONNECTOR AS	
		1	**3D-2824**	1	SEAL-O-RING	
		1	**6V-8637**	1	CONNECTOR	
		1	**6V-9746**	1	SEAL-O-RING	
	12	1	*148-8347*	2	ELBOW AS	
					(EACH INCLUDES)	
		1	**3D-2824**	1	SEAL-O-RING	
		1	**6V-9007**	1	ELBOW	
		1	**6V-9746**	1	SEAL-O-RING	
	13	1	*148-8353*	1	ELBOW AS	
		1	**3J-1907**	1	SEAL-O-RING	
		1	**6V-8397**	1	SEAL-O-RING	
		1	**6V-9001**	1	ELBOW	
	14	1	*164-8908*	1	CONNECTOR AS	
		1	**3K-0360**	1	SEAL-O-RING	
		1	**6V-8398**	1	SEAL-O-RING	
		1	**8T-0077**	1	CONNECTOR	
	15	1	*168-1968*	1	TEE AS	
		1	**3J-1907**	1	SEAL-O-RING	
		1	**6V-8397**	1	SEAL-O-RING	
		1	**126-6872**	1	TEE	
	16	1	*148-8378*	3	ELBOW AS	
					(EACH INCLUDES)	
		1	**3J-1907**	1	SEAL-O-RING	
		1	**6V-8397**	1	SEAL-O-RING	
		1	**6V-8724**	1	ELBOW	
	17	1	*164-5606*	2	CONNECTOR AS	
					(EACH INCLUDES)	
		1	**3D-2824**	1	SEAL-O-RING	
		1	**6V-9746**	1	SEAL-O-RING	
		1	**8T-0078**	1	CONNECTOR	
	18	1	**204-8000**	2	MOUNTING-CABLE TIE	
	19	1	**206-2423**	1	SADDLE-MOUNTING	
	20	1	**266-0982**	1	GUARD	
I	21	1	**329-2824**	1	HOSE AS	

503-9784 **LINES GP-HYDRAULIC OIL COOLER (**contd.**)** **i07527731**

NOTE	REF NO	GRAPHIC REF	PART NUMBER	QTY	PART NAME 1 2 3 4 5 6 (PRODUCT LEVEL)	SEE PAGE
I	22	1	**333-7098**	1	HOSE AS	
	23	1	**352-7063**	1	CAP	
Y	24	1	*504-1987*	1	VALVE GP-CONTROL (REVERSING FAN)	567
I	25	1	**514-7127**	1	HOSE AS	
I	26	1	**516-3416**	1	HOSE AS	
	27	1	**517-1695**	1	SUPPORT	
	28	1	**529-9446**	1	PLATE	
	29	1	**529-9447**	1	PLATE	
	30	1	**529-9448**	1	LINER	
	31	1	**529-9449**	1	LINER	
I	32	1	**556-8774**	1	HOSE AS	
	33	1	**5P-7466**	1	CLIP (SLOT)	
I	34	1	**7I-0088**	1	HOSE AS	
I	35	1	**7Y-4366**	1	HOSE AS	
	36	1	**8T-4121**	2	WASHER-HARD (11X21X2.5-MM THK)	
M	37	1	**8T-4136**	2	BOLT (M10X1.5X25-MM)	
M	38	1	**8T-4139**	4	BOLT (M12X1.75X30-MM)	
	39	1	**8T-4223**	5	WASHER-HARD (13.5X25.5X3-MM THK)	

I - REFER TO HYDRAULIC INFORMATION SYSTEM
M - METRIC PART
Y - SEPARATE ILLUSTRATION

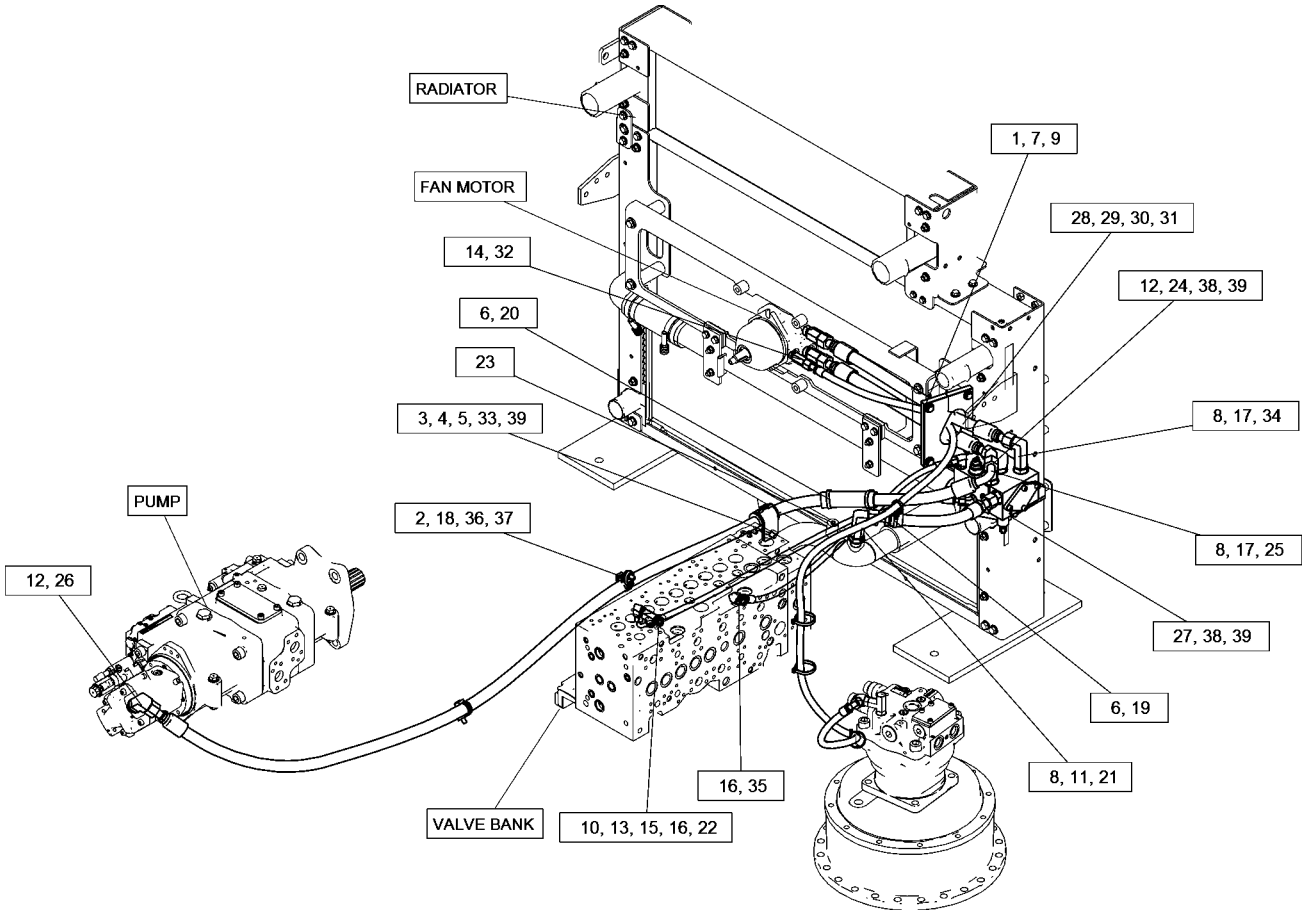

GRAPHIC #1 <END> g06281261

571-1670 LINES GP-HYDRAULIC OIL COOLER–FAN

S/N: SP91-UP

PART OF 512-5993 FAN AR-SUCTION

SMCS-1374 **i07865078**

NOTE	REF NO	GRAPHIC REF	PART NUMBER	QTY	PART NAME 1 2 3 4 5 6 (PRODUCT LEVEL)	SEE PAGE
M	1	1	**8T-4196**	6	BOLT (M10X1.5X35-MM)	
M	2	1	**8T-4192**	1	BOLT (M12X1.75X25-MM)	
	3	1	**5P-7466**	2	CLIP (SLOT)	
	4	1	**5P-7467**	2	CLIP (TAB)	
	5	1	**7K-1181**	6	STRAP-CABLE	
	6	1	**7X-7729**	4	WASHER (11X25X3-MM THK)	
	7	1	**8T-4121**	7	WASHER-HARD (11X21X2.5-MM THK)	
M	8	1	**8T-4136**	5	BOLT (M10X1.5X25-MM)	
	9	1	**8T-4223**	2	WASHER-HARD (13.5X25.5X3-MM THK)	
M	10	1	**8T-4956**	1	BOLT (M12X1.75X35-MM)	
	11	1	**118-9901**	4	SPACER (12X20X10-MM THK)	
	12	1	*148-8347*	1	ELBOW AS	
		1	**3D-2824**	1	SEAL-O-RING	
		1	**6V-9007**	1	ELBOW	
		1	**6V-9746**	1	SEAL-O-RING	
	13	1	*153-6237*	1	ELBOW AS	
		1	**3D-2824**	1	SEAL-O-RING	
		1	**6V-9004**	1	ELBOW	
		1	**6V-9746**	1	SEAL-O-RING	
	14	1	*164-5606*	2	CONNECTOR AS	
					(EACH INCLUDES)	
		1	**3D-2824**	1	SEAL-O-RING	
		1	**6V-9746**	1	SEAL-O-RING	
		1	**8T-0078**	1	CONNECTOR	
	15	1	*164-8908*	1	CONNECTOR AS	
		1	**3K-0360**	1	SEAL-O-RING	
		1	**6V-8398**	1	SEAL-O-RING	
		1	**8T-0077**	1	CONNECTOR	
	16	1	**204-8000**	5	MOUNTING-CABLE TIE	
	17	1	**527-3604**	1	LINER	
	18	1	**527-3605**	1	LINER	
	19	1	**527-3606**	1	PLATE	
	20	1	**527-3607**	1	PLATE	
	21	1	**204-2281**	5	STRAP-CABLE	
	22	1	**206-2423**	2	SADDLE-MOUNTING	
I	23	1	**521-5686**	1	HOSE AS	
I	24	1	**556-1411**	1	HOSE AS	
	25	1	**572-3905**	1	HOSE AS	
	26	1	**575-2713**	1	SUPPORT AS	
M		1	**8T-3597**	1	NUT-WELD (M12X1.75-THD)	
	27	1	**5P-8112**	2	GROMMET	

I - REFER TO HYDRAULIC INFORMATION SYSTEM
M - METRIC PART

571-1670 **LINES GP-HYDRAULIC OIL COOLER** (contd.) **i07865078**

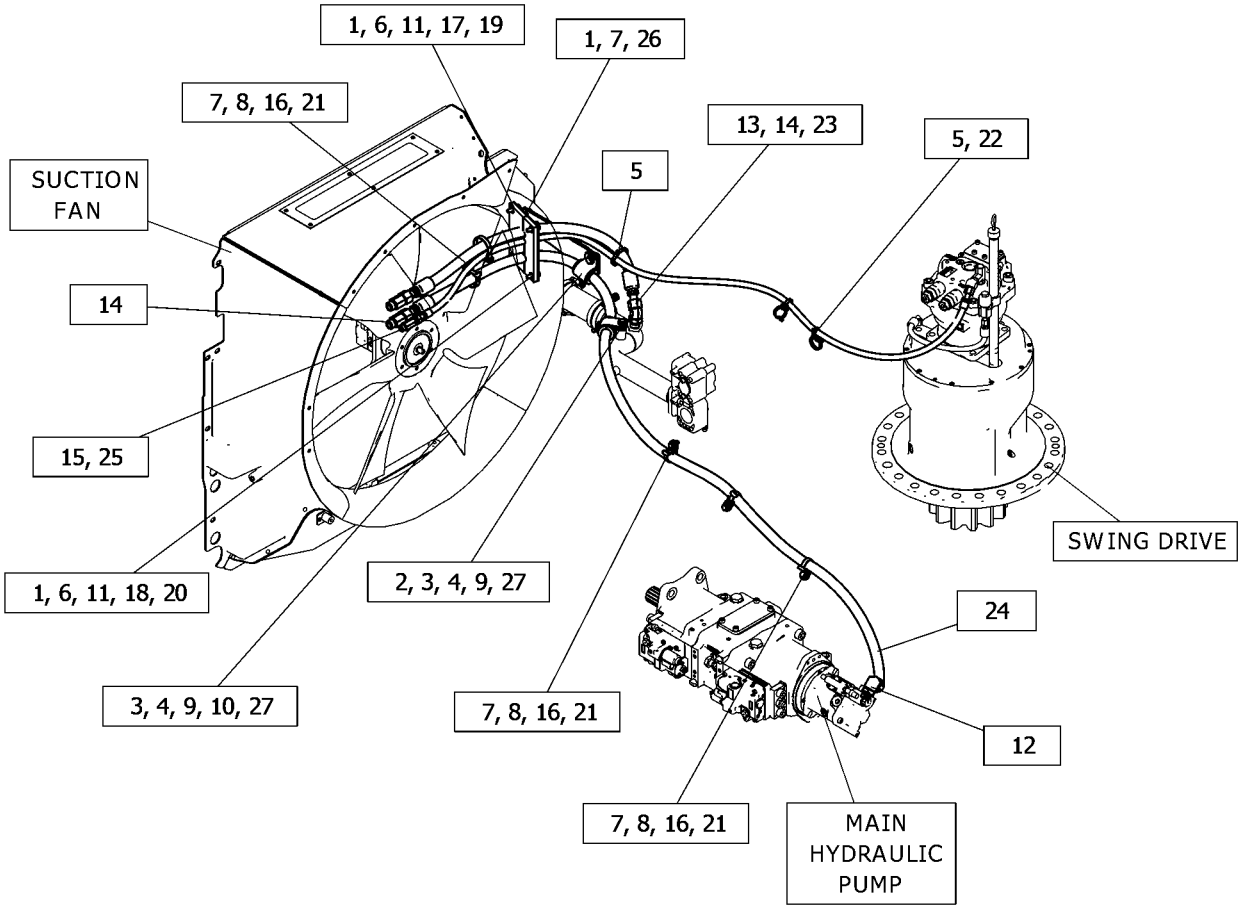

GRAPHIC #1 <END> g06460768

527-7812 LINES GP-HYDRAULIC PUMP

S/N: SP91-UP

PART OF 527-7800 HYDRAULIC AR

SMCS-5057 **i07513103**

NOTE	REF NO	GRAPHIC REF	PART NUMBER	QTY	PART NAME 1 2 3 4 5 6 (PRODUCT LEVEL)	SEE PAGE
	1	1	**1P-3704**	4	SEAL-RECTANGULAR	
M	2	1	**8T-4194**	8	BOLT (M12X1.75X50-MM)	
	3	1	**1P-5767**	4	FLANGE-HALF	
	4	1	**6V-0852**	2	CAP-DUST	
	5	1	**8T-4223**	8	WASHER-HARD (13.5X25.5X3-MM THK)	
	6	1	*164-5567*	2	COUPLER AS-QUICK DISCONNECT (MALE)	
					(EACH INCLUDES)	
		1	**6V-3965**	1	FITTING (QUICK DISCONNECT)	
		1	**214-7568**	1	SEAL-O-RING	
	7	1	*285-2663*	1	FITTING AS (QUICK DISCONNECT, MALE)	
		1	**3J-1907**	1	SEAL-O-RING	
		1	**285-2664**	1	FITTING	
I	8	1	**528-6822**	1	HOSE AS	
I	9	1	**528-6825**	1	HOSE AS	

I - REFER TO HYDRAULIC INFORMATION SYSTEM
M - METRIC PART

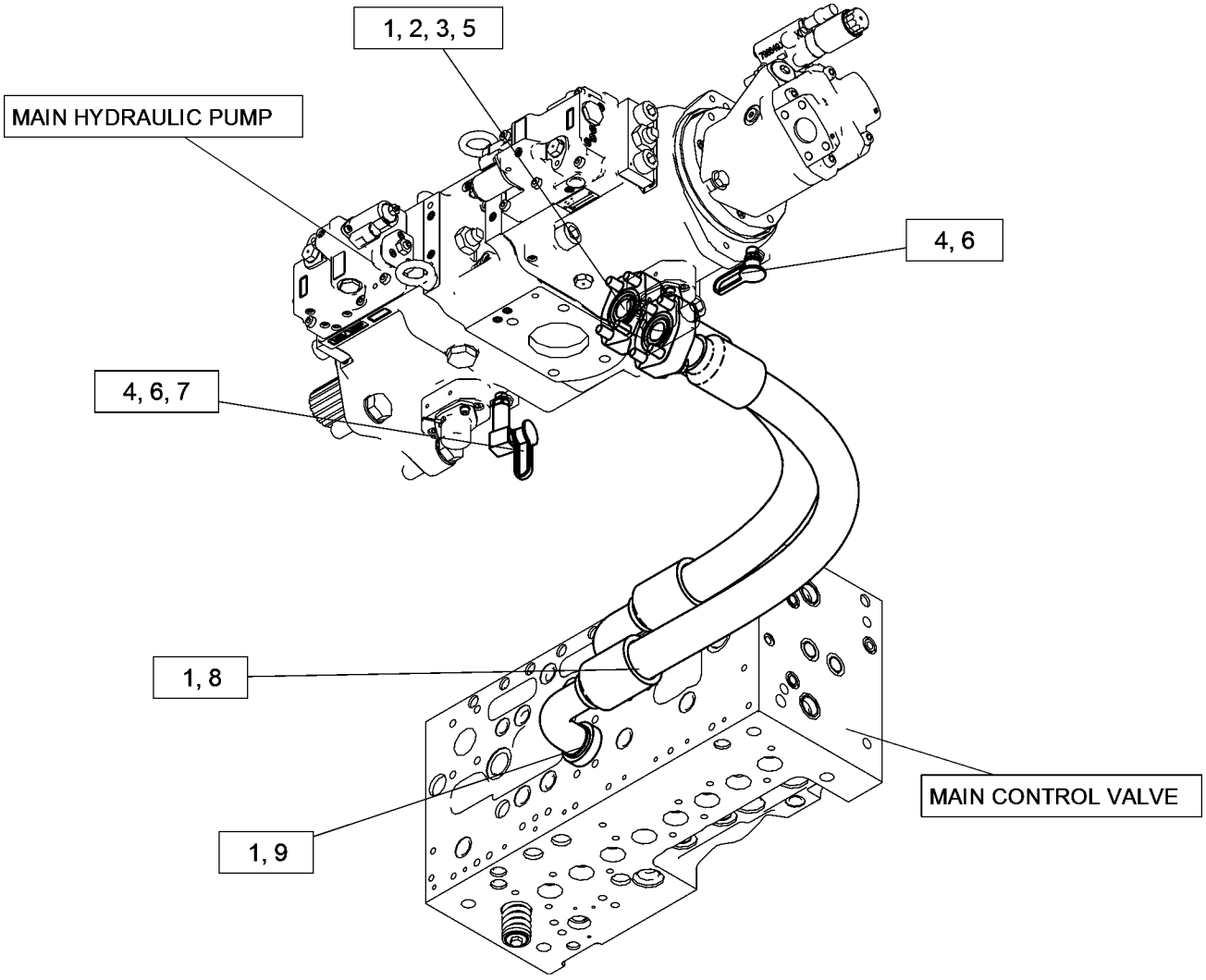

GRAPHIC #1 <END> g06278065

503-9787 LINES GP-PILOT

S/N: SP91-UP

SMCS-5057, 5059 **i07519943**

NOTE	REF NO	GRAPHIC REF	PART NUMBER	QTY	PART NAME 1 2 3 4 5 6 (PRODUCT LEVEL)	SEE PAGE
I	1	1	**221-4970**	1	HOSE AS	

I - REFER TO HYDRAULIC INFORMATION SYSTEM

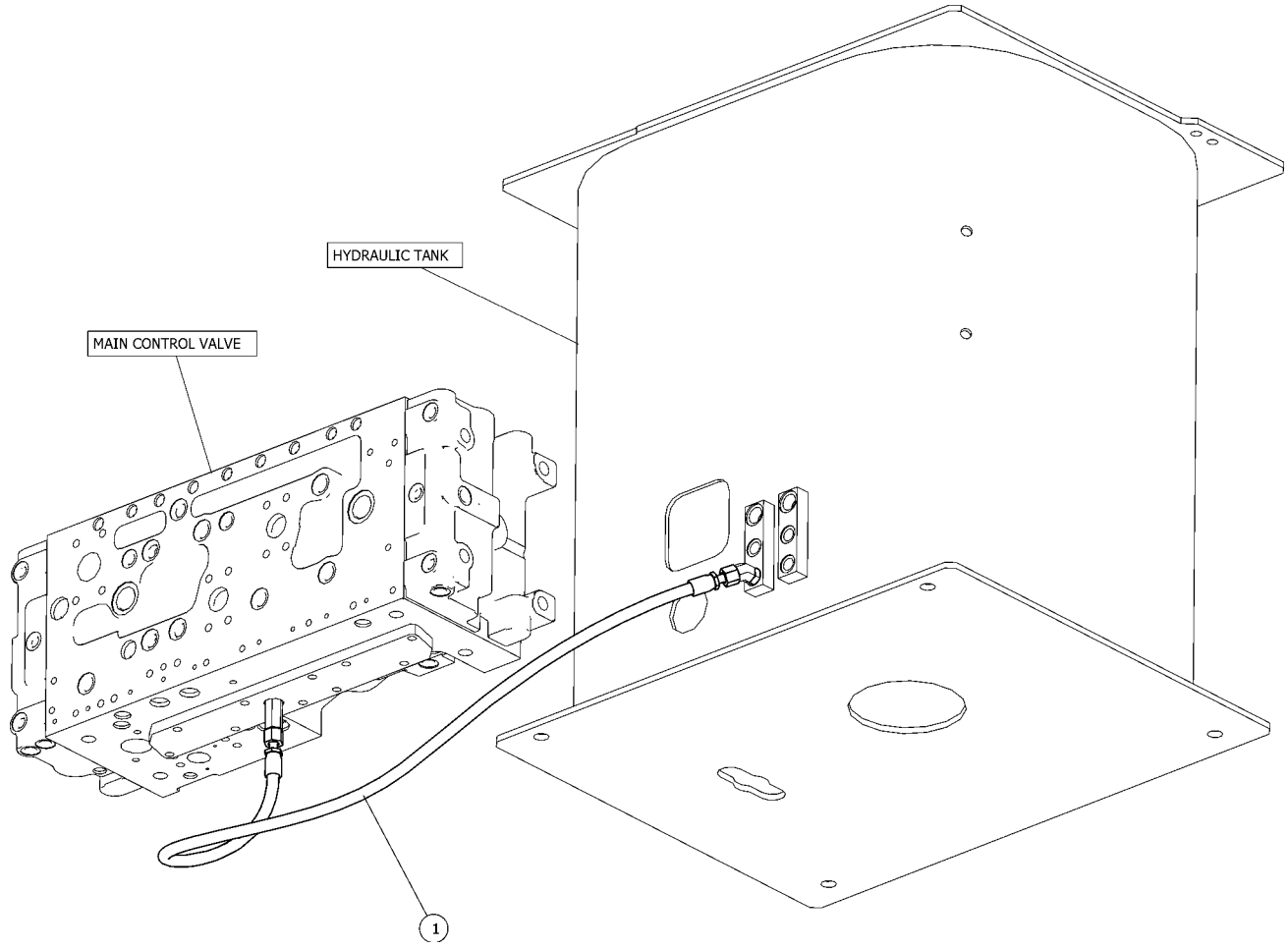

GRAPHIC #1 <END> g06285335

523-6215 LINES GP-PILOT—HEAVY LIFT

S/N: SP91-UP

PART OF 504-1790 VALVE AR-MAIN CONTROL

SMCS-5057, 5059 **i07793260**

NOTE	REF NO	GRAPHIC REF	PART NUMBER	QTY	PART NAME 1 2 3 4 5 6 (PRODUCT LEVEL)	SEE PAGE
M	1	1	**8T-4136**	2	BOLT (M10X1.5X25-MM)	
M	2	1	**8T-4189**	2	BOLT (M8X1.25X20-MM)	
	3	1	**7K-1181**	1	STRAP-CABLE	
	4	1	**8T-4121**	2	WASHER-HARD (11X21X2.5-MM THK)	
	5	1	**8T-4224**	2	WASHER-HARD (8.8X16X2-MM THK)	
I	6	1	**087-4441**	1	HOSE AS	
	7	1	*148-8336*	1	CONNECTOR AS	
		1	**3J-1907**	1	SEAL-O-RING	
		1	**6V-8397**	1	SEAL-O-RING	
		1	**6V-8636**	1	CONNECTOR	
	8	1	*148-8378*	4	ELBOW AS	
					(EACH INCLUDES)	
		1	**3J-1907**	1	SEAL-O-RING	
		1	**6V-8397**	1	SEAL-O-RING	
		1	**6V-8724**	1	ELBOW	
	9	1	*150-4044*	1	CONNECTOR AS	
		1	**3J-1907**	1	SEAL-O-RING	
		1	**6V-8397**	1	SEAL-O-RING	
		1	**8T-1779**	1	CONNECTOR	
I	10	1	**314-8102**	1	HOSE AS	
	11	1	**383-7908**	1	HOSE AS	
Y	12	1	**524-0912**	1	VALVE & MTG GP-SOLENOID (CONTROL VALVE)	562
	13	1	**525-2974**	1	SUPPORT	

I - REFER TO HYDRAULIC INFORMATION SYSTEM
M - METRIC PART
Y - SEPARATE ILLUSTRATION

523-6215 **LINES GP-PILOT (**contd.**)** **i07793260**

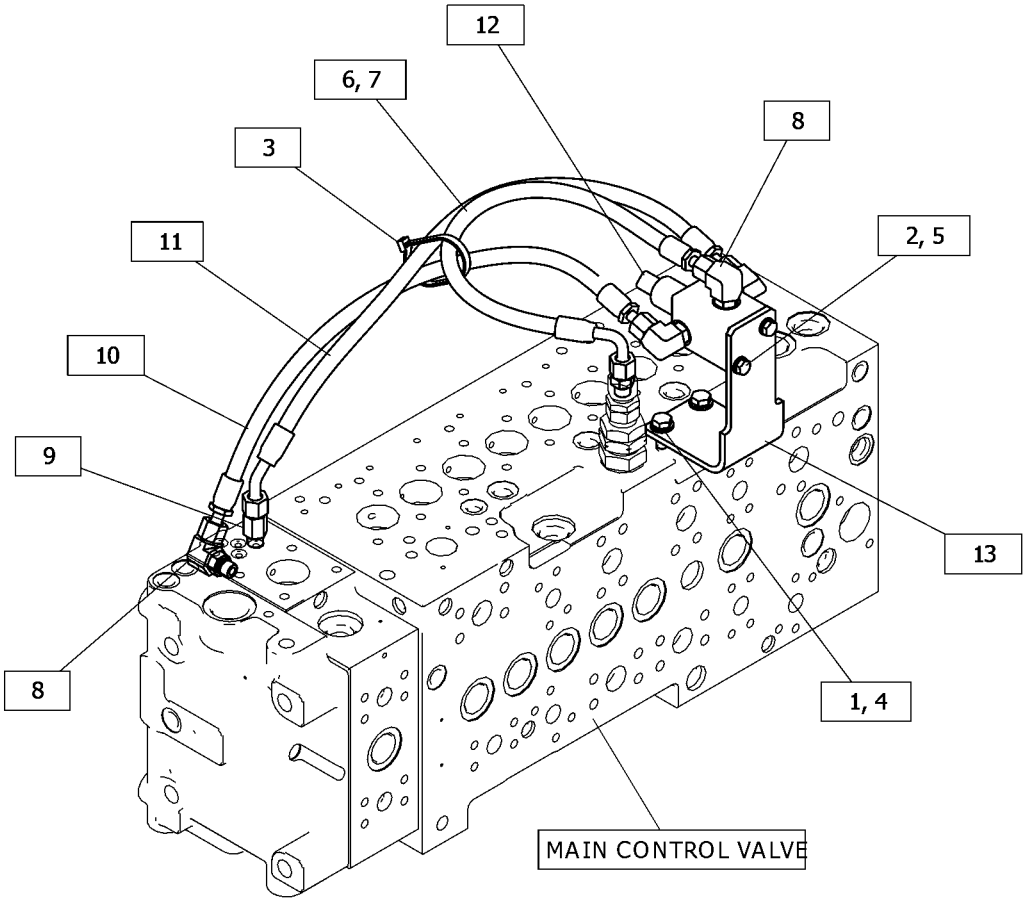

GRAPHIC #1 <END> g06438374

523-6216 LINES GP-PILOT—LIFT MODE, TOOL

S/N: SP91-UP

PART OF 504-1791 VALVE AR-MAIN CONTROL

SMCS-5057, 5059 **i07362126**

NOTE	REF NO	GRAPHIC REF	PART NUMBER	QTY	PART NAME 1 2 3 4 5 6 (PRODUCT LEVEL)	SEE PAGE
M	1	1	**8T-4136**	2	BOLT (M10X1.5X25-MM)	
M	2	1	**8T-4189**	2	BOLT (M8X1.25X20-MM)	
	3	1	**7K-1181**	1	STRAP-CABLE	
	4	1	**8T-4121**	2	WASHER-HARD (11X21X2.5-MM THK)	
	5	1	**8T-4224**	2	WASHER-HARD (8.8X16X2-MM THK)	
I	6	1	**087-4441**	1	HOSE AS	
	7	1	*148-8336*	1	CONNECTOR AS	
		1	**3J-1907**	1	SEAL-O-RING	
		1	**6V-8397**	1	SEAL-O-RING	
		1	**6V-8636**	1	CONNECTOR	
	8	1	*148-8378*	4	ELBOW AS	
					(EACH INCLUDES)	
		1	**3J-1907**	1	SEAL-O-RING	
		1	**6V-8397**	1	SEAL-O-RING	
		1	**6V-8724**	1	ELBOW	
	9	1	*150-4044*	1	CONNECTOR AS	
		1	**3J-1907**	1	SEAL-O-RING	
		1	**6V-8397**	1	SEAL-O-RING	
		1	**8T-1779**	1	CONNECTOR	
Y	10	1	**524-0912**	1	VALVE & MTG GP-SOLENOID (CONTROL VALVE)	562
	11	1	**525-2974**	1	SUPPORT	
I	12	1	**525-3638**	1	HOSE AS	
I	13	1	**525-3639**	1	HOSE AS	

I - REFER TO HYDRAULIC INFORMATION SYSTEM
M - METRIC PART
Y - SEPARATE ILLUSTRATION

523-6216 **LINES GP-PILOT (**contd.**)** **i07362126**

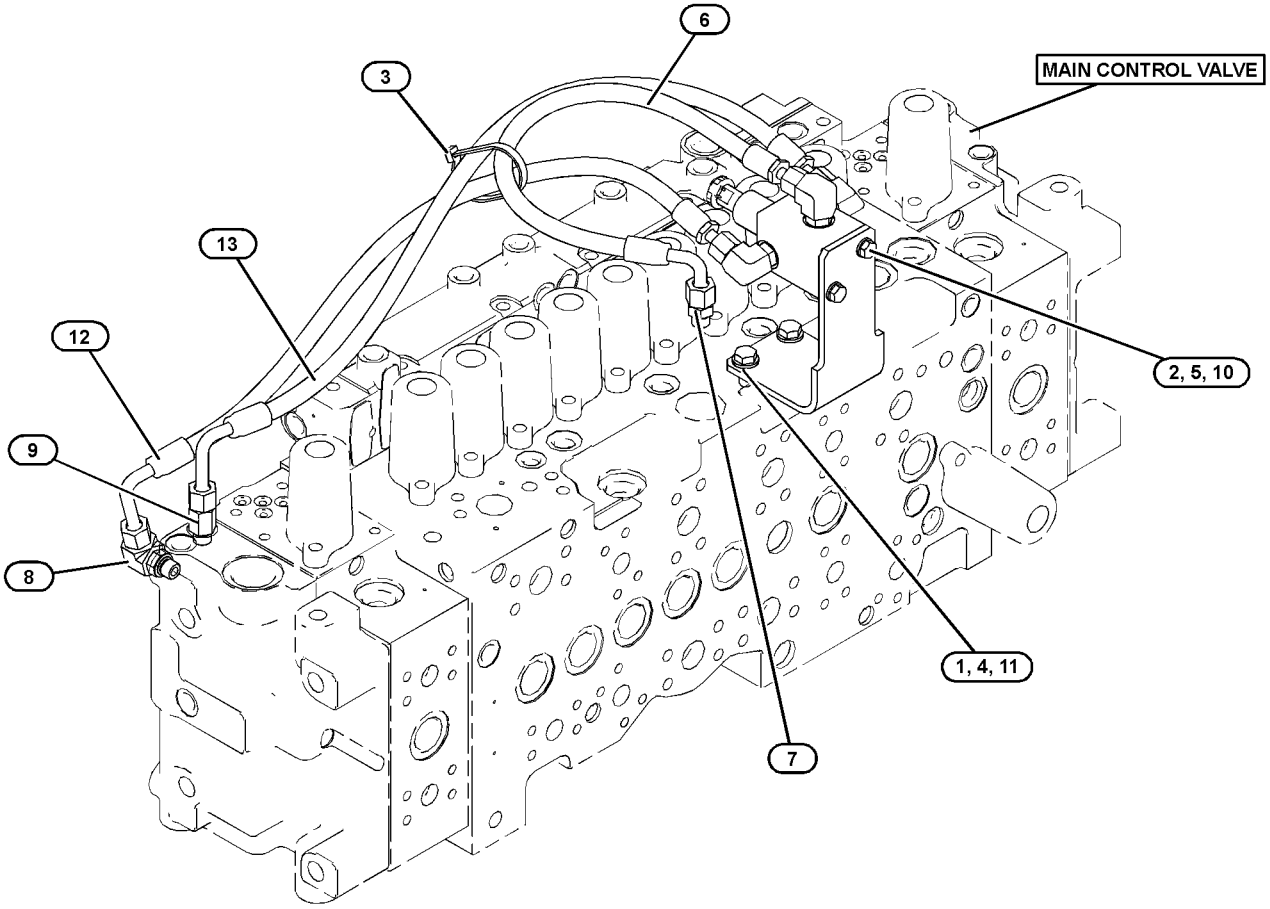

GRAPHIC #1 <END> g06230460

558-0345 LINES GP-PILOT

S/N: SP91-UP

PART OF 525-2937 HYDRAULIC AR

SMCS-5057, 5059 **i07788894**

NOTE	REF NO	GRAPHIC REF	PART NUMBER	QTY	PART NAME 1 2 3 4 5 6 (PRODUCT LEVEL)	SEE PAGE
	1	1	**3D-2824**	1	SEAL-O-RING	
	2	1	**4I-9524**	2	BAND-MARKER (BROWN, L4)	
	3	1	**6E-4701**	1	VALVE GP-CHECK (PILOT)	
		1	**3J-1907**	1	SEAL-O-RING	
		1	**6V-8397**	1	SEAL-O-RING	
	4	1	**6V-0852**	4	CAP-DUST	
	5	1	**7K-1181**	9	STRAP-CABLE	
	6	1	**8T-4121**	4	WASHER-HARD (11X21X2.5-MM THK)	
M	7	1	**8T-4136**	4	BOLT (M10X1.5X25-MM)	
	8	1	*148-8378*	1	ELBOW AS	
		1	**3J-1907**	1	SEAL-O-RING	
		1	**6V-8397**	1	SEAL-O-RING	
		1	**6V-8724**	1	ELBOW	
	9	1	*148-8407*	11	PLUG AS	
					(EACH INCLUDES)	
		1	**3J-1907**	1	SEAL-O-RING	
		1	**9S-4191**	1	PLUG (9/16-18-THD)	
	10	1	*150-4027*	1	TEE AS	
		1	**3E-2310**	1	TEE	
		1	**3J-1907**	1	SEAL-O-RING	
		1	**6V-8397**	1	SEAL-O-RING	
	11	1	*164-5567*	1	COUPLER AS-QUICK DISCONNECT (MALE)	
		1	**6V-3965**	1	FITTING (QUICK DISCONNECT)	
		1	**214-7568**	1	SEAL-O-RING	
Y	12	1	*245-2975*	1	ACCUMULATOR GP-HYDRAULIC (CHARGED) (CONTROL VALVE)	403
Y	13	1	*338-6971*	1	SENSOR GP-PRESSURE (HYDRAULIC OIL) (STICK CYLINDER, HEAD END)	239
Y	13A	1	*338-6971*	1	SENSOR GP-PRESSURE (HYDRAULIC OIL) (PUMP 1)	239
Y	13B	1	*338-6971*	1	SENSOR GP-PRESSURE (HYDRAULIC OIL) (PUMP 2)	239
I	14	1	**350-0836**	1	HOSE AS	
I	15	1	**087-4441**	1	HOSE AS	
	16	1	**206-2423**	2	SADDLE-MOUNTING	
Y	17	1	*352-6860*	1	ACCUMULATOR GP-HYDRAULIC (CHARGED) (STICK CYLINDER)	405
I	18	1	**4I-5795**	1	HOSE AS	
I	19	1	**528-0938**	1	HOSE AS	
	20	1	**557-7834**	1	BLOCK	
	21	1	**557-7835**	1	SUPPORT	
	22	1	**566-7221**	1	HOSE AS	

I - REFER TO HYDRAULIC INFORMATION SYSTEM
M - METRIC PART
Y - SEPARATE ILLUSTRATION

558-0345 **LINES GP-PILOT (**contd.**)** **i07788894**

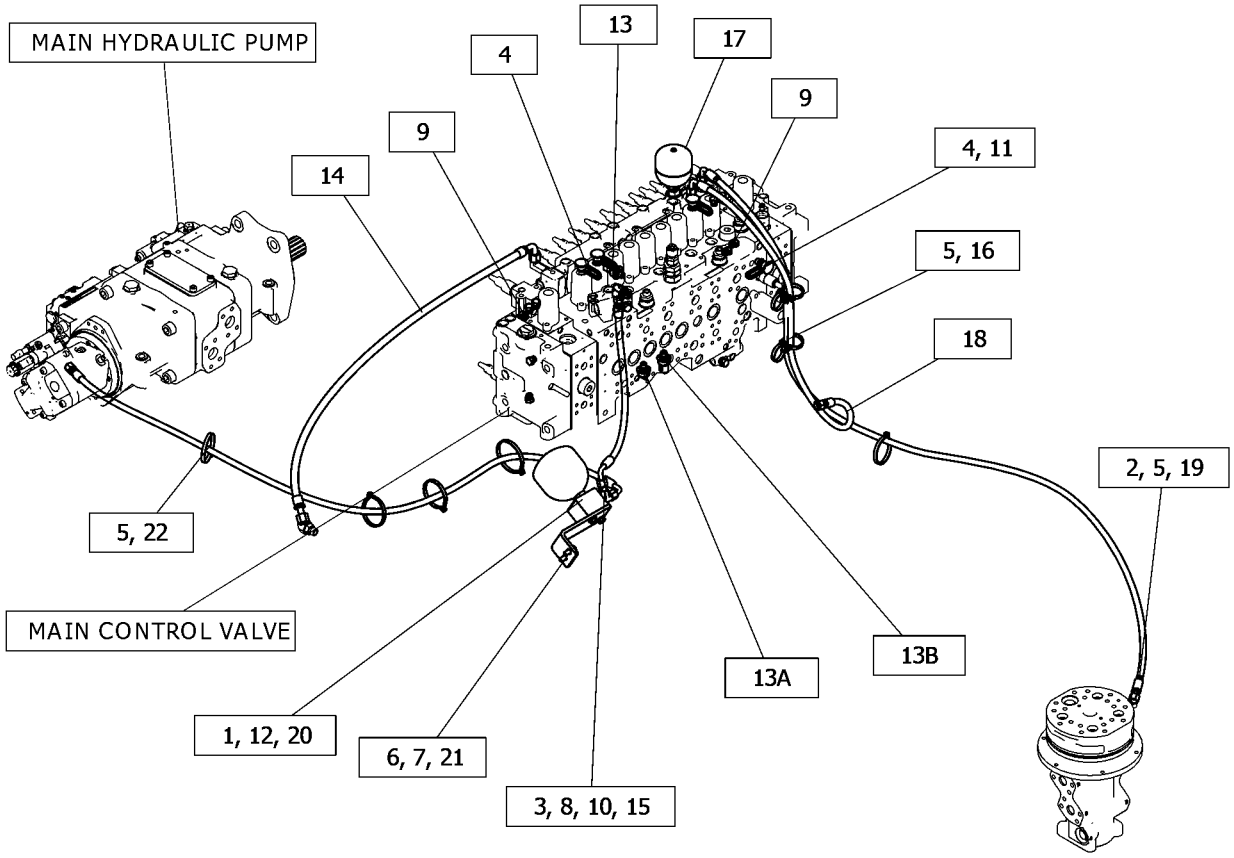

GRAPHIC #1 <END> g06407756

558-0346 LINES GP-PILOT

S/N: SP91-UP

SMCS-5057, 5059 **i07521875**

NOTE	REF NO	GRAPHIC REF	PART NUMBER	QTY	PART NAME 1 2 3 4 5 6 (PRODUCT LEVEL)	SEE PAGE
I	1	1	**4I-1037**	1	HOSE AS	

I - REFER TO HYDRAULIC INFORMATION SYSTEM

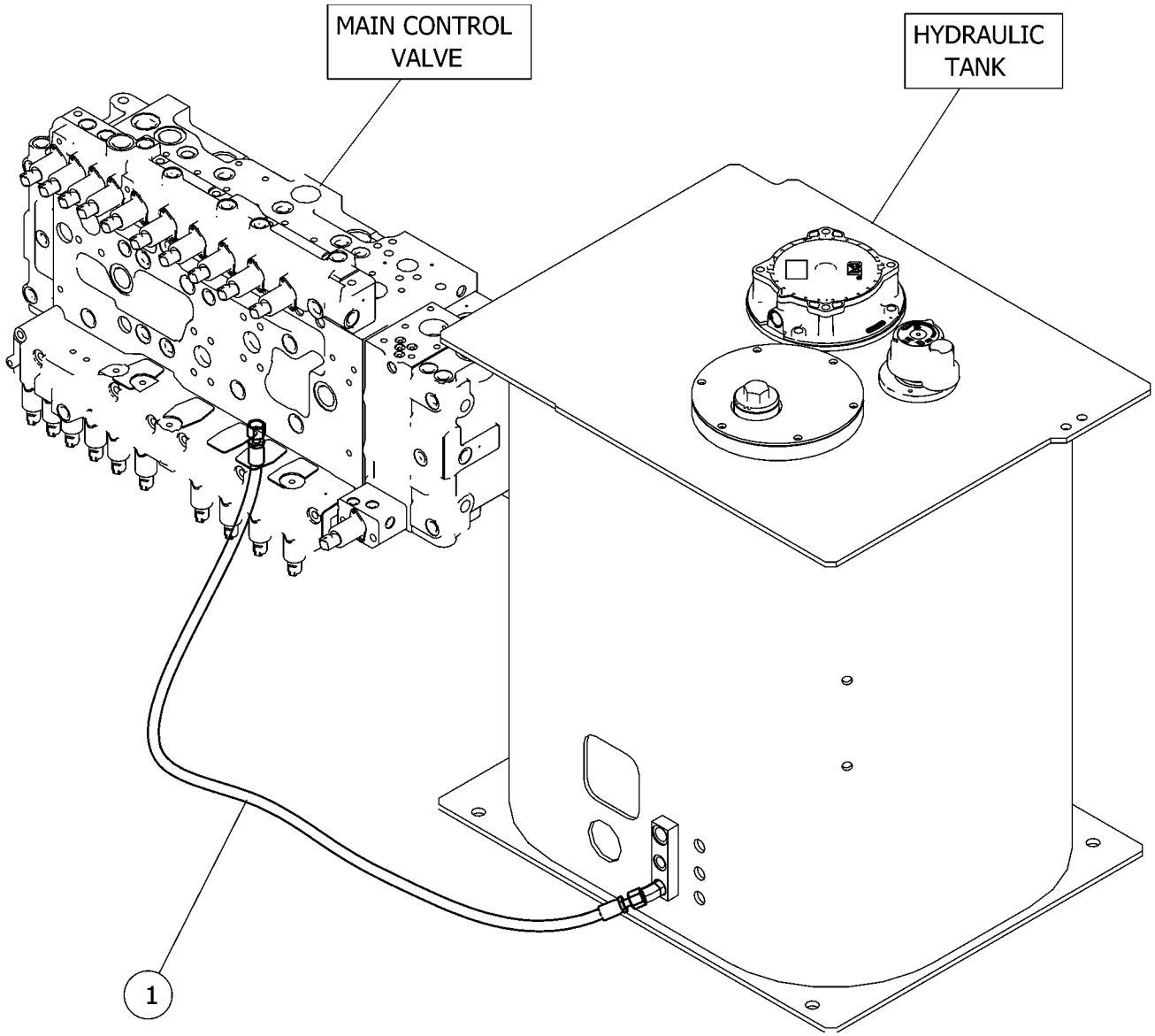

GRAPHIC #1 <END> g06303215

503-9763 LINES GP-PUMP—MAIN HYDRAULIC

S/N: SP91-UP

PART OF 525-2937 HYDRAULIC AR

SMCS-5057 **i07735273**

NOTE	REF NO	GRAPHIC REF	PART NUMBER	QTY	PART NAME 1 2 3 4 5 6 (PRODUCT LEVEL)	SEE PAGE
M	1	1	**8T-4196**	4	BOLT (M10X1.5X35-MM)	
	2	1	**9M-3786**	1	SEAL-O-RING	
	3	1	**1P-4578**	2	FLANGE-HALF	
	4	1	**4J-0522**	4	SEAL-O-RING	
	5	1	**5H-4020**	1	COVER	
	6	1	**5H-8624**	1	SEAL-O-RING	
	7	1	**8C-3451**	1	CAP-DUST (HYDRAULIC OIL)	
	8	1	**8T-4121**	4	WASHER-HARD (11X21X2.5-MM THK)	
M	9	1	**101-7401**	4	BOLT-SOCKET HEAD (M10X1.5X20-MM)	
E	10	1	**7Y-4562**		HOSE (27-CM)	
	11	1	*148-8305*	1	ADAPTER AS	
		1	**3J-1907**	1	SEAL-O-RING	
		1	**5P-9617**	1	ADAPTER	
	12	1	*148-8378*	1	ELBOW AS	
		1	**3J-1907**	1	SEAL-O-RING	
		1	**6V-8397**	1	SEAL-O-RING	
		1	**6V-8724**	1	ELBOW	
	13	1	*153-6237*	1	ELBOW AS	
		1	**3D-2824**	1	SEAL-O-RING	
		1	**6V-9004**	1	ELBOW	
		1	**6V-9746**	1	SEAL-O-RING	
	14	1	*155-3624*	1	PLUG AS	
		1	**3J-7354**	1	SEAL-O-RING	
		1	**9S-4182**	1	PLUG (7/16-20-THD)	
	15	1	*164-5546*	1	TEE AS	
		1	**3E-7410**	1	TEE	
		1	**3J-1907**	1	SEAL-O-RING	
	16	1	*164-5567*	2	COUPLER AS-QUICK DISCONNECT (MALE)	
					(EACH INCLUDES)	
		1	**6V-3965**	1	FITTING (QUICK DISCONNECT)	
		1	**214-7568**	1	SEAL-O-RING	
	17	1	*164-5590*	1	VALVE AS-FLUID SAMPLING	
		1	**3J-7354**	1	SEAL-O-RING	
		1	**8C-3446**	1	VALVE-SAMPLING	
	18	1	**419-4262**	1	FLANGE	
M	19	1	**447-1709**	4	BOLT (M16X2X45-MM)	
	20	1	**451-2175**	4	WASHER-HARD (17.5X30X3.5-MM THK)	
	21	1	**511-8282**	1	PIPE AS	
	22	1	**519-5970**	1	TUBE GP-HYDRAULIC	
I	23	1	**519-9691**	1	HOSE AS	
I	24	1	**521-1028**	1	HOSE AS	
	25	1	**6V-0852**	2	CAP-DUST	
	26	1	*366-4699*	2	PLUG AS	
					(EACH INCLUDES)	
		1	**3J-1907**	1	SEAL-O-RING	
		1	**360-3692**	1	PLUG	
	27	1	**9X-2201**	4	CLAMP-HOSE	

503-9763 **LINES GP-PUMP (**contd.**)** **i07735273**

NOTE	REF NO	GRAPHIC REF	PART NUMBER	QTY	PART NAME 1 2 3 4 5 6 (PRODUCT LEVEL)	SEE PAGE

E - ORDER BY THE CENTIMETER
I - REFER TO HYDRAULIC INFORMATION SYSTEM
M - METRIC PART

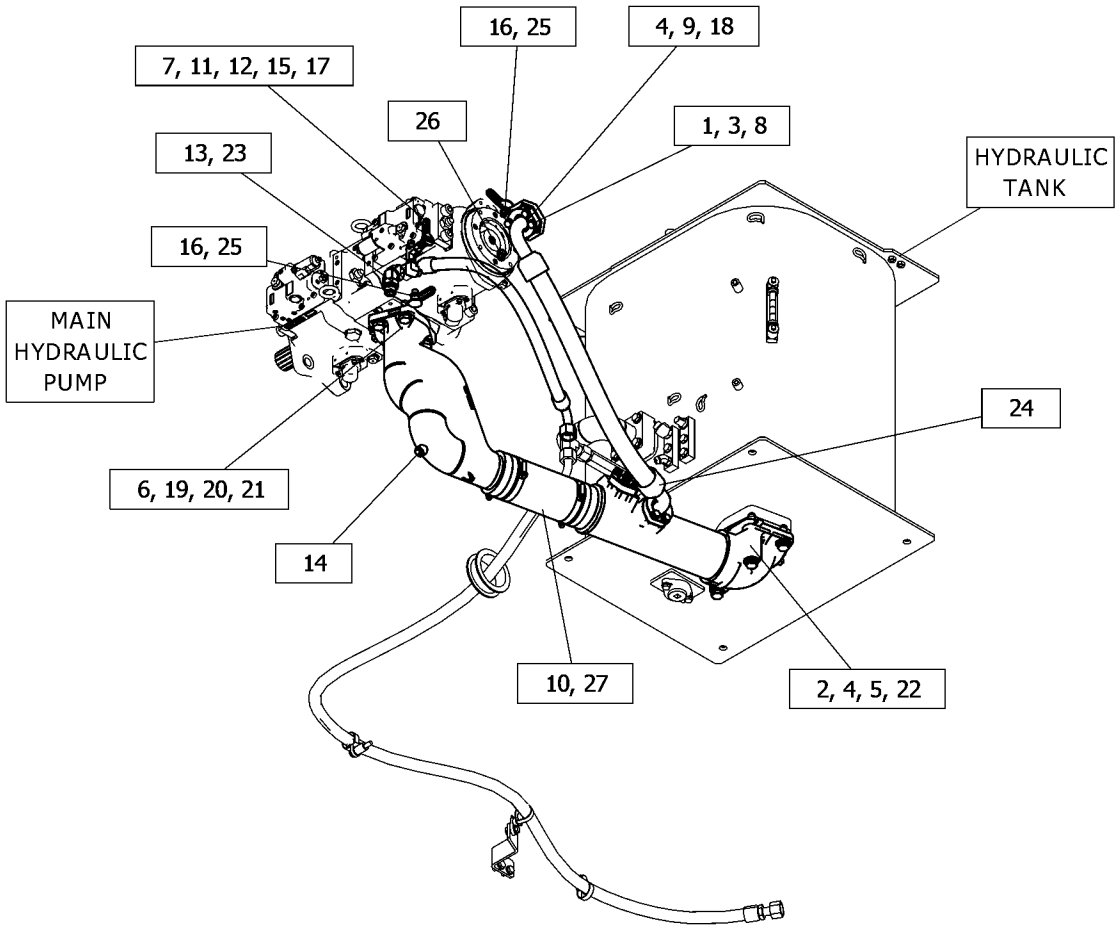

GRAPHIC #1 <END> g06369218

503-9780 LINES GP-RETURN—IMPLEMENT RETURN

S/N: SP91-UP

PART OF 550-7581 OPTION AR-HYDRAULIC

SMCS-5057 **i07837683**

NOTE	REF NO	GRAPHIC REF	PART NUMBER	QTY	PART NAME 1 2 3 4 5 6 (PRODUCT LEVEL)	SEE PAGE
	1	1	**4J-0527**	2	SEAL-O-RING	
	2	1	**7X-0584**	4	WASHER-HARD (13.5X20.5X2-MM THK)	
M	3	1	**7Y-5247**	1	U-BOLT (M10X1.5-THD)	
	4	1	**8T-4121**	2	WASHER-HARD (11X21X2.5-MM THK)	
	5	1	**8T-4223**	2	WASHER-HARD (13.5X25.5X3-MM THK)	
M	6	1	**8T-4956**	2	BOLT (M12X1.75X35-MM)	
M	7	1	**096-4883**	2	LOCKNUT (M10X1.5-THD)	
	8	1	**144-0367**	6	CLAMP-HOSE	
	9	1	*148-8407*	1	PLUG AS	
		1	**3J-1907**	1	SEAL-O-RING	
		1	**9S-4191**	1	PLUG (9/16-18-THD)	
	10	1	*148-8408*	1	PLUG AS	
		1	**3D-2824**	1	SEAL-O-RING	
		1	**9S-4183**	1	PLUG (1-1/16-12-THD)	
M	11	1	**170-8553**	8	BOLT-SOCKET HEAD (M12X1.75X40-MM)	
	12	1	**227-0428**	1	HOSE	
	13	1	**236-6339**	1	HOSE	
	14	1	**480-3465**	4	WASHER-HARD (13.5X20.5X3-MM THK)	
	15	1	**574-3108**	1	PIPE AS	
	16	1	**528-1728**	1	PIPE AS	
	17	1	**555-5189**	1	SUPPORT AS	

M - METRIC PART

503-9780 **LINES GP-RETURN (**contd.**)** **i07837683**

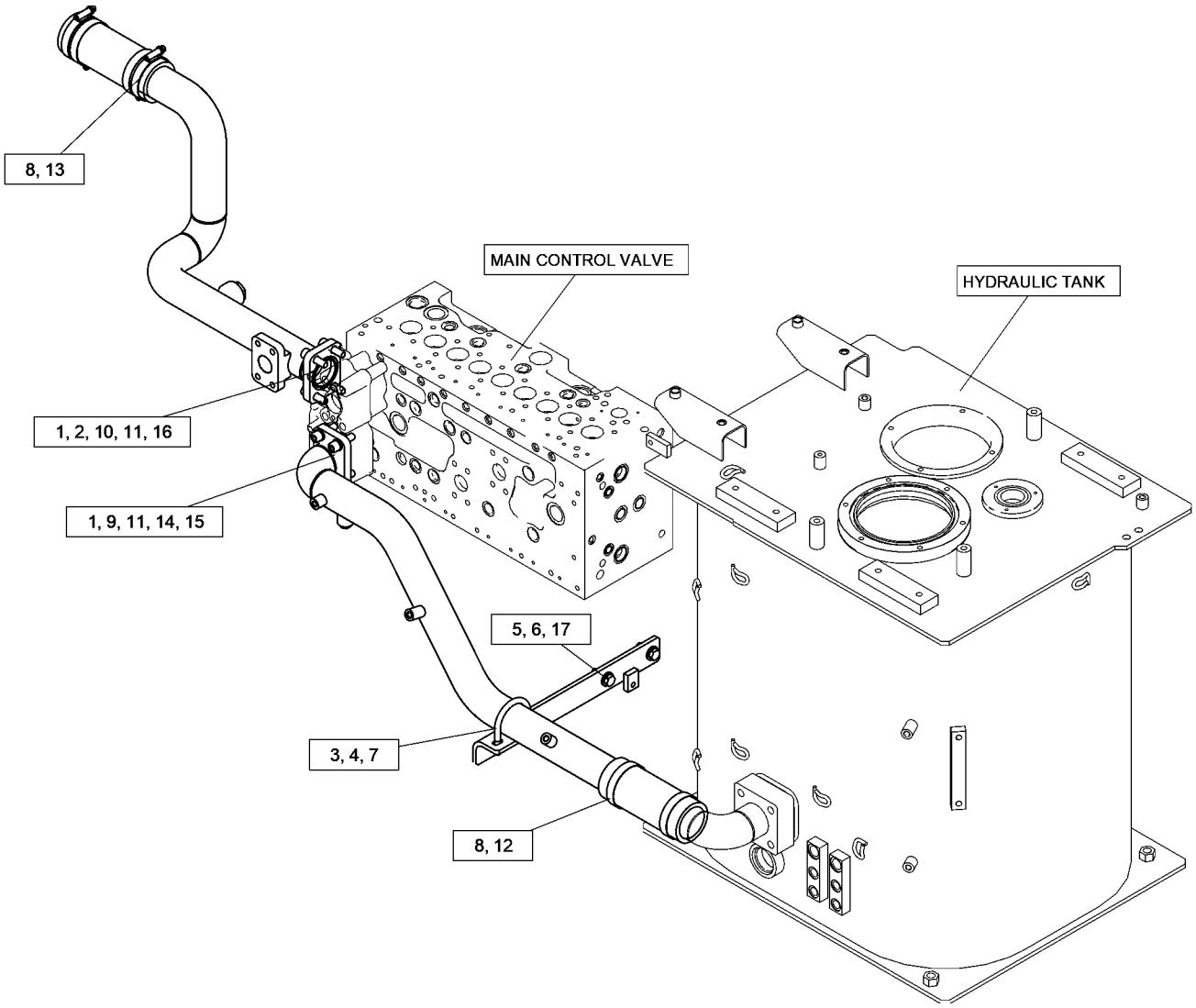

GRAPHIC #1 <END> g06427235

113-6859 LINES GP-STICK—BUCKET CYLINDER

S/N: SP91-UP
FOR USE WITH 2.55-M (8.4-FT) STICK
PART OF 512-1380 STICK AR-HOE

SMCS-5057, 5458 **i05518568**

NOTE	REF NO	GRAPHIC REF	PART NUMBER	QTY	PART NAME 1 2 3 4 5 6 (PRODUCT LEVEL)	SEE PAGE
I	1	1	**5I-3088**	2	HOSE AS	
	2	1	**1P-3703**	2	SEAL-RECTANGULAR	
	3	1	**6V-0400**	4	FLANGE-HALF	
	4	1	**8T-4223**	16	WASHER-HARD (13.5X25.5X3-MM THK)	
M	5	1	**8T-4184**	12	BOLT (M12X1.75X45-MM)	
	6	1	**1P-5767**	4	FLANGE-HALF	
	7	1	**1P-3704**	3	SEAL-RECTANGULAR	
	8	1	**4I-6046**	1	BLOCK	
M	9	1	**8T-5041**	4	BOLT (M12X1.75X120-MM)	

I - REFER TO HYDRAULIC INFORMATION SYSTEM
M - METRIC PART

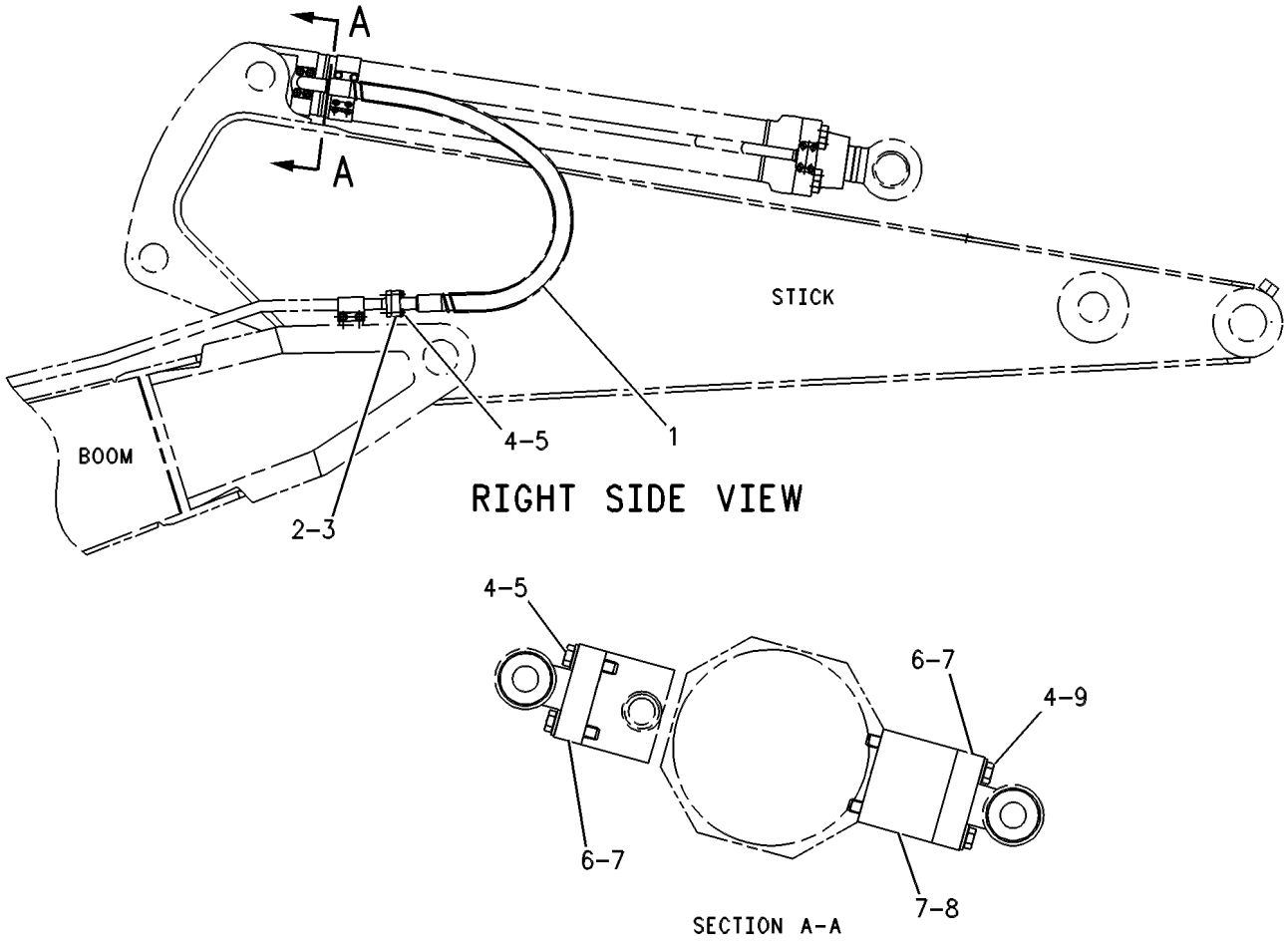

GRAPHIC #1 <END> g00261907

319-9812 LINES GP-STICK

S/N: SP91-UP
FOR USE WITH 3.2-M (10.5-F) STICK
PART OF 512-1383 STICK AR-HOE

SMCS-5057, 5458 **i07527798**

NOTE	REF NO	GRAPHIC REF	PART NUMBER	QTY	PART NAME 1 2 3 4 5 6 (PRODUCT LEVEL)	SEE PAGE
	1	1	**087-5661**	1	BLOCK	
I	2	1	**207-6282**	2	HOSE AS	
	3	1	**1P-3703**	5	SEAL-RECTANGULAR	
	4	1	**6V-0400**	8	FLANGE-HALF	
M	5	1	**8T-4184**	12	BOLT (M12X1.75X45-MM)	
	6	1	**8T-4223**	16	WASHER-HARD (13.5X25.5X3-MM THK)	
M	7	1	**8T-5001**	4	BOLT (M12X1.75X130-MM)	

I - REFER TO HYDRAULIC INFORMATION SYSTEM
M - METRIC PART

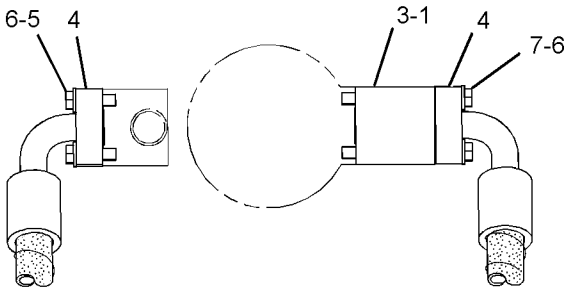

VIEW A-A

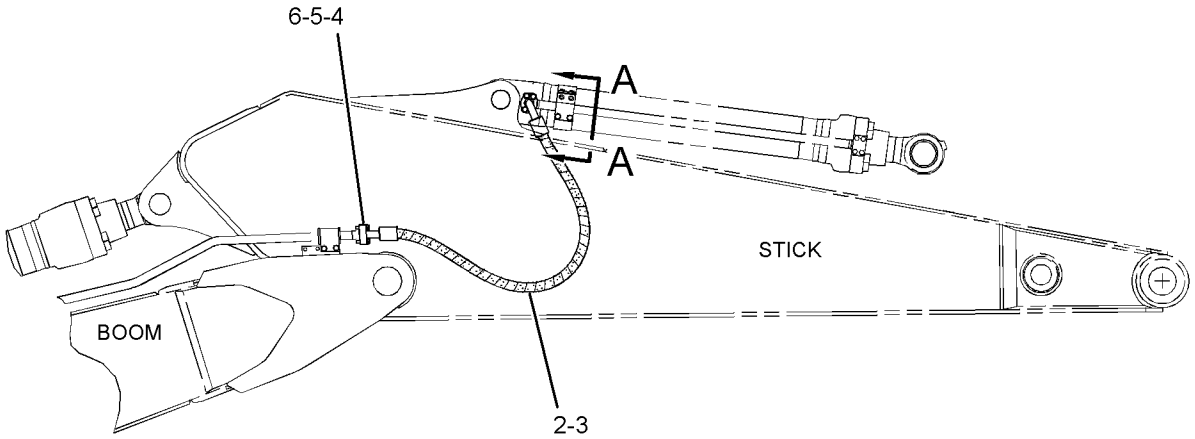

RIGHT SIDE VIEW

GRAPHIC #1 <END> g02182234

358-7466 LINES GP-STICK CYLINDER

S/N: SP91-UP

PART OF 512-0995 CYLINDER & LINES GP-STICK

SMCS-5458 **i07528789**

NOTE	REF NO	GRAPHIC REF	PART NUMBER	QTY	PART NAME 1 2 3 4 5 6 (PRODUCT LEVEL)	SEE PAGE
	1	1	**465-5193**	1	SUPPORT AS	
	2	1	**124-0909**	2	CLIP	
	3	1	**370-9352**	1	BLOCK	
	4	1	**358-7467**	1	TUBE AS	
	5	1	**465-8767**	1	SUPPORT AS	
	6	1	*363-6123*	1	PLUG AS	
		1	**7M-8485**	1	SEAL-O-RING	
		1	**363-6124**	1	PLUG	
	7	1	**1P-3705**	1	SEAL-RECTANGULAR	
	8	1	**1P-3706**	1	SEAL-RECTANGULAR	
M	9	1	**453-1259**	2	BOLT (M16X2X40-MM)	
M	10	1	**453-2840**	4	BOLT (M16X2X140-MM)	
	11	1	**453-3454**	4	WASHER-HARD (11X21X2.5-MM THK)	
M	12	1	**457-5821**	4	BOLT (M10X1.5X35-MM)	
M	13	1	**8T-4648**	4	BOLT (M12X1.75X70-MM)	
	14	1	**451-2175**	6	WASHER-HARD (17.5X30X3.5-MM THK)	
	15	1	**8T-4223**	4	WASHER-HARD (13.5X25.5X3-MM THK)	

M - METRIC PART

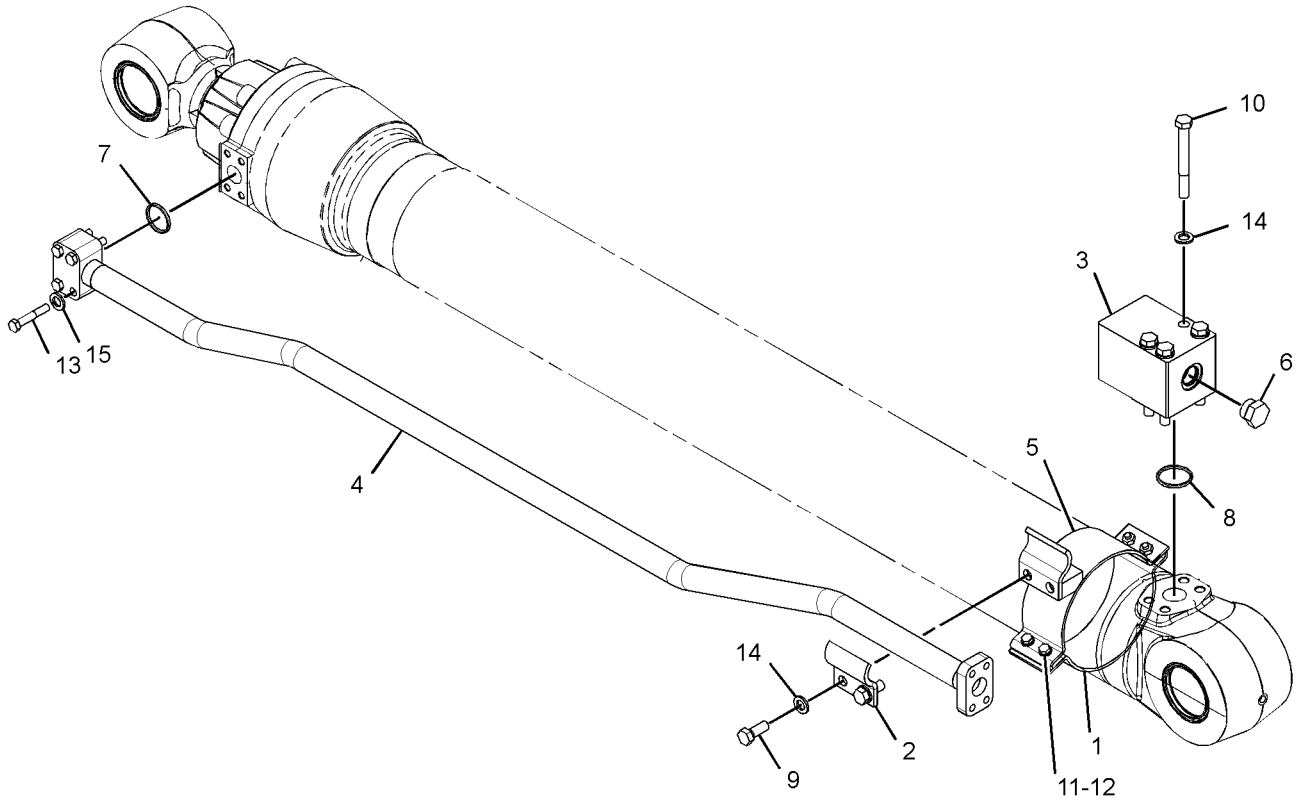

GRAPHIC #1 <END> g06120950

524-8715 LINES GP-TRAVEL MOTOR

S/N: SP91-UP

PART OF 523-7795 UNDERCARRIAGE AR

SMCS-5057, 5058 **i07531023**

NOTE	REF NO	GRAPHIC REF	PART NUMBER	QTY	PART NAME 1 2 3 4 5 6 (PRODUCT LEVEL)	SEE PAGE
M	1	1	**8T-4184**	48	BOLT (M12X1.75X45-MM)	
	2	1	*153-6259*	1	TEE AS	
		1	**3D-2824**	1	SEAL-O-RING	
		1	**6V-8777**	1	TEE-FACE SEAL	
		1	**6V-9746**	2	SEAL-O-RING	
	3	1	**1P-3703**	8	SEAL-RECTANGULAR	
	4	1	**6V-0400**	24	FLANGE-HALF	
	5	1	**7K-1181**	6	STRAP-CABLE	
	6	1	**8T-4223**	48	WASHER-HARD (13.5X25.5X3-MM THK)	
	7	1	**108-7118**	2	GROMMET	
	8	1	*148-8367*	2	ELBOW AS	
					(EACH INCLUDES)	
		1	**6V-8397**	1	SEAL-O-RING	
		1	**6V-9850**	1	ELBOW	
	9	1	*148-8378*	2	ELBOW AS	
					(EACH INCLUDES)	
		1	**3J-1907**	1	SEAL-O-RING	
		1	**6V-8397**	1	SEAL-O-RING	
		1	**6V-8724**	1	ELBOW	
	10	1	*148-8439*	1	TEE AS	
		1	**3J-1907**	1	SEAL-O-RING	
		1	**6V-8397**	2	SEAL-O-RING	
		1	**6V-8774**	1	TEE	
	11	1	*148-8327*	2	CONNECTOR AS	
					(EACH INCLUDES)	
		1	**3D-2824**	1	SEAL-O-RING	
		1	**6V-8637**	1	CONNECTOR	
		1	**6V-9746**	1	SEAL-O-RING	
	12	1	*167-1795*	1	ELBOW AS	
		1	**3D-2824**	1	SEAL-O-RING	
		1	**8T-3491**	1	ELBOW	
	13	1	*171-6723*	1	ELBOW AS	
		1	**6V-9746**	1	SEAL-O-RING	
		1	**8T-8899**	1	ELBOW	
I	14	1	**275-1365**	4	HOSE AS	
	15	1	**296-7072**	2	GROMMET	
I	16	1	**286-6824**	1	HOSE AS	
I	17	1	**528-0945**	2	HOSE AS	
I	18	1	**538-7962**	1	HOSE AS	

I - REFER TO HYDRAULIC INFORMATION SYSTEM
M - METRIC PART

524-8715 **LINES GP-TRAVEL MOTOR (**contd.**)** **i07531023**

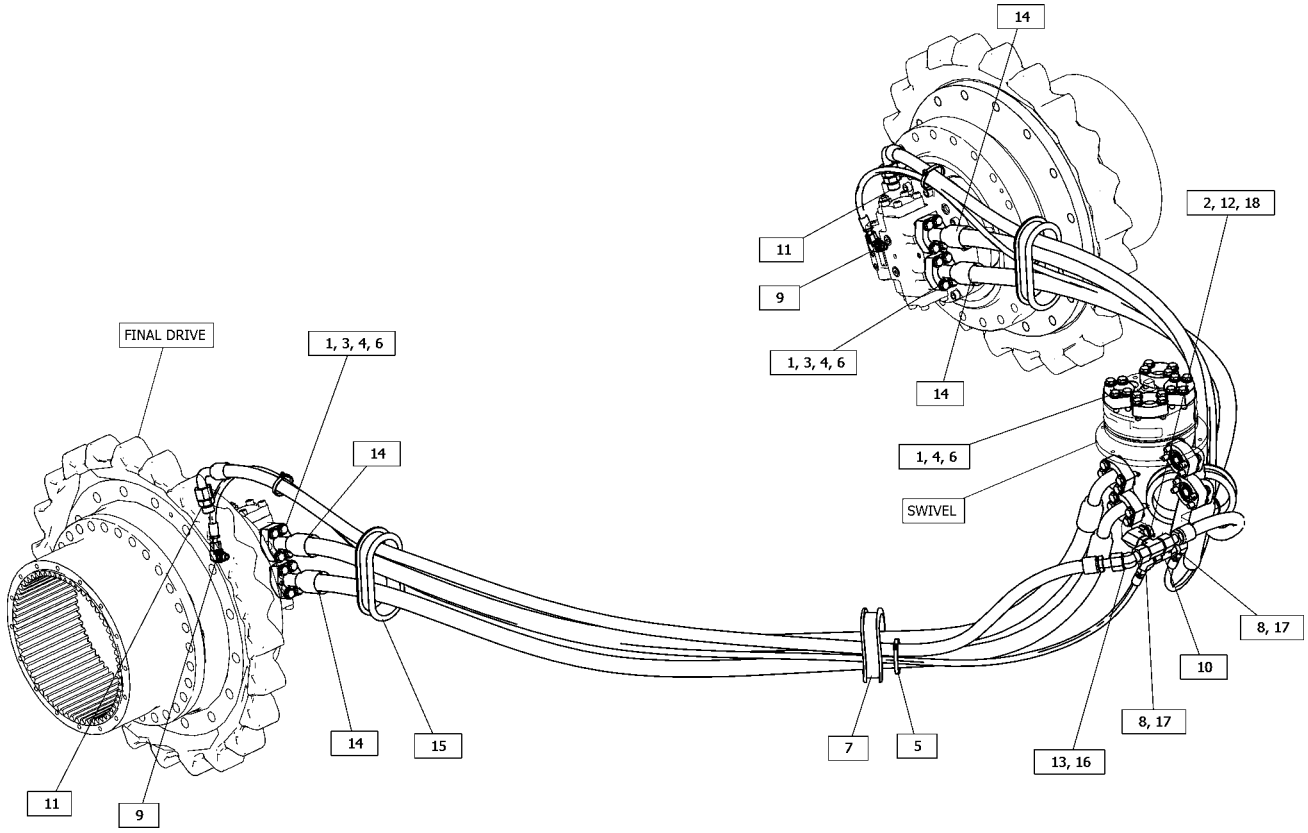

GRAPHIC #1 <END> g06286186

505-0530 MOTOR & MTG GP-SWING

S/N: SP91-UP

PART OF 512-9908 DRIVE & MOTOR GP-SWING

SMCS-5058 **i07511296**

NOTE	REF NO	GRAPHIC REF	PART NUMBER	QTY	PART NAME 1 2 3 4 5 6 (PRODUCT LEVEL)	SEE PAGE
M	1	1	**6V-8201**	4	BOLT-SOCKET HEAD (M16X2X45-MM)	
	2	1	**352-7064**	2	CAP	
	3	1	**451-2175**	4	WASHER-HARD (17.5X30X3.5-MM THK)	
Y	4	1	**505-0531**	1	MOTOR GP-SWING	530
	5	1	**6V-5204**	1	RING-RETAINING	
	6	1	**8T-6404**	1	SEAL-O-RING	

M - METRIC PART
Y - SEPARATE ILLUSTRATION

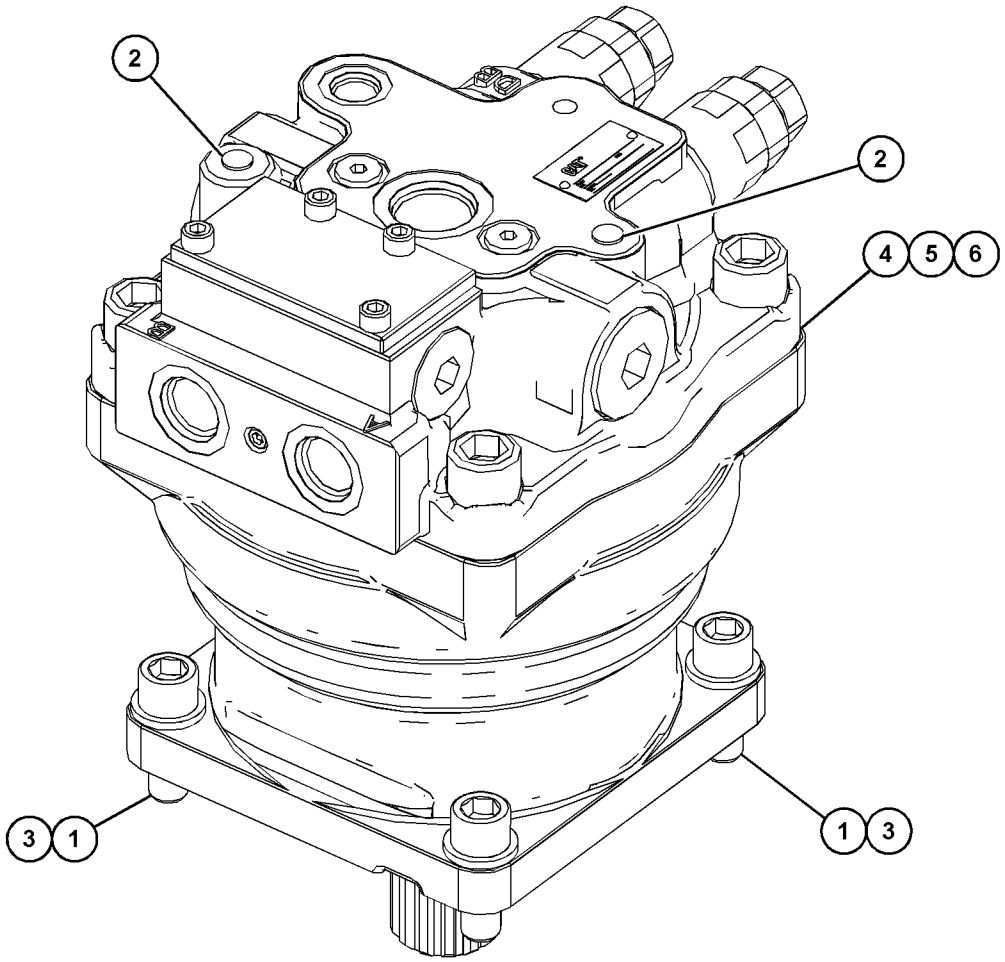

GRAPHIC #1 <END> g06278105

519-2479 MOTOR & MTG GP-TRAVEL

S/N: SP91-UP

PART OF 511-6010, 511-6017 DRIVE GP-FINAL

SMCS-4351 **i07243709**

NOTE	REF NO	GRAPHIC REF	PART NUMBER	QTY	PART NAME 1 2 3 4 5 6 (PRODUCT LEVEL)	SEE PAGE
M	1	1	**096-0008**	4	BOLT-SOCKET HEAD (M16X2X140-MM)	
Y	2	1	**511-0315**	1	MOTOR GP-TRAVEL	531
	3	1	**3F-1547**	1	SEAL-O-RING	

M - METRIC PART
Y - SEPARATE ILLUSTRATION

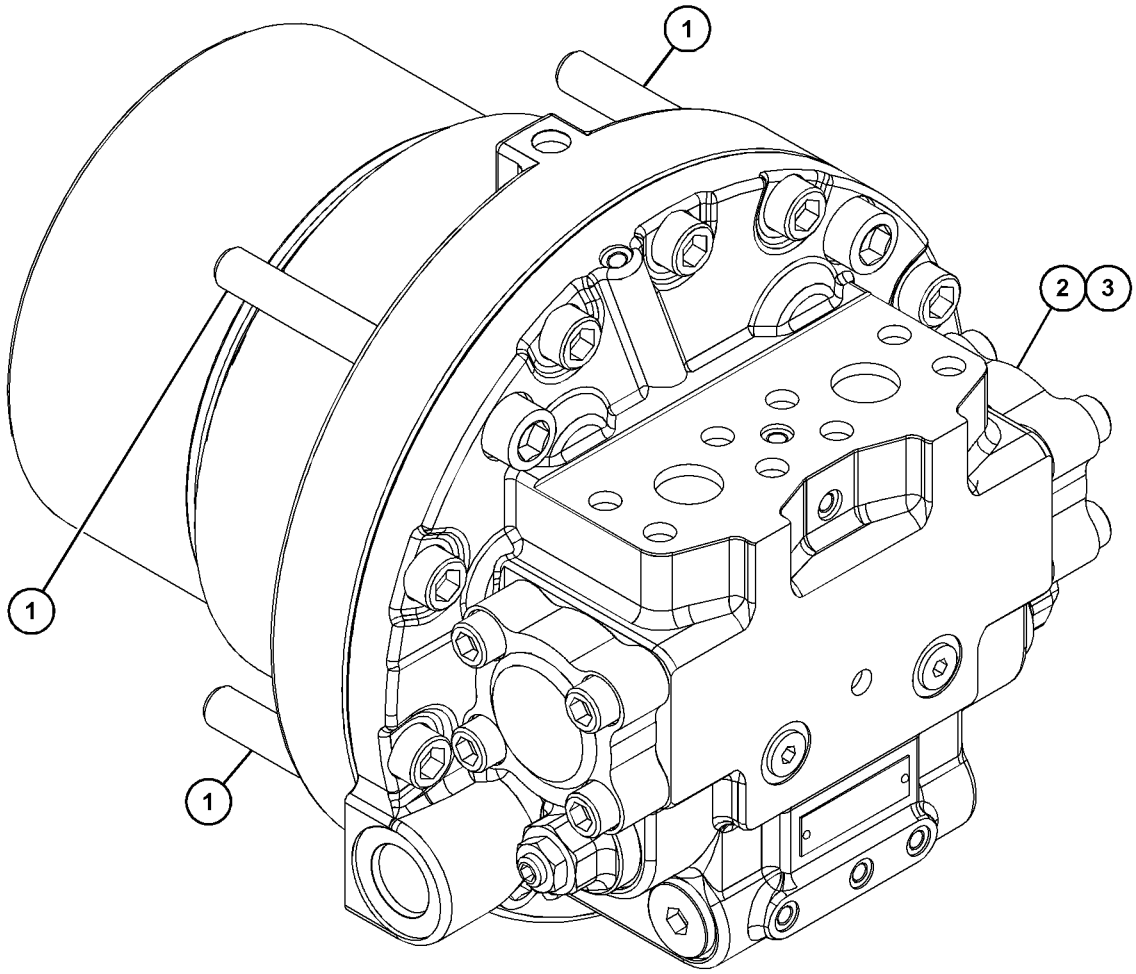

GRAPHIC #1 <END> g06257713

505-0531 MOTOR GP-SWING

S/N: SP91-UP

PART OF 558-0344 DRIVE & MOTOR GP-SWING, 505-0530 MOTOR & MTG GP-SWING

SMCS-5058 **i07511325**

NOTE	REF NO	GRAPHIC REF	PART NUMBER	QTY	PART NAME 1 2 3 4 5 6 (PRODUCT LEVEL)	SEE PAGE
	1	1	**493-3209**	1	COVER	
M	2	1	**8T-1158**	4	BOLT-SOCKET HEAD (M8X1.25X20-MM)	

M - METRIC PART

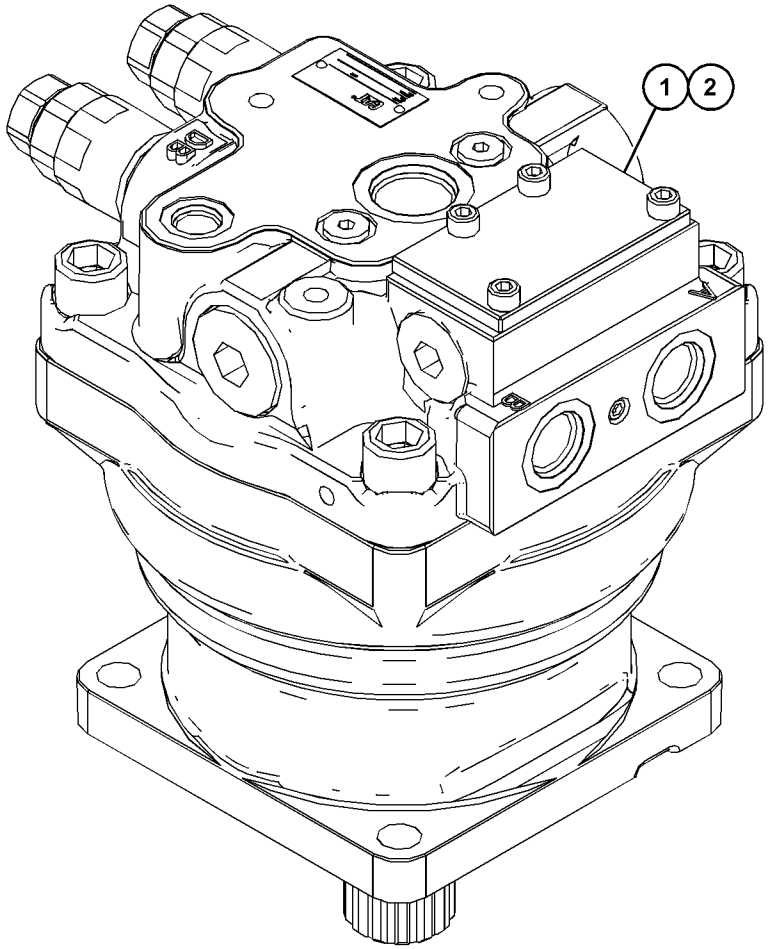

GRAPHIC #1 <END> g06277889

511-0315 MOTOR GP-TRAVEL

S/N: SP91-UP

PART OF 519-2479 MOTOR & MTG GP-TRAVEL

SMCS-4351, 5058 **i07243716**

NOTE	REF NO	GRAPHIC REF	PART NUMBER	QTY	PART NAME 1 2 3 4 5 6 (PRODUCT LEVEL)	SEE PAGE
	1	1	**536-2653**	1	BALL BEARING	
M	2	1	**8T-2503**	10	BOLT-SOCKET HEAD (M14X2X35-MM)	
	3	1	**536-2662**	4	PIN	
	4	1	**536-2640**	1	ROTATING GP-MOTOR	
	5	1	**536-2641**	1	RETAINER AS	
	6	1	**536-2650**	1	SWASHPLATE	
	7	1	**536-2663**	4	SPRING	
	8	1	**139-7308**	4	PLUG	
	9	1	**536-2649**	1	SHAFT	
	10	1	**536-2642**	1	BODY AS	
	11	1	**536-2655**	1	SEAL-LIP TYPE	
	12	1	**536-2652**	1	BALL BEARING	
	13	1	**536-2651**	2	BALL	
	14	1	**536-2656**	4	PLATE-FRICTION	
	15	1	**536-2657**	3	PLATE-SEPARATOR	
	16	1	**536-2659**	1	GUIDE-PISTON	
	17	1	**536-2658**	1	PISTON-BRAKE	
	18	1	**536-2661**	2	SPRING-BRAKE	
	19	1	**536-2660**	8	SPRING-BRAKE	
	20	1	**536-2654**	1	PIN	
	21	1	**279-4706**	2	PLUG	
	22	1	**536-2639**	1	HEAD-MOTOR	
	23	1	**536-2638**	2	VALVE AS-RELIEF	
	24	1	**7I-1041**	1	SPRING	
	25	1	**137-3687**	2	PLUG	
	26	1	**536-2664**	2	PLUG	
	27	1	**108-9151**	2	ORIFICE	
	28	1	**536-2643**	2	SEAT-SPRING	
	29	1	**536-2644**	2	SPRING	
	30	1	**536-2645**	2	SEAT-SPRING	
	31	1	**536-2637**	2	CAP AS	
	32	1	**536-2648**	3	ORIFICE	

M - METRIC PART

511-0315 **MOTOR GP-TRAVEL (**contd.**)** **i07243716**

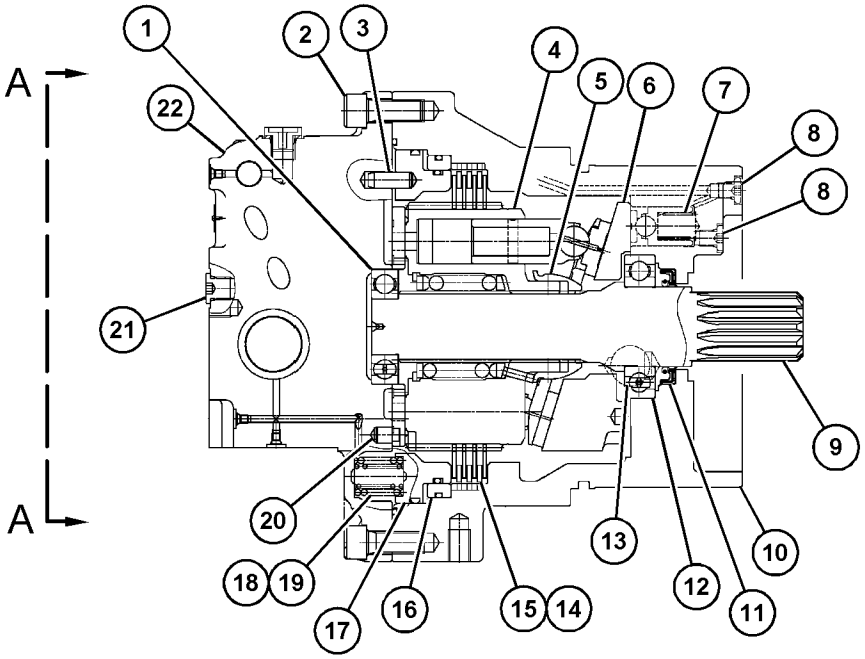

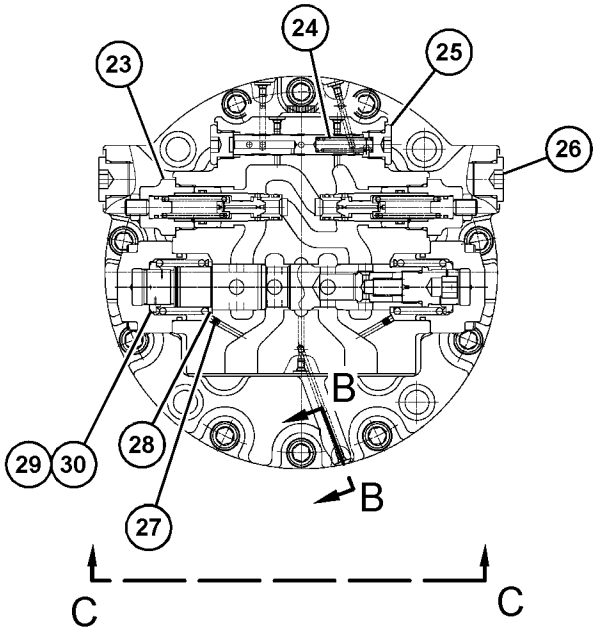

VIEW A-A

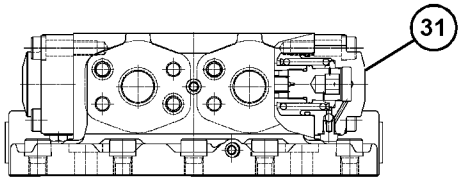

VIEW C-C

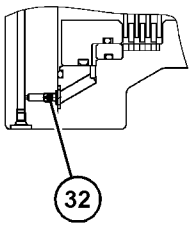

SECTION C-C

GRAPHIC #1 <END> g06259088

555-2409 MOUNTING GP-LINES—HYDRAULIC FAN OIL COOLER

S/N: SP91-UP

PART OF 527-7800 HYDRAULIC AR

SMCS-5057 **i07513229**

NOTE	REF NO	GRAPHIC REF	PART NUMBER	QTY	PART NAME 1 2 3 4 5 6 (PRODUCT LEVEL)	SEE PAGE
	1	1	**5P-7466**	1	CLIP (SLOT)	
	2	1	**5P-7467**	1	CLIP (TAB)	
	3	1	**5P-8112**	1	GROMMET	
M	4	1	**8T-4139**	2	BOLT (M12X1.75X30-MM)	
	5	1	**8T-4223**	3	WASHER-HARD (13.5X25.5X3-MM THK)	
M	6	1	**8T-4956**	1	BOLT (M12X1.75X35-MM)	
	7	1	**556-6323**	1	SUPPORT AS	
M		1	**8T-3597**	1	NUT-WELD (M12X1.75-THD)	

M - METRIC PART

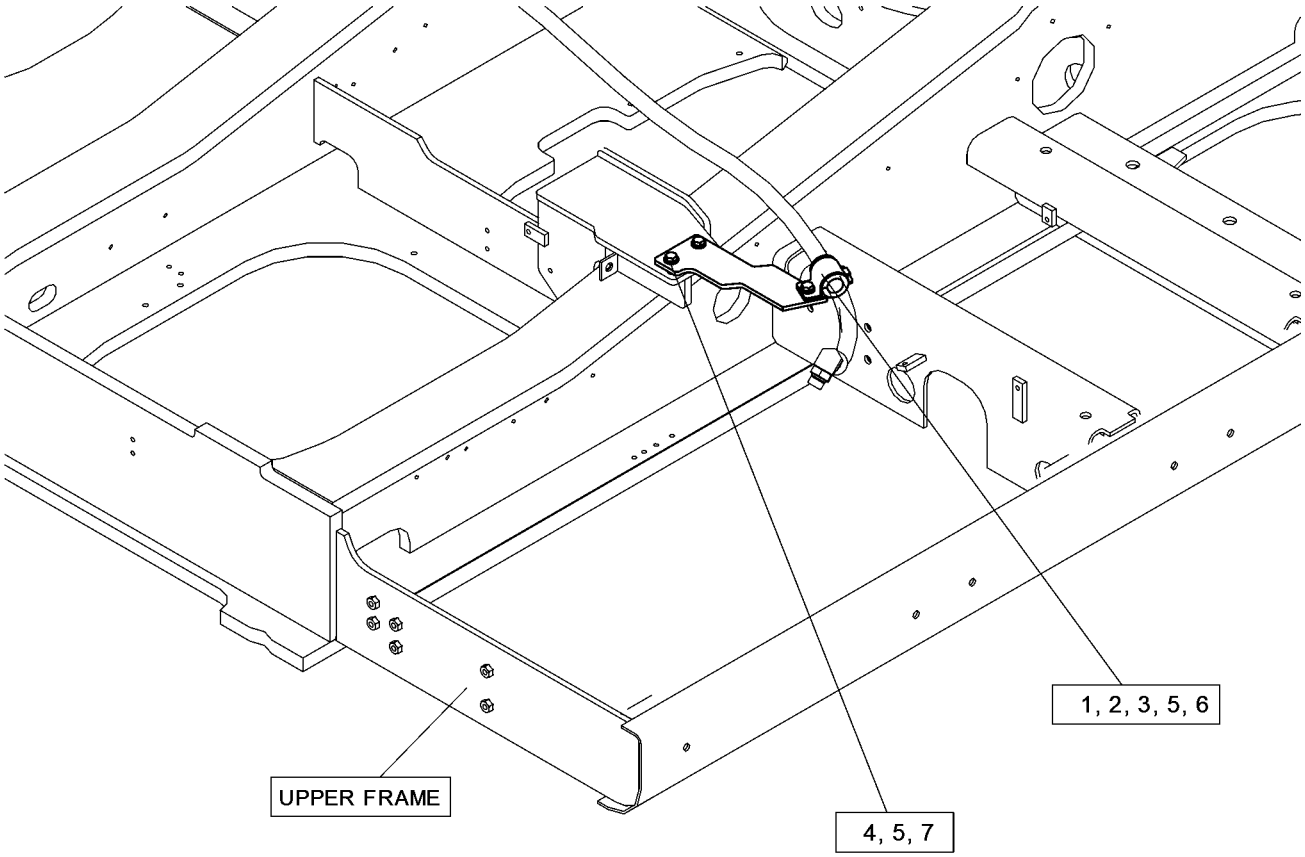

GRAPHIC #1 <END> g06306520

489-2939 MOUNTING GP-MAIN CONTROL VALVE

S/N: SP91-UP

PART OF 525-2937 HYDRAULIC AR

SMCS-5051 **i07517515**

NOTE	REF NO	GRAPHIC REF	PART NUMBER	QTY	PART NAME 1 2 3 4 5 6 (PRODUCT LEVEL)	SEE PAGE
	1	1	**325-9001**	4	SPACER (22X40X22-MM THK)	
M	2	1	**447-1718**	4	BOLT (M20X2.5X50-MM)	
	3	1	**451-2176**	4	WASHER-HARD (22X35X3.5-MM THK)	
M	4	1	**453-2846**	4	BOLT (M20X2.5X60-MM)	
	5	1	**555-7437**	1	SUPPORT AS	
	6	1	**555-7460**	1	SUPPORT AS	

M - METRIC PART

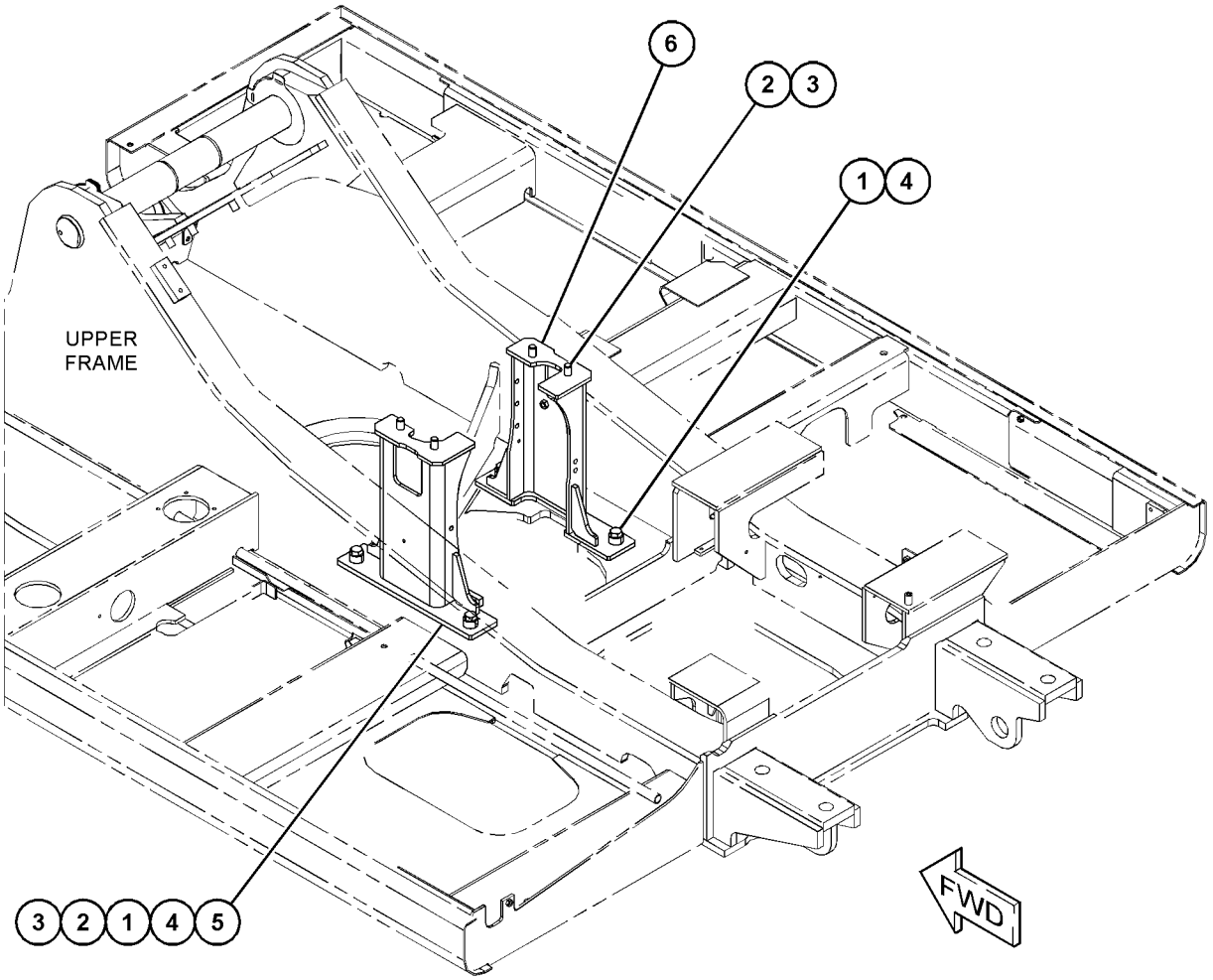

GRAPHIC #1 <END> g06231411

505-0526 PUMP & MTG GP-MAIN HYDRAULIC

S/N: SP91-UP

PART OF 527-7800 HYDRAULIC AR

SMCS-5070 **i07513237**

NOTE	REF NO	GRAPHIC REF	PART NUMBER	QTY	PART NAME 1 2 3 4 5 6 (PRODUCT LEVEL)	SEE PAGE
	1	1	**8T-4223**	2	WASHER-HARD (13.5X25.5X3-MM THK)	
M	2	1	**8T-4956**	2	BOLT (M12X1.75X35-MM)	
	3	1	**236-6919**	1	SEAL-O-RING	
M	4	1	**447-1720**	4	BOLT (M20X2.5X70-MM)	
	5	1	**451-2176**	4	WASHER-HARD (22X35X3.5-MM THK)	
Y	6	1	**550-4341**	1	PUMP GP-MAIN HYDRAULIC	541
	7	1	**511-8604**	1	SEAL-O-RING	
Y	8	1	**524-0924**	1	PUMP GP-PISTON	542

M - METRIC PART
Y - SEPARATE ILLUSTRATION

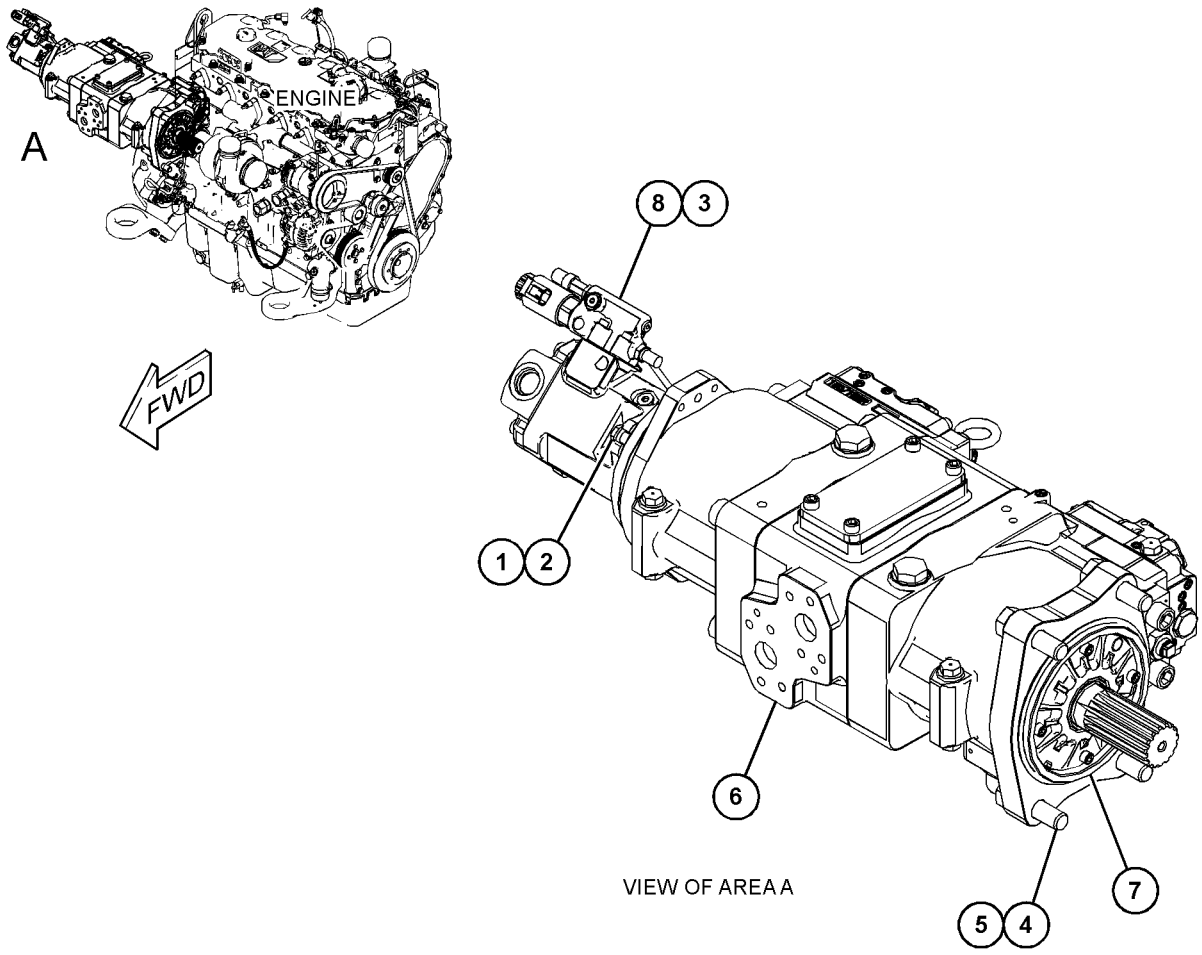

VIEW OF AREA A

GRAPHIC #1 <END> g06280755

551-1118 PUMP GP-HYDRAULIC

S/N: SP91-UP

PART OF 550-4341 PUMP GP-MAIN HYDRAULIC

SMCS-5055, 5070, 5073, 5083, 5084 **i07513353**

NOTE	REF NO	GRAPHIC REF	PART NUMBER	QTY	PART NAME 1 2 3 4 5 6 (PRODUCT LEVEL)	SEE PAGE
M	1	1	**8T-4131**	4	NUT (M20X2.5-THD)	
	2	1	**551-1107**	2	SETSCREW	
	3	1	**549-4309**	2	COVER	
	4	1	**7I-8171**	2	RING-BACKUP	
	5	1	**095-1522**	2	SEAL-O-RING	
	6	1	**549-4310**	2	STOPPER	
	7	1	**549-4327**	2	PISTON AS	
	8	1	**549-4308**	2	SEAL-O-RING	
M	9	1	**242-6919**	2	SETSCREW (M20X2.5X56-MM)	
	10	1	**551-1108**	2	BOLT-EYE	
	11	1	**347-6530**	8	SEAL-RECTANGULAR	
	12	1	**7I-8172**	2	RING-BACKUP	
	13	1	**095-1701**	2	SEAL-O-RING	
	14	1	**549-4311**	2	STOPPER	
	15	1	**549-4331**	2	PISTON AS	
	16	1	**549-4317**	2	PLATE	
M	17	1	**6V-5192**	4	BOLT-SOCKET HEAD (M8X1.25X30-MM)	
	18	1	**551-1111**	1	FLANGE	
	19	1	**095-1717**	2	SEAL-O-RING	
	20	1	**551-1102**	1	BODY AS-REAR	
	21	1	**551-1114**	1	SHAFT-REAR	
	22	1	**549-4329**	2	SWASHPLATE AS	
	23	1	**551-1110**	4	BOLT-SOCKET HEAD	
	24	1	**549-4330**	1	BARREL AS	
	25	1	**559-3652**	14	SEAL-SQUARE	
	26	1	**095-1715**	1	SEAL-O-RING	
	27	1	**551-1113**	1	GEAR	
	28	1	**551-1101**	1	BLOCK AS	
	29	1	**549-4321**	2	BEARING	
	30	1	**549-4306**	4	PIN	
	31	1	**551-1117**	1	BARREL AS	
	32	1	**360-3695**	4	PLUG	
	33	1	**238-5082**	4	SEAL-O-RING	
	34	1	**200-3280**	18	SPRING	
	35	1	**549-4319**	2	BUSHING	
	36	1	**549-4320**	2	PLATE	
	37	1	**8T-4241**	2	RING-RETAINING	
	38	1	**549-4322**	2	BEARING	
	39	1	**551-1103**	1	BODY AS-FRONT	
M	40	1	**6V-8202**	4	BOLT-SOCKET HEAD (M8X1.25X16-MM)	
	41	1	**551-1112**	1	COVER-FRONT	
	42	1	**551-1115**	1	SHAFT-FRONT	
	43	1	**551-1109**	1	SEAL-LIP TYPE	
	44	1	**247-8719**	2	SPACER (50X64X3-MM THK)	
	45	1	**247-8786**	2	DOWEL	
	46	1	**549-4316**	2	SUPPORT	
	47	1	**371-7201**	16	PLUG	
M	48	1	**6V-3938**	4	BOLT (M10X1.5X20-MM)	

551-1118 **PUMP GP-HYDRAULIC (**contd.**)** **i07513353**

NOTE	REF NO	GRAPHIC REF	PART NUMBER	QTY	PART NAME 1 2 3 4 5 6 (PRODUCT LEVEL)	SEE PAGE
	49	1	**516-4306**	1	COVER	
	50	1	**110-5525**	1	PLUG	
	51	1	**382-4825**	1	SEAL-O-RING	
M	52	1	**8T-0338**	4	BOLT-SOCKET HEAD (M8X1.25X45-MM)	

M - METRIC PART

551-1118 **PUMP GP-HYDRAULIC (**contd.**)** **i07513353**

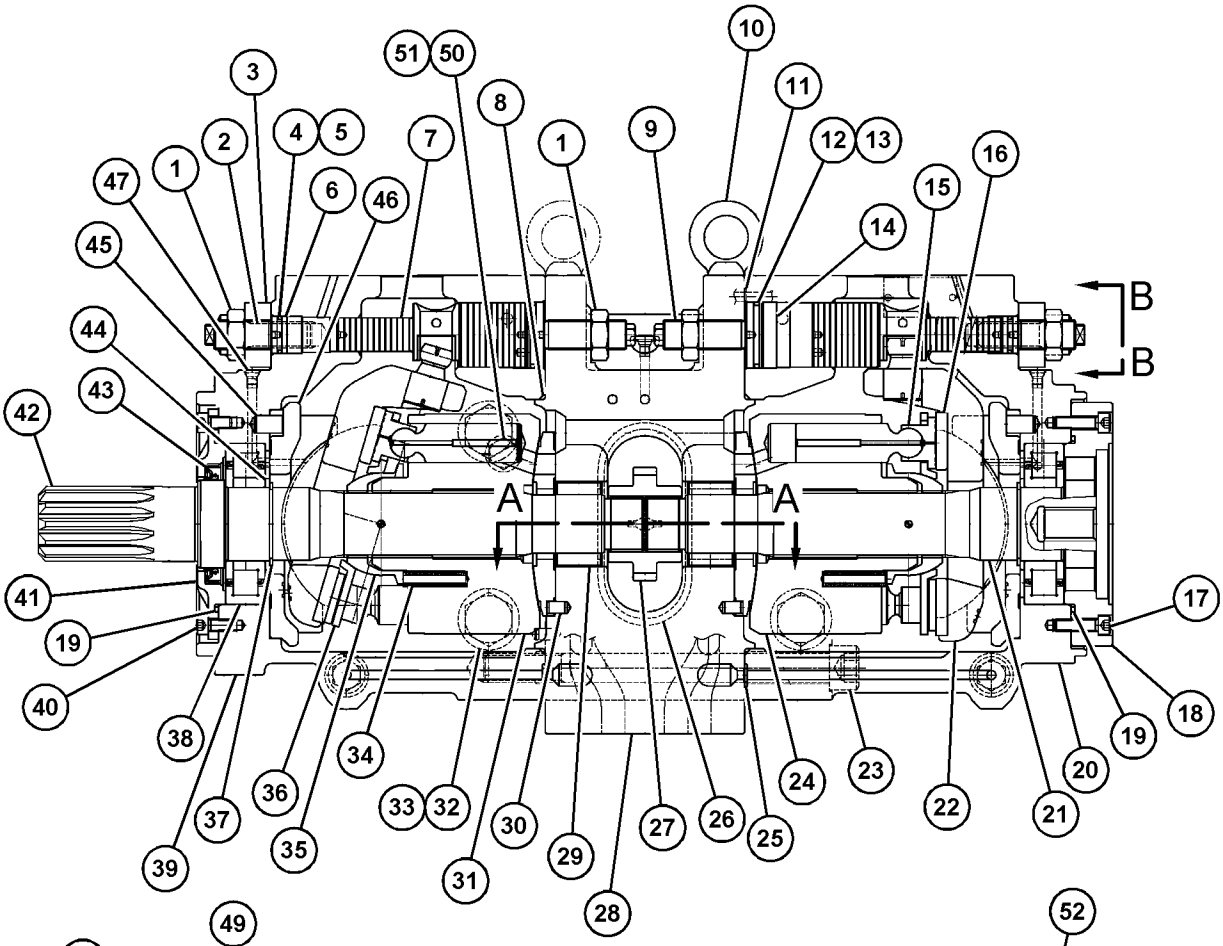

SECTION A-A

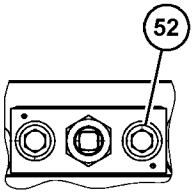

VIEW B-B

GRAPHIC #1 <END> g06307857

553-7305 PUMP GP-HYDRAULIC

S/N: SP91-UP

PART OF 524-0924 PUMP GP-PISTON

SMCS-5055, 5070, 5073, 5083, 5084 **i07515993**

NOTE	REF NO	GRAPHIC REF	PART NUMBER	QTY	PART NAME 1 2 3 4 5 6 (PRODUCT LEVEL)	SEE PAGE
	1	1	**8T-9597**	1	RING-RETAINING	
	2	1	**185-0303**	1	SEAL-OIL	
	3	1	**194-9472**	1	SPRING	
	4	1	**155-9125**	1	BEARING AS-ROLLER	
	5	1	**351-6662**	1	SWASHPLATE	
	6	1	**469-3308**	1	ROD	
	7	1	**174-9994**	1	PISTON-CONTROL	
	8	1	**355-2417**	1	PLUG-CONTROL	
	9	1	**553-7272**	1	PIN	
M	10	1	**101-7404**	4	BOLT-SOCKET HEAD (M10X1.5X30-MM)	
	11	1	**191-7583**	1	BEARING-TAPERED	
	12	1	**553-7278**	1	COVER	
	13	1	**231-4707**	1	SEAL-O-RING	
	14	1	**449-5139**	1	SEAL-O-RING	
	15	1	**351-6661**	1	ROTATING GP-PUMP	
	16	1	**553-7277**	1	HOUSING	
	17	1	**241-4007**	1	SCREW-LOCK	
	18	1	**351-6663**	2	BEARING-CRADLE	
	19	1	**543-3718**	2	SCREW (M5X16-MM)	
	20	1	**497-6387**	1	STOP-RING	
	21	1	**191-7581**	1	SHAFT	
	22	1	**120-4394**	1	PLUG-BREAK OFF	

M - METRIC PART

553-7305 **PUMP GP-HYDRAULIC (**contd.**)** **i07515993**

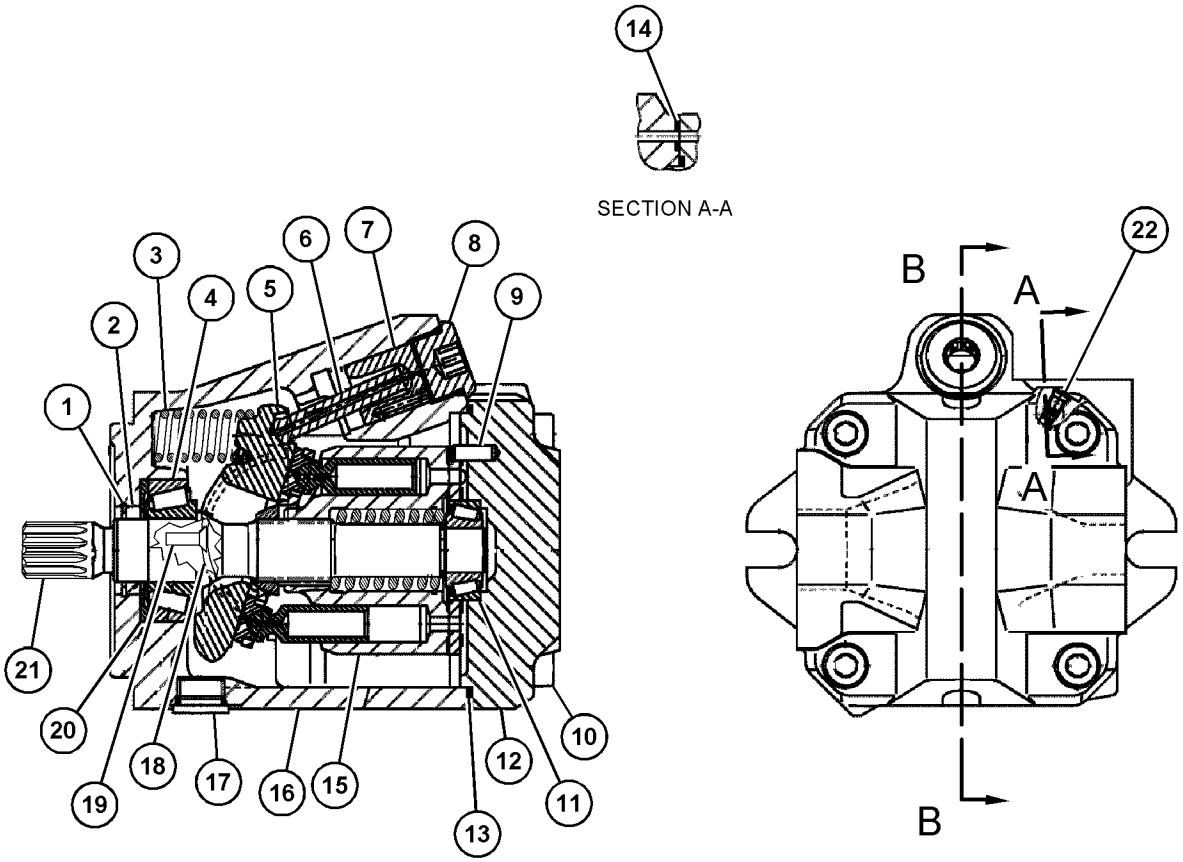

GRAPHIC #1 <END> g06307257

550-4341 PUMP GP-MAIN HYDRAULIC

S/N: SP91-UP

PART OF 505-0526 PUMP & MTG GP-MAIN HYDRAULIC

SMCS-5070 **i07513341**

NOTE	REF NO	GRAPHIC REF	PART NUMBER	QTY	PART NAME 1 2 3 4 5 6 (PRODUCT LEVEL)	SEE PAGE
Y	1	1	**551-1136**	1	HEAD GP-PUMP (CONTROL)	447
Y	2	1	**551-1135**	1	HEAD GP-PUMP (CONTROL)	445
Y	3	1	**551-1118**	1	PUMP GP-HYDRAULIC	536

Y - SEPARATE ILLUSTRATION

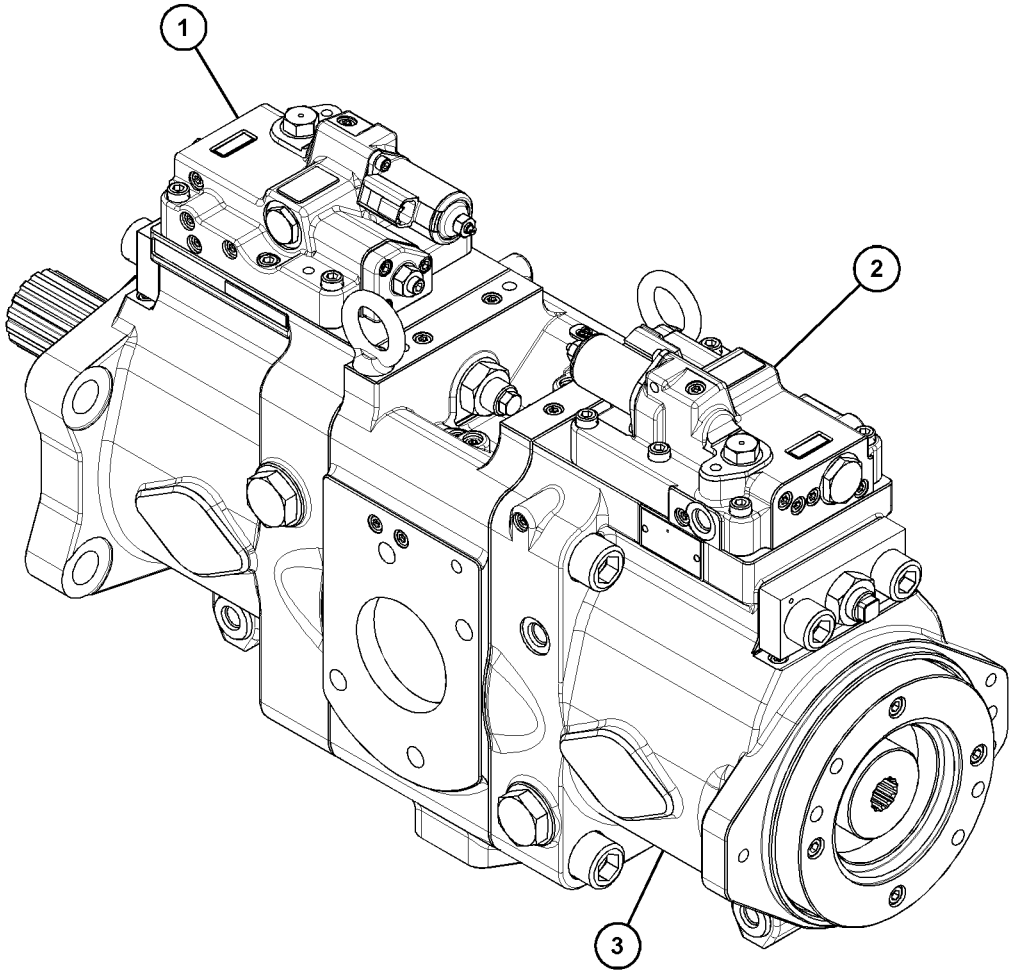

GRAPHIC #1 <END> g06305841

524-0924 PUMP GP-PISTON

S/N: SP91-UP

PART OF 505-0526 PUMP & MTG GP-MAIN HYDRAULIC

SMCS-5070 **i07513359**

NOTE	REF NO	GRAPHIC REF	PART NUMBER	QTY	PART NAME 1 2 3 4 5 6 (PRODUCT LEVEL)	SEE PAGE
Y	1	1	**553-7279**	1	HEAD GP-PUMP	449
Y	2	1	**553-7305**	1	PUMP GP-HYDRAULIC	539

Y - SEPARATE ILLUSTRATION

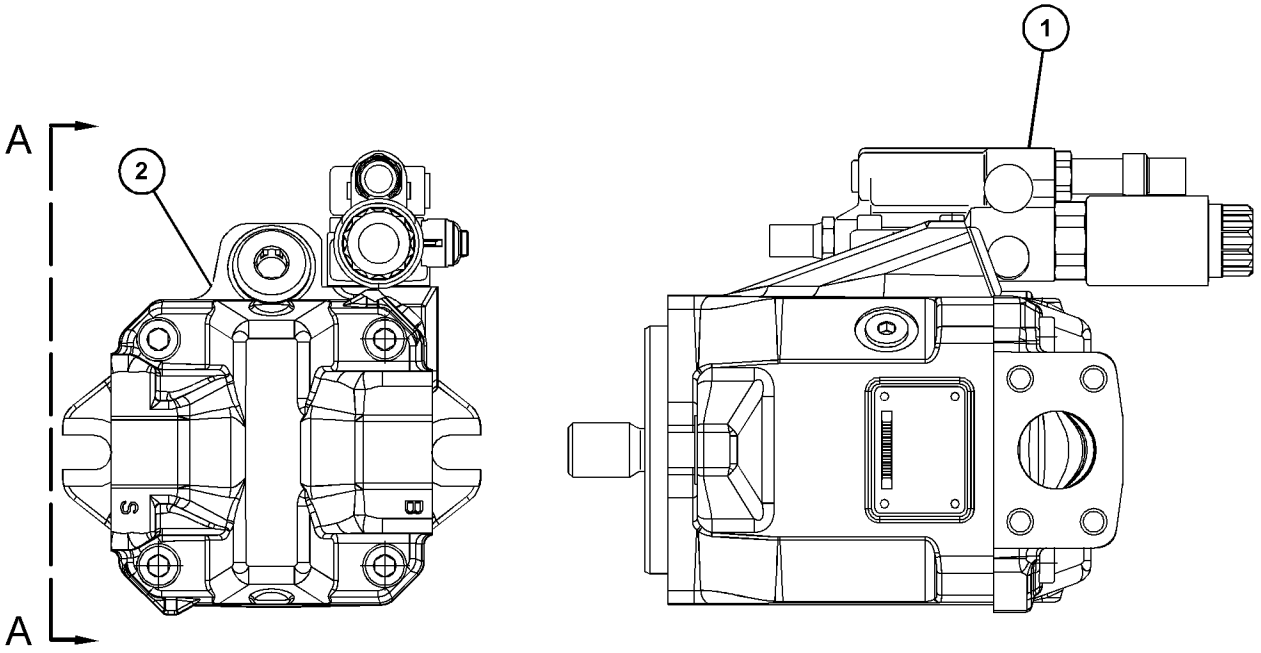

VIEW A-A

GRAPHIC #1 <END> g06305832

448-1376 SCREEN GP-HYDRAULIC

S/N: SP91-UP

PART OF 503-9758 TANK & FILTER GP-HYDRAULIC

SMCS-5068 **i07786894**

NOTE	REF NO	GRAPHIC REF	PART NUMBER	QTY	PART NAME 1 2 3 4 5 6 (PRODUCT LEVEL)	SEE PAGE
	1	1	**087-5317**	1	ROD	
	2	1	**209-6000**	1	SCREEN AS (HYDRAULIC TANK)	
	3	1	**259-0918**	1	GUIDE	
	4	1	**095-6639**	1	SPRING	
	5	1	**5H-5672**	1	SEAL-O-RING	
M	6	1	**8T-4133**	2	NUT (M10X1.5-THD)	

M - METRIC PART

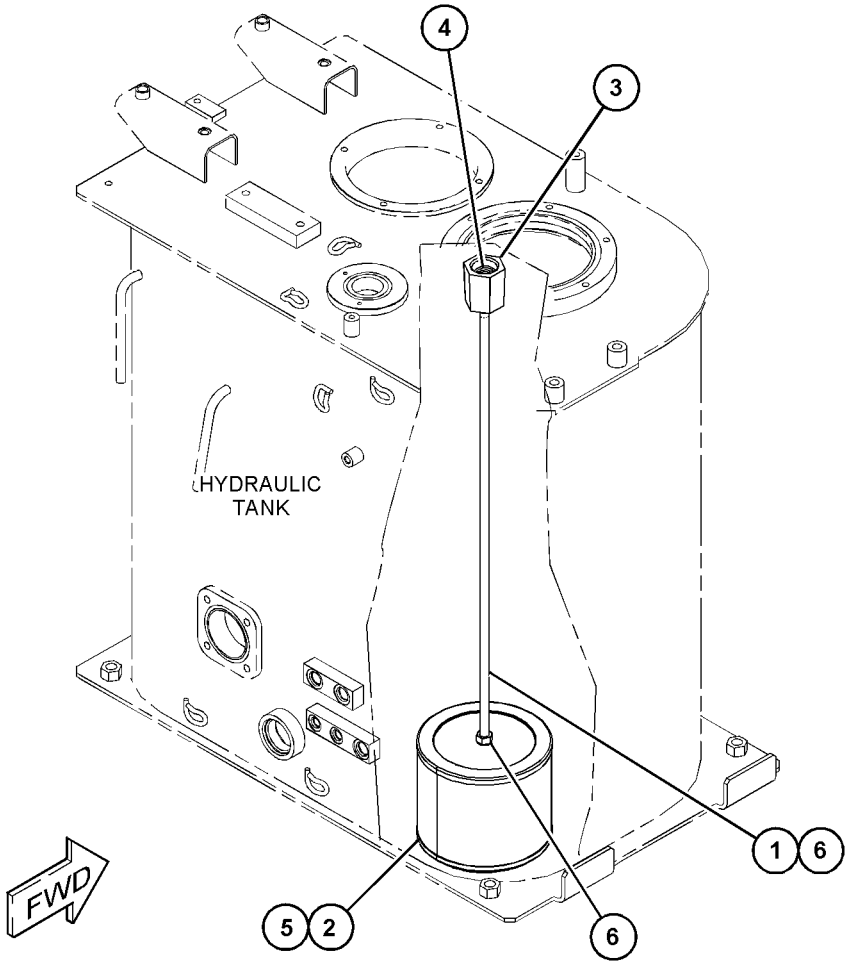

GRAPHIC #1 <END> g06230040

491-7102 SCREEN GP-HYDRAULIC

S/N: SP91-UP

PART OF 503-9758 TANK & FILTER GP-HYDRAULIC

SMCS-5068 **i07524180**

NOTE	REF NO	GRAPHIC REF	PART NUMBER	QTY	PART NAME 1 2 3 4 5 6 (PRODUCT LEVEL)	SEE PAGE
	1	1	**5H-5672**	1	SEAL-O-RING	
M	2	1	**8T-4133**	2	NUT (M10X1.5-THD)	
	3	1	**087-5317**	1	ROD	
	4	1	**209-6000**	1	SCREEN AS (HYDRAULIC TANK)	
	5	1	**259-0918**	1	GUIDE	
	6	1	**095-6639**	1	SPRING	

M - METRIC PART

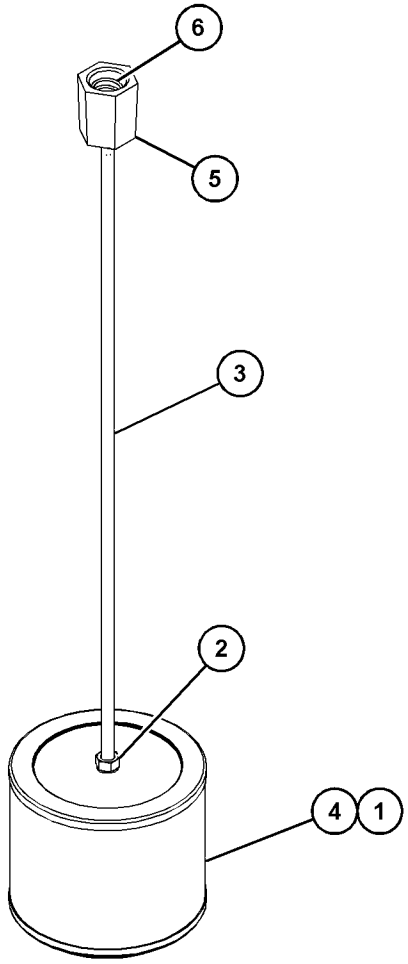

GRAPHIC #1 <END> g06284098

488-8576 SWIVEL & MOUNTING GP

S/N: SP91-UP

PART OF 525-2937 HYDRAULIC AR

SMCS-5060 **i07359931**

NOTE	REF NO	GRAPHIC REF	PART NUMBER	QTY	PART NAME 1 2 3 4 5 6 (PRODUCT LEVEL)	SEE PAGE
M	1	1	**451-2181**	2	BOLT (M12X1.75X30-MM)	
M	2	1	**453-3440**	6	BOLT (M10X1.5X30-MM)	
	3	1	**453-3454**	6	WASHER-HARD (11X21X2.5-MM THK)	
	4	1	**453-3456**	2	WASHER-HARD (13.5X25.5X5-MM THK)	
Y	5	1	**490-3995**	1	SWIVEL GP	546
	6	1	**508-9757**	1	STOPPER	

M - METRIC PART
Y - SEPARATE ILLUSTRATION

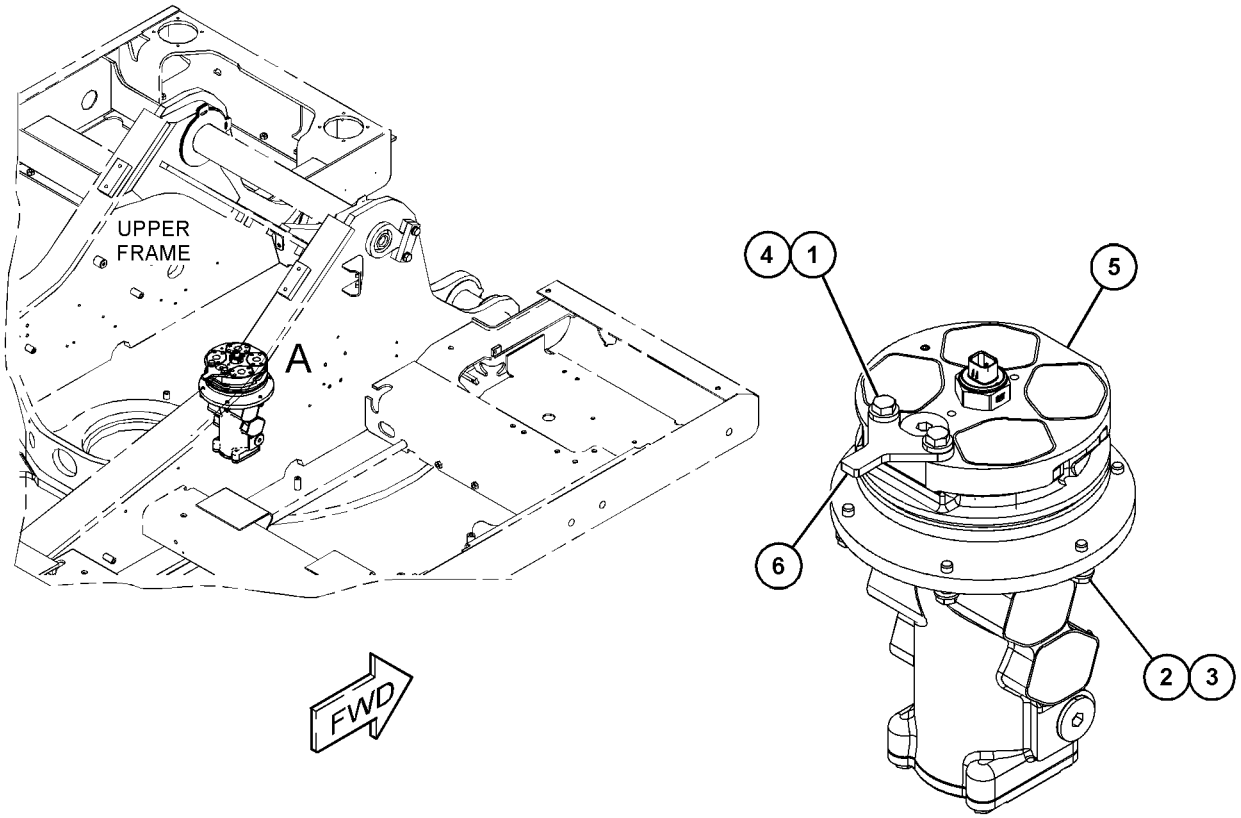

VIEW OF AREA A

GRAPHIC #1 <END> g06230909

490-3995 SWIVEL GP

S/N: SP91-UP

PART OF 488-8576 SWIVEL & MOUNTING GP

SMCS-5060 **i07359937**

NOTE	REF NO	GRAPHIC REF	PART NUMBER	QTY	PART NAME 1 2 3 4 5 6 (PRODUCT LEVEL)	SEE PAGE
	1	1	**162-4694**	5	SEAL-RING	
	2	1	**453-3454**	2	WASHER-HARD (11X21X2.5-MM THK)	
M	3	1	**455-3798**	6	BOLT (M10X1.5X25-MM)	
	4	1	**487-5859**	1	SENSOR GP-POSITION (SWING)	
		1	**238-5084**	1	SEAL-O-RING	
	5	1	**487-5860**	1	SENSOR-POSITION	
	6	1	**490-3996**	1	HOUSING-SWIVEL	
	7	1	**490-3997**	1	ROTOR-SWIVEL	
	8	1	**490-3999**	1	RETAINER	
	9	1	**492-2080**	1	COVER AS-SHAFT	
	10	1	**095-1623**	2	SEAL-O-RING	
	11	1	**095-1714**	1	SEAL-O-RING	
	12	1	**8T-6759**	2	PLUG-PIPE	

M - METRIC PART

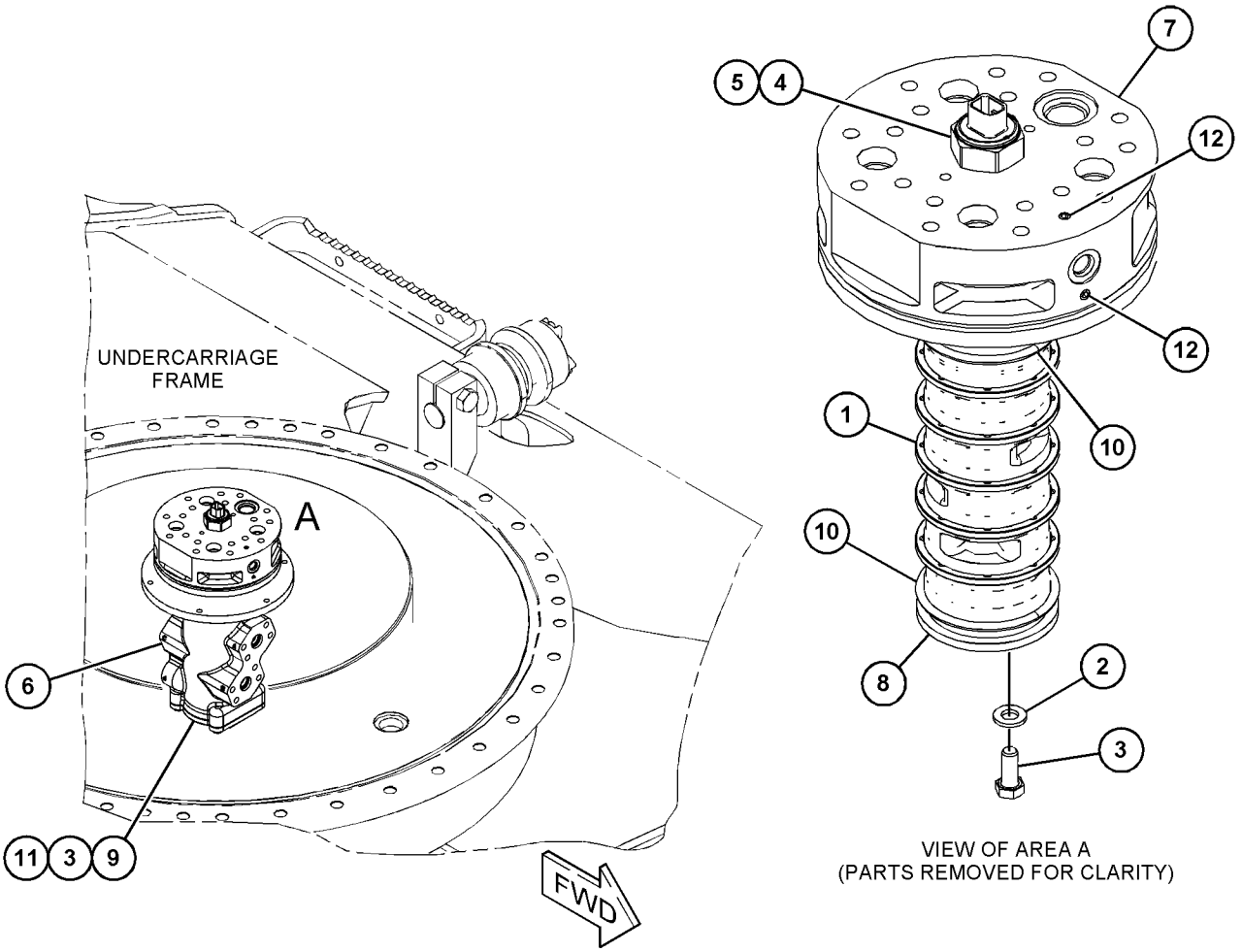

GRAPHIC #1 <END> g06230919

503-9758 TANK & FILTER GP-HYDRAULIC

S/N: SP91-UP
224-L (59.2-US GAL)
PART OF 503-9757 TANK GP-HYDRAULIC
TYPE 1

SMCS-5056, 5068 **i07524162**

NOTE	REF NO	GRAPHIC REF	PART NUMBER	QTY	PART NAME 1 2 3 4 5 6 (PRODUCT LEVEL)	SEE PAGE
M	1	2	**8T-4196**	2	BOLT (M10X1.5X35-MM)	
M	2	1	**8T-4910**	4	BOLT (M12X1.75X60-MM)	
M	3	1	**5C-9553**	3	BOLT (M6X1X16-MM)	
	4	1	**175-7896**	1	SEAL-O-RING	
	5	2	**1U-2827**	1	GUIDE-VALVE (HYDRAULIC TANK DRAIN)	
	6	1	**4J-0527**	1	SEAL-O-RING	
	7	2	**5M-2057**	1	SEAL-O-RING	
	8	2	**6D-9157**	1	SEAL-O-RING	
	9	2	**7B-3039**	1	SPRING	
	10	2	**8J-8782**	1	BODY-DRAIN VALVE (HYDRAULIC TANK)	
	11	2	**8J-8783**	1	VALVE-DRAIN (HYDRAULIC TANK)	
M	12	2	**8T-0267**	2	BOLT-SOCKET HEAD (M6X1X12-MM)	
	13	2	**8T-3298**	1	SEAL-RECTANGULAR	
	14	1,2	**8T-4121**	8	WASHER-HARD (11X21X2.5-MM THK)	
	15	2	**9J-7031**	1	PLUG-DRAIN (HYDRAULIC TANK)	
	16	1	**095-1730**	1	SEAL-O-RING	
M	17	1	**105-3484**	4	BOLT-SOCKET HEAD (M10X1.5X25-MM)	
	18	2	**165-3256**	1	PIPE AS	
	19	1	**175-6176**	1	SEAL-O-RING	
Y	20	1	**256-6453**	1	SENSOR-TEMPERATURE (2-PIN) (HYDRAULIC TANK OIL)	243
Y	21	1	**347-6081**	1	GAUGE GP-SIGHT (HYDRAULIC OIL LEVEL)	444
	22	2	**491-6075**	1	FILTER GP-OIL (HYDRAULIC CASE DRAIN) (HYDRAULIC TANK)	
		2	**6K-6307**	1	SEAL-O-RING	
Y	23	2	**491-7102**	1	SCREEN GP-HYDRAULIC	544
	24	1	**504-9586**	1	SWITCH AS-DIFF PRESSURE (RETURN FILTER)	
		1	**8T-8729**	2	PIN-CONNECTOR (16-GA TO 20-GA)	
		1	**192-7510**	1	SEAL-O-RING	
		1	**512-4914**	1	SEAL-FACE	
Y	25	1	**504-9687**	1	FILTER GP-OIL (HYDRAULIC RETURN) (HYDRAULIC TANK)	443
	26	2	**525-4107**	1	PIPE	
	27	1	**528-5916**	1	PIPE AS	
Y	28	1	**540-7019**	1	BREATHER GP (HYDRAULIC TANK)	407
	29	1	**353-0915**	1	COVER AS	
	30	1	**3K-0360**	1	SEAL-O-RING	
M	32	1	**8T-4137**	6	BOLT (M10X1.5X20-MM)	
	33	1	**8T-4223**	4	WASHER-HARD (13.5X25.5X3-MM THK)	
	34	1	**9X-8256**	3	WASHER (6.6X12X2-MM THK)	

M - METRIC PART
Y - SEPARATE ILLUSTRATION

503-9758 **TANK & FILTER GP-HYDRAULIC** (contd.) **i07524162**

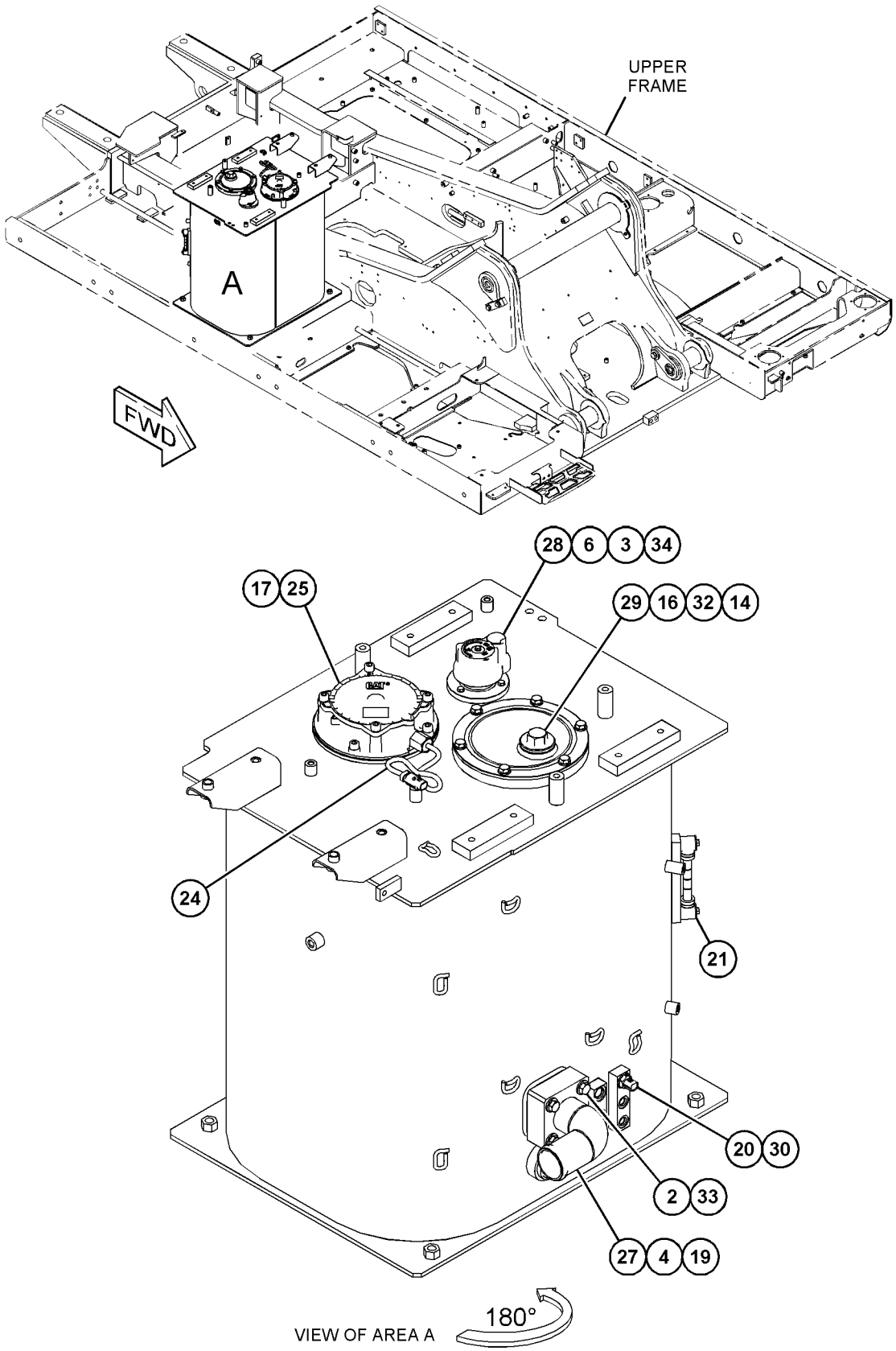

GRAPHIC #1 g06285790

503-9758 **TANK & FILTER GP-HYDRAULIC (**contd.**)** **i07524162**

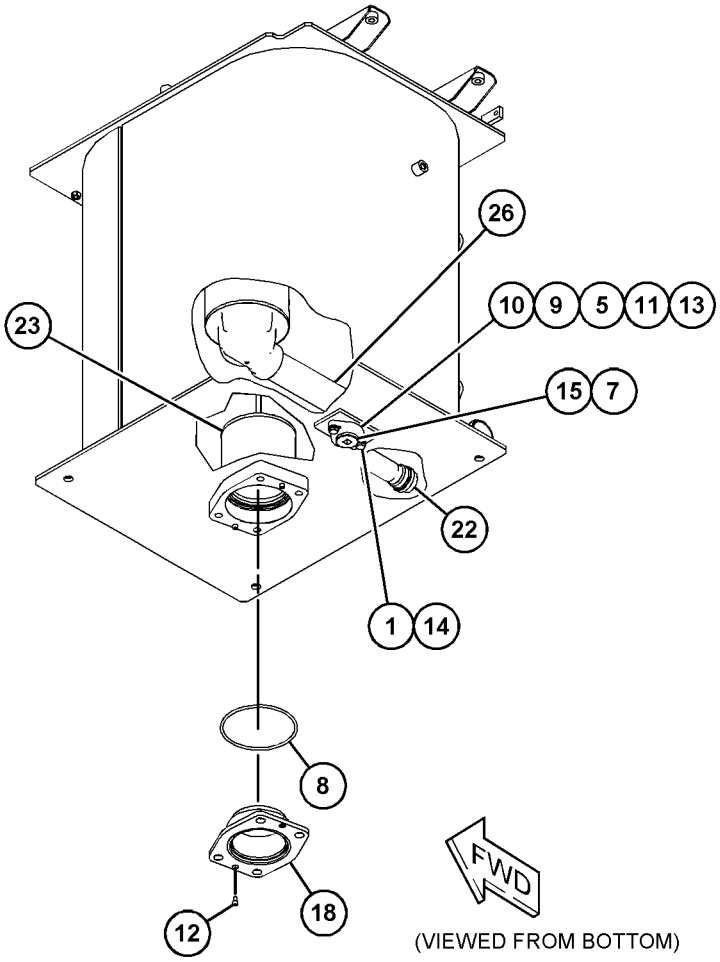

GRAPHIC #2 <END> g06285791

503-9758 TANK & FILTER GP-HYDRAULIC

S/N: SP91-UP
224-L (59.2-US GAL)
PART OF 503-9757 TANK GP-HYDRAULIC
TYPE 2

SMCS-5056, 5068 **i07786876**

NOTE	REF NO	GRAPHIC REF	PART NUMBER	QTY	PART NAME 1 2 3 4 5 6 (PRODUCT LEVEL)	SEE PAGE
M	1	2	**8T-4196**	2	BOLT (M10X1.5X35-MM)	
M	2	1	**8T-4910**	4	BOLT (M12X1.75X60-MM)	
M	3	1	**5C-9553**	3	BOLT (M6X1X16-MM)	
	4	1	**175-7896**	1	SEAL-O-RING	
	5	2	**1U-2827**	1	GUIDE-VALVE (HYDRAULIC TANK DRAIN)	
	6	1	**4J-0527**	1	SEAL-O-RING	
	7	2	**5M-2057**	1	SEAL-O-RING	
	8	2	**6D-9157**	1	SEAL-O-RING	
	9	2	**7B-3039**	1	SPRING	
	10	2	**8J-8782**	1	BODY-DRAIN VALVE (HYDRAULIC TANK)	
	11	2	**8J-8783**	1	VALVE-DRAIN (HYDRAULIC TANK)	
M	12	2	**8T-0267**	2	BOLT-SOCKET HEAD (M6X1X12-MM)	
	13	2	**8T-3298**	1	SEAL-RECTANGULAR	
	14	1,2	**8T-4121**	8	WASHER-HARD (11X21X2.5-MM THK)	
	15	2	**9J-7031**	1	PLUG-DRAIN (HYDRAULIC TANK)	
	16	1	**095-1730**	1	SEAL-O-RING	
M	17	1	**105-3484**	4	BOLT-SOCKET HEAD (M10X1.5X25-MM)	
	18	2	**165-3256**	1	PIPE AS	
	19	1	**175-6176**	1	SEAL-O-RING	
Y	20	1	**256-6453**	1	SENSOR-TEMPERATURE (2-PIN) (HYDRAULIC TANK OIL)	243
Y	21	1	**347-6081**	1	GAUGE GP-SIGHT (HYDRAULIC OIL LEVEL)	444
	22	2	**491-6075**	1	FILTER GP-OIL (HYDRAULIC CASE DRAIN) (HYDRAULIC TANK)	
		2	**6K-6307**	1	SEAL-O-RING	
CY	23	2	**448-1376**	1	SCREEN GP-HYDRAULIC	543
	24	1	**504-9586**	1	SWITCH AS-DIFF PRESSURE (RETURN FILTER)	
		1	**8T-8729**	2	PIN-CONNECTOR (16-GA TO 20-GA)	
		1	**192-7510**	1	SEAL-O-RING	
		1	**512-4914**	1	SEAL-FACE	
Y	25	1	**504-9687**	1	FILTER GP-OIL (HYDRAULIC RETURN) (HYDRAULIC TANK)	443
	26	2	**525-4107**	1	PIPE	
	27	1	**528-5916**	1	PIPE AS	
Y	28	1	**540-7019**	1	BREATHER GP (HYDRAULIC TANK)	407
	29	1	**519-8217**	1	COVER AS	
	30	1	**3K-0360**	1	SEAL-O-RING	
M	32	1	**8T-4137**	6	BOLT (M10X1.5X20-MM)	
	33	1	**8T-4223**	4	WASHER-HARD (13.5X25.5X3-MM THK)	
	34	1	**9X-8256**	3	WASHER (6.6X12X2-MM THK)	
	35	1	**556-7339**	1	TANK GP-HYDRAULIC	

C - CHANGE FROM PREVIOUS TYPE
M - METRIC PART
Y - SEPARATE ILLUSTRATION

503-9758 **TANK & FILTER GP-HYDRAULIC (**contd.**)** **i07786876**

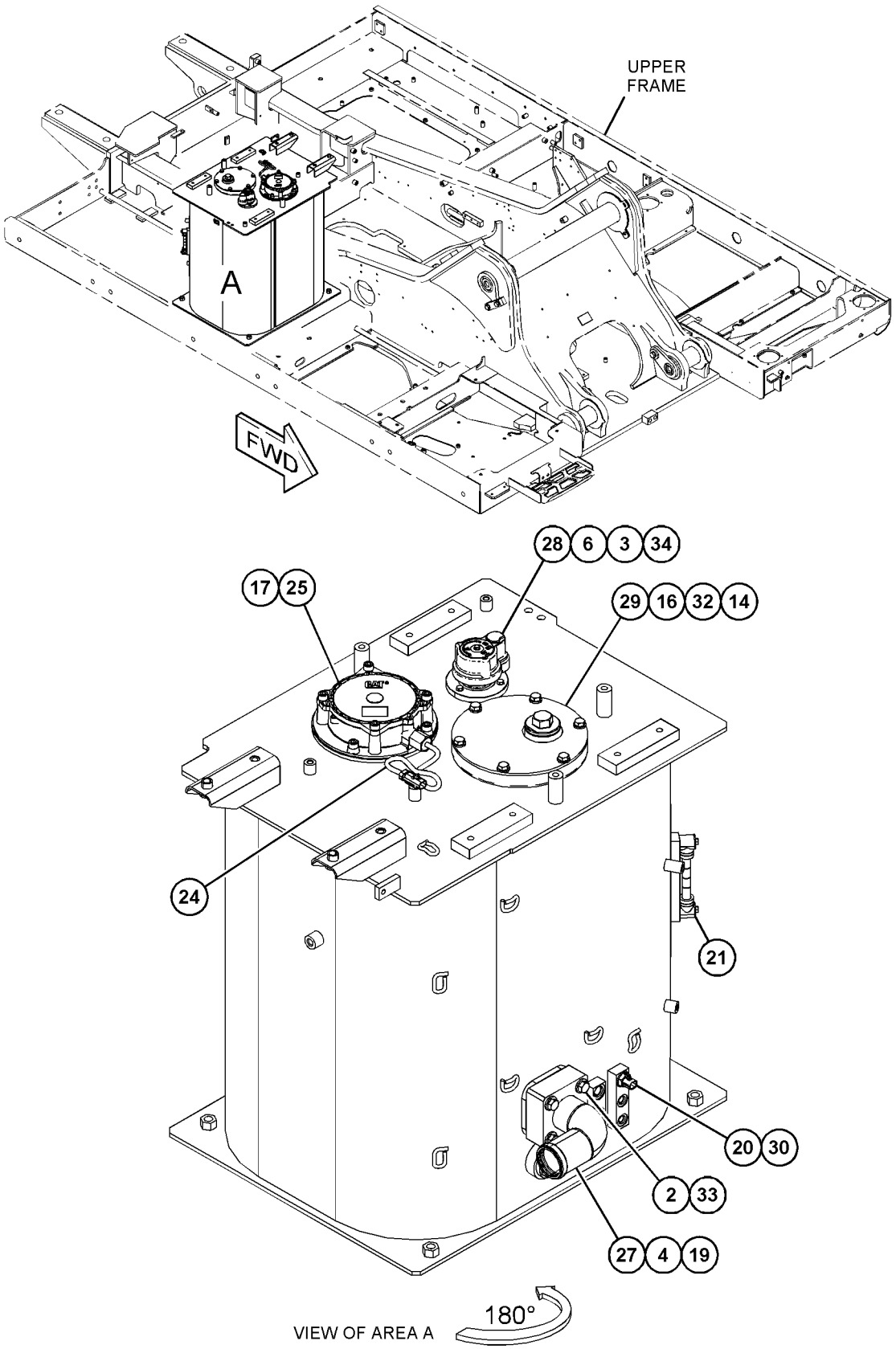

GRAPHIC #1 g06420894

503-9758 **TANK & FILTER GP-HYDRAULIC (**contd.**)** **i07786876**

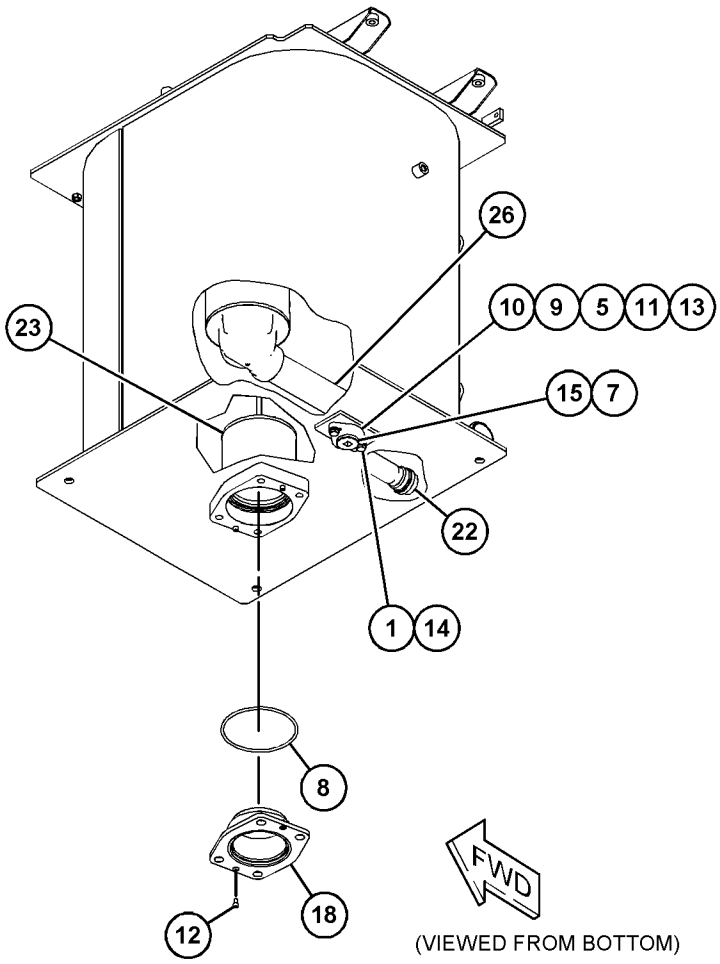

GRAPHIC #2 <END> g06285791

503-9756 TANK & MTG GP-HYDRAULIC

S/N: SP91-UP

PART OF 525-2937 HYDRAULIC AR

SMCS-5056 **i07524127**

NOTE	REF NO	GRAPHIC REF	PART NUMBER	QTY	PART NAME 1 2 3 4 5 6 (PRODUCT LEVEL)	SEE PAGE
	1	1	**085-9310**	4	SPACER (16.6X32X26-MM THK)	
	2	1	**352-7063**	2	CAP	
M	3	1	**447-1707**	4	BOLT (M16X2X60-MM)	
Y	4	1	*503-9757*	1	TANK GP-HYDRAULIC	554

M - METRIC PART
Y - SEPARATE ILLUSTRATION

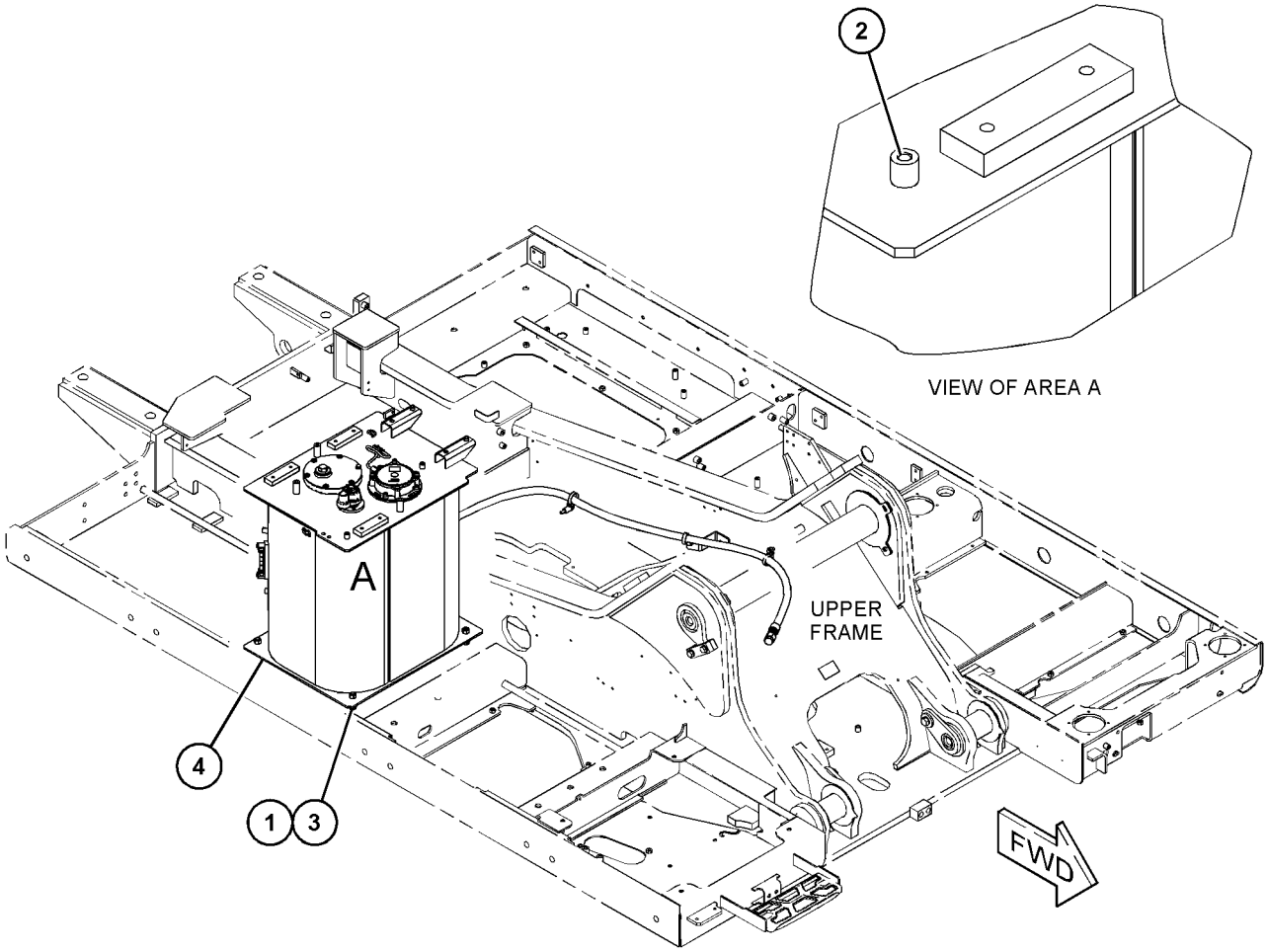

GRAPHIC #1 <END> g06279454

503-9757 TANK GP-HYDRAULIC

S/N: SP91-UP

PART OF 503-9756 TANK & MTG GP-HYDRAULIC

SMCS-5056, 5068, 7479 **i07524144**

NOTE	REF NO	GRAPHIC REF	PART NUMBER	QTY	PART NAME 1 2 3 4 5 6 (PRODUCT LEVEL)	SEE PAGE
Y	1	1	**503-9758**	1	TANK & FILTER GP-HYDRAULIC	547
Y	2	1	*503-9759*	1	LINES GP-HYDRAULIC	501

Y - SEPARATE ILLUSTRATION

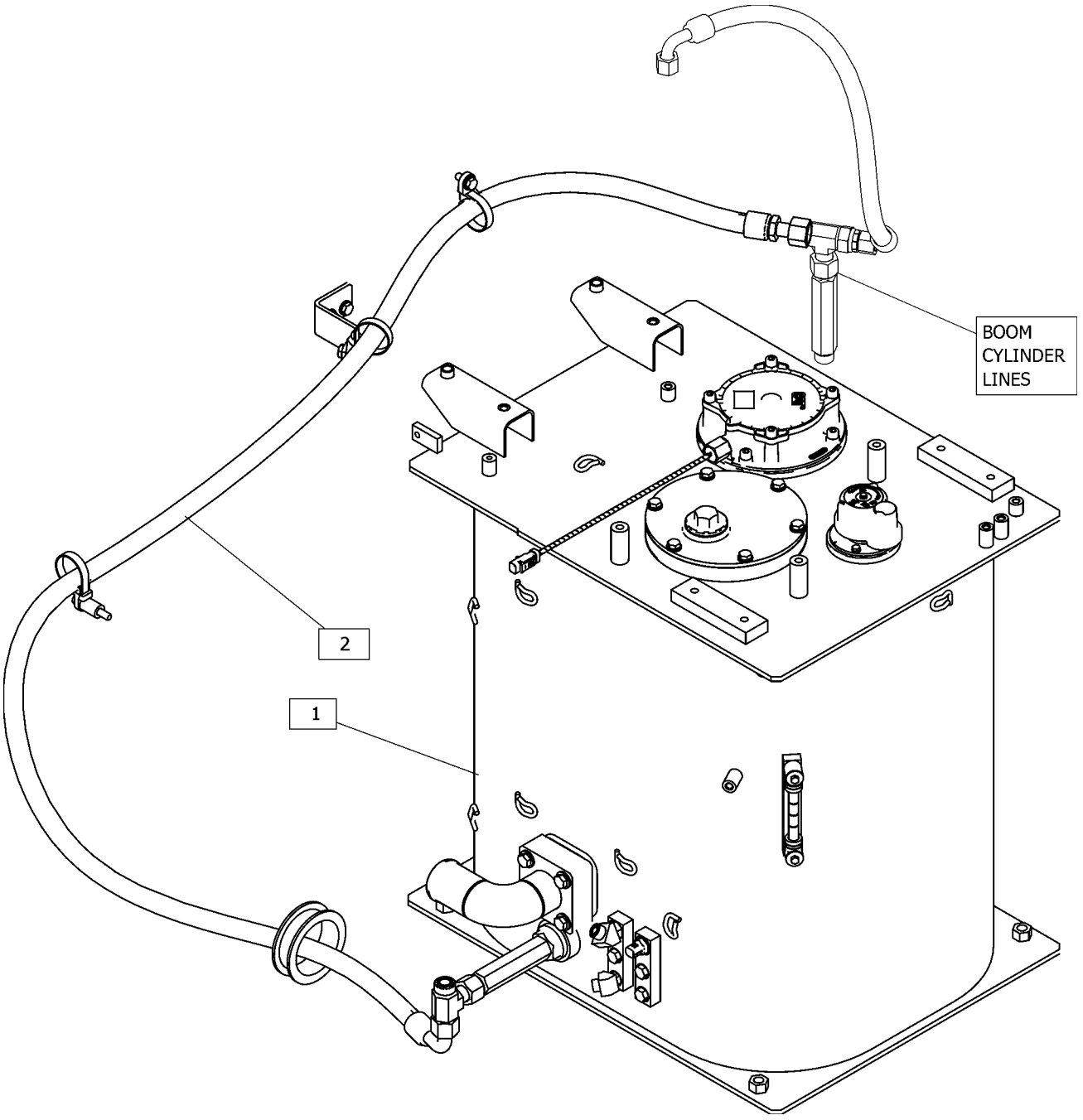

GRAPHIC #1 <END> g06278877

504-1792 VALVE & MTG GP-MAIN CONTROL—HEAVY LIFT

S/N: SP91-UP

PART OF 504-1790 VALVE AR-MAIN CONTROL

SMCS-5051 **i07526819**

NOTE	REF NO	GRAPHIC REF	PART NUMBER	QTY	PART NAME 1 2 3 4 5 6 (PRODUCT LEVEL)	SEE PAGE
	1	1	**1P-3702**	4	SEAL-RECTANGULAR	
Y	2	1	**488-7773**	1	COVER GP-VALVE END (MAIN CONTROL VALVE, RH)	413
	3	1	**4J-5309**	1	SEAL-O-RING	
	4	1	**6V-3922**	6	SEAL-O-RING	
	5	1	**7Y-5219**	8	SEAL-O-RING	
	6	1	**096-3044**	4	SEAL-O-RING	
Y	7	1	**515-5784**	1	VALVE GP-MAIN CONTROL	578
M	8	1	**447-1704**	8	BOLT (M16X2X90-MM)	
	9	1	**451-2175**	8	WASHER-HARD (17.5X30X3.5-MM THK)	
Y	10	1	**487-5869**	1	COVER GP-VALVE END (MAIN CONTROL VALVE, LH)	412

M - METRIC PART
Y - SEPARATE ILLUSTRATION

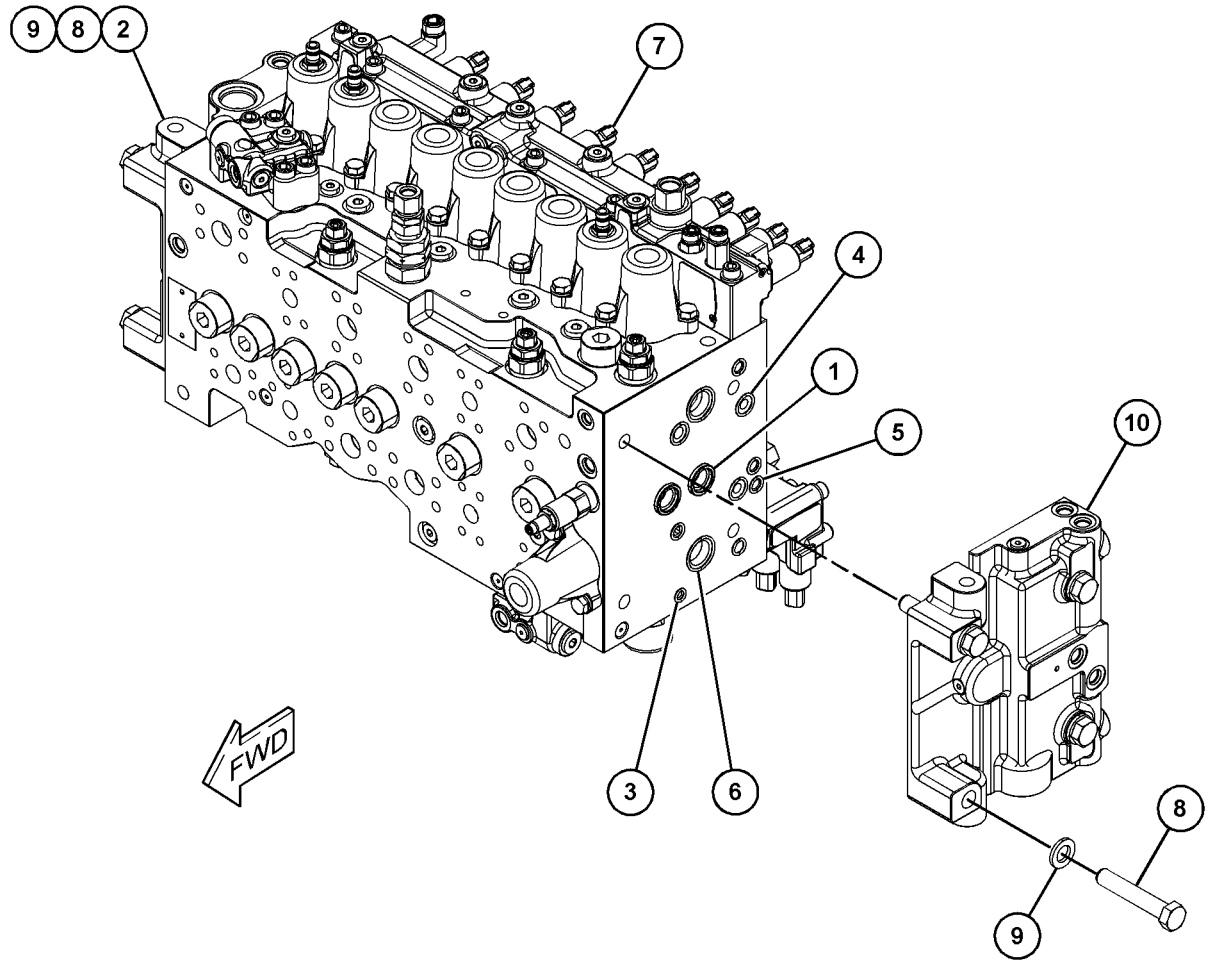

GRAPHIC #1 <END> g06286596

504-1793 VALVE & MTG GP-MAIN CONTROL—AUXILIARY

S/N: SP91-UP

PART OF 504-1791 VALVE AR-MAIN CONTROL

TYPE 1

SMCS-5051 **i07526645**

NOTE	REF NO	GRAPHIC REF	PART NUMBER	QTY	PART NAME 1 2 3 4 5 6 (PRODUCT LEVEL)	SEE PAGE
	1	1	**1P-3702**	8	SEAL-RECTANGULAR	
Y	2	1	**515-5784**	1	VALVE GP-MAIN CONTROL	578
	3	1	**4J-5309**	3	SEAL-O-RING	
	4	1	**6V-3922**	12	SEAL-O-RING	
	5	1	**7Y-5219**	18	SEAL-O-RING	
	6	1	**096-3044**	8	SEAL-O-RING	
Y	7	1	**555-8147**	2	VALVE GP-CONTROL (AUXILIARY)	574
	8	1	**451-2175**	8	WASHER-HARD (17.5X30X3.5-MM THK)	
M	9	1	**453-2843**	8	BOLT (M16X2X180-MM)	
Y	10	1	**487-5869**	1	COVER GP-VALVE END (MAIN CONTROL VALVE, LH)	412
Y	11	1	**488-7773**	1	COVER GP-VALVE END (MAIN CONTROL VALVE, RH)	413

M - METRIC PART
Y - SEPARATE ILLUSTRATION

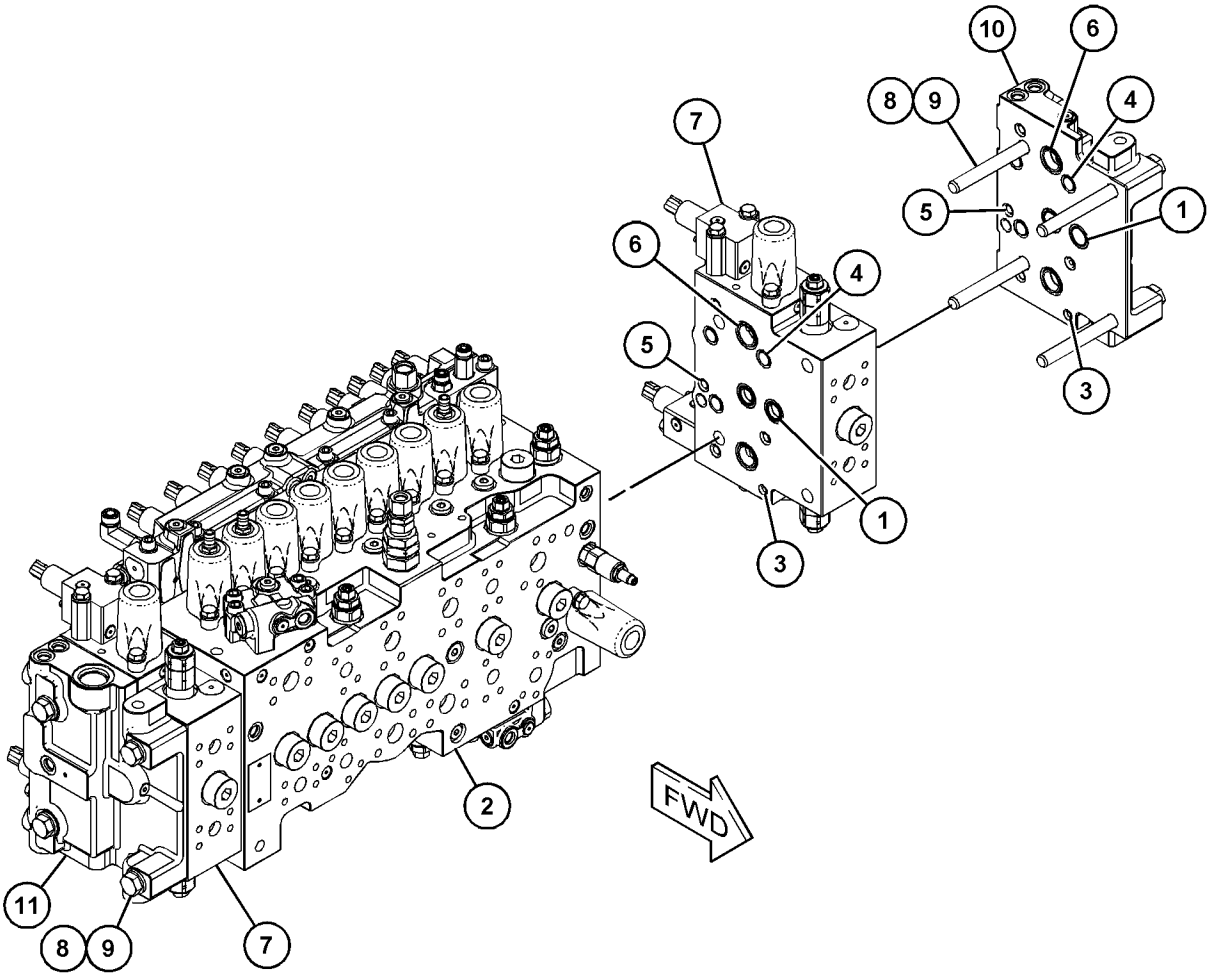

GRAPHIC #1 <END> g06286598

504-1793 VALVE & MTG GP-MAIN CONTROL–AUXILIARY

S/N: SP91-UP
PART OF 504-1791 VALVE AR-MAIN CONTROL
TYPE 2

SMCS-5051 **i07815644**

NOTE	REF NO	GRAPHIC REF	PART NUMBER	QTY	PART NAME 1 2 3 4 5 6 (PRODUCT LEVEL)	SEE PAGE
	1	1	**1P-3702**	8	SEAL-RECTANGULAR	
Y	2	1	**515-5784**	1	VALVE GP-MAIN CONTROL	578
	3	1	**4J-5309**	3	SEAL-O-RING	
	4	1	**6V-3922**	12	SEAL-O-RING	
	5	1	**7Y-5219**	18	SEAL-O-RING	
	6	1	**096-3044**	8	SEAL-O-RING	
Y	7	1	**555-8147**	2	VALVE GP-CONTROL (AUXILIARY)	574
	8	1	**451-2175**	8	WASHER-HARD (17.5X30X3.5-MM THK)	
M	9	1	**453-2843**	8	BOLT (M16X2X180-MM)	
CY	10	1	**564-4856**	1	COVER GP-VALVE END (LH)	414
CY	11	1	**564-4858**	1	COVER GP-VALVE END (RH)	415

C - CHANGE FROM PREVIOUS TYPE
M - METRIC PART
Y - SEPARATE ILLUSTRATION

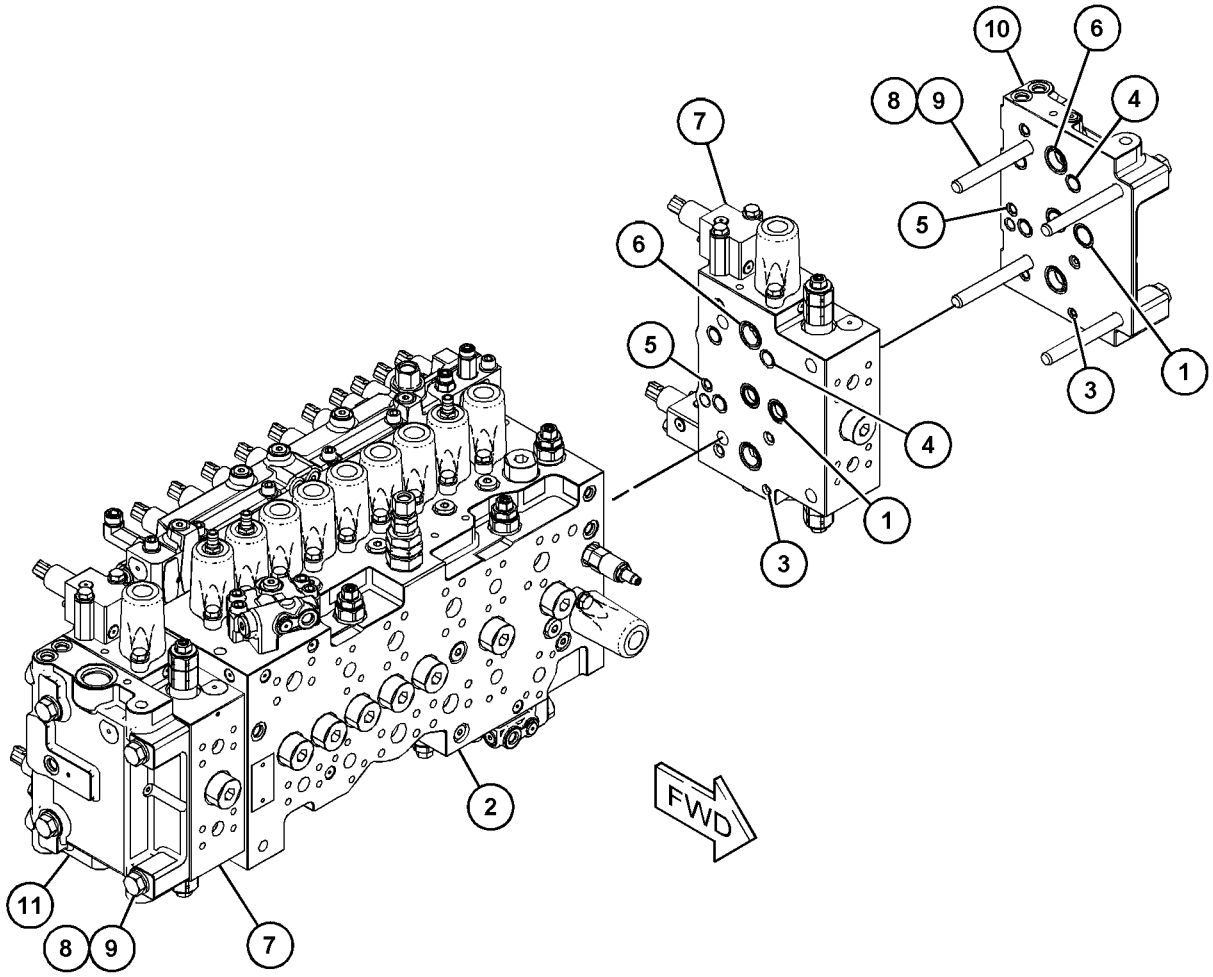

GRAPHIC #1 <END> g06421426

491-7697 VALVE & MTG GP-SOLENOID–UPPER

S/N: SP91-UP
WITH BLOCK
PART OF 555-8147 VALVE GP-CONTROL

SMCS-5479 **i07868134**

NOTE	REF NO	GRAPHIC REF	PART NUMBER	QTY	PART NAME 1 2 3 4 5 6 (PRODUCT LEVEL)	SEE PAGE
M	1	1	**8T-3998**	2	BOLT (M4X0.7X12-MM)	
	2	1	*225-4818*	4	PLUG AS	
					(EACH INCLUDES)	
		1	**4J-7533**	1	SEAL-O-RING	
		1	**225-4804**	1	PLUG	
	3	1	**485-5747**	1	VALVE GP-SOLENOID (12-VOLT)	
		1	**509-8010**	1	SEAL-O-RING	
		1	**509-8011**	1	SEAL-O-RING	
		1	**509-8012**	1	SEAL-O-RING	

M - METRIC PART

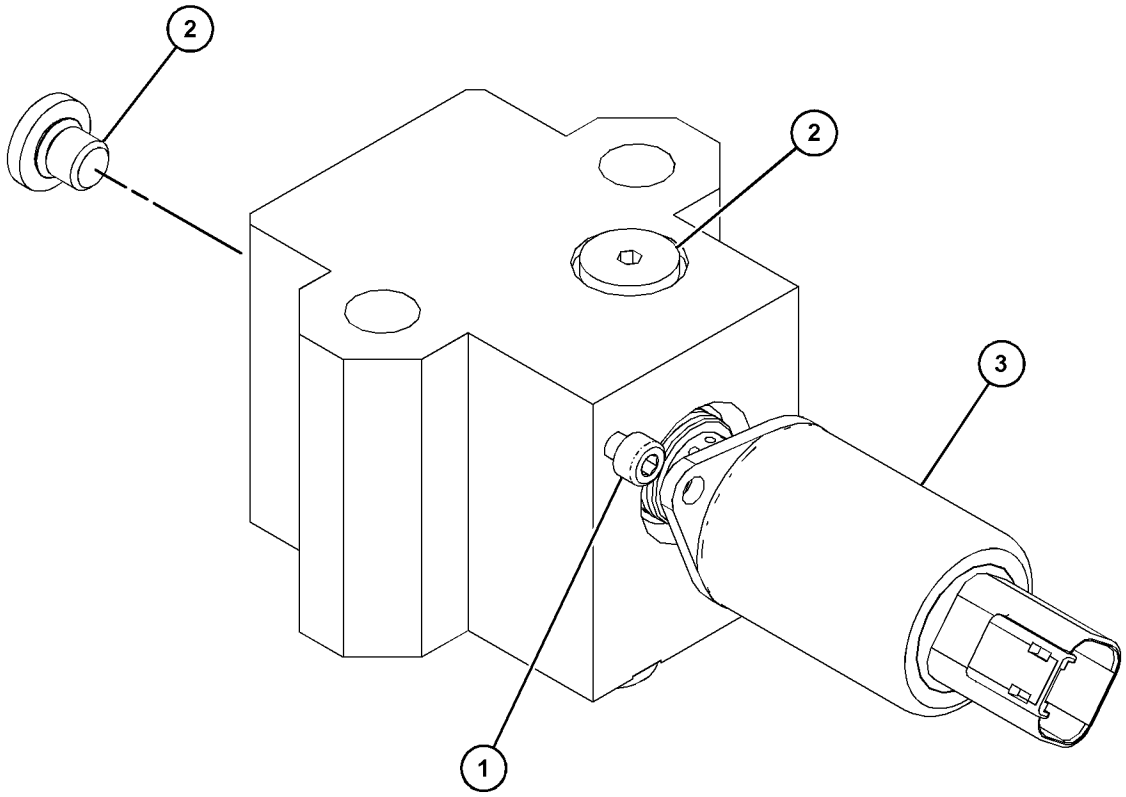

GRAPHIC #1 <END> g06233437

493-3207 VALVE & MTG GP-SOLENOID

S/N: SP91-UP

PART OF 504-4483 VALVE AR-SWING

SMCS-5479 **i07531047**

NOTE	REF NO	GRAPHIC REF	PART NUMBER	QTY	PART NAME 1 2 3 4 5 6 (PRODUCT LEVEL)	SEE PAGE
M	1	1	**131-3983**	2	BOLT-SOCKET HEAD (M8X1.25X35-MM)	
Y	2	1	**493-3208**	1	VALVE & MTG GP-SOLENOID	560
M	3	1	**298-6020**	2	BOLT-SOCKET HEAD (M8X1.25X60-MM)	

M - METRIC PART
Y - SEPARATE ILLUSTRATION

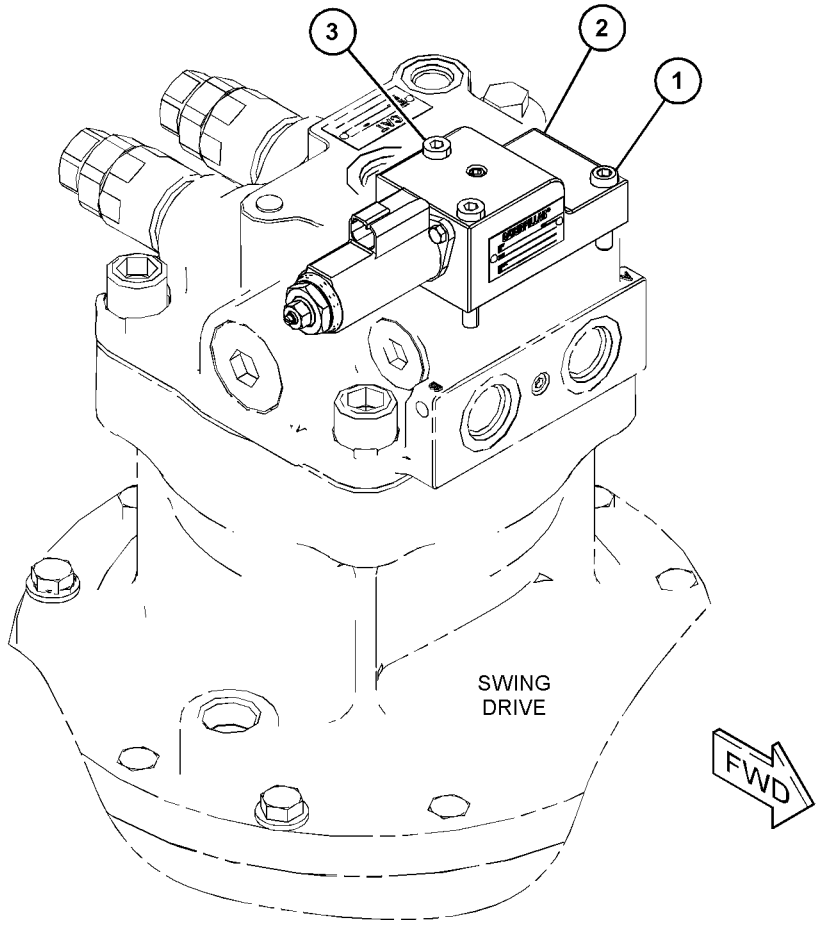

GRAPHIC #1 <END> g06229891

493-3208 VALVE & MTG GP-SOLENOID

S/N: SP91-UP

PART OF 493-3207 VALVE & MTG GP-SOLENOID

SMCS-5479 **i07531044**

NOTE	REF NO	GRAPHIC REF	PART NUMBER	QTY	PART NAME 1 2 3 4 5 6 (PRODUCT LEVEL)	SEE PAGE
	1	1	**524-3258**	1	BODY-VALVE	
M	2	1	**7I-2272**	2	BOLT (M5X0.8X12-MM)	
	3	1	**524-2806**	1	VALVE GP-SOLENOID	
		1	**095-1586**	1	SEAL-O-RING	
		1	**126-6514**	1	SEAL-O-RING	
		1	**126-6515**	1	SEAL-O-RING	
		1	**126-6516**	1	SEAL-O-RING	
	4	1	**8T-6759**	3	PLUG-PIPE	
	5	1	**133-6788**	2	ORIFICE	

M - METRIC PART

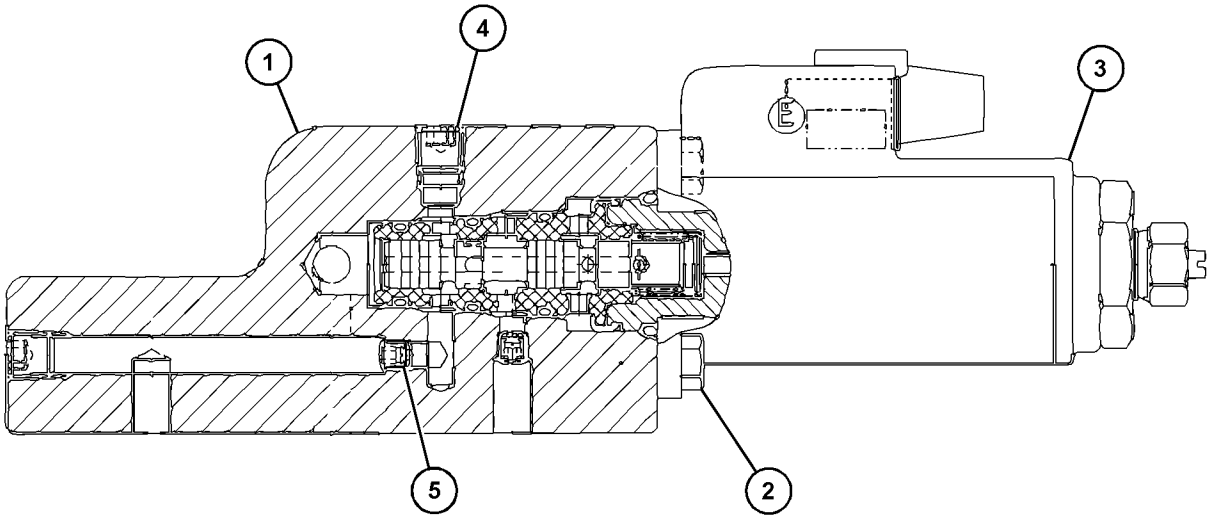

GRAPHIC #1 <END> g06229908

493-4922 VALVE & MTG GP-SOLENOID—LOWER

S/N: SP91-UP
WITH BLOCK
PART OF 555-8147 VALVE GP-CONTROL

SMCS-5479 **i07876931**

NOTE	REF NO	GRAPHIC REF	PART NUMBER	QTY	PART NAME 1 2 3 4 5 6 (PRODUCT LEVEL)	SEE PAGE
M	1	1	**8T-3998**	2	BOLT (M4X0.7X12-MM)	
	2	1	*225-4818*	4	PLUG AS	
					(EACH INCLUDES)	
		1	**4J-7533**	1	SEAL-O-RING	
		1	**225-4804**	1	PLUG	
	3	1	**485-5747**	1	VALVE GP-SOLENOID (12-VOLT)	
		1	**509-8010**	1	SEAL-O-RING	
		1	**509-8011**	1	SEAL-O-RING	
		1	**509-8012**	1	SEAL-O-RING	

M - METRIC PART

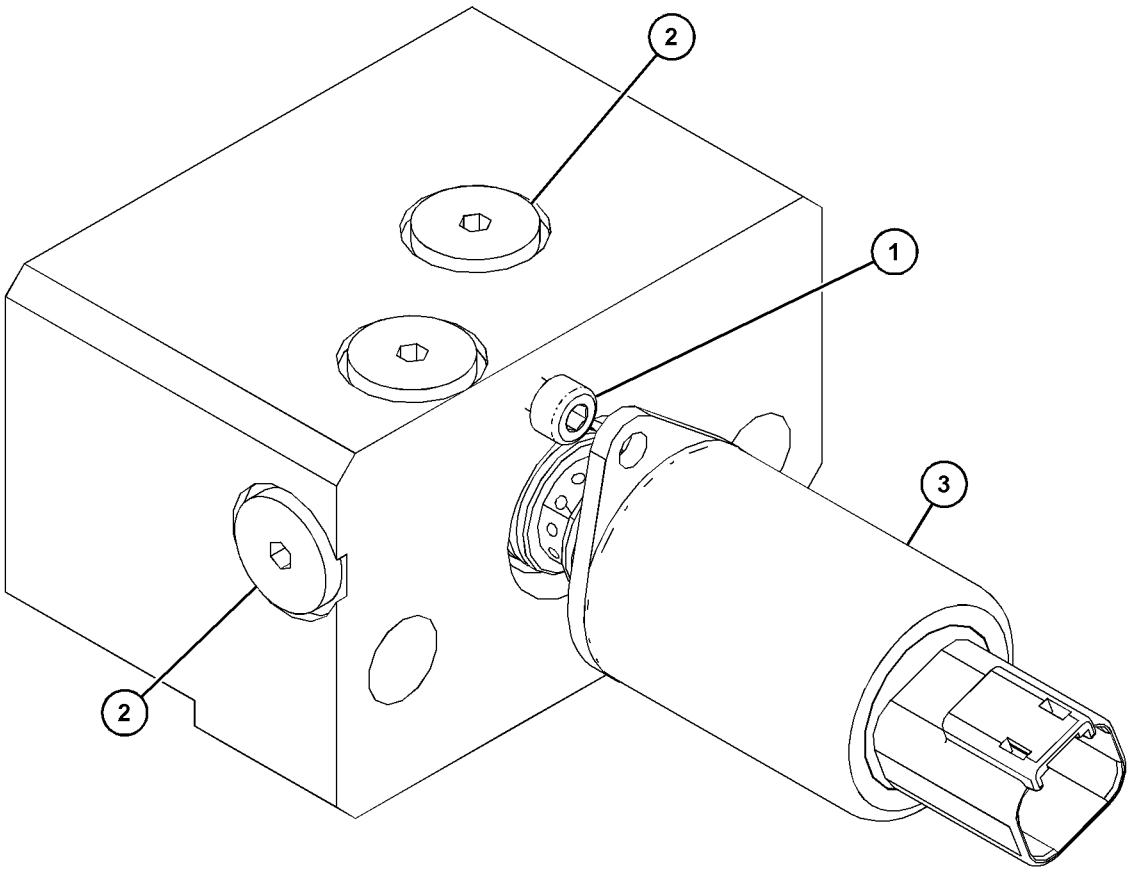

GRAPHIC #1 <END> g06234802

524-0912 VALVE & MTG GP-SOLENOID–ON/OFF

S/N: SP91-UP
WITH BLOCK
PART OF 551-6886 LINES GP-FRONT, 523-6215, 523-6216 LINES GP-PILOT

SMCS-5479 **i07356827**

NOTE	REF NO	GRAPHIC REF	PART NUMBER	QTY	PART NAME 1 2 3 4 5 6 (PRODUCT LEVEL)	SEE PAGE
M	1	1	**8T-3998**	2	BOLT (M4X0.7X12-MM)	
	2	1	**491-0908**	1	VALVE GP-SOLENOID (24-VOLT)	
		1	**509-8010**	1	SEAL-O-RING	
		1	**509-8011**	1	SEAL-O-RING	
		1	**509-8012**	1	SEAL-O-RING	

M - METRIC PART

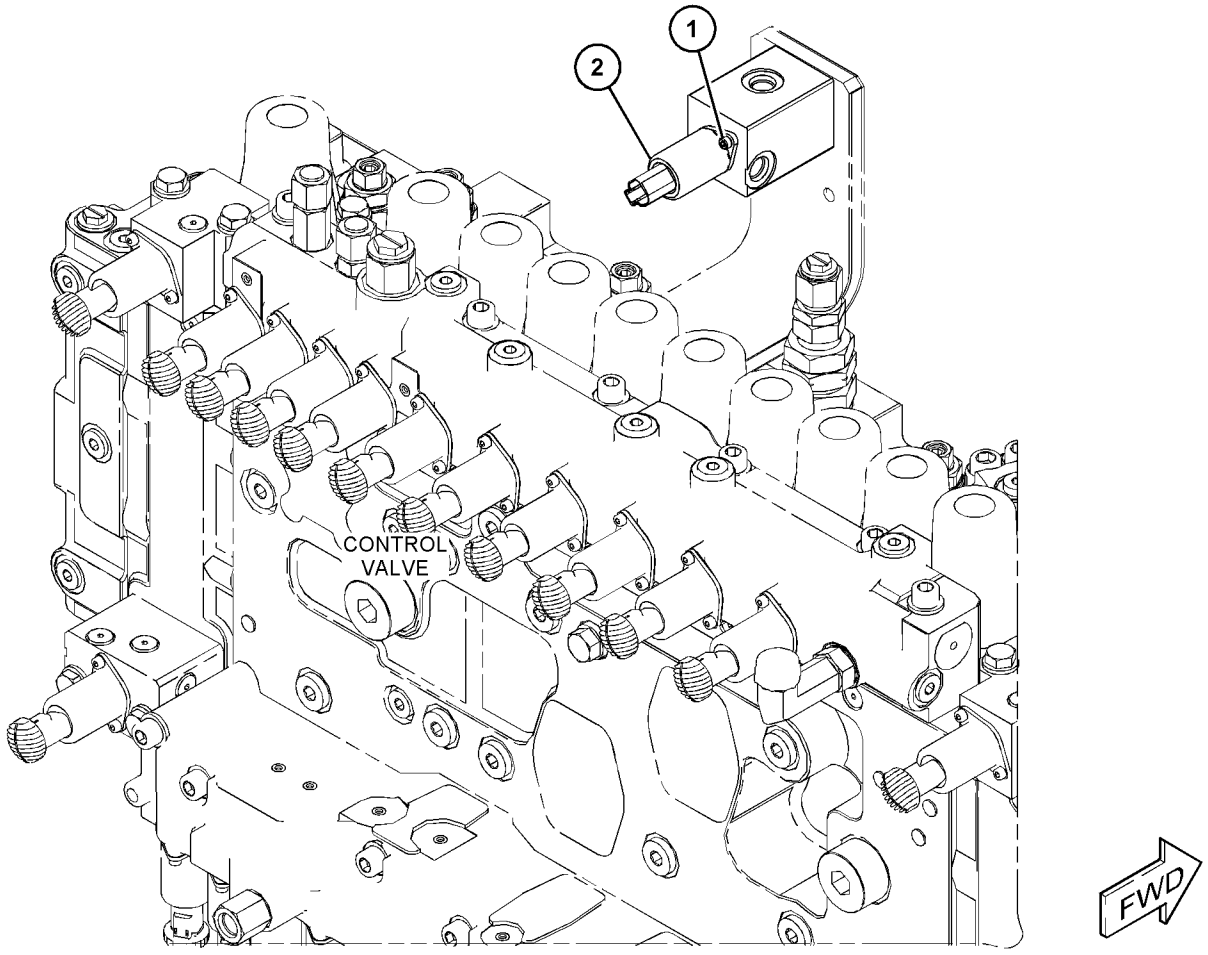

GRAPHIC #1 <END> g06232749

504-1790 VALVE AR-MAIN CONTROL—HEAVY LIFT

S/N: SP91-UP

PART OF 550-7573 OPTION AR-HYDRAULIC

SMCS-5051 **i07526815**

NOTE	PART NUMBER	QTY	PART NAME 1 2 3 4 5 6 (PRODUCT LEVEL)	SEE PAGE
Y	*523-6215*	1	LINES GP-PILOT	512
Y	**504-1792**	1	VALVE & MTG GP-MAIN CONTROL (HEAVY LIFT)	555
Y	*524-8376*	1	WIRING GP-VALVE (HEAVY LIFT)	302

Y - SEPARATE ILLUSTRATION

<END>

504-1791 VALVE AR-MAIN CONTROL—HEAVY LIFT, AUXILIARY

S/N: SP91-UP

PART OF 550-7581 OPTION AR-HYDRAULIC

SMCS-5051 **i07762903**

NOTE	PART NUMBER	QTY	PART NAME 1 2 3 4 5 6 (PRODUCT LEVEL)	SEE PAGE
Y	*523-6216*	1	LINES GP-PILOT (LIFT)	514
Y	*504-1793*	1	VALVE & MTG GP-MAIN CONTROL (AUXILIARY)	556
Y	*524-8376*	1	WIRING GP-VALVE (HEAVY LIFT)	302

Y - SEPARATE ILLUSTRATION

<END>

504-4483 VALVE AR-SWING—FINE SWING

S/N: SP91-UP

SMCS-5480 **i07520066**

NOTE	PART NUMBER	QTY	PART NAME 1 2 3 4 5 6 (PRODUCT LEVEL)	SEE PAGE
Y	*493-3207*	1	VALVE & MTG GP-SOLENOID	559
Y	*502-7185*	1	WIRING GP-CHASSIS (FINE SWING)	267

Y - SEPARATE ILLUSTRATION

<END>

297-0370 VALVE GP-CHECK

S/N: SP91-UP

PART OF 503-9774 LINES GP-BOOM CYLINDER

SMCS-5067 **i07072485**

NOTE	REF NO	GRAPHIC REF	PART NUMBER	QTY	PART NAME 1 2 3 4 5 6 (PRODUCT LEVEL)	SEE PAGE
	1	1	**095-1585**	1	SEAL-O-RING	
	2	1	**225-4804**	3	PLUG	
	3	1	**4J-7533**	3	SEAL-O-RING	
	4	1	**095-1602**	1	SEAL-O-RING	
	5	1	**232-4113**	1	RING	
	6	1	**095-1601**	1	SEAL-O-RING	
	7	1	**8T-3008**	1	RING-BACKUP	
	8	1	**095-1700**	1	SEAL-O-RING	
	9	1	**7M-8485**	1	SEAL-O-RING	
	10	1	**095-1657**	1	SEAL-O-RING	
	11	1	**232-4114**	2	RING	

297-0370 **VALVE GP-CHECK (**contd.**)** **i07072485**

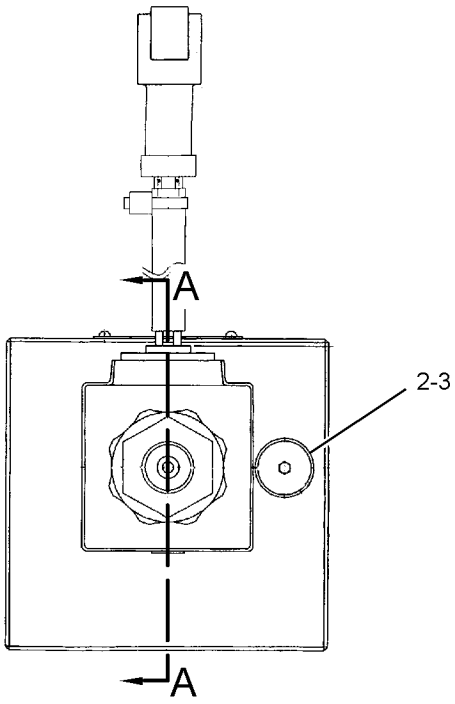

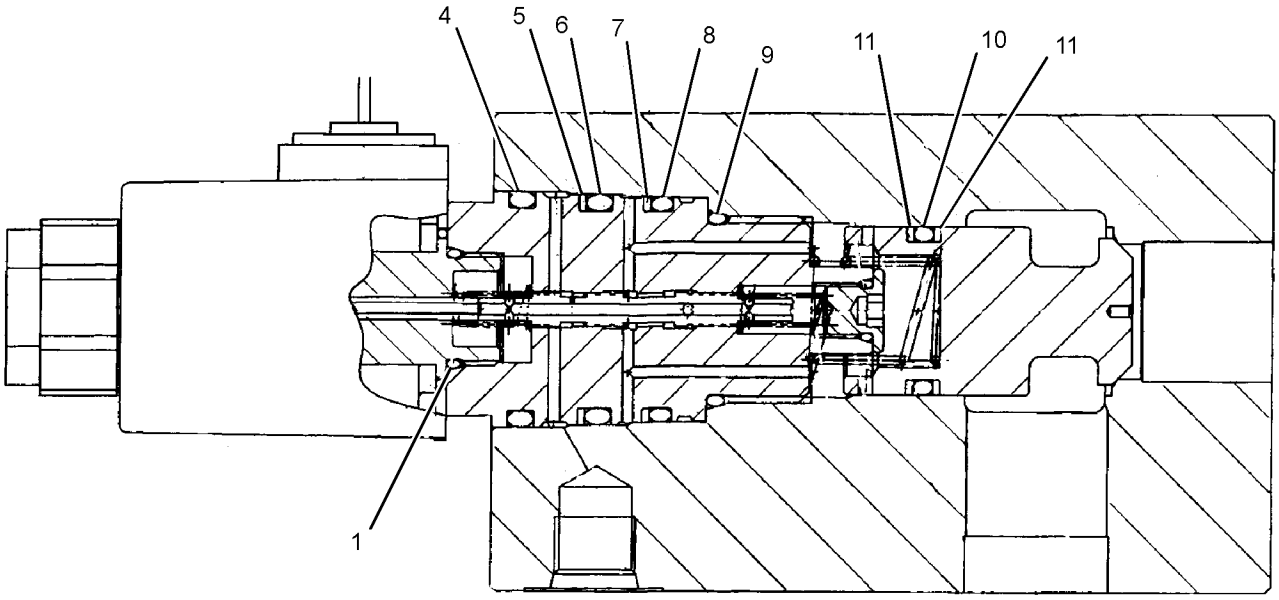

SECTION A-A

GRAPHIC #1 <END> g01382946

490-3958 VALVE GP-CHECK–RETURN

S/N: SP91-UP

PART OF 503-9760 LINES GP-HYDRAULIC OIL COOLER

SMCS-5067 **i07815655**

NOTE	REF NO	GRAPHIC REF	PART NUMBER	QTY	PART NAME 1 2 3 4 5 6 (PRODUCT LEVEL)	SEE PAGE
M	1	1	**5A-3604**	4	BOLT-SOCKET HEAD (M8X1.25X25-MM)	
	2	1	**453-3451**	4	WASHER-HARD (8.8X16X2-MM THK)	
	3	1	**095-1599**	2	SEAL-O-RING	
	4	1	**491-3416**	2	VALVE-CHECK	
	5	1	**491-3417**	2	SLEEVE	
	6	1	**491-3418**	2	COVER-VALVE	
	7	1	**491-3419**	1	SPRING-CHECK VALVE	
	8	1	**491-3420**	1	SPRING-CHECK VALVE	
					PARTS SHOWN IN GRAPHIC(S) WITHOUT A REFERENCE NUMBER ARE NOT SERVICED SEPARATELY	

M - METRIC PART

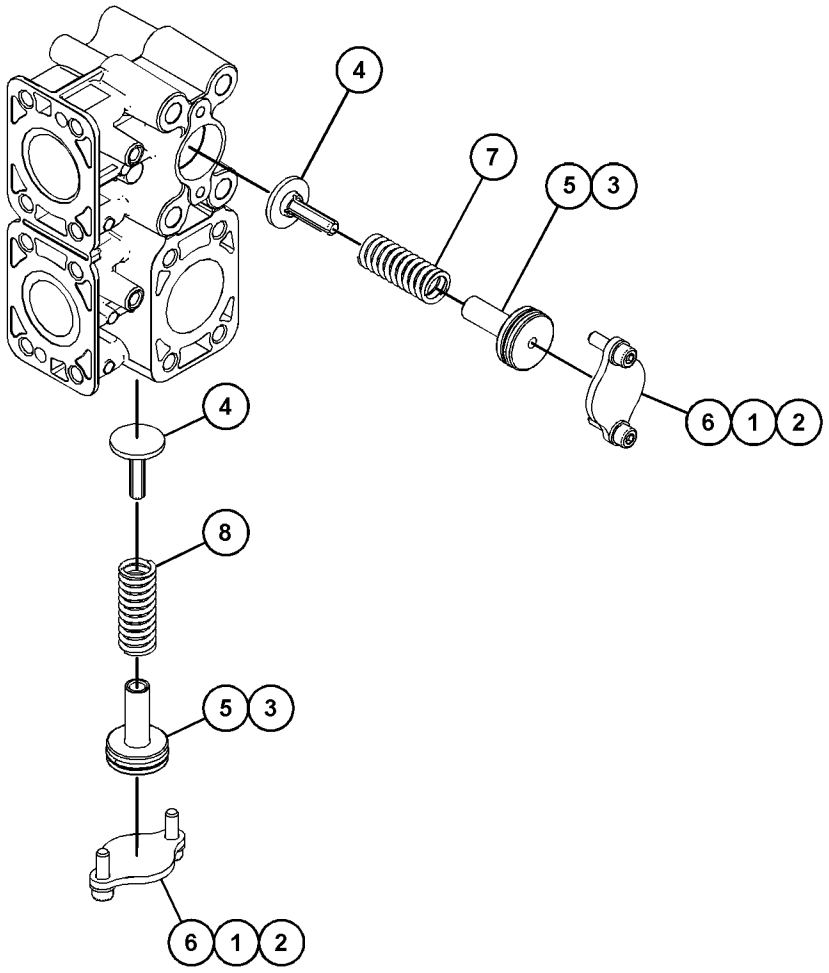

GRAPHIC #1 <END> g06233395

504-1987 VALVE GP-CONTROL—REVERSE FLOW

S/N: SP91-UP

PART OF 503-9784 LINES GP-HYDRAULIC OIL COOLER

SMCS-5051 **i07690715**

NOTE	REF NO	GRAPHIC REF	PART NUMBER	QTY	PART NAME 1 2 3 4 5 6 (PRODUCT LEVEL)	SEE PAGE
	1	1	**096-6100**	1	SEAL-O-RING	
	2	1	**147-4184**	1	PLUG	
	3	1	**153-5288**	1	SPRING	
	4	1	*162-0177*	2	PLUG AS	
					(EACH INCLUDES)	
		1	**3J-1907**	1	SEAL-O-RING	
		1	**9S-8004**	1	PLUG (9/16-18-THD)	
	5	1	**259-7389**	1	WASHER-SPRING	
	6	1	**487-5881**	2	SPRING-CHECK VALVE	
J	7	1	**491-0908**	1	VALVE GP-SOLENOID (24-VOLT) (ON/OFF)	
	9	1	**4J-5351**	1	SEAL-O-RING	
	11	1	**518-1204**	1	COVER	
	12	1	**518-1206**	2	VALVE-CHECK	
	13	1	**529-6256**	1	VALVE AS-RELIEF (CONTROL)	
	15	1	**563-8205**	1	COVER	
M	16	1	**5A-3604**	5	BOLT-SOCKET HEAD (M8X1.25X25-MM)	
	17	1	**6V-5597**	1	SEAL-O-RING	
M	18	1	**8T-1158**	2	BOLT-SOCKET HEAD (M8X1.25X20-MM)	
M	19	1	**8T-3998**	2	BOLT (M4X0.7X12-MM)	
	20	1	**8T-6759**	3	PLUG-PIPE	
					AVAILABLE REPAIR KIT(S):	
J			**506-1112**	1	KIT-SEAL (SOLENOID)	
					(INCLUDES O-RING SEALS)	

J - KIT MARKED J SERVICES PART(S) MARKED J
M - METRIC PART

504-1987 **VALVE GP-CONTROL (**contd.**)** **i07690715**

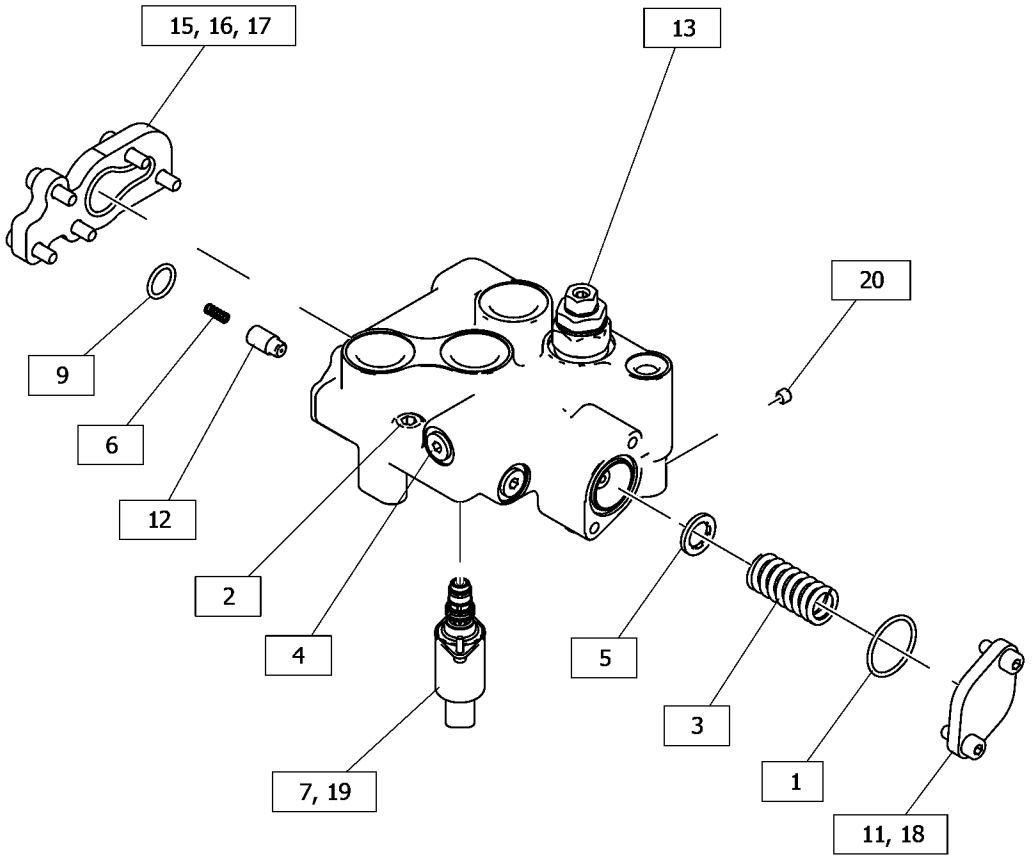

GRAPHIC #1 <END> g06395377

515-5785 VALVE GP-CONTROL

S/N: SP91-UP

PART OF 515-5784 VALVE GP-MAIN CONTROL

TYPE 1

SMCS-5051 **i07526789**

NOTE	REF NO	GRAPHIC REF	PART NUMBER	QTY	PART NAME 1 2 3 4 5 6 (PRODUCT LEVEL)	SEE PAGE
	1	1	**8T-6850**	1	SEAL-O-RING	
	2	1	**3J-1907**	3	SEAL-O-RING	
	3	1	**6E-2271**	22	RETAINER	
	4	1	**9N-0869**	5	WASHER-HARD (8.8X25.5X2-MM THK)	
M	5	1	**153-5276**	6	BOLT-SPECIAL (M10X1.5X82-MM)	
	6	1	**259-7513**	2	SPRING-CHECK VALVE (SWING PRIORITY)	
	7	1	**294-7687**	1	SPRING	
	8	1	**352-7057**	8	SPRING-RETURN	
	9	1	**352-7058**	2	SPRING-RETURN	
M	10	1	**453-3432**	5	BOLT (M8X1.25X20-MM)	
	11	1	**463-6984**	2	GUIDE-SPRING	
	12	1	**487-5879**	1	GUIDE-SPRING	
	13	1	**487-5880**	1	VALVE-CHECK (STRAIGHT TRAVEL) (STRAIGHT TRAVEL)	
	14	1	**487-5881**	1	SPRING-CHECK VALVE (STRAIGHT TRAVEL)	
	15	1	**558-8100**	2	VALVE-CHECK (REGENERATION) (REGENERATION)	
	16	1	**487-8023**	1	PLUG	

M - METRIC PART

515-5785 **VALVE GP-CONTROL (**contd.**)** **i07526789**

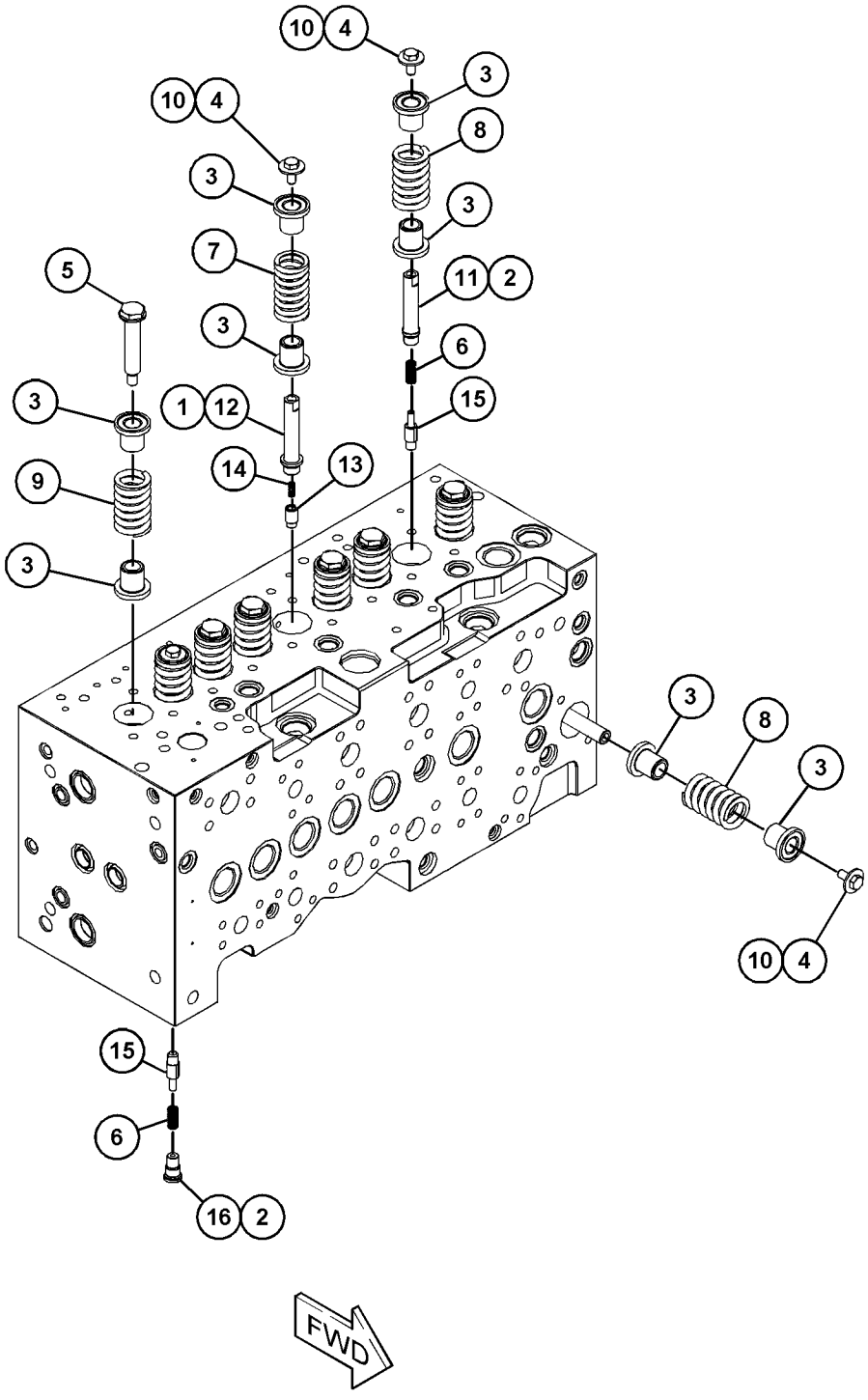

GRAPHIC #1 <END> g06284086

515-5785 VALVE GP-CONTROL

S/N: SP91-UP

PART OF 515-5784 VALVE GP-MAIN CONTROL

TYPE 2

SMCS-5051 **i07757789**

NOTE	REF NO	GRAPHIC REF	PART NUMBER	QTY	PART NAME 1 2 3 4 5 6 (PRODUCT LEVEL)	SEE PAGE
	1	1	**8T-6850**	1	SEAL-O-RING	
C	2	1	**3J-1907**	2	SEAL-O-RING	
	3	1	**6E-2271**	22	RETAINER	
C	4	1	**9N-0869**	4	WASHER-HARD (8.8X25.5X2-MM THK)	
CM	5	1	**153-5276**	7	BOLT-SPECIAL (M10X1.5X82-MM)	
	6	1	**259-7513**	2	SPRING-CHECK VALVE (SWING PRIORITY)	
	7	1	**294-7687**	1	SPRING	
	8	1	**352-7057**	8	SPRING-RETURN	
	9	1	**352-7058**	2	SPRING-RETURN	
CM	10	1	**453-3432**	4	BOLT (M8X1.25X20-MM)	
C	11	1	**463-6984**	1	GUIDE-SPRING	
	12	1	**487-5879**	1	GUIDE-SPRING	
	13	1	**487-5880**	1	VALVE-CHECK (STRAIGHT TRAVEL)	
	14	1	**487-5881**	1	SPRING-CHECK VALVE (STRAIGHT TRAVEL)	
	15	1	**558-8100**	2	VALVE-CHECK (REGENERATION)	
	16	1	**487-8023**	1	PLUG	
					PARTS SHOWN IN GRAPHIC(S) WITHOUT A REFERENCE NUMBER ARE NOT SERVICED SEPARATELY	

C - CHANGE FROM PREVIOUS TYPE
M - METRIC PART

515-5785 **VALVE GP-CONTROL (**contd.**)** **i07757789**

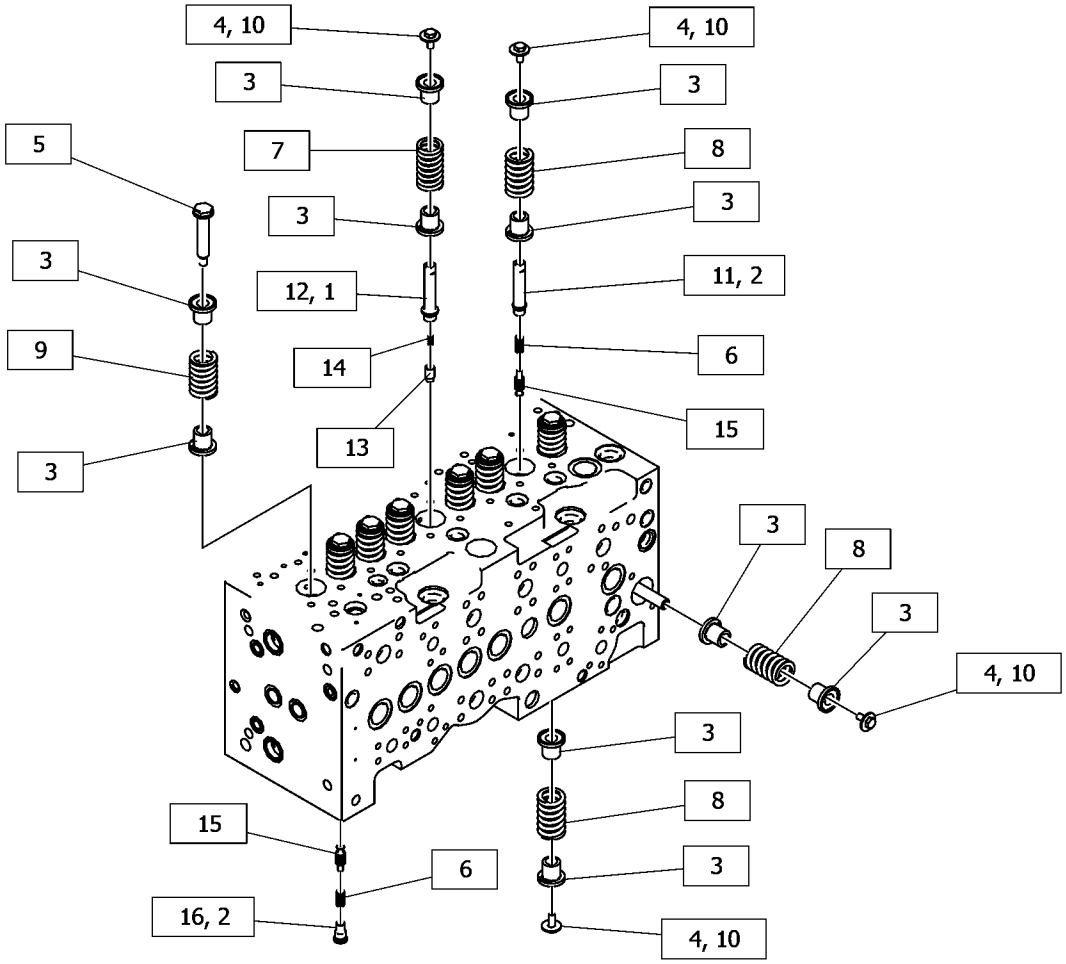

GRAPHIC #1 <END> g06421408

553-7287 VALVE GP-CONTROL

S/N: SP91-UP

PART OF 553-7280 HEAD GP-PUMP

SMCS-5051 **i07513367**

NOTE	REF NO	GRAPHIC REF	PART NUMBER	QTY	PART NAME 1 2 3 4 5 6 (PRODUCT LEVEL)	SEE PAGE
	1	1	**033-6043**	1	SEAL-O-RING	
	2	1	**213-9244**	1	SEAL-O-RING	
	3	1	**200-5363**	1	RING-THRUST	
	4	1	**553-7288**	1	PLUG	
	5	1	**553-7289**	1	SETSCREW	
M	6	1	**123-5029**	1	NUT-HEX (M8X1-THD)	

M - METRIC PART

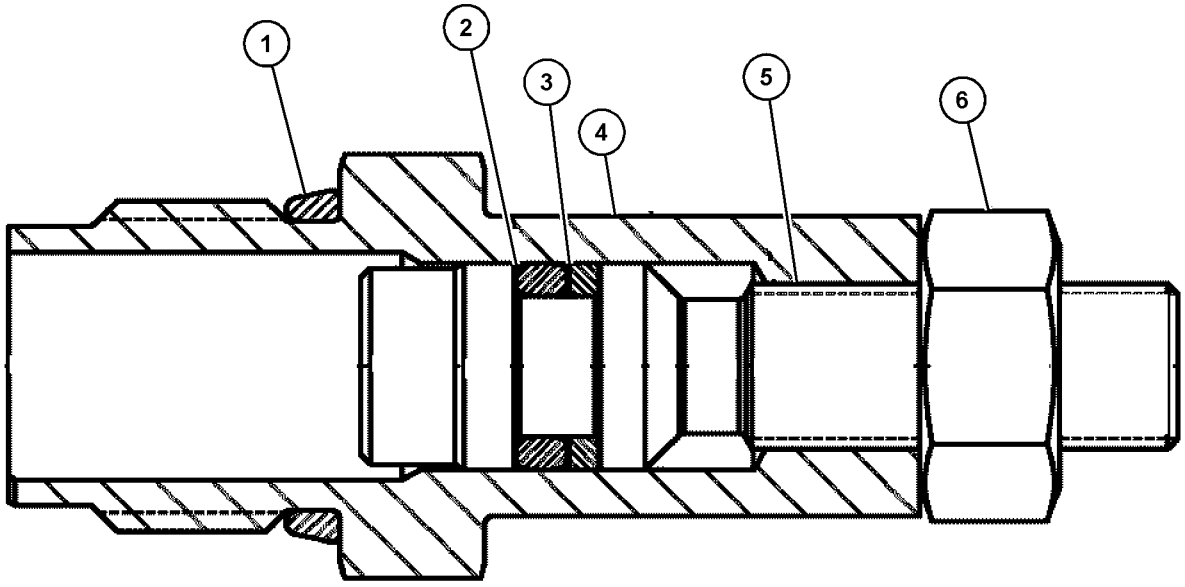

GRAPHIC #1 <END> g06308562

555-8147 VALVE GP-CONTROL—AUXILIARY

S/N: SP91-UP

PART OF 504-1793 VALVE & MTG GP-MAIN CONTROL, 557-7853 VALVE GP-CONTROL

SMCS-5051 **i07526806**

NOTE	REF NO	GRAPHIC REF	PART NUMBER	QTY	PART NAME 1 2 3 4 5 6 (PRODUCT LEVEL)	SEE PAGE
M	1	1	**8T-5005**	4	BOLT (M10X1.5X70-MM)	
	2	1	**4J-5309**	7	SEAL-O-RING	
	3	1	**6V-5597**	2	SEAL-O-RING	
	4	1	**095-1590**	1	SEAL-O-RING	
M	5	1	**453-3440**	4	BOLT (M10X1.5X30-MM)	
	6	1	**453-3454**	8	WASHER-HARD (11X21X2.5-MM THK)	
	7	1	**095-1787**	1	RING-BACKUP	
	8	1	*225-4818*	4	PLUG AS	
					(EACH INCLUDES)	
		1	**4J-7533**	1	SEAL-O-RING	
		1	**225-4804**	1	PLUG	
Y	9	1	**352-7123**	2	VALVE GP-RELIEF (LINE)	588
	10	1	**466-0113**	1	VALVE-CHECK	
	11	1	**487-5871**	1	COVER-PILOT	
	12	1	**487-5873**	1	PLUG-CHECK VALVE	
	13	1	**491-7696**	1	COVER-PILOT	
Y	14	1	**491-7697**	1	VALVE & MTG GP-SOLENOID	558
Y	15	1	**493-4922**	1	VALVE & MTG GP-SOLENOID	561
	18	1	*555-8148*	1	VALVE GP-CONTROL (AUXILIARY)	
		1	**6E-2271**	2	RETAINER	
M		1	**153-5276**	1	BOLT-SPECIAL (M10X1.5X82-MM)	
		1	**352-7057**	1	SPRING-RETURN	
	19	1	**7I-1248**	1	SPRING	

M - METRIC PART
Y - SEPARATE ILLUSTRATION

555-8147 **VALVE GP-CONTROL (**contd.**)** **i07526806**

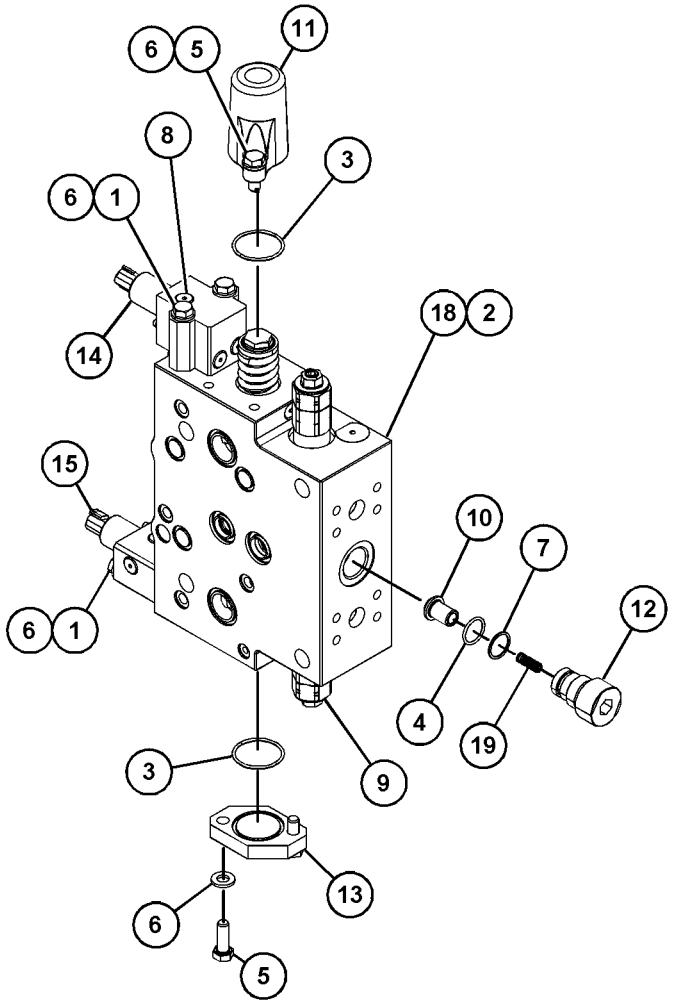

GRAPHIC #1 <END> g06281859

557-7853 VALVE GP-CONTROL–TOOL CONTROL

S/N: SP91-UP

PART OF 559-3854 CONTROL AR-AUXILIARY

SMCS-5051 **i07529627**

NOTE	REF NO	GRAPHIC REF	PART NUMBER	QTY	PART NAME 1 2 3 4 5 6 (PRODUCT LEVEL)	SEE PAGE
	1	1	**451-2175**	4	WASHER-HARD (17.5X30X3.5-MM THK)	
M	2	1	**453-2843**	4	BOLT (M16X2X180-MM)	
Y	3	1	**555-8147**	1	VALVE GP-CONTROL (AUXILIARY)	574
	4	1	**096-3044**	4	SEAL-O-RING	
	5	1	**1P-3702**	4	SEAL-RECTANGULAR	
	6	1	**4J-5309**	1	SEAL-O-RING	
	7	1	**6V-3922**	1	SEAL-O-RING	
	8	1	**7Y-5219**	9	SEAL-O-RING	

M - METRIC PART
Y - SEPARATE ILLUSTRATION

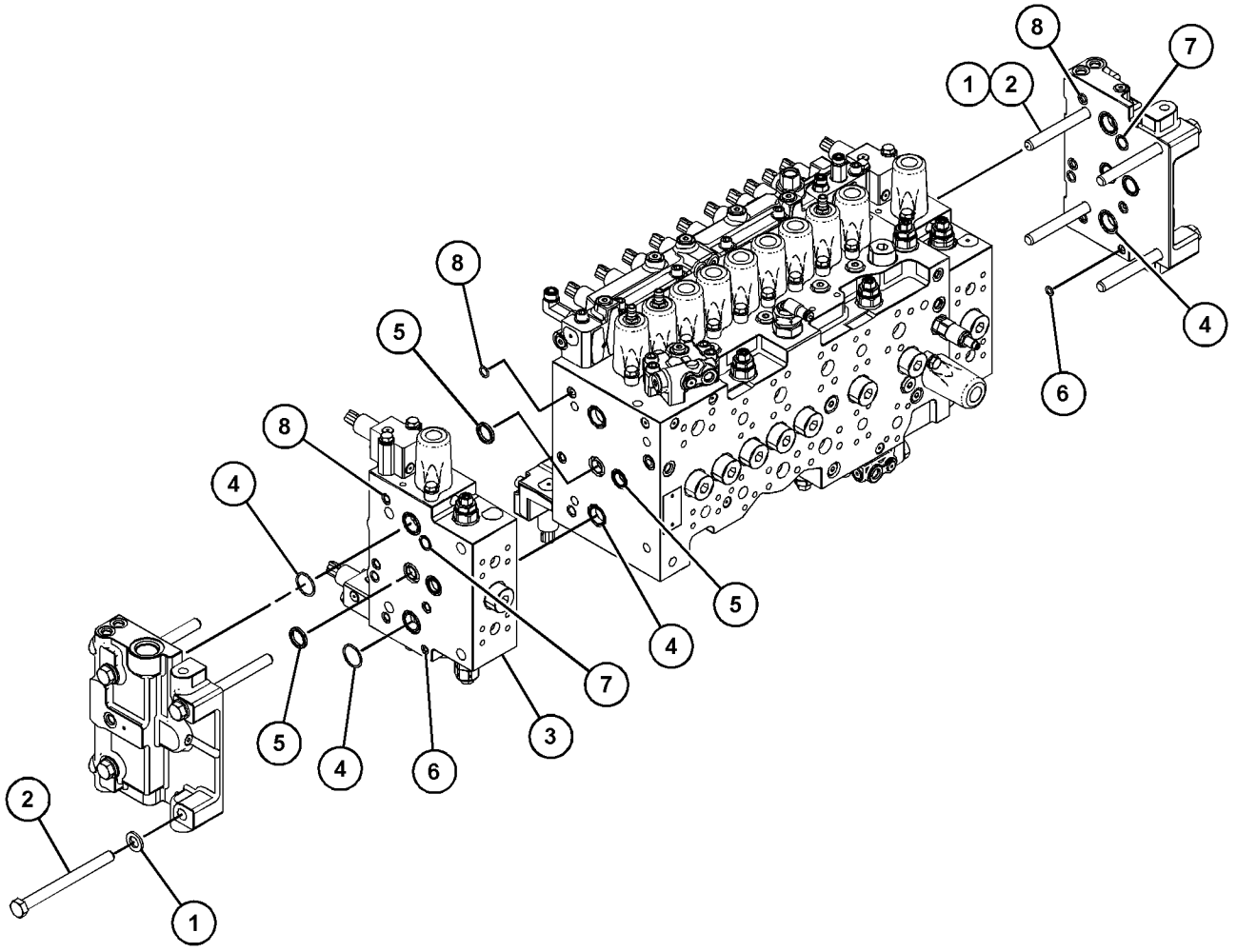

GRAPHIC #1 <END> g06270521

487-5875 VALVE GP-LOAD CONTROL–DRIFT REDUCTION

S/N: SP91-UP

PART OF 515-5784 VALVE GP-MAIN CONTROL

SMCS-5067, 5117, 5147, 5811 **i07356657**

NOTE	REF NO	GRAPHIC REF	PART NUMBER	QTY	PART NAME 1 2 3 4 5 6 (PRODUCT LEVEL)	SEE PAGE
	1	1	*148-8395*	1	PLUG AS	
		1	**3K-0360**	1	SEAL-O-RING	
		1	**9S-8005**	1	PLUG (3/4-16-THD)	
	2	1	*225-4818*	2	PLUG AS	
					(EACH INCLUDES)	
		1	**4J-7533**	1	SEAL-O-RING	
		1	**225-4804**	1	PLUG	
	3	1	*225-4820*	1	PLUG AS	
		1	**3J-7354**	1	SEAL-O-RING	
		1	**225-4821**	1	PLUG	
	4	1	**441-1105**	1	SPRING-RETURN	
	5	1	**441-1107**	1	RETAINER	

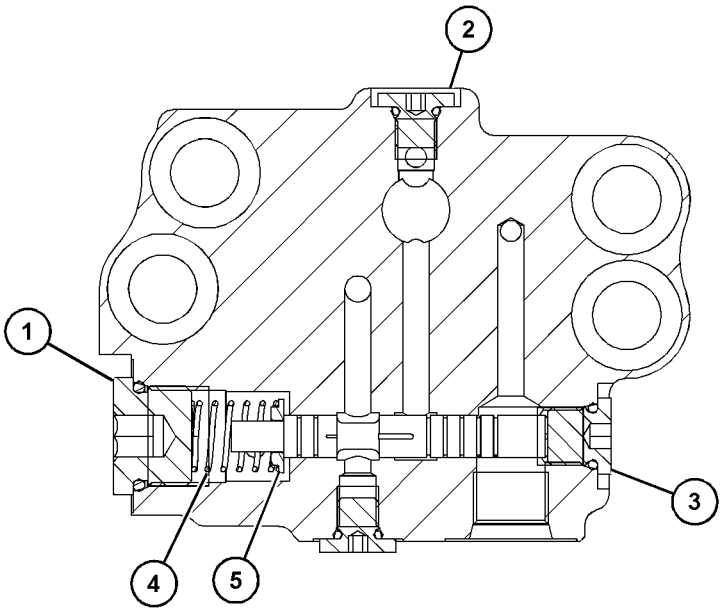

SECTION A-A

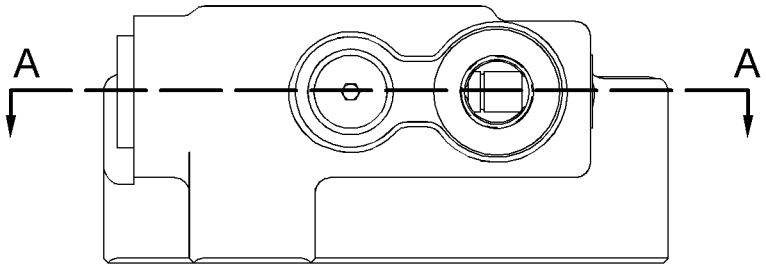

GRAPHIC #1 <END> g06230002

515-5784 VALVE GP-MAIN CONTROL—HEAVY LIFT

S/N: SP91-UP

PART OF 504-1792, 504-1793 VALVE & MTG GP-MAIN CONTROL

SMCS-5051 **i07526650**

NOTE	REF NO	GRAPHIC REF	PART NUMBER	QTY	PART NAME 1 2 3 4 5 6 (PRODUCT LEVEL)	SEE PAGE
	1	2	**7J-9933**	1	SEAL-O-RING	
	2	3	**4J-5309**	4	SEAL-O-RING	
	3	3	**6V-5393**	2	SEAL-O-RING	
	4	2,3	**6V-5597**	19	SEAL-O-RING	
	5	2	**7Y-5219**	25	SEAL-O-RING	
M	6	2	**8T-0342**	6	BOLT-SOCKET HEAD (M10X1.5X80-MM)	
M	7	2,3	**8T-7811**	8	BOLT-SOCKET HEAD (M12X1.75X50-MM)	
M	8	2	**9X-2158**	7	BOLT-SOCKET HEAD (M10X1.5X90-MM)	
	9	1,3	**095-1590**	10	SEAL-O-RING	
	10	1,3	**095-1787**	10	RING-BACKUP	
	11	1,2	*162-0177*	4	PLUG AS	
					(EACH INCLUDES)	
		1,2	**3J-1907**	1	SEAL-O-RING	
		1,2	**9S-8004**	1	PLUG (9/16-18-THD)	
	12	1,2,3	*225-4818*	16	PLUG AS	
					(EACH INCLUDES)	
		1,2,3	**4J-7533**	1	SEAL-O-RING	
		1,2,3	**225-4804**	1	PLUG	
	13	2	*225-4820*	3	PLUG AS	
					(EACH INCLUDES)	
		2	**3J-7354**	1	SEAL-O-RING	
		2	**225-4821**	1	PLUG	
Y	14	1	**323-7464**	1	VALVE GP-RELIEF (PILOT OPERATED)	584
	16	1,3	*366-4695*	5	PLUG AS	
					(EACH INCLUDES)	
		1,3	**3J-1907**	1	SEAL-O-RING	
		1,3	**360-3679**	1	PLUG-CONNECTOR (9/16-18-THD)	
	17	1,3	*367-6003*	16	PLUG AS	
					(EACH INCLUDES)	
		1,3	**3K-0360**	1	SEAL-O-RING	
		1,3	**360-3680**	1	PLUG	
	18	3	**441-1106**	2	SPRING-CHECK VALVE	
M	19	1,2,3	**453-3440**	32	BOLT (M10X1.5X30-MM)	
	20	1,2,3	**453-3454**	45	WASHER-HARD (11X21X2.5-MM THK)	
	21	1,3	**466-0113**	9	VALVE-CHECK	
	22	1,2,3	**487-5871**	8	COVER-PILOT	
	23	1,3	**487-5873**	10	PLUG-CHECK VALVE	
	24	3	**487-5874**	1	VALVE-CHECK	
Y	25	3	**487-5875**	2	VALVE GP-LOAD CONTROL (DRIFT REDUCTION)	577
Y	26	2	**515-2709**	1	VALVE GP-SOLENOID & MANIFOLD	589
Y	27	3	*515-5785*	1	VALVE GP-CONTROL	569
	28	2	*518-1160*	1	COVER GP-ACCESS (PILOT)	
		2	*164-9869*	1	CONNECTOR AS	
		2	**3J-1907**	1	SEAL-O-RING	
		2	**6V-8397**	1	SEAL-O-RING	
		2	**9X-2297**	1	CONNECTOR	
		2	**487-5872**	1	COVER-PILOT	
Y	29	2	**529-0429**	1	VALVE GP-SOLENOID & MANIFOLD	591

515-5784 **VALVE GP-MAIN CONTROL (**contd.**)** **i07526650**

NOTE	REF NO	GRAPHIC REF	PART NUMBER	QTY	PART NAME 1 2 3 4 5 6 (PRODUCT LEVEL)	SEE PAGE
	30	1	**536-7311**	1	VALVE AS-PRESSURE REDUCING (PILOT)	
		1	**2M-9780**	1	SEAL-O-RING	
	31	1	**540-1875**	1	VALVE-CHECK	
	32	3	**197-0199**	1	SPRING	
	33	2	**527-1720**	4	VALVE AS-RELIEF	
	34	2	**527-1721**	2	VALVE AS-RELIEF	
	35	3	**552-8903**	3	COVER AS	
	36	2,3	**6V-3922**	3	SEAL-O-RING	
	37	2	**6V-5556**	1	SEAL-O-RING	
	38	1,3	**7I-1248**	10	SPRING	

M - METRIC PART
Y - SEPARATE ILLUSTRATION

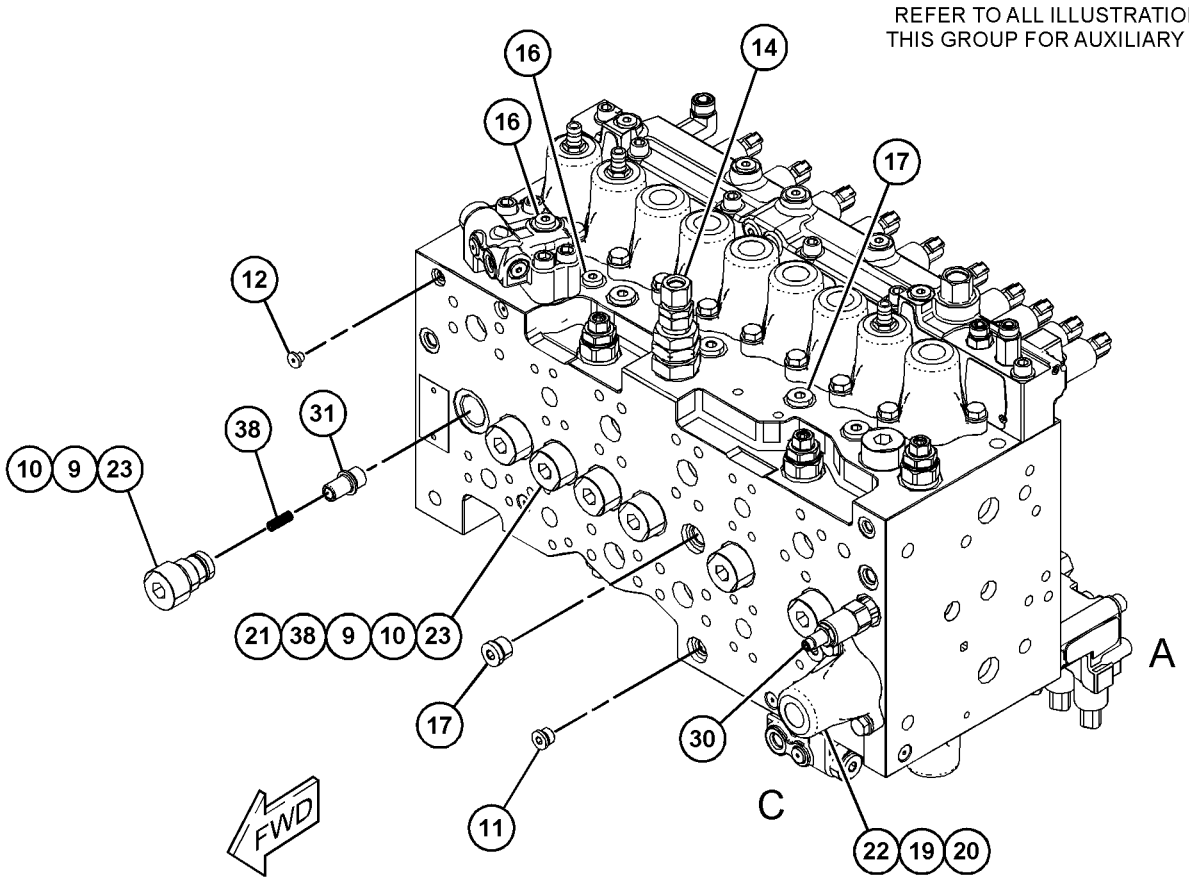

GRAPHIC #1 g06288396

515-5784 **VALVE GP-MAIN CONTROL (**contd.**)** **i07526650**

REFER TO ALL ILLUSTRATIONS OF
THIS GROUP FOR AUXILIARY VIEWS

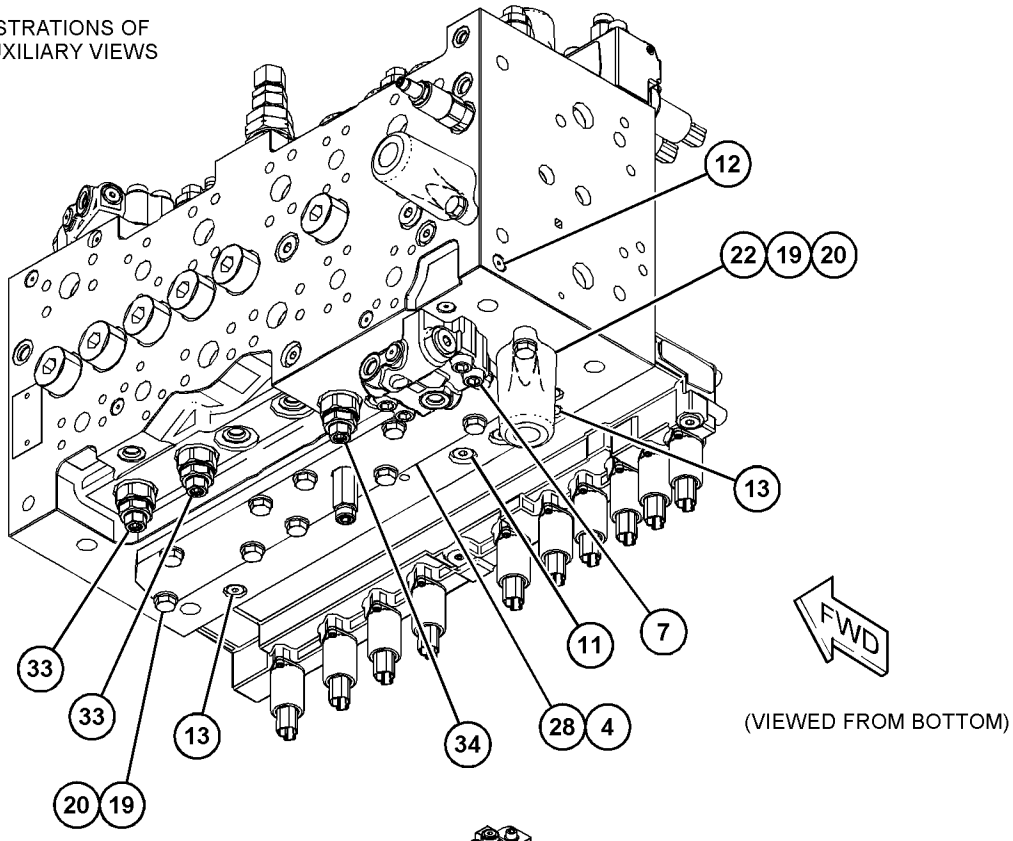

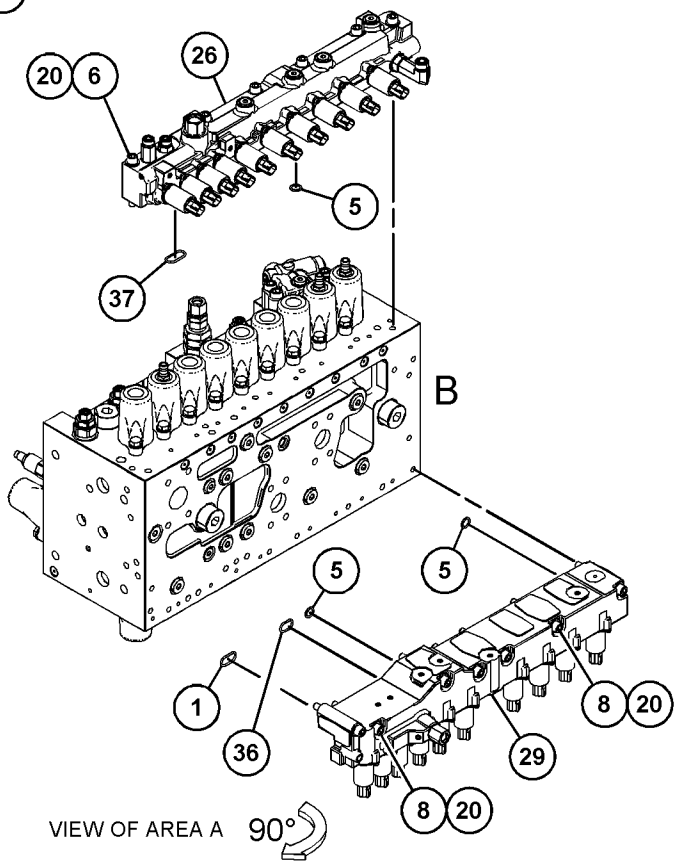

GRAPHIC #2

g06288397

515-5784 **VALVE GP-MAIN CONTROL (**contd.**)** **i07526650**

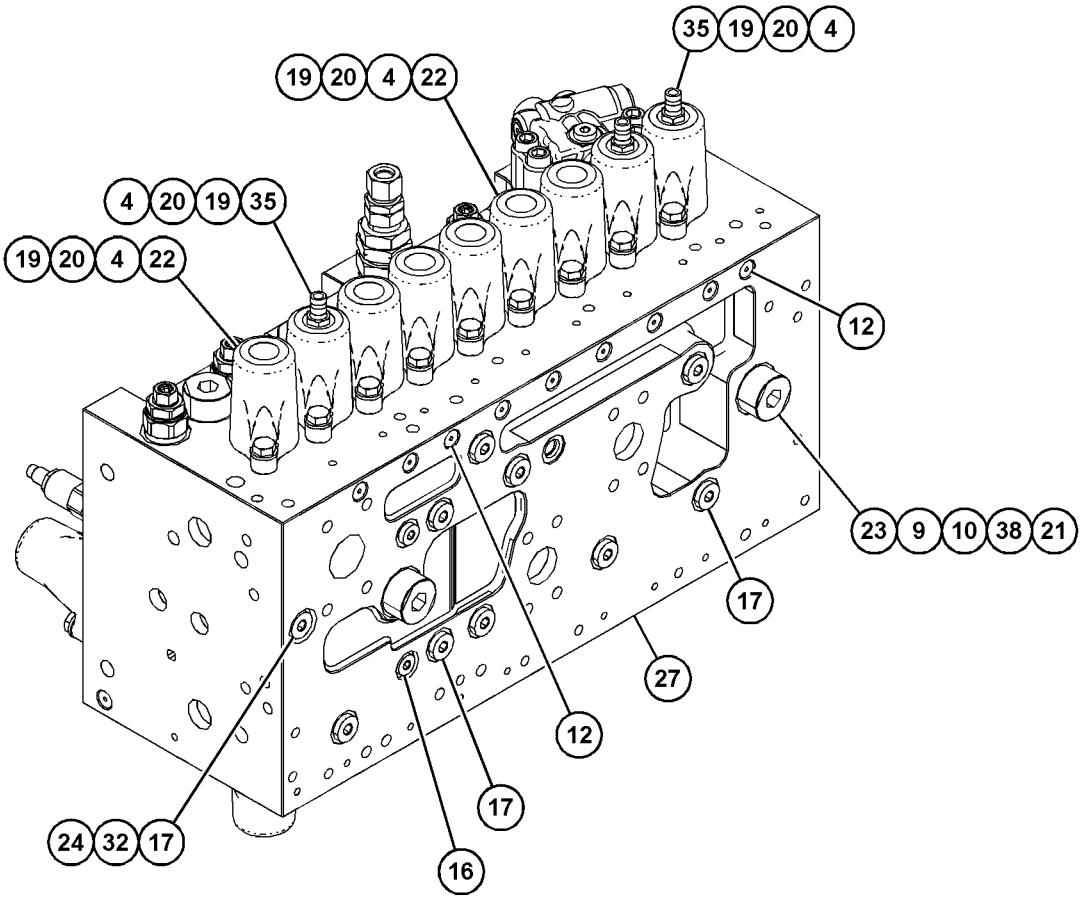

VIEW OF AREA B

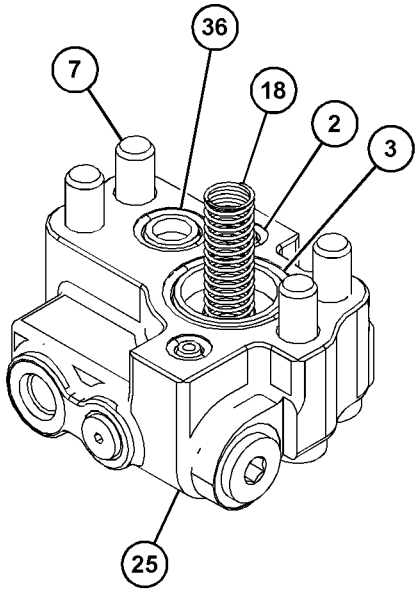

VIEW OF AREA C
(PARTS REMOVED FOR CLARITY)

GRAPHIC #3 <END> g06288398

389-2407 VALVE GP-MANUAL–AUXILIARY, SHUTOFF

S/N: SP91-UP

PART OF 321-0140, 356-8075 LINES GP-AUXILIARY HYDRAULIC

SMCS-1329, 5001, 5130

i06920775

NOTE	REF NO	GRAPHIC REF	PART NUMBER	QTY	PART NAME 1 2 3 4 5 6 (PRODUCT LEVEL)	SEE PAGE
	1	1	**302-9466**	1	HANDLE	
	2	1	**3J-1907**	1	SEAL-O-RING	
	3	1	**360-3692**	1	PLUG	

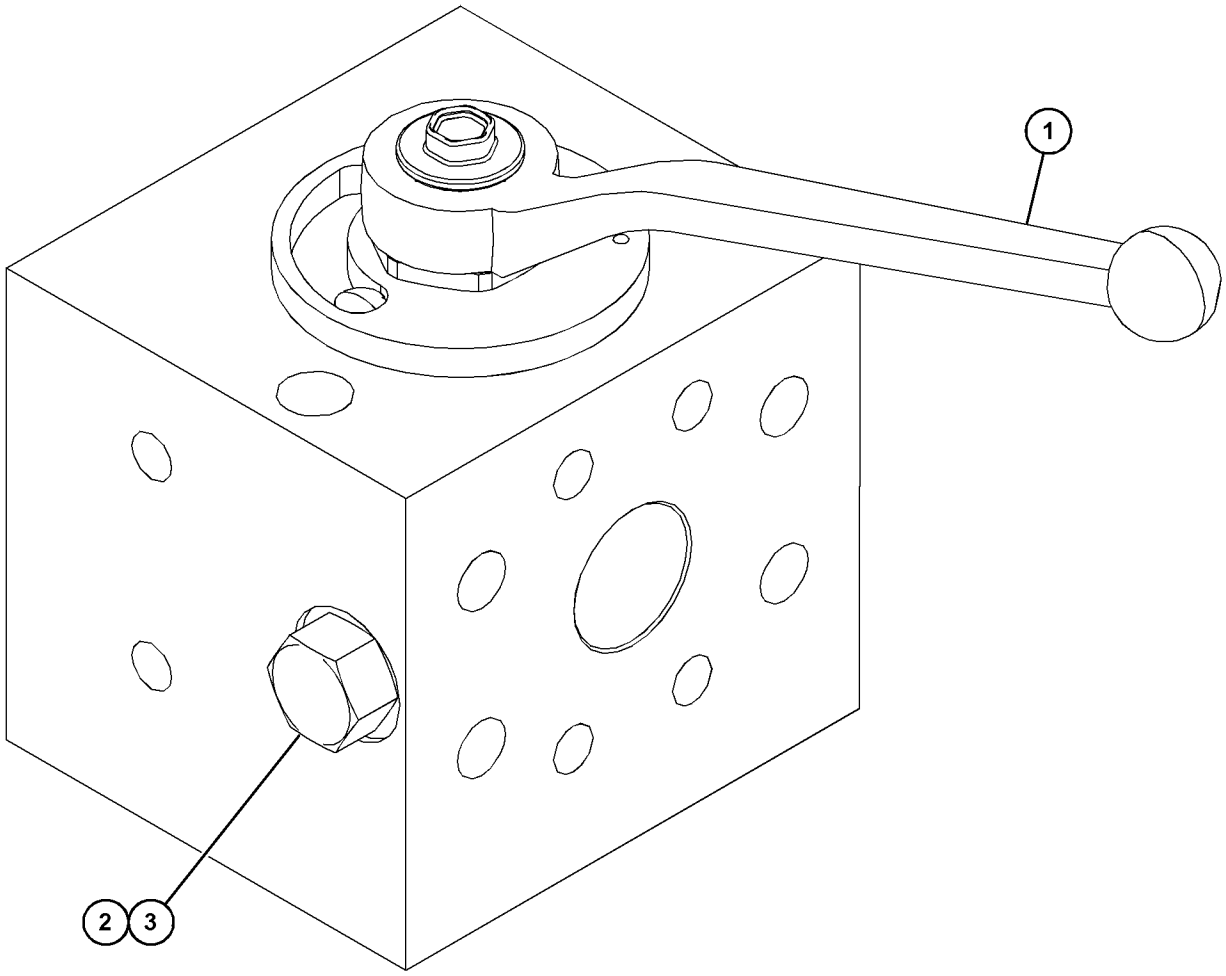

GRAPHIC #1 <END> g03878383

230-9944 VALVE GP-MODULATING

S/N: NTB1-UP

PART OF 524-5332 LINES GP-TURBOCHARGER AIR

SMCS-1940 **i07499265**

NOTE	REF NO	GRAPHIC REF	PART NUMBER	QTY	PART NAME 1 2 3 4 5 6 (PRODUCT LEVEL)	SEE PAGE
	1	1	**323-9533**	1	COIL AS (12-VOLT)	
					(IMPROVED SALT SPRAY LIFE & FOR ROHS COMPATIBILITY)	
	2	1	**164-2108**	1	WASHER (13.03X25.4X2.38-MM THK)	
	3	1	**218-2373**	1	NUT (1/2-28-THD)	
	4	1	**9X-7737**	1	SEAL-O-RING	
	5	1	**6V-4589**	1	SEAL-O-RING	

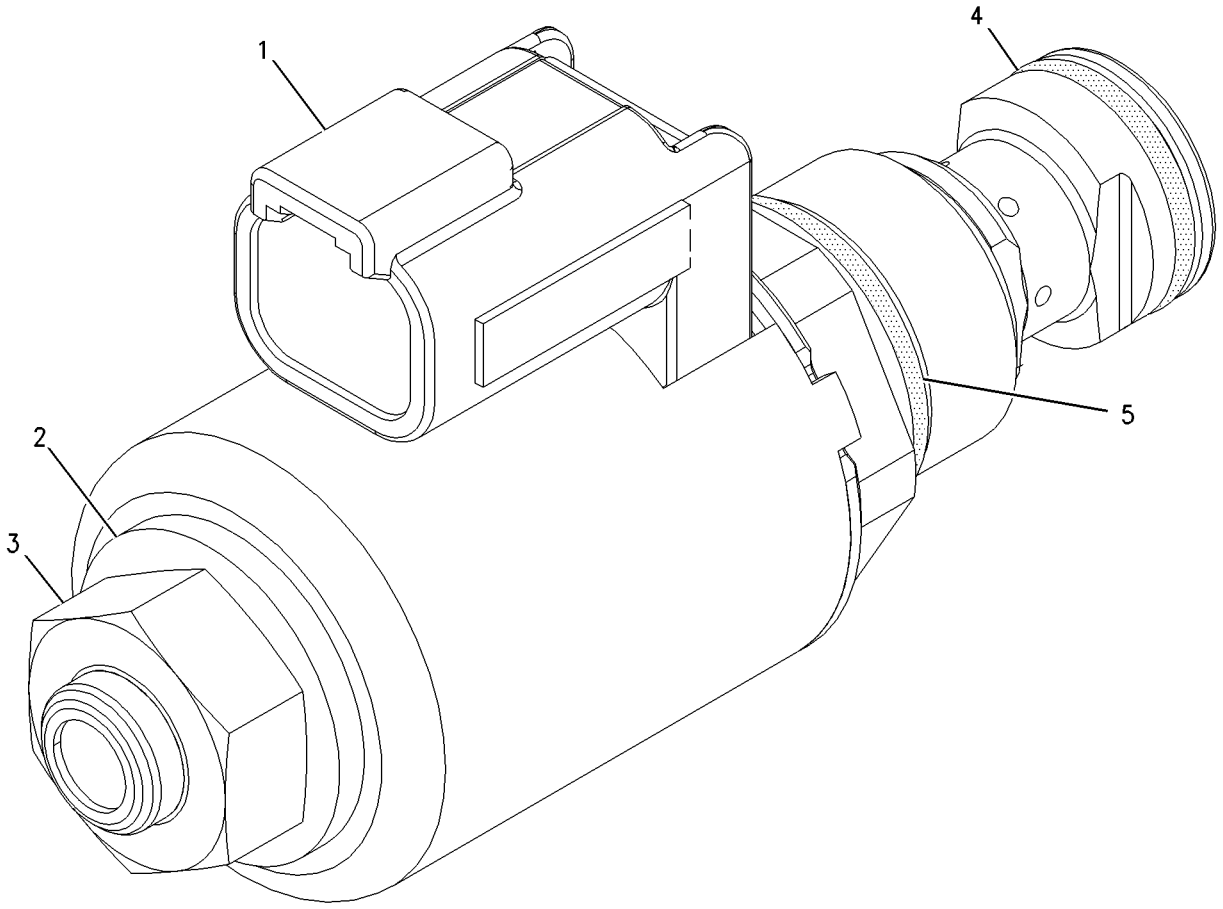

GRAPHIC #1 <END> g00912000

323-7464 VALVE GP-RELIEF—PILOT OPERATED

S/N: SP91-UP

PART OF 515-5784 VALVE GP-MAIN CONTROL

SMCS-5069, 5117 **i07715176**

NOTE	REF NO	GRAPHIC REF	PART NUMBER	QTY	PART NAME 1 2 3 4 5 6 (PRODUCT LEVEL)	SEE PAGE
	1	1	**4I-3510**	1	SPRING	
	2	1	**7F-2050**	1	LOCKNUT (3/4-16-THD)	
	3	1	**6I-6795**	1	SPRING	
	4	1	**095-1786**	1	RING-BACKUP	
	5	1	**6V-8218**	1	SEAL-O-RING	
	6	1	**6V-8978**	1	SEAL-O-RING	
	7	1	*480-2133*	1	VALVE AS-CONTROL	
	7A	1	**119-5398**	1	SCREEN-FILTER (RELIEF VALVE)	
	8	1	**352-6864**	1	SEAT-VALVE	
	9	1	**171-0037**	1	VALVE	
	10	1	**259-7848**	1	SLEEVE	
	11	1	**259-7849**	1	PISTON	
	12	1	**259-7850**	1	SLEEVE	
	13	1	**259-7851**	1	ADJUSTER	
M	14	1	**287-2499**	1	NUT (M24X2-THD)	
	15	1	**3D-2824**	1	SEAL-O-RING	
	16	1	**095-1579**	1	SEAL-O-RING	
	17	1	**095-1584**	1	SEAL-O-RING	
	18	1	**095-1587**	1	SEAL-O-RING	
	19	1	**095-1590**	1	SEAL-O-RING	
					PARTS SHOWN IN GRAPHIC(S) WITHOUT A REFERENCE NUMBER ARE NOT SERVICED SEPARATELY	

M - METRIC PART

323-7464 **VALVE GP-RELIEF (**contd.**)** **i07715176**

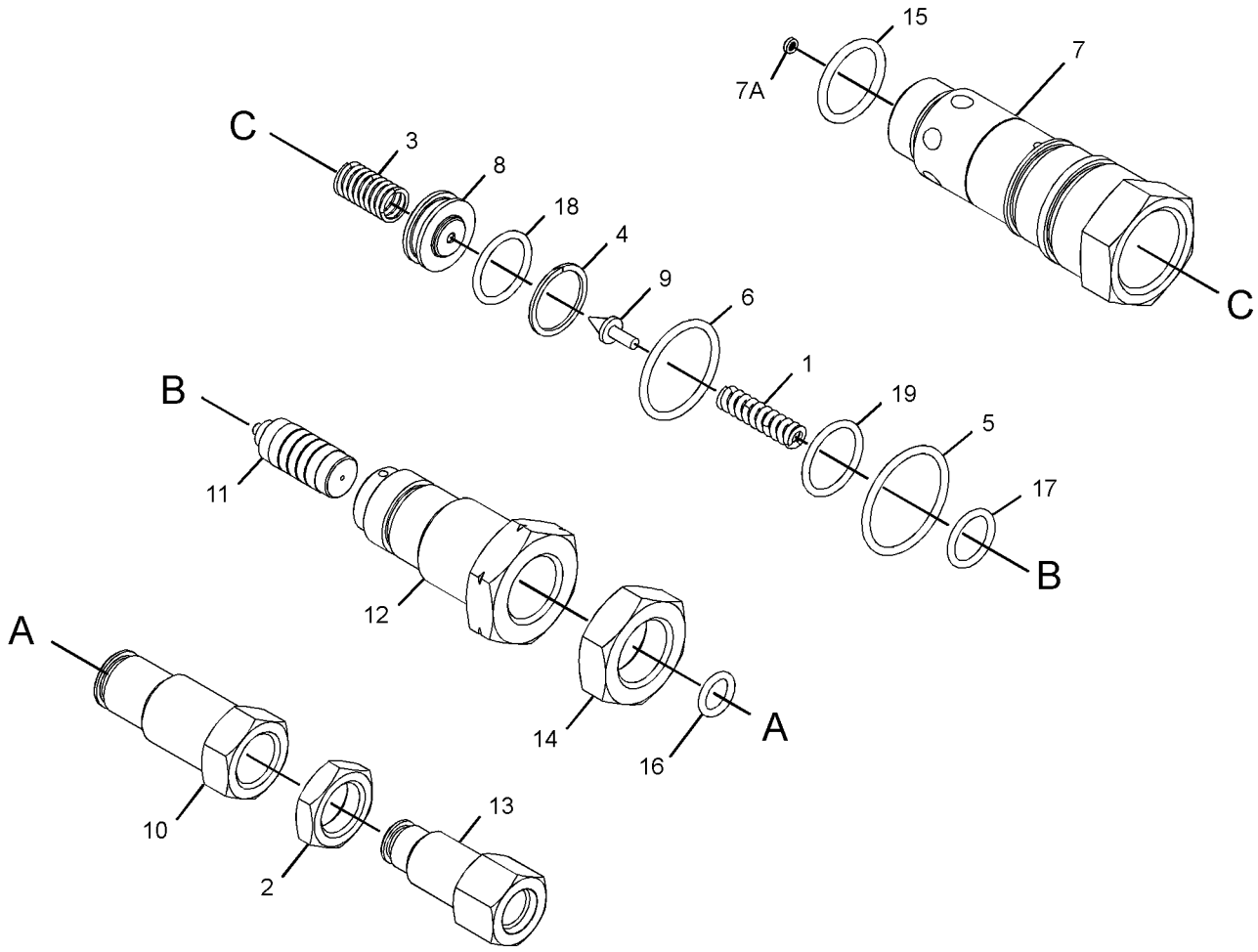

GRAPHIC #1 <END> g06182909

323-7791 VALVE GP-RELIEF

S/N: SP91-UP

PART OF 503-9774 LINES GP-BOOM CYLINDER

SMCS-5069, 5117 **i07527257**

NOTE	REF NO	GRAPHIC REF	PART NUMBER	QTY	PART NAME 1 2 3 4 5 6 (PRODUCT LEVEL)	SEE PAGE
	1	1	**197-0758**	2	SCREW	
Y	2	1	**335-0332**	1	VALVE GP-RELIEF (BOOM PRESSURE CONTROL)	587

Y - SEPARATE ILLUSTRATION

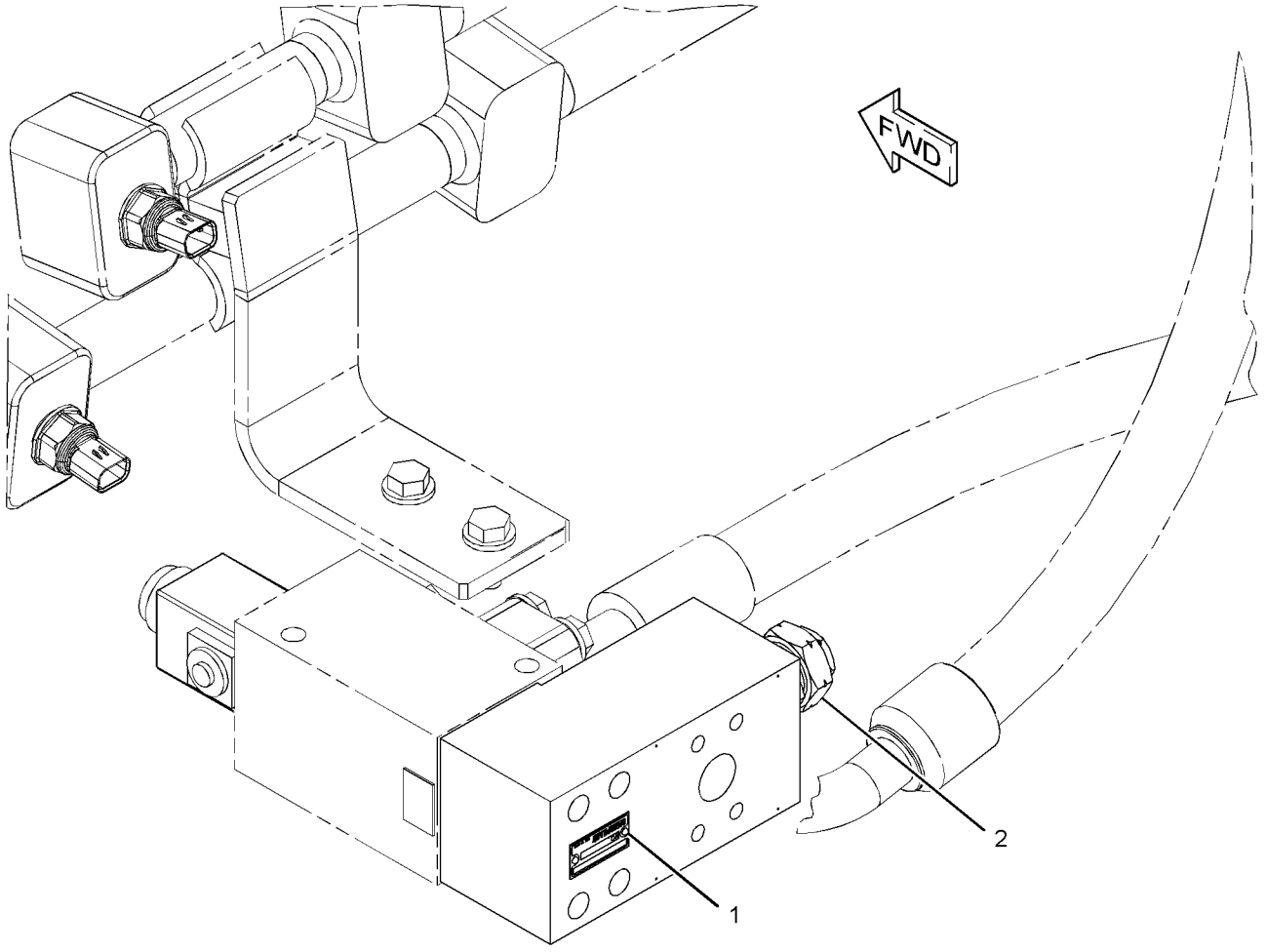

GRAPHIC #1 <END> g02409805

335-0332 VALVE GP-RELIEF

S/N: SP91-UP

PART OF 323-7791 VALVE GP-RELIEF

SMCS-5069, 5117

i07805047

NOTE	REF NO	GRAPHIC REF	PART NUMBER	QTY	PART NAME 1 2 3 4 5 6 (PRODUCT LEVEL)	SEE PAGE
	1	1	**4I-3510**	1	SPRING	
	2	1	**6I-6795**	1	SPRING	
	3	1	**095-1786**	1	RING-BACKUP	
	4	1	**352-6864**	1	SEAT-VALVE	
	5	1	**171-0035**	1	HOLDER	
	6	1	**171-0036**	1	ADJUSTER	
	7	1	**171-0037**	1	VALVE	
	8	1	**7F-2050**	1	LOCKNUT (3/4-16-THD)	
	9	1	**6V-8978**	1	SEAL-O-RING	
	10	1	**095-1579**	1	SEAL-O-RING	
	11	1	**095-1587**	1	SEAL-O-RING	
	12	1	**095-1590**	1	SEAL-O-RING	
	13	1	**3D-2824**	1	SEAL-O-RING	
	14	1	**6V-8218**	1	SEAL-O-RING	

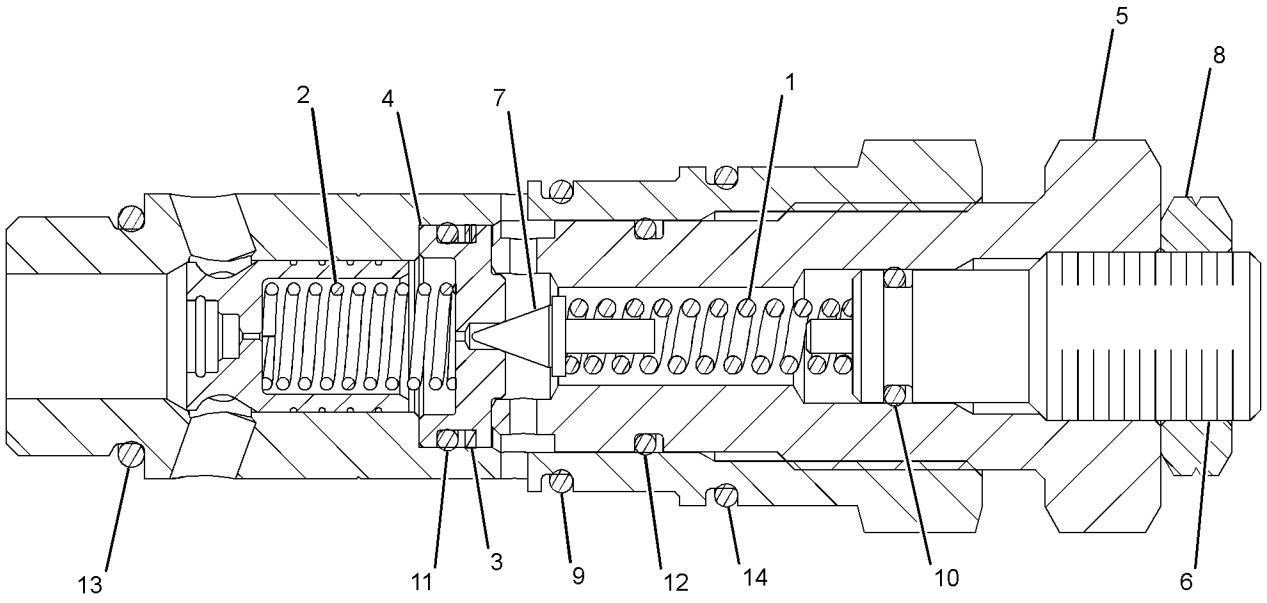

GRAPHIC #1

<END>

g01513501

352-7123 VALVE GP-RELIEF–LINE

S/N: SP91-UP

PART OF 555-8147 VALVE GP-CONTROL

SMCS-5069, 5117

i04485273

NOTE	REF NO	GRAPHIC REF	PART NUMBER	QTY	PART NAME 1 2 3 4 5 6 (PRODUCT LEVEL)	SEE PAGE
	1	1	**095-1578**	1	SEAL-O-RING	
	2	1	**103-8252**	2	RING	
	3	1	**103-8253**	2	RING	
	4	1	**103-8254**	1	SEAL-O-RING	
	5	1	**103-8255**	1	SEAL-O-RING	
	6	1	**3D-2824**	2	SEAL-O-RING	
					PARTS SHOWN IN GRAPHIC(S) WITHOUT A REFERENCE NUMBER ARE NOT SERVICED SEPARATELY	

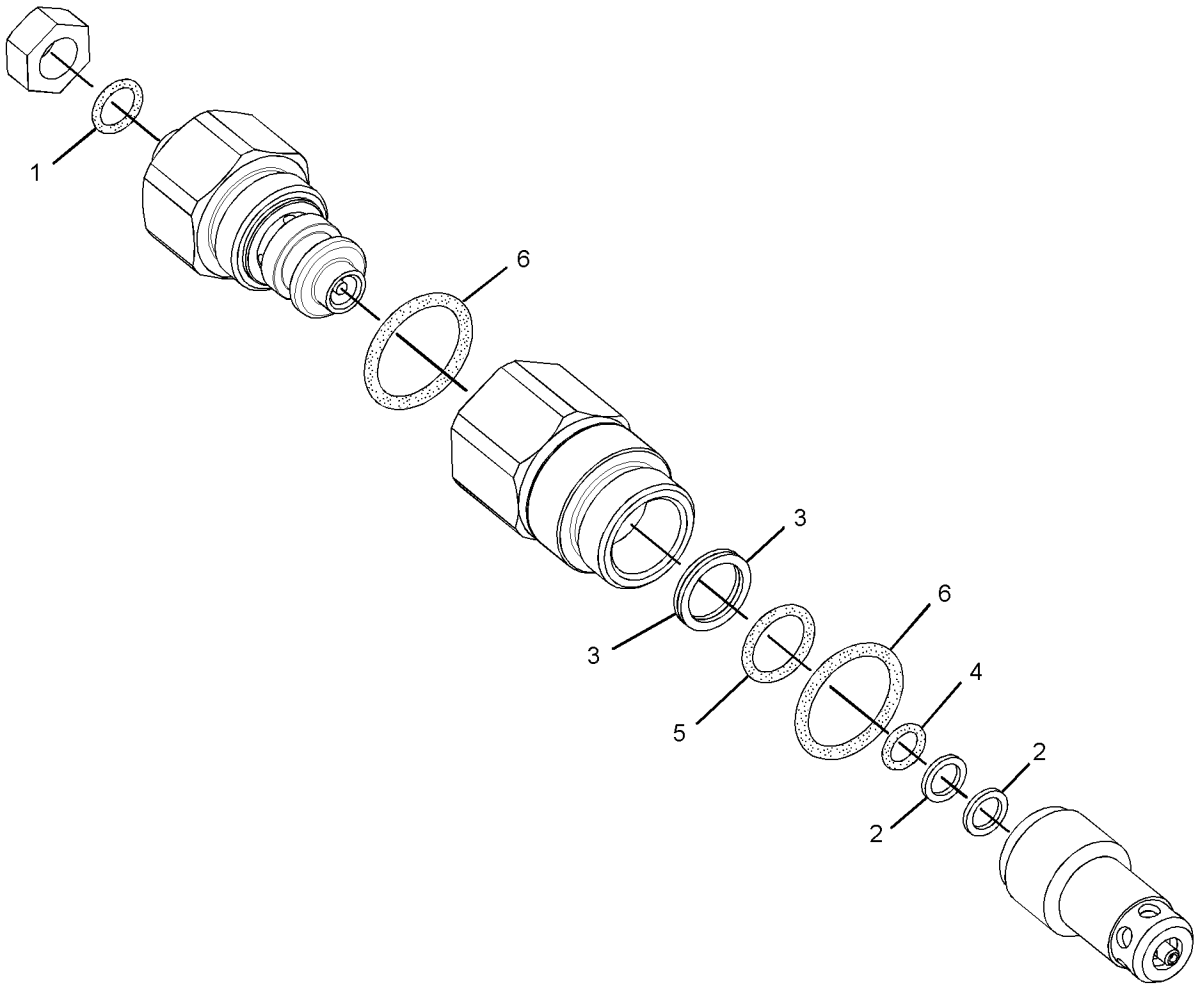

GRAPHIC #1 <END> g02217774

515-2709 VALVE GP-SOLENOID & MANIFOLD

S/N: SP91-UP

PART OF 515-5784 VALVE GP-MAIN CONTROL

SMCS-5264, 5479 **i07356654**

NOTE	REF NO	GRAPHIC REF	PART NUMBER	QTY	PART NAME 1 2 3 4 5 6 (PRODUCT LEVEL)	SEE PAGE
	1	1	**2M-9780**	1	SEAL-O-RING	
	2	1	**526-1837**	1	ADAPTER	
M	3	1	**8T-3998**	20	BOLT (M4X0.7X12-MM)	
	4	1	*148-8336*	1	CONNECTOR AS	
		1	**3J-1907**	1	SEAL-O-RING	
		1	**6V-8397**	1	SEAL-O-RING	
		1	**6V-8636**	1	CONNECTOR	
	5	1	*148-8338*	1	CONNECTOR AS	
		1	**3J-1907**	1	SEAL-O-RING	
		1	**6V-8397**	1	SEAL-O-RING	
		1	**8T-0075**	1	CONNECTOR	
	6	1	*148-8346*	1	ELBOW AS	
		1	**3K-0360**	1	SEAL-O-RING	
		1	**6V-8398**	1	SEAL-O-RING	
		1	**8T-1686**	1	ADAPTER-ELBOW	
	7	1	*162-0177*	8	PLUG AS	
					(EACH INCLUDES)	
		1	**3J-1907**	1	SEAL-O-RING	
		1	**9S-8004**	1	PLUG (9/16-18-THD)	
	8	1	**491-0908**	3	VALVE GP-SOLENOID (24-VOLT)	
	9	1	**485-5747**	7	VALVE GP-SOLENOID (12-VOLT)	
					(EACH VALVE GP-SOLENOID INCLUDES)	
		1	**509-8010**	1	SEAL-O-RING	
		1	**509-8011**	1	SEAL-O-RING	
		1	**509-8012**	1	SEAL-O-RING	

M - METRIC PART

515-2709 **VALVE GP-SOLENOID & MANIFOLD (**contd.**)** **i07356654**

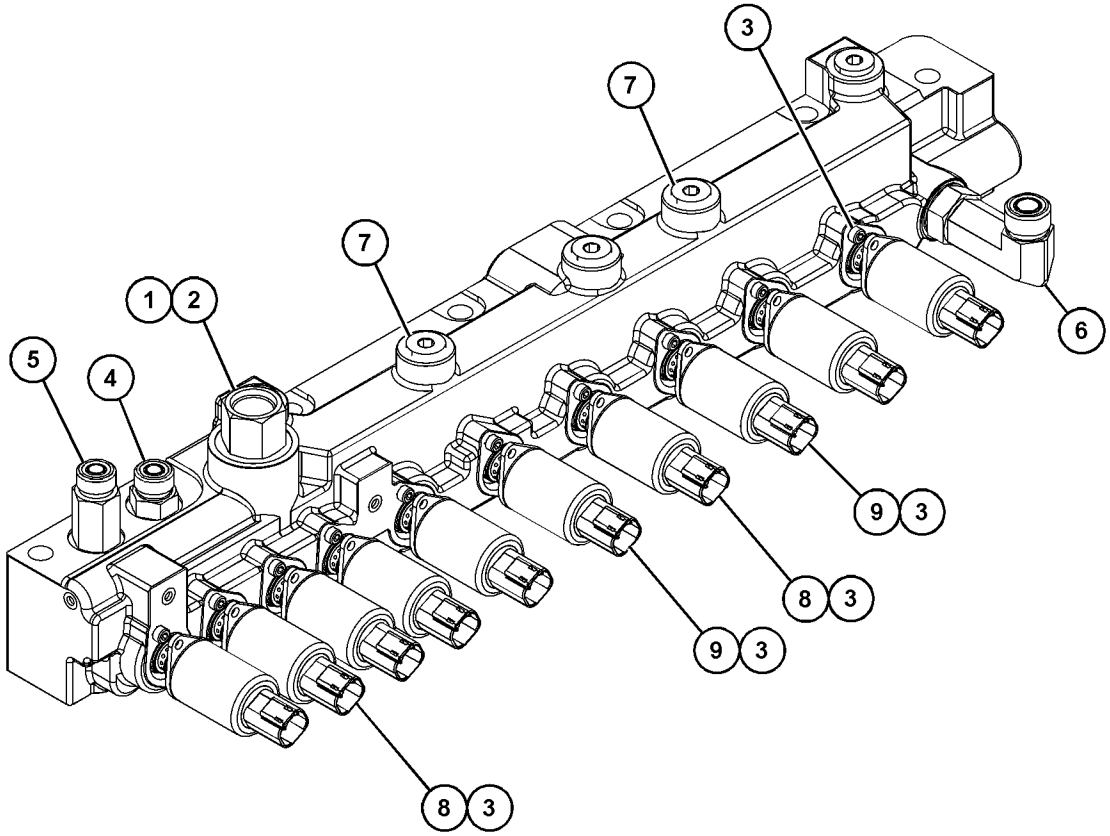

GRAPHIC #1 <END> g06235618

529-0429 VALVE GP-SOLENOID & MANIFOLD—LOWER

S/N: SP91-UP

PART OF 515-5784 VALVE GP-MAIN CONTROL

SMCS-5264, 5479 **i07526793**

NOTE	REF NO	GRAPHIC REF	PART NUMBER	QTY	PART NAME 1 2 3 4 5 6 (PRODUCT LEVEL)	SEE PAGE
J	1	1	**491-0908**	1	VALVE GP-SOLENOID (24-VOLT) (HYDRAULIC LOCKOUT)	
M	2	1	**8T-3998**	20	BOLT (M4X0.7X12-MM)	
	3	1	*148-8310*	1	ADAPTER AS	
		1	**3J-1907**	1	SEAL-O-RING	
		1	**8T-0151**	1	ADAPTER	
	4	1	*162-0177*	1	PLUG AS	
		1	**3J-1907**	1	SEAL-O-RING	
		1	**9S-8004**	1	PLUG (9/16-18-THD)	
J	5	1	**485-5747**	1	VALVE GP-SOLENOID (12-VOLT) (SWING PRIORITY)	
J	5A	1	**485-5747**	1	VALVE GP-SOLENOID (12-VOLT) (STICK OUT)	
J	5B	1	**485-5747**	1	VALVE GP-SOLENOID (12-VOLT) (STICK IN)	
J	5C	1	**485-5747**	1	VALVE GP-SOLENOID (12-VOLT) (SWING RIGHT)	
J	5D	1	**485-5747**	1	VALVE GP-SOLENOID (12-VOLT) (TRAVEL, LH FRONT)	
J	5E	1	**485-5747**	1	VALVE GP-SOLENOID (12-VOLT) (TRAVEL, RH FRONT)	
J	5F	1	**485-5747**	1	VALVE GP-SOLENOID (12-VOLT) (BUCKET OPEN)	
J	5G	1	**485-5747**	1	VALVE GP-SOLENOID (12-VOLT) (BOOM UP)	
J	5H	1	**485-5747**	1	VALVE GP-SOLENOID (12-VOLT) (STICK 2)	
					AVAILABLE REPAIR KIT(S):	
J			**506-1112**	1	KIT-SEAL (SOLENOID)	
					(INCLUDES SEALS)	

J - KIT MARKED J SERVICES PART(S) MARKED J
M - METRIC PART

529-0429 **VALVE GP-SOLENOID & MANIFOLD (**contd.**)** **i07526793**

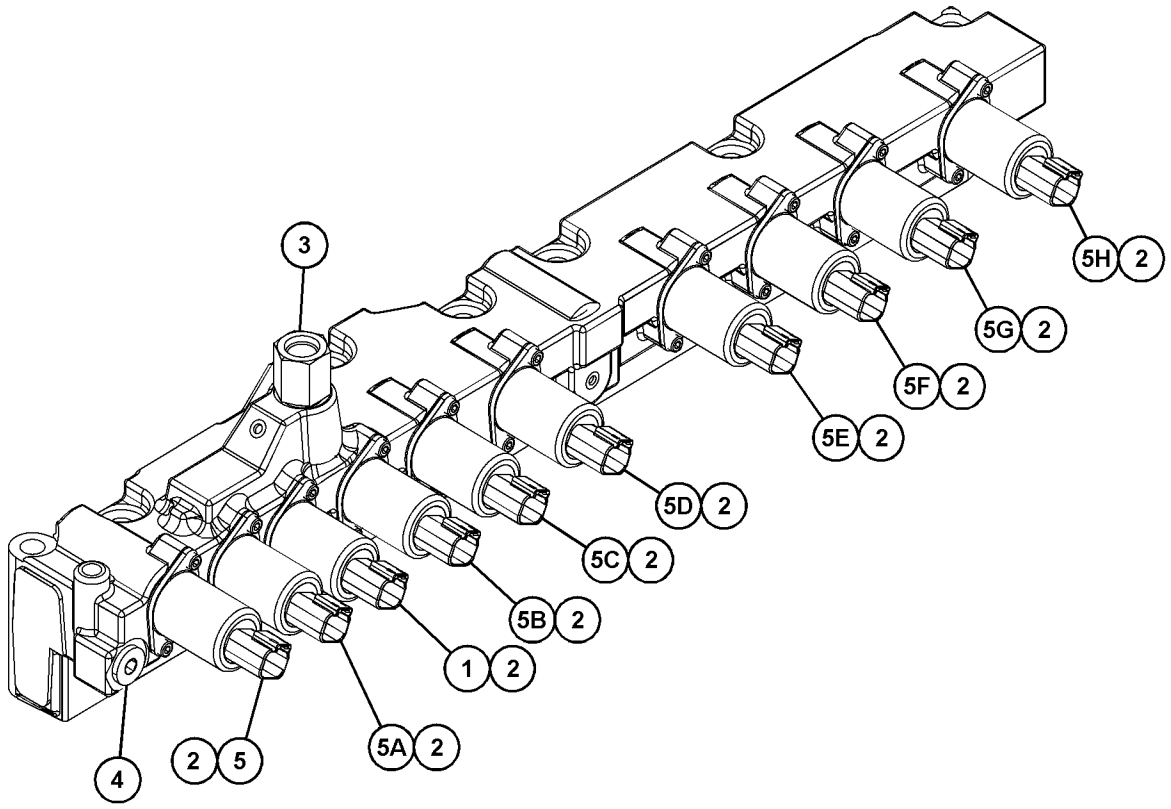

GRAPHIC #1 <END> g06282302

512-1349 BOOM AR-1 PIECE LONG

S/N: SP91-UP

SMCS-6501 **i07527817**

NOTE	PART NUMBER	QTY	PART NAME 1 2 3 4 5 6 (PRODUCT LEVEL)	SEE PAGE
Y	*496-2832*	1	BOOM GP (GRADE CONTROL)	594
Y	*521-1524*	1	FILM GP (BOOM)	745
Y	*503-9793*	1	LINES GP-BOOM (REACH BOOM)	461
Y	*192-8320*	1	LINES GP-GREASE (BOOM)	598

Y - SEPARATE ILLUSTRATION

<END>

512-1348 BOOM AR-1 PIECE SHORT

S/N: SP91-UP

SMCS-6501 **i07528608**

NOTE	PART NUMBER	QTY	PART NAME 1 2 3 4 5 6 (PRODUCT LEVEL)	SEE PAGE
Y	*496-2844*	1	BOOM GP (GRADE CONTROL)	596
Y	*521-1524*	1	FILM GP (BOOM)	745
Y	*503-9794*	1	LINES GP-BOOM	463
Y	*201-2816*	1	LINES GP-GREASE (BOOM)	600

Y - SEPARATE ILLUSTRATION

<END>

496-2832 BOOM GP—GRADE CONTROL

S/N: SP91-UP

PART OF 512-1349 BOOM AR-1 PIECE LONG

SMCS-6301, 6302, 6460, 6501, 6516, 6521, 6535, 6536 **i07527820**

NOTE	REF NO	GRAPHIC REF	PART NUMBER	QTY	PART NAME 1 2 3 4 5 6 (PRODUCT LEVEL)	SEE PAGE
	1	1	**166-1498**	2	SEAL-LIP TYPE	
	2	1	**4I-4978**	2	SPACER (113X150X8-MM THK)	
	3	1	**4I-5005**	2	PLATE	
B	4	1	**093-0074**	1	SHIM (1-MM THK)	
	5	1	**093-0349**	1	WASHER (22X60X6-MM THK)	
	6	1	**093-0366**	1	SPACER (93X130X12-MM THK)	
B	7	1	**147-3957**	1	SHIM (0.5-MM THK)	
	8	1	**166-1489**	2	SHIM (2-MM THK)	
	9	1	**166-1490**	2	SHIM (2-MM THK)	
	10	1	**192-8321**	1	PIN	
	11	1	**324-0938**	1	PLATE	
	12	1	**359-5743**	1	PIN AS	
M	13	1	**447-1709**	2	BOLT (M16X2X45-MM)	
	14	1	**451-2175**	8	WASHER-HARD (17.5X30X3.5-MM THK)	
	15	1	**451-2176**	1	WASHER-HARD (22X35X3.5-MM THK)	
M	16	1	**451-2180**	6	BOLT (M16X2X35-MM)	
M	17	1	**453-2844**	1	BOLT (M20X2.5X30-MM)	
	18	1	**496-2833**	1	BOOM & BEARING AS	
	18A	1	**504-7628**	2	BEARING-SLEEVE	
	19	1	**504-7576**	1	PIN AS	

B - USE AS REQUIRED
M - METRIC PART

496-2832 **BOOM GP** (contd.) **i07527820**

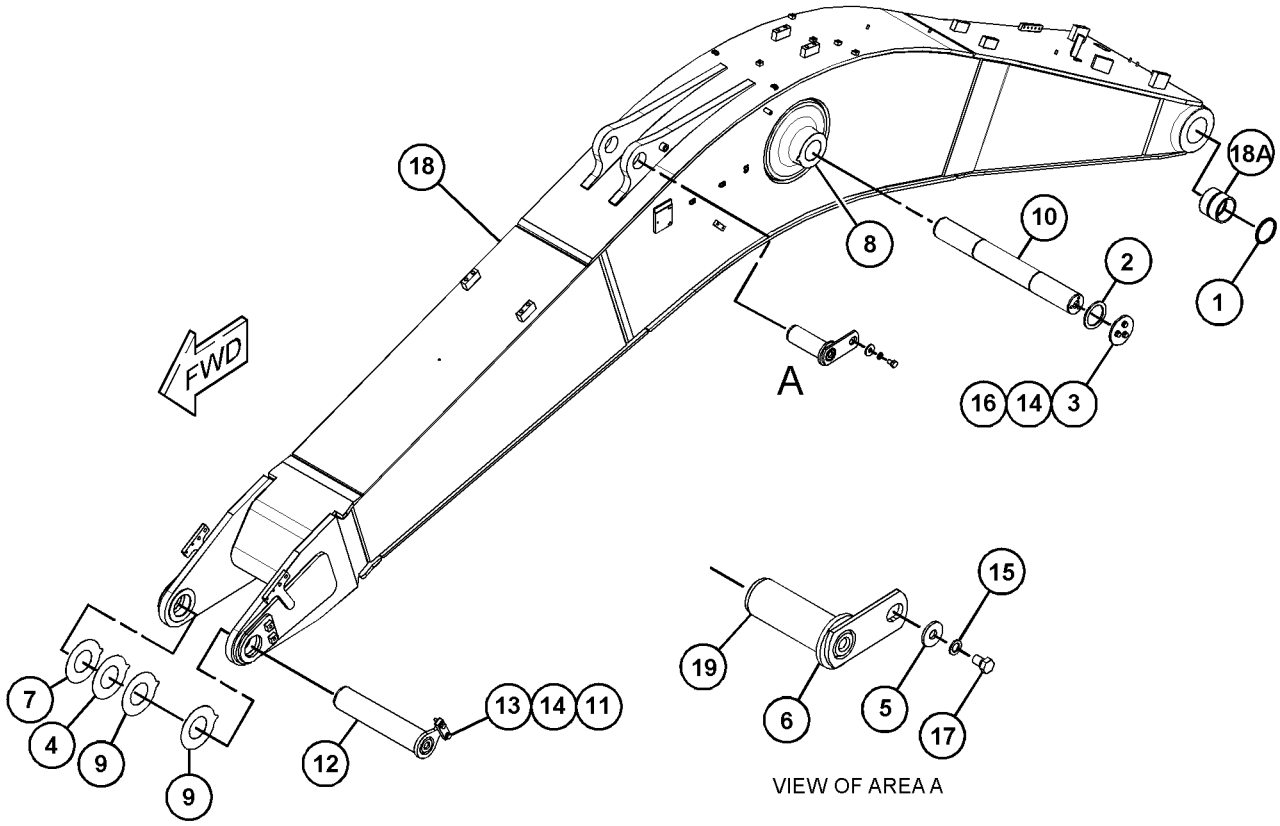

GRAPHIC #1 <END> g06282930

496-2844 BOOM GP—GRADE CONTROL

S/N: SP91-UP

6.2-M (20.3-FT)

PART OF 512-1348 BOOM AR-1 PIECE SHORT

SMCS-6301, 6302, 6460, 6501, 6516, 6521, 6535, 6536 **i07528614**

NOTE	REF NO	GRAPHIC REF	PART NUMBER	QTY	PART NAME 1 2 3 4 5 6 (PRODUCT LEVEL)	SEE PAGE
	1	1	**166-1498**	2	SEAL-LIP TYPE	
	2	1	**4I-4978**	2	SPACER (113X150X8-MM THK)	
	3	1	**4I-5005**	2	PLATE	
B	4	1	**093-0074**	1	SHIM (1-MM THK)	
	5	1	**093-0349**	1	WASHER (22X60X6-MM THK)	
	6	1	**093-0366**	1	SPACER (93X130X12-MM THK)	
B	7	1	**147-3957**	1	SHIM (0.5-MM THK)	
	8	1	**166-1489**	2	SHIM (2-MM THK)	
	9	1	**166-1490**	2	SHIM (2-MM THK)	
	10	1	**192-8321**	1	PIN	
	11	1	**324-0938**	1	PLATE	
M	12	1	**447-1709**	2	BOLT (M16X2X45-MM)	
	13	1	**451-2175**	8	WASHER-HARD (17.5X30X3.5-MM THK)	
	14	1	**451-2176**	1	WASHER-HARD (22X35X3.5-MM THK)	
M	15	1	**451-2180**	6	BOLT (M16X2X35-MM)	
M	16	1	**453-2844**	1	BOLT (M20X2.5X30-MM)	
	17	1	**489-6694**	1	PIN AS	
	18	1	**496-2845**	1	BOOM & BEARING AS	
	18A	1	**504-7628**	2	BEARING-SLEEVE	
	19	1	**504-7576**	1	PIN AS	

B - USE AS REQUIRED
M - METRIC PART

496-2844 **BOOM GP** (contd.) **i07528614**

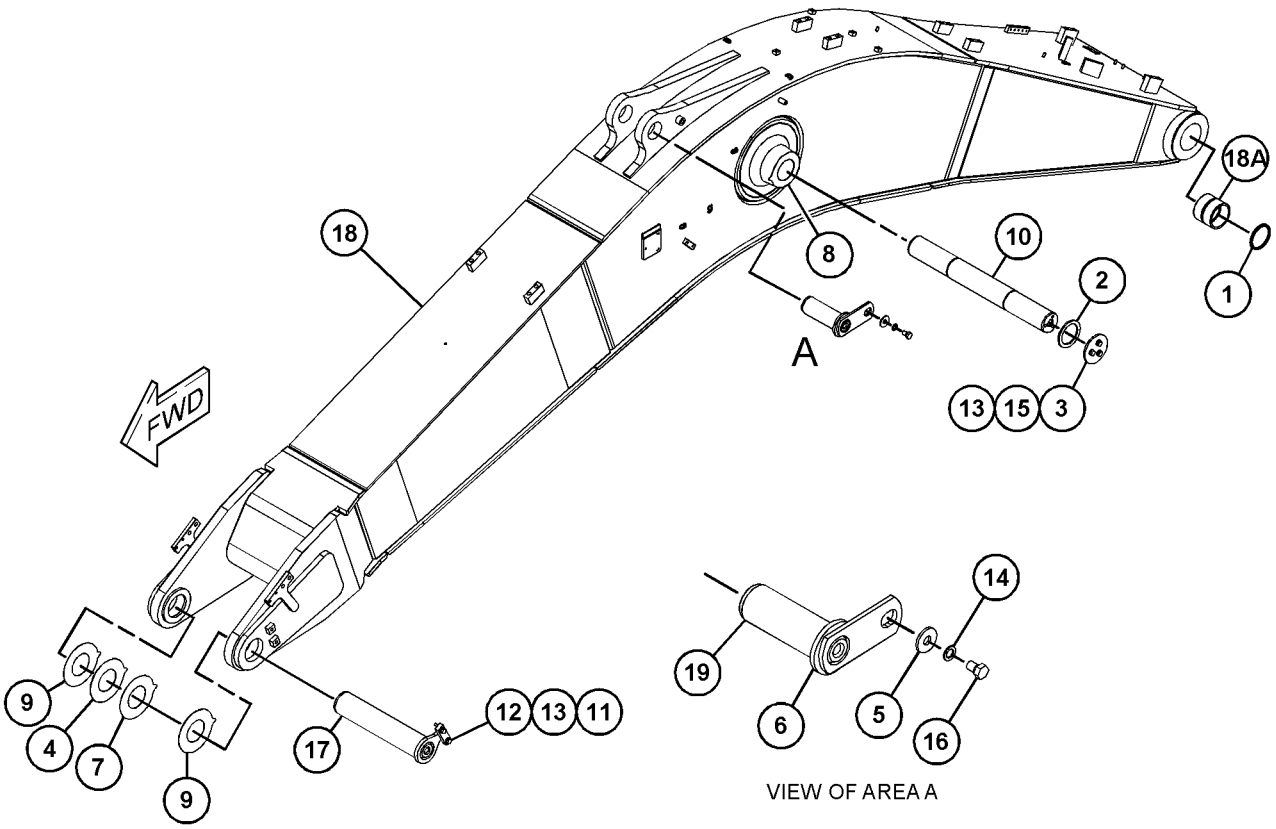

GRAPHIC #1 <END> g06282887

192-8320 LINES GP-GREASE—LONG BOOM

S/N: SP91-UP

PART OF 512-1349 BOOM AR-1 PIECE LONG

SMCS-7510 **i05411884**

NOTE	REF NO	GRAPHIC REF	PART NUMBER	QTY	PART NAME 1 2 3 4 5 6 (PRODUCT LEVEL)	SEE PAGE
	1	1	**3B-8489**	5	ADAPTER	
	2	1	**5K-9243**	2	ELBOW-FLARED	
	3	1	**134-9137**	1	HOSE AS	
	4	1	**141-3538**	1	HOSE AS	
					(EACH HOSE AS INCLUDES)	
		1	**105-6431**	1	CONNECTOR	
	5	1	**166-1579**	4	CLIP	
I	6	1	**294-1455**	1	HOSE AS	
	6A	1	**105-6431**	1	CONNECTOR	
	7	1	**212-2829**	1	TUBE AS	
	8	1	**212-2830**	1	TUBE AS	
	9	1	**033-8248**	5	CLIP (LOOP)	
	10	1	**6L-3616**	2	CONNECTOR	
	11	1	**8M-2772**	2	CLIP (LOOP)	
	12	1	**8T-4121**	11	WASHER-HARD (11X21X2.5-MM THK)	
M	13	1	**8T-4133**	6	NUT (M10X1.5-THD)	
M	14	1	**8T-4191**	5	BOLT (M10X1.5X16-MM)	

I - REFER TO HYDRAULIC INFORMATION SYSTEM
M - METRIC PART

192-8320 **LINES GP-GREASE (**contd.**)** **i05411884**

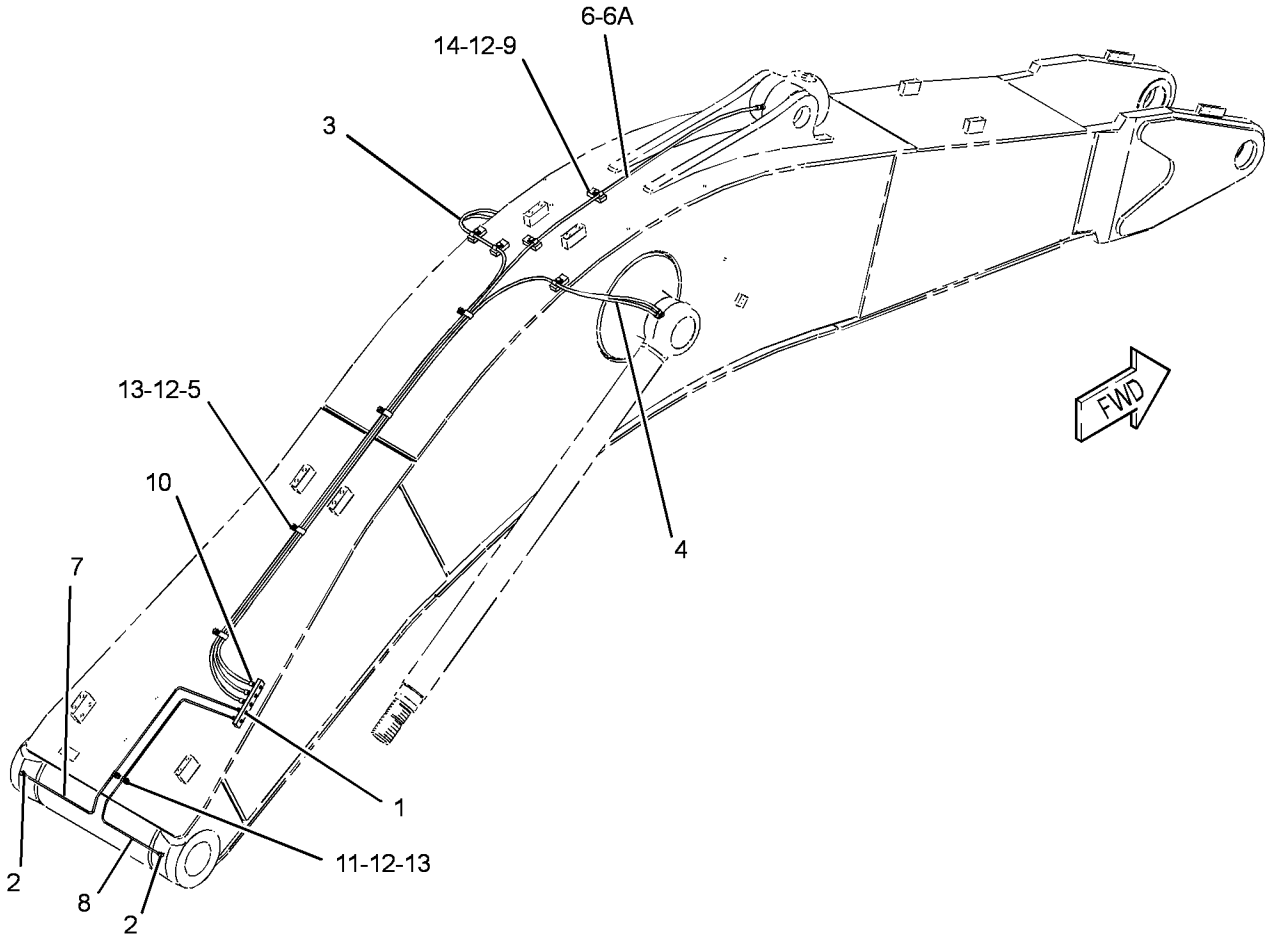

GRAPHIC #1 <END> g02728141

201-2816 LINES GP-GREASE—SHORT BOOM

S/N: SP91-UP

PART OF 512-1348 BOOM AR-1 PIECE SHORT

SMCS-7510 **i05411836**

NOTE	REF NO	GRAPHIC REF	PART NUMBER	QTY	PART NAME 1 2 3 4 5 6 (PRODUCT LEVEL)	SEE PAGE
	1	1	**3B-8489**	5	ADAPTER	
	2	1	**5K-9243**	2	ELBOW-FLARED	
	3	1	**134-9137**	1	HOSE AS	
	4	1	**141-3538**	1	HOSE AS	
I	5	1	**154-0690**	1	HOSE AS	
					(EACH HOSE AS INCLUDES)	
		1	**105-6431**	1	CONNECTOR	
	6	1	**166-1579**	3	CLIP	
	7	1	**212-2829**	1	TUBE AS	
	8	1	**212-2830**	1	TUBE AS	
	9	1	**033-8248**	4	CLIP (LOOP)	
	10	1	**6L-3616**	2	CONNECTOR	
	11	1	**8M-2772**	2	CLIP (LOOP)	
	12	1	**8T-4121**	9	WASHER-HARD (11X21X2.5-MM THK)	
M	13	1	**8T-4133**	5	NUT (M10X1.5-THD)	
M	14	1	**8T-4191**	4	BOLT (M10X1.5X16-MM)	

I - REFER TO HYDRAULIC INFORMATION SYSTEM
M - METRIC PART

201-2816 **LINES GP-GREASE (**contd.**)** **i05411836**

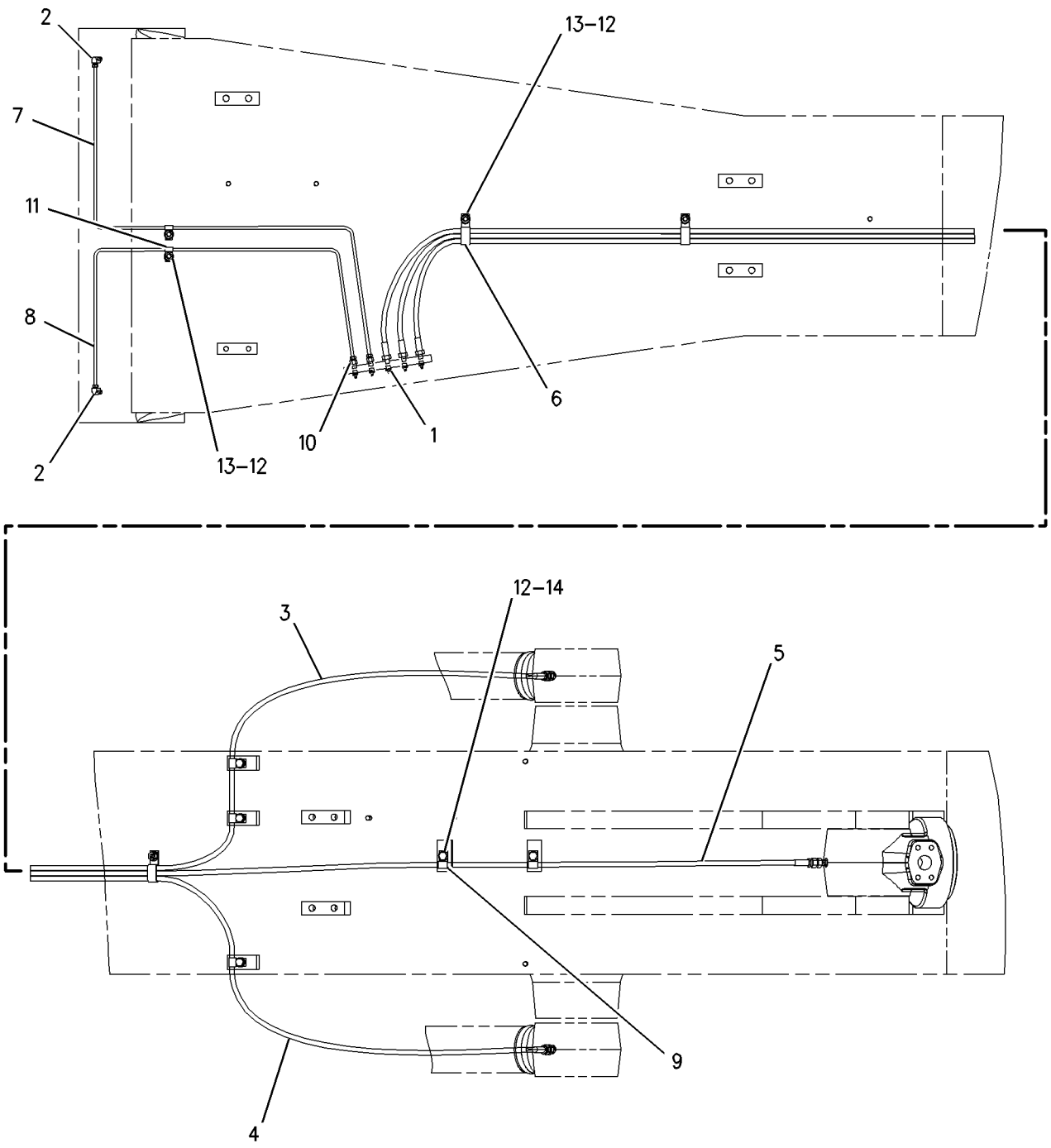

GRAPHIC #1 <END> g00885089

510-2274 LINKAGE GP-BUCKET—TB-FAMILY, WITH LIFTING EYE

S/N: SP91-UP

SMCS-6513 **i07520078**

NOTE	REF NO	GRAPHIC REF	PART NUMBER	QTY	PART NAME 1 2 3 4 5 6 (PRODUCT LEVEL)	SEE PAGE
	1	1	**3B-8489**	4	ADAPTER	
	2	1	**5B-0651**	1	FITTING-STRAIGHT	
	3	1	**166-1496**	6	SEAL-LIP TYPE	
	4	1	**235-7626**	1	LINK AS	
	5	1	**235-7636**	1	PIN AS	
	6	1	**235-7642**	1	PIN AS	
	7	1	**251-2652**	1	LINK & BEARING AS	
	7A	1	**462-2006**	2	BUSHING	
	7B	1	**462-2008**	2	BUSHING	
M	8	1	**447-1707**	6	BOLT (M16X2X60-MM)	
	9	1	**451-2177**	2	WASHER-HARD (26X44X4-MM THK)	
M	10	1	**453-2854**	2	BOLT (M24X3X50-MM)	
	11	1	**453-5032**	6	WASHER-HARD (17.5X32X8-MM THK)	
	12	1	**490-1046**	1	PLATE	
	13	1	**490-1047**	1	PLATE	
	14	1	**510-2275**	1	LINK	
	15	1	**510-2276**	1	PIN AS	
	16	1	**510-2278**	1	PIN AS	
	17	1	**510-2280**	1	SPACER (102X190X10-MM THK)	
	18	1	**510-2281**	1	SPACER (102X190X10-MM THK)	
	19	1	**201-2771**	2	WASHER (26X90X8-MM THK)	
	20	1	**367-8468**	2	SEAL-O-RING	
	21	1	**367-8470**	2	SEAL-O-RING	

M - METRIC PART

510-2274 **LINKAGE GP-BUCKET (**contd.**)** **i07520078**

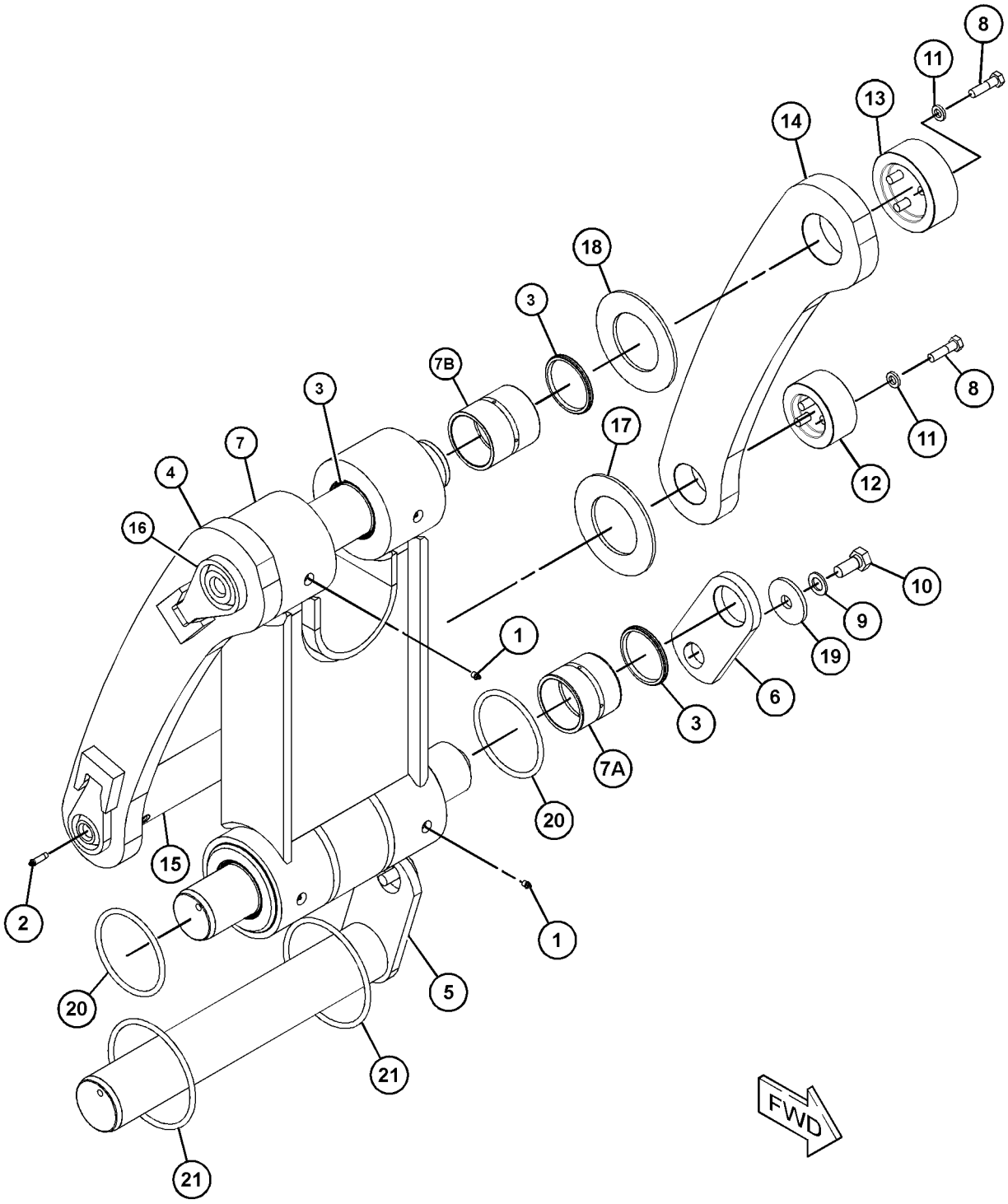

GRAPHIC #1 <END> g06123017

521-8024 LINKAGE GP-BUCKET—DB-FAMILY, WITH LIFTING EYE

S/N: SP91-UP

SMCS-6513 **i07520379**

NOTE	REF NO	GRAPHIC REF	PART NUMBER	QTY	PART NAME 1 2 3 4 5 6 (PRODUCT LEVEL)	SEE PAGE
	1	1	**3B-8489**	5	ADAPTER	
	2	1	**093-0349**	1	WASHER (22X60X6-MM THK)	
	3	1	**166-1488**	2	SHIM (2-MM THK)	
	4	1	**166-1496**	4	SEAL-LIP TYPE	
	5	1	**201-2771**	1	WASHER (26X90X8-MM THK)	
M	6	1	**201-2836**	1	BOLT (M24X3X200-MM)	
	7	1	**241-7129**	1	LINK	
	8	1	**251-2552**	1	PIN AS	
	9	1	**251-2558**	1	PIN AS	
	10	1	**451-2176**	1	WASHER-HARD (22X35X3.5-MM THK)	
	11	1	**451-2177**	1	WASHER-HARD (26X44X4-MM THK)	
M	12	1	**451-2184**	2	NUT (M20X2.5-THD)	
M	13	1	**451-2185**	2	NUT (M24X3-THD)	
M	14	1	**453-2845**	1	BOLT (M20X2.5X40-MM)	
M	15	1	**453-2854**	1	BOLT (M24X3X50-MM)	
	16	1	**504-2107**	1	LINK AS	
	17	1	**504-2109**	1	PIN	
	18	1	**504-2110**	1	PIN	
	19	1	**504-2111**	1	SPACER (72X135X22-MM THK)	
	20	1	**504-2112**	1	SPACER (102X195X22-MM THK)	
	21	1	**521-8025**	1	LINK & BEARING AS	
	21A	1	**504-7634**	2	BEARING-SLEEVE	
	21B	1	**489-3008**	2	BEARING-SLEEVE	
	22	1	**166-1495**	2	SEAL-LIP TYPE	
M	23	1	**186-5649**	1	BOLT (M20X2.5X160-MM)	
	24	1	**367-8468**	2	SEAL-O-RING	
	25	1	**367-8469**	2	SEAL-O-RING	

M - METRIC PART

521-8024 **LINKAGE GP-BUCKET (**contd.**)** **i07520379**

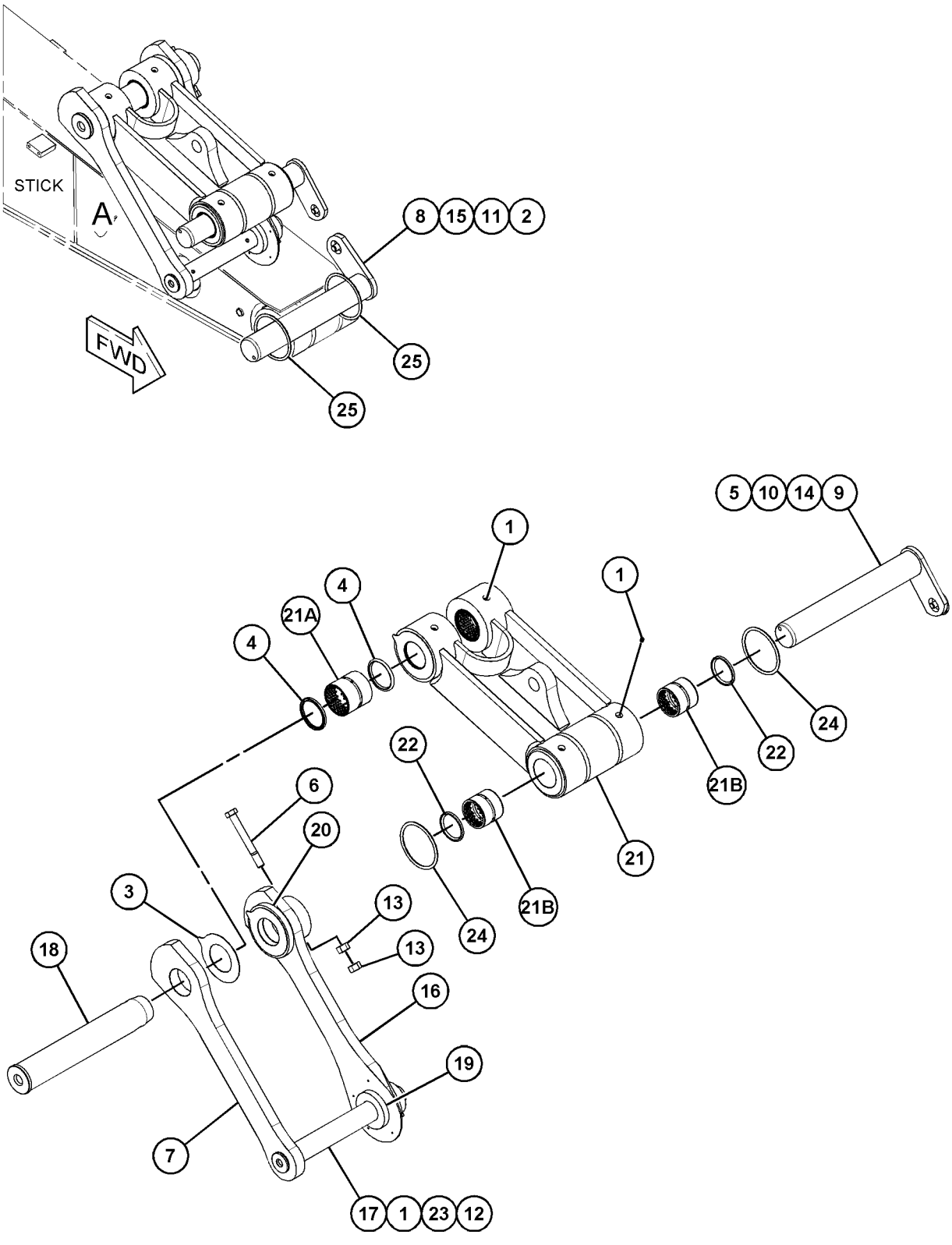

VIEW OF AREA A

GRAPHIC #1 <END> g06281807

512-1380 STICK AR-HOE–MASS

S/N: SP91-UP

SMCS-6502 **i07527806**

NOTE	PART NUMBER	QTY	PART NAME 1 2 3 4 5 6 (PRODUCT LEVEL)	SEE PAGE
Y	*113-6859*	1	LINES GP-STICK (BUCKET CYLINDER)	523
Y	*497-0946*	1	STICK GP-HOE (MASS) (TB-FAMILY)	608

Y - SEPARATE ILLUSTRATION

<END>

512-1383 STICK AR-HOE–REACH

S/N: SP91-UP

3.2-M (10.5-FT). DB-FAMILY

SMCS-6502 **i07661909**

NOTE	PART NUMBER	QTY	PART NAME 1 2 3 4 5 6 (PRODUCT LEVEL)	SEE PAGE
Y	*319-9812*	1	LINES GP-STICK	524
Y	*497-0934*	1	STICK GP-HOE (REACH)	607

Y - SEPARATE ILLUSTRATION

<END>

497-0934 STICK GP-HOE—REACH

S/N: SP91-UP
3.2-M (10.5-FT). DB-FAMILY
PART OF 512-1383 STICK AR-HOE

SMCS-6502 **i07527802**

NOTE	REF NO	GRAPHIC REF	PART NUMBER	QTY	PART NAME 1 2 3 4 5 6 (PRODUCT LEVEL)	SEE PAGE
	1	1	**166-1496**	2	SEAL-LIP TYPE	
	2	1	**166-1498**	2	SEAL-LIP TYPE	
	3	1	**093-0366**	1	SPACER (93X130X12-MM THK)	
	4	1	**166-1487**	2	SHIM (2-MM THK)	
	5	1	**235-7679**	2	SEAL-LIP TYPE	
	6	1	**451-2176**	2	WASHER-HARD (22X35X3.5-MM THK)	
M	7	1	**453-2844**	2	BOLT (M20X2.5X30-MM)	
	8	1	**093-0349**	2	WASHER (22X60X6-MM THK)	
	9	1	**093-0363**	1	SPACER (83X120X12-MM THK)	
	10	1	**113-2963**	1	PIN AS	
	11	1	**3B-8489**	3	ADAPTER	
	12	1	**555-1987**	1	STICK & BEARING AS	
	12A	1	**504-7628**	2	BEARING-SLEEVE	
	12B	1	**504-7632**	2	BEARING-SLEEVE	
	12C	1	**504-7633**	2	BEARING-SLEEVE	
	13	1	**5I-3299**	1	PIN AS	

M - METRIC PART

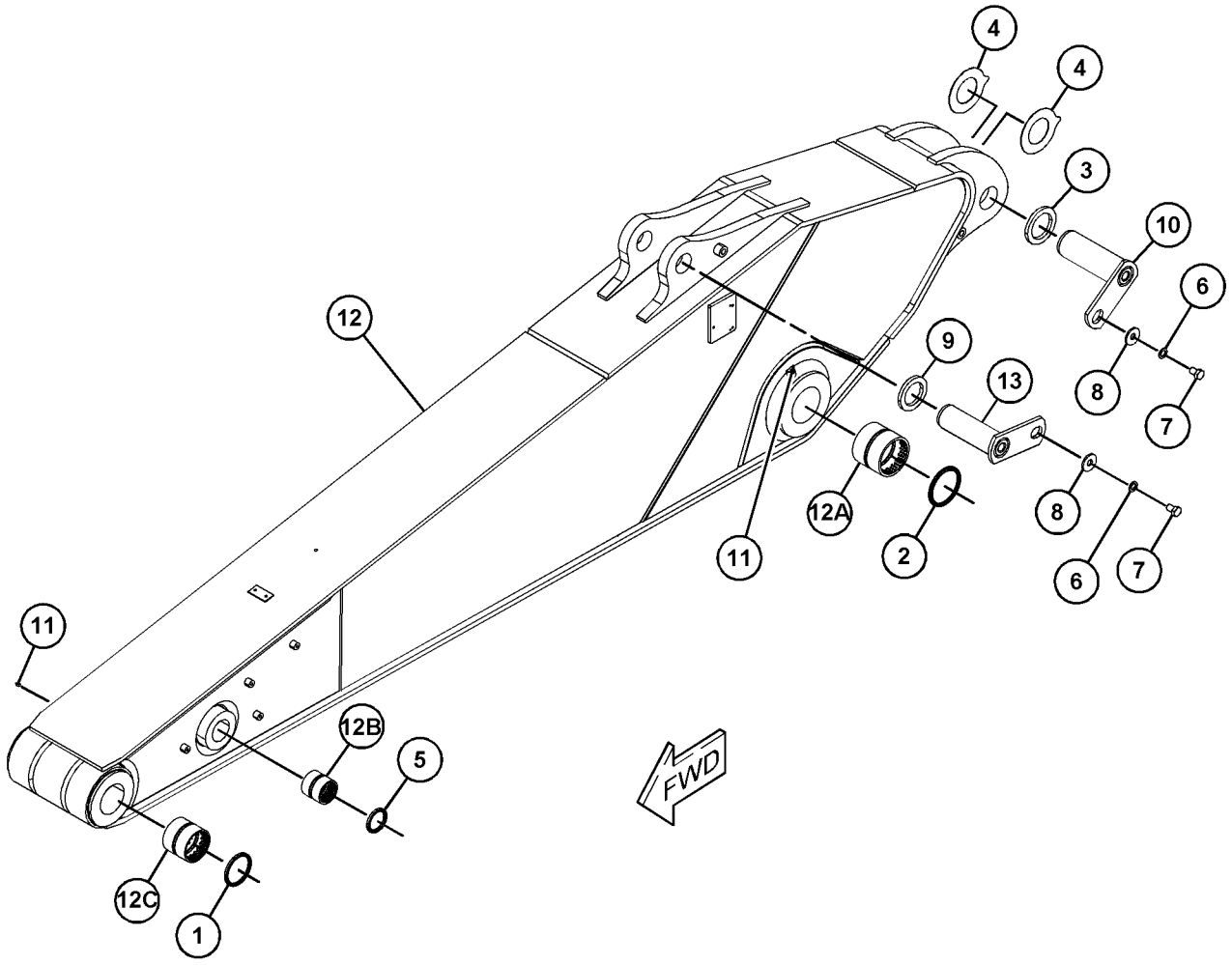

GRAPHIC #1 <END> g06282830

497-0946 STICK GP-HOE–MASS

S/N: SP91-UP
2.55-M (8.4-FT). TB-FAMILY, GRADE CONTROL
PART OF 512-1380 STICK AR-HOE

SMCS-6502 **i07527813**

NOTE	REF NO	GRAPHIC REF	PART NUMBER	QTY	PART NAME 1 2 3 4 5 6 (PRODUCT LEVEL)	SEE PAGE
	1	1	**3B-8489**	4	ADAPTER	
	2	1	**093-0349**	2	WASHER (22X60X6-MM THK)	
	3	1	**093-0366**	2	SPACER (93X130X12-MM THK)	
	4	1	**148-3386**	2	PIN AS	
	5	1	**166-1487**	2	SHIM (2-MM THK)	
	6	1	**166-1497**	2	SEAL-LIP TYPE	
	7	1	**166-1498**	2	SEAL-LIP TYPE	
	8	1	**201-3003**	2	SPACER (92X160X7-MM THK)	
	9	1	**451-2176**	2	WASHER-HARD (22X35X3.5-MM THK)	
M	10	1	**453-2844**	2	BOLT (M20X2.5X30-MM)	
	11	1	**497-0947**	1	STICK & BEARING AS	
	11A	1	**462-2005**	2	BUSHING	
	11B	1	**504-7628**	2	BEARING-SLEEVE	
	11C	1	**517-5959**	2	BEARING-SLEEVE	
	12	1	**166-1494**	2	SEAL-LIP TYPE	

M - METRIC PART

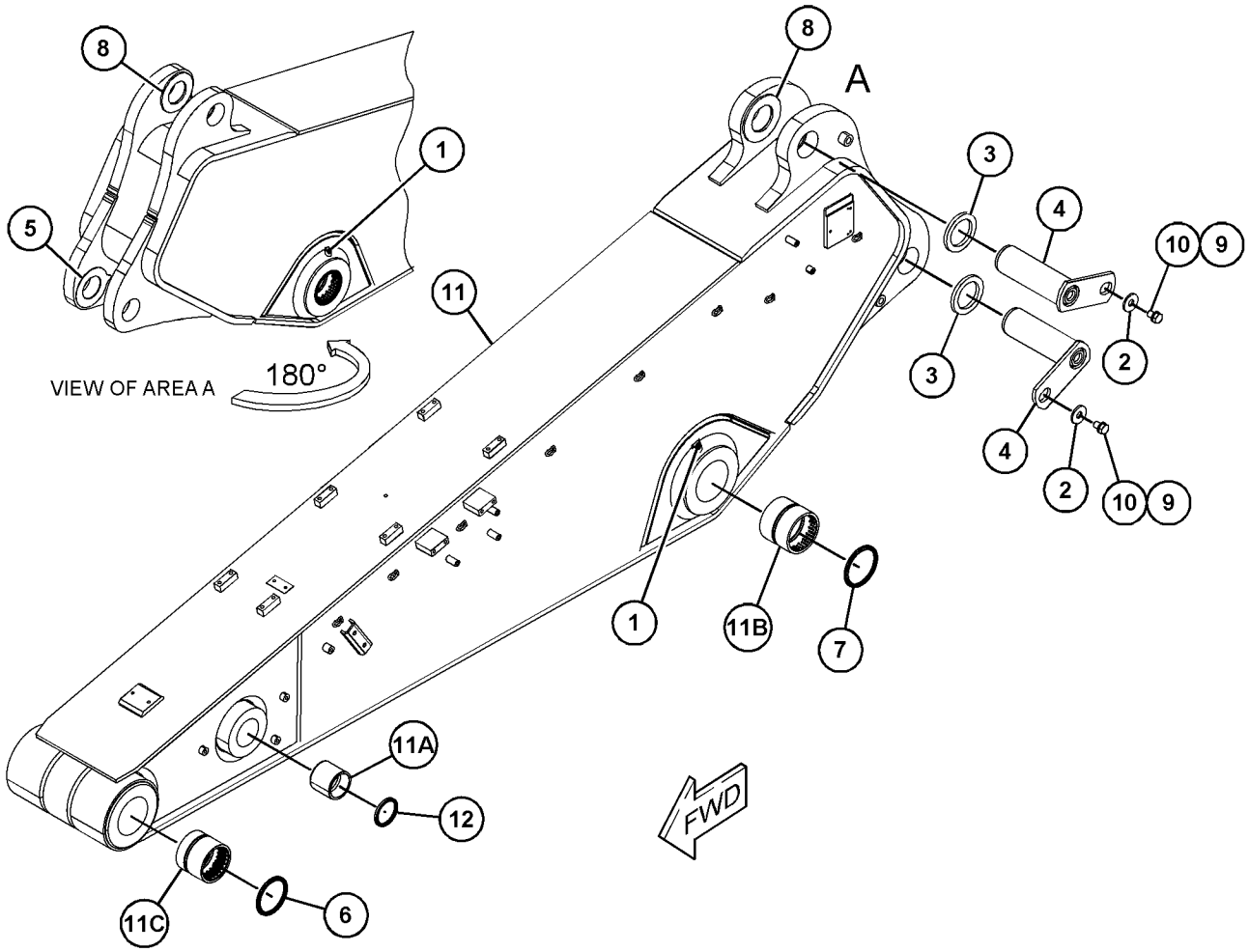

GRAPHIC #1 <END> g06281946

250-6430 ADJUSTER GP-BUCKET—DB-FAMILY

S/N: SP91-UP

PART OF 528-4646 BUCKET & ADJUSTER GP

SMCS-6513, 6700

i02503015

NOTE	REF NO	GRAPHIC REF	PART NUMBER	QTY	PART NAME 1 2 3 4 5 6 (PRODUCT LEVEL)	SEE PAGE
	1	1	**4I-6626**	1	PIN	
	2	1	**4I-6604**	4	SHIM (0.5-MM THK)	
	3	1	**4I-6605**	6	SHIM (1-MM THK)	
	4	1	**134-8951**	1	PLATE	
	5	1	**250-6457**	1	FLANGE	
M	6	1	**7X-2563**	5	BOLT (M20X2.5X60-MM)	
	7	1	**8T-4123**	5	WASHER (22X35X3.5-MM THK)	

M - METRIC PART

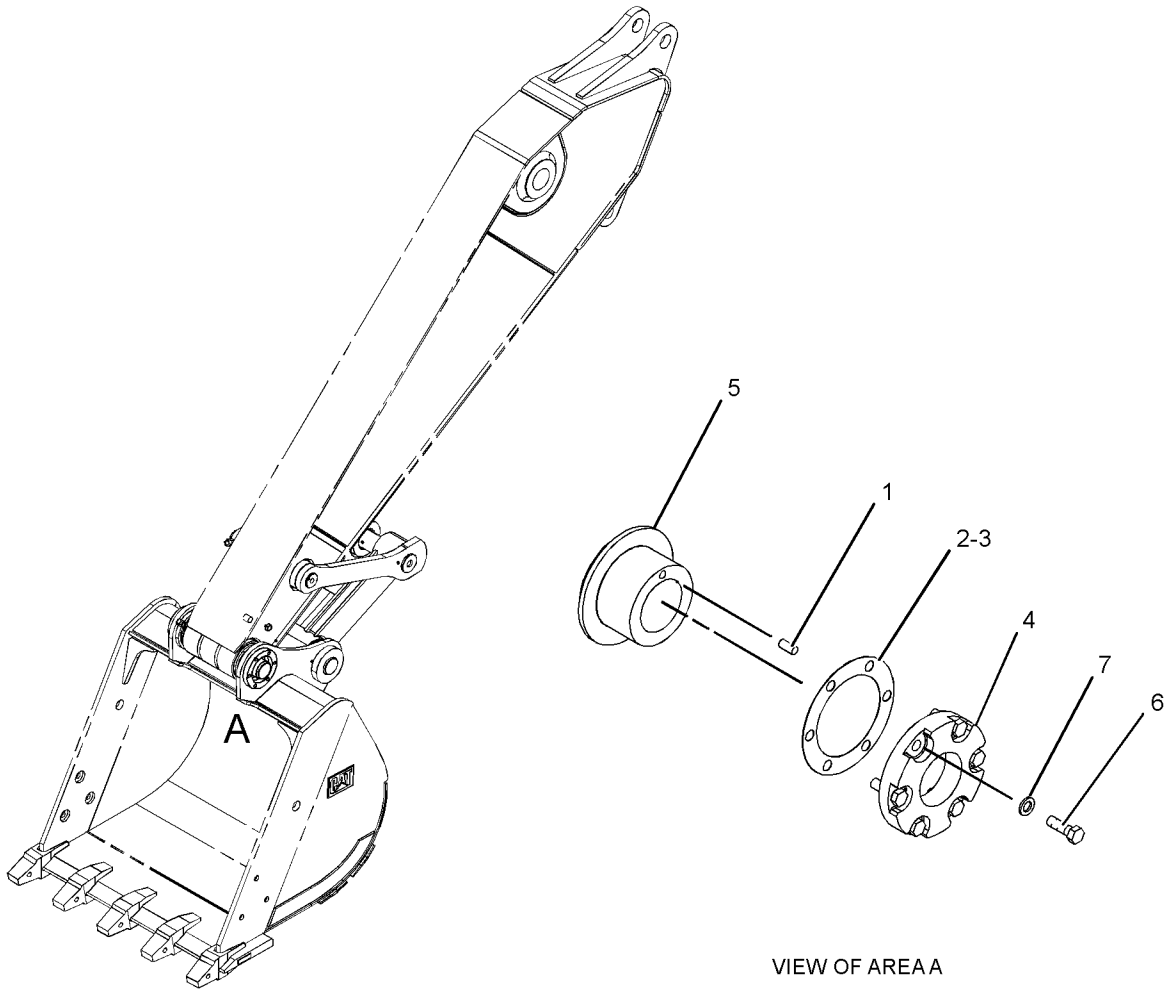

VIEW OF AREA A

GRAPHIC #1

<END>

g01218311

4I-4070 ADJUSTER GP-BUCKET–G/U/V/TB-FAMILY

S/N: SP91-UP

PART OF 483-6777, 518-9326, 525-4053, 528-4660 BUCKET & ADJUSTER GP

SMCS-6513, 6700 **i04764938**

NOTE	REF NO	GRAPHIC REF	PART NUMBER	QTY	PART NAME 1 2 3 4 5 6 (PRODUCT LEVEL)	SEE PAGE
	1	1	**4I-6626**	1	PIN	
	2	1	**134-8952**	1	PLATE	
	3	1	**250-6448**	1	FLANGE	
B	4	1	**4I-4039**	6	SHIM (1-MM THK)	
B	5	1	**4I-4043**	4	SHIM (0.5-MM THK)	
M	6	1	**7X-2563**	6	BOLT (M20X2.5X60-MM)	
	7	1	**8T-4123**	6	WASHER (22X35X3.5-MM THK)	

B - USE AS REQUIRED
M - METRIC PART

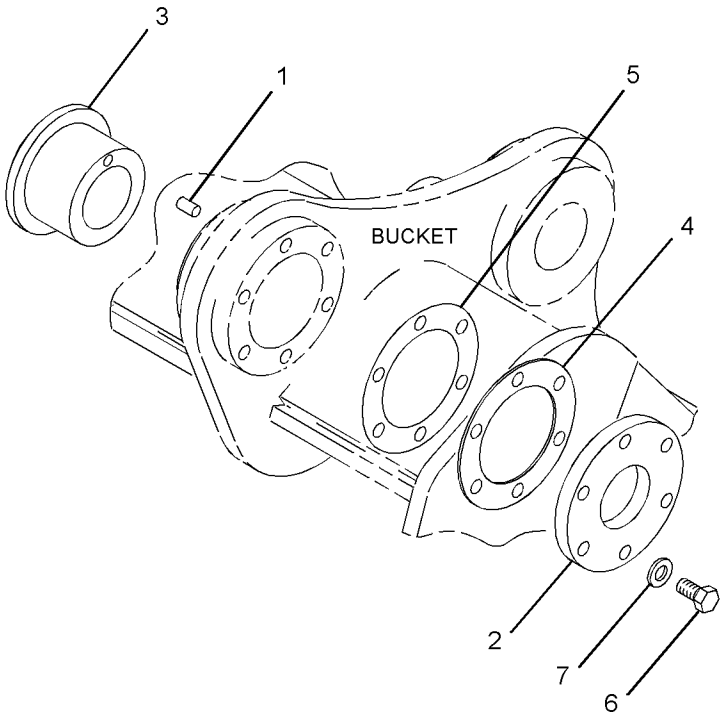

GRAPHIC #1 <END> g02830617

483-6777 BUCKET & ADJUSTER GP—GENERAL PURPOSE, HB-FAMILY

S/N: SP91-UP

1750-MM (69-IN) WIDE X 2.4-CU M (3.14-CU YD) CAPACITY. K-130 ADAPTERS, QTY OF 5

PART OF 546-6066 BUCKET AR-SEVERE SERVICE SPADE

SMCS-6503, 6513 **i07529738**

NOTE	PART NUMBER	QTY	PART NAME 1 2 3 4 5 6 (PRODUCT LEVEL)	SEE PAGE
Y	*4I-4070*	1	ADJUSTER GP-BUCKET (G/U/V/TB-FAMILY)	610
Y	**484-0446**	1	BUCKET AS-SEVERE SERVICE SPADE (K-130 ADAPTERS, QTY OF 5)	618
Y - SEPARATE ILLUSTRATION				

<END>

518-9326 BUCKET & ADJUSTER GP—TB-FAMILY

S/N: SP91-UP

1750-MM (69-IN) WIDE X 2.4-CU M (3.14-CU YD) CAPACITY. 130 ADAPTERS, QTY OF 5

PART OF 528-8133 BUCKET AR-SEVERE SERVICE SPADE

SMCS-6503, 6513 **i07306893**

NOTE	PART NUMBER	QTY	PART NAME 1 2 3 4 5 6 (PRODUCT LEVEL)	SEE PAGE
Y	*4I-4070*	1	ADJUSTER GP-BUCKET (G/U/V/TB-FAMILY)	610
Y	*518-9291*	1	BUCKET AS-SEVERE SERVICE SPADE (TB-FAMILY)	619
	137-4234	1	PLATE-IDENTIFICATION (WORK TOOL)	
			(ON LH SIDE OF BUCKET)	
	312-5694	1	SETSCREW (1/4-20X0.25-IN)	
			(USED TO MOUNT BUCKET INFORMATION PLATE)	
Y - SEPARATE ILLUSTRATION				

<END>

525-4053 BUCKET & ADJUSTER GP—TB-FAMILY, SEVERE SERV SPADE

S/N: SP91-UP

1550-MM (61-IN) WIDE X 2-CU M (2.59-CU YD) CAPACITY. 130 ADAPTERS, QTY OF 4

SMCS-6503, 6513 **i07527152**

NOTE	PART NUMBER	QTY	PART NAME 1 2 3 4 5 6 (PRODUCT LEVEL)	SEE PAGE
Y	*4I-4070*	1	ADJUSTER GP-BUCKET (G/U/V/TB-FAMILY)	610
Y	*525-4056*	1	BUCKET AS-EXTREME SERV SPADE (TB-FAMILY)	614
Y	*357-2687*	1	PROTECTOR GP-SIDE BAR	630
	137-4234	1	PLATE-IDENTIFICATION (WORK TOOL)	
			(ON CENTER OF HINGE-PLATE AS)	
	312-5694	1	SETSCREW (1/4-20X0.25-IN)	
			(USE TO MOUNT BUCKET INFORMATION PLATE)	
Y - SEPARATE ILLUSTRATION				

<END>

528-4646 BUCKET & ADJUSTER GP—SEVERE SERVICE SPADE, DB-FAMILY

S/N: SP91-UP

1650-MM (66-IN) WIDE X 2.15-CU M (2.81-CU YD) CAPACITY. 110 ADAPTERS, QTY OF 5

PART OF 528-4585 BUCKET AR-SEVERE SERVICE SPADE

SMCS-6503, 6513 **i07527104**

NOTE	PART NUMBER	QTY	PART NAME 1 2 3 4 5 6 (PRODUCT LEVEL)	SEE PAGE
Y	**250-6430**	1	ADJUSTER GP-BUCKET (DB-FAMILY)	609
Y	*533-1972*	1	BUCKET AS-SEVERE SERVICE SPADE (DB-FAMILY)	621
	312-5694	1	SETSCREW (1/4-20X0.25-IN)	
			(USED TO MOUNT BUCKET INFORMATION PLATE)	
Y - SEPARATE ILLUSTRATION				

<END>

528-4660 BUCKET & ADJUSTER GP—TB-FAMILY, HEAVY-DUTY

S/N: SP91-UP

1850-MM (72-IN) WIDE X 2.69-CU M (3.52-CU YD) CAPACITY. 110 ADAPTERS, QTY OF 5

SMCS-6503, 6513 **i07527085**

NOTE	PART NUMBER	QTY	PART NAME 1 2 3 4 5 6 (PRODUCT LEVEL)	SEE PAGE
Y	*4I-4070*	1	ADJUSTER GP-BUCKET (G/U/V/TB-FAMILY)	610
Y	*536-6924*	1	BUCKET AS-HEAVY DUTY (TB-FAMILY)	616
	137-4234	1	PLATE-IDENTIFICATION (WORK TOOL)	
			(ON REAR, RH SIDE OF HINGE PLATE AS)	
	312-5694	1	SETSCREW (1/4-20X0.25-IN)	
			(USE TO MOUNT BUCKET INFORMATION PLATE)	
Y - SEPARATE ILLUSTRATION				

<END>

528-4585 BUCKET AR-SEVERE SERVICE SPADE—DB-FAMILY

S/N: SP91-UP

1650-MM (66-IN) WIDE X 2.15-CU M (2.81-CU YD) CAPACITY

SMCS-6001 **i07527121**

NOTE	PART NUMBER	QTY	PART NAME 1 2 3 4 5 6 (PRODUCT LEVEL)	SEE PAGE
Y	*528-4646*	1	BUCKET & ADJUSTER GP (SEVERE SERVICE SPADE, DB-FAMILY)	612
Y	*357-2691*	1	PROTECTOR GP-SIDE BAR	631
Y	**505-4113**	5	TIP GP-PENETRATION PLUS (110)	637
Y - SEPARATE ILLUSTRATION				

<END>

528-8133 BUCKET AR-SEVERE SERVICE SPADE—TB-FAMILY, SEVERE SERV SPADE

S/N: SP91-UP

1750-MM (69-IN) WIDE X 2.40-CU M (3.14-CU YD) CAPACITY

SMCS-6001 **i07199021**

NOTE	PART NUMBER	QTY	PART NAME 1 2 3 4 5 6 (PRODUCT LEVEL)	SEE PAGE
Y	*518-9326*	1	BUCKET & ADJUSTER GP	611
Y	*195-7120*	1	SIDECUTTER GP	633
Y	**381-4093**	4	TIP GP-PENETRATION	635

Y - SEPARATE ILLUSTRATION

<END>

546-6066 BUCKET AR-SEVERE SERVICE SPADE—TB-FAMILY

S/N: SP91-UP

1750-MM (69-IN) WIDE X 2.4-CU M (3.14-CU-YD) CAPACITY

SMCS-6001 **i07526875**

NOTE	PART NUMBER	QTY	PART NAME 1 2 3 4 5 6 (PRODUCT LEVEL)	SEE PAGE
Y	**483-6777**	1	BUCKET & ADJUSTER GP (GENERAL PURPOSE, HB-FAMILY)	611

Y - SEPARATE ILLUSTRATION

<END>

558-6618 BUCKET AR-SEVERE SERVICE SPADE—TB-FAMILY

S/N: SP91-UP

1650-MM (66-IN) WIDE X 2.41-CU M (3.15-CU YD) CAPACITY

SMCS-6001 **i07524774**

NOTE	PART NUMBER	QTY	PART NAME 1 2 3 4 5 6 (PRODUCT LEVEL)	SEE PAGE
Y	*528-4663*	1	BUCKET GP-SEVERE SERVICE SPADE (TB-FAMILY)	623
Y	*357-2687*	1	PROTECTOR GP-SIDE BAR	630
Y	**505-4113**	5	TIP GP-PENETRATION PLUS (110)	637

Y - SEPARATE ILLUSTRATION

<END>

525-4056 BUCKET AS-EXTREME SERV SPADE—TB-FAMILY

S/N: SP91-UP

1550-MM (61-IN) X 2-CU M (2.59-CU YD) CAPACITY. 130 ADAPTERS, QTY OF 4

PART OF 525-4053 BUCKET & ADJUSTER GP

SMCS-6529 **i07655195**

NOTE	REF NO	GRAPHIC REF	PART NUMBER	QTY	PART NAME 1 2 3 4 5 6 (PRODUCT LEVEL)	SEE PAGE
	1	1	**369-0877**	2	PLATE-WEAR	
	2	1	**524-3419**	2	PLATE-WEAR	
	3	1	**352-8952**	1	PLATE-WEAR	
	4	1	**369-0878**	5	PLATE-WEAR	
	5	1	**369-0879**	1	PLATE-WEAR	
	6	1	**2C-9259**	2	PLATE-IDENTIFICATION (CAT)	
	7	1	**525-4059**	1	EDGE AS	
	7A	1	**368-3782**	1	ADAPTER-TIP (130, 2-STRAP, LH)	
	7B	1	**368-3780**	2	ADAPTER-TIP (130, 2-STRAP, CENTER)	
	7C	1	**368-3781**	1	ADAPTER-TIP (130, 2-STRAP, RH)	
	7D	1	**271-8391**	2	BLOCK-WEAR	
	7E	1	**525-5668**	1	EDGE-CUTTING (HALF ARROW) (LH)	
	7F	1	**525-5669**	1	EDGE-CUTTING (HALF ARROW) (CENTER)	
	7G	1	**525-5670**	1	EDGE-CUTTING (HALF ARROW) (RH)	
	8	1	**524-3420**	1	PLATE-SIDE (LH)	
	9	1	**524-3421**	1	PLATE-SIDE (RH)	
	10	1	**482-1096**	1	PLATE AS-HINGE	
	11	1	**138-6529**	2	SHROUD (HEEL, STRAIGHT)	
	12	1	**138-6551**	8	SHROUD (HEEL, CURVED)	
	13	1	**285-3254**	1	PLATE (PROTECTOR)	

525-4056 **BUCKET AS-EXTREME SERV SPADE (**contd.**)** **i07655195**

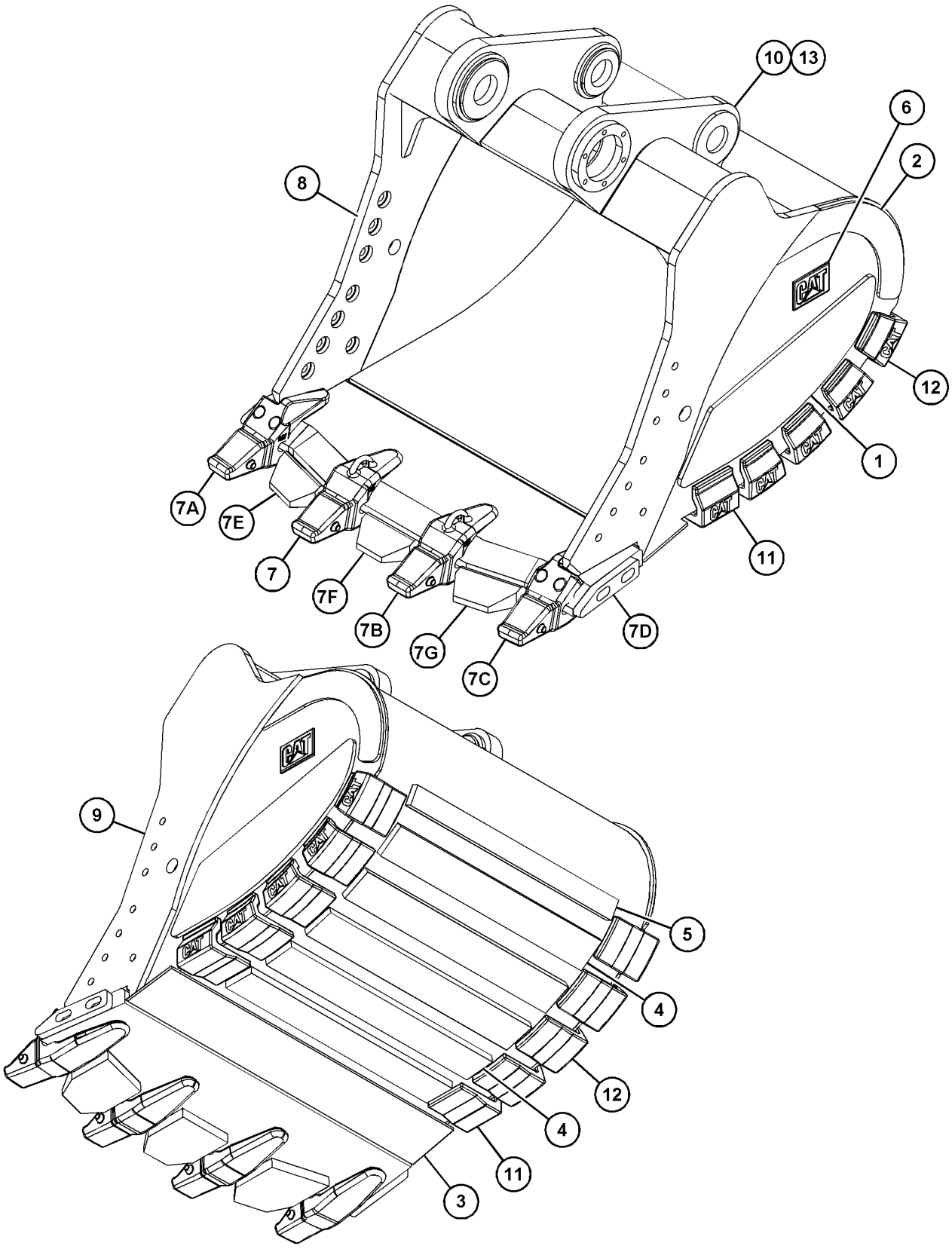

GRAPHIC #1 <END> g06387149

536-6924 BUCKET AS-HEAVY DUTY—TB-FAMILY

S/N: SP91-UP

1850-MM (72-IN) WIDE X 2.69-CU M (3.52-CU YD) CAPACITY. 110 ADAPTERS, QTY OF 5

PART OF 528-4660 BUCKET & ADJUSTER GP

SMCS-6531 **i07529795**

NOTE	REF NO	GRAPHIC REF	PART NUMBER	QTY	PART NAME 1 2 3 4 5 6 (PRODUCT LEVEL)	SEE PAGE
	1	1	**285-3254**	1	PLATE (PROTECTOR)	
	2	1	**2C-9259**	2	PLATE-IDENTIFICATION (CAT)	
	3	1	**350-1133**	2	PLATE-WEAR	
	4	1	**535-7484**	1	EDGE AS	
	4A	1	**505-4162**	1	ADAPTER-TIP (110, 2-STRAP, LH)	
	4B	1	**505-4160**	3	ADAPTER-TIP (110, 2-STRAP, CENTER)	
	4C	1	**505-4161**	1	ADAPTER-TIP (110, 2-STRAP, RH)	
	4D	1	**8P-9770**	1	PLATE	
	5	1	**359-3648**	1	PLATE-WEAR	
	6	1	**359-3649**	4	PLATE-WEAR	
	7	1	**359-3650**	2	PLATE-WEAR	
	8	1	**359-3651**	1	PLATE AS-HINGE	
	9	1	**339-3811**	1	PLATE (LH)	
	10	1	**339-3810**	1	PLATE (RH)	

536-6924 **BUCKET AS-HEAVY DUTY (**contd.**)** **i07529795**

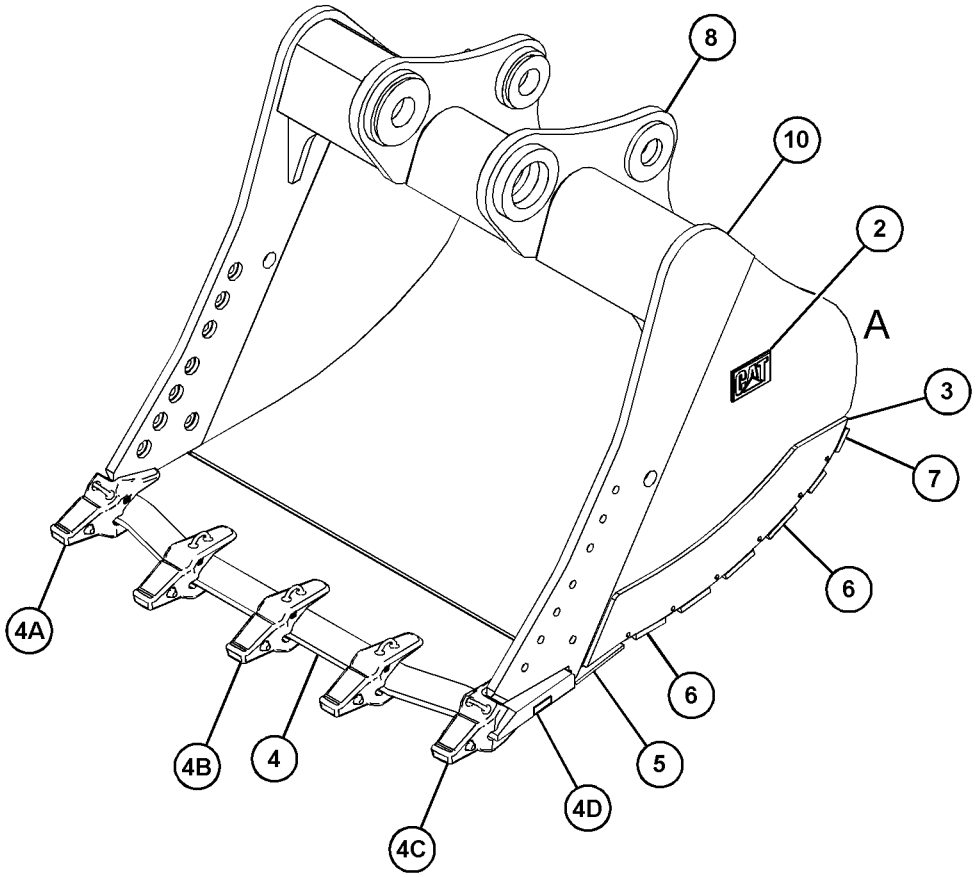

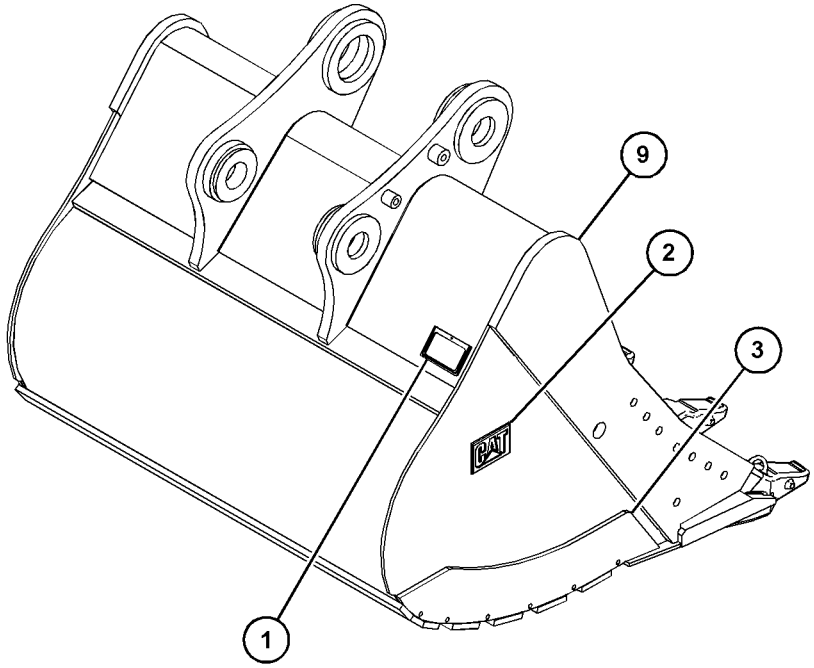

VIEW OF AREA A



GRAPHIC #1 <END> g06352612

484-0446 BUCKET AS-SEVERE SERVICE SPADE—TB-FAMILY

S/N: SP91-UP

1750-MM (69-IN) WIDE X 2.40-CU M (3.14-CU YD) CAPACITY. K-130 ADAPTERS, QTY OF 5

PART OF 483-6777 BUCKET & ADJUSTER GP

SMCS-6001 **i07529766**

NOTE	REF NO	GRAPHIC REF	PART NUMBER	QTY	PART NAME 1 2 3 4 5 6 (PRODUCT LEVEL)	SEE PAGE
	1	1	**365-3152**	1	PLATE-WEAR	
	2	1	**368-8004**	2	PLATE-WEAR	
	3	1	**482-1088**	1	PLATE (LH)	
	4	1	**482-1100**	1	PLATE (RH)	
	5	1	**484-0404**	1	EDGE AS	
	5A	1	**8P-9770**	1	PLATE	
	5B	1	**469-4316**	2	ADAPTER (K-130, 2-STRAP, CENTER)	
	5C	1	**469-4319**	1	ADAPTER (K-130, 2-STRAP, RH)	
	5D	1	**469-4320**	1	ADAPTER (K-130, 2-STRAP, LH)	
	6	1	**368-8003**	5	PLATE-WEAR	
	7	1	**368-8632**	1	PLATE-WEAR	
	8	1	**483-6754**	1	PLATE AS-HINGE	
	9	1	**285-3254**	1	PLATE (PROTECTOR)	

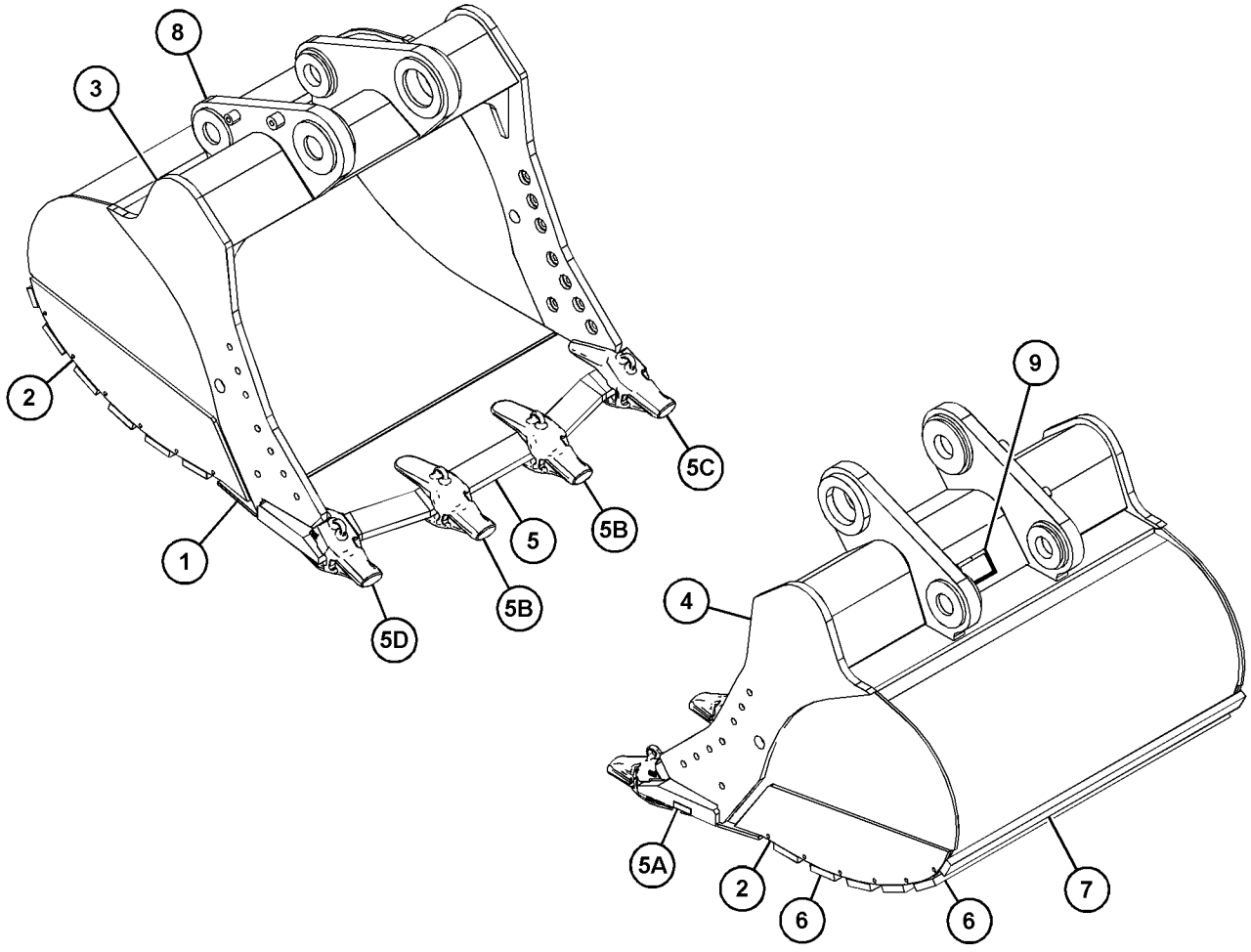

GRAPHIC #1 <END> g06202152

518-9291 BUCKET AS-SEVERE SERVICE SPADE—TB-FAMILY

S/N: SP91-UP

1750-MM (69-IN) WIDE X 2.40-CUM (3.14-CU YD) CAPACITY. K-130 ADAPTERS, QTY OF 5. 130 ADAPTERS, QTY OF 5

PART OF 518-9326 BUCKET & ADJUSTER GP

SMCS-6001 **i07198970**

NOTE	REF NO	GRAPHIC REF	PART NUMBER	QTY	PART NAME 1 2 3 4 5 6 (PRODUCT LEVEL)	SEE PAGE
	1	1	**368-8003**	5	PLATE-WEAR	
	2	1	**368-8632**	1	PLATE-WEAR	
	3	1	**365-3152**	1	PLATE-WEAR	
	4	1	**483-6754**	1	PLATE AS-HINGE	
	4A	1	**229-7766**	1	BOSS	
	5	1	**517-2367**	1	EDGE AS-CUTTING	
	5A	1	**368-3780**	2	ADAPTER-TIP (130, 2-STRAP, CENTER)	
	5B	1	**368-3781**	1	ADAPTER-TIP (130, 2-STRAP, RH)	
	5C	1	**368-3782**	1	ADAPTER-TIP (130, 2-STRAP, LH)	
	5D	1	**8P-9770**	1	PLATE	
	6	1	**2C-9259**	2	PLATE-IDENTIFICATION (CAT)	
	7	1	**368-8004**	2	PLATE-WEAR	
	8	1	**482-1088**	1	PLATE (LH)	
	9	1	**482-1100**	1	PLATE (RH)	
	10	1	**285-3254**	1	PLATE (PROTECTOR)	

518-9291 **BUCKET AS-SEVERE SERVICE SPADE** (contd.) **i07198970**

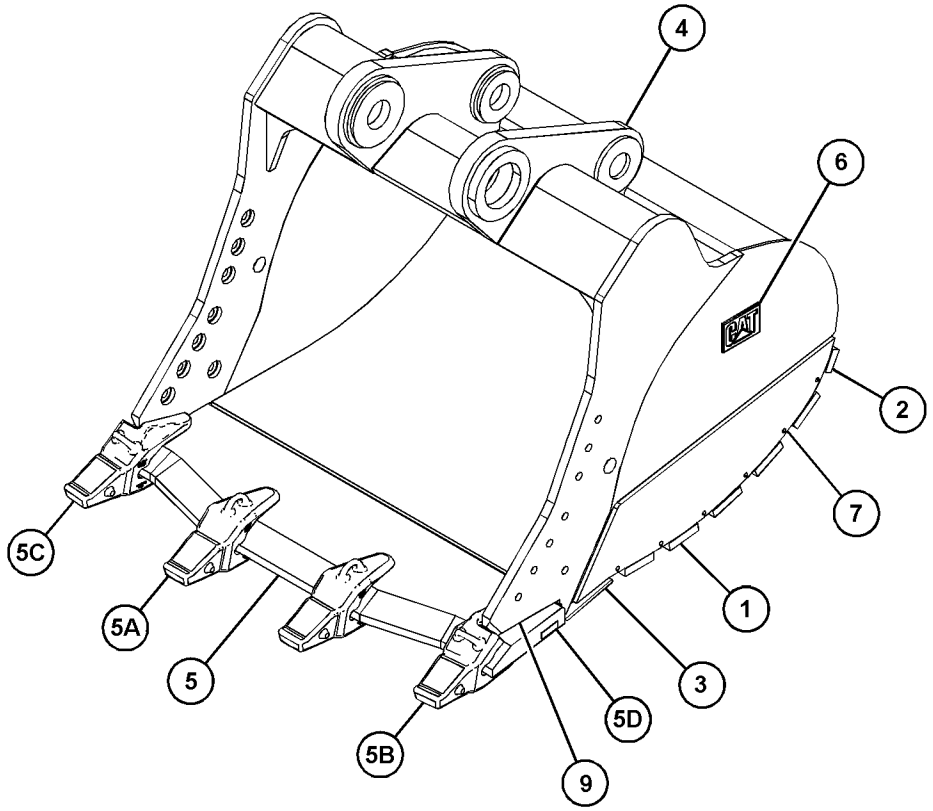

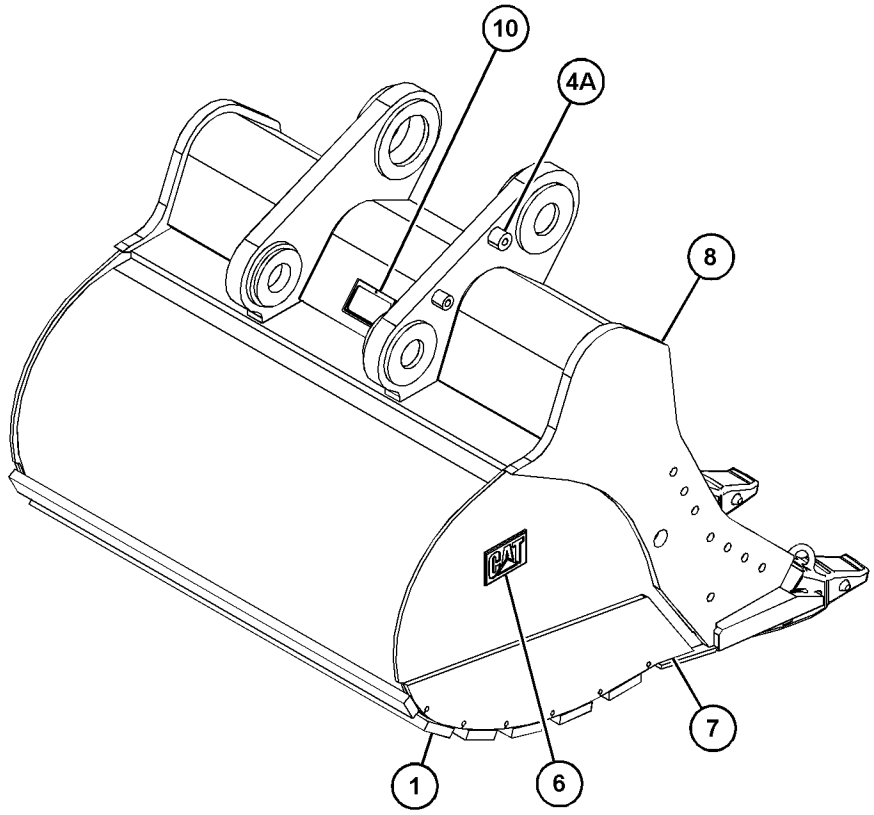

GRAPHIC #1 <END> g06269942

533-1972 BUCKET AS-SEVERE SERVICE SPADE—DB-FAMILY

S/N: SP91-UP

1650-MM (66-IN) WIDE X 2.15-CU M (2.81-CU YD) CAPACITY. 110 ADAPTERS, QTY OF 5

PART OF 528-4646 BUCKET & ADJUSTER GP

SMCS-6001 **i07527117**

NOTE	REF NO	GRAPHIC REF	PART NUMBER	QTY	PART NAME 1 2 3 4 5 6 (PRODUCT LEVEL)	SEE PAGE
	1	1	**285-3254**	1	PLATE (PROTECTOR)	
	2	1	**348-3065**	1	PLATE AS-HINGE	
	3	1	**348-3084**	4	PLATE-WEAR	
	4	1	**348-3085**	1	PLATE-WEAR	
	5	1	**348-3126**	1	PLATE-WEAR	
	6	1	*535-7476*	1	PLATE AS-SIDE (RH)	
	6A	1	**2C-9259**	1	PLATE-IDENTIFICATION (CAT)	
	6B	1	**348-3080**	1	PLATE-WEAR	
	6C	1	**371-9107**	1	PLATE (RH)	
	7	1	*535-7475*	1	PLATE AS-SIDE (LH)	
	7A	1	**2C-9259**	1	PLATE-IDENTIFICATION (CAT)	
	7B	1	**348-3080**	1	PLATE-WEAR	
	7C	1	**371-9106**	1	PLATE (LH)	
	8	1	**533-1975**	1	EDGE AS	
	8A	1	**8P-9770**	1	PLATE	
	8B	1	**505-4160**	3	ADAPTER-TIP (110, 2-STRAP, CENTER)	
	8C	1	**505-4161**	1	ADAPTER-TIP (110, 2-STRAP, RH)	
	8D	1	**505-4162**	1	ADAPTER-TIP (110, 2-STRAP, LH)	

533-1972 **BUCKET AS-SEVERE SERVICE SPADE** (contd.) **i07527117**

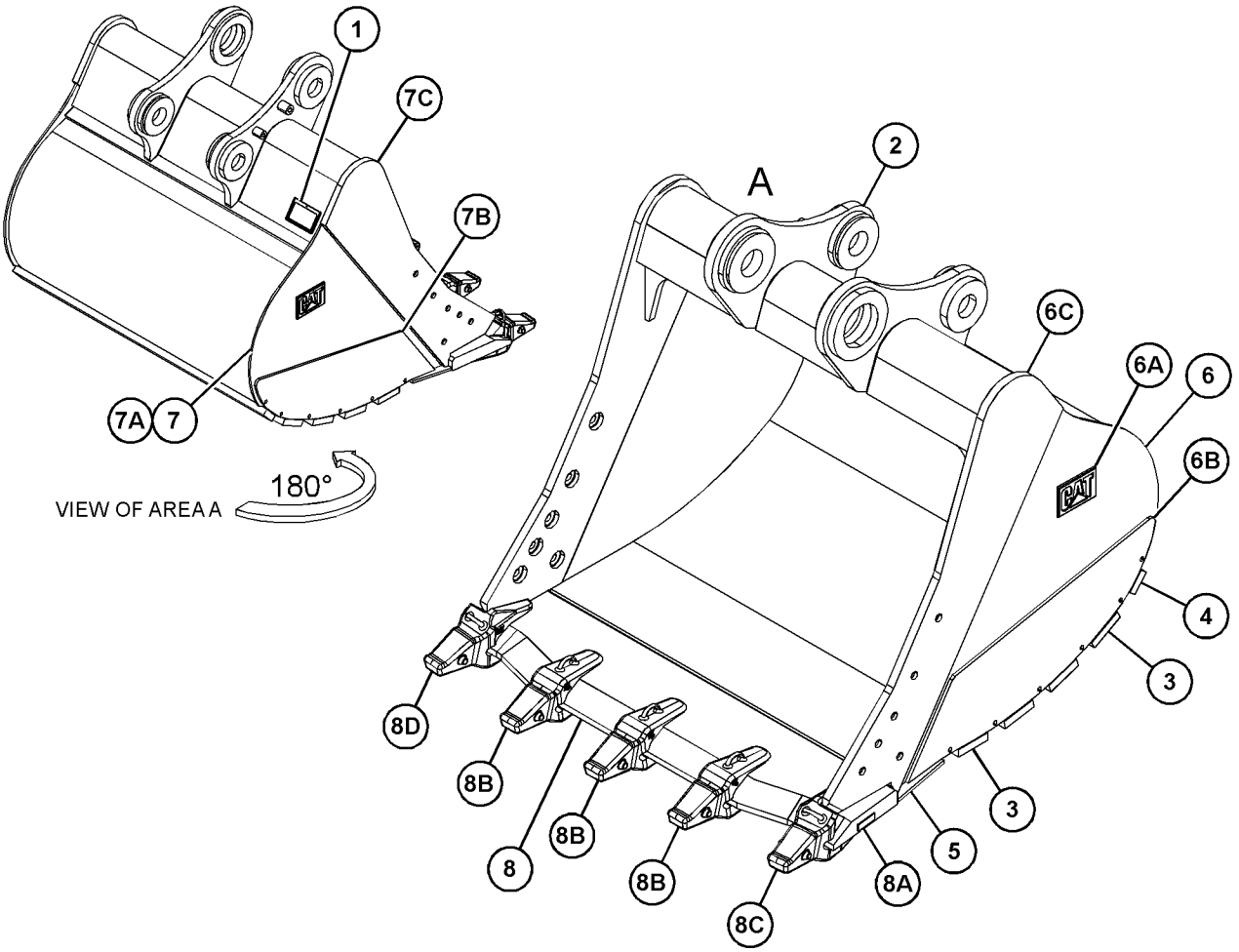

GRAPHIC #1 <END> g06310014

528-4663 BUCKET GP-SEVERE SERVICE SPADE—TB-FAMILY

S/N: SP91-UP

1650-MM (66-IN) WIDE X 2.41-CU M (3.15-CU YD) CAPACITY. 110 ADAPTERS, QTY OF 5

PART OF 558-6618 BUCKET AR-SEVERE SERVICE SPADE

SMCS-6001, 6529

i07524817

NOTE	REF NO	GRAPHIC REF	PART NUMBER	QTY	PART NAME 1 2 3 4 5 6 (PRODUCT LEVEL)	SEE PAGE
	1	1	*533-1989*	1	BUCKET AS-SEVERE SERVICE SPADE	
	2	1	**285-3254**	1	PLATE (PROTECTOR)	
	3	1	**339-3764**	4	PLATE-WEAR	
	4	1	**341-3158**	2	PLATE-WEAR	
	5	1	**350-1071**	1	PLATE-WEAR	
	6	1	**339-3813**	2	PLATE-WEAR	
	7	1	**2C-9259**	2	PLATE-IDENTIFICATION (CAT)	
	8	1	**360-3933**	1	PLATE AS-HINGE	
	9	1	**370-4600**	1	PLATE (LH)	
	10	1	**370-4601**	1	PLATE (RH)	
	11	1	**535-7482**	1	EDGE AS	
	11A	1	**505-4162**	1	ADAPTER-TIP (110, 2-STRAP, LH)	
	11B	1	**505-4160**	3	ADAPTER-TIP (110, 2-STRAP, CENTER)	
	11C	1	**505-4161**	1	ADAPTER-TIP (110, 2-STRAP, RH)	
	11D	1	**8P-9770**	1	PLATE	
	12	1	**137-4234**	1	PLATE-IDENTIFICATION (WORK TOOL)	
	13	1	**312-5694**	1	SETSCREW (1/4-20X0.25-IN)	

528-4663 **BUCKET GP-SEVERE SERVICE SPADE** (contd.) **i07524817**

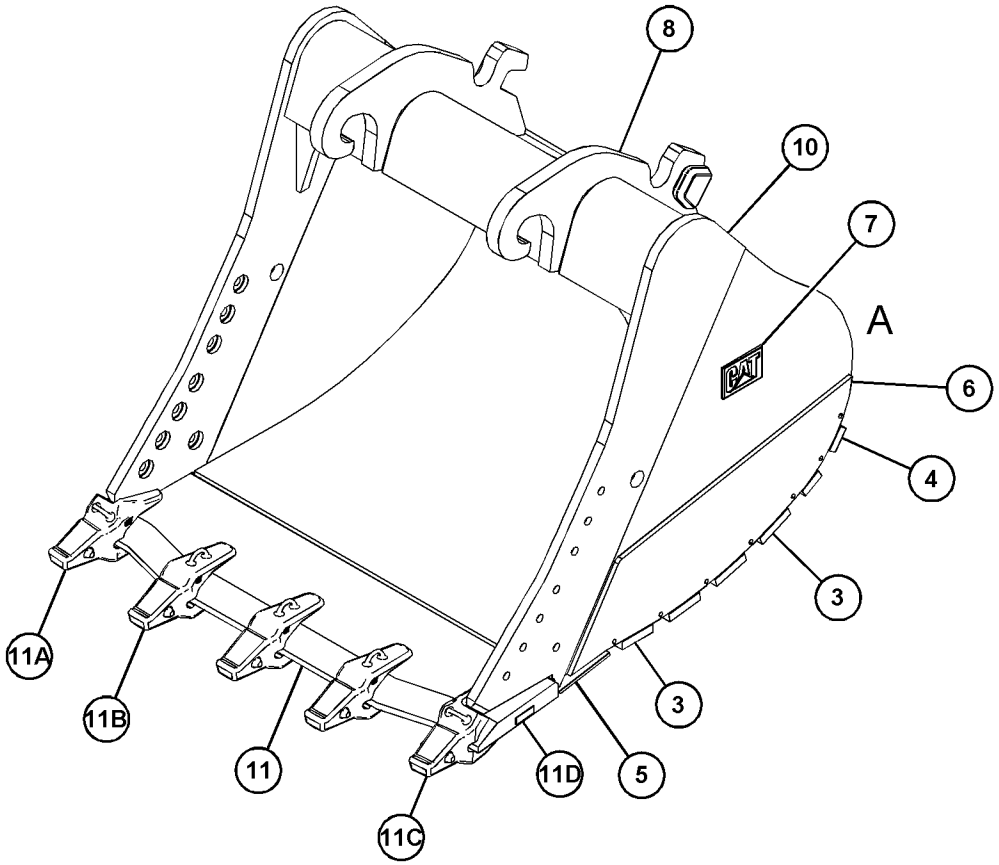

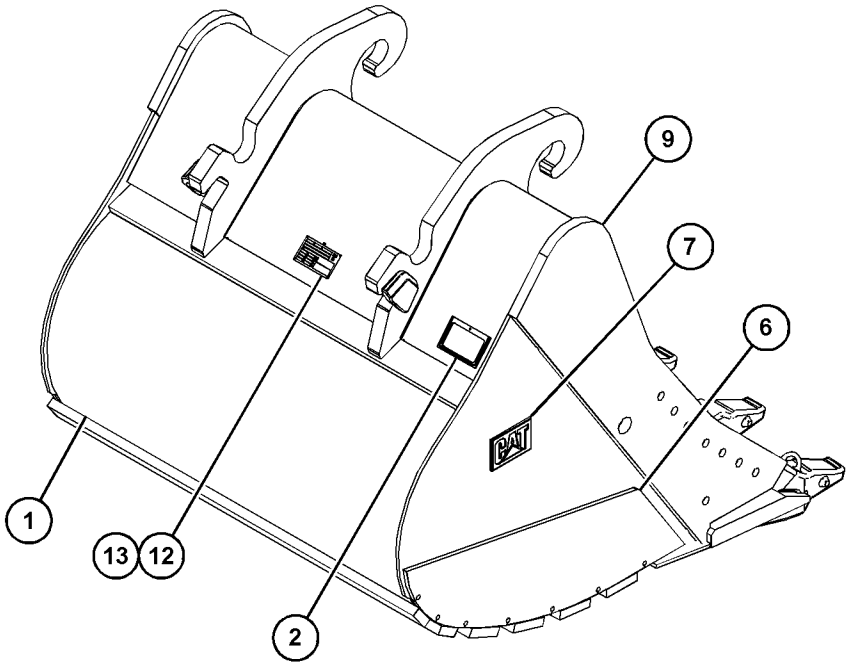

VIEW OF AREA A

180°

GRAPHIC #1 <END> g06352606

517-4758 CONTROL AR-QUICK COUPLER

S/N: SP91-UP

SMCS-6129 **i07410278**

NOTE	PART NUMBER	QTY	PART NAME 1 2 3 4 5 6 (PRODUCT LEVEL)	SEE PAGE
Y	*488-6825*	1	SWITCH GP-ROCKER (COUPLER)	254
Y	*511-9446*	1	WIRING GP-VALVE (COUPLER)	301

Y - SEPARATE ILLUSTRATION

<END>

275-7752 COUPLER AR-QUICK—WITH HOOK

S/N: SP91-UP

FOR USE WITH TB-FAMILY LINKAGE

SMCS-1408, 5057, 6129 **i06619203**

NOTE	PART NUMBER	QTY	PART NAME 1 2 3 4 5 6 (PRODUCT LEVEL)	SEE PAGE
Y	*275-6321*	1	COUPLER GP-QUICK (WITH HOOK)	626
Y	*275-7738*	1	LINES GP-COUPLER	475

Y - SEPARATE ILLUSTRATION

<END>

275-6321 COUPLER GP-QUICK–WITH HOOK

S/N: SP91-UP
FOR USE WITH TB-FAMILY LINKAGE
PART OF 275-7752 COUPLER AR-QUICK

SMCS-1408, 5057, 6129 **i06635747**

NOTE	REF NO	GRAPHIC REF	PART NUMBER	QTY	PART NAME 1 2 3 4 5 6 (PRODUCT LEVEL)	SEE PAGE
Y	1	1	*209-3464*	1	LOCK GP-QUICK COUPLER (HYDRAULIC)	629
CY	2	1	*391-2737*	1	COUPLER GP-QUICK	627
M	3	1	**136-0155**	2	SETSCREW (M4X0.7X8-MM)	
C	4	1	**228-3369**	2	FILM-WARNING (DO NOT OPERATE, READ OMM)	
	5	1	**150-8896**	2	FILM-NOTICE (LIFT EYE LOCATION)	

C - CHANGE FROM PREVIOUS TYPE
M - METRIC PART
Y - SEPARATE ILLUSTRATION

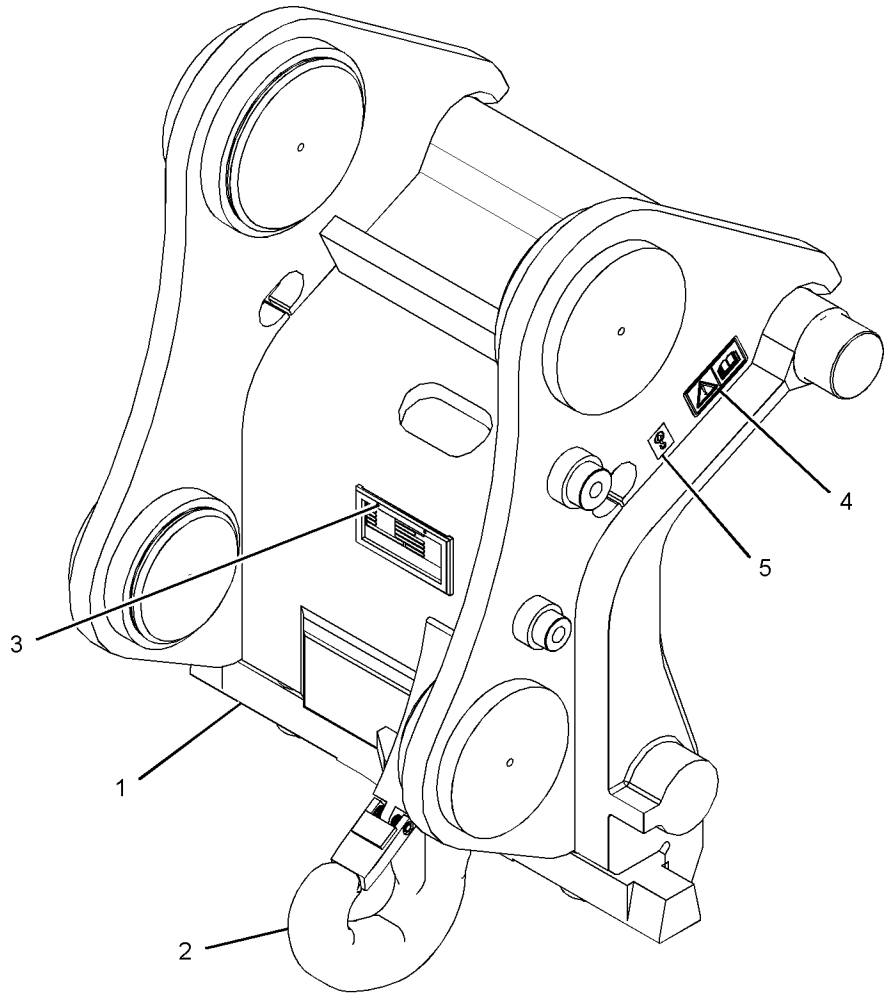

GRAPHIC #1 <END> g03201796

391-2737 COUPLER GP-QUICK

S/N: SP91-UP

PART OF 275-6321 COUPLER GP-QUICK

SMCS-1408, 5057, 6129

i06703134

NOTE	REF NO	GRAPHIC REF	PART NUMBER	QTY	PART NAME 1 2 3 4 5 6 (PRODUCT LEVEL)	SEE PAGE
Y	1	1	**173-9957**	1	HOOK GP-LIFTING (14-TON CAPACITY) (14-TON CAPACITY)	628
	2	1	**192-5239**	1	HOLDER (SERIAL NUMBER PLATE)	

Y - SEPARATE ILLUSTRATION

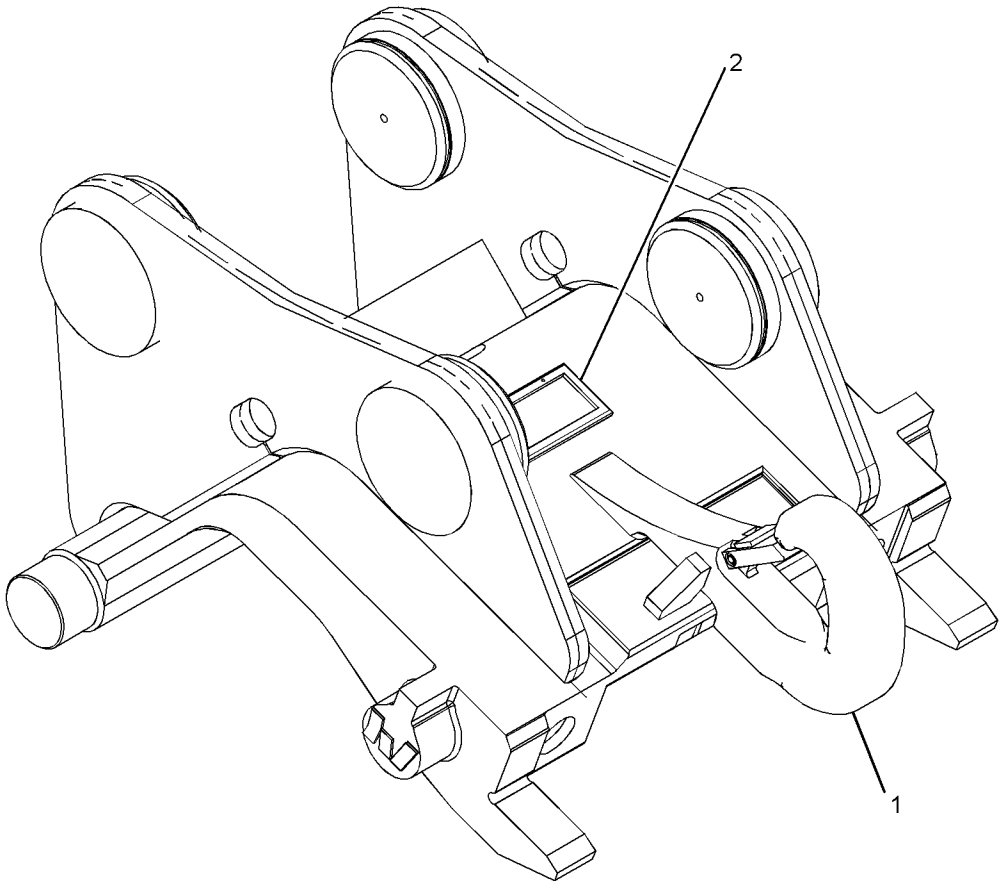

GRAPHIC #1 <END> g03177119

173-9957 HOOK GP-LIFTING—14-TON CAPACITY

S/N: SP91-UP

PART OF 391-2737 COUPLER GP-QUICK

SMCS-6459 **i02663838**

NOTE	REF NO	GRAPHIC REF	PART NUMBER	QTY	PART NAME 1 2 3 4 5 6 (PRODUCT LEVEL)	SEE PAGE
	1	1	**173-9971**	1	KIT-LATCH (QUICK COUPLER)	
					(INCLUDES PIN, SPRING & LATCH)	

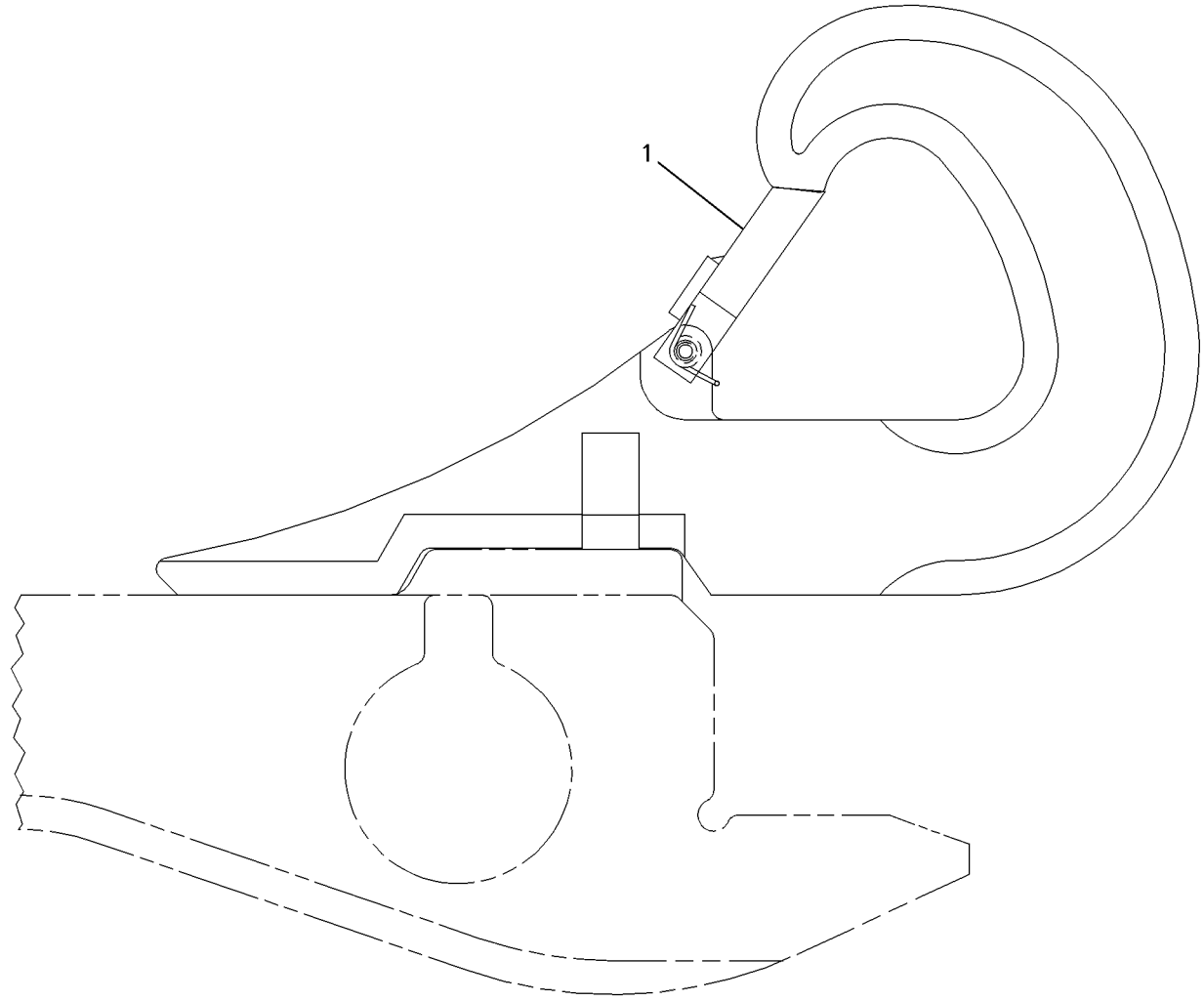

GRAPHIC #1 <END> g00576288

209-3464 LOCK GP-QUICK COUPLER–HYDRAULIC

S/N: SP91-UP

PART OF 275-6321 COUPLER GP-QUICK

SMCS-6129 **i07756866**

NOTE	REF NO	GRAPHIC REF	PART NUMBER	QTY	PART NAME 1 2 3 4 5 6 (PRODUCT LEVEL)	SEE PAGE
Y	1	1	**169-0753**	1	CYLINDER GP-COUPLER	428
M	2	1	**8T-4183**	4	BOLT (M12X1.75X40-MM)	
	3	1	**8T-4223**	4	WASHER-HARD (13.5X25.5X3-MM THK)	
M	4	1	**095-0705**	1	BOLT-SOCKET HEAD (M16X2X100-MM)	
M	5	1	**098-5747**	2	NUT (M16X2-THD)	
	6	1	**9X-8257**	2	WASHER (17.5X30X3.5-MM THK)	
	7	1	**169-0756**	2	SPACER (26.4X42.4X75-MM THK)	
	8	1	**514-9537**	2	SHAFT AS	
	9	1	**169-0738**	2	SPRING	
	10	1	**169-0739**	2	RING	
	11	1	**169-0740**	2	RING	
	12	1	**209-3466**	1	WEDGE	
	13	1	**169-0745**	2	PLATE (LOCK)	
M	14	1	**8T-4141**	2	BOLT (M20X2.5X70-MM)	
M	15	1	**169-2519**	2	BOLT (M24X3X180-MM)	

M - METRIC PART
Y - SEPARATE ILLUSTRATION

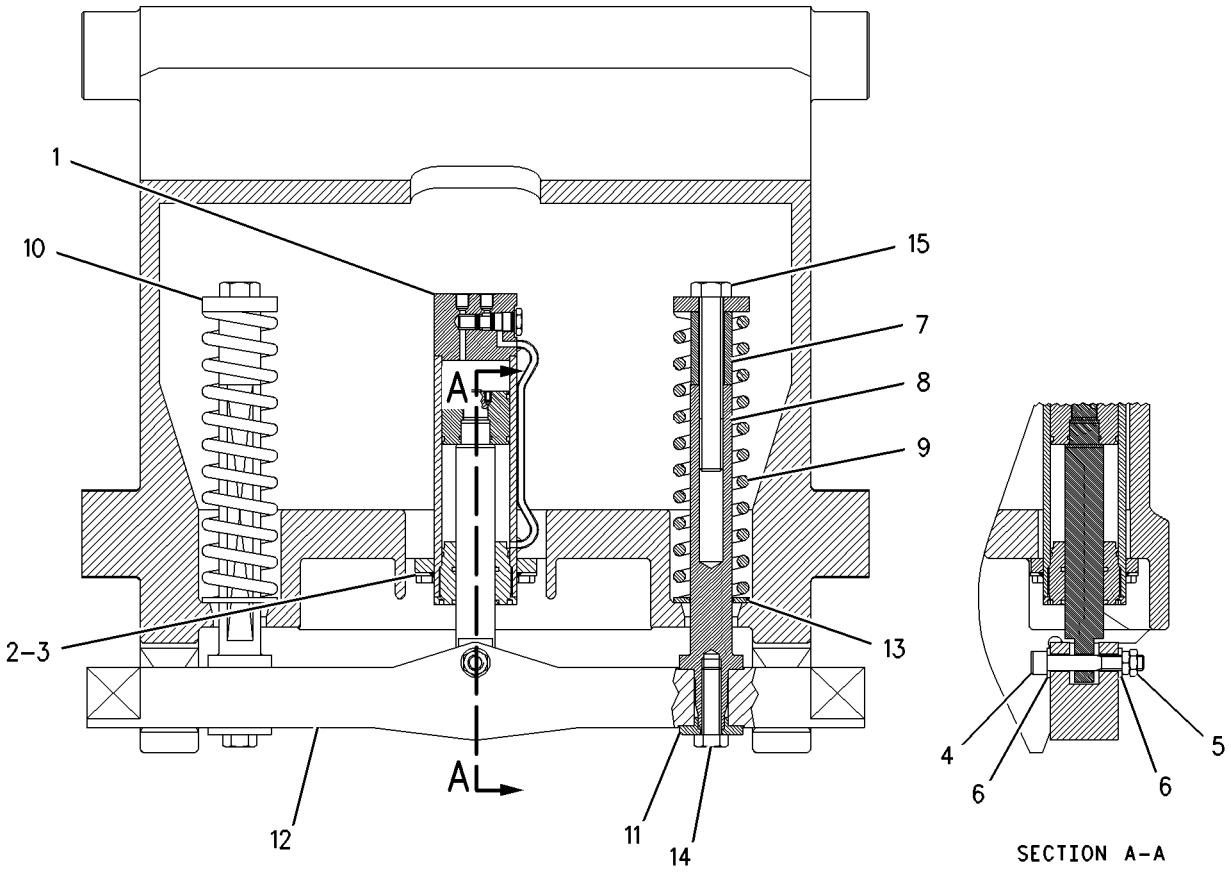

GRAPHIC #1 <END> g00950212

357-2687 PROTECTOR GP-SIDE BAR

S/N: SP91-UP

PART OF 525-4053 BUCKET & ADJUSTER GP, 558-6618 BUCKET AR-SEVERE SERVICE SPADE

SMCS-6817 **i06970926**

NOTE	REF NO	GRAPHIC REF	PART NUMBER	QTY	PART NAME 1 2 3 4 5 6 (PRODUCT LEVEL)	SEE PAGE
	1	1	**132-0998**	8	PIN	
	2	1	**132-0999**	8	RETAINER AS	
	3	1	**326-3407**	4	PROTECTOR-SIDE BAR	

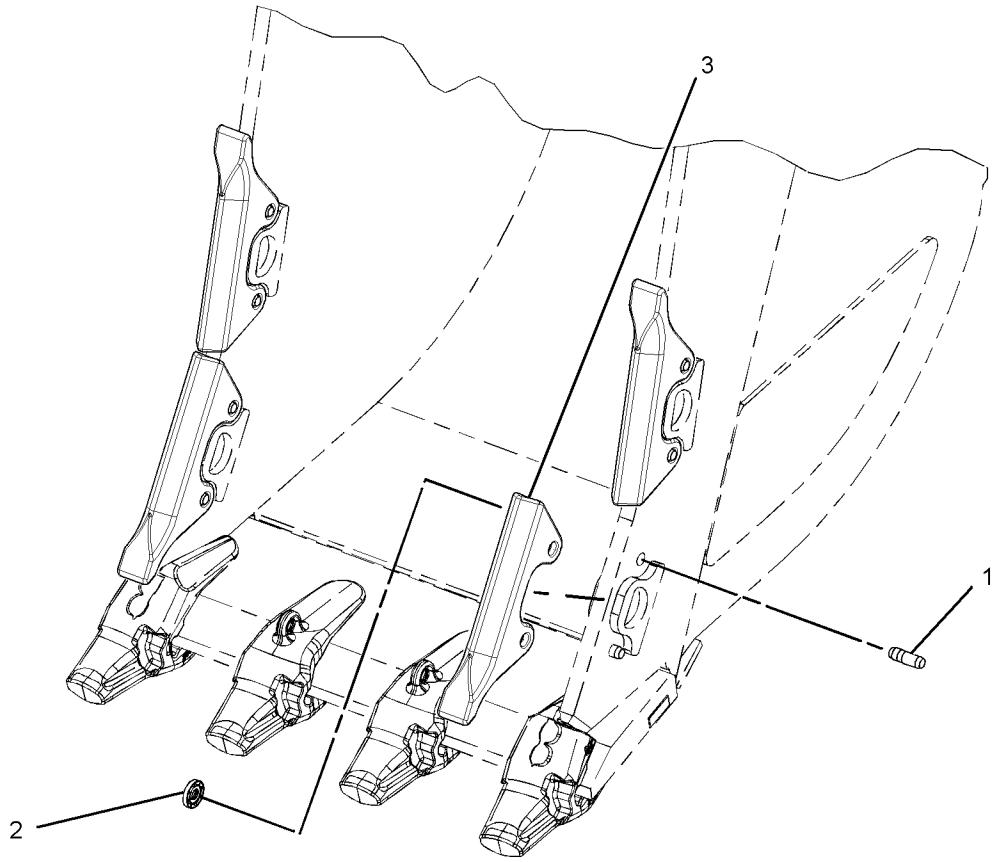

GRAPHIC #1 <END> g02351954

357-2691 PROTECTOR GP-SIDE BAR

S/N: SP91-UP

PART OF 528-4585 BUCKET AR-SEVERE SERVICE SPADE

SMCS-6817 **i04561061**

NOTE	REF NO	GRAPHIC REF	PART NUMBER	QTY	PART NAME 1 2 3 4 5 6 (PRODUCT LEVEL)	SEE PAGE
	1	1	**132-0999**	8	RETAINER AS	
	2	1	**275-5982**	8	PIN	
	3	1	**329-5958**	4	PROTECTOR-SIDE BAR	

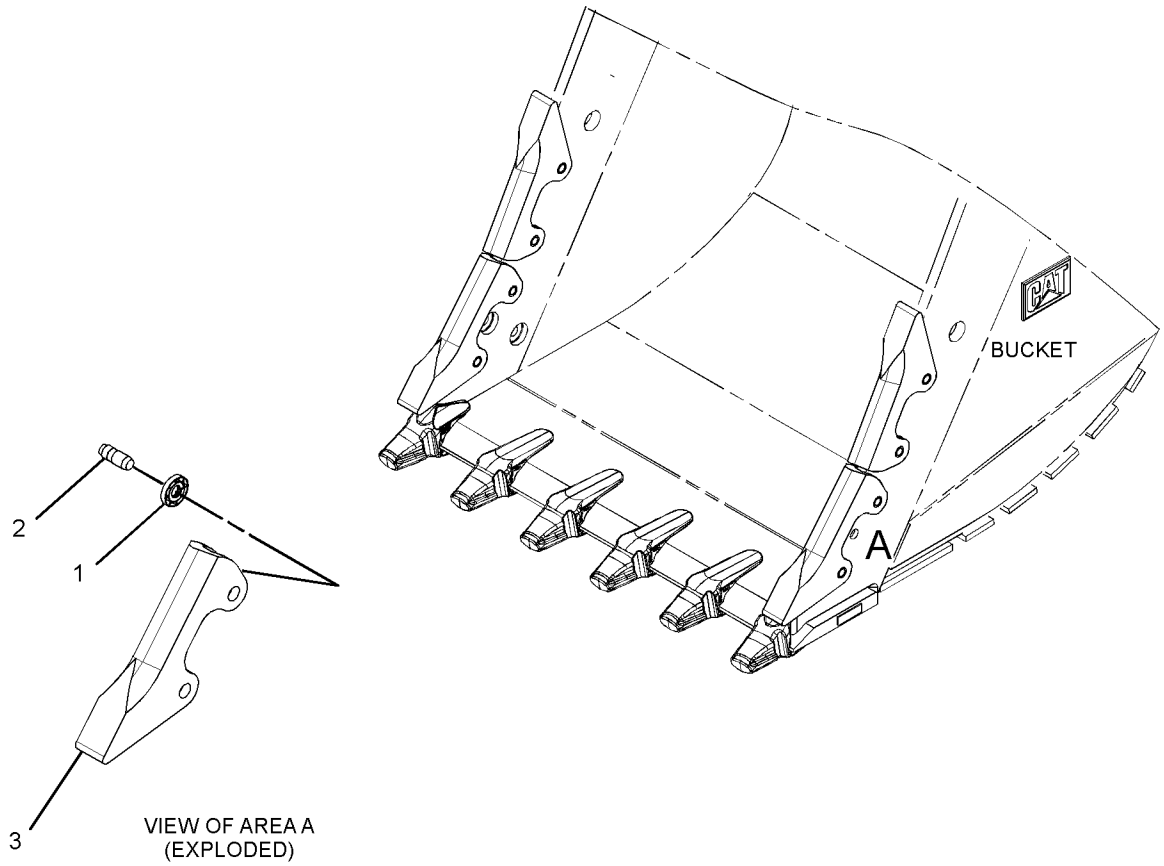

GRAPHIC #1 <END> g02242033

355-1224 RIPPER GP—SINGLE SHANK

S/N: SP91-UP

FOR USE WITH EXCAVATOR WITH REACH OR MASS EX (ME) CONFIGURATION TB-LINKAGE OR DB-LINKAGE, EQUIPPED WITH CW-45 COUPLER

SMCS-6310 **i07756876**

NOTE	REF NO	GRAPHIC REF	PART NUMBER	QTY	PART NAME 1 2 3 4 5 6 (PRODUCT LEVEL)	SEE PAGE
	1	1	**433-9730**	1	FILM-WARNING (EXPLOSION, WIRELESS, OMM, INTL)	
	2	1	**4T-4501**	1	TIP-RIPPER	
	3	1	**4T-4707**	3	RETAINER	
	4	1	**6Y-3909**	3	PIN	
	5	1	**9W-8365**	1	PROTECTOR	
	6	1	*361-6323*	1	RIPPER AS	
	6A	1	**2C-9259**	2	PLATE-IDENTIFICATION (CAT)	
	6B	1	**107-3361**	1	ADAPTER	
	7	1	**150-8896**	1	FILM-NOTICE (LIFT EYE LOCATION)	
	8	1	**159-8036**	1	FILM-WARNING (READ OMM)	
	9	1	**241-4221**	1	FILM-WARNING (FLYING DEBRIS)	
Y	10	1	*568-0343*	1	CONTROL GP-ELECTRONIC (WORK TOOL)	169

Y - SEPARATE ILLUSTRATION

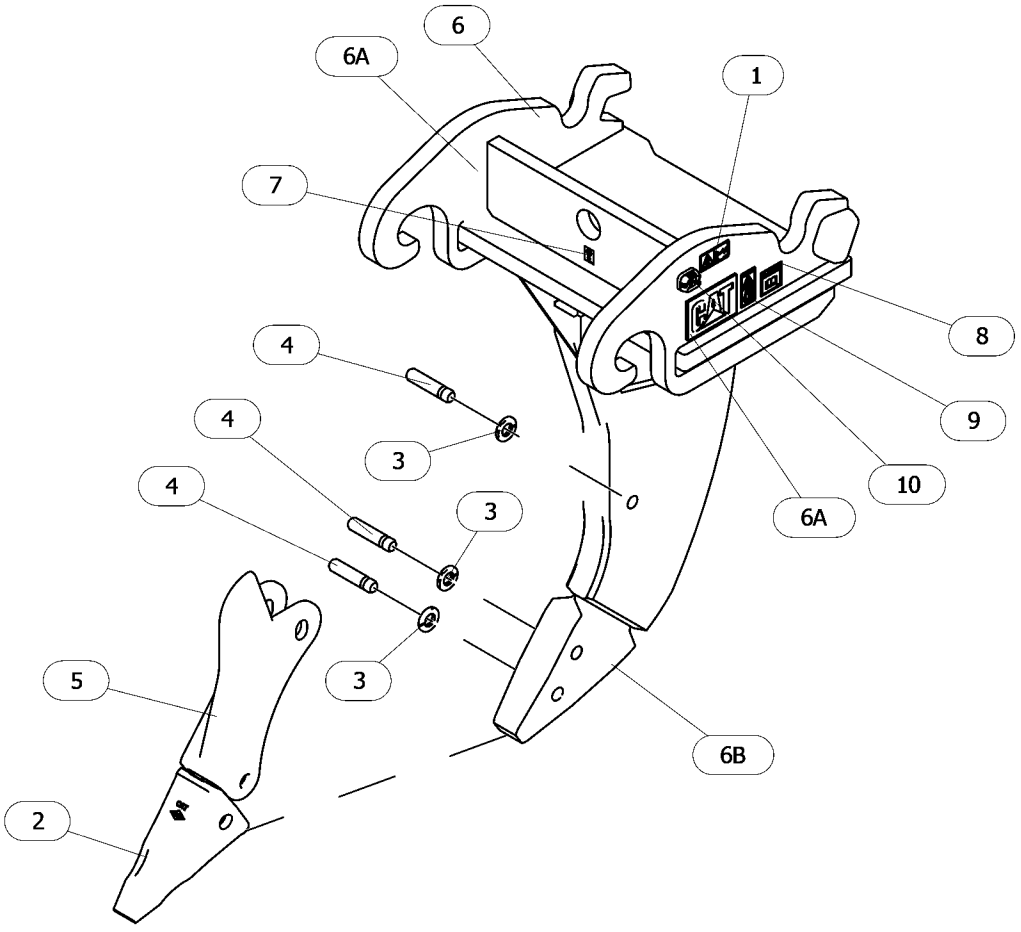

GRAPHIC #1 <END> g06464899

195-7120 SIDECUTTER GP

S/N: SP91-UP

PART OF 528-8133 BUCKET AR-SEVERE SERVICE SPADE

SMCS-6813 **i06615130**

NOTE	REF NO	GRAPHIC REF	PART NUMBER	QTY	PART NAME 1 2 3 4 5 6 (PRODUCT LEVEL)	SEE PAGE
C	1	1	**368-2856**	2	SIDECUTTER	
C	2	1	**368-2855**	1	SIDECUTTER (RH)	
C	3	1	**368-2854**	1	SIDECUTTER (LH)	
	4	1	**2J-3507**	12	NUT-FULL (1-8-THD)	
	5	1	**3K-5234**	12	WASHER-HARD (28X49X6-MM THK)	
C	6	1	**9S-1363**	12	BOLT (1-8X2.75-IN)	

C - CHANGE FROM PREVIOUS TYPE

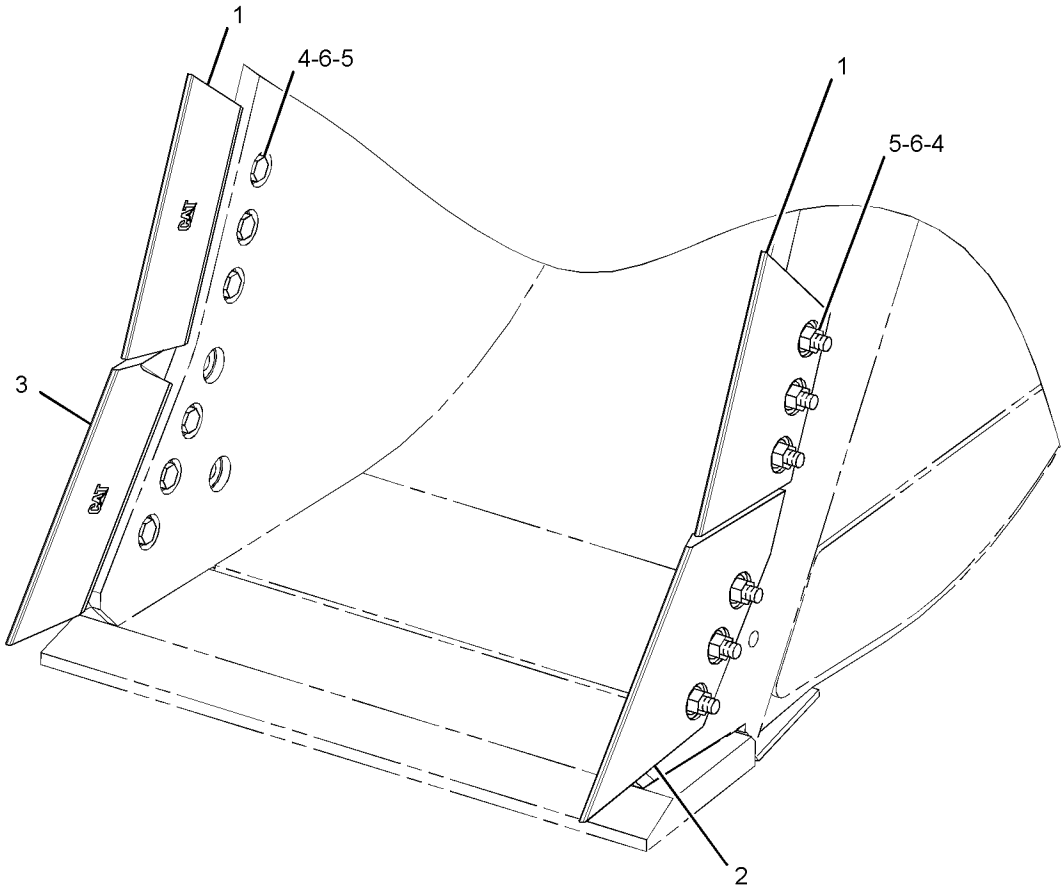

GRAPHIC #1 <END> g03495256

357-2685 SIDECUTTER GP

S/N: SP91-UP

SMCS-6813 **i06619680**

NOTE	REF NO	GRAPHIC REF	PART NUMBER	QTY	PART NAME 1 2 3 4 5 6 (PRODUCT LEVEL)	SEE PAGE
	1	1	**326-3405**	1	SIDECUTTER	
	2	1	**326-3406**	1	SIDECUTTER	
	3	1	**2J-3507**	10	NUT-FULL (1-8-THD)	
	4	1	**3K-5234**	10	WASHER-HARD (28X49X6-MM THK)	
	5	1	**1D-4637**	10	BOLT (1-8X3.25-IN)	

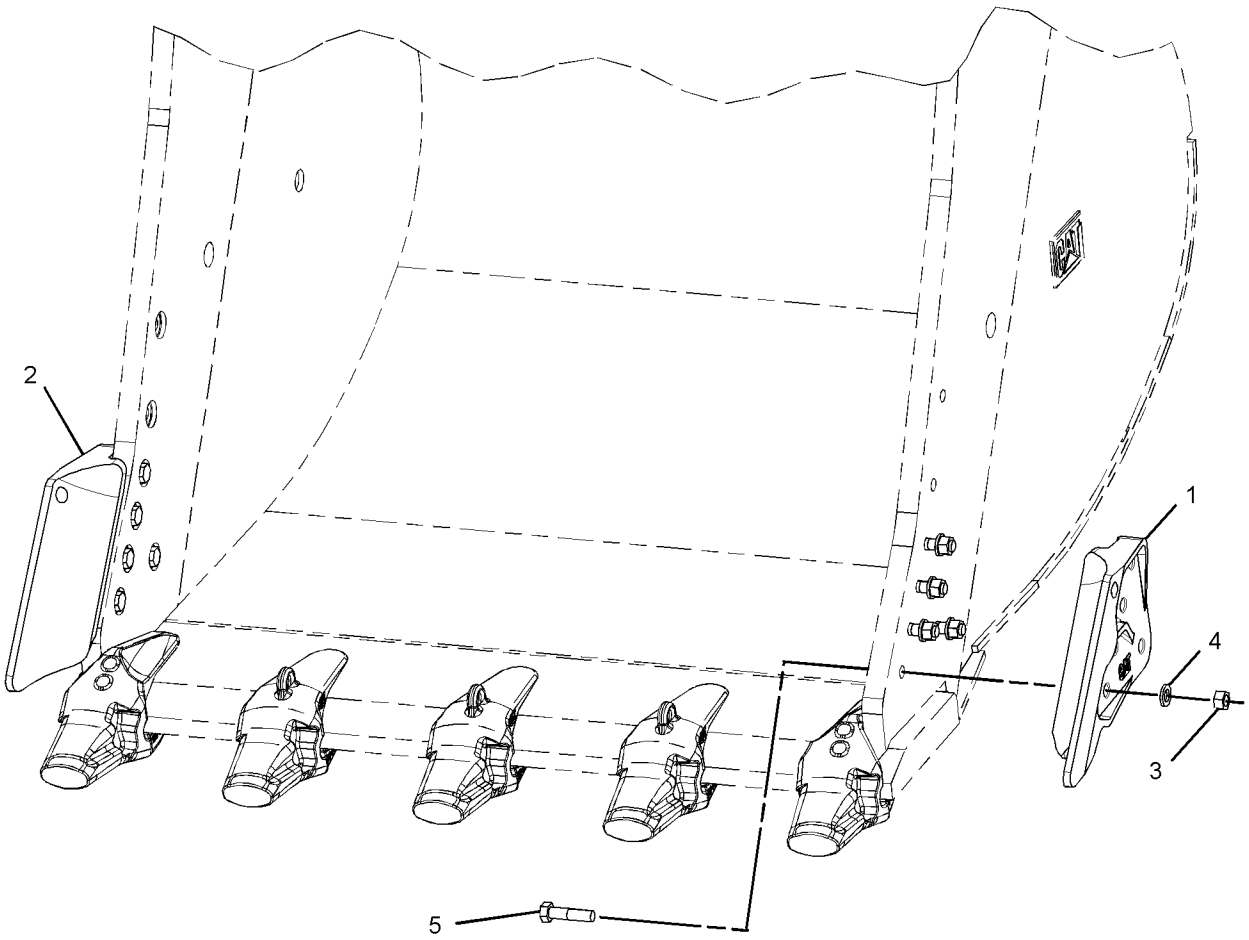

GRAPHIC #1 <END> g02358242

381-4093 TIP GP-PENETRATION

S/N: SP91-UP

X-130

PART OF 528-8133 BUCKET AR-SEVERE SERVICE SPADE

SMCS-6805 **i07199342**

NOTE	REF NO	GRAPHIC REF	PART NUMBER	QTY	PART NAME 1 2 3 4 5 6 (PRODUCT LEVEL)	SEE PAGE
	1	1	**456-7043**	2	RETAINER-LOCK	
	2	1	**456-7042**	2	SLEEVE	

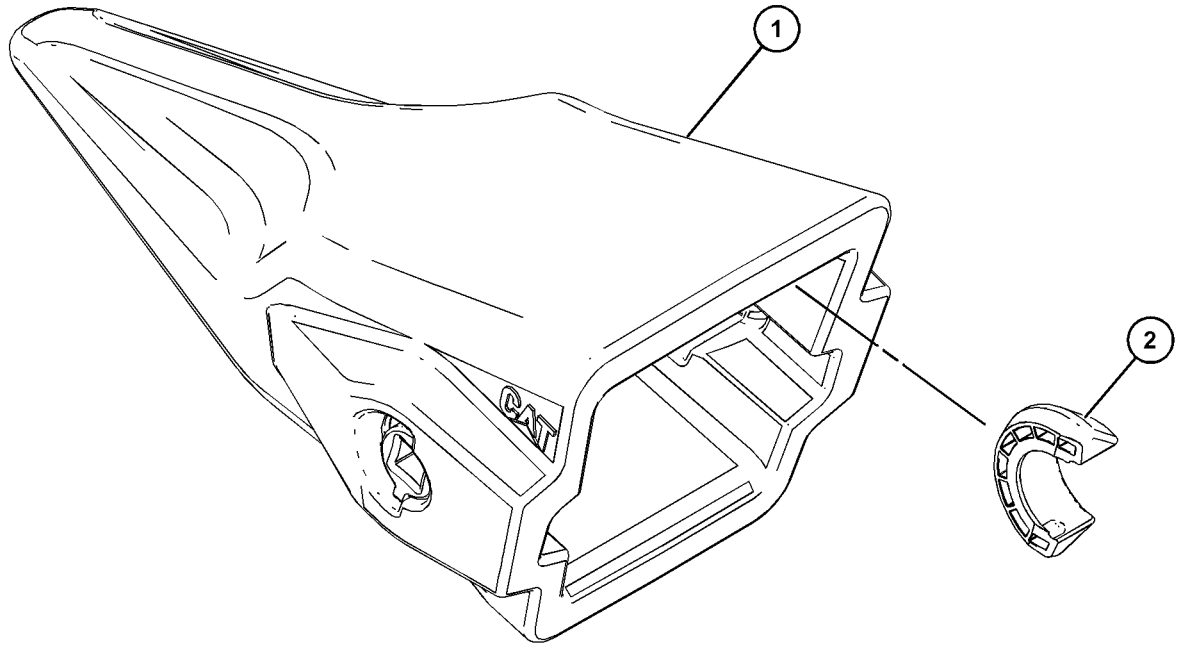

GRAPHIC #1 <END> g06068918

381-4089 TIP GP-PENETRATION PLUS

S/N: SP91-UP

X-130

SMCS-6805 **i07519221**

NOTE	REF NO	GRAPHIC REF	PART NUMBER	QTY	PART NAME 1 2 3 4 5 6 (PRODUCT LEVEL)	SEE PAGE
	1	1	**456-7042**	2	SLEEVE	
	2	1	**456-7043**	2	RETAINER-LOCK	

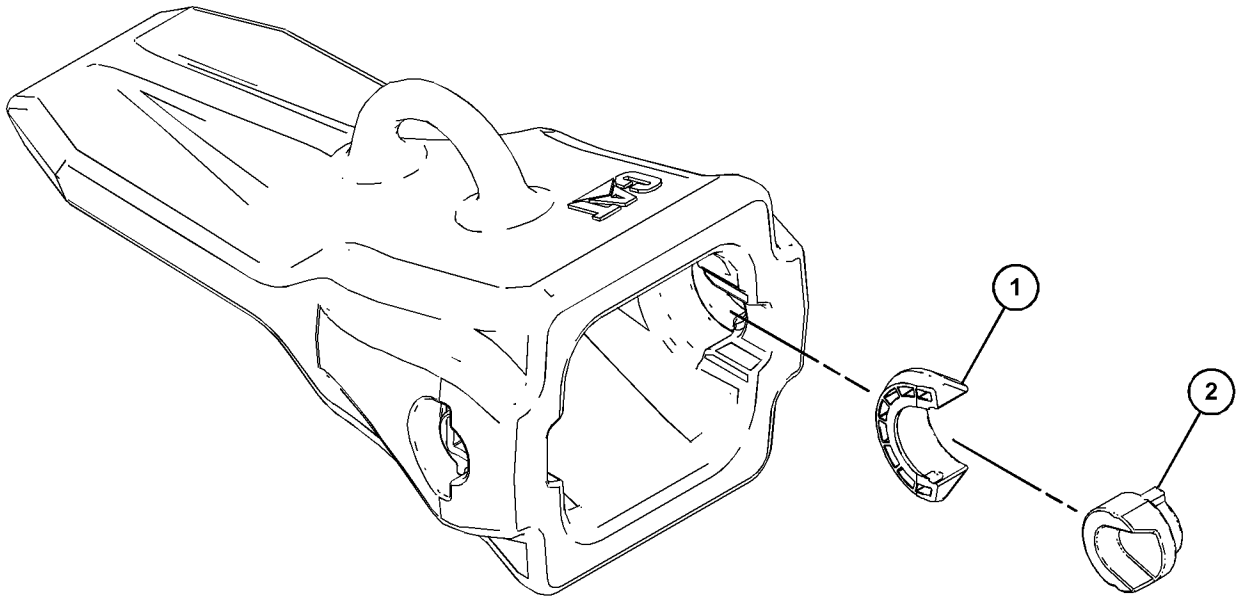

GRAPHIC #1 <END> g03839448

505-4113 TIP GP-PENETRATION PLUS–110

S/N: SP91-UP

PART OF 528-4585, 558-6618 BUCKET AR-SEVERE SERVICE SPADE

SMCS-6805 **i07520072**

NOTE	REF NO	GRAPHIC REF	PART NUMBER	QTY	PART NAME 1 2 3 4 5 6 (PRODUCT LEVEL)	SEE PAGE
	1	1	**456-7042**	2	SLEEVE	
	2	1	**456-7043**	2	RETAINER-LOCK	

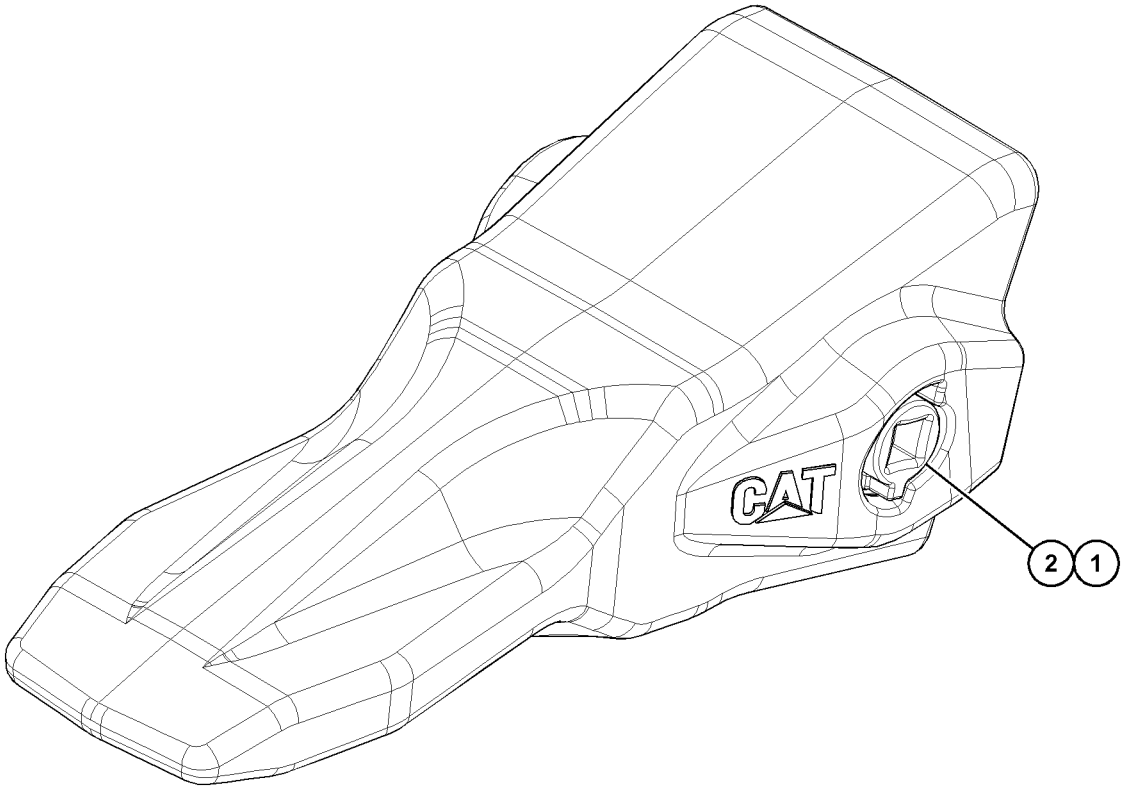

GRAPHIC #1 <END> g06275131

488-6600 AIR CONDITIONER & MOUNTING GP

S/N: SP91-UP

PART OF 500-0999, 500-1000 OPERATOR AR

SMCS-7320 **i07344902**

NOTE	REF NO	GRAPHIC REF	PART NUMBER	QTY	PART NAME 1 2 3 4 5 6 (PRODUCT LEVEL)	SEE PAGE
	1	1	**372-9583**	4	RIVET	
Y	2	1	**488-6601**	1	AIR CONDITIONER GP	640
	3	1	**488-6602**	1	CONTROLLER	
	4	1	**501-4899**	1	PLATE	
	5	1	**6V-3265**	1	CLIP	
	6	1	**7X-7729**	7	WASHER (11X25X3-MM THK)	
M	7	1	**7Y-5292**	2	SCREW-TRUSS HEAD (SELF-TAPPING)	
	8	1	**8T-4121**	1	WASHER-HARD (11X21X2.5-MM THK)	
M	9	1	**8T-4136**	7	BOLT (M10X1.5X25-MM)	
M	10	1	**8T-4137**	1	BOLT (M10X1.5X20-MM)	

M - METRIC PART
Y - SEPARATE ILLUSTRATION

488-6600 **AIR CONDITIONER & MOUNTING GP** (contd.) **i07344902**

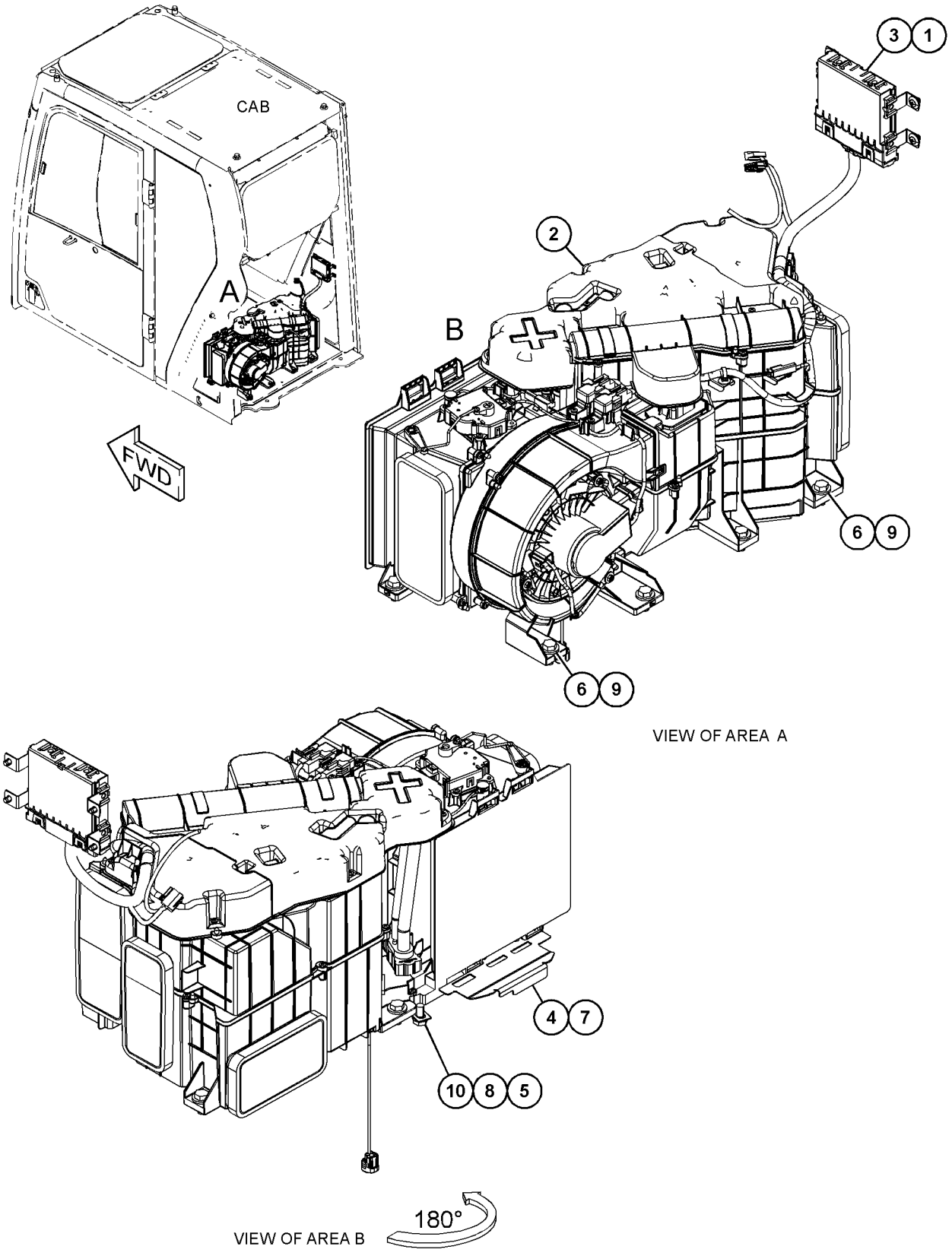

GRAPHIC #1 <END> g06229598

488-6601 AIR CONDITIONER GP

S/N: SP91-UP

PART OF 488-6600 AIR CONDITIONER & MOUNTING GP

SMCS-7320 **i07344909**

NOTE	REF NO	GRAPHIC REF	PART NUMBER	QTY	PART NAME 1 2 3 4 5 6 (PRODUCT LEVEL)	SEE PAGE
	1	1	**185-8300**	36	SCREW-TAPPING	
	2	1	**185-8302**	1	SCREW-TAPPING	
	3	1	**245-7819**	1	CLIP	
	4	1	**245-7856**	3	SCREW-TAPPING	
	5	1	**420-2380**	2	RELAY (AIR CONDITIONER, HEATER)	
	6	1	**420-2403**	1	HOLDER	
	7	1	**452-5529**	1	CONTROL AS	
	8	1	**500-0957**	1	FILTER AS	
	9	1	**520-8297**	2	PACKING	
	10	1	**520-8298**	1	PACKING	
	11	1	**520-8323**	1	CASE GP-HEATER & EVAPORATOR	
M		1	**9X-6615**	2	BOLT (M5X0.8X30-MM)	
M		1	**281-0791**	2	BOLT-SOCKET HEAD (M5X0.8X40-MM)	
		1	**520-8296**	1	PACKING	
		1	**520-8324**	1	VALVE AS-EXPANSION	
	12	1	**520-8235**	1	BRACKET	
	13	1	**520-8326**	1	CORE AS-HEATER	
	14	1	**520-8328**	1	MOTOR-ELECTRIC	
	15	1	**520-8329**	1	MOTOR-ELECTRIC (INTAKE AIR)	
	16	1	**520-8330**	1	THERMISTOR	
	17	1	**520-8331**	1	MOTOR-ELECTRIC (WITH FAN)	
	18	1	**520-8332**	1	HARNESS AS-HEATER & AIR COND	
	19	1	**520-8338**	1	MOTOR-ELECTRIC (AIR OUTLET)	
	20	1	**526-8544**	2	PACKING	

M - METRIC PART

488-6601 **AIR CONDITIONER GP (**contd.**)** **i07344909**

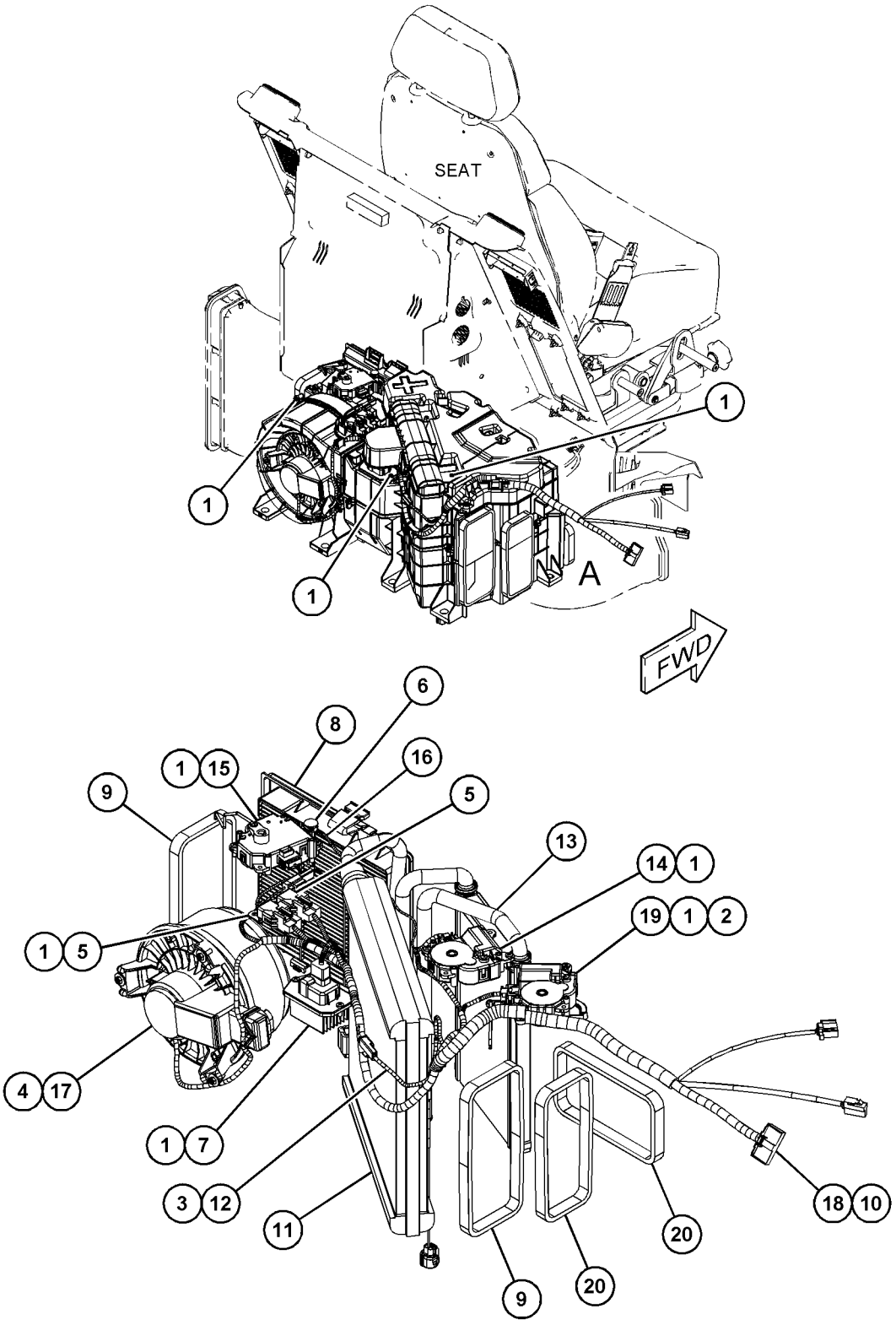

VIEW OF AREA A
(PARTS REMOVED FOR CLARITY)

GRAPHIC #1 <END> g06234772

487-6658 ARMREST GP

S/N: SP91-UP

PART OF 488-6550 CONSOLE GP-OPERATOR

SMCS-7307 **i07347308**

NOTE	REF NO	GRAPHIC REF	PART NUMBER	QTY	PART NAME 1 2 3 4 5 6 (PRODUCT LEVEL)	SEE PAGE
	1	1	**488-6535**	1	ARMREST AS (LH)	
	2	1	**488-6536**	1	ARMREST AS (RH)	
	3	1	**516-4918**	2	COVER	
	4	1	**516-4919**	2	COVER	
M	5	1	**128-2135**	4	SCREW-TRUSS HEAD (M6X1X13-MM)	
M	6	1	**9X-2041**	6	SCREW-TRUSS HEAD (M10X1.5X20-MM)	

M - METRIC PART

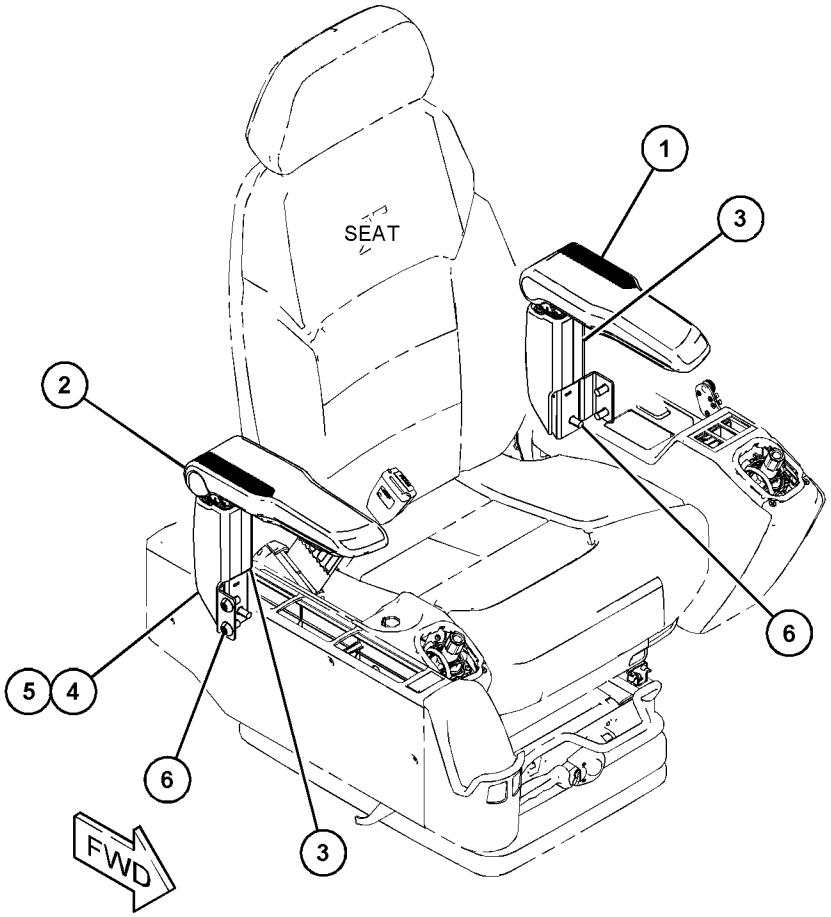

GRAPHIC #1 <END> g06227294

487-6659 ARMREST GP

S/N: SP91-UP

PART OF 488-6560 CONSOLE GP-OPERATOR

SMCS-7307 **i07360133**

NOTE	REF NO	GRAPHIC REF	PART NUMBER	QTY	PART NAME 1 2 3 4 5 6 (PRODUCT LEVEL)	SEE PAGE
	1	1	**473-9230**	1	ARMREST GP (LH)	
	2	1	**473-9232**	1	ARMREST GP (RH)	
	3	1	**516-4918**	2	COVER	
	4	1	**516-4919**	2	COVER	
M	5	1	**128-2135**	4	SCREW-TRUSS HEAD (M6X1X13-MM)	
M	6	1	**9X-2041**	6	SCREW-TRUSS HEAD (M10X1.5X20-MM)	

M - METRIC PART

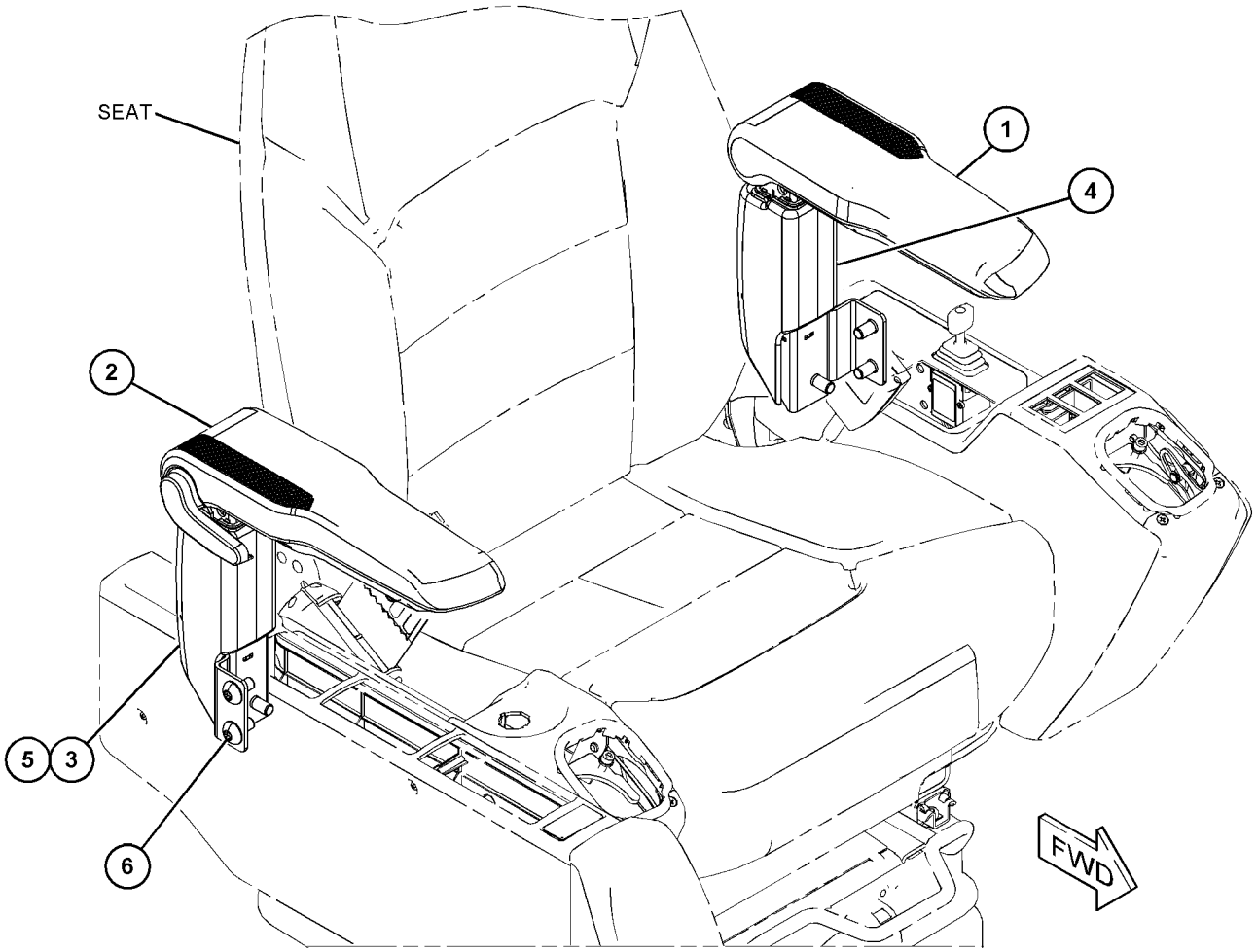

GRAPHIC #1 <END> g06230515

487-6755 BRACKET GP-MOUNTING

S/N: SP91-UP

PART OF 486-5502, 498-7724 CAB GP

SMCS-0635 **i07346366**

NOTE	REF NO	GRAPHIC REF	PART NUMBER	QTY	PART NAME 1 2 3 4 5 6 (PRODUCT LEVEL)	SEE PAGE
	1	1	**488-6566**	1	BRACKET AS	
	2	1	**488-6567**	1	BRACKET AS	
	3	1	**500-0932**	1	BRACKET AS	
	4	1	**511-5957**	1	BRACKET	
M	5	1	**9X-2041**	8	SCREW-TRUSS HEAD (M10X1.5X20-MM)	

M - METRIC PART

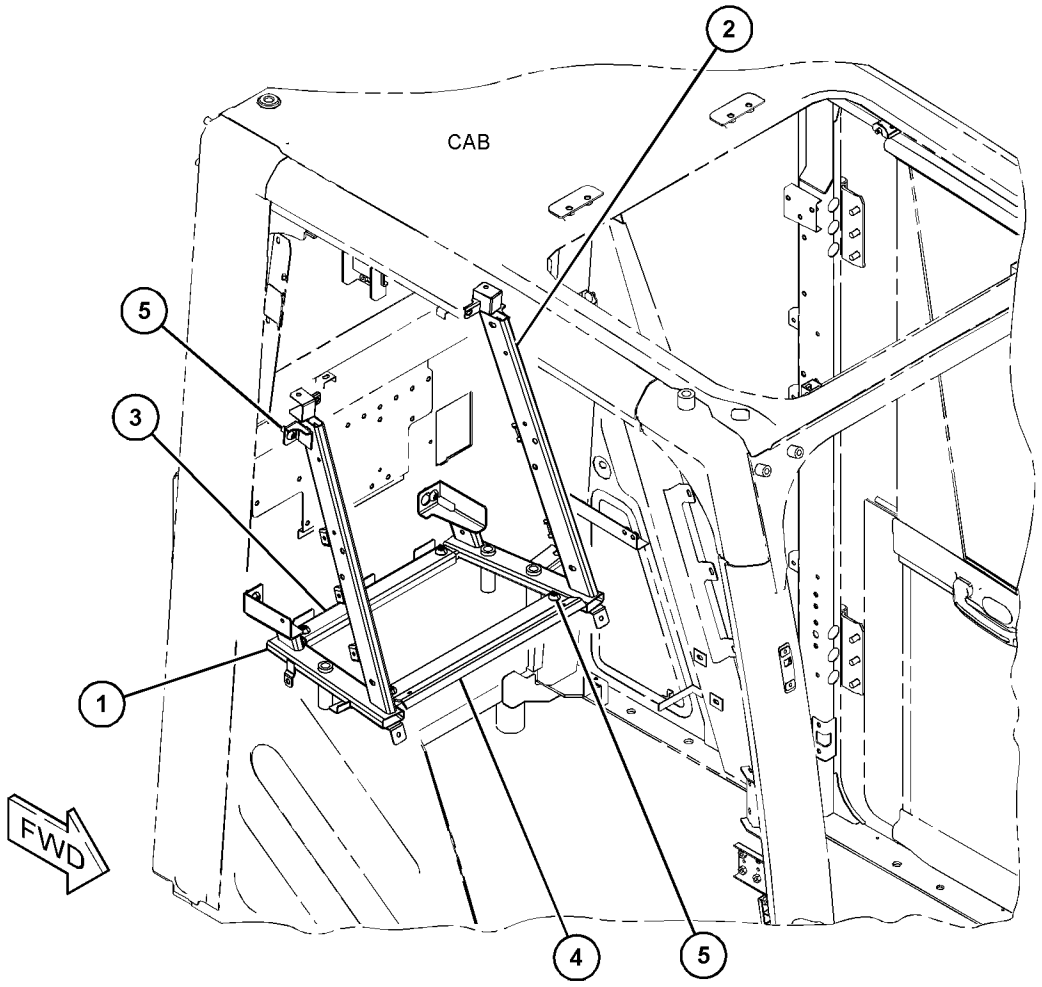

GRAPHIC #1 <END> g06230525

477-7565 CAB GP

S/N: SP91-UP

PART OF 486-5502, 498-7724 CAB GP

SMCS-7301, 7325 **i07793465**

NOTE	REF NO	GRAPHIC REF	PART NUMBER	QTY	PART NAME 1 2 3 4 5 6 (PRODUCT LEVEL)	SEE PAGE
	1	1	**4I-3090**	9	SEAL	
	2	1	**7Y-8561**	1	BUMPER	
	3	1	**156-6480**	2	SEAL	
	4	1	**156-6599**	1	STRIKER	
	5	1	**167-7042**	3	SEAL	
Y	6	1	**394-9460**	1	MIRROR GP	699
M	7	1	**189-2864**	2	SCREW-FLAT HEAD (M8X1.25X30-MM)	
	8	1	**451-2175**	1	WASHER-HARD (17.5X30X3.5-MM THK)	
M	9	1	**451-2180**	1	BOLT (M16X2X35-MM)	
	10	1	**453-3454**	1	WASHER-HARD (11X21X2.5-MM THK)	
M	11	1	**457-8759**	3	BOLT (M10X1.5X20-MM)	
	12	1	**563-9148**	1	LATCH AS	
	13	1	**566-2225**	1	HANDRAIL AS (FRONT)	
	14	1	**488-6488**	1	HANDRAIL AS (SIDE)	
	15	1	**488-6538**	1	LEVER AS	
		1	**526-8575**	1	LEVER AS	
		1	**526-8576**	1	CABLE AS	
	16	1	**500-0732**	1	PLATE	
	17	1	**500-0962**	1	INSULATION	
	18	1	**500-0963**	1	INSULATION	
	19	1	**511-5969**	1	BUMPER	
	20	1	**516-4923**	1	COVER	
	21	1	**566-2224**	1	MOUNTING GP-MIRROR	
		1	**3B-4504**	2	LOCKWASHER	
M		1	**9X-6153**	2	BOLT (M6X1X10-MM)	
Y	22	1	**524-7742**	1	COVER GP-CAB	677
	23	1	**526-8550**	1	BRACKET	
	24	1	**526-8551**	1	PLATE	
M	25	1	**127-0580**	2	SCREW-FLAT HEAD (M8X1.25X20-MM)	
	26	1	**163-6795**	3	STRAP-CABLE	
	27	1	**1R-5998**	4	LOCKWASHER	
M	28	1	**344-5675**	2	NUT (M10X1.5-THD)	
M	29	1	**3E-8020**	4	SCREW-TRUSS HEAD (M6X1X25-MM)	
	30	1	**7X-0578**	1	WASHER-HARD (10.2X32X2.5-MM THK)	
	31	1	**7X-7729**	2	WASHER (11X25X3-MM THK)	
	32	1	**8T-4121**	3	WASHER-HARD (11X21X2.5-MM THK)	
M	33	1	**8T-4137**	2	BOLT (M10X1.5X20-MM)	
	34	1	**8T-4224**	2	WASHER-HARD (8.8X16X2-MM THK)	
M	35	1	**9X-2041**	1	SCREW-TRUSS HEAD (M10X1.5X20-MM)	
M	36	1	**9X-2044**	6	SCREW-TRUSS HEAD (M6X1X16-MM)	
M	37	1	**8T-4200**	2	BOLT (M8X1.25X16-MM)	

M - METRIC PART
Y - SEPARATE ILLUSTRATION

477-7565 **CAB GP** (contd.) **i07793465**

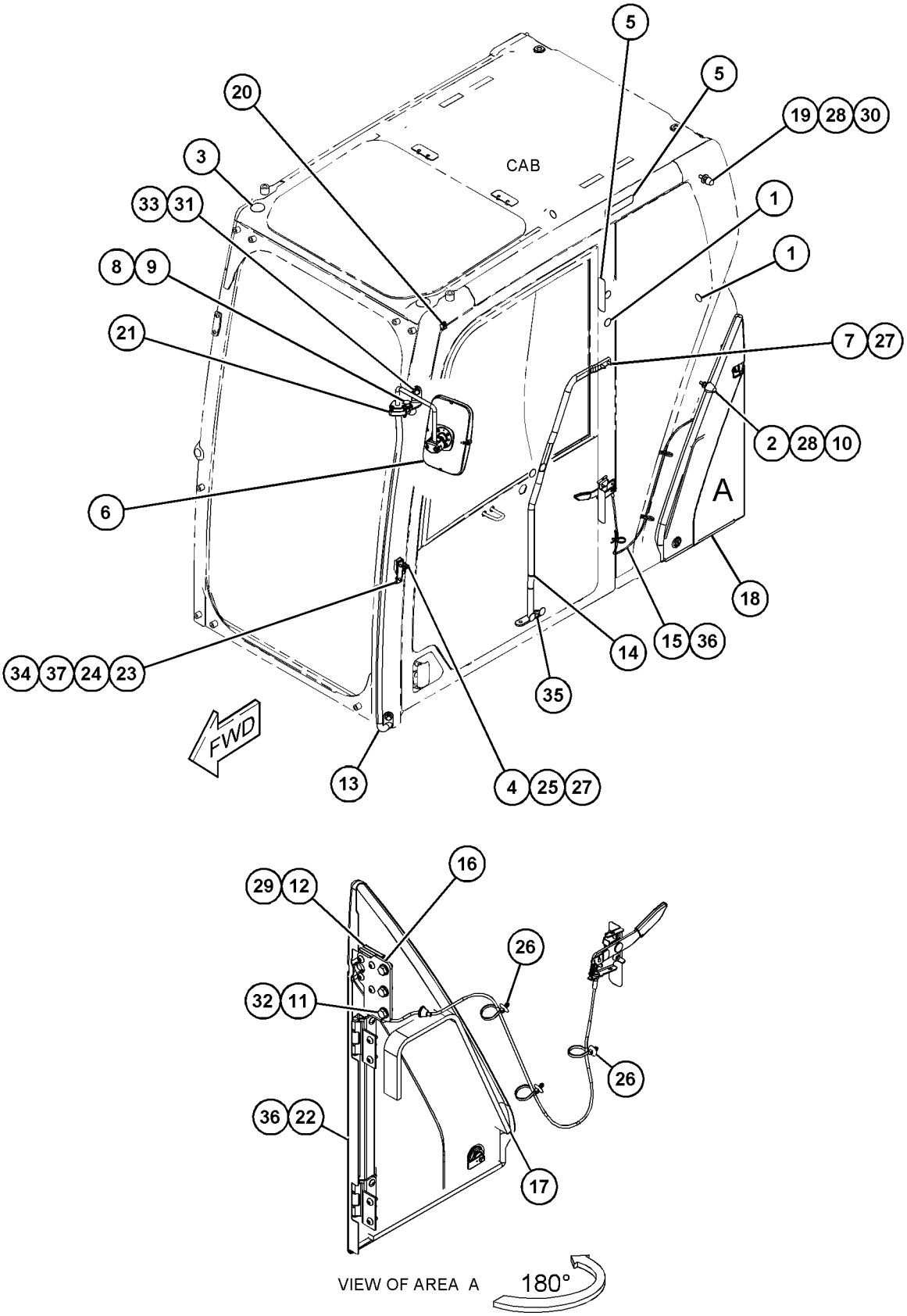

GRAPHIC #1 <END> g06404501

486-5502 CAB GP

S/N: SP91-UP

PART OF 487-6902 CAB GP

SMCS-7301, 7325 **i07714074**

NOTE	REF NO	GRAPHIC REF	PART NUMBER	QTY	PART NAME 1 2 3 4 5 6 (PRODUCT LEVEL)	SEE PAGE
Y	1	1	*477-7563*	1	WINDOW GP-CAB (FRONT)	732
Y	2	1	*477-7564*	1	WINDOW GP-CAB (REAR, SIDE)	734
Y	3	1	*477-7565*	1	CAB GP (EXTERIOR)	645
Y	4	1	**477-7567**	1	PARTS GP-DOOR	713
Y	5	1	*483-7867*	1	HATCH GP-ROOF	685
Y	6	1	*486-5407*	1	WIPER GP-WINDOW	740
Y	7	1	*487-6666*	1	CAB GP (INTERIOR)	648
Y	8	1	*487-6755*	1	BRACKET GP-MOUNTING	644
Y	9	1	**488-6559**	1	CAB GP	650
FY			**553-9988**	1	WINDOW GP-CAB (FRONT, UPPER)	738
FY			**562-5655**	1	WINDOW GP-CAB (FRONT, UPPER)	739
FY			**553-9987**	1	DOOR GP-CAB	679

F - NOT SHOWN
Y - SEPARATE ILLUSTRATION

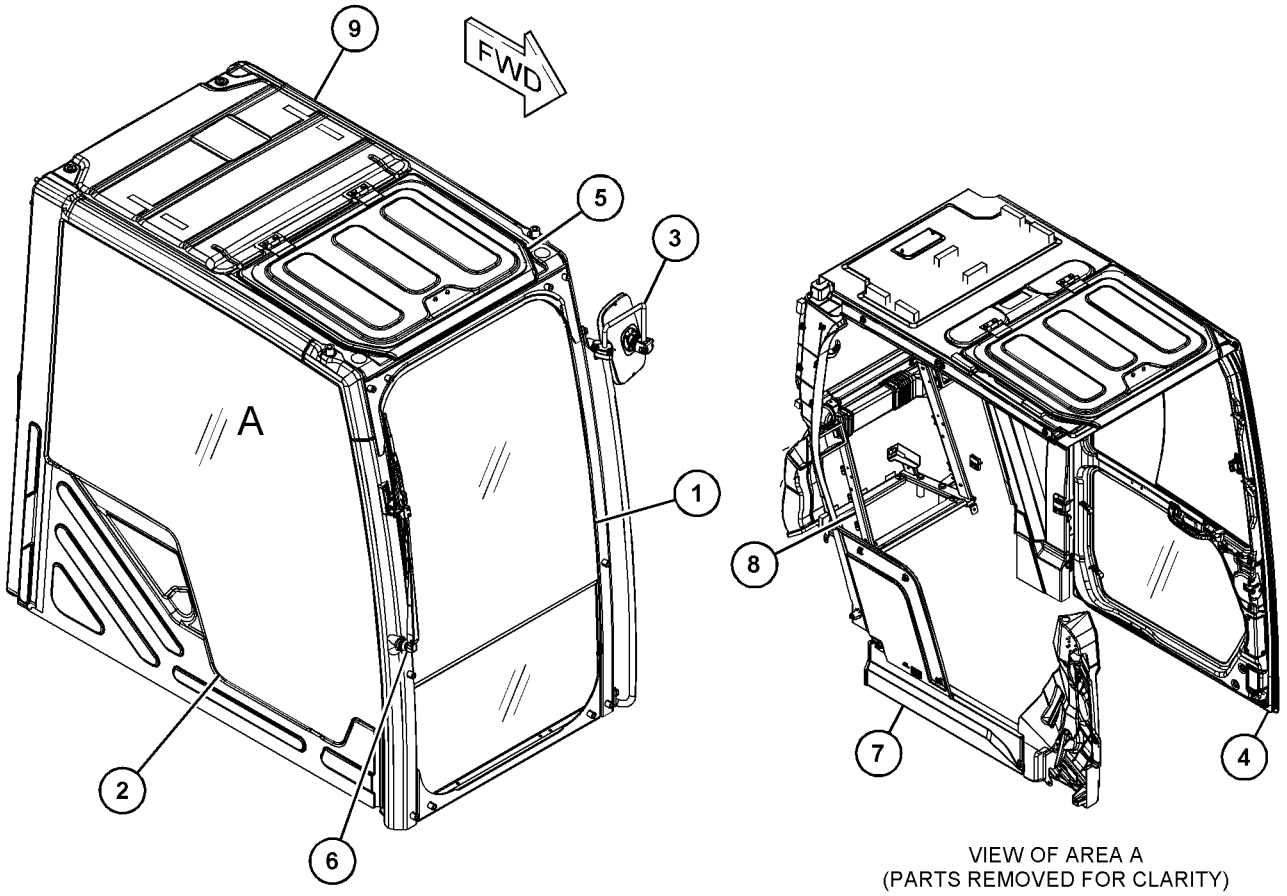

VIEW OF AREA A
(PARTS REMOVED FOR CLARITY)

GRAPHIC #1 <END> g06350771

487-6666 CAB GP—INTERIOR

S/N: SP91-UP

PART OF 486-5502, 498-7724 CAB GP

SMCS-7301, 7325

i07346330

NOTE	PART NUMBER	QTY	PART NAME 1 2 3 4 5 6 (PRODUCT LEVEL)	SEE PAGE
Y	*487-6678*	1	COVER GP-CAB (REAR)	673
Y	*488-6451*	1	COVER GP-CAB (WIPER MOTOR) (FRONT)	675
Y	*487-7003*	1	DUCT GP-CAB AIR	681
Y	*487-6672*	1	SCREEN GP-SUN	719

Y - SEPARATE ILLUSTRATION

<END>

487-6902 CAB GP

S/N: SP91-UP

PART OF 500-0999 OPERATOR AR

SMCS-7301, 7325 **i07531061**

NOTE	REF NO	GRAPHIC REF	PART NUMBER	QTY	PART NAME 1 2 3 4 5 6 (PRODUCT LEVEL)	SEE PAGE
M	1	1	**8T-4190**	4	BOLT (M16X2X25-MM)	
M	2	1	**8T-4192**	8	BOLT (M12X1.75X25-MM)	
	3	1	**8T-4223**	8	WASHER-HARD (13.5X25.5X3-MM THK)	
M	4	1	**9X-2041**	1	SCREW-TRUSS HEAD (M10X1.5X20-MM)	
	5	1	**9X-8257**	4	WASHER (17.5X30X3.5-MM THK)	
Y	6	1	*486-5502*	1	CAB GP	647

M - METRIC PART
Y - SEPARATE ILLUSTRATION

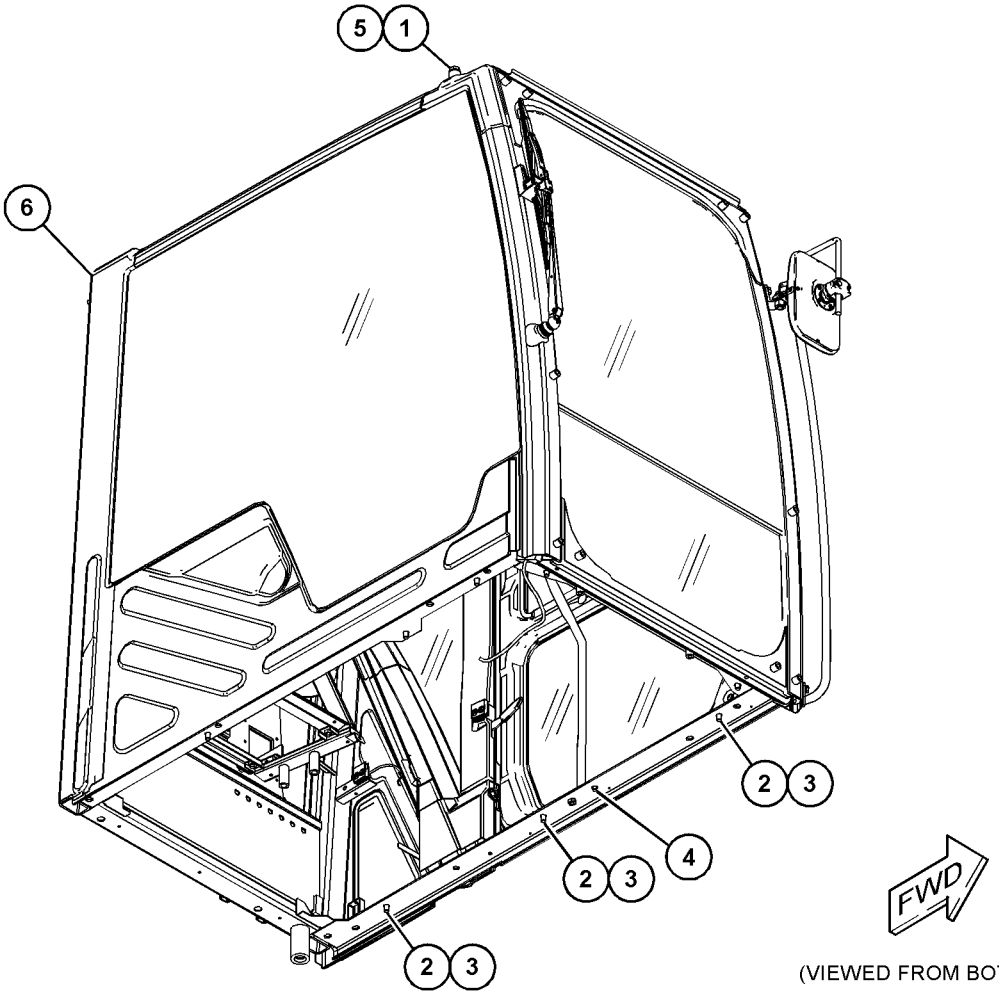

(VIEWED FROM BOTTOM)

GRAPHIC #1 <END> g06284310

488-6559 CAB GP

S/N: SP91-UP

PART OF 486-5502, 498-7724 CAB GP

SMCS-7301, 7325 **i07531065**

NOTE	REF NO	GRAPHIC REF	PART NUMBER	QTY	PART NAME 1 2 3 4 5 6 (PRODUCT LEVEL)	SEE PAGE
	1	1	**8T-4121**	6	WASHER-HARD (11X21X2.5-MM THK)	
M	2	1	**8T-4137**	6	BOLT (M10X1.5X20-MM)	
M	3	1	**9X-2041**	6	SCREW-TRUSS HEAD (M10X1.5X20-MM)	
	4	1	**486-5487**	1	DOOR AS-CAB	
	5	1	**488-6552**	2	HINGE	
	6	1	**500-0940**	1	CAB AS	
M		1	**9R-2672**	10	BOSS-THREADED (M10X1.5X120-MM)	

M - METRIC PART

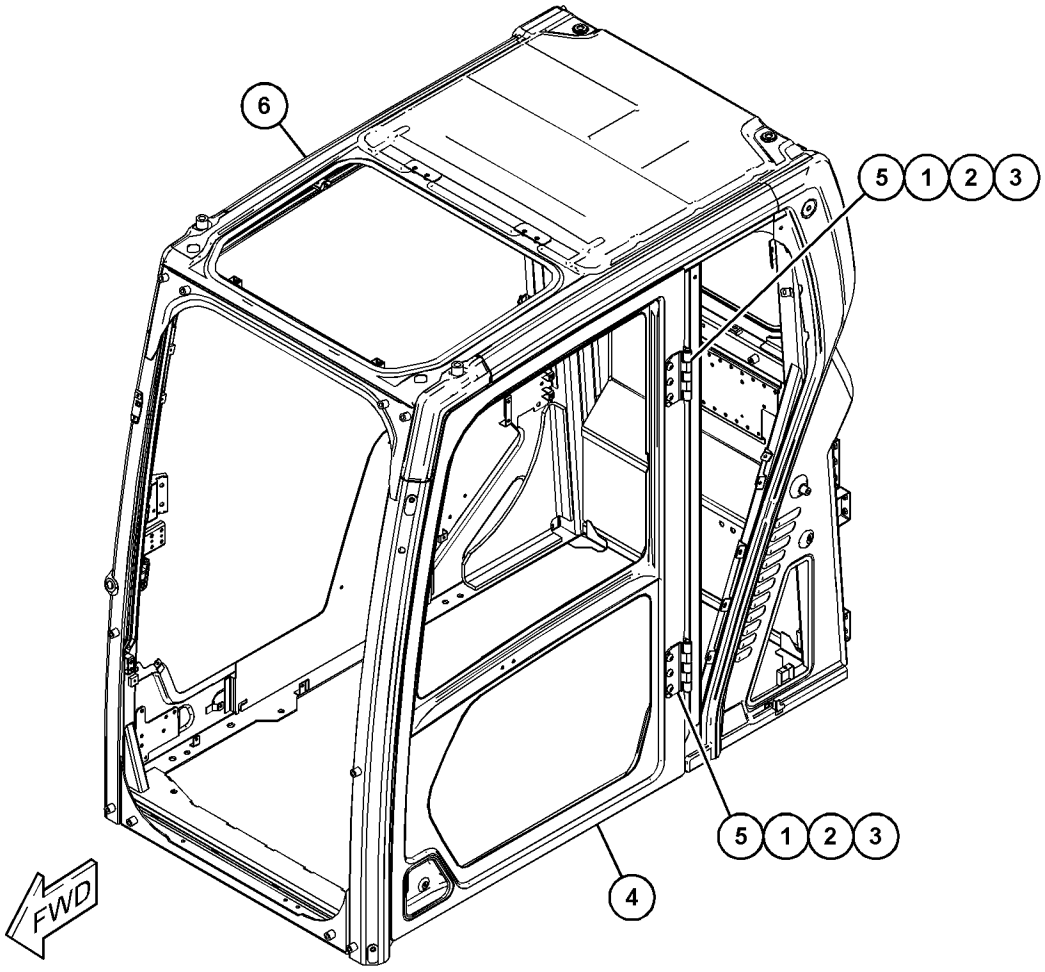

GRAPHIC #1 <END> g06284306

498-7723 CAB GP

S/N: SP91-UP

PART OF 500-1000 OPERATOR AR

SMCS-7301, 7325 **i07531066**

NOTE	REF NO	GRAPHIC REF	PART NUMBER	QTY	PART NAME 1 2 3 4 5 6 (PRODUCT LEVEL)	SEE PAGE
M	1	1	**8T-4190**	4	BOLT (M16X2X25-MM)	
M	2	1	**8T-4192**	8	BOLT (M12X1.75X25-MM)	
	3	1	**8T-4223**	8	WASHER-HARD (13.5X25.5X3-MM THK)	
M	4	1	**9X-2041**	1	SCREW-TRUSS HEAD (M10X1.5X20-MM)	
	5	1	**9X-8257**	4	WASHER (17.5X30X3.5-MM THK)	
Y	6	1	*498-7724*	1	CAB GP	652

M - METRIC PART
Y - SEPARATE ILLUSTRATION

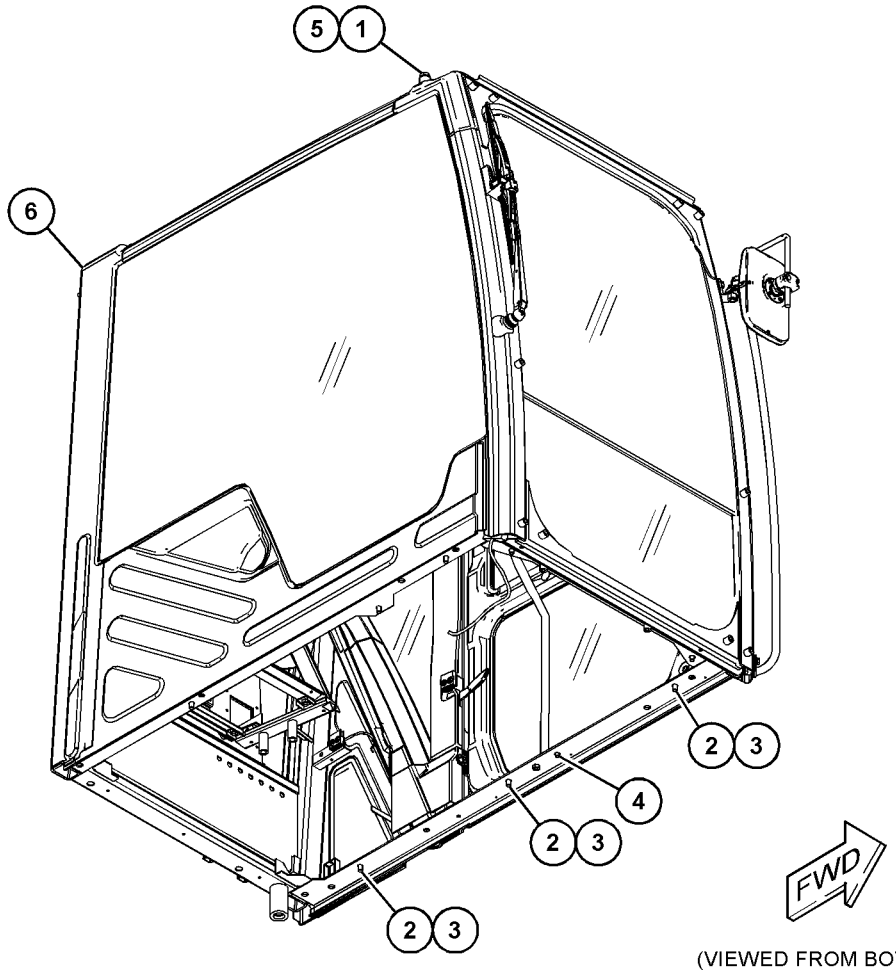

(VIEWED FROM BOTTOM)

GRAPHIC #1 <END> g06284202

498-7724 CAB GP

S/N: SP91-UP

PART OF 498-7723 CAB GP

SMCS-7301, 7325 **i07531071**

NOTE	REF NO	GRAPHIC REF	PART NUMBER	QTY	PART NAME 1 2 3 4 5 6 (PRODUCT LEVEL)	SEE PAGE
JY	1	1	*477-7563*	1	WINDOW GP-CAB (FRONT)	732
Y	2	1	*477-7564*	1	WINDOW GP-CAB (REAR, SIDE)	734
Y	3	1	*477-7565*	1	CAB GP (EXTERIOR)	645
Y	4	1	**553-9987**	1	DOOR GP-CAB	679
Y	5	1	*486-5407*	1	WIPER GP-WINDOW	740
Y	6	1	*487-6639*	1	HATCH GP-ROOF	686
Y	7	1	*487-6666*	1	CAB GP (INTERIOR)	648
Y	8	1	*487-6755*	1	BRACKET GP-MOUNTING	644
Y	9	1	**488-6559**	1	CAB GP	650
FJY			**553-9988**	1	WINDOW GP-CAB (FRONT, UPPER)	738

F - NOT SHOWN
J - ITEMS MARKED J AVAILABLE FOR SERVICE REPAIR OF WINDOW GO MARKED J
Y - SEPARATE ILLUSTRATION

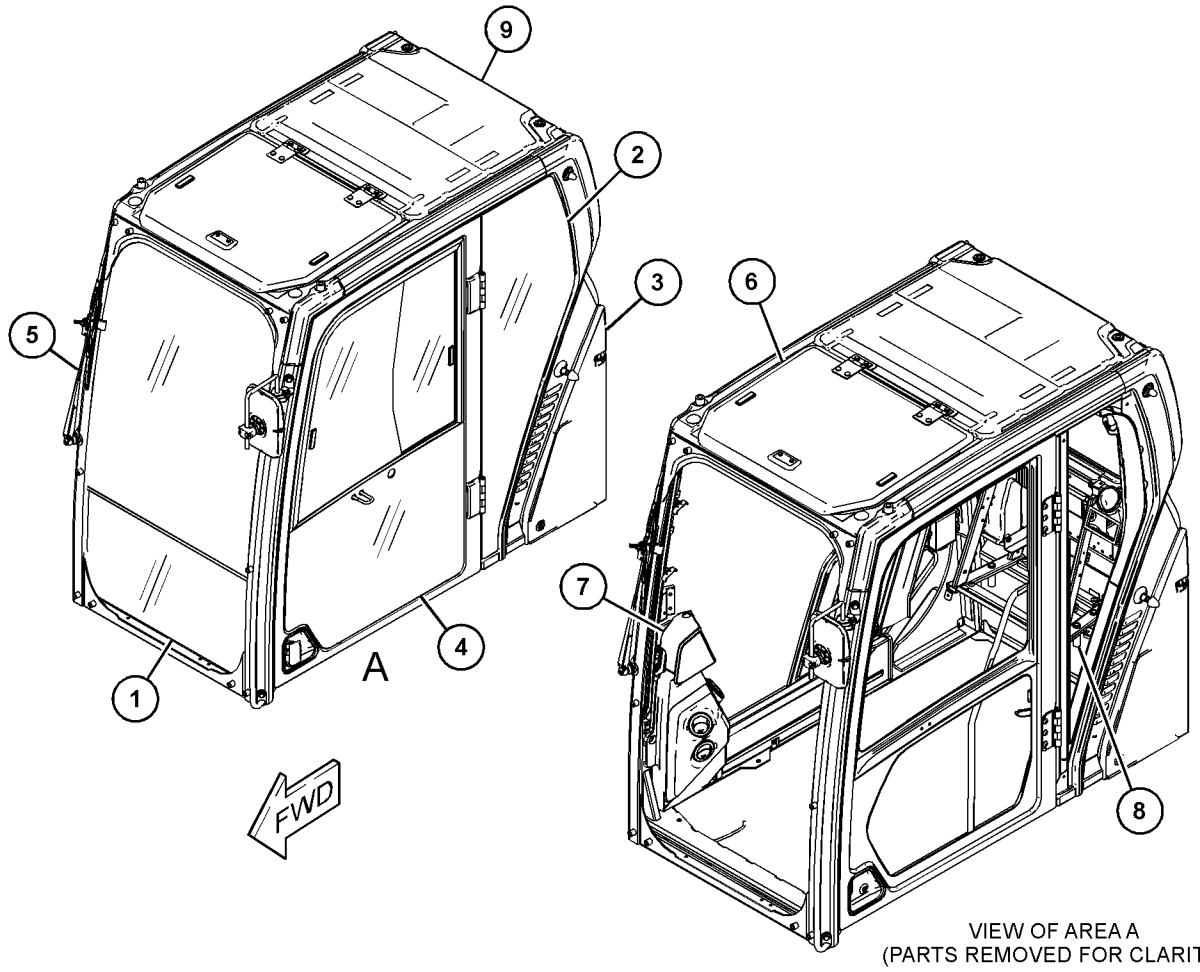

VIEW OF AREA A
(PARTS REMOVED FOR CLARITY)

GRAPHIC #1 <END> g06284726

512-1338 CAMERA & MIRROR AR—REAR RH

S/N: SP91-UP

SMCS-7319, 7348

i07571442

NOTE	PART NUMBER	QTY	PART NAME 1 2 3 4 5 6 (PRODUCT LEVEL)	SEE PAGE
Y	*502-7171*	1	CAMERA & MOUNTING GP (REAR VIEW)	157
Y	*528-3529*	1	COVER GP-SOUND SUPPRESSION (FUEL, HYDRAULIC TANKS)	331
Y	*548-8355*	1	DOOR & MTG GP-ACCESS (AIR CLEANER, BATTERY)	334
Y	*548-0293*	1	MIRROR GP-SIDE VIEW (FRONT, RH)	702
Y	*502-7213*	1	WIRING GP-CHASSIS (REAR VIEW, CAMERA)	269

Y - SEPARATE ILLUSTRATION

<END>

505-1238 COMPRESSOR GP-REFRIGERANT

S/N: NTB1-UP

PART OF 522-6120 ENGINE AR-COMPLETE

SMCS-1802 **i07861608**

NOTE	REF NO	GRAPHIC REF	PART NUMBER	QTY	PART NAME 1 2 3 4 5 6 (PRODUCT LEVEL)	SEE PAGE
Y	1	1	**567-5159**	1	COMPRESSOR GP-REFRIGERANT	655
M	2	1	**255-1281**	4	BOLT-FLANGE HEAD (M8X1.25X100-MM)	

M - METRIC PART
Y - SEPARATE ILLUSTRATION

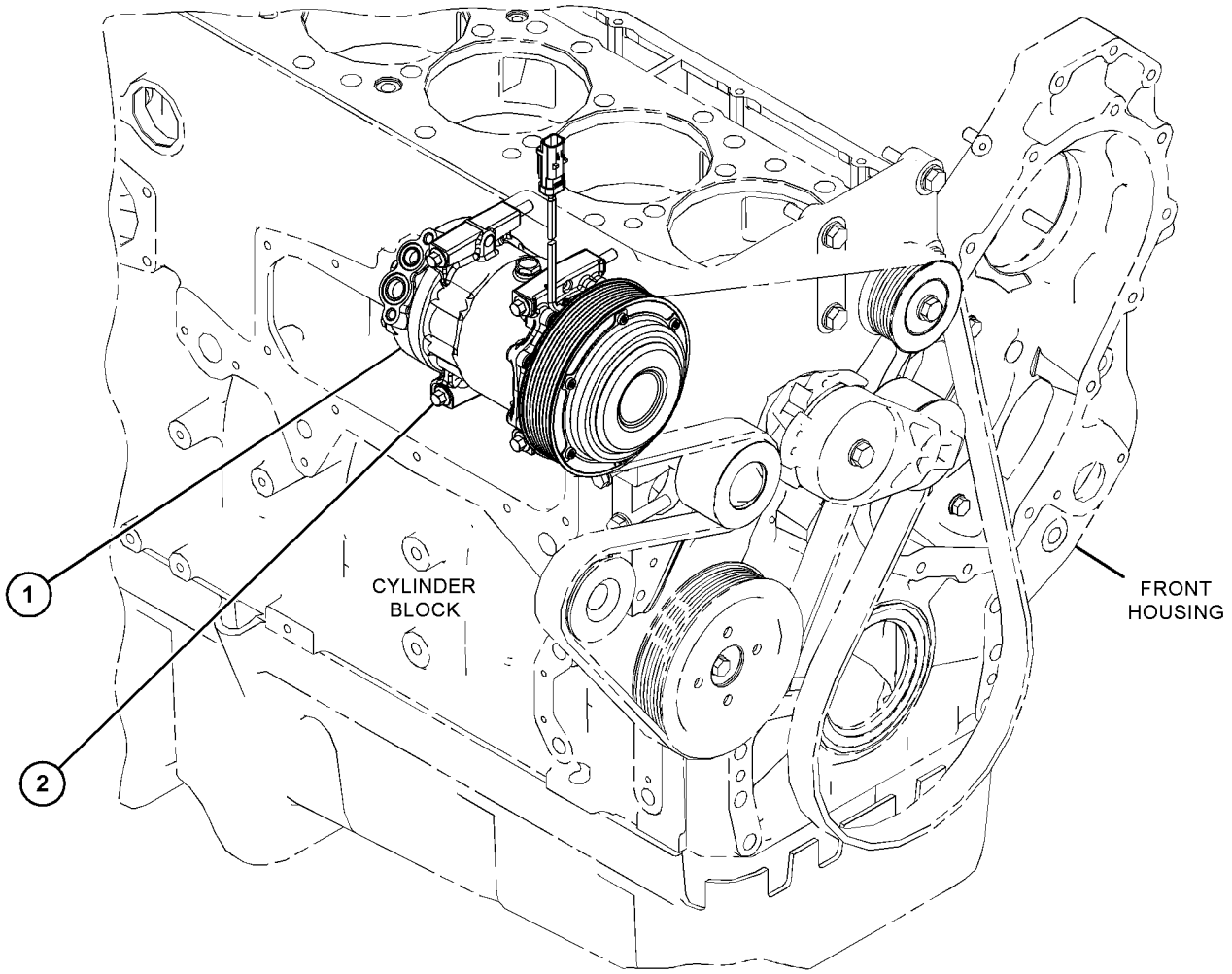

GRAPHIC #1 <END> g06315989

567-5159 COMPRESSOR GP-REFRIGERANT

S/N: NTB1-UP

PART OF 505-1238 COMPRESSOR GP-REFRIGERANT

SMCS-1802 **i07861606**

NOTE	REF NO	GRAPHIC REF	PART NUMBER	QTY	PART NAME 1 2 3 4 5 6 (PRODUCT LEVEL)	SEE PAGE
	1	1	**9W-0852**	2	PIN-CONNECTOR (14-GA TO 16-GA)	
	2	1	**243-4505**	1	RECEPTACLE AS-CONNECTOR (2-PIN)	
	3	1	**327-6593**	1	SEAL-O-RING	
	4	1	**327-6594**	1	SEAL-O-RING	

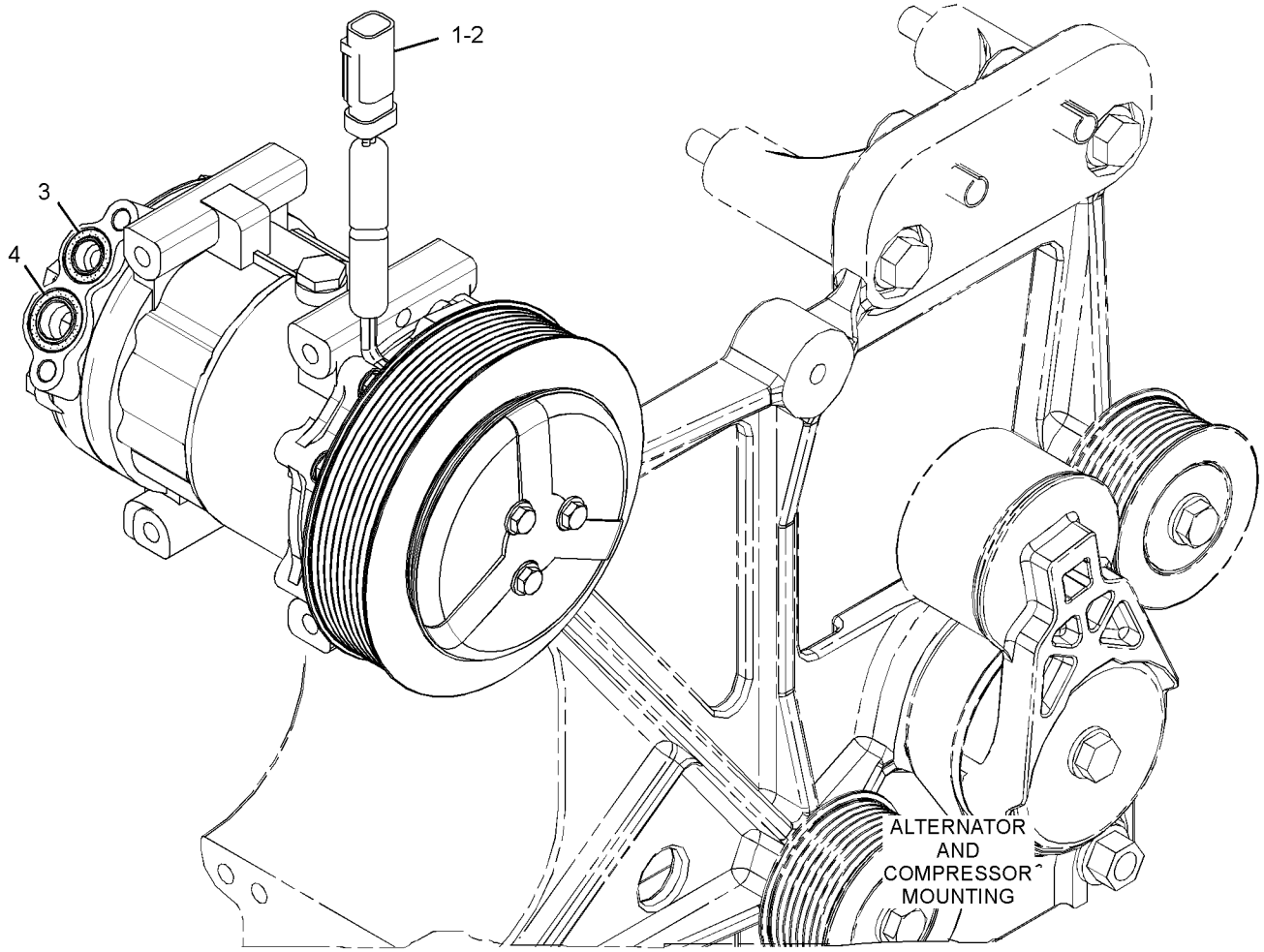

GRAPHIC #1 <END> g02149988

504-3679 CONDENSER & MTG GP-REFRIGERANT

S/N: SP91-10000

PART OF 504-1117 LINES GP-AIR CONDITIONER

SMCS-1805 **i07516054**

NOTE	REF NO	GRAPHIC REF	PART NUMBER	QTY	PART NAME 1 2 3 4 5 6 (PRODUCT LEVEL)	SEE PAGE
M	1	1	**5C-9553**	4	BOLT (M6X1X16-MM)	
	2	1	**8T-4121**	4	WASHER-HARD (11X21X2.5-MM THK)	
M	3	1	**8T-4137**	4	BOLT (M10X1.5X20-MM)	
	4	1	**9X-2038**	2	WASHER (7X19X2-MM THK)	
	5	1	**9X-8256**	4	WASHER (6.6X12X2-MM THK)	
Y	6	1	**488-6612**	1	CONDENSER GP-REFRIGERANT	657
	7	1	**488-6613**	1	BRACKET AS	
M		1	**6V-9632**	2	NUT-WELD (M6X1-THD)	
M		1	**8T-3490**	1	NUT-WELD (M10X1.5-THD)	
M		1	**8T-3612**	2	NUT-WELD (M8X1.25-THD)	
	8	1	**500-0954**	2	BRACKET	
M	9	1	**8T-4971**	2	BOLT (M6X1X30-MM)	

M - METRIC PART
Y - SEPARATE ILLUSTRATION

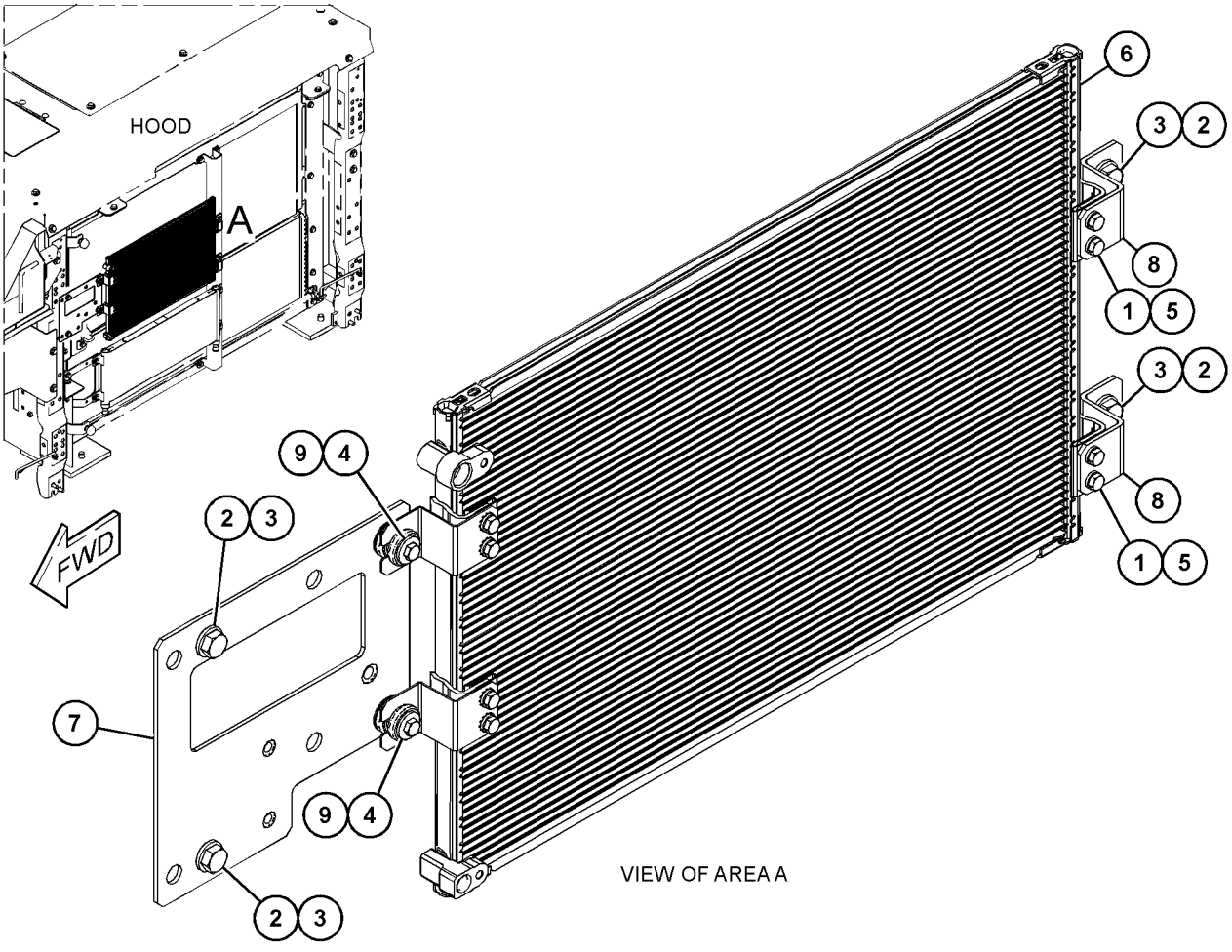

GRAPHIC #1 <END> g06277837

488-6612 CONDENSER GP-REFRIGERANT

S/N: SP91-UP

PART OF 504-3679 CONDENSER & MTG GP-REFRIGERANT

SMCS-1805 **i07360947**

NOTE	REF NO	GRAPHIC REF	PART NUMBER	QTY	PART NAME 1 2 3 4 5 6 (PRODUCT LEVEL)	SEE PAGE
	1	1	**245-7750**	2	BUSHING-RUBBER	
	2	1	**500-0784**	2	BRACKET	
	3	1	**1H-3338**	4	LOCKWASHER	
M	4	1	**5C-9553**	4	BOLT (M6X1X16-MM)	
	5	1	**9X-8256**	4	WASHER (6.6X12X2-MM THK)	

M - METRIC PART

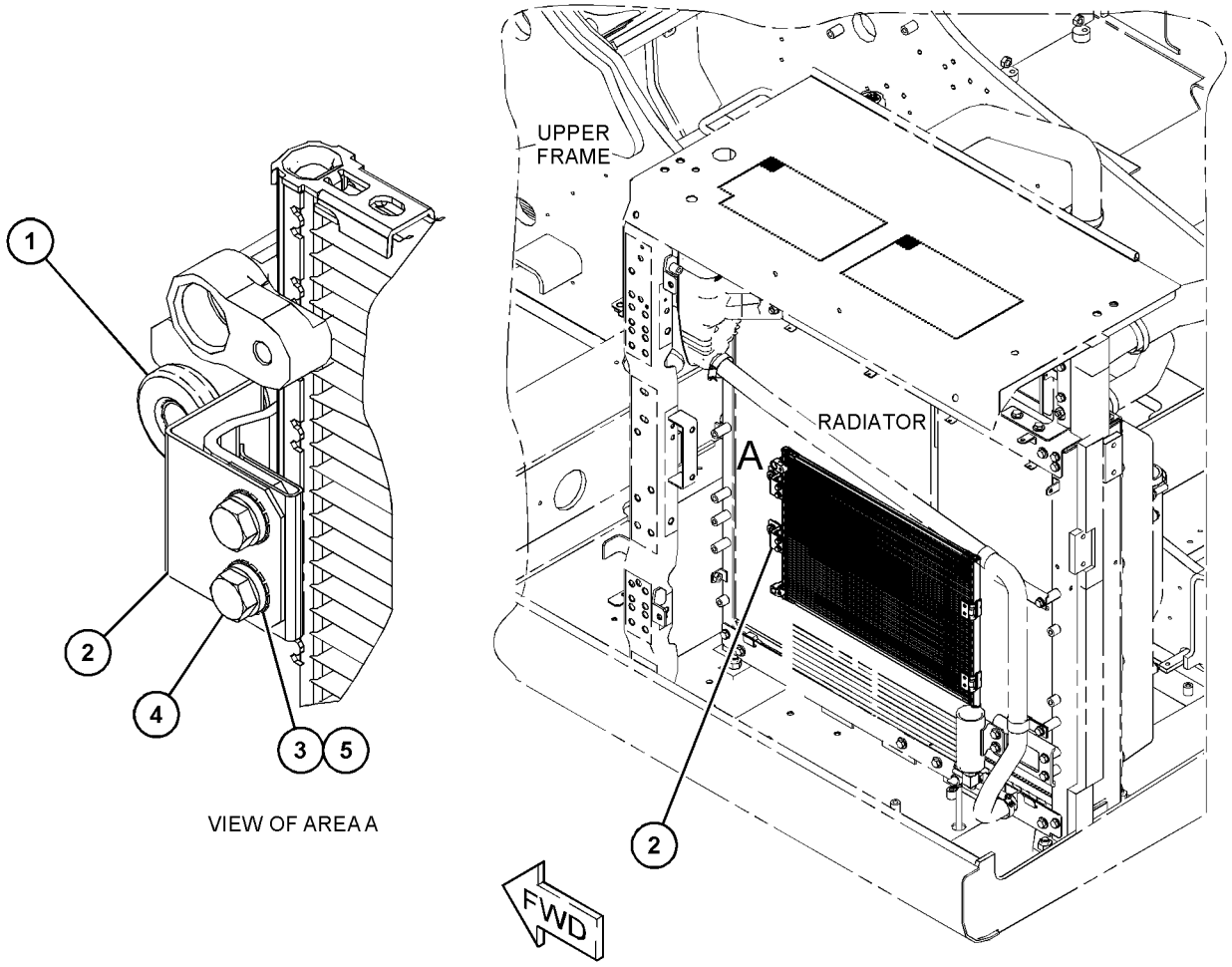

VIEW OF AREA A

GRAPHIC #1 <END> g06229996

511-6024 CONSOLE GP

S/N: SP91-UP

PART OF 488-6550 CONSOLE GP-OPERATOR

SMCS-5258, 7451 **i07787135**

NOTE	REF NO	GRAPHIC REF	PART NUMBER	QTY	PART NAME 1 2 3 4 5 6 (PRODUCT LEVEL)	SEE PAGE
	1	1	**487-6653**	1	COVER AS	
	2	1	**487-6654**	1	COVER AS	
					(EACH COVER AS INCLUDES)	
		1	**234-6579**	1	NUT-SPEED	
		1	**511-5919**	5	CLIP	
	3	1	**487-6832**	1	COVER	
	4	1	**487-6838**	1	COVER	
	5	1	**498-7728**	1	COVER AS	
		1	**511-5982**	3	COVER	
	6	1	**500-0930**	1	COVER AS-CONSOLE	
		1	**487-6652**	1	COVER AS	
		1	**487-6829**	1	COVER	
		1	**511-5919**	4	CLIP	
		1	**538-9680**	1	GUIDE	
		1	**533-0365**	4	CLIP	
		1	**487-6828**	1	COVER	
	7	1	**500-0933**	1	SUPPORT AS (LH)	
	8	1	**511-5921**	1	BAR AS	
	9	1	**568-2312**	1	HANDLE AS	
	10	1	**511-6004**	1	BRACKET AS	
	11	1	**511-6025**	1	LEVER AS	
		1	**4I-3038**	2	WASHER (3.3X8X0.5-MM THK)	
		1	**111-4799**	1	SWITCH AS-LIMIT (HYDRAULIC LOCKOUT)	
		1	**102-8803**	1	KIT-RECEPTACLE (3-PIN)	
					(INCLUDES RECEPTACLE AS & WEDGE)	
		1	**3E-3371**	1	WEDGE-RECEPTACLE LOCK (3-PIN)	
		1	**8T-8729**	3	PIN-CONNECTOR (16-GA TO 20-GA)	
D		1	**5P-5998**		TUBE (0.3-M)	
M		1	**120-9027**	2	SCREW-PAN HEAD (M3X0.5X16-MM)	
	12	1	**516-4930**	1	COVER	
M	13	1	**520-8227**	1	SCREW-MACHINE (M4X0.7X2.3-MM)	
	14	1	**520-8253**	2	SCREW-TAPPING	
M	15	1	**566-2193**	3	SCREW-MACHINE (M4X0.7X10-MM)	
M	16	1	**520-8291**	2	SCREW-MACHINE (M4X0.7X15-MM)	
	17	1	**520-8292**	2	SPACER (4.2X6X3.3-MM THK)	
	18	1	**526-8631**	1	RIVET	
M	19	1	**9X-2042**	3	SCREW-TRUSS HEAD (M6X1X12-MM)	
M	20	1	**9X-2043**	2	SCREW-TRUSS HEAD (M6X1X14-MM)	

D - ORDER BY THE METER
M - METRIC PART

511-6024 **CONSOLE GP** (contd.) **i07787135**

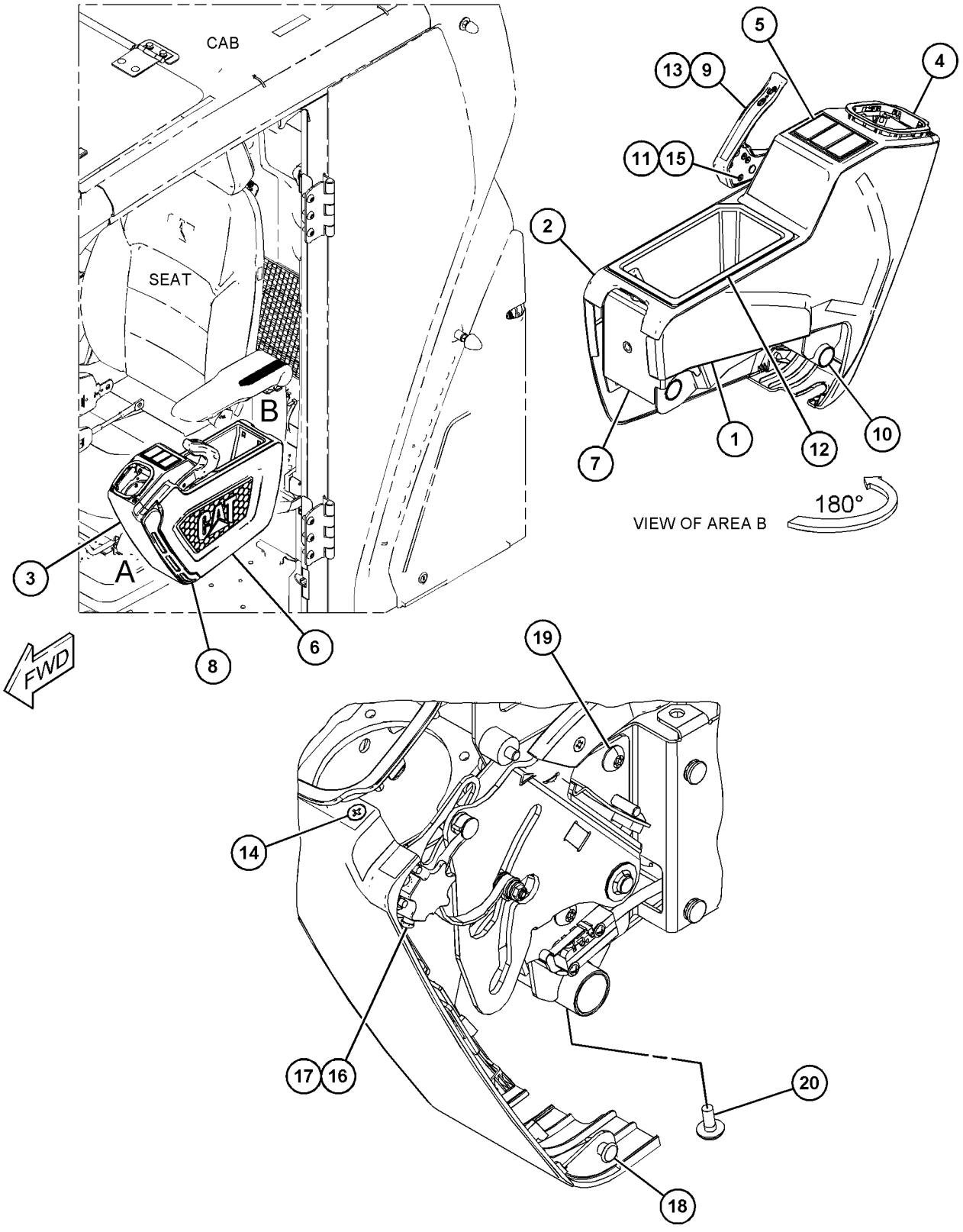

GRAPHIC #1 <END> g06228489

488-6550 CONSOLE GP-OPERATOR

S/N: SP91-UP

PART OF 500-0999 OPERATOR AR

SMCS-5258 **i07346933**

NOTE	REF NO	GRAPHIC REF	PART NUMBER	QTY	PART NAME 1 2 3 4 5 6 (PRODUCT LEVEL)	SEE PAGE
Y	1	1	*487-6658*	1	ARMREST GP (COMFORT)	642
	2	1	**487-8455**	2	CONTROL GP-JOYSTICK	
					(EACH INCLUDES)	
		1	**8T-8737**	2	PLUG-SEAL	
		1	**9X-3401**	4	PIN-CONNECTOR (16-GA TO 18-GA)	
		1	**361-7886**	1	RECEPTACLE AS-CONNECTOR (6-PIN)	
Y	3	1	*488-6534*	1	HOLDER GP-CUP	688
Y	4	1	*488-6551*	1	CONSOLE GP-OPERATOR (STORAGE)	662
Y	5	1	*488-6570*	1	CONSOLE GP-OPERATOR (SECONDARY)	665
	6	1	**495-6057**	8	BUSHING	
Y	7	1	**511-6016**	1	COVER GP-CONSOLE (RH)	678
Y	8	1	*511-6024*	1	CONSOLE GP (LH)	658
	9	1	**520-8294**	2	BRACKET	
M	10	1	**3T-0849**	6	BOLT-SOCKET HEAD (M6X1X25-MM)	
M	11	1	**9X-2043**	4	SCREW-TRUSS HEAD (M6X1X14-MM)	
	12	1	**9X-6165**	4	WASHER (6.5X22X2.5-MM THK)	
	13	1	**9X-8256**	6	WASHER (6.6X12X2-MM THK)	

M - METRIC PART
Y - SEPARATE ILLUSTRATION

488-6550 **CONSOLE GP-OPERATOR (**contd.**)** **i07346933**

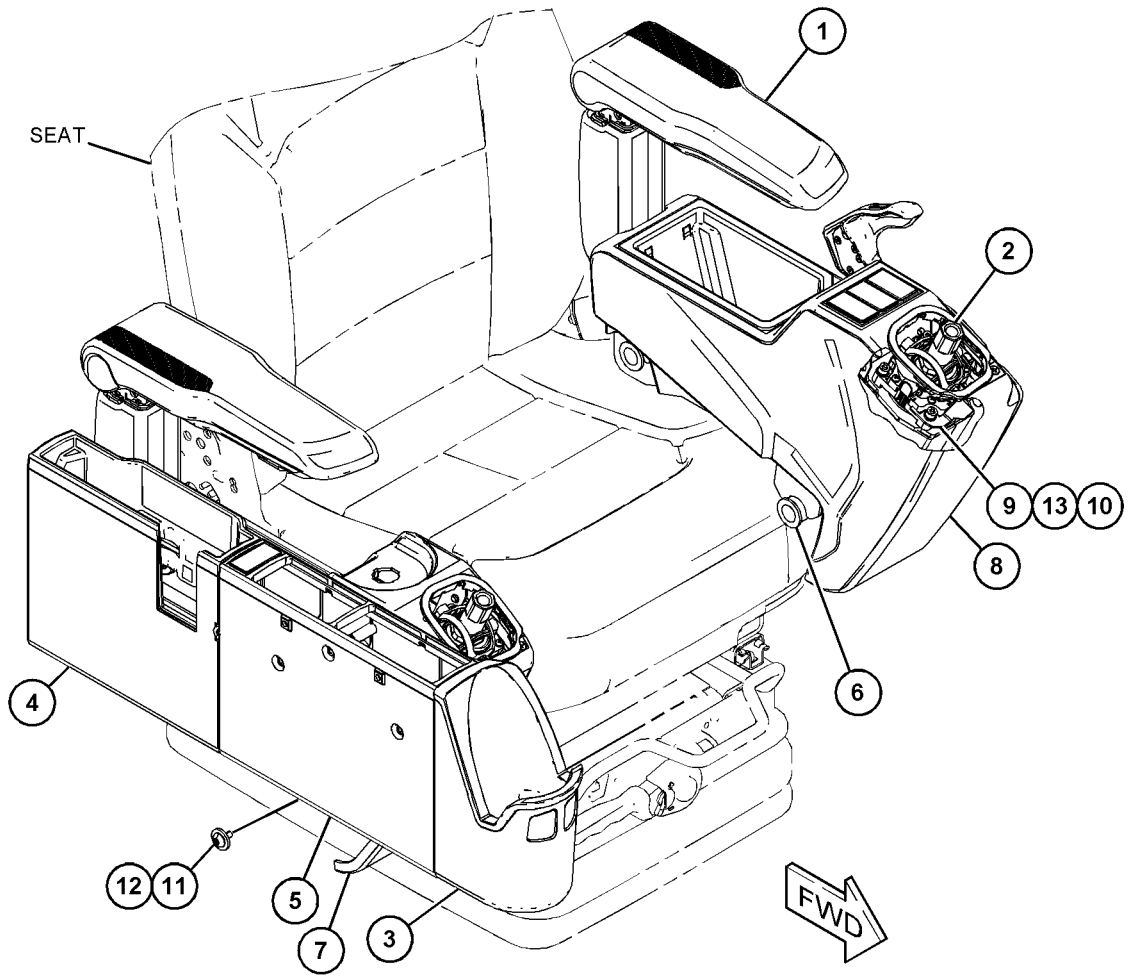

GRAPHIC #1 <END> g06227963

488-6551 CONSOLE GP-OPERATOR

S/N: SP91-UP

PART OF 488-6550, 488-6560 CONSOLE GP-OPERATOR

SMCS-5258 **i07347941**

NOTE	REF NO	GRAPHIC REF	PART NUMBER	QTY	PART NAME 1 2 3 4 5 6 (PRODUCT LEVEL)	SEE PAGE
M	1	1	**128-2135**	3	SCREW-TRUSS HEAD (M6X1X13-MM)	
M	2	1	**474-4582**	1	SCREW-PAN HEAD (M4X1.79X25-MM)	
	3	1	**486-5449**	1	COVER	
	4	1	**487-6657**	1	SUPPORT AS	
	5	1	**498-7684**	1	COVER	
	6	1	**498-7685**	1	COVER	

M - METRIC PART

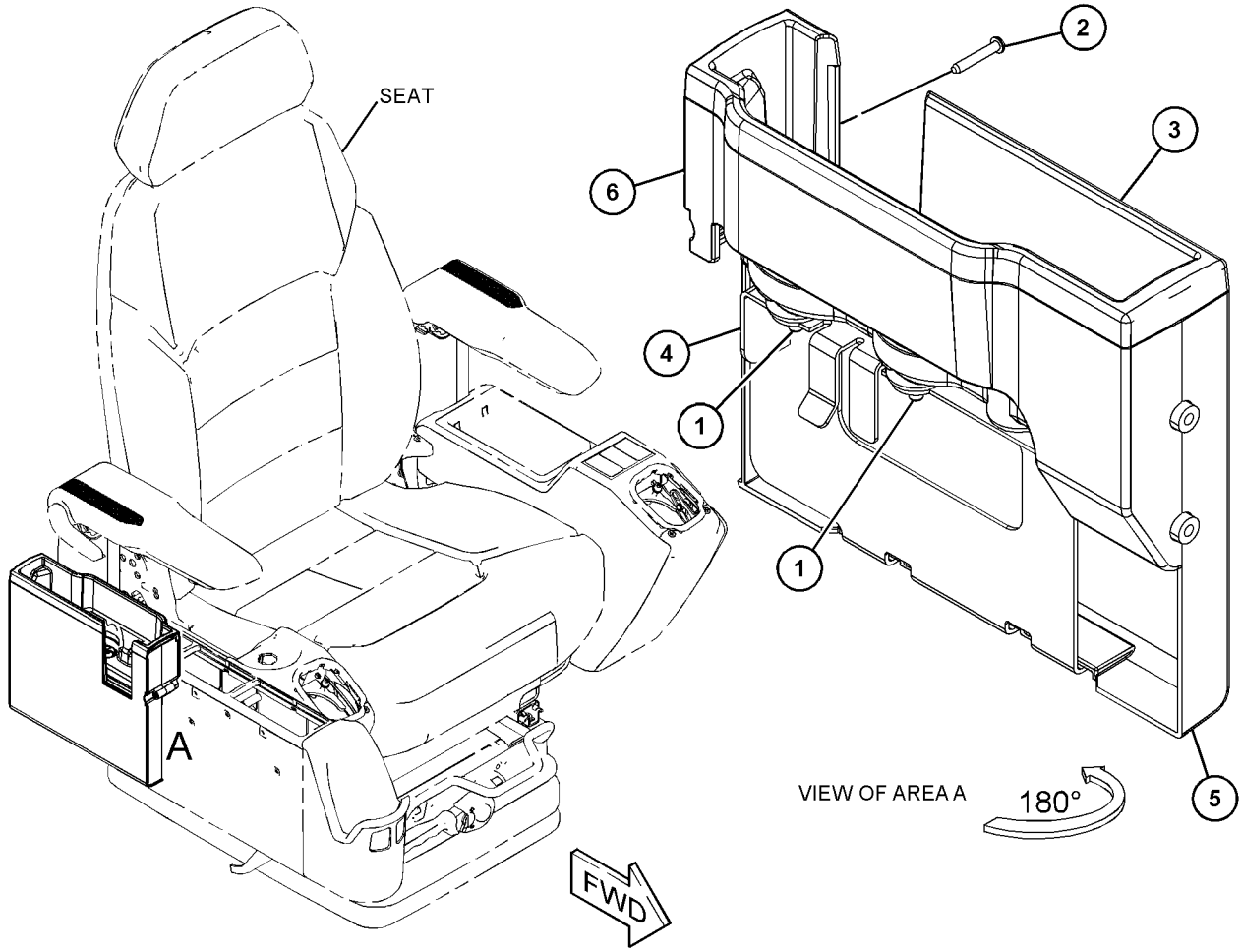

GRAPHIC #1 <END> g06227926

488-6560 CONSOLE GP-OPERATOR

S/N: SP91-UP

PART OF 500-1000 OPERATOR AR

SMCS-5258 **i07360144**

NOTE	REF NO	GRAPHIC REF	PART NUMBER	QTY	PART NAME 1 2 3 4 5 6 (PRODUCT LEVEL)	SEE PAGE
	1	1	**7Y-8561**	1	BUMPER	
Y	2	1	*487-6659*	1	ARMREST GP (DELUXE)	643
	3	1	**487-8455**	2	CONTROL GP-JOYSTICK	
					(EACH INCLUDES)	
		1	**8T-8737**	2	PLUG-SEAL	
		1	**9X-3401**	4	PIN-CONNECTOR (16-GA TO 18-GA)	
		1	**361-7886**	1	RECEPTACLE AS-CONNECTOR (6-PIN)	
Y	4	1	*488-6534*	1	HOLDER GP-CUP	688
Y	5	1	*488-6551*	1	CONSOLE GP-OPERATOR (STORAGE)	662
Y	6	1	*488-6570*	1	CONSOLE GP-OPERATOR (SECONDARY)	665
	7	1	**495-6057**	6	BUSHING	
	8	1	**500-0884**	1	DAMPER	
Y	9	1	**511-6016**	1	COVER GP-CONSOLE (RH)	678
Y	10	1	**511-6023**	1	CONSOLE GP-OPERATOR (LH)	666
	11	1	**520-8286**	1	STRIKER	
	12	1	**520-8293**	1	SPACER (18.5X34X3.1-MM THK)	
	13	1	**520-8294**	2	BRACKET	
	14	1	**332-0195**	2	CLIP	
M	15	1	**3T-0849**	6	BOLT-SOCKET HEAD (M6X1X25-MM)	
	16	1	**8T-4121**	1	WASHER-HARD (11X21X2.5-MM THK)	
M	17	1	**8T-4133**	1	NUT (M10X1.5-THD)	
M	18	1	**9X-2043**	6	SCREW-TRUSS HEAD (M6X1X14-MM)	
	19	1	**9X-6165**	4	WASHER (6.5X22X2.5-MM THK)	
	20	1	**9X-8256**	6	WASHER (6.6X12X2-MM THK)	

M - METRIC PART
Y - SEPARATE ILLUSTRATION

488-6560 **CONSOLE GP-OPERATOR (**contd.**)** **i07360144**

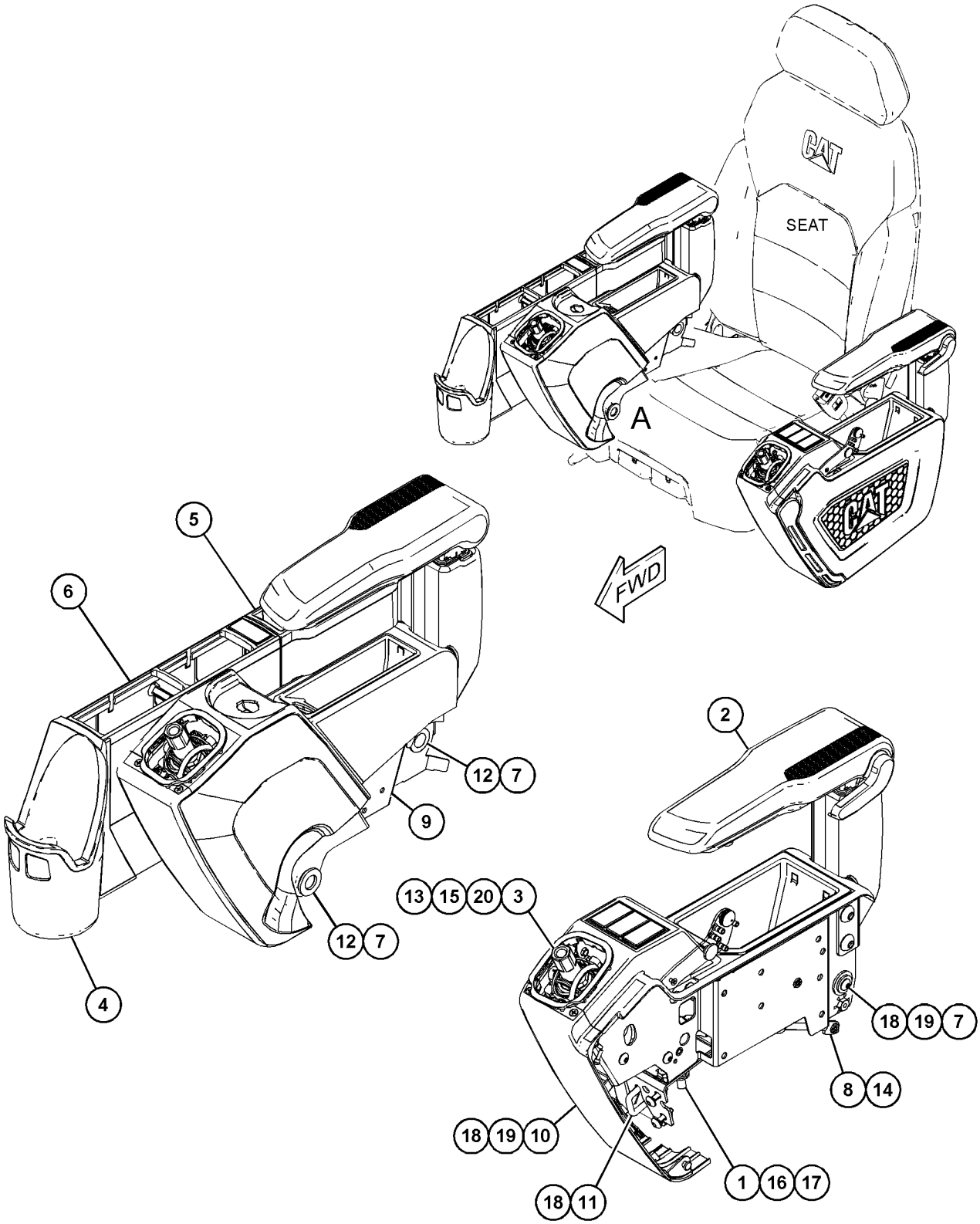

VIEW OF AREA A
(PARTS REMOVED FOR CLARITY)

GRAPHIC #1 <END> g06231059

488-6570 CONSOLE GP-OPERATOR

S/N: SP91-UP

PART OF 488-6550, 488-6560 CONSOLE GP-OPERATOR

SMCS-5258 **i07348322**

NOTE	REF NO	GRAPHIC REF	PART NUMBER	QTY	PART NAME 1 2 3 4 5 6 (PRODUCT LEVEL)	SEE PAGE
M	1	1	**474-4583**	3	SCREW-PAN HEAD (M4X1.79X40-MM)	
	2	1	**488-6490**	1	SUPPORT AS	
	3	1	**498-7678**	1	COVER	
	4	1	**498-7679**	1	COVER	
	5	1	**498-7680**	1	COVER	
	6	1	**511-5982**	1	COVER	
	7	1	**526-8917**	1	SUPPORT	
M	8	1	**9X-2042**	4	SCREW-TRUSS HEAD (M6X1X12-MM)	

M - METRIC PART

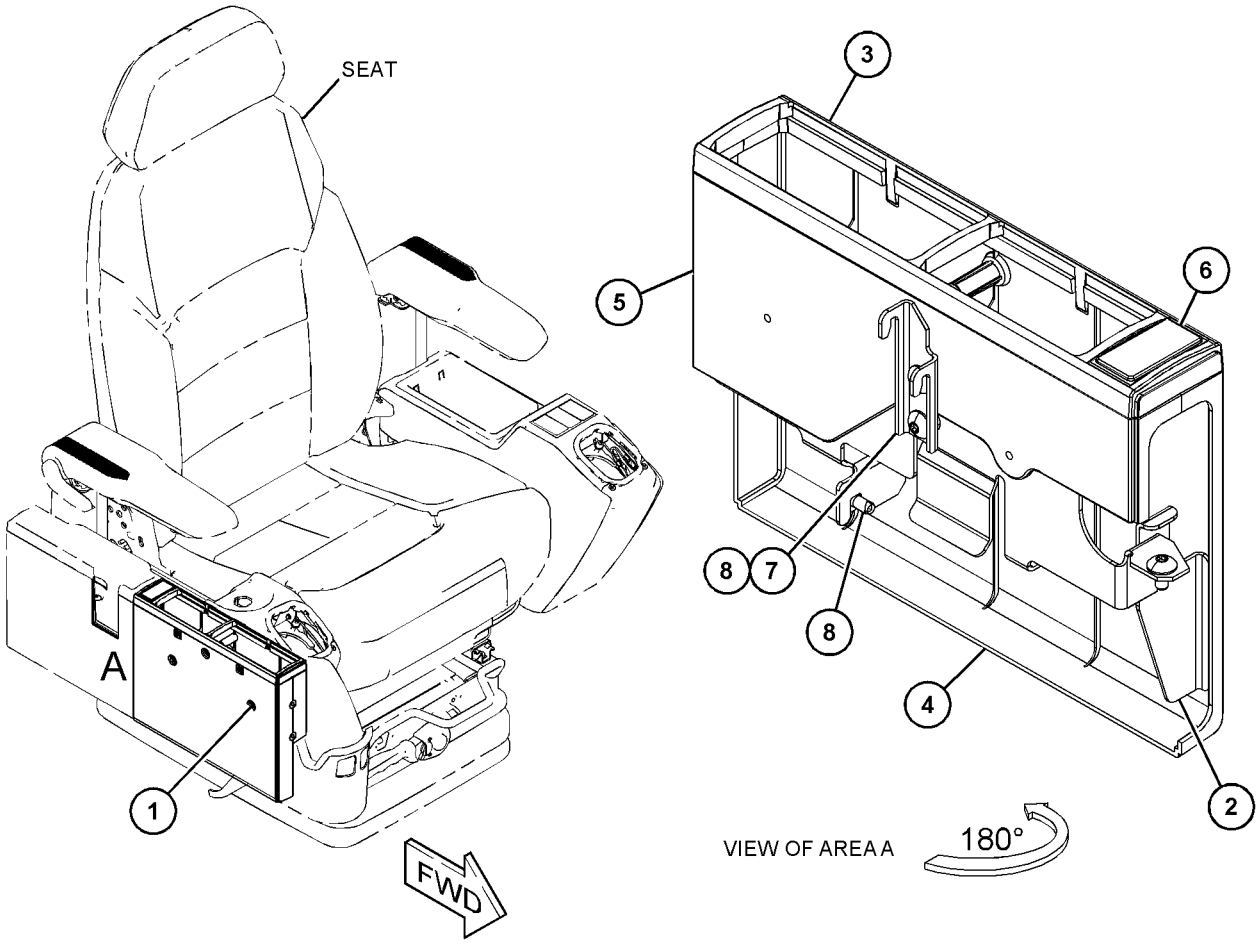

GRAPHIC #1 <END> g06227603

511-6023 CONSOLE GP-OPERATOR—LH

S/N: SP91-UP

PART OF 488-6560 CONSOLE GP-OPERATOR

SMCS-5258 **i07360129**

NOTE	REF NO	GRAPHIC REF	PART NUMBER	QTY	PART NAME 1 2 3 4 5 6 (PRODUCT LEVEL)	SEE PAGE
	1	1	**487-6653**	1	COVER AS	
		1	**234-6579**	1	NUT-SPEED	
		1	**511-5919**	5	CLIP	
	2	1	**487-6654**	1	COVER AS	
		1	**234-6579**	1	NUT-SPEED	
		1	**511-5919**	3	CLIP	
	3	1	**487-6832**	1	COVER	
	4	1	**487-6838**	1	COVER	
	5	1	**498-7728**	1	COVER AS	
		1	**511-5982**	3	COVER	
	6	1	**500-0930**	1	COVER AS-CONSOLE	
	7	1	**500-0933**	1	SUPPORT AS (LH)	
	8	1	**511-5921**	1	BAR AS	
	9	1	**511-6003**	1	HANDLE AS	
	10	1	**511-6026**	1	SWITCH GP-POSITION (HYDRAULIC LOCK)	
		1	**4I-3038**	2	WASHER (3.3X8X0.5-MM THK)	
		1	**111-4799**	1	SWITCH AS-LIMIT (HYDRAULIC LOCK)	
		1	**102-8803**	1	KIT-RECEPTACLE (3-PIN)	
					(INCLUDES RECEPTACLE AS & WEDGE)	
		1	**3E-3371**	1	WEDGE-RECEPTACLE LOCK (3-PIN)	
		1	**8T-8729**	3	PIN-CONNECTOR (16-GA TO 20-GA)	
D		1	**5P-5998**		TUBE (0.3-M)	
M		1	**120-9027**	2	SCREW-PAN HEAD (M3X0.5X16-MM)	
		1	**487-6813**	1	LATCH AS	
	11	1	**511-6027**	1	BRACKET AS	
	12	1	**516-4930**	1	COVER	
M	13	1	**520-8227**	1	SCREW-MACHINE (M4X0.7X2.3-MM)	
	14	1	**520-8253**	2	SCREW-TAPPING	
M	15	1	**520-8290**	4	SCREW-MACHINE (M4X0.7X10-MM)	
M	16	1	**520-8291**	2	SCREW-MACHINE (M4X0.7X15-MM)	
	17	1	**520-8292**	2	SPACER (4.2X6X3.3-MM THK)	
	18	1	**526-8631**	1	RIVET	
M	19	1	**3E-8020**	2	SCREW-TRUSS HEAD (M6X1X25-MM)	
M	20	1	**9X-2042**	3	SCREW-TRUSS HEAD (M6X1X12-MM)	
M	21	1	**9X-2043**	2	SCREW-TRUSS HEAD (M6X1X14-MM)	

D - ORDER BY THE METER
M - METRIC PART

511-6023 **CONSOLE GP-OPERATOR (**contd.**)** **i07360129**

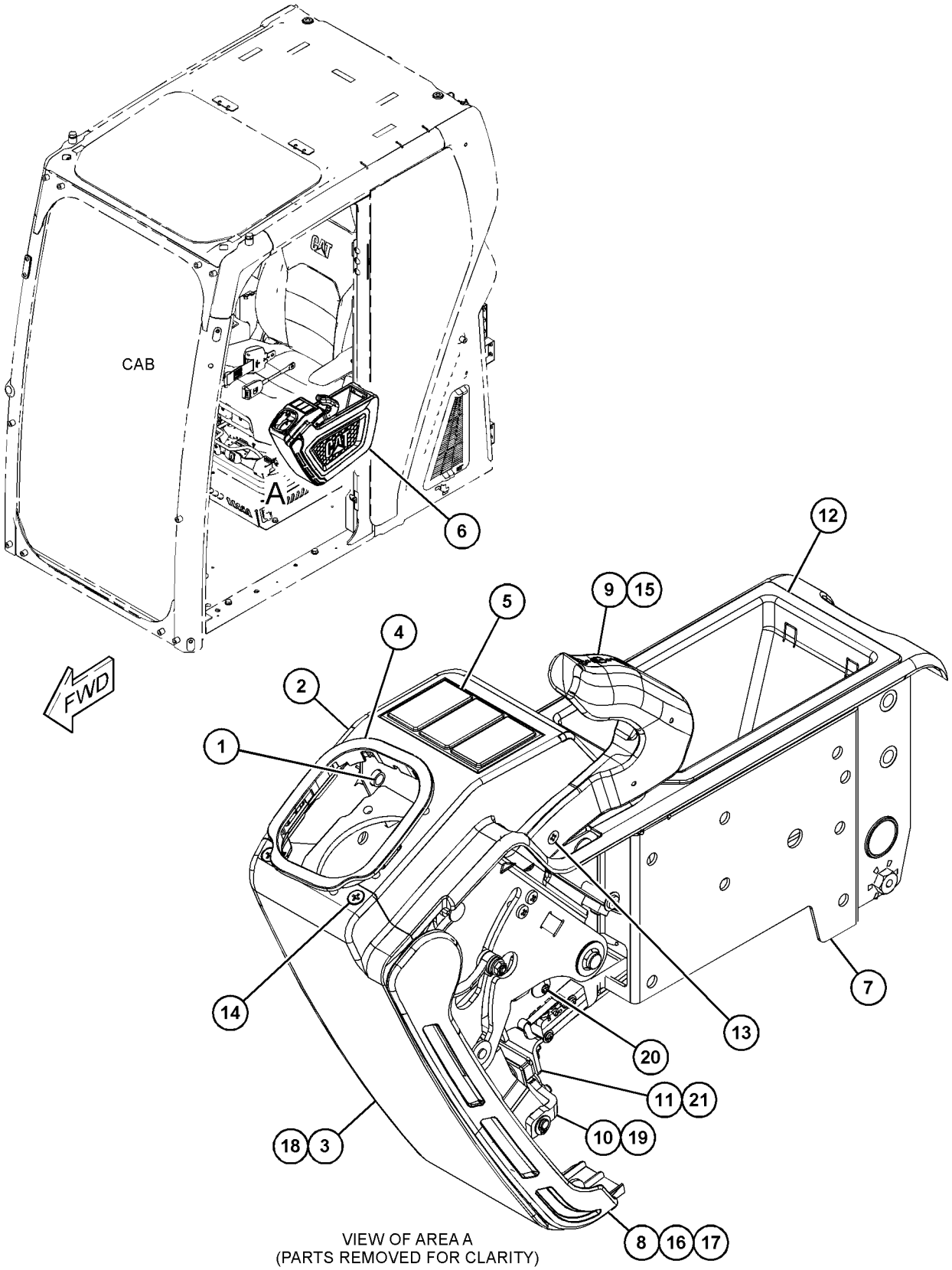

VIEW OF AREA A
(PARTS REMOVED FOR CLARITY)

GRAPHIC #1 <END> g06233199

529-7141 CONTROL & MTG GP-JOYSTICK

S/N: SP91-UP
4-PUSH BUTTON VERTICAL
PART OF 528-6835 CONTROL AR-AUXILIARY

SMCS-5063, 5705 **i07356803**

NOTE	REF NO	GRAPHIC REF	PART NUMBER	QTY	PART NAME 1 2 3 4 5 6 (PRODUCT LEVEL)	SEE PAGE
	1	1	**495-6053**	2	LEVER	
	2	1	**512-1247**	1	GRIP AS (LH, VERTICAL)	
	3	1	**512-1248**	1	GRIP AS (RH, VERTICAL)	
	4	1	**527-1848**	1	BOOT (LH)	
	5	1	**527-1849**	1	BOOT (RH)	
M	6	1	**095-1207**	2	NUT (M12X1.75-THD)	
	7	1	**282-3735**	2	SCREW-SPECIAL	

M - METRIC PART

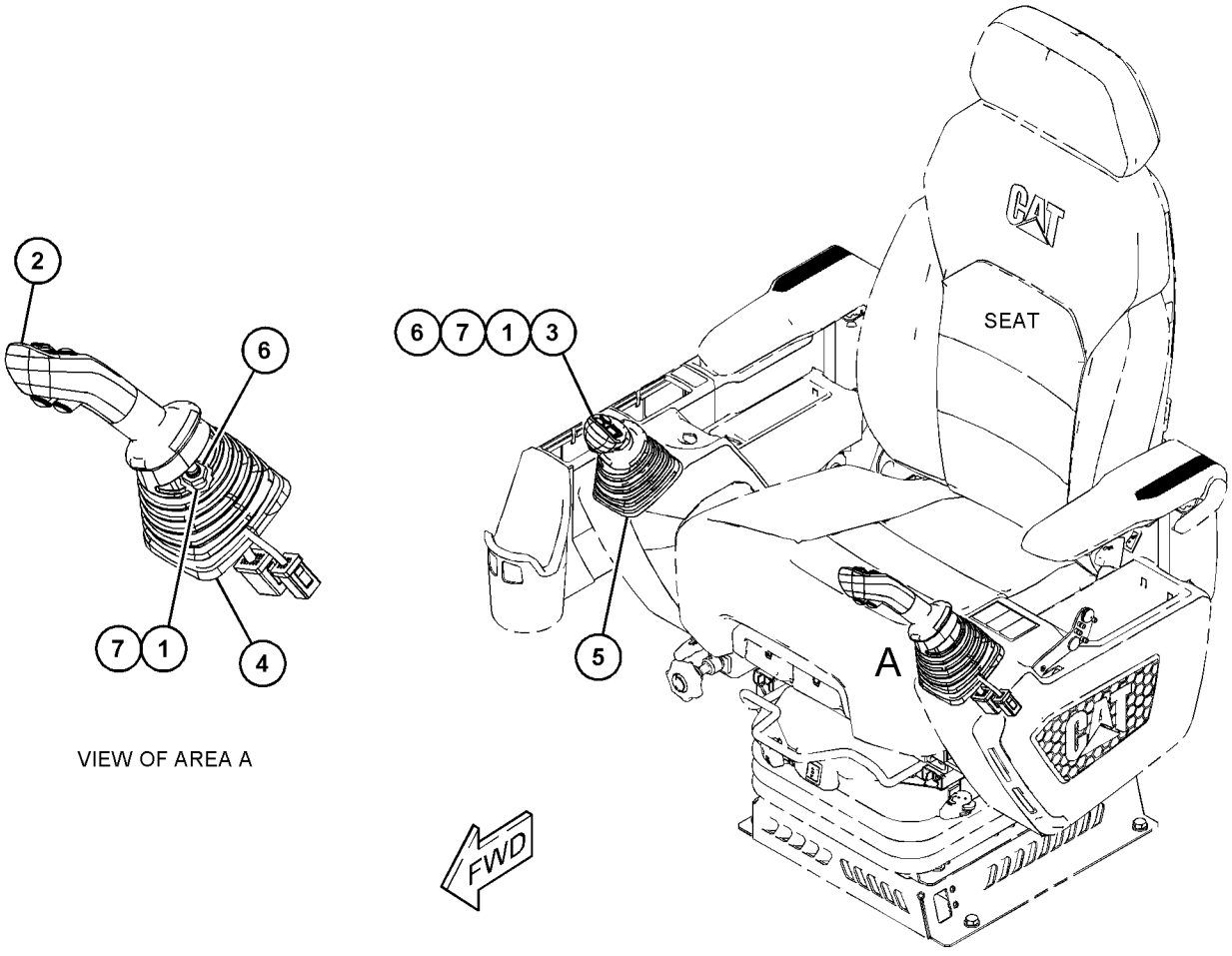

GRAPHIC #1 <END> g06229588

486-5504 CONTROL & MTG GP-PEDAL

S/N: SP91-UP

PART OF 500-0999, 500-1000 OPERATOR AR

SMCS-5462 **i07348739**

NOTE	REF NO	GRAPHIC REF	PART NUMBER	QTY	PART NAME 1 2 3 4 5 6 (PRODUCT LEVEL)	SEE PAGE
M	1	1	**101-7401**	4	BOLT-SOCKET HEAD (M10X1.5X20-MM)	
	2	1	**117-6356**	2	STEP AS	
	3	1	**122-9608**	1	PEDAL-RUBBER (RH)	
	4	1	**122-9609**	1	PEDAL-RUBBER (LH)	
	5	1	**122-9610**	2	STEP	
	6	1	**142-5546**	2	KNOB	
	7	1	**170-9498**	1	LEVER AS (RH)	
	8	1	**170-9499**	1	LEVER AS (LH)	
	9	1	**488-6458**	1	PEDAL AS (LH)	
	10	1	**488-6459**	1	PEDAL AS (RH)	
	11	1	**490-1012**	1	CONTROL GP-PEDAL	
		1	**509-3085**	1	BOOT	
		1	**8T-8729**	6	PIN-CONNECTOR (16-GA TO 20-GA)	
		1	**151-9275**	1	KIT-RECEPTACLE (6-PIN)	
					(INCLUDES RECEPTACLE AS & WEDGE)	
		1	**509-3087**	1	DAMPER AS	
	12	1	**526-8624**	2	PLATE	
	13	1	**096-6166**	2	WASHER-HARD (4.5X9X1-MM THK)	
M	14	1	**8T-0337**	2	SCREW-MACHINE (M4X0.7X12-MM)	
	15	1	**8T-4121**	12	WASHER-HARD (11X21X2.5-MM THK)	
M	16	1	**8T-4136**	8	BOLT (M10X1.5X25-MM)	
M	17	1	**8T-4191**	4	BOLT (M10X1.5X16-MM)	
	18	1	**9X-2027**	4	WASHER (11X18X2-MM THK)	

M - METRIC PART

486-5504 **CONTROL & MTG GP-PEDAL** (contd.) **i07348739**

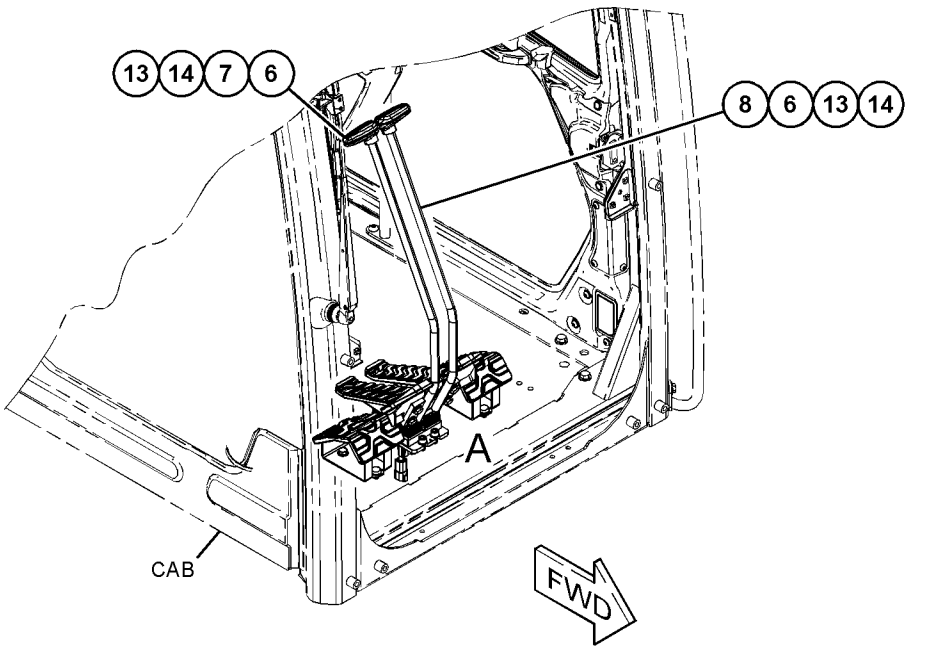

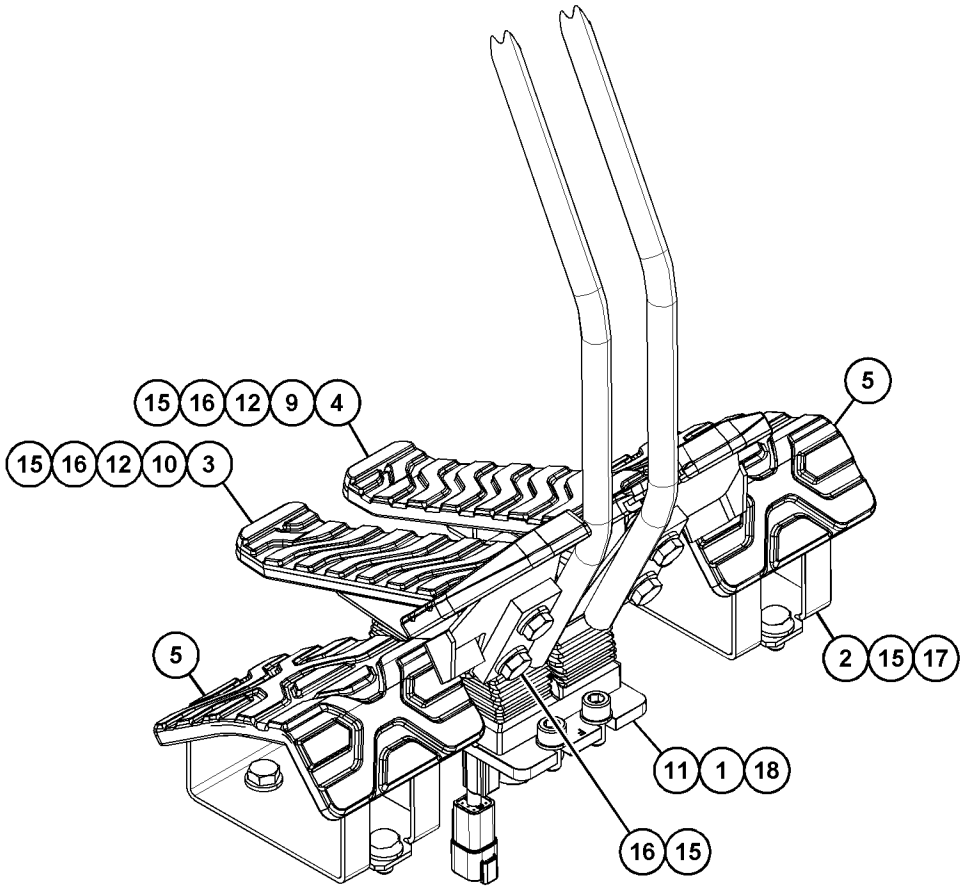

VIEW OF AREA A

GRAPHIC #1 <END> g06229730

487-6660 COVER GP-CAB

S/N: SP91-UP

PART OF 500-0999, 500-1000 OPERATOR AR

SMCS-7301, 7308 **i07348747**

NOTE	REF NO	GRAPHIC REF	PART NUMBER	QTY	PART NAME 1 2 3 4 5 6 (PRODUCT LEVEL)	SEE PAGE
	1	1	**8Y-6967**	2	LOUVER AS-VENT	
M	2	1	**128-2135**	1	SCREW-TRUSS HEAD (M6X1X13-MM)	
	3	1	**164-8474**	2	LOUVER AS-VENT	
	4	1	**234-6498**	3	RIVET	
	5	1	**487-6663**	1	COVER AS-ACCESS	
		1	**487-6839**	12	RIVET	
Y	6	1	*487-6665*	1	DUCT GP-CAB AIR	680
	7	1	**487-6668**	1	COVER AS-ACCESS	
	8	1	**487-6670**	1	COVER AS-ACCESS	
	9	1	**487-6942**	1	COVER	
	10	1	**487-6943**	1	COVER	
	11	1	**487-6944**	1	COVER	
	12	1	**487-6945**	1	COVER	
	13	1	**487-6946**	2	COVER	
	14	1	**487-6952**	1	COVER	
	15	1	**487-6953**	1	SEAL	
	16	1	**487-6954**	1	COVER	
	17	1	**488-6449**	1	COVER	
	18	1	**498-7683**	6	CLIP	
	19	1	**500-0719**	1	BRACKET AS	
	20	1	**526-8555**	1	BRACKET	
	21	1	**526-8556**	2	LINER	
	22	1	**526-8643**	2	LINER	
	23	1	**8T-4121**	4	WASHER-HARD (11X21X2.5-MM THK)	
M	24	1	**8T-4137**	4	BOLT (M10X1.5X20-MM)	

M - METRIC PART
Y - SEPARATE ILLUSTRATION

487-6660 **COVER GP-CAB** (contd.) **i07348747**

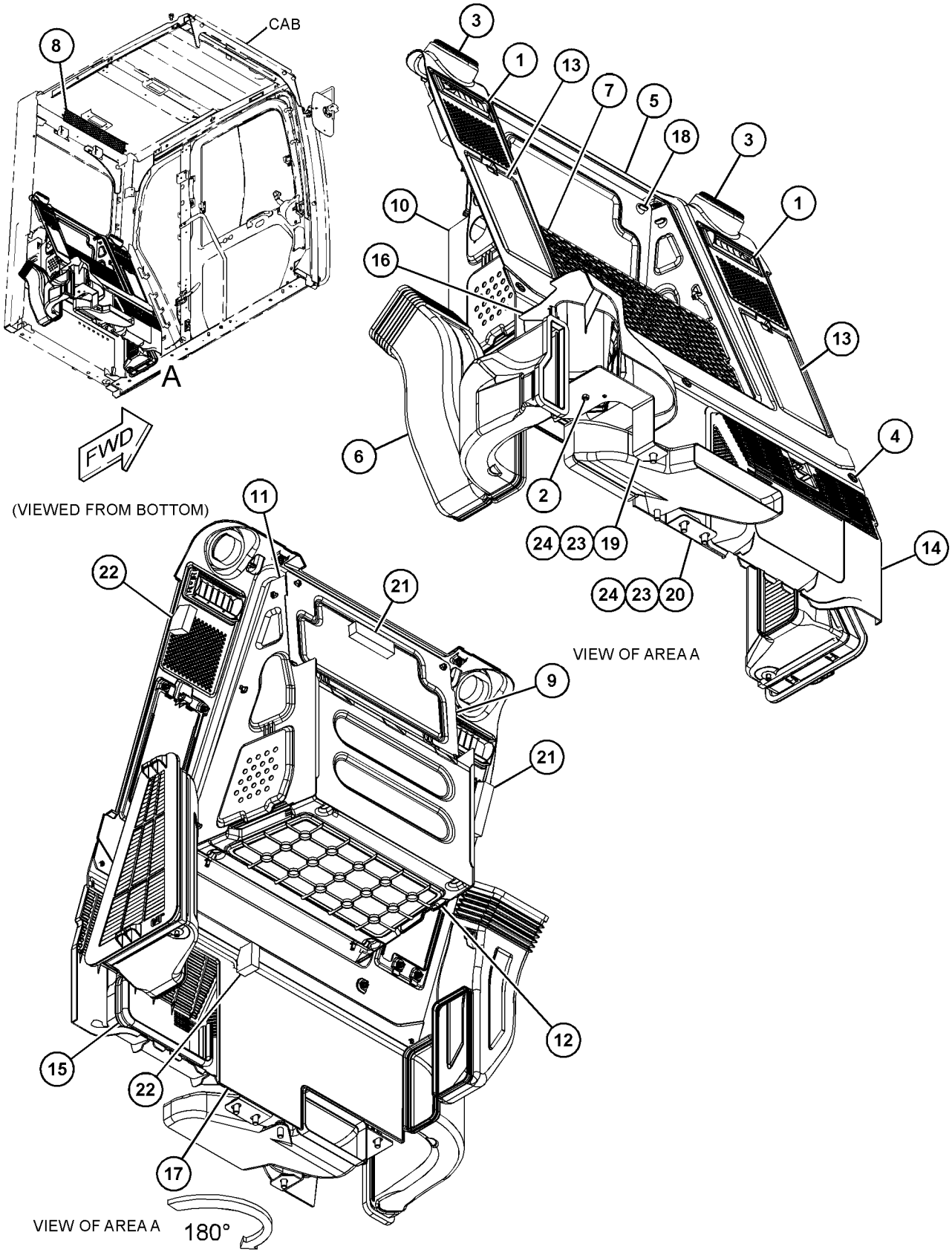

GRAPHIC #1 <END> g06272878

487-6678 COVER GP-CAB

S/N: SP91-UP

PART OF 487-6666 CAB GP

SMCS-7301, 7308 **i07346347**

NOTE	REF NO	GRAPHIC REF	PART NUMBER	QTY	PART NAME 1 2 3 4 5 6 (PRODUCT LEVEL)	SEE PAGE
	1	1	**4I-4270**	1	HOLDER-GLASS	
M	2	1	**128-2135**	4	SCREW-TRUSS HEAD (M6X1X13-MM)	
M	3	1	**128-2136**	2	SCREW-TRUSS HEAD (M6X1X16-MM)	
	4	1	**185-8205**	4	CLIP	
	5	1	**487-6679**	1	COVER AS-ACCESS	
		1	**511-5919**	6	CLIP	
	6	1	**487-6680**	1	COVER AS-ACCESS	
		1	**487-6839**	6	RIVET	
	7	1	**487-6682**	1	COVER AS-ACCESS	
		1	**487-6839**	5	RIVET	
	8	1	**487-6683**	1	COVER AS-ACCESS	
		1	**487-6839**	3	RIVET	
	9	1	**487-6684**	1	COVER	
	10	1	**487-6851**	1	COVER	
	11	1	**487-6955**	2	HOOK	
	12	1	**488-6484**	1	COVER AS-ACCESS	
		1	**487-6839**	2	RIVET	
	13	1	**488-6515**	1	COVER AS-ACCESS	
		1	**511-5919**	8	CLIP	
	14	1	**488-6574**	1	BRACKET AS	
	15	1	**488-6577**	1	BRACKET AS	
M		1	**6V-9632**	2	NUT-WELD (M6X1-THD)	
	16	1	**498-7709**	1	COVER AS-ACCESS	
		1	**487-6839**	3	RIVET	
	17	1	**500-0730**	2	HOLDER	
	18	1	**511-5900**	1	COVER	
	19	1	**511-5901**	1	COVER	
	20	1	**511-5972**	1	INSULATION	
	21	1	**520-8287**	2	PLUG	
	22	1	**526-8556**	2	LINER	
	23	1	**526-8557**	6	LINER	
	24	1	**526-8558**	6	LINER	
	25	1	**526-8559**	4	LINER	
M	26	1	**3E-8020**	6	SCREW-TRUSS HEAD (M6X1X25-MM)	
M	27	1	**9X-2044**	5	SCREW-TRUSS HEAD (M6X1X16-MM)	
	28	1	**526-8643**	1	LINER	
	29	1	**526-8642**	4	CLIP	

M - METRIC PART

487-6678 **COVER GP-CAB** (contd.) **i07346347**

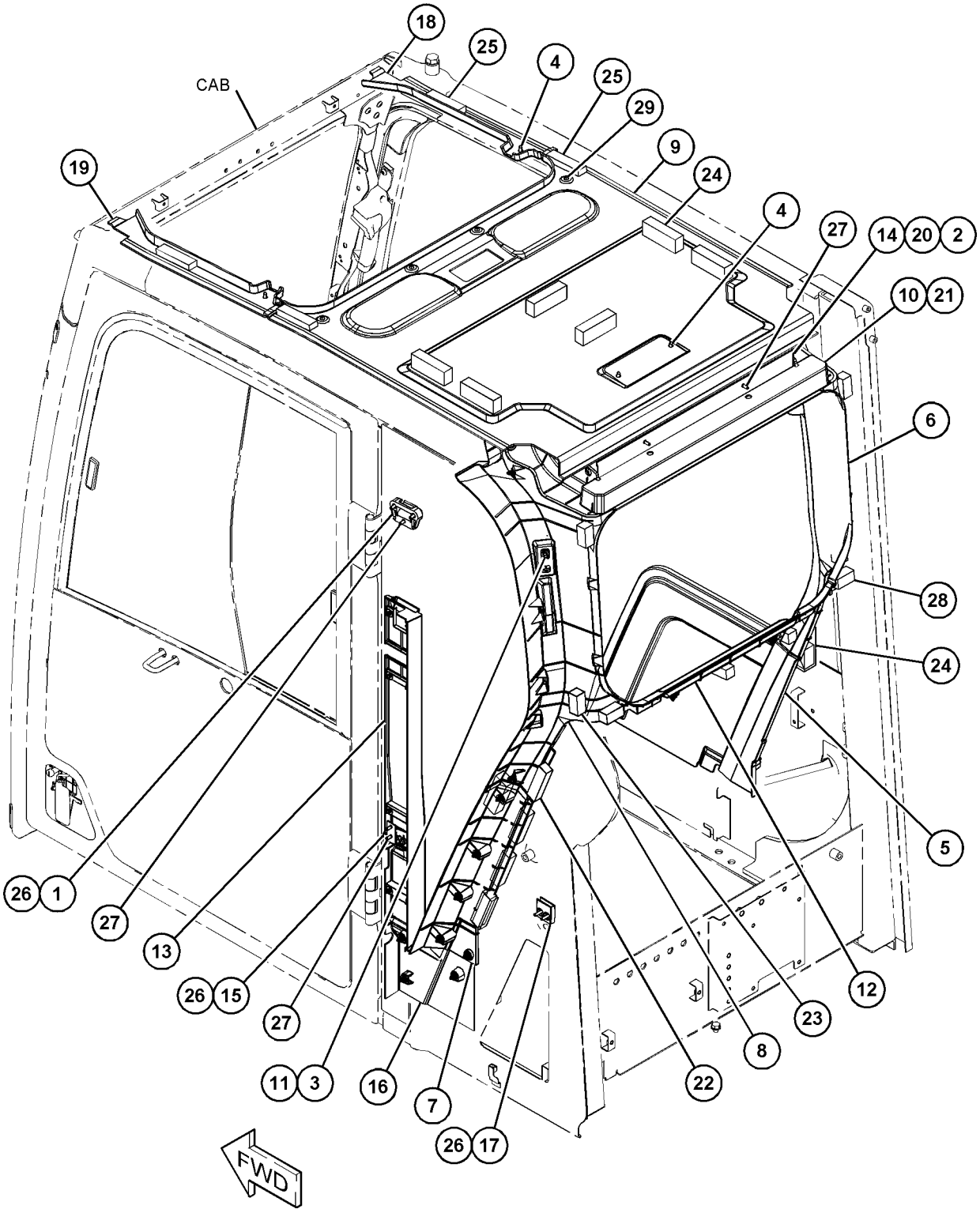

GRAPHIC #1 <END> g06272559

488-6451 COVER GP-CAB

S/N: SP91-UP

PART OF 487-6666 CAB GP

SMCS-7301, 7308 **i07346355**

NOTE	REF NO	GRAPHIC REF	PART NUMBER	QTY	PART NAME 1 2 3 4 5 6 (PRODUCT LEVEL)	SEE PAGE
	1	1	**8Y-6352**	1	LOUVER AS	
	2	1	**164-8474**	3	LOUVER AS-VENT	
	3	1	**488-6578**	1	COVER AS-ACCESS	
		1	**511-5962**	3	RIVET	
	4	1	**488-6579**	1	COVER AS	
		1	**511-5919**	1	CLIP	
		1	**511-5962**	3	RIVET	
	5	1	**491-7133**	1	BRACKET	
	6	1	**511-5959**	1	COVER AS	
	7	1	**511-5960**	1	COVER AS	
					(EACH COVER AS INCLUDES)	
		1	**511-5962**	1	RIVET	
	8	1	**511-5961**	1	DUCT	
	9	1	**526-8578**	2	INSULATION	
M	10	1	**128-2135**	9	SCREW-TRUSS HEAD (M6X1X13-MM)	
M	11	1	**9X-2045**	3	SCREW-TRUSS HEAD (M6X1X20-MM)	

M - METRIC PART

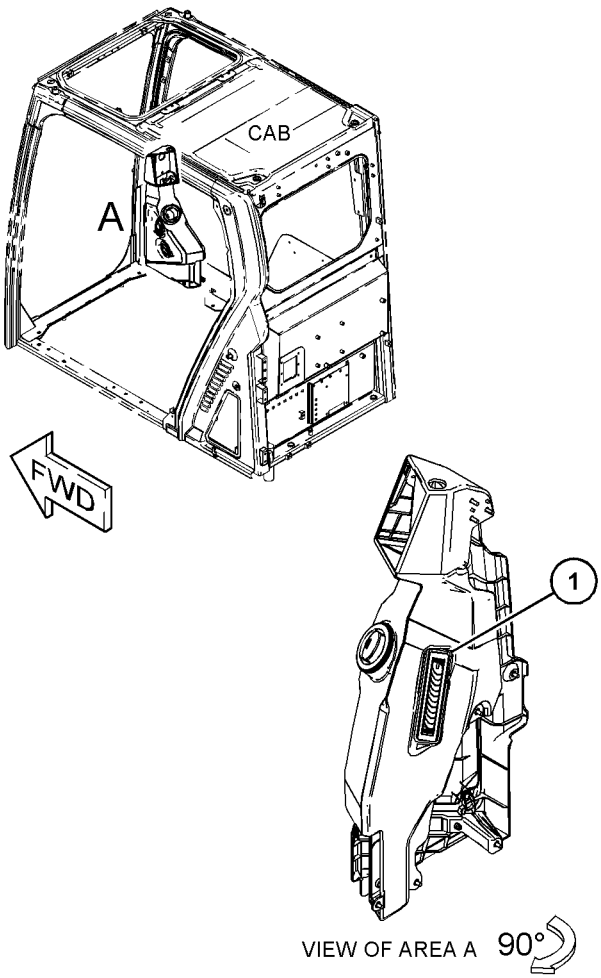

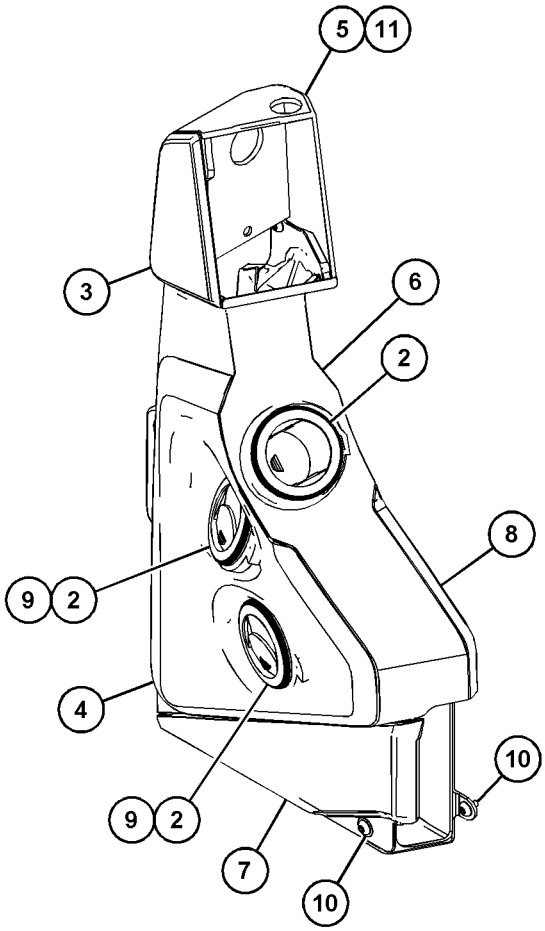

VIEW OF AREA A

GRAPHIC #1 <END> g06230385

488-6553 COVER GP-CAB

S/N: SP91-UP

PART OF 520-8306, 578-9785 OPERATOR AR

SMCS-7301, 7308 **i07394595**

NOTE	REF NO	GRAPHIC REF	PART NUMBER	QTY	PART NAME 1 2 3 4 5 6 (PRODUCT LEVEL)	SEE PAGE
	1	1	**500-0795**	1	COVER	
	2	1	**500-0796**	1	COVER	
	3	1	**500-0938**	1	BRACKET AS	
	4	1	**519-9781**	2	BRACKET AS	
					(EACH INCLUDES)	
M		1	**5C-2890**	1	NUT (M6X1-THD)	
	5	1	**538-9923**	1	PLUG	
M	6	1	**128-2135**	7	SCREW-TRUSS HEAD (M6X1X13-MM)	
M	7	1	**9X-2042**	6	SCREW-TRUSS HEAD (M6X1X12-MM)	

M - METRIC PART

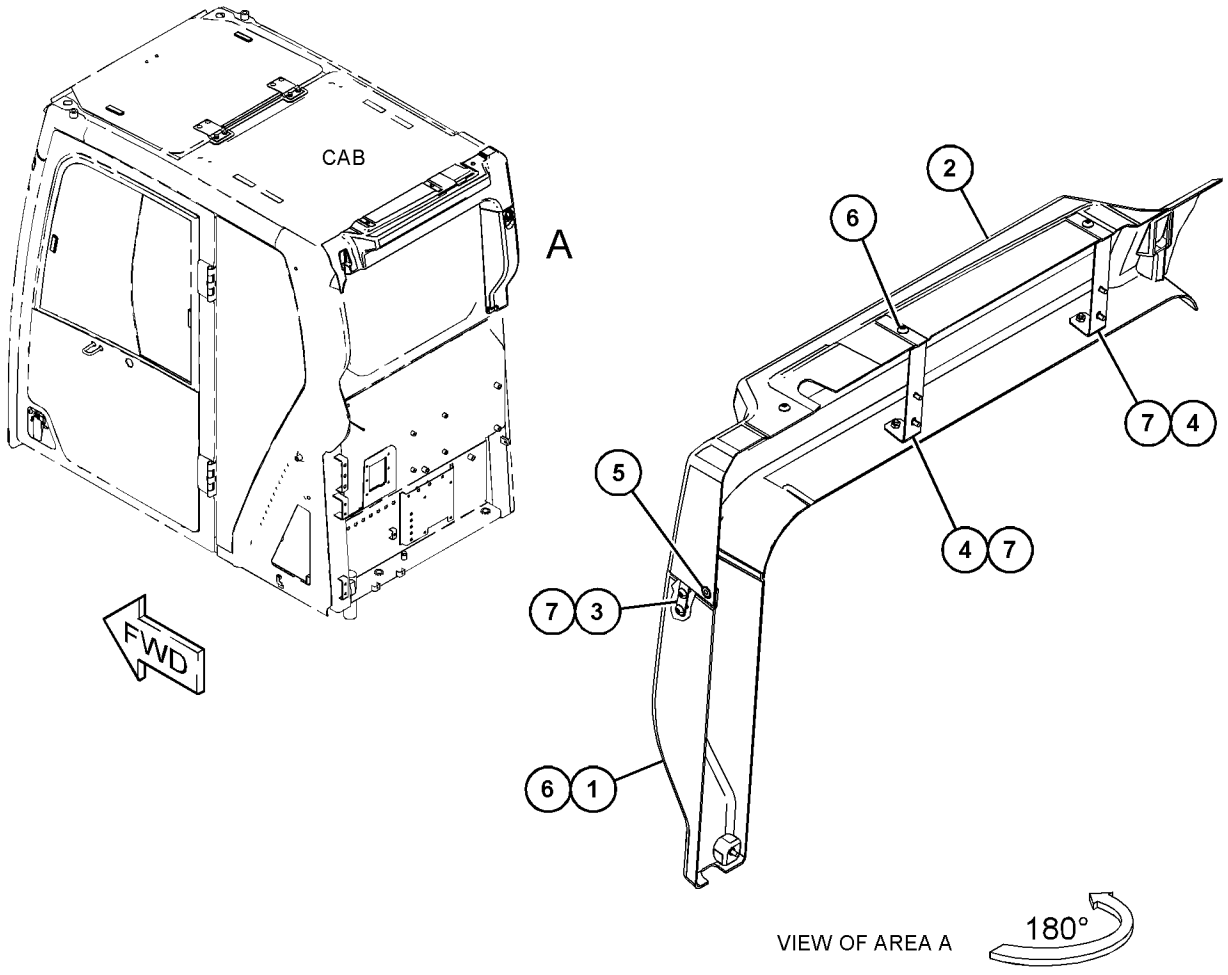

GRAPHIC #1 <END> g06306719

524-7742 COVER GP-CAB

S/N: SP91-UP

PART OF 477-7565 CAB GP

SMCS-7301, 7308 **i07344991**

NOTE	REF NO	GRAPHIC REF	PART NUMBER	QTY	PART NAME 1 2 3 4 5 6 (PRODUCT LEVEL)	SEE PAGE
	1	1	*511-6034*	1	COVER GP-CAB	
	1A	1	**526-8573**	2	HINGE	
M		1	**9X-2044**	4	SCREW-TRUSS HEAD (M6X1X16-MM)	
		1	**511-6035**	1	COVER AS	
	2	1	**526-8574**	1	LOCK AS	

M - METRIC PART

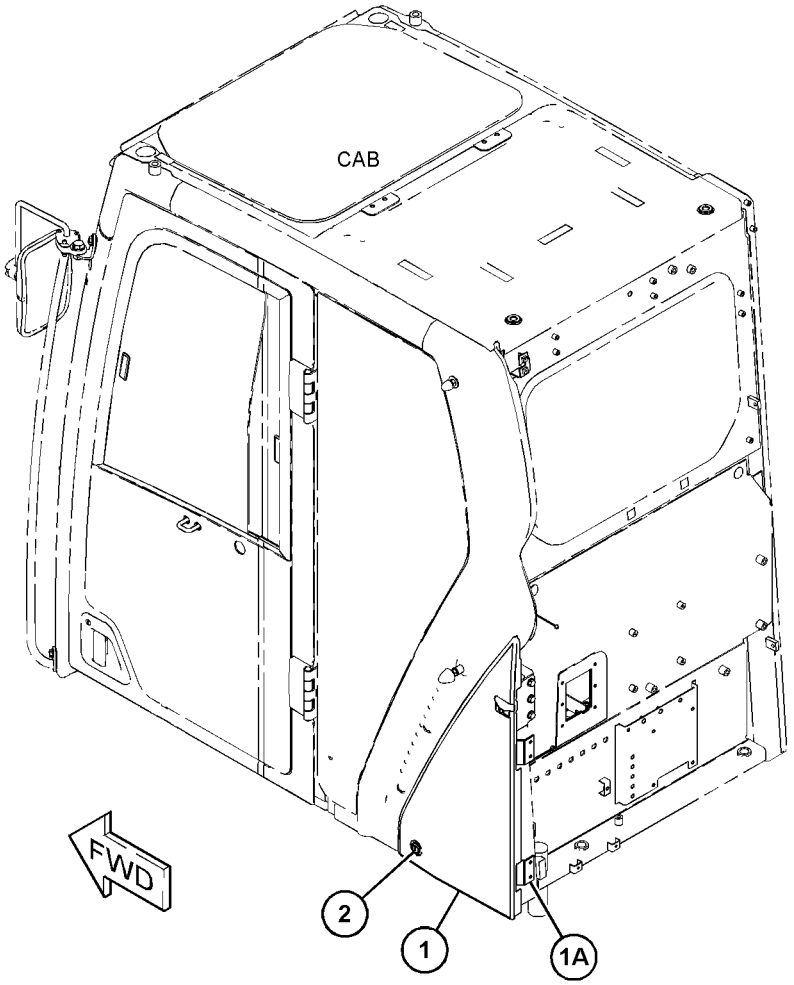

GRAPHIC #1 <END> g06230339

511-6016 COVER GP-CONSOLE

S/N: SP91-UP

PART OF 488-6550, 488-6560 CONSOLE GP-OPERATOR

SMCS-5258 **i07348572**

NOTE	REF NO	GRAPHIC REF	PART NUMBER	QTY	PART NAME 1 2 3 4 5 6 (PRODUCT LEVEL)	SEE PAGE
	1	1	**487-6673**	1	COVER AS	
		1	**234-6579**	1	NUT-SPEED	
		1	**487-6835**	1	COVER	
		1	**511-5919**	5	CLIP	
	2	1	**487-6675**	1	COVER AS	
		1	**234-6579**	1	NUT-SPEED	
		1	**487-6837**	1	COVER	
		1	**511-5919**	3	CLIP	
	3	1	**487-6836**	1	COVER	
	4	1	**487-6838**	1	COVER	
	5	1	**498-7761**	1	COVER	
	6	1	**500-0934**	1	SUPPORT AS (RH)	
	7	1	**520-8253**	2	SCREW-TAPPING	

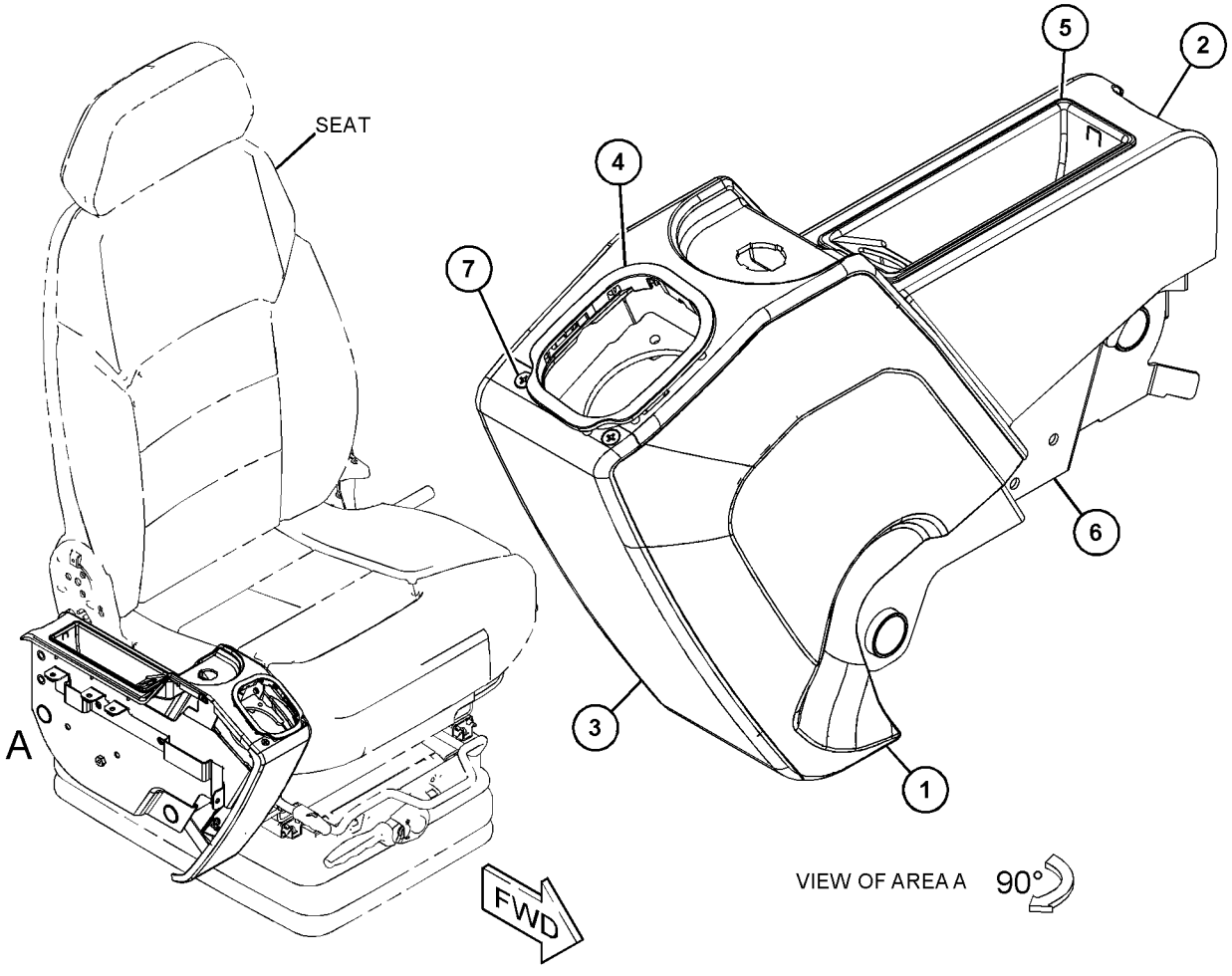

GRAPHIC #1 <END> g06227373

553-9987 DOOR GP-CAB

S/N: SP91-UP

PART OF 486-5502, 498-7724 CAB GP

SMCS-7308 **i07531075**

NOTE	REF NO	GRAPHIC REF	PART NUMBER	QTY	PART NAME 1 2 3 4 5 6 (PRODUCT LEVEL)	SEE PAGE
Y	1	1	**477-7567**	1	PARTS GP-DOOR	713

Y - SEPARATE ILLUSTRATION

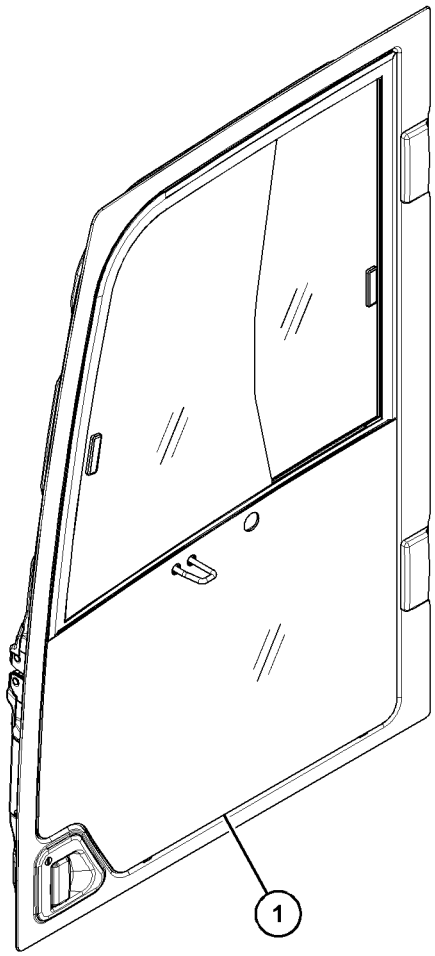

GRAPHIC #1 <END> g06322724

487-6665 DUCT GP-CAB AIR

S/N: SP91-UP

PART OF 487-6660 COVER GP-CAB

SMCS-734D **i07348751**

NOTE	REF NO	GRAPHIC REF	PART NUMBER	QTY	PART NAME 1 2 3 4 5 6 (PRODUCT LEVEL)	SEE PAGE
M	1	1	**8T-4136**	1	BOLT (M10X1.5X25-MM)	
	2	1	**7X-7729**	1	WASHER (11X25X3-MM THK)	
	3	1	**234-6498**	3	RIVET	
	4	1	**487-6940**	1	DUCT	
	5	1	**488-6434**	1	DUCT AS	
	6	1	**488-6435**	1	DUCT AS	
	7	1	**488-6436**	1	DUCT AS	
	8	1	**488-6446**	1	FILTER AS-AIR	

M - METRIC PART

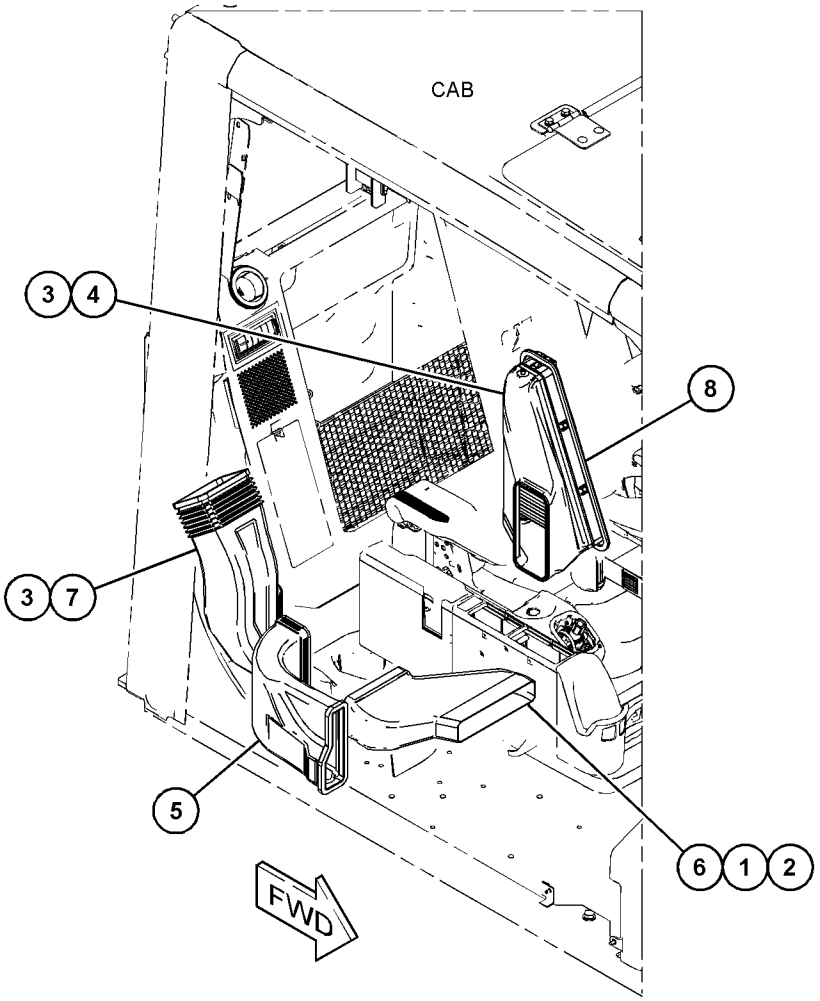

GRAPHIC #1 <END> g06227366

487-7003 DUCT GP-CAB AIR

S/N: SP91-UP

PART OF 487-6666 CAB GP

SMCS-734D **i07346350**

NOTE	REF NO	GRAPHIC REF	PART NUMBER	QTY	PART NAME 1 2 3 4 5 6 (PRODUCT LEVEL)	SEE PAGE
M	1	1	**9X-2042**	1	SCREW-TRUSS HEAD (M6X1X12-MM)	
M	2	1	**128-2135**	1	SCREW-TRUSS HEAD (M6X1X13-MM)	
	3	1	**185-8205**	2	CLIP	
	4	1	**234-6498**	1	RIVET	
	5	1	**327-0325**	2	STRAP-CABLE	
	6	1	**487-6927**	1	DUCT	
	7	1	**488-6431**	1	DUCT AS	
	8	1	**488-6432**	1	DUCT AS	
	9	1	**488-6433**	1	DUCT AS	

M - METRIC PART

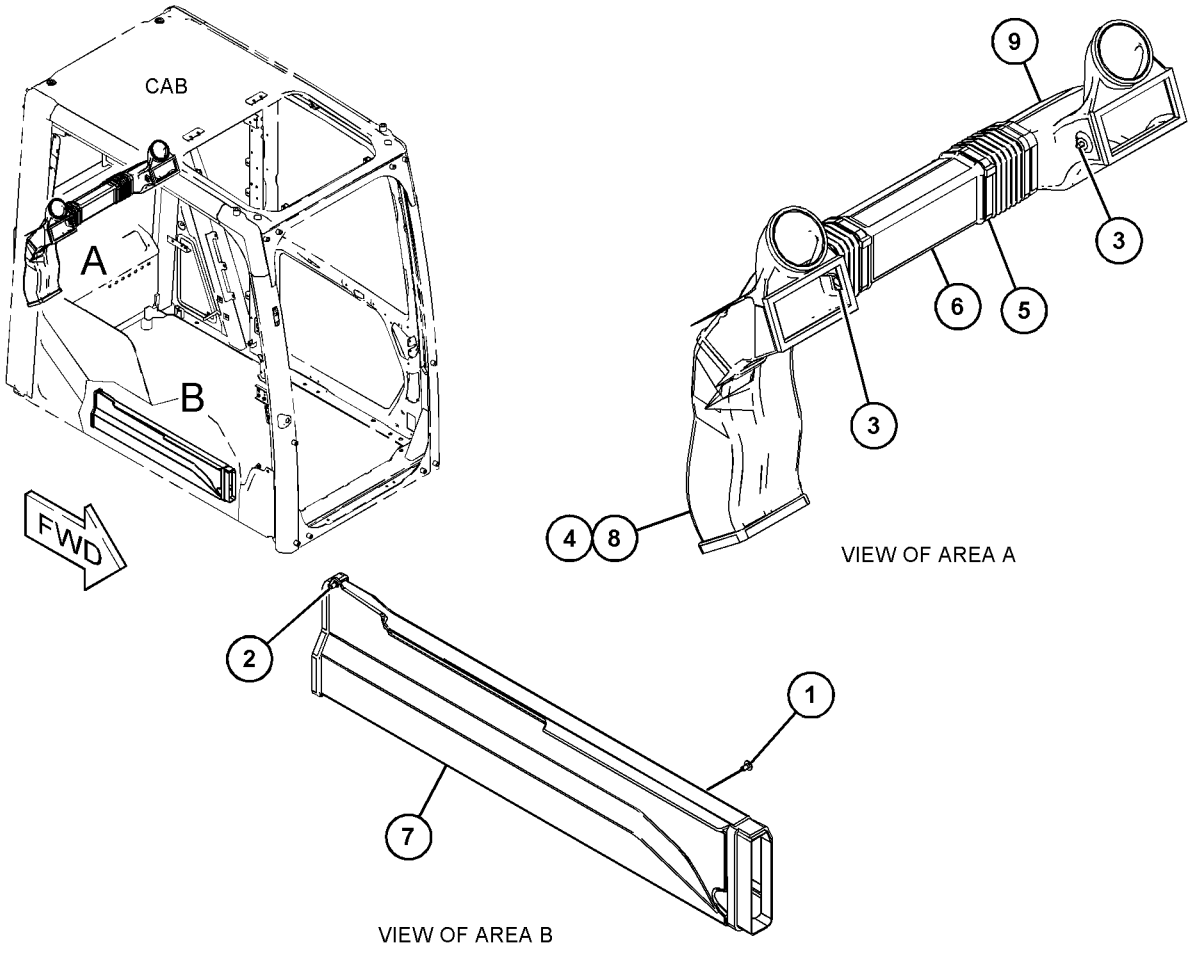

VIEW OF AREA A

VIEW OF AREA B

GRAPHIC #1 <END> g06231308

484-8025 FLOOR MAT GP

S/N: SP91-UP

PART OF 520-8306, 578-9785 OPERATOR AR

SMCS-7265, 726M **i07360911**

NOTE	REF NO	GRAPHIC REF	PART NUMBER	QTY	PART NAME 1 2 3 4 5 6 (PRODUCT LEVEL)	SEE PAGE
	1	1	**500-0948**	1	FLOOR MAT	
	2	1	**500-0949**	1	FLOOR MAT	

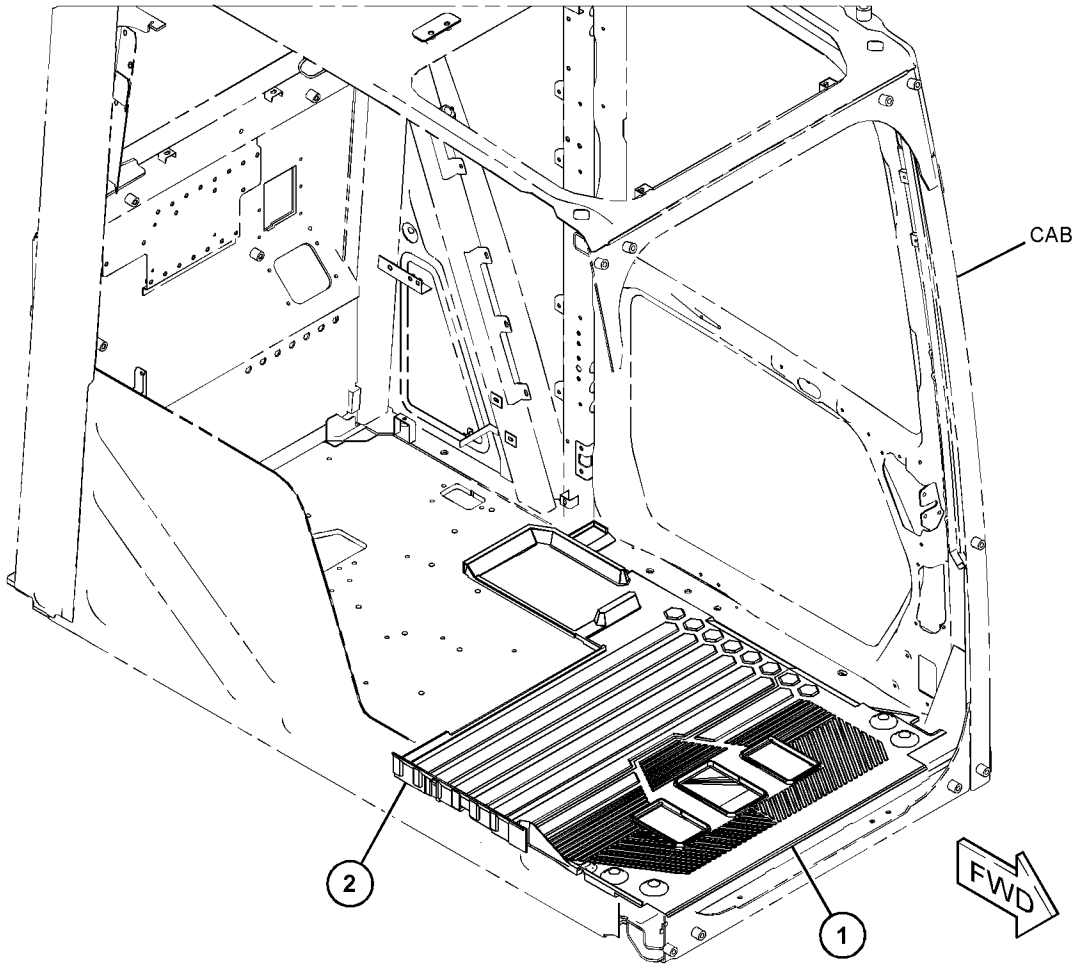

GRAPHIC #1 <END> g06230101

488-6575 GROMMET & MTG GP-WINDOW WASHER

S/N: SP91-UP

PART OF 484-8021 INSTL AR-BUMPER & WASHER LINES

SMCS-7301, 7306 **i07344724**

NOTE	REF NO	GRAPHIC REF	PART NUMBER	QTY	PART NAME 1 2 3 4 5 6 (PRODUCT LEVEL)	SEE PAGE
	1	1	**8T-4121**	2	WASHER-HARD (11X21X2.5-MM THK)	
M	2	1	**8T-4137**	2	BOLT (M10X1.5X20-MM)	
	3	1	**5P-9297**	2	CLIP (LOOP)	
	4	1	**9K-0700**	1	GROMMET	

M - METRIC PART

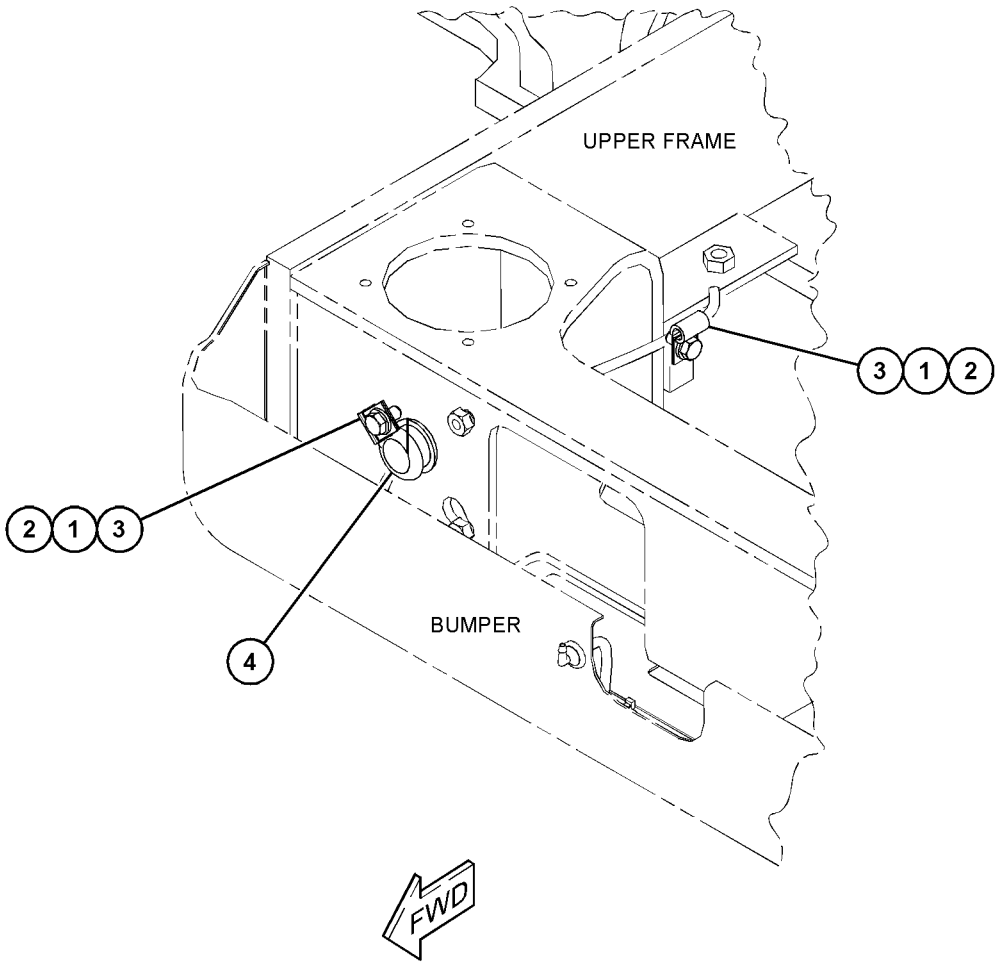

GRAPHIC #1 <END> g06229882

500-0931 GUARD & MTG GP-CAB

S/N: SP91-UP

PART OF 520-8306, 578-9785 OPERATOR AR

SMCS-7165 **i07360918**

NOTE	REF NO	GRAPHIC REF	PART NUMBER	QTY	PART NAME 1 2 3 4 5 6 (PRODUCT LEVEL)	SEE PAGE
M	1	1	**099-0823**	3	SCREW-MACHINE (M6X1X6-MM)	
	2	1	**500-0733**	1	GUARD	

M - METRIC PART

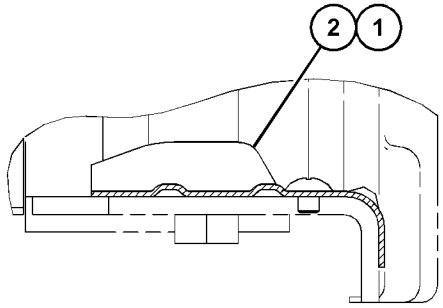

SECTION A-A

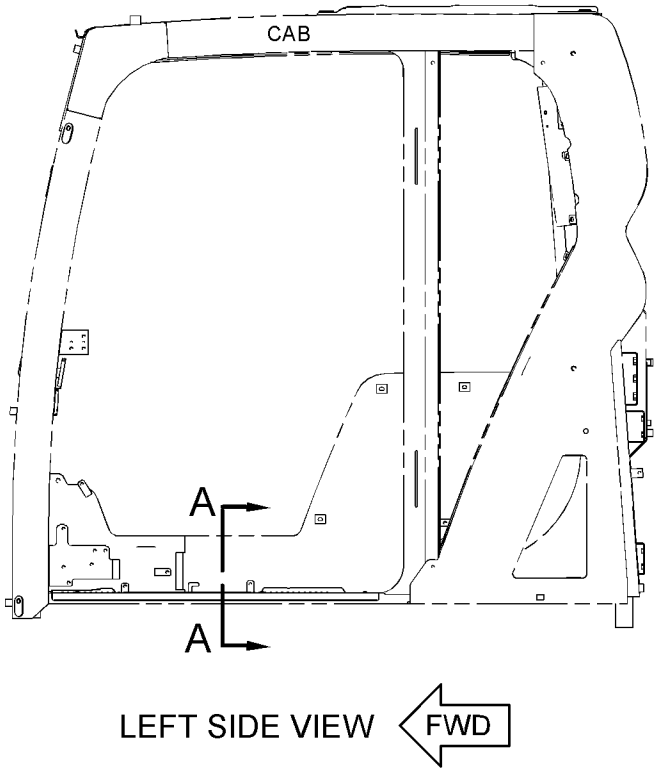

GRAPHIC #1 <END> g06231834

483-7867 HATCH GP-ROOF

S/N: SP91-UP

PART OF 486-5502 CAB GP

SMCS-7303 **i07346301**

NOTE	REF NO	GRAPHIC REF	PART NUMBER	QTY	PART NAME 1 2 3 4 5 6 (PRODUCT LEVEL)	SEE PAGE
	1	1	**099-3506**	2	SPRING AS-GAS (HATCH)	
	2	1	**105-2169**	4	BOLT AS	
	3	1	**363-9351**	1	CATCH	
	4	1	**489-6608**	1	SEAL	
	5	1	**489-6609**	1	STRIKER	
	6	1	**489-6616**	1	HATCH AS	
	6A	1	**340-6623**	2	HINGE	
B	7	1	**511-0962**	1	SHIM (1-MM THK)	
	8	1	**5D-4822**	4	RING-RETAINING	
M	9	1	**9X-2042**	2	SCREW-TRUSS HEAD (M6X1X12-MM)	
M	10	1	**9X-2045**	2	SCREW-TRUSS HEAD (M6X1X20-MM)	

B - USE AS REQUIRED
M - METRIC PART

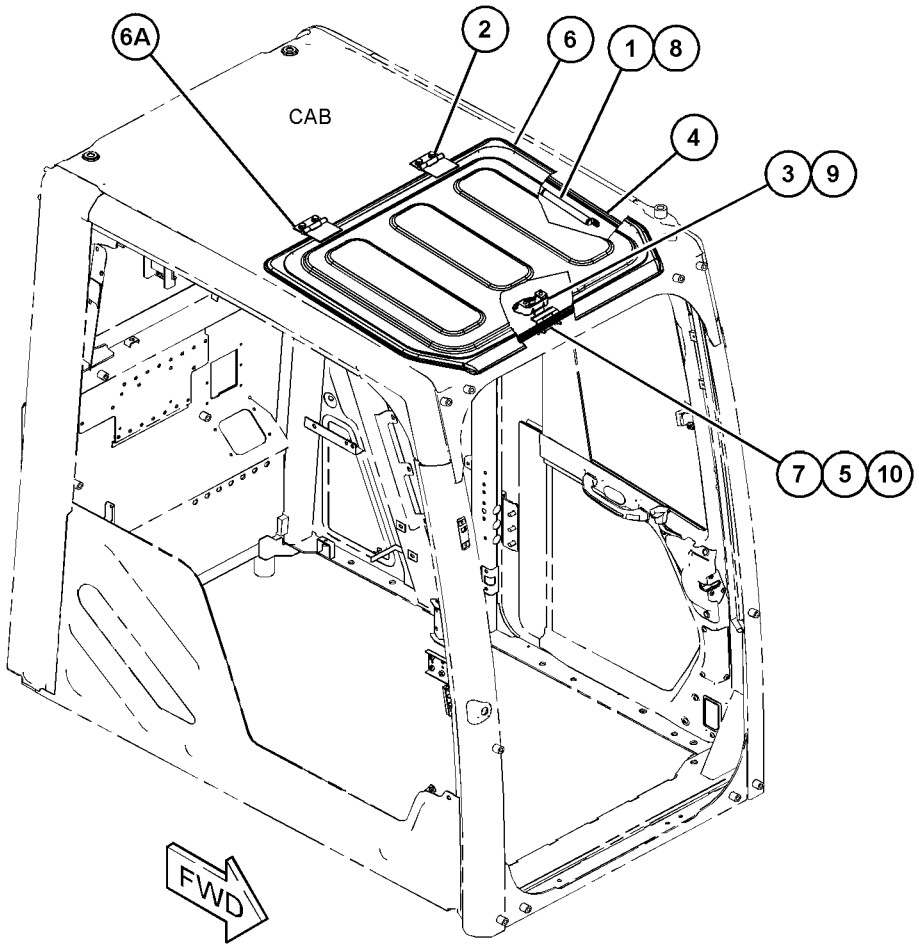

GRAPHIC #1 <END> g06230845

487-6639 HATCH GP-ROOF

S/N: SP91-UP

PART OF 498-7724 CAB GP

SMCS-7303 **i07362903**

NOTE	REF NO	GRAPHIC REF	PART NUMBER	QTY	PART NAME 1 2 3 4 5 6 (PRODUCT LEVEL)	SEE PAGE
	1	1	**099-3506**	2	SPRING AS-GAS (HATCH)	
	2	1	**105-2169**	4	BOLT AS	
	3	1	**489-6608**	1	SEAL	
	4	1	**489-6609**	1	STRIKER	
Y	5	1	**492-3915**	1	HATCH GP-ROOF	687
B	6	1	**511-0962**	1	SHIM (1-MM THK)	
	7	1	**5D-4822**	4	RING-RETAINING	
M	8	1	**9X-2045**	2	SCREW-TRUSS HEAD (M6X1X20-MM)	

B - USE AS REQUIRED
M - METRIC PART
Y - SEPARATE ILLUSTRATION

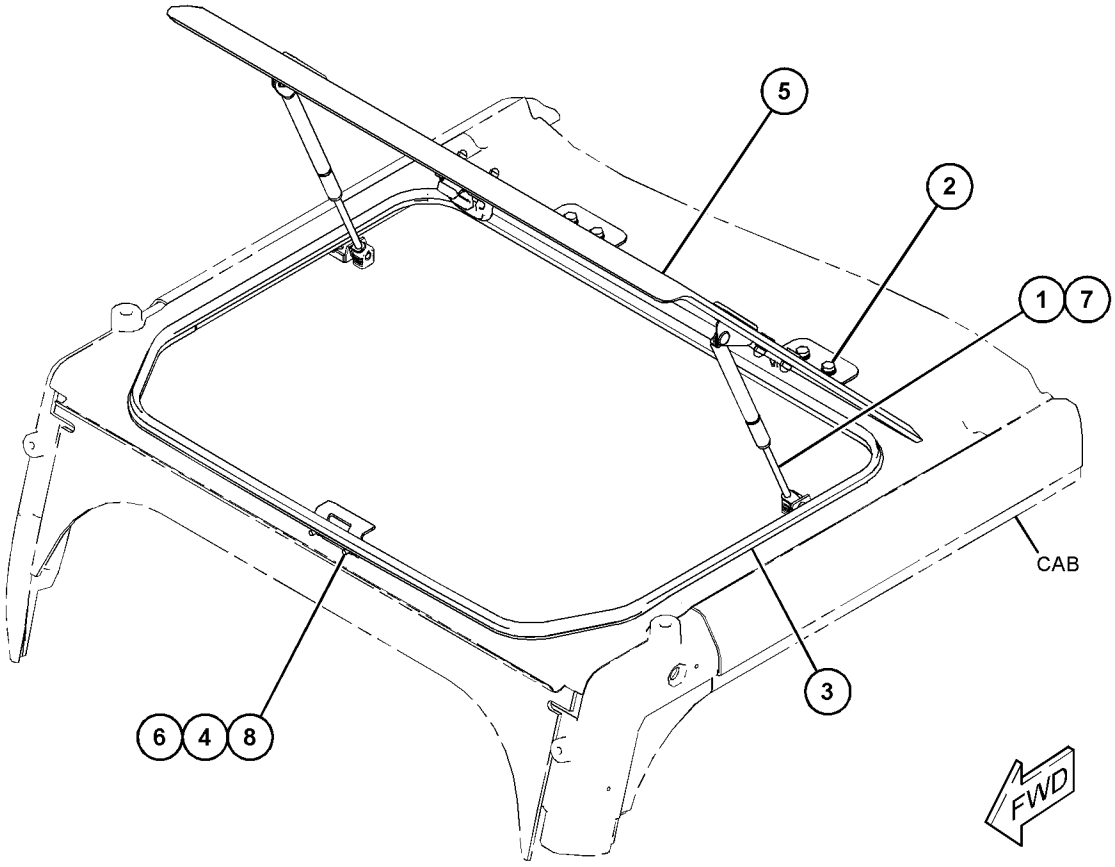

GRAPHIC #1 <END> g06232949

492-3915 HATCH GP-ROOF

S/N: SP91-UP

PART OF 487-6639 HATCH GP-ROOF

SMCS-7303 **i07362915**

NOTE	REF NO	GRAPHIC REF	PART NUMBER	QTY	PART NAME 1 2 3 4 5 6 (PRODUCT LEVEL)	SEE PAGE
	1	1	**4I-4361**	2	RETAINER	
M	2	1	**6I-5342**	4	NUT (M8X1.25-THD)	
	3	1	**085-6449**	2	PACKING	
	4	1	**161-3694**	1	CATCH	
M	5	1	**171-7477**	2	NUT (M6X1-THD)	
	6	1	**189-2693**	1	BRACKET AS	
	7	1	**189-2694**	1	BRACKET AS	
	8	1	**340-6592**	2	HINGE AS	
	9	1	**357-3914**	1	SEAL	
M	10	1	**9X-2045**	2	SCREW-TRUSS HEAD (M6X1X20-MM)	
M	11	1	**271-9408**	4	SCREW-TRUSS HEAD (M5X0.8X10-MM)	
	12	1	**4I-1260**	2	PACKING	

M - METRIC PART

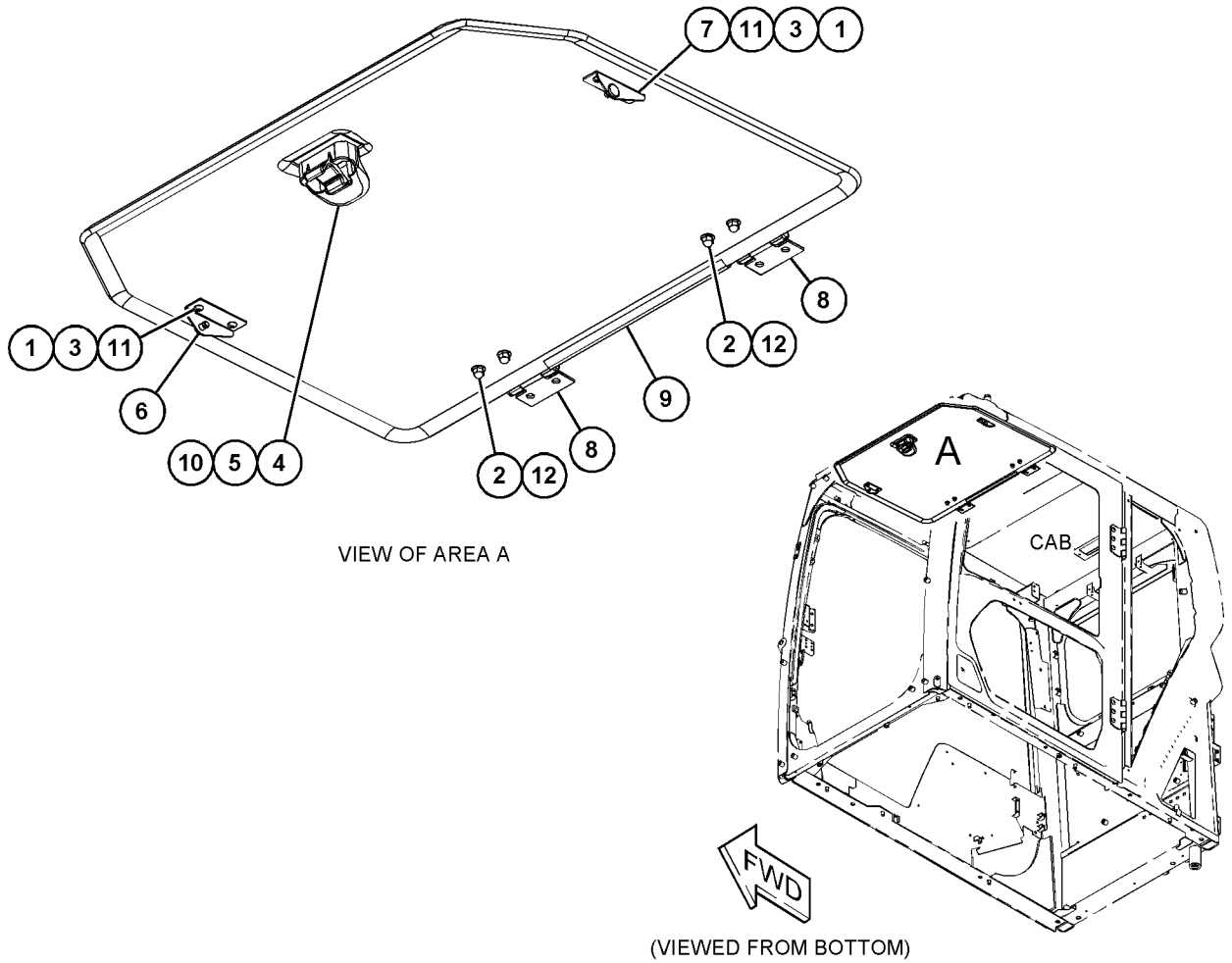

VIEW OF AREA A

(VIEWED FROM BOTTOM)

GRAPHIC #1 <END> g06230917

488-6534 HOLDER GP-CUP

S/N: SP91-UP

PART OF 488-6550, 488-6560 CONSOLE GP-OPERATOR, 578-9785 OPERATOR AR

SMCS-731C **i07347566**

NOTE	REF NO	GRAPHIC REF	PART NUMBER	QTY	PART NAME 1 2 3 4 5 6 (PRODUCT LEVEL)	SEE PAGE
	1	1	**520-8223**	1	BRACKET	
	2	1	**520-8224**	1	HOLDER	
	3	1	**520-8225**	1	HOLDER	
	4	1	**520-8238**	1	SHEET	
M	5	1	**9X-2044**	2	SCREW-TRUSS HEAD (M6X1X16-MM)	
	6	1	**526-8628**	1	PLUG	

M - METRIC PART

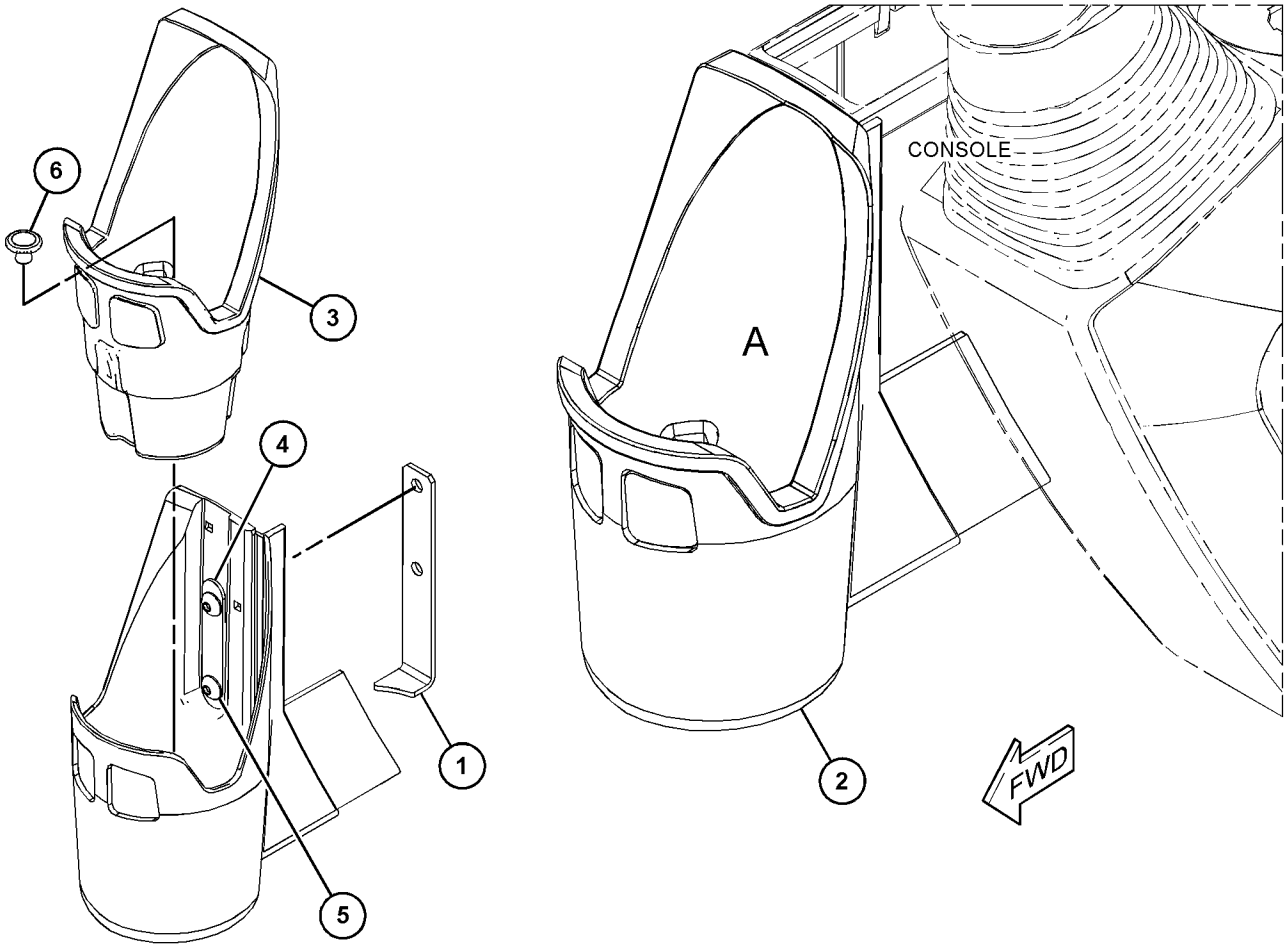

VIEW OF AREA A

GRAPHIC #1 <END> g06265342

490-2682 HORN GP-ELECTRIC

S/N: SP91-UP

PART OF 522-0500 ELECTRICAL AR

SMCS-7402 **i07499076**

NOTE	REF NO	GRAPHIC REF	PART NUMBER	QTY	PART NAME 1 2 3 4 5 6 (PRODUCT LEVEL)	SEE PAGE
	1	1	**491-7825**	1	HORN AS (24-VOLT, HIGH TONE)	
	2	1	**491-7826**	1	HORN AS (24-VOLT, LOW TONE)	
	3	1	**8T-4121**	2	WASHER-HARD (11X21X2.5-MM THK)	
M	4	1	**8T-4137**	2	BOLT (M10X1.5X20-MM)	

M - METRIC PART

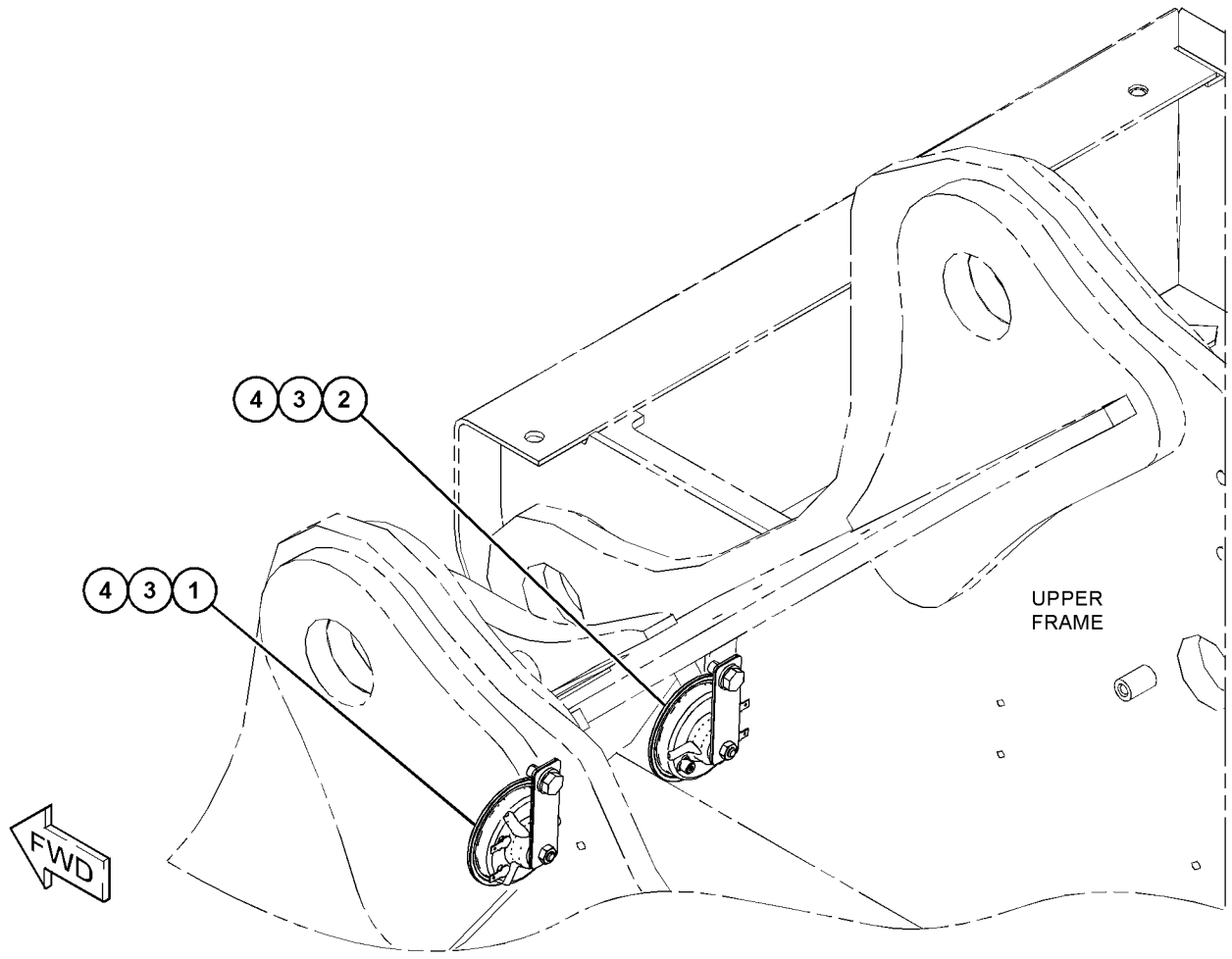

GRAPHIC #1 <END> g06231324

502-7166 INSTALLATION AR-RADIO—INSTALLATION

S/N: SP91-UP
CAN MODULE

SMCS-1408, 7338 **i07376588**

NOTE	PART NUMBER	QTY	PART NAME 1 2 3 4 5 6 (PRODUCT LEVEL)	SEE PAGE
Y	*488-6823*	1	RADIO GP	717

Y - SEPARATE ILLUSTRATION

<END>

484-8022 INSTALLATION AR-WIPER—CAB

S/N: SP91-UP
WITH LOWER WIPER

SMCS-7305 **i07519241**

NOTE	PART NUMBER	QTY	PART NAME 1 2 3 4 5 6 (PRODUCT LEVEL)	SEE PAGE
Y	*526-8596*	1	BUMPER GP-FRONT	324
Y	*526-8606*	1	LINES GP-WASHER (LOWER)	696
Y	*532-7351*	1	LINES GP-WASHER	697
Y	*526-8598*	1	WIPER GP-WINDOW	741

Y - SEPARATE ILLUSTRATION

<END>

484-8021 INSTL AR-BUMPER & WASHER LINES

S/N: SP91-UP

SMCS-7156, 7301, 7306 **i07332588**

NOTE	PART NUMBER	QTY	PART NAME 1 2 3 4 5 6 (PRODUCT LEVEL)	SEE PAGE
Y	*487-6760*	1	BUMPER GP-FRONT	323
Y	*488-6575*	1	GROMMET & MTG GP-WINDOW WASHER	683

Y - SEPARATE ILLUSTRATION

<END>

516-4946 KIT-SEAT SUSPENSION—MECHANICAL

S/N: SP91-UP

PART OF 488-6501 SEAT GP-SUSPENSION

SMCS-7312 **i07640450**

NOTE	REF NO	GRAPHIC REF	PART NUMBER	QTY	PART NAME 1 2 3 4 5 6 (PRODUCT LEVEL)	SEE PAGE
	1	1	**516-4956**	1	KIT-INDICATOR	
					(INCLUDES LEVEL INDICATOR & SCREW-CYLINDER)	
	2	1	**516-4955**	1	KIT-LEVER	
					(INCLUDES WASHERS, SPINDLE, NEEDLE BEARING, HOUSING,FLAT HEAD SCREWS, LEVER, LEVER RATCHET & COVER CAP)	
	3	1	**516-4954**	1	KIT-BEARING	
					(INCLUDES SLIDERS & BEARING)	
	4	1	**516-4953**	1	KIT-PARTS	
					(INCLUDES SCREWS, WASHER LOCKS, FLAT HEAD SCREWS, BUMPERS, SLIDERS, WASHERS, THRUST BEARINGS, SCREW CYLINDER, SLIDER)	
	5	1	**516-4947**	1	BELLOWS	
	6	1	**516-4948**	1	KIT-SPRING	
					(INCLUDES BUSHING, SPRINGS, TENSION-SPRING & SCREWS)	
	7	1	**516-4951**	1	KIT-BEARING	
					(INCLUDES BUSHINGS, BOLT, WASHER & SCREW)	
	8	1	**516-4952**	1	KIT-ABSORBER	
					(INCLUDES SPRING, BOLT, BUSHING, SHOCK ABSORBER, CLAMP RING,	

516-4946 **KIT-SEAT SUSPENSION (**contd.**)** **i07640450**

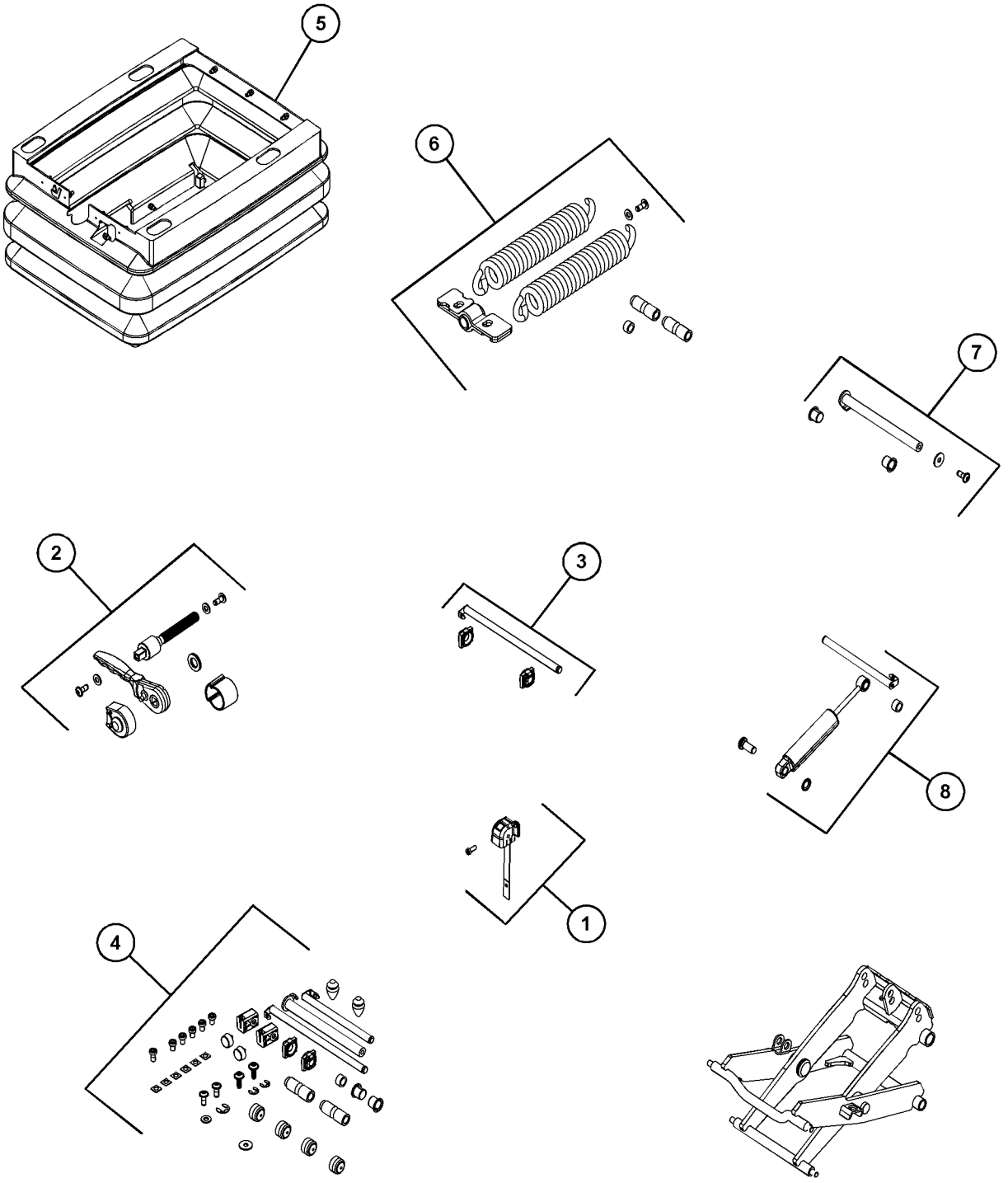

GRAPHIC #1 <END> g06271123

504-1117 LINES GP-AIR CONDITIONER

S/N: SP91-10000

PART OF 523-7792 EXCAVATOR AR

SMCS-1808 **i07516005**

NOTE	REF NO	GRAPHIC REF	PART NUMBER	QTY	PART NAME 1 2 3 4 5 6 (PRODUCT LEVEL)	SEE PAGE
M	1	1	**7X-2537**	1	BOLT (M8X1.25X35-MM)	
M	2	1	**8T-4178**	1	BOLT (M10X1.5X90-MM)	
M	3	1	**8T-4200**	2	BOLT (M8X1.25X16-MM)	
	4	1	**8T-4224**	4	WASHER-HARD (8.8X16X2-MM THK)	
M	5	1	**8T-4908**	1	BOLT (M8X1.25X25-MM)	
M	6	1	**8T-4971**	1	BOLT (M6X1X30-MM)	
	7	1	**176-1902**	1	DRYER AS-REFRIGERANT (RECEIVER)	
	8	1	**235-8891**	1	PLATE	
	9	1	**235-9014**	4	CLAMP-SPRING	
	10	1	**305-0442**	2	BAND-MARKER (HR)	
	11	1	**327-0325**	2	STRAP-CABLE	
	12	1	*357-4597*	1	ELBOW AS	
		1	**6V-3250**	1	SEAL-O-RING	
		1	**6V-8077**	1	ELBOW	
	13	1	**372-9319**	2	HOSE-DRAIN	
	14	1	*392-0808*	1	ELBOW AS	
		1	**5P-4906**	1	ELBOW	
		1	**6V-6609**	1	SEAL-O-RING	
	15	1	*421-6175*	1	ADAPTER AS	
		1	**214-7568**	1	SEAL-O-RING	
		1	**426-4018**	1	ADAPTER	
	16	1	**483-7805**	1	SPACER (11X20X65-MM THK)	
	17	1	**100-4336**	6	CLIP (LOOP)	
	18	1	**121-7098**	1	BRACKET AS	
M		1	**8T-4138**	2	BOLT (M6X1X20-MM)	
		1	**9X-8256**	2	WASHER (6.6X12X2-MM THK)	
	19	1	**122-9657**	2	CLAMP	
B	20	1	**266-7379**	2	STRAP-CABLE	
	21	1	**305-0441**	2	BAND-MARKER (HS)	
B	22	1	**3S-2093**	3	STRAP-CABLE	
	23	1	**484-1456**	1	STRAP-CABLE	
	24	1	**488-6591**	1	HOSE AS-REFRIGERANT	
		1	**121-7138**	2	SEAL-O-RING	
		1	**130-0270**	1	SWITCH AS-PRESSURE (REFRIGERANT)	
		1	**185-8293**	1	SEAL-O-RING	
	25	1	**488-6616**	1	PIPE AS	
		1	**121-7138**	2	SEAL-O-RING	
	26	1	**498-7700**	1	HOSE AS-REFRIGERANT (HIGH PRESSURE)	
		1	**121-7137**	1	SEAL-O-RING	
		1	**245-7850**	1	CAP	
	27	1	**498-7701**	1	HOSE AS-REFRIGERANT (LOW PRESSURE)	
		1	**121-7136**	1	SEAL-O-RING	
		1	**245-7851**	1	CAP	
	28	1	**498-7702**	1	BRACKET AS	
	29	1	**4S-6668**	2	CLIP	
Y	30	1	*504-3679*	1	CONDENSER & MTG GP-REFRIGERANT	656
	31	1	**526-8626**	1	LINER	

504-1117 **LINES GP-AIR CONDITIONER (**contd.**)** **i07516005**

NOTE	REF NO	GRAPHIC REF	PART NUMBER	QTY	PART NAME 1 2 3 4 5 6 (PRODUCT LEVEL)	SEE PAGE
	32	1	**5P-9297**	1	CLIP (LOOP)	
	33	1	**5P-9299**	1	CLIP (LOOP)	
	34	1	**6D-1641**	3	CLIP (LOOP)	
	35	1	**6V-2235**	2	CLIP	
M	36	1	**6V-7357**	4	BOLT (M6X1X25-MM)	
	37	1	**8T-4121**	15	WASHER-HARD (11X21X2.5-MM THK)	
M	38	1	**8T-4137**	14	BOLT (M10X1.5X20-MM)	
	39	1	**9X-8256**	5	WASHER (6.6X12X2-MM THK)	
E	43	1	**5P-0767**		HOSE (320-CM)	
E	43A	1	**5P-0767**		HOSE (312-CM)	

B - USE AS REQUIRED
E - ORDER BY THE CENTIMETER
M - METRIC PART
Y - SEPARATE ILLUSTRATION

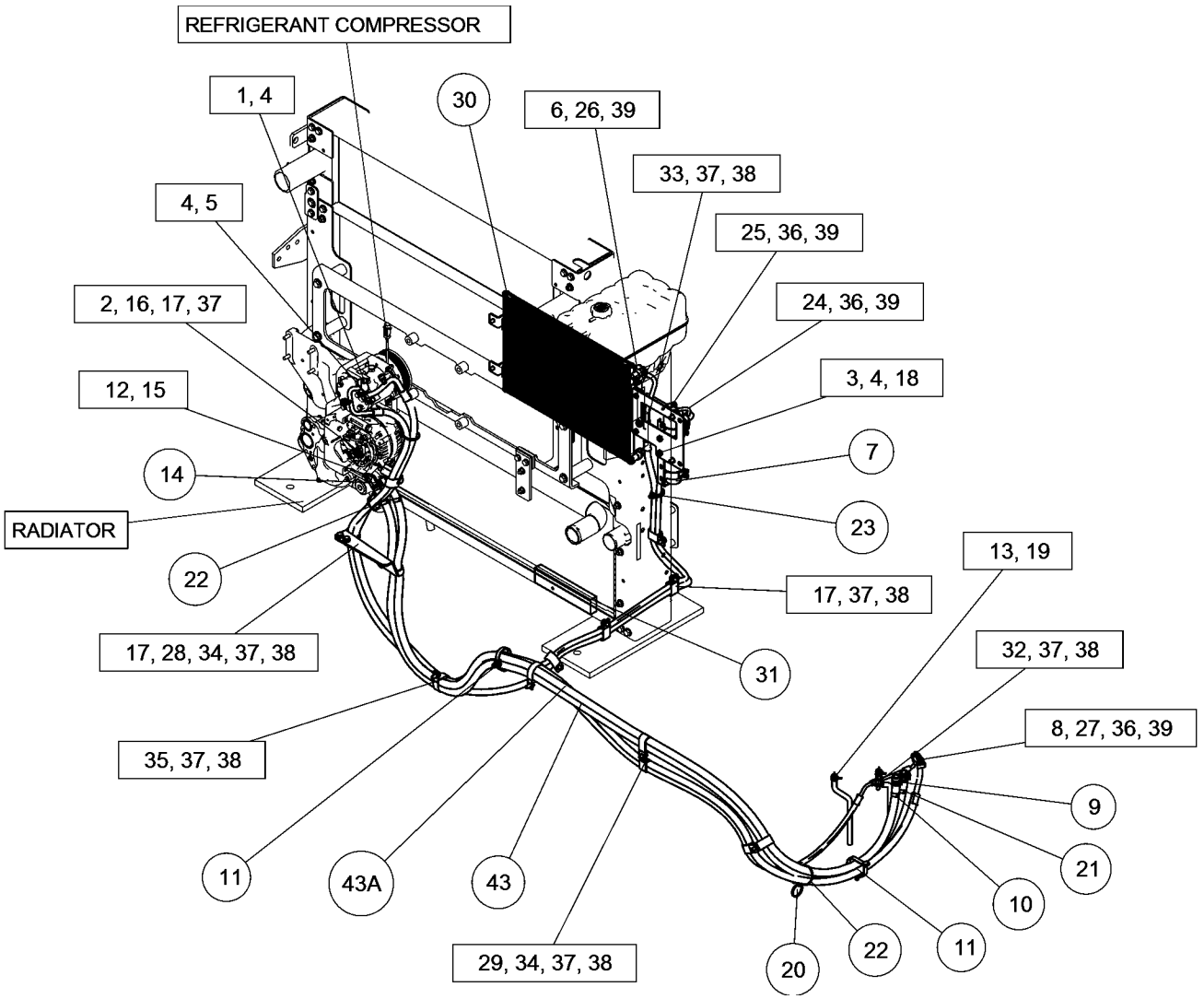

GRAPHIC #1 <END> g06277200

488-6474 LINES GP-WASHER

S/N: SP91-UP

PART OF 500-0999, 500-1000 OPERATOR AR

SMCS-7306 **i07348759**

NOTE	REF NO	GRAPHIC REF	PART NUMBER	QTY	PART NAME 1 2 3 4 5 6 (PRODUCT LEVEL)	SEE PAGE
	1	1	**7Y-3474**	1	VALVE AS-CHECK (WINDOW WASHER)	
	2	1	**484-1456**	7	STRAP-CABLE	
E	3	1	**144-0195**		HOSE (218-CM)	

E - ORDER BY THE CENTIMETER

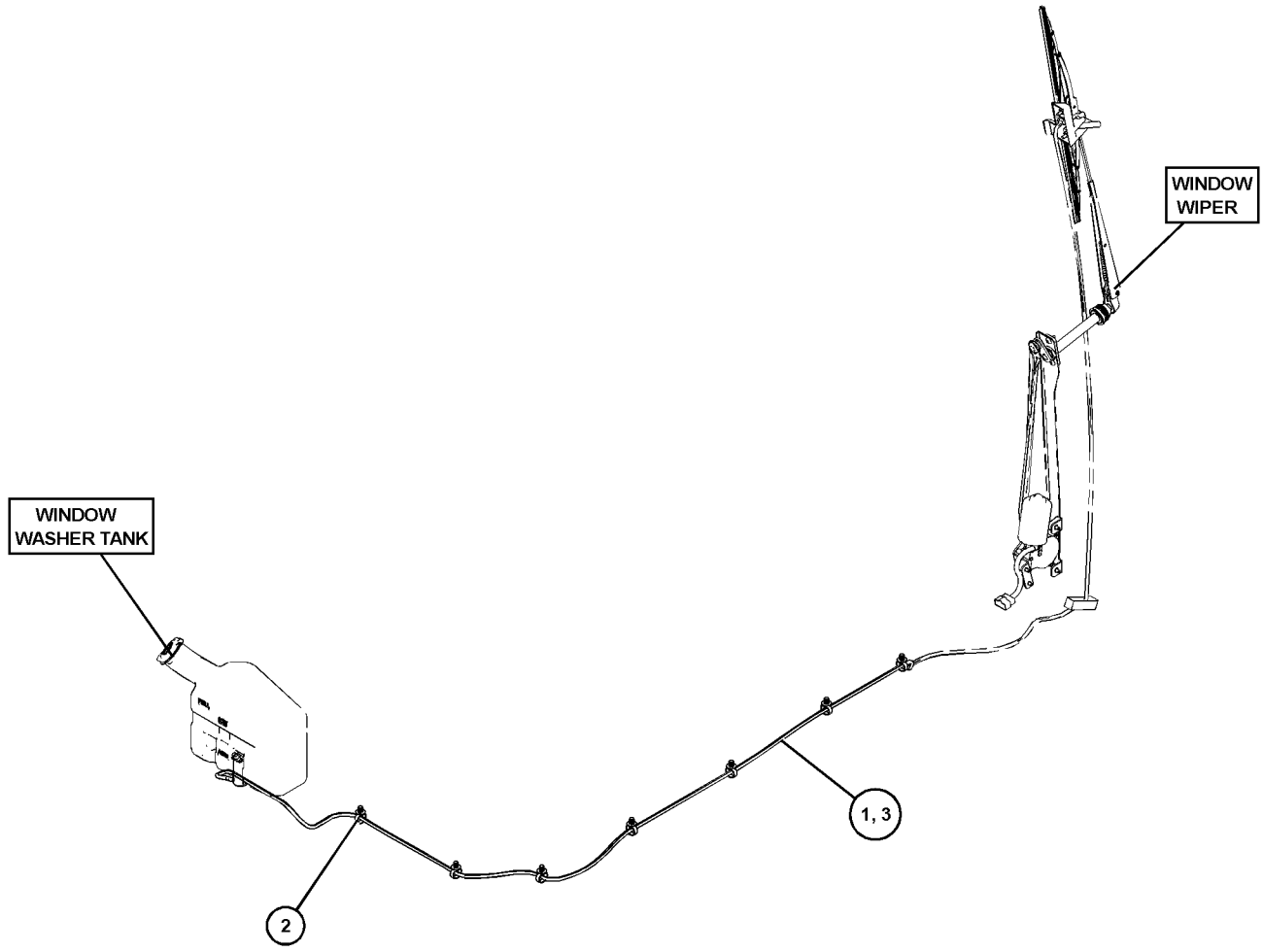

GRAPHIC #1 <END> g06228348

526-8606 LINES GP-WASHER–LOWER

S/N: SP91-UP

PART OF 484-8022 INSTALLATION AR-WIPER

SMCS-7306 **i07519254**

NOTE	REF NO	GRAPHIC REF	PART NUMBER	QTY	PART NAME 1 2 3 4 5 6 (PRODUCT LEVEL)	SEE PAGE
	1	1	**7Y-7365**	1	JOINT (3-WAY)	
	2	1	**163-6795**	1	STRAP-CABLE	
	3	1	**293-1256**	1	VALVE AS-CHECK	
E	4	1	**144-0195**		HOSE (56-CM)	
E	4A	1	**144-0195**		HOSE (5-CM)	

E - ORDER BY THE CENTIMETER

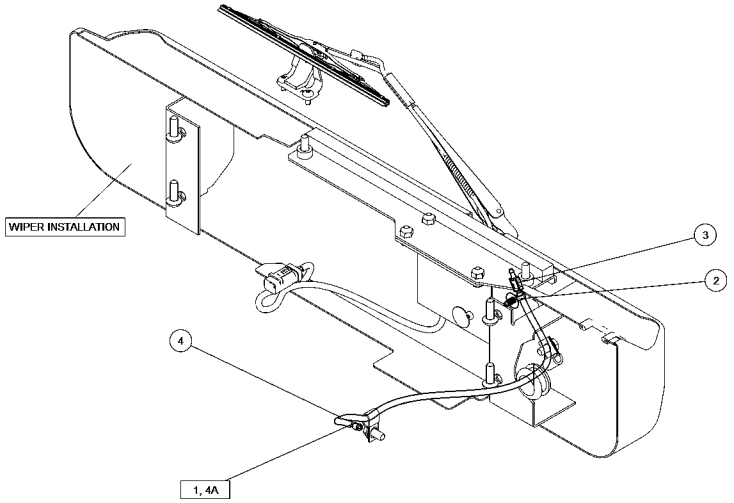

GRAPHIC #1 <END> g06253554

532-7351 LINES GP-WASHER

S/N: SP91-UP

PART OF 484-8022 INSTALLATION AR-WIPER

SMCS-7306 **i07861818**

NOTE	REF NO	GRAPHIC REF	PART NUMBER	QTY	PART NAME 1 2 3 4 5 6 (PRODUCT LEVEL)	SEE PAGE
	1	1	**8T-4121**	2	WASHER-HARD (11X21X2.5-MM THK)	
M	2	1	**8T-4137**	2	BOLT (M10X1.5X20-MM)	
	3	1	**9K-0700**	1	GROMMET	
	4	1	**5P-9297**	1	CLIP (LOOP)	
	5	1	**9X-8582**	1	CLIP (LOOP)	

M - METRIC PART

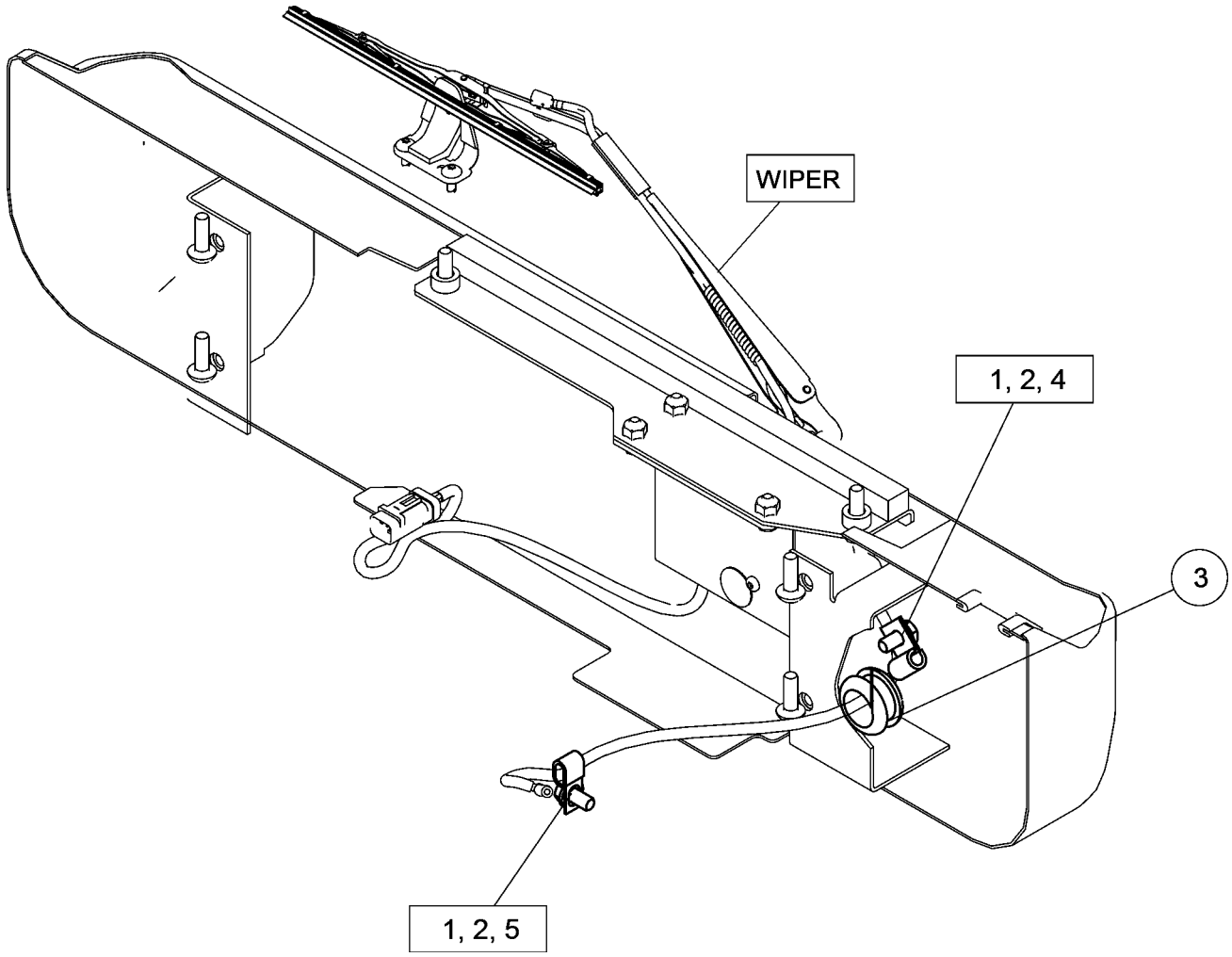

GRAPHIC #1 <END> g06258694

359-2563 LITERATURE GP

S/N: SP91-UP

PART OF 526-5211 COMMON AR

SMCS-7300 **i06064378**

NOTE	PART NUMBER	QTY	PART NAME 1 2 3 4 5 6 (PRODUCT LEVEL)	SEE PAGE
	099-3645	1	CABLE-LANYARD	
	5P-8500	2	KEY	
	5P-7958	2	SLEEVE-CABLE SPLICE	
	364-8522	1	TAG-WARNING (TIPPING HAZARD, READ OMM)	
			(ATTACH TO JOYSTICK WHEN MACHINE IS TRANSPORTED WITHOUT FRONT (BOOM) STRUCTURE OR COUNTERWEIGHT)	
			<END>	

394-9460 MIRROR GP

S/N: SP91-UP

PART OF 477-7565 CAB GP, 548-0293 MIRROR GP-SIDE VIEW

SMCS-7319 **i07344982**

NOTE	REF NO	GRAPHIC REF	PART NUMBER	QTY	PART NAME 1 2 3 4 5 6 (PRODUCT LEVEL)	SEE PAGE
M	1	1	**191-8921**	2	BOLT-SOCKET HEAD (M6X1X25-MM)	
	2	1	**9X-8256**	2	WASHER (6.6X12X2-MM THK)	

M - METRIC PART

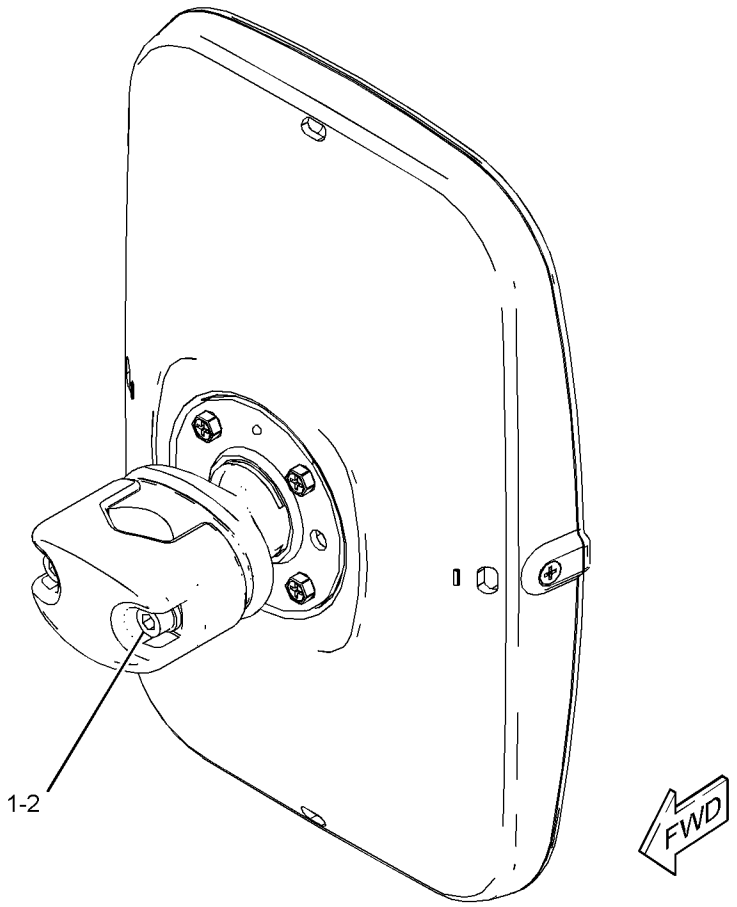

GRAPHIC #1 <END> g03652607

327-6550 MIRROR GP-REAR VIEW

S/N: SP91-UP

PART OF 327-6552 MIRROR GP-REAR VIEW

SMCS-7319 **i05719329**

NOTE	REF NO	GRAPHIC REF	PART NUMBER	QTY	PART NAME 1 2 3 4 5 6 (PRODUCT LEVEL)	SEE PAGE
M	1	1	**105-3487**	2	BOLT-SOCKET HEAD (M6X1X20-MM)	
	2	1	**9X-8256**	2	WASHER (6.6X12X2-MM THK)	

M - METRIC PART

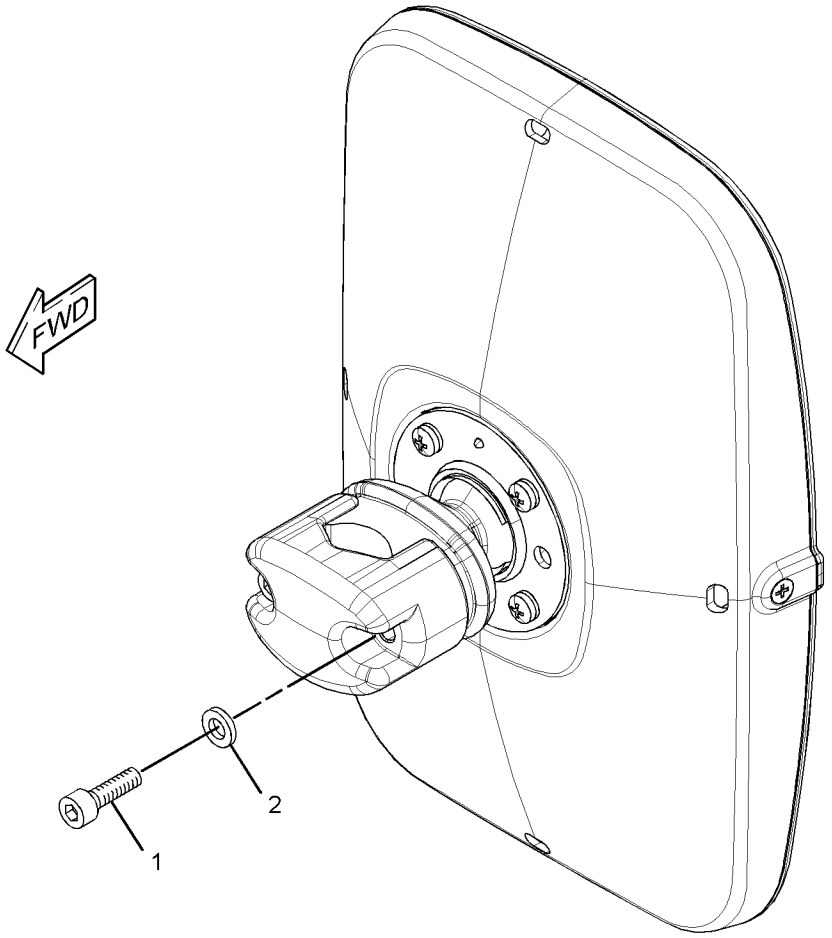

GRAPHIC #1 <END> g01615528

327-6552 MIRROR GP-REAR VIEW

S/N: SP91-UP

CANNOT BE USED WITH FALLING OPTION GUARDS

SMCS-7319 **i03678520**

NOTE	REF NO	GRAPHIC REF	PART NUMBER	QTY	PART NAME 1 2 3 4 5 6 (PRODUCT LEVEL)	SEE PAGE
Y	1	1	**327-6550**	1	MIRROR GP-REAR VIEW	700
	2	1	**327-6576**	1	SUPPORT AS (MIRROR)	
M	3	1	**8T-4175**	1	BOLT (M16X2X90-MM)	
	4	1	**9X-8257**	1	WASHER (17.5X30X3.5-MM THK)	

M - METRIC PART
Y - SEPARATE ILLUSTRATION

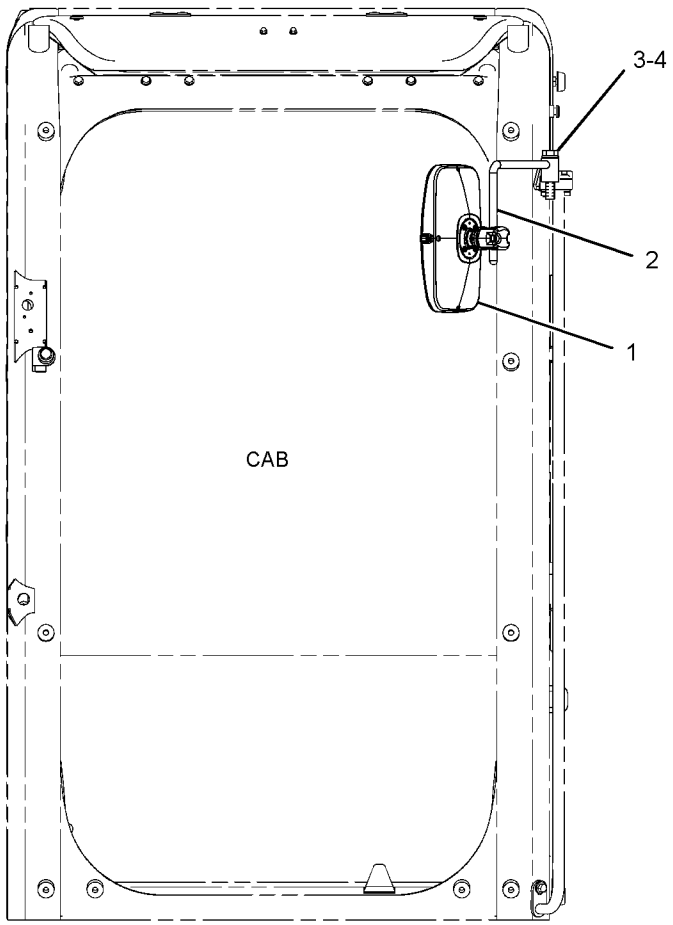

FRONT VIEW

GRAPHIC #1 <END> g01615557

548-0293 MIRROR GP-SIDE VIEW

S/N: SP91-UP

PART OF 512-1338 CAMERA & MIRROR AR

SMCS-7319 **i07528724**

NOTE	REF NO	GRAPHIC REF	PART NUMBER	QTY	PART NAME 1 2 3 4 5 6 (PRODUCT LEVEL)	SEE PAGE
M	1	1	**8T-4172**	2	BOLT (M10X1.5X80-MM)	
	2	1	**8T-4121**	2	WASHER-HARD (11X21X2.5-MM THK)	
Y	3	1	**394-9460**	1	MIRROR GP (FUEL TANK)	699
	4	1	**508-9725**	2	CLAMP	
	5	1	**548-0335**	1	SUPPORT AS	

M - METRIC PART
Y - SEPARATE ILLUSTRATION

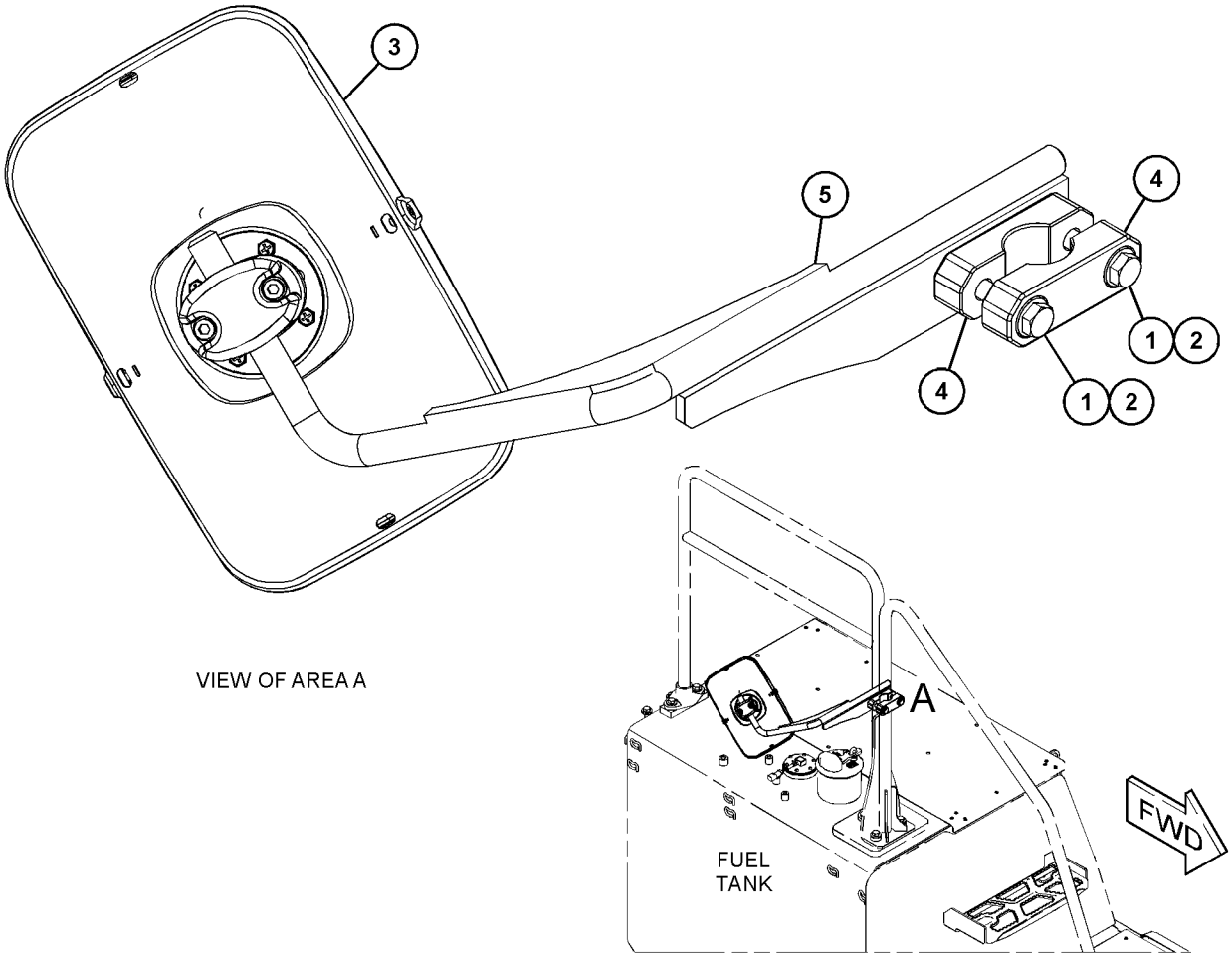

VIEW OF AREA A

GRAPHIC #1 <END> g06281981

548-0294 MIRROR GP-SIDE VIEW–REAR, RH

S/N: SP91-UP

SMCS-7319 **i07521882**

NOTE	REF NO	GRAPHIC REF	PART NUMBER	QTY	PART NAME 1 2 3 4 5 6 (PRODUCT LEVEL)	SEE PAGE
M	1	1	**8T-4172**	2	BOLT (M10X1.5X80-MM)	
	2	1	**8T-4121**	2	WASHER-HARD (11X21X2.5-MM THK)	
	3	1	**394-9459**	1	MIRROR AS	
		1	**9X-8256**	2	WASHER (6.6X12X2-MM THK)	
M		1	**191-8921**	2	BOLT-SOCKET HEAD (M6X1X25-MM)	
	4	1	**508-9725**	2	CLAMP	
	5	1	**548-0336**	1	SUPPORT AS	

M - METRIC PART

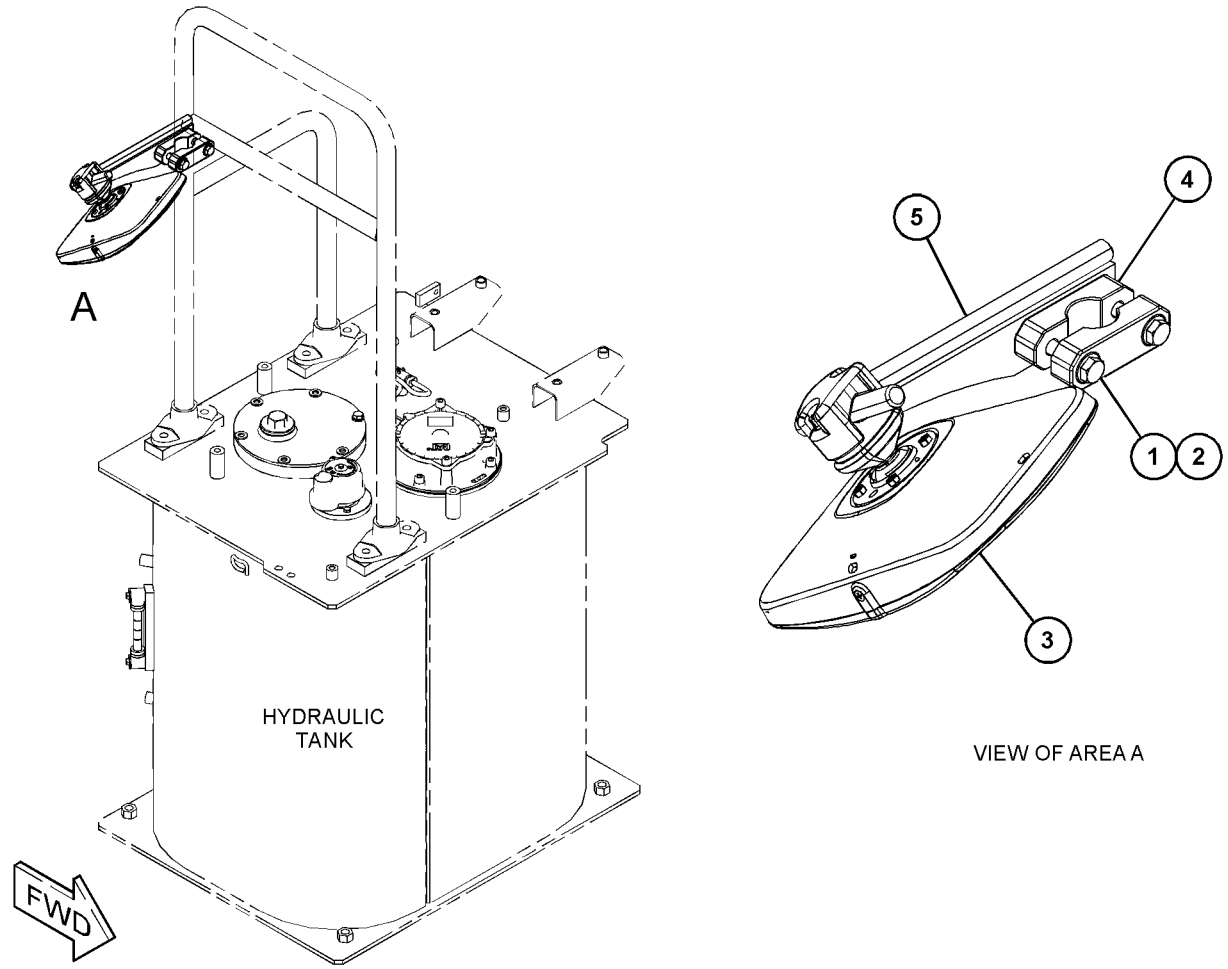

VIEW OF AREA A

GRAPHIC #1 <END> g06286068

490-5874 MODULE GP-DISPLAY*R

S/N: SP91-UP

PART OF 488-6813 MONITOR & MTG GP-OPERATOR

SMCS-7450, 7490 **i07692453**

NOTE	REF NO	GRAPHIC REF	PART NUMBER	QTY	PART NAME 1 2 3 4 5 6 (PRODUCT LEVEL)	SEE PAGE
	1	1	**545-8567**	1	COVER (DISPLAY)	
Y	2	1	**519-6970**	1	ELECTRONICS GP-MONITOR	174

Y - SEPARATE ILLUSTRATION

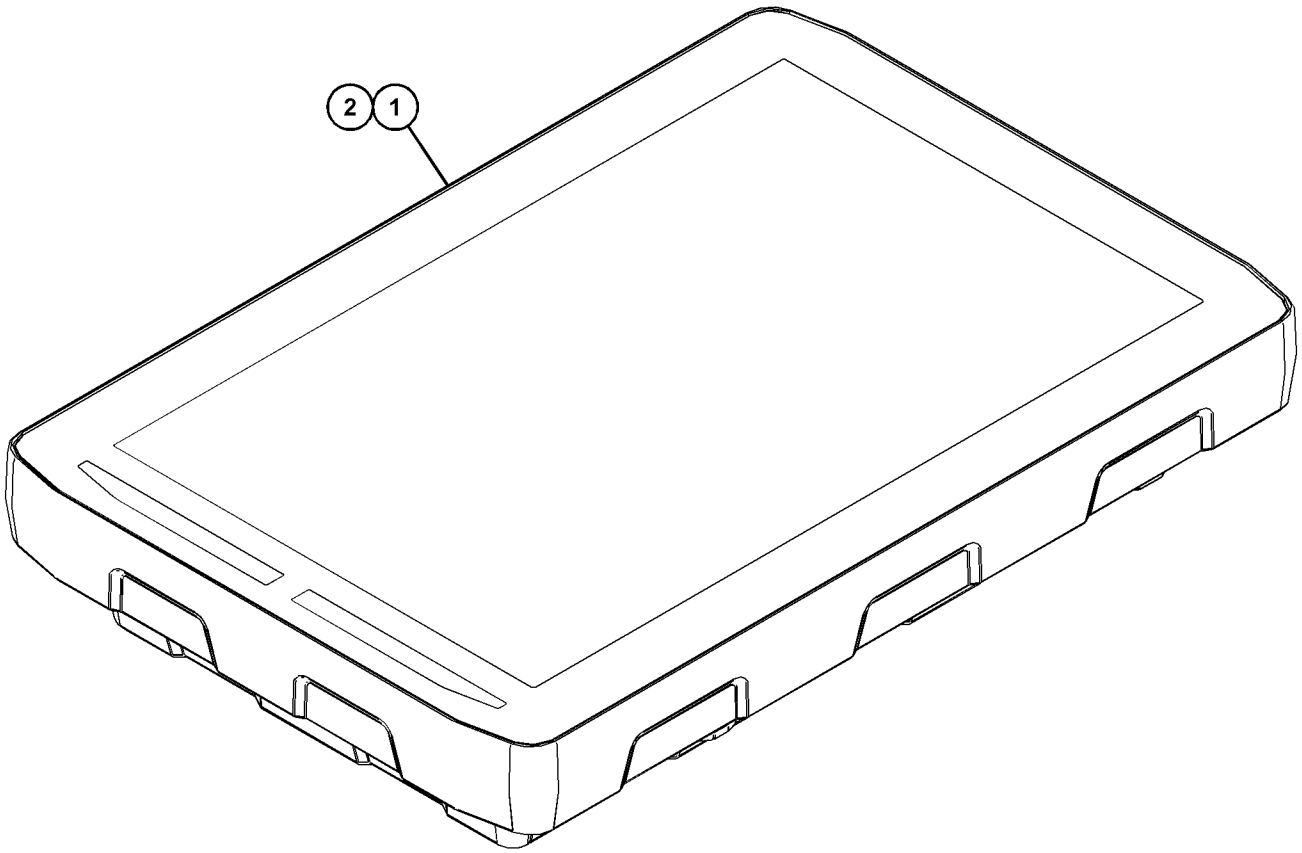

GRAPHIC #1 <END> g06387975

488-6812 MONITOR & MTG GP-OPERATOR

S/N: SP91-UP
8-IN TOUCH
PART OF 561-2292 MONITOR AR

SMCS-7490 **i07865150**

NOTE	REF NO	GRAPHIC REF	PART NUMBER	QTY	PART NAME 1 2 3 4 5 6 (PRODUCT LEVEL)	SEE PAGE
R	1	1	**490-5873**	1	MODULE GP-DISPLAY (8-IN TOUCH SCREEN)	
		1	**519-6974**	1	SOFTWARE GP-MONITOR	
	2	1	**498-7713**	1	BRACKET AS	
	3	1	**520-8260**	1	CAP	
M	4	1	**9X-2042**	7	SCREW-TRUSS HEAD (M6X1X12-MM)	

M - METRIC PART
R - REMANUFACTURED PART MAY BE AVAILABLE

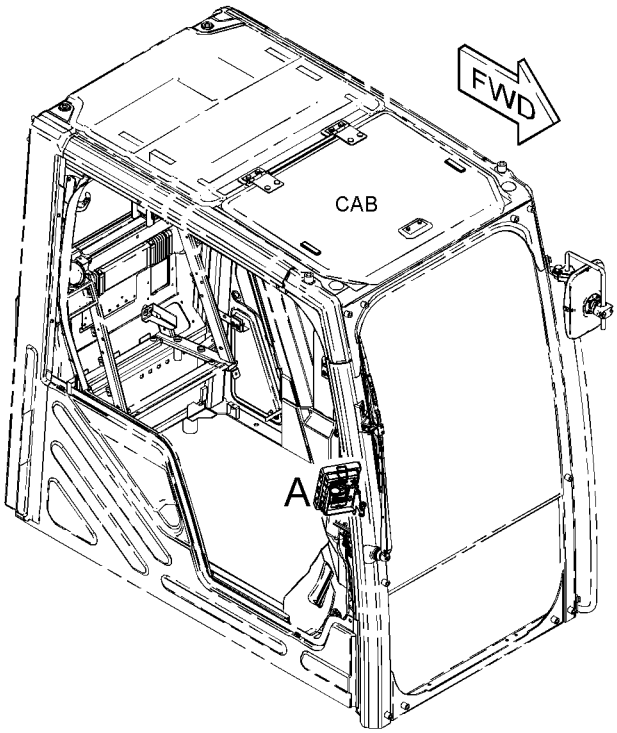

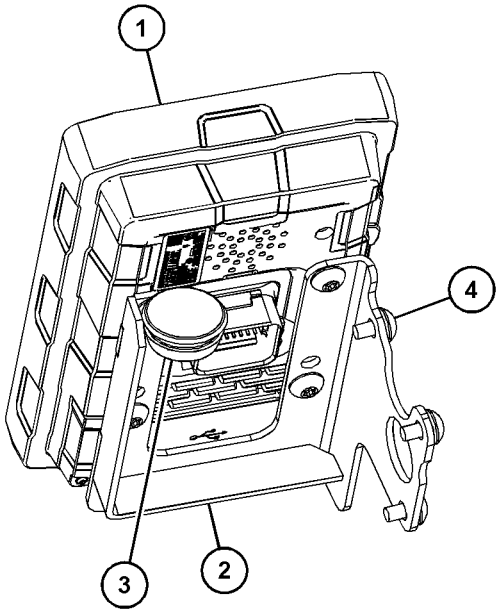

VIEW OF AREA A

GRAPHIC #1 <END> g06229902

488-6813 MONITOR & MTG GP-OPERATOR–10 INCH TOUCHSCREEN

S/N: SP91-UP

PART OF 561-2293 MONITOR AR

SMCS-7490 **i07865152**

NOTE	REF NO	GRAPHIC REF	PART NUMBER	QTY	PART NAME 1 2 3 4 5 6 (PRODUCT LEVEL)	SEE PAGE
YR	1	1	**490-5874**	1	MODULE GP-DISPLAY (10-IN TOUCH SCREEN)	704
	2	1	**498-7713**	1	BRACKET AS	
	3	1	**520-8260**	1	CAP	
M	4	1	**9X-2042**	7	SCREW-TRUSS HEAD (M6X1X12-MM)	

M - METRIC PART
R - REMANUFACTURED PART MAY BE AVAILABLE
Y - SEPARATE ILLUSTRATION

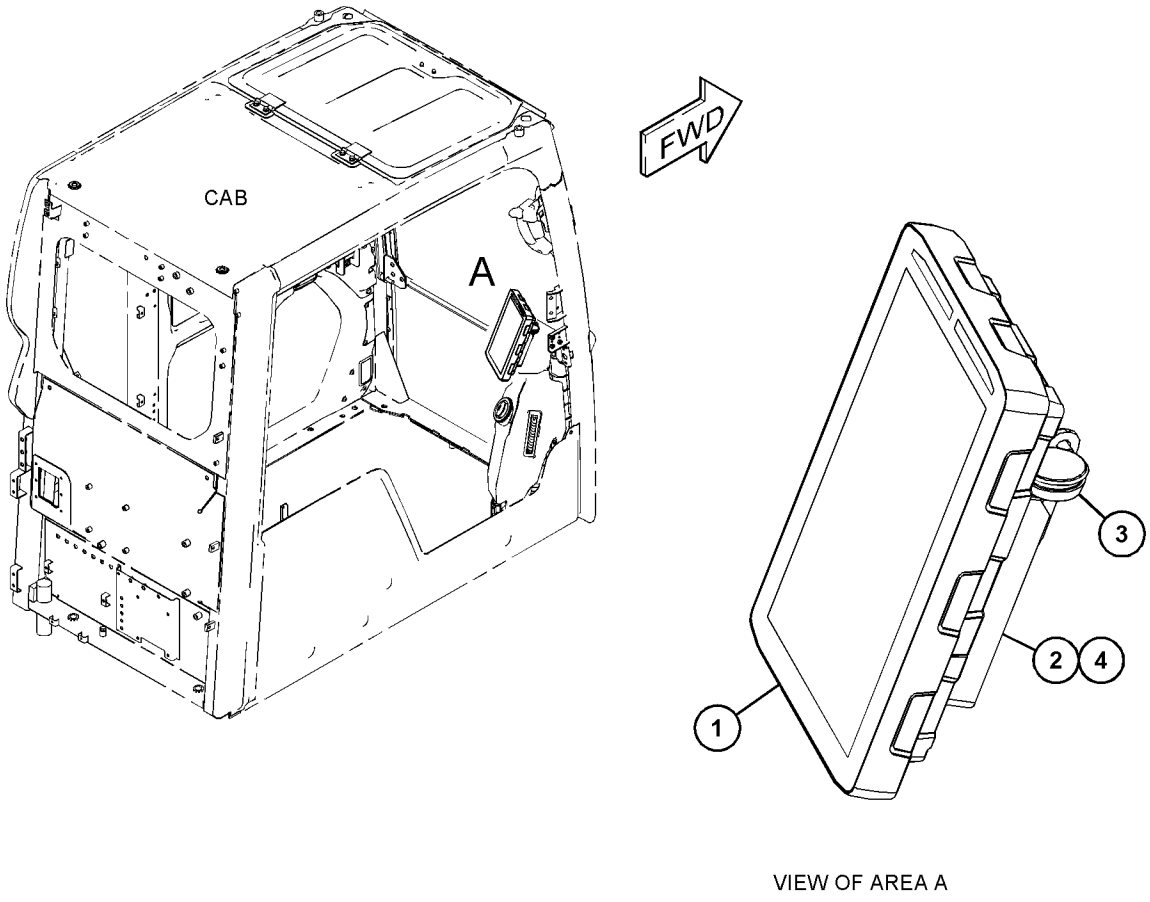

VIEW OF AREA A

GRAPHIC #1 <END> g06234723

561-2292 MONITOR AR—TOUCHSCREEN

S/N: SP91-UP

SMCS-7490 **i07787353**

NOTE	PART NUMBER	QTY	PART NAME 1 2 3 4 5 6 (PRODUCT LEVEL)	SEE PAGE
Y	*488-6812*	1	MONITOR & MTG GP-OPERATOR (8-IN TOUCH SCREEN) (8-IN)	705

Y - SEPARATE ILLUSTRATION

<END>

561-2293 MONITOR AR—10 INCH TOUCHSCREEN

S/N: SP91-UP

SMCS-7490 **i07877204**

NOTE	PART NUMBER	QTY	PART NAME 1 2 3 4 5 6 (PRODUCT LEVEL)	SEE PAGE
Y	*561-3611*	1	ELECTRONICS GP-MONITOR (10-IN)	174
Y	*488-6813*	1	MONITOR & MTG GP-OPERATOR (10-IN TOUCH SCREEN)	706

Y - SEPARATE ILLUSTRATION

<END>

526-8605 MOTOR GP-WINDOW WIPER

S/N: SP91-UP

PART OF 526-8598 WIPER GP-WINDOW

SMCS-7305 **i07531056**

NOTE	REF NO	GRAPHIC REF	PART NUMBER	QTY	PART NAME 1 2 3 4 5 6 (PRODUCT LEVEL)	SEE PAGE
	1	1	**4I-3090**	1	SEAL	
	2	1	**526-8569**	1	COVER	
	3	1	**526-8570**	1	BRACKET	
	4	1	**526-8604**	1	MOTOR AS-WINDOW WIPER	
	5	1	**9D-3769**	1	GROMMET	

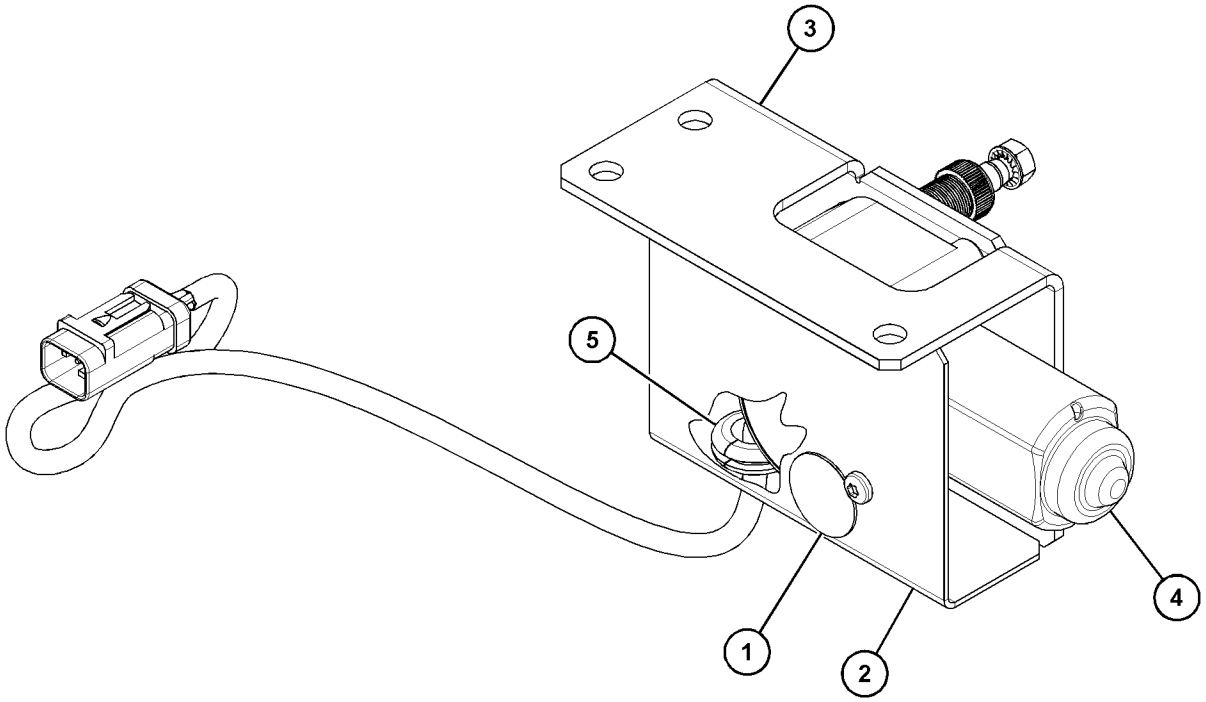

GRAPHIC #1 <END> g06271901

484-8017 MOUNTING GP-CAB–PLATFORM

S/N: SP91-UP

PART OF 520-8306, 578-9785 OPERATOR AR

SMCS-7266, 7301

i07360960

NOTE	REF NO	GRAPHIC REF	PART NUMBER	QTY	PART NAME 1 2 3 4 5 6 (PRODUCT LEVEL)	SEE PAGE
M	1	1	**8T-4136**	16	BOLT (M10X1.5X25-MM)	
	2	1	**8T-4121**	16	WASHER-HARD (11X21X2.5-MM THK)	
M	3	1	**447-1704**	2	BOLT (M16X2X90-MM)	
M	4	1	**447-1709**	2	BOLT (M16X2X45-MM)	
	5	1	**451-2175**	3	WASHER-HARD (17.5X30X3.5-MM THK)	
	6	1	**484-8018**	4	MOUNT AS	
	7	1	**086-0298**	1	WASHER (19X60X9-MM THK)	

M - METRIC PART

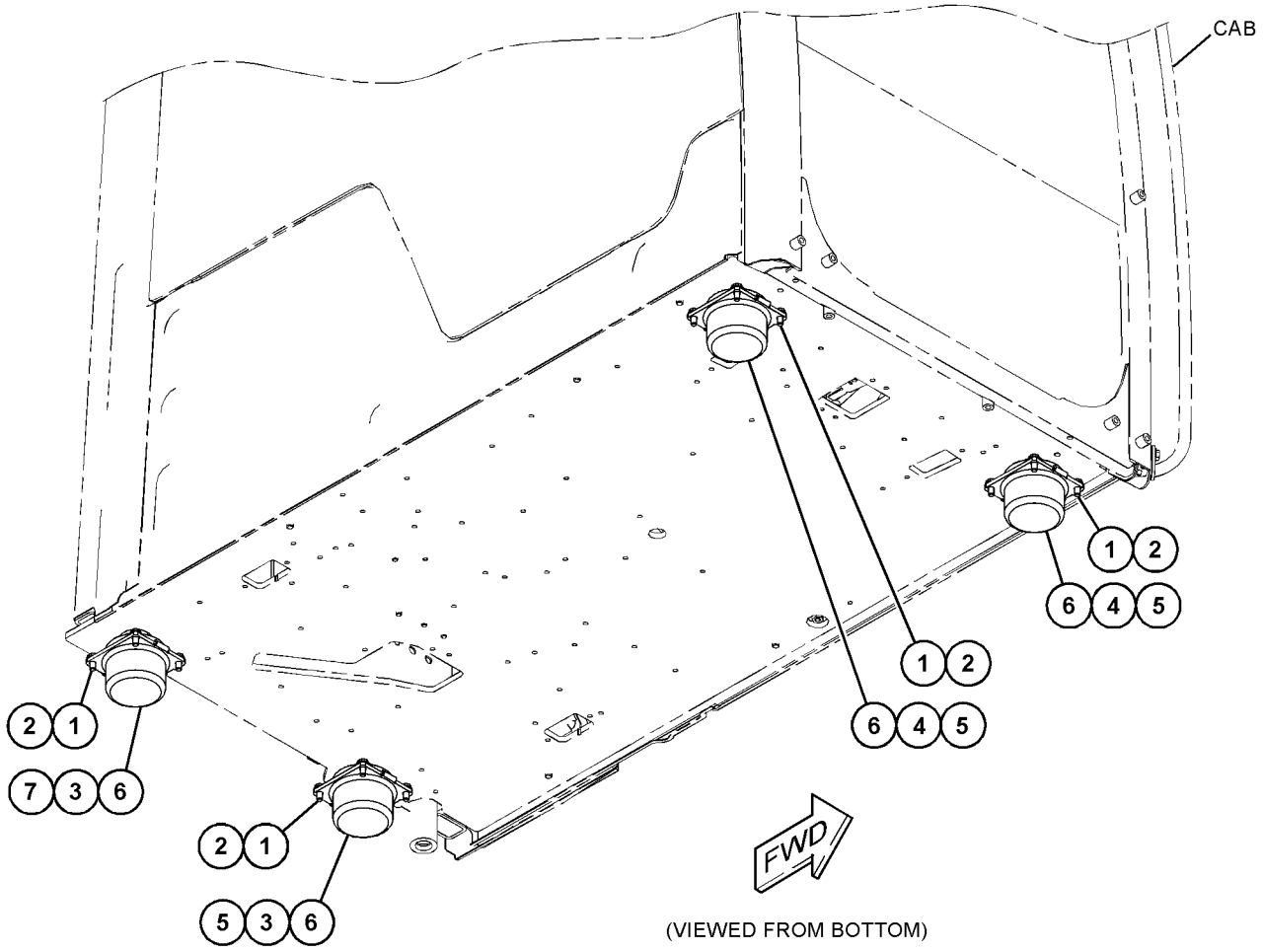

(VIEWED FROM BOTTOM)

GRAPHIC #1

<END>

g06231020

487-6904 MOUNTING GP-ROPS

S/N: SP91-UP

PART OF 520-8306, 578-9785 OPERATOR AR

SMCS-7266 **i07360962**

NOTE	REF NO	GRAPHIC REF	PART NUMBER	QTY	PART NAME 1 2 3 4 5 6 (PRODUCT LEVEL)	SEE PAGE
	1	1	**353-2087**	1	STOP (REAR)	
M	2	1	**447-1728**	1	BOLT (M30X3.5X90-MM)	
	3	1	**451-2178**	1	WASHER-HARD (33X56X6-MM THK)	

M - METRIC PART

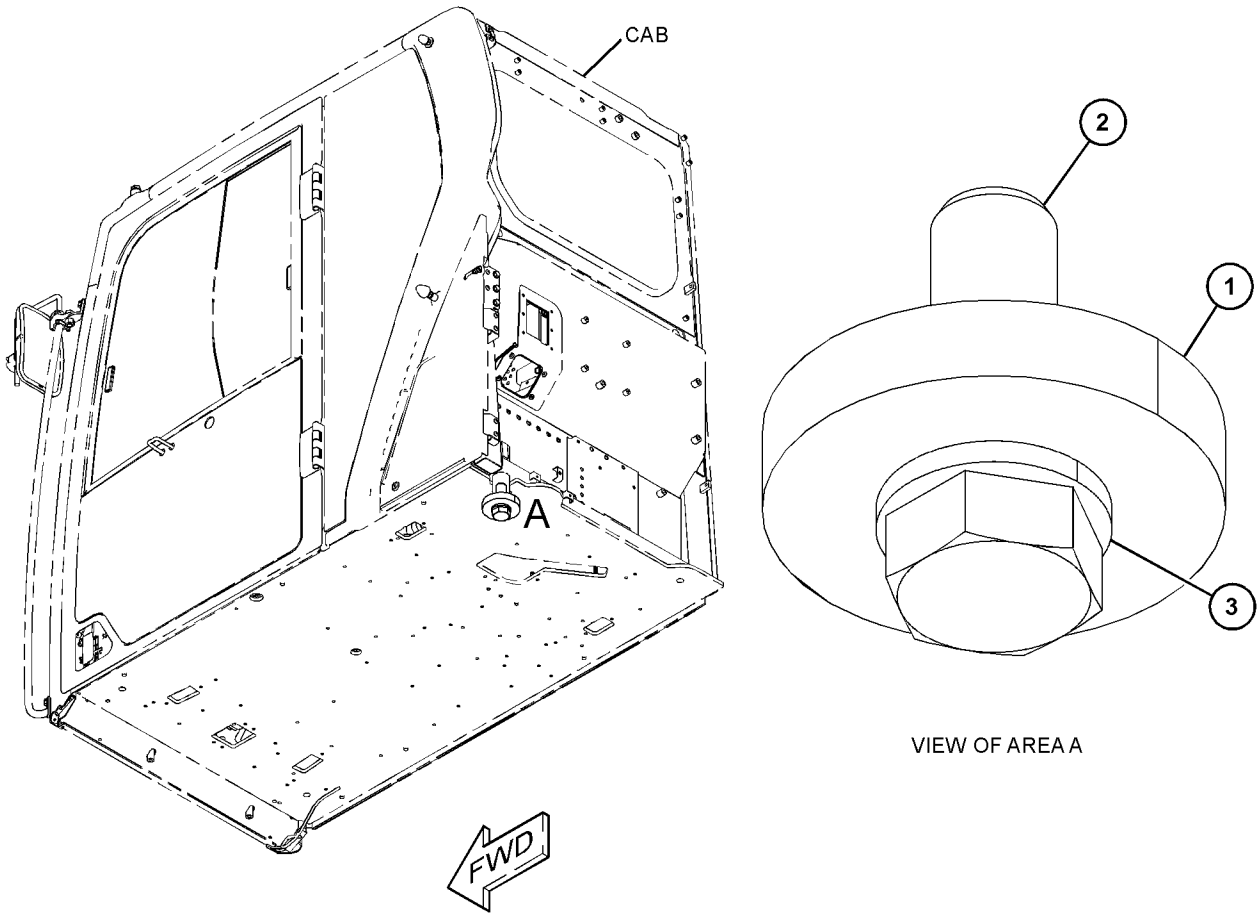

VIEW OF AREA A

(VIEWED FROM BOTTOM)

GRAPHIC #1 <END> g06231313

500-0999 OPERATOR AR—COMFORT

S/N: SP91-UP

SMCS-7301 **i07531057**

NOTE	PART NUMBER	QTY	PART NAME 1 2 3 4 5 6 (PRODUCT LEVEL)	SEE PAGE
Y	*488-6600*	1	AIR CONDITIONER & MOUNTING GP	638
Y	*487-6902*	1	CAB GP	649
Y	*488-6550*	1	CONSOLE GP-OPERATOR	660
Y	*486-5504*	1	CONTROL & MTG GP-PEDAL	669
Y	*487-6660*	1	COVER GP-CAB	671
Y	*488-6474*	1	LINES GP-WASHER	695
Y	*489-7847*	1	MODULE GP-CAB WIRING (ELECTRICAL)	219
Y	*488-0394*	1	PLATFORM GP-OPERATOR	716
Y	*488-6500*	1	SEAT GP	721
Y	*488-6530*	1	SUPPORT GP-SEAT	727

Y - SEPARATE ILLUSTRATION

<END>

500-1000 OPERATOR AR—DELUXE

S/N: SP91-UP

SMCS-7301 **i07531059**

NOTE	PART NUMBER	QTY	PART NAME 1 2 3 4 5 6 (PRODUCT LEVEL)	SEE PAGE
Y	*488-6600*	1	AIR CONDITIONER & MOUNTING GP	638
Y	*498-7723*	1	CAB GP	651
Y	*488-6560*	1	CONSOLE GP-OPERATOR (DELUXE)	663
Y	*486-5504*	1	CONTROL & MTG GP-PEDAL	669
Y	*487-6660*	1	COVER GP-CAB	671
Y	*488-6474*	1	LINES GP-WASHER	695
Y	*489-7847*	1	MODULE GP-CAB WIRING (ELECTRICAL)	219
Y	*488-0394*	1	PLATFORM GP-OPERATOR	716
Y	*488-6510*	1	SEAT GP	722
Y	*488-6530*	1	SUPPORT GP-SEAT	727

Y - SEPARATE ILLUSTRATION

<END>

520-8306 OPERATOR AR

S/N: SP91-10000

PART OF 526-5211 COMMON AR

SMCS-7301 **i07524651**

NOTE	PART NUMBER	QTY	PART NAME 1 2 3 4 5 6 (PRODUCT LEVEL)	SEE PAGE
Y	*488-6553*	1	COVER GP-CAB	676
Y	*484-8025*	1	FLOOR MAT GP	682
Y	*500-0931*	1	GUARD & MTG GP-CAB	684
Y	*484-8017*	1	MOUNTING GP-CAB (PLATFORM)	709
Y	*487-6904*	1	MOUNTING GP-ROPS	710
Y	*488-6576*	1	WASHER GP-WINDOW	731

Y - SEPARATE ILLUSTRATION

<END>

578-9785 OPERATOR AR

S/N: SP910001-UP

PART OF 526-5211 COMMON AR

SMCS-7301 **i07836955**

NOTE	PART NUMBER	QTY	PART NAME 1 2 3 4 5 6 (PRODUCT LEVEL)	SEE PAGE
Y	*488-6553*	1	COVER GP-CAB	676
Y	*484-8025*	1	FLOOR MAT GP	682
Y	*500-0931*	1	GUARD & MTG GP-CAB	684
Y	*488-6534*	1	HOLDER GP-CUP	688
Y	*484-8017*	1	MOUNTING GP-CAB (PLATFORM)	709
Y	*487-6904*	1	MOUNTING GP-ROPS	710
Y	*488-6576*	1	WASHER GP-WINDOW	731

Y - SEPARATE ILLUSTRATION

<END>

477-7567 PARTS GP-DOOR

S/N: SP91-UP

PART OF 486-5502 CAB GP, 553-9987 DOOR GP-CAB

SMCS-7308 **i07346254**

NOTE	REF NO	GRAPHIC REF	PART NUMBER	QTY	PART NAME 1 2 3 4 5 6 (PRODUCT LEVEL)	SEE PAGE
	1	1	**4I-4286**	1	KNOB	
M	2	1	**096-2622**	2	SCREW-MACHINE (M4X0.7X8-MM)	
M	3	1	**096-3884**	2	NUT-SPRING (M8X1.25-THD)	
M	4	1	**101-8899**	2	SCREW AS (M6X1.0X16-MM)	
M	5	1	**101-8900**	2	SCREW AS (M6X1X20-MM)	
	6	1	**151-9461**	2	SPACER	
	7	1	**156-6643**	2	COVER	
C	8	1	**532-7407**	1	HANDLE AS-DOOR	
		1	**532-7403**	1	HANDLE AS	
		1	**548-0043**	1	ROD-HANDLE	
	9	1	**164-0515**	1	JOINT	
	10	1	**167-7039**	1	GROMMET	
	11	1	**178-5573**	3	SPACER	
	12	1	**178-5574**	2	SPACER	
	13	1	**189-2690**	1	HANDLE	
	14	1	**334-6526**	2	SPACER	
	15	1	**334-6527**	2	SPACER	
	16	1	**334-6538**	1	BUSHING-RUBBER	
	17	1	**486-5461**	1	GLASS	
	18	1	**486-5497**	1	HANDLE AS	
		1	**201-4391**	1	CLIP	
C	19	1	**532-7404**	1	LOCK AS	
		1	**164-0514**	1	CLIP	
		1	**164-0519**	1	CLIP (13-MM)	
	20	1	**487-6775**	1	COVER	
	21	1	**487-6776**	1	COVER	
	22	1	**487-6782**	1	COVER	
	23	1	**488-6548**	1	SWITCH AS-CONTROL (CAB)	
	24	1	**520-8239**	1	HOOK AS	
	25	1	**526-8628**	3	PLUG	
	26	1	**532-7319**	1	SEAL AS	
	27	1	**538-8843**	1	WINDOW GP-DOOR	
	28	1	**538-9681**	1	HANDLE-PULL	
	29	1	**538-9682**	2	CAP	
	30	1	**539-0213**	1	BRACKET AS	
M	31	1	**109-1393**	1	BOLT-SOCKET HEAD (M4X0.7X10-MM)	
M	32	1	**185-8180**	3	SCREW (M6X1X16-MM)	
M	33	1	**9X-2042**	10	SCREW-TRUSS HEAD (M6X1X12-MM)	

C - CHANGE FROM PREVIOUS TYPE
M - METRIC PART

477-7567 **PARTS GP-DOOR (**contd.**)** **i07346254**

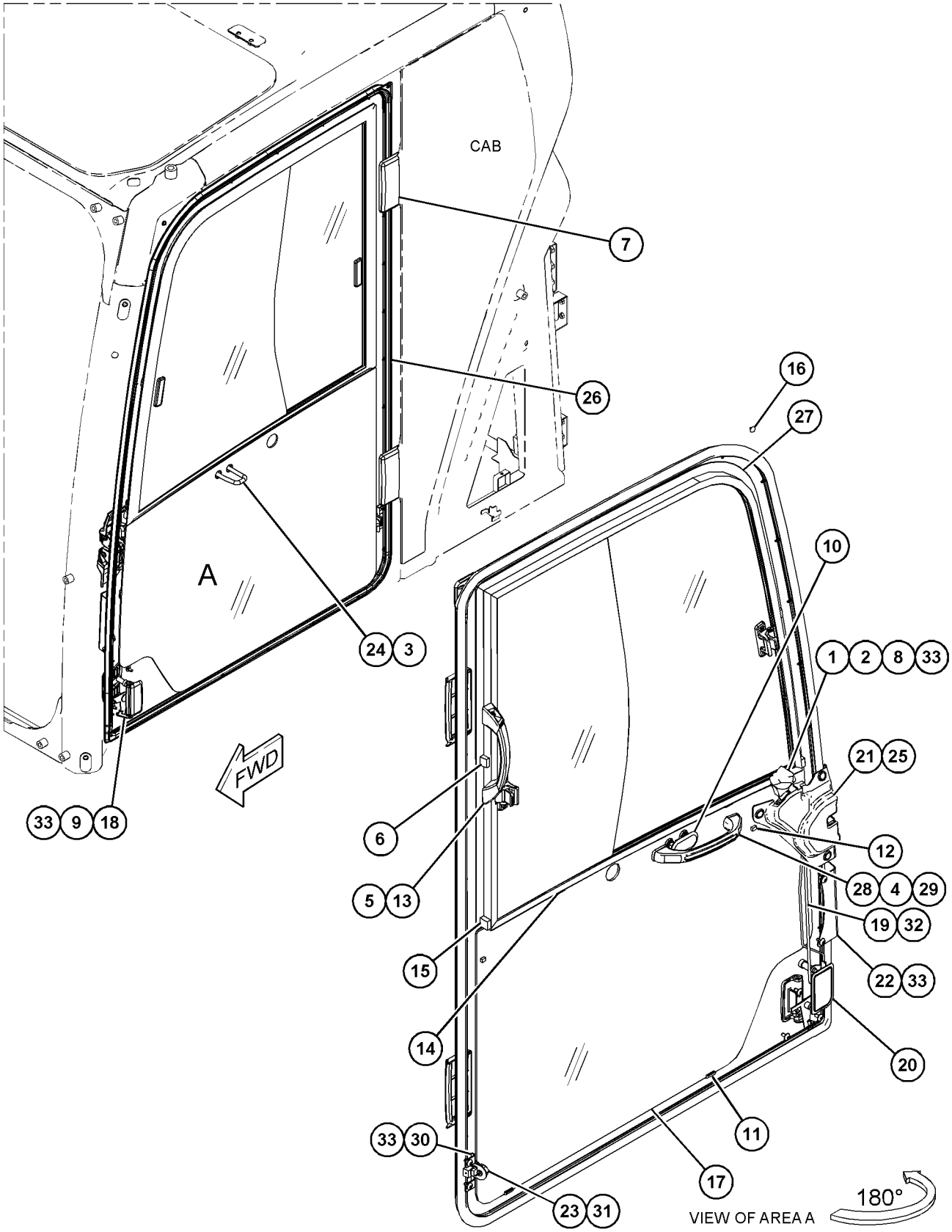

GRAPHIC #1 <END> g06267885

488-6479 PLATE & INSULN GP-CAB PLATFORM

S/N: SP91-UP

PART OF 488-0394 PLATFORM GP-OPERATOR

SMCS-7301, 7329

i07794358

NOTE	REF NO	GRAPHIC REF	PART NUMBER	QTY	PART NAME 1 2 3 4 5 6 (PRODUCT LEVEL)	SEE PAGE
	1	1	**495-6045**	1	PLATE	
	2	1	**495-6046**	1	INSULATION	
	3	1	**495-6047**	2	INSULATION	
	4	1	**495-6049**	1	INSULATION	
	5	1	**549-4024**	1	INSULATION	
	6	1	**549-4025**	1	INSULATION	

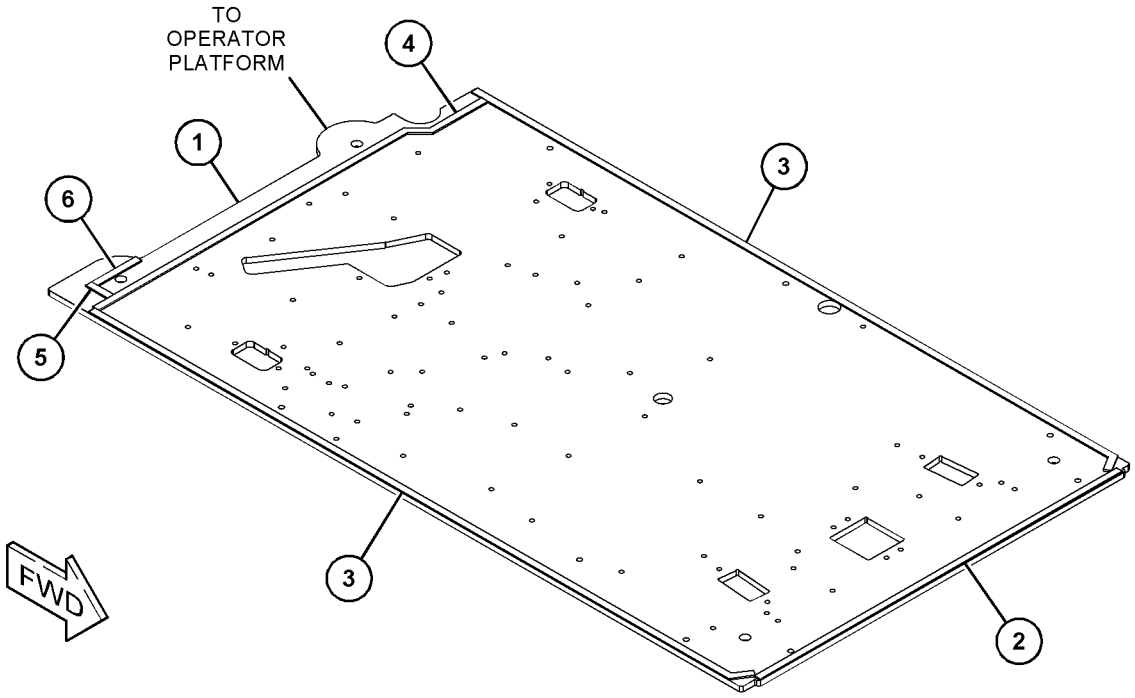

GRAPHIC #1

<END>

g06297955

488-0394 PLATFORM GP-OPERATOR

S/N: SP91-UP

PART OF 500-0999, 500-1000 OPERATOR AR

SMCS-7253 **i07794366**

NOTE	REF NO	GRAPHIC REF	PART NUMBER	QTY	PART NAME 1 2 3 4 5 6 (PRODUCT LEVEL)	SEE PAGE
	1	1	**162-0349**	2	COVER	
	2	1	**352-7063**	18	CAP	
Y	3	1	**488-6479**	1	PLATE & INSULN GP-CAB PLATFORM	715

Y - SEPARATE ILLUSTRATION

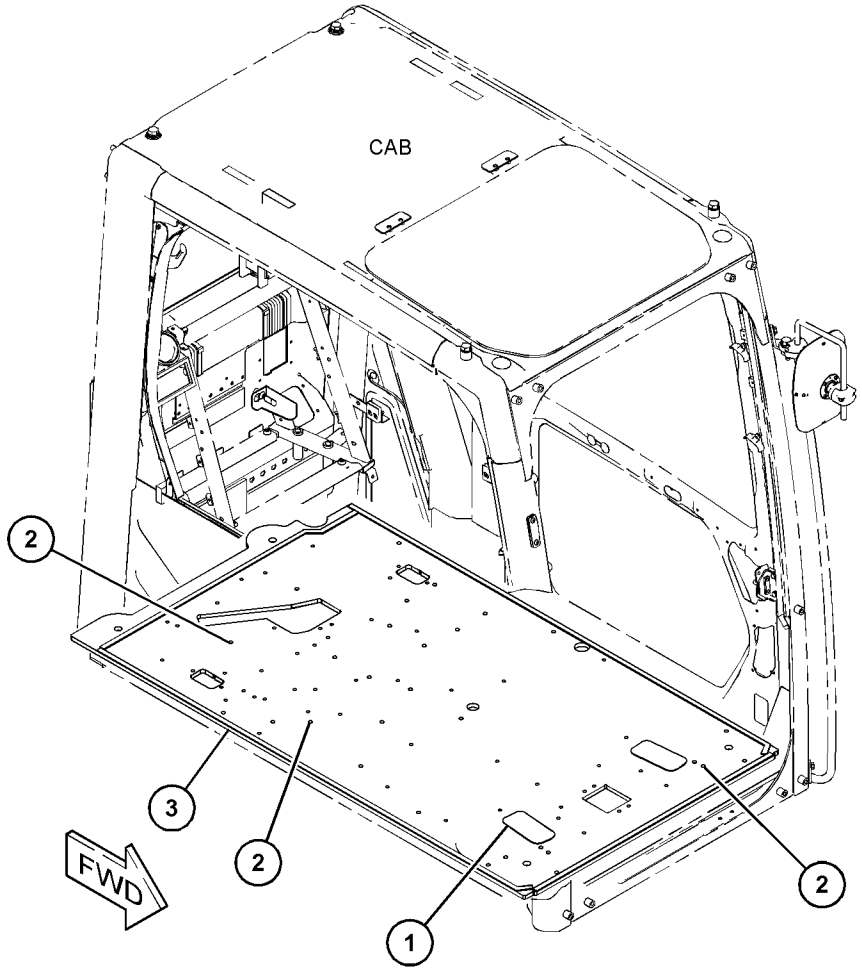

GRAPHIC #1 <END> g06229661

488-6823 RADIO GP—MOUNTING

S/N: SP91-UP
CAN MODULE
PART OF 502-7166 INSTALLATION AR-RADIO

SMCS-7338, 733C **i07359734**

NOTE	REF NO	GRAPHIC REF	PART NUMBER	QTY	PART NAME 1 2 3 4 5 6 (PRODUCT LEVEL)	SEE PAGE
	1	1	**487-7440**	1	RADIO GP	
	2	1	**515-8094**	1	ROD (ANTENNA)	
	3	1	**515-8096**	1	CABLE AS	
	4	1	**524-0479**	1	BRACKET (RADIO)	
	5	1	**524-0480**	1	BRACKET AS	
M	6	1	**095-0735**	4	SCREW-MACHINE (M5X0.8X8-MM)	
	7	1	**096-0192**	4	LOCKWASHER	
	8	1	**427-9771**	1	TIE	
	9	1	**8T-0328**	4	WASHER-HARD (5.5X10X1-MM THK)	
M	10	1	**9X-2043**	2	SCREW-TRUSS HEAD (M6X1X14-MM)	

M - METRIC PART

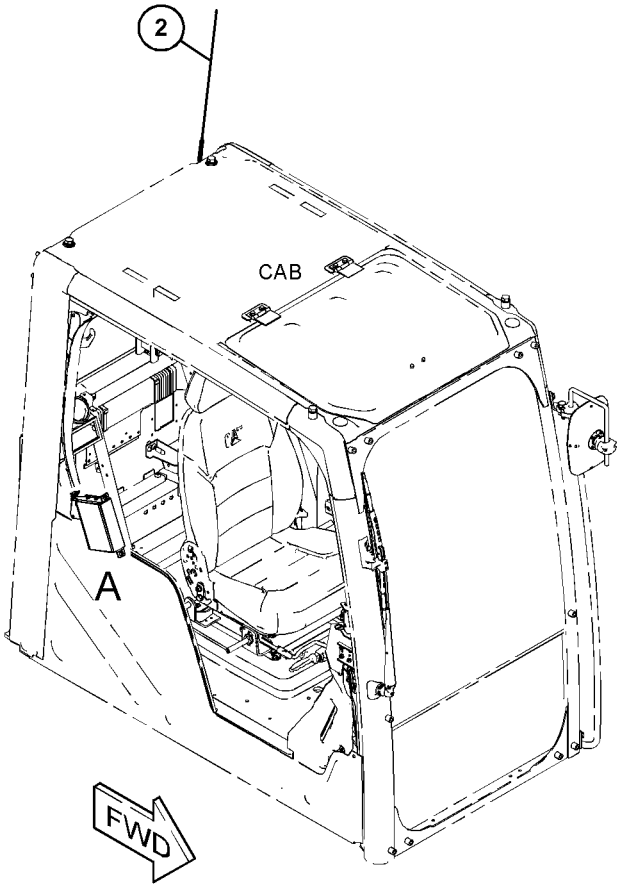

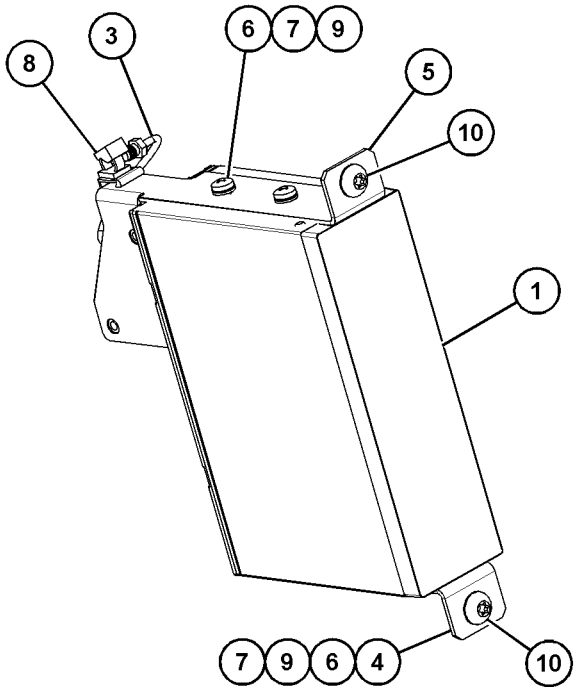

VIEW OF AREA A

GRAPHIC #1 <END> g06227650

488-6450 SCREEN & MTG GP-CAB–REAR WINDOW

S/N: SP91-UP

SMCS-7165 **i07519784**

NOTE	REF NO	GRAPHIC REF	PART NUMBER	QTY	PART NAME 1 2 3 4 5 6 (PRODUCT LEVEL)	SEE PAGE
	1	1	**488-6503**	1	SCREEN AS	
M	2	1	**9X-2044**	2	SCREW-TRUSS HEAD (M6X1X16-MM)	

M - METRIC PART

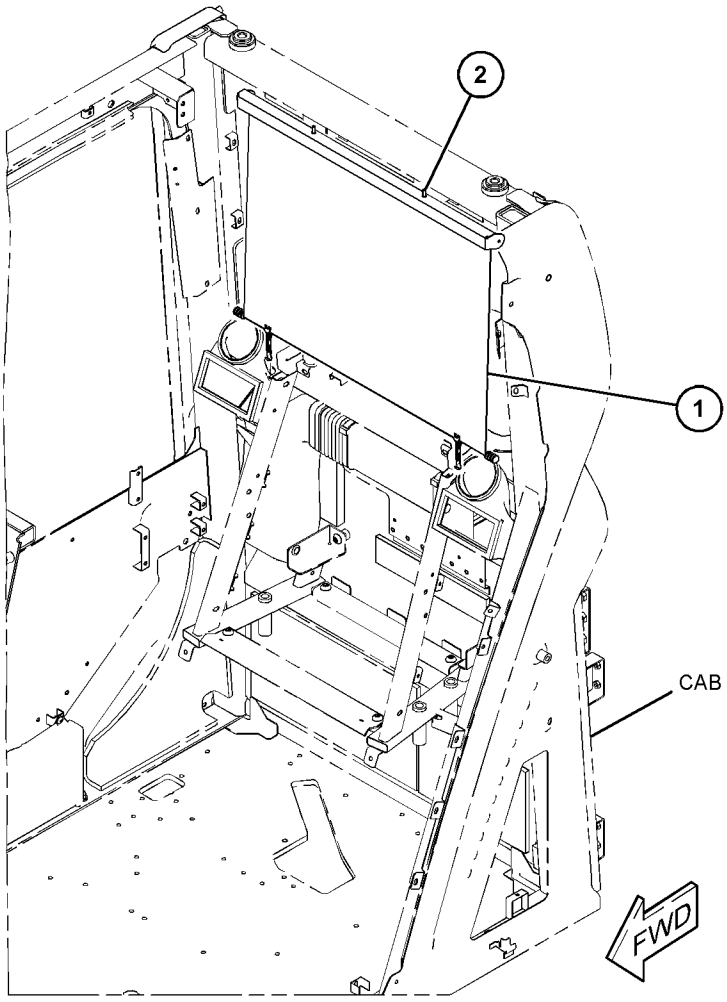

GRAPHIC #1 <END> g06231037

487-6672 SCREEN GP-SUN

S/N: SP91-UP

PART OF 487-6666 CAB GP

SMCS-7165 **i07746236**

NOTE	REF NO	GRAPHIC REF	PART NUMBER	QTY	PART NAME 1 2 3 4 5 6 (PRODUCT LEVEL)	SEE PAGE
M	1	1	**128-2135**	14	SCREW-TRUSS HEAD (M6X1X13-MM)	
	2	1	**488-6504**	1	SCREEN AS	
	3	1	**571-7226**	1	VISOR AS	
	4	1	**520-8262**	1	COVER	
	5	1	**520-8263**	1	COVER	
	6	1	**520-8264**	1	COVER	
	7	1	**520-8265**	1	COVER	
	8	1	**526-8638**	4	HOOK	

M - METRIC PART

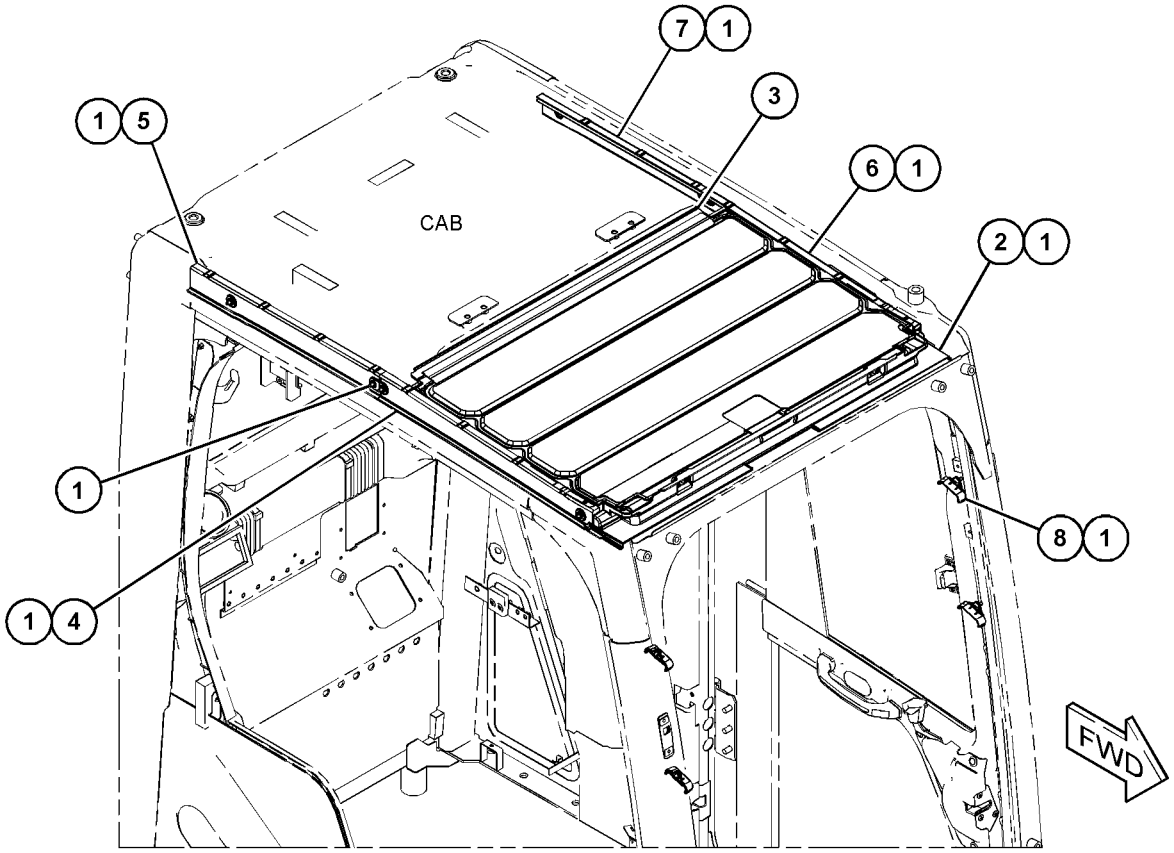

GRAPHIC #1 <END> g06403680

526-8600 SEAT BELT GP

S/N: SP91-UP

PART OF 488-6500, 488-6510 SEAT GP

SMCS-7327 **i07348814**

NOTE	REF NO	GRAPHIC REF	PART NUMBER	QTY	PART NAME 1 2 3 4 5 6 (PRODUCT LEVEL)	SEE PAGE
	1	1	**0T-0244**	1	BOLT (7/16-20X1.25-IN)	
M	2	1	**8T-4133**	1	NUT (M10X1.5-THD)	
	3	1	**8T-5360**	3	WASHER (12X22.5X2.5-MM THK)	
	4	1	**8T-9381**	1	BOLT (7/16-20X1-IN)	
	5	1	**526-8601**	1	SEAT BELT GP	
	6	1	**528-7421**	1	BRACKET AS	
	7	1	**528-7422**	1	BUSHING	
	8	1	**528-7423**	1	BUSHING	

M - METRIC PART

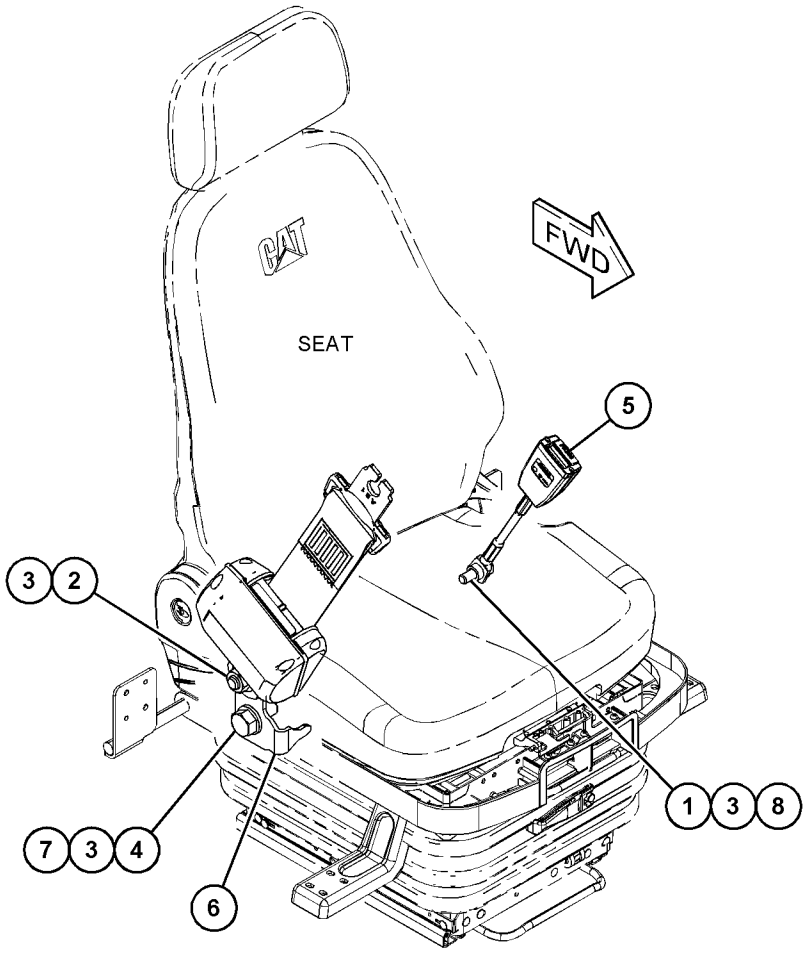

GRAPHIC #1 <END> g06237966

488-6500 SEAT GP

S/N: SP91-UP

PART OF 500-0999 OPERATOR AR

SMCS-7312 **i07639011**

NOTE	REF NO	GRAPHIC REF	PART NUMBER	QTY	PART NAME 1 2 3 4 5 6 (PRODUCT LEVEL)	SEE PAGE
M	1	1	**8T-4970**	2	BOLT (M6X1X14-MM)	
	2	1	**5P-4116**	4	WASHER-HARD (8.8X20.5X2-MM THK)	
M	3	1	**105-3482**	4	BOLT-SOCKET HEAD (M8X1.25X16-MM)	
	4	1	**9X-8256**	2	WASHER (6.6X12X2-MM THK)	
Y	5	1	**488-6501**	1	SEAT GP-SUSPENSION (COMFORT)	725
	6	1	**526-8587**	1	BRACKET	
Y	7	1	*526-8600*	1	SEAT BELT GP (RETRACTABLE, 2-IN)	720

M - METRIC PART
Y - SEPARATE ILLUSTRATION

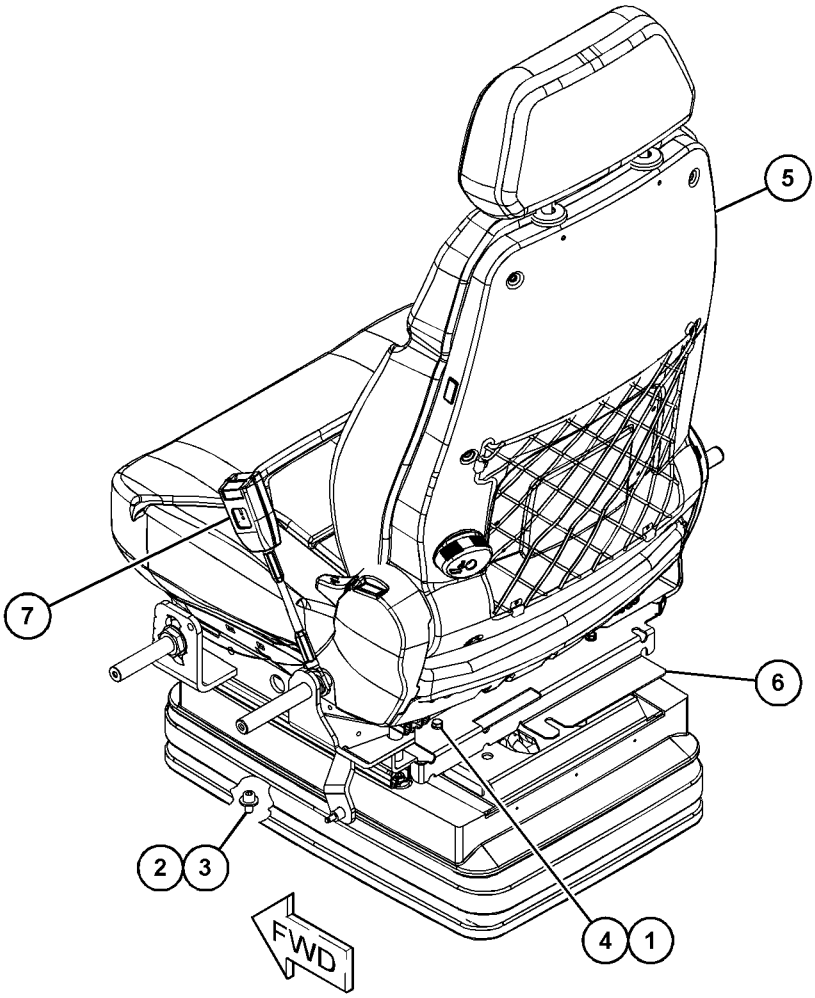

GRAPHIC #1 <END> g06229200

488-6510 SEAT GP

S/N: SP91-UP

PART OF 500-1000 OPERATOR AR

SMCS-7312 **i07366508**

NOTE	REF NO	GRAPHIC REF	PART NUMBER	QTY	PART NAME 1 2 3 4 5 6 (PRODUCT LEVEL)	SEE PAGE
M	1	1	**8T-4970**	2	BOLT (M6X1X14-MM)	
	2	1	**3S-2093**	1	STRAP-CABLE	
M	3	1	**6V-8202**	4	BOLT-SOCKET HEAD (M8X1.25X16-MM)	
	4	1	**9X-8256**	2	WASHER (6.6X12X2-MM THK)	
	5	1	**266-7379**	1	STRAP-CABLE	
Y	6	1	**488-6511**	1	SEAT GP (DELUXE)	723
	7	1	**526-8587**	1	BRACKET	
Y	8	1	*526-8600*	1	SEAT BELT GP (RETRACTABLE, 2-IN)	720
	9	1	**5P-4116**	4	WASHER-HARD (8.8X20.5X2-MM THK)	

M - METRIC PART
Y - SEPARATE ILLUSTRATION

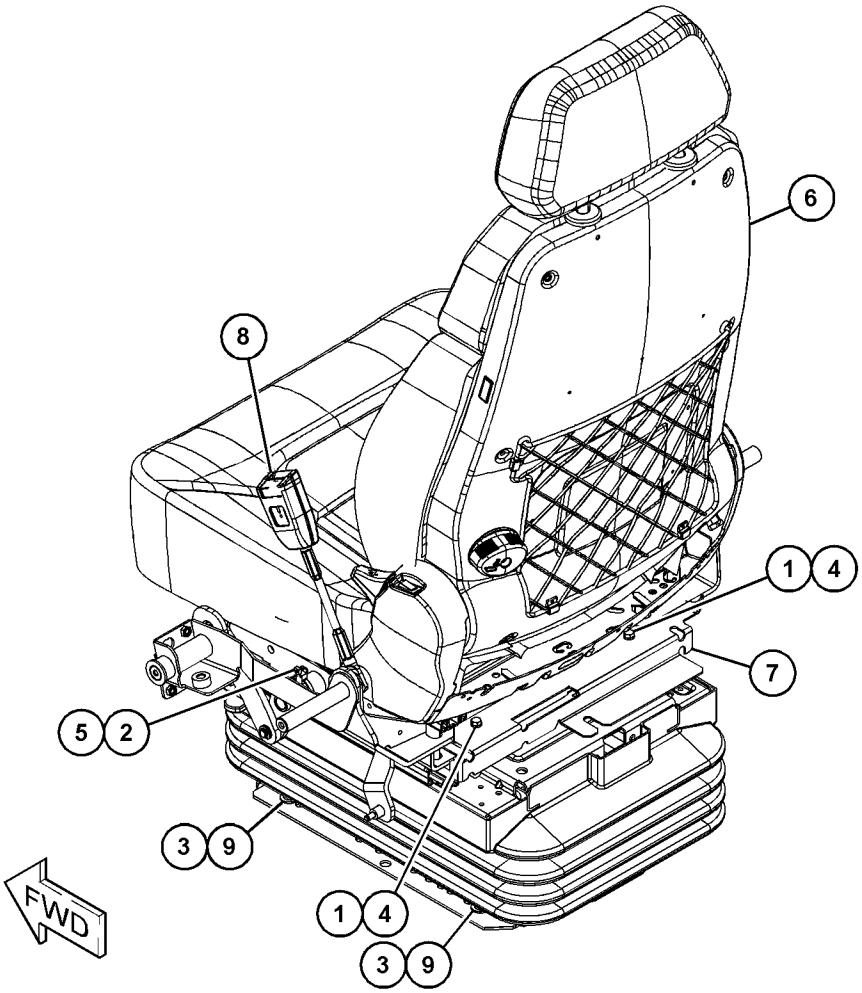

GRAPHIC #1 <END> g06231291

488-6511 SEAT GP–DELUXE

S/N: SP91-UP

PART OF 488-6510 SEAT GP

SMCS-7312 **i07362620**

NOTE	REF NO	GRAPHIC REF	PART NUMBER	QTY	PART NAME 1 2 3 4 5 6 (PRODUCT LEVEL)	SEE PAGE
	1	1	**500-1008**	1	KIT-CUSHION (BACKREST)	
	2	1	**500-1010**	1	KIT-CUSHION (SEAT)	
	3	1	**500-1011**	1	KIT-HEADREST	
Y	4	1	**500-1012**	1	SUSPENSION GP-SEAT (AIR)	728
	5	1	**500-1015**	1	KIT-HANDLE (RECLINER)	
	6	1	**500-1019**	1	KIT-SEAT	
	7	1	**500-1024**	1	KIT-SEAT ADJUSTER	
	8	1	**500-1027**	1	KIT-SUPPORT	
	9	1	**500-1028**	1	KIT-SEAT ADJUSTER	
	10	1	**500-1029**	1	KIT-HARNESS	
	12	1	**500-1031**	1	KIT-HARNESS	
	13	1	**500-1032**	1	KIT-SUPPORT	
	14	1	**500-1033**	1	HANDLE	
	15	1	**526-8646**	1	KIT-HARNESS	
					PARTS SHOWN IN GRAPHIC(S) WITHOUT A REFERENCE NUMBER ARE NOT SERVICED SEPARATELY	

Y - SEPARATE ILLUSTRATION

488-6511 **SEAT GP** (contd.) **i07362620**

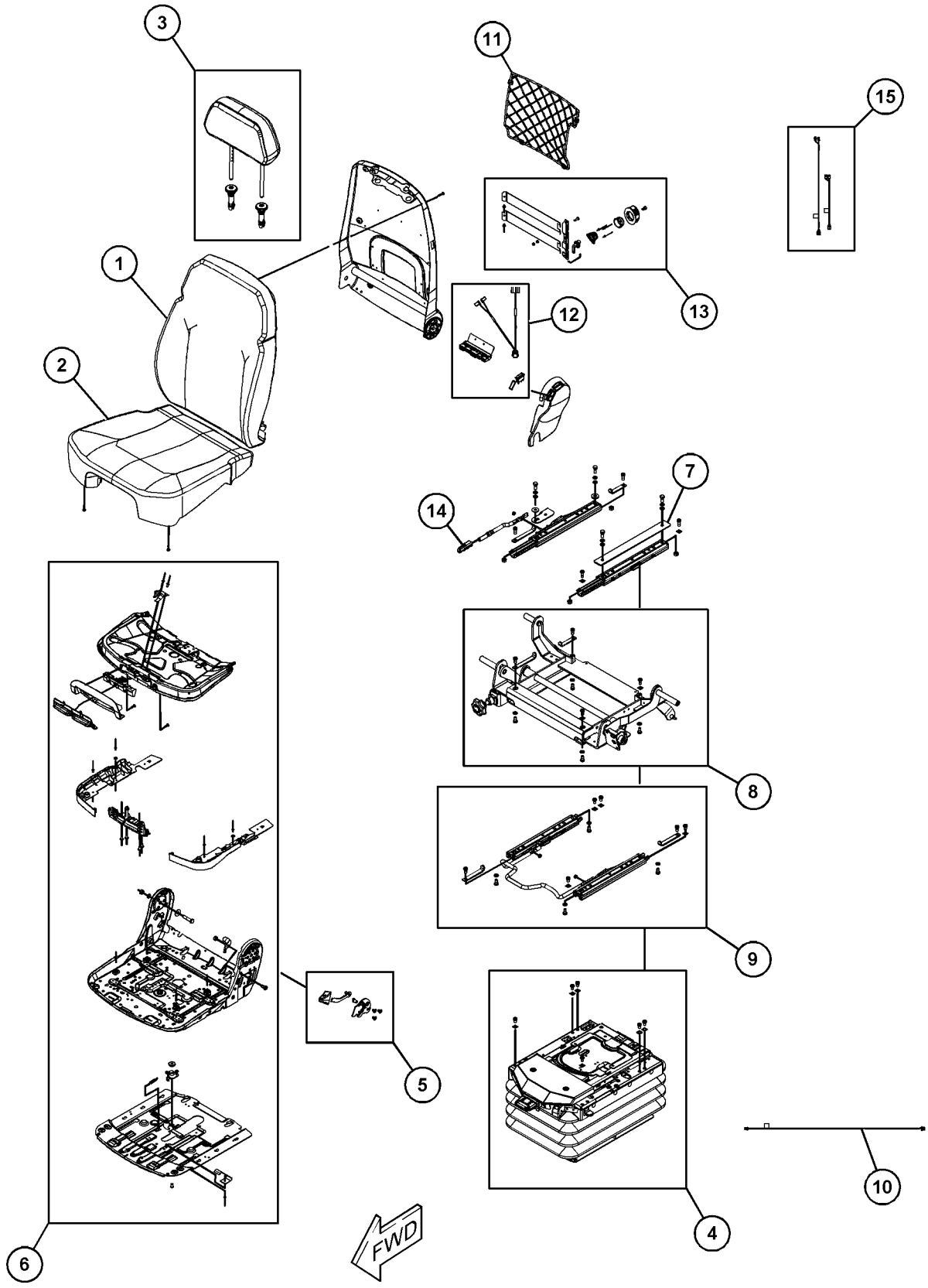

GRAPHIC #1 <END> g06233403

488-6501 SEAT GP-SUSPENSION—COMFORT

S/N: SP91-UP

PART OF 488-6500 SEAT GP

SMCS-7324, 7336 **i07639372**

NOTE	REF NO	GRAPHIC REF	PART NUMBER	QTY	PART NAME 1 2 3 4 5 6 (PRODUCT LEVEL)	SEE PAGE
	1	1	**500-1015**	1	KIT-HANDLE (RECLINER)	
					(INCLUDES HANDLE, LEVER, ADAPTOR PLATE, SCREWS)	
	2	1	**500-1024**	1	KIT-SEAT ADJUSTER	
					(INCLUDES ADJUSTABLE SLIDE, SLIDE RAIL, ANGLES, FLANGE NUT, PLATES, WASHERS & SCREWS)	
	3	1	**500-1030**	1	KIT-SEAT (STORAGE NET)	
					(INCLUDES BLIND RIVETS & STORAGE WEB)	
	4	1	**500-1032**	1	KIT-SUPPORT	
					(INCLUDES SCREWS, HANDLE, TOOTHED WHEEL, WINDING SPRING BRAKE, CARRIER, LEVERAGE, ANGLE, PLATES, RIVETS, SCREWS & LOCKNUTS)	
	5	1	**500-1033**	1	HANDLE	
	6	1	**513-9172**	1	KIT-HEADREST	
					(INCLUDES HEADREST, GUIDES & CUSHION)	
	7	1	**516-4941**	1	KIT-SEAT CUSHION (BACKREST)	
					(INCLUDES CUSHION & SCREWS)	
	8	1	**516-4942**	1	KIT-SEAT CUSHION (SEAT)	
					(INCLUDES CUSHION & SCREWS)	
	9	1	**516-4943**	1	KIT-SEAT	
					(INCLUDES PLATE, SCREWS, ANGLE, NUTS & WASHER)	
	10	1	**516-4944**	1	KIT-CONSOLE SUPPORT	
					(INCLUDES CONSOLE, SCREWS, WASHERS, ANGLES AND PLATES)	
	11	1	**516-4945**	1	KIT-SEAT ADJUSTER	
					(INCLUDES ADJUSTABLE SLIDE, SCREWS, PLATS, ANGLES & WASHERS)	
Y	12	1	**516-4946**	1	KIT-SEAT SUSPENSION	691
					PARTS SHOWN IN GRAPHIC(S) WITHOUT A REFERENCE NUMBER ARE NOT SERVICED SEPARATELY	

Y - SEPARATE ILLUSTRATION

488-6501 **SEAT GP-SUSPENSION** (contd.) **i07639372**

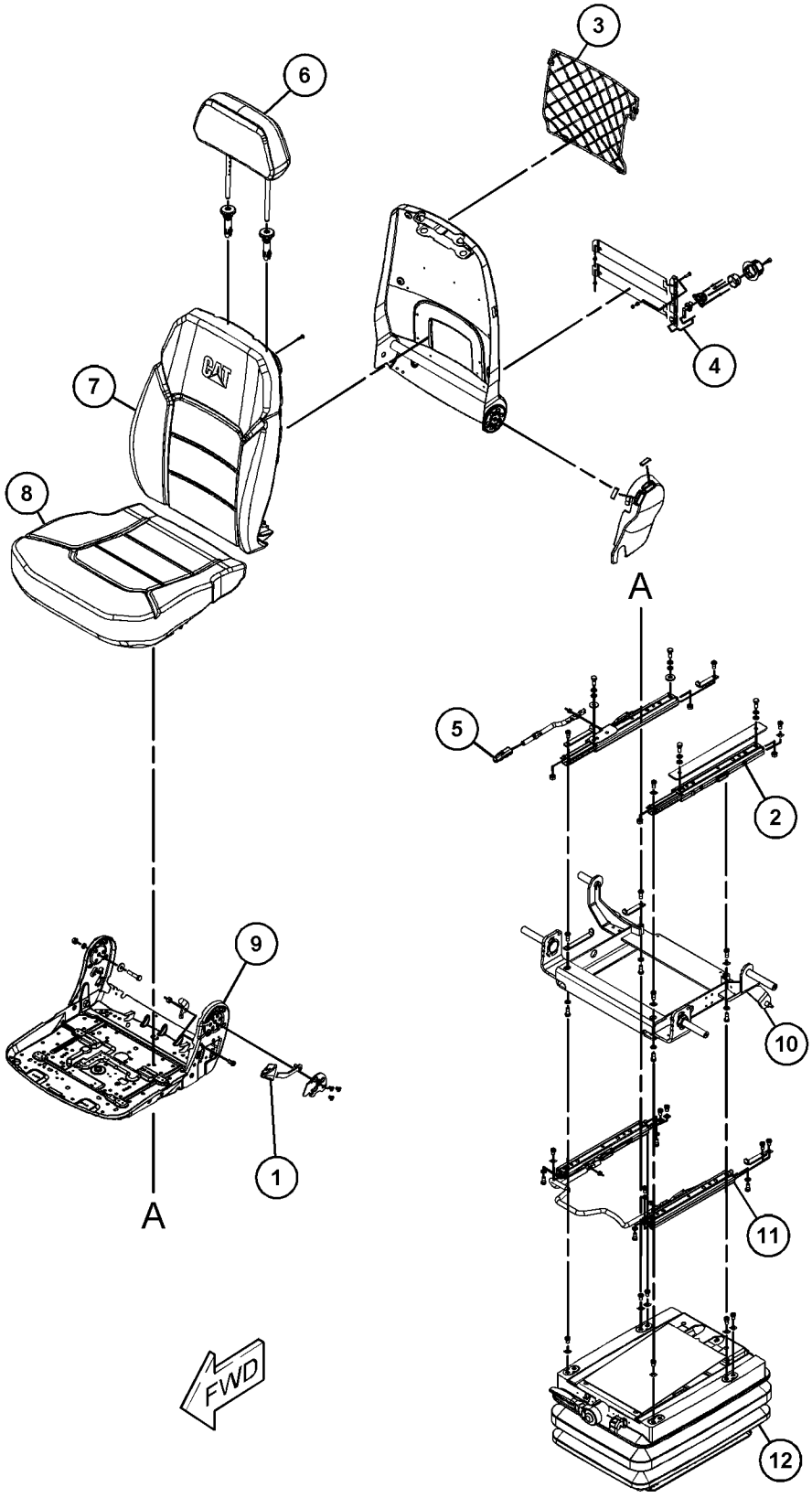

GRAPHIC #1 <END> g06273441

488-6530 SUPPORT GP-SEAT

S/N: SP91-UP

PART OF 500-0999, 500-1000 OPERATOR AR

SMCS-7321 **i07348818**

NOTE	REF NO	GRAPHIC REF	PART NUMBER	QTY	PART NAME 1 2 3 4 5 6 (PRODUCT LEVEL)	SEE PAGE
M	1	1	**8T-4191**	4	BOLT (M10X1.5X16-MM)	
	2	1	**8T-4121**	4	WASHER-HARD (11X21X2.5-MM THK)	
	3	1	**494-7279**	1	SUPPORT AS-SEAT	

M - METRIC PART

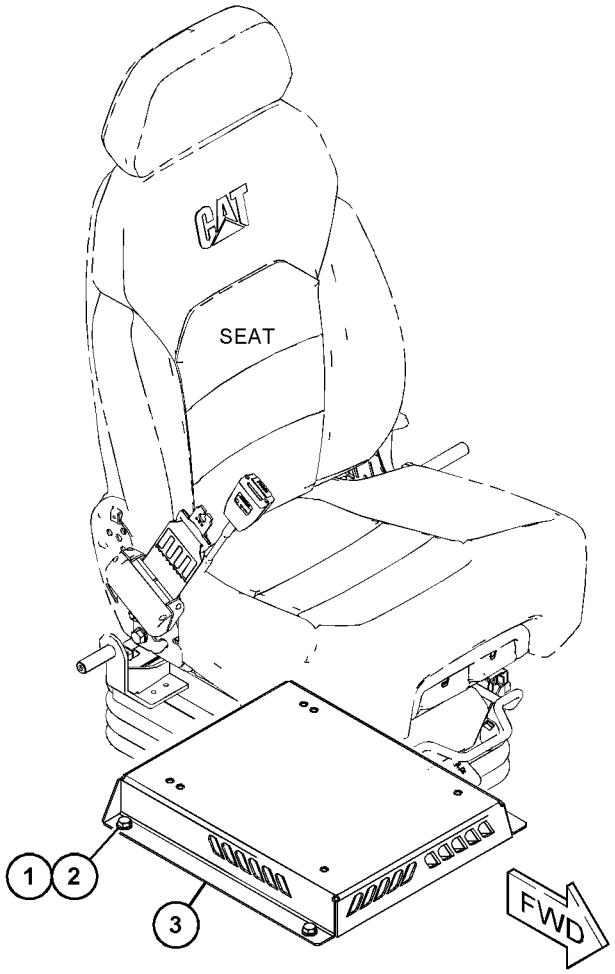

GRAPHIC #1 <END> g06229356

500-1012 SUSPENSION GP-SEAT–AIR

S/N: SP91-UP

PART OF 488-6511 SEAT GP

SMCS-7324 **i07435334**

NOTE	REF NO	GRAPHIC REF	PART NUMBER	QTY	PART NAME 1 2 3 4 5 6 (PRODUCT LEVEL)	SEE PAGE
	1	1	**304-5418**	1	KIT-GAS SPRING (SUSPENSION SEAT)	
	2	1	**304-5422**	1	KIT-SHOCK ABSORBER (SUSPENSION SEAT)	
	3	1	**366-1884**	1	KIT-COMPRESSOR (SUSPENSION SEAT)	
	4	1	**513-9150**	1	KIT-SWITCH	
	5	1	**500-1007**	1	KIT-INDICATOR	
	6	1	**500-1009**	1	KIT-HARNESS	
	7	1	**500-1016**	1	BELLOWS AS	
	8	1	**513-9160**	1	KIT-BEARING	
	9	1	**500-1022**	1	KIT-HOSE	
	10	1	**500-1023**	1	HANDLE	
	11	1	**500-1025**	1	KIT-COVER	
	12	1	**500-1026**	1	KIT-COVER	
					PARTS SHOWN IN GRAPHIC(S) WITHOUT A REFERENCE NUMBER ARE NOT SERVICED SEPARATELY	

500-1012 **SUSPENSION GP-SEAT (**contd.**)** **i07435334**

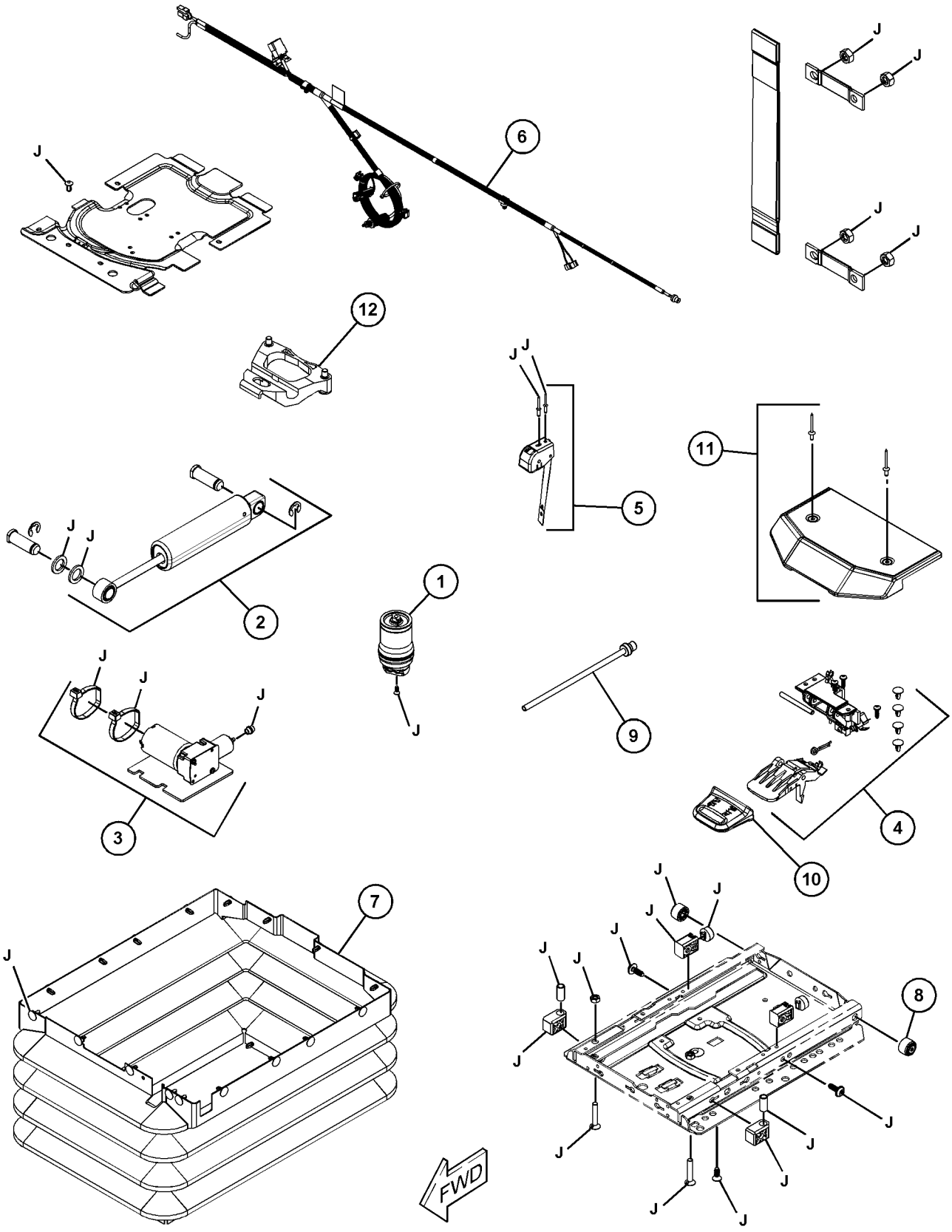

GRAPHIC #1 <END> g06233974

541-3433 VISOR GP-PROTECTION

S/N: SP91-UP

PART OF 555-9458 LIGHTING AR-FLOOD

SMCS-7340 **i07377611**

NOTE	REF NO	GRAPHIC REF	PART NUMBER	QTY	PART NAME 1 2 3 4 5 6 (PRODUCT LEVEL)	SEE PAGE
M	1	1	**5C-9553**	4	BOLT (M6X1X16-MM)	
M	2	1	**4I-5049**	7	NUT-SPACER (M6X1-THD)	
M	3	1	**6V-7357**	7	BOLT (M6X1X25-MM)	
	4	1	**9X-2038**	11	WASHER (7X19X2-MM THK)	
	5	1	**526-8639**	1	VISOR	
	6	1	**526-8648**	1	BRACKET	
P	7	1	**348-5410**		SEAL (6.8-DM)	

M - METRIC PART
P - ORDER BY DECIMETER

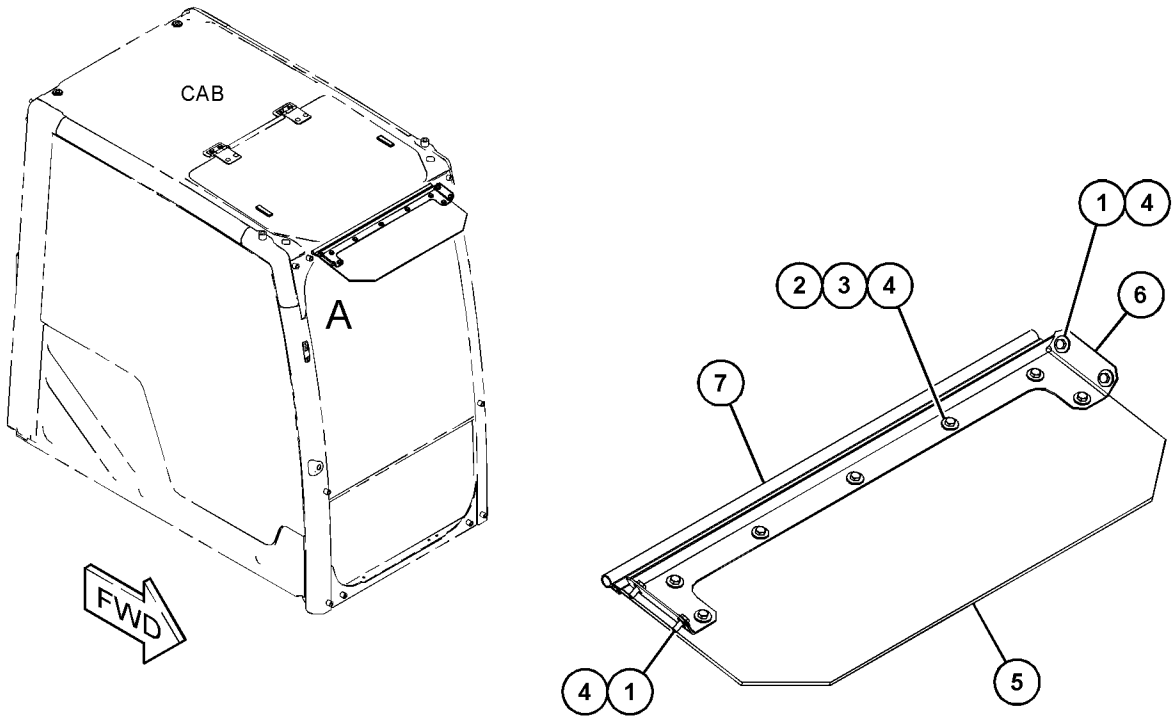

VIEW OF AREA A

GRAPHIC #1 <END> g06232742

488-6576 WASHER GP-WINDOW

S/N: SP91-UP

PART OF 520-8306, 578-9785 OPERATOR AR

SMCS-7306 **i07360968**

NOTE	REF NO	GRAPHIC REF	PART NUMBER	QTY	PART NAME 1 2 3 4 5 6 (PRODUCT LEVEL)	SEE PAGE
M	1	1	**8T-4970**	2	BOLT (M6X1X14-MM)	
	2	1	**9X-8256**	2	WASHER (6.6X12X2-MM THK)	
	3	1	**487-6979**	1	SUPPORT	
	4	1	**163-6795**	2	STRAP-CABLE	
	5	1	**488-6475**	1	TANK AS-WINDOW WASHER	
		1	**5C-8138**	1	GROMMET	
		1	**178-5431**	1	CAP AS-FILLER (WINDOW WASHER)	
		1	**3W-6399**	1	PACKING	
		1	**522-7098**	1	PUMP AS	

M - METRIC PART

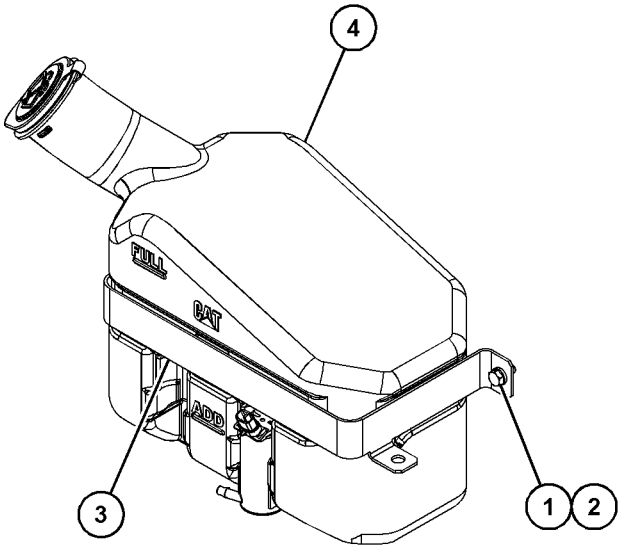

VIEW OF AREA A

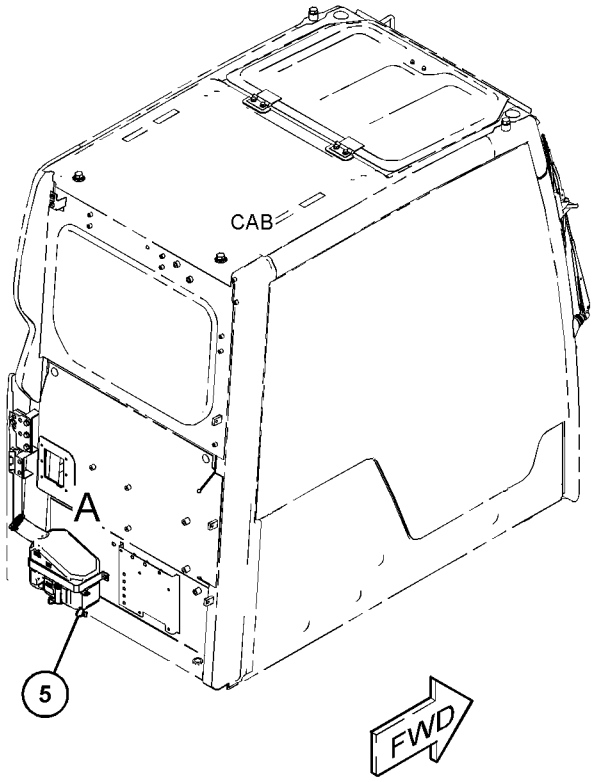

GRAPHIC #1 <END> g06230114

477-7563 WINDOW GP-CAB

S/N: SP91-UP

PART OF 486-5502, 498-7724 CAB GP

SMCS-7310 **i07817129**

NOTE	REF NO	GRAPHIC REF	PART NUMBER	QTY	PART NAME 1 2 3 4 5 6 (PRODUCT LEVEL)	SEE PAGE
M	1	1	**3E-8020**	2	SCREW-TRUSS HEAD (M6X1X25-MM)	
M	2	1	**109-1393**	1	BOLT-SOCKET HEAD (M4X0.7X10-MM)	
	3	1	**151-9557**	2	STOP-RUBBER	
	4	1	**334-6499**	1	BRACKET AS	
B	5	1	**430-5703**	1	SHIM (2-MM THK)	
Y	6	1	*484-8019*	1	WINDOW GP-CAB (FRONT, UPPER)	735
Y	7	1	*488-6492*	1	WINDOW GP-CAB (FRONT, LOWER)	737
	8	1	**488-6529**	1	BRACKET AS	
	9	1	**488-6546**	1	CABLE AS	
	10	1	**488-6548**	1	SWITCH AS-CONTROL	
	11	1	**488-6582**	1	BRACKET AS	
	12	1	**488-6583**	1	BRACKET AS	
	13	1	**498-7783**	1	BRACKET	
	14	1	**500-0740**	2	BRACKET	
	15	1	**500-0791**	1	SEAL	
	16	1	**511-5969**	2	BUMPER	
B	17	1	**526-8616**	2	SHIM (2-MM THK)	
	18	1	**538-9725**	1	COVER	
	19	1	**538-9803**	1	BRACKET	
B	20	1	**096-4007**	6	SPACER (8.2X18X0.5-MM THK)	
	21	1	**8T-4121**	2	WASHER-HARD (11X21X2.5-MM THK)	
M	22	1	**8T-4133**	2	NUT (M10X1.5-THD)	
M	23	1	**9X-2042**	14	SCREW-TRUSS HEAD (M6X1X12-MM)	
M	24	1	**9X-2044**	6	SCREW-TRUSS HEAD (M6X1X16-MM)	
B	25	1	**5P-4116**	8	WASHER-HARD (8.8X20.5X2-MM THK)	

B - USE AS REQUIRED
M - METRIC PART
Y - SEPARATE ILLUSTRATION

477-7563 **WINDOW GP-CAB (**contd.**)** **i07817129**

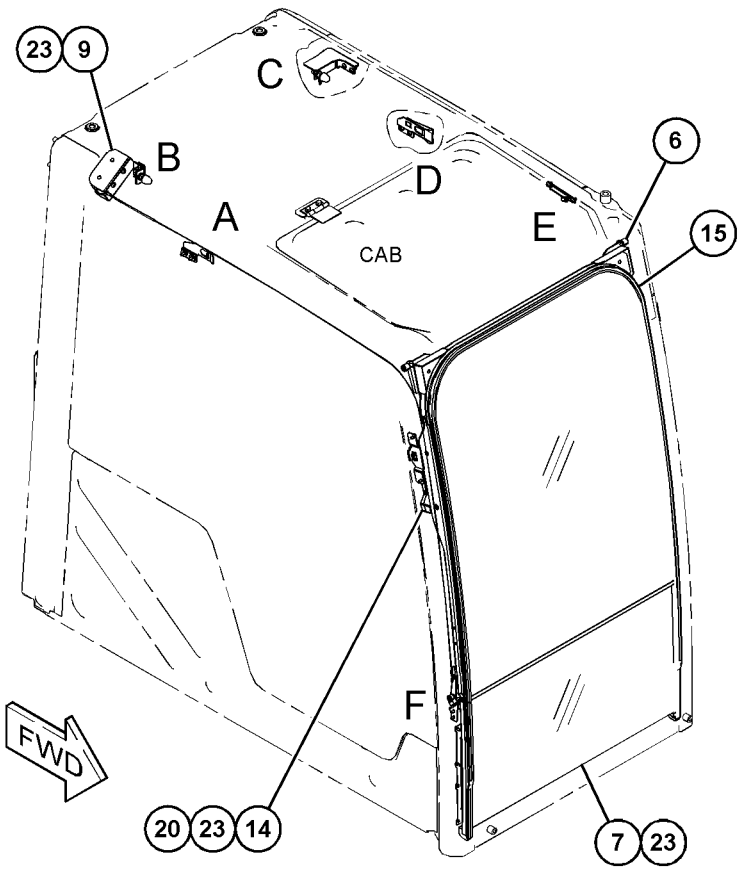

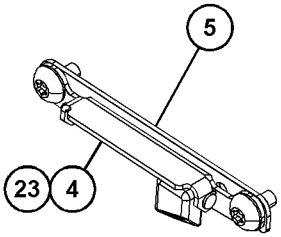

VIEW OF AREA E

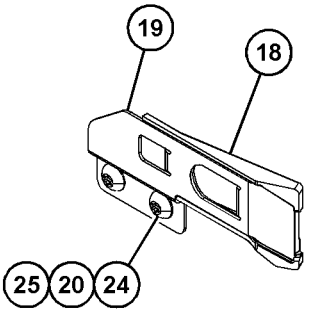

VIEW OF AREA D

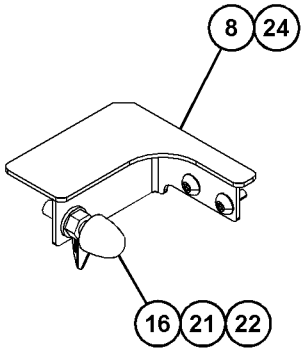

VIEW OF AREA C

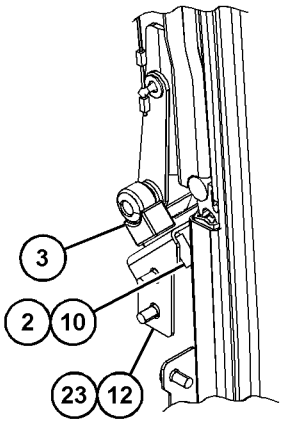

VIEW OF AREA F

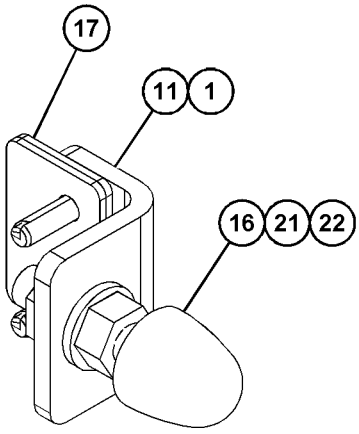

VIEW OF AREA B

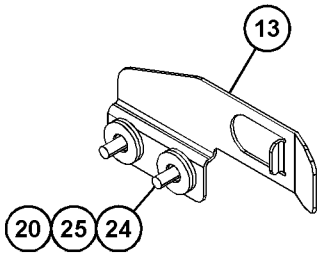

VIEW OF AREA A

GRAPHIC #1 <END> g06417301

477-7564 WINDOW GP-CAB

S/N: SP91-UP

PART OF 486-5502, 498-7724 CAB GP

SMCS-7310 **i07415476**

NOTE	REF NO	GRAPHIC REF	PART NUMBER	QTY	PART NAME 1 2 3 4 5 6 (PRODUCT LEVEL)	SEE PAGE
	1	1	**099-3629**	1	RING-KEY	
	2	1	**178-5572**	3	SPACER-SPECIAL (WINDOW)	
	3	1	**178-5573**	1	SPACER	
	4	1	**178-5574**	6	SPACER	
	5	1	**486-5426**	1	GLASS	
	6	1	**486-5427**	1	GLASS	
	7	1	**488-6545**	1	SEAL	
	8	1	**516-4875**	1	GLASS	
	9	1	**516-9872**	2	SPACER	

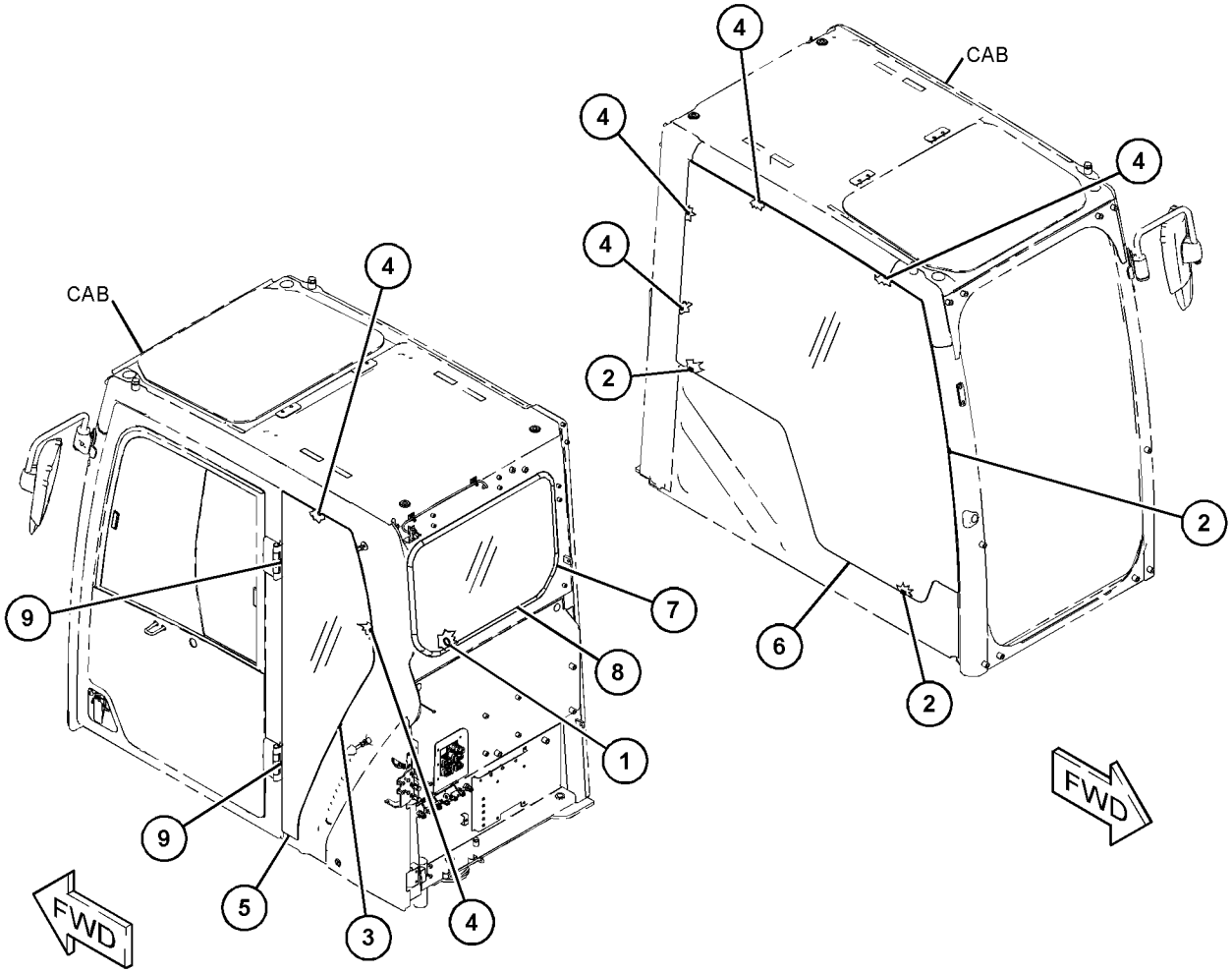

GRAPHIC #1 <END> g06230884

484-8019 WINDOW GP-CAB

S/N: SP91-UP

PART OF 477-7563 WINDOW GP-CAB

SMCS-7310 **i07344940**

NOTE	REF NO	GRAPHIC REF	PART NUMBER	QTY	PART NAME 1 2 3 4 5 6 (PRODUCT LEVEL)	SEE PAGE
	1	1	**151-9576**	1	ROLLER	
	2	1	**334-6482**	3	ROLLER	
	3	1	**438-6968**	1	HANDLE GP-WINDOW (LH)	
	4	1	**438-6969**	1	HANDLE GP-WINDOW (RH)	
	5	1	**486-5450**	1	GLASS	
	6	1	**486-5457**	1	SEAL	
	7	1	**487-6744**	1	FRAME AS	
	8	1	**487-6745**	1	BRACKET AS	
	9	1	**487-6746**	1	BRACKET AS	
	10	1	**487-6747**	1	BRACKET AS	
	11	1	**487-6748**	1	BRACKET AS	
	12	1	**487-6847**	1	PIN	
	13	1	**487-6849**	1	SEAL	
	14	1	**500-0744**	1	BLOCK	
M	15	1	**136-1613**	4	BOLT-SOCKET HEAD (M6X1X30-MM)	
M	16	1	**9X-2044**	12	SCREW-TRUSS HEAD (M6X1X16-MM)	
M	17	1	**9X-6155**	2	BOLT-SOCKET HEAD (M6X1X16.7-MM)	
	18	1	**9X-8256**	4	WASHER (6.6X12X2-MM THK)	

M - METRIC PART

484-8019 **WINDOW GP-CAB (**contd.**)** **i07344940**

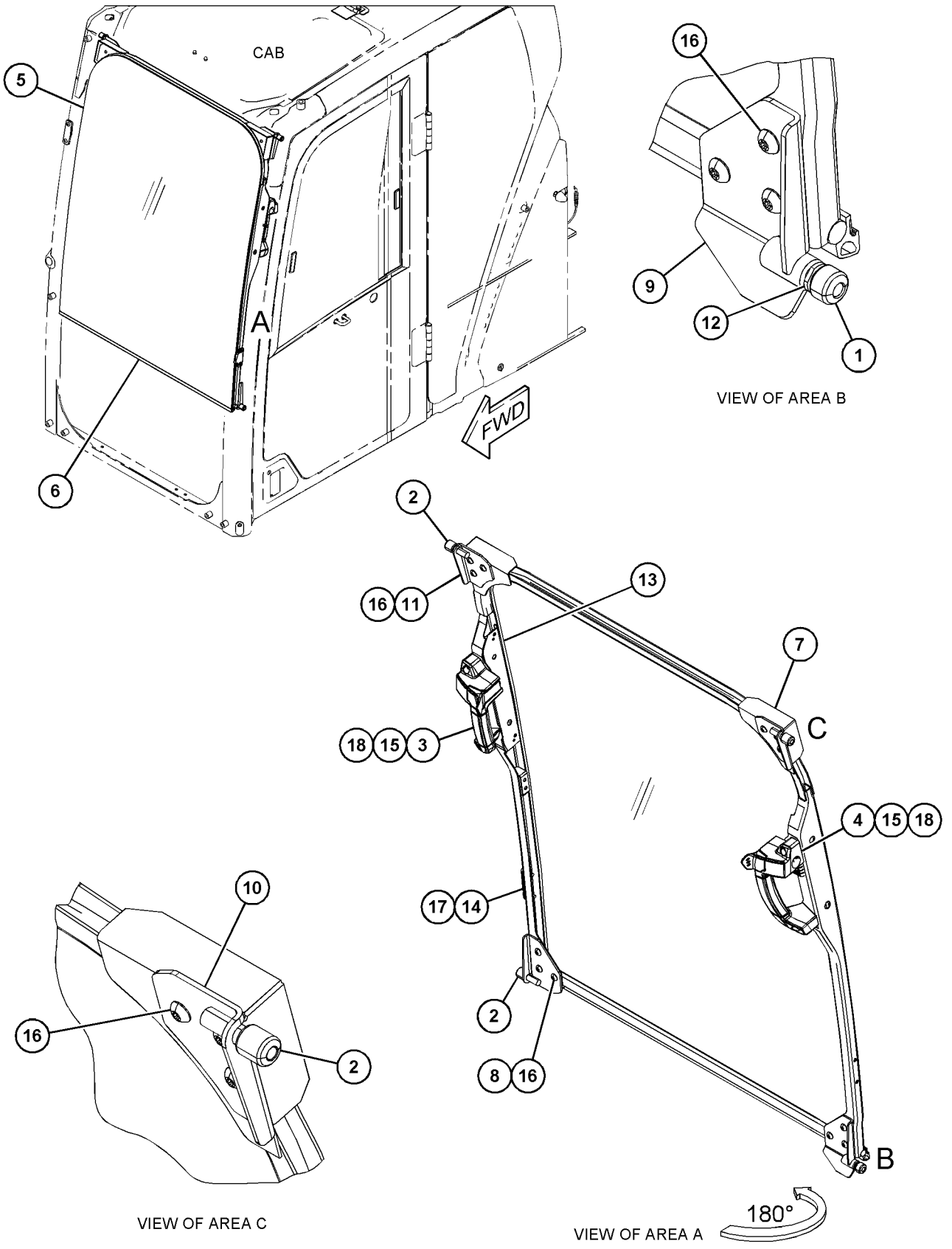

GRAPHIC #1 <END> g06231365

488-6492 WINDOW GP-CAB

S/N: SP91-UP

PART OF 477-7563 WINDOW GP-CAB

SMCS-7310 **i07344963**

NOTE	REF NO	GRAPHIC REF	PART NUMBER	QTY	PART NAME 1 2 3 4 5 6 (PRODUCT LEVEL)	SEE PAGE
	1	1	**346-8030**	2	SEAL	
	2	1	**488-6493**	1	BRACKET AS (RH)	
	3	1	**488-6494**	1	BRACKET AS (LH)	
	4	1	**491-7724**	1	GLASS	
	5	1	**500-0742**	2	STOPPER	
	6	1	**511-5966**	1	SEAL	
	7	1	**511-5967**	2	INSULATION	

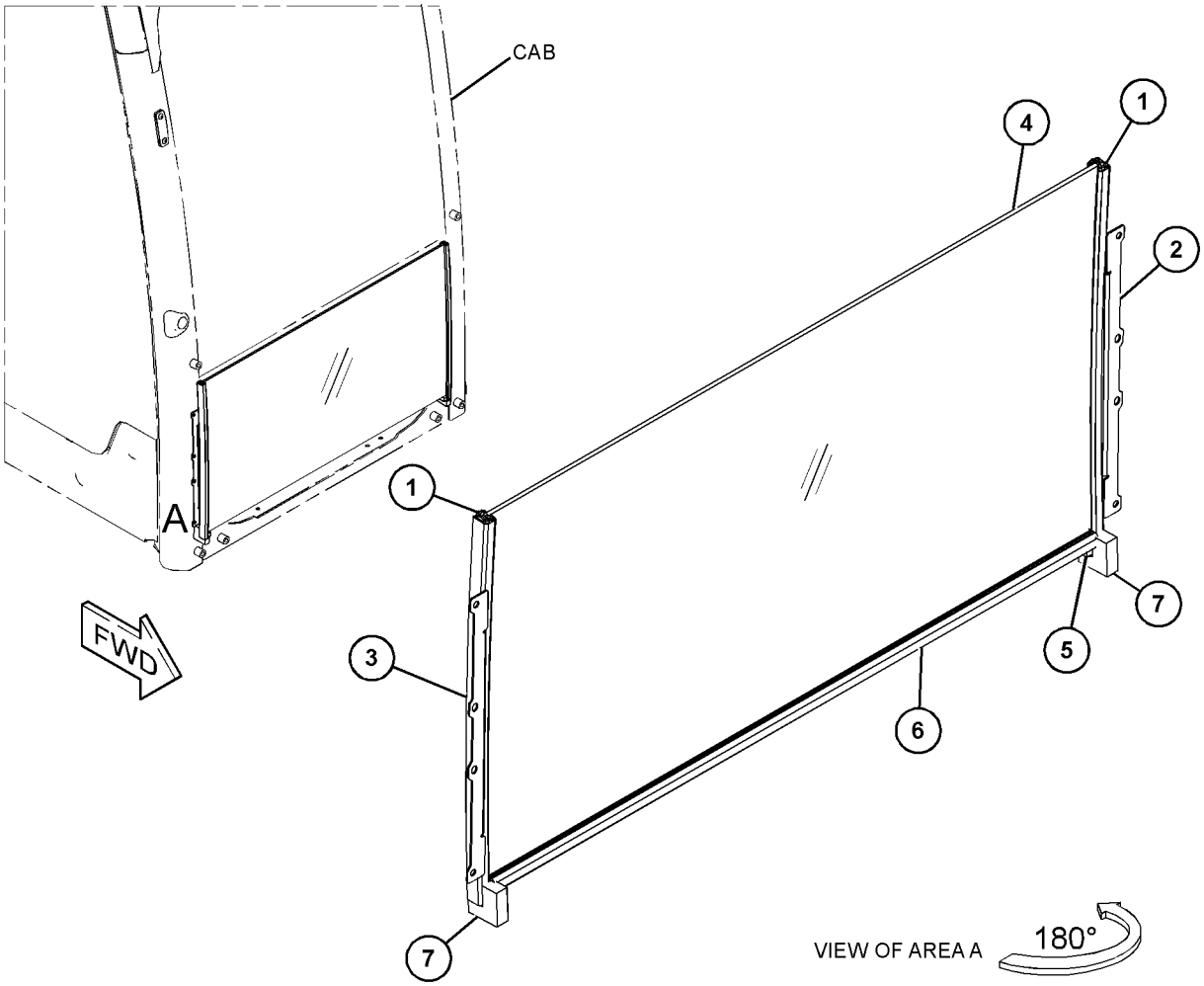

GRAPHIC #1 <END> g06230349

553-9988 WINDOW GP-CAB

S/N: SP91-UP

PART OF 486-5502, 498-7724 CAB GP

SMCS-7310 **i07531076**

NOTE	REF NO	GRAPHIC REF	PART NUMBER	QTY	PART NAME 1 2 3 4 5 6 (PRODUCT LEVEL)	SEE PAGE
	1	1	**486-5450**	1	GLASS	
	2	1	**486-5457**	1	SEAL	
	3	1	**487-6744**	1	FRAME AS	
	4	1	**487-6849**	1	SEAL	

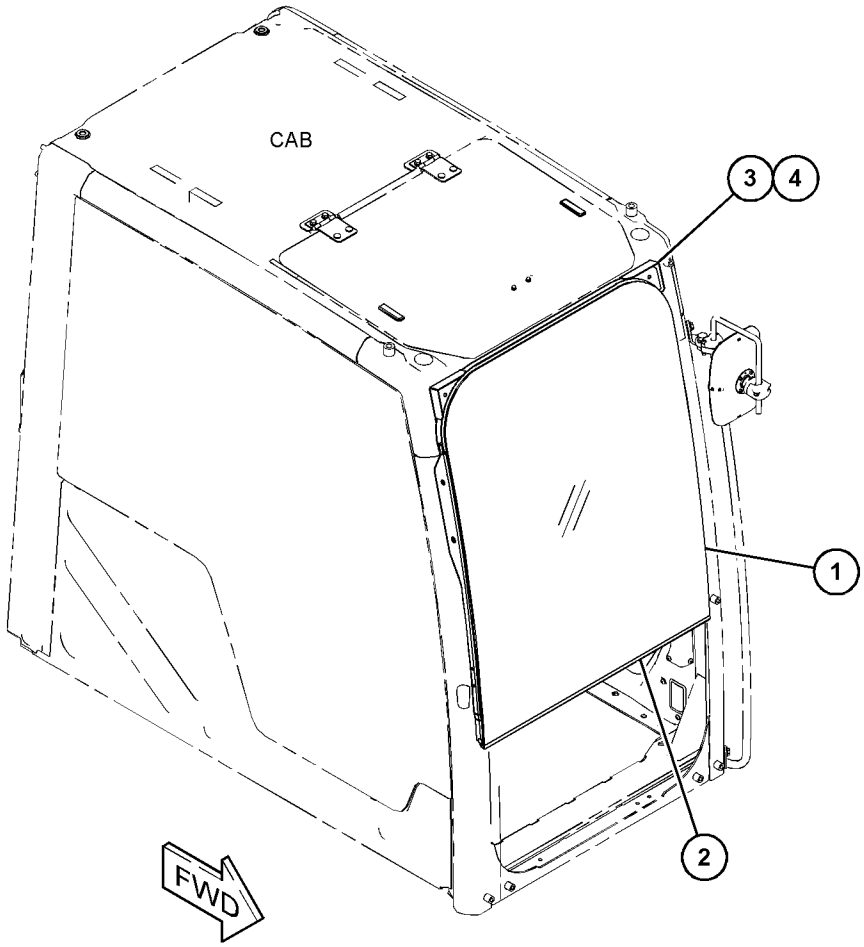

GRAPHIC #1 <END> g06321389

562-5655 WINDOW GP-CAB

S/N: SP91-UP

PART OF 486-5502 CAB GP

SMCS-7310 **i07714075**

NOTE	REF NO	GRAPHIC REF	PART NUMBER	QTY	PART NAME 1 2 3 4 5 6 (PRODUCT LEVEL)	SEE PAGE
	1	1	**536-0887**	1	GLASS (LAMINATED)	
	2	1	**486-5457**	1	SEAL	
	3	1	**487-6744**	1	FRAME AS	
	4	1	**487-6849**	1	SEAL	

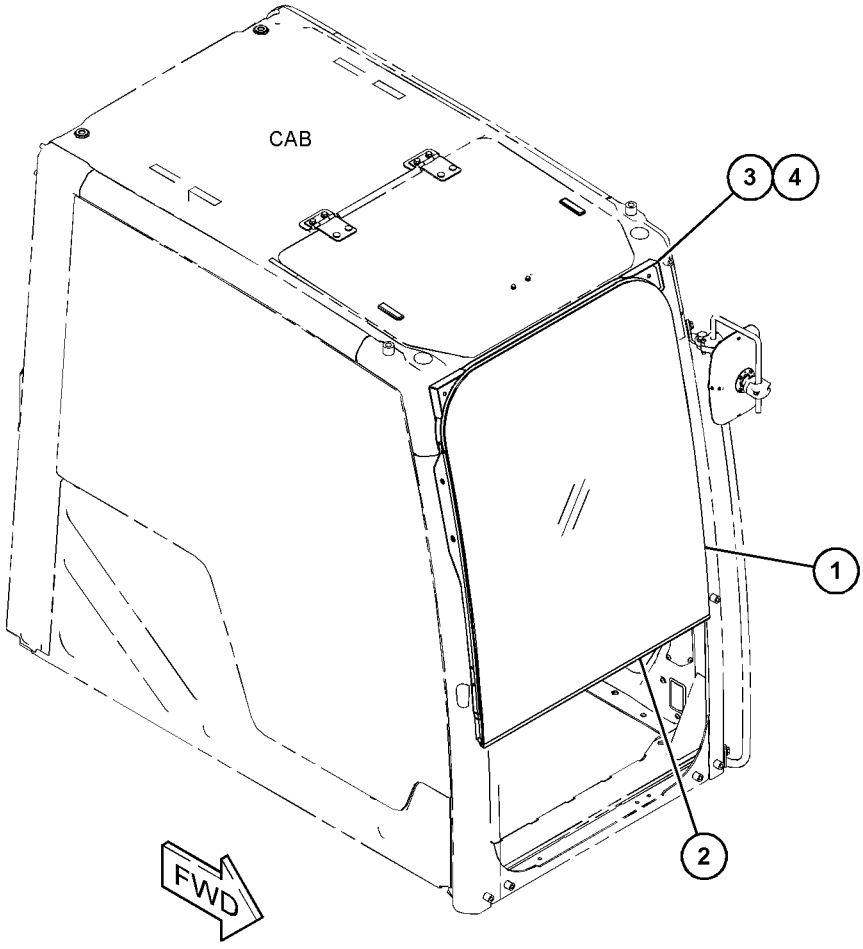

GRAPHIC #1 <END> g06321389

486-5407 WIPER GP-WINDOW

S/N: SP91-UP

PART OF 486-5502, 498-7724 CAB GP

SMCS-7305 **i07366509**

NOTE	REF NO	GRAPHIC REF	PART NUMBER	QTY	PART NAME 1 2 3 4 5 6 (PRODUCT LEVEL)	SEE PAGE
	1	1	**487-6806**	1	MOTOR AS-WINDOW WIPER	
	2	1	*488-6512*	1	LINES GP-WINDOW WASHER	
		1	**500-0729**	1	HOLDER	
M		1	**9X-2044**	2	SCREW-TRUSS HEAD (M6X1X16-MM)	
E		1	**144-0195**		HOSE (178-CM)	
		1	**383-5631**	1	NOZZLE	
	3	1	**556-4868**	1	CONTROLLER AS	
	4	1	**512-6728**	1	ARM AS-WIPER	
		1	**488-6506**	1	ARM AS-WIPER	
		1	**488-6509**	1	BLADE AS-WIPER	
M	5	1	**3E-8020**	2	SCREW-TRUSS HEAD (M6X1X25-MM)	
M	6	1	**9X-2042**	4	SCREW-TRUSS HEAD (M6X1X12-MM)	
M	7	1	**9X-2044**	2	SCREW-TRUSS HEAD (M6X1X16-MM)	
	8	1	**526-8641**	1	INSULATION	

E - ORDER BY THE CENTIMETER
M - METRIC PART

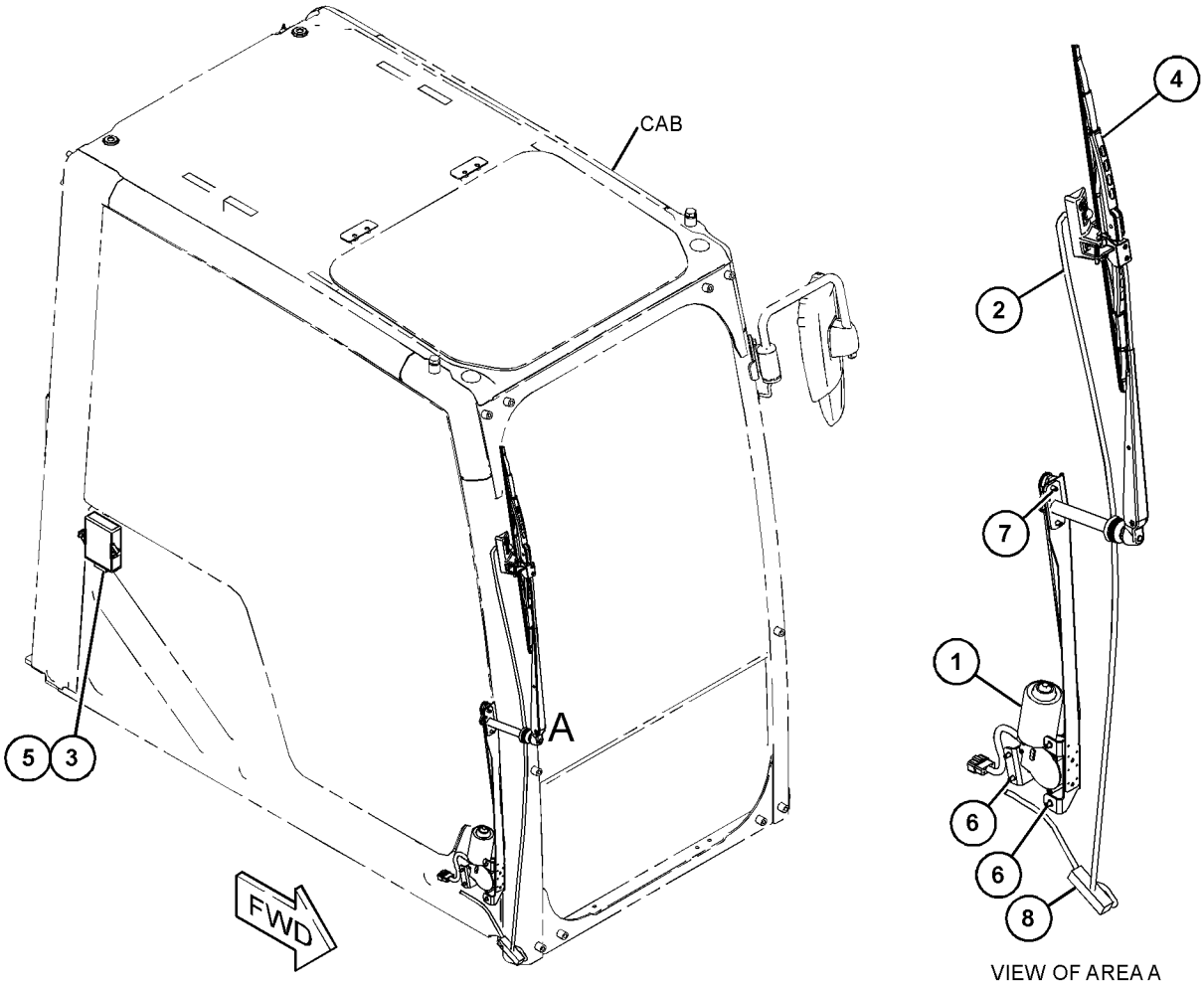

VIEW OF AREA A

GRAPHIC #1 <END> g06265336

526-8598 WIPER GP-WINDOW—LOWER

S/N: SP91-UP

PART OF 484-8022 INSTALLATION AR-WIPER

SMCS-7305 **i07531054**

NOTE	REF NO	GRAPHIC REF	PART NUMBER	QTY	PART NAME 1 2 3 4 5 6 (PRODUCT LEVEL)	SEE PAGE
	1	1	**4I-1163**	1	BRACKET	
	2	1	**8T-4121**	2	WASHER-HARD (11X21X2.5-MM THK)	
M	3	1	**8T-4189**	3	BOLT (M8X1.25X20-MM)	
M	4	1	**8T-4196**	2	BOLT (M10X1.5X35-MM)	
	5	1	**8T-4224**	3	WASHER-HARD (8.8X16X2-MM THK)	
M	6	1	**9X-2044**	2	SCREW-TRUSS HEAD (M6X1X16-MM)	
	7	1	**118-9901**	2	SPACER (12X20X10-MM THK)	
	8	1	**161-3128**	1	RELAY (24-VOLT)	
	9	1	**204-1611**	1	STRAP-CABLE (DUAL)	
	10	1	**526-8602**	1	ARM AS	
	11	1	**526-8603**	1	BLADE AS	
Y	12	1	**526-8605**	1	MOTOR GP-WINDOW WIPER	708
	13	1	**526-8607**	1	SUPPORT AS	
		1	**526-8577**	1	LINER	
B	14	1	**9X-8256**	4	WASHER (6.6X12X2-MM THK)	

B - USE AS REQUIRED
M - METRIC PART
Y - SEPARATE ILLUSTRATION

526-8598 **WIPER GP-WINDOW (**contd.**)** **i07531054**

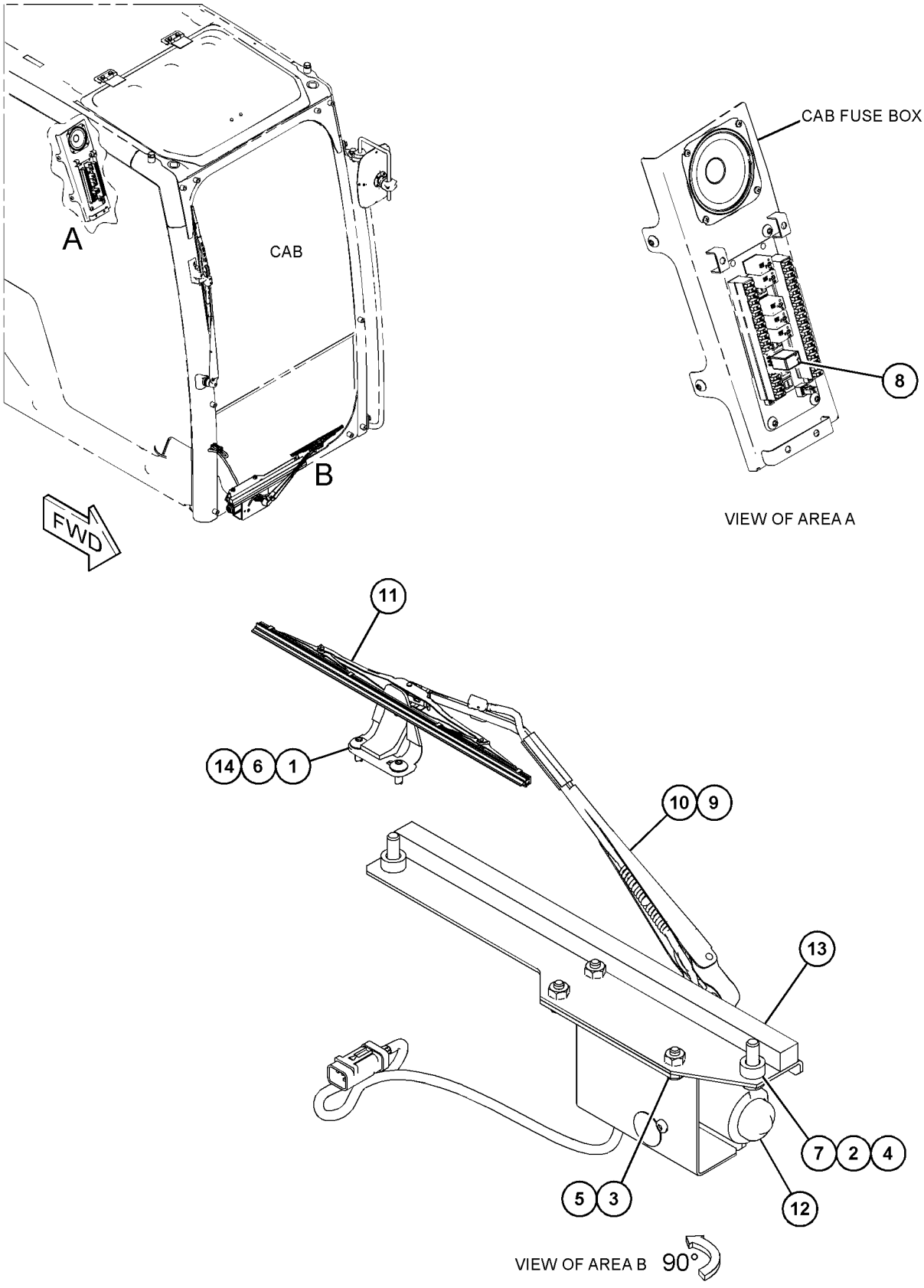

GRAPHIC #1 <END> g06272437

520-9415 FILM GP

S/N: SP91-UP
OUTSIDE JAPAN

SMCS-7405, 7557

i07352155

NOTE	REF NO	GRAPHIC REF	PART NUMBER	QTY	PART NAME 1 2 3 4 5 6 (PRODUCT LEVEL)	SEE PAGE
	1	1	**498-2825**	1	FILM-IDENTIFICATION (OPERATOR CONTROLS, READ OMM)	

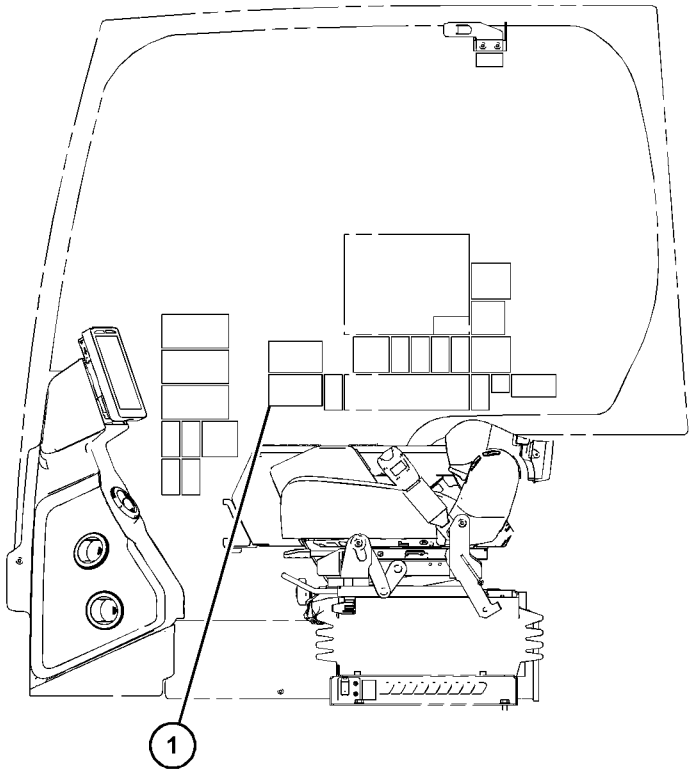

LEFT SIDE VIEW
(CAB INTERIOR)

GRAPHIC #1 <END> g06229583

520-9420 FILM GP–INTERNATIONAL

S/N: SP91-UP

PART OF 538-3026 CONTROL AR-AUXILIARY

SMCS-7405, 7557 **i07358120**

NOTE	REF NO	GRAPHIC REF	PART NUMBER	QTY	PART NAME 1 2 3 4 5 6 (PRODUCT LEVEL)	SEE PAGE
	1	1	**526-5689**	1	FILM-NOTICE (HAMMER, READ OMM)	

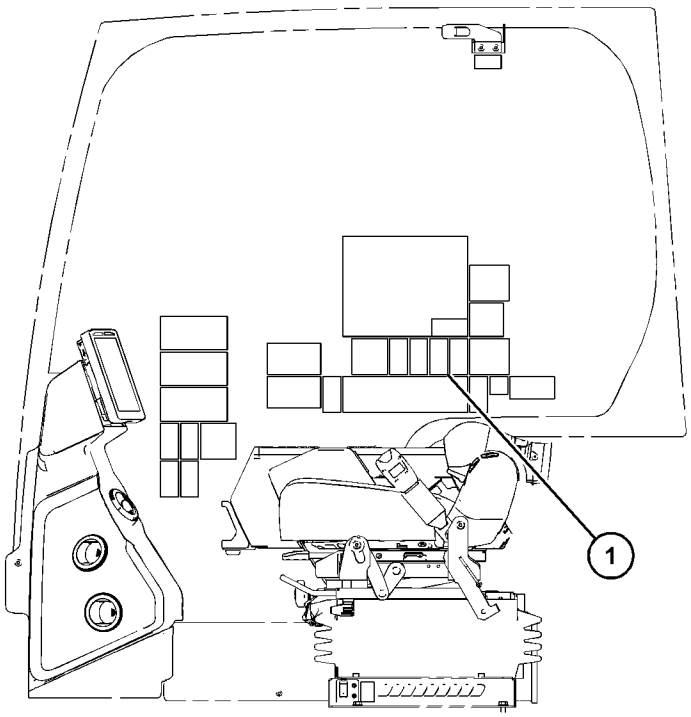

LEFT SIDE VIEW
(CAB INTERIOR)

GRAPHIC #1 <END> g06229564

521-1524 FILM GP–BOOM

S/N: SP91-UP

PART OF 512-1349 BOOM AR-1 PIECE LONG, 512-1348 BOOM AR-1 PIECE SHORT

SMCS-7405, 7557

i07351042

NOTE	PART NUMBER	QTY	PART NAME 1 2 3 4 5 6 (PRODUCT LEVEL)	SEE PAGE
	515-7834	1	FILM-IDENTIFICATION (CAT BOOM, LH)	
	515-7835	1	FILM-IDENTIFICATION (CAT BOOM, RH)	

<END>

532-7907 FILM GP–CAB

S/N: SP91-UP
COUPLER OPERATION
PART OF 550-7622 LINES GP-FRONT

SMCS-7405, 7557

i07356815

NOTE	REF NO	GRAPHIC REF	PART NUMBER	QTY	PART NAME 1 2 3 4 5 6 (PRODUCT LEVEL)	SEE PAGE
	1	1	**528-2348**	1	FILM-IDENTIFICATION (COUPLER OPERATION)	

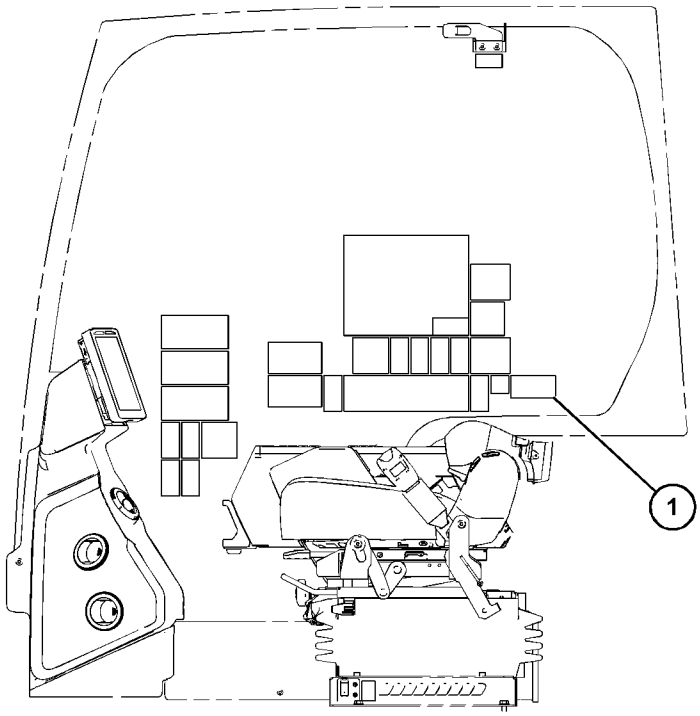

LEFT SIDE VIEW
(CAB INTERIOR)

GRAPHIC #1 <END> g06226940

533-1781 FILM GP

S/N: SP91-UP

PART OF 559-3854 CONTROL AR-AUXILIARY

SMCS-7405, 7557

i07519031

NOTE	PART NUMBER	QTY	PART NAME 1 2 3 4 5 6 (PRODUCT LEVEL)	SEE PAGE
	260-6941	1	FILM-INFORMATION (OPERATOR CONTROLS, READ OMM)	
	250-8054	1	FILM-NOTICE (HAMMER, READ OMM)	

<END>

533-7833 FILM GP–CAB, EXTERIOR

S/N: SP91-UP

PART OF 523-7792 EXCAVATOR AR

SMCS-7405, 7557 **i07512980**

NOTE	REF NO	GRAPHIC REF	PART NUMBER	QTY	PART NAME 1 2 3 4 5 6 (PRODUCT LEVEL)	SEE PAGE
	1	1	**367-0844**	1	FILM-INSTRUCTION (FUEL, READ OMM)	
	2	2	**471-8500**	1	FILM-IDENTIFICATION (OIL FILTER)	
	3	2	**533-5485**	1	FILM-IDENTIFICATION (CAT 336, RH)	
	4	2	**533-5486**	1	FILM-IDENTIFICATION (CAT 336, LH)	
	5	2	**533-5491**	1	FILM-IDENTIFICATION (FUSE/RELAY PANEL)	

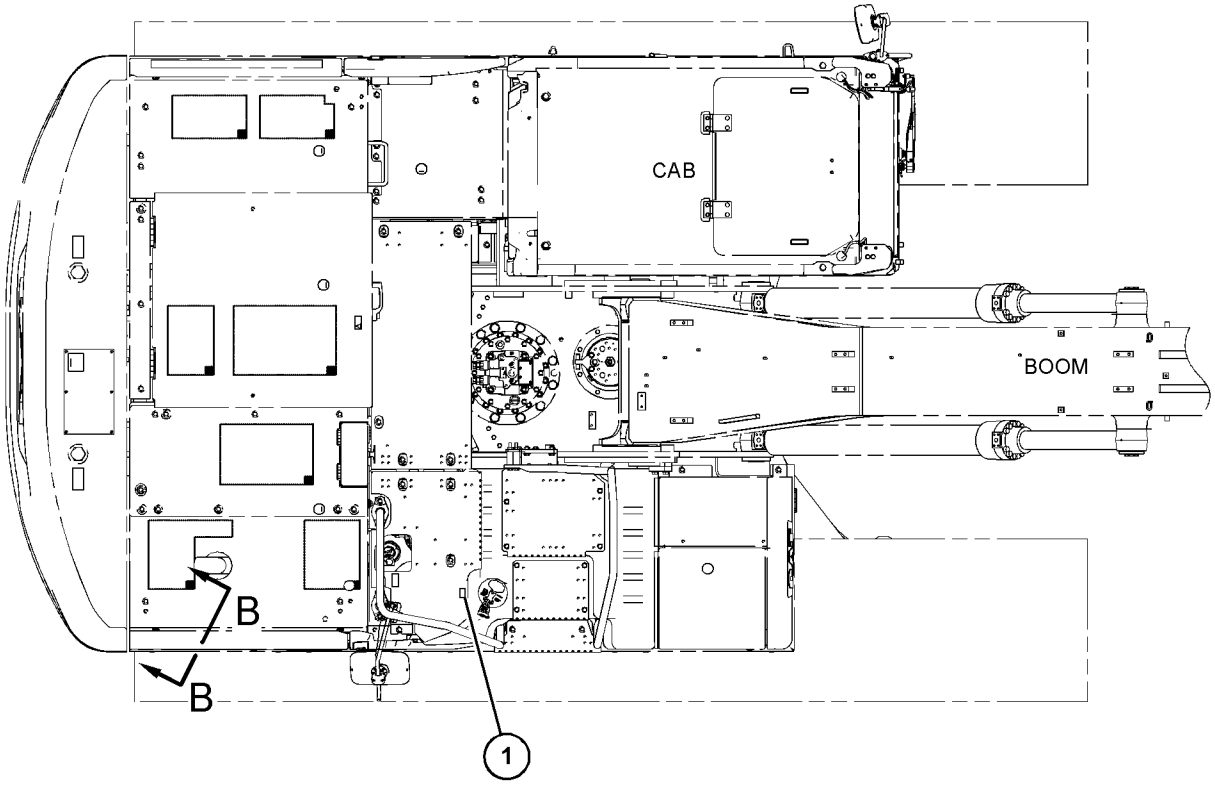

TOP VIEW FWD

GRAPHIC #1 g06305295

533-7833 **FILM GP (**contd.**)** **i07512980**

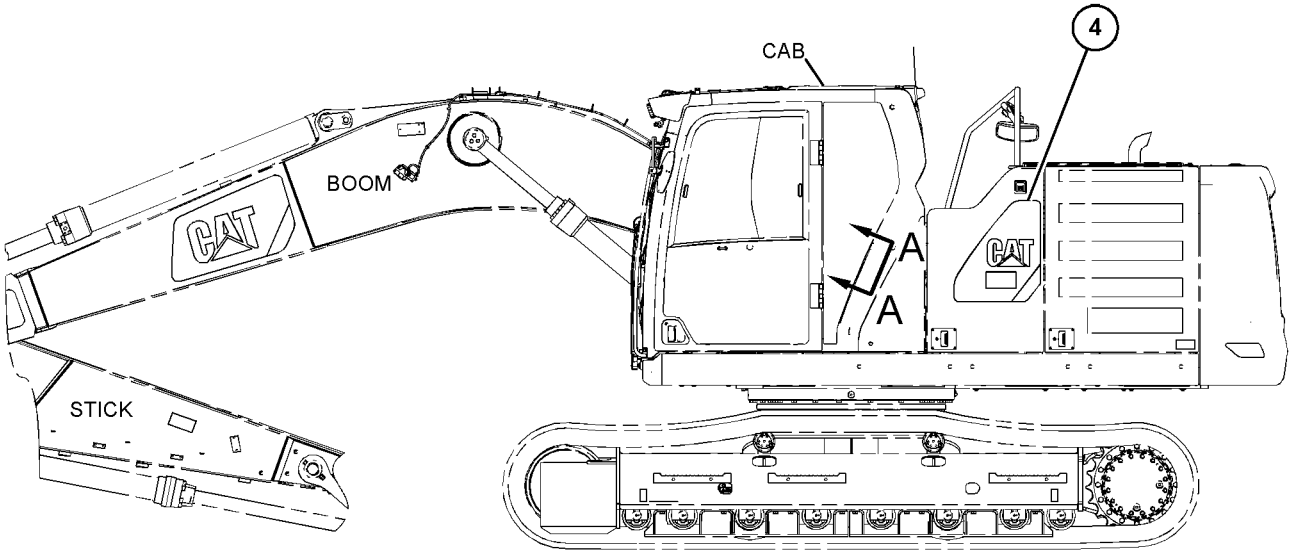

LEFT SIDE VIEW

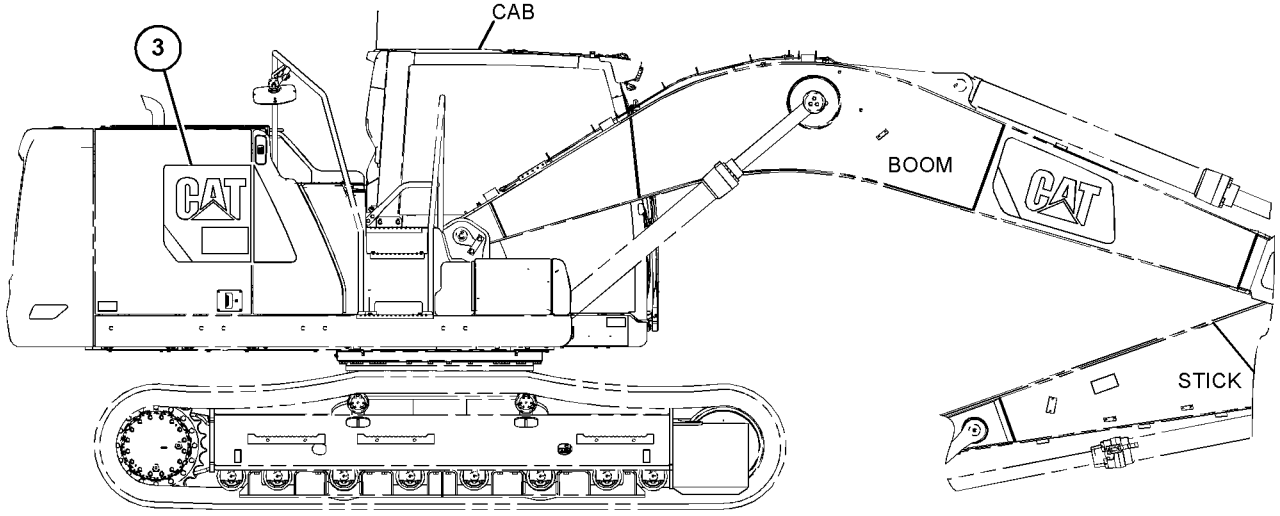

RIGHT SIDE VIEW

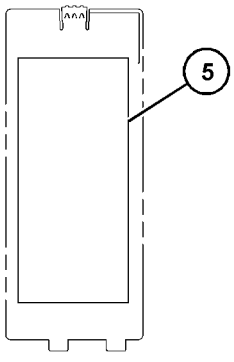

VIEW A-A

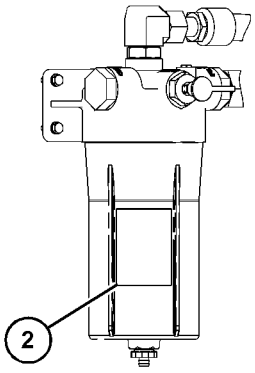

VIEW B-B

GRAPHIC #2 <END> g06305296

533-7833 FILM GP–CAB, EXTERIOR

S/N: SP91-10000

PART OF 523-7792 EXCAVATOR AR

SMCS-7405, 7557 **i07756710**

NOTE	REF NO	GRAPHIC REF	PART NUMBER	QTY	PART NAME 1 2 3 4 5 6 (PRODUCT LEVEL)	SEE PAGE
	1	1	**367-0844**	1	FILM-INSTRUCTION (FUEL, READ OMM)	
	2	2	**471-8500**	1	FILM-IDENTIFICATION (OIL FILTER)	
	3	2	**533-5485**	1	FILM-IDENTIFICATION (CAT 336, RH)	
	4	2	**533-5486**	1	FILM-IDENTIFICATION (CAT 336, LH)	
C	5	2	**574-8968**	1	FILM-IDENTIFICATION (FUSE/RELAY PANEL)	

C - CHANGE FROM PREVIOUS TYPE

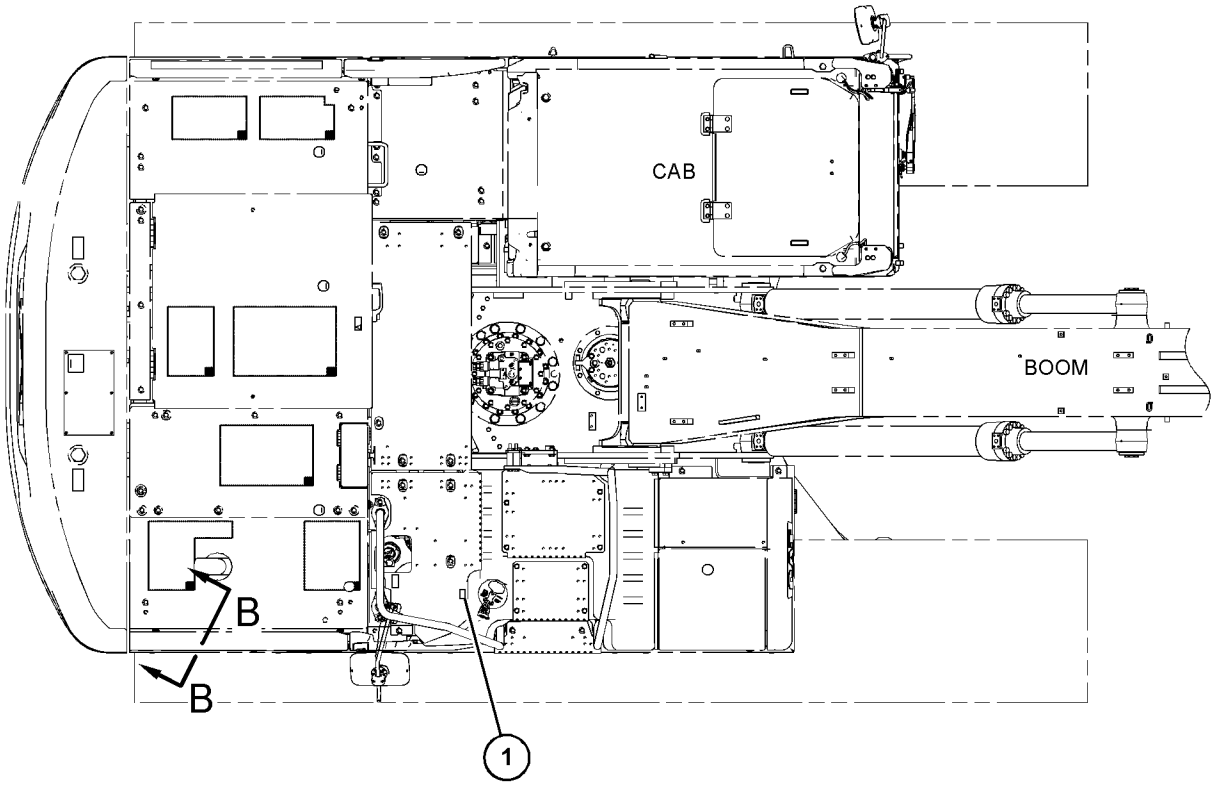

TOP VIEW FWD

GRAPHIC #1 g06305295

533-7833 **FILM GP (**contd.**)** **i07756710**

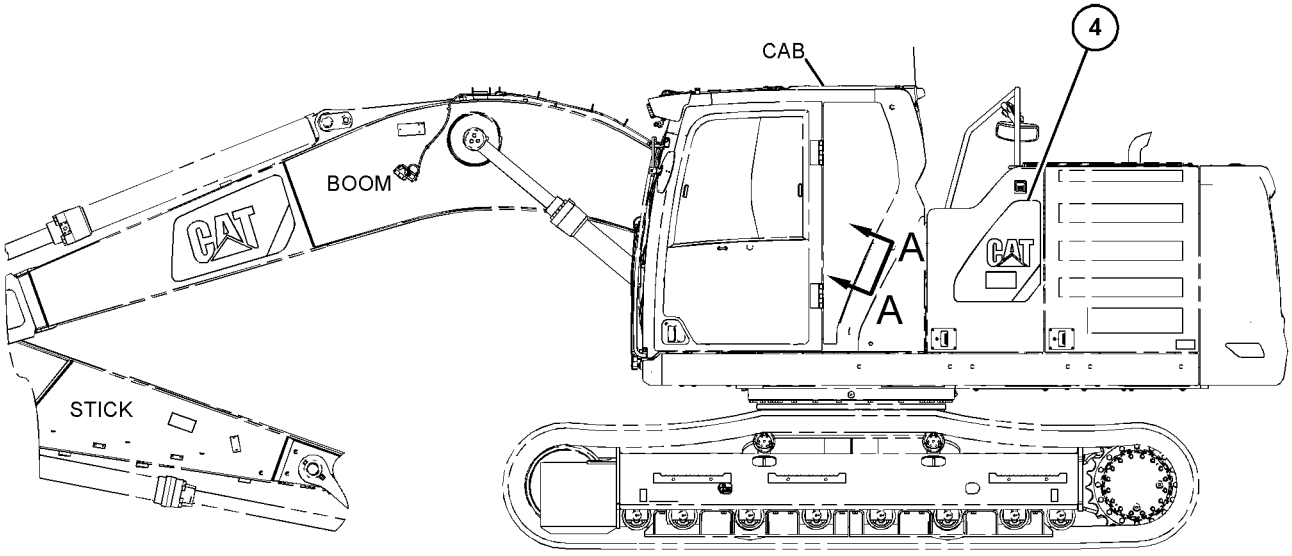

LEFT SIDE VIEW

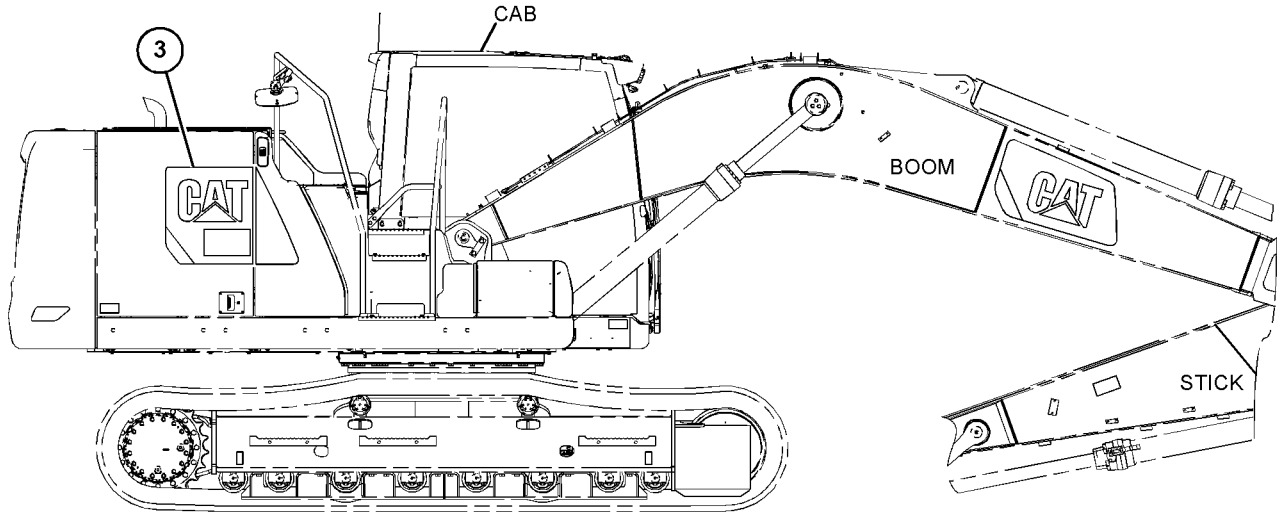

RIGHT SIDE VIEW

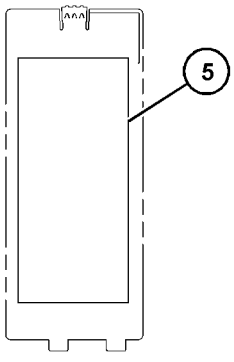

VIEW A-A

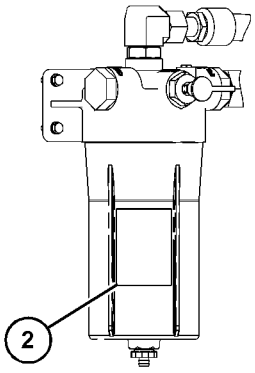

VIEW B-B

GRAPHIC #2 <END> g06305296

538-2111 FILM GP–JOYSTICK

S/N: SP91-UP

PART OF 528-6835 CONTROL AR-AUXILIARY

SMCS-7405, 7557 **i07356800**

NOTE	REF NO	GRAPHIC REF	PART NUMBER	QTY	PART NAME 1 2 3 4 5 6 (PRODUCT LEVEL)	SEE PAGE
	1	1	**528-2349**	1	FILM-INFORMATION (JOYSTICK CONTROL, READ OMM)	

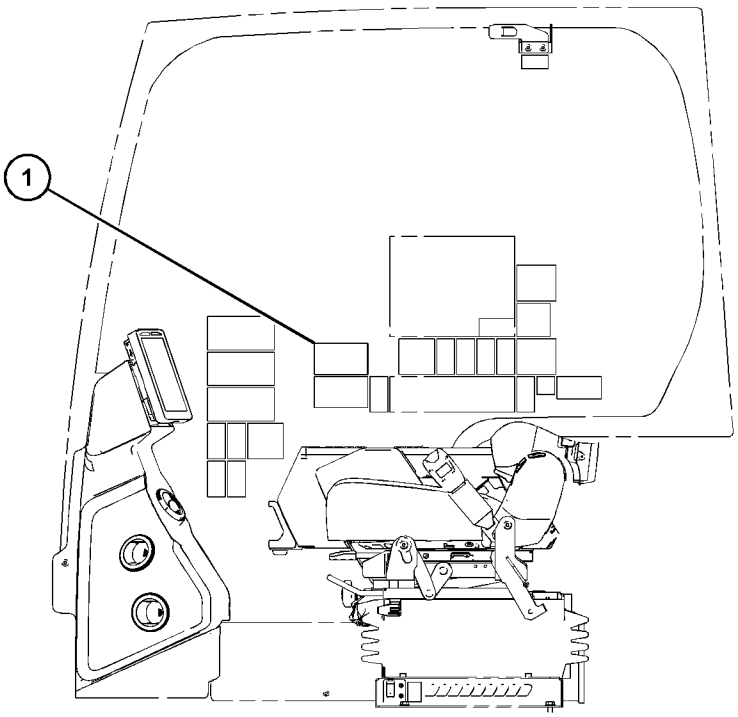

LEFT SIDE VIEW
(CAB INTERIOR)

GRAPHIC #1 <END> g06229604

546-5663 FILM GP–FUEL

S/N: SP91-UP

PART OF 546-1255 PUMP AR-FUEL TRANSFER

SMCS-7405, 7557

i07526888

NOTE	REF NO	GRAPHIC REF	PART NUMBER	QTY	PART NAME 1 2 3 4 5 6 (PRODUCT LEVEL)	SEE PAGE
	1	1	**367-0844**	1	FILM-INSTRUCTION (FUEL, READ OMM)	

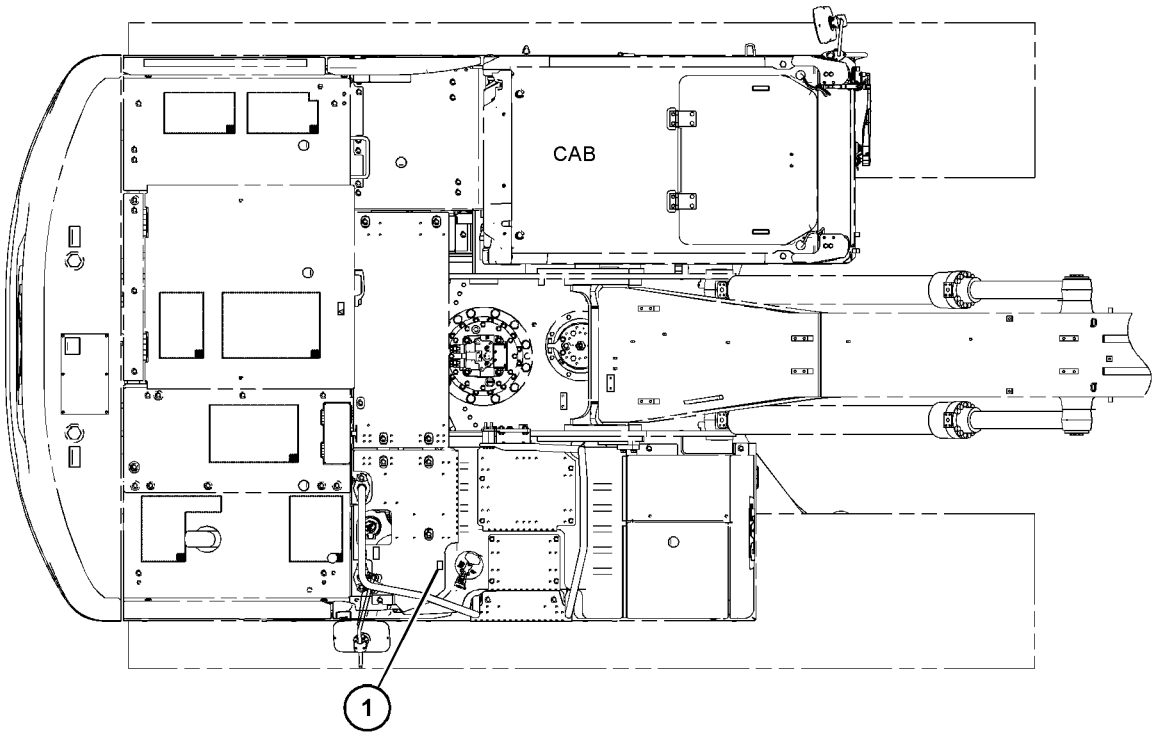

TOP VIEW FWD

GRAPHIC #1 <END> g06301607

547-9051 FILM GP—OIL FILL

S/N: SP91-UP

PART OF 546-6209 OIL CHANGE AR-HIGH SPEED

SMCS-7405, 7557 **i07526844**

NOTE	REF NO	GRAPHIC REF	PART NUMBER	QTY	PART NAME 1 2 3 4 5 6 (PRODUCT LEVEL)	SEE PAGE
	1	1	**519-5907**	1	FILM-IDENTIFICATION (OIL FILL, READ OMM)	

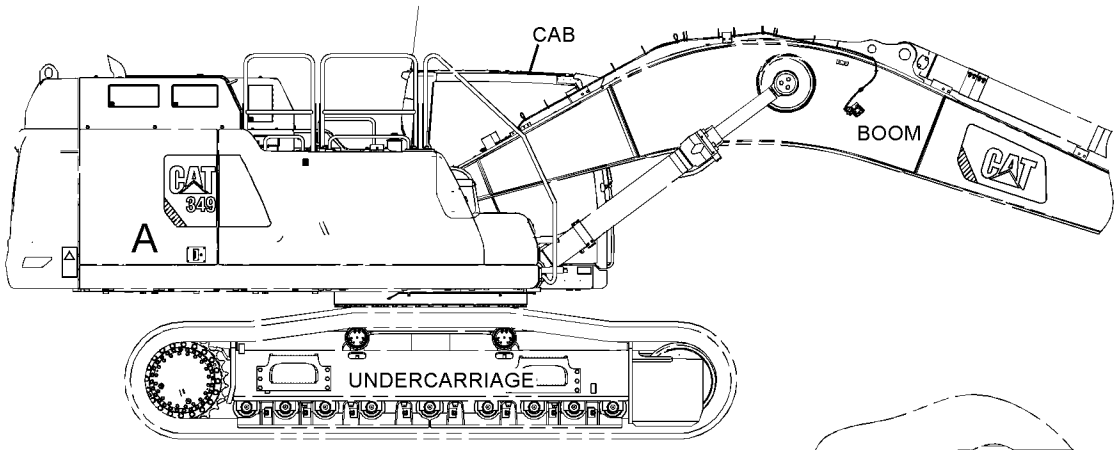

RIGHT SIDE VIEW

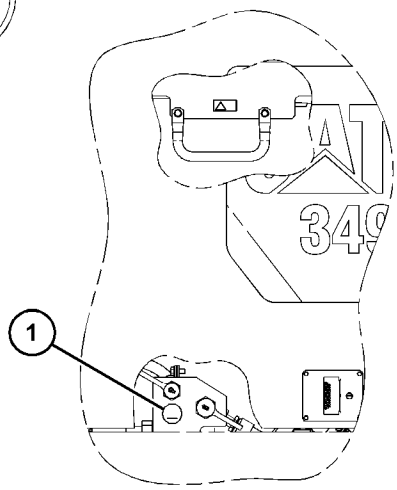

VIEW OF AREA A

GRAPHIC #1 <END> g06309855

548-2353 FILM GP

S/N: SP91-UP
BRAZILE MARKET

SMCS-7405, 7557 **i07358139**

NOTE	REF NO	GRAPHIC REF	PART NUMBER	QTY	PART NAME 1 2 3 4 5 6 (PRODUCT LEVEL)	SEE PAGE
	1	1	**202-9824**	1	FILM-INFORMATION (BRAZIL)	

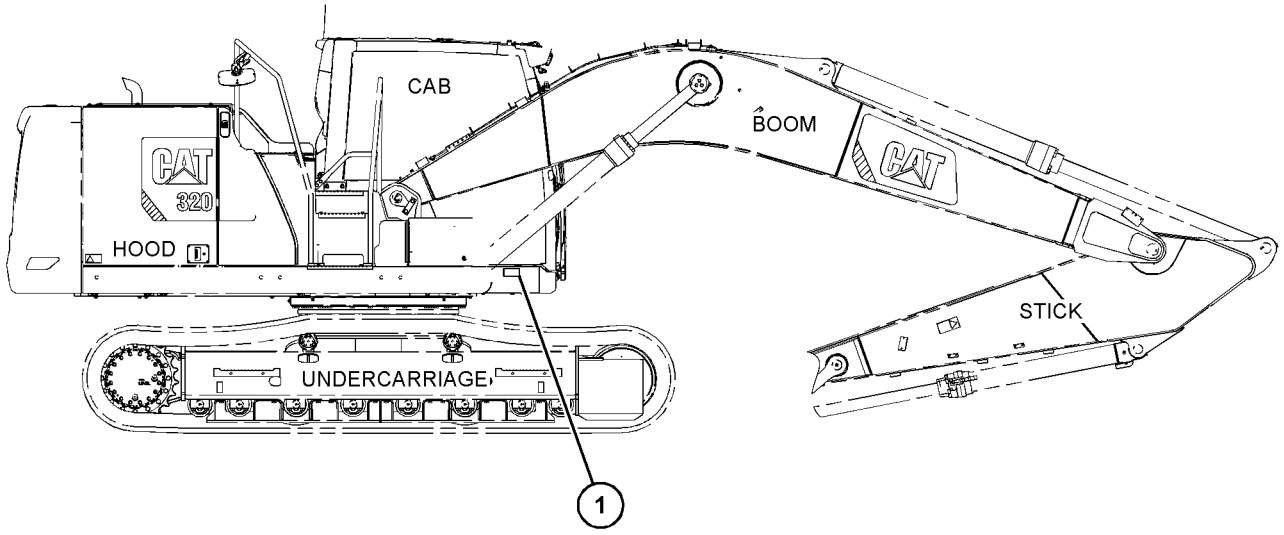

RIGHT SIDE VIEW

GRAPHIC #1 <END> g06293760

549-0911 FILM GP–BOOM PRESSURE CONTROL

S/N: SP91-UP

PART OF 525-2618 CONTROL AR-BOOM

SMCS-7405, 7557 **i07527160**

NOTE	REF NO	GRAPHIC REF	PART NUMBER	QTY	PART NAME 1 2 3 4 5 6 (PRODUCT LEVEL)	SEE PAGE
	1	1	**548-8497**	1	FILM-IDENTIFICATION (BOOM PRESSURE CONTROL)	

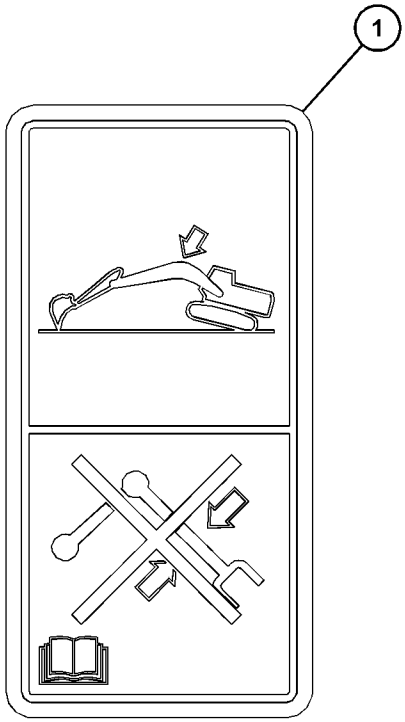

GRAPHIC #1 <END> g06280762

553-9978 FILM GP–ROPS

S/N: SP91-UP

SMCS-7405, 7557 **i07521837**

NOTE	REF NO	GRAPHIC REF	PART NUMBER	QTY	PART NAME 1 2 3 4 5 6 (PRODUCT LEVEL)	SEE PAGE
	1	1	**219-0302**	1	FILM-WARNING (NO WELD, NO DRILL, READ OMM)	

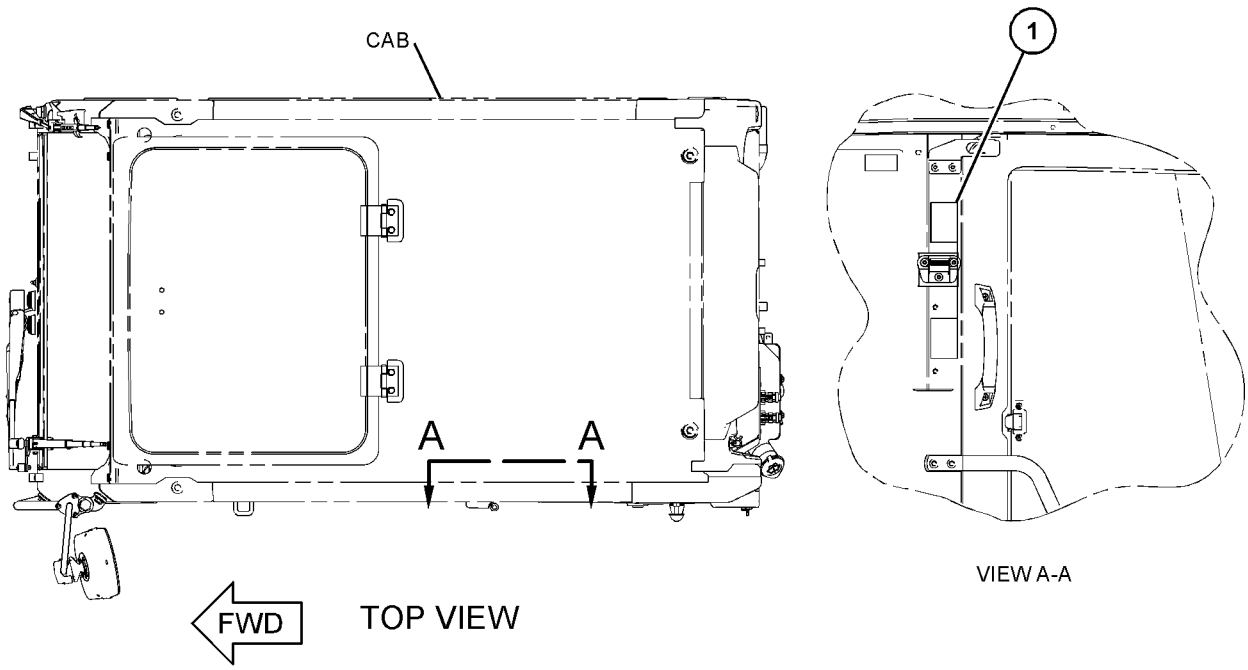

GRAPHIC #1 <END> g06311846

556-8989 FILM GP—JOYSTICK PATTERN

S/N: SP91-UP

SMCS-7405, 7557 **i07521869**

NOTE	REF NO	GRAPHIC REF	PART NUMBER	QTY	PART NAME 1 2 3 4 5 6 (PRODUCT LEVEL)	SEE PAGE
	1	1	**4I-2885**	1	CASE	
	2	1	**554-3790**	1	PLATE-INFORMATION (JOYSTICK CONTROL, READ OMM)	
	3	1	**554-3791**	1	PLATE-INFORMATION (JOYSTICK CONTROL, READ OMM)	
	4	1	**554-3792**	1	PLATE-INFORMATION (JOYSTICK CONTROL, READ OMM)	

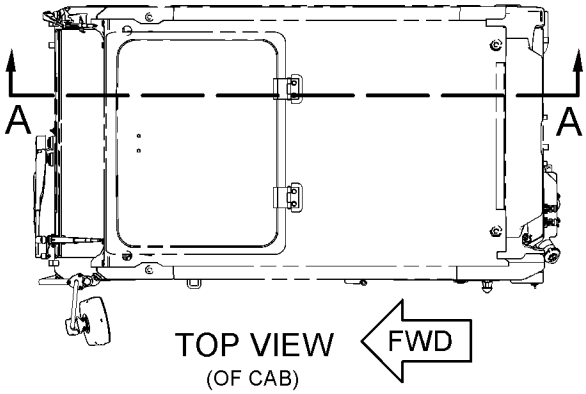

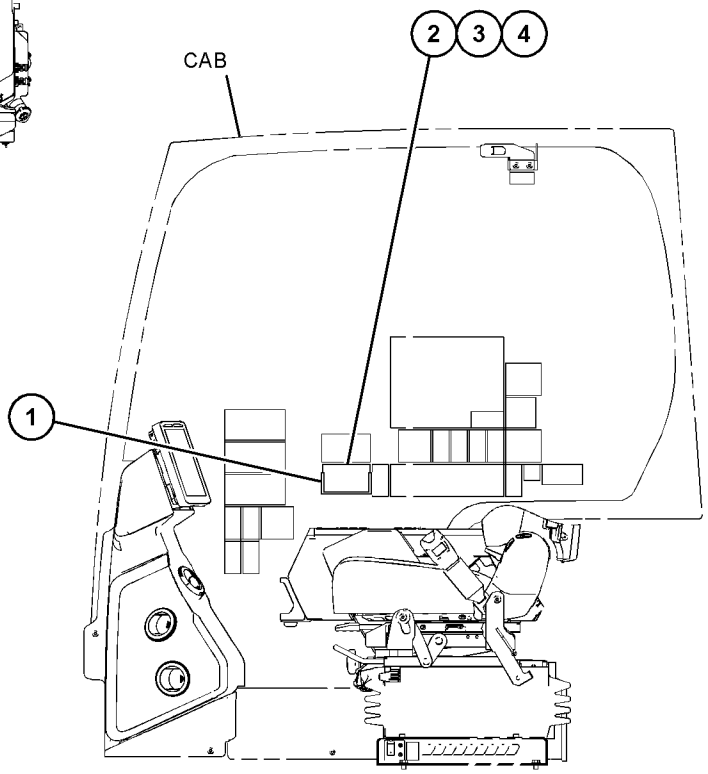

VIEW A-A

GRAPHIC #1 <END> g06288376

564-8002 FILM GP–ROPS

S/N: SP91-UP

SMCS-7405, 7557 **i07518437**

NOTE	REF NO	GRAPHIC REF	PART NUMBER	QTY	PART NAME 1 2 3 4 5 6 (PRODUCT LEVEL)	SEE PAGE
	1	1	**533-5495**	1	FILM-ROPS (WARNING, READ OMM)	

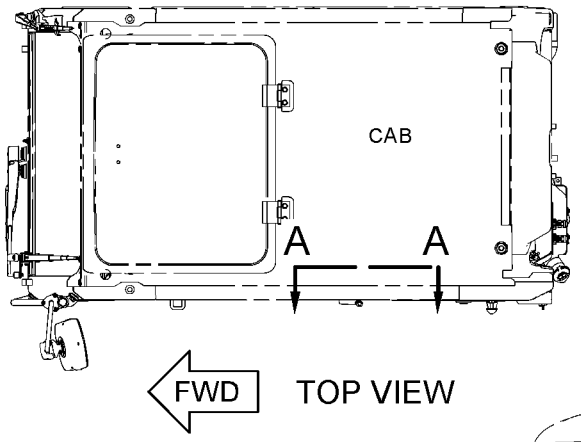

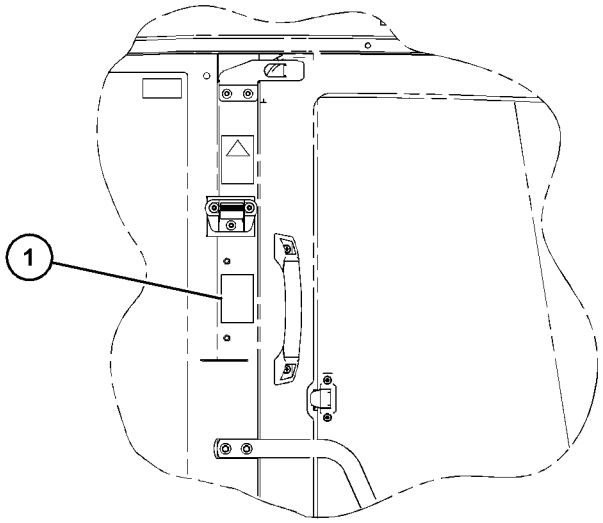

VIEW A-A

GRAPHIC #1 <END> g06348567

567-3814 FILM GP–STICK

S/N: SP91-UP

SMCS-7405, 7557 **i07516428**

NOTE	REF NO	GRAPHIC REF	PART NUMBER	QTY	PART NAME 1 2 3 4 5 6 (PRODUCT LEVEL)	SEE PAGE
	1	1	**298-4282**	2	FILM-WARNING (CRUSH HAZARD, STAY BACK, INTL)	

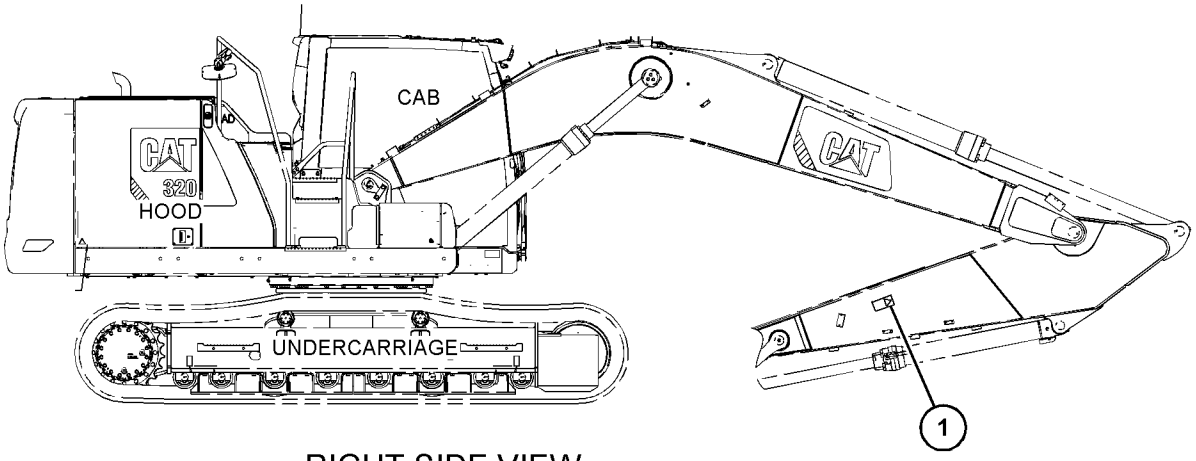

RIGHT SIDE VIEW

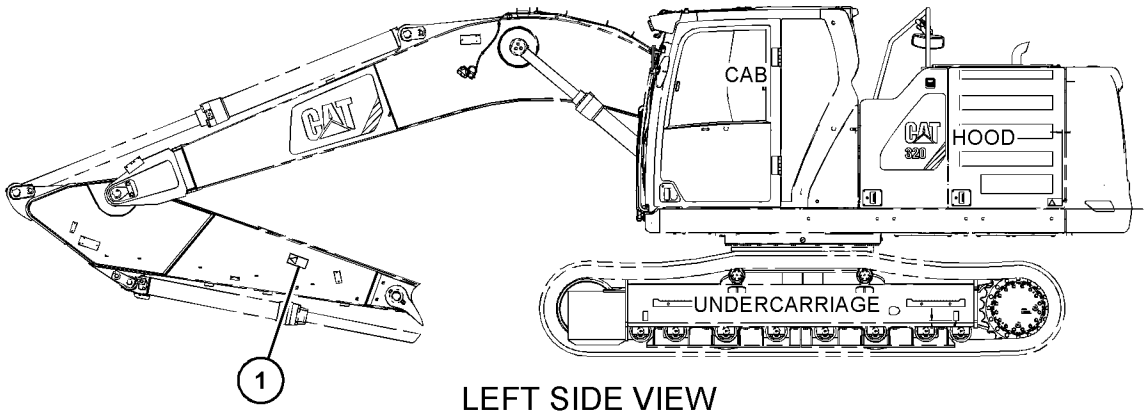

LEFT SIDE VIEW

GRAPHIC #1 <END> g06347222

578-1021 FILM GP–CAB, EXTERIOR

S/N: SP910001-UP

PART OF 523-7792 EXCAVATOR AR

SMCS-7405, 7557

i07877832

NOTE	REF NO	GRAPHIC REF	PART NUMBER	QTY	PART NAME 1 2 3 4 5 6 (PRODUCT LEVEL)	SEE PAGE
	1	1	**367-0844**	1	FILM-INSTRUCTION (FUEL, READ OMM)	
	2	1	**471-8500**	1	FILM-IDENTIFICATION (OIL FILTER)	
	3	2	**574-8968**	1	FILM-IDENTIFICATION (FUSE/RELAY PANEL)	
	4	2	**578-4166**	1	FILM-IDENTIFICATION (336)	
	5	1	**578-4190**	1	FILM-IDENTIFICATION (336)	

578-1021 **FILM GP (**contd.**)** **i07877832**

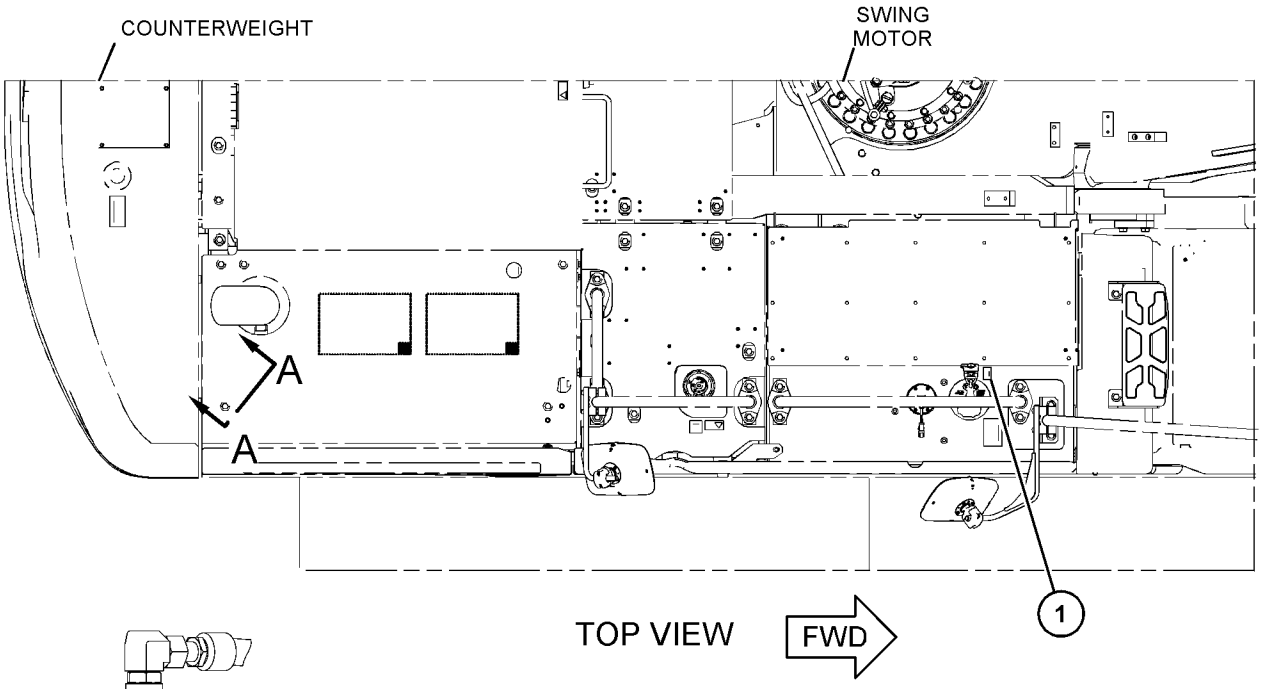

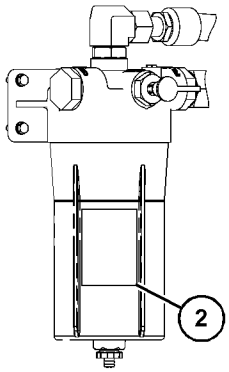

VIEW A-A

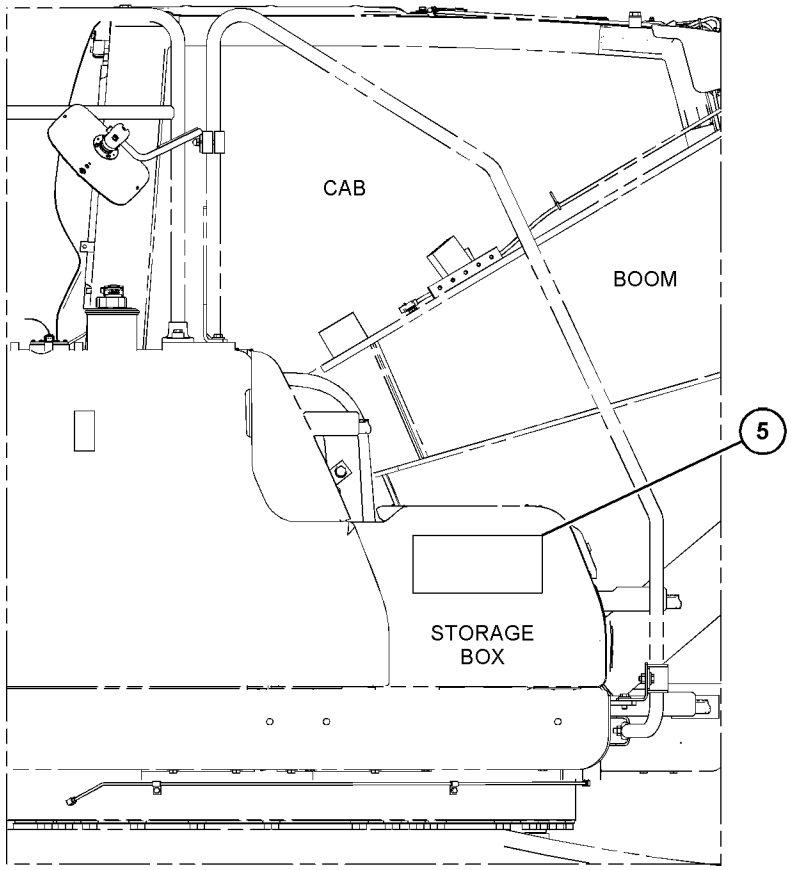

RIGHT SIDE VIEW

GRAPHIC #1 g06456579

578-1021 **FILM GP (**contd.**)** **i07877832**

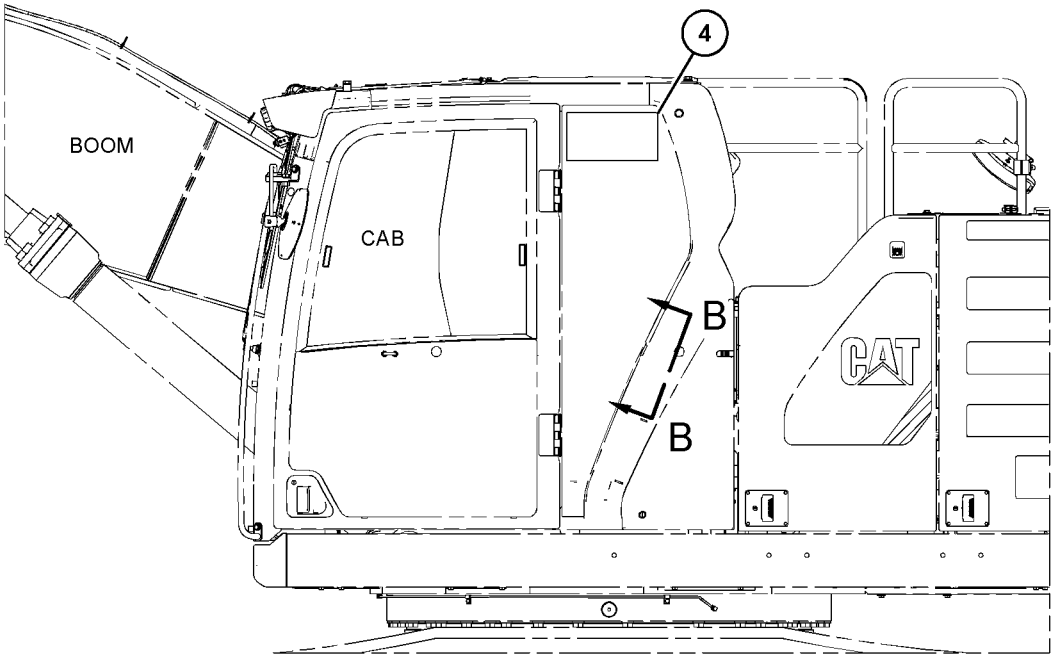

LEFT SIDE VIEW

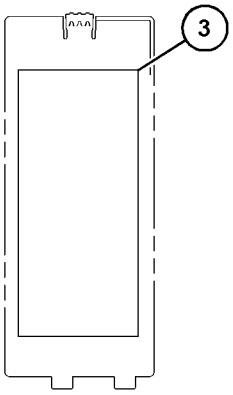

VIEW B-B

GRAPHIC #2 <END> g06456580

510-7283 PLATE & FILM GP

S/N: NTB1-UP

PART OF 526-2125 ENGINE AR

SMCS-7405, 7557

i07500717

NOTE	REF NO	GRAPHIC REF	PART NUMBER	QTY	PART NAME 1 2 3 4 5 6 (PRODUCT LEVEL)	SEE PAGE
	1	1	**433-7137**	1	FILM-IDENTIFICATION (NO STEP)	
	2	1	**430-5251**	2	FILM-WARNING (HIGH PRESSURE, READ OMM)	
	3	1	**419-8867**	1	PLATE-IDENTIFICATION (CAT)	
	4	1	**339-6055**	1	FILM-INSTRUCTION (BELT ROUTING)	
	5	1	**136-9066**	1	FILM-INFORMATION (ENGINE OIL)	
	6	1	**293-9659**	2	FILM-WARNING (UNIVERSAL, READ OMM)	
	7	1	**4W-1413**	1	PLATE-SERIAL NUMBER (ENGINE)	

510-7283 **PLATE & FILM GP (**contd.**)** **i07500717**

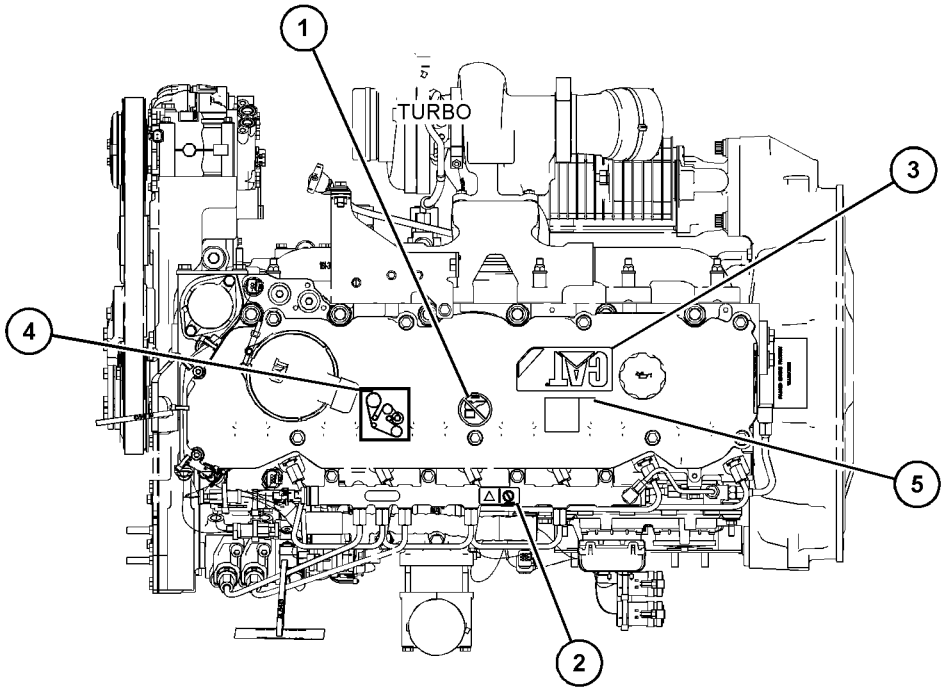

TOP VIEW OF ENGINE

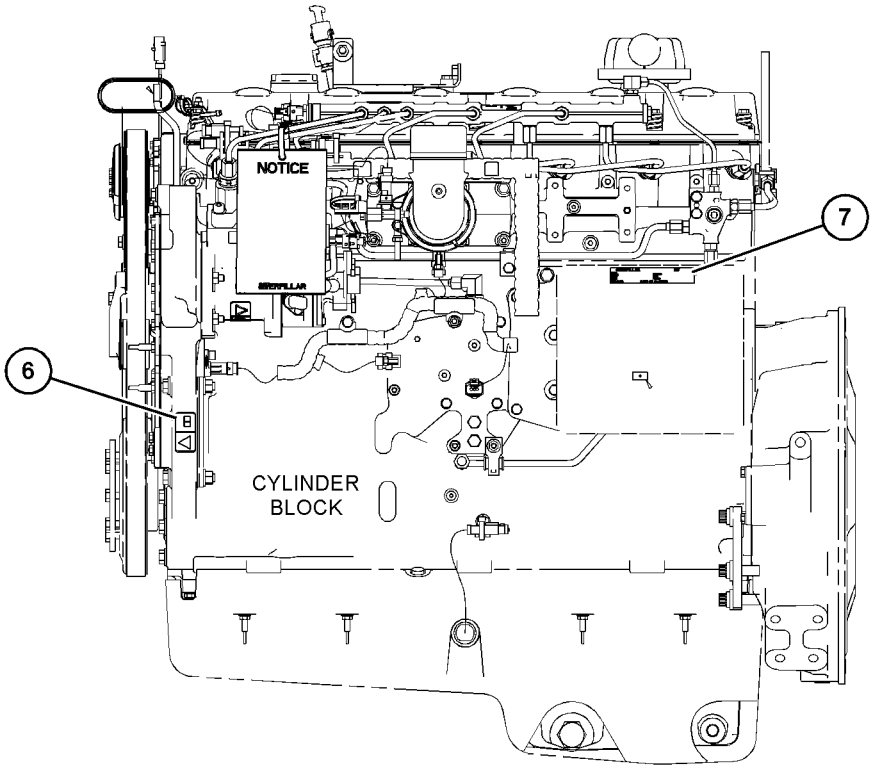

LEFT SIDE VIEW OF ENGINE

GRAPHIC #1 <END> g06306988

522-3167 PLATE & FILM GP

S/N: SP91-UP

CAB, INTERNATIONAL

SMCS-7405, 7557

i07678681

NOTE	REF NO	GRAPHIC REF	PART NUMBER	QTY	PART NAME 1 2 3 4 5 6 (PRODUCT LEVEL)	SEE PAGE
	1	2	**8T-6842**	1	FILM-INSTRUCTION (PULL RING, ALTERNATE EXIT)	
	2	2	**187-0661**	1	FILM-INSTRUCTION (ALTERNATE EXIT)	
	3	1	**214-7915**	1	FILM-INSTRUCTION (ENGINE SHUTOFF)	
	4	2	**389-9183**	1	FILM-WARNING (NO WELD, NO DRILL, READ OMM)	
	5	1	**307-0047**	1	FILM-INFORMATION (PRODUCT LINK, READ OMM)	
	6	1,2	**331-8008**	2	FILM-WARNING (FRONT WINDOW, READ OMM, INTL)	
	7	1	**519-8822**	1	FILM-WARNING (DO NOT OPERATE, READ OMM)	
	8	1	**520-9106**	1	FILM-WARNING (PRODUCT LINK RADIO, INTL)	
	9	1	**520-9108**	1	FILM-WARNING (CRUSH HAZARD, READ OMM, INTL)	

522-3167 **PLATE & FILM GP (**contd.**)** **i07678681**

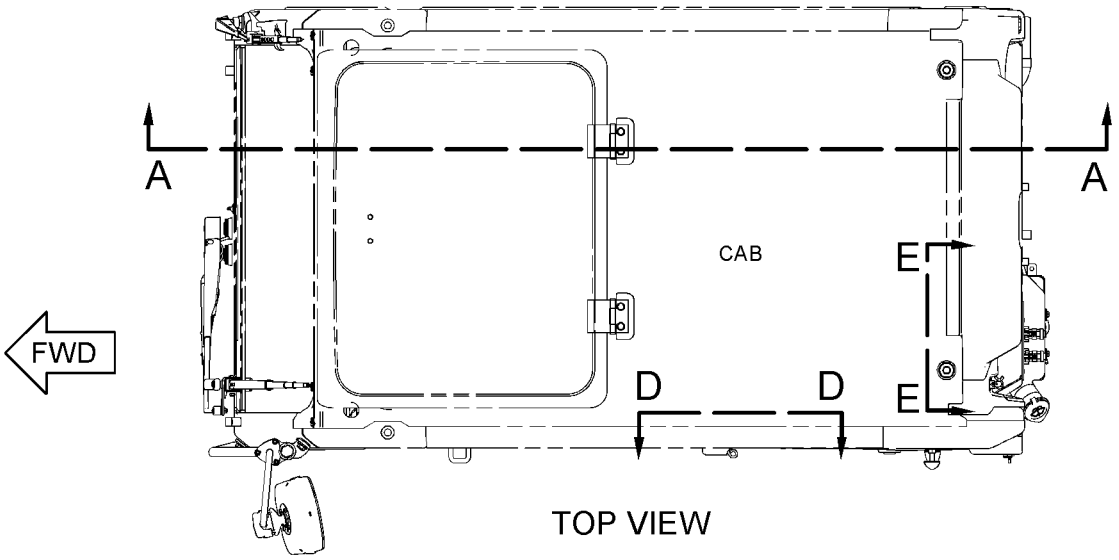

TOP VIEW

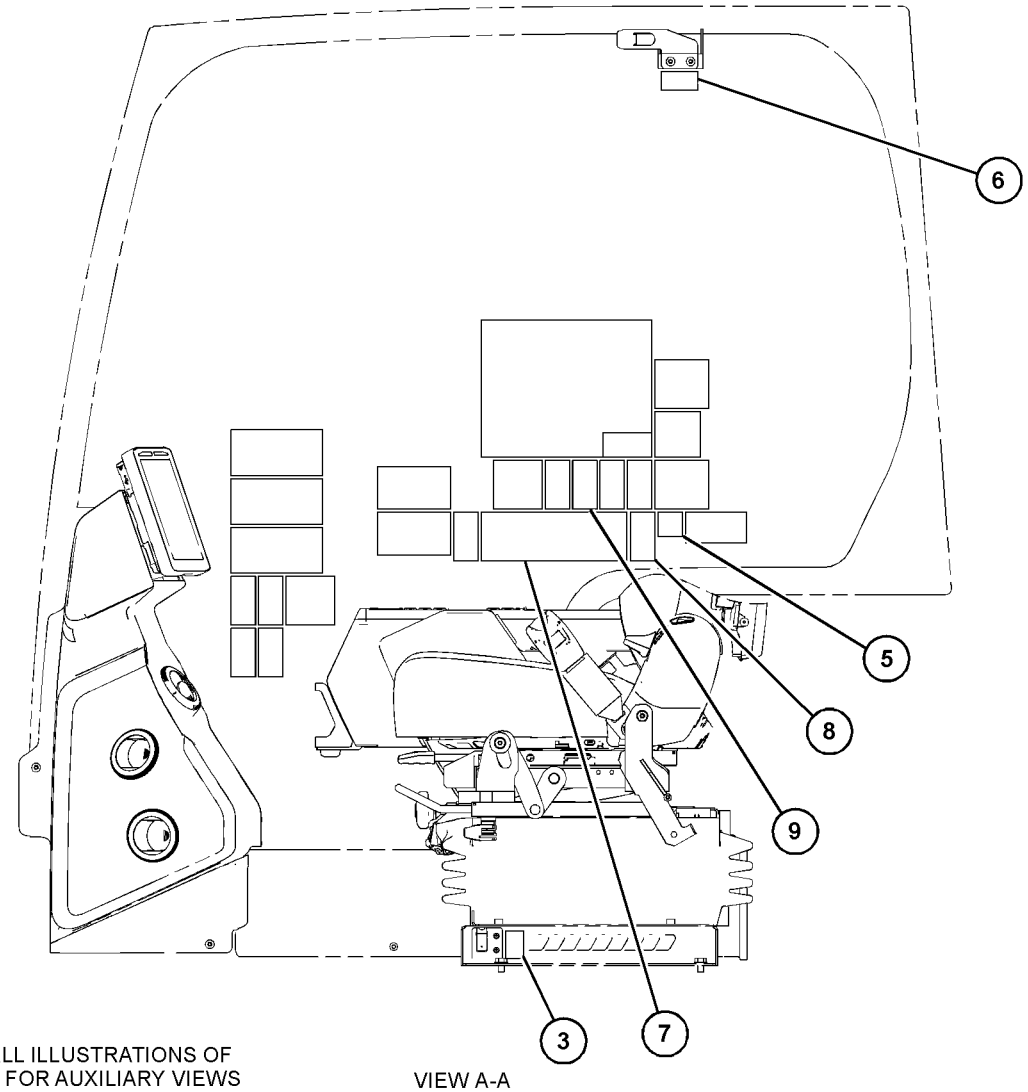

REFER TO ALL ILLUSTRATIONS OF THIS GROUP FOR AUXILIARY VIEWS

VIEW A-A

GRAPHIC #1

g06384487

522-3167 **PLATE & FILM GP (**contd.**)** **i07678681**

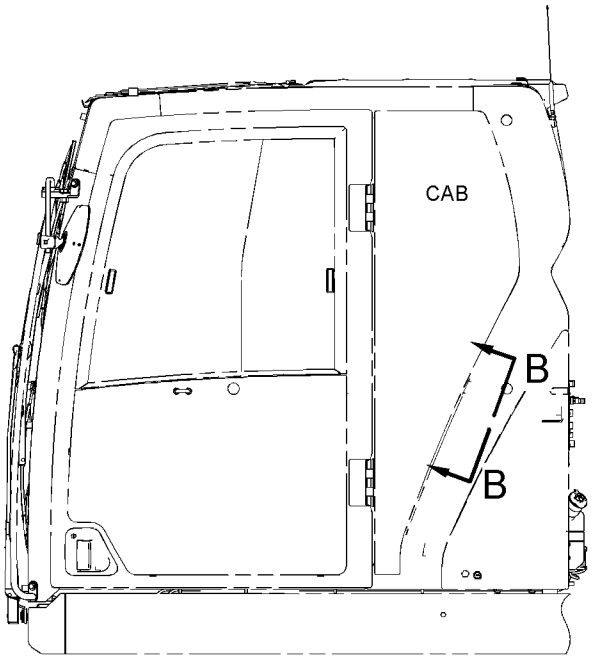

LEFT SIDE VIEW

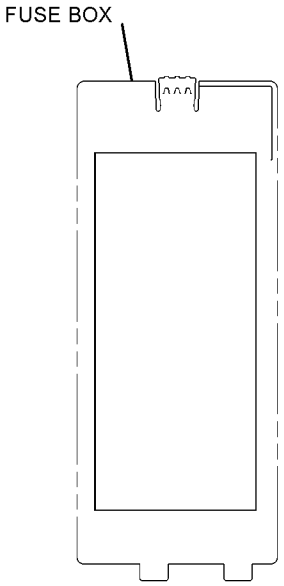

VIEW B-B

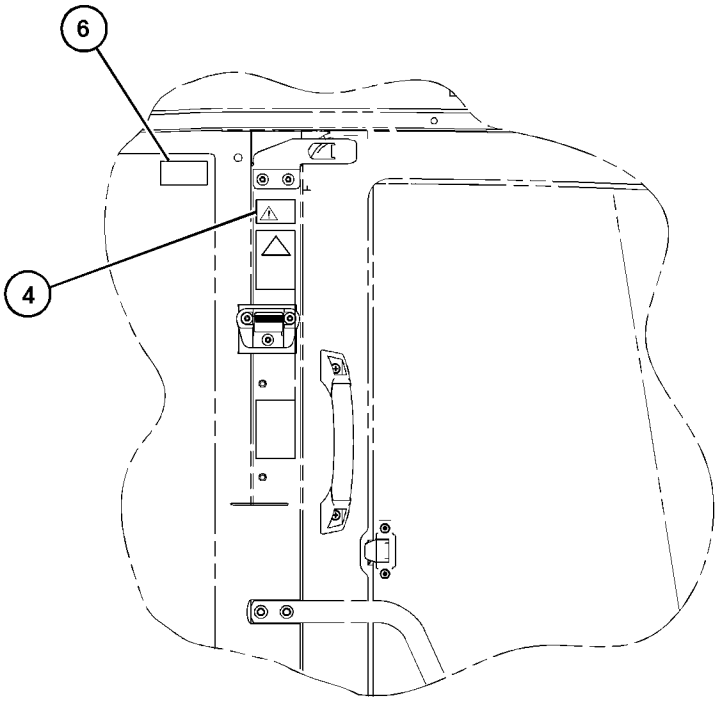

VIEW D-D

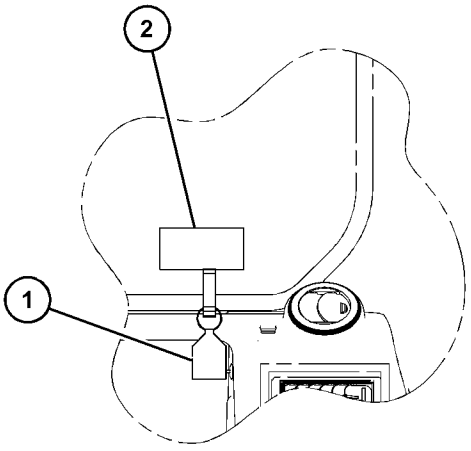

VIEW E-E

GRAPHIC #2 <END> g06384491

568-3798 PLATE & FILM GP—OUTSIDE, INTERNATIONAL

S/N: SP91-UP

SMCS-7405, 7557 **i07516424**

NOTE	REF NO	GRAPHIC REF	PART NUMBER	QTY	PART NAME 1 2 3 4 5 6 (PRODUCT LEVEL)	SEE PAGE
	1	1	**1P-2807**	4	FILM-IDENTIFICATION (LIFT EYE LOCATION)	
	2	2	**7X-7644**	6	FILM-IDENTIFICATION (TIE-DOWN)	
	3	1	**167-7270**	4	FILM-INSTRUCTION (NO STEP)	
	4	3	**224-8946**	1	FILM-WARNING (NO ETHER SPRAY/AIR INTK, INTL)	
	5	2	**225-0312**	1	FILM-WARNING (JUMP START, READ OMM, INTL)	
	6	1	**225-4257**	1	FILM-WARNING (HOT FLUID UNDER PRESS)	
	7	1	**228-7316**	2	FILM-WARNING (HOT SURFACE, HANDS CLEAR, INTL)	
	8	3	**228-9106**	1	FILM-WARNING (HOT SURFACE, HANDS CLEAR, INTL)	
	10	3	**312-5525**	1	FILM-WARNING (CUTTING HAZARD HAND, STAY BACK)	
	11	3	**349-8604**	1	FILM-INFORMATION (LOW SULFUR DIESEL FUEL)	
	12	3	**365-8085**	1	FILM-IDENTIFICATION (CAT)	
	13	1	**443-5690**	2	FILM-WARNING (LIFTING EYE, READ OMM)	
	14	3	**493-1610**	1	FILM-WARNING (ACCUMULATOR PRESSURE)	
	15	1	**515-7839**	1	FILM-IDENTIFICATION (RH)	
	16	2	**515-7905**	1	PLATE-SERIAL NUMBER (MACHINE)	
	17	1	**519-8817**	1	FILM-IDENTIFICATION (REFLECTIVE, RED, RH)	
	18	1	**519-8818**	1	FILM-IDENTIFICATION (REFLECTIVE, RED, LH)	
	19	1	**520-4810**	2	FILM-WARNING (MACHINE SWING, CRUSHING)	
	20	2	**524-7769**	1	PLATE-INSTRUCTION (AIR CONDITIONER)	
	21	1	**533-5487**	1	FILM-IDENTIFICATION (CAT)	
	22	2	**533-5494**	1	FILM-INFORMATION (LUBRICATION CHART, READ OMM)	
	23	3	**542-2341**	1	FILM-IDENTIFICATION (HYDRAULIC OIL SYSTEM)	
AF			**4W-1413**	1	PLATE-SERIAL NUMBER (ENGINE)	
					(LH SIDE OF ENGINE, TOP/REAR EDGE OF CYLINDER BLOCK)	

A - NOT PART OF THIS GROUP
F - NOT SHOWN

568-3798 **PLATE & FILM GP (**contd.**)** **i07516424**

REFER TO ALL ILLUSTRATIONS OF
THIS GROUP FOR AUXILIARY VIEWS

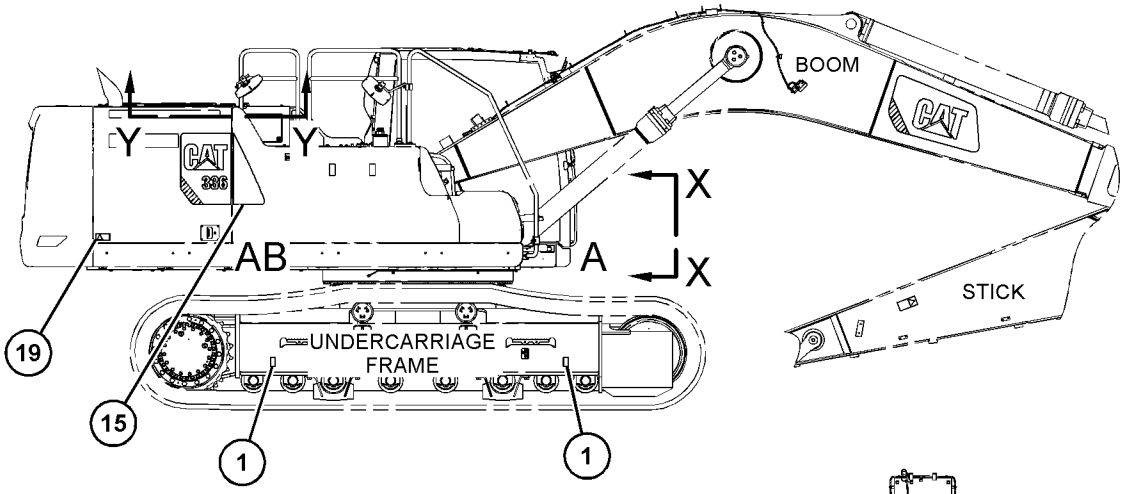

RIGHT SIDE VIEW

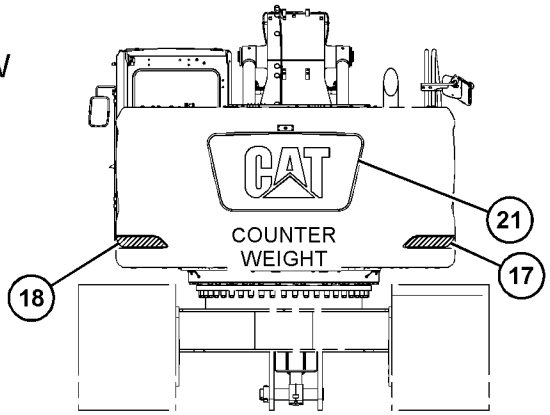

REAR VIEW

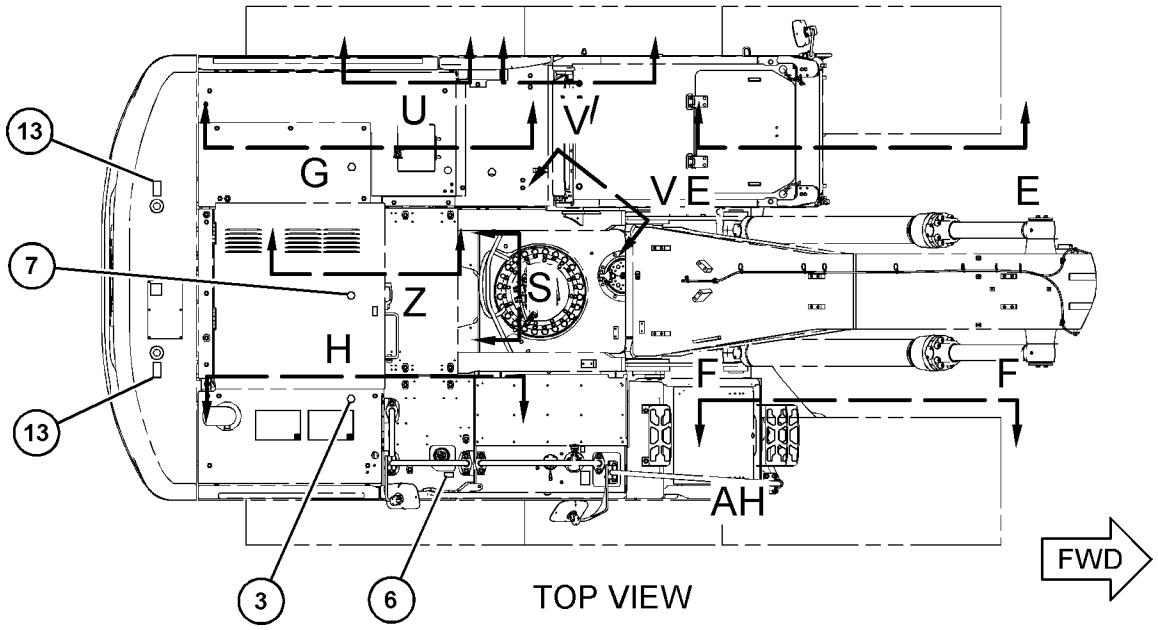

TOP VIEW

GRAPHIC #1 g06352063

568-3798 **PLATE & FILM GP (**contd.**)** **i07516424**

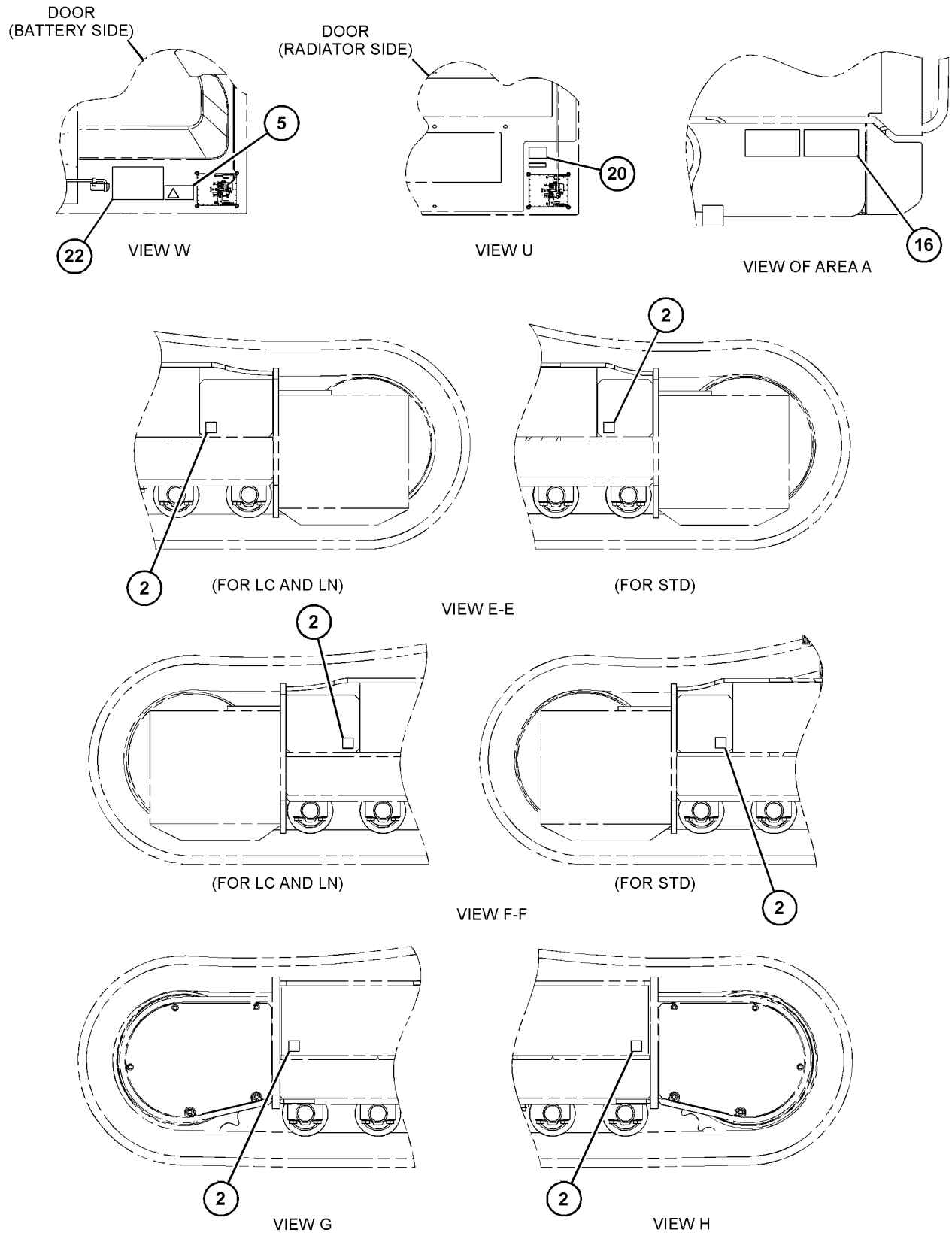

GRAPHIC #2

g06276549

568-3798 **PLATE & FILM GP** (contd.) **i07516424**

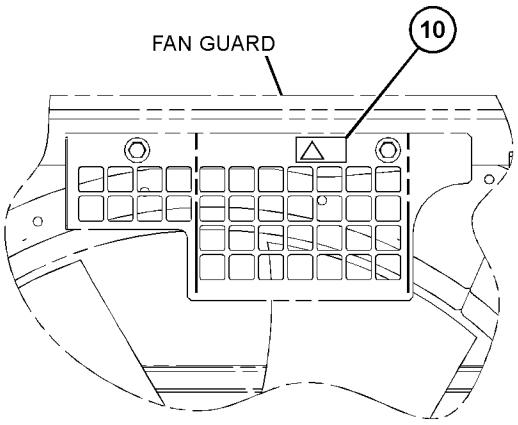

VIEW Z

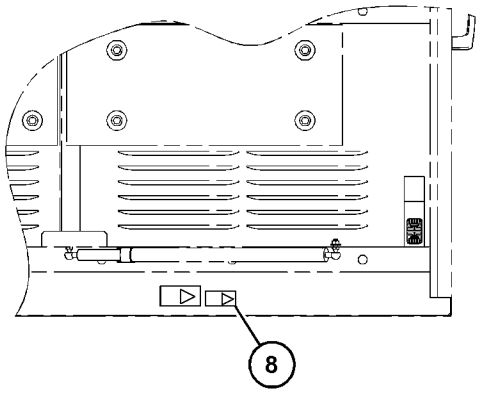

VIEW Y-Y

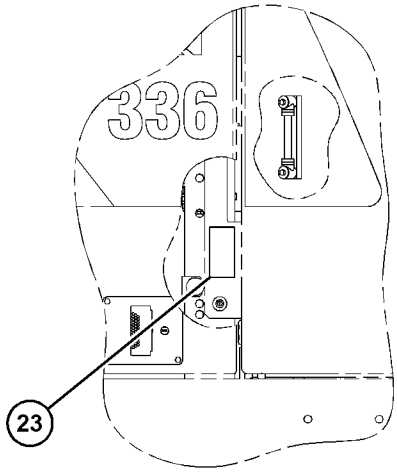

VIEW OF AREA AB

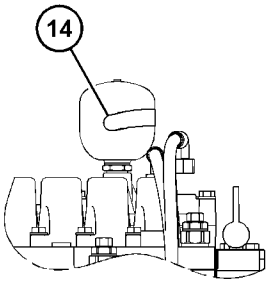

VIEW S

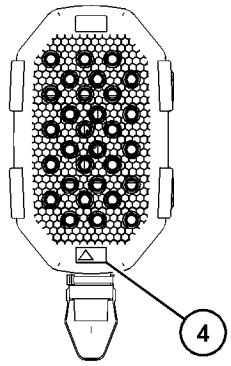

VIEW V-V

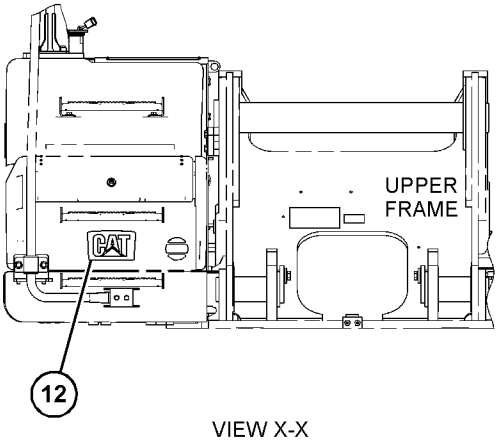

VIEW X-X

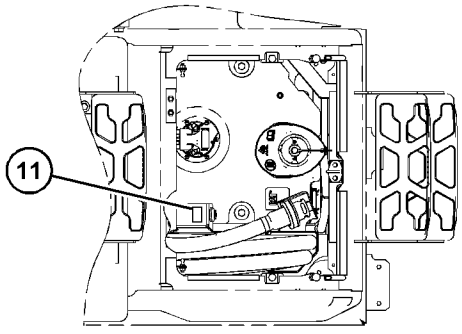

VIEW OF AREA AH

GRAPHIC #3 <END> g06276550

578-1024 PLATE & FILM GP—OUTSIDE, INTERNATIONAL

S/N: SP91-UP

SMCS-7405, 7557 **i07838426**

NOTE	REF NO	GRAPHIC REF	PART NUMBER	QTY	PART NAME 1 2 3 4 5 6 (PRODUCT LEVEL)	SEE PAGE
	1	1	**1P-2807**	4	FILM-IDENTIFICATION (LIFT EYE LOCATION)	
	2	2	**7X-7644**	6	FILM-IDENTIFICATION (TIE-DOWN)	
	3	1	**167-7270**	4	FILM-INSTRUCTION (NO STEP)	
	5	3	**312-5525**	1	FILM-WARNING (CUTTING HAZARD HAND, STAY BACK)	
	6	1	**443-5690**	2	FILM-WARNING (LIFTING EYE, READ OMM)	
	7	3	**493-1610**	1	FILM-WARNING (ACCUMULATOR PRESSURE)	
	8	2	**515-7905**	1	PLATE-SERIAL NUMBER (MACHINE)	
	9	1	**519-8817**	1	FILM-IDENTIFICATION (REFLECTIVE, RED, RH)	
	10	1	**519-8818**	1	FILM-IDENTIFICATION (REFLECTIVE, RED, LH)	
	11	1	**520-4810**	2	FILM-WARNING (MACHINE SWING, CRUSHING)	
	12	3	**224-8946**	1	FILM-WARNING (NO ETHER SPRAY/AIR INTK, INTL)	
	13	2	**225-0312**	1	FILM-WARNING (JUMP START, READ OMM, INTL)	
	14	1	**225-4257**	1	FILM-WARNING (HOT FLUID UNDER PRESS)	
	15	1	**228-7316**	1	FILM-WARNING (HOT SURFACE, HANDS CLEAR, INTL)	
	16	3	**228-9106**	1	FILM-WARNING (HOT SURFACE, HANDS CLEAR, INTL)	
	18	2	**533-5494**	1	FILM-INFORMATION (LUBRICATION CHART, READ OMM)	
	19	3	**542-2341**	1	FILM-IDENTIFICATION (HYDRAULIC OIL SYSTEM)	
	20	1	**575-8738**	1	FILM-IDENTIFICATION (CAT) (CAT)	
	21	1	**578-4144**	1	FILM-IDENTIFICATION (CAT)	
	22	1	**578-4145**	1	FILM-IDENTIFICATION (CAT) (CAT)	

578-1024 **PLATE & FILM GP** (contd.) **i07838426**

REFER TO ALL ILLUSTRATIONS OF
THIS GROUP FOR AUXILIARY VIEWS

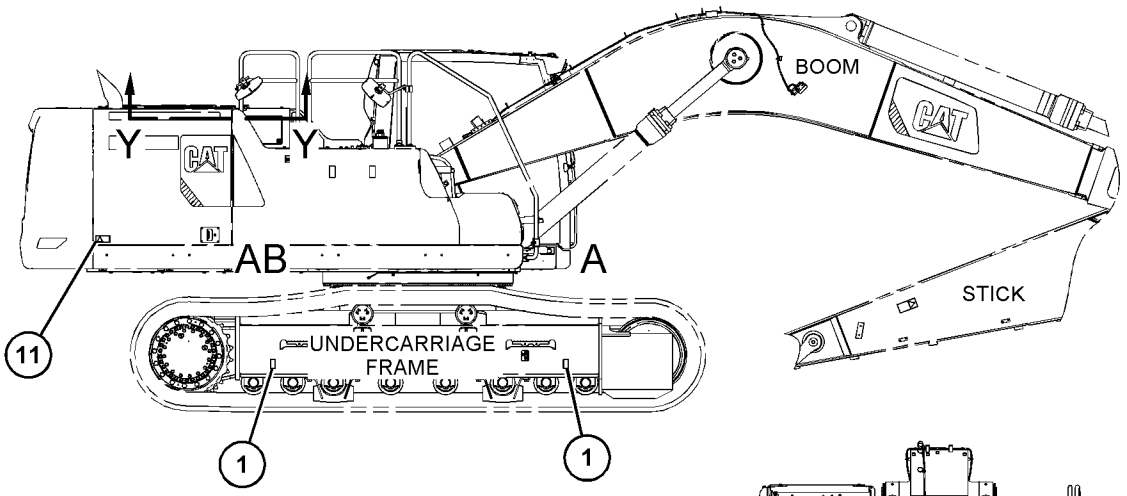

RIGHT SIDE VIEW

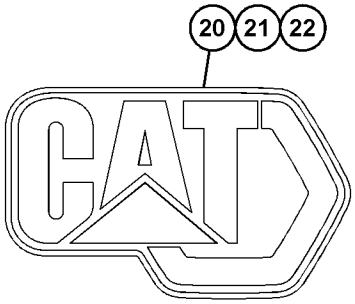

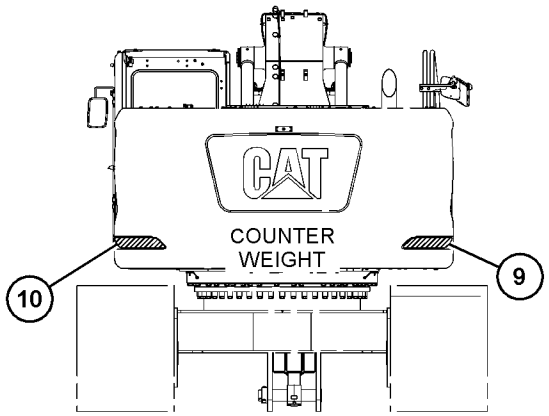

REAR VIEW

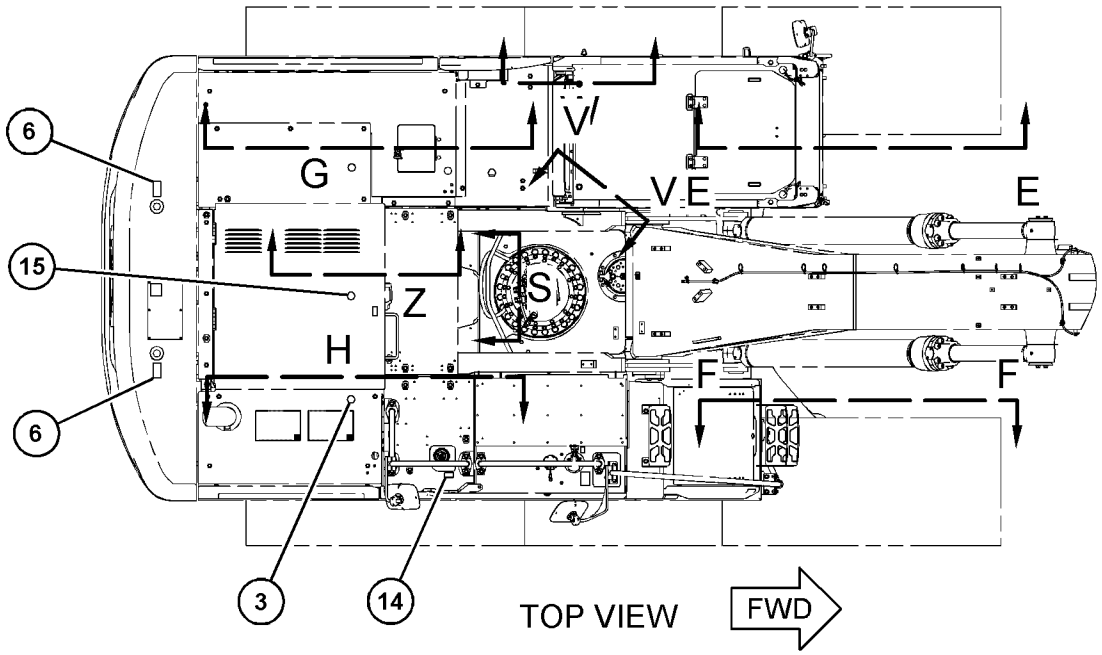

TOP VIEW FWD

GRAPHIC #1 g06428694

578-1024 **PLATE & FILM GP (**contd.**)** **i07838426**

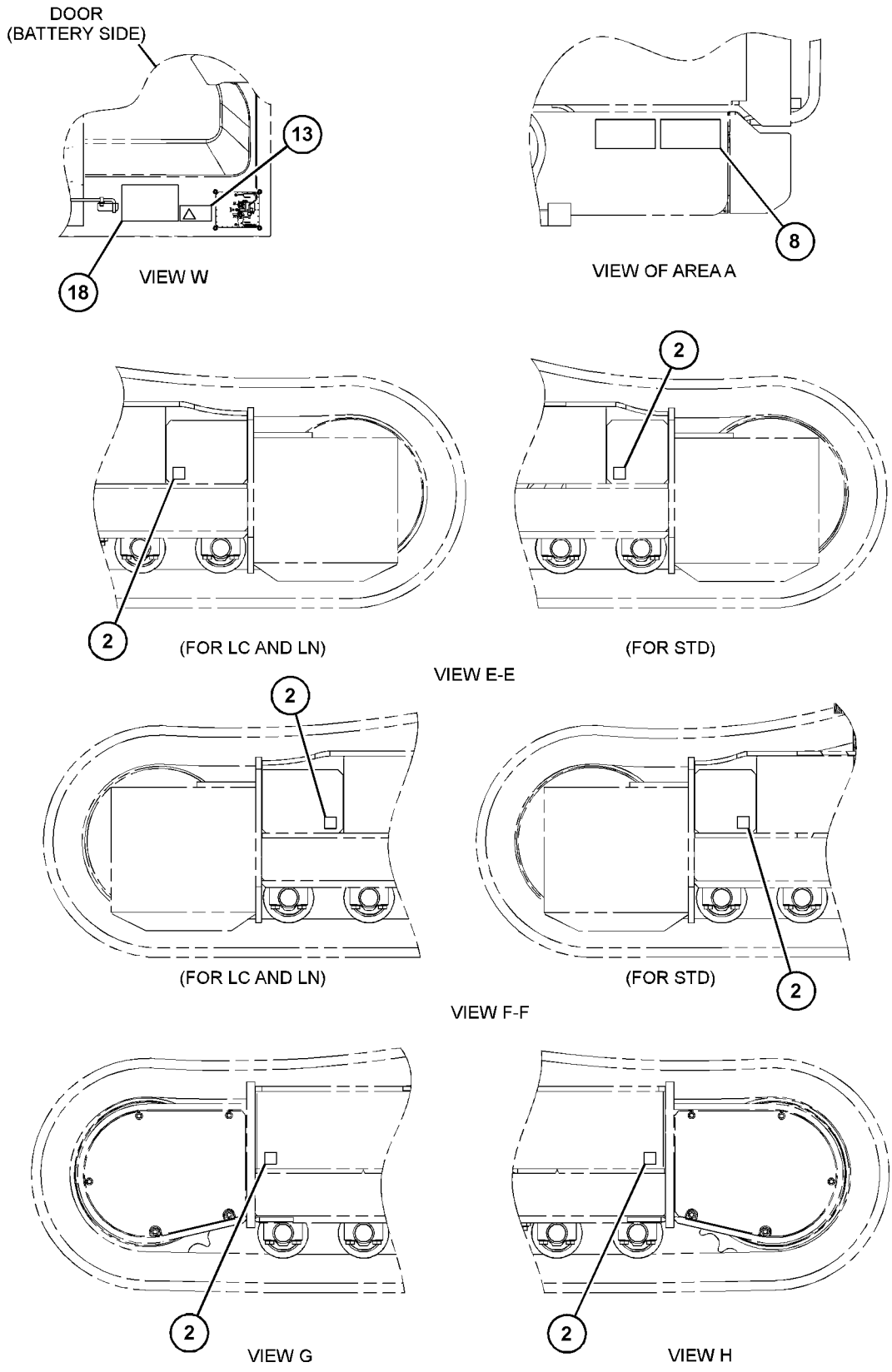

GRAPHIC #2

g06428695

578-1024 **PLATE & FILM GP** (contd.) **i07838426**

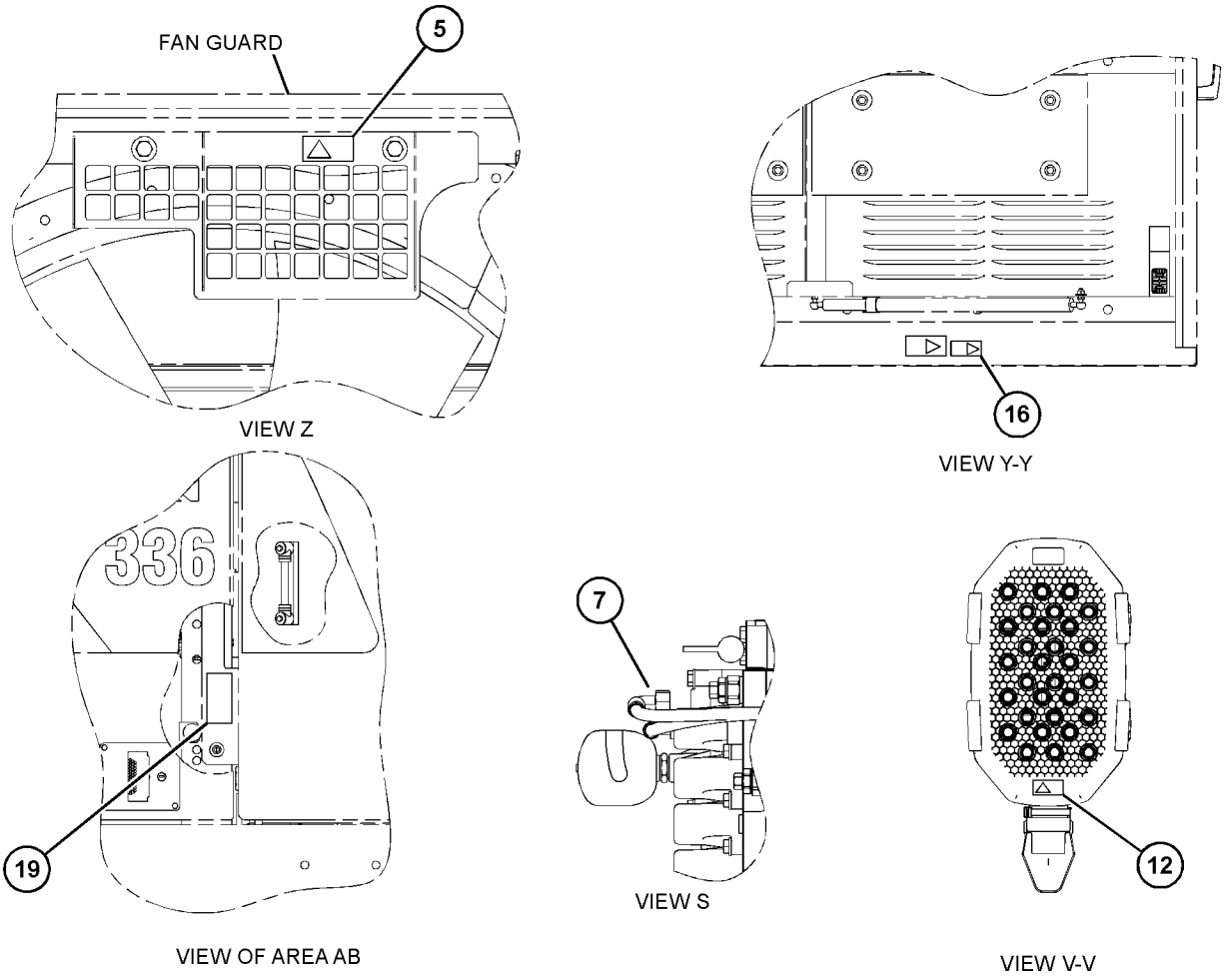

GRAPHIC #3 <END> g06428696

PART NUMBER INDEX

Part	Page
0	
0L-1026	20
	57
0S-0509	410
0S-0519	21
0S-1597	246
0T-0244	720
1	
1B-8705	8
	18
1D-4637	634
1H-1023	246
1H-2629	246
1H-3338	657
1H-7339	386
1K-8850	327
	328
1M-3097	392
1M-6119	147
	154
1M-6120	147
	154
	155
1M-9968	246
1M-9971	247
1P-0810	194
	198
1P-2807	769
	773
1P-3702	486
	494
	499
	555
	556
	557
	576
1P-3703	465
	466
	467
	469
	470
	473
	486
	499
	523
	524
	526
1P-3704	453
	455
	457
	459
	461
	463
	470
	472
	486
	510
	523
1P-3705	457
	459
	461
	463
	494
	525
1P-3706	461
	525
1P-4578	494
	499
	519
1P-5767	453
	455
	457
	459
	461
	463
	486
	503
	510
	523
1R-5998	645
1S-2563	65
1S-7251	155
1S-7252	147
	154
1S-7446	246
1S-9593	198
1T-0808	246
1U-2827	547
	550
1U-8846	345
	434
	436
	438
1W-2715	23
1W-5455	107
1W-6448	18
1W-8407	21
2	
2A-3746	23
2B-7561	345
	434
	436
2C-9259	614
	616
	619
	621
	623
	632
2D-6392	246
2F-6678	247
2G-8767	154
2H-1190	32
2H-3429	246
2H-3922	253
2H-6340	438
2J-3507	633
	634
2J-8163	246
2L-6679	223
2L-8052	187
	190
2L-8060	187
	190
2L-8067	262
2L-8069	187
	190
2L-8075	166
2L-8076	204
2L-8077	167
2L-8078	166
2L-8079	187
	190
2M-9780	579
	589
2P-1279	475
2S-4078	482
	484
2V-2043	26
	68
2W-7381	52
2Y-5829	53
	54
	129
3	
3B-0551	134
3B-0623	20
	22
3B-1925	33
3B-4504	645
3B-4611	351
	356
3B-8489	344
	345
	417
	418
	419
	420
	598
	600
	602
	604
	607
	608
3C-6969	259
3D-2824	92
	93
	467
	470
	501
	504
	506
	508
	516
	519
	521
	526
	584
	587
	588
3D-5279	120
3E-2310	516
3E-2338	307
	312
3E-3371	294
	658
	666
3E-3377	195
3E-3383	192
	193
	195
3E-3390	182
	183
	195
	196
	199
	203
3E-4313	157
	158
	159
	160
	161
3E-4352	65
	109
	122
	126
3E-4353	65
	283
3E-5169	294
3E-6600	215
	231
	232
3E-7410	90
	492
	497
	519
3E-8020	645
	666
	673
	732
	740
3E-8320	251
	252
3F-1547	529
3J-1907	92
	239
	240
	412
	413
	414
	415
	467
	470
	475
	492
	494
	497
	501
	506
	510
	512
	514
	516
	519
	521
	526
	567
	569
	571
	578
	582
	589
	591
3J-7352	109
3J-7354	412
	413
	414
	415
	519
	577
	578
3K-0360	405
	432
	438
	467
	490
	501
	504
	506
	508
	547
	550
	577
	578
	589
3K-5234	633
	634
3L-3380	246
3N-3763	246
3R-8797	246
3R-8801	246
	247
3S-2093	65
	75

► PRIMARY REFERENCE

PART NUMBER INDEX

Part Page

120
142
143
149
150
175
178
179
180
181
182
184
185
187
190
192
193
194
197
200
201
202
204
205
207
210
211
212
215
231
232
234
244
254
258
262
266
267
268
269
270
271
273
275
280
281
282
283
285
288
289
290
291
292
293
294
296
298
300
303
693
722
3T-0849 660
663
3T-0852 211
212
213
214
215
217
3T-3418 246
3T-3422 246
3T-3423 246
247

Part Page

3T-3424 246
247
3T-4709 223
3T-4710 223
3T-9494 223
247
3T-9524 246
3T-9525 . . . . . ▶223
▶246
3W-6399 731

4

4B-2049 246
4B-4158 394
395
4B-4278 352
357
4D-7388 64
4F-5695 20
4G-4972 21
37
4H-6112 410
432
438
4I-0379 120
4I-1037 518
4I-1163 741
4I-1260 687
4I-2885 758
4I-3038 658
666
4I-3090 645
708
4I-3510 584
587
4I-4039 610
4I-4043 610
4I-4070 . . . . . ▶610
611
612
4I-4270 673
4I-4286 713
4I-4361 687
4I-4978 594
596
4I-5005 594
596
4I-5049 730
4I-5795 516
4I-6046 523
4I-6604 609
4I-6605 609
4I-6626 609
610
4I-7573 75
4I-7924 352
357
362
366
367
368
369
374
376
377
4I-9521 492
497
4I-9522 492
497
4I-9524 516
4J-0520 470

Part Page

4J-0522 494
499
519
4J-0524 494
499
503
4J-0525 482
484
4J-0527 92
93
503
521
547
550
4J-5309 555
556
557
574
576
578
4J-5351 567
4J-5477 474
475
477
4J-7533 412
414
558
561
564
574
577
578
4K-8501 327
328
4L-2729 247
4M-1831 246
4M-1853 246
4M-1854 246
4M-1896 247
4N-2514 31
4N-9170 345
4P-4369 111
4R-9999 37
55
4S-6668 693
4T-4501 632
4T-4707 632
4W-1413 764
769

5

5A-3604 445
447
566
567
5B-0651 602
5C-2874 222
5C-2890 207
676
5C-7261 144
147
150
222
285
321
351
358
5C-8138 731
5C-9553 321
336
337

Part Page

338
339
362
547
550
656
657
730
5D-1026 98
434
436
5D-4822 685
686
5F-3999 96
5F-9757 143
150
5G-3676 121
5H-4020 519
5H-5672 543
544
5H-8624 519
5H-8848 392
5I-3088 523
5I-3299 607
5I-4366 501
5J-5314 246
5K-9090 470
482
484
488
489
490
5K-9243 345
598
600
5L-2087 283
5M-2057 547
550
5M-3034 246
5P-0048 453
455
5P-0767 98
434
436
694
5P-1046 90
5P-1075 32
321
5P-1076 75
83
85
98
348
350
5P-3454 187
190
5P-4116 17
94
98
102
123
138
211
212
213
321
351
358
721
722
732
5P-4906 693
5P-4924 90
134

▶ PRIMARY REFERENCE

PART NUMBER INDEX

Part	Page
5P-5649	75
5P-5777	44
5P-5930	130
5P-5998	658
	666
5P-5999	262
5P-6006	166
5P-6298	223
5P-7462	120
5P-7463	120
5P-7464	26
	68
5P-7465	26
	68
5P-7466	504
	507
	508
	533
5P-7467	504
	506
	508
	533
5P-7530	36
	66
5P-7958	698
5P-7970	17
	65
	102
	109
	122
5P-8077	461
	463
5P-8112	504
	506
	508
	533
5P-8244	17
5P-8245	12
	30
	33
	39
	307
	312
5P-8247	31
5P-8347	283
5P-8500	133
	351
	358
	698
5P-9120	386
5P-9297	683
	694
	697
5P-9299	694
5P-9617	519
5Q-4212	474
	477
	478
	480
5V-3854	326
	329

6

Part	Page
6D-1641	694
6D-9157	547
	550
6E-2271	569
	571
	574
6E-3272	450
6E-3855	450
6E-4701	516
6E-6527	450
6E-6528	450
6F-4855	444
6F-6672	444
6F-7045	253
6G-2256	154
6G-2263	154
6H-3615	461
	463
	469
	470
6I-5342	687
6I-6645	364
6I-6795	584
	587
6K-6307	547
	550
6L-3616	598
	600
6N-3279	246
6N-3826	246
6N-7523	195
6P-2215	357
	377
6P-2216	352
	357
	362
	366
	367
	368
	369
	374
	376
	377
6S-4039	294
6S-8620	121
	410
6T-0363	223
6T-0371	223
6T-0372	223
6T-5598	197
6V-0400	467
	486
	523
	524
	526
6V-0405	475
6V-0683	121
6V-0852	510
	516
	519
6V-1176	33
6V-1322	246
6V-1819	72
6V-1820	32
	109
6V-2235	694
6V-2317	9
	35
	70
	101
	123
6V-2369	258
6V-2689	200
6V-2722	147
	154
	155
	257
6V-3250	37
	51
	90
	95
	693
6V-3251	37
	49
	90
6V-3265	638
6V-3538	21
6V-3668	126
6V-3918	44
6V-3922	494
	555
	556
	557
	576
	579
6V-3938	536
6V-3940	8
	11
	46
	66
	81
	109
6V-3965	510
	516
	519
6V-4248	10
	65
6V-4249	25
	40
	41
6V-4292	134
6V-4589	583
6V-5043	410
6V-5063	95
6V-5064	36
	47
	48
	81
6V-5192	70
	536
6V-5204	432
	528
6V-5215	97
	283
6V-5217	35
	66
6V-5218	70
6V-5219	9
	33
	40
	60
	126
6V-5220	125
6V-5393	578
6V-5556	579
6V-5589	46
6V-5597	567
	574
	578
6V-5683	445
	447
6V-5839	10
	40
	41
	72
	87
	109
	111
	283
6V-5843	32
	57
6V-6317	394
	395
6V-6609	37
	49
	77
	81
	95
	241
	693
6V-7238	44
	77
	432
	438
6V-7357	694
	730
6V-7723	117
6V-7981	87
6V-8076	120
	494
6V-8077	693
6V-8133	307
	312
6V-8149	12
6V-8188	246
6V-8197	33
6V-8201	432
	528
6V-8202	536
	722
6V-8218	584
	587
6V-8237	304
	307
	312
	434
	436
6V-8336	12
	30
6V-8397	467
	470
	474
	475
	477
	478
	480
	492
	497
	501
	506
	512
	514
	516
	519
	526
	578
	589
6V-8398	467
	474
	477
	478
	480
	501
	504
	506
	508
	589
6V-8523	90
6V-8554	475
6V-8632	467
6V-8634	70
6V-8635	60
	482
	484
	488
	489
	490
6V-8636	492
	497
	512

► PRIMARY REFERENCE

PART NUMBER INDEX

Part Page

514
589
6V-8637 506
526
6V-8675 39
6V-8716 26
68
6V-8724 470
492
497
506
512
514
516
519
526
6V-8774 526
6V-8777 526
6V-8837 96
6V-8935 474
475
477
6V-8936 474
477
6V-8943 467
6V-8978 584
587
6V-8979 475
6V-9001 467
470
501
506
6V-9002 467
501
6V-9004 504
508
519
6V-9005 470
490
6V-9007 467
504
506
508
6V-9008 61
470
488
489
6V-9027 77
6V-9028 105
6V-9491 259
6V-9632 149
215
273
277
321
338
339
656
673
6V-9669 259
6V-9671 294
6V-9673 134
6V-9746 467
494
501
504
506
508
519
526
6V-9846 467
501
6V-9850 526
6V-9875 482

Part Page

6W-6005 143
147
150
6Y-2748 390
6Y-2751 390
6Y-3909 632
6Y-5685 318
319
6Y-8023 386
6Y-8028 386
6Y-8029 386
6Y-8075 392
6Y-8077 392
6Y-9855 392
6Y-9856 392
6Y-9858 392

7

7B-3039 547
550
7C-1445 11
33
7D-1649 126
7D-5363 432
438
7F-2050 584
587
7F-3488 246
7F-3525 223
7H-3171 386
392
7H-3937 222
7I-0088 507
7I-1041 531
7I-1248 574
579
7I-2272 259
560
7I-2673 144
150
211
212
244
7I-7684 438
7I-8171 536
7I-8172 536
7J-9108 467
7J-9933 578
7K-1181 75
90
120
143
150
187
190
217
221
250
258
262
265
269
270
271
272
273
275
276
280
281
283

Part Page

285
290
291
303
470
475
492
497
504
506
508
512
514
516
526
7L-2894 246
7M-0324 246
7M-0325 246
7M-0326 246
7M-0327 246
7M-8485 307
312
470
482
484
488
489
490
494
525
564
7M-8651 246
7N-0296 244
7N-0719 251
252
253
7N-5683 21
7S-6369 112
7T-0094 197
7T-1099 232
7T-3974 246
7X-0562 246
7X-0578 645
7X-0584 92
93
249
453
455
457
459
494
499
503
521
7X-0613 83
85
7X-2534 164
7X-2537 112
693
7X-2543 120
482
484
7X-2546 98
103
7X-2549 470
7X-2553 43
7X-2563 609
610
7X-2621 163
277
294
7X-3373 246
7X-6315 166
7X-7644 769

Part Page

773
7X-7729 75
83
85
94
98
103
113
233
410
504
506
508
638
645
680
7X-7888 167
7Y-0595 307
312
7Y-1056 306
311
7Y-1057 306
311
7Y-1095 345
7Y-1100 438
7Y-1113 342
7Y-1507 345
7Y-1647 345
7Y-1648 345
7Y-1650 345
7Y-1697 75
7Y-1746 394
395
7Y-1976 75
7Y-2853 15
78
79
80
331
351
358
7Y-2854 78
79
80
351
358
7Y-3195 482
484
7Y-3474 695
7Y-3732 470
472
473
7Y-3950 262
7Y-3951 193
259
262
7Y-3952 193
258
262
7Y-3953 262
7Y-3954 259
7Y-3955 262
7Y-3958 262
7Y-3962 178
200
215
217
7Y-3963 178
200
215
217
262
7Y-3964 178
200

PART NUMBER INDEX

Part	Page
	215
	217
7Y-3965	178
	200
	215
	217
	262
7Y-3966	178
	200
	215
	217
7Y-3967	178
	200
	215
	217
	262
7Y-3993	258
7Y-4366	507
7Y-4562	519
7Y-4669	422
	424
7Y-4672	422
	424
7Y-4673	422
	424
7Y-4695	422
	424
7Y-4941	426
7Y-4944	426
7Y-4956	429
7Y-5215	422
	424
7Y-5217	307
	312
7Y-5219	555
	556
	557
	576
	578
7Y-5237	494
	499
7Y-5239	426
	429
7Y-5247	92
	98
	521
7Y-5272	23
7Y-5292	638
7Y-6007	499
7Y-6215	358
7Y-7365	696
7Y-7955	492
	497
7Y-8561	645
	663
7Y-8990	351
	358

8

Part	Page
8C-3089	246
8C-3445	61
8C-3446	61
	519
8C-3451	519
8C-5607	166
	207
8C-5608	166
	207
8C-5918	147
	154
8C-8400	506
8C-8422	33
	35
	112
8C-8451	166
	207
8C-8992	348
	453
	455
8C-9660	246
8D-0482	121
8D-5054	83
	85
8D-8428	61
8F-1434	246
8F-8882	393
8H-5303	253
8H-5306	253
8J-8782	547
	550
8J-8783	547
	550
8L-8413	147
	154
8M-0506	122
8M-2772	598
	600
8M-5860	22
8N-0869	155
8P-9770	616
	618
	619
	621
	623
8S-2332	249
8S-2634	252
8T-0075	589
8T-0077	504
	506
	508
8T-0078	504
	506
	508
8T-0100	17
	35
8T-0151	591
8T-0267	547
	550
8T-0292	66
8T-0293	396
8T-0328	134
	247
	259
	717
8T-0337	259
	669
8T-0338	537
8T-0342	578
8T-0348	438
8T-0380	319
8T-1158	530
	567
8T-1159	392
8T-1160	73
8T-1685	494
8T-1686	589
8T-1779	512
	514
8T-1887	65
	122
	123
8T-1888	65
	122
	123
8T-1889	121
8T-1890	120
8T-1905	467
8T-2503	531
8T-2920	26
	68
8T-3008	564
8T-3298	547
	550
8T-3490	65
	103
	120
	149
	150
	215
	273
	323
	324
	329
	356
	357
	358
	379
	492
	656
8T-3491	526
8T-3597	103
	329
	330
	332
	338
	339
	349
	356
	357
	358
	379
	508
	533
8T-3611	60
	61
8T-3612	103
	109
	149
	150
	155
	215
	233
	356
	358
	379
	656
8T-3980	83
	85
8T-3998	558
	561
	562
	567
	589
	591
8T-4121	10
	15
	26
	40
	41
	61
	64
	68
	83
	85
	90
	92
	98
	108
	121
	130
	141
	144
	150
	154
	158
	159
	161
	163
	211
	212
	214
	215
	217
	228
	231
	232
	233
	257
	259
	267
	268
	269
	276
	277
	285
	290
	291
	294
	298
	301
	321
	327
	328
	330
	331
	336
	337
	345
	351
	358
	410
	434
	436
	453
	455
	470
	472
	473
	475
	482
	484
	486
	492
	495
	497
	499
	501
	504
	507
	508
	512
	514
	516
	519
	521
	547
	550
	598
	600
	638
	645
	650
	656

► PRIMARY REFERENCE

PART NUMBER INDEX

Part	Page
	663
	669
	671
	683
	689
	694
	697
	702
	703
	709
	727
	732
	741
8T-4123	609
	610
8T-4131	536
8T-4133	144
	150
	217
	285
	321
	327
	328
	351
	358
	543
	544
	598
	600
	663
	720
	732
8T-4136	26
	61
	64
	68
	75
	94
	98
	103
	108
	121
	130
	144
	150
	154
	159
	211
	212
	228
	257
	268
	285
	294
	298
	330
	336
	337
	345
	351
	358
	410
	470
	482
	495
	499
	501
	504
	507
	508
	512
	514
	516
	638
	669
	680
	709
8T-4137	15
	64
	75
	130
	144
	150
	154
	161
	211
	212
	214
	217
	231
	232
	233
	257
	267
	269
	276
	285
	290
	291
	294
	298
	301
	331
	345
	410
	475
	492
	495
	497
	547
	550
	638
	645
	650
	656
	671
	683
	689
	694
	697
8T-4138	163
	321
	693
8T-4139	98
	244
	469
	470
	472
	473
	478
	480
	495
	499
	507
	533
8T-4141	629
8T-4172	26
	40
	41
	68
	143
	149
	285
	702
	703
8T-4175	701
8T-4178	693
8T-4179	249
8T-4182	61
	90
	98
	113
	143
	149
	410
	486
	494
	499
8T-4183	75
	453
	455
	629
8T-4184	83
	85
	350
	453
	455
	457
	459
	461
	463
	467
	486
	523
	524
	526
8T-4185	298
8T-4189	94
	98
	102
	138
	231
	232
	244
	252
	257
	410
	492
	497
	512
	514
	741
8T-4190	649
	651
8T-4191	267
	598
	600
	669
	727
8T-4192	130
	434
	436
	504
	506
	508
	649
	651
8T-4194	453
	455
	457
	459
	461
	463
	469
	471
	486
	503
	510
8T-4196	75
	83
	85
	90
	113
	120
	143
	149
	231
	232
	283
	285
	472
	473
	482
	484
	492
	494
	497
	499
	504
	506
	508
	519
	547
	550
	741
8T-4198	141
	143
	149
	259
8T-4199	345
8T-4200	105
	251
	252
	362
	645
	693
8T-4205	246
8T-4222	143
	150
	231
	232
8T-4223	92
	98
	130
	144
	150
	244
	434
	436
	453
	455
	457
	459
	461
	463
	465
	466
	467
	469
	470
	472
	473
	474
	477
	478
	480
	486
	495
	499
	503
	504
	507
	508
	510
	521
	523

PART NUMBER INDEX

Part	Page
	524
	525
	526
	533
	535
	547
	550
	629
	649
	651
8T-4224	60
	61
	101
	102
	105
	154
	222
	228
	229
	230
	231
	232
	233
	244
	251
	252
	257
	321
	362
	410
	492
	497
	512
	514
	645
	693
	741
8T-4226	143
	147
	150
8T-4241	536
8T-4244	113
	432
	438
8T-4648	75
	83
	85
	130
	478
	480
	525
8T-4908	83
	85
	102
	154
	233
	693
8T-4910	472
	473
	547
	550
8T-4956	92
	461
	463
	465
	466
	469
	470
	474
	477
	478
	480
	495
	504
	508
	521
	533
	535
8T-4970	721
	722
	731
8T-4971	656
	693
8T-4984	90
8T-4985	90
8T-4986	108
8T-4989	108
8T-5001	98
	524
8T-5005	574
8T-5041	494
	503
	523
8T-5360	720
8T-5413	220
	329
8T-5917	10
	37
8T-6404	432
	528
8T-6466	154
	298
	501
8T-6685	453
	455
8T-6757	107
8T-6759	546
	560
	567
8T-6842	766
8T-6850	569
	571
8T-6912	211
	212
	213
	214
	215
	217
8T-7547	61
	228
	229
	230
8T-7811	578
8T-7876	105
8T-7910	475
8T-7934	231
	499
8T-8442	449
8T-8729	178
	179
	180
	181
	184
	186
	189
	192
	193
	196
	201
	202
	203
	204
	205
	210
	221
	244
	250
	262
	293
	294
	547
	550
	658
	666
	669
8T-8730	178
	179
	180
	181
	182
	183
	184
	185
	187
	190
	192
	193
	195
	196
	197
	199
	202
	203
	204
	205
	210
	262
8T-8737	143
	180
	183
	184
	187
	190
	192
	193
	195
	196
	197
	198
	199
	202
	203
	204
	205
	224
	226
	262
	660
	663
8T-8827	197
8T-8887	475
8T-8899	526
8T-8987	484
8T-9080	396
8T-9381	720
8T-9403	486
	494
	499
8T-9527	17
8T-9597	539
8T-9655	165
8T-9756	147
	154
8U-6668	105
8Y-3795	329
8Y-6352	675
8Y-6967	671

PART NUMBER INDEX

Part	Page
	567
	578
	589
	591
9S-8005	577
9S-8010	63
9S-8178	133
9S-9334	58
	59
	63
9V-3659	327
	328
9W-0844	167
	178
	182
	183
	193
	195
	196
	197
	199
	200
	201
	202
	203
	215
	217
	262
9W-0852	182
	195
	196
	199
	201
	202
	203
	262
	655
9W-2146	393
9W-8365	632
9X-1813	138
9X-2021	31
9X-2027	669
9X-2038	656
	730
9X-2041	642
	643
	644
	645
	649
	650
	651
9X-2042	149
	171
	207
	210
	259
	273
	281
	294
	658
	665
	666
	676
	681
	685
	705
	706
	713
	732
	740
9X-2043	157
	259
	658
	660
	663
	666
	717
9X-2044	282
	645
	673
	677
	688
	718
	732
	735
	740
	741
9X-2045	675
	685
	686
	687
9X-2158	578
9X-2201	519
9X-2297	578
9X-3401	134
	194
	195
	198
	204
	660
	663
9X-3402	195
	198
9X-6000	24
9X-6153	645
9X-6155	735
9X-6165	166
	207
	367
	368
	373
	660
	663
9X-6451	44
9X-6582	474
	477
9X-6615	640
9X-6620	111
9X-7737	583
9X-8256	163
	169
	207
	231
	232
	263
	321
	336
	337
	338
	339
	362
	547
	550
	656
	657
	660
	663
	693
	694
	699
	700
	703
	721
	722
	731
	735
	741
9X-8257	43
	629
	649
	651
	701
9X-8267	96
9X-8268	20
	29
9X-8582	697
9Y-0810	18
9Y-6089	38
	249
9Y-9236	410
	311
094-0580	306
	311
094-1528	438
095-0705	629
095-0735	717
095-0742	263
095-0891	306
	311
095-0927	438
095-0930	429
095-1207	668
095-1388	28
095-1390	75
	90
095-1522	536
095-1578	588
095-1579	584
	587
095-1582	445
	447
095-1584	584
095-1585	564
095-1586	560
095-1587	584
	587
095-1590	574
	578
	584
	587
095-1599	566
095-1601	564
095-1602	564
095-1619	397
095-1623	546
095-1633	422
	424
095-1635	426
095-1657	564
095-1663	445
	447
095-1700	564
095-1701	536
095-1714	546
095-1715	536
095-1717	536
095-1730	547
	550
095-1786	584
	587
095-1787	574
	578
095-6639	543
	544
095-9785	64
096-0001	445
	447
096-0008	529
096-0192	222
	717
096-1441	438
096-2622	713
096-2966	445
	447
096-3044	555
	556
	557
	576
096-3216	306
	311
096-3884	713
096-4007	732
096-4755	434
	436

0

Part	Page
030-1705	147
	154
	155
	257
030-3978	123
030-7947	123
033-6034	66
033-6043	573
033-8248	598
	600
034-3679	410
045-4065	247
061-9455	11
	33
	37
	38
061-9456	17
085-6449	687
085-7356	240
085-9310	553
086-0298	709
087-4441	512
	514
	516
087-5317	543
	544
087-5548	426
087-5550	426
087-5661	524
091-0081	109
093-0020	345
093-0074	594
	596
093-0090	342
093-0349	594
	596
	604
	607
	608
093-0363	607
093-0364	342
093-0366	594
	596
	607
	608
093-1512	397
093-1730	438
093-1731	306
	311
093-2065	120
	143
	149
094-0577	306
	311
094-0578	306
	311
094-0579	306

PART NUMBER INDEX

Part	Page
096-4883	92
	98
	434
	436
	494
	499
	521
096-5348	305
	310
096-5962	259
096-6100	567
096-6166	259
	669
096-6467	342
096-8058	306
	311
098-5747	629
099-0823	684
099-2374	445
	447
099-3506	685
	686
099-3629	734
099-3645	698
099-6418	336
	337
	338
	339
099-7857	347
	362
099-8232	470
1	
100-4336	693
100-6674	181
101-3128	165
101-3129	283
101-7398	471
101-7401	158
	215
	519
	669
101-7404	469
	470
	486
	539
101-8899	713
101-8900	713
101-9848	321
	330
	351
	352
	357
	362
	367
	368
	376
102-7965	262
102-8801	192
	193
102-8802	134
	138
	178
	187
	189
	192
	202
	203
	204
	205
	210
	244
102-8803	294
	658
	666
102-8804	195
	198
	202
	293
102-8805	192
	193
	195
	221
	250
102-8806	192
103-8252	588
103-8253	588
103-8254	588
103-8255	588
103-8345	429
104-1995	179
105-2169	685
	686
105-3482	234
	721
105-3484	443
	547
	550
105-3487	700
105-6431	598
	600
106-4159	283
106-8715	506
107-2723	494
107-2724	470
107-3136	187
	190
107-3361	632
107-6579	429
107-6656	494
107-7694	8
108-7118	526
108-7550	469
	470
108-9151	531
109-0881	386
109-1393	713
	732
109-9329	42
109-9437	42
110-5525	445
	447
	537
110-7149	438
110-8827	26
	68
111-4799	658
	666
111-4816	262
112-1531	345
113-2001	494
113-2963	607
113-6069	32
113-6666	490
113-6859	►523
	►606
113-8490	263
113-8491	263
113-8492	263
113-8493	263
114-0760	422
	424
114-0762	426
114-1322	438
114-1398	438
114-1399	438
114-1541	306
	311
114-6658	164
	167
115-3699	386
115-4219	32
115-8694	416
	472
115-8961	472
116-0118	211
	212
	290
	291
	294
116-3715	111
116-4556	4
	30
116-6158	181
117-5372	381
117-5435	342
117-6356	669
117-8568	482
	484
118-0166	482
	484
118-0911	467
118-4977	43
118-7313	43
118-9901	83
	85
	149
	504
	506
	508
	741
118-9930	42
119-2378	473
119-2379	473
119-3662	187
	190
	193
	197
	200
	262
119-5398	584
120-4394	539
120-5867	90
120-9027	658
	666
121-1022	262
121-1676	459
121-7098	693
121-7136	693
121-7137	693
121-7138	693
122-8705	434
	436
122-9608	669
122-9609	669
122-9610	669
122-9657	693
123-0858	141
123-1373	143
	147
	149
123-2112	426
123-4750	492
	497
123-5029	573
123-7615	179
	196
124-0909	525
124-0910	472
124-0911	472
124-0986	143
	149
124-1106	461
	463
124-1107	461
	463
124-1108	461
	463
124-1858	17
	37
124-3548	258
	263
124-5640	181
124-6275	109
125-4785	192
	193
	194
	262
125-4840	262
125-6535	247
125-7874	180
	184
	187
	191
	192
	193
	194
	195
	196
	199
	202
	203
	204
	205
	262
125-7875	182
	183
	187
	191
	192
	193
	195
	196
	199
	200
	201
	202
	203
	204
	205
	262
125-7876	197
126-1767	178
	179
	189
	194
	195
	196
	198
	204
126-1768	195
	198
126-6514	560
126-6515	560
126-6516	560
126-6872	506
126-9093	119
127-0580	645
128-2135	642
	643
	662
	671
	673

► PRIMARY REFERENCE

PART NUMBER INDEX

Part	Page
	675
	676
	681
	719
128-2136	280
	281
	673
128-9170	438
129-5874	461
	463
130-0270	693
131-0353	9
	17
131-3983	559
131-8847	113
132-0998	630
132-0999	630
	631
132-1805	154
132-5789	283
133-2427	342
133-5813	506
133-5828	469
133-6788	560
134-2540	196
134-8887	▶348
134-8888	348
134-8891	348
134-8951	609
134-8952	610
134-9137	598
	600
135-3980	478
	480
135-8573	15
	331
	336
	337
	338
	339
	341
	351
	356
135-8575	320
	330
	333
	334
	335
	336
	337
	338
	339
	341
	349
	350
	351
	356
135-8577	15
	78
	79
	80
	331
	351
	356
135-8578	349
135-8579	351
	356
136-0155	626
136-1613	735
136-2422	▶386
	▶388
	▶389
136-2803	432
	438
136-2898	306
	311
136-3847	386
136-4192	231
	232
136-8074	441
136-9066	764
137-3687	531
137-4234	611
	612
	623
138-5049	67
138-5708	461
	463
138-5709	461
	463
138-6529	614
138-6551	614
139-7308	531
139-8873	42
140-0240	429
141-0749	443
141-2759	263
141-3538	598
	600
141-6373	345
141-6518	349
142-3953	10
142-5546	669
143-0811	306
	311
143-9392	165
144-0195	695
	696
	740
144-0367	90
	92
	98
	503
	521
145-2264	112
147-0182	89
	97
147-3957	594
	596
147-4184	567
148-3386	608
148-3533	393
148-4605	438
148-4685	344
148-4703	345
148-4704	345
148-8305	519
148-8310	591
148-8323	482
148-8327	506
	526
148-8335	482
	484
	488
	489
	490
148-8336	492
	497
	512
	514
	589
148-8338	589
148-8342	467
148-8346	589
148-8347	467
	504
	506
	508
148-8353	467
	470
	501
	506
148-8354	467
	501
148-8355	470
	490
148-8357	470
	488
	489
148-8367	526
148-8378	470
	492
	497
	506
	512
	514
	516
	519
	526
148-8384	475
148-8391	484
148-8395	577
148-8407	92
	501
	516
	521
148-8408	92
	93
	470
	521
148-8411	490
148-8414	467
148-8415	474
	477
148-8419	474
	475
	477
148-8439	526
148-8442	494
149-5050	258
149-5051	262
149-5069	262
149-5070	262
149-5071	262
150-3036	467
150-4027	516
150-4033	467
	501
150-4036	467
150-4044	512
	514
150-4742	399
	400
	401
150-5785	228
	229
	230
150-8896	626
	632
151-2939	18
151-9274	196
	293
151-9275	669
151-9461	713
151-9557	732
151-9576	735
153-2540	262
153-2602	186
	190
153-2631	187
	190
	192
	194
153-5276	569
	571
	574
153-5288	567
153-6237	504
	508
	519
153-6259	526
154-0690	600
154-9023	77
155-2255	192
	193
155-2258	196
155-2259	192
155-2260	192
	196
	202
155-2265	192
155-2270	178
	182
	183
	184
	185
	186
	189
	198
	200
	201
	202
	203
	204
	205
	210
	215
	217
155-2271	182
	195
	196
	198
	202
155-2274	193
	198
	202
155-3624	519
155-9125	539
156-6480	645
156-6599	645
156-6643	713
157-0670	77
157-1669	120
159-8036	632
159-8049	147
	154
	155
	257
159-8050	147
	154
	155
160-6631	393
160-8197	46
160-8761	244
160-8763	244
161-3128	227
	263
	741
161-3398	111
161-3411	37
	111
161-3694	687
162-0177	412
	413
	414
	415

▶ PRIMARY REFERENCE

PART NUMBER INDEX

Part	Page
	567
	578
	589
	591
162-0349	716
162-4694	546
163-6659	193
	194
	262
163-6699	192
	193
	262
163-6795	215
	259
	645
	696
	731
163-6800	193
164-0150	123
	283
164-0514	713
164-0515	713
164-0519	713
164-2108	583
164-5546	492
	497
	519
164-5567	510
	516
	519
164-5590	519
164-5606	504
	506
	508
164-6874	240
164-8474	671
	675
164-8908	504
	506
	508
164-9869	578
165-3256	547
	550
165-9290	422
	424
165-9291	426
166-1487	607
	608
166-1488	342
	604
166-1489	594
	596
166-1490	594
	596
166-1494	418
	608
166-1495	419
	420
	604
166-1496	417
	418
	419
	602
	604
	607
166-1497	417
	608
166-1498	594
	596
	607
	608
166-1579	598
	600
167-0024	19
167-1795	526
167-3583	285
167-3593	258
167-7039	713
167-7042	645
167-7270	769
	773
167-8121	25
168-1968	506
168-6727	315
	316
	317
169-0705	178
	197
	198
	258
	265
169-0738	629
169-0739	629
169-0740	629
169-0745	629
169-0753	►428
	►629
169-0756	629
169-2519	629
169-3923	428
170-2755	321
170-3016	351
	356
170-6827	192
	193
	200
	262
170-6888	262
170-6890	262
170-6891	262
170-8553	92
	93
	469
	470
	494
	499
	503
	521
170-9360	330
	351
	356
170-9394	263
170-9498	669
170-9499	669
171-0035	587
171-0036	587
171-0037	584
	587
171-6723	526
171-7477	687
172-5291	323
	324
172-9966	465
	466
173-7916	453
	455
173-9779	304
173-9957	627
	628
173-9971	628
174-0503	196
174-9169	244
174-9994	539
175-0454	20
175-6176	443
	547
	550
175-7141	98
	103
	283
	297
175-7896	547
	550
176-1902	693
176-2947	196
177-1058	96
177-2215	154
	285
177-6315	342
178-3336	14
	220
	283
178-3620	211
	212
	289
	290
	291
	292
178-5431	731
178-5572	734
178-5573	713
	734
178-5574	713
	734
178-5576	321
178-7023	357
179-1292	392
179-1499	393
179-3046	397
179-3047	397
179-3048	397
179-3426	390
179-3428	390
179-5253	478
	480
184-5394	90
185-0230	426
185-0231	426
185-0303	539
185-1860	198
185-1861	187
	190
	262
185-8180	713
185-8205	673
	681
185-8293	693
185-8300	640
185-8302	640
186-3735	138
	186
	293
186-5649	604
187-0661	766
188-3826	4
	74
188-4217	422
	424
188-4218	422
	424
189-2690	713
189-2693	687
189-2694	687
189-2864	645
190-6114	36
191-2690	306
	311
191-5604	429
191-5605	429
191-5643	429
191-5644	429
191-5647	429
191-5648	429
191-7581	539
191-7583	539
191-7805	123
191-8920	169
191-8921	699
	703
192-5239	627
192-7510	547
	550
192-8320	593
	598
192-8321	594
	596
193-1167	44
193-2844	39
193-6662	478
	480
194-9472	539
195-0452	36
	66
195-7120	613
	633
196-0482	461
	463
196-5650	130
196-8876	161
	186
	215
197-0199	579
197-0758	586
197-6076	130
197-6082	130
197-8418	37
	70
	106
197-8419	37
	70
	106
199-4523	345
199-4524	345
199-7560	117
199-7854	143
	149
2	
200-2258	81
	89
200-3280	536
200-4495	32
200-5363	573
201-0828	390
201-2771	602
	604
201-2816	593
	600
201-2836	604
201-3003	608
201-4391	713
201-4441	142
	323
	324
201-7949	434
	436
202-5397	186
	189
202-5400	186
	189
	262
202-9824	755
203-2533	40

► PRIMARY REFERENCE

PART NUMBER INDEX

Part	Page
203-3470	492
	497
203-5805	20
203-6090	20
203-6098	96
203-9007	259
204-1611	143
	149
	211
	212
	268
	275
	276
	285
	289
	290
	291
	292
	301
	302
	741
204-2281	105
	143
	149
	155
	184
	185
	187
	190
	192
	193
	197
	202
	205
	257
	259
	294
	410
	471
	482
	484
	501
	504
	506
	508
204-6101	222
204-8000	470
	482
	484
	501
	504
	506
	508
205-9114	306
	311
206-1345	65
206-2423	504
	506
	508
	516
206-3719	55
206-9295	445
	447
207-6282	524
209-1434	48
209-3464	626
	629
209-3466	629
209-6000	543
	544
209-7293	74
	88
210-9246	36
	70
	106
211-9032	234
212-2829	598
	600
212-2830	598
	600
212-2841	342
212-7002	20
213-9100	138
213-9242	450
213-9244	573
213-9247	450
213-9803	450
214-6277	52
214-7566	21
	36
	61
	109
	123
214-7567	33
	35
	37
	38
214-7568	9
	36
	37
	88
	120
	122
	123
	134
	136
	234
	510
	516
	519
	693
214-7915	766
216-5586	20
217-8992	97
218-2373	583
219-0302	757
219-1322	428
221-4970	511
222-3785	404
222-5765	404
224-8946	769
	773
225-0312	769
	773
225-4257	769
	773
225-4804	412
	414
	558
	561
	564
	574
	577
	578
225-4818	412
	414
	558
	561
	574
	577
	578
225-4820	412
	414
	577
	578
225-4821	412
	414
	577
	578
227-0428	92
	521
227-5922	109
227-6074	344
227-6105	345
227-6192	306
	311
227-6215	432
	438
228-2775	61
228-3369	626
228-3621	25
	52
228-4947	37
	234
228-7089	70
	88
	106
228-7090	36
	120
	122
228-7092	26
	68
228-7093	60
	61
	88
228-7094	60
	61
	88
228-7096	60
	61
	63
	88
228-7100	88
	105
	236
	237
228-7101	37
	238
228-7102	116
	117
	120
228-7316	769
	773
228-9106	769
	773
229-7766	619
230-4009	143
	183
	184
	186
	189
	195
	197
	198
	199
	203
	226
	262
230-4010	198
230-4011	167
	181
	182
	183
	184
	185
	186
	189
	198
	199
	204
230-4013	183
	184
	196
	198
	203
	205
230-4014	224
	231
	232
230-5008	186
	189
	199
	202
230-5009	181
230-5010	183
	184
	186
	189
	195
	196
	202
	203
	204
230-9944	109
	583
231-1771	▶138
	▶139
231-2295	186
	189
231-4707	539
231-6843	429
232-3317	403
	404
232-4113	564
232-4114	564
234-5012	234
	241
234-5013	234
	242
234-6498	671
	680
	681
234-6579	658
	666
	678
235-7626	602
235-7636	602
235-7642	602
235-7679	607
235-8891	693
235-9014	693
236-2839	467
	501
236-3257	444
236-3259	444
236-6339	92
	98
	503
	521
236-6919	535
237-0227	198
238-0112	105
	117
238-2319	263
238-5080	36
	37
	38
	44
	50
	60
	70
	88
	106
	134
	242
	410

▶ PRIMARY REFERENCE

PART NUMBER INDEX

Part	Page
238-5081	58
	67
	88
238-5082	36
	51
	536
238-5084	26
	33
	36
	38
	44
	58
	59
	60
	61
	63
	68
	88
	410
	546
238-8245	186
239-1627	416
	473
239-1872	461
	463
239-1986	473
239-5858	115
239-7356	184
	197
240-7874	179
	180
	181
	186
	189
	193
	202
	262
240-7876	193
240-7878	186
	189
	193
	263
241-0542	9
241-4007	539
241-4221	632
241-6158	120
241-6215	494
241-7129	604
241-7163	381
241-8384	23
241-8834	186
	189
	197
242-6099	75
242-6833	422
242-6919	536
243-2310	40
243-4505	179
	181
	182
	187
	190
	201
	204
	205
	655
243-4507	182
	187
	190
	203
243-4508	184
	187
	190
	204
243-4509	195
	203
243-4510	184
	187
	190
	196
	199
	205
244-4500	17
245-2975	▶403
	▶516
245-7750	657
245-7819	640
245-7850	693
245-7851	693
245-7856	640
246-2641	133
	351
	358
246-3150	18
247-8719	536
247-8786	536
247-9304	480
248-7177	397
250-6430	▶609
	▶612
250-6448	610
250-6457	609
250-8054	747
251-0637	258
251-2552	604
251-2558	604
251-2652	602
251-3227	75
253-2695	293
253-6441	457
	459
253-6444	478
	480
253-6454	453
253-6501	▶474
253-6548	477
253-6551	477
253-6688	474
253-6691	474
255-1281	654
255-2272	306
	311
255-2900	113
255-8665	23
255-8679	23
256-2209	21
	37
256-6453	241
	242
	243
	547
	550
259-0918	543
	544
259-2976	5
	72
259-7389	567
259-7513	569
	571
259-7848	584
259-7849	584
259-7850	584
259-7851	584
260-0113	17
	37
260-6941	747
260-7524	53
	54
261-0205	56
261-0524	186
	189
	193
261-0747	197
261-3422	96
261-3423	96
261-7595	128
262-1940	24
	37
262-2603	350
262-2891	46
262-3347	455
263-0033	▶53
	▶57
263-2915	29
263-9574	143
	147
	149
264-0168	35
264-3617	253
264-7029	204
265-8463	357
266-0982	506
266-1392	492
	497
266-2905	200
266-7379	75
	120
	143
	149
	244
	266
	275
	285
	296
	298
	300
	303
	693
	722
267-6809	306
	311
267-6810	306
	311
267-6811	306
	311
267-6812	306
	311
267-6813	306
	311
267-6814	306
	311
267-6815	306
	311
267-6816	306
	311
267-6817	306
	311
267-9973	263
269-5304	89
	97
269-5305	89
	97
269-5311	4
	11
269-5325	4
	12
269-5778	12
269-7290	46
270-2679	258
271-8391	614
271-9408	687
272-4215	130
272-5000	183
	184
	187
	190
	205
272-5841	258
273-2600	46
273-3288	201
274-5873	57
275-1365	526
275-1442	120
275-1443	120
275-1681	492
275-1818	492
	497
275-2164	12
	37
275-5982	631
275-6321	625
	626
275-7738	▶475
	▶625
275-7752	▶625
275-8699	4
	47
276-5754	57
276-7278	154
277-4567	26
	68
277-4993	117
277-6304	475
277-9864	475
277-9865	475
279-0344	306
	311
279-2252	26
	36
	44
	68
279-2589	40
	41
279-4706	531
279-5772	187
	190
	263
280-4322	9
	36
280-7870	449
280-8377	109
281-0791	640
281-2210	66
281-3119	186
	189
281-3122	194
281-3132	186
	190
	192
	193
281-3395	186
	190
	262
281-3396	186
	190
281-8803	183
	198
281-8804	183
	198
281-8813	197
282-3735	668
282-3736	57
282-8228	113
283-0055	183
283-0056	184
	186

▶ PRIMARY REFERENCE

PART NUMBER INDEX

Part	Page
	189
	196
	203
284-3502	70
285-2520	467
	501
285-2663	494
	510
285-2664	494
	510
285-3254	614
	616
	618
	619
	621
	623
285-4074	55
285-6393	109
286-6824	526
286-9679	4
	66
287-2499	584
288-5726	35
	37
289-2492	113
289-5150	198
289-5506	482
290-1993	109
290-5664	249
	283
290-6884	24
	29
293-1256	696
293-4170	73
293-9367	74
293-9659	764
293-9797	73
293-9798	72
	73
294-0107	73
294-1455	598
294-7687	569
	571
295-2351	5
	55
295-4302	13
295-9234	306
	311
295-9577	445
	447
296-2735	105
296-5412	32
296-6181	306
	311
296-6183	306
	311
296-6184	306
	311
296-6185	306
	311
296-6186	306
	311
296-6189	306
	311
296-6190	306
	311
296-6192	306
	311
296-6194	306
	311
296-6195	306
	311
296-6230	306
	311
296-6231	306
	311
296-6232	306
	311
296-6247	307
	312
296-6248	307
	312
296-6269	438
296-6311	306
	311
296-7072	526
297-0370	470
	564
298-4282	760
298-6020	559

3

Part	Page
300-4538	392
300-4544	392
300-4545	391
	392
301-0091	257
301-2299	399
	400
	401
301-2981	294
302-9466	494
	582
303-9933	134
303-9937	134
304-5418	728
304-5422	728
305-0441	693
305-0442	693
306-1354	457
	459
307-0047	766
307-8698	▶224
	▶234
309-4314	65
309-5137	60
311-0501	441
311-6184	197
311-6185	197
311-8727	183
	199
311-8728	183
311-8729	186
	189
311-8732	186
	189
	195
	203
312-1139	404
312-5525	769
	773
312-5694	611
	612
	623
312-8619	23
313-5671	187
314-8102	512
317-7012	109
319-1260	294
319-6213	70
319-6216	26
	68
319-6220	61
319-6234	58
	59
	63
319-9804	98
319-9812	▶524
	▶606
320-3060	117
	236
320-3061	238
320-3063	237
321-0140	▶453
321-0150	▶477
321-1463	390
321-8649	61
321-8657	120
323-7464	578
	584
323-7791	470
	586
323-9533	583
324-0938	342
	594
	596
324-0941	342
324-5678	187
	190
	263
324-5682	258
324-5683	258
324-5684	263
324-5685	258
324-5824	187
	190
324-5825	187
	190
324-6438	422
	424
324-6439	422
	424
324-9326	17
324-9484	429
324-9486	429
325-3923	457
325-8452	4
	10
325-8634	234
	236
325-8700	143
	226
325-8995	469
	470
325-9001	534
325-9571	196
326-0316	61
326-3405	634
326-3406	634
326-3407	630
327-0325	90
	120
	681
	693
327-2886	351
	356
327-2994	349
327-2995	349
327-6550	▶700
	▶701
327-6552	▶701
327-6576	701
327-6593	655
327-6594	655
327-9955	258
328-0076	202
328-0077	294
328-0111	258
328-0132	147
	154
329-2824	506
329-3706	44
329-3734	195
	198
329-5455	63
329-5958	631
330-4374	109
330-8197	36
330-9724	120
330-9754	60
	61
331-1134	234
	237
331-4222	196
331-8008	766
332-0195	663
332-0296	234
	238
332-8555	122
332-8598	410
332-9270	40
	41
333-1207	40
	41
333-7098	507
333-8687	426
333-8688	426
334-6482	735
334-6499	732
334-6526	713
334-6527	713
334-6538	713
335-0332	586
	587
335-3999	234
335-5365	258
	281
335-6983	90
335-8235	450
335-8849	196
336-2583	381
337-4178	109
338-1148	▶96
	▶97
338-1149	96
338-3453	247
338-6971	▶239
	▶240
	▶469
	▶470
	▶492
	▶494
	▶497
	▶516
339-3764	623
339-3810	616
339-3811	616
339-3813	623
339-5431	198
339-5442	187
339-6055	764
339-6891	244
340-6592	687
340-6623	685
340-9272	264
341-0182	459
341-3158	623
342-2972	184
	186
	189
	193
342-2973	186
	189

PART NUMBER INDEX

Part	Page
	193
	263
	272
342-2974	186
	189
	202
	277
342-2975	186
	189
342-2976	184
	186
	189
	225
342-2978	186
	189
	193
	202
342-7220	52
342-8419	187
	190
342-8963	4
	40
342-9671	252
343-2387	120
343-2465	351
	356
343-8121	109
344-5081	▶140
	▶141
344-5360	120
344-5675	143
	147
	149
	645
344-7392	239
345-6703	40
346-8030	737
346-9561	5
	97
347-2324	4
	95
347-4416	120
347-4734	290
	291
347-6081	▶444
	▶547
	▶550
347-6082	444
347-6530	536
347-7963	40
	41
347-8645	121
347-8646	121
347-8748	54
347-8782	▶54
	▶57
348-1099	4
	87
348-1244	470
348-3065	621
348-3080	621
348-3084	621
348-3085	621
348-3126	621
348-5409	341
	352
	356
	358
	373
	376
348-5410	215
	730
348-5783	7
348-8327	81
348-8373	44
348-9896	5
	56
349-5303	23
349-5307	23
349-6255	247
349-6554	▶246
	▶249
349-7059	134
349-8520	67
349-8604	769
349-9658	37
	106
	114
350-0806	461
	463
350-0836	516
350-1071	623
350-1133	616
350-1300	14
350-1302	4
	14
350-2665	40
350-5417	96
350-7735	134
351-0283	44
351-0320	▶404
351-4318	120
351-4319	120
351-6661	539
351-6662	539
351-6663	539
352-0399	244
352-3968	283
352-6860	▶405
	▶516
352-6864	584
	587
352-7057	569
	571
	574
352-7058	569
	571
352-7063	494
	507
	553
	716
352-7064	344
	436
	494
	499
	528
352-7123	574
	588
352-7993	247
352-8952	614
353-0915	547
353-2087	710
353-7957	122
	123
354-5833	63
	117
355-1224	▶632
355-1642	▶204
	▶249
355-2417	539
355-7363	39
355-7407	9
356-3986	117
356-8075	▶455
356-8077	457
	459
356-8079	455
356-8084	453
356-9305	26
	68
	75
357-0003	98
357-2685	▶634
357-2687	611
	613
	630
357-2691	612
	631
357-3914	687
357-4574	61
357-4588	90
357-4597	693
357-9794	426
358-4098	197
358-7347	17
358-7451	416
	465
358-7452	416
	466
358-7453	465
358-7454	465
358-7455	466
358-7456	466
358-7466	416
	525
358-7467	525
358-7523	492
	497
358-8523	422
	424
358-8524	424
358-8525	429
358-8527	426
358-8528	426
359-2563	1
	698
359-3648	616
359-3649	616
359-3650	616
359-3651	616
359-5743	594
359-7188	429
359-7191	422
359-7192	429
359-8587	467
360-3666	90
360-3677	21
360-3678	33
360-3679	9
	51
	95
	578
360-3680	49
	50
	60
	81
	95
	578
360-3681	49
360-3682	51
	95
360-3684	33
	44
	47
	48
	81
360-3691	33
	35
360-3692	9
	494
	519
	582
360-3695	536
360-3933	623
361-1045	142
361-6323	632
361-7346	116
361-7347	▶116
	▶117
361-7886	187
	190
	660
	663
361-7981	115
361-8952	463
362-1095	465
	466
362-9435	117
362-9689	59
363-0253	109
363-0254	109
363-2460	490
363-4122	134
363-6123	525
363-6124	525
363-8107	44
363-9173	263
363-9351	685
364-8522	698
365-3152	618
	619
365-8085	769
366-1884	728
366-4695	578
366-4699	519
367-0844	748
	750
	753
	761
367-6003	578
367-8468	602
	604
367-8469	604
367-8470	602
368-1565	477
368-2854	633
368-2855	633
368-2856	633
368-3780	614
	619
368-3781	614
	619
368-3782	614
	619
368-4832	190
368-4833	187
	190
368-5219	130
368-8003	618
	619
368-8004	618
	619
368-8632	618
	619
369-0877	614
369-0878	614
369-0879	614
369-1562	233
369-3774	194
	198
370-4600	623
370-4601	623
370-9352	525
371-7152	234
371-7186	33
371-7201	445

▶ PRIMARY REFERENCE

PART NUMBER INDEX

Part	Page
	447
	536
371-9106	621
371-9107	621
372-6382	198
372-9319	693
372-9583	638
374-8331	197
374-8332	198
375-1723	429
375-1732	429
375-2467	37
	106
	114
376-3408	37
	106
	111
376-4331	424
377-3016	101
377-9593	58
378-1012	222
378-9524	438
378-9525	438
378-9526	438
378-9527	438
378-9528	438
378-9529	438
378-9530	438
378-9531	438
378-9560	438
378-9593	438
381-4089	▶636
381-4093	613
	635
382-3965	60
	123
382-4825	445
	447
	537
382-7079	474
383-5631	740
383-7908	512
385-2306	15
	331
385-3821	120
385-8201	142
388-7017	113
389-2407	453
	455
	582
389-3708	9
389-3709	51
389-3728	33
	44
389-9183	766
391-2737	626
	627
391-9889	65
392-0775	44
392-0791	90
392-0808	693
392-9208	58
	59
393-6549	▶344
	▶345
394-0437	134
394-9459	703
394-9460	645
	699
	702
394-9569	197
	198
396-0382	134
396-0393	21
396-0403	51
	95
396-0404	49
396-0405	49
	81
	95
396-7759	61
397-1832	96
397-9301	90
398-5596	50
	60
398-5597	9
398-5612	95
398-5614	47
	48
	81

4

Part	Page
419-4262	519
419-8867	764
420-1792	123
	136
420-1793	136
420-2380	640
420-2403	640
420-3657	66
421-6175	693
421-6207	33
	35
421-8488	10
423-1982	185
423-1983	199
423-1984	28
423-1985	186
	189
423-5225	349
424-4322	263
425-3985	445
	447
425-9809	222
425-9879	222
426-4018	693
427-9771	207
	259
	281
	282
	717
430-5251	764
430-5703	732
430-7160	167
431-2103	263
431-9515	▶208
	▶258
433-4841	117
433-7137	764
433-9730	632
434-0776	32
434-3928	117
434-5089	117
435-5221	197
	198
435-5222	197
	198
436-0262	342
437-2150	120
438-6968	735
438-6969	735
439-1840	119
439-1962	123
439-1963	123
439-5039	117
440-6233	120
441-1105	577
441-1106	578
441-1107	577
442-0234	494
442-1579	119
442-7945	187
	190
	263
442-7946	187
	190
442-9496	187
	190
443-5690	769
	773
443-8462	142
444-7595	263
444-7604	198
447-1703	457
	459
	494
447-1704	480
	555
	709
447-1707	457
	461
	463
	478
	553
	602
447-1708	457
	459
	478
	480
447-1709	342
	457
	459
	461
	463
	519
	594
	596
	709
447-1711	459
447-1715	42
447-1716	133
447-1718	75
	534
447-1719	388
	389
447-1720	535
447-1721	42
447-1722	318
447-1723	391
447-1728	710
447-2465	364
447-5581	244
448-1297	175
	281
	282
448-1376	▶543
	▶550
448-5101	317
	318
448-5102	317
	319
448-8980	119
448-8981	119
449-5139	539
449-5735	482
	484
450-1108	58
450-1111	▶58
	▶60
450-4408	249
451-0364	123
451-2175	342
	432
	438
	457
	459
	461
	463
	478
	480
	494
	519
	525
	528
	555
	556
	557
	576
	594
	596
	645
	709
451-2176	42
	306
	311
	342
	534
	535
	594
	596
	604
	607
	608
451-2177	382
	383
	384
	391
	602
	604
451-2178	710
451-2180	594
	596
	645
451-2181	545
451-2182	113
	432
	438
451-2183	478
	480
451-2184	42
	604
451-2185	42
	604
451-2188	42
451-6724	137
451-6726	137
451-6728	137
451-8019	263
452-3518	306
452-3519	311
452-5529	640
453-1259	457
	459
	525
453-1671	438
453-2837	461
453-2840	525
453-2843	556
	557
	576
453-2844	342
	594
	596

PART NUMBER INDEX

Part	Page
	607
	608
453-2845	604
453-2846	534
453-2854	382
	383
	384
	602
	604
453-2855	391
453-2866	75
453-3432	569
	571
453-3440	545
	574
	578
453-3446	432
	438
453-3447	113
	438
453-3448	113
453-3451	566
453-3454	465
	466
	525
	545
	546
	574
	578
	645
453-3456	545
453-5032	602
453-6477	187
	190
453-7871	187
	190
453-8030	347
	385
453-8033	113
455-0704	167
	179
	180
	181
	182
	183
	184
	185
	186
	187
	189
	190
	193
	198
	199
	202
	263
455-0705	183
	184
	186
	189
	190
	193
	196
	198
	203
	205
	263
455-0706	186
	189
	193
	199
	202
455-0707	183
	184
	186
	189
	190
	192
	193
	195
	196
	202
	203
	204
455-0708	186
	189
455-0709	143
	183
	184
	186
	189
	190
	195
	197
	198
	199
	203
	226
	262
455-2302	222
455-3798	83
	85
	546
456-0574	187
	190
456-0575	187
	190
456-0632	210
456-7042	635
	636
	637
456-7043	635
	636
	637
457-1157	130
457-5821	465
	466
	525
457-8759	645
458-9490	▶38
458-9491	▶89
460-0644	60
	88
460-3127	18
460-5302	117
461-5232	149
461-7743	342
462-2005	608
462-2006	602
462-2008	602
462-7085	70
463-1704	18
463-1705	5
	18
463-6984	569
	571
465-4853	▶342
465-5185	465
	466
465-5193	525
465-8763	465
465-8764	466
465-8767	525
466-0113	574
	578
467-4243	56
467-6039	167
467-6040	167
468-4633	478
	480
469-3308	539
469-3316	450
469-4316	618
469-4319	618
469-4320	618
469-5313	19
470-7587	306
	311
471-8500	748
	750
	761
473-9230	643
473-9232	643
474-4582	662
474-4583	665
475-0353	4
	48
475-6622	▶77
	▶98
475-6623	98
475-6626	103
475-6627	98
475-6633	98
475-6643	98
475-6644	83
	85
475-6647	83
	85
475-6649	103
475-6650	103
475-6652	98
475-6654	98
475-6656	98
475-6659	98
475-6660	77
475-6662	103
477-7563	647
	652
	732
477-7564	647
	652
	734
477-7565	▶645
	▶647
	▶652
477-7567	647
	679
	713
478-4873	231
	232
478-4876	231
	232
478-8975	282
478-8977	282
479-8364	167
479-8995	104
480-2133	584
480-3465	92
	521
481-4229	438
481-4230	438
481-4232	438
481-5928	234
482-1088	618
	619
482-1096	614
482-1100	618
	619
482-6619	431
	438
483-2762	263
483-2765	263
	264
483-2767	263
483-2768	263
483-6754	618
	619
483-6777	▶611
	▶613
483-7800	61
	113
	143
	149
483-7803	298
	501
483-7804	130
483-7805	143
	149
	693
483-7806	285
483-7867	647
	685
483-9066	193
484-0404	618
484-0446	611
	618
484-1451	143
	149
	154
	211
	212
	257
	267
	280
	281
	285
	294
	298
	410
484-1452	143
	149
	155
	184
	185
	186
	189
	192
	193
	197
	202
	205
	257
	294
	410
484-1453	120
	143
	149
	186
	189
	192
	217
	269
	272
	275
	276
	281
	290
	291
	298
	303
484-1454	130
	143
	149
	179
	180
	181

▶ PRIMARY REFERENCE

PART NUMBER INDEX

Part	Page
	182
	186
	189
	192
	193
	196
	205
	277
	285
	298
484-1456	98
	143
	149
	154
	161
	176
	211
	212
	217
	258
	266
	267
	269
	270
	271
	273
	275
	277
	281
	285
	289
	290
	291
	292
	294
	298
	301
	693
	695
484-7573	22
484-8017	▶709
	▶711
	▶712
484-8018	709
484-8019	732
	735
484-8021	▶690
484-8022	▶690
484-8025	▶682
	▶711
	▶712
484-9066	258
485-5473	52
485-5474	5
	52
485-5747	558
	561
	589
	591
485-6989	▶59
	▶63
486-5407	647
	652
	740
486-5426	734
486-5427	734
486-5449	662
486-5450	735
	738
486-5457	735
	738
	739
486-5461	713
486-5487	650
486-5497	713
486-5502	▶647
	▶649
486-5504	▶669
	▶711
487-2948	178
487-5859	546
487-5860	546
487-5869	▶412
	▶555
	▶556
487-5871	574
	578
487-5872	578
487-5873	574
	578
487-5874	578
487-5875	▶577
	▶578
487-5879	569
	571
487-5880	569
	571
487-5881	567
	569
	571
487-6639	652
	686
487-6652	658
487-6653	658
	666
487-6654	658
	666
487-6657	662
487-6658	▶642
	▶660
487-6659	▶643
	▶663
487-6660	▶671
	▶711
487-6663	671
487-6665	671
	680
487-6666	647
	648
	652
487-6668	671
487-6670	671
487-6672	648
	719
487-6673	678
487-6675	678
487-6678	648
	673
487-6679	673
487-6680	673
487-6682	673
487-6683	673
487-6684	673
487-6744	735
	738
	739
487-6745	735
487-6746	735
487-6747	735
487-6748	735
487-6755	▶644
	▶647
	▶652
487-6760	▶323
	▶690
487-6761	323
487-6775	713
487-6776	713
487-6782	713
487-6806	740
487-6813	666
487-6828	658
487-6829	658
487-6832	658
	666
487-6835	678
487-6836	678
487-6837	678
487-6838	658
	666
	678
487-6839	671
	673
487-6847	735
487-6849	735
	738
	739
487-6851	673
487-6902	▶649
	▶711
487-6904	▶710
	711
	712
487-6927	681
487-6940	680
487-6942	671
487-6943	671
487-6944	671
487-6945	671
487-6946	671
487-6952	671
487-6953	671
487-6954	671
487-6955	673
487-6979	731
487-7003	648
	681
487-7440	717
487-8023	569
	571
487-8430	194
487-8455	660
	663
488-0394	711
	716
488-5838	157
	158
	159
	160
	161
488-6431	681
488-6432	681
488-6433	681
488-6434	680
488-6435	680
488-6436	680
488-6446	680
488-6449	671
488-6450	▶718
488-6451	648
	675
488-6458	669
488-6459	669
488-6474	▶695
	▶711
488-6475	731
488-6479	▶715
	▶716
488-6484	673
488-6488	645
488-6490	665
488-6492	732
	737
488-6493	737
488-6494	737
488-6500	711
	721
488-6501	721
	725
488-6503	718
488-6504	719
488-6506	740
488-6509	740
488-6510	711
	722
488-6511	722
	723
488-6512	740
488-6515	673
488-6529	732
488-6530	711
	727
488-6534	660
	663
	688
	712
488-6535	642
488-6536	642
488-6538	645
488-6545	734
488-6546	732
488-6548	713
	732
488-6550	▶660
	▶711
488-6551	660
	662
	663
488-6552	650
488-6553	▶676
	▶711
	▶712
488-6559	647
	650
	652
488-6560	▶663
	▶711
488-6566	644
488-6567	644
488-6570	660
	663
	665
488-6574	673
488-6575	▶683
	▶690
488-6576	711
	712
	731
488-6577	673
488-6578	675
488-6579	675
488-6582	732
488-6583	732
488-6591	693
488-6600	▶638
	▶711
488-6601	638
	640
488-6602	638
488-6612	656
	657
488-6613	656
488-6616	693
488-6764	219
	279
488-6765	279

▶ PRIMARY REFERENCE

PART NUMBER INDEX

Part	Page
	280
488-6766	279
	281
488-6767	279
	282
488-6768	219
	294
488-6812	▶705
	▶707
488-6813	▶706
	▶707
488-6816	▶167
488-6821	▶142
	▶205
488-6822	▶163
	▶205
488-6823	690
	717
488-6825	▶254
	▶625
488-7773	▶413
	▶555
	▶556
488-8576	452
	545
488-9163	157
	159
	160
489-2939	452
	534
489-3008	604
489-3449	▶172
	▶173
489-3451	▶173
489-3460	173
489-3697	362
489-6608	685
	686
489-6609	685
	686
489-6616	685
489-6694	596
489-7202	397
489-7847	▶219
	▶711
489-7848	219
	258
489-7907	164
490-0571	143
	150
	161
	178
	179
	180
	181
	202
	258
	263
	264
	265
	285
490-0572	143
	150
	157
	158
	159
	160
	161
	178
	179
	180
	201
	265
490-0578	161
	178
	179
	180
	181
	201
	202
	258
	263
	264
490-0579	258
490-0582	157
	158
	159
	160
	161
	178
	201
	264
490-0585	258
490-0586	150
	180
	181
490-0587	178
490-0588	258
490-0590	165
490-1012	669
490-1046	602
490-1047	602
490-1728	23
490-1729	23
490-2682	172
	689
490-2693	172
	298
490-2700	162
	266
490-2714	▶300
	▶408
490-2765	127
	227
490-2767	177
	228
490-2768	177
	229
490-2769	1
	177
	230
490-3875	258
490-3958	503
	566
490-3995	545
	546
490-3996	546
490-3997	546
490-3999	546
490-4919	206
	207
490-5462	128
490-5464	128
490-5466	128
490-5468	128
490-5470	125
490-5473	125
490-5474	125
490-5475	125
490-5476	125
490-5477	125
490-5709	129
490-5873	705
490-5874	▶704
	▶706
490-6690	192
	194
490-7871	1
	173
490-8380	46
491-0908	562
	567
	589
	591
491-3416	566
491-3417	566
491-3418	566
491-3419	566
491-3420	566
491-3844	391
	393
491-4402	263
491-4409	263
491-5241	443
491-6075	547
	550
491-7102	▶544
	▶547
491-7133	675
491-7696	574
491-7697	▶558
	▶574
491-7724	737
491-7825	689
491-7826	689
491-7831	142
	175
	258
	281
491-8343	211
	212
491-8349	193
492-1070	234
492-1194	56
	57
492-2010	263
492-2011	262
492-2012	258
492-2080	546
492-2153	345
492-3016	407
492-3915	686
	687
492-6780	67
492-8275	105
493-0982	▶175
	▶408
493-1610	769
	773
493-3207	▶559
	▶563
493-3208	559
	560
493-3209	530
493-3272	257
493-4922	▶561
	▶574
493-9731	59
494-0022	258
494-0773	301
494-7279	727
494-9165	120
495-1682	4
	9
495-5748	4
	49
495-6045	715
495-6046	715
495-6047	715
495-6049	715
495-6053	668
495-6057	660
	663
495-8212	424
495-9813	163
496-2832	593
	594
496-2833	594
496-2844	593
	596
496-2845	596
496-2895	▶387
	▶402
496-2920	387
	388
496-2921	387
	389
496-2922	388
	394
496-2923	389
	395
496-2924	395
496-2925	394
496-2993	394
	395
	396
496-2994	396
496-2995	396
496-2998	396
496-2999	396
496-3000	396
496-3001	396
496-3002	396
	397
496-3003	397
496-3026	397
496-3679	111
496-9840	▶104
	▶105
496-9841	104
496-9842	104
496-9843	104
497-0934	606
	607
497-0946	606
	608
497-0947	608
497-6387	539
498-2825	743
498-4574	157
498-5695	▶381
	▶402
498-7495	340
	351
498-7497	340
	341
498-7498	340
	364
498-7499	340
	349
498-7500	▶320
	▶340
498-7501	▶133
	▶340
498-7505	▶347
498-7678	665
498-7679	665
498-7680	665
498-7683	671
498-7684	662
498-7685	662
498-7700	693
498-7701	693
498-7702	693
498-7709	673
498-7713	705
	706

▶ PRIMARY REFERENCE

PART NUMBER INDEX

Part	Page
498-7723	▶651
	▶711
498-7724	651
	652
498-7728	658
	666
498-7761	678
498-7783	732
498-9091	254
499-0001	13
	37
499-1657	407
499-4442	129
5	
500-0482	63
500-0483	63
500-0719	671
500-0729	740
500-0730	673
500-0732	645
500-0733	684
500-0740	732
500-0742	737
500-0744	735
500-0784	657
500-0791	732
500-0795	676
500-0796	676
500-0884	663
500-0930	658
	666
500-0931	▶684
	▶711
	▶712
500-0932	644
500-0933	658
	666
500-0934	678
500-0938	676
500-0940	650
500-0948	682
500-0949	682
500-0954	656
500-0957	640
500-0962	645
500-0963	645
500-0999	▶711
500-1000	▶711
500-1007	728
500-1008	723
500-1009	728
500-1010	723
500-1011	723
500-1012	723
	728
500-1015	723
	725
500-1016	728
500-1019	723
500-1022	728
500-1023	728
500-1024	723
	725
500-1025	728
500-1026	728
500-1027	723
500-1028	723
500-1029	723
500-1030	725
500-1031	723
500-1032	723
	725
500-1033	723
	725
500-6853	107
500-6854	4
	107
501-4186	130
	137
501-4188	137
501-4899	638
501-7237	306
	311
501-9243	231
501-9547	22
501-9548	22
502-1303	▶382
502-1304	▶383
502-1306	▶384
502-1308	▶385
502-4174	6
	90
502-4178	75
502-4246	1
	6
502-4252	6
	42
502-4255	6
	108
502-4785	6
	64
502-4787	6
	120
502-4792	6
	105
502-4797	6
	410
502-5356	6
	113
502-5358	▶244
502-5360	127
	130
502-5363	▶26
	▶71
502-5364	6
	28
502-5366	6
	61
502-5376	1
	75
502-6363	134
502-7159	▶164
	▶219
502-7165	▶250
	▶279
502-7166	▶690
502-7168	▶221
	▶279
502-7171	▶157
	▶162
	▶653
502-7174	▶158
	▶162
502-7185	▶267
	▶563
502-7186	▶211
502-7187	▶212
502-7210	127
	268
502-7213	162
	269
	653
502-7214	162
	270
	271
502-7217	▶159
	▶162
502-7218	▶160
	▶162
502-7224	▶143
	▶172
502-9958	1
	434
503-2027	▶171
	▶219
503-2958	▶168
	▶169
503-7393	125
503-7394	125
503-7395	5
	125
503-8899	294
503-9595	26
503-9596	26
503-9756	452
	553
503-9757	553
	554
503-9758	▶547
	▶550
	▶554
503-9759	▶501
	▶554
503-9760	452
	503
503-9761	452
	486
503-9762	452
	467
503-9763	452
	519
503-9771	452
	469
503-9774	452
	470
503-9779	2
	92
503-9780	2
	521
503-9782	82
	504
503-9784	82
	506
503-9787	▶511
503-9789	2
	488
503-9790	2
	408
	489
503-9792	▶490
503-9793	▶461
	▶593
503-9794	▶463
	▶593
503-9808	▶457
503-9810	▶478
503-9811	▶459
503-9812	▶480
503-9829	71
	482
504-1117	1
	693
504-1790	2
	563
504-1791	2
	563
504-1792	▶555
	▶563
504-1793	▶556
	▶557
	▶563
504-1987	507
	567
504-2107	604
504-2109	604
504-2110	604
504-2111	604
504-2112	604
504-3550	▶257
504-3553	▶154
	▶172
504-3557	172
	285
504-3560	177
	289
504-3561	▶272
	▶408
504-3679	▶656
	▶693
504-4483	▶563
504-4980	▶173
	▶207
504-7576	594
	596
504-7628	594
	596
	607
	608
504-7629	422
504-7630	429
504-7632	607
504-7633	607
504-7634	422
	604
504-9586	547
	550
504-9687	▶443
	▶547
	▶550
505-0526	452
	535
505-0530	431
	528
505-0531	432
	528
	530
505-1238	4
	654
505-1453	4
	25
505-2336	105
505-2337	32
505-4113	612
	613
	637
505-4160	616
	621
	623
505-4161	616
	621
	623
505-4162	616
	621
	623
505-5180	83
505-5313	123
505-5315	123
505-5694	5
	114
505-5876	4
	33
505-5949	108

PART NUMBER INDEX

Part	Page
505-6957	4
	7
505-7165	347
505-7169	347
505-7170	347
505-7171	347
505-7172	347
505-7637	178
	258
	265
505-7638	178
	258
505-7669	467
505-8956	4
	111
505-9564	469
	470
506-1096	384
506-1097	385
506-1098	385
506-1112	567
	591
506-1199	75
	365
506-1201	75
506-2321	426
506-2322	429
506-2794	187
	190
506-3265	4
	141
506-5459	101
506-5904	438
506-5909	187
	190
506-5910	263
506-5911	263
506-5913	187
	190
506-5915	263
506-5916	263
506-5917	263
506-5918	263
506-6195	232
506-6361	5
	101
506-6494	486
506-6501	486
506-6506	486
506-6511	486
506-6540	486
506-7016	298
506-7018	298
506-7031	206
	273
506-8332	75
506-8333	75
506-9947	►200
	►258
507-1383	263
507-1384	263
507-1742	4
	17
507-1887	64
507-2528	4
	70
507-2596	4
	39
507-2699	22
507-2700	►22
	►23
507-2701	►23
	►24
507-4952	342
507-4953	342
507-8035	306
	311
507-9361	42
507-9909	104
507-9917	70
507-9918	70
508-0556	143
508-0558	143
	149
508-3032	4
	81
508-4406	43
508-6337	98
508-6342	98
508-8884	171
508-9490	63
508-9583	351
	356
508-9584	351
	356
508-9591	336
	337
	338
	339
508-9603	336
	338
	339
508-9604	336
	337
508-9607	337
508-9608	338
	339
508-9631	347
508-9636	►78
	►79
	►82
508-9637	►80
	►82
508-9685	351
	356
508-9725	702
	703
508-9757	545
509-0696	43
509-0697	43
509-1568	117
509-2009	396
509-3085	669
509-3087	669
509-5001	154
509-5008	285
509-8010	558
	561
	562
	589
509-8011	558
	561
	562
	589
509-8012	558
	561
	562
	589
510-1207	143
	149
	181
510-1208	143
	149
	181
510-1210	143
	149
510-1695	128
510-1989	438
510-2274	►602
510-2275	602
510-2276	602
510-2278	602
510-2280	602
510-2281	602
510-2391	351
	356
510-2420	351
	356
510-2439	367
510-3106	351
	356
	366
510-3107	366
510-3129	340
	363
510-3132	340
	350
510-3135	321
510-3149	330
	351
	367
510-3150	330
	351
	368
510-3153	363
510-3155	363
510-3156	363
510-3157	363
510-3164	351
	356
510-3209	372
510-3213	371
510-3222	376
510-3223	376
510-3236	369
510-3237	369
510-3242	367
	368
510-3247	367
	368
510-3263	352
	357
	366
510-3265	366
510-3280	352
	357
510-3290	352
510-3291	330
	352
510-3317	16
	332
510-3326	16
	332
510-3341	378
510-3373	373
510-3374	368
510-3375	367
	368
510-3376	367
510-3384	376
510-3385	376
510-7283	3
	764
510-8930	222
510-9082	154
	222
510-9083	222
510-9241	5
	128
511-0315	529
	531
511-0961	►213
511-0962	685
	686
511-1370	365
511-1371	365
511-4747	108
511-4748	108
511-4824	117
511-5900	673
511-5901	673
511-5919	658
	666
	673
	675
	678
511-5921	658
	666
511-5957	644
511-5959	675
511-5960	675
511-5961	675
511-5962	675
511-5966	737
511-5967	737
511-5969	645
	732
511-5972	673
511-5982	658
	665
	666
511-6003	666
511-6004	658
511-6010	►305
	►316
511-6011	305
	306
511-6016	660
	663
	678
511-6017	►310
	►315
511-6018	310
	311
511-6023	663
	666
511-6024	►658
	►660
511-6025	658
511-6026	666
511-6027	666
511-6034	677
511-6035	677
511-7541	103
511-7544	98
511-7546	98
511-7558	83
	85
511-7581	83
	85
	102
511-7582	98
511-7583	98
511-7584	98
511-7585	103
511-7586	103
511-7587	82
	83
511-7588	94
	98
511-7589	94
	103
511-7590	75
	94
511-8260	42
511-8282	519

► PRIMARY REFERENCE

PART NUMBER INDEX

Part	Page
511-8284	469
511-8604	535
511-8733	70
511-9446	▶301
	▶625
511-9710	▶391
	▶402
511-9745	▶398
511-9751	▶398
511-9757	▶398
512-0949	85
512-0983	▶421
512-0984	▶416
	▶421
512-0985	▶416
	▶421
512-0995	▶416
512-0999	▶416
512-1247	668
512-1248	668
512-1337	▶162
512-1338	▶653
512-1348	▶593
512-1349	▶593
512-1380	▶606
512-1383	▶606
512-1653	5
	32
512-2356	416
	417
512-2357	417
	422
512-2360	416
	420
512-2361	420
	429
512-2364	416
	418
512-2365	418
	424
512-2635	494
512-4556	461
512-4558	461
512-4562	461
512-4564	461
512-4568	461
512-4576	457
512-4579	457
512-4580	457
512-4582	457
512-4585	457
512-4592	457
512-4616	478
512-4619	478
512-4623	478
512-4631	478
512-4634	478
512-4642	478
512-4650	478
	480
512-4914	547
	550
512-5335	461
	463
512-5336	461
	463
512-5573	443
512-5701	4
	112
512-5993	▶82
512-5995	▶82
512-6066	113
512-6073	113
512-6145	▶240
	▶256
512-6385	158
	161
512-6728	740
512-7126	90
512-7127	90
512-7217	32
512-7950	61
512-9908	▶431
	▶434
512-9978	459
513-0097	390
513-0098	390
513-2102	64
513-2230	61
513-2231	61
513-3120	285
513-3122	285
513-3126	285
513-3214	▶256
513-3732	410
513-4324	257
513-4370	▶147
513-4371	147
513-4372	147
513-4373	▶182
	▶268
513-8034	120
513-8035	120
513-9150	728
513-9160	728
513-9172	725
513-9412	130
513-9457	410
514-0550	244
514-0568	482
514-1499	268
514-3560	▶345
514-4956	410
514-4960	410
514-4962	410
514-5296	4
	50
514-5702	82
	274
514-5914	244
514-7112	494
514-7127	507
514-7209	▶251
514-7210	▶252
514-7346	269
514-7350	▶182
	▶274
514-7352	267
514-7718	256
	296
514-7723	492
514-9537	629
515-2709	578
	589
515-3334	113
515-5784	555
	556
	557
	578
515-5785	▶569
	▶571
	▶578
515-6467	117
515-7178	258
515-7834	745
515-7835	745
515-7839	769
515-7905	769
	773
515-8094	717
515-8096	717
515-9533	▶201
	▶258
516-0550	▶177
516-2546	139
	255
516-3416	507
516-3432	255
516-4306	537
516-4624	5
	129
516-4870	167
516-4875	734
516-4918	642
	643
516-4919	642
	643
516-4923	645
516-4930	658
	666
516-4941	725
516-4942	725
516-4943	725
516-4944	725
516-4945	725
516-4946	▶691
	▶725
516-4947	691
516-4948	691
516-4951	691
516-4952	691
516-4953	691
516-4954	691
516-4955	691
516-4956	691
516-4987	294
516-6701	4
	67
516-7395	321
516-7423	▶340
516-7428	1
	340
516-7468	351
516-7469	351
	356
516-7543	374
516-7545	351
	356
516-7546	351
	356
516-8214	5
	8
516-8215	8
516-9796	35
516-9872	734
517-0686	341
517-0824	▶173
	▶206
517-1695	507
517-2367	619
517-2403	1
	231
517-3162	1
	290
517-4512	166
517-4572	35
517-4573	4
	35
517-4579	13
517-4580	4
	13
517-4758	▶625
517-5959	608
517-5967	▶177
517-5971	▶1
517-6833	470
517-6836	471
518-1160	578
518-1204	567
518-1206	567
518-3834	492
	497
518-3835	497
518-3838	497
518-5136	426
518-5137	429
518-6237	422
518-6324	422
518-6326	422
518-9291	611
	619
518-9326	▶611
	▶613
519-2337	380
519-2338	380
519-2343	370
519-2384	352
	358
519-2388	372
519-2389	372
519-2479	305
	310
	529
519-5907	754
519-5970	519
519-6970	▶174
	▶704
519-6974	705
519-8103	120
519-8217	550
519-8817	769
	773
519-8818	769
	773
519-8822	766
519-9691	519
519-9781	676
520-2491	143
	147
	149
520-3179	412
	413
	414
	415
520-4810	769
	773
520-8223	688
520-8224	688
520-8225	688
520-8227	658
	666
520-8235	640
520-8238	688
520-8239	713
520-8253	658
	666
	678
520-8260	705
	706
520-8262	719
520-8263	719
520-8264	719
520-8265	719
520-8286	663
520-8287	673
520-8290	666

▶ PRIMARY REFERENCE

PART NUMBER INDEX

Part	Page
520-8291	658
	666
520-8292	658
	666
520-8293	663
520-8294	660
	663
520-8296	640
520-8297	640
520-8298	640
520-8306	▶711
520-8323	640
520-8324	640
520-8326	640
520-8328	640
520-8329	640
520-8330	640
520-8331	640
520-8332	640
520-8338	640
520-8469	486
520-8475	486
520-9106	766
520-9108	766
520-9415	▶743
520-9420	408
	744
521-0280	381
521-0281	381
521-0631	424
521-0634	424
521-0639	429
521-0642	429
521-0783	165
521-1028	519
521-1524	593
	745
521-2977	22
521-3183	503
521-5230	82
	85
521-5686	504
	508
521-8024	▶604
521-8025	604
521-8981	130
	132
521-8986	130
522-0445	177
	232
522-0461	▶139
522-0500	1
	172
522-0747	▶416
522-0835	416
	419
522-1048	120
522-1451	407
522-1694	5
	249
522-3167	▶766
522-3895	419
	426
522-3896	426
522-6120	1
	3
	4
522-7072	▶197
	▶285
522-7073	▶197
	▶285
522-7098	731
522-7155	▶492
522-8201	▶176
	▶452
522-8605	351
522-8630	351
	356
522-8633	351
522-8795	177
	291
522-8798	▶177
523-2199	4
	126
523-4231	5
	24
523-4986	117
523-4987	117
523-5990	4
	51
523-6215	▶512
	▶563
523-6216	▶514
	▶563
523-7061	407
523-7062	407
523-7342	220
523-7344	4
	220
523-7485	4
	43
523-7667	167
523-7792	▶1
523-7795	▶402
523-7799	▶452
523-7803	▶452
523-9619	▶19
	▶21
524-0479	717
524-0480	717
524-0912	492
	497
	512
	514
	562
524-0924	535
	542
524-2485	19
	20
524-2766	143
	149
	182
524-2806	560
524-3169	398
	399
524-3173	398
	400
524-3174	398
	401
524-3181	▶390
	▶399
	400
	401
524-3184	399
524-3188	400
524-3189	401
524-3258	560
524-3419	614
524-3420	614
524-3421	614
524-4046	113
524-4506	149
	273
524-4771	4
	65
524-4819	65
524-4821	65
524-4983	90
524-5332	4
	109
524-5428	33
524-5566	46
524-7742	645
	677
524-7769	769
524-8272	▶206
524-8314	▶214
524-8376	▶302
	▶563
524-8403	258
524-8405	258
524-8408	258
524-8521	214
	215
	217
524-8715	402
	526
525-0760	▶325
525-2129	461
525-2130	461
525-2133	461
525-2134	461
525-2135	457
525-2136	457
525-2145	478
525-2150	478
525-2293	109
525-2614	304
	315
525-2615	304
	316
525-2616	▶304
	▶402
525-2618	▶409
525-2621	▶203
	▶302
525-2937	1
	452
525-2970	492
	497
525-2974	512
	514
525-3638	514
525-3639	514
525-3740	▶203
	▶296
525-3763	1
	172
525-3964	▶194
	▶283
525-4053	▶611
525-4056	611
	614
525-4059	614
525-4107	547
	550
525-4121	▶177
525-4122	177
	292
525-5668	614
525-5669	614
525-5670	614
525-6177	228
525-6524	4
	165
525-6754	4
	119
525-7118	5
	234
525-8061	5
	283
525-9735	362
525-9736	362
525-9758	347
525-9759	347
525-9760	347
525-9761	349
525-9771	351
	357
526-1837	589
526-1922	461
526-1923	461
526-2125	▶3
	▶4
526-4014	▶200
	▶214
526-4904	211
	212
	213
526-5211	▶1
526-5689	744
526-5708	221
	250
526-6036	90
526-7268	123
526-7271	123
526-7488	126
526-7712	▶166
	▶205
526-8544	640
526-8550	645
526-8551	645
526-8555	671
526-8556	671
	673
526-8557	673
526-8558	673
526-8559	673
526-8569	708
526-8570	708
526-8573	677
526-8574	677
526-8575	645
526-8576	645
526-8577	741
526-8578	675
526-8586	207
526-8587	721
	722
526-8596	▶324
	▶690
526-8597	324
526-8598	690
	741
526-8600	▶720
	721
	722
526-8601	720
526-8602	741
526-8603	741
526-8604	708
526-8605	▶708
	▶741
526-8606	690
	696
526-8607	741
526-8616	732
526-8624	669
526-8626	693
526-8628	688
	713
526-8631	658
	666
526-8638	719
526-8639	730
526-8641	740

▶ PRIMARY REFERENCE

PART NUMBER INDEX

Part	Page
526-8642	673
526-8643	671
	673
526-8646	723
526-8648	730
526-8917	665
526-9052	90
526-9053	75
526-9175	4
	60
527-0496	75
527-0641	251
527-1081	123
527-1391	330
	351
	369
527-1392	369
527-1475	376
527-1504	362
527-1505	362
527-1521	362
527-1522	362
527-1704	384
527-1705	384
527-1720	579
527-1721	579
527-1848	668
527-1849	668
527-1870	▶204
	▶300
	▶303
527-3314	▶195
	▶287
527-3315	▶287
	▶297
527-3316	5
	297
527-3604	504
	508
527-3605	504
	508
527-3606	504
	508
527-3607	504
	508
527-3674	83
	85
527-3675	83
	85
527-3676	83
	85
527-3677	83
	85
527-5711	209
	215
527-7336	3
	172
527-7800	1
	452
527-7804	351
	356
527-7805	351
	356
527-7812	452
	510
527-8123	65
527-9114	463
527-9115	463
527-9116	463
527-9117	463
527-9120	463
527-9121	463
527-9122	463
527-9125	463
527-9126	463
527-9127	459
527-9128	459
527-9129	459
527-9130	459
527-9131	459
527-9138	480
527-9142	480
527-9146	480
527-9150	480
527-9154	480
527-9158	480
527-9286	112
527-9502	207
528-0022	▶210
	▶279
528-0126	102
528-0938	516
528-0945	526
528-0949	501
528-0952	501
528-1450	114
	115
528-1514	259
528-1627	92
528-1728	93
	521
528-2348	746
528-2349	752
528-2466	143
	149
528-2468	143
	149
528-3383	494
	499
528-3399	285
528-3529	▶331
	▶653
528-3539	▶15
	▶162
528-3558	351
	357
528-3561	351
	356
528-3563	351
	357
528-3564	351
	356
528-3566	351
	356
	370
528-3575	351
528-3579	▶327
	▶352
528-3580	▶326
	▶327
528-3581	326
528-3582	327
	328
528-3583	352
	357
528-3651	351
	356
528-3652	352
528-3658	374
	377
528-3659	374
	377
528-3660	374
	377
528-3665	352
	357
528-3678	326
	329
528-3679	326
	329
528-3684	375
528-3685	375
528-3690	159
528-3691	370
528-3696	▶195
	▶292
528-3717	471
528-3771	488
528-3774	489
528-4125	4
	122
528-4127	122
528-4585	▶612
528-4646	▶612
528-4660	▶612
528-4663	613
	623
528-5070	123
528-5515	494
528-5684	38
528-5916	547
	550
528-6822	510
528-6825	510
528-6835	2
	408
528-6870	4
	123
528-7391	397
528-7421	720
528-7422	720
528-7423	720
528-7979	410
528-8101	382
	383
528-8133	▶613
528-8509	486
528-8512	486
528-9402	341
529-0428	▶196
	▶290
	▶291
529-0429	578
	591
529-6256	567
529-7073	159
	160
529-7141	408
	668
529-8758	▶202
	▶266
529-9446	507
529-9447	507
529-9448	507
529-9449	507
530-1939	259
	262
530-1940	262
530-1941	263
530-1942	264
530-1943	▶192
	▶280
530-1944	▶193
	▶281
530-1945	▶194
	▶282
530-1946	210
530-1947	▶202
	▶294
530-1948	▶178
	▶215
	▶217
530-2707	494
531-3313	321
532-7138	61
	63
532-7317	215
532-7318	215
532-7319	713
532-7351	690
	697
532-7403	713
532-7404	713
532-7407	713
532-7907	496
	746
533-0365	658
533-1276	408
533-1781	408
	747
533-1972	612
	621
533-1975	621
533-1989	623
533-2245	117
533-2339	294
533-2342	210
533-2343	215
	217
533-2344	158
533-4958	210
533-5485	748
	750
533-5486	748
	750
533-5487	769
533-5491	748
533-5494	769
	773
533-5495	759
533-5685	281
533-7833	1
	748
	750
535-6785	4
	225
535-7475	621
535-7476	621
535-7482	623
535-7484	616
535-7519	5
	21
535-8584	67
535-9173	133
	134
535-9174	134
535-9175	352
535-9190	352
	356
535-9211	352
	356
	380
535-9248	350
535-9273	352
	358
535-9328	364
535-9353	16
	332
535-9354	16
	332
535-9355	16
	332
535-9356	16
	332
536-0278	333
	352

▶ PRIMARY REFERENCE

PART NUMBER INDEX

Part	Page
	356
536-0887	739
536-2637	531
536-2638	531
536-2639	531
536-2640	531
536-2641	531
536-2642	531
536-2643	531
536-2644	531
536-2645	531
536-2648	531
536-2649	531
536-2650	531
536-2651	531
536-2652	531
536-2653	531
536-2654	531
536-2655	531
536-2656	531
536-2657	531
536-2658	531
536-2659	531
536-2660	531
536-2661	531
536-2662	531
536-2663	531
536-2664	531
536-5437	►199
	►290
	►291
536-6924	612
	616
536-6980	17
536-7288	432
	441
536-7311	579
536-7943	194
	198
536-7945	198
536-7946	198
538-1151	461
538-1189	244
538-2111	408
	752
538-3026	2
	408
538-5287	►275
	►408
538-7962	526
538-8825	408
	494
538-8843	713
538-8999	143
	149
538-9251	341
538-9680	658
538-9681	713
538-9682	713
538-9725	732
538-9803	732
538-9804	178
	265
538-9805	178
538-9923	676
539-0213	713
539-0973	341
539-1606	494
539-1607	494
539-1608	494
539-1611	494
539-1614	494
539-1617	495
539-1900	►201
	►211
539-2132	90
539-2832	►178
	►217
539-2833	161
539-2834	161
539-2835	161
539-7999	117
540-0547	320
	321
540-1875	579
540-1916	►201
	►212
540-2244	321
540-3720	129
540-4537	495
540-4540	495
540-7019	►407
	►547
	►550
540-7039	407
540-7040	407
541-1343	98
541-1345	98
541-1346	103
541-2564	226
541-3433	209
	730
541-6658	4
	226
541-9491	486
542-1570	190
542-2341	769
	773
542-9914	►198
	►288
542-9915	283
	288
543-2007	394
	395
543-2337	352
	356
543-2338	352
	357
543-2339	352
543-2425	352
543-2457	16
	332
543-2458	16
	332
543-3718	539
543-5391	445
	447
543-9772	342
544-0524	53
544-1881	163
	170
544-4700	434
	436
544-5384	143
	149
544-5577	432
	438
545-8567	704
546-1255	►127
546-2598	352
	357
	371
546-2714	371
546-4979	352
	357
546-4980	338
	339
546-4983	336
	337
546-5240	3
	5
546-5663	127
	753
546-6066	►613
546-6209	►71
547-2608	338
	339
547-4722	352
	357
547-4740	333
	336
547-4745	►337
	►352
	►358
547-7510	337
547-7511	336
547-7514	334
	338
547-7515	335
	339
547-8270	338
547-8271	339
547-9051	71
	754
548-0043	713
548-0152	352
548-0158	78
	372
548-0194	330
	352
	373
548-0197	333
	352
	357
548-0199	►333
548-0208	352
	357
548-0293	653
	702
548-0294	►703
548-0299	352
	357
548-0300	330
	352
548-0316	352
	357
548-0333	330
	352
	362
548-0334	362
548-0335	702
548-0336	703
548-0376	352
	357
548-0377	352
	374
548-0378	377
548-0379	352
	357
	375
548-0381	352
	357
	376
548-0389	352
	357
548-0409	15
	16
548-0420	352
	357
548-0452	352
	357
548-0453	352
548-0769	373
548-1589	396
548-2353	►755
548-4075	143
	149
548-8139	492
	497
548-8355	►334
	►653
548-8356	162
	335
548-8497	756
548-9976	352
	357
549-0911	409
	756
549-4024	715
549-4025	715
549-4306	536
549-4308	536
549-4309	536
549-4310	536
549-4311	536
549-4316	536
549-4317	536
549-4319	536
549-4320	536
549-4321	536
549-4322	536
549-4327	536
549-4329	536
549-4330	536
549-4331	536
549-4357	321
549-7972	497
549-8055	►276
	►409
549-8397	46
549-9283	►205
	►298
550-0785	►183
	►276
550-0786	276
550-3493	►93
	►408
550-4341	535
	541
550-7573	►2
550-7581	►2
550-7622	►496
551-0841	46
551-1101	536
551-1102	536
551-1103	536
551-1107	536
551-1108	536
551-1109	536
551-1110	536
551-1111	536
551-1112	536
551-1113	536
551-1114	536
551-1115	536
551-1117	536
551-1118	►536
	►541
551-1124	445
	447
551-1125	445
	447
551-1126	445
	447
551-1127	445
	447

► PRIMARY REFERENCE

PART NUMBER INDEX

Part	Page
551-1128	445
	447
551-1129	445
	447
551-1130	445
	447
551-1131	445
	447
551-1133	445
	447
551-1134	445
	447
551-1135	▶445
	▶541
551-1136	▶447
	▶541
551-2612	352
	358
551-3741	143
551-3742	143
	149
	183
551-3743	144
	150
	184
551-3744	144
	150
551-3746	144
	150
551-3753	154
551-3754	154
551-3755	155
551-3756	155
551-3758	▶184
	▶272
	▶275
551-5004	▶185
	▶267
551-6783	▶303
	▶408
551-6886	496
	497
552-1669	▶117
	▶120
552-1788	▶179
	▶270
552-1789	▶179
	▶270
552-2526	285
552-2527	285
552-3923	352
552-4919	▶196
	▶273
552-5318	41
552-5560	120
552-7480	499
552-8843	75
552-8844	75
552-8903	579
553-6344	495
	499
553-6505	422
553-7272	539
553-7277	539
553-7278	539
553-7279	▶449
	▶542
553-7280	449
	450
553-7281	450
553-7282	450
553-7283	450
553-7284	450
553-7285	450
553-7286	450
553-7287	450
	573
553-7288	573
553-7289	573
553-7290	450
553-7298	450
553-7299	450
553-7300	450
553-7301	450
553-7302	450
553-7305	▶539
	▶542
553-7307	450
553-9978	▶757
553-9987	647
	652
	679
553-9988	647
	652
	738
554-2180	376
554-2190	15
	331
554-3153	285
554-3615	▶217
554-3616	▶161
	▶162
554-3790	758
554-3791	758
554-3792	758
554-9346	16
555-1814	422
555-1987	607
555-2409	452
	533
555-5143	120
555-5159	120
555-5169	120
555-5170	120
555-5171	120
555-5172	121
555-5189	92
	521
555-7258	▶205
	▶206
555-7286	▶205
555-7437	534
555-7460	534
555-8043	▶174
	▶205
555-8147	556
	557
	574
	576
555-8148	574
555-9027	408
	499
555-9457	▶162
555-9458	▶209
556-1411	504
	508
556-1592	471
556-1595	471
556-1596	471
556-3718	▶203
	▶289
556-4868	740
556-6323	533
556-6446	331
	332
556-6448	332
556-7339	550
556-7715	321
556-8774	507
556-8989	▶758
556-9108	109
557-1685	495
557-3370	▶206
557-3629	174
557-7709	4
	41
557-7834	516
557-7835	516
557-7853	408
	576
558-0344	▶432
	▶436
558-0345	452
	516
558-0346	▶518
558-1717	499
558-1719	499
558-1720	499
558-1723	499
558-1727	499
558-5156	457
558-6618	▶613
558-7716	▶204
	▶301
558-8100	569
	571
558-9990	347
559-0752	46
559-3652	445
	447
	536
559-3854	▶408
559-5559	31
559-8643	293
560-1052	143
	186
560-2458	317
	436
560-5553	177
	233
560-5566	177
	293
560-5681	▶177
560-5876	350
560-6486	233
561-0731	▶265
561-2292	▶707
561-2293	▶707
561-2933	58
	59
561-3610	▶174
561-3611	▶174
	▶707
561-6328	492
562-1130	5
	46
562-1852	117
562-4378	432
562-4379	432
562-5655	647
	739
563-0598	228
	229
	230
563-3117	4
	31
563-8205	567
563-9148	645
564-4856	▶414
	▶557
564-4858	▶415
	▶557
564-7074	113
564-7198	113
564-8002	▶759
564-8811	22
564-8812	22
565-5546	▶36
565-5547	▶88
565-5548	▶37
565-5549	▶106
565-7974	▶37
566-2193	658
566-2224	645
566-2225	645
566-5436	120
566-7221	516
566-7222	504
567-3814	▶760
567-5159	654
	655
568-0343	▶169
	▶632
568-2312	658
568-3011	1
	317
568-3798	▶769
568-5140	170
	174
568-9820	1
	3
569-1216	4
	44
569-4288	441
569-7620	173
569-9053	174
570-2258	▶199
	▶285
570-5397	▶180
	▶269
570-5399	▶180
	▶269
570-5400	▶180
	▶271
570-5401	▶181
	▶271
570-5850	441
570-5851	441
570-5852	441
570-5853	441
570-5854	441
570-5855	441
570-5856	441
570-5857	441
570-5858	441
570-5860	441
570-5861	441
570-5862	441
570-5863	441
570-5864	441
570-5865	441
570-6844	364
571-0753	71
	484
571-1670	82
	508
571-1754	▶68
	▶71
571-6368	484
571-6384	484
571-7226	719
572-3905	508
572-5541	68
572-5542	68
574-1230	17
574-3108	92

PART NUMBER INDEX

Part	Page
	521
574-8968	750
	761
575-2713	504
	508
575-4554	231
575-4995	56
575-8230	173
575-8231	173
575-8232	172
575-8738	773
575-9537	1
	340
575-9542	▶330
	▶340
575-9544	1
	340
575-9545	340
	356
576-1764	358
576-1765	358
576-1766	358
576-1767	358
	377
576-1769	356
576-1770	356
576-1793	356
576-6849	150
	179
576-6919	150
576-7678	▶149
	▶172
576-7683	1
	172
576-8419	150
	189
576-9464	▶328
	▶357
576-9465	328
	329
576-9466	329
576-9468	358
576-9469	357
576-9475	330
576-9528	330
577-2009	150
577-2118	▶277
577-2124	277
577-3418	172
577-3722	358
577-3751	358
577-3753	358
577-5886	378
	379
577-5888	378
	379
577-5889	378
	379
577-7423	378
	379
577-7425	378
	379
577-7882	379
577-8346	80
	378
577-8348	79
	379
578-1021	1
	761
578-1024	▶773
578-4144	773
578-4145	773
578-4166	761
578-4190	761
578-8177	358
578-9785	1
	712
580-6460	168
581-1372	56
582-6323	17

► PRIMARY REFERENCE

MEMORANDA



©2019 Caterpillar
All Rights Reserved

CAT, CATERPILLAR, LET'S DO THE WORK, their respective logos, “Caterpillar Yellow”, the "Power Edge" and Cat "Modern Hex" trade dress as well as corporate and product identity used herein, are trademarks of Caterpillar and may not be used without permission.